AUTOPARTS

# C.V.JOINT & DRIVE SHAFTS

CATALOGUE 2027

# AUTOPARTS®

AUTOPARTS
DRIVE SHAFT
AUTOMOTIVE COMPONENTS
CV JOINT
BOOT KIT

# 01

## Outer C.V. Joints

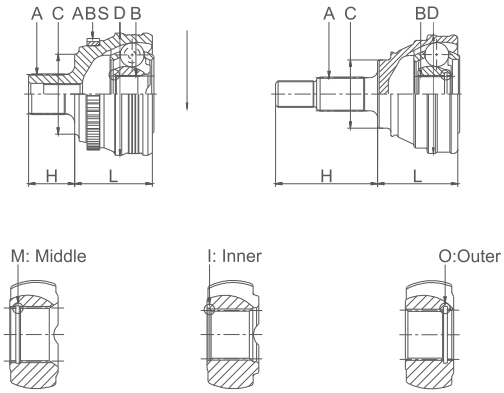


A:External Teeth, wheel side
B:Internal Teeth, wheel side
C:Seal Diameter [mm]
D:Wheel Side Joint
H:Bell pin length [mm]
L:Length [mm]
ABS:Number of teeth on ABS ring
I:Groove type:Inner
M:Groove type:Middle
O:Groove type:Outer
P:Groove position

# 02

## Inner C.V. Joints

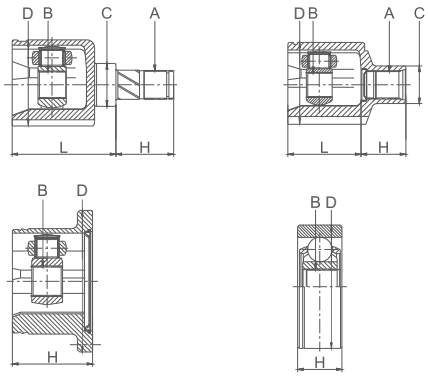


A:External Teeth, diff.side
B:Internal Teeth, diff.side
C:Seal Diameter [mm]
D:Transmission Side Joint [mm]
H:Bell pin length [mm]
L:Length [mm]

# 03

## Drive Shafts

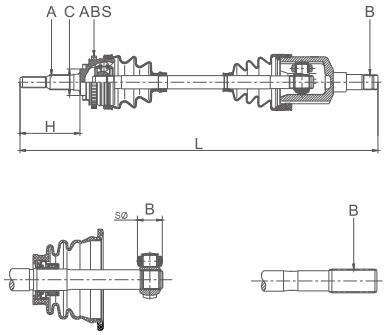


A:External Teeth, wheel side
B:External Teeth, diff.side/
Tripod roller Diameter
C:Seal Diameter [mm]
H:Bell pin length(wheel side)
L:Length [mm]
ABS:Number of teeth on ABS ring

# 04

## ABS Type

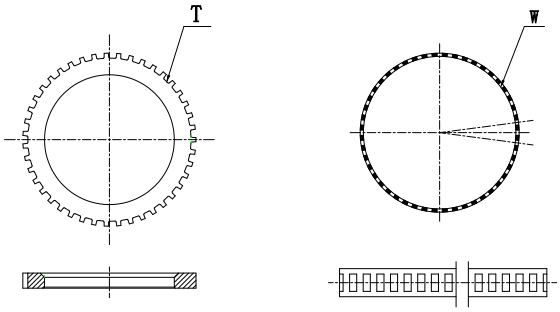


T Type
W Type

# 05

## Stub Shaft

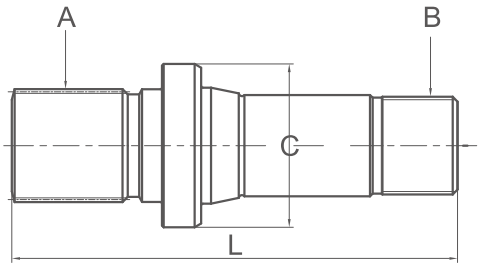


A:External Teeth, wheel side
B:External Teeth, diff.side
C:Seal Diameter [mm]
L:Length [mm]

MT/AT: Manual and Automatic integrated

L/R: Left/Right
F/R: Front/Rear

# GENERAL INDEX

Vehicle Index ..... page.I-XIV

Application ..... page.001-2321

Cross Reference List ..... page.2322-2460

New applications (compared with catalogue 2026) ..... page.2461-2464

| MAKE-MODEL | PAGE |
|---|---|
| **ABARTH** | |
| 500 | 1 |
| 500/595/695 | 1 |
| 500C | 1 |
| 500C/595C/695C | 1 |
| 500E | 1 |
| 595 | 1 |
| 595C | 1 |
| Grande Punto | 1 |
| Punto | 2 |
| Punto Evo | 2 |
| **ACURA** | |
| MDX | 2 |
| RDX | 2 |
| TSX | 2 |
| **ALFA ROMEO** | |
| 145 | 2 |
| 146 | 3 |
| 147 | 4 |
| 155 | 5 |
| 156 | 6 |
| 159 | 9 |
| 164 | 11 |
| 166 | 12 |
| Brera | 12 |
| Giulia | 13 |
| Giulietta | 14 |
| GT | 16 |
| GTV | 16 |
| Mito | 17 |
| Spider | 18 |
| Stelvio | 19 |
| Tonale | 20 |
| **ASTON MARTIN** | |
| Cygnet | 21 |
| **AUDI** | |
| 80 Quattro | 21 |
| A1 | 21 |
| A1 Allstreet | 22 |
| A1 City Carver | 23 |
| A1 Quattro | 23 |
| A1 Sportback | 23 |
| A2 | 26 |
| A3 | 26 |
| A3 Allstreet | 35 |
| A3 Allstreet Quattro | 35 |
| A3 Cabrio | 35 |
| A3 Cabrio Quattro | 38 |
| A3 Limousine | 39 |
| A3 Limousine quattro | 39 |
| A3 Limousine Quattro | 39 |
| A3 Quattro | 39 |
| A3 Sportback | 43 |
| A3 Sportback Quattro | 49 |
| A3/S3 Limousine quattro | 52 |
| A3/S3 Sportback quattro | 52 |
| A4 | 52 |
| A4 Allroad Quattro | 69 |
| A4 Avant Quattro | 73 |
| A4 Avant/RS4 Quattro | 73 |
| A4 Cabrio | 73 |
| A4 Cabrio Quattro | 75 |
| A4 Quattro | 75 |
| A4/S4 quattro | 95 |
| A5 | 95 |
| A5 Cabrio | 97 |
| A5 Cabrio Quattro | 99 |
| A5 Quattro | 103 |
| A5 Sportback | 107 |
| A5 Sportback Quattro | 109 |
| A6 | 113 |
| A6 Allroad Quattro | 125 |
| A6 Quattro | 129 |
| A7 Sportback | 147 |
| A7 Sportback Quattro | 147 |

| MAKE-MODEL | PAGE |
|---|---|
| **AUDI** | |
| A8 | 151 |
| A8 Quattro | 152 |
| Allroad Quattro | 157 |
| Cabriolet | 157 |
| Coupe | 157 |
| Coupe Quattro | 158 |
| e-tron Quattro | 158 |
| e-tron Sportback Quattro | 158 |
| Q2 | 159 |
| Q2 Quattro | 160 |
| Q3 | 160 |
| Q3 Quattro | 162 |
| Q3 Sportback | 166 |
| Q3 Sportback Quattro | 166 |
| Q4 | 167 |
| Q4 Sportback | 168 |
| Q5 | 170 |
| Q5 Quattro | 170 |
| Q5 Quattro Sportback | 174 |
| Q5 Sportback | 175 |
| Q6 | 175 |
| Q6 quattro | 175 |
| Q6 Sportback | 175 |
| Q6 Sportback Quattro | 175 |
| Q6/SQ6 quattro | 175 |
| Q6/SQ6 Sportback Quattro | 175 |
| Q7 Quattro | 175 |
| Q8 e-tron Quattro | 179 |
| Q8 e-tron Sportback Quattro | 179 |
| Q8 Quattro | 180 |
| R8 Quattro | 180 |
| R8 Spyder Quattro | 181 |
| RS3 Quattro | 181 |
| RS3 Sportback Quattro | 181 |
| RS4 Cabrio Quattro | 182 |
| RS4 Quattro | 182 |
| RS5 Cabrio Quattro | 183 |
| RS5 Quattro | 183 |
| RS5 Sportback Quattro | 183 |
| RS6 Quattro | 183 |
| RS7 Sportback Quattro | 184 |
| RSQ3 Quattro | 184 |
| RSQ3 Sportback Quattro | 185 |
| RSQ8 Quattro | 185 |
| S1 Quattro | 185 |
| S1 Sportback Quattro | 185 |
| S3 Cabrio Quattro | 185 |
| S3 Quattro | 186 |
| S3 Sportback Quattro | 188 |
| S4 Cabrio Quattro | 190 |
| S4 Quattro | 190 |
| S5 Cabrio Quattro | 192 |
| S5 Quattro | 192 |
| S5 Sportback Quattro | 193 |
| S6 Plus Quattro | 193 |
| S6 Quattro | 194 |
| S7 Sportback Quattro | 195 |
| S8 Plus Quattro | 196 |
| S8 Quattro | 196 |
| SQ2 Quattro | 196 |
| SQ5 Quattro | 196 |
| SQ7 Quattro | 197 |
| SQ8 e-tron Quattro | 197 |
| SQ8 e-tron Sportback Quattro | 197 |
| SQ8 Quattro | 198 |
| TT | 198 |
| TT Quattro | 200 |
| TTRS Quattro | 204 |
| TTS Quattro | 205 |
| **AUDI (FAW)** | |
| A6 | 206 |
| Q3 | 206 |
| **BAIC** | |
| X35 | 206 |

| MAKE-MODEL | PAGE |
|---|---|
| **BENTLEY** | |
| Bentayga | 207 |
| Continental | 207 |
| Continental Flying Spur | 207 |
| Continental GT | 207 |
| Continental GT3 | 207 |
| Continental GTC | 207 |
| Continental Supersports | 207 |
| **BESTURN (FAW)** | |
| B50 | 208 |
| B70 | 208 |
| X80 | 208 |
| **BMW** | |
| 114d | 208 |
| 114i | 208 |
| 116d | 208 |
| 116i | 209 |
| 118d | 210 |
| 118d Cabrio | 210 |
| 118d Coupe | 211 |
| 118d xDrive | 211 |
| 118i | 211 |
| 118i Cabrio | 212 |
| 120d | 212 |
| 120d Cabrio | 213 |
| 120d Coupe | 213 |
| 120d xDrive | 213 |
| 120i | 214 |
| 120i Cabrio | 215 |
| 120i Coupe | 215 |
| 123 xDrive | 215 |
| 123d | 215 |
| 123d Cabrio | 216 |
| 123d Coupe | 216 |
| 125d | 216 |
| 125i | 216 |
| 125i Cabrio | 216 |
| 125i Coupe | 216 |
| 128i Cabrio | 217 |
| 130i | 217 |
| 135i Cabrio | 217 |
| 135i Coupe | 217 |
| 214d Active Tourer | 217 |
| 214d Gran Tourer | 217 |
| 216d Active Tourer | 217 |
| 216d Gran Coupe | 217 |
| 216d Gran Tourer | 218 |
| 216i Active Tourer | 218 |
| 216i Gran Tourer | 218 |
| 218d Active Tourer | 218 |
| 218d Cabrio | 219 |
| 218d Coupe | 219 |
| 218d Gran Coupe | 219 |
| 218d Gran Tourer | 219 |
| 218d xDrive Active Tourer | 219 |
| 218d xDrive Gran Tourer | 220 |
| 218i Active Tourer | 220 |
| 218i Cabrio | 220 |
| 218i Coupe | 221 |
| 218i Gran Coupe | 221 |
| 218i Gran Tourer | 221 |
| 220d Active Tourer | 221 |
| 220d Cabrio | 222 |
| 220d Coupe | 222 |
| 220d Gran Coupe | 222 |
| 220d Gran Tourer | 222 |
| 220d xDrive Active Tourer | 222 |
| 220d xDrive Coupe | 223 |
| 220d xDrive Gran Coupe | 223 |
| 220d xDrive Gran Tourer | 223 |
| 220i Active Tourer | 223 |
| 220i Cabrio | 224 |
| 220i Coupe | 224 |
| 220i Gran Coupe | 224 |
| 220i Gran Tourer | 224 |

| MAKE-MODEL | PAGE | MAKE-MODEL | PAGE | MAKE-MODEL | PAGE |
|---|---|---|---|---|---|
| **BMW** | | **BMW** | | **BMW** | |
| 220i xDrive Gran Coupe | 225 | 328i Touring | 249 | 430d Gran Coupe | 270 |
| 223 xDrive Gran Coupe | 225 | 328i xDrive | 249 | 430d xDrive Coupe | 270 |
| 223d xDrive Active Tourer | 225 | 328i xDrive Coupe | 249 | 430d xDrive Gran Coupe | 270 |
| 223i Active Tourer | 225 | 328i xDrive Gran Turismo | 249 | 430i Cabrio | 271 |
| 223i xDrive Active Tourer | 225 | 328i xDrive Touring | 250 | 430i Coupe | 271 |
| 225d Cabrio | 225 | 330d | 250 | 430i Gran Coupe | 271 |
| 225d Coupe | 225 | 330d Cabrio | 250 | 430i xDrive Cabrio | 271 |
| 225e xDrive Active Tourer | 225 | 330d Coupe | 251 | 430i xDrive Coupe | 272 |
| 225i Active Tourer | 226 | 330d Gran Turismo | 251 | 430i xDrive Gran Coupe | 272 |
| 225i xDrive Active Tourer | 226 | 330d Touring | 251 | 435d xDrive Cabrio | 273 |
| 228i Cabrio | 226 | 330d xDrive | 252 | 435d xDrive Coupe | 273 |
| 228i Coupe | 226 | 330d xDrive Coupe | 252 | 435d xDrive Gran Coupe | 273 |
| 228i xDrive Gran Coupe | 226 | 330d xDrive Gran Turismo | 253 | 435i Cabrio | 273 |
| 230i Cabrio | 226 | 330d xDrive Touring | 253 | 435i Coupe | 273 |
| 230i Coupe | 226 | 330e | 254 | 435i Gran Coupe | 273 |
| 3 ActiveHybrid | 226 | 330e xDrive | 254 | 435i xDrive Cabrio | 274 |
| 316d | 226 | 330e xDrive Touring | 254 | 435i xDrive Coupe | 274 |
| 316d Touring | 226 | 330i | 254 | 435i xDrive Gran Coupe | 274 |
| 316i | 227 | 330i Cabrio | 255 | 440i Cabrio | 274 |
| 316i Compact | 227 | 330i Coupe | 255 | 440i Coupe | 275 |
| 316i Coupe | 227 | 330i Gran Turismo | 255 | 440i Gran Coupe | 275 |
| 316i Touring | 227 | 330i Touring | 255 | 440i xDrive Cabrio | 275 |
| 318d | 228 | 330i xDrive | 256 | 440i xDrive Coupe | 275 |
| 318d Compact | 228 | 330i xDrive Coupe | 256 | 440i xDrive Gran Coupe | 275 |
| 318d Gran Turismo | 228 | 330i xDrive Gran Turismo | 256 | 5 ActiveHybrid | 276 |
| 318d Touring | 228 | 330i xDrive Touring | 257 | 518d | 276 |
| 318d xDrive | 229 | 330xi | 257 | 518d Touring | 276 |
| 318d xDrive Touring | 229 | 335d | 257 | 518i Touring | 277 |
| 318i | 229 | 335d Coupe | 257 | 520d | 277 |
| 318i Cabrio | 230 | 335d Touring | 257 | 520d Gran Turismo | 278 |
| 318i Compact | 230 | 335d xDrive | 257 | 520d Touring | 278 |
| 318i Coupe | 230 | 335d xDrive Gran Turismo | 258 | 520d xDrive | 279 |
| 318i Touring | 231 | 335d xDrive Touring | 258 | 520d xDrive Touring | 280 |
| 320d | 231 | 335i | 258 | 520i | 281 |
| 320d Cabrio | 232 | 335i Cabrio | 259 | 520i Touring | 282 |
| 320d Compact | 233 | 335i Coupe | 259 | 523i | 283 |
| 320d Coupe | 233 | 335i Gran Turismo | 259 | 523i Touring | 283 |
| 320d Gran Turismo | 233 | 335i Touring | 259 | 525d | 283 |
| 320d Touring | 233 | 335i xDrive | 260 | 525d Touring | 284 |
| 320d xDrive | 234 | 335i xDrive Coupe | 261 | 525d xDrive | 285 |
| 320d xDrive Coupe | 235 | 335i xDrive Gran Turismo | 261 | 525d xDrive Touring | 285 |
| 320d xDrive Gran Turismo | 236 | 335i xDrive Touring | 261 | 525i | 286 |
| 320d xDrive Touring | 236 | 335xi | 262 | 525i Touring | 286 |
| 320e xDrive Touring | 238 | 340i | 262 | 525i xDrive | 286 |
| 320i | 238 | 340i Gran Turismo | 262 | 525i xDrive Touring | 286 |
| 320i Cabrio | 239 | 340i Touring | 262 | 528i | 287 |
| 320i Coupe | 239 | 340i xDrive | 262 | 528i Touring | 287 |
| 320i Gran Turismo | 240 | 340i xDrive Gran Turismo | 263 | 528i xDrive | 287 |
| 320i Touring | 240 | 340i xDrive Touring | 263 | 528i xDrive Touring | 287 |
| 320i xDrive | 241 | 418d Coupe | 263 | 530d | 287 |
| 320i xDrive Gran Turismo | 242 | 418d Gran Coupe | 263 | 530d Gran Turismo | 288 |
| 320i xDrive Touring | 242 | 418i Coupe | 264 | 530d Touring | 288 |
| 323i | 243 | 418i Gran Coupe | 264 | 530d xDrive | 289 |
| 323i Cabrio | 243 | 420d Cabrio | 264 | 530d xDrive Gran Turismo | 290 |
| 323i Coupe | 243 | 420d Coupe | 264 | 530d xDrive Touring | 290 |
| 323i Touring | 243 | 420d Gran Coupe | 264 | 530e xDrive | 291 |
| 325d | 243 | 420d xDrive Coupe | 264 | 530e xDrive Touring | 291 |
| 325d Cabrio | 244 | 420d xDrive Gran Coupe | 265 | 530i | 291 |
| 325d Coupe | 244 | 420i Cabrio | 265 | 530i Touring | 292 |
| 325d Gran Turismo | 244 | 420i Coupe | 266 | 530i xDrive | 292 |
| 325d Touring | 244 | 420i Gran Coupe | 266 | 530i xDrive Touring | 293 |
| 325i | 245 | 420i xDrive Coupe | 266 | 535d | 293 |
| 325i Cabrio | 245 | 420i xDrive Gran Coupe | 267 | 535d Gran Turismo | 293 |
| 325i Compact | 246 | 425d Cabrio | 268 | 535d Touring | 293 |
| 325i Coupe | 246 | 425d Coupe | 268 | 535d xDrive | 294 |
| 325i Touring | 246 | 425d Gran Coupe | 268 | 535d xDrive Gran Turismo | 294 |
| 325i xDrive | 247 | 428i Cabrio | 269 | 535d xDrive Touring | 294 |
| 325i xDrive Coupe | 247 | 428i Coupe | 269 | 535i | 294 |
| 325i xDrive Touring | 248 | 428i Gran Coupe | 269 | 535i Gran Turismo | 295 |
| 325xi | 248 | 428i xDrive Cabrio | 269 | 535i Touring | 295 |
| 328i | 248 | 428i xDrive Coupe | 269 | 535i xDrive | 295 |
| 328i Cabrio | 248 | 428i xDrive Gran Coupe | 269 | 535i xDrive Gran Turismo | 295 |
| 328i Coupe | 248 | 430d Cabrio | 269 | 535i xDrive Touring | 295 |
| 328i Gran Turismo | 249 | 430d Coupe | 270 | 540d xDrive | 296 |

| MAKE-MODEL | PAGE |
|---|---|
| **BMW** | |
| 540d xDrive Touring | 296 |
| 540i | 296 |
| 540i Touring | 296 |
| 540i xDrive | 296 |
| 540i xDrive Touring | 297 |
| 545e xDrive | 297 |
| 545i | 297 |
| 545i Touring | 297 |
| 550i | 297 |
| 550i Gran Turismo | 297 |
| 550i Touring | 297 |
| 550i xDrive | 297 |
| 550i xDrive Gran Turismo | 298 |
| 630i Cabrio | 298 |
| 630i Coupe | 298 |
| 635d Cabrio | 298 |
| 635d Coupe | 298 |
| 640d Cabrio | 298 |
| 640d Coupe | 298 |
| 640d Gran Coupe | 299 |
| 640d xDrive Cabrio | 299 |
| 640d xDrive Coupe | 299 |
| 640d xDrive Gran Coupe | 299 |
| 640i xDrive Cabrio | 299 |
| 640i xDrive Coupe | 299 |
| 640i xDrive Gran Coupe | 299 |
| 645i Cabrio | 300 |
| 645i Coupe | 300 |
| 650i Cabrio | 300 |
| 650i Coupe | 300 |
| 650i Gran Coupe | 300 |
| 650i xDrive Cabrio | 300 |
| 650i xDrive Coupe | 300 |
| 650i xDrive Gran Coupe | 301 |
| 730d | 301 |
| 730d xDrive | 301 |
| 730i/730Li | 301 |
| 730Ld | 302 |
| 735i/735Li | 302 |
| 740d | 302 |
| 740d xDrive | 302 |
| 740i xDrive | 302 |
| 740i/740Li | 302 |
| 745d | 302 |
| 745i/745Li | 302 |
| 750d xDrive | 302 |
| 750i xDrive | 303 |
| 750i/750Li | 303 |
| 750i/750Li xDrive | 303 |
| 760i/760Li | 303 |
| i3 | 303 |
| iX1 eDrive 20 | 304 |
| iX1 xDrive 30 | 304 |
| iX2 eDrive 20 | 304 |
| iX2 xDrive 30 | 304 |
| M Coupe | 304 |
| M135 xDrive | 304 |
| M135i | 304 |
| M135i xDrive | 304 |
| M140i | 305 |
| M140i xDrive | 305 |
| M235i Cabrio | 305 |
| M235i Coupe | 305 |
| M235i xDrive Cabrio | 305 |
| M235i xDrive Coupe | 305 |
| M235i xDrive Gran Coupe | 306 |
| M240i Cabrio | 306 |
| M240i Coupe | 306 |
| M240i xDrive Cabrio | 306 |
| M240i xDrive Coupe | 306 |
| M3 | 306 |
| M3 Cabrio | 306 |
| M3 Coupe | 306 |
| M340d xDrive | 306 |

| MAKE-MODEL | PAGE |
|---|---|
| **BMW** | |
| M340d xDrive Touring | 306 |
| M340i xDrive | 307 |
| M340i xDrive Touring | 307 |
| M440d xDrive Cabrio | 307 |
| M440d xDrive Coupe | 307 |
| M440i xDrive Cabrio | 307 |
| M440i xDrive Coupe | 308 |
| M440i xDrive Gran Coupe | 308 |
| M5 | 308 |
| M5 Touring | 308 |
| M550d xDrive | 308 |
| M550d xDrive Touring | 308 |
| M6 Cabrio | 309 |
| M6 Coupe | 309 |
| M6 Gran Coupe | 309 |
| X1 M35i xDrive | 309 |
| X1 sDrive 16d | 309 |
| X1 sDrive 18d | 310 |
| X1 sDrive 18i | 310 |
| X1 sDrive 20d | 311 |
| X1 sDrive 20i | 311 |
| X1 xDrive 18d | 312 |
| X1 xDrive 20d | 312 |
| X1 xDrive 20i | 313 |
| X1 xDrive 23d | 313 |
| X1 xDrive 23i | 314 |
| X1 xDrive 25d | 314 |
| X1 xDrive 25e | 314 |
| X1 xDrive 25i | 314 |
| X1 xDrive 28i | 314 |
| X1 xDrive 30i | 315 |
| X2 sDrive 16d | 315 |
| X2 sDrive 18d | 315 |
| X2 sDrive 18i | 315 |
| X2 sDrive 20d | 316 |
| X2 sDrive 20i | 316 |
| X2 xDrive 18d | 316 |
| X2 xDrive 20d | 316 |
| X2 xDrive 20i | 317 |
| X2 xDrive 25d | 317 |
| X2 xDrive 25e | 317 |
| X2 xDrive M35i | 317 |
| X3 | 317 |
| X3 M | 319 |
| X3 sDrive 18d | 319 |
| X3 sDrive 20i | 319 |
| X3 xDrive 18d | 319 |
| X3 xDrive 20d | 320 |
| X3 xDrive 20i | 321 |
| X3 xDrive 25d | 321 |
| X3 xDrive 25i | 321 |
| X3 xDrive 28i | 322 |
| X3 xDrive 30d | 322 |
| X3 xDrive 30e | 323 |
| X3 xDrive 30i | 323 |
| X3 xDrive 35d | 324 |
| X3 xDrive 35i | 324 |
| X3 xDrive M40d | 324 |
| X3 xDrive M40i | 324 |
| X4 M | 325 |
| X4 xDrive 20d | 325 |
| X4 xDrive 20i | 326 |
| X4 xDrive 25d | 326 |
| X4 xDrive 28i | 326 |
| X4 xDrive 30d | 326 |
| X4 xDrive 30i | 327 |
| X4 xDrive 35d | 327 |
| X4 xDrive 35i | 327 |
| X4 xDrive M40d | 328 |
| X4 xDrive M40i | 328 |
| X5 | 328 |
| X5 M | 330 |
| X5 xDrive 25d | 330 |
| X5 xDrive 28i | 331 |

| MAKE-MODEL | PAGE |
|---|---|
| **BMW** | |
| X5 xDrive 30d | 331 |
| X5 xDrive 30i | 333 |
| X5 xDrive 35d | 333 |
| X5 xDrive 35i | 333 |
| X5 xDrive 40d | 334 |
| X5 xDrive 40e | 334 |
| X5 xDrive 40i | 335 |
| X5 xDrive 45e | 335 |
| X5 xDrive 48i | 335 |
| X5 xDrive 50e | 336 |
| X5 xDrive 50i | 336 |
| X5 xDrive M50d | 336 |
| X5 xDrive M50i | 336 |
| X5 xDrive M60i | 336 |
| X6 ActiveHybrid | 337 |
| X6 M | 337 |
| X6 xDrive 28i | 337 |
| X6 xDrive 30d | 337 |
| X6 xDrive 35d | 339 |
| X6 xDrive 35i | 339 |
| X6 xDrive 40d | 340 |
| X6 xDrive 40i | 340 |
| X6 xDrive 50i | 340 |
| X6 xDrive M50d | 341 |
| X6 xDrive M50i | 341 |
| X6 xDrive M60i | 341 |
| X7 xDrive 30d | 341 |
| X7 xDrive 40d | 342 |
| X7 xDrive 40i | 342 |
| X7 xDrive M50d | 342 |
| X7 xDrive M50i | 342 |
| X7 xDrive M60i | 342 |
| Z3 Cabrio | 342 |
| Z3 Coupe | 342 |
| Z4 Cabrio | 343 |
| Z4 Coupe | 343 |
| Z4 sDrive 20i Cabrio | 343 |
| Z4 sDrive 23i Cabrio | 343 |
| Z4 sDrive 30i Cabrio | 343 |
| Z4 sDrive 35i Cabrio | 343 |
| Z4 sDrive 35is Cabrio | 343 |
| **BUICK (SGM)** | |
| Century | 343 |
| Encore | 343 |
| Excelle | 343 |
| Excelle GT | 343 |
| Excelle XT | 344 |
| La Crosse | 344 |
| Regal | 344 |
| **BYD** | |
| Atto 2/Yuan Up | 344 |
| Dolphin | 344 |
| E6 | 344 |
| e6 | 345 |
| F0 | 345 |
| F3 | 345 |
| F3-R | 345 |
| F3DM | 345 |
| F5 Suri | 345 |
| G3 | 345 |
| G3R | 345 |
| G6 | 346 |
| Haibao | 346 |
| HuWeiJian 07 | 346 |
| L3 | 346 |
| M6 | 347 |
| Qin | 347 |
| Qin Plus | 347 |
| Qin Pro | 347 |
| S6 | 347 |
| Seal | 348 |
| Seal 06 GT | 348 |
| Seal U | 348 |
| Song Max | 348 |

| MAKE-MODEL | PAGE |
|---|---|
| **BYD** | |
| Song Plus | 348 |
| Song Pro | 349 |
| Surui | 349 |
| Surui/F5 Suri | 349 |
| Tang | 349 |
| Yuan Plus/Atto 3 | 350 |
| **CADILLAC** | |
| BLS | 350 |
| CTS | 351 |
| Escalade | 351 |
| Seville | 351 |
| SRX | 351 |
| STS | 351 |
| **CHANA** | |
| Oushang | 351 |
| **CHANGAN** | |
| Alsvin | 351 |
| Alsvin V7 | 352 |
| CS15 | 352 |
| CS35 | 352 |
| CS35 Plus | 352 |
| CS55 | 352 |
| CS55 Plus | 352 |
| CS75 | 353 |
| CS75 Plus | 353 |
| CS95 | 353 |
| CX20 | 354 |
| Eado | 354 |
| Eado DT | 354 |
| Eado Plus | 354 |
| Eado XT | 354 |
| Raeton CC | 354 |
| Uni-K | 354 |
| Uni-T | 354 |
| Uni-V | 355 |
| **CHERY** | |
| A1 | 355 |
| A3 | 355 |
| A5 | 355 |
| A5/Elara/Alia/Fora | 356 |
| Arrizo 5 | 356 |
| Arrizo 5 Plus | 356 |
| Arrizo 7 | 356 |
| Arrizo 7e | 357 |
| Arrizo GX | 357 |
| Bonus 3 | 357 |
| Cowin | 357 |
| Cowin 1 | 358 |
| Cowin 2 | 358 |
| Cowin 3 | 358 |
| Cowin 5 | 358 |
| E5 | 358 |
| Eastar | 358 |
| Eastar Cross | 358 |
| Elara | 358 |
| Fulwin 2 | 358 |
| J11 | 358 |
| M11 | 358 |
| QQ3 | 358 |
| QQ6 | 358 |
| QQme | 359 |
| Tiggo | 359 |
| Tiggo 2 | 359 |
| Tiggo 3 | 359 |
| Tiggo 4 | 359 |
| Tiggo 5 | 360 |
| Tiggo 5X | 360 |
| Tiggo 7 | 360 |
| Tiggo 7 Plus | 361 |
| Tiggo 7 Plus/Tiggo 7 Pro Max | 361 |
| Tiggo 8 | 361 |
| Tiggo 8 Plus | 362 |
| Tiggo FL | 362 |
| X1 | 362 |

| MAKE-MODEL | PAGE |
|---|---|
| **CHEVROLET** | |
| Avalanche 1500 | 362 |
| Aveo | 362 |
| Aveo/Kalos | 364 |
| Aveo/Kalos/Gentra/Lova | 365 |
| Camaro | 365 |
| Captiva | 365 |
| Cobalt | 368 |
| Colorado | 368 |
| Colorado Crew Cab Pickup | 368 |
| Colorado Standard Cab Pickup | 368 |
| Colorado/S10/Luv D-Max | 368 |
| Corvette | 368 |
| Cruze | 369 |
| Epica | 371 |
| Evanda | 371 |
| HHR | 371 |
| Kalos | 372 |
| Lacetti | 372 |
| Lanos | 373 |
| Lumina APV | 373 |
| Malibu | 373 |
| Matiz | 373 |
| Niva | 374 |
| Nubira | 374 |
| Optra | 375 |
| Orlando | 375 |
| Rezzo | 375 |
| Silverado 1500 | 375 |
| Silverado 2500 Crew Cab Pickup | 375 |
| Spark | 375 |
| Spark Lite | 376 |
| Suburban 1500 | 376 |
| Trailblazer | 376 |
| Trax | 376 |
| Vectra | 377 |
| Volt | 377 |
| Zafira | 377 |
| **CHRYSLER** | |
| 300C | 377 |
| 300M | 378 |
| Caravan | 378 |
| Delta | 378 |
| Grand Voyager | 378 |
| Neon | 379 |
| New Yorker | 379 |
| Pacifica | 379 |
| PT Cruiser | 379 |
| Sebring | 380 |
| Town & Country | 381 |
| Voyager | 382 |
| Voyager/Grand Voyager | 382 |
| Voyager/Tacuma | 382 |
| Ypsilon | 382 |
| **CITROËN** | |
| AX | 383 |
| Berlingo | 383 |
| Berlingo MultiSpace | 390 |
| Berlingo/Berlingo First | 394 |
| C-Crosser | 395 |
| C-Crosser Enterprise | 396 |
| C-Elysee | 396 |
| C1 | 397 |
| C15 | 397 |
| C2 | 397 |
| C3 | 399 |
| C3 Aircross | 406 |
| C3 Origin | 407 |
| C3 Picasso | 407 |
| C3 Pluriel | 408 |
| C4 | 409 |
| C4 Aircross | 416 |
| C4 Cactus | 416 |
| C4 Grand Picasso | 418 |
| C4 Pallas | 421 |

| MAKE-MODEL | PAGE |
|---|---|
| **CITROËN** | |
| C4 Picasso | 421 |
| C4 SD | 424 |
| C4 SpaceTourer | 424 |
| C4 X | 425 |
| C5 | 425 |
| C5 Aircross | 430 |
| C5 Estate/Break | 431 |
| C5 X | 436 |
| C6 | 436 |
| C8 | 436 |
| Dispatch | 438 |
| DS3 | 440 |
| DS4 | 445 |
| DS5 | 446 |
| ë-Berlingo | 447 |
| ë-Berlingo First | 447 |
| ë-Berlingo MultiSpace | 447 |
| ë-C4 | 447 |
| ë-C4 X | 447 |
| ë-Jumper | 447 |
| ë-Jumpy | 448 |
| ë-Spacetourer | 448 |
| Evasion | 448 |
| Grand C4 SpaceTourer | 450 |
| Jumper | 451 |
| Jumper 27 | 457 |
| Jumper 31 | 462 |
| Jumper 35 | 468 |
| Jumpy | 468 |
| Jumpy/Dispatch | 474 |
| Nemo | 474 |
| Saxo | 475 |
| Spacetourer | 477 |
| Synergie | 478 |
| Xantia | 478 |
| XM | 481 |
| Xsara | 482 |
| Xsara Estate/Break | 490 |
| Xsara Picasso | 494 |
| ZX | 495 |
| **CITROËN (DF-PSA)** | |
| Fukang | 498 |
| **CUPRA** | |
| Ateca | 498 |
| Born | 498 |
| Formentor | 498 |
| Leon | 500 |
| Leon Sportstourer | 500 |
| Tavascan | 501 |
| Terramar | 501 |
| **DACIA** | |
| Dokker | 502 |
| Duster | 503 |
| Jogger | 509 |
| Lodgy | 510 |
| Logan | 511 |
| Logan II | 516 |
| Logan MCV | 516 |
| Sandero | 519 |
| Sandero II | 522 |
| Sandero Stepway | 522 |
| Solenza | 522 |
| Spring | 522 |
| SuperNova | 522 |
| **DAEWOO** | |
| Aranos | 522 |
| Cielo | 523 |
| Espero | 523 |
| Evanda | 523 |
| Gentra | 523 |
| Kalos | 523 |
| Korando | 524 |
| Lacetti | 524 |
| Lanos | 525 |

| MAKE-MODEL | PAGE |
|---|---|
| **DAEWOO** | |
| Leganza | 526 |
| Magnus | 526 |
| Matiz | 526 |
| Musso | 526 |
| Nexia | 527 |
| Nubira | 528 |
| Racer | 530 |
| Rezzo | 530 |
| Tacuma | 531 |
| Tico | 531 |
| Tosca | 531 |
| **DAIHATSU** | |
| Applause | 531 |
| Charade | 531 |
| Copen | 532 |
| Cuore | 532 |
| Extol | 532 |
| Feroza | 532 |
| Fourtrak | 532 |
| Gran Move | 532 |
| Move | 532 |
| Pyzar | 533 |
| Rocky | 533 |
| Rocky/Fourtrak | 533 |
| Rugger | 533 |
| Sigra | 533 |
| Sirion | 533 |
| Terios | 533 |
| Trevis | 534 |
| YRV | 534 |
| **DAIMLER** | |
| Super Eight | 534 |
| **DATSUN** | |
| Cross | 534 |
| **DEEPAL** | |
| S05 | 534 |
| **DODGE** | |
| Caliber | 534 |
| Caravan | 535 |
| Charger | 535 |
| Journey | 535 |
| Neon | 536 |
| Nitro | 536 |
| Ram Van | 537 |
| Stratus | 537 |
| **DS** | |
| DS3 | 537 |
| DS3 Crossback | 539 |
| DS3/DS3 Crossback | 540 |
| DS4 | 540 |
| DS4/DS4 Crossback | 541 |
| DS5 | 541 |
| N°8 74 | 542 |
| N°8 97 Long Range | 542 |
| **EMC** | |
| 7 | 542 |
| **EMGRAND** | |
| EC7 | 542 |
| EC8 | 542 |
| X7 | 542 |
| **ENGLON** | |
| SC7 | 542 |
| SX7 | 542 |
| **EVUM Motors** | |
| Acar | 542 |
| **EXEED (CHERY)** | |
| LX | 543 |
| TXL | 543 |
| VX | 543 |
| **FAW (TIANJIN)** | |
| N3 | 543 |
| Xiali | 543 |
| **FENGON** | |
| Glory 360 | 543 |
| Glory 370 | 543 |
| Glory S370 | 543 |
| **FIAT** | |
| 500 | 543 |
| 500 (312_) | 544 |
| 500C | 544 |
| 500E | 545 |
| 500L | 545 |
| 500X | 546 |
| Barchetta | 547 |
| Brava | 548 |
| Bravo | 549 |
| Bravo Van | 551 |
| Cinquecento | 551 |
| Coupe | 551 |
| Croma | 551 |
| Doblo | 553 |
| Doblo Cargo | 556 |
| Ducato | 560 |
| Ducato 10 | 574 |
| Ducato 11 | 582 |
| Ducato 14 | 582 |
| Ducato 15 | 586 |
| Ducato 18 | 587 |
| Ducato 25 | 587 |
| Ducato 30 | 587 |
| Ducato 40 | 588 |
| E-Doblo | 588 |
| E-Ducato | 588 |
| E-Ducato 35 | 588 |
| E-Scudo | 588 |
| E-Ulysse | 589 |
| Egea | 589 |
| Elba | 589 |
| Fiorino | 589 |
| Fiorino Pick Up | 590 |
| Freemont | 591 |
| Fullback | 591 |
| Grande Punto | 591 |
| Grande Punto Van | 593 |
| Idea | 593 |
| Linea | 594 |
| Marea | 595 |
| Marea S.W./Weekend | 596 |
| Multipla | 596 |
| Multipla Van | 597 |
| Palio | 597 |
| Palio Weekend | 598 |
| Panda | 599 |
| Panda Van | 602 |
| Punto | 604 |
| Punto Cabrio | 608 |
| Punto Evo | 608 |
| Punto Evo Van | 609 |
| Punto Van | 610 |
| Qubo | 611 |
| Scudo | 612 |
| Sedici | 617 |
| Seicento | 618 |
| Seicento/600 | 618 |
| Siena | 618 |
| Stilo | 619 |
| Stilo Multi Wagon | 621 |
| Stilo Van | 621 |
| Strada Pick Up | 621 |
| Talento | 622 |
| Tempra | 623 |
| Tempra S.W./Weekend | 624 |
| Tipo | 625 |
| Ulysse | 627 |
| Uno | 628 |
| **FORD** | |
| B-Max | 628 |
| C-Max | 630 |
| **FORD** | |
| Cougar | 635 |
| Courier (Fiesta) | 635 |
| E-Transit | 636 |
| Ecosport | 636 |
| Escort | 637 |
| Escort Classic | 641 |
| Fiesta | 642 |
| Fiesta Van | 647 |
| Focus | 649 |
| Focus C-Max | 665 |
| Focus CC | 667 |
| Focus Estate/Wagon | 667 |
| Focus Van | 676 |
| Fusion | 677 |
| Galaxy | 678 |
| Galaxy Van | 682 |
| Grand C-Max | 683 |
| KA | 686 |
| KA Van | 686 |
| KA+ | 686 |
| Kuga | 687 |
| Kuga Van | 692 |
| Maverick | 693 |
| Mondeo | 693 |
| Mondeo Estate/Wagon | 708 |
| Puma | 716 |
| S-Max | 716 |
| Scorpio | 720 |
| StreetKa | 720 |
| Tourneo Connect | 720 |
| Tourneo Connect/Grand Tourneo Connect | 720 |
| Tourneo Courier | 722 |
| Tourneo Custom | 722 |
| Tourneo Custom 320 | 723 |
| Transit | 724 |
| Transit 300 | 733 |
| Transit 350 | 734 |
| Transit 430 | 735 |
| Transit 460 | 735 |
| Transit Connect | 735 |
| Transit Courier | 737 |
| Transit Custom | 739 |
| Transit Custom 320 | 742 |
| Transit Tourneo | 742 |
| **FORD (CHANGAN)** | |
| Mondeo | 743 |
| **FORD ASIA & OCEANIA** | |
| Everest | 743 |
| Fiesta | 743 |
| Focus | 744 |
| **FORD AUSTRALIA** | |
| Focus | 744 |
| Puma | 744 |
| **FORD USA** | |
| Edge | 744 |
| Escape | 744 |
| Expedition | 744 |
| Explorer | 744 |
| F-150 | 745 |
| F-150 Crew Cab Pickup | 745 |
| F-150 Extended Cab | 745 |
| F-150 Extended Cab Pickup | 745 |
| F-150 Lightning Crew Cab Pickup | 745 |
| F-150 Standard Cab Pickup | 745 |
| Fiesta | 746 |
| Flex | 746 |
| Focus | 746 |
| Fusion | 746 |
| Mustang | 746 |
| Probe | 746 |
| Ranger | 747 |
| Ranger Cab & Chassis | 748 |
| Ranger Crew Cab Pickup | 749 |

| MAKE-MODEL | PAGE |
|---|---|
| **GAC** | |
| Trumpchi GA6 | 749 |
| Trumpchi GM8 | 749 |
| Trumpchi GS4 | 749 |
| Trumpchi GS5 | 749 |
| Trumpchi GS7 | 749 |
| Trumpchi GS8 | 750 |
| Trumpchi M8 | 750 |
| **GAC NE** | |
| Aion S | 750 |
| Aion S Max | 751 |
| Aion S Plus | 751 |
| Aion V | 751 |
| Aion Y | 751 |
| **GEELY** | |
| Atlas | 751 |
| Binyue | 751 |
| Binyue Cool | 752 |
| Binyue Pro | 752 |
| BL | 752 |
| Boyue | 752 |
| Boyue Pro | 752 |
| Boyue X | 753 |
| Boyue/Atlas/Emgrand X7 Sport | 753 |
| Coolray | 753 |
| Emgrand | 753 |
| Emgrand RS | 753 |
| GC7 | 753 |
| GX7 | 753 |
| Haoqing (HQ) | 753 |
| Haoqing SRV | 753 |
| Icon | 753 |
| Leading | 753 |
| Tugella | 753 |
| Ulio | 754 |
| Uliou | 754 |
| Vision | 754 |
| Xingyue | 754 |
| Xingyue L | 754 |
| Xingyue S | 754 |
| **GLEAGLE** | |
| GC7 | 755 |
| GX7 | 755 |
| Vision | 755 |
| **GMC** | |
| Yukon | 755 |
| **GREAT WALL** | |
| C30 | 755 |
| Coolbear | 755 |
| Cowry | 755 |
| Fengjun 3 | 755 |
| Fengjun 5 | 755 |
| Fengjun 5/Wingle 5 | 755 |
| Fengjun 7 | 756 |
| Fengjun 7/Wingle 7 | 756 |
| Florid | 756 |
| Florid Cross | 756 |
| Hover H3 (Haval) | 756 |
| Hover H5 | 756 |
| Hover H5/Haval 5 | 757 |
| Hover H6 | 757 |
| Hover H6 (Haval) | 757 |
| Hover M4 | 757 |
| Lingao | 758 |
| M4 | 758 |
| Pao | 758 |
| Peri | 758 |
| Safe F1 | 758 |
| Steed 6 | 758 |
| Tengyi C30 | 758 |
| Voleex (Tengyi) C10 | 758 |
| Voleex (Tengyi) C20R | 758 |
| Voleex (Tengyi) C30 | 758 |
| Voleex (Tengyi) C50 | 758 |
| Voleex (Tengyi) V80 | 758 |

| MAKE-MODEL | PAGE |
|---|---|
| **GREAT WALL** | |
| Wingle | 758 |
| Wingle 3 | 758 |
| Wingle 5 | 758 |
| Wingle 6 | 758 |
| Wingle 6/Fengjun 6/Steed 6 | 759 |
| **HAIMA (FAW)** | |
| 3 | 759 |
| M3 | 759 |
| M8 | 759 |
| S5 | 759 |
| S7 (Qishi) | 759 |
| V70 | 759 |
| **HANTENG** | |
| X7 | 759 |
| **HAVAL** | |
| Chulian | 759 |
| F5 | 759 |
| F7 | 759 |
| F7X | 760 |
| H1 | 760 |
| H2 | 760 |
| H4 | 761 |
| H5 | 761 |
| H6 | 761 |
| H6 Coupe | 763 |
| H7 | 763 |
| H7L | 764 |
| H8 | 764 |
| H9 | 764 |
| Jolion | 764 |
| M6 | 765 |
| **HAWTAI** | |
| B35 (Boliger/Baolige) | 765 |
| Santa Fé C9 | 765 |
| **HONDA** | |
| Accord | 765 |
| Accord Aerodeck | 767 |
| Accord Coupe | 767 |
| Accord Estate/Wagon | 767 |
| Avancier | 768 |
| Brio | 768 |
| Capa | 768 |
| City | 768 |
| City V | 769 |
| City/Fit Aria | 769 |
| Civic | 769 |
| Civic Aerodeck | 776 |
| Civic Coupe | 777 |
| Civic/Civic Ferio | 777 |
| CR-V | 777 |
| CR-Z | 782 |
| Crosstour | 782 |
| CRX | 782 |
| Domani | 782 |
| Elysion | 783 |
| Fit | 783 |
| Fit Aria | 783 |
| FR-V | 783 |
| Freed | 783 |
| HR-V | 783 |
| Insight | 784 |
| Integra | 784 |
| Jazz | 785 |
| Legend | 785 |
| Logo | 785 |
| Odyssey | 786 |
| Pilot | 786 |
| Prelude | 786 |
| S2000 | 787 |
| Shuttle | 787 |
| Stream | 787 |
| **HONDA (DONGFENG)** | |
| XR-V | 787 |

| MAKE-MODEL | PAGE |
|---|---|
| **HONDA (GAC)** | |
| Accord | 787 |
| Odyssey | 787 |
| Vezel | 787 |
| **HONGQI** | |
| E-HS9 | 787 |
| **HORKI (DYK)** | |
| 300E | 788 |
| **HUMMER** | |
| H3 | 788 |
| **HYUNDAI** | |
| Accent | 788 |
| Accent/i25/Solaris | 794 |
| Atos | 794 |
| Avante | 795 |
| Azera | 795 |
| Bayon | 795 |
| Coupe | 795 |
| Creta | 797 |
| Elantra | 797 |
| Elantra Coupe | 801 |
| Elantra Lavita | 801 |
| Eon | 801 |
| Equus | 802 |
| Galloper | 802 |
| Genesis | 802 |
| Genesis Coupe | 802 |
| Genesis Prada | 802 |
| Getz | 803 |
| Grand i10 | 804 |
| Grand Santa Fé | 804 |
| Grandeur | 805 |
| H-1 | 805 |
| H200 | 805 |
| Highway Van | 806 |
| i10 | 806 |
| i20 | 807 |
| i20 Active | 810 |
| i30 | 810 |
| i30 CW | 818 |
| i30 Fastback | 820 |
| i40 | 820 |
| i45 | 822 |
| Ioniq | 822 |
| Ioniq 5 | 823 |
| Ioniq 6 | 823 |
| iX20 | 823 |
| iX35 | 823 |
| ix35 | 826 |
| iX35 | 826 |
| ix35 | 827 |
| iX35 | 827 |
| ix55 | 828 |
| iX55 | 828 |
| ix55 | 828 |
| Kona | 828 |
| Lantra | 829 |
| Lantra Estate/Wagon | 830 |
| Matrix | 830 |
| Nexo | 830 |
| NF | 831 |
| Palisade | 831 |
| Pony | 831 |
| Santa Fé | 831 |
| Santamo | 842 |
| Scoupe | 842 |
| Solaris | 842 |
| Sonata | 843 |
| Terracan | 846 |
| Terracan Van | 846 |
| Tiburon | 846 |
| Trajet | 846 |
| Tucson | 847 |
| Tucson ix | 855 |
| Tucson iX35 | 855 |

| MAKE-MODEL | PAGE |
|---|---|
| **HYUNDAI** | |
| Veloster | 855 |
| Veracruz | 855 |
| XG | 856 |
| XG250 | 856 |
| XG300 | 856 |
| XG350 | 856 |
| **HYUNDAI (BEIJING)** | |
| Elantra Lingdong | 856 |
| Elantra Yuedong | 856 |
| Encino | 856 |
| MISTRA | 856 |
| Mufasa | 856 |
| Santa Fé | 856 |
| Sonata | 857 |
| Sonata Lingxiang | 857 |
| Sonata Yuxiang | 857 |
| Tucson L | 857 |
| **HYUNDAI (HUATAI)** | |
| Terracan | 857 |
| **INFINITI** | |
| EX25 | 857 |
| EX30d | 857 |
| EX35 | 857 |
| EX37 | 857 |
| FX30d | 858 |
| FX35 | 858 |
| FX37 | 858 |
| FX45 | 858 |
| FX50 | 858 |
| G20 | 858 |
| G25 | 859 |
| G35 | 859 |
| G37 | 859 |
| I30 | 859 |
| M35 | 859 |
| M35h | 860 |
| M37 | 860 |
| M56 | 860 |
| Q50 | 860 |
| Q60 | 861 |
| Q70 | 861 |
| QX4 | 862 |
| QX50 | 862 |
| QX56 | 862 |
| QX70 | 862 |
| **ISUZU** | |
| D-Max | 863 |
| KB | 863 |
| MU-7 | 863 |
| Rodeo | 863 |
| Trooper | 863 |
| Trooper/Bighorn | 864 |
| **IVECO** | |
| Daily | 864 |
| Daily 35C10/35S10 | 864 |
| **JAC** | |
| He Yue (B Class) | 864 |
| Heyue RS | 864 |
| JS4 | 864 |
| Refine S3 | 864 |
| Shuailing T6 | 864 |
| Shuailing T8 | 864 |
| Tong Yue (Tojoy) | 864 |
| **JAECOO** | |
| J7 | 865 |
| **JAGUAR** | |
| E-Pace | 865 |
| F-Pace | 867 |
| I-Pace | 869 |
| S-Type | 869 |
| X-Type | 870 |
| XE | 871 |
| XF | 873 |
| XF Sportbrake | 876 |

| MAKE-MODEL | PAGE |
|---|---|
| **JAGUAR** | |
| XJ | 877 |
| XJ6 | 878 |
| XJ8 | 878 |
| XJR | 878 |
| XK | 879 |
| XKR | 879 |
| XKRS | 880 |
| **JEEP** | |
| Cherokee | 880 |
| Commander | 884 |
| Compass | 885 |
| Grand Cherokee | 886 |
| Patriot | 892 |
| Renegade | 893 |
| Wrangler | 896 |
| **JINBEI** | |
| 750 | 896 |
| Granse | 896 |
| **KIA** | |
| Avella | 896 |
| Bongo | 896 |
| Bongo/K-Series | 897 |
| Carens | 897 |
| Carnival | 898 |
| Carnival/Grand Carnival | 899 |
| Ceed | 899 |
| Cerato | 907 |
| Cerato Koup | 909 |
| Cerato Koup/Forte5/Forte Koup | 909 |
| Cerato Koup/K3 Koup | 909 |
| Clarus | 909 |
| e-Soul | 910 |
| e-Soul Cargo | 910 |
| Forte | 910 |
| K3 Koup | 910 |
| K5 | 910 |
| Magentis | 910 |
| Mohave | 911 |
| Morning | 912 |
| Niro | 912 |
| Opirus | 912 |
| Optima | 912 |
| Picanto | 914 |
| Picanto/Morning | 916 |
| Pride | 916 |
| Pride Wagon | 917 |
| Proceed | 917 |
| Quoris | 920 |
| Retona | 920 |
| Rio | 920 |
| Rio X-Line | 925 |
| Sedona | 925 |
| Seltos | 925 |
| Sephia | 925 |
| Sephia/Mentor | 925 |
| Shuma | 925 |
| Shuma II | 926 |
| Shuma/Sephia | 926 |
| Sorento | 926 |
| Soul | 934 |
| Spectra | 935 |
| Sportage | 935 |
| Sportage R | 947 |
| Sportage Van | 947 |
| Stonic | 947 |
| Venga | 948 |
| Xceed | 949 |
| **KIA (DYK)** | |
| K3 | 949 |
| K5 | 949 |
| KX1 | 949 |
| Sportage | 949 |
| Sportage-Ace | 949 |

| MAKE-MODEL | PAGE |
|---|---|
| **LADA** | |
| 110 | 949 |
| 111 | 950 |
| 112 | 951 |
| Granta | 951 |
| Kalina | 953 |
| Largus | 955 |
| Nadeschda | 957 |
| Niva | 957 |
| Oka | 957 |
| Priora | 957 |
| Samara | 959 |
| Samara (Sputnik) | 959 |
| Samara Forma | 960 |
| Vesta | 960 |
| X Ray | 961 |
| X Ray Cross | 961 |
| **LANCIA** | |
| Dedra | 961 |
| Dedra Integrale | 962 |
| Delta | 962 |
| Delta HPE | 964 |
| Flavia | 964 |
| K(appa) | 964 |
| K(appa) Coupe | 964 |
| K(appa) S.W. | 964 |
| Lybra | 965 |
| Lybra Estate/Wagon | 965 |
| Musa | 966 |
| Phedra | 966 |
| Thesis | 967 |
| Y (Ypsilon) | 967 |
| Ypsilon | 968 |
| Z(eta) | 970 |
| **LAND ROVER** | |
| Defender | 971 |
| Defender 110 | 971 |
| Defender 130 | 971 |
| Defender 90 | 971 |
| Defender Cabrio | 971 |
| Defender Pick Up | 972 |
| Defender Station Wagon | 972 |
| Defender Van | 973 |
| Discovery | 974 |
| Discovery Sport | 980 |
| Freelander | 987 |
| Range Rover | 989 |
| Range Rover Evoque | 996 |
| Range Rover Sport | 1002 |
| Range Rover Velar | 1011 |
| **LDV** | |
| Maxus | 1012 |
| **LEXUS** | |
| CT 200h | 1013 |
| ES 200 | 1013 |
| ES 250 | 1014 |
| ES 300 | 1014 |
| ES 300h | 1014 |
| ES 350 | 1014 |
| GS 200t | 1014 |
| GS 300 | 1014 |
| GS 300h | 1015 |
| GS 350 | 1015 |
| GS 400 | 1015 |
| GS 430 | 1015 |
| GS 450h | 1015 |
| GS F | 1015 |
| GX 400 | 1015 |
| GX 460 | 1015 |
| GX 470 | 1015 |
| HS 250h | 1016 |
| IS 200 | 1016 |
| IS 200t | 1016 |
| IS 250 | 1016 |
| IS 250 C | 1016 |

| MAKE-MODEL | PAGE |
|---|---|
| **LEXUS** | |
| IS 300 | 1016 |
| IS 300h | 1016 |
| IS 350 | 1016 |
| LBX | 1016 |
| LM 300h | 1016 |
| LS 350 | 1016 |
| LS 400 | 1016 |
| LS 430 | 1016 |
| LS 460 | 1016 |
| LS 500 | 1017 |
| LS 500h | 1017 |
| LS 600h | 1017 |
| LX 450d | 1018 |
| LX 470 | 1018 |
| LX 500d | 1018 |
| LX 570 | 1018 |
| LX 600 | 1018 |
| NX 200 | 1018 |
| NX 200t | 1018 |
| NX 300 | 1019 |
| NX 300h | 1019 |
| NX 350h | 1019 |
| NX 450h+ | 1020 |
| RC 200t | 1020 |
| RC 300 | 1020 |
| RC 300h | 1020 |
| RC 350 | 1020 |
| RCF | 1020 |
| RX 200t | 1020 |
| RX 270 | 1020 |
| RX 300 | 1021 |
| RX 330 | 1021 |
| RX 350 | 1021 |
| RX 400h | 1022 |
| RX 450h | 1022 |
| RZ 300e | 1023 |
| RZ 350e | 1023 |
| RZ 450e | 1023 |
| RZ 500e | 1023 |
| RZ 550e | 1023 |
| SC 430 | 1023 |
| UX 200 | 1023 |
| UX 250h | 1023 |
| UX 300h | 1024 |
| **LIFAN** | |
| 320/Smily | 1024 |
| 330 | 1024 |
| 520 | 1024 |
| 520/Breez | 1024 |
| 520i | 1024 |
| 620 | 1024 |
| X60 | 1024 |
| **LINCOLN** | |
| MKC | 1024 |
| **LIVAN AUTO** | |
| X6 Pro | 1024 |
| **LIXIANG** | |
| L7 | 1024 |
| L8 | 1024 |
| **LOTUS** | |
| Elise | 1024 |
| **LUXGEN** | |
| Luxgen U6 | 1024 |
| **LYNK & CO** | |
| 02 | 1025 |
| 03 | 1025 |
| 05 | 1025 |
| **MAN** | |
| TGE | 1025 |
| **MAPLE (SMA)** | |
| Haijing | 1027 |
| **MARUTI** | |
| 800 | 1027 |

| MAKE-MODEL | PAGE |
|---|---|
| **MARUTI SUZUKI** | |
| Kizashi | 1027 |
| **MAXUS** | |
| eDeliver 3 | 1027 |
| **MAZDA** | |
| 121 | 1027 |
| 2 | 1027 |
| 3 | 1029 |
| 3 Hatchback (Bp) \| Axela | 1037 |
| 3 Saloon (Bp_) \| Axela | 1037 |
| 323 | 1037 |
| 323C | 1038 |
| 323C IV/Familia | 1038 |
| 323C/Familia | 1038 |
| 323F | 1039 |
| 323P | 1040 |
| 323P/Familia | 1040 |
| 5 | 1040 |
| 6 | 1041 |
| 6 Estate/Wagon | 1046 |
| 626 | 1049 |
| 626 Estate/Wagon | 1051 |
| Atenza | 1052 |
| Atenza Wagon | 1052 |
| B-Series | 1052 |
| B2200 | 1052 |
| B2500 | 1053 |
| B2600 | 1053 |
| Bongo | 1053 |
| Bongo Friendee | 1053 |
| BT-50 | 1053 |
| Capella | 1054 |
| CX-3 | 1054 |
| CX-30 | 1055 |
| CX-5 | 1056 |
| CX-60 | 1061 |
| CX-7 | 1061 |
| CX-80 | 1062 |
| CX-9 | 1062 |
| Demio | 1062 |
| E2000 | 1063 |
| E2200 | 1063 |
| MPV | 1063 |
| MX-3 | 1063 |
| MX-30 | 1063 |
| MX-5 | 1063 |
| MX-6 | 1064 |
| Premacy | 1064 |
| Proceed | 1065 |
| Protege | 1065 |
| Tribute | 1065 |
| Xedos 6 | 1065 |
| Xedos 9 | 1065 |
| **MAZDA (CHANGAN)** | |
| 3 | 1066 |
| **MAZDA (FAW)** | |
| 6 | 1066 |
| 6 (Ruiyi) | 1066 |
| 6 Estate/Wagon | 1066 |
| **MERCEDES-BENZ** | |
| 230GE | 1066 |
| 250GD | 1066 |
| 300GE | 1066 |
| 400 SE/400 SEL/S420 | 1066 |
| A140 | 1066 |
| A150 | 1066 |
| A160 | 1066 |
| A170 | 1068 |
| A180 | 1068 |
| A190 | 1070 |
| A200 | 1070 |
| A210 | 1072 |
| A220 | 1072 |
| A250 | 1073 |
| A35 AMG | 1074 |

| MAKE-MODEL | PAGE |
|---|---|
| **MERCEDES-BENZ** | |
| A45 AMG | 1074 |
| B150 | 1075 |
| B160 | 1075 |
| B170 | 1076 |
| B180 | 1076 |
| B200 | 1077 |
| B220 | 1079 |
| B250 | 1080 |
| C160 | 1080 |
| C180 | 1081 |
| C200 | 1082 |
| C220 | 1084 |
| C230 | 1086 |
| C240 | 1086 |
| C250 | 1086 |
| C270 | 1087 |
| C280 | 1087 |
| C300 | 1087 |
| C30CDi AMG | 1089 |
| C32 AMG | 1089 |
| C320 | 1089 |
| C350 | 1090 |
| C400 | 1091 |
| C43 AMG | 1091 |
| C450 AMG | 1091 |
| C55 AMG | 1092 |
| C63 AMG | 1092 |
| Citan 108D | 1092 |
| Citan 109D | 1093 |
| Citan 110 | 1093 |
| Citan 110D | 1093 |
| Citan 111D | 1094 |
| Citan 112 | 1094 |
| Citan 112D | 1094 |
| Citan 113 | 1094 |
| CL500 | 1095 |
| CLA180 | 1095 |
| CLA200 | 1096 |
| CLA220 | 1097 |
| CLA250 | 1099 |
| CLA45 AMG | 1099 |
| CLC160 | 1100 |
| CLC180 | 1100 |
| CLC200 | 1100 |
| CLC220 | 1100 |
| CLC230 | 1100 |
| CLC250 | 1100 |
| CLK200 | 1100 |
| CLK230 | 1100 |
| CLK240 | 1100 |
| CLK320 | 1100 |
| CLK430 | 1100 |
| CLK500 | 1100 |
| CLK55 AMG | 1100 |
| CLS220 | 1101 |
| CLS250 | 1101 |
| CLS280 | 1101 |
| CLS300 | 1101 |
| CLS320 | 1101 |
| CLS350 | 1101 |
| CLS400 | 1102 |
| CLS450 | 1103 |
| CLS500 | 1103 |
| CLS55 AMG | 1103 |
| CLS63 AMG | 1103 |
| E180 | 1104 |
| E200 | 1104 |
| E220 | 1106 |
| E230 | 1109 |
| E240 | 1109 |
| E250 | 1109 |
| E270 | 1110 |
| E280 | 1110 |
| E290 | 1111 |

| MAKE-MODEL | PAGE | MAKE-MODEL | PAGE | MAKE-MODEL | PAGE |
|---|---|---|---|---|---|
| MERCEDES-BENZ | | MERCEDES-BENZ | | MERCEDES-BENZ | |
| E300 | 1111 | GLE43 AMG | 1140 | SLK250 | 1158 |
| E320 | 1112 | GLE450 | 1140 | SLK280 | 1158 |
| E350 | 1113 | GLE450 AMG | 1140 | SLK300 | 1158 |
| E36 AMG | 1115 | GLE500 | 1141 | SLK32 AMG | 1158 |
| E400 | 1115 | GLE53 AMG | 1141 | SLK320 | 1158 |
| E420 | 1118 | GLE580 | 1141 | SLK350 | 1158 |
| E43 AMG | 1118 | GLE63 AMG | 1142 | SLK55 AMG | 1158 |
| E430 | 1118 | GLK200 | 1142 | Sprinter 208D | 1158 |
| E450 | 1118 | GLK220 | 1143 | Sprinter 210D | 1158 |
| E50 AMG | 1119 | GLK250 | 1143 | Sprinter 211D | 1158 |
| E500 | 1119 | GLK280 | 1143 | Sprinter 212D | 1159 |
| E53 AMG | 1120 | GLK300 | 1143 | Sprinter 214 | 1159 |
| E55 | 1120 | GLK320 | 1144 | Sprinter 214D | 1159 |
| E55 AMG | 1120 | GLK350 | 1144 | Sprinter 215D | 1159 |
| E63 AMG | 1120 | GLS350 | 1144 | Sprinter 308D | 1160 |
| EQA250 | 1121 | GLS400 | 1145 | Sprinter 310D | 1160 |
| EQA250+ | 1121 | GLS450 | 1145 | Sprinter 311D | 1160 |
| EQA300 | 1121 | GLS500 | 1145 | Sprinter 312D | 1161 |
| EQA350 | 1121 | GLS580 | 1146 | Sprinter 313D | 1161 |
| EQB250 | 1121 | GLS600 Maybach | 1146 | Sprinter 314 | 1161 |
| EQB250+ | 1121 | GLS63 AMG | 1146 | Sprinter 314D | 1161 |
| EQB300 | 1121 | MARCO POLO 160 | 1146 | Sprinter 315D | 1162 |
| EQB350 | 1121 | MARCO POLO 170 | 1146 | Sprinter 316D | 1163 |
| EQC400 | 1122 | MARCO POLO 180 | 1146 | Sprinter 317D | 1163 |
| EQE300 | 1122 | MARCO POLO 200 | 1146 | Sprinter 318D | 1163 |
| EQE350 | 1122 | MARCO POLO 220 | 1147 | Sprinter 319D | 1164 |
| EQE350+ | 1122 | MARCO POLO 250 | 1147 | Sprinter 410D | 1164 |
| EQE43 AMG | 1122 | MARCO POLO 300 | 1147 | Sprinter 411D | 1164 |
| EQE500 | 1122 | MB100 | 1148 | Sprinter 412D | 1165 |
| EQE53 AMG | 1123 | MB80 | 1148 | Sprinter 413D | 1165 |
| EQS350 | 1123 | ML230 | 1148 | Sprinter 414 | 1165 |
| EQS450 | 1123 | ML250 | 1148 | Sprinter 414D | 1165 |
| EQS450+ | 1123 | ML270 | 1148 | Sprinter 415D | 1166 |
| EQS500 | 1124 | ML280 | 1148 | Sprinter 416D | 1166 |
| EQS53 AMG | 1124 | ML300 | 1148 | Sprinter 417D | 1166 |
| EQS580 | 1124 | ML320 | 1149 | Sprinter 418D | 1167 |
| EQS680 Maybach | 1124 | ML350 | 1150 | Sprinter 419D | 1167 |
| EQV250 | 1124 | ML400 | 1151 | Sprinter 511D | 1167 |
| EQV300 | 1124 | ML420 | 1151 | Sprinter 513D | 1167 |
| eSprinter | 1125 | ML430 | 1151 | Sprinter 514D | 1167 |
| eVito | 1125 | ML450 | 1151 | Sprinter 515D | 1168 |
| F-CELL | 1125 | ML500 | 1152 | Sprinter 516D | 1168 |
| GL320 | 1125 | ML55 AMG | 1152 | Sprinter 518D | 1168 |
| GL320/350 | 1125 | ML63 AMG | 1152 | Sprinter 519D | 1168 |
| GL350 | 1125 | R280 | 1153 | T 160 | 1168 |
| GL400 | 1126 | R300 | 1153 | T 160D | 1169 |
| GL420 | 1126 | R320 | 1153 | T 180 | 1169 |
| GL450 | 1126 | R350 | 1153 | T 180D | 1169 |
| GL500 | 1127 | R500 | 1154 | V200 | 1169 |
| GL63 AMG | 1127 | R63 AMG | 1154 | V220 | 1170 |
| GLA180 | 1127 | S250 | 1154 | V230 | 1170 |
| GLA200 | 1128 | S280 | 1154 | V250 | 1170 |
| GLA220 | 1128 | S300 | 1154 | V280 | 1171 |
| GLA250 | 1129 | S320 | 1154 | V300 | 1171 |
| GLA45 AMG | 1129 | S350 | 1155 | Vaneo | 1171 |
| GLC180 | 1129 | S400 | 1156 | Viano | 1172 |
| GLC200 | 1129 | S400 Maybach | 1156 | Vito 108 | 1173 |
| GLC200d | 1130 | S420 | 1156 | Vito 109 | 1173 |
| GLC220 | 1130 | S430 | 1156 | Vito 110 | 1174 |
| GLC250 | 1132 | S450 | 1156 | Vito 111 | 1175 |
| GLC300 | 1133 | S450 Maybach | 1156 | Vito 112 | 1176 |
| GLC300de | 1135 | S500 | 1157 | Vito 113 | 1176 |
| GLC300e | 1135 | S500 Maybach | 1157 | Vito 114 | 1176 |
| GLC350 | 1135 | S550 | 1157 | Vito 115 | 1177 |
| GLC400 | 1136 | S560 | 1157 | Vito 116 | 1178 |
| GLC400e | 1136 | S560 Maybach | 1157 | Vito 119 | 1179 |
| GLC43 AMG | 1136 | S600 | 1158 | Vito 120 | 1180 |
| GLC450 | 1137 | S63 AMG | 1158 | Vito 122 | 1180 |
| GLC63 AMG | 1137 | SL350 | 1158 | Vito 123 | 1180 |
| GLE250 | 1137 | SL400 | 1158 | Vito 124 | 1181 |
| GLE300 | 1138 | SL500 | 1158 | Vito 126 | 1181 |
| GLE320 | 1138 | SL63 AMG | 1158 | X220 | 1182 |
| GLE350 | 1138 | SLK200 | 1158 | X250 | 1182 |
| GLE400 | 1139 | SLK230 | 1158 | X350 | 1182 |

| MAKE-MODEL | PAGE |
|---|---|
| **MG** | |
| Express | 1182 |
| Marvel R | 1182 |
| MG 3 | 1182 |
| MG 350 | 1182 |
| MG 4 | 1183 |
| MG 5 | 1183 |
| MG F | 1183 |
| MG GS | 1183 |
| MG HS | 1184 |
| MG S5 | 1184 |
| MG TF | 1184 |
| MG ZR | 1184 |
| MG ZS | 1184 |
| MG ZT | 1185 |
| MG ZT-T | 1185 |
| **MG (SAIC)** | |
| MG 3 | 1185 |
| MG 5 | 1185 |
| MG 6 | 1186 |
| MG 6 Pro | 1186 |
| MG 7 | 1186 |
| MG GS | 1186 |
| MG GT | 1187 |
| MG HS | 1187 |
| MG ZS | 1187 |
| Mulan | 1187 |
| Pilot | 1188 |
| RX5 | 1188 |
| **MINI** | |
| Mini Clubman | 1188 |
| Mini Clubvan | 1193 |
| Mini Cooper | 1193 |
| Mini Countryman | 1201 |
| Mini Coupe | 1207 |
| Mini One | 1208 |
| Mini Paceman | 1210 |
| Mini Roadster | 1212 |
| **MITSUBISHI** | |
| Airtrek | 1213 |
| ASX | 1213 |
| ASX Van | 1215 |
| Attrage | 1215 |
| Carisma | 1215 |
| Challenger | 1217 |
| Chariot | 1217 |
| Colt | 1217 |
| Colt CZC | 1218 |
| Colt/Mirage | 1218 |
| Delica Space Gear | 1218 |
| Diamante | 1218 |
| Eclipse | 1218 |
| Eclipse Cross | 1218 |
| Galant | 1219 |
| Galant Estate/Wagon | 1220 |
| Galloper | 1221 |
| Grandis | 1221 |
| L200 | 1221 |
| L200 Triton | 1223 |
| L200/Triton | 1223 |
| L200/Triton/Hunter | 1223 |
| L200/Triton/L200 Sportero | 1223 |
| L300 | 1223 |
| L400 | 1224 |
| Lancer | 1224 |
| Lancer Station Wagon | 1226 |
| Lancer Cargo | 1226 |
| Lancer Cedia | 1226 |
| Lancer Estate/Wagon | 1226 |
| Lancer Evolution | 1227 |
| Lancer Fortis | 1228 |
| Lancer Sportback | 1228 |
| Lancer/Lancer /Virage | 1229 |
| Lancer/Lancer Fortis/Galant Fortis | 1229 |
| Lancer/Libero | 1229 |

| MAKE-MODEL | PAGE |
|---|---|
| **MITSUBISHI** | |
| Mirage | 1229 |
| Mirage G4 | 1229 |
| Mirage/Space Star | 1230 |
| Montero | 1230 |
| Montero/Pajero/Shogun | 1230 |
| Outlander | 1231 |
| Outlander Van | 1235 |
| Pajero | 1236 |
| Pajero Canvas Top | 1239 |
| Pajero Classic | 1240 |
| Pajero Classic/Shogun Classic/Montero Classic | 1240 |
| Pajero Pinin | 1240 |
| Pajero Sport | 1240 |
| Pajero Van | 1241 |
| Pajero/Shogun/Pajero Canvas/Shogun Canvas | 1242 |
| Shogun | 1242 |
| Shogun Sport Van | 1242 |
| Sigma | 1242 |
| Sigma Estate/Wagon | 1242 |
| Space Gear | 1242 |
| Space Runner | 1243 |
| Space Star | 1243 |
| Space Wagon | 1243 |
| Strada | 1244 |
| Xpander | 1244 |
| **MITSUBISHI (BJC)** | |
| Outlander | 1244 |
| Pajero Sport | 1244 |
| **MITSUBISHI (GAC)** | |
| Pajero | 1244 |
| **MITSUBISHI (SOUEAST)** | |
| Lancer | 1244 |
| Lancer EX | 1244 |
| **MOSKVICH** | |
| 2141 | 1244 |
| 3 | 1245 |
| **NISSAN** | |
| 100NX | 1245 |
| 350Z | 1245 |
| 370Z | 1245 |
| AD | 1245 |
| AD Van | 1245 |
| Almera | 1245 |
| Almera Classic | 1249 |
| Almera Tino | 1250 |
| Altima | 1250 |
| Aprio | 1250 |
| Armada | 1250 |
| Avenir | 1251 |
| Bassara | 1251 |
| Bluebird | 1251 |
| Bluebird Sylphy | 1251 |
| Bluebird Sylphy/Sylphy III/Sentra | 1251 |
| Camiones | 1251 |
| Cefiro | 1251 |
| Cube | 1251 |
| D21 | 1252 |
| E-NV200 | 1252 |
| E-NV200 Evalia | 1252 |
| Elgrand | 1252 |
| Expert | 1252 |
| Frontier | 1252 |
| Fuga | 1252 |
| GT-R | 1252 |
| Hardbody | 1253 |
| Interstar | 1253 |
| Juke | 1254 |
| Kicks | 1256 |
| Kubistar | 1256 |
| Latio | 1256 |
| Latio Saloon (C11) | 1256 |
| Leaf | 1256 |
| March | 1257 |
| Maxima | 1257 |

| MAKE-MODEL | PAGE |
|---|---|
| **NISSAN** | |
| Maxima QX | 1257 |
| Maxima/Maxima QX | 1258 |
| Micra | 1258 |
| Micra CC | 1260 |
| Micra III/March | 1261 |
| Micra IV/March/March Active | 1261 |
| Murano | 1261 |
| Navara | 1262 |
| Navara Np300 | 1263 |
| Note | 1264 |
| NP300 | 1265 |
| NV200 | 1266 |
| NV200 Evalia | 1266 |
| NV300 | 1266 |
| NV400 | 1268 |
| Pathfinder | 1270 |
| Patrol | 1271 |
| Patrol 260 (Ebro) | 1271 |
| Patrol GR | 1271 |
| Patrol GR Wagon | 1271 |
| Pick Up | 1271 |
| Pick Up (D22) | 1272 |
| Pick Up (King Cab) | 1272 |
| Pick Up/Datsun | 1272 |
| Pixo | 1272 |
| Presage | 1272 |
| Primastar | 1272 |
| Primera | 1273 |
| Primera Estate/Wagon | 1278 |
| Pulsar | 1280 |
| Qashqai | 1280 |
| Qashqai +2 | 1285 |
| Qashqai +2/Dualis | 1285 |
| Qashqai+2 | 1286 |
| Quest | 1287 |
| Safari | 1287 |
| Sentra | 1287 |
| Sentra (USA) | 1287 |
| Serena | 1287 |
| Skyline | 1287 |
| Sunny | 1287 |
| Sunny Estate/Wagon | 1288 |
| Sunny EX | 1288 |
| Sunny Neo | 1288 |
| Sunny Van | 1288 |
| Sunny/Pulsar | 1288 |
| Sylphy | 1288 |
| Teana | 1288 |
| Terrano | 1289 |
| Terrano II | 1290 |
| Terrano II Van | 1290 |
| Terrano Regulus | 1290 |
| Terrano/Mistral | 1290 |
| Tiida | 1290 |
| Tiida Latio | 1291 |
| Tiida/Tiida Latio | 1291 |
| Tino | 1291 |
| Titan | 1291 |
| Vanette Serena | 1291 |
| Versa | 1291 |
| Wingroad | 1291 |
| Wingroad/AD Wagon | 1291 |
| X-Trail | 1291 |
| Xterra | 1297 |
| **NISSAN (DFAC)** | |
| Qashqai | 1297 |
| Teana | 1297 |
| Tiida | 1297 |
| Tiida Latio | 1297 |
| **OPEL** | |
| Adam | 1297 |
| Agila | 1298 |
| Ampera | 1298 |
| Ampera e | 1298 |

| MAKE-MODEL | PAGE |
|---|---|
| **OPEL** | |
| Antara | 1298 |
| Arena | 1301 |
| Astra | 1301 |
| Astra Cabrio | 1322 |
| Astra Classic | 1324 |
| Astra Coupe | 1327 |
| Astra F | 1327 |
| Astra GTC | 1328 |
| Astra Sports Tourer | 1332 |
| Astra Van | 1332 |
| Calibra | 1336 |
| Campo | 1336 |
| Cascada | 1336 |
| Combo | 1337 |
| Combo Tour | 1341 |
| Combo-e | 1342 |
| Corsa | 1342 |
| Corsa F | 1348 |
| Corsa Van | 1348 |
| Crossland | 1351 |
| Crossland X | 1351 |
| Crossland/Crossland X | 1351 |
| Frontera | 1352 |
| Grandland X | 1352 |
| Grandland/Grandland X | 1353 |
| GT | 1353 |
| Insignia | 1354 |
| Insignia Country Tourer | 1363 |
| Insignia Sports Tourer | 1365 |
| Karl | 1370 |
| Meriva | 1370 |
| Mokka | 1372 |
| Mokka X | 1373 |
| Mokka/Mokka X | 1374 |
| Monterey | 1374 |
| Movano | 1374 |
| Movano-e | 1380 |
| Signum | 1380 |
| Sintra | 1381 |
| Tigra | 1381 |
| Vectra | 1382 |
| Vivaro | 1391 |
| Vivaro-E | 1397 |
| Zafira | 1397 |
| Zafira Family | 1399 |
| Zafira Life | 1399 |
| Zafira Tourer | 1400 |
| Zafira Van | 1401 |
| ZAFIRA-E LIFE | 1402 |
| Zafira/Zafira Family | 1402 |
| **ORA** | |
| ES11 | 1403 |
| ES11 GT | 1403 |
| **OSHAN** | |
| X7 Plus | 1403 |
| **PERODUA** | |
| Kelisa | 1403 |
| **PEUGEOT** | |
| 1007 | 1403 |
| 106 | 1404 |
| 107 | 1407 |
| 108 | 1407 |
| 2008 | 1407 |
| 205 | 1410 |
| 206 | 1411 |
| 206 CC | 1415 |
| 206 SW | 1415 |
| 206+ | 1417 |
| 207 | 1417 |
| 207 CC | 1420 |
| 207 SW | 1421 |
| 208 | 1422 |
| 3008 | 1427 |
| 301 | 1432 |

| MAKE-MODEL | PAGE |
|---|---|
| **PEUGEOT** | |
| 306 | 1433 |
| 306 Cabrio | 1442 |
| 307 | 1443 |
| 307 CC | 1445 |
| 307 SW | 1446 |
| 308 | 1448 |
| 308 CC | 1454 |
| 308 SW | 1456 |
| 4007 | 1461 |
| 4008 | 1462 |
| 405 | 1462 |
| 406 | 1464 |
| 406 Coupe | 1470 |
| 407 | 1471 |
| 407 Coupe | 1473 |
| 407 SW | 1474 |
| 408 | 1476 |
| 5008 | 1476 |
| 508 | 1480 |
| 508 RXH | 1482 |
| 508 SW | 1482 |
| 605 | 1485 |
| 607 | 1486 |
| 806 | 1487 |
| 807 | 1489 |
| Bipper | 1490 |
| Bipper Tepee | 1491 |
| Boxer | 1491 |
| E-2008 | 1508 |
| E-208 | 1508 |
| E-EXPERT | 1508 |
| E-Expert | 1508 |
| e-Partner | 1509 |
| e-Rifter | 1509 |
| E-Traveller | 1509 |
| Expert | 1509 |
| Expert Tepee | 1517 |
| Partner | 1518 |
| Partner Origin | 1526 |
| Partner Tepee | 1527 |
| Partner/Ranch | 1530 |
| Partner/Urbana | 1530 |
| RCZ | 1530 |
| Rifter | 1530 |
| Traveller | 1531 |
| **PIAGGIO** | |
| Porter | 1532 |
| **POLESTAR** | |
| Polestar 1 | 1532 |
| Polestar 2 | 1532 |
| Polestar 4 | 1533 |
| **PORSCHE** | |
| 718 Boxster | 1533 |
| 718 Cayman | 1533 |
| 911 | 1533 |
| 911 GT2 | 1534 |
| 911 GT3 | 1535 |
| 911 Turbo | 1535 |
| Boxster | 1535 |
| Carrera GT | 1535 |
| Cayenne | 1535 |
| Cayman | 1538 |
| Macan | 1539 |
| Panamera | 1540 |
| **PROTON** | |
| 315 | 1541 |
| 316 | 1541 |
| 413 | 1541 |
| 415 | 1541 |
| 416 | 1541 |
| Exora | 1541 |
| Jumbuck | 1541 |
| Persona | 1541 |
| Persona 313 | 1541 |

| MAKE-MODEL | PAGE |
|---|---|
| **PROTON** | |
| Persona 315 | 1541 |
| Persona 318 | 1541 |
| Persona 413 | 1541 |
| Persona 415 | 1542 |
| Persona 416 | 1542 |
| Persona 418 | 1542 |
| Persona 420 | 1542 |
| Satria | 1542 |
| Satria Neo | 1542 |
| Satria/Compact | 1542 |
| Wira | 1542 |
| **QIYUAN** | |
| A05 | 1542 |
| Q05 | 1542 |
| **R AUTO** | |
| Marvel R | 1543 |
| R7 | 1543 |
| **RAM** | |
| Promaster 2500 | 1543 |
| **RENAULT** | |
| 19 | 1543 |
| 5 Super | 1543 |
| 5 Super(cinque) | 1544 |
| Alaskan | 1544 |
| Arkana | 1544 |
| Austral | 1544 |
| Avantime | 1544 |
| Captur | 1544 |
| Clio | 1546 |
| Clio Grandtour | 1557 |
| Clio Grandtour | 1557 |
| Clio I/Lutecia | 1559 |
| Clio Symbol | 1560 |
| Clio Thalia | 1560 |
| Clio Van | 1560 |
| Clio Work | 1563 |
| Clio/Lutecia | 1563 |
| Dokker | 1563 |
| Duster | 1563 |
| Espace | 1565 |
| Express | 1567 |
| Express Pick Up | 1568 |
| Fluence | 1568 |
| Grand Kangoo | 1569 |
| Grand Scenic | 1570 |
| Kadjar | 1574 |
| Kangoo | 1575 |
| Kangoo Be Bop | 1583 |
| Kangoo Express | 1584 |
| Kangoo Rapid | 1591 |
| Kangoo/Grand Kangoo | 1591 |
| Kaptur | 1591 |
| Koleos | 1592 |
| Laguna | 1593 |
| Laguna Estate/Break | 1599 |
| Latitude | 1604 |
| Lodgy | 1604 |
| Logan | 1604 |
| Logan I/Tondar 90 | 1605 |
| Logan MCV | 1605 |
| Logan/Stepway | 1606 |
| Master | 1607 |
| Master T28 | 1609 |
| Master T30 | 1612 |
| Master T35 | 1612 |
| Megane | 1614 |
| Megane Cabrio | 1626 |
| Megane CC | 1627 |
| Megane Classic | 1629 |
| Megane Coupe | 1631 |
| Megane E-Tech | 1635 |
| Megane Estate/Break | 1635 |
| Megane Scenic | 1641 |
| Megane Van | 1643 |

| MAKE-MODEL | PAGE |
|---|---|
| **RENAULT** | |
| Modus | 1644 |
| Modus/Grand Modus | 1645 |
| Rapid | 1646 |
| Rapid/Extra/Express | 1646 |
| Safrane | 1646 |
| Sandero | 1647 |
| Sandero Stepway | 1648 |
| Sandero/Stepway | 1648 |
| Scenic | 1649 |
| Scenic RX4 | 1655 |
| Symbol | 1655 |
| Taliant | 1656 |
| Talisman | 1656 |
| Talisman Estate/Break | 1657 |
| Thalia | 1657 |
| Trafic | 1659 |
| Trafic II | 1659 |
| Trafic III | 1661 |
| Trafic T1100 | 1663 |
| Trafic T1400 | 1664 |
| Trafic T900 | 1664 |
| Trafic V1100 | 1664 |
| Trafic V1400 | 1664 |
| Twingo | 1664 |
| Twizy | 1666 |
| Vel Satis | 1667 |
| Zoe | 1667 |
| **RIICH** | |
| M5 | 1668 |
| **ROEWE (SAIC)** | |
| 350 | 1668 |
| 360 | 1668 |
| Clever | 1668 |
| Ei5 | 1668 |
| eRX5 | 1668 |
| i5 | 1669 |
| I5 | 1669 |
| i5 | 1669 |
| i5 GT | 1669 |
| i6 | 1669 |
| i6 Max | 1669 |
| i6 Plus | 1669 |
| Marvel X | 1669 |
| RX3 | 1670 |
| RX3 Pro | 1670 |
| RX5 | 1670 |
| RX5 Max | 1670 |
| RX5 Plus | 1671 |
| **ROVER** | |
| 111 | 1671 |
| 111/Metro | 1671 |
| 114 | 1671 |
| 114/Metro | 1671 |
| 115 | 1671 |
| 200 | 1671 |
| 211 | 1671 |
| 214 | 1671 |
| 216 | 1671 |
| 218 | 1672 |
| 220 | 1672 |
| 25 | 1672 |
| 400 Tourer | 1673 |
| 414 | 1673 |
| 416 | 1673 |
| 416 Tourer | 1674 |
| 418 Tourer | 1674 |
| 420 | 1674 |
| 420 Tourer | 1674 |
| 45 | 1674 |
| 618 | 1675 |
| 620 | 1675 |
| 623 | 1675 |
| 75 | 1675 |
| 75 Tourer | 1675 |

| MAKE-MODEL | PAGE |
|---|---|
| **ROVER** | |
| 820 | 1676 |
| 825 | 1676 |
| 827 | 1676 |
| CDV | 1676 |
| Commerce | 1676 |
| Mini | 1676 |
| Streetwise | 1676 |
| **SAAB** | |
| 9-3 | 1677 |
| 9-3 X | 1681 |
| 9-5 | 1681 |
| 9-7X | 1683 |
| 900 | 1683 |
| 9000 | 1684 |
| **SEAT** | |
| Alhambra | 1684 |
| Alhambra Van | 1688 |
| Altea | 1689 |
| Altea Freetrack | 1692 |
| Altea XL | 1692 |
| Arona | 1695 |
| Arosa | 1696 |
| Ateca | 1697 |
| Cordoba | 1698 |
| Cordoba Vario | 1701 |
| Exeo | 1701 |
| Exeo ST | 1702 |
| Ibiza | 1703 |
| Ibiza SC | 1710 |
| Ibiza ST | 1713 |
| Inca | 1715 |
| Leon | 1715 |
| Leon SC | 1726 |
| Leon Sportstourer | 1728 |
| Leon ST | 1729 |
| Marbella | 1736 |
| Mii | 1736 |
| Tarraco | 1736 |
| Toledo | 1737 |
| **SKODA** | |
| Citigo | 1743 |
| Cube Van | 1743 |
| E-Citigo | 1743 |
| Elroq | 1743 |
| Enyaq iV | 1744 |
| Fabia | 1746 |
| Fabia Combi | 1756 |
| Favorit | 1757 |
| Felicia | 1757 |
| Felicia Cube Van | 1757 |
| Felicia Estate/Combi | 1758 |
| Felicia Pick Up | 1758 |
| Felicia Van | 1758 |
| Kamiq | 1758 |
| Karoq | 1759 |
| Kodiaq | 1761 |
| Octavia | 1764 |
| Octavia Combi | 1785 |
| Octavia Combi | 1787 |
| Rapid | 1787 |
| Rapid Spaceback | 1789 |
| Roomster | 1791 |
| Roomster Praktik | 1792 |
| Scala | 1793 |
| Superb | 1794 |
| Yeti | 1804 |
| **SKODA (SVW)** | |
| Octavia | 1806 |
| Superb | 1807 |
| Yeti | 1807 |
| **SMART** | |
| Cabrio | 1807 |
| City Coupe | 1807 |
| Crossblade | 1807 |

| MAKE-MODEL | PAGE |
|---|---|
| **SMART** | |
| Forfour | 1807 |
| Fortwo Cabrio | 1808 |
| Fortwo Coupe | 1809 |
| Roadster | 1810 |
| Roadster Coupe | 1810 |
| **SOUEAST** | |
| Lingyue (V3) | 1811 |
| Lioncel (Lingshuai) | 1811 |
| **SSANGYONG** | |
| Actyon | 1811 |
| Actyon Sports | 1811 |
| Korando | 1812 |
| Kyron | 1813 |
| Musso | 1814 |
| Rexton | 1814 |
| Rexton II | 1815 |
| Rexton W | 1815 |
| Rexton/Rexton II | 1815 |
| Rexton/Rexton W | 1816 |
| Rodius | 1816 |
| Stavic | 1816 |
| Tivoli | 1817 |
| Tivoli air | 1817 |
| XLV | 1817 |
| **SUBARU** | |
| B9 Tribeca | 1818 |
| Forester | 1818 |
| Impreza | 1821 |
| Impreza Estate/Wagon Plus | 1825 |
| Impreza WRX | 1827 |
| Impreza WRX Estate/Wagon Plus | 1830 |
| Justy | 1830 |
| Legacy | 1831 |
| Legacy Estate/Wagon | 1833 |
| Levorg | 1836 |
| Outback | 1836 |
| Solterra | 1838 |
| Trezia | 1838 |
| Tribeca | 1838 |
| Vivio | 1839 |
| WRX | 1839 |
| XV | 1839 |
| **SUZUKI** | |
| Alto | 1840 |
| Alto V | 1840 |
| Baleno | 1840 |
| Baleno Estate/Wagon | 1842 |
| Celerio | 1842 |
| Cultus | 1842 |
| Grand Escudo | 1842 |
| Grand Vitara | 1843 |
| Grand Vitara I/Grand Escudo | 1844 |
| Ignis | 1844 |
| Jimny | 1845 |
| Kizashi | 1845 |
| Liana | 1846 |
| S-Cross | 1847 |
| Samurai | 1848 |
| Splash | 1848 |
| Swift | 1848 |
| SX4 | 1851 |
| SX4 S-Cross | 1854 |
| Vitara | 1855 |
| Vitara Cabrio | 1856 |
| Vitara/Escudo | 1856 |
| Wagon R | 1856 |
| Wagon R+ | 1856 |
| X90 | 1857 |
| **TANK** | |
| Tank 300 | 1857 |
| Tank 400 | 1857 |
| Tank 500 | 1857 |
| **TESLA** | |
| Model 3 | 1857 |

| MAKE-MODEL | PAGE |
|---|---|
| **TESLA** | |
| Model S | 1860 |
| Model S 100D | 1861 |
| Model S 60 | 1862 |
| Model S 60D | 1862 |
| Model S 70 | 1863 |
| Model S 70D | 1863 |
| Model S 75 | 1864 |
| Model S 75D | 1864 |
| Model S 85 | 1865 |
| Model S 85D | 1865 |
| Model S 90 | 1865 |
| Model S 90D | 1865 |
| Model S P100D | 1866 |
| Model S P85 | 1867 |
| Model S P85D | 1867 |
| Model S P90D | 1867 |
| Model X | 1868 |
| Model X 100D | 1870 |
| Model X 60D | 1870 |
| Model X 75D | 1870 |
| Model X 90D | 1871 |
| Model X P100D | 1871 |
| Model X P90D | 1871 |
| Model Y | 1871 |
| **TOYOTA** | |
| 4 Runner | 1874 |
| 4 Runner II/Surf/Hilux Surf | 1875 |
| Allex | 1875 |
| Allion | 1875 |
| Alphard | 1875 |
| Alphard/Vellfire | 1875 |
| Altezza | 1876 |
| Altezza Gita | 1876 |
| Aurion | 1876 |
| Auris | 1876 |
| Auris Touring Sports | 1878 |
| Avalon | 1879 |
| Avensis | 1879 |
| Avensis Estate/Wagon | 1882 |
| Avensis Verso | 1884 |
| Aygo | 1885 |
| Aygo X | 1885 |
| bB | 1885 |
| Brevis | 1885 |
| bZ4X | 1885 |
| C-HR | 1886 |
| Caldina | 1886 |
| Calya | 1886 |
| Cami | 1886 |
| Camry | 1886 |
| Camry Solara | 1890 |
| Camry/Scepter | 1890 |
| Carina | 1890 |
| Carina E | 1890 |
| Celica | 1892 |
| Century | 1892 |
| Chaser | 1893 |
| Corolla | 1893 |
| Corolla Altis | 1899 |
| Corolla Compact | 1900 |
| Corolla Cross | 1900 |
| Corolla Estate/Wagon | 1900 |
| Corolla Fielder | 1902 |
| Corolla Levin | 1903 |
| Corolla Spacio | 1903 |
| Corolla Verso | 1903 |
| Corolla/Axio/Altis | 1903 |
| Corolla/Axio/Altis/Corolla Altis | 1904 |
| Corolla/Corolla Axio/Corolla Altis | 1904 |
| Corona | 1904 |
| Corona EXIV | 1904 |
| Corsa | 1904 |
| Cresta | 1904 |
| Crown | 1904 |

| MAKE-MODEL | PAGE |
|---|---|
| **TOYOTA** | |
| Curren | 1904 |
| Cynos | 1904 |
| Echo | 1904 |
| Estima | 1904 |
| FJ Cruiser | 1905 |
| Fortuner | 1905 |
| FunCargo | 1906 |
| Harrier | 1906 |
| Hiace | 1907 |
| Highlander | 1907 |
| Highlander Hybrid | 1908 |
| Highlander/Kluger | 1908 |
| Hilux | 1908 |
| Ipsum | 1909 |
| iQ | 1909 |
| Land Cruiser | 1910 |
| Land Cruiser 100 | 1910 |
| Land Cruiser 200 | 1911 |
| Land Cruiser 300 | 1911 |
| Land Cruiser 70 | 1911 |
| Land Cruiser 80 | 1911 |
| Land Cruiser 90 | 1912 |
| Land Cruiser Prado | 1912 |
| Land Cruiser V8 | 1913 |
| Land Cruiser Van | 1913 |
| Liteace | 1913 |
| Mark II | 1913 |
| Mark X | 1913 |
| Mark X Zio | 1913 |
| Matrix | 1913 |
| MR2 | 1914 |
| Nadia | 1914 |
| Noah | 1914 |
| Opa | 1914 |
| Paseo | 1914 |
| Picnic | 1914 |
| Platz | 1914 |
| Porte | 1914 |
| Previa | 1914 |
| Previa I/Estima/Previa | 1915 |
| Prius | 1915 |
| Prius C | 1916 |
| Prius PHV | 1916 |
| Prius Plus | 1916 |
| Prius+ | 1916 |
| Proace | 1916 |
| Proace City | 1917 |
| Proace City Verso | 1918 |
| Proace Verso | 1918 |
| Ractis | 1918 |
| Raum | 1919 |
| Rav 4 | 1919 |
| Rav 4L | 1926 |
| SAI | 1926 |
| Scepter | 1926 |
| Sequoia | 1926 |
| Sienna | 1927 |
| Sienta | 1927 |
| Solara | 1927 |
| Sprinter | 1927 |
| Sprinter Carib | 1927 |
| Sprinter Cielo | 1927 |
| Starlet | 1928 |
| Tercel | 1928 |
| Tundra | 1928 |
| Urban Cruiser | 1928 |
| Venza | 1928 |
| Verossa | 1929 |
| Verso | 1929 |
| Verso S | 1930 |
| Vios/Soluna Vios | 1930 |
| Vista | 1930 |
| Vista/Camry | 1930 |
| Vitz | 1930 |

| MAKE-MODEL | PAGE |
|---|---|
| **TOYOTA** | |
| Voxy | 1930 |
| Will Cypha | 1931 |
| Will VS | 1931 |
| Windom | 1931 |
| Wish | 1931 |
| WISH | 1931 |
| Wish | 1931 |
| Yaris | 1931 |
| Yaris Cross | 1934 |
| Yaris Verso | 1935 |
| Yaris Verso Van | 1935 |
| Yaris/Vios | 1936 |
| Zelas | 1936 |
| **TOYOTA (FAW)** | |
| Avalon | 1936 |
| Corolla | 1936 |
| Rav 4 | 1936 |
| **TOYOTA (GAC)** | |
| Camry | 1937 |
| Highlander | 1937 |
| Wildlander | 1937 |
| **VAUXHALL** | |
| Adam | 1937 |
| Agila | 1937 |
| Ampera | 1938 |
| Antara | 1938 |
| Arena | 1939 |
| Astra | 1939 |
| Astra Cabrio | 1958 |
| Astra Coupe | 1959 |
| Astra GTC | 1960 |
| Astra Sport Hatch | 1961 |
| Astra Sports Tourer | 1963 |
| Astra Van | 1963 |
| Calibra | 1965 |
| Cascada | 1965 |
| Combo | 1966 |
| Combo-e | 1970 |
| Corsa | 1970 |
| Corsa F | 1977 |
| Corsa Van | 1977 |
| Crossland | 1979 |
| Crossland X | 1979 |
| Crossland/Crossland X | 1979 |
| Frontera | 1979 |
| Grandland X | 1980 |
| Grandland/Grandland X | 1980 |
| Insignia | 1980 |
| Insignia Country Tourer | 1988 |
| Insignia Sports Tourer | 1989 |
| Meriva | 1993 |
| Mokka | 1995 |
| Mokka X | 1996 |
| Mokka/Mokka X | 1996 |
| Movano | 1996 |
| Movano-e | 2001 |
| Signum | 2001 |
| Sintra | 2002 |
| Tigra | 2002 |
| Vectra | 2003 |
| Viva | 2010 |
| Vivaro | 2010 |
| Vivaro Life | 2014 |
| Vivaro-E | 2015 |
| Vivaro-E life | 2015 |
| Zafira | 2015 |
| Zafira Tourer | 2017 |
| **VENUCIA** | |
| D50 | 2018 |
| R50 | 2018 |
| R50X | 2018 |
| T70 | 2018 |
| **VOLVO** | |
| 440 | 2018 |

| MAKE-MODEL | PAGE |
|---|---|
| **VOLVO** | |
| 460 | 2018 |
| 480 | 2019 |
| 850 | 2019 |
| 850 Estate/Combi | 2019 |
| 960 | 2020 |
| 960 Estate/Combi | 2020 |
| C30 | 2020 |
| C70 | 2023 |
| EX30 | 2025 |
| EX30 Cross Country | 2026 |
| S40 | 2026 |
| S60 | 2030 |
| S60 Cross Country | 2036 |
| S60 Cross Country | 2037 |
| S70 | 2037 |
| S80 | 2040 |
| S90 | 2046 |
| V40 | 2048 |
| V40 Cross Country | 2052 |
| V50 | 2055 |
| V60 | 2057 |
| V60 Cross Country | 2063 |
| V70 | 2065 |
| V70 XC | 2075 |
| V90 | 2075 |
| V90 Cross Country | 2077 |
| XC40 | 2078 |
| XC60 | 2079 |
| XC70 | 2085 |
| XC70 Cross Country | 2088 |
| XC90 | 2088 |
| **VOLVO ASIA** | |
| XC60 | 2092 |
| **VW** | |
| Amarok | 2093 |
| Arteon | 2093 |
| Arteon Shooting Brake | 2095 |
| Beetle | 2096 |
| Bora | 2097 |
| Bora Estate/Variant | 2101 |
| Caddy | 2105 |
| Caddy Alltrack | 2115 |
| Caddy California | 2119 |
| Caddy California Camper | 2119 |
| Caddy Maxi | 2119 |
| Caddy Pick-Up | 2119 |
| California | 2119 |
| Campmobile | 2126 |
| Caravelle | 2128 |
| CC | 2128 |
| Crafter | 2131 |
| Crafter 30-50 | 2132 |
| Crafter 35 | 2132 |
| e-Crafter 35 | 2133 |
| E-Golf | 2133 |
| E-Load Up | 2133 |
| E-Up | 2133 |
| Eos | 2133 |
| Fox | 2135 |
| Golf | 2135 |
| Golf Variant | 2159 |
| Golf Alltrack | 2159 |
| Golf Cabrio | 2160 |
| Golf Estate/Variant | 2162 |
| Golf Plus | 2177 |
| Golf Sportsvan | 2181 |
| Golf Van (Hatchback) | 2183 |
| Golf Van (Variant) | 2184 |
| Golf Variant | 2186 |
| Grand California | 2186 |
| ID.3 | 2187 |
| ID.4 | 2188 |
| ID.5 | 2189 |
| ID.7 | 2190 |

| MAKE-MODEL | PAGE |
|---|---|
| **VW** | |
| ID.7 Tourer | 2190 |
| Jetta | 2190 |
| Load Up | 2195 |
| Lupo | 2195 |
| Multivan | 2196 |
| New Beetle | 2203 |
| Passat | 2205 |
| Passat Alltrack | 2220 |
| Passat CC | 2222 |
| Passat Estate/Variant | 2224 |
| Passat Variant | 2241 |
| Phaeton | 2241 |
| Polo | 2242 |
| Polo Classic | 2253 |
| Polo Estate/Variant | 2254 |
| Polo Playa | 2255 |
| Polo Van (Hatchback) | 2255 |
| Polo Van (Variant) | 2255 |
| Scirocco | 2255 |
| Sharan | 2258 |
| Sharan Van | 2263 |
| T-Cross | 2264 |
| T-Roc | 2264 |
| Taigo | 2266 |
| Taos | 2266 |
| Tayron | 2266 |
| Tiguan | 2267 |
| Tiguan Allspace | 2275 |
| Touareg | 2278 |
| Touran | 2281 |
| Transporter | 2288 |
| Transporter Shuttle | 2313 |
| Transporter/Caravelle | 2314 |
| Up | 2316 |
| Vento | 2316 |
| **VW (FAW)** | |
| Bora | 2318 |
| CC | 2318 |
| Golf | 2318 |
| Magotan | 2318 |
| Sagitar | 2318 |
| T-Roc | 2318 |
| **VW (SVW)** | |
| Gran Lavida | 2319 |
| Lavida | 2319 |
| Passat | 2319 |
| Polo | 2319 |
| Polo JinQin | 2319 |
| Polo Jinqu | 2319 |
| Santana 3000 | 2319 |
| T-Cross | 2319 |
| Tiguan | 2319 |
| Tiguan L | 2319 |
| **WEY** | |
| VV5 | 2319 |
| VV6 | 2320 |
| VV7 | 2320 |
| VV7 GT | 2320 |
| **XPENG** | |
| G3 | 2320 |
| P7 | 2320 |
| **ZAZ** | |
| Tavria | 2321 |
| **ZHONGHUA (BRILLIANCE)** | |
| H530 | 2321 |
| V5 | 2321 |
| Zunchi | 2321 |
| **ZOTYE** | |
| T600 | 2321 |

| MAKE-MODEL | PAGE |
|---|---|

| | YEAR | TRANSM. | F/R | L/R | BODY STYLE & DRIVE TYPE & ENGINE | REMARKS | G-AP Ref. | PRODUCT | ABS | Technical Specifications A | B | C | H | L | P |
|---|---|---|---|---|---|---|---|---|---|---|---|---|---|---|---|
| **ABARTH** | | | | | | | | | | | | | | | |
| **500** | | | | | | | | | | | | | | | |
| 1.4 (99 kw) | 2008.08- | 5AT/5MT | F | L | Hatchback FWD 312 A1.000 | | GDS82849 | Drive Shaft | | 25 | 24 | 51 | 84.5 | 579 | |
| | 2008.08- | 5AT/5MT | F | L | Hatchback FWD 312 A1.000 | | GCI99008 | Inner Joint | | 24 | 24 | 29.7 | 86.5 | 93 | |
| | 2008.08- | | F | L/R | Hatchback FWD 312 A1.000 | | GCO17028 | Outer Joint | | 25 | 24 | 51 | 84.5 | 62 | M |
| **500/595/695** | | | | | | | | | | | | | | | |
| 1.4 (103 kw) | 2010.05- | 5AT/5MT | F | L | Hatchback FWD 312 A3.000 | | GDS82849 | Drive Shaft | | 25 | 24 | 51 | 84.5 | 579 | |
| | 2010.05- | 5AT/5MT | F | L | Hatchback FWD 312 A3.000 | | GCI99008 | Inner Joint | | 24 | 24 | 29.7 | 86.5 | 93 | |
| | 2010.05- | MT | F | R | Hatchback FWD 312 A3.000 | for vehicles with ABS,without ABS ring | GDS81769 | Drive Shaft | | 25 | 24 | 51 | 84.5 | 887 | |
| | 2010.05- | | F | L/R | Hatchback FWD 312 A3.000 | | GCO17028 | Outer Joint | | 25 | 24 | 51 | 84.5 | 62 | M |
| 1.4 (118 kw) | 2008.08- | 5AT/5MT | F | L | Hatchback FWD 312 A1.000, 312 A3.000, 312 B4.000 | | GDS82849 | Drive Shaft | | 25 | 24 | 51 | 84.5 | 579 | |
| | 2008.08- | 5AT/5MT | F | L | Hatchback FWD 312 A1.000, 312 A3.000, 312 B4.000 | | GCI99008 | Inner Joint | | 24 | 24 | 29.7 | 86.5 | 93 | |
| | 2008.08- | MT | F | R | Hatchback FWD 312 A1.000, 312 A3.000, 312 B4.000 | for vehicles with ABS,without ABS ring | GDS81769 | Drive Shaft | | 25 | 24 | 51 | 84.5 | 887 | |
| 1.4 (121 kw) | 2016.05- | 5AT/5MT | F | L | Hatchback FWD 312 B3.000 | | GDS82849 | Drive Shaft | | 25 | 24 | 51 | 84.5 | 579 | |
| | 2016.05- | 5AT/5MT | F | L | Hatchback FWD 312 B3.000 | | GCI99008 | Inner Joint | | 24 | 24 | 29.7 | 86.5 | 93 | |
| | 2016.05- | MT | F | R | Hatchback FWD 312 B3.000 | | GDS81769 | Drive Shaft | | 25 | 24 | 51 | 84.5 | 887 | |
| 1.4 (132 kw) | 2008.08- | 5AT/5MT | F | L | Hatchback FWD 312 A3.000, 312 B3.000 | | GDS82849 | Drive Shaft | | 25 | 24 | 51 | 84.5 | 579 | |
| | 2008.08- | 5AT/5MT | F | L | Hatchback FWD 312 A3.000, 312 B3.000 | | GCI99008 | Inner Joint | | 24 | 24 | 29.7 | 86.5 | 93 | |
| | 2008.08- | | F | L/R | Hatchback FWD 312 A3.000, 312 B3.000 | Type:695 | GCO17028 | Outer Joint | | 25 | 24 | 51 | 84.5 | 62 | M |
| 1.4 (140 kw) | 2008.08- | 5MT/6MT | F | L | Hatchback FWD 312 A1.000, 312 A9.000 | | GCI99008 | Inner Joint | | 24 | 24 | 29.7 | 86.5 | 93 | |
| | 2008.08- | 6MT | F | L | Hatchback FWD 312 A1.000, 312 A9.000 | | GDS82849 | Drive Shaft | | 25 | 24 | 51 | 84.5 | 579 | |
| | 2008.08- | MT | F | R | Hatchback FWD 312 A1.000, 312 A9.000 | for vehicles with ABS,without ABS ring | GDS81769 | Drive Shaft | | 25 | 24 | 51 | 84.5 | 887 | |
| **500C** | | | | | | | | | | | | | | | |
| 1.4 (99 kw) | 2008.05- | 5MT | F | L | Convertible FWD 312 A1.000 | | GDS82849 | Drive Shaft | | 25 | 24 | 51 | 84.5 | 579 | |
| | 2008.05- | 5MT | F | L | Convertible FWD 312 A1.000 | | GCI99008 | Inner Joint | | 24 | 24 | 29.7 | 86.5 | 93 | |
| | 2008.05- | MT | F | R | Convertible FWD 312 A1.000 | for vehicles with ABS,without ABS ring | GDS81769 | Drive Shaft | | 25 | 24 | 51 | 84.5 | 887 | |
| | 2008.05- | | F | L/R | Convertible FWD 312 A1.000 | | GCO17028 | Outer Joint | | 25 | 24 | 51 | 84.5 | 62 | M |
| **500C/595C/695C** | | | | | | | | | | | | | | | |
| 1.4 (103 kw) | 2009.09- | 5AT/5MT | F | L | Convertible FWD 312 A1.000, 312 A3.000 | | GDS82849 | Drive Shaft | | 25 | 24 | 51 | 84.5 | 579 | |
| | 2009.09- | 5AT/5MT | F | L | Convertible FWD 312 A1.000, 312 A3.000 | | GCI99008 | Inner Joint | | 24 | 24 | 29.7 | 86.5 | 93 | |
| | 2009.09- | MT | F | R | Convertible FWD 312 A1.000, 312 A3.000 | for vehicles with ABS,without ABS ring | GDS81769 | Drive Shaft | | 25 | 24 | 51 | 84.5 | 887 | |
| | 2009.09- | | F | L/R | Convertible FWD 312 A1.000, 312 A3.000 | | GCO17028 | Outer Joint | | 25 | 24 | 51 | 84.5 | 62 | M |
| 1.4 (118 kw) | 2011.05- | 5AT/5MT | F | L | Convertible FWD 312 A1.000, 312 A3.000, 312 B4.000 | | GDS82849 | Drive Shaft | | 25 | 24 | 51 | 84.5 | 579 | |
| | 2011.05- | 5AT/5MT | F | L | Convertible FWD 312 A1.000, 312 A3.000, 312 B4.000 | | GCI99008 | Inner Joint | | 24 | 24 | 29.7 | 86.5 | 93 | |
| | 2011.05- | MT | F | R | Convertible FWD 312 A1.000, 312 A3.000, 312 B4.000 | for vehicles with ABS,without ABS ring | GDS81769 | Drive Shaft | | 25 | 24 | 51 | 84.5 | 887 | |
| | 2011.05- | | F | L/R | Convertible FWD 312 A1.000, 312 A3.000, 312 B4.000 | | GCO17028 | Outer Joint | | 25 | 24 | 51 | 84.5 | 62 | M |
| 1.4 (121 kw) | 2016.05- | 5AT/5MT | F | L | Convertible FWD 312 B3.000 | | GDS82849 | Drive Shaft | | 25 | 24 | 51 | 84.5 | 579 | |
| | 2016.05- | 5AT/5MT | F | L | Convertible FWD 312 B3.000 | | GCI99008 | Inner Joint | | 24 | 24 | 29.7 | 86.5 | 93 | |
| 1.4 (132 kw) | 2010.06- | 5AT/5MT | F | L | Convertible FWD 312 A3.000 | | GDS82849 | Drive Shaft | | 25 | 24 | 51 | 84.5 | 579 | |
| | 2010.06- | 5AT/5MT | F | L | Convertible FWD 312 A3.000 | | GCI99008 | Inner Joint | | 24 | 24 | 29.7 | 86.5 | 93 | |
| | 2010.06- | MT | F | L/R | Convertible FWD 312 A3.000 | Type:695C | GCO17028 | Outer Joint | | 25 | 24 | 51 | 84.5 | 62 | M |
| **500E** | | | | | | | | | | | | | | | |
| EV (114 kw) | 2023.02- | ET | F | L/R | Convertible FWD | | GDS57726 | Drive Shaft | | 25 | 25 | 51 | 84 | 760 | |
| | 2023.02- | ET | F | L/R | Convertible FWD | | GCO83686 | Outer Joint | | 25 | 29 | 51 | 84 | 56 | M |
| | 2023.02- | ET | F | L/R | Convertible FWD | | GCI83253 | Inner Joint | | 25 | 29 | 32 | 59 | 106 | |
| | 2023.02- | ET | F | L/R | Hatchback FWD 463 54 481 | | GDS57726 | Drive Shaft | | 25 | 25 | 51 | 84 | 760 | |
| | 2023.02- | ET | F | L/R | Hatchback FWD 463 54 481 | | GCO83686 | Outer Joint | | 25 | 29 | 51 | 84 | 56 | M |
| | 2023.02- | ET | F | L/R | Hatchback FWD 463 54 481 | | GCI83253 | Inner Joint | | 25 | 29 | 32 | 59 | 106 | |
| **595** | | | | | | | | | | | | | | | |
| 1.4 (107 kw) | 2016.05- | 5AT/5MT | F | L | Hatchback FWD 312 B4.000 | | GDS82849 | Drive Shaft | | 25 | 24 | 51 | 84.5 | 579 | |
| | 2016.05- | 5AT/5MT | F | L | Hatchback FWD 312 B4.000 | | GCI99008 | Inner Joint | | 24 | 24 | 29.7 | 86.5 | 93 | |
| | 2016.05- | MT | F | R | Hatchback FWD 312 B4.000 | | GDS81769 | Drive Shaft | | 25 | 24 | 51 | 84.5 | 887 | |
| 1.4 (120 kw) | 2016.06- | 5AT/5MT | F | L | Hatchback FWD 312 B6.000 | | GDS82849 | Drive Shaft | | 25 | 24 | 51 | 84.5 | 579 | |
| | 2016.06- | 5AT/5MT | F | L | Hatchback FWD 312 B6.000 | | GCI99008 | Inner Joint | | 24 | 24 | 29.7 | 86.5 | 93 | |
| **595C** | | | | | | | | | | | | | | | |
| 1.4 (107 kw) | 2016.05- | 5AT/5MT | F | L | Convertible FWD 312 B4.000 | | GDS82849 | Drive Shaft | | 25 | 24 | 51 | 84.5 | 579 | |
| | 2016.05- | 5AT/5MT | F | L | Convertible FWD 312 B4.000 | | GCI99008 | Inner Joint | | 24 | 24 | 29.7 | 86.5 | 93 | |
| **Grande Punto** | | | | | | | | | | | | | | | |
| 1.4 (114 kw) | 2007.07-2010.06 | 6MT | F | L | Hatchback FWD 199 A8.000 | | GDS17142 | Drive Shaft | | 25 | 25 | 51.1 | 84.5 | 588 | |
| | 2007.07-2010.06 | 6MT | F | L/R | Hatchback FWD 199 A8.000 | | GCO17065 | Outer Joint | | 25 | 33 | 51.1 | 84.5 | 61 | I |
| | 2007.07-2010.06 | 6MT | F | L | Hatchback FWD 199 A8.000 | | GCI17085 | Inner Joint | | 25 | 33 | 34.9 | 57.5 | 97.5 | |
| | 2007.07-2010.06 | 6MT | F | R | Hatchback FWD 199 A8.000 | | GCI17072 | Inner Joint | | 25 | 33 | 34.9 | 431.5 | 93 | |
| | 2007.07-2010.06 | MT | F | R | Hatchback FWD 199 A8.000 | | GDS17143 | Drive Shaft | | 25 | 25 | 51.1 | 84.5 | 953 | |
| | 2007.07-2010.06 | | F | L/R | Hatchback FWD 199 A8.000 | | GCO17014 | Outer Joint | | 22 | 21 | 51 | 79.5 | 54 | M |
| 1.4 (132 kw) | 2008.05-2010.06 | 6MT | F | L | Hatchback FWD 199 A8.000 | | GDS17142 | Drive Shaft | | 25 | 25 | 51.1 | 84.5 | 588 | |
| | 2008.05-2010.06 | 6MT | F | R | Hatchback FWD 199 A8.000 | | GDS17143 | Drive Shaft | | 25 | 25 | 51.1 | 84.5 | 953 | |
| | 2008.05-2010.06 | 6MT | F | L/R | Hatchback FWD 199 A8.000 | | GCO17065 | Outer Joint | | 25 | 33 | 51.1 | 84.5 | 61 | I |

| | YEAR | TRANSM. | F/R | L/R | BODY STYLE & DRIVE TYPE & ENGINE | REMARKS | G-AP Ref. | PRODUCT | ABS | Technical Specifications A | B | C | H | L | P |
|---|---|---|---|---|---|---|---|---|---|---|---|---|---|---|---|
| **ABARTH** | | | | | | | | | | | | | | | |
| **Grande Punto** | | | | | | | | | | | | | | | |
| 1.4 (132 kw) | 2008.05-2010.06 | 6MT | F | L | Hatchback FWD 199 A8.000 | | GCI17085 | Inner Joint | | 25 | 33 | 34.9 | 57.5 | 97.5 | |
| | 2008.05-2010.06 | 6MT | F | R | Hatchback FWD 199 A8.000 | | GCI17072 | Inner Joint | | 25 | 33 | 34.9 | 431.5 | 93 | |
| **Punto** | | | | | | | | | | | | | | | |
| 1.4 (120 kw) | 2012.03- | 6MT | F | L/R | Hatchback FWD 955 A8.000 | | GCO17063 | Outer Joint | | 25 | 25 | 51.1 | 84.5 | 61 | M |
| | 2012.03- | 6MT | F | R | Hatchback FWD 955 A8.000 | | GCI18100 | Inner Joint | | 25 | 26 | 29.7 | 434 | 108 | |
| 1.4 (132 kw) | 2012.03- | 6MT | F | L/R | Hatchback FWD 955 A8.000 | | GCO17063 | Outer Joint | | 25 | 25 | 51.1 | 84.5 | 61 | M |
| | 2012.03- | 6MT | F | R | Hatchback FWD 955 A8.000 | | GCI18100 | Inner Joint | | 25 | 26 | 29.7 | 434 | 108 | |
| **Punto Evo** | | | | | | | | | | | | | | | |
| 1.4 (120 kw) | 2009.10-2012.02 | 6MT | F | L/R | Hatchback FWD 955 A8.000 | | GCO17063 | Outer Joint | | 25 | 25 | 51.1 | 84.5 | 61 | M |
| | 2009.10-2012.02 | 6MT | F | R | Hatchback FWD 955 A8.000 | | GCI18100 | Inner Joint | | 25 | 26 | 29.7 | 434 | 108 | |
| **ACURA** | | | | | | | | | | | | | | | |
| **MDX** | | | | | | | | | | | | | | | |
| 3.5 (179 kw) | 2001.01-2006.09 | AT | F | L/R | SUV 4WD J35A3 | Model year to:2002 | GCO23152 | Outer Joint | 50T | 28 | 35 | 64 | 89 | 61.5 | I |
| | 2001.01-2006.09 | AT | F | L/R | SUV 4WD J35A3 | Model year from:2003 | GCO23162 | Outer Joint | 50T | 30 | 35 | 68 | 89 | 61.5 | I |
| | 2001.01-2006.09 | AT | F | R | SUV 4WD J35A3 | | GCI23107 | Inner Joint | | 29 | 35 | 42 | | 126.5 | |
| 3.7 (220 kw) | 2006.10-2013.04 | AT | F | L/R | SUV 4WD J37A2 | Model year from:2007,Model year to:2009 | GCO23148 | Outer Joint | | 30 | 36 | 64 | 106 | 64 | I |
| 3.7 (224 kw) | 2006.10-2013.12 | AT | F | L/R | SUV 4WD J37A1/J37A2 | Model year from:2007,Model year to:2009 | GCO23148 | Outer Joint | | 30 | 36 | 64 | 106 | 64 | I |
| 3.7 (227 kw) | 2006.10- | AT | F | L/R | SUV 4WD J37A1 | Model year from:2007,Model year to:2009 | GCO23148 | Outer Joint | | 30 | 36 | 64 | 106 | 64 | I |
| **RDX** | | | | | | | | | | | | | | | |
| 3.5 (204 kw) | 2012.01-2015.08 | AT | F | L | SUV 4WD J35Z2 | Date to:2014.12 | GDS83457 | Drive Shaft | | 30 | 31 | 68.1 | 88.5 | 667 | |
| | 2012.01-2015.08 | AT | F | R | SUV 4WD J35Z2 | Date to:2014.12 | GDS83458 | Drive Shaft | | 30 | 31 | 68.1 | 88.5 | 630 | |
| | 2012.01-2015.08 | AT | F | L/R | SUV 4WD J35Z2 | Date to:2014.12 | GCO82380 | Outer Joint | | 30 | 34 | 68.1 | 88.5 | 65 | M |
| | 2012.01-2015.08 | AT | F | L | SUV 4WD J35Z2 | Date to:2014.12 | GCI82224 | Inner Joint | | 31 | 34 | 42 | 61.5 | 97.5 | |
| | 2012.01-2015.08 | AT | F | R | SUV 4WD J35Z2 | Date to:2014.12 | GCI82225 | Inner Joint | | 31 | 34 | 42 | | 122 | |
| | 2012.01-2015.08 | AT | R | L | SUV 4WD J35Z2 | Date from:2015.01 | GDS56249 | Drive Shaft | | 28 | 20 | 55 | 91 | 808 | |
| | 2012.01-2015.08 | AT | R | L | SUV 4WD J35Z2 | Date to:2014.12 | GDS83455 | Drive Shaft | | 23 | 20 | 52 | 88 | 806 | |
| | 2012.01-2015.08 | AT | R | R | SUV 4WD J35Z2 | Date from:2015.01 | GDS56248 | Drive Shaft | | 28 | 20 | 55 | 91 | 828 | |
| | 2012.01-2015.08 | AT | R | R | SUV 4WD J35Z2 | Date to:2014.12 | GDS83456 | Drive Shaft | | 23 | 20 | 52 | 88 | 827 | |
| | 2012.01-2015.08 | AT | R | L/R | SUV 4WD J35Z2 | Date from:2015.01 | GCO23160 | Outer Joint | | 28 | 20 | 55 | 91 | 52.5 | M |
| | 2012.01-2015.08 | AT | R | L/R | SUV 4WD J35Z2 | Date to:2014.12 | GCO81678 | Outer Joint | | 23 | 18 | 52 | 88 | 45 | M |
| | 2012.01-2015.08 | AT | R | L/R | SUV 4WD J35Z2 | Date to:2014.12 | GCI81653 | Inner Joint | | 20 | 16 | 32 | 54.5 | 97.5 | |
| | 2012.01-2015.08 | AT | R | L/R | SUV 4WD J35Z2 | Date from:2015.01 | GCI83212 | Inner Joint | | 20 | 20 | 32 | 54.5 | 105 | |
| **TSX** | | | | | | | | | | | | | | | |
| 2.4 (147 kw) | 2003.10-2008.06 | MT | F | R | Saloon FWD K24A2 | | GDS87073 | Intermediate Shaft | | 27 | 27 | | | 443 | |
| **ALFA ROMEO** | | | | | | | | | | | | | | | |
| **145** | | | | | | | | | | | | | | | |
| 1.4 (66 kw) | 1994.07-1996.12 | MT | F | L/R | Hatchback FWD AR33501 | Date to:1996.04,For vehicles without ABS | GCO17004 | Outer Joint | | 25 | 25 | 52 | 85 | 58 | I |
| | 1994.07-1996.12 | MT | F | L/R | Hatchback FWD AR33501 | Date to:1996.04,For vehicles with ABS:GrooveType:Middle,Inner teeth:22,without ABS | GCO17026 | Outer Joint | | 25 | 22 | 51 | 84 | 57 | M |
| | 1994.07-1996.12 | MT | F | L/R | Hatchback FWD AR33501 | Date to:1996.04,For vehicles with ABS:GrooveType:Inner,Inner teeth:25,with ABS:ref | GCO82004 | Outer Joint | 44T | 25 | 25 | 52 | 85 | 58 | I |
| 1.4 (76 kw) | 1996.12-2001.01 | AT/MT | F | L/R | Hatchback FWD AR33503 | | GCI18070 | Inner Joint | | | 25 | | | 32 | |
| | 1996.12-2001.01 | MT | F | L/R | Hatchback FWD AR33503 | VET From:3180592 | GCO17011 | Outer Joint | | 25 | 22 | 51 | 84.5 | 57 | O |
| | 1996.12-2001.01 | MT | F | L/R | Hatchback FWD AR33503 | | GCO17023 | Outer Joint | | 25 | 22 | 52 | 84 | 57 | O |
| | 1996.12-2001.01 | MT | F | L/R | Hatchback FWD AR33503 | Date from:1996.05 | GCO17042 | Outer Joint | | 25 | 25 | 51 | 85 | 58 | O |
| | 1996.12-2001.01 | MT | F | L/R | Hatchback FWD AR33503 | VET From:3161889;VET To:3180591 | GCO82005 | Outer Joint | 44T | 25 | 22 | 52 | 84 | 57 | O |
| | 1996.12-2001.01 | MT | F | L/R | Hatchback FWD AR33503 | | GCO82006 | Outer Joint | 44T | 25 | 25 | 52 | 85 | 58 | O |
| | 1996.12-2001.01 | MT | F | L/R | Hatchback FWD AR33503 | | GCI82011 | Inner Joint | | | 25 | | | 32 | |
| | 1996.12-2001.01 | | F | | Hatchback FWD AR33503 | | GCI82005 | Inner Joint | | | 25 | | | 32 | |
| 1.6 (76 kw) | 1994.10-1996.12 | MT | F | L/R | Hatchback FWD AR33201 | Date to:1996.04,For vehicles without ABS | GCO17004 | Outer Joint | | 25 | 25 | 52 | 85 | 58 | I |
| | 1994.10-1996.12 | MT | F | L/R | Hatchback FWD AR33201 | Date to:1996.04,For vehicles with ABS:GrooveType:Middle,Inner teeth:22,without ABS | GCO17026 | Outer Joint | | 25 | 22 | 51 | 84 | 57 | M |
| | 1994.10-1996.12 | MT | F | L/R | Hatchback FWD AR33201 | Date to:1996.04,For vehicles with ABS:GrooveType:Inner,Inner teeth:25,with ABS:ref | GCO82004 | Outer Joint | 44T | 25 | 25 | 52 | 85 | 58 | I |
| 1.6 (82 kw) | 1997.09-2000.12 | MT | F | L/R | Hatchback FWD AR32102 | | GCO17042 | Outer Joint | | 25 | 25 | 51 | 85 | 58 | O |
| | 1997.09-2000.12 | MT | F | L/R | Hatchback FWD AR32102 | | GCI82005 | Inner Joint | | | 25 | | | 32 | |
| 1.6 (88 kw) | 1996.12-2001.01 | AT/MT | F | L/R | Hatchback FWD AR32102/AR67601 | | GCI18070 | Inner Joint | | | 25 | | | 32 | |
| | 1996.12-2001.01 | MT | F | L/R | Hatchback FWD AR32102/AR67601 | | GCO17042 | Outer Joint | | 25 | 25 | 51 | 85 | 58 | O |
| | 1996.12-2001.01 | MT | F | L/R | Hatchback FWD AR32102/AR67601 | | GCO82006 | Outer Joint | 44T | 25 | 25 | 52 | 85 | 58 | O |
| | 1996.12-2001.01 | MT | F | L/R | Hatchback FWD AR32102/AR67601 | | GCI82011 | Inner Joint | | | 25 | | | 32 | |
| | 1996.12-2001.01 | MT | F | | Hatchback FWD AR32102/AR67601 | | GCI82005 | Inner Joint | | | 25 | | | 32 | |
| | 1996.12-2001.01 | | F | | Hatchback FWD AR32102/AR67601 | | GCI82006 | Inner Joint | | | 25 | | | 32 | |
| 1.7 (95 kw) | 1994.10-1996.12 | MT | F | L/R | Hatchback FWD AR33401 | Date to:1996.04,For vehicles without ABS | GCO17004 | Outer Joint | | 25 | 25 | 52 | 85 | 58 | I |
| | 1994.10-1996.12 | MT | F | L/R | Hatchback FWD AR33401 | Date to:1996.04,For vehicles with ABS:GrooveType:Middle,Inner teeth:22,without ABS | GCO17026 | Outer Joint | | 25 | 22 | 51 | 84 | 57 | M |
| | 1994.10-1996.12 | MT | F | L/R | Hatchback FWD AR33401 | Date to:1996.04,For vehicles with ABS:GrooveType:Inner,Inner teeth:25,with ABS:ref | GCO82004 | Outer Joint | 44T | 25 | 25 | 52 | 85 | 58 | I |
| | 1994.10-1996.12 | | F | | Hatchback FWD AR33401 | | GCI82006 | Inner Joint | | | 25 | | | 32 | |
| 1.8 (103 kw) | 1996.12-1998.12 | AT/MT | F | L/R | Hatchback FWD AR67106 | | GCI18070 | Inner Joint | | | 25 | | | 32 | |
| | 1996.12-1998.12 | MT | F | L/R | Hatchback FWD AR67106 | | GCO17042 | Outer Joint | | 25 | 25 | 51 | 85 | 58 | O |
| | 1996.12-1998.12 | MT | F | L/R | Hatchback FWD AR67106 | | GCO82006 | Outer Joint | 44T | 25 | 25 | 52 | 85 | 58 | O |

| | YEAR | TRANSM. | F/R | L/R | BODY STYLE & DRIVE TYPE & ENGINE | REMARKS | G-AP Ref. | PRODUCT | ABS | Technical Specifications A | B | C | H | L | P |
|---|---|---|---|---|---|---|---|---|---|---|---|---|---|---|---|
| **ALFA ROMEO** | | | | | | | | | | | | | | | |
| **145** | | | | | | | | | | | | | | | |
| 1.8 (103 kw) | 1996.12-1998.12 | MT | F | L/R | Hatchback FWD AR67106 | | GCI82011 | Inner Joint | | | 25 | | | 32 | |
| | 1996.12-1998.12 | | F | | Hatchback FWD AR67106 | | GCI82005 | Inner Joint | | | 25 | | | 32 | |
| | 1996.12-1998.12 | | F | | Hatchback FWD AR67106 | | GCI82006 | Inner Joint | | | 25 | | | 32 | |
| 1.8 (106 kw) | 1998.03-2001.01 | MT | F | L/R | Hatchback FWD AR32201 | | GCO17042 | Outer Joint | | 25 | 25 | 51 | 85 | 58 | O |
| | 1998.03-2001.01 | MT | F | L/R | Hatchback FWD AR32201 | | GCO82006 | Outer Joint | 44T | 25 | 25 | 52 | 85 | 58 | O |
| | 1998.03-2001.01 | MT | F | L/R | Hatchback FWD AR32201 | | GCI82011 | Inner Joint | | | 25 | | | 32 | |
| | 1998.03-2001.01 | MT | F | | Hatchback FWD AR32201 | | GCI82005 | Inner Joint | | | 25 | | | 32 | |
| | 1998.03-2001.01 | | F | | Hatchback FWD AR32201 | | GCI82006 | Inner Joint | | | 25 | | | 32 | |
| 1.9 (66 kw) | 1994.10-1999.02 | AT/MT | F | L/R | Hatchback FWD AR33601/AR67501 | | GCI18070 | Inner Joint | | | 25 | | | 32 | |
| | 1994.10-1999.02 | MT | F | L/R | Hatchback FWD AR33601/AR67501 | Date to:1996.04,For vehicles without ABS | GCO17004 | Outer Joint | | 25 | 25 | 52 | 85 | 58 | I |
| | 1994.10-1999.02 | MT | F | L/R | Hatchback FWD AR33601/AR67501 | VET no. to:3180591,For vehicles with ABS,without ABS | GCO17026 | Outer Joint | | 25 | 22 | 51 | 84 | 57 | M |
| | 1994.10-1999.02 | MT | F | L/R | Hatchback FWD AR33601/AR67501 | VET From:3180592 | GCO17042 | Outer Joint | | 25 | 25 | 51 | 85 | 58 | O |
| | 1994.10-1999.02 | MT | F | L/R | Hatchback FWD AR33601/AR67501 | Date to:1996.04,For vehicles with ABS,GrooveType:Inner,Inner teeth:25,with ABS:44T | GCO82004 | Outer Joint | 44T | 25 | 25 | 52 | 85 | 58 | I |
| | 1994.10-1999.02 | MT | F | L/R | Hatchback FWD AR33601/AR67501 | Date from:1996.05,VET no. to:3180591,For vehicles with ABS,with ABS:44T | GCO82006 | Outer Joint | 44T | 25 | 25 | 52 | 85 | 58 | O |
| | 1994.10-1999.02 | MT | F | L/R | Hatchback FWD AR33601/AR67501 | | GCI82011 | Inner Joint | | | 25 | | | 32 | |
| | 1994.10-1999.02 | | F | | Hatchback FWD AR33601/AR67501 | | GCI82005 | Inner Joint | | | 25 | | | 32 | |
| 1.9 (77 kw) | 1999.02-2001.01 | 5MT | F | L/R | Hatchback FWD AR32302 | | GCO82012 | Outer Joint | | 25 | 28 | 59 | 85 | 63 | O |
| | 1999.02-2001.01 | MT | F | L/R | Hatchback FWD AR32302 | Chassis no. to:316 1888 | GCO17042 | Outer Joint | | 25 | 25 | 51 | 85 | 58 | O |
| | 1999.02-2001.01 | MT | F | L/R | Hatchback FWD AR32302 | Chassis no. to:316 1888 | GCO82006 | Outer Joint | 44T | 25 | 25 | 52 | 85 | 58 | O |
| 2.0 (110 kw) | 1995.10-2001.01 | AT/MT | F | L/R | Hatchback FWD AR67204 | | GCI18070 | Inner Joint | | | 25 | | | 32 | |
| | 1995.10-2001.01 | MT | F | L/R | Hatchback FWD AR67204 | Date to:1996.04 | GCO17004 | Outer Joint | | 25 | 25 | 52 | 85 | 58 | I |
| | 1995.10-2001.01 | MT | F | L/R | Hatchback FWD AR67204 | Date from:1996.05,For vehicles with ABS,without ABS | GCO17026 | Outer Joint | | 25 | 22 | 51 | 84 | 57 | M |
| | 1995.10-2001.01 | MT | F | L/R | Hatchback FWD AR67204 | VET From:3180592 | GCO17042 | Outer Joint | | 25 | 25 | 51 | 85 | 58 | O |
| | 1995.10-2001.01 | MT | F | L/R | Hatchback FWD AR67204 | Date to:1996.04 | GCO82004 | Outer Joint | 44T | 25 | 25 | 52 | 85 | 58 | I |
| | 1995.10-2001.01 | MT | F | L/R | Hatchback FWD AR67204 | Date from:1996.05,VET no. to:3180591,For vehicles with ABS,with ABS:44T | GCO82006 | Outer Joint | 44T | 25 | 25 | 52 | 85 | 58 | O |
| | 1995.10-2001.01 | MT | F | L/R | Hatchback FWD AR67204 | | GCI82011 | Inner Joint | | | 25 | | | 32 | |
| | 1995.10-2001.01 | MT | F | | Hatchback FWD AR67204 | | GCI82005 | Inner Joint | | | 25 | | | 32 | |
| | 1995.10-2001.01 | | F | | Hatchback FWD AR67204 | | GCI82006 | Inner Joint | | | 25 | | | 32 | |
| 2.0 (114 kw) | 1998.03-2001.01 | MT | F | L/R | Hatchback FWD AR32301 | VET From:3180592 | GCO17042 | Outer Joint | | 25 | 25 | 51 | 85 | 58 | O |
| | 1998.03-2001.01 | MT | F | L/R | Hatchback FWD AR32301 | | GCO82006 | Outer Joint | 44T | 25 | 25 | 52 | 85 | 58 | O |
| | 1998.03-2001.01 | MT | F | L/R | Hatchback FWD AR32301 | | GCI82011 | Inner Joint | | | 25 | | | 32 | |
| | 1998.03-2001.01 | | F | | Hatchback FWD AR32301 | | GCI82005 | Inner Joint | | | 25 | | | 32 | |
| | 1998.03-2001.01 | | F | | Hatchback FWD AR32301 | | GCI82006 | Inner Joint | | | 25 | | | 32 | |
| **146** | | | | | | | | | | | | | | | |
| 1.4 (66 kw) | 1995.05-1996.09 | MT | F | L/R | Hatchback FWD AR33501 | Date from:1995.05,Date to:1996.09 | GCO17004 | Outer Joint | | 25 | 25 | 52 | 85 | 58 | I |
| | 1995.05-1996.09 | MT | F | L/R | Hatchback FWD AR33501 | | GCO82004 | Outer Joint | 44T | 25 | 25 | 52 | 85 | 58 | I |
| 1.4 (76 kw) | 1996.10-2001.10 | MT | F | L/R | Hatchback FWD AR33503 | VET no. from:0173865 | GCO17011 | Outer Joint | | 25 | 22 | 51 | 84.5 | 57 | O |
| | 1996.10-2001.10 | MT | F | L/R | Hatchback FWD AR33503 | VET no. from:0146135 | GCO17023 | Outer Joint | | 25 | 22 | 52 | 84 | 57 | O |
| | 1996.10-2001.10 | MT | F | L/R | Hatchback FWD AR33503 | VET no. to:0146134 | GCO17042 | Outer Joint | | 25 | 25 | 51 | 85 | 58 | O |
| | 1996.10-2001.10 | MT | F | L/R | Hatchback FWD AR33503 | VET no. from:0146134,VET no. to:0173864 | GCO82005 | Outer Joint | 44T | 25 | 22 | 52 | 84 | 57 | O |
| | 1996.10-2001.10 | MT | F | L/R | Hatchback FWD AR33503 | VET no. to:0146134 | GCO82006 | Outer Joint | 44T | 25 | 25 | 52 | 85 | 58 | O |
| | 1996.10-2001.10 | MT | F | L/R | Hatchback FWD AR33503 | VET no. to:0146134 | GCI82011 | Inner Joint | | | 25 | | | 32 | |
| 1.6 (76 kw) | 1995.05-1996.09 | MT | F | L/R | Hatchback FWD AR33201 | Date from:1995.05,Date to:1996.09 | GCO17004 | Outer Joint | | 25 | 25 | 52 | 85 | 58 | I |
| | 1995.05-1996.09 | MT | F | L/R | Hatchback FWD AR33201 | | GCO82004 | Outer Joint | 44T | 25 | 25 | 52 | 85 | 58 | I |
| 1.6 (82 kw) | 1997.09-2000.12 | MT | F | L/R | Hatchback FWD AR32102 | | GCO17042 | Outer Joint | | 25 | 25 | 51 | 85 | 58 | O |
| | 1997.09-2000.12 | MT | F | L/R | Hatchback FWD AR32102 | VET To:0173864 | GCO82006 | Outer Joint | 44T | 25 | 25 | 52 | 85 | 58 | O |
| | 1997.09-2000.12 | MT | F | L/R | Hatchback FWD AR32102 | | GCI82005 | Inner Joint | | | 25 | | | 32 | |
| | 1997.09-2000.12 | MT | F | L/R | Hatchback FWD AR32102 | | GCI82011 | Inner Joint | | | 25 | | | 32 | |
| 1.6 (88 kw) | 1996.11-2001.10 | AT/MT | F | L/R | Hatchback FWD AR32102/AR67601 | | GCI18070 | Inner Joint | | | 25 | | | 32 | |
| | 1996.11-2001.10 | MT | F | L/R | Hatchback FWD AR32102/AR67601 | | GCO17042 | Outer Joint | | 25 | 25 | 51 | 85 | 58 | O |
| | 1996.11-2001.10 | MT | F | L/R | Hatchback FWD AR32102/AR67601 | | GCO82006 | Outer Joint | 44T | 25 | 25 | 52 | 85 | 58 | O |
| | 1996.11-2001.10 | MT | F | L/R | Hatchback FWD AR32102/AR67601 | | GCI82011 | Inner Joint | | | 25 | | | 32 | |
| | 1996.11-2001.10 | MT | F | | Hatchback FWD AR32102/AR67601 | | GCI82005 | Inner Joint | | | 25 | | | 32 | |
| | 1996.11-2001.10 | | F | | Hatchback FWD AR32102/AR67601 | | GCI82006 | Inner Joint | | | 25 | | | 32 | |
| 1.7 (95 kw) | 1995.05-1996.09 | MT | F | L/R | Hatchback FWD AR33401 | Date from:1995.05,Date to:1996.09 | GCO17004 | Outer Joint | | 25 | 25 | 52 | 85 | 58 | I |
| | 1995.05-1996.09 | MT | F | L/R | Hatchback FWD AR33401 | | GCO82004 | Outer Joint | 44T | 25 | 25 | 52 | 85 | 58 | I |
| 1.8 (103 kw) | 1996.10-1999.02 | AT/MT | F | L/R | Hatchback FWD AR67106 | | GCI18070 | Inner Joint | | | 25 | | | 32 | |
| | 1996.10-1999.02 | MT | F | L/R | Hatchback FWD AR67106 | VET From:0173865 | GCO17042 | Outer Joint | | 25 | 25 | 51 | 85 | 58 | O |
| | 1996.10-1999.02 | MT | F | L/R | Hatchback FWD AR67106 | | GCO82006 | Outer Joint | 44T | 25 | 25 | 52 | 85 | 58 | O |
| | 1996.10-1999.02 | MT | F | L/R | Hatchback FWD AR67106 | | GCI82011 | Inner Joint | | | 25 | | | 32 | |
| | 1996.10-1999.02 | MT | F | | Hatchback FWD AR67106 | | GCI82005 | Inner Joint | | | 25 | | | 32 | |
| | 1996.10-1999.02 | | F | | Hatchback FWD AR67106 | | GCI82006 | Inner Joint | | | 25 | | | 32 | |
| 1.8 (106 kw) | 1996.03-2001.10 | MT | F | L/R | Hatchback FWD AR32201 | VET From:0173865 | GCO17042 | Outer Joint | | 25 | 25 | 51 | 85 | 58 | O |
| | 1996.03-2001.10 | MT | F | L/R | Hatchback FWD AR32201 | | GCO82006 | Outer Joint | 44T | 25 | 25 | 52 | 85 | 58 | O |
| | 1996.03-2001.10 | MT | F | L/R | Hatchback FWD AR32201 | | GCI82011 | Inner Joint | | | 25 | | | 32 | |

| | YEAR | TRANSM. | F/R | L/R | BODY STYLE & DRIVE TYPE & ENGINE | REMARKS | G-AP Ref. | PRODUCT | ABS | Technical Specifications A | B | C | H | L | P |
|---|---|---|---|---|---|---|---|---|---|---|---|---|---|---|---|
| **ALFA ROMEO** | | | | | | | | | | | | | | | |
| **146** | | | | | | | | | | | | | | | |
| 1.8 (106 kw) | 1996.03-2001.10 | MT | F | | Hatchback FWD AR32201 | | GCI82005 | Inner Joint | | | 25 | | | 32 | |
| | 1996.03-2001.10 | | F | | Hatchback FWD AR32201 | | GCI82006 | Inner Joint | | | 25 | | | 32 | |
| 1.9 (66 kw) | 1994.12-1999.09 | AT/MT | F | L/R | Hatchback FWD AR33601/AR67501 | | GCI18070 | Inner Joint | | | 25 | | | 32 | |
| | 1994.12-1999.09 | MT | F | L/R | Hatchback FWD AR33601/AR67501 | VET To:0059570 | GCO17004 | Outer Joint | | 25 | 25 | 52 | 85 | 58 | I |
| | 1994.12-1999.09 | MT | F | L/R | Hatchback FWD AR33601/AR67501 | VET From:0173865 | GCO17042 | Outer Joint | | 25 | 25 | 51 | 85 | 58 | O |
| | 1994.12-1999.09 | MT | F | L/R | Hatchback FWD AR33601/AR67501 | VET To:0059570 | GCO82004 | Outer Joint | 44T | 25 | 25 | 52 | 85 | 58 | I |
| | 1994.12-1999.09 | MT | F | L/R | Hatchback FWD AR33601/AR67501 | | GCO82006 | Outer Joint | 44T | 25 | 25 | 52 | 85 | 58 | O |
| | 1994.12-1999.09 | MT | F | L/R | Hatchback FWD AR33601/AR67501 | | GCI82011 | Inner Joint | | | 25 | | | 32 | |
| | 1994.12-1999.09 | | F | | Hatchback FWD AR33601/AR67501 | | GCI82005 | Inner Joint | | | 25 | | | 32 | |
| 1.9 (77 kw) | 1999.03-2001.10 | MT | F | L/R | Hatchback FWD AR32302 | VET From:0173865,Date To:1999.12 | GCO17042 | Outer Joint | | 25 | 25 | 51 | 85 | 58 | O |
| | 1999.03-2001.10 | MT | F | L/R | Hatchback FWD AR32302 | VET To:0173864 | GCO82006 | Outer Joint | 44T | 25 | 25 | 52 | 85 | 58 | O |
| | 1999.03-2001.10 | MT | F | L/R | Hatchback FWD AR32302 | VET From:0173865,Date from:2000.01 | GCO82012 | Outer Joint | | 25 | 28 | 59 | 85 | 63 | O |
| | 1999.03-2001.10 | MT | F | L/R | Hatchback FWD AR32302 | | GCI82005 | Inner Joint | | | 25 | | | 32 | |
| | 1999.03-2001.10 | MT | F | L/R | Hatchback FWD AR32302 | | GCI82011 | Inner Joint | | | 25 | | | 32 | |
| 2.0 (110 kw) | 1995.10-2001.01 | AT/MT | F | L/R | Hatchback FWD AR67204 | | GCI18070 | Inner Joint | | | 25 | | | 32 | |
| | 1995.10-2001.01 | MT | F | L/R | Hatchback FWD AR67204 | VET From:0173865 | GCO17042 | Outer Joint | | 25 | 25 | 51 | 85 | 58 | O |
| | 1995.10-2001.01 | MT | F | L/R | Hatchback FWD AR67204 | VET To:0059570 | GCO82004 | Outer Joint | 44T | 25 | 25 | 52 | 85 | 58 | I |
| | 1995.10-2001.01 | MT | F | L/R | Hatchback FWD AR67204 | | GCO82006 | Outer Joint | 44T | 25 | 25 | 52 | 85 | 58 | O |
| | 1995.10-2001.01 | MT | F | L/R | Hatchback FWD AR67204 | | GCI82011 | Inner Joint | | | 25 | | | 32 | |
| | 1995.10-2001.01 | MT | F | | Hatchback FWD AR67204 | | GCI82005 | Inner Joint | | | 25 | | | 32 | |
| | 1995.10-2001.01 | | F | | Hatchback FWD AR67204 | | GCI82006 | Inner Joint | | | 25 | | | 32 | |
| 2.0 (114 kw) | 1997.03-2001.10 | MT | F | L/R | Hatchback FWD AR32301 | VET From:0173865 | GCO17042 | Outer Joint | | 25 | 25 | 51 | 85 | 58 | O |
| | 1997.03-2001.10 | MT | F | L/R | Hatchback FWD AR32301 | | GCO82006 | Outer Joint | 44T | 25 | 25 | 52 | 85 | 58 | O |
| | 1997.03-2001.10 | MT | F | L/R | Hatchback FWD AR32301 | | GCI82011 | Inner Joint | | | 25 | | | 32 | |
| | 1997.03-2001.10 | | F | | Hatchback FWD AR32301 | | GCI82005 | Inner Joint | | | 25 | | | 32 | |
| | 1997.03-2001.10 | | F | | Hatchback FWD AR32301 | | GCI82006 | Inner Joint | | | 25 | | | 32 | |
| **147** | | | | | | | | | | | | | | | |
| 1.6 (77 kw) | 2001.01-2010.03 | 5MT | F | L/R | Hatchback FWD AR 37203 | | GDS82009 | Drive Shaft | | 25 | | 51 | 85 | 494 | |
| | 2001.01-2010.03 | 5MT | F | L/R | Hatchback FWD AR 37203 | | GCO17042 | Outer Joint | | 25 | 25 | 51 | 85 | 58 | O |
| | 2001.01-2010.03 | 5MT | F | L/R | Hatchback FWD AR 37203 | | GCI82011 | Inner Joint | | | 25 | | | 32 | |
| | 2009.01-2010.03 | MT | F | L/R | Hatchback FWD AR 37203 | | GDS82009 | Drive Shaft | | 25 | | 51 | 85 | 494 | |
| | 2009.01-2010.03 | MT | F | L/R | Hatchback FWD AR 37203 | | GCO17042 | Outer Joint | | 25 | 25 | 51 | 85 | 58 | O |
| | 2009.01-2010.03 | MT | F | L/R | Hatchback FWD AR 37203 | | GCI82011 | Inner Joint | | | 25 | | | 32 | |
| | 2009.01-2010.03 | | F | L/R | Hatchback FWD AR 37203 | | GCI82005 | Inner Joint | | | 25 | | | 32 | |
| 1.6 (88 kw) | 2001.01-2010.03 | 5MT | F | L/R | Hatchback FWD AR 32104 | | GDS82009 | Drive Shaft | | 25 | | 51 | 85 | 494 | |
| | 2001.01-2010.03 | 5MT | F | L/R | Hatchback FWD AR 32104 | | GCO17042 | Outer Joint | | 25 | 25 | 51 | 85 | 58 | O |
| | 2001.01-2010.03 | 5MT | F | L/R | Hatchback FWD AR 32104 | | GCI82011 | Inner Joint | | | 25 | | | 32 | |
| | 2001.03-2009.12 | MT | F | L/R | Hatchback FWD AR 32104 | | GDS82009 | Drive Shaft | | 25 | | 51 | 85 | 494 | |
| | 2001.03-2009.12 | MT | F | L/R | Hatchback FWD AR 32104 | | GCO17042 | Outer Joint | | 25 | 25 | 51 | 85 | 58 | O |
| | 2001.03-2009.12 | | F | L/R | Hatchback FWD AR 32104 | | GCI82005 | Inner Joint | | | 25 | | | 32 | |
| | 2001.03-2009.12 | | F | L/R | Hatchback FWD AR 32104 | | GCI82011 | Inner Joint | | | 25 | | | 32 | |
| 1.9 (74 kw) | 2003.06-2010.03 | 5MT | F | L/R | Hatchback FWD 182 B9.000 | | GDS82009 | Drive Shaft | | 25 | | 51 | 85 | 494 | |
| | 2003.06-2010.03 | MT | F | L/R | Hatchback FWD 182 B9.000 | | GCO17042 | Outer Joint | | 25 | 25 | 51 | 85 | 58 | O |
| | 2003.06-2010.03 | MT | F | L/R | Hatchback FWD 182 B9.000 | | GCI18070 | Inner Joint | | | 25 | | | 32 | |
| | 2003.06-2010.03 | MT | F | L/R | Hatchback FWD 182 B9.000 | Date to:2006.09 | GCI82011 | Inner Joint | | | 25 | | | 32 | |
| | 2003.06-2010.03 | | F | L/R | Hatchback FWD 182 B9.000 | | GCI82005 | Inner Joint | | | 25 | | | 32 | |
| 1.9 (81 kw) | 2000.10-2002.08 | 5MT | F | L | Hatchback FWD 937 A2.000 | | GDS17150 | Drive Shaft | | 25 | 25 | 51 | 84.5 | 615 | |
| | 2000.10-2002.08 | 5MT | F | R | Hatchback FWD 937 A2.000 | Chassis no. from:3145308/5080089,Exhaust Emis:Euro 3;Exhaust Emis:Euro 4 | GDS82008 | Drive Shaft | | 25 | 25 | 51 | 84.5 | 931.5 | |
| | 2000.10-2002.08 | 5MT | F | R | Hatchback FWD 937 A2.000 | Chassis no. to:3145307/5080088,Exhaust Emis:Euro 3 | GDS82011 | Drive Shaft | | 25 | | 51 | 84.5 | 521 | |
| | 2000.10-2002.08 | 5MT | F | L | Hatchback FWD 937 A2.000 | Exhaust Emis:Euro 4;Chassis no. from:3145308/5080089,Exhaust Emis:Euro 3 | GCI17005 | Inner Joint | | 25 | 26 | 32 | 91 | 95 | |
| | 2000.10-2002.08 | 5MT | F | R | Hatchback FWD 937 A2.000 | Exhaust Emis:Euro 4;Chassis no. from:3145308/5080089,Exhaust Emis:Euro 3 | GCI17006 | Inner Joint | | 25 | 26 | 29.8 | 377 | 108 | |
| | 2000.10-2002.08 | | F | L/R | Hatchback FWD 937 A2.000 | | GCO82014 | Outer Joint | | 25 | 28 | 51 | 84.5 | 64 | O |
| | 2000.10-2002.08 | | F | L/R | Hatchback FWD 937 A2.000 | | GCO82025 | Outer Joint | | 25 | 26 | 51 | 84.5 | 64.5 | M |
| 1.9 (85 kw) | 2001.04-2010.03 | 5MT | F | L | Hatchback FWD 937 A2.000;939 A7.000 | Chassis no. to:3145308/5080089 | GDS17150 | Drive Shaft | | 25 | 25 | 51 | 84.5 | 615 | |
| | 2001.04-2010.03 | 5MT | F | R | Hatchback FWD 937 A2.000;939 A7.000 | Chassis no. to:3145308/5080089 | GDS82008 | Drive Shaft | | 25 | 25 | 51 | 84.5 | 931.5 | |
| | 2001.04-2010.03 | 5MT | F | R | Hatchback FWD 937 A2.000;939 A7.000 | | GDS82011 | Drive Shaft | | 25 | | 51 | 84.5 | 521 | |
| | 2001.04-2010.03 | 5MT | F | L | Hatchback FWD 937 A2.000;939 A7.000 | Exhaust Emis:Euro 4;Chassis no. from:3145308/5080089,Exhaust Emis:Euro 3 | GCI17005 | Inner Joint | | 25 | 26 | 32 | 91 | 95 | |
| | 2001.04-2010.03 | 5MT | F | R | Hatchback FWD 937 A2.000;939 A7.000 | Exhaust Emis:Euro 4;Chassis no. from:3145308/5080089,Exhaust Emis:Euro 3 | GCI17006 | Inner Joint | | 25 | 26 | 29.8 | 377 | 108 | |
| | 2001.04-2010.03 | | F | L/R | Hatchback FWD 937 A2.000;939 A7.000 | Date To:2003.10 | GCO82014 | Outer Joint | | 25 | 28 | 51 | 84.5 | 64 | O |
| 1.9 (88 kw) | 2005.07-2010.03 | 5AT/6MT | F | L | Hatchback FWD 937 A3.000 | | GCI17005 | Inner Joint | | 25 | 26 | 32 | 91 | 95 | |
| | 2005.07-2010.03 | 5MT/6MT | F | L | Hatchback FWD 937 A3.000 | | GDS17150 | Drive Shaft | | 25 | 25 | 51 | 84.5 | 615 | |
| | 2005.07-2010.03 | 5MT/6MT | F | R | Hatchback FWD 937 A3.000 | | GDS82008 | Drive Shaft | | 25 | 25 | 51 | 84.5 | 931.5 | |
| | 2005.07-2010.03 | 5MT/6MT | F | R | Hatchback FWD 937 A3.000 | | GCI17006 | Inner Joint | | 25 | 26 | 29.8 | 377 | 108 | |
| | 2005.07-2010.03 | MT | F | L/R | Hatchback FWD 937 A3.000 | | GCO82025 | Outer Joint | | 25 | 26 | 51 | 84.5 | 64.5 | M |
| 1.9 (93 kw) | 2003.09-2004.09 | 6MT | F | L | Hatchback FWD 937 A4.000 | | GDS17150 | Drive Shaft | | 25 | 25 | 51 | 84.5 | 615 | |

| | YEAR | TRANSM. | F/R | L/R | BODY STYLE & DRIVE TYPE & ENGINE | REMARKS | G-AP Ref. | PRODUCT | ABS | Technical Specifications A | B | C | H | L | P |
|---|---|---|---|---|---|---|---|---|---|---|---|---|---|---|---|
| **ALFA ROMEO** | | | | | | | | | | | | | | | |
| **147** | | | | | | | | | | | | | | | |
| 1.9 (93 kw) | 2003.09-2004.09 | 6MT | F | R | Hatchback FWD 937 A4.000 | | GDS82008 | Drive Shaft | | 25 | 25 | 51 | 84.5 | 931.5 | |
| | 2003.09-2004.09 | 6MT | F | L | Hatchback FWD 937 A4.000 | | GCI17005 | Inner Joint | | 25 | 26 | 32 | 91 | 95 | |
| | 2003.09-2004.09 | 6MT | F | R | Hatchback FWD 937 A4.000 | | GCI17006 | Inner Joint | | 25 | 26 | 29.8 | 377 | 108 | |
| | 2003.09-2004.09 | MT | F | L/R | Hatchback FWD 937 A4.000 | | GCO82014 | Outer Joint | | 25 | 28 | 51 | 84.5 | 64 | O |
| | 2003.09-2004.09 | MT | F | L/R | Hatchback FWD 937 A4.000 | | GCO82025 | Outer Joint | | 25 | 26 | 51 | 84.5 | 64.5 | M |
| 1.9 (100 kw) | 2004.10-2010.03 | 5MT | F | L | Hatchback FWD 192 B1.000 | | GDS17150 | Drive Shaft | | 25 | 25 | 51 | 84.5 | 615 | |
| | 2004.10-2010.03 | 5MT | F | R | Hatchback FWD 192 B1.000 | Chassis no. from:3145308/5080089,Exhaust Emis:Euro 3;Exhaust Emis:Euro 4 | GDS82008 | Drive Shaft | | 25 | 25 | 51 | 84.5 | 931.5 | |
| | 2004.10-2010.03 | 5MT | F | R | Hatchback FWD 192 B1.000 | Chassis no. to:3145307/5080088,Exhaust Emis:Euro 3 | GDS82011 | Drive Shaft | | 25 | | 51 | 84.5 | 521 | |
| | 2004.10-2010.03 | 5MT | F | L | Hatchback FWD 192 B1.000 | Exhaust Emis:Euro 4;Chassis no. from:3145308/5080089,Exhaust Emis:Euro 3 | GCI17005 | Inner Joint | | 25 | 26 | 32 | 91 | 95 | |
| | 2004.10-2010.03 | 5MT | F | R | Hatchback FWD 192 B1.000 | Exhaust Emis:Euro 4;Chassis no. from:3145308/5080089,Exhaust Emis:Euro 3 | GCI17006 | Inner Joint | | 25 | 26 | 29.8 | 377 | 108 | |
| | 2004.10-2010.03 | MT | F | L/R | Hatchback FWD 192 B1.000 | | GCO82014 | Outer Joint | | 25 | 28 | 51 | 84.5 | 64 | O |
| | 2004.10-2010.03 | MT | F | L/R | Hatchback FWD 192 B1.000 | | GCO82025 | Outer Joint | | 25 | 26 | 51 | 84.5 | 64.5 | M |
| 1.9 (103 kw) | 2002.11-2010.03 | 5MT | F | L | Hatchback FWD 192 A5.000 | Chassis no. to:3145308/5080089 | GDS17150 | Drive Shaft | | 25 | 25 | 51 | 84.5 | 615 | |
| | 2002.11-2010.03 | 5MT | F | R | Hatchback FWD 192 A5.000 | Chassis no. to:3145308/5080089 | GDS82008 | Drive Shaft | | 25 | 25 | 51 | 84.5 | 931.5 | |
| | 2002.11-2010.03 | 5MT | F | R | Hatchback FWD 192 A5.000 | | GDS82011 | Drive Shaft | | 25 | | 51 | 84.5 | 521 | |
| | 2002.11-2010.03 | 5MT | F | L | Hatchback FWD 192 A5.000 | | GCI17005 | Inner Joint | | 25 | 26 | 32 | 91 | 95 | |
| | 2002.11-2010.03 | 5MT | F | R | Hatchback FWD 192 A5.000 | | GCI17006 | Inner Joint | | 25 | 26 | 29.8 | 377 | 108 | |
| | 2002.11-2010.03 | MT | F | L/R | Hatchback FWD 192 A5.000 | Date to:2005.12 | GCO82014 | Outer Joint | | 25 | 28 | 51 | 84.5 | 64 | O |
| | 2002.11-2010.03 | MT | F | L/R | Hatchback FWD 192 A5.000 | Date to:2005.12 | GCO82025 | Outer Joint | | 25 | 26 | 51 | 84.5 | 64.5 | M |
| 1.9 (110 kw) | 2004.09-2010.03 | 6MT | F | L | Hatchback FWD 937 A5.000 | | GDS17150 | Drive Shaft | | 25 | 25 | 51 | 84.5 | 615 | |
| | 2004.09-2010.03 | 6MT | F | R | Hatchback FWD 937 A5.000 | | GDS82008 | Drive Shaft | | 25 | 25 | 51 | 84.5 | 931.5 | |
| | 2004.09-2010.03 | 6MT | F | L | Hatchback FWD 937 A5.000 | | GCI17005 | Inner Joint | | 25 | 26 | 32 | 91 | 95 | |
| | 2004.09-2010.03 | 6MT | F | R | Hatchback FWD 937 A5.000 | | GCI17006 | Inner Joint | | 25 | 26 | 29.8 | 377 | 108 | |
| | 2004.09-2010.03 | MT | F | L/R | Hatchback FWD 937 A5.000 | | GCO82025 | Outer Joint | | 25 | 26 | 51 | 84.5 | 64.5 | M |
| 1.9 (125 kw) | 2008.06-2010.03 | 6MT | F | L | Hatchback FWD 937 A6.000 | | GDS17150 | Drive Shaft | | 25 | 25 | 51 | 84.5 | 615 | |
| | 2008.06-2010.03 | 6MT | F | R | Hatchback FWD 937 A6.000 | | GDS82008 | Drive Shaft | | 25 | 25 | 51 | 84.5 | 931.5 | |
| | 2008.06-2010.03 | 6MT | F | L | Hatchback FWD 937 A6.000 | | GCI17005 | Inner Joint | | 25 | 26 | 32 | 91 | 95 | |
| | 2008.06-2010.03 | 6MT | F | R | Hatchback FWD 937 A6.000 | | GCI17006 | Inner Joint | | 25 | 26 | 29.8 | 377 | 108 | |
| | 2008.06-2010.03 | MT | F | L/R | Hatchback FWD 937 A6.000 | Date from:2009.01 | GCO82025 | Outer Joint | | 25 | 26 | 51 | 84.5 | 64.5 | M |
| 2.0 (110 kw) | 2001.01-2010.03 | MT | F | L/R | Hatchback FWD AR 32310 | | GCO17042 | Outer Joint | | 25 | 25 | 51 | 85 | 58 | O |
| | 2001.01-2010.03 | MT | F | L/R | Hatchback FWD AR 32310 | | GCI18070 | Inner Joint | | | 25 | | | 32 | |
| | 2001.01-2010.03 | MT | F | L/R | Hatchback FWD AR 32310 | | GCI82011 | Inner Joint | | | 25 | | | 32 | |
| | 2001.01-2010.03 | SAT/5MT | F | L/R | Hatchback FWD AR 32310 | | GDS82009 | Drive Shaft | | 25 | | 51 | 85 | 494 | |
| | 2001.01-2010.03 | | F | L/R | Hatchback FWD AR 32310 | | GCI82005 | Inner Joint | | | 25 | | | 32 | |
| | 2001.01-2010.03 | | F | | Hatchback FWD AR 32310 | | GCI82006 | Inner Joint | | | 25 | | | 32 | |
| 3.2 (184 kw) | 2003.02-2010.03 | MT | F | L/R | Hatchback FWD 932 A.000 | | GCI48002 | Inner Joint | | | 28 | | | 32 | |
| **155** | | | | | | | | | | | | | | | |
| 1.6 (88 kw) | 1996.05-1997.12 | AT/MT | F | L/R | Saloon FWD AR67601 | | GCI18070 | Inner Joint | | | 25 | | | 32 | |
| | 1996.05-1997.12 | MT | F | L/R | Saloon FWD AR67601 | | GCO17004 | Outer Joint | | 25 | 25 | 52 | 85 | 58 | I |
| | 1996.05-1997.12 | MT | F | L/R | Saloon FWD AR67601 | Chassis no. to:166649 | GCO82004 | Outer Joint | 44T | 25 | 25 | 52 | 85 | 58 | I |
| | 1996.05-1997.12 | MT | F | L/R | Saloon FWD AR67601 | | GCO82006 | Outer Joint | 44T | 25 | 25 | 52 | 85 | 58 | O |
| | 1996.05-1997.12 | | F | | Saloon FWD AR67601 | | GCI82005 | Inner Joint | | | 25 | | | 32 | |
| 1.7 (85 kw) | 1993.04-1996.03 | AT/MT | F | L/R | Saloon FWD AR67105 | | GCO82004 | Outer Joint | 44T | 25 | 25 | 52 | 85 | 58 | I |
| | 1993.04-1996.03 | MT | F | L/R | Saloon FWD AR67105 | Date to:1995.12 | GCI48004 | Inner Joint | | | 25 | | | 32 | |
| | 1993.04-1996.03 | | F | | Saloon FWD AR67105 | | GCI82005 | Inner Joint | | | 25 | | | 32 | |
| 1.8 (77 kw) | 1992.02-1997.12 | AT/MT | F | L/R | Saloon FWD AR67402 | | GCO82004 | Outer Joint | 44T | 25 | 25 | 52 | 85 | 58 | I |
| | 1992.02-1997.12 | AT/MT | F | L/R | Saloon FWD AR67402 | | GCI48004 | Inner Joint | | | 25 | | | 32 | |
| | 1992.02-1997.12 | | F | | Saloon FWD AR67402 | | GCI82005 | Inner Joint | | | 25 | | | 32 | |
| | 1992.02-1997.12 | | F | | Saloon FWD AR67402 | | GCI82006 | Inner Joint | | | 25 | | | 32 | |
| 1.8 (93 kw) | 1992.03-1996.12 | MT | F | L/R | Saloon FWD AR67102 | Date to:1995.12 | GCO82004 | Outer Joint | 44T | 25 | 25 | 52 | 85 | 58 | I |
| | 1992.03-1996.12 | MT | F | L/R | Saloon FWD AR67102 | Date to:1995.12 | GCI48004 | Inner Joint | | | 25 | | | 32 | |
| | 1992.03-1996.12 | | F | | Saloon FWD AR67102 | | GCI82006 | Inner Joint | | | 25 | | | 32 | |
| 1.8 (103 kw) | 1996.05-1997.12 | MT | F | L/R | Saloon FWD AR67106 | | GCO82004 | Outer Joint | 44T | 25 | 25 | 52 | 85 | 58 | I |
| | 1996.05-1997.12 | | F | | Saloon FWD AR67106 | | GCI82005 | Inner Joint | | | 25 | | | 32 | |
| 1.9 (66 kw) | 1993.04-1997.12 | MT | F | L/R | Saloon FWD AR33601/AR67501 | Date to:1995.12 | GCO82004 | Outer Joint | 44T | 25 | 25 | 52 | 85 | 58 | I |
| | 1993.04-1997.12 | MT | F | L/R | Saloon FWD AR33601/AR67501 | | GCO82006 | Outer Joint | 44T | 25 | 25 | 52 | 85 | 58 | O |
| | 1993.04-1997.12 | MT | F | L/R | Saloon FWD AR33601/AR67501 | Date to:1995.12 | GCI48004 | Inner Joint | | | 25 | | | 32 | |
| | 1993.04-1997.12 | | F | | Saloon FWD AR33601/AR67501 | | GCI82005 | Inner Joint | | | 25 | | | 32 | |
| 2.0 (110 kw) | 1995.03-1997.12 | MT | F | L/R | Saloon FWD AR67204 | Date to:1995.12 | GCO82004 | Outer Joint | 44T | 25 | 25 | 52 | 85 | 58 | I |
| | 1995.03-1997.12 | MT | F | L/R | Saloon FWD AR67204 | Date to:1995.12 | GCI48004 | Inner Joint | | | 25 | | | 32 | |
| | 1995.03-1997.12 | | F | L/R | Saloon FWD AR67204 | | GCO82006 | Outer Joint | 44T | 25 | 25 | 52 | 85 | 58 | O |
| | 1995.03-1997.12 | | F | | Saloon FWD AR67204 | | GCI82005 | Inner Joint | | | 25 | | | 32 | |
| | 1995.03-1997.12 | | F | | Saloon FWD AR67204 | | GCI82006 | Inner Joint | | | 25 | | | 32 | |
| 2.0 (137 kw) | 1992.01-1997.12 | MT | F | L/R | Saloon 4WD AR67203 | | GCO82009 | Outer Joint | 44T | 25 | 28 | 56 | 85 | 63.5 | O |
| | 1992.01-1997.12 | MT | F | L/R | Saloon 4WD AR67203 | | GCI48004 | Inner Joint | | | 25 | | | 32 | |

| | YEAR | TRANSM. | F/R | L/R | BODY STYLE & DRIVE TYPE & ENGINE | REMARKS | G-AP Ref. | PRODUCT | ABS | Technical Specifications A | B | C | H | L | P |
|---|---|---|---|---|---|---|---|---|---|---|---|---|---|---|---|
| **ALFA ROMEO** | | | | | | | | | | | | | | | |
| **155** | | | | | | | | | | | | | | | |
| 2.0 (137 kw) | 1992.01-1997.12 | | F | | Saloon 4WD AR67203 | | GCI82006 | Inner Joint | | | 25 | | | 32 | |
| 2.0 (140 kw) | 1992.03-1997.12 | MT | F | L/R | Saloon 4WD AR67203 | | GCO82009 | Outer Joint | 44T | 25 | 28 | 56 | 85 | 63.5 | O |
| | 1992.03-1997.12 | MT | F | L/R | Saloon 4WD AR67203 | | GCO82019 | Outer Joint | | 25 | 28 | 56 | 85 | 63.5 | O |
| | 1992.03-1997.12 | MT | F | L/R | Saloon 4WD AR67203 | | GCI48004 | Inner Joint | | | 25 | | | 32 | |
| 2.5 (92 kw) | 1993.04-1997.12 | MT | F | L/R | Saloon FWD VM07B/VM31B | Date to:1995.12 | GCO82009 | Outer Joint | 44T | 25 | 28 | 56 | 85 | 63.5 | O |
| | 1993.04-1997.12 | MT | F | L/R | Saloon FWD VM07B/VM31B | Date to:1995.12 | GCO82019 | Outer Joint | | 25 | 28 | 56 | 85 | 63.5 | O |
| 2.5 (120 kw) | 1992.09-1997.12 | MT | F | L/R | Saloon FWD AR67303 | | GCO82009 | Outer Joint | 44T | 25 | 28 | 56 | 85 | 63.5 | O |
| | 1992.09-1997.12 | MT | F | L/R | Saloon FWD AR67303 | | GCO82019 | Outer Joint | | 25 | 28 | 56 | 85 | 63.5 | O |
| | 1992.09-1997.12 | MT | F | L/R | Saloon FWD AR67303 | | GCI48004 | Inner Joint | | | 25 | | | 32 | |
| **156** | | | | | | | | | | | | | | | |
| 1.6 (82 kw) | 1997.09-2005.09 | 5MT | F | L/R | Saloon FWD AR32102 | | GDS17159 | Drive Shaft | | 25 | | 58.8 | 85 | 490 | |
| | 1997.09-2005.09 | | F | L/R | Saloon FWD AR32102 | | GCO17042 | Outer Joint | | 25 | 25 | 51 | 85 | 58 | O |
| | 1997.09-2005.09 | | F | L/R | Saloon FWD AR32102 | | GCO82017 | Outer Joint | | 25 | 25 | 58.8 | 85 | 58 | O |
| | 1997.09-2005.09 | | F | L/R | Saloon FWD AR32102 | | GCI82005 | Inner Joint | | | 25 | | | 32 | |
| | 1997.09-2005.09 | | F | L/R | Saloon FWD AR32102 | | GCI82011 | Inner Joint | | | 25 | | | 32 | |
| 1.6 (88 kw) | 1997.02-2005.09 | 4AT/5MT | F | L/R | Saloon FWD AR32102/AR32103/AR32104/AR67601 | | GDS17159 | Drive Shaft | | 25 | | 58.8 | 85 | 490 | |
| | 1997.02-2005.09 | MT | F | L/R | Saloon FWD AR32102/AR32103/AR32104/AR67601 | | GCO82017 | Outer Joint | | 25 | 25 | 58.8 | 85 | 58 | O |
| | 1997.02-2005.09 | MT | F | L/R | Saloon FWD AR32102/AR32103/AR32104/AR67601 | | GCI18070 | Inner Joint | | | 25 | | | 32 | |
| | 1997.02-2005.09 | | F | L/R | Saloon FWD AR32102/AR32103/AR32104/AR67601 | | GCO17042 | Outer Joint | | 25 | 25 | 51 | 85 | 58 | O |
| | 1997.02-2005.09 | | F | L/R | Saloon FWD AR32102/AR32103/AR32104/AR67601 | | GCI82005 | Inner Joint | | | 25 | | | 32 | |
| | 1997.02-2005.09 | | F | L/R | Saloon FWD AR32102/AR32103/AR32104/AR67601 | | GCI82011 | Inner Joint | | | 25 | | | 32 | |
| | 1997.02-2005.09 | | F | | Saloon FWD AR32102/AR32103/AR32104/AR67601 | | GCI82006 | Inner Joint | | | 25 | | | 32 | |
| | 1997.09-2006.05 | 4AT/5MT | F | L/R | Estate FWD AR32104/AR67601 | | GDS17159 | Drive Shaft | | 25 | | 58.8 | 85 | 490 | |
| | 1997.09-2006.05 | 4AT/5MT | F | L/R | Estate FWD AR32104/AR67601 | | GCO82017 | Outer Joint | | 25 | 25 | 58.8 | 85 | 58 | O |
| | 1997.09-2006.05 | MT | F | L/R | Estate FWD AR32104/AR67601 | Date from:2003.01;Date to:2005.12 | GCI18070 | Inner Joint | | | 25 | | | 32 | |
| | 1997.09-2006.05 | | F | L/R | Estate FWD AR32104/AR67601 | | GCO17042 | Outer Joint | | 25 | 25 | 51 | 85 | 58 | O |
| | 1997.09-2006.05 | | F | L/R | Estate FWD AR32104/AR67601 | | GCI82005 | Inner Joint | | | 25 | | | 32 | |
| | 1997.09-2006.05 | | F | L/R | Estate FWD AR32104/AR67601 | | GCI82011 | Inner Joint | | | 25 | | | 32 | |
| | 1997.09-2006.05 | | F | | Estate FWD AR32104/AR67601 | | GCI82006 | Inner Joint | | | 25 | | | 32 | |
| 1.8 (103 kw) | 1997.02-2005.09 | 4AT/5MT | F | L/R | Saloon FWD AR32205 | | GDS17159 | Drive Shaft | | 25 | | 58.8 | 85 | 490 | |
| | 1997.02-2005.09 | 4AT/5MT | F | L/R | Saloon FWD AR32205 | | GCO82017 | Outer Joint | | 25 | 25 | 58.8 | 85 | 58 | O |
| | 1997.02-2005.09 | MT | F | L/R | Saloon FWD AR32205 | | GCI18070 | Inner Joint | | | 25 | | | 32 | |
| | 1997.02-2005.09 | | F | L/R | Saloon FWD AR32205 | | GCO17042 | Outer Joint | | 25 | 25 | 51 | 85 | 58 | O |
| | 1997.02-2005.09 | | F | L/R | Saloon FWD AR32205 | | GCI82005 | Inner Joint | | | 25 | | | 32 | |
| | 1997.02-2005.09 | | F | L/R | Saloon FWD AR32205 | | GCI82011 | Inner Joint | | | 25 | | | 32 | |
| | 1997.02-2005.09 | | F | | Saloon FWD AR32205 | | GCI82006 | Inner Joint | | | 25 | | | 32 | |
| | 1997.02-2006.05 | 4AT/5MT | F | L/R | Estate FWD AR32205 | | GDS17159 | Drive Shaft | | 25 | | 58.8 | 85 | 490 | |
| | 1997.02-2006.05 | 4AT/5MT | F | L/R | Estate FWD AR32205 | | GCO82017 | Outer Joint | | 25 | 25 | 58.8 | 85 | 58 | O |
| | 1997.02-2006.05 | MT | F | L/R | Estate FWD AR32205 | Date to:2005.12 | GCI18070 | Inner Joint | | | 25 | | | 32 | |
| | 1997.02-2006.05 | | F | L/R | Estate FWD AR32205 | | GCO17042 | Outer Joint | | 25 | 25 | 51 | 85 | 58 | O |
| | 1997.02-2006.05 | | F | L/R | Estate FWD AR32205 | | GCI82005 | Inner Joint | | | 25 | | | 32 | |
| | 1997.02-2006.05 | | F | L/R | Estate FWD AR32205 | | GCI82011 | Inner Joint | | | 25 | | | 32 | |
| | 1997.02-2006.05 | | F | | Estate FWD AR32205 | | GCI82006 | Inner Joint | | | 25 | | | 32 | |
| 1.8 (106 kw) | 1997.02-2005.02 | 5MT | F | L/R | Estate FWD AR32201 | | GDS17159 | Drive Shaft | | 25 | | 58.8 | 85 | 490 | |
| | 1997.02-2005.02 | MT | F | L/R | Estate FWD AR32201 | | GCO82017 | Outer Joint | | 25 | 25 | 58.8 | 85 | 58 | O |
| | 1997.02-2005.02 | MT | F | L/R | Estate FWD AR32201 | | GCI48004 | Inner Joint | | | 25 | | | 32 | |
| | 1997.02-2005.02 | | F | L/R | Estate FWD AR32201 | | GCO17042 | Outer Joint | | 25 | 25 | 51 | 85 | 58 | O |
| | 1997.02-2005.02 | | F | L/R | Estate FWD AR32201 | | GCI82005 | Inner Joint | | | 25 | | | 32 | |
| | 1997.02-2005.02 | | F | L/R | Estate FWD AR32201 | | GCI82011 | Inner Joint | | | 25 | | | 32 | |
| | 1997.02-2005.02 | | F | | Estate FWD AR32201 | | GCI82006 | Inner Joint | | | 25 | | | 32 | |
| | 1997.09-2000.10 | 5MT | F | L/R | Saloon FWD AR32201 | | GDS17159 | Drive Shaft | | 25 | | 58.8 | 85 | 490 | |
| | 1997.09-2000.10 | MT | F | L/R | Saloon FWD AR32201 | | GCO82017 | Outer Joint | | 25 | 25 | 58.8 | 85 | 58 | O |
| | 1997.09-2000.10 | MT | F | L/R | Saloon FWD AR32201 | | GCI18070 | Inner Joint | | | 25 | | | 32 | |
| | 1997.09-2000.10 | | F | L/R | Saloon FWD AR32201 | | GCO17042 | Outer Joint | | 25 | 25 | 51 | 85 | 58 | O |
| | 1997.09-2000.10 | | F | L/R | Saloon FWD AR32201 | | GCI82005 | Inner Joint | | | 25 | | | 32 | |
| | 1997.09-2000.10 | | F | L/R | Saloon FWD AR32201 | | GCI82011 | Inner Joint | | | 25 | | | 32 | |
| | 1997.09-2000.10 | | F | | Saloon FWD AR32201 | | GCI82006 | Inner Joint | | | 25 | | | 32 | |
| 1.9 (77 kw) | 1997.02-2002.09 | 5MT | F | L | Estate FWD AR32302 | | GDS82001 | Drive Shaft | | 25 | | 59 | 85 | 520 | |
| | 1997.02-2002.09 | 5MT | F | R | Estate FWD AR32302 | | GDS82002 | Drive Shaft | | 25 | | 59 | 85 | 521 | |
| | 1997.02-2002.09 | 5MT | F | L/R | Estate FWD AR32302 | | GCO82012 | Outer Joint | | 25 | 28 | 59 | 85 | 63 | O |
| | 1997.02-2002.09 | 5MT | F | L | Estate FWD AR32302 | | GCI82007 | Inner Joint | | | 34 | | | 47.5 | |
| | 1997.02-2002.09 | 5MT | F | R | Estate FWD AR32302 | | GCI82003 | Inner Joint | | | 28 | | | 32 | |
| | 1997.02-2002.09 | 5MT | F | R | Estate FWD AR32302 | | GCI83001 | Inner Joint | | | 28 | | | 32 | |
| | 1997.09-2000.10 | 5MT | F | L | Saloon FWD AR32302 | | GDS82001 | Drive Shaft | | 25 | | 59 | 85 | 520 | |
| | 1997.09-2000.10 | 5MT | F | R | Saloon FWD AR32302 | | GDS82002 | Drive Shaft | | 25 | | 59 | 85 | 521 | |

| | YEAR | TRANSM. | F/R | L/R | BODY STYLE & DRIVE TYPE & ENGINE | REMARKS | G-AP Ref. | PRODUCT | ABS | Technical Specifications A | B | C | H | L | P |
|---|---|---|---|---|---|---|---|---|---|---|---|---|---|---|---|
| **ALFA ROMEO 156** | | | | | | | | | | | | | | | |
| 1.9 (77 kw) | 1997.09-2000.10 | 5MT | F | L/R | Saloon FWD AR32302 | | GCO82012 | Outer Joint | | 25 | 28 | 59 | 85 | 63 | O |
| | 1997.09-2000.10 | 5MT | F | L | Saloon FWD AR32302 | | GCI82007 | Inner Joint | | | 34 | | | 47.5 | |
| | 1997.09-2000.10 | 5MT | F | R | Saloon FWD AR32302 | | GCI82003 | Inner Joint | | | 28 | | | 32 | |
| | 1997.09-2000.10 | 5MT | F | R | Saloon FWD AR32302 | | GCI83001 | Inner Joint | | | 28 | | | 32 | |
| 1.9 (81 kw) | 1997.02-2002.09 | 4AT/5MT | F | L | Estate FWD AR37101 | | GDS82001 | Drive Shaft | | 25 | | 59 | 85 | 520 | |
| | 1997.02-2002.09 | 4AT/5MT | F | R | Estate FWD AR37101 | | GDS82002 | Drive Shaft | | 25 | | 59 | 85 | 521 | |
| | 1997.02-2002.09 | 4AT/5MT | F | L/R | Estate FWD AR37101 | | GCO82012 | Outer Joint | | 25 | 28 | 59 | 85 | 63 | O |
| | 1997.02-2002.09 | 4AT/5MT | F | L | Estate FWD AR37101 | | GCI82007 | Inner Joint | | | 34 | | | 47.5 | |
| | 1997.02-2002.09 | 4AT/5MT | F | R | Estate FWD AR37101 | | GCI82003 | Inner Joint | | | 28 | | | 32 | |
| | 1997.02-2002.09 | 4AT/5MT | F | R | Estate FWD AR37101 | | GCI83001 | Inner Joint | | | 28 | | | 32 | |
| | 1997.02-2002.09 | 4AT/5MT | F | L | Saloon FWD AR37101 | | GDS82001 | Drive Shaft | | 25 | | 59 | 85 | 520 | |
| | 1997.02-2002.09 | 4AT/5MT | F | R | Saloon FWD AR37101 | | GDS82002 | Drive Shaft | | 25 | | 59 | 85 | 521 | |
| | 1997.02-2002.09 | 4AT/5MT | F | L/R | Saloon FWD AR37101 | | GCO82012 | Outer Joint | | 25 | 28 | 59 | 85 | 63 | O |
| | 1997.02-2002.09 | 4AT/5MT | F | L | Saloon FWD AR37101 | | GCI82007 | Inner Joint | | | 34 | | | 47.5 | |
| | 1997.02-2002.09 | 4AT/5MT | F | R | Saloon FWD AR37101 | | GCI82003 | Inner Joint | | | 28 | | | 32 | |
| | 1997.02-2002.09 | 4AT/5MT | F | R | Saloon FWD AR37101 | | GCI83001 | Inner Joint | | | 28 | | | 32 | |
| 1.9 (85 kw) | 2001.05-2005.09 | 5MT | F | L | Saloon FWD 937A2000 | VET no. from:0525925;Inner teeth of tranm.side:26 | GDS17107 | Drive Shaft | | 25 | 25 | 59 | 84 | 615 | |
| | 2001.05-2005.09 | 5MT | F | L | Saloon FWD 937A2000 | Trans. side with housing;Inner teeth of tranm.side:34 | GDS82001 | Drive Shaft | | 25 | | 59 | 85 | 520 | |
| | 2001.05-2005.09 | 5MT | F | L | Saloon FWD 937A2000 | VET no. from:0525924;Trans. side without housing | GDS82003 | Drive Shaft | | 25 | 43 | 59 | 84 | 502 | |
| | 2001.05-2005.09 | 5MT | F | R | Saloon FWD 937A2000 | Trans. side with housing | GDS82002 | Drive Shaft | | 25 | | 59 | 85 | 521 | |
| | 2001.05-2005.09 | 5MT | F | R | Saloon FWD 937A2000 | VET no. from:0525924;Trans. side without housing | GDS82004 | Drive Shaft | | 25 | 43 | 59 | 84 | 521 | |
| | 2001.05-2005.09 | 5MT | F | L/R | Saloon FWD 937A2000 | VET no. from:0525924 | GCO17009 | Outer Joint | | 25 | 26 | 59 | 84 | 63 | M |
| | 2001.05-2005.09 | 5MT | F | L/R | Saloon FWD 937A2000 | | GCO82012 | Outer Joint | | 25 | 28 | 59 | 85 | 63 | O |
| | 2001.05-2005.09 | 5MT | F | L | Saloon FWD 937A2000 | VET no. from:0525925 | GCI17005 | Inner Joint | | 25 | 26 | 32 | 91 | 95 | |
| | 2001.05-2005.09 | 5MT | F | L | Saloon FWD 937A2000 | | GCI82007 | Inner Joint | | | 34 | | | 47.5 | |
| | 2001.05-2005.09 | 5MT | F | R | Saloon FWD 937A2000 | | GCI83001 | Inner Joint | | | 28 | | | 32 | |
| | 2001.05-2006.05 | 5MT | F | L | Estate FWD 937A2000 | Trans. side with housing | GDS82001 | Drive Shaft | | 25 | | 59 | 85 | 520 | |
| | 2001.05-2006.05 | 5MT | F | L | Estate FWD 937A2000 | VET no. from:0525924;Trans. side without housing | GDS82003 | Drive Shaft | | 25 | 43 | 59 | 84 | 502 | |
| | 2001.05-2006.05 | 5MT | F | R | Estate FWD 937A2000 | Trans. side with housing | GDS82002 | Drive Shaft | | 25 | | 59 | 85 | 521 | |
| | 2001.05-2006.05 | 5MT | F | R | Estate FWD 937A2000 | VET no. from:0525924;Trans. side without housing | GDS82004 | Drive Shaft | | 25 | 43 | 59 | 84 | 521 | |
| | 2001.05-2006.05 | 5MT | F | L/R | Estate FWD 937A2000 | | GCO82012 | Outer Joint | | 25 | 28 | 59 | 85 | 63 | O |
| | 2001.05-2006.05 | 5MT | F | L | Estate FWD 937A2000 | | GCI82007 | Inner Joint | | | 34 | | | 47.5 | |
| | 2001.05-2006.05 | 5MT | F | R | Estate FWD 937A2000 | | GCI83001 | Inner Joint | | | 28 | | | 32 | |
| | 2001.05-2006.05 | MT | F | L/R | Estate FWD 937A2000 | VET no. from:0525924 | GCO17009 | Outer Joint | | 25 | 26 | 59 | 84 | 63 | M |
| 1.9 (93 kw) | 2003.11-2005.09 | 5MT | F | L | Saloon FWD 937A4000 | | GDS82003 | Drive Shaft | | 25 | 43 | 59 | 84 | 502 | |
| | 2003.11-2005.09 | 5MT | F | R | Saloon FWD 937A4000 | | GDS82004 | Drive Shaft | | 25 | 43 | 59 | 84 | 521 | |
| | 2003.11-2005.09 | MT | F | L | Saloon FWD 937A4000 | | GDS17107 | Drive Shaft | | 25 | 25 | 59 | 84 | 615 | |
| | 2003.11-2005.09 | MT | F | L/R | Saloon FWD 937A4000 | | GCO17009 | Outer Joint | | 25 | 26 | 59 | 84 | 63 | M |
| | 2003.11-2005.09 | MT | F | L | Saloon FWD 937A4000 | | GCI17005 | Inner Joint | | 25 | 26 | 32 | 91 | 95 | |
| | 2003.11-2005.09 | MT | F | R | Saloon FWD 937A4000 | | GCI17006 | Inner Joint | | 25 | 26 | 29.8 | 377 | 108 | |
| | 2003.11-2006.05 | 5MT | F | L | Estate FWD 937A4000 | | GDS82003 | Drive Shaft | | 25 | 43 | 59 | 84 | 502 | |
| | 2003.11-2006.05 | 5MT | F | R | Estate FWD 937A4000 | | GDS82004 | Drive Shaft | | 25 | 43 | 59 | 84 | 521 | |
| | 2003.11-2006.05 | MT | F | L | Estate FWD 937A4000 | | GDS17107 | Drive Shaft | | 25 | 25 | 59 | 84 | 615 | |
| | 2003.11-2006.05 | MT | F | L/R | Estate FWD 937A4000 | | GCO17009 | Outer Joint | | 25 | 26 | 59 | 84 | 63 | M |
| | 2003.11-2006.05 | MT | F | L | Estate FWD 937A4000 | | GCI17005 | Inner Joint | | 25 | 26 | 32 | 91 | 95 | |
| | 2003.11-2006.05 | MT | F | R | Estate FWD 937A4000 | | GCI17006 | Inner Joint | | 25 | 26 | 29.8 | 377 | 108 | |
| 1.9 (100 kw) | 2002.11-2004.11 | 6MT | F | L | Estate FWD 192B1000 | VET no. from:0525924,Trans. side with housing | GDS17107 | Drive Shaft | | 25 | 25 | 59 | 84 | 615 | |
| | 2002.11-2004.11 | 6MT | F | L | Estate FWD 192B1000 | VET no. to:0525923 | GDS82001 | Drive Shaft | | 25 | | 59 | 85 | 520 | |
| | 2002.11-2004.11 | 6MT | F | L | Estate FWD 192B1000 | VET no. from:0525924,Trans. side without housing | GDS82003 | Drive Shaft | | 25 | 43 | 59 | 84 | 502 | |
| | 2002.11-2004.11 | 6MT | F | R | Estate FWD 192B1000 | VET no. to:0525923 | GDS82002 | Drive Shaft | | 25 | | 59 | 85 | 521 | |
| | 2002.11-2004.11 | 6MT | F | R | Estate FWD 192B1000 | VET no. from:0525924,Trans. side without housing | GDS82004 | Drive Shaft | | 25 | 43 | 59 | 84 | 521 | |
| | 2002.11-2004.11 | 6MT | F | L/R | Estate FWD 192B1000 | VET no. from:0525924 | GCO17009 | Outer Joint | | 25 | 26 | 59 | 84 | 63 | M |
| | 2002.11-2004.11 | 6MT | F | L/R | Estate FWD 192B1000 | VET no. to:0525923 | GCO82012 | Outer Joint | | 25 | 28 | 59 | 85 | 63 | O |
| | 2002.11-2004.11 | 6MT | F | L | Estate FWD 192B1000 | VET no. from:0525924 | GCI17005 | Inner Joint | | 25 | 26 | 32 | 91 | 95 | |
| | 2002.11-2004.11 | 6MT | F | L | Estate FWD 192B1000 | VET no. to:0525923 | GCI82007 | Inner Joint | | | 34 | | | 47.5 | |
| | 2002.11-2004.11 | 6MT | F | R | Estate FWD 192B1000 | VET no. from:0525924 | GCI17006 | Inner Joint | | 25 | 26 | 29.8 | 377 | 108 | |
| | 2002.11-2004.11 | 6MT | F | R | Estate FWD 192B1000 | VET no. to:0525923 | GCI83001 | Inner Joint | | | 28 | | | 32 | |
| | 2002.11-2004.11 | MT | F | L | Saloon FWD 192B1000 | | GDS17107 | Drive Shaft | | 25 | 25 | 59 | 84 | 615 | |
| | 2002.11-2004.11 | MT | F | L | Saloon FWD 192B1000 | | GDS82003 | Drive Shaft | | 25 | 43 | 59 | 84 | 502 | |
| | 2002.11-2004.11 | MT | F | R | Saloon FWD 192B1000 | | GDS82004 | Drive Shaft | | 25 | 43 | 59 | 84 | 521 | |
| | 2002.11-2004.11 | MT | F | L/R | Saloon FWD 192B1000 | | GCO17009 | Outer Joint | | 25 | 26 | 59 | 84 | 63 | M |
| | 2002.11-2004.11 | MT | F | L | Saloon FWD 192B1000 | | GCI17005 | Inner Joint | | 25 | 26 | 32 | 91 | 95 | |
| | 2002.11-2004.11 | MT | F | R | Saloon FWD 192B1000 | | GCI17006 | Inner Joint | | 25 | 26 | 29.8 | 377 | 108 | |
| 1.9 (103 kw) | 2001.03-2006.05 | 6MT | F | L | Estate FWD 192A5000 | Date from:2003.05,Trans. side with housing | GDS17107 | Drive Shaft | | 25 | 25 | 59 | 84 | 615 | |
| | 2001.03-2006.05 | 6MT | F | L | Estate FWD 192A5000 | Date to:2003.04 | GDS82001 | Drive Shaft | | 25 | | 59 | 85 | 520 | |

| | YEAR | TRANSM. | F/R | L/R | BODY STYLE & DRIVE TYPE & ENGINE | REMARKS | G-AP Ref. | PRODUCT | ABS | Technical Specifications A | B | C | H | L | P |
|---|---|---|---|---|---|---|---|---|---|---|---|---|---|---|---|
| **ALFA ROMEO** | | | | | | | | | | | | | | | |
| **156** | | | | | | | | | | | | | | | |
| 1.9 (103 kw) | 2001.03-2006.05 | 6MT | F | L | Estate FWD 192A5000 | Date from:2003.05,Trans. side without housing | GDS82003 | Drive Shaft | | 25 | 43 | 59 | 84 | 502 | |
| | 2001.03-2006.05 | 6MT | F | R | Estate FWD 192A5000 | Date to:2003.04 | GDS82002 | Drive Shaft | | 25 | | 59 | 85 | 521 | |
| | 2001.03-2006.05 | 6MT | F | R | Estate FWD 192A5000 | Date from:2003.05,Trans. side without housing | GDS82004 | Drive Shaft | | 25 | 43 | 59 | 84 | 521 | |
| | 2001.03-2006.05 | 6MT | F | L/R | Estate FWD 192A5000 | Date from:2003.05 | GCO17009 | Outer Joint | | 25 | 26 | 59 | 84 | 63 | M |
| | 2001.03-2006.05 | 6MT | F | L/R | Estate FWD 192A5000 | Date to:2003.04 | GCO82012 | Outer Joint | | 25 | 28 | 59 | 85 | 63 | O |
| | 2001.03-2006.05 | 6MT | F | L | Estate FWD 192A5000 | Date from:2003.05 | GCI17005 | Inner Joint | | 25 | 26 | 32 | 91 | 95 | |
| | 2001.03-2006.05 | 6MT | F | L | Estate FWD 192A5000 | Date to:2003.04 | GCI82007 | Inner Joint | | | 34 | | | 47.5 | |
| | 2001.03-2006.05 | 6MT | F | R | Estate FWD 192A5000 | Date from:2003.05 | GCI17006 | Inner Joint | | 25 | 26 | 29.8 | 377 | 108 | |
| | 2001.03-2006.05 | 6MT | F | R | Estate FWD 192A5000 | Date to:2003.04 | GCI83001 | Inner Joint | | | 28 | | | 32 | |
| | 2002.11-2005.09 | 6MT | F | L | Saloon FWD 192A5000 | Date from:2003.05,Trans. side with housing | GDS17107 | Drive Shaft | | 25 | 25 | 59 | 84 | 615 | |
| | 2002.11-2005.09 | 6MT | F | L | Saloon FWD 192A5000 | Date to:2003.04 | GDS82001 | Drive Shaft | | 25 | | 59 | 85 | 520 | |
| | 2002.11-2005.09 | 6MT | F | L | Saloon FWD 192A5000 | Date from:2003.05,Trans. side without housing | GDS82003 | Drive Shaft | | 25 | 43 | 59 | 84 | 502 | |
| | 2002.11-2005.09 | 6MT | F | R | Saloon FWD 192A5000 | Date to:2003.04 | GDS82002 | Drive Shaft | | 25 | | 59 | 85 | 521 | |
| | 2002.11-2005.09 | 6MT | F | R | Saloon FWD 192A5000 | Date from:2003.05,Trans. side without housing | GDS82004 | Drive Shaft | | 25 | 43 | 59 | 84 | 521 | |
| | 2002.11-2005.09 | 6MT | F | L/R | Saloon FWD 192A5000 | Date from:2003.05 | GCO17009 | Outer Joint | | 25 | 26 | 59 | 84 | 63 | M |
| | 2002.11-2005.09 | 6MT | F | L/R | Saloon FWD 192A5000 | Date to:2003.04 | GCO82012 | Outer Joint | | 25 | 28 | 59 | 85 | 63 | O |
| | 2002.11-2005.09 | 6MT | F | L | Saloon FWD 192A5000 | Date from:2003.05 | GCI17005 | Inner Joint | | 25 | 26 | 32 | 91 | 95 | |
| | 2002.11-2005.09 | 6MT | F | L | Saloon FWD 192A5000 | Date to:2003.04 | GCI82007 | Inner Joint | | | 34 | | | 47.5 | |
| | 2002.11-2005.09 | 6MT | F | R | Saloon FWD 192A5000 | Date from:2003.05 | GCI17006 | Inner Joint | | 25 | 26 | 29.8 | 377 | 108 | |
| | 2002.11-2005.09 | 6MT | F | R | Saloon FWD 192A5000 | Date to:2003.04 | GCI83001 | Inner Joint | | | 28 | | | 32 | |
| 1.9 (110 kw) | 2001.03-2005.09 | 6MT | F | L | Saloon FWD 937A5000 | | GDS82003 | Drive Shaft | | 25 | 43 | 59 | 84 | 502 | |
| | 2001.03-2005.09 | 6MT | F | R | Saloon FWD 937A5000 | | GDS82004 | Drive Shaft | | 25 | 43 | 59 | 84 | 521 | |
| | 2001.03-2005.09 | MT | F | L | Saloon FWD 937A5000 | | GDS17107 | Drive Shaft | | 25 | 25 | 59 | 84 | 615 | |
| | 2001.03-2005.09 | MT | F | L/R | Saloon FWD 937A5000 | | GCO17009 | Outer Joint | | 25 | 26 | 59 | 84 | 63 | M |
| | 2001.03-2005.09 | MT | F | L | Saloon FWD 937A5000 | | GCI17005 | Inner Joint | | 25 | 26 | 32 | 91 | 95 | |
| | 2001.03-2005.09 | MT | F | R | Saloon FWD 937A5000 | | GCI17006 | Inner Joint | | 25 | 26 | 29.8 | 377 | 108 | |
| | 2004.07-2006.05 | 6MT | F | L | Estate 4WD 937A5000 | | GDS82003 | Drive Shaft | | 25 | 43 | 59 | 84 | 502 | |
| | 2004.07-2006.05 | 6MT | F | R | Estate 4WD 937A5000 | | GDS82004 | Drive Shaft | | 25 | 43 | 59 | 84 | 521 | |
| | 2004.07-2006.05 | MT | F | L | Estate 4WD 937A5000 | | GDS17107 | Drive Shaft | | 25 | 25 | 59 | 84 | 615 | |
| | 2004.07-2006.05 | MT | F | L/R | Estate 4WD 937A5000 | | GCO17009 | Outer Joint | | 25 | 26 | 59 | 84 | 63 | M |
| | 2004.07-2006.05 | MT | F | L | Estate 4WD 937A5000 | | GCI17005 | Inner Joint | | 25 | 26 | 32 | 91 | 95 | |
| | 2004.07-2006.05 | MT | F | R | Estate 4WD 937A5000 | | GCI17006 | Inner Joint | | 25 | 26 | 29.8 | 377 | 108 | |
| | 2004.07-2006.05 | 6MT | R | L/R | Estate 4WD 937A5000 | | GCI82005 | Inner Joint | | | 25 | | | 32 | |
| | 2004.07-2006.05 | 6MT | R | L/R | Estate 4WD 937A5000 | | GCI82011 | Inner Joint | | | 25 | | | 32 | |
| | 2005.03-2006.05 | 6MT | F | L | Estate FWD 937A5000 | | GDS82003 | Drive Shaft | | 25 | 43 | 59 | 84 | 502 | |
| | 2005.03-2006.05 | 6MT | F | R | Estate FWD 937A5000 | | GDS82004 | Drive Shaft | | 25 | 43 | 59 | 84 | 521 | |
| | 2005.03-2006.05 | MT | F | L | Estate FWD 937A5000 | | GDS17107 | Drive Shaft | | 25 | 25 | 59 | 84 | 615 | |
| | 2005.03-2006.05 | MT | F | L/R | Estate FWD 937A5000 | | GCO17009 | Outer Joint | | 25 | 26 | 59 | 84 | 63 | M |
| | 2005.03-2006.05 | MT | F | L | Estate FWD 937A5000 | | GCI17005 | Inner Joint | | 25 | 26 | 32 | 91 | 95 | |
| | 2005.03-2006.05 | MT | F | R | Estate FWD 937A5000 | | GCI17006 | Inner Joint | | 25 | 26 | 29.8 | 377 | 108 | |
| 2.0 (110 kw) | 2000.04-2002.06 | AT/MT | F | L/R | Saloon FWD AR32310 | | GCI18070 | Inner Joint | | | 25 | | | 32 | |
| | 2000.04-2002.06 | SAT/5MT | F | L/R | Saloon FWD AR32310 | | GDS17159 | Drive Shaft | | 25 | | 58.8 | 85 | 490 | |
| | 2000.04-2002.06 | SAT/5MT | F | L/R | Saloon FWD AR32310 | | GCO82017 | Outer Joint | | 25 | 25 | 58.8 | 85 | 58 | O |
| | 2000.04-2002.06 | | F | L/R | Saloon FWD AR32310 | | GCO17042 | Outer Joint | | 25 | 25 | 51 | 85 | 58 | O |
| | 2000.04-2002.06 | | F | L/R | Saloon FWD AR32310 | | GCI82005 | Inner Joint | | | 25 | | | 32 | |
| | 2000.04-2002.06 | | F | L/R | Saloon FWD AR32310 | | GCI82011 | Inner Joint | | | 25 | | | 32 | |
| | 2000.04-2002.06 | | F | | Saloon FWD AR32310 | | GCI82006 | Inner Joint | | | 25 | | | 32 | |
| | 2000.10-2002.03 | SAT/5MT | F | L/R | Estate FWD AR32310 | | GDS17159 | Drive Shaft | | 25 | | 58.8 | 85 | 490 | |
| | 2000.10-2002.03 | SAT/5MT | F | L/R | Estate FWD AR32310 | | GCO82017 | Outer Joint | | 25 | 25 | 58.8 | 85 | 58 | O |
| | 2000.10-2002.03 | | F | L/R | Estate FWD AR32310 | | GCO17042 | Outer Joint | | 25 | 25 | 51 | 85 | 58 | O |
| | 2000.10-2002.03 | | F | L/R | Estate FWD AR32310 | | GCI82005 | Inner Joint | | | 25 | | | 32 | |
| | 2000.10-2002.03 | | F | L/R | Estate FWD AR32310 | | GCI82011 | Inner Joint | | | 25 | | | 32 | |
| | 2000.10-2002.03 | | F | | Estate FWD AR32310 | | GCI82006 | Inner Joint | | | 25 | | | 32 | |
| 2.0 (114 kw) | 1997.02-2002.09 | 5MT | F | L/R | Estate FWD AR32301 | | GDS17159 | Drive Shaft | | 25 | | 58.8 | 85 | 490 | |
| | 1997.02-2002.09 | 5MT | F | L/R | Estate FWD AR32301 | | GCO82017 | Outer Joint | | 25 | 25 | 58.8 | 85 | 58 | O |
| | 1997.02-2002.09 | | F | L/R | Estate FWD AR32301 | | GCO17042 | Outer Joint | | 25 | 25 | 51 | 85 | 58 | O |
| | 1997.02-2002.09 | | F | L/R | Estate FWD AR32301 | | GCI82005 | Inner Joint | | | 25 | | | 32 | |
| | 1997.02-2002.09 | | F | L/R | Estate FWD AR32301 | | GCI82011 | Inner Joint | | | 25 | | | 32 | |
| | 1997.02-2002.09 | | F | | Estate FWD AR32301 | | GCI82006 | Inner Joint | | | 25 | | | 32 | |
| | 1997.09-2001.07 | AT/MT | F | L/R | Saloon FWD AR32301 | | GCI18070 | Inner Joint | | | 25 | | | 32 | |
| | 1997.09-2001.07 | MT | F | L/R | Saloon FWD AR32301 | Date to:2001.07 | GCO82017 | Outer Joint | | 25 | 25 | 58.8 | 85 | 58 | O |
| | 1997.09-2001.07 | SAT/5MT | F | L/R | Saloon FWD AR32301 | | GDS17159 | Drive Shaft | | 25 | | 58.8 | 85 | 490 | |
| | 1997.09-2001.07 | | F | L/R | Saloon FWD AR32301 | | GCO17042 | Outer Joint | | 25 | 25 | 51 | 85 | 58 | O |
| | 1997.09-2001.07 | | F | L/R | Saloon FWD AR32301 | | GCI82005 | Inner Joint | | | 25 | | | 32 | |
| | 1997.09-2001.07 | | F | L/R | Saloon FWD AR32301 | | GCI82011 | Inner Joint | | | 25 | | | 32 | |

| | YEAR | TRANSM. | F/R | L/R | BODY STYLE & DRIVE TYPE & ENGINE | REMARKS | G-AP Ref. | PRODUCT | ABS | Technical Specifications A | B | C | H | L | P |
|---|---|---|---|---|---|---|---|---|---|---|---|---|---|---|---|
| **ALFA ROMEO** | | | | | | | | | | | | | | | |
| **156** | | | | | | | | | | | | | | | |
| 2.0 (114 kw) | 1997.09-2001.07 | | F | | Saloon FWD AR32301 | | GCI82006 | Inner Joint | | | 25 | | | 32 | |
| 2.0 (119 kw) | 2001.03-2005.09 | SAT/5MT | F | L/R | Saloon FWD 932A2000 | | GDS17159 | Drive Shaft | | 25 | | 58.8 | 85 | 490 | |
| | 2001.03-2005.09 | SAT/5MT | F | L/R | Saloon FWD 932A2000 | | GCO82017 | Outer Joint | | 25 | 25 | 58.8 | 85 | 58 | O |
| | 2001.03-2005.09 | | F | L/R | Saloon FWD 932A2000 | | GCO17042 | Outer Joint | | 25 | 25 | 51 | 85 | 58 | O |
| | 2002.03-2006.05 | AT/MT | F | L/R | Estate FWD 932A2000 | Date from:2003.01 | GCI18070 | Inner Joint | | | 25 | | | 32 | |
| | 2002.03-2006.05 | SAT/5MT | F | L/R | Estate FWD 932A2000 | | GDS17159 | Drive Shaft | | 25 | | 58.8 | 85 | 490 | |
| | 2002.03-2006.05 | SAT/5MT | F | L/R | Estate FWD 932A2000 | | GCO82017 | Outer Joint | | 25 | 25 | 58.8 | 85 | 58 | O |
| | 2002.03-2006.05 | | F | L/R | Estate FWD 932A2000 | | GCO17042 | Outer Joint | | 25 | 25 | 51 | 85 | 58 | O |
| | 2002.03-2006.05 | | F | | Estate FWD 932A2000 | | GCI82006 | Inner Joint | | | 25 | | | 32 | |
| 2.0 (122 kw) | 2002.03-2005.09 | AT/MT | F | L/R | Saloon FWD 937A1000 | | GCO17042 | Outer Joint | | 25 | 25 | 51 | 85 | 58 | O |
| | 2002.03-2005.09 | AT/MT | F | L/R | Saloon FWD 937A1000 | | GCI18070 | Inner Joint | | | 25 | | | 32 | |
| | 2002.03-2005.09 | SAT/5MT | F | L/R | Saloon FWD 937A1000 | | GDS17159 | Drive Shaft | | 25 | | 58.8 | 85 | 490 | |
| | 2002.03-2005.09 | SAT/5MT | F | L/R | Saloon FWD 937A1000 | | GCO82017 | Outer Joint | | 25 | 25 | 58.8 | 85 | 58 | O |
| | 2002.03-2005.09 | | F | | Saloon FWD 937A1000 | | GCI82005 | Inner Joint | | | 25 | | | 32 | |
| | 2002.03-2005.09 | | F | | Saloon FWD 937A1000 | | GCI82006 | Inner Joint | | | 25 | | | 32 | |
| | 2002.03-2006.05 | 4AT/5MT | F | L/R | Estate FWD 937A1000 | | GDS17159 | Drive Shaft | | 25 | | 58.8 | 85 | 490 | |
| | 2002.03-2006.05 | 4AT/5MT | F | L/R | Estate FWD 937A1000 | | GCO82017 | Outer Joint | | 25 | 25 | 58.8 | 85 | 58 | O |
| | 2002.03-2006.05 | AT/MT | F | L/R | Estate FWD 937A1000 | | GCO17042 | Outer Joint | | 25 | 25 | 51 | 85 | 58 | O |
| | 2002.03-2006.05 | AT/MT | F | L/R | Estate FWD 937A1000 | | GCI18070 | Inner Joint | | | 25 | | | 32 | |
| | 2002.03-2006.05 | | F | | Estate FWD 937A1000 | | GCI82005 | Inner Joint | | | 25 | | | 32 | |
| | 2002.03-2006.05 | | F | | Estate FWD 937A1000 | | GCI82006 | Inner Joint | | | 25 | | | 32 | |
| 2.4 (100 kw) | 1997.02-2002.09 | MT | F | L/R | Estate FWD AR32501 | Date to:2002.09 | GCO82012 | Outer Joint | | 25 | 28 | 59 | 85 | 63 | O |
| | 1997.09-2000.10 | MT | F | L/R | Saloon FWD AR32501 | Date to:2000.10 | GCO82012 | Outer Joint | | 25 | 28 | 59 | 85 | 63 | O |
| 2.4 (103 kw) | 2000.04-2002.09 | MT | F | L/R | Saloon FWD 839A6000 | | GCO82012 | Outer Joint | | 25 | 28 | 59 | 85 | 63 | O |
| | 2000.10-2006.05 | MT | F | L/R | Estate FWD 839A6000 | | GCO82012 | Outer Joint | | 25 | 28 | 59 | 85 | 63 | O |
| 2.4 (110 kw) | 2001.03-2005.09 | 5MT | F | L/R | Saloon FWD 841C000 | | GCO82012 | Outer Joint | | 25 | 28 | 59 | 85 | 63 | O |
| | 2001.03-2005.09 | MT | F | L/R | Saloon FWD 841C000 | Date from:2003.01 | GCO17009 | Outer Joint | | 25 | 26 | 59 | 84 | 63 | M |
| | 2001.03-2006.05 | 5MT | F | L/R | Estate FWD 841C000 | | GCO82012 | Outer Joint | | 25 | 28 | 59 | 85 | 63 | O |
| | 2001.03-2006.05 | MT | F | L/R | Estate FWD 841C000 | | GCO17009 | Outer Joint | | 25 | 26 | 59 | 84 | 63 | M |
| 2.4 (120 kw) | 2001.03-2005.09 | 6MT | F | L | Saloon FWD 841M000 | | GDS17117 | Drive Shaft | | 25 | 27 | 59 | 84 | 550 | |
| | 2001.03-2005.09 | 6MT | F | R | Saloon FWD 841M000 | | GDS17110 | Drive Shaft | | 25 | 27 | 59 | 84 | 1000 | |
| | 2001.03-2005.09 | 6MT | F | L | Saloon FWD 841M000 | | GCI21016 | Inner Joint | | 27 | 26 | 35 | 78.5 | 112 | |
| | 2001.03-2005.09 | MT | F | L/R | Saloon FWD 841M000 | | GCO17009 | Outer Joint | | 25 | 26 | 59 | 84 | 63 | M |
| | 2001.03-2006.05 | 6MT | F | L | Estate FWD 841M000 | | GDS17117 | Drive Shaft | | 25 | 27 | 59 | 84 | 550 | |
| | 2001.03-2006.05 | 6MT | F | R | Estate FWD 841M000 | | GDS17110 | Drive Shaft | | 25 | 27 | 59 | 84 | 1000 | |
| | 2001.03-2006.05 | 6MT | F | L | Estate FWD 841M000 | | GCI21016 | Inner Joint | | 27 | 26 | 35 | 78.5 | 112 | |
| | 2001.03-2006.05 | MT | F | L/R | Estate FWD 841M000 | | GCO17009 | Outer Joint | | 25 | 26 | 59 | 84 | 63 | M |
| 2.4 (129 kw) | 2001.03-2005.09 | 6MT | F | L | Saloon FWD 841G000 | | GDS17117 | Drive Shaft | | 25 | 27 | 59 | 84 | 550 | |
| | 2001.03-2005.09 | 6MT | F | R | Saloon FWD 841G000 | | GDS17110 | Drive Shaft | | 25 | 27 | 59 | 84 | 1000 | |
| | 2001.03-2005.09 | 6MT | F | L | Saloon FWD 841G000 | | GCI21016 | Inner Joint | | 27 | 26 | 35 | 78.5 | 112 | |
| | 2001.03-2005.09 | MT | F | L/R | Saloon FWD 841G000 | | GCO17009 | Outer Joint | | 25 | 26 | 59 | 84 | 63 | M |
| | 2001.03-2006.05 | 6MT | F | L | Estate FWD 841G000 | | GDS17117 | Drive Shaft | | 25 | 27 | 59 | 84 | 550 | |
| | 2001.03-2006.05 | 6MT | F | R | Estate FWD 841G000 | | GDS17110 | Drive Shaft | | 25 | 27 | 59 | 84 | 1000 | |
| | 2001.03-2006.05 | 6MT | F | L | Estate FWD 841G000 | | GCI21016 | Inner Joint | | 27 | 26 | 35 | 78.5 | 112 | |
| | 2001.03-2006.05 | MT | F | L/R | Estate FWD 841G000 | | GCO17009 | Outer Joint | | 25 | 26 | 59 | 84 | 63 | M |
| 2.5 (140 kw) | 1997.02-2002.09 | MT | F | L/R | Estate FWD AR32401 | | GCO82012 | Outer Joint | | 25 | 28 | 59 | 85 | 63 | O |
| | 1997.02-2002.09 | MT | F | L | Estate FWD AR32401 | | GCI83001 | Inner Joint | | | 28 | | | 32 | |
| | 1997.02-2002.09 | MT | F | L/R | Saloon FWD AR32401 | | GCO82012 | Outer Joint | | 25 | 28 | 59 | 85 | 63 | O |
| 2.5 (141 kw) | 1997.02-2005.10 | AT/MT | F | L/R | Saloon FWD AR32405 | | GCO82012 | Outer Joint | | 25 | 28 | 59 | 85 | 63 | O |
| | 1997.02-2005.10 | MT | F | L | Saloon FWD AR32405 | | GCI83001 | Inner Joint | | | 28 | | | 32 | |
| | 1997.02-2006.05 | MT | F | L/R | Estate FWD AR32405 | | GCO82012 | Outer Joint | | 25 | 28 | 59 | 85 | 63 | O |
| | 1997.02-2006.05 | MT | F | L | Estate FWD AR32405 | | GCI83001 | Inner Joint | | | 28 | | | 32 | |
| **159** | | | | | | | | | | | | | | | |
| 1.8 (103 kw) | 2005.06-2011.11 | 5MT/6MT | F | L/R | Estate FWD 939 A4.000 | Date to:2008.11 | GCO82026 | Outer Joint | | 30 | 24 | 61 | 93 | 58 | M |
| | 2005.06-2011.11 | 5MT/6MT | F | L | Estate FWD 939 A4.000 | Date to:2008.11 | GCI82014 | Inner Joint | | 22 | 24 | 34.95 | 57.5 | 111 | |
| | 2005.06-2011.11 | 5MT/6MT | F | R | Estate FWD 939 A4.000 | Date to:2008.11 | GCI17055 | Inner Joint | | 22 | 24 | 34.9 | 378.5 | 106.5 | |
| | 2005.06-2011.11 | | F | L/R | Estate FWD 939 A4.000 | | GCO82024 | Outer Joint | | 30 | 27 | 61 | 93 | 65 | M |
| | 2005.06-2011.11 | 5MT/6MT | F | L/R | Saloon FWD 939 A4.000 | Date to:2008.11 | GCO82026 | Outer Joint | | 30 | 24 | 61 | 93 | 58 | M |
| | 2005.06-2011.11 | 5MT/6MT | F | L | Saloon FWD 939 A4.000 | Date to:2008.11 | GCI82014 | Inner Joint | | 22 | 24 | 34.95 | 57.5 | 111 | |
| | 2005.06-2011.11 | 5MT/6MT | F | R | Saloon FWD 939 A4.000 | Date to:2008.11 | GCI17055 | Inner Joint | | 22 | 24 | 34.9 | 378.5 | 106.5 | |
| | 2005.06-2011.11 | | F | L/R | Saloon FWD 939 A4.000 | | GCO82024 | Outer Joint | | 30 | 27 | 61 | 93 | 65 | M |
| 1.8 (147 kw) | 2009.05-2012.12 | | F | L/R | Saloon FWD 939 B1.000 | | GCO82024 | Outer Joint | | 30 | 27 | 61 | 93 | 65 | M |
| | 2009.07-2011.11 | | F | L/R | Estate FWD 939 B1.000 | | GCO82024 | Outer Joint | | 30 | 27 | 61 | 93 | 65 | M |
| 1.9 (85 kw) | 2005.09-2011.11 | 6MT | F | L | Saloon FWD 939 A7.000;937 A7.000 | | GDS17122 | Drive Shaft | | 30 | 25 | 61 | 92.5 | 640 | |
| | 2005.09-2011.11 | 6MT | F | R | Saloon FWD 939 A7.000;937 A7.000 | | GDS17124 | Drive Shaft | | 30 | 25 | 61 | 92.5 | 1015 | |

| | YEAR | TRANSM. | F/R | L/R | BODY STYLE & DRIVE TYPE & ENGINE | REMARKS | G-AP Ref. | PRODUCT | ABS | Technical Specifications A | B | C | H | L | P |
|---|---|---|---|---|---|---|---|---|---|---|---|---|---|---|---|
| **ALFA ROMEO 159** | | | | | | | | | | | | | | | |
| 1.9 (85 kw) | 2005.09-2011.11 | 6MT | F | L | Saloon FWD 939 A7.000;937 A7.000 | | GCI82009 | Inner Joint | | 25 | 26 | 34.9 | 57.5 | 114.5 | |
| | 2005.09-2011.11 | 6MT | F | R | Saloon FWD 939 A7.000;937 A7.000 | | GCI82010 | Inner Joint | | 25 | 26 | 34.9 | 439.5 | 108.5 | |
| | 2005.09-2011.11 | | F | L/R | Saloon FWD 939 A7.000;937 A7.000 | | GCO82023 | Outer Joint | | 30 | 26 | 61 | 92.5 | 65 | M |
| | 2006.03-2011.11 | 6MT | F | L | Estate FWD 937 A7.000 | | GDS17122 | Drive Shaft | | 30 | 25 | 61 | 92.5 | 640 | |
| | 2006.03-2011.11 | 6MT | F | R | Estate FWD 937 A7.000 | | GDS17124 | Drive Shaft | | 30 | 25 | 61 | 92.5 | 1015 | |
| | 2006.03-2011.11 | 6MT | F | L | Estate FWD 937 A7.000 | | GCI82009 | Inner Joint | | 25 | 26 | 34.9 | 57.5 | 114.5 | |
| | 2006.03-2011.11 | 6MT | F | R | Estate FWD 937 A7.000 | | GCI82010 | Inner Joint | | 25 | 26 | 34.9 | 439.5 | 108.5 | |
| | 2006.03-2011.11 | | F | L/R | Estate FWD 937 A7.000 | | GCO82023 | Outer Joint | | 30 | 26 | 61 | 92.5 | 65 | M |
| 1.9 (88 kw) | 2005.09-2011.11 | 6MT | F | L | Saloon FWD 939 A1.000 | | GDS17122 | Drive Shaft | | 30 | 25 | 61 | 92.5 | 640 | |
| | 2005.09-2011.11 | 6MT | F | R | Saloon FWD 939 A1.000 | | GDS17124 | Drive Shaft | | 30 | 25 | 61 | 92.5 | 1015 | |
| | 2005.09-2011.11 | 6MT | F | L/R | Saloon FWD 939 A1.000 | | GCO82023 | Outer Joint | | 30 | 26 | 61 | 92.5 | 65 | M |
| | 2005.09-2011.11 | 6MT | F | L | Saloon FWD 939 A1.000 | | GCI82009 | Inner Joint | | 25 | 26 | 34.9 | 57.5 | 114.5 | |
| | 2005.09-2011.11 | 6MT | F | R | Saloon FWD 939 A1.000 | | GCI82010 | Inner Joint | | 25 | 26 | 34.9 | 439.5 | 108.5 | |
| | 2006.03-2011.11 | 6MT | F | L | Estate FWD 939 A1.000 | | GDS17122 | Drive Shaft | | 30 | 25 | 61 | 92.5 | 640 | |
| | 2006.03-2011.11 | 6MT | F | R | Estate FWD 939 A1.000 | | GDS17124 | Drive Shaft | | 30 | 25 | 61 | 92.5 | 1015 | |
| | 2006.03-2011.11 | 6MT | F | L/R | Estate FWD 939 A1.000 | | GCO82023 | Outer Joint | | 30 | 26 | 61 | 92.5 | 65 | M |
| | 2006.03-2011.11 | 6MT | F | L | Estate FWD 939 A1.000 | | GCI82009 | Inner Joint | | 25 | 26 | 34.9 | 57.5 | 114.5 | |
| | 2006.03-2011.11 | 6MT | F | R | Estate FWD 939 A1.000 | | GCI82010 | Inner Joint | | 25 | 26 | 34.9 | 439.5 | 108.5 | |
| 1.9 (100 kw) | 2005.09-2011.11 | 6MT | F | L | Saloon FWD 939 A8.000;937 A8.000 | | GDS17122 | Drive Shaft | | 30 | 25 | 61 | 92.5 | 640 | |
| | 2005.09-2011.11 | 6MT | F | R | Saloon FWD 939 A8.000;937 A8.000 | | GDS17124 | Drive Shaft | | 30 | 25 | 61 | 92.5 | 1015 | |
| | 2005.09-2011.11 | 6MT | F | L | Saloon FWD 939 A8.000;937 A8.000 | | GCI82009 | Inner Joint | | 25 | 26 | 34.9 | 57.5 | 114.5 | |
| | 2005.09-2011.11 | 6MT | F | R | Saloon FWD 939 A8.000;937 A8.000 | | GCI82010 | Inner Joint | | 25 | 26 | 34.9 | 439.5 | 108.5 | |
| | 2005.09-2011.11 | | F | L/R | Saloon FWD 939 A8.000;937 A8.000 | | GCO82023 | Outer Joint | | 30 | 26 | 61 | 92.5 | 65 | M |
| | 2006.03-2011.11 | 6MT | F | L | Estate FWD 939 A8.000;937 A8.000 | | GDS17122 | Drive Shaft | | 30 | 25 | 61 | 92.5 | 640 | |
| | 2006.03-2011.11 | 6MT | F | R | Estate FWD 939 A8.000;937 A8.000 | | GDS17124 | Drive Shaft | | 30 | 25 | 61 | 92.5 | 1015 | |
| | 2006.03-2011.11 | 6MT | F | L | Estate FWD 939 A8.000;937 A8.000 | | GCI82009 | Inner Joint | | 25 | 26 | 34.9 | 57.5 | 114.5 | |
| | 2006.03-2011.11 | 6MT | F | R | Estate FWD 939 A8.000;937 A8.000 | | GCI82010 | Inner Joint | | 25 | 26 | 34.9 | 439.5 | 108.5 | |
| | 2006.03-2011.11 | | F | L/R | Estate FWD 939 A8.000;937 A8.000 | | GCO82023 | Outer Joint | | 30 | 26 | 61 | 92.5 | 65 | M |
| 1.9 (110 kw) | 2005.09-2011.11 | 6AT | F | R | Saloon FWD 939 A2.000 | | GCI17007 | Inner Joint | | 27 | 26 | 35 | 453 | 106.5 | |
| | 2005.09-2011.11 | 6AT/6MT | F | L/R | Saloon FWD 939 A2.000 | | GCO82023 | Outer Joint | | 30 | 26 | 61 | 92.5 | 65 | M |
| | 2005.09-2011.11 | AT | F | L | Saloon FWD 939 A2.000 | Date to:2008.11 | GCI21016 | Inner Joint | | 27 | 26 | 35 | 78.5 | 112 | |
| | 2005.09-2011.11 | MT | F | L | Saloon FWD 939 A2.000 | | GDS17122 | Drive Shaft | | 30 | 25 | 61 | 92.5 | 640 | |
| | 2005.09-2011.11 | MT | F | R | Saloon FWD 939 A2.000 | | GDS17124 | Drive Shaft | | 30 | 25 | 61 | 92.5 | 1015 | |
| | 2005.09-2011.11 | MT | F | L | Saloon FWD 939 A2.000 | | GCI82009 | Inner Joint | | 25 | 26 | 34.9 | 57.5 | 114.5 | |
| | 2005.09-2011.11 | MT | F | R | Saloon FWD 939 A2.000 | | GCI82010 | Inner Joint | | 25 | 26 | 34.9 | 439.5 | 108.5 | |
| | 2006.03-2011.11 | 6AT | F | R | Estate FWD 939 A2.000 | | GCI17007 | Inner Joint | | 27 | 26 | 35 | 453 | 106.5 | |
| | 2006.03-2011.11 | 6AT/6MT | F | L/R | Estate FWD 939 A2.000 | | GCO82023 | Outer Joint | | 30 | 26 | 61 | 92.5 | 65 | M |
| | 2006.03-2011.11 | AT | F | L | Estate FWD 939 A2.000 | Date to:2008.11 | GCI21016 | Inner Joint | | 27 | 26 | 35 | 78.5 | 112 | |
| | 2006.03-2011.11 | MT | F | L | Estate FWD 939 A2.000 | | GDS17122 | Drive Shaft | | 30 | 25 | 61 | 92.5 | 640 | |
| | 2006.03-2011.11 | MT | F | R | Estate FWD 939 A2.000 | | GDS17124 | Drive Shaft | | 30 | 25 | 61 | 92.5 | 1015 | |
| | 2006.03-2011.11 | MT | F | L | Estate FWD 939 A2.000 | | GCI82009 | Inner Joint | | 25 | 26 | 34.9 | 57.5 | 114.5 | |
| | 2006.03-2011.11 | MT | F | R | Estate FWD 939 A2.000 | | GCI82010 | Inner Joint | | 25 | 26 | 34.9 | 439.5 | 108.5 | |
| 1.9 (118 kw) | 2005.09-2011.11 | 6MT | F | R | Saloon FWD 939 A6.000 | | GDS17124 | Drive Shaft | | 30 | 25 | 61 | 92.5 | 1015 | |
| | 2005.09-2011.11 | | F | L/R | Saloon FWD 939 A6.000 | Date from:2005.12 | GCO82026 | Outer Joint | | 30 | 24 | 61 | 93 | 58 | M |
| | 2006.03-2011.11 | 6MT | F | R | Estate FWD 939 A6.000 | | GDS17124 | Drive Shaft | | 30 | 25 | 61 | 92.5 | 1015 | |
| | 2006.03-2011.11 | | F | L/R | Estate FWD 939 A6.000 | | GCO82026 | Outer Joint | | 30 | 24 | 61 | 93 | 58 | M |
| 2.0 (100 kw) | 2010.06-2011.11 | 6MT | F | L | Estate FWD 939 B4.000 | | GCI17031 | Inner Joint | | 25 | 26 | 32 | 59 | 110.5 | |
| | 2010.06-2011.11 | 6MT | F | R | Estate FWD 939 B4.000 | | GCI17051 | Inner Joint | | 27 | 27 | 35 | 453 | 110 | |
| | 2010.06-2011.11 | MT | F | L/R | Estate FWD 939 B4.000 | Date from:2011.01 | GCO82024 | Outer Joint | | 30 | 27 | 61 | 93 | 65 | M |
| | 2010.06-2011.11 | | F | L/R | Estate FWD 939 B4.000 | | GCO82023 | Outer Joint | | 30 | 26 | 61 | 92.5 | 65 | M |
| | 2010.06-2011.11 | 6MT | F | L | Saloon FWD 939 B4.000 | | GCI17031 | Inner Joint | | 25 | 26 | 32 | 59 | 110.5 | |
| | 2010.06-2011.11 | 6MT | F | R | Saloon FWD 939 B4.000 | | GCI17051 | Inner Joint | | 27 | 27 | 35 | 453 | 110 | |
| | 2010.06-2011.11 | MT | F | L/R | Saloon FWD 939 B4.000 | Date from:2011.01 | GCO82024 | Outer Joint | | 30 | 27 | 61 | 93 | 65 | M |
| | 2010.06-2011.11 | | F | L/R | Saloon FWD 939 B4.000 | | GCO82023 | Outer Joint | | 30 | 26 | 61 | 92.5 | 65 | M |
| 2.0 (120 kw) | 2009.05-2011.11 | MT | F | L | Estate FWD 844 A2.000 | | GDS17116 | Drive Shaft | | 30 | 27 | 61 | 93 | 627 | |
| | 2009.05-2011.11 | MT | F | R | Estate FWD 844 A2.000 | | GDS17115 | Drive Shaft | | 30 | 27 | 61 | 93 | 1028 | |
| | 2009.05-2011.11 | MT | F | L/R | Estate FWD 844 A2.000 | | GCO82024 | Outer Joint | | 30 | 27 | 61 | 93 | 65 | M |
| | 2009.05-2011.11 | MT | F | L | Estate FWD 844 A2.000 | | GCI21017 | Inner Joint | | 27 | 27 | 35 | 78.5 | 112 | |
| | 2009.05-2011.11 | MT | F | R | Estate FWD 844 A2.000 | | GCI17051 | Inner Joint | | 27 | 27 | 35 | 453 | 110 | |
| | 2009.05-2011.11 | | F | | Estate FWD 844 A2.000 | | GCO82023 | Outer Joint | | 30 | 26 | 61 | 92.5 | 65 | M |
| | 2009.05-2011.11 | MT | F | L | Saloon FWD 844 A2.000 | | GDS17116 | Drive Shaft | | 30 | 27 | 61 | 93 | 627 | |
| | 2009.05-2011.11 | MT | F | R | Saloon FWD 844 A2.000 | | GDS17115 | Drive Shaft | | 30 | 27 | 61 | 93 | 1028 | |
| | 2009.05-2011.11 | MT | F | L/R | Saloon FWD 844 A2.000 | | GCO82024 | Outer Joint | | 30 | 27 | 61 | 93 | 65 | M |
| | 2009.05-2011.11 | MT | F | R | Saloon FWD 844 A2.000 | | GCI17051 | Inner Joint | | 27 | 27 | 35 | 453 | 110 | |
| | 2009.05-2011.11 | | F | | Saloon FWD 844 A2.000 | | GCO82023 | Outer Joint | | 30 | 26 | 61 | 92.5 | 65 | M |

| | YEAR | TRANSM. | F/R | L/R | BODY STYLE & DRIVE TYPE & ENGINE | REMARKS | G-AP Ref. | PRODUCT | ABS | Technical Specifications A | B | C | H | L | P |
|---|---|---|---|---|---|---|---|---|---|---|---|---|---|---|---|
| **ALFA ROMEO** | | | | | | | | | | | | | | | |
| **159** | | | | | | | | | | | | | | | |
| 2.0 (125 kw) | 2009.05-2011.11 | 6MT | F | L | Saloon FWD 939 B3.000 | | GDS17116 | Drive Shaft | | 30 | 27 | 61 | 93 | 627 | |
| | 2009.05-2011.11 | 6MT | F | R | Saloon FWD 939 B3.000 | | GDS17115 | Drive Shaft | | 30 | 27 | 61 | 93 | 1028 | |
| | 2009.05-2011.11 | 6MT | F | L/R | Saloon FWD 939 B3.000 | Model year from:2010 | GCO82023 | Outer Joint | | 30 | 26 | 61 | 92.5 | 65 | M |
| | 2009.05-2011.11 | MT | F | L/R | Saloon FWD 939 B3.000 | | GCO82024 | Outer Joint | | 30 | 27 | 61 | 93 | 65 | M |
| | 2009.05-2011.11 | MT | F | L | Saloon FWD 939 B3.000 | | GCI21017 | Inner Joint | | 27 | 27 | 35 | 78.5 | 112 | |
| | 2009.05-2011.11 | MT | F | R | Saloon FWD 939 B3.000 | | GCI17051 | Inner Joint | | 27 | 27 | 35 | 453 | 110 | |
| | 2009.07-2011.11 | 6MT | F | L | Estate FWD 939 B3.000 | | GDS17116 | Drive Shaft | | 30 | 27 | 61 | 93 | 627 | |
| | 2009.07-2011.11 | 6MT | F | R | Estate FWD 939 B3.000 | | GDS17115 | Drive Shaft | | 30 | 27 | 61 | 93 | 1028 | |
| | 2009.07-2011.11 | 6MT | F | L/R | Estate FWD 939 B3.000 | Model year from:2010 | GCO82023 | Outer Joint | | 30 | 26 | 61 | 92.5 | 65 | M |
| | 2009.07-2011.11 | MT | F | L/R | Estate FWD 939 B3.000 | | GCO82024 | Outer Joint | | 30 | 27 | 61 | 93 | 65 | M |
| | 2009.07-2011.11 | MT | F | L | Estate FWD 939 B3.000 | | GCI21017 | Inner Joint | | 27 | 27 | 35 | 78.5 | 112 | |
| | 2009.07-2011.11 | MT | F | R | Estate FWD 939 B3.000 | | GCI17051 | Inner Joint | | 27 | 27 | 35 | 453 | 110 | |
| 2.2 (136 kw) | 2005.09-2011.11 | 6AT/6MT | F | L | Saloon FWD 939 A5.000 | | GDS17122 | Drive Shaft | | 30 | 25 | 61 | 92.5 | 640 | |
| | 2005.09-2011.11 | 6AT/6MT | F | L/R | Saloon FWD 939 A5.000 | | GCO82023 | Outer Joint | | 30 | 26 | 61 | 92.5 | 65 | M |
| | 2005.09-2011.11 | 6AT/6MT | F | L | Saloon FWD 939 A5.000 | | GCI82009 | Inner Joint | | 25 | 26 | 34.9 | 57.5 | 114.5 | |
| | 2005.09-2011.11 | | F | R | Saloon FWD 939 A5.000 | | GDS17124 | Drive Shaft | | 30 | 25 | 61 | 92.5 | 1015 | |
| | 2005.09-2011.11 | | F | R | Saloon FWD 939 A5.000 | | GCI82010 | Inner Joint | | 25 | 26 | 34.9 | 439.5 | 108.5 | |
| | 2006.03-2011.11 | 6AT/6MT | F | L | Estate FWD 939 A5.000 | | GDS17122 | Drive Shaft | | 30 | 25 | 61 | 92.5 | 640 | |
| | 2006.03-2011.11 | 6AT/6MT | F | L/R | Estate FWD 939 A5.000 | | GCO82023 | Outer Joint | | 30 | 26 | 61 | 92.5 | 65 | M |
| | 2006.03-2011.11 | 6AT/6MT | F | L | Estate FWD 939 A5.000 | | GCI82009 | Inner Joint | | 25 | 26 | 34.9 | 57.5 | 114.5 | |
| | 2006.03-2011.11 | MT | F | R | Estate FWD 939 A5.000 | | GDS17124 | Drive Shaft | | 30 | 25 | 61 | 92.5 | 1015 | |
| | 2006.03-2011.11 | MT | F | R | Estate FWD 939 A5.000 | | GCI82010 | Inner Joint | | 25 | 26 | 34.9 | 439.5 | 108.5 | |
| 2.4 (147 kw) | 2005.09-2011.11 | 6AT/6MT | F | L/R | Saloon FWD 939 A3.000 | | GCO82024 | Outer Joint | | 30 | 27 | 61 | 93 | 65 | M |
| | 2005.09-2011.11 | MT | F | L | Saloon FWD 939 A3.000 | | GDS17123 | Drive Shaft | | 30 | 27 | 61 | 93 | 598 | |
| | 2005.09-2011.11 | MT | F | R | Saloon FWD 939 A3.000 | | GDS17145 | Drive Shaft | | 30 | 27 | 61 | 93 | 1059 | |
| | 2005.09-2011.11 | | F | L | Saloon FWD 939 A3.000 | Date From:2008.10 | GCI21017 | Inner Joint | | 27 | 27 | 35 | 78.5 | 112 | |
| | 2006.03-2011.11 | 6AT/6MT | F | L/R | Estate FWD 939 A3.000 | | GCO82024 | Outer Joint | | 30 | 27 | 61 | 93 | 65 | M |
| | 2006.03-2011.11 | MT | F | L | Estate FWD 939 A3.000 | | GDS17123 | Drive Shaft | | 30 | 27 | 61 | 93 | 598 | |
| | 2006.03-2011.11 | MT | F | R | Estate FWD 939 A3.000 | | GDS17145 | Drive Shaft | | 30 | 27 | 61 | 93 | 1059 | |
| | 2006.03-2011.11 | | F | L | Estate FWD 939 A3.000 | Date From:2008.10 | GCI21017 | Inner Joint | | 27 | 27 | 35 | 78.5 | 112 | |
| 2.4 (154 kw) | 2007.05-2011.11 | AT/MT | F | L/R | Estate 4WD 939 A9.000 | | GCO82024 | Outer Joint | | 30 | 27 | 61 | 93 | 65 | M |
| | 2007.05-2011.11 | MT | F | L | Estate 4WD 939 A9.000 | | GDS17123 | Drive Shaft | | 30 | 27 | 61 | 93 | 598 | |
| | 2007.05-2011.11 | MT | F | R | Estate 4WD 939 A9.000 | | GDS17145 | Drive Shaft | | 30 | 27 | 61 | 93 | 1059 | |
| | 2007.05-2011.11 | | F | L/R | Estate 4WD 939 A9.000 | | GCO82023 | Outer Joint | | 30 | 26 | 61 | 92.5 | 65 | M |
| | 2007.05-2011.11 | | F | L/R | Estate 4WD 939 A9.000 | | GCI21016 | Inner Joint | | 27 | 26 | 35 | 78.5 | 112 | |
| | 2007.05-2011.11 | AT/MT | F | L/R | Saloon 4WD 939 A9.000 | | GCO82024 | Outer Joint | | 30 | 27 | 61 | 93 | 65 | M |
| | 2007.05-2011.11 | MT | F | L | Saloon 4WD 939 A9.000 | | GDS17123 | Drive Shaft | | 30 | 27 | 61 | 93 | 598 | |
| | 2007.05-2011.11 | MT | F | R | Saloon 4WD 939 A9.000 | | GDS17145 | Drive Shaft | | 30 | 27 | 61 | 93 | 1059 | |
| | 2007.05-2011.11 | | F | L/R | Saloon 4WD 939 A9.000 | | GCO82023 | Outer Joint | | 30 | 26 | 61 | 92.5 | 65 | M |
| | 2007.05-2011.11 | | F | L/R | Saloon 4WD 939 A9.000 | | GCI21016 | Inner Joint | | 27 | 26 | 35 | 78.5 | 112 | |
| | 2007.05-2012.12 | 6MT | F | L | Estate FWD 939 A9.000 | | GDS17123 | Drive Shaft | | 30 | 27 | 61 | 93 | 598 | |
| | 2007.05-2012.12 | 6MT | F | R | Estate FWD 939 A9.000 | | GDS17145 | Drive Shaft | | 30 | 27 | 61 | 93 | 1059 | |
| | 2007.05-2012.12 | 6MT | F | L | Estate FWD 939 A9.000 | Date to:2008.11 | GCI21017 | Inner Joint | | 27 | 27 | 35 | 78.5 | 112 | |
| | 2007.05-2012.12 | 6MT | F | R | Estate FWD 939 A9.000 | Date to:2008.11 | GCI17008 | Inner Joint | | 27 | 27 | 35 | 498 | 106.5 | |
| | 2007.05-2012.12 | MT | F | L/R | Estate FWD 939 A9.000 | | GCO82024 | Outer Joint | | 30 | 27 | 61 | 93 | 65 | M |
| | 2007.07-2011.11 | 6MT | F | L | Saloon FWD 939 A9.000 | | GDS17123 | Drive Shaft | | 30 | 27 | 61 | 93 | 598 | |
| | 2007.07-2011.11 | 6MT | F | R | Saloon FWD 939 A9.000 | | GDS17145 | Drive Shaft | | 30 | 27 | 61 | 93 | 1059 | |
| | 2007.07-2011.11 | 6MT | F | L | Saloon FWD 939 A9.000 | Date to:2008.11 | GCI21017 | Inner Joint | | 27 | 27 | 35 | 78.5 | 112 | |
| | 2007.07-2011.11 | 6MT | F | R | Saloon FWD 939 A9.000 | Date to:2008.11 | GCI17008 | Inner Joint | | 27 | 27 | 35 | 498 | 106.5 | |
| | 2007.07-2011.11 | MT | F | L/R | Saloon FWD 939 A9.000 | | GCO82024 | Outer Joint | | 30 | 27 | 61 | 93 | 65 | M |
| 3.2 (191 kw) | 2005.12-2011.11 | 6MT | F | L/R | Saloon 4WD 939 A.000 | Date to:2008.11 | GCO82023 | Outer Joint | | 30 | 26 | 61 | 92.5 | 65 | M |
| | 2005.12-2011.11 | 6MT | F | L/R | Saloon 4WD 939 A.000 | Date to:2008.11 | GCI21016 | Inner Joint | | 27 | 26 | 35 | 78.5 | 112 | |
| | 2006.03-2011.11 | 6MT | F | L/R | Estate 4WD 939 A.000 | Date to:2008.11 | GCO82023 | Outer Joint | | 30 | 26 | 61 | 92.5 | 65 | M |
| | 2006.03-2011.11 | 6MT | F | L/R | Estate 4WD 939 A.000 | Date to:2008.11 | GCI21016 | Inner Joint | | 27 | 26 | 35 | 78.5 | 112 | |
| | 2008.01-2011.11 | | F | L/R | Saloon FWD 939 A.000 | | GCO82024 | Outer Joint | | 30 | 27 | 61 | 93 | 65 | M |
| | 2008.01-2011.11 | | F | | Saloon FWD 939 A.000 | | GCO82023 | Outer Joint | | 30 | 26 | 61 | 92.5 | 65 | M |
| | 2008.01-2011.11 | | F | L | Saloon FWD 939 A.000 | | GCI21017 | Inner Joint | | 27 | 27 | 35 | 78.5 | 112 | |
| | 2008.02-2011.11 | | F | L/R | Estate FWD 939 A.000 | | GCO82024 | Outer Joint | | 30 | 27 | 61 | 93 | 65 | M |
| | 2008.02-2011.11 | | F | | Estate FWD 939 A.000 | | GCO82023 | Outer Joint | | 30 | 26 | 61 | 92.5 | 65 | M |
| | 2008.02-2011.11 | | F | L | Estate FWD 939 A.000 | | GCI21017 | Inner Joint | | 27 | 27 | 35 | 78.5 | 112 | |
| **164** | | | | | | | | | | | | | | | |
| 2.0 (102 kw) | 1987.06-1998.09 | AT/MT | F | L/R | Saloon FWD AR 06416 | | GCO17002 | Outer Joint | | 25 | 25 | 54.5 | 77 | 58 | I |
| | 1987.06-1998.09 | AT/MT | F | L/R | Saloon FWD AR 06416 | | GCO17003 | Outer Joint | 90T | 25 | 25 | 54.5 | 77 | 58 | I |
| | 1987.06-1998.09 | | F | | Saloon FWD AR 06416 | | GCI82006 | Inner Joint | | | 25 | | | 32 | |
| 2.0 (106 kw) | 1990.07-1998.09 | MT | F | L/R | Saloon FWD AR64103 | | GCO82004 | Outer Joint | 44T | 25 | 25 | 52 | 85 | 58 | I |

| | YEAR | TRANSM. | F/R | L/R | BODY STYLE & DRIVE TYPE & ENGINE | REMARKS | G-AP Ref. | PRODUCT | ABS | Technical Specifications A | B | C | H | L | P |
|---|---|---|---|---|---|---|---|---|---|---|---|---|---|---|---|
| **ALFA ROMEO** | | | | | | | | | | | | | | | |
| **164** | | | | | | | | | | | | | | | |
| 2.0 (106 kw) | 1990.07-1998.09 | MT | F | L/R | Saloon FWD AR64103 | | GCI48004 | Inner Joint | | | 25 | | | 32 | |
| | 1990.07-1998.09 | | F | | Saloon FWD AR64103 | | GCI82006 | Inner Joint | | | 25 | | | 32 | |
| 2.0 (128 kw) | 1987.10-1998.09 | AT/MT | F | L/R | Saloon FWD AR06476 | | GCO17002 | Outer Joint | | 25 | 25 | 54.5 | 77 | 58 | I |
| | 1987.10-1998.09 | MT | F | L/R | Saloon FWD AR06476 | | GCI48004 | Inner Joint | | | 25 | | | 32 | |
| | 1987.10-1998.09 | | F | | Saloon FWD AR06476 | | GCI82006 | Inner Joint | | | 25 | | | 32 | |
| 2.0 (148 kw) | 1992.09-1998.09 | AT/MT | F | L/R | Saloon FWD AR64102 | | GCO82011 | Outer Joint | 44T | 27 | 28 | 56 | 85 | 63.5 | O |
| | 1992.09-1998.09 | AT/MT | F | L/R | Saloon FWD AR64102 | | GCI48004 | Inner Joint | | | 25 | | | 32 | |
| | 1992.09-1998.09 | MT | F | L/R | Saloon FWD AR64102 | | GCI83001 | Inner Joint | | | 28 | | | 32 | |
| | 1992.09-1998.09 | | F | | Saloon FWD AR64102 | | GCI82006 | Inner Joint | | | 25 | | | 32 | |
| 2.5 (92 kw) | 1992.11-1997.10 | AT/MT | F | L/R | Saloon FWD VM08B/VM32B | | GCO82011 | Outer Joint | 44T | 27 | 28 | 56 | 85 | 63.5 | O |
| | 1992.11-1997.10 | AT/MT | F | L/R | Saloon FWD VM08B/VM32B | Date to:1997.10 | GCI83001 | Inner Joint | | | 28 | | | 32 | |
| 2.5 (120 kw) | 1992.06-1998.07 | AT/MT | F | L/R | Saloon FWD AR66201 | | GCO82011 | Outer Joint | 44T | 27 | 28 | 56 | 85 | 63.5 | O |
| 3.0 (132 kw) | 1992.09-1998.10 | AT/MT | F | L/R | Saloon FWD AR64305/AR66303 | | GCO82011 | Outer Joint | 44T | 27 | 28 | 56 | 85 | 63.5 | O |
| | 1992.09-1998.10 | AT/MT | F | L/R | Saloon FWD AR64305/AR66303 | | GCI83001 | Inner Joint | | | 28 | | | 32 | |
| 3.0 (170 kw) | 1994.02-1998.09 | AT/MT | F | L/R | Saloon 4WD AR66307 | | GCO82011 | Outer Joint | 44T | 27 | 28 | 56 | 85 | 63.5 | O |
| | 1994.02-1998.09 | MT | F | L/R | Saloon 4WD AR66307 | | GCI83001 | Inner Joint | | | 28 | | | 32 | |
| **166** | | | | | | | | | | | | | | | |
| 2.0 (110 kw) | 2000.10-2007.06 | | F | | Saloon FWD AR36301 | | GCO82002 | Outer Joint | | 27 | 25 | 59 | 84.5 | 58 | O |
| | 2000.10-2007.06 | | F | L/R | Saloon FWD AR36301 | | GCI82011 | Inner Joint | | | 25 | | | 32 | |
| | 2000.10-2007.06 | | F | | Saloon FWD AR36301 | | GCI82005 | Inner Joint | | | 25 | | | 32 | |
| | 2000.10-2007.06 | | F | | Saloon FWD AR36301 | | GCI82006 | Inner Joint | | | 25 | | | 32 | |
| 2.0 (114 kw) | 1998.08-2000.06 | 5MT | F | L/R | Saloon FWD AR34103 | | GCO82002 | Outer Joint | | 27 | 25 | 59 | 84.5 | 58 | O |
| | 1998.08-2000.06 | 5MT | F | L/R | Saloon FWD AR34103 | | GCI82011 | Inner Joint | | | 25 | | | 32 | |
| | 1998.08-2000.06 | AT/MT | F | L/R | Saloon FWD AR34103 | | GCI18070 | Inner Joint | | | 25 | | | 32 | |
| | 1998.08-2000.06 | | F | | Saloon FWD AR34103 | | GCI82005 | Inner Joint | | | 25 | | | 32 | |
| | 1998.08-2000.06 | | F | | Saloon FWD AR34103 | | GCI82006 | Inner Joint | | | 25 | | | 32 | |
| 2.0 (151 kw) | 1998.09-2000.10 | 6MT | F | L/R | Saloon FWD AR34102 | | GCI82003 | Inner Joint | | | 28 | | | 32 | |
| | 1998.09-2000.10 | AT/MT | F | L/R | Saloon FWD AR34102 | | GCO82013 | Outer Joint | | 27 | 28 | 59 | 83.5 | 63 | O |
| | 1998.09-2000.10 | | F | L/R | Saloon FWD AR34102 | | GDS17131 | Drive Shaft | | 27 | | 59 | 83.5 | 541 | |
| | 1998.09-2000.10 | | F | | Saloon FWD AR34102 | | GCO82002 | Outer Joint | | 27 | 25 | 59 | 84.5 | 58 | O |
| 2.4 (100 kw) | 1998.08-2000.06 | 5MT | F | L/R | Saloon FWD AR34202 | | GCO82013 | Outer Joint | | 27 | 28 | 59 | 83.5 | 63 | O |
| 2.4 (103 kw) | 2000.10-2003.06 | | F | L/R | Saloon FWD 839A6000 | | GCO82013 | Outer Joint | | 27 | 28 | 59 | 83.5 | 63 | O |
| 2.4 (110 kw) | 2002.04-2007.06 | | F | L/R | Saloon FWD 841C000 | | GCO82013 | Outer Joint | | 27 | 28 | 59 | 83.5 | 63 | O |
| 2.4 (120 kw) | 2003.10-2007.06 | AT | F | L/R | Saloon FWD 841M000/841N000 | | GCO99298 | Outer Joint | | 27 | 26 | 59 | 84.5 | 63 | M |
| 2.4 (129 kw) | 2003.10-2005.10 | | F | L/R | Saloon FWD 841G000/841H000 | | GCO99298 | Outer Joint | | 27 | 26 | 59 | 84.5 | 63 | M |
| 2.4 (132 kw) | 2006.07-2008.06 | | F | L/R | Saloon FWD 936B000 | | GCO99298 | Outer Joint | | 27 | 26 | 59 | 84.5 | 63 | M |
| 2.4 (136 kw) | 2005.07-2008.06 | | F | L/R | Saloon FWD 936B000 | | GCO99298 | Outer Joint | | 27 | 26 | 59 | 84.5 | 63 | M |
| 2.5 (138 kw) | 2000.07-2008.06 | MT | F | L/R | Saloon FWD AR36201 | | GDS17131 | Drive Shaft | | 27 | | 59 | 83.5 | 541 | |
| | 2000.07-2008.06 | | F | L/R | Saloon FWD AR36201 | | GCO82013 | Outer Joint | | 27 | 28 | 59 | 83.5 | 63 | O |
| 2.5 (140 kw) | 1998.08-2000.06 | AT/MT | F | L/R | Saloon FWD AR34201 | | GCO82013 | Outer Joint | | 27 | 28 | 59 | 83.5 | 63 | O |
| | 1998.08-2000.06 | MT | F | L/R | Saloon FWD AR34201 | | GDS17131 | Drive Shaft | | 27 | | 59 | 83.5 | 541 | |
| 3.0 (162 kw) | 2000.10-2008.06 | MT | F | R | Saloon FWD AR36101 | | GDS17131 | Drive Shaft | | 27 | | 59 | 83.5 | 541 | |
| | 2000.10-2008.06 | | F | L/R | Saloon FWD AR36101 | | GCO82013 | Outer Joint | | 27 | 28 | 59 | 83.5 | 63 | O |
| 3.0 (166 kw) | 1998.09-2002.06 | 4AT/6MT | F | L/R | Saloon FWD AR34301 | | GDS17131 | Drive Shaft | | 27 | | 59 | 83.5 | 541 | |
| | 1998.09-2002.06 | 4AT/6MT | F | L/R | Saloon FWD AR34301 | | GCO82013 | Outer Joint | | 27 | 28 | 59 | 83.5 | 63 | O |
| | 1998.09-2002.06 | 4AT/6MT | F | L/R | Saloon FWD AR34301 | | GCI82003 | Inner Joint | | | 28 | | | 32 | |
| 3.2 (176 kw) | 2003.07-2008.06 | MT | F | L/R | Saloon FWD 936A000 | | GDS17131 | Drive Shaft | | 27 | | 59 | 83.5 | 541 | |
| | 2003.07-2008.06 | | F | L/R | Saloon FWD 936A000 | | GCO82013 | Outer Joint | | 27 | 28 | 59 | 83.5 | 63 | O |
| **Brera** | | | | | | | | | | | | | | | |
| 1.8 (147 kw) | 2009.05-2010.06 | AT/MT | F | L/R | Hatchback FWD 939 B1.000 | | GCO82024 | Outer Joint | | 30 | 27 | 61 | 93 | 65 | M |
| 2.0 (120 kw) | 2008.03-2010.06 | 6MT | F | L | Hatchback FWD 844 A2.000 | | GDS17116 | Drive Shaft | | 30 | 27 | 61 | 93 | 627 | |
| | 2008.03-2010.06 | 6MT | F | R | Hatchback FWD 844 A2.000 | | GDS17115 | Drive Shaft | | 30 | 27 | 61 | 93 | 1028 | |
| | 2008.03-2010.06 | 6MT | F | L | Hatchback FWD 844 A2.000 | | GCI21017 | Inner Joint | | 27 | 27 | 35 | 78.5 | 112 | |
| | 2008.03-2010.06 | 6MT | F | R | Hatchback FWD 844 A2.000 | | GCI17051 | Inner Joint | | 27 | 27 | 35 | 453 | 110 | |
| | 2008.03-2010.06 | | F | L/R | Hatchback FWD 844 A2.000 | | GCO82024 | Outer Joint | | 30 | 27 | 61 | 93 | 65 | M |
| 2.0 (125 kw) | 2009.05-2010.06 | 6MT | F | L | Hatchback FWD 939 B3.000 | | GDS17116 | Drive Shaft | | 30 | 27 | 61 | 93 | 627 | |
| | 2009.05-2010.06 | 6MT | F | R | Hatchback FWD 939 B3.000 | | GDS17115 | Drive Shaft | | 30 | 27 | 61 | 93 | 1028 | |
| | 2009.05-2010.06 | 6MT | F | L | Hatchback FWD 939 B3.000 | | GCI21017 | Inner Joint | | 27 | 27 | 35 | 78.5 | 112 | |
| | 2009.05-2010.06 | 6MT | F | R | Hatchback FWD 939 B3.000 | | GCI17051 | Inner Joint | | 27 | 27 | 35 | 453 | 110 | |
| | 2009.05-2010.06 | AT/MT | F | L/R | Hatchback FWD 939 B3.000 | | GCO82024 | Outer Joint | | 30 | 27 | 61 | 93 | 65 | M |
| 2.2 (136 kw) | 2006.01-2011.05 | 6AT/6MT | F | L | Hatchback FWD 939 A5.000 | | GDS17122 | Drive Shaft | | 30 | 25 | 61 | 92.5 | 640 | |
| | 2006.01-2011.05 | 6AT/6MT | F | L/R | Hatchback FWD 939 A5.000 | | GCI82009 | Inner Joint | | 25 | 26 | 34.9 | 57.5 | 114.5 | |
| | 2006.01-2011.05 | MT | F | R | Hatchback FWD 939 A5.000 | | GDS17124 | Drive Shaft | | 30 | 25 | 61 | 92.5 | 1015 | |
| | 2006.01-2011.05 | MT | F | R | Hatchback FWD 939 A5.000 | | GCI82010 | Inner Joint | | 25 | 26 | 34.9 | 439.5 | 108.5 | |
| | 2006.01-2011.05 | | F | L/R | Hatchback FWD 939 A5.000 | | GCO82023 | Outer Joint | | 30 | 26 | 61 | 92.5 | 65 | M |

| | YEAR | TRANSM. | F/R | L/R | BODY STYLE & DRIVE TYPE & ENGINE | REMARKS | G-AP Ref. | PRODUCT | ABS | Technical Specifications A | B | C | H | L | P |
|---|---|---|---|---|---|---|---|---|---|---|---|---|---|---|---|
| **ALFA ROMEO** | | | | | | | | | | | | | | | |
| **Brera** | | | | | | | | | | | | | | | |
| 2.4 (147 kw) | 2006.01-2011.03 | 6MT | F | R | Hatchback FWD 939 A3.000 | | GCI17008 | Inner Joint | | 27 | 27 | 35 | 498 | 106.5 | |
| | 2006.01-2011.03 | MT | F | L | Hatchback FWD 939 A3.000 | | GDS17123 | Drive Shaft | | 30 | 27 | 61 | 93 | 598 | |
| | 2006.01-2011.03 | MT | F | R | Hatchback FWD 939 A3.000 | | GDS17145 | Drive Shaft | | 30 | 27 | 61 | 93 | 1059 | |
| | 2006.01-2011.03 | MT | F | L | Hatchback FWD 939 A3.000 | | GCO82024 | Outer Joint | | 30 | 27 | 61 | 93 | 65 | M |
| | 2006.01-2011.03 | | F | L | Hatchback FWD 939 A3.000 | | GCI21017 | Inner Joint | | 27 | 27 | 35 | 78.5 | 112 | |
| 2.4 (154 kw) | 2007.05-2011.03 | 6MT | F | L | Hatchback FWD 939 A9.000 | | GDS17123 | Drive Shaft | | 30 | 27 | 61 | 93 | 598 | |
| | 2007.05-2011.03 | 6MT | F | R | Hatchback FWD 939 A9.000 | | GDS17145 | Drive Shaft | | 30 | 27 | 61 | 93 | 1059 | |
| | 2007.05-2011.03 | AT/MT | F | L/R | Hatchback FWD 939 A9.000 | | GCO82024 | Outer Joint | | 30 | 27 | 61 | 93 | 65 | M |
| | 2007.05-2011.03 | | F | L | Hatchback FWD 939 A9.000 | | GCI21017 | Inner Joint | | 27 | 27 | 35 | 78.5 | 112 | |
| | 2007.05-2011.03 | | F | R | Hatchback FWD 939 A9.000 | | GCI17008 | Inner Joint | | 27 | 27 | 35 | 498 | 106.5 | |
| 3.2 (191 kw) | 2006.01-2011.05 | 6AT/6MT | F | L/R | Hatchback 4WD 939 A.000 | Date to:2008.11 | GCO82023 | Outer Joint | | 30 | 26 | 61 | 92.5 | 65 | M |
| | 2006.01-2011.05 | 6AT/6MT | F | L/R | Hatchback 4WD 939 A.000 | Date to:2008.11 | GCI21016 | Inner Joint | | 27 | 26 | 35 | 78.5 | 112 | |
| | 2008.03-2010.06 | | F | L/R | Hatchback FWD 939 A.000 | | GCO82024 | Outer Joint | | 30 | 27 | 61 | 93 | 65 | M |
| | 2008.03-2010.06 | | F | | Hatchback FWD 939 A.000 | | GCO82023 | Outer Joint | | 30 | 26 | 61 | 92.5 | 65 | M |
| | 2008.03-2010.06 | | F | L | Hatchback FWD 939 A.000 | | GCI21017 | Inner Joint | | 27 | 27 | 35 | 78.5 | 112 | |
| **Giulia** | | | | | | | | | | | | | | | |
| 2.0 (147 kw) | 2016.08-2022.10 | 8AT | R | L/R | Saloon RWD 552 73 835 | Date from:2016.09;Date to:2016.08,With differential lock | GDS57561 | Drive Shaft | | 27 | 32 | 59 | 87 | 825 | |
| | 2016.08-2022.10 | 8AT | R | L/R | Saloon RWD 552 73 835 | Date to:2016.08,Without differential lock | GDS57722 | Drive Shaft | | 27 | 37 | 59 | 87 | 825 | |
| | 2016.08-2022.10 | 8AT | R | L/R | Saloon RWD 552 73 835 | Date to:2016.08,With differential lock;Date from:2016.09,Date to:2020.07 | GCO83610 | Outer Joint | | 27 | 28 | 59 | 87 | 56 | |
| | 2016.08-2022.10 | 8AT | R | L/R | Saloon RWD 552 73 835 | Date to:2016.08,Without differential lock | GCO83683 | Outer Joint | | 27 | 25 | 59 | 87 | 77 | |
| | 2016.08-2022.10 | 8AT | R | L/R | Saloon RWD 552 73 835 | Date to:2016.08,With differential lock;Date from:2016.09 | GCI83316 | Inner Joint | | 32 | 28 | 50 | 94 | 76.5 | |
| | 2016.08-2022.10 | 8AT | R | L/R | Saloon RWD 552 73 835 | Date to:2016.08,Without differential lock | GCI83824 | Inner Joint | | 37 | 25 | 44.95 | 79.5 | 97 | |
| 2.0 (206 kw) | 2016.08- | 8AT | F | L/R | Saloon 4WD 552 73 835;EC2 | Date from:2020.08 | GCO83522 | Outer Joint | | 27 | 23 | 59 | 87 | 51 | I |
| | 2016.08- | 8AT | F | L | Saloon 4WD 552 73 835;EC2 | | GCI83632 | Inner Joint | | 22 | 23 | 28.5 | 419 | 101 | |
| | 2016.08- | 8AT | R | L/R | Saloon 4WD 552 73 835;EC2 | Date to:2020.07 | GDS57561 | Drive Shaft | | 27 | 32 | 59 | 87 | 825 | |
| | 2016.08- | 8AT | R | L/R | Saloon 4WD 552 73 835;EC2 | Date to:2020.07 | GCO83610 | Outer Joint | | 27 | 28 | 59 | 87 | 56 | |
| | 2016.08- | 8AT | R | L/R | Saloon 4WD 552 73 835;EC2 | Date to:2020.07 | GCI83316 | Inner Joint | | 32 | 28 | 50 | 94 | 76.5 | |
| | 2016.08- | 8AT | R | L/R | Saloon RWD 552 73 835;EC2 | | GDS57561 | Drive Shaft | | 27 | 32 | 59 | 87 | 825 | |
| | 2016.08- | 8AT | R | L/R | Saloon RWD 552 73 835;EC2 | Date to:2020.07 | GCO83610 | Outer Joint | | 27 | 28 | 59 | 87 | 56 | |
| | 2016.08- | 8AT | R | L/R | Saloon RWD 552 73 835;EC2 | Model year to:2022;Model year from:2022;Exhaust Emis:6/4 | GCI83316 | Inner Joint | | 32 | 28 | 50 | 94 | 76.5 | |
| 2.2 (100 kw) | 2015.10- | 6MT | R | L/R | Saloon RWD 552 66 388;552 68 532;552 84 636;463 35 975 | Date to:2020.07;Date from:2020.08,Without differential lock | GDS57722 | Drive Shaft | | 27 | 37 | 59 | 87 | 825 | |
| | 2015.10- | 6MT | R | L/R | Saloon RWD 552 66 388;552 68 532;552 84 636;463 35 975 | Date to:2020.07;Date from:2020.08,Without differential lock | GCO83683 | Outer Joint | | 27 | 25 | 59 | 87 | 77 | |
| | 2015.10- | 6MT | R | L/R | Saloon RWD 552 66 388;552 68 532;552 84 636;463 35 975 | Date to:2020.07;Date from:2020.08,Without differential lock | GCI83824 | Inner Joint | | 37 | 25 | 44.95 | 79.5 | 97 | |
| | 2015.10- | 6MT/8AT | R | L/R | Saloon RWD 552 66 388;552 68 532;552 84 636;463 35 975 | Transmission:6MT;Date from:2020.08,With differential lock | GDS57561 | Drive Shaft | | 27 | 32 | 59 | 87 | 825 | |
| | 2015.10- | 6MT/8AT | R | L/R | Saloon RWD 552 66 388;552 68 532;552 84 636;463 35 975 | Transmission:6MT;Date from:2020.08,With differential lock | GCO83610 | Outer Joint | | 27 | 28 | 59 | 87 | 56 | |
| | 2015.10- | 6MT/8AT | R | L/R | Saloon RWD 552 66 388;552 68 532;552 84 636;463 35 975 | Transmissoin:6MT;Date from:2020.08,With differential lock | GCI83316 | Inner Joint | | 32 | 28 | 50 | 94 | 76.5 | |
| 2.2 (110 kw) | 2015.10- | 6MT | R | L/R | Saloon RWD 552 66 388;552 68 532 | Date to:2020.07;Date from:2020.08,Without differential lock | GDS57722 | Drive Shaft | | 27 | 37 | 59 | 87 | 825 | |
| | 2015.10- | 6MT | R | L/R | Saloon RWD 552 66 388;552 68 532 | Date to:2020.07;Date from:2020.08,Without differential lock | GCO83683 | Outer Joint | | 27 | 25 | 59 | 87 | 77 | |
| | 2015.10- | 6MT | R | L/R | Saloon RWD 552 66 388;552 68 532 | Date to:2020.07;Date from:2020.08,Without differential lock | GCI83824 | Inner Joint | | 37 | 25 | 44.95 | 79.5 | 97 | |
| | 2015.10- | 6MT/8AT | R | L/R | Saloon RWD 552 66 388;552 68 532 | Transmission:6MT;Date from:2020.08,With differential lock | GDS57561 | Drive Shaft | | 27 | 32 | 59 | 87 | 825 | |
| | 2015.10- | 6MT/8AT | R | L/R | Saloon RWD 552 66 388;552 68 532 | Transmission:6MT;Date from:2020.08,With differential lock | GCO83610 | Outer Joint | | 27 | 28 | 59 | 87 | 56 | |
| | 2015.10- | 6MT/8AT | R | L/R | Saloon RWD 552 66 388;552 68 532 | Transmissoin:6MT;Date from:2020.08,With differential lock | GCI83316 | Inner Joint | | 32 | 28 | 50 | 94 | 76.5 | |
| 2.2 (118 kw) | 2018.08- | 6MT | R | L/R | Saloon RWD 552 75 156;552 84 636;463 35 975 | Date to:2020.07;Date from:2020.08,Without differential lock | GDS57722 | Drive Shaft | | 27 | 37 | 59 | 87 | 825 | |
| | 2018.08- | 6MT | R | L/R | Saloon RWD 552 75 156;552 84 636;463 35 975 | Date to:2020.07;Date from:2020.08,Without differential lock | GCO83683 | Outer Joint | | 27 | 25 | 59 | 87 | 77 | |
| | 2018.08- | 6MT | R | L/R | Saloon RWD 552 75 156;552 84 636;463 35 975 | Date to:2020.07;Date from:2020.08,Without differential lock | GCI83824 | Inner Joint | | 37 | 25 | 44.95 | 79.5 | 97 | |
| | 2018.08- | 6MT/8AT | R | L/R | Saloon RWD 552 75 156;552 84 636;463 35 975 | Transmission:6MT;Date from:2020.08,With differential lock | GDS57561 | Drive Shaft | | 27 | 32 | 59 | 87 | 825 | |
| | 2018.08- | 6MT/8AT | R | L/R | Saloon RWD 552 75 156;552 84 636;463 35 975 | Transmission:6MT;Date from:2020.08,With differential lock | GCO83610 | Outer Joint | | 27 | 28 | 59 | 87 | 56 | |
| | 2018.08- | 6MT/8AT | R | L/R | Saloon RWD 552 75 156;552 84 636;463 35 975 | Transmissoin:6MT;Date from:2020.08,With differential lock | GCI83316 | Inner Joint | | 32 | 28 | 50 | 94 | 76.5 | |
| 2.2 (132 kw) | 2015.10- | 6MT | R | L/R | Saloon RWD 552 66 388;552 68 532;552 71 040 | Date to:2020.07;Date from:2020.08,Without differential lock | GDS57722 | Drive Shaft | | 27 | 37 | 59 | 87 | 825 | |
| | 2015.10- | 6MT | R | L/R | Saloon RWD 552 66 388;552 68 532;552 71 040 | Date to:2020.07;Date from:2020.08,Without differential lock | GCO83683 | Outer Joint | | 27 | 25 | 59 | 87 | 77 | |
| | 2015.10- | 6MT | R | L/R | Saloon RWD 552 66 388;552 68 532;552 71 040 | Date to:2020.07;Date from:2020.08,Without differential lock | GCI83824 | Inner Joint | | 37 | 25 | 44.95 | 79.5 | 97 | |
| | 2015.10- | 6MT/8AT | R | L/R | Saloon RWD 552 66 388;552 68 532;552 71 040 | Transmission:6MT;Date from:2020.08,With differential lock | GDS57561 | Drive Shaft | | 27 | 32 | 59 | 87 | 825 | |
| | 2015.10- | 6MT/8AT | R | L/R | Saloon RWD 552 66 388;552 68 532;552 71 040 | Transmission:6MT;Date from:2020.08,With differential lock | GCO83610 | Outer Joint | | 27 | 28 | 59 | 87 | 56 | |
| | 2015.10- | 6MT/8AT | R | L/R | Saloon RWD 552 66 388;552 68 532;552 71 040 | Transmissoin:6MT;Date from:2020.08,With differential lock | GCI83316 | Inner Joint | | 32 | 28 | 50 | 94 | 76.5 | |
| | 2017.04- | 8AT | F | L/R | Saloon 4WD 552 68 818 | Date from:2020.08 | GCO83522 | Outer Joint | | 27 | 23 | 59 | 87 | 51 | I |
| | 2017.04- | 8AT | F | L | Saloon 4WD 552 68 818 | | GCI83632 | Inner Joint | | 22 | 23 | 28.5 | 419 | 101 | |
| | 2017.04- | 8AT | R | L/R | Saloon 4WD 552 68 818 | Date to:2020.07 | GDS57561 | Drive Shaft | | 27 | 32 | 59 | 87 | 825 | |
| | 2017.04- | 8AT | R | L/R | Saloon 4WD 552 68 818 | Date to:2020.07 | GCO83610 | Outer Joint | | 27 | 28 | 59 | 87 | 56 | |
| | 2017.04- | 8AT | R | L/R | Saloon 4WD 552 68 818 | Date to:2020.07 | GCI83316 | Inner Joint | | 32 | 28 | 50 | 94 | 76.5 | |
| 2.2 (140 kw) | 2018.08-2022.10 | 8AT | F | L/R | Saloon 4WD 552 68 818;552 84 529 | Date from:2020.08 | GCO83522 | Outer Joint | | 27 | 23 | 59 | 87 | 51 | I |
| | 2018.08-2022.10 | 8AT | F | L | Saloon 4WD 552 68 818;552 84 529 | | GCI83632 | Inner Joint | | 22 | 23 | 28.5 | 419 | 101 | |
| | 2018.08-2022.10 | 8AT | R | L/R | Saloon 4WD 552 68 818;552 84 529 | Date to:2020.07 | GDS57561 | Drive Shaft | | 27 | 32 | 59 | 87 | 825 | |
| | 2018.08-2022.10 | 8AT | R | L/R | Saloon 4WD 552 68 818;552 84 529 | Date to:2020.07 | GCO83610 | Outer Joint | | 27 | 28 | 59 | 87 | 56 | |
| | 2018.08-2022.10 | 8AT | R | L/R | Saloon 4WD 552 68 818;552 84 529 | Date to:2020.07 | GCI83316 | Inner Joint | | 32 | 28 | 50 | 94 | 76.5 | |
| | 2018.08-2022.10 | 6MT | R | L/R | Saloon RWD 552 68 818;552 84 636;463 35 975;46346398 | Date to:2020.07;Date from:2020.08,Without differential lock | GDS57722 | Drive Shaft | | 27 | 37 | 59 | 87 | 825 | |

| | YEAR | TRANSM. | F/R | L/R | BODY STYLE & DRIVE TYPE & ENGINE | REMARKS | G-AP Ref. | PRODUCT | ABS | Technical Specifications A | B | C | H | L | P |
|---|---|---|---|---|---|---|---|---|---|---|---|---|---|---|---|
| **ALFA ROMEO** | | | | | | | | | | | | | | | |
| **Giulia** | | | | | | | | | | | | | | | |
| 2.2 (140 kw) | 2018.08-2022.10 | 6MT | R | L/R | Saloon RWD 552 68 818;552 84 636;463 35 975;46346398 | Date to:2020.07;Date from:2020.08,Without differential lock | GCO83683 | Outer Joint | | 27 | 25 | 59 | 87 | 77 | |
| | 2018.08-2022.10 | 6MT | R | L/R | Saloon RWD 552 68 818;552 84 636;463 35 975;46346398 | Date to:2020.07;Date from:2020.08,Without differential lock | GCI83824 | Inner Joint | | 37 | 25 | 44.95 | 79.5 | 97 | |
| | 2018.08-2022.10 | 6MT/8AT | R | L/R | Saloon RWD 552 68 818;552 84 636;463 35 975;46346398 | Transmission:6MT,Date from:2020.08,With differential lock | GDS57561 | Drive Shaft | | 27 | 32 | 59 | 87 | 825 | |
| | 2018.08-2022.10 | 6MT/8AT | R | L/R | Saloon RWD 552 68 818;552 84 636;463 35 975;46346398 | Transmission:6MT,Date from:2020.08,With differential lock | GCO83610 | Outer Joint | | 27 | 28 | 59 | 87 | 56 | |
| | 2018.08-2022.10 | 6MT/8AT | R | L/R | Saloon RWD 552 68 818;552 84 636;463 35 975;46346398 | Transmissoin:6MT,Date from:2020.08,With differential lock | GCI83316 | Inner Joint | | 32 | 28 | 50 | 94 | 76.5 | |
| 2.2 (154 kw) | 2016.11- | 8AT | F | L/R | Saloon 4WD 552 68 818;552 84 529;46346359 | Date from:2020.08 | GCO83522 | Outer Joint | | 27 | 23 | 59 | 87 | 51 | I |
| | 2016.11- | 8AT | F | L | Saloon 4WD 552 68 818;552 84 529;46346359 | | GCI83632 | Inner Joint | | 22 | 23 | 28.5 | 419 | 101 | |
| | 2016.11- | 8AT | R | L/R | Saloon 4WD 552 68 818;552 84 529;46346359 | Date to:2020.07 | GDS57561 | Drive Shaft | | 27 | 32 | 59 | 87 | 825 | |
| | 2016.11- | 8AT | R | L/R | Saloon 4WD 552 68 818;552 84 529;46346359 | Date to:2020.07 | GCO83610 | Outer Joint | | 27 | 28 | 59 | 87 | 56 | |
| | 2016.11- | 8AT | R | L/R | Saloon 4WD 552 68 818;552 84 529;46346359 | Date to:2020.07 | GCI83316 | Inner Joint | | 32 | 28 | 50 | 94 | 76.5 | |
| 2.9 (375 kw) | 2015.10- | 8AT | R | L/R | Saloon RWD 670 05 0436;EED;670 05 2721 | For vehicles with electronic limited slip diff. | GCO83610 | Outer Joint | | 27 | 28 | 59 | 87 | 56 | |
| 2.9 (382 kw) | 2019.11- | 8AT | R | L/R | Saloon RWD 670 05 0436;670 05 2588;670 05 2783 | For vehicles with electronic limited slip diff. | GCO83610 | Outer Joint | | 27 | 28 | 59 | 87 | 56 | |
| 2.9 (397 kw) | 2020.05- | 8AT | R | L/R | Saloon RWD 670 05 0436 | For vehicles with electronic limited slip diff. | GCO83610 | Outer Joint | | 27 | 28 | 59 | 87 | 56 | |
| **Giulietta** | | | | | | | | | | | | | | | |
| 1.4 (77 kw) | 2011.04-2017.02 | 6MT | F | L | Hatchback FWD 940 B1.000;940 B8.000 | Date to:2012.11,Chassis no. to:7203109 | GDS56168 | Drive Shaft | | 27 | 25 | 59 | 84 | 621 | |
| | 2011.04-2017.02 | 6MT | F | R | Hatchback FWD 940 B1.000;940 B8.000 | Date to:2012.11;Chassis no. to:7203109 | GDS58233 | Drive Shaft | | 27 | 25 | 59 | 84 | 968 | |
| | 2011.04-2017.02 | 6MT | F | L/R | Hatchback FWD 940 B1.000;940 B8.000 | | GCO99348 | Outer Joint | | 27 | 25 | 59 | 84 | 61.5 | M |
| | 2011.04-2017.02 | 6MT | F | L | Hatchback FWD 940 B1.000;940 B8.000 | Date to:2012.11,Chassis no. to:7203109 | GCI17126 | Inner Joint | | 25 | 26 | 32 | 59 | 110.5 | |
| | 2011.04-2017.02 | 6MT | F | R | Hatchback FWD 940 B1.000;940 B8.000 | Date to:2012.11;Chassis no. to:7203109 | GCI84039 | Inner Joint | | 25 | 26 | 29.75 | 409 | 108.5 | |
| 1.4 (85 kw) | 2010.04-2016.02 | 6MT | F | L | Hatchback FWD 940 A6.000 | Date to:2012.11,Chassis no. to:7203109 | GDS56168 | Drive Shaft | | 27 | 25 | 59 | 84 | 621 | |
| | 2010.04-2016.02 | 6MT | F | R | Hatchback FWD 940 A6.000 | Date to:2012.11;Chassis no. to:7203109 | GDS58233 | Drive Shaft | | 27 | 25 | 59 | 84 | 968 | |
| | 2010.04-2016.02 | 6MT | F | L/R | Hatchback FWD 940 A6.000 | | GCO99348 | Outer Joint | | 27 | 25 | 59 | 84 | 61.5 | M |
| | 2010.04-2016.02 | 6MT | F | L | Hatchback FWD 940 A6.000 | Date to:2012.11,Chassis no. to:7203109 | GCI17126 | Inner Joint | | 25 | 26 | 32 | 59 | 110.5 | |
| | 2010.04-2016.02 | 6MT | F | R | Hatchback FWD 940 A6.000 | Date to:2012.11;Chassis no. to:7203109 | GCI84039 | Inner Joint | | 25 | 26 | 29.75 | 409 | 108.5 | |
| 1.4 (88 kw) | 2010.04-2020.12 | 6MT | F | L | Hatchback FWD 198 A4.000;940 B7.000 | Date to:2012.11,Chassis no. to:7203109 | GDS56168 | Drive Shaft | | 27 | 25 | 59 | 84 | 621 | |
| | 2010.04-2020.12 | 6MT | F | R | Hatchback FWD 198 A4.000;940 B7.000 | Date to:2012.11;Chassis no. to:7203109 | GDS58233 | Drive Shaft | | 27 | 25 | 59 | 84 | 968 | |
| | 2010.04-2020.12 | 6MT | F | L/R | Hatchback FWD 198 A4.000;940 B7.000 | | GCO99348 | Outer Joint | | 27 | 25 | 59 | 84 | 61.5 | M |
| | 2010.04-2020.12 | 6MT | F | L | Hatchback FWD 198 A4.000;940 B7.000 | Date to:2012.11,Chassis no. to:7203109 | GCI17126 | Inner Joint | | 25 | 26 | 32 | 59 | 110.5 | |
| | 2010.04-2020.12 | 6MT | F | R | Hatchback FWD 198 A4.000;940 B7.000 | Date to:2012.11;Chassis no. to:7203109 | GCI84039 | Inner Joint | | 25 | 26 | 29.75 | 409 | 108.5 | |
| | 2011.04-2016.02 | 6MT | F | L | Hatchback Van FWD 198 A4.000 | Date to:2012.11,Chassis no. to:7203109 | GDS56168 | Drive Shaft | | 27 | 25 | 59 | 84 | 621 | |
| | 2011.04-2016.02 | 6MT | F | R | Hatchback Van FWD 198 A4.000 | Date to:2012.11;Chassis no. to:7203109 | GDS58233 | Drive Shaft | | 27 | 25 | 59 | 84 | 968 | |
| | 2011.04-2016.02 | 6MT | F | L/R | Hatchback Van FWD 198 A4.000 | | GCO99348 | Outer Joint | | 27 | 25 | 59 | 84 | 61.5 | M |
| | 2011.04-2016.02 | 6MT | F | L | Hatchback Van FWD 198 A4.000 | Date to:2012.11,Chassis no. to:7203109 | GCI17126 | Inner Joint | | 25 | 26 | 32 | 59 | 110.5 | |
| | 2011.04-2016.02 | 6MT | F | R | Hatchback Van FWD 198 A4.000 | Date to:2012.11;Chassis no. to:7203109 | GCI84039 | Inner Joint | | 25 | 26 | 29.75 | 409 | 108.5 | |
| | 2011.12-2017.02 | 6MT | F | L | Hatchback FWD 198 A4.000 | Date to:2012.11,Chassis no. to:7203109 | GDS56168 | Drive Shaft | | 27 | 25 | 59 | 84 | 621 | |
| | 2011.12-2017.02 | 6MT | F | R | Hatchback FWD 198 A4.000 | Date to:2012.11;Chassis no. to:7203109 | GDS58233 | Drive Shaft | | 27 | 25 | 59 | 84 | 968 | |
| | 2011.12-2017.02 | 6MT | F | L/R | Hatchback FWD 198 A4.000 | | GCO99348 | Outer Joint | | 27 | 25 | 59 | 84 | 61.5 | M |
| | 2011.12-2017.02 | 6MT | F | L | Hatchback FWD 198 A4.000 | Date to:2012.11,Chassis no. to:7203109 | GCI17126 | Inner Joint | | 25 | 26 | 32 | 59 | 110.5 | |
| | 2011.12-2017.02 | 6MT | F | R | Hatchback FWD 198 A4.000 | Date to:2012.11;Chassis no. to:7203109 | GCI84039 | Inner Joint | | 25 | 26 | 29.75 | 409 | 108.5 | |
| 1.4 (110 kw) | 2014.09-2018.10 | 6MT | F | L | Hatchback FWD 940 C2.000 | | GDS56168 | Drive Shaft | | 27 | 25 | 59 | 84 | 621 | |
| | 2014.09-2018.10 | 6MT | F | L/R | Hatchback FWD 940 C2.000 | | GCO99348 | Outer Joint | | 27 | 25 | 59 | 84 | 61.5 | M |
| | 2014.09-2018.10 | 6MT | F | L | Hatchback FWD 940 C2.000 | | GCI17126 | Inner Joint | | 25 | 26 | 32 | 59 | 110.5 | |
| 1.4 (120 kw) | 2010.04-2018.10 | 6MT | F | L | Hatchback FWD 955 A8.000 | Date to:2012.11,Chassis no. to:7203109 | GDS56168 | Drive Shaft | | 27 | 25 | 59 | 84 | 621 | |
| | 2010.04-2018.10 | 6MT | F | R | Hatchback FWD 955 A8.000 | Date to:2012.11;Chassis no. to:7203109 | GDS58233 | Drive Shaft | | 27 | 25 | 59 | 84 | 968 | |
| | 2010.04-2018.10 | 6MT | F | L | Hatchback FWD 955 A8.000 | Date to:2012.11,Chassis no. to:7203109 | GCI17126 | Inner Joint | | 25 | 26 | 32 | 59 | 110.5 | |
| | 2010.04-2018.10 | 6MT | F | R | Hatchback FWD 955 A8.000 | Date to:2012.11;Chassis no. to:7203109 | GCI84039 | Inner Joint | | 25 | 26 | 29.75 | 409 | 108.5 | |
| | 2010.04-2018.10 | 6MT/6DCT | F | L/R | Hatchback FWD 955 A8.000 | | GCO99348 | Outer Joint | | 27 | 25 | 59 | 84 | 61.5 | M |
| 1.4 (125 kw) | 2010.04-2018.10 | 6MT | F | L | Hatchback FWD 940 A2.000 | Date to:2012.11,Chassis no. to:7203109 | GDS56168 | Drive Shaft | | 27 | 25 | 59 | 84 | 621 | |
| | 2010.04-2018.10 | 6MT | F | R | Hatchback FWD 940 A2.000 | Date to:2012.11;Chassis no. to:7203109 | GDS58233 | Drive Shaft | | 27 | 25 | 59 | 84 | 968 | |
| | 2010.04-2018.10 | 6MT | F | L | Hatchback FWD 940 A2.000 | Date to:2012.11,Chassis no. to:7203109 | GCI17126 | Inner Joint | | 25 | 26 | 32 | 59 | 110.5 | |
| | 2010.04-2018.10 | 6MT | F | R | Hatchback FWD 940 A2.000 | Date to:2012.11;Chassis no. to:7203109 | GCI84039 | Inner Joint | | 25 | 26 | 29.75 | 409 | 108.5 | |
| | 2010.04-2018.10 | 6MT/6DCT | F | L/R | Hatchback FWD 940 A2.000 | | GCO99348 | Outer Joint | | 27 | 25 | 59 | 84 | 61.5 | M |
| | 2011.04-2020.12 | 6MT | F | L | Hatchback Van FWD 940 A2.000 | Date to:2012.11,Chassis no. to:7203109 | GDS56168 | Drive Shaft | | 27 | 25 | 59 | 84 | 621 | |
| | 2011.04-2020.12 | 6MT | F | R | Hatchback Van FWD 940 A2.000 | Date to:2012.11;Chassis no. to:7203109 | GDS58233 | Drive Shaft | | 27 | 25 | 59 | 84 | 968 | |
| | 2011.04-2020.12 | 6MT | F | L | Hatchback Van FWD 940 A2.000 | Date to:2012.11,Chassis no. to:7203109 | GCI17126 | Inner Joint | | 25 | 26 | 32 | 59 | 110.5 | |
| | 2011.04-2020.12 | 6MT | F | R | Hatchback Van FWD 940 A2.000 | Date to:2012.11;Chassis no. to:7203109 | GCI84039 | Inner Joint | | 25 | 26 | 29.75 | 409 | 108.5 | |
| | 2011.04-2020.12 | 6MT/6DCT | F | L/R | Hatchback Van FWD 940 A2.000 | | GCO99348 | Outer Joint | | 27 | 25 | 59 | 84 | 61.5 | M |
| 1.6 (77 kw) | 2010.04-2016.02 | 6MT | F | L | Hatchback FWD 940 A3.000 | Date to:2012.11,Chassis no. to:7203109 | GDS56168 | Drive Shaft | | 27 | 25 | 59 | 84 | 621 | |
| | 2010.04-2016.02 | 6MT | F | R | Hatchback FWD 940 A3.000 | Exhaust Emis:6,Date from:2013.01 | GDS57385 | Drive Shaft | | 27 | 25 | 59 | 84 | 968 | |
| | 2010.04-2016.02 | 6MT | F | R | Hatchback FWD 940 A3.000 | Date to:2012.11,Chassis no. to:7203109 | GDS57819 | Drive Shaft | | 27 | 25 | 59 | 84 | 968 | |
| | 2010.04-2016.02 | 6MT | F | L/R | Hatchback FWD 940 A3.000 | | GCO99348 | Outer Joint | | 27 | 25 | 59 | 84 | 61.5 | M |
| | 2010.04-2016.02 | 6MT | F | R | Hatchback FWD 940 A3.000 | Date to:2012.11,Chassis no. to:7203109,VET no. from:7060698 | GCI17123 | Inner Joint | | 25 | 26 | 29.75 | 409 | 108.5 | |
| | 2010.04-2016.02 | 6MT | F | R | Hatchback FWD 940 A3.000 | Exhaust Emis:6,Date from:2013.01 | GCI83637 | Inner Joint | | 25 | 26 | 29.75 | 409 | 108.5 | |
| | 2010.04-2016.02 | 6MT | F | L/R | Hatchback FWD 940 A3.000 | Date to:2012.11,Chassis no. to:7203109 | GCI17126 | Inner Joint | | 25 | 26 | 32 | 59 | 110.5 | |
| | 2011.04-2016.02 | 6MT | F | L | Hatchback Van FWD 940 A3.000 | Date to:2012.11,Chassis no. to:7203109 | GDS56168 | Drive Shaft | | 27 | 25 | 59 | 84 | 621 | |

| | YEAR | TRANSM. | F/R | L/R | BODY STYLE & DRIVE TYPE & ENGINE | REMARKS | G-AP Ref. | PRODUCT | ABS | Technical Specifications A | B | C | H | L | P |
|---|---|---|---|---|---|---|---|---|---|---|---|---|---|---|---|
| **ALFA ROMEO** | | | | | | | | | | | | | | | |
| **Giulietta** | | | | | | | | | | | | | | | |
| 1.6 (77 kw) | 2011.04-2016.02 | 6MT | F | R | Hatchback Van FWD 940 A3.000 | Exhaust Emis:6,Date from:2013.01 | GDS57385 | Drive Shaft | | 27 | 25 | 59 | 84 | 968 | |
| | 2011.04-2016.02 | 6MT | F | R | Hatchback Van FWD 940 A3.000 | Date to:2012.11,Chassis no. to:7203109 | GDS57819 | Drive Shaft | | 27 | 25 | 59 | 84 | 968 | |
| | 2011.04-2016.02 | 6MT | F | L/R | Hatchback Van FWD 940 A3.000 | | GCO99348 | Outer Joint | | 27 | 25 | 59 | 84 | 61.5 | M |
| | 2011.04-2016.02 | 6MT | F | R | Hatchback Van FWD 940 A3.000 | Date to:2012.11,Chassis no. to:7203109,VET no. from:7060698 | GCI17123 | Inner Joint | | 25 | 26 | 29.75 | 409 | 108.5 | |
| | 2011.04-2016.02 | 6MT | F | R | Hatchback Van FWD 940 A3.000 | Exhaust Emis:6,Date from:2013.01 | GCI83637 | Inner Joint | | 25 | 26 | 29.75 | 409 | 108.5 | |
| | 2011.04-2016.02 | 6MT | F | L/R | Hatchback Van FWD 940 A3.000 | Date to:2012.11,Chassis no. to:7203109 | GCI17126 | Inner Joint | | 25 | 26 | 32 | 59 | 110.5 | |
| 1.6 (85 kw) | 2015.09-2018.10 | 6DCT | F | L | Hatchback FWD 940 C5.000 | | GDS56168 | Drive Shaft | | 27 | 25 | 59 | 84 | 621 | |
| | 2015.09-2018.10 | 6DCT/6MT | F | L | Hatchback FWD 940 C5.000 | | GCI17126 | Inner Joint | | 25 | 26 | 32 | 59 | 110.5 | |
| | 2015.09-2018.10 | 6MT | F | R | Hatchback FWD 940 C5.000 | Exhaust Emis:6 | GDS57385 | Drive Shaft | | 27 | 25 | 59 | 84 | 968 | |
| | 2015.09-2018.10 | 6MT | F | L/R | Hatchback FWD 940 C5.000 | | GCO99348 | Outer Joint | | 27 | 25 | 59 | 84 | 61.5 | M |
| | 2015.09-2018.10 | 6MT | F | R | Hatchback FWD 940 C5.000 | Exhaust Emis:6 | GCI83637 | Inner Joint | | 25 | 26 | 29.75 | 409 | 108.5 | |
| 1.6 (88 kw) | 2015.02-2020.12 | 6DCT | F | L | Hatchback FWD 940 C5.000;940 C1.000;552 80 444 | | GDS56168 | Drive Shaft | | 27 | 25 | 59 | 84 | 621 | |
| | 2015.02-2020.12 | 6DCT/6MT | F | L | Hatchback FWD 940 C5.000;940 C1.000;552 80 444 | | GCI17126 | Inner Joint | | 25 | 26 | 32 | 59 | 110.5 | |
| | 2015.02-2020.12 | 6MT | F | R | Hatchback FWD 940 C5.000;940 C1.000;552 80 444 | Exhaust Emis:6 | GDS57385 | Drive Shaft | | 27 | 25 | 59 | 84 | 968 | |
| | 2015.02-2020.12 | 6MT | F | L/R | Hatchback FWD 940 C5.000;940 C1.000;552 80 444 | | GCO99348 | Outer Joint | | 27 | 25 | 59 | 84 | 61.5 | M |
| | 2015.02-2020.12 | 6MT | F | R | Hatchback FWD 940 C5.000;940 C1.000;552 80 444 | Exhaust Emis:6 | GCI83637 | Inner Joint | | 25 | 26 | 29.75 | 409 | 108.5 | |
| 1.8 (169 kw) | 2010.04-2013.09 | 6MT | F | R | Hatchback FWD 940 A1.000 | Date to:2012.11,VET no. from:7060698 | GCI17123 | Inner Joint | | 25 | 26 | 29.75 | 409 | 108.5 | |
| | 2010.04-2013.09 | 6MT | F | R | Hatchback FWD 940 A1.000 | Date from:2012.12,Chassis no. from:7203110 | GCI82439 | Inner Joint | | 25 | 27 | 29.8 | 409 | 110 | |
| | 2010.04-2013.09 | MT | F | L | Hatchback FWD 940 A1.000 | Date From:2012.07 | GDS83976 | Drive Shaft | | 27 | 25 | 59 | 84.5 | 626 | |
| | 2010.04-2013.09 | MT | F | R | Hatchback FWD 940 A1.000 | Date From:2012.07 | GDS83975 | Drive Shaft | | 27 | 25 | 59 | 84.5 | 973 | |
| | 2010.04-2013.09 | MT | F | L/R | Hatchback FWD 940 A1.000 | | GCO17064 | Outer Joint | | 27 | 27 | 59 | 84.5 | 64 | M |
| | 2010.04-2013.09 | MT | F | L | Hatchback FWD 940 A1.000 | Date From:2012.07 | GCI82440 | Inner Joint | | 25 | 27 | 32 | 59 | 112.5 | |
| 1.8 (173 kw) | 2010.04-2016.02 | 6MT | F | L | Hatchback FWD 940 A1.000 | Date from:2012.12,Chassis no. from:7203110 | GDS83976 | Drive Shaft | | 27 | 25 | 59 | 84.5 | 626 | |
| | 2010.04-2016.02 | 6MT | F | R | Hatchback FWD 940 A1.000 | Date from:2012.12,Chassis no. from:7203110 | GDS83975 | Drive Shaft | | 27 | 25 | 59 | 84.5 | 973 | |
| | 2010.04-2016.02 | 6MT | F | L/R | Hatchback FWD 940 A1.000 | | GCO17064 | Outer Joint | | 27 | 27 | 59 | 84.5 | 64 | M |
| | 2010.04-2016.02 | 6MT | F | L | Hatchback FWD 940 A1.000 | Date from:2012.12,Chassis no. from:7203110 | GCI82440 | Inner Joint | | 25 | 27 | 32 | 59 | 112.5 | |
| | 2010.04-2016.02 | 6MT | F | R | Hatchback FWD 940 A1.000 | Date to:2012.11,VET no. from:7060698 | GCI17123 | Inner Joint | | 25 | 26 | 29.75 | 409 | 108.5 | |
| | 2010.04-2016.02 | 6MT | F | R | Hatchback FWD 940 A1.000 | Date from:2012.12,Chassis no. from:7203110 | GCI82439 | Inner Joint | | 25 | 27 | 29.8 | 409 | 110 | |
| | 2011.04-2016.02 | 6MT | F | L | Hatchback Van FWD 940 A1.000 | Date from:2012.12,Chassis no. from:7203110 | GDS83976 | Drive Shaft | | 27 | 25 | 59 | 84.5 | 626 | |
| | 2011.04-2016.02 | 6MT | F | R | Hatchback Van FWD 940 A1.000 | Date from:2012.12,Chassis no. from:7203110 | GDS83975 | Drive Shaft | | 27 | 25 | 59 | 84.5 | 973 | |
| | 2011.04-2016.02 | 6MT | F | L/R | Hatchback Van FWD 940 A1.000 | | GCO17064 | Outer Joint | | 27 | 27 | 59 | 84.5 | 64 | M |
| | 2011.04-2016.02 | 6MT | F | L | Hatchback Van FWD 940 A1.000 | Date from:2012.12,Chassis no. from:7203110 | GCI82440 | Inner Joint | | 25 | 27 | 32 | 59 | 112.5 | |
| | 2011.04-2016.02 | 6MT | F | R | Hatchback Van FWD 940 A1.000 | Date to:2012.11,VET no. from:7060698 | GCI17123 | Inner Joint | | 25 | 26 | 29.75 | 409 | 108.5 | |
| | 2011.04-2016.02 | 6MT | F | R | Hatchback Van FWD 940 A1.000 | Date from:2012.12,Chassis no. from:7203110 | GCI82439 | Inner Joint | | 25 | 27 | 29.8 | 409 | 110 | |
| 1.8 (177 kw) | 2013.09-2018.10 | AT | F | L/R | Hatchback FWD 940 B2.000 | | GCO17064 | Outer Joint | | 27 | 27 | 59 | 84.5 | 64 | M |
| 2.0 (100 kw) | 2010.04-2016.02 | 6MT | F | R | Hatchback FWD 940 A8.000;940 B6.000;940 C4.000 | Date to:2012.11,Chassis no. to:7203109,VET no. from:7060698 | GCI17123 | Inner Joint | | 25 | 26 | 29.75 | 409 | 108.5 | |
| | 2010.04-2016.02 | 6MT | F | R | Hatchback FWD 940 A8.000;940 B6.000;940 C4.000 | Date from:2012.12,Chassis no. from:7203110,Exhaust Emis:Euro 5 | GCI82439 | Inner Joint | | 25 | 27 | 29.8 | 409 | 110 | |
| | 2010.04-2016.02 | MT | F | L | Hatchback FWD 940 A8.000;940 B6.000;940 C4.000 | | GDS83976 | Drive Shaft | | 27 | 25 | 59 | 84.5 | 626 | |
| | 2010.04-2016.02 | MT | F | R | Hatchback FWD 940 A8.000;940 B6.000;940 C4.000 | | GDS83975 | Drive Shaft | | 27 | 25 | 59 | 84.5 | 973 | |
| | 2010.04-2016.02 | MT | F | L/R | Hatchback FWD 940 A8.000;940 B6.000;940 C4.000 | | GCO17064 | Outer Joint | | 27 | 27 | 59 | 84.5 | 64 | M |
| | 2010.04-2016.02 | MT | F | L | Hatchback FWD 940 A8.000;940 B6.000;940 C4.000 | | GCI82440 | Inner Joint | | 25 | 27 | 32 | 59 | 112.5 | |
| 2.0 (103 kw) | 2010.04-2020.12 | 6MT | F | R | Hatchback FWD 940 A5.000 | Date to:2012.11,Chassis no. to:7203109,VET no. from:7060698 | GCI17123 | Inner Joint | | 25 | 26 | 29.75 | 409 | 108.5 | |
| | 2010.04-2020.12 | 6MT | F | R | Hatchback FWD 940 A5.000 | Date from:2012.12,Chassis no. from:7203110,Exhaust Emis:Euro 5 | GCI82439 | Inner Joint | | 25 | 27 | 29.8 | 409 | 110 | |
| | 2010.04-2020.12 | MT | F | L | Hatchback FWD 940 A5.000 | | GDS83976 | Drive Shaft | | 27 | 25 | 59 | 84.5 | 626 | |
| | 2010.04-2020.12 | MT | F | R | Hatchback FWD 940 A5.000 | | GDS83975 | Drive Shaft | | 27 | 25 | 59 | 84.5 | 973 | |
| | 2010.04-2020.12 | MT | F | L/R | Hatchback FWD 940 A5.000 | | GCO17064 | Outer Joint | | 27 | 27 | 59 | 84.5 | 64 | M |
| | 2010.04-2020.12 | MT | F | L | Hatchback FWD 940 A5.000 | | GCI82440 | Inner Joint | | 25 | 27 | 32 | 59 | 112.5 | |
| | 2013.07-2016.02 | MT | F | L | Hatchback Van FWD 940 A5.000 | | GDS83976 | Drive Shaft | | 27 | 25 | 59 | 84.5 | 626 | |
| | 2013.07-2016.02 | MT | F | R | Hatchback Van FWD 940 A5.000 | | GDS83975 | Drive Shaft | | 27 | 25 | 59 | 84.5 | 973 | |
| | 2013.07-2016.02 | MT | F | L/R | Hatchback Van FWD 940 A5.000 | | GCO17064 | Outer Joint | | 27 | 27 | 59 | 84.5 | 64 | M |
| | 2013.07-2016.02 | MT | F | L | Hatchback Van FWD 940 A5.000 | | GCI82440 | Inner Joint | | 25 | 27 | 32 | 59 | 112.5 | |
| | 2013.07-2016.02 | MT | F | R | Hatchback Van FWD 940 A5.000 | | GCI82439 | Inner Joint | | 25 | 27 | 29.8 | 409 | 110 | |
| 2.0 (110 kw) | 2013.08-2016.02 | MT | F | L | Hatchback Van FWD 940 B5.000 | | GDS83976 | Drive Shaft | | 27 | 25 | 59 | 84.5 | 626 | |
| | 2013.08-2016.02 | MT | F | R | Hatchback Van FWD 940 B5.000 | Exhaust Emis Nm:Euro 5 | GDS83975 | Drive Shaft | | 27 | 25 | 59 | 84.5 | 973 | |
| | 2013.08-2016.02 | MT | F | L/R | Hatchback Van FWD 940 B5.000 | | GCO17064 | Outer Joint | | 27 | 27 | 59 | 84.5 | 64 | M |
| | 2013.08-2016.02 | MT | F | L | Hatchback Van FWD 940 B5.000 | | GCI82440 | Inner Joint | | 25 | 27 | 32 | 59 | 112.5 | |
| | 2013.08-2016.02 | MT | F | R | Hatchback Van FWD 940 B5.000 | Exhaust Emis Nm:Euro 5 | GCI82439 | Inner Joint | | 25 | 27 | 29.8 | 409 | 110 | |
| | 2013.08-2018.10 | MT | F | L | Hatchback FWD 940 B5.000;940 C3.000 | | GDS83976 | Drive Shaft | | 27 | 25 | 59 | 84.5 | 626 | |
| | 2013.08-2018.10 | MT | F | R | Hatchback FWD 940 B5.000;940 C3.000 | | GDS83975 | Drive Shaft | | 27 | 25 | 59 | 84.5 | 973 | |
| | 2013.08-2018.10 | MT | F | L/R | Hatchback FWD 940 B5.000;940 C3.000 | | GCO17064 | Outer Joint | | 27 | 27 | 59 | 84.5 | 64 | M |
| | 2013.08-2018.10 | MT | F | L | Hatchback FWD 940 B5.000;940 C3.000 | | GCI82440 | Inner Joint | | 25 | 27 | 32 | 59 | 112.5 | |
| | 2013.08-2018.10 | MT | F | R | Hatchback FWD 940 B5.000;940 C3.000 | | GCI82439 | Inner Joint | | 25 | 27 | 29.8 | 409 | 110 | |
| 2.0 (120 kw) | 2010.04-2018.10 | 6MT | F | R | Hatchback FWD 940 A7.000;940 B9.000 | Date to:2012.11,Chassis no. to:7203109,VET no. from:7060698 | GCI17123 | Inner Joint | | 25 | 26 | 29.75 | 409 | 108.5 | |
| | 2010.04-2018.10 | 6MT | F | R | Hatchback FWD 940 A7.000;940 B9.000 | Date from:2012.12,Chassis no. from:7203110,Exhaust Emis:Euro 5 | GCI82439 | Inner Joint | | 25 | 27 | 29.8 | 409 | 110 | |
| | 2010.04-2018.10 | MT | F | L | Hatchback FWD 940 A7.000;940 B9.000 | Date From:2012.08 | GDS83976 | Drive Shaft | | 27 | 25 | 59 | 84.5 | 626 | |

| | YEAR | TRANSM. | F/R | L/R | BODY STYLE & DRIVE TYPE & ENGINE | REMARKS | G-AP Ref. | PRODUCT | ABS | Technical Specifications A | B | C | H | L | P |
|---|---|---|---|---|---|---|---|---|---|---|---|---|---|---|---|
| **ALFA ROMEO** | | | | | | | | | | | | | | | |
| **Giulietta** | | | | | | | | | | | | | | | |
| 2.0 (120 kw) | 2010.04-2018.10 | MT | F | R | Hatchback FWD 940 A7.000;940 B9.000 | Date From:2012.08 | GDS83975 | Drive Shaft | | 27 | 25 | 59 | 84.5 | 973 | |
| | 2010.04-2018.10 | MT | F | L/R | Hatchback FWD 940 A7.000;940 B9.000 | | GCO17064 | Outer Joint | | 27 | 27 | 59 | 84.5 | 64 | M |
| | 2010.04-2018.10 | MT | F | L | Hatchback FWD 940 A7.000;940 B9.000 | Date From:2012.08 | GCI82440 | Inner Joint | | 25 | 27 | 32 | 59 | 112.5 | |
| 2.0 (125 kw) | 2010.04-2020.12 | 6MT | F | R | Hatchback FWD 940 A4.000;552 83 099 | Date to:2012.11,Chassis no. to:7203109,VET no. from:7060698 | GCI17123 | Inner Joint | | 25 | 26 | 29.75 | 409 | 108.5 | |
| | 2010.04-2020.12 | 6MT | F | R | Hatchback FWD 940 A4.000;552 83 099 | Date from:2012.12,Chassis no. from:7203110,Exhaust Emis:Euro 5 | GCI82439 | Inner Joint | | 25 | 27 | 29.8 | 409 | 110 | |
| | 2010.04-2020.12 | MT | F | L | Hatchback FWD 940 A4.000;552 83 099 | Date From:2012.08 | GDS83976 | Drive Shaft | | 27 | 25 | 59 | 84.5 | 626 | |
| | 2010.04-2020.12 | MT | F | R | Hatchback FWD 940 A4.000;552 83 099 | Date From:2012.08 | GDS83975 | Drive Shaft | | 27 | 25 | 59 | 84.5 | 973 | |
| | 2010.04-2020.12 | MT | F | L/R | Hatchback FWD 940 A4.000;552 83 099 | | GCO17064 | Outer Joint | | 27 | 27 | 59 | 84.5 | 64 | M |
| | 2010.04-2020.12 | MT | F | L | Hatchback FWD 940 A4.000;552 83 099 | Date From:2012.08 | GCI82440 | Inner Joint | | 25 | 27 | 32 | 59 | 112.5 | |
| | 2011.04-2016.02 | 6MT | F | R | Hatchback Van FWD 940 A4.000 | Date to:2012.11,Chassis no. to:7203109,VET no. from:7060698 | GCI17123 | Inner Joint | | 25 | 26 | 29.75 | 409 | 108.5 | |
| | 2011.04-2016.02 | 6MT | F | R | Hatchback Van FWD 940 A4.000 | Date from:2012.12,Chassis no. from:7203110,Exhaust Emis:Euro 5 | GCI82439 | Inner Joint | | 25 | 27 | 29.8 | 409 | 110 | |
| | 2011.04-2016.02 | MT | F | L | Hatchback Van FWD 940 A4.000 | Date From:2012.08 | GDS83976 | Drive Shaft | | 27 | 25 | 59 | 84.5 | 626 | |
| | 2011.04-2016.02 | MT | F | R | Hatchback Van FWD 940 A4.000 | Date From:2012.08 | GDS83975 | Drive Shaft | | 27 | 25 | 59 | 84.5 | 973 | |
| | 2011.04-2016.02 | MT | F | L/R | Hatchback Van FWD 940 A4.000 | | GCO17064 | Outer Joint | | 27 | 27 | 59 | 84.5 | 64 | M |
| | 2011.04-2016.02 | MT | F | L | Hatchback Van FWD 940 A4.000 | Date From:2012.08 | GCI82440 | Inner Joint | | 25 | 27 | 32 | 59 | 112.5 | |
| 2.0 (129 kw) | 2013.11-2018.10 | 6AT/6MT | F | L/R | Hatchback FWD 940 B4.000 | | GCO17064 | Outer Joint | | 27 | 27 | 59 | 84.5 | 64 | M |
| | 2015.05-2020.12 | 6DCT | F | L/R | Hatchback Van FWD 940 B4.000 | | GCO17064 | Outer Joint | | 27 | 27 | 59 | 84.5 | 64 | M |
| **GT** | | | | | | | | | | | | | | | |
| 1.8 (103 kw) | 2003.11-2010.09 | 5MT | F | L/R | Coupe FWD AR 32205 | | GDS17159 | Drive Shaft | | 25 | | 58.8 | 85 | 490 | |
| | 2003.11-2010.09 | 5MT | F | L/R | Coupe FWD AR 32205 | | GCO82017 | Outer Joint | | 25 | 25 | 58.8 | 85 | 58 | O |
| | 2003.11-2010.09 | MT | F | L/R | Coupe FWD AR 32205 | | GCI18070 | Inner Joint | | | 25 | | | 32 | |
| | 2003.11-2010.09 | | F | L/R | Coupe FWD AR 32205 | | GCO17042 | Outer Joint | | 25 | 25 | 51 | 85 | 58 | O |
| | 2003.11-2010.09 | | F | L/R | Coupe FWD AR 32205 | | GCI82005 | Inner Joint | | | 25 | | | 32 | |
| | 2003.11-2010.09 | | F | L/R | Coupe FWD AR 32205 | | GCI82011 | Inner Joint | | | 25 | | | 32 | |
| | 2003.11-2010.09 | | F | | Coupe FWD AR 32205 | | GCI82006 | Inner Joint | | | 25 | | | 32 | |
| 1.9 (110 kw) | 2003.11-2010.09 | 6MT | F | L | Coupe FWD 937 A5.000 | | GDS17150 | Drive Shaft | | 25 | 25 | 51 | 84.5 | 615 | |
| | 2003.11-2010.09 | 6MT | F | R | Coupe FWD 937 A5.000 | | GDS82008 | Drive Shaft | | 25 | 25 | 51 | 84.5 | 931.5 | |
| | 2003.11-2010.09 | 6MT | F | L | Coupe FWD 937 A5.000 | | GCI17005 | Inner Joint | | 25 | 26 | 32 | 91 | 95 | |
| | 2003.11-2010.09 | 6MT | F | R | Coupe FWD 937 A5.000 | | GCI17006 | Inner Joint | | 25 | 26 | 29.8 | 377 | 108 | |
| | 2003.11-2010.09 | MT | F | L/R | Coupe FWD 937 A5.000 | | GCO82025 | Outer Joint | | 25 | 26 | 51 | 84.5 | 64.5 | M |
| 1.9 (125 kw) | 2008.05-2010.09 | 6MT | F | L | Coupe FWD 937 A6.000 | | GDS17150 | Drive Shaft | | 25 | 25 | 51 | 84.5 | 615 | |
| | 2008.05-2010.09 | 6MT | F | R | Coupe FWD 937 A6.000 | | GDS82008 | Drive Shaft | | 25 | 25 | 51 | 84.5 | 931.5 | |
| | 2008.05-2010.09 | 6MT | F | L | Coupe FWD 937 A6.000 | | GCI17005 | Inner Joint | | 25 | 26 | 32 | 91 | 95 | |
| | 2008.05-2010.09 | 6MT | F | R | Coupe FWD 937 A6.000 | | GCI17006 | Inner Joint | | 25 | 26 | 29.8 | 377 | 108 | |
| | 2008.05-2010.09 | MT | F | L/R | Coupe FWD 937 A6.000 | | GCO82025 | Outer Joint | | 25 | 26 | 51 | 84.5 | 64.5 | M |
| 2.0 (119 kw) | 2006.12-2010.09 | AT/MT | F | L/R | Coupe FWD 932 A2.000 | | GCI18070 | Inner Joint | | | 25 | | | 32 | |
| | 2006.12-2010.09 | SAT/5MT | F | L/R | Coupe FWD 932 A2.000 | | GDS17159 | Drive Shaft | | 25 | | 58.8 | 85 | 490 | |
| | 2006.12-2010.09 | SAT/5MT | F | L/R | Coupe FWD 932 A2.000 | | GCO82017 | Outer Joint | | 25 | 25 | 58.8 | 85 | 58 | O |
| | 2006.12-2010.09 | | F | L/R | Coupe FWD 932 A2.000 | | GCO17042 | Outer Joint | | 25 | 25 | 51 | 85 | 58 | O |
| | 2006.12-2010.09 | | F | L/R | Coupe FWD 932 A2.000 | | GCI82005 | Inner Joint | | | 25 | | | 32 | |
| | 2006.12-2010.09 | | F | L/R | Coupe FWD 932 A2.000 | | GCI82011 | Inner Joint | | | 25 | | | 32 | |
| | 2006.12-2010.09 | | F | | Coupe FWD 932 A2.000 | | GCI82006 | Inner Joint | | | 25 | | | 32 | |
| 2.0 (121 kw) | 2003.11-2010.09 | 5AT/5MT | F | L/R | Coupe FWD 937 A1.000;932 A2.000 | | GDS17159 | Drive Shaft | | 25 | | 58.8 | 85 | 490 | |
| | 2003.11-2010.09 | 5AT/5MT | F | L/R | Coupe FWD 937 A1.000;932 A2.000 | | GCO82017 | Outer Joint | | 25 | 25 | 58.8 | 85 | 58 | O |
| | 2003.11-2010.09 | AT/MT | F | L/R | Coupe FWD 937 A1.000;932 A2.000 | | GCI18070 | Inner Joint | | | 25 | | | 32 | |
| | 2003.11-2010.09 | | F | L/R | Coupe FWD 937 A1.000;932 A2.000 | | GCO17042 | Outer Joint | | 25 | 25 | 51 | 85 | 58 | O |
| | 2003.11-2010.09 | | F | L/R | Coupe FWD 937 A1.000;932 A2.000 | | GCI82005 | Inner Joint | | | 25 | | | 32 | |
| | 2003.11-2010.09 | | F | L/R | Coupe FWD 937 A1.000;932 A2.000 | | GCI82011 | Inner Joint | | | 25 | | | 32 | |
| | 2003.11-2010.09 | | F | | Coupe FWD 937 A1.000;932 A2.000 | | GCI82006 | Inner Joint | | | 25 | | | 32 | |
| **GTV** | | | | | | | | | | | | | | | |
| 1.8 (106 kw) | 1997.09-2003.03 | AT/MT | F | L/R | Coupe FWD AR32201 | | GCO17042 | Outer Joint | | 25 | 25 | 51 | 85 | 58 | O |
| | 1997.09-2003.03 | AT/MT | F | L/R | Coupe FWD AR32201 | | GCO82006 | Outer Joint | 44T | 25 | 25 | 52 | 85 | 58 | O |
| | 1997.09-2003.03 | AT/MT | F | L/R | Coupe FWD AR32201 | | GCI18070 | Inner Joint | | | 25 | | | 32 | |
| | 1997.09-2003.03 | | F | L/R | Coupe FWD AR32201 | | GCI82005 | Inner Joint | | | 25 | | | 32 | |
| | 1997.09-2003.03 | | F | L/R | Coupe FWD AR32201 | | GCI82011 | Inner Joint | | | 25 | | | 32 | |
| 2.0 (110 kw) | 1995.06-2005.10 | AT/MT | F | L/R | Coupe FWD AR16201/AR32310 | | GCO17042 | Outer Joint | | 25 | 25 | 51 | 85 | 58 | O |
| | 1995.06-2005.10 | AT/MT | F | L/R | Coupe FWD AR16201/AR32310 | | GCO82006 | Outer Joint | 44T | 25 | 25 | 52 | 85 | 58 | O |
| | 1995.06-2005.10 | AT/MT | F | L/R | Coupe FWD AR16201/AR32310 | | GCI18070 | Inner Joint | | | 25 | | | 32 | |
| | 1995.06-2005.10 | MT | F | | Coupe FWD AR16201/AR32310 | | GCI82006 | Inner Joint | | | 25 | | | 32 | |
| | 1995.06-2005.10 | | F | L/R | Coupe FWD AR16201/AR32310 | | GCI82005 | Inner Joint | | | 25 | | | 32 | |
| | 1995.06-2005.10 | | F | L/R | Coupe FWD AR16201/AR32310 | | GCI82011 | Inner Joint | | | 25 | | | 32 | |
| 2.0 (114 kw) | 1997.09-2003.03 | | F | L/R | Coupe FWD AR32301 | | GCO82006 | Outer Joint | 44T | 25 | 25 | 52 | 85 | 58 | O |
| | 1997.09-2003.03 | | F | L/R | Coupe FWD AR32301 | | GCI82005 | Inner Joint | | | 25 | | | 32 | |
| | 1997.09-2003.03 | | F | L/R | Coupe FWD AR32301 | | GCI82011 | Inner Joint | | | 25 | | | 32 | |
| 2.0 (121 kw) | 2003.03-2004.10 | | F | L/R | Coupe FWD 937A1000 | | GCI82005 | Inner Joint | | | 25 | | | 32 | |

| | YEAR | TRANSM. | F/R | L/R | BODY STYLE & DRIVE TYPE & ENGINE | REMARKS | G-AP Ref. | PRODUCT | ABS | Technical Specifications A | B | C | H | L | P |
|---|---|---|---|---|---|---|---|---|---|---|---|---|---|---|---|
| **ALFA ROMEO** | | | | | | | | | | | | | | | |
| **GTV** | | | | | | | | | | | | | | | |
| 2.0 (121 kw) | 2003.03-2004.10 | | F | L/R | Coupe FWD 937A1000 | | GCI82011 | Inner Joint | | | 25 | | | 32 | |
| 2.0 (148 kw) | 1995.06-1998.09 | 5MT | F | L/R | Coupe FWD AR16202 | Chassis no. to:6063041 | GCO82009 | Outer Joint | 44T | 25 | 28 | 56 | 85 | 63.5 | O |
| | 1995.06-1998.09 | 5MT | F | L/R | Coupe FWD AR16202 | Chassis no. from:6063042 | GCO82012 | Outer Joint | | 25 | 28 | 59 | 85 | 63 | O |
| 3.0 (160 kw) | 2000.09-2003.03 | 5MT/6MT | F | L/R | Coupe FWD AR16105 | Chassis no. to:6063041 | GCO82009 | Outer Joint | 44T | 25 | 28 | 56 | 85 | 63.5 | O |
| | 2000.09-2003.03 | 5MT/6MT | F | L/R | Coupe FWD AR16105 | Chassis no. from:6063042 | GCO82012 | Outer Joint | | 25 | 28 | 59 | 85 | 63 | O |
| 3.0 (162 kw) | 1996.10-2000.10 | 5MT/6MT | F | L/R | Coupe FWD AR16102 | Chassis no. to:6063041 | GCO82009 | Outer Joint | 44T | 25 | 28 | 56 | 85 | 63.5 | O |
| | 1996.10-2000.10 | 5MT/6MT | F | L/R | Coupe FWD AR16102 | Chassis no. from:6063042 | GCO82012 | Outer Joint | | 25 | 28 | 59 | 85 | 63 | O |
| 3.2 (176 kw) | 2003.03-2004.10 | | F | L/R | Coupe FWD 936A6000 | Date to:2004.01 | GCO17009 | Outer Joint | | 25 | 26 | 59 | 84 | 63 | M |
| **Mito** | | | | | | | | | | | | | | | |
| 0.9 (63 kw) | 2011.07-2013.12 | 6MT | F | L | Hatchback FWD 312 A2.000 | | GDS17224 | Drive Shaft | | 22 | 22 | 51 | 79 | 670 | |
| | 2011.07-2013.12 | 6MT | F | R | Hatchback FWD 312 A2.000 | | GDS17225 | Drive Shaft | | 22 | 22 | 51 | 79 | 860 | |
| | 2011.07-2013.12 | 6MT | F | L/R | Hatchback FWD 312 A2.000 | | GCO17070 | Outer Joint | | 22 | 22 | 51 | 79 | 57.5 | M |
| | 2011.07-2013.12 | 6MT | F | L/R | Hatchback FWD 312 A2.000 | | GCI17004 | Inner Joint | | 22 | 21 | 36 | 61 | 93.5 | |
| 0.9 (74 kw) | 2013.12-2018.08 | 6MT | F | L | Hatchback FWD 199 B7.000 | | GDS17224 | Drive Shaft | | 22 | 22 | 51 | 79 | 670 | |
| | 2013.12-2018.08 | 6MT | F | R | Hatchback FWD 199 B7.000 | | GDS17225 | Drive Shaft | | 22 | 22 | 51 | 79 | 860 | |
| | 2013.12-2018.08 | 6MT | F | L/R | Hatchback FWD 199 B7.000 | | GCO17070 | Outer Joint | | 22 | 22 | 51 | 79 | 57.5 | M |
| | 2013.12-2018.08 | 6MT | F | L/R | Hatchback FWD 199 B7.000 | | GCI17004 | Inner Joint | | 22 | 21 | 36 | 61 | 93.5 | |
| 0.9 (77 kw) | 2013.04-2018.08 | 6MT | F | L | Hatchback FWD 199 B6.000 | | GDS17224 | Drive Shaft | | 22 | 22 | 51 | 79 | 670 | |
| | 2013.04-2018.08 | 6MT | F | R | Hatchback FWD 199 B6.000 | | GDS17225 | Drive Shaft | | 22 | 22 | 51 | 79 | 860 | |
| | 2013.04-2018.08 | 6MT | F | L/R | Hatchback FWD 199 B6.000 | | GCO17070 | Outer Joint | | 22 | 22 | 51 | 79 | 57.5 | M |
| | 2013.04-2018.08 | 6MT | F | L/R | Hatchback FWD 199 B6.000 | | GCI17004 | Inner Joint | | 22 | 21 | 36 | 61 | 93.5 | |
| | 2013.04-2018.08 | MT | F | L/R | Hatchback FWD 199 B6.000 | | GCO17014 | Outer Joint | | 22 | 21 | 51 | 79.5 | 54 | M |
| 1.3 (59 kw) | 2013.12-2015.12 | 5MT | F | L | Hatchback FWD 199 B8.000 | | GDS82635 | Drive Shaft | | 25 | 24 | 51.1 | 84.5 | 626 | |
| | 2013.12-2015.12 | 5MT | F | R | Hatchback FWD 199 B8.000 | | GDS17109 | Drive Shaft | | 25 | 24 | 51 | 84.5 | 908 | |
| | 2013.12-2015.12 | 5MT | F | L/R | Hatchback FWD 199 B8.000 | | GCO17063 | Outer Joint | | 25 | 25 | 51.1 | 84.5 | 61 | M |
| | 2013.12-2015.12 | 5MT | F | L | Hatchback FWD 199 B8.000 | | GCI81925 | Inner Joint | | 24 | 24 | 29.8 | 86.5 | 87 | |
| 1.3 (62 kw) | 2011.01-2015.12 | 5AT | F | L | Hatchback FWD 199 B4.000 | | GDS17148 | Drive Shaft | | 25 | 24 | 51.1 | 84.5 | 614 | |
| | 2011.01-2015.12 | 5AT | F | R | Hatchback FWD 199 B4.000 | | GDS17144 | Drive Shaft | | 25 | 24 | 51.1 | 84.5 | 908 | |
| | 2011.01-2015.12 | 5MT | F | L | Hatchback FWD 199 B4.000 | | GDS82635 | Drive Shaft | | 25 | 24 | 51.1 | 84.5 | 626 | |
| | 2011.01-2015.12 | 5MT | F | R | Hatchback FWD 199 B4.000 | | GDS17109 | Drive Shaft | | 25 | 24 | 51 | 84.5 | 908 | |
| | 2011.01-2015.12 | 5MT | F | L/R | Hatchback FWD 199 B4.000 | Model year from:2013 | GCO17063 | Outer Joint | | 25 | 25 | 51.1 | 84.5 | 61 | M |
| | 2011.01-2015.12 | 5MT | F | L | Hatchback FWD 199 B4.000 | | GCI81925 | Inner Joint | | 24 | 24 | 29.8 | 86.5 | 87 | |
| | 2011.01-2015.12 | 5MT | F | R | Hatchback FWD 199 B4.000 | | GCI17012 | Inner Joint | | 24 | 23 | 29.7 | 379 | 100.5 | |
| | 2011.01-2015.12 | MT | F | L | Hatchback FWD 199 B4.000 | Inner teeth of wheel side:23,Inner teeth of tranm.side:23 | GDS17182 | Drive Shaft | | 25 | 24 | 51 | 84.5 | 624 | |
| 1.3 (66 kw) | 2008.08-2010.08 | 6MT | F | L | Hatchback FWD 199 A3.000;955 B2.000 | Inner teeth of wheel side:24 | GDS17054 | Drive Shaft | | 25 | 35 | 51 | 84.5 | 472 | |
| | 2008.08-2010.08 | 6MT | F | L | Hatchback FWD 199 A3.000;955 B2.000 | Inner teeth of wheel side:24 | GDS17062 | Drive Shaft | | 25 | 24 | 51 | 84.5 | 582 | |
| | 2008.08-2010.08 | 6MT | F | L | Hatchback FWD 199 A3.000;955 B2.000 | Equipment code:5KQ;Inner teeth of wheel side:23;Trans. side with housing | GDS17070 | Drive Shaft | | 25 | 25 | 51 | 84.5 | 576 | |
| | 2008.08-2010.08 | 6MT | F | L | Hatchback FWD 199 A3.000;955 B2.000 | Equipment code:5KQ;Inner teeth of wheel side:23 | GDS17172 | Drive Shaft | | 25 | 34 | 51 | 84.5 | 486 | |
| | 2008.08-2010.08 | 6MT | F | R | Hatchback FWD 199 A3.000;955 B2.000 | Equipment code:5KQ | GDS17146 | Drive Shaft | | 25 | 34 | 51 | 84.5 | 522 | |
| | 2008.08-2010.08 | 6MT | F | L/R | Hatchback FWD 199 A3.000;955 B2.000 | | GCO17028 | Outer Joint | | 25 | 24 | 51 | 84.5 | 62 | M |
| | 2008.08-2010.08 | 6MT | F | L/R | Hatchback FWD 199 A3.000;955 B2.000 | Equipment code:5KQ | GCO17053 | Outer Joint | | 25 | 23 | 51 | 84.5 | 60 | M |
| 1.3 (70 kw) | 2009.09-2018.10 | 5AT | F | L | Hatchback FWD 199 B1.000;330 A1.000 | | GDS17148 | Drive Shaft | | 25 | 24 | 51.1 | 84.5 | 614 | |
| | 2009.09-2018.10 | 5AT | F | R | Hatchback FWD 199 B1.000;330 A1.000 | | GDS17144 | Drive Shaft | | 25 | 24 | 51.1 | 84.5 | 908 | |
| | 2009.09-2018.10 | 5MT | F | L | Hatchback FWD 199 B1.000;330 A1.000 | Inner teeth of wheel side:23 | GDS17182 | Drive Shaft | | 25 | 24 | 51 | 84.5 | 624 | |
| | 2009.09-2018.10 | 5MT | F | L | Hatchback FWD 199 B1.000;330 A1.000 | Inner teeth of wheel side:25 | GDS82635 | Drive Shaft | | 25 | 24 | 51.1 | 84.5 | 626 | |
| | 2009.09-2018.10 | 5MT | F | R | Hatchback FWD 199 B1.000;330 A1.000 | | GDS17109 | Drive Shaft | | 25 | 24 | 51 | 84.5 | 908 | |
| | 2009.09-2018.10 | 5MT | F | L/R | Hatchback FWD 199 B1.000;330 A1.000 | Model year from:2013 | GCO17063 | Outer Joint | | 25 | 25 | 51.1 | 84.5 | 61 | M |
| | 2009.09-2018.10 | 5MT | F | L | Hatchback FWD 199 B1.000;330 A1.000 | | GCI81925 | Inner Joint | | 24 | 24 | 29.8 | 86.5 | 87 | |
| | 2009.09-2018.10 | 5MT | F | R | Hatchback FWD 199 B1.000;330 A1.000 | | GCI17012 | Inner Joint | | 24 | 23 | 29.7 | 379 | 100.5 | |
| 1.4 (51 kw) | 2011.05-2018.10 | 5MT | F | L | Hatchback FWD 955 A9.000 | | GDS17222 | Drive Shaft | | 22 | 22 | 51 | 79.5 | 646 | |
| | 2011.05-2018.10 | 5MT | F | R | Hatchback FWD 955 A9.000 | | GDS17111 | Drive Shaft | | 22 | 22 | 51.2 | 79.5 | 887 | |
| | 2011.05-2018.10 | 5MT | F | L/R | Hatchback FWD 955 A9.000 | Model year to:2013 | GCO17052 | Outer Joint | | 22 | 21 | 51.2 | 79.5 | 54 | M |
| | 2011.05-2018.10 | MT | F | L/R | Hatchback FWD 955 A9.000 | | GCO17014 | Outer Joint | | 22 | 21 | 51 | 79.5 | 54 | M |
| 1.4 (57 kw) | 2011.03-2018.10 | 5MT | F | L | Hatchback FWD 350 A1.000 | | GDS17222 | Drive Shaft | | 22 | 22 | 51 | 79.5 | 646 | |
| | 2011.03-2018.10 | 5MT | F | R | Hatchback FWD 350 A1.000 | | GDS17111 | Drive Shaft | | 22 | 22 | 51.2 | 79.5 | 887 | |
| | 2011.03-2018.10 | 5MT | F | L/R | Hatchback FWD 350 A1.000 | | GCO17014 | Outer Joint | | 22 | 21 | 51 | 79.5 | 54 | M |
| | 2011.03-2018.10 | 5MT | F | L/R | Hatchback FWD 350 A1.000 | Model year to:2013 | GCO17052 | Outer Joint | | 22 | 21 | 51.2 | 79.5 | 54 | M |
| 1.4 (58 kw) | 2008.08-2013.08 | 6MT | F | L | Hatchback FWD 955 A1.000 | | GDS17222 | Drive Shaft | | 22 | 22 | 51 | 79.5 | 646 | |
| | 2008.08-2013.08 | 6MT | F | R | Hatchback FWD 955 A1.000 | | GDS17111 | Drive Shaft | | 22 | 22 | 51.2 | 79.5 | 887 | |
| | 2008.08-2013.08 | 6MT | F | L/R | Hatchback FWD 955 A1.000 | Model year to:2013 | GCO17052 | Outer Joint | | 22 | 21 | 51.2 | 79.5 | 54 | M |
| | 2008.08-2013.08 | MT | F | L/R | Hatchback FWD 955 A1.000 | | GCO17014 | Outer Joint | | 22 | 21 | 51 | 79.5 | 54 | M |
| 1.4 (70 kw) | 2008.09-2013.08 | 6MT | F | L | Hatchback FWD 199 A6.000 | Trans. side with housing;Inner teeth of tranm.side:27 | GDS17045 | Drive Shaft | | 22 | 22 | 51 | 79.5 | 649 | |
| | 2008.09-2013.08 | 6MT | F | L | Hatchback FWD 199 A6.000 | Trans. side without housing | GDS17088 | Drive Shaft | | 22 | | 51 | 79 | 552 | |
| | 2008.09-2013.08 | 6MT | F | L | Hatchback FWD 199 A6.000 | Trans. side with housing;Inner teeth of tranm.side:21 | GDS17222 | Drive Shaft | | 22 | 22 | 51 | 79.5 | 646 | |
| | 2008.09-2013.08 | 6MT | F | R | Hatchback FWD 199 A6.000 | | GDS17111 | Drive Shaft | | 22 | 22 | 51.2 | 79.5 | 887 | |

| | YEAR | TRANSM. | F/R | L/R | BODY STYLE & DRIVE TYPE & ENGINE | REMARKS | G-AP Ref. | PRODUCT | ABS | Technical Specifications A | B | C | H | L | P |
|---|---|---|---|---|---|---|---|---|---|---|---|---|---|---|---|
| **ALFA ROMEO** | | | | | | | | | | | | | | | |
| **Mito** | | | | | | | | | | | | | | | |
| 1.4 (70 kw) | 2008.09-2013.08 | 6MT | F | L/R | Hatchback FWD 199 A6.000 | | GCO17070 | Outer Joint | | 22 | 22 | 51 | 79 | 57.5 | M |
| | 2008.09-2013.08 | 6MT | F | R | Hatchback FWD 199 A6.000 | | GCI17004 | Inner Joint | | 22 | 21 | 36 | 61 | 93.5 | |
| | 2008.09-2013.08 | MT | F | L/R | Hatchback FWD 199 A6.000 | | GCO17014 | Outer Joint | | 22 | 21 | 51 | 79.5 | 54 | M |
| 1.4 (77 kw) | 2009.09-2013.08 | 6MT | F | L | Hatchback FWD 955 A6.000 | | GDS17088 | Drive Shaft | | 22 | | 51 | 79 | 552 | |
| | 2009.09-2013.08 | 6MT | F | R | Hatchback FWD 955 A6.000 | | GDS17111 | Drive Shaft | | 22 | 22 | 51.2 | 79.5 | 887 | |
| | 2009.09-2013.08 | 6MT | F | L | Hatchback FWD 955 A6.000 | | GCO17070 | Outer Joint | | 22 | 22 | 51 | 79 | 57.5 | M |
| | 2009.09-2013.08 | 6MT | F | R | Hatchback FWD 955 A6.000 | | GCO17065 | Outer Joint | | 25 | 33 | 51.1 | 84.5 | 61 | I |
| | 2009.09-2013.08 | 6MT | F | R | Hatchback FWD 955 A6.000 | | GCI17072 | Inner Joint | | 25 | 33 | 34.9 | 431.5 | 93 | |
| 1.4 (88 kw) | 2008.08-2013.08 | 5MT | F | L | Hatchback FWD 198 A4.000 | | GDS17148 | Drive Shaft | | 25 | 24 | 51.1 | 84.5 | 614 | |
| | 2008.08-2013.08 | 5MT | F | R | Hatchback FWD 198 A4.000 | | GDS82634 | Drive Shaft | | 25 | 24 | 51.1 | 84.5 | 919 | |
| | 2008.08-2013.08 | 5MT | F | L/R | Hatchback FWD 198 A4.000 | Chassis no. from:1039620 | GCO17063 | Outer Joint | | 25 | 25 | 51.1 | 84.5 | 61 | M |
| | 2008.08-2013.08 | 5MT | F | L | Hatchback FWD 198 A4.000 | | GCI17025 | Inner Joint | | 24 | 24 | 29.7 | 86.5 | 93 | |
| | 2008.08-2013.08 | 5MT | F | R | Hatchback FWD 198 A4.000 | | GCI17057 | Inner Joint | | 24 | 24 | 29.75 | 388 | 96.5 | |
| | 2009.01-2016.08 | 5MT | F | L | Hatchback FWD 198 A4.000 | | GDS17148 | Drive Shaft | | 25 | 24 | 51.1 | 84.5 | 614 | |
| | 2009.01-2016.08 | 5MT | F | R | Hatchback FWD 198 A4.000 | | GDS82634 | Drive Shaft | | 25 | 24 | 51.1 | 84.5 | 919 | |
| | 2009.01-2016.08 | 5MT | F | L/R | Hatchback FWD 198 A4.000 | Chassis no. from:1039620 | GCO17063 | Outer Joint | | 25 | 25 | 51.1 | 84.5 | 61 | M |
| | 2009.01-2016.08 | 5MT | F | L | Hatchback FWD 198 A4.000 | | GCI17025 | Inner Joint | | 24 | 24 | 29.7 | 86.5 | 93 | |
| | 2009.01-2016.08 | 5MT | F | R | Hatchback FWD 198 A4.000 | | GCI17057 | Inner Joint | | 24 | 24 | 29.75 | 388 | 96.5 | |
| | 2016.04-2018.10 | 5MT | F | L | Hatchback FWD 198 A4.000 | | GDS17148 | Drive Shaft | | 25 | 24 | 51.1 | 84.5 | 614 | |
| | 2016.04-2018.10 | 5MT | F | R | Hatchback FWD 198 A4.000 | | GDS82634 | Drive Shaft | | 25 | 24 | 51.1 | 84.5 | 919 | |
| | 2016.04-2018.10 | 5MT | F | L/R | Hatchback FWD 198 A4.000 | Chassis no. from:1039620 | GCO17063 | Outer Joint | | 25 | 25 | 51.1 | 84.5 | 61 | M |
| | 2016.04-2018.10 | 5MT | F | L | Hatchback FWD 198 A4.000 | | GCI17025 | Inner Joint | | 24 | 24 | 29.7 | 86.5 | 93 | |
| | 2016.04-2018.10 | 5MT | F | R | Hatchback FWD 198 A4.000 | | GCI17057 | Inner Joint | | 24 | 24 | 29.75 | 388 | 96.5 | |
| 1.4 (99 kw) | 2009.10-2014.12 | 5MT | F | L | Hatchback FWD 955 A2.000;955 A7.000 | | GDS17148 | Drive Shaft | | 25 | 24 | 51.1 | 84.5 | 614 | |
| | 2009.10-2014.12 | 5MT | F | R | Hatchback FWD 955 A2.000;955 A7.000 | | GDS82634 | Drive Shaft | | 25 | 24 | 51.1 | 84.5 | 919 | |
| | 2009.10-2014.12 | 5MT | F | L/R | Hatchback FWD 955 A2.000;955 A7.000 | | GCO17063 | Outer Joint | | 25 | 25 | 51.1 | 84.5 | 61 | M |
| | 2009.10-2014.12 | 5MT | F | L | Hatchback FWD 955 A2.000;955 A7.000 | | GCI17025 | Inner Joint | | 24 | 24 | 29.7 | 86.5 | 93 | |
| | 2009.10-2014.12 | 5MT | F | R | Hatchback FWD 955 A2.000;955 A7.000 | | GCI17057 | Inner Joint | | 24 | 24 | 29.75 | 388 | 96.5 | |
| 1.4 (103 kw) | 2013.12-2018.10 | 6AT | F | L/R | Hatchback FWD 955 B1.000 | | GCO17063 | Outer Joint | | 25 | 25 | 51.1 | 84.5 | 61 | M |
| 1.4 (110 kw) | 2008.09-2011.06 | 6MT | F | R | Hatchback FWD 198 A1.000 | | GDS17143 | Drive Shaft | | 25 | 25 | 51.1 | 84.5 | 953 | |
| | 2008.09-2011.06 | 6MT | F | L | Hatchback FWD 198 A1.000 | | GCI17085 | Inner Joint | | 25 | 33 | 34.9 | 57.5 | 97.5 | |
| | 2008.09-2011.06 | 6MT | F | R | Hatchback FWD 198 A1.000 | | GCI17072 | Inner Joint | | 25 | 33 | 34.9 | 431.5 | 93 | |
| | 2008.09-2011.06 | | F | L | Hatchback FWD 198 A1.000 | | GDS17142 | Drive Shaft | | 25 | 25 | 51.1 | 84.5 | 588 | |
| | 2008.09-2011.06 | | F | L/R | Hatchback FWD 198 A1.000 | | GCO17065 | Outer Joint | | 25 | 33 | 51.1 | 84.5 | 61 | I |
| 1.4 (114 kw) | 2008.08-2011.06 | 6MT | F | L/R | Hatchback FWD 199 A8.000 | | GCO17065 | Outer Joint | | 25 | 33 | 51.1 | 84.5 | 61 | I |
| 1.4 (120 kw) | 2009.10-2018.10 | 6MT | F | L/R | Hatchback FWD 955 A8.000 | | GCO17063 | Outer Joint | | 25 | 25 | 51.1 | 84.5 | 61 | M |
| 1.4 (125 kw) | 2009.09-2018.10 | MT | F | L/R | Hatchback FWD 940 A2.000 | | GCO17063 | Outer Joint | | 25 | 25 | 51.1 | 84.5 | 61 | M |
| 1.6 (85 kw) | 2008.08-2015.08 | 6MT | F | L | Hatchback FWD 955 A4.000 | Equipment code:PCC544 | GDS17142 | Drive Shaft | | 25 | 25 | 51.1 | 84.5 | 588 | |
| | 2008.08-2015.08 | 6MT | F | R | Hatchback FWD 955 A4.000 | Equipment code:PCC544 | GDS17143 | Drive Shaft | | 25 | 25 | 51.1 | 84.5 | 953 | |
| | 2008.08-2015.08 | 6MT | F | L/R | Hatchback FWD 955 A4.000 | Equipment code:PCC635 | GCO17063 | Outer Joint | | 25 | 25 | 51.1 | 84.5 | 61 | M |
| | 2008.08-2015.08 | 6MT | F | L/R | Hatchback FWD 955 A4.000 | Equipment code:PCC544 | GCO17065 | Outer Joint | | 25 | 33 | 51.1 | 84.5 | 61 | I |
| | 2008.08-2015.08 | 6MT | F | L | Hatchback FWD 955 A4.000 | Equipment code:PCC544 | GCI17085 | Inner Joint | | 25 | 33 | 34.9 | 57.5 | 97.5 | |
| | 2008.08-2015.08 | 6MT | F | R | Hatchback FWD 955 A4.000 | Equipment code:PCC544 | GCI17072 | Inner Joint | | 25 | 33 | 34.9 | 431.5 | 93 | |
| 1.6 (88 kw) | 2008.08-2015.08 | 6MT | F | L | Hatchback FWD 198 A2.000;955 A3.000 | Equipment code:PCC544 | GDS17142 | Drive Shaft | | 25 | 25 | 51.1 | 84.5 | 588 | |
| | 2008.08-2015.08 | 6MT | F | R | Hatchback FWD 198 A2.000;955 A3.000 | Equipment code:PCC544 | GDS17143 | Drive Shaft | | 25 | 25 | 51.1 | 84.5 | 953 | |
| | 2008.08-2015.08 | 6MT | F | L/R | Hatchback FWD 198 A2.000;955 A3.000 | Equipment code:PCC635 | GCO17063 | Outer Joint | | 25 | 25 | 51.1 | 84.5 | 61 | M |
| | 2008.08-2015.08 | 6MT | F | L/R | Hatchback FWD 198 A2.000;955 A3.000 | Equipment code:PCC544 | GCO17065 | Outer Joint | | 25 | 33 | 51.1 | 84.5 | 61 | I |
| | 2008.08-2015.08 | 6MT | F | L | Hatchback FWD 198 A2.000;955 A3.000 | Equipment code:PCC544 | GCI17085 | Inner Joint | | 25 | 33 | 34.9 | 57.5 | 97.5 | |
| | 2008.08-2015.08 | 6MT | F | R | Hatchback FWD 198 A2.000;955 A3.000 | Equipment code:PCC544 | GCI17072 | Inner Joint | | 25 | 33 | 34.9 | 431.5 | 93 | |
| **Spider** | | | | | | | | | | | | | | | |
| 1.8 (106 kw) | 1997.09-2003.03 | AT/MT | F | L/R | Cabriolet FWD AR32201 | | GCI18070 | Inner Joint | | | 25 | | | 32 | |
| | 1997.09-2003.03 | MT | F | L/R | Cabriolet FWD AR32201 | | GCO82006 | Outer Joint | 44T | 25 | 25 | 52 | 85 | 58 | O |
| | 1997.09-2003.03 | MT | F | | Cabriolet FWD AR32201 | | GCI82005 | Inner Joint | | | 25 | | | 32 | |
| | 1997.09-2003.03 | | F | L/R | Cabriolet FWD AR32201 | Date From:1999.02 | GCO17042 | Outer Joint | | 25 | 25 | 51 | 85 | 58 | O |
| | 1997.09-2003.03 | | F | L/R | Cabriolet FWD AR32201 | | GCI82011 | Inner Joint | | | 25 | | | 32 | |
| 1.8 (147 kw) | 2009.05-2011.03 | AT/MT | F | L/R | Convertible FWD 939 B1.000 | | GCO82024 | Outer Joint | | 30 | 27 | 61 | 93 | 65 | M |
| 2.0 (110 kw) | 1995.03-2005.04 | AT/MT | F | L/R | Cabriolet FWD AR16201/AR32310 | | GCI18070 | Inner Joint | | | 25 | | | 32 | |
| | 1995.03-2005.04 | MT | F | L/R | Cabriolet FWD AR16201/AR32310 | | GCO82006 | Outer Joint | 44T | 25 | 25 | 52 | 85 | 58 | O |
| | 1995.03-2005.04 | MT | F | | Cabriolet FWD AR16201/AR32310 | | GCI82005 | Inner Joint | | | 25 | | | 32 | |
| | 1995.03-2005.04 | | F | L/R | Cabriolet FWD AR16201/AR32310 | Date From:2002.12 | GCO17042 | Outer Joint | | 25 | 25 | 51 | 85 | 58 | O |
| | 1995.03-2005.04 | | F | L/R | Cabriolet FWD AR16201/AR32310 | | GCI82011 | Inner Joint | | | 25 | | | 32 | |
| 2.0 (114 kw) | 1998.05-2000.08 | AT/MT | F | L/R | Cabriolet FWD AR32301 | | GCO17042 | Outer Joint | | 25 | 25 | 51 | 85 | 58 | O |
| | 1998.05-2000.08 | AT/MT | F | L/R | Cabriolet FWD AR32301 | | GCI18070 | Inner Joint | | | 25 | | | 32 | |
| | 1998.05-2000.08 | MT | F | L/R | Cabriolet FWD AR32301 | | GCO82006 | Outer Joint | 44T | 25 | 25 | 52 | 85 | 58 | O |
| | 1998.05-2000.08 | MT | F | | Cabriolet FWD AR32301 | | GCI82005 | Inner Joint | | | 25 | | | 32 | |

| | YEAR | TRANSM. | F/R | L/R | BODY STYLE & DRIVE TYPE & ENGINE | REMARKS | G-AP Ref. | PRODUCT | ABS | Technical Specifications A | B | C | H | L | P |
|---|---|---|---|---|---|---|---|---|---|---|---|---|---|---|---|
| **ALFA ROMEO** | | | | | | | | | | | | | | | |
| **Spider** | | | | | | | | | | | | | | | |
| 2.0 (114 kw) | 1998.05-2000.08 | | F | L/R | Cabriolet FWD AR32301 | | GCI82011 | Inner Joint | | | 25 | | | 32 | |
| | 1998.05-2000.08 | | F | | Cabriolet FWD AR32301 | | GCI82006 | Inner Joint | | | 25 | | | 32 | |
| 2.0 (120 kw) | 2009.04-2011.03 | 6MT | F | L | Convertible FWD 844 A2.000 | | GDS17116 | Drive Shaft | | 30 | 27 | 61 | 93 | 627 | |
| | 2009.04-2011.03 | 6MT | F | R | Convertible FWD 844 A2.000 | | GDS17115 | Drive Shaft | | 30 | 27 | 61 | 93 | 1028 | |
| | 2009.04-2011.03 | 6MT | F | L | Convertible FWD 844 A2.000 | | GCI21017 | Inner Joint | | 27 | 27 | 35 | 78.5 | 112 | |
| | 2009.04-2011.03 | 6MT | F | R | Convertible FWD 844 A2.000 | | GCI17051 | Inner Joint | | 27 | 27 | 35 | 453 | 110 | |
| | 2009.04-2011.03 | | F | L/R | Convertible FWD 844 A2.000 | | GCO82024 | Outer Joint | | 30 | 27 | 61 | 93 | 65 | M |
| 2.0 (121 kw) | 2003.03-2005.04 | MT | F | L/R | Cabriolet FWD 937A1000 | Chassis no. to:6063041 | GCO82006 | Outer Joint | 44T | 25 | 25 | 52 | 85 | 58 | O |
| | 2003.03-2005.04 | | F | L/R | Cabriolet FWD 937A1000 | Date From:2002.12 | GCO17042 | Outer Joint | | 25 | 25 | 51 | 85 | 58 | O |
| | 2003.03-2005.04 | | F | L/R | Cabriolet FWD 937A1000 | | GCI82011 | Inner Joint | | | 25 | | | 32 | |
| | 2003.03-2005.04 | | F | | Cabriolet FWD 937A1000 | | GCI82005 | Inner Joint | | | 25 | | | 32 | |
| 2.0 (125 kw) | 2009.05-2010.06 | 6MT | F | L | Convertible FWD 939 B3.000 | | GDS17116 | Drive Shaft | | 30 | 27 | 61 | 93 | 627 | |
| | 2009.05-2010.06 | 6MT | F | R | Convertible FWD 939 B3.000 | | GDS17115 | Drive Shaft | | 30 | 27 | 61 | 93 | 1028 | |
| | 2009.05-2010.06 | 6MT | F | L | Convertible FWD 939 B3.000 | | GCI21017 | Inner Joint | | 27 | 27 | 35 | 78.5 | 112 | |
| | 2009.05-2010.06 | 6MT | F | R | Convertible FWD 939 B3.000 | | GCI17051 | Inner Joint | | 27 | 27 | 35 | 453 | 110 | |
| | 2009.05-2010.06 | AT/MT | F | L/R | Convertible FWD 939 B3.000 | | GCO82024 | Outer Joint | | 30 | 27 | 61 | 93 | 65 | M |
| 2.0 (148 kw) | 1998.05-2005.04 | 5MT | F | L/R | Cabriolet FWD AR16202 | Date To:1999.12 | GCO82009 | Outer Joint | 44T | 25 | 28 | 56 | 85 | 63.5 | O |
| | 1998.05-2005.04 | 5MT | F | L/R | Cabriolet FWD AR16202 | Date From:2000.01 | GCO82012 | Outer Joint | | 25 | 28 | 59 | 85 | 63 | O |
| 2.2 (136 kw) | 2006.03-2011.03 | 6AT/6MT | F | L | Convertible FWD 939 A5.000 | | GDS17122 | Drive Shaft | | 30 | 25 | 61 | 92.5 | 640 | |
| | 2006.03-2011.03 | 6AT/6MT | F | R | Convertible FWD 939 A5.000 | | GDS17124 | Drive Shaft | | 30 | 25 | 61 | 92.5 | 1015 | |
| | 2006.03-2011.03 | 6AT/6MT | F | L/R | Convertible FWD 939 A5.000 | | GCI82009 | Inner Joint | | 25 | 26 | 34.9 | 57.5 | 114.5 | |
| | 2006.03-2011.03 | | F | L/R | Convertible FWD 939 A5.000 | | GCO82023 | Outer Joint | | 30 | 26 | 61 | 92.5 | 65 | M |
| 2.4 (147 kw) | 2006.03-2011.03 | 6MT | F | R | Convertible FWD 939 A3.000 | | GCI17008 | Inner Joint | | 27 | 27 | 35 | 498 | 106.5 | |
| | 2006.03-2011.03 | MT | F | L | Convertible FWD 939 A3.000 | | GDS17123 | Drive Shaft | | 30 | 27 | 61 | 93 | 598 | |
| | 2006.03-2011.03 | MT | F | R | Convertible FWD 939 A3.000 | | GDS17124 | Drive Shaft | | 30 | 25 | 61 | 92.5 | 1015 | |
| | 2006.03-2011.03 | MT | F | R | Convertible FWD 939 A3.000 | | GDS17145 | Drive Shaft | | 30 | 27 | 61 | 93 | 1059 | |
| | 2006.03-2011.03 | MT | F | L | Convertible FWD 939 A3.000 | | GCO82024 | Outer Joint | | 30 | 27 | 61 | 93 | 65 | M |
| | 2006.03-2011.03 | MT | F | R | Convertible FWD 939 A3.000 | | GCI82010 | Inner Joint | | 25 | 26 | 34.9 | 439.5 | 108.5 | |
| | 2006.03-2011.03 | | F | L | Convertible FWD 939 A3.000 | | GCI21017 | Inner Joint | | 27 | 27 | 35 | 78.5 | 112 | |
| 2.4 (154 kw) | 2008.03-2011.03 | 6MT | F | L | Convertible FWD 939 A9.000 | | GDS17123 | Drive Shaft | | 30 | 27 | 61 | 93 | 598 | |
| | 2008.03-2011.03 | 6MT | F | R | Convertible FWD 939 A9.000 | | GDS17145 | Drive Shaft | | 30 | 27 | 61 | 93 | 1059 | |
| | 2008.03-2011.03 | AT/MT | F | L/R | Convertible FWD 939 A9.000 | | GCO82024 | Outer Joint | | 30 | 27 | 61 | 93 | 65 | M |
| | 2008.03-2011.03 | MT | F | R | Convertible FWD 939 A9.000 | | GDS17124 | Drive Shaft | | 30 | 25 | 61 | 92.5 | 1015 | |
| | 2008.03-2011.03 | MT | F | R | Convertible FWD 939 A9.000 | | GCI82010 | Inner Joint | | 25 | 26 | 34.9 | 439.5 | 108.5 | |
| | 2008.03-2011.03 | | F | L | Convertible FWD 939 A9.000 | | GCI21017 | Inner Joint | | 27 | 27 | 35 | 78.5 | 112 | |
| | 2008.03-2011.03 | | F | R | Convertible FWD 939 A9.000 | | GCI17008 | Inner Joint | | 27 | 27 | 35 | 498 | 106.5 | |
| 3.0 (141 kw) | 1995.04-2005.04 | 5MT | F | L/R | Cabriolet FWD AR16101/AR16199 | Date To:1999.12 | GCO82009 | Outer Joint | 44T | 25 | 28 | 56 | 85 | 63.5 | O |
| | 1995.04-2005.04 | 5MT | F | L/R | Cabriolet FWD AR16101/AR16199 | Date From:2000.01 | GCO82012 | Outer Joint | | 25 | 28 | 59 | 85 | 63 | O |
| 3.0 (160 kw) | 2000.09-2005.04 | 6MT | F | L/R | Cabriolet FWD AR16105 | | GCO82012 | Outer Joint | | 25 | 28 | 59 | 85 | 63 | O |
| 3.0 (162 kw) | 1999.01-2000.10 | MT | F | L/R | Cabriolet FWD AR16102 | | GCO82012 | Outer Joint | | 25 | 28 | 59 | 85 | 63 | O |
| 3.2 (176 kw) | 2003.03-2005.04 | | F | L/R | Cabriolet FWD 936A6000 | | GCO17009 | Outer Joint | | 25 | 26 | 59 | 84 | 63 | M |
| 3.2 (191 kw) | 2006.03-2011.03 | 6MT | F | L/R | Convertible 4WD 939 A.000 | Date to:2008.11 | GCO82023 | Outer Joint | | 30 | 26 | 61 | 92.5 | 65 | M |
| | 2006.03-2011.03 | 6MT | F | L/R | Convertible 4WD 939 A.000 | Date to:2008.11 | GCI21016 | Inner Joint | | 27 | 26 | 35 | 78.5 | 112 | |
| | 2008.03-2011.03 | | F | L/R | Convertible FWD 939 A.000 | | GCO82024 | Outer Joint | | 30 | 27 | 61 | 93 | 65 | M |
| | 2008.03-2011.03 | | F | | Convertible FWD 939 A.000 | | GCO82023 | Outer Joint | | 30 | 26 | 61 | 92.5 | 65 | M |
| | 2008.03-2011.03 | | F | L | Convertible FWD 939 A.000 | | GCI21017 | Inner Joint | | 27 | 27 | 35 | 78.5 | 112 | |
| **Stelvio** | | | | | | | | | | | | | | | |
| 2.0 (148 kw) | 2016.12- | 8AT | F | L | SUV 4WD 552 73 835 | | GDS57381 | Drive Shaft | | 27 | 22 | 59 | 87 | 998 | |
| | 2016.12- | 8AT | F | R | SUV 4WD 552 73 835 | | GDS57382 | Drive Shaft | | 27 | 22 | 59 | 87 | 654 | |
| | 2016.12- | 8AT | F | L/R | SUV 4WD 552 73 835 | | GCO83522 | Outer Joint | | 27 | 23 | 59 | 87 | 51 | I |
| | 2016.12- | 8AT | F | L | SUV 4WD 552 73 835 | | GCI83632 | Inner Joint | | 22 | 23 | 28.5 | 419 | 101 | |
| | 2016.12- | 8AT | F | R | SUV 4WD 552 73 835 | | GCI83633 | Inner Joint | | 22 | 23 | 36 | 72 | 104 | |
| | 2016.12- | 8AT | R | L/R | SUV 4WD 552 73 835 | | GDS56457 | Drive Shaft | | 30 | 32 | 61 | 87 | 836 | |
| | 2016.12- | 8AT | R | L/R | SUV 4WD 552 73 835 | | GCO83301 | Outer Joint | | 30 | 28 | 61 | 87 | 56 | |
| | 2016.12- | 8AT | R | L/R | SUV 4WD 552 73 835 | | GCI83316 | Inner Joint | | 32 | 28 | 50 | 94 | 76.5 | |
| 2.0 (184 kw) | 2019.12- | 8AT | F | L | SUV 4WD 552 73 835 | | GDS57381 | Drive Shaft | | 27 | 22 | 59 | 87 | 998 | |
| | 2019.12- | 8AT | F | R | SUV 4WD 552 73 835 | | GDS57382 | Drive Shaft | | 27 | 22 | 59 | 87 | 654 | |
| | 2019.12- | 8AT | F | L/R | SUV 4WD 552 73 835 | | GCO83522 | Outer Joint | | 27 | 23 | 59 | 87 | 51 | I |
| | 2019.12- | 8AT | F | L | SUV 4WD 552 73 835 | | GCI83632 | Inner Joint | | 22 | 23 | 28.5 | 419 | 101 | |
| | 2019.12- | 8AT | F | R | SUV 4WD 552 73 835 | Date to:2021.02 | GCI83633 | Inner Joint | | 22 | 23 | 36 | 72 | 104 | |
| | 2019.12- | 8AT | R | L/R | SUV 4WD 552 73 835 | | GDS56457 | Drive Shaft | | 30 | 32 | 61 | 87 | 836 | |
| | 2019.12- | 8AT | R | L/R | SUV 4WD 552 73 835 | | GCO83301 | Outer Joint | | 30 | 28 | 61 | 87 | 56 | |
| | 2019.12- | 8AT | R | L/R | SUV 4WD 552 73 835 | | GCI83316 | Inner Joint | | 32 | 28 | 50 | 94 | 76.5 | |
| 2.0 (206 kw) | 2016.12- | 8AT | F | L | SUV 4WD 552 73 835;EC2 | | GDS57381 | Drive Shaft | | 27 | 22 | 59 | 87 | 998 | |
| | 2016.12- | 8AT | F | R | SUV 4WD 552 73 835;EC2 | | GDS57382 | Drive Shaft | | 27 | 22 | 59 | 87 | 654 | |

| | YEAR | TRANSM. | F/R | L/R | BODY STYLE & DRIVE TYPE & ENGINE | REMARKS | G-AP Ref. | PRODUCT | ABS | Technical Specifications A | B | C | H | L | P |
|---|---|---|---|---|---|---|---|---|---|---|---|---|---|---|---|
| **ALFA ROMEO** | | | | | | | | | | | | | | | |
| **Stelvio** | | | | | | | | | | | | | | | |
| 2.0 (206 kw) | 2016.12- | 8AT | F | L/R | SUV 4WD 552 73 835;EC2 | | GCO83522 | Outer Joint | | 27 | 23 | 59 | 87 | 51 | I |
| | 2016.12- | 8AT | F | L | SUV 4WD 552 73 835;EC2 | | GCI83632 | Inner Joint | | 22 | 23 | 28.5 | 419 | 101 | |
| | 2016.12- | 8AT | F | R | SUV 4WD 552 73 835;EC2 | | GCI83633 | Inner Joint | | 22 | 23 | 36 | 72 | 104 | |
| | 2016.12- | 8AT | R | L/R | SUV 4WD 552 73 835;EC2 | | GDS56457 | Drive Shaft | | 30 | 32 | 61 | 87 | 836 | |
| | 2016.12- | 8AT | R | L/R | SUV 4WD 552 73 835;EC2 | | GCO83301 | Outer Joint | | 30 | 28 | 61 | 87 | 56 | |
| | 2016.12- | 8AT | R | L/R | SUV 4WD 552 73 835;EC2 | | GCI83316 | Inner Joint | | 32 | 28 | 50 | 94 | 76.5 | |
| 2.2 (110 kw) | 2016.12- | 8AT | R | L/R | SUV RWD 552 75 156 | | GDS56457 | Drive Shaft | | 30 | 32 | 61 | 87 | 836 | |
| | 2016.12- | 8AT | R | L/R | SUV RWD 552 75 156 | | GCO83301 | Outer Joint | | 30 | 28 | 61 | 87 | 56 | |
| | 2016.12- | 8AT | R | L/R | SUV RWD 552 75 156 | | GCI83316 | Inner Joint | | 32 | 28 | 50 | 94 | 76.5 | |
| 2.2 (118 kw) | 2018.08- | 8AT | R | L/R | SUV RWD 552 75 156;463 35 692;46347914 | | GDS56457 | Drive Shaft | | 30 | 32 | 61 | 87 | 836 | |
| | 2018.08- | 8AT | R | L/R | SUV RWD 552 75 156;463 35 692;46347914 | | GCO83301 | Outer Joint | | 30 | 28 | 61 | 87 | 56 | |
| | 2018.08- | 8AT | R | L/R | SUV RWD 552 75 156;463 35 692;46347914 | | GCI83316 | Inner Joint | | 32 | 28 | 50 | 94 | 76.5 | |
| 2.2 (132 kw) | 2016.12- | 8AT | F | L | SUV 4WD 552 71 838 | | GDS57381 | Drive Shaft | | 27 | 22 | 59 | 87 | 998 | |
| | 2016.12- | 8AT | F | R | SUV 4WD 552 71 838 | | GDS57382 | Drive Shaft | | 27 | 22 | 59 | 87 | 654 | |
| | 2016.12- | 8AT | F | L/R | SUV 4WD 552 71 838 | | GCO83522 | Outer Joint | | 27 | 23 | 59 | 87 | 51 | I |
| | 2016.12- | 8AT | F | L | SUV 4WD 552 71 838 | | GCI83632 | Inner Joint | | 22 | 23 | 28.5 | 419 | 101 | |
| | 2016.12- | 8AT | F | R | SUV 4WD 552 71 838 | | GCI83633 | Inner Joint | | 22 | 23 | 36 | 72 | 104 | |
| | 2016.12- | 8AT | R | L/R | SUV 4WD 552 71 838 | | GDS56457 | Drive Shaft | | 30 | 32 | 61 | 87 | 836 | |
| | 2016.12- | 8AT | R | L/R | SUV 4WD 552 71 838 | | GCO83301 | Outer Joint | | 30 | 28 | 61 | 87 | 56 | |
| | 2016.12- | 8AT | R | L/R | SUV 4WD 552 71 838 | | GCI83316 | Inner Joint | | 32 | 28 | 50 | 94 | 76.5 | |
| | 2016.12- | 8AT | R | L/R | SUV RWD 552 75 156 | | GDS56457 | Drive Shaft | | 30 | 32 | 61 | 87 | 836 | |
| | 2016.12- | 8AT | R | L/R | SUV RWD 552 75 156 | | GCO83301 | Outer Joint | | 30 | 28 | 61 | 87 | 56 | |
| | 2016.12- | 8AT | R | L/R | SUV RWD 552 75 156 | | GCI83316 | Inner Joint | | 32 | 28 | 50 | 94 | 76.5 | |
| 2.2 (140 kw) | 2018.08- | 8AT | F | L | SUV 4WD 552 68 818;552 84 529;463 35 692;46346359 | | GDS57381 | Drive Shaft | | 27 | 22 | 59 | 87 | 998 | |
| | 2018.08- | 8AT | F | R | SUV 4WD 552 68 818;552 84 529;463 35 692;46346359 | | GDS57382 | Drive Shaft | | 27 | 22 | 59 | 87 | 654 | |
| | 2018.08- | 8AT | F | L/R | SUV 4WD 552 68 818;552 84 529;463 35 692;46346359 | | GCO83522 | Outer Joint | | 27 | 23 | 59 | 87 | 51 | I |
| | 2018.08- | 8AT | F | L | SUV 4WD 552 68 818;552 84 529;463 35 692;46346359 | | GCI83632 | Inner Joint | | 22 | 23 | 28.5 | 419 | 101 | |
| | 2018.08- | 8AT | F | R | SUV 4WD 552 68 818;552 84 529;463 35 692;46346359 | | GCI83633 | Inner Joint | | 22 | 23 | 36 | 72 | 104 | |
| | 2018.08- | 8AT | R | L/R | SUV 4WD 552 68 818;552 84 529;463 35 692;46346359 | | GDS56457 | Drive Shaft | | 30 | 32 | 61 | 87 | 836 | |
| | 2018.08- | 8AT | R | L/R | SUV 4WD 552 68 818;552 84 529;463 35 692;46346359 | | GCO83301 | Outer Joint | | 30 | 28 | 61 | 87 | 56 | |
| | 2018.08- | 8AT | R | L/R | SUV 4WD 552 68 818;552 84 529;463 35 692;46346359 | | GCI83316 | Inner Joint | | 32 | 28 | 50 | 94 | 76.5 | |
| | 2018.08- | 8AT | R | L/R | SUV RWD 552 68 818;552 84 529;463 35 692;46347914 | | GDS56457 | Drive Shaft | | 30 | 32 | 61 | 87 | 836 | |
| | 2018.08- | 8AT | R | L/R | SUV RWD 552 68 818;552 84 529;463 35 692;46347914 | | GCO83301 | Outer Joint | | 30 | 28 | 61 | 87 | 56 | |
| | 2018.08- | 8AT | R | L/R | SUV RWD 552 68 818;552 84 529;463 35 692;46347914 | | GCI83316 | Inner Joint | | 32 | 28 | 50 | 94 | 76.5 | |
| 2.2 (154 kw) | 2016.12- | 8AT | F | L | SUV 4WD 552 71 838;552 84 529;46346359 | | GDS57381 | Drive Shaft | | 27 | 22 | 59 | 87 | 998 | |
| | 2016.12- | 8AT | F | R | SUV 4WD 552 71 838;552 84 529;46346359 | | GDS57382 | Drive Shaft | | 27 | 22 | 59 | 87 | 654 | |
| | 2016.12- | 8AT | F | L/R | SUV 4WD 552 71 838;552 84 529;46346359 | | GCO83522 | Outer Joint | | 27 | 23 | 59 | 87 | 51 | I |
| | 2016.12- | 8AT | F | L | SUV 4WD 552 71 838;552 84 529;46346359 | | GCI83632 | Inner Joint | | 22 | 23 | 28.5 | 419 | 101 | |
| | 2016.12- | 8AT | F | R | SUV 4WD 552 71 838;552 84 529;46346359 | | GCI83633 | Inner Joint | | 22 | 23 | 36 | 72 | 104 | |
| | 2016.12- | 8AT | R | L/R | SUV 4WD 552 71 838;552 84 529;46346359 | | GDS56457 | Drive Shaft | | 30 | 32 | 61 | 87 | 836 | |
| | 2016.12- | 8AT | R | L/R | SUV 4WD 552 71 838;552 84 529;46346359 | | GCO83301 | Outer Joint | | 30 | 28 | 61 | 87 | 56 | |
| | 2016.12- | 8AT | R | L/R | SUV 4WD 552 71 838;552 84 529;46346359 | | GCI83316 | Inner Joint | | 32 | 28 | 50 | 94 | 76.5 | |
| 2.9 (375 kw) | 2017.11- | 8AT | F | R | SUV 4WD 670 05 0436;670 05 2670;670 05 2695;670 05 2784;670 05 2786 | | GDS57382 | Drive Shaft | | 27 | 22 | 59 | 87 | 654 | |
| | 2017.11- | 8AT | F | L/R | SUV 4WD 670 05 0436;670 05 2670;670 05 2695;670 05 2784;670 05 2786 | | GCO83522 | Outer Joint | | 27 | 23 | 59 | 87 | 51 | I |
| | 2017.11- | 8AT | F | R | SUV 4WD 670 05 0436;670 05 2670;670 05 2695;670 05 2784;670 05 2786 | | GCI83633 | Inner Joint | | 22 | 23 | 36 | 72 | 104 | |
| 2.9 (382 kw) | 2019.11- | 8AT | F | R | SUV 4WD 670 05 0436;670 05 2722;670 05 2589;670 05 2784 | | GDS57382 | Drive Shaft | | 27 | 22 | 59 | 87 | 654 | |
| | 2019.11- | 8AT | F | L/R | SUV 4WD 670 05 0436;670 05 2722;670 05 2589;670 05 2784 | | GCO83522 | Outer Joint | | 27 | 23 | 59 | 87 | 51 | I |
| | 2019.11- | 8AT | F | R | SUV 4WD 670 05 0436;670 05 2722;670 05 2589;670 05 2784 | | GCI83633 | Inner Joint | | 22 | 23 | 36 | 72 | 104 | |
| **Tonale** | | | | | | | | | | | | | | | |
| 1.3 (140 kw) | 2022.03- | AT | F | L | SUV 4WD 46337540 | | GDS84541 | Drive Shaft | | 27 | 26 | 59 | 84.5 | 635 | |
| | 2022.03- | AT | F | R | SUV 4WD 46337540 | | GDS84542 | Drive Shaft | | 27 | 26 | 59 | 84.5 | 972 | |
| | 2022.03- | AT | F | L/R | SUV 4WD 46337540 | | GCO82524 | Outer Joint | | 27 | 35 | 59 | 84.5 | 61 | I |
| | 2022.03- | AT | F | L | SUV 4WD 46337540 | | GCI82842 | Inner Joint | | 26 | 35 | 31 | 52.5 | 111.5 | |
| | 2022.03- | AT | F | R | SUV 4WD 46337540 | | GCI82843 | Inner Joint | | 26 | 35 | 31 | 369.5 | 113.5 | |
| | 2022.03- | 6AT | R | L | SUV 4WD 46337540 | | GDS57611 | Drive Shaft | | 27 | 30 | 59 | 84.5 | 602 | |
| | 2022.03- | 6AT | R | R | SUV 4WD 46337540 | | GDS57612 | Drive Shaft | | 27 | 34 | 59 | 84.5 | 600 | |
| | 2022.03- | 6AT | R | L/R | SUV 4WD 46337540 | | GCO82404 | Outer Joint | | 27 | 34 | 59 | 84.5 | 65 | M |
| 1.3 (206 kw) | 2022.03- | AT | F | L | SUV 4WD 46337540 | | GDS84541 | Drive Shaft | | 27 | 26 | 59 | 84.5 | 635 | |
| | 2022.03- | AT | F | R | SUV 4WD 46337540 | | GDS84542 | Drive Shaft | | 27 | 26 | 59 | 84.5 | 972 | |
| | 2022.03- | AT | F | L/R | SUV 4WD 46337540 | | GCO82524 | Outer Joint | | 27 | 35 | 59 | 84.5 | 61 | I |
| | 2022.03- | AT | F | L | SUV 4WD 46337540 | | GCI82842 | Inner Joint | | 26 | 35 | 31 | 52.5 | 111.5 | |
| | 2022.03- | AT | F | R | SUV 4WD 46337540 | | GCI82843 | Inner Joint | | 26 | 35 | 31 | 369.5 | 113.5 | |
| | 2022.03- | 6AT | R | L | SUV 4WD 46337540 | | GDS57611 | Drive Shaft | | 27 | 30 | 59 | 84.5 | 602 | |
| | 2022.03- | 6AT | R | R | SUV 4WD 46337540 | | GDS57612 | Drive Shaft | | 27 | 34 | 59 | 84.5 | 600 | |
| | 2022.03- | 6AT | R | L/R | SUV 4WD 46337540 | | GCO82404 | Outer Joint | | 27 | 34 | 59 | 84.5 | 65 | M |

| | YEAR | TRANSM. | F/R | L/R | BODY STYLE & DRIVE TYPE & ENGINE | REMARKS | G-AP Ref. | PRODUCT | ABS | Technical Specifications A | B | C | H | L | P |
|---|---|---|---|---|---|---|---|---|---|---|---|---|---|---|---|
| **ALFA ROMEO** | | | | | | | | | | | | | | | |
| **Tonale** | | | | | | | | | | | | | | | |
| 1.3 (208 kw) | 2022.03- | AT | F | L | SUV 4WD 46337540 | | GDS84541 | Drive Shaft | | 27 | 26 | 59 | 84.5 | 635 | |
| | 2022.03- | AT | F | R | SUV 4WD 46337540 | | GDS84542 | Drive Shaft | | 27 | 26 | 59 | 84.5 | 972 | |
| | 2022.03- | AT | F | L/R | SUV 4WD 46337540 | | GCO82524 | Outer Joint | | 27 | 35 | 59 | 84.5 | 61 | I |
| | 2022.03- | AT | F | L | SUV 4WD 46337540 | | GCI82842 | Inner Joint | | 26 | 35 | 31 | 52.5 | 111.5 | |
| | 2022.03- | AT | F | R | SUV 4WD 46337540 | | GCI82843 | Inner Joint | | 26 | 35 | 31 | 369.5 | 113.5 | |
| | 2022.03- | 6AT | R | L | SUV 4WD 46337540 | | GDS57611 | Drive Shaft | | 27 | 30 | 59 | 84.5 | 602 | |
| | 2022.03- | 6AT | R | R | SUV 4WD 46337540 | | GDS57612 | Drive Shaft | | 27 | 34 | 59 | 84.5 | 600 | |
| | 2022.03- | 6AT | R | L/R | SUV 4WD 46337540 | | GCO82404 | Outer Joint | | 27 | 34 | 59 | 84.5 | 65 | M |
| 1.6 (96 kw) | 2022.09- | AT | F | L/R | SUV FWD 46346020 | | GCO82524 | Outer Joint | | 27 | 35 | 59 | 84.5 | 61 | I |
| **ASTON MARTIN** | | | | | | | | | | | | | | | |
| **Cygnet** | | | | | | | | | | | | | | | |
| 1.3 (72 kw) | 2011.04-2013.10 | AT/MT | F | L | Hatchback FWD 1NR-FE | | GDS59611 | Drive Shaft | | 26 | 23 | 55.6 | 95 | 653 | |
| | 2011.04-2013.10 | AT/MT | F | R | Hatchback FWD 1NR-FE | | GDS82095 | Drive Shaft | | 26 | 23 | 55.6 | 95 | 906 | |
| | 2011.04-2013.10 | AT/MT | F | L | Hatchback FWD 1NR-FE | | GCO59219 | Outer Joint | | 26 | 29 | 55.6 | 95 | 52.5 | I |
| | 2011.04-2013.10 | AT/MT | F | L/R | Hatchback FWD 1NR-FE | | GCO59384 | Outer Joint | | 26 | 29 | 55.6 | 96 | 54 | I |
| | 2011.04-2013.10 | AT/MT | F | L | Hatchback FWD 1NR-FE | | GCI59067 | Inner Joint | | 23 | 29 | 34 | 60 | 109 | |
| **AUDI** | | | | | | | | | | | | | | | |
| **80 Quattro** | | | | | | | | | | | | | | | |
| 1.8 (83 kw) | 1986.09- | MT | F | L | Saloon 4WD SD (09.86-08.90) | | GDS83003 | Drive Shaft | 45T | 33 | | 53 | 30 | 586 | |
| | 1986.09- | MT | F | R | Saloon 4WD SD (09.86-08.90) | | GDS83297 | Drive Shaft | 45T | 33 | | 53 | 30 | 575 | |
| | 1986.09- | MT | F | L/R | Saloon 4WD SD (09.86-08.90) | Date to:1988.07,Chassis no. from:89-H-351001 | GCO83012 | Outer Joint | 45T | 33 | 30 | 53 | 30 | 62 | I |
| | 1986.09- | MT | F | L/R | Saloon 4WD SD (09.86-08.90) | | GCI83003 | Inner Joint | | | 33 | | | 32 | |
| | 1986.09- | MT | R | L/R | Saloon 4WD SD (09.86-08.90) | Date to:1988.07,Chassis no. from:89-J-351000 | GCO83009 | Outer Joint | 45T | 33 | 30 | 53 | 30.5 | 51.5 | I |
| | 1986.09- | MT | R | L/R | Saloon 4WD SD (09.86-08.90) | | GCI83005 | Inner Joint | | | 33 | | | 32 | |
| **A1** | | | | | | | | | | | | | | | |
| 1.0 (60 kw) | 2016.01-2018.10 | 5MT | F | L | Hatchback FWD CHZE | | GDS81922 | Drive Shaft | | 36 | 33 | 52 | 59 | 581 | |
| | 2016.01-2018.10 | 5MT | F | R | Hatchback FWD CHZE | | GDS81924 | Drive Shaft | | 36 | 33 | 52 | 59 | 855 | |
| | 2016.01-2018.10 | 5MT | F | L/R | Hatchback FWD CHZE | | GCO54006 | Outer Joint | | 36 | 30 | 52 | 59 | 55.5 | I |
| | 2016.01-2018.10 | 5MT | F | L/R | Hatchback FWD CHZE | | GCI81546 | Inner Joint | | 33 | 32 | 39.9 | 58.5 | 105 | |
| | 2016.01-2018.10 | MT | F | L/R | Hatchback FWD CHZE | For PR code:TJ4/G0C | GCO83024 | Outer Joint | | 36 | 30 | 50.75 | 59 | 55.5 | I |
| 1.0 (70 kw) | 2015.03-2018.10 | 5MT | F | L | Hatchback FWD CHZB;DKLD | | GDS81922 | Drive Shaft | | 36 | 33 | 52 | 59 | 581 | |
| | 2015.03-2018.10 | 5MT | F | R | Hatchback FWD CHZB;DKLD | | GDS81924 | Drive Shaft | | 36 | 33 | 52 | 59 | 855 | |
| | 2015.03-2018.10 | 5MT | F | L/R | Hatchback FWD CHZB;DKLD | | GCO54006 | Outer Joint | | 36 | 30 | 52 | 59 | 55.5 | I |
| | 2015.03-2018.10 | 5MT | F | L/R | Hatchback FWD CHZB;DKLD | | GCI81546 | Inner Joint | | 33 | 32 | 39.9 | 58.5 | 105 | |
| | 2015.03-2018.10 | 7DCT | F | L | Hatchback FWD CHZB;DKLD | | GDS82228 | Drive Shaft | | 36 | | 52 | 75 | 475 | |
| | 2015.03-2018.10 | 7DCT | F | R | Hatchback FWD CHZB;DKLD | | GDS82358 | Drive Shaft | | 36 | | 52 | 75 | 762 | |
| | 2015.03-2018.10 | 7DCT | F | L/R | Hatchback FWD CHZB;DKLD | | GCO61081 | Outer Joint | | 36 | 27 | 52 | 75 | 65 | I |
| | 2015.03-2018.10 | 7DCT | F | L/R | Hatchback FWD CHZB;DKLD | | GCI81689 | Inner Joint | | | 32 | | | 89 | |
| 1.2 (63 kw) | 2010.05-2015.04 | 5MT | F | L | Hatchback FWD CBZA | | GDS61297 | Drive Shaft | | 36 | | 50.5 | 59 | 513 | |
| | 2010.05-2015.04 | 5MT | F | R | Hatchback FWD CBZA | | GDS61301 | Drive Shaft | | 36 | | 50.5 | 59 | 771 | |
| | 2010.05-2015.04 | 5MT | F | L/R | Hatchback FWD CBZA | | GCO54006 | Outer Joint | | 36 | 30 | 52 | 59 | 55.5 | I |
| | 2010.05-2015.04 | 5MT | F | L/R | Hatchback FWD CBZA | | GCO83024 | Outer Joint | | 36 | 30 | 50.75 | 59 | 55.5 | I |
| | 2010.05-2015.04 | 5MT | F | L/R | Hatchback FWD CBZA | | GCI53002 | Inner Joint | | | 33 | | | 34 | |
| | 2010.05-2015.04 | 5MT | F | L/R | Hatchback FWD CBZA | | GCI82447 | Inner Joint | | | 33 | | | 34 | |
| 1.4 (66 kw) | 2014.11-2018.10 | 5MT | F | L | Hatchback FWD CUSB | | GDS82039 | Drive Shaft | | 36 | | 52 | 59 | 549 | |
| | 2014.11-2018.10 | 5MT | F | R | Hatchback FWD CUSB | | GDS82360 | Drive Shaft | | 36 | | 52 | 59 | 729 | |
| | 2014.11-2018.10 | 5MT | F | L/R | Hatchback FWD CUSB | | GCO54006 | Outer Joint | | 36 | 30 | 52 | 59 | 55.5 | I |
| | 2014.11-2018.10 | 5MT | F | L/R | Hatchback FWD CUSB | | GCI53002 | Inner Joint | | | 33 | | | 34 | |
| | 2014.11-2018.10 | 5MT | F | L/R | Hatchback FWD CUSB | | GCI82447 | Inner Joint | | | 33 | | | 34 | |
| | 2014.11-2018.10 | 7DCT | F | L | Hatchback FWD CUSB | | GDS81926 | Drive Shaft | | 36 | | 52 | 75 | 550 | |
| | 2014.11-2018.10 | 7DCT | F | R | Hatchback FWD CUSB | | GDS82359 | Drive Shaft | | 36 | 40 | 52 | 75 | 755 | |
| | 2014.11-2018.10 | 7DCT | F | L/R | Hatchback FWD CUSB | | GCO61081 | Outer Joint | | 36 | 27 | 52 | 75 | 65 | I |
| | 2014.11-2018.10 | 7DCT | F | L | Hatchback FWD CUSB | | GCI83016 | Inner Joint | | | 28 | | | 32 | |
| | 2014.11-2018.10 | 7DCT | F | R | Hatchback FWD CUSB | | GCI61054 | Inner Joint | | 40 | 28 | 46.9 | 41 | 101.7 | |
| | 2014.11-2018.10 | MT | F | L/R | Hatchback FWD CUSB | | GCO83024 | Outer Joint | | 36 | 30 | 50.75 | 59 | 55.5 | I |
| 1.4 (90 kw) | 2010.05-2015.04 | 5MT | F | R | Hatchback FWD CAXA;CNVA | | GDS61301 | Drive Shaft | | 36 | | 50.5 | 59 | 771 | |
| | 2010.05-2015.04 | 6MT | F | L | Hatchback FWD CAXA;CNVA | | GDS61297 | Drive Shaft | | 36 | | 50.5 | 59 | 513 | |
| | 2010.05-2015.04 | 6MT/7DCT | F | L/R | Hatchback FWD CAXA;CNVA | | GCO54006 | Outer Joint | | 36 | 30 | 52 | 59 | 55.5 | I |
| | 2010.05-2015.04 | 6MT/7DCT | F | L/R | Hatchback FWD CAXA;CNVA | | GCO83024 | Outer Joint | | 36 | 30 | 50.75 | 59 | 55.5 | I |
| | 2010.05-2015.04 | 6MT/7DCT | F | L/R | Hatchback FWD CAXA;CNVA | | GCI53002 | Inner Joint | | | 33 | | | 34 | |
| | 2010.05-2015.04 | 6MT/7DCT | F | L/R | Hatchback FWD CAXA;CNVA | | GCI82447 | Inner Joint | | | 33 | | | 34 | |
| | 2010.05-2015.04 | 7DCT | F | L | Hatchback FWD CAXA;CNVA | | GDS61311 | Drive Shaft | | 36 | | 50.5 | 59 | 492 | |
| | 2010.05-2015.04 | 7DCT | F | R | Hatchback FWD CAXA;CNVA | | GDS61308 | Drive Shaft | | 36 | | 50.5 | 59 | 786 | |
| | 2010.05-2015.04 | MT | F | L | Hatchback FWD CAXA;CNVA | | GDS61274 | Drive Shaft | | 36 | | 50.5 | 59 | 514 | |
| | 2010.05-2015.04 | MT | F | L/R | Hatchback FWD CAXA;CNVA | | GCI83011 | Inner Joint | | | 33 | | | 34 | |

| | YEAR | TRANSM. | F/R | L/R | BODY STYLE & DRIVE TYPE & ENGINE | REMARKS | G-AP Ref. | PRODUCT | ABS | Technical Specifications A | B | C | H | L | P |
|---|---|---|---|---|---|---|---|---|---|---|---|---|---|---|---|
| **AUDI** | | | | | | | | | | | | | | | |
| **A1** | | | | | | | | | | | | | | | |
| 1.4 (92 kw) | 2014.11-2018.10 | 5MT | F | R | Hatchback FWD CZCA;CZDD | | GDS61301 | Drive Shaft | | 36 | | 50.5 | 59 | 771 | |
| | 2014.11-2018.10 | 6MT | F | L | Hatchback FWD CZCA;CZDD | | GDS61297 | Drive Shaft | | 36 | | 50.5 | 59 | 513 | |
| | 2014.11-2018.10 | 6MT/7DCT | F | L/R | Hatchback FWD CZCA;CZDD | | GCO83024 | Outer Joint | | 36 | 30 | 50.75 | 59 | 55.5 | I |
| | 2014.11-2018.10 | 6MT/7DCT | F | L/R | Hatchback FWD CZCA;CZDD | | GCI53002 | Inner Joint | | | 33 | | | 34 | |
| | 2014.11-2018.10 | 7DCT | F | L | Hatchback FWD CZCA;CZDD | Date to:2017.01 | GDS61311 | Drive Shaft | | 36 | | 50.5 | 59 | 492 | |
| | 2014.11-2018.10 | 7DCT | F | L | Hatchback FWD CZCA;CZDD | Date from:2017.02 | GDS83988 | Drive Shaft | | 36 | | 52 | 64.5 | 500 | |
| | 2014.11-2018.10 | 7DCT | F | R | Hatchback FWD CZCA;CZDD | | GDS57507 | Drive Shaft | | 36 | | 52 | 64.5 | 781 | |
| | 2014.11-2018.10 | 7DCT/6MT | F | L/R | Hatchback FWD CZCA;CZDD | | GCO54006 | Outer Joint | | 36 | 30 | 52 | 59 | 55.5 | I |
| | 2014.11-2018.10 | 7DCT/6MT | F | L/R | Hatchback FWD CZCA;CZDD | | GCI82447 | Inner Joint | | | 33 | | | 34 | |
| 1.4 (103 kw) | 2012.04-2015.04 | 6MT/7DCT | F | L/R | Hatchback FWD CPTA | | GCO61081 | Outer Joint | | 36 | 27 | 52 | 75 | 65 | I |
| | 2012.04-2015.04 | 7AT | F | L | Hatchback FWD CPTA | | GCI61069 | Inner Joint | | | 28 | | | 32 | |
| | 2012.04-2015.04 | 7AT/6MT | F | L/R | Hatchback FWD CPTA | | GCI83016 | Inner Joint | | | 28 | | | 32 | |
| 1.4 (110 kw) | 2014.11-2018.10 | 6MT/7DCT | F | L/R | Hatchback FWD CZEA | | GCI61069 | Inner Joint | | | 28 | | | 32 | |
| | 2014.11-2018.10 | 6MT/7DCT | F | L/R | Hatchback FWD CZEA | | GCI83016 | Inner Joint | | | 28 | | | 32 | |
| | 2014.11-2018.10 | 7DCT/6MT | F | L/R | Hatchback FWD CZEA | | GCO61081 | Outer Joint | | 36 | 27 | 52 | 75 | 65 | I |
| | 2014.11-2018.10 | MT | F | L/R | Hatchback FWD CZEA | | GCO83024 | Outer Joint | | 36 | 30 | 50.75 | 59 | 55.5 | I |
| 1.4 (136 kw) | 2011.01-2015.04 | 7AT | F | L | Hatchback FWD CAVG;CTHG | | GDS61260 | Drive Shaft | | 36 | | 52 | 75 | 498 | |
| | 2011.01-2015.04 | 7AT | F | L/R | Hatchback FWD CAVG;CTHG | | GCI61069 | Inner Joint | | | 28 | | | 32 | |
| | 2011.01-2015.04 | 7DCT | F | R | Hatchback FWD CAVG;CTHG | | GDS61261 | Drive Shaft | | 36 | | 52 | 75 | 785 | |
| | 2011.01-2015.04 | 7DCT | F | L/R | Hatchback FWD CAVG;CTHG | | GCO61081 | Outer Joint | | 36 | 27 | 52 | 75 | 65 | I |
| | 2011.01-2015.04 | | F | L | Hatchback FWD CAVG;CTHG | | GCI83016 | Inner Joint | | | 28 | | | 32 | |
| 1.6 (66 kw) | 2011.03-2015.04 | 5MT | F | L | Hatchback FWD CAYB | | GDS61184 | Drive Shaft | | 36 | | 52 | 59 | 496 | |
| | 2011.03-2015.04 | 5MT | F | R | Hatchback FWD CAYB | | GDS61185 | Drive Shaft | | 36 | | 52 | 59 | 785 | |
| | 2011.03-2015.04 | 5MT | F | L/R | Hatchback FWD CAYB | | GCO54006 | Outer Joint | | 36 | 30 | 52 | 59 | 55.5 | I |
| | 2011.03-2015.04 | 7DCT | F | L | Hatchback FWD CAYB | | GDS61260 | Drive Shaft | | 36 | | 52 | 75 | 498 | |
| | 2011.03-2015.04 | 7DCT | F | R | Hatchback FWD CAYB | | GDS61261 | Drive Shaft | | 36 | | 52 | 75 | 785 | |
| | 2011.03-2015.04 | 7DCT | F | L/R | Hatchback FWD CAYB | | GCO61081 | Outer Joint | | 36 | 27 | 52 | 75 | 65 | I |
| | 2011.03-2015.04 | 7DCT | F | L/R | Hatchback FWD CAYB | | GCI61069 | Inner Joint | | | 28 | | | 32 | |
| | 2011.03-2015.04 | 7DCT/5MT | F | L/R | Hatchback FWD CAYB | | GCI82447 | Inner Joint | | | 33 | | | 34 | |
| | 2011.03-2015.04 | MT | F | L/R | Hatchback FWD CAYB | | GCO83024 | Outer Joint | | 36 | 30 | 50.75 | 59 | 55.5 | I |
| | 2011.03-2015.04 | MT/5MT | F | L/R | Hatchback FWD CAYB | | GCI83011 | Inner Joint | | | 33 | | | 34 | |
| 1.6 (77 kw) | 2010.05-2015.04 | 5MT | F | L | Hatchback FWD CAYC | | GDS61184 | Drive Shaft | | 36 | | 52 | 59 | 496 | |
| | 2010.05-2015.04 | 5MT | F | R | Hatchback FWD CAYC | | GDS61185 | Drive Shaft | | 36 | | 52 | 59 | 785 | |
| | 2010.05-2015.04 | 5MT | F | L/R | Hatchback FWD CAYC | Original design | GCO54006 | Outer Joint | | 36 | 30 | 52 | 59 | 55.5 | I |
| | 2010.05-2015.04 | 5MT | F | L/R | Hatchback FWD CAYC | Non-Original design | GCO83024 | Outer Joint | | 36 | 30 | 50.75 | 59 | 55.5 | I |
| | 2010.05-2015.04 | 5MT | F | L/R | Hatchback FWD CAYC | | GCI82447 | Inner Joint | | | 33 | | | 34 | |
| 1.6 (85 kw) | 2014.11-2018.10 | 5MT | F | L | Hatchback FWD CXMA | | GDS61184 | Drive Shaft | | 36 | | 52 | 59 | 496 | |
| | 2014.11-2018.10 | 5MT | F | R | Hatchback FWD CXMA | | GDS61185 | Drive Shaft | | 36 | | 52 | 59 | 785 | |
| | 2014.11-2018.10 | 5MT | F | L/R | Hatchback FWD CXMA | | GCO54006 | Outer Joint | | 36 | 30 | 52 | 59 | 55.5 | I |
| | 2014.11-2018.10 | 5MT | F | L/R | Hatchback FWD CXMA | | GCI82447 | Inner Joint | | | 33 | | | 34 | |
| | 2014.11-2018.10 | 7DCT | F | L | Hatchback FWD CXMA | | GDS61260 | Drive Shaft | | 36 | | 52 | 75 | 498 | |
| | 2014.11-2018.10 | 7DCT | F | R | Hatchback FWD CXMA | | GDS61261 | Drive Shaft | | 36 | | 52 | 75 | 785 | |
| | 2014.11-2018.10 | 7DCT | F | L/R | Hatchback FWD CXMA | | GCO61081 | Outer Joint | | 36 | 27 | 52 | 75 | 65 | I |
| | 2014.11-2018.10 | 7DCT | F | L/R | Hatchback FWD CXMA | | GCI83016 | Inner Joint | | | 28 | | | 32 | |
| 1.8 (141 kw) | 2015.02-2018.10 | 7AT | F | L | Hatchback FWD DAJB | | GDS61260 | Drive Shaft | | 36 | | 52 | 75 | 498 | |
| | 2015.02-2018.10 | 7AT | F | R | Hatchback FWD DAJB | | GCI61054 | Inner Joint | | 40 | 28 | 46.9 | 41 | 101.7 | |
| | 2015.02-2018.10 | 7DCT | F | L/R | Hatchback FWD DAJB | | GCO61081 | Outer Joint | | 36 | 27 | 52 | 75 | 65 | I |
| | 2015.02-2018.10 | | F | L | Hatchback FWD DAJB | | GCI83016 | Inner Joint | | | 28 | | | 32 | |
| 2.0 (100 kw) | 2012.05-2015.04 | 6MT | F | L/R | Hatchback FWD CFHB | | GCO61081 | Outer Joint | | 36 | 27 | 52 | 75 | 65 | I |
| | 2012.05-2015.04 | 6MT | F | L | Hatchback FWD CFHB | | GCI61069 | Inner Joint | | | 28 | | | 32 | |
| | 2012.05-2015.04 | 6MT | F | L/R | Hatchback FWD CFHB | | GCI83016 | Inner Joint | | | 28 | | | 32 | |
| 2.0 (105 kw) | 2011.09-2015.04 | 6MT | F | L/R | Hatchback FWD CFHD | | GCO61081 | Outer Joint | | 36 | 27 | 52 | 75 | 65 | I |
| | 2011.09-2015.04 | 6MT | F | L | Hatchback FWD CFHD | | GCI61069 | Inner Joint | | | 28 | | | 32 | |
| | 2011.09-2015.04 | 6MT | F | L/R | Hatchback FWD CFHD | | GCI83016 | Inner Joint | | | 28 | | | 32 | |
| **A1 Allstreet** | | | | | | | | | | | | | | | |
| 1.0 (70 kw) | 2022.07- | 5MT | F | L | Hatchback FWD DLAC;DUSB | For PR code:OEM | GDS84011 | Drive Shaft | | 36 | 33 | 52 | 64.5 | 620 | |
| | 2022.07- | 5MT | F | L | Hatchback FWD DLAC;DUSB | For PR code:0EC | GDS84558 | Drive Shaft | | 36 | | 52 | 64.5 | 496 | |
| | 2022.07- | 5MT | F | R | Hatchback FWD DLAC;DUSB | For PR code:OEM | GDS83825 | Drive Shaft | | 36 | 33 | 52 | 64.5 | 896 | |
| | 2022.07- | 5MT | F | R | Hatchback FWD DLAC;DUSB | For PR code:0EC | GDS84562 | Drive Shaft | | 36 | | 52 | 64.5 | 799 | |
| | 2022.07- | 5MT | F | L/R | Hatchback FWD DLAC;DUSB | For PR code:0EC/0EM | GCO81744 | Outer Joint | | 36 | 30 | 52 | 64.5 | 55.5 | M |
| | 2022.07- | 5MT | F | L | Hatchback FWD DLAC;DUSB | For PR code:OEM | GCI82449 | Inner Joint | | 33 | 30 | 39.9 | 58.5 | 105 | |
| | 2022.07- | 5MT | F | R | Hatchback FWD DLAC;DUSB | For PR code:OEM | GCI82384 | Inner Joint | | 33 | 30 | 39.95 | 58.5 | 91.5 | |
| | 2022.07- | 5MT | F | L/R | Hatchback FWD DLAC;DUSB | For PR code:0EC | GCI81690 | Inner Joint | | | 30 | | | 89 | |
| 1.0 (81 kw) | 2022.07- | 6MT | F | L | Hatchback FWD DLAA | | GDS84563 | Drive Shaft | | 36 | | 52 | 64.5 | 506 | |
| | 2022.07- | 6MT | F | R | Hatchback FWD DLAA | | GDS84562 | Drive Shaft | | 36 | | 52 | 64.5 | 799 | |

| | YEAR | TRANSM. | F/R | L/R | BODY STYLE & DRIVE TYPE & ENGINE | REMARKS | G-AP Ref. | PRODUCT | ABS | Technical Specifications A | B | C | H | L | P |
|---|---|---|---|---|---|---|---|---|---|---|---|---|---|---|---|
| **AUDI** | | | | | | | | | | | | | | | |
| **A1 Allstreet** | | | | | | | | | | | | | | | |
| 1.0 (81 kw) | 2022.07- | 6MT | F | R | Hatchback FWD DLAA | | GCO81744 | Outer Joint | | 36 | 30 | 52 | 64.5 | 55.5 | M |
| | 2022.07- | 6MT | F | L | Hatchback FWD DLAA | | GCI81689 | Inner Joint | | | 32 | | | 89 | |
| | 2022.07- | 6MT | F | R | Hatchback FWD DLAA | | GCI81690 | Inner Joint | | | 30 | | | 89 | |
| | 2022.07- | 7DCT | F | R | Hatchback FWD DLAA | | GDS57885 | Drive Shaft | | 36 | | 52 | 64.5 | 765 | |
| | 2022.07- | 7DCT | F | L | Hatchback FWD DLAA | | GCO82548 | Outer Joint | | 36 | 27 | 52 | 64.5 | 65 | M |
| | 2022.07- | 7DCT | F | R | Hatchback FWD DLAA | | GCO81743 | Outer Joint | | 36 | 33 | 52 | 64.5 | 59 | I |
| 1.0 (85 kw) | 2024.03- | 6MT/7DCT | F | L | Hatchback FWD DUSA | | GDS84563 | Drive Shaft | | 36 | | 52 | 64.5 | 506 | |
| | 2024.03- | 7DCT | F | R | Hatchback FWD DUSA | | GDS57885 | Drive Shaft | | 36 | | 52 | 64.5 | 765 | |
| | 2024.03- | 7DCT | F | R | Hatchback FWD DUSA | | GCO81743 | Outer Joint | | 36 | 33 | 52 | 64.5 | 59 | I |
| | 2024.03- | 7DCT | F | R | Hatchback FWD DUSA | | GCI81689 | Inner Joint | | | 32 | | | 89 | |
| 1.5 (110 kw) | 2022.07- | 6MT | F | L/R | Hatchback FWD DPCA;DXDB | | GCO81743 | Outer Joint | | 36 | 33 | 52 | 64.5 | 59 | I |
| | 2022.07- | 6MT | F | L/R | Hatchback FWD DPCA;DXDB | | GCI83016 | Inner Joint | | | 28 | | | 32 | |
| | 2022.07- | 7DCT | F | L/R | Hatchback FWD DPCA;DXDB | | GCO82548 | Outer Joint | | 36 | 27 | 52 | 64.5 | 65 | M |
| | 2022.07- | 7DCT | F | L | Hatchback FWD DPCA;DXDB | | GCI83016 | Inner Joint | | | 28 | | | 32 | |
| **A1 City Carver** | | | | | | | | | | | | | | | |
| 1.0 (70 kw) | 2019.07-2022.06 | 5MT | F | L | Hatchback FWD DKLA | For PR code:OEM | GDS84187 | Drive Shaft | | 36 | 33 | 52 | 64.5 | 623 | |
| | 2019.07-2022.06 | 5MT | F | L | Hatchback FWD DKLA | For PR code:0EJ | GDS84563 | Drive Shaft | | 36 | | 52 | 64.5 | 506 | |
| | 2019.07-2022.06 | 5MT | F | R | Hatchback FWD DKLA | For PR code:0EM | GDS57823 | Drive Shaft | | 36 | 33 | 52 | 64.5 | 900 | |
| | 2019.07-2022.06 | 5MT | F | R | Hatchback FWD DKLA | For PR code:0EJ | GDS84562 | Drive Shaft | | 36 | | 52 | 64.5 | 799 | |
| | 2019.07-2022.06 | 5MT | F | L | Hatchback FWD DKLA | For PR code:0EM | GCO81743 | Outer Joint | | 36 | 33 | 52 | 64.5 | 59 | I |
| | 2019.07-2022.06 | 5MT | F | R | Hatchback FWD DKLA | For PR code:0EJ/0EM | GCO81744 | Outer Joint | | 36 | 30 | 52 | 64.5 | 55.5 | M |
| | 2019.07-2022.06 | 5MT | F | L | Hatchback FWD DKLA | For PR code:OEM | GCI81546 | Inner Joint | | 33 | 32 | 39.9 | 58.5 | 105 | |
| | 2019.07-2022.06 | 5MT | F | R | Hatchback FWD DKLA | For PR code:0EM | GCI82449 | Inner Joint | | 33 | 30 | 39.9 | 58.5 | 105 | |
| 1.0 (81 kw) | 2020.09-2022.06 | 6MT | F | L | Hatchback FWD DLAA | | GDS84563 | Drive Shaft | | 36 | | 52 | 64.5 | 506 | |
| | 2020.09-2022.06 | 6MT | F | R | Hatchback FWD DLAA | | GDS84562 | Drive Shaft | | 36 | | 52 | 64.5 | 799 | |
| | 2020.09-2022.06 | 6MT | F | R | Hatchback FWD DLAA | | GCO81744 | Outer Joint | | 36 | 30 | 52 | 64.5 | 55.5 | M |
| | 2020.09-2022.06 | 6MT | F | L | Hatchback FWD DLAA | | GCI81689 | Inner Joint | | | 32 | | | 89 | |
| | 2020.09-2022.06 | 6MT | F | R | Hatchback FWD DLAA | | GCI81690 | Inner Joint | | | 30 | | | 89 | |
| | 2020.09-2022.06 | 7DCT | F | R | Hatchback FWD DLAA | | GDS57885 | Drive Shaft | | 36 | | 52 | 64.5 | 765 | |
| | 2020.09-2022.06 | 7DCT | F | R | Hatchback FWD DLAA | | GCO81743 | Outer Joint | | 36 | 33 | 52 | 64.5 | 59 | I |
| | 2020.09-2022.06 | 7DCT | F | L/R | Hatchback FWD DLAA | | GCO82548 | Outer Joint | | 36 | 27 | 52 | 64.5 | 65 | M |
| 1.0 (85 kw) | 2019.07-2022.06 | 5MT | F | L | Hatchback FWD DKRF;DKJA | For PR code:OEM | GDS84187 | Drive Shaft | | 36 | 33 | 52 | 64.5 | 623 | |
| | 2019.07-2022.06 | 5MT | F | R | Hatchback FWD DKRF;DKJA | For PR code:0EM | GDS57823 | Drive Shaft | | 36 | 33 | 52 | 64.5 | 900 | |
| | 2019.07-2022.06 | 5MT | F | L | Hatchback FWD DKRF;DKJA | For PR code:OEM | GCI81546 | Inner Joint | | 33 | 32 | 39.9 | 58.5 | 105 | |
| | 2019.07-2022.06 | 5MT | F | R | Hatchback FWD DKRF;DKJA | For PR code:0EM | GCI82449 | Inner Joint | | 33 | 30 | 39.9 | 58.5 | 105 | |
| | 2019.07-2022.06 | 6MT | F | L | Hatchback FWD DKRF;DKJA | For PR code:0EJ | GDS84563 | Drive Shaft | | 36 | | 52 | 64.5 | 506 | |
| | 2019.07-2022.06 | 6MT | F | R | Hatchback FWD DKRF;DKJA | For PR code:0EJ | GDS84562 | Drive Shaft | | 36 | | 52 | 64.5 | 799 | |
| | 2019.07-2022.06 | 6MT | F | L | Hatchback FWD DKRF;DKJA | For PR code:0EM | GCO81743 | Outer Joint | | 36 | 33 | 52 | 64.5 | 59 | I |
| | 2019.07-2022.06 | 6MT | F | R | Hatchback FWD DKRF;DKJA | For PR code:0EJ/0EM | GCO81744 | Outer Joint | | 36 | 30 | 52 | 64.5 | 55.5 | M |
| | 2019.07-2022.06 | 7DCT | F | L | Hatchback FWD DKRF;DKJA | | GDS84317 | Drive Shaft | | 36 | | 52 | 64.5 | 500 | |
| | 2019.07-2022.06 | 7DCT | F | R | Hatchback FWD DKRF;DKJA | | GDS82233 | Drive Shaft | | 36 | | 52 | 64.5 | 778 | |
| | 2019.07-2022.06 | 7DCT | F | L | Hatchback FWD DKRF;DKJA | | GCO82548 | Outer Joint | | 36 | 27 | 52 | 64.5 | 65 | M |
| | 2019.07-2022.06 | 7DCT | F | R | Hatchback FWD DKRF;DKJA | | GCO81743 | Outer Joint | | 36 | 33 | 52 | 64.5 | 59 | I |
| | 2019.07-2022.06 | 7DCT | F | L | Hatchback FWD DKRF;DKJA | | GCI81689 | Inner Joint | | | 32 | | | 89 | |
| 1.5 (110 kw) | 2019.07-2022.06 | 6MT | F | L/R | Hatchback FWD DPCA | | GCI83016 | Inner Joint | | | 28 | | | 32 | |
| | 2019.07-2022.06 | 6MT/7DCT | F | L/R | Hatchback FWD DPCA | | GCO82548 | Outer Joint | | 36 | 27 | 52 | 64.5 | 65 | M |
| | 2019.07-2022.06 | 7AT/6MT | F | L | Hatchback FWD DPCA | | GDS58319 | Drive Shaft | | 36 | | 52 | 64.5 | 526 | |
| | 2019.07-2022.06 | 7AT/6MT | F | L | Hatchback FWD DPCA | | GCI61069 | Inner Joint | | | 28 | | | 32 | |
| | 2019.07-2022.06 | 7DCT | F | R | Hatchback FWD DPCA | | GDS58333 | Drive Shaft | | 36 | 40 | 52 | 64.5 | 827 | |
| **A1 Quattro** | | | | | | | | | | | | | | | |
| 2.0 (188 kw) | 2012.03-2012.11 | 6MT | F | L/R | Hatchback 4WD CDLH | | GCO83002 | Outer Joint | | 36 | 27 | 59.5 | 40 | 66 | I |
| | 2012.03-2012.11 | 6MT | F | L/R | Hatchback 4WD CDLH | | GCI83016 | Inner Joint | | | 28 | | | 32 | |
| | 2012.03-2012.11 | 6MT | R | R | Hatchback 4WD CDLH | | GDS54017 | Drive Shaft | | 36 | | 59.5 | 40 | 609 | |
| | 2012.03-2012.11 | 6MT | R | L/R | Hatchback 4WD CDLH | | GCI35026 | Outer Joint | | 36 | 33 | 59.5 | 40 | 61 | |
| | 2012.03-2012.11 | 6MT | R | R | Hatchback 4WD CDLH | | GCI53002 | Inner Joint | | | 33 | | | 34 | |
| **A1 Sportback** | | | | | | | | | | | | | | | |
| 1.0 (60 kw) | 2016.01-2018.10 | 5MT | F | L | Hatchback FWD CHZE | | GDS81922 | Drive Shaft | | 36 | 33 | 52 | 59 | 581 | |
| | 2016.01-2018.10 | 5MT | F | R | Hatchback FWD CHZE | | GDS81924 | Drive Shaft | | 36 | 33 | 52 | 59 | 855 | |
| | 2016.01-2018.10 | 5MT | F | L/R | Hatchback FWD CHZE | | GCO54006 | Outer Joint | | 36 | 30 | 52 | 59 | 55.5 | I |
| | 2016.01-2018.10 | 5MT | F | L/R | Hatchback FWD CHZE | | GCI81546 | Inner Joint | | 33 | 32 | 39.9 | 58.5 | 105 | |
| | 2016.01-2018.10 | MT | F | L/R | Hatchback FWD CHZE | For PR code:TJ4/G0C | GCO83024 | Outer Joint | | 36 | 30 | 50.75 | 59 | 55.5 | I |
| 1.0 (70 kw) | 2015.03-2018.10 | 5MT | F | L | Hatchback FWD CHZB;DKLD | | GDS81922 | Drive Shaft | | 36 | 33 | 52 | 59 | 581 | |
| | 2015.03-2018.10 | 5MT | F | R | Hatchback FWD CHZB;DKLD | | GDS81924 | Drive Shaft | | 36 | 33 | 52 | 59 | 855 | |
| | 2015.03-2018.10 | 5MT | F | L/R | Hatchback FWD CHZB;DKLD | | GCO54006 | Outer Joint | | 36 | 30 | 52 | 59 | 55.5 | I |
| | 2015.03-2018.10 | 5MT | F | L/R | Hatchback FWD CHZB;DKLD | | GCI81546 | Inner Joint | | 33 | 32 | 39.9 | 58.5 | 105 | |

| | YEAR | TRANSM. | F/R | L/R | BODY STYLE & DRIVE TYPE & ENGINE | REMARKS | G-AP Ref. | PRODUCT | ABS | Technical Specifications A | B | C | H | L | P |
|---|---|---|---|---|---|---|---|---|---|---|---|---|---|---|---|
| **AUDI** | | | | | | | | | | | | | | | |
| **A1 Sportback** | | | | | | | | | | | | | | | |
| 1.0 (70 kw) | 2015.03-2018.10 | 7DCT | F | L | Hatchback FWD CHZB;DKLD | | GDS82228 | Drive Shaft | | 36 | | 52 | 75 | 475 | |
| | 2015.03-2018.10 | 7DCT | F | R | Hatchback FWD CHZB;DKLD | | GDS82358 | Drive Shaft | | 36 | | 52 | 75 | 762 | |
| | 2015.03-2018.10 | 7DCT | F | L/R | Hatchback FWD CHZB;DKLD | | GCO61081 | Outer Joint | | 36 | 27 | 52 | 75 | 65 | I |
| | 2015.03-2018.10 | 7DCT | F | L/R | Hatchback FWD CHZB;DKLD | | GCI81689 | Inner Joint | | | 32 | | | 89 | |
| | 2018.11- | 5MT | F | L | Hatchback FWD DKLA;DLAC;DUSB | For PR code:0EM | GDS84011 | Drive Shaft | | 36 | 33 | 52 | 64.5 | 620 | |
| | 2018.11- | 5MT | F | L | Hatchback FWD DKLA;DLAC;DUSB | For PR code:0EC | GDS84558 | Drive Shaft | | 36 | | 52 | 64.5 | 496 | |
| | 2018.11- | 5MT | F | R | Hatchback FWD DKLA;DLAC;DUSB | For PR code:OEM | GDS83825 | Drive Shaft | | 36 | 33 | 52 | 64.5 | 896 | |
| | 2018.11- | 5MT | F | R | Hatchback FWD DKLA;DLAC;DUSB | For PR code:0EC | GDS84562 | Drive Shaft | | 36 | | 52 | 64.5 | 799 | |
| | 2018.11- | 5MT | F | L/R | Hatchback FWD DKLA;DLAC;DUSB | For PR code:0EC/For Engine code:DKLA/For PR code:0EM/For Engine code:DLAC/For PR code:0EM | GCO81744 | Outer Joint | | 36 | 30 | 52 | 64.5 | 55.5 | M |
| | 2018.11- | 5MT | F | R | Hatchback FWD DKLA;DLAC;DUSB | For PR code:OEM | GCI82384 | Inner Joint | | 33 | 30 | 39.95 | 58.5 | 91.5 | |
| | 2018.11- | 5MT | F | R | Hatchback FWD DKLA;DLAC;DUSB | For PR code:0EM | GCI82449 | Inner Joint | | 33 | 30 | 39.9 | 58.5 | 105 | |
| | 2018.11- | 7DCT | F | L | Hatchback FWD DKLA;DLAC;DUSB | For Engine code:DKLA | GDS82232 | Drive Shaft | | 36 | | 52 | 64.5 | 500 | |
| | 2018.11- | 7DCT | F | L | Hatchback FWD DKLA;DLAC;DUSB | For Engine code:DLAC | GDS84563 | Drive Shaft | | 36 | | 52 | 64.5 | 506 | |
| | 2018.11- | 7DCT | F | R | Hatchback FWD DKLA;DLAC;DUSB | For Engine code:DLAC | GDS57885 | Drive Shaft | | 36 | | 52 | 64.5 | 765 | |
| | 2018.11- | 7DCT | F | R | Hatchback FWD DKLA;DLAC;DUSB | For Engine code:DKLA | GDS82233 | Drive Shaft | | 36 | | 52 | 64.5 | 778 | |
| | 2018.11- | 7DCT | F | L | Hatchback FWD DKLA;DLAC;DUSB | For Engine code:DKLA | GCO81743 | Outer Joint | | 36 | 33 | 52 | 64.5 | 59 | I |
| | 2018.11- | 7DCT | F | R | Hatchback FWD DKLA;DLAC;DUSB | For Engine code:DKLA | GCO81744 | Outer Joint | | 36 | 30 | 52 | 64.5 | 55.5 | M |
| | 2018.11- | 7DCT | F | L | Hatchback FWD DKLA;DLAC;DUSB | For Engine code:DKLA | GCI81689 | Inner Joint | | | 32 | | | 89 | |
| | 2018.11- | 7DCT | F | R | Hatchback FWD DKLA;DLAC;DUSB | For Engine code:DKLA | GCI81690 | Inner Joint | | | 30 | | | 89 | |
| 1.0 (81 kw) | 2020.09- | 6MT | F | L | Hatchback FWD DLAA | | GDS84558 | Drive Shaft | | 36 | | 52 | 64.5 | 496 | |
| | 2020.09- | 6MT | F | R | Hatchback FWD DLAA | | GDS82233 | Drive Shaft | | 36 | | 52 | 64.5 | 778 | |
| | 2020.09- | 6MT | F | L/R | Hatchback FWD DLAA | | GCO81744 | Outer Joint | | 36 | 30 | 52 | 64.5 | 55.5 | M |
| | 2020.09- | 6MT | F | R | Hatchback FWD DLAA | | GCI81690 | Inner Joint | | | 30 | | | 89 | |
| | 2020.09- | 7DCT | F | L | Hatchback FWD DLAA | | GDS84563 | Drive Shaft | | 36 | | 52 | 64.5 | 506 | |
| | 2020.09- | 7DCT | F | R | Hatchback FWD DLAA | | GDS57885 | Drive Shaft | | 36 | | 52 | 64.5 | 765 | |
| | 2020.09- | 7DCT | F | R | Hatchback FWD DLAA | | GCO81743 | Outer Joint | | 36 | 33 | 52 | 64.5 | 59 | I |
| | 2020.09- | 7DCT | F | R | Hatchback FWD DLAA | | GCI81689 | Inner Joint | | | 32 | | | 89 | |
| 1.0 (85 kw) | 2018.07- | 6MT | F | L | Hatchback FWD DKRF;DKJA;DUSA | For PR code:0EM | GDS84011 | Drive Shaft | | 36 | 33 | 52 | 64.5 | 620 | |
| | 2018.07- | 6MT | F | L | Hatchback FWD DKRF;DKJA;DUSA | For PR code:0EC | GDS84558 | Drive Shaft | | 36 | | 52 | 64.5 | 496 | |
| | 2018.07- | 6MT | F | R | Hatchback FWD DKRF;DKJA;DUSA | For PR code:OEM | GDS83825 | Drive Shaft | | 36 | 33 | 52 | 64.5 | 896 | |
| | 2018.07- | 6MT | F | R | Hatchback FWD DKRF;DKJA;DUSA | For PR code:0EC | GDS84562 | Drive Shaft | | 36 | | 52 | 64.5 | 799 | |
| | 2018.07- | 6MT | F | L/R | Hatchback FWD DKRF;DKJA;DUSA | For PR code:0EM/0EJ | GCO81744 | Outer Joint | | 36 | 30 | 52 | 64.5 | 55.5 | M |
| | 2018.07- | 6MT | F | R | Hatchback FWD DKRF;DKJA;DUSA | For PR code:OEM | GCI82384 | Inner Joint | | 33 | 30 | 39.95 | 58.5 | 91.5 | |
| | 2018.07- | 6MT | F | L/R | Hatchback FWD DKRF;DKJA;DUSA | For PR code:OEC | GCI82449 | Inner Joint | | 33 | 30 | 39.9 | 58.5 | 105 | |
| | 2018.07- | 7DCT | F | L | Hatchback FWD DKRF;DKJA;DUSA | | GDS82232 | Drive Shaft | | 36 | | 52 | 64.5 | 500 | |
| | 2018.07- | 7DCT | F | R | Hatchback FWD DKRF;DKJA;DUSA | | GDS82233 | Drive Shaft | | 36 | | 52 | 64.5 | 778 | |
| | 2018.07- | 7DCT | F | L | Hatchback FWD DKRF;DKJA;DUSA | | GCO81743 | Outer Joint | | 36 | 33 | 52 | 64.5 | 59 | I |
| | 2018.07- | 7DCT | F | R | Hatchback FWD DKRF;DKJA;DUSA | | GCO81744 | Outer Joint | | 36 | 30 | 52 | 64.5 | 55.5 | M |
| | 2018.07- | 7DCT | F | L | Hatchback FWD DKRF;DKJA;DUSA | | GCI81689 | Inner Joint | | | 32 | | | 89 | |
| | 2018.07- | 7DCT | F | R | Hatchback FWD DKRF;DKJA;DUSA | | GCI81690 | Inner Joint | | | 30 | | | 89 | |
| 1.2 (63 kw) | 2012.01-2015.04 | 5MT | F | L | Hatchback FWD CBZA | | GDS61297 | Drive Shaft | | 36 | | 50.5 | 59 | 513 | |
| | 2012.01-2015.04 | 5MT | F | R | Hatchback FWD CBZA | | GDS61301 | Drive Shaft | | 36 | | 50.5 | 59 | 771 | |
| | 2012.01-2015.04 | 5MT | F | L/R | Hatchback FWD CBZA | | GCO54006 | Outer Joint | | 36 | 30 | 52 | 59 | 55.5 | I |
| | 2012.01-2015.04 | 5MT | F | L/R | Hatchback FWD CBZA | | GCO83024 | Outer Joint | | 36 | 30 | 50.75 | 59 | 55.5 | I |
| | 2012.01-2015.04 | 5MT | F | L/R | Hatchback FWD CBZA | | GCI53002 | Inner Joint | | | 33 | | | 34 | |
| | 2012.01-2015.04 | 5MT | F | L/R | Hatchback FWD CBZA | | GCI82447 | Inner Joint | | | 33 | | | 34 | |
| 1.4 (66 kw) | 2014.11-2018.10 | 5MT | F | L | Hatchback FWD CUSB | | GDS82039 | Drive Shaft | | 36 | | 52 | 59 | 549 | |
| | 2014.11-2018.10 | 5MT | F | R | Hatchback FWD CUSB | | GDS82360 | Drive Shaft | | 36 | | 52 | 59 | 729 | |
| | 2014.11-2018.10 | 5MT | F | L/R | Hatchback FWD CUSB | | GCO54006 | Outer Joint | | 36 | 30 | 52 | 59 | 55.5 | I |
| | 2014.11-2018.10 | 5MT | F | L/R | Hatchback FWD CUSB | | GCI53002 | Inner Joint | | | 33 | | | 34 | |
| | 2014.11-2018.10 | 5MT | F | L/R | Hatchback FWD CUSB | | GCI82447 | Inner Joint | | | 33 | | | 34 | |
| | 2014.11-2018.10 | 7DCT | F | L | Hatchback FWD CUSB | | GDS81926 | Drive Shaft | | 36 | | 52 | 75 | 550 | |
| | 2014.11-2018.10 | 7DCT | F | R | Hatchback FWD CUSB | | GDS82359 | Drive Shaft | | 36 | 40 | 52 | 75 | 755 | |
| | 2014.11-2018.10 | 7DCT | F | L/R | Hatchback FWD CUSB | | GCO61081 | Outer Joint | | 36 | 27 | 52 | 75 | 65 | I |
| | 2014.11-2018.10 | 7DCT | F | L | Hatchback FWD CUSB | | GCI83016 | Inner Joint | | | 28 | | | 32 | |
| | 2014.11-2018.10 | 7DCT | F | R | Hatchback FWD CUSB | | GCI61054 | Inner Joint | | 40 | 28 | 46.9 | 41 | 101.7 | |
| | 2014.11-2018.10 | MT | F | L/R | Hatchback FWD CUSB | | GCO83024 | Outer Joint | | 36 | 30 | 50.75 | 59 | 55.5 | I |
| 1.4 (90 kw) | 2011.11-2015.04 | 6MT | F | L | Hatchback FWD CAXA;CNVA | | GDS61297 | Drive Shaft | | 36 | | 50.5 | 59 | 513 | |
| | 2011.11-2015.04 | 6MT | F | R | Hatchback FWD CAXA;CNVA | | GDS61301 | Drive Shaft | | 36 | | 50.5 | 59 | 771 | |
| | 2011.11-2015.04 | 6MT/7DCT | F | L/R | Hatchback FWD CAXA;CNVA | | GCO54006 | Outer Joint | | 36 | 30 | 52 | 59 | 55.5 | I |
| | 2011.11-2015.04 | 6MT/7DCT | F | L/R | Hatchback FWD CAXA;CNVA | | GCO83024 | Outer Joint | | 36 | 30 | 50.75 | 59 | 55.5 | I |
| | 2011.11-2015.04 | 6MT/7DCT | F | L/R | Hatchback FWD CAXA;CNVA | | GCI82447 | Inner Joint | | | 33 | | | 34 | |
| | 2011.11-2015.04 | 7DCT | F | L | Hatchback FWD CAXA;CNVA | | GDS61311 | Drive Shaft | | 36 | | 50.5 | 59 | 492 | |
| | 2011.11-2015.04 | 7DCT | F | R | Hatchback FWD CAXA;CNVA | | GDS61308 | Drive Shaft | | 36 | | 50.5 | 59 | 786 | |
| | 2011.11-2015.04 | 7DCT/6MT | F | L/R | Hatchback FWD CAXA;CNVA | | GCI53002 | Inner Joint | | | 33 | | | 34 | |

| | YEAR | TRANSM. | F/R | L/R | BODY STYLE & DRIVE TYPE & ENGINE | REMARKS | G-AP Ref. | PRODUCT | ABS | Technical Specifications A | B | C | H | L | P |
|---|---|---|---|---|---|---|---|---|---|---|---|---|---|---|---|
| **AUDI** | | | | | | | | | | | | | | | |
| **A1 Sportback** | | | | | | | | | | | | | | | |
| 1.4 (90 kw) | 2011.11-2015.04 | MT | F | L | Hatchback FWD CAXA;CNVA | | GDS61274 | Drive Shaft | | 36 | | 50.5 | 59 | 514 | |
| | 2011.11-2015.04 | MT | F | L/R | Hatchback FWD CAXA;CNVA | | GCI83011 | Inner Joint | | | 33 | | | 34 | |
| 1.4 (92 kw) | 2014.11-2018.10 | 5MT | F | R | Hatchback FWD CZCA;CZDD | | GDS61301 | Drive Shaft | | 36 | | 50.5 | 59 | 771 | |
| | 2014.11-2018.10 | 6MT | F | L | Hatchback FWD CZCA;CZDD | | GDS61297 | Drive Shaft | | 36 | | 50.5 | 59 | 513 | |
| | 2014.11-2018.10 | 6MT/7DCT | F | L/R | Hatchback FWD CZCA;CZDD | | GCO83024 | Outer Joint | | 36 | 30 | 50.75 | 59 | 55.5 | I |
| | 2014.11-2018.10 | 6MT/7DCT | F | L/R | Hatchback FWD CZCA;CZDD | | GCI53002 | Inner Joint | | | 33 | | | 34 | |
| | 2014.11-2018.10 | 7DCT | F | L | Hatchback FWD CZCA;CZDD | Date to:2017.01 | GDS61311 | Drive Shaft | | 36 | | 50.5 | 59 | 492 | |
| | 2014.11-2018.10 | 7DCT | F | L | Hatchback FWD CZCA;CZDD | Date from:2017.02 | GDS83988 | Drive Shaft | | 36 | | 52 | 64.5 | 500 | |
| | 2014.11-2018.10 | 7DCT | F | R | Hatchback FWD CZCA;CZDD | | GDS57507 | Drive Shaft | | 36 | | 52 | 64.5 | 781 | |
| | 2014.11-2018.10 | 7DCT/6MT | F | L/R | Hatchback FWD CZCA;CZDD | | GCO54006 | Outer Joint | | 36 | 30 | 52 | 59 | 55.5 | I |
| | 2014.11-2018.10 | 7DCT/6MT | F | L/R | Hatchback FWD CZCA;CZDD | | GCI82447 | Inner Joint | | | 33 | | | 34 | |
| | 2016.01-2018.10 | 5MT | F | R | Hatchback FWD CZDD | | GDS61301 | Drive Shaft | | 36 | | 50.5 | 59 | 771 | |
| | 2016.01-2018.10 | 6MT | F | L | Hatchback FWD CZDD | | GDS61297 | Drive Shaft | | 36 | | 50.5 | 59 | 513 | |
| | 2016.01-2018.10 | 7DCT | F | L | Hatchback FWD CZDD | Date to:2017.01 | GDS61311 | Drive Shaft | | 36 | | 50.5 | 59 | 492 | |
| | 2016.01-2018.10 | 7DCT | F | L | Hatchback FWD CZDD | Date from:2017.02 | GDS83988 | Drive Shaft | | 36 | | 52 | 64.5 | 500 | |
| | 2016.01-2018.10 | 7DCT | F | R | Hatchback FWD CZDD | | GDS57507 | Drive Shaft | | 36 | | 52 | 64.5 | 781 | |
| 1.4 (103 kw) | 2012.04-2015.04 | 6MT | F | L/R | Hatchback FWD CPTA | | GCO61081 | Outer Joint | | 36 | 27 | 52 | 75 | 65 | I |
| | 2012.04-2015.04 | 6MT | F | L/R | Hatchback FWD CPTA | | GCI83016 | Inner Joint | | | 28 | | | 32 | |
| | 2012.04-2015.04 | 7AT/6MT | F | L | Hatchback FWD CPTA | | GCI61069 | Inner Joint | | | 28 | | | 32 | |
| 1.4 (110 kw) | 2014.11-2018.10 | 6MT/7DCT | F | L/R | Hatchback FWD CZEA | | GCI61069 | Inner Joint | | | 28 | | | 32 | |
| | 2014.11-2018.10 | 6MT/7DCT | F | L/R | Hatchback FWD CZEA | | GCI83016 | Inner Joint | | | 28 | | | 32 | |
| | 2014.11-2018.10 | 7DCT/6MT | F | L/R | Hatchback FWD CZEA | | GCO61081 | Outer Joint | | 36 | 27 | 52 | 75 | 65 | I |
| | 2014.11-2018.10 | MT | F | L/R | Hatchback FWD CZEA | Inner teeth:30 | GCO83024 | Outer Joint | | 36 | 30 | 50.75 | 59 | 55.5 | I |
| 1.4 (136 kw) | 2011.11-2015.04 | 7AT | F | L | Hatchback FWD CAVG, CTHG | | GDS61260 | Drive Shaft | | 36 | | 52 | 75 | 498 | |
| | 2011.11-2015.04 | 7AT | F | L/R | Hatchback FWD CAVG, CTHG | | GCI61069 | Inner Joint | | | 28 | | | 32 | |
| | 2011.11-2015.04 | 7DCT | F | R | Hatchback FWD CAVG, CTHG | | GDS61261 | Drive Shaft | | 36 | | 52 | 75 | 785 | |
| | 2011.11-2015.04 | 7DCT | F | L/R | Hatchback FWD CAVG, CTHG | | GCO61081 | Outer Joint | | 36 | 27 | 52 | 75 | 65 | I |
| | 2011.11-2015.04 | | F | L | Hatchback FWD CAVG, CTHG | | GCI83016 | Inner Joint | | | 28 | | | 32 | |
| 1.5 (110 kw) | 2018.09- | 6MT | F | L/R | Hatchback FWD DADA;DPCA;DXDB | | GCO81743 | Outer Joint | | 36 | 33 | 52 | 64.5 | 59 | I |
| | 2018.09- | 6MT | F | L/R | Hatchback FWD DADA;DPCA;DXDB | | GCI82447 | Inner Joint | | | 33 | | | 34 | |
| | 2018.09- | 7DCT | F | L/R | Hatchback FWD DADA;DPCA;DXDB | | GCO82548 | Outer Joint | | 36 | 27 | 52 | 64.5 | 65 | M |
| | 2018.09- | 7DCT | F | L | Hatchback FWD DADA;DPCA;DXDB | | GCI83016 | Inner Joint | | | 28 | | | 32 | |
| 1.6 (66 kw) | 2011.11-2015.04 | 5MT | F | L | Hatchback FWD CAYB | | GDS61184 | Drive Shaft | | 36 | | 52 | 59 | 496 | |
| | 2011.11-2015.04 | 5MT | F | R | Hatchback FWD CAYB | | GDS61185 | Drive Shaft | | 36 | | 52 | 59 | 785 | |
| | 2011.11-2015.04 | 5MT | F | L/R | Hatchback FWD CAYB | | GCO54006 | Outer Joint | | 36 | 30 | 52 | 59 | 55.5 | I |
| | 2011.11-2015.04 | 7DCT | F | L | Hatchback FWD CAYB | | GDS61260 | Drive Shaft | | 36 | | 52 | 75 | 498 | |
| | 2011.11-2015.04 | 7DCT | F | R | Hatchback FWD CAYB | | GDS61261 | Drive Shaft | | 36 | | 52 | 75 | 785 | |
| | 2011.11-2015.04 | 7DCT | F | L/R | Hatchback FWD CAYB | | GCO61081 | Outer Joint | | 36 | 27 | 52 | 75 | 65 | I |
| | 2011.11-2015.04 | 7DCT | F | L/R | Hatchback FWD CAYB | | GCI61069 | Inner Joint | | | 28 | | | 32 | |
| | 2011.11-2015.04 | 7DCT/5MT | F | L/R | Hatchback FWD CAYB | | GCI82447 | Inner Joint | | | 33 | | | 34 | |
| | 2011.11-2015.04 | MT | F | L/R | Hatchback FWD CAYB | | GCO83024 | Outer Joint | | 36 | 30 | 50.75 | 59 | 55.5 | I |
| | 2011.11-2015.04 | MT/5MT | F | L/R | Hatchback FWD CAYB | | GCI83011 | Inner Joint | | | 33 | | | 34 | |
| 1.6 (77 kw) | 2011.11-2015.04 | 5MT | F | L | Hatchback FWD CAYC | | GDS61184 | Drive Shaft | | 36 | | 52 | 59 | 496 | |
| | 2011.11-2015.04 | 5MT | F | R | Hatchback FWD CAYC | | GDS61185 | Drive Shaft | | 36 | | 52 | 59 | 785 | |
| | 2011.11-2015.04 | 5MT | F | L/R | Hatchback FWD CAYC | Original design | GCO54006 | Outer Joint | | 36 | 30 | 52 | 59 | 55.5 | I |
| | 2011.11-2015.04 | 5MT | F | L/R | Hatchback FWD CAYC | Non-Original design | GCO83024 | Outer Joint | | 36 | 30 | 50.75 | 59 | 55.5 | I |
| | 2011.11-2015.04 | 5MT | F | L/R | Hatchback FWD CAYC | | GCI82447 | Inner Joint | | | 33 | | | 34 | |
| 1.6 (85 kw) | 2014.11-2018.10 | 5MT | F | L | Hatchback FWD CXMA | | GDS61184 | Drive Shaft | | 36 | | 52 | 59 | 496 | |
| | 2014.11-2018.10 | 5MT | F | R | Hatchback FWD CXMA | | GDS61185 | Drive Shaft | | 36 | | 52 | 59 | 785 | |
| | 2014.11-2018.10 | 5MT | F | L/R | Hatchback FWD CXMA | | GCO54006 | Outer Joint | | 36 | 30 | 52 | 59 | 55.5 | I |
| | 2014.11-2018.10 | 5MT | F | L/R | Hatchback FWD CXMA | | GCI82447 | Inner Joint | | | 33 | | | 34 | |
| | 2014.11-2018.10 | 7DCT | F | L | Hatchback FWD CXMA | | GDS61260 | Drive Shaft | | 36 | | 52 | 75 | 498 | |
| | 2014.11-2018.10 | 7DCT | F | R | Hatchback FWD CXMA | | GDS61261 | Drive Shaft | | 36 | | 52 | 75 | 785 | |
| | 2014.11-2018.10 | 7DCT | F | L/R | Hatchback FWD CXMA | | GCO61081 | Outer Joint | | 36 | 27 | 52 | 75 | 65 | I |
| | 2014.11-2018.10 | 7DCT | F | L/R | Hatchback FWD CXMA | | GCI83016 | Inner Joint | | | 28 | | | 32 | |
| 1.8 (141 kw) | 2015.02-2018.10 | 7AT | F | L | Hatchback FWD DAJB | | GDS61260 | Drive Shaft | | 36 | | 52 | 75 | 498 | |
| | 2015.02-2018.10 | 7AT | F | R | Hatchback FWD DAJB | | GCI61054 | Inner Joint | | 40 | 28 | 46.9 | 41 | 101.7 | |
| | 2015.02-2018.10 | 7DCT | F | L/R | Hatchback FWD DAJB | | GCO61081 | Outer Joint | | 36 | 27 | 52 | 75 | 65 | I |
| | 2015.02-2018.10 | | F | L | Hatchback FWD DAJB | | GCI83016 | Inner Joint | | | 28 | | | 32 | |
| 2.0 (100 kw) | 2012.05-2015.04 | 6MT | F | L/R | Hatchback FWD CFHB | | GCO61081 | Outer Joint | | 36 | 27 | 52 | 75 | 65 | I |
| | 2012.05-2015.04 | 6MT | F | L | Hatchback FWD CFHB | | GCI61069 | Inner Joint | | | 28 | | | 32 | |
| | 2012.05-2015.04 | 6MT | F | L/R | Hatchback FWD CFHB | | GCI83016 | Inner Joint | | | 28 | | | 32 | |
| 2.0 (105 kw) | 2011.09-2015.04 | 6MT | F | L/R | Hatchback FWD CFHD | | GCO61081 | Outer Joint | | 36 | 27 | 52 | 75 | 65 | I |
| | 2011.09-2015.04 | 6MT | F | L | Hatchback FWD CFHD | | GCI61069 | Inner Joint | | | 28 | | | 32 | |
| | 2011.09-2015.04 | 6MT | F | L/R | Hatchback FWD CFHD | | GCI83016 | Inner Joint | | | 28 | | | 32 | |

| | YEAR | TRANSM. | F/R | L/R | BODY STYLE & DRIVE TYPE & ENGINE | REMARKS | G-AP Ref. | PRODUCT | ABS | Technical Specifications A | B | C | H | L | P |
|---|---|---|---|---|---|---|---|---|---|---|---|---|---|---|---|
| **AUDI** | | | | | | | | | | | | | | | |
| **A1 Sportback** | | | | | | | | | | | | | | | |
| 2.0 (147 kw) | 2018.09- | 6AT | F | L | Hatchback FWD DKZC;CZPC | | GDS84411 | Drive Shaft | | 36 | | 52 | 64.5 | 496 | |
| | 2018.09- | 6AT | F | R | Hatchback FWD DKZC;CZPC | | GDS84410 | Drive Shaft | | 36 | | 52 | 64.5 | 791 | |
| | 2018.09- | 6AT | F | L/R | Hatchback FWD DKZC;CZPC | | GCO82548 | Outer Joint | | 36 | 27 | 52 | 64.5 | 65 | M |
| | 2018.09- | 6AT | F | L/R | Hatchback FWD DKZC;CZPC | | GCI61069 | Inner Joint | | | 28 | | | 32 | |
| 2.0 (152 kw) | 2021.04- | 7AT | F | L/R | Hatchback FWD DNND | | GCO82548 | Outer Joint | | 36 | 27 | 52 | 64.5 | 65 | M |
| **A2** | | | | | | | | | | | | | | | |
| 1.2 (45 kw) | 2001.03-2005.08 | 5MT | F | L/R | Hatchback FWD ANY | | GCO99268 | Outer Joint | | 20 | 26 | 43 | 56 | 45 | M |
| 1.4 (55 kw) | 2000.02-2005.08 | 5MT | F | L | Hatchback FWD AMF;BHC | Chassis no. to:8Z_4_008100 | GDS61265 | Drive Shaft | | 36 | | 52 | 59 | 536 | |
| | 2000.02-2005.08 | 5MT | F | R | Hatchback FWD AMF;BHC | Chassis no. to:8Z_4_016900 | GDS61278 | Drive Shaft | | 36 | | 52 | 59 | 726 | |
| | 2000.02-2005.08 | 5MT | F | L/R | Hatchback FWD AMF;BHC | | GCO83024 | Outer Joint | | 36 | 30 | 50.75 | 59 | 55.5 | I |
| | 2000.02-2005.08 | 5MT | F | L/R | Hatchback FWD AMF;BHC | | GCI61006 | Inner Joint | | | 30 | | | 57.6 | |
| | 2000.02-2005.08 | 5MT | F | R | Hatchback FWD AUA;BBY | | GDS61063 | Drive Shaft | | 36 | | 50.7 | 58.5 | 751 | |
| | 2000.02-2005.08 | 5MT | F | L/R | Hatchback FWD AUA;BBY | | GCO83027 | Outer Joint | | 36 | 30 | 50.7 | 58.5 | 47.5 | I |
| | 2000.02-2005.08 | 5MT | F | L/R | Hatchback FWD AUA;BBY | | GCI83008 | Inner Joint | | | 33 | | | 32 | |
| | 2000.02-2005.08 | MT | F | L/R | Hatchback FWD AUA;BBY | | GCI83005 | Inner Joint | | | 33 | | | 32 | |
| 1.4 (66 kw) | 2003.11-2005.08 | 5MT | F | L | Hatchback FWD ATL | | GDS61265 | Drive Shaft | | 36 | | 52 | 59 | 536 | |
| | 2003.11-2005.08 | 5MT | F | R | Hatchback FWD ATL | Chassis no. to:8Z_4_016900 | GDS61278 | Drive Shaft | | 36 | | 52 | 59 | 726 | |
| | 2003.11-2005.08 | 5MT | F | L/R | Hatchback FWD ATL | | GCO54006 | Outer Joint | | 36 | 30 | 52 | 59 | 55.5 | I |
| | 2003.11-2005.08 | 5MT | F | L/R | Hatchback FWD ATL | | GCO83024 | Outer Joint | | 36 | 30 | 50.75 | 59 | 55.5 | I |
| | 2003.11-2005.08 | 5MT | F | L/R | Hatchback FWD ATL | | GCI61006 | Inner Joint | | | 30 | | | 57.6 | |
| 1.6 (81 kw) | 2002.05-2005.08 | 5MT | F | L/R | Hatchback FWD BAD | | GCO83024 | Outer Joint | | 36 | 30 | 50.75 | 59 | 55.5 | I |
| | 2002.05-2005.08 | 5MT | F | L | Hatchback FWD BAD | | GCI83011 | Inner Joint | | | 33 | | | 34 | |
| **A3** | | | | | | | | | | | | | | | |
| 1.0 (81 kw) | 2020.06- | 6MT | F | L | Saloon FWD DLAA | | GDS82231 | Drive Shaft | | 36 | | 59.5 | 40 | 486 | |
| | 2020.06- | 6MT | F | R | Saloon FWD DLAA | | GDS82229 | Drive Shaft | | 36 | | 59.5 | 40 | 767 | |
| | 2020.06- | 6MT | F | L/R | Saloon FWD DLAA | | GCO61059 | Outer Joint | | 36 | 33 | 59.5 | 40 | 59.5 | I |
| | 2020.06- | 6MT | F | L | Saloon FWD DLAA | | GCI81689 | Inner Joint | | | 32 | | | 89 | |
| | 2020.06- | 7DCT | F | L | Saloon FWD DLAA | | GDS57830 | Drive Shaft | | 36 | | 59.5 | 40 | 492 | |
| | 2020.06- | 7DCT | F | R | Saloon FWD DLAA | | GDS57831 | Drive Shaft | | 36 | | 59.5 | 40 | 758 | |
| | 2020.06- | 7DCT | F | L/R | Saloon FWD DLAA | | GCO61059 | Outer Joint | | 36 | 33 | 59.5 | 40 | 59.5 | I |
| | 2020.06- | 7DCT | F | R | Saloon FWD DLAA | | GCI81689 | Inner Joint | | | 32 | | | 89 | |
| 1.0 (85 kw) | 2016.07-2017.12 | 6MT | F | L | Hatchback FWD CHZD | | GDS82231 | Drive Shaft | | 36 | | 59.5 | 40 | 486 | |
| | 2016.07-2017.12 | 6MT | F | R | Hatchback FWD CHZD | | GDS82230 | Drive Shaft | | 36 | | 59.5 | 40 | 789 | |
| | 2016.07-2017.12 | 6MT | F | L/R | Hatchback FWD CHZD | | GCO61059 | Outer Joint | | 36 | 33 | 59.5 | 40 | 59.5 | I |
| | 2016.07-2017.12 | 6MT/7DCT | F | L/R | Hatchback FWD CHZD | | GCI81689 | Inner Joint | | | 32 | | | 89 | |
| | 2016.07-2017.12 | 7DCT | F | R | Hatchback FWD CHZD | | GDS82229 | Drive Shaft | | 36 | | 59.5 | 40 | 767 | |
| | 2016.07-2017.12 | 7DCT | F | R | Hatchback FWD CHZD | | GCO61059 | Outer Joint | | 36 | 33 | 59.5 | 40 | 59.5 | I |
| | 2016.07-2020.10 | 6MT | F | L | Saloon FWD CHZD | | GDS82231 | Drive Shaft | | 36 | | 59.5 | 40 | 486 | |
| | 2016.07-2020.10 | 6MT | F | R | Saloon FWD CHZD | | GDS82230 | Drive Shaft | | 36 | | 59.5 | 40 | 789 | |
| | 2016.07-2020.10 | 6MT/7DCT | F | L/R | Saloon FWD CHZD | | GCO61059 | Outer Joint | | 36 | 33 | 59.5 | 40 | 59.5 | I |
| | 2016.07-2020.10 | 6MT/7DCT | F | L/R | Saloon FWD CHZD | | GCI81689 | Inner Joint | | | 32 | | | 89 | |
| | 2016.07-2020.10 | 7DCT | F | R | Saloon FWD CHZD | | GDS82229 | Drive Shaft | | 36 | | 59.5 | 40 | 767 | |
| | 2018.07-2020.10 | 6MT | F | R | Saloon FWD DKRF | | GDS82230 | Drive Shaft | | 36 | | 59.5 | 40 | 789 | |
| | 2018.07-2020.10 | 6MT/7DCT | F | L | Saloon FWD DKRF | | GDS82231 | Drive Shaft | | 36 | | 59.5 | 40 | 486 | |
| | 2018.07-2020.10 | 7DCT | F | R | Saloon FWD DKRF | | GDS82229 | Drive Shaft | | 36 | | 59.5 | 40 | 767 | |
| 1.2 (77 kw) | 2010.04-2012.08 | 6MT | F | L/R | Hatchback FWD CBZB | | GCO83037 | Outer Joint | | 36 | 30 | 59.5 | 40.5 | 56 | I |
| | 2010.04-2012.08 | 6MT/7DCT | F | L | Hatchback FWD CBZB | | GDS61201 | Drive Shaft | | 36 | | 59.5 | 40.5 | 535 | |
| | 2010.04-2012.08 | 6MT/7DCT | F | L/R | Hatchback FWD CBZB | | GCI53002 | Inner Joint | | | 33 | | | 34 | |
| | 2010.04-2012.08 | 6MT/7DCT | F | L/R | Hatchback FWD CBZB | | GCI82447 | Inner Joint | | | 33 | | | 34 | |
| | 2010.04-2012.08 | 7DCT | F | L/R | Hatchback FWD CBZB | | GCO61059 | Outer Joint | | 36 | 33 | 59.5 | 40 | 59.5 | I |
| | 2010.04-2012.08 | 7DCT/6MT | F | R | Hatchback FWD CBZB | | GDS61096 | Drive Shaft | | 36 | | 59.5 | 40.5 | 799 | |
| | 2013.02-2015.05 | 5MT/6MT | F | L | Hatchback FWD CJZA | | GDS83373 | Drive Shaft | | 36 | | 59.5 | 38 | 511 | |
| | 2013.02-2015.05 | 5MT/6MT | F | R | Hatchback FWD CJZA | | GDS61307 | Drive Shaft | | 36 | | 59.5 | 40 | 819 | |
| | 2013.02-2015.05 | 5MT/6MT/7AT | F | L/R | Hatchback FWD CJZA | | GCO83037 | Outer Joint | | 36 | 30 | 59.5 | 40.5 | 56 | I |
| | 2013.02-2015.05 | 7AT/5MT/6MT | F | L/R | Hatchback FWD CJZA | | GCO61059 | Outer Joint | | 36 | 33 | 59.5 | 40 | 59.5 | I |
| | 2013.02-2015.05 | 7DCT | F | L | Hatchback FWD CJZA | | GDS61282 | Drive Shaft | | 36 | | 59.5 | 40 | 523 | |
| | 2013.02-2015.05 | 7DCT | F | R | Hatchback FWD CJZA | | GDS61096 | Drive Shaft | | 36 | | 59.5 | 40.5 | 799 | |
| | 2013.02-2015.05 | 7DCT/5MT/6MT | F | L/R | Hatchback FWD CJZA | | GCI82447 | Inner Joint | | | 33 | | | 34 | |
| | 2013.02-2015.05 | AT/MT | F | L/R | Hatchback FWD CJZA | | GCI83011 | Inner Joint | | | 33 | | | 34 | |
| | 2013.02-2015.05 | MT | F | L | Hatchback FWD CJZA | | GDS83294 | Drive Shaft | | 36 | | 59.5 | 38 | 519 | |
| | 2013.02-2015.05 | MT | F | R | Hatchback FWD CJZA | | GDS61042 | Drive Shaft | | 36 | | 59.5 | 40.5 | 814 | |
| | 2013.10-2015.05 | 5MT | F | L | Saloon FWD CJZA | | GDS83373 | Drive Shaft | | 36 | | 59.5 | 38 | 511 | |
| | 2013.10-2015.05 | 5MT | F | R | Saloon FWD CJZA | | GDS61307 | Drive Shaft | | 36 | | 59.5 | 40 | 819 | |
| | 2013.10-2015.05 | 5MT | F | L/R | Saloon FWD CJZA | | GCI82447 | Inner Joint | | | 33 | | | 34 | |
| | 2013.10-2015.05 | AT | F | R | Saloon FWD CJZA | Date from:2014.01 | GDS61096 | Drive Shaft | | 36 | | 59.5 | 40.5 | 799 | |

| | YEAR | TRANSM. | F/R | L/R | BODY STYLE & DRIVE TYPE & ENGINE | REMARKS | G-AP Ref. | PRODUCT | ABS | Technical Specifications A | B | C | H | L | P |
|---|---|---|---|---|---|---|---|---|---|---|---|---|---|---|---|
| **AUDI** | | | | | | | | | | | | | | | |
| **A3** | | | | | | | | | | | | | | | |
| 1.2 (77 kw) | 2013.10-2015.05 | AT/MT | F | L/R | Saloon FWD CJZA | Date from:2014.01 | GCI83011 | Inner Joint | | | 33 | | | 34 | |
| | 2013.10-2015.05 | MT | F | L | Saloon FWD CJZA | Date from:2014.01 | GDS83294 | Drive Shaft | | 36 | | 59.5 | 38 | 519 | |
| | 2013.10-2015.05 | MT | F | R | Saloon FWD CJZA | Date from:2014.01 | GDS61042 | Drive Shaft | | 36 | | 59.5 | 40.5 | 814 | |
| | 2013.10-2015.05 | MT | F | L/R | Saloon FWD CJZA | Date to:2015.05 | GCO83037 | Outer Joint | | 36 | 30 | 59.5 | 40.5 | 56 | I |
| 1.2 (81 kw) | 2014.05-2016.08 | 6MT | F | L | Hatchback FWD CYVB | | GDS83373 | Drive Shaft | | 36 | | 59.5 | 38 | 511 | |
| | 2014.05-2016.08 | 6MT | F | R | Hatchback FWD CYVB | | GDS61307 | Drive Shaft | | 36 | | 59.5 | 40 | 819 | |
| | 2014.05-2016.08 | 6MT | F | L/R | Hatchback FWD CYVB | | GCO83037 | Outer Joint | | 36 | 30 | 59.5 | 40.5 | 56 | I |
| | 2014.05-2016.08 | 6MT | F | R | Hatchback FWD CYVB | | GCI53002 | Inner Joint | | | 33 | | | 34 | |
| | 2014.05-2016.08 | 7DCT | F | L | Hatchback FWD CYVB | | GDS61282 | Drive Shaft | | 36 | | 59.5 | 40 | 523 | |
| | 2014.05-2016.08 | 7DCT | F | R | Hatchback FWD CYVB | | GDS61096 | Drive Shaft | | 36 | | 59.5 | 40.5 | 799 | |
| | 2014.05-2016.08 | 7DCT | F | L/R | Hatchback FWD CYVB | | GCO61059 | Outer Joint | | 36 | 33 | 59.5 | 40 | 59.5 | I |
| | 2014.05-2016.08 | 7DCT | F | L | Hatchback FWD CYVB | | GCI53002 | Inner Joint | | | 33 | | | 34 | |
| | 2014.05-2016.08 | 7DCT/6MT | F | L/R | Hatchback FWD CYVB | | GCI82447 | Inner Joint | | | 33 | | | 34 | |
| | 2014.05-2016.08 | MT | F | L | Hatchback FWD CYVB | | GDS83294 | Drive Shaft | | 36 | | 59.5 | 38 | 519 | |
| | 2014.05-2016.08 | | F | L/R | Hatchback FWD CYVB | Date To:2016.08 | GCI83011 | Inner Joint | | | 33 | | | 34 | |
| | 2014.05-2016.08 | 6MT | F | L | Saloon FWD CYVB | | GDS83373 | Drive Shaft | | 36 | | 59.5 | 38 | 511 | |
| | 2014.05-2016.08 | 6MT | F | R | Saloon FWD CYVB | | GDS61307 | Drive Shaft | | 36 | | 59.5 | 40 | 819 | |
| | 2014.05-2016.08 | 6MT | F | R | Saloon FWD CYVB | | GCI53002 | Inner Joint | | | 33 | | | 34 | |
| | 2014.05-2016.08 | 6MT | F | L/R | Saloon FWD CYVB | | GCI82447 | Inner Joint | | | 33 | | | 34 | |
| | 2014.05-2016.08 | MT | F | L | Saloon FWD CYVB | | GDS83294 | Drive Shaft | | 36 | | 59.5 | 38 | 519 | |
| | 2014.05-2016.08 | MT | F | L/R | Saloon FWD CYVB | Date to:2016.08 | GCO83037 | Outer Joint | | 36 | 30 | 59.5 | 40.5 | 56 | I |
| | 2014.05-2016.08 | MT | F | | Saloon FWD CYVB | | GCO61059 | Outer Joint | | 36 | 33 | 59.5 | 40 | 59.5 | I |
| | 2014.05-2016.08 | MT | F | | Saloon FWD CYVB | | GCO83100 | Outer Joint | | 36 | 33 | 59.5 | 38 | 56 | I |
| | 2014.05-2016.08 | MT | F | L/R | Saloon FWD CYVB | | GCI83006 | Inner Joint | | | 33 | | | 34 | |
| | 2014.05-2016.08 | | F | L/R | Saloon FWD CYVB | Date To:2016.08 | GCI83011 | Inner Joint | | | 33 | | | 34 | |
| 1.4 (90 kw) | 2012.04-2014.05 | 6MT | F | R | Hatchback FWD CMBA;CXSA | For PR code:0EJ,Trans. code:MQ250 | GDS61283 | Drive Shaft | | 36 | | 59.5 | 40 | 815 | |
| | 2012.04-2014.05 | 6MT | F | R | Hatchback FWD CMBA;CXSA | For PR code:0EC,Trans. code:MQ200_GA | GDS61307 | Drive Shaft | | 36 | | 59.5 | 40 | 819 | |
| | 2012.04-2014.05 | 6MT/7DCT | F | L | Hatchback FWD CMBA;CXSA | | GDS61282 | Drive Shaft | | 36 | | 59.5 | 40 | 523 | |
| | 2012.04-2014.05 | 6MT/7DCT | F | L/R | Hatchback FWD CMBA;CXSA | | GCO61059 | Outer Joint | | 36 | 33 | 59.5 | 40 | 59.5 | I |
| | 2012.04-2014.05 | 6MT/7DCT | F | L/R | Hatchback FWD CMBA;CXSA | | GCI53002 | Inner Joint | | | 33 | | | 34 | |
| | 2012.04-2014.05 | 6MT/7DCT | F | L/R | Hatchback FWD CMBA;CXSA | | GCI82447 | Inner Joint | | | 33 | | | 34 | |
| | 2012.04-2014.05 | 7DCT | F | R | Hatchback FWD CMBA;CXSA | | GDS61096 | Drive Shaft | | 36 | | 59.5 | 40.5 | 799 | |
| | 2012.04-2014.05 | MT | F | L | Hatchback FWD CMBA;CXSA | | GCO83037 | Outer Joint | | 36 | 30 | 59.5 | 40.5 | 56 | I |
| | 2013.09-2020.10 | 6MT | F | R | Saloon FWD CXSA | For PR code:0EJ,Trans. code:MQ250 | GDS61283 | Drive Shaft | | 36 | | 59.5 | 40 | 815 | |
| | 2013.09-2020.10 | 6MT | F | R | Saloon FWD CXSA | For PR code:0EC,Trans. code:MQ200_GA | GDS61307 | Drive Shaft | | 36 | | 59.5 | 40 | 819 | |
| | 2013.09-2020.10 | 6MT/7DCT | F | L | Saloon FWD CXSA | | GDS61282 | Drive Shaft | | 36 | | 59.5 | 40 | 523 | |
| | 2013.09-2020.10 | 6MT/7DCT | F | L/R | Saloon FWD CXSA | | GCO61059 | Outer Joint | | 36 | 33 | 59.5 | 40 | 59.5 | I |
| | 2013.09-2020.10 | 6MT/7DCT | F | L/R | Saloon FWD CXSA | | GCI82447 | Inner Joint | | | 33 | | | 34 | |
| | 2013.09-2020.10 | 7DCT | F | R | Saloon FWD CXSA | | GDS61096 | Drive Shaft | | 36 | | 59.5 | 40.5 | 799 | |
| | 2013.09-2020.10 | MT | F | L | Saloon FWD CXSA | | GCO83037 | Outer Joint | | 36 | 30 | 59.5 | 40.5 | 56 | I |
| 1.4 (92 kw) | 2007.09-2012.08 | 6MT | F | L/R | Hatchback FWD CAXC;CMSA | | GCI82447 | Inner Joint | | | 33 | | | 34 | |
| | 2007.09-2012.08 | AT | F | L | Hatchback FWD CAXC;CMSA | Date from:2011.06 | GDS61201 | Drive Shaft | | 36 | | 59.5 | 40.5 | 535 | |
| | 2007.09-2012.08 | AT | F | L | Hatchback FWD CAXC;CMSA | Date from:2008.12;Date to:2011.05 | GDS61281 | Drive Shaft | | 36 | | 59.5 | 40 | 528 | |
| | 2007.09-2012.08 | AT | F | L | Hatchback FWD CAXC;CMSA | Date to:2008.11 | GDS81783 | Drive Shaft | | 36 | 40 | 59.5 | 40 | 531 | |
| | 2007.09-2012.08 | AT | F | R | Hatchback FWD CAXC;CMSA | Date from:2011.06 | GDS61096 | Drive Shaft | | 36 | | 59.5 | 40.5 | 799 | |
| | 2007.09-2012.08 | AT | F | R | Hatchback FWD CAXC;CMSA | Date from:2008.12;Date to:2011.05 | GDS81653 | Drive Shaft | | 36 | | 59.5 | 40 | 785 | |
| | 2007.09-2012.08 | AT | F | R | Hatchback FWD CAXC;CMSA | Date to:2008.11 | GDS81784 | Drive Shaft | | 36 | 40 | 59.5 | 40 | 801 | |
| | 2007.09-2012.08 | AT | F | R | Hatchback FWD CAXC;CMSA | Date from:2011.06 | GCO61059 | Outer Joint | | 36 | 33 | 59.5 | 40 | 59.5 | I |
| | 2007.09-2012.08 | AT | F | L/R | Hatchback FWD CAXC;CMSA | Date to:2011.05 | GCO83002 | Outer Joint | | 36 | 27 | 59.5 | 40 | 66 | I |
| | 2007.09-2012.08 | AT | F | L/R | Hatchback FWD CAXC;CMSA | Date to:2008.11 | GCI61054 | Inner Joint | | 40 | 28 | 46.9 | 41 | 101.7 | |
| | 2007.09-2012.08 | AT | F | L/R | Hatchback FWD CAXC;CMSA | Date from:2008.12;Date to:2011.05 | GCI61069 | Inner Joint | | | 28 | | | 32 | |
| | 2007.09-2012.08 | AT | F | L/R | Hatchback FWD CAXC;CMSA | Date from:2008.12 | GCI83016 | Inner Joint | | | 28 | | | 32 | |
| | 2007.09-2012.08 | MT | F | L | Hatchback FWD CAXC;CMSA | [illegible] | GDS61201 | Drive Shaft | | 36 | | 59.5 | 40.5 | 535 | |
| | 2007.09-2012.08 | MT | F | R | Hatchback FWD CAXC;CMSA | | GDS61096 | Drive Shaft | | 36 | | 59.5 | 40.5 | 799 | |
| | 2007.09-2012.08 | MT | F | L/R | Hatchback FWD CAXC;CMSA | | GCO83037 | Outer Joint | | 36 | 30 | 59.5 | 40.5 | 56 | I |
| | 2007.09-2012.08 | MT | F | R | Hatchback FWD CAXC;CMSA | | GCI53002 | Inner Joint | | | 33 | | | 34 | |
| | 2013.09-2016.08 | 6MT | F | R | Saloon FWD CXSB;CZCA | For PR code:0EJ,Trans. code:MQ250 | GDS61283 | Drive Shaft | | 36 | | 59.5 | 40 | 815 | |
| | 2013.09-2016.08 | 6MT | F | R | Saloon FWD CXSB;CZCA | For PR code:0EC,Trans. code:MQ200_GA | GDS61307 | Drive Shaft | | 36 | | 59.5 | 40 | 819 | |
| | 2013.09-2016.08 | 6MT/7DCT | F | L | Saloon FWD CXSB;CZCA | | GDS61282 | Drive Shaft | | 36 | | 59.5 | 40 | 523 | |
| | 2013.09-2016.08 | 6MT/7DCT | F | L | Saloon FWD CXSB;CZCA | | GCO61059 | Outer Joint | | 36 | 33 | 59.5 | 40 | 59.5 | I |
| | 2013.09-2016.08 | 7DCT | F | R | Saloon FWD CXSB;CZCA | | GDS61096 | Drive Shaft | | 36 | | 59.5 | 40.5 | 799 | |
| | 2013.09-2016.08 | 7DCT/6MT | F | L/R | Saloon FWD CXSB;CZCA | | GCI82447 | Inner Joint | | | 33 | | | 34 | |
| | 2014.05-2016.08 | 6MT | F | R | Hatchback FWD CXSB;CZCA | For PR code:0EJ,Trans. code:MQ250 | GDS61283 | Drive Shaft | | 36 | | 59.5 | 40 | 815 | |
| | 2014.05-2016.08 | 6MT | F | R | Hatchback FWD CXSB;CZCA | For PR code:0EC,Trans. code:MQ200_GA | GDS61307 | Drive Shaft | | 36 | | 59.5 | 40 | 819 | |
| | 2014.05-2016.08 | 6MT/7DCT | F | L | Hatchback FWD CXSB;CZCA | | GDS61282 | Drive Shaft | | 36 | | 59.5 | 40 | 523 | |

| | YEAR | TRANSM. | F/R | L/R | BODY STYLE & DRIVE TYPE & ENGINE | REMARKS | G-AP Ref. | PRODUCT | ABS | Technical Specifications | | | | | |
|---|---|---|---|---|---|---|---|---|---|---|---|---|---|---|---|
| | | | | | | | | | | A | B | C | H | L | P |
| **AUDI** | | | | | | | | | | | | | | | |
| **A3** | | | | | | | | | | | | | | | |
| 1.4 (92 kw) | 2014.05-2016.08 | 6MT/7DCT | F | L/R | Hatchback FWD CXSB;CZCA | | GCO61059 | Outer Joint | | 36 | 33 | 59.5 | 40 | 59.5 | I |
| | 2014.05-2016.08 | 6MT/7DCT | F | L/R | Hatchback FWD CXSB;CZCA | | GCI82447 | Inner Joint | | | 33 | | | 34 | |
| | 2014.05-2016.08 | 7DCT | F | R | Hatchback FWD CXSB;CZCA | | GDS61096 | Drive Shaft | | 36 | | 59.5 | 40.5 | 799 | |
| | 2014.05-2016.08 | MT | F | L | Hatchback FWD CXSB;CZCA | | GCO83037 | Outer Joint | | 36 | 30 | 59.5 | 40.5 | 56 | I |
| 1.4 (103 kw) | 2013.03-2016.08 | 6MT | F | L | Hatchback FWD CPTA | | GDS61282 | Drive Shaft | | 36 | | 59.5 | 40 | 523 | |
| | 2013.03-2016.08 | 6MT | F | R | Hatchback FWD CPTA | | GDS61283 | Drive Shaft | | 36 | | 59.5 | 40 | 815 | |
| | 2013.03-2016.08 | 6MT | F | L/R | Hatchback FWD CPTA | | GCI82447 | Inner Joint | | | 33 | | | 34 | |
| | 2013.03-2016.08 | 7AT/6MT | F | L/R | Hatchback FWD CPTA | | GCI83016 | Inner Joint | | | 28 | | | 32 | |
| | 2013.03-2016.08 | 7DCT | F | L | Hatchback FWD CPTA | | GDS61100 | Drive Shaft | | 36 | | 59.5 | 40 | 513 | |
| | 2013.03-2016.08 | 7DCT | F | R | Hatchback FWD CPTA | | GDS83313 | Drive Shaft | | 36 | | 59.5 | 40 | 792 | |
| | 2013.03-2016.08 | 7DCT | F | L/R | Hatchback FWD CPTA | | GCO83101 | Outer Joint | | 36 | 27 | 59.5 | 40 | 65 | M |
| | 2013.03-2016.08 | MT | F | L | Hatchback FWD CPTA | | GCO61059 | Outer Joint | | 36 | 33 | 59.5 | 40 | 59.5 | I |
| | 2013.05-2016.08 | 6MT | F | L | Saloon FWD CPTA | | GDS61282 | Drive Shaft | | 36 | | 59.5 | 40 | 523 | |
| | 2013.05-2016.08 | 6MT | F | R | Saloon FWD CPTA | | GDS61283 | Drive Shaft | | 36 | | 59.5 | 40 | 815 | |
| | 2013.05-2016.08 | 6MT | F | L/R | Saloon FWD CPTA | | GCO61059 | Outer Joint | | 36 | 33 | 59.5 | 40 | 59.5 | I |
| | 2013.05-2016.08 | 6MT | F | L/R | Saloon FWD CPTA | | GCI82447 | Inner Joint | | | 33 | | | 34 | |
| | 2013.05-2016.08 | 7DCT | F | L | Saloon FWD CPTA | | GDS61100 | Drive Shaft | | 36 | | 59.5 | 40 | 513 | |
| | 2013.05-2016.08 | 7DCT | F | R | Saloon FWD CPTA | | GDS83313 | Drive Shaft | | 36 | | 59.5 | 40 | 792 | |
| | 2013.05-2016.08 | 7DCT | F | L/R | Saloon FWD CPTA | | GCO83101 | Outer Joint | | 36 | 27 | 59.5 | 40 | 65 | M |
| | 2013.05-2016.08 | 7DCT | F | L/R | Saloon FWD CPTA | | GCI83016 | Inner Joint | | | 28 | | | 32 | |
| 1.4 (110 kw) | 2014.05-2017.12 | 6MT | F | L | Hatchback FWD CZEA | | GDS61282 | Drive Shaft | | 36 | | 59.5 | 40 | 523 | |
| | 2014.05-2017.12 | 6MT | F | R | Hatchback FWD CZEA | | GDS61283 | Drive Shaft | | 36 | | 59.5 | 40 | 815 | |
| | 2014.05-2017.12 | 6MT | F | L/R | Hatchback FWD CZEA | | GCO61059 | Outer Joint | | 36 | 33 | 59.5 | 40 | 59.5 | I |
| | 2014.05-2017.12 | 6MT | F | L/R | Hatchback FWD CZEA | | GCI53002 | Inner Joint | | | 33 | | | 34 | |
| | 2014.05-2017.12 | 6MT | F | L/R | Hatchback FWD CZEA | | GCI82447 | Inner Joint | | | 33 | | | 34 | |
| | 2014.05-2017.12 | 7DCT | F | L | Hatchback FWD CZEA | | GDS61100 | Drive Shaft | | 36 | | 59.5 | 40 | 513 | |
| | 2014.05-2017.12 | 7DCT | F | R | Hatchback FWD CZEA | | GDS83313 | Drive Shaft | | 36 | | 59.5 | 40 | 792 | |
| | 2014.05-2017.12 | 7DCT | F | L/R | Hatchback FWD CZEA | | GCO83101 | Outer Joint | | 36 | 27 | 59.5 | 40 | 65 | M |
| | 2014.05-2017.12 | 7DCT | F | L/R | Hatchback FWD CZEA | | GCI61069 | Inner Joint | | | 28 | | | 32 | |
| | 2014.05-2017.12 | 7DCT | F | L/R | Hatchback FWD CZEA | | GCI83016 | Inner Joint | | | 28 | | | 32 | |
| | 2014.05-2020.10 | 6MT | F | L | Saloon FWD CZEA | | GDS61282 | Drive Shaft | | 36 | | 59.5 | 40 | 523 | |
| | 2014.05-2020.10 | 6MT | F | R | Saloon FWD CZEA | | GDS61283 | Drive Shaft | | 36 | | 59.5 | 40 | 815 | |
| | 2014.05-2020.10 | 6MT | F | L/R | Saloon FWD CZEA | | GCO61059 | Outer Joint | | 36 | 33 | 59.5 | 40 | 59.5 | I |
| | 2014.05-2020.10 | 6MT | F | L/R | Saloon FWD CZEA | | GCI53002 | Inner Joint | | | 33 | | | 34 | |
| | 2014.05-2020.10 | 6MT | F | L/R | Saloon FWD CZEA | | GCI82447 | Inner Joint | | | 33 | | | 34 | |
| | 2014.05-2020.10 | 7DCT | F | L | Saloon FWD CZEA | | GDS61100 | Drive Shaft | | 36 | | 59.5 | 40 | 513 | |
| | 2014.05-2020.10 | 7DCT | F | R | Saloon FWD CZEA | | GDS83313 | Drive Shaft | | 36 | | 59.5 | 40 | 792 | |
| | 2014.05-2020.10 | 7DCT | F | L/R | Saloon FWD CZEA | | GCO83101 | Outer Joint | | 36 | 27 | 59.5 | 40 | 65 | M |
| | 2014.05-2020.10 | 7DCT | F | L/R | Saloon FWD CZEA | | GCI61069 | Inner Joint | | | 28 | | | 32 | |
| | 2014.05-2020.10 | 7DCT | F | L/R | Saloon FWD CZEA | | GCI83016 | Inner Joint | | | 28 | | | 32 | |
| 1.5 (110 kw) | 2017.05-2017.12 | 6MT | F | L | Hatchback FWD DADA | | GDS61282 | Drive Shaft | | 36 | | 59.5 | 40 | 523 | |
| | 2017.05-2017.12 | 6MT | F | R | Hatchback FWD DADA | | GDS58110 | Drive Shaft | | 36 | | 59.5 | 40 | 793 | |
| | 2017.05-2017.12 | 6MT | F | L/R | Hatchback FWD DADA | | GCO61059 | Outer Joint | | 36 | 33 | 59.5 | 40 | 59.5 | I |
| | 2017.05-2017.12 | 6MT | F | L/R | Hatchback FWD DADA | | GCI82447 | Inner Joint | | | 33 | | | 34 | |
| | 2017.05-2017.12 | 7AT/6MT | F | L | Hatchback FWD DADA | | GCI83016 | Inner Joint | | | 28 | | | 32 | |
| | 2017.05-2017.12 | 7DCT | F | L | Hatchback FWD DADA | | GDS61100 | Drive Shaft | | 36 | | 59.5 | 40 | 513 | |
| | 2017.05-2017.12 | 7DCT | F | R | Hatchback FWD DADA | | GDS84503 | Drive Shaft | | 36 | 40 | 59.5 | 40 | 817 | |
| | 2017.05-2017.12 | 7DCT | F | L/R | Hatchback FWD DADA | | GCO83101 | Outer Joint | | 36 | 27 | 59.5 | 40 | 65 | M |
| | 2017.05-2017.12 | 7DCT | F | R | Hatchback FWD DADA | | GCI61090 | Inner Joint | | 40 | 28 | 46.9 | | 133.2 | |
| | 2017.05-2018.10 | 6MT | F | L | Saloon FWD DADA | | GDS61282 | Drive Shaft | | 36 | | 59.5 | 40 | 523 | |
| | 2017.05-2018.10 | 6MT | F | R | Saloon FWD DADA | | GDS58110 | Drive Shaft | | 36 | | 59.5 | 40 | 793 | |
| | 2017.05-2018.10 | 6MT | F | L/R | Saloon FWD DADA | | GCO61059 | Outer Joint | | 36 | 33 | 59.5 | 40 | 59.5 | I |
| | 2017.05-2018.10 | 6MT | F | L/R | Saloon FWD DADA | | GCI82447 | Inner Joint | | | 33 | | | 34 | |
| | 2017.05-2018.10 | 7DCT | F | L | Saloon FWD DADA | | GDS61100 | Drive Shaft | | 36 | | 59.5 | 40 | 513 | |
| | 2017.05-2018.10 | 7DCT | F | R | Saloon FWD DADA | | GDS84503 | Drive Shaft | | 36 | 40 | 59.5 | 40 | 817 | |
| | 2017.05-2018.10 | 7DCT | F | L/R | Saloon FWD DADA | | GCO83101 | Outer Joint | | 36 | 27 | 59.5 | 40 | 65 | M |
| | 2017.05-2018.10 | 7DCT | F | L | Saloon FWD DADA | | GCI83016 | Inner Joint | | | 28 | | | 32 | |
| | 2017.05-2018.10 | 7DCT | F | R | Saloon FWD DADA | | GCI61090 | Inner Joint | | 40 | 28 | 46.9 | | 133.2 | |
| | 2018.10-2020.10 | 6MT | F | L | Saloon FWD DADA;DPCA | | GDS61282 | Drive Shaft | | 36 | | 59.5 | 40 | 523 | |
| | 2018.10-2020.10 | 7DCT | F | L | Saloon FWD DADA;DPCA | | GDS61100 | Drive Shaft | | 36 | | 59.5 | 40 | 513 | |
| | 2018.10-2020.10 | 7DCT | F | R | Saloon FWD DADA;DPCA | Date to:2019.01 | GDS84503 | Drive Shaft | | 36 | 40 | 59.5 | 40 | 817 | |
| | 2018.10-2020.10 | 7DCT | F | L | Saloon FWD DADA;DPCA | Bellows Material:Plastic | GCI83016 | Inner Joint | | | 28 | | | 32 | |
| | 2020.04- | 6MT | F | L | Saloon FWD DFYA;DXDB | | GDS84408 | Drive Shaft | | 36 | | 59.5 | 40 | 499 | |
| | 2020.04- | 6MT | F | R | Saloon FWD DFYA;DXDB | | GDS84417 | Drive Shaft | | 36 | | 59.5 | 40 | 783 | |
| | 2020.04- | 6MT | F | L/R | Saloon FWD DFYA;DXDB | | GCI82447 | Inner Joint | | | 33 | | | 34 | |

| | YEAR | TRANSM. | F/R | L/R | BODY STYLE & DRIVE TYPE & ENGINE | REMARKS | G-AP Ref. | PRODUCT | ABS | Technical Specifications A | B | C | H | L | P |
|---|---|---|---|---|---|---|---|---|---|---|---|---|---|---|---|
| **AUDI** | | | | | | | | | | | | | | | |
| **A3** | | | | | | | | | | | | | | | |
| 1.5 (110 kw) | 2020.04- | 7AT | F | L | Saloon FWD DFYA;DXDB | | GDS61100 | Drive Shaft | | 36 | | 59.5 | 40 | 513 | |
| | 2020.04- | 7AT | F | L | Saloon FWD DFYA;DXDB | | GCO83101 | Outer Joint | | 36 | 27 | 59.5 | 40 | 65 | M |
| | 2020.04- | 7AT | F | R | Saloon FWD DFYA;DXDB | | GCO61059 | Outer Joint | | 36 | 33 | 59.5 | 40 | 59.5 | I |
| | 2020.04- | 7AT | F | L | Saloon FWD DFYA;DXDB | | GCI82456 | Inner Joint | | | 28 | | | 32 | |
| | 2020.04- | 7DCT | F | R | Saloon FWD DFYA;DXDB | | GDS84503 | Drive Shaft | | 36 | 40 | 59.5 | 40 | 817 | |
| | 2020.04- | 6MT | F | L | Saloon FWD DPCA;DXDB | | GDS84408 | Drive Shaft | | 36 | | 59.5 | 40 | 499 | |
| | 2020.04- | 6MT | F | R | Saloon FWD DPCA;DXDB | | GDS84417 | Drive Shaft | | 36 | | 59.5 | 40 | 783 | |
| | 2020.04- | 6MT | F | L/R | Saloon FWD DPCA;DXDB | | GCO61059 | Outer Joint | | 36 | 33 | 59.5 | 40 | 59.5 | I |
| | 2020.04- | 6MT | F | L/R | Saloon FWD DPCA;DXDB | | GCI53002 | Inner Joint | | | 33 | | | 34 | |
| | 2020.04- | 6MT | F | L/R | Saloon FWD DPCA;DXDB | | GCI82447 | Inner Joint | | | 33 | | | 34 | |
| 1.6 (66 kw) | 2009.05-2012.08 | 5MT | F | L | Hatchback FWD CAYB | | GDS83294 | Drive Shaft | | 36 | | 59.5 | 38 | 519 | |
| | 2009.05-2012.08 | 5MT | F | R | Hatchback FWD CAYB | Date to:2011.05;Date from:2011.06,For PR code:G0C | GDS61042 | Drive Shaft | | 36 | | 59.5 | 40.5 | 814 | |
| | 2009.05-2012.08 | 5MT | F | R | Hatchback FWD CAYB | Date from:2011.06,For PR code:G0J | GDS61283 | Drive Shaft | | 36 | | 59.5 | 40 | 815 | |
| | 2009.05-2012.08 | 5MT | F | L/R | Hatchback FWD CAYB | Alt Version:2 | GCO61059 | Outer Joint | | 36 | 33 | 59.5 | 40 | 59.5 | I |
| | 2009.05-2012.08 | 5MT | F | L/R | Hatchback FWD CAYB | Alt Version:1 | GCO83037 | Outer Joint | | 36 | 30 | 59.5 | 40.5 | 56 | I |
| | 2009.05-2012.08 | 5MT | F | L/R | Hatchback FWD CAYB | | GCI82447 | Inner Joint | | | 33 | | | 34 | |
| 1.6 (74 kw) | 1996.09-2006.09 | AT | F | L | Hatchback FWD AEH/AKL/APF | | GDS61020 | Drive Shaft | | 36 | | 53.2 | 77.5 | 547 | |
| | 1996.09-2006.09 | AT | F | R | Hatchback FWD AEH/AKL/APF | | GDS83011 | Drive Shaft | | 36 | | 53.2 | 77.5 | 810.5 | |
| | 1996.09-2006.09 | AT | F | L/R | Hatchback FWD AEH/AKL/APF | | GCO83070 | Outer Joint | | 36 | 30 | 53 | 78 | 60 | I |
| | 1996.09-2006.09 | AT/MT | F | L/R | Hatchback FWD AEH/AKL/APF | | GCI83008 | Inner Joint | | | 33 | | | 32 | |
| | 1996.09-2006.09 | MT | F | L | Hatchback FWD AEH/AKL/APF | | GDS61045 | Drive Shaft | | 36 | | 53 | 78.5 | 555 | |
| | 1996.09-2006.09 | MT | F | R | Hatchback FWD AEH/AKL/APF | | GDS83046 | Drive Shaft | | 36 | | 53 | 78.5 | 822 | |
| | 1996.09-2006.09 | MT | F | L/R | Hatchback FWD AEH/AKL/APF | | GCO83033 | Outer Joint | | 36 | 30 | 53 | 78.5 | 51 | I |
| 1.6 (75 kw) | 2000.05-2003.06 | AT | F | L | Hatchback FWD AVU/BFQ | | GDS61020 | Drive Shaft | | 36 | | 53.2 | 77.5 | 547 | |
| | 2000.05-2003.06 | AT | F | R | Hatchback FWD AVU/BFQ | | GDS83011 | Drive Shaft | | 36 | | 53.2 | 77.5 | 810.5 | |
| | 2000.05-2003.06 | AT | F | L/R | Hatchback FWD AVU/BFQ | | GCO83070 | Outer Joint | | 36 | 30 | 53 | 78 | 60 | I |
| | 2000.05-2003.06 | MT | F | L | Hatchback FWD AVU/BFQ | | GDS61045 | Drive Shaft | | 36 | | 53 | 78.5 | 555 | |
| | 2000.05-2003.06 | MT | F | R | Hatchback FWD AVU/BFQ | | GDS83046 | Drive Shaft | | 36 | | 53 | 78.5 | 822 | |
| | 2000.05-2003.06 | MT | F | L/R | Hatchback FWD AVU/BFQ | | GCO83033 | Outer Joint | | 36 | 30 | 53 | 78.5 | 51 | I |
| | 2000.05-2003.06 | MT | F | L/R | Hatchback FWD AVU/BFQ | | GCI83008 | Inner Joint | | | 33 | | | 32 | |
| | 2003.05-2012.08 | 5MT/7DCT | F | L/R | Hatchback FWD BGU;BSE;BSF;CCSA | | GCI82447 | Inner Joint | | | 33 | | | 34 | |
| | 2003.05-2012.08 | 6AT | F | L | Hatchback FWD BGU;BSE;BSF;CCSA | Date to:2007.05,Chassis no. to:8P_7_250000 | GDS61093 | Drive Shaft | | 36 | 26 | 59.5 | 40.5 | 587.5 | |
| | 2003.05-2012.08 | 6AT | F | L | Hatchback FWD BGU;BSE;BSF;CCSA | Date from:2007.06,Chassis no. from:8P_8A000001/8P_8B000001 | GDS83318 | Drive Shaft | | 36 | 26 | 59.5 | 38 | 581 | |
| | 2003.05-2012.08 | 6AT | F | R | Hatchback FWD BGU;BSE;BSF;CCSA | | GDS83346 | Drive Shaft | | 36 | 26 | 59.5 | 38 | 879 | |
| | 2003.05-2012.08 | 6AT | F | L/R | Hatchback FWD BGU;BSE;BSF;CCSA | | GCI61011 | Inner Joint | | 26 | 32 | 31 | 68.5 | 85 | |
| | 2003.05-2012.08 | 6AT | F | L/R | Hatchback FWD BGU;BSE;BSF;CCSA | | GCI61050 | Inner Joint | | 26 | 32 | 31 | 68.5 | 89 | |
| | 2003.05-2012.08 | 7AT | F | L | Hatchback FWD BGU;BSE;BSF;CCSA | | GDS83294 | Drive Shaft | | 36 | | 59.5 | 38 | 519 | |
| | 2003.05-2012.08 | 7AT | F | R | Hatchback FWD BGU;BSE;BSF;CCSA | | GDS61042 | Drive Shaft | | 36 | | 59.5 | 40.5 | 814 | |
| | 2003.05-2012.08 | MT | F | L | Hatchback FWD BGU;BSE;BSF;CCSA | | GDS61097 | Drive Shaft | | 36 | | 59.5 | 40.5 | 543 | |
| | 2003.05-2012.08 | MT | F | R | Hatchback FWD BGU;BSE;BSF;CCSA | | GDS61096 | Drive Shaft | | 36 | | 59.5 | 40.5 | 799 | |
| | 2003.05-2012.08 | MT | F | L/R | Hatchback FWD BGU;BSE;BSF;CCSA | | GCO83037 | Outer Joint | | 36 | 30 | 59.5 | 40.5 | 56 | I |
| | 2003.05-2012.08 | MT | F | R | Hatchback FWD BGU;BSE;BSF;CCSA | | GDS61237 | Stub Axle,differential | | 23 | 37 | | | 142.5 | |
| | 2011.01-2012.08 | 5MT | F | L | Hatchback FWD CCSA;CMXA | | GDS61097 | Drive Shaft | | 36 | | 59.5 | 40.5 | 543 | |
| | 2011.01-2012.08 | 5MT | F | R | Hatchback FWD CCSA;CMXA | | GDS61096 | Drive Shaft | | 36 | | 59.5 | 40.5 | 799 | |
| | 2011.01-2012.08 | 5MT | F | L/R | Hatchback FWD CCSA;CMXA | | GCO83037 | Outer Joint | | 36 | 30 | 59.5 | 40.5 | 56 | I |
| | 2011.01-2012.08 | MT | F | L/R | Hatchback FWD CCSA;CMXA | | GCI83006 | Inner Joint | | | 33 | | | 34 | |
| | 2011.01-2012.08 | | F | L/R | Hatchback FWD CCSA;CMXA | | GCI83011 | Inner Joint | | | 33 | | | 34 | |
| 1.6 (77 kw) | 2009.05-2012.08 | 5MT | F | L | Hatchback FWD CAYC | Date to:2011.05;Date from:2011.06,For PR code:G0C | GDS83294 | Drive Shaft | | 36 | | 59.5 | 38 | 519 | |
| | 2009.05-2012.08 | 5MT | F | R | Hatchback FWD CAYC | Date to:2011.05;Date from:2011.06,For PR code:G0C | GDS61042 | Drive Shaft | | 36 | | 59.5 | 40.5 | 814 | |
| | 2009.05-2012.08 | 5MT | F | R | Hatchback FWD CAYC | Date from:2011.06,For PR code:G0J | GDS61283 | Drive Shaft | | 36 | | 59.5 | 40 | 815 | |
| | 2009.05-2012.08 | 5MT | F | L/R | Hatchback FWD CAYC | Date to:2011.05;Date from:2011.06,For PR code:G0C | GCO83037 | Outer Joint | | 36 | 30 | 59.5 | 40.5 | 56 | I |
| | 2009.05-2012.08 | 5MT/7DCT | F | L | Hatchback FWD CAYC | Transmission:5MT,Date from:2011.06,For PR code:G0J;Transmission:7DCT,Date from:2011.06 | GDS61282 | Drive Shaft | | 36 | | 59.5 | 40 | 523 | |
| | 2009.05-2012.08 | 5MT/7DCT | F | L/R | Hatchback FWD CAYC | Transmission:5MT,Alt Version:2;Transmission:7DCT,Date from:2011.06 | GCO61059 | Outer Joint | | 36 | 33 | 59.5 | 40 | 59.5 | I |
| | 2009.05-2012.08 | 5MT/7DCT | F | L/R | Hatchback FWD CAYC | Transmission:5MT;Transmission:7DCT,Date from:2011.06 | GCI82447 | Inner Joint | | | 33 | | | 34 | |
| | 2009.05-2012.08 | 7DCT | F | L | Hatchback FWD CAYC | Date to:2011.05 | GDS61100 | Drive Shaft | | 36 | | 59.5 | 40 | 513 | |
| | 2009.05-2012.08 | 7DCT | F | R | Hatchback FWD CAYC | Date from:2011.06 | GDS61096 | Drive Shaft | | 36 | | 59.5 | 40.5 | 799 | |
| | 2009.05-2012.08 | 7DCT | F | R | Hatchback FWD CAYC | Date to:2011.05 | GDS61339 | Drive Shaft | | 36 | | 59.5 | 40 | 794 | |
| | 2009.05-2012.08 | 7DCT | F | L/R | Hatchback FWD CAYC | Date to:2011.05 | GCO83002 | Outer Joint | | 36 | 27 | 59.5 | 40 | 66 | I |
| | 2009.05-2012.08 | 7DCT | F | L/R | Hatchback FWD CAYC | Date to:2011.05 | GCI83016 | Inner Joint | | | 28 | | | 32 | |
| | 2012.10-2015.05 | 6MT | F | R | Hatchback FWD CLHA | | GDS61283 | Drive Shaft | | 36 | | 59.5 | 40 | 815 | |
| | 2012.10-2015.05 | 6MT/7DCT | F | L | Hatchback FWD CLHA | | GDS61282 | Drive Shaft | | 36 | | 59.5 | 40 | 523 | |
| | 2012.10-2015.05 | 6MT/7DCT | F | L/R | Hatchback FWD CLHA | | GCO61059 | Outer Joint | | 36 | 33 | 59.5 | 40 | 59.5 | I |
| | 2012.10-2015.05 | 6MT/7DCT | F | L/R | Hatchback FWD CLHA | | GCI53002 | Inner Joint | | | 33 | | | 34 | |
| | 2012.10-2015.05 | 6MT/7DCT | F | L/R | Hatchback FWD CLHA | | GCI82447 | Inner Joint | | | 33 | | | 34 | |
| | 2012.10-2015.05 | 7DCT | F | R | Hatchback FWD CLHA | | GDS61096 | Drive Shaft | | 36 | | 59.5 | 40.5 | 799 | |

| | YEAR | TRANSM. | F/R | L/R | BODY STYLE & DRIVE TYPE & ENGINE | REMARKS | G-AP Ref. | PRODUCT | ABS | Technical Specifications A | B | C | H | L | P |
|---|---|---|---|---|---|---|---|---|---|---|---|---|---|---|---|
| **AUDI** | | | | | | | | | | | | | | | |
| **A3** | | | | | | | | | | | | | | | |
| 1.6 (77 kw) | 2013.09-2015.05 | 6MT | F | R | Saloon FWD CLHA | | GDS61283 | Drive Shaft | | 36 | | 59.5 | 40 | 815 | |
| | 2013.09-2015.05 | 6MT/7DCT | F | L | Saloon FWD CLHA | | GDS61282 | Drive Shaft | | 36 | | 59.5 | 40 | 523 | |
| | 2013.09-2015.05 | 6MT/7DCT | F | L/R | Saloon FWD CLHA | | GCO61059 | Outer Joint | | 36 | 33 | 59.5 | 40 | 59.5 | I |
| | 2013.09-2015.05 | 6MT/7DCT | F | L/R | Saloon FWD CLHA | | GCI53002 | Inner Joint | | | 33 | | | 34 | |
| | 2013.09-2015.05 | 6MT/7DCT | F | L/R | Saloon FWD CLHA | | GCI82447 | Inner Joint | | | 33 | | | 34 | |
| | 2013.09-2015.05 | 7DCT | F | R | Saloon FWD CLHA | | GDS61096 | Drive Shaft | | 36 | | 59.5 | 40.5 | 799 | |
| 1.6 (81 kw) | 2013.09-2017.12 | 6MT | F | R | Hatchback FWD CRKB;CXXB;DBKA | | GDS61283 | Drive Shaft | | 36 | | 59.5 | 40 | 815 | |
| | 2013.09-2017.12 | 6MT/7DCT | F | L | Hatchback FWD CRKB;CXXB;DBKA | | GDS61282 | Drive Shaft | | 36 | | 59.5 | 40 | 523 | |
| | 2013.09-2017.12 | 6MT/7DCT | F | L/R | Hatchback FWD CRKB;CXXB;DBKA | | GCO61059 | Outer Joint | | 36 | 33 | 59.5 | 40 | 59.5 | I |
| | 2013.09-2017.12 | 6MT/7DCT | F | L/R | Hatchback FWD CRKB;CXXB;DBKA | | GCI53002 | Inner Joint | | | 33 | | | 34 | |
| | 2013.09-2017.12 | 6MT/7DCT | F | L/R | Hatchback FWD CRKB;CXXB;DBKA | | GCI82447 | Inner Joint | | | 33 | | | 34 | |
| | 2013.09-2017.12 | 7DCT | F | R | Hatchback FWD CRKB;CXXB;DBKA | | GDS61096 | Drive Shaft | | 36 | | 59.5 | 40.5 | 799 | |
| | 2014.05-2020.10 | 6MT | F | R | Saloon FWD CRKB;CXXB;DBKA | | GDS61283 | Drive Shaft | | 36 | | 59.5 | 40 | 815 | |
| | 2014.05-2020.10 | 6MT/7DCT | F | L | Saloon FWD CRKB;CXXB;DBKA | | GDS61282 | Drive Shaft | | 36 | | 59.5 | 40 | 523 | |
| | 2014.05-2020.10 | 6MT/7DCT | F | L/R | Saloon FWD CRKB;CXXB;DBKA | | GCO61059 | Outer Joint | | 36 | 33 | 59.5 | 40 | 59.5 | I |
| | 2014.05-2020.10 | 6MT/7DCT | F | L/R | Saloon FWD CRKB;CXXB;DBKA | | GCI53002 | Inner Joint | | | 33 | | | 34 | |
| | 2014.05-2020.10 | 6MT/7DCT | F | L/R | Saloon FWD CRKB;CXXB;DBKA | | GCI82447 | Inner Joint | | | 33 | | | 34 | |
| | 2014.05-2020.10 | 7DCT | F | R | Saloon FWD CRKB;CXXB;DBKA | | GDS61096 | Drive Shaft | | 36 | | 59.5 | 40.5 | 799 | |
| 1.6 (85 kw) | 2003.08-2007.09 | 6MT | F | L | Hatchback FWD BAG;BLP;BLF | | GDS83319 | Drive Shaft | | 36 | | 59.5 | 38 | 557 | |
| | 2003.08-2007.09 | 6MT | F | R | Hatchback FWD BAG;BLP;BLF | | GDS61211 | Drive Shaft | | 36 | | 59.5 | 40.5 | 784 | |
| | 2003.08-2007.09 | 6MT | F | L/R | Hatchback FWD BAG;BLP;BLF | | GCO83037 | Outer Joint | | 36 | 30 | 59.5 | 40.5 | 56 | I |
| | 2003.08-2007.09 | 6MT | F | L/R | Hatchback FWD BAG;BLP;BLF | | GCI82447 | Inner Joint | | | 33 | | | 34 | |
| | 2003.08-2007.09 | MT | F | R | Hatchback FWD BAG;BLP;BLF | | GDS61237 | Stub Axle,differential | | 23 | 37 | | | 142.5 | |
| | 2017.02-2020.10 | 6MT | F | R | Hatchback FWD DDYA;DGTE | | GDS61283 | Drive Shaft | | 36 | | 59.5 | 40 | 815 | |
| | 2017.02-2020.10 | 6MT/7DCT | F | L | Hatchback FWD DDYA;DGTE | | GDS61282 | Drive Shaft | | 36 | | 59.5 | 40 | 523 | |
| | 2017.02-2020.10 | 6MT/7DCT | F | L/R | Hatchback FWD DDYA;DGTE | | GCO61059 | Outer Joint | | 36 | 33 | 59.5 | 40 | 59.5 | I |
| | 2017.02-2020.10 | 6MT/7DCT | F | L/R | Hatchback FWD DDYA;DGTE | | GCI53002 | Inner Joint | | | 33 | | | 34 | |
| | 2017.02-2020.10 | 6MT/7DCT | F | L/R | Hatchback FWD DDYA;DGTE | | GCI82447 | Inner Joint | | | 33 | | | 34 | |
| | 2017.02-2020.10 | 7DCT | F | R | Hatchback FWD DDYA;DGTE | | GDS61096 | Drive Shaft | | 36 | | 59.5 | 40.5 | 799 | |
| | 2017.03-2020.10 | 6MT | F | R | Saloon FWD DDYA | | GDS61283 | Drive Shaft | | 36 | | 59.5 | 40 | 815 | |
| | 2017.03-2020.10 | 6MT/7DCT | F | L | Saloon FWD DDYA | | GDS61282 | Drive Shaft | | 36 | | 59.5 | 40 | 523 | |
| | 2017.03-2020.10 | 6MT/7DCT | F | L/R | Saloon FWD DDYA | | GCO61059 | Outer Joint | | 36 | 33 | 59.5 | 40 | 59.5 | I |
| | 2017.03-2020.10 | 6MT/7DCT | F | L/R | Saloon FWD DDYA | | GCI53002 | Inner Joint | | | 33 | | | 34 | |
| | 2017.03-2020.10 | 6MT/7DCT | F | L/R | Saloon FWD DDYA | | GCI82447 | Inner Joint | | | 33 | | | 34 | |
| | 2017.03-2020.10 | 7DCT | F | R | Saloon FWD DDYA | | GDS61096 | Drive Shaft | | 36 | | 59.5 | 40.5 | 799 | |
| | 2018.07-2020.10 | 6MT | F | R | Saloon FWD DGTE | | GDS61283 | Drive Shaft | | 36 | | 59.5 | 40 | 815 | |
| | 2018.07-2020.10 | 6MT/7DCT | F | L | Saloon FWD DGTE | | GDS61282 | Drive Shaft | | 36 | | 59.5 | 40 | 523 | |
| | 2018.07-2020.10 | 7DCT | F | R | Saloon FWD DGTE | | GDS61096 | Drive Shaft | | 36 | | 59.5 | 40.5 | 799 | |
| 1.8 (92 kw) | 1996.09-2006.09 | AT | F | L | Hatchback FWD AGN/APG | | GDS61020 | Drive Shaft | | 36 | | 53.2 | 77.5 | 547 | |
| | 1996.09-2006.09 | AT | F | R | Hatchback FWD AGN/APG | | GDS83011 | Drive Shaft | | 36 | | 53.2 | 77.5 | 810.5 | |
| | 1996.09-2006.09 | AT/MT | F | L/R | Hatchback FWD AGN/APG | | GCO83070 | Outer Joint | | 36 | 30 | 53 | 78 | 60 | I |
| | 1996.09-2006.09 | AT/MT | F | L | Hatchback FWD AGN/APG | | GCI82447 | Inner Joint | | | 33 | | | 34 | |
| | 1996.09-2006.09 | AT/MT | F | R | Hatchback FWD AGN/APG | | GCI83009 | Inner Joint | | | 33 | | | 34 | |
| | 1996.09-2006.09 | MT | F | L | Hatchback FWD AGN/APG | | GDS61314 | Drive Shaft | | 36 | | 53 | 78 | 558 | |
| | 1996.09-2006.09 | MT | F | R | Hatchback FWD AGN/APG | | GDS83004 | Drive Shaft | | 36 | | 53.2 | 77.5 | 822 | |
| 1.8 (110 kw) | 1996.09-2006.09 | 5MT | F | L | Hatchback FWD AGU/AQA/ARZ/AUM | Chassis no. from:8L_X_001446 | GDS61020 | Drive Shaft | | 36 | | 53.2 | 77.5 | 547 | |
| | 1996.09-2006.09 | 5MT | F | L | Hatchback FWD AGU/AQA/ARZ/AUM | Chassis no. to:8L_X_001445 | GDS61314 | Drive Shaft | | 36 | | 53 | 78 | 558 | |
| | 1996.09-2006.09 | 5MT | F | R | Hatchback FWD AGU/AQA/ARZ/AUM | Chassis no. to:8L_X_001445 | GDS83004 | Drive Shaft | | 36 | | 53.2 | 77.5 | 822 | |
| | 1996.09-2006.09 | 5MT | F | R | Hatchback FWD AGU/AQA/ARZ/AUM | Chassis no. from:8L_X_001446 | GDS83011 | Drive Shaft | | 36 | | 53.2 | 77.5 | 810.5 | |
| | 1996.09-2006.09 | 5MT | F | L/R | Hatchback FWD AGU/AQA/ARZ/AUM | | GCO83070 | Outer Joint | | 36 | 30 | 53 | 78 | 60 | I |
| | 1996.09-2006.09 | 5MT | F | L | Hatchback FWD AGU/AQA/ARZ/AUM | Chassis no. to:8L_X_001445 | GCI82447 | Inner Joint | | | 33 | | | 34 | |
| | 1996.09-2006.09 | 5MT | F | R | Hatchback FWD AGU/AQA/ARZ/AUM | Chassis no. to:8L_X_001445 | GCI83009 | Inner Joint | | | 33 | | | 34 | |
| 1.8 (118 kw) | 2006.11-2012.08 | 6DCT | F | R | Hatchback FWD BYT;BZB;CDAA | | GDS81653 | Drive Shaft | | 36 | | 59.5 | 40 | 785 | |
| | 2006.11-2012.08 | 6MT | F | L | Hatchback FWD BYT;BZB;CDAA | Date from:2009.11,Date to:2010.10,For PR code:0EJ | GDS61282 | Drive Shaft | | 36 | | 59.5 | 40 | 523 | |
| | 2006.11-2012.08 | 6MT | F | R | Hatchback FWD BYT;BZB;CDAA | Date from:2009.11,Date to:2010.10,For PR code:0EJ | GDS61283 | Drive Shaft | | 36 | | 59.5 | 40 | 815 | |
| | 2006.11-2012.08 | 6MT | F | R | Hatchback FWD BYT;BZB;CDAA | Date to:2009.11,Date from:2010.11,For PR code:0EJ | GDS61341 | Drive Shaft | | 36 | | 59.5 | 40 | 806 | |
| | 2006.11-2012.08 | 6MT | F | R | Hatchback FWD BYT;BZB;CDAA | For PR code:0EN | GDS83313 | Drive Shaft | | 36 | | 59.5 | 40 | 792 | |
| | 2006.11-2012.08 | 6MT | F | L/R | Hatchback FWD BYT;BZB;CDAA | Date from:2009.11,Date to:2010.10 | GCO61059 | Outer Joint | | 36 | 33 | 59.5 | 40 | 59.5 | I |
| | 2006.11-2012.08 | 6MT | F | L/R | Hatchback FWD BYT;BZB;CDAA | For PR code:0EN | GCO83002 | Outer Joint | | 36 | 27 | 59.5 | 40 | 66 | I |
| | 2006.11-2012.08 | 6MT | F | L/R | Hatchback FWD BYT;BZB;CDAA | Date from:2009.11,Date to:2010.10 | GCI53002 | Inner Joint | | | 33 | | | 34 | |
| | 2006.11-2012.08 | 6MT | F | L/R | Hatchback FWD BYT;BZB;CDAA | Trans. code:MQ350 | GCI83016 | Inner Joint | | | 28 | | | 32 | |
| | 2006.11-2012.08 | 6MT/6DCT | F | L | Hatchback FWD BYT;BZB;CDAA | Transmission:6MT,For PR code:0EN;Transmission:6DCT | GDS83295 | Drive Shaft | | 36 | | 59.5 | 40 | 491 | |
| | 2006.11-2012.08 | 6MT/6DCT | F | L/R | Hatchback FWD BYT;BZB;CDAA | Date from:2009.11,Date to:2010.10 | GCI82447 | Inner Joint | | | 33 | | | 34 | |
| | 2006.11-2012.08 | 6MT/7DCT | F | L | Hatchback FWD BYT;BZB;CDAA | Transmission:6MT,Date to:2009.11,Date from:2010.10,For PR code:0EJ;Transmission:7DCT,Date from:2006.11 | GDS61100 | Drive Shaft | | 36 | | 59.5 | 40 | 513 | |
| | 2006.11-2012.08 | 7DCT | F | L | Hatchback FWD BYT;BZB;CDAA | Date to:2008.10 | GDS82260 | Drive Shaft | | 36 | 40 | 59.5 | 40 | 519 | |

| | YEAR | TRANSM. | F/R | L/R | BODY STYLE & DRIVE TYPE & ENGINE | REMARKS | G-AP Ref. | PRODUCT | ABS | Technical Specifications A | B | C | H | L | P |
|---|---|---|---|---|---|---|---|---|---|---|---|---|---|---|---|
| **AUDI** | | | | | | | | | | | | | | | |
| **A3** | | | | | | | | | | | | | | | |
| 1.8 (118 kw) | 2006.11-2012.08 | 7DCT | F | R | Hatchback FWD BYT;BZB;CDAA | | GDS61339 | Drive Shaft | | 36 | | 59.5 | 40 | 794 | |
| | 2006.11-2012.08 | 7DCT | F | L/R | Hatchback FWD BYT;BZB;CDAA | Date from:2008.11 | GCO83101 | Outer Joint | | 36 | 27 | 59.5 | 40 | 65 | M |
| | 2006.11-2012.08 | 7DCT | F | L | Hatchback FWD BYT;BZB;CDAA | Date to:2008.10 | GCI61054 | Inner Joint | | 40 | 28 | 46.9 | 41 | 101.7 | |
| | 2006.11-2012.08 | 7DCT/6MT/6DCT | F | L/R | Hatchback FWD BYT;BZB;CDAA | Transmission:7DCT,Date from:2008.11;Transmission:6MT,Date to:2008.11;Date from:2010.11;Transmission:6DCT | GCO83002 | Outer Joint | | 36 | 27 | 59.5 | 40 | 66 | I |
| | 2006.11-2012.08 | 7DCT/6MT/6DCT | F | L/R | Hatchback FWD BYT;BZB;CDAA | Transmission:7DCT,Date from:2008.11;Transmission:6MT,Date to:2008.11;Date from:2010.11;Transmission:6DCT | GCI61069 | Inner Joint | | | 28 | | | 32 | |
| 1.8 (125 kw) | 2013.11-2020.10 | 6AT | F | L | Saloon FWD CNSB | | GDS83295 | Drive Shaft | | 36 | | 59.5 | 40 | 491 | |
| | 2013.11-2020.10 | 6AT | F | R | Saloon FWD CNSB | | GDS81891 | Drive Shaft | | 36 | | 59.5 | 40 | 781 | |
| | 2013.11-2020.10 | 6AT | F | L/R | Saloon FWD CNSB | | GCO83101 | Outer Joint | | 36 | 27 | 59.5 | 40 | 65 | M |
| | 2013.11-2020.10 | 6AT | F | L/R | Saloon FWD CNSB | | GCI61069 | Inner Joint | | | 28 | | | 32 | |
| 1.8 (132 kw) | 1998.11-2006.09 | AT | F | L/R | Hatchback FWD AJQ/APP/ARY/AUQ | | GCI61044 | Inner Joint | | | 34 | | | 85 | |
| | 1998.11-2006.09 | AT/Semi-AT | F | L | Hatchback FWD AJQ/APP/ARY/AUQ | | GDS61244 | Drive Shaft | | 36 | | 53 | 77.5 | 523 | |
| | 1998.11-2006.09 | MT | F | L | Hatchback FWD AJQ/APP/ARY/AUQ | | GDS61020 | Drive Shaft | | 36 | | 53.2 | 77.5 | 547 | |
| | 1998.11-2006.09 | MT | F | R | Hatchback FWD AJQ/APP/ARY/AUQ | | GDS83011 | Drive Shaft | | 36 | | 53.2 | 77.5 | 810.5 | |
| | 1998.11-2006.09 | MT | F | L/R | Hatchback FWD AJQ/APP/ARY/AUQ | | GCO83070 | Outer Joint | | 36 | 30 | 53 | 78 | 60 | I |
| | 1998.11-2006.09 | Semi-AT | F | R | Hatchback FWD AJQ/APP/ARY/AUQ | | GDS61243 | Drive Shaft | | 36 | | 53 | 77.5 | 813 | |
| | 1998.11-2006.09 | Semi-AT | F | L/R | Hatchback FWD AJQ/APP/ARY/AUQ | | GCO83035 | Outer Joint | | 36 | 27 | 53 | 77.5 | 65 | I |
| | 1998.11-2006.09 | | F | L/R | Hatchback FWD AJQ/APP/ARY/AUQ | | GCI83007 | Inner Joint | | | 34 | | | 85 | |
| | 2012.04-2016.08 | 6MT | F | L | Hatchback FWD CJSA | | GDS61100 | Drive Shaft | | 36 | | 59.5 | 40 | 513 | |
| | 2012.04-2016.08 | 6MT | F | R | Hatchback FWD CJSA | | GDS61101 | Drive Shaft | | 36 | | 59.5 | 40 | 803 | |
| | 2012.04-2016.08 | 6MT | F | L/R | Hatchback FWD CJSA | | GCO83101 | Outer Joint | | 36 | 27 | 59.5 | 40 | 65 | M |
| | 2012.04-2016.08 | 7DCT | F | R | Hatchback FWD CJSA | Date to:2016.02 | GDS61147 | Drive Shaft | | 36 | | 59.5 | 40 | 795 | |
| | 2012.04-2016.08 | 7DCT | F | R | Hatchback FWD CJSA | Date from:2016.03 | GDS83313 | Drive Shaft | | 36 | | 59.5 | 40 | 792 | |
| | 2012.04-2016.08 | 7DCT | F | L | Hatchback FWD CJSA | | GCO83101 | Outer Joint | | 36 | 27 | 59.5 | 40 | 65 | M |
| | 2012.04-2016.08 | 7DCT | F | L | Hatchback FWD CJSA | | GCI61069 | Inner Joint | | | 28 | | | 32 | |
| | 2012.04-2016.08 | 7DCT/6MT | F | L/R | Hatchback FWD CJSA | Transmission:7DCT,Posission:Right | GCI83016 | Inner Joint | | | 28 | | | 32 | |
| | 2012.04-2016.08 | AT | F | L/R | Hatchback FWD CJSA | Date to:2016.08;For PR code:G1C | GCO83101 | Outer Joint | | 36 | 27 | 59.5 | 40 | 65 | M |
| | 2013.05-2016.08 | 6DCT | F | L | Saloon FWD CJSA;CJSB | | GDS98006 | Stub Axle-Flange | | 37 | | | 67 | 123.5 | |
| | 2013.05-2016.08 | 6MT | F | L | Saloon FWD CJSA;CJSB | | GDS61100 | Drive Shaft | | 36 | | 59.5 | 40 | 513 | |
| | 2013.05-2016.08 | 6MT | F | R | Saloon FWD CJSA;CJSB | | GDS61101 | Drive Shaft | | 36 | | 59.5 | 40 | 803 | |
| | 2013.05-2016.08 | 7AT/6MT | F | L/R | Saloon FWD CJSA;CJSB | | GCO83101 | Outer Joint | | 36 | 27 | 59.5 | 40 | 65 | M |
| | 2013.05-2016.08 | 7DCT | F | R | Saloon FWD CJSA;CJSB | Date to:2016.02 | GDS61147 | Drive Shaft | | 36 | | 59.5 | 40 | 795 | |
| | 2013.05-2016.08 | 7DCT | F | R | Saloon FWD CJSA;CJSB | Date from:2016.03 | GDS83313 | Drive Shaft | | 36 | | 59.5 | 40 | 792 | |
| | 2013.05-2016.08 | 7DCT | F | L | Saloon FWD CJSA;CJSB | | GCI61069 | Inner Joint | | | 28 | | | 32 | |
| | 2013.05-2016.08 | 7DCT/6MT | F | L/R | Saloon FWD CJSA;CJSB | Transmission:7DCT,Posission:Right | GCI83016 | Inner Joint | | | 28 | | | 32 | |
| 1.9 (66 kw) | 1996.09-2001.06 | AT | F | L | Hatchback FWD AGR/ALH | | GDS61020 | Drive Shaft | | 36 | | 53.2 | 77.5 | 547 | |
| | 1996.09-2001.06 | AT | F | R | Hatchback FWD AGR/ALH | | GDS83011 | Drive Shaft | | 36 | | 53.2 | 77.5 | 810.5 | |
| | 1996.09-2001.06 | AT | F | L/R | Hatchback FWD AGR/ALH | | GCI61006 | Inner Joint | | | 30 | | | 57.6 | |
| | 1996.09-2001.06 | AT/MT | F | L/R | Hatchback FWD AGR/ALH | | GCO83070 | Outer Joint | | 36 | 30 | 53 | 78 | 60 | I |
| | 1996.09-2001.06 | MT | F | L | Hatchback FWD AGR/ALH | | GDS83006 | Drive Shaft | | 36 | | 53.2 | 77.5 | 557 | |
| | 1996.09-2001.06 | MT | F | R | Hatchback FWD AGR/ALH | | GDS83004 | Drive Shaft | | 36 | | 53.2 | 77.5 | 822 | |
| | 1996.09-2001.06 | MT | F | L | Hatchback FWD AGR/ALH | for OE No.:1J0498103A | GCI83011 | Inner Joint | | | 33 | | | 34 | |
| | 1996.09-2001.06 | MT | F | R | Hatchback FWD AGR/ALH | for OE No.:357498104 | GCI83009 | Inner Joint | | | 33 | | | 34 | |
| 1.9 (74 kw) | 2001.01-2003.06 | MT | F | L | Hatchback FWD ATD/AXR | | GDS83006 | Drive Shaft | | 36 | | 53.2 | 77.5 | 557 | |
| | 2001.01-2003.06 | MT | F | R | Hatchback FWD ATD/AXR | | GDS83004 | Drive Shaft | | 36 | | 53.2 | 77.5 | 822 | |
| | 2001.01-2003.06 | MT | F | L/R | Hatchback FWD ATD/AXR | | GCO83070 | Outer Joint | | 36 | 30 | 53 | 78 | 60 | I |
| | 2001.01-2003.06 | MT | F | L | Hatchback FWD ATD/AXR | For vehicles without headlamp levelling | GCI82447 | Inner Joint | | | 33 | | | 34 | |
| | 2001.01-2003.06 | MT | F | L | Hatchback FWD ATD/AXR | For vehicles with headlamp levelling | GCI83011 | Inner Joint | | | 33 | | | 34 | |
| | 2001.01-2003.06 | MT | F | R | Hatchback FWD ATD/AXR | | GCI83009 | Inner Joint | | | 33 | | | 34 | |
| | 2001.01-2003.06 | Semi-AT | F | L | Hatchback FWD ATD/AXR | | GDS61244 | Drive Shaft | | 36 | | 53 | 77.5 | 523 | |
| | 2001.01-2003.06 | Semi-AT | F | R | Hatchback FWD ATD/AXR | | GDS61243 | Drive Shaft | | 36 | | 53 | 77.5 | 813 | |
| | 2001.01-2003.06 | Semi-AT | F | L/R | Hatchback FWD ATD/AXR | | GCO83035 | Outer Joint | | 36 | 27 | 53 | 77.5 | 65 | I |
| | 2001.01-2003.06 | Semi-AT | F | L/R | Hatchback FWD ATD/AXR | | GCI83007 | Inner Joint | | | 34 | | | 85 | |
| 1.9 (77 kw) | 2003.05-2010.05 | 5MT | F | L | Hatchback FWD BKC;BLS;BXE | | GDS83294 | Drive Shaft | | 36 | | 59.5 | 38 | 519 | |
| | 2003.05-2010.05 | 5MT | F | R | Hatchback FWD BKC;BLS;BXE | | GDS61042 | Drive Shaft | | 36 | | 59.5 | 40.5 | 814 | |
| | 2003.05-2010.05 | 5MT | F | L/R | Hatchback FWD BKC;BLS;BXE | | GCI82447 | Inner Joint | | | 33 | | | 34 | |
| | 2003.05-2010.05 | 6DCT | F | L | Hatchback FWD BKC;BLS;BXE | Date to:2009.09;Date from:2009.06;For PR code:1PD;1PR;Not for For driving school cars | GDS54013 | Drive Shaft | | 36 | | 59.5 | 40 | 479.5 | |
| | 2003.05-2010.05 | 6DCT | F | L | Hatchback FWD BKC;BLS;BXE | For driving school cars | GDS83381 | Drive Shaft | | 36 | | 59.5 | 40 | 483 | |
| | 2003.05-2010.05 | 6DCT | F | R | Hatchback FWD BKC;BLS;BXE | TJ | GDS54011 | Drive Shaft | | 36 | | 59.5 | 40 | 755 | |
| | 2003.05-2010.05 | 6DCT | F | R | Hatchback FWD BKC;BLS;BXE | AAR | GDS83354 | Drive Shaft | | 36 | | 59.5 | 40 | 763 | |
| | 2003.05-2010.05 | 6DCT | F | L/R | Hatchback FWD BKC;BLS;BXE | | GCO83002 | Outer Joint | | 36 | 27 | 59.5 | 40 | 66 | I |
| | 2003.05-2010.05 | 6DCT | F | L/R | Hatchback FWD BKC;BLS;BXE | | GCO83101 | Outer Joint | | 36 | 27 | 59.5 | 40 | 65 | M |
| | 2003.05-2010.05 | 6DCT | F | L/R | Hatchback FWD BKC;BLS;BXE | TJ | GCI54004 | Inner Joint | | | 34 | | | 81 | |
| | 2003.05-2010.05 | 6DCT | F | L/R | Hatchback FWD BKC;BLS;BXE | AAR | GCI61057 | Inner Joint | | | 34 | | | 89 | |
| | 2003.05-2010.05 | AT | F | L | Hatchback FWD BKC;BLS;BXE | | GDS83241 | Drive Shaft | | 36 | | 59.5 | 40 | 475 | |
| | 2003.05-2010.05 | MT | F | L/R | Hatchback FWD BKC;BLS;BXE | | GCO83037 | Outer Joint | | 36 | 30 | 59.5 | 40.5 | 56 | I |

| | YEAR | TRANSM. | F/R | L/R | BODY STYLE & DRIVE TYPE & ENGINE | REMARKS | G-AP Ref. | PRODUCT | ABS | Technical Specifications A | B | C | H | L | P |
|---|---|---|---|---|---|---|---|---|---|---|---|---|---|---|---|
| **AUDI** | | | | | | | | | | | | | | | |
| **A3** | | | | | | | | | | | | | | | |
| 1.9 (77 kw) | 2003.05-2010.05 | MT | F | R | Hatchback FWD BKC;BLS;BXE | | GDS61237 | Stub Axle,differential | | 23 | 37 | | | 142.5 | |
| 1.9 (81 kw) | 1997.01-2002.04 | AT | F | L | Hatchback FWD AHF/ASV | | GDS61020 | Drive Shaft | | 36 | | 53.2 | 77.5 | 547 | |
| | 1997.01-2002.04 | AT | F | R | Hatchback FWD AHF/ASV | | GDS83011 | Drive Shaft | | 36 | | 53.2 | 77.5 | 810.5 | |
| | 1997.01-2002.04 | AT | F | L/R | Hatchback FWD AHF/ASV | | GCI61006 | Inner Joint | | | 30 | | | 57.6 | |
| | 1997.01-2002.04 | AT/MT | F | L/R | Hatchback FWD AHF/ASV | | GCO83070 | Outer Joint | | 36 | 30 | 53 | 78 | 60 | I |
| | 1997.01-2002.04 | MT | F | L | Hatchback FWD AHF/ASV | | GDS83006 | Drive Shaft | | 36 | | 53.2 | 77.5 | 557 | |
| | 1997.01-2002.04 | MT | F | R | Hatchback FWD AHF/ASV | | GDS83004 | Drive Shaft | | 36 | | 53.2 | 77.5 | 822 | |
| | 1997.01-2002.04 | MT | F | L | Hatchback FWD AHF/ASV | for OE No.:1J0498103A | GCI83011 | Inner Joint | | | 33 | | | 34 | |
| | 1997.01-2002.04 | MT | F | R | Hatchback FWD AHF/ASV | for OE No.:357498104 | GCI83009 | Inner Joint | | | 33 | | | 34 | |
| 1.9 (96 kw) | 2000.05-2003.06 | 5AT/6MT | F | L/R | Hatchback FWD ASZ | | GCO83035 | Outer Joint | | 36 | 27 | 53 | 77.5 | 65 | I |
| | 2000.05-2003.06 | MT | F | L | Hatchback FWD ASZ | | GDS61123 | Drive Shaft | | 36 | | 53 | 77.5 | 520 | |
| | 2000.05-2003.06 | MT | F | R | Hatchback FWD ASZ | solid shaft | GDS61121 | Drive Shaft | | 36 | | 53 | 77.5 | 806 | |
| | 2000.05-2003.06 | MT | F | L/R | Hatchback FWD ASZ | For vehicles without headlamp levelling | GCI83001 | Inner Joint | | | 28 | | | 32 | |
| | 2000.05-2003.06 | MT | F | L/R | Hatchback FWD ASZ | For vehicles with headlamp levelling | GCI83016 | Inner Joint | | | 28 | | | 32 | |
| | 2000.05-2003.06 | Semi-AT | F | L | Hatchback FWD ASZ | | GDS61244 | Drive Shaft | | 36 | | 53 | 77.5 | 523 | |
| | 2000.05-2003.06 | Semi-AT | F | R | Hatchback FWD ASZ | | GDS61243 | Drive Shaft | | 36 | | 53 | 77.5 | 813 | |
| | 2000.05-2003.06 | Semi-AT | F | L/R | Hatchback FWD ASZ | | GCI83007 | Inner Joint | | | 34 | | | 85 | |
| 2.0 (81 kw) | 2013.01-2016.08 | 5MT | F | L | Hatchback FWD CRFA | | GDS61282 | Drive Shaft | | 36 | | 59.5 | 40 | 523 | |
| | 2013.01-2016.08 | 5MT | F | R | Hatchback FWD CRFA | | GDS61283 | Drive Shaft | | 36 | | 59.5 | 40 | 815 | |
| | 2013.01-2016.08 | 5MT | F | L/R | Hatchback FWD CRFA | | GCO61059 | Outer Joint | | 36 | 33 | 59.5 | 40 | 59.5 | I |
| | 2013.01-2016.08 | 5MT | F | L/R | Hatchback FWD CRFA | | GCI53002 | Inner Joint | | | 33 | | | 34 | |
| | 2013.01-2016.08 | 5MT | F | L/R | Hatchback FWD CRFA | | GCI82447 | Inner Joint | | | 33 | | | 34 | |
| | 2013.01-2016.08 | MT | F | L | Hatchback FWD CRFA | | GDS83294 | Drive Shaft | | 36 | | 59.5 | 38 | 519 | |
| | 2013.01-2016.08 | MT | F | L | Hatchback FWD CRFA | | GCO83037 | Outer Joint | | 36 | 30 | 59.5 | 40.5 | 56 | I |
| | 2013.01-2016.08 | | F | L/R | Hatchback FWD CRFA | Date To:2016.08 | GCI83011 | Inner Joint | | | 33 | | | 34 | |
| | 2013.05-2020.10 | 5MT | F | L | Saloon FWD CRFA;DEJB | | GDS61282 | Drive Shaft | | 36 | | 59.5 | 40 | 523 | |
| | 2013.05-2020.10 | 5MT | F | R | Saloon FWD CRFA;DEJB | | GDS61283 | Drive Shaft | | 36 | | 59.5 | 40 | 815 | |
| | 2013.05-2020.10 | 5MT | F | L/R | Saloon FWD CRFA;DEJB | | GCO61059 | Outer Joint | | 36 | 33 | 59.5 | 40 | 59.5 | I |
| | 2013.05-2020.10 | 5MT | F | L/R | Saloon FWD CRFA;DEJB | | GCI53002 | Inner Joint | | | 33 | | | 34 | |
| | 2013.05-2020.10 | 5MT | F | L/R | Saloon FWD CRFA;DEJB | | GCI82447 | Inner Joint | | | 33 | | | 34 | |
| | 2013.05-2020.10 | MT | F | L | Saloon FWD CRFA;DEJB | | GDS83294 | Drive Shaft | | 36 | | 59.5 | 38 | 519 | |
| | 2013.05-2020.10 | MT | F | L | Saloon FWD CRFA;DEJB | | GCO83037 | Outer Joint | | 36 | 30 | 59.5 | 40.5 | 56 | I |
| | 2013.05-2020.10 | | F | L/R | Saloon FWD CRFA;DEJB | Date To:2016.08 | GCI83011 | Inner Joint | | | 33 | | | 34 | |
| 2.0 (85 kw) | 2020.06- | 6MT | F | L | Saloon FWD DSUD;DTRD;DTRB;DXRC | | GDS83295 | Drive Shaft | | 36 | | 59.5 | 40 | 491 | |
| | 2020.06- | 6MT | F | R | Saloon FWD DSUD;DTRD;DTRB;DXRC | | GDS81891 | Drive Shaft | | 36 | | 59.5 | 40 | 781 | |
| | 2020.06- | 6MT | F | L | Saloon FWD DSUD;DTRD;DTRB;DXRC | Groove Type:Inner | GCO83002 | Outer Joint | | 36 | 27 | 59.5 | 40 | 66 | I |
| | 2020.06- | 6MT | F | L/R | Saloon FWD DSUD;DTRD;DTRB;DXRC | | GCO83101 | Outer Joint | | 36 | 27 | 59.5 | 40 | 65 | M |
| | 2020.06- | 6MT | F | L | Saloon FWD DSUD;DTRD;DTRB;DXRC | | GCI61041 | Inner Joint | | | 28 | | | 32 | |
| | 2020.06- | 6MT | F | R | Saloon FWD DSUD;DTRD;DTRB;DXRC | | GCI61069 | Inner Joint | | | 28 | | | 32 | |
| | 2020.06- | 6MT | F | L/R | Saloon FWD DSUD;DTRD;DTRB;DXRC | | GCI82456 | Inner Joint | | | 28 | | | 32 | |
| | 2020.06- | 6MT | F | R | Saloon FWD DSUD;DTRD;DTRB;DXRC | | GDS98007 | Stub Axle-Flange | | 37 | | | 88 | 148 | |
| | 2020.06- | 7DCT | F | L | Saloon FWD DSUD;DTRD;DTRB;DXRC | | GDS61282 | Drive Shaft | | 36 | | 59.5 | 40 | 523 | |
| | 2020.06- | 7DCT | F | R | Saloon FWD DSUD;DTRD;DTRB;DXRC | | GDS84417 | Drive Shaft | | 36 | | 59.5 | 40 | 783 | |
| | 2020.06- | 7DCT | F | L/R | Saloon FWD DSUD;DTRD;DTRB;DXRC | | GCO61059 | Outer Joint | | 36 | 33 | 59.5 | 40 | 59.5 | I |
| | 2020.06- | 7DCT | F | R | Saloon FWD DSUD;DTRD;DTRB;DXRC | | GCI53002 | Inner Joint | | | 33 | | | 34 | |
| | 2020.06- | 7DCT | F | L/R | Saloon FWD DSUD;DTRD;DTRB;DXRC | | GCI82447 | Inner Joint | | | 33 | | | 34 | |
| 2.0 (100 kw) | 2003.05-2012.08 | 6DCT | F | L | Hatchback FWD AZV;CBAA;CFFA | Not For driving school cars | GDS54013 | Drive Shaft | | 36 | | 59.5 | 40 | 479.5 | |
| | 2003.05-2012.08 | 6DCT | F | L | Hatchback FWD AZV;CBAA;CFFA | For driving school cars | GDS83381 | Drive Shaft | | 36 | | 59.5 | 40 | 483 | |
| | 2003.05-2012.08 | 6DCT | F | R | Hatchback FWD AZV;CBAA;CFFA | | GDS54011 | Drive Shaft | | 36 | | 59.5 | 40 | 755 | |
| | 2003.05-2012.08 | 6DCT | F | R | Hatchback FWD AZV;CBAA;CFFA | Chassis no. to:8P_5A072500/8P_5B001000,Position:Right | GCI83041 | Inner Joint | | 23 | 34 | | 319 | 88 | |
| | 2003.05-2012.08 | 6DCT | F | L/R | Hatchback FWD AZV;CBAA;CFFA | | GCI54004 | Inner Joint | | | 34 | | | 81 | |
| | 2003.05-2012.08 | 6DCT | F | L/R | Hatchback FWD AZV;CBAA;CFFA | | GCI61057 | Inner Joint | | | 34 | | | 89 | |
| | 2003.05-2012.08 | 6MT | F | L/R | Hatchback FWD AZV;CBAA;CFFA | | GCI83016 | Inner Joint | | | 28 | | | 32 | |
| | 2003.05-2012.08 | 6MT/6DCT | F | R | Hatchback FWD AZV;CBAA;CFFA | | GDS83355 | Drive Shaft | | 36 | 23 | 59.5 | 40 | 799 | |
| | 2003.05-2012.08 | AT | F | L/R | Hatchback FWD AZV;CBAA;CFFA | For driving school cars,For Engine Code:AZV | GCO83101 | Outer Joint | | 36 | 27 | 59.5 | 40 | 65 | M |
| | 2003.05-2012.08 | MT | F | L | Hatchback FWD AZV;CBAA;CFFA | For Engine code:CBAA/CFFA | GDS83295 | Drive Shaft | | 36 | | 59.5 | 40 | 491 | |
| | 2003.05-2012.08 | MT | F | R | Hatchback FWD AZV;CBAA;CFFA | For Engine Code:AZV,For driving school cars | GDS61126 | Drive Shaft | | 36 | | 59.5 | 40 | 793 | |
| | 2003.05-2012.08 | MT | F | R | Hatchback FWD AZV;CBAA;CFFA | Date from:2004.10,For Engine code:AZV,Chassis no. from:8P5A072501 | GDS83313 | Drive Shaft | | 36 | | 59.5 | 40 | 792 | |
| | 2003.05-2012.08 | MT | F | L/R | Hatchback FWD AZV;CBAA;CFFA | For Engine Code:AZV,Date To:2004.09 | GCO83002 | Outer Joint | | 36 | 27 | 59.5 | 40 | 66 | I |
| | 2013.05-2016.08 | 6AT/6MT | F | L/R | Hatchback FWD CRBD;CRLC | | GCI54004 | Inner Joint | | | 34 | | | 81 | |
| | 2013.05-2016.08 | 6AT/6MT | F | L/R | Hatchback FWD CRBD;CRLC | Original Tripod Design | GCI61057 | Inner Joint | | | 34 | | | 89 | |
| | 2013.05-2016.08 | 6AT/6MT | F | L/R | Hatchback FWD CRBD;CRLC | | GCI83016 | Inner Joint | | | 28 | | | 32 | |
| | 2013.05-2016.08 | 6DCT | F | L | Hatchback FWD CRBD;CRLC | | GDS61285 | Drive Shaft | | 36 | | 59.5 | 40 | 472 | |
| | 2013.05-2016.08 | 6DCT | F | R | Hatchback FWD CRBD;CRLC | | GDS83354 | Drive Shaft | | 36 | | 59.5 | 40 | 763 | |
| | 2013.05-2016.08 | 6MT | F | L | Hatchback FWD CRBD;CRLC | | GDS83295 | Drive Shaft | | 36 | | 59.5 | 40 | 491 | |

| | YEAR | TRANSM. | F/R | L/R | BODY STYLE & DRIVE TYPE & ENGINE | REMARKS | G-AP Ref. | PRODUCT | ABS | Technical Specifications A | B | C | H | L | P |
|---|---|---|---|---|---|---|---|---|---|---|---|---|---|---|---|
| **AUDI** | | | | | | | | | | | | | | | |
| **A3** | | | | | | | | | | | | | | | |
| 2.0 (100 kw) | 2013.05-2016.08 | 6MT | F | R | Hatchback FWD CRBD;CRLC | | GDS83313 | Drive Shaft | | 36 | | 59.5 | 40 | 792 | |
| | 2013.05-2016.08 | 6MT | F | L | Hatchback FWD CRBD;CRLC | Date from:2013.11 | GCO83101 | Outer Joint | | 36 | 27 | 59.5 | 40 | 65 | M |
| | 2013.05-2016.08 | 6MT | F | L | Hatchback FWD CRBD;CRLC | Date from:2013.11 | GCI61069 | Inner Joint | | | 28 | | | 32 | |
| | 2013.09-2016.08 | 6AT/6MT | F | L/R | Saloon FWD CRBD;CRLC | | GCI54004 | Inner Joint | | | 34 | | | 81 | |
| | 2013.09-2016.08 | 6AT/6MT | F | L/R | Saloon FWD CRBD;CRLC | Original Tripod Design | GCI61057 | Inner Joint | | | 34 | | | 89 | |
| | 2013.09-2016.08 | 6AT/6MT | F | L/R | Saloon FWD CRBD;CRLC | | GCI83016 | Inner Joint | | | 28 | | | 32 | |
| | 2013.09-2016.08 | 6DCT | F | L | Saloon FWD CRBD;CRLC | | GDS61285 | Drive Shaft | | 36 | | 59.5 | 40 | 472 | |
| | 2013.09-2016.08 | 6DCT | F | R | Saloon FWD CRBD;CRLC | | GDS83354 | Drive Shaft | | 36 | | 59.5 | 40 | 763 | |
| | 2013.09-2016.08 | 6MT | F | L | Saloon FWD CRBD;CRLC | | GDS83295 | Drive Shaft | | 36 | | 59.5 | 40 | 491 | |
| | 2013.09-2016.08 | 6MT | F | R | Saloon FWD CRBD;CRLC | | GDS83313 | Drive Shaft | | 36 | | 59.5 | 40 | 792 | |
| | 2013.09-2016.08 | 6MT | F | L | Saloon FWD CRBD;CRLC | Date from:2013.11 | GCO83101 | Outer Joint | | 36 | 27 | 59.5 | 40 | 65 | M |
| | 2013.09-2016.08 | 6MT | F | L | Saloon FWD CRBD;CRLC | Date from:2013.11 | GCI61069 | Inner Joint | | | 28 | | | 32 | |
| 2.0 (103 kw) | 2003.05-2012.08 | 6DCT | F | L | Hatchback FWD BKD, CLJA, CFFB, CBEA, CBAB | Not For driving school cars | GDS54013 | Drive Shaft | | 36 | | 59.5 | 40 | 479.5 | |
| | 2003.05-2012.08 | 6DCT | F | L | Hatchback FWD BKD, CLJA, CFFB, CBEA, CBAB | For driving school cars | GDS83381 | Drive Shaft | | 36 | | 59.5 | 40 | 483 | |
| | 2003.05-2012.08 | 6DCT | F | R | Hatchback FWD BKD, CLJA, CFFB, CBEA, CBAB | Chassis no. from:8P_5A072501/8P_5B001001 | GDS54011 | Drive Shaft | | 36 | | 59.5 | 40 | 755 | |
| | 2003.05-2012.08 | 6DCT | F | R | Hatchback FWD BKD, CLJA, CFFB, CBEA, CBAB | For driving school cars,AAR | GDS83354 | Drive Shaft | | 36 | | 59.5 | 40 | 763 | |
| | 2003.05-2012.08 | 6DCT | F | R | Hatchback FWD BKD, CLJA, CFFB, CBEA, CBAB | Chassis no. to:8P_5A072500/8P_5B001000 | GDS83355 | Drive Shaft | | 36 | 23 | 59.5 | 40 | 799 | |
| | 2003.05-2012.08 | 6DCT | F | L/R | Hatchback FWD BKD, CLJA, CFFB, CBEA, CBAB | For driving school cars,Original design | GCO83101 | Outer Joint | | 36 | 27 | 59.5 | 40 | 65 | M |
| | 2003.05-2012.08 | 6DCT | F | R | Hatchback FWD BKD, CLJA, CFFB, CBEA, CBAB | Chassis no. to:8P_5A072500/8P_5B001000,Position:Right | GCI83041 | Inner Joint | | 23 | 34 | | 319 | 88 | |
| | 2003.05-2012.08 | 6DCT | F | L/R | Hatchback FWD BKD, CLJA, CFFB, CBEA, CBAB | | GCI54004 | Inner Joint | | | 34 | | | 81 | |
| | 2003.05-2012.08 | 6DCT | F | L/R | Hatchback FWD BKD, CLJA, CFFB, CBEA, CBAB | | GCI61057 | Inner Joint | | | 34 | | | 89 | |
| | 2003.05-2012.08 | 6MT | F | R | Hatchback FWD BKD, CLJA, CFFB, CBEA, CBAB | For driving school cars | GDS61126 | Drive Shaft | | 36 | | 59.5 | 40 | 793 | |
| | 2003.05-2012.08 | 6MT | F | R | Hatchback FWD BKD, CLJA, CFFB, CBEA, CBAB | Date to 2007.09,Chassis no. from:8P_5A072501/8P_5B001001,Chassis no. to:8P_7_999999 | GDS61339 | Drive Shaft | | 36 | | 59.5 | 40 | 794 | |
| | 2003.05-2012.08 | 6MT | F | R | Hatchback FWD BKD, CLJA, CFFB, CBEA, CBAB | | GDS83313 | Drive Shaft | | 36 | | 59.5 | 40 | 792 | |
| | 2003.05-2012.08 | 6MT | F | L/R | Hatchback FWD BKD, CLJA, CFFB, CBEA, CBAB | Chassis no. to:8P_5A072500/8P_5B001000 | GDS83295 | Drive Shaft | | 36 | | 59.5 | 40 | 491 | |
| | 2003.05-2012.08 | 6MT | F | L/R | Hatchback FWD BKD, CLJA, CFFB, CBEA, CBAB | Original design | GCI61069 | Inner Joint | | | 28 | | | 32 | |
| | 2003.05-2012.08 | 6MT | F | L/R | Hatchback FWD BKD, CLJA, CFFB, CBEA, CBAB | Non-Original design | GCI83016 | Inner Joint | | | 28 | | | 32 | |
| | 2003.05-2012.08 | 6MT/6DCT | F | L/R | Hatchback FWD BKD, CLJA, CFFB, CBEA, CBAB | Original design | GCO83002 | Outer Joint | | 36 | 27 | 59.5 | 40 | 66 | I |
| | 2005.06-2008.06 | 6DCT | F | L | Hatchback FWD BMM | Not For driving school cars | GDS54013 | Drive Shaft | | 36 | | 59.5 | 40 | 479.5 | |
| | 2005.06-2008.06 | 6DCT | F | L | Hatchback FWD BMM | Chassis no. to:8P_8A250000/8P_8B050000,For driving school cars | GDS83381 | Drive Shaft | | 36 | | 59.5 | 40 | 483 | |
| | 2005.06-2008.06 | 6DCT | F | R | Hatchback FWD BMM | Not For driving school cars | GDS54011 | Drive Shaft | | 36 | | 59.5 | 40 | 755 | |
| | 2005.06-2008.06 | 6DCT | F | R | Hatchback FWD BMM | For driving school cars | GDS83354 | Drive Shaft | | 36 | | 59.5 | 40 | 763 | |
| | 2005.06-2008.06 | 6DCT | F | L/R | Hatchback FWD BMM | TJ | GCI54004 | Inner Joint | | | 34 | | | 81 | |
| | 2005.06-2008.06 | 6DCT | F | L/R | Hatchback FWD BMM | AAR | GCI61057 | Inner Joint | | | 34 | | | 89 | |
| | 2005.06-2008.06 | 6DCT/6MT | F | L/R | Hatchback FWD BMM | Not For driving school cars | GCO83002 | Outer Joint | | 36 | 27 | 59.5 | 40 | 66 | I |
| | 2005.06-2008.06 | 6DCT/6MT | F | L/R | Hatchback FWD BMM | For driving school cars | GCO83101 | Outer Joint | | 36 | 27 | 59.5 | 40 | 65 | M |
| | 2005.06-2008.06 | 6MT | F | L | Hatchback FWD BMM | | GDS83295 | Drive Shaft | | 36 | | 59.5 | 40 | 491 | |
| | 2005.06-2008.06 | 6MT | F | R | Hatchback FWD BMM | For driving school cars | GDS61126 | Drive Shaft | | 36 | | 59.5 | 40 | 793 | |
| | 2005.06-2008.06 | 6MT | F | R | Hatchback FWD BMM | Not For driving school cars | GDS83313 | Drive Shaft | | 36 | | 59.5 | 40 | 792 | |
| | 2005.06-2008.06 | 6MT | F | L/R | Hatchback FWD BMM | | GCI83016 | Inner Joint | | | 28 | | | 32 | |
| 2.0 (105 kw) | 2012.09-2020.10 | 6AT | F | L | Hatchback FWD CRFC | | GDS61285 | Drive Shaft | | 36 | | 59.5 | 40 | 472 | |
| | 2012.09-2020.10 | 6AT | F | R | Hatchback FWD CRFC | | GDS83354 | Drive Shaft | | 36 | | 59.5 | 40 | 763 | |
| | 2012.09-2020.10 | 6AT | F | L/R | Hatchback FWD CRFC | | GCO83101 | Outer Joint | | 36 | 27 | 59.5 | 40 | 65 | M |
| | 2012.09-2020.10 | 6DCT | F | L/R | Hatchback FWD CRFC | For Modelcode:8VS | GCI54004 | Inner Joint | | | 34 | | | 81 | |
| | 2012.09-2020.10 | 6DCT | F | L/R | Hatchback FWD CRFC | For Modelcode:8VS | GCI61057 | Inner Joint | | | 34 | | | 89 | |
| | 2013.10-2020.10 | 6AT | F | L | Saloon FWD CRFC | | GDS61285 | Drive Shaft | | 36 | | 59.5 | 40 | 472 | |
| | 2013.10-2020.10 | 6AT | F | R | Saloon FWD CRFC | | GDS83354 | Drive Shaft | | 36 | | 59.5 | 40 | 763 | |
| | 2013.10-2020.10 | 6AT | F | L/R | Saloon FWD CRFC | | GCO83101 | Outer Joint | | 36 | 27 | 59.5 | 40 | 65 | M |
| | 2013.10-2020.10 | 6DCT | F | L/R | Saloon FWD CRFC | For Modelcode:8VS | GCI54004 | Inner Joint | | | 34 | | | 81 | |
| | 2013.10-2020.10 | 6DCT | F | L/R | Saloon FWD CRFC | For Modelcode:8VS | GCI61057 | Inner Joint | | | 34 | | | 89 | |
| 2.0 (110 kw) | 2003.05-2008.06 | 6AT/6MT | F | L/R | Hatchback FWD AXW;BLX;BLY;BMB;BLR;BVY;BVZ | | GCO83037 | Outer Joint | | 36 | 30 | 59.5 | 40.5 | 56 | I |
| | 2003.05-2008.06 | 6DCT | F | L/R | Hatchback FWD AXW;BLX;BLY;BMB;BLR;BVY;BVZ | | GCI61011 | Inner Joint | | 26 | 32 | 31 | 68.5 | 85 | |
| | 2003.05-2008.06 | 6DCT | F | L/R | Hatchback FWD AXW;BLX;BLY;BMB;BLR;BVY;BVZ | | GCI61050 | Inner Joint | | 26 | 32 | 31 | 68.5 | 89 | |
| | 2003.05-2008.06 | 6MT | F | L/R | Hatchback FWD AXW;BLX;BLY;BMB;BLR;BVY;BVZ | | GCI82447 | Inner Joint | | | 33 | | | 34 | |
| | 2003.05-2008.06 | AT | F | L | Hatchback FWD AXW;BLX;BLY;BMB;BLR;BVY;BVZ | | GDS61093 | Drive Shaft | | 36 | 26 | 59.5 | 40.5 | 587.5 | |
| | 2003.05-2008.06 | AT | F | R | Hatchback FWD AXW;BLX;BLY;BMB;BLR;BVY;BVZ | | GDS61094 | Drive Shaft | | 36 | 26 | 59.5 | 40.5 | 884 | |
| | 2003.05-2008.06 | MT | F | L | Hatchback FWD AXW;BLX;BLY;BMB;BLR;BVY;BVZ | | GDS83294 | Drive Shaft | | 36 | | 59.5 | 38 | 519 | |
| | 2003.05-2008.06 | MT | F | R | Hatchback FWD AXW;BLX;BLY;BMB;BLR;BVY;BVZ | | GDS61042 | Drive Shaft | | 36 | | 59.5 | 40.5 | 814 | |
| | 2012.04-2017.12 | 6DCT | F | L | Hatchback FWD CRBC;CRLB;CRUA;DEJA;DCYA;DBGA | | GDS61285 | Drive Shaft | | 36 | | 59.5 | 40 | 472 | |
| | 2012.04-2017.12 | 6DCT | F | R | Hatchback FWD CRBC;CRLB;CRUA;DEJA;DCYA;DBGA | | GDS83354 | Drive Shaft | | 36 | | 59.5 | 40 | 763 | |
| | 2012.04-2017.12 | 6DCT | F | L/R | Hatchback FWD CRBC;CRLB;CRUA;DEJA;DCYA;DBGA | TJ | GCI54004 | Inner Joint | | | 34 | | | 81 | |
| | 2012.04-2017.12 | 6DCT | F | L/R | Hatchback FWD CRBC;CRLB;CRUA;DEJA;DCYA;DBGA | AAR | GCI61057 | Inner Joint | | | 34 | | | 89 | |
| | 2012.04-2017.12 | 6MT | F | L | Hatchback FWD CRBC;CRLB;CRUA;DEJA;DCYA;DBGA | | GDS83295 | Drive Shaft | | 36 | | 59.5 | 40 | 491 | |
| | 2012.04-2017.12 | 6MT | F | R | Hatchback FWD CRBC;CRLB;CRUA;DEJA;DCYA;DBGA | | GDS83313 | Drive Shaft | | 36 | | 59.5 | 40 | 792 | |
| | 2012.04-2017.12 | 6MT | F | L/R | Hatchback FWD CRBC;CRLB;CRUA;DEJA;DCYA;DBGA | | GCO83002 | Outer Joint | | 36 | 27 | 59.5 | 40 | 66 | I |

| | YEAR | TRANSM. | F/R | L/R | BODY STYLE & DRIVE TYPE & ENGINE | REMARKS | G-AP Ref. | PRODUCT | ABS | Technical Specifications A | B | C | H | L | P |
|---|---|---|---|---|---|---|---|---|---|---|---|---|---|---|---|
| **AUDI** **A3** | | | | | | | | | | | | | | | |
| 2.0 (110 kw) | 2012.04-2017.12 | 6MT | F | L | Hatchback FWD CRBC;CRLB;CRUA;DEJA;DCYA;DBGA | | GCI61069 | Inner Joint | | | 28 | | | 32 | |
| | 2012.04-2017.12 | 6MT | F | R | Hatchback FWD CRBC;CRLB;CRUA;DEJA;DCYA;DBGA | | GCI61002 | Inner Joint | | | 28 | | | 31.8 | |
| | 2012.04-2017.12 | 6MT | F | L/R | Hatchback FWD CRBC;CRLB;CRUA;DEJA;DCYA;DBGA | | GCI83016 | Inner Joint | | | 28 | | | 32 | |
| | 2012.04-2017.12 | 6MT/6DCT/7DCT | F | L/R | Hatchback FWD CRBC;CRLB;CRUA;DEJA;DCYA;DBGA | | GCO83101 | Outer Joint | | 36 | 27 | 59.5 | 40 | 65 | M |
| | 2012.04-2017.12 | 7DCT | F | L | Hatchback FWD CRBC;CRLB;CRUA;DEJA;DCYA;DBGA | | GDS81265 | Drive Shaft | | 36 | 37 | 59.5 | 40 | 557 | |
| | 2012.04-2017.12 | 7DCT | F | R | Hatchback FWD CRBC;CRLB;CRUA;DEJA;DCYA;DBGA | | GDS83612 | Drive Shaft | | 36 | 37 | 59.5 | 40 | 907 | |
| | 2012.04-2017.12 | 7DCT | F | L | Hatchback FWD CRBC;CRLB;CRUA;DEJA;DCYA;DBGA | | GCI81158 | Inner Joint | | 37 | 34 | 34.5 | 65.5 | 83 | |
| | 2012.04-2017.12 | 7DCT | F | R | Hatchback FWD CRBC;CRLB;CRUA;DEJA;DCYA;DBGA | | GCI82108 | Inner Joint | | 37 | 34 | 40 | 77.5 | 103.5 | |
| | 2013.05-2020.10 | 6DCT | F | L | Saloon FWD CRBC;CRLB;CRUA;DEJA;DCYA;DBGA;DFGA | | GDS61285 | Drive Shaft | | 36 | | 59.5 | 40 | 472 | |
| | 2013.05-2020.10 | 6DCT | F | R | Saloon FWD CRBC;CRLB;CRUA;DEJA;DCYA;DBGA;DFGA | | GDS83354 | Drive Shaft | | 36 | | 59.5 | 40 | 763 | |
| | 2013.05-2020.10 | 6DCT | F | L/R | Saloon FWD CRBC;CRLB;CRUA;DEJA;DCYA;DBGA;DFGA | | GCI54004 | Inner Joint | | | 34 | | | 81 | |
| | 2013.05-2020.10 | 6DCT | F | L/R | Saloon FWD CRBC;CRLB;CRUA;DEJA;DCYA;DBGA;DFGA | | GCI61057 | Inner Joint | | | 34 | | | 89 | |
| | 2013.05-2020.10 | 6MT | F | L | Saloon FWD CRBC;CRLB;CRUA;DEJA;DCYA;DBGA;DFGA | | GDS83295 | Drive Shaft | | 36 | | 59.5 | 40 | 491 | |
| | 2013.05-2020.10 | 6MT | F | R | Saloon FWD CRBC;CRLB;CRUA;DEJA;DCYA;DBGA;DFGA | | GDS83313 | Drive Shaft | | 36 | | 59.5 | 40 | 792 | |
| | 2013.05-2020.10 | 6MT | F | R | Saloon FWD CRBC;CRLB;CRUA;DEJA;DCYA;DBGA;DFGA | | GCO83002 | Outer Joint | | 36 | 27 | 59.5 | 40 | 66 | I |
| | 2013.05-2020.10 | 6MT | F | L | Saloon FWD CRBC;CRLB;CRUA;DEJA;DCYA;DBGA;DFGA | | GCI61069 | Inner Joint | | | 28 | | | 32 | |
| | 2013.05-2020.10 | 6MT | F | R | Saloon FWD CRBC;CRLB;CRUA;DEJA;DCYA;DBGA;DFGA | | GCI61002 | Inner Joint | | | 28 | | | 31.8 | |
| | 2013.05-2020.10 | 6MT | F | L/R | Saloon FWD CRBC;CRLB;CRUA;DEJA;DCYA;DBGA;DFGA | | GCI83016 | Inner Joint | | | 28 | | | 32 | |
| | 2013.05-2020.10 | 6MT/6DCT/7DCT | F | L/R | Saloon FWD CRBC;CRLB;CRUA;DEJA;DCYA;DBGA;DFGA | | GCO83101 | Outer Joint | | 36 | 27 | 59.5 | 40 | 65 | M |
| | 2013.05-2020.10 | 7DCT | F | L | Saloon FWD CRBC;CRLB;CRUA;DEJA;DCYA;DBGA;DFGA | | GDS81265 | Drive Shaft | | 36 | 37 | 59.5 | 40 | 557 | |
| | 2013.05-2020.10 | 7DCT | F | R | Saloon FWD CRBC;CRLB;CRUA;DEJA;DCYA;DBGA;DFGA | | GDS83612 | Drive Shaft | | 36 | 37 | 59.5 | 40 | 907 | |
| | 2013.05-2020.10 | 7DCT | F | L | Saloon FWD CRBC;CRLB;CRUA;DEJA;DCYA;DBGA;DFGA | | GCI81158 | Inner Joint | | 37 | 34 | 34.5 | 65.5 | 83 | |
| | 2013.05-2020.10 | 7DCT | F | R | Saloon FWD CRBC;CRLB;CRUA;DEJA;DCYA;DBGA;DFGA | | GCI82108 | Inner Joint | | 37 | 34 | 40 | 77.5 | 103.5 | |
| | 2018.07-2020.10 | 6DCT | F | L | Saloon FWD DFGA | | GDS61285 | Drive Shaft | | 36 | | 59.5 | 40 | 472 | |
| | 2018.07-2020.10 | 6DCT | F | R | Saloon FWD DFGA | | GDS83354 | Drive Shaft | | 36 | | 59.5 | 40 | 763 | |
| | 2018.07-2020.10 | 6DCT | F | L/R | Saloon FWD DFGA | | GCI54004 | Inner Joint | | | 34 | | | 81 | |
| | 2018.07-2020.10 | 6DCT | F | L/R | Saloon FWD DFGA | | GCI61057 | Inner Joint | | | 34 | | | 89 | |
| | 2018.07-2020.10 | 6MT | F | L | Saloon FWD DFGA | | GDS83295 | Drive Shaft | | 36 | | 59.5 | 40 | 491 | |
| | 2018.07-2020.10 | 6MT | F | R | Saloon FWD DFGA | | GDS83313 | Drive Shaft | | 36 | | 59.5 | 40 | 792 | |
| | 2018.07-2020.10 | 6MT | F | R | Saloon FWD DFGA | | GCO83002 | Outer Joint | | 36 | 27 | 59.5 | 40 | 66 | I |
| | 2018.07-2020.10 | 6MT | F | L | Saloon FWD DFGA | | GCI61069 | Inner Joint | | | 28 | | | 32 | |
| | 2018.07-2020.10 | 6MT | F | R | Saloon FWD DFGA | | GCI61002 | Inner Joint | | | 28 | | | 31.8 | |
| | 2018.07-2020.10 | 6MT | F | L/R | Saloon FWD DFGA | | GCI83016 | Inner Joint | | | 28 | | | 32 | |
| | 2018.07-2020.10 | 6MT/6DCT/7DCT | F | L/R | Saloon FWD DFGA | | GCO83101 | Outer Joint | | 36 | 27 | 59.5 | 40 | 65 | M |
| | 2018.07-2020.10 | 7DCT | F | L | Saloon FWD DFGA | | GDS81265 | Drive Shaft | | 36 | 37 | 59.5 | 40 | 557 | |
| | 2018.07-2020.10 | 7DCT | F | R | Saloon FWD DFGA | | GDS83612 | Drive Shaft | | 36 | 37 | 59.5 | 40 | 907 | |
| | 2018.07-2020.10 | 7DCT | F | L | Saloon FWD DFGA | | GCI81158 | Inner Joint | | 37 | 34 | 34.5 | 65.5 | 83 | |
| | 2018.07-2020.10 | 7DCT | F | R | Saloon FWD DFGA | | GCI82108 | Inner Joint | | 37 | 34 | 40 | 77.5 | 103.5 | |
| | 2020.04- | 6MT | F | L | Saloon FWD DSRB;DTSB;DTSA;DXPA | | GDS83295 | Drive Shaft | | 36 | | 59.5 | 40 | 491 | |
| | 2020.04- | 6MT | F | R | Saloon FWD DSRB;DTSB;DTSA;DXPA | | GDS81891 | Drive Shaft | | 36 | | 59.5 | 40 | 781 | |
| | 2020.04- | 7DCT | F | L | Saloon FWD DSRB;DTSB;DTSA;DXPA | | GDS81265 | Drive Shaft | | 36 | 37 | 59.5 | 40 | 557 | |
| | 2020.04- | 7DCT | F | R | Saloon FWD DSRB;DTSB;DTSA;DXPA | | GDS83612 | Drive Shaft | | 36 | 37 | 59.5 | 40 | 907 | |
| | 2020.04- | 7DCT | F | L/R | Saloon FWD DSRB;DTSB;DTSA;DXPA | | GCO83101 | Outer Joint | | 36 | 27 | 59.5 | 40 | 65 | M |
| | 2020.04- | 7DCT | F | L | Saloon FWD DSRB;DTSB;DTSA;DXPA | | GCI81158 | Inner Joint | | 37 | 34 | 34.5 | 65.5 | 83 | |
| | 2020.04- | 7DCT | F | R | Saloon FWD DSRB;DTSB;DTSA;DXPA | | GCI82108 | Inner Joint | | 37 | 34 | 40 | 77.5 | 103.5 | |
| 2.0 (120 kw) | 2006.06-2008.06 | 6AT/6MT | F | L/R | Hatchback FWD BUY | | GCI54004 | Inner Joint | | | 34 | | | 81 | |
| | 2006.06-2008.06 | 6AT/6MT | F | L/R | Hatchback FWD BUY | Original Tripod Design | GCI61057 | Inner Joint | | | 34 | | | 89 | |
| | 2006.06-2008.06 | 6AT/6MT | F | L/R | Hatchback FWD BUY | | GCI83016 | Inner Joint | | | 28 | | | 32 | |
| | 2006.06-2008.06 | 6DCT | F | L | Hatchback FWD BUY | | GDS83381 | Drive Shaft | | 36 | | 59.5 | 40 | 483 | |
| | 2006.06-2008.06 | 6DCT | F | R | Hatchback FWD BUY | | GDS54011 | Drive Shaft | | 36 | | 59.5 | 40 | 755 | |
| | 2006.06-2008.06 | AT | F | L/R | Hatchback FWD BUY | For Engine code:AZV;For driving school cars | GCO83101 | Outer Joint | | 36 | 27 | 59.5 | 40 | 65 | M |
| | 2006.06-2008.06 | MT | F | L | Hatchback FWD BUY | | GDS83236 | Drive Shaft | | 36 | | 59.5 | 40 | 484 | |
| | 2006.06-2008.06 | MT | F | L | Hatchback FWD BUY | | GDS83295 | Drive Shaft | | 36 | | 59.5 | 40 | 491 | |
| | 2006.06-2008.06 | MT | F | R | Hatchback FWD BUY | | GDS61126 | Drive Shaft | | 36 | | 59.5 | 40 | 793 | |
| 2.0 (125 kw) | 2006.03-2012.08 | 6DCT | F | L | Hatchback FWD BMN;CBBB;CFGB | Date from:2009.06,For PR code:1PA | GDS54013 | Drive Shaft | | 36 | | 59.5 | 40 | 479.5 | |
| | 2006.03-2012.08 | 6DCT | F | L | Hatchback FWD BMN;CBBB;CFGB | ---------- | GDS83381 | Drive Shaft | | 36 | | 59.5 | 40 | 483 | |
| | 2006.03-2012.08 | 6DCT | F | R | Hatchback FWD BMN;CBBB;CFGB | TJ | GDS54011 | Drive Shaft | | 36 | | 59.5 | 40 | 755 | |
| | 2006.03-2012.08 | 6DCT | F | R | Hatchback FWD BMN;CBBB;CFGB | AAR | GDS83354 | Drive Shaft | | 36 | | 59.5 | 40 | 763 | |
| | 2006.03-2012.08 | 6DCT | F | L/R | Hatchback FWD BMN;CBBB;CFGB | TJ | GCI54004 | Inner Joint | | | 34 | | | 81 | |
| | 2006.03-2012.08 | 6DCT | F | L/R | Hatchback FWD BMN;CBBB;CFGB | AAR | GCI61057 | Inner Joint | | | 34 | | | 89 | |
| | 2006.03-2012.08 | 6MT | F | L | Hatchback FWD BMN;CBBB;CFGB | | GDS83295 | Drive Shaft | | 36 | | 59.5 | 40 | 491 | |
| | 2006.03-2012.08 | 6MT | F | R | Hatchback FWD BMN;CBBB;CFGB | | GDS61126 | Drive Shaft | | 36 | | 59.5 | 40 | 793 | |
| | 2006.03-2012.08 | 6MT | F | L/R | Hatchback FWD BMN;CBBB;CFGB | | GCI83016 | Inner Joint | | | 28 | | | 32 | |
| | 2006.03-2012.08 | 6MT/6DCT | F | L/R | Hatchback FWD BMN;CBBB;CFGB | | GCO83101 | Outer Joint | | 36 | 27 | 59.5 | 40 | 65 | M |
| 2.0 (135 kw) | 2013.05-2017.12 | 6MT | F | L | Hatchback FWD CUNA;DGCA | Date to:2013.10,For PR code:2H0/2H6 | GDS83295 | Drive Shaft | | 36 | | 59.5 | 40 | 491 | |

| | YEAR | TRANSM. | F/R | L/R | BODY STYLE & DRIVE TYPE & ENGINE | REMARKS | G-AP Ref. | PRODUCT | ABS | Technical Specifications A | B | C | H | L | P |
|---|---|---|---|---|---|---|---|---|---|---|---|---|---|---|---|
| **AUDI** | | | | | | | | | | | | | | | |
| **A3** | | | | | | | | | | | | | | | |
| 2.0 (135 kw) | 2013.05-2017.12 | 6MT | F | R | Hatchback FWD CUNA;DGCA | | GDS83313 | Drive Shaft | | 36 | | 59.5 | 40 | 792 | |
| | 2013.05-2017.12 | 6MT | F | L | Hatchback FWD CUNA;DGCA | | GCI61069 | Inner Joint | | | 28 | | | 32 | |
| | 2013.05-2017.12 | 6MT | F | R | Hatchback FWD CUNA;DGCA | | GCI83016 | Inner Joint | | | 28 | | | 32 | |
| | 2013.05-2017.12 | Semi-AT | F | L | Hatchback FWD CUNA;DGCA | | GDS61285 | Drive Shaft | | 36 | | 59.5 | 40 | 472 | |
| | 2013.05-2017.12 | Semi-AT | F | L | Hatchback FWD CUNA;DGCA | | GCO83101 | Outer Joint | | 36 | 27 | 59.5 | 40 | 65 | M |
| | 2014.05-2018.07 | 6MT | F | L | Saloon FWD CUNA;DGCA | | GDS83295 | Drive Shaft | | 36 | | 59.5 | 40 | 491 | |
| | 2014.05-2018.07 | 6MT | F | R | Saloon FWD CUNA;DGCA | | GDS83313 | Drive Shaft | | 36 | | 59.5 | 40 | 792 | |
| | 2014.05-2018.07 | 6MT | F | L | Saloon FWD CUNA;DGCA | | GCI61069 | Inner Joint | | | 28 | | | 32 | |
| | 2014.05-2018.07 | 6MT | F | R | Saloon FWD CUNA;DGCA | | GCI83016 | Inner Joint | | | 28 | | | 32 | |
| | 2014.05-2018.07 | MT | F | L/R | Saloon FWD CUNA;DGCA | For PR code:G0K/G0R | GCO83101 | Outer Joint | | 36 | 27 | 59.5 | 40 | 65 | M |
| | 2014.05-2018.07 | Semi-AT | F | L | Saloon FWD CUNA;DGCA | | GDS61285 | Drive Shaft | | 36 | | 59.5 | 40 | 472 | |
| 2.0 (140 kw) | 2016.05-2017.12 | 6MT | F | L | Hatchback FWD CZPB | | GDS83295 | Drive Shaft | | 36 | | 59.5 | 40 | 491 | |
| | 2016.05-2017.12 | 6MT | F | R | Hatchback FWD CZPB | | GDS83313 | Drive Shaft | | 36 | | 59.5 | 40 | 792 | |
| | 2016.05-2017.12 | 6MT | F | L | Hatchback FWD CZPB | | GCO83101 | Outer Joint | | 36 | 27 | 59.5 | 40 | 65 | M |
| | 2016.05-2017.12 | 6MT | F | L | Hatchback FWD CZPB | | GCI61069 | Inner Joint | | | 28 | | | 32 | |
| | 2016.05-2017.12 | 6MT | F | R | Hatchback FWD CZPB | | GCI83016 | Inner Joint | | | 28 | | | 32 | |
| | 2016.05-2017.12 | 7DCT | F | L | Hatchback FWD CZPB | | GDS84237 | Drive Shaft | | 36 | 37 | 59.5 | 40 | 560 | |
| | 2016.05-2017.12 | 7DCT | F | L | Hatchback FWD CZPB | | GCI83028 | Inner Joint | | 37 | 28 | | 65.5 | 90.2 | |
| | 2016.05-2020.10 | 6MT | F | L | Saloon FWD CZPB;DKZA | | GDS83295 | Drive Shaft | | 36 | | 59.5 | 40 | 491 | |
| | 2016.05-2020.10 | 6MT | F | R | Saloon FWD CZPB;DKZA | | GDS83313 | Drive Shaft | | 36 | | 59.5 | 40 | 792 | |
| | 2016.05-2020.10 | 6MT | F | L | Saloon FWD CZPB;DKZA | | GCI61069 | Inner Joint | | | 28 | | | 32 | |
| | 2016.05-2020.10 | 6MT | F | R | Saloon FWD CZPB;DKZA | | GCI83016 | Inner Joint | | | 28 | | | 32 | |
| | 2016.05-2020.10 | 7AT/6MT | F | L | Saloon FWD CZPB;DKZA | | GCO83101 | Outer Joint | | 36 | 27 | 59.5 | 40 | 65 | M |
| | 2016.05-2020.10 | 7DCT | F | L | Saloon FWD CZPB;DKZA | | GDS84237 | Drive Shaft | | 36 | 37 | 59.5 | 40 | 560 | |
| | 2016.05-2020.10 | 7DCT | F | L | Saloon FWD CZPB;DKZA | | GCI83028 | Inner Joint | | 37 | 28 | | 65.5 | 90.2 | |
| | 2018.07-2020.10 | 6MT | F | L | Saloon FWD DKZA | | GDS83295 | Drive Shaft | | 36 | | 59.5 | 40 | 491 | |
| | 2018.07-2020.10 | 6MT | F | R | Saloon FWD DKZA | | GDS83313 | Drive Shaft | | 36 | | 59.5 | 40 | 792 | |
| | 2018.07-2020.10 | 6MT | F | R | Saloon FWD DKZA | Bellows Material:Plastic | GCI83016 | Inner Joint | | | 28 | | | 32 | |
| | 2018.07-2020.10 | 7DCT | F | L | Saloon FWD DKZA | | GDS84237 | Drive Shaft | | 36 | 37 | 59.5 | 40 | 560 | |
| 2.0 (147 kw) | 2004.09-2012.08 | 6DCT | F | R | Hatchback FWD AXX;BWA;CAWB;CCZA | Date from:2010.01 | GDS81653 | Drive Shaft | | 36 | | 59.5 | 40 | 785 | |
| | 2004.09-2012.08 | 6DCT | F | R | Hatchback FWD AXX;BWA;CAWB;CCZA | Date to:2009.12 | GDS83349 | Drive Shaft | | 36 | | 59.5 | 40 | 784 | |
| | 2004.09-2012.08 | 6MT | F | R | Hatchback FWD AXX;BWA;CAWB;CCZA | Date to:2009.12 | GDS61126 | Drive Shaft | | 36 | | 59.5 | 40 | 793 | |
| | 2004.09-2012.08 | 6MT | F | R | Hatchback FWD AXX;BWA;CAWB;CCZA | Date from:2010.01 | GDS83313 | Drive Shaft | | 36 | | 59.5 | 40 | 792 | |
| | 2004.09-2012.08 | 6MT/6DCT | F | L | Hatchback FWD AXX;BWA;CAWB;CCZA | | GDS83295 | Drive Shaft | | 36 | | 59.5 | 40 | 491 | |
| | 2004.09-2012.08 | 6MT/6DCT | F | L/R | Hatchback FWD AXX;BWA;CAWB;CCZA | Date to:2009.12 | GCO83002 | Outer Joint | | 36 | 27 | 59.5 | 40 | 66 | I |
| | 2004.09-2012.08 | 6MT/6DCT | F | L/R | Hatchback FWD AXX;BWA;CAWB;CCZA | Date from:2010.01 | GCO83101 | Outer Joint | | 36 | 27 | 59.5 | 40 | 65 | M |
| | 2004.09-2012.08 | 6MT/6DCT | F | L/R | Hatchback FWD AXX;BWA;CAWB;CCZA | | GCI83016 | Inner Joint | | | 28 | | | 32 | |
| 2.0 (162 kw) | 2015.11-2020.10 | 6AT | F | L | Saloon FWD CNTC;CHHB | | GDS83295 | Drive Shaft | | 36 | | 59.5 | 40 | 491 | |
| | 2015.11-2020.10 | 6AT | F | R | Saloon FWD CNTC;CHHB | | GDS81891 | Drive Shaft | | 36 | | 59.5 | 40 | 781 | |
| | 2015.11-2020.10 | 6AT | F | L/R | Saloon FWD CNTC;CHHB | | GCI61069 | Inner Joint | | | 28 | | | 32 | |
| | 2015.11-2020.10 | 6DCT | F | L/R | Saloon FWD CNTC;CHHB | Date to:2016.11 | GCO83101 | Outer Joint | | 36 | 27 | 59.5 | 40 | 65 | M |
| | 2015.11-2020.10 | 6DCT | F | L | Saloon FWD CNTC;CHHB | | GDS98006 | Stub Axle-Flange | | 37 | | | 67 | 123.5 | |
| **A3 Allstreet** | | | | | | | | | | | | | | | |
| 1.5 (110 kw) | 2024.02- | 7DCT | F | L | Hatchback FWD DXDB | | GDS61100 | Drive Shaft | | 36 | | 59.5 | 40 | 513 | |
| | 2024.02- | 7DCT | F | R | Hatchback FWD DXDB | | GDS84503 | Drive Shaft | | 36 | 40 | 59.5 | 40 | 817 | |
| | 2024.09- | 6MT | F | L | Hatchback FWD DXDB | | GDS84408 | Drive Shaft | | 36 | | 59.5 | 40 | 499 | |
| | 2024.09- | 6MT | F | R | Hatchback FWD DXDB | | GDS84417 | Drive Shaft | | 36 | | 59.5 | 40 | 783 | |
| 1.5 (150 kw) | 2024.11- | 6DCT | F | L | Hatchback FWD DUCB, EANB | | GDS81985 | Drive Shaft | | 36 | 37 | 59.5 | 40 | 546 | |
| | 2024.11- | AT | F | L | Hatchback FWD DUCB, EANB | | GCI81158 | Inner Joint | | 37 | 34 | 34.5 | 65.5 | 83 | |
| 2.0 (110 kw) | 2024.02- | 7DCT | F | L | Hatchback FWD DXPA | | GDS81265 | Drive Shaft | | 36 | 37 | 59.5 | 40 | 557 | |
| | 2024.02- | 7DCT | F | R | Hatchback FWD DXPA | | GDS83612 | Drive Shaft | | 36 | 37 | 59.5 | 40 | 907 | |
| | 2024.02- | AT | F | L | Hatchback FWD DXPA | | GCI81158 | Inner Joint | | 37 | 34 | 34.5 | 65.5 | 83 | |
| **A3 Allstreet Quattro** | | | | | | | | | | | | | | | |
| 2.0 (150 kw) | 2025.03- | 7DCT | R | L | Hatchback 4WD DNNE | | GDS61286 | Drive Shaft | | 36 | | 59.5 | 40 | 587 | |
| | 2025.03- | 7DCT | R | R | Hatchback 4WD DNNE | | GDS61287 | Drive Shaft | | 36 | | 59.5 | 40 | 632 | |
| **A3 Cabrio** | | | | | | | | | | | | | | | |
| 1.2 (77 kw) | 2010.03-2013.05 | 6MT | F | L | Convertible FWD CBZB | | GDS61201 | Drive Shaft | | 36 | | 59.5 | 40.5 | 535 | |
| | 2010.03-2013.05 | 6MT | F | R | Convertible FWD CBZB | | GDS61096 | Drive Shaft | | 36 | | 59.5 | 40.5 | 799 | |
| | 2010.03-2013.05 | 6MT | F | L/R | Convertible FWD CBZB | | GCO83037 | Outer Joint | | 36 | 30 | 59.5 | 40.5 | 56 | I |
| | 2010.03-2013.05 | 6MT | F | L/R | Convertible FWD CBZB | | GCO83100 | Outer Joint | | 36 | 33 | 59.5 | 38 | 56 | I |
| | 2010.03-2013.05 | 6MT | F | L/R | Convertible FWD CBZB | | GCI82447 | Inner Joint | | | 33 | | | 34 | |
| 1.4 (85 kw) | 2016.02-2020.10 | 6MT | F | L | Convertible FWD CZCC | For PR code:0EJ,Trans. code:MQ250;For PR code:0EC,Trans. code:MQ200_GA | GDS61282 | Drive Shaft | | 36 | | 59.5 | 40 | 523 | |
| | 2016.02-2020.10 | 6MT | F | R | Convertible FWD CZCC | For PR code:0EJ,Trans. code:MQ250 | GDS61283 | Drive Shaft | | 36 | | 59.5 | 40 | 815 | |
| | 2016.02-2020.10 | 6MT | F | R | Convertible FWD CZCC | For PR code:0EC,Trans. code:MQ200_GA | GDS61307 | Drive Shaft | | 36 | | 59.5 | 40 | 819 | |
| | 2016.02-2020.10 | 6MT | F | R | Convertible FWD CZCC | For PR code:0EC,Trans. code:MQ200_GA | GCO83037 | Outer Joint | | 36 | 30 | 59.5 | 40.5 | 56 | I |

| | YEAR | TRANSM. | F/R | L/R | BODY STYLE & DRIVE TYPE & ENGINE | REMARKS | G-AP Ref. | PRODUCT | ABS | Technical Specifications A | B | C | H | L | P |
|---|---|---|---|---|---|---|---|---|---|---|---|---|---|---|---|
| **AUDI** | | | | | | | | | | | | | | | |
| **A3 Cabrio** | | | | | | | | | | | | | | | |
| 1.4 (85 kw) | 2016.02-2020.10 | 6MT | F | L/R | Convertible FWD CZCC | For PR code:0EJ,Trans. code:MQ250 | GCO61059 | Outer Joint | | 36 | 33 | 59.5 | 40 | 59.5 | I |
| | 2016.02-2020.10 | 6MT/7DCT | F | L | Convertible FWD CZCC | Transmission:6MT,For PR code:0EC,Trans. code:MQ200GA;Transmission:7DCT | GCO61059 | Outer Joint | | 36 | 33 | 59.5 | 40 | 59.5 | I |
| | 2016.02-2020.10 | 7DCT | F | L | Convertible FWD CZCC | | GDS61282 | Drive Shaft | | 36 | | 59.5 | 40 | 523 | |
| | 2016.02-2020.10 | 7DCT | F | R | Convertible FWD CZCC | | GDS61096 | Drive Shaft | | 36 | | 59.5 | 40.5 | 799 | |
| | 2016.02-2020.10 | 7DCT | F | L/R | Convertible FWD CZCC | | GCI82447 | Inner Joint | | | 33 | | | 34 | |
| 1.4 (92 kw) | 2011.02-2013.05 | 6MT | F | L | Convertible FWD CAXC | | GDS61201 | Drive Shaft | | 36 | | 59.5 | 40.5 | 535 | |
| | 2011.02-2013.05 | 6MT | F | R | Convertible FWD CAXC | | GDS61096 | Drive Shaft | | 36 | | 59.5 | 40.5 | 799 | |
| | 2011.02-2013.05 | 6MT | F | L/R | Convertible FWD CAXC | | GCI82447 | Inner Joint | | | 33 | | | 34 | |
| | 2011.02-2013.05 | AT | F | L | Convertible FWD CAXC | | GDS81783 | Drive Shaft | | 36 | 40 | 59.5 | 40 | 531 | |
| | 2011.02-2013.05 | AT | F | R | Convertible FWD CAXC | | GDS81784 | Drive Shaft | | 36 | 40 | 59.5 | 40 | 801 | |
| | 2011.02-2013.05 | AT | F | L/R | Convertible FWD CAXC | | GCO83002 | Outer Joint | | 36 | 27 | 59.5 | 40 | 66 | I |
| | 2011.02-2013.05 | MT | F | L/R | Convertible FWD CAXC | | GCI83006 | Inner Joint | | | 33 | | | 34 | |
| | 2011.02-2013.05 | MT/7DCT | F | L/R | Convertible FWD CAXC | | GCI83011 | Inner Joint | | | 33 | | | 34 | |
| | 2011.02-2013.05 | | F | L/R | Convertible FWD CAXC | | GCO61059 | Outer Joint | | 36 | 33 | 59.5 | 40 | 59.5 | I |
| | 2014.02-2016.07 | 6MT | F | L | Convertible FWD CXSB;CZCA | For PR code:0EC;Trans. code:MQ200_GA | GDS53007 | Drive Shaft | | 36 | | 59.5 | 40 | 559 | |
| | 2014.02-2016.07 | 6MT | F | L | Convertible FWD CXSB;CZCA | For PR code:0EJ,Trans. code:MQ250;For PR code:0EC,Trans. code:MQ200_GA | GDS61282 | Drive Shaft | | 36 | | 59.5 | 40 | 523 | |
| | 2014.02-2016.07 | 6MT | F | R | Convertible FWD CXSB;CZCA | For PR code:0EJ,Trans. code:MQ250 | GDS61283 | Drive Shaft | | 36 | | 59.5 | 40 | 815 | |
| | 2014.02-2016.07 | 6MT | F | R | Convertible FWD CXSB;CZCA | For PR code:0EC,Trans. code:MQ200_GA | GDS61307 | Drive Shaft | | 36 | | 59.5 | 40 | 819 | |
| | 2014.02-2016.07 | 6MT | F | R | Convertible FWD CXSB;CZCA | For PR code:0EC,Trans. code:MQ200_GA | GCO83037 | Outer Joint | | 36 | 30 | 59.5 | 40.5 | 56 | I |
| | 2014.02-2016.07 | 6MT | F | L/R | Convertible FWD CXSB;CZCA | For PR code:0EJ,Trans. code:MQ250 | GCO61059 | Outer Joint | | 36 | 33 | 59.5 | 40 | 59.5 | I |
| | 2014.02-2016.07 | 6MT/7DCT | F | L | Convertible FWD CXSB;CZCA | Transmission:6MT,For PR code:0EC,Trans. code:MQ200GA;Transmission:7DCT | GCO61059 | Outer Joint | | 36 | 33 | 59.5 | 40 | 59.5 | I |
| | 2014.02-2016.07 | 7DCT | F | L | Convertible FWD CXSB;CZCA | | GDS61282 | Drive Shaft | | 36 | | 59.5 | 40 | 523 | |
| | 2014.02-2016.07 | 7DCT | F | R | Convertible FWD CXSB;CZCA | | GDS61096 | Drive Shaft | | 36 | | 59.5 | 40.5 | 799 | |
| | 2014.02-2016.07 | 7DCT | F | L/R | Convertible FWD CXSB;CZCA | | GCI82447 | Inner Joint | | | 33 | | | 34 | |
| | 2014.02-2016.07 | MT | F | L | Convertible FWD CXSB;CZCA | | GDS83294 | Drive Shaft | | 36 | | 59.5 | 38 | 519 | |
| 1.4 (103 kw) | 2013.10-2014.05 | 6MT | F | L | Convertible FWD CPTA | | GDS61282 | Drive Shaft | | 36 | | 59.5 | 40 | 523 | |
| | 2013.10-2014.05 | 6MT | F | R | Convertible FWD CPTA | | GDS61283 | Drive Shaft | | 36 | | 59.5 | 40 | 815 | |
| | 2013.10-2014.05 | 6MT | F | L/R | Convertible FWD CPTA | | GCO61059 | Outer Joint | | 36 | 33 | 59.5 | 40 | 59.5 | I |
| | 2013.10-2014.05 | 6MT/7DCT | F | L/R | Convertible FWD CPTA | | GCI82447 | Inner Joint | | | 33 | | | 34 | |
| | 2013.10-2014.05 | 7AT/6MT | F | L/R | Convertible FWD CPTA | | GCI83016 | Inner Joint | | | 28 | | | 32 | |
| | 2013.10-2014.05 | 7DCT | F | L | Convertible FWD CPTA | | GDS61100 | Drive Shaft | | 36 | | 59.5 | 40 | 513 | |
| | 2013.10-2014.05 | 7DCT | F | R | Convertible FWD CPTA | | GDS83313 | Drive Shaft | | 36 | | 59.5 | 40 | 792 | |
| | 2013.10-2014.05 | 7DCT | F | L/R | Convertible FWD CPTA | | GCO83101 | Outer Joint | | 36 | 27 | 59.5 | 40 | 65 | M |
| 1.4 (110 kw) | 2014.05-2020.10 | 6MT | F | L | Convertible FWD CZEA | | GDS61282 | Drive Shaft | | 36 | | 59.5 | 40 | 523 | |
| | 2014.05-2020.10 | 6MT | F | R | Convertible FWD CZEA | | GDS61283 | Drive Shaft | | 36 | | 59.5 | 40 | 815 | |
| | 2014.05-2020.10 | 6MT | F | L/R | Convertible FWD CZEA | | GCO61059 | Outer Joint | | 36 | 33 | 59.5 | 40 | 59.5 | I |
| | 2014.05-2020.10 | 6MT | F | L/R | Convertible FWD CZEA | | GCI53002 | Inner Joint | | | 33 | | | 34 | |
| | 2014.05-2020.10 | 6MT | F | L/R | Convertible FWD CZEA | | GCI82447 | Inner Joint | | | 33 | | | 34 | |
| | 2014.05-2020.10 | 7DCT | F | L | Convertible FWD CZEA | | GDS61100 | Drive Shaft | | 36 | | 59.5 | 40 | 513 | |
| | 2014.05-2020.10 | 7DCT | F | R | Convertible FWD CZEA | | GDS83313 | Drive Shaft | | 36 | | 59.5 | 40 | 792 | |
| | 2014.05-2020.10 | 7DCT | F | L/R | Convertible FWD CZEA | | GCO83101 | Outer Joint | | 36 | 27 | 59.5 | 40 | 65 | M |
| | 2014.05-2020.10 | 7DCT | F | L/R | Convertible FWD CZEA | | GCI61069 | Inner Joint | | | 28 | | | 32 | |
| | 2014.05-2020.10 | 7DCT | F | L/R | Convertible FWD CZEA | | GCI83016 | Inner Joint | | | 28 | | | 32 | |
| 1.5 (110 kw) | 2017.05-2018.10 | 6MT | F | L | Convertible FWD DADA | | GDS61282 | Drive Shaft | | 36 | | 59.5 | 40 | 523 | |
| | 2017.05-2018.10 | 6MT | F | R | Convertible FWD DADA | | GDS58110 | Drive Shaft | | 36 | | 59.5 | 40 | 793 | |
| | 2017.05-2018.10 | 6MT | F | L/R | Convertible FWD DADA | | GCO61059 | Outer Joint | | 36 | 33 | 59.5 | 40 | 59.5 | I |
| | 2017.05-2018.10 | 6MT | F | L/R | Convertible FWD DADA | | GCI82447 | Inner Joint | | | 33 | | | 34 | |
| | 2017.05-2018.10 | 7DCT | F | L | Convertible FWD DADA | | GDS61100 | Drive Shaft | | 36 | | 59.5 | 40 | 513 | |
| | 2017.05-2018.10 | 7DCT | F | R | Convertible FWD DADA | | GDS84503 | Drive Shaft | | 36 | 40 | 59.5 | 40 | 817 | |
| | 2017.05-2018.10 | 7DCT | F | L/R | Convertible FWD DADA | | GCO83101 | Outer Joint | | 36 | 27 | 59.5 | 40 | 65 | M |
| | 2017.05-2018.10 | 7DCT | F | L | Convertible FWD DADA | | GCI83016 | Inner Joint | | | 28 | | | 32 | |
| | 2017.05-2018.10 | 7DCT | F | R | Convertible FWD DADA | | GCI61090 | Inner Joint | | 40 | 28 | 46.9 | | 133.2 | |
| | 2018.10-2020.10 | 6MT | F | L | Convertible FWD DADA;DPCA | | GDS61282 | Drive Shaft | | 36 | | 59.5 | 40 | 523 | |
| | 2018.10-2020.10 | 7DCT | F | L | Convertible FWD DADA;DPCA | | GDS61100 | Drive Shaft | | 36 | | 59.5 | 40 | 513 | |
| | 2018.10-2020.10 | 7DCT | F | R | Convertible FWD DADA;DPCA | Date to:2019.01 | GDS84503 | Drive Shaft | | 36 | 40 | 59.5 | 40 | 817 | |
| | 2018.10-2020.10 | 7DCT | F | L | Convertible FWD DADA;DPCA | Bellows Material:Plastic | GCI83016 | Inner Joint | | | 28 | | | 32 | |
| 1.6 (75 kw) | 2008.09-2010.05 | 5MT | F | R | Convertible FWD BSE | | GDS61096 | Drive Shaft | | 36 | | 59.5 | 40.5 | 799 | |
| | 2008.09-2010.05 | 5MT | F | L/R | Convertible FWD BSE | | GCO83037 | Outer Joint | | 36 | 30 | 59.5 | 40.5 | 56 | I |
| | 2008.09-2010.05 | MT | F | L/R | Convertible FWD BSE | | GCI83006 | Inner Joint | | | 33 | | | 34 | |
| | 2008.09-2010.05 | | F | L | Convertible FWD BSE | | GDS61097 | Drive Shaft | | 36 | | 59.5 | 40.5 | 543 | |
| | 2008.09-2010.05 | | F | L/R | Convertible FWD BSE | | GCI83011 | Inner Joint | | | 33 | | | 34 | |
| 1.6 (77 kw) | 2009.05-2013.05 | 5MT | F | L | Convertible FWD CAYC | | GDS83294 | Drive Shaft | | 36 | | 59.5 | 38 | 519 | |
| | 2009.05-2013.05 | 5MT | F | R | Convertible FWD CAYC | | GDS61042 | Drive Shaft | | 36 | | 59.5 | 40.5 | 814 | |
| | 2009.05-2013.05 | 5MT | F | L/R | Convertible FWD CAYC | | GCI82447 | Inner Joint | | | 33 | | | 34 | |
| 1.6 (81 kw) | 2014.02-2020.10 | 6MT | F | L | Convertible FWD CRKB;CXXB | | GDS61282 | Drive Shaft | | 36 | | 59.5 | 40 | 523 | |

| | YEAR | TRANSM. | F/R | L/R | BODY STYLE & DRIVE TYPE & ENGINE | REMARKS | G-AP Ref. | PRODUCT | ABS | Technical Specifications | | | | | |
|---|---|---|---|---|---|---|---|---|---|---|---|---|---|---|---|
| | | | | | | | | | | A | B | C | H | L | P |
| **AUDI** | | | | | | | | | | | | | | | |
| **A3 Cabrio** | | | | | | | | | | | | | | | |
| 1.6 (81 kw) | 2014.02-2020.10 | 6MT | F | R | Convertible FWD CRKB;CXXB | | GDS61283 | Drive Shaft | | 36 | | 59.5 | 40 | 815 | |
| | 2014.02-2020.10 | 6MT | F | L/R | Convertible FWD CRKB;CXXB | | GCO61059 | Outer Joint | | 36 | 33 | 59.5 | 40 | 59.5 | I |
| | 2014.02-2020.10 | 6MT | F | L/R | Convertible FWD CRKB;CXXB | | GCI53002 | Inner Joint | | | 33 | | | 34 | |
| | 2014.02-2020.10 | 6MT | F | L/R | Convertible FWD CRKB;CXXB | | GCI82447 | Inner Joint | | | 33 | | | 34 | |
| | 2014.02-2020.10 | MT | F | L | Convertible FWD CRKB;CXXB | | GDS83294 | Drive Shaft | | 36 | | 59.5 | 38 | 519 | |
| | 2014.02-2020.10 | MT | F | L | Convertible FWD CRKB;CXXB | | GCO83037 | Outer Joint | | 36 | 30 | 59.5 | 40.5 | 56 | I |
| | 2014.02-2020.10 | MT | F | L/R | Convertible FWD CRKB;CXXB | | GCI83006 | Inner Joint | | | 33 | | | 34 | |
| 1.6 (85 kw) | 2017.04-2020.10 | 6MT | F | L | Convertible FWD DDYA | | GDS61282 | Drive Shaft | | 36 | | 59.5 | 40 | 523 | |
| | 2017.04-2020.10 | 6MT | F | R | Convertible FWD DDYA | | GDS61283 | Drive Shaft | | 36 | | 59.5 | 40 | 815 | |
| | 2017.04-2020.10 | 6MT | F | L/R | Convertible FWD DDYA | | GCO61059 | Outer Joint | | 36 | 33 | 59.5 | 40 | 59.5 | I |
| | 2017.04-2020.10 | 6MT | F | L/R | Convertible FWD DDYA | | GCI53002 | Inner Joint | | | 33 | | | 34 | |
| | 2017.04-2020.10 | 6MT | F | L/R | Convertible FWD DDYA | | GCI82447 | Inner Joint | | | 33 | | | 34 | |
| | 2017.04-2020.10 | | F | L/R | Convertible FWD DDYA | | GCI83011 | Inner Joint | | | 33 | | | 34 | |
| 1.8 (118 kw) | 2008.04-2013.05 | 6DCT | F | L | Convertible FWD BZB;CDAA | | GDS83295 | Drive Shaft | | 36 | | 59.5 | 40 | 491 | |
| | 2008.04-2013.05 | 6DCT | F | R | Convertible FWD BZB;CDAA | | GDS81653 | Drive Shaft | | 36 | | 59.5 | 40 | 785 | |
| | 2008.04-2013.05 | 6DCT | F | L/R | Convertible FWD BZB;CDAA | | GCI83016 | Inner Joint | | | 28 | | | 32 | |
| | 2008.04-2013.05 | 6MT | F | L | Convertible FWD BZB;CDAA | Date to:2009.10;Date from:2010.11 | GDS61100 | Drive Shaft | | 36 | | 59.5 | 40 | 513 | |
| | 2008.04-2013.05 | 6MT | F | L | Convertible FWD BZB;CDAA | Date from:2009.11,Date to:2010.10 | GDS61282 | Drive Shaft | | 36 | | 59.5 | 40 | 523 | |
| | 2008.04-2013.05 | 6MT | F | R | Convertible FWD BZB;CDAA | Date from:2009.11,Date to:2010.10 | GDS61283 | Drive Shaft | | 36 | | 59.5 | 40 | 815 | |
| | 2008.04-2013.05 | 6MT | F | R | Convertible FWD BZB;CDAA | Date to:2009.10;Date from:2010.11 | GDS61341 | Drive Shaft | | 36 | | 59.5 | 40 | 806 | |
| | 2008.04-2013.05 | 6MT | F | L/R | Convertible FWD BZB;CDAA | Date from:2009.11,Date to:2010.10 | GCO61059 | Outer Joint | | 36 | 33 | 59.5 | 40 | 59.5 | I |
| | 2008.04-2013.05 | 6MT | F | L/R | Convertible FWD BZB;CDAA | Date from:2009.11,Date to:2010.10 | GCI53002 | Inner Joint | | | 33 | | | 34 | |
| | 2008.04-2013.05 | 6MT | F | L/R | Convertible FWD BZB;CDAA | Date to:2009.10;Date from:2010.11 | GCI61069 | Inner Joint | | | 28 | | | 32 | |
| | 2008.04-2013.05 | 6MT | F | L/R | Convertible FWD BZB;CDAA | Date from:2009.11,Date to:2010.10 | GCI82447 | Inner Joint | | | 33 | | | 34 | |
| | 2008.04-2013.05 | 7AT | F | L | Convertible FWD BZB;CDAA | | GDS83236 | Drive Shaft | | 36 | | 59.5 | 40 | 484 | |
| | 2008.04-2013.05 | 7DCT | F | L | Convertible FWD BZB;CDAA | | GDS61100 | Drive Shaft | | 36 | | 59.5 | 40 | 513 | |
| | 2008.04-2013.05 | 7DCT | F | R | Convertible FWD BZB;CDAA | Date from:2011.04,Date to:2012.03 | GDS61126 | Drive Shaft | | 36 | | 59.5 | 40 | 793 | |
| | 2008.04-2013.05 | 7DCT | F | R | Convertible FWD BZB;CDAA | Date to:2011.03,Date from:2012.04 | GDS61147 | Drive Shaft | | 36 | | 59.5 | 40 | 795 | |
| | 2008.04-2013.05 | 7DCT | F | R | Convertible FWD BZB;CDAA | Date from:2011.04,Date to:2012.03 | GDS61339 | Drive Shaft | | 36 | | 59.5 | 40 | 794 | |
| | 2008.04-2013.05 | 7DCT | F | L/R | Convertible FWD BZB;CDAA | | GCO83101 | Outer Joint | | 36 | 27 | 59.5 | 40 | 65 | M |
| | 2008.04-2013.05 | 7DCT/6DCT/6MT | F | L/R | Convertible FWD BZB;CDAA | Transmission:7DCT,Date from:01.04,Date to:2012.03;Transmission:6MT,Date from:2009.10,Date from:2010.11;Transmission:6MT | GCO83002 | Outer Joint | | 36 | 27 | 59.5 | 40 | 66 | I |
| | 2008.04-2013.05 | | F | L/R | Convertible FWD BZB;CDAA | Date From:2009.11,Date To:2009.11 | GCI83006 | Inner Joint | | | 33 | | | 34 | |
| 1.8 (125 kw) | 2014.05-2020.10 | 6AT | F | L | Convertible FWD CNSB | | GDS83295 | Drive Shaft | | 36 | | 59.5 | 40 | 491 | |
| | 2014.05-2020.10 | 6AT | F | R | Convertible FWD CNSB | | GDS81891 | Drive Shaft | | 36 | | 59.5 | 40 | 781 | |
| | 2014.05-2020.10 | 6AT | F | L/R | Convertible FWD CNSB | | GCI61069 | Inner Joint | | | 28 | | | 32 | |
| | 2014.05-2020.10 | AT/6DCT | F | L/R | Convertible FWD CNSB | Transmission:AT,Date to:2016.07;Transmission:6DCT | GCO83101 | Outer Joint | | 36 | 27 | 59.5 | 40 | 65 | M |
| 1.8 (132 kw) | 2013.10-2016.07 | 6DCT | F | L | Convertible FWD CJSA;CJSB | | GDS83295 | Drive Shaft | | 36 | | 59.5 | 40 | 491 | |
| | 2013.10-2016.07 | 6DCT | F | R | Convertible FWD CJSA;CJSB | | GDS81891 | Drive Shaft | | 36 | | 59.5 | 40 | 781 | |
| | 2013.10-2016.07 | 6DCT/7DCT | F | L/R | Convertible FWD CJSA;CJSB | Transmission:7DCT,Posission:Left | GCI61069 | Inner Joint | | | 28 | | | 32 | |
| | 2013.10-2016.07 | 6MT | F | L | Convertible FWD CJSA;CJSB | | GDS61100 | Drive Shaft | | 36 | | 59.5 | 40 | 513 | |
| | 2013.10-2016.07 | 6MT | F | R | Convertible FWD CJSA;CJSB | | GDS61101 | Drive Shaft | | 36 | | 59.5 | 40 | 803 | |
| | 2013.10-2016.07 | 7DCT | F | R | Convertible FWD CJSA;CJSB | Date to:2015.02 | GDS61126 | Drive Shaft | | 36 | | 59.5 | 40 | 793 | |
| | 2013.10-2016.07 | 7DCT | F | R | Convertible FWD CJSA;CJSB | Date from:2015.02 | GDS61147 | Drive Shaft | | 36 | | 59.5 | 40 | 795 | |
| | 2013.10-2016.07 | 7DCT | F | R | Convertible FWD CJSA;CJSB | Date from:2016.04 | GDS83313 | Drive Shaft | | 36 | | 59.5 | 40 | 792 | |
| | 2013.10-2016.07 | 7DCT/6DCT | F | L/R | Convertible FWD CJSA;CJSB | Transmission:6DCT,Date to:2016.03;Transmission:7DCT | GCO83101 | Outer Joint | | 36 | 27 | 59.5 | 40 | 65 | M |
| | 2013.10-2016.07 | 7DCT/6MT | F | L/R | Convertible FWD CJSA;CJSB | Transmission:7DCT,Posission:Right | GCI83016 | Inner Joint | | | 28 | | | 32 | |
| | 2015.01-2017.12 | 6DCT | F | L | Convertible FWD CJSA;CJSB | | GDS83295 | Drive Shaft | | 36 | | 59.5 | 40 | 491 | |
| | 2015.01-2017.12 | 6DCT | F | R | Convertible FWD CJSA;CJSB | | GDS81891 | Drive Shaft | | 36 | | 59.5 | 40 | 781 | |
| | 2015.01-2017.12 | 6DCT | F | L | Convertible FWD CJSA;CJSB | | GDS98006 | Stub Axle-Flange | | 37 | | | 67 | 123.5 | |
| | 2015.01-2017.12 | 6DCT/7DCT | F | L/R | Convertible FWD CJSA;CJSB | Transmission:7DCT,Position:Right;Transmission:6DCT,Position:Light/Right | GCI83016 | Inner Joint | | | 28 | | | 32 | |
| | 2015.01-2017.12 | 6MT | F | L | Convertible FWD CJSA;CJSB | | GDS61100 | Drive Shaft | | 36 | | 59.5 | 40 | 513 | |
| | 2015.01-2017.12 | 6MT | F | R | Convertible FWD CJSA;CJSB | Date from:2015.04 | GDS61101 | Drive Shaft | | 36 | | 59.5 | 40 | 803 | |
| | 2015.01-2017.12 | 7DCT | F | R | Convertible FWD CJSA;CJSB | Date to:2016.03 | GDS61147 | Drive Shaft | | 36 | | 59.5 | 40 | 795 | |
| | 2015.01-2017.12 | 7DCT | F | R | Convertible FWD CJSA;CJSB | Date from:2016.04 | GDS83313 | Drive Shaft | | 36 | | 59.5 | 40 | 792 | |
| 1.9 (77 kw) | 2008.04-2009.10 | 5MT | F | L | Convertible FWD BLS | | GDS83294 | Drive Shaft | | 36 | | 59.5 | 38 | 519 | |
| | 2008.04-2009.10 | 5MT | F | R | Convertible FWD BLS | | GDS61042 | Drive Shaft | | 36 | | 59.5 | 40.5 | 814 | |
| | 2008.04-2009.10 | 5MT | F | L/R | Convertible FWD BLS | | GCI82447 | Inner Joint | | | 33 | | | 34 | |
| 2.0 (100 kw) | 2008.04-2013.05 | 6AT/6MT | F | L/R | Convertible FWD CBAA;CFFA | | GCI54004 | Inner Joint | | | 34 | | | 81 | |
| | 2008.04-2013.05 | 6AT/6MT | F | L/R | Convertible FWD CBAA;CFFA | Original Tripod Design | GCI61057 | Inner Joint | | | 34 | | | 89 | |
| | 2008.04-2013.05 | 6AT/6MT | F | L/R | Convertible FWD CBAA;CFFA | | GCI83016 | Inner Joint | | | 28 | | | 32 | |
| | 2008.04-2013.05 | AT | F | L | Convertible FWD CBAA;CFFA | Date to:2009.05,Date from:2009.08,For PR code: 1PD/1PF/1PA | GDS54013 | Drive Shaft | | 36 | | 59.5 | 40 | 479.5 | |
| | 2008.04-2013.05 | AT | F | R | Convertible FWD CBAA;CFFA | | GDS54011 | Drive Shaft | | 36 | | 59.5 | 40 | 755 | |
| | 2008.04-2013.05 | MT | F | L | Convertible FWD CBAA;CFFA | | GDS83295 | Drive Shaft | | 36 | | 59.5 | 40 | 491 | |
| | 2008.04-2013.05 | MT | F | R | Convertible FWD CBAA;CFFA | | GDS83236 | Drive Shaft | | 36 | | 59.5 | 40 | 484 | |
| | 2008.04-2013.05 | MT | F | R | Convertible FWD CBAA;CFFA | | GDS83313 | Drive Shaft | | 36 | | 59.5 | 40 | 792 | |

| | YEAR | TRANSM. | F/R | L/R | BODY STYLE & DRIVE TYPE & ENGINE | REMARKS | G-AP Ref. | PRODUCT | ABS | Technical Specifications A | B | C | H | L | P |
|---|---|---|---|---|---|---|---|---|---|---|---|---|---|---|---|
| **AUDI** | | | | | | | | | | | | | | | |
| **A3 Cabrio** | | | | | | | | | | | | | | | |
| 2.0 (100 kw) | 2008.04-2013.05 | MT | F | L | Convertible FWD CBAA;CFFA | Rims:With alloy rim | GCO61059 | Outer Joint | | 36 | 33 | 59.5 | 40 | 59.5 | I |
| | 2008.04-2013.05 | MT | F | L | Convertible FWD CBAA;CFFA | Rims:With steel rim | GCO83101 | Outer Joint | | 36 | 27 | 59.5 | 40 | 65 | M |
| | 2008.04-2013.05 | | F | L/R | Convertible FWD CBAA;CFFA | For Engine code:CBAA/CFFA | GCO83002 | Outer Joint | | 36 | 27 | 59.5 | 40 | 66 | I |
| | 2013.10-2016.07 | 6AT/6MT | F | L/R | Convertible FWD CRLC | | GCI54004 | Inner Joint | | | 34 | | | 81 | |
| | 2013.10-2016.07 | 6AT/6MT | F | L/R | Convertible FWD CRLC | Original Tripod Design | GCI61057 | Inner Joint | | | 34 | | | 89 | |
| | 2013.10-2016.07 | 6AT/6MT | F | L/R | Convertible FWD CRLC | | GCI83016 | Inner Joint | | | 28 | | | 32 | |
| | 2013.10-2016.07 | 6DCT | F | L | Convertible FWD CRLC | | GDS61285 | Drive Shaft | | 36 | | 59.5 | 40 | 472 | |
| | 2013.10-2016.07 | 6DCT | F | R | Convertible FWD CRLC | | GDS83354 | Drive Shaft | | 36 | | 59.5 | 40 | 763 | |
| | 2013.10-2016.07 | 6DCT/6MT | F | L/R | Convertible FWD CRLC | Transmission:6DCT,Date from:2015.02;Transmission:6MT | GCO83101 | Outer Joint | | 36 | 27 | 59.5 | 40 | 65 | M |
| | 2013.10-2016.07 | 6MT | F | L | Convertible FWD CRLC | | GDS83295 | Drive Shaft | | 36 | | 59.5 | 40 | 491 | |
| | 2013.10-2016.07 | 6MT | F | R | Convertible FWD CRLC | | GDS83313 | Drive Shaft | | 36 | | 59.5 | 40 | 792 | |
| | 2013.10-2016.07 | 6MT | F | L | Convertible FWD CRLC | Date to:2013.12;For PR code:2H7 | GCI61069 | Inner Joint | | | 28 | | | 32 | |
| 2.0 (103 kw) | 2008.04-2013.05 | 6AT/6MT | F | L/R | Convertible FWD CBAB;CFFB | | GCI54004 | Inner Joint | | | 34 | | | 81 | |
| | 2008.04-2013.05 | 6AT/6MT | F | L/R | Convertible FWD CBAB;CFFB | Original Tripod Design | GCI61057 | Inner Joint | | | 34 | | | 89 | |
| | 2008.04-2013.05 | 6AT/6MT | F | L/R | Convertible FWD CBAB;CFFB | | GCI83016 | Inner Joint | | | 28 | | | 32 | |
| | 2008.04-2013.05 | AT | F | L | Convertible FWD CBAB;CFFB | Date to:2009.05;Date from:2009.06;For PR code:1PD/1PF/1PA | GDS54013 | Drive Shaft | | 36 | | 59.5 | 40 | 479.5 | |
| | 2008.04-2013.05 | AT | F | R | Convertible FWD CBAB;CFFB | | GDS54011 | Drive Shaft | | 36 | | 59.5 | 40 | 755 | |
| | 2008.04-2013.05 | MT | F | L | Convertible FWD CBAB;CFFB | | GDS83295 | Drive Shaft | | 36 | | 59.5 | 40 | 491 | |
| | 2008.04-2013.05 | MT | F | R | Convertible FWD CBAB;CFFB | | GDS83236 | Drive Shaft | | 36 | | 59.5 | 40 | 484 | |
| | 2008.04-2013.05 | MT | F | R | Convertible FWD CBAB;CFFB | | GDS83313 | Drive Shaft | | 36 | | 59.5 | 40 | 792 | |
| | 2008.04-2013.05 | MT | F | L | Convertible FWD CBAB;CFFB | Rims:With alloy rim | GCO61059 | Outer Joint | | 36 | 33 | 59.5 | 40 | 59.5 | I |
| | 2008.04-2013.05 | MT | F | L | Convertible FWD CBAB;CFFB | Rims:With steel rim | GCO83101 | Outer Joint | | 36 | 27 | 59.5 | 40 | 65 | M |
| | 2008.04-2013.05 | | F | L/R | Convertible FWD CBAB;CFFB | For Engine code:CBAA/CFFA | GCO83002 | Outer Joint | | 36 | 27 | 59.5 | 40 | 66 | I |
| 2.0 (110 kw) | 2013.10-2020.10 | 6DCT | F | L | Convertible FWD CRLB;DCYA | | GDS61285 | Drive Shaft | | 36 | | 59.5 | 40 | 472 | |
| | 2013.10-2020.10 | 6DCT | F | R | Convertible FWD CRLB;DCYA | | GDS83354 | Drive Shaft | | 36 | | 59.5 | 40 | 763 | |
| | 2013.10-2020.10 | 6DCT | F | L/R | Convertible FWD CRLB;DCYA | TJ | GCI54004 | Inner Joint | | | 34 | | | 81 | |
| | 2013.10-2020.10 | 6DCT | F | L/R | Convertible FWD CRLB;DCYA | AAR | GCI61057 | Inner Joint | | | 34 | | | 89 | |
| | 2013.10-2020.10 | 6MT | F | L | Convertible FWD CRLB;DCYA | | GDS83295 | Drive Shaft | | 36 | | 59.5 | 40 | 491 | |
| | 2013.10-2020.10 | 6MT | F | R | Convertible FWD CRLB;DCYA | | GDS83313 | Drive Shaft | | 36 | | 59.5 | 40 | 792 | |
| | 2013.10-2020.10 | 6MT | F | L/R | Convertible FWD CRLB;DCYA | | GCI83016 | Inner Joint | | | 28 | | | 32 | |
| | 2013.10-2020.10 | 6MT/6DCT | F | L/R | Convertible FWD CRLB;DCYA | | GCO83101 | Outer Joint | | 36 | 27 | 59.5 | 40 | 65 | M |
| 2.0 (135 kw) | 2014.05-2016.07 | 6MT | F | L | Convertible FWD CUNA | | GDS83295 | Drive Shaft | | 36 | | 59.5 | 40 | 491 | |
| | 2014.05-2016.07 | 6MT | F | R | Convertible FWD CUNA | | GDS83313 | Drive Shaft | | 36 | | 59.5 | 40 | 792 | |
| | 2014.05-2016.07 | 6MT | F | L | Convertible FWD CUNA | | GCI61069 | Inner Joint | | | 28 | | | 32 | |
| | 2014.05-2016.07 | 6MT | F | R | Convertible FWD CUNA | | GCI83016 | Inner Joint | | | 28 | | | 32 | |
| | 2014.05-2016.07 | AT/6DCT | F | L/R | Convertible FWD CUNA | Transmission:AT,Date to:2016.07;For PR code:GJK;Transmission:6DCT | GCO83101 | Outer Joint | | 36 | 27 | 59.5 | 40 | 65 | M |
| | 2014.05-2016.07 | Semi-AT | F | L | Convertible FWD CUNA | | GDS61285 | Drive Shaft | | 36 | | 59.5 | 40 | 472 | |
| 2.0 (140 kw) | 2016.05-2020.10 | 6MT | F | L | Convertible FWD CZPB | | GDS83295 | Drive Shaft | | 36 | | 59.5 | 40 | 491 | |
| | 2016.05-2020.10 | 6MT | F | R | Convertible FWD CZPB | | GDS83313 | Drive Shaft | | 36 | | 59.5 | 40 | 792 | |
| | 2016.05-2020.10 | 6MT | F | L | Convertible FWD CZPB | | GCO83101 | Outer Joint | | 36 | 27 | 59.5 | 40 | 65 | M |
| | 2016.05-2020.10 | 6MT | F | L | Convertible FWD CZPB | | GCI61069 | Inner Joint | | | 28 | | | 32 | |
| | 2016.05-2020.10 | 6MT | F | R | Convertible FWD CZPB | | GCI83016 | Inner Joint | | | 28 | | | 32 | |
| | 2016.05-2020.10 | 7DCT | F | L | Convertible FWD CZPB | | GDS84237 | Drive Shaft | | 36 | 37 | 59.5 | 40 | 560 | |
| | 2016.05-2020.10 | 7DCT | F | L | Convertible FWD CZPB | | GCI83028 | Inner Joint | | 37 | 28 | | 65.5 | 90.2 | |
| | 2018.11-2020.10 | 6MT | F | L | Convertible FWD DKZA | | GDS83295 | Drive Shaft | | 36 | | 59.5 | 40 | 491 | |
| | 2018.11-2020.10 | 6MT | F | R | Convertible FWD DKZA | | GDS83313 | Drive Shaft | | 36 | | 59.5 | 40 | 792 | |
| | 2018.11-2020.10 | 6MT | F | R | Convertible FWD DKZA | Bellows Material:Plastic | GCI83016 | Inner Joint | | | 28 | | | 32 | |
| | 2018.11-2020.10 | 7DCT | F | L | Convertible FWD DKZA | | GDS84237 | Drive Shaft | | 36 | 37 | 59.5 | 40 | 560 | |
| 2.0 (147 kw) | 2008.04-2013.05 | 6AT/6MT | F | L/R | Convertible FWD CAWB;CCZA | Date from:2010.04,For Engine code:CCZA | GCO83101 | Outer Joint | | 36 | 27 | 59.5 | 40 | 65 | M |
| | 2008.04-2013.05 | 6MT | F | R | Convertible FWD CAWB;CCZA | Date to:2010.03;For Engine code:CCZA | GDS61126 | Drive Shaft | | 36 | | 59.5 | 40 | 793 | |
| | 2008.04-2013.05 | 6MT | F | R | Convertible FWD CAWB;CCZA | For Engine code:CAWB;Date to:2010.03;For Engine code:CCZA | GDS61339 | Drive Shaft | | 36 | | 59.5 | 40 | 794 | |
| | 2008.04-2013.05 | 6MT | F | R | Convertible FWD CAWB;CCZA | Date from:2010.04,For Engine code:CCZA | GDS83313 | Drive Shaft | | 36 | | 59.5 | 40 | 792 | |
| | 2008.04-2013.05 | 6MT | F | R | Convertible FWD CAWB;CCZA | | GCI83016 | Inner Joint | | | 28 | | | 32 | |
| | 2008.04-2013.05 | AT | F | R | Convertible FWD CAWB;CCZA | Date From:2010.04,For Engine Code:CCZA | GDS81653 | Drive Shaft | | 36 | | 59.5 | 40 | 785 | |
| | 2008.04-2013.05 | AT | F | R | Convertible FWD CAWB;CCZA | | GDS83349 | Drive Shaft | | 36 | | 59.5 | 40 | 784 | |
| | 2008.04-2013.05 | AT | F | R | Convertible FWD CAWB;CCZA | Date from:2010.04,For Engine code:CCZA | GCO83002 | Outer Joint | | 36 | 27 | 59.5 | 40 | 66 | I |
| | 2008.04-2013.05 | AT/MT | F | L | Convertible FWD CAWB;CCZA | Date To:2010.03;For Engine Code:CCZA;For Engine Code:CAWB | GDS83295 | Drive Shaft | | 36 | | 59.5 | 40 | 491 | |
| | 2008.04-2013.05 | MT/Semi-AT | F | L | Convertible FWD CAWB;CCZA | | GDS83236 | Drive Shaft | | 36 | | 59.5 | 40 | 484 | |
| **A3 Cabrio Quattro** | | | | | | | | | | | | | | | |
| 1.8 (132 kw) | 2014.03-2016.07 | 6AT | F | L | Convertible 4WD CJSB | | GDS83295 | Drive Shaft | | 36 | | 59.5 | 40 | 491 | |
| | 2014.03-2016.07 | 6AT | F | L/R | Convertible 4WD CJSB | | GCO83101 | Outer Joint | | 36 | 27 | 59.5 | 40 | 65 | M |
| | 2014.03-2016.07 | 6AT | F | L | Convertible 4WD CJSB | | GCI61069 | Inner Joint | | | 28 | | | 32 | |
| | 2014.03-2016.07 | 6DCT | F | R | Convertible 4WD CJSB | | GDS81892 | Drive Shaft | | 36 | | 59.5 | 40 | 602 | |
| | 2014.03-2016.07 | | F | L/R | Convertible 4WD CJSB | | GCI83016 | Inner Joint | | | 28 | | | 32 | |
| | 2014.03-2016.07 | 6AT | R | L | Convertible 4WD CJSB | | GDS61286 | Drive Shaft | | 36 | | 59.5 | 40 | 587 | |

| | YEAR | TRANSM. | F/R | L/R | BODY STYLE & DRIVE TYPE & ENGINE | REMARKS | G-AP Ref. | PRODUCT | ABS | Technical Specifications A | B | C | H | L | P |
|---|---|---|---|---|---|---|---|---|---|---|---|---|---|---|---|
| **AUDI** | | | | | | | | | | | | | | | |
| **A3 Cabrio Quattro** | | | | | | | | | | | | | | | |
| 1.8 (132 kw) | 2014.03-2016.07 | 6AT | R | R | Convertible 4WD CJSB | | GDS61287 | Drive Shaft | | 36 | | 59.5 | 40 | 632 | |
| | 2014.03-2016.07 | 6AT | R | L/R | Convertible 4WD CJSB | | GCI61103 | Inner Joint | | | 33 | | | 32 | |
| 2.0 (110 kw) | 2014.03-2020.10 | 6MT | F | L | Convertible 4WD CRLB;DCYA | | GDS83295 | Drive Shaft | | 36 | | 59.5 | 40 | 491 | |
| | 2014.03-2020.10 | 6MT | F | R | Convertible 4WD CRLB;DCYA | | GDS81892 | Drive Shaft | | 36 | | 59.5 | 40 | 602 | |
| | 2014.03-2020.10 | 6MT | F | L/R | Convertible 4WD CRLB;DCYA | | GCO83101 | Outer Joint | | 36 | 27 | 59.5 | 40 | 65 | M |
| | 2014.03-2020.10 | 6MT | F | L | Convertible 4WD CRLB;DCYA | | GCI61069 | Inner Joint | | | 28 | | | 32 | |
| | 2014.03-2020.10 | | F | L/R | Convertible 4WD CRLB;DCYA | | GCI83016 | Inner Joint | | | 28 | | | 32 | |
| | 2014.03-2020.10 | 6MT | R | L | Convertible 4WD CRLB;DCYA | | GDS61286 | Drive Shaft | | 36 | | 59.5 | 40 | 587 | |
| | 2014.03-2020.10 | 6MT | R | R | Convertible 4WD CRLB;DCYA | | GDS61287 | Drive Shaft | | 36 | | 59.5 | 40 | 632 | |
| | 2014.03-2020.10 | 6MT | R | L/R | Convertible 4WD CRLB;DCYA | | GCI61103 | Inner Joint | | | 33 | | | 32 | |
| 2.0 (135 kw) | 2014.05-2020.10 | 6AT | F | L | Convertible 4WD CUNA;DGCA | | GDS61285 | Drive Shaft | | 36 | | 59.5 | 40 | 472 | |
| | 2014.05-2020.10 | 6AT | F | R | Convertible 4WD CUNA;DGCA | | GDS81893 | Drive Shaft | | 36 | | 59.5 | 40 | 575 | |
| | 2014.05-2020.10 | 6AT | F | L/R | Convertible 4WD CUNA;DGCA | | GCI61057 | Inner Joint | | | 34 | | | 89 | |
| | 2014.05-2020.10 | 6DCT | F | L/R | Convertible 4WD CUNA;DGCA | | GCI54004 | Inner Joint | | | 34 | | | 81 | |
| | 2014.05-2020.10 | 7DCT | F | L | Convertible 4WD CUNA;DGCA | | GDS81265 | Drive Shaft | | 36 | 37 | 59.5 | 40 | 557 | |
| | 2014.05-2020.10 | 7DCT | F | L | Convertible 4WD CUNA;DGCA | | GCI81158 | Inner Joint | | 37 | 34 | 34.5 | 65.5 | 83 | |
| | 2014.05-2020.10 | AT | F | | Convertible 4WD CUNA;DGCA | | GCI83016 | Inner Joint | | | 28 | | | 32 | |
| | 2014.05-2020.10 | MT | F | L/R | Convertible 4WD CUNA;DGCA | | GCO83101 | Outer Joint | | 36 | 27 | 59.5 | 40 | 65 | M |
| | 2014.05-2020.10 | 6AT | R | L | Convertible 4WD CUNA;DGCA | | GDS61286 | Drive Shaft | | 36 | | 59.5 | 40 | 587 | |
| | 2014.05-2020.10 | 6AT | R | R | Convertible 4WD CUNA;DGCA | | GDS61287 | Drive Shaft | | 36 | | 59.5 | 40 | 632 | |
| | 2014.05-2020.10 | 6AT | R | L/R | Convertible 4WD CUNA;DGCA | | GCI61103 | Inner Joint | | | 33 | | | 32 | |
| 2.0 (140 kw) | 2016.05-2020.10 | 7AT | F | R | Convertible 4WD CZPB | Wheel Hub Diam [mm]:42,Date to:2017.08;Wheel Hub Diam [mm]:27,Date from:2017.10 | GDS81892 | Drive Shaft | | 36 | | 59.5 | 40 | 602 | |
| | 2016.05-2020.10 | 7AT | F | L | Convertible 4WD CZPB | | GCI83028 | Inner Joint | | 37 | 28 | | 65.5 | 90.2 | |
| | 2016.05-2020.10 | 7AT | F | R | Convertible 4WD CZPB | | GCI61069 | Inner Joint | | | 28 | | | 32 | |
| | 2016.05-2020.10 | 7DCT | F | L | Convertible 4WD CZPB | | GDS84237 | Drive Shaft | | 36 | 37 | 59.5 | 40 | 560 | |
| | 2016.05-2020.10 | 7AT | R | L | Convertible 4WD CZPB | | GDS61286 | Drive Shaft | | 36 | | 59.5 | 40 | 587 | |
| | 2016.05-2020.10 | 7AT | R | R | Convertible 4WD CZPB | | GDS61287 | Drive Shaft | | 36 | | 59.5 | 40 | 632 | |
| | 2016.05-2020.10 | 7AT | R | L/R | Convertible 4WD CZPB | | GCI35026 | Outer Joint | | 36 | 33 | 59.5 | 40 | 61 | |
| | 2016.05-2020.10 | 7AT | R | L/R | Convertible 4WD CZPB | | GCI61103 | Inner Joint | | | 33 | | | 32 | |
| | 2018.11-2020.10 | 7AT | F | L | Convertible 4WD DKZA | | GDS84237 | Drive Shaft | | 36 | 37 | 59.5 | 40 | 560 | |
| | 2018.11-2020.10 | 7DCT | F | R | Convertible 4WD DKZA | | GDS81892 | Drive Shaft | | 36 | | 59.5 | 40 | 602 | |
| | 2018.11-2020.10 | 7DCT | R | L | Convertible 4WD DKZA | | GDS61286 | Drive Shaft | | 36 | | 59.5 | 40 | 587 | |
| | 2018.11-2020.10 | 7DCT | R | R | Convertible 4WD DKZA | | GDS61287 | Drive Shaft | | 36 | | 59.5 | 40 | 632 | |
| | 2018.11-2020.10 | 7DCT | R | L/R | Convertible 4WD DKZA | | GCI35026 | Outer Joint | | 36 | 33 | 59.5 | 40 | 61 | |
| | 2018.11-2020.10 | 7DCT | R | L/R | Convertible 4WD DKZA | | GCI61103 | Inner Joint | | | 33 | | | 32 | |
| 2.0 (162 kw) | 2014.05-2020.10 | 6AT | F | L | Convertible 4WD CNTC | | GDS83295 | Drive Shaft | | 36 | | 59.5 | 40 | 491 | |
| | 2014.05-2020.10 | 6AT | F | R | Convertible 4WD CNTC | Wheel Hub Diam [mm]:42,Date to:2017.08;Wheel Hub Diam [mm]:27,Date from:2017.10 | GDS81892 | Drive Shaft | | 36 | | 59.5 | 40 | 602 | |
| | 2014.05-2020.10 | 6AT | F | L | Convertible 4WD CNTC | | GCO83101 | Outer Joint | | 36 | 27 | 59.5 | 40 | 65 | M |
| | 2014.05-2020.10 | 6AT | F | L | Convertible 4WD CNTC | | GCI61069 | Inner Joint | | | 28 | | | 32 | |
| | 2014.05-2020.10 | 6AT | R | L | Convertible 4WD CNTC | | GDS61286 | Drive Shaft | | 36 | | 59.5 | 40 | 587 | |
| | 2014.05-2020.10 | 6AT | R | R | Convertible 4WD CNTC | | GDS61287 | Drive Shaft | | 36 | | 59.5 | 40 | 632 | |
| | 2014.05-2020.10 | 6AT | R | L/R | Convertible 4WD CNTC | | GCI35026 | Outer Joint | | 36 | 33 | 59.5 | 40 | 61 | |
| | 2014.05-2020.10 | 6AT | R | L/R | Convertible 4WD CNTC | | GCI61103 | Inner Joint | | | 33 | | | 32 | |
| **A3 Limousine** | | | | | | | | | | | | | | | |
| 1.5 (85 kw) | 2024.05- | 6MT | F | L | Saloon FWD DXDE | | GDS84408 | Drive Shaft | | 36 | | 59.5 | 40 | 499 | |
| | 2024.05- | 6MT | F | R | Saloon FWD DXDE | | GDS84417 | Drive Shaft | | 36 | | 59.5 | 40 | 783 | |
| | 2024.05- | 6MT | F | L/R | Saloon FWD DXDE | | GCO61059 | Outer Joint | | 36 | 33 | 59.5 | 40 | 59.5 | I |
| | 2024.05- | 6MT | F | L/R | Saloon FWD DXDE | | GCI82447 | Inner Joint | | | 33 | | | 34 | |
| | 2024.05- | 7DCT | F | L | Saloon FWD DXDE | | GDS61282 | Drive Shaft | | 36 | | 59.5 | 40 | 523 | |
| | 2024.05- | 7DCT | F | R | Saloon FWD DXDE | | GDS84417 | Drive Shaft | | 36 | | 59.5 | 40 | 783 | |
| | 2024.05- | 7DCT | F | L/R | Saloon FWD DXDE | | GCO61059 | Outer Joint | | 36 | 33 | 59.5 | 40 | 59.5 | I |
| | 2024.05- | 7DCT | F | L | Saloon FWD DXDE | | GCI53002 | Inner Joint | | | 33 | | | 34 | |
| | 2024.05- | 7DCT | F | R | Saloon FWD DXDE | | GCI82447 | Inner Joint | | | 33 | | | 34 | |
| **A3 Limousine quattro** | | | | | | | | | | | | | | | |
| 2.0 (150 kw) | 2021.04- | 7DCT | R | L | Saloon 4WD DNVB | | GDS61286 | Drive Shaft | | 36 | | 59.5 | 40 | 587 | |
| | 2021.04- | 7DCT | R | R | Saloon 4WD DNVB | | GDS61287 | Drive Shaft | | 36 | | 59.5 | 40 | 632 | |
| **A3 Limousine Quattro** | | | | | | | | | | | | | | | |
| 2.0 (150 kw) | 2025.04- | 7DCT/6MT | R | L | Saloon 4WD DNNE | | GDS61286 | Drive Shaft | | 36 | | 59.5 | 40 | 587 | |
| | 2025.04- | 7DCT/6MT | R | R | Saloon 4WD DNNE | | GDS61287 | Drive Shaft | | 36 | | 59.5 | 40 | 632 | |
| **A3 Quattro** | | | | | | | | | | | | | | | |
| 1.6 (81 kw) | 2015.05-2016.08 | 6MT | F | L | Saloon 4WD CXXB | | GDS83295 | Drive Shaft | | 36 | | 59.5 | 40 | 491 | |
| | 2015.05-2016.08 | 6MT | F | R | Saloon 4WD CXXB | | GDS81892 | Drive Shaft | | 36 | | 59.5 | 40 | 602 | |
| | 2015.05-2016.08 | 6MT | F | L | Saloon 4WD CXXB | | GCO83101 | Outer Joint | | 36 | 27 | 59.5 | 40 | 65 | M |
| | 2015.05-2016.08 | 6MT | F | L | Saloon 4WD CXXB | | GCI61069 | Inner Joint | | | 28 | | | 32 | |
| | 2015.05-2016.08 | | F | L/R | Saloon 4WD CXXB | | GCI83016 | Inner Joint | | | 28 | | | 32 | |

| | YEAR | TRANSM. | F/R | L/R | BODY STYLE & DRIVE TYPE & ENGINE | REMARKS | G-AP Ref. | PRODUCT | ABS | Technical Specifications A | B | C | H | L | P |
|---|---|---|---|---|---|---|---|---|---|---|---|---|---|---|---|
| **AUDI** | | | | | | | | | | | | | | | |
| **A3 Quattro** | | | | | | | | | | | | | | | |
| 1.6 (81 kw) | 2015.05-2016.08 | 6MT | R | L | Saloon 4WD CXXB | | GDS61286 | Drive Shaft | | 36 | | 59.5 | 40 | 587 | |
| | 2015.05-2016.08 | 6MT | R | R | Saloon 4WD CXXB | | GDS61287 | Drive Shaft | | 36 | | 59.5 | 40 | 632 | |
| | 2015.05-2016.08 | 6MT | R | L/R | Saloon 4WD CXXB | | GCI35026 | Outer Joint | | 36 | 33 | 59.5 | 40 | 61 | |
| | 2015.05-2016.08 | 6MT | R | L/R | Saloon 4WD CXXB | | GCI61103 | Inner Joint | | | 33 | | | 32 | |
| 1.8 (110 kw) | 1997.08-2003.06 | 4AT/5MT | F | L | Hatchback 4WD AGU/AQA/ARX | Date to:1999.05 | GDS61314 | Drive Shaft | | 36 | | 53 | 78 | 558 | |
| | 1997.08-2003.06 | 4AT/5MT | F | R | Hatchback 4WD AGU/AQA/ARX | For Engine code:AQA,Chassis no. from:8L_X_098488 | GDS61186 | Drive Shaft | | 36 | | 53 | 77.5 | 653 | |
| | 1997.08-2003.06 | 5MT | F | R | Hatchback 4WD AGU/AQA/ARX | For Engine code:ARX,For Engine code:AQA,Chassis no. to:8L_X_098487 | GDS83004 | Drive Shaft | | 36 | | 53.2 | 77.5 | 822 | |
| | 1997.08-2003.06 | 5MT | F | L/R | Hatchback 4WD AGU/AQA/ARX | For Engine code:AQA,Chassis no. from:8L_X_098488 | GCO83035 | Outer Joint | | 36 | 27 | 53 | 77.5 | 65 | I |
| | 1997.08-2003.06 | 5MT | F | L/R | Hatchback 4WD AGU/AQA/ARX | For Engine Code:ARX,For Engine code:AQA,Chassis no. to:8L_X_098487 | GCO83070 | Outer Joint | | 36 | 30 | 53 | 78 | 60 | I |
| | 1997.08-2003.06 | 5MT | F | L | Hatchback 4WD AGU/AQA/ARX | For Engine code:AQA,Chassis no. to:8L_X_098487 | GCI83011 | Inner Joint | | | 33 | | | 34 | |
| | 1997.08-2003.06 | 5MT | F | R | Hatchback 4WD AGU/AQA/ARX | For Engine code:AQA,Chassis no. to:8L_X_098487 | GCI83009 | Inner Joint | | | 33 | | | 34 | |
| | 1997.08-2003.06 | 5MT | F | L/R | Hatchback 4WD AGU/AQA/ARX | For Engine code:AQA,Chassis no. from:8L_X_098488,Bellows Material:Elastomer | GCI83001 | Inner Joint | | | 28 | | | 32 | |
| | 1997.08-2003.06 | 5MT | F | L/R | Hatchback 4WD AGU/AQA/ARX | For Engine code:AQA,Chassis no. from:8L_X_098488,Bellows Material:Plastic | GCI83016 | Inner Joint | | | 28 | | | 32 | |
| | 1997.08-2003.06 | 6MT | F | L | Hatchback 4WD AGU/AQA/ARX | For Engine code:AQA,Chassis no. from:8L_X_098488 | GDS61123 | Drive Shaft | | 36 | | 53 | 77.5 | 520 | |
| | 1997.08-2003.06 | AT | F | L | Hatchback 4WD AGU/AQA/ARX | | GDS61020 | Drive Shaft | | 36 | | 53.2 | 77.5 | 547 | |
| | 1997.08-2003.06 | 4AT/5MT | R | L | Hatchback 4WD AGU/AQA/ARX | | GDS82364 | Drive Shaft | | 36 | | 53 | 78.5 | 651 | |
| | 1997.08-2003.06 | 4AT/5MT | R | R | Hatchback 4WD AGU/AQA/ARX | | GDS81587 | Drive Shaft | | 36 | | 53 | 78.5 | 522 | |
| | 1997.08-2003.06 | 5MT | R | L/R | Hatchback 4WD AGU/AQA/ARX | | GCI82447 | Inner Joint | | | 33 | | | 34 | |
| | 1997.08-2003.06 | | R | L/R | Hatchback 4WD AGU/AQA/ARX | | GCO83033 | Outer Joint | | 36 | 30 | 53 | 78.5 | 51 | I |
| 1.8 (118 kw) | 2008.07-2012.08 | 6MT | F | L | Hatchback 4WD CDAA | | GDS83295 | Drive Shaft | | 36 | | 59.5 | 40 | 491 | |
| | 2008.07-2012.08 | 6MT | F | R | Hatchback 4WD CDAA | | GDS83266 | Drive Shaft | | 36 | | 59.5 | 40 | 601 | |
| | 2008.07-2012.08 | 6MT | F | L | Hatchback 4WD CDAA | Rims:With steel rim | GCO83101 | Outer Joint | | 36 | 27 | 59.5 | 40 | 65 | M |
| | 2008.07-2012.08 | | F | L/R | Hatchback 4WD CDAA | | GCO83002 | Outer Joint | | 36 | 27 | 59.5 | 40 | 66 | I |
| | 2008.07-2012.08 | | F | L/R | Hatchback 4WD CDAA | | GCI83006 | Inner Joint | | | 33 | | | 34 | |
| | 2008.07-2012.08 | | F | L/R | Hatchback 4WD CDAA | | GCI83016 | Inner Joint | | | 28 | | | 32 | |
| | 2008.07-2012.08 | 6MT | R | L | Hatchback 4WD CDAA | | GDS61284 | Drive Shaft | | 36 | | 59.5 | 40 | 594 | |
| | 2008.07-2012.08 | 6MT | R | R | Hatchback 4WD CDAA | | GDS61293 | Drive Shaft | | 36 | | 59.5 | 40 | 631 | |
| | 2008.07-2012.08 | 6MT | R | L/R | Hatchback 4WD CDAA | | GCI35026 | Outer Joint | | 36 | 33 | 59.5 | 40 | 61 | |
| | 2008.07-2012.08 | 6MT | R | L/R | Hatchback 4WD CDAA | Date to:2012.05 | GCI82447 | Inner Joint | | | 33 | | | 34 | |
| 1.8 (132 kw) | 1998.11-2003.06 | 5AT/5MT | F | L/R | Hatchback 4WD AJQ/ARY | | GCO83035 | Outer Joint | | 36 | 27 | 53 | 77.5 | 65 | I |
| | 1998.11-2003.06 | AT | F | L/R | Hatchback 4WD AJQ/ARY | | GCI61044 | Inner Joint | | | 34 | | | 85 | |
| | 1998.11-2003.06 | AT | F | L/R | Hatchback 4WD AJQ/ARY | | GCI83007 | Inner Joint | | | 34 | | | 85 | |
| | 1998.11-2003.06 | AT/Semi-AT | F | L | Hatchback 4WD AJQ/ARY | | GDS61244 | Drive Shaft | | 36 | | 53 | 77.5 | 523 | |
| | 1998.11-2003.06 | MT | F | L | Hatchback 4WD AJQ/ARY | | GDS61123 | Drive Shaft | | 36 | | 53 | 77.5 | 520 | |
| | 1998.11-2003.06 | MT | F | R | Hatchback 4WD AJQ/ARY | | GDS61186 | Drive Shaft | | 36 | | 53 | 77.5 | 653 | |
| | 1998.11-2003.06 | MT | F | L/R | Hatchback 4WD AJQ/ARY | Date From:1999.06 | GCI83001 | Inner Joint | | | 28 | | | 32 | |
| | 1998.11-2003.06 | Semi-AT | F | R | Hatchback 4WD AJQ/ARY | | GDS61243 | Drive Shaft | | 36 | | 53 | 77.5 | 813 | |
| | 1998.11-2003.06 | 5AT/5MT/6MT | R | L | Hatchback 4WD AJQ/ARY | | GDS82364 | Drive Shaft | | 36 | | 53 | 78.5 | 651 | |
| | 1998.11-2003.06 | 5AT/5MT/6MT | R | R | Hatchback 4WD AJQ/ARY | | GDS81587 | Drive Shaft | | 36 | | 53 | 78.5 | 522 | |
| | 1998.11-2003.06 | | R | L/R | Hatchback 4WD AJQ/ARY | | GCO83033 | Outer Joint | | 36 | 30 | 53 | 78.5 | 51 | I |
| | 1998.11-2003.06 | | R | L/R | Hatchback 4WD AJQ/ARY | | GCI83011 | Inner Joint | | | 33 | | | 34 | |
| | 2012.08-2016.08 | 6AT | F | L | Hatchback 4WD CJSB | | GDS83295 | Drive Shaft | | 36 | | 59.5 | 40 | 491 | |
| | 2012.08-2016.08 | 6AT | F | L | Hatchback 4WD CJSB | | GCO83101 | Outer Joint | | 36 | 27 | 59.5 | 40 | 65 | M |
| | 2012.08-2016.08 | 6AT | F | L | Hatchback 4WD CJSB | | GCI61069 | Inner Joint | | | 28 | | | 32 | |
| | 2012.08-2016.08 | 6AT/6MT | F | R | Hatchback 4WD CJSB | | GDS81892 | Drive Shaft | | 36 | | 59.5 | 40 | 602 | |
| | 2012.08-2016.08 | | F | L/R | Hatchback 4WD CJSB | | GCI83016 | Inner Joint | | | 28 | | | 32 | |
| | 2012.08-2016.08 | 6AT | R | L | Hatchback 4WD CJSB | | GDS61286 | Drive Shaft | | 36 | | 59.5 | 40 | 587 | |
| | 2012.08-2016.08 | 6AT | R | R | Hatchback 4WD CJSB | | GDS61287 | Drive Shaft | | 36 | | 59.5 | 40 | 632 | |
| | 2012.08-2016.08 | 6AT | R | L/R | Hatchback 4WD CJSB | | GCI35026 | Outer Joint | | 36 | 33 | 59.5 | 40 | 61 | |
| | 2012.08-2016.08 | 6AT | R | L/R | Hatchback 4WD CJSB | | GCI61103 | Inner Joint | | | 33 | | | 32 | |
| | 2013.11-2016.08 | 6AT | F | L | Saloon 4WD CJSB | | GDS83295 | Drive Shaft | | 36 | | 59.5 | 40 | 491 | |
| | 2013.11-2016.08 | 6AT | F | L | Saloon 4WD CJSB | | GCO83101 | Outer Joint | | 36 | 27 | 59.5 | 40 | 65 | M |
| | 2013.11-2016.08 | 6AT | F | L | Saloon 4WD CJSB | | GCI61069 | Inner Joint | | | 28 | | | 32 | |
| | 2013.11-2016.08 | 6AT/6MT | F | R | Saloon 4WD CJSB | | GDS81892 | Drive Shaft | | 36 | | 59.5 | 40 | 602 | |
| | 2013.11-2016.08 | | F | L/R | Saloon 4WD CJSB | | GCI83016 | Inner Joint | | | 28 | | | 32 | |
| | 2013.11-2016.08 | 6AT | R | L | Saloon 4WD CJSB | | GDS61286 | Drive Shaft | | 36 | | 59.5 | 40 | 587 | |
| | 2013.11-2016.08 | 6AT | R | R | Saloon 4WD CJSB | | GDS61287 | Drive Shaft | | 36 | | 59.5 | 40 | 632 | |
| | 2013.11-2016.08 | 6AT | R | L/R | Saloon 4WD CJSB | | GCI35026 | Outer Joint | | 36 | 33 | 59.5 | 40 | 61 | |
| | 2013.11-2016.08 | 6AT | R | L/R | Saloon 4WD CJSB | | GCI61103 | Inner Joint | | | 33 | | | 32 | |
| 1.9 (96 kw) | 2000.05-2003.06 | 5AT/6MT | F | R | Hatchback 4WD ASZ | | GDS61186 | Drive Shaft | | 36 | | 53 | 77.5 | 653 | |
| | 2000.05-2003.06 | 5AT/6MT | F | L/R | Hatchback 4WD ASZ | | GCI83001 | Inner Joint | | | 28 | | | 32 | |
| | 2000.05-2003.06 | 6MT | F | L | Hatchback 4WD ASZ | | GDS61123 | Drive Shaft | | 36 | | 53 | 77.5 | 520 | |
| | 2000.05-2003.06 | 6MT | F | L/R | Hatchback 4WD ASZ | | GCO83035 | Outer Joint | | 36 | 27 | 53 | 77.5 | 65 | I |
| | 2000.05-2003.06 | 5AT/6MT | R | L | Hatchback 4WD ASZ | | GDS82364 | Drive Shaft | | 36 | | 53 | 78.5 | 651 | |
| | 2000.05-2003.06 | 5AT/6MT | R | R | Hatchback 4WD ASZ | | GDS81587 | Drive Shaft | | 36 | | 53 | 78.5 | 522 | |

| | YEAR | TRANSM. | F/R | L/R | BODY STYLE & DRIVE TYPE & ENGINE | REMARKS | G-AP Ref. | PRODUCT | ABS | Technical Specifications A | B | C | H | L | P |
|---|---|---|---|---|---|---|---|---|---|---|---|---|---|---|---|
| **AUDI** | | | | | | | | | | | | | | | |
| **A3 Quattro** | | | | | | | | | | | | | | | |
| 1.9 (96 kw) | 2000.05-2003.06 | 5AT/6MT | R | L/R | Hatchback 4WD ASZ | | GCO83033 | Outer Joint | | 36 | 30 | 53 | 78.5 | 51 | I |
| | 2000.05-2003.06 | 5AT/6MT | R | L/R | Hatchback 4WD ASZ | | GCI53002 | Inner Joint | | | 33 | | | 34 | |
| | 2000.05-2003.06 | 5AT/6MT | R | L/R | Hatchback 4WD ASZ | | GCI82447 | Inner Joint | | | 33 | | | 34 | |
| 2.0 (100 kw) | 2003.06-2008.06 | AT | F | L | Hatchback 4WD AZV | | GDS83241 | Drive Shaft | | 36 | | 59.5 | 40 | 475 | |
| | 2003.06-2008.06 | AT | F | R | Hatchback 4WD AZV | Chassis no. from:8P-5A072 501,Chassis no. from:8P-5B001 001 | GDS54011 | Drive Shaft | | 36 | | 59.5 | 40 | 755 | |
| | 2003.06-2008.06 | AT | F | R | Hatchback 4WD AZV | Chassis no. to:8P-5A072 500;Chassis no. to:8P-5B001 000 | GDS83355 | Drive Shaft | | 36 | 23 | 59.5 | 40 | 799 | |
| | 2003.06-2008.06 | AT | F | L/R | Hatchback 4WD AZV | Chassis no. from:8P-5A072 501;Chassis no. from:8P-5B001 001 | GCI61057 | Inner Joint | | | 34 | | | 89 | |
| | 2003.06-2008.06 | MT | F | L | Hatchback 4WD AZV | | GDS83236 | Drive Shaft | | 36 | | 59.5 | 40 | 484 | |
| | 2003.06-2008.06 | MT | F | L | Hatchback 4WD AZV | | GDS83295 | Drive Shaft | | 36 | | 59.5 | 40 | 491 | |
| | 2003.06-2008.06 | MT | F | R | Hatchback 4WD AZV | Chassis no. from:8P-5A072 501;Chassis no. from:8P-5B001 001 | GDS61126 | Drive Shaft | | 36 | | 59.5 | 40 | 793 | |
| | 2003.06-2008.06 | MT | F | R | Hatchback 4WD AZV | | GDS83266 | Drive Shaft | | 36 | | 59.5 | 40 | 601 | |
| | 2003.06-2008.06 | 6AT | R | L/R | Hatchback 4WD AZV | | GCO83037 | Outer Joint | | 36 | 30 | 59.5 | 40.5 | 56 | I |
| 2.0 (103 kw) | 2004.08-2012.08 | 6MT | F | L | Hatchback 4WD BKD;CBAB;CFFB | Date to:2008.06 | GDS83295 | Drive Shaft | | 36 | | 59.5 | 40 | 491 | |
| | 2004.08-2012.08 | 6MT | F | R | Hatchback 4WD BKD;CBAB;CFFB | For Engine Code:BKD | GDS83266 | Drive Shaft | | 36 | | 59.5 | 40 | 601 | |
| | 2004.08-2012.08 | 6MT | F | R | Hatchback 4WD BKD;CBAB;CFFB | For Engine Code:CBAB/CFFB | GDS83295 | Drive Shaft | | 36 | | 59.5 | 40 | 491 | |
| | 2004.08-2012.08 | 6MT | F | L/R | Hatchback 4WD BKD;CBAB;CFFB | | GCO83002 | Outer Joint | | 36 | 27 | 59.5 | 40 | 66 | I |
| | 2004.08-2012.08 | 6MT | F | L/R | Hatchback 4WD BKD;CBAB;CFFB | | GCO83101 | Outer Joint | | 36 | 27 | 59.5 | 40 | 65 | M |
| | 2004.08-2012.08 | 6MT | F | L/R | Hatchback 4WD BKD;CBAB;CFFB | | GCI61041 | Inner Joint | | | 28 | | | 32 | |
| | 2004.08-2012.08 | 6MT | F | L/R | Hatchback 4WD BKD;CBAB;CFFB | | GCI61069 | Inner Joint | | | 28 | | | 32 | |
| | 2004.08-2012.08 | 6MT | F | L/R | Hatchback 4WD BKD;CBAB;CFFB | | GCI83016 | Inner Joint | | | 28 | | | 32 | |
| | 2004.08-2012.08 | MT | F | L | Hatchback 4WD BKD;CBAB;CFFB | Date from:2008.07 | GDS83236 | Drive Shaft | | 36 | | 59.5 | 40 | 484 | |
| | 2004.08-2012.08 | 6MT | R | L | Hatchback 4WD BKD;CBAB;CFFB | | GDS61284 | Drive Shaft | | 36 | | 59.5 | 40 | 594 | |
| | 2004.08-2012.08 | 6MT | R | R | Hatchback 4WD BKD;CBAB;CFFB | | GDS61293 | Drive Shaft | | 36 | | 59.5 | 40 | 631 | |
| | 2004.08-2012.08 | 6MT | R | L/R | Hatchback 4WD BKD;CBAB;CFFB | | GCI35026 | Outer Joint | | 36 | 33 | 59.5 | 40 | 61 | |
| | 2004.08-2012.08 | 6MT | R | L/R | Hatchback 4WD BKD;CBAB;CFFB | Date to:2011.05 | GCO83037 | Outer Joint | | 36 | 30 | 59.5 | 40.5 | 56 | I |
| | 2004.08-2012.08 | 6MT | R | L/R | Hatchback 4WD BKD;CBAB;CFFB | | GCI53002 | Inner Joint | | | 33 | | | 34 | |
| | 2004.08-2012.08 | 6MT | R | L/R | Hatchback 4WD BKD;CBAB;CFFB | | GCI82447 | Inner Joint | | | 33 | | | 34 | |
| | 2006.01-2008.06 | 6MT | F | L | Hatchback 4WD BMM | | GDS83295 | Drive Shaft | | 36 | | 59.5 | 40 | 491 | |
| | 2006.01-2008.06 | 6MT | F | R | Hatchback 4WD BMM | | GDS83266 | Drive Shaft | | 36 | | 59.5 | 40 | 601 | |
| | 2006.01-2008.06 | AT | F | L | Hatchback 4WD BMM | | GDS83241 | Drive Shaft | | 36 | | 59.5 | 40 | 475 | |
| | 2006.01-2008.06 | AT | F | L | Hatchback 4WD BMM | | GCI54004 | Inner Joint | | | 34 | | | 81 | |
| | 2006.01-2008.06 | MT | F | L | Hatchback 4WD BMM | | GDS83236 | Drive Shaft | | 36 | | 59.5 | 40 | 484 | |
| | 2006.01-2008.06 | | F | L/R | Hatchback 4WD BMM | | GCO83002 | Outer Joint | | 36 | 27 | 59.5 | 40 | 66 | I |
| | 2006.01-2008.06 | | F | L/R | Hatchback 4WD BMM | | GCI83016 | Inner Joint | | | 28 | | | 32 | |
| | 2006.01-2008.06 | 6MT | R | L | Hatchback 4WD BMM | | GDS61284 | Drive Shaft | | 36 | | 59.5 | 40 | 594 | |
| | 2006.01-2008.06 | 6MT | R | R | Hatchback 4WD BMM | | GDS61293 | Drive Shaft | | 36 | | 59.5 | 40 | 631 | |
| | 2006.01-2008.06 | 6MT | R | L/R | Hatchback 4WD BMM | | GCI35026 | Outer Joint | | 36 | 33 | 59.5 | 40 | 61 | |
| | 2006.01-2008.06 | 6MT | R | L/R | Hatchback 4WD BMM | | GCO83037 | Outer Joint | | 36 | 30 | 59.5 | 40.5 | 56 | I |
| | 2006.01-2008.06 | 6MT | R | L/R | Hatchback 4WD BMM | | GCI82447 | Inner Joint | | | 33 | | | 34 | |
| | 2006.01-2008.06 | | R | L/R | Hatchback 4WD BMM | Date To:2007.05 | GCI83011 | Inner Joint | | | 33 | | | 34 | |
| 2.0 (110 kw) | 2012.10-2017.12 | 6MT | F | L | Hatchback 4WD CRBC;CRLB;DCYA | | GDS83295 | Drive Shaft | | 36 | | 59.5 | 40 | 491 | |
| | 2012.10-2017.12 | 6MT | F | R | Hatchback 4WD CRBC;CRLB;DCYA | | GDS83313 | Drive Shaft | | 36 | | 59.5 | 40 | 792 | |
| | 2012.10-2017.12 | 6MT | F | L/R | Hatchback 4WD CRBC;CRLB;DCYA | | GCO83101 | Outer Joint | | 36 | 27 | 59.5 | 40 | 65 | M |
| | 2012.10-2017.12 | 6MT | F | L/R | Hatchback 4WD CRBC;CRLB;DCYA | | GCI83016 | Inner Joint | | | 28 | | | 32 | |
| | 2012.10-2017.12 | 6MT | R | L | Hatchback 4WD CRBC;CRLB;DCYA | | GDS61286 | Drive Shaft | | 36 | | 59.5 | 40 | 587 | |
| | 2012.10-2017.12 | 6MT | R | R | Hatchback 4WD CRBC;CRLB;DCYA | | GDS61287 | Drive Shaft | | 36 | | 59.5 | 40 | 632 | |
| | 2012.10-2017.12 | 6MT | R | L/R | Hatchback 4WD CRBC;CRLB;DCYA | | GCI35026 | Outer Joint | | 36 | 33 | 59.5 | 40 | 61 | |
| | 2012.10-2017.12 | 6MT | R | L/R | Hatchback 4WD CRBC;CRLB;DCYA | | GCI61103 | Inner Joint | | | 33 | | | 32 | |
| | 2013.10-2020.10 | 6MT | F | L | Saloon 4WD CRBC;CRLB;DCYA | | GDS83295 | Drive Shaft | | 36 | | 59.5 | 40 | 491 | |
| | 2013.10-2020.10 | 6MT | F | R | Saloon 4WD CRBC;CRLB;DCYA | | GDS83313 | Drive Shaft | | 36 | | 59.5 | 40 | 792 | |
| | 2013.10-2020.10 | 6MT | F | L/R | Saloon 4WD CRBC;CRLB;DCYA | | GCO83101 | Outer Joint | | 36 | 27 | 59.5 | 40 | 65 | M |
| | 2013.10-2020.10 | 6MT | F | L/R | Saloon 4WD CRBC;CRLB;DCYA | | GCI83016 | Inner Joint | | | 28 | | | 32 | |
| | 2013.10-2020.10 | 6MT | R | L | Saloon 4WD CRBC;CRLB;DCYA | | GDS61286 | Drive Shaft | | 36 | | 59.5 | 40 | 587 | |
| | 2013.10-2020.10 | 6MT | R | R | Saloon 4WD CRBC;CRLB;DCYA | | GDS61287 | Drive Shaft | | 36 | | 59.5 | 40 | 632 | |
| | 2013.10-2020.10 | 6MT | R | L/R | Saloon 4WD CRBC;CRLB;DCYA | | GCI61103 | Inner Joint | | | 33 | | | 32 | |
| 2.0 (125 kw) | 2006.03-2012.08 | 6MT | F | L | Hatchback 4WD BMN;CBBB;CFGB | | GDS83295 | Drive Shaft | | 36 | | 59.5 | 40 | 491 | |
| | 2006.03-2012.08 | 6MT | F | R | Hatchback 4WD BMN;CBBB;CFGB | | GDS83266 | Drive Shaft | | 36 | | 59.5 | 40 | 601 | |
| | 2006.03-2012.08 | MT/Semi-AT | F | L | Hatchback 4WD BMN;CBBB;CFGB | | GDS83236 | Drive Shaft | | 36 | | 59.5 | 40 | 484 | |
| | 2006.03-2012.08 | | F | L/R | Hatchback 4WD BMN;CBBB;CFGB | | GCO83002 | Outer Joint | | 36 | 27 | 59.5 | 40 | 66 | I |
| | 2006.03-2012.08 | | F | L/R | Hatchback 4WD BMN;CBBB;CFGB | | GCI83016 | Inner Joint | | | 28 | | | 32 | |
| | 2006.03-2012.08 | 6MT | R | L | Hatchback 4WD BMN;CBBB;CFGB | | GDS61284 | Drive Shaft | | 36 | | 59.5 | 40 | 594 | |
| | 2006.03-2012.08 | 6MT | R | R | Hatchback 4WD BMN;CBBB;CFGB | | GDS61293 | Drive Shaft | | 36 | | 59.5 | 40 | 631 | |
| | 2006.03-2012.08 | 6MT | R | L/R | Hatchback 4WD BMN;CBBB;CFGB | | GCI35026 | Outer Joint | | 36 | 33 | 59.5 | 40 | 61 | |
| | 2006.03-2012.08 | 6MT | R | L/R | Hatchback 4WD BMN;CBBB;CFGB | Date To:2007.05,Chassis no. to:8P7250000 | GCO83037 | Outer Joint | | 36 | 30 | 59.5 | 40.5 | 56 | I |
| | 2006.03-2012.08 | 6MT | R | L/R | Hatchback 4WD BMN;CBBB;CFGB | | GCI53002 | Inner Joint | | | 33 | | | 34 | |

| | YEAR | TRANSM. | F/R | L/R | BODY STYLE & DRIVE TYPE & ENGINE | REMARKS | G-AP Ref. | PRODUCT | ABS | Technical Specifications A | B | C | H | L | P |
|---|---|---|---|---|---|---|---|---|---|---|---|---|---|---|---|
| **AUDI** | | | | | | | | | | | | | | | |
| **A3 Quattro** | | | | | | | | | | | | | | | |
| 2.0 (125 kw) | 2006.03-2012.08 | 6MT | R | L/R | Hatchback 4WD BMN;CBBB;CFGB | Date to:2012.05 | GCI82447 | Inner Joint | | | 33 | | | 34 | |
| 2.0 (135 kw) | 2012.12-2017.12 | 6DCT | F | L | Hatchback 4WD CUNA;DGCA | | GDS61285 | Drive Shaft | | 36 | | 59.5 | 40 | 472 | |
| | 2012.12-2017.12 | 6DCT | F | L/R | Hatchback 4WD CUNA;DGCA | For Modelcode:8V1 | GCI54004 | Inner Joint | | | 34 | | | 81 | |
| | 2012.12-2017.12 | 6DCT | F | L/R | Hatchback 4WD CUNA;DGCA | For Modelcode:8V1 | GCI61057 | Inner Joint | | | 34 | | | 89 | |
| | 2012.12-2017.12 | 6DCT/7DCT | F | R | Hatchback 4WD CUNA;DGCA | | GDS81893 | Drive Shaft | | 36 | | 59.5 | 40 | 575 | |
| | 2012.12-2017.12 | 7DCT | F | L | Hatchback 4WD CUNA;DGCA | | GDS81265 | Drive Shaft | | 36 | 37 | 59.5 | 40 | 557 | |
| | 2012.12-2017.12 | 7DCT | F | L | Hatchback 4WD CUNA;DGCA | | GCI81158 | Inner Joint | | 37 | 34 | 34.5 | 65.5 | 83 | |
| | 2012.12-2017.12 | 7DCT | F | R | Hatchback 4WD CUNA;DGCA | | GCI61057 | Inner Joint | | | 34 | | | 89 | |
| | 2012.12-2017.12 | AT | F | L/R | Hatchback 4WD CUNA;DGCA | | GCI61057 | Inner Joint | | | 34 | | | 89 | |
| | 2012.12-2017.12 | AT | F | | Hatchback 4WD CUNA;DGCA | | GCI83016 | Inner Joint | | | 28 | | | 32 | |
| | 2012.12-2017.12 | 6AT/7AT | R | L | Hatchback 4WD CUNA;DGCA | | GDS61286 | Drive Shaft | | 36 | | 59.5 | 40 | 587 | |
| | 2012.12-2017.12 | 6AT/7AT | R | R | Hatchback 4WD CUNA;DGCA | | GDS61287 | Drive Shaft | | 36 | | 59.5 | 40 | 632 | |
| | 2012.12-2017.12 | 6DCT/7DCT | R | L/R | Hatchback 4WD CUNA;DGCA | Transmission:6DCT;For Modelcode:8V1;Transmission:7DCT | GCO83101 | Outer Joint | | 36 | 27 | 59.5 | 40 | 65 | M |
| | 2012.12-2017.12 | | R | L/R | Hatchback 4WD CUNA;DGCA | For Modelcode:8VS | GCI61103 | Inner Joint | | | 33 | | | 32 | |
| | 2014.05-2018.07 | 6DCT | F | L | Saloon 4WD CUNA;DGCA | | GDS61285 | Drive Shaft | | 36 | | 59.5 | 40 | 472 | |
| | 2014.05-2018.07 | 6DCT | F | L/R | Saloon 4WD CUNA;DGCA | TJ | GCI54004 | Inner Joint | | | 34 | | | 81 | |
| | 2014.05-2018.07 | 6DCT | F | L/R | Saloon 4WD CUNA;DGCA | AAR | GCI61057 | Inner Joint | | | 34 | | | 89 | |
| | 2014.05-2018.07 | 6DCT/7DCT | F | R | Saloon 4WD CUNA;DGCA | | GDS81893 | Drive Shaft | | 36 | | 59.5 | 40 | 575 | |
| | 2014.05-2018.07 | 6DCT/7DCT | F | L/R | Saloon 4WD CUNA;DGCA | | GCO83101 | Outer Joint | | 36 | 27 | 59.5 | 40 | 65 | M |
| | 2014.05-2018.07 | 7DCT | F | L | Saloon 4WD CUNA;DGCA | | GDS81265 | Drive Shaft | | 36 | 37 | 59.5 | 40 | 557 | |
| | 2014.05-2018.07 | 7DCT | F | L | Saloon 4WD CUNA;DGCA | | GCI81158 | Inner Joint | | 37 | 34 | 34.5 | 65.5 | 83 | |
| | 2014.05-2018.07 | 7DCT | F | R | Saloon 4WD CUNA;DGCA | | GCI61057 | Inner Joint | | | 34 | | | 89 | |
| | 2014.05-2018.07 | 6DCT/7DCT | R | L | Saloon 4WD CUNA;DGCA | | GDS61286 | Drive Shaft | | 36 | | 59.5 | 40 | 587 | |
| | 2014.05-2018.07 | 6DCT/7DCT | R | R | Saloon 4WD CUNA;DGCA | | GDS61287 | Drive Shaft | | 36 | | 59.5 | 40 | 632 | |
| | 2014.05-2018.07 | 6DCT/7DCT | R | L/R | Saloon 4WD CUNA;DGCA | | GCI35026 | Outer Joint | | 36 | 33 | 59.5 | 40 | 61 | |
| | 2014.05-2018.07 | 6DCT/7DCT | R | L/R | Saloon 4WD CUNA;DGCA | | GCI61103 | Inner Joint | | | 33 | | | 32 | |
| | 2018.07-2019.07 | 6DCT | F | L | Saloon 4WD DJGA | For PR code:2H0/2H6/2H7 | GDS61285 | Drive Shaft | | 36 | | 59.5 | 40 | 472 | |
| | 2018.07-2019.07 | 6MT/7DCT | F | R | Saloon 4WD DJGA | | GDS81893 | Drive Shaft | | 36 | | 59.5 | 40 | 575 | |
| | 2018.07-2019.07 | 7DCT | F | L | Saloon 4WD DJGA | | GDS81265 | Drive Shaft | | 36 | 37 | 59.5 | 40 | 557 | |
| | 2018.07-2019.07 | 7DCT | F | L | Saloon 4WD DJGA | Transmission:7DCT | GCI81158 | Inner Joint | | 37 | 34 | 34.5 | 65.5 | 83 | |
| | 2018.07-2019.07 | 7DCT | R | L | Saloon 4WD DJGA | | GDS61286 | Drive Shaft | | 36 | | 59.5 | 40 | 587 | |
| | 2018.07-2019.07 | 7DCT | R | R | Saloon 4WD DJGA | | GDS61287 | Drive Shaft | | 36 | | 59.5 | 40 | 632 | |
| | 2018.07-2019.07 | 7DCT | R | L/R | Saloon 4WD DJGA | | GCI35026 | Outer Joint | | 36 | 33 | 59.5 | 40 | 61 | |
| | 2018.07-2019.07 | 7DCT | R | L/R | Saloon 4WD DJGA | Transmission:7DCT | GCI61103 | Inner Joint | | | 33 | | | 32 | |
| | 2018.07-2019.07 | 6DCT/7DCT | F/R | L/R | Saloon 4WD DJGA | Position:Front Right;Transmission:7DCT;Position:Front/Rear;Transmission:6DCT | GCI61057 | Inner Joint | | | 34 | | | 89 | |
| 2.0 (140 kw) | 2016.05-2017.12 | 7AT | F | R | Hatchback 4WD CZPB | Wheel Hub Diam [mm]:42;Date to:2017.08;Wheel Hub Diam [mm]:27;Date from:2017.10 | GDS81892 | Drive Shaft | | 36 | | 59.5 | 40 | 602 | |
| | 2016.05-2017.12 | 7AT | F | L | Hatchback 4WD CZPB | | GCI83028 | Inner Joint | | 37 | 28 | | 65.5 | 90.2 | |
| | 2016.05-2017.12 | 7AT | F | R | Hatchback 4WD CZPB | | GCI61069 | Inner Joint | | | 28 | | | 32 | |
| | 2016.05-2017.12 | 7DCT | F | L | Hatchback 4WD CZPB | | GDS84237 | Drive Shaft | | 36 | 37 | 59.5 | 40 | 560 | |
| | 2016.05-2017.12 | 7AT | R | L | Hatchback 4WD CZPB | | GDS61286 | Drive Shaft | | 36 | | 59.5 | 40 | 587 | |
| | 2016.05-2017.12 | 7AT | R | R | Hatchback 4WD CZPB | | GDS61287 | Drive Shaft | | 36 | | 59.5 | 40 | 632 | |
| | 2016.05-2017.12 | 7AT | R | L/R | Hatchback 4WD CZPB | | GCI35026 | Outer Joint | | 36 | 33 | 59.5 | 40 | 61 | |
| | 2016.05-2017.12 | 7AT | R | L/R | Hatchback 4WD CZPB | | GCI61103 | Inner Joint | | | 33 | | | 32 | |
| | 2016.05-2020.10 | 7AT | F | R | Saloon 4WD CZPB;DKZA | Wheel Hub Diam [mm]:42;Date to:2017.08;Wheel Hub Diam [mm]:27;Date from:2017.10 | GDS81892 | Drive Shaft | | 36 | | 59.5 | 40 | 602 | |
| | 2016.05-2020.10 | 7AT | F | L | Saloon 4WD CZPB;DKZA | | GCI83028 | Inner Joint | | 37 | 28 | | 65.5 | 90.2 | |
| | 2016.05-2020.10 | 7AT | F | R | Saloon 4WD CZPB;DKZA | | GCI61069 | Inner Joint | | | 28 | | | 32 | |
| | 2016.05-2020.10 | 7DCT | F | L | Saloon 4WD CZPB;DKZA | | GDS84237 | Drive Shaft | | 36 | 37 | 59.5 | 40 | 560 | |
| | 2016.05-2020.10 | 7AT | R | L | Saloon 4WD CZPB;DKZA | | GDS61286 | Drive Shaft | | 36 | | 59.5 | 40 | 587 | |
| | 2016.05-2020.10 | 7AT | R | R | Saloon 4WD CZPB;DKZA | | GDS61287 | Drive Shaft | | 36 | | 59.5 | 40 | 632 | |
| | 2016.05-2020.10 | 7AT | R | L/R | Saloon 4WD CZPB;DKZA | | GCI35026 | Outer Joint | | 36 | 33 | 59.5 | 40 | 61 | |
| | 2016.05-2020.10 | 7AT | R | L/R | Saloon 4WD CZPB;DKZA | | GCI61103 | Inner Joint | | | 33 | | | 32 | |
| | 2018.07-2020.10 | 7AT | F | L | Saloon 4WD DKZA | | GDS84237 | Drive Shaft | | 36 | 37 | 59.5 | 40 | 560 | |
| | 2018.07-2020.10 | 7DCT | F | R | Saloon 4WD DKZA | | GDS81892 | Drive Shaft | | 36 | | 59.5 | 40 | 602 | |
| | 2018.07-2020.10 | 7DCT | R | L | Saloon 4WD DKZA | | GDS61286 | Drive Shaft | | 36 | | 59.5 | 40 | 587 | |
| | 2018.07-2020.10 | 7DCT | R | R | Saloon 4WD DKZA | | GDS61287 | Drive Shaft | | 36 | | 59.5 | 40 | 632 | |
| | 2018.07-2020.10 | 7DCT | R | L/R | Saloon 4WD DKZA | | GCI35026 | Outer Joint | | 36 | 33 | 59.5 | 40 | 61 | |
| | 2018.07-2020.10 | 7DCT | R | L/R | Saloon 4WD DKZA | | GCI61103 | Inner Joint | | | 33 | | | 32 | |
| | 2021.07- | 7AT | F | L/R | Saloon 4WD DNNA | | GCO83101 | Outer Joint | | 36 | 27 | 59.5 | 40 | 65 | M |
| | 2021.07- | 7DCT | F | L | Saloon 4WD DNNA | | GDS84237 | Drive Shaft | | 36 | 37 | 59.5 | 40 | 560 | |
| | 2021.07- | 7DCT | R | L | Saloon 4WD DNNA | | GDS61286 | Drive Shaft | | 36 | | 59.5 | 40 | 587 | |
| | 2021.07- | 7DCT | R | R | Saloon 4WD DNNA | | GDS61287 | Drive Shaft | | 36 | | 59.5 | 40 | 632 | |
| | 2021.07- | 7DCT | R | L/R | Saloon 4WD DNNA | | GCI35026 | Outer Joint | | 36 | 33 | 59.5 | 40 | 61 | |
| | 2021.07- | 7DCT | R | L/R | Saloon 4WD DNNA | | GCI61103 | Inner Joint | | | 33 | | | 32 | |
| 2.0 (147 kw) | 2004.09-2012.08 | 6AT/6MT | F | L | Hatchback 4WD AXX;BWA;CCZA;CBFA;CCTA | | GDS83295 | Drive Shaft | | 36 | | 59.5 | 40 | 491 | |
| | 2004.09-2012.08 | 6AT/6MT | F | R | Hatchback 4WD AXX;BWA;CCZA;CBFA;CCTA | | GDS83266 | Drive Shaft | | 36 | | 59.5 | 40 | 601 | |

| | YEAR | TRANSM. | F/R | L/R | BODY STYLE & DRIVE TYPE & ENGINE | REMARKS | G-AP Ref. | PRODUCT | ABS | Technical Specifications A | B | C | H | L | P |
|---|---|---|---|---|---|---|---|---|---|---|---|---|---|---|---|
| **AUDI** | | | | | | | | | | | | | | | |
| **A3 Quattro** | | | | | | | | | | | | | | | |
| 2.0 (147 kw) | 2004.09-2012.08 | 6AT/6MT | F | L | Hatchback 4WD AXX;BWA;CCZA;CBFA;CCTA | | GCO83101 | Outer Joint | | 36 | 27 | 59.5 | 40 | 65 | M |
| | 2004.09-2012.08 | MT/Semi-AT | F | L | Hatchback 4WD AXX;BWA;CCZA;CBFA;CCTA | | GDS83236 | Drive Shaft | | 36 | | 59.5 | 40 | 484 | |
| | 2004.09-2012.08 | | F | L/R | Hatchback 4WD AXX;BWA;CCZA;CBFA;CCTA | | GCO83002 | Outer Joint | | 36 | 27 | 59.5 | 40 | 66 | I |
| | 2004.09-2012.08 | | F | L/R | Hatchback 4WD AXX;BWA;CCZA;CBFA;CCTA | | GCI83016 | Inner Joint | | | 28 | | | 32 | |
| | 2004.09-2012.08 | 6AT/6MT | R | L | Hatchback 4WD AXX;BWA;CCZA;CBFA;CCTA | | GDS61284 | Drive Shaft | | 36 | | 59.5 | 40 | 594 | |
| | 2004.09-2012.08 | 6AT/6MT | R | R | Hatchback 4WD AXX;BWA;CCZA;CBFA;CCTA | | GDS61293 | Drive Shaft | | 36 | | 59.5 | 40 | 631 | |
| | 2004.09-2012.08 | 6AT/6MT | R | L/R | Hatchback 4WD AXX;BWA;CCZA;CBFA;CCTA | | GCI35026 | Outer Joint | | 36 | 33 | 59.5 | 40 | 61 | |
| | 2004.09-2012.08 | 6AT/6MT | R | L/R | Hatchback 4WD AXX;BWA;CCZA;CBFA;CCTA | | GCO83037 | Outer Joint | | 36 | 30 | 59.5 | 40.5 | 56 | I |
| | 2004.09-2012.08 | 6AT/6MT | R | L/R | Hatchback 4WD AXX;BWA;CCZA;CBFA;CCTA | | GCI53002 | Inner Joint | | | 33 | | | 34 | |
| | 2004.09-2012.08 | 6AT/6MT | R | L/R | Hatchback 4WD AXX;BWA;CCZA;CBFA;CCTA | Date to:2012.05 | GCI82447 | Inner Joint | | | 33 | | | 34 | |
| | 2020.12- | 7DCT | F | L | Saloon 4WD DTUA | | GDS81265 | Drive Shaft | | 36 | 37 | 59.5 | 40 | 557 | |
| | 2020.12- | 7DCT | F | R | Saloon 4WD DTUA | | GDS81893 | Drive Shaft | | 36 | | 59.5 | 40 | 575 | |
| | 2020.12- | 7DCT | F | R | Saloon 4WD DTUA | | GCO83101 | Outer Joint | | 36 | 27 | 59.5 | 40 | 65 | M |
| | 2020.12- | 7DCT | F | L | Saloon 4WD DTUA | | GCI81158 | Inner Joint | | 37 | 34 | 34.5 | 65.5 | 83 | |
| | 2020.12- | 7DCT | F | R | Saloon 4WD DTUA | | GCI61057 | Inner Joint | | | 34 | | | 89 | |
| | 2020.12- | 7DCT | R | L | Saloon 4WD DTUA | | GDS61286 | Drive Shaft | | 36 | | 59.5 | 40 | 587 | |
| | 2020.12- | 7DCT | R | R | Saloon 4WD DTUA | | GDS61287 | Drive Shaft | | 36 | | 59.5 | 40 | 632 | |
| | 2020.12- | 7DCT | R | L/R | Saloon 4WD DTUA | | GCI61103 | Inner Joint | | | 33 | | | 32 | |
| 3.2 (184 kw) | 2003.07-2009.05 | 6DCT | F | L | Hatchback 4WD BDB;BMJ;BUB | for vehicles with direct shift gear box;Chassis no. to:8P-7-084 000 | GDS83241 | Drive Shaft | | 36 | | 59.5 | 40 | 475 | |
| | 2003.07-2009.05 | AT | F | L | Hatchback 4WD BDB;BMJ;BUB | for vehicles without direct shift gear box;Chassis no.from:8P-7-084 001 | GDS83295 | Drive Shaft | | 36 | | 59.5 | 40 | 491 | |
| | 2003.07-2009.05 | AT | F | L | Hatchback 4WD BDB;BMJ;BUB | | GCI54004 | Inner Joint | | | 34 | | | 81 | |
| | 2003.07-2009.05 | AT/MT | F | L | Hatchback 4WD BDB;BMJ;BUB | | GDS83236 | Drive Shaft | | 36 | | 59.5 | 40 | 484 | |
| | 2003.07-2009.05 | AT/MT | F | R | Hatchback 4WD BDB;BMJ;BUB | | GDS83266 | Drive Shaft | | 36 | | 59.5 | 40 | 601 | |
| | 2003.07-2009.05 | MT | F | L | Hatchback 4WD BDB;BMJ;BUB | | GDS83295 | Drive Shaft | | 36 | | 59.5 | 40 | 491 | |
| | 2003.07-2009.05 | MT | F | L | Hatchback 4WD BDB;BMJ;BUB | | GCO61059 | Outer Joint | | 36 | 33 | 59.5 | 40 | 59.5 | I |
| | 2003.07-2009.05 | MT | F | L/R | Hatchback 4WD BDB;BMJ;BUB | | GCI83016 | Inner Joint | | | 28 | | | 32 | |
| | 2003.07-2009.05 | | F | L/R | Hatchback 4WD BDB;BMJ;BUB | | GCO83002 | Outer Joint | | 36 | 27 | 59.5 | 40 | 66 | I |
| | 2003.07-2009.05 | 6AT/6MT | R | L | Hatchback 4WD BDB;BMJ;BUB | | GDS61284 | Drive Shaft | | 36 | | 59.5 | 40 | 594 | |
| | 2003.07-2009.05 | 6AT/6MT | R | R | Hatchback 4WD BDB;BMJ;BUB | | GDS61293 | Drive Shaft | | 36 | | 59.5 | 40 | 631 | |
| | 2003.07-2009.05 | 6AT/6MT | R | L/R | Hatchback 4WD BDB;BMJ;BUB | | GCI35026 | Outer Joint | | 36 | 33 | 59.5 | 40 | 61 | |
| | 2003.07-2009.05 | 6AT/6MT | R | L/R | Hatchback 4WD BDB;BMJ;BUB | | GCO83037 | Outer Joint | | 36 | 30 | 59.5 | 40.5 | 56 | I |
| | 2003.07-2009.05 | 6AT/6MT | R | L/R | Hatchback 4WD BDB;BMJ;BUB | | GCI53002 | Inner Joint | | | 33 | | | 34 | |
| | 2003.07-2009.05 | 6AT/6MT | R | L/R | Hatchback 4WD BDB;BMJ;BUB | | GCI82447 | Inner Joint | | | 33 | | | 34 | |
| **A3 Sportback** | | | | | | | | | | | | | | | |
| 1.0 (81 kw) | 2020.06- | 6MT | F | L | Hatchback FWD DLAA | | GDS82231 | Drive Shaft | | 36 | | 59.5 | 40 | 486 | |
| | 2020.06- | 6MT | F | R | Hatchback FWD DLAA | | GDS82229 | Drive Shaft | | 36 | | 59.5 | 40 | 767 | |
| | 2020.06- | 6MT | F | L/R | Hatchback FWD DLAA | | GCO61059 | Outer Joint | | 36 | 33 | 59.5 | 40 | 59.5 | I |
| | 2020.06- | 6MT | F | L | Hatchback FWD DLAA | | GCI81689 | Inner Joint | | | 32 | | | 89 | |
| | 2020.06- | 7DCT | F | L | Hatchback FWD DLAA | | GDS57830 | Drive Shaft | | 36 | | 59.5 | 40 | 492 | |
| | 2020.06- | 7DCT | F | R | Hatchback FWD DLAA | | GDS57831 | Drive Shaft | | 36 | | 59.5 | 40 | 758 | |
| | 2020.06- | 7DCT | F | L/R | Hatchback FWD DLAA | | GCO61059 | Outer Joint | | 36 | 33 | 59.5 | 40 | 59.5 | I |
| | 2020.06- | 7DCT | F | L/R | Hatchback FWD DLAA | | GCI81689 | Inner Joint | | | 32 | | | 89 | |
| 1.0 (85 kw) | 2016.07-2020.10 | 6MT | F | L | Hatchback FWD CHZD;DKRF | | GDS82231 | Drive Shaft | | 36 | | 59.5 | 40 | 486 | |
| | 2016.07-2020.10 | 6MT | F | R | Hatchback FWD CHZD;DKRF | | GDS82230 | Drive Shaft | | 36 | | 59.5 | 40 | 789 | |
| | 2016.07-2020.10 | 6MT/7DCT | F | L/R | Hatchback FWD CHZD;DKRF | | GCO61059 | Outer Joint | | 36 | 33 | 59.5 | 40 | 59.5 | I |
| | 2016.07-2020.10 | 6MT/7DCT | F | L/R | Hatchback FWD CHZD;DKRF | | GCI81689 | Inner Joint | | | 32 | | | 89 | |
| | 2016.07-2020.10 | 7DCT | F | R | Hatchback FWD CHZD;DKRF | | GDS82229 | Drive Shaft | | 36 | | 59.5 | 40 | 767 | |
| | 2018.07-2020.10 | 6MT | F | R | Hatchback FWD DKRF | | GDS82230 | Drive Shaft | | 36 | | 59.5 | 40 | 789 | |
| | 2018.07-2020.10 | 6MT/7DCT | F | L | Hatchback FWD DKRF | | GDS82231 | Drive Shaft | | 36 | | 59.5 | 40 | 486 | |
| | 2018.07-2020.10 | 7DCT | F | R | Hatchback FWD DKRF | | GDS82229 | Drive Shaft | | 36 | | 59.5 | 40 | 767 | |
| 1.2 (77 kw) | 2010.04-2013.03 | 6MT | F | L/R | Hatchback FWD CBZB | | GCO83037 | Outer Joint | | 36 | 30 | 59.5 | 40.5 | 56 | I |
| | 2010.04-2013.03 | 6MT/7DCT | F | L | Hatchback FWD CBZB | | GDS61201 | Drive Shaft | | 36 | | 59.5 | 40.5 | 535 | |
| | 2010.04-2013.03 | 6MT/7DCT | F | L/R | Hatchback FWD CBZB | | GCI53002 | Inner Joint | | | 33 | | | 34 | |
| | 2010.04-2013.03 | 6MT/7DCT | F | L/R | Hatchback FWD CBZB | | GCI82447 | Inner Joint | | | 33 | | | 34 | |
| | 2010.04-2013.03 | 7DCT | F | L/R | Hatchback FWD CBZB | | GCO61059 | Outer Joint | | 36 | 33 | 59.5 | 40 | 59.5 | I |
| | 2010.04-2013.03 | 7DCT/6MT | F | R | Hatchback FWD CBZB | | GDS61096 | Drive Shaft | | 36 | | 59.5 | 40.5 | 799 | |
| | 2013.05-2015.05 | 6MT | F | L | Hatchback FWD CJZA | | GDS83373 | Drive Shaft | | 36 | | 59.5 | 38 | 511 | |
| | 2013.05-2015.05 | 6MT | F | R | Hatchback FWD CJZA | | GDS61307 | Drive Shaft | | 36 | | 59.5 | 40 | 819 | |
| | 2013.05-2015.05 | 6MT/7AT | F | L/R | Hatchback FWD CJZA | | GCO83037 | Outer Joint | | 36 | 30 | 59.5 | 40.5 | 56 | I |
| | 2013.05-2015.05 | 7AT/6MT | F | L/R | Hatchback FWD CJZA | | GCO61059 | Outer Joint | | 36 | 33 | 59.5 | 40 | 59.5 | I |
| | 2013.05-2015.05 | 7DCT | F | L | Hatchback FWD CJZA | | GDS61282 | Drive Shaft | | 36 | | 59.5 | 40 | 523 | |
| | 2013.05-2015.05 | 7DCT | F | R | Hatchback FWD CJZA | | GDS61096 | Drive Shaft | | 36 | | 59.5 | 40.5 | 799 | |
| | 2013.05-2015.05 | 7DCT/6MT | F | L/R | Hatchback FWD CJZA | | GCI82447 | Inner Joint | | | 33 | | | 34 | |
| | 2013.05-2015.05 | AT/MT | F | L/R | Hatchback FWD CJZA | | GCI83011 | Inner Joint | | | 33 | | | 34 | |
| | 2013.05-2015.05 | MT | F | L | Hatchback FWD CJZA | | GDS83294 | Drive Shaft | | 36 | | 59.5 | 38 | 519 | |

| | YEAR | TRANSM. | F/R | L/R | BODY STYLE & DRIVE TYPE & ENGINE | REMARKS | G-AP Ref. | PRODUCT | ABS | Technical Specifications A | B | C | H | L | P |
|---|---|---|---|---|---|---|---|---|---|---|---|---|---|---|---|
| **AUDI** | | | | | | | | | | | | | | | |
| **A3 Sportback** | | | | | | | | | | | | | | | |
| 1.2 (77 kw) | 2013.05-2015.05 | MT | F | R | Hatchback FWD CJZA | | GDS61042 | Drive Shaft | | 36 | | 59.5 | 40.5 | 814 | |
| 1.2 (81 kw) | 2014.05-2016.08 | 6MT | F | L | Hatchback FWD CYVB | | GDS83373 | Drive Shaft | | 36 | | 59.5 | 38 | 511 | |
| | 2014.05-2016.08 | 6MT | F | R | Hatchback FWD CYVB | | GDS61307 | Drive Shaft | | 36 | | 59.5 | 40 | 819 | |
| | 2014.05-2016.08 | 6MT | F | L/R | Hatchback FWD CYVB | | GCO83037 | Outer Joint | | 36 | 30 | 59.5 | 40.5 | 56 | I |
| | 2014.05-2016.08 | 6MT/7DCT | F | L/R | Hatchback FWD CYVB | | GCI53002 | Inner Joint | | | 33 | | | 34 | |
| | 2014.05-2016.08 | 6MT/7DCT | F | L/R | Hatchback FWD CYVB | | GCI82447 | Inner Joint | | | 33 | | | 34 | |
| | 2014.05-2016.08 | 6MT/7DCT | F | L/R | Hatchback FWD CYVB | | GCI83011 | Inner Joint | | | 33 | | | 34 | |
| | 2014.05-2016.08 | 7DCT | F | L | Hatchback FWD CYVB | | GDS61282 | Drive Shaft | | 36 | | 59.5 | 40 | 523 | |
| | 2014.05-2016.08 | 7DCT | F | R | Hatchback FWD CYVB | | GDS61096 | Drive Shaft | | 36 | | 59.5 | 40.5 | 799 | |
| | 2014.05-2016.08 | 7DCT | F | L/R | Hatchback FWD CYVB | | GCO61059 | Outer Joint | | 36 | 33 | 59.5 | 40 | 59.5 | I |
| 1.4 (81 kw) | 2013.11-2020.10 | 6MT | F | R | Hatchback FWD CPWA | For PR code:0EJ,Trans. code:MQ250 | GDS61283 | Drive Shaft | | 36 | | 59.5 | 40 | 815 | |
| | 2013.11-2020.10 | 6MT | F | R | Hatchback FWD CPWA | For PR code:0EC,Trans. code:MQ200_GA | GDS61307 | Drive Shaft | | 36 | | 59.5 | 40 | 819 | |
| | 2013.11-2020.10 | 6MT/7DCT | F | L | Hatchback FWD CPWA | | GDS61282 | Drive Shaft | | 36 | | 59.5 | 40 | 523 | |
| | 2013.11-2020.10 | 6MT/7DCT | F | L | Hatchback FWD CPWA | | GCO61059 | Outer Joint | | 36 | 33 | 59.5 | 40 | 59.5 | I |
| | 2013.11-2020.10 | 7DCT | F | R | Hatchback FWD CPWA | | GDS61096 | Drive Shaft | | 36 | | 59.5 | 40.5 | 799 | |
| | 2013.11-2020.10 | 7DCT/6MT | F | L/R | Hatchback FWD CPWA | | GCI82447 | Inner Joint | | | 33 | | | 34 | |
| 1.4 (90 kw) | 2012.09-2020.10 | 6MT | F | R | Hatchback FWD CMBA;CXSA | For PR code:0EJ,Trans. code:MQ250 | GDS61283 | Drive Shaft | | 36 | | 59.5 | 40 | 815 | |
| | 2012.09-2020.10 | 6MT | F | R | Hatchback FWD CMBA;CXSA | For PR code:0EC,Trans. code:MQ200_GA | GDS61307 | Drive Shaft | | 36 | | 59.5 | 40 | 819 | |
| | 2012.09-2020.10 | 6MT/7DCT | F | L | Hatchback FWD CMBA;CXSA | | GDS61282 | Drive Shaft | | 36 | | 59.5 | 40 | 523 | |
| | 2012.09-2020.10 | 6MT/7DCT | F | L | Hatchback FWD CMBA;CXSA | | GCO61059 | Outer Joint | | 36 | 33 | 59.5 | 40 | 59.5 | I |
| | 2012.09-2020.10 | 7DCT | F | R | Hatchback FWD CMBA;CXSA | | GDS61096 | Drive Shaft | | 36 | | 59.5 | 40.5 | 799 | |
| | 2012.09-2020.10 | 7DCT/6MT | F | L/R | Hatchback FWD CMBA;CXSA | | GCI82447 | Inner Joint | | | 33 | | | 34 | |
| 1.4 (92 kw) | 2007.09-2013.03 | 6MT | F | L/R | Hatchback FWD CAXC;CMSA | | GCI82447 | Inner Joint | | | 33 | | | 34 | |
| | 2007.09-2013.03 | 7DCT | F | L/R | Hatchback FWD CAXC;CMSA | Date to:2008.11 | GCI61054 | Inner Joint | | 40 | 28 | 46.9 | 41 | 101.7 | |
| | 2007.09-2013.03 | 7DCT | F | L/R | Hatchback FWD CAXC;CMSA | Date from:2008.12 | GCI83016 | Inner Joint | | | 28 | | | 32 | |
| | 2007.09-2013.03 | AT | F | L | Hatchback FWD CAXC;CMSA | Date from:2011.06 | GDS61201 | Drive Shaft | | 36 | | 59.5 | 40.5 | 535 | |
| | 2007.09-2013.03 | AT | F | L | Hatchback FWD CAXC;CMSA | Date from:2008.12,Date to:2011.05 | GDS61281 | Drive Shaft | | 36 | | 59.5 | 40 | 528 | |
| | 2007.09-2013.03 | AT | F | L | Hatchback FWD CAXC;CMSA | Date to:2008.11 | GDS81783 | Drive Shaft | | 36 | 40 | 59.5 | 40 | 531 | |
| | 2007.09-2013.03 | AT | F | R | Hatchback FWD CAXC;CMSA | Date from:2011.06 | GDS61096 | Drive Shaft | | 36 | | 59.5 | 40.5 | 799 | |
| | 2007.09-2013.03 | AT | F | R | Hatchback FWD CAXC;CMSA | Date from:2008.12,Date to:2011.05 | GDS81653 | Drive Shaft | | 36 | | 59.5 | 40 | 785 | |
| | 2007.09-2013.03 | AT | F | R | Hatchback FWD CAXC;CMSA | Date to:2008.11 | GDS81784 | Drive Shaft | | 36 | 40 | 59.5 | 40 | 801 | |
| | 2007.09-2013.03 | AT | F | R | Hatchback FWD CAXC;CMSA | Date from:2011.06 | GCO61059 | Outer Joint | | 36 | 33 | 59.5 | 40 | 59.5 | I |
| | 2007.09-2013.03 | AT | F | L/R | Hatchback FWD CAXC;CMSA | Date to:2011.05 | GCO83002 | Outer Joint | | 36 | 27 | 59.5 | 40 | 66 | I |
| | 2007.09-2013.03 | AT | F | L/R | Hatchback FWD CAXC;CMSA | Date from:2008.12;Date to:2011.05 | GCI61069 | Inner Joint | | | 28 | | | 32 | |
| | 2007.09-2013.03 | MT | F | L | Hatchback FWD CAXC;CMSA | date from:2008.07,date to:2009.11,chassis no. from:8P9A000001;date from:2006.12 | GDS61201 | Drive Shaft | | 36 | | 59.5 | 40.5 | 535 | |
| | 2007.09-2013.03 | MT | F | R | Hatchback FWD CAXC;CMSA | | GDS61096 | Drive Shaft | | 36 | | 59.5 | 40.5 | 799 | |
| | 2007.09-2013.03 | MT | F | R | Hatchback FWD CAXC;CMSA | | GCO83037 | Outer Joint | | 36 | 30 | 59.5 | 40.5 | 56 | I |
| | 2007.09-2013.03 | MT | F | R | Hatchback FWD CAXC;CMSA | | GCI53002 | Inner Joint | | | 33 | | | 34 | |
| | 2014.05-2016.08 | 6MT | F | R | Hatchback FWD CXSB;CZCA | For PR code:0EJ,Trans. code:MQ250 | GDS61283 | Drive Shaft | | 36 | | 59.5 | 40 | 815 | |
| | 2014.05-2016.08 | 6MT | F | R | Hatchback FWD CXSB;CZCA | For PR code:0EC,Trans. code:MQ200_GA | GDS61307 | Drive Shaft | | 36 | | 59.5 | 40 | 819 | |
| | 2014.05-2016.08 | 6MT/7DCT | F | L | Hatchback FWD CXSB;CZCA | | GDS61282 | Drive Shaft | | 36 | | 59.5 | 40 | 523 | |
| | 2014.05-2016.08 | 6MT/7DCT | F | L | Hatchback FWD CXSB;CZCA | | GCO61059 | Outer Joint | | 36 | 33 | 59.5 | 40 | 59.5 | I |
| | 2014.05-2016.08 | 7DCT | F | R | Hatchback FWD CXSB;CZCA | | GDS61096 | Drive Shaft | | 36 | | 59.5 | 40.5 | 799 | |
| | 2014.05-2016.08 | 7DCT/6MT | F | L/R | Hatchback FWD CXSB;CZCA | | GCI82447 | Inner Joint | | | 33 | | | 34 | |
| 1.4 (103 kw) | 2013.03-2014.11 | 6MT | F | L | Hatchback FWD CPTA | | GDS61282 | Drive Shaft | | 36 | | 59.5 | 40 | 523 | |
| | 2013.03-2014.11 | 6MT | F | R | Hatchback FWD CPTA | | GDS61283 | Drive Shaft | | 36 | | 59.5 | 40 | 815 | |
| | 2013.03-2014.11 | 6MT | F | L/R | Hatchback FWD CPTA | | GCO61059 | Outer Joint | | 36 | 33 | 59.5 | 40 | 59.5 | I |
| | 2013.03-2014.11 | 6MT | F | L/R | Hatchback FWD CPTA | | GCI82447 | Inner Joint | | | 33 | | | 34 | |
| | 2013.03-2014.11 | 7DCT | F | L | Hatchback FWD CPTA | | GDS61100 | Drive Shaft | | 36 | | 59.5 | 40 | 513 | |
| | 2013.03-2014.11 | 7DCT | F | R | Hatchback FWD CPTA | | GDS83313 | Drive Shaft | | 36 | | 59.5 | 40 | 792 | |
| | 2013.03-2014.11 | 7DCT | F | L/R | Hatchback FWD CPTA | | GCO83101 | Outer Joint | | 36 | 27 | 59.5 | 40 | 65 | M |
| | 2013.03-2014.11 | 7DCT | F | L/R | Hatchback FWD CPTA | | GCI83016 | Inner Joint | | | 28 | | | 32 | |
| 1.4 (110 kw) | 2014.05-2020.10 | 6MT | F | L | Hatchback FWD CZEA | | GDS61282 | Drive Shaft | | 36 | | 59.5 | 40 | 523 | |
| | 2014.05-2020.10 | 6MT | F | R | Hatchback FWD CZEA | | GDS61283 | Drive Shaft | | 36 | | 59.5 | 40 | 815 | |
| | 2014.05-2020.10 | 6MT | F | L/R | Hatchback FWD CZEA | | GCO61059 | Outer Joint | | 36 | 33 | 59.5 | 40 | 59.5 | I |
| | 2014.05-2020.10 | 6MT | F | L/R | Hatchback FWD CZEA | | GCI53002 | Inner Joint | | | 33 | | | 34 | |
| | 2014.05-2020.10 | 6MT | F | L/R | Hatchback FWD CZEA | | GCI82447 | Inner Joint | | | 33 | | | 34 | |
| | 2014.05-2020.10 | 7DCT | F | L | Hatchback FWD CZEA | | GDS61100 | Drive Shaft | | 36 | | 59.5 | 40 | 513 | |
| | 2014.05-2020.10 | 7DCT | F | R | Hatchback FWD CZEA | | GDS83313 | Drive Shaft | | 36 | | 59.5 | 40 | 792 | |
| | 2014.05-2020.10 | 7DCT | F | L/R | Hatchback FWD CZEA | | GCO83101 | Outer Joint | | 36 | 27 | 59.5 | 40 | 65 | M |
| | 2014.05-2020.10 | 7DCT | F | L/R | Hatchback FWD CZEA | | GCI61069 | Inner Joint | | | 28 | | | 32 | |
| | 2014.05-2020.10 | 7DCT | F | L/R | Hatchback FWD CZEA | | GCI83016 | Inner Joint | | | 28 | | | 32 | |
| 1.4 (150 kw) | 2014.05-2020.10 | 6AT | F | L | Hatchback FWD CUKB;CXUA;DGEA | | GDS81985 | Drive Shaft | | 36 | 37 | 59.5 | 40 | 546 | |
| | 2014.05-2020.10 | 6AT | F | R | Hatchback FWD CUKB;CXUA;DGEA | | GDS83612 | Drive Shaft | | 36 | 37 | 59.5 | 40 | 907 | |
| | 2014.05-2020.10 | 6AT | F | R | Hatchback FWD CUKB;CXUA;DGEA | | GCO83101 | Outer Joint | | 36 | 27 | 59.5 | 40 | 65 | M |

| | YEAR | TRANSM. | F/R | L/R | BODY STYLE & DRIVE TYPE & ENGINE | REMARKS | G-AP Ref. | PRODUCT | ABS | Technical Specifications A | B | C | H | L | P |
|---|---|---|---|---|---|---|---|---|---|---|---|---|---|---|---|
| **AUDI** | | | | | | | | | | | | | | | |
| **A3 Sportback** | | | | | | | | | | | | | | | |
| 1.4 (150 kw) | 2014.05-2020.10 | 6AT | F | L | Hatchback FWD CUKB;CXUA;DGEA | | GCI81158 | Inner Joint | | 37 | 34 | 34.5 | 65.5 | 83 | |
| | 2014.05-2020.10 | 6AT | F | R | Hatchback FWD CUKB;CXUA;DGEA | | GCI82108 | Inner Joint | | 37 | 34 | 40 | 77.5 | 103.5 | |
| | 2018.07-2020.10 | 6DCT | F | L | Hatchback FWD DGEA | | GDS81985 | Drive Shaft | | 36 | 37 | 59.5 | 40 | 546 | |
| | 2018.07-2020.10 | 6DCT | F | R | Hatchback FWD DGEA | | GDS83612 | Drive Shaft | | 36 | 37 | 59.5 | 40 | 907 | |
| | 2018.07-2020.10 | 6DCT | F | L | Hatchback FWD DGEA | | GCI81158 | Inner Joint | | 37 | 34 | 34.5 | 65.5 | 83 | |
| | 2020.06- | 6AT | F | L | Hatchback FWD DGEA | Date To:2020.11 | GDS81985 | Drive Shaft | | 36 | 37 | 59.5 | 40 | 546 | |
| | 2020.06- | 6AT | F | R | Hatchback FWD DGEA | | GDS83612 | Drive Shaft | | 36 | 37 | 59.5 | 40 | 907 | |
| | 2020.06- | 6AT | F | L/R | Hatchback FWD DGEA | | GCO83101 | Outer Joint | | 36 | 27 | 59.5 | 40 | 65 | M |
| | 2020.06- | 6AT | F | L | Hatchback FWD DGEA | | GCI81158 | Inner Joint | | 37 | 34 | 34.5 | 65.5 | 83 | |
| | 2020.06- | 6AT | F | R | Hatchback FWD DGEA | | GCI82108 | Inner Joint | | 37 | 34 | 40 | 77.5 | 103.5 | |
| 1.4 (180 kw) | 2021.07- | 6AT | F | L | Hatchback FWD DGEA | | GCI81158 | Inner Joint | | 37 | 34 | 34.5 | 65.5 | 83 | |
| | 2021.07- | 6AT | F | R | Hatchback FWD DGEA | | GCI82108 | Inner Joint | | 37 | 34 | 40 | 77.5 | 103.5 | |
| | 2021.07- | 6DCT | F | L | Hatchback FWD DGEA | Date from:2023.09,Date to:2023.11 | GDS81985 | Drive Shaft | | 36 | 37 | 59.5 | 40 | 546 | |
| | 2021.07- | 6DCT | F | R | Hatchback FWD DGEA | Date To:2023.11 | GDS83612 | Drive Shaft | | 36 | 37 | 59.5 | 40 | 907 | |
| 1.5 (85 kw) | 2024.05- | 7DCT | F | L | Hatchback FWD DXDE | | GDS61282 | Drive Shaft | | 36 | | 59.5 | 40 | 523 | |
| 1.5 (96 kw) | 2018.11-2020.10 | 7AT | F | L | Hatchback FWD DHFA | | GDS61282 | Drive Shaft | | 36 | | 59.5 | 40 | 523 | |
| | 2018.11-2020.10 | 7AT | F | R | Hatchback FWD DHFA | | GDS84417 | Drive Shaft | | 36 | | 59.5 | 40 | 783 | |
| | 2018.11-2020.10 | 7AT | F | L | Hatchback FWD DHFA | | GCO61059 | Outer Joint | | 36 | 33 | 59.5 | 40 | 59.5 | I |
| | 2018.11-2020.10 | 7AT | F | L | Hatchback FWD DHFA | | GCI53002 | Inner Joint | | | 33 | | | 34 | |
| | 2018.11-2020.10 | 7AT | F | L/R | Hatchback FWD DHFA | | GCI83011 | Inner Joint | | | 33 | | | 34 | |
| | 2018.11-2020.10 | 7DCT | F | L/R | Hatchback FWD DHFA | | GCI82447 | Inner Joint | | | 33 | | | 34 | |
| | 2020.07- | 7AT | F | L | Hatchback FWD DHFA | | GDS61282 | Drive Shaft | | 36 | | 59.5 | 40 | 523 | |
| | 2020.07- | 7AT | F | R | Hatchback FWD DHFA | | GDS84417 | Drive Shaft | | 36 | | 59.5 | 40 | 783 | |
| | 2020.07- | 7AT | F | L/R | Hatchback FWD DHFA | | GCO61059 | Outer Joint | | 36 | 33 | 59.5 | 40 | 59.5 | I |
| | 2020.07- | 7AT | F | R | Hatchback FWD DHFA | | GCI53002 | Inner Joint | | | 33 | | | 34 | |
| | 2020.07- | 7AT | R | L/R | Hatchback FWD DHFA | | GCI82447 | Inner Joint | | | 33 | | | 34 | |
| 1.5 (110 kw) | 2017.05-2018.10 | 6MT | F | L | Hatchback FWD DADA | | GDS61282 | Drive Shaft | | 36 | | 59.5 | 40 | 523 | |
| | 2017.05-2018.10 | 6MT | F | R | Hatchback FWD DADA | | GDS58110 | Drive Shaft | | 36 | | 59.5 | 40 | 793 | |
| | 2017.05-2018.10 | 6MT | F | L/R | Hatchback FWD DADA | | GCO61059 | Outer Joint | | 36 | 33 | 59.5 | 40 | 59.5 | I |
| | 2017.05-2018.10 | 6MT | F | L/R | Hatchback FWD DADA | | GCI82447 | Inner Joint | | | 33 | | | 34 | |
| | 2017.05-2018.10 | 7DCT | F | L | Hatchback FWD DADA | | GDS61100 | Drive Shaft | | 36 | | 59.5 | 40 | 513 | |
| | 2017.05-2018.10 | 7DCT | F | R | Hatchback FWD DADA | | GDS84503 | Drive Shaft | | 36 | 40 | 59.5 | 40 | 817 | |
| | 2017.05-2018.10 | 7DCT | F | L/R | Hatchback FWD DADA | | GCO83101 | Outer Joint | | 36 | 27 | 59.5 | 40 | 65 | M |
| | 2017.05-2018.10 | 7DCT | F | L | Hatchback FWD DADA | | GCI83016 | Inner Joint | | | 28 | | | 32 | |
| | 2017.05-2018.10 | 7DCT | F | R | Hatchback FWD DADA | | GCI61090 | Inner Joint | | 40 | 28 | 46.9 | | 133.2 | |
| | 2018.10-2020.10 | 6MT | F | L | Hatchback FWD DADA;DPCA | | GDS61282 | Drive Shaft | | 36 | | 59.5 | 40 | 523 | |
| | 2018.10-2020.10 | 7DCT | F | L | Hatchback FWD DADA;DPCA | | GDS61100 | Drive Shaft | | 36 | | 59.5 | 40 | 513 | |
| | 2018.10-2020.10 | 7DCT | F | R | Hatchback FWD DADA;DPCA | Date to:2019.01 | GDS84503 | Drive Shaft | | 36 | 40 | 59.5 | 40 | 817 | |
| | 2018.10-2020.10 | 7DCT | F | L | Hatchback FWD DADA;DPCA | Bellows Material:Plastic | GCI83016 | Inner Joint | | | 28 | | | 32 | |
| | 2019.11- | 6MT | F | L | Hatchback FWD DPCA;DXDB | | GDS84408 | Drive Shaft | | 36 | | 59.5 | 40 | 499 | |
| | 2019.11- | 6MT | F | R | Hatchback FWD DPCA;DXDB | | GDS84417 | Drive Shaft | | 36 | | 59.5 | 40 | 783 | |
| | 2019.11- | 6MT | F | L/R | Hatchback FWD DPCA;DXDB | | GCO61059 | Outer Joint | | 36 | 33 | 59.5 | 40 | 59.5 | I |
| | 2019.11- | 6MT | F | L/R | Hatchback FWD DPCA;DXDB | | GCI53002 | Inner Joint | | | 33 | | | 34 | |
| | 2019.11- | 6MT | F | L/R | Hatchback FWD DPCA;DXDB | | GCI82447 | Inner Joint | | | 33 | | | 34 | |
| | 2020.04- | 7AT | F | L | Hatchback FWD DFYA;DXDB | | GDS61100 | Drive Shaft | | 36 | | 59.5 | 40 | 513 | |
| | 2020.04- | 7AT | F | L | Hatchback FWD DFYA;DXDB | | GCO83101 | Outer Joint | | 36 | 27 | 59.5 | 40 | 65 | M |
| | 2020.04- | 7AT | F | R | Hatchback FWD DFYA;DXDB | | GCO61059 | Outer Joint | | 36 | 33 | 59.5 | 40 | 59.5 | I |
| | 2020.04- | 7AT | F | L | Hatchback FWD DFYA;DXDB | | GCI82456 | Inner Joint | | | 28 | | | 32 | |
| | 2020.04- | 7DCT | F | R | Hatchback FWD DFYA;DXDB | | GDS84503 | Drive Shaft | | 36 | 40 | 59.5 | 40 | 817 | |
| 1.5 (150 kw) | 2024.06- | 6DCT | F | L | Hatchback FWD DUCB | | GDS81985 | Drive Shaft | | 36 | 37 | 59.5 | 40 | 546 | |
| | 2024.06- | AT | F | L | Hatchback FWD DUCB | | GCI81158 | Inner Joint | | 37 | 34 | 34.5 | 65.5 | 83 | |
| 1.5 (200 kw) | 2024.11- | 6DCT | F | L | Hatchback FWD DUCA, EANB | | GDS81985 | Drive Shaft | | 36 | 37 | 59.5 | 40 | 546 | |
| | 2024.11- | AT | F | L | Hatchback FWD DUCA, EANB | | GCI81158 | Inner Joint | | 37 | 34 | 34.5 | 65.5 | 83 | |
| 1.6 (66 kw) | 2009.05-2013.03 | 5MT | F | L | Hatchback FWD CAYB | | GDS83294 | Drive Shaft | | 36 | | 59.5 | 38 | 519 | |
| | 2009.05-2013.03 | 5MT | F | R | Hatchback FWD CAYB | Date to:2011.05;Date from:2011.06,For PR code:G0C | GDS61042 | Drive Shaft | | 36 | | 59.5 | 40.5 | 814 | |
| | 2009.05-2013.03 | 5MT | F | R | Hatchback FWD CAYB | Date from:2011.06,For PR code:G0J | GDS61283 | Drive Shaft | | 36 | | 59.5 | 40 | 815 | |
| | 2009.05-2013.03 | 5MT | F | L/R | Hatchback FWD CAYB | Alt Version:2 | GCO61059 | Outer Joint | | 36 | 33 | 59.5 | 40 | 59.5 | I |
| | 2009.05-2013.03 | 5MT | F | L/R | Hatchback FWD CAYB | Alt Version:1 | GCO83037 | Outer Joint | | 36 | 30 | 59.5 | 40.5 | 56 | I |
| | 2009.05-2013.03 | 5MT | F | L/R | Hatchback FWD CAYB | | GCI82447 | Inner Joint | | | 33 | | | 34 | |
| 1.6 (75 kw) | 2004.09-2013.03 | 5MT/7DCT | F | L/R | Hatchback FWD BGU, BSE, BSF, CCSA | | GCI82447 | Inner Joint | | | 33 | | | 34 | |
| | 2004.09-2013.03 | 6AT | F | L | Hatchback FWD BGU, BSE, BSF, CCSA | Date to:2007.05,Chassis no. to:8P_7_250000 | GDS61093 | Drive Shaft | | 36 | 26 | 59.5 | 40.5 | 587.5 | |
| | 2004.09-2013.03 | 6AT | F | L | Hatchback FWD BGU, BSE, BSF, CCSA | Date from:2007.06,Chassis no. from:8P_8A000001/8P_8B000001 | GDS83318 | Drive Shaft | | 36 | 26 | 59.5 | 38 | 581 | |
| | 2004.09-2013.03 | 6AT | F | R | Hatchback FWD BGU, BSE, BSF, CCSA | | GDS83346 | Drive Shaft | | 36 | 26 | 59.5 | 38 | 879 | |
| | 2004.09-2013.03 | 6AT | F | L/R | Hatchback FWD BGU, BSE, BSF, CCSA | | GCI61011 | Inner Joint | | 26 | 32 | 31 | 68.5 | 85 | |
| | 2004.09-2013.03 | 6AT | F | L/R | Hatchback FWD BGU, BSE, BSF, CCSA | | GCI61050 | Inner Joint | | 26 | 32 | 31 | 68.5 | 89 | |

| | YEAR | TRANSM. | F/R | L/R | BODY STYLE & DRIVE TYPE & ENGINE | REMARKS | G-AP Ref. | PRODUCT | ABS | Technical Specifications | | | | | |
|---|---|---|---|---|---|---|---|---|---|---|---|---|---|---|---|
| | | | | | | | | | | A | B | C | H | L | P |
| **AUDI**<br>**A3 Sportback** | | | | | | | | | | | | | | | |
| 1.6 (75 kw) | 2004.09-2013.03 | 6AT/7AT/5MT | F | L/R | Hatchback FWD BGU, BSE, BSF, CCSA | | GCO83037 | Outer Joint | | 36 | 30 | 59.5 | 40.5 | 56 | I |
| | 2004.09-2013.03 | 7AT | F | L | Hatchback FWD BGU, BSE, BSF, CCSA | | GDS83294 | Drive Shaft | | 36 | | 59.5 | 38 | 519 | |
| | 2004.09-2013.03 | 7AT | F | R | Hatchback FWD BGU, BSE, BSF, CCSA | | GDS61042 | Drive Shaft | | 36 | | 59.5 | 40.5 | 814 | |
| | 2004.09-2013.03 | MT | F | L | Hatchback FWD BGU, BSE, BSF, CCSA | | GDS61097 | Drive Shaft | | 36 | | 59.5 | 40.5 | 543 | |
| | 2004.09-2013.03 | MT | F | R | Hatchback FWD BGU, BSE, BSF, CCSA | | GDS61096 | Drive Shaft | | 36 | | 59.5 | 40.5 | 799 | |
| | 2011.01-2013.03 | 5MT | F | L | Hatchback FWD BSE;CCSA;CMXA | | GDS61097 | Drive Shaft | | 36 | | 59.5 | 40.5 | 543 | |
| | 2011.01-2013.03 | 5MT | F | R | Hatchback FWD BSE;CCSA;CMXA | | GDS61096 | Drive Shaft | | 36 | | 59.5 | 40.5 | 799 | |
| | 2011.01-2013.03 | 5MT | F | L/R | Hatchback FWD BSE;CCSA;CMXA | | GCO83037 | Outer Joint | | 36 | 30 | 59.5 | 40.5 | 56 | I |
| | 2011.01-2013.03 | MT | F | L/R | Hatchback FWD BSE;CCSA;CMXA | | GCI83006 | Inner Joint | | | 33 | | | 34 | |
| | 2011.01-2013.03 | | F | L/R | Hatchback FWD BSE;CCSA;CMXA | | GCI83011 | Inner Joint | | | 33 | | | 34 | |
| 1.6 (77 kw) | 2009.05-2013.03 | 5MT | F | L | Hatchback FWD CAYC | Date to:2011.05;Date from:2011.06,For PR code:G0C | GDS83294 | Drive Shaft | | 36 | | 59.5 | 38 | 519 | |
| | 2009.05-2013.03 | 5MT | F | R | Hatchback FWD CAYC | Date to:2011.05;Date from:2011.06,For PR code:G0C | GDS61042 | Drive Shaft | | 36 | | 59.5 | 40.5 | 814 | |
| | 2009.05-2013.03 | 5MT | F | R | Hatchback FWD CAYC | Date from:2011.06,For PR code:G0J | GDS61283 | Drive Shaft | | 36 | | 59.5 | 40 | 815 | |
| | 2009.05-2013.03 | 5MT | F | L/R | Hatchback FWD CAYC | Date to:2011.05;Date from:2011.06,For PR code:G0C | GCO83037 | Outer Joint | | 36 | 30 | 59.5 | 40.5 | 56 | I |
| | 2009.05-2013.03 | 5MT/7DCT | F | L | Hatchback FWD CAYC | Transmission:5MT,Date from:2011.06,For PR code:G0J;Transmission:7DCT,Date from:2011.06 | GDS61282 | Drive Shaft | | 36 | | 59.5 | 40 | 523 | |
| | 2009.05-2013.03 | 5MT/7DCT | F | L/R | Hatchback FWD CAYC | Transmission:5MT,Alt Version:2;Transmission:7DCT,Date from:2011.06 | GCO61059 | Outer Joint | | 36 | 33 | 59.5 | 40 | 59.5 | I |
| | 2009.05-2013.03 | 5MT/7DCT | F | L/R | Hatchback FWD CAYC | Transmission:5MT;Transmission:7DCT,Date from:2011.06 | GCI82447 | Inner Joint | | | 33 | | | 34 | |
| | 2009.05-2013.03 | 7DCT | F | L | Hatchback FWD CAYC | Date to:2011.05 | GDS61100 | Drive Shaft | | 36 | | 59.5 | 40 | 513 | |
| | 2009.05-2013.03 | 7DCT | F | R | Hatchback FWD CAYC | Date from:2011.06 | GDS61096 | Drive Shaft | | 36 | | 59.5 | 40.5 | 799 | |
| | 2009.05-2013.03 | 7DCT | F | R | Hatchback FWD CAYC | Date to:2011.05 | GDS61339 | Drive Shaft | | 36 | | 59.5 | 40 | 794 | |
| | 2009.05-2013.03 | 7DCT | F | L/R | Hatchback FWD CAYC | Date to:2011.05 | GCO83002 | Outer Joint | | 36 | 27 | 59.5 | 40 | 66 | I |
| | 2009.05-2013.03 | 7DCT | F | R | Hatchback FWD CAYC | Date to:2011.05 | GCI61069 | Inner Joint | | | 28 | | | 32 | |
| | 2009.05-2013.03 | 7DCT | F | L/R | Hatchback FWD CAYC | Date to:2011.05 | GCI83016 | Inner Joint | | | 28 | | | 32 | |
| | 2012.10-2016.12 | 6MT | F | R | Hatchback FWD CLHA | | GDS61283 | Drive Shaft | | 36 | | 59.5 | 40 | 815 | |
| | 2012.10-2016.12 | 6MT/7DCT | F | L | Hatchback FWD CLHA | | GDS61282 | Drive Shaft | | 36 | | 59.5 | 40 | 523 | |
| | 2012.10-2016.12 | 6MT/7DCT | F | L/R | Hatchback FWD CLHA | | GCO61059 | Outer Joint | | 36 | 33 | 59.5 | 40 | 59.5 | I |
| | 2012.10-2016.12 | 6MT/7DCT | F | L/R | Hatchback FWD CLHA | | GCI53002 | Inner Joint | | | 33 | | | 34 | |
| | 2012.10-2016.12 | 6MT/7DCT | F | L/R | Hatchback FWD CLHA | | GCI82447 | Inner Joint | | | 33 | | | 34 | |
| | 2012.10-2016.12 | 7DCT | F | R | Hatchback FWD CLHA | | GDS61096 | Drive Shaft | | 36 | | 59.5 | 40.5 | 799 | |
| 1.6 (81 kw) | 2013.09-2020.10 | 6MT | F | R | Hatchback FWD CRKB;CXXB;DBKA | | GDS61283 | Drive Shaft | | 36 | | 59.5 | 40 | 815 | |
| | 2013.09-2020.10 | 6MT/7DCT | F | L | Hatchback FWD CRKB;CXXB;DBKA | | GDS61282 | Drive Shaft | | 36 | | 59.5 | 40 | 523 | |
| | 2013.09-2020.10 | 6MT/7DCT | F | L/R | Hatchback FWD CRKB;CXXB;DBKA | | GCO61059 | Outer Joint | | 36 | 33 | 59.5 | 40 | 59.5 | I |
| | 2013.09-2020.10 | 6MT/7DCT | F | L/R | Hatchback FWD CRKB;CXXB;DBKA | | GCI53002 | Inner Joint | | | 33 | | | 34 | |
| | 2013.09-2020.10 | 6MT/7DCT | F | L/R | Hatchback FWD CRKB;CXXB;DBKA | | GCI82447 | Inner Joint | | | 33 | | | 34 | |
| | 2013.09-2020.10 | 7DCT | F | R | Hatchback FWD CRKB;CXXB;DBKA | | GDS61096 | Drive Shaft | | 36 | | 59.5 | 40.5 | 799 | |
| 1.6 (85 kw) | 2004.09-2007.09 | 6MT | F | L | Hatchback FWD BLP, BLF | | GDS83319 | Drive Shaft | | 36 | | 59.5 | 38 | 557 | |
| | 2004.09-2007.09 | 6MT | F | R | Hatchback FWD BLP, BLF | | GDS61211 | Drive Shaft | | 36 | | 59.5 | 40.5 | 784 | |
| | 2004.09-2007.09 | 6MT | F | L/R | Hatchback FWD BLP, BLF | | GCO83037 | Outer Joint | | 36 | 30 | 59.5 | 40.5 | 56 | I |
| | 2004.09-2007.09 | 6MT | F | L/R | Hatchback FWD BLP, BLF | | GCI82447 | Inner Joint | | | 33 | | | 34 | |
| | 2017.02-2020.10 | 6MT | F | R | Hatchback FWD DDYA | | GDS61283 | Drive Shaft | | 36 | | 59.5 | 40 | 815 | |
| | 2017.02-2020.10 | 6MT/7DCT | F | L | Hatchback FWD DDYA | | GDS61282 | Drive Shaft | | 36 | | 59.5 | 40 | 523 | |
| | 2017.02-2020.10 | 6MT/7DCT | F | L/R | Hatchback FWD DDYA | | GCO61059 | Outer Joint | | 36 | 33 | 59.5 | 40 | 59.5 | I |
| | 2017.02-2020.10 | 6MT/7DCT | F | L/R | Hatchback FWD DDYA | | GCI53002 | Inner Joint | | | 33 | | | 34 | |
| | 2017.02-2020.10 | 6MT/7DCT | F | L/R | Hatchback FWD DDYA | | GCI82447 | Inner Joint | | | 33 | | | 34 | |
| | 2017.02-2020.10 | 7DCT | F | R | Hatchback FWD DDYA | | GDS61096 | Drive Shaft | | 36 | | 59.5 | 40.5 | 799 | |
| | 2018.07-2020.10 | 6MT | F | R | Hatchback FWD DGTE | | GDS61283 | Drive Shaft | | 36 | | 59.5 | 40 | 815 | |
| | 2018.07-2020.10 | 6MT/7DCT | F | L | Hatchback FWD DGTE | | GDS61282 | Drive Shaft | | 36 | | 59.5 | 40 | 523 | |
| | 2018.07-2020.10 | 7DCT | F | R | Hatchback FWD DGTE | | GDS61096 | Drive Shaft | | 36 | | 59.5 | 40.5 | 799 | |
| 1.8 (118 kw) | 2006.11-2013.03 | 6DCT | F | L | Hatchback FWD BYT;BZB;CDAA | Transmission:6MT,For PR code:0EN;Transmission:6DCT | GDS83295 | Drive Shaft | | 36 | | 59.5 | 40 | 491 | |
| | 2006.11-2013.03 | 6DCT | F | R | Hatchback FWD BYT;BZB;CDAA | | GDS81653 | Drive Shaft | | 36 | | 59.5 | 40 | 785 | |
| | 2006.11-2013.03 | 6DCT/7DCT/6MT | F | L/R | Hatchback FWD BYT;BZB;CDAA | Transmission:6MT,Date to:2009.11;Date from:2010.11;Transmission:6MT,For PR code:0EN;Transmission:6DCT/7DCT | GCO83002 | Outer Joint | | 36 | 27 | 59.5 | 40 | 66 | I |
| | 2006.11-2013.03 | 6MT | F | L | Hatchback FWD BYT;BZB;CDAA | Date from:2009.11,Date to:2010.10,For PR code:0EJ | GDS61282 | Drive Shaft | | 36 | | 59.5 | 40 | 523 | |
| | 2006.11-2013.03 | 6MT | F | R | Hatchback FWD BYT;BZB;CDAA | Date from:2009.11,Date to:2010.10,For PR code:0EJ | GDS61283 | Drive Shaft | | 36 | | 59.5 | 40 | 815 | |
| | 2006.11-2013.03 | 6MT | F | R | Hatchback FWD BYT;BZB;CDAA | Date to:2009.11,Date from:2010.11,For PR code:0EJ | GDS61341 | Drive Shaft | | 36 | | 59.5 | 40 | 806 | |
| | 2006.11-2013.03 | 6MT | F | R | Hatchback FWD BYT;BZB;CDAA | For PR code:0EN | GDS83313 | Drive Shaft | | 36 | | 59.5 | 40 | 792 | |
| | 2006.11-2013.03 | 6MT | F | L/R | Hatchback FWD BYT;BZB;CDAA | Date from:2009.11,Date to:2010.10 | GCO61059 | Outer Joint | | 36 | 33 | 59.5 | 40 | 59.5 | I |
| | 2006.11-2013.03 | 6MT | F | L/R | Hatchback FWD BYT;BZB;CDAA | Date from:2009.11,Date to:2010.10 | GCI53002 | Inner Joint | | | 33 | | | 34 | |
| | 2006.11-2013.03 | 6MT | F | L/R | Hatchback FWD BYT;BZB;CDAA | Trans. code:MQ350 | GCI83016 | Inner Joint | | | 28 | | | 32 | |
| | 2006.11-2013.03 | 6MT/6DCT | F | L/R | Hatchback FWD BYT;BZB;CDAA | Date from:2009.11,Date to:2010.10 | GCI82447 | Inner Joint | | | 33 | | | 34 | |
| | 2006.11-2013.03 | 6MT/6DCT/7DCT | F | L/R | Hatchback FWD BYT;BZB;CDAA | Transmission:7DCT,Date from:2009.11;Transmission:6MT,Date to:2009.11;Date from:2010.11;Transmission:6DCT | GCI61069 | Inner Joint | | | 28 | | | 32 | |
| | 2006.11-2013.03 | 6MT/7DCT | F | L | Hatchback FWD BYT;BZB;CDAA | Transmission:6MT,Date to:2009.11;Date from:2010.11,For PR code:0EJ;Transmission:7DCT,Date from:2009.11 | GDS61100 | Drive Shaft | | 36 | | 59.5 | 40 | 513 | |
| | 2006.11-2013.03 | 7DCT | F | L | Hatchback FWD BYT;BZB;CDAA | Date to:2008.10 | GDS82260 | Drive Shaft | | 36 | 40 | 59.5 | 40 | 519 | |
| | 2006.11-2013.03 | 7DCT | F | R | Hatchback FWD BYT;BZB;CDAA | | GDS61339 | Drive Shaft | | 36 | | 59.5 | 40 | 794 | |
| | 2006.11-2013.03 | 7DCT | F | L/R | Hatchback FWD BYT;BZB;CDAA | Date from:2008.11 | GCO83101 | Outer Joint | | 36 | 27 | 59.5 | 40 | 65 | M |
| | 2006.11-2013.03 | 7DCT | F | L | Hatchback FWD BYT;BZB;CDAA | Date to:2008.10 | GCI61054 | Inner Joint | | 40 | 28 | 46.9 | 41 | 101.7 | |

| | YEAR | TRANSM. | F/R | L/R | BODY STYLE & DRIVE TYPE & ENGINE | REMARKS | G-AP Ref. | PRODUCT | ABS | Technical Specifications A | B | C | H | L | P |
|---|---|---|---|---|---|---|---|---|---|---|---|---|---|---|---|
| **AUDI** | | | | | | | | | | | | | | | |
| **A3 Sportback** | | | | | | | | | | | | | | | |
| 1.8 (132 kw) | 2012.09-2016.08 | 6MT | F | L | Hatchback FWD CJSA;CJSB | | GDS61100 | Drive Shaft | | 36 | | 59.5 | 40 | 513 | |
| | 2012.09-2016.08 | 6MT | F | R | Hatchback FWD CJSA;CJSB | | GDS61101 | Drive Shaft | | 36 | | 59.5 | 40 | 803 | |
| | 2012.09-2016.08 | 6MT | F | L/R | Hatchback FWD CJSA;CJSB | | GCO83101 | Outer Joint | | 36 | 27 | 59.5 | 40 | 65 | M |
| | 2012.09-2016.08 | 7DCT | F | R | Hatchback FWD CJSA;CJSB | Date to:2016.02 | GDS61147 | Drive Shaft | | 36 | | 59.5 | 40 | 795 | |
| | 2012.09-2016.08 | 7DCT | F | R | Hatchback FWD CJSA;CJSB | Date from:2016.03 | GDS83313 | Drive Shaft | | 36 | | 59.5 | 40 | 792 | |
| | 2012.09-2016.08 | 7DCT | F | L | Hatchback FWD CJSA;CJSB | | GCO83101 | Outer Joint | | 36 | 27 | 59.5 | 40 | 65 | M |
| | 2012.09-2016.08 | 7DCT | F | L | Hatchback FWD CJSA;CJSB | | GCI61069 | Inner Joint | | | 28 | | | 32 | |
| | 2012.09-2016.08 | 7DCT/6MT | F | L/R | Hatchback FWD CJSA;CJSB | Transmission:7DCT,Posission:Right | GCI83016 | Inner Joint | | | 28 | | | 32 | |
| | 2012.09-2016.08 | AT | F | L/R | Hatchback FWD CJSA;CJSB | Date to:2016.08;For PR code:G1C | GCO83101 | Outer Joint | | 36 | 27 | 59.5 | 40 | 65 | M |
| | 2014.03-2015.12 | 6DCT | F | L | Hatchback FWD CJSA;CJSB | | GDS98006 | Stub Axle-Flange | | 37 | | | 67 | 123.5 | |
| | 2014.03-2015.12 | 6MT | F | L | Hatchback FWD CJSA;CJSB | | GDS61100 | Drive Shaft | | 36 | | 59.5 | 40 | 513 | |
| | 2014.03-2015.12 | 6MT | F | R | Hatchback FWD CJSA;CJSB | Date from:2015.02 | GDS61101 | Drive Shaft | | 36 | | 59.5 | 40 | 803 | |
| | 2014.03-2015.12 | 6MT/7DCT | F | L/R | Hatchback FWD CJSA;CJSB | Transmission:7DCT,Position:Right;Transmission:6MT,Position:Left/Right;Bellows Material:Plastic | GCI83016 | Inner Joint | | | 28 | | | 32 | |
| | 2014.03-2015.12 | 7DCT | F | R | Hatchback FWD CJSA;CJSB | Date to:2016.02 | GDS61147 | Drive Shaft | | 36 | | 59.5 | 40 | 795 | |
| | 2014.03-2015.12 | 7DCT | F | R | Hatchback FWD CJSA;CJSB | Date from:2016.03 | GDS83313 | Drive Shaft | | 36 | | 59.5 | 40 | 792 | |
| 1.9 (77 kw) | 2004.09-2010.05 | 5MT | F | L | Hatchback FWD BXE, BKC, BLS | | GDS83294 | Drive Shaft | | 36 | | 59.5 | 38 | 519 | |
| | 2004.09-2010.05 | 5MT | F | R | Hatchback FWD BXE, BKC, BLS | | GDS61042 | Drive Shaft | | 36 | | 59.5 | 40.5 | 814 | |
| | 2004.09-2010.05 | 5MT | F | L/R | Hatchback FWD BXE, BKC, BLS | | GCI82447 | Inner Joint | | | 33 | | | 34 | |
| | 2004.09-2010.05 | 6DCT | F | L | Hatchback FWD BXE, BKC, BLS | Date to:2009.08;Date from:2009.08;For PR code:1PD1PF1PA;Not for driving school cars | GDS54013 | Drive Shaft | | 36 | | 59.5 | 40 | 479.5 | |
| | 2004.09-2010.05 | 6DCT | F | L | Hatchback FWD BXE, BKC, BLS | For driving school cars | GDS83381 | Drive Shaft | | 36 | | 59.5 | 40 | 483 | |
| | 2004.09-2010.05 | 6DCT | F | R | Hatchback FWD BXE, BKC, BLS | TJ | GDS54011 | Drive Shaft | | 36 | | 59.5 | 40 | 755 | |
| | 2004.09-2010.05 | 6DCT | F | R | Hatchback FWD BXE, BKC, BLS | AAR | GDS83354 | Drive Shaft | | 36 | | 59.5 | 40 | 763 | |
| | 2004.09-2010.05 | 6DCT | F | L/R | Hatchback FWD BXE, BKC, BLS | | GCO83002 | Outer Joint | | 36 | 27 | 59.5 | 40 | 66 | I |
| | 2004.09-2010.05 | 6DCT | F | L/R | Hatchback FWD BXE, BKC, BLS | | GCO83101 | Outer Joint | | 36 | 27 | 59.5 | 40 | 65 | M |
| | 2004.09-2010.05 | 6DCT | F | L/R | Hatchback FWD BXE, BKC, BLS | TJ | GCI54004 | Inner Joint | | | 34 | | | 81 | |
| | 2004.09-2010.05 | 6DCT | F | L/R | Hatchback FWD BXE, BKC, BLS | AAR | GCI61057 | Inner Joint | | | 34 | | | 89 | |
| | 2004.09-2010.05 | AT | F | L | Hatchback FWD BXE, BKC, BLS | | GDS83241 | Drive Shaft | | 36 | | 59.5 | 40 | 475 | |
| | 2004.09-2010.05 | MT | F | L/R | Hatchback FWD BXE, BKC, BLS | | GCO83037 | Outer Joint | | 36 | 30 | 59.5 | 40.5 | 56 | I |
| 2.0 (81 kw) | 2013.05-2020.10 | 5MT | F | L | Hatchback FWD CRFA | | GDS61282 | Drive Shaft | | 36 | | 59.5 | 40 | 523 | |
| | 2013.05-2020.10 | 5MT | F | R | Hatchback FWD CRFA | | GDS61283 | Drive Shaft | | 36 | | 59.5 | 40 | 815 | |
| | 2013.05-2020.10 | 5MT | F | L/R | Hatchback FWD CRFA | | GCO61059 | Outer Joint | | 36 | 33 | 59.5 | 40 | 59.5 | I |
| | 2013.05-2020.10 | 5MT | F | L/R | Hatchback FWD CRFA | | GCI53002 | Inner Joint | | | 33 | | | 34 | |
| | 2013.05-2020.10 | 5MT | F | L/R | Hatchback FWD CRFA | | GCI82447 | Inner Joint | | | 33 | | | 34 | |
| | 2013.05-2020.10 | MT | F | L | Hatchback FWD CRFA | | GDS83294 | Drive Shaft | | 36 | | 59.5 | 38 | 519 | |
| | 2013.05-2020.10 | MT | F | L | Hatchback FWD CRFA | | GCO83037 | Outer Joint | | 36 | 30 | 59.5 | 40.5 | 56 | I |
| | 2013.05-2020.10 | | F | L/R | Hatchback FWD CRFA | Date To:2016.08 | GCI83011 | Inner Joint | | | 33 | | | 34 | |
| 2.0 (85 kw) | 2019.11- | 6MT | F | L | Hatchback FWD DSUD;DTRD;DTRB;DXRC | | GDS83295 | Drive Shaft | | 36 | | 59.5 | 40 | 491 | |
| | 2019.11- | 6MT | F | R | Hatchback FWD DSUD;DTRD;DTRB;DXRC | | GDS81891 | Drive Shaft | | 36 | | 59.5 | 40 | 781 | |
| | 2019.11- | 6MT | F | L/R | Hatchback FWD DSUD;DTRD;DTRB;DXRC | | GCO83101 | Outer Joint | | 36 | 27 | 59.5 | 40 | 65 | M |
| | 2019.11- | 6MT | F | L/R | Hatchback FWD DSUD;DTRD;DTRB;DXRC | | GCI61069 | Inner Joint | | | 28 | | | 32 | |
| | 2019.11- | 6MT | F | L/R | Hatchback FWD DSUD;DTRD;DTRB;DXRC | | GCI82456 | Inner Joint | | | 28 | | | 32 | |
| | 2019.11- | 6MT | F | R | Hatchback FWD DSUD;DTRD;DTRB;DXRC | | GDS98007 | Stub Axle-Flange | | 37 | | | 88 | 148 | |
| | 2019.11- | 7DCT | F | L | Hatchback FWD DSUD;DTRD;DTRB;DXRC | | GDS61282 | Drive Shaft | | 36 | | 59.5 | 40 | 523 | |
| | 2019.11- | 7DCT | F | R | Hatchback FWD DSUD;DTRD;DTRB;DXRC | | GDS84417 | Drive Shaft | | 36 | | 59.5 | 40 | 783 | |
| | 2019.11- | 7DCT | F | L/R | Hatchback FWD DSUD;DTRD;DTRB;DXRC | | GCO61059 | Outer Joint | | 36 | 33 | 59.5 | 40 | 59.5 | I |
| | 2019.11- | 7DCT | F | L/R | Hatchback FWD DSUD;DTRD;DTRB;DXRC | | GCI53002 | Inner Joint | | | 33 | | | 34 | |
| | 2019.11- | 7DCT | F | L/R | Hatchback FWD DSUD;DTRD;DTRB;DXRC | | GCI82447 | Inner Joint | | | 33 | | | 34 | |
| 2.0 (100 kw) | 2004.09-2013.03 | 6DCT | F | L | Hatchback FWD CFFA, AZV, CBAA | Not For driving school cars | GDS54013 | Drive Shaft | | 36 | | 59.5 | 40 | 479.5 | |
| | 2004.09-2013.03 | 6DCT | F | R | Hatchback FWD CFFA, AZV, CBAA | Transmission:7DCT,Position:Right;Transmission:6MT,Position:Left/Right;Bellows Material:Plastic | GDS54011 | Drive Shaft | | 36 | | 59.5 | 40 | 755 | |
| | 2004.09-2013.03 | 6DCT | F | R | Hatchback FWD CFFA, AZV, CBAA | Chassis no. to:8P-5A072 500/8P-5B001 000 | GDS83355 | Drive Shaft | | 36 | 23 | 59.5 | 40 | 799 | |
| | 2004.09-2013.03 | 6DCT | F | R | Hatchback FWD CFFA, AZV, CBAA | Chassis no. to:8P_5A072500/8P_5B001000;Position:Right | GCI83041 | Inner Joint | | 23 | 34 | | 319 | 88 | |
| | 2004.09-2013.03 | 6DCT | F | L/R | Hatchback FWD CFFA, AZV, CBAA | Transmission:7DCT,Position:Left;Transmission:6MT,Position:Left/Right;Bellows Material:Plastic;Category:Long Joint | GCI54004 | Inner Joint | | | 34 | | | 81 | |
| | 2004.09-2013.03 | 6DCT | F | L/R | Hatchback FWD CFFA, AZV, CBAA | Transmission:7DCT,Position:Left;Transmission:6MT,Position:Left/Right;Bellows Material:Plastic;Category:Long Joint | GCI61057 | Inner Joint | | | 34 | | | 89 | |
| | 2004.09-2013.03 | 6MT | F | L/R | Hatchback FWD CFFA, AZV, CBAA | | GCI83016 | Inner Joint | | | 28 | | | 32 | |
| | 2004.09-2013.03 | AT | F | L/R | Hatchback FWD CFFA, AZV, CBAA | For driving school cars,For Engine Code:AZV | GCO83101 | Outer Joint | | 36 | 27 | 59.5 | 40 | 65 | M |
| | 2004.09-2013.03 | AT/MT | F | L/R | Hatchback FWD CFFA, AZV, CBAA | For Engine Code:CBAA/CFFA;Transmission:6T;For Engine Code:AZV;Transmission:MT;For Engine Code:AZV:CBAA/CFFA | GCO83002 | Outer Joint | | 36 | 27 | 59.5 | 40 | 66 | I |
| | 2004.09-2013.03 | MT | F | L | Hatchback FWD CFFA, AZV, CBAA | For Engine Code:AZV,For driving school cars | GDS83295 | Drive Shaft | | 36 | | 59.5 | 40 | 491 | |
| | 2004.09-2013.03 | MT | F | R | Hatchback FWD CFFA, AZV, CBAA | For Engine code:AZV;For driving school cars | GDS61126 | Drive Shaft | | 36 | | 59.5 | 40 | 793 | |
| | 2004.09-2013.03 | MT | F | R | Hatchback FWD CFFA, AZV, CBAA | | GDS83236 | Drive Shaft | | 36 | | 59.5 | 40 | 484 | |
| | 2004.09-2013.03 | MT | F | R | Hatchback FWD CFFA, AZV, CBAA | For Engine Code:AZV,For driving school cars | GDS83313 | Drive Shaft | | 36 | | 59.5 | 40 | 792 | |
| | 2013.05-2016.08 | 6AT/6MT | F | L/R | Hatchback FWD CRBD;CRLC | | GCI54004 | Inner Joint | | | 34 | | | 81 | |
| | 2013.05-2016.08 | 6AT/6MT | F | L/R | Hatchback FWD CRBD;CRLC | Original Tripod Design | GCI61057 | Inner Joint | | | 34 | | | 89 | |
| | 2013.05-2016.08 | 6AT/6MT | F | L/R | Hatchback FWD CRBD;CRLC | | GCI83016 | Inner Joint | | | 28 | | | 32 | |
| | 2013.05-2016.08 | 6DCT | F | L | Hatchback FWD CRBD;CRLC | | GDS61285 | Drive Shaft | | 36 | | 59.5 | 40 | 472 | |
| | 2013.05-2016.08 | 6DCT | F | R | Hatchback FWD CRBD;CRLC | | GDS83354 | Drive Shaft | | 36 | | 59.5 | 40 | 763 | |

| | YEAR | TRANSM. | F/R | L/R | BODY STYLE & DRIVE TYPE & ENGINE | REMARKS | G-AP Ref. | PRODUCT | ABS | Technical Specifications A | B | C | H | L | P |
|---|---|---|---|---|---|---|---|---|---|---|---|---|---|---|---|
| **AUDI** | | | | | | | | | | | | | | | |
| **A3 Sportback** | | | | | | | | | | | | | | | |
| 2.0 (100 kw) | 2013.05-2016.08 | 6MT | F | L | Hatchback FWD CRBD;CRLC | | GDS83295 | Drive Shaft | | 36 | | 59.5 | 40 | 491 | |
| | 2013.05-2016.08 | 6MT | F | R | Hatchback FWD CRBD;CRLC | | GDS83313 | Drive Shaft | | 36 | | 59.5 | 40 | 792 | |
| | 2013.05-2016.08 | 6MT | F | L | Hatchback FWD CRBD;CRLC | Date to:2013.10;For PR code:2H7 | GCO83101 | Outer Joint | | 36 | 27 | 59.5 | 40 | 65 | M |
| | 2013.05-2016.08 | 6MT | F | L | Hatchback FWD CRBD;CRLC | Date to:2013.10;For PR code:2H7 | GCI61069 | Inner Joint | | | 28 | | | 32 | |
| 2.0 (103 kw) | 2004.09-2013.03 | 6DCT | F | L | Hatchback FWD BKD;CBAB;CFFB;CLJA;CBEA | Not For driving school cars | GDS54013 | Drive Shaft | | 36 | | 59.5 | 40 | 479.5 | |
| | 2004.09-2013.03 | 6DCT | F | L | Hatchback FWD BKD;CBAB;CFFB;CLJA;CBEA | For driving school cars | GDS83381 | Drive Shaft | | 36 | | 59.5 | 40 | 483 | |
| | 2004.09-2013.03 | 6DCT | F | R | Hatchback FWD BKD;CBAB;CFFB;CLJA;CBEA | Not For driving school cars | GDS54011 | Drive Shaft | | 36 | | 59.5 | 40 | 755 | |
| | 2004.09-2013.03 | 6DCT | F | R | Hatchback FWD BKD;CBAB;CFFB;CLJA;CBEA | For driving school cars | GDS83354 | Drive Shaft | | 36 | | 59.5 | 40 | 763 | |
| | 2004.09-2013.03 | 6DCT | F | L/R | Hatchback FWD BKD;CBAB;CFFB;CLJA;CBEA | TJ | GCI54004 | Inner Joint | | | 34 | | | 81 | |
| | 2004.09-2013.03 | 6DCT | F | L/R | Hatchback FWD BKD;CBAB;CFFB;CLJA;CBEA | AAR | GCI61057 | Inner Joint | | | 34 | | | 89 | |
| | 2004.09-2013.03 | 6DCT/6MT | F | R | Hatchback FWD BKD;CBAB;CFFB;CLJA;CBEA | Chassis no.:WAUZZZ8P1DA000001-WAUZZZ8P1DA000001;Chassis no.:from prodcution date(yyyymmdd):20080801-20080801;Chassis no.:with automatic damper | GDS83355 | Drive Shaft | | 36 | 23 | 59.5 | 40 | 799 | |
| | 2004.09-2013.03 | 6DCT/6MT | F | L/R | Hatchback FWD BKD;CBAB;CFFB;CLJA;CBEA | Not For driving school cars | GCO83002 | Outer Joint | | 36 | 27 | 59.5 | 40 | 66 | I |
| | 2004.09-2013.03 | 6DCT/6MT | F | L/R | Hatchback FWD BKD;CBAB;CFFB;CLJA;CBEA | For driving school cars | GCO83101 | Outer Joint | | 36 | 27 | 59.5 | 40 | 65 | M |
| | 2004.09-2013.03 | 6MT | F | L | Hatchback FWD BKD;CBAB;CFFB;CLJA;CBEA | Add from:2008.07;Chassis no. from:8P_MA000001/8P_8B000001;For steel rims;With vibration damper | GDS83295 | Drive Shaft | | 36 | | 59.5 | 40 | 491 | |
| | 2004.09-2013.03 | 6MT | F | R | Hatchback FWD BKD;CBAB;CFFB;CLJA;CBEA | For driving school cars | GDS61126 | Drive Shaft | | 36 | | 59.5 | 40 | 793 | |
| | 2004.09-2013.03 | 6MT | F | R | Hatchback FWD BKD;CBAB;CFFB;CLJA;CBEA | Chassis no.:WAUZZZ8P1DA000001-WAUZZZ8P1DA000001;Chassis no.:from prodcution date(yyyymmdd):20080801-20080801;Chassis no.:without automatic damper | GDS83313 | Drive Shaft | | 36 | | 59.5 | 40 | 792 | |
| | 2004.09-2013.03 | 6MT | F | L/R | Hatchback FWD BKD;CBAB;CFFB;CLJA;CBEA | | GCI83016 | Inner Joint | | | 28 | | | 32 | |
| | 2004.09-2013.03 | AT | F | L | Hatchback FWD BKD;CBAB;CFFB;CLJA;CBEA | | GDS83241 | Drive Shaft | | 36 | | 59.5 | 40 | 475 | |
| | 2004.09-2013.03 | MT | F | R | Hatchback FWD BKD;CBAB;CFFB;CLJA;CBEA | Chassis no.to:8P-5A-072500/8P-5B-001000 | GDS83236 | Drive Shaft | | 36 | | 59.5 | 40 | 484 | |
| | 2005.06-2008.06 | 6DCT | F | L | Hatchback FWD BMM | Not For driving school cars | GDS54013 | Drive Shaft | | 36 | | 59.5 | 40 | 479.5 | |
| | 2005.06-2008.06 | 6DCT | F | L | Hatchback FWD BMM | Chassis no. to:8P_8A250000/8P_8B050000;For driving school cars | GDS83381 | Drive Shaft | | 36 | | 59.5 | 40 | 483 | |
| | 2005.06-2008.06 | 6DCT | F | R | Hatchback FWD BMM | Not For driving school cars | GDS54011 | Drive Shaft | | 36 | | 59.5 | 40 | 755 | |
| | 2005.06-2008.06 | 6DCT | F | R | Hatchback FWD BMM | For driving school cars | GDS83354 | Drive Shaft | | 36 | | 59.5 | 40 | 763 | |
| | 2005.06-2008.06 | 6DCT | F | L/R | Hatchback FWD BMM | TJ | GCI54004 | Inner Joint | | | 34 | | | 81 | |
| | 2005.06-2008.06 | 6DCT | F | L/R | Hatchback FWD BMM | AAR | GCI61057 | Inner Joint | | | 34 | | | 89 | |
| | 2005.06-2008.06 | 6DCT/6MT | F | L/R | Hatchback FWD BMM | Not For driving school cars | GCO83002 | Outer Joint | | 36 | 27 | 59.5 | 40 | 66 | I |
| | 2005.06-2008.06 | 6DCT/6MT | F | L/R | Hatchback FWD BMM | For driving school cars | GCO83101 | Outer Joint | | 36 | 27 | 59.5 | 40 | 65 | M |
| | 2005.06-2008.06 | 6MT | F | L | Hatchback FWD BMM | | GDS83295 | Drive Shaft | | 36 | | 59.5 | 40 | 491 | |
| | 2005.06-2008.06 | 6MT | F | R | Hatchback FWD BMM | For driving school cars | GDS61126 | Drive Shaft | | 36 | | 59.5 | 40 | 793 | |
| | 2005.06-2008.06 | 6MT | F | R | Hatchback FWD BMM | Not For driving school cars | GDS83313 | Drive Shaft | | 36 | | 59.5 | 40 | 792 | |
| | 2005.06-2008.06 | 6MT | F | L/R | Hatchback FWD BMM | | GCI83016 | Inner Joint | | | 28 | | | 32 | |
| 2.0 (105 kw) | 2013.03-2020.10 | 6AT | F | L | Hatchback FWD CRFC | | GDS61285 | Drive Shaft | | 36 | | 59.5 | 40 | 472 | |
| | 2013.03-2020.10 | 6AT | F | R | Hatchback FWD CRFC | | GDS83354 | Drive Shaft | | 36 | | 59.5 | 40 | 763 | |
| | 2013.03-2020.10 | 6AT | F | L/R | Hatchback FWD CRFC | | GCO83101 | Outer Joint | | 36 | 27 | 59.5 | 40 | 65 | M |
| | 2013.03-2020.10 | 6AT | F | L/R | Hatchback FWD CRFC | | GCI61057 | Inner Joint | | | 34 | | | 89 | |
| | 2013.03-2020.10 | | F | L/R | Hatchback FWD CRFC | | GCI54004 | Inner Joint | | | 34 | | | 81 | |
| 2.0 (110 kw) | 2004.09-2008.06 | 6AT/6MT | F | L/R | Hatchback FWD BLR, AXW, BVY, BVZ, BLX, BLY, BMB | | GCO83037 | Outer Joint | | 36 | 30 | 59.5 | 40.5 | 56 | I |
| | 2004.09-2008.06 | 6DCT | F | L/R | Hatchback FWD BLR, AXW, BVY, BVZ, BLX, BLY, BMB | | GCI61011 | Inner Joint | | 26 | 32 | 31 | 68.5 | 85 | |
| | 2004.09-2008.06 | 6DCT | F | L/R | Hatchback FWD BLR, AXW, BVY, BVZ, BLX, BLY, BMB | | GCI61050 | Inner Joint | | 26 | 32 | 31 | 68.5 | 89 | |
| | 2004.09-2008.06 | 6MT | F | L/R | Hatchback FWD BLR, AXW, BVY, BVZ, BLX, BLY, BMB | | GCI82447 | Inner Joint | | | 33 | | | 34 | |
| | 2004.09-2008.06 | AT | F | L | Hatchback FWD BLR, AXW, BVY, BVZ, BLX, BLY, BMB | | GDS61093 | Drive Shaft | | 36 | 26 | 59.5 | 40.5 | 587.5 | |
| | 2004.09-2008.06 | AT | F | R | Hatchback FWD BLR, AXW, BVY, BVZ, BLX, BLY, BMB | | GDS61094 | Drive Shaft | | 36 | 26 | 59.5 | 40.5 | 884 | |
| | 2004.09-2008.06 | MT | F | L | Hatchback FWD BLR, AXW, BVY, BVZ, BLX, BLY, BMB | | GDS83294 | Drive Shaft | | 36 | | 59.5 | 38 | 519 | |
| | 2004.09-2008.06 | MT | F | R | Hatchback FWD BLR, AXW, BVY, BVZ, BLX, BLY, BMB | | GDS61042 | Drive Shaft | | 36 | | 59.5 | 40.5 | 814 | |
| | 2012.09-2020.10 | 6DCT | F | L | Hatchback FWD CRBC;CRLB;CRUA;DEJA;DCYA;DBGA;DFGA | | GDS61285 | Drive Shaft | | 36 | | 59.5 | 40 | 472 | |
| | 2012.09-2020.10 | 6DCT | F | R | Hatchback FWD CRBC;CRLB;CRUA;DEJA;DCYA;DBGA;DFGA | | GDS83354 | Drive Shaft | | 36 | | 59.5 | 40 | 763 | |
| | 2012.09-2020.10 | 6DCT | F | L/R | Hatchback FWD CRBC;CRLB;CRUA;DEJA;DCYA;DBGA;DFGA | For PR code:8VA;TJ | GCI54004 | Inner Joint | | | 34 | | | 81 | |
| | 2012.09-2020.10 | 6DCT | F | L/R | Hatchback FWD CRBC;CRLB;CRUA;DEJA;DCYA;DBGA;DFGA | For PR code:8VA;AAR | GCI61057 | Inner Joint | | | 34 | | | 89 | |
| | 2012.09-2020.10 | 6MT | F | L | Hatchback FWD CRBC;CRLB;CRUA;DEJA;DCYA;DBGA;DFGA | | GDS83295 | Drive Shaft | | 36 | | 59.5 | 40 | 491 | |
| | 2012.09-2020.10 | 6MT | F | R | Hatchback FWD CRBC;CRLB;CRUA;DEJA;DCYA;DBGA;DFGA | | GDS83313 | Drive Shaft | | 36 | | 59.5 | 40 | 792 | |
| | 2012.09-2020.10 | 6MT | F | L | Hatchback FWD CRBC;CRLB;CRUA;DEJA;DCYA;DBGA;DFGA | Date to:2013.10;For PR code:2H7 | GCI61069 | Inner Joint | | | 28 | | | 32 | |
| | 2012.09-2020.10 | 6MT | F | L/R | Hatchback FWD CRBC;CRLB;CRUA;DEJA;DCYA;DBGA;DFGA | | GCI83016 | Inner Joint | | | 28 | | | 32 | |
| | 2012.09-2020.10 | 6MT/6DCT/7DCT | F | L/R | Hatchback FWD CRBC;CRLB;CRUA;DEJA;DCYA;DBGA;DFGA | | GCO83101 | Outer Joint | | 36 | 27 | 59.5 | 40 | 65 | M |
| | 2012.09-2020.10 | 7DCT | F | L | Hatchback FWD CRBC;CRLB;CRUA;DEJA;DCYA;DBGA;DFGA | | GDS81265 | Drive Shaft | | 36 | 37 | 59.5 | 40 | 557 | |
| | 2012.09-2020.10 | 7DCT | F | R | Hatchback FWD CRBC;CRLB;CRUA;DEJA;DCYA;DBGA;DFGA | | GDS83612 | Drive Shaft | | 36 | 37 | 59.5 | 40 | 907 | |
| | 2012.09-2020.10 | 7DCT | F | L | Hatchback FWD CRBC;CRLB;CRUA;DEJA;DCYA;DBGA;DFGA | | GCI81158 | Inner Joint | | 37 | 34 | 34.5 | 65.5 | 83 | |
| | 2012.09-2020.10 | 7DCT | F | R | Hatchback FWD CRBC;CRLB;CRUA;DEJA;DCYA;DBGA;DFGA | | GCI82108 | Inner Joint | | 37 | 34 | 40 | 77.5 | 103.5 | |
| | 2012.09-2020.10 | AT | F | L | Hatchback FWD CRBC;CRLB;CRUA;DEJA;DCYA;DBGA;DFGA | | GDS83241 | Drive Shaft | | 36 | | 59.5 | 40 | 475 | |
| | 2012.09-2020.10 | AT | F | R | Hatchback FWD CRBC;CRLB;CRUA;DEJA;DCYA;DBGA;DFGA | | GDS54011 | Drive Shaft | | 36 | | 59.5 | 40 | 755 | |
| | 2012.09-2020.10 | MT | F | R | Hatchback FWD CRBC;CRLB;CRUA;DEJA;DCYA;DBGA;DFGA | | GDS61126 | Drive Shaft | | 36 | | 59.5 | 40 | 793 | |
| | 2018.07-2020.10 | 6DCT | F | L | Hatchback FWD DFGA | | GDS61285 | Drive Shaft | | 36 | | 59.5 | 40 | 472 | |
| | 2018.07-2020.10 | 6DCT | F | R | Hatchback FWD DFGA | | GDS83354 | Drive Shaft | | 36 | | 59.5 | 40 | 763 | |
| | 2018.07-2020.10 | 6DCT | F | L/R | Hatchback FWD DFGA | For PR code:8VA;TJ | GCI54004 | Inner Joint | | | 34 | | | 81 | |
| | 2018.07-2020.10 | 6DCT | F | L/R | Hatchback FWD DFGA | For PR code:8VA;AAR | GCI61057 | Inner Joint | | | 34 | | | 89 | |
| | 2018.07-2020.10 | 6MT | F | L | Hatchback FWD DFGA | | GDS83295 | Drive Shaft | | 36 | | 59.5 | 40 | 491 | |

| | YEAR | TRANSM. | F/R | L/R | BODY STYLE & DRIVE TYPE & ENGINE | REMARKS | G-AP Ref. | PRODUCT | ABS | Technical Specifications A | B | C | H | L | P |
|---|---|---|---|---|---|---|---|---|---|---|---|---|---|---|---|
| **AUDI** | | | | | | | | | | | | | | | |
| **A3 Sportback** | | | | | | | | | | | | | | | |
| 2.0 (110 kw) | 2018.07-2020.10 | 6MT | F | R | Hatchback FWD DFGA | | GDS83313 | Drive Shaft | | 36 | | 59.5 | 40 | 792 | |
| | 2018.07-2020.10 | 6MT | F | L | Hatchback FWD DFGA | Date to:2013.10;For PR code:2H7 | GCI61069 | Inner Joint | | | 28 | | | 32 | |
| | 2018.07-2020.10 | 6MT | F | L/R | Hatchback FWD DFGA | | GCI83016 | Inner Joint | | | 28 | | | 32 | |
| | 2018.07-2020.10 | 6MT/6DCT/7DCT | F | L/R | Hatchback FWD DFGA | | GCO83101 | Outer Joint | | 36 | 27 | 59.5 | 40 | 65 | M |
| | 2018.07-2020.10 | 7DCT | F | L | Hatchback FWD DFGA | | GDS81265 | Drive Shaft | | 36 | 37 | 59.5 | 40 | 557 | |
| | 2018.07-2020.10 | 7DCT | F | R | Hatchback FWD DFGA | | GDS83612 | Drive Shaft | | 36 | 37 | 59.5 | 40 | 907 | |
| | 2018.07-2020.10 | 7DCT | F | L | Hatchback FWD DFGA | | GCI81158 | Inner Joint | | 37 | 34 | 34.5 | 65.5 | 83 | |
| | 2018.07-2020.10 | 7DCT | F | R | Hatchback FWD DFGA | | GCI82108 | Inner Joint | | 37 | 34 | 40 | 77.5 | 103.5 | |
| | 2018.07-2020.10 | AT | F | L | Hatchback FWD DFGA | | GDS83241 | Drive Shaft | | 36 | | 59.5 | 40 | 475 | |
| | 2018.07-2020.10 | AT | F | R | Hatchback FWD DFGA | | GDS54011 | Drive Shaft | | 36 | | 59.5 | 40 | 755 | |
| | 2018.07-2020.10 | MT | F | R | Hatchback FWD DFGA | | GDS61126 | Drive Shaft | | 36 | | 59.5 | 40 | 793 | |
| | 2019.11- | 6MT | F | L | Hatchback FWD DSRB;DTSB;DTSA;DXPA | | GDS83295 | Drive Shaft | | 36 | | 59.5 | 40 | 491 | |
| | 2019.11- | 6MT | F | R | Hatchback FWD DSRB;DTSB;DTSA;DXPA | | GDS81891 | Drive Shaft | | 36 | | 59.5 | 40 | 781 | |
| | 2019.11- | 6MT/7DCT | F | L/R | Hatchback FWD DSRB;DTSB;DTSA;DXPA | | GCO83101 | Outer Joint | | 36 | 27 | 59.5 | 40 | 65 | M |
| | 2019.11- | 7DCT | F | L | Hatchback FWD DSRB;DTSB;DTSA;DXPA | | GDS81265 | Drive Shaft | | 36 | 37 | 59.5 | 40 | 557 | |
| | 2019.11- | 7DCT | F | R | Hatchback FWD DSRB;DTSB;DTSA;DXPA | | GDS83612 | Drive Shaft | | 36 | 37 | 59.5 | 40 | 907 | |
| | 2019.11- | 7DCT | F | L | Hatchback FWD DSRB;DTSB;DTSA;DXPA | | GCI81158 | Inner Joint | | 37 | 34 | 34.5 | 65.5 | 83 | |
| | 2019.11- | 7DCT | F | R | Hatchback FWD DSRB;DTSB;DTSA;DXPA | | GCI82108 | Inner Joint | | 37 | 34 | 40 | 77.5 | 103.5 | |
| 2.0 (120 kw) | 2006.06-2008.06 | 6AT/6MT | F | L/R | Hatchback FWD BUY | | GCI54004 | Inner Joint | | | 34 | | | 81 | |
| | 2006.06-2008.06 | 6AT/6MT | F | L/R | Hatchback FWD BUY | Original Tripod Design | GCI61057 | Inner Joint | | | 34 | | | 89 | |
| | 2006.06-2008.06 | 6AT/6MT | F | L/R | Hatchback FWD BUY | | GCI83016 | Inner Joint | | | 28 | | | 32 | |
| | 2006.06-2008.06 | 6DCT | F | L | Hatchback FWD BUY | | GDS83381 | Drive Shaft | | 36 | | 59.5 | 40 | 483 | |
| | 2006.06-2008.06 | 6DCT | F | R | Hatchback FWD BUY | | GDS54011 | Drive Shaft | | 36 | | 59.5 | 40 | 755 | |
| | 2006.06-2008.06 | AT | F | L/R | Hatchback FWD BUY | For Engine code:BKD;For driving school cars | GCO83101 | Outer Joint | | 36 | 27 | 59.5 | 40 | 65 | M |
| | 2006.06-2008.06 | MT | F | L | Hatchback FWD BUY | | GDS83236 | Drive Shaft | | 36 | | 59.5 | 40 | 484 | |
| | 2006.06-2008.06 | MT | F | L | Hatchback FWD BUY | | GDS83295 | Drive Shaft | | 36 | | 59.5 | 40 | 491 | |
| | 2006.06-2008.06 | MT | F | R | Hatchback FWD BUY | | GDS61126 | Drive Shaft | | 36 | | 59.5 | 40 | 793 | |
| 2.0 (125 kw) | 2006.03-2013.03 | 6DCT | F | L | Hatchback FWD BMN;CBBB;CFGB | Date from:2009.06,For PR code:1PA | GDS54013 | Drive Shaft | | 36 | | 59.5 | 40 | 479.5 | |
| | 2006.03-2013.03 | 6DCT | F | L | Hatchback FWD BMN;CBBB;CFGB | | GDS83381 | Drive Shaft | | 36 | | 59.5 | 40 | 483 | |
| | 2006.03-2013.03 | 6DCT | F | R | Hatchback FWD BMN;CBBB;CFGB | TJ | GDS54011 | Drive Shaft | | 36 | | 59.5 | 40 | 755 | |
| | 2006.03-2013.03 | 6DCT | F | R | Hatchback FWD BMN;CBBB;CFGB | AAR | GDS83354 | Drive Shaft | | 36 | | 59.5 | 40 | 763 | |
| | 2006.03-2013.03 | 6DCT | F | L/R | Hatchback FWD BMN;CBBB;CFGB | TJ | GCI54004 | Inner Joint | | | 34 | | | 81 | |
| | 2006.03-2013.03 | 6DCT | F | L/R | Hatchback FWD BMN;CBBB;CFGB | AAR | GCI61057 | Inner Joint | | | 34 | | | 89 | |
| | 2006.03-2013.03 | 6MT | F | L | Hatchback FWD BMN;CBBB;CFGB | | GDS83295 | Drive Shaft | | 36 | | 59.5 | 40 | 491 | |
| | 2006.03-2013.03 | 6MT | F | R | Hatchback FWD BMN;CBBB;CFGB | | GDS61126 | Drive Shaft | | 36 | | 59.5 | 40 | 793 | |
| | 2006.03-2013.03 | 6MT | F | L/R | Hatchback FWD BMN;CBBB;CFGB | | GCI83016 | Inner Joint | | | 28 | | | 32 | |
| | 2006.03-2013.03 | 6MT/6DCT | F | L/R | Hatchback FWD BMN;CBBB;CFGB | | GCO83101 | Outer Joint | | 36 | 27 | 59.5 | 40 | 65 | M |
| 2.0 (135 kw) | 2013.05-2018.07 | 6MT | F | L | Hatchback FWD CUNA;DGCA | Date to:2013.10,For PR code:2H0/2H6 | GDS83295 | Drive Shaft | | 36 | | 59.5 | 40 | 491 | |
| | 2013.05-2018.07 | 6MT | F | R | Hatchback FWD CUNA;DGCA | | GDS83313 | Drive Shaft | | 36 | | 59.5 | 40 | 792 | |
| | 2013.05-2018.07 | 6MT | F | L | Hatchback FWD CUNA;DGCA | | GCO83101 | Outer Joint | | 36 | 27 | 59.5 | 40 | 65 | M |
| | 2013.05-2018.07 | 6MT | F | L | Hatchback FWD CUNA;DGCA | | GCI61069 | Inner Joint | | | 28 | | | 32 | |
| | 2013.05-2018.07 | 6MT | F | R | Hatchback FWD CUNA;DGCA | | GCI83016 | Inner Joint | | | 28 | | | 32 | |
| 2.0 (140 kw) | 2016.05-2020.10 | 6MT | F | L | Hatchback FWD CZPB;DKZA | | GDS83295 | Drive Shaft | | 36 | | 59.5 | 40 | 491 | |
| | 2016.05-2020.10 | 6MT | F | R | Hatchback FWD CZPB;DKZA | | GDS83313 | Drive Shaft | | 36 | | 59.5 | 40 | 792 | |
| | 2016.05-2020.10 | 6MT | F | L | Hatchback FWD CZPB;DKZA | | GCO83101 | Outer Joint | | 36 | 27 | 59.5 | 40 | 65 | M |
| | 2016.05-2020.10 | 6MT | F | L | Hatchback FWD CZPB;DKZA | | GCI61069 | Inner Joint | | | 28 | | | 32 | |
| | 2016.05-2020.10 | 6MT | F | R | Hatchback FWD CZPB;DKZA | | GCI83016 | Inner Joint | | | 28 | | | 32 | |
| | 2016.05-2020.10 | 7DCT | F | L | Hatchback FWD CZPB;DKZA | | GDS84237 | Drive Shaft | | 36 | 37 | 59.5 | 40 | 560 | |
| | 2016.05-2020.10 | 7DCT | F | L | Hatchback FWD CZPB;DKZA | | GCI83028 | Inner Joint | | 37 | 28 | | 65.5 | 90.2 | |
| | 2018.07-2020.10 | 6MT | F | L | Hatchback FWD DKZA | | GDS83295 | Drive Shaft | | 36 | | 59.5 | 40 | 491 | |
| | 2018.07-2020.10 | 6MT | F | R | Hatchback FWD DKZA | | GDS83313 | Drive Shaft | | 36 | | 59.5 | 40 | 792 | |
| | 2018.07-2020.10 | 6MT | F | R | Hatchback FWD DKZA | Bellows Material:Plastic | GCI83016 | Inner Joint | | | 28 | | | 32 | |
| | 2018.07-2020.10 | 7DCT | F | L | Hatchback FWD DKZA | | GDS84237 | Drive Shaft | | 36 | 37 | 59.5 | 40 | 560 | |
| 2.0 (147 kw) | 2004.09-2013.03 | 6DCT | F | R | Hatchback FWD AXX;BWA;BPY;CAWB;CCZA;CBFA;CCTA | Date from:2010.01 | GDS81653 | Drive Shaft | | 36 | | 59.5 | 40 | 785 | |
| | 2004.09-2013.03 | 6DCT | F | R | Hatchback FWD AXX;BWA;BPY;CAWB;CCZA;CBFA;CCTA | Date to:2009.12 | GDS83349 | Drive Shaft | | 36 | | 59.5 | 40 | 784 | |
| | 2004.09-2013.03 | 6MT | F | R | Hatchback FWD AXX;BWA;BPY;CAWB;CCZA;CBFA;CCTA | Date to:2009.12 | GDS61126 | Drive Shaft | | 36 | | 59.5 | 40 | 793 | |
| | 2004.09-2013.03 | 6MT | F | R | Hatchback FWD AXX;BWA;BPY;CAWB;CCZA;CBFA;CCTA | Date from:2010.01 | GDS83313 | Drive Shaft | | 36 | | 59.5 | 40 | 792 | |
| | 2004.09-2013.03 | 6MT/6DCT | F | L/R | Hatchback FWD AXX;BWA;BPY;CAWB;CCZA;CBFA;CCTA | Date to:2009.12 | GCO83002 | Outer Joint | | 36 | 27 | 59.5 | 40 | 66 | I |
| | 2004.09-2013.03 | 6MT/6DCT | F | L/R | Hatchback FWD AXX;BWA;BPY;CAWB;CCZA;CBFA;CCTA | Date from:2010.01 | GCO83101 | Outer Joint | | 36 | 27 | 59.5 | 40 | 65 | M |
| | 2004.09-2013.03 | 6MT/6DCT | F | L/R | Hatchback FWD AXX;BWA;BPY;CAWB;CCZA;CBFA;CCTA | | GCI83016 | Inner Joint | | | 28 | | | 32 | |
| | 2004.09-2013.03 | AT | F | L | Hatchback FWD AXX;BWA;BPY;CAWB;CCZA;CBFA;CCTA | | GDS83295 | Drive Shaft | | 36 | | 59.5 | 40 | 491 | |
| 2.0 (162 kw) | 2015.02-2016.08 | 6DCT | F | L | Hatchback FWD CHHB | | GDS98006 | Stub Axle-Flange | | 37 | | | 67 | 123.5 | |
| **A3 Sportback Quattro** | | | | | | | | | | | | | | | |
| 1.6 (81 kw) | 2015.05-2016.08 | 6MT | F | L | Hatchback 4WD CXXB | | GDS83295 | Drive Shaft | | 36 | | 59.5 | 40 | 491 | |
| | 2015.05-2016.08 | 6MT | F | R | Hatchback 4WD CXXB | | GDS81892 | Drive Shaft | | 36 | | 59.5 | 40 | 602 | |

| | YEAR | TRANSM. | F/R | L/R | BODY STYLE & DRIVE TYPE & ENGINE | REMARKS | G-AP Ref. | PRODUCT | ABS | Technical Specifications A | B | C | H | L | P |
|---|---|---|---|---|---|---|---|---|---|---|---|---|---|---|---|
| **AUDI** | | | | | | | | | | | | | | | |
| **A3 Sportback Quattro** | | | | | | | | | | | | | | | |
| 1.6 (81 kw) | 2015.05-2016.08 | 6MT | F | L/R | Hatchback 4WD CXXB | | GCO83101 | Outer Joint | | 36 | 27 | 59.5 | 40 | 65 | M |
| | 2015.05-2016.08 | 6MT | F | L/R | Hatchback 4WD CXXB | | GCI61069 | Inner Joint | | | 28 | | | 32 | |
| | 2015.05-2016.08 | 6MT | F | L/R | Hatchback 4WD CXXB | | GCI83016 | Inner Joint | | | 28 | | | 32 | |
| | 2015.05-2016.08 | 6MT | R | L | Hatchback 4WD CXXB | | GDS61286 | Drive Shaft | | 36 | | 59.5 | 40 | 587 | |
| | 2015.05-2016.08 | 6MT | R | R | Hatchback 4WD CXXB | | GDS61287 | Drive Shaft | | 36 | | 59.5 | 40 | 632 | |
| | 2015.05-2016.08 | 6MT | R | L/R | Hatchback 4WD CXXB | | GCI35026 | Outer Joint | | 36 | 33 | 59.5 | 40 | 61 | |
| | 2015.05-2016.08 | 6MT | R | L/R | Hatchback 4WD CXXB | | GCI61103 | Inner Joint | | | 33 | | | 32 | |
| 1.8 (118 kw) | 2008.07-2013.03 | 7AT/6MT | F | L | Hatchback 4WD CDAA | | GDS83295 | Drive Shaft | | 36 | | 59.5 | 40 | 491 | |
| | 2008.07-2013.03 | 7AT/6MT | F | R | Hatchback 4WD CDAA | | GDS83266 | Drive Shaft | | 36 | | 59.5 | 40 | 601 | |
| | 2008.07-2013.03 | 7AT/6MT | F | L | Hatchback 4WD CDAA | Rims:With steel rim | GCO83101 | Outer Joint | | 36 | 27 | 59.5 | 40 | 65 | M |
| | 2008.07-2013.03 | | F | L/R | Hatchback 4WD CDAA | | GCO83002 | Outer Joint | | 36 | 27 | 59.5 | 40 | 66 | I |
| | 2008.07-2013.03 | | F | L/R | Hatchback 4WD CDAA | | GCI83006 | Inner Joint | | | 33 | | | 34 | |
| | 2008.07-2013.03 | | F | L/R | Hatchback 4WD CDAA | | GCI83016 | Inner Joint | | | 28 | | | 32 | |
| | 2008.07-2013.03 | 6MT/7AT | R | L | Hatchback 4WD CDAA | | GDS61284 | Drive Shaft | | 36 | | 59.5 | 40 | 594 | |
| | 2008.07-2013.03 | 6MT/7AT | R | R | Hatchback 4WD CDAA | | GDS61293 | Drive Shaft | | 36 | | 59.5 | 40 | 631 | |
| | 2008.07-2013.03 | 7AT/6MT | R | L/R | Hatchback 4WD CDAA | | GCI35026 | Outer Joint | | 36 | 33 | 59.5 | 40 | 61 | |
| | 2008.07-2013.03 | 7DCT/6MT | R | L/R | Hatchback 4WD CDAA | Date to:2012.05 | GCI82447 | Inner Joint | | | 33 | | | 34 | |
| 1.8 (132 kw) | 2013.05-2016.08 | 6AT | F | L | Hatchback 4WD CJSB | | GDS83295 | Drive Shaft | | 36 | | 59.5 | 40 | 491 | |
| | 2013.05-2016.08 | 6AT | F | L | Hatchback 4WD CJSB | | GCO83101 | Outer Joint | | 36 | 27 | 59.5 | 40 | 65 | M |
| | 2013.05-2016.08 | 6AT | F | L | Hatchback 4WD CJSB | | GCI61069 | Inner Joint | | | 28 | | | 32 | |
| | 2013.05-2016.08 | 6AT/6MT | F | R | Hatchback 4WD CJSB | | GDS81892 | Drive Shaft | | 36 | | 59.5 | 40 | 602 | |
| | 2013.05-2016.08 | | F | L/R | Hatchback 4WD CJSB | | GCI83016 | Inner Joint | | | 28 | | | 32 | |
| | 2013.05-2016.08 | 6AT | R | L | Hatchback 4WD CJSB | | GDS61286 | Drive Shaft | | 36 | | 59.5 | 40 | 587 | |
| | 2013.05-2016.08 | 6AT | R | R | Hatchback 4WD CJSB | | GDS61287 | Drive Shaft | | 36 | | 59.5 | 40 | 632 | |
| | 2013.05-2016.08 | 6AT | R | L/R | Hatchback 4WD CJSB | | GCI35026 | Outer Joint | | 36 | 33 | 59.5 | 40 | 61 | |
| | 2013.05-2016.08 | 6AT | R | L/R | Hatchback 4WD CJSB | | GCI61103 | Inner Joint | | | 33 | | | 32 | |
| 2.0 (103 kw) | 2005.11-2013.03 | AT | F | L | Hatchback 4WD BKD;CBAB;CFFB | | GDS83241 | Drive Shaft | | 36 | | 59.5 | 40 | 475 | |
| | 2005.11-2013.03 | AT | F | R | Hatchback 4WD BKD;CBAB;CFFB | | GDS54011 | Drive Shaft | | 36 | | 59.5 | 40 | 755 | |
| | 2005.11-2013.03 | AT | F | L/R | Hatchback 4WD BKD;CBAB;CFFB | | GCI54004 | Inner Joint | | | 34 | | | 81 | |
| | 2005.11-2013.03 | AT | F | L/R | Hatchback 4WD BKD;CBAB;CFFB | | GCI61057 | Inner Joint | | | 34 | | | 89 | |
| | 2005.11-2013.03 | AT/MT | F | L/R | Hatchback 4WD BKD;CBAB;CFFB | | GCO83002 | Outer Joint | | 36 | 27 | 59.5 | 40 | 66 | I |
| | 2005.11-2013.03 | MT | F | L | Hatchback 4WD BKD;CBAB;CFFB | Date from:2008.07 | GDS83236 | Drive Shaft | | 36 | | 59.5 | 40 | 484 | |
| | 2005.11-2013.03 | MT | F | L | Hatchback 4WD BKD;CBAB;CFFB | Date to:2008.06 | GDS83295 | Drive Shaft | | 36 | | 59.5 | 40 | 491 | |
| | 2005.11-2013.03 | MT | F | R | Hatchback 4WD BKD;CBAB;CFFB | For Engine Code:BKD | GDS83266 | Drive Shaft | | 36 | | 59.5 | 40 | 601 | |
| | 2005.11-2013.03 | MT | F | R | Hatchback 4WD BKD;CBAB;CFFB | For Engine Code:CBAB/CFFB | GDS83295 | Drive Shaft | | 36 | | 59.5 | 40 | 491 | |
| | 2005.11-2013.03 | MT | F | L/R | Hatchback 4WD BKD;CBAB;CFFB | | GCO83101 | Outer Joint | | 36 | 27 | 59.5 | 40 | 65 | M |
| | 2005.11-2013.03 | MT | F | L/R | Hatchback 4WD BKD;CBAB;CFFB | | GCI61041 | Inner Joint | | | 28 | | | 32 | |
| | 2005.11-2013.03 | MT | F | L/R | Hatchback 4WD BKD;CBAB;CFFB | | GCI61069 | Inner Joint | | | 28 | | | 32 | |
| | 2005.11-2013.03 | MT | F | L/R | Hatchback 4WD BKD;CBAB;CFFB | | GCI83016 | Inner Joint | | | 28 | | | 32 | |
| | 2005.11-2013.03 | 6MT | R | L/R | Hatchback 4WD BKD;CBAB;CFFB | Date to:2011.05 | GCO83037 | Outer Joint | | 36 | 30 | 59.5 | 40.5 | 56 | I |
| | 2005.11-2013.03 | AT/MT | R | L | Hatchback 4WD BKD;CBAB;CFFB | | GDS61284 | Drive Shaft | | 36 | | 59.5 | 40 | 594 | |
| | 2005.11-2013.03 | AT/MT | R | R | Hatchback 4WD BKD;CBAB;CFFB | | GDS61293 | Drive Shaft | | 36 | | 59.5 | 40 | 631 | |
| | 2005.11-2013.03 | AT/MT | R | L/R | Hatchback 4WD BKD;CBAB;CFFB | | GCI35026 | Outer Joint | | 36 | 33 | 59.5 | 40 | 61 | |
| | 2005.11-2013.03 | AT/MT | R | L/R | Hatchback 4WD BKD;CBAB;CFFB | | GCI53002 | Inner Joint | | | 33 | | | 34 | |
| | 2006.01-2008.06 | 6AT/6MT | F | L | Hatchback 4WD BMM | | GDS83295 | Drive Shaft | | 36 | | 59.5 | 40 | 491 | |
| | 2006.01-2008.06 | 6AT/6MT | F | R | Hatchback 4WD BMM | | GDS83266 | Drive Shaft | | 36 | | 59.5 | 40 | 601 | |
| | 2006.01-2008.06 | AT | F | L/R | Hatchback 4WD BMM | Date from:2007.06;for driving school cars | GCO83101 | Outer Joint | | 36 | 27 | 59.5 | 40 | 65 | M |
| | 2006.01-2008.06 | AT | F | L/R | Hatchback 4WD BMM | Date from:2007.06 | GCI61057 | Inner Joint | | | 34 | | | 89 | |
| | 2006.01-2008.06 | MT | F | L | Hatchback 4WD BMM | | GDS83236 | Drive Shaft | | 36 | | 59.5 | 40 | 484 | |
| | 2006.01-2008.06 | Semi-AT | F | L | Hatchback 4WD BMM | | GDS83241 | Drive Shaft | | 36 | | 59.5 | 40 | 475 | |
| | 2006.01-2008.06 | Semi-AT | F | L | Hatchback 4WD BMM | | GCI54004 | Inner Joint | | | 34 | | | 81 | |
| | 2006.01-2008.06 | | F | L/R | Hatchback 4WD BMM | | GCO83002 | Outer Joint | | 36 | 27 | 59.5 | 40 | 66 | I |
| | 2006.01-2008.06 | | F | L/R | Hatchback 4WD BMM | | GCI83016 | Inner Joint | | | 28 | | | 32 | |
| | 2006.01-2008.06 | 6AT/6MT | R | L | Hatchback 4WD BMM | | GDS61284 | Drive Shaft | | 36 | | 59.5 | 40 | 594 | |
| | 2006.01-2008.06 | 6AT/6MT | R | R | Hatchback 4WD BMM | | GDS61293 | Drive Shaft | | 36 | | 59.5 | 40 | 631 | |
| | 2006.01-2008.06 | 6AT/6MT | R | L/R | Hatchback 4WD BMM | | GCO83037 | Outer Joint | | 36 | 30 | 59.5 | 40.5 | 56 | I |
| | 2006.01-2008.06 | 6AT/6MT | R | L/R | Hatchback 4WD BMM | | GCI82447 | Inner Joint | | | 33 | | | 34 | |
| | 2006.01-2008.06 | | R | L/R | Hatchback 4WD BMM | Date From:2007.06 | GCI83011 | Inner Joint | | | 33 | | | 34 | |
| 2.0 (110 kw) | 2013.02-2020.10 | 6MT | F | L | Hatchback 4WD CRBC;CRLB;DCYA | | GDS83295 | Drive Shaft | | 36 | | 59.5 | 40 | 491 | |
| | 2013.02-2020.10 | 6MT | F | R | Hatchback 4WD CRBC;CRLB;DCYA | | GDS83313 | Drive Shaft | | 36 | | 59.5 | 40 | 792 | |
| | 2013.02-2020.10 | 6MT | F | L/R | Hatchback 4WD CRBC;CRLB;DCYA | | GCO83101 | Outer Joint | | 36 | 27 | 59.5 | 40 | 65 | M |
| | 2013.02-2020.10 | 6MT | F | L/R | Hatchback 4WD CRBC;CRLB;DCYA | | GCI83016 | Inner Joint | | | 28 | | | 32 | |
| | 2013.02-2020.10 | 6MT | R | L | Hatchback 4WD CRBC;CRLB;DCYA | | GDS61286 | Drive Shaft | | 36 | | 59.5 | 40 | 587 | |
| | 2013.02-2020.10 | 6MT | R | R | Hatchback 4WD CRBC;CRLB;DCYA | | GDS61287 | Drive Shaft | | 36 | | 59.5 | 40 | 632 | |
| | 2013.02-2020.10 | 6MT | R | L/R | Hatchback 4WD CRBC;CRLB;DCYA | | GCI35026 | Outer Joint | | 36 | 33 | 59.5 | 40 | 61 | |

| | YEAR | TRANSM. | F/R | L/R | BODY STYLE & DRIVE TYPE & ENGINE | REMARKS | G-AP Ref. | PRODUCT | ABS | Technical Specifications A | B | C | H | L | P |
|---|---|---|---|---|---|---|---|---|---|---|---|---|---|---|---|
| **AUDI** | | | | | | | | | | | | | | | |
| **A3 Sportback Quattro** | | | | | | | | | | | | | | | |
| 2.0 (110 kw) | 2013.02-2020.10 | 6MT | R | L/R | Hatchback 4WD CRBC;CRLB;DCYA | | GCI61103 | Inner Joint | | | 33 | | | 32 | |
| 2.0 (125 kw) | 2006.03-2013.03 | 6AT/6MT | F | L | Hatchback 4WD BMN;CBBB;CFGB | | GDS83295 | Drive Shaft | | 36 | | 59.5 | 40 | 491 | |
| | 2006.03-2013.03 | 6AT/6MT | F | R | Hatchback 4WD BMN;CBBB;CFGB | | GDS83266 | Drive Shaft | | 36 | | 59.5 | 40 | 601 | |
| | 2006.03-2013.03 | 6AT/6MT | F | L/R | Hatchback 4WD BMN;CBBB;CFGB | GrooveType:Inner | GCO83002 | Outer Joint | | 36 | 27 | 59.5 | 40 | 66 | I |
| | 2006.03-2013.03 | 6AT/6MT | F | L/R | Hatchback 4WD BMN;CBBB;CFGB | GrooveType:Middle | GCO83101 | Outer Joint | | 36 | 27 | 59.5 | 40 | 65 | M |
| | 2006.03-2013.03 | 6AT/6MT | F | L/R | Hatchback 4WD BMN;CBBB;CFGB | | GCI61041 | Inner Joint | | | 28 | | | 32 | |
| | 2006.03-2013.03 | 6AT/6MT | F | L/R | Hatchback 4WD BMN;CBBB;CFGB | | GCI83016 | Inner Joint | | | 28 | | | 32 | |
| | 2006.03-2013.03 | AT | F | L | Hatchback 4WD BMN;CBBB;CFGB | | GDS83241 | Drive Shaft | | 36 | | 59.5 | 40 | 475 | |
| | 2006.03-2013.03 | AT | F | R | Hatchback 4WD BMN;CBBB;CFGB | | GDS54011 | Drive Shaft | | 36 | | 59.5 | 40 | 755 | |
| | 2006.03-2013.03 | AT | F | L/R | Hatchback 4WD BMN;CBBB;CFGB | | GCI61057 | Inner Joint | | | 34 | | | 89 | |
| | 2006.03-2013.03 | MT/Semi-AT | F | L | Hatchback 4WD BMN;CBBB;CFGB | | GDS83236 | Drive Shaft | | 36 | | 59.5 | 40 | 484 | |
| | 2006.03-2013.03 | 6AT/6MT | R | L | Hatchback 4WD BMN;CBBB;CFGB | | GDS61284 | Drive Shaft | | 36 | | 59.5 | 40 | 594 | |
| | 2006.03-2013.03 | 6AT/6MT | R | R | Hatchback 4WD BMN;CBBB;CFGB | | GDS61293 | Drive Shaft | | 36 | | 59.5 | 40 | 631 | |
| | 2006.03-2013.03 | 6AT/6MT | R | L/R | Hatchback 4WD BMN;CBBB;CFGB | | GCI35026 | Outer Joint | | 36 | 33 | 59.5 | 40 | 61 | |
| | 2006.03-2013.03 | 6AT/6MT | R | L/R | Hatchback 4WD BMN;CBBB;CFGB | | GCI53002 | Inner Joint | | | 33 | | | 34 | |
| | 2006.03-2013.03 | 6AT/6MT | R | L/R | Hatchback 4WD BMN;CBBB;CFGB | | GCI82447 | Inner Joint | | | 33 | | | 34 | |
| | 2006.03-2013.03 | 6MT | R | L/R | Hatchback 4WD BMN;CBBB;CFGB | | GCO83037 | Outer Joint | | 36 | 30 | 59.5 | 40.5 | 56 | I |
| 2.0 (135 kw) | 2013.05-2018.07 | 6DCT | F | L | Hatchback 4WD CUNA;DGCA | | GDS61285 | Drive Shaft | | 36 | | 59.5 | 40 | 472 | |
| | 2013.05-2018.07 | 6DCT | F | L/R | Hatchback 4WD CUNA;DGCA | For Modelcode:8VA;TJ | GCI54004 | Inner Joint | | | 34 | | | 81 | |
| | 2013.05-2018.07 | 6DCT | F | L/R | Hatchback 4WD CUNA;DGCA | For Modelcode:8VA;AAR | GCI61057 | Inner Joint | | | 34 | | | 89 | |
| | 2013.05-2018.07 | 6DCT/7DCT | F | R | Hatchback 4WD CUNA;DGCA | | GDS81893 | Drive Shaft | | 36 | | 59.5 | 40 | 575 | |
| | 2013.05-2018.07 | 6DCT/7DCT | F | L/R | Hatchback 4WD CUNA;DGCA | Transmission:6DCT;For Modelcode:8VF;Front Axle Left and Right;Transmission:7DCT;Front Axle Right | GCO83101 | Outer Joint | | 36 | 27 | 59.5 | 40 | 65 | M |
| | 2013.05-2018.07 | 7DCT | F | L | Hatchback 4WD CUNA;DGCA | | GDS81265 | Drive Shaft | | 36 | 37 | 59.5 | 40 | 557 | |
| | 2013.05-2018.07 | 7DCT | F | L | Hatchback 4WD CUNA;DGCA | | GCI81158 | Inner Joint | | 37 | 34 | 34.5 | 65.5 | 83 | |
| | 2013.05-2018.07 | 7DCT | F | R | Hatchback 4WD CUNA;DGCA | | GCI61057 | Inner Joint | | | 34 | | | 89 | |
| | 2013.05-2018.07 | AT | F | | Hatchback 4WD CUNA;DGCA | | GCI83016 | Inner Joint | | | 28 | | | 32 | |
| | 2013.05-2018.07 | 6AT/7AT | R | L | Hatchback 4WD CUNA;DGCA | | GDS61286 | Drive Shaft | | 36 | | 59.5 | 40 | 587 | |
| | 2013.05-2018.07 | 6AT/7AT | R | R | Hatchback 4WD CUNA;DGCA | | GDS61287 | Drive Shaft | | 36 | | 59.5 | 40 | 632 | |
| | 2013.05-2018.07 | 6DCT | R | L/R | Hatchback 4WD CUNA;DGCA | Modelcode:8VA | GCO83101 | Outer Joint | | 36 | 27 | 59.5 | 40 | 65 | M |
| | 2013.05-2018.07 | 6DCT/7DCT | R | L/R | Hatchback 4WD CUNA;DGCA | Not for Modelcode:8VA | GCI35026 | Outer Joint | | 36 | 33 | 59.5 | 40 | 61 | |
| | 2013.05-2018.07 | 6DCT/7DCT | R | L/R | Hatchback 4WD CUNA;DGCA | For Modelcode:8VA | GCI61103 | Inner Joint | | | 33 | | | 32 | |
| | 2018.07-2020.10 | 6DCT | F | L | Hatchback 4WD DJGA | For PR code:2H0/2H6/2H7 | GDS61285 | Drive Shaft | | 36 | | 59.5 | 40 | 472 | |
| | 2018.07-2020.10 | 6MT/7DCT | F | R | Hatchback 4WD DJGA | | GDS81893 | Drive Shaft | | 36 | | 59.5 | 40 | 575 | |
| | 2018.07-2020.10 | 7DCT | F | L | Hatchback 4WD DJGA | | GDS81265 | Drive Shaft | | 36 | 37 | 59.5 | 40 | 557 | |
| | 2018.07-2020.10 | 7DCT | F | L | Hatchback 4WD DJGA | Transmission:7DCT | GCI81158 | Inner Joint | | 37 | 34 | 34.5 | 65.5 | 83 | |
| | 2018.07-2020.10 | 7DCT | R | L | Hatchback 4WD DJGA | | GDS61286 | Drive Shaft | | 36 | | 59.5 | 40 | 587 | |
| | 2018.07-2020.10 | 7DCT | R | R | Hatchback 4WD DJGA | | GDS61287 | Drive Shaft | | 36 | | 59.5 | 40 | 632 | |
| | 2018.07-2020.10 | 7DCT | R | L/R | Hatchback 4WD DJGA | | GCI35026 | Outer Joint | | 36 | 33 | 59.5 | 40 | 61 | |
| | 2018.07-2020.10 | 7DCT | R | L/R | Hatchback 4WD DJGA | Transmission:7DCT | GCI61103 | Inner Joint | | | 33 | | | 32 | |
| | 2018.07-2020.10 | 6DCT/7DCT | F/R | L/R | Hatchback 4WD DJGA | Position:Front Right;Transmission:7DCT;Position:Front/Rear;Transmission:6DCT | GCI61057 | Inner Joint | | | 34 | | | 89 | |
| 2.0 (140 kw) | 2016.05-2020.10 | 7AT | F | R | Hatchback 4WD CZPB;DKZA | Wheel Hub Diam [mm]:42;Date to:2017.08;Wheel Hub Diam [mm]:27;Date from:2017.10 | GDS81892 | Drive Shaft | | 36 | | 59.5 | 40 | 602 | |
| | 2016.05-2020.10 | 7AT | F | L | Hatchback 4WD CZPB;DKZA | | GCI83028 | Inner Joint | | 37 | 28 | | 65.5 | 90.2 | |
| | 2016.05-2020.10 | 7AT | F | R | Hatchback 4WD CZPB;DKZA | | GCI61069 | Inner Joint | | | 28 | | | 32 | |
| | 2016.05-2020.10 | 7DCT | F | L | Hatchback 4WD CZPB;DKZA | | GDS84237 | Drive Shaft | | 36 | 37 | 59.5 | 40 | 560 | |
| | 2016.05-2020.10 | 7AT | R | L | Hatchback 4WD CZPB;DKZA | | GDS61286 | Drive Shaft | | 36 | | 59.5 | 40 | 587 | |
| | 2016.05-2020.10 | 7AT | R | R | Hatchback 4WD CZPB;DKZA | | GDS61287 | Drive Shaft | | 36 | | 59.5 | 40 | 632 | |
| | 2016.05-2020.10 | 7AT | R | L/R | Hatchback 4WD CZPB;DKZA | | GCI35026 | Outer Joint | | 36 | 33 | 59.5 | 40 | 61 | |
| | 2016.05-2020.10 | 7AT | R | L/R | Hatchback 4WD CZPB;DKZA | | GCI61103 | Inner Joint | | | 33 | | | 32 | |
| | 2018.07-2020.10 | 7AT | F | L | Hatchback 4WD DKZA | | GDS84237 | Drive Shaft | | 36 | 37 | 59.5 | 40 | 560 | |
| | 2018.07-2020.10 | 7DCT | F | R | Hatchback 4WD DKZA | | GDS81892 | Drive Shaft | | 36 | | 59.5 | 40 | 602 | |
| | 2018.07-2020.10 | 7DCT | R | L | Hatchback 4WD DKZA | | GDS61286 | Drive Shaft | | 36 | | 59.5 | 40 | 587 | |
| | 2018.07-2020.10 | 7DCT | R | R | Hatchback 4WD DKZA | | GDS61287 | Drive Shaft | | 36 | | 59.5 | 40 | 632 | |
| | 2018.07-2020.10 | 7DCT | R | L/R | Hatchback 4WD DKZA | | GCI35026 | Outer Joint | | 36 | 33 | 59.5 | 40 | 61 | |
| | 2018.07-2020.10 | 7DCT | R | L/R | Hatchback 4WD DKZA | | GCI61103 | Inner Joint | | | 33 | | | 32 | |
| | 2021.07- | 7AT | F | L/R | Hatchback 4WD DNNA | | GCO83101 | Outer Joint | | 36 | 27 | 59.5 | 40 | 65 | M |
| | 2021.07- | 7DCT | F | L | Hatchback 4WD DNNA | | GDS84237 | Drive Shaft | | 36 | 37 | 59.5 | 40 | 560 | |
| | 2021.07- | 7DCT | R | L | Hatchback 4WD DNNA | | GDS61286 | Drive Shaft | | 36 | | 59.5 | 40 | 587 | |
| | 2021.07- | 7DCT | R | R | Hatchback 4WD DNNA | | GDS61287 | Drive Shaft | | 36 | | 59.5 | 40 | 632 | |
| | 2021.07- | 7DCT | R | L/R | Hatchback 4WD DNNA | | GCI35026 | Outer Joint | | 36 | 33 | 59.5 | 40 | 61 | |
| | 2021.07- | 7DCT | R | L/R | Hatchback 4WD DNNA | | GCI61103 | Inner Joint | | | 33 | | | 32 | |
| 2.0 (147 kw) | 2004.09-2013.03 | 6AT/6MT | F | L | Hatchback 4WD AXX;BWA;BPY;CCZA;CBFA;CCTA | | GDS83295 | Drive Shaft | | 36 | | 59.5 | 40 | 491 | |
| | 2004.09-2013.03 | 6AT/6MT | F | R | Hatchback 4WD AXX;BWA;BPY;CCZA;CBFA;CCTA | | GDS83266 | Drive Shaft | | 36 | | 59.5 | 40 | 601 | |
| | 2004.09-2013.03 | MT/Semi-AT | F | L | Hatchback 4WD AXX;BWA;BPY;CCZA;CBFA;CCTA | | GDS83236 | Drive Shaft | | 36 | | 59.5 | 40 | 484 | |
| | 2004.09-2013.03 | | F | L/R | Hatchback 4WD AXX;BWA;BPY;CCZA;CBFA;CCTA | | GCO83002 | Outer Joint | | 36 | 27 | 59.5 | 40 | 66 | I |
| | 2004.09-2013.03 | | F | L/R | Hatchback 4WD AXX;BWA;BPY;CCZA;CBFA;CCTA | Date From:2010.02 | GCO83101 | Outer Joint | | 36 | 27 | 59.5 | 40 | 65 | M |

| | YEAR | TRANSM. | F/R | L/R | BODY STYLE & DRIVE TYPE & ENGINE | REMARKS | G-AP Ref. | PRODUCT | ABS | Technical Specifications A | B | C | H | L | P |
|---|---|---|---|---|---|---|---|---|---|---|---|---|---|---|---|
| **AUDI** | | | | | | | | | | | | | | | |
| **A3 Sportback Quattro** | | | | | | | | | | | | | | | |
| 2.0 (147 kw) | 2004.09-2013.03 | | F | L/R | Hatchback 4WD AXX;BWA;BPY;CCZA;CBFA;CCTA | | GCI83016 | Inner Joint | | | 28 | | | 32 | |
| | 2004.09-2013.03 | 6AT/6MT | R | L | Hatchback 4WD AXX;BWA;BPY;CCZA;CBFA;CCTA | | GDS61284 | Drive Shaft | | 36 | | 59.5 | 40 | 594 | |
| | 2004.09-2013.03 | 6AT/6MT | R | R | Hatchback 4WD AXX;BWA;BPY;CCZA;CBFA;CCTA | | GDS61293 | Drive Shaft | | 36 | | 59.5 | 40 | 631 | |
| | 2004.09-2013.03 | 6AT/6MT | R | L/R | Hatchback 4WD AXX;BWA;BPY;CCZA;CBFA;CCTA | | GCI35026 | Outer Joint | | 36 | 33 | 59.5 | 40 | 61 | |
| | 2004.09-2013.03 | 6AT/6MT | R | L/R | Hatchback 4WD AXX;BWA;BPY;CCZA;CBFA;CCTA | | GCO83037 | Outer Joint | | 36 | 30 | 59.5 | 40.5 | 56 | I |
| | 2004.09-2013.03 | 6AT/6MT | R | L/R | Hatchback 4WD AXX;BWA;BPY;CCZA;CBFA;CCTA | | GCI53002 | Inner Joint | | | 33 | | | 34 | |
| | 2004.09-2013.03 | 6AT/6MT | R | L/R | Hatchback 4WD AXX;BWA;BPY;CCZA;CBFA;CCTA | Date to:2012.05 | GCI82447 | Inner Joint | | | 33 | | | 34 | |
| | 2020.12- | 7DCT | F | L | Hatchback 4WD DTUA | | GDS81265 | Drive Shaft | | 36 | 37 | 59.5 | 40 | 557 | |
| | 2020.12- | 7DCT | F | R | Hatchback 4WD DTUA | | GDS81893 | Drive Shaft | | 36 | | 59.5 | 40 | 575 | |
| | 2020.12- | 7DCT | F | R | Hatchback 4WD DTUA | | GCO83101 | Outer Joint | | 36 | 27 | 59.5 | 40 | 65 | M |
| | 2020.12- | 7DCT | F | L | Hatchback 4WD DTUA | | GCI81158 | Inner Joint | | 37 | 34 | 34.5 | 65.5 | 83 | |
| | 2020.12- | 7DCT | F | R | Hatchback 4WD DTUA | | GCI61057 | Inner Joint | | | 34 | | | 89 | |
| | 2020.12- | 7DCT | R | L | Hatchback 4WD DTUA | | GDS61286 | Drive Shaft | | 36 | | 59.5 | 40 | 587 | |
| | 2020.12- | 7DCT | R | R | Hatchback 4WD DTUA | | GDS61287 | Drive Shaft | | 36 | | 59.5 | 40 | 632 | |
| | 2020.12- | 7DCT | R | L/R | Hatchback 4WD DTUA | | GCI61103 | Inner Joint | | | 33 | | | 32 | |
| 2.0 (150 kw) | 2024.08- | 7DCT | R | L | Hatchback 4WD DNNE | | GDS61286 | Drive Shaft | | 36 | | 59.5 | 40 | 587 | |
| | 2024.08- | 7DCT | R | R | Hatchback 4WD DNNE | | GDS61287 | Drive Shaft | | 36 | | 59.5 | 40 | 632 | |
| 3.2 (184 kw) | 2004.09-2009.05 | 6DCT | F | L | Hatchback 4WD BDB;BMJ;BUB | Date to:2006.05 | GDS83241 | Drive Shaft | | 36 | | 59.5 | 40 | 475 | |
| | 2004.09-2009.05 | AT | F | L | Hatchback 4WD BDB;BMJ;BUB | Date from:2006.06 | GDS83295 | Drive Shaft | | 36 | | 59.5 | 40 | 491 | |
| | 2004.09-2009.05 | AT | F | L | Hatchback 4WD BDB;BMJ;BUB | | GCI54004 | Inner Joint | | | 34 | | | 81 | |
| | 2004.09-2009.05 | AT/MT | F | L | Hatchback 4WD BDB;BMJ;BUB | | GDS83236 | Drive Shaft | | 36 | | 59.5 | 40 | 484 | |
| | 2004.09-2009.05 | AT/MT | F | R | Hatchback 4WD BDB;BMJ;BUB | | GDS83266 | Drive Shaft | | 36 | | 59.5 | 40 | 601 | |
| | 2004.09-2009.05 | MT | F | L | Hatchback 4WD BDB;BMJ;BUB | | GDS83295 | Drive Shaft | | 36 | | 59.5 | 40 | 491 | |
| | 2004.09-2009.05 | MT | F | L | Hatchback 4WD BDB;BMJ;BUB | | GCO61059 | Outer Joint | | 36 | 33 | 59.5 | 40 | 59.5 | I |
| | 2004.09-2009.05 | MT | F | L/R | Hatchback 4WD BDB;BMJ;BUB | | GCI83016 | Inner Joint | | | 28 | | | 32 | |
| | 2004.09-2009.05 | | F | L/R | Hatchback 4WD BDB;BMJ;BUB | | GCO83002 | Outer Joint | | 36 | 27 | 59.5 | 40 | 66 | I |
| | 2004.09-2009.05 | 6AT/6MT | R | L | Hatchback 4WD BDB;BMJ;BUB | | GDS61284 | Drive Shaft | | 36 | | 59.5 | 40 | 594 | |
| | 2004.09-2009.05 | 6AT/6MT | R | R | Hatchback 4WD BDB;BMJ;BUB | | GDS61293 | Drive Shaft | | 36 | | 59.5 | 40 | 631 | |
| | 2004.09-2009.05 | 6AT/6MT | R | L/R | Hatchback 4WD BDB;BMJ;BUB | | GCI35026 | Outer Joint | | 36 | 33 | 59.5 | 40 | 61 | |
| | 2004.09-2009.05 | 6AT/6MT | R | L/R | Hatchback 4WD BDB;BMJ;BUB | | GCO83037 | Outer Joint | | 36 | 30 | 59.5 | 40.5 | 56 | I |
| | 2004.09-2009.05 | 6AT/6MT | R | L/R | Hatchback 4WD BDB;BMJ;BUB | | GCI53002 | Inner Joint | | | 33 | | | 34 | |
| | 2004.09-2009.05 | 6AT/6MT | R | L/R | Hatchback 4WD BDB;BMJ;BUB | | GCI82447 | Inner Joint | | | 33 | | | 34 | |
| **A3/S3 Limousine quattro** | | | | | | | | | | | | | | | |
| 2.0 (245 kw) | 2024.02- | 7DCT | F | L | Saloon 4WD DNFF, DSFD | | GDS84237 | Drive Shaft | | 36 | 37 | 59.5 | 40 | 560 | |
| | 2024.02- | 7DCT | R | L | Saloon 4WD DNFF, DSFD | For PR code:GP0 | GDS61286 | Drive Shaft | | 36 | | 59.5 | 40 | 587 | |
| | 2024.02- | 7DCT | R | R | Saloon 4WD DNFF, DSFD | For PR code:GP0 | GDS61287 | Drive Shaft | | 36 | | 59.5 | 40 | 632 | |
| **A3/S3 Sportback quattro** | | | | | | | | | | | | | | | |
| 2.0 (245 kw) | 2024.02- | 7DCT | F | L | Hatchback 4WD DNFF, DSFD | | GDS84237 | Drive Shaft | | 36 | 37 | 59.5 | 40 | 560 | |
| | 2024.02- | 7DCT | R | L | Hatchback 4WD DNFF, DSFD | For PR code:GP0 | GDS61286 | Drive Shaft | | 36 | | 59.5 | 40 | 587 | |
| | 2024.02- | 7DCT | R | R | Hatchback 4WD DNFF, DSFD | For PR code:GP0 | GDS61287 | Drive Shaft | | 36 | | 59.5 | 40 | 632 | |
| **A4** | | | | | | | | | | | | | | | |
| 1.4 (110 kw) | 2015.08-2019.11 | 6MT/7DCT | F | L/R | Saloon FWD CVNA | | GDS82075 | Drive Shaft | | 42 | | 76.5 | 34 | 463 | |
| | 2015.08-2019.11 | AT/MT | F | L/R | Saloon FWD CVNA | Date from:2016.01 | GCO83103 | Outer Joint | | 42 | 28 | 76.4 | 34 | 54 | I |
| | 2015.08-2019.11 | AT/MT | F | L/R | Saloon FWD CVNA | Date from:2016.01 | GCI83022 | Inner Joint | | | 34 | | | 88.5 | |
| | 2016.02-2019.10 | 6MT/7DCT | F | L/R | Estate FWD CVNA | | GDS82075 | Drive Shaft | | 42 | | 76.5 | 34 | 463 | |
| | 2016.02-2019.10 | 7DCT/6MT | F | L/R | Estate FWD CVNA | AAR | GCI61077 | Inner Joint | | | 34 | | | 88 | |
| | 2016.02-2019.10 | AT/MT | F | L/R | Estate FWD CVNA | | GCO83103 | Outer Joint | | 42 | 28 | 76.4 | 34 | 54 | I |
| | 2016.02-2019.10 | AT/MT | F | L/R | Estate FWD CVNA | TJ | GCI83022 | Inner Joint | | | 34 | | | 88.5 | |
| 1.6 (74 kw) | 1994.11-2000.10 | 4AT | F | L | Saloon FWD ADP/AHL/ANA/ARM | | GDS83012 | Drive Shaft | 45W | 33 | | 53 | 30 | 498 | |
| | 1994.11-2000.10 | 4AT | F | R | Saloon FWD ADP/AHL/ANA/ARM | | GDS99108 | Drive Shaft | 45W | 33 | | 53 | 30 | 586 | |
| | 1994.11-2000.10 | 4AT | F | L/R | Saloon FWD ADP/AHL/ANA/ARM | | GCI50019 | Inner Joint | | | 34 | | | 59.5 | |
| | 1994.11-2000.10 | 4AT/5MT | F | L/R | Saloon FWD ADP/AHL/ANA/ARM | Chassis no. from:8D_W_109972 | GCO61012 | Outer Joint | 45W | 33 | 30 | 53 | 30 | 62 | I |
| | 1994.11-2000.10 | 4AT/5MT | F | L/R | Saloon FWD ADP/AHL/ANA/ARM | Chassis no. to:8D_W_109971 | GCO83018 | Outer Joint | 45W | 33 | 30 | 53 | 30 | 62 | I |
| | 1994.11-2000.10 | 5MT | F | L | Saloon FWD ADP/AHL/ANA/ARM | | GDS83002 | Drive Shaft | 45W | 33 | | 53 | 30 | 614 | |
| | 1994.11-2000.10 | 5MT | F | R | Saloon FWD ADP/AHL/ANA/ARM | | GDS99111 | Drive Shaft | 45W | 33 | | 53 | 30 | 636 | |
| | 1994.11-2000.10 | 5MT | F | L/R | Saloon FWD ADP/AHL/ANA/ARM | From OE | GCI83002 | Inner Joint | | | 33 | | | 32 | |
| | 1994.11-2000.10 | 5MT | F | L/R | Saloon FWD ADP/AHL/ANA/ARM | From Drive Shaft | GCI83006 | Inner Joint | | | 33 | | | 34 | |
| | 1994.11-2001.09 | 4AT | F | L | Estate FWD ADP/AHL/ANA/ARM | | GDS83012 | Drive Shaft | 45W | 33 | | 53 | 30 | 498 | |
| | 1994.11-2001.09 | 4AT | F | R | Estate FWD ADP/AHL/ANA/ARM | | GDS99108 | Drive Shaft | 45W | 33 | | 53 | 30 | 586 | |
| | 1994.11-2001.09 | 4AT | F | L/R | Estate FWD ADP/AHL/ANA/ARM | | GCI50019 | Inner Joint | | | 34 | | | 59.5 | |
| | 1994.11-2001.09 | 4AT/5MT | F | L/R | Estate FWD ADP/AHL/ANA/ARM | Chassis no. from:8D_W_109972 | GCO61012 | Outer Joint | 45W | 33 | 30 | 53 | 30 | 62 | I |
| | 1994.11-2001.09 | 4AT/5MT | F | L/R | Estate FWD ADP/AHL/ANA/ARM | Chassis no. to:8D_W_109971 | GCO83018 | Outer Joint | 45W | 33 | 30 | 53 | 30 | 62 | I |
| | 1994.11-2001.09 | 5MT | F | L | Estate FWD ADP/AHL/ANA/ARM | | GDS83002 | Drive Shaft | 45W | 33 | | 53 | 30 | 614 | |
| | 1994.11-2001.09 | 5MT | F | R | Estate FWD ADP/AHL/ANA/ARM | | GDS99111 | Drive Shaft | 45W | 33 | | 53 | 30 | 636 | |
| | 1994.11-2001.09 | 5MT | F | L/R | Estate FWD ADP/AHL/ANA/ARM | From OE | GCI83002 | Inner Joint | | | 33 | | | 32 | |

| | YEAR | TRANSM. | F/R | L/R | BODY STYLE & DRIVE TYPE & ENGINE | REMARKS | G-AP Ref. | PRODUCT | ABS | Technical Specifications A | B | C | H | L | P |
|---|---|---|---|---|---|---|---|---|---|---|---|---|---|---|---|
| **AUDI** | | | | | | | | | | | | | | | |
| **A4** | | | | | | | | | | | | | | | |
| 1.6 (74 kw) | 1994.11-2001.09 | 5MT | F | L/R | Estate FWD ADP/AHL/ANA/ARM | From Drive Shaft | GCI83006 | Inner Joint | | | 33 | | | 34 | |
| 1.6 (75 kw) | 2000.06-2000.10 | 5MT | F | L | Saloon FWD ALZ | | GDS83002 | Drive Shaft | 45W | 33 | | 53 | 30 | 614 | |
| | 2000.06-2000.10 | 5MT | F | R | Saloon FWD ALZ | | GDS99111 | Drive Shaft | 45W | 33 | | 53 | 30 | 636 | |
| | 2000.06-2000.10 | 5MT | F | L/R | Saloon FWD ALZ | From OE | GCO61012 | Outer Joint | 45W | 33 | 30 | 53 | 30 | 62 | I |
| | 2000.06-2000.10 | 5MT | F | L/R | Saloon FWD ALZ | From OE | GCI83002 | Inner Joint | | | 33 | | | 32 | |
| | 2000.06-2000.10 | 5MT | F | L/R | Saloon FWD ALZ | From Drive Shaft | GCI83006 | Inner Joint | | | 33 | | | 34 | |
| | 2000.06-2001.09 | 5MT | F | L | Estate FWD ALZ | | GDS83002 | Drive Shaft | 45W | 33 | | 53 | 30 | 614 | |
| | 2000.06-2001.09 | 5MT | F | R | Estate FWD ALZ | | GDS99111 | Drive Shaft | 45W | 33 | | 53 | 30 | 636 | |
| | 2000.06-2001.09 | 5MT | F | L/R | Estate FWD ALZ | From OE | GCO61012 | Outer Joint | 45W | 33 | 30 | 53 | 30 | 62 | I |
| | 2000.06-2001.09 | 5MT | F | L/R | Estate FWD ALZ | From OE | GCI83002 | Inner Joint | | | 33 | | | 32 | |
| | 2000.06-2001.09 | 5MT | F | L/R | Estate FWD ALZ | From Drive Shaft | GCI83006 | Inner Joint | | | 33 | | | 34 | |
| | 2000.11-2004.12 | 5MT | F | R | Saloon FWD ALZ | | GDS82350 | Drive Shaft | 45W | 38 | | 59.5 | 34 | 641 | |
| | 2000.11-2004.12 | 5MT | F | L/R | Saloon FWD ALZ | | GCO83030 | Outer Joint | | 38 | 33 | 59.5 | 34 | 56.5 | M |
| | 2000.11-2004.12 | 5MT | F | L/R | Saloon FWD ALZ | | GCO83058 | Outer Joint | 45W | 38 | 33 | 59.5 | 34 | 56.5 | M |
| | 2000.11-2004.12 | 5MT | F | R | Saloon FWD ALZ | | GCI81777 | Inner Joint | | | 33 | | | 33 | |
| | 2001.09-2004.12 | 5MT | F | R | Estate FWD ALZ | | GDS82350 | Drive Shaft | 45W | 38 | | 59.5 | 34 | 641 | |
| | 2001.09-2004.12 | 5MT | F | R | Estate FWD ALZ | | GCI81777 | Inner Joint | | | 33 | | | 33 | |
| | 2001.09-2004.12 | MT | F | L/R | Estate FWD ALZ | | GCO83058 | Outer Joint | 45W | 38 | 33 | 59.5 | 34 | 56.5 | M |
| | 2001.09-2004.12 | | F | L/R | Estate FWD ALZ | | GCO83030 | Outer Joint | | 38 | 33 | 59.5 | 34 | 56.5 | M |
| | 2004.11-2008.06 | 5MT | F | R | Estate FWD ALZ | | GDS82350 | Drive Shaft | 45W | 38 | | 59.5 | 34 | 641 | |
| | 2004.11-2008.06 | 5MT | F | L/R | Estate FWD ALZ | | GCO83030 | Outer Joint | | 38 | 33 | 59.5 | 34 | 56.5 | M |
| | 2004.11-2008.06 | 5MT | F | L/R | Estate FWD ALZ | | GCO83058 | Outer Joint | 45W | 38 | 33 | 59.5 | 34 | 56.5 | M |
| | 2004.11-2008.06 | 5MT | F | R | Estate FWD ALZ | | GCI81777 | Inner Joint | | | 33 | | | 33 | |
| | 2004.11-2008.06 | 5MT | F | R | Saloon FWD ALZ | | GDS82350 | Drive Shaft | 45W | 38 | | 59.5 | 34 | 641 | |
| | 2004.11-2008.06 | 5MT | F | L/R | Saloon FWD ALZ | | GCO83030 | Outer Joint | | 38 | 33 | 59.5 | 34 | 56.5 | M |
| | 2004.11-2008.06 | 5MT | F | L/R | Saloon FWD ALZ | | GCO83058 | Outer Joint | 45W | 38 | 33 | 59.5 | 34 | 56.5 | M |
| | 2004.11-2008.06 | 5MT | F | R | Saloon FWD ALZ | | GCI81777 | Inner Joint | | | 33 | | | 33 | |
| | 2004.11-2008.06 | | F | | Saloon FWD ALZ | | GCO83078 | Outer Joint | 45W | 38 | 27 | 59.5 | 34.5 | 63 | M |
| 1.8 (85 kw) | 1995.07-2000.06 | 4AT | F | L | Saloon FWD AFY | | GDS83012 | Drive Shaft | 45W | 33 | | 53 | 30 | 498 | |
| | 1995.07-2000.06 | 4AT | F | R | Saloon FWD AFY | | GDS99108 | Drive Shaft | 45W | 33 | | 53 | 30 | 586 | |
| | 1995.07-2000.06 | 4AT | F | L/R | Saloon FWD AFY | Chassis no. from:8D_W_109972 | GCO61012 | Outer Joint | 45W | 33 | 30 | 53 | 30 | 62 | I |
| | 1995.07-2000.06 | 4AT | F | L/R | Saloon FWD AFY | | GCI50019 | Inner Joint | | | 34 | | | 59.5 | |
| | 1995.07-2000.06 | 4AT/5MT | F | L/R | Saloon FWD AFY | Transmission:4AT;Chassis no. to:8D_W_109971;Transmission:5MT | GCO83018 | Outer Joint | 45W | 33 | 30 | 53 | 30 | 62 | I |
| | 1995.07-2000.06 | 5MT | F | L | Saloon FWD AFY | | GDS83005 | Drive Shaft | 45W | 33 | | 53 | 30 | 614 | |
| | 1995.07-2000.06 | 5MT | F | R | Saloon FWD AFY | | GDS83001 | Drive Shaft | 45W | 33 | | 53 | 30 | 634 | |
| | 1995.07-2000.06 | 5MT | F | L/R | Saloon FWD AFY | | GCI83001 | Inner Joint | | | 28 | | | 32 | |
| | 1995.07-2001.09 | 4AT | F | L | Estate FWD AFY | | GDS83012 | Drive Shaft | 45W | 33 | | 53 | 30 | 498 | |
| | 1995.07-2001.09 | 4AT | F | R | Estate FWD AFY | | GDS99108 | Drive Shaft | 45W | 33 | | 53 | 30 | 586 | |
| | 1995.07-2001.09 | 4AT | F | L/R | Estate FWD AFY | Chassis no. from:8D_W_109972 | GCO61012 | Outer Joint | 45W | 33 | 30 | 53 | 30 | 62 | I |
| | 1995.07-2001.09 | 4AT | F | L/R | Estate FWD AFY | | GCI50019 | Inner Joint | | | 34 | | | 59.5 | |
| | 1995.07-2001.09 | 4AT/5MT | F | L/R | Estate FWD AFY | Transmission:4AT;Chassis no. to:8D_W_109971;Transmission:5MT | GCO83018 | Outer Joint | 45W | 33 | 30 | 53 | 30 | 62 | I |
| | 1995.07-2001.09 | 5MT | F | L | Estate FWD AFY | | GDS83005 | Drive Shaft | 45W | 33 | | 53 | 30 | 614 | |
| | 1995.07-2001.09 | 5MT | F | R | Estate FWD AFY | | GDS83001 | Drive Shaft | 45W | 33 | | 53 | 30 | 634 | |
| | 1995.07-2001.09 | 5MT | F | L/R | Estate FWD AFY | | GCI83001 | Inner Joint | | | 28 | | | 32 | |
| 1.8 (88 kw) | 2008.01-2015.12 | CVT/6MT | F | L/R | Saloon FWD CABA;CDHA | Date to:2011.10 | GDS83273 | Drive Shaft | | 42 | | 76.5 | 34 | 460 | |
| | 2008.01-2015.12 | CVT/6MT | F | L/R | Saloon FWD CABA;CDHA | Date from:2011.11 | GDS83291 | Drive Shaft | | 42 | | 76.4 | 34 | 464 | |
| | 2008.01-2015.12 | CVT/6MT | F | L/R | Saloon FWD CABA;CDHA | Date to:2011.10 | GCO83087 | Outer Joint | | 42 | 27 | 76.5 | 34 | 57 | M |
| | 2008.01-2015.12 | CVT/6MT | F | L/R | Saloon FWD CABA;CDHA | Date from:2011.11 | GCO83103 | Outer Joint | | 42 | 28 | 76.4 | 34 | 54 | I |
| | 2008.01-2015.12 | CVT/6MT | F | L/R | Saloon FWD CABA;CDHA | | GCI81054 | Inner Joint | | | 24 | | | 86 | |
| | 2008.01-2015.12 | CVT/6MT | F | L/R | Saloon FWD CABA;CDHA | | GCI83022 | Inner Joint | | | 34 | | | 88.5 | |
| | 2008.04-2015.12 | CVT/6MT | F | L/R | Estate FWD CDHA | Date to:2011.10 | GDS83273 | Drive Shaft | | 42 | | 76.5 | 34 | 460 | |
| | 2008.04-2015.12 | CVT/6MT | F | L/R | Estate FWD CDHA | Date from:2011.11 | GDS83291 | Drive Shaft | | 42 | | 76.4 | 34 | 464 | |
| | 2008.04-2015.12 | CVT/6MT | F | L/R | Estate FWD CDHA | Date to:2011.10 | GCO83087 | Outer Joint | | 42 | 27 | 76.5 | 34 | 57 | M |
| | 2008.04-2015.12 | CVT/6MT | F | L/R | Estate FWD CDHA | Date from:2011.11 | GCO83103 | Outer Joint | | 42 | 28 | 76.4 | 34 | 54 | I |
| | 2008.04-2015.12 | CVT/6MT | F | L/R | Estate FWD CDHA | | GCI81054 | Inner Joint | | | 24 | | | 86 | |
| | 2008.04-2015.12 | CVT/6MT | F | L/R | Estate FWD CDHA | | GCI83022 | Inner Joint | | | 34 | | | 88.5 | |
| 1.8 (92 kw) | 1994.11-2000.10 | 4AT | F | L | Saloon FWD ADR/APT/ARG/AVV | | GDS83012 | Drive Shaft | 45W | 33 | | 53 | 30 | 498 | |
| | 1994.11-2000.10 | 4AT | F | R | Saloon FWD ADR/APT/ARG/AVV | | GDS99108 | Drive Shaft | 45W | 33 | | 53 | 30 | 586 | |
| | 1994.11-2000.10 | 4AT | F | L/R | Saloon FWD ADR/APT/ARG/AVV | Chassis no. from:8D_W_109972 | GCO61012 | Outer Joint | 45W | 33 | 30 | 53 | 30 | 62 | I |
| | 1994.11-2000.10 | 4AT | F | L/R | Saloon FWD ADR/APT/ARG/AVV | Chassis no. to:8D_W_109971 | GCO83018 | Outer Joint | 45W | 33 | 30 | 53 | 30 | 62 | I |
| | 1994.11-2000.10 | 4AT | F | L/R | Saloon FWD ADR/APT/ARG/AVV | | GCI50019 | Inner Joint | | | 34 | | | 59.5 | |
| | 1994.11-2000.10 | 5MT | F | L | Saloon FWD ADR/APT/ARG/AVV | | GDS83005 | Drive Shaft | 45W | 33 | | 53 | 30 | 614 | |
| | 1994.11-2000.10 | 5MT | F | R | Saloon FWD ADR/APT/ARG/AVV | | GDS83001 | Drive Shaft | 45W | 33 | | 53 | 30 | 634 | |
| | 1994.11-2000.10 | 5MT | F | L/R | Saloon FWD ADR/APT/ARG/AVV | | GCO83018 | Outer Joint | 45W | 33 | 30 | 53 | 30 | 62 | I |
| | 1994.11-2000.10 | 5MT | F | L/R | Saloon FWD ADR/APT/ARG/AVV | | GCI83001 | Inner Joint | | | 28 | | | 32 | |

| | YEAR | TRANSM. | F/R | L/R | BODY STYLE & DRIVE TYPE & ENGINE | REMARKS | G-AP Ref. | PRODUCT | ABS | Technical Specifications A | B | C | H | L | P |
|---|---|---|---|---|---|---|---|---|---|---|---|---|---|---|---|
| **AUDI** | | | | | | | | | | | | | | | |
| **A4** | | | | | | | | | | | | | | | |
| 1.8 (92 kw) | 1994.11-2001.09 | 4AT | F | L | Estate FWD ADR/APT/ARG/AVV | | GDS83012 | Drive Shaft | 45W | 33 | | 53 | 30 | 498 | |
| | 1994.11-2001.09 | 4AT | F | R | Estate FWD ADR/APT/ARG/AVV | | GDS99108 | Drive Shaft | 45W | 33 | | 53 | 30 | 586 | |
| | 1994.11-2001.09 | 4AT | F | L/R | Estate FWD ADR/APT/ARG/AVV | Chassis no. from:8D_W_109972 | GCO61012 | Outer Joint | 45W | 33 | 30 | 53 | 30 | 62 | I |
| | 1994.11-2001.09 | 4AT | F | L/R | Estate FWD ADR/APT/ARG/AVV | Chassis no. to:8D_W_109971 | GCO83018 | Outer Joint | 45W | 33 | 30 | 53 | 30 | 62 | I |
| | 1994.11-2001.09 | 4AT | F | L/R | Estate FWD ADR/APT/ARG/AVV | | GCI50019 | Inner Joint | | | 34 | | | 59.5 | |
| | 1994.11-2001.09 | 5MT | F | L | Estate FWD ADR/APT/ARG/AVV | | GDS83005 | Drive Shaft | 45W | 33 | | 53 | 30 | 614 | |
| | 1994.11-2001.09 | 5MT | F | R | Estate FWD ADR/APT/ARG/AVV | | GDS83001 | Drive Shaft | 45W | 33 | | 53 | 30 | 634 | |
| | 1994.11-2001.09 | 5MT | F | L/R | Estate FWD ADR/APT/ARG/AVV | | GCO83018 | Outer Joint | 45W | 33 | 30 | 53 | 30 | 62 | I |
| | 1994.11-2001.09 | 5MT | F | L/R | Estate FWD ADR/APT/ARG/AVV | | GCI83001 | Inner Joint | | | 28 | | | 32 | |
| 1.8 (110 kw) | 1995.10-2000.10 | 4AT | F | L/R | Saloon FWD AEB/ANB/APU/ARK/AWT | Chassis no. from:8D_W_109972 | GCO61012 | Outer Joint | 45W | 33 | 30 | 53 | 30 | 62 | I |
| | 1995.10-2000.10 | 5AT | F | L | Saloon FWD AEB/ANB/APU/ARK/AWT | | GDS83036 | Drive Shaft | 45W | 33 | | 53 | 30 | 524 | |
| | 1995.10-2000.10 | 5AT | F | R | Saloon FWD AEB/ANB/APU/ARK/AWT | | GDS83012 | Drive Shaft | 45W | 33 | | 53 | 30 | 498 | |
| | 1995.10-2000.10 | 5AT | F | L | Saloon FWD AEB/ANB/APU/ARK/AWT | | GCO83045 | Outer Joint | | 33 | 30 | 53 | 30 | 62 | I |
| | 1995.10-2000.10 | 5AT | F | L/R | Saloon FWD AEB/ANB/APU/ARK/AWT | | GCI50019 | Inner Joint | | | 34 | | | 59.5 | |
| | 1995.10-2000.10 | 5AT/5MT | F | L/R | Saloon FWD AEB/ANB/APU/ARK/AWT | Transmission:5AT,Chassis no. to:8D_W_109971;Transmission:5MT | GCO83018 | Outer Joint | 45W | 33 | 30 | 53 | 30 | 62 | I |
| | 1995.10-2000.10 | 5MT | F | L | Saloon FWD AEB/ANB/APU/ARK/AWT | | GDS83005 | Drive Shaft | 45W | 33 | | 53 | 30 | 614 | |
| | 1995.10-2000.10 | 5MT | F | R | Saloon FWD AEB/ANB/APU/ARK/AWT | | GDS83001 | Drive Shaft | 45W | 33 | | 53 | 30 | 634 | |
| | 1995.10-2000.10 | 5MT | F | L/R | Saloon FWD AEB/ANB/APU/ARK/AWT | | GCI83001 | Inner Joint | | | 28 | | | 32 | |
| | 1995.10-2001.09 | 5AT | F | L | Estate FWD AEB/ANB/APU/ARK/AWT | | GDS83036 | Drive Shaft | 45W | 33 | | 53 | 30 | 524 | |
| | 1995.10-2001.09 | 5AT | F | R | Estate FWD AEB/ANB/APU/ARK/AWT | | GDS83012 | Drive Shaft | 45W | 33 | | 53 | 30 | 498 | |
| | 1995.10-2001.09 | 5AT | F | L | Estate FWD AEB/ANB/APU/ARK/AWT | | GCO83045 | Outer Joint | | 33 | 30 | 53 | 30 | 62 | I |
| | 1995.10-2001.09 | 5AT | F | L/R | Estate FWD AEB/ANB/APU/ARK/AWT | Chassis no. from:8D_W_109972 | GCO61012 | Outer Joint | 45W | 33 | 30 | 53 | 30 | 62 | I |
| | 1995.10-2001.09 | 5AT | F | L/R | Estate FWD AEB/ANB/APU/ARK/AWT | | GCI50019 | Inner Joint | | | 34 | | | 59.5 | |
| | 1995.10-2001.09 | 5AT/5MT | F | L/R | Estate FWD AEB/ANB/APU/ARK/AWT | Transmission:5AT,Chassis no. to:8D_W_109971;Transmission:5MT | GCO83018 | Outer Joint | 45W | 33 | 30 | 53 | 30 | 62 | I |
| | 1995.10-2001.09 | 5MT | F | L | Estate FWD AEB/ANB/APU/ARK/AWT | | GDS83005 | Drive Shaft | 45W | 33 | | 53 | 30 | 614 | |
| | 1995.10-2001.09 | 5MT | F | R | Estate FWD AEB/ANB/APU/ARK/AWT | | GDS83001 | Drive Shaft | 45W | 33 | | 53 | 30 | 634 | |
| | 1995.10-2001.09 | 5MT | F | L/R | Estate FWD AEB/ANB/APU/ARK/AWT | | GCI83001 | Inner Joint | | | 28 | | | 32 | |
| | 2000.11-2002.07 | 5MT | F | L/R | Saloon FWD AVJ | | GCO83030 | Outer Joint | | 38 | 33 | 59.5 | 34 | 56.5 | M |
| | 2000.11-2002.07 | 5MT | F | L/R | Saloon FWD AVJ | Chassis no. to:8E_1_014312 | GCI61010 | Inner Joint | | | 28 | | | 32 | |
| | 2000.11-2002.07 | CVT | F | L/R | Saloon FWD AVJ | Chassis no. from:8E_4_195501 | GCO83078 | Outer Joint | 45W | 38 | 27 | 59.5 | 34.5 | 63 | M |
| | 2000.11-2002.07 | CVT | F | L/R | Saloon FWD AVJ | Chassis no. from:8E_4_195501 | GCI61044 | Inner Joint | | | 34 | | | 85 | |
| | 2000.11-2002.07 | MT | F | L | Saloon FWD AVJ | | GDS83057 | Drive Shaft | 45W | 38 | | 59.5 | 34.5 | 593 | |
| | 2000.11-2002.07 | MT | F | R | Saloon FWD AVJ | | GDS83058 | Drive Shaft | 45W | 38 | | 59.5 | 34.5 | 613 | |
| | 2000.11-2002.07 | MT | F | L/R | Saloon FWD AVJ | | GCO83058 | Outer Joint | 45W | 38 | 33 | 59.5 | 34 | 56.5 | M |
| | 2000.11-2002.07 | MT | F | L/R | Saloon FWD AVJ | Date To:2001.02,Chassis no. to:8E01026954 | GCI61002 | Inner Joint | | | 28 | | | 31.8 | |
| | 2000.11-2002.07 | MT/Semi-AT | F | L/R | Saloon FWD AVJ | chassis no. from:8E-1A014313,Chassis no. to:8E-1A026954 | GCO83092 | Outer Joint | 45W | 38 | 27 | 59.5 | 34 | 68 | I |
| | 2000.11-2002.07 | Semi-AT | F | L/R | Saloon FWD AVJ | | GDS83052 | Drive Shaft | 45W | 38 | | 59.5 | 34.5 | 522 | |
| | 2000.11-2002.07 | CVT/5MT | R | L/R | Saloon FWD AVJ | Transmission:5MT,Chassis no. from:8E_2_120000;Transmission:CVT,Chassis no. to:8E_4_195500 | GCI83007 | Inner Joint | | | 34 | | | 85 | |
| | 2001.09-2002.07 | 5MT | F | L/R | Estate FWD AVJ | | GCO83030 | Outer Joint | | 38 | 33 | 59.5 | 34 | 56.5 | M |
| | 2001.09-2002.07 | MT | F | L | Estate FWD AVJ | | GDS83057 | Drive Shaft | 45W | 38 | | 59.5 | 34.5 | 593 | |
| | 2001.09-2002.07 | MT | F | R | Estate FWD AVJ | | GDS83058 | Drive Shaft | 45W | 38 | | 59.5 | 34.5 | 613 | |
| | 2001.09-2002.07 | MT | F | L/R | Estate FWD AVJ | | GCO83058 | Outer Joint | 45W | 38 | 33 | 59.5 | 34 | 56.5 | M |
| | 2001.09-2002.07 | MT | F | L/R | Estate FWD AVJ | | GCI83007 | Inner Joint | | | 34 | | | 85 | |
| | 2001.09-2002.07 | Semi-AT | F | L/R | Estate FWD AVJ | | GDS83052 | Drive Shaft | 45W | 38 | | 59.5 | 34.5 | 522 | |
| | 2001.09-2002.07 | Semi-AT | F | L/R | Estate FWD AVJ | | GCO83092 | Outer Joint | 45W | 38 | 27 | 59.5 | 34 | 68 | I |
| 1.8 (118 kw) | 2007.11-2012.03 | CVT/6MT | F | L/R | Estate FWD CABB;CDHB | Date to:2011.10 | GDS83273 | Drive Shaft | | 42 | | 76.5 | 34 | 460 | |
| | 2007.11-2012.03 | CVT/6MT | F | L/R | Estate FWD CABB;CDHB | Date from:2011.11 | GDS83291 | Drive Shaft | | 42 | | 76.4 | 34 | 464 | |
| | 2007.11-2012.03 | CVT/6MT | F | L/R | Estate FWD CABB;CDHB | Date to:2011.10 | GCO83087 | Outer Joint | | 42 | 27 | 76.5 | 34 | 57 | M |
| | 2007.11-2012.03 | CVT/6MT | F | L/R | Estate FWD CABB;CDHB | Date from:2011.11 | GCO83103 | Outer Joint | | 42 | 28 | 76.4 | 34 | 54 | I |
| | 2007.11-2012.03 | CVT/6MT | F | L/R | Estate FWD CABB;CDHB | | GCI83022 | Inner Joint | | | 34 | | | 88.5 | |
| | 2007.11-2012.03 | CVT/6MT | F | L/R | Saloon FWD CABB;CDHB | Date to:2011.10 | GDS83273 | Drive Shaft | | 42 | | 76.5 | 34 | 460 | |
| | 2007.11-2012.03 | CVT/6MT | F | L/R | Saloon FWD CABB;CDHB | Date from:2011.11 | GDS83291 | Drive Shaft | | 42 | | 76.4 | 34 | 464 | |
| | 2007.11-2012.03 | CVT/6MT | F | L/R | Saloon FWD CABB;CDHB | Date to:2011.10 | GCO83087 | Outer Joint | | 42 | 27 | 76.5 | 34 | 57 | M |
| | 2007.11-2012.03 | CVT/6MT | F | L/R | Saloon FWD CABB;CDHB | Date from:2011.11 | GCO83103 | Outer Joint | | 42 | 28 | 76.4 | 34 | 54 | I |
| | 2007.11-2012.03 | CVT/6MT | F | L/R | Saloon FWD CABB;CDHB | | GCI83022 | Inner Joint | | | 34 | | | 88.5 | |
| 1.8 (120 kw) | 2002.07-2004.12 | 5MT/CVT | F | L/R | Estate FWD BFB | Transmission:5MT,Chassis no. from:8E_4_500001;Transmission:CVT,Chassis no. to:8E_4_195497 | GCI61044 | Inner Joint | | | 34 | | | 85 | |
| | 2002.07-2004.12 | AT/Semi-AT | F | L/R | Estate FWD BFB | | GDS83052 | Drive Shaft | 45W | 38 | | 59.5 | 34.5 | 522 | |
| | 2002.07-2004.12 | CVT | F | L/R | Estate FWD BFB | | GCO83078 | Outer Joint | 45W | 38 | 27 | 59.5 | 34.5 | 63 | M |
| | 2002.07-2004.12 | CVT | F | L/R | Estate FWD BFB | Chassis no. to:8E_4_195500 | GCI83007 | Inner Joint | | | 34 | | | 85 | |
| | 2002.07-2004.12 | MT | F | L | Estate FWD BFB | | GDS83057 | Drive Shaft | 45W | 38 | | 59.5 | 34.5 | 593 | |
| | 2002.07-2004.12 | MT | F | R | Estate FWD BFB | | GDS83058 | Drive Shaft | 45W | 38 | | 59.5 | 34.5 | 613 | |
| | 2002.07-2004.12 | MT | F | L/R | Estate FWD BFB | | GCO83030 | Outer Joint | | 38 | 33 | 59.5 | 34 | 56.5 | M |
| | 2002.07-2004.12 | MT | F | L/R | Estate FWD BFB | Date from:2003.04 | GCO83067 | Outer Joint | 45W | 38 | 27 | 59.5 | 34 | 68 | M |
| | 2002.07-2004.12 | Semi-AT | F | L/R | Estate FWD BFB | | GCO83092 | Outer Joint | 45W | 38 | 27 | 59.5 | 34 | 68 | I |
| | 2002.07-2004.12 | 5MT/CVT | F | L/R | Saloon FWD BFB | Transmission:5MT,Chassis no. from:8E_4_500001;Transmission:CVT,Chassis no. to:8E_4_195497 | GCI61044 | Inner Joint | | | 34 | | | 85 | |

| | YEAR | TRANSM. | F/R | L/R | BODY STYLE & DRIVE TYPE & ENGINE | REMARKS | G-AP Ref. | PRODUCT | ABS | Technical Specifications A | B | C | H | L | P |
|---|---|---|---|---|---|---|---|---|---|---|---|---|---|---|---|
| **AUDI** | | | | | | | | | | | | | | | |
| **A4** | | | | | | | | | | | | | | | |
| 1.8 (120 kw) | 2002.07-2004.12 | AT/Semi-AT | F | L/R | Saloon FWD BFB | | GDS83052 | Drive Shaft | 45W | 38 | | 59.5 | 34.5 | 522 | |
| | 2002.07-2004.12 | CVT | F | L/R | Saloon FWD BFB | | GCO83078 | Outer Joint | 45W | 38 | 27 | 59.5 | 34.5 | 63 | M |
| | 2002.07-2004.12 | CVT | F | L/R | Saloon FWD BFB | Chassis no. to:8E_4_195500 | GCI83007 | Inner Joint | | | 34 | | | 85 | |
| | 2002.07-2004.12 | MT | F | L | Saloon FWD BFB | | GDS83057 | Drive Shaft | 45W | 38 | | 59.5 | 34.5 | 593 | |
| | 2002.07-2004.12 | MT | F | R | Saloon FWD BFB | | GDS83058 | Drive Shaft | 45W | 38 | | 59.5 | 34.5 | 613 | |
| | 2002.07-2004.12 | MT | F | L/R | Saloon FWD BFB | | GCO83030 | Outer Joint | | 38 | 33 | 59.5 | 34 | 56.5 | M |
| | 2002.07-2004.12 | MT | F | L/R | Saloon FWD BFB | Date from:2003.04 | GCO83067 | Outer Joint | 45W | 38 | 27 | 59.5 | 34 | 68 | M |
| | 2002.07-2004.12 | MT | F | L/R | Saloon FWD BFB | Date to:2003.03 | GCO83092 | Outer Joint | 45W | 38 | 27 | 59.5 | 34 | 68 | I |
| | 2004.11-2008.06 | 5MT | F | L | Estate FWD BFB | | GDS83057 | Drive Shaft | 45W | 38 | | 59.5 | 34.5 | 593 | |
| | 2004.11-2008.06 | 5MT | F | R | Estate FWD BFB | | GDS83058 | Drive Shaft | 45W | 38 | | 59.5 | 34.5 | 613 | |
| | 2004.11-2008.06 | 5MT | F | L/R | Estate FWD BFB | | GCO83067 | Outer Joint | 45W | 38 | 27 | 59.5 | 34 | 68 | M |
| | 2004.11-2008.06 | 5MT/CVT | F | L/R | Estate FWD BFB | TJ | GCI61044 | Inner Joint | | | 34 | | | 85 | |
| | 2004.11-2008.06 | CVT | F | L/R | Estate FWD BFB | | GDS83052 | Drive Shaft | 45W | 38 | | 59.5 | 34.5 | 522 | |
| | 2004.11-2008.06 | CVT | F | L/R | Estate FWD BFB | | GCO83078 | Outer Joint | 45W | 38 | 27 | 59.5 | 34.5 | 63 | M |
| | 2004.11-2008.06 | MT | F | L | Estate FWD BFB | AAR | GCI61076 | Inner Joint | | | 34 | | | 85 | |
| | 2004.11-2008.06 | 5MT | F | L | Saloon FWD BFB | | GDS83057 | Drive Shaft | 45W | 38 | | 59.5 | 34.5 | 593 | |
| | 2004.11-2008.06 | 5MT | F | R | Saloon FWD BFB | | GDS83058 | Drive Shaft | 45W | 38 | | 59.5 | 34.5 | 613 | |
| | 2004.11-2008.06 | 5MT | F | L/R | Saloon FWD BFB | | GCO83067 | Outer Joint | 45W | 38 | 27 | 59.5 | 34 | 68 | M |
| | 2004.11-2008.06 | 5MT/CVT | F | L/R | Saloon FWD BFB | | GCO83019 | Outer Joint | 45W | 38 | 27 | 59.5 | 34.5 | 63 | I |
| | 2004.11-2008.06 | 5MT/CVT | F | L/R | Saloon FWD BFB | TJ | GCI61044 | Inner Joint | | | 34 | | | 85 | |
| | 2004.11-2008.06 | CVT | F | L/R | Saloon FWD BFB | | GDS83052 | Drive Shaft | 45W | 38 | | 59.5 | 34.5 | 522 | |
| | 2004.11-2008.06 | CVT | F | L/R | Saloon FWD BFB | | GCO83078 | Outer Joint | 45W | 38 | 27 | 59.5 | 34.5 | 63 | M |
| | 2004.11-2008.06 | MT | F | L | Saloon FWD BFB | AAR | GCI61076 | Inner Joint | | | 34 | | | 85 | |
| 1.8 (125 kw) | 2001.07-2004.12 | 5MT | F | R | Saloon FWD AMB | | GDS83058 | Drive Shaft | 45W | 38 | | 59.5 | 34.5 | 613 | |
| | 2001.07-2004.12 | 5MT | F | L/R | Saloon FWD AMB | Chassis no. from:8E_4_000001 | GCO83067 | Outer Joint | 45W | 38 | 27 | 59.5 | 34 | 68 | M |
| | 2001.07-2004.12 | 5MT | F | L/R | Saloon FWD AMB | Chassis no. from:8E_4_000001 | GCI61044 | Inner Joint | | | 34 | | | 85 | |
| | 2001.07-2004.12 | 5MT/CVT | F | L/R | Saloon FWD AMB | Transmission:MT,Chassis no. to:8E_3_992000;Transmission:CVT,Chassis no. to:8E_4_195500 | GCO83092 | Outer Joint | 45W | 38 | 27 | 59.5 | 34 | 68 | I |
| | 2001.07-2004.12 | CVT | F | L/R | Saloon FWD AMB | | GDS83052 | Drive Shaft | 45W | 38 | | 59.5 | 34.5 | 522 | |
| | 2001.07-2004.12 | CVT | F | L/R | Saloon FWD AMB | Chassis no. from:8E_4_195501 | GCO83078 | Outer Joint | 45W | 38 | 27 | 59.5 | 34.5 | 63 | M |
| | 2001.07-2004.12 | CVT | F | L/R | Saloon FWD AMB | Chassis no. from:8E_4_195501 | GCI61044 | Inner Joint | | | 34 | | | 85 | |
| | 2001.07-2004.12 | CVT | F | L/R | Saloon FWD AMB | Chassis no. to:8E_4_195500 | GCI83007 | Inner Joint | | | 34 | | | 85 | |
| | 2001.07-2004.12 | MT | F | L | Saloon FWD AMB | For Engine Code:AMB | GDS83057 | Drive Shaft | 45W | 38 | | 59.5 | 34.5 | 593 | |
| | 2011.11-2015.12 | 6MT/CVT | F | L/R | Estate FWD CJEB | Inner teeth of wheel side:28 | GDS83291 | Drive Shaft | | 42 | | 76.4 | 34 | 464 | |
| | 2011.11-2015.12 | CVT/6MT | F | L/R | Estate FWD CJEB | Inner teeth of wheel side:27 | GCO83087 | Outer Joint | | 42 | 27 | 76.5 | 34 | 57 | M |
| | 2011.11-2015.12 | CVT/6MT | F | L/R | Estate FWD CJEB | Inner teeth of wheel side:28 | GCO83103 | Outer Joint | | 42 | 28 | 76.4 | 34 | 54 | I |
| | 2011.11-2015.12 | CVT/6MT | F | L/R | Estate FWD CJEB | | GCI83022 | Inner Joint | | | 34 | | | 88.5 | |
| | 2011.11-2015.12 | CVT/6MT | F | L/R | Saloon FWD CJEB | | GDS83291 | Drive Shaft | | 42 | | 76.4 | 34 | 464 | |
| | 2011.11-2015.12 | CVT/6MT | F | L/R | Saloon FWD CJEB | | GCO83103 | Outer Joint | | 42 | 28 | 76.4 | 34 | 54 | I |
| | 2011.11-2015.12 | CVT/6MT | F | L/R | Saloon FWD CJEB | | GCI81054 | Inner Joint | | | 24 | | | 86 | |
| | 2011.11-2015.12 | CVT/6MT | F | L/R | Saloon FWD CJEB | | GCI83022 | Inner Joint | | | 34 | | | 88.5 | |
| 1.8 (132 kw) | 1997.08-2001.09 | MT | F | L/R | Estate FWD AJL | | GCO83019 | Outer Joint | 45W | 38 | 27 | 59.5 | 34.5 | 63 | I |
| | 1997.08-2001.09 | | F | L/R | Estate FWD AJL | | GCI83001 | Inner Joint | | | 28 | | | 32 | |
| | 1997.10-2000.10 | AT/MT | F | L/R | Saloon FWD AJL | | GCO83019 | Outer Joint | 45W | 38 | 27 | 59.5 | 34.5 | 63 | I |
| | 1997.10-2000.10 | MT | F | R | Saloon FWD AJL | | GDS83001 | Drive Shaft | 45W | 33 | | 53 | 30 | 634 | |
| | 1997.10-2000.10 | | F | L/R | Saloon FWD AJL | | GCI83001 | Inner Joint | | | 28 | | | 32 | |
| 1.8 (140 kw) | 2002.11-2004.12 | 5MT | F | L/R | Estate FWD BEX | | GCO83067 | Outer Joint | 45W | 38 | 27 | 59.5 | 34 | 68 | M |
| | 2002.11-2004.12 | AT | F | L/R | Estate FWD BEX | | GDS83052 | Drive Shaft | 45W | 38 | | 59.5 | 34.5 | 522 | |
| | 2002.11-2004.12 | CVT | F | L/R | Estate FWD BEX | Chassis no. to:8E_4_195500 | GCO83092 | Outer Joint | 45W | 38 | 27 | 59.5 | 34 | 68 | I |
| | 2002.11-2004.12 | CVT | F | | Estate FWD BEX | Chassis no. from:8E_4_195501 | GCO83078 | Outer Joint | 45W | 38 | 27 | 59.5 | 34.5 | 63 | M |
| | 2002.11-2004.12 | CVT | F | L/R | Estate FWD BEX | Chassis no. to:8E_4_195500 | GCI83007 | Inner Joint | | | 34 | | | 85 | |
| | 2002.11-2004.12 | CVT/6MT | F | L | Estate FWD BEX | | GDS83057 | Drive Shaft | 45W | 38 | | 59.5 | 34.5 | 593 | |
| | 2002.11-2004.12 | CVT/6MT | F | R | Estate FWD BEX | | GDS83058 | Drive Shaft | 45W | 38 | | 59.5 | 34.5 | 613 | |
| | 2002.11-2004.12 | CVT/6MT | F | L/R | Estate FWD BEX | Transmission:CVT,Chassis no. from:8E_4_195501 | GCI61044 | Inner Joint | | | 34 | | | 85 | |
| | 2002.11-2004.12 | 5MT | F | L/R | Saloon FWD BEX | | GCO83067 | Outer Joint | 45W | 38 | 27 | 59.5 | 34 | 68 | M |
| | 2002.11-2004.12 | 6MT/CVT | F | L/R | Saloon FWD BEX | Transmission:CVT,Chassis no. from:8E_4_195501 | GCI61044 | Inner Joint | | | 34 | | | 85 | |
| | 2002.11-2004.12 | CVT | F | L/R | Saloon FWD BEX | Chassis no. to:8E_4_195500 | GDS83052 | Drive Shaft | 45W | 38 | | 59.5 | 34.5 | 522 | |
| | 2002.11-2004.12 | CVT | F | L/R | Saloon FWD BEX | Chassis no. to:8E_4_195500 | GCO83092 | Outer Joint | 45W | 38 | 27 | 59.5 | 34 | 68 | I |
| | 2002.11-2004.12 | CVT | F | L/R | Saloon FWD BEX | Chassis no. to:8E_4_195500 | GCI83007 | Inner Joint | | | 34 | | | 85 | |
| | 2002.11-2004.12 | CVT/6MT | F | L | Saloon FWD BEX | | GDS83057 | Drive Shaft | 45W | 38 | | 59.5 | 34.5 | 593 | |
| | 2002.11-2004.12 | CVT/6MT | F | R | Saloon FWD BEX | | GDS83058 | Drive Shaft | 45W | 38 | | 59.5 | 34.5 | 613 | |
| | 2002.11-2004.12 | | F | | Saloon FWD BEX | | GCO83078 | Outer Joint | 45W | 38 | 27 | 59.5 | 34.5 | 63 | M |
| 1.9 (55 kw) | 1996.03-2000.06 | 5MT | F | L | Saloon FWD AFF | | GDS61122 | Drive Shaft | 45W | 33 | | 53 | 30 | 602 | |
| | 1996.03-2000.06 | 5MT | F | R | Saloon FWD AFF | For Europe | GDS83007 | Drive Shaft | 45W | 33 | | 53 | 30 | 622 | |
| | 1996.03-2000.06 | 5MT | F | R | Saloon FWD AFF | For North America | GDS83009 | Drive Shaft | 45W | 33 | | 53 | 30 | 617 | |
| | 1996.03-2000.06 | 5MT | F | L/R | Saloon FWD AFF | Chassis no. to:8DW109971;Chassis no. from:8DX200001 | GCO61012 | Outer Joint | 45W | 33 | 30 | 53 | 30 | 62 | I |

| | YEAR | TRANSM. | F/R | L/R | BODY STYLE & DRIVE TYPE & ENGINE | REMARKS | G-AP Ref. | PRODUCT | ABS | Technical Specifications A | B | C | H | L | P |
|---|---|---|---|---|---|---|---|---|---|---|---|---|---|---|---|
| **AUDI** | | | | | | | | | | | | | | | |
| **A4** | | | | | | | | | | | | | | | |
| 1.9 (55 kw) | 1996.03-2000.06 | 5MT | F | L/R | Saloon FWD AFF | Chassis no. from:8DW109972,Chassis no. to:8DX199999 | GCO83018 | Outer Joint | 45W | 33 | 30 | 53 | 30 | 62 | I |
| | 1996.03-2000.06 | 5MT | F | L/R | Saloon FWD AFF | | GCI50019 | Inner Joint | | | 34 | | | 59.5 | |
| | 1996.03-2000.06 | AT | F | L | Saloon FWD AFF | Date from:1996.03,Date to:2000.06 | GDS83012 | Drive Shaft | 45W | 33 | | 53 | 30 | 498 | |
| | 1996.03-2000.06 | AT | F | R | Saloon FWD AFF | Date from:1996.03,Date to:2000.06 | GDS99108 | Drive Shaft | 45W | 33 | | 53 | 30 | 586 | |
| | 1996.03-2001.09 | 5MT | F | R | Estate FWD AFF | For North America | GDS83009 | Drive Shaft | 45W | 33 | | 53 | 30 | 617 | |
| | 1996.03-2001.09 | 5MT | F | L/R | Estate FWD AFF | | GCI50019 | Inner Joint | | | 34 | | | 59.5 | |
| | 1996.03-2001.09 | AT | F | L | Estate FWD AFF | | GDS83012 | Drive Shaft | 45W | 33 | | 53 | 30 | 498 | |
| | 1996.03-2001.09 | AT | F | R | Estate FWD AFF | | GDS99108 | Drive Shaft | 45W | 33 | | 53 | 30 | 586 | |
| 1.9 (66 kw) | 1995.01-2000.10 | 4AT | F | L | Saloon FWD 1Z/AHH/AHU | | GDS83012 | Drive Shaft | 45W | 33 | | 53 | 30 | 498 | |
| | 1995.01-2000.10 | 4AT | F | R | Saloon FWD 1Z/AHH/AHU | | GDS99108 | Drive Shaft | 45W | 33 | | 53 | 30 | 586 | |
| | 1995.01-2000.10 | 4AT/5MT | F | L/R | Saloon FWD 1Z/AHH/AHU | Transmission:5MT,Chassis no. to:8D_X_000001,Chassis no. from:8D_X_199999,Transmission:4AT,Chassis no. to:8D_X_199999,Chassis no. from:8D_X_199999 | GCO61012 | Outer Joint | 45W | 33 | 30 | 53 | 30 | 62 | I |
| | 1995.01-2000.10 | 4AT/5MT | F | L/R | Saloon FWD 1Z/AHH/AHU | Transmission:5MT,Chassis no. to:8D_W_109971/8D_W_000001,Transmission:4AT,Chassis no. to:8D_W_109971 | GCO83018 | Outer Joint | 45W | 33 | 30 | 53 | 30 | 62 | I |
| | 1995.01-2000.10 | 4AT/5MT | F | L/R | Saloon FWD 1Z/AHH/AHU | | GCI50019 | Inner Joint | | | 34 | | | 59.5 | |
| | 1995.01-2000.10 | 5MT | F | L | Saloon FWD 1Z/AHH/AHU | | GDS61122 | Drive Shaft | 45W | 33 | | 53 | 30 | 602 | |
| | 1995.01-2000.10 | 5MT | F | R | Saloon FWD 1Z/AHH/AHU | For Europe | GDS83007 | Drive Shaft | 45W | 33 | | 53 | 30 | 622 | |
| | 1995.01-2000.10 | 5MT | F | R | Saloon FWD 1Z/AHH/AHU | For North America | GDS83009 | Drive Shaft | 45W | 33 | | 53 | 30 | 617 | |
| | 1995.01-2001.09 | 4AT | F | L | Estate FWD 1Z/AHH/AHU | | GDS83012 | Drive Shaft | 45W | 33 | | 53 | 30 | 498 | |
| | 1995.01-2001.09 | 4AT | F | R | Estate FWD 1Z/AHH/AHU | | GDS99108 | Drive Shaft | 45W | 33 | | 53 | 30 | 586 | |
| | 1995.01-2001.09 | 4AT/5MT | F | L/R | Estate FWD 1Z/AHH/AHU | Transmission:5MT,Chassis no. to:8D_X_000001,Chassis no. from:8D_X_199999,Transmission:4AT,Chassis no. to:8D_X_199999,Chassis no. from:8D_X_199999 | GCO61012 | Outer Joint | 45W | 33 | 30 | 53 | 30 | 62 | I |
| | 1995.01-2001.09 | 4AT/5MT | F | L/R | Estate FWD 1Z/AHH/AHU | Transmission:5MT,Chassis no. to:8D_W_109971/8D_W_000001,Transmission:4AT,Chassis no. to:8D_W_109971 | GCO83018 | Outer Joint | 45W | 33 | 30 | 53 | 30 | 62 | I |
| | 1995.01-2001.09 | 4AT/5MT | F | L/R | Estate FWD 1Z/AHH/AHU | | GCI50019 | Inner Joint | | | 34 | | | 59.5 | |
| | 1995.01-2001.09 | 5MT | F | L | Estate FWD 1Z/AHH/AHU | | GDS61122 | Drive Shaft | 45W | 33 | | 53 | 30 | 602 | |
| | 1995.01-2001.09 | 5MT | F | R | Estate FWD 1Z/AHH/AHU | For Europe | GDS83007 | Drive Shaft | 45W | 33 | | 53 | 30 | 622 | |
| | 1995.01-2001.09 | 5MT | F | R | Estate FWD 1Z/AHH/AHU | For North America | GDS83009 | Drive Shaft | 45W | 33 | | 53 | 30 | 617 | |
| | 1998.03-2000.06 | 5MT | F | L | Estate FWD AHU | | GDS61122 | Drive Shaft | 45W | 33 | | 53 | 30 | 602 | |
| | 1998.03-2000.06 | 5MT | F | R | Estate FWD AHU | For Europe | GDS83007 | Drive Shaft | 45W | 33 | | 53 | 30 | 622 | |
| | 1998.03-2000.06 | 5MT | F | R | Estate FWD AHU | For North America | GDS83009 | Drive Shaft | 45W | 33 | | 53 | 30 | 617 | |
| | 1998.03-2000.06 | 5MT | F | L/R | Estate FWD AHU | | GCO61012 | Outer Joint | 45W | 33 | 30 | 53 | 30 | 62 | I |
| | 1998.03-2000.06 | 5MT | F | L/R | Estate FWD AHU | | GCI50019 | Inner Joint | | | 34 | | | 59.5 | |
| 1.9 (74 kw) | 2001.05-2004.12 | 5MT | F | L | Saloon FWD AVB | | GDS83057 | Drive Shaft | 45W | 38 | | 59.5 | 34.5 | 593 | |
| | 2001.05-2004.12 | 5MT | F | R | Saloon FWD AVB | | GDS83058 | Drive Shaft | 45W | 38 | | 59.5 | 34.5 | 613 | |
| | 2001.05-2004.12 | 5MT | F | L/R | Saloon FWD AVB | Chassis no. from:8E_4_000001 | GCO83067 | Outer Joint | 45W | 38 | 27 | 59.5 | 34 | 68 | M |
| | 2001.05-2004.12 | 5MT | F | L/R | Saloon FWD AVB | Chassis no. to:8E_3_390000 | GCO83092 | Outer Joint | 45W | 38 | 27 | 59.5 | 34 | 68 | I |
| | 2001.05-2004.12 | 5MT | F | L/R | Saloon FWD AVB | | GCI61044 | Inner Joint | | | 34 | | | 85 | |
| | 2001.11-2004.12 | 5MT | F | L | Estate FWD AVB | | GDS83057 | Drive Shaft | 45W | 38 | | 59.5 | 34.5 | 593 | |
| | 2001.11-2004.12 | 5MT | F | R | Estate FWD AVB | | GDS83058 | Drive Shaft | 45W | 38 | | 59.5 | 34.5 | 613 | |
| | 2001.11-2004.12 | 5MT | F | L/R | Estate FWD AVB | Chassis no. from:8E_4_000001 | GCO83067 | Outer Joint | 45W | 38 | 27 | 59.5 | 34 | 68 | M |
| | 2001.11-2004.12 | 5MT | F | L/R | Estate FWD AVB | Chassis no. to:8E_3_390000 | GCO83092 | Outer Joint | 45W | 38 | 27 | 59.5 | 34 | 68 | I |
| | 2001.11-2004.12 | 5MT | F | L/R | Estate FWD AVB | | GCI61044 | Inner Joint | | | 34 | | | 85 | |
| 1.9 (81 kw) | 1996.02-2000.06 | 4AT | F | L | Estate FWD AFN/AVG | | GDS83012 | Drive Shaft | 45W | 33 | | 53 | 30 | 498 | |
| | 1996.02-2000.06 | 4AT | F | R | Estate FWD AFN/AVG | | GDS99108 | Drive Shaft | 45W | 33 | | 53 | 30 | 586 | |
| | 1996.02-2000.06 | 4AT/5MT | F | L/R | Estate FWD AFN/AVG | Transmission:5MT,Chassis no. from:8D_W_109972,Chassis no. to:8D_X_199999,Transmission:4AT | GCO83018 | Outer Joint | 45W | 33 | 30 | 53 | 30 | 62 | I |
| | 1996.02-2000.06 | 4AT/5MT | F | L/R | Estate FWD AFN/AVG | | GCI50019 | Inner Joint | | | 34 | | | 59.5 | |
| | 1996.02-2000.06 | 5MT | F | L | Estate FWD AFN/AVG | | GDS61122 | Drive Shaft | 45W | 33 | | 53 | 30 | 602 | |
| | 1996.02-2000.06 | 5MT | F | R | Estate FWD AFN/AVG | For Europe | GDS83007 | Drive Shaft | 45W | 33 | | 53 | 30 | 622 | |
| | 1996.02-2000.06 | 5MT | F | R | Estate FWD AFN/AVG | For North America | GDS83009 | Drive Shaft | 45W | 33 | | 53 | 30 | 617 | |
| | 1996.02-2000.06 | 5MT | F | L/R | Estate FWD AFN/AVG | Transmission:5MT,Chassis no. to:8D_W_109971,Chassis no. from:8D_X_200001 | GCO61012 | Outer Joint | 45W | 33 | 30 | 53 | 30 | 62 | I |
| | 1996.02-2000.06 | 4AT | F | L | Saloon FWD AFN/AVG | | GDS83012 | Drive Shaft | 45W | 33 | | 53 | 30 | 498 | |
| | 1996.02-2000.06 | 4AT | F | R | Saloon FWD AFN/AVG | | GDS99108 | Drive Shaft | 45W | 33 | | 53 | 30 | 586 | |
| | 1996.02-2000.06 | 4AT/5MT | F | L/R | Saloon FWD AFN/AVG | Transmission:5MT,Chassis no. from:8D_W_109972,Chassis no. to:8D_X_199999,Transmission:4AT | GCO83018 | Outer Joint | 45W | 33 | 30 | 53 | 30 | 62 | I |
| | 1996.02-2000.06 | 4AT/5MT | F | L/R | Saloon FWD AFN/AVG | | GCI50019 | Inner Joint | | | 34 | | | 59.5 | |
| | 1996.02-2000.06 | 5MT | F | L | Saloon FWD AFN/AVG | | GDS61122 | Drive Shaft | 45W | 33 | | 53 | 30 | 602 | |
| | 1996.02-2000.06 | 5MT | F | R | Saloon FWD AFN/AVG | For Europe | GDS83007 | Drive Shaft | 45W | 33 | | 53 | 30 | 622 | |
| | 1996.02-2000.06 | 5MT | F | R | Saloon FWD AFN/AVG | For North America | GDS83009 | Drive Shaft | 45W | 33 | | 53 | 30 | 617 | |
| | 1996.02-2000.06 | 5MT | F | L/R | Saloon FWD AFN/AVG | Transmission:5MT,Chassis no. to:8D_W_109971,Chassis no. from:8D_X_200001 | GCO61012 | Outer Joint | 45W | 33 | 30 | 53 | 30 | 62 | I |
| 1.9 (85 kw) | 1998.12-2001.09 | 5AT/5MT | F | L/R | Estate FWD AJM/ATJ | | GCO83021 | Outer Joint | 45W | 33 | 27 | 53 | 30 | 63 | I |
| | 1998.12-2001.09 | 5MT | F | L | Estate FWD AJM/ATJ | | GDS61083 | Drive Shaft | 45W | 33 | | 53 | 30 | 603 | |
| | 1998.12-2001.09 | 5MT | F | R | Estate FWD AJM/ATJ | | GDS61082 | Drive Shaft | 45W | 33 | | 53 | 30 | 620 | |
| | 1998.12-2001.09 | 5MT | F | L/R | Estate FWD AJM/ATJ | | GCI50019 | Inner Joint | | | 34 | | | 59.5 | |
| | 2000.01-2001.09 | 5AT/5MT | F | L/R | Saloon FWD AJM | | GCO83021 | Outer Joint | 45W | 33 | 27 | 53 | 30 | 63 | I |
| | 2000.01-2001.09 | 5AT/5MT | F | L/R | Saloon FWD AJM | | GCI50019 | Inner Joint | | | 34 | | | 59.5 | |
| | 2000.01-2001.09 | 5MT | F | L | Saloon FWD AJM | | GDS61083 | Drive Shaft | 45W | 33 | | 53 | 30 | 603 | |
| | 2000.01-2001.09 | 5MT | F | R | Saloon FWD AJM | | GDS61082 | Drive Shaft | 45W | 33 | | 53 | 30 | 620 | |
| | 2000.01-2001.09 | MT | F | L | Saloon FWD AJM | | GDS61122 | Drive Shaft | 45W | 33 | | 53 | 30 | 602 | |
| | 2004.06-2004.12 | 5MT | F | L | Estate FWD BKE | | GDS83057 | Drive Shaft | 45W | 38 | | 59.5 | 34.5 | 593 | |

| | YEAR | TRANSM. | F/R | L/R | BODY STYLE & DRIVE TYPE & ENGINE | REMARKS | G-AP Ref. | PRODUCT | ABS | Technical Specifications A | B | C | H | L | P |
|---|---|---|---|---|---|---|---|---|---|---|---|---|---|---|---|
| **AUDI** | | | | | | | | | | | | | | | |
| **A4** | | | | | | | | | | | | | | | |
| 1.9 (85 kw) | 2004.06-2004.12 | 5MT | F | R | Estate FWD BKE | | GDS83058 | Drive Shaft | 45W | 38 | | 59.5 | 34.5 | 613 | |
| | 2004.06-2004.12 | 5MT | F | L/R | Estate FWD BKE | | GCO83067 | Outer Joint | 45W | 38 | 27 | 59.5 | 34 | 68 | M |
| | 2004.06-2004.12 | 5MT | F | L/R | Estate FWD BKE | TJ | GCI61044 | Inner Joint | | | 34 | | | 85 | |
| | 2004.06-2004.12 | 5MT | F | L/R | Estate FWD BKE | AAR | GCI61076 | Inner Joint | | | 34 | | | 85 | |
| | 2004.06-2004.12 | 5MT | F | L | Saloon FWD BKE | | GDS83057 | Drive Shaft | 45W | 38 | | 59.5 | 34.5 | 593 | |
| | 2004.06-2004.12 | 5MT | F | R | Saloon FWD BKE | | GDS83058 | Drive Shaft | 45W | 38 | | 59.5 | 34.5 | 613 | |
| | 2004.06-2004.12 | | F | L/R | Saloon FWD BKE | | GCO83067 | Outer Joint | 45W | 38 | 27 | 59.5 | 34 | 68 | M |
| | 2004.06-2004.12 | | F | | Saloon FWD BKE | | GCO83078 | Outer Joint | 45W | 38 | 27 | 59.5 | 34.5 | 63 | M |
| | 2004.06-2004.12 | | F | L | Saloon FWD BKE | AAR | GCI61076 | Inner Joint | | | 34 | | | 85 | |
| | 2004.06-2004.12 | | F | L/R | Saloon FWD BKE | TJ | GCI61044 | Inner Joint | | | 34 | | | 85 | |
| | 2004.11-2008.06 | MT | F | L | Estate FWD BKE;BRB | | GDS83057 | Drive Shaft | 45W | 38 | | 59.5 | 34.5 | 593 | |
| | 2004.11-2008.06 | MT | F | R | Estate FWD BKE;BRB | | GDS83058 | Drive Shaft | 45W | 38 | | 59.5 | 34.5 | 613 | |
| | 2004.11-2008.06 | MT | F | L/R | Estate FWD BKE;BRB | | GCO83067 | Outer Joint | 45W | 38 | 27 | 59.5 | 34 | 68 | M |
| | 2004.11-2008.06 | MT | F | L/R | Estate FWD BKE;BRB | | GCO83078 | Outer Joint | 45W | 38 | 27 | 59.5 | 34.5 | 63 | M |
| | 2004.11-2008.06 | MT | F | L/R | Estate FWD BKE;BRB | | GCI61044 | Inner Joint | | | 34 | | | 85 | |
| | 2004.11-2008.06 | MT | F | L | Saloon FWD BKE;BRB | | GDS83057 | Drive Shaft | 45W | 38 | | 59.5 | 34.5 | 593 | |
| | 2004.11-2008.06 | MT | F | R | Saloon FWD BKE;BRB | | GDS83058 | Drive Shaft | 45W | 38 | | 59.5 | 34.5 | 613 | |
| | 2004.11-2008.06 | MT | F | L/R | Saloon FWD BKE;BRB | | GCO83067 | Outer Joint | 45W | 38 | 27 | 59.5 | 34 | 68 | M |
| | 2004.11-2008.06 | MT | F | L/R | Saloon FWD BKE;BRB | | GCO83078 | Outer Joint | 45W | 38 | 27 | 59.5 | 34.5 | 63 | M |
| | 2004.11-2008.06 | MT | F | L/R | Saloon FWD BKE;BRB | | GCI61044 | Inner Joint | | | 34 | | | 85 | |
| 1.9 (96 kw) | 2000.11-2004.12 | AT | F | L/R | Saloon FWD AVF;AWX | | GDS83052 | Drive Shaft | 45W | 38 | | 59.5 | 34.5 | 522 | |
| | 2000.11-2004.12 | AT | F | L/R | Saloon FWD AVF;AWX | Date From:2004.01 | GCO83078 | Outer Joint | 45W | 38 | 27 | 59.5 | 34.5 | 63 | M |
| | 2000.11-2004.12 | AT | F | L/R | Saloon FWD AVF;AWX | Date To:2003.12,Chassis no. to:8E4195500 | GCO83092 | Outer Joint | 45W | 38 | 27 | 59.5 | 34 | 68 | I |
| | 2000.11-2004.12 | AT/MT | F | L/R | Saloon FWD AVF;AWX | Chassis no. from:8E_4_000001/8E_4_195501 | GCI61044 | Inner Joint | | | 34 | | | 85 | |
| | 2000.11-2004.12 | CVT | F | L/R | Saloon FWD AVF;AWX | Chassis no. to:8E_4_195500 | GCI83007 | Inner Joint | | | 34 | | | 85 | |
| | 2000.11-2004.12 | MT | F | L | Saloon FWD AVF;AWX | | GDS83057 | Drive Shaft | 45W | 38 | | 59.5 | 34.5 | 593 | |
| | 2000.11-2004.12 | MT | F | R | Saloon FWD AVF;AWX | | GDS83058 | Drive Shaft | 45W | 38 | | 59.5 | 34.5 | 613 | |
| | 2000.11-2004.12 | MT | F | L/R | Saloon FWD AVF;AWX | Date From:2003.04 | GCO83067 | Outer Joint | 45W | 38 | 27 | 59.5 | 34 | 68 | M |
| | 2000.11-2004.12 | MT | F | L/R | Saloon FWD AVF;AWX | Date To:2003.03,Chassis no. to:8E3390000 | GCO83092 | Outer Joint | 45W | 38 | 27 | 59.5 | 34 | 68 | I |
| | 2001.09-2004.12 | 5MT/6MT | F | L/R | Estate FWD AVF;AWX | | GCI83007 | Inner Joint | | | 34 | | | 85 | |
| | 2001.09-2004.12 | AT | F | L/R | Estate FWD AVF;AWX | | GDS83052 | Drive Shaft | 45W | 38 | | 59.5 | 34.5 | 522 | |
| | 2001.09-2004.12 | AT | F | L/R | Estate FWD AVF;AWX | Date From:2004.01 | GCO83078 | Outer Joint | 45W | 38 | 27 | 59.5 | 34.5 | 63 | M |
| | 2001.09-2004.12 | AT | F | L/R | Estate FWD AVF;AWX | Date to:2003.12,Chassis no. to:8E4195500 | GCO83092 | Outer Joint | 45W | 38 | 27 | 59.5 | 34 | 68 | I |
| | 2001.09-2004.12 | AT/MT | F | L/R | Estate FWD AVF;AWX | | GCI61044 | Inner Joint | | | 34 | | | 85 | |
| | 2001.09-2004.12 | MT | F | L | Estate FWD AVF;AWX | | GDS83057 | Drive Shaft | 45W | 38 | | 59.5 | 34.5 | 593 | |
| | 2001.09-2004.12 | MT | F | R | Estate FWD AVF;AWX | | GDS83058 | Drive Shaft | 45W | 38 | | 59.5 | 34.5 | 613 | |
| | 2001.09-2004.12 | MT | F | L/R | Estate FWD AVF;AWX | Date From:2003.04 | GCO83067 | Outer Joint | 45W | 38 | 27 | 59.5 | 34 | 68 | M |
| | 2001.09-2004.12 | MT | F | L/R | Estate FWD AVF;AWX | Date to:2003.03,Chassis no. to:8E3390000 | GCO83092 | Outer Joint | 45W | 38 | 27 | 59.5 | 34 | 68 | I |
| 2.0 (88 kw) | 2008.06-2015.12 | 6MT | F | L/R | Estate FWD CAGC;CJCC | Date to:2011.10,For PR code:1BA/1BE/1BL/1BD/1BV | GDS83273 | Drive Shaft | | 42 | | 76.5 | 34 | 460 | |
| | 2008.06-2015.12 | 6MT | F | L/R | Estate FWD CAGC;CJCC | Date from:2011.11 | GDS83291 | Drive Shaft | | 42 | | 76.4 | 34 | 464 | |
| | 2008.06-2015.12 | 6MT | F | L/R | Estate FWD CAGC;CJCC | Date to:2011.10,For PR code:1BR | GDS83328 | Drive Shaft | | 42 | | 76.5 | 34 | 463 | |
| | 2008.06-2015.12 | 6MT | F | L/R | Estate FWD CAGC;CJCC | Date to:2011.10 | GCO83087 | Outer Joint | | 42 | 27 | 76.5 | 34 | 57 | M |
| | 2008.06-2015.12 | 6MT | F | L/R | Estate FWD CAGC;CJCC | Date from:2011.11 | GCO83103 | Outer Joint | | 42 | 28 | 76.4 | 34 | 54 | I |
| | 2008.06-2015.12 | 6MT | F | L/R | Estate FWD CAGC;CJCC | AAR | GCI81054 | Inner Joint | | | 24 | | | 86 | |
| | 2008.06-2015.12 | 6MT | F | L/R | Estate FWD CAGC;CJCC | TJ | GCI83022 | Inner Joint | | | 34 | | | 88.5 | |
| | 2008.06-2015.12 | 6MT | F | L/R | Saloon FWD CAGC;CJCC | Date to:2011.10,For PR code:1BA/1BE/1BL/1BD/1BV | GDS83273 | Drive Shaft | | 42 | | 76.5 | 34 | 460 | |
| | 2008.06-2015.12 | 6MT | F | L/R | Saloon FWD CAGC;CJCC | Date from:2011.11 | GDS83291 | Drive Shaft | | 42 | | 76.4 | 34 | 464 | |
| | 2008.06-2015.12 | 6MT | F | L/R | Saloon FWD CAGC;CJCC | Date to:2011.10,For PR code:1BR | GDS83328 | Drive Shaft | | 42 | | 76.5 | 34 | 463 | |
| | 2008.06-2015.12 | 6MT | F | L/R | Saloon FWD CAGC;CJCC | Date to:2011.10 | GCO83087 | Outer Joint | | 42 | 27 | 76.5 | 34 | 57 | M |
| | 2008.06-2015.12 | 6MT | F | L/R | Saloon FWD CAGC;CJCC | Date from:2011.11 | GCO83103 | Outer Joint | | 42 | 28 | 76.4 | 34 | 54 | I |
| | 2008.06-2015.12 | 6MT | F | L/R | Saloon FWD CAGC;CJCC | AAR | GCI81054 | Inner Joint | | | 24 | | | 86 | |
| | 2008.06-2015.12 | 6MT | F | L/R | Saloon FWD CAGC;CJCC | TJ | GCI83022 | Inner Joint | | | 34 | | | 88.5 | |
| 2.0 (89 kw) | 2005.09-2006.09 | AT | F | | Estate FWD BVG | | GCI61044 | Inner Joint | | | 34 | | | 85 | |
| | 2005.09-2006.09 | CVT | F | L/R | Estate FWD BVG | | GDS81132 | Drive Shaft | 45W | 38 | | 59.5 | 34.5 | 525 | |
| | 2005.09-2006.09 | CVT | F | L/R | Estate FWD BVG | | GCO83078 | Outer Joint | 45W | 38 | 27 | 59.5 | 34.5 | 63 | M |
| | 2005.09-2006.09 | CVT | F | L/R | Estate FWD BVG | | GCI61063 | Inner Joint | | | 34 | | | 91 | |
| | 2005.09-2006.09 | | F | L/R | Estate FWD BVG | Date From:2006.01 | GCO83067 | Outer Joint | 45W | 38 | 27 | 59.5 | 34 | 68 | M |
| | 2005.09-2006.09 | AT | F | | Saloon FWD BVG | | GCI61044 | Inner Joint | | | 34 | | | 85 | |
| | 2005.09-2006.09 | CVT | F | L/R | Saloon FWD BVG | | GDS81132 | Drive Shaft | 45W | 38 | | 59.5 | 34.5 | 525 | |
| | 2005.09-2006.09 | CVT | F | L/R | Saloon FWD BVG | | GCO83078 | Outer Joint | 45W | 38 | 27 | 59.5 | 34.5 | 63 | M |
| | 2005.09-2006.09 | CVT | F | L/R | Saloon FWD BVG | | GCI61063 | Inner Joint | | | 34 | | | 91 | |
| | 2005.09-2006.09 | | F | L/R | Saloon FWD BVG | | GCO83067 | Outer Joint | 45W | 38 | 27 | 59.5 | 34 | 68 | M |
| 2.0 (90 kw) | 2016.04-2018.09 | 6MT/7DCT | F | L/R | Estate FWD DEUC | | GDS82075 | Drive Shaft | | 42 | | 76.5 | 34 | 463 | |
| | 2016.04-2018.09 | AT/MT | F | L/R | Estate FWD DEUC | | GCO83103 | Outer Joint | | 42 | 28 | 76.4 | 34 | 54 | I |
| | 2016.04-2018.09 | AT/MT | F | L/R | Estate FWD DEUC | | GCI83022 | Inner Joint | | | 34 | | | 88.5 | |

| | YEAR | TRANSM. | F/R | L/R | BODY STYLE & DRIVE TYPE & ENGINE | REMARKS | G-AP Ref. | PRODUCT | ABS | Technical Specifications | | | | | |
|---|---|---|---|---|---|---|---|---|---|---|---|---|---|---|---|
| | | | | | | | | | | A | B | C | H | L | P |
| **AUDI** | | | | | | | | | | | | | | | |
| **A4** | | | | | | | | | | | | | | | |
| 2.0 (90 kw) | 2016.05-2019.11 | 6MT/7DCT | F | L/R | Saloon FWD DEUC | | GDS82075 | Drive Shaft | | 42 | | 76.5 | 34 | 463 | |
| | 2016.05-2019.11 | AT/MT | F | L/R | Saloon FWD DEUC | | GCO83103 | Outer Joint | | 42 | 28 | 76.4 | 34 | 54 | I |
| | 2016.05-2019.11 | AT/MT | F | L/R | Saloon FWD DEUC | | GCI83022 | Inner Joint | | | 34 | | | 88.5 | |
| | 2018.10-2020.10 | 6MT/7DCT | F | L/R | Estate FWD DEUC | | GDS82075 | Drive Shaft | | 42 | | 76.5 | 34 | 463 | |
| 2.0 (93 kw) | 2005.11-2006.11 | 6MT | F | L | Estate FWD BVF | | GDS83057 | Drive Shaft | 45W | 38 | | 59.5 | 34.5 | 593 | |
| | 2005.11-2006.11 | 6MT | F | R | Estate FWD BVF | | GDS83058 | Drive Shaft | 45W | 38 | | 59.5 | 34.5 | 613 | |
| | 2005.11-2006.11 | 6MT | F | L/R | Estate FWD BVF | | GCO83067 | Outer Joint | 45W | 38 | 27 | 59.5 | 34 | 68 | M |
| | 2005.11-2006.11 | | F | | Estate FWD BVF | | GCO83078 | Outer Joint | 45W | 38 | 27 | 59.5 | 34.5 | 63 | M |
| | 2005.11-2006.11 | | F | L | Estate FWD BVF | AAR | GCI61076 | Inner Joint | | | 34 | | | 85 | |
| | 2005.11-2006.11 | | F | L/R | Estate FWD BVF | TJ | GCI61044 | Inner Joint | | | 34 | | | 85 | |
| | 2005.11-2006.11 | 6MT | F | L | Saloon FWD BVF | | GDS83057 | Drive Shaft | 45W | 38 | | 59.5 | 34.5 | 593 | |
| | 2005.11-2006.11 | 6MT | F | R | Saloon FWD BVF | | GDS83058 | Drive Shaft | 45W | 38 | | 59.5 | 34.5 | 613 | |
| | 2005.11-2006.11 | 6MT | F | L/R | Saloon FWD BVF | | GCO83067 | Outer Joint | 45W | 38 | 27 | 59.5 | 34 | 68 | M |
| | 2005.11-2006.11 | | F | | Saloon FWD BVF | | GCO83078 | Outer Joint | 45W | 38 | 27 | 59.5 | 34.5 | 63 | M |
| | 2005.11-2006.11 | | F | L | Saloon FWD BVF | AAR | GCI61076 | Inner Joint | | | 34 | | | 85 | |
| | 2005.11-2006.11 | | F | L/R | Saloon FWD BVF | TJ | GCI61044 | Inner Joint | | | 34 | | | 85 | |
| 2.0 (96 kw) | 2000.11-2004.12 | 5MT | F | L/R | Saloon FWD ALT | Chassis no. from:8E_1_004665,Chassis no. to:8E_2_100000 | GCI61010 | Inner Joint | | | 28 | | | 32 | |
| | 2000.11-2004.12 | 5MT | F | L/R | Saloon FWD ALT | Chassis no. from:8E_5_035001 | GCI61070 | Inner Joint | | | 24 | | | 85 | |
| | 2000.11-2004.12 | 5MT/CVT | F | L/R | Saloon FWD ALT | Transmission:5MT,Chassis no. from:8E_1_004665;Transmission:CVT | GCO83030 | Outer Joint | | 38 | 33 | 59.5 | 34 | 56.5 | M |
| | 2000.11-2004.12 | CVT | F | L/R | Saloon FWD ALT | | GCI83007 | Inner Joint | | | 34 | | | 85 | |
| | 2000.11-2004.12 | MT | F | L | Saloon FWD ALT | Chassis no. to:8E1-004664,Date From:2001.05,Date To:2004.06,Chassis no. from:8E1-004665,Chassis no. to:8E5035000 | GDS83057 | Drive Shaft | 45W | 38 | | 59.5 | 34.5 | 593 | |
| | 2000.11-2004.12 | MT | F | L | Saloon FWD ALT | Date From:2004.07,Chassis no. from:8E5035001 | GDS83310 | Drive Shaft | 45W | 38 | | 59.5 | 34 | 594 | |
| | 2000.11-2004.12 | MT | F | R | Saloon FWD ALT | | GDS83058 | Drive Shaft | 45W | 38 | | 59.5 | 34.5 | 613 | |
| | 2000.11-2004.12 | MT | F | L/R | Saloon FWD ALT | Date From:2004.07,Chassis no. from:8E5030001 | GCO83058 | Outer Joint | 45W | 38 | 33 | 59.5 | 34 | 56.5 | M |
| | 2000.11-2004.12 | MT | F | L/R | Saloon FWD ALT | Chassis no. to:8E-1A004664 | GCO83092 | Outer Joint | 45W | 38 | 27 | 59.5 | 34 | 68 | I |
| | 2000.11-2004.12 | MT | F | L/R | Saloon FWD ALT | Date to:2001.04,Chassis no. to:8E2100000 | GCI61002 | Inner Joint | | | 28 | | | 31.8 | |
| | 2000.11-2004.12 | Semi-AT | F | L/R | Saloon FWD ALT | Date To:2004.10,Chassis no. to:8E5120254 | GDS83298 | Drive Shaft | 45W | 38 | | 59.5 | 34 | 540 | |
| | 2000.11-2004.12 | Semi-AT | F | L/R | Saloon FWD ALT | Date From:2004.11 | GDS83364 | Drive Shaft | 45W | 38 | | 59.5 | 34 | 522 | |
| | 2000.11-2004.12 | Semi-AT | F | L/R | Saloon FWD ALT | Date To:2004.10,Chassis no. to:8E5120254 | GCI61006 | Inner Joint | | | 30 | | | 57.6 | |
| | 2001.09-2004.12 | 5MT | F | L/R | Estate FWD ALT | Chassis no. from:8E_1_004665,Chassis no. to:8E_2_100000 | GCI61010 | Inner Joint | | | 28 | | | 32 | |
| | 2001.09-2004.12 | 5MT | F | L/R | Estate FWD ALT | Chassis no. from:8E_5_035001 | GCI61070 | Inner Joint | | | 24 | | | 85 | |
| | 2001.09-2004.12 | AT | F | L/R | Estate FWD ALT | Date to:2004.10;Chassis no. to:8E5120254 | GDS83298 | Drive Shaft | 45W | 38 | | 59.5 | 34 | 540 | |
| | 2001.09-2004.12 | AT | F | L/R | Estate FWD ALT | | GCO83058 | Outer Joint | 45W | 38 | 33 | 59.5 | 34 | 56.5 | M |
| | 2001.09-2004.12 | AT/Semi-AT | F | L/R | Estate FWD ALT | | GDS83364 | Drive Shaft | 45W | 38 | | 59.5 | 34 | 522 | |
| | 2001.09-2004.12 | MT | F | L | Estate FWD ALT | Chassis no. from:8E_2_120000 | GDS83057 | Drive Shaft | 45W | 38 | | 59.5 | 34.5 | 593 | |
| | 2001.09-2004.12 | MT | F | L | Estate FWD ALT | Chassis no. from:8E_5_035001 | GDS83310 | Drive Shaft | 45W | 38 | | 59.5 | 34 | 594 | |
| | 2001.09-2004.12 | MT | F | R | Estate FWD ALT | | GDS83058 | Drive Shaft | 45W | 38 | | 59.5 | 34.5 | 613 | |
| | 2001.09-2004.12 | MT | F | L/R | Estate FWD ALT | Date to:2004.06;Chassis no. to:8E5035000 | GCO83030 | Outer Joint | | 38 | 33 | 59.5 | 34 | 56.5 | M |
| | 2001.09-2004.12 | MT | F | L/R | Estate FWD ALT | Chassis no. from:8E-1A004665 | GCO83058 | Outer Joint | 45W | 38 | 33 | 59.5 | 34 | 56.5 | M |
| | 2001.09-2004.12 | MT | F | L/R | Estate FWD ALT | Chassis no. to:8E-1A004664 | GCO83092 | Outer Joint | 45W | 38 | 27 | 59.5 | 34 | 68 | I |
| | 2001.09-2004.12 | MT | F | L/R | Estate FWD ALT | Date to:2004.06;Chassis no. to:8E5035000 | GCI61044 | Inner Joint | | | 34 | | | 85 | |
| | 2001.09-2004.12 | MT | F | L/R | Estate FWD ALT | Date to:2004.06;Chassis no. to:8E5035000 | GCI83007 | Inner Joint | | | 34 | | | 85 | |
| | 2004.11-2008.06 | 5MT | F | L | Estate FWD ALT | | GDS83310 | Drive Shaft | 45W | 38 | | 59.5 | 34 | 594 | |
| | 2004.11-2008.06 | 5MT | F | R | Estate FWD ALT | | GDS83058 | Drive Shaft | 45W | 38 | | 59.5 | 34.5 | 613 | |
| | 2004.11-2008.06 | 5MT | F | L/R | Estate FWD ALT | | GCI61070 | Inner Joint | | | 24 | | | 85 | |
| | 2004.11-2008.06 | CVT | F | L/R | Estate FWD ALT | | GDS83364 | Drive Shaft | 45W | 38 | | 59.5 | 34 | 522 | |
| | 2004.11-2008.06 | CVT/5MT | F | L/R | Estate FWD ALT | | GCO83030 | Outer Joint | | 38 | 33 | 59.5 | 34 | 56.5 | M |
| | 2004.11-2008.06 | CVT/5MT | F | L/R | Estate FWD ALT | | GCO83058 | Outer Joint | 45W | 38 | 33 | 59.5 | 34 | 56.5 | M |
| | 2004.11-2008.06 | 5MT | F | L | Saloon FWD ALT | | GDS83310 | Drive Shaft | 45W | 38 | | 59.5 | 34 | 594 | |
| | 2004.11-2008.06 | 5MT | F | R | Saloon FWD ALT | | GDS83058 | Drive Shaft | 45W | 38 | | 59.5 | 34.5 | 613 | |
| | 2004.11-2008.06 | 5MT | F | L/R | Saloon FWD ALT | | GCI61070 | Inner Joint | | | 24 | | | 85 | |
| | 2004.11-2008.06 | CVT | F | L/R | Saloon FWD ALT | | GDS83364 | Drive Shaft | 45W | 38 | | 59.5 | 34 | 522 | |
| | 2004.11-2008.06 | CVT/5MT | F | L/R | Saloon FWD ALT | | GCO83030 | Outer Joint | | 38 | 33 | 59.5 | 34 | 56.5 | M |
| | 2004.11-2008.06 | CVT/5MT | F | L/R | Saloon FWD ALT | | GCO83058 | Outer Joint | 45W | 38 | 33 | 59.5 | 34 | 56.5 | M |
| 2.0 (100 kw) | 2004.11-2008.06 | 6MT | F | R | Estate FWD BNA;BRF | | GDS61019 | Drive Shaft | 45W | 38 | | 59.5 | 34.5 | 624 | |
| | 2004.11-2008.06 | AT | F | L/R | Estate FWD BNA;BRF | | GDS83052 | Drive Shaft | 45W | 38 | | 59.5 | 34.5 | 522 | |
| | 2004.11-2008.06 | AT/MT | F | L/R | Estate FWD BNA;BRF | Trans. code:GAZ/FRG | GCI61044 | Inner Joint | | | 34 | | | 85 | |
| | 2004.11-2008.06 | CVT | F | L/R | Estate FWD BNA;BRF | | GDS81132 | Drive Shaft | 45W | 38 | | 59.5 | 34.5 | 525 | |
| | 2004.11-2008.06 | CVT | F | L/R | Estate FWD BNA;BRF | | GCO83078 | Outer Joint | 45W | 38 | 27 | 59.5 | 34.5 | 63 | M |
| | 2004.11-2008.06 | MT | F | L | Estate FWD BNA;BRF | For Engine code:BNA,BRF;Trans. code:HCF | GDS83057 | Drive Shaft | 45W | 38 | | 59.5 | 34.5 | 593 | |
| | 2004.11-2008.06 | MT | F | L | Estate FWD BNA;BRF | Date to:2008.03;For Engine code:BNA;Trans. code:HTA | GDS83363 | Drive Shaft | 45W | 38 | | 59.5 | 34.5 | 611 | |
| | 2004.11-2008.06 | MT | F | R | Estate FWD BNA;BRF | | GDS83058 | Drive Shaft | 45W | 38 | | 59.5 | 34.5 | 613 | |
| | 2004.11-2008.06 | MT | F | L/R | Estate FWD BNA;BRF | | GCO83067 | Outer Joint | 45W | 38 | 27 | 59.5 | 34 | 68 | M |
| | 2004.11-2008.06 | MT | F | L | Estate FWD BNA;BRF | AAR | GCI61076 | Inner Joint | | | 34 | | | 85 | |
| | 2004.11-2008.06 | MT | F | L/R | Estate FWD BNA;BRF | Trans. code:FRF | GCI50019 | Inner Joint | | | 34 | | | 59.5 | |

| | YEAR | TRANSM. | F/R | L/R | BODY STYLE & DRIVE TYPE & ENGINE | REMARKS | G-AP Ref. | PRODUCT | ABS | Technical Specifications A | B | C | H | L | P |
|---|---|---|---|---|---|---|---|---|---|---|---|---|---|---|---|
| **AUDI** | | | | | | | | | | | | | | | |
| **A4** | | | | | | | | | | | | | | | |
| 2.0 (100 kw) | 2004.11-2008.06 | 6MT | F | R | Saloon FWD BNA;BRF | | GDS61019 | Drive Shaft | 45W | 38 | | 59.5 | 34.5 | 624 | |
| | 2004.11-2008.06 | CVT | F | L/R | Saloon FWD BNA;BRF | | GDS81132 | Drive Shaft | 45W | 38 | | 59.5 | 34.5 | 525 | |
| | 2004.11-2008.06 | CVT | F | L/R | Saloon FWD BNA;BRF | | GCO83078 | Outer Joint | 45W | 38 | 27 | 59.5 | 34.5 | 63 | M |
| | 2004.11-2008.06 | MT | F | L | Saloon FWD BNA;BRF | For Engine code:BNA,BRF;Trans. code:HCF | GDS83057 | Drive Shaft | 45W | 38 | | 59.5 | 34.5 | 593 | |
| | 2004.11-2008.06 | MT | F | L | Saloon FWD BNA;BRF | Date to:2007.10;For Engine code:BNA;Trans. code:HTA | GDS83363 | Drive Shaft | 45W | 38 | | 59.5 | 34.5 | 611 | |
| | 2004.11-2008.06 | MT | F | R | Saloon FWD BNA;BRF | | GDS83058 | Drive Shaft | 45W | 38 | | 59.5 | 34.5 | 613 | |
| | 2004.11-2008.06 | MT | F | L/R | Saloon FWD BNA;BRF | | GCO83067 | Outer Joint | 45W | 38 | 27 | 59.5 | 34 | 68 | M |
| | 2004.11-2008.06 | MT | F | L | Saloon FWD BNA;BRF | AAR | GCI61076 | Inner Joint | | | 34 | | | 85 | |
| | 2004.11-2008.06 | MT | F | L/R | Saloon FWD BNA;BRF | Trans. code:FRF | GCI50019 | Inner Joint | | | 34 | | | 59.5 | |
| | 2004.11-2008.06 | MT | F | L/R | Saloon FWD BNA;BRF | Trans. code:GAZ/FRG | GCI61044 | Inner Joint | | | 34 | | | 85 | |
| | 2007.11-2015.12 | CVT/6MT | F | L/R | Saloon FWD CAGB;CJCB;CSUB | Date to:2011.10,For PR code:1BA/1BE/1BL/1BD/1BV | GDS83273 | Drive Shaft | | 42 | | 76.5 | 34 | 460 | |
| | 2007.11-2015.12 | CVT/6MT | F | L/R | Saloon FWD CAGB;CJCB;CSUB | Date from:2011.11 | GDS83291 | Drive Shaft | | 42 | | 76.4 | 34 | 464 | |
| | 2007.11-2015.12 | CVT/6MT | F | L/R | Saloon FWD CAGB;CJCB;CSUB | Date to:2011.10,For PR code:1BR | GDS83328 | Drive Shaft | | 42 | | 76.5 | 34 | 463 | |
| | 2007.11-2015.12 | CVT/6MT | F | L/R | Saloon FWD CAGB;CJCB;CSUB | Date to:2011.10 | GCO83087 | Outer Joint | | 42 | 27 | 76.5 | 34 | 57 | M |
| | 2007.11-2015.12 | CVT/6MT | F | L/R | Saloon FWD CAGB;CJCB;CSUB | Date from:2011.11 | GCO83103 | Outer Joint | | 42 | 28 | 76.4 | 34 | 54 | I |
| | 2007.11-2015.12 | CVT/6MT | F | L/R | Saloon FWD CAGB;CJCB;CSUB | AAR | GCI81054 | Inner Joint | | | 24 | | | 86 | |
| | 2007.11-2015.12 | CVT/6MT | F | L/R | Saloon FWD CAGB;CJCB;CSUB | TJ | GCI83022 | Inner Joint | | | 34 | | | 88.5 | |
| | 2008.04-2015.12 | CVT/6MT | F | L/R | Estate FWD CAGB;CJCB;CSUB | Date to:2011.10,For PR code:1BA/1BE/1BL/1BD/1BV | GDS83273 | Drive Shaft | | 42 | | 76.5 | 34 | 460 | |
| | 2008.04-2015.12 | CVT/6MT | F | L/R | Estate FWD CAGB;CJCB;CSUB | Date from:2011.11 | GDS83291 | Drive Shaft | | 42 | | 76.4 | 34 | 464 | |
| | 2008.04-2015.12 | CVT/6MT | F | L/R | Estate FWD CAGB;CJCB;CSUB | Date to:2011.10,For PR code:1BR | GDS83328 | Drive Shaft | | 42 | | 76.5 | 34 | 463 | |
| | 2008.04-2015.12 | CVT/6MT | F | L/R | Estate FWD CAGB;CJCB;CSUB | Date to:2011.10 | GCO83087 | Outer Joint | | 42 | 27 | 76.5 | 34 | 57 | M |
| | 2008.04-2015.12 | CVT/6MT | F | L/R | Estate FWD CAGB;CJCB;CSUB | Date from:2011.11 | GCO83103 | Outer Joint | | 42 | 28 | 76.4 | 34 | 54 | I |
| | 2008.04-2015.12 | CVT/6MT | F | L/R | Estate FWD CAGB;CJCB;CSUB | AAR | GCI81054 | Inner Joint | | | 24 | | | 86 | |
| | 2008.04-2015.12 | CVT/6MT | F | L/R | Estate FWD CAGB;CJCB;CSUB | TJ | GCI83022 | Inner Joint | | | 34 | | | 88.5 | |
| | 2015.05-2019.11 | 6MT/7DCT | F | L/R | Saloon FWD DEUB | | GDS82075 | Drive Shaft | | 42 | | 76.5 | 34 | 463 | |
| | 2015.05-2019.11 | AT/MT | F | L/R | Saloon FWD DEUB | | GCO83103 | Outer Joint | | 42 | 28 | 76.4 | 34 | 54 | I |
| | 2015.05-2019.11 | AT/MT | F | L/R | Saloon FWD DEUB | | GCI83022 | Inner Joint | | | 34 | | | 88.5 | |
| | 2015.08-2019.10 | 6MT/7DCT | F | L/R | Estate FWD DEUB | | GDS82075 | Drive Shaft | | 42 | | 76.5 | 34 | 463 | |
| | 2015.08-2019.10 | AT/MT | F | L/R | Estate FWD DEUB | Date from:2016.01 | GCO83103 | Outer Joint | | 42 | 28 | 76.4 | 34 | 54 | I |
| | 2015.08-2019.10 | AT/MT | F | L/R | Estate FWD DEUB | Date from:2016.01 | GCI83022 | Inner Joint | | | 34 | | | 88.5 | |
| | 2019.07- | 7AT | F | L/R | Estate FWD DEZB;DTNB | | GDS82256 | Drive Shaft | | 42 | | 76.5 | 34 | 464 | |
| | 2019.07- | 7AT | F | L/R | Estate FWD DEZB;DTNB | | GCO81750 | Outer Joint | | 42 | 29 | 76.5 | 34 | 60 | I |
| | 2019.07- | 7AT | F | L/R | Estate FWD DEZB;DTNB | AAR | GCI61077 | Inner Joint | | | 34 | | | 88 | |
| | 2019.07- | 7AT | F | L/R | Estate FWD DEZB;DTNB | TJ | GCI83022 | Inner Joint | | | 34 | | | 88.5 | |
| | 2019.07- | 7AT | F | L/R | Saloon FWD DEZB;DTNB | | GDS82256 | Drive Shaft | | 42 | | 76.5 | 34 | 464 | |
| | 2019.07- | 7AT | F | L/R | Saloon FWD DEZB;DTNB | | GCO81750 | Outer Joint | | 42 | 29 | 76.5 | 34 | 60 | I |
| | 2019.07- | 7AT | F | L/R | Saloon FWD DEZB;DTNB | | GCI61077 | Inner Joint | | | 34 | | | 88 | |
| | 2019.07- | AT/MT | F | L/R | Saloon FWD DEZB;DTNB | Date from:2020.01 | GCO83103 | Outer Joint | | 42 | 28 | 76.4 | 34 | 54 | I |
| | 2019.07- | AT/MT | F | L/R | Saloon FWD DEZB;DTNB | Date from:2020.01,TJ | GCI83022 | Inner Joint | | | 34 | | | 88.5 | |
| 2.0 (103 kw) | 2004.11-2008.06 | 6MT | F | L | Estate FWD BLB;BRE | Trans. code:HTA | GDS83363 | Drive Shaft | 45W | 38 | | 59.5 | 34.5 | 611 | |
| | 2004.11-2008.06 | 6MT | F | R | Estate FWD BLB;BRE | Trans. code:HTA | GDS61019 | Drive Shaft | 45W | 38 | | 59.5 | 34.5 | 624 | |
| | 2004.11-2008.06 | AT | F | L/R | Estate FWD BLB;BRE | | GDS83052 | Drive Shaft | 45W | 38 | | 59.5 | 34.5 | 522 | |
| | 2004.11-2008.06 | AT/MT | F | L/R | Estate FWD BLB;BRE | Trans. code:GAZ/FRG | GCI61044 | Inner Joint | | | 34 | | | 85 | |
| | 2004.11-2008.06 | CVT | F | L/R | Estate FWD BLB;BRE | | GDS81132 | Drive Shaft | 45W | 38 | | 59.5 | 34.5 | 525 | |
| | 2004.11-2008.06 | CVT | F | L/R | Estate FWD BLB;BRE | | GCO83078 | Outer Joint | 45W | 38 | 27 | 59.5 | 34.5 | 63 | M |
| | 2004.11-2008.06 | MT | F | L | Estate FWD BLB;BRE | Trans. code:HCF | GDS83057 | Drive Shaft | 45W | 38 | | 59.5 | 34.5 | 593 | |
| | 2004.11-2008.06 | MT | F | R | Estate FWD BLB;BRE | Trans. code:HCF | GDS83058 | Drive Shaft | 45W | 38 | | 59.5 | 34.5 | 613 | |
| | 2004.11-2008.06 | MT | F | L/R | Estate FWD BLB;BRE | | GCO83067 | Outer Joint | 45W | 38 | 27 | 59.5 | 34 | 68 | M |
| | 2004.11-2008.06 | MT | F | L | Estate FWD BLB;BRE | AAR | GCI61076 | Inner Joint | | | 34 | | | 85 | |
| | 2004.11-2008.06 | MT | F | L/R | Estate FWD BLB;BRE | Trans. code:FRF | GCI50019 | Inner Joint | | | 34 | | | 59.5 | |
| | 2004.11-2008.06 | 6MT | F | L | Estate FWD BPW | | GDS83057 | Drive Shaft | 45W | 38 | | 59.5 | 34.5 | 593 | |
| | 2004.11-2008.06 | 6MT | F | R | Estate FWD BPW | | GDS83058 | Drive Shaft | 45W | 38 | | 59.5 | 34.5 | 613 | |
| | 2004.11-2008.06 | 6MT | F | L/R | Estate FWD BPW | | GCO83067 | Outer Joint | 45W | 38 | 27 | 59.5 | 34 | 68 | M |
| | 2004.11-2008.06 | CVT | F | L/R | Estate FWD BPW | | GDS81132 | Drive Shaft | 45W | 38 | | 59.5 | 34.5 | 525 | |
| | 2004.11-2008.06 | CVT | F | L/R | Estate FWD BPW | | GCO83078 | Outer Joint | 45W | 38 | 27 | 59.5 | 34.5 | 63 | M |
| | 2004.11-2008.06 | CVT | F | L/R | Estate FWD BPW | AAR | GCI61063 | Inner Joint | | | 34 | | | 91 | |
| | 2004.11-2008.06 | CVT/6MT | F | L/R | Estate FWD BPW | TJ | GCI61044 | Inner Joint | | | 34 | | | 85 | |
| | 2004.11-2008.06 | 6MT | F | L | Saloon FWD BLB;BRE | For Engine code:BRE | GDS83057 | Drive Shaft | 45W | 38 | | 59.5 | 34.5 | 593 | |
| | 2004.11-2008.06 | 6MT | F | L | Saloon FWD BLB;BRE | For Engine code:BLB,Trans. code:HTA | GDS83363 | Drive Shaft | 45W | 38 | | 59.5 | 34.5 | 611 | |
| | 2004.11-2008.06 | 6MT | F | R | Saloon FWD BLB;BRE | Trans. code:HTA | GDS61019 | Drive Shaft | 45W | 38 | | 59.5 | 34.5 | 624 | |
| | 2004.11-2008.06 | AT | F | L/R | Saloon FWD BLB;BRE | | GDS83052 | Drive Shaft | 45W | 38 | | 59.5 | 34.5 | 522 | |
| | 2004.11-2008.06 | AT/MT | F | L/R | Saloon FWD BLB;BRE | Trans. code:GAZ/FRG;TJ | GCI61044 | Inner Joint | | | 34 | | | 85 | |
| | 2004.11-2008.06 | CVT | F | L/R | Saloon FWD BLB;BRE | | GDS81132 | Drive Shaft | 45W | 38 | | 59.5 | 34.5 | 525 | |
| | 2004.11-2008.06 | CVT | F | L/R | Saloon FWD BLB;BRE | | GCO83078 | Outer Joint | 45W | 38 | 27 | 59.5 | 34.5 | 63 | M |
| | 2004.11-2008.06 | MT | F | R | Saloon FWD BLB;BRE | Trans. code:HCF | GDS83058 | Drive Shaft | 45W | 38 | | 59.5 | 34.5 | 613 | |

| | YEAR | TRANSM. | F/R | L/R | BODY STYLE & DRIVE TYPE & ENGINE | REMARKS | G-AP Ref. | PRODUCT | ABS | Technical Specifications A | B | C | H | L | P |
|---|---|---|---|---|---|---|---|---|---|---|---|---|---|---|---|
| **AUDI** | | | | | | | | | | | | | | | |
| **A4** | | | | | | | | | | | | | | | |
| 2.0 (103 kw) | 2004.11-2008.06 | MT | F | L/R | Saloon FWD BLB;BRE | | GCO83067 | Outer Joint | 45W | 38 | 27 | 59.5 | 34 | 68 | M |
| | 2004.11-2008.06 | MT | F | L | Saloon FWD BLB;BRE | AAR | GCI61076 | Inner Joint | | | 34 | | | 85 | |
| | 2004.11-2008.06 | MT | F | L/R | Saloon FWD BLB;BRE | Trans. code:FRF;TJ | GCI50019 | Inner Joint | | | 34 | | | 59.5 | |
| | 2004.11-2008.06 | MT | F | L | Saloon FWD BPW | | GDS83057 | Drive Shaft | 45W | 38 | | 59.5 | 34.5 | 593 | |
| | 2004.11-2008.06 | MT | F | R | Saloon FWD BPW | | GDS83058 | Drive Shaft | 45W | 38 | | 59.5 | 34.5 | 613 | |
| | 2004.11-2008.06 | MT | F | L/R | Saloon FWD BPW | | GCO83067 | Outer Joint | 45W | 38 | 27 | 59.5 | 34 | 68 | M |
| | 2004.11-2008.06 | MT | F | L/R | Saloon FWD BPW | | GCO83078 | Outer Joint | 45W | 38 | 27 | 59.5 | 34.5 | 63 | M |
| | 2004.11-2008.06 | MT | F | L/R | Saloon FWD BPW | TJ | GCI61044 | Inner Joint | | | 34 | | | 85 | |
| | 2004.11-2008.06 | MT | F | L/R | Saloon FWD BPW | AAR | GCI61076 | Inner Joint | | | 34 | | | 85 | |
| 2.0 (105 kw) | 2007.11-2015.12 | CVT/6MT | F | L/R | Saloon FWD CAGA;CMEA;CJCA;CMFA | Date to:2011.10,For PR code:1BA/1BE/1BL/1BD/1BV | GDS83273 | Drive Shaft | | 42 | | 76.5 | 34 | 460 | |
| | 2007.11-2015.12 | CVT/6MT | F | L/R | Saloon FWD CAGA;CMEA;CJCA;CMFA | Date from:2011.11 | GDS83291 | Drive Shaft | | 42 | | 76.4 | 34 | 464 | |
| | 2007.11-2015.12 | CVT/6MT | F | L/R | Saloon FWD CAGA;CMEA;CJCA;CMFA | Date to:2011.10,For PR code:1BR | GDS83328 | Drive Shaft | | 42 | | 76.5 | 34 | 463 | |
| | 2007.11-2015.12 | CVT/6MT | F | L/R | Saloon FWD CAGA;CMEA;CJCA;CMFA | Date to:2011.10 | GCO83087 | Outer Joint | | 42 | 27 | 76.5 | 34 | 57 | M |
| | 2007.11-2015.12 | CVT/6MT | F | L/R | Saloon FWD CAGA;CMEA;CJCA;CMFA | Date from:2011.11 | GCO83103 | Outer Joint | | 42 | 28 | 76.4 | 34 | 54 | I |
| | 2007.11-2015.12 | CVT/6MT | F | L/R | Saloon FWD CAGA;CMEA;CJCA;CMFA | TJ | GCI83022 | Inner Joint | | | 34 | | | 88.5 | |
| | 2008.04-2015.12 | CVT/6MT | F | L/R | Estate FWD CAGA;CMEA;CJCA;CMFA | Date to:2011.10,For PR code:1BA/1BE/1BL/1BD/1BV | GDS83273 | Drive Shaft | | 42 | | 76.5 | 34 | 460 | |
| | 2008.04-2015.12 | CVT/6MT | F | L/R | Estate FWD CAGA;CMEA;CJCA;CMFA | | GDS83291 | Drive Shaft | | 42 | | 76.4 | 34 | 464 | |
| | 2008.04-2015.12 | CVT/6MT | F | L/R | Estate FWD CAGA;CMEA;CJCA;CMFA | Date to:2011.10,For PR code:1BR | GDS83328 | Drive Shaft | | 42 | | 76.5 | 34 | 463 | |
| | 2008.04-2015.12 | CVT/6MT | F | L/R | Estate FWD CAGA;CMEA;CJCA;CMFA | Date to:2011.10 | GCO83087 | Outer Joint | | 42 | 27 | 76.5 | 34 | 57 | M |
| | 2008.04-2015.12 | CVT/6MT | F | L/R | Estate FWD CAGA;CMEA;CJCA;CMFA | Date from:2011.11 | GCO83103 | Outer Joint | | 42 | 28 | 76.4 | 34 | 54 | I |
| | 2008.04-2015.12 | CVT/6MT | F | L/R | Estate FWD CAGA;CMEA;CJCA;CMFA | AAR | GCI81054 | Inner Joint | | | 24 | | | 86 | |
| | 2008.04-2015.12 | CVT/6MT | F | L/R | Estate FWD CAGA;CMEA;CJCA;CMFA | TJ | GCI83022 | Inner Joint | | | 34 | | | 88.5 | |
| 2.0 (110 kw) | 2002.07-2004.12 | 5MT | F | L/R | Estate FWD AWA | Chassis no. to:8E_5_035000 | GCI83007 | Inner Joint | | | 34 | | | 85 | |
| | 2002.07-2004.12 | 5MT/CVT | F | L/R | Estate FWD AWA | Chassis no. from:8E_5_035001 | GCI61070 | Inner Joint | | | 24 | | | 85 | |
| | 2002.07-2004.12 | AT/Semi-AT | F | L/R | Estate FWD AWA | | GDS83052 | Drive Shaft | 45W | 38 | | 59.5 | 34.5 | 522 | |
| | 2002.07-2004.12 | AT/Semi-AT | F | L/R | Estate FWD AWA | Date from:2004.07;Chassis no. from:8E5035001 | GDS83364 | Drive Shaft | 45W | 38 | | 59.5 | 34 | 522 | |
| | 2002.07-2004.12 | CVT | F | L/R | Estate FWD AWA | | GCO83078 | Outer Joint | 45W | 38 | 27 | 59.5 | 34.5 | 63 | M |
| | 2002.07-2004.12 | CVT | F | L/R | Estate FWD AWA | Chassis no. to:8E_5_035000 | GCI61044 | Inner Joint | | | 34 | | | 85 | |
| | 2002.07-2004.12 | MT | F | L | Estate FWD AWA | Inner teeth of wheel side:27 | GDS83057 | Drive Shaft | 45W | 38 | | 59.5 | 34.5 | 593 | |
| | 2002.07-2004.12 | MT | F | L | Estate FWD AWA | Inner teeth of wheel side:33 | GDS83310 | Drive Shaft | 45W | 38 | | 59.5 | 34 | 594 | |
| | 2002.07-2004.12 | MT | F | R | Estate FWD AWA | | GDS83058 | Drive Shaft | 45W | 38 | | 59.5 | 34.5 | 613 | |
| | 2002.07-2004.12 | MT | F | L/R | Estate FWD AWA | Date to:2004.06;Chassis no. to:8E5035000 | GCO83030 | Outer Joint | | 38 | 33 | 59.5 | 34 | 56.5 | M |
| | 2002.07-2004.12 | MT | F | L/R | Estate FWD AWA | Chassis no. from:8E-2A-100000 | GCO83058 | Outer Joint | 45W | 38 | 33 | 59.5 | 34 | 56.5 | M |
| | 2002.07-2004.12 | 5MT | F | L/R | Saloon FWD AWA | Chassis no. to:8E_5_035000 | GCI83007 | Inner Joint | | | 34 | | | 85 | |
| | 2002.07-2004.12 | 5MT/CVT | F | L/R | Saloon FWD AWA | Chassis no. from:8E_5_035001 | GCI61070 | Inner Joint | | | 24 | | | 85 | |
| | 2002.07-2004.12 | AT/Semi-AT | F | L/R | Saloon FWD AWA | | GDS83052 | Drive Shaft | 45W | 38 | | 59.5 | 34.5 | 522 | |
| | 2002.07-2004.12 | AT/Semi-AT | F | L/R | Saloon FWD AWA | Date from:2004.07;Chassis no. from:8E5035001 | GDS83364 | Drive Shaft | 45W | 38 | | 59.5 | 34 | 522 | |
| | 2002.07-2004.12 | CVT | F | L/R | Saloon FWD AWA | | GCO83078 | Outer Joint | 45W | 38 | 27 | 59.5 | 34.5 | 63 | M |
| | 2002.07-2004.12 | CVT | F | L/R | Saloon FWD AWA | Chassis no. to:8E_5_035000 | GCI61044 | Inner Joint | | | 34 | | | 85 | |
| | 2002.07-2004.12 | MT | F | L | Saloon FWD AWA | Inner teeth of wheel side:27 | GDS83057 | Drive Shaft | 45W | 38 | | 59.5 | 34.5 | 593 | |
| | 2002.07-2004.12 | MT | F | L | Saloon FWD AWA | Inner teeth of wheel side:33 | GDS83310 | Drive Shaft | 45W | 38 | | 59.5 | 34 | 594 | |
| | 2002.07-2004.12 | MT | F | R | Saloon FWD AWA | | GDS83058 | Drive Shaft | 45W | 38 | | 59.5 | 34.5 | 613 | |
| | 2002.07-2004.12 | MT | F | L/R | Saloon FWD AWA | Date to:2004.06;Chassis no. to:8E5035000 | GCO83030 | Outer Joint | | 38 | 33 | 59.5 | 34 | 56.5 | M |
| | 2002.07-2004.12 | MT | F | L/R | Saloon FWD AWA | Date from:2004.06 | GCO83058 | Outer Joint | 45W | 38 | 33 | 59.5 | 34 | 56.5 | M |
| | 2013.05-2015.12 | CVT/6MT | F | L/R | Estate FWD CJCD;CMFB;CSUA | | GDS83291 | Drive Shaft | | 42 | | 76.4 | 34 | 464 | |
| | 2013.05-2015.12 | CVT/6MT | F | L/R | Estate FWD CJCD;CMFB;CSUA | | GCO83103 | Outer Joint | | 42 | 28 | 76.4 | 34 | 54 | I |
| | 2013.05-2015.12 | CVT/6MT | F | L/R | Estate FWD CJCD;CMFB;CSUA | AAR | GCI81054 | Inner Joint | | | 24 | | | 86 | |
| | 2013.05-2015.12 | CVT/6MT | F | L/R | Estate FWD CJCD;CMFB;CSUA | TJ | GCI83022 | Inner Joint | | | 34 | | | 88.5 | |
| | 2013.05-2015.12 | CVT/6MT | F | L/R | Saloon FWD CJCD;CMFB;CSUA | | GDS83291 | Drive Shaft | | 42 | | 76.4 | 34 | 464 | |
| | 2013.05-2015.12 | CVT/6MT | F | L/R | Saloon FWD CJCD;CMFB;CSUA | | GCO83103 | Outer Joint | | 42 | 28 | 76.4 | 34 | 54 | I |
| | 2013.05-2015.12 | CVT/6MT | F | L/R | Saloon FWD CJCD;CMFB;CSUA | AAR | GCI81054 | Inner Joint | | | 24 | | | 86 | |
| | 2013.05-2015.12 | CVT/6MT | F | L/R | Saloon FWD CJCD;CMFB;CSUA | TJ | GCI83022 | Inner Joint | | | 34 | | | 88.5 | |
| | 2015.05-2019.11 | 6MT/7DCT | F | L/R | Saloon FWD CZHA;DEUA | | GDS82075 | Drive Shaft | | 42 | | 76.5 | 34 | 463 | |
| | 2015.05-2019.11 | 6MT/7DCT | F | L/R | Saloon FWD CZHA;DEUA | Transmission:6MT,Date from:2016.02 | GCI61077 | Inner Joint | | | 34 | | | 88 | |
| | 2015.05-2019.11 | AT/MT | F | L/R | Saloon FWD CZHA;DEUA | | GCO83103 | Outer Joint | | 42 | 28 | 76.4 | 34 | 54 | I |
| | 2015.08- | 6MT/7DCT | F | L/R | Saloon FWD CZHA;DEUA | | GDS82075 | Drive Shaft | | 42 | | 76.5 | 34 | 463 | |
| | 2015.08-2018.09 | 6MT/7DCT | F | L/R | Estate FWD CZHA;DEUA | | GDS82075 | Drive Shaft | | 42 | | 76.5 | 34 | 463 | |
| | 2015.08-2018.09 | 6MT/7DCT | F | L/R | Estate FWD CZHA;DEUA | Transmission:6MT,Date from:2016.02 | GCI61077 | Inner Joint | | | 34 | | | 88 | |
| | 2015.08-2018.09 | AT/MT | F | L/R | Estate FWD CZHA;DEUA | Date from:2016.01 | GCO83103 | Outer Joint | | 42 | 28 | 76.4 | 34 | 54 | I |
| | 2018.10-2019.10 | 6MT/7DCT | F | L/R | Estate FWD DEUA | | GDS82075 | Drive Shaft | | 42 | | 76.5 | 34 | 463 | |
| | 2018.12- | 6MT/7DCT | F | L/R | Estate FWD DLVB;DMSB;CVKC | | GDS82075 | Drive Shaft | | 42 | | 76.5 | 34 | 463 | |
| | 2018.12- | 7AT | F | L/R | Estate FWD DLVB;DMSB;CVKC | | GCO81357 | Outer Joint | | 42 | 28 | 76.5 | 34 | 54 | I |
| | 2018.12- | 7AT/6MT | F | L/R | Estate FWD DLVB;DMSB;CVKC | AAR | GCI61077 | Inner Joint | | | 34 | | | 88 | |
| | 2018.12- | AT/MT | F | L/R | Estate FWD DLVB;DMSB;CVKC | Date from:2019.01,TJ | GCI83022 | Inner Joint | | | 34 | | | 88.5 | |
| | 2018.12- | 6MT/7DCT | F | L/R | Saloon FWD DLVB;DMSB;CVKC;DEMB | | GDS82075 | Drive Shaft | | 42 | | 76.5 | 34 | 463 | |

| | YEAR | TRANSM. | F/R | L/R | BODY STYLE & DRIVE TYPE & ENGINE | REMARKS | G-AP Ref. | PRODUCT | ABS | Technical Specifications A | B | C | H | L | P |
|---|---|---|---|---|---|---|---|---|---|---|---|---|---|---|---|
| **AUDI** | | | | | | | | | | | | | | | |
| **A4** | | | | | | | | | | | | | | | |
| 2.0 (110 kw) | 2018.12- | 7AT | F | L/R | Saloon FWD DLVB;DMSB;CVKC;DEMB | | GCO81357 | Outer Joint | | 42 | 28 | 76.5 | 34 | 54 | I |
| | 2018.12- | 7AT/6MT | F | L/R | Saloon FWD DLVB;DMSB;CVKC;DEMB | | GCI61077 | Inner Joint | | | 34 | | | 88 | |
| | 2018.12- | AT/MT | F | L/R | Saloon FWD DLVB;DMSB;CVKC;DEMB | Date from:2019.01,TJ | GCI83022 | Inner Joint | | | 34 | | | 88.5 | |
| 2.0 (120 kw) | 2006.06-2008.06 | 6MT | F | L | Estate FWD BVA | | GDS83057 | Drive Shaft | 45W | 38 | | 59.5 | 34.5 | 593 | |
| | 2006.06-2008.06 | 6MT | F | R | Estate FWD BVA | | GDS83058 | Drive Shaft | 45W | 38 | | 59.5 | 34.5 | 613 | |
| | 2006.06-2008.06 | 6MT | F | L/R | Estate FWD BVA | | GCO83067 | Outer Joint | 45W | 38 | 27 | 59.5 | 34 | 68 | M |
| | 2006.06-2008.06 | | F | | Estate FWD BVA | | GCO83078 | Outer Joint | 45W | 38 | 27 | 59.5 | 34.5 | 63 | M |
| | 2006.06-2008.06 | | F | L | Estate FWD BVA | AAR | GCI61076 | Inner Joint | | | 34 | | | 85 | |
| | 2006.06-2008.06 | | F | L/R | Estate FWD BVA | TJ | GCI61044 | Inner Joint | | | 34 | | | 85 | |
| | 2006.06-2008.06 | 6MT | F | L | Saloon FWD BVA | | GDS83057 | Drive Shaft | 45W | 38 | | 59.5 | 34.5 | 593 | |
| | 2006.06-2008.06 | 6MT | F | R | Saloon FWD BVA | | GDS83058 | Drive Shaft | 45W | 38 | | 59.5 | 34.5 | 613 | |
| | 2006.06-2008.06 | 6MT | F | L/R | Saloon FWD BVA | | GCO83067 | Outer Joint | 45W | 38 | 27 | 59.5 | 34 | 68 | M |
| | 2006.06-2008.06 | | F | | Saloon FWD BVA | | GCO83078 | Outer Joint | 45W | 38 | 27 | 59.5 | 34.5 | 63 | M |
| | 2006.06-2008.06 | | F | L | Saloon FWD BVA | AAR | GCI61076 | Inner Joint | | | 34 | | | 85 | |
| | 2006.06-2008.06 | | F | L/R | Saloon FWD BVA | TJ | GCI61044 | Inner Joint | | | 34 | | | 85 | |
| | 2008.08-2015.12 | 6MT | F | L/R | Estate FWD CAHB;CGLD;CNHC | Date from:2011.11,For Engine code:CAHB | GDS83291 | Drive Shaft | | 42 | | 76.4 | 34 | 464 | |
| | 2008.08-2015.12 | CVT/6MT | F | L/R | Estate FWD CAHB;CGLD;CNHC | For Engine code:CGLD/CNHC,For Engine code:CAHB,Date to:2011.10,For PR code:1BA/1BE/1BL/1BD/1BV | GDS83273 | Drive Shaft | | 42 | | 76.5 | 34 | 460 | |
| | 2008.08-2015.12 | CVT/6MT | F | L/R | Estate FWD CAHB;CGLD;CNHC | For Engine code:CAHB,Date to:2011.10,For PR code:1BR | GDS83328 | Drive Shaft | | 42 | | 76.5 | 34 | 463 | |
| | 2008.08-2015.12 | CVT/6MT | F | L/R | Estate FWD CAHB;CGLD;CNHC | For Engine code:CAHB,Date to:2011.10 | GCO83087 | Outer Joint | | 42 | 27 | 76.5 | 34 | 57 | M |
| | 2008.08-2015.12 | CVT/6MT | F | L/R | Estate FWD CAHB;CGLD;CNHC | For Engine code:CGLD/CNHC | GCO83102 | Outer Joint | | 42 | 29 | 76.5 | 34 | 60 | I |
| | 2008.08-2015.12 | CVT/6MT | F | L/R | Estate FWD CAHB;CGLD;CNHC | For Engine code:CAHB,Date from:2011.11 | GCO83103 | Outer Joint | | 42 | 28 | 76.4 | 34 | 54 | I |
| | 2008.08-2015.12 | CVT/6MT | F | L/R | Estate FWD CAHB;CGLD;CNHC | AAR | GCI81054 | Inner Joint | | | 24 | | | 86 | |
| | 2008.08-2015.12 | CVT/6MT | F | L/R | Estate FWD CAHB;CGLD;CNHC | TJ | GCI83022 | Inner Joint | | | 34 | | | 88.5 | |
| | 2008.08-2015.12 | 6MT | F | L/R | Saloon FWD CAHB;CGLD;CNHC | Date from:2011.11,For Engine code:CAHB | GDS83291 | Drive Shaft | | 42 | | 76.4 | 34 | 464 | |
| | 2008.08-2015.12 | CVT/6MT | F | L/R | Saloon FWD CAHB;CGLD;CNHC | For Engine code:CGLD/CNHC,For Engine code:CAHB,Date to:2011.10,For PR code:1BA/1BE/1BL/1BD/1BV | GDS83273 | Drive Shaft | | 42 | | 76.5 | 34 | 460 | |
| | 2008.08-2015.12 | CVT/6MT | F | L/R | Saloon FWD CAHB;CGLD;CNHC | For Engine code:CAHB,Date to:2011.10,For PR code:1BR | GDS83328 | Drive Shaft | | 42 | | 76.5 | 34 | 463 | |
| | 2008.08-2015.12 | CVT/6MT | F | L/R | Saloon FWD CAHB;CGLD;CNHC | For Engine code:CAHB,Date to:2011.10 | GCO83087 | Outer Joint | | 42 | 27 | 76.5 | 34 | 57 | M |
| | 2008.08-2015.12 | CVT/6MT | F | L/R | Saloon FWD CAHB;CGLD;CNHC | For Engine code:CGLD/CNHC | GCO83102 | Outer Joint | | 42 | 29 | 76.5 | 34 | 60 | I |
| | 2008.08-2015.12 | CVT/6MT | F | L/R | Saloon FWD CAHB;CGLD;CNHC | For Engine code:CAHB,Date from:2011.11 | GCO83103 | Outer Joint | | 42 | 28 | 76.4 | 34 | 54 | I |
| | 2008.08-2015.12 | CVT/6MT | F | L/R | Saloon FWD CAHB;CGLD;CNHC | AAR | GCI81054 | Inner Joint | | | 24 | | | 86 | |
| | 2008.08-2015.12 | CVT/6MT | F | L/R | Saloon FWD CAHB;CGLD;CNHC | TJ | GCI83022 | Inner Joint | | | 34 | | | 88.5 | |
| | 2019.03- | 7AT | F | L/R | Saloon FWD DEZE;DTNA | | GDS82256 | Drive Shaft | | 42 | | 76.5 | 34 | 464 | |
| | 2019.03- | 7AT | F | L/R | Saloon FWD DEZE;DTNA | | GCO81750 | Outer Joint | | 42 | 29 | 76.5 | 34 | 60 | I |
| | 2019.03- | 7AT | F | L/R | Saloon FWD DEZE;DTNA | | GCI61077 | Inner Joint | | | 34 | | | 88 | |
| | 2019.03- | AT | F | L/R | Saloon FWD DEZE;DTNA | TJ | GCI83022 | Inner Joint | | | 34 | | | 88.5 | |
| | 2019.07- | 7AT | F | L/R | Estate FWD DEZE;DTNA | | GDS82256 | Drive Shaft | | 42 | | 76.5 | 34 | 464 | |
| | 2019.07- | 7AT | F | L/R | Estate FWD DEZE;DTNA | | GCO81750 | Outer Joint | | 42 | 29 | 76.5 | 34 | 60 | I |
| | 2019.07- | 7AT | F | L/R | Estate FWD DEZE;DTNA | AAR | GCI61077 | Inner Joint | | | 34 | | | 88 | |
| | 2019.07- | AT | F | L/R | Estate FWD DEZE;DTNA | Date from:2020.01,TJ | GCI83022 | Inner Joint | | | 34 | | | 88.5 | |
| 2.0 (125 kw) | 2006.06-2008.06 | MT | F | L | Estate FWD BRD | | GDS83057 | Drive Shaft | 45W | 38 | | 59.5 | 34.5 | 593 | |
| | 2006.06-2008.06 | MT | F | R | Estate FWD BRD | | GDS83058 | Drive Shaft | 45W | 38 | | 59.5 | 34.5 | 613 | |
| | 2006.06-2008.06 | MT | F | L/R | Estate FWD BRD | | GCO83067 | Outer Joint | 45W | 38 | 27 | 59.5 | 34 | 68 | M |
| | 2006.06-2008.06 | MT | F | L/R | Estate FWD BRD | | GCO83078 | Outer Joint | 45W | 38 | 27 | 59.5 | 34.5 | 63 | M |
| | 2006.06-2008.06 | MT | F | L/R | Estate FWD BRD | TJ | GCI61044 | Inner Joint | | | 34 | | | 85 | |
| | 2006.06-2008.06 | MT | F | L/R | Estate FWD BRD | AAR | GCI61076 | Inner Joint | | | 34 | | | 85 | |
| | 2006.06-2008.06 | 6MT | F | L | Saloon FWD BRD | | GDS83057 | Drive Shaft | 45W | 38 | | 59.5 | 34.5 | 593 | |
| | 2006.06-2008.06 | 6MT | F | R | Saloon FWD BRD | | GDS83058 | Drive Shaft | 45W | 38 | | 59.5 | 34.5 | 613 | |
| | 2006.06-2008.06 | 6MT | F | L/R | Saloon FWD BRD | | GCO83067 | Outer Joint | 45W | 38 | 27 | 59.5 | 34 | 68 | M |
| | 2006.06-2008.06 | 6MT | F | L/R | Saloon FWD BRD | TJ | GCI61044 | Inner Joint | | | 34 | | | 85 | |
| | 2006.06-2008.06 | 6MT | F | L/R | Saloon FWD BRD | AAR | GCI61076 | Inner Joint | | | 34 | | | 85 | |
| | 2006.10-2008.06 | AT | F | L/R | Estate FWD BPJ;BYK | Date to:2004.06;Chassis no. to:8E5035000 | GCI61044 | Inner Joint | | | 34 | | | 85 | |
| | 2006.10-2008.06 | SAT/6MT | F | L | Estate FWD BPJ;BYK | | GDS83057 | Drive Shaft | 45W | 38 | | 59.5 | 34.5 | 593 | |
| | 2006.10-2008.06 | SAT/6MT | F | R | Estate FWD BPJ;BYK | | GDS83058 | Drive Shaft | 45W | 38 | | 59.5 | 34.5 | 613 | |
| | 2006.10-2008.06 | SAT/6MT | F | L/R | Estate FWD BPJ;BYK | Date from:2007.03,GrooveType:Middle | GCO83067 | Outer Joint | 45W | 38 | 27 | 59.5 | 34 | 68 | M |
| | 2006.10-2008.06 | | F | | Estate FWD BPJ;BYK | | GCO83078 | Outer Joint | 45W | 38 | 27 | 59.5 | 34.5 | 63 | M |
| | 2006.10-2008.06 | | F | L | Estate FWD BPJ;BYK | Date From:2007.03 | GCI61076 | Inner Joint | | | 34 | | | 85 | |
| | 2006.10-2008.06 | AT | F | L/R | Saloon FWD BPJ;BYK | Date to:2004.06;Chassis no. to:8E5035000 | GCI61044 | Inner Joint | | | 34 | | | 85 | |
| | 2006.10-2008.06 | SAT/6MT | F | L | Saloon FWD BPJ;BYK | | GDS83057 | Drive Shaft | 45W | 38 | | 59.5 | 34.5 | 593 | |
| | 2006.10-2008.06 | SAT/6MT | F | R | Saloon FWD BPJ;BYK | | GDS83058 | Drive Shaft | 45W | 38 | | 59.5 | 34.5 | 613 | |
| | 2006.10-2008.06 | SAT/6MT | F | L/R | Saloon FWD BPJ;BYK | Date from:2007.03,GrooveType:Middle | GCO83067 | Outer Joint | 45W | 38 | 27 | 59.5 | 34 | 68 | M |
| | 2006.10-2008.06 | | F | | Saloon FWD BPJ;BYK | | GCO83078 | Outer Joint | 45W | 38 | 27 | 59.5 | 34.5 | 63 | M |
| | 2006.10-2008.06 | | F | L | Saloon FWD BPJ;BYK | Date From:2007.03 | GCI61076 | Inner Joint | | | 34 | | | 85 | |
| | 2008.01-2012.03 | 6MT | F | L/R | Saloon FWD CAHA | Date to:2011.10,For PR code:1BA/1BE/1BL/1BD/1BV | GDS83273 | Drive Shaft | | 42 | | 76.5 | 34 | 460 | |
| | 2008.01-2012.03 | 6MT | F | L/R | Saloon FWD CAHA | Date from:2011.11 | GDS83291 | Drive Shaft | | 42 | | 76.4 | 34 | 464 | |
| | 2008.01-2012.03 | 6MT | F | L/R | Saloon FWD CAHA | Date to:2011.10,For PR code:1BR | GDS83328 | Drive Shaft | | 42 | | 76.5 | 34 | 463 | |

| | YEAR | TRANSM. | F/R | L/R | BODY STYLE & DRIVE TYPE & ENGINE | REMARKS | G-AP Ref. | PRODUCT | ABS | Technical Specifications A | B | C | H | L | P |
|---|---|---|---|---|---|---|---|---|---|---|---|---|---|---|---|
| **AUDI** | | | | | | | | | | | | | | | |
| **A4** | | | | | | | | | | | | | | | |
| 2.0 (125 kw) | 2008.01-2012.03 | 6MT | F | L/R | Saloon FWD CAHA | Date to:2011.10,For PR code:1BA/1BE/1BL/1BD/1BV/1BR;Bellows Material:Neoprene | GCO83087 | Outer Joint | | 42 | 27 | 76.5 | 34 | 57 | M |
| | 2008.01-2012.03 | 6MT | F | L/R | Saloon FWD CAHA | Date from:2011.11;Bellows Material:Neoprene | GCO83103 | Outer Joint | | 42 | 28 | 76.4 | 34 | 54 | I |
| | 2008.01-2012.03 | 6MT | F | L/R | Saloon FWD CAHA | AAR | GCI81054 | Inner Joint | | | 24 | | | 86 | |
| | 2008.01-2012.03 | 6MT | F | L/R | Saloon FWD CAHA | TJ | GCI83022 | Inner Joint | | | 34 | | | 88.5 | |
| | 2008.04-2012.03 | 6MT | F | L/R | Estate FWD CAHA | Date to:2011.10,For PR code:1BA/1BE/1BL/1BD/1BV | GDS83273 | Drive Shaft | | 42 | | 76.5 | 34 | 460 | |
| | 2008.04-2012.03 | 6MT | F | L/R | Estate FWD CAHA | Date from:2011.11 | GDS83291 | Drive Shaft | | 42 | | 76.4 | 34 | 464 | |
| | 2008.04-2012.03 | 6MT | F | L/R | Estate FWD CAHA | Date to:2011.10,For PR code:1BR | GDS83328 | Drive Shaft | | 42 | | 76.5 | 34 | 463 | |
| | 2008.04-2012.03 | 6MT | F | L/R | Estate FWD CAHA | Date to:2011.10 | GCO83087 | Outer Joint | | 42 | 27 | 76.5 | 34 | 57 | M |
| | 2008.04-2012.03 | 6MT | F | L/R | Estate FWD CAHA | Date from:2011.11 | GCO83103 | Outer Joint | | 42 | 28 | 76.4 | 34 | 54 | I |
| | 2008.04-2012.03 | 6MT | F | L/R | Estate FWD CAHA | | GCI81054 | Inner Joint | | | 24 | | | 86 | |
| | 2008.04-2012.03 | 6MT | F | L/R | Estate FWD CAHA | | GCI83022 | Inner Joint | | | 34 | | | 88.5 | |
| | 2016.11- | 6MT/7DCT | F | L | Estate FWD CVLA;DRXA | | GDS82075 | Drive Shaft | | 42 | | 76.5 | 34 | 463 | |
| | 2016.11-2019.10 | 6MT/7DCT | F | L/R | Estate FWD CVLA | | GDS82075 | Drive Shaft | | 42 | | 76.5 | 34 | 463 | |
| | 2016.11-2019.10 | AT/MT | F | L/R | Estate FWD CVLA | Date from:2017.01 | GCO83103 | Outer Joint | | 42 | 28 | 76.4 | 34 | 54 | I |
| | 2016.11-2019.10 | AT/MT | F | L/R | Estate FWD CVLA | Date from:2017.01 | GCI83022 | Inner Joint | | | 34 | | | 88.5 | |
| 2.0 (130 kw) | 2011.11-2015.12 | CVT/6MT | F | L/R | Estate FWD CGLC | | GDS83273 | Drive Shaft | | 42 | | 76.5 | 34 | 460 | |
| | 2011.11-2015.12 | CVT/6MT | F | L/R | Estate FWD CGLC | | GCO83102 | Outer Joint | | 42 | 29 | 76.5 | 34 | 60 | I |
| | 2011.11-2015.12 | CVT/6MT | F | L/R | Estate FWD CGLC | | GCI81054 | Inner Joint | | | 24 | | | 86 | |
| | 2011.11-2015.12 | CVT/6MT | F | L/R | Estate FWD CGLC | | GCI83022 | Inner Joint | | | 34 | | | 88.5 | |
| | 2011.11-2015.12 | CVT/6MT | F | L/R | Saloon FWD CGLC;CMGB | | GDS83273 | Drive Shaft | | 42 | | 76.5 | 34 | 460 | |
| | 2011.11-2015.12 | CVT/6MT | F | L/R | Saloon FWD CGLC;CMGB | | GCO83102 | Outer Joint | | 42 | 29 | 76.5 | 34 | 60 | I |
| | 2011.11-2015.12 | CVT/6MT | F | L/R | Saloon FWD CGLC;CMGB | | GCI81054 | Inner Joint | | | 24 | | | 86 | |
| | 2011.11-2015.12 | CVT/6MT | F | L/R | Saloon FWD CGLC;CMGB | | GCI83022 | Inner Joint | | | 34 | | | 88.5 | |
| 2.0 (132 kw) | 2008.06-2015.12 | 6MT | F | L/R | Estate FWD CDNB;CFKA | Date to:2011.10,For PR code:1BA/1BE/1BL/1BD/1BV | GDS83273 | Drive Shaft | | 42 | | 76.5 | 34 | 460 | |
| | 2008.06-2015.12 | 6MT | F | L/R | Estate FWD CDNB;CFKA | Date from:2011.11 | GDS83291 | Drive Shaft | | 42 | | 76.4 | 34 | 464 | |
| | 2008.06-2015.12 | 6MT | F | L/R | Estate FWD CDNB;CFKA | Date to:2011.10,For PR code:1BR | GDS83328 | Drive Shaft | | 42 | | 76.5 | 34 | 463 | |
| | 2008.06-2015.12 | 6MT | F | L/R | Estate FWD CDNB;CFKA | Date to:2011.10,For PR code:1BA/1BE/1BL/1BD/1BV/1BR;Bellows Material:Neoprene | GCO83087 | Outer Joint | | 42 | 27 | 76.5 | 34 | 57 | M |
| | 2008.06-2015.12 | 6MT | F | L/R | Estate FWD CDNB;CFKA | Date from:2011.11;Bellows Material:Neoprene | GCO83103 | Outer Joint | | 42 | 28 | 76.4 | 34 | 54 | I |
| | 2008.06-2015.12 | 6MT | F | L/R | Estate FWD CDNB;CFKA | AAR | GCI81054 | Inner Joint | | | 24 | | | 86 | |
| | 2008.06-2015.12 | 6MT | F | L/R | Estate FWD CDNB;CFKA | TJ | GCI83022 | Inner Joint | | | 34 | | | 88.5 | |
| | 2008.06-2015.12 | CVT/6MT | F | L/R | Saloon FWD CDNB;CAEA;CFKA | Date to:2011.10,For PR code:1BA/1BE/1BL/1BD/1BV | GDS83273 | Drive Shaft | | 42 | | 76.5 | 34 | 460 | |
| | 2008.06-2015.12 | CVT/6MT | F | L/R | Saloon FWD CDNB;CAEA;CFKA | Date from:2011.11 | GDS83291 | Drive Shaft | | 42 | | 76.4 | 34 | 464 | |
| | 2008.06-2015.12 | CVT/6MT | F | L/R | Saloon FWD CDNB;CAEA;CFKA | Date to:2011.10,For PR code:1BR | GDS83328 | Drive Shaft | | 42 | | 76.5 | 34 | 463 | |
| | 2008.06-2015.12 | CVT/6MT | F | L/R | Saloon FWD CDNB;CAEA;CFKA | Date to:2011.10 | GCO83087 | Outer Joint | | 42 | 27 | 76.5 | 34 | 57 | M |
| | 2008.06-2015.12 | CVT/6MT | F | L/R | Saloon FWD CDNB;CAEA;CFKA | Date from:2011.11 | GCO83103 | Outer Joint | | 42 | 28 | 76.4 | 34 | 54 | I |
| | 2008.06-2015.12 | CVT/6MT | F | L/R | Saloon FWD CDNB;CAEA;CFKA | | GCI83022 | Inner Joint | | | 34 | | | 88.5 | |
| | 2009.11-2015.12 | 6MT | F | L/R | Estate FWD CFKA | Date to:2011.10,For PR code:1BA/1BE/1BL/1BD/1BV | GDS83273 | Drive Shaft | | 42 | | 76.5 | 34 | 460 | |
| | 2009.11-2015.12 | 6MT | F | L/R | Estate FWD CFKA | Date from:2011.11 | GDS83291 | Drive Shaft | | 42 | | 76.4 | 34 | 464 | |
| | 2009.11-2015.12 | 6MT | F | L/R | Estate FWD CFKA | Date to:2011.10,For PR code:1BR | GDS83328 | Drive Shaft | | 42 | | 76.5 | 34 | 463 | |
| | 2009.11-2015.12 | AT/MT | F | L/R | Estate FWD CFKA | Date to:2011.11 | GCO83087 | Outer Joint | | 42 | 27 | 76.5 | 34 | 57 | M |
| | 2009.11-2015.12 | AT/MT | F | L/R | Estate FWD CFKA | Date from:2011.11 | GCO83103 | Outer Joint | | 42 | 28 | 76.4 | 34 | 54 | I |
| | 2009.11-2015.12 | AT/MT | F | L/R | Estate FWD CFKA | | GCI83022 | Inner Joint | | | 34 | | | 88.5 | |
| | 2009.11-2015.12 | | F | | Estate FWD CFKA | | GCI81054 | Inner Joint | | | 24 | | | 86 | |
| | 2009.11-2015.12 | 6MT | F | L/R | Saloon FWD CFKA | Date to:2011.10,For PR code:1BA/1BE/1BL/1BD/1BV | GDS83273 | Drive Shaft | | 42 | | 76.5 | 34 | 460 | |
| | 2009.11-2015.12 | 6MT | F | L/R | Saloon FWD CFKA | Date from:2011.11 | GDS83291 | Drive Shaft | | 42 | | 76.4 | 34 | 464 | |
| | 2009.11-2015.12 | 6MT | F | L/R | Saloon FWD CFKA | Date to:2011.10,For PR code:1BR | GDS83328 | Drive Shaft | | 42 | | 76.5 | 34 | 463 | |
| | 2009.11-2015.12 | AT/MT | F | L/R | Saloon FWD CFKA | Date to:2011.11 | GCO83087 | Outer Joint | | 42 | 27 | 76.5 | 34 | 57 | M |
| | 2009.11-2015.12 | AT/MT | F | L/R | Saloon FWD CFKA | Date from:2011.11 | GCO83103 | Outer Joint | | 42 | 28 | 76.4 | 34 | 54 | I |
| | 2009.11-2015.12 | AT/MT | F | L/R | Saloon FWD CFKA | | GCI83022 | Inner Joint | | | 34 | | | 88.5 | |
| | 2009.11-2015.12 | | F | | Saloon FWD CFKA | | GCI81054 | Inner Joint | | | 24 | | | 86 | |
| 2.0 (140 kw) | 2013.09-2015.12 | CVT/6MT | F | L/R | Estate FWD CNHA | | GDS83273 | Drive Shaft | | 42 | | 76.5 | 34 | 460 | |
| | 2013.09-2015.12 | CVT/6MT | F | L/R | Estate FWD CNHA | | GCO83102 | Outer Joint | | 42 | 29 | 76.5 | 34 | 60 | I |
| | 2013.09-2015.12 | CVT/6MT | F | L/R | Estate FWD CNHA | TJ | GCI83022 | Inner Joint | | | 34 | | | 88.5 | |
| | 2013.09-2015.12 | CVT/6MT | F | | Estate FWD CNHA | AAR | GCI81054 | Inner Joint | | | 24 | | | 86 | |
| | 2013.09-2015.12 | AT/MT | F | L/R | Saloon FWD CNHA | | GCI83022 | Inner Joint | | | 34 | | | 88.5 | |
| | 2013.09-2015.12 | CVT/6MT | F | L/R | Saloon FWD CNHA | | GDS83273 | Drive Shaft | | 42 | | 76.5 | 34 | 460 | |
| | 2013.09-2015.12 | | F | L/R | Saloon FWD CNHA | | GCO83102 | Outer Joint | | 42 | 29 | 76.5 | 34 | 60 | I |
| | 2013.09-2015.12 | | F | | Saloon FWD CNHA | | GCI81054 | Inner Joint | | | 24 | | | 86 | |
| | 2015.05- | 7DCT | F | L/R | Saloon FWD DESA;DETA | Date to:2016.01 | GDS82074 | Drive Shaft | | 42 | | 76.5 | 34 | 462 | |
| | 2015.05- | 7DCT | F | L/R | Saloon FWD DESA;DETA | Date from:2016.02 | GDS82256 | Drive Shaft | | 42 | | 76.5 | 34 | 464 | |
| | 2015.05-2019.11 | 6MT/7DCT | F | L/R | Saloon FWD CVKB;DBPA | | GDS82075 | Drive Shaft | | 42 | | 76.5 | 34 | 463 | |
| | 2015.05-2019.11 | 6MT/7DCT | F | L/R | Saloon FWD CVKB;DBPA | Transmission:6MT,Date from:2016.02 | GCI61077 | Inner Joint | | | 34 | | | 88 | |
| | 2015.05-2019.11 | AT/MT | F | L/R | Saloon FWD CVKB;DBPA | | GCO83103 | Outer Joint | | 42 | 28 | 76.4 | 34 | 54 | I |
| | 2015.05-2019.11 | 6MT/7AT | F | L/R | Saloon FWD DESA;DETA;DFVA | Date to:2016.01 | GDS82074 | Drive Shaft | | 42 | | 76.5 | 34 | 462 | |
| | 2015.05-2019.11 | 6MT/7AT | F | L/R | Saloon FWD DESA;DETA;DFVA | Date from:2016.02 | GDS82256 | Drive Shaft | | 42 | | 76.5 | 34 | 464 | |

| | YEAR | TRANSM. | F/R | L/R | BODY STYLE & DRIVE TYPE & ENGINE | REMARKS | G-AP Ref. | PRODUCT | ABS | Technical Specifications A | B | C | H | L | P |
|---|---|---|---|---|---|---|---|---|---|---|---|---|---|---|---|
| **AUDI** | | | | | | | | | | | | | | | |
| **A4** | | | | | | | | | | | | | | | |
| 2.0 (140 kw) | 2015.05-2019.11 | 6MT/7AT | F | L/R | Saloon FWD DESA;DETA;DFVA | Date from:2016.02 | GCO81750 | Outer Joint | | 42 | 29 | 76.5 | 34 | 60 | I |
| | 2015.05-2019.11 | 6MT/7AT | F | L/R | Saloon FWD DESA;DETA;DFVA | Date from:2016.02,AAR | GCI61077 | Inner Joint | | | 34 | | | 88 | |
| | 2015.05-2019.11 | 6MT/7AT | F | L/R | Saloon FWD DESA;DETA;DFVA | Date to:2016.01,AAR | GCI81054 | Inner Joint | | | 24 | | | 86 | |
| | 2015.05-2019.11 | 6MT/7AT | F | L/R | Saloon FWD DESA;DETA;DFVA | TJ | GCI83022 | Inner Joint | | | 34 | | | 88.5 | |
| | 2015.08- | 6MT/7DCT | F | L/R | Estate FWD CVKB;DBPA;DKYA | | GDS82075 | Drive Shaft | | 42 | | 76.5 | 34 | 463 | |
| | 2015.08- | 6MT/7DCT | F | L/R | Estate FWD CVKB;DBPA;DKYA | Transmission:6MT,Date from:2016.02 | GCI61077 | Inner Joint | | | 34 | | | 88 | |
| | 2015.08- | AT/MT | F | L/R | Estate FWD CVKB;DBPA;DKYA | Date from:2016.01 | GCO83103 | Outer Joint | | 42 | 28 | 76.4 | 34 | 54 | I |
| | 2015.08-2018.09 | 6MT/7AT | F | L/R | Estate FWD DESA;DETA;DFVA | Date to:2016.01 | GDS82074 | Drive Shaft | | 42 | | 76.5 | 34 | 462 | |
| | 2015.08-2018.09 | 6MT/7AT | F | L/R | Estate FWD DESA;DETA;DFVA | Date from:2016.02 | GDS82256 | Drive Shaft | | 42 | | 76.5 | 34 | 464 | |
| | 2015.08-2018.09 | 6MT/7AT | F | L/R | Estate FWD DESA;DETA;DFVA | Date from:2016.02 | GCO81750 | Outer Joint | | 42 | 29 | 76.5 | 34 | 60 | I |
| | 2015.08-2018.09 | 6MT/7AT | F | L/R | Estate FWD DESA;DETA;DFVA | Date from:2016.02,AAR | GCI61077 | Inner Joint | | | 34 | | | 88 | |
| | 2015.08-2018.09 | 6MT/7AT | F | L/R | Estate FWD DESA;DETA;DFVA | Date to:2016.01,AAR | GCI81054 | Inner Joint | | | 24 | | | 86 | |
| | 2015.08-2018.09 | 6MT/7AT | F | L/R | Estate FWD DESA;DETA;DFVA | TJ | GCI83022 | Inner Joint | | | 34 | | | 88.5 | |
| | 2017.05- | 6MT/7DCT | F | L/R | Estate FWD DEMA;DLVA;DKYA | For Enginecode:DEMA/DKYA | GDS82075 | Drive Shaft | | 42 | | 76.5 | 34 | 463 | |
| | 2017.05- | 7AT | F | L/R | Estate FWD DEMA;DLVA;DKYA | For Engine code::DEMA/DKYA;8 balls;Inner teeth:28 | GCO81357 | Outer Joint | | 42 | 28 | 76.5 | 34 | 54 | I |
| | 2017.05- | 7AT | F | L/R | Estate FWD DEMA;DLVA;DKYA | | GCO81750 | Outer Joint | | 42 | 29 | 76.5 | 34 | 60 | I |
| | 2017.05- | 7AT/6MT | F | L/R | Estate FWD DEMA;DLVA;DKYA | | GCI61077 | Inner Joint | | | 34 | | | 88 | |
| | 2017.05- | AT/MT | F | L/R | Estate FWD DEMA;DLVA;DKYA | 6 balls | GCO83103 | Outer Joint | | 42 | 28 | 76.4 | 34 | 54 | I |
| | 2017.05- | AT/MT | F | L/R | Estate FWD DEMA;DLVA;DKYA | TJ | GCI83022 | Inner Joint | | | 34 | | | 88.5 | |
| | 2017.05- | 6MT/7DCT | F | L/R | Saloon FWD DEMA;DLVA;DKYA | For Enginecode:DEMA/DKYA | GDS82075 | Drive Shaft | | 42 | | 76.5 | 34 | 463 | |
| | 2017.05- | 7AT | F | L/R | Saloon FWD DEMA;DLVA;DKYA | For Engine code::DEMA/DKYA;8 balls;Inner teeth:28 | GCO81357 | Outer Joint | | 42 | 28 | 76.5 | 34 | 54 | I |
| | 2017.05- | 7AT | F | L/R | Saloon FWD DEMA;DLVA;DKYA | | GCO81750 | Outer Joint | | 42 | 29 | 76.5 | 34 | 60 | I |
| | 2017.05- | 7AT/6MT | F | L/R | Saloon FWD DEMA;DLVA;DKYA | | GCI61077 | Inner Joint | | | 34 | | | 88 | |
| | 2017.05- | AT/MT | F | L/R | Saloon FWD DEMA;DLVA;DKYA | 6 balls | GCO83103 | Outer Joint | | 42 | 28 | 76.4 | 34 | 54 | I |
| | 2017.05- | AT/MT | F | L/R | Saloon FWD DEMA;DLVA;DKYA | TJ | GCI83022 | Inner Joint | | | 34 | | | 88.5 | |
| | 2018.10-2020.08 | 7DCT | F | L/R | Estate FWD DESA;DETA | Date to:2016.01 | GDS82074 | Drive Shaft | | 42 | | 76.5 | 34 | 462 | |
| | 2018.10-2020.08 | 7DCT | F | L/R | Estate FWD DESA;DETA | Date from:2016.02 | GDS82256 | Drive Shaft | | 42 | | 76.5 | 34 | 464 | |
| 2.0 (147 kw) | 2004.11-2008.06 | 6MT | F | L | Estate FWD BGB;BWE;BPG | | GDS83057 | Drive Shaft | 45W | 38 | | 59.5 | 34.5 | 593 | |
| | 2004.11-2008.06 | 6MT | F | R | Estate FWD BGB;BWE;BPG | | GDS83058 | Drive Shaft | 45W | 38 | | 59.5 | 34.5 | 613 | |
| | 2004.11-2008.06 | 6MT | F | L/R | Estate FWD BGB;BWE;BPG | | GCO83067 | Outer Joint | 45W | 38 | 27 | 59.5 | 34 | 68 | M |
| | 2004.11-2008.06 | 6MT/CVT | F | L/R | Estate FWD BGB;BWE;BPG | | GCI61044 | Inner Joint | | | 34 | | | 85 | |
| | 2004.11-2008.06 | CVT | F | L/R | Estate FWD BGB;BWE;BPG | | GDS83052 | Drive Shaft | 45W | 38 | | 59.5 | 34.5 | 522 | |
| | 2004.11-2008.06 | CVT | F | L/R | Estate FWD BGB;BWE;BPG | | GCO83078 | Outer Joint | 45W | 38 | 27 | 59.5 | 34.5 | 63 | M |
| | 2004.11-2008.06 | 6MT | F | L | Saloon FWD BGB;BWE;BWT;BPG | | GDS83057 | Drive Shaft | 45W | 38 | | 59.5 | 34.5 | 593 | |
| | 2004.11-2008.06 | 6MT | F | R | Saloon FWD BGB;BWE;BWT;BPG | | GDS83058 | Drive Shaft | 45W | 38 | | 59.5 | 34.5 | 613 | |
| | 2004.11-2008.06 | 6MT | F | L/R | Saloon FWD BGB;BWE;BWT;BPG | | GCO83067 | Outer Joint | 45W | 38 | 27 | 59.5 | 34 | 68 | M |
| | 2004.11-2008.06 | 6MT/CVT | F | L/R | Saloon FWD BGB;BWE;BWT;BPG | | GCI61044 | Inner Joint | | | 34 | | | 85 | |
| | 2004.11-2008.06 | CVT | F | L/R | Saloon FWD BGB;BWE;BWT;BPG | | GDS83052 | Drive Shaft | 45W | 38 | | 59.5 | 34.5 | 522 | |
| | 2004.11-2008.06 | CVT | F | L/R | Saloon FWD BGB;BWE;BWT;BPG | | GCO83078 | Outer Joint | 45W | 38 | 27 | 59.5 | 34.5 | 63 | M |
| 2.0 (150 kw) | 2020.06- | 7AT | F | L/R | Estate FWD DMSA | | GDS82075 | Drive Shaft | | 42 | | 76.5 | 34 | 463 | |
| | 2020.06- | 7AT | F | L/R | Estate FWD DMSA | | GCO81357 | Outer Joint | | 42 | 28 | 76.5 | 34 | 54 | I |
| | 2020.06- | 7AT | F | L/R | Estate FWD DMSA | | GCI61077 | Inner Joint | | | 34 | | | 88 | |
| | 2020.06- | 7AT | F | L/R | Saloon FWD DMSA | | GDS82075 | Drive Shaft | | 42 | | 76.5 | 34 | 463 | |
| | 2020.06- | 7AT | F | L/R | Saloon FWD DMSA | | GCO81357 | Outer Joint | | 42 | 28 | 76.5 | 34 | 54 | I |
| | 2020.06- | 7AT | F | L/R | Saloon FWD DMSA | | GCI61077 | Inner Joint | | | 34 | | | 88 | |
| | 2020.09- | 7AT | F | L/R | Estate FWD DTPA | | GCI61077 | Inner Joint | | | 34 | | | 88 | |
| | 2020.09- | 7DCT | F | L/R | Estate FWD DTPA | | GDS82256 | Drive Shaft | | 42 | | 76.5 | 34 | 464 | |
| | 2020.09- | 7AT | F | L/R | Saloon FWD DTPA | | GCI61077 | Inner Joint | | | 34 | | | 88 | |
| | 2020.09- | 7DCT | F | L/R | Saloon FWD DTPA | | GDS82256 | Drive Shaft | | 42 | | 76.5 | 34 | 464 | |
| 2.0 (155 kw) | 2008.06-2013.05 | 6AT/7AT/6MT | F | L/R | Estate FWD CDNC;CAEB | Date to:2011.10 | GCO83086 | Outer Joint | | 42 | 33 | 76.5 | 34 | 45.5 | M |
| | 2008.06-2013.05 | AT/MT | F | L/R | Estate FWD CDNC;CAEB | | GCI83022 | Inner Joint | | | 34 | | | 88.5 | |
| | 2008.06-2013.05 | CVT/6MT | F | L/R | Estate FWD CDNC;CAEB | Date to:2011.10,For PR code:1BA/1BE/1BL/1BD/1BV | GDS83273 | Drive Shaft | | 42 | | 76.5 | 34 | 460 | |
| | 2008.06-2013.05 | CVT/6MT | F | L/R | Estate FWD CDNC;CAEB | Date from:2011.11 | GDS83291 | Drive Shaft | | 42 | | 76.4 | 34 | 464 | |
| | 2008.06-2013.05 | CVT/6MT | F | L/R | Estate FWD CDNC;CAEB | Date to:2011.10,For PR code:1BR | GDS83328 | Drive Shaft | | 42 | | 76.5 | 34 | 463 | |
| | 2008.06-2013.05 | CVT/7AT/6MT | F | L/R | Estate FWD CDNC;CAEB | Date to:2011.10,For PR code:1BA/1BE/1BL/1BD;Date to:2011.10,For PR code:1BR | GCO83087 | Outer Joint | | 42 | 27 | 76.5 | 34 | 57 | M |
| | 2008.06-2013.05 | CVT/7AT/6MT | F | L/R | Estate FWD CDNC;CAEB | Date from:2011.11 | GCO83103 | Outer Joint | | 42 | 28 | 76.4 | 34 | 54 | I |
| | 2008.06-2013.05 | CVT/6MT | F | L/R | Saloon FWD CDNC;CAEB | Date to:2011.10,For PR code:1BA/1BE/1BL/1BD/1BV | GDS83273 | Drive Shaft | | 42 | | 76.5 | 34 | 460 | |
| | 2008.06-2013.05 | CVT/6MT | F | L/R | Saloon FWD CDNC;CAEB | Date from:2011.11 | GDS83291 | Drive Shaft | | 42 | | 76.4 | 34 | 464 | |
| | 2008.06-2013.05 | CVT/6MT | F | L/R | Saloon FWD CDNC;CAEB | Date to:2011.10,For PR code:1BR | GDS83328 | Drive Shaft | | 42 | | 76.5 | 34 | 463 | |
| | 2008.06-2013.05 | CVT/6MT | F | L/R | Saloon FWD CDNC;CAEB | Date to:2011.10 | GCO83087 | Outer Joint | | 42 | 27 | 76.5 | 34 | 57 | M |
| | 2008.06-2013.05 | CVT/6MT | F | L/R | Saloon FWD CDNC;CAEB | Date from:2011.11 | GCO83103 | Outer Joint | | 42 | 28 | 76.4 | 34 | 54 | I |
| | 2008.06-2013.05 | CVT/6MT | F | L/R | Saloon FWD CDNC;CAEB | | GCI83022 | Inner Joint | | | 34 | | | 88.5 | |
| 2.0 (162 kw) | 2005.06-2008.06 | 6MT | F | L | Estate FWD BUL | | GDS83057 | Drive Shaft | 45W | 38 | | 59.5 | 34.5 | 593 | |
| | 2005.06-2008.06 | 6MT | F | R | Estate FWD BUL | | GDS83058 | Drive Shaft | 45W | 38 | | 59.5 | 34.5 | 613 | |
| | 2005.06-2008.06 | AT | F | L/R | Estate FWD BUL | Date to:2004.06;Chassis no. to:8E5035000 | GCI61044 | Inner Joint | | | 34 | | | 85 | |

| | YEAR | TRANSM. | F/R | L/R | BODY STYLE & DRIVE TYPE & ENGINE | REMARKS | G-AP Ref. | PRODUCT | ABS | Technical Specifications A | B | C | H | L | P |
|---|---|---|---|---|---|---|---|---|---|---|---|---|---|---|---|
| **AUDI** | | | | | | | | | | | | | | | |
| **A4** | | | | | | | | | | | | | | | |
| 2.0 (162 kw) | 2005.06-2008.06 | MT | F | L/R | Estate FWD BUL | Date from:2007.01 | GCI61044 | Inner Joint | | | 34 | | | 85 | |
| | 2005.06-2008.06 | | F | L/R | Estate FWD BUL | | GCO83067 | Outer Joint | 45W | 38 | 27 | 59.5 | 34 | 68 | M |
| | 2005.06-2008.06 | | F | | Estate FWD BUL | | GCO83078 | Outer Joint | 45W | 38 | 27 | 59.5 | 34.5 | 63 | M |
| | 2005.06-2008.06 | | F | L | Estate FWD BUL | Date From:2006.02,Date To:2008.03 | GCI61076 | Inner Joint | | | 34 | | | 85 | |
| | 2005.06-2008.06 | 6MT | F | L | Saloon FWD BUL | | GDS83057 | Drive Shaft | 45W | 38 | | 59.5 | 34.5 | 593 | |
| | 2005.06-2008.06 | 6MT | F | R | Saloon FWD BUL | | GDS83058 | Drive Shaft | 45W | 38 | | 59.5 | 34.5 | 613 | |
| | 2005.06-2008.06 | AT | F | L/R | Saloon FWD BUL | Date to:2004.06;Chassis no. to:8E5035000 | GCI61044 | Inner Joint | | | 34 | | | 85 | |
| | 2005.06-2008.06 | MT | F | L/R | Saloon FWD BUL | Date from:2006.01 | GCI61044 | Inner Joint | | | 34 | | | 85 | |
| | 2005.06-2008.06 | | F | L/R | Saloon FWD BUL | | GCO83067 | Outer Joint | 45W | 38 | 27 | 59.5 | 34 | 68 | M |
| | 2005.06-2008.06 | | F | | Saloon FWD BUL | | GCO83078 | Outer Joint | 45W | 38 | 27 | 59.5 | 34.5 | 63 | M |
| | 2005.06-2008.06 | | F | L | Saloon FWD BUL | Date To:2007.10 | GCI61076 | Inner Joint | | | 34 | | | 85 | |
| | 2013.05-2015.12 | CVT | F | L/R | Saloon FWD CAED | | GDS83291 | Drive Shaft | | 42 | | 76.4 | 34 | 464 | |
| | 2013.05-2015.12 | | F | L/R | Saloon FWD CAED | | GCO83103 | Outer Joint | | 42 | 28 | 76.4 | 34 | 54 | I |
| | 2013.05-2015.12 | | F | L/R | Saloon FWD CAED | Chassis no. from:8KD000001 | GCI83022 | Inner Joint | | | 34 | | | 88.5 | |
| | 2013.05-2015.12 | | F | | Saloon FWD CAED | | GCI81054 | Inner Joint | | | 24 | | | 86 | |
| 2.0 (165 kw) | 2013.05-2015.12 | 6MT/7AT/8AT | F | L/R | Estate FWD CNCD | | GCI81054 | Inner Joint | | | 24 | | | 86 | |
| | 2013.05-2015.12 | CVT/6MT | F | L/R | Estate FWD CNCD | | GDS83291 | Drive Shaft | | 42 | | 76.4 | 34 | 464 | |
| | 2013.05-2015.12 | CVT/6MT | F | L/R | Estate FWD CNCD | | GCI83022 | Inner Joint | | | 34 | | | 88.5 | |
| | 2013.05-2015.12 | | F | L/R | Estate FWD CNCD | | GCO83103 | Outer Joint | | 42 | 28 | 76.4 | 34 | 54 | I |
| | 2013.05-2015.12 | 6MT/7AT/8AT | F | L/R | Saloon FWD CNCD | | GCI81054 | Inner Joint | | | 24 | | | 86 | |
| | 2013.05-2015.12 | CVT | F | L/R | Saloon FWD CNCD | | GCI83022 | Inner Joint | | | 34 | | | 88.5 | |
| | 2013.05-2015.12 | CVT/6MT | F | L/R | Saloon FWD CNCD | | GDS83291 | Drive Shaft | | 42 | | 76.4 | 34 | 464 | |
| | 2013.05-2015.12 | | F | L/R | Saloon FWD CNCD | | GCO83103 | Outer Joint | | 42 | 28 | 76.4 | 34 | 54 | I |
| 2.0 (180 kw) | 2018.07-2019.10 | 7AT | F | L/R | Estate FWD DKNA | | GDS82256 | Drive Shaft | | 42 | | 76.5 | 34 | 464 | |
| | 2018.07-2019.10 | 7AT | F | L/R | Estate FWD DKNA | | GCO81750 | Outer Joint | | 42 | 29 | 76.5 | 34 | 60 | I |
| | 2018.07-2019.10 | 7AT | F | L/R | Estate FWD DKNA | | GCI61077 | Inner Joint | | | 34 | | | 88 | |
| | 2018.07-2019.10 | AT | F | L/R | Estate FWD DKNA | Date from:2019.01 | GCO83103 | Outer Joint | | 42 | 28 | 76.4 | 34 | 54 | I |
| | 2018.07-2019.10 | AT | F | L/R | Estate FWD DKNA | Date from:2019.01,TJ | GCI83022 | Inner Joint | | | 34 | | | 88.5 | |
| | 2018.07-2019.11 | 7AT | F | L/R | Saloon FWD DKNA | | GDS82256 | Drive Shaft | | 42 | | 76.5 | 34 | 464 | |
| | 2018.07-2019.11 | 7AT | F | L/R | Saloon FWD DKNA | | GCO81750 | Outer Joint | | 42 | 29 | 76.5 | 34 | 60 | I |
| | 2018.07-2019.11 | 7AT | F | L/R | Saloon FWD DKNA | | GCI61077 | Inner Joint | | | 34 | | | 88 | |
| | 2018.07-2019.11 | AT | F | L/R | Saloon FWD DKNA | Date from:2019.01 | GCO83103 | Outer Joint | | 42 | 28 | 76.4 | 34 | 54 | I |
| | 2018.07-2019.11 | AT | F | L/R | Saloon FWD DKNA | Date from:2019.01,TJ | GCI83022 | Inner Joint | | | 34 | | | 88.5 | |
| 2.0 (183 kw) | 2015.11-2019.11 | 7AT | F | L/R | Saloon FWD CYRC | Date to:2016.01 | GDS82074 | Drive Shaft | | 42 | | 76.5 | 34 | 462 | |
| | 2015.11-2019.11 | 7AT | F | L/R | Saloon FWD CYRC | Date from:2016.02 | GDS82256 | Drive Shaft | | 42 | | 76.5 | 34 | 464 | |
| | 2015.11-2019.11 | 7AT | F | L/R | Saloon FWD CYRC | | GCO81750 | Outer Joint | | 42 | 29 | 76.5 | 34 | 60 | I |
| | 2015.11-2019.11 | AT | F | L/R | Saloon FWD CYRC | Date from:2016.01 | GCI83022 | Inner Joint | | | 34 | | | 88.5 | |
| | 2016.05-2019.10 | 7AT | F | L/R | Estate FWD CYRC | | GDS82256 | Drive Shaft | | 42 | | 76.5 | 34 | 464 | |
| | 2016.05-2019.10 | 7AT | F | L/R | Estate FWD CYRC | | GCO81750 | Outer Joint | | 42 | 29 | 76.5 | 34 | 60 | I |
| | 2016.05-2019.10 | AT | F | L/R | Estate FWD CYRC | | GCI83022 | Inner Joint | | | 34 | | | 88.5 | |
| 2.0 (185 kw) | 2015.05-2019.11 | 7AT | F | L/R | Saloon FWD CYRB;CYMC | Date to:2016.01 | GDS82074 | Drive Shaft | | 42 | | 76.5 | 34 | 462 | |
| | 2015.05-2019.11 | 7AT | F | L/R | Saloon FWD CYRB;CYMC | Date from:2016.02 | GDS82256 | Drive Shaft | | 42 | | 76.5 | 34 | 464 | |
| | 2015.05-2019.11 | 7AT | F | L/R | Saloon FWD CYRB;CYMC | | GCO81750 | Outer Joint | | 42 | 29 | 76.5 | 34 | 60 | I |
| | 2015.05-2019.11 | AT | F | L/R | Saloon FWD CYRB;CYMC | | GCI83022 | Inner Joint | | | 34 | | | 88.5 | |
| | 2016.05-2019.10 | 7AT | F | L/R | Estate FWD CYRB;CYMC | | GDS82256 | Drive Shaft | | 42 | | 76.5 | 34 | 464 | |
| | 2016.05-2019.10 | 7AT | F | L/R | Estate FWD CYRB;CYMC | | GCO81750 | Outer Joint | | 42 | 29 | 76.5 | 34 | 60 | I |
| | 2016.05-2019.10 | AT | F | L/R | Estate FWD CYRB;CYMC | | GCI83022 | Inner Joint | | | 34 | | | 88.5 | |
| | 2017.05-2019.10 | 7AT | F | L/R | Estate FWD DDWA | | GDS82256 | Drive Shaft | | 42 | | 76.5 | 34 | 464 | |
| | 2017.05-2019.10 | 7AT | F | L/R | Estate FWD DDWA | | GCO81750 | Outer Joint | | 42 | 29 | 76.5 | 34 | 60 | I |
| | 2017.05-2019.10 | 7AT | F | L/R | Estate FWD DDWA | | GCI61077 | Inner Joint | | | 34 | | | 88 | |
| | 2017.05-2019.10 | AT | F | L/R | Estate FWD DDWA | TJ | GCI83022 | Inner Joint | | | 34 | | | 88.5 | |
| | 2017.05-2019.11 | 7AT | F | L/R | Saloon FWD DDWA | | GDS82256 | Drive Shaft | | 42 | | 76.5 | 34 | 464 | |
| | 2017.05-2019.11 | 7AT | F | L/R | Saloon FWD DDWA | | GCO81750 | Outer Joint | | 42 | 29 | 76.5 | 34 | 60 | I |
| | 2017.05-2019.11 | 7AT | F | L/R | Saloon FWD DDWA | | GCI61077 | Inner Joint | | | 34 | | | 88 | |
| | 2017.05-2019.11 | AT | F | L/R | Saloon FWD DDWA | TJ | GCI83022 | Inner Joint | | | 34 | | | 88.5 | |
| 2.4 (110 kw) | 1995.07-1997.07 | 5AT | F | R | Estate FWD AFM | | GDS83038 | Drive Shaft | 45W | 38 | | 59.5 | 34 | 503 | |
| | 1995.07-1997.07 | 5AT | F | R | Saloon FWD AFM | | GDS83038 | Drive Shaft | 45W | 38 | | 59.5 | 34 | 503 | |
| 2.4 (120 kw) | 1997.08-2000.10 | 5AT | F | R | Saloon FWD AJG/AMM/APZ | | GDS83048 | Drive Shaft | 45W | 38 | | 59.5 | 34.5 | 502 | |
| | 1997.08-2000.10 | AT | F | L | Saloon FWD AJG/AMM/APZ | | GDS83015 | Drive Shaft | 45W | 38 | | 59.5 | 34.5 | 527 | |
| | 1997.08-2000.10 | AT | F | L | Saloon FWD AJG/AMM/APZ | | GCI50019 | Inner Joint | | | 34 | | | 59.5 | |
| | 1997.08-2000.10 | AT/MT | F | L/R | Saloon FWD AJG/AMM/APZ | | GCO83019 | Outer Joint | 45W | 38 | 27 | 59.5 | 34.5 | 63 | I |
| | 1997.08-2000.10 | MT | F | L | Saloon FWD AJG/AMM/APZ | | GDS83008 | Drive Shaft | 45W | 38 | | 59.5 | 34.5 | 603 | |
| | 1997.08-2000.10 | MT | F | R | Saloon FWD AJG/AMM/APZ | | GDS61019 | Drive Shaft | 45W | 38 | | 59.5 | 34.5 | 624 | |
| | 1997.08-2000.10 | MT | F | L/R | Saloon FWD AJG/AMM/APZ | | GCI50019 | Inner Joint | | | 34 | | | 59.5 | |
| | 1997.08-2001.09 | 5AT | F | R | Estate FWD AJG/AMM/APZ | | GDS83048 | Drive Shaft | 45W | 38 | | 59.5 | 34.5 | 502 | |

| | YEAR | TRANSM. | F/R | L/R | BODY STYLE & DRIVE TYPE & ENGINE | REMARKS | G-AP Ref. | PRODUCT | ABS | Technical Specifications | | | | | |
|---|---|---|---|---|---|---|---|---|---|---|---|---|---|---|---|
| | | | | | | | | | | A | B | C | H | L | P |
| **AUDI** | | | | | | | | | | | | | | | |
| **A4** | | | | | | | | | | | | | | | |
| 2.4 (120 kw) | 1997.08-2001.09 | AT | F | L | Estate FWD AJG/AMM/APZ | | GDS83015 | Drive Shaft | 45W | 38 | | 59.5 | 34.5 | 527 | |
| | 1997.08-2001.09 | AT/MT | F | L/R | Estate FWD AJG/AMM/APZ | | GCO83019 | Outer Joint | 45W | 38 | 27 | 59.5 | 34.5 | 63 | I |
| | 1997.08-2001.09 | AT/MT | F | L/R | Estate FWD AJG/AMM/APZ | | GCI50019 | Inner Joint | | | 34 | | | 59.5 | |
| | 1997.08-2001.09 | MT | F | L | Estate FWD AJG/AMM/APZ | | GDS83008 | Drive Shaft | 45W | 38 | | 59.5 | 34.5 | 603 | |
| | 1997.08-2001.09 | MT | F | R | Estate FWD AJG/AMM/APZ | | GDS61019 | Drive Shaft | 45W | 38 | | 59.5 | 34.5 | 624 | |
| | 2001.09-2004.12 | 5MT/6MT/CVT | F | L/R | Estate FWD AMM | Transmission:6MT/6MT,Chassis no. from:8E_4_000001,Transmission:CVT,Chassis no. from:8E_4_195601 | GCI61044 | Inner Joint | | | 34 | | | 85 | |
| | 2001.09-2004.12 | AT/Semi-AT | F | L/R | Estate FWD AMM | | GDS83052 | Drive Shaft | 45W | 38 | | 59.5 | 34.5 | 522 | |
| | 2001.09-2004.12 | CVT | F | L/R | Estate FWD AMM | Chassis no. to:8E_4_195500 | GCI83007 | Inner Joint | | | 34 | | | 85 | |
| | 2001.09-2004.12 | MT | F | L | Estate FWD AMM | | GDS83057 | Drive Shaft | 45W | 38 | | 59.5 | 34.5 | 593 | |
| | 2001.09-2004.12 | MT | F | R | Estate FWD AMM | | GDS83058 | Drive Shaft | 45W | 38 | | 59.5 | 34.5 | 613 | |
| | 2001.09-2004.12 | MT | F | L/R | Estate FWD AMM | Chassis no. from:8E4000001,Date from:2003.04 | GCO83067 | Outer Joint | 45W | 38 | 27 | 59.5 | 34 | 68 | M |
| | 2001.09-2004.12 | MT | F | L/R | Estate FWD AMM | Date to:2003.03 | GCO83092 | Outer Joint | 45W | 38 | 27 | 59.5 | 34 | 68 | I |
| | 2001.09-2004.12 | Semi-AT | F | L/R | Estate FWD AMM | Chassis no. from:8E4195501,Date from:2004.01 | GCO83078 | Outer Joint | 45W | 38 | 27 | 59.5 | 34.5 | 63 | M |
| | 2001.09-2004.12 | 5MT/6MT/CVT | F | L/R | Saloon FWD AMM | Transmission:6MT/6MT,Chassis no. from:8E_4_000001,Transmission:CVT,Chassis no. from:8E_4_195601 | GCI61044 | Inner Joint | | | 34 | | | 85 | |
| | 2001.09-2004.12 | AT/Semi-AT | F | L/R | Saloon FWD AMM | | GDS83052 | Drive Shaft | 45W | 38 | | 59.5 | 34.5 | 522 | |
| | 2001.09-2004.12 | CVT | F | L/R | Saloon FWD AMM | Chassis no. to:8E_4_195500 | GCI83007 | Inner Joint | | | 34 | | | 85 | |
| | 2001.09-2004.12 | MT | F | L | Saloon FWD AMM | | GDS83057 | Drive Shaft | 45W | 38 | | 59.5 | 34.5 | 593 | |
| | 2001.09-2004.12 | MT | F | R | Saloon FWD AMM | | GDS83058 | Drive Shaft | 45W | 38 | | 59.5 | 34.5 | 613 | |
| | 2001.09-2004.12 | MT | F | L/R | Saloon FWD AMM | Chassis no. from:8E4000001,Date from:2003.04 | GCO83067 | Outer Joint | 45W | 38 | 27 | 59.5 | 34 | 68 | M |
| | 2001.09-2004.12 | MT | F | L/R | Saloon FWD AMM | Date to:2003.03 | GCO83092 | Outer Joint | 45W | 38 | 27 | 59.5 | 34 | 68 | I |
| | 2001.09-2004.12 | Semi-AT | F | L/R | Saloon FWD AMM | Chassis no. from:8E4195501,Date from:2004.01 | GCO83078 | Outer Joint | 45W | 38 | 27 | 59.5 | 34.5 | 63 | M |
| 2.4 (121 kw) | 1997.08-2001.08 | 5AT | F | R | Saloon FWD AGA/ALF/AML/APS/ARJ | | GDS83048 | Drive Shaft | 45W | 38 | | 59.5 | 34.5 | 502 | |
| | 1997.08-2001.08 | AT | F | L | Saloon FWD AGA/ALF/AML/APS/ARJ | | GDS83015 | Drive Shaft | 45W | 38 | | 59.5 | 34.5 | 527 | |
| | 1997.08-2001.08 | AT | F | L | Saloon FWD AGA/ALF/AML/APS/ARJ | | GCI50019 | Inner Joint | | | 34 | | | 59.5 | |
| | 1997.08-2001.08 | AT/MT | F | L/R | Saloon FWD AGA/ALF/AML/APS/ARJ | | GCO83019 | Outer Joint | 45W | 38 | 27 | 59.5 | 34.5 | 63 | I |
| | 1997.08-2001.08 | MT | F | L | Saloon FWD AGA/ALF/AML/APS/ARJ | | GDS83008 | Drive Shaft | 45W | 38 | | 59.5 | 34.5 | 603 | |
| | 1997.08-2001.08 | MT | F | R | Saloon FWD AGA/ALF/AML/APS/ARJ | | GDS61019 | Drive Shaft | 45W | 38 | | 59.5 | 34.5 | 624 | |
| | 1997.08-2001.08 | MT | F | L/R | Saloon FWD AGA/ALF/AML/APS/ARJ | | GCI50019 | Inner Joint | | | 34 | | | 59.5 | |
| | 1997.08-2001.08 | MT | F | L/R | Saloon FWD AGA/ALF/AML/APS/ARJ | Date from:1997.08 | GCI83002 | Inner Joint | | | 33 | | | 32 | |
| | 1997.08-2001.09 | 5AT | F | R | Estate FWD AGA/ALF/AML/APS/ARJ | | GDS83048 | Drive Shaft | 45W | 38 | | 59.5 | 34.5 | 502 | |
| | 1997.08-2001.09 | AT | F | L | Estate FWD AGA/ALF/AML/APS/ARJ | | GDS83015 | Drive Shaft | 45W | 38 | | 59.5 | 34.5 | 527 | |
| | 1997.08-2001.09 | AT | F | L/R | Estate FWD AGA/ALF/AML/APS/ARJ | | GCO83019 | Outer Joint | 45W | 38 | 27 | 59.5 | 34.5 | 63 | I |
| | 1997.08-2001.09 | AT/MT | F | L/R | Estate FWD AGA/ALF/AML/APS/ARJ | | GCI50019 | Inner Joint | | | 34 | | | 59.5 | |
| | 1997.08-2001.09 | MT | F | L | Estate FWD AGA/ALF/AML/APS/ARJ | | GDS83008 | Drive Shaft | 45W | 38 | | 59.5 | 34.5 | 603 | |
| | 1997.08-2001.09 | MT | F | R | Estate FWD AGA/ALF/AML/APS/ARJ | | GDS61019 | Drive Shaft | 45W | 38 | | 59.5 | 34.5 | 624 | |
| | 1997.08-2001.09 | MT | F | L/R | Estate FWD AGA/ALF/AML/APS/ARJ | Date from:1997.08 | GCI83002 | Inner Joint | | | 33 | | | 32 | |
| 2.4 (125 kw) | 2001.09-2004.12 | 5MT/6MT/CVT | F | L/R | Estate FWD BDV | Transmission:6MT/6MT,Chassis no. from:8E_4_000001,Transmission:CVT,Chassis no. from:8E_4_195601 | GCI61044 | Inner Joint | | | 34 | | | 85 | |
| | 2001.09-2004.12 | CVT | F | L/R | Estate FWD BDV | Chassis no. to:8E_4_195500 | GCI83007 | Inner Joint | | | 34 | | | 85 | |
| | 2001.09-2004.12 | MT | F | L | Estate FWD BDV | | GDS83057 | Drive Shaft | 45W | 38 | | 59.5 | 34.5 | 593 | |
| | 2001.09-2004.12 | MT | F | R | Estate FWD BDV | | GDS83058 | Drive Shaft | 45W | 38 | | 59.5 | 34.5 | 613 | |
| | 2001.09-2004.12 | MT | F | L/R | Estate FWD BDV | Date From:2003.04 | GCO83067 | Outer Joint | 45W | 38 | 27 | 59.5 | 34 | 68 | M |
| | 2001.09-2004.12 | MT | F | L/R | Estate FWD BDV | Date To:2003.03 | GCO83092 | Outer Joint | 45W | 38 | 27 | 59.5 | 34 | 68 | I |
| | 2001.09-2004.12 | Semi-AT | F | L/R | Estate FWD BDV | | GDS83052 | Drive Shaft | 45W | 38 | | 59.5 | 34.5 | 522 | |
| | 2001.09-2004.12 | Semi-AT | F | L/R | Estate FWD BDV | Date From:2004.01 | GCO83078 | Outer Joint | 45W | 38 | 27 | 59.5 | 34.5 | 63 | M |
| | 2001.09-2004.12 | 5MT/6MT/CVT | F | L/R | Saloon FWD BDV | Transmission:6MT/6MT,Chassis no. from:8E_4_000001,Transmission:CVT,Chassis no. from:8E_4_195601 | GCI61044 | Inner Joint | | | 34 | | | 85 | |
| | 2001.09-2004.12 | CVT | F | L/R | Saloon FWD BDV | Chassis no. to:8E_4_195500 | GCI83007 | Inner Joint | | | 34 | | | 85 | |
| | 2001.09-2004.12 | MT | F | L | Saloon FWD BDV | | GDS83057 | Drive Shaft | 45W | 38 | | 59.5 | 34.5 | 593 | |
| | 2001.09-2004.12 | MT | F | R | Saloon FWD BDV | | GDS83058 | Drive Shaft | 45W | 38 | | 59.5 | 34.5 | 613 | |
| | 2001.09-2004.12 | MT | F | L/R | Saloon FWD BDV | Date From:2003.04 | GCO83067 | Outer Joint | 45W | 38 | 27 | 59.5 | 34 | 68 | M |
| | 2001.09-2004.12 | MT | F | L/R | Saloon FWD BDV | Date To:2003.03 | GCO83092 | Outer Joint | 45W | 38 | 27 | 59.5 | 34 | 68 | I |
| | 2001.09-2004.12 | Semi-AT | F | L/R | Saloon FWD BDV | | GDS83052 | Drive Shaft | 45W | 38 | | 59.5 | 34.5 | 522 | |
| | 2001.09-2004.12 | Semi-AT | F | L/R | Saloon FWD BDV | Date From:2004.01 | GCO83078 | Outer Joint | 45W | 38 | 27 | 59.5 | 34.5 | 63 | M |
| 2.5 (110 kw) | 1997.11-2000.10 | 5AT | F | R | Saloon FWD AFB/AKN | | GDS83048 | Drive Shaft | 45W | 38 | | 59.5 | 34.5 | 502 | |
| | 1997.11-2000.10 | AT/5AT | F | L | Saloon FWD AFB/AKN | | GDS83015 | Drive Shaft | 45W | 38 | | 59.5 | 34.5 | 527 | |
| | 1997.11-2000.10 | AT/MT | F | L/R | Saloon FWD AFB/AKN | | GCO83019 | Outer Joint | 45W | 38 | 27 | 59.5 | 34.5 | 63 | I |
| | 1997.11-2000.10 | AT/MT | F | L/R | Saloon FWD AFB/AKN | | GCI50019 | Inner Joint | | | 34 | | | 59.5 | |
| | 1997.11-2000.10 | MT | F | L | Saloon FWD AFB/AKN | | GDS83008 | Drive Shaft | 45W | 38 | | 59.5 | 34.5 | 603 | |
| | 1997.11-2000.10 | MT | F | R | Saloon FWD AFB/AKN | | GDS61019 | Drive Shaft | 45W | 38 | | 59.5 | 34.5 | 624 | |
| | 1997.11-2001.09 | 5AT | F | R | Estate FWD AFB/AKN | | GDS83048 | Drive Shaft | 45W | 38 | | 59.5 | 34.5 | 502 | |
| | 1997.11-2001.09 | AT/5AT | F | L | Estate FWD AFB/AKN | | GDS83015 | Drive Shaft | 45W | 38 | | 59.5 | 34.5 | 527 | |
| | 1997.11-2001.09 | AT/MT | F | L/R | Estate FWD AFB/AKN | | GCO83019 | Outer Joint | 45W | 38 | 27 | 59.5 | 34.5 | 63 | I |
| | 1997.11-2001.09 | AT/MT | F | L/R | Estate FWD AFB/AKN | | GCI50019 | Inner Joint | | | 34 | | | 59.5 | |
| | 1997.11-2001.09 | MT | F | L | Estate FWD AFB/AKN | | GDS83008 | Drive Shaft | 45W | 38 | | 59.5 | 34.5 | 603 | |
| | 1997.11-2001.09 | MT | F | R | Estate FWD AFB/AKN | | GDS61019 | Drive Shaft | 45W | 38 | | 59.5 | 34.5 | 624 | |
| 2.5 (114 kw) | 2001.08-2002.07 | 6MT | F | L | Saloon FWD AYM | Trans. code:FRF | GDS83363 | Drive Shaft | 45W | 38 | | 59.5 | 34.5 | 611 | |

| | YEAR | TRANSM. | F/R | L/R | BODY STYLE & DRIVE TYPE & ENGINE | REMARKS | G-AP Ref. | PRODUCT | ABS | Technical Specifications A | B | C | H | L | P |
|---|---|---|---|---|---|---|---|---|---|---|---|---|---|---|---|
| **AUDI** | | | | | | | | | | | | | | | |
| **A4** | | | | | | | | | | | | | | | |
| 2.5 (114 kw) | 2001.08-2002.07 | MT | F | L | Saloon FWD AYM | Trans. code:GAZ/FRG | GDS83057 | Drive Shaft | 45W | 38 | | 59.5 | 34.5 | 593 | |
| | 2001.08-2002.07 | MT | F | R | Saloon FWD AYM | Trans. code:FRF | GDS61019 | Drive Shaft | 45W | 38 | | 59.5 | 34.5 | 624 | |
| | 2001.08-2002.07 | MT | F | R | Saloon FWD AYM | Trans. code:GAZ/FRG | GDS83058 | Drive Shaft | 45W | 38 | | 59.5 | 34.5 | 613 | |
| | 2001.08-2002.07 | MT | F | L/R | Saloon FWD AYM | Trans. code:FRF | GCO83067 | Outer Joint | 45W | 38 | 27 | 59.5 | 34 | 68 | M |
| | 2001.08-2002.07 | MT | F | L/R | Saloon FWD AYM | Trans. code:GAZ/FRG | GCO83092 | Outer Joint | 45W | 38 | 27 | 59.5 | 34 | 68 | I |
| | 2001.08-2002.07 | MT | F | L/R | Saloon FWD AYM | Trans. code:FRF | GCI50019 | Inner Joint | | | 34 | | | 59.5 | |
| | 2001.08-2002.07 | MT | F | L/R | Saloon FWD AYM | Trans. code:GAZ/FRG | GCI83007 | Inner Joint | | | 34 | | | 85 | |
| | 2001.08-2002.07 | Semi-AT | F | L/R | Saloon FWD AYM | | GDS83052 | Drive Shaft | 45W | 38 | | 59.5 | 34.5 | 522 | |
| | 2001.08-2002.07 | Semi-AT | F | L/R | Saloon FWD AYM | | GCI83007 | Inner Joint | | | 34 | | | 85 | |
| | 2001.09-2002.07 | 6MT | F | L | Estate FWD AYM | Trans. code:FRF | GDS83363 | Drive Shaft | 45W | 38 | | 59.5 | 34.5 | 611 | |
| | 2001.09-2002.07 | MT | F | L | Estate FWD AYM | Trans. code:GAZ/FRG | GDS83057 | Drive Shaft | 45W | 38 | | 59.5 | 34.5 | 593 | |
| | 2001.09-2002.07 | MT | F | R | Estate FWD AYM | Trans. code:FRF | GDS61019 | Drive Shaft | 45W | 38 | | 59.5 | 34.5 | 624 | |
| | 2001.09-2002.07 | MT | F | R | Estate FWD AYM | Trans. code:GAZ/FRG | GDS83058 | Drive Shaft | 45W | 38 | | 59.5 | 34.5 | 613 | |
| | 2001.09-2002.07 | MT | F | L/R | Estate FWD AYM | Trans. code:FRF | GCO83067 | Outer Joint | 45W | 38 | 27 | 59.5 | 34 | 68 | M |
| | 2001.09-2002.07 | MT | F | L/R | Estate FWD AYM | Trans. code:GAZ/FRG | GCO83092 | Outer Joint | 45W | 38 | 27 | 59.5 | 34 | 68 | I |
| | 2001.09-2002.07 | MT | F | L/R | Estate FWD AYM | Trans. code:FRF | GCI50019 | Inner Joint | | | 34 | | | 59.5 | |
| | 2001.09-2002.07 | MT | F | L/R | Estate FWD AYM | Trans. code:GAZ/FRG | GCI83007 | Inner Joint | | | 34 | | | 85 | |
| | 2001.09-2002.07 | Semi-AT | F | L/R | Estate FWD AYM | | GDS83052 | Drive Shaft | 45W | 38 | | 59.5 | 34.5 | 522 | |
| | 2001.09-2002.07 | Semi-AT | F | L/R | Estate FWD AYM | | GCI83007 | Inner Joint | | | 34 | | | 85 | |
| 2.5 (120 kw) | 2002.07-2004.12 | AT/Semi-AT | F | L/R | Estate FWD BFC;BCZ;BDG | | GDS83052 | Drive Shaft | 45W | 38 | | 59.5 | 34.5 | 522 | |
| | 2002.07-2004.12 | CVT | F | L/R | Estate FWD BFC;BCZ;BDG | Chassis no. from:8E_4_195501 | GCI61044 | Inner Joint | | | 34 | | | 85 | |
| | 2002.07-2004.12 | CVT | F | L/R | Estate FWD BFC;BCZ;BDG | Chassis no. to:8E_4_195500 | GCI83007 | Inner Joint | | | 34 | | | 85 | |
| | 2002.07-2004.12 | MT | F | L | Estate FWD BFC;BCZ;BDG | For Engine code:BFC;Trans. code:GAZ/FRG | GDS83057 | Drive Shaft | 45W | 38 | | 59.5 | 34.5 | 593 | |
| | 2002.07-2004.12 | MT | F | L | Estate FWD BFC;BCZ;BDG | Date from:2002.08; Date to:2004.10;For Engine code:BFC/BCZ/BDG;Trans. code:GSF | GDS83363 | Drive Shaft | 45W | 38 | | 59.5 | 34.5 | 611 | |
| | 2002.07-2004.12 | MT | F | R | Estate FWD BFC;BCZ;BDG | Trans. code:FRF | GDS61019 | Drive Shaft | 45W | 38 | | 59.5 | 34.5 | 624 | |
| | 2002.07-2004.12 | MT | F | R | Estate FWD BFC;BCZ;BDG | | GDS83058 | Drive Shaft | 45W | 38 | | 59.5 | 34.5 | 613 | |
| | 2002.07-2004.12 | MT | F | L/R | Estate FWD BFC;BCZ;BDG | transm. Type:FRF;For Engine Code:BCZ/BDG/BFC | GCO83067 | Outer Joint | 45W | 38 | 27 | 59.5 | 34 | 68 | M |
| | 2002.07-2004.12 | MT | F | L/R | Estate FWD BFC;BCZ;BDG | transm. Type:GAZ/FRG,For Engine Code:BFC | GCO83092 | Outer Joint | 45W | 38 | 27 | 59.5 | 34 | 68 | I |
| | 2002.07-2004.12 | MT | F | L/R | Estate FWD BFC;BCZ;BDG | Trans. code:FRF | GCI50019 | Inner Joint | | | 34 | | | 59.5 | |
| | 2002.07-2004.12 | Semi-AT | F | L/R | Estate FWD BFC;BCZ;BDG | Chassis no. from:8E4195501,Date from:2004.01 | GCO83078 | Outer Joint | 45W | 38 | 27 | 59.5 | 34.5 | 63 | M |
| | 2002.07-2004.12 | AT | F | L/R | Saloon FWD BFC;BCZ;BDG | Chassis no. from:8E_4_195501 | GCI61044 | Inner Joint | | | 34 | | | 85 | |
| | 2002.07-2004.12 | AT/Semi-AT | F | L/R | Saloon FWD BFC;BCZ;BDG | | GDS83052 | Drive Shaft | 45W | 38 | | 59.5 | 34.5 | 522 | |
| | 2002.07-2004.12 | CVT | F | L/R | Saloon FWD BFC;BCZ;BDG | Chassis no. to:8E_4_195500 | GCI83007 | Inner Joint | | | 34 | | | 85 | |
| | 2002.07-2004.12 | MT | F | L | Saloon FWD BFC;BCZ;BDG | For Engine code:BFC;Trans. code:GAZ/FRG | GDS83057 | Drive Shaft | 45W | 38 | | 59.5 | 34.5 | 593 | |
| | 2002.07-2004.12 | MT | F | L | Saloon FWD BFC;BCZ;BDG | ---------- | GDS83363 | Drive Shaft | 45W | 38 | | 59.5 | 34.5 | 611 | |
| | 2002.07-2004.12 | MT | F | R | Saloon FWD BFC;BCZ;BDG | Trans. code:FRF | GDS61019 | Drive Shaft | 45W | 38 | | 59.5 | 34.5 | 624 | |
| | 2002.07-2004.12 | MT | F | R | Saloon FWD BFC;BCZ;BDG | | GDS83058 | Drive Shaft | 45W | 38 | | 59.5 | 34.5 | 613 | |
| | 2002.07-2004.12 | MT | F | L/R | Saloon FWD BFC;BCZ;BDG | transm. Type:FRF;For Engine Code:BCZ/BDG/BFC | GCO83067 | Outer Joint | 45W | 38 | 27 | 59.5 | 34 | 68 | M |
| | 2002.07-2004.12 | MT | F | L/R | Saloon FWD BFC;BCZ;BDG | Trans. code:FRF | GCI50019 | Inner Joint | | | 34 | | | 59.5 | |
| | 2002.07-2004.12 | Semi-AT | F | L/R | Saloon FWD BFC;BCZ;BDG | Chassis no. from:8E4195501,Date from:2004.01 | GCO83078 | Outer Joint | 45W | 38 | 27 | 59.5 | 34.5 | 63 | M |
| | 2002.07-2004.12 | | F | L/R | Saloon FWD BFC;BCZ;BDG | Date To:2003.12,Chassis no. to:8E4195500,For Engine Code:Ec_BFC | GCO83092 | Outer Joint | 45W | 38 | 27 | 59.5 | 34 | 68 | I |
| | 2004.11-2006.05 | 6MT | F | L | Estate FWD BDG | | GDS83363 | Drive Shaft | 45W | 38 | | 59.5 | 34.5 | 611 | |
| | 2004.11-2006.05 | 6MT | F | R | Estate FWD BDG | | GDS61019 | Drive Shaft | 45W | 38 | | 59.5 | 34.5 | 624 | |
| | 2004.11-2006.05 | 6MT | F | L/R | Estate FWD BDG | | GCO83067 | Outer Joint | 45W | 38 | 27 | 59.5 | 34 | 68 | M |
| | 2004.11-2006.05 | CVT | F | L/R | Estate FWD BDG | | GDS83052 | Drive Shaft | 45W | 38 | | 59.5 | 34.5 | 522 | |
| | 2004.11-2006.05 | CVT | F | L/R | Estate FWD BDG | | GCO83078 | Outer Joint | 45W | 38 | 27 | 59.5 | 34.5 | 63 | M |
| | 2004.11-2006.05 | CVT | F | L/R | Estate FWD BDG | | GCI61044 | Inner Joint | | | 34 | | | 85 | |
| | 2004.11-2006.05 | AT | F | L/R | Saloon FWD BDG | | GCO83019 | Outer Joint | 45W | 38 | 27 | 59.5 | 34.5 | 63 | I |
| | 2004.11-2006.05 | AT/CVT | F | L/R | Saloon FWD BDG | | GDS83052 | Drive Shaft | 45W | 38 | | 59.5 | 34.5 | 522 | |
| | 2004.11-2006.05 | AT/CVT | F | L/R | Saloon FWD BDG | | GCI61044 | Inner Joint | | | 34 | | | 85 | |
| | 2004.11-2006.05 | CVT | F | L/R | Saloon FWD BDG | | GCO83078 | Outer Joint | 45W | 38 | 27 | 59.5 | 34.5 | 63 | M |
| | 2004.11-2006.05 | MT | F | L | Saloon FWD BDG | | GDS83363 | Drive Shaft | 45W | 38 | | 59.5 | 34.5 | 611 | |
| | 2004.11-2006.05 | MT | F | R | Saloon FWD BDG | Trans. code:FRF | GDS61019 | Drive Shaft | 45W | 38 | | 59.5 | 34.5 | 624 | |
| | 2004.11-2006.05 | MT | F | L/R | Saloon FWD BDG | | GCO83067 | Outer Joint | 45W | 38 | 27 | 59.5 | 34 | 68 | M |
| 2.6 (102 kw) | 1996.01-1997.07 | 5AT | F | L | Saloon FWD ACZ | | GDS83037 | Drive Shaft | 45W | 38 | | 59.5 | 34 | 530 | |
| | 1996.01-1997.07 | 5AT | F | R | Saloon FWD ACZ | Inner teeth of wheel side:30 | GDS83038 | Drive Shaft | 45W | 38 | | 59.5 | 34 | 503 | |
| | 1996.01-1997.07 | 5AT | F | R | Saloon FWD ACZ | Inner teeth of wheel side:27 | GDS83048 | Drive Shaft | 45W | 38 | | 59.5 | 34.5 | 502 | |
| | 1996.01-1997.07 | 5AT | F | L/R | Saloon FWD ACZ | | GCO83049 | Outer Joint | | 38 | 30 | 59.5 | 34 | 59.5 | I |
| | 1996.01-1997.07 | 5MT | F | L | Saloon FWD ACZ | | GDS83008 | Drive Shaft | 45W | 38 | | 59.5 | 34.5 | 603 | |
| | 1996.01-1997.07 | 5MT | F | R | Saloon FWD ACZ | | GDS61019 | Drive Shaft | 45W | 38 | | 59.5 | 34.5 | 624 | |
| | 1996.01-1997.07 | 5MT | F | L/R | Saloon FWD ACZ | | GCI50019 | Inner Joint | | | 34 | | | 59.5 | |
| | 1996.01-1997.07 | AT | F | L/R | Saloon FWD ACZ | | GCO83020 | Outer Joint | 45W | 38 | 30 | 59.5 | 34 | 59.5 | I |
| | 1996.01-1997.07 | MT | F | R | Saloon FWD ACZ | | GDS83058 | Drive Shaft | 45W | 38 | | 59.5 | 34.5 | 613 | |
| | 1996.01-1997.07 | MT | F | L/R | Saloon FWD ACZ | | GCO83019 | Outer Joint | 45W | 38 | 27 | 59.5 | 34.5 | 63 | I |
| 2.6 (110 kw) | 1994.11-1998.07 | 5AT | F | L | Estate FWD ABC | | GDS83037 | Drive Shaft | 45W | 38 | | 59.5 | 34 | 530 | |

| | YEAR | TRANSM. | F/R | L/R | BODY STYLE & DRIVE TYPE & ENGINE | REMARKS | G-AP Ref. | PRODUCT | ABS | Technical Specifications A | B | C | H | L | P |
|---|---|---|---|---|---|---|---|---|---|---|---|---|---|---|---|
| **AUDI** | | | | | | | | | | | | | | | |
| **A4** | | | | | | | | | | | | | | | |
| 2.6 (110 kw) | 1994.11-1998.07 | 5AT | F | R | Estate FWD ABC | Inner teeth of wheel side:30 | GDS83038 | Drive Shaft | 45W | 38 | | 59.5 | 34 | 503 | |
| | 1994.11-1998.07 | 5AT | F | R | Estate FWD ABC | Inner teeth of wheel side:27 | GDS83048 | Drive Shaft | 45W | 38 | | 59.5 | 34.5 | 502 | |
| | 1994.11-1998.07 | 5AT | F | L/R | Estate FWD ABC | | GCO83020 | Outer Joint | 45W | 38 | 30 | 59.5 | 34 | 59.5 | I |
| | 1994.11-1998.07 | 5AT | F | L/R | Estate FWD ABC | | GCO83049 | Outer Joint | | 38 | 30 | 59.5 | 34 | 59.5 | I |
| | 1994.11-1998.07 | 5MT | F | L | Estate FWD ABC | | GDS83008 | Drive Shaft | 45W | 38 | | 59.5 | 34.5 | 603 | |
| | 1994.11-1998.07 | 5MT | F | R | Estate FWD ABC | | GDS61019 | Drive Shaft | 45W | 38 | | 59.5 | 34.5 | 624 | |
| | 1994.11-1998.07 | 5MT | F | L/R | Estate FWD ABC | | GCO83019 | Outer Joint | 45W | 38 | 27 | 59.5 | 34.5 | 63 | I |
| | 1994.11-1998.07 | MT | F | R | Estate FWD ABC | Date to:1998.07 | GDS83058 | Drive Shaft | 45W | 38 | | 59.5 | 34.5 | 613 | |
| | 1994.11-1998.07 | MT | F | L/R | Estate FWD ABC | | GCI50019 | Inner Joint | | | 34 | | | 59.5 | |
| | 1994.11-1998.07 | 5AT | F | L | Saloon FWD ABC | | GDS83037 | Drive Shaft | 45W | 38 | | 59.5 | 34 | 530 | |
| | 1994.11-1998.07 | 5AT | F | R | Saloon FWD ABC | Inner teeth of wheel side:30 | GDS83038 | Drive Shaft | 45W | 38 | | 59.5 | 34 | 503 | |
| | 1994.11-1998.07 | 5AT | F | R | Saloon FWD ABC | Inner teeth of wheel side:27 | GDS83048 | Drive Shaft | 45W | 38 | | 59.5 | 34.5 | 502 | |
| | 1994.11-1998.07 | 5AT | F | L/R | Saloon FWD ABC | | GCO83020 | Outer Joint | 45W | 38 | 30 | 59.5 | 34 | 59.5 | I |
| | 1994.11-1998.07 | 5AT | F | L/R | Saloon FWD ABC | | GCO83049 | Outer Joint | | 38 | 30 | 59.5 | 34 | 59.5 | I |
| | 1994.11-1998.07 | 5MT | F | L | Saloon FWD ABC | | GDS83008 | Drive Shaft | 45W | 38 | | 59.5 | 34.5 | 603 | |
| | 1994.11-1998.07 | 5MT | F | R | Saloon FWD ABC | | GDS61019 | Drive Shaft | 45W | 38 | | 59.5 | 34.5 | 624 | |
| | 1994.11-1998.07 | 5MT | F | L/R | Saloon FWD ABC | | GCO83019 | Outer Joint | 45W | 38 | 27 | 59.5 | 34.5 | 63 | I |
| | 1994.11-1998.07 | MT | F | L/R | Saloon FWD ABC | | GCI50019 | Inner Joint | | | 34 | | | 59.5 | |
| 2.7 (120 kw) | 2005.11-2008.03 | 6MT | F | L | Estate FWD BSG | | GDS83057 | Drive Shaft | 45W | 38 | | 59.5 | 34.5 | 593 | |
| | 2005.11-2008.03 | 6MT | F | R | Estate FWD BSG | | GDS82410 | Drive Shaft | 45W | 38 | | 59.5 | 34.5 | 620 | |
| | 2005.11-2008.03 | AT | F | L | Estate FWD BSG | | GDS83052 | Drive Shaft | 45W | 38 | | 59.5 | 34.5 | 522 | |
| | 2005.11-2008.03 | | F | L/R | Estate FWD BSG | | GCO83078 | Outer Joint | 45W | 38 | 27 | 59.5 | 34.5 | 63 | M |
| | 2005.11-2008.03 | | F | L/R | Estate FWD BSG | | GCI61044 | Inner Joint | | | 34 | | | 85 | |
| | 2005.11-2008.06 | 6MT | F | L | Saloon FWD BSG | | GDS83057 | Drive Shaft | 45W | 38 | | 59.5 | 34.5 | 593 | |
| | 2005.11-2008.06 | 6MT | F | R | Saloon FWD BSG | | GDS82410 | Drive Shaft | 45W | 38 | | 59.5 | 34.5 | 620 | |
| | 2005.11-2008.06 | AT | F | L | Saloon FWD BSG | Date to:2007.12 | GDS83052 | Drive Shaft | 45W | 38 | | 59.5 | 34.5 | 522 | |
| | 2005.11-2008.06 | | F | L/R | Saloon FWD BSG | | GCO83078 | Outer Joint | 45W | 38 | 27 | 59.5 | 34.5 | 63 | M |
| | 2005.11-2008.06 | | F | L/R | Saloon FWD BSG | | GCI61044 | Inner Joint | | | 34 | | | 85 | |
| | 2007.11-2012.03 | AT/MT | F | L/R | Saloon FWD CAMB;CGKB | | GCI83022 | Inner Joint | | | 34 | | | 88.5 | |
| | 2007.11-2012.03 | CVT | F | L/R | Saloon FWD CAMB;CGKB | Date from:2011.11 | GDS83273 | Drive Shaft | | 42 | | 76.5 | 34 | 460 | |
| | 2007.11-2012.03 | CVT | F | L/R | Saloon FWD CAMB;CGKB | Date to:2011.10 | GDS83321 | Drive Shaft | | 42 | | 76.5 | 34 | 462 | |
| | 2007.11-2012.03 | CVT | F | L/R | Saloon FWD CAMB;CGKB | Date to:2011.10 | GCO83088 | Outer Joint | | 42 | 29 | 76.5 | 34 | 61.5 | M |
| | 2007.11-2012.03 | CVT | F | L/R | Saloon FWD CAMB;CGKB | Date from:2011.11 | GCO83102 | Outer Joint | | 42 | 29 | 76.5 | 34 | 60 | I |
| | 2008.04-2012.03 | AT/MT | F | L/R | Estate FWD CAMB;CGKB | | GCI83022 | Inner Joint | | | 34 | | | 88.5 | |
| | 2008.04-2012.03 | CVT | F | L/R | Estate FWD CAMB;CGKB | Date from:2011.11 | GDS83273 | Drive Shaft | | 42 | | 76.5 | 34 | 460 | |
| | 2008.04-2012.03 | CVT | F | L/R | Estate FWD CAMB;CGKB | Date to:2011.10 | GDS83321 | Drive Shaft | | 42 | | 76.5 | 34 | 462 | |
| | 2008.04-2012.03 | CVT | F | L/R | Estate FWD CAMB;CGKB | Date to:2011.10 | GCO83088 | Outer Joint | | 42 | 29 | 76.5 | 34 | 61.5 | M |
| | 2008.04-2012.03 | CVT | F | L/R | Estate FWD CAMB;CGKB | Date from:2011.11 | GCO83102 | Outer Joint | | 42 | 29 | 76.5 | 34 | 60 | I |
| 2.7 (132 kw) | 2006.01-2008.06 | 6MT | F | L | Estate FWD BPP | | GDS83057 | Drive Shaft | 45W | 38 | | 59.5 | 34.5 | 593 | |
| | 2006.01-2008.06 | 6MT | F | R | Estate FWD BPP | | GDS82410 | Drive Shaft | 45W | 38 | | 59.5 | 34.5 | 620 | |
| | 2006.01-2008.06 | 6MT/CVT | F | L/R | Estate FWD BPP | | GCO83078 | Outer Joint | 45W | 38 | 27 | 59.5 | 34.5 | 63 | M |
| | 2006.01-2008.06 | 6MT/CVT | F | L/R | Estate FWD BPP | | GCI61044 | Inner Joint | | | 34 | | | 85 | |
| | 2006.01-2008.06 | 6MT | F | L | Saloon FWD BPP | | GDS83057 | Drive Shaft | 45W | 38 | | 59.5 | 34.5 | 593 | |
| | 2006.01-2008.06 | 6MT | F | R | Saloon FWD BPP | | GDS82410 | Drive Shaft | 45W | 38 | | 59.5 | 34.5 | 620 | |
| | 2006.01-2008.06 | CVT | F | L | Saloon FWD BPP | | GDS83052 | Drive Shaft | 45W | 38 | | 59.5 | 34.5 | 522 | |
| | 2006.01-2008.06 | | F | L/R | Saloon FWD BPP | | GCO83078 | Outer Joint | 45W | 38 | 27 | 59.5 | 34.5 | 63 | M |
| | 2006.01-2008.06 | | F | L/R | Saloon FWD BPP | | GCI61044 | Inner Joint | | | 34 | | | 85 | |
| 2.7 (140 kw) | 2007.11-2012.03 | AT/MT | F | L/R | Saloon FWD CAMA;CGKA | | GCI83022 | Inner Joint | | | 34 | | | 88.5 | |
| | 2007.11-2012.03 | CVT/6MT | F | L/R | Saloon FWD CAMA;CGKA | Date from:2011.11 | GDS83273 | Drive Shaft | | 42 | | 76.5 | 34 | 460 | |
| | 2007.11-2012.03 | CVT/6MT | F | L/R | Saloon FWD CAMA;CGKA | Date to:2011.10 | GDS83321 | Drive Shaft | | 42 | | 76.5 | 34 | 462 | |
| | 2007.11-2012.03 | CVT/6MT | F | L/R | Saloon FWD CAMA;CGKA | Date To:2011.10,For Engine Code:CAMA | GCO83088 | Outer Joint | | 42 | 29 | 76.5 | 34 | 61.5 | M |
| | 2007.11-2012.03 | CVT/6MT | F | L/R | Saloon FWD CAMA;CGKA | Date From:2011.11,For Engine Code:CAMA | GCO83102 | Outer Joint | | 42 | 29 | 76.5 | 34 | 60 | I |
| | 2007.11-2012.03 | CVT/6MT | F | L/R | Saloon FWD CAMA;CGKA | For Engine Code:CGKA | GCO83103 | Outer Joint | | 42 | 28 | 76.4 | 34 | 54 | I |
| | 2008.04-2012.03 | CVT/6MT | F | L/R | Estate FWD CAMA;CGKA | Date from:2011.11 | GDS83273 | Drive Shaft | | 42 | | 76.5 | 34 | 460 | |
| | 2008.04-2012.03 | CVT/6MT | F | L/R | Estate FWD CAMA;CGKA | Date to:2011.10 | GDS83321 | Drive Shaft | | 42 | | 76.5 | 34 | 462 | |
| | 2008.04-2012.03 | CVT/6MT | F | L/R | Estate FWD CAMA;CGKA | Date to:2011.10 | GCO83088 | Outer Joint | | 42 | 29 | 76.5 | 34 | 61.5 | M |
| | 2008.04-2012.03 | CVT/6MT | F | L/R | Estate FWD CAMA;CGKA | Date from:2011.11 | GCO83102 | Outer Joint | | 42 | 29 | 76.5 | 34 | 60 | I |
| | 2008.04-2012.03 | CVT/6MT | F | L/R | Estate FWD CAMA;CGKA | | GCI83022 | Inner Joint | | | 34 | | | 88.5 | |
| | 2008.04-2012.03 | | F | L/R | Estate FWD CAMA;CGKA | For Engine code:CGKA | GCO83103 | Outer Joint | | 42 | 28 | 76.4 | 34 | 54 | I |
| 2.8 (128 kw) | 1994.11-1997.07 | AT | F | L | Saloon FWD AAH | | GDS83015 | Drive Shaft | 45W | 38 | | 59.5 | 34.5 | 527 | |
| | 1994.11-1997.07 | AT | F | R | Saloon FWD AAH | | GDS83048 | Drive Shaft | 45W | 38 | | 59.5 | 34.5 | 502 | |
| | 1994.11-1997.07 | AT/MT | F | L/R | Saloon FWD AAH | | GCO83019 | Outer Joint | 45W | 38 | 27 | 59.5 | 34.5 | 63 | I |
| | 1994.11-1997.07 | AT/MT | F | L/R | Saloon FWD AAH | | GCI50019 | Inner Joint | | | 34 | | | 59.5 | |
| | 1994.11-1997.07 | MT | F | L | Saloon FWD AAH | | GDS83008 | Drive Shaft | 45W | 38 | | 59.5 | 34.5 | 603 | |
| | 1994.11-1997.07 | MT | F | R | Saloon FWD AAH | | GDS61019 | Drive Shaft | 45W | 38 | | 59.5 | 34.5 | 624 | |

| | YEAR | TRANSM. | F/R | L/R | BODY STYLE & DRIVE TYPE & ENGINE | REMARKS | G-AP Ref. | PRODUCT | ABS | Technical Specifications A | B | C | H | L | P |
|---|---|---|---|---|---|---|---|---|---|---|---|---|---|---|---|
| **AUDI** | | | | | | | | | | | | | | | |
| **A4** | | | | | | | | | | | | | | | |
| 2.8 (128 kw) | 1994.11-1997.07 | | F | L/R | Saloon FWD AAH | | GCO83020 | Outer Joint | 45W | 38 | 30 | 59.5 | 34 | 59.5 | I |
| | 1994.11-1997.07 | | F | L/R | Saloon FWD AAH | | GCI83002 | Inner Joint | | | 33 | | | 32 | |
| | 1996.03-1996.11 | AT/MT | F | L/R | Estate FWD AAH | | GCO83019 | Outer Joint | 45W | 38 | 27 | 59.5 | 34.5 | 63 | I |
| | 1996.03-1996.11 | MT | F | L | Estate FWD AAH | Chassis no. to:8D-T-260000 | GDS83008 | Drive Shaft | 45W | 38 | | 59.5 | 34.5 | 603 | |
| | 1996.03-1996.11 | MT | F | R | Estate FWD AAH | Chassis no. to:8D-T-260000 | GDS61019 | Drive Shaft | 45W | 38 | | 59.5 | 34.5 | 624 | |
| 2.8 (140 kw) | 1999.03-2000.09 | 5AT | F | L | Estate FWD ATX | | GDS83015 | Drive Shaft | 45W | 38 | | 59.5 | 34.5 | 527 | |
| | 1999.03-2000.09 | 5AT | F | R | Estate FWD ATX | | GDS83048 | Drive Shaft | 45W | 38 | | 59.5 | 34.5 | 502 | |
| | 1999.03-2000.09 | 5AT/5MT | F | L/R | Estate FWD ATX | | GCO83019 | Outer Joint | 45W | 38 | 27 | 59.5 | 34.5 | 63 | I |
| | 1999.03-2000.09 | 5AT/5MT | F | L/R | Estate FWD ATX | | GCI50019 | Inner Joint | | | 34 | | | 59.5 | |
| | 1999.03-2000.09 | 5MT | F | L | Estate FWD ATX | | GDS83008 | Drive Shaft | 45W | 38 | | 59.5 | 34.5 | 603 | |
| | 1999.03-2000.09 | 5MT | F | R | Estate FWD ATX | | GDS61019 | Drive Shaft | 45W | 38 | | 59.5 | 34.5 | 624 | |
| | 1999.09-2000.10 | 5AT | F | L | Saloon FWD ATX | | GDS83015 | Drive Shaft | 45W | 38 | | 59.5 | 34.5 | 527 | |
| | 1999.09-2000.10 | 5AT | F | R | Saloon FWD ATX | | GDS83048 | Drive Shaft | 45W | 38 | | 59.5 | 34.5 | 502 | |
| | 1999.09-2000.10 | 5MT | F | L/R | Saloon FWD ATX | | GCI50019 | Inner Joint | | | 34 | | | 59.5 | |
| | 1999.09-2000.10 | MT | F | L | Saloon FWD ATX | | GDS83008 | Drive Shaft | 45W | 38 | | 59.5 | 34.5 | 603 | |
| | 1999.09-2000.10 | MT | F | R | Saloon FWD ATX | | GDS61019 | Drive Shaft | 45W | 38 | | 59.5 | 34.5 | 624 | |
| | 1999.09-2000.10 | | F | L/R | Saloon FWD ATX | | GCO83019 | Outer Joint | 45W | 38 | 27 | 59.5 | 34.5 | 63 | I |
| | 1999.09-2000.10 | | F | L/R | Saloon FWD ATX | | GCO83020 | Outer Joint | 45W | 38 | 30 | 59.5 | 34 | 59.5 | I |
| | 1999.09-2000.10 | | F | L/R | Saloon FWD ATX | | GCI83002 | Inner Joint | | | 33 | | | 32 | |
| 2.8 (142 kw) | 1996.03-2000.06 | 5AT | F | R | Estate FWD ACK/ALG/APR/AQD | | GDS83048 | Drive Shaft | 45W | 38 | | 59.5 | 34.5 | 502 | |
| | 1996.03-2000.06 | AT | F | L | Estate FWD ACK/ALG/APR/AQD | | GDS83015 | Drive Shaft | 45W | 38 | | 59.5 | 34.5 | 527 | |
| | 1996.03-2000.06 | AT/MT | F | L/R | Estate FWD ACK/ALG/APR/AQD | | GCO83019 | Outer Joint | 45W | 38 | 27 | 59.5 | 34.5 | 63 | I |
| | 1996.03-2000.06 | AT/MT | F | L/R | Estate FWD ACK/ALG/APR/AQD | | GCI50019 | Inner Joint | | | 34 | | | 59.5 | |
| | 1996.03-2000.06 | MT | F | L | Estate FWD ACK/ALG/APR/AQD | | GDS83008 | Drive Shaft | 45W | 38 | | 59.5 | 34.5 | 603 | |
| | 1996.03-2000.06 | MT | F | R | Estate FWD ACK/ALG/APR/AQD | | GDS61019 | Drive Shaft | 45W | 38 | | 59.5 | 34.5 | 624 | |
| | 1996.03-2000.06 | | F | L/R | Estate FWD ACK/ALG/APR/AQD | | GCO83020 | Outer Joint | 45W | 38 | 30 | 59.5 | 34 | 59.5 | I |
| | 1996.03-2000.06 | | F | L/R | Estate FWD ACK/ALG/APR/AQD | Date to:2000.06;Engine code:ALG/APR/AQD | GCI83002 | Inner Joint | | | 33 | | | 32 | |
| | 1996.03-2000.10 | 5AT | F | R | Saloon FWD ACK/ALG/AMX/APR/AQD/ATQ | | GDS83048 | Drive Shaft | 45W | 38 | | 59.5 | 34.5 | 502 | |
| | 1996.03-2000.10 | AT | F | L | Saloon FWD ACK/ALG/AMX/APR/AQD/ATQ | | GDS83015 | Drive Shaft | 45W | 38 | | 59.5 | 34.5 | 527 | |
| | 1996.03-2000.10 | AT/MT | F | L/R | Saloon FWD ACK/ALG/AMX/APR/AQD/ATQ | | GCO83019 | Outer Joint | 45W | 38 | 27 | 59.5 | 34.5 | 63 | I |
| | 1996.03-2000.10 | AT/MT | F | L/R | Saloon FWD ACK/ALG/AMX/APR/AQD/ATQ | | GCI50019 | Inner Joint | | | 34 | | | 59.5 | |
| | 1996.03-2000.10 | MT | F | L | Saloon FWD ACK/ALG/AMX/APR/AQD/ATQ | | GDS83008 | Drive Shaft | 45W | 38 | | 59.5 | 34.5 | 603 | |
| | 1996.03-2000.10 | MT | F | R | Saloon FWD ACK/ALG/AMX/APR/AQD/ATQ | | GDS61019 | Drive Shaft | 45W | 38 | | 59.5 | 34.5 | 624 | |
| 3.0 (150 kw) | 2011.11-2015.12 | CVT/6MT | F | L/R | Estate FWD CLAB | | GDS83273 | Drive Shaft | | 42 | | 76.5 | 34 | 460 | |
| | 2011.11-2015.12 | CVT/6MT | F | L/R | Estate FWD CLAB | | GCO83102 | Outer Joint | | 42 | 29 | 76.5 | 34 | 60 | I |
| | 2011.11-2015.12 | CVT/6MT | F | L/R | Estate FWD CLAB | TJ | GCI83022 | Inner Joint | | | 34 | | | 88.5 | |
| | 2011.11-2015.12 | AT/MT | F | L/R | Saloon FWD CLAB | | GCI83022 | Inner Joint | | | 34 | | | 88.5 | |
| | 2011.11-2015.12 | CVT/6MT | F | L/R | Saloon FWD CLAB | | GDS83273 | Drive Shaft | | 42 | | 76.5 | 34 | 460 | |
| | 2011.11-2015.12 | | F | L/R | Saloon FWD CLAB | | GCO83102 | Outer Joint | | 42 | 29 | 76.5 | 34 | 60 | I |
| 3.0 (160 kw) | 2001.04-2004.12 | 5MT/6MT/CVT | F | L/R | Estate FWD BBJ | Transmission:5MT/6MT;Chassis no. from:8E_4_000001;Transmission:CVT;Chassis no. from:8E_4_195501 | GCI61044 | Inner Joint | | | 34 | | | 85 | |
| | 2001.04-2004.12 | AT | F | L/R | Estate FWD BBJ | | GDS83052 | Drive Shaft | 45W | 38 | | 59.5 | 34.5 | 522 | |
| | 2001.04-2004.12 | AT | F | L/R | Estate FWD BBJ | Chassis no. from:8E4195501,Date from:2004.01 | GCO83078 | Outer Joint | 45W | 38 | 27 | 59.5 | 34.5 | 63 | M |
| | 2001.04-2004.12 | CVT | F | L/R | Estate FWD BBJ | Chassis no. to:8E_4_195500 | GCI83007 | Inner Joint | | | 34 | | | 85 | |
| | 2001.04-2004.12 | MT | F | L | Estate FWD BBJ | | GDS83057 | Drive Shaft | 45W | 38 | | 59.5 | 34.5 | 593 | |
| | 2001.04-2004.12 | MT | F | R | Estate FWD BBJ | | GDS83058 | Drive Shaft | 45W | 38 | | 59.5 | 34.5 | 613 | |
| | 2001.04-2004.12 | MT | F | L/R | Estate FWD BBJ | Chassis no. from:8E4000001,Date from:2003.04 | GCO83067 | Outer Joint | 45W | 38 | 27 | 59.5 | 34 | 68 | M |
| | 2001.04-2004.12 | MT | F | L/R | Estate FWD BBJ | Date to:2003.03 | GCO83092 | Outer Joint | 45W | 38 | 27 | 59.5 | 34 | 68 | I |
| | 2001.04-2004.12 | 5MT/6MT/CVT | F | L/R | Saloon FWD BBJ | Transmission:5MT/6MT;Chassis no. from:8E_4_000001;Transmission:CVT;Chassis no. from:8E_4_195501 | GCI61044 | Inner Joint | | | 34 | | | 85 | |
| | 2001.04-2004.12 | AT | F | L/R | Saloon FWD BBJ | | GDS83052 | Drive Shaft | 45W | 38 | | 59.5 | 34.5 | 522 | |
| | 2001.04-2004.12 | AT | F | L/R | Saloon FWD BBJ | Chassis no. from:8E4195501,Date from:2004.01 | GCO83078 | Outer Joint | 45W | 38 | 27 | 59.5 | 34.5 | 63 | M |
| | 2001.04-2004.12 | CVT | F | L/R | Saloon FWD BBJ | Chassis no. to:8E_4_195500 | GCI83007 | Inner Joint | | | 34 | | | 85 | |
| | 2001.04-2004.12 | MT | F | L | Saloon FWD BBJ | | GDS83057 | Drive Shaft | 45W | 38 | | 59.5 | 34.5 | 593 | |
| | 2001.04-2004.12 | MT | F | R | Saloon FWD BBJ | | GDS83058 | Drive Shaft | 45W | 38 | | 59.5 | 34.5 | 613 | |
| | 2001.04-2004.12 | MT | F | L/R | Saloon FWD BBJ | Chassis no. from:8E4000001,Date from:2003.04 | GCO83067 | Outer Joint | 45W | 38 | 27 | 59.5 | 34 | 68 | M |
| | 2001.04-2004.12 | MT | F | L/R | Saloon FWD BBJ | Date to:2003.12;Chassis no. to:8E4195500;Date to:2003.03;Chassis no. to:8E3399999 | GCO83092 | Outer Joint | 45W | 38 | 27 | 59.5 | 34 | 68 | I |
| | 2004.11-2006.05 | AT/CVT | F | L/R | Estate FWD BBJ | | GDS83052 | Drive Shaft | 45W | 38 | | 59.5 | 34.5 | 522 | |
| | 2004.11-2006.05 | CVT | F | L/R | Estate FWD BBJ | | GCO83078 | Outer Joint | 45W | 38 | 27 | 59.5 | 34.5 | 63 | M |
| | 2004.11-2006.05 | MT | F | L | Estate FWD BBJ | | GDS83057 | Drive Shaft | 45W | 38 | | 59.5 | 34.5 | 593 | |
| | 2004.11-2006.05 | MT | F | R | Estate FWD BBJ | | GDS83058 | Drive Shaft | 45W | 38 | | 59.5 | 34.5 | 613 | |
| | 2004.11-2006.05 | MT | F | L/R | Estate FWD BBJ | | GCO83067 | Outer Joint | 45W | 38 | 27 | 59.5 | 34 | 68 | M |
| | 2004.11-2006.05 | MT | F | L | Estate FWD BBJ | Date to:2006.02 | GCI61076 | Inner Joint | | | 34 | | | 85 | |
| | 2004.11-2006.05 | | F | L/R | Estate FWD BBJ | TJ | GCI61044 | Inner Joint | | | 34 | | | 85 | |
| | 2004.11-2006.05 | AT/CVT | F | L/R | Saloon FWD BBJ | | GDS83052 | Drive Shaft | 45W | 38 | | 59.5 | 34.5 | 522 | |
| | 2004.11-2006.05 | CVT | F | L/R | Saloon FWD BBJ | | GCO83078 | Outer Joint | 45W | 38 | 27 | 59.5 | 34.5 | 63 | M |
| | 2004.11-2006.05 | MT | F | L | Saloon FWD BBJ | | GDS83057 | Drive Shaft | 45W | 38 | | 59.5 | 34.5 | 593 | |

| | YEAR | TRANSM. | F/R | L/R | BODY STYLE & DRIVE TYPE & ENGINE | REMARKS | G-AP Ref. | PRODUCT | ABS | Technical Specifications A | B | C | H | L | P |
|---|---|---|---|---|---|---|---|---|---|---|---|---|---|---|---|
| **AUDI** | | | | | | | | | | | | | | | |
| **A4** | | | | | | | | | | | | | | | |
| 3.0 (160 kw) | 2004.11-2006.05 | MT | F | R | Saloon FWD BBJ | | GDS83058 | Drive Shaft | 45W | 38 | | 59.5 | 34.5 | 613 | |
| | 2004.11-2006.05 | MT | F | L/R | Saloon FWD BBJ | | GCO83067 | Outer Joint | 45W | 38 | 27 | 59.5 | 34 | 68 | M |
| | 2004.11-2006.05 | | F | L/R | Saloon FWD BBJ | | GCI61044 | Inner Joint | | | 34 | | | 85 | |
| | 2015.09-2018.08 | 7AT | F | L/R | Saloon FWD CSWB | Date to:2016.01 | GDS82074 | Drive Shaft | | 42 | | 76.5 | 34 | 462 | |
| | 2015.09-2018.08 | 7AT | F | L/R | Saloon FWD CSWB | Date from:2016.02 | GDS82256 | Drive Shaft | | 42 | | 76.5 | 34 | 464 | |
| | 2015.09-2018.08 | 7AT | F | L/R | Saloon FWD CSWB | | GCO81750 | Outer Joint | | 42 | 29 | 76.5 | 34 | 60 | I |
| | 2015.09-2018.08 | AT | F | L/R | Saloon FWD CSWB | Date from:2016.01 | GCI83022 | Inner Joint | | | 34 | | | 88.5 | |
| | 2015.10-2018.08 | 7AT | F | L/R | Estate FWD CSWB | Date to:2016.01 | GDS82074 | Drive Shaft | | 42 | | 76.5 | 34 | 462 | |
| | 2015.10-2018.08 | 7AT | F | L/R | Estate FWD CSWB | Date from:2016.02 | GDS82256 | Drive Shaft | | 42 | | 76.5 | 34 | 464 | |
| | 2015.10-2018.08 | 7AT | F | L/R | Estate FWD CSWB | | GCO81750 | Outer Joint | | 42 | 29 | 76.5 | 34 | 60 | I |
| | 2015.10-2018.08 | AT | F | L/R | Estate FWD CSWB | Date from:2016.01 | GCI83022 | Inner Joint | | | 34 | | | 88.5 | |
| 3.0 (162 kw) | 2000.11-2004.12 | 5MT/6MT/CVT | F | L/R | Saloon FWD ASN;AVK | Transmission:5MT/6MT;Chassis no. from:8E_4_000001;Transmission:CVT;Chassis no. from:8E_4_195501 | GCI61044 | Inner Joint | | | 34 | | | 85 | |
| | 2000.11-2004.12 | AT | F | L/R | Saloon FWD ASN;AVK | | GDS83052 | Drive Shaft | 45W | 38 | | 59.5 | 34.5 | 522 | |
| | 2000.11-2004.12 | AT | F | L/R | Saloon FWD ASN;AVK | | GCO83078 | Outer Joint | 45W | 38 | 27 | 59.5 | 34.5 | 63 | M |
| | 2000.11-2004.12 | CVT | F | L/R | Saloon FWD ASN;AVK | Chassis no. to:8E_4_195500 | GCI83007 | Inner Joint | | | 34 | | | 85 | |
| | 2000.11-2004.12 | MT | F | L | Saloon FWD ASN;AVK | | GDS83057 | Drive Shaft | 45W | 38 | | 59.5 | 34.5 | 593 | |
| | 2000.11-2004.12 | MT | F | R | Saloon FWD ASN;AVK | | GDS83058 | Drive Shaft | 45W | 38 | | 59.5 | 34.5 | 613 | |
| | 2000.11-2004.12 | MT | F | L/R | Saloon FWD ASN;AVK | | GCO83067 | Outer Joint | 45W | 38 | 27 | 59.5 | 34 | 68 | M |
| | 2000.11-2004.12 | MT | F | L/R | Saloon FWD ASN;AVK | | GCO83092 | Outer Joint | 45W | 38 | 27 | 59.5 | 34 | 68 | I |
| | 2001.09-2004.12 | 5MT/6MT/CVT | F | L/R | Estate FWD ASN | Transmission:5MT/6MT;Chassis no. from:8E_4_000001;Transmission:CVT;Chassis no. from:8E_4_195501 | GCI61044 | Inner Joint | | | 34 | | | 85 | |
| | 2001.09-2004.12 | AT | F | L/R | Estate FWD ASN | | GDS83052 | Drive Shaft | 45W | 38 | | 59.5 | 34.5 | 522 | |
| | 2001.09-2004.12 | AT | F | L/R | Estate FWD ASN | Date From:2004.01 | GCO83078 | Outer Joint | 45W | 38 | 27 | 59.5 | 34.5 | 63 | M |
| | 2001.09-2004.12 | AT | F | L/R | Estate FWD ASN | Date to:2003.12,Chassis no. to:8E4195500 | GCO83092 | Outer Joint | 45W | 38 | 27 | 59.5 | 34 | 68 | I |
| | 2001.09-2004.12 | CVT | F | L/R | Estate FWD ASN | Chassis no. to:8E_4_195500 | GCI83007 | Inner Joint | | | 34 | | | 85 | |
| | 2001.09-2004.12 | MT | F | L | Estate FWD ASN | | GDS83057 | Drive Shaft | 45W | 38 | | 59.5 | 34.5 | 593 | |
| | 2001.09-2004.12 | MT | F | R | Estate FWD ASN | | GDS83058 | Drive Shaft | 45W | 38 | | 59.5 | 34.5 | 613 | |
| | 2001.09-2004.12 | MT | F | L/R | Estate FWD ASN | Date From:2003.04 | GCO83067 | Outer Joint | 45W | 38 | 27 | 59.5 | 34 | 68 | M |
| | 2001.09-2004.12 | MT | F | L/R | Estate FWD ASN | Date to:2003.03,Chassis no. to:8E3390000 | GCO83092 | Outer Joint | 45W | 38 | 27 | 59.5 | 34 | 68 | I |
| 3.2 (188 kw) | 2005.01-2008.06 | CVT | F | L/R | Estate FWD AUK | | GDS83052 | Drive Shaft | 45W | 38 | | 59.5 | 34.5 | 522 | |
| | 2005.01-2008.06 | MT | F | L/R | Estate FWD AUK | Date to:2008.03 | GCO83067 | Outer Joint | 45W | 38 | 27 | 59.5 | 34 | 68 | M |
| | 2005.01-2008.06 | | F | L/R | Estate FWD AUK | | GCO83078 | Outer Joint | 45W | 38 | 27 | 59.5 | 34.5 | 63 | M |
| | 2005.01-2008.06 | | F | L/R | Estate FWD AUK | | GCI61044 | Inner Joint | | | 34 | | | 85 | |
| | 2005.01-2008.06 | AT | F | L/R | Saloon FWD AUK | | GCI61044 | Inner Joint | | | 34 | | | 85 | |
| | 2005.01-2008.06 | CVT/6MT | F | L/R | Saloon FWD AUK | | GDS83052 | Drive Shaft | 45W | 38 | | 59.5 | 34.5 | 522 | |
| | 2005.01-2008.06 | MT | F | L/R | Saloon FWD AUK | Date to:2007.10 | GCO83067 | Outer Joint | 45W | 38 | 27 | 59.5 | 34 | 68 | M |
| | 2005.01-2008.06 | | F | L/R | Saloon FWD AUK | | GCO83078 | Outer Joint | 45W | 38 | 27 | 59.5 | 34.5 | 63 | M |
| 3.2 (195 kw) | 2008.09-2012.03 | 6AT/7AT/6MT | F | L/R | Estate FWD CALA | Date to:2011.10 | GCO83086 | Outer Joint | | 42 | 33 | 76.5 | 34 | 45.5 | M |
| | 2008.09-2012.03 | AT/MT | F | L/R | Estate FWD CALA | Date from:2011.11 | GCO83103 | Outer Joint | | 42 | 28 | 76.4 | 34 | 54 | I |
| | 2008.09-2012.03 | AT/MT | F | L/R | Estate FWD CALA | | GCI83022 | Inner Joint | | | 34 | | | 88.5 | |
| | 2008.09-2012.03 | CVT | F | L/R | Estate FWD CALA | Date to:2011.10,For PR code:1BA/1BE/1BL | GDS83273 | Drive Shaft | | 42 | | 76.5 | 34 | 460 | |
| | 2008.09-2012.03 | CVT | F | L/R | Estate FWD CALA | Date from:2011.11 | GDS83291 | Drive Shaft | | 42 | | 76.4 | 34 | 464 | |
| | 2008.09-2012.03 | CVT | F | L/R | Estate FWD CALA | Date to:2011.10,For PR code:1BR | GDS83328 | Drive Shaft | | 42 | | 76.5 | 34 | 463 | |
| | 2008.09-2012.03 | CVT | F | L/R | Estate FWD CALA | Date to:2011.10;for vehicles with off-road suspension | GCO83087 | Outer Joint | | 42 | 27 | 76.5 | 34 | 57 | M |
| | 2008.09-2012.03 | AT/MT | F | L/R | Saloon FWD CALA | Date from:2011.11 | GCO83103 | Outer Joint | | 42 | 28 | 76.4 | 34 | 54 | I |
| | 2008.09-2012.03 | AT/MT | F | L/R | Saloon FWD CALA | | GCI83022 | Inner Joint | | | 34 | | | 88.5 | |
| | 2008.09-2012.03 | CVT | F | L/R | Saloon FWD CALA | Date to:2011.10,For PR code:1BA/1BE/1BL | GDS83273 | Drive Shaft | | 42 | | 76.5 | 34 | 460 | |
| | 2008.09-2012.03 | CVT | F | L/R | Saloon FWD CALA | Date from:2011.11 | GDS83291 | Drive Shaft | | 42 | | 76.4 | 34 | 464 | |
| | 2008.09-2012.03 | CVT | F | L/R | Saloon FWD CALA | Date to:2011.10,For PR code:1BR | GDS83328 | Drive Shaft | | 42 | | 76.5 | 34 | 463 | |
| | 2008.09-2012.03 | CVT | F | L/R | Saloon FWD CALA | Date to:2011.10;for vehicles with off-road suspension | GCO83087 | Outer Joint | | 42 | 27 | 76.5 | 34 | 57 | M |
| **A4 Allroad Quattro** | | | | | | | | | | | | | | | |
| 2.0 (100 kw) | 2009.09-2016.05 | 6MT | F | L/R | Estate 4WD CAGB;CJCB;CSUB | For Engine code:CAGB | GDS83345 | Drive Shaft | | 42 | | 76.5 | 34 | 463 | |
| | 2009.09-2016.05 | 6MT | F | L/R | Estate 4WD CAGB;CJCB;CSUB | For Engine code:CJCB/CSUB | GDS83371 | Drive Shaft | | 42 | | 76.5 | 34 | 465 | |
| | 2009.09-2016.05 | 6MT | F | L/R | Estate 4WD CAGB;CJCB;CSUB | TJ | GCI61070 | Inner Joint | | | 24 | | | 85 | |
| | 2009.09-2016.05 | 6MT | F | L/R | Estate 4WD CAGB;CJCB;CSUB | AAR | GCI81054 | Inner Joint | | | 24 | | | 86 | |
| | 2009.09-2016.05 | MT | F | L/R | Estate 4WD CAGB;CJCB;CSUB | For Engine code:CAGB | GCO83086 | Outer Joint | | 42 | 33 | 76.5 | 34 | 45.5 | M |
| | 2009.09-2016.05 | MT | F | L/R | Estate 4WD CAGB;CJCB;CSUB | | GCI83022 | Inner Joint | | | 34 | | | 88.5 | |
| | 2009.09-2016.05 | | F | L/R | Estate 4WD CAGB;CJCB;CSUB | Date From:2012.08;For Engine Code:CGLD/CNHC | GCO83107 | Outer Joint | | 42 | 25 | 76.5 | 34 | 47.5 | I |
| | 2009.09-2016.05 | 6MT | R | L/R | Estate 4WD CAGB;CJCB;CSUB | Date to:2011.08 | GDS82076 | Drive Shaft | | 42 | | 76.5 | 34 | 630 | |
| | 2009.09-2016.05 | 6MT | R | L/R | Estate 4WD CAGB;CJCB;CSUB | Date from:2011.09 | GDS83367 | Drive Shaft | | 42 | | 76.5 | 34 | 626 | |
| | 2009.09-2016.05 | 6MT | R | L/R | Estate 4WD CAGB;CJCB;CSUB | Date from:2011.09 | GCI83044 | Inner Joint | | | 25 | | | 26 | |
| | 2016.11-2018.07 | 6MT | F | L/R | Estate 4WD DEUB | For PR code:GH1 | GDS82074 | Drive Shaft | | 42 | | 76.5 | 34 | 462 | |
| | 2016.11-2018.07 | 6MT | F | L/R | Estate 4WD DEUB | For PR code:GH4,For vehicles with AWD & variable torque dist. | GDS82075 | Drive Shaft | | 42 | | 76.5 | 34 | 463 | |
| | 2016.11-2018.07 | AT | F | L/R | Estate 4WD DEUB | Date from:2017.01 | GCO83103 | Outer Joint | | 42 | 28 | 76.4 | 34 | 54 | I |
| | 2016.11-2018.07 | AT | F | L/R | Estate 4WD DEUB | Date from:2017.01 | GCI83022 | Inner Joint | | | 34 | | | 88.5 | |
| | 2016.11-2018.07 | 6MT | R | L | Estate 4WD DEUB | For PR code:GH4;For veh. with all-wheel drive & controlled clutch;Mounting Type:Bolted | GDS58134 | Drive Shaft | | 38 | | 59.5 | 34 | 653 | |

| | YEAR | TRANSM. | F/R | L/R | BODY STYLE & DRIVE TYPE & ENGINE | REMARKS | G-AP Ref. | PRODUCT | ABS | Technical Specifications A | B | C | H | L | P |
|---|---|---|---|---|---|---|---|---|---|---|---|---|---|---|---|
| **AUDI** | | | | | | | | | | | | | | | |
| **A4 Allroad Quattro** | | | | | | | | | | | | | | | |
| 2.0 (100 kw) | 2016.11-2018.07 | 6MT | R | R | Estate 4WD DEUB | For PR code:GH4;For veh. with all-wheel drive & controlled clutch;Mounting Type:Bolted | GDS58135 | Drive Shaft | | 38 | | 59.5 | 34 | 550 | |
| | 2016.11-2018.07 | 6MT | R | L/R | Estate 4WD DEUB | For PR code:GH1 | GDS82363 | Drive Shaft | | 38 | | 59.5 | 34 | 624 | |
| | 2016.11-2018.07 | 6MT | R | L/R | Estate 4WD DEUB | Rear differential with uncoupling feature;Without rear differential lock | GCI81751 | Outer Joint | | 38 | 33 | 59.5 | 34 | 78 | |
| | 2016.11-2018.07 | 6MT | R | L/R | Estate 4WD DEUB | For PR code:GH4;For veh. with all-wheel drive & controlled clutch;Mounting Type:Bolted | GCI81752 | Inner Joint | | | 33 | | | 34 | |
| 2.0 (105 kw) | 2009.09-2016.05 | 7AT/6MT | F | L/R | Estate 4WD CAGA;CJCA | For Engine code:CAGA | GDS83345 | Drive Shaft | | 42 | | 76.5 | 34 | 463 | |
| | 2009.09-2016.05 | 7AT/6MT | F | L/R | Estate 4WD CAGA;CJCA | For Engine code:CJCA | GDS83371 | Drive Shaft | | 42 | | 76.5 | 34 | 465 | |
| | 2009.09-2016.05 | 7AT/6MT | F | L/R | Estate 4WD CAGA;CJCA | For Engine Code:CAGA | GCO83086 | Outer Joint | | 42 | 33 | 76.5 | 34 | 45.5 | M |
| | 2009.09-2016.05 | 7AT/6MT | F | L/R | Estate 4WD CAGA;CJCA | For Engine Code:CJCA | GCO83107 | Outer Joint | | 42 | 25 | 76.5 | 34 | 47.5 | I |
| | 2009.09-2016.05 | 7AT/6MT | F | L/R | Estate 4WD CAGA;CJCA | TJ;Angular | GCI61070 | Inner Joint | | | 24 | | | 85 | |
| | 2009.09-2016.05 | 7AT/6MT | F | L/R | Estate 4WD CAGA;CJCA | AAR | GCI81054 | Inner Joint | | | 24 | | | 86 | |
| | 2009.09-2016.05 | AT/MT | F | L/R | Estate 4WD CAGA;CJCA | TJ;Round | GCI83022 | Inner Joint | | | 34 | | | 88.5 | |
| | 2009.09-2016.05 | 7AT/6MT | R | L/R | Estate 4WD CAGA;CJCA | Date to:2011.08 | GDS82076 | Drive Shaft | | 42 | | 76.5 | 34 | 630 | |
| | 2009.09-2016.05 | 7AT/6MT | R | L/R | Estate 4WD CAGA;CJCA | Date from:2011.09 | GDS83367 | Drive Shaft | | 42 | | 76.5 | 34 | 626 | |
| | 2009.09-2016.05 | 7AT/6MT | R | L/R | Estate 4WD CAGA;CJCA | Date from:2011.09 | GCI83040 | Outer Joint | | 42 | 25 | 76.5 | 34 | 66 | M |
| | 2009.09-2016.05 | 7AT/6MT | R | L/R | Estate 4WD CAGA;CJCA | Date to:2011.08 | GCO83086 | Outer Joint | | 42 | 33 | 76.5 | 34 | 45.5 | M |
| | 2009.09-2016.05 | 7AT/6MT | R | L/R | Estate 4WD CAGA;CJCA | Date to:2011.08 | GCI81618 | Inner Joint | | | 33 | | | 34 | |
| | 2009.09-2016.05 | 7AT/6MT | R | L/R | Estate 4WD CAGA;CJCA | Date from:2011.09 | GCI83044 | Inner Joint | | | 25 | | | 26 | |
| 2.0 (110 kw) | 2013.05-2016.05 | 6MT | F | L/R | Estate 4WD CJCD;CSUA | | GDS83371 | Drive Shaft | | 42 | | 76.5 | 34 | 465 | |
| | 2013.05-2016.05 | 6MT | F | L/R | Estate 4WD CJCD;CSUA | A4 Allroad Quattro | GCO83107 | Outer Joint | | 42 | 25 | 76.5 | 34 | 47.5 | I |
| | 2013.05-2016.05 | 6MT | F | L/R | Estate 4WD CJCD;CSUA | TJ | GCI61070 | Inner Joint | | | 24 | | | 85 | |
| | 2013.05-2016.05 | 6MT | F | L/R | Estate 4WD CJCD;CSUA | AAR | GCI81054 | Inner Joint | | | 24 | | | 86 | |
| | 2013.05-2016.05 | 6MT | F | L/R | Estate 4WD CJCD;CSUA | TJ | GCI83022 | Inner Joint | | | 34 | | | 88.5 | |
| | 2013.05-2016.05 | 6MT | R | L/R | Estate 4WD CJCD;CSUA | | GDS83367 | Drive Shaft | | 42 | | 76.5 | 34 | 626 | |
| | 2013.05-2016.05 | 6MT | R | L/R | Estate 4WD CJCD;CSUA | | GCI83040 | Outer Joint | | 42 | 25 | 76.5 | 34 | 66 | M |
| | 2013.05-2016.05 | 6MT | R | L/R | Estate 4WD CJCD;CSUA | | GCI83044 | Inner Joint | | | 25 | | | 26 | |
| | 2016.11-2019.10 | 6MT | F | L/R | Estate 4WD DEUA | For PR code:GH1 | GDS82074 | Drive Shaft | | 42 | | 76.5 | 34 | 462 | |
| | 2016.11-2019.10 | 6MT | F | L/R | Estate 4WD DEUA | For PR code:GH4;For vehicles with AWD & variable torque dist. | GDS82075 | Drive Shaft | | 42 | | 76.5 | 34 | 463 | |
| | 2016.11-2019.10 | AT | F | L/R | Estate 4WD DEUA | Date from:2017.01 | GCO83103 | Outer Joint | | 42 | 28 | 76.4 | 34 | 54 | I |
| | 2016.11-2019.10 | AT | F | L/R | Estate 4WD DEUA | Date from:2017.01 | GCI83022 | Inner Joint | | | 34 | | | 88.5 | |
| | 2016.11-2019.10 | 6MT | R | L | Estate 4WD DEUA | For PR code:GH4;For veh. with all-wheel drive & controlled clutch;Mounting Type:Bolted | GDS58134 | Drive Shaft | | 38 | | 59.5 | 34 | 653 | |
| | 2016.11-2019.10 | 6MT | R | R | Estate 4WD DEUA | For PR code:GH4;For veh. with all-wheel drive & controlled clutch;Mounting Type:Bolted | GDS58135 | Drive Shaft | | 38 | | 59.5 | 34 | 550 | |
| | 2016.11-2019.10 | 6MT | R | L/R | Estate 4WD DEUA | For PR code:GH1 | GDS82363 | Drive Shaft | | 38 | | 59.5 | 34 | 624 | |
| | 2016.11-2019.10 | 6MT | R | L/R | Estate 4WD DEUA | Rear differential with uncoupling feature;Without rear differential lock | GCI81751 | Outer Joint | | 38 | 33 | 59.5 | 34 | 78 | |
| | 2016.11-2019.10 | 6MT | R | L/R | Estate 4WD DEUA | For PR code:GH4;For veh. with all-wheel drive & controlled clutch;Mounting Type:Bolted | GCI81752 | Inner Joint | | | 33 | | | 34 | |
| 2.0 (120 kw) | 2009.04-2016.05 | 7AT/6MT | F | L/R | Estate 4WD CAHB;CGLD;CNHC | For Engine code:CGLD/CNHC | GDS83371 | Drive Shaft | | 42 | | 76.5 | 34 | 465 | |
| | 2009.04-2016.05 | 7AT/6MT | F | L/R | Estate 4WD CAHB;CGLD;CNHC | TJ | GCI61070 | Inner Joint | | | 24 | | | 85 | |
| | 2009.04-2016.05 | 7AT/6MT | F | L/R | Estate 4WD CAHB;CGLD;CNHC | AAR | GCI81054 | Inner Joint | | | 24 | | | 86 | |
| | 2009.04-2016.05 | AT/MT | F | L/R | Estate 4WD CAHB;CGLD;CNHC | For Engine code:CAHB | GDS83345 | Drive Shaft | | 42 | | 76.5 | 34 | 463 | |
| | 2009.04-2016.05 | AT/MT | F | L/R | Estate 4WD CAHB;CGLD;CNHC | For Engine code:CAHB | GCO83086 | Outer Joint | | 42 | 33 | 76.5 | 34 | 45.5 | M |
| | 2009.04-2016.05 | MT | F | L/R | Estate 4WD CAHB;CGLD;CNHC | Date from:2012.01 | GCI83022 | Inner Joint | | | 34 | | | 88.5 | |
| | 2009.04-2016.05 | | F | L/R | Estate 4WD CAHB;CGLD;CNHC | Date From:2012.08;For Engine Code:CGLD/CNHC | GCO83107 | Outer Joint | | 42 | 25 | 76.5 | 34 | 47.5 | I |
| | 2009.04-2016.05 | 7AT/6MT | R | L/R | Estate 4WD CAHB;CGLD;CNHC | Date to:2011.08 | GDS82076 | Drive Shaft | | 42 | | 76.5 | 34 | 630 | |
| | 2009.04-2016.05 | 7AT/6MT | R | L/R | Estate 4WD CAHB;CGLD;CNHC | Date from:2011.09 | GDS83367 | Drive Shaft | | 42 | | 76.5 | 34 | 626 | |
| | 2009.04-2016.05 | 7AT/6MT | R | L/R | Estate 4WD CAHB;CGLD;CNHC | Date from:2011.09 | GCI83044 | Inner Joint | | | 25 | | | 26 | |
| | 2016.05-2019.10 | 7AT | F | L/R | Estate 4WD DETB | For PR code:GH1 | GDS82074 | Drive Shaft | | 42 | | 76.5 | 34 | 462 | |
| | 2016.05-2019.10 | 7DCT | F | L/R | Estate 4WD DETB | For PR code:GH4;For vehicles with AWD & variable torque dist. | GDS82075 | Drive Shaft | | 42 | | 76.5 | 34 | 463 | |
| | 2016.05-2019.10 | AT | F | L/R | Estate 4WD DETB | For PR code:GH1/GH2/GH4 | GCO83103 | Outer Joint | | 42 | 28 | 76.4 | 34 | 54 | I |
| | 2016.05-2019.10 | AT | F | L/R | Estate 4WD DETB | For PR code:GH1/GH2/GH4 | GCI83022 | Inner Joint | | | 34 | | | 88.5 | |
| | 2016.05-2019.10 | 7DCT | R | L | Estate 4WD DETB | For PR code:GH4;For veh. with all-wheel drive & controlled clutch;Mounting Type:Bolted | GDS58134 | Drive Shaft | | 38 | | 59.5 | 34 | 653 | |
| | 2016.05-2019.10 | 7DCT | R | R | Estate 4WD DETB | For PR code:GH4;For veh. with all-wheel drive & controlled clutch;Mounting Type:Bolted | GDS58135 | Drive Shaft | | 38 | | 59.5 | 34 | 550 | |
| | 2016.05-2019.10 | 7DCT | R | L/R | Estate 4WD DETB | For PR code:GH1 | GDS82363 | Drive Shaft | | 38 | | 59.5 | 34 | 624 | |
| | 2016.05-2019.10 | 7DCT | R | L/R | Estate 4WD DETB | Rear differential with uncoupling feature;Without rear differential lock | GCI81751 | Outer Joint | | 38 | 33 | 59.5 | 34 | 78 | |
| | 2016.05-2019.10 | 7DCT | R | L/R | Estate 4WD DETB | For PR code:GH4;For veh. with all-wheel drive & controlled clutch;Mounting Type:Bolted | GCI81752 | Inner Joint | | | 33 | | | 34 | |
| 2.0 (125 kw) | 2009.04-2016.05 | 6MT | F | L/R | Estate 4WD CAHA | | GDS83345 | Drive Shaft | | 42 | | 76.5 | 34 | 463 | |
| | 2009.04-2016.05 | 6MT | F | L/R | Estate 4WD CAHA | | GCO83086 | Outer Joint | | 42 | 33 | 76.5 | 34 | 45.5 | M |
| | 2009.04-2016.05 | 6MT | F | L/R | Estate 4WD CAHA | | GCI61070 | Inner Joint | | | 24 | | | 85 | |
| | 2009.04-2016.05 | 6MT | F | L/R | Estate 4WD CAHA | | GCI83022 | Inner Joint | | | 34 | | | 88.5 | |
| | 2009.04-2016.05 | 6MT | R | L/R | Estate 4WD CAHA | Date to:2011.08 | GDS82076 | Drive Shaft | | 42 | | 76.5 | 34 | 630 | |
| | 2009.04-2016.05 | 6MT | R | L/R | Estate 4WD CAHA | Date from:2011.09 | GDS83367 | Drive Shaft | | 42 | | 76.5 | 34 | 626 | |
| | 2009.04-2016.05 | 6MT | R | L/R | Estate 4WD CAHA | Date from:2011.09 | GCI83040 | Outer Joint | | 42 | 25 | 76.5 | 34 | 66 | M |
| | 2009.04-2016.05 | 6MT | R | L/R | Estate 4WD CAHA | Date to:2011.08 | GCO83086 | Outer Joint | | 42 | 33 | 76.5 | 34 | 45.5 | M |
| | 2009.04-2016.05 | 6MT | R | L/R | Estate 4WD CAHA | Date to:2011.08 | GCI81618 | Inner Joint | | | 33 | | | 34 | |
| | 2009.04-2016.05 | 6MT | R | L/R | Estate 4WD CAHA | Date from:2011.09 | GCI83044 | Inner Joint | | | 25 | | | 26 | |
| 2.0 (130 kw) | 2011.11-2016.05 | 7AT/6MT | F | L/R | Estate 4WD CGLC | | GDS83371 | Drive Shaft | | 42 | | 76.5 | 34 | 465 | |
| | 2011.11-2016.05 | 7AT/6MT | F | L/R | Estate 4WD CGLC | | GCO83107 | Outer Joint | | 42 | 25 | 76.5 | 34 | 47.5 | I |

| | YEAR | TRANSM. | F/R | L/R | BODY STYLE & DRIVE TYPE & ENGINE | REMARKS | G-AP Ref. | PRODUCT | ABS | Technical Specifications A | B | C | H | L | P |
|---|---|---|---|---|---|---|---|---|---|---|---|---|---|---|---|
| **AUDI** | | | | | | | | | | | | | | | |
| **A4 Allroad Quattro** | | | | | | | | | | | | | | | |
| 2.0 (130 kw) | 2011.11-2016.05 | 7AT/6MT | F | L/R | Estate 4WD CGLC | TJ | GCI61070 | Inner Joint | | | 24 | | | 85 | |
| | 2011.11-2016.05 | 7AT/6MT | F | L/R | Estate 4WD CGLC | AAR | GCI81054 | Inner Joint | | | 24 | | | 86 | |
| | 2011.11-2016.05 | 7AT/6MT | R | L/R | Estate 4WD CGLC | | GDS83367 | Drive Shaft | | 42 | | 76.5 | 34 | 626 | |
| | 2011.11-2016.05 | 7AT/6MT | R | L/R | Estate 4WD CGLC | | GCI83040 | Outer Joint | | 42 | 25 | 76.5 | 34 | 66 | M |
| | 2011.11-2016.05 | 7AT/6MT | R | L/R | Estate 4WD CGLC | | GCI83044 | Inner Joint | | | 25 | | | 26 | |
| 2.0 (140 kw) | 2013.09-2016.05 | 7AT/6MT | F | L/R | Estate 4WD CNHA | | GDS83371 | Drive Shaft | | 42 | | 76.5 | 34 | 465 | |
| | 2013.09-2016.05 | 7AT/6MT | F | L/R | Estate 4WD CNHA | | GCO83107 | Outer Joint | | 42 | 25 | 76.5 | 34 | 47.5 | I |
| | 2013.09-2016.05 | 7AT/6MT | F | L/R | Estate 4WD CNHA | TJ | GCI61070 | Inner Joint | | | 24 | | | 85 | |
| | 2013.09-2016.05 | 7AT/6MT | F | L/R | Estate 4WD CNHA | AAR | GCI81054 | Inner Joint | | | 24 | | | 86 | |
| | 2013.09-2016.05 | 7AT/6MT | R | L/R | Estate 4WD CNHA | | GDS83367 | Drive Shaft | | 42 | | 76.5 | 34 | 626 | |
| | 2013.09-2016.05 | 7AT/6MT | R | L/R | Estate 4WD CNHA | | GCI83040 | Outer Joint | | 42 | 25 | 76.5 | 34 | 66 | M |
| | 2013.09-2016.05 | 7AT/6MT | R | L/R | Estate 4WD CNHA | | GCI83044 | Inner Joint | | | 25 | | | 26 | |
| | 2016.01-2019.12 | 6MT/7DCT | F | L/R | Estate 4WD DESA;DETA;DFVA | For PR code:GH4,For vehicles with AWD & variable torque dist. | GDS82075 | Drive Shaft | | 42 | | 76.5 | 34 | 463 | |
| | 2016.01-2019.12 | 7AT/6MT | F | L/R | Estate 4WD DESA;DETA;DFVA | Date From:2016.02,For PR code:GH1 | GDS82074 | Drive Shaft | | 42 | | 76.5 | 34 | 462 | |
| | 2016.01-2019.12 | AT | F | L/R | Estate 4WD DESA;DETA;DFVA | For PR code:GH1/GH2/GH4 | GCO83103 | Outer Joint | | 42 | 28 | 76.4 | 34 | 54 | I |
| | 2016.01-2019.12 | AT | F | L/R | Estate 4WD DESA;DETA;DFVA | For PR code:GH1/GH2/GH4 | GCI83022 | Inner Joint | | | 34 | | | 88.5 | |
| | 2016.01-2019.12 | 6MT/7DCT | R | L/R | Estate 4WD DESA;DETA;DFVA | For PR code:GH1 | GDS82363 | Drive Shaft | | 38 | | 59.5 | 34 | 624 | |
| | 2016.01-2019.12 | 7DCT/6MT | R | L | Estate 4WD DESA;DETA;DFVA | For PR code:GH4,For veh. with all-wheel drive & controlled clutch;Mounting Type:Bolted | GDS58134 | Drive Shaft | | 38 | | 59.5 | 34 | 653 | |
| | 2016.01-2019.12 | 7DCT/6MT | R | R | Estate 4WD DESA;DETA;DFVA | For PR code:GH4,For veh. with all-wheel drive & controlled clutch;Mounting Type:Bolted | GDS58135 | Drive Shaft | | 38 | | 59.5 | 34 | 550 | |
| | 2016.01-2019.12 | 7DCT/6MT | R | L/R | Estate 4WD DESA;DETA;DFVA | Rear differential with uncoupling feature;Without rear differential lock | GCI81751 | Outer Joint | | 38 | 33 | 59.5 | 34 | 78 | |
| | 2016.01-2019.12 | 7DCT/6MT | R | L/R | Estate 4WD DESA;DETA;DFVA | For PR code:GH4,For veh. with all-wheel drive & controlled clutch;Mounting Type:Bolted | GCI81752 | Inner Joint | | | 33 | | | 34 | |
| | 2020.01- | 7DCT | F | L/R | Estate 4WD DETA | Without rear differential lock | GDS82074 | Drive Shaft | | 42 | | 76.5 | 34 | 462 | |
| | 2020.01- | 7DCT | F | L/R | Estate 4WD DETA | Rear differential with uncoupling feature | GDS82075 | Drive Shaft | | 42 | | 76.5 | 34 | 463 | |
| | 2020.01- | 7AT/6MT | R | L/R | Estate 4WD DETA | | GCI81751 | Outer Joint | | 38 | 33 | 59.5 | 34 | 78 | |
| | 2020.01- | 7DCT/6MT | R | L/R | Estate 4WD DETA | Without rear differential lock | GDS82363 | Drive Shaft | | 38 | | 59.5 | 34 | 624 | |
| 2.0 (150 kw) | 2020.09- | 7DCT | F | L/R | Estate 4WD DTPA | For PR code:GH1 | GDS82074 | Drive Shaft | | 42 | | 76.5 | 34 | 462 | |
| | 2020.09- | 7DCT | F | L/R | Estate 4WD DTPA | For PR code:GH4,For veh. with all-wheel drive & controlled clutch | GDS82075 | Drive Shaft | | 42 | | 76.5 | 34 | 463 | |
| | 2020.09- | 6MT | R | L | Estate 4WD DTPA | For PR code:GH4,For veh. with all-wheel drive & controlled clutch;Mounting Type:Bolted | GDS58134 | Drive Shaft | | 38 | | 59.5 | 34 | 653 | |
| | 2020.09- | 6MT | R | R | Estate 4WD DTPA | For PR code:GH4,For veh. with all-wheel drive & controlled clutch;Mounting Type:Bolted | GDS58135 | Drive Shaft | | 38 | | 59.5 | 34 | 550 | |
| | 2020.09- | 6MT | R | L/R | Estate 4WD DTPA | For PR code:GH4,For veh. with all-wheel drive & controlled clutch;Mounting Type:Bolted | GCI81752 | Inner Joint | | | 33 | | | 34 | |
| | 2020.09- | 7DCT | R | L/R | Estate 4WD DTPA | For PR code:GH1 | GDS82363 | Drive Shaft | | 38 | | 59.5 | 34 | 624 | |
| | 2020.09- | 7DCT | R | L/R | Estate 4WD DTPA | Rear differential with uncoupling feature;Without rear differential lock | GCI81751 | Outer Joint | | 38 | 33 | 59.5 | 34 | 78 | |
| 2.0 (155 kw) | 2009.04-2016.05 | 7AT/8AT/6MT | F | L/R | Estate 4WD CDNC;CPMA | [illegible] | GDS83345 | Drive Shaft | | 42 | | 76.5 | 34 | 463 | |
| | 2009.04-2016.05 | 7AT/8AT/6MT | F | L/R | Estate 4WD CDNC;CPMA | [illegible] | GDS83371 | Drive Shaft | | 42 | | 76.5 | 34 | 465 | |
| | 2009.04-2016.05 | 7AT/8AT/6MT | F | L/R | Estate 4WD CDNC;CPMA | TJ | GCI61070 | Inner Joint | | | 24 | | | 85 | |
| | 2009.04-2016.05 | 7AT/8AT/6MT | F | L/R | Estate 4WD CDNC;CPMA | AAR | GCI81054 | Inner Joint | | | 24 | | | 86 | |
| | 2009.04-2016.05 | MT | F | L/R | Estate 4WD CDNC;CPMA | | GCI83022 | Inner Joint | | | 34 | | | 88.5 | |
| | 2009.04-2016.05 | | F | L/R | Estate 4WD CDNC;CPMA | Date From:2012.08 | GCO83107 | Outer Joint | | 42 | 25 | 76.5 | 34 | 47.5 | I |
| | 2009.04-2016.05 | 6MT/7AT/8AT | R | L/R | Estate 4WD CDNC;CPMA | Date to:2011.08 | GDS82076 | Drive Shaft | | 42 | | 76.5 | 34 | 630 | |
| | 2009.04-2016.05 | 6MT/7AT/8AT | R | L/R | Estate 4WD CDNC;CPMA | Date from:2011.09 | GDS83367 | Drive Shaft | | 42 | | 76.5 | 34 | 626 | |
| | 2009.04-2016.05 | 7AT/6MT | R | L/R | Estate 4WD CDNC;CPMA | Date from:2011.09 | GCI83044 | Inner Joint | | | 25 | | | 26 | |
| | 2009.04-2016.05 | AT/MT | R | L/R | Estate 4WD CDNC;CPMA | | GCO83086 | Outer Joint | | 42 | 33 | 76.5 | 34 | 45.5 | M |
| 2.0 (162 kw) | 2013.05-2016.05 | 8AT | F | L/R | Estate 4WD CPMB | | GDS83371 | Drive Shaft | | 42 | | 76.5 | 34 | 465 | |
| | 2013.05-2016.05 | AT/MT | F | L/R | Estate 4WD CPMB | | GCI81054 | Inner Joint | | | 24 | | | 86 | |
| | 2013.05-2016.05 | AT/MT | F | L/R | Estate 4WD CPMB | | GCI83022 | Inner Joint | | | 34 | | | 88.5 | |
| | 2013.05-2016.05 | | F | L/R | Estate 4WD CPMB | Date From:2012.08 | GCO83107 | Outer Joint | | 42 | 25 | 76.5 | 34 | 47.5 | I |
| | 2013.05-2016.05 | 8AT | R | L/R | Estate 4WD CPMB | | GDS83367 | Drive Shaft | | 42 | | 76.5 | 34 | 626 | |
| | 2013.05-2016.05 | 8AT | R | L/R | Estate 4WD CPMB | | GCI83044 | Inner Joint | | | 25 | | | 26 | |
| | 2013.05-2016.05 | AT/MT | R | L/R | Estate 4WD CPMB | | GCO83086 | Outer Joint | | 42 | 33 | 76.5 | 34 | 45.5 | M |
| 2.0 (165 kw) | 2013.05-2016.05 | AT/MT | F | L/R | Estate 4WD CNCD | | GCI81054 | Inner Joint | | | 24 | | | 86 | |
| | 2013.05-2016.05 | AT/MT | F | L/R | Estate 4WD CNCD | | GCI83022 | Inner Joint | | | 34 | | | 88.5 | |
| | 2013.05-2016.05 | CVT/7AT/6MT | F | L/R | Estate 4WD CNCD | | GDS83371 | Drive Shaft | | 42 | | 76.5 | 34 | 465 | |
| | 2013.05-2016.05 | | F | L/R | Estate 4WD CNCD | Date From:2012.08 | GCO83107 | Outer Joint | | 42 | 25 | 76.5 | 34 | 47.5 | I |
| | 2013.05-2016.05 | 7AT/6MT | R | L/R | Estate 4WD CNCD | | GCI83044 | Inner Joint | | | 25 | | | 26 | |
| | 2013.05-2016.05 | AT/MT | R | L/R | Estate 4WD CNCD | | GCO83086 | Outer Joint | | 42 | 33 | 76.5 | 34 | 45.5 | M |
| | 2013.05-2016.05 | CVT/7AT/6MT | R | L/R | Estate 4WD CNCD | | GDS83367 | Drive Shaft | | 42 | | 76.5 | 34 | 626 | |
| 2.0 (180 kw) | 2018.07- | 7AT | F | L/R | Estate 4WD DKNA | For PR code:GH1 | GDS82074 | Drive Shaft | | 42 | | 76.5 | 34 | 462 | |
| | 2018.07- | 7DCT | F | L/R | Estate 4WD DKNA | For PR code:GH4,For vehicles with AWD & variable torque dist. | GDS82075 | Drive Shaft | | 42 | | 76.5 | 34 | 463 | |
| | 2018.07- | AT | F | L/R | Estate 4WD DKNA | Date from:2019.01;For PR code:GH1/GH2/GH4 | GCO83103 | Outer Joint | | 42 | 28 | 76.4 | 34 | 54 | I |
| | 2018.07- | AT | F | L/R | Estate 4WD DKNA | Date from:2019.01;For PR code:GH1/GH2/GH4 | GCI83022 | Inner Joint | | | 34 | | | 88.5 | |
| | 2018.07- | 7DCT | R | L | Estate 4WD DKNA | For PR code:GH4,For veh. with all-wheel drive & controlled clutch;Mounting Type:Bolted | GDS58134 | Drive Shaft | | 38 | | 59.5 | 34 | 653 | |
| | 2018.07- | 7DCT | R | R | Estate 4WD DKNA | For PR code:GH4,For veh. with all-wheel drive & controlled clutch;Mounting Type:Bolted | GDS58135 | Drive Shaft | | 38 | | 59.5 | 34 | 550 | |
| | 2018.07- | 7DCT | R | L/R | Estate 4WD DKNA | For PR code:GH1 | GDS82363 | Drive Shaft | | 38 | | 59.5 | 34 | 624 | |
| | 2018.07- | 7DCT | R | L/R | Estate 4WD DKNA | Rear differential with uncoupling feature;Without rear differential lock | GCI81751 | Outer Joint | | 38 | 33 | 59.5 | 34 | 78 | |
| | 2018.07- | 7DCT | R | L/R | Estate 4WD DKNA | For PR code:GH4,For veh. with all-wheel drive & controlled clutch;Mounting Type:Bolted | GCI81752 | Inner Joint | | | 33 | | | 34 | |

| | YEAR | TRANSM. | F/R | L/R | BODY STYLE & DRIVE TYPE & ENGINE | REMARKS | G-AP Ref. | PRODUCT | ABS | Technical Specifications A | B | C | H | L | P |
|---|---|---|---|---|---|---|---|---|---|---|---|---|---|---|---|
| **AUDI** | | | | | | | | | | | | | | | |
| **A4 Allroad Quattro** | | | | | | | | | | | | | | | |
| 2.0 (183 kw) | 2016.05-2019.10 | 7AT | F | L/R | Estate 4WD CYRC | For PR code:GH1 | GDS82074 | Drive Shaft | | 42 | | 76.5 | 34 | 462 | |
| | 2016.05-2019.10 | 7DCT | F | L/R | Estate 4WD CYRC | For PR code:GH4,For vehicles with AWD & variable torque dist. | GDS82075 | Drive Shaft | | 42 | | 76.5 | 34 | 463 | |
| | 2016.05-2019.10 | AT | F | L/R | Estate 4WD CYRC | For PR code:GH1/GH2/GH4 | GCO83103 | Outer Joint | | 42 | 28 | 76.4 | 34 | 54 | I |
| | 2016.05-2019.10 | AT | F | L/R | Estate 4WD CYRC | For PR code:GH1/GH2/GH4 | GCI83022 | Inner Joint | | | 34 | | | 88.5 | |
| | 2016.05-2019.10 | 7DCT | R | L | Estate 4WD CYRC | For PR code:GH4;For veh. with all-wheel drive & controlled clutch;Mounting Type:Bolted | GDS58134 | Drive Shaft | | 38 | | 59.5 | 34 | 653 | |
| | 2016.05-2019.10 | 7DCT | R | R | Estate 4WD CYRC | For PR code:GH4;For veh. with all-wheel drive & controlled clutch;Mounting Type:Bolted | GDS58135 | Drive Shaft | | 38 | | 59.5 | 34 | 550 | |
| | 2016.05-2019.10 | 7DCT | R | L/R | Estate 4WD CYRC | For PR code:GH1 | GDS82363 | Drive Shaft | | 38 | | 59.5 | 34 | 624 | |
| | 2016.05-2019.10 | 7DCT | R | L/R | Estate 4WD CYRC | Rear differential with uncoupling feature;Without rear differential lock | GCI81751 | Outer Joint | | 38 | 33 | 59.5 | 34 | 78 | |
| | 2016.05-2019.10 | 7DCT | R | L/R | Estate 4WD CYRC | For PR code:GH4;For veh. with all-wheel drive & controlled clutch;Mounting Type:Bolted | GCI81752 | Inner Joint | | | 33 | | | 34 | |
| 2.0 (185 kw) | 2016.01- | 7AT | F | L/R | Estate 4WD CYRB;CYMC;DLHB | Date From:2016.02,For PR code:GH1 | GDS82074 | Drive Shaft | | 42 | | 76.5 | 34 | 462 | |
| | 2016.01- | 7DCT | F | L/R | Estate 4WD CYRB;CYMC;DLHB | For PR code:GH4,For vehicles with AWD & variable torque dist. | GDS82075 | Drive Shaft | | 42 | | 76.5 | 34 | 463 | |
| | 2016.01- | AT | F | L/R | Estate 4WD CYRB;CYMC;DLHB | For PR code:GH1/GH2/GH4 | GCO83103 | Outer Joint | | 42 | 28 | 76.4 | 34 | 54 | I |
| | 2016.01- | AT | F | L/R | Estate 4WD CYRB;CYMC;DLHB | For PR code:GH1/GH2/GH4 | GCI83022 | Inner Joint | | | 34 | | | 88.5 | |
| | 2016.01- | 7DCT | R | L | Estate 4WD CYRB;CYMC;DLHB | For PR code:GH4;For veh. with all-wheel drive & controlled clutch;Mounting Type:Bolted | GDS58134 | Drive Shaft | | 38 | | 59.5 | 34 | 653 | |
| | 2016.01- | 7DCT | R | R | Estate 4WD CYRB;CYMC;DLHB | For PR code:GH4;For veh. with all-wheel drive & controlled clutch;Mounting Type:Bolted | GDS58135 | Drive Shaft | | 38 | | 59.5 | 34 | 550 | |
| | 2016.01- | 7DCT | R | L/R | Estate 4WD CYRB;CYMC;DLHB | For PR code:GH1 | GDS82363 | Drive Shaft | | 38 | | 59.5 | 34 | 624 | |
| | 2016.01- | 7DCT | R | L/R | Estate 4WD CYRB;CYMC;DLHB | Rear differential with uncoupling feature;Without rear differential lock | GCI81751 | Outer Joint | | 38 | 33 | 59.5 | 34 | 78 | |
| | 2016.01- | 7DCT | R | L/R | Estate 4WD CYRB;CYMC;DLHB | For PR code:GH4;For veh. with all-wheel drive & controlled clutch;Mounting Type:Bolted | GCI81752 | Inner Joint | | | 33 | | | 34 | |
| | 2018.11-2019.10 | 7AT | F | L/R | Estate 4WD DDWA | For PR code:GH1 | GDS82074 | Drive Shaft | | 42 | | 76.5 | 34 | 462 | |
| | 2018.11-2019.10 | 7DCT | F | L/R | Estate 4WD DDWA | For PR code:GH4,For vehicles with AWD & variable torque dist. | GDS82075 | Drive Shaft | | 42 | | 76.5 | 34 | 463 | |
| | 2018.11-2019.10 | AT | F | L/R | Estate 4WD DDWA | Date from:2019.01,For PR code:GH1/GH2/GH4 | GCO83103 | Outer Joint | | 42 | 28 | 76.4 | 34 | 54 | I |
| | 2018.11-2019.10 | AT | F | L/R | Estate 4WD DDWA | Date from:2019.01,For PR code:GH1/GH2/GH4 | GCI83022 | Inner Joint | | | 34 | | | 88.5 | |
| | 2018.11-2019.10 | 7DCT | R | L | Estate 4WD DDWA | For PR code:GH4;For veh. with all-wheel drive & controlled clutch;Mounting Type:Bolted | GDS58134 | Drive Shaft | | 38 | | 59.5 | 34 | 653 | |
| | 2018.11-2019.10 | 7DCT | R | R | Estate 4WD DDWA | For PR code:GH4;For veh. with all-wheel drive & controlled clutch;Mounting Type:Bolted | GDS58135 | Drive Shaft | | 38 | | 59.5 | 34 | 550 | |
| | 2018.11-2019.10 | 7DCT | R | L/R | Estate 4WD DDWA | For PR code:GH1 | GDS82363 | Drive Shaft | | 38 | | 59.5 | 34 | 624 | |
| | 2018.11-2019.10 | 7DCT | R | L/R | Estate 4WD DDWA | Rear differential with uncoupling feature;Without rear differential lock | GCI81751 | Outer Joint | | 38 | 33 | 59.5 | 34 | 78 | |
| | 2018.11-2019.10 | 7DCT | R | L/R | Estate 4WD DDWA | For PR code:GH4;For veh. with all-wheel drive & controlled clutch;Mounting Type:Bolted | GCI81752 | Inner Joint | | | 33 | | | 34 | |
| 2.0 (195 kw) | 2020.08- | 7DCT | F | L/R | Estate 4WD DMTA;DPAA | For PR code:GH1 | GDS82074 | Drive Shaft | | 42 | | 76.5 | 34 | 462 | |
| | 2020.08- | 7DCT | F | L/R | Estate 4WD DMTA;DPAA | For PR code:GH4,For veh. with all-wheel drive & controlled clutch | GDS82075 | Drive Shaft | | 42 | | 76.5 | 34 | 463 | |
| | 2020.08- | 7DCT | R | L | Estate 4WD DMTA;DPAA | For PR code:GH4;For veh. with all-wheel drive & controlled clutch;Mounting Type:Bolted | GDS58134 | Drive Shaft | | 38 | | 59.5 | 34 | 653 | |
| | 2020.08- | 7DCT | R | R | Estate 4WD DMTA;DPAA | For PR code:GH4;For veh. with all-wheel drive & controlled clutch;Mounting Type:Bolted | GDS58135 | Drive Shaft | | 38 | | 59.5 | 34 | 550 | |
| | 2020.08- | 7DCT | R | L/R | Estate 4WD DMTA;DPAA | For PR code:GH1 | GDS82363 | Drive Shaft | | 38 | | 59.5 | 34 | 624 | |
| | 2020.08- | 7DCT | R | L/R | Estate 4WD DMTA;DPAA | Rear differential with uncoupling feature;Without rear differential lock | GCI81751 | Outer Joint | | 38 | 33 | 59.5 | 34 | 78 | |
| | 2020.08- | 7DCT | R | L/R | Estate 4WD DMTA;DPAA | For PR code:GH4;For veh. with all-wheel drive & controlled clutch;Mounting Type:Bolted | GCI81752 | Inner Joint | | | 33 | | | 34 | |
| 3.0 (160 kw) | 2016.01-2018.08 | 7DCT | F | L/R | Estate 4WD CSWB | | GDS82075 | Drive Shaft | | 42 | | 76.5 | 34 | 463 | |
| | 2016.01-2018.08 | AT | F | L/R | Estate 4WD CSWB | | GCO83103 | Outer Joint | | 42 | 28 | 76.4 | 34 | 54 | I |
| | 2016.01-2018.08 | AT | F | L/R | Estate 4WD CSWB | | GCI83022 | Inner Joint | | | 34 | | | 88.5 | |
| | 2016.01-2018.08 | 7AT | R | L/R | Estate 4WD CSWB | For PR code:GH1 | GDS82252 | Drive Shaft | | 38 | | 59.5 | 34 | 627 | |
| | 2016.01-2018.08 | 7DCT | R | L/R | Estate 4WD CSWB | Rear differential Torque Vectoring;Without rear differential lock | GCI81702 | Outer Joint | | 38 | 28 | 59.5 | 34 | 81.5 | |
| | 2016.01-2018.08 | AT | R | L | Estate 4WD CSWB | For PR code:GH2;For vehicles with AWD & variable torque dist;Mounting Type:Bolted | GDS58136 | Drive Shaft | | 38 | | 59.5 | 34 | 586 | |
| | 2016.01-2018.08 | AT | R | R | Estate 4WD CSWB | For PR code:GH2;For vehicles with AWD & variable torque dist;Mounting Type:Bolted | GDS58137 | Drive Shaft | | 38 | | 59.5 | 34 | 545 | |
| | 2016.01-2018.08 | AT | R | L/R | Estate 4WD CSWB | For PR code:GH2;For vehicles with AWD & variable torque dist;Mounting Type:Bolted | GCI84020 | Inner Joint | | | 28 | | | 32 | |
| 3.0 (170 kw) | 2018.07- | 8AT | F | L/R | Estate 4WD DCPE | | GDS82075 | Drive Shaft | | 42 | | 76.5 | 34 | 463 | |
| | 2018.07- | AT | F | L/R | Estate 4WD DCPE | Date from:2019.01 | GCO83103 | Outer Joint | | 42 | 28 | 76.4 | 34 | 54 | I |
| | 2018.07- | AT | F | L/R | Estate 4WD DCPE | Date from:2019.01 | GCI83022 | Inner Joint | | | 34 | | | 88.5 | |
| | 2018.07- | 8AT | R | L/R | Estate 4WD DCPE | Rear differential Torque Vectoring;Without rear differential lock | GCI81702 | Outer Joint | | 38 | 28 | 59.5 | 34 | 81.5 | |
| | 2018.07- | AT | R | L | Estate 4WD DCPE | For PR code:GH2;For vehicles with AWD & variable torque dist;Mounting Type:Bolted | GDS58136 | Drive Shaft | | 38 | | 59.5 | 34 | 586 | |
| | 2018.07- | AT | R | R | Estate 4WD DCPE | For PR code:GH2;For vehicles with AWD & variable torque dist;Mounting Type:Bolted | GDS58137 | Drive Shaft | | 38 | | 59.5 | 34 | 545 | |
| | 2018.07- | AT | R | L/R | Estate 4WD DCPE | For PR code:GH2;For vehicles with AWD & variable torque dist;Mounting Type:Bolted | GCI84020 | Inner Joint | | | 28 | | | 32 | |
| | 2018.07- | | R | L/R | Estate 4WD DCPE | For PR code:GH1 | GDS82252 | Drive Shaft | | 38 | | 59.5 | 34 | 627 | |
| 3.0 (176 kw) | 2009.04-2012.01 | 7AT/6MT | F | L/R | Estate 4WD CCWA | | GDS83291 | Drive Shaft | | 42 | | 76.4 | 34 | 464 | |
| | 2009.04-2012.01 | 7AT/6MT | F | L/R | Estate 4WD CCWA | | GCO83087 | Outer Joint | | 42 | 27 | 76.5 | 34 | 57 | M |
| | 2009.04-2012.01 | 7AT/6MT | F | L/R | Estate 4WD CCWA | | GCI83022 | Inner Joint | | | 34 | | | 88.5 | |
| | 2009.04-2012.01 | 7AT/6MT | R | L/R | Estate 4WD CCWA | Date to:2011.05 | GDS81894 | Drive Shaft | | 42 | | 76.5 | 34 | 630 | |
| | 2009.04-2012.01 | 7AT/6MT | R | L/R | Estate 4WD CCWA | Date from:2011.06 | GDS82080 | Drive Shaft | | 42 | | 76.5 | 34 | 629 | |
| | 2009.04-2012.01 | 7AT/6MT | R | L/R | Estate 4WD CCWA | Date to:2011.05 | GCO83087 | Outer Joint | | 42 | 27 | 76.5 | 34 | 57 | M |
| | 2009.04-2012.01 | 7AT/6MT | R | L/R | Estate 4WD CCWA | Date to:2011.05 | GCI61069 | Inner Joint | | | 28 | | | 32 | |
| | 2009.04-2012.01 | 7AT/6MT | R | L/R | Estate 4WD CCWA | Date From:2011.06 | GCI61107 | Inner Joint | | 42 | 28 | 76.5 | 34 | 82 | |
| | 2009.04-2012.01 | 7AT/6MT | R | L/R | Estate 4WD CCWA | Date From:2011.06 | GCI81610 | Inner Joint | | | 28 | | | 28 | |
| 3.0 (180 kw) | 2012.01-2016.05 | 7AT | F | L/R | Estate 4WD CDUC;CKVB;CKVC | | GDS83291 | Drive Shaft | | 42 | | 76.4 | 34 | 464 | |
| | 2012.01-2016.05 | 7AT | F | L/R | Estate 4WD CDUC;CKVB;CKVC | | GCO83103 | Outer Joint | | 42 | 28 | 76.4 | 34 | 54 | I |
| | 2012.01-2016.05 | 7AT | F | L/R | Estate 4WD CDUC;CKVB;CKVC | | GCI83022 | Inner Joint | | | 34 | | | 88.5 | |
| | 2012.01-2016.05 | 7AT | R | L/R | Estate 4WD CDUC;CKVB;CKVC | | GDS82080 | Drive Shaft | | 42 | | 76.5 | 34 | 629 | |
| | 2012.01-2016.05 | 7AT | R | L/R | Estate 4WD CDUC;CKVB;CKVC | | GCI61107 | Inner Joint | | 42 | 28 | 76.5 | 34 | 82 | |
| | 2012.01-2016.05 | 7AT | R | L/R | Estate 4WD CDUC;CKVB;CKVC | | GCI81610 | Inner Joint | | | 28 | | | 28 | |

| | YEAR | TRANSM. | F/R | L/R | BODY STYLE & DRIVE TYPE & ENGINE | REMARKS | G-AP Ref. | PRODUCT | ABS | Technical Specifications A | B | C | H | L | P |
|---|---|---|---|---|---|---|---|---|---|---|---|---|---|---|---|
| **AUDI** | | | | | | | | | | | | | | | |
| **A4 Allroad Quattro** | | | | | | | | | | | | | | | |
| 3.0 (200 kw) | 2016.01-2018.08 | 8AT | F | L/R | Estate 4WD CRTC | | GDS82075 | Drive Shaft | | 42 | | 76.5 | 34 | 463 | |
| | 2016.01-2018.08 | AT | F | L/R | Estate 4WD CRTC | | GCO83103 | Outer Joint | | 42 | 28 | 76.4 | 34 | 54 | I |
| | 2016.01-2018.08 | AT | F | L/R | Estate 4WD CRTC | | GCI83022 | Inner Joint | | | 34 | | | 88.5 | |
| | 2016.01-2018.08 | 8AT | R | L/R | Estate 4WD CRTC | For PR code:GH1 | GDS82252 | Drive Shaft | | 38 | | 59.5 | 34 | 627 | |
| | 2016.01-2018.08 | 8AT | R | L/R | Estate 4WD CRTC | Rear differential Torque Vectoring;Without rear differential lock | GCI81702 | Outer Joint | | 38 | 28 | 59.5 | 34 | 81.5 | |
| | 2016.01-2018.08 | AT | R | L | Estate 4WD CRTC | For PR code:GH2;For vehicles with AWD & variable torque dist;Mounting Type:Bolted | GDS58136 | Drive Shaft | | 38 | | 59.5 | 34 | 586 | |
| | 2016.01-2018.08 | AT | R | R | Estate 4WD CRTC | For PR code:GH2;For vehicles with AWD & variable torque dist;Mounting Type:Bolted | GDS58137 | Drive Shaft | | 38 | | 59.5 | 34 | 545 | |
| | 2016.01-2018.08 | AT | R | L/R | Estate 4WD CRTC | For PR code:GH2;For vehicles with AWD & variable torque dist;Mounting Type:Bolted | GCI84020 | Inner Joint | | | 28 | | | 32 | |
| 3.0 (210 kw) | 2018.07-2019.10 | 8AT | F | L/R | Estate 4WD DCPC | | GDS82075 | Drive Shaft | | 42 | | 76.5 | 34 | 463 | |
| | 2018.07-2019.10 | AT | F | L/R | Estate 4WD DCPC | Date from:2019.01 | GCO83103 | Outer Joint | | 42 | 28 | 76.4 | 34 | 54 | I |
| | 2018.07-2019.10 | AT | F | L/R | Estate 4WD DCPC | Date from:2019.01 | GCI83022 | Inner Joint | | | 34 | | | 88.5 | |
| | 2018.07-2019.10 | 8AT | R | L/R | Estate 4WD DCPC | Rear differential Torque Vectoring;Without rear differential lock | GCI81702 | Outer Joint | | 38 | 28 | 59.5 | 34 | 81.5 | |
| | 2018.07-2019.10 | AT | R | L | Estate 4WD DCPC | For PR code:GH2;For vehicles with AWD & variable torque dist;Mounting Type:Bolted | GDS58136 | Drive Shaft | | 38 | | 59.5 | 34 | 586 | |
| | 2018.07-2019.10 | AT | R | R | Estate 4WD DCPC | For PR code:GH2;For vehicles with AWD & variable torque dist;Mounting Type:Bolted | GDS58137 | Drive Shaft | | 38 | | 59.5 | 34 | 545 | |
| | 2018.07-2019.10 | AT | R | L/R | Estate 4WD DCPC | For PR code:GH2;For vehicles with AWD & variable torque dist;Mounting Type:Bolted | GCI84020 | Inner Joint | | | 28 | | | 32 | |
| | 2018.07-2019.10 | | R | L/R | Estate 4WD DCPC | For PR code:GH1 | GDS82252 | Drive Shaft | | 38 | | 59.5 | 34 | 627 | |
| | 2019.11- | 8AT | F | L/R | Estate 4WD DCPC | | GDS82075 | Drive Shaft | | 42 | | 76.5 | 34 | 463 | |
| | 2019.11- | 8AT | R | L/R | Estate 4WD DCPC | Without rear differential lock | GDS82252 | Drive Shaft | | 38 | | 59.5 | 34 | 627 | |
| | 2019.11- | 8AT | R | L/R | Estate 4WD DCPC | | GCI81702 | Outer Joint | | 38 | 28 | 59.5 | 34 | 81.5 | |
| | 2019.11- | 8AT | R | L/R | Estate 4WD DCPC | | GCI84020 | Inner Joint | | | 28 | | | 32 | |
| | 2020.08- | 8AT | F | L/R | Estate 4WD DMGA | | GDS82075 | Drive Shaft | | 42 | | 76.5 | 34 | 463 | |
| | 2020.08- | 8AT | F | L/R | Estate 4WD DMGA | | GCO81357 | Outer Joint | | 42 | 28 | 76.5 | 34 | 54 | I |
| | 2020.08- | 8AT | F | L/R | Estate 4WD DMGA | | GCI61077 | Inner Joint | | | 34 | | | 88 | |
| | 2020.08- | 8AT | R | L/R | Estate 4WD DMGA | For PR code:GH1 | GDS82252 | Drive Shaft | | 38 | | 59.5 | 34 | 627 | |
| | 2020.08- | 8AT | R | L/R | Estate 4WD DMGA | Rear differential Torque Vectoring;Without rear differential lock | GCI81702 | Outer Joint | | 38 | 28 | 59.5 | 34 | 81.5 | |
| | 2020.08- | AT | R | L | Estate 4WD DMGA | For PR code:GH2;For vehicles with AWD & variable torque dist;Mounting Type:Bolted | GDS58136 | Drive Shaft | | 38 | | 59.5 | 34 | 586 | |
| | 2020.08- | AT | R | R | Estate 4WD DMGA | For PR code:GH2;For vehicles with AWD & variable torque dist;Mounting Type:Bolted | GDS58137 | Drive Shaft | | 38 | | 59.5 | 34 | 545 | |
| | 2020.08- | AT | R | L/R | Estate 4WD DMGA | For PR code:GH2;For vehicles with AWD & variable torque dist;Mounting Type:Bolted | GCI84020 | Inner Joint | | | 28 | | | 32 | |
| **A4 Avant Quattro** | | | | | | | | | | | | | | | |
| 2.8 (140 kw) | 1999.03-2000.09 | 5AT | F | R | Estate 4WD ATX | Chassis no. from:8D-X-200 001,Chassis no. to:8D-1-200 000 | GDS83038 | Drive Shaft | 45W | 38 | | 59.5 | 34 | 503 | |
| | 1999.03-2000.09 | AT | R | L/R | Estate 4WD ATX | for OE number:8D0 407 451 KX | GDS83037 | Drive Shaft | 45W | 38 | | 59.5 | 34 | 530 | |
| **A4 Avant/RS4 Quattro** | | | | | | | | | | | | | | | |
| 2.9 (346 kw) | 2024.07-2024.12 | 8AT | F | L/R | Estate 4WD DECC | | GDS82075 | Drive Shaft | | 42 | | 76.5 | 34 | 463 | |
| | 2024.07-2024.12 | 8AT | R | L | Estate 4WD DECC | Rear differential Torque Vectoring | GDS58136 | Drive Shaft | | 38 | | 59.5 | 34 | 586 | |
| | 2024.07-2024.12 | 8AT | R | R | Estate 4WD DECC | Rear differential Torque Vectoring | GDS58137 | Drive Shaft | | 38 | | 59.5 | 34 | 545 | |
| | 2024.07-2024.12 | 8AT | R | L/R | Estate 4WD DECC | Without rear differential lock | GDS82252 | Drive Shaft | | 38 | | 59.5 | 34 | 627 | |
| | 2024.07-2024.12 | 8AT | R | L/R | Estate 4WD DECC | Rear differential Torque Vectoring;Without rear differential lock | GCI81702 | Outer Joint | | 38 | 28 | 59.5 | 34 | 81.5 | |
| | 2024.07-2024.12 | AT | R | L/R | Estate 4WD DECC | For PR code:GH2;For vehicles with AWD & variable torque dist;Mounting Type:Bolted | GCI84020 | Inner Joint | | | 28 | | | 32 | |
| **A4 Cabrio** | | | | | | | | | | | | | | | |
| 1.8 (120 kw) | 2002.07-2005.12 | AT/CVT/Semi-AT | F | L/R | Convertible FWD BFB | | GDS83052 | Drive Shaft | 45W | 38 | | 59.5 | 34.5 | 522 | |
| | 2002.07-2005.12 | CVT | F | L/R | Convertible FWD BFB | Chassis no. to:8H_4_014950 | GCI83007 | Inner Joint | | | 34 | | | 85 | |
| | 2002.07-2005.12 | CVT/5MT | F | L/R | Convertible FWD BFB | Chassis no. from:8H_4_002001 | GCI61044 | Inner Joint | | | 34 | | | 85 | |
| | 2002.07-2005.12 | MT | F | L | Convertible FWD BFB | | GDS83057 | Drive Shaft | 45W | 38 | | 59.5 | 34.5 | 593 | |
| | 2002.07-2005.12 | MT | F | R | Convertible FWD BFB | | GDS83058 | Drive Shaft | 45W | 38 | | 59.5 | 34.5 | 613 | |
| | 2002.07-2005.12 | MT | F | L/R | Convertible FWD BFB | Chassis no. from:8E4000001,Date from:2003.04 | GCO83067 | Outer Joint | 45W | 38 | 27 | 59.5 | 34 | 68 | M |
| | 2002.07-2005.12 | MT | F | L | Convertible FWD BFB | Date from:2003.04,Date to:2005.12 | GCI61076 | Inner Joint | | | 34 | | | 85 | |
| | 2002.07-2005.12 | | F | L/R | Convertible FWD BFB | Date to:2003.03,Chassis no. to:8E3396000;Date to:2003.12,Chassis no. to:8E4196500 | GCO83092 | Outer Joint | 45W | 38 | 27 | 59.5 | 34 | 68 | I |
| | 2006.01-2009.03 | 5MT | F | L | Convertible FWD BFB | | GDS83057 | Drive Shaft | 45W | 38 | | 59.5 | 34.5 | 593 | |
| | 2006.01-2009.03 | 5MT | F | R | Convertible FWD BFB | | GDS83058 | Drive Shaft | 45W | 38 | | 59.5 | 34.5 | 613 | |
| | 2006.01-2009.03 | 5MT | F | L/R | Convertible FWD BFB | | GCO83067 | Outer Joint | 45W | 38 | 27 | 59.5 | 34 | 68 | M |
| | 2006.01-2009.03 | CVT | F | L/R | Convertible FWD BFB | | GDS83052 | Drive Shaft | 45W | 38 | | 59.5 | 34.5 | 522 | |
| | 2006.01-2009.03 | CVT | F | L/R | Convertible FWD BFB | | GCO83078 | Outer Joint | 45W | 38 | 27 | 59.5 | 34.5 | 63 | M |
| | 2006.01-2009.03 | CVT/5MT | F | L/R | Convertible FWD BFB | | GCI61044 | Inner Joint | | | 34 | | | 85 | |
| 1.8 (125 kw) | 2002.10-2005.10 | AT | F | L/R | Convertible FWD AMB | | GDS83052 | Drive Shaft | 45W | 38 | | 59.5 | 34.5 | 522 | |
| | 2002.10-2005.10 | AT | F | L/R | Convertible FWD AMB | Chassis no. from:8E_4_195501 | GCO83078 | Outer Joint | 45W | 38 | 27 | 59.5 | 34.5 | 63 | M |
| | 2002.10-2005.10 | AT | F | L/R | Convertible FWD AMB | Chassis no. to:8E_4_195500 | GCO83092 | Outer Joint | 45W | 38 | 27 | 59.5 | 34 | 68 | I |
| | 2002.10-2005.10 | AT | F | L/R | Convertible FWD AMB | Chassis no. from:8E_4_195501 | GCI61044 | Inner Joint | | | 34 | | | 85 | |
| | 2002.10-2005.10 | AT | F | L/R | Convertible FWD AMB | Chassis no. to:8E_4_195500 | GCI83007 | Inner Joint | | | 34 | | | 85 | |
| 2.0 (96 kw) | 2004.09-2005.12 | 5MT | F | L | Convertible FWD ALT | | GDS83310 | Drive Shaft | 45W | 38 | | 59.5 | 34 | 594 | |
| | 2004.09-2005.12 | 5MT | F | R | Convertible FWD ALT | | GDS83058 | Drive Shaft | 45W | 38 | | 59.5 | 34.5 | 613 | |
| | 2004.09-2005.12 | 5MT | F | L/R | Convertible FWD ALT | | GCI61070 | Inner Joint | | | 24 | | | 85 | |
| | 2004.09-2005.12 | AT | F | L/R | Convertible FWD ALT | | GCO83058 | Outer Joint | 45W | 38 | 33 | 59.5 | 34 | 56.5 | M |
| | 2004.09-2005.12 | AT/MT | F | L/R | Convertible FWD ALT | | GCI61044 | Inner Joint | | | 34 | | | 85 | |
| | 2004.09-2005.12 | MT | F | L/R | Convertible FWD ALT | Chassis no. from:8E-1A004665 | GCO83058 | Outer Joint | 45W | 38 | 33 | 59.5 | 34 | 56.5 | M |
| | 2004.09-2005.12 | MT | F | L/R | Convertible FWD ALT | Chassis no. to:8E-1A004664 | GCO83092 | Outer Joint | 45W | 38 | 27 | 59.5 | 34 | 68 | I |

| | YEAR | TRANSM. | F/R | L/R | BODY STYLE & DRIVE TYPE & ENGINE | REMARKS | G-AP Ref. | PRODUCT | ABS | Technical Specifications A | B | C | H | L | P |
|---|---|---|---|---|---|---|---|---|---|---|---|---|---|---|---|
| **AUDI** | | | | | | | | | | | | | | | |
| **A4 Cabrio** | | | | | | | | | | | | | | | |
| 2.0 (96 kw) | 2004.09-2005.12 | | F | L/R | Convertible FWD ALT | | GCO83030 | Outer Joint | | 38 | 33 | 59.5 | 34 | 56.5 | M |
| 2.0 (100 kw) | 2006.01-2009.03 | 6MT | F | L/R | Convertible FWD BRC | TJ | GCI61044 | Inner Joint | | | 34 | | | 85 | |
| | 2006.01-2009.03 | AT/Semi-AT | F | L/R | Convertible FWD BRC | | GDS81132 | Drive Shaft | 45W | 38 | | 59.5 | 34.5 | 525 | |
| | 2006.01-2009.03 | CVT | F | L/R | Convertible FWD BRC | | GCO83078 | Outer Joint | 45W | 38 | 27 | 59.5 | 34.5 | 63 | M |
| | 2006.01-2009.03 | MT | F | L | Convertible FWD BRC | | GDS83057 | Drive Shaft | 45W | 38 | | 59.5 | 34.5 | 593 | |
| | 2006.01-2009.03 | MT | F | R | Convertible FWD BRC | | GDS83058 | Drive Shaft | 45W | 38 | | 59.5 | 34.5 | 613 | |
| | 2006.01-2009.03 | MT | F | L | Convertible FWD BRC | AAR | GCI61076 | Inner Joint | | | 34 | | | 85 | |
| | 2006.01-2009.03 | MT/6MT | F | L/R | Convertible FWD BRC | | GCO83067 | Outer Joint | 45W | 38 | 27 | 59.5 | 34 | 68 | M |
| 2.0 (103 kw) | 2006.01-2009.03 | 6MT | F | L | Convertible FWD BPW | | GDS83057 | Drive Shaft | 45W | 38 | | 59.5 | 34.5 | 593 | |
| | 2006.01-2009.03 | 6MT | F | R | Convertible FWD BPW | | GDS83058 | Drive Shaft | 45W | 38 | | 59.5 | 34.5 | 613 | |
| | 2006.01-2009.03 | 6MT | F | L/R | Convertible FWD BPW | | GCO83067 | Outer Joint | 45W | 38 | 27 | 59.5 | 34 | 68 | M |
| | 2006.01-2009.03 | CVT | F | L/R | Convertible FWD BPW | | GDS81132 | Drive Shaft | 45W | 38 | | 59.5 | 34.5 | 525 | |
| | 2006.01-2009.03 | CVT | F | L/R | Convertible FWD BPW | | GDS83052 | Drive Shaft | 45W | 38 | | 59.5 | 34.5 | 522 | |
| | 2006.01-2009.03 | CVT | F | L/R | Convertible FWD BPW | | GCO83078 | Outer Joint | 45W | 38 | 27 | 59.5 | 34.5 | 63 | M |
| | 2006.01-2009.03 | CVT | F | L/R | Convertible FWD BPW | AAR | GCI61063 | Inner Joint | | | 34 | | | 91 | |
| | 2006.01-2009.03 | CVT/6MT | F | L/R | Convertible FWD BPW | TJ | GCI61044 | Inner Joint | | | 34 | | | 85 | |
| 2.0 (147 kw) | 2006.01-2009.03 | 6MT | F | L | Convertible FWD BWE;BWT | | GDS83057 | Drive Shaft | 45W | 38 | | 59.5 | 34.5 | 593 | |
| | 2006.01-2009.03 | 6MT | F | R | Convertible FWD BWE;BWT | | GDS83058 | Drive Shaft | 45W | 38 | | 59.5 | 34.5 | 613 | |
| | 2006.01-2009.03 | 6MT | F | L/R | Convertible FWD BWE;BWT | | GCO83067 | Outer Joint | 45W | 38 | 27 | 59.5 | 34 | 68 | M |
| | 2006.01-2009.03 | 6MT/CVT | F | L/R | Convertible FWD BWE;BWT | | GCI61044 | Inner Joint | | | 34 | | | 85 | |
| | 2006.01-2009.03 | CVT | F | L/R | Convertible FWD BWE;BWT | | GDS83052 | Drive Shaft | 45W | 38 | | 59.5 | 34.5 | 522 | |
| | 2006.01-2009.03 | CVT | F | L/R | Convertible FWD BWE;BWT | | GCO83078 | Outer Joint | 45W | 38 | 27 | 59.5 | 34.5 | 63 | M |
| 2.4 (120 kw) | 2002.04-2005.12 | 5MT/6MT/CVT | F | L/R | Convertible FWD AMM | Transmission:6MT/6MT;Chassis no.: from:8H_4_002001;Transmission:CVT;Chassis no.: from:8H_4_014951 | GCI61044 | Inner Joint | | | 34 | | | 85 | |
| | 2002.04-2005.12 | AT/Semi-AT | F | L/R | Convertible FWD AMM | | GDS83052 | Drive Shaft | 45W | 38 | | 59.5 | 34.5 | 522 | |
| | 2002.04-2005.12 | CVT | F | L/R | Convertible FWD AMM | Chassis no. to:8H_4_014950 | GCI83007 | Inner Joint | | | 34 | | | 85 | |
| | 2002.04-2005.12 | MT | F | L | Convertible FWD AMM | | GDS83057 | Drive Shaft | 45W | 38 | | 59.5 | 34.5 | 593 | |
| | 2002.04-2005.12 | MT | F | R | Convertible FWD AMM | | GDS83058 | Drive Shaft | 45W | 38 | | 59.5 | 34.5 | 613 | |
| | 2002.04-2005.12 | MT | F | L/R | Convertible FWD AMM | | GCO83067 | Outer Joint | 45W | 38 | 27 | 59.5 | 34 | 68 | M |
| | 2002.04-2005.12 | | F | L/R | Convertible FWD AMM | Date from:2003.06;Chassis no.: to:8E3346600;Date from:2003.06;Date to:2003.12;Chassis no.: to:8E3190000 | GCO83092 | Outer Joint | 45W | 38 | 27 | 59.5 | 34 | 68 | I |
| 2.4 (125 kw) | 2002.04-2005.12 | 5MT/6MT/CVT | F | L/R | Convertible FWD BDV | Transmission:6MT/6MT;Chassis no.: from:8H_4_002001;Transmission:CVT;Chassis no.: from:8H_4_014951 | GCI61044 | Inner Joint | | | 34 | | | 85 | |
| | 2002.04-2005.12 | CVT | F | L/R | Convertible FWD BDV | Chassis no. to:8H_4_014950 | GCI83007 | Inner Joint | | | 34 | | | 85 | |
| | 2002.04-2005.12 | MT | F | L | Convertible FWD BDV | | GDS83057 | Drive Shaft | 45W | 38 | | 59.5 | 34.5 | 593 | |
| | 2002.04-2005.12 | MT | F | R | Convertible FWD BDV | | GDS83058 | Drive Shaft | 45W | 38 | | 59.5 | 34.5 | 613 | |
| | 2002.04-2005.12 | MT | F | L/R | Convertible FWD BDV | Date From:2003.04 | GCO83067 | Outer Joint | 45W | 38 | 27 | 59.5 | 34 | 68 | M |
| | 2002.04-2005.12 | MT | F | L/R | Convertible FWD BDV | Date To:2003.03 | GCO83092 | Outer Joint | 45W | 38 | 27 | 59.5 | 34 | 68 | I |
| | 2002.04-2005.12 | Semi-AT | F | L/R | Convertible FWD BDV | | GDS83052 | Drive Shaft | 45W | 38 | | 59.5 | 34.5 | 522 | |
| 2.5 (120 kw) | 2002.08-2005.12 | 6MT | F | L | Convertible FWD BFC;BCZ;BDG | For Engine code:BFC | GDS83057 | Drive Shaft | 45W | 38 | | 59.5 | 34.5 | 593 | |
| | 2002.08-2005.12 | 6MT | F | L | Convertible FWD BFC;BCZ;BDG | For Engine code:BCZ/BDG | GDS83363 | Drive Shaft | 45W | 38 | | 59.5 | 34.5 | 611 | |
| | 2002.08-2005.12 | 6MT | F | R | Convertible FWD BFC;BCZ;BDG | For Engine code:BCZ/BDG | GDS61019 | Drive Shaft | 45W | 38 | | 59.5 | 34.5 | 624 | |
| | 2002.08-2005.12 | 6MT | F | R | Convertible FWD BFC;BCZ;BDG | For Engine code:BFC | GDS83058 | Drive Shaft | 45W | 38 | | 59.5 | 34.5 | 613 | |
| | 2002.08-2005.12 | 6MT | F | L/R | Convertible FWD BFC;BCZ;BDG | For Engine code:BFC,Original design | GCO83019 | Outer Joint | 45W | 38 | 27 | 59.5 | 34.5 | 63 | I |
| | 2002.08-2005.12 | 6MT | F | L/R | Convertible FWD BFC;BCZ;BDG | For Engine code:BCZ/BDG | GCO83067 | Outer Joint | 45W | 38 | 27 | 59.5 | 34 | 68 | M |
| | 2002.08-2005.12 | 6MT | F | L/R | Convertible FWD BFC;BCZ;BDG | For Engine code:BFC,Non-Original design | GCO83092 | Outer Joint | 45W | 38 | 27 | 59.5 | 34 | 68 | I |
| | 2002.08-2005.12 | 6MT | F | L/R | Convertible FWD BFC;BCZ;BDG | For Engine code:BFC | GCI83007 | Inner Joint | | | 34 | | | 85 | |
| | 2002.08-2005.12 | CVT | F | L/R | Convertible FWD BFC;BCZ;BDG | | GDS83052 | Drive Shaft | 45W | 38 | | 59.5 | 34.5 | 522 | |
| | 2002.08-2005.12 | CVT | F | L/R | Convertible FWD BFC;BCZ;BDG | Chassis no. from:8H_4_014951 | GCO83067 | Outer Joint | 45W | 38 | 27 | 59.5 | 34 | 68 | M |
| | 2002.08-2005.12 | CVT | F | L/R | Convertible FWD BFC;BCZ;BDG | Chassis no. to:8H_4_014950 | GCO83092 | Outer Joint | 45W | 38 | 27 | 59.5 | 34 | 68 | I |
| | 2002.08-2005.12 | CVT | F | L/R | Convertible FWD BFC;BCZ;BDG | Chassis no. from:8H_4_014951 | GCI61044 | Inner Joint | | | 34 | | | 85 | |
| | 2002.08-2005.12 | CVT | F | L/R | Convertible FWD BFC;BCZ;BDG | Chassis no. to:8H_4_014950 | GCI83007 | Inner Joint | | | 34 | | | 85 | |
| 2.7 (132 kw) | 2006.06-2009.03 | AT | F | L/R | Convertible FWD BPP | | GDS83052 | Drive Shaft | 45W | 38 | | 59.5 | 34.5 | 522 | |
| | 2006.06-2009.03 | MT | F | R | Convertible FWD BPP | | GDS83058 | Drive Shaft | 45W | 38 | | 59.5 | 34.5 | 613 | |
| | 2006.06-2009.03 | | F | L/R | Convertible FWD BPP | | GCO83078 | Outer Joint | 45W | 38 | 27 | 59.5 | 34.5 | 63 | M |
| | 2006.06-2009.03 | | F | L/R | Convertible FWD BPP | | GCI61044 | Inner Joint | | | 34 | | | 85 | |
| 3.0 (160 kw) | 2002.04-2005.12 | 5MT/6MT/CVT | F | L/R | Convertible FWD BBJ | Transmission:6MT/6MT;Chassis no.: from:8H_4_002001;Transmission:CVT;Chassis no.: from:8H_4_014951 | GCI61044 | Inner Joint | | | 34 | | | 85 | |
| | 2002.04-2005.12 | AT | F | L/R | Convertible FWD BBJ | | GDS83052 | Drive Shaft | 45W | 38 | | 59.5 | 34.5 | 522 | |
| | 2002.04-2005.12 | CVT | F | L/R | Convertible FWD BBJ | Chassis no. to:8H_4_014950 | GCI83007 | Inner Joint | | | 34 | | | 85 | |
| | 2002.04-2005.12 | MT | F | L | Convertible FWD BBJ | | GDS83057 | Drive Shaft | 45W | 38 | | 59.5 | 34.5 | 593 | |
| | 2002.04-2005.12 | MT | F | R | Convertible FWD BBJ | Date from:2003.04;Chassis no.: from:8E4000001;Date to:2003.03;Chassis no.: to:8E3999999 | GDS83058 | Drive Shaft | 45W | 38 | | 59.5 | 34.5 | 613 | |
| | 2002.04-2005.12 | MT | F | L/R | Convertible FWD BBJ | | GCO83092 | Outer Joint | 45W | 38 | 27 | 59.5 | 34 | 68 | I |
| | 2002.04-2005.12 | SAT/5MT/6MT | F | L/R | Convertible FWD BBJ | | GCO83067 | Outer Joint | 45W | 38 | 27 | 59.5 | 34 | 68 | M |
| 3.0 (162 kw) | 2002.04-2005.12 | 5MT/6MT/CVT | F | L/R | Convertible FWD ASN;AVK;BGN | Transmission:6MT/6MT;Chassis no.: from:8H_4_002001;Transmission:CVT;Chassis no.: from:8H_4_014951 | GCI61044 | Inner Joint | | | 34 | | | 85 | |
| | 2002.04-2005.12 | CVT | F | L/R | Convertible FWD ASN;AVK;BGN | Chassis no. to:8H_4_014950 | GCI83007 | Inner Joint | | | 34 | | | 85 | |
| | 2002.04-2005.12 | MT | F | L | Convertible FWD ASN;AVK;BGN | | GDS83057 | Drive Shaft | 45W | 38 | | 59.5 | 34.5 | 593 | |
| | 2002.04-2005.12 | MT | F | R | Convertible FWD ASN;AVK;BGN | | GDS83058 | Drive Shaft | 45W | 38 | | 59.5 | 34.5 | 613 | |
| | 2002.04-2005.12 | MT | F | L/R | Convertible FWD ASN;AVK;BGN | Date From:2003.04 | GCO83067 | Outer Joint | 45W | 38 | 27 | 59.5 | 34 | 68 | M |

| | YEAR | TRANSM. | F/R | L/R | BODY STYLE & DRIVE TYPE & ENGINE | REMARKS | G-AP Ref. | PRODUCT | ABS | Technical Specifications A | B | C | H | L | P |
|---|---|---|---|---|---|---|---|---|---|---|---|---|---|---|---|
| **AUDI** | | | | | | | | | | | | | | | |
| **A4 Cabrio** | | | | | | | | | | | | | | | |
| 3.0 (162 kw) | 2002.04-2005.12 | MT | F | L/R | Convertible FWD ASN;AVK;BGN | Date To:2003.03 | GCO83092 | Outer Joint | 45W | 38 | 27 | 59.5 | 34 | 68 | I |
| | 2002.04-2005.12 | Semi-AT | F | L/R | Convertible FWD ASN;AVK;BGN | | GDS83052 | Drive Shaft | 45W | 38 | | 59.5 | 34.5 | 522 | |
| 3.2 (188 kw) | 2006.01-2009.03 | AT | F | L/R | Convertible FWD AUK | | GCI61044 | Inner Joint | | | 34 | | | 85 | |
| | 2006.01-2009.03 | CVT | F | L/R | Convertible FWD AUK | | GDS83052 | Drive Shaft | 45W | 38 | | 59.5 | 34.5 | 522 | |
| | 2006.01-2009.03 | | F | L/R | Convertible FWD AUK | | GCO83078 | Outer Joint | 45W | 38 | 27 | 59.5 | 34.5 | 63 | M |
| **A4 Cabrio Quattro** | | | | | | | | | | | | | | | |
| 1.8 (120 kw) | 2003.05-2005.12 | 5MT/6MT | F | L/R | Convertible 4WD BFB | Chassis no. from:8E_5_035001 | GCI61070 | Inner Joint | | | 24 | | | 85 | |
| | 2003.05-2005.12 | AT | F | L/R | Convertible 4WD BFB | | GDS83052 | Drive Shaft | 45W | 38 | | 59.5 | 34.5 | 522 | |
| | 2003.05-2005.12 | AT/MT | F | L/R | Convertible 4WD BFB | | GCI61044 | Inner Joint | | | 34 | | | 85 | |
| | 2003.05-2005.12 | MT | F | L/R | Convertible 4WD BFB | | GCO83058 | Outer Joint | 45W | 38 | 33 | 59.5 | 34 | 56.5 | M |
| | 2003.05-2005.12 | SAT/5MT/6MT | F | L | Convertible 4WD BFB | | GDS83057 | Drive Shaft | 45W | 38 | | 59.5 | 34.5 | 593 | |
| | 2003.05-2005.12 | SAT/5MT/6MT | F | L | Convertible 4WD BFB | | GDS83310 | Drive Shaft | 45W | 38 | | 59.5 | 34 | 594 | |
| | 2003.05-2005.12 | SAT/5MT/6MT | F | R | Convertible 4WD BFB | | GDS83058 | Drive Shaft | 45W | 38 | | 59.5 | 34.5 | 613 | |
| | 2003.05-2005.12 | | F | L/R | Convertible 4WD BFB | | GCO83030 | Outer Joint | | 38 | 33 | 59.5 | 34 | 56.5 | M |
| | 2003.05-2005.12 | 5MT/6MT | R | L/R | Convertible 4WD BFB | For PR code:1YF | GDS82401 | Drive Shaft | 45W | 38 | | 59.5 | 34 | 617 | |
| | 2003.05-2005.12 | 5MT/6MT | R | L/R | Convertible 4WD BFB | | GCI61010 | Inner Joint | | | 28 | | | 32 | |
| | 2003.05-2005.12 | SAT/5MT/6MT | R | L/R | Convertible 4WD BFB | For PR code:1YE | GDS82073 | Drive Shaft | 45W | 38 | | 59.5 | 34 | 612 | |
| 3.0 (150 kw) | 2006.01-2009.03 | 6AT | F | R | Convertible 4WD BKN | | GCI83007 | Inner Joint | | | 34 | | | 85 | |
| | 2006.01-2009.03 | AT | F | L | Convertible 4WD BKN | | GDS83347 | Drive Shaft | 45W | 38 | | 59.5 | 34.5 | 580 | |
| | 2006.01-2009.03 | AT | F | R | Convertible 4WD BKN | | GDS82239 | Drive Shaft | 45W | 38 | | 59.5 | 34.5 | 493 | |
| | 2006.01-2009.03 | AT | F | L/R | Convertible 4WD BKN | | GCO83078 | Outer Joint | 45W | 38 | 27 | 59.5 | 34.5 | 63 | M |
| | 2006.01-2009.03 | MT | F | L | Convertible 4WD BKN | | GDS83057 | Drive Shaft | 45W | 38 | | 59.5 | 34.5 | 593 | |
| | 2006.01-2009.03 | MT | F | R | Convertible 4WD BKN | | GDS83058 | Drive Shaft | 45W | 38 | | 59.5 | 34.5 | 613 | |
| | 2006.01-2009.03 | MT | F | L | Convertible 4WD BKN | AAR | GCI61076 | Inner Joint | | | 34 | | | 85 | |
| | 2006.01-2009.03 | | F | L/R | Convertible 4WD BKN | | GCO83067 | Outer Joint | 45W | 38 | 27 | 59.5 | 34 | 68 | M |
| | 2006.01-2009.03 | | F | L/R | Convertible 4WD BKN | TJ | GCI61044 | Inner Joint | | | 34 | | | 85 | |
| | 2006.01-2009.03 | 6AT/6MT | R | L/R | Convertible 4WD BKN | | GDS82401 | Drive Shaft | 45W | 38 | | 59.5 | 34 | 617 | |
| 3.0 (162 kw) | 2003.05-2005.12 | 6MT | F | L | Convertible 4WD ASN;AVK;BGN | Chassis no. from:8H_5_003001 | GDS82156 | Drive Shaft | 45W | 38 | | 59.5 | 34.5 | 612 | |
| | 2003.05-2005.12 | AT | F | L | Convertible 4WD ASN;AVK;BGN | | GDS83052 | Drive Shaft | 45W | 38 | | 59.5 | 34.5 | 522 | |
| | 2003.05-2005.12 | AT | F | R | Convertible 4WD ASN;AVK;BGN | | GDS82168 | Drive Shaft | 45W | 38 | | 59.5 | 34.5 | 490 | |
| | 2003.05-2005.12 | AT/MT | F | L/R | Convertible 4WD ASN;AVK;BGN | Date to:2004.04;Chassis no. to:8E4350000;Date from:2004.05;Chassis no. from:8E4350001;Date to:2003.12;Chassis no. to:8E4199999 | GCO83078 | Outer Joint | 45W | 38 | 27 | 59.5 | 34.5 | 63 | M |
| | 2003.05-2005.12 | MT | F | L | Convertible 4WD ASN;AVK;BGN | Date to:2004.04,Chassis no. to:8E4350000 | GDS83043 | Drive Shaft | 45W | 38 | | 59.5 | 34.5 | 612 | |
| | 2003.05-2005.12 | MT | F | R | Convertible 4WD ASN;AVK;BGN | | GDS81593 | Drive Shaft | 45W | 38 | | 59.5 | 34.5 | 633 | |
| | 2003.05-2005.12 | MT | F | R | Convertible 4WD ASN;AVK;BGN | Date from:2004.05;Chassis no. from:8E4350001 | GDS81918 | Drive Shaft | 45W | 38 | | 59.5 | 34.5 | 632 | |
| | 2003.05-2005.12 | SAT/5AT/5MT/6MT | F | L/R | Convertible 4WD ASN;AVK;BGN | | GCI61044 | Inner Joint | | | 34 | | | 85 | |
| | 2003.05-2005.12 | | F | L/R | Convertible 4WD ASN;AVK;BGN | Date to:2004.04;Chassis no. to:8E4350000;Date to:2003.12;Chassis no. to:8E4199999 | GCO83092 | Outer Joint | 45W | 38 | 27 | 59.5 | 34 | 68 | I |
| | 2003.05-2005.12 | 5AT/5MT/6MT | R | L/R | Convertible 4WD ASN;AVK;BGN | For PR code:1YE | GDS82073 | Drive Shaft | 45W | 38 | | 59.5 | 34 | 612 | |
| | 2003.05-2005.12 | 5AT/5MT/6MT | R | L/R | Convertible 4WD ASN;AVK;BGN | For PR code:1YF | GDS82401 | Drive Shaft | 45W | 38 | | 59.5 | 34 | 617 | |
| | 2003.05-2005.12 | 5MT | R | L/R | Convertible 4WD ASN;AVK;BGN | Chassis no. to:8H_5_003000 | GCI61010 | Inner Joint | | | 28 | | | 32 | |
| 3.0 (171 kw) | 2006.01-2009.03 | 6AT | F | R | Convertible 4WD ASB | | GCI83007 | Inner Joint | | | 34 | | | 85 | |
| | 2006.01-2009.03 | AT | F | L | Convertible 4WD ASB | | GDS83347 | Drive Shaft | 45W | 38 | | 59.5 | 34.5 | 580 | |
| | 2006.01-2009.03 | AT | F | R | Convertible 4WD ASB | | GDS82239 | Drive Shaft | 45W | 38 | | 59.5 | 34.5 | 493 | |
| | 2006.01-2009.03 | AT | F | L/R | Convertible 4WD ASB | | GCO83078 | Outer Joint | 45W | 38 | 27 | 59.5 | 34.5 | 63 | M |
| | 2006.01-2009.03 | MT | F | L | Convertible 4WD ASB | | GDS83057 | Drive Shaft | 45W | 38 | | 59.5 | 34.5 | 593 | |
| | 2006.01-2009.03 | MT | F | R | Convertible 4WD ASB | | GDS83058 | Drive Shaft | 45W | 38 | | 59.5 | 34.5 | 613 | |
| | 2006.01-2009.03 | MT | F | L | Convertible 4WD ASB | AAR | GCI61076 | Inner Joint | | | 34 | | | 85 | |
| | 2006.01-2009.03 | MT | F | L/R | Convertible 4WD ASB | Date from:2008.01 | GCI61044 | Inner Joint | | | 34 | | | 85 | |
| | 2006.01-2009.03 | | F | L/R | Convertible 4WD ASB | | GCO83067 | Outer Joint | 45W | 38 | 27 | 59.5 | 34 | 68 | M |
| | 2006.01-2009.03 | 6AT/6MT | R | L/R | Convertible 4WD ASB | | GDS82401 | Drive Shaft | 45W | 38 | | 59.5 | 34 | 617 | |
| 3.2 (188 kw) | 2006.01-2009.03 | 6AT | F | R | Convertible 4WD AUK;BKH | | GDS82168 | Drive Shaft | 45W | 38 | | 59.5 | 34.5 | 490 | |
| | 2006.01-2009.03 | 6MT | F | L | Convertible 4WD AUK;BKH | | GDS82156 | Drive Shaft | 45W | 38 | | 59.5 | 34.5 | 612 | |
| | 2006.01-2009.03 | AT | F | L | Convertible 4WD AUK;BKH | | GDS83347 | Drive Shaft | 45W | 38 | | 59.5 | 34.5 | 580 | |
| | 2006.01-2009.03 | AT | F | L | Convertible 4WD AUK;BKH | AAR | GCI61076 | Inner Joint | | | 34 | | | 85 | |
| | 2006.01-2009.03 | AT/6AT | F | L/R | Convertible 4WD AUK;BKH | TJ | GCI61044 | Inner Joint | | | 34 | | | 85 | |
| | 2006.01-2009.03 | AT/MT | F | L/R | Convertible 4WD AUK;BKH | | GCO83078 | Outer Joint | 45W | 38 | 27 | 59.5 | 34.5 | 63 | M |
| | 2006.01-2009.03 | MT | F | R | Convertible 4WD AUK;BKH | | GDS81918 | Drive Shaft | 45W | 38 | | 59.5 | 34.5 | 632 | |
| | 2006.01-2009.03 | 6AT/6MT | R | L/R | Convertible 4WD AUK;BKH | | GDS82401 | Drive Shaft | 45W | 38 | | 59.5 | 34 | 617 | |
| **A4 Quattro** | | | | | | | | | | | | | | | |
| 1.8 (85 kw) | 1995.07-2000.10 | 5MT | F | L | Saloon 4WD AFY | | GDS83002 | Drive Shaft | 45W | 33 | | 53 | 30 | 614 | |
| | 1995.07-2000.10 | 5MT | F | R | Saloon 4WD AFY | | GDS99111 | Drive Shaft | 45W | 33 | | 53 | 30 | 636 | |
| | 1995.07-2000.10 | 5MT | F | L/R | Saloon 4WD AFY | Chassis no. from:8D_W_109792 | GCO61012 | Outer Joint | 45W | 33 | 30 | 53 | 30 | 62 | I |
| | 1995.07-2000.10 | 5MT | F | L/R | Saloon 4WD AFY | Chassis no. to:8D_W_109791 | GCO83018 | Outer Joint | 45W | 33 | 30 | 53 | 30 | 62 | I |
| | 1995.07-2000.10 | 5MT | F | L/R | Saloon 4WD AFY | | GCI83006 | Inner Joint | | | 33 | | | 34 | |
| | 1995.07-2000.10 | 5MT | R | L/R | Saloon 4WD AFY | | GDS83039 | Drive Shaft | 45T | 33 | | 53 | 30 | 595.5 | |
| | 1995.07-2000.10 | 5MT | R | L/R | Saloon 4WD AFY | | GCO83026 | Outer Joint | 45T | 33 | 30 | 53 | 30 | 62 | I |

| | YEAR | TRANSM. | F/R | L/R | BODY STYLE & DRIVE TYPE & ENGINE | REMARKS | G-AP Ref. | PRODUCT | ABS | Technical Specifications A | B | C | H | L | P |
|---|---|---|---|---|---|---|---|---|---|---|---|---|---|---|---|
| **AUDI** | | | | | | | | | | | | | | | |
| **A4 Quattro** | | | | | | | | | | | | | | | |
| 1.8 (85 kw) | 1995.07-2000.10 | 5MT | R | L/R | Saloon 4WD AFY | | GCI83002 | Inner Joint | | | 33 | | | 32 | |
| | 1996.02-2001.09 | 5MT | F | L | Estate 4WD AFY | | GDS83002 | Drive Shaft | 45W | 33 | | 53 | 30 | 614 | |
| | 1996.02-2001.09 | 5MT | F | R | Estate 4WD AFY | | GDS99111 | Drive Shaft | 45W | 33 | | 53 | 30 | 636 | |
| | 1996.02-2001.09 | 5MT | F | L/R | Estate 4WD AFY | Chassis no. from:8D_W_109792 | GCO61012 | Outer Joint | 45W | 33 | 30 | 53 | 30 | 62 | I |
| | 1996.02-2001.09 | 5MT | F | L/R | Estate 4WD AFY | Chassis no. to:8D_W_109791 | GCO83018 | Outer Joint | 45W | 33 | 30 | 53 | 30 | 62 | I |
| | 1996.02-2001.09 | 5MT | F | L/R | Estate 4WD AFY | | GCI83006 | Inner Joint | | | 33 | | | 34 | |
| | 1996.02-2001.09 | 5MT | R | L/R | Estate 4WD AFY | | GDS83039 | Drive Shaft | 45T | 33 | | 53 | 30 | 595.5 | |
| | 1996.02-2001.09 | 5MT | R | L/R | Estate 4WD AFY | | GCO83026 | Outer Joint | 45T | 33 | 30 | 53 | 30 | 62 | I |
| | 1996.02-2001.09 | 5MT | R | L/R | Estate 4WD AFY | | GCI83002 | Inner Joint | | | 33 | | | 32 | |
| 1.8 (92 kw) | 1994.11-2000.10 | 5MT | F | L | Saloon 4WD ADR/APT/ARG | | GDS83002 | Drive Shaft | 45W | 33 | | 53 | 30 | 614 | |
| | 1994.11-2000.10 | 5MT | F | R | Saloon 4WD ADR/APT/ARG | | GDS99111 | Drive Shaft | 45W | 33 | | 53 | 30 | 636 | |
| | 1994.11-2000.10 | 5MT | F | L/R | Saloon 4WD ADR/APT/ARG | Chassis no. from:8D_W_109792 | GCO61012 | Outer Joint | 45W | 33 | 30 | 53 | 30 | 62 | I |
| | 1994.11-2000.10 | 5MT | F | L/R | Saloon 4WD ADR/APT/ARG | Chassis no. to:8D_W_109791 | GCO83018 | Outer Joint | 45W | 33 | 30 | 53 | 30 | 62 | I |
| | 1994.11-2000.10 | 5MT | F | L/R | Saloon 4WD ADR/APT/ARG | | GCI83006 | Inner Joint | | | 33 | | | 34 | |
| | 1994.11-2000.10 | 5MT | R | L/R | Saloon 4WD ADR/APT/ARG | | GDS83039 | Drive Shaft | 45T | 33 | | 53 | 30 | 595.5 | |
| | 1994.11-2000.10 | 5MT | R | L/R | Saloon 4WD ADR/APT/ARG | | GCO83026 | Outer Joint | 45T | 33 | 30 | 53 | 30 | 62 | I |
| | 1994.11-2000.10 | 5MT | R | L/R | Saloon 4WD ADR/APT/ARG | | GCI83002 | Inner Joint | | | 33 | | | 32 | |
| | 1996.02-2001.09 | 5MT | F | L | Estate 4WD ADR/APT/ARG | | GDS83002 | Drive Shaft | 45W | 33 | | 53 | 30 | 614 | |
| | 1996.02-2001.09 | 5MT | F | R | Estate 4WD ADR/APT/ARG | | GDS99111 | Drive Shaft | 45W | 33 | | 53 | 30 | 636 | |
| | 1996.02-2001.09 | 5MT | F | L/R | Estate 4WD ADR/APT/ARG | | GCO83018 | Outer Joint | 45W | 33 | 30 | 53 | 30 | 62 | I |
| | 1996.02-2001.09 | 5MT | F | L/R | Estate 4WD ADR/APT/ARG | | GCI83006 | Inner Joint | | | 33 | | | 34 | |
| | 1996.02-2001.09 | 5MT | R | L/R | Estate 4WD ADR/APT/ARG | | GDS83039 | Drive Shaft | 45T | 33 | | 53 | 30 | 595.5 | |
| | 1996.02-2001.09 | 5MT | R | L/R | Estate 4WD ADR/APT/ARG | | GCO83026 | Outer Joint | 45T | 33 | 30 | 53 | 30 | 62 | I |
| 1.8 (110 kw) | 1995.02-2000.10 | 5AT | F | L | Saloon 4WD AEB/ANB/APU/ARK/AWT | | GDS83036 | Drive Shaft | 45W | 33 | | 53 | 30 | 524 | |
| | 1995.02-2000.10 | 5AT | F | R | Saloon 4WD AEB/ANB/APU/ARK/AWT | | GDS83012 | Drive Shaft | 45W | 33 | | 53 | 30 | 498 | |
| | 1995.02-2000.10 | 5AT | F | L | Saloon 4WD AEB/ANB/APU/ARK/AWT | | GCO83045 | Outer Joint | | 33 | 30 | 53 | 30 | 62 | I |
| | 1995.02-2000.10 | 5AT | F | L/R | Saloon 4WD AEB/ANB/APU/ARK/AWT | | GCI50019 | Inner Joint | | | 34 | | | 59.5 | |
| | 1995.02-2000.10 | 5AT/5MT | F | L/R | Saloon 4WD AEB/ANB/APU/ARK/AWT | Chassis no. from:8D_W_109792 | GCO61012 | Outer Joint | 45W | 33 | 30 | 53 | 30 | 62 | I |
| | 1995.02-2000.10 | 5AT/5MT | F | L/R | Saloon 4WD AEB/ANB/APU/ARK/AWT | Chassis no. to:8D_W_109791 | GCO83018 | Outer Joint | 45W | 33 | 30 | 53 | 30 | 62 | I |
| | 1995.02-2000.10 | 5MT | F | L | Saloon 4WD AEB/ANB/APU/ARK/AWT | | GDS83002 | Drive Shaft | 45W | 33 | | 53 | 30 | 614 | |
| | 1995.02-2000.10 | 5MT | F | R | Saloon 4WD AEB/ANB/APU/ARK/AWT | | GDS99111 | Drive Shaft | 45W | 33 | | 53 | 30 | 636 | |
| | 1995.02-2000.10 | 5MT | F | L/R | Saloon 4WD AEB/ANB/APU/ARK/AWT | | GCI83006 | Inner Joint | | | 33 | | | 34 | |
| | 1995.02-2000.10 | 5AT/5MT | R | L/R | Saloon 4WD AEB/ANB/APU/ARK/AWT | | GDS83039 | Drive Shaft | 45T | 33 | | 53 | 30 | 595.5 | |
| | 1995.02-2000.10 | 5AT/5MT | R | L/R | Saloon 4WD AEB/ANB/APU/ARK/AWT | | GCO83026 | Outer Joint | 45T | 33 | 30 | 53 | 30 | 62 | I |
| | 1995.02-2000.10 | 5AT/5MT | R | L/R | Saloon 4WD AEB/ANB/APU/ARK/AWT | | GCI83002 | Inner Joint | | | 33 | | | 32 | |
| | 1996.02-2001.09 | 5AT | F | L | Estate 4WD AEB/ANB/APU/ARK/AWT | | GDS83036 | Drive Shaft | 45W | 33 | | 53 | 30 | 524 | |
| | 1996.02-2001.09 | 5AT | F | R | Estate 4WD AEB/ANB/APU/ARK/AWT | | GDS83012 | Drive Shaft | 45W | 33 | | 53 | 30 | 498 | |
| | 1996.02-2001.09 | 5AT | F | L | Estate 4WD AEB/ANB/APU/ARK/AWT | | GCO83045 | Outer Joint | | 33 | 30 | 53 | 30 | 62 | I |
| | 1996.02-2001.09 | 5AT | F | L/R | Estate 4WD AEB/ANB/APU/ARK/AWT | | GCI50019 | Inner Joint | | | 34 | | | 59.5 | |
| | 1996.02-2001.09 | 5AT/5MT | F | L/R | Estate 4WD AEB/ANB/APU/ARK/AWT | Chassis no. from:8D_W_109792 | GCO61012 | Outer Joint | 45W | 33 | 30 | 53 | 30 | 62 | I |
| | 1996.02-2001.09 | 5AT/5MT | F | L/R | Estate 4WD AEB/ANB/APU/ARK/AWT | Chassis no. to:8D_W_109791 | GCO83018 | Outer Joint | 45W | 33 | 30 | 53 | 30 | 62 | I |
| | 1996.02-2001.09 | 5MT | F | L | Estate 4WD AEB/ANB/APU/ARK/AWT | | GDS83002 | Drive Shaft | 45W | 33 | | 53 | 30 | 614 | |
| | 1996.02-2001.09 | 5MT | F | R | Estate 4WD AEB/ANB/APU/ARK/AWT | | GDS99111 | Drive Shaft | 45W | 33 | | 53 | 30 | 636 | |
| | 1996.02-2001.09 | 5MT | F | L/R | Estate 4WD AEB/ANB/APU/ARK/AWT | | GCI83006 | Inner Joint | | | 33 | | | 34 | |
| | 1996.02-2001.09 | 5AT/5MT | R | L/R | Estate 4WD AEB/ANB/APU/ARK/AWT | | GDS83039 | Drive Shaft | 45T | 33 | | 53 | 30 | 595.5 | |
| | 1996.02-2001.09 | 5AT/5MT | R | L/R | Estate 4WD AEB/ANB/APU/ARK/AWT | | GCO83026 | Outer Joint | 45T | 33 | 30 | 53 | 30 | 62 | I |
| | 1996.02-2001.09 | 5AT/5MT | R | L/R | Estate 4WD AEB/ANB/APU/ARK/AWT | | GCI83002 | Inner Joint | | | 33 | | | 32 | |
| | 2000.11-2002.07 | 5MT | F | L | Saloon 4WD AVJ | Chassis no. to:8E_5_035000 | GDS83057 | Drive Shaft | 45W | 38 | | 59.5 | 34.5 | 593 | |
| | 2000.11-2002.07 | 5MT | F | L | Saloon 4WD AVJ | Chassis no. from:8E_5_035001 | GDS83310 | Drive Shaft | 45W | 38 | | 59.5 | 34 | 594 | |
| | 2000.11-2002.07 | 5MT | F | R | Saloon 4WD AVJ | Chassis no. to:8E_1_014312 | GDS82350 | Drive Shaft | 45W | 38 | | 59.5 | 34 | 641 | |
| | 2000.11-2002.07 | 5MT | F | R | Saloon 4WD AVJ | Chassis no. from:8E_1A014313;Chassis no. to:8E_1A026954;Chassis no. from:8E_2_120001 | GDS83058 | Drive Shaft | 45W | 38 | | 59.5 | 34.5 | 613 | |
| | 2000.11-2002.07 | 5MT | F | L/R | Saloon 4WD AVJ | Chassis no. from:8E_5_035001 | GCI61070 | Inner Joint | | | 24 | | | 85 | |
| | 2000.11-2002.07 | AT | F | L/R | Saloon 4WD AVJ | | GDS83052 | Drive Shaft | 45W | 38 | | 59.5 | 34.5 | 522 | |
| | 2000.11-2002.07 | MT | F | L/R | Saloon 4WD AVJ | | GCO83030 | Outer Joint | | 38 | 33 | 59.5 | 34 | 56.5 | M |
| | 2000.11-2002.07 | MT | F | L/R | Saloon 4WD AVJ | Chassis no. to:8E-1A014312 | GCO83058 | Outer Joint | 45W | 38 | 33 | 59.5 | 34 | 56.5 | M |
| | 2000.11-2002.07 | MT | F | L/R | Saloon 4WD AVJ | chassis no. from:8E-1A014313;Chassis no. to:8E-1A026954 | GCO83092 | Outer Joint | 45W | 38 | 27 | 59.5 | 34 | 68 | I |
| | 2000.11-2002.07 | 5MT | R | L/R | Saloon 4WD AVJ | | GDS82073 | Drive Shaft | 45W | 38 | | 59.5 | 34 | 612 | |
| | 2000.11-2002.07 | MT | R | L/R | Saloon 4WD AVJ | Chassis no. from:8E-1A026955 | GCO83058 | Outer Joint | 45W | 38 | 33 | 59.5 | 34 | 56.5 | M |
| | 2000.11-2002.07 | | R | L/R | Saloon 4WD AVJ | | GCI81618 | Inner Joint | | | 33 | | | 34 | |
| | 2001.09-2002.07 | AT | F | L/R | Estate 4WD AVJ | | GDS83052 | Drive Shaft | 45W | 38 | | 59.5 | 34.5 | 522 | |
| | 2001.09-2002.07 | MT | F | L | Estate 4WD AVJ | | GDS83057 | Drive Shaft | 45W | 38 | | 59.5 | 34.5 | 593 | |
| | 2001.09-2002.07 | MT | F | R | Estate 4WD AVJ | | GDS83058 | Drive Shaft | 45W | 38 | | 59.5 | 34.5 | 613 | |
| | 2001.09-2002.07 | MT | F | L/R | Estate 4WD AVJ | | GCO83030 | Outer Joint | | 38 | 33 | 59.5 | 34 | 56.5 | M |
| | 2001.09-2002.07 | MT | F | L/R | Estate 4WD AVJ | Chassis no. to:8E-1A014312 | GCO83058 | Outer Joint | 45W | 38 | 33 | 59.5 | 34 | 56.5 | M |
| | 2001.09-2002.07 | MT | F | L/R | Estate 4WD AVJ | chassis no. from:8E-1A014313;Chassis no. to:8E-1A026954 | GCO83092 | Outer Joint | 45W | 38 | 27 | 59.5 | 34 | 68 | I |

| | YEAR | TRANSM. | F/R | L/R | BODY STYLE & DRIVE TYPE & ENGINE | REMARKS | G-AP Ref. | PRODUCT | ABS | Technical Specifications A | B | C | H | L | P |
|---|---|---|---|---|---|---|---|---|---|---|---|---|---|---|---|
| **AUDI** | | | | | | | | | | | | | | | |
| **A4 Quattro** | | | | | | | | | | | | | | | |
| 1.8 (110 kw) | 2001.09-2002.07 | MT | F | L/R | Estate 4WD AVJ | Trans. code:FTZ | GCI50019 | Inner Joint | | | 34 | | | 59.5 | |
| | 2001.09-2002.07 | MT | F | L/R | Estate 4WD AVJ | Trans. code:FPT | GCI61044 | Inner Joint | | | 34 | | | 85 | |
| | 2001.09-2002.07 | MT | R | L/R | Estate 4WD AVJ | Chassis no. from:8E-1A026955 | GCO83058 | Outer Joint | 45W | 38 | 33 | 59.5 | 34 | 56.5 | M |
| | 2001.09-2002.07 | SAT/5MT | R | L/R | Estate 4WD AVJ | | GDS82073 | Drive Shaft | 45W | 38 | | 59.5 | 34 | 612 | |
| | 2001.09-2002.07 | | R | L/R | Estate 4WD AVJ | | GCI81618 | Inner Joint | | | 33 | | | 34 | |
| 1.8 (118 kw) | 2008.09-2012.03 | 6MT | F | L/R | Estate 4WD CDHB | | GDS83345 | Drive Shaft | | 42 | | 76.5 | 34 | 463 | |
| | 2008.09-2012.03 | AT/MT | F | L/R | Estate 4WD CDHB | | GCO83086 | Outer Joint | | 42 | 33 | 76.5 | 34 | 45.5 | M |
| | 2008.09-2012.03 | | F | L/R | Estate 4WD CDHB | TJ | GCI61070 | Inner Joint | | | 24 | | | 85 | |
| | 2008.09-2012.03 | 6MT | R | L | Estate 4WD CDHB | Date to:2011.08,For PR code:GH2,For vehicles with electronic limited slip diff. | GDS81886 | Drive Shaft | | 42 | | 76.5 | 34 | 589 | |
| | 2008.09-2012.03 | 6MT | R | L | Estate 4WD CDHB | Date from:2011.09,For PR code:GH2,For vehicles with electronic limited slip diff. | GDS82078 | Drive Shaft | | 42 | | 76.5 | 34 | 587 | |
| | 2008.09-2012.03 | 6MT | R | R | Estate 4WD CDHB | Date to:2011.08,For PR code:GH2,For vehicles with electronic limited slip diff. | GDS81885 | Drive Shaft | | 42 | | 76.5 | 34 | 546 | |
| | 2008.09-2012.03 | 6MT | R | R | Estate 4WD CDHB | Date from:2011.09,For PR code:GH2,For vehicles with electronic limited slip diff. | GDS82079 | Drive Shaft | | 42 | | 76.5 | 34 | 545 | |
| | 2008.09-2012.03 | 6MT | R | L/R | Estate 4WD CDHB | Date to:2011.08,For PR code:GH1 | GDS82076 | Drive Shaft | | 42 | | 76.5 | 34 | 630 | |
| | 2008.09-2012.03 | 6MT | R | L/R | Estate 4WD CDHB | Date from:2011.09,For PR code:GH1 | GDS83367 | Drive Shaft | | 42 | | 76.5 | 34 | 626 | |
| | 2008.09-2012.03 | 6MT | R | L/R | Estate 4WD CDHB | Date from:2011.09,For PR code:GH2,For vehicles with AWD & variable torque dist. | GCI61107 | Inner Joint | | 42 | 28 | 76.5 | 34 | 82 | |
| | 2008.09-2012.03 | 6MT | R | L/R | Estate 4WD CDHB | Date from:2011.09,For PR code:GH2,For vehicles with AWD & variable torque dist. | GCI81610 | Inner Joint | | | 28 | | | 28 | |
| | 2008.09-2012.03 | 6MT | R | L/R | Estate 4WD CDHB | Date from:2011.09,For PR code:GH1 | GCI83044 | Inner Joint | | | 25 | | | 26 | |
| | 2008.09-2012.03 | 6MT | F | L/R | Saloon 4WD CDHB | | GDS83345 | Drive Shaft | | 42 | | 76.5 | 34 | 463 | |
| | 2008.09-2012.03 | AT/MT | F | L/R | Saloon 4WD CDHB | | GCO83086 | Outer Joint | | 42 | 33 | 76.5 | 34 | 45.5 | M |
| | 2008.09-2012.03 | | F | L/R | Saloon 4WD CDHB | TJ | GCI61070 | Inner Joint | | | 24 | | | 85 | |
| | 2008.09-2012.03 | 6MT | R | L | Saloon 4WD CDHB | Date to:2011.08,For PR code:GH2,For vehicles with electronic limited slip diff. | GDS81886 | Drive Shaft | | 42 | | 76.5 | 34 | 589 | |
| | 2008.09-2012.03 | 6MT | R | L | Saloon 4WD CDHB | Date from:2011.09,For PR code:GH2,For vehicles with electronic limited slip diff. | GDS82078 | Drive Shaft | | 42 | | 76.5 | 34 | 587 | |
| | 2008.09-2012.03 | 6MT | R | R | Saloon 4WD CDHB | Date to:2011.08,For PR code:GH2,For vehicles with electronic limited slip diff. | GDS81885 | Drive Shaft | | 42 | | 76.5 | 34 | 546 | |
| | 2008.09-2012.03 | 6MT | R | R | Saloon 4WD CDHB | Date from:2011.09,For PR code:GH2,For vehicles with electronic limited slip diff. | GDS82079 | Drive Shaft | | 42 | | 76.5 | 34 | 545 | |
| | 2008.09-2012.03 | 6MT | R | L/R | Saloon 4WD CDHB | Date to:2011.08,For PR code:GH1 | GDS82076 | Drive Shaft | | 42 | | 76.5 | 34 | 630 | |
| | 2008.09-2012.03 | 6MT | R | L/R | Saloon 4WD CDHB | Date from:2011.09,For PR code:GH1 | GDS83367 | Drive Shaft | | 42 | | 76.5 | 34 | 626 | |
| | 2008.09-2012.03 | 6MT | R | L/R | Saloon 4WD CDHB | Date from:2011.09,For PR code:GH2,For vehicles with AWD & variable torque dist. | GCI61107 | Inner Joint | | 42 | 28 | 76.5 | 34 | 82 | |
| | 2008.09-2012.03 | 6MT | R | L/R | Saloon 4WD CDHB | Date from:2011.09,For PR code:GH2,For vehicles with AWD & variable torque dist. | GCI81610 | Inner Joint | | | 28 | | | 28 | |
| | 2008.09-2012.03 | 6MT | R | L/R | Saloon 4WD CDHB | Date from:2011.09,For PR code:GH1 | GCI83044 | Inner Joint | | | 25 | | | 26 | |
| 1.8 (120 kw) | 2002.07-2004.12 | 5MT/6MT | F | L | Estate 4WD BFB | | GDS83057 | Drive Shaft | 45W | 38 | | 59.5 | 34.5 | 593 | |
| | 2002.07-2004.12 | 5MT/6MT | F | L | Estate 4WD BFB | | GDS83310 | Drive Shaft | 45W | 38 | | 59.5 | 34 | 594 | |
| | 2002.07-2004.12 | 5MT/6MT | F | R | Estate 4WD BFB | | GDS83058 | Drive Shaft | 45W | 38 | | 59.5 | 34.5 | 613 | |
| | 2002.07-2004.12 | 5MT/6MT | F | L/R | Estate 4WD BFB | | GCO83058 | Outer Joint | 45W | 38 | 33 | 59.5 | 34 | 56.5 | M |
| | 2002.07-2004.12 | 5MT/6MT | F | L/R | Estate 4WD BFB | Chassis no. from:8E_5_035001 | GCI61070 | Inner Joint | | | 24 | | | 85 | |
| | 2002.07-2004.12 | AT | F | L | Estate 4WD BFB | | GDS61122 | Drive Shaft | 45W | 33 | | 53 | 30 | 602 | |
| | 2002.07-2004.12 | MT | F | L/R | Estate 4WD BFB | | GCO83030 | Outer Joint | | 38 | 33 | 59.5 | 34 | 56.5 | M |
| | 2002.07-2004.12 | MT | F | L/R | Estate 4WD BFB | | GCI61044 | Inner Joint | | | 34 | | | 85 | |
| | 2002.07-2004.12 | MT | F | L/R | Estate 4WD BFB | | GCI83007 | Inner Joint | | | 34 | | | 85 | |
| | 2002.07-2004.12 | 5MT/6MT | R | L/R | Estate 4WD BFB | | GDS82073 | Drive Shaft | 45W | 38 | | 59.5 | 34 | 612 | |
| | 2002.07-2004.12 | | R | L/R | Estate 4WD BFB | | GCI81618 | Inner Joint | | | 33 | | | 34 | |
| | 2002.07-2004.12 | 5MT/6MT | F | L | Saloon 4WD BFB | Inner teeth of wheel side:27 | GDS83057 | Drive Shaft | 45W | 38 | | 59.5 | 34.5 | 593 | |
| | 2002.07-2004.12 | 5MT/6MT | F | L | Saloon 4WD BFB | Inner teeth of wheel side:33 | GDS83310 | Drive Shaft | 45W | 38 | | 59.5 | 34 | 594 | |
| | 2002.07-2004.12 | 5MT/6MT | F | R | Saloon 4WD BFB | | GDS83058 | Drive Shaft | 45W | 38 | | 59.5 | 34.5 | 613 | |
| | 2002.07-2004.12 | 5MT/6MT | F | L/R | Saloon 4WD BFB | | GCO83058 | Outer Joint | 45W | 38 | 33 | 59.5 | 34 | 56.5 | M |
| | 2002.07-2004.12 | 5MT/6MT | F | L/R | Saloon 4WD BFB | Chassis no. from:8E_5_035001 | GCI61070 | Inner Joint | | | 24 | | | 85 | |
| | 2002.07-2004.12 | AT | F | L/R | Saloon 4WD BFB | | GDS83052 | Drive Shaft | 45W | 38 | | 59.5 | 34.5 | 522 | |
| | 2002.07-2004.12 | AT/MT | F | L/R | Saloon 4WD BFB | | GCI61044 | Inner Joint | | | 34 | | | 85 | |
| | 2002.07-2004.12 | MT | F | L/R | Saloon 4WD BFB | | GCO83030 | Outer Joint | | 38 | 33 | 59.5 | 34 | 56.5 | M |
| | 2002.07-2004.12 | 5MT/6MT | R | L/R | Saloon 4WD BFB | | GDS82073 | Drive Shaft | 45W | 38 | | 59.5 | 34 | 612 | |
| | 2002.07-2004.12 | | R | L/R | Saloon 4WD BFB | | GCI81618 | Inner Joint | | | 33 | | | 34 | |
| | 2004.11-2008.06 | 6MT | F | L | Estate 4WD BFB | | GDS83310 | Drive Shaft | 45W | 38 | | 59.5 | 34 | 594 | |
| | 2004.11-2008.06 | 6MT | F | R | Estate 4WD BFB | | GDS83058 | Drive Shaft | 45W | 38 | | 59.5 | 34.5 | 613 | |
| | 2004.11-2008.06 | 6MT | F | L/R | Estate 4WD BFB | | GCO83030 | Outer Joint | | 38 | 33 | 59.5 | 34 | 56.5 | M |
| | 2004.11-2008.06 | 6MT | F | L/R | Estate 4WD BFB | | GCO83058 | Outer Joint | 45W | 38 | 33 | 59.5 | 34 | 56.5 | M |
| | 2004.11-2008.06 | 6MT | F | L/R | Estate 4WD BFB | | GCI61044 | Inner Joint | | | 34 | | | 85 | |
| | 2004.11-2008.06 | 6MT | F | L/R | Estate 4WD BFB | | GCI61070 | Inner Joint | | | 24 | | | 85 | |
| | 2004.11-2008.06 | 6MT | R | L/R | Estate 4WD BFB | | GDS82073 | Drive Shaft | 45W | 38 | | 59.5 | 34 | 612 | |
| | 2004.11-2008.06 | 6MT | R | L/R | Estate 4WD BFB | | GCI81618 | Inner Joint | | | 33 | | | 34 | |
| | 2004.11-2008.06 | 6MT | F | L | Saloon 4WD BFB | | GDS83310 | Drive Shaft | 45W | 38 | | 59.5 | 34 | 594 | |
| | 2004.11-2008.06 | 6MT | F | R | Saloon 4WD BFB | | GDS83058 | Drive Shaft | 45W | 38 | | 59.5 | 34.5 | 613 | |
| | 2004.11-2008.06 | 6MT | F | L/R | Saloon 4WD BFB | | GCO83030 | Outer Joint | | 38 | 33 | 59.5 | 34 | 56.5 | M |
| | 2004.11-2008.06 | 6MT | F | L/R | Saloon 4WD BFB | | GCO83058 | Outer Joint | 45W | 38 | 33 | 59.5 | 34 | 56.5 | M |
| | 2004.11-2008.06 | 6MT | F | L/R | Saloon 4WD BFB | | GCI61044 | Inner Joint | | | 34 | | | 85 | |
| | 2004.11-2008.06 | 6MT | F | L/R | Saloon 4WD BFB | | GCI61070 | Inner Joint | | | 24 | | | 85 | |
| | 2004.11-2008.06 | 6MT | R | L/R | Saloon 4WD BFB | | GDS82073 | Drive Shaft | 45W | 38 | | 59.5 | 34 | 612 | |

| | YEAR | TRANSM. | F/R | L/R | BODY STYLE & DRIVE TYPE & ENGINE | REMARKS | G-AP Ref. | PRODUCT | ABS | Technical Specifications A | B | C | H | L | P |
|---|---|---|---|---|---|---|---|---|---|---|---|---|---|---|---|
| **AUDI** | | | | | | | | | | | | | | | |
| **A4 Quattro** | | | | | | | | | | | | | | | |
| 1.8 (120 kw) | 2004.11-2008.06 | 6MT | R | L/R | Saloon 4WD BFB | | GCI81618 | Inner Joint | | | 33 | | | 34 | |
| 1.8 (125 kw) | 2001.07-2004.12 | 5AT | F | L/R | Saloon 4WD AMB;AWM | Chassis no. from:8E_4_195501 | GCO83078 | Outer Joint | 45W | 38 | 27 | 59.5 | 34.5 | 63 | M |
| | 2001.07-2004.12 | 5AT | F | L/R | Saloon 4WD AMB;AWM | Chassis no. to:8E_4_195500 | GCO83092 | Outer Joint | 45W | 38 | 27 | 59.5 | 34 | 68 | I |
| | 2001.07-2004.12 | 5MT | F | L/R | Saloon 4WD AMB;AWM | | GCO83030 | Outer Joint | | 38 | 33 | 59.5 | 34 | 56.5 | M |
| | 2001.07-2004.12 | 5MT | F | L/R | Saloon 4WD AMB;AWM | | GCO83058 | Outer Joint | 45W | 38 | 33 | 59.5 | 34 | 56.5 | M |
| | 2001.07-2004.12 | 5MT | F | L/R | Saloon 4WD AMB;AWM | Chassis no. from:8E_5_035001 | GCI61070 | Inner Joint | | | 24 | | | 85 | |
| | 2001.07-2004.12 | 5MT | F | L/R | Saloon 4WD AMB;AWM | Chassis no. to:8E_5_035000 | GCI83007 | Inner Joint | | | 34 | | | 85 | |
| | 2001.07-2004.12 | AT | F | L | Saloon 4WD AMB;AWM | | GDS83052 | Drive Shaft | 45W | 38 | | 59.5 | 34.5 | 522 | |
| | 2001.07-2004.12 | AT | F | R | Saloon 4WD AMB;AWM | | GDS82168 | Drive Shaft | 45W | 38 | | 59.5 | 34.5 | 490 | |
| | 2001.07-2004.12 | MT | F | L | Saloon 4WD AMB;AWM | Inner teeth of wheel side:27 | GDS83057 | Drive Shaft | 45W | 38 | | 59.5 | 34.5 | 593 | |
| | 2001.07-2004.12 | MT | F | L | Saloon 4WD AMB;AWM | Inner teeth of wheel side:33 | GDS83310 | Drive Shaft | 45W | 38 | | 59.5 | 34 | 594 | |
| | 2001.07-2004.12 | MT | F | R | Saloon 4WD AMB;AWM | | GDS83058 | Drive Shaft | 45W | 38 | | 59.5 | 34.5 | 613 | |
| | 2001.07-2004.12 | 5AT/5MT | R | L/R | Saloon 4WD AMB;AWM | Date to:2002.07 | GDS82073 | Drive Shaft | 45W | 38 | | 59.5 | 34 | 612 | |
| | 2001.07-2004.12 | 5AT/5MT | R | L/R | Saloon 4WD AMB;AWM | Date from:2002.08 | GDS82401 | Drive Shaft | 45W | 38 | | 59.5 | 34 | 617 | |
| | 2001.07-2004.12 | 5AT/5MT | R | L/R | Saloon 4WD AMB;AWM | Chassis no. from:8E_3_134001 | GCI61010 | Inner Joint | | | 28 | | | 32 | |
| | 2001.07-2004.12 | AT/MT | R | L/R | Saloon 4WD AMB;AWM | | GCO83058 | Outer Joint | 45W | 38 | 33 | 59.5 | 34 | 56.5 | M |
| | 2001.07-2004.12 | AT/MT | R | L/R | Saloon 4WD AMB;AWM | Chassis no. to:8E_3_134000 | GCI81618 | Inner Joint | | | 33 | | | 34 | |
| | 2001.09-2004.12 | 5AT | F | L | Estate 4WD AMB | | GDS83052 | Drive Shaft | 45W | 38 | | 59.5 | 34.5 | 522 | |
| | 2001.09-2004.12 | 5AT | F | L/R | Estate 4WD AMB | Chassis no. from:8E_4_195501 | GCO83078 | Outer Joint | 45W | 38 | 27 | 59.5 | 34.5 | 63 | M |
| | 2001.09-2004.12 | 5AT | F | L/R | Estate 4WD AMB | Chassis no. to:8E_4_195500 | GCO83092 | Outer Joint | 45W | 38 | 27 | 59.5 | 34 | 68 | I |
| | 2001.09-2004.12 | 5AT | F | L/R | Estate 4WD AMB | Chassis no. from:8E_4_195501 | GCI61044 | Inner Joint | | | 34 | | | 85 | |
| | 2001.09-2004.12 | 5MT/6MT | F | L | Estate 4WD AMB | Chassis no. to:8E_5_035000 | GDS83057 | Drive Shaft | 45W | 38 | | 59.5 | 34.5 | 593 | |
| | 2001.09-2004.12 | 5MT/6MT | F | L | Estate 4WD AMB | Chassis no. from:8E_5_035001 | GDS83310 | Drive Shaft | 45W | 38 | | 59.5 | 34 | 594 | |
| | 2001.09-2004.12 | 5MT/6MT | F | R | Estate 4WD AMB | | GDS83058 | Drive Shaft | 45W | 38 | | 59.5 | 34.5 | 613 | |
| | 2001.09-2004.12 | 5MT/6MT | F | L/R | Estate 4WD AMB | | GCO83030 | Outer Joint | | 38 | 33 | 59.5 | 34 | 56.5 | M |
| | 2001.09-2004.12 | 5MT/6MT | F | L/R | Estate 4WD AMB | Chassis no. from:8E_5_035001 | GCI61070 | Inner Joint | | | 24 | | | 85 | |
| | 2001.09-2004.12 | AT | F | R | Estate 4WD AMB | For Engine Code:AMB,Chassis no. to:8E-4-195 500 | GDS82168 | Drive Shaft | 45W | 38 | | 59.5 | 34.5 | 490 | |
| | 2001.09-2004.12 | 5AT | R | L/R | Estate 4WD AMB | Chassis no. to:8E_3_134000 | GDS82073 | Drive Shaft | 45W | 38 | | 59.5 | 34 | 612 | |
| | 2001.09-2004.12 | 5AT | R | L/R | Estate 4WD AMB | Chassis no. from:8E_3_134001 | GCI61010 | Inner Joint | | | 28 | | | 32 | |
| | 2001.09-2004.12 | 5AT/5MT/6MT | R | L/R | Estate 4WD AMB | Chassis no. from:8E_3_134001 | GDS82401 | Drive Shaft | 45W | 38 | | 59.5 | 34 | 617 | |
| | 2001.09-2004.12 | 5MT/6MT | R | L/R | Estate 4WD AMB | Chassis no. from:8E-3-134 001,For Engine Code:AMB | GCI61002 | Inner Joint | | | 28 | | | 31.8 | |
| | 2001.09-2004.12 | 5MT/6MT | F/R | L/R | Estate 4WD AMB | | GCO83058 | Outer Joint | 45W | 38 | 33 | 59.5 | 34 | 56.5 | M |
| | 2011.11-2015.12 | 6MT | F | L/R | Estate 4WD CJEB | | GDS83371 | Drive Shaft | | 42 | | 76.5 | 34 | 465 | |
| | 2011.11-2015.12 | 6MT | F | L/R | Estate 4WD CJEB | | GCO83107 | Outer Joint | | 42 | 25 | 76.5 | 34 | 47.5 | I |
| | 2011.11-2015.12 | AT/MT | F | L/R | Estate 4WD CJEB | | GCI83022 | Inner Joint | | | 34 | | | 88.5 | |
| | 2011.11-2015.12 | | F | | Estate 4WD CJEB | | GCO83103 | Outer Joint | | 42 | 28 | 76.4 | 34 | 54 | I |
| | 2011.11-2015.12 | | F | L/R | Estate 4WD CJEB | | GCI81054 | Inner Joint | | | 24 | | | 86 | |
| | 2011.11-2015.12 | 6MT | R | L | Estate 4WD CJEB | For PR code:GH2,For vehicles with electronic limited slip diff. | GDS82078 | Drive Shaft | | 42 | | 76.5 | 34 | 587 | |
| | 2011.11-2015.12 | 6MT | R | R | Estate 4WD CJEB | For PR code:GH2,For vehicles with electronic limited slip diff. | GDS82079 | Drive Shaft | | 42 | | 76.5 | 34 | 545 | |
| | 2011.11-2015.12 | 6MT | R | L/R | Estate 4WD CJEB | For PR code:GH1 | GDS83367 | Drive Shaft | | 42 | | 76.5 | 34 | 626 | |
| | 2011.11-2015.12 | 6MT | R | L/R | Estate 4WD CJEB | | GCI83040 | Outer Joint | | 42 | 25 | 76.5 | 34 | 66 | M |
| | 2011.11-2015.12 | 6MT | R | L/R | Estate 4WD CJEB | Wheel Side | GCI61107 | Inner Joint | | 42 | 28 | 76.5 | 34 | 82 | |
| | 2011.11-2015.12 | 6MT | R | L/R | Estate 4WD CJEB | For PR code:GH2,For vehicles with AWD & variable torque dst. | GCI81610 | Inner Joint | | | 28 | | | 28 | |
| | 2011.11-2015.12 | 6MT | R | L/R | Estate 4WD CJEB | For PR code:GH1 | GCI83044 | Inner Joint | | | 25 | | | 26 | |
| | 2011.11-2015.12 | 6MT | F | L/R | Saloon 4WD CJEB | | GDS83371 | Drive Shaft | | 42 | | 76.5 | 34 | 465 | |
| | 2011.11-2015.12 | 6MT | F | L/R | Saloon 4WD CJEB | | GCO83107 | Outer Joint | | 42 | 25 | 76.5 | 34 | 47.5 | I |
| | 2011.11-2015.12 | 6MT | F | L/R | Saloon 4WD CJEB | AAR | GCI81054 | Inner Joint | | | 24 | | | 86 | |
| | 2011.11-2015.12 | 6MT | F | L/R | Saloon 4WD CJEB | TJ | GCI83022 | Inner Joint | | | 34 | | | 88.5 | |
| | 2011.11-2015.12 | 6MT | R | L | Saloon 4WD CJEB | For PR code:GH2,For vehicles with electronic limited slip diff. | GDS82078 | Drive Shaft | | 42 | | 76.5 | 34 | 587 | |
| | 2011.11-2015.12 | 6MT | R | R | Saloon 4WD CJEB | For PR code:GH2,For vehicles with electronic limited slip diff. | GDS82079 | Drive Shaft | | 42 | | 76.5 | 34 | 545 | |
| | 2011.11-2015.12 | 6MT | R | L/R | Saloon 4WD CJEB | For PR code:GH1 | GDS83367 | Drive Shaft | | 42 | | 76.5 | 34 | 626 | |
| | 2011.11-2015.12 | 6MT | R | L/R | Saloon 4WD CJEB | For PR Code:GH1 | GCI83040 | Outer Joint | | 42 | 25 | 76.5 | 34 | 66 | M |
| | 2011.11-2015.12 | 6MT | R | L/R | Saloon 4WD CJEB | For PR Code:GH2,For vehicles with electronic LTD slip differential | GCI61107 | Inner Joint | | 42 | 28 | 76.5 | 34 | 82 | |
| | 2011.11-2015.12 | 6MT | R | L/R | Saloon 4WD CJEB | For PR Code:GH2,For vehicles with electronic LTD slip differential | GCI81610 | Inner Joint | | | 28 | | | 28 | |
| | 2011.11-2015.12 | 6MT | R | L/R | Saloon 4WD CJEB | For PR code:GH1 | GCI83044 | Inner Joint | | | 25 | | | 26 | |
| 1.8 (132 kw) | 1997.10-2000.10 | 5MT | F | R | Saloon 4WD AJL | | GDS83041 | Drive Shaft | 45W | 38 | | 59.5 | 34 | 640 | |
| | 1997.10-2000.10 | 5MT | F | L/R | Saloon 4WD AJL | Chassis no. to:8DX199999 | GCI83002 | Inner Joint | | | 33 | | | 32 | |
| | 1997.10-2000.10 | AT/MT | F | L | Saloon 4WD AJL | | GDS83040 | Drive Shaft | 45W | 38 | | 59.5 | 34 | 617 | |
| | 1997.10-2000.10 | AT/MT | F | L/R | Saloon 4WD AJL | | GCO83019 | Outer Joint | 45W | 38 | 27 | 59.5 | 34.5 | 63 | I |
| | 1997.10-2000.10 | | F | L | Saloon 4WD AJL | | GDS61122 | Drive Shaft | 45W | 33 | | 53 | 30 | 602 | |
| | 1997.10-2000.10 | | F | R | Saloon 4WD AJL | | GDS83007 | Drive Shaft | 45W | 33 | | 53 | 30 | 622 | |
| | 1997.10-2000.10 | | F | L/R | Saloon 4WD AJL | | GCO83020 | Outer Joint | 45W | 38 | 30 | 59.5 | 34 | 59.5 | I |
| | 1997.10-2000.10 | | F | L/R | Saloon 4WD AJL | | GCO83049 | Outer Joint | | 38 | 30 | 59.5 | 34 | 59.5 | I |
| | 1997.10-2000.10 | 5MT | R | L/R | Saloon 4WD AJL | | GDS83039 | Drive Shaft | 45T | 33 | | 53 | 30 | 595.5 | |
| | 1997.10-2000.10 | 5MT | R | L/R | Saloon 4WD AJL | | GCO83026 | Outer Joint | 45T | 33 | 30 | 53 | 30 | 62 | I |

| | YEAR | TRANSM. | F/R | L/R | BODY STYLE & DRIVE TYPE & ENGINE | REMARKS | G-AP Ref. | PRODUCT | ABS | Technical Specifications A | B | C | H | L | P |
|---|---|---|---|---|---|---|---|---|---|---|---|---|---|---|---|
| **AUDI** | | | | | | | | | | | | | | | |
| **A4 Quattro** | | | | | | | | | | | | | | | |
| 1.8 (132 kw) | 1997.10-2001.09 | 5MT | F | R | Estate 4WD AJL | | GDS83041 | Drive Shaft | 45W | 38 | | 59.5 | 34 | 640 | |
| | 1997.10-2001.09 | 5MT | F | L/R | Estate 4WD AJL | Chassis no. to:8DX199999 | GCI83002 | Inner Joint | | | 33 | | | 32 | |
| | 1997.10-2001.09 | MT | F | L | Estate 4WD AJL | | GDS83040 | Drive Shaft | 45W | 38 | | 59.5 | 34 | 617 | |
| | 1997.10-2001.09 | MT | F | L/R | Estate 4WD AJL | | GCO83019 | Outer Joint | 45W | 38 | 27 | 59.5 | 34.5 | 63 | I |
| | 1997.10-2001.09 | | F | L | Estate 4WD AJL | | GDS61122 | Drive Shaft | 45W | 33 | | 53 | 30 | 602 | |
| | 1997.10-2001.09 | | F | R | Estate 4WD AJL | | GDS83007 | Drive Shaft | 45W | 33 | | 53 | 30 | 622 | |
| | 1997.10-2001.09 | | F | L/R | Estate 4WD AJL | | GCO83020 | Outer Joint | 45W | 38 | 30 | 59.5 | 34 | 59.5 | I |
| | 1997.10-2001.09 | | F | L/R | Estate 4WD AJL | | GCO83049 | Outer Joint | | 38 | 30 | 59.5 | 34 | 59.5 | I |
| | 1997.10-2001.09 | 5MT | R | L/R | Estate 4WD AJL | | GDS83039 | Drive Shaft | 45T | 33 | | 53 | 30 | 595.5 | |
| | 1997.10-2001.09 | 5MT | R | L/R | Estate 4WD AJL | | GCO83026 | Outer Joint | 45T | 33 | 30 | 53 | 30 | 62 | I |
| 1.8 (140 kw) | 2002.11-2004.12 | 6MT | F | L | Estate 4WD BEX | | GDS83057 | Drive Shaft | 45W | 38 | | 59.5 | 34.5 | 593 | |
| | 2002.11-2004.12 | 6MT | F | L | Estate 4WD BEX | | GDS83310 | Drive Shaft | 45W | 38 | | 59.5 | 34 | 594 | |
| | 2002.11-2004.12 | 6MT | F | R | Estate 4WD BEX | | GDS83058 | Drive Shaft | 45W | 38 | | 59.5 | 34.5 | 613 | |
| | 2002.11-2004.12 | 6MT | F | L/R | Estate 4WD BEX | | GCO83058 | Outer Joint | 45W | 38 | 33 | 59.5 | 34 | 56.5 | M |
| | 2002.11-2004.12 | 6MT | F | L/R | Estate 4WD BEX | Chassis no. from:8E_5_035001 | GCI61070 | Inner Joint | | | 24 | | | 85 | |
| | 2002.11-2004.12 | AT | F | L | Estate 4WD BEX | | GDS61122 | Drive Shaft | 45W | 33 | | 53 | 30 | 602 | |
| | 2002.11-2004.12 | MT | F | L/R | Estate 4WD BEX | | GCO83030 | Outer Joint | | 38 | 33 | 59.5 | 34 | 56.5 | M |
| | 2002.11-2004.12 | MT | F | L/R | Estate 4WD BEX | | GCI61044 | Inner Joint | | | 34 | | | 85 | |
| | 2002.11-2004.12 | MT | F | L/R | Estate 4WD BEX | | GCI83007 | Inner Joint | | | 34 | | | 85 | |
| | 2002.11-2004.12 | 6MT | R | L/R | Estate 4WD BEX | | GDS82401 | Drive Shaft | 45W | 38 | | 59.5 | 34 | 617 | |
| | 2002.11-2004.12 | 6MT | R | L/R | Estate 4WD BEX | | GCI61010 | Inner Joint | | | 28 | | | 32 | |
| | 2002.11-2004.12 | 5AT/6MT | F | L/R | Saloon 4WD BEX | Chassis no. from:8E_5_035001 | GCI61070 | Inner Joint | | | 24 | | | 85 | |
| | 2002.11-2004.12 | AT | F | L/R | Saloon 4WD BEX | | GDS83052 | Drive Shaft | 45W | 38 | | 59.5 | 34.5 | 522 | |
| | 2002.11-2004.12 | AT/MT | F | L/R | Saloon 4WD BEX | | GCI61044 | Inner Joint | | | 34 | | | 85 | |
| | 2002.11-2004.12 | CVT/6MT | F | L | Saloon 4WD BEX | Inner teeth of wheel side:27 | GDS83057 | Drive Shaft | 45W | 38 | | 59.5 | 34.5 | 593 | |
| | 2002.11-2004.12 | CVT/6MT | F | L | Saloon 4WD BEX | Inner teeth of wheel side:33 | GDS83310 | Drive Shaft | 45W | 38 | | 59.5 | 34 | 594 | |
| | 2002.11-2004.12 | CVT/6MT | F | R | Saloon 4WD BEX | | GDS83058 | Drive Shaft | 45W | 38 | | 59.5 | 34.5 | 613 | |
| | 2002.11-2004.12 | CVT/6MT | F | L/R | Saloon 4WD BEX | | GCO83058 | Outer Joint | 45W | 38 | 33 | 59.5 | 34 | 56.5 | M |
| | 2002.11-2004.12 | MT | F | L/R | Saloon 4WD BEX | | GCO83030 | Outer Joint | | 38 | 33 | 59.5 | 34 | 56.5 | M |
| | 2002.11-2004.12 | 5AT/6MT | R | L/R | Saloon 4WD BEX | | GCI61010 | Inner Joint | | | 28 | | | 32 | |
| | 2002.11-2004.12 | CVT/6MT | R | L/R | Saloon 4WD BEX | | GDS82401 | Drive Shaft | 45W | 38 | | 59.5 | 34 | 617 | |
| 1.9 (81 kw) | 1996.07-2000.01 | 5MT | F | L | Estate 4WD AFN/AVG | | GDS61122 | Drive Shaft | 45W | 33 | | 53 | 30 | 602 | |
| | 1996.07-2000.01 | 5MT | F | R | Estate 4WD AFN/AVG | For Europe | GDS83007 | Drive Shaft | 45W | 33 | | 53 | 30 | 622 | |
| | 1996.07-2000.01 | 5MT | F | R | Estate 4WD AFN/AVG | For North America | GDS83009 | Drive Shaft | 45W | 33 | | 53 | 30 | 617 | |
| | 1996.07-2000.01 | 5MT | F | L/R | Estate 4WD AFN/AVG | Chassis no. from:8D_W_109792 | GCO61012 | Outer Joint | 45W | 33 | 30 | 53 | 30 | 62 | I |
| | 1996.07-2000.01 | 5MT | F | L/R | Estate 4WD AFN/AVG | Chassis no. to:8D_W_109791 | GCO83018 | Outer Joint | 45W | 33 | 30 | 53 | 30 | 62 | I |
| | 1996.07-2000.01 | 5MT | F | L/R | Estate 4WD AFN/AVG | | GCI50019 | Inner Joint | | | 34 | | | 59.5 | |
| | 1996.07-2000.01 | 5MT | R | L/R | Estate 4WD AFN/AVG | | GDS83039 | Drive Shaft | 45T | 33 | | 53 | 30 | 595.5 | |
| | 1996.07-2000.01 | 5MT | R | L/R | Estate 4WD AFN/AVG | | GCO83026 | Outer Joint | 45T | 33 | 30 | 53 | 30 | 62 | I |
| | 1996.07-2000.01 | 5MT | R | L/R | Estate 4WD AFN/AVG | | GCI83002 | Inner Joint | | | 33 | | | 32 | |
| | 1996.07-2000.01 | 5MT | F | L | Saloon 4WD AFN/AVG | | GDS61122 | Drive Shaft | 45W | 33 | | 53 | 30 | 602 | |
| | 1996.07-2000.01 | 5MT | F | R | Saloon 4WD AFN/AVG | For Europe | GDS83007 | Drive Shaft | 45W | 33 | | 53 | 30 | 622 | |
| | 1996.07-2000.01 | 5MT | F | R | Saloon 4WD AFN/AVG | For North America | GDS83009 | Drive Shaft | 45W | 33 | | 53 | 30 | 617 | |
| | 1996.07-2000.01 | 5MT | F | L/R | Saloon 4WD AFN/AVG | Chassis no. from:8D_W_109792 | GCO61012 | Outer Joint | 45W | 33 | 30 | 53 | 30 | 62 | I |
| | 1996.07-2000.01 | 5MT | F | L/R | Saloon 4WD AFN/AVG | Chassis no. to:8D_W_109791 | GCO83018 | Outer Joint | 45W | 33 | 30 | 53 | 30 | 62 | I |
| | 1996.07-2000.01 | 5MT | F | L/R | Saloon 4WD AFN/AVG | | GCI50019 | Inner Joint | | | 34 | | | 59.5 | |
| | 1996.07-2000.01 | 5MT | R | L/R | Saloon 4WD AFN/AVG | | GDS83039 | Drive Shaft | 45T | 33 | | 53 | 30 | 595.5 | |
| | 1996.07-2000.01 | 5MT | R | L/R | Saloon 4WD AFN/AVG | | GCO83026 | Outer Joint | 45T | 33 | 30 | 53 | 30 | 62 | I |
| | 1996.07-2000.01 | 5MT | R | L/R | Saloon 4WD AFN/AVG | | GCI83002 | Inner Joint | | | 33 | | | 32 | |
| 1.9 (85 kw) | 1998.12-2000.10 | 5MT | F | R | Saloon 4WD AJM/ATJ | | GDS83007 | Drive Shaft | 45W | 33 | | 53 | 30 | 622 | |
| | 1998.12-2000.10 | 5MT/6MT | F | L | Saloon 4WD AJM/ATJ | | GDS61122 | Drive Shaft | 45W | 33 | | 53 | 30 | 602 | |
| | 1998.12-2000.10 | 5MT/6MT | F | L/R | Saloon 4WD AJM/ATJ | | GCI50019 | Inner Joint | | | 34 | | | 59.5 | |
| | 1998.12-2000.10 | 6MT | F | R | Saloon 4WD AJM/ATJ | | GDS61019 | Drive Shaft | 45W | 38 | | 59.5 | 34.5 | 624 | |
| | 1998.12-2000.10 | 6MT | F | L/R | Saloon 4WD AJM/ATJ | | GCO83019 | Outer Joint | 45W | 38 | 27 | 59.5 | 34.5 | 63 | I |
| | 1998.12-2000.10 | 5MT/6MT | R | L/R | Saloon 4WD AJM/ATJ | | GDS83039 | Drive Shaft | 45T | 33 | | 53 | 30 | 595.5 | |
| | 1998.12-2000.10 | 5MT/6MT | R | L/R | Saloon 4WD AJM/ATJ | | GCO83026 | Outer Joint | 45T | 33 | 30 | 53 | 30 | 62 | I |
| | 1998.12-2000.10 | 5MT/6MT | R | L/R | Saloon 4WD AJM/ATJ | | GCI83002 | Inner Joint | | | 33 | | | 32 | |
| | 2000.01-2001.09 | 6MT | F | R | Estate 4WD ATJ | | GDS61019 | Drive Shaft | 45W | 38 | | 59.5 | 34.5 | 624 | |
| | 2000.01-2001.09 | 6MT | F | L/R | Estate 4WD ATJ | | GCO83019 | Outer Joint | 45W | 38 | 27 | 59.5 | 34.5 | 63 | I |
| | 2000.01-2001.09 | 6MT | F | L/R | Estate 4WD ATJ | | GCI50019 | Inner Joint | | | 34 | | | 59.5 | |
| | 2000.01-2001.09 | 6MT | R | L/R | Estate 4WD ATJ | | GDS83039 | Drive Shaft | 45T | 33 | | 53 | 30 | 595.5 | |
| | 2000.01-2001.09 | 6MT | R | L/R | Estate 4WD ATJ | | GCO83026 | Outer Joint | 45T | 33 | 30 | 53 | 30 | 62 | I |
| | 2000.01-2001.09 | 6MT | R | L/R | Estate 4WD ATJ | | GCI83002 | Inner Joint | | | 33 | | | 32 | |
| 1.9 (96 kw) | 2001.11-2004.12 | 6MT | F | L | Estate 4WD AVF | | GDS83057 | Drive Shaft | 45W | 38 | | 59.5 | 34.5 | 593 | |
| | 2001.11-2004.12 | 6MT | F | R | Estate 4WD AVF | | GDS83058 | Drive Shaft | 45W | 38 | | 59.5 | 34.5 | 613 | |

| | YEAR | TRANSM. | F/R | L/R | BODY STYLE & DRIVE TYPE & ENGINE | REMARKS | G-AP Ref. | PRODUCT | ABS | Technical Specifications A | B | C | H | L | P |
|---|---|---|---|---|---|---|---|---|---|---|---|---|---|---|---|
| **AUDI** | | | | | | | | | | | | | | | |
| **A4 Quattro** | | | | | | | | | | | | | | | |
| 1.9 (96 kw) | 2001.11-2004.12 | 6MT | F | L/R | Estate 4WD AVF | | GCO83019 | Outer Joint | 45W | 38 | 27 | 59.5 | 34.5 | 63 | I |
| | 2001.11-2004.12 | 6MT | F | L/R | Estate 4WD AVF | Chassis no. from:8E_4_023001 | GCO83030 | Outer Joint | | 38 | 33 | 59.5 | 34 | 56.5 | M |
| | 2001.11-2004.12 | 6MT | F | L/R | Estate 4WD AVF | Chassis no. from:8E_4_023001 | GCO83058 | Outer Joint | 45W | 38 | 33 | 59.5 | 34 | 56.5 | M |
| | 2001.11-2004.12 | 6MT | F | L/R | Estate 4WD AVF | Chassis no. to:8E_4_023000 | GCO83092 | Outer Joint | 45W | 38 | 27 | 59.5 | 34 | 68 | I |
| | 2001.11-2004.12 | 6MT | F | L/R | Estate 4WD AVF | Chassis no. from:8E_4_023001 | GCI83007 | Inner Joint | | | 34 | | | 85 | |
| | 2001.11-2004.12 | 6MT | R | L/R | Estate 4WD AVF | | GDS82401 | Drive Shaft | 45W | 38 | | 59.5 | 34 | 617 | |
| | 2001.11-2004.12 | 6MT | R | L/R | Estate 4WD AVF | | GCI61010 | Inner Joint | | | 28 | | | 32 | |
| | 2001.11-2004.12 | 6MT | F | L | Saloon 4WD AVF | | GDS83057 | Drive Shaft | 45W | 38 | | 59.5 | 34.5 | 593 | |
| | 2001.11-2004.12 | 6MT | F | R | Saloon 4WD AVF | | GDS83058 | Drive Shaft | 45W | 38 | | 59.5 | 34.5 | 613 | |
| | 2001.11-2004.12 | 6MT | F | L/R | Saloon 4WD AVF | | GCO83019 | Outer Joint | 45W | 38 | 27 | 59.5 | 34.5 | 63 | I |
| | 2001.11-2004.12 | 6MT | F | L/R | Saloon 4WD AVF | | GCO83030 | Outer Joint | | 38 | 33 | 59.5 | 34 | 56.5 | M |
| | 2001.11-2004.12 | 6MT | F | L/R | Saloon 4WD AVF | | GCO83058 | Outer Joint | 45W | 38 | 33 | 59.5 | 34 | 56.5 | M |
| | 2001.11-2004.12 | 6MT | F | L/R | Saloon 4WD AVF | | GCO83092 | Outer Joint | 45W | 38 | 27 | 59.5 | 34 | 68 | I |
| | 2001.11-2004.12 | 6MT | F | L/R | Saloon 4WD AVF | Chassis no. from:8E_4_023001 | GCI83007 | Inner Joint | | | 34 | | | 85 | |
| | 2001.11-2004.12 | 6MT | R | L/R | Saloon 4WD AVF | | GDS82401 | Drive Shaft | 45W | 38 | | 59.5 | 34 | 617 | |
| | 2001.11-2004.12 | 6MT | R | L/R | Saloon 4WD AVF | | GCI61002 | Inner Joint | | | 28 | | | 31.8 | |
| | 2001.11-2004.12 | 6MT | R | L/R | Saloon 4WD AVF | | GCI61010 | Inner Joint | | | 28 | | | 32 | |
| 2.0 (103 kw) | 2006.01-2008.06 | 6MT | F | L | Estate 4WD BPW | | GDS83310 | Drive Shaft | 45W | 38 | | 59.5 | 34 | 594 | |
| | 2006.01-2008.06 | 6MT | F | R | Estate 4WD BPW | | GDS83058 | Drive Shaft | 45W | 38 | | 59.5 | 34.5 | 613 | |
| | 2006.01-2008.06 | 6MT | F | L/R | Estate 4WD BPW | | GCO83030 | Outer Joint | | 38 | 33 | 59.5 | 34 | 56.5 | M |
| | 2006.01-2008.06 | 6MT | F | L/R | Estate 4WD BPW | | GCO83058 | Outer Joint | 45W | 38 | 33 | 59.5 | 34 | 56.5 | M |
| | 2006.01-2008.06 | 6MT | F | L/R | Estate 4WD BPW | | GCI61070 | Inner Joint | | | 24 | | | 85 | |
| | 2006.01-2008.06 | AT | F | L/R | Estate 4WD BPW | | GDS83052 | Drive Shaft | 45W | 38 | | 59.5 | 34.5 | 522 | |
| | 2006.01-2008.06 | MT | F | L/R | Estate 4WD BPW | | GCI61044 | Inner Joint | | | 34 | | | 85 | |
| | 2006.01-2008.06 | | F | L/R | Estate 4WD BPW | Date From:2006.06;Date To:2008.03 | GCO83067 | Outer Joint | 45W | 38 | 27 | 59.5 | 34 | 68 | M |
| | 2006.01-2008.06 | 6MT | R | L/R | Estate 4WD BPW | | GDS82401 | Drive Shaft | 45W | 38 | | 59.5 | 34 | 617 | |
| | 2006.01-2008.06 | 6MT | R | L/R | Estate 4WD BPW | | GCI61010 | Inner Joint | | | 28 | | | 32 | |
| | 2006.01-2008.06 | 6MT | F | L | Saloon 4WD BPW | | GDS83310 | Drive Shaft | 45W | 38 | | 59.5 | 34 | 594 | |
| | 2006.01-2008.06 | 6MT | F | R | Saloon 4WD BPW | | GDS83058 | Drive Shaft | 45W | 38 | | 59.5 | 34.5 | 613 | |
| | 2006.01-2008.06 | 6MT | F | L/R | Saloon 4WD BPW | | GCO83030 | Outer Joint | | 38 | 33 | 59.5 | 34 | 56.5 | M |
| | 2006.01-2008.06 | 6MT | F | L/R | Saloon 4WD BPW | | GCO83058 | Outer Joint | 45W | 38 | 33 | 59.5 | 34 | 56.5 | M |
| | 2006.01-2008.06 | 6MT | F | L/R | Saloon 4WD BPW | | GCI61070 | Inner Joint | | | 24 | | | 85 | |
| | 2006.01-2008.06 | AT | F | L/R | Saloon 4WD BPW | | GDS83052 | Drive Shaft | 45W | 38 | | 59.5 | 34.5 | 522 | |
| | 2006.01-2008.06 | | F | L/R | Saloon 4WD BPW | Date From:2006.06;Date To:2007.10 | GCO83067 | Outer Joint | 45W | 38 | 27 | 59.5 | 34 | 68 | M |
| | 2006.01-2008.06 | 6MT | R | L/R | Saloon 4WD BPW | | GDS82401 | Drive Shaft | 45W | 38 | | 59.5 | 34 | 617 | |
| | 2006.01-2008.06 | 6MT | R | L/R | Saloon 4WD BPW | | GCI61010 | Inner Joint | | | 28 | | | 32 | |
| 2.0 (105 kw) | 2008.04-2015.12 | 6MT | F | L/R | Estate 4WD CAGA;CJCA | Chassis no. to:8K_CA200000 | GDS83345 | Drive Shaft | | 42 | | 76.5 | 34 | 463 | |
| | 2008.04-2015.12 | 6MT | F | L/R | Estate 4WD CAGA;CJCA | Chassis no. from:8K_D_000001 | GDS83371 | Drive Shaft | | 42 | | 76.5 | 34 | 465 | |
| | 2008.04-2015.12 | 6MT | F | L/R | Estate 4WD CAGA;CJCA | Chassis no. to:8K_CA200000 | GCO83086 | Outer Joint | | 42 | 33 | 76.5 | 34 | 45.5 | M |
| | 2008.04-2015.12 | 6MT | F | L/R | Estate 4WD CAGA;CJCA | Chassis no. from:8K_D_000001 | GCO83107 | Outer Joint | | 42 | 25 | 76.5 | 34 | 47.5 | I |
| | 2008.04-2015.12 | 6MT | F | L/R | Estate 4WD CAGA;CJCA | TJ | GCI61070 | Inner Joint | | | 24 | | | 85 | |
| | 2008.04-2015.12 | 6MT | F | L/R | Estate 4WD CAGA;CJCA | Chassis no. from:8K_D_000001,AAR | GCI81054 | Inner Joint | | | 24 | | | 86 | |
| | 2008.04-2015.12 | 6MT | R | L | Estate 4WD CAGA;CJCA | Date to:2011.08,For PR code:GH2,For vehicles with electronic limited slip diff. | GDS81886 | Drive Shaft | | 42 | | 76.5 | 34 | 589 | |
| | 2008.04-2015.12 | 6MT | R | L | Estate 4WD CAGA;CJCA | Date from:2011.09,For PR code:GH2,For vehicles with electronic limited slip diff. | GDS82078 | Drive Shaft | | 42 | | 76.5 | 34 | 587 | |
| | 2008.04-2015.12 | 6MT | R | R | Estate 4WD CAGA;CJCA | Date to:2011.08,For PR code:GH2,For vehicles with electronic limited slip diff. | GDS81885 | Drive Shaft | | 42 | | 76.5 | 34 | 546 | |
| | 2008.04-2015.12 | 6MT | R | R | Estate 4WD CAGA;CJCA | Date from:2011.09,For PR code:GH2,For vehicles with electronic limited slip diff. | GDS82079 | Drive Shaft | | 42 | | 76.5 | 34 | 545 | |
| | 2008.04-2015.12 | 6MT | R | L/R | Estate 4WD CAGA;CJCA | Date to:2011.08,For PR code:GH1 | GDS82076 | Drive Shaft | | 42 | | 76.5 | 34 | 630 | |
| | 2008.04-2015.12 | 6MT | R | L/R | Estate 4WD CAGA;CJCA | Date from:2011.09,For PR code:GH1 | GDS83367 | Drive Shaft | | 42 | | 76.5 | 34 | 626 | |
| | 2008.04-2015.12 | 6MT | R | L/R | Estate 4WD CAGA;CJCA | For PR code:GH1,Date from:2011.09 | GCI83040 | Outer Joint | | 42 | 25 | 76.5 | 34 | 66 | M |
| | 2008.04-2015.12 | 6MT | R | L/R | Estate 4WD CAGA;CJCA | For PR code:GH1,Date to:2011.08 | GCO83086 | Outer Joint | | 42 | 33 | 76.5 | 34 | 45.5 | M |
| | 2008.04-2015.12 | 6MT | R | L/R | Estate 4WD CAGA;CJCA | For PR code:GH2,For vehicles with electronic LTD slip differential,Date to:2011.08 | GCO83087 | Outer Joint | | 42 | 27 | 76.5 | 34 | 57 | M |
| | 2008.04-2015.12 | 6MT | R | L/R | Estate 4WD CAGA;CJCA | For PR code:GH2,For vehicles with electronic LTD slip differential,Date to:2011.08 | GCI61069 | Inner Joint | | | 28 | | | 32 | |
| | 2008.04-2015.12 | 6MT | R | L/R | Estate 4WD CAGA;CJCA | For PR code:GH2,For vehicles with electronic LTD slip differential,Date from:2011.09 | GCI61107 | Inner Joint | | 42 | 28 | 76.5 | 34 | 82 | |
| | 2008.04-2015.12 | 6MT | R | L/R | Estate 4WD CAGA;CJCA | For PR code:GH2,For vehicles with electronic LTD slip differential,Date from:2011.09 | GCI81610 | Inner Joint | | | 28 | | | 28 | |
| | 2008.04-2015.12 | 6MT | R | L/R | Estate 4WD CAGA;CJCA | For PR code:GH1,Date to:2011.08 | GCI81618 | Inner Joint | | | 33 | | | 34 | |
| | 2008.04-2015.12 | 6MT | R | L/R | Estate 4WD CAGA;CJCA | For PR code:GH1,Date from:2011.09 | GCI83044 | Inner Joint | | | 25 | | | 26 | |
| | 2008.11-2015.12 | 6MT | F | L/R | Saloon 4WD CAGA;CJCA | Chassis no. to:8K_CA200000/8K_CN075000/8K_CY715000 | GDS83345 | Drive Shaft | | 42 | | 76.5 | 34 | 463 | |
| | 2008.11-2015.12 | 6MT | F | L/R | Saloon 4WD CAGA;CJCA | Chassis no. from:8K_D_000001 | GDS83371 | Drive Shaft | | 42 | | 76.5 | 34 | 465 | |
| | 2008.11-2015.12 | 6MT | F | L/R | Saloon 4WD CAGA;CJCA | Chassis no. to:8K_CA200000/8K_CN075000/8K_CY715000 | GCO83086 | Outer Joint | | 42 | 33 | 76.5 | 34 | 45.5 | M |
| | 2008.11-2015.12 | 6MT | F | L/R | Saloon 4WD CAGA;CJCA | Chassis no. from:8K_D_000001 | GCO83107 | Outer Joint | | 42 | 25 | 76.5 | 34 | 47.5 | I |
| | 2008.11-2015.12 | 6MT | F | L/R | Saloon 4WD CAGA;CJCA | TJ | GCI61070 | Inner Joint | | | 24 | | | 85 | |
| | 2008.11-2015.12 | 6MT | F | L/R | Saloon 4WD CAGA;CJCA | Chassis no. from:8K_D_000001,AAR | GCI81054 | Inner Joint | | | 24 | | | 86 | |
| | 2008.11-2015.12 | 6MT | R | L | Saloon 4WD CAGA;CJCA | Date to:2011.08,For PR code:GH2,For vehicles with electronic limited slip diff. | GDS81886 | Drive Shaft | | 42 | | 76.5 | 34 | 589 | |
| | 2008.11-2015.12 | 6MT | R | L | Saloon 4WD CAGA;CJCA | Date from:2011.09,For PR code:GH2,For vehicles with electronic limited slip diff. | GDS82078 | Drive Shaft | | 42 | | 76.5 | 34 | 587 | |
| | 2008.11-2015.12 | 6MT | R | R | Saloon 4WD CAGA;CJCA | Date to:2011.08,For PR code:GH2,For vehicles with electronic limited slip diff. | GDS81885 | Drive Shaft | | 42 | | 76.5 | 34 | 546 | |

| | YEAR | TRANSM. | F/R | L/R | BODY STYLE & DRIVE TYPE & ENGINE | REMARKS | G-AP Ref. | PRODUCT | ABS | Technical Specifications A | B | C | H | L | P |
|---|---|---|---|---|---|---|---|---|---|---|---|---|---|---|---|
| **AUDI** | | | | | | | | | | | | | | | |
| **A4 Quattro** | | | | | | | | | | | | | | | |
| 2.0 (105 kw) | 2008.11-2015.12 | 6MT | R | R | Saloon 4WD CAGA;CJCA | Date from:2011.09,For PR code:GH2,For vehicles with electronic limited slip diff. | GDS82079 | Drive Shaft | | 42 | | 76.5 | 34 | 545 | |
| | 2008.11-2015.12 | 6MT | R | L/R | Saloon 4WD CAGA;CJCA | Date to:2011.08,For PR code:GH1 | GDS82076 | Drive Shaft | | 42 | | 76.5 | 34 | 630 | |
| | 2008.11-2015.12 | 6MT | R | L/R | Saloon 4WD CAGA;CJCA | Date from:2011.09,For PR code:GH1 | GDS83367 | Drive Shaft | | 42 | | 76.5 | 34 | 626 | |
| | 2008.11-2015.12 | 6MT | R | L/R | Saloon 4WD CAGA;CJCA | For PR code:GH1,Date from:2011.09 | GCI83040 | Outer Joint | | 42 | 25 | 76.5 | 34 | 66 | M |
| | 2008.11-2015.12 | 6MT | R | L/R | Saloon 4WD CAGA;CJCA | For PR code:GH1,Date to:2011.08 | GCO83086 | Outer Joint | | 42 | 33 | 76.5 | 34 | 45.5 | M |
| | 2008.11-2015.12 | 6MT | R | L/R | Saloon 4WD CAGA;CJCA | For PR code:GH2,For vehicles with electronic LTD slip differential,Date to:2011.08 | GCO83087 | Outer Joint | | 42 | 27 | 76.5 | 34 | 57 | M |
| | 2008.11-2015.12 | 6MT | R | L/R | Saloon 4WD CAGA;CJCA | For PR code:GH2,For vehicles with electronic LTD slip differential,Date to:2011.08 | GCI61069 | Inner Joint | | | 28 | | | 32 | |
| | 2008.11-2015.12 | 6MT | R | L/R | Saloon 4WD CAGA;CJCA | For PR code:GH2,For vehicles with electronic LTD slip differential,Date from:2011.09 | GCI61107 | Inner Joint | | 42 | 28 | 76.5 | 34 | 82 | |
| | 2008.11-2015.12 | 6MT | R | L/R | Saloon 4WD CAGA;CJCA | For PR code:GH2,For vehicles with electronic LTD slip differential,Date from:2011.09 | GCI81610 | Inner Joint | | | 28 | | | 28 | |
| | 2008.11-2015.12 | 6MT | R | L/R | Saloon 4WD CAGA;CJCA | For PR code:GH1,Date to:2011.08 | GCI81618 | Inner Joint | | | 33 | | | 34 | |
| | 2008.11-2015.12 | 6MT | R | L/R | Saloon 4WD CAGA;CJCA | For PR code:GH1,Date from:2011.09 | GCI83044 | Inner Joint | | | 25 | | | 26 | |
| 2.0 (110 kw) | 2013.05-2015.12 | 6MT | F | L/R | Estate 4WD CJCD;CSUA | | GDS83371 | Drive Shaft | | 42 | | 76.5 | 34 | 465 | |
| | 2013.05-2015.12 | 6MT | F | L/R | Estate 4WD CJCD;CSUA | | GCO83107 | Outer Joint | | 42 | 25 | 76.5 | 34 | 47.5 | I |
| | 2013.05-2015.12 | 6MT | F | L/R | Estate 4WD CJCD;CSUA | TJ | GCI61070 | Inner Joint | | | 24 | | | 85 | |
| | 2013.05-2015.12 | 6MT | F | L/R | Estate 4WD CJCD;CSUA | AAR | GCI81054 | Inner Joint | | | 24 | | | 86 | |
| | 2013.05-2015.12 | 6MT | R | L | Estate 4WD CJCD;CSUA | For PR code:GH2,For vehicles with electronic limited slip diff. | GDS82078 | Drive Shaft | | 42 | | 76.5 | 34 | 587 | |
| | 2013.05-2015.12 | 6MT | R | R | Estate 4WD CJCD;CSUA | For PR code:GH2,For vehicles with electronic limited slip diff. | GDS82079 | Drive Shaft | | 42 | | 76.5 | 34 | 545 | |
| | 2013.05-2015.12 | 6MT | R | L/R | Estate 4WD CJCD;CSUA | For PR code:GH1 | GDS83367 | Drive Shaft | | 42 | | 76.5 | 34 | 626 | |
| | 2013.05-2015.12 | 6MT | R | L/R | Estate 4WD CJCD;CSUA | For PR Code:GH1 | GCI83040 | Outer Joint | | 42 | 25 | 76.5 | 34 | 66 | M |
| | 2013.05-2015.12 | 6MT | R | L/R | Estate 4WD CJCD;CSUA | For PR Code:GH2,For vehicles with electronic LTD slip differential | GCI61107 | Inner Joint | | 42 | 28 | 76.5 | 34 | 82 | |
| | 2013.05-2015.12 | 6MT | R | L/R | Estate 4WD CJCD;CSUA | For PR Code:GH2,For vehicles with electronic LTD slip differential | GCI81610 | Inner Joint | | | 28 | | | 28 | |
| | 2013.05-2015.12 | 6MT | R | L/R | Estate 4WD CJCD;CSUA | For PR Code:GH1 | GCI83044 | Inner Joint | | | 25 | | | 26 | |
| | 2013.05-2015.12 | 6MT | F | L/R | Saloon 4WD CJCD;CSUA | | GDS83371 | Drive Shaft | | 42 | | 76.5 | 34 | 465 | |
| | 2013.05-2015.12 | 6MT | F | L/R | Saloon 4WD CJCD;CSUA | | GCO83107 | Outer Joint | | 42 | 25 | 76.5 | 34 | 47.5 | I |
| | 2013.05-2015.12 | 6MT | F | L/R | Saloon 4WD CJCD;CSUA | AAR | GCI81054 | Inner Joint | | | 24 | | | 86 | |
| | 2013.05-2015.12 | 6MT | F | L/R | Saloon 4WD CJCD;CSUA | TJ | GCI83022 | Inner Joint | | | 34 | | | 88.5 | |
| | 2013.05-2015.12 | 6MT | R | L | Saloon 4WD CJCD;CSUA | For PR code:GH2,For vehicles with electronic limited slip diff. | GDS82078 | Drive Shaft | | 42 | | 76.5 | 34 | 587 | |
| | 2013.05-2015.12 | 6MT | R | R | Saloon 4WD CJCD;CSUA | For PR code:GH2,For vehicles with electronic limited slip diff. | GDS82079 | Drive Shaft | | 42 | | 76.5 | 34 | 545 | |
| | 2013.05-2015.12 | 6MT | R | L/R | Saloon 4WD CJCD;CSUA | For PR code:GH1 | GDS83367 | Drive Shaft | | 42 | | 76.5 | 34 | 626 | |
| | 2013.05-2015.12 | 6MT | R | L/R | Saloon 4WD CJCD;CSUA | For PR Code:GH1 | GCI83040 | Outer Joint | | 42 | 25 | 76.5 | 34 | 66 | M |
| | 2013.05-2015.12 | 6MT | R | L/R | Saloon 4WD CJCD;CSUA | For PR code:GH2,For vehicles with AWD & variable torque dist. | GCI61107 | Inner Joint | | 42 | 28 | 76.5 | 34 | 82 | |
| | 2013.05-2015.12 | 6MT | R | L/R | Saloon 4WD CJCD;CSUA | For PR code:GH2,For vehicles with AWD & variable torque dist. | GCI81610 | Inner Joint | | | 28 | | | 28 | |
| | 2013.05-2015.12 | 6MT | R | L/R | Saloon 4WD CJCD;CSUA | For PR code:GH1 | GCI83044 | Inner Joint | | | 25 | | | 26 | |
| | 2016.09-2019.10 | 6MT | F | L/R | Estate 4WD DEUA | For PR code:GH1 | GDS82074 | Drive Shaft | | 42 | | 76.5 | 34 | 462 | |
| | 2016.09-2019.10 | 6MT | F | L/R | Estate 4WD DEUA | For PR code:GH4,For vehicles with AWD & variable torque dist. | GDS82075 | Drive Shaft | | 42 | | 76.5 | 34 | 463 | |
| | 2016.09-2019.10 | AT | F | L/R | Estate 4WD DEUA | Date from:2017.01 | GCO83103 | Outer Joint | | 42 | 28 | 76.4 | 34 | 54 | I |
| | 2016.09-2019.10 | AT | F | L/R | Estate 4WD DEUA | Date from:2017.01 | GCI83022 | Inner Joint | | | 34 | | | 88.5 | |
| | 2016.09-2019.10 | 6MT | R | L | Estate 4WD DEUA | For PR code:GH4,For veh. with all-wheel drive & controlled clutch,Mounting Type:Bolted | GDS58134 | Drive Shaft | | 38 | | 59.5 | 34 | 653 | |
| | 2016.09-2019.10 | 6MT | R | R | Estate 4WD DEUA | For PR code:GH4,For veh. with all-wheel drive & controlled clutch,Mounting Type:Bolted | GDS58135 | Drive Shaft | | 38 | | 59.5 | 34 | 550 | |
| | 2016.09-2019.10 | 6MT | R | L/R | Estate 4WD DEUA | For PR code:GH1 | GDS82363 | Drive Shaft | | 38 | | 59.5 | 34 | 624 | |
| | 2016.09-2019.10 | 6MT | R | L/R | Estate 4WD DEUA | Rear differential with uncoupling feature;Without rear differential lock | GCI81751 | Outer Joint | | 38 | 33 | 59.5 | 34 | 78 | |
| | 2016.09-2019.10 | 6MT | R | L/R | Estate 4WD DEUA | For PR code:GH4,For veh. with all-wheel drive & controlled clutch,Mounting Type:Bolted | GCI81752 | Inner Joint | | | 33 | | | 34 | |
| | 2016.09-2019.11 | 6MT | F | L/R | Saloon 4WD DEUA | For PR code:GH1 | GDS82074 | Drive Shaft | | 42 | | 76.5 | 34 | 462 | |
| | 2016.09-2019.11 | 6MT | F | L/R | Saloon 4WD DEUA | For PR code:GH4,For vehicles with AWD & variable torque dist. | GDS82075 | Drive Shaft | | 42 | | 76.5 | 34 | 463 | |
| | 2016.09-2019.11 | AT | F | L/R | Saloon 4WD DEUA | Date from:2017.01 | GCO83103 | Outer Joint | | 42 | 28 | 76.4 | 34 | 54 | I |
| | 2016.09-2019.11 | AT | F | L/R | Saloon 4WD DEUA | Date from:2017.01 | GCI83022 | Inner Joint | | | 34 | | | 88.5 | |
| | 2016.09-2019.11 | 6MT | R | L | Saloon 4WD DEUA | For PR code:GH4,For veh. with all-wheel drive & controlled clutch,Mounting Type:Bolted | GDS58134 | Drive Shaft | | 38 | | 59.5 | 34 | 653 | |
| | 2016.09-2019.11 | 6MT | R | R | Saloon 4WD DEUA | For PR code:GH4,For veh. with all-wheel drive & controlled clutch,Mounting Type:Bolted | GDS58135 | Drive Shaft | | 38 | | 59.5 | 34 | 550 | |
| | 2016.09-2019.11 | 6MT | R | L/R | Saloon 4WD DEUA | For PR code:GH1 | GDS82363 | Drive Shaft | | 38 | | 59.5 | 34 | 624 | |
| | 2016.09-2019.11 | 6MT | R | L/R | Saloon 4WD DEUA | Rear differential with uncoupling feature;Without rear differential lock | GCI81751 | Outer Joint | | 38 | 33 | 59.5 | 34 | 78 | |
| | 2016.09-2019.11 | 6MT | R | L/R | Saloon 4WD DEUA | For PR code:GH4,For veh. with all-wheel drive & controlled clutch,Mounting Type:Bolted | GCI81752 | Inner Joint | | | 33 | | | 34 | |
| 2.0 (120 kw) | 2006.06-2008.06 | 6MT | F | L | Estate 4WD BVA | | GDS83310 | Drive Shaft | 45W | 38 | | 59.5 | 34 | 594 | |
| | 2006.06-2008.06 | 6MT | F | R | Estate 4WD BVA | | GDS83058 | Drive Shaft | 45W | 38 | | 59.5 | 34.5 | 613 | |
| | 2006.06-2008.06 | 6MT | F | L/R | Estate 4WD BVA | | GCI61070 | Inner Joint | | | 24 | | | 85 | |
| | 2006.06-2008.06 | MT | F | L/R | Estate 4WD BVA | | GCO83058 | Outer Joint | 45W | 38 | 33 | 59.5 | 34 | 56.5 | M |
| | 2006.06-2008.06 | | F | L/R | Estate 4WD BVA | | GCO83030 | Outer Joint | | 38 | 33 | 59.5 | 34 | 56.5 | M |
| | 2006.06-2008.06 | | F | L/R | Estate 4WD BVA | | GCO83067 | Outer Joint | 45W | 38 | 27 | 59.5 | 34 | 68 | M |
| | 2006.06-2008.06 | 6MT | R | L/R | Estate 4WD BVA | | GDS82401 | Drive Shaft | 45W | 38 | | 59.5 | 34 | 617 | |
| | 2006.06-2008.06 | 6MT | R | L/R | Estate 4WD BVA | | GCI61010 | Inner Joint | | | 28 | | | 32 | |
| | 2006.06-2008.06 | 6MT | F | L | Saloon 4WD BVA | | GDS83310 | Drive Shaft | 45W | 38 | | 59.5 | 34 | 594 | |
| | 2006.06-2008.06 | 6MT | F | R | Saloon 4WD BVA | | GDS83058 | Drive Shaft | 45W | 38 | | 59.5 | 34.5 | 613 | |
| | 2006.06-2008.06 | 6MT | F | L/R | Saloon 4WD BVA | | GCI61070 | Inner Joint | | | 24 | | | 85 | |
| | 2006.06-2008.06 | MT | F | L/R | Saloon 4WD BVA | | GCO83058 | Outer Joint | 45W | 38 | 33 | 59.5 | 34 | 56.5 | M |
| | 2006.06-2008.06 | | F | L/R | Saloon 4WD BVA | | GCO83030 | Outer Joint | | 38 | 33 | 59.5 | 34 | 56.5 | M |
| | 2006.06-2008.06 | | F | L/R | Saloon 4WD BVA | | GCO83067 | Outer Joint | 45W | 38 | 27 | 59.5 | 34 | 68 | M |

| | YEAR | TRANSM. | F/R | L/R | BODY STYLE & DRIVE TYPE & ENGINE | REMARKS | G-AP Ref. | PRODUCT | ABS | Technical Specifications A | B | C | H | L | P |
|---|---|---|---|---|---|---|---|---|---|---|---|---|---|---|---|
| **AUDI** | | | | | | | | | | | | | | | |
| **A4 Quattro** | | | | | | | | | | | | | | | |
| 2.0 (120 kw) | 2006.06-2008.06 | 6MT | R | L/R | Saloon 4WD BVA | | GDS82401 | Drive Shaft | 45W | 38 | | 59.5 | 34 | 617 | |
| | 2006.06-2008.06 | 6MT | R | L/R | Saloon 4WD BVA | | GCI61010 | Inner Joint | | | 28 | | | 32 | |
| | 2016.09-2018.09 | 7AT | F | L/R | Estate 4WD DETB | For PR code:GH1 | GDS82074 | Drive Shaft | | 42 | | 76.5 | 34 | 462 | |
| | 2016.09-2018.09 | 7DCT | F | L/R | Estate 4WD DETB | For PR code:GH4,For vehicles with AWD & variable torque dist. | GDS82075 | Drive Shaft | | 42 | | 76.5 | 34 | 463 | |
| | 2016.09-2018.09 | AT | F | L/R | Estate 4WD DETB | Date From:2017.01;For PR code:GH1/GH2/GH4 | GCO83103 | Outer Joint | | 42 | 28 | 76.4 | 34 | 54 | I |
| | 2016.09-2018.09 | AT | F | L/R | Estate 4WD DETB | Date From:2017.01;For PR code:GH1/GH2/GH4 | GCI83022 | Inner Joint | | | 34 | | | 88.5 | |
| | 2016.09-2018.09 | 7DCT | R | L | Estate 4WD DETB | For PR code:GH4;For veh. with all-wheel drive & controlled clutch;Mounting Type:Bolted | GDS58134 | Drive Shaft | | 38 | | 59.5 | 34 | 653 | |
| | 2016.09-2018.09 | 7DCT | R | R | Estate 4WD DETB | For PR code:GH4;For veh. with all-wheel drive & controlled clutch;Mounting Type:Bolted | GDS58135 | Drive Shaft | | 38 | | 59.5 | 34 | 550 | |
| | 2016.09-2018.09 | 7DCT | R | L/R | Estate 4WD DETB | For PR code:GH1 | GDS82363 | Drive Shaft | | 38 | | 59.5 | 34 | 624 | |
| | 2016.09-2018.09 | 7DCT | R | L/R | Estate 4WD DETB | Rear differential with uncoupling feature;Without rear differential lock | GCI81751 | Outer Joint | | 38 | 33 | 59.5 | 34 | 78 | |
| | 2016.09-2018.09 | 7DCT | R | L/R | Estate 4WD DETB | For PR code:GH4;For veh. with all-wheel drive & controlled clutch;Mounting Type:Bolted | GCI81752 | Inner Joint | | | 33 | | | 34 | |
| | 2016.09-2019.11 | 7AT | F | L/R | Saloon 4WD DETB | For PR code:GH1 | GDS82074 | Drive Shaft | | 42 | | 76.5 | 34 | 462 | |
| | 2016.09-2019.11 | 7DCT | F | L/R | Saloon 4WD DETB | For PR code:GH4,For vehicles with AWD & variable torque dist. | GDS82075 | Drive Shaft | | 42 | | 76.5 | 34 | 463 | |
| | 2016.09-2019.11 | AT | F | L/R | Saloon 4WD DETB | Date From:2017.01;For PR code:GH1/GH2/GH4 | GCO83103 | Outer Joint | | 42 | 28 | 76.4 | 34 | 54 | I |
| | 2016.09-2019.11 | AT | F | L/R | Saloon 4WD DETB | Date From:2017.01;For PR code:GH1/GH2/GH4 | GCI83022 | Inner Joint | | | 34 | | | 88.5 | |
| | 2016.09-2019.11 | 7DCT | R | L | Saloon 4WD DETB | For PR code:GH4;For veh. with all-wheel drive & controlled clutch;Mounting Type:Bolted | GDS58134 | Drive Shaft | | 38 | | 59.5 | 34 | 653 | |
| | 2016.09-2019.11 | 7DCT | R | R | Saloon 4WD DETB | For PR code:GH4;For veh. with all-wheel drive & controlled clutch;Mounting Type:Bolted | GDS58135 | Drive Shaft | | 38 | | 59.5 | 34 | 550 | |
| | 2016.09-2019.11 | 7DCT | R | L/R | Saloon 4WD DETB | For PR code:GH1 | GDS82363 | Drive Shaft | | 38 | | 59.5 | 34 | 624 | |
| | 2016.09-2019.11 | 7DCT | R | L/R | Saloon 4WD DETB | Rear differential with uncoupling feature;Without rear differential lock | GCI81751 | Outer Joint | | 38 | 33 | 59.5 | 34 | 78 | |
| | 2016.09-2019.11 | 7DCT | R | L/R | Saloon 4WD DETB | For PR code:GH4;For veh. with all-wheel drive & controlled clutch;Mounting Type:Bolted | GCI81752 | Inner Joint | | | 33 | | | 34 | |
| 2.0 (125 kw) | 2006.06-2008.06 | 6MT | F | L | Estate 4WD BRD | | GDS83310 | Drive Shaft | 45W | 38 | | 59.5 | 34 | 594 | |
| | 2006.06-2008.06 | 6MT | F | R | Estate 4WD BRD | | GDS83058 | Drive Shaft | 45W | 38 | | 59.5 | 34.5 | 613 | |
| | 2006.06-2008.06 | 6MT | F | L/R | Estate 4WD BRD | | GCO83030 | Outer Joint | | 38 | 33 | 59.5 | 34 | 56.5 | M |
| | 2006.06-2008.06 | 6MT | F | L/R | Estate 4WD BRD | | GCO83058 | Outer Joint | 45W | 38 | 33 | 59.5 | 34 | 56.5 | M |
| | 2006.06-2008.06 | 6MT | F | L/R | Estate 4WD BRD | | GCI61070 | Inner Joint | | | 24 | | | 85 | |
| | 2006.06-2008.06 | 6MT | R | L/R | Estate 4WD BRD | | GDS82401 | Drive Shaft | 45W | 38 | | 59.5 | 34 | 617 | |
| | 2006.06-2008.06 | 6MT | R | L/R | Estate 4WD BRD | | GCI61002 | Inner Joint | | | 28 | | | 31.8 | |
| | 2006.06-2008.06 | 6MT | R | L/R | Estate 4WD BRD | | GCI61010 | Inner Joint | | | 28 | | | 32 | |
| | 2006.06-2008.06 | 6MT | F | L | Saloon 4WD BRD | | GDS83310 | Drive Shaft | 45W | 38 | | 59.5 | 34 | 594 | |
| | 2006.06-2008.06 | 6MT | F | R | Saloon 4WD BRD | | GDS83058 | Drive Shaft | 45W | 38 | | 59.5 | 34.5 | 613 | |
| | 2006.06-2008.06 | 6MT | F | L/R | Saloon 4WD BRD | | GCO83058 | Outer Joint | 45W | 38 | 33 | 59.5 | 34 | 56.5 | M |
| | 2006.06-2008.06 | 6MT | F | L/R | Saloon 4WD BRD | | GCI61070 | Inner Joint | | | 24 | | | 85 | |
| | 2006.06-2008.06 | | F | L/R | Saloon 4WD BRD | | GCO83030 | Outer Joint | | 38 | 33 | 59.5 | 34 | 56.5 | M |
| | 2006.06-2008.06 | | F | L/R | Saloon 4WD BRD | | GCO83067 | Outer Joint | 45W | 38 | 27 | 59.5 | 34 | 68 | M |
| | 2006.06-2008.06 | 6MT | R | L/R | Saloon 4WD BRD | | GDS82401 | Drive Shaft | 45W | 38 | | 59.5 | 34 | 617 | |
| | 2006.06-2008.06 | 6MT | R | L/R | Saloon 4WD BRD | | GCI61010 | Inner Joint | | | 28 | | | 32 | |
| | 2008.01-2012.03 | 6MT | F | L/R | Saloon 4WD CAHA | | GDS83345 | Drive Shaft | | 42 | | 76.5 | 34 | 463 | |
| | 2008.01-2012.03 | AT/MT | F | L/R | Saloon 4WD CAHA | | GCO83086 | Outer Joint | | 42 | 33 | 76.5 | 34 | 45.5 | M |
| | 2008.01-2012.03 | | F | L/R | Saloon 4WD CAHA | TJ | GCI61070 | Inner Joint | | | 24 | | | 85 | |
| | 2008.01-2012.03 | | F | | Saloon 4WD CAHA | AAR | GCI81054 | Inner Joint | | | 24 | | | 86 | |
| | 2008.01-2012.03 | 6MT | R | L | Saloon 4WD CAHA | Date to:2011.08,For PR code:GH2,For vehicles with electronic limited slip diff. | GDS81886 | Drive Shaft | | 42 | | 76.5 | 34 | 589 | |
| | 2008.01-2012.03 | 6MT | R | L | Saloon 4WD CAHA | Date from:2011.09,For PR code:GH2,For vehicles with electronic limited slip diff. | GDS82078 | Drive Shaft | | 42 | | 76.5 | 34 | 587 | |
| | 2008.01-2012.03 | 6MT | R | R | Saloon 4WD CAHA | Date to:2011.08,For PR code:GH2,For vehicles with electronic limited slip diff. | GDS81885 | Drive Shaft | | 42 | | 76.5 | 34 | 546 | |
| | 2008.01-2012.03 | 6MT | R | R | Saloon 4WD CAHA | Date from:2011.09,For PR code:GH2,For vehicles with electronic limited slip diff. | GDS82079 | Drive Shaft | | 42 | | 76.5 | 34 | 545 | |
| | 2008.01-2012.03 | 6MT | R | L/R | Saloon 4WD CAHA | Date to:2011.08,For PR code:GH1 | GDS82076 | Drive Shaft | | 42 | | 76.5 | 34 | 630 | |
| | 2008.01-2012.03 | 6MT | R | L/R | Saloon 4WD CAHA | Date from:2011.09,For PR code:GH1 | GDS83367 | Drive Shaft | | 42 | | 76.5 | 34 | 626 | |
| | 2008.01-2012.03 | 6MT | R | L/R | Saloon 4WD CAHA | Wheel Side | GCI61107 | Inner Joint | | 42 | 28 | 76.5 | 34 | 82 | |
| | 2008.01-2012.03 | 6MT | R | L/R | Saloon 4WD CAHA | Date from:2011.09,For PR code:GH2,For vehicles with AWD & variable torque dist. | GCI81610 | Inner Joint | | | 28 | | | 28 | |
| | 2008.01-2012.03 | 6MT | R | L/R | Saloon 4WD CAHA | Date from:2011.09,For PR code:GH1 | GCI83044 | Inner Joint | | | 25 | | | 26 | |
| | 2008.08-2012.03 | 6MT | F | L/R | Estate 4WD CAHA | | GDS83345 | Drive Shaft | | 42 | | 76.5 | 34 | 463 | |
| | 2008.08-2012.03 | AT/MT | F | L/R | Estate 4WD CAHA | | GCO83086 | Outer Joint | | 42 | 33 | 76.5 | 34 | 45.5 | M |
| | 2008.08-2012.03 | | F | L/R | Estate 4WD CAHA | TJ | GCI61070 | Inner Joint | | | 24 | | | 85 | |
| | 2008.08-2012.03 | | F | | Estate 4WD CAHA | AAR | GCI81054 | Inner Joint | | | 24 | | | 86 | |
| | 2008.08-2012.03 | 6MT | R | L | Estate 4WD CAHA | Date to:2011.08,For PR code:GH2,For vehicles with electronic limited slip diff. | GDS81886 | Drive Shaft | | 42 | | 76.5 | 34 | 589 | |
| | 2008.08-2012.03 | 6MT | R | L | Estate 4WD CAHA | Date from:2011.09,For PR code:GH2,For vehicles with electronic limited slip diff. | GDS82078 | Drive Shaft | | 42 | | 76.5 | 34 | 587 | |
| | 2008.08-2012.03 | 6MT | R | R | Estate 4WD CAHA | Date to:2011.08,For PR code:GH2,For vehicles with electronic limited slip diff. | GDS81885 | Drive Shaft | | 42 | | 76.5 | 34 | 546 | |
| | 2008.08-2012.03 | 6MT | R | R | Estate 4WD CAHA | Date from:2011.09,For PR code:GH2,For vehicles with electronic limited slip diff. | GDS82079 | Drive Shaft | | 42 | | 76.5 | 34 | 545 | |
| | 2008.08-2012.03 | 6MT | R | L/R | Estate 4WD CAHA | Date to:2011.08,For PR code:GH1 | GDS82076 | Drive Shaft | | 42 | | 76.5 | 34 | 630 | |
| | 2008.08-2012.03 | 6MT | R | L/R | Estate 4WD CAHA | Date from:2011.09,For PR code:GH1 | GDS83367 | Drive Shaft | | 42 | | 76.5 | 34 | 626 | |
| | 2008.08-2012.03 | 6MT | R | L/R | Estate 4WD CAHA | Date from:2011.09,For PR code:GH2,For vehicles with AWD & variable torque dist. | GCI61107 | Inner Joint | | 42 | 28 | 76.5 | 34 | 82 | |
| | 2008.08-2012.03 | 6MT | R | L/R | Estate 4WD CAHA | Date from:2011.09,For PR code:GH2,For vehicles with AWD & variable torque dist. | GCI81610 | Inner Joint | | | 28 | | | 28 | |
| | 2008.08-2012.03 | 6MT | R | L/R | Estate 4WD CAHA | Date from:2011.09,For PR code:GH1 | GCI83044 | Inner Joint | | | 25 | | | 26 | |
| 2.0 (130 kw) | 2011.11-2015.12 | 7AT/6MT | F | L/R | Estate 4WD CGLC | | GDS83371 | Drive Shaft | | 42 | | 76.5 | 34 | 465 | |
| | 2011.11-2015.12 | 7AT/6MT | F | L/R | Estate 4WD CGLC | | GCO83107 | Outer Joint | | 42 | 25 | 76.5 | 34 | 47.5 | I |
| | 2011.11-2015.12 | 7AT/6MT | F | L/R | Estate 4WD CGLC | TJ | GCI61070 | Inner Joint | | | 24 | | | 85 | |

| | YEAR | TRANSM. | F/R | L/R | BODY STYLE & DRIVE TYPE & ENGINE | REMARKS | G-AP Ref. | PRODUCT | ABS | Technical Specifications A | B | C | H | L | P |
|---|---|---|---|---|---|---|---|---|---|---|---|---|---|---|---|
| **AUDI** | | | | | | | | | | | | | | | |
| **A4 Quattro** | | | | | | | | | | | | | | | |
| 2.0 (130 kw) | 2011.11-2015.12 | 7AT/6MT | F | L/R | Estate 4WD CGLC | AAR | GCI81054 | Inner Joint | | | 24 | | | 86 | |
| | 2011.11-2015.12 | 7AT/6MT | F | L/R | Estate 4WD CGLC | TJ | GCI83022 | Inner Joint | | | 34 | | | 88.5 | |
| | 2011.11-2015.12 | 7AT/6MT | R | L | Estate 4WD CGLC | For PR code:GH2,For vehicles with electronic limited slip diff. | GDS82078 | Drive Shaft | | 42 | | 76.5 | 34 | 587 | |
| | 2011.11-2015.12 | 7AT/6MT | R | R | Estate 4WD CGLC | For PR code:GH2,For vehicles with electronic limited slip diff. | GDS82079 | Drive Shaft | | 42 | | 76.5 | 34 | 545 | |
| | 2011.11-2015.12 | 7AT/6MT | R | L/R | Estate 4WD CGLC | For PR code:GH1 | GDS83367 | Drive Shaft | | 42 | | 76.5 | 34 | 626 | |
| | 2011.11-2015.12 | 7AT/6MT | R | L/R | Estate 4WD CGLC | For PR code:GH1 | GCI83040 | Outer Joint | | 42 | 25 | 76.5 | 34 | 66 | M |
| | 2011.11-2015.12 | 7AT/6MT | R | L/R | Estate 4WD CGLC | For PR code:GH2,For vehicles with electronic LTD slip differential | GCI61107 | Inner Joint | | 42 | 28 | 76.5 | 34 | 82 | |
| | 2011.11-2015.12 | 7AT/6MT | R | L/R | Estate 4WD CGLC | For PR code:GH2,For vehicles with electronic LTD slip differential | GCI81610 | Inner Joint | | | 28 | | | 28 | |
| | 2011.11-2015.12 | 7AT/6MT | R | L/R | Estate 4WD CGLC | For PR code:GH1 | GCI83044 | Inner Joint | | | 25 | | | 26 | |
| | 2011.11-2015.12 | 7AT/6MT | F | L/R | Saloon 4WD CGLC | | GDS83371 | Drive Shaft | | 42 | | 76.5 | 34 | 465 | |
| | 2011.11-2015.12 | 7AT/6MT | F | L/R | Saloon 4WD CGLC | | GCO83107 | Outer Joint | | 42 | 25 | 76.5 | 34 | 47.5 | I |
| | 2011.11-2015.12 | 7AT/6MT | F | L/R | Saloon 4WD CGLC | AAR | GCI81054 | Inner Joint | | | 24 | | | 86 | |
| | 2011.11-2015.12 | 7AT/6MT | F | L/R | Saloon 4WD CGLC | TJ | GCI83022 | Inner Joint | | | 34 | | | 88.5 | |
| | 2011.11-2015.12 | 7AT/6MT | R | L | Saloon 4WD CGLC | For PR code:GH2,For vehicles with electronic limited slip diff. | GDS82078 | Drive Shaft | | 42 | | 76.5 | 34 | 587 | |
| | 2011.11-2015.12 | 7AT/6MT | R | R | Saloon 4WD CGLC | For PR code:GH2,For vehicles with electronic limited slip diff. | GDS82079 | Drive Shaft | | 42 | | 76.5 | 34 | 545 | |
| | 2011.11-2015.12 | 7AT/6MT | R | L/R | Saloon 4WD CGLC | For PR code:GH1 | GDS83367 | Drive Shaft | | 42 | | 76.5 | 34 | 626 | |
| | 2011.11-2015.12 | 7AT/6MT | R | L/R | Saloon 4WD CGLC | For PR Code:GH1 | GCI83040 | Outer Joint | | 42 | 25 | 76.5 | 34 | 66 | M |
| | 2011.11-2015.12 | 7AT/6MT | R | L/R | Saloon 4WD CGLC | For PR Code:GH2,For vehicles with electronic LTD slip differential | GCI61107 | Inner Joint | | 42 | 28 | 76.5 | 34 | 82 | |
| | 2011.11-2015.12 | 7AT/6MT | R | L/R | Saloon 4WD CGLC | For PR Code:GH2,For vehicles with electronic LTD slip differential | GCI81610 | Inner Joint | | | 28 | | | 28 | |
| | 2011.11-2015.12 | 7AT/6MT | R | L/R | Saloon 4WD CGLC | For PR code:GH1 | GCI83044 | Inner Joint | | | 25 | | | 26 | |
| 2.0 (132 kw) | 2009.11-2012.03 | 6MT | F | L/R | Saloon 4WD CFKA | Chassis no. to:8KCA200000/8KCN075000/8KCY715000 | GDS83345 | Drive Shaft | | 42 | | 76.5 | 34 | 463 | |
| | 2009.11-2012.03 | 6MT | F | L/R | Saloon 4WD CFKA | Chassis no. from:8KD000001 | GDS83371 | Drive Shaft | | 42 | | 76.5 | 34 | 465 | |
| | 2009.11-2012.03 | 6MT | F | L/R | Saloon 4WD CFKA | | GCO83086 | Outer Joint | | 42 | 33 | 76.5 | 34 | 45.5 | M |
| | 2009.11-2012.03 | 6MT | F | L/R | Saloon 4WD CFKA | | GCO83107 | Outer Joint | | 42 | 25 | 76.5 | 34 | 47.5 | I |
| | 2009.11-2012.03 | 6MT | F | L/R | Saloon 4WD CFKA | TJ | GCI61070 | Inner Joint | | | 24 | | | 85 | |
| | 2009.11-2012.03 | 6MT | F | L/R | Saloon 4WD CFKA | AAR | GCI81054 | Inner Joint | | | 24 | | | 86 | |
| | 2009.11-2012.03 | 6MT | R | L | Saloon 4WD CFKA | Date to:2011.08,For PR code:GH2,For vehicles with electronic limited slip diff. | GDS81886 | Drive Shaft | | 42 | | 76.5 | 34 | 589 | |
| | 2009.11-2012.03 | 6MT | R | L | Saloon 4WD CFKA | Date from:2011.09,For PR code:GH2,For vehicles with electronic limited slip diff. | GDS82078 | Drive Shaft | | 42 | | 76.5 | 34 | 587 | |
| | 2009.11-2012.03 | 6MT | R | R | Saloon 4WD CFKA | Date to:2011.08,For PR code:GH2,For vehicles with electronic limited slip diff. | GDS81885 | Drive Shaft | | 42 | | 76.5 | 34 | 546 | |
| | 2009.11-2012.03 | 6MT | R | R | Saloon 4WD CFKA | Date from:2011.09,For PR code:GH2,For vehicles with electronic limited slip diff. | GDS82079 | Drive Shaft | | 42 | | 76.5 | 34 | 545 | |
| | 2009.11-2012.03 | 6MT | R | L/R | Saloon 4WD CFKA | Date to:2011.08,For PR code:GH1 | GDS82076 | Drive Shaft | | 42 | | 76.5 | 34 | 630 | |
| | 2009.11-2012.03 | 6MT | R | L/R | Saloon 4WD CFKA | Date from:2011.09,For PR code:GH1 | GDS83367 | Drive Shaft | | 42 | | 76.5 | 34 | 626 | |
| | 2009.11-2012.03 | 6MT | R | L/R | Saloon 4WD CFKA | Date from:2011.09,For PR code:GH2,For vehicles with AWD & variable torque dist. | GCI61107 | Inner Joint | | 42 | 28 | 76.5 | 34 | 82 | |
| | 2009.11-2012.03 | 6MT | R | L/R | Saloon 4WD CFKA | Date from:2011.09,For PR code:GH2,For vehicles with AWD & variable torque dist. | GCI81610 | Inner Joint | | | 28 | | | 28 | |
| | 2009.11-2012.03 | 6MT | R | L/R | Saloon 4WD CFKA | Date from:2011.09,For PR code:GH1 | GCI83044 | Inner Joint | | | 25 | | | 26 | |
| | 2009.11-2015.12 | 6MT | F | L/R | Estate 4WD CFKA | Chassis no. to:8KCA200000 | GDS83345 | Drive Shaft | | 42 | | 76.5 | 34 | 463 | |
| | 2009.11-2015.12 | 6MT | F | L/R | Estate 4WD CFKA | Chassis no. from:8KD000001 | GDS83371 | Drive Shaft | | 42 | | 76.5 | 34 | 465 | |
| | 2009.11-2015.12 | 6MT | F | L/R | Estate 4WD CFKA | TJ | GCI61070 | Inner Joint | | | 24 | | | 85 | |
| | 2009.11-2015.12 | 6MT | F | L/R | Estate 4WD CFKA | AAR | GCI81054 | Inner Joint | | | 24 | | | 86 | |
| | 2009.11-2015.12 | AT/MT | F | L/R | Estate 4WD CFKA | | GCO83086 | Outer Joint | | 42 | 33 | 76.5 | 34 | 45.5 | M |
| | 2009.11-2015.12 | | F | L/R | Estate 4WD CFKA | Date From:2012.08 | GCO83107 | Outer Joint | | 42 | 25 | 76.5 | 34 | 47.5 | I |
| | 2009.11-2015.12 | 6MT | R | L | Estate 4WD CFKA | Date to:2011.08,For PR code:GH2,For vehicles with electronic limited slip diff. | GDS81886 | Drive Shaft | | 42 | | 76.5 | 34 | 589 | |
| | 2009.11-2015.12 | 6MT | R | L | Estate 4WD CFKA | Date from:2011.09,For PR code:GH2,For vehicles with electronic limited slip diff. | GDS82078 | Drive Shaft | | 42 | | 76.5 | 34 | 587 | |
| | 2009.11-2015.12 | 6MT | R | R | Estate 4WD CFKA | Date to:2011.08,For PR code:GH2,For vehicles with electronic limited slip diff. | GDS81885 | Drive Shaft | | 42 | | 76.5 | 34 | 546 | |
| | 2009.11-2015.12 | 6MT | R | R | Estate 4WD CFKA | Date from:2011.09,For PR code:GH2,For vehicles with electronic limited slip diff. | GDS82079 | Drive Shaft | | 42 | | 76.5 | 34 | 545 | |
| | 2009.11-2015.12 | 6MT | R | L/R | Estate 4WD CFKA | Date to:2011.08,For PR code:GH1 | GDS82076 | Drive Shaft | | 42 | | 76.5 | 34 | 630 | |
| | 2009.11-2015.12 | 6MT | R | L/R | Estate 4WD CFKA | Date from:2011.09,For PR code:GH1 | GDS83367 | Drive Shaft | | 42 | | 76.5 | 34 | 626 | |
| | 2009.11-2015.12 | 6MT | R | L/R | Estate 4WD CFKA | Date from:2011.09,For PR code:GH2,For vehicles with AWD & variable torque dist. | GCI61107 | Inner Joint | | 42 | 28 | 76.5 | 34 | 82 | |
| | 2009.11-2015.12 | 6MT | R | L/R | Estate 4WD CFKA | Date from:2011.09,For PR code:GH2,For vehicles with AWD & variable torque dist. | GCI81610 | Inner Joint | | | 28 | | | 28 | |
| | 2009.11-2015.12 | 6MT | R | L/R | Estate 4WD CFKA | Date from:2011.09,For PR code:GH1 | GCI83044 | Inner Joint | | | 25 | | | 26 | |
| | 2009.11-2015.12 | 6MT | F | L/R | Saloon 4WD CFKA | Chassis no. to:8KCA200000/8KCN075000/8KCY715000 | GDS83345 | Drive Shaft | | 42 | | 76.5 | 34 | 463 | |
| | 2009.11-2015.12 | 6MT | F | L/R | Saloon 4WD CFKA | Chassis no. from:8KD000001 | GDS83371 | Drive Shaft | | 42 | | 76.5 | 34 | 465 | |
| | 2009.11-2015.12 | 6MT | F | L/R | Saloon 4WD CFKA | TJ | GCI61070 | Inner Joint | | | 24 | | | 85 | |
| | 2009.11-2015.12 | 6MT | F | L/R | Saloon 4WD CFKA | AAR | GCI81054 | Inner Joint | | | 24 | | | 86 | |
| | 2009.11-2015.12 | AT/MT | F | L/R | Saloon 4WD CFKA | | GCO83086 | Outer Joint | | 42 | 33 | 76.5 | 34 | 45.5 | M |
| | 2009.11-2015.12 | | F | L/R | Saloon 4WD CFKA | Date From:2012.08 | GCO83107 | Outer Joint | | 42 | 25 | 76.5 | 34 | 47.5 | I |
| | 2009.11-2015.12 | 6MT | R | L | Saloon 4WD CFKA | Date to:2011.08,For PR code:GH2,For vehicles with electronic limited slip diff. | GDS81886 | Drive Shaft | | 42 | | 76.5 | 34 | 589 | |
| | 2009.11-2015.12 | 6MT | R | L | Saloon 4WD CFKA | Date from:2011.09,For PR code:GH2,For vehicles with electronic limited slip diff. | GDS82078 | Drive Shaft | | 42 | | 76.5 | 34 | 587 | |
| | 2009.11-2015.12 | 6MT | R | R | Saloon 4WD CFKA | Date to:2011.08,For PR code:GH2,For vehicles with electronic limited slip diff. | GDS81885 | Drive Shaft | | 42 | | 76.5 | 34 | 546 | |
| | 2009.11-2015.12 | 6MT | R | R | Saloon 4WD CFKA | Date from:2011.09,For PR code:GH2,For vehicles with electronic limited slip diff. | GDS82079 | Drive Shaft | | 42 | | 76.5 | 34 | 545 | |
| | 2009.11-2015.12 | 6MT | R | L/R | Saloon 4WD CFKA | Date to:2011.08,For PR code:GH1 | GDS82076 | Drive Shaft | | 42 | | 76.5 | 34 | 630 | |
| | 2009.11-2015.12 | 6MT | R | L/R | Saloon 4WD CFKA | Date from:2011.09,For PR code:GH1 | GDS83367 | Drive Shaft | | 42 | | 76.5 | 34 | 626 | |
| | 2009.11-2015.12 | 6MT | R | L/R | Saloon 4WD CFKA | Date from:2011.09,For PR code:GH2,For vehicles with AWD & variable torque dist. | GCI61107 | Inner Joint | | 42 | 28 | 76.5 | 34 | 82 | |
| | 2009.11-2015.12 | 6MT | R | L/R | Saloon 4WD CFKA | Date from:2011.09,For PR code:GH2,For vehicles with AWD & variable torque dist. | GCI81610 | Inner Joint | | | 28 | | | 28 | |
| | 2009.11-2015.12 | 6MT | R | L/R | Saloon 4WD CFKA | Date from:2011.09,For PR code:GH1 | GCI83044 | Inner Joint | | | 25 | | | 26 | |

| | YEAR | TRANSM. | F/R | L/R | BODY STYLE & DRIVE TYPE & ENGINE | REMARKS | G-AP Ref. | PRODUCT | ABS | Technical Specifications A | B | C | H | L | P |
|---|---|---|---|---|---|---|---|---|---|---|---|---|---|---|---|
| **AUDI** | | | | | | | | | | | | | | | |
| **A4 Quattro** | | | | | | | | | | | | | | | |
| 2.0 (140 kw) | 2013.09-2015.12 | 6MT | F | L/R | Estate 4WD CNHA | | GDS83371 | Drive Shaft | | 42 | | 76.5 | 34 | 465 | |
| | 2013.09-2015.12 | 6MT | F | L/R | Estate 4WD CNHA | | GCO83107 | Outer Joint | | 42 | 25 | 76.5 | 34 | 47.5 | I |
| | 2013.09-2015.12 | 6MT | F | L/R | Estate 4WD CNHA | TJ | GCI61070 | Inner Joint | | | 24 | | | 85 | |
| | 2013.09-2015.12 | 6MT | F | L/R | Estate 4WD CNHA | AAR | GCI81054 | Inner Joint | | | 24 | | | 86 | |
| | 2013.09-2015.12 | 6MT | R | L | Estate 4WD CNHA | For PR code:GH2,For vehicles with electronic limited slip diff. | GDS82078 | Drive Shaft | | 42 | | 76.5 | 34 | 587 | |
| | 2013.09-2015.12 | 6MT | R | R | Estate 4WD CNHA | For PR code:GH2,For vehicles with electronic limited slip diff. | GDS82079 | Drive Shaft | | 42 | | 76.5 | 34 | 545 | |
| | 2013.09-2015.12 | 6MT | R | L/R | Estate 4WD CNHA | For PR code:GH1 | GDS83367 | Drive Shaft | | 42 | | 76.5 | 34 | 626 | |
| | 2013.09-2015.12 | 6MT | R | L/R | Estate 4WD CNHA | For PR Code:GH1 | GCI83040 | Outer Joint | | 42 | 25 | 76.5 | 34 | 66 | M |
| | 2013.09-2015.12 | 6MT | R | L/R | Estate 4WD CNHA | For PR Code:GH2,For vehicles with electronic LTD slip differential | GCI61107 | Inner Joint | | 42 | 28 | 76.5 | 34 | 82 | |
| | 2013.09-2015.12 | 6MT | R | L/R | Estate 4WD CNHA | For PR Code:GH2,For vehicles with electronic LTD slip differential | GCI81610 | Inner Joint | | | 28 | | | 28 | |
| | 2013.09-2015.12 | 6MT | R | L/R | Estate 4WD CNHA | For PR Code:GH1 | GCI83044 | Inner Joint | | | 25 | | | 26 | |
| | 2013.09-2015.12 | 7AT/6MT | F | L/R | Saloon 4WD CNHA | | GDS83371 | Drive Shaft | | 42 | | 76.5 | 34 | 465 | |
| | 2013.09-2015.12 | 7AT/6MT | F | L/R | Saloon 4WD CNHA | | GCO83107 | Outer Joint | | 42 | 25 | 76.5 | 34 | 47.5 | I |
| | 2013.09-2015.12 | | F | L/R | Saloon 4WD CNHA | | GCI81054 | Inner Joint | | | 24 | | | 86 | |
| | 2013.09-2015.12 | 7AT/6MT | R | L | Saloon 4WD CNHA | For PR code:GH2,For vehicles with electronic limited slip diff. | GDS82078 | Drive Shaft | | 42 | | 76.5 | 34 | 587 | |
| | 2013.09-2015.12 | 7AT/6MT | R | R | Saloon 4WD CNHA | For PR code:GH2,For vehicles with electronic limited slip diff. | GDS82079 | Drive Shaft | | 42 | | 76.5 | 34 | 545 | |
| | 2013.09-2015.12 | 7AT/6MT | R | L/R | Saloon 4WD CNHA | For PR code:GH1 | GDS83367 | Drive Shaft | | 42 | | 76.5 | 34 | 626 | |
| | 2013.09-2015.12 | 7AT/6MT | R | L/R | Saloon 4WD CNHA | | GCI83040 | Outer Joint | | 42 | 25 | 76.5 | 34 | 66 | M |
| | 2013.09-2015.12 | 7AT/6MT | R | L/R | Saloon 4WD CNHA | For PR code:GH2,For vehicles with AWD & variable torque dist. | GCI61107 | Inner Joint | | 42 | 28 | 76.5 | 34 | 82 | |
| | 2013.09-2015.12 | 7AT/6MT | R | L/R | Saloon 4WD CNHA | For PR code:GH2,For vehicles with AWD & variable torque dist. | GCI81610 | Inner Joint | | | 28 | | | 28 | |
| | 2013.09-2015.12 | 7AT/6MT | R | L/R | Saloon 4WD CNHA | For PR code:GH1 | GCI83044 | Inner Joint | | | 25 | | | 26 | |
| | 2015.09-2019.11 | 6MT/7DCT | F | L/R | Saloon 4WD DESA;DETA;DFVA | For PR code:GH4,For vehicles with AWD & variable torque dist. | GDS82075 | Drive Shaft | | 42 | | 76.5 | 34 | 463 | |
| | 2015.09-2019.11 | 7AT/6MT | F | L/R | Saloon 4WD DESA;DETA;DFVA | Date From:2016.02,For PR code:GH1 | GDS82074 | Drive Shaft | | 42 | | 76.5 | 34 | 462 | |
| | 2015.09-2019.11 | AT | F | L/R | Saloon 4WD DESA;DETA;DFVA | | GCO83103 | Outer Joint | | 42 | 28 | 76.4 | 34 | 54 | I |
| | 2015.09-2019.11 | AT | F | L/R | Saloon 4WD DESA;DETA;DFVA | | GCI83022 | Inner Joint | | | 34 | | | 88.5 | |
| | 2015.09-2019.11 | 6MT/7DCT | R | L/R | Saloon 4WD DESA;DETA;DFVA | For PR code:GH1 | GDS82363 | Drive Shaft | | 38 | | 59.5 | 34 | 624 | |
| | 2015.09-2019.11 | 7DCT/6MT | R | L | Saloon 4WD DESA;DETA;DFVA | For PR code:GH4;For veh. with all-wheel drive & controlled clutch;Mounting Type:Bolted | GDS58134 | Drive Shaft | | 38 | | 59.5 | 34 | 653 | |
| | 2015.09-2019.11 | 7DCT/6MT | R | R | Saloon 4WD DESA;DETA;DFVA | For PR code:GH4;For veh. with all-wheel drive & controlled clutch;Mounting Type:Bolted | GDS58135 | Drive Shaft | | 38 | | 59.5 | 34 | 550 | |
| | 2015.09-2019.11 | 7DCT/6MT | R | L/R | Saloon 4WD DESA;DETA;DFVA | Rear differential with uncoupling feature;Without rear differential lock | GCI81751 | Outer Joint | | 38 | 33 | 59.5 | 34 | 78 | |
| | 2015.09-2019.11 | 7DCT/6MT | R | L/R | Saloon 4WD DESA;DETA;DFVA | For PR code:GH4;For veh. with all-wheel drive & controlled clutch;Mounting Type:Bolted | GCI81752 | Inner Joint | | | 33 | | | 34 | |
| | 2015.09-2020.09 | 7DCT | F | L/R | Saloon 4WD DETA | | GDS82074 | Drive Shaft | | 42 | | 76.5 | 34 | 462 | |
| | 2015.09-2020.09 | 7DCT | F | L/R | Saloon 4WD DETA | Rear differential with uncoupling feature | GDS82075 | Drive Shaft | | 42 | | 76.5 | 34 | 463 | |
| | 2015.09-2020.09 | 7AT/6MT | R | L/R | Saloon 4WD DETA | | GCI81751 | Outer Joint | | 38 | 33 | 59.5 | 34 | 78 | |
| | 2015.09-2020.09 | 7DCT/6MT | R | L/R | Saloon 4WD DETA | Without rear differential lock | GDS82363 | Drive Shaft | | 38 | | 59.5 | 34 | 624 | |
| | 2015.10-2018.09 | 6MT/7DCT | F | L/R | Estate 4WD DESA;DETA;DFVA | For PR code:GH4,For vehicles with AWD & variable torque dist. | GDS82075 | Drive Shaft | | 42 | | 76.5 | 34 | 463 | |
| | 2015.10-2018.09 | 7AT | F | L/R | Estate 4WD DESA;DETA;DFVA | For PR code:GH4,For vehicles with AWD & variable torque dist. | GCO81357 | Outer Joint | | 42 | 28 | 76.5 | 34 | 54 | I |
| | 2015.10-2018.09 | 7AT/6MT | F | L/R | Estate 4WD DESA;DETA;DFVA | Date From:2016.02,For PR code:GH1 | GDS82074 | Drive Shaft | | 42 | | 76.5 | 34 | 462 | |
| | 2015.10-2018.09 | AT | F | L/R | Estate 4WD DESA;DETA;DFVA | For veh. with all-wheel drive & controlled clutch | GCO83103 | Outer Joint | | 42 | 28 | 76.4 | 34 | 54 | I |
| | 2015.10-2018.09 | AT | F | L/R | Estate 4WD DESA;DETA;DFVA | | GCI83022 | Inner Joint | | | 34 | | | 88.5 | |
| | 2015.10-2018.09 | 6MT/7DCT | R | L/R | Estate 4WD DESA;DETA;DFVA | For PR code:GH1 | GDS82363 | Drive Shaft | | 38 | | 59.5 | 34 | 624 | |
| | 2015.10-2018.09 | 7DCT/6MT | R | L | Estate 4WD DESA;DETA;DFVA | For PR code:GH4;For veh. with all-wheel drive & controlled clutch;Mounting Type:Bolted | GDS58134 | Drive Shaft | | 38 | | 59.5 | 34 | 653 | |
| | 2015.10-2018.09 | 7DCT/6MT | R | R | Estate 4WD DESA;DETA;DFVA | For PR code:GH4;For veh. with all-wheel drive & controlled clutch;Mounting Type:Bolted | GDS58135 | Drive Shaft | | 38 | | 59.5 | 34 | 550 | |
| | 2015.10-2018.09 | 7DCT/6MT | R | L/R | Estate 4WD DESA;DETA;DFVA | Rear differential with uncoupling feature;Without rear differential lock | GCI81751 | Outer Joint | | 38 | 33 | 59.5 | 34 | 78 | |
| | 2015.10-2018.09 | 7DCT/6MT | R | L/R | Estate 4WD DESA;DETA;DFVA | For PR code:GH4;For veh. with all-wheel drive & controlled clutch;Mounting Type:Bolted | GCI81752 | Inner Joint | | | 33 | | | 34 | |
| | 2018.10-2020.09 | 7DCT | F | L/R | Estate 4WD DETA | Date from:2016.02,Without rear differential lock | GDS82074 | Drive Shaft | | 42 | | 76.5 | 34 | 462 | |
| | 2018.10-2020.09 | 7DCT | F | L/R | Estate 4WD DETA | Rear differential with uncoupling feature | GDS82075 | Drive Shaft | | 42 | | 76.5 | 34 | 463 | |
| | 2018.10-2020.09 | 7AT/6MT | R | L/R | Estate 4WD DETA | | GCI81751 | Outer Joint | | 38 | 33 | 59.5 | 34 | 78 | |
| | 2018.10-2020.09 | 7DCT/6MT | R | L/R | Estate 4WD DETA | Without rear differential lock | GDS82363 | Drive Shaft | | 38 | | 59.5 | 34 | 624 | |
| 2.0 (147 kw) | 2004.11-2008.06 | 6AT | F | L | Estate 4WD BGB;BWE;BWT;BPG | | GDS81493 | Drive Shaft | 45W | 38 | | 59.5 | 34 | 580 | |
| | 2004.11-2008.06 | 6AT | F | R | Estate 4WD BGB;BWE;BWT;BPG | | GDS81494 | Drive Shaft | 45W | 38 | | 59.5 | 34 | 490 | |
| | 2004.11-2008.06 | 6AT/6MT | F | L/R | Estate 4WD BGB;BWE;BWT;BPG | | GCO83030 | Outer Joint | | 38 | 33 | 59.5 | 34 | 56.5 | M |
| | 2004.11-2008.06 | 6AT/6MT | F | L/R | Estate 4WD BGB;BWE;BWT;BPG | | GCO83058 | Outer Joint | 45W | 38 | 33 | 59.5 | 34 | 56.5 | M |
| | 2004.11-2008.06 | 6AT/6MT | F | L/R | Estate 4WD BGB;BWE;BWT;BPG | | GCI61070 | Inner Joint | | | 24 | | | 85 | |
| | 2004.11-2008.06 | 6MT | F | L | Estate 4WD BGB;BWE;BWT;BPG | | GDS83310 | Drive Shaft | 45W | 38 | | 59.5 | 34 | 594 | |
| | 2004.11-2008.06 | 6MT | F | R | Estate 4WD BGB;BWE;BWT;BPG | | GDS83058 | Drive Shaft | 45W | 38 | | 59.5 | 34.5 | 613 | |
| | 2004.11-2008.06 | 6AT/6MT | R | L/R | Estate 4WD BGB;BWE;BWT;BPG | | GDS82401 | Drive Shaft | 45W | 38 | | 59.5 | 34 | 617 | |
| | 2004.11-2008.06 | 6AT/6MT | R | L/R | Estate 4WD BGB;BWE;BWT;BPG | | GCI61010 | Inner Joint | | | 28 | | | 32 | |
| | 2004.11-2008.06 | 6AT | F | L | Saloon 4WD BGB;BWE;BWT;BPG | | GDS81493 | Drive Shaft | 45W | 38 | | 59.5 | 34 | 580 | |
| | 2004.11-2008.06 | 6AT | F | R | Saloon 4WD BGB;BWE;BWT;BPG | | GDS81494 | Drive Shaft | 45W | 38 | | 59.5 | 34 | 490 | |
| | 2004.11-2008.06 | 6AT/6MT | F | L/R | Saloon 4WD BGB;BWE;BWT;BPG | | GCO83030 | Outer Joint | | 38 | 33 | 59.5 | 34 | 56.5 | M |
| | 2004.11-2008.06 | 6AT/6MT | F | L/R | Saloon 4WD BGB;BWE;BWT;BPG | | GCO83058 | Outer Joint | 45W | 38 | 33 | 59.5 | 34 | 56.5 | M |
| | 2004.11-2008.06 | 6AT/6MT | F | L/R | Saloon 4WD BGB;BWE;BWT;BPG | | GCI61070 | Inner Joint | | | 24 | | | 85 | |
| | 2004.11-2008.06 | 6MT | F | L | Saloon 4WD BGB;BWE;BWT;BPG | | GDS83310 | Drive Shaft | 45W | 38 | | 59.5 | 34 | 594 | |
| | 2004.11-2008.06 | 6MT | F | R | Saloon 4WD BGB;BWE;BWT;BPG | | GDS83058 | Drive Shaft | 45W | 38 | | 59.5 | 34.5 | 613 | |
| | 2004.11-2008.06 | 6AT/6MT | R | L/R | Saloon 4WD BGB;BWE;BWT;BPG | | GDS82401 | Drive Shaft | 45W | 38 | | 59.5 | 34 | 617 | |

| | YEAR | TRANSM. | F/R | L/R | BODY STYLE & DRIVE TYPE & ENGINE | REMARKS | G-AP Ref. | PRODUCT | ABS | Technical Specifications A | B | C | H | L | P |
|---|---|---|---|---|---|---|---|---|---|---|---|---|---|---|---|
| **AUDI** | | | | | | | | | | | | | | | |
| **A4 Quattro** | | | | | | | | | | | | | | | |
| 2.0 (147 kw) | 2004.11-2008.06 | 6AT/6MT | R | L/R | Saloon 4WD BGB;BWE;BWT;BPG | | GCI61010 | Inner Joint | | | 28 | | | 32 | |
| 2.0 (150 kw) | 2020.05- | 7DCT | F | L/R | Estate 4WD DTPA | For PR code:GH1 | GDS82074 | Drive Shaft | | 42 | | 76.5 | 34 | 462 | |
| | 2020.05- | 7DCT | F | L/R | Estate 4WD DTPA | For PR code:GH4,For veh. with all-wheel drive & controlled clutch | GDS82075 | Drive Shaft | | 42 | | 76.5 | 34 | 463 | |
| | 2020.05- | 7DCT | R | L | Estate 4WD DTPA | For PR code:GH4;For veh. with all-wheel drive & controlled clutch;Mounting Type:Bolted | GDS58134 | Drive Shaft | | 38 | | 59.5 | 34 | 653 | |
| | 2020.05- | 7DCT | R | R | Estate 4WD DTPA | For PR code:GH4;For veh. with all-wheel drive & controlled clutch;Mounting Type:Bolted | GDS58135 | Drive Shaft | | 38 | | 59.5 | 34 | 550 | |
| | 2020.05- | 7DCT | R | L/R | Estate 4WD DTPA | For PR code:GH1 | GDS82363 | Drive Shaft | | 38 | | 59.5 | 34 | 624 | |
| | 2020.05- | 7DCT | R | L/R | Estate 4WD DTPA | Rear differential with uncoupling feature;Without rear differential lock | GCI81751 | Outer Joint | | 38 | 33 | 59.5 | 34 | 78 | |
| | 2020.05- | 7DCT | R | L/R | Estate 4WD DTPA | For PR code:GH4;For veh. with all-wheel drive & controlled clutch;Mounting Type:Bolted | GCI81752 | Inner Joint | | | 33 | | | 34 | |
| | 2020.05- | 7DCT | F | L/R | Saloon 4WD DTPA | For PR code:GH1 | GDS82074 | Drive Shaft | | 42 | | 76.5 | 34 | 462 | |
| | 2020.05- | 7DCT | F | L/R | Saloon 4WD DTPA | For PR code:GH4,For veh. with all-wheel drive & controlled clutch | GDS82075 | Drive Shaft | | 42 | | 76.5 | 34 | 463 | |
| | 2020.05- | 7DCT | R | L | Saloon 4WD DTPA | For PR code:GH4;For veh. with all-wheel drive & controlled clutch;Mounting Type:Bolted | GDS58134 | Drive Shaft | | 38 | | 59.5 | 34 | 653 | |
| | 2020.05- | 7DCT | R | R | Saloon 4WD DTPA | For PR code:GH4;For veh. with all-wheel drive & controlled clutch;Mounting Type:Bolted | GDS58135 | Drive Shaft | | 38 | | 59.5 | 34 | 550 | |
| | 2020.05- | 7DCT | R | L/R | Saloon 4WD DTPA | For PR code:GH1 | GDS82363 | Drive Shaft | | 38 | | 59.5 | 34 | 624 | |
| | 2020.05- | 7DCT | R | L/R | Saloon 4WD DTPA | Rear differential with uncoupling feature;Without rear differential lock | GCI81751 | Outer Joint | | 38 | 33 | 59.5 | 34 | 78 | |
| | 2020.05- | 7DCT | R | L/R | Saloon 4WD DTPA | For PR code:GH4;For veh. with all-wheel drive & controlled clutch;Mounting Type:Bolted | GCI81752 | Inner Joint | | | 33 | | | 34 | |
| | 2020.06- | 7DCT | F | L/R | Estate 4WD DMSA | For PR code:GH1 | GDS82074 | Drive Shaft | | 42 | | 76.5 | 34 | 462 | |
| | 2020.06- | 7DCT | F | L/R | Estate 4WD DMSA | For PR code:GH4,For veh. with all-wheel drive & controlled clutch | GDS82075 | Drive Shaft | | 42 | | 76.5 | 34 | 463 | |
| | 2020.06- | 6MT | R | L | Estate 4WD DMSA | For PR code:GH4;For veh. with all-wheel drive & controlled clutch;Mounting Type:Bolted | GDS58134 | Drive Shaft | | 38 | | 59.5 | 34 | 653 | |
| | 2020.06- | 6MT | R | R | Estate 4WD DMSA | For PR code:GH4;For veh. with all-wheel drive & controlled clutch;Mounting Type:Bolted | GDS58135 | Drive Shaft | | 38 | | 59.5 | 34 | 550 | |
| | 2020.06- | 6MT | R | L/R | Estate 4WD DMSA | For PR code:GH4;For veh. with all-wheel drive & controlled clutch;Mounting Type:Bolted | GCI81752 | Inner Joint | | | 33 | | | 34 | |
| | 2020.06- | 7DCT | R | L/R | Estate 4WD DMSA | For PR code:GH1 | GDS82363 | Drive Shaft | | 38 | | 59.5 | 34 | 624 | |
| | 2020.06- | 7DCT | R | L/R | Estate 4WD DMSA | Rear differential with uncoupling feature;Without rear differential lock | GCI81751 | Outer Joint | | 38 | 33 | 59.5 | 34 | 78 | |
| | 2020.06- | 7DCT | F | L/R | Saloon 4WD DMSA | For PR code:GH1 | GDS82074 | Drive Shaft | | 42 | | 76.5 | 34 | 462 | |
| | 2020.06- | 7DCT | F | L/R | Saloon 4WD DMSA | For PR code:GH4,For veh. with all-wheel drive & controlled clutch | GDS82075 | Drive Shaft | | 42 | | 76.5 | 34 | 463 | |
| | 2020.06- | 7DCT | R | L/R | Saloon 4WD DMSA | For PR code:GH1 | GDS82363 | Drive Shaft | | 38 | | 59.5 | 34 | 624 | |
| | 2020.06- | 7DCT | R | L/R | Saloon 4WD DMSA | Rear differential with uncoupling feature;Without rear differential lock | GCI81751 | Outer Joint | | 38 | 33 | 59.5 | 34 | 78 | |
| | 2020.06- | 7DCT/6MT | R | L | Saloon 4WD DMSA | For PR code:GH4;For veh. with all-wheel drive & controlled clutch;Mounting Type:Bolted | GDS58134 | Drive Shaft | | 38 | | 59.5 | 34 | 653 | |
| | 2020.06- | 7DCT/6MT | R | R | Saloon 4WD DMSA | For PR code:GH4;For veh. with all-wheel drive & controlled clutch;Mounting Type:Bolted | GDS58135 | Drive Shaft | | 38 | | 59.5 | 34 | 550 | |
| | 2020.06- | 7DCT/6MT | R | L/R | Saloon 4WD DMSA | For PR code:GH4;For veh. with all-wheel drive & controlled clutch;Mounting Type:Bolted | GCI81752 | Inner Joint | | | 33 | | | 34 | |
| 2.0 (155 kw) | 2008.06-2015.12 | 7AT/6MT | F | L/R | Estate 4WD CDNC;CAEB | Chassis no. to:8KCA200000 | GDS83345 | Drive Shaft | | 42 | | 76.5 | 34 | 463 | |
| | 2008.06-2015.12 | 7AT/6MT | F | L/R | Estate 4WD CDNC;CAEB | Chassis no. from:8KD000001 | GDS83371 | Drive Shaft | | 42 | | 76.5 | 34 | 465 | |
| | 2008.06-2015.12 | 7AT/6MT | F | L/R | Estate 4WD CDNC;CAEB | Chassis no. to:8KCA200000 | GCO83086 | Outer Joint | | 42 | 33 | 76.5 | 34 | 45.5 | M |
| | 2008.06-2015.12 | 7AT/6MT | F | L/R | Estate 4WD CDNC;CAEB | Date from:2012.08 | GCO83107 | Outer Joint | | 42 | 25 | 76.5 | 34 | 47.5 | I |
| | 2008.06-2015.12 | 7AT/6MT | F | L/R | Estate 4WD CDNC;CAEB | TJ | GCI61070 | Inner Joint | | | 24 | | | 85 | |
| | 2008.06-2015.12 | 7AT/6MT | F | L/R | Estate 4WD CDNC;CAEB | AAR | GCI81054 | Inner Joint | | | 24 | | | 86 | |
| | 2008.06-2015.12 | 7AT/6MT | R | L | Estate 4WD CDNC;CAEB | Date to:2011.08,For PR code:GH2,For vehicles with electronic limited slip diff. | GDS81886 | Drive Shaft | | 42 | | 76.5 | 34 | 589 | |
| | 2008.06-2015.12 | 7AT/6MT | R | L | Estate 4WD CDNC;CAEB | Date from:2011.09,For PR code:GH2,For vehicles with electronic limited slip diff. | GDS82078 | Drive Shaft | | 42 | | 76.5 | 34 | 587 | |
| | 2008.06-2015.12 | 7AT/6MT | R | R | Estate 4WD CDNC;CAEB | Date to:2011.08,For PR code:GH2,For vehicles with electronic limited slip diff. | GDS81885 | Drive Shaft | | 42 | | 76.5 | 34 | 546 | |
| | 2008.06-2015.12 | 7AT/6MT | R | R | Estate 4WD CDNC;CAEB | Date from:2011.09,For PR code:GH2,For vehicles with electronic limited slip diff. | GDS82079 | Drive Shaft | | 42 | | 76.5 | 34 | 545 | |
| | 2008.06-2015.12 | 7AT/6MT | R | L/R | Estate 4WD CDNC;CAEB | Date to:2011.08,For PR code:GH1 | GDS82076 | Drive Shaft | | 42 | | 76.5 | 34 | 630 | |
| | 2008.06-2015.12 | 7AT/6MT | R | L/R | Estate 4WD CDNC;CAEB | Date from:2011.09,For PR code:GH1 | GDS83367 | Drive Shaft | | 42 | | 76.5 | 34 | 626 | |
| | 2008.06-2015.12 | 7AT/6MT | R | L/R | Estate 4WD CDNC;CAEB | | GCI61107 | Inner Joint | | 42 | 28 | 76.5 | 34 | 82 | |
| | 2008.06-2015.12 | 7AT/6MT | R | L/R | Estate 4WD CDNC;CAEB | Date from:2011.09,For PR code:GH2,For vehicles with AWD & variable torque dist. | GCI81610 | Inner Joint | | | 28 | | | 28 | |
| | 2008.06-2015.12 | 7AT/6MT | R | L/R | Estate 4WD CDNC;CAEB | Date from:2011.09,For PR code:GH1 | GCI83044 | Inner Joint | | | 25 | | | 26 | |
| | 2008.06-2015.12 | 6AT/7AT/8AT/6MT | F | L/R | Saloon 4WD CDNC;CAEB;CPMA | Chassis no. to:8KCA200000/8KCN075000/8KCY715000 | GDS83345 | Drive Shaft | | 42 | | 76.5 | 34 | 463 | |
| | 2008.06-2015.12 | 6AT/7AT/8AT/6MT | F | L/R | Saloon 4WD CDNC;CAEB;CPMA | Chassis no. to:8KCA200000 | GCO83086 | Outer Joint | | 42 | 33 | 76.5 | 34 | 45.5 | M |
| | 2008.06-2015.12 | 6AT/7AT/8AT/6MT | F | L/R | Saloon 4WD CDNC;CAEB;CPMA | Date from:2012.08 | GCO83107 | Outer Joint | | 42 | 25 | 76.5 | 34 | 47.5 | I |
| | 2008.06-2015.12 | 6AT/7AT/8AT/6MT | F | L/R | Saloon 4WD CDNC;CAEB;CPMA | Chassis no. to:8KCA200000,TJ | GCI61070 | Inner Joint | | | 24 | | | 85 | |
| | 2008.06-2015.12 | 6AT/7AT/8AT/6MT | F | L/R | Saloon 4WD CDNC;CAEB;CPMA | Chassis no. from:8KD000001,AAR | GCI81054 | Inner Joint | | | 24 | | | 86 | |
| | 2008.06-2015.12 | 7AT/8AT/6MT | F | L/R | Saloon 4WD CDNC;CAEB;CPMA | Chassis no. from:8KD000001 | GDS83371 | Drive Shaft | | 42 | | 76.5 | 34 | 465 | |
| | 2008.06-2015.12 | 6AT/7AT/8AT/6MT | R | L/R | Saloon 4WD CDNC;CAEB;CPMA | Wheel Side | GCI61107 | Inner Joint | | 42 | 28 | 76.5 | 34 | 82 | |
| | 2008.06-2015.12 | 6AT/7AT/8AT/6MT | R | L/R | Saloon 4WD CDNC;CAEB;CPMA | Date from:2011.09,For PR code:GH2,For vehicles with AWD & variable torque dist. | GCI81610 | Inner Joint | | | 28 | | | 28 | |
| | 2008.06-2015.12 | 7AT/6MT | R | L/R | Saloon 4WD CDNC;CAEB;CPMA | Date from:2011.09,For PR code:GH1 | GCI83044 | Inner Joint | | | 25 | | | 26 | |
| | 2008.06-2015.12 | 7AT/8AT/6MT | R | L | Saloon 4WD CDNC;CAEB;CPMA | Date to:2011.08,For PR code:GH2,For vehicles with electronic limited slip diff. | GDS81886 | Drive Shaft | | 42 | | 76.5 | 34 | 589 | |
| | 2008.06-2015.12 | 7AT/8AT/6MT | R | L | Saloon 4WD CDNC;CAEB;CPMA | Date from:2011.09,For PR code:GH2,For vehicles with electronic limited slip diff. | GDS82078 | Drive Shaft | | 42 | | 76.5 | 34 | 587 | |
| | 2008.06-2015.12 | 7AT/8AT/6MT | R | R | Saloon 4WD CDNC;CAEB;CPMA | Date to:2011.08,For PR code:GH2,For vehicles with electronic limited slip diff. | GDS81885 | Drive Shaft | | 42 | | 76.5 | 34 | 546 | |
| | 2008.06-2015.12 | 7AT/8AT/6MT | R | R | Saloon 4WD CDNC;CAEB;CPMA | Date from:2011.09,For PR code:GH2,For vehicles with electronic limited slip diff. | GDS82079 | Drive Shaft | | 42 | | 76.5 | 34 | 545 | |
| | 2008.06-2015.12 | 7AT/8AT/6MT | R | L/R | Saloon 4WD CDNC;CAEB;CPMA | Date to:2011.08,For PR code:GH1 | GDS82076 | Drive Shaft | | 42 | | 76.5 | 34 | 630 | |
| | 2008.06-2015.12 | 7AT/8AT/6MT | R | L/R | Saloon 4WD CDNC;CAEB;CPMA | Date from:2011.09,For PR code:GH1 | GDS83367 | Drive Shaft | | 42 | | 76.5 | 34 | 626 | |
| 2.0 (162 kw) | 2005.06-2008.06 | 6MT | F | L | Estate 4WD BUL | | GDS83310 | Drive Shaft | 45W | 38 | | 59.5 | 34 | 594 | |
| | 2005.06-2008.06 | 6MT | F | R | Estate 4WD BUL | | GDS83058 | Drive Shaft | 45W | 38 | | 59.5 | 34.5 | 613 | |
| | 2005.06-2008.06 | 6MT | F | L/R | Estate 4WD BUL | | GCI61070 | Inner Joint | | | 24 | | | 85 | |
| | 2005.06-2008.06 | MT | F | L/R | Estate 4WD BUL | | GCO83058 | Outer Joint | 45W | 38 | 33 | 59.5 | 34 | 56.5 | M |
| | 2005.06-2008.06 | | F | L/R | Estate 4WD BUL | | GCO83030 | Outer Joint | | 38 | 33 | 59.5 | 34 | 56.5 | M |
| | 2005.06-2008.06 | | F | L/R | Estate 4WD BUL | Date From:2006.02 | GCO83067 | Outer Joint | 45W | 38 | 27 | 59.5 | 34 | 68 | M |

| | YEAR | TRANSM. | F/R | L/R | BODY STYLE & DRIVE TYPE & ENGINE | REMARKS | G-AP Ref. | PRODUCT | ABS | Technical Specifications A | B | C | H | L | P |
|---|---|---|---|---|---|---|---|---|---|---|---|---|---|---|---|
| **AUDI** | | | | | | | | | | | | | | | |
| **A4 Quattro** | | | | | | | | | | | | | | | |
| 2.0 (162 kw) | 2005.06-2008.06 | 6MT | R | L/R | Estate 4WD BUL | | GDS82401 | Drive Shaft | 45W | 38 | | 59.5 | 34 | 617 | |
| | 2005.06-2008.06 | 6MT | R | L/R | Estate 4WD BUL | | GCI61010 | Inner Joint | | | 28 | | | 32 | |
| | 2005.06-2008.06 | 6MT | F | L | Saloon 4WD BUL | | GDS83310 | Drive Shaft | 45W | 38 | | 59.5 | 34 | 594 | |
| | 2005.06-2008.06 | 6MT | F | R | Saloon 4WD BUL | | GDS83058 | Drive Shaft | 45W | 38 | | 59.5 | 34.5 | 613 | |
| | 2005.06-2008.06 | 6MT | F | L/R | Saloon 4WD BUL | | GCI61070 | Inner Joint | | | 24 | | | 85 | |
| | 2005.06-2008.06 | MT | F | L/R | Saloon 4WD BUL | | GCO83058 | Outer Joint | 45W | 38 | 33 | 59.5 | 34 | 56.5 | M |
| | 2005.06-2008.06 | | F | L/R | Saloon 4WD BUL | | GCO83030 | Outer Joint | | 38 | 33 | 59.5 | 34 | 56.5 | M |
| | 2005.06-2008.06 | | F | L/R | Saloon 4WD BUL | | GCO83067 | Outer Joint | 45W | 38 | 27 | 59.5 | 34 | 68 | M |
| | 2005.06-2008.06 | 6MT | R | L/R | Saloon 4WD BUL | | GDS82401 | Drive Shaft | 45W | 38 | | 59.5 | 34 | 617 | |
| | 2005.06-2008.06 | 6MT | R | L/R | Saloon 4WD BUL | | GCI61010 | Inner Joint | | | 28 | | | 32 | |
| | 2013.05-2015.12 | 8AT | F | L/R | Saloon 4WD CPMB;CAED | | GDS83371 | Drive Shaft | | 42 | | 76.5 | 34 | 465 | |
| | 2013.05-2015.12 | 8AT | F | L/R | Saloon 4WD CPMB;CAED | | GCO83107 | Outer Joint | | 42 | 25 | 76.5 | 34 | 47.5 | I |
| | 2013.05-2015.12 | AT/MT | F | L/R | Saloon 4WD CPMB;CAED | | GCI83022 | Inner Joint | | | 34 | | | 88.5 | |
| | 2013.05-2015.12 | | F | L/R | Saloon 4WD CPMB;CAED | | GCI81054 | Inner Joint | | | 24 | | | 86 | |
| | 2013.05-2015.12 | 8AT | R | L | Saloon 4WD CPMB;CAED | For PR code:GH2,For vehicles with electronic limited slip diff. | GDS82078 | Drive Shaft | | 42 | | 76.5 | 34 | 587 | |
| | 2013.05-2015.12 | 8AT | R | R | Saloon 4WD CPMB;CAED | For PR code:GH2,For vehicles with electronic limited slip diff. | GDS82079 | Drive Shaft | | 42 | | 76.5 | 34 | 545 | |
| | 2013.05-2015.12 | 8AT | R | L/R | Saloon 4WD CPMB;CAED | For PR code:GH1 | GDS83367 | Drive Shaft | | 42 | | 76.5 | 34 | 626 | |
| | 2013.05-2015.12 | 8AT | R | L/R | Saloon 4WD CPMB;CAED | | GCI83040 | Outer Joint | | 42 | 25 | 76.5 | 34 | 66 | M |
| | 2013.05-2015.12 | 8AT | R | L/R | Saloon 4WD CPMB;CAED | For PR code:GH2,For vehicles with AWD & variable torque dist. | GCI61107 | Inner Joint | | 42 | 28 | 76.5 | 34 | 82 | |
| | 2013.05-2015.12 | 8AT | R | L/R | Saloon 4WD CPMB;CAED | For PR code:GH2,For vehicles with AWD & variable torque dist. | GCI81610 | Inner Joint | | | 28 | | | 28 | |
| | 2013.05-2015.12 | 8AT | R | L/R | Saloon 4WD CPMB;CAED | For PR code:GH1 | GCI83044 | Inner Joint | | | 25 | | | 26 | |
| 2.0 (165 kw) | 2013.05-2015.12 | 7AT/6MT | F | L/R | Estate 4WD CNCD | | GDS83371 | Drive Shaft | | 42 | | 76.5 | 34 | 465 | |
| | 2013.05-2015.12 | 7AT/6MT | F | L/R | Estate 4WD CNCD | | GCO83107 | Outer Joint | | 42 | 25 | 76.5 | 34 | 47.5 | I |
| | 2013.05-2015.12 | AT/MT | F | L/R | Estate 4WD CNCD | | GCI83022 | Inner Joint | | | 34 | | | 88.5 | |
| | 2013.05-2015.12 | | F | L/R | Estate 4WD CNCD | | GCI81054 | Inner Joint | | | 24 | | | 86 | |
| | 2013.05-2015.12 | 7AT/6MT | R | L | Estate 4WD CNCD | For PR code:GH2,For vehicles with electronic limited slip diff. | GDS82078 | Drive Shaft | | 42 | | 76.5 | 34 | 587 | |
| | 2013.05-2015.12 | 7AT/6MT | R | R | Estate 4WD CNCD | For PR code:GH2,For vehicles with electronic limited slip diff. | GDS82079 | Drive Shaft | | 42 | | 76.5 | 34 | 545 | |
| | 2013.05-2015.12 | 7AT/6MT | R | L/R | Estate 4WD CNCD | For PR code:GH1 | GDS83367 | Drive Shaft | | 42 | | 76.5 | 34 | 626 | |
| | 2013.05-2015.12 | 7AT/6MT | R | L/R | Estate 4WD CNCD | | GCI83040 | Outer Joint | | 42 | 25 | 76.5 | 34 | 66 | M |
| | 2013.05-2015.12 | 7AT/6MT | R | L/R | Estate 4WD CNCD | For PR code:GH2,For vehicles with AWD & variable torque dist. | GCI61107 | Inner Joint | | 42 | 28 | 76.5 | 34 | 82 | |
| | 2013.05-2015.12 | 7AT/6MT | R | L/R | Estate 4WD CNCD | For PR code:GH2,For vehicles with AWD & variable torque dist. | GCI81610 | Inner Joint | | | 28 | | | 28 | |
| | 2013.05-2015.12 | 7AT/6MT | R | L/R | Estate 4WD CNCD | For PR code:GH1 | GCI83044 | Inner Joint | | | 25 | | | 26 | |
| | 2013.05-2015.12 | 7AT/6MT | F | L/R | Saloon 4WD CNCD | | GDS83371 | Drive Shaft | | 42 | | 76.5 | 34 | 465 | |
| | 2013.05-2015.12 | 7AT/6MT | F | L/R | Saloon 4WD CNCD | | GCO83107 | Outer Joint | | 42 | 25 | 76.5 | 34 | 47.5 | I |
| | 2013.05-2015.12 | AT/MT | F | L/R | Saloon 4WD CNCD | | GCI83022 | Inner Joint | | | 34 | | | 88.5 | |
| | 2013.05-2015.12 | | F | L/R | Saloon 4WD CNCD | | GCI81054 | Inner Joint | | | 24 | | | 86 | |
| | 2013.05-2015.12 | 7AT/6MT | R | L | Saloon 4WD CNCD | For PR code:GH2,For vehicles with electronic limited slip diff. | GDS82078 | Drive Shaft | | 42 | | 76.5 | 34 | 587 | |
| | 2013.05-2015.12 | 7AT/6MT | R | R | Saloon 4WD CNCD | For PR code:GH2,For vehicles with electronic limited slip diff. | GDS82079 | Drive Shaft | | 42 | | 76.5 | 34 | 545 | |
| | 2013.05-2015.12 | 7AT/6MT | R | L/R | Saloon 4WD CNCD | For PR code:GH1 | GDS83367 | Drive Shaft | | 42 | | 76.5 | 34 | 626 | |
| | 2013.05-2015.12 | 7AT/6MT | R | L/R | Saloon 4WD CNCD | | GCI83040 | Outer Joint | | 42 | 25 | 76.5 | 34 | 66 | M |
| | 2013.05-2015.12 | 7AT/6MT | R | L/R | Saloon 4WD CNCD | For PR code:GH2,For vehicles with AWD & variable torque dist. | GCI61107 | Inner Joint | | 42 | 28 | 76.5 | 34 | 82 | |
| | 2013.05-2015.12 | 7AT/6MT | R | L/R | Saloon 4WD CNCD | For PR code:GH2,For vehicles with AWD & variable torque dist. | GCI81610 | Inner Joint | | | 28 | | | 28 | |
| | 2013.05-2015.12 | 7AT/6MT | R | L/R | Saloon 4WD CNCD | For PR code:GH1 | GCI83044 | Inner Joint | | | 25 | | | 26 | |
| 2.0 (180 kw) | 2018.07-2020.08 | 7AT | F | L/R | Estate 4WD DKNA | For PR code:GH1 | GDS82074 | Drive Shaft | | 42 | | 76.5 | 34 | 462 | |
| | 2018.07-2020.08 | 7DCT | F | L/R | Estate 4WD DKNA | For PR code:GH4,For vehicles with AWD & variable torque dist. | GDS82075 | Drive Shaft | | 42 | | 76.5 | 34 | 463 | |
| | 2018.07-2020.08 | AT | F | L/R | Estate 4WD DKNA | Date From:2019.01;For PR code:GH1/GH2/GH4 | GCO83103 | Outer Joint | | 42 | 28 | 76.4 | 34 | 54 | I |
| | 2018.07-2020.08 | AT | F | L/R | Estate 4WD DKNA | Date From:2019.01;For PR code:GH1/GH2/GH4 | GCI83022 | Inner Joint | | | 34 | | | 88.5 | |
| | 2018.07-2020.08 | 7DCT | R | L | Estate 4WD DKNA | For PR code:GH4;For veh. with all-wheel drive & controlled clutch (Mounting Type:Bolted) | GDS58134 | Drive Shaft | | 38 | | 59.5 | 34 | 653 | |
| | 2018.07-2020.08 | 7DCT | R | R | Estate 4WD DKNA | For PR code:GH4;For veh. with all-wheel drive & controlled clutch (Mounting Type:Bolted) | GDS58135 | Drive Shaft | | 38 | | 59.5 | 34 | 550 | |
| | 2018.07-2020.08 | 7DCT | R | L/R | Estate 4WD DKNA | For PR code:GH1 | GDS82363 | Drive Shaft | | 38 | | 59.5 | 34 | 624 | |
| | 2018.07-2020.08 | 7DCT | R | L/R | Estate 4WD DKNA | Rear differential with uncoupling feature;Without rear differential lock | GCI81751 | Outer Joint | | 38 | 33 | 59.5 | 34 | 78 | |
| | 2018.07-2020.08 | 7DCT | R | L/R | Estate 4WD DKNA | For PR code:GH4;For veh. with all-wheel drive & controlled clutch (Mounting Type:Bolted) | GCI81752 | Inner Joint | | | 33 | | | 34 | |
| | 2018.07-2020.08 | 7AT | F | L/R | Saloon 4WD DKNA | For PR code:GH1 | GDS82074 | Drive Shaft | | 42 | | 76.5 | 34 | 462 | |
| | 2018.07-2020.08 | 7DCT | F | L/R | Saloon 4WD DKNA | For PR code:GH4,For vehicles with AWD & variable torque dist. | GDS82075 | Drive Shaft | | 42 | | 76.5 | 34 | 463 | |
| | 2018.07-2020.08 | AT | F | L/R | Saloon 4WD DKNA | Date from:2019.01,For PR code:GH1/GH2/GH4 | GCO83103 | Outer Joint | | 42 | 28 | 76.4 | 34 | 54 | I |
| | 2018.07-2020.08 | AT | F | L/R | Saloon 4WD DKNA | Date from:2019.01,For PR code:GH1/GH2/GH4 | GCI83022 | Inner Joint | | | 34 | | | 88.5 | |
| | 2018.07-2020.08 | 7DCT | R | L | Saloon 4WD DKNA | For PR code:GH4;For veh. with all-wheel drive & controlled clutch (Mounting Type:Bolted) | GDS58134 | Drive Shaft | | 38 | | 59.5 | 34 | 653 | |
| | 2018.07-2020.08 | 7DCT | R | R | Saloon 4WD DKNA | For PR code:GH4;For veh. with all-wheel drive & controlled clutch (Mounting Type:Bolted) | GDS58135 | Drive Shaft | | 38 | | 59.5 | 34 | 550 | |
| | 2018.07-2020.08 | 7DCT | R | L/R | Saloon 4WD DKNA | For PR code:GH1 | GDS82363 | Drive Shaft | | 38 | | 59.5 | 34 | 624 | |
| | 2018.07-2020.08 | 7DCT | R | L/R | Saloon 4WD DKNA | Rear differential with uncoupling feature;Without rear differential lock | GCI81751 | Outer Joint | | 38 | 33 | 59.5 | 34 | 78 | |
| | 2018.07-2020.08 | 7DCT | R | L/R | Saloon 4WD DKNA | For PR code:GH4;For veh. with all-wheel drive & controlled clutch (Mounting Type:Bolted) | GCI81752 | Inner Joint | | | 33 | | | 34 | |
| 2.0 (183 kw) | 2015.11-2019.10 | 7AT | F | L/R | Estate 4WD CYRC | Date From:2016.02,For PR code:GH1 | GDS82074 | Drive Shaft | | 42 | | 76.5 | 34 | 462 | |
| | 2015.11-2019.10 | 7DCT | F | L/R | Estate 4WD CYRC | For PR code:GH4,For vehicles with AWD & variable torque dist. | GDS82075 | Drive Shaft | | 42 | | 76.5 | 34 | 463 | |
| | 2015.11-2019.10 | AT | F | L/R | Estate 4WD CYRC | Date From:2016.01;For PR code:GH1/GH2/GH4 | GCO83103 | Outer Joint | | 42 | 28 | 76.4 | 34 | 54 | I |
| | 2015.11-2019.10 | AT | F | L/R | Estate 4WD CYRC | Date From:2016.01;For PR code:GH1/GH2/GH4 | GCI83022 | Inner Joint | | | 34 | | | 88.5 | |

| | YEAR | TRANSM. | F/R | L/R | BODY STYLE & DRIVE TYPE & ENGINE | REMARKS | G-AP Ref. | PRODUCT | ABS | Technical Specifications A | B | C | H | L | P |
|---|---|---|---|---|---|---|---|---|---|---|---|---|---|---|---|
| **AUDI** | | | | | | | | | | | | | | | |
| **A4 Quattro** | | | | | | | | | | | | | | | |
| 2.0 (183 kw) | 2015.11-2019.10 | 7DCT | R | L | Estate 4WD CYRC | For PR code:GH4;For veh. with all-wheel drive & controlled clutch;Mounting Type:Bolted | GDS58134 | Drive Shaft | | 38 | | 59.5 | 34 | 653 | |
| | 2015.11-2019.10 | 7DCT | R | R | Estate 4WD CYRC | For PR code:GH4;For veh. with all-wheel drive & controlled clutch;Mounting Type:Bolted | GDS58135 | Drive Shaft | | 38 | | 59.5 | 34 | 550 | |
| | 2015.11-2019.10 | 7DCT | R | L/R | Estate 4WD CYRC | For PR code:GH1 | GDS82363 | Drive Shaft | | 38 | | 59.5 | 34 | 624 | |
| | 2015.11-2019.10 | 7DCT | R | L/R | Estate 4WD CYRC | Rear differential with uncoupling feature;Without rear differential lock | GCI81751 | Outer Joint | | 38 | 33 | 59.5 | 34 | 78 | |
| | 2015.11-2019.10 | 7DCT | R | L/R | Estate 4WD CYRC | For PR code:GH4;For veh. with all-wheel drive & controlled clutch;Mounting Type:Bolted | GCI81752 | Inner Joint | | | 33 | | | 34 | |
| | 2015.11-2019.11 | 7AT | F | L/R | Saloon 4WD CYRC | Date From:2016.02,For PR code:GH1 | GDS82074 | Drive Shaft | | 42 | | 76.5 | 34 | 462 | |
| | 2015.11-2019.11 | 7DCT | F | L/R | Saloon 4WD CYRC | For PR code:GH4,For vehicles with AWD & variable torque dist. | GDS82075 | Drive Shaft | | 42 | | 76.5 | 34 | 463 | |
| | 2015.11-2019.11 | AT | F | L/R | Saloon 4WD CYRC | Date From:2016.01;For PR code:GH1/GH2/GH4 | GCO83103 | Outer Joint | | 42 | 28 | 76.4 | 34 | 54 | I |
| | 2015.11-2019.11 | AT | F | L/R | Saloon 4WD CYRC | Date From:2016.01;For PR code:GH1/GH2/GH4 | GCI83022 | Inner Joint | | | 34 | | | 88.5 | |
| | 2015.11-2019.11 | 7DCT | R | L | Saloon 4WD CYRC | For PR code:GH4;For veh. with all-wheel drive & controlled clutch;Mounting Type:Bolted | GDS58134 | Drive Shaft | | 38 | | 59.5 | 34 | 653 | |
| | 2015.11-2019.11 | 7DCT | R | R | Saloon 4WD CYRC | For PR code:GH4;For veh. with all-wheel drive & controlled clutch;Mounting Type:Bolted | GDS58135 | Drive Shaft | | 38 | | 59.5 | 34 | 550 | |
| | 2015.11-2019.11 | 7DCT | R | L/R | Saloon 4WD CYRC | For PR code:GH1 | GDS82363 | Drive Shaft | | 38 | | 59.5 | 34 | 624 | |
| | 2015.11-2019.11 | 7DCT | R | L/R | Saloon 4WD CYRC | Rear differential with uncoupling feature;Without rear differential lock | GCI81751 | Outer Joint | | 38 | 33 | 59.5 | 34 | 78 | |
| | 2015.11-2019.11 | 7DCT | R | L/R | Saloon 4WD CYRC | For PR code:GH4;For veh. with all-wheel drive & controlled clutch;Mounting Type:Bolted | GCI81752 | Inner Joint | | | 33 | | | 34 | |
| 2.0 (185 kw) | 2015.05-2019.11 | 6MT/7DCT | F | L/R | Saloon 4WD CYRB;CYMC | For PR code:GH4,For vehicles with AWD & variable torque dist. | GDS82075 | Drive Shaft | | 42 | | 76.5 | 34 | 463 | |
| | 2015.05-2019.11 | 7AT/6MT | F | L/R | Saloon 4WD CYRB;CYMC | Date From:2016.02,For PR code:GH1 | GDS82074 | Drive Shaft | | 42 | | 76.5 | 34 | 462 | |
| | 2015.05-2019.11 | AT | F | L/R | Saloon 4WD CYRB;CYMC | For PR code:GH1/GH2/GH4 | GCO83103 | Outer Joint | | 42 | 28 | 76.4 | 34 | 54 | I |
| | 2015.05-2019.11 | AT | F | L/R | Saloon 4WD CYRB;CYMC | For PR code:GH1/GH2/GH4 | GCI83022 | Inner Joint | | | 34 | | | 88.5 | |
| | 2015.05-2019.11 | 6MT/7DCT | R | L/R | Saloon 4WD CYRB;CYMC | For PR code:GH1 | GDS82363 | Drive Shaft | | 38 | | 59.5 | 34 | 624 | |
| | 2015.05-2019.11 | 7DCT/6MT | R | L | Saloon 4WD CYRB;CYMC | For PR code:GH4;For veh. with all-wheel drive & controlled clutch;Mounting Type:Bolted | GDS58134 | Drive Shaft | | 38 | | 59.5 | 34 | 653 | |
| | 2015.05-2019.11 | 7DCT/6MT | R | R | Saloon 4WD CYRB;CYMC | For PR code:GH4;For veh. with all-wheel drive & controlled clutch;Mounting Type:Bolted | GDS58135 | Drive Shaft | | 38 | | 59.5 | 34 | 550 | |
| | 2015.05-2019.11 | 7DCT/6MT | R | L/R | Saloon 4WD CYRB;CYMC | Rear differential with uncoupling feature;Without rear differential lock | GCI81751 | Outer Joint | | 38 | 33 | 59.5 | 34 | 78 | |
| | 2015.05-2019.11 | 7DCT/6MT | R | L/R | Saloon 4WD CYRB;CYMC | For PR code:GH4;For veh. with all-wheel drive & controlled clutch;Mounting Type:Bolted | GCI81752 | Inner Joint | | | 33 | | | 34 | |
| | 2015.08-2019.10 | 6MT/7DCT | F | L/R | Estate 4WD CYRB;CYMC | For PR code:GH4,For vehicles with AWD & variable torque dist. | GDS82075 | Drive Shaft | | 42 | | 76.5 | 34 | 463 | |
| | 2015.08-2019.10 | 7AT/6MT | F | L/R | Estate 4WD CYRB;CYMC | Date From:2016.02,For PR code:GH1 | GDS82074 | Drive Shaft | | 42 | | 76.5 | 34 | 462 | |
| | 2015.08-2019.10 | AT | F | L/R | Estate 4WD CYRB;CYMC | Date From:2016.01;For PR code:GH1/GH2/GH4 | GCO83103 | Outer Joint | | 42 | 28 | 76.4 | 34 | 54 | I |
| | 2015.08-2019.10 | AT | F | L/R | Estate 4WD CYRB;CYMC | Date From:2016.01;For PR code:GH1/GH2/GH4 | GCI83022 | Inner Joint | | | 34 | | | 88.5 | |
| | 2015.08-2019.10 | 6MT/7DCT | R | L/R | Estate 4WD CYRB;CYMC | For PR code:GH1 | GDS82363 | Drive Shaft | | 38 | | 59.5 | 34 | 624 | |
| | 2015.08-2019.10 | 7DCT/6MT | R | L | Estate 4WD CYRB;CYMC | For PR code:GH4;For veh. with all-wheel drive & controlled clutch;Mounting Type:Bolted | GDS58134 | Drive Shaft | | 38 | | 59.5 | 34 | 653 | |
| | 2015.08-2019.10 | 7DCT/6MT | R | R | Estate 4WD CYRB;CYMC | For PR code:GH4;For veh. with all-wheel drive & controlled clutch;Mounting Type:Bolted | GDS58135 | Drive Shaft | | 38 | | 59.5 | 34 | 550 | |
| | 2015.08-2019.10 | 7DCT/6MT | R | L/R | Estate 4WD CYRB;CYMC | Rear differential with uncoupling feature;Without rear differential lock | GCI81751 | Outer Joint | | 38 | 33 | 59.5 | 34 | 78 | |
| | 2015.08-2019.10 | 7DCT/6MT | R | L/R | Estate 4WD CYRB;CYMC | For PR code:GH4;For veh. with all-wheel drive & controlled clutch;Mounting Type:Bolted | GCI81752 | Inner Joint | | | 33 | | | 34 | |
| | 2017.05-2018.06 | 7AT | F | L/R | Estate 4WD DDWA | For PR Code:GH1 | GDS82074 | Drive Shaft | | 42 | | 76.5 | 34 | 462 | |
| | 2017.05-2018.06 | 7DCT | F | L/R | Estate 4WD DDWA | For PR code:GH4,For vehicles with AWD & variable torque dist. | GDS82075 | Drive Shaft | | 42 | | 76.5 | 34 | 463 | |
| | 2017.05-2018.06 | AT | F | L/R | Estate 4WD DDWA | Date from:2019.01;For PR code:GH1/GH2/GH4 | GCO83103 | Outer Joint | | 42 | 28 | 76.4 | 34 | 54 | I |
| | 2017.05-2018.06 | AT | F | L/R | Estate 4WD DDWA | Date from:2019.01;For PR code:GH1/GH2/GH4 | GCI83022 | Inner Joint | | | 34 | | | 88.5 | |
| | 2017.05-2018.06 | 7DCT | R | L | Estate 4WD DDWA | For PR code:GH4;For veh. with all-wheel drive & controlled clutch;Mounting Type:Bolted | GDS58134 | Drive Shaft | | 38 | | 59.5 | 34 | 653 | |
| | 2017.05-2018.06 | 7DCT | R | R | Estate 4WD DDWA | For PR code:GH4;For veh. with all-wheel drive & controlled clutch;Mounting Type:Bolted | GDS58135 | Drive Shaft | | 38 | | 59.5 | 34 | 550 | |
| | 2017.05-2018.06 | 7DCT | R | L/R | Estate 4WD DDWA | For PR code:GH1 | GDS82363 | Drive Shaft | | 38 | | 59.5 | 34 | 624 | |
| | 2017.05-2018.06 | 7DCT | R | L/R | Estate 4WD DDWA | Rear differential with uncoupling feature;Without rear differential lock | GCI81751 | Outer Joint | | 38 | 33 | 59.5 | 34 | 78 | |
| | 2017.05-2018.06 | 7DCT | R | L/R | Estate 4WD DDWA | For PR code:GH4;For veh. with all-wheel drive & controlled clutch;Mounting Type:Bolted | GCI81752 | Inner Joint | | | 33 | | | 34 | |
| | 2017.05-2019.11 | 7AT | F | L/R | Saloon 4WD DDWA | For PR Code:GH1 | GDS82074 | Drive Shaft | | 42 | | 76.5 | 34 | 462 | |
| | 2017.05-2019.11 | 7DCT | F | L/R | Saloon 4WD DDWA | For PR code:GH4,For vehicles with AWD & variable torque dist. | GDS82075 | Drive Shaft | | 42 | | 76.5 | 34 | 463 | |
| | 2017.05-2019.11 | AT | F | L/R | Saloon 4WD DDWA | For PR code:GH1/GH2/GH4 | GCO83103 | Outer Joint | | 42 | 28 | 76.4 | 34 | 54 | I |
| | 2017.05-2019.11 | AT | F | L/R | Saloon 4WD DDWA | For PR code:GH1/GH2/GH4 | GCI83022 | Inner Joint | | | 34 | | | 88.5 | |
| | 2017.05-2019.11 | 7DCT | R | L | Saloon 4WD DDWA | For PR code:GH4;For veh. with all-wheel drive & controlled clutch;Mounting Type:Bolted | GDS58134 | Drive Shaft | | 38 | | 59.5 | 34 | 653 | |
| | 2017.05-2019.11 | 7DCT | R | R | Saloon 4WD DDWA | For PR code:GH4;For veh. with all-wheel drive & controlled clutch;Mounting Type:Bolted | GDS58135 | Drive Shaft | | 38 | | 59.5 | 34 | 550 | |
| | 2017.05-2019.11 | 7DCT | R | L/R | Saloon 4WD DDWA | For PR code:GH1 | GDS82363 | Drive Shaft | | 38 | | 59.5 | 34 | 624 | |
| | 2017.05-2019.11 | 7DCT | R | L/R | Saloon 4WD DDWA | Rear differential with uncoupling feature;Without rear differential lock | GCI81751 | Outer Joint | | 38 | 33 | 59.5 | 34 | 78 | |
| | 2017.05-2019.11 | 7DCT | R | L/R | Saloon 4WD DDWA | For PR code:GH4;For veh. with all-wheel drive & controlled clutch;Mounting Type:Bolted | GCI81752 | Inner Joint | | | 33 | | | 34 | |
| 2.0 (195 kw) | 2020.08- | 7DCT | F | L/R | Estate 4WD DMTA | For PR code:GH1 | GDS82074 | Drive Shaft | | 42 | | 76.5 | 34 | 462 | |
| | 2020.08- | 7DCT | F | L/R | Estate 4WD DMTA | For PR code:GH4,For veh. with all-wheel drive & controlled clutch | GDS82075 | Drive Shaft | | 42 | | 76.5 | 34 | 463 | |
| | 2020.08- | 7DCT | R | L | Estate 4WD DMTA | For PR code:GH4;For veh. with all-wheel drive & controlled clutch;Mounting Type:Bolted | GDS58134 | Drive Shaft | | 38 | | 59.5 | 34 | 653 | |
| | 2020.08- | 7DCT | R | R | Estate 4WD DMTA | For PR code:GH4;For veh. with all-wheel drive & controlled clutch;Mounting Type:Bolted | GDS58135 | Drive Shaft | | 38 | | 59.5 | 34 | 550 | |
| | 2020.08- | 7DCT | R | L/R | Estate 4WD DMTA | For PR code:GH1 | GDS82363 | Drive Shaft | | 38 | | 59.5 | 34 | 624 | |
| | 2020.08- | 7DCT | R | L/R | Estate 4WD DMTA | Rear differential with uncoupling feature;Without rear differential lock | GCI81751 | Outer Joint | | 38 | 33 | 59.5 | 34 | 78 | |
| | 2020.08- | 7DCT | R | L/R | Estate 4WD DMTA | For PR code:GH4;For veh. with all-wheel drive & controlled clutch;Mounting Type:Bolted | GCI81752 | Inner Joint | | | 33 | | | 34 | |
| | 2020.08- | 7DCT | F | L/R | Saloon 4WD DMTA;DPAA | For PR code:GH1 | GDS82074 | Drive Shaft | | 42 | | 76.5 | 34 | 462 | |
| | 2020.08- | 7DCT | F | L/R | Saloon 4WD DMTA;DPAA | For PR code:GH4,For veh. with all-wheel drive & controlled clutch | GDS82075 | Drive Shaft | | 42 | | 76.5 | 34 | 463 | |
| | 2020.08- | 7DCT | R | L | Saloon 4WD DMTA;DPAA | For PR code:GH4;For veh. with all-wheel drive & controlled clutch;Mounting Type:Bolted | GDS58134 | Drive Shaft | | 38 | | 59.5 | 34 | 653 | |
| | 2020.08- | 7DCT | R | R | Saloon 4WD DMTA;DPAA | For PR code:GH4;For veh. with all-wheel drive & controlled clutch;Mounting Type:Bolted | GDS58135 | Drive Shaft | | 38 | | 59.5 | 34 | 550 | |
| | 2020.08- | 7DCT | R | L/R | Saloon 4WD DMTA;DPAA | For PR code:GH1 | GDS82363 | Drive Shaft | | 38 | | 59.5 | 34 | 624 | |
| | 2020.08- | 7DCT | R | L/R | Saloon 4WD DMTA;DPAA | Rear differential with uncoupling feature;Without rear differential lock | GCI81751 | Outer Joint | | 38 | 33 | 59.5 | 34 | 78 | |
| | 2020.08- | 7DCT | R | L/R | Saloon 4WD DMTA;DPAA | For PR code:GH4;For veh. with all-wheel drive & controlled clutch;Mounting Type:Bolted | GCI81752 | Inner Joint | | | 33 | | | 34 | |
| 2.4 (120 kw) | 1997.08-2000.06 | 5MT | F | R | Estate 4WD AJG/APZ | | GDS83041 | Drive Shaft | 45W | 38 | | 59.5 | 34 | 640 | |

| | YEAR | TRANSM. | F/R | L/R | BODY STYLE & DRIVE TYPE & ENGINE | REMARKS | G-AP Ref. | PRODUCT | ABS | Technical Specifications A | B | C | H | L | P |
|---|---|---|---|---|---|---|---|---|---|---|---|---|---|---|---|
| **AUDI** | | | | | | | | | | | | | | | |
| **A4 Quattro** | | | | | | | | | | | | | | | |
| 2.4 (120 kw) | 1997.08-2000.06 | 5MT | F | L/R | Estate 4WD AJG/APZ | Date to:2000.06;Chassis no. to:8DX199999 | GCI83002 | Inner Joint | | | 33 | | | 32 | |
| | 1997.08-2000.06 | AT | F | L | Estate 4WD AJG/APZ | | GDS83040 | Drive Shaft | 45W | 38 | | 59.5 | 34 | 617 | |
| | 1997.08-2000.06 | MT | F | L | Estate 4WD AJG/APZ | Date to:2000.06 | GDS83008 | Drive Shaft | 45W | 38 | | 59.5 | 34.5 | 603 | |
| | 1997.08-2000.06 | MT | F | R | Estate 4WD AJG/APZ | Date to:2000.06 | GDS61019 | Drive Shaft | 45W | 38 | | 59.5 | 34.5 | 624 | |
| | 1997.08-2000.06 | MT | F | L/R | Estate 4WD AJG/APZ | | GCO83019 | Outer Joint | 45W | 38 | 27 | 59.5 | 34.5 | 63 | I |
| | 1997.08-2000.06 | MT | F | L/R | Estate 4WD AJG/APZ | | GCI50019 | Inner Joint | | | 34 | | | 59.5 | |
| | 1997.08-2000.06 | | F | L/R | Estate 4WD AJG/APZ | | GCO83020 | Outer Joint | 45W | 38 | 30 | 59.5 | 34 | 59.5 | I |
| | 1997.08-2000.06 | | F | L/R | Estate 4WD AJG/APZ | | GCO83049 | Outer Joint | | 38 | 30 | 59.5 | 34 | 59.5 | I |
| | 1997.08-2000.06 | 5MT | R | L/R | Estate 4WD AJG/APZ | | GDS83039 | Drive Shaft | 45T | 33 | | 53 | 30 | 595.5 | |
| | 1997.08-2000.06 | 5MT | R | L/R | Estate 4WD AJG/APZ | | GCO83026 | Outer Joint | 45T | 33 | 30 | 53 | 30 | 62 | I |
| | 1997.08-2000.06 | 5MT | F | R | Saloon 4WD AJG/APZ | | GDS83041 | Drive Shaft | 45W | 38 | | 59.5 | 34 | 640 | |
| | 1997.08-2000.06 | 5MT | F | L/R | Saloon 4WD AJG/APZ | Date to:2000.06;Chassis no. to:8DX199999 | GCI83002 | Inner Joint | | | 33 | | | 32 | |
| | 1997.08-2000.06 | AT | F | L | Saloon 4WD AJG/APZ | | GDS83040 | Drive Shaft | 45W | 38 | | 59.5 | 34 | 617 | |
| | 1997.08-2000.06 | MT | F | L | Saloon 4WD AJG/APZ | Date to:2000.06 | GDS83008 | Drive Shaft | 45W | 38 | | 59.5 | 34.5 | 603 | |
| | 1997.08-2000.06 | MT | F | R | Saloon 4WD AJG/APZ | Date to:2000.06 | GDS61019 | Drive Shaft | 45W | 38 | | 59.5 | 34.5 | 624 | |
| | 1997.08-2000.06 | MT | F | L/R | Saloon 4WD AJG/APZ | | GCO83019 | Outer Joint | 45W | 38 | 27 | 59.5 | 34.5 | 63 | I |
| | 1997.08-2000.06 | MT | F | L/R | Saloon 4WD AJG/APZ | | GCI50019 | Inner Joint | | | 34 | | | 59.5 | |
| | 1997.08-2000.06 | | F | L/R | Saloon 4WD AJG/APZ | | GCO83020 | Outer Joint | 45W | 38 | 30 | 59.5 | 34 | 59.5 | I |
| | 1997.08-2000.06 | | F | L/R | Saloon 4WD AJG/APZ | | GCO83049 | Outer Joint | | 38 | 30 | 59.5 | 34 | 59.5 | I |
| | 1997.08-2000.06 | 5MT | R | L/R | Saloon 4WD AJG/APZ | | GDS83039 | Drive Shaft | 45T | 33 | | 53 | 30 | 595.5 | |
| | 1997.08-2000.06 | 5MT | R | L/R | Saloon 4WD AJG/APZ | | GCO83026 | Outer Joint | 45T | 33 | 30 | 53 | 30 | 62 | I |
| 2.4 (121 kw) | 1997.08-2000.10 | 5AT | F | L | Saloon 4WD AGA/ALF/AML/APS/ARJ | | GDS83037 | Drive Shaft | 45W | 38 | | 59.5 | 34 | 530 | |
| | 1997.08-2000.10 | 5AT | F | R | Saloon 4WD AGA/ALF/AML/APS/ARJ | Inner teeth of wheel side:30 | GDS83038 | Drive Shaft | 45W | 38 | | 59.5 | 34 | 503 | |
| | 1997.08-2000.10 | 5AT | F | R | Saloon 4WD AGA/ALF/AML/APS/ARJ | Inner teeth of wheel side:27 | GDS83048 | Drive Shaft | 45W | 38 | | 59.5 | 34.5 | 502 | |
| | 1997.08-2000.10 | 5MT | F | L | Saloon 4WD AGA/ALF/AML/APS/ARJ | | GDS83040 | Drive Shaft | 45W | 38 | | 59.5 | 34 | 617 | |
| | 1997.08-2000.10 | 5MT | F | R | Saloon 4WD AGA/ALF/AML/APS/ARJ | Inner teeth of wheel side:30 | GDS83041 | Drive Shaft | 45W | 38 | | 59.5 | 34 | 640 | |
| | 1997.08-2000.10 | 5MT | F | L/R | Saloon 4WD AGA/ALF/AML/APS/ARJ | | GCO83020 | Outer Joint | 45W | 38 | 30 | 59.5 | 34 | 59.5 | I |
| | 1997.08-2000.10 | 5MT | F | L/R | Saloon 4WD AGA/ALF/AML/APS/ARJ | | GCO83049 | Outer Joint | | 38 | 30 | 59.5 | 34 | 59.5 | I |
| | 1997.08-2000.10 | MT | F | L | Saloon 4WD AGA/ALF/AML/APS/ARJ | | GDS83008 | Drive Shaft | 45W | 38 | | 59.5 | 34.5 | 603 | |
| | 1997.08-2000.10 | MT | F | R | Saloon 4WD AGA/ALF/AML/APS/ARJ | Inner teeth of wheel side:27 | GDS61019 | Drive Shaft | 45W | 38 | | 59.5 | 34.5 | 624 | |
| | 1997.08-2000.10 | MT | F | L/R | Saloon 4WD AGA/ALF/AML/APS/ARJ | | GCO83019 | Outer Joint | 45W | 38 | 27 | 59.5 | 34.5 | 63 | I |
| | 1997.08-2000.10 | MT | F | L/R | Saloon 4WD AGA/ALF/AML/APS/ARJ | | GCI50019 | Inner Joint | | | 34 | | | 59.5 | |
| | 1997.08-2000.10 | MT | F | L/R | Saloon 4WD AGA/ALF/AML/APS/ARJ | Date from:1997.08 | GCI83002 | Inner Joint | | | 33 | | | 32 | |
| | 1997.08-2000.10 | 5AT/5MT | R | L/R | Saloon 4WD AGA/ALF/AML/APS/ARJ | | GDS83039 | Drive Shaft | 45T | 33 | | 53 | 30 | 595.5 | |
| | 1997.08-2000.10 | AT/MT | R | L/R | Saloon 4WD AGA/ALF/AML/APS/ARJ | | GCO83026 | Outer Joint | 45T | 33 | 30 | 53 | 30 | 62 | I |
| | 1997.08-2001.09 | 5AT | F | L | Estate 4WD AGA/ALF/AML/APS/ARJ | | GDS83037 | Drive Shaft | 45W | 38 | | 59.5 | 34 | 530 | |
| | 1997.08-2001.09 | 5AT | F | R | Estate 4WD AGA/ALF/AML/APS/ARJ | Inner teeth of wheel side:30 | GDS83038 | Drive Shaft | 45W | 38 | | 59.5 | 34 | 503 | |
| | 1997.08-2001.09 | 5AT | F | R | Estate 4WD AGA/ALF/AML/APS/ARJ | Inner teeth of wheel side:27 | GDS83048 | Drive Shaft | 45W | 38 | | 59.5 | 34.5 | 502 | |
| | 1997.08-2001.09 | 5MT | F | L | Estate 4WD AGA/ALF/AML/APS/ARJ | | GDS83040 | Drive Shaft | 45W | 38 | | 59.5 | 34 | 617 | |
| | 1997.08-2001.09 | 5MT | F | R | Estate 4WD AGA/ALF/AML/APS/ARJ | Inner teeth of wheel side:30 | GDS83041 | Drive Shaft | 45W | 38 | | 59.5 | 34 | 640 | |
| | 1997.08-2001.09 | 5MT | F | L/R | Estate 4WD AGA/ALF/AML/APS/ARJ | | GCO83020 | Outer Joint | 45W | 38 | 30 | 59.5 | 34 | 59.5 | I |
| | 1997.08-2001.09 | 5MT | F | L/R | Estate 4WD AGA/ALF/AML/APS/ARJ | | GCO83049 | Outer Joint | | 38 | 30 | 59.5 | 34 | 59.5 | I |
| | 1997.08-2001.09 | 5MT | F | L/R | Estate 4WD AGA/ALF/AML/APS/ARJ | Chassis no. to:8DX199999;Chassis no. From:8DX200001 | GCI83002 | Inner Joint | | | 33 | | | 32 | |
| | 1997.08-2001.09 | MT | F | L | Estate 4WD AGA/ALF/AML/APS/ARJ | | GDS83008 | Drive Shaft | 45W | 38 | | 59.5 | 34.5 | 603 | |
| | 1997.08-2001.09 | MT | F | R | Estate 4WD AGA/ALF/AML/APS/ARJ | Inner teeth of wheel side:27 | GDS61019 | Drive Shaft | 45W | 38 | | 59.5 | 34.5 | 624 | |
| | 1997.08-2001.09 | MT | F | L/R | Estate 4WD AGA/ALF/AML/APS/ARJ | | GCO83019 | Outer Joint | 45W | 38 | 27 | 59.5 | 34.5 | 63 | I |
| | 1997.08-2001.09 | MT | F | L/R | Estate 4WD AGA/ALF/AML/APS/ARJ | | GCI50019 | Inner Joint | | | 34 | | | 59.5 | |
| | 1997.08-2001.09 | 5AT/5MT | R | L/R | Estate 4WD AGA/ALF/AML/APS/ARJ | | GDS83039 | Drive Shaft | 45T | 33 | | 53 | 30 | 595.5 | |
| | 1997.08-2001.09 | AT/MT | R | L/R | Estate 4WD AGA/ALF/AML/APS/ARJ | | GCO83026 | Outer Joint | 45T | 33 | 30 | 53 | 30 | 62 | I |
| | 1997.08-2001.09 | | R | L/R | Estate 4WD AGA/ALF/AML/APS/ARJ | | GCI83002 | Inner Joint | | | 33 | | | 32 | |
| 2.5 (110 kw) | 1997.11-2000.10 | 5AT | F | L | Saloon 4WD AFB/AKN | | GDS83037 | Drive Shaft | 45W | 38 | | 59.5 | 34 | 530 | |
| | 1997.11-2000.10 | 5AT | F | R | Saloon 4WD AFB/AKN | | GDS83038 | Drive Shaft | 45W | 38 | | 59.5 | 34 | 503 | |
| | 1997.11-2000.10 | 5AT | F | L/R | Saloon 4WD AFB/AKN | | GCO83020 | Outer Joint | 45W | 38 | 30 | 59.5 | 34 | 59.5 | I |
| | 1997.11-2000.10 | 5AT | F | L/R | Saloon 4WD AFB/AKN | | GCO83049 | Outer Joint | | 38 | 30 | 59.5 | 34 | 59.5 | I |
| | 1997.11-2000.10 | 6MT | F | L | Saloon 4WD AFB/AKN | | GDS83008 | Drive Shaft | 45W | 38 | | 59.5 | 34.5 | 603 | |
| | 1997.11-2000.10 | 6MT | F | R | Saloon 4WD AFB/AKN | | GDS61019 | Drive Shaft | 45W | 38 | | 59.5 | 34.5 | 624 | |
| | 1997.11-2000.10 | AT | F | L | Saloon 4WD AFB/AKN | | GDS83015 | Drive Shaft | 45W | 38 | | 59.5 | 34.5 | 527 | |
| | 1997.11-2000.10 | AT | F | R | Saloon 4WD AFB/AKN | | GDS83048 | Drive Shaft | 45W | 38 | | 59.5 | 34.5 | 502 | |
| | 1997.11-2000.10 | AT/MT/6MT | F | L/R | Saloon 4WD AFB/AKN | | GCO83019 | Outer Joint | 45W | 38 | 27 | 59.5 | 34.5 | 63 | I |
| | 1997.11-2000.10 | MT/6MT | F | L/R | Saloon 4WD AFB/AKN | | GCI50019 | Inner Joint | | | 34 | | | 59.5 | |
| | 1997.11-2000.10 | 5AT/6MT | R | L/R | Saloon 4WD AFB/AKN | | GDS83039 | Drive Shaft | 45T | 33 | | 53 | 30 | 595.5 | |
| | 1997.11-2000.10 | 6MT | R | L/R | Saloon 4WD AFB/AKN | | GCI83001 | Inner Joint | | | 28 | | | 32 | |
| | 1997.11-2000.10 | AT/MT | R | L/R | Saloon 4WD AFB/AKN | | GCO83026 | Outer Joint | 45T | 33 | 30 | 53 | 30 | 62 | I |
| | 1997.11-2000.10 | | R | L/R | Saloon 4WD AFB/AKN | | GCI83002 | Inner Joint | | | 33 | | | 32 | |
| | 1997.11-2001.09 | 5AT | F | L | Estate 4WD AFB/AKN | | GDS83037 | Drive Shaft | 45W | 38 | | 59.5 | 34 | 530 | |

| | YEAR | TRANSM. | F/R | L/R | BODY STYLE & DRIVE TYPE & ENGINE | REMARKS | G-AP Ref. | PRODUCT | ABS | Technical Specifications A | B | C | H | L | P |
|---|---|---|---|---|---|---|---|---|---|---|---|---|---|---|---|
| **AUDI** | | | | | | | | | | | | | | | |
| **A4 Quattro** | | | | | | | | | | | | | | | |
| 2.5 (110 kw) | 1997.11-2001.09 | 5AT | F | R | Estate 4WD AFB/AKN | | GDS83038 | Drive Shaft | 45W | 38 | | 59.5 | 34 | 503 | |
| | 1997.11-2001.09 | 5AT | F | L/R | Estate 4WD AFB/AKN | | GCO83049 | Outer Joint | | 38 | 30 | 59.5 | 34 | 59.5 | I |
| | 1997.11-2001.09 | 6MT | F | L | Estate 4WD AFB/AKN | | GDS83008 | Drive Shaft | 45W | 38 | | 59.5 | 34.5 | 603 | |
| | 1997.11-2001.09 | 6MT | F | R | Estate 4WD AFB/AKN | | GDS61019 | Drive Shaft | 45W | 38 | | 59.5 | 34.5 | 624 | |
| | 1997.11-2001.09 | AT | F | L | Estate 4WD AFB/AKN | | GDS83015 | Drive Shaft | 45W | 38 | | 59.5 | 34.5 | 527 | |
| | 1997.11-2001.09 | AT | F | R | Estate 4WD AFB/AKN | | GDS83048 | Drive Shaft | 45W | 38 | | 59.5 | 34.5 | 502 | |
| | 1997.11-2001.09 | AT/5AT | F | L/R | Estate 4WD AFB/AKN | | GCO83020 | Outer Joint | 45W | 38 | 30 | 59.5 | 34 | 59.5 | I |
| | 1997.11-2001.09 | AT/MT/6MT | F | L/R | Estate 4WD AFB/AKN | | GCO83019 | Outer Joint | 45W | 38 | 27 | 59.5 | 34.5 | 63 | I |
| | 1997.11-2001.09 | MT/6MT | F | L/R | Estate 4WD AFB/AKN | | GCI50019 | Inner Joint | | | 34 | | | 59.5 | |
| | 1997.11-2001.09 | 5AT/6MT | R | L/R | Estate 4WD AFB/AKN | | GDS83039 | Drive Shaft | 45T | 33 | | 53 | 30 | 595.5 | |
| | 1997.11-2001.09 | 6MT | R | L/R | Estate 4WD AFB/AKN | | GCI83001 | Inner Joint | | | 28 | | | 32 | |
| | 1997.11-2001.09 | AT/MT | R | L/R | Estate 4WD AFB/AKN | | GCO83026 | Outer Joint | 45T | 33 | 30 | 53 | 30 | 62 | I |
| | 1997.11-2001.09 | AT/MT | R | L/R | Estate 4WD AFB/AKN | | GCI83002 | Inner Joint | | | 33 | | | 32 | |
| 2.5 (132 kw) | 2000.11-2004.12 | AT | F | L | Saloon 4WD AKE;BAU;BDH | | GDS83052 | Drive Shaft | 45W | 38 | | 59.5 | 34.5 | 522 | |
| | 2000.11-2004.12 | AT | F | R | Saloon 4WD AKE;BAU;BDH | | GDS82168 | Drive Shaft | 45W | 38 | | 59.5 | 34.5 | 490 | |
| | 2000.11-2004.12 | AT | F | L/R | Saloon 4WD AKE;BAU;BDH | For Engine Code:AKE/BAU,Date From:2004.01,Chassis no. from:8E4195301 | GCO83078 | Outer Joint | 45W | 38 | 27 | 59.5 | 34.5 | 63 | M |
| | 2000.11-2004.12 | AT | F | L/R | Saloon 4WD AKE;BAU;BDH | For Engine Code:AKE/BAU,Date To:2003.12,Chassis no. to:8E4195300 | GCO83092 | Outer Joint | 45W | 38 | 27 | 59.5 | 34 | 68 | I |
| | 2000.11-2004.12 | AT | F | R | Saloon 4WD AKE;BAU;BDH | AAR | GCI61076 | Inner Joint | | | 34 | | | 85 | |
| | 2000.11-2004.12 | MT | F | L | Saloon 4WD AKE;BAU;BDH | | GDS83057 | Drive Shaft | 45W | 38 | | 59.5 | 34.5 | 593 | |
| | 2000.11-2004.12 | MT | F | R | Saloon 4WD AKE;BAU;BDH | | GDS83058 | Drive Shaft | 45W | 38 | | 59.5 | 34.5 | 613 | |
| | 2000.11-2004.12 | MT | F | L/R | Saloon 4WD AKE;BAU;BDH | For Engine Code:BAU/BDH | GCO83067 | Outer Joint | 45W | 38 | 27 | 59.5 | 34 | 68 | M |
| | 2000.11-2004.12 | MT | F | L/R | Saloon 4WD AKE;BAU;BDH | TJ | GCI61044 | Inner Joint | | | 34 | | | 85 | |
| | 2000.11-2004.12 | 5AT/6MT | R | L/R | Saloon 4WD AKE;BAU;BDH | | GCI61010 | Inner Joint | | | 28 | | | 32 | |
| | 2000.11-2004.12 | AT/MT | R | L/R | Saloon 4WD AKE;BAU;BDH | | GDS82401 | Drive Shaft | 45W | 38 | | 59.5 | 34 | 617 | |
| | 2000.11-2004.12 | AT/MT | R | L/R | Saloon 4WD AKE;BAU;BDH | | GCO83058 | Outer Joint | 45W | 38 | 33 | 59.5 | 34 | 56.5 | M |
| | 2001.09-2004.12 | AT | F | L | Estate 4WD AKE;BAU;BDH | | GDS83052 | Drive Shaft | 45W | 38 | | 59.5 | 34.5 | 522 | |
| | 2001.09-2004.12 | AT | F | R | Estate 4WD AKE;BAU;BDH | | GDS82168 | Drive Shaft | 45W | 38 | | 59.5 | 34.5 | 490 | |
| | 2001.09-2004.12 | AT | F | L/R | Estate 4WD AKE;BAU;BDH | AAR | GCI61076 | Inner Joint | | | 34 | | | 85 | |
| | 2001.09-2004.12 | AT/MT | F | L/R | Estate 4WD AKE;BAU;BDH | GrooveType:Middle | GCO83078 | Outer Joint | 45W | 38 | 27 | 59.5 | 34.5 | 63 | M |
| | 2001.09-2004.12 | MT | F | L | Estate 4WD AKE;BAU;BDH | | GDS83057 | Drive Shaft | 45W | 38 | | 59.5 | 34.5 | 593 | |
| | 2001.09-2004.12 | MT | F | R | Estate 4WD AKE;BAU;BDH | | GDS83058 | Drive Shaft | 45W | 38 | | 59.5 | 34.5 | 613 | |
| | 2001.09-2004.12 | MT | F | L/R | Estate 4WD AKE;BAU;BDH | For Engine code:BAU/BDH | GCO83067 | Outer Joint | 45W | 38 | 27 | 59.5 | 34 | 68 | M |
| | 2001.09-2004.12 | MT | F | L/R | Estate 4WD AKE;BAU;BDH | For Engine code:AKE | GCO83092 | Outer Joint | 45W | 38 | 27 | 59.5 | 34 | 68 | I |
| | 2001.09-2004.12 | MT | F | L/R | Estate 4WD AKE;BAU;BDH | TJ | GCI61044 | Inner Joint | | | 34 | | | 85 | |
| | 2001.09-2004.12 | 5AT/6MT | R | L/R | Estate 4WD AKE;BAU;BDH | | GCI61010 | Inner Joint | | | 28 | | | 32 | |
| | 2001.09-2004.12 | AT/MT | R | L/R | Estate 4WD AKE;BAU;BDH | | GDS82401 | Drive Shaft | 45W | 38 | | 59.5 | 34 | 617 | |
| | 2001.09-2004.12 | AT/MT | R | L/R | Estate 4WD AKE;BAU;BDH | | GCO83058 | Outer Joint | 45W | 38 | 33 | 59.5 | 34 | 56.5 | M |
| 2.6 (110 kw) | 1994.11-1998.07 | 5MT | F | L | Saloon 4WD ABC | | GDS83040 | Drive Shaft | 45W | 38 | | 59.5 | 34 | 617 | |
| | 1994.11-1998.07 | 5MT | F | R | Saloon 4WD ABC | | GDS83041 | Drive Shaft | 45W | 38 | | 59.5 | 34 | 640 | |
| | 1994.11-1998.07 | MT | F | L | Saloon 4WD ABC | Date to:1996.01 | GDS83008 | Drive Shaft | 45W | 38 | | 59.5 | 34.5 | 603 | |
| | 1994.11-1998.07 | MT | F | R | Saloon 4WD ABC | Date to:1996.01 | GDS61019 | Drive Shaft | 45W | 38 | | 59.5 | 34.5 | 624 | |
| | 1994.11-1998.07 | MT | F | L/R | Saloon 4WD ABC | Date to:1998.07 | GCO83019 | Outer Joint | 45W | 38 | 27 | 59.5 | 34.5 | 63 | I |
| | 1994.11-1998.07 | MT | F | L/R | Saloon 4WD ABC | Date to:1998.07 | GCO83020 | Outer Joint | 45W | 38 | 30 | 59.5 | 34 | 59.5 | I |
| | 1994.11-1998.07 | MT/5MT | F | L/R | Saloon 4WD ABC | Date to:1998.07 | GCI83002 | Inner Joint | | | 33 | | | 32 | |
| | 1994.11-1998.07 | | F | L/R | Saloon 4WD ABC | | GCO83049 | Outer Joint | | 38 | 30 | 59.5 | 34 | 59.5 | I |
| | 1994.11-1998.07 | 5MT | R | L/R | Saloon 4WD ABC | | GDS83039 | Drive Shaft | 45T | 33 | | 53 | 30 | 595.5 | |
| | 1994.11-1998.07 | 5MT | R | L/R | Saloon 4WD ABC | | GCO83026 | Outer Joint | 45T | 33 | 30 | 53 | 30 | 62 | I |
| | 1994.11-1998.07 | MT | R | L/R | Saloon 4WD ABC | | GCI83011 | Inner Joint | | | 33 | | | 34 | |
| | 1995.07-1998.07 | 5MT | F | R | Estate 4WD ABC | | GDS83041 | Drive Shaft | 45W | 38 | | 59.5 | 34 | 640 | |
| | 1995.07-1998.07 | MT | F | L | Estate 4WD ABC | | GDS83040 | Drive Shaft | 45W | 38 | | 59.5 | 34 | 617 | |
| | 1995.07-1998.07 | MT | F | L/R | Estate 4WD ABC | Date to:1998.07 | GCO83019 | Outer Joint | 45W | 38 | 27 | 59.5 | 34.5 | 63 | I |
| | 1995.07-1998.07 | MT | F | L/R | Estate 4WD ABC | Date to:1998.07 | GCO83020 | Outer Joint | 45W | 38 | 30 | 59.5 | 34 | 59.5 | I |
| | 1995.07-1998.07 | MT/5MT | F | L/R | Estate 4WD ABC | Date to:1998.07 | GCI83002 | Inner Joint | | | 33 | | | 32 | |
| | 1995.07-1998.07 | | F | L/R | Estate 4WD ABC | | GCO83049 | Outer Joint | | 38 | 30 | 59.5 | 34 | 59.5 | I |
| | 1995.07-1998.07 | 5MT | R | L/R | Estate 4WD ABC | | GDS83039 | Drive Shaft | 45T | 33 | | 53 | 30 | 595.5 | |
| | 1995.07-1998.07 | 5MT | R | L/R | Estate 4WD ABC | | GCO83026 | Outer Joint | 45T | 33 | 30 | 53 | 30 | 62 | I |
| | 1995.07-1998.07 | MT | R | L/R | Estate 4WD ABC | | GCI83011 | Inner Joint | | | 33 | | | 34 | |
| 2.8 (128 kw) | 1994.11-1996.12 | 5MT | F | L | Saloon 4WD AAH | | GDS83040 | Drive Shaft | 45W | 38 | | 59.5 | 34 | 617 | |
| | 1994.11-1996.12 | 5MT | F | R | Saloon 4WD AAH | | GDS83041 | Drive Shaft | 45W | 38 | | 59.5 | 34 | 640 | |
| | 1994.11-1996.12 | AT/MT | F | L/R | Saloon 4WD AAH | Date to:1996.12 | GCO83020 | Outer Joint | 45W | 38 | 30 | 59.5 | 34 | 59.5 | I |
| | 1994.11-1996.12 | MT | F | L | Saloon 4WD AAH | Date to:1996.12 | GDS83008 | Drive Shaft | 45W | 38 | | 59.5 | 34.5 | 603 | |
| | 1994.11-1996.12 | MT | F | R | Saloon 4WD AAH | Date to:1996.12 | GDS61019 | Drive Shaft | 45W | 38 | | 59.5 | 34.5 | 624 | |
| | 1994.11-1996.12 | | F | L/R | Saloon 4WD AAH | Date To:1996.12 | GCO83019 | Outer Joint | 45W | 38 | 27 | 59.5 | 34.5 | 63 | I |
| | 1994.11-1996.12 | | F | L/R | Saloon 4WD AAH | | GCO83049 | Outer Joint | | 38 | 30 | 59.5 | 34 | 59.5 | I |
| | 1994.11-1996.12 | 5MT | R | L/R | Saloon 4WD AAH | | GDS83039 | Drive Shaft | 45T | 33 | | 53 | 30 | 595.5 | |

| | YEAR | TRANSM. | F/R | L/R | BODY STYLE & DRIVE TYPE & ENGINE | REMARKS | G-AP Ref. | PRODUCT | ABS | Technical Specifications A | B | C | H | L | P |
|---|---|---|---|---|---|---|---|---|---|---|---|---|---|---|---|
| **AUDI** | | | | | | | | | | | | | | | |
| **A4 Quattro** | | | | | | | | | | | | | | | |
| 2.8 (128 kw) | 1994.11-1996.12 | 5MT | R | L/R | Saloon 4WD AAH | | GCO83026 | Outer Joint | 45T | 33 | 30 | 53 | 30 | 62 | I |
| | 1994.11-1996.12 | MT | R | L/R | Saloon 4WD AAH | | GCI83011 | Inner Joint | | | 33 | | | 34 | |
| | 1994.11-1996.12 | 5MT | F/R | L/R | Saloon 4WD AAH | | GCI83002 | Inner Joint | | | 33 | | | 32 | |
| | 1996.01-1996.09 | | F | L/R | Estate 4WD AAH | | GCO83019 | Outer Joint | 45W | 38 | 27 | 59.5 | 34.5 | 63 | I |
| 2.8 (140 kw) | 1999.09-2000.10 | 5AT/5MT | F | R | Saloon 4WD ATX | | GDS83041 | Drive Shaft | 45W | 38 | | 59.5 | 34 | 640 | |
| | 1999.09-2000.10 | 5MT | F | L | Saloon 4WD ATX | | GDS83040 | Drive Shaft | 45W | 38 | | 59.5 | 34 | 617 | |
| | 1999.09-2000.10 | 5MT | F | L/R | Saloon 4WD ATX | Chassis no. from:8DX200001 | GCI83002 | Inner Joint | | | 33 | | | 32 | |
| | 1999.09-2000.10 | MT | F | R | Saloon 4WD ATX | | GDS83058 | Drive Shaft | 45W | 38 | | 59.5 | 34.5 | 613 | |
| | 1999.09-2000.10 | | F | L/R | Saloon 4WD ATX | | GCO83020 | Outer Joint | 45W | 38 | 30 | 59.5 | 34 | 59.5 | I |
| | 1999.09-2000.10 | | F | L/R | Saloon 4WD ATX | | GCO83049 | Outer Joint | | 38 | 30 | 59.5 | 34 | 59.5 | I |
| | 1999.09-2000.10 | 5AT/5MT | R | L/R | Saloon 4WD ATX | | GDS83039 | Drive Shaft | 45T | 33 | | 53 | 30 | 595.5 | |
| | 1999.09-2000.10 | MT/Semi-AT | R | L/R | Saloon 4WD ATX | | GCO83026 | Outer Joint | 45T | 33 | 30 | 53 | 30 | 62 | I |
| 2.8 (142 kw) | 1996.06-2001.08 | 5AT | F | L | Saloon 4WD ACK/ALG/AMX/APR/AQD | | GDS83037 | Drive Shaft | 45W | 38 | | 59.5 | 34 | 530 | |
| | 1996.06-2001.08 | 5AT | F | R | Saloon 4WD ACK/ALG/AMX/APR/AQD | Inner teeth of wheel side:30 | GDS83038 | Drive Shaft | 45W | 38 | | 59.5 | 34 | 503 | |
| | 1996.06-2001.08 | 5AT | F | R | Saloon 4WD ACK/ALG/AMX/APR/AQD | Inner teeth of wheel side:27 | GDS83048 | Drive Shaft | 45W | 38 | | 59.5 | 34.5 | 502 | |
| | 1996.06-2001.08 | 5MT | F | L | Saloon 4WD ACK/ALG/AMX/APR/AQD | | GDS83040 | Drive Shaft | 45W | 38 | | 59.5 | 34 | 617 | |
| | 1996.06-2001.08 | 5MT | F | R | Saloon 4WD ACK/ALG/AMX/APR/AQD | Inner teeth of wheel side:30 | GDS83041 | Drive Shaft | 45W | 38 | | 59.5 | 34 | 640 | |
| | 1996.06-2001.08 | MT | F | L | Saloon 4WD ACK/ALG/AMX/APR/AQD | | GDS83008 | Drive Shaft | 45W | 38 | | 59.5 | 34.5 | 603 | |
| | 1996.06-2001.08 | MT | F | R | Saloon 4WD ACK/ALG/AMX/APR/AQD | Inner teeth of wheel side:27 | GDS61019 | Drive Shaft | 45W | 38 | | 59.5 | 34.5 | 624 | |
| | 1996.06-2001.08 | MT | F | L/R | Saloon 4WD ACK/ALG/AMX/APR/AQD | | GCO83019 | Outer Joint | 45W | 38 | 27 | 59.5 | 34.5 | 63 | I |
| | 1996.06-2001.08 | MT | F | L/R | Saloon 4WD ACK/ALG/AMX/APR/AQD | | GCO83020 | Outer Joint | 45W | 38 | 30 | 59.5 | 34 | 59.5 | I |
| | 1996.06-2001.08 | SAT/5AT/5MT | F | L/R | Saloon 4WD ACK/ALG/AMX/APR/AQD | | GCI83002 | Inner Joint | | | 33 | | | 32 | |
| | 1996.06-2001.08 | | F | L/R | Saloon 4WD ACK/ALG/AMX/APR/AQD | | GCO83049 | Outer Joint | | 38 | 30 | 59.5 | 34 | 59.5 | I |
| | 1996.06-2001.08 | 5AT/5MT | R | L/R | Saloon 4WD ACK/ALG/AMX/APR/AQD | | GDS83039 | Drive Shaft | 45T | 33 | | 53 | 30 | 595.5 | |
| | 1996.06-2001.08 | AT/MT | R | L/R | Saloon 4WD ACK/ALG/AMX/APR/AQD | | GCO83026 | Outer Joint | 45T | 33 | 30 | 53 | 30 | 62 | I |
| | 1996.06-2001.08 | MT | R | L/R | Saloon 4WD ACK/ALG/AMX/APR/AQD | Date from:1997.01 | GCI83011 | Inner Joint | | | 33 | | | 34 | |
| | 1996.06-2001.09 | 5AT | F | L | Estate 4WD ACK/ALG/AMX/APR/AQD | | GDS83037 | Drive Shaft | 45W | 38 | | 59.5 | 34 | 530 | |
| | 1996.06-2001.09 | 5AT | F | R | Estate 4WD ACK/ALG/AMX/APR/AQD | Inner teeth of wheel side:30 | GDS83038 | Drive Shaft | 45W | 38 | | 59.5 | 34 | 503 | |
| | 1996.06-2001.09 | 5AT | F | R | Estate 4WD ACK/ALG/AMX/APR/AQD | Inner teeth of wheel side:27 | GDS83048 | Drive Shaft | 45W | 38 | | 59.5 | 34.5 | 502 | |
| | 1996.06-2001.09 | 5MT | F | L | Estate 4WD ACK/ALG/AMX/APR/AQD | | GDS83040 | Drive Shaft | 45W | 38 | | 59.5 | 34 | 617 | |
| | 1996.06-2001.09 | 5MT | F | R | Estate 4WD ACK/ALG/AMX/APR/AQD | Inner teeth of wheel side:30 | GDS83041 | Drive Shaft | 45W | 38 | | 59.5 | 34 | 640 | |
| | 1996.06-2001.09 | MT | F | L | Estate 4WD ACK/ALG/AMX/APR/AQD | | GDS83008 | Drive Shaft | 45W | 38 | | 59.5 | 34.5 | 603 | |
| | 1996.06-2001.09 | MT | F | R | Estate 4WD ACK/ALG/AMX/APR/AQD | Inner teeth of wheel side:27 | GDS61019 | Drive Shaft | 45W | 38 | | 59.5 | 34.5 | 624 | |
| | 1996.06-2001.09 | MT | F | L/R | Estate 4WD ACK/ALG/AMX/APR/AQD | | GCO83020 | Outer Joint | 45W | 38 | 30 | 59.5 | 34 | 59.5 | I |
| | 1996.06-2001.09 | SAT/5AT/5MT | F | L/R | Estate 4WD ACK/ALG/AMX/APR/AQD | | GCI83002 | Inner Joint | | | 33 | | | 32 | |
| | 1996.06-2001.09 | | F | L/R | Estate 4WD ACK/ALG/AMX/APR/AQD | | GCO83019 | Outer Joint | 45W | 38 | 27 | 59.5 | 34.5 | 63 | I |
| | 1996.06-2001.09 | | F | L/R | Estate 4WD ACK/ALG/AMX/APR/AQD | | GCO83049 | Outer Joint | | 38 | 30 | 59.5 | 34 | 59.5 | I |
| | 1996.06-2001.09 | 5AT/5MT | R | L/R | Estate 4WD ACK/ALG/AMX/APR/AQD | | GDS83039 | Drive Shaft | 45T | 33 | | 53 | 30 | 595.5 | |
| | 1996.06-2001.09 | AT/MT | R | L/R | Estate 4WD ACK/ALG/AMX/APR/AQD | | GCO83026 | Outer Joint | 45T | 33 | 30 | 53 | 30 | 62 | I |
| | 1996.06-2001.09 | MT | R | L/R | Estate 4WD ACK/ALG/AMX/APR/AQD | | GCI83011 | Inner Joint | | | 33 | | | 34 | |
| 3.0 (150 kw) | 2004.11-2008.06 | 6AT | F | R | Estate 4WD BKN | | GCI83007 | Inner Joint | | | 34 | | | 85 | |
| | 2004.11-2008.06 | AT | F | L | Estate 4WD BKN | | GDS83347 | Drive Shaft | 45W | 38 | | 59.5 | 34.5 | 580 | |
| | 2004.11-2008.06 | AT | F | R | Estate 4WD BKN | | GDS82239 | Drive Shaft | 45W | 38 | | 59.5 | 34.5 | 493 | |
| | 2004.11-2008.06 | AT | F | L/R | Estate 4WD BKN | | GCO83078 | Outer Joint | 45W | 38 | 27 | 59.5 | 34.5 | 63 | M |
| | 2004.11-2008.06 | MT | F | L | Estate 4WD BKN | | GDS83057 | Drive Shaft | 45W | 38 | | 59.5 | 34.5 | 593 | |
| | 2004.11-2008.06 | MT | F | R | Estate 4WD BKN | | GDS83058 | Drive Shaft | 45W | 38 | | 59.5 | 34.5 | 613 | |
| | 2004.11-2008.06 | MT | F | L | Estate 4WD BKN | Date to:2008.03 | GCI61076 | Inner Joint | | | 34 | | | 85 | |
| | 2004.11-2008.06 | MT | F | L/R | Estate 4WD BKN | TJ | GCI61044 | Inner Joint | | | 34 | | | 85 | |
| | 2004.11-2008.06 | | F | L/R | Estate 4WD BKN | | GCO83067 | Outer Joint | 45W | 38 | 27 | 59.5 | 34 | 68 | M |
| | 2004.11-2008.06 | 6AT/6MT | R | L/R | Estate 4WD BKN | | GDS82401 | Drive Shaft | 45W | 38 | | 59.5 | 34 | 617 | |
| | 2004.11-2008.06 | 6AT/6MT | R | L/R | Estate 4WD BKN | | GCI61010 | Inner Joint | | | 28 | | | 32 | |
| | 2004.11-2008.06 | 6AT | F | R | Saloon 4WD BKN | | GCI83007 | Inner Joint | | | 34 | | | 85 | |
| | 2004.11-2008.06 | AT | F | L | Saloon 4WD BKN | | GDS83347 | Drive Shaft | 45W | 38 | | 59.5 | 34.5 | 580 | |
| | 2004.11-2008.06 | AT | F | R | Saloon 4WD BKN | | GDS82239 | Drive Shaft | 45W | 38 | | 59.5 | 34.5 | 493 | |
| | 2004.11-2008.06 | AT | F | L/R | Saloon 4WD BKN | | GCO83078 | Outer Joint | 45W | 38 | 27 | 59.5 | 34.5 | 63 | M |
| | 2004.11-2008.06 | MT | F | L | Saloon 4WD BKN | | GDS83057 | Drive Shaft | 45W | 38 | | 59.5 | 34.5 | 593 | |
| | 2004.11-2008.06 | MT | F | R | Saloon 4WD BKN | | GDS83058 | Drive Shaft | 45W | 38 | | 59.5 | 34.5 | 613 | |
| | 2004.11-2008.06 | MT | F | L | Saloon 4WD BKN | Date to:2007.10 | GCI61076 | Inner Joint | | | 34 | | | 85 | |
| | 2004.11-2008.06 | MT | F | L/R | Saloon 4WD BKN | TJ | GCI61044 | Inner Joint | | | 34 | | | 85 | |
| | 2004.11-2008.06 | | F | L/R | Saloon 4WD BKN | | GCO83067 | Outer Joint | 45W | 38 | 27 | 59.5 | 34 | 68 | M |
| | 2004.11-2008.06 | 6AT/6MT | R | L/R | Saloon 4WD BKN | | GDS82401 | Drive Shaft | 45W | 38 | | 59.5 | 34 | 617 | |
| | 2004.11-2008.06 | 6AT/6MT | R | L/R | Saloon 4WD BKN | | GCI61010 | Inner Joint | | | 28 | | | 32 | |
| 3.0 (155 kw) | 2008.06-2010.05 | 6AT/7DCT | F | L/R | Estate 4WD CCWB | | GDS83273 | Drive Shaft | | 42 | | 76.5 | 34 | 460 | |
| | 2008.06-2010.05 | AT/MT | F | L/R | Estate 4WD CCWB | Date from:2009.01 | GCO83086 | Outer Joint | | 42 | 33 | 76.5 | 34 | 45.5 | M |
| | 2008.06-2010.05 | AT/MT | F | L/R | Estate 4WD CCWB | TJ | GCI61070 | Inner Joint | | | 24 | | | 85 | |

| | YEAR | TRANSM. | F/R | L/R | BODY STYLE & DRIVE TYPE & ENGINE | REMARKS | G-AP Ref. | PRODUCT | ABS | Technical Specifications A | B | C | H | L | P |
|---|---|---|---|---|---|---|---|---|---|---|---|---|---|---|---|
| **AUDI** | | | | | | | | | | | | | | | |
| **A4 Quattro** | | | | | | | | | | | | | | | |
| 3.0 (155 kw) | 2008.06-2010.05 | | F | L/R | Estate 4WD CCWB | | GCO83087 | Outer Joint | | 42 | 27 | 76.5 | 34 | 57 | M |
| | 2008.06-2010.05 | | F | L/R | Estate 4WD CCWB | | GCI83022 | Inner Joint | | | 34 | | | 88.5 | |
| | 2008.06-2010.05 | 6AT/7AT | R | L | Estate 4WD CCWB | For PR code:GH2,For vehicles with electronic limited slip diff. | GDS81886 | Drive Shaft | | 42 | | 76.5 | 34 | 589 | |
| | 2008.06-2010.05 | 6AT/7AT | R | R | Estate 4WD CCWB | For PR code:GH2,For vehicles with electronic limited slip diff. | GDS81885 | Drive Shaft | | 42 | | 76.5 | 34 | 546 | |
| | 2008.06-2010.05 | 6AT/7AT | R | L/R | Estate 4WD CCWB | For PR code:GH1 | GDS81894 | Drive Shaft | | 42 | | 76.5 | 34 | 630 | |
| | 2008.06-2010.05 | 6AT/7AT | R | L/R | Estate 4WD CCWB | | GCI61069 | Inner Joint | | | 28 | | | 32 | |
| | 2008.06-2010.05 | 6AT/7DCT | F | L/R | Saloon 4WD CCWB | | GDS83273 | Drive Shaft | | 42 | | 76.5 | 34 | 460 | |
| | 2008.06-2010.05 | AT/MT | F | L/R | Saloon 4WD CCWB | Date from:2009.01 | GCO83086 | Outer Joint | | 42 | 33 | 76.5 | 34 | 45.5 | M |
| | 2008.06-2010.05 | AT/MT | F | L/R | Saloon 4WD CCWB | TJ | GCI61070 | Inner Joint | | | 24 | | | 85 | |
| | 2008.06-2010.05 | | F | L/R | Saloon 4WD CCWB | | GCO83087 | Outer Joint | | 42 | 27 | 76.5 | 34 | 57 | M |
| | 2008.06-2010.05 | | F | L/R | Saloon 4WD CCWB | | GCI83022 | Inner Joint | | | 34 | | | 88.5 | |
| | 2008.06-2010.05 | 6AT/7AT | R | L | Saloon 4WD CCWB | For PR code:GH2,For vehicles with electronic limited slip diff. | GDS81886 | Drive Shaft | | 42 | | 76.5 | 34 | 589 | |
| | 2008.06-2010.05 | 6AT/7AT | R | R | Saloon 4WD CCWB | For PR code:GH2,For vehicles with electronic limited slip diff. | GDS81885 | Drive Shaft | | 42 | | 76.5 | 34 | 546 | |
| | 2008.06-2010.05 | 6AT/7AT | R | L/R | Saloon 4WD CCWB | For PR code:GH1 | GDS81894 | Drive Shaft | | 42 | | 76.5 | 34 | 630 | |
| | 2008.06-2010.05 | 6AT/7AT | R | L/R | Saloon 4WD CCWB | | GCI61069 | Inner Joint | | | 28 | | | 32 | |
| 3.0 (160 kw) | 2001.04-2004.12 | 5AT | F | L/R | Estate 4WD BBJ | Chassis no. from:8E_4_195501 | GCI61044 | Inner Joint | | | 34 | | | 85 | |
| | 2001.04-2004.12 | 5MT/6MT | F | L | Estate 4WD BBJ | Chassis no. from:8E_4_350001 | GDS82156 | Drive Shaft | 45W | 38 | | 59.5 | 34.5 | 612 | |
| | 2001.04-2004.12 | AT | F | L | Estate 4WD BBJ | | GDS83052 | Drive Shaft | 45W | 38 | | 59.5 | 34.5 | 522 | |
| | 2001.04-2004.12 | AT | F | R | Estate 4WD BBJ | | GDS82168 | Drive Shaft | 45W | 38 | | 59.5 | 34.5 | 490 | |
| | 2001.04-2004.12 | MT | F | L | Estate 4WD BBJ | | GDS83043 | Drive Shaft | 45W | 38 | | 59.5 | 34.5 | 612 | |
| | 2001.04-2004.12 | MT | F | R | Estate 4WD BBJ | | GDS81593 | Drive Shaft | 45W | 38 | | 59.5 | 34.5 | 633 | |
| | 2001.04-2004.12 | MT | F | R | Estate 4WD BBJ | Chassis no. from:8E-4-350001 | GDS81918 | Drive Shaft | 45W | 38 | | 59.5 | 34.5 | 632 | |
| | 2001.04-2004.12 | MT | F | L/R | Estate 4WD BBJ | Date to:2003.05 | GCO83092 | Outer Joint | 45W | 38 | 27 | 59.5 | 34 | 68 | I |
| | 2001.04-2004.12 | | F | | Estate 4WD BBJ | | GCO83078 | Outer Joint | 45W | 38 | 27 | 59.5 | 34.5 | 63 | M |
| | 2001.04-2004.12 | 5MT/6MT | R | L/R | Estate 4WD BBJ | Chassis no. to:8E_4_350000 | GCI61010 | Inner Joint | | | 28 | | | 32 | |
| | 2001.04-2004.12 | SAT/5AT/5MT/6MT | R | L/R | Estate 4WD BBJ | | GDS82401 | Drive Shaft | 45W | 38 | | 59.5 | 34 | 617 | |
| | 2001.04-2004.12 | 5AT | F | L/R | Saloon 4WD BBJ | Chassis no. from:8E_4_195501 | GCI61044 | Inner Joint | | | 34 | | | 85 | |
| | 2001.04-2004.12 | 5MT/6MT | F | L | Saloon 4WD BBJ | Chassis no. from:8E_4_350001 | GDS82156 | Drive Shaft | 45W | 38 | | 59.5 | 34.5 | 612 | |
| | 2001.04-2004.12 | AT | F | L | Saloon 4WD BBJ | | GDS83052 | Drive Shaft | 45W | 38 | | 59.5 | 34.5 | 522 | |
| | 2001.04-2004.12 | AT | F | R | Saloon 4WD BBJ | | GDS82168 | Drive Shaft | 45W | 38 | | 59.5 | 34.5 | 490 | |
| | 2001.04-2004.12 | MT | F | L | Saloon 4WD BBJ | | GDS83043 | Drive Shaft | 45W | 38 | | 59.5 | 34.5 | 612 | |
| | 2001.04-2004.12 | MT | F | R | Saloon 4WD BBJ | | GDS81593 | Drive Shaft | 45W | 38 | | 59.5 | 34.5 | 633 | |
| | 2001.04-2004.12 | MT | F | R | Saloon 4WD BBJ | Chassis no. from:8E-4-350001 | GDS81918 | Drive Shaft | 45W | 38 | | 59.5 | 34.5 | 632 | |
| | 2001.04-2004.12 | MT | F | L/R | Saloon 4WD BBJ | Date to:2003.05 | GCO83092 | Outer Joint | 45W | 38 | 27 | 59.5 | 34 | 68 | I |
| | 2001.04-2004.12 | | F | | Saloon 4WD BBJ | | GCO83078 | Outer Joint | 45W | 38 | 27 | 59.5 | 34.5 | 63 | M |
| | 2001.04-2004.12 | 5MT/6MT | R | L/R | Saloon 4WD BBJ | Chassis no. to:8E_4_350000 | GCI61010 | Inner Joint | | | 28 | | | 32 | |
| | 2001.04-2004.12 | SAT/5AT/5MT/6MT | R | L/R | Saloon 4WD BBJ | | GDS82401 | Drive Shaft | 45W | 38 | | 59.5 | 34 | 617 | |
| | 2004.11-2006.07 | 5AT/6MT | F | L/R | Estate 4WD BBJ | | GCI61044 | Inner Joint | | | 34 | | | 85 | |
| | 2004.11-2006.07 | 6MT | F | L | Estate 4WD BBJ | | GDS82156 | Drive Shaft | 45W | 38 | | 59.5 | 34.5 | 612 | |
| | 2004.11-2006.07 | 6MT | F | R | Estate 4WD BBJ | | GDS81918 | Drive Shaft | 45W | 38 | | 59.5 | 34.5 | 632 | |
| | 2004.11-2006.07 | AT | F | L | Estate 4WD BBJ | | GDS83052 | Drive Shaft | 45W | 38 | | 59.5 | 34.5 | 522 | |
| | 2004.11-2006.07 | AT | F | R | Estate 4WD BBJ | | GDS82168 | Drive Shaft | 45W | 38 | | 59.5 | 34.5 | 490 | |
| | 2004.11-2006.07 | MT | F | L/R | Estate 4WD BBJ | Date from:2004.05;Chassis no. from:8E4350001 | GCO83078 | Outer Joint | 45W | 38 | 27 | 59.5 | 34.5 | 63 | M |
| | 2004.11-2006.07 | | F | L/R | Estate 4WD BBJ | Chassis no. from:8H-4-002001 | GCO83067 | Outer Joint | 45W | 38 | 27 | 59.5 | 34 | 68 | M |
| | 2004.11-2006.07 | 5AT/6MT | R | L/R | Estate 4WD BBJ | | GDS82401 | Drive Shaft | 45W | 38 | | 59.5 | 34 | 617 | |
| | 2004.11-2006.07 | 6MT | R | L/R | Estate 4WD BBJ | Date to:2006.05,Chassis no. to:8E_6_805000 | GCI61010 | Inner Joint | | | 28 | | | 32 | |
| | 2004.11-2006.07 | 5AT | F | L/R | Saloon 4WD BBJ | | GCI61044 | Inner Joint | | | 34 | | | 85 | |
| | 2004.11-2006.07 | 6MT | F | L | Saloon 4WD BBJ | | GDS82156 | Drive Shaft | 45W | 38 | | 59.5 | 34.5 | 612 | |
| | 2004.11-2006.07 | 6MT | F | R | Saloon 4WD BBJ | | GDS81918 | Drive Shaft | 45W | 38 | | 59.5 | 34.5 | 632 | |
| | 2004.11-2006.07 | AT | F | L | Saloon 4WD BBJ | | GDS83052 | Drive Shaft | 45W | 38 | | 59.5 | 34.5 | 522 | |
| | 2004.11-2006.07 | AT | F | R | Saloon 4WD BBJ | | GDS82168 | Drive Shaft | 45W | 38 | | 59.5 | 34.5 | 490 | |
| | 2004.11-2006.07 | MT | F | L/R | Saloon 4WD BBJ | Date from:2004.05;Chassis no. from:8E4350001 | GCO83078 | Outer Joint | 45W | 38 | 27 | 59.5 | 34.5 | 63 | M |
| | 2004.11-2006.07 | | F | L/R | Saloon 4WD BBJ | Chassis no. from:8H-4-002001 | GCO83067 | Outer Joint | 45W | 38 | 27 | 59.5 | 34 | 68 | M |
| | 2004.11-2006.07 | 5AT/6MT | R | L/R | Saloon 4WD BBJ | | GDS82401 | Drive Shaft | 45W | 38 | | 59.5 | 34 | 617 | |
| | 2004.11-2006.07 | 6MT | F/R | L/R | Saloon 4WD BBJ | Posission:Front,Date to:2006.05,Chassis no. to:8E_6_805000 | GCI61010 | Inner Joint | | | 28 | | | 32 | |
| | 2015.09-2018.08 | 7AT | F | L/R | Saloon 4WD CSWB | | GCO81357 | Outer Joint | | 42 | 28 | 76.5 | 34 | 54 | I |
| | 2015.09-2018.08 | 7AT | F | L/R | Saloon 4WD CSWB | Date from:2016.02 | GCI61077 | Inner Joint | | | 34 | | | 88 | |
| | 2015.09-2018.08 | 7DCT | F | L/R | Saloon 4WD CSWB | | GDS82075 | Drive Shaft | | 42 | | 76.5 | 34 | 463 | |
| | 2015.09-2018.08 | 7AT | R | L/R | Saloon 4WD CSWB | For PR code:GH1 | GDS82252 | Drive Shaft | | 38 | | 59.5 | 34 | 627 | |
| | 2015.09-2018.08 | 7AT | R | L/R | Saloon 4WD CSWB | For PR code:GH1 | GCI61069 | Inner Joint | | | 28 | | | 32 | |
| | 2015.09-2018.08 | 8AT | R | L/R | Saloon 4WD CSWB | Rear differential Torque Vectoring;Without rear differential lock | GCI81702 | Outer Joint | | 38 | 28 | 59.5 | 34 | 81.5 | |
| | 2015.09-2018.08 | AT | R | L | Saloon 4WD CSWB | For PR code:GH2;For vehicles with AWD & variable torque dist;Mounting Type:Bolted | GDS58136 | Drive Shaft | | 38 | | 59.5 | 34 | 586 | |
| | 2015.09-2018.08 | AT | R | R | Saloon 4WD CSWB | For PR code:GH2;For vehicles with AWD & variable torque dist;Mounting Type:Bolted | GDS58137 | Drive Shaft | | 38 | | 59.5 | 34 | 545 | |
| | 2015.09-2018.08 | AT | R | L/R | Saloon 4WD CSWB | For PR code:GH2;For vehicles with AWD & variable torque dist;Mounting Type:Bolted | GCI84020 | Inner Joint | | | 28 | | | 32 | |
| | 2015.11-2018.08 | 7AT | F | L/R | Estate 4WD CSWB | | GDS82075 | Drive Shaft | | 42 | | 76.5 | 34 | 463 | |

| | YEAR | TRANSM. | F/R | L/R | BODY STYLE & DRIVE TYPE & ENGINE | REMARKS | G-AP Ref. | PRODUCT | ABS | Technical Specifications A | B | C | H | L | P |
|---|---|---|---|---|---|---|---|---|---|---|---|---|---|---|---|
| **AUDI** | | | | | | | | | | | | | | | |
| **A4 Quattro** | | | | | | | | | | | | | | | |
| 3.0 (160 kw) | 2015.11-2018.08 | 7AT | F | L/R | Estate 4WD CSWB | | GCO81357 | Outer Joint | | 42 | 28 | 76.5 | 34 | 54 | I |
| | 2015.11-2018.08 | 7AT | F | L/R | Estate 4WD CSWB | | GCI61077 | Inner Joint | | | 34 | | | 88 | |
| | 2015.11-2018.08 | 7AT | R | L/R | Estate 4WD CSWB | For PR Code:GH1 | GDS82252 | Drive Shaft | | 38 | | 59.5 | 34 | 627 | |
| | 2015.11-2018.08 | 7AT | R | L/R | Estate 4WD CSWB | For PR Code:GH1 | GCI61069 | Inner Joint | | | 28 | | | 32 | |
| | 2015.11-2018.08 | 7DCT | R | L/R | Estate 4WD CSWB | Rear differential Torque Vectoring;Without rear differential lock | GCI81702 | Outer Joint | | 38 | 28 | 59.5 | 34 | 81.5 | |
| | 2015.11-2018.08 | AT | R | L | Estate 4WD CSWB | For PR code:GH2;For vehicles with AWD & variable torque dist;Mounting Type:Bolted | GDS58136 | Drive Shaft | | 38 | | 59.5 | 34 | 586 | |
| | 2015.11-2018.08 | AT | R | R | Estate 4WD CSWB | For PR code:GH2;For vehicles with AWD & variable torque dist;Mounting Type:Bolted | GDS58137 | Drive Shaft | | 38 | | 59.5 | 34 | 545 | |
| | 2015.11-2018.08 | AT | R | L/R | Estate 4WD CSWB | For PR code:GH2;For vehicles with AWD & variable torque dist;Mounting Type:Bolted | GCI84020 | Inner Joint | | | 28 | | | 32 | |
| 3.0 (162 kw) | 2000.11-2004.12 | 6MT | F | L | Saloon 4WD ASN;AVK | Date From:2004.05 | GDS82156 | Drive Shaft | 45W | 38 | | 59.5 | 34.5 | 612 | |
| | 2000.11-2004.12 | AT | F | L | Saloon 4WD ASN;AVK | | GDS83052 | Drive Shaft | 45W | 38 | | 59.5 | 34.5 | 522 | |
| | 2000.11-2004.12 | AT | F | R | Saloon 4WD ASN;AVK | | GDS82168 | Drive Shaft | 45W | 38 | | 59.5 | 34.5 | 490 | |
| | 2000.11-2004.12 | AT | F | L/R | Saloon 4WD ASN;AVK | | GCI61044 | Inner Joint | | | 34 | | | 85 | |
| | 2000.11-2004.12 | AT | F | L/R | Saloon 4WD ASN;AVK | | GCI61076 | Inner Joint | | | 34 | | | 85 | |
| | 2000.11-2004.12 | AT/MT | F | L/R | Saloon 4WD ASN;AVK | Date From:2004.05 | GCO83078 | Outer Joint | 45W | 38 | 27 | 59.5 | 34.5 | 63 | M |
| | 2000.11-2004.12 | MT | F | L | Saloon 4WD ASN;AVK | Date To:2004.04 | GDS83043 | Drive Shaft | 45W | 38 | | 59.5 | 34.5 | 612 | |
| | 2000.11-2004.12 | MT | F | R | Saloon 4WD ASN;AVK | Date To:2004.04 | GDS81593 | Drive Shaft | 45W | 38 | | 59.5 | 34.5 | 633 | |
| | 2000.11-2004.12 | MT | F | R | Saloon 4WD ASN;AVK | Date From:2004.05 | GDS81918 | Drive Shaft | 45W | 38 | | 59.5 | 34.5 | 632 | |
| | 2000.11-2004.12 | MT | F | L/R | Saloon 4WD ASN;AVK | Date to:2002.04,Chassis no. to:8E4350000 | GCO83092 | Outer Joint | 45W | 38 | 27 | 59.5 | 34 | 68 | I |
| | 2000.11-2004.12 | MT | F | L/R | Saloon 4WD ASN;AVK | | GCI61010 | Inner Joint | | | 28 | | | 32 | |
| | 2000.11-2004.12 | AT/MT | R | L/R | Saloon 4WD ASN;AVK | | GDS82401 | Drive Shaft | 45W | 38 | | 59.5 | 34 | 617 | |
| | 2000.11-2004.12 | AT/MT | R | L/R | Saloon 4WD ASN;AVK | | GCO83058 | Outer Joint | 45W | 38 | 33 | 59.5 | 34 | 56.5 | M |
| | 2000.11-2004.12 | AT/MT | R | L/R | Saloon 4WD ASN;AVK | | GCI61069 | Inner Joint | | | 28 | | | 32 | |
| | 2001.09-2004.12 | 5MT/6MT | F | L | Estate 4WD ASN;AVK | Chassis no. from:8E_4_350001 | GDS82156 | Drive Shaft | 45W | 38 | | 59.5 | 34.5 | 612 | |
| | 2001.09-2004.12 | AT | F | L | Estate 4WD ASN;AVK | | GDS83052 | Drive Shaft | 45W | 38 | | 59.5 | 34.5 | 522 | |
| | 2001.09-2004.12 | AT | F | R | Estate 4WD ASN;AVK | | GDS82168 | Drive Shaft | 45W | 38 | | 59.5 | 34.5 | 490 | |
| | 2001.09-2004.12 | AT | F | L/R | Estate 4WD ASN;AVK | Date From:2004.01 | GCO83078 | Outer Joint | 45W | 38 | 27 | 59.5 | 34.5 | 63 | M |
| | 2001.09-2004.12 | AT | F | L/R | Estate 4WD ASN;AVK | | GCI61044 | Inner Joint | | | 34 | | | 85 | |
| | 2001.09-2004.12 | AT | F | L/R | Estate 4WD ASN;AVK | | GCI61076 | Inner Joint | | | 34 | | | 85 | |
| | 2001.09-2004.12 | MT | F | L | Estate 4WD ASN;AVK | Date to:2004.04 | GDS83043 | Drive Shaft | 45W | 38 | | 59.5 | 34.5 | 612 | |
| | 2001.09-2004.12 | MT | F | R | Estate 4WD ASN;AVK | Date to:2004.04 | GDS81593 | Drive Shaft | 45W | 38 | | 59.5 | 34.5 | 633 | |
| | 2001.09-2004.12 | MT | F | R | Estate 4WD ASN;AVK | Date From:2004.05 | GDS81918 | Drive Shaft | 45W | 38 | | 59.5 | 34.5 | 632 | |
| | 2001.09-2004.12 | MT | F | L/R | Estate 4WD ASN;AVK | Date From:2004.05 | GCO83078 | Outer Joint | 45W | 38 | 27 | 59.5 | 34.5 | 63 | M |
| | 2001.09-2004.12 | MT | F | L/R | Estate 4WD ASN;AVK | Date to:2004.04,Chassis no. to:8E4350000 | GCO83092 | Outer Joint | 45W | 38 | 27 | 59.5 | 34 | 68 | I |
| | 2001.09-2004.12 | MT | F | L/R | Estate 4WD ASN;AVK | | GCI61010 | Inner Joint | | | 28 | | | 32 | |
| | 2001.09-2004.12 | AT/MT | R | L/R | Estate 4WD ASN;AVK | | GDS82401 | Drive Shaft | 45W | 38 | | 59.5 | 34 | 617 | |
| | 2001.09-2004.12 | AT/MT | R | L/R | Estate 4WD ASN;AVK | | GCO83058 | Outer Joint | 45W | 38 | 33 | 59.5 | 34 | 56.5 | M |
| | 2001.09-2004.12 | AT/MT | R | L/R | Estate 4WD ASN;AVK | | GCI61069 | Inner Joint | | | 28 | | | 32 | |
| 3.0 (170 kw) | 2018.07- | 8AT | F | L/R | Estate 4WD DCPE | | GDS82075 | Drive Shaft | | 42 | | 76.5 | 34 | 463 | |
| | 2018.07- | 8AT | F | L/R | Estate 4WD DCPE | | GCO81357 | Outer Joint | | 42 | 28 | 76.5 | 34 | 54 | I |
| | 2018.07- | 8AT | F | L/R | Estate 4WD DCPE | | GCI61077 | Inner Joint | | | 34 | | | 88 | |
| | 2018.07- | 8AT | R | L/R | Estate 4WD DCPE | Rear differential Torque Vectoring;Without rear differential lock | GCI81702 | Outer Joint | | 38 | 28 | 59.5 | 34 | 81.5 | |
| | 2018.07- | AT | R | L | Estate 4WD DCPE | For PR code:GH2;For vehicles with AWD & variable torque dist;Mounting Type:Bolted | GDS58136 | Drive Shaft | | 38 | | 59.5 | 34 | 586 | |
| | 2018.07- | AT | R | R | Estate 4WD DCPE | For PR code:GH2;For vehicles with AWD & variable torque dist;Mounting Type:Bolted | GDS58137 | Drive Shaft | | 38 | | 59.5 | 34 | 545 | |
| | 2018.07- | AT | R | L/R | Estate 4WD DCPE | For PR code:GH2;For vehicles with AWD & variable torque dist;Mounting Type:Bolted | GCI84020 | Inner Joint | | | 28 | | | 32 | |
| | 2018.07- | | R | L/R | Estate 4WD DCPE | For PR code:GH1 | GDS82252 | Drive Shaft | | 38 | | 59.5 | 34 | 627 | |
| | 2018.07- | 8AT | F | L/R | Saloon 4WD DCPE | | GDS82075 | Drive Shaft | | 42 | | 76.5 | 34 | 463 | |
| | 2018.07- | 8AT | F | L/R | Saloon 4WD DCPE | | GCO81357 | Outer Joint | | 42 | 28 | 76.5 | 34 | 54 | I |
| | 2018.07- | 8AT | F | L/R | Saloon 4WD DCPE | | GCI61077 | Inner Joint | | | 34 | | | 88 | |
| | 2018.07- | 7DCT | R | L/R | Saloon 4WD DCPE | Rear differential Torque Vectoring;Without rear differential lock | GCI81702 | Outer Joint | | 38 | 28 | 59.5 | 34 | 81.5 | |
| | 2018.07- | AT | R | L | Saloon 4WD DCPE | For PR code:GH2;For vehicles with AWD & variable torque dist;Mounting Type:Bolted | GDS58136 | Drive Shaft | | 38 | | 59.5 | 34 | 586 | |
| | 2018.07- | AT | R | R | Saloon 4WD DCPE | For PR code:GH2;For vehicles with AWD & variable torque dist;Mounting Type:Bolted | GDS58137 | Drive Shaft | | 38 | | 59.5 | 34 | 545 | |
| | 2018.07- | AT | R | L/R | Saloon 4WD DCPE | For PR code:GH2;For vehicles with AWD & variable torque dist;Mounting Type:Bolted | GCI84020 | Inner Joint | | | 28 | | | 32 | |
| | 2018.07- | | R | L/R | Saloon 4WD DCPE | For PR code:GH1 | GDS82252 | Drive Shaft | | 38 | | 59.5 | 34 | 627 | |
| 3.0 (171 kw) | 2006.01-2008.06 | 6AT | F | L | Estate 4WD ASB | | GDS83347 | Drive Shaft | 45W | 38 | | 59.5 | 34.5 | 580 | |
| | 2006.01-2008.06 | 6AT | F | R | Estate 4WD ASB | | GDS82239 | Drive Shaft | 45W | 38 | | 59.5 | 34.5 | 493 | |
| | 2006.01-2008.06 | 6AT | F | L/R | Estate 4WD ASB | | GCO83078 | Outer Joint | 45W | 38 | 27 | 59.5 | 34.5 | 63 | M |
| | 2006.01-2008.06 | 6AT | F | L/R | Estate 4WD ASB | AAR | GCI61076 | Inner Joint | | | 34 | | | 85 | |
| | 2006.01-2008.06 | 6AT/6MT | F | L/R | Estate 4WD ASB | | GCO83067 | Outer Joint | 45W | 38 | 27 | 59.5 | 34 | 68 | M |
| | 2006.01-2008.06 | 6AT/6MT | F | L/R | Estate 4WD ASB | TJ | GCI61044 | Inner Joint | | | 34 | | | 85 | |
| | 2006.01-2008.06 | 6MT | F | L | Estate 4WD ASB | | GDS83057 | Drive Shaft | 45W | 38 | | 59.5 | 34.5 | 593 | |
| | 2006.01-2008.06 | 6MT | F | R | Estate 4WD ASB | | GDS83058 | Drive Shaft | 45W | 38 | | 59.5 | 34.5 | 613 | |
| | 2006.01-2008.06 | 6AT/6MT | R | L/R | Estate 4WD ASB | | GDS82401 | Drive Shaft | 45W | 38 | | 59.5 | 34 | 617 | |
| | 2006.01-2008.06 | 6AT/6MT | R | L/R | Estate 4WD ASB | | GCI61010 | Inner Joint | | | 28 | | | 32 | |
| | 2006.01-2008.06 | 6AT | F | R | Saloon 4WD ASB | | GCI83007 | Inner Joint | | | 34 | | | 85 | |
| | 2006.01-2008.06 | AT | F | L | Saloon 4WD ASB | | GDS83347 | Drive Shaft | 45W | 38 | | 59.5 | 34.5 | 580 | |

| | YEAR | TRANSM. | F/R | L/R | BODY STYLE & DRIVE TYPE & ENGINE | REMARKS | G-AP Ref. | PRODUCT | ABS | Technical Specifications A | B | C | H | L | P |
|---|---|---|---|---|---|---|---|---|---|---|---|---|---|---|---|
| **AUDI** | | | | | | | | | | | | | | | |
| **A4 Quattro** | | | | | | | | | | | | | | | |
| 3.0 (171 kw) | 2006.01-2008.06 | AT | F | R | Saloon 4WD ASB | | GDS82239 | Drive Shaft | 45W | 38 | | 59.5 | 34.5 | 493 | |
| | 2006.01-2008.06 | AT | F | L/R | Saloon 4WD ASB | | GCO83078 | Outer Joint | 45W | 38 | 27 | 59.5 | 34.5 | 63 | M |
| | 2006.01-2008.06 | MT | F | L | Saloon 4WD ASB | | GDS83057 | Drive Shaft | 45W | 38 | | 59.5 | 34.5 | 593 | |
| | 2006.01-2008.06 | MT | F | R | Saloon 4WD ASB | | GDS83058 | Drive Shaft | 45W | 38 | | 59.5 | 34.5 | 613 | |
| | 2006.01-2008.06 | MT | F | L | Saloon 4WD ASB | Date to:2007.10 | GCI61076 | Inner Joint | | | 34 | | | 85 | |
| | 2006.01-2008.06 | MT | F | L/R | Saloon 4WD ASB | Date from:2008.01 | GCI61044 | Inner Joint | | | 34 | | | 85 | |
| | 2006.01-2008.06 | | F | L/R | Saloon 4WD ASB | | GCO83067 | Outer Joint | 45W | 38 | 27 | 59.5 | 34 | 68 | M |
| | 2006.01-2008.06 | 6AT/6MT | R | L/R | Saloon 4WD ASB | | GDS82401 | Drive Shaft | 45W | 38 | | 59.5 | 34 | 617 | |
| | 2006.01-2008.06 | 6AT/6MT | R | L/R | Saloon 4WD ASB | | GCI61010 | Inner Joint | | | 28 | | | 32 | |
| 3.0 (176 kw) | 2007.11-2012.03 | 6AT/6MT | F | L/R | Saloon 4WD CAPA;CCWA;CCLA | | GCI83022 | Inner Joint | | | 34 | | | 88.5 | |
| | 2007.11-2012.03 | 6AT/7AT/6MT | F | L/R | Saloon 4WD CAPA;CCWA;CCLA | Date to:2011.10 | GCO83087 | Outer Joint | | 42 | 27 | 76.5 | 34 | 57 | M |
| | 2007.11-2012.03 | 6AT/7AT/6MT | F | L/R | Saloon 4WD CAPA;CCWA;CCLA | Date from:2011.11 | GCO83103 | Outer Joint | | 42 | 28 | 76.4 | 34 | 54 | I |
| | 2007.11-2012.03 | 6AT/7DCT/6MT | F | L/R | Saloon 4WD CAPA;CCWA;CCLA | Date to:2011.10 | GDS83273 | Drive Shaft | | 42 | | 76.5 | 34 | 460 | |
| | 2007.11-2012.03 | 6AT/7DCT/6MT | F | L/R | Saloon 4WD CAPA;CCWA;CCLA | Date from:2011.11 | GDS83291 | Drive Shaft | | 42 | | 76.4 | 34 | 464 | |
| | 2007.11-2012.03 | AT/MT | F | L/R | Saloon 4WD CAPA;CCWA;CCLA | | GCO83086 | Outer Joint | | 42 | 33 | 76.5 | 34 | 45.5 | M |
| | 2007.11-2012.03 | 6AT/7AT/6MT | R | L | Saloon 4WD CAPA;CCWA;CCLA | Date to:2011.08,For PR code:GH2,For vehicles with electronic limited slip diff. | GDS81886 | Drive Shaft | | 42 | | 76.5 | 34 | 589 | |
| | 2007.11-2012.03 | 6AT/7AT/6MT | R | L | Saloon 4WD CAPA;CCWA;CCLA | Date from:2011.09,For PR code:GH2,For vehicles with electronic limited slip diff. | GDS82078 | Drive Shaft | | 42 | | 76.5 | 34 | 587 | |
| | 2007.11-2012.03 | 6AT/7AT/6MT | R | R | Saloon 4WD CAPA;CCWA;CCLA | Date to:2011.08,For PR code:GH2,For vehicles with electronic limited slip diff. | GDS81885 | Drive Shaft | | 42 | | 76.5 | 34 | 546 | |
| | 2007.11-2012.03 | 6AT/7AT/6MT | R | R | Saloon 4WD CAPA;CCWA;CCLA | Date from:2011.09,For PR code:GH2,For vehicles with electronic limited slip diff. | GDS82079 | Drive Shaft | | 42 | | 76.5 | 34 | 545 | |
| | 2007.11-2012.03 | 6AT/7AT/6MT | R | L/R | Saloon 4WD CAPA;CCWA;CCLA | Date to:2011.08 | GDS81894 | Drive Shaft | | 42 | | 76.5 | 34 | 630 | |
| | 2007.11-2012.03 | 6AT/7AT/6MT | R | L/R | Saloon 4WD CAPA;CCWA;CCLA | Date from:2011.09,For PR code:GH1 | GDS82080 | Drive Shaft | | 42 | | 76.5 | 34 | 629 | |
| | 2007.11-2012.03 | 6AT/7AT/6MT | R | L/R | Saloon 4WD CAPA;CCWA;CCLA | | GCI61069 | Inner Joint | | | 28 | | | 32 | |
| | 2007.11-2012.03 | 6AT/7AT/6MT | R | L/R | Saloon 4WD CAPA;CCWA;CCLA | Wheel Side | GCI61107 | Inner Joint | | 42 | 28 | 76.5 | 34 | 82 | |
| | 2007.11-2012.03 | 6AT/7AT/6MT | R | L/R | Saloon 4WD CAPA;CCWA;CCLA | Date from:2011.09 | GCI81610 | Inner Joint | | | 28 | | | 28 | |
| | 2008.04-2012.03 | 6AT/6MT | F | L/R | Estate 4WD CAPA;CCWA;CCLA | | GCI83022 | Inner Joint | | | 34 | | | 88.5 | |
| | 2008.04-2012.03 | 6AT/7AT/6MT | F | L/R | Estate 4WD CAPA;CCWA;CCLA | Date from:2011.11 | GDS83291 | Drive Shaft | | 42 | | 76.4 | 34 | 464 | |
| | 2008.04-2012.03 | 6AT/7AT/6MT | F | L/R | Estate 4WD CAPA;CCWA;CCLA | Date to:2011.10 | GCO83087 | Outer Joint | | 42 | 27 | 76.5 | 34 | 57 | M |
| | 2008.04-2012.03 | 6AT/7AT/6MT | F | L/R | Estate 4WD CAPA;CCWA;CCLA | Date from:2011.11 | GCO83103 | Outer Joint | | 42 | 28 | 76.4 | 34 | 54 | I |
| | 2008.04-2012.03 | 6AT/7DCT/6MT | F | L/R | Estate 4WD CAPA;CCWA;CCLA | Date to:2011.10 | GDS83273 | Drive Shaft | | 42 | | 76.5 | 34 | 460 | |
| | 2008.04-2012.03 | 6AT/7AT/6MT | R | L | Estate 4WD CAPA;CCWA;CCLA | Date to:2011.08,For PR code:GH2,For vehicles with electronic limited slip diff. | GDS81886 | Drive Shaft | | 42 | | 76.5 | 34 | 589 | |
| | 2008.04-2012.03 | 6AT/7AT/6MT | R | L | Estate 4WD CAPA;CCWA;CCLA | Date from:2011.09,For PR code:GH2,For vehicles with electronic limited slip diff. | GDS82078 | Drive Shaft | | 42 | | 76.5 | 34 | 587 | |
| | 2008.04-2012.03 | 6AT/7AT/6MT | R | R | Estate 4WD CAPA;CCWA;CCLA | Date to:2011.08,For PR code:GH2,For vehicles with electronic limited slip diff. | GDS81885 | Drive Shaft | | 42 | | 76.5 | 34 | 546 | |
| | 2008.04-2012.03 | 6AT/7AT/6MT | R | R | Estate 4WD CAPA;CCWA;CCLA | Date from:2011.09,For PR code:GH2,For vehicles with electronic limited slip diff. | GDS82079 | Drive Shaft | | 42 | | 76.5 | 34 | 545 | |
| | 2008.04-2012.03 | 6AT/7AT/6MT | R | L/R | Estate 4WD CAPA;CCWA;CCLA | Date to:2011.08 | GDS81894 | Drive Shaft | | 42 | | 76.5 | 34 | 630 | |
| | 2008.04-2012.03 | 6AT/7AT/6MT | R | L/R | Estate 4WD CAPA;CCWA;CCLA | Date from:2011.09,For PR code:GH1 | GDS82080 | Drive Shaft | | 42 | | 76.5 | 34 | 629 | |
| | 2008.04-2012.03 | 6AT/7AT/6MT | R | L/R | Estate 4WD CAPA;CCWA;CCLA | | GCI61069 | Inner Joint | | | 28 | | | 32 | |
| | 2008.04-2012.03 | 6AT/7AT/6MT | R | L/R | Estate 4WD CAPA;CCWA;CCLA | Wheel Side | GCI61107 | Inner Joint | | 42 | 28 | 76.5 | 34 | 82 | |
| | 2008.04-2012.03 | 6AT/7AT/6MT | R | L/R | Estate 4WD CAPA;CCWA;CCLA | Date from:2011.09 | GCI81610 | Inner Joint | | | 28 | | | 28 | |
| 3.0 (180 kw) | 2011.11-2015.12 | 7AT | F | L/R | Estate 4WD CDUC;CKVB;CKVC | | GDS83291 | Drive Shaft | | 42 | | 76.4 | 34 | 464 | |
| | 2011.11-2015.12 | 7AT | F | L/R | Estate 4WD CDUC;CKVB;CKVC | | GCO83103 | Outer Joint | | 42 | 28 | 76.4 | 34 | 54 | I |
| | 2011.11-2015.12 | 7AT | F | L/R | Estate 4WD CDUC;CKVB;CKVC | TJ | GCI83022 | Inner Joint | | | 34 | | | 88.5 | |
| | 2011.11-2015.12 | 7AT | R | L | Estate 4WD CDUC;CKVB;CKVC | For PR code:GH2,For vehicles with electronic limited slip diff. | GDS82078 | Drive Shaft | | 42 | | 76.5 | 34 | 587 | |
| | 2011.11-2015.12 | 7AT | R | R | Estate 4WD CDUC;CKVB;CKVC | For PR code:GH2,For vehicles with electronic limited slip diff. | GDS82079 | Drive Shaft | | 42 | | 76.5 | 34 | 545 | |
| | 2011.11-2015.12 | 7AT | R | L/R | Estate 4WD CDUC;CKVB;CKVC | For PR code:GH1 | GDS82080 | Drive Shaft | | 42 | | 76.5 | 34 | 629 | |
| | 2011.11-2015.12 | 7AT | R | L/R | Estate 4WD CDUC;CKVB;CKVC | | GCI61107 | Inner Joint | | 42 | 28 | 76.5 | 34 | 82 | |
| | 2011.11-2015.12 | 7AT | R | L/R | Estate 4WD CDUC;CKVB;CKVC | | GCI81610 | Inner Joint | | | 28 | | | 28 | |
| | 2011.11-2015.12 | 7AT/6MT | F | L/R | Saloon 4WD CDUC;CKVB;CKVC | | GDS83291 | Drive Shaft | | 42 | | 76.4 | 34 | 464 | |
| | 2011.11-2015.12 | AT/MT | F | L/R | Saloon 4WD CDUC;CKVB;CKVC | | GCO83103 | Outer Joint | | 42 | 28 | 76.4 | 34 | 54 | I |
| | 2011.11-2015.12 | AT/MT | F | L/R | Saloon 4WD CDUC;CKVB;CKVC | | GCI83022 | Inner Joint | | | 34 | | | 88.5 | |
| | 2011.11-2015.12 | 7AT/6MT | R | L | Saloon 4WD CDUC;CKVB;CKVC | For PR code:GH2,For vehicles with electronic limited slip diff. | GDS82078 | Drive Shaft | | 42 | | 76.5 | 34 | 587 | |
| | 2011.11-2015.12 | 7AT/6MT | R | R | Saloon 4WD CDUC;CKVB;CKVC | For PR code:GH2,For vehicles with electronic limited slip diff. | GDS82079 | Drive Shaft | | 42 | | 76.5 | 34 | 545 | |
| | 2011.11-2015.12 | 7AT/6MT | R | L/R | Saloon 4WD CDUC;CKVB;CKVC | For PR code:GH1 | GDS82080 | Drive Shaft | | 42 | | 76.5 | 34 | 629 | |
| | 2011.11-2015.12 | 7AT/6MT | R | L/R | Saloon 4WD CDUC;CKVB;CKVC | Wheel Side | GCI61107 | Inner Joint | | 42 | 28 | 76.5 | 34 | 82 | |
| | 2011.11-2015.12 | 7AT/6MT | R | L/R | Saloon 4WD CDUC;CKVB;CKVC | Transmission side | GCI81610 | Inner Joint | | | 28 | | | 28 | |
| 3.0 (200 kw) | 2012.02-2015.12 | 7AT | F | L/R | Estate 4WD CMUA;CRED | | GDS83291 | Drive Shaft | | 42 | | 76.4 | 34 | 464 | |
| | 2012.02-2015.12 | AT/MT | F | L/R | Estate 4WD CMUA;CRED | | GCO83103 | Outer Joint | | 42 | 28 | 76.4 | 34 | 54 | I |
| | 2012.02-2015.12 | AT/MT | F | L/R | Estate 4WD CMUA;CRED | | GCI83022 | Inner Joint | | | 34 | | | 88.5 | |
| | 2012.02-2015.12 | 7AT | R | L | Estate 4WD CMUA;CRED | For PR code:GH2,For vehicles with electronic limited slip diff. | GDS82078 | Drive Shaft | | 42 | | 76.5 | 34 | 587 | |
| | 2012.02-2015.12 | 7AT | R | R | Estate 4WD CMUA;CRED | For PR code:GH2,For vehicles with electronic limited slip diff. | GDS82079 | Drive Shaft | | 42 | | 76.5 | 34 | 545 | |
| | 2012.02-2015.12 | 7AT | R | L/R | Estate 4WD CMUA;CRED | For PR code:GH1 | GDS82080 | Drive Shaft | | 42 | | 76.5 | 34 | 629 | |
| | 2012.02-2015.12 | 7AT | R | L/R | Estate 4WD CMUA;CRED | Wheel Side | GCI61107 | Inner Joint | | 42 | 28 | 76.5 | 34 | 82 | |
| | 2012.02-2015.12 | 7AT | R | L/R | Estate 4WD CMUA;CRED | Transmission side | GCI81610 | Inner Joint | | | 28 | | | 28 | |
| | 2012.02-2015.12 | 7AT | F | L/R | Saloon 4WD CMUA;CRED | | GDS83291 | Drive Shaft | | 42 | | 76.4 | 34 | 464 | |
| | 2012.02-2015.12 | AT/MT | F | L/R | Saloon 4WD CMUA;CRED | | GCO83103 | Outer Joint | | 42 | 28 | 76.4 | 34 | 54 | I |
| | 2012.02-2015.12 | AT/MT | F | L/R | Saloon 4WD CMUA;CRED | | GCI83022 | Inner Joint | | | 34 | | | 88.5 | |

| | YEAR | TRANSM. | F/R | L/R | BODY STYLE & DRIVE TYPE & ENGINE | REMARKS | G-AP Ref. | PRODUCT | ABS | Technical Specifications A | B | C | H | L | P |
|---|---|---|---|---|---|---|---|---|---|---|---|---|---|---|---|
| **AUDI** | | | | | | | | | | | | | | | |
| **A4 Quattro** | | | | | | | | | | | | | | | |
| 3.0 (200 kw) | 2012.02-2015.12 | 7AT | R | L | Saloon 4WD CMUA;CRED | For PR code:GH2;For vehicles with electronic limited slip diff. | GDS82078 | Drive Shaft | | 42 | | 76.5 | 34 | 587 | |
| | 2012.02-2015.12 | 7AT | R | R | Saloon 4WD CMUA;CRED | For PR code:GH2;For vehicles with electronic limited slip diff. | GDS82079 | Drive Shaft | | 42 | | 76.5 | 34 | 545 | |
| | 2012.02-2015.12 | 7AT | R | L/R | Saloon 4WD CMUA;CRED | For PR code:GH1 | GDS82080 | Drive Shaft | | 42 | | 76.5 | 34 | 629 | |
| | 2012.02-2015.12 | 7AT | R | L/R | Saloon 4WD CMUA;CRED | Wheel Side | GCI61107 | Inner Joint | | 42 | 28 | 76.5 | 34 | 82 | |
| | 2012.02-2015.12 | 7AT | R | L/R | Saloon 4WD CMUA;CRED | Transmission side | GCI81610 | Inner Joint | | | 28 | | | 28 | |
| | 2015.05-2018.08 | 8AT | F | L/R | Saloon 4WD CRTC | | GDS82075 | Drive Shaft | | 42 | | 76.5 | 34 | 463 | |
| | 2015.05-2018.08 | 8AT | F | L/R | Saloon 4WD CRTC | | GCO81357 | Outer Joint | | 42 | 28 | 76.5 | 34 | 54 | I |
| | 2015.05-2018.08 | 8AT | F | L/R | Saloon 4WD CRTC | Date from:2016.02 | GCI61077 | Inner Joint | | | 34 | | | 88 | |
| | 2015.05-2018.08 | 8AT | R | L/R | Saloon 4WD CRTC | For PR code:GH1 | GDS82252 | Drive Shaft | | 38 | | 59.5 | 34 | 627 | |
| | 2015.05-2018.08 | 8AT | R | L/R | Saloon 4WD CRTC | Rear differential Torque Vectoring;Without rear differential lock | GCI81702 | Outer Joint | | 38 | 28 | 59.5 | 34 | 81.5 | |
| | 2015.05-2018.08 | 8AT | R | L/R | Saloon 4WD CRTC | For PR code:GH1 | GCI61069 | Inner Joint | | | 28 | | | 32 | |
| | 2015.05-2018.08 | AT | R | L | Saloon 4WD CRTC | For PR code:GH2;For vehicles with AWD & variable torque dist;Mounting Type:Bolted | GDS58136 | Drive Shaft | | 38 | | 59.5 | 34 | 586 | |
| | 2015.05-2018.08 | AT | R | R | Saloon 4WD CRTC | For PR code:GH2;For vehicles with AWD & variable torque dist;Mounting Type:Bolted | GDS58137 | Drive Shaft | | 38 | | 59.5 | 34 | 545 | |
| | 2015.05-2018.08 | AT | R | L/R | Saloon 4WD CRTC | For PR code:GH2;For vehicles with AWD & variable torque dist;Mounting Type:Bolted | GCI84020 | Inner Joint | | | 28 | | | 32 | |
| | 2015.08-2018.08 | 8AT | F | L/R | Estate 4WD CRTC | | GDS82075 | Drive Shaft | | 42 | | 76.5 | 34 | 463 | |
| | 2015.08-2018.08 | AT | F | L/R | Estate 4WD CRTC | Date from:2016.01 | GCO83103 | Outer Joint | | 42 | 28 | 76.4 | 34 | 54 | I |
| | 2015.08-2018.08 | AT | F | L/R | Estate 4WD CRTC | Date from:2016.01 | GCI83022 | Inner Joint | | | 34 | | | 88.5 | |
| | 2015.08-2018.08 | 8AT | R | L/R | Estate 4WD CRTC | For PR code:GH1 | GDS82252 | Drive Shaft | | 38 | | 59.5 | 34 | 627 | |
| | 2015.08-2018.08 | 8AT | R | L/R | Estate 4WD CRTC | Rear differential Torque Vectoring;Without rear differential lock | GCI81702 | Outer Joint | | 38 | 28 | 59.5 | 34 | 81.5 | |
| | 2015.08-2018.08 | AT | R | L | Estate 4WD CRTC | For PR code:GH2;For vehicles with AWD & variable torque dist;Mounting Type:Bolted | GDS58136 | Drive Shaft | | 38 | | 59.5 | 34 | 586 | |
| | 2015.08-2018.08 | AT | R | R | Estate 4WD CRTC | For PR code:GH2;For vehicles with AWD & variable torque dist;Mounting Type:Bolted | GDS58137 | Drive Shaft | | 38 | | 59.5 | 34 | 545 | |
| | 2015.08-2018.08 | AT | R | L/R | Estate 4WD CRTC | For PR code:GH2;For vehicles with AWD & variable torque dist;Mounting Type:Bolted | GCI84020 | Inner Joint | | | 28 | | | 32 | |
| 3.0 (210 kw) | 2018.07-2019.10 | 8AT | F | L/R | Estate 4WD DCPC | | GDS82075 | Drive Shaft | | 42 | | 76.5 | 34 | 463 | |
| | 2018.07-2019.10 | 8AT | F | L/R | Estate 4WD DCPC | | GCO81357 | Outer Joint | | 42 | 28 | 76.5 | 34 | 54 | I |
| | 2018.07-2019.10 | 8AT | F | L/R | Estate 4WD DCPC | | GCI61077 | Inner Joint | | | 34 | | | 88 | |
| | 2018.07-2019.10 | 8AT | R | L/R | Estate 4WD DCPC | Rear differential Torque Vectoring;Without rear differential lock | GCI81702 | Outer Joint | | 38 | 28 | 59.5 | 34 | 81.5 | |
| | 2018.07-2019.10 | AT | R | L | Estate 4WD DCPC | For PR code:GH2;For vehicles with AWD & variable torque dist;Mounting Type:Bolted | GDS58136 | Drive Shaft | | 38 | | 59.5 | 34 | 586 | |
| | 2018.07-2019.10 | AT | R | R | Estate 4WD DCPC | For PR code:GH2;For vehicles with AWD & variable torque dist;Mounting Type:Bolted | GDS58137 | Drive Shaft | | 38 | | 59.5 | 34 | 545 | |
| | 2018.07-2019.10 | AT | R | L/R | Estate 4WD DCPC | For PR code:GH2;For vehicles with AWD & variable torque dist;Mounting Type:Bolted | GCI84020 | Inner Joint | | | 28 | | | 32 | |
| | 2018.07-2019.10 | | R | L/R | Estate 4WD DCPC | For PR code:GH1 | GDS82252 | Drive Shaft | | 38 | | 59.5 | 34 | 627 | |
| | 2018.07-2020.08 | 8AT | F | L/R | Saloon 4WD DCPC | | GDS82075 | Drive Shaft | | 42 | | 76.5 | 34 | 463 | |
| | 2018.07-2020.08 | 8AT | F | L/R | Saloon 4WD DCPC | | GCO81357 | Outer Joint | | 42 | 28 | 76.5 | 34 | 54 | I |
| | 2018.07-2020.08 | 8AT | F | L/R | Saloon 4WD DCPC | | GCI61077 | Inner Joint | | | 34 | | | 88 | |
| | 2018.07-2020.08 | 8AT | R | L/R | Saloon 4WD DCPC | Rear differential Torque Vectoring;Without rear differential lock | GCI81702 | Outer Joint | | 38 | 28 | 59.5 | 34 | 81.5 | |
| | 2018.07-2020.08 | AT | R | L | Saloon 4WD DCPC | For PR code:GH2;For vehicles with AWD & variable torque dist;Mounting Type:Bolted | GDS58136 | Drive Shaft | | 38 | | 59.5 | 34 | 586 | |
| | 2018.07-2020.08 | AT | R | R | Saloon 4WD DCPC | For PR code:GH2;For vehicles with AWD & variable torque dist;Mounting Type:Bolted | GDS58137 | Drive Shaft | | 38 | | 59.5 | 34 | 545 | |
| | 2018.07-2020.08 | AT | R | L/R | Saloon 4WD DCPC | For PR code:GH2;For vehicles with AWD & variable torque dist;Mounting Type:Bolted | GCI84020 | Inner Joint | | | 28 | | | 32 | |
| | 2018.07-2020.08 | | R | L/R | Saloon 4WD DCPC | For PR code:GH1 | GDS82252 | Drive Shaft | | 38 | | 59.5 | 34 | 627 | |
| | 2020.08- | 8AT | F | L/R | Estate 4WD DMGA | | GDS82075 | Drive Shaft | | 42 | | 76.5 | 34 | 463 | |
| | 2020.08- | 8AT | F | L/R | Estate 4WD DMGA | | GCO81357 | Outer Joint | | 42 | 28 | 76.5 | 34 | 54 | I |
| | 2020.08- | AT | F | L/R | Estate 4WD DMGA | | GCI61077 | Inner Joint | | | 34 | | | 88 | |
| | 2020.08- | 8AT | R | L/R | Estate 4WD DMGA | For PR code:GH1 | GDS82252 | Drive Shaft | | 38 | | 59.5 | 34 | 627 | |
| | 2020.08- | 8AT | R | L/R | Estate 4WD DMGA | Rear differential Torque Vectoring;Without rear differential lock | GCI81702 | Outer Joint | | 38 | 28 | 59.5 | 34 | 81.5 | |
| | 2020.08- | AT | R | L | Estate 4WD DMGA | For PR code:GH2;For vehicles with AWD & variable torque dist;Mounting Type:Bolted | GDS58136 | Drive Shaft | | 38 | | 59.5 | 34 | 586 | |
| | 2020.08- | AT | R | R | Estate 4WD DMGA | For PR code:GH2;For vehicles with AWD & variable torque dist;Mounting Type:Bolted | GDS58137 | Drive Shaft | | 38 | | 59.5 | 34 | 545 | |
| | 2020.08- | AT | R | L/R | Estate 4WD DMGA | For PR code:GH2;For vehicles with AWD & variable torque dist;Mounting Type:Bolted | GCI84020 | Inner Joint | | | 28 | | | 32 | |
| | 2020.08- | 8AT | F | L/R | Saloon 4WD DMGA | | GDS82075 | Drive Shaft | | 42 | | 76.5 | 34 | 463 | |
| | 2020.08- | 8AT | F | L/R | Saloon 4WD DMGA | | GCO81357 | Outer Joint | | 42 | 28 | 76.5 | 34 | 54 | I |
| | 2020.08- | AT | F | L/R | Saloon 4WD DMGA | | GCI61077 | Inner Joint | | | 34 | | | 88 | |
| | 2020.08- | 8AT | R | L/R | Saloon 4WD DMGA | For PR code:GH1 | GDS82252 | Drive Shaft | | 38 | | 59.5 | 34 | 627 | |
| | 2020.08- | 8AT | R | L/R | Saloon 4WD DMGA | Rear differential Torque Vectoring;Without rear differential lock | GCI81702 | Outer Joint | | 38 | 28 | 59.5 | 34 | 81.5 | |
| | 2020.08- | AT | R | L | Saloon 4WD DMGA | For PR code:GH2;For vehicles with AWD & variable torque dist;Mounting Type:Bolted | GDS58136 | Drive Shaft | | 38 | | 59.5 | 34 | 586 | |
| | 2020.08- | AT | R | R | Saloon 4WD DMGA | For PR code:GH2;For vehicles with AWD & variable torque dist;Mounting Type:Bolted | GDS58137 | Drive Shaft | | 38 | | 59.5 | 34 | 545 | |
| | 2020.08- | AT | R | L/R | Saloon 4WD DMGA | For PR code:GH2;For vehicles with AWD & variable torque dist;Mounting Type:Bolted | GCI84020 | Inner Joint | | | 28 | | | 32 | |
| 3.2 (188 kw) | 2005.01-2008.06 | 6AT | F | R | Estate 4WD AUK;BKH | | GDS82168 | Drive Shaft | 45W | 38 | | 59.5 | 34.5 | 490 | |
| | 2005.01-2008.06 | 6AT | F | L/R | Estate 4WD AUK;BKH | | GCI61044 | Inner Joint | | | 34 | | | 85 | |
| | 2005.01-2008.06 | 6MT | F | L | Estate 4WD AUK;BKH | | GDS82156 | Drive Shaft | 45W | 38 | | 59.5 | 34.5 | 612 | |
| | 2005.01-2008.06 | AT | F | L | Estate 4WD AUK;BKH | | GDS83347 | Drive Shaft | 45W | 38 | | 59.5 | 34.5 | 580 | |
| | 2005.01-2008.06 | AT/MT | F | L/R | Estate 4WD AUK;BKH | | GCO83078 | Outer Joint | 45W | 38 | 27 | 59.5 | 34.5 | 63 | M |
| | 2005.01-2008.06 | MT | F | R | Estate 4WD AUK;BKH | | GDS81918 | Drive Shaft | 45W | 38 | | 59.5 | 34.5 | 632 | |
| | 2005.01-2008.06 | MT | F | L/R | Estate 4WD AUK;BKH | | GCO83030 | Outer Joint | | 38 | 33 | 59.5 | 34 | 56.5 | M |
| | 2005.01-2008.06 | 6AT/6MT | R | L/R | Estate 4WD AUK;BKH | | GDS82401 | Drive Shaft | 45W | 38 | | 59.5 | 34 | 617 | |
| | 2005.01-2008.06 | 6MT | F/R | L/R | Estate 4WD AUK;BKH | Posission:Front,Date to:2006.05,Chassis no. to:8E_6_805000 | GCI61010 | Inner Joint | | | 28 | | | 32 | |
| | 2005.01-2008.06 | 6AT | F | R | Saloon 4WD AUK;BKH | | GDS82168 | Drive Shaft | 45W | 38 | | 59.5 | 34.5 | 490 | |
| | 2005.01-2008.06 | 6AT | F | L/R | Saloon 4WD AUK;BKH | | GCI61044 | Inner Joint | | | 34 | | | 85 | |

| | YEAR | TRANSM. | F/R | L/R | BODY STYLE & DRIVE TYPE & ENGINE | REMARKS | G-AP Ref. | PRODUCT | ABS | Technical Specifications A | B | C | H | L | P |
|---|---|---|---|---|---|---|---|---|---|---|---|---|---|---|---|
| **AUDI** | | | | | | | | | | | | | | | |
| **A4 Quattro** | | | | | | | | | | | | | | | |
| 3.2 (188 kw) | 2005.01-2008.06 | 6MT | F | L | Saloon 4WD AUK;BKH | | GDS82156 | Drive Shaft | 45W | 38 | | 59.5 | 34.5 | 612 | |
| | 2005.01-2008.06 | AT | F | L | Saloon 4WD AUK;BKH | | GDS83347 | Drive Shaft | 45W | 38 | | 59.5 | 34.5 | 580 | |
| | 2005.01-2008.06 | AT/MT | F | L/R | Saloon 4WD AUK;BKH | | GCO83078 | Outer Joint | 45W | 38 | 27 | 59.5 | 34.5 | 63 | M |
| | 2005.01-2008.06 | MT | F | R | Saloon 4WD AUK;BKH | | GDS81918 | Drive Shaft | 45W | 38 | | 59.5 | 34.5 | 632 | |
| | 2005.01-2008.06 | MT | F | L/R | Saloon 4WD AUK;BKH | | GCO83030 | Outer Joint | | 38 | 33 | 59.5 | 34 | 56.5 | M |
| | 2005.01-2008.06 | SAT/6AT/6MT | R | L/R | Saloon 4WD AUK;BKH | | GDS82401 | Drive Shaft | 45W | 38 | | 59.5 | 34 | 617 | |
| | 2005.01-2008.06 | 6MT | F/R | L/R | Saloon 4WD AUK;BKH | Posission:Front;Date to:2006.05;Chassis no. to:8E_6_805000 | GCI61010 | Inner Joint | | | 28 | | | 32 | |
| 3.2 (195 kw) | 2007.11-2012.03 | 6AT/6MT | F | L/R | Saloon 4WD CALA | | GDS83345 | Drive Shaft | | 42 | | 76.5 | 34 | 463 | |
| | 2007.11-2012.03 | AT/MT | F | L/R | Saloon 4WD CALA | | GCO83086 | Outer Joint | | 42 | 33 | 76.5 | 34 | 45.5 | M |
| | 2007.11-2012.03 | | F | L/R | Saloon 4WD CALA | TJ | GCI61070 | Inner Joint | | | 24 | | | 85 | |
| | 2007.11-2012.03 | 6AT/6MT | R | L | Saloon 4WD CALA | Date to:2011.08;For PR code:GH2;For vehicles with electronic limited slip diff. | GDS81886 | Drive Shaft | | 42 | | 76.5 | 34 | 589 | |
| | 2007.11-2012.03 | 6AT/6MT | R | L | Saloon 4WD CALA | Date from:2011.09;For PR code:GH2;For vehicles with electronic limited slip diff. | GDS82078 | Drive Shaft | | 42 | | 76.5 | 34 | 587 | |
| | 2007.11-2012.03 | 6AT/6MT | R | R | Saloon 4WD CALA | Date to:2011.08;For PR code:GH2;For vehicles with electronic limited slip diff. | GDS81885 | Drive Shaft | | 42 | | 76.5 | 34 | 546 | |
| | 2007.11-2012.03 | 6AT/6MT | R | R | Saloon 4WD CALA | Date from:2011.09;For PR code:GH2;For vehicles with electronic limited slip diff. | GDS82079 | Drive Shaft | | 42 | | 76.5 | 34 | 545 | |
| | 2007.11-2012.03 | 6AT/6MT | R | L/R | Saloon 4WD CALA | For PR code:GH1 | GDS82076 | Drive Shaft | | 42 | | 76.5 | 34 | 630 | |
| | 2007.11-2012.03 | 6AT/6MT | R | L/R | Saloon 4WD CALA | Wheel Side | GCI61107 | Inner Joint | | 42 | 28 | 76.5 | 34 | 82 | |
| | 2007.11-2012.03 | 6AT/6MT | R | L/R | Saloon 4WD CALA | Transmission side | GCI81610 | Inner Joint | | | 28 | | | 28 | |
| | 2008.04-2012.03 | 6AT/6MT | F | L/R | Estate 4WD CALA | | GDS83345 | Drive Shaft | | 42 | | 76.5 | 34 | 463 | |
| | 2008.04-2012.03 | AT/MT | F | L/R | Estate 4WD CALA | | GCO83086 | Outer Joint | | 42 | 33 | 76.5 | 34 | 45.5 | M |
| | 2008.04-2012.03 | | F | L/R | Estate 4WD CALA | TJ | GCI61070 | Inner Joint | | | 24 | | | 85 | |
| | 2008.04-2012.03 | 6AT/6MT | R | L | Estate 4WD CALA | Date to:2011.08;For PR code:GH2;For vehicles with electronic limited slip diff. | GDS81886 | Drive Shaft | | 42 | | 76.5 | 34 | 589 | |
| | 2008.04-2012.03 | 6AT/6MT | R | L | Estate 4WD CALA | Date from:2011.09;For PR code:GH2;For vehicles with electronic limited slip diff. | GDS82078 | Drive Shaft | | 42 | | 76.5 | 34 | 587 | |
| | 2008.04-2012.03 | 6AT/6MT | R | R | Estate 4WD CALA | Date to:2011.08;For PR code:GH2;For vehicles with electronic limited slip diff. | GDS81885 | Drive Shaft | | 42 | | 76.5 | 34 | 546 | |
| | 2008.04-2012.03 | 6AT/6MT | R | R | Estate 4WD CALA | Date from:2011.09;For PR code:GH2;For vehicles with electronic limited slip diff. | GDS82079 | Drive Shaft | | 42 | | 76.5 | 34 | 545 | |
| | 2008.04-2012.03 | 6AT/6MT | R | L/R | Estate 4WD CALA | For PR code:GH1 | GDS82076 | Drive Shaft | | 42 | | 76.5 | 34 | 630 | |
| | 2008.04-2012.03 | 6AT/6MT | R | L/R | Estate 4WD CALA | Wheel Side | GCI61107 | Inner Joint | | 42 | 28 | 76.5 | 34 | 82 | |
| | 2008.04-2012.03 | 6AT/6MT | R | L/R | Estate 4WD CALA | Transmission side | GCI81610 | Inner Joint | | | 28 | | | 28 | |
| **A4/S4 quattro** | | | | | | | | | | | | | | | |
| 4.2 (253 kw) | 2004.03-2005.12 | 6AT | F | L | Convertible 4WD BBK, BHF | | GDS83347 | Drive Shaft | 45W | 38 | | 59.5 | 34.5 | 580 | |
| | 2004.03-2005.12 | 6AT | F | R | Convertible 4WD BBK, BHF | | GDS82239 | Drive Shaft | 45W | 38 | | 59.5 | 34.5 | 493 | |
| | 2004.03-2005.12 | 6AT | F | L/R | Convertible 4WD BBK, BHF | | GCO83078 | Outer Joint | 45W | 38 | 27 | 59.5 | 34.5 | 63 | M |
| | 2004.03-2005.12 | 6AT | F | L/R | Convertible 4WD BBK, BHF | AAR | GCI61076 | Inner Joint | | | 34 | | | 85 | |
| | 2004.03-2005.12 | 6AT/6MT | F | L/R | Convertible 4WD BBK, BHF | | GCO83067 | Outer Joint | 45W | 38 | 27 | 59.5 | 34 | 68 | M |
| | 2004.03-2005.12 | 6AT/6MT | F | L/R | Convertible 4WD BBK, BHF | TJ | GCI61044 | Inner Joint | | | 34 | | | 85 | |
| | 2004.03-2005.12 | 6MT | F | L | Convertible 4WD BBK, BHF | | GDS83057 | Drive Shaft | 45W | 38 | | 59.5 | 34.5 | 593 | |
| | 2004.03-2005.12 | 6MT | F | R | Convertible 4WD BBK, BHF | | GDS83058 | Drive Shaft | 45W | 38 | | 59.5 | 34.5 | 613 | |
| | 2004.03-2005.12 | 6AT/6MT | R | L/R | Convertible 4WD BBK, BHF | For PR code:1YE | GDS82073 | Drive Shaft | 45W | 38 | | 59.5 | 34 | 612 | |
| | 2004.03-2005.12 | 6AT/6MT | R | L/R | Convertible 4WD BBK, BHF | For PR code:1YF | GDS82401 | Drive Shaft | 45W | 38 | | 59.5 | 34 | 617 | |
| | 2004.03-2005.12 | 6AT/6MT | R | L/R | Convertible 4WD BBK, BHF | For PR code:1YF | GCI61010 | Inner Joint | | | 28 | | | 32 | |
| | 2004.03-2005.12 | 6AT/6MT | R | L/R | Convertible 4WD BBK, BHF | For PR code:1YE | GCI81618 | Inner Joint | | | 33 | | | 34 | |
| **A5** | | | | | | | | | | | | | | | |
| 1.4 (110 kw) | 2016.11-2020.02 | 7DCT | F | L/R | Coupe FWD CVNA | | GDS82075 | Drive Shaft | | 42 | | 76.5 | 34 | 463 | |
| | 2016.11-2020.02 | AT/MT | F | L/R | Coupe FWD CVNA | Date from:2017.01 | GCO83103 | Outer Joint | | 42 | 28 | 76.4 | 34 | 54 | I |
| | 2016.11-2020.02 | AT/MT | F | L/R | Coupe FWD CVNA | Date from:2017.01 | GCI83022 | Inner Joint | | | 34 | | | 88.5 | |
| 1.8 (118 kw) | 2009.05-2011.09 | AT/MT | F | L/R | Coupe FWD CDHB | | GCI83022 | Inner Joint | | | 34 | | | 88.5 | |
| | 2009.05-2011.09 | AT/MT/CVT/6MT | F | L/R | Coupe FWD CDHB | | GCO83087 | Outer Joint | | 42 | 27 | 76.5 | 34 | 57 | M |
| | 2009.05-2011.09 | CVT/6MT | F | L/R | Coupe FWD CDHB | | GDS83273 | Drive Shaft | | 42 | | 76.5 | 34 | 460 | |
| 1.8 (125 kw) | 2007.10-2017.01 | CVT/6MT | F | L/R | Coupe FWD CABD;CJEB | For Engine code:CABD | GDS83273 | Drive Shaft | | 42 | | 76.5 | 34 | 460 | |
| | 2007.10-2017.01 | CVT/6MT | F | L/R | Coupe FWD CABD;CJEB | For Engine code:CJEB | GDS83291 | Drive Shaft | | 42 | | 76.4 | 34 | 464 | |
| | 2007.10-2017.01 | CVT/6MT | F | L/R | Coupe FWD CABD;CJEB | For Engine code:CABD | GCO83087 | Outer Joint | | 42 | 27 | 76.5 | 34 | 57 | M |
| | 2007.10-2017.01 | CVT/6MT | F | L/R | Coupe FWD CABD;CJEB | For Engine code:CJEB | GCO83103 | Outer Joint | | 42 | 28 | 76.4 | 34 | 54 | I |
| | 2007.10-2017.01 | CVT/6MT | F | L/R | Coupe FWD CABD;CJEB | | GCI83022 | Inner Joint | | | 34 | | | 88.5 | |
| 1.8 (130 kw) | 2015.05-2017.01 | CVT/6MT | F | L/R | Coupe FWD CJEE | | GDS83291 | Drive Shaft | | 42 | | 76.4 | 34 | 464 | |
| | 2015.05-2017.01 | CVT/6MT | F | L/R | Coupe FWD CJEE | | GCI83022 | Inner Joint | | | 34 | | | 88.5 | |
| | 2015.05-2017.01 | | F | L/R | Coupe FWD CJEE | | GCO83103 | Outer Joint | | 42 | 28 | 76.4 | 34 | 54 | I |
| | 2016.02-2017.01 | CVT/6MT | F | L/R | Coupe FWD CJEE | | GDS83291 | Drive Shaft | | 42 | | 76.4 | 34 | 464 | |
| | 2016.02-2017.01 | CVT/6MT | F | L/R | Coupe FWD CJEE | | GCI83022 | Inner Joint | | | 34 | | | 88.5 | |
| 2.0 (100 kw) | 2019.10- | 7AT | F | L/R | Coupe FWD DEZB;DTNB | | GDS82256 | Drive Shaft | | 42 | | 76.5 | 34 | 464 | |
| | 2019.10- | 7AT | F | L/R | Coupe FWD DEZB;DTNB | | GCI61077 | Inner Joint | | | 34 | | | 88 | |
| | 2019.10- | AT | F | L/R | Coupe FWD DEZB;DTNB | | GCO81750 | Outer Joint | | 42 | 29 | 76.5 | 34 | 60 | I |
| | 2019.10- | AT/MT | F | L/R | Coupe FWD DEZB;DTNB | Date from:2020.01,TJ | GCI83022 | Inner Joint | | | 34 | | | 88.5 | |
| 2.0 (110 kw) | 2017.05-2020.02 | 6MT/7DCT | F | L | Coupe FWD CZHA;DEUA | | GDS82075 | Drive Shaft | | 42 | | 76.5 | 34 | 463 | |
| | 2017.05-2020.02 | 6MT/7DCT | F | L/R | Coupe FWD CZHA;DEUA | | GDS82075 | Drive Shaft | | 42 | | 76.5 | 34 | 463 | |
| | 2017.05-2020.02 | AT/MT | F | L/R | Coupe FWD CZHA;DEUA | | GCO83103 | Outer Joint | | 42 | 28 | 76.4 | 34 | 54 | I |
| | 2017.05-2020.02 | AT/MT | F | L/R | Coupe FWD CZHA;DEUA | | GCI83022 | Inner Joint | | | 34 | | | 88.5 | |

| | YEAR | TRANSM. | F/R | L/R | BODY STYLE & DRIVE TYPE & ENGINE | REMARKS | G-AP Ref. | PRODUCT | ABS | Technical Specifications A | B | C | H | L | P |
|---|---|---|---|---|---|---|---|---|---|---|---|---|---|---|---|
| **AUDI** **A5** | | | | | | | | | | | | | | | |
| 2.0 (110 kw) | 2019.02- | 6MT/7DCT | F | L/R | Coupe FWD DLVB;DMSB | For Enginecode:DMSB/DLVB | GDS82075 | Drive Shaft | | 42 | | 76.5 | 34 | 463 | |
| | 2019.02- | 7AT/6MT | F | L/R | Coupe FWD DLVB;DMSB | | GCO81357 | Outer Joint | | 42 | 28 | 76.5 | 34 | 54 | I |
| | 2019.02- | 7AT/6MT | F | L/R | Coupe FWD DLVB;DMSB | | GCI61077 | Inner Joint | | | 34 | | | 88 | |
| | 2019.02- | AT/MT | F | L/R | Coupe FWD DLVB;DMSB | TJ | GCI83022 | Inner Joint | | | 34 | | | 88.5 | |
| | 2020.03- | 7AT | F | L/R | Coupe FWD CVKC;DEMB | | GCI61077 | Inner Joint | | | 34 | | | 88 | |
| | 2020.03- | 7DCT | F | L/R | Coupe FWD CVKC;DEMB | | GDS82075 | Drive Shaft | | 42 | | 76.5 | 34 | 463 | |
| | 2020.03- | 7DCT | F | L/R | Coupe FWD CVKC;DEMB | | GCO81357 | Outer Joint | | 42 | 28 | 76.5 | 34 | 54 | I |
| 2.0 (120 kw) | 2008.08-2017.01 | AT/MT | F | L/R | Coupe FWD CAHB;CGLD;CNHC | Date to:2011.10;For Engine code:CAHB | GCO83087 | Outer Joint | | 42 | 27 | 76.5 | 34 | 57 | M |
| | 2008.08-2017.01 | AT/MT | F | L/R | Coupe FWD CAHB;CGLD;CNHC | Date to:2011.07;For Engine code:CGLD;For Engine code:CNHC | GCO83088 | Outer Joint | | 42 | 29 | 76.5 | 34 | 61.5 | M |
| | 2008.08-2017.01 | AT/MT | F | L/R | Coupe FWD CAHB;CGLD;CNHC | Date from:2011.11 | GCO83103 | Outer Joint | | 42 | 28 | 76.4 | 34 | 54 | I |
| | 2008.08-2017.01 | AT/MT | F | L/R | Coupe FWD CAHB;CGLD;CNHC | | GCI83022 | Inner Joint | | | 34 | | | 88.5 | |
| | 2008.08-2017.01 | CVT/6MT | F | L/R | Coupe FWD CAHB;CGLD;CNHC | Date to:2011.10;For Engine code:CAHB;Date from:2011.11;For Engine code:CGLD;CNHC | GDS83273 | Drive Shaft | | 42 | | 76.5 | 34 | 460 | |
| | 2008.08-2017.01 | CVT/6MT | F | L/R | Coupe FWD CAHB;CGLD;CNHC | Date from:2011.11,For Engine code:CAHB | GDS83291 | Drive Shaft | | 42 | | 76.4 | 34 | 464 | |
| | 2008.08-2017.01 | CVT/6MT | F | L/R | Coupe FWD CAHB;CGLD;CNHC | Date to:2011.10,For Engine code:CGLD/CNHC | GDS83321 | Drive Shaft | | 42 | | 76.5 | 34 | 462 | |
| | 2008.08-2017.01 | | F | L/R | Coupe FWD CAHB;CGLD;CNHC | | GCO83102 | Outer Joint | | 42 | 29 | 76.5 | 34 | 60 | I |
| | 2019.08- | 7AT | F | L/R | Coupe FWD DEZE;DTNA | | GDS82256 | Drive Shaft | | 42 | | 76.5 | 34 | 464 | |
| | 2019.08- | 7AT | F | L/R | Coupe FWD DEZE;DTNA | | GCO81750 | Outer Joint | | 42 | 29 | 76.5 | 34 | 60 | I |
| | 2019.08- | AT | F | L/R | Coupe FWD DEZE;DTNA | Date from:2020.01 | GCI83022 | Inner Joint | | | 34 | | | 88.5 | |
| 2.0 (125 kw) | 2008.08-2012.03 | 6MT | F | L/R | Coupe FWD CAHA | Date to:2011.10 | GDS83273 | Drive Shaft | | 42 | | 76.5 | 34 | 460 | |
| | 2008.08-2012.03 | 6MT | F | L/R | Coupe FWD CAHA | Date from:2011.11 | GDS83291 | Drive Shaft | | 42 | | 76.4 | 34 | 464 | |
| | 2008.08-2012.03 | 6MT | F | L/R | Coupe FWD CAHA | Date to:2011.10 | GCO83087 | Outer Joint | | 42 | 27 | 76.5 | 34 | 57 | M |
| | 2008.08-2012.03 | 6MT | F | L/R | Coupe FWD CAHA | Date from:2011.11 | GCO83103 | Outer Joint | | 42 | 28 | 76.4 | 34 | 54 | I |
| | 2008.08-2012.03 | 6MT | F | L/R | Coupe FWD CAHA | | GCI83022 | Inner Joint | | | 34 | | | 88.5 | |
| 2.0 (130 kw) | 2011.10-2017.01 | CVT/6MT | F | L/R | Coupe FWD CGLC | | GDS83273 | Drive Shaft | | 42 | | 76.5 | 34 | 460 | |
| | 2011.10-2017.01 | CVT/6MT | F | L/R | Coupe FWD CGLC | Date to:2011.10 | GCO83088 | Outer Joint | | 42 | 29 | 76.5 | 34 | 61.5 | M |
| | 2011.10-2017.01 | CVT/6MT | F | L/R | Coupe FWD CGLC | Date from:2011.11 | GCO83102 | Outer Joint | | 42 | 29 | 76.5 | 34 | 60 | I |
| | 2011.10-2017.01 | CVT/6MT | F | L/R | Coupe FWD CGLC | | GCI81054 | Inner Joint | | | 24 | | | 86 | |
| | 2011.10-2017.01 | CVT/6MT | F | L/R | Coupe FWD CGLC | | GCI83022 | Inner Joint | | | 34 | | | 88.5 | |
| 2.0 (132 kw) | 2008.11-2012.03 | CVT/6MT | F | L/R | Coupe FWD CDNB | Date to:2011.10 | GDS83273 | Drive Shaft | | 42 | | 76.5 | 34 | 460 | |
| | 2008.11-2012.03 | CVT/6MT | F | L/R | Coupe FWD CDNB | Date from:2011.11 | GDS83291 | Drive Shaft | | 42 | | 76.4 | 34 | 464 | |
| | 2008.11-2012.03 | CVT/6MT | F | L/R | Coupe FWD CDNB | Date to:2011.10 | GCO83087 | Outer Joint | | 42 | 27 | 76.5 | 34 | 57 | M |
| | 2008.11-2012.03 | CVT/6MT | F | L/R | Coupe FWD CDNB | Date from:2011.11 | GCO83103 | Outer Joint | | 42 | 28 | 76.4 | 34 | 54 | I |
| | 2008.11-2012.03 | CVT/6MT | F | L/R | Coupe FWD CDNB | | GCI83022 | Inner Joint | | | 34 | | | 88.5 | |
| 2.0 (140 kw) | 2013.09-2017.01 | AT/MT | F | L/R | Coupe FWD CNHA | | GCO83088 | Outer Joint | | 42 | 29 | 76.5 | 34 | 61.5 | M |
| | 2013.09-2017.01 | CVT/6MT | F | L/R | Coupe FWD CNHA | | GDS83273 | Drive Shaft | | 42 | | 76.5 | 34 | 460 | |
| | 2013.09-2017.01 | CVT/6MT | F | L/R | Coupe FWD CNHA | | GCO83102 | Outer Joint | | 42 | 29 | 76.5 | 34 | 60 | I |
| | 2013.09-2017.01 | CVT/6MT | F | L/R | Coupe FWD CNHA | | GCI83022 | Inner Joint | | | 34 | | | 88.5 | |
| | 2016.06- | 7DCT | F | L/R | Coupe FWD DESA;DETA | | GDS82256 | Drive Shaft | | 42 | | 76.5 | 34 | 464 | |
| | 2016.07-2020.02 | 7AT | F | L/R | Coupe FWD DESA;DETA | | GDS82256 | Drive Shaft | | 42 | | 76.5 | 34 | 464 | |
| | 2016.07-2020.02 | 7AT | F | L/R | Coupe FWD DESA;DETA | | GCO81750 | Outer Joint | | 42 | 29 | 76.5 | 34 | 60 | I |
| | 2016.07-2020.02 | 7AT | F | L/R | Coupe FWD DESA;DETA | AAR | GCI61077 | Inner Joint | | | 34 | | | 88 | |
| | 2016.07-2020.02 | 7AT | F | L/R | Coupe FWD DESA;DETA | TJ | GCI83022 | Inner Joint | | | 34 | | | 88.5 | |
| | 2016.09-2020.02 | 6MT/7DCT | F | L/R | Coupe FWD CVKB;DKYA | | GDS82075 | Drive Shaft | | 42 | | 76.5 | 34 | 463 | |
| | 2016.09-2020.02 | AT/MT | F | L/R | Coupe FWD CVKB;DKYA | Date from:2017.01 | GCO83103 | Outer Joint | | 42 | 28 | 76.4 | 34 | 54 | I |
| | 2016.09-2020.02 | AT/MT | F | L/R | Coupe FWD CVKB;DKYA | Date from:2017.01 | GCI83022 | Inner Joint | | | 34 | | | 88.5 | |
| | 2017.05- | 6MT/7DCT | F | L/R | Coupe FWD DEMA;DHDA;DLVA;DKYA | For Engine code:DEMA/DKYA/DHDA/DLVA | GDS82075 | Drive Shaft | | 42 | | 76.5 | 34 | 463 | |
| | 2017.05- | 7AT/6MT | F | L/R | Coupe FWD DEMA;DHDA;DLVA;DKYA | | GCO81357 | Outer Joint | | 42 | 28 | 76.5 | 34 | 54 | I |
| | 2017.05- | 7AT/6MT | F | L/R | Coupe FWD DEMA;DHDA;DLVA;DKYA | | GCI61077 | Inner Joint | | | 34 | | | 88 | |
| | 2017.05- | AT/MT | F | L/R | Coupe FWD DEMA;DHDA;DLVA;DKYA | TJ | GCI83022 | Inner Joint | | | 34 | | | 88.5 | |
| | 2017.06- | 7DCT | F | L/R | Coupe FWD CVKB;DKYA | | GDS82075 | Drive Shaft | | 42 | | 76.5 | 34 | 463 | |
| 2.0 (150 kw) | 2020.07- | 7AT | F | L/R | Coupe FWD DMSA | | GCO81357 | Outer Joint | | 42 | 28 | 76.5 | 34 | 54 | I |
| | 2020.07- | 7AT | F | L/R | Coupe FWD DMSA | | GCI61077 | Inner Joint | | | 34 | | | 88 | |
| | 2020.07- | 7DCT | F | L/R | Coupe FWD DMSA | | GDS82075 | Drive Shaft | | 42 | | 76.5 | 34 | 463 | |
| | 2020.09- | 7AT | F | L/R | Coupe FWD DTPA | | GDS82256 | Drive Shaft | | 42 | | 76.5 | 34 | 464 | |
| | 2020.09- | 7AT | F | L/R | Coupe FWD DTPA | | GCO81750 | Outer Joint | | 42 | 29 | 76.5 | 34 | 60 | I |
| | 2020.09- | 7AT | F | L/R | Coupe FWD DTPA | | GCI61077 | Inner Joint | | | 34 | | | 88 | |
| | 2020.11- | 7DCT | F | L/R | Coupe FWD DMSA | | GDS82075 | Drive Shaft | | 42 | | 76.5 | 34 | 463 | |
| 2.0 (155 kw) | 2008.06-2013.11 | CVT/6MT | F | L/R | Coupe FWD CDNC | Date to:2011.10 | GDS83273 | Drive Shaft | | 42 | | 76.5 | 34 | 460 | |
| | 2008.06-2013.11 | CVT/6MT | F | L/R | Coupe FWD CDNC | Date from:2011.11 | GDS83291 | Drive Shaft | | 42 | | 76.4 | 34 | 464 | |
| | 2008.06-2013.11 | CVT/6MT | F | L/R | Coupe FWD CDNC | Date to:2011.10 | GCO83087 | Outer Joint | | 42 | 27 | 76.5 | 34 | 57 | M |
| | 2008.06-2013.11 | CVT/6MT | F | L/R | Coupe FWD CDNC | Date from:2011.11 | GCO83103 | Outer Joint | | 42 | 28 | 76.4 | 34 | 54 | I |
| | 2008.06-2013.11 | CVT/6MT | F | L/R | Coupe FWD CDNC | AAR | GCI81054 | Inner Joint | | | 24 | | | 86 | |
| | 2008.06-2013.11 | CVT/6MT | F | L/R | Coupe FWD CDNC | TJ | GCI83022 | Inner Joint | | | 34 | | | 88.5 | |
| 2.0 (165 kw) | 2013.05-2016.05 | CVT/6MT | F | L/R | Coupe FWD CNCD | | GDS83291 | Drive Shaft | | 42 | | 76.4 | 34 | 464 | |
| | 2013.05-2016.05 | CVT/6MT | F | L/R | Coupe FWD CNCD | | GCI83022 | Inner Joint | | | 34 | | | 88.5 | |

| | YEAR | TRANSM. | F/R | L/R | BODY STYLE & DRIVE TYPE & ENGINE | REMARKS | G-AP Ref. | PRODUCT | ABS | Technical Specifications A | B | C | H | L | P |
|---|---|---|---|---|---|---|---|---|---|---|---|---|---|---|---|
| **AUDI** | | | | | | | | | | | | | | | |
| **A5** | | | | | | | | | | | | | | | |
| 2.0 (165 kw) | 2013.05-2016.05 | | F | L/R | Coupe FWD CNCD | | GCO83103 | Outer Joint | | 42 | 28 | 76.4 | 34 | 54 | I |
| | 2014.02-2016.12 | CVT/6MT | F | L/R | Coupe FWD CNCD | | GDS83291 | Drive Shaft | | 42 | | 76.4 | 34 | 464 | |
| | 2014.02-2016.12 | CVT/6MT | F | L/R | Coupe FWD CNCD | | GCI83022 | Inner Joint | | | 34 | | | 88.5 | |
| 2.0 (169 kw) | 2015.08-2017.01 | CVT/6MT | F | L/R | Coupe FWD CNCE | | GDS83291 | Drive Shaft | | 42 | | 76.4 | 34 | 464 | |
| | 2015.08-2017.01 | CVT/6MT | F | L/R | Coupe FWD CNCE | | GCI83022 | Inner Joint | | | 34 | | | 88.5 | |
| | 2015.08-2017.01 | | F | L/R | Coupe FWD CNCE | | GCO83103 | Outer Joint | | 42 | 28 | 76.4 | 34 | 54 | I |
| | 2016.02-2017.01 | CVT/6MT | F | L/R | Coupe FWD CNCE | | GDS83291 | Drive Shaft | | 42 | | 76.4 | 34 | 464 | |
| | 2016.02-2017.01 | CVT/6MT | F | L/R | Coupe FWD CNCE | | GCI83022 | Inner Joint | | | 34 | | | 88.5 | |
| 2.0 (180 kw) | 2018.07-2020.08 | 7AT | F | L/R | Coupe FWD DKNA | | GDS82256 | Drive Shaft | | 42 | | 76.5 | 34 | 464 | |
| | 2018.07-2020.08 | 7AT | F | L/R | Coupe FWD DKNA | | GCO81750 | Outer Joint | | 42 | 29 | 76.5 | 34 | 60 | I |
| | 2018.07-2020.08 | 7AT | F | L/R | Coupe FWD DKNA | | GCI61077 | Inner Joint | | | 34 | | | 88 | |
| | 2018.07-2020.08 | AT | F | L/R | Coupe FWD DKNA | Date from:2019.01 | GCO83103 | Outer Joint | | 42 | 28 | 76.4 | 34 | 54 | I |
| | 2018.07-2020.08 | AT | F | L/R | Coupe FWD DKNA | Date from:2019.01,TJ | GCI83022 | Inner Joint | | | 34 | | | 88.5 | |
| 2.0 (185 kw) | 2016.11-2020.02 | 7AT | F | L/R | Coupe FWD CYRB | | GDS82256 | Drive Shaft | | 42 | | 76.5 | 34 | 464 | |
| | 2016.11-2020.02 | 7AT | F | L/R | Coupe FWD CYRB | | GCO81750 | Outer Joint | | 42 | 29 | 76.5 | 34 | 60 | I |
| | 2016.11-2020.02 | AT | F | L/R | Coupe FWD CYRB | Date from:2017.01 | GCI83022 | Inner Joint | | | 34 | | | 88.5 | |
| | 2017.05-2020.02 | 7AT | F | L/R | Coupe FWD DDWA | | GDS82256 | Drive Shaft | | 42 | | 76.5 | 34 | 464 | |
| | 2017.05-2020.02 | 7AT | F | L/R | Coupe FWD DDWA | | GCO81750 | Outer Joint | | 42 | 29 | 76.5 | 34 | 60 | I |
| | 2017.05-2020.02 | 7AT | F | L/R | Coupe FWD DDWA | | GCI61077 | Inner Joint | | | 34 | | | 88 | |
| | 2017.05-2020.02 | AT | F | L/R | Coupe FWD DDWA | TJ | GCI83022 | Inner Joint | | | 34 | | | 88.5 | |
| 2.7 (120 kw) | 2007.09-2012.03 | AT/MT | F | L/R | Coupe FWD CAMB;CGKB | | GCI83022 | Inner Joint | | | 34 | | | 88.5 | |
| | 2007.09-2012.03 | CVT | F | L/R | Coupe FWD CAMB;CGKB | Date from:2011.11 | GDS83273 | Drive Shaft | | 42 | | 76.5 | 34 | 460 | |
| | 2007.09-2012.03 | CVT | F | L/R | Coupe FWD CAMB;CGKB | Date to:2011.10 | GDS83321 | Drive Shaft | | 42 | | 76.5 | 34 | 462 | |
| | 2007.09-2012.03 | CVT | F | L/R | Coupe FWD CAMB;CGKB | Date to:2011.10 | GCO83088 | Outer Joint | | 42 | 29 | 76.5 | 34 | 61.5 | M |
| | 2007.09-2012.03 | CVT | F | L/R | Coupe FWD CAMB;CGKB | Date from:2011.11 | GCO83102 | Outer Joint | | 42 | 29 | 76.5 | 34 | 60 | I |
| 2.7 (140 kw) | 2007.06-2012.03 | CVT/6MT | F | L/R | Coupe FWD CAMA;CGKA | Date from:2011.11 | GDS83273 | Drive Shaft | | 42 | | 76.5 | 34 | 460 | |
| | 2007.06-2012.03 | CVT/6MT | F | L/R | Coupe FWD CAMA;CGKA | Date to:2011.10 | GDS83321 | Drive Shaft | | 42 | | 76.5 | 34 | 462 | |
| | 2007.06-2012.03 | CVT/6MT | F | L/R | Coupe FWD CAMA;CGKA | Date to:2011.10 | GCO83088 | Outer Joint | | 42 | 29 | 76.5 | 34 | 61.5 | M |
| | 2007.06-2012.03 | CVT/6MT | F | L/R | Coupe FWD CAMA;CGKA | Date from:2011.11 | GCO83102 | Outer Joint | | 42 | 29 | 76.5 | 34 | 60 | I |
| | 2007.06-2012.03 | CVT/6MT | F | L/R | Coupe FWD CAMA;CGKA | | GCI83022 | Inner Joint | | | 34 | | | 88.5 | |
| 3.0 (150 kw) | 2011.10-2017.01 | AT/MT | F | L/R | Coupe FWD CLAB | | GCI83022 | Inner Joint | | | 34 | | | 88.5 | |
| | 2011.10-2017.01 | CVT/6MT | F | L/R | Coupe FWD CLAB | | GDS83273 | Drive Shaft | | 42 | | 76.5 | 34 | 460 | |
| | 2011.10-2017.01 | CVT/6MT | F | L/R | Coupe FWD CLAB | Date to:2011.10 | GCO83088 | Outer Joint | | 42 | 29 | 76.5 | 34 | 61.5 | M |
| | 2011.10-2017.01 | CVT/6MT | F | L/R | Coupe FWD CLAB | Date from:2011.11 | GCO83102 | Outer Joint | | 42 | 29 | 76.5 | 34 | 60 | I |
| 3.0 (160 kw) | 2016.11-2018.08 | 7AT | F | L/R | Coupe FWD CSWB | | GDS82256 | Drive Shaft | | 42 | | 76.5 | 34 | 464 | |
| | 2016.11-2018.08 | 7AT | F | L/R | Coupe FWD CSWB | | GCO81750 | Outer Joint | | 42 | 29 | 76.5 | 34 | 60 | I |
| | 2016.11-2018.08 | AT | F | L/R | Coupe FWD CSWB | Date from:2017.01 | GCI83022 | Inner Joint | | | 34 | | | 88.5 | |
| 3.2 (195 kw) | 2007.06-2012.03 | AT/MT | F | L/R | Coupe FWD CALA | | GCI83022 | Inner Joint | | | 34 | | | 88.5 | |
| | 2007.06-2012.03 | CVT | F | L/R | Coupe FWD CALA | Chassis no. to:8T_8_011000;Date to:2011.10;Chassis no. from:8T_8_011001 | GDS83273 | Drive Shaft | | 42 | | 76.5 | 34 | 460 | |
| | 2007.06-2012.03 | CVT | F | L/R | Coupe FWD CALA | Date from:2011.11 | GDS83291 | Drive Shaft | | 42 | | 76.4 | 34 | 464 | |
| | 2007.06-2012.03 | CVT | F | L/R | Coupe FWD CALA | Date to:2011.10 | GCO83087 | Outer Joint | | 42 | 27 | 76.5 | 34 | 57 | M |
| | 2007.06-2012.03 | CVT | F | L/R | Coupe FWD CALA | Date from:2011.11 | GCO83103 | Outer Joint | | 42 | 28 | 76.4 | 34 | 54 | I |
| **A5 Cabrio** | | | | | | | | | | | | | | | |
| 1.8 (118 kw) | 2009.09-2012.03 | AT/MT | F | L/R | Convertible FWD CDHB | Date to:2011.11 | GCO83087 | Outer Joint | | 42 | 27 | 76.5 | 34 | 57 | M |
| | 2009.09-2012.03 | AT/MT | F | L/R | Convertible FWD CDHB | Date from:2011.11 | GCO83103 | Outer Joint | | 42 | 28 | 76.4 | 34 | 54 | I |
| | 2009.09-2012.03 | AT/MT | F | L/R | Convertible FWD CDHB | | GCI83022 | Inner Joint | | | 34 | | | 88.5 | |
| | 2009.09-2012.03 | CVT/6MT | F | L/R | Convertible FWD CDHB | Date to:2011.10 | GDS83273 | Drive Shaft | | 42 | | 76.5 | 34 | 460 | |
| | 2009.09-2012.03 | CVT/6MT | F | L/R | Convertible FWD CDHB | Date from:2011.11 | GDS83291 | Drive Shaft | | 42 | | 76.4 | 34 | 464 | |
| 1.8 (125 kw) | 2011.09-2016.03 | AT/MT | F | L/R | Convertible FWD CJEB | | GCI83022 | Inner Joint | | | 34 | | | 88.5 | |
| | 2011.09-2016.03 | CVT/6MT | F | L/R | Convertible FWD CJEB | | GDS83291 | Drive Shaft | | 42 | | 76.4 | 34 | 464 | |
| | 2011.09-2016.03 | CVT/6MT | F | L/R | Convertible FWD CJEB | Date to:2011.10 | GCO83087 | Outer Joint | | 42 | 27 | 76.5 | 34 | 57 | M |
| | 2011.09-2016.03 | CVT/6MT | F | L/R | Convertible FWD CJEB | Date from:2011.11 | GCO83103 | Outer Joint | | 42 | 28 | 76.4 | 34 | 54 | I |
| 1.8 (130 kw) | 2015.05-2017.01 | CVT/6MT | F | L/R | Convertible FWD CJEE | | GDS83291 | Drive Shaft | | 42 | | 76.4 | 34 | 464 | |
| | 2015.05-2017.01 | | F | L/R | Convertible FWD CJEE | | GCO83103 | Outer Joint | | 42 | 28 | 76.4 | 34 | 54 | I |
| | 2015.05-2017.01 | | F | L/R | Convertible FWD CJEE | | GCI83022 | Inner Joint | | | 34 | | | 88.5 | |
| 2.0 (100 kw) | 2018.07- | 7AT | F | L/R | Convertible FWD DEZB;DTNB | | GDS82256 | Drive Shaft | | 42 | | 76.5 | 34 | 464 | |
| | 2018.07- | 7AT | F | L/R | Convertible FWD DEZB;DTNB | | GCI61077 | Inner Joint | | | 34 | | | 88 | |
| | 2018.07- | AT | F | L/R | Convertible FWD DEZB;DTNB | | GCO81750 | Outer Joint | | 42 | 29 | 76.5 | 34 | 60 | I |
| 2.0 (105 kw) | 2011.10-2015.05 | 6MT | F | L/R | Convertible FWD CJCA | | GDS83291 | Drive Shaft | | 42 | | 76.4 | 34 | 464 | |
| | 2011.10-2015.05 | 6MT | F | L/R | Convertible FWD CJCA | Date to:2011.10 | GCO83087 | Outer Joint | | 42 | 27 | 76.5 | 34 | 57 | M |
| | 2011.10-2015.05 | 6MT | F | L/R | Convertible FWD CJCA | | GCO83103 | Outer Joint | | 42 | 28 | 76.4 | 34 | 54 | I |
| | 2011.10-2015.05 | 6MT | F | L/R | Convertible FWD CJCA | Date from:2011.11 | GCI83022 | Inner Joint | | | 34 | | | 88.5 | |
| 2.0 (110 kw) | 2013.05-2017.01 | 6MT | F | L/R | Convertible FWD CJCD;CSUA | | GDS83291 | Drive Shaft | | 42 | | 76.4 | 34 | 464 | |
| | 2013.05-2017.01 | AT/MT | F | L/R | Convertible FWD CJCD;CSUA | | GCO83103 | Outer Joint | | 42 | 28 | 76.4 | 34 | 54 | I |
| | 2013.05-2017.01 | AT/MT | F | L/R | Convertible FWD CJCD;CSUA | | GCI83022 | Inner Joint | | | 34 | | | 88.5 | |

| | YEAR | TRANSM. | F/R | L/R | BODY STYLE & DRIVE TYPE & ENGINE | REMARKS | G-AP Ref. | PRODUCT | ABS | Technical Specifications A | B | C | H | L | P |
|---|---|---|---|---|---|---|---|---|---|---|---|---|---|---|---|
| **AUDI** **A5 Cabrio** | | | | | | | | | | | | | | | |
| 2.0 (110 kw) | 2017.08-2019.12 | 6MT/7DCT | F | L/R | Convertible FWD DEUA | | GDS82075 | Drive Shaft | | 42 | | 76.5 | 34 | 463 | |
| | 2017.08-2019.12 | 7AT/6MT | F | L/R | Convertible FWD DEUA | | GCO81357 | Outer Joint | | 42 | 28 | 76.5 | 34 | 54 | I |
| | 2017.08-2019.12 | AT/MT | F | L/R | Convertible FWD DEUA | Date from:2018.01 | GCI83022 | Inner Joint | | | 34 | | | 88.5 | |
| | 2020.06- | 7AT | F | L/R | Convertible FWD DMSB | | GCO81357 | Outer Joint | | 42 | 28 | 76.5 | 34 | 54 | I |
| | 2020.06- | 7AT | F | L/R | Convertible FWD DMSB | | GCI61077 | Inner Joint | | | 34 | | | 88 | |
| | 2020.06- | 7DCT | F | L/R | Convertible FWD DMSB | | GDS82075 | Drive Shaft | | 42 | | 76.5 | 34 | 463 | |
| 2.0 (120 kw) | 2009.05-2014.06 | 6MT | F | L/R | Convertible FWD CAHB;CGLD | Date from:2011.11 | GDS83291 | Drive Shaft | | 42 | | 76.4 | 34 | 464 | |
| | 2009.05-2014.06 | 6MT | F | L/R | Convertible FWD CAHB;CGLD | Date to:2011.10 | GCO83087 | Outer Joint | | 42 | 27 | 76.5 | 34 | 57 | M |
| | 2009.05-2014.06 | 6MT | F | L/R | Convertible FWD CAHB;CGLD | | GCI83022 | Inner Joint | | | 34 | | | 88.5 | |
| | 2009.05-2014.06 | AT/MT | F | L/R | Convertible FWD CAHB;CGLD | Date from:2011.11 | GCO83103 | Outer Joint | | 42 | 28 | 76.4 | 34 | 54 | I |
| | 2009.05-2014.06 | CVT | F | L/R | Convertible FWD CAHB;CGLD | Date to:2011.10 | GDS83321 | Drive Shaft | | 42 | | 76.5 | 34 | 462 | |
| | 2009.05-2014.06 | CVT | F | L/R | Convertible FWD CAHB;CGLD | Date to:2011.10 | GCO83088 | Outer Joint | | 42 | 29 | 76.5 | 34 | 61.5 | M |
| | 2009.05-2014.06 | CVT | F | L/R | Convertible FWD CAHB;CGLD | Date from:2011.11 | GCO83102 | Outer Joint | | 42 | 29 | 76.5 | 34 | 60 | I |
| | 2009.05-2014.06 | CVT/6MT | F | L/R | Convertible FWD CAHB;CGLD | Transmission:6MT,Date to:2011.10;Transmission:CVT,Date to:2011.11 | GDS83273 | Drive Shaft | | 42 | | 76.5 | 34 | 460 | |
| | 2019.10- | 7AT | F | L/R | Convertible FWD DEZE;DTNA | | GDS82256 | Drive Shaft | | 42 | | 76.5 | 34 | 464 | |
| | 2019.10- | 7AT | F | L/R | Convertible FWD DEZE;DTNA | | GCO81750 | Outer Joint | | 42 | 29 | 76.5 | 34 | 60 | I |
| | 2019.10- | AT | F | L/R | Convertible FWD DEZE;DTNA | Date from:2020.01 | GCI83022 | Inner Joint | | | 34 | | | 88.5 | |
| 2.0 (125 kw) | 2009.05-2012.03 | 6MT | F | L/R | Convertible FWD CAHA | Date to:2011.10 | GDS83273 | Drive Shaft | | 42 | | 76.5 | 34 | 460 | |
| | 2009.05-2012.03 | 6MT | F | L/R | Convertible FWD CAHA | Date from:2011.11 | GDS83291 | Drive Shaft | | 42 | | 76.4 | 34 | 464 | |
| | 2009.05-2012.03 | AT/MT | F | L/R | Convertible FWD CAHA | Date to:2011.11 | GCO83087 | Outer Joint | | 42 | 27 | 76.5 | 34 | 57 | M |
| | 2009.05-2012.03 | AT/MT | F | L/R | Convertible FWD CAHA | Date from:2011.11 | GCO83103 | Outer Joint | | 42 | 28 | 76.4 | 34 | 54 | I |
| | 2009.05-2012.03 | AT/MT | F | L/R | Convertible FWD CAHA | | GCI83022 | Inner Joint | | | 34 | | | 88.5 | |
| 2.0 (130 kw) | 2011.10-2017.01 | CVT/6MT | F | L/R | Convertible FWD CGLC | Date from:2011.11 | GDS83273 | Drive Shaft | | 42 | | 76.5 | 34 | 460 | |
| | 2011.10-2017.01 | CVT/6MT | F | L/R | Convertible FWD CGLC | Date to:2011.10 | GDS83321 | Drive Shaft | | 42 | | 76.5 | 34 | 462 | |
| | 2011.10-2017.01 | CVT/6MT | F | L/R | Convertible FWD CGLC | Date to:2011.10 | GCO83088 | Outer Joint | | 42 | 29 | 76.5 | 34 | 61.5 | M |
| | 2011.10-2017.01 | CVT/6MT | F | L/R | Convertible FWD CGLC | Date from:2011.11 | GCO83102 | Outer Joint | | 42 | 29 | 76.5 | 34 | 60 | I |
| | 2011.10-2017.01 | CVT/6MT | F | L/R | Convertible FWD CGLC | | GCI83022 | Inner Joint | | | 34 | | | 88.5 | |
| 2.0 (132 kw) | 2009.03-2012.03 | AT/MT | F | L/R | Convertible FWD CDNB;CAEA | Date to:2011.11 | GCO83087 | Outer Joint | | 42 | 27 | 76.5 | 34 | 57 | M |
| | 2009.03-2012.03 | AT/MT | F | L/R | Convertible FWD CDNB;CAEA | Date from:2011.11 | GCO83103 | Outer Joint | | 42 | 28 | 76.4 | 34 | 54 | I |
| | 2009.03-2012.03 | AT/MT | F | L/R | Convertible FWD CDNB;CAEA | | GCI83022 | Inner Joint | | | 34 | | | 88.5 | |
| | 2009.03-2012.03 | CVT | F | L/R | Convertible FWD CDNB;CAEA | Date to:2011.10 | GDS83273 | Drive Shaft | | 42 | | 76.5 | 34 | 460 | |
| | 2009.03-2012.03 | CVT | F | L/R | Convertible FWD CDNB;CAEA | Date from:2011.11 | GDS83291 | Drive Shaft | | 42 | | 76.4 | 34 | 464 | |
| 2.0 (140 kw) | 2013.09-2017.01 | CVT/6MT | F | L/R | Convertible FWD CNHA | | GDS83273 | Drive Shaft | | 42 | | 76.5 | 34 | 460 | |
| | 2013.09-2017.01 | CVT/6MT | F | L/R | Convertible FWD CNHA | | GCO83102 | Outer Joint | | 42 | 29 | 76.5 | 34 | 60 | I |
| | 2013.09-2017.01 | CVT/6MT | F | L/R | Convertible FWD CNHA | | GCI83022 | Inner Joint | | | 34 | | | 88.5 | |
| | 2016.11- | 7DCT | F | L/R | Convertible FWD DETA | | GDS82256 | Drive Shaft | | 42 | | 76.5 | 34 | 464 | |
| | 2016.11-2019.12 | 7AT | F | L/R | Convertible FWD DETA | | GDS82256 | Drive Shaft | | 42 | | 76.5 | 34 | 464 | |
| | 2016.11-2019.12 | 7AT | F | L/R | Convertible FWD DETA | | GCO81750 | Outer Joint | | 42 | 29 | 76.5 | 34 | 60 | I |
| | 2016.11-2019.12 | AT/MT | F | L/R | Convertible FWD DETA | Date from:2017.01 | GCI83022 | Inner Joint | | | 34 | | | 88.5 | |
| | 2017.03-2019.12 | 6MT/7DCT | F | L/R | Convertible FWD CVKB;DKYA | | GDS82075 | Drive Shaft | | 42 | | 76.5 | 34 | 463 | |
| | 2017.03-2019.12 | AT/MT | F | L/R | Convertible FWD CVKB;DKYA | | GCO83103 | Outer Joint | | 42 | 28 | 76.4 | 34 | 54 | I |
| | 2017.03-2019.12 | AT/MT | F | L/R | Convertible FWD CVKB;DKYA | | GCI83022 | Inner Joint | | | 34 | | | 88.5 | |
| | 2017.05- | 6MT/7DCT | F | L/R | Convertible FWD DEMA;DLVA;DKYA | Date From:2020.07,For Enginecode:DEMA/DKYA,For Enginecode:DLVA | GDS82075 | Drive Shaft | | 42 | | 76.5 | 34 | 463 | |
| | 2017.05- | 7AT/6MT | F | L/R | Convertible FWD DEMA;DLVA;DKYA | | GCO81357 | Outer Joint | | 42 | 28 | 76.5 | 34 | 54 | I |
| | 2017.05- | 7AT/6MT | F | L/R | Convertible FWD DEMA;DLVA;DKYA | | GCI61077 | Inner Joint | | | 34 | | | 88 | |
| | 2017.05- | AT/MT | F | L/R | Convertible FWD DEMA;DLVA;DKYA | TJ | GCI83022 | Inner Joint | | | 34 | | | 88.5 | |
| | 2017.06-2020.12 | 7DCT | F | L/R | Convertible FWD CVKB;DKYA | | GDS82075 | Drive Shaft | | 42 | | 76.5 | 34 | 463 | |
| 2.0 (150 kw) | 2020.07- | 7AT | F | L/R | Convertible FWD DMSA | | GDS82075 | Drive Shaft | | 42 | | 76.5 | 34 | 463 | |
| | 2020.07- | 7AT | F | L/R | Convertible FWD DMSA | | GCO81357 | Outer Joint | | 42 | 28 | 76.5 | 34 | 54 | I |
| | 2020.07- | 7AT | F | L/R | Convertible FWD DMSA | | GCI61077 | Inner Joint | | | 34 | | | 88 | |
| | 2020.09- | 7AT | F | L/R | Convertible FWD DTPA | | GCI61077 | Inner Joint | | | 34 | | | 88 | |
| | 2020.09- | 7DCT | F | L/R | Convertible FWD DTPA | | GDS82256 | Drive Shaft | | 42 | | 76.5 | 34 | 464 | |
| 2.0 (155 kw) | 2009.03-2014.06 | CVT/6MT | F | L/R | Convertible FWD CDNC;CAEB | Date to:2011.10 | GDS83273 | Drive Shaft | | 42 | | 76.5 | 34 | 460 | |
| | 2009.03-2014.06 | CVT/6MT | F | L/R | Convertible FWD CDNC;CAEB | Date from:2011.11 | GDS83291 | Drive Shaft | | 42 | | 76.4 | 34 | 464 | |
| | 2009.03-2014.06 | CVT/6MT | F | L/R | Convertible FWD CDNC;CAEB | Date to:2011.10 | GCO83087 | Outer Joint | | 42 | 27 | 76.5 | 34 | 57 | M |
| | 2009.03-2014.06 | CVT/6MT | F | L/R | Convertible FWD CDNC;CAEB | Date from:2011.11 | GCO83103 | Outer Joint | | 42 | 28 | 76.4 | 34 | 54 | I |
| | 2009.03-2014.06 | CVT/6MT | F | L/R | Convertible FWD CDNC;CAEB | AAR | GCI81054 | Inner Joint | | | 24 | | | 86 | |
| | 2009.03-2014.06 | CVT/6MT | F | L/R | Convertible FWD CDNC;CAEB | TJ | GCI83022 | Inner Joint | | | 34 | | | 88.5 | |
| 2.0 (162 kw) | 2013.05-2014.12 | CVT | F | L/R | Convertible FWD CAED | | GDS83291 | Drive Shaft | | 42 | | 76.4 | 34 | 464 | |
| | 2013.05-2014.12 | CVT | F | L/R | Convertible FWD CAED | | GCI83022 | Inner Joint | | | 34 | | | 88.5 | |
| | 2013.05-2014.12 | | F | L/R | Convertible FWD CAED | | GCO83103 | Outer Joint | | 42 | 28 | 76.4 | 34 | 54 | I |
| 2.0 (165 kw) | 2013.05-2016.05 | CVT/6MT | F | L/R | Convertible FWD CNCD | | GDS83291 | Drive Shaft | | 42 | | 76.4 | 34 | 464 | |
| | 2013.05-2016.05 | CVT/6MT | F | L/R | Convertible FWD CNCD | | GCI83022 | Inner Joint | | | 34 | | | 88.5 | |
| | 2013.05-2016.05 | | F | L/R | Convertible FWD CNCD | | GCO83103 | Outer Joint | | 42 | 28 | 76.4 | 34 | 54 | I |
| | 2014.02-2016.12 | CVT/6MT | F | L/R | Convertible FWD CNCD | | GDS83291 | Drive Shaft | | 42 | | 76.4 | 34 | 464 | |

| | YEAR | TRANSM. | F/R | L/R | BODY STYLE & DRIVE TYPE & ENGINE | REMARKS | G-AP Ref. | PRODUCT | ABS | Technical Specifications A | B | C | H | L | P |
|---|---|---|---|---|---|---|---|---|---|---|---|---|---|---|---|
| **AUDI** | | | | | | | | | | | | | | | |
| **A5 Cabrio** | | | | | | | | | | | | | | | |
| 2.0 (165 kw) | 2014.02-2016.12 | CVT/6MT | F | L/R | Convertible FWD CNCD | | GCI83022 | Inner Joint | | | 34 | | | 88.5 | |
| 2.0 (169 kw) | 2015.08-2017.01 | CVT/6MT | F | L/R | Convertible FWD CNCE | | GDS83291 | Drive Shaft | | 42 | | 76.4 | 34 | 464 | |
| | 2015.08-2017.01 | CVT/6MT | F | L/R | Convertible FWD CNCE | | GCI83022 | Inner Joint | | | 34 | | | 88.5 | |
| | 2015.08-2017.01 | | F | L/R | Convertible FWD CNCE | | GCO83103 | Outer Joint | | 42 | 28 | 76.4 | 34 | 54 | I |
| | 2016.02-2017.01 | CVT/6MT | F | L/R | Convertible FWD CNCE | | GDS83291 | Drive Shaft | | 42 | | 76.4 | 34 | 464 | |
| | 2016.02-2017.01 | CVT/6MT | F | L/R | Convertible FWD CNCE | | GCI83022 | Inner Joint | | | 34 | | | 88.5 | |
| 2.0 (180 kw) | 2018.07-2019.12 | 7AT | F | L/R | Convertible FWD DKNA | | GDS82256 | Drive Shaft | | 42 | | 76.5 | 34 | 464 | |
| | 2018.07-2019.12 | 7AT | F | L/R | Convertible FWD DKNA | | GCO81750 | Outer Joint | | 42 | 29 | 76.5 | 34 | 60 | I |
| | 2018.07-2019.12 | 7AT | F | L/R | Convertible FWD DKNA | | GCI61077 | Inner Joint | | | 34 | | | 88 | |
| | 2018.07-2019.12 | AT | F | L/R | Convertible FWD DKNA | Date from:2019.01 | GCO83103 | Outer Joint | | 42 | 28 | 76.4 | 34 | 54 | I |
| | 2018.07-2019.12 | AT | F | L/R | Convertible FWD DKNA | Date from:2019.01,TJ | GCI83022 | Inner Joint | | | 34 | | | 88.5 | |
| 2.0 (185 kw) | 2017.03-2019.12 | 7AT | F | L/R | Convertible FWD CYRB | | GDS82256 | Drive Shaft | | 42 | | 76.5 | 34 | 464 | |
| | 2017.03-2019.12 | 7AT | F | L/R | Convertible FWD CYRB | | GCO81750 | Outer Joint | | 42 | 29 | 76.5 | 34 | 60 | I |
| | 2017.03-2019.12 | AT | F | L/R | Convertible FWD CYRB | | GCI83022 | Inner Joint | | | 34 | | | 88.5 | |
| | 2017.05-2019.12 | 7AT | F | L/R | Convertible FWD DDWA | | GDS82256 | Drive Shaft | | 42 | | 76.5 | 34 | 464 | |
| | 2017.05-2019.12 | 7AT | F | L/R | Convertible FWD DDWA | | GCO81750 | Outer Joint | | 42 | 29 | 76.5 | 34 | 60 | I |
| | 2017.05-2019.12 | 7AT | F | L/R | Convertible FWD DDWA | | GCI61077 | Inner Joint | | | 34 | | | 88 | |
| | 2017.05-2019.12 | AT | F | L/R | Convertible FWD DDWA | TJ | GCI83022 | Inner Joint | | | 34 | | | 88.5 | |
| 2.7 (120 kw) | 2009.05-2012.03 | AT/MT | F | L/R | Convertible FWD CGKB | | GCI83022 | Inner Joint | | | 34 | | | 88.5 | |
| | 2009.05-2012.03 | CVT | F | L/R | Convertible FWD CGKB | Date from:2011.11 | GDS83273 | Drive Shaft | | 42 | | 76.5 | 34 | 460 | |
| | 2009.05-2012.03 | CVT | F | L/R | Convertible FWD CGKB | Date to:2011.10 | GDS83321 | Drive Shaft | | 42 | | 76.5 | 34 | 462 | |
| | 2009.05-2012.03 | | F | L/R | Convertible FWD CGKB | Date To:2011.10 | GCO83088 | Outer Joint | | 42 | 29 | 76.5 | 34 | 61.5 | M |
| | 2009.05-2012.03 | | F | L/R | Convertible FWD CGKB | Date From:2011.11 | GCO83102 | Outer Joint | | 42 | 29 | 76.5 | 34 | 60 | I |
| 2.7 (140 kw) | 2009.03-2012.03 | AT/MT | F | L/R | Convertible FWD CGKA | | GCI83022 | Inner Joint | | | 34 | | | 88.5 | |
| | 2009.03-2012.03 | CVT/6MT | F | L/R | Convertible FWD CGKA | Date from:2011.11 | GDS83273 | Drive Shaft | | 42 | | 76.5 | 34 | 460 | |
| | 2009.03-2012.03 | CVT/6MT | F | L/R | Convertible FWD CGKA | Date to:2011.10 | GDS83321 | Drive Shaft | | 42 | | 76.5 | 34 | 462 | |
| | 2009.03-2012.03 | | F | L/R | Convertible FWD CGKA | Date To:2011.10 | GCO83088 | Outer Joint | | 42 | 29 | 76.5 | 34 | 61.5 | M |
| | 2009.03-2012.03 | | F | L/R | Convertible FWD CGKA | Date From:2011.11 | GCO83102 | Outer Joint | | 42 | 29 | 76.5 | 34 | 60 | I |
| 3.0 (150 kw) | 2011.10-2017.01 | AT/MT | F | L/R | Convertible FWD CLAB | | GCI83022 | Inner Joint | | | 34 | | | 88.5 | |
| | 2011.10-2017.01 | CVT | F | L/R | Convertible FWD CLAB | Date from:2011.11 | GDS83273 | Drive Shaft | | 42 | | 76.5 | 34 | 460 | |
| | 2011.10-2017.01 | CVT | F | L/R | Convertible FWD CLAB | Date to:2011.10 | GDS83321 | Drive Shaft | | 42 | | 76.5 | 34 | 462 | |
| | 2011.10-2017.01 | CVT | F | L/R | Convertible FWD CLAB | Date to:2011.10 | GCO83088 | Outer Joint | | 42 | 29 | 76.5 | 34 | 61.5 | M |
| | 2011.10-2017.01 | CVT | F | L/R | Convertible FWD CLAB | Date from:2011.11 | GCO83102 | Outer Joint | | 42 | 29 | 76.5 | 34 | 60 | I |
| 3.0 (160 kw) | 2017.03-2018.08 | 7AT | F | L/R | Convertible FWD CSWB | | GDS82256 | Drive Shaft | | 42 | | 76.5 | 34 | 464 | |
| | 2017.03-2018.08 | 7AT | F | L/R | Convertible FWD CSWB | | GCO81750 | Outer Joint | | 42 | 29 | 76.5 | 34 | 60 | I |
| | 2017.03-2018.08 | AT | F | L/R | Convertible FWD CSWB | | GCI83022 | Inner Joint | | | 34 | | | 88.5 | |
| 3.2 (195 kw) | 2009.03-2012.03 | AT/MT | F | L/R | Convertible FWD CALA | Date to:2011.11 | GCO83087 | Outer Joint | | 42 | 27 | 76.5 | 34 | 57 | M |
| | 2009.03-2012.03 | AT/MT | F | L/R | Convertible FWD CALA | Date from:2011.11 | GCO83103 | Outer Joint | | 42 | 28 | 76.4 | 34 | 54 | I |
| | 2009.03-2012.03 | AT/MT | F | L/R | Convertible FWD CALA | | GCI83022 | Inner Joint | | | 34 | | | 88.5 | |
| | 2009.03-2012.03 | CVT | F | L/R | Convertible FWD CALA | Date to:2011.10 | GDS83273 | Drive Shaft | | 42 | | 76.5 | 34 | 460 | |
| | 2009.03-2012.03 | CVT | F | L/R | Convertible FWD CALA | Date from:2011.11 | GDS83291 | Drive Shaft | | 42 | | 76.4 | 34 | 464 | |
| | 2009.03-2012.03 | | F | | Convertible FWD CALA | | GCI81054 | Inner Joint | | | 24 | | | 86 | |
| **A5 Cabrio Quattro** | | | | | | | | | | | | | | | |
| 2.0 (130 kw) | 2012.01-2015.05 | 6MT | F | L/R | Convertible 4WD CGLC | | GDS83371 | Drive Shaft | | 42 | | 76.5 | 34 | 465 | |
| | 2012.01-2015.05 | 6MT | F | L/R | Convertible 4WD CGLC | | GCO83107 | Outer Joint | | 42 | 25 | 76.5 | 34 | 47.5 | I |
| | 2012.01-2015.05 | | F | L/R | Convertible 4WD CGLC | | GCI81054 | Inner Joint | | | 24 | | | 86 | |
| | 2012.01-2015.05 | 6MT | R | L | Convertible 4WD CGLC | For PR code:GH2,For vehicles with electronic limited slip diff. | GDS82078 | Drive Shaft | | 42 | | 76.5 | 34 | 587 | |
| | 2012.01-2015.05 | 6MT | R | R | Convertible 4WD CGLC | For PR code:GH2,For vehicles with electronic limited slip diff. | GDS82079 | Drive Shaft | | 42 | | 76.5 | 34 | 545 | |
| | 2012.01-2015.05 | 6MT | R | L/R | Convertible 4WD CGLC | For PR code:GH1 | GDS83367 | Drive Shaft | | 42 | | 76.5 | 34 | 626 | |
| | 2012.01-2015.05 | 6MT | R | L/R | Convertible 4WD CGLC | | GCI83040 | Outer Joint | | 42 | 25 | 76.5 | 34 | 66 | M |
| | 2012.01-2015.05 | 6MT | R | L/R | Convertible 4WD CGLC | Wheel Side | GCI61107 | Inner Joint | | 42 | 28 | 76.5 | 34 | 82 | |
| | 2012.01-2015.05 | 6MT | R | L/R | Convertible 4WD CGLC | For PR code:GH2,For vehicles with AWD & variable torque dist. | GCI81610 | Inner Joint | | | 28 | | | 28 | |
| | 2012.01-2015.05 | 6MT | R | L/R | Convertible 4WD CGLC | For PR code:GH1 | GCI83044 | Inner Joint | | | 25 | | | 26 | |
| 2.0 (140 kw) | 2013.09-2017.01 | 7AT/6MT | F | L/R | Convertible 4WD CNHA | | GDS83371 | Drive Shaft | | 42 | | 76.5 | 34 | 465 | |
| | 2013.09-2017.01 | 7AT/6MT | F | L/R | Convertible 4WD CNHA | | GCO83107 | Outer Joint | | 42 | 25 | 76.5 | 34 | 47.5 | I |
| | 2013.09-2017.01 | | F | L/R | Convertible 4WD CNHA | | GCI81054 | Inner Joint | | | 24 | | | 86 | |
| | 2013.09-2017.01 | 6MT | R | L/R | Convertible 4WD CNHA | For PR code:GH1 | GCI83044 | Inner Joint | | | 25 | | | 26 | |
| | 2013.09-2017.01 | 7AT/6MT | R | L | Convertible 4WD CNHA | For PR code:GH2,For vehicles with electronic limited slip diff. | GDS82078 | Drive Shaft | | 42 | | 76.5 | 34 | 587 | |
| | 2013.09-2017.01 | 7AT/6MT | R | R | Convertible 4WD CNHA | For PR code:GH2,For vehicles with electronic limited slip diff. | GDS82079 | Drive Shaft | | 42 | | 76.5 | 34 | 545 | |
| | 2013.09-2017.01 | 7AT/6MT | R | L/R | Convertible 4WD CNHA | For PR code:GH1 | GDS83367 | Drive Shaft | | 42 | | 76.5 | 34 | 626 | |
| | 2013.09-2017.01 | 7AT/6MT | R | L/R | Convertible 4WD CNHA | | GCI83040 | Outer Joint | | 42 | 25 | 76.5 | 34 | 66 | M |
| | 2013.09-2017.01 | 7AT/6MT | R | L/R | Convertible 4WD CNHA | Wheel Side | GCI61107 | Inner Joint | | 42 | 28 | 76.5 | 34 | 82 | |
| | 2013.09-2017.01 | 7AT/6MT | R | L/R | Convertible 4WD CNHA | For PR code:GH2,For vehicles with AWD & variable torque dist. | GCI81610 | Inner Joint | | | 28 | | | 28 | |
| | 2017.03- | 7DCT | F | L/R | Convertible 4WD DETA | Without rear differential lock | GDS82074 | Drive Shaft | | 42 | | 76.5 | 34 | 462 | |
| | 2017.03- | 7DCT | F | L/R | Convertible 4WD DETA | Rear differential with uncoupling feature | GDS82075 | Drive Shaft | | 42 | | 76.5 | 34 | 463 | |

| | YEAR | TRANSM. | F/R | L/R | BODY STYLE & DRIVE TYPE & ENGINE | REMARKS | G-AP Ref. | PRODUCT | ABS | Technical Specifications A | B | C | H | L | P |
|---|---|---|---|---|---|---|---|---|---|---|---|---|---|---|---|
| **AUDI** **A5 Cabrio Quattro** | | | | | | | | | | | | | | | |
| 2.0 (140 kw) | 2017.03- | 7AT | R | L/R | Convertible 4WD DETA | | GCI81751 | Outer Joint | | 38 | 33 | 59.5 | 34 | 78 | |
| | 2017.03- | 7DCT | R | L/R | Convertible 4WD DETA | Without rear differential lock | GDS82363 | Drive Shaft | | 38 | | 59.5 | 34 | 624 | |
| | 2017.03-2020.04 | 7AT | F | L/R | Convertible 4WD DETA | For PR code:GH1 | GDS82074 | Drive Shaft | | 42 | | 76.5 | 34 | 462 | |
| | 2017.03-2020.04 | 7AT | F | L/R | Convertible 4WD DETA | For PR code:GH1 | GCI81054 | Inner Joint | | | 24 | | | 86 | |
| | 2017.03-2020.04 | 7DCT | F | L/R | Convertible 4WD DETA | For PR code:GH4,For vehicles with AWD & variable torque dist. | GDS82075 | Drive Shaft | | 42 | | 76.5 | 34 | 463 | |
| | 2017.03-2020.04 | 7DCT | F | L/R | Convertible 4WD DETA | For PR code:GH4,For vehicles with AWD & variable torque dist. | GCI61077 | Inner Joint | | | 34 | | | 88 | |
| | 2017.03-2020.04 | AT | F | L/R | Convertible 4WD DETA | | GCO83103 | Outer Joint | | 42 | 28 | 76.4 | 34 | 54 | I |
| | 2017.03-2020.04 | 7DCT | R | L | Convertible 4WD DETA | For PR code:GH4;For veh. with all-wheel drive & controlled clutch;Mounting Type:Bolted | GDS58134 | Drive Shaft | | 38 | | 59.5 | 34 | 653 | |
| | 2017.03-2020.04 | 7DCT | R | R | Convertible 4WD DETA | For PR code:GH4;For veh. with all-wheel drive & controlled clutch;Mounting Type:Bolted | GDS58135 | Drive Shaft | | 38 | | 59.5 | 34 | 550 | |
| | 2017.03-2020.04 | 7DCT | R | L/R | Convertible 4WD DETA | For PR code:GH1 | GDS82363 | Drive Shaft | | 38 | | 59.5 | 34 | 624 | |
| | 2017.03-2020.04 | 7DCT | R | L/R | Convertible 4WD DETA | Rear differential with uncoupling feature;Without rear differential lock | GCI81751 | Outer Joint | | 38 | 33 | 59.5 | 34 | 78 | |
| | 2017.03-2020.04 | 7DCT | R | L/R | Convertible 4WD DETA | For PR code:GH4;For veh. with all-wheel drive & controlled clutch;Mounting Type:Bolted | GCI81752 | Inner Joint | | | 33 | | | 34 | |
| 2.0 (150 kw) | 2020.06- | 7AT | F | L/R | Convertible 4WD DMSA | For PR code:GH4,For vehicles with AWD & variable torque dist. | GCO81357 | Outer Joint | | 42 | 28 | 76.5 | 34 | 54 | I |
| | 2020.06- | 7DCT | F | L/R | Convertible 4WD DMSA | Without rear differential lock | GDS82074 | Drive Shaft | | 42 | | 76.5 | 34 | 462 | |
| | 2020.06- | 7DCT | F | L/R | Convertible 4WD DMSA | Rear differential with uncoupling feature | GDS82075 | Drive Shaft | | 42 | | 76.5 | 34 | 463 | |
| | 2020.06- | 7DCT | F | L/R | Convertible 4WD DMSA | For PR code:GH4,For vehicles with AWD & variable torque dist. | GCI61077 | Inner Joint | | | 34 | | | 88 | |
| | 2020.06- | 7DCT | R | L | Convertible 4WD DMSA | For PR code:GH4;For veh. with all-wheel drive & controlled clutch;Mounting Type:Bolted | GDS58134 | Drive Shaft | | 38 | | 59.5 | 34 | 653 | |
| | 2020.06- | 7DCT | R | R | Convertible 4WD DMSA | For PR code:GH4;For veh. with all-wheel drive & controlled clutch;Mounting Type:Bolted | GDS58135 | Drive Shaft | | 38 | | 59.5 | 34 | 550 | |
| | 2020.06- | 7DCT | R | L/R | Convertible 4WD DMSA | For PR code:GH1 | GDS82363 | Drive Shaft | | 38 | | 59.5 | 34 | 624 | |
| | 2020.06- | 7DCT | R | L/R | Convertible 4WD DMSA | Rear differential with uncoupling feature;Without rear differential lock | GCI81751 | Outer Joint | | 38 | 33 | 59.5 | 34 | 78 | |
| | 2020.06- | 7DCT | R | L/R | Convertible 4WD DMSA | For PR code:GH4;For veh. with all-wheel drive & controlled clutch;Mounting Type:Bolted | GCI81752 | Inner Joint | | | 33 | | | 34 | |
| | 2020.09- | 7AT | F | L/R | Convertible 4WD DTPA | For PR code:GH4,For vehicles with AWD & variable torque dist. | GCO81357 | Outer Joint | | 42 | 28 | 76.5 | 34 | 54 | I |
| | 2020.09- | 7DCT | F | L/R | Convertible 4WD DTPA | Without rear differential lock | GDS82074 | Drive Shaft | | 42 | | 76.5 | 34 | 462 | |
| | 2020.09- | 7DCT | F | L/R | Convertible 4WD DTPA | Rear differential with uncoupling feature | GDS82075 | Drive Shaft | | 42 | | 76.5 | 34 | 463 | |
| | 2020.09- | 7DCT | F | L/R | Convertible 4WD DTPA | For PR code:GH4,For vehicles with AWD & variable torque dist. | GCI61077 | Inner Joint | | | 34 | | | 88 | |
| | 2020.09- | 7DCT | R | L | Convertible 4WD DTPA | For PR code:GH4;For veh. with all-wheel drive & controlled clutch;Mounting Type:Bolted | GDS58134 | Drive Shaft | | 38 | | 59.5 | 34 | 653 | |
| | 2020.09- | 7DCT | R | R | Convertible 4WD DTPA | For PR code:GH4;For veh. with all-wheel drive & controlled clutch;Mounting Type:Bolted | GDS58135 | Drive Shaft | | 38 | | 59.5 | 34 | 550 | |
| | 2020.09- | 7DCT | R | L/R | Convertible 4WD DTPA | For PR code:GH1 | GDS82363 | Drive Shaft | | 38 | | 59.5 | 34 | 624 | |
| | 2020.09- | 7DCT | R | L/R | Convertible 4WD DTPA | Rear differential with uncoupling feature;Without rear differential lock | GCI81751 | Outer Joint | | 38 | 33 | 59.5 | 34 | 78 | |
| | 2020.09- | 7DCT | R | L/R | Convertible 4WD DTPA | For PR code:GH4;For veh. with all-wheel drive & controlled clutch;Mounting Type:Bolted | GCI81752 | Inner Joint | | | 33 | | | 34 | |
| 2.0 (155 kw) | 2009.03-2017.01 | 6AT/7AT | F | L/R | Convertible 4WD CDNC;CAEB;CPMA | Date from:2011.08;Chassis no. from:8FC000001 | GDS83371 | Drive Shaft | | 42 | | 76.5 | 34 | 465 | |
| | 2009.03-2017.01 | 6AT/7AT | F | L/R | Convertible 4WD CDNC;CAEB;CPMA | TJ | GCI61070 | Inner Joint | | | 24 | | | 85 | |
| | 2009.03-2017.01 | 6AT/7AT | F | L/R | Convertible 4WD CDNC;CAEB;CPMA | AAR | GCI81054 | Inner Joint | | | 24 | | | 86 | |
| | 2009.03-2017.01 | AT/MT | F | L/R | Convertible 4WD CDNC;CAEB;CPMA | | GDS83345 | Drive Shaft | | 42 | | 76.5 | 34 | 463 | |
| | 2009.03-2017.01 | AT/MT | F | L/R | Convertible 4WD CDNC;CAEB;CPMA | | GCO83086 | Outer Joint | | 42 | 33 | 76.5 | 34 | 45.5 | M |
| | 2009.03-2017.01 | | F | L/R | Convertible 4WD CDNC;CAEB;CPMA | | GCO83107 | Outer Joint | | 42 | 25 | 76.5 | 34 | 47.5 | I |
| | 2009.03-2017.01 | 6AT/7AT | R | L | Convertible 4WD CDNC;CAEB;CPMA | Date to:2011.08;For PR code:GH2;For vehicles with electronic limited slip diff. | GDS81886 | Drive Shaft | | 42 | | 76.5 | 34 | 589 | |
| | 2009.03-2017.01 | 6AT/7AT | R | L | Convertible 4WD CDNC;CAEB;CPMA | Date from:2011.09;For PR code:GH2;For vehicles with electronic limited slip diff. | GDS82078 | Drive Shaft | | 42 | | 76.5 | 34 | 587 | |
| | 2009.03-2017.01 | 6AT/7AT | R | R | Convertible 4WD CDNC;CAEB;CPMA | Date to:2011.08;For PR code:GH2;For vehicles with electronic limited slip diff. | GDS81885 | Drive Shaft | | 42 | | 76.5 | 34 | 546 | |
| | 2009.03-2017.01 | 6AT/7AT | R | R | Convertible 4WD CDNC;CAEB;CPMA | Date from:2011.09;For PR code:GH2;For vehicles with electronic limited slip diff. | GDS82079 | Drive Shaft | | 42 | | 76.5 | 34 | 545 | |
| | 2009.03-2017.01 | 6AT/7AT | R | L/R | Convertible 4WD CDNC;CAEB;CPMA | Chassis no. to:8F_BN050000 | GDS82076 | Drive Shaft | | 42 | | 76.5 | 34 | 630 | |
| | 2009.03-2017.01 | 6AT/7AT | R | L/R | Convertible 4WD CDNC;CAEB;CPMA | Chassis no. from:8F_C_000001 | GDS83367 | Drive Shaft | | 42 | | 76.5 | 34 | 626 | |
| | 2009.03-2017.01 | 6AT/7AT | R | L/R | Convertible 4WD CDNC;CAEB;CPMA | Date from:2011.09;For PR code:GH2;For vehicles with AWD & variable torque dist. | GCI61107 | Inner Joint | | 42 | 28 | 76.5 | 34 | 82 | |
| | 2009.03-2017.01 | 6AT/7AT | R | L/R | Convertible 4WD CDNC;CAEB;CPMA | Date from:2011.09;For PR code:GH2;For vehicles with AWD & variable torque dist. | GCI81610 | Inner Joint | | | 28 | | | 28 | |
| | 2009.03-2017.01 | 6AT/7AT | R | L/R | Convertible 4WD CDNC;CAEB;CPMA | Chassis no. from:8F_C_000001 | GCI83044 | Inner Joint | | | 25 | | | 26 | |
| 2.0 (162 kw) | 2012.03-2017.01 | 7DCT | F | L/R | Cabriolet 4WD CPMB | | GDS83371 | Drive Shaft | | 42 | | 76.5 | 34 | 465 | |
| | 2012.03-2017.01 | | F | L/R | Cabriolet 4WD CPMB | For PR code:GH2,For vehicles with AWD & variable torque dist. | GCI61107 | Inner Joint | | 42 | 28 | 76.5 | 34 | 82 | |
| | 2012.03-2017.01 | 6MT/7DCT/8AT | R | L/R | Cabriolet 4WD CPMB | For PR code:GH1 | GDS83367 | Drive Shaft | | 42 | | 76.5 | 34 | 626 | |
| | 2012.03-2017.01 | 7DCT | R | L | Cabriolet 4WD CPMB | For Pr Code:GH2 | GDS82078 | Drive Shaft | | 42 | | 76.5 | 34 | 587 | |
| | 2012.03-2017.01 | 7DCT | R | R | Cabriolet 4WD CPMB | For Pr Code:GH2 | GDS82079 | Drive Shaft | | 42 | | 76.5 | 34 | 545 | |
| | 2012.03-2017.01 | AT/MT | R | L/R | Cabriolet 4WD CPMB | For PR code:GH2,For vehicles with AWD & variable torque dist. | GCI81610 | Inner Joint | | | 28 | | | 28 | |
| | 2012.03-2017.01 | AT/MT | R | L/R | Cabriolet 4WD CPMB | For PR code:GH1 | GCI83044 | Inner Joint | | | 25 | | | 26 | |
| | 2012.03-2017.01 | 8AT | F | L/R | Convertible 4WD CPMB | | GDS83371 | Drive Shaft | | 42 | | 76.5 | 34 | 465 | |
| | 2012.03-2017.01 | | F | | Convertible 4WD CPMB | | GCO83107 | Outer Joint | | 42 | 25 | 76.5 | 34 | 47.5 | I |
| | 2012.03-2017.01 | | F | | Convertible 4WD CPMB | | GCI81054 | Inner Joint | | | 24 | | | 86 | |
| | 2012.03-2017.01 | 8AT | R | L | Convertible 4WD CPMB | For PR code:GH2 | GDS82078 | Drive Shaft | | 42 | | 76.5 | 34 | 587 | |
| | 2012.03-2017.01 | 8AT | R | R | Convertible 4WD CPMB | For PR code:GH2 | GDS82079 | Drive Shaft | | 42 | | 76.5 | 34 | 545 | |
| | 2012.03-2017.01 | 8AT | R | L/R | Convertible 4WD CPMB | For PR code:GH1 | GDS83367 | Drive Shaft | | 42 | | 76.5 | 34 | 626 | |
| | 2012.03-2017.01 | AT/MT | R | L/R | Convertible 4WD CPMB | For PR code:GH1 | GCI83044 | Inner Joint | | | 25 | | | 26 | |
| 2.0 (165 kw) | 2013.05-2016.05 | 7AT | F | L/R | Convertible 4WD CNCD | | GDS83371 | Drive Shaft | | 42 | | 76.5 | 34 | 465 | |
| | 2013.05-2016.05 | 7AT | F | L/R | Convertible 4WD CNCD | | GCO83107 | Outer Joint | | 42 | 25 | 76.5 | 34 | 47.5 | I |
| | 2013.05-2016.05 | | F | L/R | Convertible 4WD CNCD | Chassis no. from:8FC000001 | GCI81054 | Inner Joint | | | 24 | | | 86 | |
| | 2013.05-2016.05 | 7AT | R | L | Convertible 4WD CNCD | For PR code:GH2;For vehicles with electronic limited slip diff. | GDS82078 | Drive Shaft | | 42 | | 76.5 | 34 | 587 | |
| | 2013.05-2016.05 | 7AT | R | R | Convertible 4WD CNCD | For PR code:GH2;For vehicles with electronic limited slip diff. | GDS82079 | Drive Shaft | | 42 | | 76.5 | 34 | 545 | |
| | 2013.05-2016.05 | 7AT | R | L/R | Convertible 4WD CNCD | For PR code:GH1 | GDS83367 | Drive Shaft | | 42 | | 76.5 | 34 | 626 | |

| | YEAR | TRANSM. | F/R | L/R | BODY STYLE & DRIVE TYPE & ENGINE | REMARKS | G-AP Ref. | PRODUCT | ABS | Technical Specifications A | B | C | H | L | P |
|---|---|---|---|---|---|---|---|---|---|---|---|---|---|---|---|
| **AUDI** | | | | | | | | | | | | | | | |
| **A5 Cabrio Quattro** | | | | | | | | | | | | | | | |
| 2.0 (165 kw) | 2013.05-2016.05 | 7AT | R | L/R | Convertible 4WD CNCD | | GCI83040 | Outer Joint | | 42 | 25 | 76.5 | 34 | 66 | M |
| | 2013.05-2016.05 | 7AT | R | L/R | Convertible 4WD CNCD | For PR code:GH2,For vehicles with AWD & variable torque dist. | GCI61107 | Inner Joint | | 42 | 28 | 76.5 | 34 | 82 | |
| | 2013.05-2016.05 | 7AT | R | L/R | Convertible 4WD CNCD | For PR code:GH2,For vehicles with AWD & variable torque dist. | GCI81610 | Inner Joint | | | 28 | | | 28 | |
| | 2013.05-2016.05 | 7AT | R | L/R | Convertible 4WD CNCD | For PR code:GH1 | GCI83044 | Inner Joint | | | 25 | | | 26 | |
| | 2014.02-2016.12 | 7DCT | F | L/R | Convertible 4WD CNCD | | GDS83371 | Drive Shaft | | 42 | | 76.5 | 34 | 465 | |
| | 2014.02-2016.12 | 6MT/7DCT/8AT | R | L/R | Convertible 4WD CNCD | For PR code:GH1 | GDS83367 | Drive Shaft | | 42 | | 76.5 | 34 | 626 | |
| | 2014.02-2016.12 | 7DCT | R | L | Convertible 4WD CNCD | For Pr Code:GH2 | GDS82078 | Drive Shaft | | 42 | | 76.5 | 34 | 587 | |
| | 2014.02-2016.12 | 7DCT | R | R | Convertible 4WD CNCD | For Pr Code:GH2 | GDS82079 | Drive Shaft | | 42 | | 76.5 | 34 | 545 | |
| | 2014.02-2016.12 | AT/MT | R | L/R | Convertible 4WD CNCD | For PR code:GH2,For vehicles with AWD & variable torque dist. | GCI61107 | Inner Joint | | 42 | 28 | 76.5 | 34 | 82 | |
| | 2014.02-2016.12 | AT/MT | R | L/R | Convertible 4WD CNCD | For PR code:GH2,For vehicles with AWD & variable torque dist. | GCI81610 | Inner Joint | | | 28 | | | 28 | |
| | 2014.02-2016.12 | AT/MT | R | L/R | Convertible 4WD CNCD | For PR code:GH1 | GCI83044 | Inner Joint | | | 25 | | | 26 | |
| 2.0 (169 kw) | 2015.08-2017.01 | 7AT | F | L/R | Convertible 4WD CNCE | | GDS83371 | Drive Shaft | | 42 | | 76.5 | 34 | 465 | |
| | 2015.08-2017.01 | 7AT | F | L/R | Convertible 4WD CNCE | | GCO83107 | Outer Joint | | 42 | 25 | 76.5 | 34 | 47.5 | I |
| | 2015.08-2017.01 | | F | L/R | Convertible 4WD CNCE | Chassis no. from:8FC000001 | GCI81054 | Inner Joint | | | 24 | | | 86 | |
| | 2015.08-2017.01 | 7AT | R | L | Convertible 4WD CNCE | For PR code:GH2,For vehicles with electronic limited slip diff. | GDS82078 | Drive Shaft | | 42 | | 76.5 | 34 | 587 | |
| | 2015.08-2017.01 | 7AT | R | R | Convertible 4WD CNCE | For PR code:GH2,For vehicles with electronic limited slip diff. | GDS82079 | Drive Shaft | | 42 | | 76.5 | 34 | 545 | |
| | 2015.08-2017.01 | 7AT | R | L/R | Convertible 4WD CNCE | For PR code:GH1 | GDS83367 | Drive Shaft | | 42 | | 76.5 | 34 | 626 | |
| | 2015.08-2017.01 | 7AT | R | L/R | Convertible 4WD CNCE | | GCI83040 | Outer Joint | | 42 | 25 | 76.5 | 34 | 66 | M |
| | 2015.08-2017.01 | 7AT | R | L/R | Convertible 4WD CNCE | Wheel Side | GCI61107 | Inner Joint | | 42 | 28 | 76.5 | 34 | 82 | |
| | 2015.08-2017.01 | 7AT | R | L/R | Convertible 4WD CNCE | For PR code:GH2,For vehicles with AWD & variable torque dist. | GCI81610 | Inner Joint | | | 28 | | | 28 | |
| | 2015.08-2017.01 | 7AT | R | L/R | Convertible 4WD CNCE | For PR code:GH1 | GCI83044 | Inner Joint | | | 25 | | | 26 | |
| | 2016.02-2017.01 | 7DCT | F | L/R | Convertible 4WD CNCE | | GDS83371 | Drive Shaft | | 42 | | 76.5 | 34 | 465 | |
| | 2016.02-2017.01 | 6MT/7DCT/8AT | R | L/R | Convertible 4WD CNCE | For PR code:GH1 | GDS83367 | Drive Shaft | | 42 | | 76.5 | 34 | 626 | |
| | 2016.02-2017.01 | 7DCT | R | L | Convertible 4WD CNCE | For Pr Code:GH2 | GDS82078 | Drive Shaft | | 42 | | 76.5 | 34 | 587 | |
| | 2016.02-2017.01 | 7DCT | R | R | Convertible 4WD CNCE | For Pr Code:GH2 | GDS82079 | Drive Shaft | | 42 | | 76.5 | 34 | 545 | |
| | 2016.02-2017.01 | AT/MT | R | L/R | Convertible 4WD CNCE | For PR code:GH2,For vehicles with AWD & variable torque dist. | GCI61107 | Inner Joint | | 42 | 28 | 76.5 | 34 | 82 | |
| | 2016.02-2017.01 | AT/MT | R | L/R | Convertible 4WD CNCE | For PR code:GH2,For vehicles with AWD & variable torque dist. | GCI81610 | Inner Joint | | | 28 | | | 28 | |
| | 2016.02-2017.01 | AT/MT | R | L/R | Convertible 4WD CNCE | For PR code:GH1 | GCI83044 | Inner Joint | | | 25 | | | 26 | |
| 2.0 (180 kw) | 2018.07- | 7AT | F | L/R | Convertible 4WD DKNA | For PR code:GH1 | GDS82074 | Drive Shaft | | 42 | | 76.5 | 34 | 462 | |
| | 2018.07- | 7DCT | F | L/R | Convertible 4WD DKNA | For PR code:GH4,For vehicles with AWD & variable torque dist. | GDS82075 | Drive Shaft | | 42 | | 76.5 | 34 | 463 | |
| | 2018.07- | AT | F | L/R | Convertible 4WD DKNA | Date from:2019.01,For PR code:GH1/GH2/GH4 | GCO83103 | Outer Joint | | 42 | 28 | 76.4 | 34 | 54 | I |
| | 2018.07- | AT | F | L/R | Convertible 4WD DKNA | Date from:2019.01,For PR code:GH1/GH2/GH4 | GCI83022 | Inner Joint | | | 34 | | | 88.5 | |
| | 2018.07- | 7DCT | R | L | Convertible 4WD DKNA | For PR code:GH4;For veh. with all-wheel drive & controlled clutch;Mounting Type:Bolted | GDS58134 | Drive Shaft | | 38 | | 59.5 | 34 | 653 | |
| | 2018.07- | 7DCT | R | R | Convertible 4WD DKNA | For PR code:GH4;For veh. with all-wheel drive & controlled clutch;Mounting Type:Bolted | GDS58135 | Drive Shaft | | 38 | | 59.5 | 34 | 550 | |
| | 2018.07- | 7DCT | R | L/R | Convertible 4WD DKNA | For PR code:GH1 | GDS82363 | Drive Shaft | | 38 | | 59.5 | 34 | 624 | |
| | 2018.07- | 7DCT | R | L/R | Convertible 4WD DKNA | Rear differential with uncoupling feature;Without rear differential lock | GCI81751 | Outer Joint | | 38 | 33 | 59.5 | 34 | 78 | |
| | 2018.07- | 7DCT | R | L/R | Convertible 4WD DKNA | For PR code:GH4;For veh. with all-wheel drive & controlled clutch;Mounting Type:Bolted | GCI81752 | Inner Joint | | | 33 | | | 34 | |
| 2.0 (185 kw) | 2016.11- | 7AT | F | L/R | Convertible 4WD CYRB;CYMC;DLHB | For PR code:GH1 | GDS82074 | Drive Shaft | | 42 | | 76.5 | 34 | 462 | |
| | 2016.11- | 7DCT | F | L/R | Convertible 4WD CYRB;CYMC;DLHB | For PR code:GH4,For vehicles with AWD & variable torque dist. | GDS82075 | Drive Shaft | | 42 | | 76.5 | 34 | 463 | |
| | 2016.11- | AT | F | L/R | Convertible 4WD CYRB;CYMC;DLHB | Date From:2017.01;For PR code:GH1/GH2/GH4 | GCO83103 | Outer Joint | | 42 | 28 | 76.4 | 34 | 54 | I |
| | 2016.11- | AT | F | L/R | Convertible 4WD CYRB;CYMC;DLHB | Date From:2017.01;For PR code:GH1/GH2/GH4 | GCI83022 | Inner Joint | | | 34 | | | 88.5 | |
| | 2016.11- | 7DCT | R | L | Convertible 4WD CYRB;CYMC;DLHB | For PR code:GH4;For veh. with all-wheel drive & controlled clutch;Mounting Type:Bolted | GDS58134 | Drive Shaft | | 38 | | 59.5 | 34 | 653 | |
| | 2016.11- | 7DCT | R | R | Convertible 4WD CYRB;CYMC;DLHB | For PR code:GH4;For veh. with all-wheel drive & controlled clutch;Mounting Type:Bolted | GDS58135 | Drive Shaft | | 38 | | 59.5 | 34 | 550 | |
| | 2016.11- | 7DCT | R | L/R | Convertible 4WD CYRB;CYMC;DLHB | For PR code:GH1 | GDS82363 | Drive Shaft | | 38 | | 59.5 | 34 | 624 | |
| | 2016.11- | 7DCT | R | L/R | Convertible 4WD CYRB;CYMC;DLHB | Rear differential with uncoupling feature;Without rear differential lock | GCI81751 | Outer Joint | | 38 | 33 | 59.5 | 34 | 78 | |
| | 2016.11- | 7DCT | R | L/R | Convertible 4WD CYRB;CYMC;DLHB | For PR code:GH4;For veh. with all-wheel drive & controlled clutch;Mounting Type:Bolted | GCI81752 | Inner Joint | | | 33 | | | 34 | |
| | 2017.05-2020.04 | 7AT | F | L/R | Convertible 4WD DDWA;DLHB | For PR code:GH1 | GDS82074 | Drive Shaft | | 42 | | 76.5 | 34 | 462 | |
| | 2017.05-2020.04 | 7DCT | F | L/R | Convertible 4WD DDWA;DLHB | For PR code:GH4,For vehicles with AWD & variable torque dist. | GDS82075 | Drive Shaft | | 42 | | 76.5 | 34 | 463 | |
| | 2017.05-2020.04 | AT | F | L/R | Convertible 4WD DDWA;DLHB | For PR code:GH1/GH2/GH4 | GCO83103 | Outer Joint | | 42 | 28 | 76.4 | 34 | 54 | I |
| | 2017.05-2020.04 | AT | F | L/R | Convertible 4WD DDWA;DLHB | For PR code:GH1/GH2/GH4 | GCI83022 | Inner Joint | | | 34 | | | 88.5 | |
| | 2017.05-2020.04 | 7DCT | R | L | Convertible 4WD DDWA;DLHB | For PR code:GH4;For veh. with all-wheel drive & controlled clutch;Mounting Type:Bolted | GDS58134 | Drive Shaft | | 38 | | 59.5 | 34 | 653 | |
| | 2017.05-2020.04 | 7DCT | R | R | Convertible 4WD DDWA;DLHB | For PR code:GH4;For veh. with all-wheel drive & controlled clutch;Mounting Type:Bolted | GDS58135 | Drive Shaft | | 38 | | 59.5 | 34 | 550 | |
| | 2017.05-2020.04 | 7DCT | R | L/R | Convertible 4WD DDWA;DLHB | For PR code:GH1 | GDS82363 | Drive Shaft | | 38 | | 59.5 | 34 | 624 | |
| | 2017.05-2020.04 | 7DCT | R | L/R | Convertible 4WD DDWA;DLHB | Rear differential with uncoupling feature;Without rear differential lock | GCI81751 | Outer Joint | | 38 | 33 | 59.5 | 34 | 78 | |
| | 2017.05-2020.04 | 7DCT | R | L/R | Convertible 4WD DDWA;DLHB | For PR code:GH4;For veh. with all-wheel drive & controlled clutch;Mounting Type:Bolted | GCI81752 | Inner Joint | | | 33 | | | 34 | |
| | 2017.06- | 7DCT | F | L/R | Convertible 4WD CYRB;DLHB | Without rear differential lock | GDS82074 | Drive Shaft | | 42 | | 76.5 | 34 | 462 | |
| | 2017.06- | 7DCT | F | L/R | Convertible 4WD CYRB;DLHB | Rear differential with uncoupling feature | GDS82075 | Drive Shaft | | 42 | | 76.5 | 34 | 463 | |
| | 2017.06- | 7DCT | R | L/R | Convertible 4WD CYRB;DLHB | Without rear differential lock | GDS82363 | Drive Shaft | | 38 | | 59.5 | 34 | 624 | |
| | 2017.06- | | R | L/R | Convertible 4WD CYRB;DLHB | | GCI81751 | Outer Joint | | 38 | 33 | 59.5 | 34 | 78 | |
| 2.0 (195 kw) | 2020.06- | 7AT | F | L/R | Convertible 4WD DMTA;DPAA | For PR code:GH4,For vehicles with AWD & variable torque dist. | GCO81357 | Outer Joint | | 42 | 28 | 76.5 | 34 | 54 | I |
| | 2020.06- | 7DCT | F | L/R | Convertible 4WD DMTA;DPAA | Without rear differential lock | GDS82074 | Drive Shaft | | 42 | | 76.5 | 34 | 462 | |
| | 2020.06- | 7DCT | F | L/R | Convertible 4WD DMTA;DPAA | Rear differential with uncoupling feature | GDS82075 | Drive Shaft | | 42 | | 76.5 | 34 | 463 | |
| | 2020.06- | 7DCT | F | L/R | Convertible 4WD DMTA;DPAA | For PR code:GH4,For vehicles with AWD & variable torque dist. | GCI61077 | Inner Joint | | | 34 | | | 88 | |
| | 2020.06- | 7DCT | R | L/R | Convertible 4WD DMTA;DPAA | For PR code:GH1 | GDS82363 | Drive Shaft | | 38 | | 59.5 | 34 | 624 | |
| | 2020.06- | 7DCT | R | L/R | Convertible 4WD DMTA;DPAA | Rear differential with uncoupling feature;Without rear differential lock | GCI81751 | Outer Joint | | 38 | 33 | 59.5 | 34 | 78 | |

| | YEAR | TRANSM. | F/R | L/R | BODY STYLE & DRIVE TYPE & ENGINE | REMARKS | G-AP Ref. | PRODUCT | ABS | Technical Specifications A | B | C | H | L | P |
|---|---|---|---|---|---|---|---|---|---|---|---|---|---|---|---|
| **AUDI** | | | | | | | | | | | | | | | |
| **A5 Cabrio Quattro** | | | | | | | | | | | | | | | |
| 2.0 (195 kw) | 2020.06- | 7DCT/6MT | R | L | Convertible 4WD DMTA;DPAA | For PR code:GH4;For veh. with all-wheel drive & controlled clutch;Mounting Type:Bolted | GDS58134 | Drive Shaft | | 38 | | 59.5 | 34 | 653 | |
| | 2020.06- | 7DCT/6MT | R | R | Convertible 4WD DMTA;DPAA | For PR code:GH4;For veh. with all-wheel drive & controlled clutch;Mounting Type:Bolted | GDS58135 | Drive Shaft | | 38 | | 59.5 | 34 | 550 | |
| | 2020.06- | 7DCT/6MT | R | L/R | Convertible 4WD DMTA;DPAA | For PR code:GH4;For veh. with all-wheel drive & controlled clutch;Mounting Type:Bolted | GCI81752 | Inner Joint | | | 33 | | | 34 | |
| 3.0 (160 kw) | 2015.05-2017.01 | 7AT | F | L/R | Convertible 4WD CKVD | | GDS83291 | Drive Shaft | | 42 | | 76.4 | 34 | 464 | |
| | 2015.05-2017.01 | 7AT | F | L/R | Convertible 4WD CKVD | | GCI83022 | Inner Joint | | | 34 | | | 88.5 | |
| | 2015.05-2017.01 | | F | L/R | Convertible 4WD CKVD | | GCO83103 | Outer Joint | | 42 | 28 | 76.4 | 34 | 54 | I |
| | 2015.05-2017.01 | 7AT | R | L | Convertible 4WD CKVD | For PR code:GH2;For vehicles with electronic limited slip diff. | GDS82078 | Drive Shaft | | 42 | | 76.5 | 34 | 587 | |
| | 2015.05-2017.01 | 7AT | R | R | Convertible 4WD CKVD | For PR code:GH2;For vehicles with electronic limited slip diff. | GDS82079 | Drive Shaft | | 42 | | 76.5 | 34 | 545 | |
| | 2015.05-2017.01 | 7AT | R | L/R | Convertible 4WD CKVD | For PR code:GH1 | GDS82080 | Drive Shaft | | 42 | | 76.5 | 34 | 629 | |
| | 2015.05-2017.01 | 7AT | R | L/R | Convertible 4WD CKVD | Wheel Side | GCI61107 | Inner Joint | | 42 | 28 | 76.5 | 34 | 82 | |
| | 2015.05-2017.01 | 7AT | R | L/R | Convertible 4WD CKVD | Transmission side | GCI81610 | Inner Joint | | | 28 | | | 28 | |
| | 2016.12-2018.08 | 7AT | F | L/R | Convertible 4WD CSWB | | GCO81357 | Outer Joint | | 42 | 28 | 76.5 | 34 | 54 | I |
| | 2016.12-2018.08 | 7AT | F | L/R | Convertible 4WD CSWB | | GCI61077 | Inner Joint | | | 34 | | | 88 | |
| | 2016.12-2018.08 | 7DCT | F | L/R | Convertible 4WD CSWB | | GDS82075 | Drive Shaft | | 42 | | 76.5 | 34 | 463 | |
| | 2016.12-2018.08 | 7AT | R | L/R | Convertible 4WD CSWB | For PR code:GH1 | GDS82252 | Drive Shaft | | 38 | | 59.5 | 34 | 627 | |
| | 2016.12-2018.08 | 7AT | R | L/R | Convertible 4WD CSWB | For PR code:GH1 | GCI61069 | Inner Joint | | | 28 | | | 32 | |
| | 2016.12-2018.08 | 8AT | R | L/R | Convertible 4WD CSWB | Rear differential Torque Vectoring;Without rear differential lock | GCI81702 | Outer Joint | | 38 | 28 | 59.5 | 34 | 81.5 | |
| | 2016.12-2018.08 | AT | R | L | Convertible 4WD CSWB | For PR code:GH2;For vehicles with AWD & variable torque dist;Mounting Type:Bolted | GDS58136 | Drive Shaft | | 38 | | 59.5 | 34 | 586 | |
| | 2016.12-2018.08 | AT | R | R | Convertible 4WD CSWB | For PR code:GH2;For vehicles with AWD & variable torque dist;Mounting Type:Bolted | GDS58137 | Drive Shaft | | 38 | | 59.5 | 34 | 545 | |
| | 2016.12-2018.08 | AT | R | L/R | Convertible 4WD CSWB | For PR code:GH2;For vehicles with AWD & variable torque dist;Mounting Type:Bolted | GCI84020 | Inner Joint | | | 28 | | | 32 | |
| 3.0 (176 kw) | 2009.03-2012.03 | 7AT | F | L/R | Convertible 4WD CCWA | | GCI83022 | Inner Joint | | | 34 | | | 88.5 | |
| | 2009.03-2012.03 | 7DCT | F | L/R | Convertible 4WD CCWA | Date to:2011.10 | GDS83273 | Drive Shaft | | 42 | | 76.5 | 34 | 460 | |
| | 2009.03-2012.03 | 7DCT | F | L/R | Convertible 4WD CCWA | Date from:2011.11 | GDS83291 | Drive Shaft | | 42 | | 76.4 | 34 | 464 | |
| | 2009.03-2012.03 | AT/MT | F | L/R | Convertible 4WD CCWA | | GCO83086 | Outer Joint | | 42 | 33 | 76.5 | 34 | 45.5 | M |
| | 2009.03-2012.03 | | F | L/R | Convertible 4WD CCWA | Date To:2011.10 | GCO83087 | Outer Joint | | 42 | 27 | 76.5 | 34 | 57 | M |
| | 2009.03-2012.03 | | F | L/R | Convertible 4WD CCWA | | GCO83103 | Outer Joint | | 42 | 28 | 76.4 | 34 | 54 | I |
| | 2009.03-2012.03 | 7AT | R | L | Convertible 4WD CCWA | Date to:2011.08,For PR code:GH2;For vehicles with electronic limited slip diff. | GDS81886 | Drive Shaft | | 42 | | 76.5 | 34 | 589 | |
| | 2009.03-2012.03 | 7AT | R | L | Convertible 4WD CCWA | Date from:2011.09,For PR code:GH2;For vehicles with electronic limited slip diff. | GDS82078 | Drive Shaft | | 42 | | 76.5 | 34 | 587 | |
| | 2009.03-2012.03 | 7AT | R | R | Convertible 4WD CCWA | Date to:2011.08,For PR code:GH2;For vehicles with electronic limited slip diff. | GDS81885 | Drive Shaft | | 42 | | 76.5 | 34 | 546 | |
| | 2009.03-2012.03 | 7AT | R | R | Convertible 4WD CCWA | Date from:2011.09,For PR code:GH2;For vehicles with electronic limited slip diff. | GDS82079 | Drive Shaft | | 42 | | 76.5 | 34 | 545 | |
| | 2009.03-2012.03 | 7AT | R | L/R | Convertible 4WD CCWA | Date to:2011.08;For PR code:GH1 | GDS81894 | Drive Shaft | | 42 | | 76.5 | 34 | 630 | |
| | 2009.03-2012.03 | 7AT | R | L/R | Convertible 4WD CCWA | Date from:2011.09,For PR code:GH1 | GDS82080 | Drive Shaft | | 42 | | 76.5 | 34 | 629 | |
| | 2009.03-2012.03 | 7AT | R | L/R | Convertible 4WD CCWA | | GCI61069 | Inner Joint | | | 28 | | | 32 | |
| | 2009.03-2012.03 | 7AT | R | L/R | Convertible 4WD CCWA | | GCI61107 | Inner Joint | | 42 | 28 | 76.5 | 34 | 82 | |
| | 2009.03-2012.03 | 7AT | R | L/R | Convertible 4WD CCWA | Date from:2011.09 | GCI81610 | Inner Joint | | | 28 | | | 28 | |
| 3.0 (180 kw) | 2011.10-2017.01 | 7AT | F | L/R | Convertible 4WD CDUC;CKVC | | GDS83291 | Drive Shaft | | 42 | | 76.4 | 34 | 464 | |
| | 2011.10-2017.01 | 7AT | F | L/R | Convertible 4WD CDUC;CKVC | | GCO83103 | Outer Joint | | 42 | 28 | 76.4 | 34 | 54 | I |
| | 2011.10-2017.01 | 7AT | F | L/R | Convertible 4WD CDUC;CKVC | | GCI83022 | Inner Joint | | | 34 | | | 88.5 | |
| | 2011.10-2017.01 | 7AT | R | L | Convertible 4WD CDUC;CKVC | For PR code:GH2;For vehicles with electronic limited slip diff. | GDS82078 | Drive Shaft | | 42 | | 76.5 | 34 | 587 | |
| | 2011.10-2017.01 | 7AT | R | R | Convertible 4WD CDUC;CKVC | For PR code:GH2;For vehicles with electronic limited slip diff. | GDS82079 | Drive Shaft | | 42 | | 76.5 | 34 | 545 | |
| | 2011.10-2017.01 | 7AT | R | L/R | Convertible 4WD CDUC;CKVC | For PR code:GH1 | GDS82080 | Drive Shaft | | 42 | | 76.5 | 34 | 629 | |
| | 2011.10-2017.01 | 7AT | R | L/R | Convertible 4WD CDUC;CKVC | | GCI61107 | Inner Joint | | 42 | 28 | 76.5 | 34 | 82 | |
| | 2011.10-2017.01 | 7AT | R | L/R | Convertible 4WD CDUC;CKVC | | GCI81610 | Inner Joint | | | 28 | | | 28 | |
| 3.0 (200 kw) | 2011.11-2017.01 | 7AT | F | L/R | Convertible 4WD CMUA;CRED | | GDS83291 | Drive Shaft | | 42 | | 76.4 | 34 | 464 | |
| | 2011.11-2017.01 | AT/MT | F | L/R | Convertible 4WD CMUA;CRED | | GCO83103 | Outer Joint | | 42 | 28 | 76.4 | 34 | 54 | I |
| | 2011.11-2017.01 | AT/MT | F | L/R | Convertible 4WD CMUA;CRED | | GCI83022 | Inner Joint | | | 34 | | | 88.5 | |
| | 2011.11-2017.01 | 7AT | R | L | Convertible 4WD CMUA;CRED | For PR code:GH2;For vehicles with electronic limited slip diff. | GDS82078 | Drive Shaft | | 42 | | 76.5 | 34 | 587 | |
| | 2011.11-2017.01 | 7AT | R | R | Convertible 4WD CMUA;CRED | For PR code:GH2;For vehicles with electronic limited slip diff. | GDS82079 | Drive Shaft | | 42 | | 76.5 | 34 | 545 | |
| | 2011.11-2017.01 | 7AT | R | L/R | Convertible 4WD CMUA;CRED | For PR code:GH1 | GDS82080 | Drive Shaft | | 42 | | 76.5 | 34 | 629 | |
| | 2011.11-2017.01 | 7AT | R | L/R | Convertible 4WD CMUA;CRED | Wheel Side | GCI61107 | Inner Joint | | 42 | 28 | 76.5 | 34 | 82 | |
| | 2011.11-2017.01 | 7AT | R | L/R | Convertible 4WD CMUA;CRED | Transmission side | GCI81610 | Inner Joint | | | 28 | | | 28 | |
| 3.0 (210 kw) | 2016.11- | 8AT | F | L/R | Convertible 4WD DCPC | | GDS82075 | Drive Shaft | | 42 | | 76.5 | 34 | 463 | |
| | 2016.11- | 8AT | R | L/R | Convertible 4WD DCPC | Without rear differential lock | GDS82252 | Drive Shaft | | 38 | | 59.5 | 34 | 627 | |
| | 2016.11- | 8AT | R | L/R | Convertible 4WD DCPC | | GCI81702 | Outer Joint | | 38 | 28 | 59.5 | 34 | 81.5 | |
| | 2016.11- | 8AT | R | L/R | Convertible 4WD DCPC | | GCI84020 | Inner Joint | | | 28 | | | 32 | |
| | 2016.11-2019.12 | 8AT | F | L/R | Convertible 4WD DCPC | | GDS82075 | Drive Shaft | | 42 | | 76.5 | 34 | 463 | |
| | 2016.11-2019.12 | 8AT | F | L/R | Convertible 4WD DCPC | | GCO81357 | Outer Joint | | 42 | 28 | 76.5 | 34 | 54 | I |
| | 2016.11-2019.12 | 8AT | F | L/R | Convertible 4WD DCPC | | GCI61077 | Inner Joint | | | 34 | | | 88 | |
| | 2016.11-2019.12 | 8AT | R | L/R | Convertible 4WD DCPC | For PR code:GH1 | GDS82252 | Drive Shaft | | 38 | | 59.5 | 34 | 627 | |
| | 2016.11-2019.12 | 8AT | R | L/R | Convertible 4WD DCPC | Rear differential Torque Vectoring;Without rear differential lock | GCI81702 | Outer Joint | | 38 | 28 | 59.5 | 34 | 81.5 | |
| | 2016.11-2019.12 | 8AT | R | L/R | Convertible 4WD DCPC | For PR code:GH1 | GCI61069 | Inner Joint | | | 28 | | | 32 | |
| | 2016.11-2019.12 | AT | R | L | Convertible 4WD DCPC | For PR code:GH2;For vehicles with AWD & variable torque dist;Mounting Type:Bolted | GDS58136 | Drive Shaft | | 38 | | 59.5 | 34 | 586 | |
| | 2016.11-2019.12 | AT | R | R | Convertible 4WD DCPC | For PR code:GH2;For vehicles with AWD & variable torque dist;Mounting Type:Bolted | GDS58137 | Drive Shaft | | 38 | | 59.5 | 34 | 545 | |
| | 2016.11-2019.12 | AT | R | L/R | Convertible 4WD DCPC | For PR code:GH2;For vehicles with AWD & variable torque dist;Mounting Type:Bolted | GCI84020 | Inner Joint | | | 28 | | | 32 | |
| 3.2 (195 kw) | 2009.03-2012.03 | 7AT | F | L/R | Convertible 4WD CALA | | GDS83345 | Drive Shaft | | 42 | | 76.5 | 34 | 463 | |

| | YEAR | TRANSM. | F/R | L/R | BODY STYLE & DRIVE TYPE & ENGINE | REMARKS | G-AP Ref. | PRODUCT | ABS | Technical Specifications A | B | C | H | L | P |
|---|---|---|---|---|---|---|---|---|---|---|---|---|---|---|---|
| **AUDI** | | | | | | | | | | | | | | | |
| **A5 Cabrio Quattro** | | | | | | | | | | | | | | | |
| 3.2 (195 kw) | 2009.03-2012.03 | 7AT | F | L/R | Convertible 4WD CALA | | GCO83086 | Outer Joint | | 42 | 33 | 76.5 | 34 | 45.5 | M |
| | 2009.03-2012.03 | | F | L/R | Convertible 4WD CALA | TJ | GCI61070 | Inner Joint | | | 24 | | | 85 | |
| | 2009.03-2012.03 | | F | | Convertible 4WD CALA | AAR | GCI81054 | Inner Joint | | | 24 | | | 86 | |
| | 2009.03-2012.03 | 6AT/7AT | R | L | Convertible 4WD CALA | Date to:2011.08,For PR code:GH2,For vehicles with electronic limited slip diff. | GDS81886 | Drive Shaft | | 42 | | 76.5 | 34 | 589 | |
| | 2009.03-2012.03 | 6AT/7AT | R | L | Convertible 4WD CALA | Date from:2011.09,For PR code:GH2,For vehicles with electronic limited slip diff. | GDS82078 | Drive Shaft | | 42 | | 76.5 | 34 | 587 | |
| | 2009.03-2012.03 | 6AT/7AT | R | R | Convertible 4WD CALA | Date to:2011.08,For PR code:GH2,For vehicles with electronic limited slip diff. | GDS81885 | Drive Shaft | | 42 | | 76.5 | 34 | 546 | |
| | 2009.03-2012.03 | 6AT/7AT | R | R | Convertible 4WD CALA | Date from:2011.09,For PR code:GH2,For vehicles with electronic limited slip diff. | GDS82079 | Drive Shaft | | 42 | | 76.5 | 34 | 545 | |
| | 2009.03-2012.03 | 6AT/7AT | R | L/R | Convertible 4WD CALA | For PR code:GH1 | GDS82076 | Drive Shaft | | 42 | | 76.5 | 34 | 630 | |
| | 2009.03-2012.03 | 6AT/7AT | R | L/R | Convertible 4WD CALA | | GCI61107 | Inner Joint | | 42 | 28 | 76.5 | 34 | 82 | |
| | 2009.03-2012.03 | 6AT/7AT | R | L/R | Convertible 4WD CALA | | GCI81610 | Inner Joint | | | 28 | | | 28 | |
| **A5 Quattro** | | | | | | | | | | | | | | | |
| 2.0 (125 kw) | 2008.08-2012.03 | AT/MT | F | L/R | Coupe 4WD CAHA | | GDS83345 | Drive Shaft | | 42 | | 76.5 | 34 | 463 | |
| | 2008.08-2012.03 | AT/MT | F | L/R | Coupe 4WD CAHA | | GCO83086 | Outer Joint | | 42 | 33 | 76.5 | 34 | 45.5 | M |
| | 2008.08-2012.03 | | F | L/R | Coupe 4WD CAHA | TJ | GCI61070 | Inner Joint | | | 24 | | | 85 | |
| | 2008.08-2012.03 | 6MT | R | L | Coupe 4WD CAHA | Date to:2011.07,For PR code:GH2,For vehicles with electronic limited slip diff. | GDS81886 | Drive Shaft | | 42 | | 76.5 | 34 | 589 | |
| | 2008.08-2012.03 | 6MT | R | L | Coupe 4WD CAHA | Date from:2011.08,For PR code:GH2,For vehicles with electronic limited slip diff. | GDS82078 | Drive Shaft | | 42 | | 76.5 | 34 | 587 | |
| | 2008.08-2012.03 | 6MT | R | R | Coupe 4WD CAHA | Date to:2011.07,For PR code:GH2,For vehicles with electronic limited slip diff. | GDS81885 | Drive Shaft | | 42 | | 76.5 | 34 | 546 | |
| | 2008.08-2012.03 | 6MT | R | R | Coupe 4WD CAHA | Date from:2011.08,For PR code:GH2,For vehicles with electronic limited slip diff. | GDS82079 | Drive Shaft | | 42 | | 76.5 | 34 | 545 | |
| | 2008.08-2012.03 | 6MT | R | L/R | Coupe 4WD CAHA | For PR code:GH1 | GDS82076 | Drive Shaft | | 42 | | 76.5 | 34 | 630 | |
| | 2008.08-2012.03 | 6MT | R | L/R | Coupe 4WD CAHA | | GCI61107 | Inner Joint | | 42 | 28 | 76.5 | 34 | 82 | |
| | 2008.08-2012.03 | 6MT | R | L/R | Coupe 4WD CAHA | | GCI81610 | Inner Joint | | | 28 | | | 28 | |
| 2.0 (130 kw) | 2011.12-2017.01 | 7AT/6MT | F | L/R | Coupe 4WD CGLC | | GDS83371 | Drive Shaft | | 42 | | 76.5 | 34 | 465 | |
| | 2011.12-2017.01 | 7AT/6MT | F | L/R | Coupe 4WD CGLC | | GCO83107 | Outer Joint | | 42 | 25 | 76.5 | 34 | 47.5 | I |
| | 2011.12-2017.01 | 7AT/6MT | F | L/R | Coupe 4WD CGLC | AAR | GCI81054 | Inner Joint | | | 24 | | | 86 | |
| | 2011.12-2017.01 | 7AT/6MT | R | L | Coupe 4WD CGLC | For PR code:GH2,For vehicles with electronic limited slip diff. | GDS82078 | Drive Shaft | | 42 | | 76.5 | 34 | 587 | |
| | 2011.12-2017.01 | 7AT/6MT | R | R | Coupe 4WD CGLC | For PR code:GH2,For vehicles with electronic limited slip diff. | GDS82079 | Drive Shaft | | 42 | | 76.5 | 34 | 545 | |
| | 2011.12-2017.01 | 7AT/6MT | R | L/R | Coupe 4WD CGLC | For PR code:GH1 | GDS83367 | Drive Shaft | | 42 | | 76.5 | 34 | 626 | |
| | 2011.12-2017.01 | 7AT/6MT | R | L/R | Coupe 4WD CGLC | For PR Code:GH1 | GCI83040 | Outer Joint | | 42 | 25 | 76.5 | 34 | 66 | M |
| | 2011.12-2017.01 | 7AT/6MT | R | L/R | Coupe 4WD CGLC | For PR code:GH2,For vehicles with electronic LTD slip differential | GCI61107 | Inner Joint | | 42 | 28 | 76.5 | 34 | 82 | |
| | 2011.12-2017.01 | 7AT/6MT | R | L/R | Coupe 4WD CGLC | For PR code:GH2,For vehicles with electronic LTD slip differential | GCI81610 | Inner Joint | | | 28 | | | 28 | |
| | 2011.12-2017.01 | 7AT/6MT | R | L/R | Coupe 4WD CGLC | For PR code:GH1 | GCI83044 | Inner Joint | | | 25 | | | 26 | |
| 2.0 (140 kw) | 2013.09-2017.01 | 7AT/6MT | F | L/R | Coupe 4WD CNHA | | GDS83371 | Drive Shaft | | 42 | | 76.5 | 34 | 465 | |
| | 2013.09-2017.01 | 7AT/6MT | F | L/R | Coupe 4WD CNHA | | GCO83107 | Outer Joint | | 42 | 25 | 76.5 | 34 | 47.5 | I |
| | 2013.09-2017.01 | | F | L/R | Coupe 4WD CNHA | | GCI81054 | Inner Joint | | | 24 | | | 86 | |
| | 2013.09-2017.01 | 7AT/6MT | R | L | Coupe 4WD CNHA | For PR code:GH2,For vehicles with electronic limited slip diff. | GDS82078 | Drive Shaft | | 42 | | 76.5 | 34 | 587 | |
| | 2013.09-2017.01 | 7AT/6MT | R | R | Coupe 4WD CNHA | For PR code:GH2,For vehicles with electronic limited slip diff. | GDS82079 | Drive Shaft | | 42 | | 76.5 | 34 | 545 | |
| | 2013.09-2017.01 | 7AT/6MT | R | L/R | Coupe 4WD CNHA | For PR code:GH1 | GDS83367 | Drive Shaft | | 42 | | 76.5 | 34 | 626 | |
| | 2013.09-2017.01 | 7AT/6MT | R | L/R | Coupe 4WD CNHA | | GCI83040 | Outer Joint | | 42 | 25 | 76.5 | 34 | 66 | M |
| | 2013.09-2017.01 | 7AT/6MT | R | L/R | Coupe 4WD CNHA | Wheel Side | GCI61107 | Inner Joint | | 42 | 28 | 76.5 | 34 | 82 | |
| | 2013.09-2017.01 | 7AT/6MT | R | L/R | Coupe 4WD CNHA | For PR code:GH2,For vehicles with AWD & variable torque dist | GCI81610 | Inner Joint | | | 28 | | | 28 | |
| | 2013.09-2017.01 | 7AT/6MT | R | L/R | Coupe 4WD CNHA | For PR code:GH1 | GCI83044 | Inner Joint | | | 25 | | | 26 | |
| | 2016.10- | 7DCT | F | L/R | Coupe 4WD DETA | Without rear differential lock | GDS82074 | Drive Shaft | | 42 | | 76.5 | 34 | 462 | |
| | 2016.10- | 7DCT | F | L/R | Coupe 4WD DETA | Rear differential with uncoupling feature | GDS82075 | Drive Shaft | | 42 | | 76.5 | 34 | 463 | |
| | 2016.10- | 7AT/6MT | R | L/R | Coupe 4WD DETA | | GCI81751 | Outer Joint | | 38 | 33 | 59.5 | 34 | 78 | |
| | 2016.10- | 7DCT/6MT | R | L/R | Coupe 4WD DETA | Without rear differential lock | GDS82363 | Drive Shaft | | 38 | | 59.5 | 34 | 624 | |
| | 2016.10-2019.12 | 6MT/7DCT | F | L/R | Coupe 4WD DESA;DETA | For PR code:GH4,For vehicles with AWD & variable torque dist. | GDS82075 | Drive Shaft | | 42 | | 76.5 | 34 | 463 | |
| | 2016.10-2019.12 | 7AT/6MT | F | L/R | Coupe 4WD DESA;DETA | For PR code:GH1 | GDS82074 | Drive Shaft | | 42 | | 76.5 | 34 | 462 | |
| | 2016.10-2019.12 | AT | F | L/R | Coupe 4WD DESA;DETA | | GCO83103 | Outer Joint | | 42 | 28 | 76.4 | 34 | 54 | I |
| | 2016.10-2019.12 | 6MT/7DCT | R | L/R | Coupe 4WD DESA;DETA | For PR code:GH1 | GDS82363 | Drive Shaft | | 38 | | 59.5 | 34 | 624 | |
| | 2016.10-2019.12 | 7DCT/6MT | R | L | Coupe 4WD DESA;DETA | For PR code:GH4,For veh. with all-wheel drive & controlled clutch,Mounting Type:Bolted | GDS58134 | Drive Shaft | | 38 | | 59.5 | 34 | 653 | |
| | 2016.10-2019.12 | 7DCT/6MT | R | R | Coupe 4WD DESA;DETA | For PR code:GH4,For veh. with all-wheel drive & controlled clutch,Mounting Type:Bolted | GDS58135 | Drive Shaft | | 38 | | 59.5 | 34 | 550 | |
| | 2016.10-2019.12 | 7DCT/6MT | R | L/R | Coupe 4WD DESA;DETA | Rear differential with uncoupling feature;Without rear differential lock | GCI81751 | Outer Joint | | 38 | 33 | 59.5 | 34 | 78 | |
| | 2016.10-2019.12 | 7DCT/6MT | R | L/R | Coupe 4WD DESA;DETA | For PR code:GH4,For veh. with all-wheel drive & controlled clutch,Mounting Type:Bolted | GCI81752 | Inner Joint | | | 33 | | | 34 | |
| 2.0 (150 kw) | 2020.07- | 7AT | F | L/R | Coupe 4WD DMSA | For PR code:GH4,For vehicles with AWD & variable torque dist. | GCO81357 | Outer Joint | | 42 | 28 | 76.5 | 34 | 54 | I |
| | 2020.07- | 7DCT | F | L/R | Coupe 4WD DMSA | Without rear differential lock | GDS82074 | Drive Shaft | | 42 | | 76.5 | 34 | 462 | |
| | 2020.07- | 7DCT | F | L/R | Coupe 4WD DMSA | Rear differential with uncoupling feature | GDS82075 | Drive Shaft | | 42 | | 76.5 | 34 | 463 | |
| | 2020.07- | 7DCT | F | L/R | Coupe 4WD DMSA | For PR code:GH4,For vehicles with AWD & variable torque dist. | GCI61077 | Inner Joint | | | 34 | | | 88 | |
| | 2020.07- | 7DCT | R | L | Coupe 4WD DMSA | For PR code:GH4,For veh. with all-wheel drive & controlled clutch,Mounting Type:Bolted | GDS58134 | Drive Shaft | | 38 | | 59.5 | 34 | 653 | |
| | 2020.07- | 7DCT | R | R | Coupe 4WD DMSA | For PR code:GH4,For veh. with all-wheel drive & controlled clutch,Mounting Type:Bolted | GDS58135 | Drive Shaft | | 38 | | 59.5 | 34 | 550 | |
| | 2020.07- | 7DCT | R | L/R | Coupe 4WD DMSA | For PR code:GH1 | GDS82363 | Drive Shaft | | 38 | | 59.5 | 34 | 624 | |
| | 2020.07- | 7DCT | R | L/R | Coupe 4WD DMSA | Rear differential with uncoupling feature;Without rear differential lock | GCI81751 | Outer Joint | | 38 | 33 | 59.5 | 34 | 78 | |
| | 2020.07- | 7DCT | R | L/R | Coupe 4WD DMSA | For PR code:GH4,For veh. with all-wheel drive & controlled clutch,Mounting Type:Bolted | GCI81752 | Inner Joint | | | 33 | | | 34 | |
| | 2020.09- | 7AT | F | L/R | Coupe 4WD DTPA | For PR code:GH4,For vehicles with AWD & variable torque dist. | GCO81357 | Outer Joint | | 42 | 28 | 76.5 | 34 | 54 | I |
| | 2020.09- | 7DCT | F | L/R | Coupe 4WD DTPA | Without rear differential lock | GDS82074 | Drive Shaft | | 42 | | 76.5 | 34 | 462 | |
| | 2020.09- | 7DCT | F | L/R | Coupe 4WD DTPA | Rear differential with uncoupling feature | GDS82075 | Drive Shaft | | 42 | | 76.5 | 34 | 463 | |

| | YEAR | TRANSM. | F/R | L/R | BODY STYLE & DRIVE TYPE & ENGINE | REMARKS | G-AP Ref. | PRODUCT | ABS | Technical Specifications A | B | C | H | L | P |
|---|---|---|---|---|---|---|---|---|---|---|---|---|---|---|---|
| **AUDI** | | | | | | | | | | | | | | | |
| **A5 Quattro** | | | | | | | | | | | | | | | |
| 2.0 (150 kw) | 2020.09- | 7DCT | F | L/R | Coupe 4WD DTPA | For PR code:GH4,For vehicles with AWD & variable torque dist. | GCI61077 | Inner Joint | | | 34 | | | 88 | |
| | 2020.09- | 7DCT | R | L | Coupe 4WD DTPA | For PR code:GH4;For veh. with all-wheel drive & controlled clutch;Mounting Type:Bolted | GDS58134 | Drive Shaft | | 38 | | 59.5 | 34 | 653 | |
| | 2020.09- | 7DCT | R | R | Coupe 4WD DTPA | For PR code:GH4;For veh. with all-wheel drive & controlled clutch;Mounting Type:Bolted | GDS58135 | Drive Shaft | | 38 | | 59.5 | 34 | 550 | |
| | 2020.09- | 7DCT | R | L/R | Coupe 4WD DTPA | For PR code:GH1 | GDS82363 | Drive Shaft | | 38 | | 59.5 | 34 | 624 | |
| | 2020.09- | 7DCT | R | L/R | Coupe 4WD DTPA | Rear differential with uncoupling feature;Without rear differential lock | GCI81751 | Outer Joint | | 38 | 33 | 59.5 | 34 | 78 | |
| | 2020.09- | 7DCT | R | L/R | Coupe 4WD DTPA | For PR code:GH4;For veh. with all-wheel drive & controlled clutch;Mounting Type:Bolted | GCI81752 | Inner Joint | | | 33 | | | 34 | |
| 2.0 (155 kw) | 2008.06-2017.01 | 6AT/7AT/8AT/6MT | F | L/R | Coupe 4WD CDNC;CAEB;CPMA | Chassis no. to:8TBA150000 | GDS83345 | Drive Shaft | | 42 | | 76.5 | 34 | 463 | |
| | 2008.06-2017.01 | 6AT/7AT/8AT/6MT | F | L/R | Coupe 4WD CDNC;CAEB;CPMA | Chassis no. from:8T-C-000001 | GDS83371 | Drive Shaft | | 42 | | 76.5 | 34 | 465 | |
| | 2008.06-2017.01 | 6AT/7AT/8AT/6MT | F | L/R | Coupe 4WD CDNC;CAEB;CPMA | Chassis no. to:8T-BA150000,Date to:2012.03 | GCO83086 | Outer Joint | | 42 | 33 | 76.5 | 34 | 45.5 | M |
| | 2008.06-2017.01 | 6AT/7AT/8AT/6MT | F | L/R | Coupe 4WD CDNC;CAEB;CPMA | Date from:2012.08 | GCO83107 | Outer Joint | | 42 | 25 | 76.5 | 34 | 47.5 | I |
| | 2008.06-2017.01 | 6AT/7AT/8AT/6MT | F | L/R | Coupe 4WD CDNC;CAEB;CPMA | TJ | GCI61070 | Inner Joint | | | 24 | | | 85 | |
| | 2008.06-2017.01 | 6AT/7AT/8AT/6MT | F | L/R | Coupe 4WD CDNC;CAEB;CPMA | AAR | GCI81054 | Inner Joint | | | 24 | | | 86 | |
| | 2008.06-2017.01 | AT/MT | F | L/R | Coupe 4WD CDNC;CAEB;CPMA | Date to:2011.11 | GCO83087 | Outer Joint | | 42 | 27 | 76.5 | 34 | 57 | M |
| | 2008.06-2017.01 | AT/MT | F | L/R | Coupe 4WD CDNC;CAEB;CPMA | Date from:2011.11 | GCO83103 | Outer Joint | | 42 | 28 | 76.4 | 34 | 54 | I |
| | 2008.06-2017.01 | 6AT/7AT/8AT/6MT | R | L | Coupe 4WD CDNC;CAEB;CPMA | Date to:2011.07,For PR code:GH2,For vehicles with electronic limited slip diff. | GDS81886 | Drive Shaft | | 42 | | 76.5 | 34 | 589 | |
| | 2008.06-2017.01 | 6AT/7AT/8AT/6MT | R | L | Coupe 4WD CDNC;CAEB;CPMA | Date from:2011.08,For PR code:GH2,For vehicles with electronic limited slip diff. | GDS82078 | Drive Shaft | | 42 | | 76.5 | 34 | 587 | |
| | 2008.06-2017.01 | 6AT/7AT/8AT/6MT | R | R | Coupe 4WD CDNC;CAEB;CPMA | Date to:2011.07,For PR code:GH2,For vehicles with electronic limited slip diff. | GDS81885 | Drive Shaft | | 42 | | 76.5 | 34 | 546 | |
| | 2008.06-2017.01 | 6AT/7AT/8AT/6MT | R | R | Coupe 4WD CDNC;CAEB;CPMA | Date from:2011.08,For PR code:GH2,For vehicles with electronic limited slip diff. | GDS82079 | Drive Shaft | | 42 | | 76.5 | 34 | 545 | |
| | 2008.06-2017.01 | 6AT/7AT/8AT/6MT | R | L/R | Coupe 4WD CDNC;CAEB;CPMA | For PR code:GH1,Chassis no. to:8T_BA150000 | GDS82076 | Drive Shaft | | 42 | | 76.5 | 34 | 630 | |
| | 2008.06-2017.01 | 6AT/7AT/8AT/6MT | R | L/R | Coupe 4WD CDNC;CAEB;CPMA | For PR code:GH1,Chassis no. from:8T_C_000001 | GDS83367 | Drive Shaft | | 42 | | 76.5 | 34 | 626 | |
| | 2008.06-2017.01 | 6AT/7AT/8AT/6MT | R | L/R | Coupe 4WD CDNC;CAEB;CPMA | Date from:2011.08,For PR code:GH2,For vehicles with AWD & variable torque dist. | GCI61107 | Inner Joint | | 42 | 28 | 76.5 | 34 | 82 | |
| | 2008.06-2017.01 | 6AT/7AT/8AT/6MT | R | L/R | Coupe 4WD CDNC;CAEB;CPMA | Date from:2011.08,For PR code:GH2,For vehicles with AWD & variable torque dist. | GCI81610 | Inner Joint | | | 28 | | | 28 | |
| | 2008.06-2017.01 | 7AT/6MT | R | L/R | Coupe 4WD CDNC;CAEB;CPMA | For PR code:GH1,Chassis no. from:8T_C_000001 | GCI83044 | Inner Joint | | | 25 | | | 26 | |
| 2.0 (162 kw) | 2012.03-2017.01 | 6MT | F | L/R | Coupe 4WD CPMB;CAED | | GDS83371 | Drive Shaft | | 42 | | 76.5 | 34 | 465 | |
| | 2012.03-2017.01 | 6MT | F | L/R | Coupe 4WD CPMB;CAED | | GCO83107 | Outer Joint | | 42 | 25 | 76.5 | 34 | 47.5 | I |
| | 2012.03-2017.01 | | F | L/R | Coupe 4WD CPMB;CAED | | GCI81054 | Inner Joint | | | 24 | | | 86 | |
| | 2012.03-2017.01 | 6MT | R | L | Coupe 4WD CPMB;CAED | For PR code:GH2 | GDS82078 | Drive Shaft | | 42 | | 76.5 | 34 | 587 | |
| | 2012.03-2017.01 | 6MT | R | R | Coupe 4WD CPMB;CAED | For PR code:GH2 | GDS82079 | Drive Shaft | | 42 | | 76.5 | 34 | 545 | |
| | 2012.03-2017.01 | 6MT | R | L/R | Coupe 4WD CPMB;CAED | For PR code:GH1 | GDS83367 | Drive Shaft | | 42 | | 76.5 | 34 | 626 | |
| | 2012.03-2017.01 | 6MT | R | L/R | Coupe 4WD CPMB;CAED | | GCI83040 | Outer Joint | | 42 | 25 | 76.5 | 34 | 66 | M |
| | 2012.03-2017.01 | 6MT | R | L/R | Coupe 4WD CPMB;CAED | | GCI61107 | Inner Joint | | 42 | 28 | 76.5 | 34 | 82 | |
| | 2012.03-2017.01 | 6MT | R | L/R | Coupe 4WD CPMB;CAED | For PR code:GH2,For vehicles with AWD & variable torque dist. | GCI81610 | Inner Joint | | | 28 | | | 28 | |
| | 2012.03-2017.01 | 6MT | R | L/R | Coupe 4WD CPMB;CAED | For PR code:GH1 | GCI83044 | Inner Joint | | | 25 | | | 26 | |
| 2.0 (165 kw) | 2013.05-2016.05 | 7AT/6MT | F | L/R | Coupe 4WD CNCD | | GDS83371 | Drive Shaft | | 42 | | 76.5 | 34 | 465 | |
| | 2013.05-2016.05 | 7AT/6MT | F | L/R | Coupe 4WD CNCD | | GCO83107 | Outer Joint | | 42 | 25 | 76.5 | 34 | 47.5 | I |
| | 2013.05-2016.05 | | F | L/R | Coupe 4WD CNCD | | GCI81054 | Inner Joint | | | 24 | | | 86 | |
| | 2013.05-2016.05 | 7AT/6MT | R | L | Coupe 4WD CNCD | For PR code:GH2,For vehicles with electronic limited slip diff. | GDS82078 | Drive Shaft | | 42 | | 76.5 | 34 | 587 | |
| | 2013.05-2016.05 | 7AT/6MT | R | R | Coupe 4WD CNCD | For PR code:GH2,For vehicles with electronic limited slip diff. | GDS82079 | Drive Shaft | | 42 | | 76.5 | 34 | 545 | |
| | 2013.05-2016.05 | 7AT/6MT | R | L/R | Coupe 4WD CNCD | For PR code:GH1 | GDS83367 | Drive Shaft | | 42 | | 76.5 | 34 | 626 | |
| | 2013.05-2016.05 | 7AT/6MT | R | L/R | Coupe 4WD CNCD | | GCI83040 | Outer Joint | | 42 | 25 | 76.5 | 34 | 66 | M |
| | 2013.05-2016.05 | 7AT/6MT | R | L/R | Coupe 4WD CNCD | For PR code:GH2,For vehicles with AWD & variable torque dist. | GCI61107 | Inner Joint | | 42 | 28 | 76.5 | 34 | 82 | |
| | 2013.05-2016.05 | 7AT/6MT | R | L/R | Coupe 4WD CNCD | For PR code:GH2,For vehicles with AWD & variable torque dist. | GCI81610 | Inner Joint | | | 28 | | | 28 | |
| | 2013.05-2016.05 | 7AT/6MT | R | L/R | Coupe 4WD CNCD | For PR code:GH1 | GCI83044 | Inner Joint | | | 25 | | | 26 | |
| | 2014.02-2016.12 | 7DCT | F | L/R | Coupe 4WD CNCD | | GDS83371 | Drive Shaft | | 42 | | 76.5 | 34 | 465 | |
| | 2014.02-2016.12 | 6MT/7DCT/8AT | R | L/R | Coupe 4WD CNCD | For PR code:GH1 | GDS83367 | Drive Shaft | | 42 | | 76.5 | 34 | 626 | |
| | 2014.02-2016.12 | 7DCT | R | L | Coupe 4WD CNCD | For Pr Code:GH2 | GDS82078 | Drive Shaft | | 42 | | 76.5 | 34 | 587 | |
| | 2014.02-2016.12 | 7DCT | R | R | Coupe 4WD CNCD | For Pr Code:GH2 | GDS82079 | Drive Shaft | | 42 | | 76.5 | 34 | 545 | |
| | 2014.02-2016.12 | AT/MT | R | L/R | Coupe 4WD CNCD | For PR code:GH2,For vehicles with AWD & variable torque dist. | GCI61107 | Inner Joint | | 42 | 28 | 76.5 | 34 | 82 | |
| | 2014.02-2016.12 | AT/MT | R | L/R | Coupe 4WD CNCD | For PR code:GH2,For vehicles with AWD & variable torque dist. | GCI81610 | Inner Joint | | | 28 | | | 28 | |
| | 2014.02-2016.12 | AT/MT | R | L/R | Coupe 4WD CNCD | For PR code:GH1 | GCI83044 | Inner Joint | | | 25 | | | 26 | |
| 2.0 (169 kw) | 2015.08-2017.01 | 7AT/6MT | F | L/R | Coupe 4WD CNCE | | GDS83371 | Drive Shaft | | 42 | | 76.5 | 34 | 465 | |
| | 2015.08-2017.01 | 7AT/6MT | F | L/R | Coupe 4WD CNCE | | GCO83107 | Outer Joint | | 42 | 25 | 76.5 | 34 | 47.5 | I |
| | 2015.08-2017.01 | | F | L/R | Coupe 4WD CNCE | | GCI81054 | Inner Joint | | | 24 | | | 86 | |
| | 2015.08-2017.01 | 7AT/6MT | R | L | Coupe 4WD CNCE | For PR code:GH2,For vehicles with electronic limited slip diff. | GDS82078 | Drive Shaft | | 42 | | 76.5 | 34 | 587 | |
| | 2015.08-2017.01 | 7AT/6MT | R | R | Coupe 4WD CNCE | For PR code:GH2,For vehicles with electronic limited slip diff. | GDS82079 | Drive Shaft | | 42 | | 76.5 | 34 | 545 | |
| | 2015.08-2017.01 | 7AT/6MT | R | L/R | Coupe 4WD CNCE | For PR code:GH1 | GDS83367 | Drive Shaft | | 42 | | 76.5 | 34 | 626 | |
| | 2015.08-2017.01 | 7AT/6MT | R | L/R | Coupe 4WD CNCE | | GCI83040 | Outer Joint | | 42 | 25 | 76.5 | 34 | 66 | M |
| | 2015.08-2017.01 | 7AT/6MT | R | L/R | Coupe 4WD CNCE | Wheel Side | GCI61107 | Inner Joint | | 42 | 28 | 76.5 | 34 | 82 | |
| | 2015.08-2017.01 | 7AT/6MT | R | L/R | Coupe 4WD CNCE | For PR code:GH2,For vehicles with AWD & variable torque dist. | GCI81610 | Inner Joint | | | 28 | | | 28 | |
| | 2015.08-2017.01 | 7AT/6MT | R | L/R | Coupe 4WD CNCE | For PR code:GH1 | GCI83044 | Inner Joint | | | 25 | | | 26 | |
| | 2016.02-2017.01 | 7DCT | F | L/R | Coupe 4WD CNCE | | GDS83371 | Drive Shaft | | 42 | | 76.5 | 34 | 465 | |
| | 2016.02-2017.01 | 6MT/7DCT/8AT | R | L/R | Coupe 4WD CNCE | For PR code:GH1 | GDS83367 | Drive Shaft | | 42 | | 76.5 | 34 | 626 | |
| | 2016.02-2017.01 | 7DCT | R | L | Coupe 4WD CNCE | For Pr Code:GH2 | GDS82078 | Drive Shaft | | 42 | | 76.5 | 34 | 587 | |
| | 2016.02-2017.01 | 7DCT | R | R | Coupe 4WD CNCE | For Pr Code:GH2 | GDS82079 | Drive Shaft | | 42 | | 76.5 | 34 | 545 | |
| | 2016.02-2017.01 | AT/MT | R | L/R | Coupe 4WD CNCE | For PR code:GH2,For vehicles with AWD & variable torque dist. | GCI61107 | Inner Joint | | 42 | 28 | 76.5 | 34 | 82 | |

| | YEAR | TRANSM. | F/R | L/R | BODY STYLE & DRIVE TYPE & ENGINE | REMARKS | G-AP Ref. | PRODUCT | ABS | Technical Specifications A | B | C | H | L | P |
|---|---|---|---|---|---|---|---|---|---|---|---|---|---|---|---|
| **AUDI** | | | | | | | | | | | | | | | |
| **A5 Quattro** | | | | | | | | | | | | | | | |
| 2.0 (169 kw) | 2016.02-2017.01 | AT/MT | R | L/R | Coupe 4WD CNCE | For PR code:GH2,For vehicles with AWD & variable torque dist. | GCI81610 | Inner Joint | | | 28 | | | 28 | |
| | 2016.02-2017.01 | AT/MT | R | L/R | Coupe 4WD CNCE | For PR code:GH1 | GCI83044 | Inner Joint | | | 25 | | | 26 | |
| 2.0 (180 kw) | 2018.07-2020.08 | 7AT | F | L/R | Coupe 4WD DKNA | For PR code:GH1 | GDS82074 | Drive Shaft | | 42 | | 76.5 | 34 | 462 | |
| | 2018.07-2020.08 | 7DCT | F | L/R | Coupe 4WD DKNA | For PR code:GH4,For vehicles with AWD & variable torque dist. | GDS82075 | Drive Shaft | | 42 | | 76.5 | 34 | 463 | |
| | 2018.07-2020.08 | AT | F | L/R | Coupe 4WD DKNA | Date from:2019.01,For PR code:GH1/GH2/GH4 | GCO83103 | Outer Joint | | 42 | 28 | 76.4 | 34 | 54 | I |
| | 2018.07-2020.08 | AT | F | L/R | Coupe 4WD DKNA | Date from:2019.01,For PR code:GH1/GH2/GH4 | GCI83022 | Inner Joint | | | 34 | | | 88.5 | |
| | 2018.07-2020.08 | 7DCT | R | L | Coupe 4WD DKNA | For PR code:GH4;For veh. with all-wheel drive & controlled clutch;Mounting Type:Bolted | GDS58134 | Drive Shaft | | 38 | | 59.5 | 34 | 653 | |
| | 2018.07-2020.08 | 7DCT | R | R | Coupe 4WD DKNA | For PR code:GH4;For veh. with all-wheel drive & controlled clutch;Mounting Type:Bolted | GDS58135 | Drive Shaft | | 38 | | 59.5 | 34 | 550 | |
| | 2018.07-2020.08 | 7DCT | R | L/R | Coupe 4WD DKNA | For PR code:GH1 | GDS82363 | Drive Shaft | | 38 | | 59.5 | 34 | 624 | |
| | 2018.07-2020.08 | 7DCT | R | L/R | Coupe 4WD DKNA | Rear differential with uncoupling feature;Without rear differential lock | GCI81751 | Outer Joint | | 38 | 33 | 59.5 | 34 | 78 | |
| | 2018.07-2020.08 | 7DCT | R | L/R | Coupe 4WD DKNA | For PR code:GH4;For veh. with all-wheel drive & controlled clutch;Mounting Type:Bolted | GCI81752 | Inner Joint | | | 33 | | | 34 | |
| 2.0 (183 kw) | 2016.06-2020.02 | 7AT | F | L/R | Coupe 4WD CYRC | For PR code:GH1 | GDS82074 | Drive Shaft | | 42 | | 76.5 | 34 | 462 | |
| | 2016.06-2020.02 | 7DCT | F | L/R | Coupe 4WD CYRC | For PR code:GH4,For vehicles with AWD & variable torque dist. | GDS82075 | Drive Shaft | | 42 | | 76.5 | 34 | 463 | |
| | 2016.06-2020.02 | AT | F | L/R | Coupe 4WD CYRC | Date From:2017.01;For PR code:GH1/GH2/GH4 | GCO83103 | Outer Joint | | 42 | 28 | 76.4 | 34 | 54 | I |
| | 2016.06-2020.02 | AT | F | L/R | Coupe 4WD CYRC | Date From:2017.01;For PR code:GH1/GH2/GH4 | GCI83022 | Inner Joint | | | 34 | | | 88.5 | |
| | 2016.06-2020.02 | 7DCT | R | L | Coupe 4WD CYRC | For PR code:GH4;For veh. with all-wheel drive & controlled clutch;Mounting Type:Bolted | GDS58134 | Drive Shaft | | 38 | | 59.5 | 34 | 653 | |
| | 2016.06-2020.02 | 7DCT | R | R | Coupe 4WD CYRC | For PR code:GH4;For veh. with all-wheel drive & controlled clutch;Mounting Type:Bolted | GDS58135 | Drive Shaft | | 38 | | 59.5 | 34 | 550 | |
| | 2016.06-2020.02 | 7DCT | R | L/R | Coupe 4WD CYRC | For PR code:GH1 | GDS82363 | Drive Shaft | | 38 | | 59.5 | 34 | 624 | |
| | 2016.06-2020.02 | 7DCT | R | L/R | Coupe 4WD CYRC | Rear differential with uncoupling feature;Without rear differential lock | GCI81751 | Outer Joint | | 38 | 33 | 59.5 | 34 | 78 | |
| | 2016.06-2020.02 | 7DCT | R | L/R | Coupe 4WD CYRC | For PR code:GH4;For veh. with all-wheel drive & controlled clutch;Mounting Type:Bolted | GCI81752 | Inner Joint | | | 33 | | | 34 | |
| 2.0 (185 kw) | 2016.06- | 6MT/7DCT | F | L/R | Coupe 4WD CYRB;CYMC;DLHB | For PR code:GH4,For vehicles with AWD & variable torque dist. | GDS82075 | Drive Shaft | | 42 | | 76.5 | 34 | 463 | |
| | 2016.06- | 7AT/6MT | F | L/R | Coupe 4WD CYRB;CYMC;DLHB | For PR code:GH1 | GDS82074 | Drive Shaft | | 42 | | 76.5 | 34 | 462 | |
| | 2016.06- | AT | F | L/R | Coupe 4WD CYRB;CYMC;DLHB | Date From:2017.01;For PR code:GH1/GH2/GH4 | GCO83103 | Outer Joint | | 42 | 28 | 76.4 | 34 | 54 | I |
| | 2016.06- | AT | F | L/R | Coupe 4WD CYRB;CYMC;DLHB | Date From:2017.01;For PR code:GH1/GH2/GH4 | GCI83022 | Inner Joint | | | 34 | | | 88.5 | |
| | 2016.06- | 6MT/7DCT | R | L/R | Coupe 4WD CYRB;CYMC;DLHB | For PR code:GH1 | GDS82363 | Drive Shaft | | 38 | | 59.5 | 34 | 624 | |
| | 2016.06- | 7DCT/6MT | R | L | Coupe 4WD CYRB;CYMC;DLHB | For PR code:GH4;For veh. with all-wheel drive & controlled clutch;Mounting Type:Bolted | GDS58134 | Drive Shaft | | 38 | | 59.5 | 34 | 653 | |
| | 2016.06- | 7DCT/6MT | R | R | Coupe 4WD CYRB;CYMC;DLHB | For PR code:GH4;For veh. with all-wheel drive & controlled clutch;Mounting Type:Bolted | GDS58135 | Drive Shaft | | 38 | | 59.5 | 34 | 550 | |
| | 2016.06- | 7DCT/6MT | R | L/R | Coupe 4WD CYRB;CYMC;DLHB | Rear differential with uncoupling feature;Without rear differential lock | GCI81751 | Outer Joint | | 38 | 33 | 59.5 | 34 | 78 | |
| | 2016.06- | 7DCT/6MT | R | L/R | Coupe 4WD CYRB;CYMC;DLHB | For PR code:GH4;For veh. with all-wheel drive & controlled clutch;Mounting Type:Bolted | GCI81752 | Inner Joint | | | 33 | | | 34 | |
| | 2017.05-2020.02 | 6MT/7DCT | F | L/R | Coupe 4WD DDWA;DLHB | For PR code:GH4,For vehicles with AWD & variable torque dist. | GDS82075 | Drive Shaft | | 42 | | 76.5 | 34 | 463 | |
| | 2017.05-2020.02 | 7AT/6MT | F | L/R | Coupe 4WD DDWA;DLHB | For PR code:GH1 | GDS82074 | Drive Shaft | | 42 | | 76.5 | 34 | 462 | |
| | 2017.05-2020.02 | AT | F | L/R | Coupe 4WD DDWA;DLHB | For PR code:GH1/GH2/GH4 | GCO83103 | Outer Joint | | 42 | 28 | 76.4 | 34 | 54 | I |
| | 2017.05-2020.02 | AT | F | L/R | Coupe 4WD DDWA;DLHB | For PR code:GH1/GH2/GH4 | GCI83022 | Inner Joint | | | 34 | | | 88.5 | |
| | 2017.05-2020.02 | 6MT/7DCT | R | L/R | Coupe 4WD DDWA;DLHB | For PR code:GH1 | GDS82363 | Drive Shaft | | 38 | | 59.5 | 34 | 624 | |
| | 2017.05-2020.02 | 7DCT/6MT | R | L | Coupe 4WD DDWA;DLHB | For PR code:GH4;For veh. with all-wheel drive & controlled clutch;Mounting Type:Bolted | GDS58134 | Drive Shaft | | 38 | | 59.5 | 34 | 653 | |
| | 2017.05-2020.02 | 7DCT/6MT | R | R | Coupe 4WD DDWA;DLHB | For PR code:GH4;For veh. with all-wheel drive & controlled clutch;Mounting Type:Bolted | GDS58135 | Drive Shaft | | 38 | | 59.5 | 34 | 550 | |
| | 2017.05-2020.02 | 7DCT/6MT | R | L/R | Coupe 4WD DDWA;DLHB | Rear differential with uncoupling feature;Without rear differential lock | GCI81751 | Outer Joint | | 38 | 33 | 59.5 | 34 | 78 | |
| | 2017.05-2020.02 | 7DCT/6MT | R | L/R | Coupe 4WD DDWA;DLHB | For PR code:GH4;For veh. with all-wheel drive & controlled clutch;Mounting Type:Bolted | GCI81752 | Inner Joint | | | 33 | | | 34 | |
| | 2017.06- | 7DCT | F | L/R | Coupe 4WD CYRB;DLHB | Without rear differential lock | GDS82074 | Drive Shaft | | 42 | | 76.5 | 34 | 462 | |
| | 2017.06- | 7DCT | F | L/R | Coupe 4WD CYRB;DLHB | Rear differential with uncoupling feature | GDS82075 | Drive Shaft | | 42 | | 76.5 | 34 | 463 | |
| | 2017.06- | 7DCT/6MT | R | L/R | Coupe 4WD CYRB;DLHB | Without rear differential lock | GDS82363 | Drive Shaft | | 38 | | 59.5 | 34 | 624 | |
| | 2017.06- | | R | L/R | Coupe 4WD CYRB;DLHB | | GCI81751 | Outer Joint | | 38 | 33 | 59.5 | 34 | 78 | |
| 2.0 (195 kw) | 2019.10- | 7AT | F | L/R | Coupe 4WD DMTA;DPAA | For PR code:GH4,For vehicles with AWD & variable torque dist. | GCO81357 | Outer Joint | | 42 | 28 | 76.5 | 34 | 54 | I |
| | 2019.10- | 7DCT | F | L/R | Coupe 4WD DMTA;DPAA | Without rear differential lock | GDS82074 | Drive Shaft | | 42 | | 76.5 | 34 | 462 | |
| | 2019.10- | 7DCT | F | L/R | Coupe 4WD DMTA;DPAA | Rear differential with uncoupling feature | GDS82075 | Drive Shaft | | 42 | | 76.5 | 34 | 463 | |
| | 2019.10- | 7DCT | F | L/R | Coupe 4WD DMTA;DPAA | For PR code:GH4,For vehicles with AWD & variable torque dist. | GCI61077 | Inner Joint | | | 34 | | | 88 | |
| | 2019.10- | 7DCT | R | L | Coupe 4WD DMTA;DPAA | For PR code:GH4;For veh. with all-wheel drive & controlled clutch;Mounting Type:Bolted | GDS58134 | Drive Shaft | | 38 | | 59.5 | 34 | 653 | |
| | 2019.10- | 7DCT | R | R | Coupe 4WD DMTA;DPAA | For PR code:GH4;For veh. with all-wheel drive & controlled clutch;Mounting Type:Bolted | GDS58135 | Drive Shaft | | 38 | | 59.5 | 34 | 550 | |
| | 2019.10- | 7DCT | R | L/R | Coupe 4WD DMTA;DPAA | For PR code:GH1 | GDS82363 | Drive Shaft | | 38 | | 59.5 | 34 | 624 | |
| | 2019.10- | 7DCT | R | L/R | Coupe 4WD DMTA;DPAA | Rear differential with uncoupling feature;Without rear differential lock | GCI81751 | Outer Joint | | 38 | 33 | 59.5 | 34 | 78 | |
| | 2019.10- | 7DCT | R | L/R | Coupe 4WD DMTA;DPAA | For PR code:GH4;For veh. with all-wheel drive & controlled clutch;Mounting Type:Bolted | GCI81752 | Inner Joint | | | 33 | | | 34 | |
| 3.0 (155 kw) | 2008.03-2010.05 | 6AT/7DCT | F | L/R | Coupe 4WD CCWB | | GDS83273 | Drive Shaft | | 42 | | 76.5 | 34 | 460 | |
| | 2008.03-2010.05 | AT/MT | F | L/R | Coupe 4WD CCWB | | GCO83086 | Outer Joint | | 42 | 33 | 76.5 | 34 | 45.5 | M |
| | 2008.03-2010.05 | AT/MT | F | L/R | Coupe 4WD CCWB | TJ | GCI61070 | Inner Joint | | | 24 | | | 85 | |
| | 2008.03-2010.05 | | F | L/R | Coupe 4WD CCWB | Date To:2011.10 | GCO83087 | Outer Joint | | 42 | 27 | 76.5 | 34 | 57 | M |
| | 2008.03-2010.05 | | F | L/R | Coupe 4WD CCWB | | GCI83022 | Inner Joint | | | 34 | | | 88.5 | |
| | 2008.03-2010.05 | 6AT/7AT | R | L | Coupe 4WD CCWB | For PR code:GH2,For vehicles with electronic limited slip diff. | GDS81886 | Drive Shaft | | 42 | | 76.5 | 34 | 589 | |
| | 2008.03-2010.05 | 6AT/7AT | R | R | Coupe 4WD CCWB | For PR code:GH2,For vehicles with electronic limited slip diff. | GDS81885 | Drive Shaft | | 42 | | 76.5 | 34 | 546 | |
| | 2008.03-2010.05 | 6AT/7AT | R | L/R | Coupe 4WD CCWB | For PR code:GH1 | GDS81894 | Drive Shaft | | 42 | | 76.5 | 34 | 630 | |
| | 2008.03-2010.05 | 6AT/7AT | R | L/R | Coupe 4WD CCWB | | GCI61069 | Inner Joint | | | 28 | | | 32 | |
| 3.0 (160 kw) | 2015.05-2017.01 | 7AT | F | L/R | Coupe 4WD CKVD | | GDS83291 | Drive Shaft | | 42 | | 76.4 | 34 | 464 | |
| | 2015.05-2017.01 | 7AT | F | L/R | Coupe 4WD CKVD | | GCO83103 | Outer Joint | | 42 | 28 | 76.4 | 34 | 54 | I |
| | 2015.05-2017.01 | 7AT | F | L/R | Coupe 4WD CKVD | | GCI83022 | Inner Joint | | | 34 | | | 88.5 | |
| | 2015.05-2017.01 | 7AT | R | L | Coupe 4WD CKVD | For PR code:GH2,For vehicles with electronic limited slip diff. | GDS82078 | Drive Shaft | | 42 | | 76.5 | 34 | 587 | |
| | 2015.05-2017.01 | 7AT | R | R | Coupe 4WD CKVD | For PR code:GH2,For vehicles with electronic limited slip diff. | GDS82079 | Drive Shaft | | 42 | | 76.5 | 34 | 545 | |

| | YEAR | TRANSM. | F/R | L/R | BODY STYLE & DRIVE TYPE & ENGINE | REMARKS | G-AP Ref. | PRODUCT | ABS | Technical Specifications A | B | C | H | L | P |
|---|---|---|---|---|---|---|---|---|---|---|---|---|---|---|---|
| **AUDI** | | | | | | | | | | | | | | | |
| **A5 Quattro** | | | | | | | | | | | | | | | |
| 3.0 (160 kw) | 2015.05-2017.01 | 7AT | R | L/R | Coupe 4WD CKVD | For PR code:GH1 | GDS82080 | Drive Shaft | | 42 | | 76.5 | 34 | 629 | |
| | 2015.05-2017.01 | 7AT | R | L/R | Coupe 4WD CKVD | Wheel Side | GCI61107 | Inner Joint | | 42 | 28 | 76.5 | 34 | 82 | |
| | 2015.05-2017.01 | 7AT | R | L/R | Coupe 4WD CKVD | Transmission side | GCI81610 | Inner Joint | | | 28 | | | 28 | |
| | 2016.07-2018.08 | 7AT | F | L/R | Coupe 4WD CSWB | | GCO81357 | Outer Joint | | 42 | 28 | 76.5 | 34 | 54 | I |
| | 2016.07-2018.08 | 7AT | F | L/R | Coupe 4WD CSWB | | GCI61077 | Inner Joint | | | 34 | | | 88 | |
| | 2016.07-2018.08 | 7DCT | F | L/R | Coupe 4WD CSWB | | GDS82075 | Drive Shaft | | 42 | | 76.5 | 34 | 463 | |
| | 2016.07-2018.08 | 7AT | R | L/R | Coupe 4WD CSWB | For PR code:GH1 | GDS82252 | Drive Shaft | | 38 | | 59.5 | 34 | 627 | |
| | 2016.07-2018.08 | 7AT | R | L/R | Coupe 4WD CSWB | For PR code:GH1 | GCI61069 | Inner Joint | | | 28 | | | 32 | |
| | 2016.07-2018.08 | 8AT | R | L/R | Coupe 4WD CSWB | Rear differential Torque Vectoring;Without rear differential lock | GCI81702 | Outer Joint | | 38 | 28 | 59.5 | 34 | 81.5 | |
| | 2016.07-2018.08 | AT | R | L | Coupe 4WD CSWB | For PR code:GH2;For vehicles with AWD & variable torque dist;Mounting Type:Bolted | GDS58136 | Drive Shaft | | 38 | | 59.5 | 34 | 586 | |
| | 2016.07-2018.08 | AT | R | R | Coupe 4WD CSWB | For PR code:GH2;For vehicles with AWD & variable torque dist;Mounting Type:Bolted | GDS58137 | Drive Shaft | | 38 | | 59.5 | 34 | 545 | |
| | 2016.07-2018.08 | AT | R | L/R | Coupe 4WD CSWB | For PR code:GH2;For vehicles with AWD & variable torque dist;Mounting Type:Bolted | GCI84020 | Inner Joint | | | 28 | | | 32 | |
| 3.0 (170 kw) | 2018.07-2020.11 | 8AT | F | L/R | Coupe 4WD DCPE | | GDS82075 | Drive Shaft | | 42 | | 76.5 | 34 | 463 | |
| | 2018.07-2020.11 | 8AT | F | L/R | Coupe 4WD DCPE | | GCO81357 | Outer Joint | | 42 | 28 | 76.5 | 34 | 54 | I |
| | 2018.07-2020.11 | 8AT | F | L/R | Coupe 4WD DCPE | | GCI61077 | Inner Joint | | | 34 | | | 88 | |
| | 2018.07-2020.11 | 8AT | R | L/R | Coupe 4WD DCPE | Rear differential Torque Vectoring;Without rear differential lock | GCI81702 | Outer Joint | | 38 | 28 | 59.5 | 34 | 81.5 | |
| | 2018.07-2020.11 | AT | R | L | Coupe 4WD DCPE | For PR code:GH2;For vehicles with AWD & variable torque dist;Mounting Type:Bolted | GDS58136 | Drive Shaft | | 38 | | 59.5 | 34 | 586 | |
| | 2018.07-2020.11 | AT | R | R | Coupe 4WD DCPE | For PR code:GH2;For vehicles with AWD & variable torque dist;Mounting Type:Bolted | GDS58137 | Drive Shaft | | 38 | | 59.5 | 34 | 545 | |
| | 2018.07-2020.11 | AT | R | L/R | Coupe 4WD DCPE | For PR code:GH2;For vehicles with AWD & variable torque dist;Mounting Type:Bolted | GCI84020 | Inner Joint | | | 28 | | | 32 | |
| | 2018.07-2020.11 | | R | L/R | Coupe 4WD DCPE | For PR code:GH1 | GDS82252 | Drive Shaft | | 38 | | 59.5 | 34 | 627 | |
| 3.0 (176 kw) | 2007.06-2012.03 | 6AT/7AT/6MT | F | L/R | Coupe 4WD CAPA;CCWA | Date from:2011.11 | GDS83291 | Drive Shaft | | 42 | | 76.4 | 34 | 464 | |
| | 2007.06-2012.03 | 6AT/7AT/6MT | F | L/R | Coupe 4WD CAPA;CCWA | Date to:2011.10 | GCO83087 | Outer Joint | | 42 | 27 | 76.5 | 34 | 57 | M |
| | 2007.06-2012.03 | 6AT/7AT/6MT | F | L/R | Coupe 4WD CAPA;CCWA | Date from:2011.11 | GCO83103 | Outer Joint | | 42 | 28 | 76.4 | 34 | 54 | I |
| | 2007.06-2012.03 | 6AT/7AT/6MT | F | L/R | Coupe 4WD CAPA;CCWA | | GCI83022 | Inner Joint | | | 34 | | | 88.5 | |
| | 2007.06-2012.03 | 6AT/7DCT/6MT | F | L/R | Coupe 4WD CAPA;CCWA | Chassis no. to:8T_8_011000;Date to:2011.10;Chassis no. from:8T_8_011001 | GDS83273 | Drive Shaft | | 42 | | 76.5 | 34 | 460 | |
| | 2007.06-2012.03 | AT/MT | F | L/R | Coupe 4WD CAPA;CCWA | | GCO83086 | Outer Joint | | 42 | 33 | 76.5 | 34 | 45.5 | M |
| | 2007.06-2012.03 | 6AT/7AT/6MT | R | L | Coupe 4WD CAPA;CCWA | Date to:2011.07;For PR code:GH2;For vehicles with electronic limited slip diff. | GDS81886 | Drive Shaft | | 42 | | 76.5 | 34 | 589 | |
| | 2007.06-2012.03 | 6AT/7AT/6MT | R | L | Coupe 4WD CAPA;CCWA | Date from:2011.08;For PR code:GH2;For vehicles with electronic limited slip diff. | GDS82078 | Drive Shaft | | 42 | | 76.5 | 34 | 587 | |
| | 2007.06-2012.03 | 6AT/7AT/6MT | R | R | Coupe 4WD CAPA;CCWA | Date to:2011.07;For PR code:GH2;For vehicles with electronic limited slip diff. | GDS81885 | Drive Shaft | | 42 | | 76.5 | 34 | 546 | |
| | 2007.06-2012.03 | 6AT/7AT/6MT | R | R | Coupe 4WD CAPA;CCWA | Date from:2011.08;For PR code:GH2;For vehicles with electronic limited slip diff. | GDS82079 | Drive Shaft | | 42 | | 76.5 | 34 | 545 | |
| | 2007.06-2012.03 | 6AT/7AT/6MT | R | L/R | Coupe 4WD CAPA;CCWA | Date to:2007.08;Date from:2007.09;For PR code:GH1 | GDS81894 | Drive Shaft | | 42 | | 76.5 | 34 | 630 | |
| | 2007.06-2012.03 | 6AT/7AT/6MT | R | L/R | Coupe 4WD CAPA;CCWA | | GCI61107 | Inner Joint | | 42 | 28 | 76.5 | 34 | 82 | |
| | 2007.06-2012.03 | 6AT/7AT/6MT | R | L/R | Coupe 4WD CAPA;CCWA | Transmission side | GCI81610 | Inner Joint | | | 28 | | | 28 | |
| 3.0 (180 kw) | 2011.10-2017.01 | 7AT | F | L/R | Coupe 4WD CDUC;CKVB;CKVC | | GCO83103 | Outer Joint | | 42 | 28 | 76.4 | 34 | 54 | I |
| | 2011.10-2017.01 | 7AT | F | L/R | Coupe 4WD CDUC;CKVB;CKVC | | GCI83022 | Inner Joint | | | 34 | | | 88.5 | |
| | 2011.10-2017.01 | 7AT/6MT | F | L/R | Coupe 4WD CDUC;CKVB;CKVC | | GDS83291 | Drive Shaft | | 42 | | 76.4 | 34 | 464 | |
| | 2011.10-2017.01 | 7AT/6MT | R | L | Coupe 4WD CDUC;CKVB;CKVC | For PR code:GH2;For vehicles with electronic limited slip diff. | GDS82078 | Drive Shaft | | 42 | | 76.5 | 34 | 587 | |
| | 2011.10-2017.01 | 7AT/6MT | R | R | Coupe 4WD CDUC;CKVB;CKVC | For PR code:GH2;For vehicles with electronic limited slip diff. | GDS82079 | Drive Shaft | | 42 | | 76.5 | 34 | 545 | |
| | 2011.10-2017.01 | 7AT/6MT | R | L/R | Coupe 4WD CDUC;CKVB;CKVC | For PR code:GH1 | GDS82080 | Drive Shaft | | 42 | | 76.5 | 34 | 629 | |
| | 2011.10-2017.01 | 7AT/6MT | R | L/R | Coupe 4WD CDUC;CKVB;CKVC | | GCI61107 | Inner Joint | | 42 | 28 | 76.5 | 34 | 82 | |
| | 2011.10-2017.01 | 7AT/6MT | R | L/R | Coupe 4WD CDUC;CKVB;CKVC | | GCI81610 | Inner Joint | | | 28 | | | 28 | |
| 3.0 (200 kw) | 2011.12-2017.01 | 7AT | F | L/R | Coupe 4WD CMUA;CRED;CHMB | | GDS83291 | Drive Shaft | | 42 | | 76.4 | 34 | 464 | |
| | 2011.12-2017.01 | AT | F | L/R | Coupe 4WD CMUA;CRED;CHMB | | GCO83103 | Outer Joint | | 42 | 28 | 76.4 | 34 | 54 | I |
| | 2011.12-2017.01 | AT | F | L/R | Coupe 4WD CMUA;CRED;CHMB | | GCI83022 | Inner Joint | | | 34 | | | 88.5 | |
| | 2011.12-2017.01 | 7AT | R | L | Coupe 4WD CMUA;CRED;CHMB | For PR code:GH2;For vehicles with electronic limited slip diff. | GDS82078 | Drive Shaft | | 42 | | 76.5 | 34 | 587 | |
| | 2011.12-2017.01 | 7AT | R | R | Coupe 4WD CMUA;CRED;CHMB | For PR code:GH2;For vehicles with electronic limited slip diff. | GDS82079 | Drive Shaft | | 42 | | 76.5 | 34 | 545 | |
| | 2011.12-2017.01 | 7AT | R | L/R | Coupe 4WD CMUA;CRED;CHMB | For PR code:GH1 | GDS82080 | Drive Shaft | | 42 | | 76.5 | 34 | 629 | |
| | 2011.12-2017.01 | 7AT | R | L/R | Coupe 4WD CMUA;CRED;CHMB | Wheel Side | GCI61107 | Inner Joint | | 42 | 28 | 76.5 | 34 | 82 | |
| | 2011.12-2017.01 | 7AT | R | L/R | Coupe 4WD CMUA;CRED;CHMB | Transmission side | GCI81610 | Inner Joint | | | 28 | | | 28 | |
| | 2017.02-2017.12 | 8AT | F | L/R | Coupe 4WD CRTC | | GDS82075 | Drive Shaft | | 42 | | 76.5 | 34 | 463 | |
| | 2017.02-2017.12 | 8AT | F | L/R | Coupe 4WD CRTC | | GCO81357 | Outer Joint | | 42 | 28 | 76.5 | 34 | 54 | I |
| | 2017.02-2017.12 | 8AT | F | L/R | Coupe 4WD CRTC | | GCI61077 | Inner Joint | | | 34 | | | 88 | |
| | 2017.02-2017.12 | 8AT | R | L/R | Coupe 4WD CRTC | For PR code:GH1 | GDS82252 | Drive Shaft | | 38 | | 59.5 | 34 | 627 | |
| | 2017.02-2017.12 | 8AT | R | L/R | Coupe 4WD CRTC | Rear differential Torque Vectoring;Without rear differential lock | GCI81702 | Outer Joint | | 38 | 28 | 59.5 | 34 | 81.5 | |
| | 2017.02-2017.12 | 8AT | R | L/R | Coupe 4WD CRTC | For PR code:GH1 | GCI61069 | Inner Joint | | | 28 | | | 32 | |
| | 2017.02-2017.12 | AT | R | L | Coupe 4WD CRTC | For PR code:GH2;For vehicles with AWD & variable torque dist;Mounting Type:Bolted | GDS58136 | Drive Shaft | | 38 | | 59.5 | 34 | 586 | |
| | 2017.02-2017.12 | AT | R | R | Coupe 4WD CRTC | For PR code:GH2;For vehicles with AWD & variable torque dist;Mounting Type:Bolted | GDS58137 | Drive Shaft | | 38 | | 59.5 | 34 | 545 | |
| | 2017.02-2017.12 | AT | R | L/R | Coupe 4WD CRTC | For PR code:GH2;For vehicles with AWD & variable torque dist;Mounting Type:Bolted | GCI84020 | Inner Joint | | | 28 | | | 32 | |
| 3.0 (210 kw) | 2017.01-2020.02 | 8AT | F | L/R | Coupe 4WD DCPC | | GDS82075 | Drive Shaft | | 42 | | 76.5 | 34 | 463 | |
| | 2017.01-2020.02 | 8AT | F | L/R | Coupe 4WD DCPC | | GCO81357 | Outer Joint | | 42 | 28 | 76.5 | 34 | 54 | I |
| | 2017.01-2020.02 | AT | F | L/R | Coupe 4WD DCPC | | GCO83103 | Outer Joint | | 42 | 28 | 76.4 | 34 | 54 | I |
| | 2017.01-2020.02 | AT | F | L/R | Coupe 4WD DCPC | | GCI83022 | Inner Joint | | | 34 | | | 88.5 | |
| | 2017.01-2020.02 | 8AT | R | L/R | Coupe 4WD DCPC | For PR code:GH1 | GDS82252 | Drive Shaft | | 38 | | 59.5 | 34 | 627 | |
| | 2017.01-2020.02 | 8AT | R | L/R | Coupe 4WD DCPC | Rear differential Torque Vectoring;Without rear differential lock | GCI81702 | Outer Joint | | 38 | 28 | 59.5 | 34 | 81.5 | |
| | 2017.01-2020.02 | AT | R | L | Coupe 4WD DCPC | For PR code:GH2;For vehicles with AWD & variable torque dist;Mounting Type:Bolted | GDS58136 | Drive Shaft | | 38 | | 59.5 | 34 | 586 | |

| | YEAR | TRANSM. | F/R | L/R | BODY STYLE & DRIVE TYPE & ENGINE | REMARKS | G-AP Ref. | PRODUCT | ABS | Technical Specifications A | B | C | H | L | P |
|---|---|---|---|---|---|---|---|---|---|---|---|---|---|---|---|
| **AUDI** | | | | | | | | | | | | | | | |
| **A5 Quattro** | | | | | | | | | | | | | | | |
| 3.0 (210 kw) | 2017.01-2020.02 | AT | R | R | Coupe 4WD DCPC | For PR code:GH2;For vehicles with AWD & variable torque dist;Mounting Type:Bolted | GDS58137 | Drive Shaft | | 38 | | 59.5 | 34 | 545 | |
| | 2017.01-2020.02 | AT | R | L/R | Coupe 4WD DCPC | For PR code:GH2;For vehicles with AWD & variable torque dist;Mounting Type:Bolted | GCI84020 | Inner Joint | | | 28 | | | 32 | |
| | 2017.01-2020.11 | 8AT | F | L/R | Coupe 4WD DCPC | | GDS82075 | Drive Shaft | | 42 | | 76.5 | 34 | 463 | |
| | 2017.01-2020.11 | 8AT | R | L/R | Coupe 4WD DCPC | Without rear differential lock | GDS82252 | Drive Shaft | | 38 | | 59.5 | 34 | 627 | |
| | 2017.01-2020.11 | 8AT | R | L/R | Coupe 4WD DCPC | | GCI81702 | Outer Joint | | 38 | 28 | 59.5 | 34 | 81.5 | |
| | 2017.01-2020.11 | 8AT | R | L/R | Coupe 4WD DCPC | | GCI84020 | Inner Joint | | | 28 | | | 32 | |
| | 2020.08- | 8AT | F | L/R | Coupe 4WD DMGA | | GDS82075 | Drive Shaft | | 42 | | 76.5 | 34 | 463 | |
| | 2020.08- | 8AT | F | L/R | Coupe 4WD DMGA | | GCO81357 | Outer Joint | | 42 | 28 | 76.5 | 34 | 54 | I |
| | 2020.08- | 8AT | F | L/R | Coupe 4WD DMGA | | GCI61077 | Inner Joint | | | 34 | | | 88 | |
| | 2020.08- | 8AT | R | L/R | Coupe 4WD DMGA | For PR Code:GH1 | GDS82252 | Drive Shaft | | 38 | | 59.5 | 34 | 627 | |
| | 2020.08- | 8AT | R | L/R | Coupe 4WD DMGA | Rear differential Torque Vectoring;Without rear differential lock | GCI81702 | Outer Joint | | 38 | 28 | 59.5 | 34 | 81.5 | |
| | 2020.08- | AT | R | L | Coupe 4WD DMGA | For PR code:GH2;For vehicles with AWD & variable torque dist;Mounting Type:Bolted | GDS58136 | Drive Shaft | | 38 | | 59.5 | 34 | 586 | |
| | 2020.08- | AT | R | R | Coupe 4WD DMGA | For PR code:GH2;For vehicles with AWD & variable torque dist;Mounting Type:Bolted | GDS58137 | Drive Shaft | | 38 | | 59.5 | 34 | 545 | |
| | 2020.08- | AT | R | L/R | Coupe 4WD DMGA | For PR code:GH2;For vehicles with AWD & variable torque dist;Mounting Type:Bolted | GCI84020 | Inner Joint | | | 28 | | | 32 | |
| 3.2 (195 kw) | 2007.06-2012.03 | 6AT/6MT | F | L/R | Coupe 4WD CALA | | GDS83345 | Drive Shaft | | 42 | | 76.5 | 34 | 463 | |
| | 2007.06-2012.03 | AT/MT | F | L/R | Coupe 4WD CALA | Date to:2011.11 | GCO83087 | Outer Joint | | 42 | 27 | 76.5 | 34 | 57 | M |
| | 2007.06-2012.03 | AT/MT | F | L/R | Coupe 4WD CALA | Date from:2011.11 | GCO83103 | Outer Joint | | 42 | 28 | 76.4 | 34 | 54 | I |
| | 2007.06-2012.03 | | F | L/R | Coupe 4WD CALA | | GCO83086 | Outer Joint | | 42 | 33 | 76.5 | 34 | 45.5 | M |
| | 2007.06-2012.03 | | F | L/R | Coupe 4WD CALA | Chassis no. from:8T8011001,TJ | GCI61070 | Inner Joint | | | 24 | | | 85 | |
| | 2007.06-2012.03 | 6AT/6MT | R | L | Coupe 4WD CALA | Date to:2011.07,For PR code:GH2;For vehicles with electronic limited slip diff | GDS81886 | Drive Shaft | | 42 | | 76.5 | 34 | 589 | |
| | 2007.06-2012.03 | 6AT/6MT | R | L | Coupe 4WD CALA | Date from:2011.08,For PR code:GH2;For vehicles with electronic limited slip diff | GDS82078 | Drive Shaft | | 42 | | 76.5 | 34 | 587 | |
| | 2007.06-2012.03 | 6AT/6MT | R | R | Coupe 4WD CALA | Date to:2011.07,For PR code:GH2;For vehicles with electronic limited slip diff | GDS81885 | Drive Shaft | | 42 | | 76.5 | 34 | 546 | |
| | 2007.06-2012.03 | 6AT/6MT | R | R | Coupe 4WD CALA | Date from:2011.08,For PR code:GH2;For vehicles with electronic limited slip diff | GDS82079 | Drive Shaft | | 42 | | 76.5 | 34 | 545 | |
| | 2007.06-2012.03 | 6AT/6MT | R | L/R | Coupe 4WD CALA | Date from:2007.09,For PR code:GH1 | GDS82076 | Drive Shaft | | 42 | | 76.5 | 34 | 630 | |
| | 2007.06-2012.03 | 6AT/6MT | R | L/R | Coupe 4WD CALA | | GCI61107 | Inner Joint | | 42 | 28 | 76.5 | 34 | 82 | |
| | 2007.06-2012.03 | 6AT/6MT | R | L/R | Coupe 4WD CALA | | GCI81610 | Inner Joint | | | 28 | | | 28 | |
| **A5 Sportback** | | | | | | | | | | | | | | | |
| 1.4 (110 kw) | 2017.01-2020.02 | 7DCT | F | L/R | Hatchback FWD CVNA | | GDS82075 | Drive Shaft | | 42 | | 76.5 | 34 | 463 | |
| | 2017.01-2020.02 | AT/MT | F | L/R | Hatchback FWD CVNA | | GCO83103 | Outer Joint | | 42 | 28 | 76.4 | 34 | 54 | I |
| | 2017.01-2020.02 | AT/MT | F | L/R | Hatchback FWD CVNA | | GCI83022 | Inner Joint | | | 34 | | | 88.5 | |
| 1.8 (106 kw) | 2014.09-2017.01 | CVT/6MT | F | L/R | Hatchback FWD CJED | | GDS83291 | Drive Shaft | | 42 | | 76.4 | 34 | 464 | |
| | 2014.09-2017.01 | | F | L/R | Hatchback FWD CJED | | GCO83103 | Outer Joint | | 42 | 28 | 76.4 | 34 | 54 | I |
| | 2014.09-2017.01 | | F | L/R | Hatchback FWD CJED | | GCI83022 | Inner Joint | | | 34 | | | 88.5 | |
| 1.8 (118 kw) | 2009.11-2011.09 | AT/MT | F | L/R | Hatchback FWD CDHB | | GCO83087 | Outer Joint | | 42 | 27 | 76.5 | 34 | 57 | M |
| | 2009.11-2011.09 | AT/MT | F | L/R | Hatchback FWD CDHB | | GCO83103 | Outer Joint | | 42 | 28 | 76.4 | 34 | 54 | I |
| | 2009.11-2011.09 | AT/MT | F | L/R | Hatchback FWD CDHB | | GCI83022 | Inner Joint | | | 34 | | | 88.5 | |
| | 2009.11-2011.09 | CVT/6MT | F | L/R | Hatchback FWD CDHB | | GDS83273 | Drive Shaft | | 42 | | 76.5 | 34 | 460 | |
| 1.8 (125 kw) | 2011.08-2017.01 | AT/MT | F | L/R | Hatchback FWD CJEB | | GCI83022 | Inner Joint | | | 34 | | | 88.5 | |
| | 2011.08-2017.01 | CVT/6MT | F | L/R | Hatchback FWD CJEB | | GDS83291 | Drive Shaft | | 42 | | 76.4 | 34 | 464 | |
| | 2011.08-2017.01 | CVT/6MT | F | L/R | Hatchback FWD CJEB | Date to:2011.10 | GCO83087 | Outer Joint | | 42 | 27 | 76.5 | 34 | 57 | M |
| | 2011.08-2017.01 | CVT/6MT | F | L/R | Hatchback FWD CJEB | Date from:2011.11 | GCO83103 | Outer Joint | | 42 | 28 | 76.4 | 34 | 54 | I |
| 1.8 (130 kw) | 2015.05-2017.01 | CVT/6MT | F | L/R | Hatchback FWD CJEE | | GDS83291 | Drive Shaft | | 42 | | 76.4 | 34 | 464 | |
| | 2015.05-2017.01 | | F | L/R | Hatchback FWD CJEE | | GCO83103 | Outer Joint | | 42 | 28 | 76.4 | 34 | 54 | I |
| | 2015.05-2017.01 | | F | L/R | Hatchback FWD CJEE | | GCI83022 | Inner Joint | | | 34 | | | 88.5 | |
| | 2016.02-2017.01 | CVT/6MT | F | L/R | Hatchback FWD CJEE | | GDS83291 | Drive Shaft | | 42 | | 76.4 | 34 | 464 | |
| | 2016.02-2017.01 | CVT/6MT | F | L/R | Hatchback FWD CJEE | | GCI83022 | Inner Joint | | | 34 | | | 88.5 | |
| 2.0 (100 kw) | 2009.09-2017.01 | CVT/6MT | F | L/R | Hatchback FWD CAGB;CJCB;CSUB | Date to:2011.10 | GDS83273 | Drive Shaft | | 42 | | 76.5 | 34 | 460 | |
| | 2009.09-2017.01 | CVT/6MT | F | L/R | Hatchback FWD CAGB;CJCB;CSUB | Date from:2011.11 | GDS83291 | Drive Shaft | | 42 | | 76.4 | 34 | 464 | |
| | 2009.09-2017.01 | CVT/6MT | F | L/R | Hatchback FWD CAGB;CJCB;CSUB | Date to:2011.10 | GCO83087 | Outer Joint | | 42 | 27 | 76.5 | 34 | 57 | M |
| | 2009.09-2017.01 | CVT/6MT | F | L/R | Hatchback FWD CAGB;CJCB;CSUB | Date from:2011.11 | GCO83103 | Outer Joint | | 42 | 28 | 76.4 | 34 | 54 | I |
| | 2009.09-2017.01 | CVT/6MT | F | L/R | Hatchback FWD CAGB;CJCB;CSUB | TJ | GCI83022 | Inner Joint | | | 34 | | | 88.5 | |
| | 2017.05-2020.02 | 6MT | F | L/R | Hatchback FWD DEUB | | GCO81750 | Outer Joint | | 42 | 29 | 76.5 | 34 | 60 | I |
| | 2017.05-2020.02 | 6MT/7AT | F | L/R | Hatchback FWD DEUB | | GDS82256 | Drive Shaft | | 42 | | 76.5 | 34 | 464 | |
| | 2017.05-2020.02 | AT/MT | F | L/R | Hatchback FWD DEUB | | GCO83103 | Outer Joint | | 42 | 28 | 76.4 | 34 | 54 | I |
| | 2017.05-2020.02 | AT/MT | F | L/R | Hatchback FWD DEUB | | GCI83022 | Inner Joint | | | 34 | | | 88.5 | |
| | 2019.10- | 7AT | F | L/R | Hatchback FWD DEZB;DTNB | | GDS82256 | Drive Shaft | | 42 | | 76.5 | 34 | 464 | |
| | 2019.10- | 7AT | F | L/R | Hatchback FWD DEZB;DTNB | | GCO81750 | Outer Joint | | 42 | 29 | 76.5 | 34 | 60 | I |
| | 2019.10- | 7AT | F | L/R | Hatchback FWD DEZB;DTNB | | GCI61077 | Inner Joint | | | 34 | | | 88 | |
| | 2019.10- | AT/MT | F | L/R | Hatchback FWD DEZB;DTNB | Date from:2020.01 | GCO83103 | Outer Joint | | 42 | 28 | 76.4 | 34 | 54 | I |
| | 2019.10- | AT/MT | F | L/R | Hatchback FWD DEZB;DTNB | Date from:2020.01,TJ | GCI83022 | Inner Joint | | | 34 | | | 88.5 | |
| 2.0 (105 kw) | 2009.09-2017.01 | AT/MT | F | L/R | Hatchback FWD CAGA;CMEA;CJCA;CMFA | Date to:2011.11 | GCO83087 | Outer Joint | | 42 | 27 | 76.5 | 34 | 57 | M |
| | 2009.09-2017.01 | AT/MT | F | L/R | Hatchback FWD CAGA;CMEA;CJCA;CMFA | Date from:2011.11 | GCO83103 | Outer Joint | | 42 | 28 | 76.4 | 34 | 54 | I |
| | 2009.09-2017.01 | AT/MT | F | L/R | Hatchback FWD CAGA;CMEA;CJCA;CMFA | | GCI83022 | Inner Joint | | | 34 | | | 88.5 | |
| | 2009.09-2017.01 | CVT/6MT | F | L/R | Hatchback FWD CAGA;CMEA;CJCA;CMFA | Date to:2011.10 | GDS83273 | Drive Shaft | | 42 | | 76.5 | 34 | 460 | |
| | 2009.09-2017.01 | CVT/6MT | F | L/R | Hatchback FWD CAGA;CMEA;CJCA;CMFA | Date from:2011.11 | GDS83291 | Drive Shaft | | 42 | | 76.4 | 34 | 464 | |

| | YEAR | TRANSM. | F/R | L/R | BODY STYLE & DRIVE TYPE & ENGINE | REMARKS | G-AP Ref. | PRODUCT | ABS | Technical Specifications A | B | C | H | L | P |
|---|---|---|---|---|---|---|---|---|---|---|---|---|---|---|---|
| **AUDI** **A5 Sportback** | | | | | | | | | | | | | | | |
| 2.0 (110 kw) | 2013.05-2017.01 | AT/MT | F | L/R | Hatchback FWD CJCD;CMFB;CSUA | | GCO83103 | Outer Joint | | 42 | 28 | 76.4 | 34 | 54 | I |
| | 2013.05-2017.01 | AT/MT | F | L/R | Hatchback FWD CJCD;CMFB;CSUA | | GCI83022 | Inner Joint | | | 34 | | | 88.5 | |
| | 2013.05-2017.01 | CVT/6MT | F | L/R | Hatchback FWD CJCD;CMFB;CSUA | | GDS83291 | Drive Shaft | | 42 | | 76.4 | 34 | 464 | |
| | 2017.01-2020.02 | 6MT/7DCT | F | L/R | Hatchback FWD CZHA;DEUA | | GDS82075 | Drive Shaft | | 42 | | 76.5 | 34 | 463 | |
| | 2017.01-2020.02 | AT/MT | F | L/R | Hatchback FWD CZHA;DEUA | | GCO83103 | Outer Joint | | 42 | 28 | 76.4 | 34 | 54 | I |
| | 2017.01-2020.02 | AT/MT | F | L/R | Hatchback FWD CZHA;DEUA | | GCI83022 | Inner Joint | | | 34 | | | 88.5 | |
| | 2017.01-2020.02 | 6MT/7DCT | F | L | Hatchback FWD DEUA | | GDS82075 | Drive Shaft | | 42 | | 76.5 | 34 | 463 | |
| | 2018.08- | 6MT/7DCT | F | L/R | Hatchback FWD DLVB;DMSB | For Enginecode:DMSB/DLVB | GDS82075 | Drive Shaft | | 42 | | 76.5 | 34 | 463 | |
| | 2018.08- | 7AT/6MT | F | L/R | Hatchback FWD DLVB;DMSB | | GCO81357 | Outer Joint | | 42 | 28 | 76.5 | 34 | 54 | I |
| | 2018.08- | 7AT/6MT | F | L/R | Hatchback FWD DLVB;DMSB | | GCI61077 | Inner Joint | | | 34 | | | 88 | |
| | 2018.08- | AT/MT | F | L/R | Hatchback FWD DLVB;DMSB | Date from:2019.01,TJ | GCI83022 | Inner Joint | | | 34 | | | 88.5 | |
| 2.0 (120 kw) | 2009.09-2017.01 | AT/MT | F | L/R | Hatchback FWD CAHB;CGLD;CNHC | Date to:2011.11 | GCO83087 | Outer Joint | | 42 | 27 | 76.5 | 34 | 57 | M |
| | 2009.09-2017.01 | AT/MT | F | L/R | Hatchback FWD CAHB;CGLD;CNHC | Date from:2011.11 | GCO83103 | Outer Joint | | 42 | 28 | 76.4 | 34 | 54 | I |
| | 2009.09-2017.01 | AT/MT | F | L/R | Hatchback FWD CAHB;CGLD;CNHC | | GCI83022 | Inner Joint | | | 34 | | | 88.5 | |
| | 2009.09-2017.01 | CVT/6MT | F | L/R | Hatchback FWD CAHB;CGLD;CNHC | Date to:2011.10,For Engine code:CAHB;Date from:2011.11,For Engine code:CGLD/CNHC | GDS83273 | Drive Shaft | | 42 | | 76.5 | 34 | 460 | |
| | 2009.09-2017.01 | CVT/6MT | F | L/R | Hatchback FWD CAHB;CGLD;CNHC | Date from:2011.11,For Engine code:CAHB | GDS83291 | Drive Shaft | | 42 | | 76.4 | 34 | 464 | |
| | 2009.09-2017.01 | CVT/6MT | F | L/R | Hatchback FWD CAHB;CGLD;CNHC | Date to:2011.10,For Engine code:CGLD/CNHC | GDS83321 | Drive Shaft | | 42 | | 76.5 | 34 | 462 | |
| | 2009.09-2017.01 | | F | L/R | Hatchback FWD CAHB;CGLD;CNHC | Date To:2011.10 | GCO83088 | Outer Joint | | 42 | 29 | 76.5 | 34 | 61.5 | M |
| | 2009.09-2017.01 | | F | L/R | Hatchback FWD CAHB;CGLD;CNHC | | GCO83102 | Outer Joint | | 42 | 29 | 76.5 | 34 | 60 | I |
| | 2019.08- | 7AT | F | L/R | Hatchback FWD DEZE;DTNA | | GDS82256 | Drive Shaft | | 42 | | 76.5 | 34 | 464 | |
| | 2019.08- | 7AT | F | L/R | Hatchback FWD DEZE;DTNA | | GCO81750 | Outer Joint | | 42 | 29 | 76.5 | 34 | 60 | I |
| | 2019.08- | AT | F | L/R | Hatchback FWD DEZE;DTNA | Date from:2020.01 | GCI83022 | Inner Joint | | | 34 | | | 88.5 | |
| 2.0 (125 kw) | 2009.09-2012.03 | 6MT | F | L/R | Hatchback FWD CAHA | Date to:2011.10 | GDS83273 | Drive Shaft | | 42 | | 76.5 | 34 | 460 | |
| | 2009.09-2012.03 | 6MT | F | L/R | Hatchback FWD CAHA | Date from:2011.11 | GDS83291 | Drive Shaft | | 42 | | 76.4 | 34 | 464 | |
| | 2009.09-2012.03 | 6MT | F | L/R | Hatchback FWD CAHA | Date to:2011.10 | GCO83087 | Outer Joint | | 42 | 27 | 76.5 | 34 | 57 | M |
| | 2009.09-2012.03 | 6MT | F | L/R | Hatchback FWD CAHA | Date from:2011.11 | GCO83103 | Outer Joint | | 42 | 28 | 76.4 | 34 | 54 | I |
| | 2009.09-2012.03 | 6MT | F | L/R | Hatchback FWD CAHA | | GCI83022 | Inner Joint | | | 34 | | | 88.5 | |
| | 2017.02- | 6MT/7DCT | F | L | Hatchback FWD CVLA;DRXA | | GDS82075 | Drive Shaft | | 42 | | 76.5 | 34 | 463 | |
| | 2017.02-2020.02 | 6MT/7DCT | F | L/R | Hatchback FWD CVLA | | GDS82075 | Drive Shaft | | 42 | | 76.5 | 34 | 463 | |
| | 2017.02-2020.02 | AT/MT | F | L/R | Hatchback FWD CVLA | | GCO83103 | Outer Joint | | 42 | 28 | 76.4 | 34 | 54 | I |
| | 2017.02-2020.02 | AT/MT | F | L/R | Hatchback FWD CVLA | | GCI83022 | Inner Joint | | | 34 | | | 88.5 | |
| 2.0 (130 kw) | 2011.10-2017.01 | CVT/6MT | F | L/R | Hatchback FWD CGLC | | GDS83273 | Drive Shaft | | 42 | | 76.5 | 34 | 460 | |
| | 2011.10-2017.01 | CVT/6MT | F | L/R | Hatchback FWD CGLC | Date to:2011.10 | GCO83088 | Outer Joint | | 42 | 29 | 76.5 | 34 | 61.5 | M |
| | 2011.10-2017.01 | CVT/6MT | F | L/R | Hatchback FWD CGLC | Date from:2011.11 | GCO83102 | Outer Joint | | 42 | 29 | 76.5 | 34 | 60 | I |
| | 2011.10-2017.01 | CVT/6MT | F | L/R | Hatchback FWD CGLC | | GCI81054 | Inner Joint | | | 24 | | | 86 | |
| | 2011.10-2017.01 | CVT/6MT | F | L/R | Hatchback FWD CGLC | | GCI83022 | Inner Joint | | | 34 | | | 88.5 | |
| 2.0 (132 kw) | 2009.09-2014.06 | AT/MT | F | L/R | Hatchback FWD CDNB | Date to:2011.11 | GCO83087 | Outer Joint | | 42 | 27 | 76.5 | 34 | 57 | M |
| | 2009.09-2014.06 | AT/MT | F | L/R | Hatchback FWD CDNB | Date from:2011.11 | GCO83103 | Outer Joint | | 42 | 28 | 76.4 | 34 | 54 | I |
| | 2009.09-2014.06 | AT/MT | F | L/R | Hatchback FWD CDNB | | GCI83022 | Inner Joint | | | 34 | | | 88.5 | |
| | 2009.09-2014.06 | CVT/6MT | F | L/R | Hatchback FWD CDNB | Date to:2011.10 | GDS83273 | Drive Shaft | | 42 | | 76.5 | 34 | 460 | |
| | 2009.09-2014.06 | CVT/6MT | F | L/R | Hatchback FWD CDNB | Date from:2011.11 | GDS83291 | Drive Shaft | | 42 | | 76.4 | 34 | 464 | |
| 2.0 (140 kw) | 2013.09-2017.01 | CVT/6MT | F | L/R | Hatchback FWD CNHA | | GDS83273 | Drive Shaft | | 42 | | 76.5 | 34 | 460 | |
| | 2013.09-2017.01 | CVT/6MT | F | L/R | Hatchback FWD CNHA | | GCO83102 | Outer Joint | | 42 | 29 | 76.5 | 34 | 60 | I |
| | 2013.09-2017.01 | CVT/6MT | F | L/R | Hatchback FWD CNHA | | GCI83022 | Inner Joint | | | 34 | | | 88.5 | |
| | 2016.09- | 7DCT | F | L/R | Hatchback FWD DESA;DETA | | GDS82256 | Drive Shaft | | 42 | | 76.5 | 34 | 464 | |
| | 2016.09-2020.04 | 6MT/7AT | F | L/R | Hatchback FWD DESA;DETA | | GDS82256 | Drive Shaft | | 42 | | 76.5 | 34 | 464 | |
| | 2016.09-2020.04 | 6MT/7AT | F | L/R | Hatchback FWD DESA;DETA | | GCO81750 | Outer Joint | | 42 | 29 | 76.5 | 34 | 60 | I |
| | 2016.09-2020.04 | 6MT/7AT | F | L/R | Hatchback FWD DESA;DETA | AAR | GCI61077 | Inner Joint | | | 34 | | | 88 | |
| | 2016.09-2020.04 | 6MT/7AT | F | L/R | Hatchback FWD DESA;DETA | TJ | GCI83022 | Inner Joint | | | 34 | | | 88.5 | |
| | 2017.01-2020.02 | 6MT/7DCT | F | L/R | Hatchback FWD CVKB;DKYA | | GDS82075 | Drive Shaft | | 42 | | 76.5 | 34 | 463 | |
| | 2017.01-2020.02 | AT/MT | F | L/R | Hatchback FWD CVKB;DKYA | | GCO83103 | Outer Joint | | 42 | 28 | 76.4 | 34 | 54 | I |
| | 2017.01-2020.02 | AT/MT | F | L/R | Hatchback FWD CVKB;DKYA | | GCI83022 | Inner Joint | | | 34 | | | 88.5 | |
| | 2017.05- | 6MT/7DCT | F | L/R | Hatchback FWD DEMA;DHDA;DLVA;DKYA | For Enginecode:DEMA/DKYA/DLVA | GDS82075 | Drive Shaft | | 42 | | 76.5 | 34 | 463 | |
| | 2017.05- | 7AT | F | L/R | Hatchback FWD DEMA;DHDA;DLVA;DKYA | | GCO81357 | Outer Joint | | 42 | 28 | 76.5 | 34 | 54 | I |
| | 2017.05- | 7AT/6MT | F | L/R | Hatchback FWD DEMA;DHDA;DLVA;DKYA | | GCI61077 | Inner Joint | | | 34 | | | 88 | |
| | 2017.05- | AT/MT | F | L/R | Hatchback FWD DEMA;DHDA;DLVA;DKYA | TJ | GCI83022 | Inner Joint | | | 34 | | | 88.5 | |
| | 2017.06- | 7DCT | F | L/R | Hatchback FWD CVKB;DKYA | | GDS82075 | Drive Shaft | | 42 | | 76.5 | 34 | 463 | |
| 2.0 (150 kw) | 2020.06- | 7AT | F | L/R | Hatchback FWD DMSA | | GCO81357 | Outer Joint | | 42 | 28 | 76.5 | 34 | 54 | I |
| | 2020.06- | 7AT | F | L/R | Hatchback FWD DMSA | | GCI61077 | Inner Joint | | | 34 | | | 88 | |
| | 2020.06- | 7DCT | F | L/R | Hatchback FWD DMSA | | GDS82075 | Drive Shaft | | 42 | | 76.5 | 34 | 463 | |
| | 2020.09- | 7AT | F | L/R | Hatchback FWD DTPA | | GDS82256 | Drive Shaft | | 42 | | 76.5 | 34 | 464 | |
| | 2020.09- | 7AT | F | L/R | Hatchback FWD DTPA | | GCO81750 | Outer Joint | | 42 | 29 | 76.5 | 34 | 60 | I |
| | 2020.09- | 7AT | F | L/R | Hatchback FWD DTPA | | GCI61077 | Inner Joint | | | 34 | | | 88 | |
| 2.0 (155 kw) | 2009.09-2013.11 | 6MT/7AT/8AT | F | L/R | Hatchback FWD CDNC | | GCI81054 | Inner Joint | | | 24 | | | 86 | |
| | 2009.09-2013.11 | AT/MT | F | L/R | Hatchback FWD CDNC | Date to:2011.11 | GCO83087 | Outer Joint | | 42 | 27 | 76.5 | 34 | 57 | M |

| | YEAR | TRANSM. | F/R | L/R | BODY STYLE & DRIVE TYPE & ENGINE | REMARKS | G-AP Ref. | PRODUCT | ABS | Technical Specifications A | B | C | H | L | P |
|---|---|---|---|---|---|---|---|---|---|---|---|---|---|---|---|
| **AUDI** | | | | | | | | | | | | | | | |
| **A5 Sportback** | | | | | | | | | | | | | | | |
| 2.0 (155 kw) | 2009.09-2013.11 | AT/MT | F | L/R | Hatchback FWD CDNC | Date from:2011.11 | GCO83103 | Outer Joint | | 42 | 28 | 76.4 | 34 | 54 | I |
| | 2009.09-2013.11 | AT/MT | F | L/R | Hatchback FWD CDNC | | GCI83022 | Inner Joint | | | 34 | | | 88.5 | |
| | 2009.09-2013.11 | CVT/6MT | F | L/R | Hatchback FWD CDNC | Date to:2011.10 | GDS83273 | Drive Shaft | | 42 | | 76.5 | 34 | 460 | |
| | 2009.09-2013.11 | CVT/6MT | F | L/R | Hatchback FWD CDNC | Date from:2011.11 | GDS83291 | Drive Shaft | | 42 | | 76.4 | 34 | 464 | |
| 2.0 (165 kw) | 2013.05-2016.05 | CVT/6MT | F | L/R | Hatchback FWD CNCD | | GDS83291 | Drive Shaft | | 42 | | 76.4 | 34 | 464 | |
| | 2013.05-2016.05 | | F | L/R | Hatchback FWD CNCD | | GCO83103 | Outer Joint | | 42 | 28 | 76.4 | 34 | 54 | I |
| | 2013.05-2016.05 | | F | L/R | Hatchback FWD CNCD | | GCI83022 | Inner Joint | | | 34 | | | 88.5 | |
| | 2014.02-2016.12 | CVT/6MT | F | L/R | Hatchback FWD CNCD | | GDS83291 | Drive Shaft | | 42 | | 76.4 | 34 | 464 | |
| | 2014.02-2016.12 | CVT/6MT | F | L/R | Hatchback FWD CNCD | | GCI83022 | Inner Joint | | | 34 | | | 88.5 | |
| 2.0 (169 kw) | 2015.08-2017.01 | CVT/6MT | F | L/R | Hatchback FWD CNCE | | GDS83291 | Drive Shaft | | 42 | | 76.4 | 34 | 464 | |
| | 2015.08-2017.01 | | F | L/R | Hatchback FWD CNCE | | GCO83103 | Outer Joint | | 42 | 28 | 76.4 | 34 | 54 | I |
| | 2015.08-2017.01 | | F | L/R | Hatchback FWD CNCE | | GCI83022 | Inner Joint | | | 34 | | | 88.5 | |
| | 2016.02-2017.01 | CVT/6MT | F | L/R | Hatchback FWD CNCE | | GDS83291 | Drive Shaft | | 42 | | 76.4 | 34 | 464 | |
| | 2016.02-2017.01 | CVT/6MT | F | L/R | Hatchback FWD CNCE | | GCI83022 | Inner Joint | | | 34 | | | 88.5 | |
| 2.0 (180 kw) | 2018.07-2020.02 | 7AT | F | L/R | Hatchback FWD DKNA | | GDS82256 | Drive Shaft | | 42 | | 76.5 | 34 | 464 | |
| | 2018.07-2020.02 | 7AT | F | L/R | Hatchback FWD DKNA | | GCO81750 | Outer Joint | | 42 | 29 | 76.5 | 34 | 60 | I |
| | 2018.07-2020.02 | 7AT | F | L/R | Hatchback FWD DKNA | | GCI61077 | Inner Joint | | | 34 | | | 88 | |
| | 2018.07-2020.02 | AT | F | L/R | Hatchback FWD DKNA | Date from:2019.01 | GCO83103 | Outer Joint | | 42 | 28 | 76.4 | 34 | 54 | I |
| | 2018.07-2020.02 | AT | F | L/R | Hatchback FWD DKNA | Date from:2019.01,TJ | GCI83022 | Inner Joint | | | 34 | | | 88.5 | |
| 2.0 (185 kw) | 2016.11-2020.02 | 7AT | F | L/R | Hatchback FWD CYRB | | GDS82256 | Drive Shaft | | 42 | | 76.5 | 34 | 464 | |
| | 2016.11-2020.02 | 7AT | F | L/R | Hatchback FWD CYRB | | GCO81750 | Outer Joint | | 42 | 29 | 76.5 | 34 | 60 | I |
| | 2016.11-2020.02 | AT | F | L/R | Hatchback FWD CYRB | Date from:2017.01 | GCI83022 | Inner Joint | | | 34 | | | 88.5 | |
| | 2017.05-2020.02 | 7AT | F | L/R | Hatchback FWD DDWA | | GDS82256 | Drive Shaft | | 42 | | 76.5 | 34 | 464 | |
| | 2017.05-2020.02 | 7AT | F | L/R | Hatchback FWD DDWA | | GCO81750 | Outer Joint | | 42 | 29 | 76.5 | 34 | 60 | I |
| | 2017.05-2020.02 | 7AT | F | L/R | Hatchback FWD DDWA | | GCI61077 | Inner Joint | | | 34 | | | 88 | |
| | 2017.05-2020.02 | AT | F | L/R | Hatchback FWD DDWA | TJ | GCI83022 | Inner Joint | | | 34 | | | 88.5 | |
| | 2017.06-2020.02 | 7DCT | F | L/R | Hatchback FWD CYRB | | GDS82256 | Drive Shaft | | 42 | | 76.5 | 34 | 464 | |
| 2.7 (120 kw) | 2009.09-2012.03 | AT/MT | F | L/R | Hatchback FWD CGKB | | GCI83022 | Inner Joint | | | 34 | | | 88.5 | |
| | 2009.09-2012.03 | CVT | F | L/R | Hatchback FWD CGKB | Date from:2011.11 | GDS83273 | Drive Shaft | | 42 | | 76.5 | 34 | 460 | |
| | 2009.09-2012.03 | CVT | F | L/R | Hatchback FWD CGKB | Date to:2011.10 | GDS83321 | Drive Shaft | | 42 | | 76.5 | 34 | 462 | |
| | 2009.09-2012.03 | | F | L/R | Hatchback FWD CGKB | Date To:2012.02 | GCO83087 | Outer Joint | | 42 | 27 | 76.5 | 34 | 57 | M |
| | 2009.09-2012.03 | | F | L/R | Hatchback FWD CGKB | Date To:2011.10 | GCO83088 | Outer Joint | | 42 | 29 | 76.5 | 34 | 61.5 | M |
| | 2009.09-2012.03 | | F | L/R | Hatchback FWD CGKB | Date From:2011.11 | GCO83102 | Outer Joint | | 42 | 29 | 76.5 | 34 | 60 | I |
| 2.7 (140 kw) | 2009.09-2012.03 | CVT/6MT | F | L/R | Hatchback FWD CGKA | Date from:2011.11 | GDS83273 | Drive Shaft | | 42 | | 76.5 | 34 | 460 | |
| | 2009.09-2012.03 | CVT/6MT | F | L/R | Hatchback FWD CGKA | Date to:2011.10 | GDS83321 | Drive Shaft | | 42 | | 76.5 | 34 | 462 | |
| | 2009.09-2012.03 | CVT/6MT | F | L/R | Hatchback FWD CGKA | | GCO83087 | Outer Joint | | 42 | 27 | 76.5 | 34 | 57 | M |
| | 2009.09-2012.03 | CVT/6MT | F | L/R | Hatchback FWD CGKA | Date to:2011.10 | GCO83088 | Outer Joint | | 42 | 29 | 76.5 | 34 | 61.5 | M |
| | 2009.09-2012.03 | CVT/6MT | F | L/R | Hatchback FWD CGKA | Date from:2011.11 | GCO83102 | Outer Joint | | 42 | 29 | 76.5 | 34 | 60 | I |
| | 2009.09-2012.03 | CVT/6MT | F | L/R | Hatchback FWD CGKA | | GCI83022 | Inner Joint | | | 34 | | | 88.5 | |
| 3.0 (150 kw) | 2011.10-2017.01 | AT/MT | F | L/R | Hatchback FWD CLAB | | GCI83022 | Inner Joint | | | 34 | | | 88.5 | |
| | 2011.10-2017.01 | CVT/6MT | F | L/R | Hatchback FWD CLAB | | GDS83273 | Drive Shaft | | 42 | | 76.5 | 34 | 460 | |
| | 2011.10-2017.01 | CVT/6MT | F | L/R | Hatchback FWD CLAB | Date to:2011.10 | GCO83088 | Outer Joint | | 42 | 29 | 76.5 | 34 | 61.5 | M |
| | 2011.10-2017.01 | CVT/6MT | F | L/R | Hatchback FWD CLAB | Date from:2011.11 | GCO83102 | Outer Joint | | 42 | 29 | 76.5 | 34 | 60 | I |
| 3.0 (160 kw) | 2017.03-2018.08 | 7AT | F | L/R | Hatchback FWD CSWB | | GDS82256 | Drive Shaft | | 42 | | 76.5 | 34 | 464 | |
| | 2017.03-2018.08 | 7AT | F | L/R | Hatchback FWD CSWB | | GCO81750 | Outer Joint | | 42 | 29 | 76.5 | 34 | 60 | I |
| | 2017.03-2018.08 | AT | F | L/R | Hatchback FWD CSWB | | GCI83022 | Inner Joint | | | 34 | | | 88.5 | |
| **A5 Sportback Quattro** | | | | | | | | | | | | | | | |
| 2.0 (110 kw) | 2017.05-2020.02 | 6MT | F | L/R | Hatchback 4WD CZHA;DEUA | For PR code:GH1 | GDS82074 | Drive Shaft | | 42 | | 76.5 | 34 | 462 | |
| | 2017.05-2020.02 | 6MT | F | L/R | Hatchback 4WD CZHA;DEUA | For PR code:GH4,For vehicles with AWD & variable torque dist. | GDS82075 | Drive Shaft | | 42 | | 76.5 | 34 | 463 | |
| | 2017.05-2020.02 | AT | F | L/R | Hatchback 4WD CZHA;DEUA | | GCO83103 | Outer Joint | | 42 | 28 | 76.4 | 34 | 54 | I |
| | 2017.05-2020.02 | AT | F | L/R | Hatchback 4WD CZHA;DEUA | | GCI83022 | Inner Joint | | | 34 | | | 88.5 | |
| | 2017.05-2020.02 | 6MT | R | L | Hatchback 4WD CZHA;DEUA | For PR code:GH4;For veh. with all-wheel drive & controlled clutch;Mounting Type:Bolted | GDS58134 | Drive Shaft | | 38 | | 59.5 | 34 | 653 | |
| | 2017.05-2020.02 | 6MT | R | R | Hatchback 4WD CZHA;DEUA | For PR code:GH4;For veh. with all-wheel drive & controlled clutch;Mounting Type:Bolted | GDS58135 | Drive Shaft | | 38 | | 59.5 | 34 | 550 | |
| | 2017.05-2020.02 | 6MT | R | L/R | Hatchback 4WD CZHA;DEUA | For PR code:GH1 | GDS82363 | Drive Shaft | | 38 | | 59.5 | 34 | 624 | |
| | 2017.05-2020.02 | 6MT | R | L/R | Hatchback 4WD CZHA;DEUA | Rear differential with uncoupling feature;Without rear differential lock | GCI81751 | Outer Joint | | 38 | 33 | 59.5 | 34 | 78 | |
| | 2017.05-2020.02 | 6MT | R | L/R | Hatchback 4WD CZHA;DEUA | For PR code:GH4;For veh. with all-wheel drive & controlled clutch;Mounting Type:Bolted | GCI81752 | Inner Joint | | | 33 | | | 34 | |
| 2.0 (125 kw) | 2009.09-2012.03 | 6MT | F | L/R | Hatchback 4WD CAHA | | GDS83345 | Drive Shaft | | 42 | | 76.5 | 34 | 463 | |
| | 2009.09-2012.03 | AT/MT | F | L/R | Hatchback 4WD CAHA | | GCO83086 | Outer Joint | | 42 | 33 | 76.5 | 34 | 45.5 | M |
| | 2009.09-2012.03 | | F | L/R | Hatchback 4WD CAHA | TJ | GCI61070 | Inner Joint | | | 24 | | | 85 | |
| | 2009.09-2012.03 | 6MT | R | L | Hatchback 4WD CAHA | Date to:2011.07,For PR code:GH2,For vehicles with electronic limited slip diff. | GDS81886 | Drive Shaft | | 42 | | 76.5 | 34 | 589 | |
| | 2009.09-2012.03 | 6MT | R | L | Hatchback 4WD CAHA | Date from:2011.08,For PR code:GH2,For vehicles with electronic limited slip diff. | GDS82078 | Drive Shaft | | 42 | | 76.5 | 34 | 587 | |
| | 2009.09-2012.03 | 6MT | R | R | Hatchback 4WD CAHA | Date to:2011.07,For PR code:GH2,For vehicles with electronic limited slip diff. | GDS81885 | Drive Shaft | | 42 | | 76.5 | 34 | 546 | |
| | 2009.09-2012.03 | 6MT | R | R | Hatchback 4WD CAHA | Date from:2011.08,For PR code:GH2,For vehicles with electronic limited slip diff. | GDS82079 | Drive Shaft | | 42 | | 76.5 | 34 | 545 | |
| | 2009.09-2012.03 | 6MT | R | L/R | Hatchback 4WD CAHA | For PR code:GH1 | GDS82076 | Drive Shaft | | 42 | | 76.5 | 34 | 630 | |
| | 2009.09-2012.03 | 6MT | R | L/R | Hatchback 4WD CAHA | | GCI61107 | Inner Joint | | 42 | 28 | 76.5 | 34 | 82 | |

| | YEAR | TRANSM. | F/R | L/R | BODY STYLE & DRIVE TYPE & ENGINE | REMARKS | G-AP Ref. | PRODUCT | ABS | Technical Specifications A | B | C | H | L | P |
|---|---|---|---|---|---|---|---|---|---|---|---|---|---|---|---|
| **AUDI** | | | | | | | | | | | | | | | |
| **A5 Sportback Quattro** | | | | | | | | | | | | | | | |
| 2.0 (125 kw) | 2009.09-2012.03 | 6MT | R | L/R | Hatchback 4WD CAHA | | GCI81610 | Inner Joint | | | 28 | | | 28 | |
| 2.0 (130 kw) | 2011.12-2017.01 | 7AT/6MT | F | L/R | Hatchback 4WD CGLC | | GDS83371 | Drive Shaft | | 42 | | 76.5 | 34 | 465 | |
| | 2011.12-2017.01 | 7AT/6MT | F | L/R | Hatchback 4WD CGLC | | GCO83107 | Outer Joint | | 42 | 25 | 76.5 | 34 | 47.5 | I |
| | 2011.12-2017.01 | 7AT/6MT | F | L/R | Hatchback 4WD CGLC | AAR | GCI81054 | Inner Joint | | | 24 | | | 86 | |
| | 2011.12-2017.01 | 7AT/6MT | R | L | Hatchback 4WD CGLC | For PR code:GH2,For vehicles with electronic limited slip diff. | GDS82078 | Drive Shaft | | 42 | | 76.5 | 34 | 587 | |
| | 2011.12-2017.01 | 7AT/6MT | R | R | Hatchback 4WD CGLC | For PR code:GH2,For vehicles with electronic limited slip diff. | GDS82079 | Drive Shaft | | 42 | | 76.5 | 34 | 545 | |
| | 2011.12-2017.01 | 7AT/6MT | R | L/R | Hatchback 4WD CGLC | For PR code:GH1 | GDS83367 | Drive Shaft | | 42 | | 76.5 | 34 | 626 | |
| | 2011.12-2017.01 | 7AT/6MT | R | L/R | Hatchback 4WD CGLC | For PR Code:GH1 | GCI83040 | Outer Joint | | 42 | 25 | 76.5 | 34 | 66 | M |
| | 2011.12-2017.01 | 7AT/6MT | R | L/R | Hatchback 4WD CGLC | For PR code:GH2,For vehicles with electronic LTD slip differential | GCI61107 | Inner Joint | | 42 | 28 | 76.5 | 34 | 82 | |
| | 2011.12-2017.01 | 7AT/6MT | R | L/R | Hatchback 4WD CGLC | For PR code:GH2,For vehicles with electronic LTD slip differential | GCI81610 | Inner Joint | | | 28 | | | 28 | |
| | 2011.12-2017.01 | 7AT/6MT | R | L/R | Hatchback 4WD CGLC | For PR code:GH1 | GCI83044 | Inner Joint | | | 25 | | | 26 | |
| 2.0 (140 kw) | 2013.09-2017.01 | 7AT/6MT | F | L/R | Hatchback 4WD CNHA | | GDS83371 | Drive Shaft | | 42 | | 76.5 | 34 | 465 | |
| | 2013.09-2017.01 | 7AT/6MT | F | L/R | Hatchback 4WD CNHA | | GCO83107 | Outer Joint | | 42 | 25 | 76.5 | 34 | 47.5 | I |
| | 2013.09-2017.01 | 7AT/6MT | F | L/R | Hatchback 4WD CNHA | TJ | GCI61070 | Inner Joint | | | 24 | | | 85 | |
| | 2013.09-2017.01 | 7AT/6MT | F | L/R | Hatchback 4WD CNHA | AAR | GCI81054 | Inner Joint | | | 24 | | | 86 | |
| | 2013.09-2017.01 | 7AT/6MT | R | L | Hatchback 4WD CNHA | For PR code:GH2,For vehicles with electronic limited slip diff. | GDS82078 | Drive Shaft | | 42 | | 76.5 | 34 | 587 | |
| | 2013.09-2017.01 | 7AT/6MT | R | R | Hatchback 4WD CNHA | For PR code:GH2,For vehicles with electronic limited slip diff. | GDS82079 | Drive Shaft | | 42 | | 76.5 | 34 | 545 | |
| | 2013.09-2017.01 | 7AT/6MT | R | L/R | Hatchback 4WD CNHA | For PR code:GH1 | GDS83367 | Drive Shaft | | 42 | | 76.5 | 34 | 626 | |
| | 2013.09-2017.01 | 7AT/6MT | R | L/R | Hatchback 4WD CNHA | For PR code:GH1 | GCI83040 | Outer Joint | | 42 | 25 | 76.5 | 34 | 66 | M |
| | 2013.09-2017.01 | 7AT/6MT | R | L/R | Hatchback 4WD CNHA | For PR code:GH2,For vehicles with electronic LTD slip differential | GCI61107 | Inner Joint | | 42 | 28 | 76.5 | 34 | 82 | |
| | 2013.09-2017.01 | 7AT/6MT | R | L/R | Hatchback 4WD CNHA | For PR code:GH2,For vehicles with electronic LTD slip differential | GCI81610 | Inner Joint | | | 28 | | | 28 | |
| | 2013.09-2017.01 | 7AT/6MT | R | L/R | Hatchback 4WD CNHA | For PR code:GH1 | GCI83044 | Inner Joint | | | 25 | | | 26 | |
| | 2016.08- | 7DCT | F | L/R | Hatchback 4WD DETA | Without rear differential lock | GDS82074 | Drive Shaft | | 42 | | 76.5 | 34 | 462 | |
| | 2016.08- | 7DCT | F | L/R | Hatchback 4WD DETA | Rear differential with uncoupling feature | GDS82075 | Drive Shaft | | 42 | | 76.5 | 34 | 463 | |
| | 2016.08- | 7AT/6MT | R | L/R | Hatchback 4WD DETA | | GCI81751 | Outer Joint | | 38 | 33 | 59.5 | 34 | 78 | |
| | 2016.08- | 7DCT/6MT | R | L/R | Hatchback 4WD DETA | Without rear differential lock | GDS82363 | Drive Shaft | | 38 | | 59.5 | 34 | 624 | |
| | 2016.10-2020.02 | 6MT/7DCT | F | L/R | Hatchback 4WD DESA;DETA | For PR code:GH1 | GDS82074 | Drive Shaft | | 42 | | 76.5 | 34 | 462 | |
| | 2016.10-2020.02 | 6MT/7DCT | F | L/R | Hatchback 4WD DESA;DETA | For PR code:GH4 | GDS82075 | Drive Shaft | | 42 | | 76.5 | 34 | 463 | |
| | 2016.10-2020.02 | 6MT/7DCT | F | L/R | Hatchback 4WD DESA;DETA | For PR code:GH4 | GCO81357 | Outer Joint | | 42 | 28 | 76.5 | 34 | 54 | I |
| | 2016.10-2020.02 | 6MT/7DCT | F | L/R | Hatchback 4WD DESA;DETA | For PR code:GH4 | GCI61077 | Inner Joint | | | 34 | | | 88 | |
| | 2016.10-2020.02 | 6MT/7DCT | F | L/R | Hatchback 4WD DESA;DETA | For PR code:GH1 | GCI81054 | Inner Joint | | | 24 | | | 86 | |
| | 2016.10-2020.02 | AT | F | L/R | Hatchback 4WD DESA;DETA | | GCO83103 | Outer Joint | | 42 | 28 | 76.4 | 34 | 54 | I |
| | 2016.10-2020.02 | 6MT/7DCT | R | L/R | Hatchback 4WD DESA;DETA | For PR code:GH1 | GDS82363 | Drive Shaft | | 38 | | 59.5 | 34 | 624 | |
| | 2016.10-2020.02 | 6MT/7DCT | R | L/R | Hatchback 4WD DESA;DETA | Rear differential with uncoupling feature;Without rear differential lock | GCI81751 | Outer Joint | | 38 | 33 | 59.5 | 34 | 78 | |
| | 2016.10-2020.02 | 6MT/7DCT | R | L/R | Hatchback 4WD DESA;DETA | | GCI81752 | Inner Joint | | | 33 | | | 34 | |
| | 2016.10-2020.02 | 7DCT/6MT | R | L | Hatchback 4WD DESA;DETA | For PR code:GH4;For veh. with all-wheel drive & controlled clutch;Mounting Type:Bolted | GDS58134 | Drive Shaft | | 38 | | 59.5 | 34 | 653 | |
| | 2016.10-2020.02 | 7DCT/6MT | R | R | Hatchback 4WD DESA;DETA | For PR code:GH4;For veh. with all-wheel drive & controlled clutch;Mounting Type:Bolted | GDS58135 | Drive Shaft | | 38 | | 59.5 | 34 | 550 | |
| 2.0 (150 kw) | 2020.06- | 7AT | F | L/R | Hatchback 4WD DMSA | For PR code:GH4,For vehicles with AWD & variable torque dist. | GCO81357 | Outer Joint | | 42 | 28 | 76.5 | 34 | 54 | I |
| | 2020.06- | 7DCT | F | L/R | Hatchback 4WD DMSA | Without rear differential lock | GDS82074 | Drive Shaft | | 42 | | 76.5 | 34 | 462 | |
| | 2020.06- | 7DCT | F | L/R | Hatchback 4WD DMSA | Rear differential with uncoupling feature | GDS82075 | Drive Shaft | | 42 | | 76.5 | 34 | 463 | |
| | 2020.06- | 7DCT | F | L/R | Hatchback 4WD DMSA | For PR code:GH4,For vehicles with AWD & variable torque dist. | GCI61077 | Inner Joint | | | 34 | | | 88 | |
| | 2020.06- | 7DCT | R | L/R | Hatchback 4WD DMSA | For PR code:GH1 | GDS82363 | Drive Shaft | | 38 | | 59.5 | 34 | 624 | |
| | 2020.06- | 7DCT | R | L/R | Hatchback 4WD DMSA | Rear differential with uncoupling feature;Without rear differential lock | GCI81751 | Outer Joint | | 38 | 33 | 59.5 | 34 | 78 | |
| | 2020.06- | 7DCT/6MT | R | L | Hatchback 4WD DMSA | For PR code:GH4;For veh. with all-wheel drive & controlled clutch;Mounting Type:Bolted | GDS58134 | Drive Shaft | | 38 | | 59.5 | 34 | 653 | |
| | 2020.06- | 7DCT/6MT | R | R | Hatchback 4WD DMSA | For PR code:GH4;For veh. with all-wheel drive & controlled clutch;Mounting Type:Bolted | GDS58135 | Drive Shaft | | 38 | | 59.5 | 34 | 550 | |
| | 2020.06- | 7DCT/6MT | R | L/R | Hatchback 4WD DMSA | For PR code:GH4;For veh. with all-wheel drive & controlled clutch;Mounting Type:Bolted | GCI81752 | Inner Joint | | | 33 | | | 34 | |
| | 2020.09- | 7AT | F | L/R | Hatchback 4WD DTPA | For PR code:GH4,For vehicles with AWD & variable torque dist. | GCO81357 | Outer Joint | | 42 | 28 | 76.5 | 34 | 54 | I |
| | 2020.09- | 7DCT | F | L/R | Hatchback 4WD DTPA | Without rear differential lock | GDS82074 | Drive Shaft | | 42 | | 76.5 | 34 | 462 | |
| | 2020.09- | 7DCT | F | L/R | Hatchback 4WD DTPA | Rear differential with uncoupling feature | GDS82075 | Drive Shaft | | 42 | | 76.5 | 34 | 463 | |
| | 2020.09- | 7DCT | F | L/R | Hatchback 4WD DTPA | For PR code:GH4,For vehicles with AWD & variable torque dist. | GCI61077 | Inner Joint | | | 34 | | | 88 | |
| | 2020.09- | 7DCT | R | L | Hatchback 4WD DTPA | For PR code:GH4;For veh. with all-wheel drive & controlled clutch;Mounting Type:Bolted | GDS58134 | Drive Shaft | | 38 | | 59.5 | 34 | 653 | |
| | 2020.09- | 7DCT | R | R | Hatchback 4WD DTPA | For PR code:GH4;For veh. with all-wheel drive & controlled clutch;Mounting Type:Bolted | GDS58135 | Drive Shaft | | 38 | | 59.5 | 34 | 550 | |
| | 2020.09- | 7DCT | R | L/R | Hatchback 4WD DTPA | For PR code:GH1 | GDS82363 | Drive Shaft | | 38 | | 59.5 | 34 | 624 | |
| | 2020.09- | 7DCT | R | L/R | Hatchback 4WD DTPA | Rear differential with uncoupling feature;Without rear differential lock | GCI81751 | Outer Joint | | 38 | 33 | 59.5 | 34 | 78 | |
| | 2020.09- | 7DCT | R | L/R | Hatchback 4WD DTPA | For PR code:GH4;For veh. with all-wheel drive & controlled clutch;Mounting Type:Bolted | GCI81752 | Inner Joint | | | 33 | | | 34 | |
| 2.0 (155 kw) | 2009.09-2017.01 | 7AT/6MT | F | L/R | Hatchback 4WD CDNC | Chassis no. to:8TBA150000 | GDS83345 | Drive Shaft | | 42 | | 76.5 | 34 | 463 | |
| | 2009.09-2017.01 | 7AT/6MT | F | L/R | Hatchback 4WD CDNC | Date from:2011.08;Date to:2013.05;Chassis no. from:8T-C-000001 | GDS83371 | Drive Shaft | | 42 | | 76.5 | 34 | 465 | |
| | 2009.09-2017.01 | 7AT/6MT | F | L/R | Hatchback 4WD CDNC | TJ | GCI61070 | Inner Joint | | | 24 | | | 85 | |
| | 2009.09-2017.01 | 7AT/6MT | F | L/R | Hatchback 4WD CDNC | AAR | GCI81054 | Inner Joint | | | 24 | | | 86 | |
| | 2009.09-2017.01 | AT/MT | F | L/R | Hatchback 4WD CDNC | | GCO83086 | Outer Joint | | 42 | 33 | 76.5 | 34 | 45.5 | M |
| | 2009.09-2017.01 | | F | L/R | Hatchback 4WD CDNC | | GCO83107 | Outer Joint | | 42 | 25 | 76.5 | 34 | 47.5 | I |
| | 2009.09-2017.01 | 7AT/6MT | R | L | Hatchback 4WD CDNC | Date to:2011.07;For PR code:GH2;For vehicles with electronic limited slip diff. | GDS81886 | Drive Shaft | | 42 | | 76.5 | 34 | 589 | |
| | 2009.09-2017.01 | 7AT/6MT | R | L | Hatchback 4WD CDNC | Date from:2011.08;For PR code:GH2;For vehicles with electronic limited slip diff. | GDS82078 | Drive Shaft | | 42 | | 76.5 | 34 | 587 | |
| | 2009.09-2017.01 | 7AT/6MT | R | R | Hatchback 4WD CDNC | Date to:2011.07;For PR code:GH2;For vehicles with electronic limited slip diff. | GDS81885 | Drive Shaft | | 42 | | 76.5 | 34 | 546 | |
| | 2009.09-2017.01 | 7AT/6MT | R | R | Hatchback 4WD CDNC | Date from:2011.08;For PR code:GH2;For vehicles with electronic limited slip diff. | GDS82079 | Drive Shaft | | 42 | | 76.5 | 34 | 545 | |

| | YEAR | TRANSM. | F/R | L/R | BODY STYLE & DRIVE TYPE & ENGINE | REMARKS | G-AP Ref. | PRODUCT | ABS | Technical Specifications A | B | C | H | L | P |
|---|---|---|---|---|---|---|---|---|---|---|---|---|---|---|---|
| **AUDI** | | | | | | | | | | | | | | | |
| **A5 Sportback Quattro** | | | | | | | | | | | | | | | |
| 2.0 (155 kw) | 2009.09-2017.01 | 7AT/6MT | R | L/R | Hatchback 4WD CDNC | For PR code:GH1,Chassis no. to:8T_BA150000 | GDS82076 | Drive Shaft | | 42 | | 76.5 | 34 | 630 | |
| | 2009.09-2017.01 | 7AT/6MT | R | L/R | Hatchback 4WD CDNC | For PR code:GH1,Chassis no. from:8T_C_000001 | GDS83367 | Drive Shaft | | 42 | | 76.5 | 34 | 626 | |
| | 2009.09-2017.01 | 7AT/6MT | R | L/R | Hatchback 4WD CDNC | Date from:2011.08;For PR code:GH2;For vehicles with AWD & variable torque dist. | GCI61107 | Inner Joint | | 42 | 28 | 76.5 | 34 | 82 | |
| | 2009.09-2017.01 | 7AT/6MT | R | L/R | Hatchback 4WD CDNC | Date from:2011.08;For PR code:GH2;For vehicles with AWD & variable torque dist. | GCI81610 | Inner Joint | | | 28 | | | 28 | |
| | 2009.09-2017.01 | 7AT/6MT | R | L/R | Hatchback 4WD CDNC | For PR code:GH1,Chassis no. from:8T_C_000001 | GCI83044 | Inner Joint | | | 25 | | | 26 | |
| 2.0 (165 kw) | 2013.05-2016.05 | 7AT/6MT | F | L/R | Hatchback 4WD CNCD | | GDS83371 | Drive Shaft | | 42 | | 76.5 | 34 | 465 | |
| | 2013.05-2016.05 | 7AT/6MT | F | L/R | Hatchback 4WD CNCD | | GCO83107 | Outer Joint | | 42 | 25 | 76.5 | 34 | 47.5 | I |
| | 2013.05-2016.05 | | F | L/R | Hatchback 4WD CNCD | | GCI81054 | Inner Joint | | | 24 | | | 86 | |
| | 2013.05-2016.05 | 7AT/6MT | R | L | Hatchback 4WD CNCD | For PR code:GH2,For vehicles with electronic limited slip diff. | GDS82078 | Drive Shaft | | 42 | | 76.5 | 34 | 587 | |
| | 2013.05-2016.05 | 7AT/6MT | R | R | Hatchback 4WD CNCD | For PR code:GH2,For vehicles with electronic limited slip diff. | GDS82079 | Drive Shaft | | 42 | | 76.5 | 34 | 545 | |
| | 2013.05-2016.05 | 7AT/6MT | R | L/R | Hatchback 4WD CNCD | For PR code:GH1 | GDS83367 | Drive Shaft | | 42 | | 76.5 | 34 | 626 | |
| | 2013.05-2016.05 | 7AT/6MT | R | L/R | Hatchback 4WD CNCD | | GCI83040 | Outer Joint | | 42 | 25 | 76.5 | 34 | 66 | M |
| | 2013.05-2016.05 | 7AT/6MT | R | L/R | Hatchback 4WD CNCD | For PR code:GH2,For vehicles with AWD & variable torque dist. | GCI61107 | Inner Joint | | 42 | 28 | 76.5 | 34 | 82 | |
| | 2013.05-2016.05 | 7AT/6MT | R | L/R | Hatchback 4WD CNCD | For PR code:GH2,For vehicles with AWD & variable torque dist. | GCI81610 | Inner Joint | | | 28 | | | 28 | |
| | 2013.05-2016.05 | 7AT/6MT | R | L/R | Hatchback 4WD CNCD | For PR code:GH1 | GCI83044 | Inner Joint | | | 25 | | | 26 | |
| | 2014.02-2016.12 | 7DCT | F | L/R | Hatchback 4WD CNCD | | GDS83371 | Drive Shaft | | 42 | | 76.5 | 34 | 465 | |
| | 2014.02-2016.12 | 6MT/7DCT/8AT | R | L/R | Hatchback 4WD CNCD | For PR code:GH1 | GDS83367 | Drive Shaft | | 42 | | 76.5 | 34 | 626 | |
| | 2014.02-2016.12 | 7DCT | R | L | Hatchback 4WD CNCD | For Pr Code:GH2 | GDS82078 | Drive Shaft | | 42 | | 76.5 | 34 | 587 | |
| | 2014.02-2016.12 | 7DCT | R | R | Hatchback 4WD CNCD | For Pr Code:GH2 | GDS82079 | Drive Shaft | | 42 | | 76.5 | 34 | 545 | |
| | 2014.02-2016.12 | AT/MT | R | L/R | Hatchback 4WD CNCD | For PR code:GH2,For vehicles with AWD & variable torque dist. | GCI61107 | Inner Joint | | 42 | 28 | 76.5 | 34 | 82 | |
| | 2014.02-2016.12 | AT/MT | R | L/R | Hatchback 4WD CNCD | For PR code:GH2,For vehicles with AWD & variable torque dist. | GCI81610 | Inner Joint | | | 28 | | | 28 | |
| | 2014.02-2016.12 | AT/MT | R | L/R | Hatchback 4WD CNCD | For PR code:GH1 | GCI83044 | Inner Joint | | | 25 | | | 26 | |
| 2.0 (169 kw) | 2015.08-2017.01 | 7AT/6MT | F | L/R | Hatchback 4WD CNCE | | GDS83371 | Drive Shaft | | 42 | | 76.5 | 34 | 465 | |
| | 2015.08-2017.01 | 7AT/6MT | F | L/R | Hatchback 4WD CNCE | | GCO83107 | Outer Joint | | 42 | 25 | 76.5 | 34 | 47.5 | I |
| | 2015.08-2017.01 | | F | L/R | Hatchback 4WD CNCE | | GCI81054 | Inner Joint | | | 24 | | | 86 | |
| | 2015.08-2017.01 | 7AT/6MT | R | L | Hatchback 4WD CNCE | For PR code:GH2,For vehicles with electronic limited slip diff. | GDS82078 | Drive Shaft | | 42 | | 76.5 | 34 | 587 | |
| | 2015.08-2017.01 | 7AT/6MT | R | R | Hatchback 4WD CNCE | For PR code:GH2,For vehicles with electronic limited slip diff. | GDS82079 | Drive Shaft | | 42 | | 76.5 | 34 | 545 | |
| | 2015.08-2017.01 | 7AT/6MT | R | L/R | Hatchback 4WD CNCE | For PR code:GH1 | GDS83367 | Drive Shaft | | 42 | | 76.5 | 34 | 626 | |
| | 2015.08-2017.01 | 7AT/6MT | R | L/R | Hatchback 4WD CNCE | | GCI83040 | Outer Joint | | 42 | 25 | 76.5 | 34 | 66 | M |
| | 2015.08-2017.01 | 7AT/6MT | R | L/R | Hatchback 4WD CNCE | Wheel Side | GCI61107 | Inner Joint | | 42 | 28 | 76.5 | 34 | 82 | |
| | 2015.08-2017.01 | 7AT/6MT | R | L/R | Hatchback 4WD CNCE | For PR code:GH2,For vehicles with AWD & variable torque dist. | GCI81610 | Inner Joint | | | 28 | | | 28 | |
| | 2015.08-2017.01 | 7AT/6MT | R | L/R | Hatchback 4WD CNCE | For PR code:GH1 | GCI83044 | Inner Joint | | | 25 | | | 26 | |
| | 2016.02-2017.01 | 7DCT | F | L/R | Hatchback 4WD CNCE | | GDS83371 | Drive Shaft | | 42 | | 76.5 | 34 | 465 | |
| | 2016.02-2017.01 | 6MT/7DCT/8AT | R | L/R | Hatchback 4WD CNCE | For PR code:GH1 | GDS83367 | Drive Shaft | | 42 | | 76.5 | 34 | 626 | |
| | 2016.02-2017.01 | 7DCT | R | L | Hatchback 4WD CNCE | For Pr Code:GH2 | GDS82078 | Drive Shaft | | 42 | | 76.5 | 34 | 587 | |
| | 2016.02-2017.01 | 7DCT | R | R | Hatchback 4WD CNCE | For Pr Code:GH2 | GDS82079 | Drive Shaft | | 42 | | 76.5 | 34 | 545 | |
| | 2016.02-2017.01 | AT/MT | R | L/R | Hatchback 4WD CNCE | For PR code:GH2,For vehicles with AWD & variable torque dist. | GCI61107 | Inner Joint | | 42 | 28 | 76.5 | 34 | 82 | |
| | 2016.02-2017.01 | AT/MT | R | L/R | Hatchback 4WD CNCE | For PR code:GH2,For vehicles with AWD & variable torque dist. | GCI81610 | Inner Joint | | | 28 | | | 28 | |
| | 2016.02-2017.01 | AT/MT | R | L/R | Hatchback 4WD CNCE | For PR code:GH1 | GCI83044 | Inner Joint | | | 25 | | | 26 | |
| 2.0 (180 kw) | 2019.02-2020.08 | 7AT | F | L/R | Hatchback 4WD DKNA | For PR code:GH1 | GDS82074 | Drive Shaft | | 42 | | 76.5 | 34 | 462 | |
| | 2019.02-2020.08 | 7DCT | F | L/R | Hatchback 4WD DKNA | For PR code:GH4,For vehicles with AWD & variable torque dist. | GDS82075 | Drive Shaft | | 42 | | 76.5 | 34 | 463 | |
| | 2019.02-2020.08 | AT | F | L/R | Hatchback 4WD DKNA | For PR code:GH1/GH2/GH4 | GCO83103 | Outer Joint | | 42 | 28 | 76.4 | 34 | 54 | I |
| | 2019.02-2020.08 | AT | F | L/R | Hatchback 4WD DKNA | For PR code:GH1/GH2/GH4 | GCI83022 | Inner Joint | | | 34 | | | 88.5 | |
| | 2019.02-2020.08 | 7DCT | R | L | Hatchback 4WD DKNA | For PR code:GH4;For veh. with all-wheel drive & controlled clutch;Mounting Type:Bolted | GDS58134 | Drive Shaft | | 38 | | 59.5 | 34 | 653 | |
| | 2019.02-2020.08 | 7DCT | R | R | Hatchback 4WD DKNA | For PR code:GH4;For veh. with all-wheel drive & controlled clutch;Mounting Type:Bolted | GDS58135 | Drive Shaft | | 38 | | 59.5 | 34 | 550 | |
| | 2019.02-2020.08 | 7DCT | R | L/R | Hatchback 4WD DKNA | For PR code:GH1 | GDS82363 | Drive Shaft | | 38 | | 59.5 | 34 | 624 | |
| | 2019.02-2020.08 | 7DCT | R | L/R | Hatchback 4WD DKNA | Rear differential with uncoupling feature;Without rear differential lock | GCI81751 | Outer Joint | | 38 | 33 | 59.5 | 34 | 78 | |
| | 2019.02-2020.08 | 7DCT | R | L/R | Hatchback 4WD DKNA | For PR code:GH4;For veh. with all-wheel drive & controlled clutch;Mounting Type:Bolted | GCI81752 | Inner Joint | | | 33 | | | 34 | |
| 2.0 (183 kw) | 2016.09-2020.02 | 7AT | F | L/R | Hatchback 4WD CYRC | For PR code:GH1 | GDS82074 | Drive Shaft | | 42 | | 76.5 | 34 | 462 | |
| | 2016.09-2020.02 | 7DCT | F | L/R | Hatchback 4WD CYRC | For PR code:GH4,For vehicles with AWD & variable torque dist. | GDS82075 | Drive Shaft | | 42 | | 76.5 | 34 | 463 | |
| | 2016.09-2020.02 | AT | F | L/R | Hatchback 4WD CYRC | Date From:2017.01;For PR code:GH1/GH2/GH4 | GCO83103 | Outer Joint | | 42 | 28 | 76.4 | 34 | 54 | I |
| | 2016.09-2020.02 | AT | F | L/R | Hatchback 4WD CYRC | Date From:2017.01;For PR code:GH1/GH2/GH4 | GCI83022 | Inner Joint | | | 34 | | | 88.5 | |
| | 2016.09-2020.02 | 7DCT | R | L | Hatchback 4WD CYRC | For PR code:GH4;For veh. with all-wheel drive & controlled clutch;Mounting Type:Bolted | GDS58134 | Drive Shaft | | 38 | | 59.5 | 34 | 653 | |
| | 2016.09-2020.02 | 7DCT | R | R | Hatchback 4WD CYRC | For PR code:GH4;For veh. with all-wheel drive & controlled clutch;Mounting Type:Bolted | GDS58135 | Drive Shaft | | 38 | | 59.5 | 34 | 550 | |
| | 2016.09-2020.02 | 7DCT | R | L/R | Hatchback 4WD CYRC | For PR code:GH1 | GDS82363 | Drive Shaft | | 38 | | 59.5 | 34 | 624 | |
| | 2016.09-2020.02 | 7DCT | R | L/R | Hatchback 4WD CYRC | Rear differential with uncoupling feature;Without rear differential lock | GCI81751 | Outer Joint | | 38 | 33 | 59.5 | 34 | 78 | |
| | 2016.09-2020.02 | 7DCT | R | L/R | Hatchback 4WD CYRC | For PR code:GH4;For veh. with all-wheel drive & controlled clutch;Mounting Type:Bolted | GCI81752 | Inner Joint | | | 33 | | | 34 | |
| 2.0 (185 kw) | 2016.09- | 7AT/6MT | F | L/R | Hatchback 4WD CYRB;CYMC;DLHB | For PR code:GH1 | GDS82074 | Drive Shaft | | 42 | | 76.5 | 34 | 462 | |
| | 2016.09- | 7DCT | F | L/R | Hatchback 4WD CYRB;CYMC;DLHB | For PR code:GH4,For vehicles with AWD & variable torque dist. | GDS82075 | Drive Shaft | | 42 | | 76.5 | 34 | 463 | |
| | 2016.09- | AT | F | L/R | Hatchback 4WD CYRB;CYMC;DLHB | Date From:2017.01;For PR code:GH1/GH2/GH4 | GCO83103 | Outer Joint | | 42 | 28 | 76.4 | 34 | 54 | I |
| | 2016.09- | AT | F | L/R | Hatchback 4WD CYRB;CYMC;DLHB | Date From:2017.01;For PR code:GH1/GH2/GH4 | GCI83022 | Inner Joint | | | 34 | | | 88.5 | |
| | 2016.09- | 7DCT | R | L | Hatchback 4WD CYRB;CYMC;DLHB | For PR code:GH4;For veh. with all-wheel drive & controlled clutch;Mounting Type:Bolted | GDS58134 | Drive Shaft | | 38 | | 59.5 | 34 | 653 | |
| | 2016.09- | 7DCT | R | R | Hatchback 4WD CYRB;CYMC;DLHB | For PR code:GH4;For veh. with all-wheel drive & controlled clutch;Mounting Type:Bolted | GDS58135 | Drive Shaft | | 38 | | 59.5 | 34 | 550 | |
| | 2016.09- | 7DCT | R | L/R | Hatchback 4WD CYRB;CYMC;DLHB | For PR code:GH1 | GDS82363 | Drive Shaft | | 38 | | 59.5 | 34 | 624 | |
| | 2016.09- | 7DCT | R | L/R | Hatchback 4WD CYRB;CYMC;DLHB | Rear differential with uncoupling feature;Without rear differential lock | GCI81751 | Outer Joint | | 38 | 33 | 59.5 | 34 | 78 | |

| | YEAR | TRANSM. | F/R | L/R | BODY STYLE & DRIVE TYPE & ENGINE | REMARKS | G-AP Ref. | PRODUCT | ABS | Technical Specifications A | B | C | H | L | P |
|---|---|---|---|---|---|---|---|---|---|---|---|---|---|---|---|
| **AUDI** | | | | | | | | | | | | | | | |
| **A5 Sportback Quattro** | | | | | | | | | | | | | | | |
| 2.0 (185 kw) | 2016.09- | 7DCT | R | L/R | Hatchback 4WD CYRB;CYMC;DLHB | For PR code:GH4,For veh. with all-wheel drive & controlled clutch Mounting Type:Bolted | GCI81752 | Inner Joint | | | 33 | | | 34 | |
| | 2017.05-2020.02 | 6MT/7DCT | F | L/R | Hatchback 4WD DDWA;DLHB | For PR code:GH4,For vehicles with AWD & variable torque dist. | GDS82075 | Drive Shaft | | 42 | | 76.5 | 34 | 463 | |
| | 2017.05-2020.02 | 7AT/6MT | F | L/R | Hatchback 4WD DDWA;DLHB | For PR code:GH1 | GDS82074 | Drive Shaft | | 42 | | 76.5 | 34 | 462 | |
| | 2017.05-2020.02 | AT | F | L/R | Hatchback 4WD DDWA;DLHB | For PR code:GH1/GH2/GH4 | GCO83103 | Outer Joint | | 42 | 28 | 76.4 | 34 | 54 | I |
| | 2017.05-2020.02 | AT | F | L/R | Hatchback 4WD DDWA;DLHB | For PR code:GH1/GH2/GH4 | GCI83022 | Inner Joint | | | 34 | | | 88.5 | |
| | 2017.05-2020.02 | 6MT/7DCT | R | L/R | Hatchback 4WD DDWA;DLHB | For PR code:GH1 | GDS82363 | Drive Shaft | | 38 | | 59.5 | 34 | 624 | |
| | 2017.05-2020.02 | 7DCT/6MT | R | L | Hatchback 4WD DDWA;DLHB | For PR code:GH4,For veh. with all-wheel drive & controlled clutch Mounting Type:Bolted | GDS58134 | Drive Shaft | | 38 | | 59.5 | 34 | 653 | |
| | 2017.05-2020.02 | 7DCT/6MT | R | R | Hatchback 4WD DDWA;DLHB | For PR code:GH4,For veh. with all-wheel drive & controlled clutch Mounting Type:Bolted | GDS58135 | Drive Shaft | | 38 | | 59.5 | 34 | 550 | |
| | 2017.05-2020.02 | 7DCT/6MT | R | L/R | Hatchback 4WD DDWA;DLHB | Rear differential with uncoupling feature;Without rear differential lock | GCI81751 | Outer Joint | | 38 | 33 | 59.5 | 34 | 78 | |
| | 2017.05-2020.02 | 7DCT/6MT | R | L/R | Hatchback 4WD DDWA;DLHB | For PR code:GH4,For veh. with all-wheel drive & controlled clutch Mounting Type:Bolted | GCI81752 | Inner Joint | | | 33 | | | 34 | |
| | 2017.06- | 7DCT | F | L/R | Hatchback 4WD CYRB;DLHB | Without rear differential lock | GDS82074 | Drive Shaft | | 42 | | 76.5 | 34 | 462 | |
| | 2017.06- | 7DCT | F | L/R | Hatchback 4WD CYRB;DLHB | Rear differential with uncoupling feature | GDS82075 | Drive Shaft | | 42 | | 76.5 | 34 | 463 | |
| | 2017.06- | 7DCT | R | L/R | Hatchback 4WD CYRB;DLHB | Without rear differential lock | GDS82363 | Drive Shaft | | 38 | | 59.5 | 34 | 624 | |
| | 2017.06- | | R | L/R | Hatchback 4WD CYRB;DLHB | | GCI81751 | Outer Joint | | 38 | 33 | 59.5 | 34 | 78 | |
| 2.0 (195 kw) | 2019.10- | 7AT | F | L/R | Hatchback 4WD DMTA;DPAA | For PR code:GH4,For vehicles with AWD & variable torque dist. | GCO81357 | Outer Joint | | 42 | 28 | 76.5 | 34 | 54 | I |
| | 2019.10- | 7DCT | F | L/R | Hatchback 4WD DMTA;DPAA | Without rear differential lock | GDS82074 | Drive Shaft | | 42 | | 76.5 | 34 | 462 | |
| | 2019.10- | 7DCT | F | L/R | Hatchback 4WD DMTA;DPAA | Rear differential with uncoupling feature | GDS82075 | Drive Shaft | | 42 | | 76.5 | 34 | 463 | |
| | 2019.10- | 7DCT | F | L/R | Hatchback 4WD DMTA;DPAA | For PR code:GH4,For vehicles with AWD & variable torque dist. | GCI61077 | Inner Joint | | | 34 | | | 88 | |
| | 2019.10- | 7DCT | R | L | Hatchback 4WD DMTA;DPAA | For PR code:GH4,For veh. with all-wheel drive & controlled clutch Mounting Type:Bolted | GDS58134 | Drive Shaft | | 38 | | 59.5 | 34 | 653 | |
| | 2019.10- | 7DCT | R | R | Hatchback 4WD DMTA;DPAA | For PR code:GH4,For veh. with all-wheel drive & controlled clutch Mounting Type:Bolted | GDS58135 | Drive Shaft | | 38 | | 59.5 | 34 | 550 | |
| | 2019.10- | 7DCT | R | L/R | Hatchback 4WD DMTA;DPAA | For PR code:GH1 | GDS82363 | Drive Shaft | | 38 | | 59.5 | 34 | 624 | |
| | 2019.10- | 7DCT | R | L/R | Hatchback 4WD DMTA;DPAA | Rear differential with uncoupling feature;Without rear differential lock | GCI81751 | Outer Joint | | 38 | 33 | 59.5 | 34 | 78 | |
| | 2019.10- | 7DCT | R | L/R | Hatchback 4WD DMTA;DPAA | For PR code:GH4,For veh. with all-wheel drive & controlled clutch Mounting Type:Bolted | GCI81752 | Inner Joint | | | 33 | | | 34 | |
| 3.0 (160 kw) | 2015.05-2017.01 | 7AT | F | L/R | Hatchback 4WD CKVD | | GDS83291 | Drive Shaft | | 42 | | 76.4 | 34 | 464 | |
| | 2015.05-2017.01 | 7AT | F | L/R | Hatchback 4WD CKVD | | GCO83103 | Outer Joint | | 42 | 28 | 76.4 | 34 | 54 | I |
| | 2015.05-2017.01 | 7AT | F | L/R | Hatchback 4WD CKVD | | GCI83022 | Inner Joint | | | 34 | | | 88.5 | |
| | 2015.05-2017.01 | 7AT | R | L | Hatchback 4WD CKVD | For PR code:GH2,For vehicles with electronic limited slip diff. | GDS82078 | Drive Shaft | | 42 | | 76.5 | 34 | 587 | |
| | 2015.05-2017.01 | 7AT | R | R | Hatchback 4WD CKVD | For PR code:GH2,For vehicles with electronic limited slip diff. | GDS82079 | Drive Shaft | | 42 | | 76.5 | 34 | 545 | |
| | 2015.05-2017.01 | 7AT | R | L/R | Hatchback 4WD CKVD | For PR code:GH1 | GDS82080 | Drive Shaft | | 42 | | 76.5 | 34 | 629 | |
| | 2015.05-2017.01 | 7AT | R | L/R | Hatchback 4WD CKVD | Wheel Side | GCI61107 | Inner Joint | | 42 | 28 | 76.5 | 34 | 82 | |
| | 2015.05-2017.01 | 7AT | R | L/R | Hatchback 4WD CKVD | Transmission side | GCI81610 | Inner Joint | | | 28 | | | 28 | |
| | 2016.09-2018.08 | 7AT | F | L/R | Hatchback 4WD CSWB | | GCO81357 | Outer Joint | | 42 | 28 | 76.5 | 34 | 54 | I |
| | 2016.09-2018.08 | 7AT | F | L/R | Hatchback 4WD CSWB | | GCI61077 | Inner Joint | | | 34 | | | 88 | |
| | 2016.09-2018.08 | 7DCT | F | L/R | Hatchback 4WD CSWB | | GDS82075 | Drive Shaft | | 42 | | 76.5 | 34 | 463 | |
| | 2016.09-2018.08 | 7AT | R | L/R | Hatchback 4WD CSWB | For PR code:GH1 | GDS82252 | Drive Shaft | | 38 | | 59.5 | 34 | 627 | |
| | 2016.09-2018.08 | 7AT | R | L/R | Hatchback 4WD CSWB | For PR code:GH1 | GCI61069 | Inner Joint | | | 28 | | | 32 | |
| | 2016.09-2018.08 | 7DCT | R | L/R | Hatchback 4WD CSWB | Rear differential Torque Vectoring;Without rear differential lock | GCI81702 | Outer Joint | | 38 | 28 | 59.5 | 34 | 81.5 | |
| | 2016.09-2018.08 | AT | R | L | Hatchback 4WD CSWB | For PR code:GH2,For vehicles with AWD & variable torque dist.Mounting Type:Bolted | GDS58136 | Drive Shaft | | 38 | | 59.5 | 34 | 586 | |
| | 2016.09-2018.08 | AT | R | R | Hatchback 4WD CSWB | For PR code:GH2,For vehicles with AWD & variable torque dist.Mounting Type:Bolted | GDS58137 | Drive Shaft | | 38 | | 59.5 | 34 | 545 | |
| | 2016.09-2018.08 | AT | R | L/R | Hatchback 4WD CSWB | For PR code:GH2,For vehicles with AWD & variable torque dist.Mounting Type:Bolted | GCI84020 | Inner Joint | | | 28 | | | 32 | |
| 3.0 (170 kw) | 2018.07- | 8AT | F | L/R | Hatchback 4WD DCPE | | GDS82075 | Drive Shaft | | 42 | | 76.5 | 34 | 463 | |
| | 2018.07- | 8AT | F | L/R | Hatchback 4WD DCPE | | GCO81357 | Outer Joint | | 42 | 28 | 76.5 | 34 | 54 | I |
| | 2018.07- | 8AT | F | L/R | Hatchback 4WD DCPE | | GCI61077 | Inner Joint | | | 34 | | | 88 | |
| | 2018.07- | 8AT | R | L/R | Hatchback 4WD DCPE | Rear differential Torque Vectoring;Without rear differential lock | GCI81702 | Outer Joint | | 38 | 28 | 59.5 | 34 | 81.5 | |
| | 2018.07- | AT | R | L | Hatchback 4WD DCPE | For PR code:GH2,For vehicles with AWD & variable torque dist.Mounting Type:Bolted | GDS58136 | Drive Shaft | | 38 | | 59.5 | 34 | 586 | |
| | 2018.07- | AT | R | R | Hatchback 4WD DCPE | For PR code:GH2,For vehicles with AWD & variable torque dist.Mounting Type:Bolted | GDS58137 | Drive Shaft | | 38 | | 59.5 | 34 | 545 | |
| | 2018.07- | AT | R | L/R | Hatchback 4WD DCPE | For PR code:GH2,For vehicles with AWD & variable torque dist.Mounting Type:Bolted | GCI84020 | Inner Joint | | | 28 | | | 32 | |
| | 2018.07- | | R | L/R | Hatchback 4WD DCPE | For PR code:GH1 | GDS82252 | Drive Shaft | | 38 | | 59.5 | 34 | 627 | |
| 3.0 (176 kw) | 2009.09-2012.03 | 7AT/6MT | F | L/R | Hatchback 4WD CCWA | | GCI83022 | Inner Joint | | | 34 | | | 88.5 | |
| | 2009.09-2012.03 | 7DCT/6MT | F | L/R | Hatchback 4WD CCWA | Date to:2011.10 | GDS83273 | Drive Shaft | | 42 | | 76.5 | 34 | 460 | |
| | 2009.09-2012.03 | 7DCT/6MT | F | L/R | Hatchback 4WD CCWA | Date from:2011.11 | GDS83291 | Drive Shaft | | 42 | | 76.4 | 34 | 464 | |
| | 2009.09-2012.03 | AT/MT | F | L/R | Hatchback 4WD CCWA | Date to:2011.11 | GCO83087 | Outer Joint | | 42 | 27 | 76.5 | 34 | 57 | M |
| | 2009.09-2012.03 | AT/MT | F | L/R | Hatchback 4WD CCWA | Date from:2011.11 | GCO83103 | Outer Joint | | 42 | 28 | 76.4 | 34 | 54 | I |
| | 2009.09-2012.03 | 7AT/6MT | R | L | Hatchback 4WD CCWA | Date to:2011.07,For PR code:GH2,For vehicles with electronic limited slip diff. | GDS81886 | Drive Shaft | | 42 | | 76.5 | 34 | 589 | |
| | 2009.09-2012.03 | 7AT/6MT | R | L | Hatchback 4WD CCWA | Date from:2011.08,For PR code:GH2,For vehicles with electronic limited slip diff. | GDS82078 | Drive Shaft | | 42 | | 76.5 | 34 | 587 | |
| | 2009.09-2012.03 | 7AT/6MT | R | R | Hatchback 4WD CCWA | Date to:2011.07,For PR code:GH2,For vehicles with electronic limited slip diff. | GDS81885 | Drive Shaft | | 42 | | 76.5 | 34 | 546 | |
| | 2009.09-2012.03 | 7AT/6MT | R | R | Hatchback 4WD CCWA | Date from:2011.08,For PR code:GH2,For vehicles with electronic limited slip diff. | GDS82079 | Drive Shaft | | 42 | | 76.5 | 34 | 545 | |
| | 2009.09-2012.03 | 7AT/6MT | R | L/R | Hatchback 4WD CCWA | For PR code:GH1 | GDS81894 | Drive Shaft | | 42 | | 76.5 | 34 | 630 | |
| | 2009.09-2012.03 | 7AT/6MT | R | L/R | Hatchback 4WD CCWA | | GCI61069 | Inner Joint | | | 28 | | | 32 | |
| | 2009.09-2012.03 | 7AT/6MT | R | L/R | Hatchback 4WD CCWA | | GCI61107 | Inner Joint | | 42 | 28 | 76.5 | 34 | 82 | |
| | 2009.09-2012.03 | 7AT/6MT | R | L/R | Hatchback 4WD CCWA | Date from:2011.08,For PR code:GH2 | GCI81610 | Inner Joint | | | 28 | | | 28 | |
| 3.0 (180 kw) | 2011.10-2017.01 | 7AT/6MT | F | L/R | Hatchback 4WD CDUC;CKVB;CKVC | | GDS83291 | Drive Shaft | | 42 | | 76.4 | 34 | 464 | |
| | 2011.10-2017.01 | 7AT/6MT | F | L/R | Hatchback 4WD CDUC;CKVB;CKVC | | GCO83103 | Outer Joint | | 42 | 28 | 76.4 | 34 | 54 | I |
| | 2011.10-2017.01 | 7AT/6MT | F | L/R | Hatchback 4WD CDUC;CKVB;CKVC | | GCI83022 | Inner Joint | | | 34 | | | 88.5 | |
| | 2011.10-2017.01 | 7AT/6MT | R | L | Hatchback 4WD CDUC;CKVB;CKVC | For PR code:GH2,For vehicles with electronic limited slip diff. | GDS82078 | Drive Shaft | | 42 | | 76.5 | 34 | 587 | |

| | YEAR | TRANSM. | F/R | L/R | BODY STYLE & DRIVE TYPE & ENGINE | REMARKS | G-AP Ref. | PRODUCT | ABS | Technical Specifications A | B | C | H | L | P |
|---|---|---|---|---|---|---|---|---|---|---|---|---|---|---|---|
| **AUDI** | | | | | | | | | | | | | | | |
| **A5 Sportback Quattro** | | | | | | | | | | | | | | | |
| 3.0 (180 kw) | 2011.10-2017.01 | 7AT/6MT | R | R | Hatchback 4WD CDUC;CKVB;CKVC | For PR code:GH2,For vehicles with electronic limited slip diff. | GDS82079 | Drive Shaft | | 42 | | 76.5 | 34 | 545 | |
| | 2011.10-2017.01 | 7AT/6MT | R | L/R | Hatchback 4WD CDUC;CKVB;CKVC | For PR code:GH1 | GDS82080 | Drive Shaft | | 42 | | 76.5 | 34 | 629 | |
| | 2011.10-2017.01 | 7AT/6MT | R | L/R | Hatchback 4WD CDUC;CKVB;CKVC | | GCI61107 | Inner Joint | | 42 | 28 | 76.5 | 34 | 82 | |
| | 2011.10-2017.01 | 7AT/6MT | R | L/R | Hatchback 4WD CDUC;CKVB;CKVC | | GCI81610 | Inner Joint | | | 28 | | | 28 | |
| 3.0 (200 kw) | 2011.12-2017.01 | 7AT | F | L/R | Hatchback 4WD CMUA;CRED;CHMB | | GDS83291 | Drive Shaft | | 42 | | 76.4 | 34 | 464 | |
| | 2011.12-2017.01 | AT | F | L/R | Hatchback 4WD CMUA;CRED;CHMB | | GCO83103 | Outer Joint | | 42 | 28 | 76.4 | 34 | 54 | I |
| | 2011.12-2017.01 | AT | F | L/R | Hatchback 4WD CMUA;CRED;CHMB | | GCI83022 | Inner Joint | | | 34 | | | 88.5 | |
| | 2011.12-2017.01 | 7AT | R | L | Hatchback 4WD CMUA;CRED;CHMB | For PR code:GH2,For vehicles with electronic limited slip diff. | GDS82078 | Drive Shaft | | 42 | | 76.5 | 34 | 587 | |
| | 2011.12-2017.01 | 7AT | R | R | Hatchback 4WD CMUA;CRED;CHMB | For PR code:GH2,For vehicles with electronic limited slip diff. | GDS82079 | Drive Shaft | | 42 | | 76.5 | 34 | 545 | |
| | 2011.12-2017.01 | 7AT | R | L/R | Hatchback 4WD CMUA;CRED;CHMB | For PR code:GH1 | GDS82080 | Drive Shaft | | 42 | | 76.5 | 34 | 629 | |
| | 2011.12-2017.01 | 7AT | R | L/R | Hatchback 4WD CMUA;CRED;CHMB | Wheel Side | GCI61107 | Inner Joint | | 42 | 28 | 76.5 | 34 | 82 | |
| | 2011.12-2017.01 | 7AT | R | L/R | Hatchback 4WD CMUA;CRED;CHMB | Transmission side | GCI81610 | Inner Joint | | | 28 | | | 28 | |
| | 2017.02-2017.12 | 8AT | F | L/R | Hatchback 4WD CRTC | | GDS82075 | Drive Shaft | | 42 | | 76.5 | 34 | 463 | |
| | 2017.02-2017.12 | 8AT | F | L/R | Hatchback 4WD CRTC | | GCO81357 | Outer Joint | | 42 | 28 | 76.5 | 34 | 54 | I |
| | 2017.02-2017.12 | 8AT | F | L/R | Hatchback 4WD CRTC | | GCI61077 | Inner Joint | | | 34 | | | 88 | |
| | 2017.02-2017.12 | 8AT | R | L/R | Hatchback 4WD CRTC | For PR code:GH1 | GDS82252 | Drive Shaft | | 38 | | 59.5 | 34 | 627 | |
| | 2017.02-2017.12 | 8AT | R | L/R | Hatchback 4WD CRTC | Rear differential Torque Vectoring;Without rear differential lock | GCI81702 | Outer Joint | | 38 | 28 | 59.5 | 34 | 81.5 | |
| | 2017.02-2017.12 | 8AT | R | L/R | Hatchback 4WD CRTC | For PR code:GH1 | GCI61069 | Inner Joint | | | 28 | | | 32 | |
| | 2017.02-2017.12 | AT | R | L | Hatchback 4WD CRTC | For PR code:GH2;For vehicles with AWD & variable torque dist;Mounting Type:Bolted | GDS58136 | Drive Shaft | | 38 | | 59.5 | 34 | 586 | |
| | 2017.02-2017.12 | AT | R | R | Hatchback 4WD CRTC | For PR code:GH2;For vehicles with AWD & variable torque dist;Mounting Type:Bolted | GDS58137 | Drive Shaft | | 38 | | 59.5 | 34 | 545 | |
| | 2017.02-2017.12 | AT | R | L/R | Hatchback 4WD CRTC | For PR code:GH2;For vehicles with AWD & variable torque dist;Mounting Type:Bolted | GCI84020 | Inner Joint | | | 28 | | | 32 | |
| 3.0 (210 kw) | 2017.01- | 8AT | F | L/R | Hatchback 4WD DCPC | | GDS82075 | Drive Shaft | | 42 | | 76.5 | 34 | 463 | |
| | 2017.01- | 8AT | R | L/R | Hatchback 4WD DCPC | Without rear differential lock | GDS82252 | Drive Shaft | | 38 | | 59.5 | 34 | 627 | |
| | 2017.01- | 8AT | R | L/R | Hatchback 4WD DCPC | | GCI81702 | Outer Joint | | 38 | 28 | 59.5 | 34 | 81.5 | |
| | 2017.01- | 8AT | R | L/R | Hatchback 4WD DCPC | | GCI84020 | Inner Joint | | | 28 | | | 32 | |
| | 2017.01-2020.02 | 8AT | F | L/R | Hatchback 4WD DCPC | | GDS82075 | Drive Shaft | | 42 | | 76.5 | 34 | 463 | |
| | 2017.01-2020.02 | AT | F | L/R | Hatchback 4WD DCPC | | GCO83103 | Outer Joint | | 42 | 28 | 76.4 | 34 | 54 | I |
| | 2017.01-2020.02 | AT | F | L/R | Hatchback 4WD DCPC | | GCI83022 | Inner Joint | | | 34 | | | 88.5 | |
| | 2017.01-2020.02 | 7DCT | R | L/R | Hatchback 4WD DCPC | Rear differential Torque Vectoring;Without rear differential lock | GCI81702 | Outer Joint | | 38 | 28 | 59.5 | 34 | 81.5 | |
| | 2017.01-2020.02 | 8AT | R | L/R | Hatchback 4WD DCPC | For PR code:GH1 | GDS82252 | Drive Shaft | | 38 | | 59.5 | 34 | 627 | |
| | 2017.01-2020.02 | 8AT | R | L/R | Hatchback 4WD DCPC | For PR code:GH1 | GCI61069 | Inner Joint | | | 28 | | | 32 | |
| | 2017.01-2020.02 | AT | R | L | Hatchback 4WD DCPC | For PR code:GH2;For vehicles with AWD & variable torque dist;Mounting Type:Bolted | GDS58136 | Drive Shaft | | 38 | | 59.5 | 34 | 586 | |
| | 2017.01-2020.02 | AT | R | R | Hatchback 4WD DCPC | For PR code:GH2;For vehicles with AWD & variable torque dist;Mounting Type:Bolted | GDS58137 | Drive Shaft | | 38 | | 59.5 | 34 | 545 | |
| | 2017.01-2020.02 | AT | R | L/R | Hatchback 4WD DCPC | For PR code:GH2;For vehicles with AWD & variable torque dist;Mounting Type:Bolted | GCI84020 | Inner Joint | | | 28 | | | 32 | |
| | 2020.08- | 8AT | F | L/R | Hatchback 4WD DMGA | | GDS82075 | Drive Shaft | | 42 | | 76.5 | 34 | 463 | |
| | 2020.08- | 8AT | F | L/R | Hatchback 4WD DMGA | | GCO81357 | Outer Joint | | 42 | 28 | 76.5 | 34 | 54 | I |
| | 2020.08- | 8AT | F | L/R | Hatchback 4WD DMGA | | GCI61077 | Inner Joint | | | 34 | | | 88 | |
| | 2020.08- | 8AT | R | L/R | Hatchback 4WD DMGA | For PR Code:GH1 | GDS82252 | Drive Shaft | | 38 | | 59.5 | 34 | 627 | |
| | 2020.08- | 8AT | R | L/R | Hatchback 4WD DMGA | Rear differential Torque Vectoring;Without rear differential lock | GCI81702 | Outer Joint | | 38 | 28 | 59.5 | 34 | 81.5 | |
| | 2020.08- | AT | R | L | Hatchback 4WD DMGA | For PR code:GH2;For vehicles with AWD & variable torque dist;Mounting Type:Bolted | GDS58136 | Drive Shaft | | 38 | | 59.5 | 34 | 586 | |
| | 2020.08- | AT | R | R | Hatchback 4WD DMGA | For PR code:GH2;For vehicles with AWD & variable torque dist;Mounting Type:Bolted | GDS58137 | Drive Shaft | | 38 | | 59.5 | 34 | 545 | |
| | 2020.08- | AT | R | L/R | Hatchback 4WD DMGA | For PR code:GH2;For vehicles with AWD & variable torque dist;Mounting Type:Bolted | GCI84020 | Inner Joint | | | 28 | | | 32 | |
| 3.2 (195 kw) | 2009.09-2012.03 | 7AT | F | L/R | Hatchback 4WD CALA | | GDS83345 | Drive Shaft | | 42 | | 76.5 | 34 | 463 | |
| | 2009.09-2012.03 | | F | L/R | Hatchback 4WD CALA | TJ | GCI61070 | Inner Joint | | | 24 | | | 85 | |
| | 2009.09-2012.03 | 7AT | R | L | Hatchback 4WD CALA | Date to:2011.07,For PR code:GH2,For vehicles with electronic limited slip diff. | GDS81886 | Drive Shaft | | 42 | | 76.5 | 34 | 589 | |
| | 2009.09-2012.03 | 7AT | R | L | Hatchback 4WD CALA | Date from:2011.08,For PR code:GH2,For vehicles with electronic limited slip diff. | GDS82078 | Drive Shaft | | 42 | | 76.5 | 34 | 587 | |
| | 2009.09-2012.03 | 7AT | R | R | Hatchback 4WD CALA | Date to:2011.07,For PR code:GH2,For vehicles with electronic limited slip diff. | GDS81885 | Drive Shaft | | 42 | | 76.5 | 34 | 546 | |
| | 2009.09-2012.03 | 7AT | R | R | Hatchback 4WD CALA | Date from:2011.08,For PR code:GH2,For vehicles with electronic limited slip diff. | GDS82079 | Drive Shaft | | 42 | | 76.5 | 34 | 545 | |
| | 2009.09-2012.03 | 7AT | R | L/R | Hatchback 4WD CALA | For PR code:GH1 | GDS82076 | Drive Shaft | | 42 | | 76.5 | 34 | 630 | |
| | 2009.09-2012.03 | 7AT | R | L/R | Hatchback 4WD CALA | Date to:2011.08;for vehicles with limited slip differential | GCO83087 | Outer Joint | | 42 | 27 | 76.5 | 34 | 57 | M |
| | 2009.09-2012.03 | 7AT | R | L/R | Hatchback 4WD CALA | | GCI61107 | Inner Joint | | 42 | 28 | 76.5 | 34 | 82 | |
| | 2009.09-2012.03 | 7AT | R | L/R | Hatchback 4WD CALA | | GCI81610 | Inner Joint | | | 28 | | | 28 | |
| | 2009.09-2012.03 | 7AT | F/R | L/R | Hatchback 4WD CALA | | GCO83086 | Outer Joint | | 42 | 33 | 76.5 | 34 | 45.5 | M |
| **A6** | | | | | | | | | | | | | | | |
| 1.8 (85 kw) | 1997.05-2000.05 | 4AT/5MT | F | L/R | Saloon FWD AFY | | GCO83018 | Outer Joint | 45W | 33 | 30 | 53 | 30 | 62 | I |
| | 1997.05-2000.05 | 5MT | F | L/R | Saloon FWD AFY | | GCI83001 | Inner Joint | | | 28 | | | 32 | |
| | 1998.02-2000.05 | 4AT/5MT | F | L/R | Estate FWD AFY | | GCO83018 | Outer Joint | 45W | 33 | 30 | 53 | 30 | 62 | I |
| | 1998.02-2000.05 | 5MT | F | L/R | Estate FWD AFY | | GCI83001 | Inner Joint | | | 28 | | | 32 | |
| 1.8 (92 kw) | 1997.12-2001.04 | 4AT/5MT | F | L/R | Saloon FWD AJP/AQE/ARH | | GCO83018 | Outer Joint | 45W | 33 | 30 | 53 | 30 | 62 | I |
| | 1997.12-2001.04 | 5MT | F | L/R | Saloon FWD AJP/AQE/ARH | | GCI83001 | Inner Joint | | | 28 | | | 32 | |
| | 1998.02-2001.05 | 4AT/5MT | F | L/R | Estate FWD AJP/AQE/ARH | | GCO83018 | Outer Joint | 45W | 33 | 30 | 53 | 30 | 62 | I |
| | 1998.02-2001.05 | 5MT | F | L/R | Estate FWD AJP/AQE/ARH | | GCI83001 | Inner Joint | | | 28 | | | 32 | |
| 1.8 (110 kw) | 1997.04-2004.05 | 5AT | F | L/R | Saloon FWD AEB/ANB/APU/ARK/AWT | | GCO83020 | Outer Joint | 45W | 38 | 30 | 59.5 | 34 | 59.5 | I |
| | 1997.04-2004.05 | 5AT | F | L/R | Saloon FWD AEB/ANB/APU/ARK/AWT | | GCO83049 | Outer Joint | | 38 | 30 | 59.5 | 34 | 59.5 | I |
| | 1997.04-2004.05 | 5MT | F | L/R | Saloon FWD AEB/ANB/APU/ARK/AWT | Chassis no. to:4B1200000 | GCO83018 | Outer Joint | 45W | 33 | 30 | 53 | 30 | 62 | I |

| | YEAR | TRANSM. | F/R | L/R | BODY STYLE & DRIVE TYPE & ENGINE | REMARKS | G-AP Ref. | PRODUCT | ABS | Technical Specifications A | B | C | H | L | P |
|---|---|---|---|---|---|---|---|---|---|---|---|---|---|---|---|
| **AUDI** | | | | | | | | | | | | | | | |
| **A6** | | | | | | | | | | | | | | | |
| 1.8 (110 kw) | 1997.04-2004.05 | 5MT | F | L/R | Saloon FWD AEB/ANB/APU/ARK/AWT | Chassis no. from:4B2000001,without ABS | GCO83030 | Outer Joint | | 38 | 33 | 59.5 | 34 | 56.5 | M |
| | 1997.04-2004.05 | 5MT | F | L/R | Saloon FWD AEB/ANB/APU/ARK/AWT | Chassis no. from:4B2000001,with ABS | GCO83058 | Outer Joint | 45W | 38 | 33 | 59.5 | 34 | 56.5 | M |
| | 1997.04-2004.05 | 5MT | F | L/R | Saloon FWD AEB/ANB/APU/ARK/AWT | | GCI83001 | Inner Joint | | | 28 | | | 32 | |
| | 1997.04-2004.05 | CVT | F | L/R | Saloon FWD AEB/ANB/APU/ARK/AWT | | GDS83066 | Drive Shaft | 45W | 38 | | 59.5 | 34.5 | 544 | |
| | 1997.04-2004.05 | CVT | F | L/R | Saloon FWD AEB/ANB/APU/ARK/AWT | | GCO83019 | Outer Joint | 45W | 38 | 27 | 59.5 | 34.5 | 63 | I |
| | 1997.04-2004.05 | CVT | F | L/R | Saloon FWD AEB/ANB/APU/ARK/AWT | | GCI83007 | Inner Joint | | | 34 | | | 85 | |
| | 1998.02-2005.01 | 5AT | F | L/R | Estate FWD AEB/ANB/APU/ARK/AWT | | GCO83020 | Outer Joint | 45W | 38 | 30 | 59.5 | 34 | 59.5 | I |
| | 1998.02-2005.01 | 5AT | F | L/R | Estate FWD AEB/ANB/APU/ARK/AWT | | GCO83049 | Outer Joint | | 38 | 30 | 59.5 | 34 | 59.5 | I |
| | 1998.02-2005.01 | 5MT | F | L/R | Estate FWD AEB/ANB/APU/ARK/AWT | Chassis no. to:4B1200000 | GCO83018 | Outer Joint | 45W | 33 | 30 | 53 | 30 | 62 | I |
| | 1998.02-2005.01 | 5MT | F | L/R | Estate FWD AEB/ANB/APU/ARK/AWT | Chassis no. from:4B2000001,without ABS | GCO83030 | Outer Joint | | 38 | 33 | 59.5 | 34 | 56.5 | M |
| | 1998.02-2005.01 | 5MT | F | L/R | Estate FWD AEB/ANB/APU/ARK/AWT | Chassis no. from:4B2000001,with ABS | GCO83058 | Outer Joint | 45W | 38 | 33 | 59.5 | 34 | 56.5 | M |
| | 1998.02-2005.01 | 5MT | F | L/R | Estate FWD AEB/ANB/APU/ARK/AWT | | GCI83001 | Inner Joint | | | 28 | | | 32 | |
| | 1998.02-2005.01 | CVT | F | L/R | Estate FWD AEB/ANB/APU/ARK/AWT | | GDS83066 | Drive Shaft | 45W | 38 | | 59.5 | 34.5 | 544 | |
| | 1998.02-2005.01 | CVT | F | L/R | Estate FWD AEB/ANB/APU/ARK/AWT | | GCO83019 | Outer Joint | 45W | 38 | 27 | 59.5 | 34.5 | 63 | I |
| | 1998.02-2005.01 | CVT | F | L/R | Estate FWD AEB/ANB/APU/ARK/AWT | | GCI83007 | Inner Joint | | | 34 | | | 85 | |
| 1.8 (132 kw) | 1997.11-2000.10 | 5MT | F | L/R | Saloon FWD AJL | | GCO83019 | Outer Joint | 45W | 38 | 27 | 59.5 | 34.5 | 63 | I |
| | 1997.11-2000.10 | 5MT | F | L/R | Saloon FWD AJL | | GCI83001 | Inner Joint | | | 28 | | | 32 | |
| | 1998.02-2000.10 | 5MT | F | L/R | Estate FWD AJL | | GCO83019 | Outer Joint | 45W | 38 | 27 | 59.5 | 34.5 | 63 | I |
| | 1998.02-2000.10 | 5MT | F | L/R | Estate FWD AJL | | GCI83001 | Inner Joint | | | 28 | | | 32 | |
| 1.8 (140 kw) | 2014.09-2018.09 | 7AT/6MT | F | L/R | Estate FWD CYGA | | GDS61290 | Drive Shaft | | 42 | | 76.4 | 34 | 493 | |
| | 2014.09-2018.09 | 7AT/6MT | F | L/R | Estate FWD CYGA | | GCO83103 | Outer Joint | | 42 | 28 | 76.4 | 34 | 54 | I |
| | 2014.09-2018.09 | 7AT/6MT | F | L/R | Estate FWD CYGA | | GCI83022 | Inner Joint | | | 34 | | | 88.5 | |
| | 2014.09-2018.09 | 7AT/6MT | F | L/R | Saloon FWD CYGA | | GDS61290 | Drive Shaft | | 42 | | 76.4 | 34 | 493 | |
| | 2014.09-2018.09 | 7AT/6MT | F | L/R | Saloon FWD CYGA | | GCO83103 | Outer Joint | | 42 | 28 | 76.4 | 34 | 54 | I |
| | 2014.09-2018.09 | 7AT/6MT | F | L/R | Saloon FWD CYGA | | GCI83022 | Inner Joint | | | 34 | | | 88.5 | |
| | 2017.06-2018.09 | 7AT/6MT | F | L/R | Estate FWD CYGA | | GCI83022 | Inner Joint | | | 34 | | | 88.5 | |
| | 2017.06-2018.09 | 7DCT | F | L/R | Estate FWD CYGA | | GDS61290 | Drive Shaft | | 42 | | 76.4 | 34 | 493 | |
| 1.9 (66 kw) | 1994.07-1997.10 | AT/MT | F | L/R | Estate FWD 1Z/AHU | | GCO83016 | Outer Joint | 45T | 38 | 30 | 59.5 | 34 | 61 | I |
| | 1994.07-1997.10 | MT | F | R | Estate FWD 1Z/AHU | | GDS61076 | Drive Shaft | 45W | 38 | | 59.5 | 34.5 | 645 | |
| | 1994.07-1997.10 | MT | F | R | Estate FWD 1Z/AHU | | GCI50019 | Inner Joint | | | 34 | | | 59.5 | |
| | 1994.07-1997.10 | AT/MT | F | L/R | Saloon FWD 1Z/AHU | | GCO83016 | Outer Joint | 45T | 38 | 30 | 59.5 | 34 | 61 | I |
| | 1994.07-1997.10 | MT | F | R | Saloon FWD 1Z/AHU | | GDS61076 | Drive Shaft | 45W | 38 | | 59.5 | 34.5 | 645 | |
| | 1994.07-1997.10 | MT | F | R | Saloon FWD 1Z/AHU | | GCI50019 | Inner Joint | | | 34 | | | 59.5 | |
| 1.9 (81 kw) | 1997.04-2001.04 | 4AT | F | L | Estate FWD AFN/AVG | | GDS83020 | Drive Shaft | 45W | 38 | | 59.5 | 34.5 | 522 | |
| | 1997.04-2001.04 | 4AT/5MT | F | L/R | Estate FWD AFN/AVG | | GCO83019 | Outer Joint | 45W | 38 | 27 | 59.5 | 34.5 | 63 | I |
| | 1997.04-2001.04 | 4AT/5MT | F | L/R | Estate FWD AFN/AVG | | GCI50019 | Inner Joint | | | 34 | | | 59.5 | |
| | 1997.04-2001.04 | 5MT | F | L | Estate FWD AFN/AVG | | GDS61019 | Drive Shaft | 45W | 38 | | 59.5 | 34.5 | 624 | |
| | 1997.04-2001.04 | 5MT | F | R | Estate FWD AFN/AVG | | GDS61076 | Drive Shaft | 45W | 38 | | 59.5 | 34.5 | 645 | |
| | 1997.04-2001.04 | 4AT | F | L | Saloon FWD AFN/AVG | | GDS83020 | Drive Shaft | 45W | 38 | | 59.5 | 34.5 | 522 | |
| | 1997.04-2001.04 | 4AT/5MT | F | L/R | Saloon FWD AFN/AVG | | GCO83019 | Outer Joint | 45W | 38 | 27 | 59.5 | 34.5 | 63 | I |
| | 1997.04-2001.04 | 4AT/5MT | F | L/R | Saloon FWD AFN/AVG | | GCI50019 | Inner Joint | | | 34 | | | 59.5 | |
| | 1997.04-2001.04 | 5MT | F | L | Saloon FWD AFN/AVG | | GDS61019 | Drive Shaft | 45W | 38 | | 59.5 | 34.5 | 624 | |
| | 1997.04-2001.04 | 5MT | F | R | Saloon FWD AFN/AVG | | GDS61076 | Drive Shaft | 45W | 38 | | 59.5 | 34.5 | 645 | |
| | 1997.04-2001.04 | AT | F | L | Saloon FWD AFN/AVG | | GDS83019 | Drive Shaft | 45W | 38 | | 59.5 | 34.5 | 550 | |
| | 1997.04-2001.04 | MT | F | R | Saloon FWD AFN/AVG | | GDS99113 | Drive Shaft | 45W | 38 | | 59.5 | 34.5 | 654 | |
| 1.9 (85 kw) | 1998.01-2001.04 | 5AT | F | L | Saloon FWD AJM | | GDS83019 | Drive Shaft | 45W | 38 | | 59.5 | 34.5 | 550 | |
| | 1998.01-2001.04 | 5AT | F | R | Saloon FWD AJM | | GDS83020 | Drive Shaft | 45W | 38 | | 59.5 | 34.5 | 522 | |
| | 1998.01-2001.04 | 5MT | F | L | Saloon FWD AJM | | GDS61019 | Drive Shaft | 45W | 38 | | 59.5 | 34.5 | 624 | |
| | 1998.01-2001.04 | 5MT | F | R | Saloon FWD AJM | | GDS61076 | Drive Shaft | 45W | 38 | | 59.5 | 34.5 | 645 | |
| | 1998.01-2001.04 | AT/MT | F | L/R | Saloon FWD AJM | | GCO83019 | Outer Joint | 45W | 38 | 27 | 59.5 | 34.5 | 63 | I |
| | 1998.01-2001.04 | AT/MT | F | L/R | Saloon FWD AJM | Date to:2001.04 | GCO83021 | Outer Joint | 45W | 33 | 27 | 53 | 30 | 63 | I |
| | 1998.01-2001.04 | AT/MT/5AT/5MT | F | L/R | Saloon FWD AJM | | GCI50019 | Inner Joint | | | 34 | | | 59.5 | |
| | 1998.01-2001.04 | MT | F | R | Saloon FWD AJM | Date to:2001.04 | GDS99113 | Drive Shaft | 45W | 38 | | 59.5 | 34.5 | 654 | |
| | 1998.01-2001.04 | MT | F | | Saloon FWD AJM | | GCI61044 | Inner Joint | | | 34 | | | 85 | |
| | 2000.11-2001.04 | 5MT | F | L | Estate FWD AJM | | GDS61019 | Drive Shaft | 45W | 38 | | 59.5 | 34.5 | 624 | |
| | 2000.11-2001.04 | 5MT | F | R | Estate FWD AJM | | GDS61076 | Drive Shaft | 45W | 38 | | 59.5 | 34.5 | 645 | |
| | 2000.11-2001.04 | AT | F | L | Estate FWD AJM | Date from:2000.11;Date to:2001.04 | GDS83019 | Drive Shaft | 45W | 38 | | 59.5 | 34.5 | 550 | |
| | 2000.11-2001.04 | AT | F | R | Estate FWD AJM | Date from:2000.11;Date to:2001.04 | GDS83020 | Drive Shaft | 45W | 38 | | 59.5 | 34.5 | 522 | |
| | 2000.11-2001.04 | AT/MT | F | L/R | Estate FWD AJM | | GCO83019 | Outer Joint | 45W | 38 | 27 | 59.5 | 34.5 | 63 | I |
| | 2000.11-2001.04 | AT/MT | F | L/R | Estate FWD AJM | Date from:2000.11;Date to:2001.04 | GCO83021 | Outer Joint | 45W | 33 | 27 | 53 | 30 | 63 | I |
| | 2000.11-2001.04 | AT/MT/5MT | F | L/R | Estate FWD AJM | | GCI50019 | Inner Joint | | | 34 | | | 59.5 | |
| | 2000.11-2001.04 | MT | F | R | Estate FWD AJM | Date from:2000.11;Date to:2001.04 | GDS99113 | Drive Shaft | 45W | 38 | | 59.5 | 34.5 | 654 | |
| | 2000.11-2001.04 | MT | F | | Estate FWD AJM | | GCI61044 | Inner Joint | | | 34 | | | 85 | |
| 1.9 (96 kw) | 2001.06-2005.01 | 5MT | F | L | Estate FWD AVF/AWX | | GDS61019 | Drive Shaft | 45W | 38 | | 59.5 | 34.5 | 624 | |
| | 2001.06-2005.01 | 5MT | F | R | Estate FWD AVF/AWX | | GDS61076 | Drive Shaft | 45W | 38 | | 59.5 | 34.5 | 645 | |

| | YEAR | TRANSM. | F/R | L/R | BODY STYLE & DRIVE TYPE & ENGINE | REMARKS | G-AP Ref. | PRODUCT | ABS | Technical Specifications A | B | C | H | L | P |
|---|---|---|---|---|---|---|---|---|---|---|---|---|---|---|---|
| **AUDI** | | | | | | | | | | | | | | | |
| **A6** | | | | | | | | | | | | | | | |
| 1.9 (96 kw) | 2001.06-2005.01 | CVT | F | L/R | Estate FWD AVF/AWX | | GDS83066 | Drive Shaft | 45W | 38 | | 59.5 | 34.5 | 544 | |
| | 2001.06-2005.01 | CVT | F | L/R | Estate FWD AVF/AWX | | GCI61044 | Inner Joint | | | 34 | | | 85 | |
| | 2001.06-2005.01 | CVT/5MT/6MT | F | L/R | Estate FWD AVF/AWX | | GCO83019 | Outer Joint | 45W | 38 | 27 | 59.5 | 34.5 | 63 | I |
| | 2001.06-2005.01 | 5MT | F | L | Saloon FWD AVF/AWX | | GDS61019 | Drive Shaft | 45W | 38 | | 59.5 | 34.5 | 624 | |
| | 2001.06-2005.01 | 5MT | F | R | Saloon FWD AVF/AWX | | GDS61076 | Drive Shaft | 45W | 38 | | 59.5 | 34.5 | 645 | |
| | 2001.06-2005.01 | CVT | F | L/R | Saloon FWD AVF/AWX | | GDS83066 | Drive Shaft | 45W | 38 | | 59.5 | 34.5 | 544 | |
| | 2001.06-2005.01 | CVT | F | L/R | Saloon FWD AVF/AWX | | GCI61044 | Inner Joint | | | 34 | | | 85 | |
| | 2001.06-2005.01 | CVT/5MT/6MT | F | L/R | Saloon FWD AVF/AWX | | GCO83019 | Outer Joint | 45W | 38 | 27 | 59.5 | 34.5 | 63 | I |
| 2.0 (74 kw) | 1994.06-1996.06 | AT/MT | F | L/R | Saloon FWD AAE | Date to:1996.06 | GCO83016 | Outer Joint | 45T | 38 | 30 | 59.5 | 34 | 61 | I |
| | 1994.06-1996.06 | MT | F | L/R | Saloon FWD AAE | Date to:1996.06 | GCI83001 | Inner Joint | | | 28 | | | 32 | |
| | 1994.06-1996.07 | AT/MT | F | L/R | Estate FWD AAE | Date to:1996.07 | GCO83016 | Outer Joint | 45T | 38 | 30 | 59.5 | 34 | 61 | I |
| | 1994.06-1996.07 | MT | F | L/R | Estate FWD AAE | Date to:1996.07 | GCI83001 | Inner Joint | | | 28 | | | 32 | |
| 2.0 (85 kw) | 1994.06-1996.06 | AT/MT | F | L/R | Estate FWD ABK | Date to:1996.06 | GCO83016 | Outer Joint | 45T | 38 | 30 | 59.5 | 34 | 61 | I |
| | 1994.06-1996.06 | MT | F | L/R | Estate FWD ABK | Date to:1996.06 | GCI83001 | Inner Joint | | | 28 | | | 32 | |
| | 1994.06-1996.06 | AT/MT | F | L/R | Saloon FWD ABK | Date to:1996.06 | GCO83016 | Outer Joint | 45T | 38 | 30 | 59.5 | 34 | 61 | I |
| | 1994.06-1996.06 | MT | F | L/R | Saloon FWD ABK | Date to:1996.06 | GCI83001 | Inner Joint | | | 28 | | | 32 | |
| 2.0 (89 kw) | 2005.09-2006.06 | 6MT | F | L | Estate FWD BVG | | GDS83290 | Drive Shaft | | 38 | | 59.5 | 34 | 617 | |
| | 2005.09-2006.06 | 6MT | F | R | Estate FWD BVG | AAR | GDS81591 | Drive Shaft | | 38 | | 59.5 | 34 | 653 | |
| | 2005.09-2006.06 | 6MT | F | R | Estate FWD BVG | TJ | GDS83329 | Drive Shaft | | 38 | | 59.5 | 34 | 655 | |
| | 2005.09-2006.06 | 6MT | F | L/R | Estate FWD BVG | | GCO83077 | Outer Joint | | 38 | 27 | 59.5 | 34 | 63 | M |
| | 2005.09-2006.06 | 6MT | F | L/R | Estate FWD BVG | TJ | GCI61044 | Inner Joint | | | 34 | | | 85 | |
| | 2005.09-2006.06 | 6MT | F | L/R | Estate FWD BVG | AAR | GCI61076 | Inner Joint | | | 34 | | | 85 | |
| | 2005.09-2006.06 | 6MT | F | L | Saloon FWD BVG | | GDS83290 | Drive Shaft | | 38 | | 59.5 | 34 | 617 | |
| | 2005.09-2006.06 | 6MT | F | R | Saloon FWD BVG | AAR | GDS81591 | Drive Shaft | | 38 | | 59.5 | 34 | 653 | |
| | 2005.09-2006.06 | 6MT | F | R | Saloon FWD BVG | TJ | GDS83329 | Drive Shaft | | 38 | | 59.5 | 34 | 655 | |
| | 2005.09-2006.06 | 6MT | F | L/R | Saloon FWD BVG | | GCO83077 | Outer Joint | | 38 | 27 | 59.5 | 34 | 63 | M |
| | 2005.09-2006.06 | 6MT | F | L/R | Saloon FWD BVG | TJ | GCI61044 | Inner Joint | | | 34 | | | 85 | |
| | 2005.09-2006.06 | 6MT | F | L/R | Saloon FWD BVG | AAR | GCI61076 | Inner Joint | | | 34 | | | 85 | |
| 2.0 (96 kw) | 2001.04-2004.05 | 5MT | F | L | Saloon FWD ALT | | GDS61019 | Drive Shaft | 45W | 38 | | 59.5 | 34.5 | 624 | |
| | 2001.04-2004.05 | 5MT | F | R | Saloon FWD ALT | | GDS61076 | Drive Shaft | 45W | 38 | | 59.5 | 34.5 | 645 | |
| | 2001.04-2004.05 | 5MT | F | L/R | Saloon FWD ALT | | GCI50019 | Inner Joint | | | 34 | | | 59.5 | |
| | 2001.04-2004.05 | CVT | F | L/R | Saloon FWD ALT | | GDS83066 | Drive Shaft | 45W | 38 | | 59.5 | 34.5 | 544 | |
| | 2001.04-2004.05 | CVT | F | L/R | Saloon FWD ALT | | GCO83058 | Outer Joint | 45W | 38 | 33 | 59.5 | 34 | 56.5 | M |
| | 2001.04-2004.05 | CVT | F | L/R | Saloon FWD ALT | | GCI83007 | Inner Joint | | | 34 | | | 85 | |
| | 2001.04-2004.05 | CVT/5MT | F | L/R | Saloon FWD ALT | | GCO83019 | Outer Joint | 45W | 38 | 27 | 59.5 | 34.5 | 63 | I |
| | 2001.04-2005.01 | 5MT | F | L | Estate FWD ALT | | GDS61019 | Drive Shaft | 45W | 38 | | 59.5 | 34.5 | 624 | |
| | 2001.04-2005.01 | 5MT | F | R | Estate FWD ALT | | GDS61076 | Drive Shaft | 45W | 38 | | 59.5 | 34.5 | 645 | |
| | 2001.04-2005.01 | 5MT | F | L/R | Estate FWD ALT | | GCI50019 | Inner Joint | | | 34 | | | 59.5 | |
| | 2001.04-2005.01 | CVT | F | L/R | Estate FWD ALT | | GDS83066 | Drive Shaft | 45W | 38 | | 59.5 | 34.5 | 544 | |
| | 2001.04-2005.01 | CVT | F | L/R | Estate FWD ALT | | GCO83058 | Outer Joint | 45W | 38 | 33 | 59.5 | 34 | 56.5 | M |
| | 2001.04-2005.01 | CVT | F | L/R | Estate FWD ALT | | GCI83007 | Inner Joint | | | 34 | | | 85 | |
| | 2001.04-2005.01 | CVT/5MT | F | L/R | Estate FWD ALT | | GCO83019 | Outer Joint | 45W | 38 | 27 | 59.5 | 34.5 | 63 | I |
| 2.0 (100 kw) | 2004.07-2011.03 | 6MT | F | L | Saloon FWD BNA;BRF;CAGB | | GDS83290 | Drive Shaft | | 38 | | 59.5 | 34 | 617 | |
| | 2004.07-2011.03 | 6MT | F | R | Saloon FWD BNA;BRF;CAGB | AAR | GDS81591 | Drive Shaft | | 38 | | 59.5 | 34 | 653 | |
| | 2004.07-2011.03 | 6MT | F | R | Saloon FWD BNA;BRF;CAGB | TJ | GDS83329 | Drive Shaft | | 38 | | 59.5 | 34 | 655 | |
| | 2004.07-2011.03 | 6MT/CVT | F | L/R | Saloon FWD BNA;BRF;CAGB | Original design | GCO83077 | Outer Joint | | 38 | 27 | 59.5 | 34 | 63 | M |
| | 2004.07-2011.03 | 6MT/CVT | F | L/R | Saloon FWD BNA;BRF;CAGB | TJ | GCI61044 | Inner Joint | | | 34 | | | 85 | |
| | 2004.07-2011.03 | 6MT/CVT | F | L/R | Saloon FWD BNA;BRF;CAGB | AAR | GCI61076 | Inner Joint | | | 34 | | | 85 | |
| | 2004.07-2011.03 | CVT | F | L | Saloon FWD BNA;BRF;CAGB | | GDS83025 | Drive Shaft | | 38 | | 59.5 | 34 | 543 | |
| | 2004.07-2011.03 | CVT | F | L | Saloon FWD BNA;BRF;CAGB | | GDS83271 | Drive Shaft | | 38 | | 59.5 | 34 | 548 | |
| | 2004.07-2011.03 | CVT | F | R | Saloon FWD BNA;BRF;CAGB | | GDS83026 | Drive Shaft | | 38 | | 59.5 | 34 | 558 | |
| | 2005.06-2011.08 | 6MT | F | L | Estate FWD BNA;BRF;CAGB | | GDS83290 | Drive Shaft | | 38 | | 59.5 | 34 | 617 | |
| | 2005.06-2011.08 | 6MT | F | R | Estate FWD BNA;BRF;CAGB | AAR | GDS81591 | Drive Shaft | | 38 | | 59.5 | 34 | 653 | |
| | 2005.06-2011.08 | 6MT | F | R | Estate FWD BNA;BRF;CAGB | TJ | GDS83329 | Drive Shaft | | 38 | | 59.5 | 34 | 655 | |
| | 2005.06-2011.08 | 6MT/CVT | F | L/R | Estate FWD BNA;BRF;CAGB | Original design | GCO83077 | Outer Joint | | 38 | 27 | 59.5 | 34 | 63 | M |
| | 2005.06-2011.08 | 6MT/CVT | F | L/R | Estate FWD BNA;BRF;CAGB | TJ | GCI61044 | Inner Joint | | | 34 | | | 85 | |
| | 2005.06-2011.08 | 6MT/CVT | F | L/R | Estate FWD BNA;BRF;CAGB | AAR | GCI61076 | Inner Joint | | | 34 | | | 85 | |
| | 2005.06-2011.08 | CVT | F | L | Estate FWD BNA;BRF;CAGB | | GDS83025 | Drive Shaft | | 38 | | 59.5 | 34 | 543 | |
| | 2005.06-2011.08 | CVT | F | L | Estate FWD BNA;BRF;CAGB | | GDS83271 | Drive Shaft | | 38 | | 59.5 | 34 | 548 | |
| | 2005.06-2011.08 | CVT | F | R | Estate FWD BNA;BRF;CAGB | | GDS83026 | Drive Shaft | | 38 | | 59.5 | 34 | 558 | |
| | 2012.01-2018.09 | 6MT | F | R | Estate FWD CGLE;CSUE;DDCA | for model cod 4GC | GDS61290 | Drive Shaft | | 42 | | 76.4 | 34 | 493 | |
| | 2012.01-2018.09 | 6MT | F | L/R | Estate FWD CGLE;CSUE;DDCA | for model cod:4G2 | GDS81529 | Drive Shaft | | 42 | | 76.5 | 34 | 498 | |
| | 2012.01-2018.09 | 6MT | F | R | Estate FWD CGLE;CSUE;DDCA | for model cod 4GC,TJ | GCI83022 | Inner Joint | | | 34 | | | 88.5 | |
| | 2012.01-2018.09 | 6MT | F | L/R | Estate FWD CGLE;CSUE;DDCA | for model cod 4G2 | GCI61077 | Inner Joint | | | 34 | | | 88 | |
| | 2012.01-2018.09 | 7DCT | F | L/R | Estate FWD CGLE;CSUE;DDCA | for model cod 4GC | GDS81530 | Drive Shaft | | 42 | | 76.5 | 34 | 496 | |

| | YEAR | TRANSM. | F/R | L/R | BODY STYLE & DRIVE TYPE & ENGINE | REMARKS | G-AP Ref. | PRODUCT | ABS | Technical Specifications A | B | C | H | L | P |
|---|---|---|---|---|---|---|---|---|---|---|---|---|---|---|---|
| **AUDI** | | | | | | | | | | | | | | | |
| **A6** | | | | | | | | | | | | | | | |
| 2.0 (100 kw) | 2012.01-2018.09 | 7DCT | F | L/R | Estate FWD CGLE;CSUE;DDCA | for model cod 4GC | GCI61077 | Inner Joint | | | 34 | | | 88 | |
| | 2012.01-2018.09 | AT/CVT | F | L/R | Estate FWD CGLE;CSUE;DDCA | | GCI61077 | Inner Joint | | | 34 | | | 88 | |
| | 2012.01-2018.09 | CVT | F | L/R | Estate FWD CGLE;CSUE;DDCA | | GDS81529 | Drive Shaft | | 42 | | 76.5 | 34 | 498 | |
| | 2012.01-2018.09 | CVT/7AT/6MT | F | L/R | Estate FWD CGLE;CSUE;DDCA | Model code:4G5 | GCO83088 | Outer Joint | | 42 | 29 | 76.5 | 34 | 61.5 | M |
| | 2012.01-2018.09 | CVT/7AT/6MT | F | L/R | Estate FWD CGLE;CSUE;DDCA | Model code:4GD | GCO83103 | Outer Joint | | 42 | 28 | 76.4 | 34 | 54 | I |
| | 2012.01-2018.09 | 6MT | F | R | Saloon FWD CGLE;CSUE;DDCA | For Modelcode:4GC | GDS61290 | Drive Shaft | | 42 | | 76.4 | 34 | 493 | |
| | 2012.01-2018.09 | 6MT | F | R | Saloon FWD CGLE;CSUE;DDCA | for model cod 4GC,TJ | GCI83022 | Inner Joint | | | 34 | | | 88.5 | |
| | 2012.01-2018.09 | 6MT | F | L/R | Saloon FWD CGLE;CSUE;DDCA | for model cod:4G2 | GCI61077 | Inner Joint | | | 34 | | | 88 | |
| | 2012.01-2018.09 | 6MT/7DCT | F | L/R | Saloon FWD CGLE;CSUE;DDCA | For Modelcode:4GC | GDS81530 | Drive Shaft | | 42 | | 76.5 | 34 | 496 | |
| | 2012.01-2018.09 | 6MT/CVT | F | L/R | Saloon FWD CGLE;CSUE;DDCA | For Modelcode:4G2 | GDS81529 | Drive Shaft | | 42 | | 76.5 | 34 | 498 | |
| | 2012.01-2018.09 | 7DCT | F | R | Saloon FWD CGLE;CSUE;DDCA | for model cod 4GC | GDS81530 | Drive Shaft | | 42 | | 76.5 | 34 | 496 | |
| | 2012.01-2018.09 | 7DCT | F | R | Saloon FWD CGLE;CSUE;DDCA | for model cod:4GC | GCI61077 | Inner Joint | | | 34 | | | 88 | |
| | 2012.01-2018.09 | CVT | F | L/R | Saloon FWD CGLE;CSUE;DDCA | | GCI61077 | Inner Joint | | | 34 | | | 88 | |
| | 2012.01-2018.09 | CVT/7AT/6MT | F | L/R | Saloon FWD CGLE;CSUE;DDCA | Model code:4G2 | GCO83088 | Outer Joint | | 42 | 29 | 76.5 | 34 | 61.5 | M |
| | 2012.01-2018.09 | CVT/7AT/6MT | F | L/R | Saloon FWD CGLE;CSUE;DDCA | Model code:4GC | GCO83103 | Outer Joint | | 42 | 28 | 76.4 | 34 | 54 | I |
| | 2019.01- | 7AT | F | L | Estate FWD DEZF | Date from:2020.07 | GDS84553 | Drive Shaft | | 42 | | 76.5 | 34 | 496 | |
| | 2019.01- | 7AT | F | L | Estate FWD DEZF | Date to:2020.06 | GDS84560 | Drive Shaft | | 42 | | 76.5 | 34 | 494 | |
| | 2019.01- | 7AT | F | R | Estate FWD DEZF | | GDS84560 | Drive Shaft | | 42 | | 76.5 | 34 | 494 | |
| | 2019.01- | 7AT | F | L/R | Estate FWD DEZF | | GCI61077 | Inner Joint | | | 34 | | | 88 | |
| | 2019.01- | AT | F | L/R | Estate FWD DEZF | | GCO81750 | Outer Joint | | 42 | 29 | 76.5 | 34 | 60 | I |
| | 2019.01- | 7AT | F | L | Saloon FWD DEZF | Date from:2020.07 | GDS84553 | Drive Shaft | | 42 | | 76.5 | 34 | 496 | |
| | 2019.01- | 7AT | F | L | Saloon FWD DEZF | Date to:2020.06 | GDS84560 | Drive Shaft | | 42 | | 76.5 | 34 | 494 | |
| | 2019.01- | 7AT | F | R | Saloon FWD DEZF | | GDS84560 | Drive Shaft | | 42 | | 76.5 | 34 | 494 | |
| | 2019.01- | 7AT | F | L/R | Saloon FWD DEZF | | GCI61077 | Inner Joint | | | 34 | | | 88 | |
| | 2019.01- | AT | F | L/R | Saloon FWD DEZF | | GCO81750 | Outer Joint | | 42 | 29 | 76.5 | 34 | 60 | I |
| 2.0 (103 kw) | 1994.06-1997.10 | AT/MT | F | L/R | Estate FWD ACE | | GCO83016 | Outer Joint | 45T | 38 | 30 | 59.5 | 34 | 61 | I |
| | 1994.06-1997.10 | MT | F | L/R | Estate FWD ACE | | GCI83001 | Inner Joint | | | 28 | | | 32 | |
| | 1994.06-1997.10 | AT/MT | F | L/R | Saloon FWD ACE | | GCO83016 | Outer Joint | 45T | 38 | 30 | 59.5 | 34 | 61 | I |
| | 1994.06-1997.10 | MT | F | L/R | Saloon FWD ACE | | GCI83001 | Inner Joint | | | 28 | | | 32 | |
| | 2004.07-2008.10 | 6MT | F | L | Saloon FWD BLB;BRE | | GDS83290 | Drive Shaft | | 38 | | 59.5 | 34 | 617 | |
| | 2004.07-2008.10 | 6MT | F | R | Saloon FWD BLB;BRE | AAR | GDS81591 | Drive Shaft | | 38 | | 59.5 | 34 | 653 | |
| | 2004.07-2008.10 | 6MT | F | R | Saloon FWD BLB;BRE | TJ | GDS83329 | Drive Shaft | | 38 | | 59.5 | 34 | 655 | |
| | 2004.07-2008.10 | 6MT/CVT | F | L/R | Saloon FWD BLB;BRE | Original design | GCO83077 | Outer Joint | | 38 | 27 | 59.5 | 34 | 63 | M |
| | 2004.07-2008.10 | 6MT/CVT | F | L/R | Saloon FWD BLB;BRE | TJ | GCI61044 | Inner Joint | | | 34 | | | 85 | |
| | 2004.07-2008.10 | 6MT/CVT | F | L/R | Saloon FWD BLB;BRE | AAR | GCI61076 | Inner Joint | | | 34 | | | 85 | |
| | 2004.07-2008.10 | CVT | F | L | Saloon FWD BLB;BRE | | GDS83025 | Drive Shaft | | 38 | | 59.5 | 34 | 543 | |
| | 2004.07-2008.10 | CVT | F | R | Saloon FWD BLB;BRE | | GDS83026 | Drive Shaft | | 38 | | 59.5 | 34 | 558 | |
| | 2005.06-2008.10 | 6MT | F | L | Estate FWD BLB;BRE | | GDS83290 | Drive Shaft | | 38 | | 59.5 | 34 | 617 | |
| | 2005.06-2008.10 | 6MT | F | R | Estate FWD BLB;BRE | AAR | GDS81591 | Drive Shaft | | 38 | | 59.5 | 34 | 653 | |
| | 2005.06-2008.10 | 6MT | F | R | Estate FWD BLB;BRE | TJ | GDS83329 | Drive Shaft | | 38 | | 59.5 | 34 | 655 | |
| | 2005.06-2008.10 | 6MT/CVT | F | L/R | Estate FWD BLB;BRE | Original design | GCO83077 | Outer Joint | | 38 | 27 | 59.5 | 34 | 63 | M |
| | 2005.06-2008.10 | 6MT/CVT | F | L/R | Estate FWD BLB;BRE | TJ | GCI61044 | Inner Joint | | | 34 | | | 85 | |
| | 2005.06-2008.10 | 6MT/CVT | F | L/R | Estate FWD BLB;BRE | AAR | GCI61076 | Inner Joint | | | 34 | | | 85 | |
| | 2005.06-2008.10 | CVT | F | L | Estate FWD BLB;BRE | | GDS83025 | Drive Shaft | | 38 | | 59.5 | 34 | 543 | |
| | 2005.06-2008.10 | CVT | F | R | Estate FWD BLB;BRE | | GDS83026 | Drive Shaft | | 38 | | 59.5 | 34 | 558 | |
| 2.0 (110 kw) | 2014.09-2018.09 | 6MT | F | R | Estate FWD CSUD;DDCB | | GDS61290 | Drive Shaft | | 42 | | 76.4 | 34 | 493 | |
| | 2014.09-2018.09 | 6MT/7DCT | F | L/R | Estate FWD CSUD;DDCB | | GDS81530 | Drive Shaft | | 42 | | 76.5 | 34 | 496 | |
| | 2014.09-2018.09 | AT/MT | F | L/R | Estate FWD CSUD;DDCB | Date from:2015.01 | GCO83103 | Outer Joint | | 42 | 28 | 76.4 | 34 | 54 | I |
| | 2014.09-2018.09 | AT/MT | F | L/R | Estate FWD CSUD;DDCB | Date from:2015.01 | GCI83022 | Inner Joint | | | 34 | | | 88.5 | |
| | 2014.09-2018.09 | 6MT | F | R | Saloon FWD CSUD;DDCB | | GDS61290 | Drive Shaft | | 42 | | 76.4 | 34 | 493 | |
| | 2014.09-2018.09 | 6MT/7DCT | F | L/R | Saloon FWD CSUD;DDCB | | GDS81530 | Drive Shaft | | 42 | | 76.5 | 34 | 496 | |
| | 2014.09-2018.09 | AT/MT | F | L/R | Saloon FWD CSUD;DDCB | Date from:2015.01 | GCO83103 | Outer Joint | | 42 | 28 | 76.4 | 34 | 54 | I |
| | 2014.09-2018.09 | AT/MT | F | L/R | Saloon FWD CSUD;DDCB | Date from:2015.01 | GCI83022 | Inner Joint | | | 34 | | | 88.5 | |
| 2.0 (120 kw) | 2009.04-2011.03 | 6MT | F | L | Saloon FWD CAHB | | GDS83290 | Drive Shaft | | 38 | | 59.5 | 34 | 617 | |
| | 2009.04-2011.03 | 6MT | F | R | Saloon FWD CAHB | AAR | GDS81591 | Drive Shaft | | 38 | | 59.5 | 34 | 653 | |
| | 2009.04-2011.03 | 6MT | F | R | Saloon FWD CAHB | TJ | GDS83329 | Drive Shaft | | 38 | | 59.5 | 34 | 655 | |
| | 2009.04-2011.03 | CVT | F | L | Saloon FWD CAHB | | GDS83025 | Drive Shaft | | 38 | | 59.5 | 34 | 543 | |
| | 2009.04-2011.03 | CVT | F | R | Saloon FWD CAHB | | GDS83026 | Drive Shaft | | 38 | | 59.5 | 34 | 558 | |
| | 2009.04-2011.03 | CVT/6MT | F | L/R | Saloon FWD CAHB | | GCO83077 | Outer Joint | | 38 | 27 | 59.5 | 34 | 63 | M |
| | 2009.04-2011.03 | CVT/6MT | F | L/R | Saloon FWD CAHB | TJ | GCI61044 | Inner Joint | | | 34 | | | 85 | |
| | 2009.04-2011.03 | CVT/6MT | F | L/R | Saloon FWD CAHB | AAR | GCI61076 | Inner Joint | | | 34 | | | 85 | |
| | 2009.04-2011.08 | 6MT | F | L | Estate FWD CAHB | | GDS83290 | Drive Shaft | | 38 | | 59.5 | 34 | 617 | |
| | 2009.04-2011.08 | 6MT | F | R | Estate FWD CAHB | AAR | GDS81591 | Drive Shaft | | 38 | | 59.5 | 34 | 653 | |
| | 2009.04-2011.08 | 6MT | F | R | Estate FWD CAHB | TJ | GDS83329 | Drive Shaft | | 38 | | 59.5 | 34 | 655 | |
| | 2009.04-2011.08 | CVT | F | L | Estate FWD CAHB | | GDS83025 | Drive Shaft | | 38 | | 59.5 | 34 | 543 | |

| | YEAR | TRANSM. | F/R | L/R | BODY STYLE & DRIVE TYPE & ENGINE | REMARKS | G-AP Ref. | PRODUCT | ABS | Technical Specifications A | B | C | H | L | P |
|---|---|---|---|---|---|---|---|---|---|---|---|---|---|---|---|
| **AUDI** | | | | | | | | | | | | | | | |
| **A6** | | | | | | | | | | | | | | | |
| 2.0 (120 kw) | 2009.04-2011.08 | CVT | F | R | Estate FWD CAHB | | GDS83026 | Drive Shaft | | 38 | | 59.5 | 34 | 558 | |
| | 2009.04-2011.08 | CVT/6MT | F | L/R | Estate FWD CAHB | | GCO83077 | Outer Joint | | 38 | 27 | 59.5 | 34 | 63 | M |
| | 2009.04-2011.08 | CVT/6MT | F | L/R | Estate FWD CAHB | TJ | GCI61044 | Inner Joint | | | 34 | | | 85 | |
| | 2009.04-2011.08 | CVT/6MT | F | L/R | Estate FWD CAHB | AAR | GCI61076 | Inner Joint | | | 34 | | | 85 | |
| | 2011.03-2018.09 | CVT | F | L/R | Saloon FWD CGLD | TJ | GCI83022 | Inner Joint | | | 34 | | | 88.5 | |
| | 2011.03-2018.09 | CVT/6MT | F | L/R | Saloon FWD CGLD | | GDS81529 | Drive Shaft | | 42 | | 76.5 | 34 | 498 | |
| | 2011.03-2018.09 | CVT/6MT | F | L/R | Saloon FWD CGLD | AAR | GCI61077 | Inner Joint | | | 34 | | | 88 | |
| | 2011.03-2018.09 | MT/CVT | F | L/R | Saloon FWD CGLD | Date from:2011.12;Date to:2015.04 | GCO83088 | Outer Joint | | 42 | 29 | 76.5 | 34 | 61.5 | M |
| | 2011.05-2018.09 | CVT | F | L/R | Estate FWD CGLD | TJ | GCI83022 | Inner Joint | | | 34 | | | 88.5 | |
| | 2011.05-2018.09 | CVT/6MT | F | L/R | Estate FWD CGLD | | GDS81529 | Drive Shaft | | 42 | | 76.5 | 34 | 498 | |
| | 2011.05-2018.09 | CVT/6MT | F | L/R | Estate FWD CGLD | AAR | GCI61077 | Inner Joint | | | 34 | | | 88 | |
| | 2011.05-2018.09 | MT/CVT | F | L/R | Estate FWD CGLD | Date from:2011.12;Date to:2015.04 | GCO83088 | Outer Joint | | 42 | 29 | 76.5 | 34 | 61.5 | M |
| | 2019.03- | 7AT | F | L | Estate FWD DEZD;DTPB | Date from:2020.07 | GDS84553 | Drive Shaft | | 42 | | 76.5 | 34 | 496 | |
| | 2019.03- | 7AT | F | L | Estate FWD DEZD;DTPB | Date to:2020.06 | GDS84560 | Drive Shaft | | 42 | | 76.5 | 34 | 494 | |
| | 2019.03- | 7AT | F | R | Estate FWD DEZD;DTPB | | GDS84560 | Drive Shaft | | 42 | | 76.5 | 34 | 494 | |
| | 2019.03- | 7AT | F | L/R | Estate FWD DEZD;DTPB | | GCO81750 | Outer Joint | | 42 | 29 | 76.5 | 34 | 60 | I |
| | 2019.03- | 7AT | F | L/R | Estate FWD DEZD;DTPB | | GCI61077 | Inner Joint | | | 34 | | | 88 | |
| | 2019.03- | 7AT | F | L | Saloon FWD DEZD;DTPB | Date from:2020.07 | GDS84553 | Drive Shaft | | 42 | | 76.5 | 34 | 496 | |
| | 2019.03- | 7AT | F | L | Saloon FWD DEZD;DTPB | Date to:2020.06 | GDS84560 | Drive Shaft | | 42 | | 76.5 | 34 | 494 | |
| | 2019.03- | 7AT | F | R | Saloon FWD DEZD;DTPB | | GDS84560 | Drive Shaft | | 42 | | 76.5 | 34 | 494 | |
| | 2019.03- | 7AT | F | L/R | Saloon FWD DEZD;DTPB | | GCO81750 | Outer Joint | | 42 | 29 | 76.5 | 34 | 60 | I |
| | 2019.03- | 7AT | F | L/R | Saloon FWD DEZD;DTPB | | GCI61077 | Inner Joint | | | 34 | | | 88 | |
| 2.0 (125 kw) | 2005.06-2011.03 | 6MT | F | L | Saloon FWD BPJ;BYK | | GDS83290 | Drive Shaft | | 38 | | 59.5 | 34 | 617 | |
| | 2005.06-2011.03 | 6MT | F | R | Saloon FWD BPJ;BYK | AAR | GDS81591 | Drive Shaft | | 38 | | 59.5 | 34 | 653 | |
| | 2005.06-2011.03 | 6MT | F | R | Saloon FWD BPJ;BYK | TJ | GDS83329 | Drive Shaft | | 38 | | 59.5 | 34 | 655 | |
| | 2005.06-2011.03 | 6MT/CVT | F | L/R | Saloon FWD BPJ;BYK | | GCO83077 | Outer Joint | | 38 | 27 | 59.5 | 34 | 63 | M |
| | 2005.06-2011.03 | 6MT/CVT | F | L/R | Saloon FWD BPJ;BYK | TJ | GCI61044 | Inner Joint | | | 34 | | | 85 | |
| | 2005.06-2011.03 | 6MT/CVT | F | L/R | Saloon FWD BPJ;BYK | AAR | GCI61076 | Inner Joint | | | 34 | | | 85 | |
| | 2005.06-2011.03 | CVT | F | L | Saloon FWD BPJ;BYK | | GDS83271 | Drive Shaft | | 38 | | 59.5 | 34 | 548 | |
| | 2005.06-2011.03 | CVT | F | R | Saloon FWD BPJ;BYK | | GDS83026 | Drive Shaft | | 38 | | 59.5 | 34 | 558 | |
| | 2005.06-2011.08 | 6MT | F | L | Estate FWD BPJ | | GDS83290 | Drive Shaft | | 38 | | 59.5 | 34 | 617 | |
| | 2005.06-2011.08 | 6MT | F | R | Estate FWD BPJ | AAR | GDS81591 | Drive Shaft | | 38 | | 59.5 | 34 | 653 | |
| | 2005.06-2011.08 | 6MT | F | R | Estate FWD BPJ | TJ | GDS83329 | Drive Shaft | | 38 | | 59.5 | 34 | 655 | |
| | 2005.06-2011.08 | 6MT/CVT | F | L/R | Estate FWD BPJ | | GCO83077 | Outer Joint | | 38 | 27 | 59.5 | 34 | 63 | M |
| | 2005.06-2011.08 | 6MT/CVT | F | L/R | Estate FWD BPJ | TJ | GCI61044 | Inner Joint | | | 34 | | | 85 | |
| | 2005.06-2011.08 | 6MT/CVT | F | L/R | Estate FWD BPJ | AAR | GCI61076 | Inner Joint | | | 34 | | | 85 | |
| | 2005.06-2011.08 | CVT | F | L | Estate FWD BPJ | | GDS83271 | Drive Shaft | | 38 | | 59.5 | 34 | 548 | |
| | 2005.06-2011.08 | CVT | F | R | Estate FWD BPJ | | GDS83026 | Drive Shaft | | 38 | | 59.5 | 34 | 558 | |
| | 2008.10-2011.08 | 6MT | F | L | Estate FWD CAHA | | GDS83290 | Drive Shaft | | 38 | | 59.5 | 34 | 617 | |
| | 2008.10-2011.08 | 6MT | F | R | Estate FWD CAHA | AAR | GDS81591 | Drive Shaft | | 38 | | 59.5 | 34 | 653 | |
| | 2008.10-2011.08 | 6MT | F | R | Estate FWD CAHA | TJ | GDS83329 | Drive Shaft | | 38 | | 59.5 | 34 | 655 | |
| | 2008.10-2011.08 | 6MT/CVT | F | L/R | Estate FWD CAHA | Original design | GCO83077 | Outer Joint | | 38 | 27 | 59.5 | 34 | 63 | M |
| | 2008.10-2011.08 | 6MT/CVT | F | L/R | Estate FWD CAHA | TJ | GCI61044 | Inner Joint | | | 34 | | | 85 | |
| | 2008.10-2011.08 | 6MT/CVT | F | L/R | Estate FWD CAHA | AAR | GCI61076 | Inner Joint | | | 34 | | | 85 | |
| | 2008.10-2011.08 | CVT | F | L | Estate FWD CAHA | | GDS83025 | Drive Shaft | | 38 | | 59.5 | 34 | 543 | |
| | 2008.10-2011.08 | CVT | F | L | Estate FWD CAHA | | GDS83271 | Drive Shaft | | 38 | | 59.5 | 34 | 548 | |
| | 2008.10-2011.08 | CVT | F | R | Estate FWD CAHA | | GDS83026 | Drive Shaft | | 38 | | 59.5 | 34 | 558 | |
| | 2008.11-2011.03 | 6MT | F | L | Saloon FWD CAHA | | GDS83290 | Drive Shaft | | 38 | | 59.5 | 34 | 617 | |
| | 2008.11-2011.03 | 6MT | F | R | Saloon FWD CAHA | AAR | GDS81591 | Drive Shaft | | 38 | | 59.5 | 34 | 653 | |
| | 2008.11-2011.03 | 6MT | F | R | Saloon FWD CAHA | TJ | GDS83329 | Drive Shaft | | 38 | | 59.5 | 34 | 655 | |
| | 2008.11-2011.03 | 6MT/CVT | F | L/R | Saloon FWD CAHA | Original design | GCO83077 | Outer Joint | | 38 | 27 | 59.5 | 34 | 63 | M |
| | 2008.11-2011.03 | 6MT/CVT | F | L/R | Saloon FWD CAHA | TJ | GCI61044 | Inner Joint | | | 34 | | | 85 | |
| | 2008.11-2011.03 | 6MT/CVT | F | L/R | Saloon FWD CAHA | AAR | GCI61076 | Inner Joint | | | 34 | | | 85 | |
| | 2008.11-2011.03 | CVT | F | L | Saloon FWD CAHA | | GDS83025 | Drive Shaft | | 38 | | 59.5 | 34 | 543 | |
| | 2008.11-2011.03 | CVT | F | L | Saloon FWD CAHA | | GDS83271 | Drive Shaft | | 38 | | 59.5 | 34 | 548 | |
| | 2008.11-2011.03 | CVT | F | R | Saloon FWD CAHA | | GDS83026 | Drive Shaft | | 38 | | 59.5 | 34 | 558 | |
| 2.0 (130 kw) | 2011.03-2018.09 | 6MT/CVT | F | L/R | Saloon FWD CGLC;CMGB | | GDS81529 | Drive Shaft | | 42 | | 76.5 | 34 | 498 | |
| | 2011.03-2018.09 | 6MT/CVT | F | L/R | Saloon FWD CGLC;CMGB | | GCO83088 | Outer Joint | | 42 | 29 | 76.5 | 34 | 61.5 | M |
| | 2011.03-2018.09 | 6MT/CVT | F | L/R | Saloon FWD CGLC;CMGB | AAR | GCI61077 | Inner Joint | | | 34 | | | 88 | |
| | 2011.03-2018.09 | 6MT/CVT | F | L/R | Saloon FWD CGLC;CMGB | TJ | GCI83022 | Inner Joint | | | 34 | | | 88.5 | |
| | 2011.05-2018.09 | 6MT/CVT | F | L/R | Estate FWD CGLC;CMGB | | GDS81529 | Drive Shaft | | 42 | | 76.5 | 34 | 498 | |
| | 2011.05-2018.09 | 6MT/CVT | F | L/R | Estate FWD CGLC;CMGB | | GCO83088 | Outer Joint | | 42 | 29 | 76.5 | 34 | 61.5 | M |
| | 2011.05-2018.09 | 6MT/CVT | F | L/R | Estate FWD CGLC;CMGB | AAR | GCI61077 | Inner Joint | | | 34 | | | 88 | |
| | 2011.05-2018.09 | 6MT/CVT | F | L/R | Estate FWD CGLC;CMGB | TJ | GCI83022 | Inner Joint | | | 34 | | | 88.5 | |
| 2.0 (132 kw) | 2011.05-2018.09 | CVT/6MT | F | L/R | Saloon FWD CDNB | 6 balls,TJ | GDS61290 | Drive Shaft | | 42 | | 76.4 | 34 | 493 | |

| | YEAR | TRANSM. | F/R | L/R | BODY STYLE & DRIVE TYPE & ENGINE | REMARKS | G-AP Ref. | PRODUCT | ABS | Technical Specifications A | B | C | H | L | P |
|---|---|---|---|---|---|---|---|---|---|---|---|---|---|---|---|
| **AUDI** | | | | | | | | | | | | | | | |
| **A6** | | | | | | | | | | | | | | | |
| 2.0 (132 kw) | 2011.05-2018.09 | CVT/6MT | F | L/R | Saloon FWD CDNB | 8 balls,AAR | GDS81530 | Drive Shaft | | 42 | | 76.5 | 34 | 496 | |
| | 2011.05-2018.09 | CVT/6MT | F | L/R | Saloon FWD CDNB | 8 balls | GCO81353 | Outer Joint | | 42 | 28 | 76.5 | 34 | 54 | I |
| | 2011.05-2018.09 | CVT/6MT | F | L/R | Saloon FWD CDNB | 6 balls | GCO83103 | Outer Joint | | 42 | 28 | 76.4 | 34 | 54 | I |
| | 2011.05-2018.09 | CVT/6MT | F | L/R | Saloon FWD CDNB | AAR | GCI61077 | Inner Joint | | | 34 | | | 88 | |
| | 2011.05-2018.09 | CVT/6MT | F | L/R | Saloon FWD CDNB | TJ | GCI83022 | Inner Joint | | | 34 | | | 88.5 | |
| | 2011.06-2018.09 | AT/CVT | F | L/R | Estate FWD CDNB | | GDS81530 | Drive Shaft | | 42 | | 76.5 | 34 | 496 | |
| | 2011.06-2018.09 | AT/CVT | F | L/R | Estate FWD CDNB | AAR | GCI61077 | Inner Joint | | | 34 | | | 88 | |
| | 2011.06-2018.09 | AT/MT | F | L/R | Estate FWD CDNB | Date to:2011.11 | GCO83087 | Outer Joint | | 42 | 27 | 76.5 | 34 | 57 | M |
| | 2011.06-2018.09 | AT/MT | F | L/R | Estate FWD CDNB | Date to:2014.12 | GCO83088 | Outer Joint | | 42 | 29 | 76.5 | 34 | 61.5 | M |
| | 2011.06-2018.09 | AT/MT | F | L/R | Estate FWD CDNB | Date from:2011.11 | GCO83103 | Outer Joint | | 42 | 28 | 76.4 | 34 | 54 | I |
| | 2011.06-2018.09 | CVT/6MT | F | L/R | Estate FWD CDNB | | GDS61290 | Drive Shaft | | 42 | | 76.4 | 34 | 493 | |
| | 2011.06-2018.09 | CVT/6MT | F | L/R | Estate FWD CDNB | TJ | GCI83022 | Inner Joint | | | 34 | | | 88.5 | |
| 2.0 (140 kw) | 2013.11-2018.09 | 6MT | F | L | Estate FWD CNHA;CZJA;DDDA | | GDS83382 | Drive Shaft | | 42 | | 76.5 | 34 | 495 | |
| | 2013.11-2018.09 | 6MT | F | R | Estate FWD CNHA;CZJA;DDDA | | GCI83022 | Inner Joint | | | 34 | | | 88.5 | |
| | 2013.11-2018.09 | 6MT/7DCT | F | L/R | Estate FWD CNHA;CZJA;DDDA | | GCO83102 | Outer Joint | | 42 | 29 | 76.5 | 34 | 60 | I |
| | 2013.11-2018.09 | 7DCT | F | L/R | Estate FWD CNHA;CZJA;DDDA | | GDS83382 | Drive Shaft | | 42 | | 76.5 | 34 | 495 | |
| | 2013.11-2018.09 | 6MT/7DCT | F | L/R | Saloon FWD CNHA;CZJA;DDDA | | GDS83382 | Drive Shaft | | 42 | | 76.5 | 34 | 495 | |
| | 2013.11-2018.09 | 6MT/7DCT | F | L/R | Saloon FWD CNHA;CZJA;DDDA | | GCO83102 | Outer Joint | | 42 | 29 | 76.5 | 34 | 60 | I |
| | 2013.11-2018.09 | 6MT/7DCT | F | L/R | Saloon FWD CNHA;CZJA;DDDA | TJ | GCI83022 | Inner Joint | | | 34 | | | 88.5 | |
| 2.0 (150 kw) | 2018.05- | 7AT | F | L | Estate FWD DFBA;DTPA | Date from:2020.07 | GDS84553 | Drive Shaft | | 42 | | 76.5 | 34 | 496 | |
| | 2018.05- | 7AT | F | L | Estate FWD DFBA;DTPA | Date to:2020.06 | GDS84560 | Drive Shaft | | 42 | | 76.5 | 34 | 494 | |
| | 2018.05- | 7AT | F | R | Estate FWD DFBA;DTPA | | GDS84560 | Drive Shaft | | 42 | | 76.5 | 34 | 494 | |
| | 2018.05- | 7AT | F | L/R | Estate FWD DFBA;DTPA | | GCO81750 | Outer Joint | | 42 | 29 | 76.5 | 34 | 60 | I |
| | 2018.05- | 7AT | F | L/R | Estate FWD DFBA;DTPA | | GCI61077 | Inner Joint | | | 34 | | | 88 | |
| | 2018.07- | 7AT | F | L | Saloon FWD DFBA;DTPA | Date from:2020.07 | GDS84553 | Drive Shaft | | 42 | | 76.5 | 34 | 496 | |
| | 2018.07- | 7AT | F | L | Saloon FWD DFBA;DTPA | Date to:2020.06 | GDS84560 | Drive Shaft | | 42 | | 76.5 | 34 | 494 | |
| | 2018.07- | 7AT | F | R | Saloon FWD DFBA;DTPA | Date from:2020.07 | GDS84560 | Drive Shaft | | 42 | | 76.5 | 34 | 494 | |
| | 2018.07- | 7AT | F | L/R | Saloon FWD DFBA;DTPA | | GCO81750 | Outer Joint | | 42 | 29 | 76.5 | 34 | 60 | I |
| | 2018.07- | 7AT | F | L/R | Saloon FWD DFBA;DTPA | | GCI61077 | Inner Joint | | | 34 | | | 88 | |
| | 2020.09- | 7AT | F | L/R | Estate FWD DMTC | | GDS84560 | Drive Shaft | | 42 | | 76.5 | 34 | 494 | |
| | 2020.09- | 7AT | F | L/R | Estate FWD DMTC | | GCO81750 | Outer Joint | | 42 | 29 | 76.5 | 34 | 60 | I |
| | 2020.09- | 7AT | F | L/R | Estate FWD DMTC | | GCI61077 | Inner Joint | | | 34 | | | 88 | |
| | 2020.09- | 7AT | F | L/R | Saloon FWD DMTC | | GDS84560 | Drive Shaft | | 42 | | 76.5 | 34 | 494 | |
| | 2020.09- | 7AT | F | L/R | Saloon FWD DMTC | | GCO81750 | Outer Joint | | 42 | 29 | 76.5 | 34 | 60 | I |
| | 2020.09- | 7AT | F | L/R | Saloon FWD DMTC | | GCI61077 | Inner Joint | | | 34 | | | 88 | |
| | 2021.01- | | F | L/R | Estate FWD DMTC | | GDS84560 | Drive Shaft | | 42 | | 76.5 | 34 | 494 | |
| | 2021.01- | | F | L/R | Saloon FWD | | GDS84560 | Drive Shaft | | 42 | | 76.5 | 34 | 494 | |
| 2.0 (155 kw) | 2011.03-2013.05 | CVT | F | L/R | Saloon FWD CAEB | Date to:2011.10 | GDS61290 | Drive Shaft | | 42 | | 76.4 | 34 | 493 | |
| | 2011.03-2013.05 | CVT | F | L/R | Saloon FWD CAEB | Date from:2011.11 | GDS81530 | Drive Shaft | | 42 | | 76.5 | 34 | 496 | |
| | 2011.03-2013.05 | CVT | F | L/R | Saloon FWD CAEB | Date from:2011.11 | GCO81353 | Outer Joint | | 42 | 28 | 76.5 | 34 | 54 | I |
| | 2011.03-2013.05 | CVT | F | L/R | Saloon FWD CAEB | Date to:2011.10 | GCO83103 | Outer Joint | | 42 | 28 | 76.4 | 34 | 54 | I |
| | 2011.03-2013.05 | CVT | F | L/R | Saloon FWD CAEB | Date from:2011.11 | GCI61077 | Inner Joint | | | 34 | | | 88 | |
| | 2011.03-2013.05 | CVT | F | L/R | Saloon FWD CAEB | Date to:2011.10,TJ | GCI83022 | Inner Joint | | | 34 | | | 88.5 | |
| 2.0 (162 kw) | 2013.05-2018.09 | CVT | F | L/R | Saloon FWD CAED | Date to:2011.10 | GDS61290 | Drive Shaft | | 42 | | 76.4 | 34 | 493 | |
| | 2013.05-2018.09 | CVT | F | L/R | Saloon FWD CAED | Date from:2011.11 | GDS81530 | Drive Shaft | | 42 | | 76.5 | 34 | 496 | |
| | 2013.05-2018.09 | CVT | F | L/R | Saloon FWD CAED | Date from:2011.11 | GCO81353 | Outer Joint | | 42 | 28 | 76.5 | 34 | 54 | I |
| | 2013.05-2018.09 | CVT | F | L/R | Saloon FWD CAED | Date to:2011.10 | GCO83103 | Outer Joint | | 42 | 28 | 76.4 | 34 | 54 | I |
| | 2013.05-2018.09 | CVT | F | L/R | Saloon FWD CAED | Date from:2011.11 | GCI61077 | Inner Joint | | | 34 | | | 88 | |
| | 2013.05-2018.09 | CVT | F | L/R | Saloon FWD CAED | Date to:2011.10,TJ | GCI83022 | Inner Joint | | | 34 | | | 88.5 | |
| 2.0 (180 kw) | 2011.11-2015.04 | 8AT | F | L/R | Saloon FWD CHJA | Date to:2014.08 | GDS81529 | Drive Shaft | | 42 | | 76.5 | 34 | 498 | |
| | 2011.11-2015.04 | 8AT | F | L/R | Saloon FWD CHJA | Date from:2014.09 | GDS83382 | Drive Shaft | | 42 | | 76.5 | 34 | 495 | |
| | 2011.11-2015.04 | 8AT | F | L/R | Saloon FWD CHJA | Date to:2014.08 | GCO83088 | Outer Joint | | 42 | 29 | 76.5 | 34 | 61.5 | M |
| | 2011.11-2015.04 | 8AT | F | L/R | Saloon FWD CHJA | Date from:2014.09 | GCO83102 | Outer Joint | | 42 | 29 | 76.5 | 34 | 60 | I |
| | 2011.11-2015.04 | 8AT | F | L/R | Saloon FWD CHJA | AAR | GCI61077 | Inner Joint | | | 34 | | | 88 | |
| | 2011.11-2015.04 | 8AT | F | L/R | Saloon FWD CHJA | TJ | GCI83022 | Inner Joint | | | 34 | | | 88.5 | |
| | 2018.08- | 7AT | F | L/R | Estate FWD DKNA;DLHA | | GDS84560 | Drive Shaft | | 42 | | 76.5 | 34 | 494 | |
| | 2018.08- | 7AT | F | L/R | Estate FWD DKNA;DLHA | | GCO81750 | Outer Joint | | 42 | 29 | 76.5 | 34 | 60 | I |
| | 2018.08- | 7AT | F | L/R | Estate FWD DKNA;DLHA | | GCI61077 | Inner Joint | | | 34 | | | 88 | |
| | 2018.08- | 7AT | F | L/R | Saloon FWD DKNA;DLHA | | GDS84560 | Drive Shaft | | 42 | | 76.5 | 34 | 494 | |
| | 2018.08- | 7AT | F | L/R | Saloon FWD DKNA;DLHA | | GCO81750 | Outer Joint | | 42 | 29 | 76.5 | 34 | 60 | I |
| | 2018.08- | 7AT | F | L/R | Saloon FWD DKNA;DLHA | | GCI61077 | Inner Joint | | | 34 | | | 88 | |
| 2.0 (185 kw) | 2014.09-2018.09 | 7AT | F | L/R | Estate FWD CYPA;CYNB | | GDS83382 | Drive Shaft | | 42 | | 76.5 | 34 | 495 | |
| | 2014.09-2018.09 | | F | L/R | Estate FWD CYPA;CYNB | | GCO83102 | Outer Joint | | 42 | 29 | 76.5 | 34 | 60 | I |
| | 2014.09-2018.09 | | F | L/R | Estate FWD CYPA;CYNB | | GCI83022 | Inner Joint | | | 34 | | | 88.5 | |
| | 2014.09-2018.09 | 7AT | F | L/R | Saloon FWD CYPA;CYNB | | GDS83382 | Drive Shaft | | 42 | | 76.5 | 34 | 495 | |

| | YEAR | TRANSM. | F/R | L/R | BODY STYLE & DRIVE TYPE & ENGINE | REMARKS | G-AP Ref. | PRODUCT | ABS | Technical Specifications A | B | C | H | L | P |
|---|---|---|---|---|---|---|---|---|---|---|---|---|---|---|---|
| **AUDI** | | | | | | | | | | | | | | | |
| **A6** | | | | | | | | | | | | | | | |
| 2.0 (185 kw) | 2014.09-2018.09 | | F | L/R | Saloon FWD CYPA;CYNB | | GCO83102 | Outer Joint | | 42 | 29 | 76.5 | 34 | 60 | I |
| | 2014.09-2018.09 | | F | L/R | Saloon FWD CYPA;CYNB | | GCI83022 | Inner Joint | | | 34 | | | 88.5 | |
| 2.0 (195 kw) | 2020.05- | 7AT | F | L/R | Estate FWD DMTA | Date to:2020.06;Position:Front axle left and right;Date from:2020.07;Position:Front axle right | GDS84553 | Drive Shaft | | 42 | | 76.5 | 34 | 496 | |
| | 2020.05- | 7AT | F | L/R | Estate FWD DMTA | Inner teeth:28 | GCO81357 | Outer Joint | | 42 | 28 | 76.5 | 34 | 54 | I |
| | 2020.05- | 7AT | F | L/R | Estate FWD DMTA | | GCI61077 | Inner Joint | | | 34 | | | 88 | |
| | 2020.05- | 7AT | F | L/R | Saloon FWD DMTA;DPAA | Date to:2020.06;Position:Front axle left and right;Date from:2020.07;Position:Front axle right | GDS84553 | Drive Shaft | | 42 | | 76.5 | 34 | 496 | |
| | 2020.05- | 7AT | F | L/R | Saloon FWD DMTA;DPAA | | GCO81357 | Outer Joint | | 42 | 28 | 76.5 | 34 | 54 | I |
| | 2020.05- | 7AT | F | L/R | Saloon FWD DMTA;DPAA | | GCI61077 | Inner Joint | | | 34 | | | 88 | |
| 2.3 (98 kw) | 1994.06-1996.06 | MT | F | L/R | Estate FWD AAR | | GCO83016 | Outer Joint | 45T | 38 | 30 | 59.5 | 34 | 61 | I |
| | 1994.06-1996.06 | MT | F | L/R | Estate FWD AAR | | GCI83001 | Inner Joint | | | 28 | | | 32 | |
| | 1994.06-1996.06 | MT | F | L/R | Saloon FWD AAR | | GCO83016 | Outer Joint | 45T | 38 | 30 | 59.5 | 34 | 61 | I |
| | 1994.06-1996.06 | MT | F | L/R | Saloon FWD AAR | | GCI83001 | Inner Joint | | | 28 | | | 32 | |
| 2.4 (100 kw) | 1997.08-2004.05 | 5MT | F | L | Saloon FWD ALW/ARN/ASM | | GDS61019 | Drive Shaft | 45W | 38 | | 59.5 | 34.5 | 624 | |
| | 1997.08-2004.05 | 5MT | F | R | Saloon FWD ALW/ARN/ASM | | GDS61076 | Drive Shaft | 45W | 38 | | 59.5 | 34.5 | 645 | |
| | 1997.08-2004.05 | AT | F | L | Saloon FWD ALW/ARN/ASM | Date to:2004.05;For Engine code:ALW | GDS83019 | Drive Shaft | 45W | 38 | | 59.5 | 34.5 | 550 | |
| | 1997.08-2004.05 | AT | F | R | Saloon FWD ALW/ARN/ASM | Date to:2004.05;For Engine code:ALW | GDS83020 | Drive Shaft | 45W | 38 | | 59.5 | 34.5 | 522 | |
| | 1997.08-2004.05 | AT | F | L/R | Saloon FWD ALW/ARN/ASM | Date to:2004.05;For Engine code:ALW | GCO83019 | Outer Joint | 45W | 38 | 27 | 59.5 | 34.5 | 63 | I |
| | 1997.08-2004.05 | AT/MT/5MT | F | L/R | Saloon FWD ALW/ARN/ASM | | GCI50019 | Inner Joint | | | 34 | | | 59.5 | |
| | 1997.08-2004.05 | MT | F | R | Saloon FWD ALW/ARN/ASM | Date to:2004.05 | GDS99113 | Drive Shaft | 45W | 38 | | 59.5 | 34.5 | 654 | |
| | 1997.08-2005.01 | 5MT | F | L | Estate FWD ALW/ARN/ASM | | GDS61019 | Drive Shaft | 45W | 38 | | 59.5 | 34.5 | 624 | |
| | 1997.08-2005.01 | 5MT | F | R | Estate FWD ALW/ARN/ASM | | GDS61076 | Drive Shaft | 45W | 38 | | 59.5 | 34.5 | 645 | |
| | 1997.08-2005.01 | AT | F | L | Estate FWD ALW/ARN/ASM | For Engine code:ALW | GDS83019 | Drive Shaft | 45W | 38 | | 59.5 | 34.5 | 550 | |
| | 1997.08-2005.01 | AT | F | R | Estate FWD ALW/ARN/ASM | For Engine code:ALW | GDS83020 | Drive Shaft | 45W | 38 | | 59.5 | 34.5 | 522 | |
| | 1997.08-2005.01 | AT | F | L/R | Estate FWD ALW/ARN/ASM | For Engine code:ALW | GCO83019 | Outer Joint | 45W | 38 | 27 | 59.5 | 34.5 | 63 | I |
| | 1997.08-2005.01 | AT/MT/5MT | F | L/R | Estate FWD ALW/ARN/ASM | | GCI50019 | Inner Joint | | | 34 | | | 59.5 | |
| | 1997.08-2005.01 | MT | F | R | Estate FWD ALW/ARN/ASM | | GDS99113 | Drive Shaft | 45W | 38 | | 59.5 | 34.5 | 654 | |
| 2.4 (115 kw) | 1998.04-2001.04 | 5AT | F | L | Estate FWD APC | | GDS83019 | Drive Shaft | 45W | 38 | | 59.5 | 34.5 | 550 | |
| | 1998.04-2001.04 | 5AT | F | R | Estate FWD APC | | GDS83020 | Drive Shaft | 45W | 38 | | 59.5 | 34.5 | 522 | |
| | 1998.04-2001.04 | 5MT | F | L | Estate FWD APC | | GDS61019 | Drive Shaft | 45W | 38 | | 59.5 | 34.5 | 624 | |
| | 1998.04-2001.04 | 5MT | F | R | Estate FWD APC | | GDS61076 | Drive Shaft | 45W | 38 | | 59.5 | 34.5 | 645 | |
| | 1998.04-2001.04 | AT/MT/5AT/5MT | F | L/R | Estate FWD APC | | GCI50019 | Inner Joint | | | 34 | | | 59.5 | |
| | 1998.04-2001.04 | MT | F | R | Estate FWD APC | Date from:1998.04;Date to:2001.04 | GDS99113 | Drive Shaft | 45W | 38 | | 59.5 | 34.5 | 654 | |
| | 1998.04-2001.04 | MT | F | L/R | Estate FWD APC | Date from:1998.04;Date to:2001.04 | GCO83019 | Outer Joint | 45W | 38 | 27 | 59.5 | 34.5 | 63 | I |
| | 1998.04-2001.04 | 5AT | F | L | Saloon FWD APC | | GDS83019 | Drive Shaft | 45W | 38 | | 59.5 | 34.5 | 550 | |
| | 1998.04-2001.04 | 5AT | F | R | Saloon FWD APC | | GDS83020 | Drive Shaft | 45W | 38 | | 59.5 | 34.5 | 522 | |
| | 1998.04-2001.04 | 5MT | F | L | Saloon FWD APC | | GDS61019 | Drive Shaft | 45W | 38 | | 59.5 | 34.5 | 624 | |
| | 1998.04-2001.04 | 5MT | F | R | Saloon FWD APC | | GDS61076 | Drive Shaft | 45W | 38 | | 59.5 | 34.5 | 645 | |
| | 1998.04-2001.04 | AT/MT/5AT/5MT | F | L/R | Saloon FWD APC | | GCI50019 | Inner Joint | | | 34 | | | 59.5 | |
| | 1998.04-2001.04 | MT | F | R | Saloon FWD APC | Date from:1998.04;Date to:2001.04 | GDS99113 | Drive Shaft | 45W | 38 | | 59.5 | 34.5 | 654 | |
| | 1998.04-2001.04 | MT | F | L/R | Saloon FWD APC | Date from:1998.04;Date to:2001.04 | GCO83019 | Outer Joint | 45W | 38 | 27 | 59.5 | 34.5 | 63 | I |
| 2.4 (120 kw) | 1997.04-2004.05 | 5AT | F | L | Saloon FWD AJG/AMM/APZ | | GDS83019 | Drive Shaft | 45W | 38 | | 59.5 | 34.5 | 550 | |
| | 1997.04-2004.05 | 5AT | F | R | Saloon FWD AJG/AMM/APZ | | GDS83020 | Drive Shaft | 45W | 38 | | 59.5 | 34.5 | 522 | |
| | 1997.04-2004.05 | 5MT | F | L | Saloon FWD AJG/AMM/APZ | | GDS61019 | Drive Shaft | 45W | 38 | | 59.5 | 34.5 | 624 | |
| | 1997.04-2004.05 | 5MT | F | R | Saloon FWD AJG/AMM/APZ | | GDS61076 | Drive Shaft | 45W | 38 | | 59.5 | 34.5 | 645 | |
| | 1997.04-2004.05 | AT/CVT | F | L/R | Saloon FWD AJG/AMM/APZ | | GDS83066 | Drive Shaft | 45W | 38 | | 59.5 | 34.5 | 544 | |
| | 1997.04-2004.05 | AT/MT | F | L/R | Saloon FWD AJG/AMM/APZ | | GCO83019 | Outer Joint | 45W | 38 | 27 | 59.5 | 34.5 | 63 | I |
| | 1997.04-2004.05 | AT/MT/5AT/5MT | F | L/R | Saloon FWD AJG/AMM/APZ | | GCI50019 | Inner Joint | | | 34 | | | 59.5 | |
| | 1997.04-2004.05 | CVT | F | L/R | Saloon FWD AJG/AMM/APZ | | GCI61044 | Inner Joint | | | 34 | | | 85 | |
| | 1997.04-2004.05 | CVT | F | L/R | Saloon FWD AJG/AMM/APZ | | GCI83007 | Inner Joint | | | 34 | | | 85 | |
| | 1997.04-2004.05 | MT | F | R | Saloon FWD AJG/AMM/APZ | Date from:1998.10;Date to:2004.05 | GDS99113 | Drive Shaft | 45W | 38 | | 59.5 | 34.5 | 654 | |
| | 1997.04-2004.05 | | F | L/R | Saloon FWD AJG/AMM/APZ | Date To:1998.09 | GCO83020 | Outer Joint | 45W | 38 | 30 | 59.5 | 34 | 59.5 | I |
| | 1997.04-2004.05 | | F | L/R | Saloon FWD AJG/AMM/APZ | Date To:2004.05;For Engine Code:AJG;For Engine Code:APZ | GCI83002 | Inner Joint | | | 33 | | | 32 | |
| | 1998.02-2005.01 | 5AT | F | L | Estate FWD AJG/AMM/APZ | | GDS83019 | Drive Shaft | 45W | 38 | | 59.5 | 34.5 | 550 | |
| | 1998.02-2005.01 | 5AT | F | R | Estate FWD AJG/AMM/APZ | | GDS83020 | Drive Shaft | 45W | 38 | | 59.5 | 34.5 | 522 | |
| | 1998.02-2005.01 | 5MT | F | L | Estate FWD AJG/AMM/APZ | | GDS61019 | Drive Shaft | 45W | 38 | | 59.5 | 34.5 | 624 | |
| | 1998.02-2005.01 | 5MT | F | R | Estate FWD AJG/AMM/APZ | | GDS61076 | Drive Shaft | 45W | 38 | | 59.5 | 34.5 | 645 | |
| | 1998.02-2005.01 | AT/CVT | F | L/R | Estate FWD AJG/AMM/APZ | | GDS83066 | Drive Shaft | 45W | 38 | | 59.5 | 34.5 | 544 | |
| | 1998.02-2005.01 | AT/MT | F | L/R | Estate FWD AJG/AMM/APZ | | GCO83019 | Outer Joint | 45W | 38 | 27 | 59.5 | 34.5 | 63 | I |
| | 1998.02-2005.01 | AT/MT/5AT/5MT | F | L/R | Estate FWD AJG/AMM/APZ | | GCI50019 | Inner Joint | | | 34 | | | 59.5 | |
| | 1998.02-2005.01 | CVT | F | L/R | Estate FWD AJG/AMM/APZ | | GCI61044 | Inner Joint | | | 34 | | | 85 | |
| | 1998.02-2005.01 | CVT | F | L/R | Estate FWD AJG/AMM/APZ | | GCI83007 | Inner Joint | | | 34 | | | 85 | |
| | 1998.02-2005.01 | MT | F | R | Estate FWD AJG/AMM/APZ | Date from:1998.10 | GDS99113 | Drive Shaft | 45W | 38 | | 59.5 | 34.5 | 654 | |
| | 1998.02-2005.01 | | F | L/R | Estate FWD AJG/AMM/APZ | Date To:1998.09 | GCO83020 | Outer Joint | 45W | 38 | 30 | 59.5 | 34 | 59.5 | I |
| | 1998.02-2005.01 | | F | L/R | Estate FWD AJG/AMM/APZ | For Engine Code:AJG;For Engine Code:APZ | GCI83002 | Inner Joint | | | 33 | | | 32 | |
| 2.4 (121 kw) | 1997.04-2001.09 | 5AT | F | L | Saloon FWD AGA/ALF/AML/APS/ARJ | | GDS83019 | Drive Shaft | 45W | 38 | | 59.5 | 34.5 | 550 | |

| | YEAR | TRANSM. | F/R | L/R | BODY STYLE & DRIVE TYPE & ENGINE | REMARKS | G-AP Ref. | PRODUCT | ABS | Technical Specifications A | B | C | H | L | P |
|---|---|---|---|---|---|---|---|---|---|---|---|---|---|---|---|
| **AUDI** | | | | | | | | | | | | | | | |
| **A6** | | | | | | | | | | | | | | | |
| 2.4 (121 kw) | 1997.04-2001.09 | 5AT | F | R | Saloon FWD AGA/ALF/AML/APS/ARJ | | GDS83020 | Drive Shaft | 45W | 38 | | 59.5 | 34.5 | 522 | |
| | 1997.04-2001.09 | 5MT | F | L | Saloon FWD AGA/ALF/AML/APS/ARJ | | GDS61019 | Drive Shaft | 45W | 38 | | 59.5 | 34.5 | 624 | |
| | 1997.04-2001.09 | 5MT | F | R | Saloon FWD AGA/ALF/AML/APS/ARJ | | GDS61076 | Drive Shaft | 45W | 38 | | 59.5 | 34.5 | 645 | |
| | 1997.04-2001.09 | AT/CVT | F | L/R | Saloon FWD AGA/ALF/AML/APS/ARJ | | GDS83066 | Drive Shaft | 45W | 38 | | 59.5 | 34.5 | 544 | |
| | 1997.04-2001.09 | AT/MT | F | L/R | Saloon FWD AGA/ALF/AML/APS/ARJ | Date from:1998.10;Date to:2001.09 | GCO83019 | Outer Joint | 45W | 38 | 27 | 59.5 | 34.5 | 63 | I |
| | 1997.04-2001.09 | AT/MT | F | L/R | Saloon FWD AGA/ALF/AML/APS/ARJ | Date to:1998.09 | GCO83020 | Outer Joint | 45W | 38 | 30 | 59.5 | 34 | 59.5 | I |
| | 1997.04-2001.09 | AT/MT/5AT/5MT | F | L/R | Saloon FWD AGA/ALF/AML/APS/ARJ | | GCI50019 | Inner Joint | | | 34 | | | 59.5 | |
| | 1997.04-2001.09 | CVT | F | L/R | Saloon FWD AGA/ALF/AML/APS/ARJ | | GCI61044 | Inner Joint | | | 34 | | | 85 | |
| | 1997.04-2001.09 | CVT | F | L/R | Saloon FWD AGA/ALF/AML/APS/ARJ | | GCI83007 | Inner Joint | | | 34 | | | 85 | |
| | 1997.04-2001.09 | MT | F | R | Saloon FWD AGA/ALF/AML/APS/ARJ | Date To:1998.09 | GDS83058 | Drive Shaft | 45W | 38 | | 59.5 | 34.5 | 613 | |
| | 1997.04-2001.09 | MT | F | R | Saloon FWD AGA/ALF/AML/APS/ARJ | Date From:1998.10;Date To:2001.09 | GDS99113 | Drive Shaft | 45W | 38 | | 59.5 | 34.5 | 654 | |
| | 1997.04-2001.09 | | F | L/R | Saloon FWD AGA/ALF/AML/APS/ARJ | Date To:2001.09 | GCI83002 | Inner Joint | | | 33 | | | 32 | |
| | 1998.02-2001.05 | 5AT | F | L | Estate FWD AGA/ALF/AML/APS/ARJ | | GDS83019 | Drive Shaft | 45W | 38 | | 59.5 | 34.5 | 550 | |
| | 1998.02-2001.05 | 5AT | F | R | Estate FWD AGA/ALF/AML/APS/ARJ | | GDS83020 | Drive Shaft | 45W | 38 | | 59.5 | 34.5 | 522 | |
| | 1998.02-2001.05 | 5MT | F | L | Estate FWD AGA/ALF/AML/APS/ARJ | | GDS61019 | Drive Shaft | 45W | 38 | | 59.5 | 34.5 | 624 | |
| | 1998.02-2001.05 | 5MT | F | R | Estate FWD AGA/ALF/AML/APS/ARJ | | GDS61076 | Drive Shaft | 45W | 38 | | 59.5 | 34.5 | 645 | |
| | 1998.02-2001.05 | AT/CVT | F | L/R | Estate FWD AGA/ALF/AML/APS/ARJ | | GDS83066 | Drive Shaft | 45W | 38 | | 59.5 | 34.5 | 544 | |
| | 1998.02-2001.05 | AT/MT | F | L/R | Estate FWD AGA/ALF/AML/APS/ARJ | Date from:1998.10;Date to:2001.05 | GCO83019 | Outer Joint | 45W | 38 | 27 | 59.5 | 34.5 | 63 | I |
| | 1998.02-2001.05 | AT/MT | F | L/R | Estate FWD AGA/ALF/AML/APS/ARJ | Date to:1998.09 | GCO83020 | Outer Joint | 45W | 38 | 30 | 59.5 | 34 | 59.5 | I |
| | 1998.02-2001.05 | AT/MT/5AT/5MT | F | L/R | Estate FWD AGA/ALF/AML/APS/ARJ | | GCI50019 | Inner Joint | | | 34 | | | 59.5 | |
| | 1998.02-2001.05 | CVT | F | L/R | Estate FWD AGA/ALF/AML/APS/ARJ | | GCI61044 | Inner Joint | | | 34 | | | 85 | |
| | 1998.02-2001.05 | CVT | F | L/R | Estate FWD AGA/ALF/AML/APS/ARJ | | GCI83007 | Inner Joint | | | 34 | | | 85 | |
| | 1998.02-2001.05 | MT | F | R | Estate FWD AGA/ALF/AML/APS/ARJ | Date to:2001.05,For Engine code:AGA/ALF | GDS99113 | Drive Shaft | 45W | 38 | | 59.5 | 34.5 | 654 | |
| | 1998.02-2001.05 | | F | L/R | Estate FWD AGA/ALF/AML/APS/ARJ | Date To:2001.05 | GCI83002 | Inner Joint | | | 33 | | | 32 | |
| 2.4 (125 kw) | 2001.06-2004.07 | 5MT | F | L | Saloon FWD BDV | | GDS61019 | Drive Shaft | 45W | 38 | | 59.5 | 34.5 | 624 | |
| | 2001.06-2004.07 | 5MT | F | R | Saloon FWD BDV | | GDS61076 | Drive Shaft | 45W | 38 | | 59.5 | 34.5 | 645 | |
| | 2001.06-2004.07 | 5MT | F | L/R | Saloon FWD BDV | | GCI50019 | Inner Joint | | | 34 | | | 59.5 | |
| | 2001.06-2004.07 | 5MT/CVT | F | L/R | Saloon FWD BDV | | GCO83019 | Outer Joint | 45W | 38 | 27 | 59.5 | 34.5 | 63 | I |
| | 2001.06-2004.07 | CVT | F | L/R | Saloon FWD BDV | | GDS83066 | Drive Shaft | 45W | 38 | | 59.5 | 34.5 | 544 | |
| | 2001.06-2004.07 | CVT | F | L/R | Saloon FWD BDV | | GCI61044 | Inner Joint | | | 34 | | | 85 | |
| | 2001.06-2005.01 | 5MT | F | L | Estate FWD BDV | | GDS61019 | Drive Shaft | 45W | 38 | | 59.5 | 34.5 | 624 | |
| | 2001.06-2005.01 | 5MT | F | R | Estate FWD BDV | | GDS61076 | Drive Shaft | 45W | 38 | | 59.5 | 34.5 | 645 | |
| | 2001.06-2005.01 | 5MT | F | L/R | Estate FWD BDV | | GCI50019 | Inner Joint | | | 34 | | | 59.5 | |
| | 2001.06-2005.01 | 5MT/CVT | F | L/R | Estate FWD BDV | | GCO83019 | Outer Joint | 45W | 38 | 27 | 59.5 | 34.5 | 63 | I |
| | 2001.06-2005.01 | CVT | F | L/R | Estate FWD BDV | | GDS83066 | Drive Shaft | 45W | 38 | | 59.5 | 34.5 | 544 | |
| | 2001.06-2005.01 | CVT | F | L/R | Estate FWD BDV | | GCI61044 | Inner Joint | | | 34 | | | 85 | |
| 2.4 (130 kw) | 2004.05-2008.10 | 6MT | F | L | Saloon FWD BDW | | GDS83290 | Drive Shaft | | 38 | | 59.5 | 34 | 617 | |
| | 2004.05-2008.10 | 6MT | F | R | Saloon FWD BDW | AAR | GDS81591 | Drive Shaft | | 38 | | 59.5 | 34 | 653 | |
| | 2004.05-2008.10 | 6MT | F | R | Saloon FWD BDW | TJ | GDS83329 | Drive Shaft | | 38 | | 59.5 | 34 | 655 | |
| | 2004.05-2008.10 | 6MT/CVT | F | L/R | Saloon FWD BDW | | GCO83077 | Outer Joint | | 38 | 27 | 59.5 | 34 | 63 | M |
| | 2004.05-2008.10 | 6MT/CVT | F | L/R | Saloon FWD BDW | TJ | GCI61044 | Inner Joint | | | 34 | | | 85 | |
| | 2004.05-2008.10 | 6MT/CVT | F | L/R | Saloon FWD BDW | AAR | GCI61076 | Inner Joint | | | 34 | | | 85 | |
| | 2004.05-2008.10 | CVT | F | L | Saloon FWD BDW | | GDS83271 | Drive Shaft | | 38 | | 59.5 | 34 | 548 | |
| | 2004.05-2008.10 | CVT | F | R | Saloon FWD BDW | | GDS83026 | Drive Shaft | | 38 | | 59.5 | 34 | 558 | |
| | 2005.03-2008.10 | 6MT | F | L | Estate FWD BDW | | GDS83290 | Drive Shaft | | 38 | | 59.5 | 34 | 617 | |
| | 2005.03-2008.10 | 6MT | F | R | Estate FWD BDW | AAR | GDS81591 | Drive Shaft | | 38 | | 59.5 | 34 | 653 | |
| | 2005.03-2008.10 | 6MT | F | R | Estate FWD BDW | TJ | GDS83329 | Drive Shaft | | 38 | | 59.5 | 34 | 655 | |
| | 2005.03-2008.10 | 6MT/CVT | F | L/R | Estate FWD BDW | | GCO83077 | Outer Joint | | 38 | 27 | 59.5 | 34 | 63 | M |
| | 2005.03-2008.10 | 6MT/CVT | F | L/R | Estate FWD BDW | TJ | GCI61044 | Inner Joint | | | 34 | | | 85 | |
| | 2005.03-2008.10 | 6MT/CVT | F | L/R | Estate FWD BDW | AAR | GCI61076 | Inner Joint | | | 34 | | | 85 | |
| | 2005.03-2008.10 | CVT | F | L | Estate FWD BDW | | GDS83271 | Drive Shaft | | 38 | | 59.5 | 34 | 548 | |
| | 2005.03-2008.10 | CVT | F | R | Estate FWD BDW | | GDS83026 | Drive Shaft | | 38 | | 59.5 | 34 | 558 | |
| 2.5 (85 kw) | 1994.06-1997.10 | AT | F | L | Estate FWD AAT | | GDS83060 | Drive Shaft | 45T | 38 | | 59.5 | 34 | 565 | |
| | 1994.06-1997.10 | AT | F | R | Estate FWD AAT | | GDS83061 | Drive Shaft | 45T | 38 | | 59.5 | 34 | 488 | |
| | 1994.06-1997.10 | AT/MT | F | L/R | Estate FWD AAT | | GCO83017 | Outer Joint | 45T | 38 | 27 | 59.5 | 34.5 | 68.5 | I |
| | 1994.06-1997.10 | AT/MT | F | L/R | Estate FWD AAT | | GCI50019 | Inner Joint | | | 34 | | | 59.5 | |
| | 1994.06-1997.10 | MT | F | L | Estate FWD AAT | | GDS83050 | Drive Shaft | 45T | 38 | | 59.5 | 34.5 | 612 | |
| | 1994.06-1997.10 | MT | F | R | Estate FWD AAT | | GDS83051 | Drive Shaft | 45T | 38 | | 59.5 | 34.5 | 647 | |
| | 1994.06-1997.10 | AT | F | L | Saloon FWD AAT | | GDS83060 | Drive Shaft | 45T | 38 | | 59.5 | 34 | 565 | |
| | 1994.06-1997.10 | AT | F | R | Saloon FWD AAT | | GDS83061 | Drive Shaft | 45T | 38 | | 59.5 | 34 | 488 | |
| | 1994.06-1997.10 | AT/MT | F | L/R | Saloon FWD AAT | | GCO83017 | Outer Joint | 45T | 38 | 27 | 59.5 | 34.5 | 68.5 | I |
| | 1994.06-1997.10 | AT/MT | F | L/R | Saloon FWD AAT | | GCI50019 | Inner Joint | | | 34 | | | 59.5 | |
| | 1994.06-1997.10 | MT | F | L | Saloon FWD AAT | | GDS83050 | Drive Shaft | 45T | 38 | | 59.5 | 34.5 | 612 | |
| | 1994.06-1997.10 | MT | F | R | Saloon FWD AAT | | GDS83051 | Drive Shaft | 45T | 38 | | 59.5 | 34.5 | 647 | |
| 2.5 (103 kw) | 1994.10-1997.10 | AT | F | L | Estate FWD AEL | | GDS83060 | Drive Shaft | 45T | 38 | | 59.5 | 34 | 565 | |

| | YEAR | TRANSM. | F/R | L/R | BODY STYLE & DRIVE TYPE & ENGINE | REMARKS | G-AP Ref. | PRODUCT | ABS | Technical Specifications A | B | C | H | L | P |
|---|---|---|---|---|---|---|---|---|---|---|---|---|---|---|---|
| **AUDI** | | | | | | | | | | | | | | | |
| **A6** | | | | | | | | | | | | | | | |
| 2.5 (103 kw) | 1994.10-1997.10 | AT | F | R | Estate FWD AEL | | GDS83061 | Drive Shaft | 45T | 38 | | 59.5 | 34 | 488 | |
| | 1994.10-1997.10 | AT/MT | F | L/R | Estate FWD AEL | | GCO83017 | Outer Joint | 45T | 38 | 27 | 59.5 | 34.5 | 68.5 | I |
| | 1994.10-1997.10 | AT/MT | F | L/R | Estate FWD AEL | | GCI50019 | Inner Joint | | | 34 | | | 59.5 | |
| | 1994.10-1997.10 | MT | F | L | Estate FWD AEL | | GDS83050 | Drive Shaft | 45T | 38 | | 59.5 | 34.5 | 612 | |
| | 1994.10-1997.10 | MT | F | R | Estate FWD AEL | | GDS83051 | Drive Shaft | 45T | 38 | | 59.5 | 34.5 | 647 | |
| | 1994.10-1997.10 | AT | F | L | Saloon FWD AEL | | GDS83060 | Drive Shaft | 45T | 38 | | 59.5 | 34 | 565 | |
| | 1994.10-1997.10 | AT | F | R | Saloon FWD AEL | | GDS83061 | Drive Shaft | 45T | 38 | | 59.5 | 34 | 488 | |
| | 1994.10-1997.10 | AT/MT | F | L/R | Saloon FWD AEL | | GCO83017 | Outer Joint | 45T | 38 | 27 | 59.5 | 34.5 | 68.5 | I |
| | 1994.10-1997.10 | AT/MT | F | L/R | Saloon FWD AEL | | GCI50019 | Inner Joint | | | 34 | | | 59.5 | |
| | 1994.10-1997.10 | MT | F | L | Saloon FWD AEL | | GDS83050 | Drive Shaft | 45T | 38 | | 59.5 | 34.5 | 612 | |
| | 1994.10-1997.10 | MT | F | R | Saloon FWD AEL | | GDS83051 | Drive Shaft | 45T | 38 | | 59.5 | 34.5 | 647 | |
| 2.5 (110 kw) | 1997.04-2001.04 | 5AT | F | L | Estate FWD AFB/AKN | | GDS83019 | Drive Shaft | 45W | 38 | | 59.5 | 34.5 | 550 | |
| | 1997.04-2001.04 | 5AT | F | R | Estate FWD AFB/AKN | | GDS83020 | Drive Shaft | 45W | 38 | | 59.5 | 34.5 | 522 | |
| | 1997.04-2001.04 | 5AT/5MT/6MT | F | L/R | Estate FWD AFB/AKN | | GCO83019 | Outer Joint | 45W | 38 | 27 | 59.5 | 34.5 | 63 | I |
| | 1997.04-2001.04 | 5AT/5MT/6MT | F | L/R | Estate FWD AFB/AKN | | GCI50019 | Inner Joint | | | 34 | | | 59.5 | |
| | 1997.04-2001.04 | 5MT/6MT | F | L | Estate FWD AFB/AKN | | GDS61019 | Drive Shaft | 45W | 38 | | 59.5 | 34.5 | 624 | |
| | 1997.04-2001.04 | 5MT/6MT | F | R | Estate FWD AFB/AKN | | GDS61076 | Drive Shaft | 45W | 38 | | 59.5 | 34.5 | 645 | |
| | 1997.04-2001.04 | 5AT | F | L | Saloon FWD AFB/AKN | | GDS83019 | Drive Shaft | 45W | 38 | | 59.5 | 34.5 | 550 | |
| | 1997.04-2001.04 | 5AT | F | R | Saloon FWD AFB/AKN | | GDS83020 | Drive Shaft | 45W | 38 | | 59.5 | 34.5 | 522 | |
| | 1997.04-2001.04 | 5AT/5MT/6MT | F | L/R | Saloon FWD AFB/AKN | | GCO83019 | Outer Joint | 45W | 38 | 27 | 59.5 | 34.5 | 63 | I |
| | 1997.04-2001.04 | 5AT/5MT/6MT | F | L/R | Saloon FWD AFB/AKN | | GCI50019 | Inner Joint | | | 34 | | | 59.5 | |
| | 1997.04-2001.04 | 5MT/6MT | F | L | Saloon FWD AFB/AKN | | GDS61019 | Drive Shaft | 45W | 38 | | 59.5 | 34.5 | 624 | |
| | 1997.04-2001.04 | 5MT/6MT | F | R | Saloon FWD AFB/AKN | | GDS61076 | Drive Shaft | 45W | 38 | | 59.5 | 34.5 | 645 | |
| 2.5 (114 kw) | 2001.04-2002.06 | 6MT/CVT | F | L/R | Estate FWD AYM | | GCO83019 | Outer Joint | 45W | 38 | 27 | 59.5 | 34.5 | 63 | I |
| | 2001.04-2002.06 | CVT | F | L/R | Estate FWD AYM | | GDS83066 | Drive Shaft | 45W | 38 | | 59.5 | 34.5 | 544 | |
| | 2001.04-2002.06 | CVT | F | L/R | Estate FWD AYM | | GCI61044 | Inner Joint | | | 34 | | | 85 | |
| | 2001.04-2002.06 | MT | F | L | Estate FWD AYM | Date to:2002.06 | GDS61019 | Drive Shaft | 45W | 38 | | 59.5 | 34.5 | 624 | |
| | 2001.04-2002.06 | MT | F | R | Estate FWD AYM | Date to:2002.06 | GDS99113 | Drive Shaft | 45W | 38 | | 59.5 | 34.5 | 654 | |
| | 2001.04-2002.06 | AT | F | L | Saloon FWD AYM | Date to:2003.12 | GDS83019 | Drive Shaft | 45W | 38 | | 59.5 | 34.5 | 550 | |
| | 2001.04-2002.06 | AT | F | R | Saloon FWD AYM | Date to:2003.12 | GDS83020 | Drive Shaft | 45W | 38 | | 59.5 | 34.5 | 522 | |
| | 2001.04-2002.06 | AT/CVT | F | L/R | Saloon FWD AYM | | GDS83066 | Drive Shaft | 45W | 38 | | 59.5 | 34.5 | 544 | |
| | 2001.04-2002.06 | AT/MT | F | L/R | Saloon FWD AYM | Date to:2003.12 | GCO83019 | Outer Joint | 45W | 38 | 27 | 59.5 | 34.5 | 63 | I |
| | 2001.04-2002.06 | AT/MT | F | L/R | Saloon FWD AYM | Date to:2003.12 | GCI50019 | Inner Joint | | | 34 | | | 59.5 | |
| | 2001.04-2002.06 | CVT | F | L/R | Saloon FWD AYM | | GCI61044 | Inner Joint | | | 34 | | | 85 | |
| | 2001.04-2002.06 | CVT | F | L/R | Saloon FWD AYM | | GCI83007 | Inner Joint | | | 34 | | | 85 | |
| | 2001.04-2002.06 | MT | F | L | Saloon FWD AYM | Date to:2003.12 | GDS61019 | Drive Shaft | 45W | 38 | | 59.5 | 34.5 | 624 | |
| | 2001.04-2002.06 | MT | F | R | Saloon FWD AYM | Date to:2003.12 | GDS61076 | Drive Shaft | 45W | 38 | | 59.5 | 34.5 | 645 | |
| 2.5 (120 kw) | 2002.07-2004.07 | 6MT/CVT | F | L/R | Saloon FWD BCZ/BDG/BFC | | GCO83019 | Outer Joint | 45W | 38 | 27 | 59.5 | 34.5 | 63 | I |
| | 2002.07-2004.07 | CVT | F | L/R | Saloon FWD BCZ/BDG/BFC | | GDS83066 | Drive Shaft | 45W | 38 | | 59.5 | 34.5 | 544 | |
| | 2002.07-2004.07 | CVT | F | L/R | Saloon FWD BCZ/BDG/BFC | | GCI61044 | Inner Joint | | | 34 | | | 85 | |
| | 2002.07-2005.01 | 6MT/CVT | F | L/R | Estate FWD BCZ/BDG/BFC | | GCO83019 | Outer Joint | 45W | 38 | 27 | 59.5 | 34.5 | 63 | I |
| | 2002.07-2005.01 | AT | F | L | Estate FWD BCZ/BDG/BFC | | GDS83019 | Drive Shaft | 45W | 38 | | 59.5 | 34.5 | 550 | |
| | 2002.07-2005.01 | AT | F | R | Estate FWD BCZ/BDG/BFC | | GDS83020 | Drive Shaft | 45W | 38 | | 59.5 | 34.5 | 522 | |
| | 2002.07-2005.01 | AT/MT | F | L/R | Estate FWD BCZ/BDG/BFC | | GCI50019 | Inner Joint | | | 34 | | | 59.5 | |
| | 2002.07-2005.01 | CVT | F | L/R | Estate FWD BCZ/BDG/BFC | | GDS83066 | Drive Shaft | 45W | 38 | | 59.5 | 34.5 | 544 | |
| | 2002.07-2005.01 | CVT | F | L/R | Estate FWD BCZ/BDG/BFC | | GCI61044 | Inner Joint | | | 34 | | | 85 | |
| | 2002.07-2005.01 | MT | F | L | Estate FWD BCZ/BDG/BFC | | GDS61019 | Drive Shaft | 45W | 38 | | 59.5 | 34.5 | 624 | |
| | 2002.07-2005.01 | MT | F | R | Estate FWD BCZ/BDG/BFC | | GDS61076 | Drive Shaft | 45W | 38 | | 59.5 | 34.5 | 645 | |
| 2.5 (132 kw) | 1999.11-2004.05 | 5AT | F | L | Saloon FWD AKE/BAU/BDH | | GDS83019 | Drive Shaft | 45W | 38 | | 59.5 | 34.5 | 550 | |
| | 1999.11-2004.05 | 5AT | F | R | Saloon FWD AKE/BAU/BDH | | GDS83020 | Drive Shaft | 45W | 38 | | 59.5 | 34.5 | 522 | |
| | 1999.11-2004.05 | AT/MT/5AT | F | L/R | Saloon FWD AKE/BAU/BDH | | GCI50019 | Inner Joint | | | 34 | | | 59.5 | |
| | 1999.11-2004.05 | CVT | F | L/R | Saloon FWD AKE/BAU/BDH | Date to:2004.05 | GDS83066 | Drive Shaft | 45W | 38 | | 59.5 | 34.5 | 544 | |
| | 1999.11-2004.05 | MT | F | L | Saloon FWD AKE/BAU/BDH | | GDS61019 | Drive Shaft | 45W | 38 | | 59.5 | 34.5 | 624 | |
| | 1999.11-2004.05 | MT | F | R | Saloon FWD AKE/BAU/BDH | | GDS61076 | Drive Shaft | 45W | 38 | | 59.5 | 34.5 | 645 | |
| | 1999.11-2004.05 | MT/Semi-AT | F | L/R | Saloon FWD AKE/BAU/BDH | Date to:2004.05 | GCO83019 | Outer Joint | 45W | 38 | 27 | 59.5 | 34.5 | 63 | I |
| | 1999.11-2005.01 | 5AT | F | L | Estate FWD AKE/BAU/BDH | | GDS83019 | Drive Shaft | 45W | 38 | | 59.5 | 34.5 | 550 | |
| | 1999.11-2005.01 | 5AT | F | R | Estate FWD AKE/BAU/BDH | | GDS83020 | Drive Shaft | 45W | 38 | | 59.5 | 34.5 | 522 | |
| | 1999.11-2005.01 | AT/MT/5AT | F | L/R | Estate FWD AKE/BAU/BDH | | GCI50019 | Inner Joint | | | 34 | | | 59.5 | |
| | 1999.11-2005.01 | AT/MT/Semi-AT/5AT | F | L/R | Estate FWD AKE/BAU/BDH | | GCO83019 | Outer Joint | 45W | 38 | 27 | 59.5 | 34.5 | 63 | I |
| | 1999.11-2005.01 | CVT | F | L/R | Estate FWD AKE/BAU/BDH | | GDS83066 | Drive Shaft | 45W | 38 | | 59.5 | 34.5 | 544 | |
| | 1999.11-2005.01 | MT | F | L | Estate FWD AKE/BAU/BDH | | GDS61019 | Drive Shaft | 45W | 38 | | 59.5 | 34.5 | 624 | |
| | 1999.11-2005.01 | MT | F | R | Estate FWD AKE/BAU/BDH | | GDS61076 | Drive Shaft | 45W | 38 | | 59.5 | 34.5 | 645 | |
| 2.6 (110 kw) | 1994.06-1997.10 | AT/MT | F | L/R | Estate FWD ABC | | GCO83016 | Outer Joint | 45T | 38 | 30 | 59.5 | 34 | 61 | I |
| | 1994.06-1997.10 | AT/MT | F | L/R | Saloon FWD ABC | | GCO83016 | Outer Joint | 45T | 38 | 30 | 59.5 | 34 | 61 | I |
| 2.7 (120 kw) | 2004.11-2011.03 | 6MT | F | L | Saloon FWD BSG;CANB | | GDS82081 | Drive Shaft | | 38 | | 59.5 | 34 | 615 | |

| | YEAR | TRANSM. | F/R | L/R | BODY STYLE & DRIVE TYPE & ENGINE | REMARKS | G-AP Ref. | PRODUCT | ABS | Technical Specifications A | B | C | H | L | P |
|---|---|---|---|---|---|---|---|---|---|---|---|---|---|---|---|
| **AUDI** | | | | | | | | | | | | | | | |
| **A6** | | | | | | | | | | | | | | | |
| 2.7 (120 kw) | 2004.11-2011.03 | 6MT | F | R | Saloon FWD BSG;CANB | | GDS82353 | Drive Shaft | | 38 | | 59.5 | 34 | 652 | |
| | 2004.11-2011.03 | AT | F | L/R | Saloon FWD BSG;CANB | | GCI61044 | Inner Joint | | | 34 | | | 85 | |
| | 2004.11-2011.03 | MT | F | L/R | Saloon FWD BSG;CANB | | GCO99351 | Outer Joint | | 38 | 29 | 59.5 | 34 | 70 | M |
| | 2005.03-2011.08 | 6MT | F | L | Estate FWD BSG;CANB | | GDS82081 | Drive Shaft | | 38 | | 59.5 | 34 | 615 | |
| | 2005.03-2011.08 | 6MT | F | R | Estate FWD BSG;CANB | | GDS82353 | Drive Shaft | | 38 | | 59.5 | 34 | 652 | |
| | 2005.03-2011.08 | AT | F | L/R | Estate FWD BSG;CANB | | GCI61044 | Inner Joint | | | 34 | | | 85 | |
| | 2005.03-2011.08 | CVT | F | L | Estate FWD BSG;CANB | | GDS83025 | Drive Shaft | | 38 | | 59.5 | 34 | 543 | |
| | 2005.03-2011.08 | CVT | F | R | Estate FWD BSG;CANB | | GDS83026 | Drive Shaft | | 38 | | 59.5 | 34 | 558 | |
| | 2005.03-2011.08 | CVT/6MT | F | L/R | Estate FWD BSG;CANB | | GCO99351 | Outer Joint | | 38 | 29 | 59.5 | 34 | 70 | M |
| 2.7 (132 kw) | 2004.11-2008.10 | 6MT | F | L | Saloon FWD BPP | | GDS82081 | Drive Shaft | | 38 | | 59.5 | 34 | 615 | |
| | 2004.11-2008.10 | 6MT | F | R | Saloon FWD BPP | | GDS82353 | Drive Shaft | | 38 | | 59.5 | 34 | 652 | |
| | 2004.11-2008.10 | 6MT | F | L/R | Saloon FWD BPP | AAR | GCI61076 | Inner Joint | | | 34 | | | 85 | |
| | 2004.11-2008.10 | CVT | F | L | Saloon FWD BPP | | GDS83025 | Drive Shaft | | 38 | | 59.5 | 34 | 543 | |
| | 2004.11-2008.10 | CVT | F | R | Saloon FWD BPP | | GDS83026 | Drive Shaft | | 38 | | 59.5 | 34 | 558 | |
| | 2004.11-2008.10 | CVT/6MT | F | L/R | Saloon FWD BPP | | GCO99351 | Outer Joint | | 38 | 29 | 59.5 | 34 | 70 | M |
| | 2004.11-2008.10 | CVT/6MT | F | L/R | Saloon FWD BPP | TJ | GCI61044 | Inner Joint | | | 34 | | | 85 | |
| | 2005.03-2008.10 | 6MT | F | L | Estate FWD BPP | | GDS82081 | Drive Shaft | | 38 | | 59.5 | 34 | 615 | |
| | 2005.03-2008.10 | 6MT | F | R | Estate FWD BPP | | GDS82353 | Drive Shaft | | 38 | | 59.5 | 34 | 652 | |
| | 2005.03-2008.10 | 6MT | F | L/R | Estate FWD BPP | AAR | GCI61076 | Inner Joint | | | 34 | | | 85 | |
| | 2005.03-2008.10 | CVT | F | L | Estate FWD BPP | | GDS83025 | Drive Shaft | | 38 | | 59.5 | 34 | 543 | |
| | 2005.03-2008.10 | CVT | F | R | Estate FWD BPP | | GDS83026 | Drive Shaft | | 38 | | 59.5 | 34 | 558 | |
| | 2005.03-2008.10 | CVT/6MT | F | L/R | Estate FWD BPP | | GCO99351 | Outer Joint | | 38 | 29 | 59.5 | 34 | 70 | M |
| | 2005.03-2008.10 | CVT/6MT | F | L/R | Estate FWD BPP | TJ | GCI61044 | Inner Joint | | | 34 | | | 85 | |
| 2.7 (140 kw) | 2008.10-2011.03 | 6MT | F | L | Saloon FWD CANA | | GDS82081 | Drive Shaft | | 38 | | 59.5 | 34 | 615 | |
| | 2008.10-2011.03 | 6MT | F | R | Saloon FWD CANA | | GDS82353 | Drive Shaft | | 38 | | 59.5 | 34 | 652 | |
| | 2008.10-2011.03 | CVT | F | L | Saloon FWD CANA | | GDS83025 | Drive Shaft | | 38 | | 59.5 | 34 | 543 | |
| | 2008.10-2011.03 | CVT | F | R | Saloon FWD CANA | | GDS83026 | Drive Shaft | | 38 | | 59.5 | 34 | 558 | |
| | 2008.10-2011.03 | CVT/6MT | F | L/R | Saloon FWD CANA | | GCO99351 | Outer Joint | | 38 | 29 | 59.5 | 34 | 70 | M |
| | 2008.10-2011.03 | MT | F | L/R | Saloon FWD CANA | | GCI61044 | Inner Joint | | | 34 | | | 85 | |
| | 2008.10-2011.08 | 6MT | F | L | Estate FWD CANA | | GDS82081 | Drive Shaft | | 38 | | 59.5 | 34 | 615 | |
| | 2008.10-2011.08 | 6MT | F | R | Estate FWD CANA | | GDS82353 | Drive Shaft | | 38 | | 59.5 | 34 | 652 | |
| | 2008.10-2011.08 | 6MT | F | L/R | Estate FWD CANA | AAR | GCI61076 | Inner Joint | | | 34 | | | 85 | |
| | 2008.10-2011.08 | CVT | F | L | Estate FWD CANA | | GDS83025 | Drive Shaft | | 38 | | 59.5 | 34 | 543 | |
| | 2008.10-2011.08 | CVT | F | R | Estate FWD CANA | | GDS83026 | Drive Shaft | | 38 | | 59.5 | 34 | 558 | |
| | 2008.10-2011.08 | CVT/6MT | F | L/R | Estate FWD CANA | | GCO99351 | Outer Joint | | 38 | 29 | 59.5 | 34 | 70 | M |
| | 2008.10-2011.08 | CVT/6MT | F | L/R | Estate FWD CANA | TJ | GCI61044 | Inner Joint | | | 34 | | | 85 | |
| 2.7 (169 kw) | 1999.02-2000.08 | 5AT | F | L | Estate FWD AJK | | GDS83019 | Drive Shaft | 45W | 38 | | 59.5 | 34.5 | 550 | |
| | 1999.02-2000.08 | 5AT | F | R | Estate FWD AJK | | GDS83020 | Drive Shaft | 45W | 38 | | 59.5 | 34.5 | 522 | |
| | 1999.02-2000.08 | 6MT | F | L | Estate FWD AJK | | GDS61019 | Drive Shaft | 45W | 38 | | 59.5 | 34.5 | 624 | |
| | 1999.02-2000.08 | 6MT | F | R | Estate FWD AJK | | GDS61076 | Drive Shaft | 45W | 38 | | 59.5 | 34.5 | 645 | |
| | 1999.02-2000.08 | MT | F | R | Estate FWD AJK | Date to:2000.08 | GDS99113 | Drive Shaft | 45W | 38 | | 59.5 | 34.5 | 654 | |
| | 1999.02-2000.08 | MT | F | L/R | Estate FWD AJK | Date to:2000.08 | GCO83019 | Outer Joint | 45W | 38 | 27 | 59.5 | 34.5 | 63 | I |
| | 1999.02-2000.08 | MT/5AT/6MT | F | L/R | Estate FWD AJK | | GCI50019 | Inner Joint | | | 34 | | | 59.5 | |
| | 1999.02-2000.08 | | F | L/R | Estate FWD AJK | Date To:2000.08 | GCI83001 | Inner Joint | | | 28 | | | 32 | |
| | 1999.02-2000.08 | 5AT | F | L | Saloon FWD AJK | | GDS83019 | Drive Shaft | 45W | 38 | | 59.5 | 34.5 | 550 | |
| | 1999.02-2000.08 | 5AT | F | R | Saloon FWD AJK | | GDS83020 | Drive Shaft | 45W | 38 | | 59.5 | 34.5 | 522 | |
| | 1999.02-2000.08 | 6MT | F | L | Saloon FWD AJK | | GDS61019 | Drive Shaft | 45W | 38 | | 59.5 | 34.5 | 624 | |
| | 1999.02-2000.08 | 6MT | F | R | Saloon FWD AJK | | GDS61076 | Drive Shaft | 45W | 38 | | 59.5 | 34.5 | 645 | |
| | 1999.02-2000.08 | MT | F | R | Saloon FWD AJK | Date to:2000.08 | GDS99113 | Drive Shaft | 45W | 38 | | 59.5 | 34.5 | 654 | |
| | 1999.02-2000.08 | MT | F | L/R | Saloon FWD AJK | Date to:2000.08 | GCO83019 | Outer Joint | 45W | 38 | 27 | 59.5 | 34.5 | 63 | I |
| | 1999.02-2000.08 | MT/5AT/6MT | F | L/R | Saloon FWD AJK | | GCI50019 | Inner Joint | | | 34 | | | 59.5 | |
| | 1999.02-2000.08 | | F | L/R | Saloon FWD AJK | Date To:2000.08 | GCI83001 | Inner Joint | | | 28 | | | 32 | |
| 2.8 (128 kw) | 1994.06-1997.10 | AT | F | L | Saloon FWD AAH | | GDS83060 | Drive Shaft | 45T | 38 | | 59.5 | 34 | 565 | |
| | 1994.06-1997.10 | AT | F | R | Saloon FWD AAH | | GDS83061 | Drive Shaft | 45T | 38 | | 59.5 | 34 | 488 | |
| | 1994.06-1997.10 | AT/MT | F | L/R | Saloon FWD AAH | | GCO83017 | Outer Joint | 45T | 38 | 27 | 59.5 | 34.5 | 68.5 | I |
| | 1994.06-1997.10 | AT/MT | F | L/R | Saloon FWD AAH | | GCI50019 | Inner Joint | | | 34 | | | 59.5 | |
| | 1994.06-1997.10 | MT | F | L | Saloon FWD AAH | | GDS83050 | Drive Shaft | 45T | 38 | | 59.5 | 34.5 | 612 | |
| | 1994.06-1997.10 | MT | F | R | Saloon FWD AAH | | GDS83051 | Drive Shaft | 45T | 38 | | 59.5 | 34.5 | 647 | |
| | 1994.06-1997.12 | AT | F | L | Estate FWD AAH | | GDS83060 | Drive Shaft | 45T | 38 | | 59.5 | 34 | 565 | |
| | 1994.06-1997.12 | AT | F | R | Estate FWD AAH | | GDS83061 | Drive Shaft | 45T | 38 | | 59.5 | 34 | 488 | |
| | 1994.06-1997.12 | AT/MT | F | L/R | Estate FWD AAH | | GCO83017 | Outer Joint | 45T | 38 | 27 | 59.5 | 34.5 | 68.5 | I |
| | 1994.06-1997.12 | AT/MT | F | L/R | Estate FWD AAH | | GCI50019 | Inner Joint | | | 34 | | | 59.5 | |
| | 1994.06-1997.12 | MT | F | L | Estate FWD AAH | | GDS83050 | Drive Shaft | 45T | 38 | | 59.5 | 34.5 | 612 | |
| | 1994.06-1997.12 | MT | F | R | Estate FWD AAH | | GDS83051 | Drive Shaft | 45T | 38 | | 59.5 | 34.5 | 647 | |
| 2.8 (132 kw) | 1997.10-2000.05 | 5AT | F | L | Estate FWD AGE | | GDS83019 | Drive Shaft | 45W | 38 | | 59.5 | 34.5 | 550 | |

| | YEAR | TRANSM. | F/R | L/R | BODY STYLE & DRIVE TYPE & ENGINE | REMARKS | G-AP Ref. | PRODUCT | ABS | Technical Specifications A | B | C | H | L | P |
|---|---|---|---|---|---|---|---|---|---|---|---|---|---|---|---|
| **AUDI** | | | | | | | | | | | | | | | |
| **A6** | | | | | | | | | | | | | | | |
| 2.8 (132 kw) | 1997.10-2000.05 | 5AT | F | R | Estate FWD AGE | | GDS83020 | Drive Shaft | 45W | 38 | | 59.5 | 34.5 | 522 | |
| | 1997.10-2000.05 | 5MT | F | L | Estate FWD AGE | | GDS61019 | Drive Shaft | 45W | 38 | | 59.5 | 34.5 | 624 | |
| | 1997.10-2000.05 | 5MT | F | R | Estate FWD AGE | | GDS61076 | Drive Shaft | 45W | 38 | | 59.5 | 34.5 | 645 | |
| | 1997.10-2000.05 | AT | F | L/R | Estate FWD AGE | Date from:1998.10 | GCO83019 | Outer Joint | 45W | 38 | 27 | 59.5 | 34.5 | 63 | I |
| | 1997.10-2000.05 | MT | F | R | Estate FWD AGE | Date from:1998.10 | GDS99113 | Drive Shaft | 45W | 38 | | 59.5 | 34.5 | 654 | |
| | 1997.10-2000.05 | | F | L/R | Estate FWD AGE | Date To:1998.09 | GCO83020 | Outer Joint | 45W | 38 | 30 | 59.5 | 34 | 59.5 | I |
| | 1997.10-2000.05 | | F | L/R | Estate FWD AGE | | GCI83002 | Inner Joint | | | 33 | | | 32 | |
| | 1997.10-2000.05 | 5AT | F | L | Saloon FWD AGE | | GDS83019 | Drive Shaft | 45W | 38 | | 59.5 | 34.5 | 550 | |
| | 1997.10-2000.05 | 5AT | F | R | Saloon FWD AGE | | GDS83020 | Drive Shaft | 45W | 38 | | 59.5 | 34.5 | 522 | |
| | 1997.10-2000.05 | 5MT | F | L | Saloon FWD AGE | | GDS61019 | Drive Shaft | 45W | 38 | | 59.5 | 34.5 | 624 | |
| | 1997.10-2000.05 | 5MT | F | R | Saloon FWD AGE | | GDS61076 | Drive Shaft | 45W | 38 | | 59.5 | 34.5 | 645 | |
| | 1997.10-2000.05 | AT | F | L/R | Saloon FWD AGE | Date from:1998.10 | GCO83019 | Outer Joint | 45W | 38 | 27 | 59.5 | 34.5 | 63 | I |
| | 1997.10-2000.05 | AT/MT/5AT/5MT | F | L/R | Saloon FWD AGE | | GCI50019 | Inner Joint | | | 34 | | | 59.5 | |
| | 1997.10-2000.05 | MT | F | R | Saloon FWD AGE | Date from:1998.10 | GDS99113 | Drive Shaft | 45W | 38 | | 59.5 | 34.5 | 654 | |
| | 1997.10-2000.05 | | F | L/R | Saloon FWD AGE | Date To:1998.09 | GCO83020 | Outer Joint | 45W | 38 | 30 | 59.5 | 34 | 59.5 | I |
| | 1997.10-2000.05 | | F | L/R | Saloon FWD AGE | | GCI83002 | Inner Joint | | | 33 | | | 32 | |
| 2.8 (140 kw) | 1999.07-2001.04 | 5MT | F | L | Estate FWD ATX | | GDS61019 | Drive Shaft | 45W | 38 | | 59.5 | 34.5 | 624 | |
| | 1999.07-2001.04 | 5MT | F | R | Estate FWD ATX | | GDS61076 | Drive Shaft | 45W | 38 | | 59.5 | 34.5 | 645 | |
| | 1999.07-2001.04 | 5MT | F | L/R | Estate FWD ATX | | GCI50019 | Inner Joint | | | 34 | | | 59.5 | |
| | 1999.07-2001.04 | AT | F | L | Estate FWD ATX | Date to:2001.04 | GDS83019 | Drive Shaft | 45W | 38 | | 59.5 | 34.5 | 550 | |
| | 1999.07-2001.04 | AT | F | R | Estate FWD ATX | Date to:2001.04 | GDS83020 | Drive Shaft | 45W | 38 | | 59.5 | 34.5 | 522 | |
| | 1999.07-2001.04 | MT | F | R | Estate FWD ATX | Date to:2001.04 | GDS99113 | Drive Shaft | 45W | 38 | | 59.5 | 34.5 | 654 | |
| | 1999.07-2001.04 | | F | L/R | Estate FWD ATX | | GCO83019 | Outer Joint | 45W | 38 | 27 | 59.5 | 34.5 | 63 | I |
| | 1999.07-2001.04 | | F | L/R | Estate FWD ATX | Date To:2001.04 | GCI83002 | Inner Joint | | | 33 | | | 32 | |
| | 1999.07-2001.04 | 5MT | F | L | Saloon FWD ATX | | GDS61019 | Drive Shaft | 45W | 38 | | 59.5 | 34.5 | 624 | |
| | 1999.07-2001.04 | 5MT | F | R | Saloon FWD ATX | | GDS61076 | Drive Shaft | 45W | 38 | | 59.5 | 34.5 | 645 | |
| | 1999.07-2001.04 | 5MT | F | L/R | Saloon FWD ATX | | GCI50019 | Inner Joint | | | 34 | | | 59.5 | |
| | 1999.07-2001.04 | AT | F | L | Saloon FWD ATX | Date to:2001.04 | GDS83019 | Drive Shaft | 45W | 38 | | 59.5 | 34.5 | 550 | |
| | 1999.07-2001.04 | AT | F | R | Saloon FWD ATX | Date to:2001.04 | GDS83020 | Drive Shaft | 45W | 38 | | 59.5 | 34.5 | 522 | |
| | 1999.07-2001.04 | AT/MT | F | L/R | Saloon FWD ATX | | GCO83019 | Outer Joint | 45W | 38 | 27 | 59.5 | 34.5 | 63 | I |
| | 1999.07-2001.04 | MT | F | R | Saloon FWD ATX | Date to:2001.04 | GDS99113 | Drive Shaft | 45W | 38 | | 59.5 | 34.5 | 654 | |
| | 1999.07-2001.04 | | F | L/R | Saloon FWD ATX | Date To:2001.04 | GCI83002 | Inner Joint | | | 33 | | | 32 | |
| | 2008.10-2011.03 | CVT | F | L | Saloon FWD CCDA | | GDS83271 | Drive Shaft | | 38 | | 59.5 | 34 | 548 | |
| | 2008.10-2011.03 | CVT | F | R | Saloon FWD CCDA | | GDS83026 | Drive Shaft | | 38 | | 59.5 | 34 | 558 | |
| | 2008.10-2011.03 | MT | F | L | Saloon FWD CCDA | | GDS83290 | Drive Shaft | | 38 | | 59.5 | 34 | 617 | |
| | 2008.10-2011.03 | MT | F | R | Saloon FWD CCDA | AAR | GDS81591 | Drive Shaft | | 38 | | 59.5 | 34 | 653 | |
| | 2008.10-2011.03 | MT | F | R | Saloon FWD CCDA | TJ | GDS83329 | Drive Shaft | | 38 | | 59.5 | 34 | 655 | |
| | 2008.10-2011.03 | MT/CVT | F | L/R | Saloon FWD CCDA | | GCO83077 | Outer Joint | | 38 | 27 | 59.5 | 34 | 63 | M |
| | 2008.10-2011.03 | MT/CVT | F | L/R | Saloon FWD CCDA | TJ | GCI61044 | Inner Joint | | | 34 | | | 85 | |
| | 2008.10-2011.03 | MT/CVT | F | L/R | Saloon FWD CCDA | AAR | GCI61076 | Inner Joint | | | 34 | | | 85 | |
| | 2008.10-2011.08 | CVT | F | L | Estate FWD CCDA | | GDS83271 | Drive Shaft | | 38 | | 59.5 | 34 | 548 | |
| | 2008.10-2011.08 | CVT | F | R | Estate FWD CCDA | | GDS83026 | Drive Shaft | | 38 | | 59.5 | 34 | 558 | |
| | 2008.10-2011.08 | MT | F | L | Estate FWD CCDA | | GDS83290 | Drive Shaft | | 38 | | 59.5 | 34 | 617 | |
| | 2008.10-2011.08 | MT | F | R | Estate FWD CCDA | AAR | GDS81591 | Drive Shaft | | 38 | | 59.5 | 34 | 653 | |
| | 2008.10-2011.08 | MT | F | R | Estate FWD CCDA | TJ | GDS83329 | Drive Shaft | | 38 | | 59.5 | 34 | 655 | |
| | 2008.10-2011.08 | MT/CVT | F | L/R | Estate FWD CCDA | | GCO83077 | Outer Joint | | 38 | 27 | 59.5 | 34 | 63 | M |
| | 2008.10-2011.08 | MT/CVT | F | L/R | Estate FWD CCDA | TJ | GCI61044 | Inner Joint | | | 34 | | | 85 | |
| | 2008.10-2011.08 | MT/CVT | F | L/R | Estate FWD CCDA | AAR | GCI61076 | Inner Joint | | | 34 | | | 85 | |
| 2.8 (142 kw) | 1995.10-1997.10 | 4AT/5MT | F | L/R | Estate FWD ACK | | GCO83017 | Outer Joint | 45T | 38 | 27 | 59.5 | 34.5 | 68.5 | I |
| | 1995.10-1997.10 | AT | F | L | Estate FWD ACK | | GDS83060 | Drive Shaft | 45T | 38 | | 59.5 | 34 | 565 | |
| | 1995.10-1997.10 | AT | F | L | Saloon FWD ACK | | GDS83060 | Drive Shaft | 45T | 38 | | 59.5 | 34 | 565 | |
| | 1995.10-1997.10 | AT/MT | F | L/R | Saloon FWD ACK | | GCO83017 | Outer Joint | 45T | 38 | 27 | 59.5 | 34.5 | 68.5 | I |
| | 1997.05-2001.09 | 5AT | F | L | Saloon FWD ACK/ALG/AMX/APR/AQD | | GDS83019 | Drive Shaft | 45W | 38 | | 59.5 | 34.5 | 550 | |
| | 1997.05-2001.09 | 5AT | F | R | Saloon FWD ACK/ALG/AMX/APR/AQD | | GDS83020 | Drive Shaft | 45W | 38 | | 59.5 | 34.5 | 522 | |
| | 1997.05-2001.09 | 5MT | F | L | Saloon FWD ACK/ALG/AMX/APR/AQD | | GDS61019 | Drive Shaft | 45W | 38 | | 59.5 | 34.5 | 624 | |
| | 1997.05-2001.09 | 5MT | F | R | Saloon FWD ACK/ALG/AMX/APR/AQD | | GDS61076 | Drive Shaft | 45W | 38 | | 59.5 | 34.5 | 645 | |
| | 1997.05-2001.09 | AT/CVT | F | L/R | Saloon FWD ACK/ALG/AMX/APR/AQD | | GDS83066 | Drive Shaft | 45W | 38 | | 59.5 | 34.5 | 544 | |
| | 1997.05-2001.09 | AT/MT | F | L/R | Saloon FWD ACK/ALG/AMX/APR/AQD | Date from:1998.10;Date to:2001.09 | GCO83019 | Outer Joint | 45W | 38 | 27 | 59.5 | 34.5 | 63 | I |
| | 1997.05-2001.09 | AT/MT | F | L/R | Saloon FWD ACK/ALG/AMX/APR/AQD | Date from:1997.05;Date to:1998.09 | GCO83020 | Outer Joint | 45W | 38 | 30 | 59.5 | 34 | 59.5 | I |
| | 1997.05-2001.09 | AT/MT/5AT/5MT | F | L/R | Saloon FWD ACK/ALG/AMX/APR/AQD | | GCI50019 | Inner Joint | | | 34 | | | 59.5 | |
| | 1997.05-2001.09 | MT | F | R | Saloon FWD ACK/ALG/AMX/APR/AQD | Date from:1998.10;Date to:2001.09 | GDS99113 | Drive Shaft | 45W | 38 | | 59.5 | 34.5 | 654 | |
| | 1997.05-2001.09 | | F | L/R | Saloon FWD ACK/ALG/AMX/APR/AQD | Date From:1997.05;Date To:2001.09 | GCI83002 | Inner Joint | | | 33 | | | 32 | |
| | 1997.06-2001.09 | 5AT | F | L | Estate FWD ACK/ALG/AMX/APR/AQD | | GDS83019 | Drive Shaft | 45W | 38 | | 59.5 | 34.5 | 550 | |
| | 1997.06-2001.09 | 5AT | F | R | Estate FWD ACK/ALG/AMX/APR/AQD | | GDS83020 | Drive Shaft | 45W | 38 | | 59.5 | 34.5 | 522 | |
| | 1997.06-2001.09 | 5MT | F | L | Estate FWD ACK/ALG/AMX/APR/AQD | | GDS61019 | Drive Shaft | 45W | 38 | | 59.5 | 34.5 | 624 | |

| | YEAR | TRANSM. | F/R | L/R | BODY STYLE & DRIVE TYPE & ENGINE | REMARKS | G-AP Ref. | PRODUCT | ABS | Technical Specifications A | B | C | H | L | P |
|---|---|---|---|---|---|---|---|---|---|---|---|---|---|---|---|
| **AUDI** | | | | | | | | | | | | | | | |
| **A6** | | | | | | | | | | | | | | | |
| 2.8 (142 kw) | 1997.06-2001.09 | 5MT | F | R | Estate FWD ACK/ALG/AMX/APR/AQD | | GDS61076 | Drive Shaft | 45W | 38 | | 59.5 | 34.5 | 645 | |
| | 1997.06-2001.09 | AT/CVT | F | L/R | Estate FWD ACK/ALG/AMX/APR/AQD | | GDS83066 | Drive Shaft | 45W | 38 | | 59.5 | 34.5 | 544 | |
| | 1997.06-2001.09 | AT/MT | F | L/R | Estate FWD ACK/ALG/AMX/APR/AQD | Date from:1998.10;Date to:2001.09 | GCO83019 | Outer Joint | 45W | 38 | 27 | 59.5 | 34.5 | 63 | I |
| | 1997.06-2001.09 | AT/MT | F | L/R | Estate FWD ACK/ALG/AMX/APR/AQD | Date to:1998.09 | GCO83020 | Outer Joint | 45W | 38 | 30 | 59.5 | 34 | 59.5 | I |
| | 1997.06-2001.09 | MT | F | R | Estate FWD ACK/ALG/AMX/APR/AQD | Date from:1998.10;Date to:2001.09 | GDS99113 | Drive Shaft | 45W | 38 | | 59.5 | 34.5 | 654 | |
| | 1997.06-2001.09 | MT/5AT/5MT | F | L/R | Estate FWD ACK/ALG/AMX/APR/AQD | | GCI50019 | Inner Joint | | | 34 | | | 59.5 | |
| | 1997.06-2001.09 | | F | L/R | Estate FWD ACK/ALG/AMX/APR/AQD | Date To:2001.09 | GCI83002 | Inner Joint | | | 33 | | | 32 | |
| 2.8 (150 kw) | 2010.11-2015.04 | AT | F | L/R | Saloon FWD CHVA | | GCO83103 | Outer Joint | | 42 | 28 | 76.4 | 34 | 54 | I |
| | 2010.11-2015.04 | AT | F | L/R | Saloon FWD CHVA | | GCI83022 | Inner Joint | | | 34 | | | 88.5 | |
| | 2010.11-2015.04 | AT/CVT | F | L/R | Saloon FWD CHVA | | GDS81530 | Drive Shaft | | 42 | | 76.5 | 34 | 496 | |
| | 2010.11-2015.04 | CVT/6MT | F | L/R | Saloon FWD CHVA | | GDS61290 | Drive Shaft | | 42 | | 76.4 | 34 | 493 | |
| | 2010.11-2015.04 | | F | L/R | Saloon FWD CHVA | | GCO83087 | Outer Joint | | 42 | 27 | 76.5 | 34 | 57 | M |
| | 2011.05-2015.04 | AT | F | L/R | Estate FWD CHVA | | GCO83103 | Outer Joint | | 42 | 28 | 76.4 | 34 | 54 | I |
| | 2011.05-2015.04 | AT | F | L/R | Estate FWD CHVA | | GCI83022 | Inner Joint | | | 34 | | | 88.5 | |
| | 2011.05-2015.04 | AT/CVT | F | L/R | Estate FWD CHVA | | GDS81530 | Drive Shaft | | 42 | | 76.5 | 34 | 496 | |
| | 2011.05-2015.04 | CVT/6MT | F | L/R | Estate FWD CHVA | | GDS61290 | Drive Shaft | | 42 | | 76.4 | 34 | 493 | |
| | 2011.05-2015.04 | | F | L/R | Estate FWD CHVA | | GCO83087 | Outer Joint | | 42 | 27 | 76.5 | 34 | 57 | M |
| 2.8 (154 kw) | 2006.11-2008.10 | CVT | F | L | Estate FWD BDX | | GDS83271 | Drive Shaft | | 38 | | 59.5 | 34 | 548 | |
| | 2006.11-2008.10 | CVT | F | R | Estate FWD BDX | | GDS83026 | Drive Shaft | | 38 | | 59.5 | 34 | 558 | |
| | 2006.11-2008.10 | MT | F | L | Estate FWD BDX | | GDS83290 | Drive Shaft | | 38 | | 59.5 | 34 | 617 | |
| | 2006.11-2008.10 | MT | F | R | Estate FWD BDX | AAR | GDS81591 | Drive Shaft | | 38 | | 59.5 | 34 | 653 | |
| | 2006.11-2008.10 | MT | F | R | Estate FWD BDX | TJ | GDS83329 | Drive Shaft | | 38 | | 59.5 | 34 | 655 | |
| | 2006.11-2008.10 | MT/CVT | F | L/R | Estate FWD BDX | | GCO83077 | Outer Joint | | 38 | 27 | 59.5 | 34 | 63 | M |
| | 2006.11-2008.10 | MT/CVT | F | L/R | Estate FWD BDX | TJ | GCI61044 | Inner Joint | | | 34 | | | 85 | |
| | 2006.11-2008.10 | MT/CVT | F | L/R | Estate FWD BDX | AAR | GCI61076 | Inner Joint | | | 34 | | | 85 | |
| | 2006.11-2008.10 | CVT | F | L | Saloon FWD BDX | | GDS83271 | Drive Shaft | | 38 | | 59.5 | 34 | 548 | |
| | 2006.11-2008.10 | CVT | F | R | Saloon FWD BDX | | GDS83026 | Drive Shaft | | 38 | | 59.5 | 34 | 558 | |
| | 2006.11-2008.10 | MT | F | L | Saloon FWD BDX | | GDS83290 | Drive Shaft | | 38 | | 59.5 | 34 | 617 | |
| | 2006.11-2008.10 | MT | F | R | Saloon FWD BDX | AAR | GDS81591 | Drive Shaft | | 38 | | 59.5 | 34 | 653 | |
| | 2006.11-2008.10 | MT | F | R | Saloon FWD BDX | TJ | GDS83329 | Drive Shaft | | 38 | | 59.5 | 34 | 655 | |
| | 2006.11-2008.10 | MT/CVT | F | L/R | Saloon FWD BDX | | GCO83077 | Outer Joint | | 38 | 27 | 59.5 | 34 | 63 | M |
| | 2006.11-2008.10 | MT/CVT | F | L/R | Saloon FWD BDX | TJ | GCI61044 | Inner Joint | | | 34 | | | 85 | |
| | 2006.11-2008.10 | MT/CVT | F | L/R | Saloon FWD BDX | AAR | GCI61076 | Inner Joint | | | 34 | | | 85 | |
| 2.8 (162 kw) | 2008.10-2011.03 | CVT | F | L | Saloon FWD CCEA | | GDS83271 | Drive Shaft | | 38 | | 59.5 | 34 | 548 | |
| | 2008.10-2011.03 | CVT | F | R | Saloon FWD CCEA | | GDS83026 | Drive Shaft | | 38 | | 59.5 | 34 | 558 | |
| | 2008.10-2011.03 | CVT | F | L/R | Saloon FWD CCEA | | GCO83077 | Outer Joint | | 38 | 27 | 59.5 | 34 | 63 | M |
| | 2008.10-2011.03 | CVT | F | L/R | Saloon FWD CCEA | | GCI61044 | Inner Joint | | | 34 | | | 85 | |
| | 2008.10-2011.08 | CVT | F | L | Estate FWD CCEA | | GDS83271 | Drive Shaft | | 38 | | 59.5 | 34 | 548 | |
| | 2008.10-2011.08 | CVT | F | R | Estate FWD CCEA | | GDS83026 | Drive Shaft | | 38 | | 59.5 | 34 | 558 | |
| | 2008.10-2011.08 | CVT | F | L/R | Estate FWD CCEA | | GCO83077 | Outer Joint | | 38 | 27 | 59.5 | 34 | 63 | M |
| | 2008.10-2011.08 | CVT | F | L/R | Estate FWD CCEA | | GCI61044 | Inner Joint | | | 34 | | | 85 | |
| 3.0 (150 kw) | 2010.11-2018.09 | CVT/6MT | F | L/R | Saloon FWD CLAB | | GDS81529 | Drive Shaft | | 42 | | 76.5 | 34 | 498 | |
| | 2010.11-2018.09 | CVT/6MT | F | L/R | Saloon FWD CLAB | | GCO83088 | Outer Joint | | 42 | 29 | 76.5 | 34 | 61.5 | M |
| | 2010.11-2018.09 | CVT/6MT | F | L/R | Saloon FWD CLAB | AAR | GCI61077 | Inner Joint | | | 34 | | | 88 | |
| | 2010.11-2018.09 | CVT/6MT | F | L/R | Saloon FWD CLAB | TJ | GCI83022 | Inner Joint | | | 34 | | | 88.5 | |
| | 2011.05-2018.09 | 6MT/CVT | F | L/R | Estate FWD CLAB | | GDS81529 | Drive Shaft | | 42 | | 76.5 | 34 | 498 | |
| | 2011.05-2018.09 | 6MT/CVT | F | L/R | Estate FWD CLAB | | GCO83088 | Outer Joint | | 42 | 29 | 76.5 | 34 | 61.5 | M |
| | 2011.05-2018.09 | 6MT/CVT | F | L/R | Estate FWD CLAB | TJ | GCI83022 | Inner Joint | | | 34 | | | 88.5 | |
| 3.0 (155 kw) | 2014.09-2018.09 | 7AT | F | L/R | Estate FWD CTCB;CZVD | | GDS83382 | Drive Shaft | | 42 | | 76.5 | 34 | 495 | |
| | 2014.09-2018.09 | | F | L/R | Estate FWD CTCB;CZVD | | GCO83102 | Outer Joint | | 42 | 29 | 76.5 | 34 | 60 | I |
| | 2014.09-2018.09 | | F | L/R | Estate FWD CTCB;CZVD | | GCI83022 | Inner Joint | | | 34 | | | 88.5 | |
| | 2014.09-2018.09 | 7AT | F | L/R | Saloon FWD CTCB;CZVD | | GDS83382 | Drive Shaft | | 42 | | 76.5 | 34 | 495 | |
| | 2014.09-2018.09 | | F | L/R | Saloon FWD CTCB;CZVD | | GCO83102 | Outer Joint | | 42 | 29 | 76.5 | 34 | 60 | I |
| | 2014.09-2018.09 | | F | L/R | Saloon FWD CTCB;CZVD | | GCI83022 | Inner Joint | | | 34 | | | 88.5 | |
| 3.0 (160 kw) | 2001.06-2005.01 | 5MT | F | L | Estate FWD BBJ | | GDS61019 | Drive Shaft | 45W | 38 | | 59.5 | 34.5 | 624 | |
| | 2001.06-2005.01 | 5MT | F | R | Estate FWD BBJ | | GDS61076 | Drive Shaft | 45W | 38 | | 59.5 | 34.5 | 645 | |
| | 2001.06-2005.01 | CVT | F | L/R | Estate FWD BBJ | | GDS83066 | Drive Shaft | 45W | 38 | | 59.5 | 34.5 | 544 | |
| | 2001.06-2005.01 | CVT | F | L/R | Estate FWD BBJ | | GCI61044 | Inner Joint | | | 34 | | | 85 | |
| | 2001.06-2005.01 | CVT | F | L/R | Estate FWD BBJ | | GCI83007 | Inner Joint | | | 34 | | | 85 | |
| | 2001.06-2005.01 | MT | F | R | Estate FWD BBJ | | GDS99113 | Drive Shaft | 45W | 38 | | 59.5 | 34.5 | 654 | |
| | 2001.06-2005.01 | MT/CVT | F | L/R | Estate FWD BBJ | | GCO83019 | Outer Joint | 45W | 38 | 27 | 59.5 | 34.5 | 63 | I |
| | 2001.06-2005.01 | 5MT | F | L | Saloon FWD BBJ | | GDS61019 | Drive Shaft | 45W | 38 | | 59.5 | 34.5 | 624 | |
| | 2001.06-2005.01 | 5MT | F | R | Saloon FWD BBJ | | GDS61076 | Drive Shaft | 45W | 38 | | 59.5 | 34.5 | 645 | |
| | 2001.06-2005.01 | CVT | F | L/R | Saloon FWD BBJ | | GDS83066 | Drive Shaft | 45W | 38 | | 59.5 | 34.5 | 544 | |
| | 2001.06-2005.01 | CVT | F | L/R | Saloon FWD BBJ | | GCI61044 | Inner Joint | | | 34 | | | 85 | |

| | YEAR | TRANSM. | F/R | L/R | BODY STYLE & DRIVE TYPE & ENGINE | REMARKS | G-AP Ref. | PRODUCT | ABS | Technical Specifications A | B | C | H | L | P |
|---|---|---|---|---|---|---|---|---|---|---|---|---|---|---|---|
| **AUDI** | | | | | | | | | | | | | | | |
| **A6** | | | | | | | | | | | | | | | |
| 3.0 (160 kw) | 2001.06-2005.01 | CVT | F | L/R | Saloon FWD BBJ | | GCI83007 | Inner Joint | | | 34 | | | 85 | |
| | 2001.06-2005.01 | MT | F | R | Saloon FWD BBJ | | GDS99113 | Drive Shaft | 45W | 38 | | 59.5 | 34.5 | 654 | |
| | 2001.06-2005.01 | | F | L/R | Saloon FWD BBJ | | GCO83019 | Outer Joint | 45W | 38 | 27 | 59.5 | 34.5 | 63 | I |
| | 2004.08-2006.05 | CVT | F | L | Saloon FWD BBJ | | GDS83271 | Drive Shaft | | 38 | | 59.5 | 34 | 548 | |
| | 2004.08-2006.05 | CVT | F | R | Saloon FWD BBJ | | GDS83026 | Drive Shaft | | 38 | | 59.5 | 34 | 558 | |
| | 2004.08-2006.05 | CVT | F | L/R | Saloon FWD BBJ | | GCO83077 | Outer Joint | | 38 | 27 | 59.5 | 34 | 63 | M |
| | 2004.08-2006.05 | CVT | F | L/R | Saloon FWD BBJ | | GCI61044 | Inner Joint | | | 34 | | | 85 | |
| | 2005.03-2006.05 | CVT | F | L | Estate FWD BBJ | | GDS83271 | Drive Shaft | | 38 | | 59.5 | 34 | 548 | |
| | 2005.03-2006.05 | CVT | F | R | Estate FWD BBJ | | GDS83026 | Drive Shaft | | 38 | | 59.5 | 34 | 558 | |
| | 2005.03-2006.05 | CVT | F | L/R | Estate FWD BBJ | | GCO83077 | Outer Joint | | 38 | 27 | 59.5 | 34 | 63 | M |
| | 2005.03-2006.05 | CVT | F | L/R | Estate FWD BBJ | | GCI61044 | Inner Joint | | | 34 | | | 85 | |
| | 2014.09-2018.09 | 7AT | F | L/R | Estate FWD CTCC;CZVB | | GDS83382 | Drive Shaft | | 42 | | 76.5 | 34 | 495 | |
| | 2014.09-2018.09 | 7AT | F | L/R | Estate FWD CTCC;CZVB | | GCO83102 | Outer Joint | | 42 | 29 | 76.5 | 34 | 60 | I |
| | 2014.09-2018.09 | 7AT | F | L/R | Estate FWD CTCC;CZVB | TJ | GCI83022 | Inner Joint | | | 34 | | | 88.5 | |
| | 2014.09-2018.09 | 7AT | F | L/R | Saloon FWD CTCC;CZVB | | GDS83382 | Drive Shaft | | 42 | | 76.5 | 34 | 495 | |
| | 2014.09-2018.09 | | F | L/R | Saloon FWD CTCC;CZVB | | GCO83102 | Outer Joint | | 42 | 29 | 76.5 | 34 | 60 | I |
| | 2014.09-2018.09 | | F | L/R | Saloon FWD CTCC;CZVB | | GCI83022 | Inner Joint | | | 34 | | | 88.5 | |
| 3.0 (162 kw) | 2001.04-2004.07 | 5MT/6MT | F | L | Saloon FWD ASN | | GDS61019 | Drive Shaft | 45W | 38 | | 59.5 | 34.5 | 624 | |
| | 2001.04-2004.07 | 5MT/6MT | F | R | Saloon FWD ASN | | GDS61076 | Drive Shaft | 45W | 38 | | 59.5 | 34.5 | 645 | |
| | 2001.04-2004.07 | AT | F | L/R | Saloon FWD ASN | Date to:2004.12 | GCI61044 | Inner Joint | | | 34 | | | 85 | |
| | 2001.04-2004.07 | AT/MT | F | L/R | Saloon FWD ASN | Date to:2004.12 | GCO83019 | Outer Joint | 45W | 38 | 27 | 59.5 | 34.5 | 63 | I |
| | 2001.04-2004.07 | CVT | F | L/R | Saloon FWD ASN | | GDS83066 | Drive Shaft | 45W | 38 | | 59.5 | 34.5 | 544 | |
| | 2001.04-2004.07 | CVT | F | L/R | Saloon FWD ASN | TJ | GCI61044 | Inner Joint | | | 34 | | | 85 | |
| | 2001.04-2004.07 | MT | F | R | Saloon FWD ASN | Date to:2004.07 | GDS99113 | Drive Shaft | 45W | 38 | | 59.5 | 34.5 | 654 | |
| | 2001.04-2005.01 | 5MT/6MT | F | L | Estate FWD ASN | | GDS61019 | Drive Shaft | 45W | 38 | | 59.5 | 34.5 | 624 | |
| | 2001.04-2005.01 | 5MT/6MT | F | R | Estate FWD ASN | | GDS61076 | Drive Shaft | 45W | 38 | | 59.5 | 34.5 | 645 | |
| | 2001.04-2005.01 | AT/MT | F | L/R | Estate FWD ASN | | GCO83019 | Outer Joint | 45W | 38 | 27 | 59.5 | 34.5 | 63 | I |
| | 2001.04-2005.01 | CVT | F | L/R | Estate FWD ASN | | GDS83066 | Drive Shaft | 45W | 38 | | 59.5 | 34.5 | 544 | |
| | 2001.04-2005.01 | CVT | F | L/R | Estate FWD ASN | | GCI83007 | Inner Joint | | | 34 | | | 85 | |
| | 2001.04-2005.01 | MT | F | R | Estate FWD ASN | | GDS99113 | Drive Shaft | 45W | 38 | | 59.5 | 34.5 | 654 | |
| | 2001.04-2005.01 | MT/5MT/6MT | F | L/R | Estate FWD ASN | | GCI50019 | Inner Joint | | | 34 | | | 59.5 | |
| 3.2 (188 kw) | 2004.05-2009.05 | 6MT | F | L | Saloon FWD AUK;BKH | | GDS83290 | Drive Shaft | | 38 | | 59.5 | 34 | 617 | |
| | 2004.05-2009.05 | 6MT | F | R | Saloon FWD AUK;BKH | AAR | GDS81591 | Drive Shaft | | 38 | | 59.5 | 34 | 653 | |
| | 2004.05-2009.05 | 6MT | F | R | Saloon FWD AUK;BKH | TJ | GDS83329 | Drive Shaft | | 38 | | 59.5 | 34 | 655 | |
| | 2004.05-2009.05 | 6MT/CVT | F | L/R | Saloon FWD AUK;BKH | | GCO83077 | Outer Joint | | 38 | 27 | 59.5 | 34 | 63 | M |
| | 2004.05-2009.05 | 6MT/CVT | F | L/R | Saloon FWD AUK;BKH | TJ | GCI61044 | Inner Joint | | | 34 | | | 85 | |
| | 2004.05-2009.05 | 6MT/CVT | F | L/R | Saloon FWD AUK;BKH | AAR | GCI61076 | Inner Joint | | | 34 | | | 85 | |
| | 2004.05-2009.05 | CVT | F | L | Saloon FWD AUK;BKH | | GDS83271 | Drive Shaft | | 38 | | 59.5 | 34 | 548 | |
| | 2004.05-2009.05 | CVT | F | R | Saloon FWD AUK;BKH | | GDS83026 | Drive Shaft | | 38 | | 59.5 | 34 | 558 | |
| | 2005.03-2008.10 | CVT | F | L | Estate FWD AUK | | GDS83271 | Drive Shaft | | 38 | | 59.5 | 34 | 548 | |
| | 2005.03-2008.10 | CVT | F | R | Estate FWD AUK | | GDS83026 | Drive Shaft | | 38 | | 59.5 | 34 | 558 | |
| | 2005.03-2008.10 | MT | F | L | Estate FWD AUK | | GDS83290 | Drive Shaft | | 38 | | 59.5 | 34 | 617 | |
| | 2005.03-2008.10 | MT | F | R | Estate FWD AUK | AAR | GDS81591 | Drive Shaft | | 38 | | 59.5 | 34 | 653 | |
| | 2005.03-2008.10 | MT | F | R | Estate FWD AUK | TJ | GDS83329 | Drive Shaft | | 38 | | 59.5 | 34 | 655 | |
| | 2005.03-2008.10 | MT/CVT | F | L/R | Estate FWD AUK | | GCO83077 | Outer Joint | | 38 | 27 | 59.5 | 34 | 63 | M |
| | 2005.03-2008.10 | MT/CVT | F | L/R | Estate FWD AUK | TJ | GCI61044 | Inner Joint | | | 34 | | | 85 | |
| | 2005.03-2008.10 | MT/CVT | F | L/R | Estate FWD AUK | AAR | GCI61076 | Inner Joint | | | 34 | | | 85 | |
| 3.2 (195 kw) | 2009.05-2011.03 | AT | F | L | Saloon FWD CALA | | GDS83271 | Drive Shaft | | 38 | | 59.5 | 34 | 548 | |
| | 2009.05-2011.03 | AT | F | R | Saloon FWD CALA | | GDS83026 | Drive Shaft | | 38 | | 59.5 | 34 | 558 | |
| | 2009.05-2011.03 | AT | F | L/R | Saloon FWD CALA | | GCO83077 | Outer Joint | | 38 | 27 | 59.5 | 34 | 63 | M |
| | 2009.05-2011.03 | AT | F | L/R | Saloon FWD CALA | | GCI61044 | Inner Joint | | | 34 | | | 85 | |
| 3.7 (191 kw) | 1999.03-2005.01 | AT/MT | F | L/R | Estate FWD AQG | | GCO83019 | Outer Joint | 45W | 38 | 27 | 59.5 | 34.5 | 63 | I |
| | 1999.03-2005.01 | AT/MT | F | L/R | Saloon FWD AQG | | GCO83019 | Outer Joint | 45W | 38 | 27 | 59.5 | 34.5 | 63 | I |
| **A6 Allroad Quattro** | | | | | | | | | | | | | | | |
| 2.0 (150 kw) | 2020.09- | 7AT | F | R | Estate 4WD DTPA | | GDS84553 | Drive Shaft | | 42 | | 76.5 | 34 | 496 | |
| | 2020.09- | 7AT | F | L/R | Estate 4WD DTPA | | GCO81357 | Outer Joint | | 42 | 28 | 76.5 | 34 | 54 | I |
| | 2020.09- | 7AT | F | L/R | Estate 4WD DTPA | | GCI61077 | Inner Joint | | | 34 | | | 88 | |
| 2.7 (120 kw) | 2006.05-2011.08 | 6AT | F | L | Estate 4WD BSG;CAND | | GDS83305 | Drive Shaft | | 38 | | 59.5 | 34 | 603 | |
| | 2006.05-2011.08 | 6AT | F | R | Estate 4WD BSG;CAND | AAR | GDS81590 | Drive Shaft | | 38 | | 59.5 | 34 | 523 | |
| | 2006.05-2011.08 | 6AT | F | R | Estate 4WD BSG;CAND | TJ | GDS83306 | Drive Shaft | | 38 | | 59.5 | 34 | 525 | |
| | 2006.05-2011.08 | 6AT | F | L/R | Estate 4WD BSG;CAND | | GCO83077 | Outer Joint | | 38 | 27 | 59.5 | 34 | 63 | M |
| | 2006.05-2011.08 | 6AT | F | L/R | Estate 4WD BSG;CAND | TJ | GCI61044 | Inner Joint | | | 34 | | | 85 | |
| | 2006.05-2011.08 | 6AT | F | L/R | Estate 4WD BSG;CAND | AAR | GCI61076 | Inner Joint | | | 34 | | | 85 | |
| | 2006.05-2011.08 | 6AT | R | L/R | Estate 4WD BSG;CAND | Date from:2008.11 | GDS81915 | Drive Shaft | | 38 | | 59.5 | 34 | 650 | |
| | 2006.05-2011.08 | 6AT | R | L/R | Estate 4WD BSG;CAND | Date to:2008.10 | GDS82348 | Drive Shaft | | 38 | | 59.5 | 34 | 648 | |

| | YEAR | TRANSM. | F/R | L/R | BODY STYLE & DRIVE TYPE & ENGINE | REMARKS | G-AP Ref. | PRODUCT | ABS | Technical Specifications A | B | C | H | L | P |
|---|---|---|---|---|---|---|---|---|---|---|---|---|---|---|---|
| **AUDI** | | | | | | | | | | | | | | | |
| **A6 Allroad Quattro** | | | | | | | | | | | | | | | |
| 2.7 (120 kw) | 2006.05-2011.08 | 6AT | R | L/R | Estate 4WD BSG;CAND | Date to:2008.10 | GCO81358 | Outer Joint | | 38 | 33 | 59.5 | 34 | 54 | M |
| | 2006.05-2011.08 | 6AT | R | L/R | Estate 4WD BSG;CAND | | GCI61069 | Inner Joint | | | 28 | | | 32 | |
| 2.7 (132 kw) | 2006.03-2008.10 | 6AT | F | L | Estate 4WD BPP | TJ | GDS83305 | Drive Shaft | | 38 | | 59.5 | 34 | 603 | |
| | 2006.03-2008.10 | 6AT | F | R | Estate 4WD BPP | AAR | GDS81590 | Drive Shaft | | 38 | | 59.5 | 34 | 523 | |
| | 2006.03-2008.10 | 6AT | F | R | Estate 4WD BPP | TJ | GDS83306 | Drive Shaft | | 38 | | 59.5 | 34 | 525 | |
| | 2006.03-2008.10 | 6AT | F | L/R | Estate 4WD BPP | | GCO83077 | Outer Joint | | 38 | 27 | 59.5 | 34 | 63 | M |
| | 2006.03-2008.10 | 6AT | F | L/R | Estate 4WD BPP | TJ | GCI61044 | Inner Joint | | | 34 | | | 85 | |
| | 2006.03-2008.10 | 6AT | F | L/R | Estate 4WD BPP | AAR | GCI61076 | Inner Joint | | | 34 | | | 85 | |
| | 2006.03-2008.10 | 6AT | R | L/R | Estate 4WD BPP | Chassis no. from:4F_9_000001 | GDS81915 | Drive Shaft | | 38 | | 59.5 | 34 | 650 | |
| | 2006.03-2008.10 | 6AT | R | L/R | Estate 4WD BPP | Chassis no. to:4F_8_250000 | GDS82348 | Drive Shaft | | 38 | | 59.5 | 34 | 648 | |
| | 2006.03-2008.10 | 6AT | R | L/R | Estate 4WD BPP | Chassis no. to:4F_8_250000 | GCO81358 | Outer Joint | | 38 | 33 | 59.5 | 34 | 54 | M |
| | 2006.03-2008.10 | 6AT | R | L/R | Estate 4WD BPP | | GCI61069 | Inner Joint | | | 28 | | | 32 | |
| 2.7 (140 kw) | 2008.10-2011.08 | 6AT | F | L | Estate 4WD CANC | | GDS83305 | Drive Shaft | | 38 | | 59.5 | 34 | 603 | |
| | 2008.10-2011.08 | 6AT | F | R | Estate 4WD CANC | AAR | GDS81590 | Drive Shaft | | 38 | | 59.5 | 34 | 523 | |
| | 2008.10-2011.08 | 6AT | F | R | Estate 4WD CANC | TJ | GDS83306 | Drive Shaft | | 38 | | 59.5 | 34 | 525 | |
| | 2008.10-2011.08 | 6AT | F | L/R | Estate 4WD CANC | TJ | GCI61044 | Inner Joint | | | 34 | | | 85 | |
| | 2008.10-2011.08 | 6AT | F | L/R | Estate 4WD CANC | AAR | GCI61076 | Inner Joint | | | 34 | | | 85 | |
| | 2008.10-2011.08 | 6AT | R | L/R | Estate 4WD CANC | Chassis no. from:4F_9_000001 | GDS81915 | Drive Shaft | | 38 | | 59.5 | 34 | 650 | |
| | 2008.10-2011.08 | 6AT | R | L/R | Estate 4WD CANC | Chassis no. to:4F_8_250000 | GDS82348 | Drive Shaft | | 38 | | 59.5 | 34 | 648 | |
| | 2008.10-2011.08 | 6AT | R | L/R | Estate 4WD CANC | Chassis no. to:4F_8_250000 | GCO81358 | Outer Joint | | 38 | 33 | 59.5 | 34 | 54 | M |
| | 2008.10-2011.08 | 6AT | R | L/R | Estate 4WD CANC | | GCI61069 | Inner Joint | | | 28 | | | 32 | |
| | 2008.10-2011.08 | 6AT | F/R | L/R | Estate 4WD CANC | | GCO83077 | Outer Joint | | 38 | 27 | 59.5 | 34 | 63 | M |
| 3.0 (140 kw) | 2015.11-2018.09 | 7AT | F | L/R | Estate 4WD CZVF | | GDS61290 | Drive Shaft | | 42 | | 76.4 | 34 | 493 | |
| | 2015.11-2018.09 | 7AT | F | L/R | Estate 4WD CZVF | | GCO83103 | Outer Joint | | 42 | 28 | 76.4 | 34 | 54 | I |
| | 2015.11-2018.09 | 7AT | F | L/R | Estate 4WD CZVF | | GCI83022 | Inner Joint | | | 34 | | | 88.5 | |
| | 2015.11-2018.09 | 7AT | R | L | Estate 4WD CZVF | For PR code:GH2,For vehicles with electronic ltd slip differential | GDS61291 | Drive Shaft | | 42 | | 76.5 | 34 | 620 | |
| | 2015.11-2018.09 | 7AT | R | R | Estate 4WD CZVF | For PR code:GH2,For vehicles with electronic ltd slip differential | GDS82251 | Drive Shaft | | 42 | | 76.5 | 34 | 576 | |
| | 2015.11-2018.09 | 7AT | R | L/R | Estate 4WD CZVF | For PR code:GH1 | GDS83368 | Drive Shaft | | 42 | | 76.5 | 34 | 660 | |
| | 2015.11-2018.09 | 7AT | R | L/R | Estate 4WD CZVF | For PR code:GH2,For vehicles with electronic ltd slip differential;For PR code:GH1 | GCI83039 | Outer Joint | | 42 | 28 | 76.5 | 34 | 72 | |
| | 2015.11-2018.09 | 7AT | R | L/R | Estate 4WD CZVF | For PR code:GH2,For vehicles with electronic ltd slip differential;For PR code:GH1 | GCI61069 | Inner Joint | | | 28 | | | 32 | |
| 3.0 (150 kw) | 2012.01-2014.12 | 7AT | F | L/R | Estate 4WD CLAA | | GDS61290 | Drive Shaft | | 42 | | 76.4 | 34 | 493 | |
| | 2012.01-2014.12 | 7AT | F | L/R | Estate 4WD CLAA | | GCO83103 | Outer Joint | | 42 | 28 | 76.4 | 34 | 54 | I |
| | 2012.01-2014.12 | 7AT | F | L/R | Estate 4WD CLAA | | GCI83022 | Inner Joint | | | 34 | | | 88.5 | |
| | 2012.01-2014.12 | 7AT | R | L | Estate 4WD CLAA | For PR code:GH2,For vehicles with electronic LTD slip differential | GDS61291 | Drive Shaft | | 42 | | 76.5 | 34 | 620 | |
| | 2012.01-2014.12 | 7AT | R | R | Estate 4WD CLAA | For PR code:GH2,For vehicles with electronic LTD slip differential | GDS82251 | Drive Shaft | | 42 | | 76.5 | 34 | 576 | |
| | 2012.01-2014.12 | 7AT | R | L/R | Estate 4WD CLAA | For PR code:GH1 | GDS83368 | Drive Shaft | | 42 | | 76.5 | 34 | 660 | |
| | 2012.01-2014.12 | 7AT | R | L/R | Estate 4WD CLAA | | GCI83039 | Outer Joint | | 42 | 28 | 76.5 | 34 | 72 | |
| | 2012.01-2014.12 | 7AT | R | L/R | Estate 4WD CLAA | | GCI61069 | Inner Joint | | | 28 | | | 32 | |
| 3.0 (155 kw) | 2006.05-2011.08 | 6AT | F | L | Estate 4WD BNG;CDYB | | GDS83305 | Drive Shaft | | 38 | | 59.5 | 34 | 603 | |
| | 2006.05-2011.08 | AT | F | R | Estate 4WD BNG;CDYB | AAR | GDS81590 | Drive Shaft | | 38 | | 59.5 | 34 | 523 | |
| | 2006.05-2011.08 | AT | F | R | Estate 4WD BNG;CDYB | TJ | GDS83306 | Drive Shaft | | 38 | | 59.5 | 34 | 525 | |
| | 2006.05-2011.08 | AT/MT | F | L/R | Estate 4WD BNG;CDYB | | GCO83077 | Outer Joint | | 38 | 27 | 59.5 | 34 | 63 | M |
| | 2006.05-2011.08 | AT/MT | F | L/R | Estate 4WD BNG;CDYB | TJ | GCI61044 | Inner Joint | | | 34 | | | 85 | |
| | 2006.05-2011.08 | AT/MT | F | L/R | Estate 4WD BNG;CDYB | AAR | GCI61076 | Inner Joint | | | 34 | | | 85 | |
| | 2006.05-2011.08 | MT | F | L | Estate 4WD BNG;CDYB | | GDS83290 | Drive Shaft | | 38 | | 59.5 | 34 | 617 | |
| | 2006.05-2011.08 | MT | F | R | Estate 4WD BNG;CDYB | AAR | GDS81591 | Drive Shaft | | 38 | | 59.5 | 34 | 653 | |
| | 2006.05-2011.08 | MT | F | R | Estate 4WD BNG;CDYB | TJ | GDS83329 | Drive Shaft | | 38 | | 59.5 | 34 | 655 | |
| | 2006.05-2011.08 | AT/MT | R | L/R | Estate 4WD BNG;CDYB | Date from:2008.11 | GDS81915 | Drive Shaft | | 38 | | 59.5 | 34 | 650 | |
| | 2006.05-2011.08 | AT/MT | R | L/R | Estate 4WD BNG;CDYB | Date to:2008.10 | GDS82348 | Drive Shaft | | 38 | | 59.5 | 34 | 648 | |
| | 2006.05-2011.08 | AT/MT | R | L/R | Estate 4WD BNG;CDYB | Date to:2008.10 | GCO81358 | Outer Joint | | 38 | 33 | 59.5 | 34 | 54 | M |
| | 2006.05-2011.08 | AT/MT | R | L/R | Estate 4WD BNG;CDYB | | GCI61069 | Inner Joint | | | 28 | | | 32 | |
| | 2014.09-2018.09 | 7AT | F | L/R | Estate 4WD CRTF;CZVC | | GDS61290 | Drive Shaft | | 42 | | 76.4 | 34 | 493 | |
| | 2014.09-2018.09 | 7AT | F | L/R | Estate 4WD CRTF;CZVC | | GCO83103 | Outer Joint | | 42 | 28 | 76.4 | 34 | 54 | I |
| | 2014.09-2018.09 | 7AT | F | L/R | Estate 4WD CRTF;CZVC | | GCI83022 | Inner Joint | | | 34 | | | 88.5 | |
| | 2014.09-2018.09 | 7AT | R | L | Estate 4WD CRTF;CZVC | For PR code:GH2,For vehicles with electronic limited slip diff. | GDS61291 | Drive Shaft | | 42 | | 76.5 | 34 | 620 | |
| | 2014.09-2018.09 | 7AT | R | R | Estate 4WD CRTF;CZVC | For PR code:GH2,For vehicles with electronic limited slip diff. | GDS82251 | Drive Shaft | | 42 | | 76.5 | 34 | 576 | |
| | 2014.09-2018.09 | 7AT | R | L/R | Estate 4WD CRTF;CZVC | For PR code:GH1 | GDS83368 | Drive Shaft | | 42 | | 76.5 | 34 | 660 | |
| | 2014.09-2018.09 | 7AT | R | L/R | Estate 4WD CRTF;CZVC | | GCI83039 | Outer Joint | | 42 | 28 | 76.5 | 34 | 72 | |
| | 2014.09-2018.09 | 7AT | R | L/R | Estate 4WD CRTF;CZVC | | GCI61069 | Inner Joint | | | 28 | | | 32 | |
| 3.0 (160 kw) | 2014.09-2018.09 | 7AT | F | L/R | Estate 4WD CRTE;CZVA | | GDS61290 | Drive Shaft | | 42 | | 76.4 | 34 | 493 | |
| | 2014.09-2018.09 | 7AT | F | L/R | Estate 4WD CRTE;CZVA | | GCO83103 | Outer Joint | | 42 | 28 | 76.4 | 34 | 54 | I |
| | 2014.09-2018.09 | 7AT | F | L/R | Estate 4WD CRTE;CZVA | | GCI83022 | Inner Joint | | | 34 | | | 88.5 | |
| | 2014.09-2018.09 | 7AT | R | L | Estate 4WD CRTE;CZVA | For PR code:GH2,For vehicles with electronic LTD slip differential | GDS61291 | Drive Shaft | | 42 | | 76.5 | 34 | 620 | |
| | 2014.09-2018.09 | 7AT | R | R | Estate 4WD CRTE;CZVA | For PR code:GH2,For vehicles with electronic LTD slip differential | GDS82251 | Drive Shaft | | 42 | | 76.5 | 34 | 576 | |
| | 2014.09-2018.09 | 7AT | R | L/R | Estate 4WD CRTE;CZVA | For PR code:GH1 | GDS83368 | Drive Shaft | | 42 | | 76.5 | 34 | 660 | |

| | YEAR | TRANSM. | F/R | L/R | BODY STYLE & DRIVE TYPE & ENGINE | REMARKS | G-AP Ref. | PRODUCT | ABS | Technical Specifications A | B | C | H | L | P |
|---|---|---|---|---|---|---|---|---|---|---|---|---|---|---|---|
| **AUDI** | | | | | | | | | | | | | | | |
| **A6 Allroad Quattro** | | | | | | | | | | | | | | | |
| 3.0 (160 kw) | 2014.09-2018.09 | 7AT | R | L/R | Estate 4WD CRTE;CZVA | | GCI83039 | Outer Joint | | 42 | 28 | 76.5 | 34 | 72 | |
| | 2014.09-2018.09 | 7AT | R | L/R | Estate 4WD CRTE;CZVA | | GCI61069 | Inner Joint | | | 28 | | | 32 | |
| 3.0 (170 kw) | 2018.11- | 8AT | F | L/R | Estate 4WD DDVE | For PR code:GH1/GH2 | GDS84553 | Drive Shaft | | 42 | | 76.5 | 34 | 496 | |
| | 2018.11- | 8AT | F | L/R | Estate 4WD DDVE | For PR code:GH4,For vehicles with AWD & variable torque dist. | GDS84556 | Drive Shaft | | 42 | | 76.5 | 34 | 495 | |
| | 2018.11- | 8AT | F | L/R | Estate 4WD DDVE | For PR code:GH1/GH2 | GCO81357 | Outer Joint | | 42 | 28 | 76.5 | 34 | 54 | I |
| | 2018.11- | 8AT | F | L/R | Estate 4WD DDVE | Date from:2019.02,For PR Code:GH4 | GCO82603 | Outer Joint | | 42 | 30 | 76.5 | 34 | 60 | I |
| | 2018.11- | 8AT | F | L/R | Estate 4WD DDVE | For PR code:GH1/GH2 | GCI61077 | Inner Joint | | | 34 | | | 88 | |
| | 2018.11- | 8AT | F | L/R | Estate 4WD DDVE | For PR code:GH4,For vehicles with AWD & variable torque dist. | GCI81397 | Inner Joint | | | 27 | | | 89 | |
| | 2018.11- | 8AT | R | L | Estate 4WD DDVE | For PR code:GH4,For vehicles with AWD & variable torque dist. | GDS56373 | Drive Shaft | | 42 | | 76.5 | 34 | 660 | |
| | 2018.11- | 8AT | R | L | Estate 4WD DDVE | For PR code:GH2,For vehicles with AWD & variable torque dist. | GDS58068 | Drive Shaft | | 42 | | 76.5 | 34 | 618 | |
| | 2018.11- | 8AT | R | R | Estate 4WD DDVE | For PR code:GH4,For vehicles with AWD & variable torque dist. | GDS56844 | Drive Shaft | | 42 | | 76.5 | 34 | 581 | |
| | 2018.11- | 8AT | R | R | Estate 4WD DDVE | For PR code:GH2,For vehicles with AWD & variable torque dist. | GDS58054 | Drive Shaft | | 42 | | 76.5 | 34 | 574 | |
| | 2018.11- | 8AT | R | L/R | Estate 4WD DDVE | For PR code:GH1 | GDS83368 | Drive Shaft | | 42 | | 76.5 | 34 | 660 | |
| | 2018.11- | 8AT | R | L/R | Estate 4WD DDVE | For PR code:GH4,For vehicles with AWD & variable torque dist. | GCI81752 | Inner Joint | | | 33 | | | 34 | |
| 3.0 (171 kw) | 2006.05-2008.10 | 6AT | F | L | Estate 4WD ASB | | GDS83305 | Drive Shaft | | 38 | | 59.5 | 34 | 603 | |
| | 2006.05-2008.10 | AT | F | R | Estate 4WD ASB | AAR | GDS81590 | Drive Shaft | | 38 | | 59.5 | 34 | 523 | |
| | 2006.05-2008.10 | AT | F | R | Estate 4WD ASB | TJ | GDS83306 | Drive Shaft | | 38 | | 59.5 | 34 | 525 | |
| | 2006.05-2008.10 | AT/MT | F | L/R | Estate 4WD ASB | | GCO83077 | Outer Joint | | 38 | 27 | 59.5 | 34 | 63 | M |
| | 2006.05-2008.10 | AT/MT | F | L/R | Estate 4WD ASB | TJ | GCI61044 | Inner Joint | | | 34 | | | 85 | |
| | 2006.05-2008.10 | AT/MT | F | L/R | Estate 4WD ASB | AAR | GCI61076 | Inner Joint | | | 34 | | | 85 | |
| | 2006.05-2008.10 | MT | F | L | Estate 4WD ASB | | GDS83290 | Drive Shaft | | 38 | | 59.5 | 34 | 617 | |
| | 2006.05-2008.10 | MT | F | R | Estate 4WD ASB | AAR | GDS81591 | Drive Shaft | | 38 | | 59.5 | 34 | 653 | |
| | 2006.05-2008.10 | MT | F | R | Estate 4WD ASB | TJ | GDS83329 | Drive Shaft | | 38 | | 59.5 | 34 | 655 | |
| | 2006.05-2008.10 | 6AT/6MT | R | L/R | Estate 4WD ASB | Chassis no. from:4F_9_000001 | GDS81915 | Drive Shaft | | 38 | | 59.5 | 34 | 650 | |
| | 2006.05-2008.10 | AT/MT | R | L/R | Estate 4WD ASB | Chassis no. to:4F_8_250000 | GDS82348 | Drive Shaft | | 38 | | 59.5 | 34 | 648 | |
| | 2006.05-2008.10 | AT/MT | R | L/R | Estate 4WD ASB | | GCO81358 | Outer Joint | | 38 | 33 | 59.5 | 34 | 54 | M |
| | 2006.05-2008.10 | AT/MT | R | L/R | Estate 4WD ASB | | GCI61069 | Inner Joint | | | 28 | | | 32 | |
| 3.0 (176 kw) | 2008.10-2011.08 | 6AT | F | L | Estate 4WD CDYA;CDYC | | GDS83305 | Drive Shaft | | 38 | | 59.5 | 34 | 603 | |
| | 2008.10-2011.08 | AT | F | R | Estate 4WD CDYA;CDYC | AAR | GDS81590 | Drive Shaft | | 38 | | 59.5 | 34 | 523 | |
| | 2008.10-2011.08 | AT | F | R | Estate 4WD CDYA;CDYC | TJ | GDS83306 | Drive Shaft | | 38 | | 59.5 | 34 | 525 | |
| | 2008.10-2011.08 | AT/MT | F | L/R | Estate 4WD CDYA;CDYC | | GCO83077 | Outer Joint | | 38 | 27 | 59.5 | 34 | 63 | M |
| | 2008.10-2011.08 | AT/MT | F | L/R | Estate 4WD CDYA;CDYC | TJ | GCI61044 | Inner Joint | | | 34 | | | 85 | |
| | 2008.10-2011.08 | AT/MT | F | L/R | Estate 4WD CDYA;CDYC | AAR | GCI61076 | Inner Joint | | | 34 | | | 85 | |
| | 2008.10-2011.08 | MT | F | L | Estate 4WD CDYA;CDYC | | GDS83290 | Drive Shaft | | 38 | | 59.5 | 34 | 617 | |
| | 2008.10-2011.08 | MT | F | R | Estate 4WD CDYA;CDYC | AAR | GDS81591 | Drive Shaft | | 38 | | 59.5 | 34 | 653 | |
| | 2008.10-2011.08 | MT | F | R | Estate 4WD CDYA;CDYC | TJ | GDS83329 | Drive Shaft | | 38 | | 59.5 | 34 | 655 | |
| | 2008.10-2011.08 | 6AT/6MT | R | L/R | Estate 4WD CDYA;CDYC | Chassis no. to:4F_8_250000 | GDS82348 | Drive Shaft | | 38 | | 59.5 | 34 | 648 | |
| | 2008.10-2011.08 | 6AT/6MT | R | L/R | Estate 4WD CDYA;CDYC | | GCO81358 | Outer Joint | | 38 | 33 | 59.5 | 34 | 54 | M |
| | 2008.10-2011.08 | AT/MT | R | L/R | Estate 4WD CDYA;CDYC | Chassis no. from:4F_9_000001 | GDS81915 | Drive Shaft | | 38 | | 59.5 | 34 | 650 | |
| | 2008.10-2011.08 | AT/MT | R | L/R | Estate 4WD CDYA;CDYC | | GCI61069 | Inner Joint | | | 28 | | | 32 | |
| 3.0 (180 kw) | 2012.01-2016.06 | 7AT | F | L/R | Estate 4WD CKVC;CDUD | | GDS61290 | Drive Shaft | | 42 | | 76.4 | 34 | 493 | |
| | 2012.01-2016.06 | 7AT | F | L/R | Estate 4WD CKVC;CDUD | | GCO83103 | Outer Joint | | 42 | 28 | 76.4 | 34 | 54 | I |
| | 2012.01-2016.06 | 7AT | F | L/R | Estate 4WD CKVC;CDUD | | GCI83022 | Inner Joint | | | 34 | | | 88.5 | |
| | 2012.01-2016.06 | 7AT | R | L | Estate 4WD CKVC;CDUD | For PR code:GH2,For vehicles with electronic LTD slip differential | GDS61291 | Drive Shaft | | 42 | | 76.5 | 34 | 620 | |
| | 2012.01-2016.06 | 7AT | R | R | Estate 4WD CKVC;CDUD | For PR code:GH2,For vehicles with electronic LTD slip differential | GDS82251 | Drive Shaft | | 42 | | 76.5 | 34 | 576 | |
| | 2012.01-2016.06 | 7AT | R | L/R | Estate 4WD CKVC;CDUD | For PR code:GH1 | GDS83368 | Drive Shaft | | 42 | | 76.5 | 34 | 660 | |
| | 2012.01-2016.06 | 7AT | R | L/R | Estate 4WD CKVC;CDUD | | GCI83039 | Outer Joint | | 42 | 28 | 76.5 | 34 | 72 | |
| | 2012.01-2016.06 | 7AT | R | L/R | Estate 4WD CKVC;CDUD | | GCI61069 | Inner Joint | | | 28 | | | 32 | |
| | 2021.01- | 7AT | F | L/R | Estate 4WD DMGH | For PR code:GH1/GH2 | GDS84553 | Drive Shaft | | 42 | | 76.5 | 34 | 496 | |
| | 2021.01- | 7AT | F | L/R | Estate 4WD DMGH | For PR code:GH4,For vehicles with AWD & variable torque dist. | GDS84556 | Drive Shaft | | 42 | | 76.5 | 34 | 495 | |
| | 2021.01- | 7AT | F | L/R | Estate 4WD DMGH | For PR code:GH1/GH2 | GCO81357 | Outer Joint | | 42 | 28 | 76.5 | 34 | 54 | I |
| | 2021.01- | 7AT | F | L/R | Estate 4WD DMGH | For PR Code:GH4 | GCO82603 | Outer Joint | | 42 | 30 | 76.5 | 34 | 60 | I |
| | 2021.01- | 7AT | F | L/R | Estate 4WD DMGH | For PR code:GH1/GH2 | GCI61077 | Inner Joint | | | 34 | | | 88 | |
| | 2021.01- | 7AT | F | L/R | Estate 4WD DMGH | For PR code:GH4,For vehicles with AWD & variable torque dist. | GCI81397 | Inner Joint | | | 27 | | | 89 | |
| | 2021.01- | 7AT | R | L | Estate 4WD DMGH | For PR code:GH4,For vehicles with AWD & variable torque dist. | GDS56373 | Drive Shaft | | 42 | | 76.5 | 34 | 660 | |
| | 2021.01- | 7AT | R | L | Estate 4WD DMGH | For PR code:GH2,For vehicles with AWD & variable torque dist. | GDS58068 | Drive Shaft | | 42 | | 76.5 | 34 | 618 | |
| | 2021.01- | 7AT | R | R | Estate 4WD DMGH | For PR code:GH4,For vehicles with AWD & variable torque dist. | GDS56844 | Drive Shaft | | 42 | | 76.5 | 34 | 581 | |
| | 2021.01- | 7AT | R | R | Estate 4WD DMGH | For PR code:GH2,For vehicles with AWD & variable torque dist. | GDS58054 | Drive Shaft | | 42 | | 76.5 | 34 | 574 | |
| | 2021.01- | 7AT | R | L/R | Estate 4WD DMGH | For PR code:GH1 | GDS83368 | Drive Shaft | | 42 | | 76.5 | 34 | 660 | |
| | 2021.01- | 7AT | R | L/R | Estate 4WD DMGH | For PR code:GH4,For vehicles with AWD & variable torque dist. | GCI81752 | Inner Joint | | | 33 | | | 34 | |
| 3.0 (200 kw) | 2014.09-2018.09 | 7AT | F | L/R | Estate 4WD CRTD | | GDS61290 | Drive Shaft | | 42 | | 76.4 | 34 | 493 | |
| | 2014.09-2018.09 | 7AT | F | L/R | Estate 4WD CRTD | | GCO83103 | Outer Joint | | 42 | 28 | 76.4 | 34 | 54 | I |
| | 2014.09-2018.09 | 7AT | F | L/R | Estate 4WD CRTD | | GCI83022 | Inner Joint | | | 34 | | | 88.5 | |
| | 2014.09-2018.09 | 7AT | R | L | Estate 4WD CRTD | For PR code:GH2,For vehicles with electronic LTD slip differential | GDS61291 | Drive Shaft | | 42 | | 76.5 | 34 | 620 | |
| | 2014.09-2018.09 | 7AT | R | R | Estate 4WD CRTD | For PR code:GH2,For vehicles with electronic LTD slip differential | GDS82251 | Drive Shaft | | 42 | | 76.5 | 34 | 576 | |

| | YEAR | TRANSM. | F/R | L/R | BODY STYLE & DRIVE TYPE & ENGINE | REMARKS | G-AP Ref. | PRODUCT | ABS | Technical Specifications A | B | C | H | L | P |
|---|---|---|---|---|---|---|---|---|---|---|---|---|---|---|---|
| **AUDI** **A6 Allroad Quattro** | | | | | | | | | | | | | | | |
| 3.0 (200 kw) | 2014.09-2018.09 | 7AT | R | L/R | Estate 4WD CRTD | For PR code:GH1 | GDS83368 | Drive Shaft | | 42 | | 76.5 | 34 | 660 | |
| | 2014.09-2018.09 | 7AT | R | L/R | Estate 4WD CRTD | | GCI83039 | Outer Joint | | 42 | 28 | 76.5 | 34 | 72 | |
| | 2014.09-2018.09 | 7AT | R | L/R | Estate 4WD CRTD | | GCI61069 | Inner Joint | | | 28 | | | 32 | |
| 3.0 (210 kw) | 2018.11- | 8AT | F | L/R | Estate 4WD DDVB;DMGA | For PR code:GH1/GH2 | GDS84553 | Drive Shaft | | 42 | | 76.5 | 34 | 496 | |
| | 2018.11- | 8AT | F | L/R | Estate 4WD DDVB;DMGA | For PR code:GH4,For vehicles with AWD & variable torque dist. | GDS84556 | Drive Shaft | | 42 | | 76.5 | 34 | 495 | |
| | 2018.11- | 8AT | F | L/R | Estate 4WD DDVB;DMGA | For PR code:GH1/GH2 | GCO81357 | Outer Joint | | 42 | 28 | 76.5 | 34 | 54 | I |
| | 2018.11- | 8AT | F | L/R | Estate 4WD DDVB;DMGA | Date from:2019.02,For PR Code:GH4 | GCO82603 | Outer Joint | | 42 | 30 | 76.5 | 34 | 60 | I |
| | 2018.11- | 8AT | F | L/R | Estate 4WD DDVB;DMGA | For PR code:GH1/GH2 | GCI61077 | Inner Joint | | | 34 | | | 88 | |
| | 2018.11- | 8AT | F | L/R | Estate 4WD DDVB;DMGA | For PR code:GH4,For vehicles with AWD & variable torque dist. | GCI81397 | Inner Joint | | | 27 | | | 89 | |
| | 2018.11- | 8AT | R | L | Estate 4WD DDVB;DMGA | For PR code:GH4,For vehicles with AWD & variable torque dist. | GDS56373 | Drive Shaft | | 42 | | 76.5 | 34 | 660 | |
| | 2018.11- | 8AT | R | L | Estate 4WD DDVB;DMGA | For PR code:GH2,For vehicles with AWD & variable torque dist. | GDS58068 | Drive Shaft | | 42 | | 76.5 | 34 | 618 | |
| | 2018.11- | 8AT | R | R | Estate 4WD DDVB;DMGA | For PR code:GH4,For vehicles with AWD & variable torque dist. | GDS56844 | Drive Shaft | | 42 | | 76.5 | 34 | 581 | |
| | 2018.11- | 8AT | R | R | Estate 4WD DDVB;DMGA | For PR code:GH2,For vehicles with AWD & variable torque dist. | GDS58054 | Drive Shaft | | 42 | | 76.5 | 34 | 574 | |
| | 2018.11- | 8AT | R | L/R | Estate 4WD DDVB;DMGA | For PR code:GH1 | GDS83368 | Drive Shaft | | 42 | | 76.5 | 34 | 660 | |
| | 2018.11- | 8AT | R | L/R | Estate 4WD DDVB;DMGA | For PR code:GH4,For vehicles with AWD & variable torque dist. | GCI81752 | Inner Joint | | | 33 | | | 34 | |
| 3.0 (213 kw) | 2008.10-2011.08 | 6AT | F | L | Estate 4WD CAJA | | GDS83305 | Drive Shaft | | 38 | | 59.5 | 34 | 603 | |
| | 2008.10-2011.08 | 6AT | F | R | Estate 4WD CAJA | AAR | GDS81590 | Drive Shaft | | 38 | | 59.5 | 34 | 523 | |
| | 2008.10-2011.08 | 6AT | F | R | Estate 4WD CAJA | TJ | GDS83306 | Drive Shaft | | 38 | | 59.5 | 34 | 525 | |
| | 2008.10-2011.08 | 6AT | F | L/R | Estate 4WD CAJA | TJ | GCI61044 | Inner Joint | | | 34 | | | 85 | |
| | 2008.10-2011.08 | 6AT | F | L/R | Estate 4WD CAJA | AAR | GCI61076 | Inner Joint | | | 34 | | | 85 | |
| | 2008.10-2011.08 | 6AT | R | L/R | Estate 4WD CAJA | Chassis no. from:4F_9_000001 | GDS81915 | Drive Shaft | | 38 | | 59.5 | 34 | 650 | |
| | 2008.10-2011.08 | 6AT | R | L/R | Estate 4WD CAJA | Chassis no. to:4F_8_250000 | GDS82348 | Drive Shaft | | 38 | | 59.5 | 34 | 648 | |
| | 2008.10-2011.08 | 6AT | R | L/R | Estate 4WD CAJA | Chassis no. to:4F_8_250000 | GCO81358 | Outer Joint | | 38 | 33 | 59.5 | 34 | 54 | M |
| | 2008.10-2011.08 | 6AT | R | L/R | Estate 4WD CAJA | | GCI61069 | Inner Joint | | | 28 | | | 32 | |
| | 2008.10-2011.08 | 6AT | F/R | L/R | Estate 4WD CAJA | | GCO83077 | Outer Joint | | 38 | 27 | 59.5 | 34 | 63 | M |
| 3.0 (228 kw) | 2012.01-2014.12 | 7AT | F | L/R | Estate 4WD CGWD | | GDS61290 | Drive Shaft | | 42 | | 76.4 | 34 | 493 | |
| | 2012.01-2014.12 | 7AT | F | L/R | Estate 4WD CGWD | | GCO83103 | Outer Joint | | 42 | 28 | 76.4 | 34 | 54 | I |
| | 2012.01-2014.12 | 7AT | F | L/R | Estate 4WD CGWD | | GCI83022 | Inner Joint | | | 34 | | | 88.5 | |
| | 2012.01-2014.12 | 7AT | R | L | Estate 4WD CGWD | For PR code:GH2,For vehicles with electronic limited slip diff. | GDS61291 | Drive Shaft | | 42 | | 76.5 | 34 | 620 | |
| | 2012.01-2014.12 | 7AT | R | R | Estate 4WD CGWD | For PR code:GH2,For vehicles with electronic limited slip diff. | GDS82251 | Drive Shaft | | 42 | | 76.5 | 34 | 576 | |
| | 2012.01-2014.12 | 7AT | R | L/R | Estate 4WD CGWD | For PR code:GH1 | GDS83368 | Drive Shaft | | 42 | | 76.5 | 34 | 660 | |
| | 2012.01-2014.12 | 7AT | R | L/R | Estate 4WD CGWD | | GCI83039 | Outer Joint | | 42 | 28 | 76.5 | 34 | 72 | |
| | 2012.01-2014.12 | 7AT | R | L/R | Estate 4WD CGWD | | GCI61069 | Inner Joint | | | 28 | | | 32 | |
| 3.0 (230 kw) | 2012.01-2014.12 | 8AT | F | L/R | Estate 4WD CGQB | | GDS61290 | Drive Shaft | | 42 | | 76.4 | 34 | 493 | |
| | 2012.01-2014.12 | 8AT | F | L/R | Estate 4WD CGQB | | GCO83103 | Outer Joint | | 42 | 28 | 76.4 | 34 | 54 | I |
| | 2012.01-2014.12 | 8AT | F | L/R | Estate 4WD CGQB | | GCI83022 | Inner Joint | | | 34 | | | 88.5 | |
| | 2012.01-2014.12 | 8AT | R | L | Estate 4WD CGQB | For PR code:GH2,For vehicles with electronic LTD slip differential | GDS61291 | Drive Shaft | | 42 | | 76.5 | 34 | 620 | |
| | 2012.01-2014.12 | 8AT | R | R | Estate 4WD CGQB | For PR code:GH2,For vehicles with electronic LTD slip differential | GDS82251 | Drive Shaft | | 42 | | 76.5 | 34 | 576 | |
| | 2012.01-2014.12 | 8AT | R | L/R | Estate 4WD CGQB | For PR code:GH1 | GDS83368 | Drive Shaft | | 42 | | 76.5 | 34 | 660 | |
| | 2012.01-2014.12 | 8AT | R | L/R | Estate 4WD CGQB | | GCI83039 | Outer Joint | | 42 | 28 | 76.5 | 34 | 72 | |
| | 2012.01-2014.12 | 8AT | R | L/R | Estate 4WD CGQB | | GCI61069 | Inner Joint | | | 28 | | | 32 | |
| 3.0 (235 kw) | 2012.01-2018.09 | 8AT | F | L/R | Estate 4WD CVUA | | GDS61290 | Drive Shaft | | 42 | | 76.4 | 34 | 493 | |
| | 2012.01-2018.09 | 8AT | F | L/R | Estate 4WD CVUA | | GCO83103 | Outer Joint | | 42 | 28 | 76.4 | 34 | 54 | I |
| | 2012.01-2018.09 | 8AT | F | L/R | Estate 4WD CVUA | | GCI83022 | Inner Joint | | | 34 | | | 88.5 | |
| | 2012.01-2018.09 | 8AT | R | L | Estate 4WD CVUA | For PR code:GH2,For vehicles with electronic LTD slip differential | GDS61291 | Drive Shaft | | 42 | | 76.5 | 34 | 620 | |
| | 2012.01-2018.09 | 8AT | R | R | Estate 4WD CVUA | For PR code:GH2,For vehicles with electronic LTD slip differential | GDS82251 | Drive Shaft | | 42 | | 76.5 | 34 | 576 | |
| | 2012.01-2018.09 | 8AT | R | L/R | Estate 4WD CVUA | For PR code:GH1 | GDS83368 | Drive Shaft | | 42 | | 76.5 | 34 | 660 | |
| | 2012.01-2018.09 | 8AT | R | L/R | Estate 4WD CVUA | | GCI83039 | Outer Joint | | 42 | 28 | 76.5 | 34 | 72 | |
| | 2012.01-2018.09 | 8AT | R | L/R | Estate 4WD CVUA | | GCI61069 | Inner Joint | | | 28 | | | 32 | |
| 3.0 (245 kw) | 2014.09-2018.09 | 7AT | F | L/R | Estate 4WD CREC | | GDS61290 | Drive Shaft | | 42 | | 76.4 | 34 | 493 | |
| | 2014.09-2018.09 | 7AT | F | L/R | Estate 4WD CREC | | GCO83103 | Outer Joint | | 42 | 28 | 76.4 | 34 | 54 | I |
| | 2014.09-2018.09 | 7AT | F | L/R | Estate 4WD CREC | | GCI83022 | Inner Joint | | | 34 | | | 88.5 | |
| | 2014.09-2018.09 | 7AT | R | L | Estate 4WD CREC | Differential:For vehicles with electronic ltd slip differential;For PR code:GH2 | GDS61291 | Drive Shaft | | 42 | | 76.5 | 34 | 620 | |
| | 2014.09-2018.09 | 7AT | R | R | Estate 4WD CREC | Differential:For vehicles with electronic ltd slip differential;For PR code:GH2 | GDS82251 | Drive Shaft | | 42 | | 76.5 | 34 | 576 | |
| | 2014.09-2018.09 | 7AT | R | L/R | Estate 4WD CREC | For PR code:GH1 | GDS83368 | Drive Shaft | | 42 | | 76.5 | 34 | 660 | |
| | 2014.09-2018.09 | 7AT | R | L/R | Estate 4WD CREC | | GCI83039 | Outer Joint | | 42 | 28 | 76.5 | 34 | 72 | |
| | 2014.09-2018.09 | 7AT | R | L/R | Estate 4WD CREC | | GCI61069 | Inner Joint | | | 28 | | | 32 | |
| 3.0 (250 kw) | 2019.11- | 7AT | F | L/R | Estate 4WD DLZA | For PR code:GH1/GH2 | GDS84553 | Drive Shaft | | 42 | | 76.5 | 34 | 496 | |
| | 2019.11- | 7AT | F | L/R | Estate 4WD DLZA | For PR code:GH4,For vehicles with AWD & variable torque dist. | GDS84556 | Drive Shaft | | 42 | | 76.5 | 34 | 495 | |
| | 2019.11- | 7AT | F | L/R | Estate 4WD DLZA | For PR code:GH1/GH2 | GCO81357 | Outer Joint | | 42 | 28 | 76.5 | 34 | 54 | I |
| | 2019.11- | 7AT | F | L/R | Estate 4WD DLZA | For PR Code:GH4 | GCO82603 | Outer Joint | | 42 | 30 | 76.5 | 34 | 60 | I |
| | 2019.11- | 7AT | F | L/R | Estate 4WD DLZA | For PR code:GH1/GH2 | GCI61077 | Inner Joint | | | 34 | | | 88 | |
| | 2019.11- | 7AT | F | L/R | Estate 4WD DLZA | For PR code:GH4,For vehicles with AWD & variable torque dist. | GCI81397 | Inner Joint | | | 27 | | | 89 | |
| | 2019.11- | 7AT | R | L | Estate 4WD DLZA | For PR code:GH4,For vehicles with AWD & variable torque dist. | GDS56373 | Drive Shaft | | 42 | | 76.5 | 34 | 660 | |
| | 2019.11- | 7AT | R | L | Estate 4WD DLZA | For PR code:GH2,For vehicles with AWD & variable torque dist. | GDS58068 | Drive Shaft | | 42 | | 76.5 | 34 | 618 | |

| | YEAR | TRANSM. | F/R | L/R | BODY STYLE & DRIVE TYPE & ENGINE | REMARKS | G-AP Ref. | PRODUCT | ABS | Technical Specifications A | B | C | H | L | P |
|---|---|---|---|---|---|---|---|---|---|---|---|---|---|---|---|
| **AUDI** | | | | | | | | | | | | | | | |
| **A6 Allroad Quattro** | | | | | | | | | | | | | | | |
| 3.0 (250 kw) | 2019.11- | 7AT | R | R | Estate 4WD DLZA | For PR code:GH4,For vehicles with AWD & variable torque dist | GDS56844 | Drive Shaft | | 42 | | 76.5 | 34 | 581 | |
| | 2019.11- | 7AT | R | R | Estate 4WD DLZA | For PR code:GH2;For vehicles with AWD & variable torque dist. | GDS58054 | Drive Shaft | | 42 | | 76.5 | 34 | 574 | |
| | 2019.11- | 7AT | R | L/R | Estate 4WD DLZA | For PR code:GH1 | GDS83368 | Drive Shaft | | 42 | | 76.5 | 34 | 660 | |
| | 2019.11- | 7AT | R | L/R | Estate 4WD DLZA | For PR code:GH4,For vehicles with AWD & variable torque dist | GCI81752 | Inner Joint | | | 33 | | | 34 | |
| 3.0 (253 kw) | 2020.11- | 8AT | F | L/R | Estate 4WD DMKD | For PR code:GH1/GH2 | GDS84553 | Drive Shaft | | 42 | | 76.5 | 34 | 496 | |
| | 2020.11- | 8AT | F | L/R | Estate 4WD DMKD | For PR code:GH4,For vehicles with AWD & variable torque dist. | GDS84556 | Drive Shaft | | 42 | | 76.5 | 34 | 495 | |
| | 2020.11- | 8AT | F | L/R | Estate 4WD DMKD | For PR code:GH1/GH2 | GCO81357 | Outer Joint | | 42 | 28 | 76.5 | 34 | 54 | I |
| | 2020.11- | 8AT | F | L/R | Estate 4WD DMKD | For PR Code:GH4 | GCO82603 | Outer Joint | | 42 | 30 | 76.5 | 34 | 60 | I |
| | 2020.11- | 8AT | F | L/R | Estate 4WD DMKD | For PR code:GH1/GH2 | GCI61077 | Inner Joint | | | 34 | | | 88 | |
| | 2020.11- | 8AT | F | L/R | Estate 4WD DMKD | For PR code:GH4,For vehicles with AWD & variable torque dist | GCI81397 | Inner Joint | | | 27 | | | 89 | |
| | 2020.11- | 8AT | R | L | Estate 4WD DMKD | For PR code:GH4,For vehicles with AWD & variable torque dist. | GDS56373 | Drive Shaft | | 42 | | 76.5 | 34 | 660 | |
| | 2020.11- | 8AT | R | L | Estate 4WD DMKD | For PR code:GH2;For vehicles with AWD & variable torque dist. | GDS58068 | Drive Shaft | | 42 | | 76.5 | 34 | 618 | |
| | 2020.11- | 8AT | R | R | Estate 4WD DMKD | For PR code:GH4,For vehicles with AWD & variable torque dist | GDS56844 | Drive Shaft | | 42 | | 76.5 | 34 | 581 | |
| | 2020.11- | 8AT | R | R | Estate 4WD DMKD | For PR code:GH2;For vehicles with AWD & variable torque dist. | GDS58054 | Drive Shaft | | 42 | | 76.5 | 34 | 574 | |
| | 2020.11- | 8AT | R | L/R | Estate 4WD DMKD | For PR code:GH1 | GDS83368 | Drive Shaft | | 42 | | 76.5 | 34 | 660 | |
| | 2020.11- | 8AT | R | L/R | Estate 4WD DMKD | For PR code:GH4,For vehicles with AWD & variable torque dist | GCI81752 | Inner Joint | | | 33 | | | 34 | |
| 3.0 (257 kw) | 2019.03- | 8AT | F | L/R | Estate 4WD DEWA | For PR code:GH1/GH2 | GDS84553 | Drive Shaft | | 42 | | 76.5 | 34 | 496 | |
| | 2019.03- | 8AT | F | L/R | Estate 4WD DEWA | For PR code:GH4,For vehicles with AWD & variable torque dist. | GDS84556 | Drive Shaft | | 42 | | 76.5 | 34 | 495 | |
| | 2019.03- | 8AT | F | L/R | Estate 4WD DEWA | For PR code:GH1/GH2 | GCO81357 | Outer Joint | | 42 | 28 | 76.5 | 34 | 54 | I |
| | 2019.03- | 8AT | F | L/R | Estate 4WD DEWA | For PR Code:GH4 | GCO82603 | Outer Joint | | 42 | 30 | 76.5 | 34 | 60 | I |
| | 2019.03- | 8AT | F | L/R | Estate 4WD DEWA | For PR code:GH1/GH2 | GCI61077 | Inner Joint | | | 34 | | | 88 | |
| | 2019.03- | 8AT | F | L/R | Estate 4WD DEWA | For PR code:GH4,For vehicles with AWD & variable torque dist. | GCI81397 | Inner Joint | | | 27 | | | 89 | |
| | 2019.03- | 8AT | R | L | Estate 4WD DEWA | For PR code:GH4,For vehicles with AWD & variable torque dist. | GDS56373 | Drive Shaft | | 42 | | 76.5 | 34 | 660 | |
| | 2019.03- | 8AT | R | L | Estate 4WD DEWA | For PR code:GH2;For vehicles with AWD & variable torque dist. | GDS58068 | Drive Shaft | | 42 | | 76.5 | 34 | 618 | |
| | 2019.03- | 8AT | R | R | Estate 4WD DEWA | For PR code:GH4,For vehicles with AWD & variable torque dist | GDS56844 | Drive Shaft | | 42 | | 76.5 | 34 | 581 | |
| | 2019.03- | 8AT | R | R | Estate 4WD DEWA | For PR code:GH2;For vehicles with AWD & variable torque dist. | GDS58054 | Drive Shaft | | 42 | | 76.5 | 34 | 574 | |
| | 2019.03- | 8AT | R | L/R | Estate 4WD DEWA | For PR code:GH1 | GDS83368 | Drive Shaft | | 42 | | 76.5 | 34 | 660 | |
| | 2019.03- | 8AT | R | L/R | Estate 4WD DEWA | For PR code:GH4,For vehicles with AWD & variable torque dist | GCI81752 | Inner Joint | | | 33 | | | 34 | |
| 3.2 (188 kw) | 2006.05-2008.10 | 6AT | F | L | Estate 4WD AUK | | GDS83305 | Drive Shaft | | 38 | | 59.5 | 34 | 603 | |
| | 2006.05-2008.10 | AT | F | R | Estate 4WD AUK | AAR | GDS81590 | Drive Shaft | | 38 | | 59.5 | 34 | 523 | |
| | 2006.05-2008.10 | AT | F | R | Estate 4WD AUK | TJ | GDS83306 | Drive Shaft | | 38 | | 59.5 | 34 | 525 | |
| | 2006.05-2008.10 | AT/MT | F | L/R | Estate 4WD AUK | | GCO83077 | Outer Joint | | 38 | 27 | 59.5 | 34 | 63 | M |
| | 2006.05-2008.10 | AT/MT | F | L/R | Estate 4WD AUK | TJ | GCI61044 | Inner Joint | | | 34 | | | 85 | |
| | 2006.05-2008.10 | AT/MT | F | L/R | Estate 4WD AUK | AAR | GCI61076 | Inner Joint | | | 34 | | | 85 | |
| | 2006.05-2008.10 | MT | F | L | Estate 4WD AUK | | GDS83290 | Drive Shaft | | 38 | | 59.5 | 34 | 617 | |
| | 2006.05-2008.10 | MT | F | R | Estate 4WD AUK | AAR | GDS81591 | Drive Shaft | | 38 | | 59.5 | 34 | 653 | |
| | 2006.05-2008.10 | MT | F | R | Estate 4WD AUK | TJ | GDS83329 | Drive Shaft | | 38 | | 59.5 | 34 | 655 | |
| | 2006.05-2008.10 | 6AT/6MT | R | L/R | Estate 4WD AUK | Chassis no. from:4F_9_000001 | GDS81915 | Drive Shaft | | 38 | | 59.5 | 34 | 650 | |
| | 2006.05-2008.10 | 6AT/6MT | R | L/R | Estate 4WD AUK | Chassis no. to:4F8250000 | GDS82348 | Drive Shaft | | 38 | | 59.5 | 34 | 648 | |
| | 2006.05-2008.10 | 6AT/6MT | R | L/R | Estate 4WD AUK | | GCO81358 | Outer Joint | | 38 | 33 | 59.5 | 34 | 54 | M |
| | 2006.05-2008.10 | 6AT/6MT | R | L/R | Estate 4WD AUK | Chassis no. to:4F8250000 | GCI61069 | Inner Joint | | | 28 | | | 32 | |
| 4.2 (257 kw) | 2006.05-2010.12 | 6AT | F | L | Estate 4WD BVJ | | GDS83305 | Drive Shaft | | 38 | | 59.5 | 34 | 603 | |
| | 2006.05-2010.12 | 6AT | F | R | Estate 4WD BVJ | AAR | GDS81590 | Drive Shaft | | 38 | | 59.5 | 34 | 523 | |
| | 2006.05-2010.12 | 6AT | F | R | Estate 4WD BVJ | TJ | GDS83306 | Drive Shaft | | 38 | | 59.5 | 34 | 525 | |
| | 2006.05-2010.12 | 6AT | F | L/R | Estate 4WD BVJ | | GCO83077 | Outer Joint | | 38 | 27 | 59.5 | 34 | 63 | M |
| | 2006.05-2010.12 | 6AT | F | L/R | Estate 4WD BVJ | TJ | GCI61044 | Inner Joint | | | 34 | | | 85 | |
| | 2006.05-2010.12 | 6AT | F | L/R | Estate 4WD BVJ | AAR | GCI61076 | Inner Joint | | | 34 | | | 85 | |
| | 2006.05-2010.12 | 6AT | R | L/R | Estate 4WD BVJ | Date from:2008.11 | GDS81915 | Drive Shaft | | 38 | | 59.5 | 34 | 650 | |
| | 2006.05-2010.12 | 6AT | R | L/R | Estate 4WD BVJ | Date to:2008.10 | GDS82348 | Drive Shaft | | 38 | | 59.5 | 34 | 648 | |
| | 2006.05-2010.12 | 6AT | R | L/R | Estate 4WD BVJ | Date to:2008.10 | GCO81358 | Outer Joint | | 38 | 33 | 59.5 | 34 | 54 | M |
| | 2006.05-2010.12 | 6AT | R | L/R | Estate 4WD BVJ | | GCI61069 | Inner Joint | | | 28 | | | 32 | |
| **A6 Quattro** | | | | | | | | | | | | | | | |
| 1.8 (92 kw) | 1995.10-1997.04 | AT | F | L | Saloon 4WD ADR | | GDS83060 | Drive Shaft | 45T | 38 | | 59.5 | 34 | 565 | |
| | 1995.10-1997.04 | AT | F | L/R | Saloon 4WD ADR | | GCO83016 | Outer Joint | 45T | 38 | 30 | 59.5 | 34 | 61 | I |
| | 1995.10-1997.04 | MT | R | L/R | Saloon 4WD ADR | | GCO83014 | Outer Joint | 45T | 38 | 25 | 59.5 | 34.5 | 61 | O |
| | 1995.10-1997.10 | AT | F | L | Estate 4WD ADR | | GDS83060 | Drive Shaft | 45T | 38 | | 59.5 | 34 | 565 | |
| | 1995.10-1997.10 | AT | F | L/R | Estate 4WD ADR | | GCO83017 | Outer Joint | 45T | 38 | 27 | 59.5 | 34.5 | 68.5 | I |
| | 1995.10-1997.10 | 5MT | R | L/R | Estate 4WD ADR | | GCO83014 | Outer Joint | 45T | 38 | 25 | 59.5 | 34.5 | 61 | O |
| 1.8 (110 kw) | 1997.04-2005.01 | 5MT | F | R | Estate 4WD AEB/ANB/APU/ARK/AWT | Chassis no. to:4B1200000,Date To:2002.12 | GDS83066 | Drive Shaft | 45W | 38 | | 59.5 | 34.5 | 544 | |
| | 1997.04-2005.01 | 5MT | F | R | Estate 4WD AEB/ANB/APU/ARK/AWT | Chassis no. to:4B1200000,Date To:2002.12 | GCO83019 | Outer Joint | 45W | 38 | 27 | 59.5 | 34.5 | 63 | I |
| | 1997.04-2005.01 | 5MT | F | L/R | Estate 4WD AEB/ANB/APU/ARK/AWT | Chassis no. to:4B_1_200000 | GCO83018 | Outer Joint | 45W | 33 | 30 | 53 | 30 | 62 | I |
| | 1997.04-2005.01 | 5MT | F | L/R | Estate 4WD AEB/ANB/APU/ARK/AWT | Chassis no. from:4B_2_000001 | GCO83030 | Outer Joint | | 38 | 33 | 59.5 | 34 | 56.5 | M |
| | 1997.04-2005.01 | 5MT | F | L/R | Estate 4WD AEB/ANB/APU/ARK/AWT | Chassis no. from:4B_2_000001 | GCO83058 | Outer Joint | 45W | 38 | 33 | 59.5 | 34 | 56.5 | M |
| | 1997.04-2005.01 | 5MT | F | R | Estate 4WD AEB/ANB/APU/ARK/AWT | Chassis no. to:4B1200000,Date To:2002.12 | GCI83007 | Inner Joint | | | 34 | | | 85 | |
| | 1997.04-2005.01 | | R | L/R | Estate 4WD AEB/ANB/APU/ARK/AWT | | GCI83002 | Inner Joint | | | 33 | | | 32 | |

| | YEAR | TRANSM. | F/R | L/R | BODY STYLE & DRIVE TYPE & ENGINE | REMARKS | G-AP Ref. | PRODUCT | ABS | Technical Specifications A | B | C | H | L | P |
|---|---|---|---|---|---|---|---|---|---|---|---|---|---|---|---|
| **AUDI** | | | | | | | | | | | | | | | |
| **A6 Quattro** | | | | | | | | | | | | | | | |
| 1.8 (110 kw) | 1997.04-2005.01 | 5MT | F | L | Saloon 4WD AEB/ANB/APU/ARK/AWT | Chassis no. to:4B1200000,Date To:2002.12 | GDS83066 | Drive Shaft | 45W | 38 | | 59.5 | 34.5 | 544 | |
| | 1997.04-2005.01 | 5MT | F | L/R | Saloon 4WD AEB/ANB/APU/ARK/AWT | Chassis no. to:4B1200000 | GCO83018 | Outer Joint | 45W | 33 | 30 | 53 | 30 | 62 | I |
| | 1997.04-2005.01 | 5MT | F | L/R | Saloon 4WD AEB/ANB/APU/ARK/AWT | Chassis no. from:4B2000001 | GCO83030 | Outer Joint | | 38 | 33 | 59.5 | 34 | 56.5 | M |
| | 1997.04-2005.01 | 5MT | F | L/R | Saloon 4WD AEB/ANB/APU/ARK/AWT | Chassis no. from:4B2000001 | GCO83058 | Outer Joint | 45W | 38 | 33 | 59.5 | 34 | 56.5 | M |
| | 1997.04-2005.01 | 5MT | R | L/R | Saloon 4WD AEB/ANB/APU/ARK/AWT | | GCO83080 | Outer Joint | 45W | 33 | 30 | 53 | 30 | 62 | I |
| | 1997.04-2005.01 | 5MT | F/R | L/R | Saloon 4WD AEB/ANB/APU/ARK/AWT | | GCI83002 | Inner Joint | | | 33 | | | 32 | |
| 1.8 (132 kw) | 1997.11-2000.10 | 5AT/5MT | F | L | Estate 4WD AJL | Chassis no. from:4BX020001 | GDS61019 | Drive Shaft | 45W | 38 | | 59.5 | 34.5 | 624 | |
| | 1997.11-2000.10 | 5AT/5MT | F | L | Estate 4WD AJL | Chassis no. to:4B_X_020000 | GDS83041 | Drive Shaft | 45W | 38 | | 59.5 | 34 | 640 | |
| | 1997.11-2000.10 | 5AT/5MT | F | R | Estate 4WD AJL | Chassis no. from:4BX020001 | GDS61076 | Drive Shaft | 45W | 38 | | 59.5 | 34.5 | 645 | |
| | 1997.11-2000.10 | 5AT/5MT | F | L/R | Estate 4WD AJL | Chassis no. from:4BX020001 | GCO83019 | Outer Joint | 45W | 38 | 27 | 59.5 | 34.5 | 63 | I |
| | 1997.11-2000.10 | 5AT/5MT | F | L/R | Estate 4WD AJL | Chassis no. to:4BX020000 | GCO83020 | Outer Joint | 45W | 38 | 30 | 59.5 | 34 | 59.5 | I |
| | 1997.11-2000.10 | 5AT/5MT | F | L/R | Estate 4WD AJL | Chassis no. from:4BX020001 | GCI50019 | Inner Joint | | | 34 | | | 59.5 | |
| | 1997.11-2000.10 | | F | L/R | Estate 4WD AJL | Chassis no. To:4B_X_020000 | GCO83049 | Outer Joint | | 38 | 30 | 59.5 | 34 | 59.5 | I |
| | 1997.11-2000.10 | | F | L/R | Estate 4WD AJL | Chassis no. to:4BX020000 | GCI83002 | Inner Joint | | | 33 | | | 32 | |
| | 1997.11-2000.10 | | R | L/R | Estate 4WD AJL | | GCI83002 | Inner Joint | | | 33 | | | 32 | |
| | 1997.11-2000.10 | 5AT/5MT | F | L | Saloon 4WD AJL | Chassis no. from:4BX020001 | GDS61019 | Drive Shaft | 45W | 38 | | 59.5 | 34.5 | 624 | |
| | 1997.11-2000.10 | 5AT/5MT | F | L | Saloon 4WD AJL | Chassis no. to:4B_X_020000 | GDS83041 | Drive Shaft | 45W | 38 | | 59.5 | 34 | 640 | |
| | 1997.11-2000.10 | 5AT/5MT | F | R | Saloon 4WD AJL | Chassis no. from:4BX020001 | GDS61076 | Drive Shaft | 45W | 38 | | 59.5 | 34.5 | 645 | |
| | 1997.11-2000.10 | 5AT/5MT | F | L/R | Saloon 4WD AJL | Chassis no. from:4BX020001 | GCO83019 | Outer Joint | 45W | 38 | 27 | 59.5 | 34.5 | 63 | I |
| | 1997.11-2000.10 | 5AT/5MT | F | L/R | Saloon 4WD AJL | Chassis no. to:4BX020000 | GCO83020 | Outer Joint | 45W | 38 | 30 | 59.5 | 34 | 59.5 | I |
| | 1997.11-2000.10 | 5AT/5MT | F | L/R | Saloon 4WD AJL | Chassis no. from:4BX020001 | GCI50019 | Inner Joint | | | 34 | | | 59.5 | |
| | 1997.11-2000.10 | | F | L/R | Saloon 4WD AJL | Chassis no. To:4B_X_020000 | GCO83049 | Outer Joint | | 38 | 30 | 59.5 | 34 | 59.5 | I |
| | 1997.11-2000.10 | | F | L/R | Saloon 4WD AJL | Chassis no. to:4BX020000 | GCI83002 | Inner Joint | | | 33 | | | 32 | |
| | 1997.11-2000.10 | 5AT/5MT | R | L/R | Saloon 4WD AJL | Chassis no. to:4B1120000 | GCO83080 | Outer Joint | 45W | 33 | 30 | 53 | 30 | 62 | I |
| | 1997.11-2000.10 | | R | L/R | Saloon 4WD AJL | | GCI83002 | Inner Joint | | | 33 | | | 32 | |
| 2.0 (103 kw) | 1994.06-1997.04 | MT | F | L/R | Saloon 4WD ACE | Date to:1997.04 | GCO83016 | Outer Joint | 45T | 38 | 30 | 59.5 | 34 | 61 | I |
| | 1994.06-1997.04 | MT | F | L/R | Saloon 4WD ACE | Date to:1997.04 | GCI83002 | Inner Joint | | | 33 | | | 32 | |
| | 1994.06-1997.04 | AT/MT | R | L/R | Saloon 4WD ACE | Date to:1997.04 | GCO83014 | Outer Joint | 45T | 38 | 25 | 59.5 | 34.5 | 61 | O |
| | 1994.06-1997.04 | AT/MT | R | L/R | Saloon 4WD ACE | Date to:1997.04 | GCI83001 | Inner Joint | | | 28 | | | 32 | |
| | 1994.06-1997.10 | MT | F | L/R | Estate 4WD ACE | | GCO83016 | Outer Joint | 45T | 38 | 30 | 59.5 | 34 | 61 | I |
| | 1994.06-1997.10 | MT | F | L/R | Estate 4WD ACE | | GCI83002 | Inner Joint | | | 33 | | | 32 | |
| | 1994.06-1997.10 | AT/MT | R | L/R | Estate 4WD ACE | | GCO83014 | Outer Joint | 45T | 38 | 25 | 59.5 | 34.5 | 61 | O |
| | 1994.06-1997.10 | AT/MT | R | L/R | Estate 4WD ACE | | GCI83001 | Inner Joint | | | 28 | | | 32 | |
| 2.0 (140 kw) | 2015.04-2018.09 | 7AT | F | L/R | Estate 4WD CNHA;DDDA | | GDS83382 | Drive Shaft | | 42 | | 76.5 | 34 | 495 | |
| | 2015.04-2018.09 | 7AT | F | L/R | Estate 4WD CNHA;DDDA | | GCO83102 | Outer Joint | | 42 | 29 | 76.5 | 34 | 60 | I |
| | 2015.04-2018.09 | 7AT | F | L/R | Estate 4WD CNHA;DDDA | TJ | GCI83022 | Inner Joint | | | 34 | | | 88.5 | |
| | 2015.04-2018.09 | 7AT | R | L | Estate 4WD CNHA;DDDA | For PR code:GH2,For vehicles with electronic LTD slip differential | GDS61291 | Drive Shaft | | 42 | | 76.5 | 34 | 620 | |
| | 2015.04-2018.09 | 7AT | R | R | Estate 4WD CNHA;DDDA | For PR code:GH2,For vehicles with electronic LTD slip differential | GDS82251 | Drive Shaft | | 42 | | 76.5 | 34 | 576 | |
| | 2015.04-2018.09 | 7AT | R | L/R | Estate 4WD CNHA;DDDA | For PR code:GH1 | GDS83368 | Drive Shaft | | 42 | | 76.5 | 34 | 660 | |
| | 2015.04-2018.09 | 7AT | R | L/R | Estate 4WD CNHA;DDDA | | GCI83039 | Outer Joint | | 42 | 28 | 76.5 | 34 | 72 | |
| | 2015.04-2018.09 | 7AT | R | L/R | Estate 4WD CNHA;DDDA | | GCI61069 | Inner Joint | | | 28 | | | 32 | |
| | 2015.04-2018.09 | 7AT | F | L/R | Saloon 4WD CNHA;DDDA | | GDS83382 | Drive Shaft | | 42 | | 76.5 | 34 | 495 | |
| | 2015.04-2018.09 | 7AT | F | L/R | Saloon 4WD CNHA;DDDA | | GCO83102 | Outer Joint | | 42 | 29 | 76.5 | 34 | 60 | I |
| | 2015.04-2018.09 | 7AT | F | L/R | Saloon 4WD CNHA;DDDA | TJ | GCI83022 | Inner Joint | | | 34 | | | 88.5 | |
| | 2015.04-2018.09 | 7AT | R | L | Saloon 4WD CNHA;DDDA | For PR Code:GH2,For vehicles with electronic LTD slip differential | GDS61291 | Drive Shaft | | 42 | | 76.5 | 34 | 620 | |
| | 2015.04-2018.09 | 7AT | R | R | Saloon 4WD CNHA;DDDA | For PR Code:GH2,For vehicles with electronic LTD slip differential | GDS82251 | Drive Shaft | | 42 | | 76.5 | 34 | 576 | |
| | 2015.04-2018.09 | 7AT | R | L/R | Saloon 4WD CNHA;DDDA | For PR code:GH1 | GDS83368 | Drive Shaft | | 42 | | 76.5 | 34 | 660 | |
| | 2015.04-2018.09 | 7AT | R | L/R | Saloon 4WD CNHA;DDDA | | GCI83039 | Outer Joint | | 42 | 28 | 76.5 | 34 | 72 | |
| | 2015.04-2018.09 | 7AT | R | L/R | Saloon 4WD CNHA;DDDA | | GCI61069 | Inner Joint | | | 28 | | | 32 | |
| 2.0 (150 kw) | 2018.07- | 7AT | F | L/R | Estate 4WD DFBA;DTPA | For PR code:GH2,For vehicles with electronic LTD slip differential | GDS84553 | Drive Shaft | | 42 | | 76.5 | 34 | 496 | |
| | 2018.07- | 7AT | F | L/R | Estate 4WD DFBA;DTPA | For PR code:GH4,For vehicles with AWD & variable torque dist. | GDS84556 | Drive Shaft | | 42 | | 76.5 | 34 | 495 | |
| | 2018.07- | 7AT | F | L/R | Estate 4WD DFBA;DTPA | For PR code:GH2,For vehicles with electronic LTD slip differential | GCO81357 | Outer Joint | | 42 | 28 | 76.5 | 34 | 54 | I |
| | 2018.07- | 7AT | F | L/R | Estate 4WD DFBA;DTPA | Date From:2019.02,For PR Code:GH4 | GCO82603 | Outer Joint | | 42 | 30 | 76.5 | 34 | 60 | I |
| | 2018.07- | 7AT | F | L/R | Estate 4WD DFBA;DTPA | | GCI61077 | Inner Joint | | | 34 | | | 88 | |
| | 2018.07- | 7AT | R | L | Estate 4WD DFBA;DTPA | For PR code:GH2,For vehicles with AWD & variable torque dist. | GDS58068 | Drive Shaft | | 42 | | 76.5 | 34 | 618 | |
| | 2018.07- | 7AT | R | R | Estate 4WD DFBA;DTPA | For PR code:GH4,For vehicles with AWD & variable torque dist | GDS56844 | Drive Shaft | | 42 | | 76.5 | 34 | 581 | |
| | 2018.07- | 7AT | R | R | Estate 4WD DFBA;DTPA | For PR code:GH2,For vehicles with AWD & variable torque dist. | GDS58054 | Drive Shaft | | 42 | | 76.5 | 34 | 574 | |
| | 2018.07- | 7AT | R | R | Estate 4WD DFBA;DTPA | For PR code:GH4,For vehicles with AWD & variable torque dist | GCI81752 | Inner Joint | | | 33 | | | 34 | |
| | 2018.07- | 7AT | F | L/R | Saloon 4WD DFBA;DTPA | For PR code:GH2,For vehicles with AWD & variable torque dist. | GDS84553 | Drive Shaft | | 42 | | 76.5 | 34 | 496 | |
| | 2018.07- | 7AT | F | L/R | Saloon 4WD DFBA;DTPA | For PR code:GH4,For veh. with all-wheel drive & controlled clutch | GDS84556 | Drive Shaft | | 42 | | 76.5 | 34 | 495 | |
| | 2018.07- | 7AT | F | L/R | Saloon 4WD DFBA;DTPA | | GCI61077 | Inner Joint | | | 34 | | | 88 | |
| | 2018.07- | 7AT | R | L | Saloon 4WD DFBA;DTPA | For PR code:GH2,For vehicles with AWD & variable torque dist. | GDS58068 | Drive Shaft | | 42 | | 76.5 | 34 | 618 | |
| | 2018.07- | 7AT | R | R | Saloon 4WD DFBA;DTPA | For PR code:GH4,For vehicles with AWD & variable torque dist | GDS56844 | Drive Shaft | | 42 | | 76.5 | 34 | 581 | |
| | 2018.07- | 7AT | R | R | Saloon 4WD DFBA;DTPA | For PR code:GH2,For vehicles with AWD & variable torque dist. | GDS58054 | Drive Shaft | | 42 | | 76.5 | 34 | 574 | |
| | 2018.07- | 7AT | R | R | Saloon 4WD DFBA;DTPA | For PR code:GH4,For vehicles with AWD & variable torque dist | GCI81752 | Inner Joint | | | 33 | | | 34 | |

| | YEAR | TRANSM. | F/R | L/R | BODY STYLE & DRIVE TYPE & ENGINE | REMARKS | G-AP Ref. | PRODUCT | ABS | Technical Specifications A | B | C | H | L | P |
|---|---|---|---|---|---|---|---|---|---|---|---|---|---|---|---|
| **AUDI** | | | | | | | | | | | | | | | |
| **A6 Quattro** | | | | | | | | | | | | | | | |
| 2.0 (155 kw) | 2012.05-2015.04 | 8AT | F | L/R | Saloon 4WD CAEB | | GDS61290 | Drive Shaft | | 42 | | 76.4 | 34 | 493 | |
| | 2012.05-2015.04 | AT | F | | Saloon 4WD CAEB | | GCI83022 | Inner Joint | | | 34 | | | 88.5 | |
| | 2012.05-2015.04 | | F | | Saloon 4WD CAEB | | GCO83103 | Outer Joint | | 42 | 28 | 76.4 | 34 | 54 | I |
| | 2012.05-2015.04 | 8AT | R | L/R | Saloon 4WD CAEB | | GDS83368 | Drive Shaft | | 42 | | 76.5 | 34 | 660 | |
| | 2012.05-2015.04 | 8AT | R | L/R | Saloon 4WD CAEB | | GCI83039 | Outer Joint | | 42 | 28 | 76.5 | 34 | 72 | |
| | 2012.05-2015.04 | 8AT | R | L/R | Saloon 4WD CAEB | | GCI61069 | Inner Joint | | | 28 | | | 32 | |
| 2.0 (180 kw) | 2018.08- | 7AT | F | L/R | Estate 4WD DKNA;DLHA | For PR code:GH2,For vehicles with electronic LTD slip differential | GDS84553 | Drive Shaft | | 42 | | 76.5 | 34 | 496 | |
| | 2018.08- | 7AT | F | L/R | Estate 4WD DKNA;DLHA | For PR code:GH4,For vehicles with AWD & variable torque dist | GDS84556 | Drive Shaft | | 42 | | 76.5 | 34 | 495 | |
| | 2018.08- | 7AT | F | L/R | Estate 4WD DKNA;DLHA | For PR code:GH2,For vehicles with electronic LTD slip differential | GCO81357 | Outer Joint | | 42 | 28 | 76.5 | 34 | 54 | I |
| | 2018.08- | 7AT | F | L/R | Estate 4WD DKNA;DLHA | Date From:2019.02,For PR Code:GH4 | GCO82603 | Outer Joint | | 42 | 30 | 76.5 | 34 | 60 | I |
| | 2018.08- | 7AT | F | L/R | Estate 4WD DKNA;DLHA | | GCI61077 | Inner Joint | | | 34 | | | 88 | |
| | 2018.08- | 7AT | R | L | Estate 4WD DKNA;DLHA | For PR code:GH2,For vehicles with AWD & variable torque dist | GDS58068 | Drive Shaft | | 42 | | 76.5 | 34 | 618 | |
| | 2018.08- | 7AT | R | R | Estate 4WD DKNA;DLHA | For PR code:GH4,For vehicles with AWD & variable torque dist | GDS56844 | Drive Shaft | | 42 | | 76.5 | 34 | 581 | |
| | 2018.08- | 7AT | R | R | Estate 4WD DKNA;DLHA | For PR code:GH2,For vehicles with AWD & variable torque dist | GDS58054 | Drive Shaft | | 42 | | 76.5 | 34 | 574 | |
| | 2018.08- | 7AT | R | R | Estate 4WD DKNA;DLHA | For PR code:GH4,For vehicles with AWD & variable torque dist | GCI81752 | Inner Joint | | | 33 | | | 34 | |
| | 2018.08- | 7AT | F | L/R | Saloon 4WD DKNA;DLHA | For PR code:GH2,For vehicles with electronic LTD slip differential | GDS84553 | Drive Shaft | | 42 | | 76.5 | 34 | 496 | |
| | 2018.08- | 7AT | F | L/R | Saloon 4WD DKNA;DLHA | For PR code:GH4,For vehicles with AWD & variable torque dist | GDS84556 | Drive Shaft | | 42 | | 76.5 | 34 | 495 | |
| | 2018.08- | 7AT | F | L/R | Saloon 4WD DKNA;DLHA | For PR code:GH2,For vehicles with electronic LTD slip differential | GCO81357 | Outer Joint | | 42 | 28 | 76.5 | 34 | 54 | I |
| | 2018.08- | 7AT | F | L/R | Saloon 4WD DKNA;DLHA | Date From:2019.02,For PR Code:GH4 | GCO82603 | Outer Joint | | 42 | 30 | 76.5 | 34 | 60 | I |
| | 2018.08- | 7AT | F | L/R | Saloon 4WD DKNA;DLHA | | GCI61077 | Inner Joint | | | 34 | | | 88 | |
| | 2018.08- | 7AT | R | L | Saloon 4WD DKNA;DLHA | For PR code:GH2,For vehicles with AWD & variable torque dist | GDS58068 | Drive Shaft | | 42 | | 76.5 | 34 | 618 | |
| | 2018.08- | 7AT | R | R | Saloon 4WD DKNA;DLHA | For PR code:GH4,For vehicles with AWD & variable torque dist | GDS56844 | Drive Shaft | | 42 | | 76.5 | 34 | 581 | |
| | 2018.08- | 7AT | R | R | Saloon 4WD DKNA;DLHA | For PR code:GH2,For vehicles with AWD & variable torque dist | GDS58054 | Drive Shaft | | 42 | | 76.5 | 34 | 574 | |
| | 2018.08- | 7AT | R | R | Saloon 4WD DKNA;DLHA | For PR code:GH4,For vehicles with AWD & variable torque dist | GCI81752 | Inner Joint | | | 33 | | | 34 | |
| 2.0 (183 kw) | 2015.05-2018.09 | 7AT | F | L/R | Estate 4WD CYPB | | GDS61290 | Drive Shaft | | 42 | | 76.4 | 34 | 493 | |
| | 2015.05-2018.09 | 7AT | F | L/R | Estate 4WD CYPB | | GCO83103 | Outer Joint | | 42 | 28 | 76.4 | 34 | 54 | I |
| | 2015.05-2018.09 | 7AT | F | L/R | Estate 4WD CYPB | | GCI83022 | Inner Joint | | | 34 | | | 88.5 | |
| | 2015.05-2018.09 | 7AT | R | L | Estate 4WD CYPB | For PR code:GH2,For vehicles with electronic ltd slip differential | GDS61291 | Drive Shaft | | 42 | | 76.5 | 34 | 620 | |
| | 2015.05-2018.09 | 7AT | R | R | Estate 4WD CYPB | For PR code:GH2,For vehicles with electronic ltd slip differential | GDS82251 | Drive Shaft | | 42 | | 76.5 | 34 | 576 | |
| | 2015.05-2018.09 | 7AT | R | L/R | Estate 4WD CYPB | For PR code:GH1 | GDS83368 | Drive Shaft | | 42 | | 76.5 | 34 | 660 | |
| | 2015.05-2018.09 | 7AT | R | L/R | Estate 4WD CYPB | For PR code:GH2,For vehicles with electronic ltd slip differential;For PR code:GH1 | GCI83039 | Outer Joint | | 42 | 28 | 76.5 | 34 | 72 | |
| | 2015.05-2018.09 | 7AT | R | L/R | Estate 4WD CYPB | For PR code:GH2,For vehicles with electronic ltd slip differential;For PR code:GH1 | GCI61069 | Inner Joint | | | 28 | | | 32 | |
| | 2015.05-2018.09 | 7AT | F | L/R | Saloon 4WD CYPB | | GDS61290 | Drive Shaft | | 42 | | 76.4 | 34 | 493 | |
| | 2015.05-2018.09 | 7AT | F | L/R | Saloon 4WD CYPB | | GCO83103 | Outer Joint | | 42 | 28 | 76.4 | 34 | 54 | I |
| | 2015.05-2018.09 | 7AT | F | L/R | Saloon 4WD CYPB | | GCI83022 | Inner Joint | | | 34 | | | 88.5 | |
| | 2015.05-2018.09 | 7AT | R | L | Saloon 4WD CYPB | For PR code:GH2,For vehicles with electronic ltd slip differential | GDS61291 | Drive Shaft | | 42 | | 76.5 | 34 | 620 | |
| | 2015.05-2018.09 | 7AT | R | R | Saloon 4WD CYPB | For PR code:GH2,For vehicles with electronic ltd slip differential | GDS82251 | Drive Shaft | | 42 | | 76.5 | 34 | 576 | |
| | 2015.05-2018.09 | 7AT | R | L/R | Saloon 4WD CYPB | For PR code:GH1 | GDS83368 | Drive Shaft | | 42 | | 76.5 | 34 | 660 | |
| | 2015.05-2018.09 | 7AT | R | L/R | Saloon 4WD CYPB | For PR code:GH2,For vehicles with electronic ltd slip differential;For PR code:GH1 | GCI83039 | Outer Joint | | 42 | 28 | 76.5 | 34 | 72 | |
| | 2015.05-2018.09 | 7AT | R | L/R | Saloon 4WD CYPB | For PR code:GH2,For vehicles with electronic ltd slip differential;For PR code:GH1 | GCI61069 | Inner Joint | | | 28 | | | 32 | |
| 2.0 (185 kw) | 2014.05-2018.09 | 7AT/8AT | F | L/R | Saloon 4WD CYPA;CYNB | | GDS61290 | Drive Shaft | | 42 | | 76.4 | 34 | 493 | |
| | 2014.05-2018.09 | 7AT/8AT | F | L/R | Saloon 4WD CYPA;CYNB | | GCO83103 | Outer Joint | | 42 | 28 | 76.4 | 34 | 54 | I |
| | 2014.05-2018.09 | 7AT/8AT | F | L/R | Saloon 4WD CYPA;CYNB | | GCI83022 | Inner Joint | | | 34 | | | 88.5 | |
| | 2014.05-2018.09 | 7AT/8AT | R | L | Saloon 4WD CYPA;CYNB | For PR code:GH2,For vehicles with electronic ltd slip differential | GDS61291 | Drive Shaft | | 42 | | 76.5 | 34 | 620 | |
| | 2014.05-2018.09 | 7AT/8AT | R | R | Saloon 4WD CYPA;CYNB | For PR code:GH2,For vehicles with electronic ltd slip differential | GDS82251 | Drive Shaft | | 42 | | 76.5 | 34 | 576 | |
| | 2014.05-2018.09 | 7AT/8AT | R | L/R | Saloon 4WD CYPA;CYNB | For PR code:GH1 | GDS83368 | Drive Shaft | | 42 | | 76.5 | 34 | 660 | |
| | 2014.05-2018.09 | 7AT/8AT | R | L/R | Saloon 4WD CYPA;CYNB | For PR code:GH2,For vehicles with electronic ltd slip differential;For PR code:GH1 | GCI83039 | Outer Joint | | 42 | 28 | 76.5 | 34 | 72 | |
| | 2014.05-2018.09 | 7AT/8AT | R | L/R | Saloon 4WD CYPA;CYNB | For PR code:GH2,For vehicles with electronic ltd slip differential;For PR code:GH1 | GCI61069 | Inner Joint | | | 28 | | | 32 | |
| | 2015.05-2018.09 | 7AT | F | L/R | Estate 4WD CYPA | | GDS61290 | Drive Shaft | | 42 | | 76.4 | 34 | 493 | |
| | 2015.05-2018.09 | 7AT | F | L/R | Estate 4WD CYPA | | GCO83103 | Outer Joint | | 42 | 28 | 76.4 | 34 | 54 | I |
| | 2015.05-2018.09 | 7AT | F | L/R | Estate 4WD CYPA | | GCI83022 | Inner Joint | | | 34 | | | 88.5 | |
| | 2015.05-2018.09 | 7AT | R | L | Estate 4WD CYPA | For PR code:GH2,For vehicles with electronic ltd slip differential | GDS61291 | Drive Shaft | | 42 | | 76.5 | 34 | 620 | |
| | 2015.05-2018.09 | 7AT | R | R | Estate 4WD CYPA | For PR code:GH2,For vehicles with electronic ltd slip differential | GDS82251 | Drive Shaft | | 42 | | 76.5 | 34 | 576 | |
| | 2015.05-2018.09 | 7AT | R | L/R | Estate 4WD CYPA | For PR code:GH1 | GDS83368 | Drive Shaft | | 42 | | 76.5 | 34 | 660 | |
| | 2015.05-2018.09 | 7AT | R | L/R | Estate 4WD CYPA | For PR code:GH2,For vehicles with electronic ltd slip differential;For PR code:GH1 | GCI83039 | Outer Joint | | 42 | 28 | 76.5 | 34 | 72 | |
| | 2015.05-2018.09 | 7AT | R | L/R | Estate 4WD CYPA | For PR code:GH2,For vehicles with electronic ltd slip differential;For PR code:GH1 | GCI61069 | Inner Joint | | | 28 | | | 32 | |
| | 2017.06-2018.09 | 7AT | F | L/R | Estate 4WD CYPA | | GCI83022 | Inner Joint | | | 34 | | | 88.5 | |
| | 2017.06-2018.09 | 7DCT | F | L/R | Estate 4WD CYPA | | GDS61290 | Drive Shaft | | 42 | | 76.4 | 34 | 493 | |
| | 2017.06-2018.09 | 6MT/7DCT | R | L/R | Estate 4WD CYPA | For PR code:GH1 | GDS83368 | Drive Shaft | | 42 | | 76.5 | 34 | 660 | |
| | 2017.06-2018.09 | 7DCT | R | L | Estate 4WD CYPA | For PR code:GH2 | GDS61291 | Drive Shaft | | 42 | | 76.5 | 34 | 620 | |
| | 2017.06-2018.09 | 7DCT | R | R | Estate 4WD CYPA | For Pr Code:GH2 | GDS82251 | Drive Shaft | | 42 | | 76.5 | 34 | 576 | |
| 2.0 (195 kw) | 2020.05- | 7AT | F | L/R | Estate 4WD DMTA | Position:Front axle left and right;Date to:2020.06;Position:Front axle right;Date from:2020.07 | GDS84553 | Drive Shaft | | 42 | | 76.5 | 34 | 496 | |
| | 2020.05- | 7AT | F | L/R | Estate 4WD DMTA | | GCO81357 | Outer Joint | | 42 | 28 | 76.5 | 34 | 54 | I |
| | 2020.05- | 7AT | F | L/R | Estate 4WD DMTA | | GCI61077 | Inner Joint | | | 34 | | | 88 | |
| | 2020.05- | 7AT | R | L | Estate 4WD DMTA | For PR code:GH2,For vehicles with AWD & variable torque dist | GDS58068 | Drive Shaft | | 42 | | 76.5 | 34 | 618 | |

| | YEAR | TRANSM. | F/R | L/R | BODY STYLE & DRIVE TYPE & ENGINE | REMARKS | G-AP Ref. | PRODUCT | ABS | Technical Specifications A | B | C | H | L | P |
|---|---|---|---|---|---|---|---|---|---|---|---|---|---|---|---|
| **AUDI** | | | | | | | | | | | | | | | |
| **A6 Quattro** | | | | | | | | | | | | | | | |
| 2.0 (195 kw) | 2020.05- | 7AT | R | R | Estate 4WD DMTA | For PR code:GH4,For vehicles with AWD & variable torque dist | GDS56844 | Drive Shaft | | 42 | | 76.5 | 34 | 581 | |
| | 2020.05- | 7AT | R | R | Estate 4WD DMTA | For PR code:GH2;For vehicles with AWD & variable torque dist. | GDS58054 | Drive Shaft | | 42 | | 76.5 | 34 | 574 | |
| | 2020.05- | 7AT | R | R | Estate 4WD DMTA | For PR code:GH4,For vehicles with AWD & variable torque dist | GCI81752 | Inner Joint | | | 33 | | | 34 | |
| | 2020.05- | 7AT | F | L/R | Saloon 4WD DMTA;DPAA | Position:Front axle left and right;Date to:2020.06;Position:Front axle right;Date from:2030.07 | GDS84553 | Drive Shaft | | 42 | | 76.5 | 34 | 496 | |
| | 2020.05- | 7AT | F | L/R | Saloon 4WD DMTA;DPAA | | GCO81357 | Outer Joint | | 42 | 28 | 76.5 | 34 | 54 | I |
| | 2020.05- | 7AT | F | L/R | Saloon 4WD DMTA;DPAA | | GCI61077 | Inner Joint | | | 34 | | | 88 | |
| | 2020.05- | 7AT | R | L | Saloon 4WD DMTA;DPAA | For PR code:GH2;For vehicles with AWD & variable torque dist. | GDS58068 | Drive Shaft | | 42 | | 76.5 | 34 | 618 | |
| | 2020.05- | 7AT | R | R | Saloon 4WD DMTA;DPAA | For PR code:GH4,For vehicles with AWD & variable torque dist | GDS56844 | Drive Shaft | | 42 | | 76.5 | 34 | 581 | |
| | 2020.05- | 7AT | R | R | Saloon 4WD DMTA;DPAA | For PR code:GH2;For vehicles with AWD & variable torque dist. | GDS58054 | Drive Shaft | | 42 | | 76.5 | 34 | 574 | |
| | 2020.05- | 7AT | R | R | Saloon 4WD DMTA;DPAA | For PR code:GH4,For vehicles with AWD & variable torque dist | GCI81752 | Inner Joint | | | 33 | | | 34 | |
| 2.0 (220 kw) | 2019.11- | 7AT | F | L/R | Saloon 4WD DLGA | | GDS84556 | Drive Shaft | | 42 | | 76.5 | 34 | 495 | |
| | 2019.11- | 7AT | F | L/R | Saloon 4WD DLGA | | GCO82603 | Outer Joint | | 42 | 30 | 76.5 | 34 | 60 | I |
| | 2019.11- | 7AT | F | L/R | Saloon 4WD DLGA | | GCI81397 | Inner Joint | | | 27 | | | 89 | |
| | 2019.11- | 7AT | R | L | Saloon 4WD DLGA | For PR code:GH2;For vehicles with AWD & variable torque dist. | GDS58068 | Drive Shaft | | 42 | | 76.5 | 34 | 618 | |
| | 2019.11- | 7AT | R | R | Saloon 4WD DLGA | For PR code:GH2;For vehicles with AWD & variable torque dist. | GDS58054 | Drive Shaft | | 42 | | 76.5 | 34 | 574 | |
| | 2019.11- | AT | R | R | Saloon 4WD DLGA | For PR code:GH4,For vehicles with AWD & variable torque dist | GDS56844 | Drive Shaft | | 42 | | 76.5 | 34 | 581 | |
| | 2019.11- | AT | R | R | Saloon 4WD DLGA | For PR code:GH4,For vehicles with AWD & variable torque dist | GCI81752 | Inner Joint | | | 33 | | | 34 | |
| | 2021.02- | 7AT | F | L/R | Estate 4WD DRYA;EBCA | | GDS84556 | Drive Shaft | | 42 | | 76.5 | 34 | 495 | |
| | 2021.02- | 7AT | F | L/R | Estate 4WD DRYA;EBCA | | GCO82603 | Outer Joint | | 42 | 30 | 76.5 | 34 | 60 | I |
| | 2021.02- | 7AT | F | L/R | Estate 4WD DRYA;EBCA | | GCI81397 | Inner Joint | | | 27 | | | 89 | |
| | 2021.02- | 7AT | R | L | Estate 4WD DRYA;EBCA | | GDS83368 | Drive Shaft | | 42 | | 76.5 | 34 | 660 | |
| | 2021.02- | 7AT | F | L/R | Saloon 4WD DRYA | | GDS84556 | Drive Shaft | | 42 | | 76.5 | 34 | 495 | |
| | 2021.02- | AT | R | R | Saloon 4WD DRYA | For PR code:GH4,For vehicles with AWD & variable torque dist | GDS56844 | Drive Shaft | | 42 | | 76.5 | 34 | 581 | |
| | 2021.02- | AT | R | R | Saloon 4WD DRYA | For PR code:GH4,For vehicles with AWD & variable torque dist | GCI81752 | Inner Joint | | | 33 | | | 34 | |
| 2.0 (270 kw) | 2019.11- | 7AT | F | L/R | Saloon 4WD DLGA | | GDS84556 | Drive Shaft | | 42 | | 76.5 | 34 | 495 | |
| | 2019.11- | 7AT | F | L/R | Saloon 4WD DLGA | | GCO82603 | Outer Joint | | 42 | 30 | 76.5 | 34 | 60 | I |
| | 2019.11- | 7AT | F | L/R | Saloon 4WD DLGA | | GCI81397 | Inner Joint | | | 27 | | | 89 | |
| | 2019.11- | 7AT | R | L | Saloon 4WD DLGA | For PR code:GH2;For vehicles with AWD & variable torque dist. | GDS58068 | Drive Shaft | | 42 | | 76.5 | 34 | 618 | |
| | 2019.11- | 7AT | R | R | Saloon 4WD DLGA | For PR code:GH2;For vehicles with AWD & variable torque dist. | GDS58054 | Drive Shaft | | 42 | | 76.5 | 34 | 574 | |
| | 2019.11- | AT | R | R | Saloon 4WD DLGA | For PR code:GH4,For vehicles with AWD & variable torque dist | GDS56844 | Drive Shaft | | 42 | | 76.5 | 34 | 581 | |
| | 2019.11- | AT | R | R | Saloon 4WD DLGA | For PR code:GH4,For vehicles with AWD & variable torque dist | GCI81752 | Inner Joint | | | 33 | | | 34 | |
| | 2020.04- | 7AT | F | L/R | Estate 4WD DLGA | | GDS84556 | Drive Shaft | | 42 | | 76.5 | 34 | 495 | |
| | 2020.04- | 7AT | F | L/R | Estate 4WD DLGA | | GCO82603 | Outer Joint | | 42 | 30 | 76.5 | 34 | 60 | I |
| | 2020.04- | 7AT | F | L/R | Estate 4WD DLGA | | GCI81397 | Inner Joint | | | 27 | | | 89 | |
| | 2020.04- | 7AT | R | L | Estate 4WD DLGA | | GDS83368 | Drive Shaft | | 42 | | 76.5 | 34 | 660 | |
| | 2021.02- | 7AT | F | L/R | Estate 4WD DRYA | | GDS84556 | Drive Shaft | | 42 | | 76.5 | 34 | 495 | |
| | 2021.02- | 7AT | R | L | Estate 4WD DRYA | | GDS83368 | Drive Shaft | | 42 | | 76.5 | 34 | 660 | |
| | 2021.02- | 7AT | R | L/R | Estate 4WD DRYA | For PR code:GH2;For vehicles with AWD & variable torque dist. | GCI84020 | Inner Joint | | | 28 | | | 32 | |
| | 2021.02- | 7AT | F | L/R | Saloon 4WD DRYA | | GDS84556 | Drive Shaft | | 42 | | 76.5 | 34 | 495 | |
| | 2021.02- | AT | R | R | Saloon 4WD DRYA | For PR code:GH4,For vehicles with AWD & variable torque dist | GDS56844 | Drive Shaft | | 42 | | 76.5 | 34 | 581 | |
| | 2021.02- | AT | R | R | Saloon 4WD DRYA | For PR code:GH4,For vehicles with AWD & variable torque dist | GCI81752 | Inner Joint | | | 33 | | | 34 | |
| 2.4 (115 kw) | 1998.08-2001.05 | 5AT | F | L | Estate 4WD APC | | GDS83019 | Drive Shaft | 45W | 38 | | 59.5 | 34.5 | 550 | |
| | 1998.08-2001.05 | 5AT | F | R | Estate 4WD APC | | GDS83020 | Drive Shaft | 45W | 38 | | 59.5 | 34.5 | 522 | |
| | 1998.08-2001.05 | AT/MT | F | L/R | Estate 4WD APC | | GCO83019 | Outer Joint | 45W | 38 | 27 | 59.5 | 34.5 | 63 | I |
| | 1998.08-2001.05 | AT/MT/5AT | F | L/R | Estate 4WD APC | | GCI50019 | Inner Joint | | | 34 | | | 59.5 | |
| | 1998.08-2001.05 | MT | F | L | Estate 4WD APC | | GDS61019 | Drive Shaft | 45W | 38 | | 59.5 | 34.5 | 624 | |
| | 1998.08-2001.05 | MT | F | R | Estate 4WD APC | | GDS61076 | Drive Shaft | 45W | 38 | | 59.5 | 34.5 | 645 | |
| | 1998.08-2001.05 | MT | F | R | Estate 4WD APC | | GDS99113 | Drive Shaft | 45W | 38 | | 59.5 | 34.5 | 654 | |
| | 1998.08-2001.05 | | R | L/R | Estate 4WD APC | | GCI83002 | Inner Joint | | | 33 | | | 32 | |
| | 1998.08-2001.05 | 5AT | F | L | Saloon 4WD APC | | GDS83019 | Drive Shaft | 45W | 38 | | 59.5 | 34.5 | 550 | |
| | 1998.08-2001.05 | 5AT | F | R | Saloon 4WD APC | | GDS83020 | Drive Shaft | 45W | 38 | | 59.5 | 34.5 | 522 | |
| | 1998.08-2001.05 | AT/MT | F | L/R | Saloon 4WD APC | | GCO83019 | Outer Joint | 45W | 38 | 27 | 59.5 | 34.5 | 63 | I |
| | 1998.08-2001.05 | AT/MT/5AT | F | L/R | Saloon 4WD APC | | GCI50019 | Inner Joint | | | 34 | | | 59.5 | |
| | 1998.08-2001.05 | MT | F | L | Saloon 4WD APC | | GDS61019 | Drive Shaft | 45W | 38 | | 59.5 | 34.5 | 624 | |
| | 1998.08-2001.05 | MT | F | R | Saloon 4WD APC | | GDS61076 | Drive Shaft | 45W | 38 | | 59.5 | 34.5 | 645 | |
| | 1998.08-2001.05 | MT | F | R | Saloon 4WD APC | | GDS99113 | Drive Shaft | 45W | 38 | | 59.5 | 34.5 | 654 | |
| | 1998.08-2001.05 | | R | L/R | Saloon 4WD APC | | GCI83002 | Inner Joint | | | 33 | | | 32 | |
| 2.4 (120 kw) | 1997.05-2001.05 | 5AT | F | L | Saloon 4WD AJG/APZ | | GDS83019 | Drive Shaft | 45W | 38 | | 59.5 | 34.5 | 550 | |
| | 1997.05-2001.05 | 5AT | F | R | Saloon 4WD AJG/APZ | | GDS83020 | Drive Shaft | 45W | 38 | | 59.5 | 34.5 | 522 | |
| | 1997.05-2001.05 | 5AT/5MT | F | L/R | Saloon 4WD AJG/APZ | Chassis no. from:4BX020001 | GCO83019 | Outer Joint | 45W | 38 | 27 | 59.5 | 34.5 | 63 | I |
| | 1997.05-2001.05 | 5MT | F | L | Saloon 4WD AJG/APZ | Chassis no. from:4B_X_020001 | GDS61019 | Drive Shaft | 45W | 38 | | 59.5 | 34.5 | 624 | |
| | 1997.05-2001.05 | 5MT | F | L | Saloon 4WD AJG/APZ | Chassis no. to:4B_X_020000 | GDS83041 | Drive Shaft | 45W | 38 | | 59.5 | 34 | 640 | |
| | 1997.05-2001.05 | 5MT | F | R | Saloon 4WD AJG/APZ | | GDS61076 | Drive Shaft | 45W | 38 | | 59.5 | 34.5 | 645 | |
| | 1997.05-2001.05 | 5MT | F | L/R | Saloon 4WD AJG/APZ | Chassis no. to:4BX020000 | GCO83020 | Outer Joint | 45W | 38 | 30 | 59.5 | 34 | 59.5 | I |
| | 1997.05-2001.05 | 5MT | F | L/R | Saloon 4WD AJG/APZ | Chassis no. To:4B_X_020000 | GCO83049 | Outer Joint | | 38 | 30 | 59.5 | 34 | 59.5 | I |

| | YEAR | TRANSM. | F/R | L/R | BODY STYLE & DRIVE TYPE & ENGINE | REMARKS | G-AP Ref. | PRODUCT | ABS | Technical Specifications A | B | C | H | L | P |
|---|---|---|---|---|---|---|---|---|---|---|---|---|---|---|---|
| **AUDI** | | | | | | | | | | | | | | | |
| **A6 Quattro** | | | | | | | | | | | | | | | |
| 2.4 (120 kw) | 1997.05-2001.05 | 5MT | F | L/R | Saloon 4WD AJG/APZ | Chassis no. to:4BX020000 | GCI83002 | Inner Joint | | | 33 | | | 32 | |
| | 1997.05-2001.05 | MT | F | R | Saloon 4WD AJG/APZ | Date from:1998.10;Date to:2001.05 | GDS99113 | Drive Shaft | 45W | 38 | | 59.5 | 34.5 | 654 | |
| | 1997.05-2001.05 | AT | R | L/R | Saloon 4WD AJG/APZ | | GCI83002 | Inner Joint | | | 33 | | | 32 | |
| | 1997.12-2001.05 | 5AT | F | L | Estate 4WD AJG/APZ | | GDS83019 | Drive Shaft | 45W | 38 | | 59.5 | 34.5 | 550 | |
| | 1997.12-2001.05 | 5AT | F | R | Estate 4WD AJG/APZ | | GDS83020 | Drive Shaft | 45W | 38 | | 59.5 | 34.5 | 522 | |
| | 1997.12-2001.05 | 5AT/5MT | F | L/R | Estate 4WD AJG/APZ | Chassis no. from:4BX020001 | GCO83019 | Outer Joint | 45W | 38 | 27 | 59.5 | 34.5 | 63 | I |
| | 1997.12-2001.05 | 5MT | F | L | Estate 4WD AJG/APZ | Chassis no. from:4B_X_020001 | GDS61019 | Drive Shaft | 45W | 38 | | 59.5 | 34.5 | 624 | |
| | 1997.12-2001.05 | 5MT | F | L | Estate 4WD AJG/APZ | Chassis no. to:4B_X_020000 | GDS83041 | Drive Shaft | 45W | 38 | | 59.5 | 34 | 640 | |
| | 1997.12-2001.05 | 5MT | F | R | Estate 4WD AJG/APZ | | GDS61076 | Drive Shaft | 45W | 38 | | 59.5 | 34.5 | 645 | |
| | 1997.12-2001.05 | 5MT | F | L/R | Estate 4WD AJG/APZ | Chassis no. to:4BX020000 | GCO83020 | Outer Joint | 45W | 38 | 30 | 59.5 | 34 | 59.5 | I |
| | 1997.12-2001.05 | 5MT | F | L/R | Estate 4WD AJG/APZ | Chassis no. To:4B_X_020000 | GCO83049 | Outer Joint | | 38 | 30 | 59.5 | 34 | 59.5 | I |
| | 1997.12-2001.05 | 5MT | F | L/R | Estate 4WD AJG/APZ | Chassis no. to:4BX020000 | GCI83002 | Inner Joint | | | 33 | | | 32 | |
| | 1997.12-2001.05 | MT | F | R | Estate 4WD AJG/APZ | Date from:1998.10;Date to:2001.05 | GDS99113 | Drive Shaft | 45W | 38 | | 59.5 | 34.5 | 654 | |
| | 1997.12-2001.05 | | R | L/R | Estate 4WD AJG/APZ | | GCI83002 | Inner Joint | | | 33 | | | 32 | |
| 2.4 (121 kw) | 1997.01-2001.09 | 5AT | F | L | Estate 4WD AGA/ALF/AML/APS/ARJ | | GDS83019 | Drive Shaft | 45W | 38 | | 59.5 | 34.5 | 550 | |
| | 1997.01-2001.09 | 5AT | F | R | Estate 4WD AGA/ALF/AML/APS/ARJ | | GDS83020 | Drive Shaft | 45W | 38 | | 59.5 | 34.5 | 522 | |
| | 1997.01-2001.09 | 5AT/5MT | F | L/R | Estate 4WD AGA/ALF/AML/APS/ARJ | | GCO83019 | Outer Joint | 45W | 38 | 27 | 59.5 | 34.5 | 63 | I |
| | 1997.01-2001.09 | 5AT/5MT | F | L/R | Estate 4WD AGA/ALF/AML/APS/ARJ | | GCO83020 | Outer Joint | 45W | 38 | 30 | 59.5 | 34 | 59.5 | I |
| | 1997.01-2001.09 | 5MT | F | L | Estate 4WD AGA/ALF/AML/APS/ARJ | Chassis no. from:4B_X_020001 | GDS61019 | Drive Shaft | 45W | 38 | | 59.5 | 34.5 | 624 | |
| | 1997.01-2001.09 | 5MT | F | L | Estate 4WD AGA/ALF/AML/APS/ARJ | Chassis no. to:4B_X_020000 | GDS83041 | Drive Shaft | 45W | 38 | | 59.5 | 34 | 640 | |
| | 1997.01-2001.09 | 5MT | F | R | Estate 4WD AGA/ALF/AML/APS/ARJ | | GDS61076 | Drive Shaft | 45W | 38 | | 59.5 | 34.5 | 645 | |
| | 1997.01-2001.09 | 5MT | F | L/R | Estate 4WD AGA/ALF/AML/APS/ARJ | Chassis no. To:4B_X_020000 | GCO83049 | Outer Joint | | 38 | 30 | 59.5 | 34 | 59.5 | I |
| | 1997.01-2001.09 | 5MT | F | L/R | Estate 4WD AGA/ALF/AML/APS/ARJ | Chassis no. to:4BX020000 | GCI83002 | Inner Joint | | | 33 | | | 32 | |
| | 1997.01-2001.09 | AT/MT/5AT/5MT | F | L/R | Estate 4WD AGA/ALF/AML/APS/ARJ | | GCI50019 | Inner Joint | | | 34 | | | 59.5 | |
| | 1997.01-2001.09 | MT | F | R | Estate 4WD AGA/ALF/AML/APS/ARJ | Date from:1998.10;Date to:2001.09;For Engine code:AGA/ALF | GDS99113 | Drive Shaft | 45W | 38 | | 59.5 | 34.5 | 654 | |
| | 1997.01-2001.09 | | R | L/R | Estate 4WD AGA/ALF/AML/APS/ARJ | | GCI83002 | Inner Joint | | | 33 | | | 32 | |
| | 1997.05-2001.05 | 5AT | F | L | Saloon 4WD AGA/ALF/AML/APS/ARJ | | GDS83019 | Drive Shaft | 45W | 38 | | 59.5 | 34.5 | 550 | |
| | 1997.05-2001.05 | 5AT | F | R | Saloon 4WD AGA/ALF/AML/APS/ARJ | | GDS83020 | Drive Shaft | 45W | 38 | | 59.5 | 34.5 | 522 | |
| | 1997.05-2001.05 | 5AT/5MT | F | L/R | Saloon 4WD AGA/ALF/AML/APS/ARJ | | GCO83019 | Outer Joint | 45W | 38 | 27 | 59.5 | 34.5 | 63 | I |
| | 1997.05-2001.05 | 5AT/5MT | F | L/R | Saloon 4WD AGA/ALF/AML/APS/ARJ | | GCO83020 | Outer Joint | 45W | 38 | 30 | 59.5 | 34 | 59.5 | I |
| | 1997.05-2001.05 | 5MT | F | L | Saloon 4WD AGA/ALF/AML/APS/ARJ | Chassis no. from:4B_X_020001 | GDS61019 | Drive Shaft | 45W | 38 | | 59.5 | 34.5 | 624 | |
| | 1997.05-2001.05 | 5MT | F | L | Saloon 4WD AGA/ALF/AML/APS/ARJ | Chassis no. to:4B_X_020000 | GDS83041 | Drive Shaft | 45W | 38 | | 59.5 | 34 | 640 | |
| | 1997.05-2001.05 | 5MT | F | R | Saloon 4WD AGA/ALF/AML/APS/ARJ | | GDS61076 | Drive Shaft | 45W | 38 | | 59.5 | 34.5 | 645 | |
| | 1997.05-2001.05 | 5MT | F | L/R | Saloon 4WD AGA/ALF/AML/APS/ARJ | Chassis no. To:4B_X_020000 | GCO83049 | Outer Joint | | 38 | 30 | 59.5 | 34 | 59.5 | I |
| | 1997.05-2001.05 | 5MT | F | L/R | Saloon 4WD AGA/ALF/AML/APS/ARJ | Chassis no. to:4BX020000 | GCI83002 | Inner Joint | | | 33 | | | 32 | |
| | 1997.05-2001.05 | AT/MT/5AT/5MT | F | L/R | Saloon 4WD AGA/ALF/AML/APS/ARJ | | GCI50019 | Inner Joint | | | 34 | | | 59.5 | |
| | 1997.05-2001.05 | MT | F | R | Saloon 4WD AGA/ALF/AML/APS/ARJ | Date from:1998.10;Date to:2001.09;For Engine code:AGA/ALF | GDS99113 | Drive Shaft | 45W | 38 | | 59.5 | 34.5 | 654 | |
| | 1997.05-2001.05 | | R | L/R | Saloon 4WD AGA/ALF/AML/APS/ARJ | | GCI83002 | Inner Joint | | | 33 | | | 32 | |
| 2.4 (125 kw) | 2001.06-2004.05 | 5AT | F | L | Saloon 4WD BDV | | GDS83019 | Drive Shaft | 45W | 38 | | 59.5 | 34.5 | 550 | |
| | 2001.06-2004.05 | 5AT | F | R | Saloon 4WD BDV | | GDS83020 | Drive Shaft | 45W | 38 | | 59.5 | 34.5 | 522 | |
| | 2001.06-2004.05 | 5MT | F | L | Saloon 4WD BDV | | GDS61019 | Drive Shaft | 45W | 38 | | 59.5 | 34.5 | 624 | |
| | 2001.06-2004.05 | 5MT | F | R | Saloon 4WD BDV | | GDS61076 | Drive Shaft | 45W | 38 | | 59.5 | 34.5 | 645 | |
| | 2001.06-2004.05 | AT | F | L/R | Saloon 4WD BDV | Date to:2004.05 | GDS83066 | Drive Shaft | 45W | 38 | | 59.5 | 34.5 | 544 | |
| | 2001.06-2004.05 | AT/MT | F | L/R | Saloon 4WD BDV | | GCO83019 | Outer Joint | 45W | 38 | 27 | 59.5 | 34.5 | 63 | I |
| | 2001.06-2004.05 | AT/MT/5AT/5MT | F | L/R | Saloon 4WD BDV | | GCI50019 | Inner Joint | | | 34 | | | 59.5 | |
| | 2001.06-2004.05 | MT | F | R | Saloon 4WD BDV | Date to:2004.05 | GDS99113 | Drive Shaft | 45W | 38 | | 59.5 | 34.5 | 654 | |
| | 2001.06-2004.05 | 5MT | R | L/R | Saloon 4WD BDV | | GCI83002 | Inner Joint | | | 33 | | | 32 | |
| | 2001.06-2005.01 | 5AT | F | L | Estate 4WD BDV | | GDS83019 | Drive Shaft | 45W | 38 | | 59.5 | 34.5 | 550 | |
| | 2001.06-2005.01 | 5AT | F | R | Estate 4WD BDV | | GDS83020 | Drive Shaft | 45W | 38 | | 59.5 | 34.5 | 522 | |
| | 2001.06-2005.01 | 5MT | F | L | Estate 4WD BDV | | GDS61019 | Drive Shaft | 45W | 38 | | 59.5 | 34.5 | 624 | |
| | 2001.06-2005.01 | 5MT | F | R | Estate 4WD BDV | | GDS61076 | Drive Shaft | 45W | 38 | | 59.5 | 34.5 | 645 | |
| | 2001.06-2005.01 | AT | F | L/R | Estate 4WD BDV | | GDS83066 | Drive Shaft | 45W | 38 | | 59.5 | 34.5 | 544 | |
| | 2001.06-2005.01 | AT/MT | F | L/R | Estate 4WD BDV | | GCO83019 | Outer Joint | 45W | 38 | 27 | 59.5 | 34.5 | 63 | I |
| | 2001.06-2005.01 | AT/MT/5AT/5MT | F | L/R | Estate 4WD BDV | | GCI50019 | Inner Joint | | | 34 | | | 59.5 | |
| | 2001.06-2005.01 | MT | F | R | Estate 4WD BDV | | GDS99113 | Drive Shaft | 45W | 38 | | 59.5 | 34.5 | 654 | |
| | 2001.06-2005.01 | 5MT | R | L/R | Estate 4WD BDV | | GCI83002 | Inner Joint | | | 33 | | | 32 | |
| 2.4 (130 kw) | 2005.01-2008.10 | 6MT | F | L | Saloon 4WD BDW | TJ | GDS83290 | Drive Shaft | | 38 | | 59.5 | 34 | 617 | |
| | 2005.01-2008.10 | 6MT | F | R | Saloon 4WD BDW | AAR | GDS81591 | Drive Shaft | | 38 | | 59.5 | 34 | 653 | |
| | 2005.01-2008.10 | 6MT | F | R | Saloon 4WD BDW | TJ | GDS83329 | Drive Shaft | | 38 | | 59.5 | 34 | 655 | |
| | 2005.01-2008.10 | 6MT | F | L/R | Saloon 4WD BDW | | GCO83077 | Outer Joint | | 38 | 27 | 59.5 | 34 | 63 | M |
| | 2005.01-2008.10 | 6MT | F | L/R | Saloon 4WD BDW | TJ | GCI61044 | Inner Joint | | | 34 | | | 85 | |
| | 2005.01-2008.10 | 6MT | F | L/R | Saloon 4WD BDW | AAR | GCI61076 | Inner Joint | | | 34 | | | 85 | |
| | 2005.01-2008.10 | 6MT | R | L/R | Saloon 4WD BDW | | GDS82348 | Drive Shaft | | 38 | | 59.5 | 34 | 648 | |
| | 2005.01-2008.10 | 6MT | R | L/R | Saloon 4WD BDW | | GCO81358 | Outer Joint | | 38 | 33 | 59.5 | 34 | 54 | M |
| | 2005.01-2008.10 | 6MT | R | L/R | Saloon 4WD BDW | | GCI61069 | Inner Joint | | | 28 | | | 32 | |

| | YEAR | TRANSM. | F/R | L/R | BODY STYLE & DRIVE TYPE & ENGINE | REMARKS | G-AP Ref. | PRODUCT | ABS | Technical Specifications A | B | C | H | L | P |
|---|---|---|---|---|---|---|---|---|---|---|---|---|---|---|---|
| **AUDI** | | | | | | | | | | | | | | | |
| **A6 Quattro** | | | | | | | | | | | | | | | |
| 2.4 (130 kw) | 2005.03-2008.10 | 6MT | F | L | Estate 4WD BDW | | GDS83290 | Drive Shaft | | 38 | | 59.5 | 34 | 617 | |
| | 2005.03-2008.10 | 6MT | F | R | Estate 4WD BDW | AAR | GDS81591 | Drive Shaft | | 38 | | 59.5 | 34 | 653 | |
| | 2005.03-2008.10 | 6MT | F | R | Estate 4WD BDW | TJ | GDS83329 | Drive Shaft | | 38 | | 59.5 | 34 | 655 | |
| | 2005.03-2008.10 | 6MT | F | L/R | Estate 4WD BDW | | GCO83077 | Outer Joint | | 38 | 27 | 59.5 | 34 | 63 | M |
| | 2005.03-2008.10 | 6MT | F | L/R | Estate 4WD BDW | TJ | GCI61044 | Inner Joint | | | 34 | | | 85 | |
| | 2005.03-2008.10 | 6MT | F | L/R | Estate 4WD BDW | AAR | GCI61076 | Inner Joint | | | 34 | | | 85 | |
| | 2005.03-2008.10 | 6MT | R | L/R | Estate 4WD BDW | | GDS82348 | Drive Shaft | | 38 | | 59.5 | 34 | 648 | |
| | 2005.03-2008.10 | 6MT | R | L/R | Estate 4WD BDW | | GCO81358 | Outer Joint | | 38 | 33 | 59.5 | 34 | 54 | M |
| | 2005.03-2008.10 | 6MT | R | L/R | Estate 4WD BDW | | GCI61069 | Inner Joint | | | 28 | | | 32 | |
| 2.5 (103 kw) | 1995.07-1997.04 | AT/MT | F | L/R | Saloon 4WD AEL | | GCO83016 | Outer Joint | 45T | 38 | 30 | 59.5 | 34 | 61 | I |
| | 1995.07-1997.10 | 6MT | F | L/R | Estate 4WD AEL | | GCO83017 | Outer Joint | 45T | 38 | 27 | 59.5 | 34.5 | 68.5 | I |
| | 1995.07-1997.10 | 6MT | R | L/R | Estate 4WD AEL | | GCO83014 | Outer Joint | 45T | 38 | 25 | 59.5 | 34.5 | 61 | O |
| 2.5 (110 kw) | 1997.04-2001.05 | 5AT | F | L | Estate 4WD AFB/AKN | | GDS83019 | Drive Shaft | 45W | 38 | | 59.5 | 34.5 | 550 | |
| | 1997.04-2001.05 | 5AT | F | R | Estate 4WD AFB/AKN | | GDS83020 | Drive Shaft | 45W | 38 | | 59.5 | 34.5 | 522 | |
| | 1997.04-2001.05 | 5AT/5MT/6MT | F | L/R | Estate 4WD AFB/AKN | | GCO83019 | Outer Joint | 45W | 38 | 27 | 59.5 | 34.5 | 63 | I |
| | 1997.04-2001.05 | 5AT/5MT/6MT | F | L/R | Estate 4WD AFB/AKN | | GCI50019 | Inner Joint | | | 34 | | | 59.5 | |
| | 1997.04-2001.05 | 5MT/6MT | F | L | Estate 4WD AFB/AKN | | GDS61019 | Drive Shaft | 45W | 38 | | 59.5 | 34.5 | 624 | |
| | 1997.04-2001.05 | 5MT/6MT | F | R | Estate 4WD AFB/AKN | | GDS61076 | Drive Shaft | 45W | 38 | | 59.5 | 34.5 | 645 | |
| | 1997.04-2001.05 | 5AT/5MT/6MT | R | L/R | Estate 4WD AFB/AKN | | GCI83002 | Inner Joint | | | 33 | | | 32 | |
| | 1997.04-2001.05 | 5AT | F | L | Saloon 4WD AFB/AKN | | GDS83019 | Drive Shaft | 45W | 38 | | 59.5 | 34.5 | 550 | |
| | 1997.04-2001.05 | 5AT | F | R | Saloon 4WD AFB/AKN | | GDS83020 | Drive Shaft | 45W | 38 | | 59.5 | 34.5 | 522 | |
| | 1997.04-2001.05 | 6MT | F | L | Saloon 4WD AFB/AKN | | GDS61019 | Drive Shaft | 45W | 38 | | 59.5 | 34.5 | 624 | |
| | 1997.04-2001.05 | 6MT | F | R | Saloon 4WD AFB/AKN | | GDS61076 | Drive Shaft | 45W | 38 | | 59.5 | 34.5 | 645 | |
| | 1997.04-2001.05 | 6MT/5AT | F | L/R | Saloon 4WD AFB/AKN | | GCO83019 | Outer Joint | 45W | 38 | 27 | 59.5 | 34.5 | 63 | I |
| | 1997.04-2001.05 | 6MT/5AT | F | L/R | Saloon 4WD AFB/AKN | | GCI50019 | Inner Joint | | | 34 | | | 59.5 | |
| | 1997.04-2001.05 | 5AT/6MT | R | L/R | Saloon 4WD AFB/AKN | Chassis no. to:4B1120000 | GCO83080 | Outer Joint | 45W | 33 | 30 | 53 | 30 | 62 | I |
| | 1997.04-2001.05 | 5AT/6MT | R | L/R | Saloon 4WD AFB/AKN | | GCI83002 | Inner Joint | | | 33 | | | 32 | |
| 2.5 (132 kw) | 1999.11-2004.05 | 5AT | F | L | Saloon 4WD AKE/BAU/BDH | | GDS83019 | Drive Shaft | 45W | 38 | | 59.5 | 34.5 | 550 | |
| | 1999.11-2004.05 | 5AT | F | R | Saloon 4WD AKE/BAU/BDH | | GDS83020 | Drive Shaft | 45W | 38 | | 59.5 | 34.5 | 522 | |
| | 1999.11-2004.05 | 6MT | F | L | Saloon 4WD AKE/BAU/BDH | | GDS61019 | Drive Shaft | 45W | 38 | | 59.5 | 34.5 | 624 | |
| | 1999.11-2004.05 | 6MT | F | R | Saloon 4WD AKE/BAU/BDH | | GDS61076 | Drive Shaft | 45W | 38 | | 59.5 | 34.5 | 645 | |
| | 1999.11-2004.05 | 6MT/5AT | F | L/R | Saloon 4WD AKE/BAU/BDH | | GCO83019 | Outer Joint | 45W | 38 | 27 | 59.5 | 34.5 | 63 | I |
| | 1999.11-2004.05 | 6MT/5AT | F | L/R | Saloon 4WD AKE/BAU/BDH | | GCI50019 | Inner Joint | | | 34 | | | 59.5 | |
| | 1999.11-2004.05 | | R | L/R | Saloon 4WD AKE/BAU/BDH | Date to:2004.05 | GCI83001 | Inner Joint | | | 28 | | | 32 | |
| | 1999.11-2005.01 | 5AT | F | L | Estate 4WD AKE/BAU/BDH | | GDS83019 | Drive Shaft | 45W | 38 | | 59.5 | 34.5 | 550 | |
| | 1999.11-2005.01 | 5AT | F | R | Estate 4WD AKE/BAU/BDH | | GDS83020 | Drive Shaft | 45W | 38 | | 59.5 | 34.5 | 522 | |
| | 1999.11-2005.01 | 6MT | F | L | Estate 4WD AKE/BAU/BDH | | GDS61019 | Drive Shaft | 45W | 38 | | 59.5 | 34.5 | 624 | |
| | 1999.11-2005.01 | 6MT | F | R | Estate 4WD AKE/BAU/BDH | | GDS61076 | Drive Shaft | 45W | 38 | | 59.5 | 34.5 | 645 | |
| | 1999.11-2005.01 | 6MT/5AT | F | L/R | Estate 4WD AKE/BAU/BDH | | GCO83019 | Outer Joint | 45W | 38 | 27 | 59.5 | 34.5 | 63 | I |
| | 1999.11-2005.01 | 6MT/5AT | F | L/R | Estate 4WD AKE/BAU/BDH | | GCI50019 | Inner Joint | | | 34 | | | 59.5 | |
| | 1999.11-2005.01 | 5AT/6MT | R | L/R | Estate 4WD AKE/BAU/BDH | | GCI83001 | Inner Joint | | | 28 | | | 32 | |
| 2.6 (110 kw) | 1994.06-1997.04 | MT | F | L/R | Saloon 4WD ABC | Date to:1997.04 | GCO83016 | Outer Joint | 45T | 38 | 30 | 59.5 | 34 | 61 | I |
| | 1994.06-1997.04 | MT | F | L/R | Saloon 4WD ABC | Date to:1997.04 | GCI83002 | Inner Joint | | | 33 | | | 32 | |
| | 1994.06-1997.04 | AT/MT | R | L/R | Saloon 4WD ABC | Date to:1997.04 | GCO83014 | Outer Joint | 45T | 38 | 25 | 59.5 | 34.5 | 61 | O |
| | 1994.06-1997.04 | AT/MT | R | L/R | Saloon 4WD ABC | Date to:1997.04 | GCI83001 | Inner Joint | | | 28 | | | 32 | |
| | 1994.06-1997.10 | MT | F | L/R | Estate 4WD ABC | | GCO83016 | Outer Joint | 45T | 38 | 30 | 59.5 | 34 | 61 | I |
| | 1994.06-1997.10 | MT | F | L/R | Estate 4WD ABC | | GCI83002 | Inner Joint | | | 33 | | | 32 | |
| | 1994.06-1997.10 | AT/MT | R | L/R | Estate 4WD ABC | | GCO83014 | Outer Joint | 45T | 38 | 25 | 59.5 | 34.5 | 61 | O |
| | 1994.06-1997.10 | AT/MT | R | L/R | Estate 4WD ABC | | GCI83001 | Inner Joint | | | 28 | | | 32 | |
| 2.7 (120 kw) | 2005.06-2011.03 | 6AT | F | L | Saloon 4WD BSG;CAND | | GDS83305 | Drive Shaft | | 38 | | 59.5 | 34 | 603 | |
| | 2005.06-2011.03 | 6AT | F | R | Saloon 4WD BSG;CAND | AAR | GDS81590 | Drive Shaft | | 38 | | 59.5 | 34 | 523 | |
| | 2005.06-2011.03 | 6AT | F | R | Saloon 4WD BSG;CAND | TJ | GDS83306 | Drive Shaft | | 38 | | 59.5 | 34 | 525 | |
| | 2005.06-2011.03 | 6AT | F | L/R | Saloon 4WD BSG;CAND | | GCO83077 | Outer Joint | | 38 | 27 | 59.5 | 34 | 63 | M |
| | 2005.06-2011.03 | 6AT | F | L/R | Saloon 4WD BSG;CAND | TJ | GCI61044 | Inner Joint | | | 34 | | | 85 | |
| | 2005.06-2011.03 | 6AT | F | L/R | Saloon 4WD BSG;CAND | AAR | GCI61076 | Inner Joint | | | 34 | | | 85 | |
| | 2005.06-2011.03 | 6AT | R | L/R | Saloon 4WD BSG;CAND | Date from:2008.11 | GDS81915 | Drive Shaft | | 38 | | 59.5 | 34 | 650 | |
| | 2005.06-2011.03 | 6AT | R | L/R | Saloon 4WD BSG;CAND | Date to:2008.10 | GDS82348 | Drive Shaft | | 38 | | 59.5 | 34 | 648 | |
| | 2005.06-2011.03 | 6AT | R | L/R | Saloon 4WD BSG;CAND | Date to:2008.10 | GCO81358 | Outer Joint | | 38 | 33 | 59.5 | 34 | 54 | M |
| | 2005.06-2011.03 | 6AT | R | L/R | Saloon 4WD BSG;CAND | | GCI61069 | Inner Joint | | | 28 | | | 32 | |
| | 2005.06-2011.08 | 6AT | F | L | Estate 4WD BSG;CAND | | GDS83305 | Drive Shaft | | 38 | | 59.5 | 34 | 603 | |
| | 2005.06-2011.08 | 6AT | F | R | Estate 4WD BSG;CAND | AAR | GDS81590 | Drive Shaft | | 38 | | 59.5 | 34 | 523 | |
| | 2005.06-2011.08 | 6AT | F | R | Estate 4WD BSG;CAND | TJ | GDS83306 | Drive Shaft | | 38 | | 59.5 | 34 | 525 | |
| | 2005.06-2011.08 | 6AT | F | L/R | Estate 4WD BSG;CAND | | GCO83077 | Outer Joint | | 38 | 27 | 59.5 | 34 | 63 | M |
| | 2005.06-2011.08 | 6AT | F | L/R | Estate 4WD BSG;CAND | TJ | GCI61044 | Inner Joint | | | 34 | | | 85 | |
| | 2005.06-2011.08 | 6AT | F | L/R | Estate 4WD BSG;CAND | AAR | GCI61076 | Inner Joint | | | 34 | | | 85 | |

| | YEAR | TRANSM. | F/R | L/R | BODY STYLE & DRIVE TYPE & ENGINE | REMARKS | G-AP Ref. | PRODUCT | ABS | Technical Specifications A | B | C | H | L | P |
|---|---|---|---|---|---|---|---|---|---|---|---|---|---|---|---|
| **AUDI** **A6 Quattro** | | | | | | | | | | | | | | | |
| 2.7 (120 kw) | 2005.06-2011.08 | 6AT | R | L/R | Estate 4WD BSG;CAND | Date from:2008.11 | GDS81915 | Drive Shaft | | 38 | | 59.5 | 34 | 650 | |
| | 2005.06-2011.08 | 6AT | R | L/R | Estate 4WD BSG;CAND | Date to:2008.10 | GDS82348 | Drive Shaft | | 38 | | 59.5 | 34 | 648 | |
| | 2005.06-2011.08 | 6AT | R | L/R | Estate 4WD BSG;CAND | Date to:2008.10 | GCO81358 | Outer Joint | | 38 | 33 | 59.5 | 34 | 54 | M |
| | 2005.06-2011.08 | 6AT | R | L/R | Estate 4WD BSG;CAND | | GCI61069 | Inner Joint | | | 28 | | | 32 | |
| 2.7 (132 kw) | 2004.11-2008.10 | 6AT | F | L | Estate 4WD BPP | | GDS83305 | Drive Shaft | | 38 | | 59.5 | 34 | 603 | |
| | 2004.11-2008.10 | 6AT | F | R | Estate 4WD BPP | AAR | GDS81590 | Drive Shaft | | 38 | | 59.5 | 34 | 523 | |
| | 2004.11-2008.10 | 6AT | F | R | Estate 4WD BPP | TJ | GDS83306 | Drive Shaft | | 38 | | 59.5 | 34 | 525 | |
| | 2004.11-2008.10 | 6AT | F | L/R | Estate 4WD BPP | | GCO83077 | Outer Joint | | 38 | 27 | 59.5 | 34 | 63 | M |
| | 2004.11-2008.10 | 6AT | F | L/R | Estate 4WD BPP | TJ | GCI61044 | Inner Joint | | | 34 | | | 85 | |
| | 2004.11-2008.10 | 6AT | F | L/R | Estate 4WD BPP | AAR | GCI61076 | Inner Joint | | | 34 | | | 85 | |
| | 2004.11-2008.10 | 6AT | R | L/R | Estate 4WD BPP | | GDS82348 | Drive Shaft | | 38 | | 59.5 | 34 | 648 | |
| | 2004.11-2008.10 | 6AT | R | L/R | Estate 4WD BPP | | GCO81358 | Outer Joint | | 38 | 33 | 59.5 | 34 | 54 | M |
| | 2004.11-2008.10 | 6AT | R | L/R | Estate 4WD BPP | | GCI61069 | Inner Joint | | | 28 | | | 32 | |
| | 2004.11-2008.10 | 6AT | F | L | Saloon 4WD BPP | TJ | GDS83305 | Drive Shaft | | 38 | | 59.5 | 34 | 603 | |
| | 2004.11-2008.10 | 6AT | F | R | Saloon 4WD BPP | AAR | GDS81590 | Drive Shaft | | 38 | | 59.5 | 34 | 523 | |
| | 2004.11-2008.10 | 6AT | F | R | Saloon 4WD BPP | TJ | GDS83306 | Drive Shaft | | 38 | | 59.5 | 34 | 525 | |
| | 2004.11-2008.10 | 6AT | F | L/R | Saloon 4WD BPP | | GCO83077 | Outer Joint | | 38 | 27 | 59.5 | 34 | 63 | M |
| | 2004.11-2008.10 | 6AT | F | L/R | Saloon 4WD BPP | TJ | GCI61044 | Inner Joint | | | 34 | | | 85 | |
| | 2004.11-2008.10 | 6AT | F | L/R | Saloon 4WD BPP | AAR | GCI61076 | Inner Joint | | | 34 | | | 85 | |
| | 2004.11-2008.10 | 6AT | R | L/R | Saloon 4WD BPP | | GDS82348 | Drive Shaft | | 38 | | 59.5 | 34 | 648 | |
| | 2004.11-2008.10 | 6AT | R | L/R | Saloon 4WD BPP | | GCO81358 | Outer Joint | | 38 | 33 | 59.5 | 34 | 54 | M |
| | 2004.11-2008.10 | 6AT | R | L/R | Saloon 4WD BPP | | GCI61069 | Inner Joint | | | 28 | | | 32 | |
| 2.7 (140 kw) | 2008.10-2011.03 | 6AT | F | L | Saloon 4WD CANC | | GDS83305 | Drive Shaft | | 38 | | 59.5 | 34 | 603 | |
| | 2008.10-2011.03 | 6AT | F | R | Saloon 4WD CANC | AAR | GDS81590 | Drive Shaft | | 38 | | 59.5 | 34 | 523 | |
| | 2008.10-2011.03 | 6AT | F | R | Saloon 4WD CANC | TJ | GDS83306 | Drive Shaft | | 38 | | 59.5 | 34 | 525 | |
| | 2008.10-2011.03 | 6AT | F | L/R | Saloon 4WD CANC | TJ | GCI61044 | Inner Joint | | | 34 | | | 85 | |
| | 2008.10-2011.03 | 6AT | F | L/R | Saloon 4WD CANC | AAR | GCI61076 | Inner Joint | | | 34 | | | 85 | |
| | 2008.10-2011.03 | 6AT | R | L/R | Saloon 4WD CANC | | GDS81915 | Drive Shaft | | 38 | | 59.5 | 34 | 650 | |
| | 2008.10-2011.03 | 6AT | R | L/R | Saloon 4WD CANC | | GCI61069 | Inner Joint | | | 28 | | | 32 | |
| | 2008.10-2011.03 | 6AT | F/R | L/R | Saloon 4WD CANC | | GCO83077 | Outer Joint | | 38 | 27 | 59.5 | 34 | 63 | M |
| | 2008.10-2011.08 | 6AT | F | L | Estate 4WD CANC | TJ | GDS83305 | Drive Shaft | | 38 | | 59.5 | 34 | 603 | |
| | 2008.10-2011.08 | 6AT | F | R | Estate 4WD CANC | AAR | GDS81590 | Drive Shaft | | 38 | | 59.5 | 34 | 523 | |
| | 2008.10-2011.08 | 6AT | F | R | Estate 4WD CANC | TJ | GDS83306 | Drive Shaft | | 38 | | 59.5 | 34 | 525 | |
| | 2008.10-2011.08 | 6AT | F | L/R | Estate 4WD CANC | TJ | GCI61044 | Inner Joint | | | 34 | | | 85 | |
| | 2008.10-2011.08 | 6AT | F | L/R | Estate 4WD CANC | AAR | GCI61076 | Inner Joint | | | 34 | | | 85 | |
| | 2008.10-2011.08 | 6AT | R | L/R | Estate 4WD CANC | | GDS81915 | Drive Shaft | | 38 | | 59.5 | 34 | 650 | |
| | 2008.10-2011.08 | 6AT | R | L/R | Estate 4WD CANC | | GCI61069 | Inner Joint | | | 28 | | | 32 | |
| | 2008.10-2011.08 | 6AT | F/R | L/R | Estate 4WD CANC | | GCO83077 | Outer Joint | | 38 | 27 | 59.5 | 34 | 63 | M |
| 2.7 (169 kw) | 1999.02-2001.05 | 5AT | F | L | Estate 4WD AJK/AZA | | GDS83019 | Drive Shaft | 45W | 38 | | 59.5 | 34.5 | 550 | |
| | 1999.02-2001.05 | 5AT | F | R | Estate 4WD AJK/AZA | | GDS83020 | Drive Shaft | 45W | 38 | | 59.5 | 34.5 | 522 | |
| | 1999.02-2001.05 | MT | F | L | Estate 4WD AJK/AZA | TJ | GDS61019 | Drive Shaft | 45W | 38 | | 59.5 | 34.5 | 624 | |
| | 1999.02-2001.05 | MT | F | R | Estate 4WD AJK/AZA | | GDS61076 | Drive Shaft | 45W | 38 | | 59.5 | 34.5 | 645 | |
| | 1999.02-2001.05 | MT | F | R | Estate 4WD AJK/AZA | Date From:1999.02;Date To:2001.05 | GDS99113 | Drive Shaft | 45W | 38 | | 59.5 | 34.5 | 654 | |
| | 1999.02-2001.05 | MT | F | L/R | Estate 4WD AJK/AZA | Date from:1999.02;Date to:2001.05 | GCO83019 | Outer Joint | 45W | 38 | 27 | 59.5 | 34.5 | 63 | I |
| | 1999.02-2001.05 | MT/5AT | F | L/R | Estate 4WD AJK/AZA | | GCI50019 | Inner Joint | | | 34 | | | 59.5 | |
| | 1999.02-2001.05 | | F/R | L/R | Estate 4WD AJK/AZA | Date From:1999.02;Date To:2001.05 | GCI83001 | Inner Joint | | | 28 | | | 32 | |
| | 1999.02-2001.05 | 5AT | F | L | Saloon 4WD AJK/AZA | | GDS83019 | Drive Shaft | 45W | 38 | | 59.5 | 34.5 | 550 | |
| | 1999.02-2001.05 | 5AT | F | R | Saloon 4WD AJK/AZA | | GDS83020 | Drive Shaft | 45W | 38 | | 59.5 | 34.5 | 522 | |
| | 1999.02-2001.05 | MT | F | L | Saloon 4WD AJK/AZA | Date from:1999.02;Date to:2001.05 | GDS61019 | Drive Shaft | 45W | 38 | | 59.5 | 34.5 | 624 | |
| | 1999.02-2001.05 | MT | F | R | Saloon 4WD AJK/AZA | | GDS61076 | Drive Shaft | 45W | 38 | | 59.5 | 34.5 | 645 | |
| | 1999.02-2001.05 | MT | F | R | Saloon 4WD AJK/AZA | Date from:1999.02;Date to:2001.05 | GDS99113 | Drive Shaft | 45W | 38 | | 59.5 | 34.5 | 654 | |
| | 1999.02-2001.05 | MT | F | L/R | Saloon 4WD AJK/AZA | Date from:1999.02;Date to:2001.05 | GCO83019 | Outer Joint | 45W | 38 | 27 | 59.5 | 34.5 | 63 | I |
| | 1999.02-2001.05 | MT/5AT | F | L/R | Saloon 4WD AJK/AZA | | GCI50019 | Inner Joint | | | 34 | | | 59.5 | |
| | 1999.02-2001.05 | | F/R | L/R | Saloon 4WD AJK/AZA | Date From:1999.02;Date To:2001.05 | GCI83001 | Inner Joint | | | 28 | | | 32 | |
| 2.7 (184 kw) | 2001.06-2005.01 | 5AT | F | L | Estate 4WD ARE/BES | | GDS83019 | Drive Shaft | 45W | 38 | | 59.5 | 34.5 | 550 | |
| | 2001.06-2005.01 | 5AT | F | R | Estate 4WD ARE/BES | | GDS83020 | Drive Shaft | 45W | 38 | | 59.5 | 34.5 | 522 | |
| | 2001.06-2005.01 | AT/MT | F | L/R | Estate 4WD ARE/BES | | GCO83019 | Outer Joint | 45W | 38 | 27 | 59.5 | 34.5 | 63 | I |
| | 2001.06-2005.01 | | F/R | L/R | Estate 4WD ARE/BES | | GCI83001 | Inner Joint | | | 28 | | | 32 | |
| | 2001.06-2005.01 | 5AT | F | L | Saloon 4WD ARE/BES | | GDS83019 | Drive Shaft | 45W | 38 | | 59.5 | 34.5 | 550 | |
| | 2001.06-2005.01 | 5AT | F | R | Saloon 4WD ARE/BES | | GDS83020 | Drive Shaft | 45W | 38 | | 59.5 | 34.5 | 522 | |
| | 2001.06-2005.01 | AT/MT | F | L/R | Saloon 4WD ARE/BES | | GCO83019 | Outer Joint | 45W | 38 | 27 | 59.5 | 34.5 | 63 | I |
| | 2001.06-2005.01 | | F/R | L/R | Saloon 4WD ARE/BES | | GCI83001 | Inner Joint | | | 28 | | | 32 | |
| 2.8 (128 kw) | 1994.06-1997.04 | 4AT/5MT | F | L | Saloon 4WD AAH/AFC | | GCI61033 | Inner Joint | | | 34 | | | 85 | |
| | 1994.06-1997.04 | AT | F | L | Saloon 4WD AAH/AFC | | GDS83060 | Drive Shaft | 45T | 38 | | 59.5 | 34 | 565 | |
| | 1994.06-1997.04 | AT | F | R | Saloon 4WD AAH/AFC | | GDS83061 | Drive Shaft | 45T | 38 | | 59.5 | 34 | 488 | |

| | YEAR | TRANSM. | F/R | L/R | BODY STYLE & DRIVE TYPE & ENGINE | REMARKS | G-AP Ref. | PRODUCT | ABS | Technical Specifications A | B | C | H | L | P |
|---|---|---|---|---|---|---|---|---|---|---|---|---|---|---|---|
| **AUDI** | | | | | | | | | | | | | | | |
| **A6 Quattro** | | | | | | | | | | | | | | | |
| 2.8 (128 kw) | 1994.06-1997.04 | AT/MT | F | L/R | Saloon 4WD AAH/AFC | Date to:1997.04 | GCO83017 | Outer Joint | 45T | 38 | 27 | 59.5 | 34.5 | 68.5 | I |
| | 1994.06-1997.04 | AT/MT | F | L/R | Saloon 4WD AAH/AFC | | GCI50019 | Inner Joint | | | 34 | | | 59.5 | |
| | 1994.06-1997.04 | MT | F | L | Saloon 4WD AAH/AFC | | GDS83050 | Drive Shaft | 45T | 38 | | 59.5 | 34.5 | 612 | |
| | 1994.06-1997.04 | MT | F | R | Saloon 4WD AAH/AFC | | GDS83051 | Drive Shaft | 45T | 38 | | 59.5 | 34.5 | 647 | |
| | 1994.06-1997.04 | AT/MT | R | L/R | Saloon 4WD AAH/AFC | | GCO83014 | Outer Joint | 45T | 38 | 25 | 59.5 | 34.5 | 61 | O |
| | 1994.06-1997.04 | AT/MT | F/R | L/R | Saloon 4WD AAH/AFC | | GCI83001 | Inner Joint | | | 28 | | | 32 | |
| | 1994.06-1997.12 | 4AT/5MT | F | L | Estate 4WD AAH/AFC | | GCI61033 | Inner Joint | | | 34 | | | 85 | |
| | 1994.06-1997.12 | AT | F | L | Estate 4WD AAH/AFC | | GDS83060 | Drive Shaft | 45T | 38 | | 59.5 | 34 | 565 | |
| | 1994.06-1997.12 | AT | F | R | Estate 4WD AAH/AFC | | GDS83061 | Drive Shaft | 45T | 38 | | 59.5 | 34 | 488 | |
| | 1994.06-1997.12 | AT/MT | F | L/R | Estate 4WD AAH/AFC | | GCO83017 | Outer Joint | 45T | 38 | 27 | 59.5 | 34.5 | 68.5 | I |
| | 1994.06-1997.12 | AT/MT | F | L/R | Estate 4WD AAH/AFC | | GCI50019 | Inner Joint | | | 34 | | | 59.5 | |
| | 1994.06-1997.12 | MT | F | L | Estate 4WD AAH/AFC | | GDS83050 | Drive Shaft | 45T | 38 | | 59.5 | 34.5 | 612 | |
| | 1994.06-1997.12 | MT | F | R | Estate 4WD AAH/AFC | | GDS83051 | Drive Shaft | 45T | 38 | | 59.5 | 34.5 | 647 | |
| | 1994.06-1997.12 | AT/MT | R | L/R | Estate 4WD AAH/AFC | | GCO83014 | Outer Joint | 45T | 38 | 25 | 59.5 | 34.5 | 61 | O |
| | 1994.06-1997.12 | AT/MT | F/R | L/R | Estate 4WD AAH/AFC | | GCI83001 | Inner Joint | | | 28 | | | 32 | |
| 2.8 (140 kw) | 1998.08-2001.05 | 5AT | F | L | Estate 4WD ATX | | GDS83019 | Drive Shaft | 45W | 38 | | 59.5 | 34.5 | 550 | |
| | 1998.08-2001.05 | 5AT | F | R | Estate 4WD ATX | | GDS83020 | Drive Shaft | 45W | 38 | | 59.5 | 34.5 | 522 | |
| | 1998.08-2001.05 | 5AT | F | L/R | Estate 4WD ATX | | GCO83019 | Outer Joint | 45W | 38 | 27 | 59.5 | 34.5 | 63 | I |
| | 1998.08-2001.05 | 5MT | F | L | Estate 4WD ATX | Chassis no. from:4B_X_020001 | GDS61019 | Drive Shaft | 45W | 38 | | 59.5 | 34.5 | 624 | |
| | 1998.08-2001.05 | 5MT | F | L | Estate 4WD ATX | Chassis no. to:4B_X_020000 | GDS83041 | Drive Shaft | 45W | 38 | | 59.5 | 34 | 640 | |
| | 1998.08-2001.05 | 5MT | F | R | Estate 4WD ATX | Chassis no. from:4B_X_020001 | GDS61076 | Drive Shaft | 45W | 38 | | 59.5 | 34.5 | 645 | |
| | 1998.08-2001.05 | 5MT | F | L/R | Estate 4WD ATX | Chassis no. to:4B_X_020000 | GCO83049 | Outer Joint | | 38 | 30 | 59.5 | 34 | 59.5 | I |
| | 1998.08-2001.05 | 5AT/5MT | R | L/R | Estate 4WD ATX | | GCI83002 | Inner Joint | | | 33 | | | 32 | |
| | 1998.08-2001.05 | 5AT | F | L | Saloon 4WD ATX | | GDS83019 | Drive Shaft | 45W | 38 | | 59.5 | 34.5 | 550 | |
| | 1998.08-2001.05 | 5AT | F | R | Saloon 4WD ATX | | GDS83020 | Drive Shaft | 45W | 38 | | 59.5 | 34.5 | 522 | |
| | 1998.08-2001.05 | 5AT/5MT | F | L/R | Saloon 4WD ATX | Chassis no. from:4BX020001 | GCO83019 | Outer Joint | 45W | 38 | 27 | 59.5 | 34.5 | 63 | I |
| | 1998.08-2001.05 | 5MT | F | L | Saloon 4WD ATX | Chassis no. from:4B_X_020001 | GDS61019 | Drive Shaft | 45W | 38 | | 59.5 | 34.5 | 624 | |
| | 1998.08-2001.05 | 5MT | F | L | Saloon 4WD ATX | Chassis no. to:4B_X_020000 | GDS83041 | Drive Shaft | 45W | 38 | | 59.5 | 34 | 640 | |
| | 1998.08-2001.05 | 5MT | F | R | Saloon 4WD ATX | | GDS61076 | Drive Shaft | 45W | 38 | | 59.5 | 34.5 | 645 | |
| | 1998.08-2001.05 | 5MT | F | R | Saloon 4WD ATX | Chassis no. from:4BX020001 | GDS99113 | Drive Shaft | 45W | 38 | | 59.5 | 34.5 | 654 | |
| | 1998.08-2001.05 | 5MT | F | L/R | Saloon 4WD ATX | Chassis no. to:4BX020000 | GCO83020 | Outer Joint | 45W | 38 | 30 | 59.5 | 34 | 59.5 | I |
| | 1998.08-2001.05 | 5MT | F | L/R | Saloon 4WD ATX | Chassis no. To:4B_X_020000 | GCO83049 | Outer Joint | | 38 | 30 | 59.5 | 34 | 59.5 | I |
| | 1998.08-2001.05 | 5MT | F | L/R | Saloon 4WD ATX | Chassis no. to:4BX020000 | GCI83002 | Inner Joint | | | 33 | | | 32 | |
| | 1998.08-2001.05 | | R | L/R | Saloon 4WD ATX | | GCO83026 | Outer Joint | 45T | 33 | 30 | 53 | 30 | 62 | I |
| | 1998.08-2001.05 | | R | L/R | Saloon 4WD ATX | | GCI83002 | Inner Joint | | | 33 | | | 32 | |
| | 2008.10-2011.03 | 6MT | F | L | Saloon 4WD CCDA | | GDS83290 | Drive Shaft | | 38 | | 59.5 | 34 | 617 | |
| | 2008.10-2011.03 | 6MT | F | R | Saloon 4WD CCDA | AAR | GDS81591 | Drive Shaft | | 38 | | 59.5 | 34 | 653 | |
| | 2008.10-2011.03 | 6MT | F | R | Saloon 4WD CCDA | TJ | GDS83329 | Drive Shaft | | 38 | | 59.5 | 34 | 655 | |
| | 2008.10-2011.03 | 6MT | F | L/R | Saloon 4WD CCDA | | GCO83077 | Outer Joint | | 38 | 27 | 59.5 | 34 | 63 | M |
| | 2008.10-2011.03 | 6MT | F | L/R | Saloon 4WD CCDA | TJ | GCI61044 | Inner Joint | | | 34 | | | 85 | |
| | 2008.10-2011.03 | 6MT | F | L/R | Saloon 4WD CCDA | AAR | GCI61076 | Inner Joint | | | 34 | | | 85 | |
| | 2008.10-2011.03 | 6MT | R | L/R | Saloon 4WD CCDA | | GDS82348 | Drive Shaft | | 38 | | 59.5 | 34 | 648 | |
| | 2008.10-2011.03 | 6MT | R | L/R | Saloon 4WD CCDA | | GCO81358 | Outer Joint | | 38 | 33 | 59.5 | 34 | 54 | M |
| | 2008.10-2011.03 | 6MT | R | L/R | Saloon 4WD CCDA | | GCI61069 | Inner Joint | | | 28 | | | 32 | |
| | 2008.10-2011.08 | 6MT | F | L | Estate 4WD CCDA | | GDS83290 | Drive Shaft | | 38 | | 59.5 | 34 | 617 | |
| | 2008.10-2011.08 | 6MT | F | R | Estate 4WD CCDA | AAR | GDS81591 | Drive Shaft | | 38 | | 59.5 | 34 | 653 | |
| | 2008.10-2011.08 | 6MT | F | R | Estate 4WD CCDA | TJ | GDS83329 | Drive Shaft | | 38 | | 59.5 | 34 | 655 | |
| | 2008.10-2011.08 | 6MT | F | L/R | Estate 4WD CCDA | | GCO83077 | Outer Joint | | 38 | 27 | 59.5 | 34 | 63 | M |
| | 2008.10-2011.08 | 6MT | F | L/R | Estate 4WD CCDA | TJ | GCI61044 | Inner Joint | | | 34 | | | 85 | |
| | 2008.10-2011.08 | 6MT | F | L/R | Estate 4WD CCDA | AAR | GCI61076 | Inner Joint | | | 34 | | | 85 | |
| | 2008.10-2011.08 | 6MT | R | L/R | Estate 4WD CCDA | | GDS82348 | Drive Shaft | | 38 | | 59.5 | 34 | 648 | |
| | 2008.10-2011.08 | 6MT | R | L/R | Estate 4WD CCDA | | GCO81358 | Outer Joint | | 38 | 33 | 59.5 | 34 | 54 | M |
| | 2008.10-2011.08 | 6MT | R | L/R | Estate 4WD CCDA | | GCI61069 | Inner Joint | | | 28 | | | 32 | |
| 2.8 (142 kw) | 1995.12-1997.10 | 4AT/5MT | F | L/R | Estate 4WD ACK | | GCO83017 | Outer Joint | 45T | 38 | 27 | 59.5 | 34.5 | 68.5 | I |
| | 1995.12-1997.10 | AT | F | L | Estate 4WD ACK | | GDS83060 | Drive Shaft | 45T | 38 | | 59.5 | 34 | 565 | |
| | 1995.12-1997.10 | 4AT/5MT | R | L/R | Estate 4WD ACK | | GCO83014 | Outer Joint | 45T | 38 | 25 | 59.5 | 34.5 | 61 | O |
| | 1996.01-1997.04 | 4AT/5MT | F | L/R | Saloon 4WD ACK | | GCO83017 | Outer Joint | 45T | 38 | 27 | 59.5 | 34.5 | 68.5 | I |
| | 1996.01-1997.04 | AT | F | L | Saloon 4WD ACK | | GDS83060 | Drive Shaft | 45T | 38 | | 59.5 | 34 | 565 | |
| | 1996.01-1997.04 | AT/MT | R | L/R | Saloon 4WD ACK | | GCO83014 | Outer Joint | 45T | 38 | 25 | 59.5 | 34.5 | 61 | O |
| | 1997.04-2001.05 | 5AT | F | L | Saloon 4WD ACK/ALG/AMX/APR/AQD | | GDS83019 | Drive Shaft | 45W | 38 | | 59.5 | 34.5 | 550 | |
| | 1997.04-2001.05 | 5AT | F | R | Saloon 4WD ACK/ALG/AMX/APR/AQD | | GDS83020 | Drive Shaft | 45W | 38 | | 59.5 | 34.5 | 522 | |
| | 1997.04-2001.05 | 5AT/5MT | F | L/R | Saloon 4WD ACK/ALG/AMX/APR/AQD | | GCO83019 | Outer Joint | 45W | 38 | 27 | 59.5 | 34.5 | 63 | I |
| | 1997.04-2001.05 | 5AT/5MT | F | L/R | Saloon 4WD ACK/ALG/AMX/APR/AQD | | GCO83020 | Outer Joint | 45W | 38 | 30 | 59.5 | 34 | 59.5 | I |
| | 1997.04-2001.05 | 5MT | F | L | Saloon 4WD ACK/ALG/AMX/APR/AQD | Chassis no. from:4B_X_020001 | GDS61019 | Drive Shaft | 45W | 38 | | 59.5 | 34.5 | 624 | |
| | 1997.04-2001.05 | 5MT | F | L | Saloon 4WD ACK/ALG/AMX/APR/AQD | Chassis no. to:4B_X_020000 | GDS83041 | Drive Shaft | 45W | 38 | | 59.5 | 34 | 640 | |

| | YEAR | TRANSM. | F/R | L/R | BODY STYLE & DRIVE TYPE & ENGINE | REMARKS | G-AP Ref. | PRODUCT | ABS | Technical Specifications A | B | C | H | L | P |
|---|---|---|---|---|---|---|---|---|---|---|---|---|---|---|---|
| **AUDI** | | | | | | | | | | | | | | | |
| **A6 Quattro** | | | | | | | | | | | | | | | |
| 2.8 (142 kw) | 1997.04-2001.05 | 5MT | F | R | Saloon 4WD ACK/ALG/AMX/APR/AQD | | GDS61076 | Drive Shaft | 45W | 38 | | 59.5 | 34.5 | 645 | |
| | 1997.04-2001.05 | 5MT | F | L/R | Saloon 4WD ACK/ALG/AMX/APR/AQD | Chassis no. To:4B_X_020000 | GCO83049 | Outer Joint | | 38 | 30 | 59.5 | 34 | 59.5 | I |
| | 1997.04-2001.05 | 5MT | F | L/R | Saloon 4WD ACK/ALG/AMX/APR/AQD | Chassis no. to:4BX020000 | GCI83002 | Inner Joint | | | 33 | | | 32 | |
| | 1997.04-2001.05 | AT/MT/5AT/5MT | F | L/R | Saloon 4WD ACK/ALG/AMX/APR/AQD | | GCI50019 | Inner Joint | | | 34 | | | 59.5 | |
| | 1997.04-2001.05 | MT | F | R | Saloon 4WD ACK/ALG/AMX/APR/AQD | Date to:2001.05;For Engine code:ACK | GDS99113 | Drive Shaft | 45W | 38 | | 59.5 | 34.5 | 654 | |
| | 1997.08-2001.09 | 5AT | F | L | Estate 4WD ACK/ALG/AMX/APR/AQD | | GDS83019 | Drive Shaft | 45W | 38 | | 59.5 | 34.5 | 550 | |
| | 1997.08-2001.09 | 5AT | F | R | Estate 4WD ACK/ALG/AMX/APR/AQD | | GDS83020 | Drive Shaft | 45W | 38 | | 59.5 | 34.5 | 522 | |
| | 1997.08-2001.09 | 5AT/5MT | F | L/R | Estate 4WD ACK/ALG/AMX/APR/AQD | | GCO83019 | Outer Joint | 45W | 38 | 27 | 59.5 | 34.5 | 63 | I |
| | 1997.08-2001.09 | 5AT/5MT | F | L/R | Estate 4WD ACK/ALG/AMX/APR/AQD | | GCO83020 | Outer Joint | 45W | 38 | 30 | 59.5 | 34 | 59.5 | I |
| | 1997.08-2001.09 | 5MT | F | L | Estate 4WD ACK/ALG/AMX/APR/AQD | Chassis no. from:4B_X_020001 | GDS61019 | Drive Shaft | 45W | 38 | | 59.5 | 34.5 | 624 | |
| | 1997.08-2001.09 | 5MT | F | L | Estate 4WD ACK/ALG/AMX/APR/AQD | Chassis no. to:4B_X_020000 | GDS83041 | Drive Shaft | 45W | 38 | | 59.5 | 34 | 640 | |
| | 1997.08-2001.09 | 5MT | F | R | Estate 4WD ACK/ALG/AMX/APR/AQD | | GDS61076 | Drive Shaft | 45W | 38 | | 59.5 | 34.5 | 645 | |
| | 1997.08-2001.09 | 5MT | F | L/R | Estate 4WD ACK/ALG/AMX/APR/AQD | Chassis no. To:4B_X_020000 | GCO83049 | Outer Joint | | 38 | 30 | 59.5 | 34 | 59.5 | I |
| | 1997.08-2001.09 | 5MT | F | L/R | Estate 4WD ACK/ALG/AMX/APR/AQD | Chassis no. to:4BX020000 | GCI83002 | Inner Joint | | | 33 | | | 32 | |
| | 1997.08-2001.09 | AT/MT/5AT/5MT | F | L/R | Estate 4WD ACK/ALG/AMX/APR/AQD | | GCI50019 | Inner Joint | | | 34 | | | 59.5 | |
| | 1997.08-2001.09 | MT | F | R | Estate 4WD ACK/ALG/AMX/APR/AQD | Date to:2001.09;For Engine code:ACK | GDS99113 | Drive Shaft | 45W | 38 | | 59.5 | 34.5 | 654 | |
| 2.8 (150 kw) | 2010.11-2015.04 | 7AT | F | L/R | Saloon 4WD CHVA | | GDS61290 | Drive Shaft | | 42 | | 76.4 | 34 | 493 | |
| | 2010.11-2015.04 | AT | F | L/R | Saloon 4WD CHVA | | GCO83103 | Outer Joint | | 42 | 28 | 76.4 | 34 | 54 | I |
| | 2010.11-2015.04 | AT | F | L/R | Saloon 4WD CHVA | | GCI83022 | Inner Joint | | | 34 | | | 88.5 | |
| | 2010.11-2015.04 | 7AT | R | L | Saloon 4WD CHVA | For PR code:GH2;For vehicles with electronic limited slip diff. | GDS61291 | Drive Shaft | | 42 | | 76.5 | 34 | 620 | |
| | 2010.11-2015.04 | 7AT | R | R | Saloon 4WD CHVA | For PR code:GH2;For vehicles with electronic limited slip diff. | GDS82251 | Drive Shaft | | 42 | | 76.5 | 34 | 576 | |
| | 2010.11-2015.04 | 7AT | R | L/R | Saloon 4WD CHVA | For PR code:GH1 | GDS83368 | Drive Shaft | | 42 | | 76.5 | 34 | 660 | |
| | 2010.11-2015.04 | 7AT | R | L/R | Saloon 4WD CHVA | | GCI83039 | Outer Joint | | 42 | 28 | 76.5 | 34 | 72 | |
| | 2010.11-2015.04 | 7AT | R | L/R | Saloon 4WD CHVA | | GCI61069 | Inner Joint | | | 28 | | | 32 | |
| | 2011.05-2015.04 | 7AT | F | L/R | Estate 4WD CHVA | | GDS61290 | Drive Shaft | | 42 | | 76.4 | 34 | 493 | |
| | 2011.05-2015.04 | AT | F | L/R | Estate 4WD CHVA | | GCO83103 | Outer Joint | | 42 | 28 | 76.4 | 34 | 54 | I |
| | 2011.05-2015.04 | AT | F | L/R | Estate 4WD CHVA | | GCI83022 | Inner Joint | | | 34 | | | 88.5 | |
| | 2011.05-2015.04 | 7AT | R | L | Estate 4WD CHVA | Differential:For vehicles with electronic ltd slip differential;For PR code:GH2 | GDS61291 | Drive Shaft | | 42 | | 76.5 | 34 | 620 | |
| | 2011.05-2015.04 | 7AT | R | R | Estate 4WD CHVA | Differential:For vehicles with electronic ltd slip differential;For PR code:GH2 | GDS82251 | Drive Shaft | | 42 | | 76.5 | 34 | 576 | |
| | 2011.05-2015.04 | 7AT | R | L/R | Estate 4WD CHVA | For PR code:GH1 | GDS83368 | Drive Shaft | | 42 | | 76.5 | 34 | 660 | |
| | 2011.05-2015.04 | 7AT | R | L/R | Estate 4WD CHVA | | GCI83039 | Outer Joint | | 42 | 28 | 76.5 | 34 | 72 | |
| | 2011.05-2015.04 | 7AT | R | L/R | Estate 4WD CHVA | | GCI61069 | Inner Joint | | | 28 | | | 32 | |
| 2.8 (154 kw) | 2007.06-2008.10 | 6AT | F | L | Estate 4WD BDX | | GDS83305 | Drive Shaft | | 38 | | 59.5 | 34 | 603 | |
| | 2007.06-2008.10 | 6AT | F | R | Estate 4WD BDX | AAR | GDS81590 | Drive Shaft | | 38 | | 59.5 | 34 | 523 | |
| | 2007.06-2008.10 | 6AT | F | R | Estate 4WD BDX | TJ | GDS83306 | Drive Shaft | | 38 | | 59.5 | 34 | 525 | |
| | 2007.06-2008.10 | 6AT | F | L/R | Estate 4WD BDX | | GCO83077 | Outer Joint | | 38 | 27 | 59.5 | 34 | 63 | M |
| | 2007.06-2008.10 | 6AT | F | L/R | Estate 4WD BDX | TJ | GCI61044 | Inner Joint | | | 34 | | | 85 | |
| | 2007.06-2008.10 | 6AT | F | L/R | Estate 4WD BDX | AAR | GCI61076 | Inner Joint | | | 34 | | | 85 | |
| | 2007.06-2008.10 | 6AT | R | L/R | Estate 4WD BDX | | GDS82348 | Drive Shaft | | 38 | | 59.5 | 34 | 648 | |
| | 2007.06-2008.10 | 6AT | R | L/R | Estate 4WD BDX | | GCO81358 | Outer Joint | | 38 | 33 | 59.5 | 34 | 54 | M |
| | 2007.06-2008.10 | 6AT | R | L/R | Estate 4WD BDX | | GCI61069 | Inner Joint | | | 28 | | | 32 | |
| | 2007.06-2008.10 | 6AT | F | L | Saloon 4WD BDX | | GDS83305 | Drive Shaft | | 38 | | 59.5 | 34 | 603 | |
| | 2007.06-2008.10 | 6AT | F | R | Saloon 4WD BDX | AAR | GDS81590 | Drive Shaft | | 38 | | 59.5 | 34 | 523 | |
| | 2007.06-2008.10 | 6AT | F | R | Saloon 4WD BDX | TJ | GDS83306 | Drive Shaft | | 38 | | 59.5 | 34 | 525 | |
| | 2007.06-2008.10 | 6AT | F | L/R | Saloon 4WD BDX | | GCO83077 | Outer Joint | | 38 | 27 | 59.5 | 34 | 63 | M |
| | 2007.06-2008.10 | 6AT | F | L/R | Saloon 4WD BDX | TJ | GCI61044 | Inner Joint | | | 34 | | | 85 | |
| | 2007.06-2008.10 | 6AT | F | L/R | Saloon 4WD BDX | AAR | GCI61076 | Inner Joint | | | 34 | | | 85 | |
| | 2007.06-2008.10 | 6AT | R | L/R | Saloon 4WD BDX | | GDS82348 | Drive Shaft | | 38 | | 59.5 | 34 | 648 | |
| | 2007.06-2008.10 | 6AT | R | L/R | Saloon 4WD BDX | | GCO81358 | Outer Joint | | 38 | 33 | 59.5 | 34 | 54 | M |
| | 2007.06-2008.10 | 6AT | R | L/R | Saloon 4WD BDX | | GCI61069 | Inner Joint | | | 28 | | | 32 | |
| 2.8 (162 kw) | 2008.10-2011.03 | 6AT | F | L | Saloon 4WD CCEA | | GDS83305 | Drive Shaft | | 38 | | 59.5 | 34 | 603 | |
| | 2008.10-2011.03 | 6AT | F | R | Saloon 4WD CCEA | AAR | GDS81590 | Drive Shaft | | 38 | | 59.5 | 34 | 523 | |
| | 2008.10-2011.03 | 6AT | F | R | Saloon 4WD CCEA | TJ | GDS83306 | Drive Shaft | | 38 | | 59.5 | 34 | 525 | |
| | 2008.10-2011.03 | 6AT | F | L/R | Saloon 4WD CCEA | | GCO83077 | Outer Joint | | 38 | 27 | 59.5 | 34 | 63 | M |
| | 2008.10-2011.03 | 6AT | F | L/R | Saloon 4WD CCEA | TJ | GCI61044 | Inner Joint | | | 34 | | | 85 | |
| | 2008.10-2011.03 | 6AT | F | L/R | Saloon 4WD CCEA | AAR | GCI61076 | Inner Joint | | | 34 | | | 85 | |
| | 2008.10-2011.03 | 6AT | R | L/R | Saloon 4WD CCEA | | GDS82348 | Drive Shaft | | 38 | | 59.5 | 34 | 648 | |
| | 2008.10-2011.03 | 6AT | R | L/R | Saloon 4WD CCEA | | GCO81358 | Outer Joint | | 38 | 33 | 59.5 | 34 | 54 | M |
| | 2008.10-2011.03 | 6AT | R | L/R | Saloon 4WD CCEA | | GCI61069 | Inner Joint | | | 28 | | | 32 | |
| | 2008.10-2011.08 | 6AT | F | L | Estate 4WD CCEA | | GDS83305 | Drive Shaft | | 38 | | 59.5 | 34 | 603 | |
| | 2008.10-2011.08 | 6AT | F | R | Estate 4WD CCEA | AAR | GDS81590 | Drive Shaft | | 38 | | 59.5 | 34 | 523 | |
| | 2008.10-2011.08 | 6AT | F | R | Estate 4WD CCEA | TJ | GDS83306 | Drive Shaft | | 38 | | 59.5 | 34 | 525 | |
| | 2008.10-2011.08 | 6AT | F | L/R | Estate 4WD CCEA | | GCO83077 | Outer Joint | | 38 | 27 | 59.5 | 34 | 63 | M |
| | 2008.10-2011.08 | 6AT | F | L/R | Estate 4WD CCEA | TJ | GCI61044 | Inner Joint | | | 34 | | | 85 | |
| | 2008.10-2011.08 | 6AT | F | L/R | Estate 4WD CCEA | AAR | GCI61076 | Inner Joint | | | 34 | | | 85 | |

| | YEAR | TRANSM. | F/R | L/R | BODY STYLE & DRIVE TYPE & ENGINE | REMARKS | G-AP Ref. | PRODUCT | ABS | Technical Specifications A | B | C | H | L | P |
|---|---|---|---|---|---|---|---|---|---|---|---|---|---|---|---|
| **AUDI** | | | | | | | | | | | | | | | |
| **A6 Quattro** | | | | | | | | | | | | | | | |
| 2.8 (162 kw) | 2008.10-2011.08 | 6AT | R | L/R | Estate 4WD CCEA | | GDS82348 | Drive Shaft | | 38 | | 59.5 | 34 | 648 | |
| | 2008.10-2011.08 | 6AT | R | L/R | Estate 4WD CCEA | | GCO81358 | Outer Joint | | 38 | 33 | 59.5 | 34 | 54 | M |
| | 2008.10-2011.08 | 6AT | R | L/R | Estate 4WD CCEA | | GCI61069 | Inner Joint | | | 28 | | | 32 | |
| | 2014.09-2018.09 | 7AT | F | L/R | Estate 4WD CVPA | | GDS61290 | Drive Shaft | | 42 | | 76.4 | 34 | 493 | |
| | 2014.09-2018.09 | 7AT | F | L/R | Estate 4WD CVPA | | GCO83103 | Outer Joint | | 42 | 28 | 76.4 | 34 | 54 | I |
| | 2014.09-2018.09 | 7AT | F | L/R | Estate 4WD CVPA | | GCI83022 | Inner Joint | | | 34 | | | 88.5 | |
| | 2014.09-2018.09 | 7AT | R | L | Estate 4WD CVPA | For PR code:GH2,For vehicles with electronic ltd slip differential | GDS61291 | Drive Shaft | | 42 | | 76.5 | 34 | 620 | |
| | 2014.09-2018.09 | 7AT | R | R | Estate 4WD CVPA | For PR code:GH2,For vehicles with electronic ltd slip differential | GDS82251 | Drive Shaft | | 42 | | 76.5 | 34 | 576 | |
| | 2014.09-2018.09 | 7AT | R | L/R | Estate 4WD CVPA | For PR code:GH1 | GDS83368 | Drive Shaft | | 42 | | 76.5 | 34 | 660 | |
| | 2014.09-2018.09 | 7AT | R | L/R | Estate 4WD CVPA | For PR code:GH2,For vehicles with electronic ltd slip differential;For PR code:GH1 | GCI83039 | Outer Joint | | 42 | 28 | 76.5 | 34 | 72 | |
| | 2014.09-2018.09 | 7AT | R | L/R | Estate 4WD CVPA | For PR code:GH2,For vehicles with electronic ltd slip differential;For PR code:GH1 | GCI61069 | Inner Joint | | | 28 | | | 32 | |
| | 2014.09-2018.09 | 7AT | F | L/R | Saloon 4WD CVPA | | GDS61290 | Drive Shaft | | 42 | | 76.4 | 34 | 493 | |
| | 2014.09-2018.09 | 7AT | F | L/R | Saloon 4WD CVPA | | GCO83103 | Outer Joint | | 42 | 28 | 76.4 | 34 | 54 | I |
| | 2014.09-2018.09 | 7AT | F | L/R | Saloon 4WD CVPA | | GCI83022 | Inner Joint | | | 34 | | | 88.5 | |
| | 2014.09-2018.09 | 7AT | R | L | Saloon 4WD CVPA | For PR code:GH2,For vehicles with electronic ltd slip differential | GDS61291 | Drive Shaft | | 42 | | 76.5 | 34 | 620 | |
| | 2014.09-2018.09 | 7AT | R | R | Saloon 4WD CVPA | For PR code:GH2,For vehicles with electronic ltd slip differential | GDS82251 | Drive Shaft | | 42 | | 76.5 | 34 | 576 | |
| | 2014.09-2018.09 | 7AT | R | L/R | Saloon 4WD CVPA | For PR code:GH1 | GDS83368 | Drive Shaft | | 42 | | 76.5 | 34 | 660 | |
| | 2014.09-2018.09 | 7AT | R | L/R | Saloon 4WD CVPA | For PR code:GH2,For vehicles with electronic ltd slip differential;For PR code:GH1 | GCI83039 | Outer Joint | | 42 | 28 | 76.5 | 34 | 72 | |
| | 2014.09-2018.09 | 7AT | R | L/R | Saloon 4WD CVPA | For PR code:GH2,For vehicles with electronic ltd slip differential;For PR code:GH1 | GCI61069 | Inner Joint | | | 28 | | | 32 | |
| 3.0 (150 kw) | 2011.03-2018.09 | 7AT | F | L/R | Saloon 4WD CLAA | | GDS61290 | Drive Shaft | | 42 | | 76.4 | 34 | 493 | |
| | 2011.03-2018.09 | 7AT | F | L/R | Saloon 4WD CLAA | | GCO83103 | Outer Joint | | 42 | 28 | 76.4 | 34 | 54 | I |
| | 2011.03-2018.09 | 7AT | F | L/R | Saloon 4WD CLAA | | GCI83022 | Inner Joint | | | 34 | | | 88.5 | |
| | 2011.03-2018.09 | 7AT | R | L | Saloon 4WD CLAA | For PR code:GH2,For vehicles with electronic LTD slip differential | GDS61291 | Drive Shaft | | 42 | | 76.5 | 34 | 620 | |
| | 2011.03-2018.09 | 7AT | R | R | Saloon 4WD CLAA | For PR code:GH2,For vehicles with electronic LTD slip differential | GDS82251 | Drive Shaft | | 42 | | 76.5 | 34 | 576 | |
| | 2011.03-2018.09 | 7AT | R | L/R | Saloon 4WD CLAA | For PR code:GH1 | GDS83368 | Drive Shaft | | 42 | | 76.5 | 34 | 660 | |
| | 2011.03-2018.09 | 7AT | R | L/R | Saloon 4WD CLAA | | GCI83039 | Outer Joint | | 42 | 28 | 76.5 | 34 | 72 | |
| | 2011.03-2018.09 | 7AT | R | L/R | Saloon 4WD CLAA | | GCI61069 | Inner Joint | | | 28 | | | 32 | |
| | 2011.05-2018.09 | 7AT | F | L/R | Estate 4WD CLAA | | GDS61290 | Drive Shaft | | 42 | | 76.4 | 34 | 493 | |
| | 2011.05-2018.09 | 7AT | F | L/R | Estate 4WD CLAA | | GCO83103 | Outer Joint | | 42 | 28 | 76.4 | 34 | 54 | I |
| | 2011.05-2018.09 | 7AT | F | L/R | Estate 4WD CLAA | | GCI83022 | Inner Joint | | | 34 | | | 88.5 | |
| | 2011.05-2018.09 | 7AT | R | L | Estate 4WD CLAA | For PR code:GH2,For vehicles with electronic LTD slip differential | GDS61291 | Drive Shaft | | 42 | | 76.5 | 34 | 620 | |
| | 2011.05-2018.09 | 7AT | R | R | Estate 4WD CLAA | For PR code:GH2,For vehicles with electronic LTD slip differential | GDS82251 | Drive Shaft | | 42 | | 76.5 | 34 | 576 | |
| | 2011.05-2018.09 | 7AT | R | L/R | Estate 4WD CLAA | For PR code:GH1 | GDS83368 | Drive Shaft | | 42 | | 76.5 | 34 | 660 | |
| | 2011.05-2018.09 | 7AT | R | L/R | Estate 4WD CLAA | | GCI83039 | Outer Joint | | 42 | 28 | 76.5 | 34 | 72 | |
| | 2011.05-2018.09 | 7AT | R | L/R | Estate 4WD CLAA | | GCI61069 | Inner Joint | | | 28 | | | 32 | |
| 3.0 (155 kw) | 2004.05-2011.03 | 6AT | F | L | Saloon 4WD BNG;CDYB | | GDS83305 | Drive Shaft | | 38 | | 59.5 | 34 | 603 | |
| | 2004.05-2011.03 | AT | F | R | Saloon 4WD BNG;CDYB | AAR | GDS81590 | Drive Shaft | | 38 | | 59.5 | 34 | 523 | |
| | 2004.05-2011.03 | AT | F | R | Saloon 4WD BNG;CDYB | TJ | GDS83306 | Drive Shaft | | 38 | | 59.5 | 34 | 525 | |
| | 2004.05-2011.03 | AT/MT | F | L/R | Saloon 4WD BNG;CDYB | | GCO83077 | Outer Joint | | 38 | 27 | 59.5 | 34 | 63 | M |
| | 2004.05-2011.03 | AT/MT | F | L/R | Saloon 4WD BNG;CDYB | TJ | GCI61044 | Inner Joint | | | 34 | | | 85 | |
| | 2004.05-2011.03 | AT/MT | F | L/R | Saloon 4WD BNG;CDYB | AAR | GCI61076 | Inner Joint | | | 34 | | | 85 | |
| | 2004.05-2011.03 | MT | F | L | Saloon 4WD BNG;CDYB | | GDS83290 | Drive Shaft | | 38 | | 59.5 | 34 | 617 | |
| | 2004.05-2011.03 | MT | F | R | Saloon 4WD BNG;CDYB | AAR | GDS81591 | Drive Shaft | | 38 | | 59.5 | 34 | 653 | |
| | 2004.05-2011.03 | MT | F | R | Saloon 4WD BNG;CDYB | TJ | GDS83329 | Drive Shaft | | 38 | | 59.5 | 34 | 655 | |
| | 2004.05-2011.03 | AT/MT | R | L/R | Saloon 4WD BNG;CDYB | Date from:2008.11 | GDS81915 | Drive Shaft | | 38 | | 59.5 | 34 | 650 | |
| | 2004.05-2011.03 | AT/MT | R | L/R | Saloon 4WD BNG;CDYB | Date to:2008.10 | GDS82348 | Drive Shaft | | 38 | | 59.5 | 34 | 648 | |
| | 2004.05-2011.03 | AT/MT | R | L/R | Saloon 4WD BNG;CDYB | Date to:2008.10 | GCO81358 | Outer Joint | | 38 | 33 | 59.5 | 34 | 54 | M |
| | 2004.05-2011.03 | AT/MT | R | L/R | Saloon 4WD BNG;CDYB | | GCI61069 | Inner Joint | | | 28 | | | 32 | |
| | 2005.03-2011.08 | 6AT | F | L | Estate 4WD BNG;CDYB | | GDS83305 | Drive Shaft | | 38 | | 59.5 | 34 | 603 | |
| | 2005.03-2011.08 | AT | F | R | Estate 4WD BNG;CDYB | AAR | GDS81590 | Drive Shaft | | 38 | | 59.5 | 34 | 523 | |
| | 2005.03-2011.08 | AT | F | R | Estate 4WD BNG;CDYB | TJ | GDS83306 | Drive Shaft | | 38 | | 59.5 | 34 | 525 | |
| | 2005.03-2011.08 | AT/MT | F | L/R | Estate 4WD BNG;CDYB | | GCO83077 | Outer Joint | | 38 | 27 | 59.5 | 34 | 63 | M |
| | 2005.03-2011.08 | AT/MT | F | L/R | Estate 4WD BNG;CDYB | TJ | GCI61044 | Inner Joint | | | 34 | | | 85 | |
| | 2005.03-2011.08 | AT/MT | F | L/R | Estate 4WD BNG;CDYB | AAR | GCI61076 | Inner Joint | | | 34 | | | 85 | |
| | 2005.03-2011.08 | MT | F | L | Estate 4WD BNG;CDYB | | GDS83290 | Drive Shaft | | 38 | | 59.5 | 34 | 617 | |
| | 2005.03-2011.08 | MT | F | R | Estate 4WD BNG;CDYB | AAR | GDS81591 | Drive Shaft | | 38 | | 59.5 | 34 | 653 | |
| | 2005.03-2011.08 | MT | F | R | Estate 4WD BNG;CDYB | TJ | GDS83329 | Drive Shaft | | 38 | | 59.5 | 34 | 655 | |
| | 2005.03-2011.08 | AT/MT | R | L/R | Estate 4WD BNG;CDYB | Date from:2008.11 | GDS81915 | Drive Shaft | | 38 | | 59.5 | 34 | 650 | |
| | 2005.03-2011.08 | AT/MT | R | L/R | Estate 4WD BNG;CDYB | Date to:2008.10 | GDS82348 | Drive Shaft | | 38 | | 59.5 | 34 | 648 | |
| | 2005.03-2011.08 | AT/MT | R | L/R | Estate 4WD BNG;CDYB | Date to:2008.10 | GCO81358 | Outer Joint | | 38 | 33 | 59.5 | 34 | 54 | M |
| | 2005.03-2011.08 | AT/MT | R | L/R | Estate 4WD BNG;CDYB | | GCI61069 | Inner Joint | | | 28 | | | 32 | |
| | 2014.09-2018.09 | 7AT | F | L/R | Estate 4WD CRTF;CZVC | | GDS61290 | Drive Shaft | | 42 | | 76.4 | 34 | 493 | |
| | 2014.09-2018.09 | 7AT | F | L/R | Estate 4WD CRTF;CZVC | | GCO83103 | Outer Joint | | 42 | 28 | 76.4 | 34 | 54 | I |
| | 2014.09-2018.09 | 7AT | F | L/R | Estate 4WD CRTF;CZVC | | GCI83022 | Inner Joint | | | 34 | | | 88.5 | |
| | 2014.09-2018.09 | 7AT | R | L | Estate 4WD CRTF;CZVC | For PR code:GH2,For vehicles with electronic limited slip diff. | GDS61291 | Drive Shaft | | 42 | | 76.5 | 34 | 620 | |

| | YEAR | TRANSM. | F/R | L/R | BODY STYLE & DRIVE TYPE & ENGINE | REMARKS | G-AP Ref. | PRODUCT | ABS | Technical Specifications A | B | C | H | L | P |
|---|---|---|---|---|---|---|---|---|---|---|---|---|---|---|---|
| **AUDI** **A6 Quattro** | | | | | | | | | | | | | | | |
| 3.0 (155 kw) | 2014.09-2018.09 | 7AT | R | R | Estate 4WD CRTF;CZVC | For PR code:GH2,For vehicles with electronic limited slip diff. | GDS82251 | Drive Shaft | | 42 | | 76.5 | 34 | 576 | |
| | 2014.09-2018.09 | 7AT | R | L/R | Estate 4WD CRTF;CZVC | For PR code:GH1 | GDS83368 | Drive Shaft | | 42 | | 76.5 | 34 | 660 | |
| | 2014.09-2018.09 | 7AT | R | L/R | Estate 4WD CRTF;CZVC | | GCI83039 | Outer Joint | | 42 | 28 | 76.5 | 34 | 72 | |
| | 2014.09-2018.09 | 7AT | R | L/R | Estate 4WD CRTF;CZVC | | GCI61069 | Inner Joint | | | 28 | | | 32 | |
| | 2014.09-2018.09 | 7AT | F | L/R | Saloon 4WD CRTF;CZVC | | GDS61290 | Drive Shaft | | 42 | | 76.4 | 34 | 493 | |
| | 2014.09-2018.09 | 7AT | F | L/R | Saloon 4WD CRTF;CZVC | | GCO83103 | Outer Joint | | 42 | 28 | 76.4 | 34 | 54 | I |
| | 2014.09-2018.09 | 7AT | F | L/R | Saloon 4WD CRTF;CZVC | | GCI83022 | Inner Joint | | | 34 | | | 88.5 | |
| | 2014.09-2018.09 | 7AT | R | L | Saloon 4WD CRTF;CZVC | For PR code:GH2,For vehicles with electronic limited slip diff. | GDS61291 | Drive Shaft | | 42 | | 76.5 | 34 | 620 | |
| | 2014.09-2018.09 | 7AT | R | R | Saloon 4WD CRTF;CZVC | For PR code:GH2,For vehicles with electronic limited slip diff. | GDS82251 | Drive Shaft | | 42 | | 76.5 | 34 | 576 | |
| | 2014.09-2018.09 | 7AT | R | L/R | Saloon 4WD CRTF;CZVC | For PR code:GH1 | GDS83368 | Drive Shaft | | 42 | | 76.5 | 34 | 660 | |
| | 2014.09-2018.09 | 7AT | R | L/R | Saloon 4WD CRTF;CZVC | | GCI83039 | Outer Joint | | 42 | 28 | 76.5 | 34 | 72 | |
| | 2014.09-2018.09 | 7AT | R | L/R | Saloon 4WD CRTF;CZVC | | GCI61069 | Inner Joint | | | 28 | | | 32 | |
| | 2018.07- | AT | F | L/R | Estate 4WD DDVF | For PR code:GH1/GH2 | GDS84553 | Drive Shaft | | 42 | | 76.5 | 34 | 496 | |
| | 2018.07- | AT | F | L/R | Estate 4WD DDVF | For PR code:GH4,For vehicles with AWD & variable torque dist. | GDS84556 | Drive Shaft | | 42 | | 76.5 | 34 | 495 | |
| | 2018.07- | AT | F | L/R | Estate 4WD DDVF | For PR code:GH1/GH2 | GCO81357 | Outer Joint | | 42 | 28 | 76.5 | 34 | 54 | I |
| | 2018.07- | AT | R | L | Estate 4WD DDVF | For PR code:GH4,For vehicles with AWD & variable torque dist. | GDS56373 | Drive Shaft | | 42 | | 76.5 | 34 | 660 | |
| | 2018.07- | AT | R | L | Estate 4WD DDVF | For PR code:GH2,For vehicles with AWD & variable torque dist. | GDS58068 | Drive Shaft | | 42 | | 76.5 | 34 | 618 | |
| | 2018.07- | AT | R | R | Estate 4WD DDVF | For PR code:GH4,For vehicles with AWD & variable torque dist. | GDS56844 | Drive Shaft | | 42 | | 76.5 | 34 | 581 | |
| | 2018.07- | AT | R | R | Estate 4WD DDVF | For PR code:GH2,For vehicles with AWD & variable torque dist. | GDS58054 | Drive Shaft | | 42 | | 76.5 | 34 | 574 | |
| | 2018.07- | AT | R | L/R | Estate 4WD DDVF | For PR code:GH1 | GDS83368 | Drive Shaft | | 42 | | 76.5 | 34 | 660 | |
| | 2018.07- | AT | R | L/R | Estate 4WD DDVF | For PR code:GH4,For vehicles with AWD & variable torque dist. | GCI81752 | Inner Joint | | | 33 | | | 34 | |
| | 2018.07- | AT | F | L/R | Saloon 4WD DDVF | For PR code:GH1/GH2 | GDS84553 | Drive Shaft | | 42 | | 76.5 | 34 | 496 | |
| | 2018.07- | AT | F | L/R | Saloon 4WD DDVF | For PR code:GH4,For vehicles with AWD & variable torque dist. | GDS84556 | Drive Shaft | | 42 | | 76.5 | 34 | 495 | |
| | 2018.07- | AT | F | L/R | Saloon 4WD DDVF | For PR code:GH1/GH2 | GCO81357 | Outer Joint | | 42 | 28 | 76.5 | 34 | 54 | I |
| | 2018.07- | AT | R | L | Saloon 4WD DDVF | For PR code:GH4,For vehicles with AWD & variable torque dist. | GDS56373 | Drive Shaft | | 42 | | 76.5 | 34 | 660 | |
| | 2018.07- | AT | R | L | Saloon 4WD DDVF | For PR code:GH2,For vehicles with AWD & variable torque dist. | GDS58068 | Drive Shaft | | 42 | | 76.5 | 34 | 618 | |
| | 2018.07- | AT | R | R | Saloon 4WD DDVF | For PR code:GH4,For vehicles with AWD & variable torque dist. | GDS56844 | Drive Shaft | | 42 | | 76.5 | 34 | 581 | |
| | 2018.07- | AT | R | R | Saloon 4WD DDVF | For PR code:GH2,For vehicles with AWD & variable torque dist. | GDS58054 | Drive Shaft | | 42 | | 76.5 | 34 | 574 | |
| | 2018.07- | AT | R | L/R | Saloon 4WD DDVF | For PR code:GH1 | GDS83368 | Drive Shaft | | 42 | | 76.5 | 34 | 660 | |
| | 2018.07- | AT | R | L/R | Saloon 4WD DDVF | For PR code:GH4,For vehicles with AWD & variable torque dist. | GCI81752 | Inner Joint | | | 33 | | | 34 | |
| 3.0 (160 kw) | 2001.06-2005.01 | 5AT | F | L | Estate 4WD BBJ | | GDS83019 | Drive Shaft | 45W | 38 | | 59.5 | 34.5 | 550 | |
| | 2001.06-2005.01 | 5AT | F | R | Estate 4WD BBJ | | GDS83020 | Drive Shaft | 45W | 38 | | 59.5 | 34.5 | 522 | |
| | 2001.06-2005.01 | 6MT | F | L | Estate 4WD BBJ | | GDS61019 | Drive Shaft | 45W | 38 | | 59.5 | 34.5 | 624 | |
| | 2001.06-2005.01 | 6MT | F | R | Estate 4WD BBJ | | GDS61076 | Drive Shaft | 45W | 38 | | 59.5 | 34.5 | 645 | |
| | 2001.06-2005.01 | MT | F | R | Estate 4WD BBJ | | GDS99113 | Drive Shaft | 45W | 38 | | 59.5 | 34.5 | 654 | |
| | 2001.06-2005.01 | | F | L/R | Estate 4WD BBJ | | GCO83019 | Outer Joint | 45W | 38 | 27 | 59.5 | 34.5 | 63 | I |
| | 2001.06-2005.01 | | R | L/R | Estate 4WD BBJ | | GCI83001 | Inner Joint | | | 28 | | | 32 | |
| | 2001.06-2005.01 | | R | L/R | Estate 4WD BBJ | | GCI83002 | Inner Joint | | | 33 | | | 32 | |
| | 2001.06-2005.01 | 6MT | F | L | Saloon 4WD BBJ | | GDS61019 | Drive Shaft | 45W | 38 | | 59.5 | 34.5 | 624 | |
| | 2001.06-2005.01 | 6MT | F | R | Saloon 4WD BBJ | | GDS61076 | Drive Shaft | 45W | 38 | | 59.5 | 34.5 | 645 | |
| | 2001.06-2005.01 | AT | F | L/R | Saloon 4WD BBJ | | GDS83066 | Drive Shaft | 45W | 38 | | 59.5 | 34.5 | 544 | |
| | 2001.06-2005.01 | MT | F | R | Saloon 4WD BBJ | | GDS99113 | Drive Shaft | 45W | 38 | | 59.5 | 34.5 | 654 | |
| | 2001.06-2005.01 | | F | L/R | Saloon 4WD BBJ | | GCO83019 | Outer Joint | 45W | 38 | 27 | 59.5 | 34.5 | 63 | I |
| | 2001.06-2005.01 | | R | L/R | Saloon 4WD BBJ | | GCI83001 | Inner Joint | | | 28 | | | 32 | |
| | 2001.06-2005.01 | | R | L/R | Saloon 4WD BBJ | | GCI83002 | Inner Joint | | | 33 | | | 32 | |
| | 2004.05-2006.05 | 6AT | F | L | Saloon 4WD BBJ | | GDS83305 | Drive Shaft | | 38 | | 59.5 | 34 | 603 | |
| | 2004.05-2006.05 | 6AT | F | R | Saloon 4WD BBJ | AAR | GDS81590 | Drive Shaft | | 38 | | 59.5 | 34 | 523 | |
| | 2004.05-2006.05 | 6AT | F | R | Saloon 4WD BBJ | TJ | GDS83306 | Drive Shaft | | 38 | | 59.5 | 34 | 525 | |
| | 2004.05-2006.05 | 6AT | F | L/R | Saloon 4WD BBJ | | GCO83077 | Outer Joint | | 38 | 27 | 59.5 | 34 | 63 | M |
| | 2004.05-2006.05 | 6AT | F | L/R | Saloon 4WD BBJ | TJ | GCI61044 | Inner Joint | | | 34 | | | 85 | |
| | 2004.05-2006.05 | 6AT | F | L/R | Saloon 4WD BBJ | AAR | GCI61076 | Inner Joint | | | 34 | | | 85 | |
| | 2004.05-2006.05 | 6AT | R | L/R | Saloon 4WD BBJ | | GDS82348 | Drive Shaft | | 38 | | 59.5 | 34 | 648 | |
| | 2004.05-2006.05 | 6AT | R | L/R | Saloon 4WD BBJ | | GCO81358 | Outer Joint | | 38 | 33 | 59.5 | 34 | 54 | M |
| | 2004.05-2006.05 | 6AT | R | L/R | Saloon 4WD BBJ | | GCI61069 | Inner Joint | | | 28 | | | 32 | |
| | 2005.03-2006.05 | 6AT | F | L | Estate 4WD BBJ | | GDS83305 | Drive Shaft | | 38 | | 59.5 | 34 | 603 | |
| | 2005.03-2006.05 | 6AT | F | R | Estate 4WD BBJ | AAR | GDS81590 | Drive Shaft | | 38 | | 59.5 | 34 | 523 | |
| | 2005.03-2006.05 | 6AT | F | R | Estate 4WD BBJ | TJ | GDS83306 | Drive Shaft | | 38 | | 59.5 | 34 | 525 | |
| | 2005.03-2006.05 | 6AT | F | L/R | Estate 4WD BBJ | | GCO83077 | Outer Joint | | 38 | 27 | 59.5 | 34 | 63 | M |
| | 2005.03-2006.05 | 6AT | F | L/R | Estate 4WD BBJ | TJ | GCI61044 | Inner Joint | | | 34 | | | 85 | |
| | 2005.03-2006.05 | 6AT | F | L/R | Estate 4WD BBJ | AAR | GCI61076 | Inner Joint | | | 34 | | | 85 | |
| | 2005.03-2006.05 | 6AT | R | L/R | Estate 4WD BBJ | | GDS82348 | Drive Shaft | | 38 | | 59.5 | 34 | 648 | |
| | 2005.03-2006.05 | 6AT | R | L/R | Estate 4WD BBJ | | GCO81358 | Outer Joint | | 38 | 33 | 59.5 | 34 | 54 | M |
| | 2005.03-2006.05 | 6AT | R | L/R | Estate 4WD BBJ | | GCI61069 | Inner Joint | | | 28 | | | 32 | |
| | 2014.09-2018.09 | 7AT | F | L/R | Estate 4WD CRTE;CZVA | | GDS61290 | Drive Shaft | | 42 | | 76.4 | 34 | 493 | |
| | 2014.09-2018.09 | 7AT | F | L/R | Estate 4WD CRTE;CZVA | | GCO83103 | Outer Joint | | 42 | 28 | 76.4 | 34 | 54 | I |

| | YEAR | TRANSM. | F/R | L/R | BODY STYLE & DRIVE TYPE & ENGINE | REMARKS | G-AP Ref. | PRODUCT | ABS | Technical Specifications A | B | C | H | L | P |
|---|---|---|---|---|---|---|---|---|---|---|---|---|---|---|---|
| **AUDI** **A6 Quattro** | | | | | | | | | | | | | | | |
| 3.0 (160 kw) | 2014.09-2018.09 | 7AT | F | L/R | Estate 4WD CRTE;CZVA | | GCI83022 | Inner Joint | | | 34 | | | 88.5 | |
| | 2014.09-2018.09 | 7AT | R | L | Estate 4WD CRTE;CZVA | For PR code:GH2,For vehicles with electronic LTD slip differential | GDS61291 | Drive Shaft | | 42 | | 76.5 | 34 | 620 | |
| | 2014.09-2018.09 | 7AT | R | R | Estate 4WD CRTE;CZVA | For PR code:GH2,For vehicles with electronic LTD slip differential | GDS82251 | Drive Shaft | | 42 | | 76.5 | 34 | 576 | |
| | 2014.09-2018.09 | 7AT | R | L/R | Estate 4WD CRTE;CZVA | For PR code:GH1 | GDS83368 | Drive Shaft | | 42 | | 76.5 | 34 | 660 | |
| | 2014.09-2018.09 | 7AT | R | L/R | Estate 4WD CRTE;CZVA | | GCI83039 | Outer Joint | | 42 | 28 | 76.5 | 34 | 72 | |
| | 2014.09-2018.09 | 7AT | R | L/R | Estate 4WD CRTE;CZVA | | GCI61069 | Inner Joint | | | 28 | | | 32 | |
| | 2014.09-2018.09 | 7AT | F | L/R | Saloon 4WD CRTE;CZVA | | GDS61290 | Drive Shaft | | 42 | | 76.4 | 34 | 493 | |
| | 2014.09-2018.09 | 7AT | F | L/R | Saloon 4WD CRTE;CZVA | | GCO83103 | Outer Joint | | 42 | 28 | 76.4 | 34 | 54 | I |
| | 2014.09-2018.09 | 7AT | F | L/R | Saloon 4WD CRTE;CZVA | | GCI83022 | Inner Joint | | | 34 | | | 88.5 | |
| | 2014.09-2018.09 | 7AT | R | L | Saloon 4WD CRTE;CZVA | For PR code:GH2,For vehicles with electronic limited slip diff. | GDS61291 | Drive Shaft | | 42 | | 76.5 | 34 | 620 | |
| | 2014.09-2018.09 | 7AT | R | R | Saloon 4WD CRTE;CZVA | For PR code:GH2,For vehicles with electronic limited slip diff. | GDS82251 | Drive Shaft | | 42 | | 76.5 | 34 | 576 | |
| | 2014.09-2018.09 | 7AT | R | L/R | Saloon 4WD CRTE;CZVA | For PR code:GH1 | GDS83368 | Drive Shaft | | 42 | | 76.5 | 34 | 660 | |
| | 2014.09-2018.09 | 7AT | R | L/R | Saloon 4WD CRTE;CZVA | | GCI83039 | Outer Joint | | 42 | 28 | 76.5 | 34 | 72 | |
| | 2014.09-2018.09 | 7AT | R | L/R | Saloon 4WD CRTE;CZVA | | GCI61069 | Inner Joint | | | 28 | | | 32 | |
| 3.0 (162 kw) | 2001.06-2005.01 | 5AT | F | L | Estate 4WD ASN | | GDS83019 | Drive Shaft | 45W | 38 | | 59.5 | 34.5 | 550 | |
| | 2001.06-2005.01 | 5AT | F | R | Estate 4WD ASN | | GDS83020 | Drive Shaft | 45W | 38 | | 59.5 | 34.5 | 522 | |
| | 2001.06-2005.01 | 6MT | F | L | Estate 4WD ASN | | GDS61019 | Drive Shaft | 45W | 38 | | 59.5 | 34.5 | 624 | |
| | 2001.06-2005.01 | 6MT | F | R | Estate 4WD ASN | | GDS61076 | Drive Shaft | 45W | 38 | | 59.5 | 34.5 | 645 | |
| | 2001.06-2005.01 | AT | F | L/R | Estate 4WD ASN | | GDS83066 | Drive Shaft | 45W | 38 | | 59.5 | 34.5 | 544 | |
| | 2001.06-2005.01 | AT/MT | F | L/R | Estate 4WD ASN | | GCO83019 | Outer Joint | 45W | 38 | 27 | 59.5 | 34.5 | 63 | I |
| | 2001.06-2005.01 | AT/MT/5AT/6MT | F | L/R | Estate 4WD ASN | | GCI50019 | Inner Joint | | | 34 | | | 59.5 | |
| | 2001.06-2005.01 | MT | F | R | Estate 4WD ASN | | GDS99113 | Drive Shaft | 45W | 38 | | 59.5 | 34.5 | 654 | |
| | 2001.06-2005.01 | | R | L/R | Estate 4WD ASN | | GCI83001 | Inner Joint | | | 28 | | | 32 | |
| | 2001.06-2005.01 | | R | L/R | Estate 4WD ASN | | GCI83002 | Inner Joint | | | 33 | | | 32 | |
| | 2001.06-2005.01 | 5AT | F | L | Saloon 4WD ASN | | GDS83019 | Drive Shaft | 45W | 38 | | 59.5 | 34.5 | 550 | |
| | 2001.06-2005.01 | 5AT | F | R | Saloon 4WD ASN | | GDS83020 | Drive Shaft | 45W | 38 | | 59.5 | 34.5 | 522 | |
| | 2001.06-2005.01 | 6MT | F | L | Saloon 4WD ASN | | GDS61019 | Drive Shaft | 45W | 38 | | 59.5 | 34.5 | 624 | |
| | 2001.06-2005.01 | 6MT | F | R | Saloon 4WD ASN | | GDS61076 | Drive Shaft | 45W | 38 | | 59.5 | 34.5 | 645 | |
| | 2001.06-2005.01 | AT | F | L/R | Saloon 4WD ASN | | GDS83066 | Drive Shaft | 45W | 38 | | 59.5 | 34.5 | 544 | |
| | 2001.06-2005.01 | AT/MT | F | L/R | Saloon 4WD ASN | Date to:2004.12 | GCO83019 | Outer Joint | 45W | 38 | 27 | 59.5 | 34.5 | 63 | I |
| | 2001.06-2005.01 | MT | F | R | Saloon 4WD ASN | | GDS99113 | Drive Shaft | 45W | 38 | | 59.5 | 34.5 | 654 | |
| | 2001.06-2005.01 | | R | L/R | Saloon 4WD ASN | | GCI83001 | Inner Joint | | | 28 | | | 32 | |
| | 2001.06-2005.01 | | R | L/R | Saloon 4WD ASN | | GCI83002 | Inner Joint | | | 33 | | | 32 | |
| 3.0 (165 kw) | 2004.05-2006.05 | 6AT | F | L | Saloon 4WD BMK | TJ | GDS83305 | Drive Shaft | | 38 | | 59.5 | 34 | 603 | |
| | 2004.05-2006.05 | 6AT | F | R | Saloon 4WD BMK | AAR | GDS81590 | Drive Shaft | | 38 | | 59.5 | 34 | 523 | |
| | 2004.05-2006.05 | 6AT | F | R | Saloon 4WD BMK | TJ | GDS83306 | Drive Shaft | | 38 | | 59.5 | 34 | 525 | |
| | 2004.05-2006.05 | 6AT/6MT | F | L/R | Saloon 4WD BMK | | GCO83077 | Outer Joint | | 38 | 27 | 59.5 | 34 | 63 | M |
| | 2004.05-2006.05 | 6AT/6MT | F | L/R | Saloon 4WD BMK | TJ | GCI61044 | Inner Joint | | | 34 | | | 85 | |
| | 2004.05-2006.05 | 6AT/6MT | F | L/R | Saloon 4WD BMK | AAR | GCI61076 | Inner Joint | | | 34 | | | 85 | |
| | 2004.05-2006.05 | 6MT | F | L | Saloon 4WD BMK | TJ | GDS83290 | Drive Shaft | | 38 | | 59.5 | 34 | 617 | |
| | 2004.05-2006.05 | 6MT | F | R | Saloon 4WD BMK | AAR | GDS81591 | Drive Shaft | | 38 | | 59.5 | 34 | 653 | |
| | 2004.05-2006.05 | 6MT | F | R | Saloon 4WD BMK | TJ | GDS83329 | Drive Shaft | | 38 | | 59.5 | 34 | 655 | |
| | 2004.05-2006.05 | 6AT/6MT | R | L/R | Saloon 4WD BMK | | GDS82348 | Drive Shaft | | 38 | | 59.5 | 34 | 648 | |
| | 2004.05-2006.05 | 6AT/6MT | R | L/R | Saloon 4WD BMK | | GCO81358 | Outer Joint | | 38 | 33 | 59.5 | 34 | 54 | M |
| | 2004.05-2006.05 | 6AT/6MT | R | L/R | Saloon 4WD BMK | | GCI61069 | Inner Joint | | | 28 | | | 32 | |
| | 2005.03-2006.05 | 6AT | F | L | Estate 4WD BMK | TJ | GDS83305 | Drive Shaft | | 38 | | 59.5 | 34 | 603 | |
| | 2005.03-2006.05 | 6AT | F | R | Estate 4WD BMK | AAR | GDS81590 | Drive Shaft | | 38 | | 59.5 | 34 | 523 | |
| | 2005.03-2006.05 | 6AT | F | R | Estate 4WD BMK | TJ | GDS83306 | Drive Shaft | | 38 | | 59.5 | 34 | 525 | |
| | 2005.03-2006.05 | 6AT/6MT | F | L/R | Estate 4WD BMK | | GCO83077 | Outer Joint | | 38 | 27 | 59.5 | 34 | 63 | M |
| | 2005.03-2006.05 | 6AT/6MT | F | L/R | Estate 4WD BMK | TJ | GCI61044 | Inner Joint | | | 34 | | | 85 | |
| | 2005.03-2006.05 | 6AT/6MT | F | L/R | Estate 4WD BMK | AAR | GCI61076 | Inner Joint | | | 34 | | | 85 | |
| | 2005.03-2006.05 | 6MT | F | L | Estate 4WD BMK | TJ | GDS83290 | Drive Shaft | | 38 | | 59.5 | 34 | 617 | |
| | 2005.03-2006.05 | 6MT | F | R | Estate 4WD BMK | AAR | GDS81591 | Drive Shaft | | 38 | | 59.5 | 34 | 653 | |
| | 2005.03-2006.05 | 6MT | F | R | Estate 4WD BMK | TJ | GDS83329 | Drive Shaft | | 38 | | 59.5 | 34 | 655 | |
| | 2005.03-2006.05 | 6AT/6MT | R | L/R | Estate 4WD BMK | | GDS82348 | Drive Shaft | | 38 | | 59.5 | 34 | 648 | |
| | 2005.03-2006.05 | 6AT/6MT | R | L/R | Estate 4WD BMK | | GCO81358 | Outer Joint | | 38 | 33 | 59.5 | 34 | 54 | M |
| | 2005.03-2006.05 | 6AT/6MT | R | L/R | Estate 4WD BMK | | GCI61069 | Inner Joint | | | 28 | | | 32 | |
| 3.0 (170 kw) | 2018.05- | 8AT | F | L/R | Estate 4WD DDVE | For PR code:GH1/GH2 | GDS84553 | Drive Shaft | | 42 | | 76.5 | 34 | 496 | |
| | 2018.05- | 8AT | F | L/R | Estate 4WD DDVE | For PR code:GH4,For vehicles with AWD & variable torque dist. | GDS84556 | Drive Shaft | | 42 | | 76.5 | 34 | 495 | |
| | 2018.05- | 8AT | F | L/R | Estate 4WD DDVE | For PR code:GH1/GH2 | GCO81357 | Outer Joint | | 42 | 28 | 76.5 | 34 | 54 | I |
| | 2018.05- | 8AT | F | L/R | Estate 4WD DDVE | Date From:2019.02,For PR Code:GH4 | GCO82603 | Outer Joint | | 42 | 30 | 76.5 | 34 | 60 | I |
| | 2018.05- | 8AT | F | L/R | Estate 4WD DDVE | | GCI61077 | Inner Joint | | | 34 | | | 88 | |
| | 2018.05- | 8AT | R | L | Estate 4WD DDVE | For PR code:GH4,For vehicles with AWD & variable torque dist. | GDS56373 | Drive Shaft | | 42 | | 76.5 | 34 | 660 | |
| | 2018.05- | 8AT | R | L | Estate 4WD DDVE | For PR code:GH2,For vehicles with AWD & variable torque dist. | GDS58068 | Drive Shaft | | 42 | | 76.5 | 34 | 618 | |
| | 2018.05- | 8AT | R | R | Estate 4WD DDVE | For PR code:GH4,For vehicles with AWD & variable torque dist. | GDS56844 | Drive Shaft | | 42 | | 76.5 | 34 | 581 | |

| | YEAR | TRANSM. | F/R | L/R | BODY STYLE & DRIVE TYPE & ENGINE | REMARKS | G-AP Ref. | PRODUCT | ABS | Technical Specifications A | B | C | H | L | P |
|---|---|---|---|---|---|---|---|---|---|---|---|---|---|---|---|
| **AUDI** | | | | | | | | | | | | | | | |
| **A6 Quattro** | | | | | | | | | | | | | | | |
| 3.0 (170 kw) | 2018.05- | 8AT | R | R | Estate 4WD DDVE | For PR code:GH2;For vehicles with AWD & variable torque dist. | GDS58054 | Drive Shaft | | 42 | | 76.5 | 34 | 574 | |
| | 2018.05- | 8AT | R | L/R | Estate 4WD DDVE | For PR code:GH1 | GDS83368 | Drive Shaft | | 42 | | 76.5 | 34 | 660 | |
| | 2018.05- | 8AT | R | L/R | Estate 4WD DDVE | For PR code:GH4;For vehicles with AWD & variable torque dist. | GCI81752 | Inner Joint | | | 33 | | | 34 | |
| | 2018.07- | 8AT | F | L/R | Saloon 4WD DDVE | For PR code:GH1/GH2 | GDS84553 | Drive Shaft | | 42 | | 76.5 | 34 | 496 | |
| | 2018.07- | 8AT | F | L/R | Saloon 4WD DDVE | For PR code:GH4;For vehicles with AWD & variable torque dist. | GDS84556 | Drive Shaft | | 42 | | 76.5 | 34 | 495 | |
| | 2018.07- | 8AT | F | L/R | Saloon 4WD DDVE | For PR code:GH1/GH2 | GCO81357 | Outer Joint | | 42 | 28 | 76.5 | 34 | 54 | I |
| | 2018.07- | 8AT | F | L/R | Saloon 4WD DDVE | Date From:2019.02,For PR Code:GH4 | GCO82603 | Outer Joint | | 42 | 30 | 76.5 | 34 | 60 | I |
| | 2018.07- | 8AT | F | L/R | Saloon 4WD DDVE | | GCI61077 | Inner Joint | | | 34 | | | 88 | |
| | 2018.07- | 8AT | R | L | Saloon 4WD DDVE | For PR code:GH4;For vehicles with AWD & variable torque dist. | GDS56373 | Drive Shaft | | 42 | | 76.5 | 34 | 660 | |
| | 2018.07- | 8AT | R | L | Saloon 4WD DDVE | For PR code:GH2;For vehicles with AWD & variable torque dist. | GDS58068 | Drive Shaft | | 42 | | 76.5 | 34 | 618 | |
| | 2018.07- | 8AT | R | R | Saloon 4WD DDVE | For PR code:GH4;For vehicles with AWD & variable torque dist. | GDS56844 | Drive Shaft | | 42 | | 76.5 | 34 | 581 | |
| | 2018.07- | 8AT | R | R | Saloon 4WD DDVE | For PR code:GH2;For vehicles with AWD & variable torque dist. | GDS58054 | Drive Shaft | | 42 | | 76.5 | 34 | 574 | |
| | 2018.07- | 8AT | R | L/R | Saloon 4WD DDVE | For PR code:GH1 | GDS83368 | Drive Shaft | | 42 | | 76.5 | 34 | 660 | |
| | 2018.07- | 8AT | R | L/R | Saloon 4WD DDVE | For PR code:GH4;For vehicles with AWD & variable torque dist. | GCI81752 | Inner Joint | | | 33 | | | 34 | |
| 3.0 (171 kw) | 2006.06-2008.10 | 6AT | F | L | Estate 4WD ASB | TJ | GDS83305 | Drive Shaft | | 38 | | 59.5 | 34 | 603 | |
| | 2006.06-2008.10 | 6AT | F | R | Estate 4WD ASB | AAR | GDS81590 | Drive Shaft | | 38 | | 59.5 | 34 | 523 | |
| | 2006.06-2008.10 | 6AT | F | R | Estate 4WD ASB | TJ | GDS83306 | Drive Shaft | | 38 | | 59.5 | 34 | 525 | |
| | 2006.06-2008.10 | 6AT/6MT | F | L/R | Estate 4WD ASB | | GCO83077 | Outer Joint | | 38 | 27 | 59.5 | 34 | 63 | M |
| | 2006.06-2008.10 | 6AT/6MT | F | L/R | Estate 4WD ASB | TJ | GCI61044 | Inner Joint | | | 34 | | | 85 | |
| | 2006.06-2008.10 | 6AT/6MT | F | L/R | Estate 4WD ASB | AAR | GCI61076 | Inner Joint | | | 34 | | | 85 | |
| | 2006.06-2008.10 | 6MT | F | L | Estate 4WD ASB | TJ | GDS83290 | Drive Shaft | | 38 | | 59.5 | 34 | 617 | |
| | 2006.06-2008.10 | 6MT | F | R | Estate 4WD ASB | AAR | GDS81591 | Drive Shaft | | 38 | | 59.5 | 34 | 653 | |
| | 2006.06-2008.10 | 6MT | F | R | Estate 4WD ASB | TJ | GDS83329 | Drive Shaft | | 38 | | 59.5 | 34 | 655 | |
| | 2006.06-2008.10 | 6AT/6MT | R | L/R | Estate 4WD ASB | | GDS82348 | Drive Shaft | | 38 | | 59.5 | 34 | 648 | |
| | 2006.06-2008.10 | 6AT/6MT | R | L/R | Estate 4WD ASB | | GCO81358 | Outer Joint | | 38 | 33 | 59.5 | 34 | 54 | M |
| | 2006.06-2008.10 | 6AT/6MT | R | L/R | Estate 4WD ASB | | GCI61069 | Inner Joint | | | 28 | | | 32 | |
| | 2006.06-2008.10 | 6AT | F | L | Saloon 4WD ASB | TJ | GDS83305 | Drive Shaft | | 38 | | 59.5 | 34 | 603 | |
| | 2006.06-2008.10 | 6AT | F | R | Saloon 4WD ASB | AAR | GDS81590 | Drive Shaft | | 38 | | 59.5 | 34 | 523 | |
| | 2006.06-2008.10 | 6AT | F | R | Saloon 4WD ASB | TJ | GDS83306 | Drive Shaft | | 38 | | 59.5 | 34 | 525 | |
| | 2006.06-2008.10 | 6AT/6MT | F | L/R | Saloon 4WD ASB | | GCO83077 | Outer Joint | | 38 | 27 | 59.5 | 34 | 63 | M |
| | 2006.06-2008.10 | 6AT/6MT | F | L/R | Saloon 4WD ASB | TJ | GCI61044 | Inner Joint | | | 34 | | | 85 | |
| | 2006.06-2008.10 | 6AT/6MT | F | L/R | Saloon 4WD ASB | AAR | GCI61076 | Inner Joint | | | 34 | | | 85 | |
| | 2006.06-2008.10 | 6MT | F | L | Saloon 4WD ASB | TJ | GDS83290 | Drive Shaft | | 38 | | 59.5 | 34 | 617 | |
| | 2006.06-2008.10 | 6MT | F | R | Saloon 4WD ASB | AAR | GDS81591 | Drive Shaft | | 38 | | 59.5 | 34 | 653 | |
| | 2006.06-2008.10 | 6MT | F | R | Saloon 4WD ASB | TJ | GDS83329 | Drive Shaft | | 38 | | 59.5 | 34 | 655 | |
| | 2006.06-2008.10 | 6AT/6MT | R | L/R | Saloon 4WD ASB | | GDS82348 | Drive Shaft | | 38 | | 59.5 | 34 | 648 | |
| | 2006.06-2008.10 | 6AT/6MT | R | L/R | Saloon 4WD ASB | | GCO81358 | Outer Joint | | 38 | 33 | 59.5 | 34 | 54 | M |
| | 2006.06-2008.10 | 6AT/6MT | R | L/R | Saloon 4WD ASB | | GCI61069 | Inner Joint | | | 28 | | | 32 | |
| 3.0 (176 kw) | 2008.10-2011.03 | 6AT | F | L | Saloon 4WD CDYA;CDYC | | GDS83305 | Drive Shaft | | 38 | | 59.5 | 34 | 603 | |
| | 2008.10-2011.03 | AT | F | R | Saloon 4WD CDYA;CDYC | AAR | GDS81590 | Drive Shaft | | 38 | | 59.5 | 34 | 523 | |
| | 2008.10-2011.03 | AT | F | R | Saloon 4WD CDYA;CDYC | TJ | GDS83306 | Drive Shaft | | 38 | | 59.5 | 34 | 525 | |
| | 2008.10-2011.03 | AT/MT | F | L/R | Saloon 4WD CDYA;CDYC | TJ | GCI61044 | Inner Joint | | | 34 | | | 85 | |
| | 2008.10-2011.03 | AT/MT | F | L/R | Saloon 4WD CDYA;CDYC | AAR | GCI61076 | Inner Joint | | | 34 | | | 85 | |
| | 2008.10-2011.03 | MT | F | L | Saloon 4WD CDYA;CDYC | | GDS83290 | Drive Shaft | | 38 | | 59.5 | 34 | 617 | |
| | 2008.10-2011.03 | MT | F | R | Saloon 4WD CDYA;CDYC | AAR | GDS81591 | Drive Shaft | | 38 | | 59.5 | 34 | 653 | |
| | 2008.10-2011.03 | MT | F | R | Saloon 4WD CDYA;CDYC | TJ | GDS83329 | Drive Shaft | | 38 | | 59.5 | 34 | 655 | |
| | 2008.10-2011.03 | AT/MT | R | L/R | Saloon 4WD CDYA;CDYC | | GDS81915 | Drive Shaft | | 38 | | 59.5 | 34 | 650 | |
| | 2008.10-2011.03 | AT/MT | R | L/R | Saloon 4WD CDYA;CDYC | | GCI61069 | Inner Joint | | | 28 | | | 32 | |
| | 2008.10-2011.03 | AT/MT | F/R | L/R | Saloon 4WD CDYA;CDYC | | GCO83077 | Outer Joint | | 38 | 27 | 59.5 | 34 | 63 | M |
| | 2008.10-2011.08 | 6AT | F | L | Estate 4WD CDYA;CDYC | TJ | GDS83305 | Drive Shaft | | 38 | | 59.5 | 34 | 603 | |
| | 2008.10-2011.08 | 6AT | F | R | Estate 4WD CDYA;CDYC | AAR | GDS81590 | Drive Shaft | | 38 | | 59.5 | 34 | 523 | |
| | 2008.10-2011.08 | 6AT | F | R | Estate 4WD CDYA;CDYC | TJ | GDS83306 | Drive Shaft | | 38 | | 59.5 | 34 | 525 | |
| | 2008.10-2011.08 | 6AT/6MT | F | L/R | Estate 4WD CDYA;CDYC | TJ | GCI61044 | Inner Joint | | | 34 | | | 85 | |
| | 2008.10-2011.08 | 6AT/6MT | F | L/R | Estate 4WD CDYA;CDYC | AAR | GCI61076 | Inner Joint | | | 34 | | | 85 | |
| | 2008.10-2011.08 | 6MT | F | L | Estate 4WD CDYA;CDYC | TJ | GDS83290 | Drive Shaft | | 38 | | 59.5 | 34 | 617 | |
| | 2008.10-2011.08 | 6MT | F | R | Estate 4WD CDYA;CDYC | AAR | GDS81591 | Drive Shaft | | 38 | | 59.5 | 34 | 653 | |
| | 2008.10-2011.08 | 6MT | F | R | Estate 4WD CDYA;CDYC | TJ | GDS83329 | Drive Shaft | | 38 | | 59.5 | 34 | 655 | |
| | 2008.10-2011.08 | 6AT/6MT | R | L/R | Estate 4WD CDYA;CDYC | | GDS81915 | Drive Shaft | | 38 | | 59.5 | 34 | 650 | |
| | 2008.10-2011.08 | 6AT/6MT | R | L/R | Estate 4WD CDYA;CDYC | | GCI61069 | Inner Joint | | | 28 | | | 32 | |
| | 2008.10-2011.08 | 6AT/6MT | F/R | L/R | Estate 4WD CDYA;CDYC | | GCO83077 | Outer Joint | | 38 | 27 | 59.5 | 34 | 63 | M |
| 3.0 (180 kw) | 2011.03-2018.09 | 7AT | F | L/R | Saloon 4WD CDUC;CKVB;CKVC;CDUD | | GDS61290 | Drive Shaft | | 42 | | 76.4 | 34 | 493 | |
| | 2011.03-2018.09 | 7AT | F | L/R | Saloon 4WD CDUC;CKVB;CKVC;CDUD | | GCO83103 | Outer Joint | | 42 | 28 | 76.4 | 34 | 54 | I |
| | 2011.03-2018.09 | 7AT | F | L/R | Saloon 4WD CDUC;CKVB;CKVC;CDUD | | GCI83022 | Inner Joint | | | 34 | | | 88.5 | |
| | 2011.03-2018.09 | 7AT | R | L | Saloon 4WD CDUC;CKVB;CKVC;CDUD | For PR code:GH2;For vehicles with electronic LTD slip differential | GDS61291 | Drive Shaft | | 42 | | 76.5 | 34 | 620 | |
| | 2011.03-2018.09 | 7AT | R | R | Saloon 4WD CDUC;CKVB;CKVC;CDUD | For PR code:GH2;For vehicles with electronic LTD slip differential | GDS82251 | Drive Shaft | | 42 | | 76.5 | 34 | 576 | |

| | YEAR | TRANSM. | F/R | L/R | BODY STYLE & DRIVE TYPE & ENGINE | REMARKS | G-AP Ref. | PRODUCT | ABS | Technical Specifications A | B | C | H | L | P |
|---|---|---|---|---|---|---|---|---|---|---|---|---|---|---|---|
| **AUDI** **A6 Quattro** | | | | | | | | | | | | | | | |
| 3.0 (180 kw) | 2011.03-2018.09 | 7AT | R | L/R | Saloon 4WD CDUC;CKVB;CKVC;CDUD | For PR code:GH1 | GDS83368 | Drive Shaft | | 42 | | 76.5 | 34 | 660 | |
| | 2011.03-2018.09 | 7AT | R | L/R | Saloon 4WD CDUC;CKVB;CKVC;CDUD | | GCI83039 | Outer Joint | | 42 | 28 | 76.5 | 34 | 72 | |
| | 2011.03-2018.09 | 7AT | R | L/R | Saloon 4WD CDUC;CKVB;CKVC;CDUD | | GCI61069 | Inner Joint | | | 28 | | | 32 | |
| | 2011.05-2018.09 | 7AT | F | L/R | Estate 4WD CDUC;CKVB;CKVC;CDUD | | GDS61290 | Drive Shaft | | 42 | | 76.4 | 34 | 493 | |
| | 2011.05-2018.09 | 7AT | F | L/R | Estate 4WD CDUC;CKVB;CKVC;CDUD | | GCO83103 | Outer Joint | | 42 | 28 | 76.4 | 34 | 54 | I |
| | 2011.05-2018.09 | 7AT | F | L/R | Estate 4WD CDUC;CKVB;CKVC;CDUD | | GCI83022 | Inner Joint | | | 34 | | | 88.5 | |
| | 2011.05-2018.09 | 7AT | R | L | Estate 4WD CDUC;CKVB;CKVC;CDUD | For PR code:GH2;For vehicles with electronic LTD slip differential | GDS61291 | Drive Shaft | | 42 | | 76.5 | 34 | 620 | |
| | 2011.05-2018.09 | 7AT | R | R | Estate 4WD CDUC;CKVB;CKVC;CDUD | For PR code:GH2;For vehicles with electronic LTD slip differential | GDS82251 | Drive Shaft | | 42 | | 76.5 | 34 | 576 | |
| | 2011.05-2018.09 | 7AT | R | L/R | Estate 4WD CDUC;CKVB;CKVC;CDUD | For PR code:GH1 | GDS83368 | Drive Shaft | | 42 | | 76.5 | 34 | 660 | |
| | 2011.05-2018.09 | 7AT | R | L/R | Estate 4WD CDUC;CKVB;CKVC;CDUD | | GCI83039 | Outer Joint | | 42 | 28 | 76.5 | 34 | 72 | |
| | 2011.05-2018.09 | 7AT | R | L/R | Estate 4WD CDUC;CKVB;CKVC;CDUD | | GCI61069 | Inner Joint | | | 28 | | | 32 | |
| | 2021.01- | 7AT | F | L/R | Estate 4WD DMGH | For PR code:GH1/GH2 | GDS84553 | Drive Shaft | | 42 | | 76.5 | 34 | 496 | |
| | 2021.01- | 7AT | F | L/R | Estate 4WD DMGH | For PR code:GH4,For vehicles with AWD & variable torque dist. | GDS84556 | Drive Shaft | | 42 | | 76.5 | 34 | 495 | |
| | 2021.01- | 7AT | F | L/R | Estate 4WD DMGH | For PR code:GH1/GH2 | GCO81357 | Outer Joint | | 42 | 28 | 76.5 | 34 | 54 | I |
| | 2021.01- | 7AT | F | L/R | Estate 4WD DMGH | For PR Code:GH4 | GCO82603 | Outer Joint | | 42 | 30 | 76.5 | 34 | 60 | I |
| | 2021.01- | 7AT | F | L/R | Estate 4WD DMGH | For PR code:GH1/GH2 | GCI61077 | Inner Joint | | | 34 | | | 88 | |
| | 2021.01- | 7AT | F | L/R | Estate 4WD DMGH | For PR code:GH4,For vehicles with AWD & variable torque dist. | GCI81397 | Inner Joint | | | 27 | | | 89 | |
| | 2021.01- | 7AT | R | L | Estate 4WD DMGH | For PR code:GH4,For vehicles with AWD & variable torque dist. | GDS56373 | Drive Shaft | | 42 | | 76.5 | 34 | 660 | |
| | 2021.01- | 7AT | R | L | Estate 4WD DMGH | For PR code:GH2;For vehicles with AWD & variable torque dist. | GDS58068 | Drive Shaft | | 42 | | 76.5 | 34 | 618 | |
| | 2021.01- | 7AT | R | R | Estate 4WD DMGH | For PR code:GH4,For vehicles with AWD & variable torque dist. | GDS56844 | Drive Shaft | | 42 | | 76.5 | 34 | 581 | |
| | 2021.01- | 7AT | R | R | Estate 4WD DMGH | For PR code:GH2;For vehicles with AWD & variable torque dist. | GDS58054 | Drive Shaft | | 42 | | 76.5 | 34 | 574 | |
| | 2021.01- | 7AT | R | L/R | Estate 4WD DMGH | For PR code:GH1 | GDS83368 | Drive Shaft | | 42 | | 76.5 | 34 | 660 | |
| | 2021.01- | 7AT | R | L/R | Estate 4WD DMGH | For PR code:GH4,For vehicles with AWD & variable torque dist. | GCI81752 | Inner Joint | | | 33 | | | 34 | |
| | 2021.01- | 7AT | F | L/R | Saloon 4WD DMGH | For PR code:GH1/GH2 | GCI61077 | Inner Joint | | | 34 | | | 88 | |
| | 2021.01- | AT | F | L/R | Saloon 4WD DMGH | For PR code:GH1/GH2 | GDS84553 | Drive Shaft | | 42 | | 76.5 | 34 | 496 | |
| | 2021.01- | AT | F | L/R | Saloon 4WD DMGH | For PR code:GH4,For vehicles with AWD & variable torque dist. | GDS84556 | Drive Shaft | | 42 | | 76.5 | 34 | 495 | |
| | 2021.01- | AT | F | L/R | Saloon 4WD DMGH | For PR code:GH1/GH2 | GCO81357 | Outer Joint | | 42 | 28 | 76.5 | 34 | 54 | I |
| | 2021.01- | AT | F | L/R | Saloon 4WD DMGH | For PR code:GH4,For vehicles with AWD & variable torque dist. | GCI81397 | Inner Joint | | | 27 | | | 89 | |
| | 2021.01- | AT | R | L | Saloon 4WD DMGH | For PR code:GH4,For vehicles with AWD & variable torque dist. | GDS56373 | Drive Shaft | | 42 | | 76.5 | 34 | 660 | |
| | 2021.01- | AT | R | L | Saloon 4WD DMGH | For PR code:GH2;For vehicles with AWD & variable torque dist. | GDS58068 | Drive Shaft | | 42 | | 76.5 | 34 | 618 | |
| | 2021.01- | AT | R | R | Saloon 4WD DMGH | For PR code:GH4,For vehicles with AWD & variable torque dist. | GDS56844 | Drive Shaft | | 42 | | 76.5 | 34 | 581 | |
| | 2021.01- | AT | R | R | Saloon 4WD DMGH | For PR code:GH2;For vehicles with AWD & variable torque dist. | GDS58054 | Drive Shaft | | 42 | | 76.5 | 34 | 574 | |
| | 2021.01- | AT | R | L/R | Saloon 4WD DMGH | For PR code:GH1 | GDS83368 | Drive Shaft | | 42 | | 76.5 | 34 | 660 | |
| | 2021.01- | AT | R | L/R | Saloon 4WD DMGH | For PR code:GH4,For vehicles with AWD & variable torque dist. | GCI81752 | Inner Joint | | | 33 | | | 34 | |
| 3.0 (183 kw) | 2019.07- | 8AT | F | L/R | Estate 4WD CVMD | For PR code:GH1/GH2 | GDS84553 | Drive Shaft | | 42 | | 76.5 | 34 | 496 | |
| | 2019.07- | 8AT | F | L/R | Estate 4WD CVMD | For PR code:GH4,For vehicles with AWD & variable torque dist. | GDS84556 | Drive Shaft | | 42 | | 76.5 | 34 | 495 | |
| | 2019.07- | 8AT | F | L/R | Estate 4WD CVMD | For PR code:GH1/GH2 | GCO81357 | Outer Joint | | 42 | 28 | 76.5 | 34 | 54 | I |
| | 2019.07- | 8AT | F | L/R | Estate 4WD CVMD | For PR Code:GH4 | GCO82603 | Outer Joint | | 42 | 30 | 76.5 | 34 | 60 | I |
| | 2019.07- | 8AT | F | L/R | Estate 4WD CVMD | For PR code:GH4,For vehicles with AWD & variable torque dist. | GCI81397 | Inner Joint | | | 27 | | | 89 | |
| | 2019.07- | 8AT | R | L | Estate 4WD CVMD | For PR code:GH4,For vehicles with AWD & variable torque dist. | GDS56373 | Drive Shaft | | 42 | | 76.5 | 34 | 660 | |
| | 2019.07- | 8AT | R | L | Estate 4WD CVMD | For PR code:GH2;For vehicles with AWD & variable torque dist. | GDS58068 | Drive Shaft | | 42 | | 76.5 | 34 | 618 | |
| | 2019.07- | 8AT | R | R | Estate 4WD CVMD | For PR code:GH4,For vehicles with AWD & variable torque dist. | GDS56844 | Drive Shaft | | 42 | | 76.5 | 34 | 581 | |
| | 2019.07- | 8AT | R | R | Estate 4WD CVMD | For PR code:GH2;For vehicles with AWD & variable torque dist. | GDS58054 | Drive Shaft | | 42 | | 76.5 | 34 | 574 | |
| | 2019.07- | 8AT | R | L/R | Estate 4WD CVMD | For PR code:GH1 | GDS83368 | Drive Shaft | | 42 | | 76.5 | 34 | 660 | |
| | 2019.07- | 8AT | R | L/R | Estate 4WD CVMD | For PR code:GH4,For vehicles with AWD & variable torque dist. | GCI81752 | Inner Joint | | | 33 | | | 34 | |
| | 2019.07- | 8AT | F | L/R | Saloon 4WD CVMD | For PR code:GH1/GH2 | GDS84553 | Drive Shaft | | 42 | | 76.5 | 34 | 496 | |
| | 2019.07- | 8AT | F | L/R | Saloon 4WD CVMD | For PR code:GH4,For vehicles with AWD & variable torque dist. | GDS84556 | Drive Shaft | | 42 | | 76.5 | 34 | 495 | |
| | 2019.07- | 8AT | F | L/R | Saloon 4WD CVMD | For PR code:GH1/GH2 | GCO81357 | Outer Joint | | 42 | 28 | 76.5 | 34 | 54 | I |
| | 2019.07- | 8AT | F | L/R | Saloon 4WD CVMD | For PR Code:GH4 | GCO82603 | Outer Joint | | 42 | 30 | 76.5 | 34 | 60 | I |
| | 2019.07- | 8AT | F | L/R | Saloon 4WD CVMD | For PR code:GH4,For vehicles with AWD & variable torque dist. | GCI81397 | Inner Joint | | | 27 | | | 89 | |
| | 2019.07- | 8AT | R | L | Saloon 4WD CVMD | For PR code:GH4,For vehicles with AWD & variable torque dist. | GDS56373 | Drive Shaft | | 42 | | 76.5 | 34 | 660 | |
| | 2019.07- | 8AT | R | L | Saloon 4WD CVMD | For PR code:GH2;For vehicles with AWD & variable torque dist. | GDS58068 | Drive Shaft | | 42 | | 76.5 | 34 | 618 | |
| | 2019.07- | 8AT | R | R | Saloon 4WD CVMD | For PR code:GH4,For vehicles with AWD & variable torque dist. | GDS56844 | Drive Shaft | | 42 | | 76.5 | 34 | 581 | |
| | 2019.07- | 8AT | R | R | Saloon 4WD CVMD | For PR code:GH2;For vehicles with AWD & variable torque dist. | GDS58054 | Drive Shaft | | 42 | | 76.5 | 34 | 574 | |
| | 2019.07- | 8AT | R | L/R | Saloon 4WD CVMD | For PR code:GH1 | GDS83368 | Drive Shaft | | 42 | | 76.5 | 34 | 660 | |
| | 2019.07- | 8AT | R | L/R | Saloon 4WD CVMD | For PR code:GH4,For vehicles with AWD & variable torque dist. | GCI81752 | Inner Joint | | | 33 | | | 34 | |
| 3.0 (200 kw) | 2014.09-2018.09 | 7AT | F | L/R | Estate 4WD CRTD | | GDS61290 | Drive Shaft | | 42 | | 76.4 | 34 | 493 | |
| | 2014.09-2018.09 | 7AT | F | L/R | Estate 4WD CRTD | | GCO83103 | Outer Joint | | 42 | 28 | 76.4 | 34 | 54 | I |
| | 2014.09-2018.09 | 7AT | F | L/R | Estate 4WD CRTD | | GCI83022 | Inner Joint | | | 34 | | | 88.5 | |
| | 2014.09-2018.09 | 7AT | R | L | Estate 4WD CRTD | For PR code:GH2;For vehicles with electronic LTD slip differential | GDS61291 | Drive Shaft | | 42 | | 76.5 | 34 | 620 | |
| | 2014.09-2018.09 | 7AT | R | R | Estate 4WD CRTD | For PR code:GH2;For vehicles with electronic LTD slip differential | GDS82251 | Drive Shaft | | 42 | | 76.5 | 34 | 576 | |
| | 2014.09-2018.09 | 7AT | R | L/R | Estate 4WD CRTD | For PR code:GH1 | GDS83368 | Drive Shaft | | 42 | | 76.5 | 34 | 660 | |
| | 2014.09-2018.09 | 7AT | R | L/R | Estate 4WD CRTD | | GCI83039 | Outer Joint | | 42 | 28 | 76.5 | 34 | 72 | |
| | 2014.09-2018.09 | 7AT | R | L/R | Estate 4WD CRTD | | GCI61069 | Inner Joint | | | 28 | | | 32 | |
| | 2014.09-2018.09 | 7AT | F | L/R | Saloon 4WD CRTD | | GDS61290 | Drive Shaft | | 42 | | 76.4 | 34 | 493 | |

| | YEAR | TRANSM. | F/R | L/R | BODY STYLE & DRIVE TYPE & ENGINE | REMARKS | G-AP Ref. | PRODUCT | ABS | Technical Specifications A | B | C | H | L | P |
|---|---|---|---|---|---|---|---|---|---|---|---|---|---|---|---|
| **AUDI** | | | | | | | | | | | | | | | |
| **A6 Quattro** | | | | | | | | | | | | | | | |
| 3.0 (200 kw) | 2014.09-2018.09 | 7AT | F | L/R | Saloon 4WD CRTD | | GCO83103 | Outer Joint | | 42 | 28 | 76.4 | 34 | 54 | I |
| | 2014.09-2018.09 | 7AT | F | L/R | Saloon 4WD CRTD | | GCI83022 | Inner Joint | | | 34 | | | 88.5 | |
| | 2014.09-2018.09 | 7AT | R | L | Saloon 4WD CRTD | For PR code:GH2,For vehicles with electronic LTD slip differential | GDS61291 | Drive Shaft | | 42 | | 76.5 | 34 | 620 | |
| | 2014.09-2018.09 | 7AT | R | R | Saloon 4WD CRTD | For PR code:GH2,For vehicles with electronic LTD slip differential | GDS82251 | Drive Shaft | | 42 | | 76.5 | 34 | 576 | |
| | 2014.09-2018.09 | 7AT | R | L/R | Saloon 4WD CRTD | For PR code:GH1 | GDS83368 | Drive Shaft | | 42 | | 76.5 | 34 | 660 | |
| | 2014.09-2018.09 | 7AT | R | L/R | Saloon 4WD CRTD | | GCI83039 | Outer Joint | | 42 | 28 | 76.5 | 34 | 72 | |
| | 2014.09-2018.09 | 7AT | R | L/R | Saloon 4WD CRTD | | GCI61069 | Inner Joint | | | 28 | | | 32 | |
| 3.0 (210 kw) | 2018.02- | 8AT | F | L/R | Saloon 4WD DDVB;DMGA | For PR code:GH1/GH2 | GDS84553 | Drive Shaft | | 42 | | 76.5 | 34 | 496 | |
| | 2018.02- | 8AT | F | L/R | Saloon 4WD DDVB;DMGA | For PR code:GH4,For vehicles with AWD & variable torque dist. | GDS84556 | Drive Shaft | | 42 | | 76.5 | 34 | 495 | |
| | 2018.02- | 8AT | F | L/R | Saloon 4WD DDVB;DMGA | For PR code:GH1/GH2 | GCO81357 | Outer Joint | | 42 | 28 | 76.5 | 34 | 54 | I |
| | 2018.02- | 8AT | F | L/R | Saloon 4WD DDVB;DMGA | Date From:2019.02,For PR Code:GH4 | GCO82603 | Outer Joint | | 42 | 30 | 76.5 | 34 | 60 | I |
| | 2018.02- | 8AT | F | L/R | Saloon 4WD DDVB;DMGA | | GCI61077 | Inner Joint | | | 34 | | | 88 | |
| | 2018.02- | 8AT | R | L | Saloon 4WD DDVB;DMGA | For PR code:GH4,For vehicles with AWD & variable torque dist. | GDS56373 | Drive Shaft | | 42 | | 76.5 | 34 | 660 | |
| | 2018.02- | 8AT | R | L | Saloon 4WD DDVB;DMGA | For PR code:GH2,For vehicles with AWD & variable torque dist. | GDS58068 | Drive Shaft | | 42 | | 76.5 | 34 | 618 | |
| | 2018.02- | 8AT | R | R | Saloon 4WD DDVB;DMGA | For PR code:GH4,For vehicles with AWD & variable torque dist. | GDS56844 | Drive Shaft | | 42 | | 76.5 | 34 | 581 | |
| | 2018.02- | 8AT | R | R | Saloon 4WD DDVB;DMGA | For PR code:GH2,For vehicles with AWD & variable torque dist. | GDS58054 | Drive Shaft | | 42 | | 76.5 | 34 | 574 | |
| | 2018.02- | 8AT | R | L/R | Saloon 4WD DDVB;DMGA | For PR code:GH1 | GDS83368 | Drive Shaft | | 42 | | 76.5 | 34 | 660 | |
| | 2018.02- | 8AT | R | L/R | Saloon 4WD DDVB;DMGA | For PR code:GH4,For vehicles with AWD & variable torque dist. | GCI81752 | Inner Joint | | | 33 | | | 34 | |
| | 2018.05- | 8AT | F | L/R | Estate 4WD DDVB;DMGA | For PR code:GH1/GH2 | GDS84553 | Drive Shaft | | 42 | | 76.5 | 34 | 496 | |
| | 2018.05- | 8AT | F | L/R | Estate 4WD DDVB;DMGA | For PR code:GH4,For vehicles with AWD & variable torque dist. | GDS84556 | Drive Shaft | | 42 | | 76.5 | 34 | 495 | |
| | 2018.05- | 8AT | F | L/R | Estate 4WD DDVB;DMGA | For PR code:GH1/GH2 | GCO81357 | Outer Joint | | 42 | 28 | 76.5 | 34 | 54 | I |
| | 2018.05- | 8AT | F | L/R | Estate 4WD DDVB;DMGA | Date From:2019.02,For PR Code:GH4 | GCO82603 | Outer Joint | | 42 | 30 | 76.5 | 34 | 60 | I |
| | 2018.05- | 8AT | F | L/R | Estate 4WD DDVB;DMGA | | GCI61077 | Inner Joint | | | 34 | | | 88 | |
| | 2018.05- | 8AT | R | L | Estate 4WD DDVB;DMGA | For PR code:GH4,For vehicles with AWD & variable torque dist. | GDS56373 | Drive Shaft | | 42 | | 76.5 | 34 | 660 | |
| | 2018.05- | 8AT | R | L | Estate 4WD DDVB;DMGA | For PR code:GH2,For vehicles with AWD & variable torque dist. | GDS58068 | Drive Shaft | | 42 | | 76.5 | 34 | 618 | |
| | 2018.05- | 8AT | R | R | Estate 4WD DDVB;DMGA | For PR code:GH4,For vehicles with AWD & variable torque dist. | GDS56844 | Drive Shaft | | 42 | | 76.5 | 34 | 581 | |
| | 2018.05- | 8AT | R | R | Estate 4WD DDVB;DMGA | For PR code:GH2,For vehicles with AWD & variable torque dist. | GDS58054 | Drive Shaft | | 42 | | 76.5 | 34 | 574 | |
| | 2018.05- | 8AT | R | L/R | Estate 4WD DDVB;DMGA | For PR code:GH1 | GDS83368 | Drive Shaft | | 42 | | 76.5 | 34 | 660 | |
| | 2018.05- | 8AT | R | L/R | Estate 4WD DDVB;DMGA | For PR code:GH4,For vehicles with AWD & variable torque dist. | GCI81752 | Inner Joint | | | 33 | | | 34 | |
| 3.0 (213 kw) | 2008.10-2011.03 | 6AT | F | L | Saloon 4WD CAJA | | GDS83305 | Drive Shaft | | 38 | | 59.5 | 34 | 603 | |
| | 2008.10-2011.03 | 6AT | F | R | Saloon 4WD CAJA | AAR | GDS81590 | Drive Shaft | | 38 | | 59.5 | 34 | 523 | |
| | 2008.10-2011.03 | 6AT | F | R | Saloon 4WD CAJA | TJ | GDS83306 | Drive Shaft | | 38 | | 59.5 | 34 | 525 | |
| | 2008.10-2011.03 | 6AT | F | L/R | Saloon 4WD CAJA | TJ | GCI61044 | Inner Joint | | | 34 | | | 85 | |
| | 2008.10-2011.03 | 6AT | F | L/R | Saloon 4WD CAJA | AAR | GCI61076 | Inner Joint | | | 34 | | | 85 | |
| | 2008.10-2011.03 | 6AT | R | L/R | Saloon 4WD CAJA | | GDS81915 | Drive Shaft | | 38 | | 59.5 | 34 | 650 | |
| | 2008.10-2011.03 | 6AT | R | L/R | Saloon 4WD CAJA | | GCI61069 | Inner Joint | | | 28 | | | 32 | |
| | 2008.10-2011.03 | 6AT | F/R | L/R | Saloon 4WD CAJA | | GCO83077 | Outer Joint | | 38 | 27 | 59.5 | 34 | 63 | M |
| | 2008.10-2011.08 | 6AT | F | L | Estate 4WD CAJA | | GDS83305 | Drive Shaft | | 38 | | 59.5 | 34 | 603 | |
| | 2008.10-2011.08 | 6AT | F | R | Estate 4WD CAJA | AAR | GDS81590 | Drive Shaft | | 38 | | 59.5 | 34 | 523 | |
| | 2008.10-2011.08 | 6AT | F | R | Estate 4WD CAJA | TJ | GDS83306 | Drive Shaft | | 38 | | 59.5 | 34 | 525 | |
| | 2008.10-2011.08 | 6AT | F | L/R | Estate 4WD CAJA | TJ | GCI61044 | Inner Joint | | | 34 | | | 85 | |
| | 2008.10-2011.08 | 6AT | F | L/R | Estate 4WD CAJA | AAR | GCI61076 | Inner Joint | | | 34 | | | 85 | |
| | 2008.10-2011.08 | 6AT | R | L/R | Estate 4WD CAJA | | GDS81915 | Drive Shaft | | 38 | | 59.5 | 34 | 650 | |
| | 2008.10-2011.08 | 6AT | R | L/R | Estate 4WD CAJA | | GCI61069 | Inner Joint | | | 28 | | | 32 | |
| | 2008.10-2011.08 | 6AT | F/R | L/R | Estate 4WD CAJA | | GCO83077 | Outer Joint | | 38 | 27 | 59.5 | 34 | 63 | M |
| 3.0 (220 kw) | 2008.10-2011.03 | 6AT | F | L | Saloon 4WD CCAA | | GDS83305 | Drive Shaft | | 38 | | 59.5 | 34 | 603 | |
| | 2008.10-2011.03 | 6AT | F | R | Saloon 4WD CCAA | AAR | GDS81590 | Drive Shaft | | 38 | | 59.5 | 34 | 523 | |
| | 2008.10-2011.03 | 6AT | F | R | Saloon 4WD CCAA | TJ | GDS83306 | Drive Shaft | | 38 | | 59.5 | 34 | 525 | |
| | 2008.10-2011.03 | 6AT | F | L/R | Saloon 4WD CCAA | TJ | GCI61044 | Inner Joint | | | 34 | | | 85 | |
| | 2008.10-2011.03 | 6AT | F | L/R | Saloon 4WD CCAA | AAR | GCI61076 | Inner Joint | | | 34 | | | 85 | |
| | 2008.10-2011.03 | 6AT | R | L/R | Saloon 4WD CCAA | | GDS81915 | Drive Shaft | | 38 | | 59.5 | 34 | 650 | |
| | 2008.10-2011.03 | 6AT | R | L/R | Saloon 4WD CCAA | | GCI61069 | Inner Joint | | | 28 | | | 32 | |
| | 2008.10-2011.03 | 6AT | F/R | L/R | Saloon 4WD CCAA | | GCO83077 | Outer Joint | | 38 | 27 | 59.5 | 34 | 63 | M |
| | 2008.10-2011.08 | 6AT | F | L | Estate 4WD CCAA | | GDS83305 | Drive Shaft | | 38 | | 59.5 | 34 | 603 | |
| | 2008.10-2011.08 | 6AT | F | R | Estate 4WD CCAA | AAR | GDS81590 | Drive Shaft | | 38 | | 59.5 | 34 | 523 | |
| | 2008.10-2011.08 | 6AT | F | R | Estate 4WD CCAA | TJ | GDS83306 | Drive Shaft | | 38 | | 59.5 | 34 | 525 | |
| | 2008.10-2011.08 | 6AT | F | L/R | Estate 4WD CCAA | TJ | GCI61044 | Inner Joint | | | 34 | | | 85 | |
| | 2008.10-2011.08 | 6AT | F | L/R | Estate 4WD CCAA | AAR | GCI61076 | Inner Joint | | | 34 | | | 85 | |
| | 2008.10-2011.08 | 6AT | R | L/R | Estate 4WD CCAA | | GDS81915 | Drive Shaft | | 38 | | 59.5 | 34 | 650 | |
| | 2008.10-2011.08 | 6AT | R | L/R | Estate 4WD CCAA | | GCI61069 | Inner Joint | | | 28 | | | 32 | |
| | 2008.10-2011.08 | 6AT | F/R | L/R | Estate 4WD CCAA | | GCO83077 | Outer Joint | | 38 | 27 | 59.5 | 34 | 63 | M |
| | 2010.11-2012.05 | 7AT | F | L/R | Saloon 4WD CCAA;CGWB | | GDS61290 | Drive Shaft | | 42 | | 76.4 | 34 | 493 | |
| | 2010.11-2012.05 | AT | F | L/R | Saloon 4WD CCAA;CGWB | | GCO83103 | Outer Joint | | 42 | 28 | 76.4 | 34 | 54 | I |
| | 2010.11-2012.05 | AT | F | L/R | Saloon 4WD CCAA;CGWB | | GCI83022 | Inner Joint | | | 34 | | | 88.5 | |
| | 2010.11-2012.05 | 7AT | R | L | Saloon 4WD CCAA;CGWB | For PR code:GH2,For vehicles with electronic limited slip diff. | GDS61291 | Drive Shaft | | 42 | | 76.5 | 34 | 620 | |

| | YEAR | TRANSM. | F/R | L/R | BODY STYLE & DRIVE TYPE & ENGINE | REMARKS | G-AP Ref. | PRODUCT | ABS | Technical Specifications A | B | C | H | L | P |
|---|---|---|---|---|---|---|---|---|---|---|---|---|---|---|---|
| **AUDI** **A6 Quattro** | | | | | | | | | | | | | | | |
| 3.0 (220 kw) | 2010.11-2012.05 | 7AT | R | R | Saloon 4WD CCAA;CGWB | For PR code:GH2,For vehicles with electronic limited slip diff. | GDS82251 | Drive Shaft | | 42 | | 76.5 | 34 | 576 | |
| | 2010.11-2012.05 | 7AT | R | L/R | Saloon 4WD CCAA;CGWB | For PR code:GH1 | GDS83368 | Drive Shaft | | 42 | | 76.5 | 34 | 660 | |
| | 2010.11-2012.05 | 7AT | R | L/R | Saloon 4WD CCAA;CGWB | | GCI83039 | Outer Joint | | 42 | 28 | 76.5 | 34 | 72 | |
| | 2010.11-2012.05 | 7AT | R | L/R | Saloon 4WD CCAA;CGWB | | GCI61069 | Inner Joint | | | 28 | | | 32 | |
| | 2011.05-2012.05 | 7AT | F | L/R | Estate 4WD CGWB | | GDS61290 | Drive Shaft | | 42 | | 76.4 | 34 | 493 | |
| | 2011.05-2012.05 | AT | F | L/R | Estate 4WD CGWB | | GCO83103 | Outer Joint | | 42 | 28 | 76.4 | 34 | 54 | I |
| | 2011.05-2012.05 | AT | F | L/R | Estate 4WD CGWB | | GCI83022 | Inner Joint | | | 34 | | | 88.5 | |
| | 2011.05-2012.05 | 7AT | R | L | Estate 4WD CGWB | Differential:For vehicles with electronic ltd slip differential;For PR code:GH2 | GDS61291 | Drive Shaft | | 42 | | 76.5 | 34 | 620 | |
| | 2011.05-2012.05 | 7AT | R | R | Estate 4WD CGWB | Differential:For vehicles with electronic ltd slip differential;For PR code:GH2 | GDS82251 | Drive Shaft | | 42 | | 76.5 | 34 | 576 | |
| | 2011.05-2012.05 | 7AT | R | L/R | Estate 4WD CGWB | For PR code:GH1 | GDS83368 | Drive Shaft | | 42 | | 76.5 | 34 | 660 | |
| | 2011.05-2012.05 | 7AT | R | L/R | Estate 4WD CGWB | | GCI83039 | Outer Joint | | 42 | 28 | 76.5 | 34 | 72 | |
| | 2011.05-2012.05 | 7AT | R | L/R | Estate 4WD CGWB | | GCI61069 | Inner Joint | | | 28 | | | 32 | |
| 3.0 (228 kw) | 2011.03-2018.09 | 7AT/8AT | F | L/R | Saloon 4WD CGXB;CTUA;CGWD | | GDS61290 | Drive Shaft | | 42 | | 76.4 | 34 | 493 | |
| | 2011.03-2018.09 | AT | F | L/R | Saloon 4WD CGXB;CTUA;CGWD | | GCO83103 | Outer Joint | | 42 | 28 | 76.4 | 34 | 54 | I |
| | 2011.03-2018.09 | AT | F | L/R | Saloon 4WD CGXB;CTUA;CGWD | | GCI83022 | Inner Joint | | | 34 | | | 88.5 | |
| | 2011.03-2018.09 | 7AT/8AT | R | L | Saloon 4WD CGXB;CTUA;CGWD | For PR code:GH2,For vehicles with electronic ltd slip differential | GDS61291 | Drive Shaft | | 42 | | 76.5 | 34 | 620 | |
| | 2011.03-2018.09 | 7AT/8AT | R | R | Saloon 4WD CGXB;CTUA;CGWD | For PR code:GH2,For vehicles with electronic ltd slip differential | GDS82251 | Drive Shaft | | 42 | | 76.5 | 34 | 576 | |
| | 2011.03-2018.09 | 7AT/8AT | R | L/R | Saloon 4WD CGXB;CTUA;CGWD | For PR code:GH1 | GDS83368 | Drive Shaft | | 42 | | 76.5 | 34 | 660 | |
| | 2011.03-2018.09 | 7AT/8AT | R | L/R | Saloon 4WD CGXB;CTUA;CGWD | | GCI83039 | Outer Joint | | 42 | 28 | 76.5 | 34 | 72 | |
| | 2011.03-2018.09 | 7AT/8AT | R | L/R | Saloon 4WD CGXB;CTUA;CGWD | | GCI61069 | Inner Joint | | | 28 | | | 32 | |
| | 2011.11-2018.09 | 7AT | F | L/R | Estate 4WD CGWD | | GDS61290 | Drive Shaft | | 42 | | 76.4 | 34 | 493 | |
| | 2011.11-2018.09 | AT | F | L/R | Estate 4WD CGWD | | GCO83103 | Outer Joint | | 42 | 28 | 76.4 | 34 | 54 | I |
| | 2011.11-2018.09 | AT | F | L/R | Estate 4WD CGWD | | GCI83022 | Inner Joint | | | 34 | | | 88.5 | |
| | 2011.11-2018.09 | 7AT | R | L | Estate 4WD CGWD | For PR code:GH2,For vehicles with electronic ltd slip differential | GDS61291 | Drive Shaft | | 42 | | 76.5 | 34 | 620 | |
| | 2011.11-2018.09 | 7AT | R | R | Estate 4WD CGWD | For PR code:GH2,For vehicles with electronic ltd slip differential | GDS82251 | Drive Shaft | | 42 | | 76.5 | 34 | 576 | |
| | 2011.11-2018.09 | 7AT | R | L/R | Estate 4WD CGWD | For PR code:GH1 | GDS83368 | Drive Shaft | | 42 | | 76.5 | 34 | 660 | |
| | 2011.11-2018.09 | 7AT | R | L/R | Estate 4WD CGWD | | GCI83039 | Outer Joint | | 42 | 28 | 76.5 | 34 | 72 | |
| | 2011.11-2018.09 | 7AT | R | L/R | Estate 4WD CGWD | | GCI61069 | Inner Joint | | | 28 | | | 32 | |
| 3.0 (230 kw) | 2011.11-2018.09 | 8AT | F | L/R | Estate 4WD CGQB | | GDS61290 | Drive Shaft | | 42 | | 76.4 | 34 | 493 | |
| | 2011.11-2018.09 | AT | F | L/R | Estate 4WD CGQB | | GCO83103 | Outer Joint | | 42 | 28 | 76.4 | 34 | 54 | I |
| | 2011.11-2018.09 | AT | F | L/R | Estate 4WD CGQB | | GCI83022 | Inner Joint | | | 34 | | | 88.5 | |
| | 2011.11-2018.09 | 8AT | R | L | Estate 4WD CGQB | For PR code:GH2,For vehicles with electronic ltd slip differential | GDS61291 | Drive Shaft | | 42 | | 76.5 | 34 | 620 | |
| | 2011.11-2018.09 | 8AT | R | R | Estate 4WD CGQB | For PR code:GH2,For vehicles with electronic ltd slip differential | GDS82251 | Drive Shaft | | 42 | | 76.5 | 34 | 576 | |
| | 2011.11-2018.09 | 8AT | R | L/R | Estate 4WD CGQB | For PR code:GH1 | GDS83368 | Drive Shaft | | 42 | | 76.5 | 34 | 660 | |
| | 2011.11-2018.09 | 8AT | R | L/R | Estate 4WD CGQB | | GCI83039 | Outer Joint | | 42 | 28 | 76.5 | 34 | 72 | |
| | 2011.11-2018.09 | 8AT | R | L/R | Estate 4WD CGQB | | GCI61069 | Inner Joint | | | 28 | | | 32 | |
| | 2011.11-2018.09 | 8AT | F | L/R | Saloon 4WD CGQB | | GDS61290 | Drive Shaft | | 42 | | 76.4 | 34 | 493 | |
| | 2011.11-2018.09 | AT | F | L/R | Saloon 4WD CGQB | | GCO83103 | Outer Joint | | 42 | 28 | 76.4 | 34 | 54 | I |
| | 2011.11-2018.09 | AT | F | L/R | Saloon 4WD CGQB | | GCI83022 | Inner Joint | | | 34 | | | 88.5 | |
| | 2011.11-2018.09 | 8AT | R | L | Saloon 4WD CGQB | For PR code:GH2,For vehicles with electronic ltd slip differential | GDS61291 | Drive Shaft | | 42 | | 76.5 | 34 | 620 | |
| | 2011.11-2018.09 | 8AT | R | R | Saloon 4WD CGQB | For PR code:GH2,For vehicles with electronic ltd slip differential | GDS82251 | Drive Shaft | | 42 | | 76.5 | 34 | 576 | |
| | 2011.11-2018.09 | 8AT | R | L/R | Saloon 4WD CGQB | For PR code:GH1 | GDS83368 | Drive Shaft | | 42 | | 76.5 | 34 | 660 | |
| | 2011.11-2018.09 | 8AT | R | L/R | Saloon 4WD CGQB | | GCI83039 | Outer Joint | | 42 | 28 | 76.5 | 34 | 72 | |
| | 2011.11-2018.09 | 8AT | R | L/R | Saloon 4WD CGQB | | GCI61069 | Inner Joint | | | 28 | | | 32 | |
| 3.0 (235 kw) | 2014.09-2018.09 | 8AT | F | L/R | Estate 4WD CVUA | | GDS61290 | Drive Shaft | | 42 | | 76.4 | 34 | 493 | |
| | 2014.09-2018.09 | 8AT | F | L/R | Estate 4WD CVUA | | GCO83103 | Outer Joint | | 42 | 28 | 76.4 | 34 | 54 | I |
| | 2014.09-2018.09 | 8AT | F | L/R | Estate 4WD CVUA | | GCI83022 | Inner Joint | | | 34 | | | 88.5 | |
| | 2014.09-2018.09 | 8AT | R | L | Estate 4WD CVUA | For PR code:GH2,For vehicles with electronic LTD slip differential | GDS61291 | Drive Shaft | | 42 | | 76.5 | 34 | 620 | |
| | 2014.09-2018.09 | 8AT | R | R | Estate 4WD CVUA | For PR code:GH2,For vehicles with electronic LTD slip differential | GDS82251 | Drive Shaft | | 42 | | 76.5 | 34 | 576 | |
| | 2014.09-2018.09 | 8AT | R | L/R | Estate 4WD CVUA | For PR code:GH1 | GDS83368 | Drive Shaft | | 42 | | 76.5 | 34 | 660 | |
| | 2014.09-2018.09 | 8AT | R | L/R | Estate 4WD CVUA | | GCI83039 | Outer Joint | | 42 | 28 | 76.5 | 34 | 72 | |
| | 2014.09-2018.09 | 8AT | R | L/R | Estate 4WD CVUA | | GCI61069 | Inner Joint | | | 28 | | | 32 | |
| | 2014.09-2018.09 | 8AT | F | L/R | Saloon 4WD CVUA | | GDS61290 | Drive Shaft | | 42 | | 76.4 | 34 | 493 | |
| | 2014.09-2018.09 | 8AT | F | L/R | Saloon 4WD CVUA | | GCO83103 | Outer Joint | | 42 | 28 | 76.4 | 34 | 54 | I |
| | 2014.09-2018.09 | 8AT | F | L/R | Saloon 4WD CVUA | | GCI83022 | Inner Joint | | | 34 | | | 88.5 | |
| | 2014.09-2018.09 | 8AT | R | L | Saloon 4WD CVUA | For PR code:GH2,For vehicles with electronic limited slip diff. | GDS61291 | Drive Shaft | | 42 | | 76.5 | 34 | 620 | |
| | 2014.09-2018.09 | 8AT | R | R | Saloon 4WD CVUA | For PR code:GH2,For vehicles with electronic limited slip diff. | GDS82251 | Drive Shaft | | 42 | | 76.5 | 34 | 576 | |
| | 2014.09-2018.09 | 8AT | R | L/R | Saloon 4WD CVUA | For PR code:GH1 | GDS83368 | Drive Shaft | | 42 | | 76.5 | 34 | 660 | |
| | 2014.09-2018.09 | 8AT | R | L/R | Saloon 4WD CVUA | | GCI83039 | Outer Joint | | 42 | 28 | 76.5 | 34 | 72 | |
| | 2014.09-2018.09 | 8AT | R | L/R | Saloon 4WD CVUA | | GCI61069 | Inner Joint | | | 28 | | | 32 | |
| 3.0 (240 kw) | 2014.09-2018.09 | 8AT | F | L/R | Estate 4WD CVUB | | GDS61290 | Drive Shaft | | 42 | | 76.4 | 34 | 493 | |
| | 2014.09-2018.09 | 8AT | F | L/R | Estate 4WD CVUB | | GCO83103 | Outer Joint | | 42 | 28 | 76.4 | 34 | 54 | I |
| | 2014.09-2018.09 | 8AT | F | L/R | Estate 4WD CVUB | | GCI83022 | Inner Joint | | | 34 | | | 88.5 | |
| | 2014.09-2018.09 | 8AT | R | L | Estate 4WD CVUB | For PR code:GH2,For vehicles with electronic LTD slip differential | GDS61291 | Drive Shaft | | 42 | | 76.5 | 34 | 620 | |
| | 2014.09-2018.09 | 8AT | R | R | Estate 4WD CVUB | For PR code:GH2,For vehicles with electronic LTD slip differential | GDS82251 | Drive Shaft | | 42 | | 76.5 | 34 | 576 | |

| | YEAR | TRANSM. | F/R | L/R | BODY STYLE & DRIVE TYPE & ENGINE | REMARKS | G-AP Ref. | PRODUCT | ABS | Technical Specifications A | B | C | H | L | P |
|---|---|---|---|---|---|---|---|---|---|---|---|---|---|---|---|
| **AUDI** **A6 Quattro** | | | | | | | | | | | | | | | |
| 3.0 (240 kw) | 2014.09-2018.09 | 8AT | R | L/R | Estate 4WD CVUB | For PR code:GH1 | GDS83368 | Drive Shaft | | 42 | | 76.5 | 34 | 660 | |
| | 2014.09-2018.09 | 8AT | R | L/R | Estate 4WD CVUB | | GCI83039 | Outer Joint | | 42 | 28 | 76.5 | 34 | 72 | |
| | 2014.09-2018.09 | 8AT | R | L/R | Estate 4WD CVUB | | GCI61069 | Inner Joint | | | 28 | | | 32 | |
| | 2014.09-2018.09 | 8AT | F | L/R | Saloon 4WD CVUB | | GDS61290 | Drive Shaft | | 42 | | 76.4 | 34 | 493 | |
| | 2014.09-2018.09 | 8AT | F | L/R | Saloon 4WD CVUB | | GCO83103 | Outer Joint | | 42 | 28 | 76.4 | 34 | 54 | I |
| | 2014.09-2018.09 | 8AT | F | L/R | Saloon 4WD CVUB | | GCI83022 | Inner Joint | | | 34 | | | 88.5 | |
| | 2014.09-2018.09 | 8AT | R | L | Saloon 4WD CVUB | For PR code:GH2,For vehicles with electronic limited slip diff. | GDS61291 | Drive Shaft | | 42 | | 76.5 | 34 | 620 | |
| | 2014.09-2018.09 | 8AT | R | R | Saloon 4WD CVUB | For PR code:GH2,For vehicles with electronic limited slip diff. | GDS82251 | Drive Shaft | | 42 | | 76.5 | 34 | 576 | |
| | 2014.09-2018.09 | 8AT | R | L/R | Saloon 4WD CVUB | For PR code:GH1 | GDS83368 | Drive Shaft | | 42 | | 76.5 | 34 | 660 | |
| | 2014.09-2018.09 | 8AT | R | L/R | Saloon 4WD CVUB | | GCI83039 | Outer Joint | | 42 | 28 | 76.5 | 34 | 72 | |
| | 2014.09-2018.09 | 8AT | R | L/R | Saloon 4WD CVUB | | GCI61069 | Inner Joint | | | 28 | | | 32 | |
| 3.0 (245 kw) | 2014.09-2018.09 | 7AT | F | L/R | Estate 4WD CREC | | GDS61290 | Drive Shaft | | 42 | | 76.4 | 34 | 493 | |
| | 2014.09-2018.09 | 7AT | F | L/R | Estate 4WD CREC | | GCO83103 | Outer Joint | | 42 | 28 | 76.4 | 34 | 54 | I |
| | 2014.09-2018.09 | 7AT | F | L/R | Estate 4WD CREC | | GCI83022 | Inner Joint | | | 34 | | | 88.5 | |
| | 2014.09-2018.09 | 7AT | R | L | Estate 4WD CREC | For PR code:GH2,For vehicles with electronic limited slip diff. | GDS61291 | Drive Shaft | | 42 | | 76.5 | 34 | 620 | |
| | 2014.09-2018.09 | 7AT | R | R | Estate 4WD CREC | For PR code:GH2,For vehicles with electronic limited slip diff. | GDS82251 | Drive Shaft | | 42 | | 76.5 | 34 | 576 | |
| | 2014.09-2018.09 | 7AT | R | L/R | Estate 4WD CREC | For PR code:GH1 | GDS83368 | Drive Shaft | | 42 | | 76.5 | 34 | 660 | |
| | 2014.09-2018.09 | 7AT | R | L/R | Estate 4WD CREC | | GCI83039 | Outer Joint | | 42 | 28 | 76.5 | 34 | 72 | |
| | 2014.09-2018.09 | 7AT | R | L/R | Estate 4WD CREC | | GCI61069 | Inner Joint | | | 28 | | | 32 | |
| | 2014.09-2018.09 | 7AT/8AT | F | L/R | Saloon 4WD CREC | | GDS61290 | Drive Shaft | | 42 | | 76.4 | 34 | 493 | |
| | 2014.09-2018.09 | 7AT/8AT | F | L/R | Saloon 4WD CREC | | GCO83103 | Outer Joint | | 42 | 28 | 76.4 | 34 | 54 | I |
| | 2014.09-2018.09 | 7AT/8AT | F | L/R | Saloon 4WD CREC | | GCI83022 | Inner Joint | | | 34 | | | 88.5 | |
| | 2014.09-2018.09 | 7AT | R | L | Saloon 4WD CREC | For PR code:GH2,For vehicles with electronic limited slip diff. | GDS61291 | Drive Shaft | | 42 | | 76.5 | 34 | 620 | |
| | 2014.09-2018.09 | 7AT | R | R | Saloon 4WD CREC | For PR code:GH2,For vehicles with electronic limited slip diff. | GDS82251 | Drive Shaft | | 42 | | 76.5 | 34 | 576 | |
| | 2014.09-2018.09 | 7AT | R | L/R | Saloon 4WD CREC | For PR code:GH1 | GDS83368 | Drive Shaft | | 42 | | 76.5 | 34 | 660 | |
| | 2014.09-2018.09 | 7AT/8AT | R | L/R | Saloon 4WD CREC | | GCI83039 | Outer Joint | | 42 | 28 | 76.5 | 34 | 72 | |
| | 2014.09-2018.09 | 7AT/8AT | R | L/R | Saloon 4WD CREC | | GCI61069 | Inner Joint | | | 28 | | | 32 | |
| 3.0 (250 kw) | 2016.09-2018.09 | 8AT | F | L/R | Saloon 4WD CREH | | GDS61290 | Drive Shaft | | 42 | | 76.4 | 34 | 493 | |
| | 2016.09-2018.09 | 8AT | F | L/R | Saloon 4WD CREH | | GCO83103 | Outer Joint | | 42 | 28 | 76.4 | 34 | 54 | I |
| | 2016.09-2018.09 | 8AT | F | L/R | Saloon 4WD CREH | | GCI83022 | Inner Joint | | | 34 | | | 88.5 | |
| | 2016.09-2018.09 | 8AT | R | L | Saloon 4WD CREH | Not For PR code:GH1 | GDS61291 | Drive Shaft | | 42 | | 76.5 | 34 | 620 | |
| | 2016.09-2018.09 | 8AT | R | R | Saloon 4WD CREH | Not For PR code:GH1 | GDS82251 | Drive Shaft | | 42 | | 76.5 | 34 | 576 | |
| | 2016.09-2018.09 | 8AT | R | L/R | Saloon 4WD CREH | For PR code:GH1 | GDS83368 | Drive Shaft | | 42 | | 76.5 | 34 | 660 | |
| | 2016.09-2018.09 | 8AT | R | L/R | Saloon 4WD CREH | | GCI83039 | Outer Joint | | 42 | 28 | 76.5 | 34 | 72 | |
| | 2016.09-2018.09 | 8AT | R | L/R | Saloon 4WD CREH | | GCI61069 | Inner Joint | | | 28 | | | 32 | |
| | 2018.02- | 7AT | F | L/R | Saloon 4WD DLZA | For PR code:GH1/GH2 | GDS84553 | Drive Shaft | | 42 | | 76.5 | 34 | 496 | |
| | 2018.02- | 7AT | F | L/R | Saloon 4WD DLZA | For PR code:GH4,For vehicles with AWD & variable torque dist. | GDS84556 | Drive Shaft | | 42 | | 76.5 | 34 | 495 | |
| | 2018.02- | 7AT | F | L/R | Saloon 4WD DLZA | For PR code:GH1/GH2 | GCO81357 | Outer Joint | | 42 | 28 | 76.5 | 34 | 54 | I |
| | 2018.02- | 7AT | F | L/R | Saloon 4WD DLZA | Date From:2019.02,For PR Code:GH4 | GCO82603 | Outer Joint | | 42 | 30 | 76.5 | 34 | 60 | I |
| | 2018.02- | 7AT | F | L/R | Saloon 4WD DLZA | | GCI61077 | Inner Joint | | | 34 | | | 88 | |
| | 2018.02- | 7AT | R | L | Saloon 4WD DLZA | For PR code:GH4,For vehicles with AWD & variable torque dist. | GDS56373 | Drive Shaft | | 42 | | 76.5 | 34 | 660 | |
| | 2018.02- | 7AT | R | L | Saloon 4WD DLZA | For PR code:GH2,For vehicles with AWD & variable torque dist. | GDS58068 | Drive Shaft | | 42 | | 76.5 | 34 | 618 | |
| | 2018.02- | 7AT | R | R | Saloon 4WD DLZA | For PR code:GH4,For vehicles with AWD & variable torque dist. | GDS56844 | Drive Shaft | | 42 | | 76.5 | 34 | 581 | |
| | 2018.02- | 7AT | R | R | Saloon 4WD DLZA | For PR code:GH2,For vehicles with AWD & variable torque dist. | GDS58054 | Drive Shaft | | 42 | | 76.5 | 34 | 574 | |
| | 2018.02- | 7AT | R | L/R | Saloon 4WD DLZA | For PR code:GH1 | GDS83368 | Drive Shaft | | 42 | | 76.5 | 34 | 660 | |
| | 2018.02- | 7AT | R | L/R | Saloon 4WD DLZA | For PR code:GH4,For vehicles with AWD & variable torque dist. | GCI81752 | Inner Joint | | | 33 | | | 34 | |
| | 2018.05- | 7AT | F | L/R | Estate 4WD DLZA | For PR code:GH1/GH2 | GDS84553 | Drive Shaft | | 42 | | 76.5 | 34 | 496 | |
| | 2018.05- | 7AT | F | L/R | Estate 4WD DLZA | For PR code:GH4,For vehicles with AWD & variable torque dist. | GDS84556 | Drive Shaft | | 42 | | 76.5 | 34 | 495 | |
| | 2018.05- | 7AT | F | L/R | Estate 4WD DLZA | For PR code:GH1/GH2 | GCO81357 | Outer Joint | | 42 | 28 | 76.5 | 34 | 54 | I |
| | 2018.05- | 7AT | F | L/R | Estate 4WD DLZA | Date From:2019.02,For PR Code:GH4 | GCO82603 | Outer Joint | | 42 | 30 | 76.5 | 34 | 60 | I |
| | 2018.05- | 7AT | F | L/R | Estate 4WD DLZA | | GCI61077 | Inner Joint | | | 34 | | | 88 | |
| | 2018.05- | 7AT | R | L | Estate 4WD DLZA | For PR code:GH4,For vehicles with AWD & variable torque dist. | GDS56373 | Drive Shaft | | 42 | | 76.5 | 34 | 660 | |
| | 2018.05- | 7AT | R | L | Estate 4WD DLZA | For PR code:GH2,For vehicles with AWD & variable torque dist. | GDS58068 | Drive Shaft | | 42 | | 76.5 | 34 | 618 | |
| | 2018.05- | 7AT | R | R | Estate 4WD DLZA | For PR code:GH4,For vehicles with AWD & variable torque dist. | GDS56844 | Drive Shaft | | 42 | | 76.5 | 34 | 581 | |
| | 2018.05- | 7AT | R | R | Estate 4WD DLZA | For PR code:GH2,For vehicles with AWD & variable torque dist. | GDS58054 | Drive Shaft | | 42 | | 76.5 | 34 | 574 | |
| | 2018.05- | 7AT | R | L/R | Estate 4WD DLZA | For PR code:GH1 | GDS83368 | Drive Shaft | | 42 | | 76.5 | 34 | 660 | |
| | 2018.05- | 7AT | R | L/R | Estate 4WD DLZA | For PR code:GH4,For vehicles with AWD & variable torque dist. | GCI81752 | Inner Joint | | | 33 | | | 34 | |
| 3.2 (183 kw) | 2006.09-2008.10 | 6AT | F | L | Saloon 4WD BYU | | GDS83305 | Drive Shaft | | 38 | | 59.5 | 34 | 603 | |
| | 2006.09-2008.10 | 6AT | F | R | Saloon 4WD BYU | AAR | GDS81590 | Drive Shaft | | 38 | | 59.5 | 34 | 523 | |
| | 2006.09-2008.10 | 6AT | F | R | Saloon 4WD BYU | TJ | GDS83306 | Drive Shaft | | 38 | | 59.5 | 34 | 525 | |
| | 2006.09-2008.10 | 6AT | F | L/R | Saloon 4WD BYU | | GCO83077 | Outer Joint | | 38 | 27 | 59.5 | 34 | 63 | M |
| | 2006.09-2008.10 | 6AT | F | L/R | Saloon 4WD BYU | TJ | GCI61044 | Inner Joint | | | 34 | | | 85 | |
| | 2006.09-2008.10 | 6AT | F | L/R | Saloon 4WD BYU | AAR | GCI61076 | Inner Joint | | | 34 | | | 85 | |
| | 2006.09-2008.10 | 6AT | R | L/R | Saloon 4WD BYU | | GDS82348 | Drive Shaft | | 38 | | 59.5 | 34 | 648 | |
| | 2006.09-2008.10 | 6AT | R | L/R | Saloon 4WD BYU | | GCO81358 | Outer Joint | | 38 | 33 | 59.5 | 34 | 54 | M |

| | YEAR | TRANSM. | F/R | L/R | BODY STYLE & DRIVE TYPE & ENGINE | REMARKS | G-AP Ref. | PRODUCT | ABS | Technical Specifications A | B | C | H | L | P |
|---|---|---|---|---|---|---|---|---|---|---|---|---|---|---|---|
| **AUDI** **A6 Quattro** | | | | | | | | | | | | | | | |
| 3.2 (183 kw) | 2006.09-2008.10 | 6AT | R | L/R | Saloon 4WD BYU | | GCI61069 | Inner Joint | | | 28 | | | 32 | |
| 3.2 (188 kw) | 2004.05-2008.10 | 6AT | F | L | Saloon 4WD AUK;BKH | | GDS83305 | Drive Shaft | | 38 | | 59.5 | 34 | 603 | |
| | 2004.05-2008.10 | 6AT | F | R | Saloon 4WD AUK;BKH | AAR | GDS81590 | Drive Shaft | | 38 | | 59.5 | 34 | 523 | |
| | 2004.05-2008.10 | 6AT | F | R | Saloon 4WD AUK;BKH | TJ | GDS83306 | Drive Shaft | | 38 | | 59.5 | 34 | 525 | |
| | 2004.05-2008.10 | 6MT | F | L | Saloon 4WD AUK;BKH | | GDS83290 | Drive Shaft | | 38 | | 59.5 | 34 | 617 | |
| | 2004.05-2008.10 | 6MT | F | R | Saloon 4WD AUK;BKH | AAR | GDS81591 | Drive Shaft | | 38 | | 59.5 | 34 | 653 | |
| | 2004.05-2008.10 | 6MT | F | R | Saloon 4WD AUK;BKH | TJ | GDS83329 | Drive Shaft | | 38 | | 59.5 | 34 | 655 | |
| | 2004.05-2008.10 | AT/MT | F | L/R | Saloon 4WD AUK;BKH | | GCO83077 | Outer Joint | | 38 | 27 | 59.5 | 34 | 63 | M |
| | 2004.05-2008.10 | AT/MT | F | L/R | Saloon 4WD AUK;BKH | TJ | GCI61044 | Inner Joint | | | 34 | | | 85 | |
| | 2004.05-2008.10 | AT/MT | F | L/R | Saloon 4WD AUK;BKH | AAR | GCI61076 | Inner Joint | | | 34 | | | 85 | |
| | 2004.05-2008.10 | AT/MT | R | L/R | Saloon 4WD AUK;BKH | | GDS82348 | Drive Shaft | | 38 | | 59.5 | 34 | 648 | |
| | 2004.05-2008.10 | AT/MT | R | L/R | Saloon 4WD AUK;BKH | | GCO81358 | Outer Joint | | 38 | 33 | 59.5 | 34 | 54 | M |
| | 2004.05-2008.10 | AT/MT | R | L/R | Saloon 4WD AUK;BKH | | GCI61069 | Inner Joint | | | 28 | | | 32 | |
| | 2005.03-2008.10 | 6AT | F | L | Estate 4WD AUK;BKH | | GDS83305 | Drive Shaft | | 38 | | 59.5 | 34 | 603 | |
| | 2005.03-2008.10 | 6AT | F | R | Estate 4WD AUK;BKH | | GDS81590 | Drive Shaft | | 38 | | 59.5 | 34 | 523 | |
| | 2005.03-2008.10 | 6AT/6MT | F | L/R | Estate 4WD AUK;BKH | | GCO83077 | Outer Joint | | 38 | 27 | 59.5 | 34 | 63 | M |
| | 2005.03-2008.10 | 6AT/6MT | F | L/R | Estate 4WD AUK;BKH | TJ | GCI61044 | Inner Joint | | | 34 | | | 85 | |
| | 2005.03-2008.10 | 6AT/6MT | F | L/R | Estate 4WD AUK;BKH | AAR | GCI61076 | Inner Joint | | | 34 | | | 85 | |
| | 2005.03-2008.10 | 6MT | F | L | Estate 4WD AUK;BKH | | GDS83290 | Drive Shaft | | 38 | | 59.5 | 34 | 617 | |
| | 2005.03-2008.10 | 6MT | F | R | Estate 4WD AUK;BKH | | GDS81591 | Drive Shaft | | 38 | | 59.5 | 34 | 653 | |
| | 2005.03-2008.10 | 6AT/6MT | R | L/R | Estate 4WD AUK;BKH | | GDS82348 | Drive Shaft | | 38 | | 59.5 | 34 | 648 | |
| | 2005.03-2008.10 | 6AT/6MT | R | L/R | Estate 4WD AUK;BKH | | GCO81358 | Outer Joint | | 38 | 33 | 59.5 | 34 | 54 | M |
| | 2005.03-2008.10 | 6AT/6MT | R | L/R | Estate 4WD AUK;BKH | | GCI61069 | Inner Joint | | | 28 | | | 32 | |
| 3.7 (191 kw) | 1999.03-2005.01 | AT/MT | F | L/R | Estate 4WD AQG | | GCO83019 | Outer Joint | 45W | 38 | 27 | 59.5 | 34.5 | 63 | I |
| 4.2 (220 kw) | 1999.04-2005.01 | 5AT | F | L | Estate 4WD ARS/ASG | | GDS83066 | Drive Shaft | 45W | 38 | | 59.5 | 34.5 | 544 | |
| | 1999.04-2005.01 | AT | F | L/R | Estate 4WD ARS/ASG | | GCI61044 | Inner Joint | | | 34 | | | 85 | |
| | 1999.04-2005.01 | AT/MT | F | L/R | Estate 4WD ARS/ASG | | GCO83019 | Outer Joint | 45W | 38 | 27 | 59.5 | 34.5 | 63 | I |
| | 1999.04-2005.01 | MT | F | | Estate 4WD ARS/ASG | | GCI50019 | Inner Joint | | | 34 | | | 59.5 | |
| | 1999.04-2005.01 | | F/R | L/R | Estate 4WD ARS/ASG | Date From:1999.04 | GCI83001 | Inner Joint | | | 28 | | | 32 | |
| | 1999.04-2005.01 | 5AT | F | L | Saloon 4WD ARS/ASG | | GDS83066 | Drive Shaft | 45W | 38 | | 59.5 | 34.5 | 544 | |
| | 1999.04-2005.01 | AT | F | L/R | Saloon 4WD ARS/ASG | | GCI61044 | Inner Joint | | | 34 | | | 85 | |
| | 1999.04-2005.01 | AT/MT | F | L/R | Saloon 4WD ARS/ASG | | GCO83019 | Outer Joint | 45W | 38 | 27 | 59.5 | 34.5 | 63 | I |
| | 1999.04-2005.01 | MT | F | R | Saloon 4WD ARS/ASG | | GCI50019 | Inner Joint | | | 34 | | | 59.5 | |
| | 1999.04-2005.01 | | F/R | L/R | Saloon 4WD ARS/ASG | Date From:1999.04 | GCI83001 | Inner Joint | | | 28 | | | 32 | |
| 4.2 (246 kw) | 2004.05-2006.05 | 6AT | F | L | Saloon 4WD BAT;BNK | | GDS83305 | Drive Shaft | | 38 | | 59.5 | 34 | 603 | |
| | 2004.05-2006.05 | 6AT | F | R | Saloon 4WD BAT;BNK | AAR | GDS81590 | Drive Shaft | | 38 | | 59.5 | 34 | 523 | |
| | 2004.05-2006.05 | 6AT | F | R | Saloon 4WD BAT;BNK | TJ | GDS83306 | Drive Shaft | | 38 | | 59.5 | 34 | 525 | |
| | 2004.05-2006.05 | 6AT | F | L/R | Saloon 4WD BAT;BNK | | GCO83077 | Outer Joint | | 38 | 27 | 59.5 | 34 | 63 | M |
| | 2004.05-2006.05 | 6AT | F | L/R | Saloon 4WD BAT;BNK | TJ | GCI61044 | Inner Joint | | | 34 | | | 85 | |
| | 2004.05-2006.05 | 6AT | F | L/R | Saloon 4WD BAT;BNK | AAR | GCI61076 | Inner Joint | | | 34 | | | 85 | |
| | 2004.05-2006.05 | 6AT | R | L/R | Saloon 4WD BAT;BNK | | GDS82348 | Drive Shaft | | 38 | | 59.5 | 34 | 648 | |
| | 2004.05-2006.05 | 6AT | R | L/R | Saloon 4WD BAT;BNK | | GCO81358 | Outer Joint | | 38 | 33 | 59.5 | 34 | 54 | M |
| | 2004.05-2006.05 | 6AT | R | L/R | Saloon 4WD BAT;BNK | | GCI61069 | Inner Joint | | | 28 | | | 32 | |
| | 2005.03-2006.05 | 6AT | F | L | Estate 4WD BAT | | GDS83305 | Drive Shaft | | 38 | | 59.5 | 34 | 603 | |
| | 2005.03-2006.05 | 6AT | F | R | Estate 4WD BAT | AAR | GDS81590 | Drive Shaft | | 38 | | 59.5 | 34 | 523 | |
| | 2005.03-2006.05 | 6AT | F | R | Estate 4WD BAT | TJ | GDS83306 | Drive Shaft | | 38 | | 59.5 | 34 | 525 | |
| | 2005.03-2006.05 | 6AT | F | L/R | Estate 4WD BAT | | GCO83077 | Outer Joint | | 38 | 27 | 59.5 | 34 | 63 | M |
| | 2005.03-2006.05 | 6AT | F | L/R | Estate 4WD BAT | TJ | GCI61044 | Inner Joint | | | 34 | | | 85 | |
| | 2005.03-2006.05 | 6AT | F | L/R | Estate 4WD BAT | AAR | GCI61076 | Inner Joint | | | 34 | | | 85 | |
| | 2005.03-2006.05 | 6AT | R | L/R | Estate 4WD BAT | | GDS82348 | Drive Shaft | | 38 | | 59.5 | 34 | 648 | |
| | 2005.03-2006.05 | 6AT | R | L/R | Estate 4WD BAT | | GCO81358 | Outer Joint | | 38 | 33 | 59.5 | 34 | 54 | M |
| | 2005.03-2006.05 | 6AT | R | L/R | Estate 4WD BAT | | GCI61069 | Inner Joint | | | 28 | | | 32 | |
| 4.2 (257 kw) | 2006.06-2011.03 | 6AT | F | L | Saloon 4WD BVJ | | GDS83305 | Drive Shaft | | 38 | | 59.5 | 34 | 603 | |
| | 2006.06-2011.03 | 6AT | F | R | Saloon 4WD BVJ | AAR | GDS81590 | Drive Shaft | | 38 | | 59.5 | 34 | 523 | |
| | 2006.06-2011.03 | 6AT | F | R | Saloon 4WD BVJ | TJ | GDS83306 | Drive Shaft | | 38 | | 59.5 | 34 | 525 | |
| | 2006.06-2011.03 | 6AT | F | L/R | Saloon 4WD BVJ | | GCO83077 | Outer Joint | | 38 | 27 | 59.5 | 34 | 63 | M |
| | 2006.06-2011.03 | 6AT | F | L/R | Saloon 4WD BVJ | TJ | GCI61044 | Inner Joint | | | 34 | | | 85 | |
| | 2006.06-2011.03 | 6AT | F | L/R | Saloon 4WD BVJ | AAR | GCI61076 | Inner Joint | | | 34 | | | 85 | |
| | 2006.06-2011.03 | 6AT | R | L/R | Saloon 4WD BVJ | Date from:2008.11 | GDS81915 | Drive Shaft | | 38 | | 59.5 | 34 | 650 | |
| | 2006.06-2011.03 | 6AT | R | L/R | Saloon 4WD BVJ | Date to:2008.10 | GDS82348 | Drive Shaft | | 38 | | 59.5 | 34 | 648 | |
| | 2006.06-2011.03 | 6AT | R | L/R | Saloon 4WD BVJ | Date to:2008.10 | GCO81358 | Outer Joint | | 38 | 33 | 59.5 | 34 | 54 | M |
| | 2006.06-2011.03 | 6AT | R | L/R | Saloon 4WD BVJ | | GCI61069 | Inner Joint | | | 28 | | | 32 | |
| | 2006.06-2011.08 | 6AT | F | L | Estate 4WD BVJ | | GDS83305 | Drive Shaft | | 38 | | 59.5 | 34 | 603 | |
| | 2006.06-2011.08 | 6AT | F | R | Estate 4WD BVJ | AAR | GDS81590 | Drive Shaft | | 38 | | 59.5 | 34 | 523 | |
| | 2006.06-2011.08 | 6AT | F | R | Estate 4WD BVJ | TJ | GDS83306 | Drive Shaft | | 38 | | 59.5 | 34 | 525 | |

| | YEAR | TRANSM. | F/R | L/R | BODY STYLE & DRIVE TYPE & ENGINE | REMARKS | G-AP Ref. | PRODUCT | ABS | Technical Specifications A | B | C | H | L | P |
|---|---|---|---|---|---|---|---|---|---|---|---|---|---|---|---|
| **AUDI** | | | | | | | | | | | | | | | |
| **A6 Quattro** | | | | | | | | | | | | | | | |
| 4.2 (257 kw) | 2006.06-2011.08 | 6AT | F | L/R | Estate 4WD BVJ | | GCO83077 | Outer Joint | | 38 | 27 | 59.5 | 34 | 63 | M |
| | 2006.06-2011.08 | 6AT | F | L/R | Estate 4WD BVJ | TJ | GCI61044 | Inner Joint | | | 34 | | | 85 | |
| | 2006.06-2011.08 | 6AT | F | L/R | Estate 4WD BVJ | AAR | GCI61076 | Inner Joint | | | 34 | | | 85 | |
| | 2006.06-2011.08 | 6AT | R | L/R | Estate 4WD BVJ | Date from:2008.11 | GDS81915 | Drive Shaft | | 38 | | 59.5 | 34 | 650 | |
| | 2006.06-2011.08 | 6AT | R | L/R | Estate 4WD BVJ | Date to:2008.10 | GDS82348 | Drive Shaft | | 38 | | 59.5 | 34 | 648 | |
| | 2006.06-2011.08 | 6AT | R | L/R | Estate 4WD BVJ | Date to:2008.10 | GCO81358 | Outer Joint | | 38 | 33 | 59.5 | 34 | 54 | M |
| | 2006.06-2011.08 | 6AT | R | L/R | Estate 4WD BVJ | | GCI61069 | Inner Joint | | | 28 | | | 32 | |
| **A7 Sportback** | | | | | | | | | | | | | | | |
| 1.8 (140 kw) | 2015.04-2018.05 | DCT | F | L/R | Hatchback FWD CYGA | | GDS61290 | Drive Shaft | | 42 | | 76.4 | 34 | 493 | |
| | 2015.04-2018.05 | DCT | F | L/R | Hatchback FWD CYGA | | GCO83103 | Outer Joint | | 42 | 28 | 76.4 | 34 | 54 | I |
| | 2015.04-2018.05 | DCT | F | L/R | Hatchback FWD CYGA | | GCI83022 | Inner Joint | | | 34 | | | 88.5 | |
| | 2016.02-2018.05 | 7AT | F | L/R | Hatchback FWD CYGA | | GCI83022 | Inner Joint | | | 34 | | | 88.5 | |
| | 2016.02-2018.05 | 7DCT | F | L/R | Hatchback FWD CYGA | | GDS61290 | Drive Shaft | | 42 | | 76.4 | 34 | 493 | |
| 2.0 (120 kw) | 2020.10- | 7DCT | F | L | Hatchback FWD DTPB | | GDS84553 | Drive Shaft | | 42 | | 76.5 | 34 | 496 | |
| 2.0 (140 kw) | 2020.08- | 7DCT | F | L/R | Hatchback FWD DLHC | | GDS84553 | Drive Shaft | | 42 | | 76.5 | 34 | 496 | |
| 2.0 (150 kw) | 2018.09- | 7AT | F | L | Hatchback FWD DFBA;DTPA | Date from:2020.07 | GDS84553 | Drive Shaft | | 42 | | 76.5 | 34 | 496 | |
| | 2018.09- | 7AT | F | L | Hatchback FWD DFBA;DTPA | Date to:2020.06 | GDS84560 | Drive Shaft | | 42 | | 76.5 | 34 | 494 | |
| | 2018.09- | 7AT | F | R | Hatchback FWD DFBA;DTPA | | GDS84560 | Drive Shaft | | 42 | | 76.5 | 34 | 494 | |
| | 2018.09- | 7AT | F | L/R | Hatchback FWD DFBA;DTPA | | GCO81750 | Outer Joint | | 42 | 29 | 76.5 | 34 | 60 | I |
| | 2018.09- | 7AT | F | L/R | Hatchback FWD DFBA;DTPA | | GCI61077 | Inner Joint | | | 34 | | | 88 | |
| | 2020.08- | AT | F | L/R | Hatchback FWD DMTC | Date to:2022.06 | GDS84553 | Drive Shaft | | 42 | | 76.5 | 34 | 496 | |
| | 2020.08- | AT | F | L/R | Hatchback FWD DMTC | Date to:2022.06 | GCO81357 | Outer Joint | | 42 | 28 | 76.5 | 34 | 54 | I |
| | 2020.08- | AT | F | L/R | Hatchback FWD DMTC | | GCI61077 | Inner Joint | | | 34 | | | 88 | |
| 2.0 (180 kw) | 2018.07- | 7AT | F | L/R | Hatchback FWD DKNA;DLHA | | GDS84560 | Drive Shaft | | 42 | | 76.5 | 34 | 494 | |
| | 2018.07- | 7AT | F | L/R | Hatchback FWD DKNA;DLHA | | GCO81750 | Outer Joint | | 42 | 29 | 76.5 | 34 | 60 | I |
| | 2018.07- | 7AT | F | L/R | Hatchback FWD DKNA;DLHA | | GCI61077 | Inner Joint | | | 34 | | | 88 | |
| 2.0 (185 kw) | 2014.09-2018.05 | 7AT | F | L/R | Hatchback FWD CYPA | | GDS83382 | Drive Shaft | | 42 | | 76.5 | 34 | 495 | |
| | 2014.09-2018.05 | AT | F | L/R | Hatchback FWD CYPA | | GCO83102 | Outer Joint | | 42 | 29 | 76.5 | 34 | 60 | I |
| | 2014.09-2018.05 | AT | F | L/R | Hatchback FWD CYPA | | GCI83022 | Inner Joint | | | 34 | | | 88.5 | |
| | 2015.09-2018.05 | 7AT | F | L/R | Hatchback FWD CYPA | | GCI83022 | Inner Joint | | | 34 | | | 88.5 | |
| | 2015.09-2018.05 | 7DCT | F | L/R | Hatchback FWD CYPA | | GDS83382 | Drive Shaft | | 42 | | 76.5 | 34 | 495 | |
| 2.0 (195 kw) | 2020.05- | 7AT | F | L/R | Hatchback FWD DMTA | | GDS84560 | Drive Shaft | | 42 | | 76.5 | 34 | 494 | |
| | 2020.05- | 7AT | F | L/R | Hatchback FWD DMTA | | GCO81750 | Outer Joint | | 42 | 29 | 76.5 | 34 | 60 | I |
| | 2020.05- | 7AT | F | L/R | Hatchback FWD DMTA | | GCI61077 | Inner Joint | | | 34 | | | 88 | |
| 2.8 (150 kw) | 2011.02-2015.03 | AT | F | L/R | Hatchback FWD CHVA | | GCI83022 | Inner Joint | | | 34 | | | 88.5 | |
| | 2011.02-2015.03 | CVT | F | L/R | Hatchback FWD CHVA | Date to:2011.10 | GDS61290 | Drive Shaft | | 42 | | 76.4 | 34 | 493 | |
| | 2011.02-2015.03 | CVT | F | L/R | Hatchback FWD CHVA | Date from:2011.11 | GDS81530 | Drive Shaft | | 42 | | 76.5 | 34 | 496 | |
| | 2011.02-2015.03 | CVT | F | L/R | Hatchback FWD CHVA | | GCO83087 | Outer Joint | | 42 | 27 | 76.5 | 34 | 57 | M |
| | 2011.02-2015.03 | CVT | F | L/R | Hatchback FWD CHVA | | GCO83103 | Outer Joint | | 42 | 28 | 76.4 | 34 | 54 | I |
| 3.0 (140 kw) | 2015.11-2018.05 | 7AT | F | L/R | Hatchback FWD CZVE | | GDS83382 | Drive Shaft | | 42 | | 76.5 | 34 | 495 | |
| | 2015.11-2018.05 | DCT | F | L/R | Hatchback FWD CZVE | | GCO83102 | Outer Joint | | 42 | 29 | 76.5 | 34 | 60 | I |
| | 2015.11-2018.05 | DCT | F | L/R | Hatchback FWD CZVE | | GCI83022 | Inner Joint | | | 34 | | | 88.5 | |
| 3.0 (150 kw) | 2010.11-2015.03 | AT | F | L/R | Hatchback FWD CLAB | | GCO83087 | Outer Joint | | 42 | 27 | 76.5 | 34 | 57 | M |
| | 2010.11-2015.03 | AT/DCT | F | L/R | Hatchback FWD CLAB | | GCI83022 | Inner Joint | | | 34 | | | 88.5 | |
| | 2010.11-2015.03 | CVT | F | L/R | Hatchback FWD CLAB | | GDS81529 | Drive Shaft | | 42 | | 76.5 | 34 | 498 | |
| | 2010.11-2015.03 | | F | L/R | Hatchback FWD CLAB | | GCO83088 | Outer Joint | | 42 | 29 | 76.5 | 34 | 61.5 | M |
| 3.0 (155 kw) | 2015.11-2018.05 | 7AT | F | L/R | Hatchback FWD CTCB;CZVD;CZVC | | GDS83382 | Drive Shaft | | 42 | | 76.5 | 34 | 495 | |
| | 2015.11-2018.05 | DCT | F | L/R | Hatchback FWD CTCB;CZVD;CZVC | | GCO83102 | Outer Joint | | 42 | 29 | 76.5 | 34 | 60 | I |
| | 2015.11-2018.05 | DCT | F | L/R | Hatchback FWD CTCB;CZVD;CZVC | | GCI83022 | Inner Joint | | | 34 | | | 88.5 | |
| 3.0 (160 kw) | 2014.07-2018.05 | 7AT | F | L/R | Hatchback FWD CTCC;CZVB | | GDS83382 | Drive Shaft | | 42 | | 76.5 | 34 | 495 | |
| | 2014.07-2018.05 | DCT | F | L/R | Hatchback FWD CTCC;CZVB | | GCO83102 | Outer Joint | | 42 | 29 | 76.5 | 34 | 60 | I |
| | 2014.07-2018.05 | DCT | F | L/R | Hatchback FWD CTCC;CZVB | | GCI83022 | Inner Joint | | | 34 | | | 88.5 | |
| **A7 Sportback Quattro** | | | | | | | | | | | | | | | |
| 2.0 (150 kw) | 2018.09- | 7AT | F | L/R | Hatchback 4WD DFBA;DTPA | For PR code:GH2,For vehicles with electronic LTD slip differential | GDS84553 | Drive Shaft | | 42 | | 76.5 | 34 | 496 | |
| | 2018.09- | 7AT | F | L/R | Hatchback 4WD DFBA;DTPA | For PR code:GH2,For vehicles with electronic LTD slip differential | GCO81357 | Outer Joint | | 42 | 28 | 76.5 | 34 | 54 | I |
| | 2018.09- | 7AT | R | R | Hatchback 4WD DFBA;DTPA | For PR code:GH4,For vehicles with AWD & variable torque dist | GDS56844 | Drive Shaft | | 42 | | 76.5 | 34 | 581 | |
| | 2018.09- | 7AT | R | R | Hatchback 4WD DFBA;DTPA | For PR code:GH4,For vehicles with AWD & variable torque dist | GCI81752 | Inner Joint | | | 33 | | | 34 | |
| 2.0 (180 kw) | 2018.07- | 7AT | F | L/R | Hatchback 4WD DKNA;DLHA | For PR code:GH2,For vehicles with electronic LTD slip differential | GDS84553 | Drive Shaft | | 42 | | 76.5 | 34 | 496 | |
| | 2018.07- | 7AT | F | L/R | Hatchback 4WD DKNA;DLHA | For PR code:GH2,For vehicles with electronic LTD slip differential | GCO81357 | Outer Joint | | 42 | 28 | 76.5 | 34 | 54 | I |
| | 2018.07- | 7AT | R | R | Hatchback 4WD DKNA;DLHA | For PR code:GH4,For vehicles with AWD & variable torque dist | GDS56844 | Drive Shaft | | 42 | | 76.5 | 34 | 581 | |
| | 2018.07- | 7AT | R | R | Hatchback 4WD DKNA;DLHA | For PR code:GH4,For vehicles with AWD & variable torque dist | GCI81752 | Inner Joint | | | 33 | | | 34 | |
| 2.0 (183 kw) | 2015.05-2018.05 | DCT | F | L/R | Hatchback 4WD CYPB | | GDS61290 | Drive Shaft | | 42 | | 76.4 | 34 | 493 | |
| | 2015.05-2018.05 | DCT | F | L/R | Hatchback 4WD CYPB | | GCO83103 | Outer Joint | | 42 | 28 | 76.4 | 34 | 54 | I |
| | 2015.05-2018.05 | DCT | F | L/R | Hatchback 4WD CYPB | | GCI83022 | Inner Joint | | | 34 | | | 88.5 | |
| | 2015.05-2018.05 | 7AT | R | L/R | Hatchback 4WD CYPB | | GCI83039 | Outer Joint | | 42 | 28 | 76.5 | 34 | 72 | |

| | YEAR | TRANSM. | F/R | L/R | BODY STYLE & DRIVE TYPE & ENGINE | REMARKS | G-AP Ref. | PRODUCT | ABS | Technical Specifications A | B | C | H | L | P |
|---|---|---|---|---|---|---|---|---|---|---|---|---|---|---|---|
| **AUDI** | | | | | | | | | | | | | | | |
| **A7 Sportback Quattro** | | | | | | | | | | | | | | | |
| 2.0 (183 kw) | 2015.05-2018.05 | 7AT | R | L/R | Hatchback 4WD CYPB | | GCI61069 | Inner Joint | | | 28 | | | 32 | |
| | 2015.05-2018.05 | DCT | R | L | Hatchback 4WD CYPB | For PR code:GH2 | GDS61291 | Drive Shaft | | 42 | | 76.5 | 34 | 620 | |
| | 2015.05-2018.05 | DCT | R | R | Hatchback 4WD CYPB | For PR code:GH2 | GDS82251 | Drive Shaft | | 42 | | 76.5 | 34 | 576 | |
| | 2015.05-2018.05 | DCT | R | L/R | Hatchback 4WD CYPB | For PR code:GH1 | GDS83368 | Drive Shaft | | 42 | | 76.5 | 34 | 660 | |
| 2.0 (185 kw) | 2015.05-2018.05 | DCT | F | L/R | Hatchback 4WD CYPA;CYNB | | GDS61290 | Drive Shaft | | 42 | | 76.4 | 34 | 493 | |
| | 2015.05-2018.05 | DCT | F | L/R | Hatchback 4WD CYPA;CYNB | | GCO83103 | Outer Joint | | 42 | 28 | 76.4 | 34 | 54 | I |
| | 2015.05-2018.05 | DCT | F | L/R | Hatchback 4WD CYPA;CYNB | | GCI83022 | Inner Joint | | | 34 | | | 88.5 | |
| | 2015.05-2018.05 | 7AT | R | L/R | Hatchback 4WD CYPA;CYNB | | GCI83039 | Outer Joint | | 42 | 28 | 76.5 | 34 | 72 | |
| | 2015.05-2018.05 | 7AT | R | L/R | Hatchback 4WD CYPA;CYNB | | GCI61069 | Inner Joint | | | 28 | | | 32 | |
| | 2015.05-2018.05 | DCT | R | L | Hatchback 4WD CYPA;CYNB | For PR code:GH2 | GDS61291 | Drive Shaft | | 42 | | 76.5 | 34 | 620 | |
| | 2015.05-2018.05 | DCT | R | R | Hatchback 4WD CYPA;CYNB | For PR code:GH2 | GDS82251 | Drive Shaft | | 42 | | 76.5 | 34 | 576 | |
| | 2015.05-2018.05 | DCT | R | L/R | Hatchback 4WD CYPA;CYNB | For PR code:GH1 | GDS83368 | Drive Shaft | | 42 | | 76.5 | 34 | 660 | |
| | 2015.09-2018.05 | 7AT | F | L/R | Hatchback 4WD CYPA | | GCI83022 | Inner Joint | | | 34 | | | 88.5 | |
| | 2015.09-2018.05 | 7DCT | F | L/R | Hatchback 4WD CYPA | | GDS61290 | Drive Shaft | | 42 | | 76.4 | 34 | 493 | |
| | 2015.09-2018.05 | 7DCT | R | L | Hatchback 4WD CYPA | For PR code:GH2 | GDS61291 | Drive Shaft | | 42 | | 76.5 | 34 | 620 | |
| | 2015.09-2018.05 | 7DCT | R | R | Hatchback 4WD CYPA | For Pr Code:GH2 | GDS82251 | Drive Shaft | | 42 | | 76.5 | 34 | 576 | |
| | 2015.09-2018.05 | 7DCT/8AT | R | L/R | Hatchback 4WD CYPA | For PR code:GH1 | GDS83368 | Drive Shaft | | 42 | | 76.5 | 34 | 660 | |
| 2.0 (195 kw) | 2020.05- | 7AT | F | L/R | Hatchback 4WD DMTA | ---------- | GDS84553 | Drive Shaft | | 42 | | 76.5 | 34 | 496 | |
| | 2020.05- | 7AT | F | L/R | Hatchback 4WD DMTA | For PR code:GH4,For veh. with all-wheel drive & controlled clutch | GCO81357 | Outer Joint | | 42 | 28 | 76.5 | 34 | 54 | I |
| | 2020.05- | 7AT | F | L/R | Hatchback 4WD DMTA | For PR code:GH4 | GCI61077 | Inner Joint | | | 34 | | | 88 | |
| | 2020.05- | 7AT | R | R | Hatchback 4WD DMTA | For PR code:GH4,For vehicles with AWD & variable torque dist | GDS56844 | Drive Shaft | | 42 | | 76.5 | 34 | 581 | |
| | 2020.05- | 7AT | R | R | Hatchback 4WD DMTA | For PR code:GH4,For vehicles with AWD & variable torque dist | GCI81752 | Inner Joint | | | 33 | | | 34 | |
| 2.0 (220 kw) | 2019.11- | 7AT | F | L/R | Hatchback 4WD DLGA | | GCO82603 | Outer Joint | | 42 | 30 | 76.5 | 34 | 60 | I |
| | 2019.11- | AT | F | L/R | Hatchback 4WD DLGA | | GDS84556 | Drive Shaft | | 42 | | 76.5 | 34 | 495 | |
| | 2019.11- | AT | F | L/R | Hatchback 4WD DLGA | | GCI81397 | Inner Joint | | | 27 | | | 89 | |
| | 2019.11- | AT | R | L | Hatchback 4WD DLGA | | GDS83368 | Drive Shaft | | 42 | | 76.5 | 34 | 660 | |
| | 2021.02- | 7AT | F | L/R | Hatchback 4WD DRYA | | GDS84556 | Drive Shaft | | 42 | | 76.5 | 34 | 495 | |
| | 2021.02- | 7AT | R | L | Hatchback 4WD DRYA | | GDS83368 | Drive Shaft | | 42 | | 76.5 | 34 | 660 | |
| 2.0 (270 kw) | 2019.07- | 7AT | F | L/R | Hatchback 4WD DLGA;DRYA | | GDS84556 | Drive Shaft | | 42 | | 76.5 | 34 | 495 | |
| | 2019.07- | AT | F | L/R | Hatchback 4WD DLGA;DRYA | | GCI81397 | Inner Joint | | | 27 | | | 89 | |
| | 2019.07- | 7AT | R | L | Hatchback 4WD DLGA;DRYA | | GDS83368 | Drive Shaft | | 42 | | 76.5 | 34 | 660 | |
| | 2021.02- | AT | F | L/R | Hatchback 4WD DRYA | | GCI81397 | Inner Joint | | | 27 | | | 89 | |
| | 2021.02- | 7AT | R | L | Hatchback 4WD DRYA | | GDS83368 | Drive Shaft | | 42 | | 76.5 | 34 | 660 | |
| 2.8 (150 kw) | 2010.10-2015.03 | 7AT | F | L/R | Hatchback 4WD CNYA;CHVA | | GDS61290 | Drive Shaft | | 42 | | 76.4 | 34 | 493 | |
| | 2010.10-2015.03 | AT | F | L/R | Hatchback 4WD CNYA;CHVA | Date to:2011.11 | GCO83087 | Outer Joint | | 42 | 27 | 76.5 | 34 | 57 | M |
| | 2010.10-2015.03 | AT | F | L/R | Hatchback 4WD CNYA;CHVA | Date from:2011.11 | GCO83103 | Outer Joint | | 42 | 28 | 76.4 | 34 | 54 | I |
| | 2010.10-2015.03 | AT | F | L/R | Hatchback 4WD CNYA;CHVA | | GCI83022 | Inner Joint | | | 34 | | | 88.5 | |
| | 2010.10-2015.03 | 7AT | R | L | Hatchback 4WD CNYA;CHVA | For PR code:GH2 | GDS61291 | Drive Shaft | | 42 | | 76.5 | 34 | 620 | |
| | 2010.10-2015.03 | 7AT | R | R | Hatchback 4WD CNYA;CHVA | For PR code:GH2 | GDS82251 | Drive Shaft | | 42 | | 76.5 | 34 | 576 | |
| | 2010.10-2015.03 | 7AT | R | L/R | Hatchback 4WD CNYA;CHVA | For PR code:GH1 | GDS83368 | Drive Shaft | | 42 | | 76.5 | 34 | 660 | |
| | 2010.10-2015.03 | 7AT | R | L/R | Hatchback 4WD CNYA;CHVA | | GCI83039 | Outer Joint | | 42 | 28 | 76.5 | 34 | 72 | |
| | 2010.10-2015.03 | 7AT | R | L/R | Hatchback 4WD CNYA;CHVA | | GCI61069 | Inner Joint | | | 28 | | | 32 | |
| 2.8 (162 kw) | 2014.09-2018.05 | AT | F | L/R | Hatchback 4WD CVPA | | GDS61290 | Drive Shaft | | 42 | | 76.4 | 34 | 493 | |
| | 2014.09-2018.05 | AT | F | L/R | Hatchback 4WD CVPA | | GCO83103 | Outer Joint | | 42 | 28 | 76.4 | 34 | 54 | I |
| | 2014.09-2018.05 | AT | F | L/R | Hatchback 4WD CVPA | | GCI83022 | Inner Joint | | | 34 | | | 88.5 | |
| | 2014.09-2018.05 | 7AT | R | L/R | Hatchback 4WD CVPA | | GCI83039 | Outer Joint | | 42 | 28 | 76.5 | 34 | 72 | |
| | 2014.09-2018.05 | 7AT | R | L/R | Hatchback 4WD CVPA | | GCI61069 | Inner Joint | | | 28 | | | 32 | |
| | 2014.09-2018.05 | AT | R | L | Hatchback 4WD CVPA | For PR code:GH2,For vehicles with electronic ltd slip differential | GDS61291 | Drive Shaft | | 42 | | 76.5 | 34 | 620 | |
| | 2014.09-2018.05 | AT | R | R | Hatchback 4WD CVPA | For PR code:GH2,For vehicles with electronic ltd slip differential | GDS82251 | Drive Shaft | | 42 | | 76.5 | 34 | 576 | |
| | 2014.09-2018.05 | AT | R | L/R | Hatchback 4WD CVPA | For PR code:GH1 | GDS83368 | Drive Shaft | | 42 | | 76.5 | 34 | 660 | |
| 3.0 (140 kw) | 2015.11-2018.05 | 7AT | F | L/R | Hatchback 4WD CZVE;CZVF | | GDS61290 | Drive Shaft | | 42 | | 76.4 | 34 | 493 | |
| | 2015.11-2018.05 | AT | F | L/R | Hatchback 4WD CZVE;CZVF | | GCO83103 | Outer Joint | | 42 | 28 | 76.4 | 34 | 54 | I |
| | 2015.11-2018.05 | AT | F | L/R | Hatchback 4WD CZVE;CZVF | | GCI83022 | Inner Joint | | | 34 | | | 88.5 | |
| | 2015.11-2018.05 | 7AT | R | L/R | Hatchback 4WD CZVE;CZVF | | GCI83039 | Outer Joint | | 42 | 28 | 76.5 | 34 | 72 | |
| | 2015.11-2018.05 | 7AT | R | L/R | Hatchback 4WD CZVE;CZVF | | GCI61069 | Inner Joint | | | 28 | | | 32 | |
| | 2015.11-2018.05 | DCT | R | L | Hatchback 4WD CZVE;CZVF | For PR code:GH2,For vehicles with electronic ltd slip differential | GDS61291 | Drive Shaft | | 42 | | 76.5 | 34 | 620 | |
| | 2015.11-2018.05 | DCT | R | R | Hatchback 4WD CZVE;CZVF | For PR code:GH2,For vehicles with electronic ltd slip differential | GDS82251 | Drive Shaft | | 42 | | 76.5 | 34 | 576 | |
| | 2015.11-2018.05 | DCT | R | L/R | Hatchback 4WD CZVE;CZVF | For PR code:GH1 | GDS83368 | Drive Shaft | | 42 | | 76.5 | 34 | 660 | |
| 3.0 (150 kw) | 2010.12-2015.03 | 7AT | F | L/R | Hatchback 4WD CLAA | | GDS61290 | Drive Shaft | | 42 | | 76.4 | 34 | 493 | |
| | 2010.12-2015.03 | AT | F | L/R | Hatchback 4WD CLAA | Date to:2011.11 | GCO83087 | Outer Joint | | 42 | 27 | 76.5 | 34 | 57 | M |
| | 2010.12-2015.03 | AT | F | L/R | Hatchback 4WD CLAA | Date from:2011.11 | GCO83103 | Outer Joint | | 42 | 28 | 76.4 | 34 | 54 | I |
| | 2010.12-2015.03 | AT | F | L/R | Hatchback 4WD CLAA | | GCI83022 | Inner Joint | | | 34 | | | 88.5 | |
| | 2010.12-2015.03 | 7AT | R | L | Hatchback 4WD CLAA | For PR code:GH2 | GDS61291 | Drive Shaft | | 42 | | 76.5 | 34 | 620 | |
| | 2010.12-2015.03 | 7AT | R | R | Hatchback 4WD CLAA | For PR code:GH2 | GDS82251 | Drive Shaft | | 42 | | 76.5 | 34 | 576 | |
| | 2010.12-2015.03 | 7AT | R | L/R | Hatchback 4WD CLAA | For PR code:GH1 | GDS83368 | Drive Shaft | | 42 | | 76.5 | 34 | 660 | |

| | YEAR | TRANSM. | F/R | L/R | BODY STYLE & DRIVE TYPE & ENGINE | REMARKS | G-AP Ref. | PRODUCT | ABS | Technical Specifications A | B | C | H | L | P |
|---|---|---|---|---|---|---|---|---|---|---|---|---|---|---|---|
| **AUDI** **A7 Sportback Quattro** | | | | | | | | | | | | | | | |
| 3.0 (150 kw) | 2010.12-2015.03 | 7AT | R | L/R | Hatchback 4WD CLAA | | GCI83039 | Outer Joint | | 42 | 28 | 76.5 | 34 | 72 | |
| | 2010.12-2015.03 | 7AT | R | L/R | Hatchback 4WD CLAA | | GCI61069 | Inner Joint | | | 28 | | | 32 | |
| 3.0 (155 kw) | 2014.07-2018.05 | AT | F | L/R | Hatchback 4WD CRTF;CTCB;CZVD;CZVC | | GDS61290 | Drive Shaft | | 42 | | 76.4 | 34 | 493 | |
| | 2014.07-2018.05 | AT | F | L/R | Hatchback 4WD CRTF;CTCB;CZVD;CZVC | | GCO83103 | Outer Joint | | 42 | 28 | 76.4 | 34 | 54 | I |
| | 2014.07-2018.05 | AT | F | L/R | Hatchback 4WD CRTF;CTCB;CZVD;CZVC | | GCI83022 | Inner Joint | | | 34 | | | 88.5 | |
| | 2014.07-2018.05 | 7AT | R | L | Hatchback 4WD CRTF;CTCB;CZVD;CZVC | For PR code:GH2 | GDS61291 | Drive Shaft | | 42 | | 76.5 | 34 | 620 | |
| | 2014.07-2018.05 | 7AT | R | R | Hatchback 4WD CRTF;CTCB;CZVD;CZVC | For PR code:GH2 | GDS82251 | Drive Shaft | | 42 | | 76.5 | 34 | 576 | |
| | 2014.07-2018.05 | 7AT | R | L/R | Hatchback 4WD CRTF;CTCB;CZVD;CZVC | For PR code:GH1 | GDS83368 | Drive Shaft | | 42 | | 76.5 | 34 | 660 | |
| | 2014.07-2018.05 | 7AT | R | L/R | Hatchback 4WD CRTF;CTCB;CZVD;CZVC | | GCI83039 | Outer Joint | | 42 | 28 | 76.5 | 34 | 72 | |
| | 2014.07-2018.05 | 7AT | R | L/R | Hatchback 4WD CRTF;CTCB;CZVD;CZVC | | GCI61069 | Inner Joint | | | 28 | | | 32 | |
| | 2018.04- | AT | F | L/R | Hatchback 4WD DDVF | For PR code:GH1/GH2 | GDS84553 | Drive Shaft | | 42 | | 76.5 | 34 | 496 | |
| | 2018.04- | AT | F | L/R | Hatchback 4WD DDVF | For PR code:GH4,For vehicles with AWD & variable torque dist. | GDS84556 | Drive Shaft | | 42 | | 76.5 | 34 | 495 | |
| | 2018.04- | AT | F | L/R | Hatchback 4WD DDVF | For PR code:GH1/GH2 | GCO81357 | Outer Joint | | 42 | 28 | 76.5 | 34 | 54 | I |
| | 2018.04- | AT | F | L/R | Hatchback 4WD DDVF | | GCI81397 | Inner Joint | | | 27 | | | 89 | |
| | 2018.04- | AT | R | L | Hatchback 4WD DDVF | For PR code:GH4,For vehicles with AWD & variable torque dist. | GDS56373 | Drive Shaft | | 42 | | 76.5 | 34 | 660 | |
| | 2018.04- | AT | R | L | Hatchback 4WD DDVF | For PR code:GH2,For vehicles with AWD & variable torque dist. | GDS58068 | Drive Shaft | | 42 | | 76.5 | 34 | 618 | |
| | 2018.04- | AT | R | R | Hatchback 4WD DDVF | For PR code:GH4,For vehicles with AWD & variable torque dist | GDS56844 | Drive Shaft | | 42 | | 76.5 | 34 | 581 | |
| | 2018.04- | AT | R | R | Hatchback 4WD DDVF | For PR code:GH2,For vehicles with AWD & variable torque dist. | GDS58054 | Drive Shaft | | 42 | | 76.5 | 34 | 574 | |
| | 2018.04- | AT | R | L/R | Hatchback 4WD DDVF | For PR code:GH1 | GDS83368 | Drive Shaft | | 42 | | 76.5 | 34 | 660 | |
| | 2018.04- | AT | R | L/R | Hatchback 4WD DDVF | For PR code:GH4,For vehicles with AWD & variable torque dist | GCI81752 | Inner Joint | | | 33 | | | 34 | |
| 3.0 (160 kw) | 2014.07-2018.05 | AT | F | L/R | Hatchback 4WD CRTE;CZVA | | GDS61290 | Drive Shaft | | 42 | | 76.4 | 34 | 493 | |
| | 2014.07-2018.05 | AT | F | L/R | Hatchback 4WD CRTE;CZVA | | GCO83103 | Outer Joint | | 42 | 28 | 76.4 | 34 | 54 | I |
| | 2014.07-2018.05 | AT | F | L/R | Hatchback 4WD CRTE;CZVA | | GCI83022 | Inner Joint | | | 34 | | | 88.5 | |
| | 2014.07-2018.05 | 7AT | R | L | Hatchback 4WD CRTE;CZVA | For PR code:GH2 | GDS61291 | Drive Shaft | | 42 | | 76.5 | 34 | 620 | |
| | 2014.07-2018.05 | 7AT | R | R | Hatchback 4WD CRTE;CZVA | For PR code:GH2 | GDS82251 | Drive Shaft | | 42 | | 76.5 | 34 | 576 | |
| | 2014.07-2018.05 | 7AT | R | L/R | Hatchback 4WD CRTE;CZVA | For PR code:GH1 | GDS83368 | Drive Shaft | | 42 | | 76.5 | 34 | 660 | |
| | 2014.07-2018.05 | 7AT | R | L/R | Hatchback 4WD CRTE;CZVA | | GCI83039 | Outer Joint | | 42 | 28 | 76.5 | 34 | 72 | |
| | 2014.07-2018.05 | 7AT | R | L/R | Hatchback 4WD CRTE;CZVA | | GCI61069 | Inner Joint | | | 28 | | | 32 | |
| 3.0 (170 kw) | 2018.06- | 8AT | F | L/R | Hatchback 4WD DDVE | For PR code:GH1/GH2 | GDS84553 | Drive Shaft | | 42 | | 76.5 | 34 | 496 | |
| | 2018.06- | 8AT | F | L/R | Hatchback 4WD DDVE | For PR code:GH4,For vehicles with AWD & variable torque dist. | GDS84556 | Drive Shaft | | 42 | | 76.5 | 34 | 495 | |
| | 2018.06- | 8AT | F | L/R | Hatchback 4WD DDVE | For PR code:GH1/GH2 | GCO81357 | Outer Joint | | 42 | 28 | 76.5 | 34 | 54 | I |
| | 2018.06- | 8AT | F | L/R | Hatchback 4WD DDVE | | GCI81397 | Inner Joint | | | 27 | | | 89 | |
| | 2018.06- | 8AT | R | L | Hatchback 4WD DDVE | For PR code:GH4,For vehicles with AWD & variable torque dist. | GDS56373 | Drive Shaft | | 42 | | 76.5 | 34 | 660 | |
| | 2018.06- | 8AT | R | L | Hatchback 4WD DDVE | For PR code:GH2,For vehicles with AWD & variable torque dist. | GDS58068 | Drive Shaft | | 42 | | 76.5 | 34 | 618 | |
| | 2018.06- | 8AT | R | R | Hatchback 4WD DDVE | For PR code:GH4,For vehicles with AWD & variable torque dist | GDS56844 | Drive Shaft | | 42 | | 76.5 | 34 | 581 | |
| | 2018.06- | 8AT | R | R | Hatchback 4WD DDVE | For PR code:GH2,For vehicles with AWD & variable torque dist. | GDS58054 | Drive Shaft | | 42 | | 76.5 | 34 | 574 | |
| | 2018.06- | 8AT | R | L/R | Hatchback 4WD DDVE | For PR code:GH1 | GDS83368 | Drive Shaft | | 42 | | 76.5 | 34 | 660 | |
| | 2018.06- | 8AT | R | L/R | Hatchback 4WD DDVE | For PR code:GH4,For vehicles with AWD & variable torque dist | GCI81752 | Inner Joint | | | 33 | | | 34 | |
| 3.0 (176 kw) | 2013.05-2017.06 | 8AT | F | L/R | Hatchback 4WD CPNB | | GDS61290 | Drive Shaft | | 42 | | 76.4 | 34 | 493 | |
| | 2013.05-2017.06 | AT | F | L/R | Hatchback 4WD CPNB | | GCO83103 | Outer Joint | | 42 | 28 | 76.4 | 34 | 54 | I |
| | 2013.05-2017.06 | AT | F | L/R | Hatchback 4WD CPNB | | GCI83022 | Inner Joint | | | 34 | | | 88.5 | |
| | 2013.05-2017.06 | 8AT | R | L | Hatchback 4WD CPNB | For PR code:GH2 | GDS61291 | Drive Shaft | | 42 | | 76.5 | 34 | 620 | |
| | 2013.05-2017.06 | 8AT | R | R | Hatchback 4WD CPNB | For PR code:GH2 | GDS82251 | Drive Shaft | | 42 | | 76.5 | 34 | 576 | |
| | 2013.05-2017.06 | 8AT | R | L/R | Hatchback 4WD CPNB | For PR code:GH1 | GDS83368 | Drive Shaft | | 42 | | 76.5 | 34 | 660 | |
| | 2013.05-2017.06 | 8AT | R | L/R | Hatchback 4WD CPNB | | GCI83039 | Outer Joint | | 42 | 28 | 76.5 | 34 | 72 | |
| | 2013.05-2017.06 | 8AT | R | L/R | Hatchback 4WD CPNB | | GCI61069 | Inner Joint | | | 28 | | | 32 | |
| 3.0 (180 kw) | 2010.10-2016.06 | 7AT/8AT | F | L/R | Hatchback 4WD CDUC;CKVB;CKVC;CDUD | | GDS61290 | Drive Shaft | | 42 | | 76.4 | 34 | 493 | |
| | 2010.10-2016.06 | 7AT/8AT | F | L/R | Hatchback 4WD CDUC;CKVB;CKVC;CDUD | | GDS81530 | Drive Shaft | | 42 | | 76.5 | 34 | 496 | |
| | 2010.10-2016.06 | 7AT/8AT | F | L/R | Hatchback 4WD CDUC;CKVB;CKVC;CDUD | 8 balls | GCO81353 | Outer Joint | | 42 | 28 | 76.5 | 34 | 54 | I |
| | 2010.10-2016.06 | 7AT/8AT | F | L/R | Hatchback 4WD CDUC;CKVB;CKVC;CDUD | Inner Teeth:27 | GCO83087 | Outer Joint | | 42 | 27 | 76.5 | 34 | 57 | M |
| | 2010.10-2016.06 | 7AT/8AT | F | L/R | Hatchback 4WD CDUC;CKVB;CKVC;CDUD | Inner Teeth:28 | GCO83103 | Outer Joint | | 42 | 28 | 76.4 | 34 | 54 | I |
| | 2010.10-2016.06 | 7AT/8AT | F | L/R | Hatchback 4WD CDUC;CKVB;CKVC;CDUD | AAR | GCI61077 | Inner Joint | | | 34 | | | 88 | |
| | 2010.10-2016.06 | 7AT/8AT | F | L/R | Hatchback 4WD CDUC;CKVB;CKVC;CDUD | TJ | GCI83022 | Inner Joint | | | 34 | | | 88.5 | |
| | 2010.10-2016.06 | 7AT/8AT | R | L | Hatchback 4WD CDUC;CKVB;CKVC;CDUD | For PR code:GH2,For vehicles with sports suspension | GDS61291 | Drive Shaft | | 42 | | 76.5 | 34 | 620 | |
| | 2010.10-2016.06 | 7AT/8AT | R | R | Hatchback 4WD CDUC;CKVB;CKVC;CDUD | For PR code:GH2,For vehicles with sports suspension | GDS82251 | Drive Shaft | | 42 | | 76.5 | 34 | 576 | |
| | 2010.10-2016.06 | 7AT/8AT | R | L/R | Hatchback 4WD CDUC;CKVB;CKVC;CDUD | For PR code:GH1,For vehicles without sports suspension | GDS83368 | Drive Shaft | | 42 | | 76.5 | 34 | 660 | |
| | 2010.10-2016.06 | 7AT/8AT | R | L/R | Hatchback 4WD CDUC;CKVB;CKVC;CDUD | For PR code:GH1,For vehicles without sports suspension;For PR code:GH2,For vehicles with sports suspension | GCI83039 | Outer Joint | | 42 | 28 | 76.5 | 34 | 72 | |
| | 2010.10-2016.06 | 7AT/8AT | R | L/R | Hatchback 4WD CDUC;CKVB;CKVC;CDUD | For PR code:GH1,For vehicles without sports suspension;For PR code:GH2,For vehicles with sports suspension | GCI61069 | Inner Joint | | | 28 | | | 32 | |
| | 2021.01- | 7AT | F | L/R | Hatchback 4WD DMGH | For PR code:GH1/GH2 | GDS84553 | Drive Shaft | | 42 | | 76.5 | 34 | 496 | |
| | 2021.01- | 7AT | F | L/R | Hatchback 4WD DMGH | For PR code:GH4,For veh. with all-wheel drive & controlled clutch | GDS84556 | Drive Shaft | | 42 | | 76.5 | 34 | 495 | |
| | 2021.01- | 7AT | F | L/R | Hatchback 4WD DMGH | For PR code:GH1/GH2 | GCO81357 | Outer Joint | | 42 | 28 | 76.5 | 34 | 54 | I |
| | 2021.01- | 7AT | F | L/R | Hatchback 4WD DMGH | For PR code:GH4 | GCO82603 | Outer Joint | | 42 | 30 | 76.5 | 34 | 60 | I |
| | 2021.01- | 7AT | F | L/R | Hatchback 4WD DMGH | For PR code:GH1/GH2 | GCI61077 | Inner Joint | | | 34 | | | 88 | |
| | 2021.01- | 7AT | F | L/R | Hatchback 4WD DMGH | For PR code:GH4,For vehicles with AWD & variable torque dist. | GCI81397 | Inner Joint | | | 27 | | | 89 | |
| | 2021.01- | 7AT | R | L | Hatchback 4WD DMGH | For PR code:GH4,For vehicles with AWD & variable torque dist | GDS56373 | Drive Shaft | | 42 | | 76.5 | 34 | 660 | |

| | YEAR | TRANSM. | F/R | L/R | BODY STYLE & DRIVE TYPE & ENGINE | REMARKS | G-AP Ref. | PRODUCT | ABS | Technical Specifications A | B | C | H | L | P |
|---|---|---|---|---|---|---|---|---|---|---|---|---|---|---|---|
| **AUDI** | | | | | | | | | | | | | | | |
| **A7 Sportback Quattro** | | | | | | | | | | | | | | | |
| 3.0 (180 kw) | 2021.01- | 7AT | R | L | Hatchback 4WD DMGH | For PR code:GH2,For vehicles with AWD & variable torque dist. | GDS58068 | Drive Shaft | | 42 | | 76.5 | 34 | 618 | |
| | 2021.01- | 7AT | R | R | Hatchback 4WD DMGH | For PR code:GH4,For vehicles with AWD & variable torque dist. | GDS56844 | Drive Shaft | | 42 | | 76.5 | 34 | 581 | |
| | 2021.01- | 7AT | R | R | Hatchback 4WD DMGH | For PR code:GH2,For vehicles with AWD & variable torque dist. | GDS58054 | Drive Shaft | | 42 | | 76.5 | 34 | 574 | |
| | 2021.01- | 7AT | R | L/R | Hatchback 4WD DMGH | For PR code:GH1 | GDS83368 | Drive Shaft | | 42 | | 76.5 | 34 | 660 | |
| | 2021.01- | 7AT | R | L/R | Hatchback 4WD DMGH | For PR code:GH4,For vehicles with AWD & variable torque dist. | GCI81752 | Inner Joint | | | 33 | | | 34 | |
| 3.0 (183 kw) | 2019.09- | 7DCT/8AT | F | L/R | Hatchback 4WD CVMD | For Pr Code:Gh1/GH2 | GDS84553 | Drive Shaft | | 42 | | 76.5 | 34 | 496 | |
| | 2019.09- | 7DCT/8AT | F | L/R | Hatchback 4WD CVMD | For Pr Code:GH4,For Veh. With All-Wheel Drive & Controlled Clutch | GDS84556 | Drive Shaft | | 42 | | 76.5 | 34 | 495 | |
| | 2019.09- | AT | F | L/R | Hatchback 4WD CVMD | For PR code:GH4,For vehicles with AWD & variable torque dist. | GCI81397 | Inner Joint | | | 27 | | | 89 | |
| | 2019.09- | 7DCT/8AT | R | L | Hatchback 4WD CVMD | For Pr Code:GH2;For Vehicles With Awd & Variable Torque Dist. | GDS58068 | Drive Shaft | | 42 | | 76.5 | 34 | 618 | |
| | 2019.09- | 7DCT/8AT | R | R | Hatchback 4WD CVMD | For PR code:GH4 | GDS56844 | Drive Shaft | | 42 | | 76.5 | 34 | 581 | |
| | 2019.09- | 7DCT/8AT | R | R | Hatchback 4WD CVMD | For Pr Code:GH2;For Vehicles With Awd & Variable Torque Dist. | GDS58054 | Drive Shaft | | 42 | | 76.5 | 34 | 574 | |
| | 2019.09- | AT | R | L/R | Hatchback 4WD CVMD | For PR code:GH1 | GDS83368 | Drive Shaft | | 42 | | 76.5 | 34 | 660 | |
| 3.0 (200 kw) | 2014.05-2018.05 | 7AT | F | L/R | Hatchback 4WD CRTD | | GDS61290 | Drive Shaft | | 42 | | 76.4 | 34 | 493 | |
| | 2014.05-2018.05 | 7AT | F | L/R | Hatchback 4WD CRTD | | GCO83103 | Outer Joint | | 42 | 28 | 76.4 | 34 | 54 | I |
| | 2014.05-2018.05 | 7AT | F | L/R | Hatchback 4WD CRTD | | GCI83022 | Inner Joint | | | 34 | | | 88.5 | |
| | 2014.05-2018.05 | 7AT | R | L | Hatchback 4WD CRTD | For PR code:GH2,For vehicles with electronic LTD slip differential | GDS61291 | Drive Shaft | | 42 | | 76.5 | 34 | 620 | |
| | 2014.05-2018.05 | 7AT | R | R | Hatchback 4WD CRTD | For PR code:GH2,For vehicles with electronic LTD slip differential | GDS82251 | Drive Shaft | | 42 | | 76.5 | 34 | 576 | |
| | 2014.05-2018.05 | 7AT | R | L/R | Hatchback 4WD CRTD | For PR code:GH1 | GDS83368 | Drive Shaft | | 42 | | 76.5 | 34 | 660 | |
| | 2014.05-2018.05 | 7AT | R | L/R | Hatchback 4WD CRTD | | GCI83039 | Outer Joint | | 42 | 28 | 76.5 | 34 | 72 | |
| | 2014.05-2018.05 | 7AT | R | L/R | Hatchback 4WD CRTD | | GCI61069 | Inner Joint | | | 28 | | | 32 | |
| 3.0 (210 kw) | 2017.10- | 8AT | F | L/R | Hatchback 4WD DDVB;DMGA | For PR code:GH1/GH2 | GDS84553 | Drive Shaft | | 42 | | 76.5 | 34 | 496 | |
| | 2017.10- | 8AT | F | L/R | Hatchback 4WD DDVB;DMGA | For PR code:GH4,For vehicles with AWD & variable torque dist. | GDS84556 | Drive Shaft | | 42 | | 76.5 | 34 | 495 | |
| | 2017.10- | 8AT | F | L/R | Hatchback 4WD DDVB;DMGA | For PR code:GH1/GH2 | GCO81357 | Outer Joint | | 42 | 28 | 76.5 | 34 | 54 | I |
| | 2017.10- | 8AT | F | L/R | Hatchback 4WD DDVB;DMGA | | GCI81397 | Inner Joint | | | 27 | | | 89 | |
| | 2017.10- | 8AT | R | L | Hatchback 4WD DDVB;DMGA | For PR code:GH4,For vehicles with AWD & variable torque dist. | GDS56373 | Drive Shaft | | 42 | | 76.5 | 34 | 660 | |
| | 2017.10- | 8AT | R | L | Hatchback 4WD DDVB;DMGA | For PR code:GH2,For vehicles with AWD & variable torque dist. | GDS58068 | Drive Shaft | | 42 | | 76.5 | 34 | 618 | |
| | 2017.10- | 8AT | R | R | Hatchback 4WD DDVB;DMGA | For PR code:GH4,For vehicles with AWD & variable torque dist. | GDS56844 | Drive Shaft | | 42 | | 76.5 | 34 | 581 | |
| | 2017.10- | 8AT | R | R | Hatchback 4WD DDVB;DMGA | For PR code:GH2,For vehicles with AWD & variable torque dist. | GDS58054 | Drive Shaft | | 42 | | 76.5 | 34 | 574 | |
| | 2017.10- | 8AT | R | L/R | Hatchback 4WD DDVB;DMGA | For PR code:GH1 | GDS83368 | Drive Shaft | | 42 | | 76.5 | 34 | 660 | |
| | 2017.10- | 8AT | R | L/R | Hatchback 4WD DDVB;DMGA | For PR code:GH4,For vehicles with AWD & variable torque dist. | GCI81752 | Inner Joint | | | 33 | | | 34 | |
| 3.0 (220 kw) | 2010.10-2012.05 | 7AT | F | L/R | Hatchback 4WD CGWB;CHMA | | GDS61290 | Drive Shaft | | 42 | | 76.4 | 34 | 493 | |
| | 2010.10-2012.05 | AT | F | L/R | Hatchback 4WD CGWB;CHMA | Date to:2011.11 | GCO83087 | Outer Joint | | 42 | 27 | 76.5 | 34 | 57 | M |
| | 2010.10-2012.05 | AT | F | L/R | Hatchback 4WD CGWB;CHMA | Date from:2011.11 | GCO83103 | Outer Joint | | 42 | 28 | 76.4 | 34 | 54 | I |
| | 2010.10-2012.05 | AT | F | L/R | Hatchback 4WD CGWB;CHMA | | GCI83022 | Inner Joint | | | 34 | | | 88.5 | |
| | 2010.10-2012.05 | 7AT | R | L | Hatchback 4WD CGWB;CHMA | For PR code:GH2 | GDS61291 | Drive Shaft | | 42 | | 76.5 | 34 | 620 | |
| | 2010.10-2012.05 | 7AT | R | R | Hatchback 4WD CGWB;CHMA | For PR code:GH2 | GDS82251 | Drive Shaft | | 42 | | 76.5 | 34 | 576 | |
| | 2010.10-2012.05 | 7AT | R | L/R | Hatchback 4WD CGWB;CHMA | For PR code:GH1 | GDS83368 | Drive Shaft | | 42 | | 76.5 | 34 | 660 | |
| | 2010.10-2012.05 | 7AT | R | L/R | Hatchback 4WD CGWB;CHMA | | GCI83039 | Outer Joint | | 42 | 28 | 76.5 | 34 | 72 | |
| | 2010.10-2012.05 | 7AT | R | L/R | Hatchback 4WD CGWB;CHMA | | GCI61069 | Inner Joint | | | 28 | | | 32 | |
| 3.0 (228 kw) | 2011.01-2015.03 | 7AT/8AT | F | L/R | Hatchback 4WD CGXB;CTTA;CTUA;CGWD | | GDS61290 | Drive Shaft | | 42 | | 76.4 | 34 | 493 | |
| | 2011.01-2015.03 | AT | F | L/R | Hatchback 4WD CGXB;CTTA;CTUA;CGWD | Date to:2011.11 | GCO83087 | Outer Joint | | 42 | 27 | 76.5 | 34 | 57 | M |
| | 2011.01-2015.03 | AT | F | L/R | Hatchback 4WD CGXB;CTTA;CTUA;CGWD | Date from:2011.11 | GCO83103 | Outer Joint | | 42 | 28 | 76.4 | 34 | 54 | I |
| | 2011.01-2015.03 | AT | F | L/R | Hatchback 4WD CGXB;CTTA;CTUA;CGWD | | GCI83022 | Inner Joint | | | 34 | | | 88.5 | |
| | 2011.01-2015.03 | 7AT | R | L/R | Hatchback 4WD CGXB;CTTA;CTUA;CGWD | | GCI83039 | Outer Joint | | 42 | 28 | 76.5 | 34 | 72 | |
| | 2011.01-2015.03 | 7AT | R | L/R | Hatchback 4WD CGXB;CTTA;CTUA;CGWD | | GCI61069 | Inner Joint | | | 28 | | | 32 | |
| | 2011.01-2015.03 | 7AT/8AT | R | L | Hatchback 4WD CGXB;CTTA;CTUA;CGWD | For PR code:GH2 | GDS61291 | Drive Shaft | | 42 | | 76.5 | 34 | 620 | |
| | 2011.01-2015.03 | 7AT/8AT | R | R | Hatchback 4WD CGXB;CTTA;CTUA;CGWD | For PR code:GH2 | GDS82251 | Drive Shaft | | 42 | | 76.5 | 34 | 576 | |
| | 2011.01-2015.03 | 7AT/8AT | R | L/R | Hatchback 4WD CGXB;CTTA;CTUA;CGWD | For PR code:GH1 | GDS83368 | Drive Shaft | | 42 | | 76.5 | 34 | 660 | |
| 3.0 (230 kw) | 2011.11-2015.03 | 8AT | F | L/R | Hatchback 4WD CGQB | | GDS61290 | Drive Shaft | | 42 | | 76.4 | 34 | 493 | |
| | 2011.11-2015.03 | 8AT | F | L/R | Hatchback 4WD CGQB | | GCO83103 | Outer Joint | | 42 | 28 | 76.4 | 34 | 54 | I |
| | 2011.11-2015.03 | 8AT | F | L/R | Hatchback 4WD CGQB | | GCI83022 | Inner Joint | | | 34 | | | 88.5 | |
| | 2011.11-2015.03 | 8AT | R | L | Hatchback 4WD CGQB | For PR code:GH2,For vehicles with electronic LTD slip differential | GDS61291 | Drive Shaft | | 42 | | 76.5 | 34 | 620 | |
| | 2011.11-2015.03 | 8AT | R | R | Hatchback 4WD CGQB | For PR code:GH2,For vehicles with electronic LTD slip differential | GDS82251 | Drive Shaft | | 42 | | 76.5 | 34 | 576 | |
| | 2011.11-2015.03 | 8AT | R | L/R | Hatchback 4WD CGQB | For PR code:GH1 | GDS83368 | Drive Shaft | | 42 | | 76.5 | 34 | 660 | |
| | 2011.11-2015.03 | 8AT | R | L/R | Hatchback 4WD CGQB | | GCI83039 | Outer Joint | | 42 | 28 | 76.5 | 34 | 72 | |
| | 2011.11-2015.03 | 8AT | R | L/R | Hatchback 4WD CGQB | | GCI61069 | Inner Joint | | | 28 | | | 32 | |
| 3.0 (235 kw) | 2014.05-2018.05 | AT | F | L/R | Hatchback 4WD CVUA | | GDS61290 | Drive Shaft | | 42 | | 76.4 | 34 | 493 | |
| | 2014.05-2018.05 | AT | F | L/R | Hatchback 4WD CVUA | | GCO83103 | Outer Joint | | 42 | 28 | 76.4 | 34 | 54 | I |
| | 2014.05-2018.05 | AT | F | L/R | Hatchback 4WD CVUA | | GCI83022 | Inner Joint | | | 34 | | | 88.5 | |
| | 2014.05-2018.05 | 8AT | R | L | Hatchback 4WD CVUA | For PR code:GH2 | GDS61291 | Drive Shaft | | 42 | | 76.5 | 34 | 620 | |
| | 2014.05-2018.05 | 8AT | R | R | Hatchback 4WD CVUA | For PR code:GH2 | GDS82251 | Drive Shaft | | 42 | | 76.5 | 34 | 576 | |
| | 2014.05-2018.05 | 8AT | R | L/R | Hatchback 4WD CVUA | For PR code:GH1 | GDS83368 | Drive Shaft | | 42 | | 76.5 | 34 | 660 | |
| | 2014.05-2018.05 | 8AT | R | L/R | Hatchback 4WD CVUA | | GCI83039 | Outer Joint | | 42 | 28 | 76.5 | 34 | 72 | |
| | 2014.05-2018.05 | 8AT | R | L/R | Hatchback 4WD CVUA | | GCI61069 | Inner Joint | | | 28 | | | 32 | |
| 3.0 (240 kw) | 2014.09-2018.05 | AT | F | L/R | Hatchback 4WD CVUB | | GDS61290 | Drive Shaft | | 42 | | 76.4 | 34 | 493 | |

| | YEAR | TRANSM. | F/R | L/R | BODY STYLE & DRIVE TYPE & ENGINE | REMARKS | G-AP Ref. | PRODUCT | ABS | Technical Specifications A | B | C | H | L | P |
|---|---|---|---|---|---|---|---|---|---|---|---|---|---|---|---|
| **AUDI** | | | | | | | | | | | | | | | |
| **A7 Sportback Quattro** | | | | | | | | | | | | | | | |
| 3.0 (240 kw) | 2014.09-2018.05 | AT | F | L/R | Hatchback 4WD CVUB | | GCO83103 | Outer Joint | | 42 | 28 | 76.4 | 34 | 54 | I |
| | 2014.09-2018.05 | AT | F | L/R | Hatchback 4WD CVUB | | GCI83022 | Inner Joint | | | 34 | | | 88.5 | |
| | 2014.09-2018.05 | 8AT | R | L | Hatchback 4WD CVUB | For PR code:GH2 | GDS61291 | Drive Shaft | | 42 | | 76.5 | 34 | 620 | |
| | 2014.09-2018.05 | 8AT | R | R | Hatchback 4WD CVUB | For PR code:GH2 | GDS82251 | Drive Shaft | | 42 | | 76.5 | 34 | 576 | |
| | 2014.09-2018.05 | 8AT | R | L/R | Hatchback 4WD CVUB | For PR code:GH1 | GDS83368 | Drive Shaft | | 42 | | 76.5 | 34 | 660 | |
| | 2014.09-2018.05 | 8AT | R | L/R | Hatchback 4WD CVUB | | GCI83039 | Outer Joint | | 42 | 28 | 76.5 | 34 | 72 | |
| | 2014.09-2018.05 | 8AT | R | L/R | Hatchback 4WD CVUB | | GCI61069 | Inner Joint | | | 28 | | | 32 | |
| 3.0 (245 kw) | 2014.05-2018.05 | AT | F | L/R | Hatchback 4WD CREC | | GDS61290 | Drive Shaft | | 42 | | 76.4 | 34 | 493 | |
| | 2014.05-2018.05 | AT | F | L/R | Hatchback 4WD CREC | | GCO83103 | Outer Joint | | 42 | 28 | 76.4 | 34 | 54 | I |
| | 2014.05-2018.05 | AT | F | L/R | Hatchback 4WD CREC | | GCI83022 | Inner Joint | | | 34 | | | 88.5 | |
| | 2014.05-2018.05 | 7AT | R | L | Hatchback 4WD CREC | For PR code:GH2 | GDS61291 | Drive Shaft | | 42 | | 76.5 | 34 | 620 | |
| | 2014.05-2018.05 | 7AT | R | R | Hatchback 4WD CREC | For PR code:GH2 | GDS82251 | Drive Shaft | | 42 | | 76.5 | 34 | 576 | |
| | 2014.05-2018.05 | 7AT | R | L/R | Hatchback 4WD CREC | For PR code:GH1 | GDS83368 | Drive Shaft | | 42 | | 76.5 | 34 | 660 | |
| | 2014.05-2018.05 | AT | R | L/R | Hatchback 4WD CREC | | GCI83039 | Outer Joint | | 42 | 28 | 76.5 | 34 | 72 | |
| | 2014.05-2018.05 | AT | R | L/R | Hatchback 4WD CREC | | GCI61069 | Inner Joint | | | 28 | | | 32 | |
| | 2015.09-2018.05 | 7AT | F | L/R | Hatchback 4WD CREC | | GCI83022 | Inner Joint | | | 34 | | | 88.5 | |
| | 2015.09-2018.05 | 7DCT | F | L/R | Hatchback 4WD CREC | | GDS61290 | Drive Shaft | | 42 | | 76.4 | 34 | 493 | |
| | 2015.09-2018.05 | 7DCT | R | L | Hatchback 4WD CREC | For PR code:GH2 | GDS61291 | Drive Shaft | | 42 | | 76.5 | 34 | 620 | |
| | 2015.09-2018.05 | 7DCT | R | R | Hatchback 4WD CREC | For Pr Code:GH2 | GDS82251 | Drive Shaft | | 42 | | 76.5 | 34 | 576 | |
| | 2015.09-2018.05 | 7DCT/8AT | R | L/R | Hatchback 4WD CREC | For PR code:GH1 | GDS83368 | Drive Shaft | | 42 | | 76.5 | 34 | 660 | |
| 3.0 (250 kw) | 2016.05-2018.05 | AT | F | L/R | Hatchback 4WD CREH | | GDS61290 | Drive Shaft | | 42 | | 76.4 | 34 | 493 | |
| | 2016.05-2018.05 | AT | F | L/R | Hatchback 4WD CREH | | GCO83103 | Outer Joint | | 42 | 28 | 76.4 | 34 | 54 | I |
| | 2016.05-2018.05 | AT | F | L/R | Hatchback 4WD CREH | | GCI83022 | Inner Joint | | | 34 | | | 88.5 | |
| | 2016.05-2018.05 | AT | R | L | Hatchback 4WD CREH | For PR code:GH2 | GDS61291 | Drive Shaft | | 42 | | 76.5 | 34 | 620 | |
| | 2016.05-2018.05 | AT | R | R | Hatchback 4WD CREH | For PR code:GH2 | GDS82251 | Drive Shaft | | 42 | | 76.5 | 34 | 576 | |
| | 2016.05-2018.05 | AT | R | L/R | Hatchback 4WD CREH | For PR code:GH1 | GDS83368 | Drive Shaft | | 42 | | 76.5 | 34 | 660 | |
| | 2016.05-2018.05 | AT | R | L/R | Hatchback 4WD CREH | | GCI83039 | Outer Joint | | 42 | 28 | 76.5 | 34 | 72 | |
| | 2016.05-2018.05 | AT | R | L/R | Hatchback 4WD CREH | | GCI61069 | Inner Joint | | | 28 | | | 32 | |
| | 2017.10- | 7AT | F | L/R | Hatchback 4WD DLZA | For PR code:GH1/GH2 | GDS84553 | Drive Shaft | | 42 | | 76.5 | 34 | 496 | |
| | 2017.10- | 7AT | F | L/R | Hatchback 4WD DLZA | For PR code:GH4,For vehicles with AWD & variable torque dist. | GDS84556 | Drive Shaft | | 42 | | 76.5 | 34 | 495 | |
| | 2017.10- | 7AT | F | L/R | Hatchback 4WD DLZA | For PR code:GH1/GH2 | GCO81357 | Outer Joint | | 42 | 28 | 76.5 | 34 | 54 | I |
| | 2017.10- | 7AT | F | L/R | Hatchback 4WD DLZA | | GCI81397 | Inner Joint | | | 27 | | | 89 | |
| | 2017.10- | 7AT | R | L | Hatchback 4WD DLZA | For PR code:GH4,For vehicles with AWD & variable torque dist. | GDS56373 | Drive Shaft | | 42 | | 76.5 | 34 | 660 | |
| | 2017.10- | 7AT | R | L | Hatchback 4WD DLZA | For PR code:GH2,For vehicles with AWD & variable torque dist. | GDS58068 | Drive Shaft | | 42 | | 76.5 | 34 | 618 | |
| | 2017.10- | 7AT | R | R | Hatchback 4WD DLZA | For PR code:GH4,For vehicles with AWD & variable torque dist | GDS56844 | Drive Shaft | | 42 | | 76.5 | 34 | 581 | |
| | 2017.10- | 7AT | R | R | Hatchback 4WD DLZA | For PR code:GH2,For vehicles with AWD & variable torque dist. | GDS58054 | Drive Shaft | | 42 | | 76.5 | 34 | 574 | |
| | 2017.10- | 7AT | R | L/R | Hatchback 4WD DLZA | For PR code:GH1 | GDS83368 | Drive Shaft | | 42 | | 76.5 | 34 | 660 | |
| | 2017.10- | 7AT | R | L/R | Hatchback 4WD DLZA | For PR code:GH4,For vehicles with AWD & variable torque dist | GCI81752 | Inner Joint | | | 33 | | | 34 | |
| **A8** | | | | | | | | | | | | | | | |
| 2.0 (180 kw) | 2012.02-2015.11 | 8AT | F | L/R | Saloon FWD CHJA | | GDS83382 | Drive Shaft | | 42 | | 76.5 | 34 | 495 | |
| | 2012.02-2015.11 | 8AT | F | L/R | Saloon FWD CHJA | | GCO83102 | Outer Joint | | 42 | 29 | 76.5 | 34 | 60 | I |
| | 2012.02-2015.11 | 8AT | F | L/R | Saloon FWD CHJA | | GCI61077 | Inner Joint | | | 34 | | | 88 | |
| | 2012.02-2015.11 | 8AT | F | L/R | Saloon FWD CHJA | | GCI83022 | Inner Joint | | | 34 | | | 88.5 | |
| 2.5 (110 kw) | 1997.06-2002.09 | AT | F | L | Saloon FWD AFB/AKN | For Engine code:AFB/AKN | GDS83249 | Drive Shaft | 45W | 38 | | 59.5 | 34.5 | 561 | |
| | 1997.06-2002.09 | AT | F | R | Saloon FWD AFB/AKN | | GDS83019 | Drive Shaft | 45W | 38 | | 59.5 | 34.5 | 550 | |
| | 1997.06-2002.09 | AT | F | L/R | Saloon FWD AFB/AKN | | GCI50019 | Inner Joint | | | 34 | | | 59.5 | |
| | 1997.06-2002.09 | AT/MT | F | L/R | Saloon FWD AFB/AKN | | GCO83019 | Outer Joint | 45W | 38 | 27 | 59.5 | 34.5 | 63 | I |
| 2.5 (132 kw) | 1999.11-2002.09 | AT | F | L | Saloon FWD AKE | | GDS83249 | Drive Shaft | 45W | 38 | | 59.5 | 34.5 | 561 | |
| | 1999.11-2002.09 | AT | F | R | Saloon FWD AKE | | GDS83019 | Drive Shaft | 45W | 38 | | 59.5 | 34.5 | 550 | |
| | 1999.11-2002.09 | AT | F | R | Saloon FWD AKE | | GCI50019 | Inner Joint | | | 34 | | | 59.5 | |
| | 1999.11-2002.09 | AT/MT | F | L/R | Saloon FWD AKE | | GCO83019 | Outer Joint | 45W | 38 | 27 | 59.5 | 34.5 | 63 | I |
| 2.5 (150 kw) | 2012.07-2016.06 | 8AT | F | L/R | Saloon FWD CPAA;CVBA | | GDS61290 | Drive Shaft | | 42 | | 76.4 | 34 | 493 | |
| | 2012.07-2016.06 | 8AT | F | L/R | Saloon FWD CPAA;CVBA | | GCI83022 | Inner Joint | | | 34 | | | 88.5 | |
| | 2012.07-2016.06 | | F | | Saloon FWD CPAA;CVBA | | GCO83103 | Outer Joint | | 42 | 28 | 76.4 | 34 | 54 | I |
| | 2012.09-2017.12 | 8AT | F | L/R | Saloon FWD CPAA;CVBA | | GDS61290 | Drive Shaft | | 42 | | 76.4 | 34 | 493 | |
| | 2012.09-2017.12 | 8AT | F | L/R | Saloon FWD CPAA;CVBA | | GCI83022 | Inner Joint | | | 34 | | | 88.5 | |
| 2.8 (120 kw) | 1995.07-1996.03 | AT | F | L | Saloon FWD AEJ | | GCI50019 | Inner Joint | | | 34 | | | 59.5 | |
| | 1995.07-1996.03 | AT/MT | F | L/R | Saloon FWD AEJ | | GCO83019 | Outer Joint | 45W | 38 | 27 | 59.5 | 34.5 | 63 | I |
| 2.8 (128 kw) | 1994.06-1996.03 | AT | F | L | Saloon FWD AAH | | GCI50019 | Inner Joint | | | 34 | | | 59.5 | |
| | 1994.06-1996.03 | AT/MT | F | L/R | Saloon FWD AAH | | GCO83019 | Outer Joint | 45W | 38 | 27 | 59.5 | 34.5 | 63 | I |
| 2.8 (142 kw) | 1996.03-2002.09 | AT | F | L | Saloon FWD ACK/ALG/AMX/APR/AQD | For Engine code:ACK/ALG/APR/AMX/AQD | GDS83249 | Drive Shaft | 45W | 38 | | 59.5 | 34.5 | 561 | |
| | 1996.03-2002.09 | AT | F | R | Saloon FWD ACK/ALG/AMX/APR/AQD | For Engine code:ACK/ALG/APR/AQD/AMX | GDS83019 | Drive Shaft | 45W | 38 | | 59.5 | 34.5 | 550 | |
| | 1996.03-2002.09 | AT | F | | Saloon FWD ACK/ALG/AMX/APR/AQD | | GCI50019 | Inner Joint | | | 34 | | | 59.5 | |
| | 1996.03-2002.09 | AT/MT | F | L/R | Saloon FWD ACK/ALG/AMX/APR/AQD | | GCO83019 | Outer Joint | 45W | 38 | 27 | 59.5 | 34.5 | 63 | I |
| 2.8 (154 kw) | 2007.08-2010.07 | CVT | F | L | Saloon FWD BDX | Date to:2007.10 | GDS81589 | Drive Shaft | | 38 | | 59.5 | 34 | 612 | |

| | YEAR | TRANSM. | F/R | L/R | BODY STYLE & DRIVE TYPE & ENGINE | REMARKS | G-AP Ref. | PRODUCT | ABS | Technical Specifications A | B | C | H | L | P |
|---|---|---|---|---|---|---|---|---|---|---|---|---|---|---|---|
| **AUDI** | | | | | | | | | | | | | | | |
| **A8** | | | | | | | | | | | | | | | |
| 2.8 (154 kw) | 2007.08-2010.07 | CVT | F | L | Saloon FWD BDX | Date from:2007.11 | GDS81596 | Drive Shaft | | 38 | | 59.5 | 34 | 558 | |
| | 2007.08-2010.07 | CVT | F | R | Saloon FWD BDX | Date from:2007.11 | GDS58195 | Drive Shaft | | 38 | | 59.5 | 34 | 581 | |
| | 2007.08-2010.07 | CVT | F | R | Saloon FWD BDX | Date to:2007.10 | GDS83025 | Drive Shaft | | 38 | | 59.5 | 34 | 543 | |
| | 2007.08-2010.07 | CVT | F | L/R | Saloon FWD BDX | | GCO83077 | Outer Joint | | 38 | 27 | 59.5 | 34 | 63 | M |
| | 2007.08-2010.07 | CVT | F | L/R | Saloon FWD BDX | TJ | GCI61044 | Inner Joint | | | 34 | | | 85 | |
| | 2007.08-2010.07 | CVT | F | L/R | Saloon FWD BDX | AAR | GCI61076 | Inner Joint | | | 34 | | | 85 | |
| 3.0 (150 kw) | 2011.09-2013.09 | 8AT | F | L/R | Saloon FWD CLAB | | GDS83382 | Drive Shaft | | 42 | | 76.5 | 34 | 495 | |
| | 2011.09-2013.09 | 8AT | F | L/R | Saloon FWD CLAB | | GCO83102 | Outer Joint | | 42 | 29 | 76.5 | 34 | 60 | I |
| | 2011.09-2013.09 | AT | F | L/R | Saloon FWD CLAB | TJ | GCI83022 | Inner Joint | | | 34 | | | 88.5 | |
| | 2011.09-2013.09 | | F | L/R | Saloon FWD CLAB | | GCO83088 | Outer Joint | | 42 | 29 | 76.5 | 34 | 61.5 | M |
| 3.0 (160 kw) | 2003.07-2006.05 | SAT | F | L | Saloon FWD BBJ | | GDS81596 | Drive Shaft | | 38 | | 59.5 | 34 | 558 | |
| | 2003.07-2006.05 | SAT | F | R | Saloon FWD BBJ | | GDS58195 | Drive Shaft | | 38 | | 59.5 | 34 | 581 | |
| | 2003.07-2006.05 | SAT | F | L/R | Saloon FWD BBJ | | GCO83077 | Outer Joint | | 38 | 27 | 59.5 | 34 | 63 | M |
| | 2003.07-2006.05 | SAT | F | L | Saloon FWD BBJ | AAR | GCI61076 | Inner Joint | | | 34 | | | 85 | |
| | 2003.07-2006.05 | SAT | F | L/R | Saloon FWD BBJ | TJ | GCI61044 | Inner Joint | | | 34 | | | 85 | |
| 3.0 (162 kw) | 2003.07-2005.05 | 6AT | F | L | Saloon FWD ASN | | GDS81596 | Drive Shaft | | 38 | | 59.5 | 34 | 558 | |
| | 2003.07-2005.05 | 6AT | F | R | Saloon FWD ASN | | GDS58195 | Drive Shaft | | 38 | | 59.5 | 34 | 581 | |
| | 2003.07-2005.05 | 6AT | F | L/R | Saloon FWD ASN | | GCO83077 | Outer Joint | | 38 | 27 | 59.5 | 34 | 63 | M |
| | 2003.07-2005.05 | 6AT | F | L | Saloon FWD ASN | AAR | GCI61076 | Inner Joint | | | 34 | | | 85 | |
| | 2003.07-2005.05 | 6AT | F | L/R | Saloon FWD ASN | TJ | GCI61044 | Inner Joint | | | 34 | | | 85 | |
| 3.2 (191 kw) | 2005.06-2010.07 | CVT/6AT | F | L | Saloon FWD BPK | Date to:2007.10 | GDS81589 | Drive Shaft | | 38 | | 59.5 | 34 | 612 | |
| | 2005.06-2010.07 | CVT/6AT | F | L | Saloon FWD BPK | Date from:2007.11 | GDS81596 | Drive Shaft | | 38 | | 59.5 | 34 | 558 | |
| | 2005.06-2010.07 | CVT/6AT | F | R | Saloon FWD BPK | Date from:2007.11 | GDS58195 | Drive Shaft | | 38 | | 59.5 | 34 | 581 | |
| | 2005.06-2010.07 | CVT/6AT | F | R | Saloon FWD BPK | Date to:2007.10 | GDS83025 | Drive Shaft | | 38 | | 59.5 | 34 | 543 | |
| | 2005.06-2010.07 | CVT/6AT | F | L/R | Saloon FWD BPK | | GCO83077 | Outer Joint | | 38 | 27 | 59.5 | 34 | 63 | M |
| | 2005.06-2010.07 | CVT/6AT | F | L | Saloon FWD BPK | AAR | GCI61076 | Inner Joint | | | 34 | | | 85 | |
| | 2005.06-2010.07 | CVT/6AT | F | L/R | Saloon FWD BPK | TJ | GCI61044 | Inner Joint | | | 34 | | | 85 | |
| 3.7 (169 kw) | 1995.07-1999.12 | AT | F | L | Saloon FWD AEW | | GDS83249 | Drive Shaft | 45W | 38 | | 59.5 | 34.5 | 561 | |
| | 1995.07-1999.12 | AT | F | R | Saloon FWD AEW | | GDS83019 | Drive Shaft | 45W | 38 | | 59.5 | 34.5 | 550 | |
| | 1995.07-1999.12 | AT | F | R | Saloon FWD AEW | | GCI50019 | Inner Joint | | | 34 | | | 59.5 | |
| | 1995.07-1999.12 | AT/MT | F | L/R | Saloon FWD AEW | | GCO83019 | Outer Joint | 45W | 38 | 27 | 59.5 | 34.5 | 63 | I |
| 3.7 (191 kw) | 1998.10-2002.09 | AT | F | L | Saloon FWD AKC/AQG | For Engine code:AKC/AQG | GDS83249 | Drive Shaft | 45W | 38 | | 59.5 | 34.5 | 561 | |
| | 1998.10-2002.09 | AT | F | R | Saloon FWD AKC/AQG | | GDS83019 | Drive Shaft | 45W | 38 | | 59.5 | 34.5 | 550 | |
| | 1998.10-2002.09 | AT | F | R | Saloon FWD AKC/AQG | | GCI50019 | Inner Joint | | | 34 | | | 59.5 | |
| | 1998.10-2002.09 | AT/MT | F | L/R | Saloon FWD AKC/AQG | | GCO83019 | Outer Joint | 45W | 38 | 27 | 59.5 | 34.5 | 63 | I |
| **A8 Quattro** | | | | | | | | | | | | | | | |
| 2.0 (185 kw) | 2016.09-2018.01 | 8AT | F | L/R | Saloon 4WD CYPA | | GDS61290 | Drive Shaft | | 42 | | 76.4 | 34 | 493 | |
| | 2016.09-2018.01 | 8AT | F | L/R | Saloon 4WD CYPA | | GCO83103 | Outer Joint | | 42 | 28 | 76.4 | 34 | 54 | I |
| | 2016.09-2018.01 | 8AT | F | L/R | Saloon 4WD CYPA | | GCI83022 | Inner Joint | | | 34 | | | 88.5 | |
| | 2016.09-2018.01 | 8AT | R | L | Saloon 4WD CYPA | For PR code:GH2,For vehicles with electronic limited slip diff. | GDS61291 | Drive Shaft | | 42 | | 76.5 | 34 | 620 | |
| | 2016.09-2018.01 | 8AT | R | R | Saloon 4WD CYPA | For PR code:GH2,For vehicles with electronic limited slip diff. | GDS82251 | Drive Shaft | | 42 | | 76.5 | 34 | 576 | |
| | 2016.09-2018.01 | 8AT | R | L/R | Saloon 4WD CYPA | For PR code:GH1 | GDS83368 | Drive Shaft | | 42 | | 76.5 | 34 | 660 | |
| | 2016.09-2018.01 | 8AT | R | L/R | Saloon 4WD CYPA | | GCI83039 | Outer Joint | | 42 | 28 | 76.5 | 34 | 72 | |
| | 2016.09-2018.01 | 8AT | R | L/R | Saloon 4WD CYPA | | GCI61069 | Inner Joint | | | 28 | | | 32 | |
| | 2017.01-2018.01 | 8AT | F | L/R | Saloon 4WD CYPA | | GDS61290 | Drive Shaft | | 42 | | 76.4 | 34 | 493 | |
| | 2017.01-2018.01 | 8AT | F | L/R | Saloon 4WD CYPA | | GCI83022 | Inner Joint | | | 34 | | | 88.5 | |
| | 2017.01-2018.01 | 8AT | R | L | Saloon 4WD CYPA | For PR code:GH2 | GDS61291 | Drive Shaft | | 42 | | 76.5 | 34 | 620 | |
| | 2017.01-2018.01 | 8AT | R | R | Saloon 4WD CYPA | For Pr Code:GH2 | GDS82251 | Drive Shaft | | 42 | | 76.5 | 34 | 576 | |
| | 2017.01-2018.01 | 8AT | R | L/R | Saloon 4WD CYPA | For PR code:GH1 | GDS83368 | Drive Shaft | | 42 | | 76.5 | 34 | 660 | |
| 2.5 (110 kw) | 1997.06-2000.06 | 5AT | F | L | Saloon 4WD AFB/AKN | | GDS83249 | Drive Shaft | 45W | 38 | | 59.5 | 34.5 | 561 | |
| | 1997.06-2000.06 | 5AT | F | R | Saloon 4WD AFB/AKN | | GDS83019 | Drive Shaft | 45W | 38 | | 59.5 | 34.5 | 550 | |
| | 1997.06-2000.06 | AT/MT | F | L/R | Saloon 4WD AFB/AKN | | GCO83019 | Outer Joint | 45W | 38 | 27 | 59.5 | 34.5 | 63 | I |
| | 1997.06-2000.06 | AT/MT | R | L/R | Saloon 4WD AFB/AKN | not for armoured vehicles | GCI83001 | Inner Joint | | | 28 | | | 32 | |
| 2.5 (132 kw) | 1999.11-2002.09 | 5AT | F | L | Saloon 4WD AKE | | GDS83249 | Drive Shaft | 45W | 38 | | 59.5 | 34.5 | 561 | |
| | 1999.11-2002.09 | 5AT | F | R | Saloon 4WD AKE | | GDS83019 | Drive Shaft | 45W | 38 | | 59.5 | 34.5 | 550 | |
| | 1999.11-2002.09 | AT/MT | R | L/R | Saloon 4WD AKE | not for armoured vehicles | GCI83001 | Inner Joint | | | 28 | | | 32 | |
| | 1999.11-2002.09 | | F/R | L/R | Saloon 4WD AKE | | GCO83019 | Outer Joint | 45W | 38 | 27 | 59.5 | 34.5 | 63 | I |
| 2.8 (120 kw) | 1995.07-1996.03 | AT | F | L | Saloon 4WD AEJ | | GCI50019 | Inner Joint | | | 34 | | | 59.5 | |
| | 1995.07-1996.03 | AT/MT | R | L/R | Saloon 4WD AEJ | not for armoured vehicles | GCI83001 | Inner Joint | | | 28 | | | 32 | |
| | 1995.07-1996.03 | | F/R | L/R | Saloon 4WD AEJ | | GCO83019 | Outer Joint | 45W | 38 | 27 | 59.5 | 34.5 | 63 | I |
| 2.8 (128 kw) | 1994.06-1996.03 | 5AT | F | L | Saloon 4WD AAH | | GDS83249 | Drive Shaft | 45W | 38 | | 59.5 | 34.5 | 561 | |
| | 1994.06-1996.03 | 5AT | F | R | Saloon 4WD AAH | | GDS83019 | Drive Shaft | 45W | 38 | | 59.5 | 34.5 | 550 | |
| | 1994.06-1996.03 | AT/MT | R | L/R | Saloon 4WD AAH | Date from:1994.06;not for armoured vehicles | GCI83001 | Inner Joint | | | 28 | | | 32 | |
| | 1994.06-1996.03 | AT/MT | F/R | L/R | Saloon 4WD AAH | | GCO83019 | Outer Joint | 45W | 38 | 27 | 59.5 | 34.5 | 63 | I |
| 2.8 (142 kw) | 1995.07-2002.09 | 5AT | F | L | Saloon 4WD ACK/ALG/AMX/APR/AQD | | GDS83249 | Drive Shaft | 45W | 38 | | 59.5 | 34.5 | 561 | |

| | YEAR | TRANSM. | F/R | L/R | BODY STYLE & DRIVE TYPE & ENGINE | REMARKS | G-AP Ref. | PRODUCT | ABS | Technical Specifications A | B | C | H | L | P |
|---|---|---|---|---|---|---|---|---|---|---|---|---|---|---|---|
| **AUDI** **A8 Quattro** | | | | | | | | | | | | | | | |
| 2.8 (142 kw) | 1995.07-2002.09 | 5AT | F | R | Saloon 4WD ACK/ALG/AMX/APR/AQD | | GDS83019 | Drive Shaft | 45W | 38 | | 59.5 | 34.5 | 550 | |
| | 1995.07-2002.09 | | F | | Saloon 4WD ACK/ALG/AMX/APR/AQD | | GCI50019 | Inner Joint | | | 34 | | | 59.5 | |
| | 1995.07-2002.09 | AT/MT | R | L/R | Saloon 4WD ACK/ALG/AMX/APR/AQD | not for armoured vehicles | GCI83001 | Inner Joint | | | 28 | | | 32 | |
| | 1995.07-2002.09 | | F/R | L/R | Saloon 4WD ACK/ALG/AMX/APR/AQD | | GCO83019 | Outer Joint | 45W | 38 | 27 | 59.5 | 34.5 | 63 | I |
| 3.0 (155 kw) | 2003.11-2010.07 | 6AT | F | L | Saloon 4WD BNG | | GDS81589 | Drive Shaft | | 38 | | 59.5 | 34 | 612 | |
| | 2003.11-2010.07 | 6AT | F | R | Saloon 4WD BNG | | GDS83025 | Drive Shaft | | 38 | | 59.5 | 34 | 543 | |
| | 2003.11-2010.07 | 6AT | F | L/R | Saloon 4WD BNG | | GCO83077 | Outer Joint | | 38 | 27 | 59.5 | 34 | 63 | M |
| | 2003.11-2010.07 | 6AT | F | L | Saloon 4WD BNG | AAR | GCI61076 | Inner Joint | | | 34 | | | 85 | |
| | 2003.11-2010.07 | 6AT | F | L/R | Saloon 4WD BNG | TJ | GCI61044 | Inner Joint | | | 34 | | | 85 | |
| | 2003.11-2010.07 | 6AT | R | L/R | Saloon 4WD BNG | | GDS81532 | Drive Shaft | | 38 | | 59.5 | 34 | 660 | |
| | 2003.11-2010.07 | 6AT | R | L/R | Saloon 4WD BNG | | GCO81358 | Outer Joint | | 38 | 33 | 59.5 | 34 | 54 | M |
| | 2003.11-2010.07 | 6AT | R | L/R | Saloon 4WD BNG | | GCI81399 | Inner Joint | | | 28 | | | 32 | |
| | 2010.08-2015.11 | 8AT | F | L/R | Saloon 4WD CDTB;CTBB | | GDS61290 | Drive Shaft | | 42 | | 76.4 | 34 | 493 | |
| | 2010.08-2015.11 | 8AT | F | L/R | Saloon 4WD CDTB;CTBB | Date to:2010.08 | GCO83087 | Outer Joint | | 42 | 27 | 76.5 | 34 | 57 | M |
| | 2010.08-2015.11 | 8AT | F | L/R | Saloon 4WD CDTB;CTBB | Date from:2010.09 | GCO83103 | Outer Joint | | 42 | 28 | 76.4 | 34 | 54 | I |
| | 2010.08-2015.11 | AT | F | L/R | Saloon 4WD CDTB;CTBB | | GCI83022 | Inner Joint | | | 34 | | | 88.5 | |
| | 2010.08-2015.11 | 8AT | R | L | Saloon 4WD CDTB;CTBB | For PR code:GH2,For vehicles with electronic ltd slip differential | GDS61291 | Drive Shaft | | 42 | | 76.5 | 34 | 620 | |
| | 2010.08-2015.11 | 8AT | R | R | Saloon 4WD CDTB;CTBB | For PR code:GH2,For vehicles with electronic ltd slip differential | GDS82251 | Drive Shaft | | 42 | | 76.5 | 34 | 576 | |
| | 2010.08-2015.11 | 8AT | R | L/R | Saloon 4WD CDTB;CTBB | For PR code:GH1 | GDS83368 | Drive Shaft | | 42 | | 76.5 | 34 | 660 | |
| | 2010.08-2015.11 | 8AT | R | L/R | Saloon 4WD CDTB;CTBB | For PR code:GH1/GH2 | GCI83039 | Outer Joint | | 42 | 28 | 76.5 | 34 | 72 | |
| | 2010.08-2015.11 | 8AT | R | L/R | Saloon 4WD CDTB;CTBB | For PR code:GH1/GH2 | GCI61069 | Inner Joint | | | 28 | | | 32 | |
| 3.0 (160 kw) | 2003.11-2004.05 | 6AT | F | L | Saloon 4WD BBJ | | GDS81596 | Drive Shaft | | 38 | | 59.5 | 34 | 558 | |
| | 2003.11-2004.05 | 6AT | F | R | Saloon 4WD BBJ | | GDS58195 | Drive Shaft | | 38 | | 59.5 | 34 | 581 | |
| | 2003.11-2004.05 | 6AT | F | L/R | Saloon 4WD BBJ | | GCO83077 | Outer Joint | | 38 | 27 | 59.5 | 34 | 63 | M |
| | 2003.11-2004.05 | 6AT | F | L | Saloon 4WD BBJ | AAR | GCI61076 | Inner Joint | | | 34 | | | 85 | |
| | 2003.11-2004.05 | 6AT | F | L/R | Saloon 4WD BBJ | TJ | GCI61044 | Inner Joint | | | 34 | | | 85 | |
| | 2003.11-2004.05 | 6AT | R | L/R | Saloon 4WD BBJ | | GDS81532 | Drive Shaft | | 38 | | 59.5 | 34 | 660 | |
| | 2003.11-2004.05 | 6AT | R | L/R | Saloon 4WD BBJ | | GCO81358 | Outer Joint | | 38 | 33 | 59.5 | 34 | 54 | M |
| | 2003.11-2004.05 | 6AT | R | L/R | Saloon 4WD BBJ | | GCI81399 | Inner Joint | | | 28 | | | 32 | |
| 3.0 (162 kw) | 2003.07-2005.05 | 6AT | F | L | Saloon 4WD ASN | | GDS81596 | Drive Shaft | | 38 | | 59.5 | 34 | 558 | |
| | 2003.07-2005.05 | 6AT | F | R | Saloon 4WD ASN | | GDS58195 | Drive Shaft | | 38 | | 59.5 | 34 | 581 | |
| | 2003.07-2005.05 | 6AT | F | L/R | Saloon 4WD ASN | | GCO83077 | Outer Joint | | 38 | 27 | 59.5 | 34 | 63 | M |
| | 2003.07-2005.05 | 6AT | F | L | Saloon 4WD ASN | AAR | GCI61076 | Inner Joint | | | 34 | | | 85 | |
| | 2003.07-2005.05 | 6AT | F | L/R | Saloon 4WD ASN | TJ | GCI61044 | Inner Joint | | | 34 | | | 85 | |
| | 2003.07-2005.05 | 6AT | R | L/R | Saloon 4WD ASN | | GDS81532 | Drive Shaft | | 38 | | 59.5 | 34 | 660 | |
| | 2003.07-2005.05 | 6AT | R | L/R | Saloon 4WD ASN | | GCO81358 | Outer Joint | | 38 | 33 | 59.5 | 34 | 54 | M |
| | 2003.07-2005.05 | 6AT | R | L/R | Saloon 4WD ASN | | GCI81399 | Inner Joint | | | 28 | | | 32 | |
| 3.0 (171 kw) | 2003.08-2010.07 | 6AT | F | L | Saloon 4WD ASB | | GDS81589 | Drive Shaft | | 38 | | 59.5 | 34 | 612 | |
| | 2003.08-2010.07 | 6AT | F | R | Saloon 4WD ASB | | GDS83025 | Drive Shaft | | 38 | | 59.5 | 34 | 543 | |
| | 2003.08-2010.07 | 6AT | F | L/R | Saloon 4WD ASB | | GCO83077 | Outer Joint | | 38 | 27 | 59.5 | 34 | 63 | M |
| | 2003.08-2010.07 | 6AT | F | L | Saloon 4WD ASB | AAR | GCI61076 | Inner Joint | | | 34 | | | 85 | |
| | 2003.08-2010.07 | 6AT | F | L/R | Saloon 4WD ASB | TJ | GCI61044 | Inner Joint | | | 34 | | | 85 | |
| | 2003.08-2010.07 | 6AT | R | L/R | Saloon 4WD ASB | | GDS81532 | Drive Shaft | | 38 | | 59.5 | 34 | 660 | |
| | 2003.08-2010.07 | 6AT | R | L/R | Saloon 4WD ASB | | GCO81358 | Outer Joint | | 38 | 33 | 59.5 | 34 | 54 | M |
| | 2003.08-2010.07 | 6AT | R | L/R | Saloon 4WD ASB | | GCI81399 | Inner Joint | | | 28 | | | 32 | |
| 3.0 (176 kw) | 2012.11-2016.06 | 8AT | F | L/R | Saloon 4WD CPNB;CPNA | | GDS61290 | Drive Shaft | | 42 | | 76.4 | 34 | 493 | |
| | 2012.11-2016.06 | AT | F | L/R | Saloon 4WD CPNB;CPNA | | GCO83103 | Outer Joint | | 42 | 28 | 76.4 | 34 | 54 | I |
| | 2012.11-2016.06 | AT | F | L/R | Saloon 4WD CPNB;CPNA | | GCI83022 | Inner Joint | | | 34 | | | 88.5 | |
| | 2012.11-2016.06 | 8AT | R | L | Saloon 4WD CPNB;CPNA | For PR code:GH2,For vehicles with electronic LTD slip differential | GDS61291 | Drive Shaft | | 42 | | 76.5 | 34 | 620 | |
| | 2012.11-2016.06 | 8AT | R | R | Saloon 4WD CPNB;CPNA | For PR code:GH2,For vehicles with electronic LTD slip differential | GDS82251 | Drive Shaft | | 42 | | 76.5 | 34 | 576 | |
| | 2012.11-2016.06 | 8AT | R | L/R | Saloon 4WD CPNB;CPNA | For PR code:GH1 | GDS83368 | Drive Shaft | | 42 | | 76.5 | 34 | 660 | |
| | 2012.11-2016.06 | AT | R | L/R | Saloon 4WD CPNB;CPNA | | GCI83039 | Outer Joint | | 42 | 28 | 76.5 | 34 | 72 | |
| | 2012.11-2016.06 | AT | R | L/R | Saloon 4WD CPNB;CPNA | | GCI61069 | Inner Joint | | | 28 | | | 32 | |
| 3.0 (183 kw) | 2019.01- | 8AT | F | L/R | Saloon 4WD CVMD | | GDS84553 | Drive Shaft | | 42 | | 76.5 | 34 | 496 | |
| | 2019.01- | 8AT | F | L/R | Saloon 4WD CVMD | | GCO81357 | Outer Joint | | 42 | 28 | 76.5 | 34 | 54 | I |
| | 2019.01- | 8AT | F | L/R | Saloon 4WD CVMD | | GCI61077 | Inner Joint | | | 34 | | | 88 | |
| | 2019.01- | 8AT | R | L | Saloon 4WD CVMD | For PR code:GH2,For vehicles with AWD & variable torque dist. | GDS58068 | Drive Shaft | | 42 | | 76.5 | 34 | 618 | |
| | 2019.01- | 8AT | R | R | Saloon 4WD CVMD | For PR code:GH2,For vehicles with AWD & variable torque dist. | GDS58054 | Drive Shaft | | 42 | | 76.5 | 34 | 574 | |
| | 2019.01- | 8AT | R | L/R | Saloon 4WD CVMD | For PR code:GH1 | GDS83368 | Drive Shaft | | 42 | | 76.5 | 34 | 660 | |
| 3.0 (184 kw) | 2010.07-2018.01 | 8AT | F | L/R | Saloon 4WD CDTA;CMHA;CDTC | | GDS61290 | Drive Shaft | | 42 | | 76.4 | 34 | 493 | |
| | 2010.07-2018.01 | AT | F | L/R | Saloon 4WD CDTA;CMHA;CDTC | | GCO83103 | Outer Joint | | 42 | 28 | 76.4 | 34 | 54 | I |
| | 2010.07-2018.01 | AT | F | L/R | Saloon 4WD CDTA;CMHA;CDTC | | GCI83022 | Inner Joint | | | 34 | | | 88.5 | |
| | 2010.07-2018.01 | | F | L/R | Saloon 4WD CDTA;CMHA;CDTC | Date To:2010.08 | GCO83087 | Outer Joint | | 42 | 27 | 76.5 | 34 | 57 | M |
| | 2010.07-2018.01 | 8AT | R | L | Saloon 4WD CDTA;CMHA;CDTC | For PR code:GH2,For vehicles with electronic limited slip diff. | GDS61291 | Drive Shaft | | 42 | | 76.5 | 34 | 620 | |
| | 2010.07-2018.01 | 8AT | R | R | Saloon 4WD CDTA;CMHA;CDTC | For PR code:GH2,For vehicles with electronic limited slip diff. | GDS82251 | Drive Shaft | | 42 | | 76.5 | 34 | 576 | |

| | YEAR | TRANSM. | F/R | L/R | BODY STYLE & DRIVE TYPE & ENGINE | REMARKS | G-AP Ref. | PRODUCT | ABS | Technical Specifications A | B | C | H | L | P |
|---|---|---|---|---|---|---|---|---|---|---|---|---|---|---|---|
| **AUDI** | | | | | | | | | | | | | | | |
| **A8 Quattro** | | | | | | | | | | | | | | | |
| 3.0 (184 kw) | 2010.07-2018.01 | 8AT | R | L/R | Saloon 4WD CDTA;CMHA;CDTC | For PR code:GH1 | GDS83368 | Drive Shaft | | 42 | | 76.5 | 34 | 660 | |
| | 2010.07-2018.01 | 8AT | R | L/R | Saloon 4WD CDTA;CMHA;CDTC | For PR code:GH1/GH2 | GCI83039 | Outer Joint | | 42 | 28 | 76.5 | 34 | 72 | |
| | 2010.07-2018.01 | 8AT | R | L/R | Saloon 4WD CDTA;CMHA;CDTC | For PR code:GH1/GH2 | GCI61069 | Inner Joint | | | 28 | | | 32 | |
| 3.0 (190 kw) | 2013.10-2018.01 | 8AT | F | L/R | Saloon 4WD CTBA | | GDS61290 | Drive Shaft | | 42 | | 76.4 | 34 | 493 | |
| | 2013.10-2018.01 | 8AT | F | L/R | Saloon 4WD CTBA | | GCO83103 | Outer Joint | | 42 | 28 | 76.4 | 34 | 54 | I |
| | 2013.10-2018.01 | 8AT | F | L/R | Saloon 4WD CTBA | | GCI83022 | Inner Joint | | | 34 | | | 88.5 | |
| | 2013.10-2018.01 | 8AT | R | L | Saloon 4WD CTBA | For PR Code:GH2;For vehicles with electronic LTD slip differential | GDS61291 | Drive Shaft | | 42 | | 76.5 | 34 | 620 | |
| | 2013.10-2018.01 | 8AT | R | R | Saloon 4WD CTBA | For PR Code:GH2;For vehicles with electronic LTD slip differential | GDS82251 | Drive Shaft | | 42 | | 76.5 | 34 | 576 | |
| | 2013.10-2018.01 | 8AT | R | L/R | Saloon 4WD CTBA | For PR code:GH1 | GDS83368 | Drive Shaft | | 42 | | 76.5 | 34 | 660 | |
| | 2013.10-2018.01 | 8AT | R | L/R | Saloon 4WD CTBA | | GCI83039 | Outer Joint | | 42 | 28 | 76.5 | 34 | 72 | |
| | 2013.10-2018.01 | 8AT | R | L/R | Saloon 4WD CTBA | | GCI61069 | Inner Joint | | | 28 | | | 32 | |
| 3.0 (193 kw) | 2015.05-2018.01 | 8AT | F | L/R | Saloon 4WD CTBD | | GDS61290 | Drive Shaft | | 42 | | 76.4 | 34 | 493 | |
| | 2015.05-2018.01 | 8AT | F | L/R | Saloon 4WD CTBD | | GCO83103 | Outer Joint | | 42 | 28 | 76.4 | 34 | 54 | I |
| | 2015.05-2018.01 | 8AT | F | L/R | Saloon 4WD CTBD | | GCI83022 | Inner Joint | | | 34 | | | 88.5 | |
| | 2015.05-2018.01 | 8AT | R | L | Saloon 4WD CTBD | For PR Code:GH2;For vehicles with electronic LTD slip differential | GDS61291 | Drive Shaft | | 42 | | 76.5 | 34 | 620 | |
| | 2015.05-2018.01 | 8AT | R | R | Saloon 4WD CTBD | For PR Code:GH2;For vehicles with electronic LTD slip differential | GDS82251 | Drive Shaft | | 42 | | 76.5 | 34 | 576 | |
| | 2015.05-2018.01 | 8AT | R | L/R | Saloon 4WD CTBD | For PR code:GH1 | GDS83368 | Drive Shaft | | 42 | | 76.5 | 34 | 660 | |
| | 2015.05-2018.01 | 8AT | R | L/R | Saloon 4WD CTBD | | GCI83039 | Outer Joint | | 42 | 28 | 76.5 | 34 | 72 | |
| | 2015.05-2018.01 | 8AT | R | L/R | Saloon 4WD CTBD | | GCI61069 | Inner Joint | | | 28 | | | 32 | |
| 3.0 (210 kw) | 2017.06- | 8AT | F | L/R | Saloon 4WD DDVC;DMGK | | GDS84553 | Drive Shaft | | 42 | | 76.5 | 34 | 496 | |
| | 2017.06- | 8AT | F | L/R | Saloon 4WD DDVC;DMGK | | GCO81357 | Outer Joint | | 42 | 28 | 76.5 | 34 | 54 | I |
| | 2017.06- | 8AT | F | L/R | Saloon 4WD DDVC;DMGK | | GCI61077 | Inner Joint | | | 34 | | | 88 | |
| | 2017.06- | 8AT | R | L | Saloon 4WD DDVC;DMGK | For PR code:GH2;For vehicles with AWD & variable torque dist. | GDS58068 | Drive Shaft | | 42 | | 76.5 | 34 | 618 | |
| | 2017.06- | 8AT | R | R | Saloon 4WD DDVC;DMGK | For PR code:GH2;For vehicles with AWD & variable torque dist. | GDS58054 | Drive Shaft | | 42 | | 76.5 | 34 | 574 | |
| | 2017.06- | 8AT | R | L/R | Saloon 4WD DDVC;DMGK | For PR code:GH1 | GDS83368 | Drive Shaft | | 42 | | 76.5 | 34 | 660 | |
| | 2018.07- | 8AT | F | L/R | Saloon 4WD CZSA | | GDS84553 | Drive Shaft | | 42 | | 76.5 | 34 | 496 | |
| | 2018.07- | 8AT | F | L/R | Saloon 4WD CZSA | | GCO81357 | Outer Joint | | 42 | 28 | 76.5 | 34 | 54 | I |
| | 2018.07- | 8AT | F | L/R | Saloon 4WD CZSA | | GCI61077 | Inner Joint | | | 34 | | | 88 | |
| | 2018.07- | 8AT | R | L | Saloon 4WD CZSA | For PR code:GH2;For vehicles with AWD & variable torque dist. | GDS58068 | Drive Shaft | | 42 | | 76.5 | 34 | 618 | |
| | 2018.07- | 8AT | R | R | Saloon 4WD CZSA | For PR code:GH2;For vehicles with AWD & variable torque dist. | GDS58054 | Drive Shaft | | 42 | | 76.5 | 34 | 574 | |
| | 2018.07- | 8AT | R | L/R | Saloon 4WD CZSA | For PR code:GH1 | GDS83368 | Drive Shaft | | 42 | | 76.5 | 34 | 660 | |
| 3.0 (213 kw) | 2010.07-2014.04 | 8AT | F | L/R | Saloon 4WD CGXA;CGWA;CREG | | GDS61290 | Drive Shaft | | 42 | | 76.4 | 34 | 493 | |
| | 2010.07-2014.04 | 8AT | F | L/R | Saloon 4WD CGXA;CGWA;CREG | | GCI83022 | Inner Joint | | | 34 | | | 88.5 | |
| | 2010.07-2014.04 | AT | F | L/R | Saloon 4WD CGXA;CGWA;CREG | | GCO83103 | Outer Joint | | 42 | 28 | 76.4 | 34 | 54 | I |
| | 2010.07-2014.04 | | F | L/R | Saloon 4WD CGXA;CGWA;CREG | Date To:2010.08 | GCO83087 | Outer Joint | | 42 | 27 | 76.5 | 34 | 57 | M |
| | 2010.07-2014.04 | 8AT | R | L | Saloon 4WD CGXA;CGWA;CREG | For PR code:GH2;For vehicles with electronic limited slip diff. | GDS61291 | Drive Shaft | | 42 | | 76.5 | 34 | 620 | |
| | 2010.07-2014.04 | 8AT | R | R | Saloon 4WD CGXA;CGWA;CREG | For PR code:GH2;For vehicles with electronic limited slip diff. | GDS82251 | Drive Shaft | | 42 | | 76.5 | 34 | 576 | |
| | 2010.07-2014.04 | 8AT | R | L/R | Saloon 4WD CGXA;CGWA;CREG | For PR code:GH1 | GDS83368 | Drive Shaft | | 42 | | 76.5 | 34 | 660 | |
| | 2010.07-2014.04 | 8AT | R | L/R | Saloon 4WD CGXA;CGWA;CREG | For PR code:GH1/GH2 | GCI83039 | Outer Joint | | 42 | 28 | 76.5 | 34 | 72 | |
| | 2010.07-2014.04 | 8AT | R | L/R | Saloon 4WD CGXA;CGWA;CREG | | GCI61069 | Inner Joint | | | 28 | | | 32 | |
| | 2011.02-2018.01 | 8AT | F | L/R | Saloon 4WD CGWA;CREG | | GDS61290 | Drive Shaft | | 42 | | 76.4 | 34 | 493 | |
| | 2011.02-2018.01 | 8AT | F | L/R | Saloon 4WD CGWA;CREG | | GCI83022 | Inner Joint | | | 34 | | | 88.5 | |
| | 2011.02-2018.01 | 8AT | R | L | Saloon 4WD CGWA;CREG | For PR code:GH2 | GDS61291 | Drive Shaft | | 42 | | 76.5 | 34 | 620 | |
| | 2011.02-2018.01 | 8AT | R | R | Saloon 4WD CGWA;CREG | For Pr Code:GH2 | GDS82251 | Drive Shaft | | 42 | | 76.5 | 34 | 576 | |
| | 2011.02-2018.01 | 8AT | R | L/R | Saloon 4WD CGWA;CREG | For PR code:GH1 | GDS83368 | Drive Shaft | | 42 | | 76.5 | 34 | 660 | |
| 3.0 (228 kw) | 2011.11-2018.01 | 8AT | F | L/R | Saloon 4WD CGWD;CREA | | GDS61290 | Drive Shaft | | 42 | | 76.4 | 34 | 493 | |
| | 2011.11-2018.01 | 8AT | F | L/R | Saloon 4WD CGWD;CREA | | GCI83022 | Inner Joint | | | 34 | | | 88.5 | |
| | 2011.11-2018.01 | AT | F | L/R | Saloon 4WD CGWD;CREA | | GCO83103 | Outer Joint | | 42 | 28 | 76.4 | 34 | 54 | I |
| | 2011.11-2018.01 | 8AT | R | L | Saloon 4WD CGWD;CREA | For PR code:GH2;For vehicles with electronic ltd slip differential | GDS61291 | Drive Shaft | | 42 | | 76.5 | 34 | 620 | |
| | 2011.11-2018.01 | 8AT | R | R | Saloon 4WD CGWD;CREA | For PR code:GH2;For vehicles with electronic ltd slip differential | GDS82251 | Drive Shaft | | 42 | | 76.5 | 34 | 576 | |
| | 2011.11-2018.01 | 8AT | R | L/R | Saloon 4WD CGWD;CREA | For PR code:GH1 | GDS83368 | Drive Shaft | | 42 | | 76.5 | 34 | 660 | |
| | 2011.11-2018.01 | 8AT | R | L/R | Saloon 4WD CGWD;CREA | For PR code:GH1/GH2 | GCI83039 | Outer Joint | | 42 | 28 | 76.5 | 34 | 72 | |
| | 2011.11-2018.01 | 8AT | R | L/R | Saloon 4WD CGWD;CREA | For PR code:GH2;For vehicles with electronic ltd slip differential;For PR code:GH1 | GCI61069 | Inner Joint | | | 28 | | | 32 | |
| 3.0 (245 kw) | 2010.06-2018.01 | 8AT | F | L/R | Saloon 4WD CMDA;CGXC;CTUB;CREC;CTDA | | GDS61290 | Drive Shaft | | 42 | | 76.4 | 34 | 493 | |
| | 2010.06-2018.01 | 8AT | F | L/R | Saloon 4WD CMDA;CGXC;CTUB;CREC;CTDA | | GCO83087 | Outer Joint | | 42 | 27 | 76.5 | 34 | 57 | M |
| | 2010.06-2018.01 | 8AT | F | L/R | Saloon 4WD CMDA;CGXC;CTUB;CREC;CTDA | | GCO83103 | Outer Joint | | 42 | 28 | 76.4 | 34 | 54 | I |
| | 2010.06-2018.01 | 8AT | F | L/R | Saloon 4WD CMDA;CGXC;CTUB;CREC;CTDA | | GCI83022 | Inner Joint | | | 34 | | | 88.5 | |
| | 2010.06-2018.01 | 8AT | R | L | Saloon 4WD CMDA;CGXC;CTUB;CREC;CTDA | For PR code:GH2;For vehicles with electronic limited slip diff. | GDS61291 | Drive Shaft | | 42 | | 76.5 | 34 | 620 | |
| | 2010.06-2018.01 | 8AT | R | R | Saloon 4WD CMDA;CGXC;CTUB;CREC;CTDA | For PR code:GH2;For vehicles with electronic limited slip diff. | GDS82251 | Drive Shaft | | 42 | | 76.5 | 34 | 576 | |
| | 2010.06-2018.01 | 8AT | R | L/R | Saloon 4WD CMDA;CGXC;CTUB;CREC;CTDA | For PR code:GH1 | GDS83368 | Drive Shaft | | 42 | | 76.5 | 34 | 660 | |
| | 2010.06-2018.01 | 8AT | R | L/R | Saloon 4WD CMDA;CGXC;CTUB;CREC;CTDA | For PR code:GH1/GH2 | GCI83039 | Outer Joint | | 42 | 28 | 76.5 | 34 | 72 | |
| | 2010.06-2018.01 | 8AT | R | L/R | Saloon 4WD CMDA;CGXC;CTUB;CREC;CTDA | | GCI61069 | Inner Joint | | | 28 | | | 32 | |
| | 2011.02-2018.01 | 8AT | F | L/R | Saloon 4WD CMDA;CTDA | | GDS61290 | Drive Shaft | | 42 | | 76.4 | 34 | 493 | |
| | 2011.02-2018.01 | 8AT | F | L/R | Saloon 4WD CMDA;CTDA | | GCI83022 | Inner Joint | | | 34 | | | 88.5 | |
| | 2011.02-2018.01 | 8AT | R | L | Saloon 4WD CMDA;CTDA | For PR code:GH2 | GDS61291 | Drive Shaft | | 42 | | 76.5 | 34 | 620 | |

| | YEAR | TRANSM. | F/R | L/R | BODY STYLE & DRIVE TYPE & ENGINE | REMARKS | G-AP Ref. | PRODUCT | ABS | Technical Specifications A | B | C | H | L | P |
|---|---|---|---|---|---|---|---|---|---|---|---|---|---|---|---|
| **AUDI** | | | | | | | | | | | | | | | |
| **A8 Quattro** | | | | | | | | | | | | | | | |
| 3.0 (245 kw) | 2011.02-2018.01 | 8AT | R | R | Saloon 4WD CMDA;CTDA | For Pr Code:GH2 | GDS82251 | Drive Shaft | | 42 | | 76.5 | 34 | 576 | |
| | 2011.02-2018.01 | 8AT | R | L/R | Saloon 4WD CMDA;CTDA | For PR code:GH1 | GDS83368 | Drive Shaft | | 42 | | 76.5 | 34 | 660 | |
| 3.0 (250 kw) | 2017.06- | 8AT | F | L/R | Saloon 4WD CZSE | | GDS84553 | Drive Shaft | | 42 | | 76.5 | 34 | 496 | |
| | 2017.06- | 8AT | F | L/R | Saloon 4WD CZSE | | GCO81357 | Outer Joint | | 42 | 28 | 76.5 | 34 | 54 | I |
| | 2017.06- | 8AT | F | L/R | Saloon 4WD CZSE | | GCI61077 | Inner Joint | | | 34 | | | 88 | |
| | 2017.06- | 8AT | R | L | Saloon 4WD CZSE | For PR code:GH2;For vehicles with AWD & variable torque dist. | GDS58068 | Drive Shaft | | 42 | | 76.5 | 34 | 618 | |
| | 2017.06- | 8AT | R | R | Saloon 4WD CZSE | For PR code:GH2;For vehicles with AWD & variable torque dist. | GDS58054 | Drive Shaft | | 42 | | 76.5 | 34 | 574 | |
| | 2017.06- | 8AT | R | L/R | Saloon 4WD CZSE | For PR code:GH1 | GDS83368 | Drive Shaft | | 42 | | 76.5 | 34 | 660 | |
| 3.0 (330 kw) | 2019.10- | 8AT | F | L/R | Saloon 4WD CZSE | | GCO81750 | Outer Joint | | 42 | 29 | 76.5 | 34 | 60 | I |
| | 2019.10- | 8AT | F | L/R | Saloon 4WD CZSE | | GCI81397 | Inner Joint | | | 27 | | | 89 | |
| | 2019.10- | 8AT | R | L/R | Saloon 4WD CZSE | | GDS83368 | Drive Shaft | | 42 | | 76.5 | 34 | 660 | |
| 3.0 (340 kw) | 2021.11- | AT | F | L/R | Saloon 4WD CZSE;EALD | | GCI81397 | Inner Joint | | | 27 | | | 89 | |
| | 2021.11- | AT | R | L/R | Saloon 4WD CZSE;EALD | | GDS83368 | Drive Shaft | | 42 | | 76.5 | 34 | 660 | |
| 3.2 (191 kw) | 2005.06-2010.07 | SAT/6AT | F | L | Saloon 4WD BPK | Date to:2007.10 | GDS81589 | Drive Shaft | | 38 | | 59.5 | 34 | 612 | |
| | 2005.06-2010.07 | SAT/6AT | F | L | Saloon 4WD BPK | Date from:2007.11 | GDS81596 | Drive Shaft | | 38 | | 59.5 | 34 | 558 | |
| | 2005.06-2010.07 | SAT/6AT | F | R | Saloon 4WD BPK | Date to:2007.10 | GDS83025 | Drive Shaft | | 38 | | 59.5 | 34 | 543 | |
| | 2005.06-2010.07 | SAT/6AT | F | L/R | Saloon 4WD BPK | | GCO83077 | Outer Joint | | 38 | 27 | 59.5 | 34 | 63 | M |
| | 2005.06-2010.07 | SAT/6AT | F | L | Saloon 4WD BPK | AAR | GCI61076 | Inner Joint | | | 34 | | | 85 | |
| | 2005.06-2010.07 | SAT/6AT | F | L/R | Saloon 4WD BPK | TJ | GCI61044 | Inner Joint | | | 34 | | | 85 | |
| | 2005.06-2010.07 | SAT/6AT | R | L/R | Saloon 4WD BPK | | GDS81532 | Drive Shaft | | 38 | | 59.5 | 34 | 660 | |
| | 2005.06-2010.07 | SAT/6AT | R | L/R | Saloon 4WD BPK | | GCO81358 | Outer Joint | | 38 | 33 | 59.5 | 34 | 54 | M |
| | 2005.06-2010.07 | SAT/6AT | R | L/R | Saloon 4WD BPK | | GCI81399 | Inner Joint | | | 28 | | | 32 | |
| 3.3 (165 kw) | 1999.12-2002.09 | 5AT | F | L | Saloon 4WD AKF | | GDS83249 | Drive Shaft | 45W | 38 | | 59.5 | 34.5 | 561 | |
| | 1999.12-2002.09 | 5AT | F | R | Saloon 4WD AKF | | GDS83019 | Drive Shaft | 45W | 38 | | 59.5 | 34.5 | 550 | |
| | 1999.12-2002.09 | AT/MT | R | L/R | Saloon 4WD AKF | not for armoured vehicles | GCI83001 | Inner Joint | | | 28 | | | 32 | |
| | 1999.12-2002.09 | | F/R | L/R | Saloon 4WD AKF | | GCO83019 | Outer Joint | 45W | 38 | 27 | 59.5 | 34.5 | 63 | I |
| 3.7 (169 kw) | 1995.07-1998.12 | 5AT | F | L | Saloon 4WD AEW/AKJ | | GDS83249 | Drive Shaft | 45W | 38 | | 59.5 | 34.5 | 561 | |
| | 1995.07-1998.12 | 5AT | F | R | Saloon 4WD AEW/AKJ | | GDS83019 | Drive Shaft | 45W | 38 | | 59.5 | 34.5 | 550 | |
| | 1995.07-1998.12 | AT/MT | R | L/R | Saloon 4WD AEW/AKJ | not for armoured vehicles | GCI83001 | Inner Joint | | | 28 | | | 32 | |
| | 1995.07-1998.12 | | F/R | L/R | Saloon 4WD AEW/AKJ | | GCO83019 | Outer Joint | 45W | 38 | 27 | 59.5 | 34.5 | 63 | I |
| 3.7 (191 kw) | 1998.10-2002.09 | 5AT | F | L | Saloon 4WD AKC/AQG | | GDS83249 | Drive Shaft | 45W | 38 | | 59.5 | 34.5 | 561 | |
| | 1998.10-2002.09 | 5AT | F | R | Saloon 4WD AKC/AQG | For Enginecode:AQG | GDS83019 | Drive Shaft | 45W | 38 | | 59.5 | 34.5 | 550 | |
| | 1998.10-2002.09 | 5AT | F | R | Saloon 4WD AKC/AQG | For Enginecode:AKC | GDS83020 | Drive Shaft | 45W | 38 | | 59.5 | 34.5 | 522 | |
| | 1998.10-2002.09 | AT/MT | R | L/R | Saloon 4WD AKC/AQG | not for armoured vehicles | GCI83001 | Inner Joint | | | 28 | | | 32 | |
| | 1998.10-2002.09 | | F/R | L/R | Saloon 4WD AKC/AQG | | GCO83019 | Outer Joint | 45W | 38 | 27 | 59.5 | 34.5 | 63 | I |
| 3.7 (206 kw) | 2002.10-2006.05 | 6AT | F | L | Saloon 4WD BFL | | GDS81596 | Drive Shaft | | 38 | | 59.5 | 34 | 558 | |
| | 2002.10-2006.05 | 6AT | F | R | Saloon 4WD BFL | | GDS81588 | Drive Shaft | | 38 | | 59.5 | 34 | 477 | |
| | 2002.10-2006.05 | 6AT | F | L/R | Saloon 4WD BFL | | GCO83077 | Outer Joint | | 38 | 27 | 59.5 | 34 | 63 | M |
| | 2002.10-2006.05 | 6AT | F | L/R | Saloon 4WD BFL | TJ | GCI61044 | Inner Joint | | | 34 | | | 85 | |
| | 2002.10-2006.05 | 6AT | F | L/R | Saloon 4WD BFL | AAR | GCI61076 | Inner Joint | | | 34 | | | 85 | |
| | 2002.10-2006.05 | 6AT | R | L/R | Saloon 4WD BFL | | GDS81532 | Drive Shaft | | 38 | | 59.5 | 34 | 660 | |
| | 2002.10-2006.05 | 6AT | R | L/R | Saloon 4WD BFL | | GCO81358 | Outer Joint | | 38 | 33 | 59.5 | 34 | 54 | M |
| | 2002.10-2006.05 | 6AT | R | L/R | Saloon 4WD BFL | | GCI81399 | Inner Joint | | | 28 | | | 32 | |
| 4.0 (202 kw) | 2003.05-2005.07 | 6AT | F | L | Saloon 4WD ASE | | GDS81596 | Drive Shaft | | 38 | | 59.5 | 34 | 558 | |
| | 2003.05-2005.07 | 6AT | F | R | Saloon 4WD ASE | | GDS81588 | Drive Shaft | | 38 | | 59.5 | 34 | 477 | |
| | 2003.05-2005.07 | 6AT | F | L/R | Saloon 4WD ASE | TJ | GCI61044 | Inner Joint | | | 34 | | | 85 | |
| | 2003.05-2005.07 | 6AT | F | L/R | Saloon 4WD ASE | AAR | GCI61076 | Inner Joint | | | 34 | | | 85 | |
| | 2003.05-2005.07 | 6AT | R | L/R | Saloon 4WD ASE | | GDS81536 | Drive Shaft | | 38 | | 59.5 | 34 | 660 | |
| | 2003.05-2005.07 | 6AT | R | L/R | Saloon 4WD ASE | | GCI81399 | Inner Joint | | | 28 | | | 32 | |
| | 2003.05-2005.07 | 6AT | F/R | L/R | Saloon 4WD ASE | | GCO83077 | Outer Joint | | 38 | 27 | 59.5 | 34 | 63 | M |
| 4.0 (309 kw) | 2012.03-2014.12 | 8AT | F | L/R | Saloon 4WD CEUA | | GDS61290 | Drive Shaft | | 42 | | 76.4 | 34 | 493 | |
| | 2012.03-2014.12 | AT | F | L/R | Saloon 4WD CEUA | | GCO83103 | Outer Joint | | 42 | 28 | 76.4 | 34 | 54 | I |
| | 2012.03-2014.12 | AT | F | L/R | Saloon 4WD CEUA | | GCI83022 | Inner Joint | | | 34 | | | 88.5 | |
| | 2012.03-2014.12 | 8AT | R | L | Saloon 4WD CEUA | For PR code:GH2;For vehicles with electronic ltd slip differential | GDS61291 | Drive Shaft | | 42 | | 76.5 | 34 | 620 | |
| | 2012.03-2014.12 | 8AT | R | R | Saloon 4WD CEUA | For PR code:GH2;For vehicles with electronic ltd slip differential | GDS82251 | Drive Shaft | | 42 | | 76.5 | 34 | 576 | |
| | 2012.03-2014.12 | 8AT | R | L/R | Saloon 4WD CEUA | For PR code:GH1 | GDS83368 | Drive Shaft | | 42 | | 76.5 | 34 | 660 | |
| | 2012.03-2014.12 | 8AT | R | L/R | Saloon 4WD CEUA | For PR code:GH1/GH2 | GCI83039 | Outer Joint | | 42 | 28 | 76.5 | 34 | 72 | |
| | 2012.03-2014.12 | 8AT | R | L/R | Saloon 4WD CEUA | For PR code:GH1/GH2 | GCI61069 | Inner Joint | | | 28 | | | 32 | |
| 4.0 (320 kw) | 2013.10-2015.12 | 8AT | F | L/R | Saloon 4WD CTGA | | GDS61290 | Drive Shaft | | 42 | | 76.4 | 34 | 493 | |
| | 2013.10-2015.12 | AT | F | L/R | Saloon 4WD CTGA | | GCO83103 | Outer Joint | | 42 | 28 | 76.4 | 34 | 54 | I |
| | 2013.10-2015.12 | AT | F | L/R | Saloon 4WD CTGA | | GCI83022 | Inner Joint | | | 34 | | | 88.5 | |
| | 2013.10-2015.12 | 8AT | R | L | Saloon 4WD CTGA | For PR code:GH2;For vehicles with electronic limited slip diff. | GDS61291 | Drive Shaft | | 42 | | 76.5 | 34 | 620 | |
| | 2013.10-2015.12 | 8AT | R | R | Saloon 4WD CTGA | For PR code:GH2;For vehicles with electronic limited slip diff. | GDS82251 | Drive Shaft | | 42 | | 76.5 | 34 | 576 | |
| | 2013.10-2015.12 | 8AT | R | L/R | Saloon 4WD CTGA | For PR code:GH1 | GDS83368 | Drive Shaft | | 42 | | 76.5 | 34 | 660 | |
| | 2013.10-2015.12 | 8AT | R | L/R | Saloon 4WD CTGA | For PR code:GH1/GH2 | GCI83039 | Outer Joint | | 42 | 28 | 76.5 | 34 | 72 | |

| | YEAR | TRANSM. | F/R | L/R | BODY STYLE & DRIVE TYPE & ENGINE | REMARKS | G-AP Ref. | PRODUCT | ABS | Technical Specifications A | B | C | H | L | P |
|---|---|---|---|---|---|---|---|---|---|---|---|---|---|---|---|
| **AUDI** | | | | | | | | | | | | | | | |
| **A8 Quattro** | | | | | | | | | | | | | | | |
| 4.0 (320 kw) | 2013.10-2015.12 | 8AT | R | L/R | Saloon 4WD CTGA | For PR code:GH1/GH2 | GCI61069 | Inner Joint | | | 28 | | | 32 | |
| | 2014.08-2018.01 | 8AT | F | L/R | Saloon 4WD CTGA | | GDS61290 | Drive Shaft | | 42 | | 76.4 | 34 | 493 | |
| | 2014.08-2018.01 | 8AT | F | L/R | Saloon 4WD CTGA | | GCI83022 | Inner Joint | | | 34 | | | 88.5 | |
| | 2014.08-2018.01 | 8AT | R | L | Saloon 4WD CTGA | For PR code:GH2 | GDS61291 | Drive Shaft | | 42 | | 76.5 | 34 | 620 | |
| | 2014.08-2018.01 | 8AT | R | R | Saloon 4WD CTGA | For Pr Code:GH2 | GDS82251 | Drive Shaft | | 42 | | 76.5 | 34 | 576 | |
| | 2014.08-2018.01 | 8AT | R | L/R | Saloon 4WD CTGA | For PR code:GH1 | GDS83368 | Drive Shaft | | 42 | | 76.5 | 34 | 660 | |
| | 2019.11- | 8AT | F | L/R | Saloon 4WD CVXB | | GCI81397 | Inner Joint | | | 27 | | | 89 | |
| 4.0 (338 kw) | 2018.05- | 8AT | F | L/R | Saloon 4WD CXYA;DWPA | | GDS84553 | Drive Shaft | | 42 | | 76.5 | 34 | 496 | |
| | 2018.05- | 8AT | F | L/R | Saloon 4WD CXYA;DWPA | | GCO81357 | Outer Joint | | 42 | 28 | 76.5 | 34 | 54 | I |
| | 2018.05- | 8AT | F | L/R | Saloon 4WD CXYA;DWPA | | GCI61077 | Inner Joint | | | 34 | | | 88 | |
| | 2018.05- | 8AT | R | L | Saloon 4WD CXYA;DWPA | For PR code:GH2;For vehicles with AWD & variable torque dist. | GDS58068 | Drive Shaft | | 42 | | 76.5 | 34 | 618 | |
| | 2018.05- | 8AT | R | R | Saloon 4WD CXYA;DWPA | For PR code:GH2;For vehicles with AWD & variable torque dist. | GDS58054 | Drive Shaft | | 42 | | 76.5 | 34 | 574 | |
| | 2018.05- | 8AT | R | L/R | Saloon 4WD CXYA;DWPA | For PR code:GH1 | GDS83368 | Drive Shaft | | 42 | | 76.5 | 34 | 660 | |
| 4.2 (175 kw) | 1999.02-2000.04 | 5AT | F | L | Saloon 4WD ARU | | GDS83249 | Drive Shaft | 45W | 38 | | 59.5 | 34.5 | 561 | |
| | 1999.02-2000.04 | 5AT | F | R | Saloon 4WD ARU | | GDS83020 | Drive Shaft | 45W | 38 | | 59.5 | 34.5 | 522 | |
| | 1999.02-2000.04 | AT/MT | R | L/R | Saloon 4WD ARU | not for armoured vehicles | GCI83001 | Inner Joint | | | 28 | | | 32 | |
| | 1999.02-2000.04 | | F/R | L/R | Saloon 4WD ARU | | GCO83019 | Outer Joint | 45W | 38 | 27 | 59.5 | 34.5 | 63 | I |
| 4.2 (180 kw) | 1994.06-1996.07 | AT/MT | R | L/R | Saloon 4WD AEM | Date from:1994.06;not for armoured vehicles | GCI83001 | Inner Joint | | | 28 | | | 32 | |
| | 1994.06-1996.07 | | F/R | L/R | Saloon 4WD AEM | | GCO83019 | Outer Joint | 45W | 38 | 27 | 59.5 | 34.5 | 63 | I |
| 4.2 (210 kw) | 1995.07-1998.09 | 4AT/5AT | F | L/R | Saloon 4WD AGH | | GCO83019 | Outer Joint | 45W | 38 | 27 | 59.5 | 34.5 | 63 | I |
| 4.2 (220 kw) | 1994.06-1999.12 | 5AT | F | L | Saloon 4WD ABZ/AKG | | GDS83249 | Drive Shaft | 45W | 38 | | 59.5 | 34.5 | 561 | |
| | 1994.06-1999.12 | 5AT | F | R | Saloon 4WD ABZ/AKG | | GDS83020 | Drive Shaft | 45W | 38 | | 59.5 | 34.5 | 522 | |
| | 1994.06-1999.12 | AT/MT | R | L/R | Saloon 4WD ABZ/AKG | Date from:1994.06;not for armoured vehicles | GCI83001 | Inner Joint | | | 28 | | | 32 | |
| | 1994.06-1999.12 | AT/MT | F/R | L/R | Saloon 4WD ABZ/AKG | | GCO83019 | Outer Joint | 45W | 38 | 27 | 59.5 | 34.5 | 63 | I |
| 4.2 (228 kw) | 1998.10-2002.09 | 5AT | F | L | Saloon 4WD AQF/AUW | | GDS83249 | Drive Shaft | 45W | 38 | | 59.5 | 34.5 | 561 | |
| | 1998.10-2002.09 | 5AT | F | R | Saloon 4WD AQF/AUW | | GDS83020 | Drive Shaft | 45W | 38 | | 59.5 | 34.5 | 522 | |
| | 1998.10-2002.09 | AT/MT | R | L/R | Saloon 4WD AQF/AUW | not for armoured vehicles | GCI83001 | Inner Joint | | | 28 | | | 32 | |
| | 1998.10-2002.09 | | F/R | L/R | Saloon 4WD AQF/AUW | | GCO83019 | Outer Joint | 45W | 38 | 27 | 59.5 | 34.5 | 63 | I |
| 4.2 (235 kw) | 2005.01-2005.06 | 6AT | F | L | Saloon 4WD BMC | | GDS81596 | Drive Shaft | | 38 | | 59.5 | 34 | 558 | |
| | 2005.01-2005.06 | 6AT | F | R | Saloon 4WD BMC | | GDS81588 | Drive Shaft | | 38 | | 59.5 | 34 | 477 | |
| | 2005.01-2005.06 | 6AT | F | L/R | Saloon 4WD BMC | TJ | GCI61044 | Inner Joint | | | 34 | | | 85 | |
| | 2005.01-2005.06 | 6AT | F | L/R | Saloon 4WD BMC | AAR | GCI61076 | Inner Joint | | | 34 | | | 85 | |
| | 2005.01-2005.06 | 6AT | R | L/R | Saloon 4WD BMC | | GDS81536 | Drive Shaft | | 38 | | 59.5 | 34 | 660 | |
| | 2005.01-2005.06 | 6AT | R | L/R | Saloon 4WD BMC | | GCI81399 | Inner Joint | | | 28 | | | 32 | |
| | 2005.01-2005.06 | 6AT | F/R | L/R | Saloon 4WD BMC | | GCO83077 | Outer Joint | | 38 | 27 | 59.5 | 34 | 63 | M |
| 4.2 (240 kw) | 2005.07-2010.07 | 6AT | F | L | Saloon 4WD BVN | | GDS81596 | Drive Shaft | | 38 | | 59.5 | 34 | 558 | |
| | 2005.07-2010.07 | 6AT | F | R | Saloon 4WD BVN | | GDS81588 | Drive Shaft | | 38 | | 59.5 | 34 | 477 | |
| | 2005.07-2010.07 | 6AT | F | L/R | Saloon 4WD BVN | TJ | GCI61044 | Inner Joint | | | 34 | | | 85 | |
| | 2005.07-2010.07 | 6AT | F | L/R | Saloon 4WD BVN | AAR | GCI61076 | Inner Joint | | | 34 | | | 85 | |
| | 2005.07-2010.07 | 6AT | R | L/R | Saloon 4WD BVN | | GDS81536 | Drive Shaft | | 38 | | 59.5 | 34 | 660 | |
| | 2005.07-2010.07 | 6AT | R | L/R | Saloon 4WD BVN | | GCI81399 | Inner Joint | | | 28 | | | 32 | |
| | 2005.07-2010.07 | 6AT | F/R | L/R | Saloon 4WD BVN | | GCO83077 | Outer Joint | | 38 | 27 | 59.5 | 34 | 63 | M |
| 4.2 (246 kw) | 2002.10-2010.07 | 6AT | F | L | Saloon 4WD BFM;BGK | | GDS81596 | Drive Shaft | | 38 | | 59.5 | 34 | 558 | |
| | 2002.10-2010.07 | 6AT | F | R | Saloon 4WD BFM;BGK | | GDS81588 | Drive Shaft | | 38 | | 59.5 | 34 | 477 | |
| | 2002.10-2010.07 | 6AT | F | L/R | Saloon 4WD BFM;BGK | | GCO83077 | Outer Joint | | 38 | 27 | 59.5 | 34 | 63 | M |
| | 2002.10-2010.07 | 6AT | F | L/R | Saloon 4WD BFM;BGK | TJ | GCI61044 | Inner Joint | | | 34 | | | 85 | |
| | 2002.10-2010.07 | 6AT | F | L/R | Saloon 4WD BFM;BGK | AAR | GCI61076 | Inner Joint | | | 34 | | | 85 | |
| | 2002.10-2010.07 | 6AT | R | L/R | Saloon 4WD BFM;BGK | | GDS81532 | Drive Shaft | | 38 | | 59.5 | 34 | 660 | |
| | 2002.10-2010.07 | 6AT | R | L/R | Saloon 4WD BFM;BGK | | GCO81358 | Outer Joint | | 38 | 33 | 59.5 | 34 | 54 | M |
| | 2002.10-2010.07 | 6AT | R | L/R | Saloon 4WD BFM;BGK | | GCI81399 | Inner Joint | | | 28 | | | 32 | |
| 4.2 (257 kw) | 2006.06-2010.07 | 6AT | F | L | Saloon 4WD BVJ | | GDS81589 | Drive Shaft | | 38 | | 59.5 | 34 | 612 | |
| | 2006.06-2010.07 | 6AT | F | R | Saloon 4WD BVJ | | GDS83025 | Drive Shaft | | 38 | | 59.5 | 34 | 543 | |
| | 2006.06-2010.07 | 6AT | F | L/R | Saloon 4WD BVJ | | GCO83077 | Outer Joint | | 38 | 27 | 59.5 | 34 | 63 | M |
| | 2006.06-2010.07 | 6AT | F | L | Saloon 4WD BVJ | AAR | GCI61076 | Inner Joint | | | 34 | | | 85 | |
| | 2006.06-2010.07 | 6AT | F | L/R | Saloon 4WD BVJ | TJ | GCI61044 | Inner Joint | | | 34 | | | 85 | |
| | 2006.06-2010.07 | 6AT | R | L/R | Saloon 4WD BVJ | | GDS81532 | Drive Shaft | | 38 | | 59.5 | 34 | 660 | |
| | 2006.06-2010.07 | 6AT | R | L/R | Saloon 4WD BVJ | | GCO81358 | Outer Joint | | 38 | 33 | 59.5 | 34 | 54 | M |
| | 2006.06-2010.07 | 6AT | R | L/R | Saloon 4WD BVJ | | GCI81399 | Inner Joint | | | 28 | | | 32 | |
| 4.2 (258 kw) | 2009.11-2014.04 | 8AT | F | L/R | Saloon 4WD CDSB | | GDS81528 | Drive Shaft | | 42 | | 76.5 | 34 | 488 | |
| | 2009.11-2014.04 | 8AT | F | L/R | Saloon 4WD CDSB | Date to:2010.08 | GCO83087 | Outer Joint | | 42 | 27 | 76.5 | 34 | 57 | M |
| | 2009.11-2014.04 | 8AT | F | L/R | Saloon 4WD CDSB | | GCO83088 | Outer Joint | | 42 | 29 | 76.5 | 34 | 61.5 | M |
| | 2009.11-2014.04 | 8AT | F | L/R | Saloon 4WD CDSB | Date from:2010.09 | GCO83103 | Outer Joint | | 42 | 28 | 76.4 | 34 | 54 | I |
| | 2009.11-2014.04 | 8AT | F | L/R | Saloon 4WD CDSB | | GCI81397 | Inner Joint | | | 27 | | | 89 | |
| | 2009.11-2014.04 | 8AT | F | L/R | Saloon 4WD CDSB | | GCI83022 | Inner Joint | | | 34 | | | 88.5 | |
| | 2009.11-2014.04 | 8AT | R | L | Saloon 4WD CDSB | For PR code:GH2;For vehicles with electronic limited slip diff. | GDS81527 | Drive Shaft | | 42 | | 76.5 | 34 | 590 | |

| | YEAR | TRANSM. | F/R | L/R | BODY STYLE & DRIVE TYPE & ENGINE | REMARKS | G-AP Ref. | PRODUCT | ABS | Technical Specifications A | B | C | H | L | P |
|---|---|---|---|---|---|---|---|---|---|---|---|---|---|---|---|
| **AUDI** | | | | | | | | | | | | | | | |
| **A8 Quattro** | | | | | | | | | | | | | | | |
| 4.2 (258 kw) | 2009.11-2014.04 | 8AT | R | L/R | Saloon 4WD CDSB | For PR code:GH1 | GDS83368 | Drive Shaft | | 42 | | 76.5 | 34 | 660 | |
| | 2009.11-2014.04 | 8AT | R | L/R | Saloon 4WD CDSB | | GCI83039 | Outer Joint | | 42 | 28 | 76.5 | 34 | 72 | |
| | 2009.11-2014.04 | 8AT | R | L/R | Saloon 4WD CDSB | | GCI61069 | Inner Joint | | | 28 | | | 32 | |
| 4.2 (273 kw) | 2009.11-2012.12 | 8AT | F | L/R | Saloon 4WD CDRA | | GDS61290 | Drive Shaft | | 42 | | 76.4 | 34 | 493 | |
| | 2009.11-2012.12 | AT | F | L/R | Saloon 4WD CDRA | | GCO83103 | Outer Joint | | 42 | 28 | 76.4 | 34 | 54 | I |
| | 2009.11-2012.12 | AT | F | L/R | Saloon 4WD CDRA | | GCI83022 | Inner Joint | | | 34 | | | 88.5 | |
| | 2009.11-2012.12 | | F | L/R | Saloon 4WD CDRA | Date To:2010.08 | GCO83087 | Outer Joint | | 42 | 27 | 76.5 | 34 | 57 | M |
| | 2009.11-2012.12 | 8AT | R | L | Saloon 4WD CDRA | For PR code:GH2,For vehicles with electronic limited slip diff. | GDS61291 | Drive Shaft | | 42 | | 76.5 | 34 | 620 | |
| | 2009.11-2012.12 | 8AT | R | R | Saloon 4WD CDRA | For PR code:GH2,For vehicles with electronic limited slip diff. | GDS82251 | Drive Shaft | | 42 | | 76.5 | 34 | 576 | |
| | 2009.11-2012.12 | 8AT | R | L/R | Saloon 4WD CDRA | For PR code:GH1 | GDS83368 | Drive Shaft | | 42 | | 76.5 | 34 | 660 | |
| | 2009.11-2012.12 | 8AT | R | L/R | Saloon 4WD CDRA | For PR code:GH1/GH2 | GCI83039 | Outer Joint | | 42 | 28 | 76.5 | 34 | 72 | |
| | 2009.11-2012.12 | 8AT | R | L/R | Saloon 4WD CDRA | For PR code:GH1/GH2 | GCI61069 | Inner Joint | | | 28 | | | 32 | |
| 4.2 (283 kw) | 2013.10-2018.01 | 8AT | F | L/R | Saloon 4WD CTEC | | GDS81528 | Drive Shaft | | 42 | | 76.5 | 34 | 488 | |
| | 2013.10-2018.01 | 8AT | F | L/R | Saloon 4WD CTEC | | GCI81397 | Inner Joint | | | 27 | | | 89 | |
| | 2013.10-2018.01 | AT | F | L/R | Saloon 4WD CTEC | | GCO83088 | Outer Joint | | 42 | 29 | 76.5 | 34 | 61.5 | M |
| | 2013.10-2018.01 | 8AT | R | L | Saloon 4WD CTEC | For PR code:GH2,For vehicles with electronic limited slip diff. | GDS81527 | Drive Shaft | | 42 | | 76.5 | 34 | 590 | |
| | 2013.10-2018.01 | 8AT | R | L/R | Saloon 4WD CTEC | For PR code:GH1 | GDS83368 | Drive Shaft | | 42 | | 76.5 | 34 | 660 | |
| | 2013.10-2018.01 | 8AT | R | L/R | Saloon 4WD CTEC | | GCI61069 | Inner Joint | | | 28 | | | 32 | |
| 6.0 (309 kw) | 2001.03-2002.09 | 5AT | F | L | Saloon 4WD AZC | | GDS83249 | Drive Shaft | 45W | 38 | | 59.5 | 34.5 | 561 | |
| | 2001.03-2002.09 | 5AT | F | R | Saloon 4WD AZC | | GDS83020 | Drive Shaft | 45W | 38 | | 59.5 | 34.5 | 522 | |
| | 2001.03-2002.09 | AT/MT | R | L/R | Saloon 4WD AZC | not for armoured vehicles | GCI83001 | Inner Joint | | | 28 | | | 32 | |
| | 2001.03-2002.09 | AT/MT | F/R | L/R | Saloon 4WD AZC | not for armoured vehicles | GCO83019 | Outer Joint | 45W | 38 | 27 | 59.5 | 34.5 | 63 | I |
| 6.0 (331 kw) | 2003.12-2010.07 | 6AT | F | L | Saloon 4WD BHT;BTE;BSB | Not for armoured vehicles | GDS81596 | Drive Shaft | | 38 | | 59.5 | 34 | 558 | |
| | 2003.12-2010.07 | 6AT | F | R | Saloon 4WD BHT;BTE;BSB | Not for armoured vehicles | GDS81588 | Drive Shaft | | 38 | | 59.5 | 34 | 477 | |
| | 2003.12-2010.07 | 6AT | F | L/R | Saloon 4WD BHT;BTE;BSB | Not for armoured vehicles,universal number:AD-877 | GCO83077 | Outer Joint | | 38 | 27 | 59.5 | 34 | 63 | M |
| | 2003.12-2010.07 | 6AT | F | L/R | Saloon 4WD BHT;BTE;BSB | Not for armoured vehicles;TJ | GCI61044 | Inner Joint | | | 34 | | | 85 | |
| | 2003.12-2010.07 | 6AT | F | L/R | Saloon 4WD BHT;BTE;BSB | Not for armoured vehicles;AAR | GCI61076 | Inner Joint | | | 34 | | | 85 | |
| | 2003.12-2010.07 | 6AT | R | L/R | Saloon 4WD BHT;BTE;BSB | | GDS81536 | Drive Shaft | | 38 | | 59.5 | 34 | 660 | |
| | 2003.12-2010.07 | 6AT | R | L/R | Saloon 4WD BHT;BTE;BSB | | GCI81399 | Inner Joint | | | 28 | | | 32 | |
| 6.3 (368 kw) | 2011.01-2018.01 | 8AT | F | L/R | Saloon 4WD CEJA;CTNA | | GDS61290 | Drive Shaft | | 42 | | 76.4 | 34 | 493 | |
| | 2011.01-2018.01 | AT | F | L/R | Saloon 4WD CEJA;CTNA | | GCO83103 | Outer Joint | | 42 | 28 | 76.4 | 34 | 54 | I |
| | 2011.01-2018.01 | AT | F | L/R | Saloon 4WD CEJA;CTNA | | GCI83022 | Inner Joint | | | 34 | | | 88.5 | |
| | 2011.01-2018.01 | 8AT | R | L | Saloon 4WD CEJA;CTNA | For PR code:GH2,For vehicles with electronic limited slip diff. | GDS61291 | Drive Shaft | | 42 | | 76.5 | 34 | 620 | |
| | 2011.01-2018.01 | 8AT | R | R | Saloon 4WD CEJA;CTNA | For PR code:GH2,For vehicles with electronic limited slip diff. | GDS82251 | Drive Shaft | | 42 | | 76.5 | 34 | 576 | |
| | 2011.01-2018.01 | 8AT | R | L/R | Saloon 4WD CEJA;CTNA | For PR code:GH1 | GDS83368 | Drive Shaft | | 42 | | 76.5 | 34 | 660 | |
| | 2011.01-2018.01 | 8AT | R | L/R | Saloon 4WD CEJA;CTNA | For PR code:GH1/GH2 | GCI83039 | Outer Joint | | 42 | 28 | 76.5 | 34 | 72 | |
| | 2011.01-2018.01 | 8AT | R | L/R | Saloon 4WD CEJA;CTNA | For PR code:GH1/GH2 | GCI61069 | Inner Joint | | | 28 | | | 32 | |
| **Allroad Quattro** | | | | | | | | | | | | | | | |
| 2.5 (120 kw) | 2003.05-2005.08 | AT/MT | F | L/R | Estate 4WD BCZ | | GCO83019 | Outer Joint | 45W | 38 | 27 | 59.5 | 34.5 | 63 | I |
| | 2003.05-2005.08 | AT/MT | F | L/R | Estate 4WD BCZ | | GCI61044 | Inner Joint | | | 34 | | | 85 | |
| 2.5 (132 kw) | 2000.05-2005.08 | 5AT | F | L | Estate 4WD AKE;BAU | | GDS83239 | Drive Shaft | 45W | 38 | | 59.5 | 34.5 | 530 | |
| | 2000.05-2005.08 | 5AT | F | R | Estate 4WD AKE;BAU | | GDS83240 | Drive Shaft | 45W | 38 | | 59.5 | 34.5 | 498 | |
| | 2000.05-2005.08 | AT/MT | F | L/R | Estate 4WD AKE;BAU | | GCO83019 | Outer Joint | 45W | 38 | 27 | 59.5 | 34.5 | 63 | I |
| | 2000.05-2005.08 | AT/MT | F | L/R | Estate 4WD AKE;BAU | | GCI61044 | Inner Joint | | | 34 | | | 85 | |
| 2.7 (184 kw) | 2000.05-2005.08 | 5AT | F | L | Estate 4WD ARE;BES | | GDS83239 | Drive Shaft | 45W | 38 | | 59.5 | 34.5 | 530 | |
| | 2000.05-2005.08 | 5AT | F | R | Estate 4WD ARE;BES | | GDS83240 | Drive Shaft | 45W | 38 | | 59.5 | 34.5 | 498 | |
| | 2000.05-2005.08 | AT/MT | F | L/R | Estate 4WD ARE;BES | | GCO83019 | Outer Joint | 45W | 38 | 27 | 59.5 | 34.5 | 63 | I |
| | 2000.05-2005.08 | AT/MT | F | L/R | Estate 4WD ARE;BES | | GCI61044 | Inner Joint | | | 34 | | | 85 | |
| 4.2 (220 kw) | 2002.07-2005.08 | AT/MT | F | L/R | Estate 4WD BAS | | GCO83019 | Outer Joint | 45W | 38 | 27 | 59.5 | 34.5 | 63 | I |
| | 2002.07-2005.08 | AT/MT | F | L/R | Estate 4WD BAS | | GCI61044 | Inner Joint | | | 34 | | | 85 | |
| **Cabriolet** | | | | | | | | | | | | | | | |
| 1.8 (92 kw) | 1997.04-2000.08 | AT/MT | F | L/R | Cabriolet FWD ADR | | GCO83012 | Outer Joint | 45T | 33 | 30 | 53 | 30 | 62 | I |
| 1.9 (66 kw) | 1995.05-2000.08 | AT/MT | F | L/R | Cabriolet FWD 1Z/AHU | | GCO83012 | Outer Joint | 45T | 33 | 30 | 53 | 30 | 62 | I |
| 2.0 (85 kw) | 1993.01-1998.09 | AT/MT | F | L/R | Cabriolet FWD ABK | | GCO83012 | Outer Joint | 45T | 33 | 30 | 53 | 30 | 62 | I |
| | 1993.01-1998.09 | AT/MT | F | L/R | Cabriolet FWD ABK | | GCO83051 | Outer Joint | | 33 | 30 | 53 | 30 | 61 | I |
| | 1993.01-1998.09 | MT | F | L | Cabriolet FWD ABK | | GDS83003 | Drive Shaft | 45T | 33 | | 53 | 30 | 586 | |
| | 1993.01-1998.09 | MT | F | R | Cabriolet FWD ABK | | GDS83297 | Drive Shaft | 45T | 33 | | 53 | 30 | 575 | |
| | 1993.01-1998.09 | MT | F | L/R | Cabriolet FWD ABK | | GCI83014 | Inner Joint | | | 33 | | | 32 | |
| 2.6 (110 kw) | 1994.01-2000.08 | AT/MT | F | L/R | Cabriolet FWD ABC | Date from:1994.01 | GCO83017 | Outer Joint | 45T | 38 | 27 | 59.5 | 34.5 | 68.5 | I |
| | 1994.01-2000.08 | AT/MT | F | L/R | Cabriolet FWD ABC | | GCI50019 | Inner Joint | | | 34 | | | 59.5 | |
| 2.8 (128 kw) | 1992.11-2000.08 | AT/MT | F | L/R | Cabriolet FWD AAH | | GCO83017 | Outer Joint | 45T | 38 | 27 | 59.5 | 34.5 | 68.5 | I |
| **Coupe** | | | | | | | | | | | | | | | |
| 2.0 (85 kw) | 1989.05-1996.12 | AT/MT | F | L/R | Coupe FWD AAD/ABK | | GCO83012 | Outer Joint | 45T | 33 | 30 | 53 | 30 | 62 | I |
| | 1989.05-1996.12 | MT | F | L | Coupe FWD AAD/ABK | | GDS83003 | Drive Shaft | 45T | 33 | | 53 | 30 | 586 | |
| | 1989.05-1996.12 | MT | F | R | Coupe FWD AAD/ABK | | GDS83297 | Drive Shaft | 45T | 33 | | 53 | 30 | 575 | |

| | YEAR | TRANSM. | F/R | L/R | BODY STYLE & DRIVE TYPE & ENGINE | REMARKS | G-AP Ref. | PRODUCT | ABS | Technical Specifications A | B | C | H | L | P |
|---|---|---|---|---|---|---|---|---|---|---|---|---|---|---|---|
| **AUDI** | | | | | | | | | | | | | | | |
| **Coupe** | | | | | | | | | | | | | | | |
| 2.0 (85 kw) | 1989.05-1996.12 | MT | F | L/R | Coupe FWD AAD/ABK | | GCI83014 | Inner Joint | | | 33 | | | 32 | |
| | 1989.05-1996.12 | MT/3AT | F | L/R | Coupe FWD AAD/ABK | | GCO83051 | Outer Joint | | 33 | 30 | 53 | 30 | 61 | I |
| 2.0 (103 kw) | 1992.08-1996.06 | MT | F | R | Coupe FWD ACE | | GDS83044 | Drive Shaft | 45T | 33 | | 53 | 30 | 563 | |
| | 1992.08-1996.06 | MT | F | L/R | Coupe FWD ACE | Date to:1996.06 | GCO83012 | Outer Joint | 45T | 33 | 30 | 53 | 30 | 62 | I |
| | 1992.08-1996.06 | MT | F | L/R | Coupe FWD ACE | Date to:1996.06 | GCO83051 | Outer Joint | | 33 | 30 | 53 | 30 | 61 | I |
| | 1992.08-1996.06 | MT | F | L/R | Coupe FWD ACE | Date to:1996.06 | GCI83001 | Inner Joint | | | 28 | | | 32 | |
| 2.6 (110 kw) | 1991.08-1996.05 | AT/MT | F | L/R | Coupe FWD ABC | | GCO83017 | Outer Joint | 45T | 38 | 27 | 59.5 | 34.5 | 68.5 | I |
| 2.8 (128 kw) | 1991.08-1996.05 | AT/MT | F | L/R | Coupe FWD AAH | Date to:1996.05 | GCO83017 | Outer Joint | 45T | 38 | 27 | 59.5 | 34.5 | 68.5 | I |
| **Coupe Quattro** | | | | | | | | | | | | | | | |
| 2.3 (123 kw) | 1990.05-1996.12 | 5MT | R | L/R | Coupe 4WD 7A | | GCO83012 | Outer Joint | 45T | 33 | 30 | 53 | 30 | 62 | I |
| | 1990.05-1996.12 | MT | F/R | L/R | Coupe 4WD 7A | | GCI83011 | Inner Joint | | | 33 | | | 34 | |
| 2.8 (128 kw) | 1991.08-1996.12 | MT | F | L/R | Coupe 4WD AAH | | GCO83016 | Outer Joint | 45T | 38 | 30 | 59.5 | 34 | 61 | I |
| | 1991.08-1996.12 | 5MT | R | L/R | Coupe 4WD AAH | | GCO83012 | Outer Joint | 45T | 33 | 30 | 53 | 30 | 62 | I |
| | 1991.08-1996.12 | MT | F/R | L/R | Coupe 4WD AAH | | GCI83011 | Inner Joint | | | 33 | | | 34 | |
| **e-tron Quattro** | | | | | | | | | | | | | | | |
| EV (226 kw) | 2020.09- | ET | F | L/R | SUV 4WD | | GDS84117 | Drive Shaft | | 42 | | 76.5 | 34 | 518 | |
| | 2020.09- | ET | F | L/R | SUV 4WD | | GCO82603 | Outer Joint | | 42 | 30 | 76.5 | 34 | 60 | I |
| | 2020.09- | ET | F | L/R | SUV 4WD | | GCI82522 | Inner Joint | | | 29 | | | 83.5 | |
| | 2020.09- | ET | R | L | SUV 4WD | | GDS84121 | Drive Shaft | | 42 | | 76.5 | 34 | 518 | |
| | 2020.09- | ET | R | R | SUV 4WD | | GDS84120 | Drive Shaft | | 42 | | 76.5 | 34 | 484 | |
| | 2020.09- | ET | R | L/R | SUV 4WD | | GCO82604 | Outer Joint | | 42 | 30 | 76.5 | 34 | 96.2 | |
| | 2020.09- | ET | R | L/R | SUV 4WD | | GCI82524 | Inner Joint | | | 30 | | | 28 | |
| EV (230 kw) | 2019.09-2023.07 | ET | F | L/R | SUV 4WD EAWA;EASB | | GDS84117 | Drive Shaft | | 42 | | 76.5 | 34 | 518 | |
| | 2019.09-2023.07 | ET | F | L/R | SUV 4WD EAWA;EASB | | GCO82603 | Outer Joint | | 42 | 30 | 76.5 | 34 | 60 | I |
| | 2019.09-2023.07 | ET | F | L/R | SUV 4WD EAWA;EASB | | GCI82522 | Inner Joint | | | 29 | | | 83.5 | |
| | 2019.09-2023.07 | ET | R | L | SUV 4WD EAWA;EASB | | GDS84121 | Drive Shaft | | 42 | | 76.5 | 34 | 518 | |
| | 2019.09-2023.07 | ET | R | R | SUV 4WD EAWA;EASB | | GDS84120 | Drive Shaft | | 42 | | 76.5 | 34 | 484 | |
| | 2019.09-2023.07 | ET | R | L/R | SUV 4WD EAWA;EASB | | GCO82604 | Outer Joint | | 42 | 30 | 76.5 | 34 | 96.2 | |
| | 2019.09-2023.07 | ET | R | L/R | SUV 4WD EAWA;EASB | | GCI82524 | Inner Joint | | | 30 | | | 28 | |
| EV (300 kw) | 2018.09-2023.07 | ET | F | L/R | SUV 4WD EASA;EAWA | | GDS84117 | Drive Shaft | | 42 | | 76.5 | 34 | 518 | |
| | 2018.09-2023.07 | ET | F | L/R | SUV 4WD EASA;EAWA | | GCO82603 | Outer Joint | | 42 | 30 | 76.5 | 34 | 60 | I |
| | 2018.09-2023.07 | ET | F | L/R | SUV 4WD EASA;EAWA | | GCI82522 | Inner Joint | | | 29 | | | 83.5 | |
| | 2018.09-2023.07 | ET | R | L | SUV 4WD EASA;EAWA | | GDS84121 | Drive Shaft | | 42 | | 76.5 | 34 | 518 | |
| | 2018.09-2023.07 | ET | R | R | SUV 4WD EASA;EAWA | | GDS84120 | Drive Shaft | | 42 | | 76.5 | 34 | 484 | |
| | 2018.09-2023.07 | ET | R | L/R | SUV 4WD EASA;EAWA | | GCO82604 | Outer Joint | | 42 | 30 | 76.5 | 34 | 96.2 | |
| | 2018.09-2023.07 | ET | R | L/R | SUV 4WD EASA;EAWA | | GCI82524 | Inner Joint | | | 30 | | | 28 | |
| EV (370 kw) | 2020.09-2023.07 | ET | F | L/R | SUV 4WD EAVA;EATA;EAUA | | GDS84117 | Drive Shaft | | 42 | | 76.5 | 34 | 518 | |
| | 2020.09-2023.07 | ET | F | L/R | SUV 4WD EAVA;EATA;EAUA | | GCO82603 | Outer Joint | | 42 | 30 | 76.5 | 34 | 60 | I |
| | 2020.09-2023.07 | ET | F | L/R | SUV 4WD EAVA;EATA;EAUA | | GCI82522 | Inner Joint | | | 29 | | | 83.5 | |
| | 2020.09-2023.07 | ET | R | L/R | SUV 4WD EAVA;EATA;EAUA | | GDS84099 | Drive Shaft | | 42 | | 76.5 | 34 | 493 | |
| | 2020.09-2023.07 | ET | R | L/R | SUV 4WD EAVA;EATA;EAUA | | GCO82604 | Outer Joint | | 42 | 30 | 76.5 | 34 | 96.2 | |
| | 2020.09-2023.07 | ET | R | L/R | SUV 4WD EAVA;EATA;EAUA | Date to:2022.06 | GCI35051 | Inner Joint | | | 30 | | | 30.5 | |
| **e-tron Sportback Quattro** | | | | | | | | | | | | | | | |
| EV (226 kw) | 2020.09- | ET | F | L/R | SUV 4WD | | GDS84117 | Drive Shaft | | 42 | | 76.5 | 34 | 518 | |
| | 2020.09- | ET | F | L/R | SUV 4WD | | GCO82603 | Outer Joint | | 42 | 30 | 76.5 | 34 | 60 | I |
| | 2020.09- | ET | F | L/R | SUV 4WD | | GCI82522 | Inner Joint | | | 29 | | | 83.5 | |
| | 2020.09- | ET | R | L | SUV 4WD | | GDS84121 | Drive Shaft | | 42 | | 76.5 | 34 | 518 | |
| | 2020.09- | ET | R | L/R | SUV 4WD | | GCO82604 | Outer Joint | | 42 | 30 | 76.5 | 34 | 96.2 | |
| | 2020.09- | ET | R | L/R | SUV 4WD | | GCI82524 | Inner Joint | | | 30 | | | 28 | |
| EV (230 kw) | 2019.09-2023.07 | ET | F | L/R | SUV 4WD EAWA;EASB | | GDS84117 | Drive Shaft | | 42 | | 76.5 | 34 | 518 | |
| | 2019.09-2023.07 | ET | F | L/R | SUV 4WD EAWA;EASB | | GCO82603 | Outer Joint | | 42 | 30 | 76.5 | 34 | 60 | I |
| | 2019.09-2023.07 | ET | F | L/R | SUV 4WD EAWA;EASB | | GCI82522 | Inner Joint | | | 29 | | | 83.5 | |
| | 2019.09-2023.07 | ET | R | L | SUV 4WD EAWA;EASB | | GDS84121 | Drive Shaft | | 42 | | 76.5 | 34 | 518 | |
| | 2019.09-2023.07 | ET | R | R | SUV 4WD EAWA;EASB | | GDS84120 | Drive Shaft | | 42 | | 76.5 | 34 | 484 | |
| | 2019.09-2023.07 | ET | R | L/R | SUV 4WD EAWA;EASB | | GCO82604 | Outer Joint | | 42 | 30 | 76.5 | 34 | 96.2 | |
| | 2019.09-2023.07 | ET | R | L/R | SUV 4WD EAWA;EASB | | GCI82524 | Inner Joint | | | 30 | | | 28 | |
| EV (300 kw) | 2019.09-2023.07 | ET | F | L/R | SUV 4WD EASA;EAWA | | GDS84117 | Drive Shaft | | 42 | | 76.5 | 34 | 518 | |
| | 2019.09-2023.07 | ET | F | L/R | SUV 4WD EASA;EAWA | | GCO82603 | Outer Joint | | 42 | 30 | 76.5 | 34 | 60 | I |
| | 2019.09-2023.07 | ET | F | L/R | SUV 4WD EASA;EAWA | | GCI82522 | Inner Joint | | | 29 | | | 83.5 | |
| | 2019.09-2023.07 | ET | R | L | SUV 4WD EASA;EAWA | | GDS84121 | Drive Shaft | | 42 | | 76.5 | 34 | 518 | |
| | 2019.09-2023.07 | ET | R | R | SUV 4WD EASA;EAWA | | GDS84120 | Drive Shaft | | 42 | | 76.5 | 34 | 484 | |
| | 2019.09-2023.07 | ET | R | L/R | SUV 4WD EASA;EAWA | | GCO82604 | Outer Joint | | 42 | 30 | 76.5 | 34 | 96.2 | |
| | 2019.09-2023.07 | ET | R | L/R | SUV 4WD EASA;EAWA | | GCI82524 | Inner Joint | | | 30 | | | 28 | |
| EV (370 kw) | 2020.09-2023.07 | ET | F | L/R | SUV 4WD EAVA;EATA;EAUA | | GDS84117 | Drive Shaft | | 42 | | 76.5 | 34 | 518 | |
| | 2020.09-2023.07 | ET | F | L/R | SUV 4WD EAVA;EATA;EAUA | | GCO82603 | Outer Joint | | 42 | 30 | 76.5 | 34 | 60 | I |

| | YEAR | TRANSM. | F/R | L/R | BODY STYLE & DRIVE TYPE & ENGINE | REMARKS | G-AP Ref. | PRODUCT | ABS | Technical Specifications A | B | C | H | L | P |
|---|---|---|---|---|---|---|---|---|---|---|---|---|---|---|---|
| **AUDI** | | | | | | | | | | | | | | | |
| **e-tron Sportback Quattro** | | | | | | | | | | | | | | | |
| EV (370 kw) | 2020.09-2023.07 | ET | F | L/R | SUV 4WD EAVA;EATA;EAUA | | GCI82522 | Inner Joint | | | 29 | | | 83.5 | |
| | 2020.09-2023.07 | ET | R | L/R | SUV 4WD EAVA;EATA;EAUA | | GDS84099 | Drive Shaft | | 42 | | 76.5 | 34 | 493 | |
| | 2020.09-2023.07 | ET | R | L/R | SUV 4WD EAVA;EATA;EAUA | | GCO82604 | Outer Joint | | 42 | 30 | 76.5 | 34 | 96.2 | |
| | 2020.09-2023.07 | ET | R | L/R | SUV 4WD EAVA;EATA;EAUA | Date to:2022.06 | GCI35051 | Inner Joint | | | 30 | | | 30.5 | |
| **Q2** | | | | | | | | | | | | | | | |
| 1.0 (81 kw) | 2020.08- | 6MT | F | L | SUV FWD DLAA | | GDS82231 | Drive Shaft | | 36 | | 59.5 | 40 | 486 | |
| | 2020.08- | 6MT | F | R | SUV FWD DLAA | | GDS82229 | Drive Shaft | | 36 | | 59.5 | 40 | 767 | |
| | 2020.08- | 6MT | F | L/R | SUV FWD DLAA | | GCO61059 | Outer Joint | | 36 | 33 | 59.5 | 40 | 59.5 | I |
| | 2020.08- | 6MT | F | L | SUV FWD DLAA | | GCI81689 | Inner Joint | | | 32 | | | 89 | |
| 1.0 (85 kw) | 2016.10-2020.10 | 6MT | F | R | SUV FWD CHZJ | | GDS82230 | Drive Shaft | | 36 | | 59.5 | 40 | 789 | |
| | 2016.10-2020.10 | 6MT/7DCT | F | L | SUV FWD CHZJ | | GDS82231 | Drive Shaft | | 36 | | 59.5 | 40 | 486 | |
| | 2016.10-2020.10 | 6MT/7DCT | F | L/R | SUV FWD CHZJ | | GCO61059 | Outer Joint | | 36 | 33 | 59.5 | 40 | 59.5 | I |
| | 2016.10-2020.10 | 6MT/7DCT | F | L/R | SUV FWD CHZJ | | GCI81689 | Inner Joint | | | 32 | | | 89 | |
| | 2016.10-2020.10 | 7DCT | F | R | SUV FWD CHZJ | | GDS82229 | Drive Shaft | | 36 | | 59.5 | 40 | 767 | |
| | 2018.07- | 6MT | F | R | SUV FWD DKRF;DUSA | | GDS82230 | Drive Shaft | | 36 | | 59.5 | 40 | 789 | |
| | 2018.07- | 6MT/7DCT | F | L | SUV FWD DKRF;DUSA | | GDS82231 | Drive Shaft | | 36 | | 59.5 | 40 | 486 | |
| | 2018.07- | 7DCT | F | R | SUV FWD DKRF;DUSA | | GDS82229 | Drive Shaft | | 36 | | 59.5 | 40 | 767 | |
| 1.4 (110 kw) | 2016.06- | 6MT/7DCT | F | L | SUV FWD CZEA | | GDS61100 | Drive Shaft | | 36 | | 59.5 | 40 | 513 | |
| | 2016.06- | 6MT/7DCT | F | L/R | SUV FWD CZEA | | GCO83002 | Outer Joint | | 36 | 27 | 59.5 | 40 | 66 | I |
| | 2016.06- | 6MT/7DCT | F | L/R | SUV FWD CZEA | | GCO83101 | Outer Joint | | 36 | 27 | 59.5 | 40 | 65 | M |
| | 2016.06- | 6MT/7DCT | F | L/R | SUV FWD CZEA | Original design | GCI61069 | Inner Joint | | | 28 | | | 32 | |
| | 2016.06- | 6MT/7DCT | F | L/R | SUV FWD CZEA | Non-Original design | GCI83016 | Inner Joint | | | 28 | | | 32 | |
| | 2016.06- | 7DCT | F | R | SUV FWD CZEA | | GDS83313 | Drive Shaft | | 36 | | 59.5 | 40 | 792 | |
| | 2016.06-2018.08 | 7DCT | F | L | SUV FWD CZEA | | GDS61100 | Drive Shaft | | 36 | | 59.5 | 40 | 513 | |
| | 2016.06-2018.08 | 7DCT | F | R | SUV FWD CZEA | | GDS83313 | Drive Shaft | | 36 | | 59.5 | 40 | 792 | |
| | 2016.06-2018.08 | AT/MT | F | L/R | SUV FWD CZEA | Bellows Material:Plastic | GCI83016 | Inner Joint | | | 28 | | | 32 | |
| 1.5 (110 kw) | 2018.07- | 6MT | F | R | SUV FWD DADA;DPCA;DXDB | | GDS83313 | Drive Shaft | | 36 | | 59.5 | 40 | 792 | |
| | 2018.07- | 6MT | F | L/R | SUV FWD DADA;DPCA;DXDB | | GCI83016 | Inner Joint | | | 28 | | | 32 | |
| | 2018.07- | 6MT/7DCT | F | L | SUV FWD DADA;DPCA;DXDB | | GDS61100 | Drive Shaft | | 36 | | 59.5 | 40 | 513 | |
| | 2018.07- | 6MT/7DCT | F | L/R | SUV FWD DADA;DPCA;DXDB | | GCO61059 | Outer Joint | | 36 | 33 | 59.5 | 40 | 59.5 | I |
| | 2018.07- | 6MT/7DCT | F | L/R | SUV FWD DADA;DPCA;DXDB | | GCO83101 | Outer Joint | | 36 | 27 | 59.5 | 40 | 65 | M |
| | 2018.07- | 7DCT | F | R | SUV FWD DADA;DPCA;DXDB | | GDS84503 | Drive Shaft | | 36 | 40 | 59.5 | 40 | 817 | |
| | 2018.07- | 7DCT | F | R | SUV FWD DADA;DPCA;DXDB | | GCI61090 | Inner Joint | | 40 | 28 | 46.9 | | 133.2 | |
| 1.6 (85 kw) | 2016.06-2018.07 | 6MT | F | R | SUV FWD DDYA | | GDS61283 | Drive Shaft | | 36 | | 59.5 | 40 | 815 | |
| | 2016.06-2018.07 | 6MT/7DCT | F | L | SUV FWD DDYA | | GDS61282 | Drive Shaft | | 36 | | 59.5 | 40 | 523 | |
| | 2016.06-2018.07 | 6MT/7DCT | F | L/R | SUV FWD DDYA | | GCO61059 | Outer Joint | | 36 | 33 | 59.5 | 40 | 59.5 | I |
| | 2016.06-2018.07 | 6MT/7DCT | F | L/R | SUV FWD DDYA | | GCI53002 | Inner Joint | | | 33 | | | 34 | |
| | 2016.06-2018.07 | 6MT/7DCT | F | L/R | SUV FWD DDYA | | GCI82447 | Inner Joint | | | 33 | | | 34 | |
| | 2016.06-2018.07 | 7DCT | F | R | SUV FWD DDYA | | GDS61096 | Drive Shaft | | 36 | | 59.5 | 40.5 | 799 | |
| | 2018.07-2020.10 | 6MT | F | R | SUV FWD DGTE | Date from:2019.03 | GDS61042 | Drive Shaft | | 36 | | 59.5 | 40.5 | 814 | |
| | 2018.07-2020.10 | 6MT | F | R | SUV FWD DGTE | Date to:2019.02 | GDS61283 | Drive Shaft | | 36 | | 59.5 | 40 | 815 | |
| | 2018.07-2020.10 | 6MT/7DCT | F | L | SUV FWD DGTE | | GDS61282 | Drive Shaft | | 36 | | 59.5 | 40 | 523 | |
| | 2018.07-2020.10 | 7DCT | F | R | SUV FWD DGTE | | GDS61096 | Drive Shaft | | 36 | | 59.5 | 40.5 | 799 | |
| 2.0 (85 kw) | 2021.02- | 6MT | F | L | SUV FWD DTRD;DTRB;DXRC | Date from:2021.03 | GDS83295 | Drive Shaft | | 36 | | 59.5 | 40 | 491 | |
| | 2021.02- | 6MT | F | R | SUV FWD DTRD;DTRB;DXRC | | GDS81891 | Drive Shaft | | 36 | | 59.5 | 40 | 781 | |
| | 2021.02- | 6MT | F | L/R | SUV FWD DTRD;DTRB;DXRC | | GCI82456 | Inner Joint | | | 28 | | | 32 | |
| | 2021.02- | 6MT | F | R | SUV FWD DTRD;DTRB;DXRC | | GDS98007 | Stub Axle-Flange | | 37 | | | 88 | 148 | |
| | 2021.02- | 6MT/7DCT | F | L/R | SUV FWD DTRD;DTRB;DXRC | Transmission:7DCT,For PR code:0IJ | GCO83101 | Outer Joint | | 36 | 27 | 59.5 | 40 | 65 | M |
| | 2021.02- | 7DCT | F | L | SUV FWD DTRD;DTRB;DXRC | For PR code:0EG | GDS61282 | Drive Shaft | | 36 | | 59.5 | 40 | 523 | |
| | 2021.02- | 7DCT | F | L | SUV FWD DTRD;DTRB;DXRC | For PR code:0IJ | GDS81265 | Drive Shaft | | 36 | 37 | 59.5 | 40 | 557 | |
| | 2021.02- | 7DCT | F | R | SUV FWD DTRD;DTRB;DXRC | For PR code:0IJ | GDS83612 | Drive Shaft | | 36 | 37 | 59.5 | 40 | 907 | |
| | 2021.02- | 7DCT | F | R | SUV FWD DTRD;DTRB;DXRC | For PR code:0EG | GDS84417 | Drive Shaft | | 36 | | 59.5 | 40 | 783 | |
| | 2021.02- | 7DCT | F | L/R | SUV FWD DTRD;DTRB;DXRC | For PR code:0EG | GCO61059 | Outer Joint | | 36 | 33 | 59.5 | 40 | 59.5 | I |
| | 2021.02- | 7DCT | F | L | SUV FWD DTRD;DTRB;DXRC | For PR code:0IJ | GCI81158 | Inner Joint | | 37 | 34 | 34.5 | 65.5 | 83 | |
| | 2021.02- | 7DCT | F | R | SUV FWD DTRD;DTRB;DXRC | For PR code:0IJ | GCI82108 | Inner Joint | | 37 | 34 | 40 | 77.5 | 103.5 | |
| | 2021.02- | 7DCT | F | L/R | SUV FWD DTRD;DTRB;DXRC | For PR code:0EG | GCI82447 | Inner Joint | | | 33 | | | 34 | |
| 2.0 (110 kw) | 2016.09- | 6MT | F | L | SUV FWD DFGA;DTTC;DXRB | | GDS83295 | Drive Shaft | | 36 | | 59.5 | 40 | 491 | |
| | 2016.09- | 6MT | F | R | SUV FWD DFGA;DTTC;DXRB | | GDS83313 | Drive Shaft | | 36 | | 59.5 | 40 | 792 | |
| | 2016.09- | 6MT | F | L/R | SUV FWD DFGA;DTTC;DXRB | | GCI83016 | Inner Joint | | | 28 | | | 32 | |
| | 2016.09- | 6MT | F | L/R | SUV FWD DFGA;DTTC;DXRB | Bellows Material:Plastic | GCI83016 | Inner Joint | | | 28 | | | 32 | |
| | 2016.09- | 7DCT | F | L | SUV FWD DFGA;DTTC;DXRB | | GDS81265 | Drive Shaft | | 36 | 37 | 59.5 | 40 | 557 | |
| | 2016.09- | 7DCT | F | R | SUV FWD DFGA;DTTC;DXRB | | GDS83612 | Drive Shaft | | 36 | 37 | 59.5 | 40 | 907 | |
| | 2016.09- | 7DCT | F | L | SUV FWD DFGA;DTTC;DXRB | | GCI81158 | Inner Joint | | 37 | 34 | 34.5 | 65.5 | 83 | |
| | 2016.09- | 7DCT | F | R | SUV FWD DFGA;DTTC;DXRB | | GCI82108 | Inner Joint | | 37 | 34 | 40 | 77.5 | 103.5 | |
| | 2016.09- | 7DCT/6MT | F | L/R | SUV FWD DFGA;DTTC;DXRB | | GCO83101 | Outer Joint | | 36 | 27 | 59.5 | 40 | 65 | M |

| | YEAR | TRANSM. | F/R | L/R | BODY STYLE & DRIVE TYPE & ENGINE | REMARKS | G-AP Ref. | PRODUCT | ABS | Technical Specifications A | B | C | H | L | P |
|---|---|---|---|---|---|---|---|---|---|---|---|---|---|---|---|
| **AUDI** | | | | | | | | | | | | | | | |
| **Q2** | | | | | | | | | | | | | | | |
| 2.0 (110 kw) | 2016.09- | Semi-AT | F | L | SUV FWD DFGA;DTTC;DXRB | | GDS61285 | Drive Shaft | | 36 | | 59.5 | 40 | 472 | |
| | 2016.09- | Semi-AT | F | L/R | SUV FWD DFGA;DTTC;DXRB | | GCI61057 | Inner Joint | | | 34 | | | 89 | |
| **Q2 Quattro** | | | | | | | | | | | | | | | |
| 2.0 (110 kw) | 2016.09- | 7AT | F | R | SUV 4WD DFGA;DTTC | | GDS81893 | Drive Shaft | | 36 | | 59.5 | 40 | 575 | |
| | 2016.09- | 7AT | F | L/R | SUV 4WD DFGA;DTTC | | GCO83101 | Outer Joint | | 36 | 27 | 59.5 | 40 | 65 | M |
| | 2016.09- | 7AT | F | L | SUV 4WD DFGA;DTTC | | GCI81158 | Inner Joint | | 37 | 34 | 34.5 | 65.5 | 83 | |
| | 2016.09- | 7AT | F | R | SUV 4WD DFGA;DTTC | | GCI61057 | Inner Joint | | | 34 | | | 89 | |
| | 2016.09- | 7DCT | F | L | SUV 4WD DFGA;DTTC | | GDS81265 | Drive Shaft | | 36 | 37 | 59.5 | 40 | 557 | |
| | 2016.09- | 7AT | R | L | SUV 4WD DFGA;DTTC | | GDS61331 | Drive Shaft | | 36 | | 59.5 | 40 | 606 | |
| | 2016.09- | 7AT | R | R | SUV 4WD DFGA;DTTC | | GDS61332 | Drive Shaft | | 36 | | 59.5 | 40 | 650 | |
| | 2016.09- | 7AT | R | L/R | SUV 4WD DFGA;DTTC | | GCI35026 | Outer Joint | | 36 | 33 | 59.5 | 40 | 61 | |
| | 2016.09- | 7AT | R | L/R | SUV 4WD DFGA;DTTC | | GCI61103 | Inner Joint | | | 33 | | | 32 | |
| | 2019.01- | 7DCT | F | L | SUV 4WD DFGA;DTTC;DXRB | | GDS81265 | Drive Shaft | | 36 | 37 | 59.5 | 40 | 557 | |
| | 2019.01- | 7DCT | F | R | SUV 4WD DFGA;DTTC;DXRB | | GDS81893 | Drive Shaft | | 36 | | 59.5 | 40 | 575 | |
| | 2019.01- | 7DCT | F | L | SUV 4WD DFGA;DTTC;DXRB | | GCI81158 | Inner Joint | | 37 | 34 | 34.5 | 65.5 | 83 | |
| | 2019.01- | 7DCT | F | R | SUV 4WD DFGA;DTTC;DXRB | | GCI61057 | Inner Joint | | | 34 | | | 89 | |
| | 2019.01- | 7DCT | R | L/R | SUV 4WD DFGA;DTTC;DXRB | | GCI61103 | Inner Joint | | | 33 | | | 32 | |
| 2.0 (140 kw) | 2016.07-2018.08 | 7AT | F | R | SUV 4WD DFHA | | GDS81893 | Drive Shaft | | 36 | | 59.5 | 40 | 575 | |
| | 2016.07-2018.08 | 7AT | F | L/R | SUV 4WD DFHA | | GCO83101 | Outer Joint | | 36 | 27 | 59.5 | 40 | 65 | M |
| | 2016.07-2018.08 | 7AT | F | L | SUV 4WD DFHA | | GCI81158 | Inner Joint | | 37 | 34 | 34.5 | 65.5 | 83 | |
| | 2016.07-2018.08 | 7AT | F | R | SUV 4WD DFHA | | GCI61057 | Inner Joint | | | 34 | | | 89 | |
| | 2016.07-2018.08 | 7DCT | F | L | SUV 4WD DFHA | | GDS81265 | Drive Shaft | | 36 | 37 | 59.5 | 40 | 557 | |
| | 2016.07-2018.08 | 7AT | R | L | SUV 4WD DFHA | | GDS61331 | Drive Shaft | | 36 | | 59.5 | 40 | 606 | |
| | 2016.07-2018.08 | 7AT | R | R | SUV 4WD DFHA | | GDS61332 | Drive Shaft | | 36 | | 59.5 | 40 | 650 | |
| | 2016.07-2018.08 | 7AT | R | L/R | SUV 4WD DFHA | | GCI35026 | Outer Joint | | 36 | 33 | 59.5 | 40 | 61 | |
| | 2016.07-2018.08 | 7AT | R | L/R | SUV 4WD DFHA | | GCI61103 | Inner Joint | | | 33 | | | 32 | |
| | 2017.05- | 7AT | F | R | SUV 4WD CZPB;DKZA | Wheel Hub Diam [mm]:43,Date to:2017.08;Wheel Hub Diam [mm]:27,Date from:2017.10 | GDS81892 | Drive Shaft | | 36 | | 59.5 | 40 | 602 | |
| | 2017.05- | 7AT | F | L/R | SUV 4WD CZPB;DKZA | | GCO83101 | Outer Joint | | 36 | 27 | 59.5 | 40 | 65 | M |
| | 2017.05- | 7AT | F | L | SUV 4WD CZPB;DKZA | For Engine code:CZPB/DKZA | GCI83028 | Inner Joint | | 37 | 28 | | 65.5 | 90.2 | |
| | 2017.05- | 7AT | F | R | SUV 4WD CZPB;DKZA | | GCI61069 | Inner Joint | | | 28 | | | 32 | |
| | 2017.05- | 7DCT | F | L | SUV 4WD CZPB;DKZA | For Engine code:DNNA | GDS81265 | Drive Shaft | | 36 | 37 | 59.5 | 40 | 557 | |
| | 2017.05- | 7DCT | F | L | SUV 4WD CZPB;DKZA | For Engine code:CZPB/DKZA | GDS84237 | Drive Shaft | | 36 | 37 | 59.5 | 40 | 560 | |
| | 2017.05- | 7DCT | F | L | SUV 4WD CZPB;DKZA | For Engine code:DNNA | GCI81158 | Inner Joint | | 37 | 34 | 34.5 | 65.5 | 83 | |
| | 2017.05- | 7AT | R | L | SUV 4WD CZPB;DKZA | | GDS61331 | Drive Shaft | | 36 | | 59.5 | 40 | 606 | |
| | 2017.05- | 7AT | R | R | SUV 4WD CZPB;DKZA | | GDS61332 | Drive Shaft | | 36 | | 59.5 | 40 | 650 | |
| | 2017.05- | 7AT | R | L/R | SUV 4WD CZPB;DKZA | | GCI35026 | Outer Joint | | 36 | 33 | 59.5 | 40 | 61 | |
| | 2017.05- | 7AT | R | L/R | SUV 4WD CZPB;DKZA | | GCI61103 | Inner Joint | | | 33 | | | 32 | |
| | 2018.09- | 7AT | F | L | SUV 4WD DKZA | For Engine code:CZPB/DKZA | GDS84237 | Drive Shaft | | 36 | 37 | 59.5 | 40 | 560 | |
| | 2018.09- | 7DCT | F | L | SUV 4WD DKZA | | GDS81265 | Drive Shaft | | 36 | 37 | 59.5 | 40 | 557 | |
| | 2018.09- | 7DCT | F | R | SUV 4WD DKZA | | GDS81892 | Drive Shaft | | 36 | | 59.5 | 40 | 602 | |
| | 2018.09- | 7DCT | F | L | SUV 4WD DKZA | For Engine code:DNNA | GCI81158 | Inner Joint | | 37 | 34 | 34.5 | 65.5 | 83 | |
| | 2018.09- | 7DCT | R | L/R | SUV 4WD DKZA | | GCI61103 | Inner Joint | | | 33 | | | 32 | |
| | 2021.04- | 7DCT | F | L | SUV 4WD DNNA | For Engine code:DNNA | GDS81265 | Drive Shaft | | 36 | 37 | 59.5 | 40 | 557 | |
| | 2021.04- | 7DCT | F | L | SUV 4WD DNNA | For Engine code:CZPB/DKZA | GDS84237 | Drive Shaft | | 36 | 37 | 59.5 | 40 | 560 | |
| | 2021.04- | 7DCT | F | R | SUV 4WD DNNA | | GDS81892 | Drive Shaft | | 36 | | 59.5 | 40 | 602 | |
| | 2021.04- | 7DCT | F | L | SUV 4WD DNNA | For Engine code:DNNA | GCI81158 | Inner Joint | | 37 | 34 | 34.5 | 65.5 | 83 | |
| | 2021.04- | 7DCT | R | L/R | SUV 4WD DNNA | | GCI61103 | Inner Joint | | | 33 | | | 32 | |
| **Q3** | | | | | | | | | | | | | | | |
| 1.4 (92 kw) | 2016.07-2018.10 | 6MT | F | L | SUV FWD CZDB | | GDS83295 | Drive Shaft | | 36 | | 59.5 | 40 | 491 | |
| | 2016.07-2018.10 | 6MT | F | R | SUV FWD CZDB | | GDS82386 | Drive Shaft | | 36 | | 59.5 | 40 | 806 | |
| | 2016.07-2018.10 | 6MT | F | R | SUV FWD CZDB | For Engine code:CHPB;Trans. code:MQ500 | GCO83101 | Outer Joint | | 36 | 27 | 59.5 | 40 | 65 | M |
| | 2016.07-2018.10 | 6MT | F | L/R | SUV FWD CZDB | For Engine code:CHPB;Trans. code:MQ350 | GCO83101 | Outer Joint | | 36 | 27 | 59.5 | 40 | 65 | M |
| 1.4 (110 kw) | 2013.10-2018.10 | 6DCT | F | L | SUV FWD CHPB;CZEA;CZDA | For Engine code:CHPB;For Engine code:CZDA/CZEA,Date to:2015.06 | GDS83295 | Drive Shaft | | 36 | | 59.5 | 40 | 491 | |
| | 2013.10-2018.10 | 6DCT | F | R | SUV FWD CHPB;CZEA;CZDA | For Engine code:CHPB;For Engine code:CZDA/CZEA,Date to:2015.06 | GDS81653 | Drive Shaft | | 36 | | 59.5 | 40 | 785 | |
| | 2013.10-2018.10 | 6DCT | F | L/R | SUV FWD CHPB;CZEA;CZDA | For Engine code:CHPB;For Engine code:CZDA/CZEA,Date to:2015.06 | GCO83101 | Outer Joint | | 36 | 27 | 59.5 | 40 | 65 | M |
| | 2013.10-2018.10 | 6DCT/6MT | F | L/R | SUV FWD CHPB;CZEA;CZDA | Transmission:6DCT,For Engine code:CHPB;For Engine code:CZDA/CZEA,Date to:2015.06;Transmission:6MT,Trans. code:MQ350 | GCI61069 | Inner Joint | | | 28 | | | 32 | |
| | 2013.10-2018.10 | 6MT | F | L | SUV FWD CHPB;CZEA;CZDA | Trans. code:MQ500,For Engine code:CHPB | GDS61296 | Drive Shaft | | 36 | 40 | 59.5 | 40 | 500 | |
| | 2013.10-2018.10 | 6MT | F | L | SUV FWD CHPB;CZEA;CZDA | For Engine code:CHPB;Trans. code:MQ350 | GDS83295 | Drive Shaft | | 36 | | 59.5 | 40 | 491 | |
| | 2013.10-2018.10 | 6MT | F | R | SUV FWD CHPB;CZEA;CZDA | For Engine code:CHPB,Trans. code:MQ500 | GDS57372 | Drive Shaft | | 36 | 40 | 59.5 | 40 | 828 | |
| | 2013.10-2018.10 | 6MT | F | R | SUV FWD CHPB;CZEA;CZDA | For Engine code:CHPB,Trans. code:MQ350,Date to:2015.06;For Engine code:CZDA/CZEA,Trans. code:MQ350 | GDS61147 | Drive Shaft | | 36 | | 59.5 | 40 | 795 | |
| | 2013.10-2018.10 | 6MT | F | L/R | SUV FWD CHPB;CZEA;CZDA | Transmission:6MT,Trans. code:MQ350,Date from:2015.06;For Engine code:CHPB/CZEA,Date to:2015.06;For Engine code:CZDA/CZEA,Trans. code:MQ350 | GCO83101 | Outer Joint | | 36 | 27 | 59.5 | 40 | 65 | M |
| | 2013.10-2018.10 | 6MT | F | L | SUV FWD CHPB;CZEA;CZDA | Trans. code:MQ500,For Engine Code:CHPB | GCI61054 | Inner Joint | | 40 | 28 | 46.9 | 41 | 101.7 | |
| | 2013.10-2018.10 | 6MT | F | R | SUV FWD CHPB;CZEA;CZDA | For Engine code:CHPB,Trans. code:MQ500 | GCI61090 | Inner Joint | | 40 | 28 | 46.9 | | 133.2 | |
| | 2013.10-2018.10 | 6MT/6DCT | F | R | SUV FWD CHPB;CZEA;CZDA | Transmission:6MT,Trans. code:MQ500,Date from:2015.06;For Engine code:CHPB/CZEA,Date to:2015.06;For Engine code:CZDA/CZEA,Trans. code:MQ500 | GDS82386 | Drive Shaft | | 36 | | 59.5 | 40 | 806 | |
| 1.4 (180 kw) | 2020.11- | 6AT | F | L/R | SUV FWD DGEA | | GCO83101 | Outer Joint | | 36 | 27 | 59.5 | 40 | 65 | M |

| | YEAR | TRANSM. | F/R | L/R | BODY STYLE & DRIVE TYPE & ENGINE | REMARKS | G-AP Ref. | PRODUCT | ABS | Technical Specifications | | | | | |
|---|---|---|---|---|---|---|---|---|---|---|---|---|---|---|---|
| | | | | | | | | | | A | B | C | H | L | P |
| **AUDI** | | | | | | | | | | | | | | | |
| **Q3** | | | | | | | | | | | | | | | |
| 1.4 (180 kw) | 2020.11- | 6AT | F | L | SUV FWD DGEA | | GCI81158 | Inner Joint | | 37 | 34 | 34.5 | 65.5 | 83 | |
| | 2020.11- | 6AT | F | R | SUV FWD DGEA | | GCI82108 | Inner Joint | | 37 | 34 | 40 | 77.5 | 103.5 | |
| | 2020.11- | 6DCT | F | L | SUV FWD DGEA | | GDS81265 | Drive Shaft | | 36 | 37 | 59.5 | 40 | 557 | |
| | 2020.11- | 6DCT | F | R | SUV FWD DGEA | | GDS57844 | Drive Shaft | | 36 | 37 | 59.5 | 40 | 929 | |
| 1.5 (110 kw) | 2018.08- | 6MT | F | L | SUV FWD DADA;DPCA;DXDB | | GDS81896 | Drive Shaft | | 36 | | 59.5 | 40 | 500 | |
| | 2018.08- | 6MT | F | R | SUV FWD DADA;DPCA;DXDB | For PR code:0EN | GDS82386 | Drive Shaft | | 36 | | 59.5 | 40 | 806 | |
| | 2018.08- | 6MT | F | R | SUV FWD DADA;DPCA;DXDB | For PR code:0ED | GDS83313 | Drive Shaft | | 36 | | 59.5 | 40 | 792 | |
| | 2018.08- | 6MT | F | L/R | SUV FWD DADA;DPCA;DXDB | | GCO83101 | Outer Joint | | 36 | 27 | 59.5 | 40 | 65 | M |
| | 2018.08- | 6MT | F | L/R | SUV FWD DADA;DPCA;DXDB | | GCI83016 | Inner Joint | | | 28 | | | 32 | |
| | 2018.08- | 7DCT | F | L | SUV FWD DADA;DPCA;DXDB | | GDS83323 | Drive Shaft | | 36 | 37 | 59.5 | 40 | 570 | |
| | 2018.08- | 7DCT | F | R | SUV FWD DADA;DPCA;DXDB | Date to:2019.01 | GDS84510 | Drive Shaft | | 36 | 37 | 59.5 | 40 | 925 | |
| | 2018.08- | 7DCT | F | L | SUV FWD DADA;DPCA;DXDB | | GCO83101 | Outer Joint | | 36 | 27 | 59.5 | 40 | 65 | M |
| | 2018.08- | 7DCT | F | R | SUV FWD DADA;DPCA;DXDB | Date to:2019.01 | GCO83101 | Outer Joint | | 36 | 27 | 59.5 | 40 | 65 | M |
| | 2018.08- | 7DCT | F | L | SUV FWD DADA;DPCA;DXDB | | GCI83028 | Inner Joint | | 37 | 28 | | 65.5 | 90.2 | |
| | 2019.11- | 7AT | F | L | SUV FWD DFYA | | GDS83323 | Drive Shaft | | 36 | 37 | 59.5 | 40 | 570 | |
| | 2019.11- | 7AT | F | L | SUV FWD DFYA | | GCO83101 | Outer Joint | | 36 | 27 | 59.5 | 40 | 65 | M |
| | 2019.11- | 7AT | F | L | SUV FWD DFYA | | GCI83028 | Inner Joint | | 37 | 28 | | 65.5 | 90.2 | |
| | 2019.11- | 7DCT | F | R | SUV FWD DFYA | | GDS84510 | Drive Shaft | | 36 | 37 | 59.5 | 40 | 925 | |
| 2.0 (88 kw) | 2015.03-2018.10 | 6MT | F | L | SUV FWD CUVD;DFTC | Trans. Code:MQ350,For PR code:0EN | GDS83295 | Drive Shaft | | 36 | | 59.5 | 40 | 491 | |
| | 2015.03-2018.10 | 6MT | F | R | SUV FWD CUVD;DFTC | For PR code:0EU,Trans. code:MQ500 | GDS57372 | Drive Shaft | | 36 | 40 | 59.5 | 40 | 828 | |
| | 2015.03-2018.10 | 6MT | F | R | SUV FWD CUVD;DFTC | Trans. Code:MQ350,For PR code:0EN | GDS61147 | Drive Shaft | | 36 | | 59.5 | 40 | 795 | |
| | 2015.03-2018.10 | 6MT | F | R | SUV FWD CUVD;DFTC | Trans. Code:MQ500,For PR code:0EU | GCO83101 | Outer Joint | | 36 | 27 | 59.5 | 40 | 65 | M |
| | 2015.03-2018.10 | 6MT | F | L/R | SUV FWD CUVD;DFTC | Trans. Code:MQ350,For PR code:0EN | GCO83101 | Outer Joint | | 36 | 27 | 59.5 | 40 | 65 | M |
| | 2015.03-2018.10 | 6MT | F | L/R | SUV FWD CUVD;DFTC | For PR code:0EN,Transm. code:MQ350 | GCI61069 | Inner Joint | | | 28 | | | 32 | |
| | 2015.03-2018.10 | 6MT | F | L/R | SUV FWD CUVD;DFTC | Trans. Code:MQ500,For PR code:0EU | GCI61090 | Inner Joint | | 40 | 28 | 46.9 | | 133.2 | |
| | 2015.03-2018.10 | 7DCT | F | L | SUV FWD CUVD;DFTC | | GDS81265 | Drive Shaft | | 36 | 37 | 59.5 | 40 | 557 | |
| | 2015.03-2018.10 | 7DCT | F | R | SUV FWD CUVD;DFTC | | GDS83613 | Drive Shaft | | 36 | 37 | 59.5 | 40 | 921 | |
| | 2015.03-2018.10 | 7DCT | F | L/R | SUV FWD CUVD;DFTC | | GCO83101 | Outer Joint | | 36 | 27 | 59.5 | 40 | 65 | M |
| | 2015.03-2018.10 | 7DCT | F | L | SUV FWD CUVD;DFTC | | GCI81158 | Inner Joint | | 37 | 34 | 34.5 | 65.5 | 83 | |
| | 2015.03-2018.10 | 7DCT | F | R | SUV FWD CUVD;DFTC | | GCI82108 | Inner Joint | | 37 | 34 | 40 | 77.5 | 103.5 | |
| | 2015.03-2018.10 | MT | F | L | SUV FWD CUVD;DFTC | For PR code:0EU | GDS61296 | Drive Shaft | | 36 | 40 | 59.5 | 40 | 500 | |
| | 2015.03-2018.10 | MT | F | L | SUV FWD CUVD;DFTC | For PR code:0EU | GCO83002 | Outer Joint | | 36 | 27 | 59.5 | 40 | 66 | I |
| 2.0 (100 kw) | 2011.09-2018.10 | 6MT | F | L | SUV FWD CFFA;DFTB;CUVB | For Engine Code:CFFA,Date From:2013.06,For PR code:0EU,Trans. Code:MQ500 | GDS61296 | Drive Shaft | | 36 | 40 | 59.5 | 40 | 500 | |
| | 2011.09-2018.10 | 6MT | F | L | SUV FWD CFFA;DFTB;CUVB | For Engine Code:CFFA,Date From:2013.06,For PR code:0EN,Trans. Code:MQ350 | GDS83295 | Drive Shaft | | 36 | | 59.5 | 40 | 491 | |
| | 2011.09-2018.10 | 6MT | F | R | SUV FWD CFFA;DFTB;CUVB | For Engine Code:CFFA,Date From:2013.06,For PR code:0EU,Trans. Code:MQ500 | GDS57372 | Drive Shaft | | 36 | 40 | 59.5 | 40 | 828 | |
| | 2011.09-2018.10 | 6MT | F | R | SUV FWD CFFA;DFTB;CUVB | For Engine Code:CFFA,Date From:2013.06,For PR code:0EN,Trans. Code:MQ350 | GDS61147 | Drive Shaft | | 36 | | 59.5 | 40 | 795 | |
| | 2011.09-2018.10 | 6MT | F | L | SUV FWD CFFA;DFTB;CUVB | For Engine Code:CFFA,Date From:2013.06,For PR code:0EU,Trans. Code:MQ500 | GCO83002 | Outer Joint | | 36 | 27 | 59.5 | 40 | 66 | I |
| | 2011.09-2018.10 | 6MT | F | R | SUV FWD CFFA;DFTB;CUVB | For Engine Code:CFFA,Date From:2013.06,For PR code:0EU,Trans. Code:MQ500 | GCO83101 | Outer Joint | | 36 | 27 | 59.5 | 40 | 65 | M |
| | 2011.09-2018.10 | 6MT | F | L/R | SUV FWD CFFA;DFTB;CUVB | For Engine Code:CFFA,Date From:2013.06,For PR code:0EN,Trans. Code:MQ350 | GCO83101 | Outer Joint | | 36 | 27 | 59.5 | 40 | 65 | M |
| | 2011.09-2018.10 | 6MT | F | L | SUV FWD CFFA;DFTB;CUVB | For Engine Code:CFFA,Date From:2013.06,For PR code:0EU,Trans. Code:MQ500 | GCI61054 | Inner Joint | | 40 | 28 | 46.9 | 41 | 101.7 | |
| | 2011.09-2018.10 | 6MT | F | L/R | SUV FWD CFFA;DFTB;CUVB | For Engine Code:CFFA,Date From:2013.06,For PR code:0EN,Trans. Code:MQ350 | GCI61069 | Inner Joint | | | 28 | | | 32 | |
| | 2011.09-2018.10 | 6MT | F | L/R | SUV FWD CFFA;DFTB;CUVB | For Engine Code:CFFA,Date From:2013.06,For PR code:0EU,Trans. Code:MQ500 | GCI61090 | Inner Joint | | 40 | 28 | 46.9 | | 133.2 | |
| | 2011.09-2018.10 | 6MT | F | L/R | SUV FWD CFFA;DFTB;CUVB | For Engine Code:CFFA,Date To:2013.05 | GCI83016 | Inner Joint | | | 28 | | | 32 | |
| | 2011.09-2018.10 | 7DCT | F | L | SUV FWD CFFA;DFTB;CUVB | | GDS81265 | Drive Shaft | | 36 | 37 | 59.5 | 40 | 557 | |
| | 2011.09-2018.10 | 7DCT | F | R | SUV FWD CFFA;DFTB;CUVB | | GDS83613 | Drive Shaft | | 36 | 37 | 59.5 | 40 | 921 | |
| | 2011.09-2018.10 | 7DCT | F | L/R | SUV FWD CFFA;DFTB;CUVB | | GCO83101 | Outer Joint | | 36 | 27 | 59.5 | 40 | 65 | M |
| | 2011.09-2018.10 | 7DCT | F | L | SUV FWD CFFA;DFTB;CUVB | | GCI81158 | Inner Joint | | 37 | 34 | 34.5 | 65.5 | 83 | |
| | 2011.09-2018.10 | 7DCT | F | R | SUV FWD CFFA;DFTB;CUVB | | GCI82108 | Inner Joint | | 37 | 34 | 40 | 77.5 | 103.5 | |
| 2.0 (103 kw) | 2011.09-2018.10 | 6MT | F | L | SUV FWD CFFB;CLJA | Date From:2013.06,For Engine Code:CFFB/CLJA,For PR code:0EU,Trans. Code:MQ500 | GDS61296 | Drive Shaft | | 36 | 40 | 59.5 | 40 | 500 | |
| | 2011.09-2018.10 | 6MT | F | L | SUV FWD CFFB;CLJA | Date To:2013.05,For Engine Code:CFFB,Date From:2013.06,For Engine Code:CFFB/CLJA,For PR code:0EN,Trans. Code:MQ350 | GDS83295 | Drive Shaft | | 36 | | 59.5 | 40 | 491 | |
| | 2011.09-2018.10 | 6MT | F | R | SUV FWD CFFB;CLJA | Date from:2013.06,For Engine code:CFFB/CLJA,For PR code:0EU,Trans. code:MQ500 | GDS57372 | Drive Shaft | | 36 | 40 | 59.5 | 40 | 828 | |
| | 2011.09-2018.10 | 6MT | F | R | SUV FWD CFFB;CLJA | Date To:2013.05,For Engine Code:CFFB,Date From:2013.06,For Engine Code:CFFB/CLJA,For PR code:0EN,Trans. Code:MQ350 | GDS61147 | Drive Shaft | | 36 | | 59.5 | 40 | 795 | |
| | 2011.09-2018.10 | 6MT | F | L | SUV FWD CFFB;CLJA | Date From:2013.06,For Engine Code:CFFB/CLJA,For PR code:0EU,Trans. Code:MQ500 | GCO83002 | Outer Joint | | 36 | 27 | 59.5 | 40 | 66 | I |
| | 2011.09-2018.10 | 6MT | F | L/R | SUV FWD CFFB;CLJA | Date To:2013.05,For Engine Code:CFFB,Date From:2013.06,For Engine Code:CFFB/CLJA,For PR code:0EN,Trans. Code:MQ350 | GCO83101 | Outer Joint | | 36 | 27 | 59.5 | 40 | 65 | M |
| | 2011.09-2018.10 | 6MT | F | L | SUV FWD CFFB;CLJA | Date From:2013.06,For Engine Code:CFFB/CLJA,For PR code:0EU,Trans. Code:MQ500 | GCI61054 | Inner Joint | | 40 | 28 | 46.9 | 41 | 101.7 | |
| | 2011.09-2018.10 | 6MT | F | L/R | SUV FWD CFFB;CLJA | Date From:2013.06,For Engineecode:CFFB/CLJA,For PR code:0EN,Transm. code:MQ350 | GCI61069 | Inner Joint | | | 28 | | | 32 | |
| | 2011.09-2018.10 | 6MT | F | L/R | SUV FWD CFFB;CLJA | Date From:2013.06,For Engine Code:CFFB/CLJA,For PR code:0EU,Trans. Code:MQ500 | GCI61090 | Inner Joint | | 40 | 28 | 46.9 | | 133.2 | |
| | 2011.09-2018.10 | 6MT | F | L/R | SUV FWD CFFB;CLJA | Date To:2013.05,For Engine Code:CFFB,Date From:2013.06,For Engine Code:CFFB/CLJA,For PR code:0EN,Trans. Code:MQ350 | GCI83016 | Inner Joint | | | 28 | | | 32 | |
| 2.0 (110 kw) | 2014.11-2018.10 | 6MT | F | L | SUV FWD CUVC;DBBA;DFTA | Trans. Code:MQ350,For PR code:0EN | GDS83295 | Drive Shaft | | 36 | | 59.5 | 40 | 491 | |
| | 2014.11-2018.10 | 6MT | F | R | SUV FWD CUVC;DBBA;DFTA | For PR code:0EU,Trans. code:MQ500 | GDS57372 | Drive Shaft | | 36 | 40 | 59.5 | 40 | 828 | |
| | 2014.11-2018.10 | 6MT | F | R | SUV FWD CUVC;DBBA;DFTA | Trans. Code:MQ350,For PR code:0EN | GDS61147 | Drive Shaft | | 36 | | 59.5 | 40 | 795 | |
| | 2014.11-2018.10 | 6MT | F | R | SUV FWD CUVC;DBBA;DFTA | Trans. Code:MQ500,For PR code:0EU | GCO83101 | Outer Joint | | 36 | 27 | 59.5 | 40 | 65 | M |
| | 2014.11-2018.10 | 6MT | F | L/R | SUV FWD CUVC;DBBA;DFTA | Trans. Code:MQ350,For PR code:0EN | GCO83101 | Outer Joint | | 36 | 27 | 59.5 | 40 | 65 | M |
| | 2014.11-2018.10 | 6MT | F | L/R | SUV FWD CUVC;DBBA;DFTA | For PR code:0EN,Transm. code:MQ350 | GCI61069 | Inner Joint | | | 28 | | | 32 | |
| | 2014.11-2018.10 | 6MT | F | L/R | SUV FWD CUVC;DBBA;DFTA | Trans. Code:MQ500,For PR code:0EU | GCI61090 | Inner Joint | | 40 | 28 | 46.9 | | 133.2 | |

| | YEAR | TRANSM. | F/R | L/R | BODY STYLE & DRIVE TYPE & ENGINE | REMARKS | G-AP Ref. | PRODUCT | ABS | Technical Specifications A | B | C | H | L | P |
|---|---|---|---|---|---|---|---|---|---|---|---|---|---|---|---|
| **AUDI** | | | | | | | | | | | | | | | |
| **Q3** | | | | | | | | | | | | | | | |
| 2.0 (110 kw) | 2014.11-2018.10 | 7DCT | F | L | SUV FWD CUVC;DBBA;DFTA | | GDS81265 | Drive Shaft | | 36 | 37 | 59.5 | 40 | 557 | |
| | 2014.11-2018.10 | 7DCT | F | R | SUV FWD CUVC;DBBA;DFTA | | GDS83613 | Drive Shaft | | 36 | 37 | 59.5 | 40 | 921 | |
| | 2014.11-2018.10 | 7DCT | F | L/R | SUV FWD CUVC;DBBA;DFTA | | GCO83101 | Outer Joint | | 36 | 27 | 59.5 | 40 | 65 | M |
| | 2014.11-2018.10 | 7DCT | F | L | SUV FWD CUVC;DBBA;DFTA | | GCI81158 | Inner Joint | | 37 | 34 | 34.5 | 65.5 | 83 | |
| | 2014.11-2018.10 | 7DCT | F | R | SUV FWD CUVC;DBBA;DFTA | | GCI82108 | Inner Joint | | 37 | 34 | 40 | 77.5 | 103.5 | |
| | 2014.11-2018.10 | MT | F | L | SUV FWD CUVC;DBBA;DFTA | For PR code:0EU | GDS61296 | Drive Shaft | | 36 | 40 | 59.5 | 40 | 500 | |
| | 2014.11-2018.10 | MT | F | L | SUV FWD CUVC;DBBA;DFTA | For PR code:0EU | GCO83002 | Outer Joint | | 36 | 27 | 59.5 | 40 | 66 | I |
| | 2018.09- | 6MT | F | L | SUV FWD DFGA;DTSB;DTSA;DXPA | | GDS81896 | Drive Shaft | | 36 | | 59.5 | 40 | 500 | |
| | 2018.09- | 6MT | F | R | SUV FWD DFGA;DTSB;DTSA;DXPA | | GDS61101 | Drive Shaft | | 36 | | 59.5 | 40 | 803 | |
| | 2018.09- | 6MT | F | L/R | SUV FWD DFGA;DTSB;DTSA;DXPA | | GCI83016 | Inner Joint | | | 28 | | | 32 | |
| | 2018.09- | 6MT/7DCT | F | L/R | SUV FWD DFGA;DTSB;DTSA;DXPA | | GCO83101 | Outer Joint | | 36 | 27 | 59.5 | 40 | 65 | M |
| | 2018.09- | 7DCT | F | L | SUV FWD DFGA;DTSB;DTSA;DXPA | | GDS82351 | Drive Shaft | | 36 | 37 | 59.5 | 40 | 568 | |
| | 2018.09- | 7DCT | F | R | SUV FWD DFGA;DTSB;DTSA;DXPA | | GDS83613 | Drive Shaft | | 36 | 37 | 59.5 | 40 | 921 | |
| | 2018.09- | 7DCT | F | L | SUV FWD DFGA;DTSB;DTSA;DXPA | | GCI81158 | Inner Joint | | 37 | 34 | 34.5 | 65.5 | 83 | |
| | 2018.09- | 7DCT | F | R | SUV FWD DFGA;DTSB;DTSA;DXPA | | GCI82108 | Inner Joint | | 37 | 34 | 40 | 77.5 | 103.5 | |
| 2.0 (130 kw) | 2011.06-2015.04 | 6MT | F | L | SUV FWD CFGC | Trans. Code:MQ500,For PR code:0EU | GDS61296 | Drive Shaft | | 36 | 40 | 59.5 | 40 | 500 | |
| | 2011.06-2015.04 | 6MT | F | L | SUV FWD CFGC | Trans. Code:MQ350,For PR code:0EN | GDS83295 | Drive Shaft | | 36 | | 59.5 | 40 | 491 | |
| | 2011.06-2015.04 | 6MT | F | R | SUV FWD CFGC | For PR code:0EU,Trans. code:MQ500 | GDS57372 | Drive Shaft | | 36 | 40 | 59.5 | 40 | 828 | |
| | 2011.06-2015.04 | 6MT | F | R | SUV FWD CFGC | Trans. Code:MQ350,For PR code:0EN | GDS61147 | Drive Shaft | | 36 | | 59.5 | 40 | 795 | |
| | 2011.06-2015.04 | 6MT | F | L | SUV FWD CFGC | Trans. Code:MQ500,For PR code:0EU,Trans. Code:MQ350,For PR code:0EN | GCO83002 | Outer Joint | | 36 | 27 | 59.5 | 40 | 66 | I |
| | 2011.06-2015.04 | 6MT | F | R | SUV FWD CFGC | Trans. Code:MQ500,For PR code:0EU | GCO83101 | Outer Joint | | 36 | 27 | 59.5 | 40 | 65 | M |
| | 2011.06-2015.04 | 6MT | F | L/R | SUV FWD CFGC | Trans. Code:MQ350,For PR code:0EN | GCO83101 | Outer Joint | | 36 | 27 | 59.5 | 40 | 65 | M |
| | 2011.06-2015.04 | 6MT | F | L | SUV FWD CFGC | Trans. Code:MQ500,For PR code:0EU | GCI61054 | Inner Joint | | 40 | 28 | 46.9 | 41 | 101.7 | |
| | 2011.06-2015.04 | 6MT | F | L/R | SUV FWD CFGC | For PR code:0EN,Transm. code:MQ350 | GCI61069 | Inner Joint | | | 28 | | | 32 | |
| | 2011.06-2015.04 | 6MT | F | L/R | SUV FWD CFGC | Trans. Code:MQ500,For PR code:0EU | GCI61090 | Inner Joint | | 40 | 28 | 46.9 | | 133.2 | |
| 2.0 (132 kw) | 2015.05-2018.10 | 6MT | F | L | SUV FWD CULB | | GDS83295 | Drive Shaft | | 36 | | 59.5 | 40 | 491 | |
| | 2015.05-2018.10 | 6MT | F | R | SUV FWD CULB | | GDS61147 | Drive Shaft | | 36 | | 59.5 | 40 | 795 | |
| | 2015.05-2018.10 | 6MT | F | L/R | SUV FWD CULB | | GCO83101 | Outer Joint | | 36 | 27 | 59.5 | 40 | 65 | M |
| | 2015.05-2018.10 | 6MT | F | L/R | SUV FWD CULB | | GCI61069 | Inner Joint | | | 28 | | | 32 | |
| 2.0 (135 kw) | 2015.05-2018.10 | 6MT | F | L | SUV FWD CUWA;DFUA | Trans. Code:MQ350,For PR code:0EN | GDS83295 | Drive Shaft | | 36 | | 59.5 | 40 | 491 | |
| | 2015.05-2018.10 | 6MT | F | R | SUV FWD CUWA;DFUA | For PR code:0EU,Trans. code:MQ500 | GDS57372 | Drive Shaft | | 36 | 40 | 59.5 | 40 | 828 | |
| | 2015.05-2018.10 | 6MT | F | R | SUV FWD CUWA;DFUA | Trans. Code:MQ350,For PR code:0EN | GDS61147 | Drive Shaft | | 36 | | 59.5 | 40 | 795 | |
| | 2015.05-2018.10 | 6MT | F | R | SUV FWD CUWA;DFUA | For PR code:0EU,Trans. code:MQ500 | GCO83101 | Outer Joint | | 36 | 27 | 59.5 | 40 | 65 | M |
| | 2015.05-2018.10 | 6MT | F | L/R | SUV FWD CUWA;DFUA | Trans. Code:MQ350,For PR code:0EN | GCO83101 | Outer Joint | | 36 | 27 | 59.5 | 40 | 65 | M |
| | 2015.05-2018.10 | 6MT | F | L/R | SUV FWD CUWA;DFUA | For PR code:0EN,Transm. code:MQ350 | GCI61069 | Inner Joint | | | 28 | | | 32 | |
| | 2015.05-2018.10 | 6MT | F | L/R | SUV FWD CUWA;DFUA | For PR code:0EU,Trans. code:MQ500 | GCI61090 | Inner Joint | | 40 | 28 | 46.9 | | 133.2 | |
| | 2015.05-2018.10 | MT | F | L | SUV FWD CUWA;DFUA | For PR code:0EU | GDS61296 | Drive Shaft | | 36 | 40 | 59.5 | 40 | 500 | |
| | 2015.05-2018.10 | MT | F | L | SUV FWD CUWA;DFUA | For PR code:0EU | GCO83002 | Outer Joint | | 36 | 27 | 59.5 | 40 | 66 | I |
| **Q3 Quattro** | | | | | | | | | | | | | | | |
| 2.0 (103 kw) | 2012.01-2018.10 | 6MT | F | L | SUV 4WD CFFB | Trans. code:MQ500,For PR code:0EU | GDS61296 | Drive Shaft | | 36 | 40 | 59.5 | 40 | 500 | |
| | 2012.01-2018.10 | 6MT | F | L | SUV 4WD CFFB | Trans. code:MQ350,For PR code:0EN | GDS83295 | Drive Shaft | | 36 | | 59.5 | 40 | 491 | |
| | 2012.01-2018.10 | 6MT | F | R | SUV 4WD CFFB | Trans. code:MQ350,For PR code:0EN | GDS83266 | Drive Shaft | | 36 | | 59.5 | 40 | 601 | |
| | 2012.01-2018.10 | 6MT | F | R | SUV 4WD CFFB | Trans. code:MQ500,For PR code:0EU | GDS83369 | Drive Shaft | | 36 | 40 | 59.5 | 40 | 598 | |
| | 2012.01-2018.10 | 6MT | F | L/R | SUV 4WD CFFB | | GCO83002 | Outer Joint | | 36 | 27 | 59.5 | 40 | 66 | I |
| | 2012.01-2018.10 | 6MT | F | L | SUV 4WD CFFB | Trans. code:MQ500,For PR code:0EU | GCI61090 | Inner Joint | | 40 | 28 | 46.9 | | 133.2 | |
| | 2012.01-2018.10 | 6MT | F | R | SUV 4WD CFFB | Trans. code:MQ500,For PR code:0EU | GCI61054 | Inner Joint | | 40 | 28 | 46.9 | 41 | 101.7 | |
| | 2012.01-2018.10 | 6MT | F | L/R | SUV 4WD CFFB | Trans. code:MQ350,For PR code:0EN | GCI83016 | Inner Joint | | | 28 | | | 32 | |
| | 2012.01-2018.10 | 7DCT | F | L | SUV 4WD CFFB | | GDS81265 | Drive Shaft | | 36 | 37 | 59.5 | 40 | 557 | |
| | 2012.01-2018.10 | 7DCT | F | R | SUV 4WD CFFB | | GDS61347 | Drive Shaft | | 36 | 40 | 59.5 | 40 | 593 | |
| | 2012.01-2018.10 | 7DCT | F | L/R | SUV 4WD CFFB | | GCO83101 | Outer Joint | | 36 | 27 | 59.5 | 40 | 65 | M |
| | 2012.01-2018.10 | 7DCT | F | L | SUV 4WD CFFB | | GCI81158 | Inner Joint | | 37 | 34 | 34.5 | 65.5 | 83 | |
| | 2012.01-2018.10 | 7DCT | F | R | SUV 4WD CFFB | TJ | GCI61048 | Inner Joint | | 40 | 34 | 46.9 | | 127.5 | |
| | 2012.01-2018.10 | 7DCT | F | R | SUV 4WD CFFB | AAR | GCI61084 | Inner Joint | | 40 | 34 | 46.9 | | 128 | |
| | 2012.01-2018.10 | MT | F | L/R | SUV 4WD CFFB | | GDS61214 | Stub Axle,differential | | 40 | 37 | | | 125 | |
| | 2012.01-2018.10 | 7DCT/6MT | R | L | SUV 4WD CFFB | | GDS61284 | Drive Shaft | | 36 | | 59.5 | 40 | 594 | |
| | 2012.01-2018.10 | 7DCT/6MT | R | R | SUV 4WD CFFB | | GDS61293 | Drive Shaft | | 36 | | 59.5 | 40 | 631 | |
| | 2012.01-2018.10 | 7DCT/6MT | R | L/R | SUV 4WD CFFB | | GCI35026 | Outer Joint | | 36 | 33 | 59.5 | 40 | 61 | |
| | 2012.01-2018.10 | 7DCT/6MT | R | L/R | SUV 4WD CFFB | | GCI53002 | Inner Joint | | | 33 | | | 34 | |
| | 2012.01-2018.10 | 7DCT/6MT | R | L/R | SUV 4WD CFFB | | GCI82447 | Inner Joint | | | 33 | | | 34 | |
| 2.0 (110 kw) | 2014.11-2018.10 | 6MT | F | L | SUV 4WD CUVC;DFTA | For PR code:0EU,Trans. code:MQ500 | GDS61296 | Drive Shaft | | 36 | 40 | 59.5 | 40 | 500 | |
| | 2014.11-2018.10 | 6MT | F | L | SUV 4WD CUVC;DFTA | For PR code:0EN,Trans. code:MQ350 | GDS83295 | Drive Shaft | | 36 | | 59.5 | 40 | 491 | |
| | 2014.11-2018.10 | 6MT | F | R | SUV 4WD CUVC;DFTA | Date from:2017.10,For PR code:0EN,Trans. code:MQ350 | GDS81892 | Drive Shaft | | 36 | | 59.5 | 40 | 602 | |
| | 2014.11-2018.10 | 6MT | F | R | SUV 4WD CUVC;DFTA | Date to:2017.09,For PR code:0EN,Trans. code:MQ350 | GDS83266 | Drive Shaft | | 36 | | 59.5 | 40 | 601 | |
| | 2014.11-2018.10 | 6MT | F | R | SUV 4WD CUVC;DFTA | For PR code:0EU,Trans. code:MQ500 | GDS83369 | Drive Shaft | | 36 | 40 | 59.5 | 40 | 598 | |
| | 2014.11-2018.10 | 6MT | F | L/R | SUV 4WD CUVC;DFTA | For PR code:0EN,Trans. code:MQ350 | GCO83002 | Outer Joint | | 36 | 27 | 59.5 | 40 | 66 | I |

| | YEAR | TRANSM. | F/R | L/R | BODY STYLE & DRIVE TYPE & ENGINE | REMARKS | G-AP Ref. | PRODUCT | ABS | Technical Specifications A | B | C | H | L | P |
|---|---|---|---|---|---|---|---|---|---|---|---|---|---|---|---|
| **AUDI** | | | | | | | | | | | | | | | |
| **Q3 Quattro** | | | | | | | | | | | | | | | |
| 2.0 (110 kw) | 2014.11-2018.10 | 6MT | F | L/R | SUV 4WD CUVC;DFTA | For PR code:0EU,Trans. code:MQ500 | GCI61054 | Inner Joint | | 40 | 28 | 46.9 | 41 | 101.7 | |
| | 2014.11-2018.10 | 6MT | F | L/R | SUV 4WD CUVC;DFTA | For PR code:0EN,Trans. code:MQ350 | GCI61069 | Inner Joint | | | 28 | | | 32 | |
| | 2014.11-2018.10 | 7DCT | F | L | SUV 4WD CUVC;DFTA | | GDS81265 | Drive Shaft | | 36 | 37 | 59.5 | 40 | 557 | |
| | 2014.11-2018.10 | 7DCT | F | R | SUV 4WD CUVC;DFTA | | GDS61347 | Drive Shaft | | 36 | 40 | 59.5 | 40 | 593 | |
| | 2014.11-2018.10 | 7DCT | F | L | SUV 4WD CUVC;DFTA | | GCI81158 | Inner Joint | | 37 | 34 | 34.5 | 65.5 | 83 | |
| | 2014.11-2018.10 | 7DCT | F | R | SUV 4WD CUVC;DFTA | TJ | GCI61048 | Inner Joint | | 40 | 34 | 46.9 | | 127.5 | |
| | 2014.11-2018.10 | 7DCT | F | R | SUV 4WD CUVC;DFTA | AAR | GCI61084 | Inner Joint | | 40 | 34 | 46.9 | | 128 | |
| | 2014.11-2018.10 | 7DCT/6MT | F | L/R | SUV 4WD CUVC;DFTA | Transmission:6MT,For PR code:0EU,Trans. code:MQ500;Transmission:7DCT | GCO83101 | Outer Joint | | 36 | 27 | 59.5 | 40 | 65 | M |
| | 2014.11-2018.10 | 6MT/7DCT | R | L | SUV 4WD CUVC;DFTA | | GDS61284 | Drive Shaft | | 36 | | 59.5 | 40 | 594 | |
| | 2014.11-2018.10 | 6MT/7DCT | R | R | SUV 4WD CUVC;DFTA | | GDS61293 | Drive Shaft | | 36 | | 59.5 | 40 | 631 | |
| | 2014.11-2018.10 | 6MT/7DCT | R | L/R | SUV 4WD CUVC;DFTA | | GCI35026 | Outer Joint | | 36 | 33 | 59.5 | 40 | 61 | |
| | 2014.11-2018.10 | 6MT/7DCT | R | L/R | SUV 4WD CUVC;DFTA | | GCI53002 | Inner Joint | | | 33 | | | 34 | |
| | 2014.11-2018.10 | 6MT/7DCT | R | L/R | SUV 4WD CUVC;DFTA | | GCI82447 | Inner Joint | | | 33 | | | 34 | |
| | 2018.09- | 6MT | F | L | SUV 4WD DFGA;DTSB;DTSA | | GDS81896 | Drive Shaft | | 36 | | 59.5 | 40 | 500 | |
| | 2018.09- | 6MT | F | R | SUV 4WD DFGA;DTSB;DTSA | | GDS84020 | Drive Shaft | | 36 | | 59.5 | 40 | 615 | |
| | 2018.09- | 6MT | F | L/R | SUV 4WD DFGA;DTSB;DTSA | | GCI61069 | Inner Joint | | | 28 | | | 32 | |
| | 2018.09- | 6MT/7DCT | F | L/R | SUV 4WD DFGA;DTSB;DTSA | | GCO83101 | Outer Joint | | 36 | 27 | 59.5 | 40 | 65 | M |
| | 2018.09- | 7DCT | F | L | SUV 4WD DFGA;DTSB;DTSA | | GDS82351 | Drive Shaft | | 36 | 37 | 59.5 | 40 | 568 | |
| | 2018.09- | 7DCT | F | R | SUV 4WD DFGA;DTSB;DTSA | Trans. code:DQ381,Bolted Propeller Shaft | GDS61346 | Drive Shaft | | 36 | | 59.5 | 40 | 589 | |
| | 2018.09- | 7DCT | F | L | SUV 4WD DFGA;DTSB;DTSA | | GCI81158 | Inner Joint | | 37 | 34 | 34.5 | 65.5 | 83 | |
| | 2018.09- | 7DCT | F | R | SUV 4WD DFGA;DTSB;DTSA | Transm. Type:DQ381 | GCI61057 | Inner Joint | | | 34 | | | 89 | |
| | 2018.09- | 6MT/7DCT | R | L | SUV 4WD DFGA;DTSB;DTSA | | GDS61331 | Drive Shaft | | 36 | | 59.5 | 40 | 606 | |
| | 2018.09- | 6MT/7DCT | R | R | SUV 4WD DFGA;DTSB;DTSA | | GDS61332 | Drive Shaft | | 36 | | 59.5 | 40 | 650 | |
| | 2018.09- | 6MT/7DCT | R | L/R | SUV 4WD DFGA;DTSB;DTSA | | GCI35026 | Outer Joint | | 36 | 33 | 59.5 | 40 | 61 | |
| | 2018.09- | 6MT/7DCT | R | L/R | SUV 4WD DFGA;DTSB;DTSA | | GCI61103 | Inner Joint | | | 33 | | | 32 | |
| 2.0 (120 kw) | 2011.06-2015.04 | 7AT | F | L | SUV 4WD CFGD | | GDS81265 | Drive Shaft | | 36 | 37 | 59.5 | 40 | 557 | |
| | 2011.06-2015.04 | 7AT | F | R | SUV 4WD CFGD | | GDS61347 | Drive Shaft | | 36 | 40 | 59.5 | 40 | 593 | |
| | 2011.06-2015.04 | 7AT | F | L/R | SUV 4WD CFGD | | GCO83101 | Outer Joint | | 36 | 27 | 59.5 | 40 | 65 | M |
| | 2011.06-2015.04 | 7DCT | F | L | SUV 4WD CFGD | | GCI81158 | Inner Joint | | 37 | 34 | 34.5 | 65.5 | 83 | |
| | 2011.06-2015.04 | 7DCT | F | R | SUV 4WD CFGD | | GCI61048 | Inner Joint | | 40 | 34 | 46.9 | | 127.5 | |
| | 2011.06-2015.04 | MT | F | L/R | SUV 4WD CFGD | | GDS61214 | Stub Axle,differential | | 40 | 37 | | | 125 | |
| | 2011.06-2015.04 | 7AT | R | L | SUV 4WD CFGD | | GDS61284 | Drive Shaft | | 36 | | 59.5 | 40 | 594 | |
| | 2011.06-2015.04 | 7AT | R | R | SUV 4WD CFGD | | GDS61293 | Drive Shaft | | 36 | | 59.5 | 40 | 631 | |
| | 2011.06-2015.04 | 7AT | R | L/R | SUV 4WD CFGD | | GCI35026 | Outer Joint | | 36 | 33 | 59.5 | 40 | 61 | |
| | 2011.06-2015.04 | 7AT | R | L/R | SUV 4WD CFGD | | GCI53002 | Inner Joint | | | 33 | | | 34 | |
| | 2011.06-2015.04 | 7DCT | R | L/R | SUV 4WD CFGD | | GCI82447 | Inner Joint | | | 33 | | | 34 | |
| 2.0 (125 kw) | 2011.06-2015.04 | 6MT | F | L | SUV 4WD CCZC | For PR code:0EU,Trans. code:MQ500 | GDS61296 | Drive Shaft | | 36 | 40 | 59.5 | 40 | 500 | |
| | 2011.06-2015.04 | 6MT | F | L | SUV 4WD CCZC | For PR code:0EN,Trans. code:MQ350 | GDS83295 | Drive Shaft | | 36 | | 59.5 | 40 | 491 | |
| | 2011.06-2015.04 | 6MT | F | R | SUV 4WD CCZC | For PR code:0EU,Trans. code:MQ500,facelift | GDS81784 | Drive Shaft | | 36 | 40 | 59.5 | 40 | 801 | |
| | 2011.06-2015.04 | 6MT | F | R | SUV 4WD CCZC | For PR code:0EN,Trans. code:MQ350 | GDS83266 | Drive Shaft | | 36 | | 59.5 | 40 | 601 | |
| | 2011.06-2015.04 | 6MT | F | R | SUV 4WD CCZC | For PR code:0EU,Trans. code:MQ500 | GDS83269 | Drive Shaft | | 36 | 40 | 59.5 | 40 | 605 | |
| | 2011.06-2015.04 | 6MT | F | L/R | SUV 4WD CCZC | | GCO83002 | Outer Joint | | 36 | 27 | 59.5 | 40 | 66 | I |
| | 2011.06-2015.04 | 6MT | F | L/R | SUV 4WD CCZC | For PR code:0EU,Trans. code:MQ500 | GCI61054 | Inner Joint | | 40 | 28 | 46.9 | 41 | 101.7 | |
| | 2011.06-2015.04 | 6MT | F | L/R | SUV 4WD CCZC | For PR code:0EN,Trans. code:MQ350,Original design | GCI61069 | Inner Joint | | | 28 | | | 32 | |
| | 2011.06-2015.04 | 6MT | F | L/R | SUV 4WD CCZC | For PR code:0EN,Trans. code:MQ350,Non-Original design | GCI83016 | Inner Joint | | | 28 | | | 32 | |
| | 2011.06-2015.04 | 7DCT | F | L | SUV 4WD CCZC | | GDS81265 | Drive Shaft | | 36 | 37 | 59.5 | 40 | 557 | |
| | 2011.06-2015.04 | 7DCT | F | R | SUV 4WD CCZC | | GDS61347 | Drive Shaft | | 36 | 40 | 59.5 | 40 | 593 | |
| | 2011.06-2015.04 | 7DCT | F | L/R | SUV 4WD CCZC | | GCO83101 | Outer Joint | | 36 | 27 | 59.5 | 40 | 65 | M |
| | 2011.06-2015.04 | 7DCT | F | L | SUV 4WD CCZC | | GCI81158 | Inner Joint | | 37 | 34 | 34.5 | 65.5 | 83 | |
| | 2011.06-2015.04 | 7DCT | F | R | SUV 4WD CCZC | TJ | GCI61048 | Inner Joint | | 40 | 34 | 46.9 | | 127.5 | |
| | 2011.06-2015.04 | 7DCT | F | R | SUV 4WD CCZC | AAR | GCI61084 | Inner Joint | | 40 | 34 | 46.9 | | 128 | |
| | 2011.06-2015.04 | 7DCT/6MT | R | L | SUV 4WD CCZC | | GDS61284 | Drive Shaft | | 36 | | 59.5 | 40 | 594 | |
| | 2011.06-2015.04 | 7DCT/6MT | R | R | SUV 4WD CCZC | | GDS61293 | Drive Shaft | | 36 | | 59.5 | 40 | 631 | |
| | 2011.06-2015.04 | 7DCT/6MT | R | L/R | SUV 4WD CCZC | | GCI35026 | Outer Joint | | 36 | 33 | 59.5 | 40 | 61 | |
| | 2011.06-2015.04 | 7DCT/6MT | R | L/R | SUV 4WD CCZC | | GCI53002 | Inner Joint | | | 33 | | | 34 | |
| | 2011.06-2015.04 | 7DCT/6MT | R | L/R | SUV 4WD CCZC | | GCI82447 | Inner Joint | | | 33 | | | 34 | |
| 2.0 (130 kw) | 2011.06-2018.10 | 6MT | F | L | SUV 4WD CFGC;CLLB | For PR code:0EU,Trans. code:MQ500 | GDS61296 | Drive Shaft | | 36 | 40 | 59.5 | 40 | 500 | |
| | 2011.06-2018.10 | 6MT | F | L | SUV 4WD CFGC;CLLB | For PR code:0EN,Trans. code:MQ350 | GDS83295 | Drive Shaft | | 36 | | 59.5 | 40 | 491 | |
| | 2011.06-2018.10 | 6MT | F | R | SUV 4WD CFGC;CLLB | For PR code:0EN,Trans. code:MQ350 | GDS83266 | Drive Shaft | | 36 | | 59.5 | 40 | 601 | |
| | 2011.06-2018.10 | 6MT | F | R | SUV 4WD CFGC;CLLB | For PR code:0EU,Trans. code:MQ500 | GDS83369 | Drive Shaft | | 36 | 40 | 59.5 | 40 | 598 | |
| | 2011.06-2018.10 | 6MT | F | L/R | SUV 4WD CFGC;CLLB | For PR code:0EN,Trans. code:MQ350 | GCO83002 | Outer Joint | | 36 | 27 | 59.5 | 40 | 66 | I |
| | 2011.06-2018.10 | 6MT | F | L/R | SUV 4WD CFGC;CLLB | For PR code:0EU,Trans. code:MQ500 | GCI61054 | Inner Joint | | 40 | 28 | 46.9 | 41 | 101.7 | |
| | 2011.06-2018.10 | 6MT | F | L/R | SUV 4WD CFGC;CLLB | For PR code:0EN,Trans. code:MQ350 | GCI83016 | Inner Joint | | | 28 | | | 32 | |
| | 2011.06-2018.10 | 7DCT | F | L | SUV 4WD CFGC;CLLB | | GDS81265 | Drive Shaft | | 36 | 37 | 59.5 | 40 | 557 | |
| | 2011.06-2018.10 | 7DCT | F | R | SUV 4WD CFGC;CLLB | | GDS61347 | Drive Shaft | | 36 | 40 | 59.5 | 40 | 593 | |

| | YEAR | TRANSM. | F/R | L/R | BODY STYLE & DRIVE TYPE & ENGINE | REMARKS | G-AP Ref. | PRODUCT | ABS | Technical Specifications A | B | C | H | L | P |
|---|---|---|---|---|---|---|---|---|---|---|---|---|---|---|---|
| **AUDI** **Q3 Quattro** | | | | | | | | | | | | | | | |
| 2.0 (130 kw) | 2011.06-2018.10 | 7DCT | F | L | SUV 4WD CFGC;CLLB | AAR | GCI81158 | Inner Joint | | 37 | 34 | 34.5 | 65.5 | 83 | |
| | 2011.06-2018.10 | 7DCT | F | R | SUV 4WD CFGC;CLLB | TJ | GCI61048 | Inner Joint | | 40 | 34 | 46.9 | | 127.5 | |
| | 2011.06-2018.10 | 7DCT | F | R | SUV 4WD CFGC;CLLB | AAR | GCI61084 | Inner Joint | | 40 | 34 | 46.9 | | 128 | |
| | 2011.06-2018.10 | 7DCT/6MT | F | L/R | SUV 4WD CFGC;CLLB | Transmission:6MT,For PR code:0EU,Trans. code:MQ500;Transmission:7DCT | GCO83101 | Outer Joint | | 36 | 27 | 59.5 | 40 | 65 | M |
| | 2011.06-2018.10 | 7DCT/6MT | R | L | SUV 4WD CFGC;CLLB | | GDS61284 | Drive Shaft | | 36 | | 59.5 | 40 | 594 | |
| | 2011.06-2018.10 | 7DCT/6MT | R | R | SUV 4WD CFGC;CLLB | | GDS61293 | Drive Shaft | | 36 | | 59.5 | 40 | 631 | |
| | 2011.06-2018.10 | 7DCT/6MT | R | L/R | SUV 4WD CFGC;CLLB | | GCI35026 | Outer Joint | | 36 | 33 | 59.5 | 40 | 61 | |
| | 2011.06-2018.10 | 7DCT/6MT | R | L/R | SUV 4WD CFGC;CLLB | | GCI53002 | Inner Joint | | | 33 | | | 34 | |
| | 2011.06-2018.10 | 7DCT/6MT | R | L/R | SUV 4WD CFGC;CLLB | | GCI82447 | Inner Joint | | | 33 | | | 34 | |
| 2.0 (132 kw) | 2014.11-2018.10 | 6MT | F | L | SUV 4WD CULB | | GDS83295 | Drive Shaft | | 36 | | 59.5 | 40 | 491 | |
| | 2014.11-2018.10 | 6MT | F | R | SUV 4WD CULB | | GDS81892 | Drive Shaft | | 36 | | 59.5 | 40 | 602 | |
| | 2014.11-2018.10 | 6MT | F | R | SUV 4WD CULB | | GDS83266 | Drive Shaft | | 36 | | 59.5 | 40 | 601 | |
| | 2014.11-2018.10 | 6MT | F | L/R | SUV 4WD CULB | | GCO83002 | Outer Joint | | 36 | 27 | 59.5 | 40 | 66 | I |
| | 2014.11-2018.10 | 6MT | F | L/R | SUV 4WD CULB | | GCI61069 | Inner Joint | | | 28 | | | 32 | |
| | 2014.11-2018.10 | 7DCT | F | L | SUV 4WD CULB | | GDS81265 | Drive Shaft | | 36 | 37 | 59.5 | 40 | 557 | |
| | 2014.11-2018.10 | 7DCT | F | R | SUV 4WD CULB | | GDS61347 | Drive Shaft | | 36 | 40 | 59.5 | 40 | 593 | |
| | 2014.11-2018.10 | 7DCT | F | L | SUV 4WD CULB | | GCI81158 | Inner Joint | | 37 | 34 | 34.5 | 65.5 | 83 | |
| | 2014.11-2018.10 | 7DCT | F | R | SUV 4WD CULB | | GCI61048 | Inner Joint | | 40 | 34 | 46.9 | | 127.5 | |
| | 2014.11-2018.10 | 7DCT/6MT | F | L/R | SUV 4WD CULB | | GCO83101 | Outer Joint | | 36 | 27 | 59.5 | 40 | 65 | M |
| | 2014.11-2018.10 | 6MT/7DCT | R | L | SUV 4WD CULB | | GDS61284 | Drive Shaft | | 36 | | 59.5 | 40 | 594 | |
| | 2014.11-2018.10 | 6MT/7DCT | R | R | SUV 4WD CULB | | GDS61293 | Drive Shaft | | 36 | | 59.5 | 40 | 631 | |
| | 2014.11-2018.10 | 6MT/7DCT | R | L/R | SUV 4WD CULB | | GCI35026 | Outer Joint | | 36 | 33 | 59.5 | 40 | 61 | |
| | 2014.11-2018.10 | 6MT/7DCT | R | L/R | SUV 4WD CULB | | GCI53002 | Inner Joint | | | 33 | | | 34 | |
| 2.0 (135 kw) | 2014.11-2018.10 | 6MT | F | L | SUV 4WD CUWA;CYLA;DFUA | Trans. Code:MQ500,For PR code:0EU | GDS61296 | Drive Shaft | | 36 | 40 | 59.5 | 40 | 500 | |
| | 2014.11-2018.10 | 6MT | F | L | SUV 4WD CUWA;CYLA;DFUA | Trans. Code:MQ350,For PR code:0EN,Date From:2017.10 | GDS83295 | Drive Shaft | | 36 | | 59.5 | 40 | 491 | |
| | 2014.11-2018.10 | 6MT | F | R | SUV 4WD CUWA;CYLA;DFUA | Trans. Code:MQ350,For PR code:0EN,Date From:2017.10 | GDS81892 | Drive Shaft | | 36 | | 59.5 | 40 | 602 | |
| | 2014.11-2018.10 | 6MT | F | R | SUV 4WD CUWA;CYLA;DFUA | Trans. Code:MQ350,For PR code:0EN.Date To:2017.09 | GDS83266 | Drive Shaft | | 36 | | 59.5 | 40 | 601 | |
| | 2014.11-2018.10 | 6MT | F | R | SUV 4WD CUWA;CYLA;DFUA | Trans. Code:MQ500,For PR code:0EU | GDS83369 | Drive Shaft | | 36 | 40 | 59.5 | 40 | 598 | |
| | 2014.11-2018.10 | 6MT | F | L/R | SUV 4WD CUWA;CYLA;DFUA | Trans. Code:MQ500,For PR code:0EU;Trans. Code:MQ350,For PR code:0EN | GCO83002 | Outer Joint | | 36 | 27 | 59.5 | 40 | 66 | I |
| | 2014.11-2018.10 | 6MT | F | L | SUV 4WD CUWA;CYLA;DFUA | Trans. Code:MQ500,For PR code:0EU | GCI61090 | Inner Joint | | 40 | 28 | 46.9 | | 133.2 | |
| | 2014.11-2018.10 | 6MT | F | L/R | SUV 4WD CUWA;CYLA;DFUA | Trans. Code:MQ500,For PR code:0EU | GCI61054 | Inner Joint | | 40 | 28 | 46.9 | 41 | 101.7 | |
| | 2014.11-2018.10 | 6MT | F | L/R | SUV 4WD CUWA;CYLA;DFUA | For PR code:0EN,Transm. code:MQ350 | GCI61069 | Inner Joint | | | 28 | | | 32 | |
| | 2014.11-2018.10 | 7DCT | F | L | SUV 4WD CUWA;CYLA;DFUA | | GDS81265 | Drive Shaft | | 36 | 37 | 59.5 | 40 | 557 | |
| | 2014.11-2018.10 | 7DCT | F | R | SUV 4WD CUWA;CYLA;DFUA | | GDS61347 | Drive Shaft | | 36 | 40 | 59.5 | 40 | 593 | |
| | 2014.11-2018.10 | 7DCT | F | L | SUV 4WD CUWA;CYLA;DFUA | | GCI81158 | Inner Joint | | 37 | 34 | 34.5 | 65.5 | 83 | |
| | 2014.11-2018.10 | 7DCT | F | R | SUV 4WD CUWA;CYLA;DFUA | | GCI61048 | Inner Joint | | 40 | 34 | 46.9 | | 127.5 | |
| | 2014.11-2018.10 | 7DCT/6MT | F | L/R | SUV 4WD CUWA;CYLA;DFUA | Transmission:6MT;Trans. Code:MQ500;For PR code:0EN;Transmission:7DCT;Gearbox Type:Manual | GCO83101 | Outer Joint | | 36 | 27 | 59.5 | 40 | 65 | M |
| | 2014.11-2018.10 | 6MT/7DCT | R | L | SUV 4WD CUWA;CYLA;DFUA | | GDS61284 | Drive Shaft | | 36 | | 59.5 | 40 | 594 | |
| | 2014.11-2018.10 | 6MT/7DCT | R | R | SUV 4WD CUWA;CYLA;DFUA | | GDS61293 | Drive Shaft | | 36 | | 59.5 | 40 | 631 | |
| | 2014.11-2018.10 | 6MT/7DCT | R | L/R | SUV 4WD CUWA;CYLA;DFUA | | GCI35026 | Outer Joint | | 36 | 33 | 59.5 | 40 | 61 | |
| | 2014.11-2018.10 | 6MT/7DCT | R | L/R | SUV 4WD CUWA;CYLA;DFUA | | GCI53002 | Inner Joint | | | 33 | | | 34 | |
| 2.0 (140 kw) | 2018.07-2021.06 | 7AT | F | L | SUV 4WD DKTC | Trans. code:DQ381 | GDS82351 | Drive Shaft | | 36 | 37 | 59.5 | 40 | 568 | |
| | 2018.07-2021.06 | 7AT | F | R | SUV 4WD DKTC | Trans. code:DQ381 | GDS81889 | Drive Shaft | | 36 | | 59.5 | 40 | 614 | |
| | 2018.07-2021.06 | 7AT | F | R | SUV 4WD DKTC | Trans. code:DQ500 | GDS84257 | Drive Shaft | | 36 | 40 | 59.5 | 40 | 609 | |
| | 2018.07-2021.06 | 7AT | F | L/R | SUV 4WD DKTC | | GCO83101 | Outer Joint | | 36 | 27 | 59.5 | 40 | 65 | M |
| | 2018.07-2021.06 | 7AT | F | L | SUV 4WD DKTC | | GCI81158 | Inner Joint | | 37 | 34 | 34.5 | 65.5 | 83 | |
| | 2018.07-2021.06 | 7AT | F | R | SUV 4WD DKTC | TJ | GCI61048 | Inner Joint | | 40 | 34 | 46.9 | | 127.5 | |
| | 2018.07-2021.06 | 7AT | F | R | SUV 4WD DKTC | Trans. code:DQ500 | GCI61084 | Inner Joint | | 40 | 34 | 46.9 | | 128 | |
| | 2018.07-2021.06 | 7DCT | F | R | SUV 4WD DKTC | Trans. code:DQ381 | GCI61069 | Inner Joint | | | 28 | | | 32 | |
| | 2018.07-2021.06 | 7AT | R | L | SUV 4WD DKTC | | GDS61331 | Drive Shaft | | 36 | | 59.5 | 40 | 606 | |
| | 2018.07-2021.06 | 7AT | R | R | SUV 4WD DKTC | | GDS61332 | Drive Shaft | | 36 | | 59.5 | 40 | 650 | |
| | 2018.07-2021.06 | 7AT | R | L/R | SUV 4WD DKTC | | GCI35026 | Outer Joint | | 36 | 33 | 59.5 | 40 | 61 | |
| | 2018.07-2021.06 | 7AT | R | L/R | SUV 4WD DKTC | | GCI61103 | Inner Joint | | | 33 | | | 32 | |
| | 2018.10- | 7AT | F | L | SUV 4WD DFHA | | GDS82351 | Drive Shaft | | 36 | 37 | 59.5 | 40 | 568 | |
| | 2018.10- | 7AT | F | R | SUV 4WD DFHA | Transm Code:DQ500 | GDS61166 | Drive Shaft | | 36 | 40 | 59.5 | 40 | 611 | |
| | 2018.10- | 7AT | F | R | SUV 4WD DFHA | Trans. code:DQ381 | GDS61346 | Drive Shaft | | 36 | | 59.5 | 40 | 589 | |
| | 2018.10- | 7AT | F | L | SUV 4WD DFHA | | GCO83101 | Outer Joint | | 36 | 27 | 59.5 | 40 | 65 | M |
| | 2018.10- | 7AT | F | R | SUV 4WD DFHA | Trans. code:DQ381 | GCO83101 | Outer Joint | | 36 | 27 | 59.5 | 40 | 65 | M |
| | 2018.10- | 7AT | F | L | SUV 4WD DFHA | | GCI81158 | Inner Joint | | 37 | 34 | 34.5 | 65.5 | 83 | |
| | 2018.10- | 7AT | F | R | SUV 4WD DFHA | Trans. code:DQ500 | GCI61048 | Inner Joint | | 40 | 34 | 46.9 | | 127.5 | |
| | 2018.10- | 7AT | F | R | SUV 4WD DFHA | Trans. code:DQ381 | GCI61057 | Inner Joint | | | 34 | | | 89 | |
| | 2018.10- | 7AT | R | L | SUV 4WD DFHA | | GDS61331 | Drive Shaft | | 36 | | 59.5 | 40 | 606 | |
| | 2018.10- | 7AT | R | R | SUV 4WD DFHA | | GDS61332 | Drive Shaft | | 36 | | 59.5 | 40 | 650 | |
| | 2018.10- | 7AT | R | L/R | SUV 4WD DFHA | | GCI35026 | Outer Joint | | 36 | 33 | 59.5 | 40 | 61 | |
| | 2018.10- | 7AT | R | L/R | SUV 4WD DFHA | | GCI61103 | Inner Joint | | | 33 | | | 32 | |

| | YEAR | TRANSM. | F/R | L/R | BODY STYLE & DRIVE TYPE & ENGINE | REMARKS | G-AP Ref. | PRODUCT | ABS | Technical Specifications A | B | C | H | L | P |
|---|---|---|---|---|---|---|---|---|---|---|---|---|---|---|---|
| **AUDI** **Q3 Quattro** | | | | | | | | | | | | | | | |
| 2.0 (140 kw) | 2021.04- | 7DCT | F | L | SUV 4WD DNNA | Trans. code:DQ381/DQ500 | GDS82351 | Drive Shaft | | 36 | 37 | 59.5 | 40 | 568 | |
| | 2021.04- | 7DCT | F | R | SUV 4WD DNNA | Trans. code:DQ381 | GDS81889 | Drive Shaft | | 36 | | 59.5 | 40 | 614 | |
| | 2021.04- | 7DCT | F | L | SUV 4WD DNNA | Trans. code:DQ381/DQ500 | GCI81158 | Inner Joint | | 37 | 34 | 34.5 | 65.5 | 83 | |
| | 2021.04- | 7DCT | F | R | SUV 4WD DNNA | Trans. code:DQ500;TJ | GCI61048 | Inner Joint | | 40 | 34 | 46.9 | | 127.5 | |
| | 2021.04- | 7DCT | F | R | SUV 4WD DNNA | Trans. code:DQ500;AAR | GCI61084 | Inner Joint | | 40 | 34 | 46.9 | | 128 | |
| | 2021.04- | 7DCT | R | L/R | SUV 4WD DNNA | | GCI61103 | Inner Joint | | | 33 | | | 32 | |
| 2.0 (142 kw) | 2024.04- | 7DCT | F | L | SUV 4WD DXNB | | GDS82351 | Drive Shaft | | 36 | 37 | 59.5 | 40 | 568 | |
| | 2024.04- | 7DCT | F | R | SUV 4WD DXNB | With flange | GDS61346 | Drive Shaft | | 36 | | 59.5 | 40 | 589 | |
| | 2024.04- | 7DCT | F | L | SUV 4WD DXNB | | GCI81158 | Inner Joint | | 37 | 34 | 34.5 | 65.5 | 83 | |
| | 2024.04- | 7DCT | F | R | SUV 4WD DXNB | | GCI61057 | Inner Joint | | | 34 | | | 89 | |
| | 2024.04- | 7DCT | R | L/R | SUV 4WD DXNB | | GCI61103 | Inner Joint | | | 33 | | | 32 | |
| 2.0 (147 kw) | 2014.09-2018.10 | 6AT | F | L | SUV 4WD CCTA | | GDS81715 | Drive Shaft | | 36 | 26 | 59.5 | 40 | 566 | |
| | 2014.09-2018.10 | 6AT | F | R | SUV 4WD CCTA | | GDS81775 | Drive Shaft | | 36 | 40 | 59.5 | 40 | 594 | |
| | 2014.09-2018.10 | 6AT | F | L | SUV 4WD CCTA | | GCO83002 | Outer Joint | | 36 | 27 | 59.5 | 40 | 66 | I |
| | 2014.09-2018.10 | 6AT | F | R | SUV 4WD CCTA | | GCI61048 | Inner Joint | | 40 | 34 | 46.9 | | 127.5 | |
| | 2014.09-2018.10 | DCT | F | R | SUV 4WD CCTA | For PR code:TQ2/G02 | GDS61347 | Drive Shaft | | 36 | 40 | 59.5 | 40 | 593 | |
| | 2014.09-2018.10 | DCT | F | R | SUV 4WD CCTA | For PR code:TQ2/G02 | GCO83101 | Outer Joint | | 36 | 27 | 59.5 | 40 | 65 | M |
| | 2014.09-2018.10 | DCT | F | R | SUV 4WD CCTA | For PR code:TQ2/G02 | GCI61084 | Inner Joint | | 40 | 34 | 46.9 | | 128 | |
| | 2014.09-2018.10 | | F | L | SUV 4WD CCTA | | GCI61038 | Inner Joint | | 26 | 34 | 31 | 68.5 | 88.5 | |
| | 2014.09-2018.10 | 6AT | R | L | SUV 4WD CCTA | | GDS61284 | Drive Shaft | | 36 | | 59.5 | 40 | 594 | |
| | 2014.09-2018.10 | 6AT | R | R | SUV 4WD CCTA | | GDS61293 | Drive Shaft | | 36 | | 59.5 | 40 | 631 | |
| | 2014.09-2018.10 | 6AT | R | L/R | SUV 4WD CCTA | | GCI35026 | Outer Joint | | 36 | 33 | 59.5 | 40 | 61 | |
| | 2014.09-2018.10 | 6AT | R | L/R | SUV 4WD CCTA | | GCI53002 | Inner Joint | | | 33 | | | 34 | |
| | 2020.11- | 7DCT | F | L | SUV 4WD DTUA | | GDS82351 | Drive Shaft | | 36 | 37 | 59.5 | 40 | 568 | |
| | 2020.11- | 7DCT | F | R | SUV 4WD DTUA | Trans. code:DQ500 | GDS61166 | Drive Shaft | | 36 | 40 | 59.5 | 40 | 611 | |
| | 2020.11- | 7DCT | F | R | SUV 4WD DTUA | Trans. code:DQ381 | GDS61346 | Drive Shaft | | 36 | | 59.5 | 40 | 589 | |
| | 2020.11- | 7DCT | F | L/R | SUV 4WD DTUA | Trans. code:DQ500/DQ381 | GCO83101 | Outer Joint | | 36 | 27 | 59.5 | 40 | 65 | M |
| | 2020.11- | 7DCT | F | L | SUV 4WD DTUA | | GCI81158 | Inner Joint | | 37 | 34 | 34.5 | 65.5 | 83 | |
| | 2020.11- | 7DCT | F | R | SUV 4WD DTUA | Trans. code:DQ500 | GCI61048 | Inner Joint | | 40 | 34 | 46.9 | | 127.5 | |
| | 2020.11- | 7DCT | F | R | SUV 4WD DTUA | Trans. code:DQ381 | GCI61057 | Inner Joint | | | 34 | | | 89 | |
| | 2020.11- | 7DCT | F | R | SUV 4WD DTUA | Trans. code:DQ500 | GCI61084 | Inner Joint | | 40 | 34 | 46.9 | | 128 | |
| | 2020.11- | 7DCT | R | L | SUV 4WD DTUA | | GDS61331 | Drive Shaft | | 36 | | 59.5 | 40 | 606 | |
| | 2020.11- | 7DCT | R | R | SUV 4WD DTUA | | GDS61332 | Drive Shaft | | 36 | | 59.5 | 40 | 650 | |
| | 2020.11- | 7DCT | R | L/R | SUV 4WD DTUA | | GCI35026 | Outer Joint | | 36 | 33 | 59.5 | 40 | 61 | |
| | 2020.11- | 7DCT | R | L/R | SUV 4WD DTUA | | GCI61103 | Inner Joint | | | 33 | | | 32 | |
| | 2020.11- | 7DCT | R | L/R | SUV 4WD DTUA | | GCI83008 | Inner Joint | | | 33 | | | 32 | |
| 2.0 (155 kw) | 2011.06-2015.04 | 7AT | F | L | SUV 4WD CPSA | | GDS81265 | Drive Shaft | | 36 | 37 | 59.5 | 40 | 557 | |
| | 2011.06-2015.04 | 7AT | F | R | SUV 4WD CPSA | | GDS61347 | Drive Shaft | | 36 | 40 | 59.5 | 40 | 593 | |
| | 2011.06-2015.04 | 7AT | F | L/R | SUV 4WD CPSA | | GCO83101 | Outer Joint | | 36 | 27 | 59.5 | 40 | 65 | M |
| | 2011.06-2015.04 | 7DCT | F | L | SUV 4WD CPSA | Tripod Joint | GCI81158 | Inner Joint | | 37 | 34 | 34.5 | 65.5 | 83 | |
| | 2011.06-2015.04 | 7DCT | F | R | SUV 4WD CPSA | | GCI61048 | Inner Joint | | 40 | 34 | 46.9 | | 127.5 | |
| | 2011.06-2015.04 | 7AT | R | L | SUV 4WD CPSA | | GDS61284 | Drive Shaft | | 36 | | 59.5 | 40 | 594 | |
| | 2011.06-2015.04 | 7AT | R | R | SUV 4WD CPSA | | GDS61293 | Drive Shaft | | 36 | | 59.5 | 40 | 631 | |
| | 2011.06-2015.04 | 7AT | R | L/R | SUV 4WD CPSA | | GCI35026 | Outer Joint | | 36 | 33 | 59.5 | 40 | 61 | |
| | 2011.06-2015.04 | 7DCT | F/R | L/R | SUV 4WD CPSA | VL | GCI82447 | Inner Joint | | | 33 | | | 34 | |
| 2.0 (162 kw) | 2014.11-2018.10 | 7AT | F | L | SUV 4WD CULC | | GDS81265 | Drive Shaft | | 36 | 37 | 59.5 | 40 | 557 | |
| | 2014.11-2018.10 | 7AT | F | R | SUV 4WD CULC | | GDS61347 | Drive Shaft | | 36 | 40 | 59.5 | 40 | 593 | |
| | 2014.11-2018.10 | 7AT | F | L/R | SUV 4WD CULC | | GCO83101 | Outer Joint | | 36 | 27 | 59.5 | 40 | 65 | M |
| | 2014.11-2018.10 | AT | F | L | SUV 4WD CULC | | GCI61038 | Inner Joint | | 26 | 34 | 31 | 68.5 | 88.5 | |
| | 2014.11-2018.10 | AT | F | R | SUV 4WD CULC | | GCI61048 | Inner Joint | | 40 | 34 | 46.9 | | 127.5 | |
| | 2014.11-2018.10 | | F | L | SUV 4WD CULC | | GCI81158 | Inner Joint | | 37 | 34 | 34.5 | 65.5 | 83 | |
| | 2014.11-2018.10 | 7AT | R | L | SUV 4WD CULC | | GDS61284 | Drive Shaft | | 36 | | 59.5 | 40 | 594 | |
| | 2014.11-2018.10 | 7AT | R | R | SUV 4WD CULC | | GDS61293 | Drive Shaft | | 36 | | 59.5 | 40 | 631 | |
| | 2014.11-2018.10 | 7AT | R | L/R | SUV 4WD CULC | | GCI35026 | Outer Joint | | 36 | 33 | 59.5 | 40 | 61 | |
| 2.0 (169 kw) | 2018.07- | 7AT | F | L | SUV 4WD DKTA | | GDS82351 | Drive Shaft | | 36 | 37 | 59.5 | 40 | 568 | |
| | 2018.07- | 7AT | F | R | SUV 4WD DKTA | | GDS84257 | Drive Shaft | | 36 | 40 | 59.5 | 40 | 609 | |
| | 2018.07- | 7AT | F | L/R | SUV 4WD DKTA | | GCO83101 | Outer Joint | | 36 | 27 | 59.5 | 40 | 65 | M |
| | 2018.07- | 7AT | F | L | SUV 4WD DKTA | | GCI81158 | Inner Joint | | 37 | 34 | 34.5 | 65.5 | 83 | |
| | 2018.07- | 7AT | F | R | SUV 4WD DKTA | TJ | GCI61048 | Inner Joint | | 40 | 34 | 46.9 | | 127.5 | |
| | 2018.07- | 7AT | F | R | SUV 4WD DKTA | | GCI61084 | Inner Joint | | 40 | 34 | 46.9 | | 128 | |
| | 2018.07- | 7AT | R | L | SUV 4WD DKTA | | GDS61331 | Drive Shaft | | 36 | | 59.5 | 40 | 606 | |
| | 2018.07- | 7AT | R | R | SUV 4WD DKTA | | GDS61332 | Drive Shaft | | 36 | | 59.5 | 40 | 650 | |
| | 2018.07- | 7AT | R | L/R | SUV 4WD DKTA | | GCI35026 | Outer Joint | | 36 | 33 | 59.5 | 40 | 61 | |
| | 2018.07- | 7AT | R | L/R | SUV 4WD DKTA | | GCI61103 | Inner Joint | | | 33 | | | 32 | |
| 2.0 (180 kw) | 2021.01- | 7AT | F | L | SUV 4WD DNPA | | GDS82351 | Drive Shaft | | 36 | 37 | 59.5 | 40 | 568 | |

| | YEAR | TRANSM. | F/R | L/R | BODY STYLE & DRIVE TYPE & ENGINE | REMARKS | G-AP Ref. | PRODUCT | ABS | Technical Specifications A | B | C | H | L | P |
|---|---|---|---|---|---|---|---|---|---|---|---|---|---|---|---|
| **AUDI** | | | | | | | | | | | | | | | |
| **Q3 Quattro** | | | | | | | | | | | | | | | |
| 2.0 (180 kw) | 2021.01- | 7AT | F | L | SUV 4WD DNPA | | GCO83101 | Outer Joint | | 36 | 27 | 59.5 | 40 | 65 | M |
| | 2021.01- | 7AT | F | L | SUV 4WD DNPA | | GCI81158 | Inner Joint | | 37 | 34 | 34.5 | 65.5 | 83 | |
| | 2021.01- | 7AT | R | L/R | SUV 4WD DNPA | | GCI35026 | Outer Joint | | 36 | 33 | 59.5 | 40 | 61 | |
| | 2021.01- | 7DCT | R | L | SUV 4WD DNPA | | GDS61331 | Drive Shaft | | 36 | | 59.5 | 40 | 606 | |
| | 2021.01- | 7DCT | R | R | SUV 4WD DNPA | | GDS61332 | Drive Shaft | | 36 | | 59.5 | 40 | 650 | |
| | 2021.01- | 7DCT | R | L/R | SUV 4WD DNPA | | GCI61103 | Inner Joint | | | 33 | | | 32 | |
| | 2021.01- | 7DCT | R | L/R | SUV 4WD DNPA | | GCI83008 | Inner Joint | | | 33 | | | 32 | |
| **Q3 Sportback** | | | | | | | | | | | | | | | |
| 1.4 (180 kw) | 2020.11- | 6AT | F | L/R | SUV FWD DGEA | | GCO83101 | Outer Joint | | 36 | 27 | 59.5 | 40 | 65 | M |
| | 2020.11- | 6AT | F | L | SUV FWD DGEA | | GCI81158 | Inner Joint | | 37 | 34 | 34.5 | 65.5 | 83 | |
| | 2020.11- | 6AT | F | R | SUV FWD DGEA | | GCI82108 | Inner Joint | | 37 | 34 | 40 | 77.5 | 103.5 | |
| | 2020.11- | 6DCT | F | L | SUV FWD DGEA | | GDS81265 | Drive Shaft | | 36 | 37 | 59.5 | 40 | 557 | |
| | 2020.11- | 6DCT | F | R | SUV FWD DGEA | | GDS57844 | Drive Shaft | | 36 | 37 | 59.5 | 40 | 929 | |
| 1.5 (110 kw) | 2019.09- | 6MT | F | L | SUV FWD DPCA;DXDB | | GDS81896 | Drive Shaft | | 36 | | 59.5 | 40 | 500 | |
| | 2019.09- | 6MT | F | R | SUV FWD DPCA;DXDB | For PR code:0EN | GDS82386 | Drive Shaft | | 36 | | 59.5 | 40 | 806 | |
| | 2019.09- | 6MT | F | R | SUV FWD DPCA;DXDB | For PR code:0ED | GDS83313 | Drive Shaft | | 36 | | 59.5 | 40 | 792 | |
| | 2019.09- | 6MT | F | L/R | SUV FWD DPCA;DXDB | | GCI83016 | Inner Joint | | | 28 | | | 32 | |
| | 2019.09- | 6MT/7DCT | F | L/R | SUV FWD DPCA;DXDB | | GCO83101 | Outer Joint | | 36 | 27 | 59.5 | 40 | 65 | M |
| | 2019.09- | 7DCT | F | L | SUV FWD DPCA;DXDB | | GDS83323 | Drive Shaft | | 36 | 37 | 59.5 | 40 | 570 | |
| | 2019.09- | 7DCT | F | R | SUV FWD DPCA;DXDB | | GDS84510 | Drive Shaft | | 36 | 37 | 59.5 | 40 | 925 | |
| | 2019.09- | 7DCT | F | L | SUV FWD DPCA;DXDB | | GCI83028 | Inner Joint | | 37 | 28 | | 65.5 | 90.2 | |
| | 2019.11- | 7AT | F | L | SUV FWD DFYA;DXDB | | GDS83323 | Drive Shaft | | 36 | 37 | 59.5 | 40 | 570 | |
| | 2019.11- | 7AT | F | L | SUV FWD DFYA;DXDB | | GCO83101 | Outer Joint | | 36 | 27 | 59.5 | 40 | 65 | M |
| | 2019.11- | 7AT | F | L | SUV FWD DFYA;DXDB | | GCI83028 | Inner Joint | | 37 | 28 | | 65.5 | 90.2 | |
| | 2019.11- | 7DCT | F | R | SUV FWD DFYA;DXDB | | GDS84510 | Drive Shaft | | 36 | 37 | 59.5 | 40 | 925 | |
| 2.0 (110 kw) | 2019.11- | 6MT | F | L | SUV FWD DFGA;DTSB;DTSA;DXPA | | GDS81896 | Drive Shaft | | 36 | | 59.5 | 40 | 500 | |
| | 2019.11- | 6MT | F | R | SUV FWD DFGA;DTSB;DTSA;DXPA | | GDS61101 | Drive Shaft | | 36 | | 59.5 | 40 | 803 | |
| | 2019.11- | 6MT | F | L/R | SUV FWD DFGA;DTSB;DTSA;DXPA | | GCI83016 | Inner Joint | | | 28 | | | 32 | |
| | 2019.11- | 6MT/7DCT | F | L/R | SUV FWD DFGA;DTSB;DTSA;DXPA | | GCO83101 | Outer Joint | | 36 | 27 | 59.5 | 40 | 65 | M |
| | 2019.11- | 7DCT | F | L | SUV FWD DFGA;DTSB;DTSA;DXPA | | GDS82351 | Drive Shaft | | 36 | 37 | 59.5 | 40 | 568 | |
| | 2019.11- | 7DCT | F | R | SUV FWD DFGA;DTSB;DTSA;DXPA | | GDS83613 | Drive Shaft | | 36 | 37 | 59.5 | 40 | 921 | |
| | 2019.11- | 7DCT | F | L | SUV FWD DFGA;DTSB;DTSA;DXPA | | GCI81158 | Inner Joint | | 37 | 34 | 34.5 | 65.5 | 83 | |
| | 2019.11- | 7DCT | F | R | SUV FWD DFGA;DTSB;DTSA;DXPA | | GCI82108 | Inner Joint | | 37 | 34 | 40 | 77.5 | 103.5 | |
| **Q3 Sportback Quattro** | | | | | | | | | | | | | | | |
| 2.0 (110 kw) | 2019.09- | 6MT | F | L | SUV 4WD DFGA;DTSB;DTSA | | GDS81896 | Drive Shaft | | 36 | | 59.5 | 40 | 500 | |
| | 2019.09- | 6MT | F | R | SUV 4WD DFGA;DTSB;DTSA | | GDS84020 | Drive Shaft | | 36 | | 59.5 | 40 | 615 | |
| | 2019.09- | 6MT | F | L/R | SUV 4WD DFGA;DTSB;DTSA | | GCO83101 | Outer Joint | | 36 | 27 | 59.5 | 40 | 65 | M |
| | 2019.09- | 6MT | F | L/R | SUV 4WD DFGA;DTSB;DTSA | | GCI61069 | Inner Joint | | | 28 | | | 32 | |
| | 2019.09- | 6MT | F | L/R | SUV 4WD DFGA;DTSB;DTSA | | GCI82456 | Inner Joint | | | 28 | | | 32 | |
| | 2019.09- | 7DCT | F | L | SUV 4WD DFGA;DTSB;DTSA | | GDS82351 | Drive Shaft | | 36 | 37 | 59.5 | 40 | 568 | |
| | 2019.09- | 7DCT | F | R | SUV 4WD DFGA;DTSB;DTSA | | GDS61346 | Drive Shaft | | 36 | | 59.5 | 40 | 589 | |
| | 2019.09- | 7DCT | F | L | SUV 4WD DFGA;DTSB;DTSA | | GCI81158 | Inner Joint | | 37 | 34 | 34.5 | 65.5 | 83 | |
| | 2019.09- | 7DCT | F | R | SUV 4WD DFGA;DTSB;DTSA | | GCI61057 | Inner Joint | | | 34 | | | 89 | |
| | 2019.09- | 6MT | R | L | SUV 4WD DFGA;DTSB;DTSA | | GDS61331 | Drive Shaft | | 36 | | 59.5 | 40 | 606 | |
| | 2019.09- | 6MT | R | R | SUV 4WD DFGA;DTSB;DTSA | | GDS61332 | Drive Shaft | | 36 | | 59.5 | 40 | 650 | |
| | 2019.09- | 6MT | R | L/R | SUV 4WD DFGA;DTSB;DTSA | | GCI35026 | Outer Joint | | 36 | 33 | 59.5 | 40 | 61 | |
| | 2019.09- | 6MT | R | L/R | SUV 4WD DFGA;DTSB;DTSA | | GCI61103 | Inner Joint | | | 33 | | | 32 | |
| 2.0 (140 kw) | 2019.07- | 7AT | F | R | SUV 4WD DFHA | Trans. code:DQ500 | GDS61166 | Drive Shaft | | 36 | 40 | 59.5 | 40 | 611 | |
| | 2019.07- | 7AT | F | R | SUV 4WD DFHA | Trans. code:DQ381 | GDS61346 | Drive Shaft | | 36 | | 59.5 | 40 | 589 | |
| | 2019.07- | 7DCT | F | L | SUV 4WD DFHA | | GDS82351 | Drive Shaft | | 36 | 37 | 59.5 | 40 | 568 | |
| | 2019.07- | AT | F | R | SUV 4WD DFHA | Trans. code:DQ500;TJ | GCI61048 | Inner Joint | | 40 | 34 | 46.9 | | 127.5 | |
| | 2019.07- | AT | F | R | SUV 4WD DFHA | Trans. code:DQ500 | GCI61084 | Inner Joint | | 40 | 34 | 46.9 | | 128 | |
| | 2019.07- | 7AT | R | R | SUV 4WD DFHA | | GDS61332 | Drive Shaft | | 36 | | 59.5 | 40 | 650 | |
| | 2019.07- | 7DCT | R | L | SUV 4WD DFHA | | GDS61331 | Drive Shaft | | 36 | | 59.5 | 40 | 606 | |
| | 2019.07- | 7DCT | R | L/R | SUV 4WD DFHA | | GCI61103 | Inner Joint | | | 33 | | | 32 | |
| | 2019.07- | 7DCT | R | L/R | SUV 4WD DFHA | | GCI83008 | Inner Joint | | | 33 | | | 32 | |
| | 2019.11-2021.06 | 7AT | F | L/R | SUV 4WD DKTC | Trans. code:DQ500 | GCO83101 | Outer Joint | | 36 | 27 | 59.5 | 40 | 65 | M |
| | 2019.11-2021.06 | 7AT | F | L | SUV 4WD DKTC | Trans. code:DQ500 | GCI81158 | Inner Joint | | 37 | 34 | 34.5 | 65.5 | 83 | |
| | 2019.11-2021.06 | 7AT | F | R | SUV 4WD DKTC | Trans. code:DQ381 | GCI61069 | Inner Joint | | | 28 | | | 32 | |
| | 2019.11-2021.06 | 7DCT | F | L | SUV 4WD DKTC | Trans. code:DQ500 | GDS82351 | Drive Shaft | | 36 | 37 | 59.5 | 40 | 568 | |
| | 2019.11-2021.06 | 7DCT | F | R | SUV 4WD DKTC | Trans. code:DQ381 | GDS81889 | Drive Shaft | | 36 | | 59.5 | 40 | 614 | |
| | 2019.11-2021.06 | 7DCT | F | R | SUV 4WD DKTC | Trans. code:DQ500 | GDS84257 | Drive Shaft | | 36 | 40 | 59.5 | 40 | 609 | |
| | 2019.11-2021.06 | 7DCT | F | R | SUV 4WD DKTC | Trans. code:DQ500;TJ | GCI61048 | Inner Joint | | 40 | 34 | 46.9 | | 127.5 | |
| | 2019.11-2021.06 | 7DCT | F | R | SUV 4WD DKTC | Trans. code:DQ500;AAR | GCI61084 | Inner Joint | | 40 | 34 | 46.9 | | 128 | |
| | 2019.11-2021.06 | 7DCT | R | L | SUV 4WD DKTC | | GDS61331 | Drive Shaft | | 36 | | 59.5 | 40 | 606 | |

| | YEAR | TRANSM. | F/R | L/R | BODY STYLE & DRIVE TYPE & ENGINE | REMARKS | G-AP Ref. | PRODUCT | ABS | Technical Specifications A | B | C | H | L | P |
|---|---|---|---|---|---|---|---|---|---|---|---|---|---|---|---|
| **AUDI** | | | | | | | | | | | | | | | |
| **Q3 Sportback Quattro** | | | | | | | | | | | | | | | |
| 2.0 (140 kw) | 2019.11-2021.06 | 7DCT | R | R | SUV 4WD DKTC | | GDS61332 | Drive Shaft | | 36 | | 59.5 | 40 | 650 | |
| | 2019.11-2021.06 | 7DCT | R | L/R | SUV 4WD DKTC | | GCI61103 | Inner Joint | | | 33 | | | 32 | |
| | 2019.11-2021.06 | 7DCT | R | L/R | SUV 4WD DKTC | | GCI83008 | Inner Joint | | | 33 | | | 32 | |
| | 2021.04- | 7DCT | F | L | SUV 4WD DNNA | Trans. code:DQ381/DQ500 | GDS82351 | Drive Shaft | | 36 | 37 | 59.5 | 40 | 568 | |
| | 2021.04- | 7DCT | F | R | SUV 4WD DNNA | Trans. code:DQ381 | GDS81889 | Drive Shaft | | 36 | | 59.5 | 40 | 614 | |
| | 2021.04- | 7DCT | F | L | SUV 4WD DNNA | Trans. code:DQ381/DQ500 | GCI81158 | Inner Joint | | 37 | 34 | 34.5 | 65.5 | 83 | |
| | 2021.04- | 7DCT | F | R | SUV 4WD DNNA | Trans. code:DQ500;TJ | GCI61048 | Inner Joint | | 40 | 34 | 46.9 | | 127.5 | |
| | 2021.04- | 7DCT | F | R | SUV 4WD DNNA | Trans. code:DQ500;AAR | GCI61084 | Inner Joint | | 40 | 34 | 46.9 | | 128 | |
| | 2021.04- | 7DCT | R | L/R | SUV 4WD DNNA | | GCI61103 | Inner Joint | | | 33 | | | 32 | |
| 2.0 (142 kw) | 2024.04- | 7DCT | F | L | SUV 4WD DXNB | | GDS82351 | Drive Shaft | | 36 | 37 | 59.5 | 40 | 568 | |
| | 2024.04- | 7DCT | F | R | SUV 4WD DXNB | With flange | GDS61346 | Drive Shaft | | 36 | | 59.5 | 40 | 589 | |
| | 2024.04- | 7DCT | F | L | SUV 4WD DXNB | | GCI81158 | Inner Joint | | 37 | 34 | 34.5 | 65.5 | 83 | |
| | 2024.04- | 7DCT | F | R | SUV 4WD DXNB | | GCI61057 | Inner Joint | | | 34 | | | 89 | |
| | 2024.04- | 7DCT | R | L/R | SUV 4WD DXNB | | GCI61103 | Inner Joint | | | 33 | | | 32 | |
| 2.0 (147 kw) | 2020.09- | 7DCT | F | L | SUV 4WD DTUA | | GDS82351 | Drive Shaft | | 36 | 37 | 59.5 | 40 | 568 | |
| | 2020.09- | 7DCT | F | R | SUV 4WD DTUA | Trans. code:DQ500 | GDS61166 | Drive Shaft | | 36 | 40 | 59.5 | 40 | 611 | |
| | 2020.09- | 7DCT | F | R | SUV 4WD DTUA | Trans. code:DQ381 | GDS61346 | Drive Shaft | | 36 | | 59.5 | 40 | 589 | |
| | 2020.09- | 7DCT | F | L/R | SUV 4WD DTUA | Trans. code:DQ500/DQ381 | GCO83101 | Outer Joint | | 36 | 27 | 59.5 | 40 | 65 | M |
| | 2020.09- | 7DCT | F | L | SUV 4WD DTUA | | GCI81158 | Inner Joint | | 37 | 34 | 34.5 | 65.5 | 83 | |
| | 2020.09- | 7DCT | F | R | SUV 4WD DTUA | Trans. code:DQ500 | GCI61048 | Inner Joint | | 40 | 34 | 46.9 | | 127.5 | |
| | 2020.09- | 7DCT | F | R | SUV 4WD DTUA | Trans. code:DQ381 | GCI61057 | Inner Joint | | | 34 | | | 89 | |
| | 2020.09- | 7DCT | F | R | SUV 4WD DTUA | Trans. code:DQ500 | GCI61084 | Inner Joint | | 40 | 34 | 46.9 | | 128 | |
| | 2020.09- | 7DCT | R | L | SUV 4WD DTUA | | GDS61331 | Drive Shaft | | 36 | | 59.5 | 40 | 606 | |
| | 2020.09- | 7DCT | R | R | SUV 4WD DTUA | | GDS61332 | Drive Shaft | | 36 | | 59.5 | 40 | 650 | |
| | 2020.09- | 7DCT | R | L/R | SUV 4WD DTUA | | GCI35026 | Outer Joint | | 36 | 33 | 59.5 | 40 | 61 | |
| | 2020.09- | 7DCT | R | L/R | SUV 4WD DTUA | | GCI61103 | Inner Joint | | | 33 | | | 32 | |
| | 2020.09- | 7DCT | R | L/R | SUV 4WD DTUA | | GCI83008 | Inner Joint | | | 33 | | | 32 | |
| 2.0 (169 kw) | 2019.06- | 7AT | F | L | SUV 4WD DKTA | | GDS82351 | Drive Shaft | | 36 | 37 | 59.5 | 40 | 568 | |
| | 2019.06- | 7AT | F | R | SUV 4WD DKTA | | GDS84257 | Drive Shaft | | 36 | 40 | 59.5 | 40 | 609 | |
| | 2019.06- | 7AT | F | L/R | SUV 4WD DKTA | | GCO83101 | Outer Joint | | 36 | 27 | 59.5 | 40 | 65 | M |
| | 2019.06- | 7AT | F | L | SUV 4WD DKTA | | GCI81158 | Inner Joint | | 37 | 34 | 34.5 | 65.5 | 83 | |
| | 2019.06- | 7AT | F | R | SUV 4WD DKTA | AAR | GCI61084 | Inner Joint | | 40 | 34 | 46.9 | | 128 | |
| | 2019.06- | 7DCT | F | R | SUV 4WD DKTA | TJ | GCI61048 | Inner Joint | | 40 | 34 | 46.9 | | 127.5 | |
| | 2019.06- | 7AT | R | L | SUV 4WD DKTA | | GDS61331 | Drive Shaft | | 36 | | 59.5 | 40 | 606 | |
| | 2019.06- | 7AT | R | R | SUV 4WD DKTA | | GDS61332 | Drive Shaft | | 36 | | 59.5 | 40 | 650 | |
| | 2019.06- | 7DCT | R | L/R | SUV 4WD DKTA | | GCI61103 | Inner Joint | | | 33 | | | 32 | |
| | 2019.06- | 7DCT | R | L/R | SUV 4WD DKTA | | GCI83008 | Inner Joint | | | 33 | | | 32 | |
| 2.0 (180 kw) | 2021.01- | 7AT | F | L | SUV 4WD DNPA | | GDS82351 | Drive Shaft | | 36 | 37 | 59.5 | 40 | 568 | |
| | 2021.01- | 7AT | F | L | SUV 4WD DNPA | | GCO83101 | Outer Joint | | 36 | 27 | 59.5 | 40 | 65 | M |
| | 2021.01- | 7AT | F | L | SUV 4WD DNPA | | GCI81158 | Inner Joint | | 37 | 34 | 34.5 | 65.5 | 83 | |
| | 2021.01- | 7AT | R | L/R | SUV 4WD DNPA | | GCI35026 | Outer Joint | | 36 | 33 | 59.5 | 40 | 61 | |
| | 2021.01- | 7DCT | R | L | SUV 4WD DNPA | | GDS61331 | Drive Shaft | | 36 | | 59.5 | 40 | 606 | |
| | 2021.01- | 7DCT | R | R | SUV 4WD DNPA | | GDS61332 | Drive Shaft | | 36 | | 59.5 | 40 | 650 | |
| | 2021.01- | 7DCT | R | L/R | SUV 4WD DNPA | | GCI61103 | Inner Joint | | | 33 | | | 32 | |
| | 2021.01- | 7DCT | R | L/R | SUV 4WD DNPA | | GCI83008 | Inner Joint | | | 33 | | | 32 | |
| **Q4** | | | | | | | | | | | | | | | |
| EV (125 kw) | 2021.05- | ET | R | L | SUV RWD EBJA | Date to:2024.04,For PR code:N06 | GDS56955 | Drive Shaft | | 38 | 37 | 59.5 | 34 | 634 | |
| | 2021.05- | ET | R | L | SUV RWD EBJA | For PR code:N22/T65 | GDS58102 | Drive Shaft | | 38 | 42 | 59.5 | 34 | 639 | |
| | 2021.05- | ET | R | R | SUV RWD EBJA | Date to:2024.04,For PR code:N06 | GDS56956 | Drive Shaft | | 38 | 37 | 59.5 | 34 | 859 | |
| | 2021.05- | ET | R | R | SUV RWD EBJA | For PR code:N22/T65 | GDS58101 | Drive Shaft | | 38 | 42 | 59.5 | 34 | 853 | |
| | 2021.05- | ET | R | L/R | SUV RWD EBJA | Date to:2024.04,For PR code:N06 | GCO83488 | Outer Joint | | 38 | 28 | 59.5 | 34 | 81 | |
| | 2021.05- | ET | R | L/R | SUV RWD EBJA | For PR code:N22/T65 | GCO83846 | Outer Joint | | 38 | 27 | 59.5 | 34 | 65 | M |
| | 2021.05- | ET | R | L/R | SUV RWD EBJA | Date to:2024.04,For PR code:N06 | GCI83571 | Inner Joint | | 37 | 28 | 39.95 | 69 | 85.5 | |
| EV (150 kw) | 2021.03- | ET | R | L | SUV RWD EBJA | Date to:2024.04,For PR code:N06 | GDS56955 | Drive Shaft | | 38 | 37 | 59.5 | 34 | 634 | |
| | 2021.03- | ET | R | L | SUV RWD EBJA | For PR code:N22/T65 | GDS58102 | Drive Shaft | | 38 | 42 | 59.5 | 34 | 639 | |
| | 2021.03- | ET | R | R | SUV RWD EBJA | Date to:2024.04,For PR code:N06 | GDS56956 | Drive Shaft | | 38 | 37 | 59.5 | 34 | 859 | |
| | 2021.03- | ET | R | R | SUV RWD EBJA | For PR code:N22/T65 | GDS58101 | Drive Shaft | | 38 | 42 | 59.5 | 34 | 853 | |
| | 2021.03- | ET | R | L/R | SUV RWD EBJA | Date to:2024.04,For PR code:N06 | GCO83488 | Outer Joint | | 38 | 28 | 59.5 | 34 | 81 | |
| | 2021.03- | ET | R | L/R | SUV RWD EBJA | For PR code:N22/T65 | GCO83846 | Outer Joint | | 38 | 27 | 59.5 | 34 | 65 | M |
| | 2021.03- | ET | R | L/R | SUV RWD EBJA | Date to:2024.04,For PR code:N06 | GCI83571 | Inner Joint | | 37 | 28 | 39.95 | 69 | 85.5 | |
| EV (195 kw) | 2021.06- | ET | F | L | SUV 4WD EBRA;EBJA | For left-hand drive vehicles | GDS56405 | Drive Shaft | | 38 | 33 | 59.5 | 40.5 | 663 | |
| | 2021.06- | ET | F | L | SUV 4WD EBRA;EBJA | For right-hand drive vehicles | GDS57677 | Drive Shaft | | 38 | 33 | 59.5 | 40.5 | 565 | |
| | 2021.06- | ET | F | R | SUV 4WD EBRA;EBJA | For left-hand drive vehicles | GDS56971 | Drive Shaft | | 38 | 33 | 59.5 | 40.5 | 622 | |
| | 2021.06- | ET | F | R | SUV 4WD EBRA;EBJA | For right-hand drive vehicles | GDS57678 | Drive Shaft | | 38 | 33 | 59.5 | 40.5 | 721 | |
| | 2021.06- | ET | F | L/R | SUV 4WD EBRA;EBJA | | GCO83674 | Outer Joint | | 38 | 33 | 59.5 | 40.5 | 59 | I |

| | YEAR | TRANSM. | F/R | L/R | BODY STYLE & DRIVE TYPE & ENGINE | REMARKS | G-AP Ref. | PRODUCT | ABS | Technical Specifications A | B | C | H | L | P |
|---|---|---|---|---|---|---|---|---|---|---|---|---|---|---|---|
| **AUDI** | | | | | | | | | | | | | | | |
| **Q4** | | | | | | | | | | | | | | | |
| EV (195 kw) | 2021.06- | ET | F | L/R | SUV 4WD EBRA;EBJA | | GCI81546 | Inner Joint | | 33 | 32 | 39.9 | 58.5 | 105 | |
| | 2021.06- | ET | R | L | SUV 4WD EBRA;EBJA | Date to:2024.04,For PR code:N06 | GDS56955 | Drive Shaft | | 38 | 37 | 59.5 | 34 | 634 | |
| | 2021.06- | ET | R | L | SUV 4WD EBRA;EBJA | For PR code:N22/T65 | GDS58102 | Drive Shaft | | 38 | 42 | 59.5 | 34 | 639 | |
| | 2021.06- | ET | R | R | SUV 4WD EBRA;EBJA | Date to:2024.04,For PR code:N06 | GDS56956 | Drive Shaft | | 38 | 37 | 59.5 | 34 | 859 | |
| | 2021.06- | ET | R | R | SUV 4WD EBRA;EBJA | For PR code:N22/T65 | GDS58101 | Drive Shaft | | 38 | 42 | 59.5 | 34 | 853 | |
| | 2021.06- | ET | R | L/R | SUV 4WD EBRA;EBJA | Date to:2024.04,For PR code:N06 | GCO83488 | Outer Joint | | 38 | 28 | 59.5 | 34 | 81 | |
| | 2021.06- | ET | R | L/R | SUV 4WD EBRA;EBJA | For PR code:N22/T65 | GCO83846 | Outer Joint | | 38 | 27 | 59.5 | 34 | 65 | M |
| | 2021.06- | ET | R | L/R | SUV 4WD EBRA;EBJA | Date to:2024.04,For PR code:N06 | GCI83571 | Inner Joint | | 37 | 28 | 39.95 | 69 | 85.5 | |
| EV (210 kw) | 2023.10- | ET | F | L | SUV 4WD EDFA;EDDA | For left-hand drive vehicles | GDS56405 | Drive Shaft | | 38 | 33 | 59.5 | 40.5 | 663 | |
| | 2023.10- | ET | F | L | SUV 4WD EDFA;EDDA | For right-hand drive vehicles | GDS57677 | Drive Shaft | | 38 | 33 | 59.5 | 40.5 | 565 | |
| | 2023.10- | ET | F | R | SUV 4WD EDFA;EDDA | For left-hand drive vehicles | GDS56971 | Drive Shaft | | 38 | 33 | 59.5 | 40.5 | 622 | |
| | 2023.10- | ET | F | R | SUV 4WD EDFA;EDDA | For right-hand drive vehicles | GDS57678 | Drive Shaft | | 38 | 33 | 59.5 | 40.5 | 721 | |
| | 2023.10- | ET | F | L/R | SUV 4WD EDFA;EDDA | | GCO83674 | Outer Joint | | 38 | 33 | 59.5 | 40.5 | 59 | I |
| | 2023.10- | ET | F | L/R | SUV 4WD EDFA;EDDA | | GCI81546 | Inner Joint | | 33 | 32 | 39.9 | 58.5 | 105 | |
| | 2023.10- | ET | R | L | SUV 4WD EDFA;EDDA | Date to:2024.04,For PR code:N06 | GDS56955 | Drive Shaft | | 38 | 37 | 59.5 | 34 | 634 | |
| | 2023.10- | ET | R | L | SUV 4WD EDFA;EDDA | For PR code:N22/T65 | GDS58102 | Drive Shaft | | 38 | 42 | 59.5 | 34 | 639 | |
| | 2023.10- | ET | R | R | SUV 4WD EDFA;EDDA | Date to:2024.04,For PR code:N06 | GDS56956 | Drive Shaft | | 38 | 37 | 59.5 | 34 | 859 | |
| | 2023.10- | ET | R | R | SUV 4WD EDFA;EDDA | For PR code:N22/T65 | GDS58101 | Drive Shaft | | 38 | 42 | 59.5 | 34 | 853 | |
| | 2023.10- | ET | R | L/R | SUV 4WD EDFA;EDDA | Date to:2024.04,For PR code:N06 | GCO83488 | Outer Joint | | 38 | 28 | 59.5 | 34 | 81 | |
| | 2023.10- | ET | R | L/R | SUV 4WD EDFA;EDDA | For PR code:N22/T65 | GCO83846 | Outer Joint | | 38 | 27 | 59.5 | 34 | 65 | M |
| | 2023.10- | ET | R | L/R | SUV 4WD EDFA;EDDA | Date to:2024.04,For PR code:N06 | GCI83571 | Inner Joint | | 37 | 28 | 39.95 | 69 | 85.5 | |
| | 2023.10- | ET | R | L | SUV RWD EDFA | Date to:2024.04,For PR code:N06 | GDS56955 | Drive Shaft | | 38 | 37 | 59.5 | 34 | 634 | |
| | 2023.10- | ET | R | L | SUV RWD EDFA | For PR code:N22/T65 | GDS58102 | Drive Shaft | | 38 | 42 | 59.5 | 34 | 639 | |
| | 2023.10- | ET | R | R | SUV RWD EDFA | Date to:2024.04,For PR code:N06 | GDS56956 | Drive Shaft | | 38 | 37 | 59.5 | 34 | 859 | |
| | 2023.10- | ET | R | R | SUV RWD EDFA | For PR code:N22/T65 | GDS58101 | Drive Shaft | | 38 | 42 | 59.5 | 34 | 853 | |
| | 2023.10- | ET | R | L/R | SUV RWD EDFA | Date to:2024.04,For PR code:N06 | GCO83488 | Outer Joint | | 38 | 28 | 59.5 | 34 | 81 | |
| | 2023.10- | ET | R | L/R | SUV RWD EDFA | For PR code:N22/T65 | GCO83846 | Outer Joint | | 38 | 27 | 59.5 | 34 | 65 | M |
| | 2023.10- | ET | R | L/R | SUV RWD EDFA | Date to:2024.04,For PR code:N06 | GCI83571 | Inner Joint | | 37 | 28 | 39.95 | 69 | 85.5 | |
| EV (220 kw) | 2021.03- | ET | F | L | SUV 4WD EBRA;EBJA | For left-hand drive vehicles | GDS56405 | Drive Shaft | | 38 | 33 | 59.5 | 40.5 | 663 | |
| | 2021.03- | ET | F | L | SUV 4WD EBRA;EBJA | For right-hand drive vehicles | GDS57677 | Drive Shaft | | 38 | 33 | 59.5 | 40.5 | 565 | |
| | 2021.03- | ET | F | R | SUV 4WD EBRA;EBJA | For left-hand drive vehicles | GDS56971 | Drive Shaft | | 38 | 33 | 59.5 | 40.5 | 622 | |
| | 2021.03- | ET | F | R | SUV 4WD EBRA;EBJA | For right-hand drive vehicles | GDS57678 | Drive Shaft | | 38 | 33 | 59.5 | 40.5 | 721 | |
| | 2021.03- | ET | F | L/R | SUV 4WD EBRA;EBJA | | GCO83674 | Outer Joint | | 38 | 33 | 59.5 | 40.5 | 59 | I |
| | 2021.03- | ET | F | L/R | SUV 4WD EBRA;EBJA | | GCI81546 | Inner Joint | | 33 | 32 | 39.9 | 58.5 | 105 | |
| | 2021.03- | ET | R | L | SUV 4WD EBRA;EBJA | Date to:2024.04,For PR code:N06 | GDS56955 | Drive Shaft | | 38 | 37 | 59.5 | 34 | 634 | |
| | 2021.03- | ET | R | L | SUV 4WD EBRA;EBJA | For PR code:N22/T65 | GDS58102 | Drive Shaft | | 38 | 42 | 59.5 | 34 | 639 | |
| | 2021.03- | ET | R | R | SUV 4WD EBRA;EBJA | Date to:2024.04,For PR code:N06 | GDS56956 | Drive Shaft | | 38 | 37 | 59.5 | 34 | 859 | |
| | 2021.03- | ET | R | R | SUV 4WD EBRA;EBJA | For PR code:N22/T65 | GDS58101 | Drive Shaft | | 38 | 42 | 59.5 | 34 | 853 | |
| | 2021.03- | ET | R | L/R | SUV 4WD EBRA;EBJA | Date to:2024.04,For PR code:N06 | GCO83488 | Outer Joint | | 38 | 28 | 59.5 | 34 | 81 | |
| | 2021.03- | ET | R | L/R | SUV 4WD EBRA;EBJA | For PR code:N22/T65 | GCO83846 | Outer Joint | | 38 | 27 | 59.5 | 34 | 65 | M |
| | 2021.03- | ET | R | L/R | SUV 4WD EBRA;EBJA | Date to:2024.04,For PR code:N06 | GCI83571 | Inner Joint | | 37 | 28 | 39.95 | 69 | 85.5 | |
| EV (250 kw) | 2023.10- | ET | F | L | SUV 4WD EDFA;EDDA | For left-hand drive vehicles | GDS56405 | Drive Shaft | | 38 | 33 | 59.5 | 40.5 | 663 | |
| | 2023.10- | ET | F | L | SUV 4WD EDFA;EDDA | For right-hand drive vehicles | GDS57677 | Drive Shaft | | 38 | 33 | 59.5 | 40.5 | 565 | |
| | 2023.10- | ET | F | R | SUV 4WD EDFA;EDDA | For left-hand drive vehicles | GDS56971 | Drive Shaft | | 38 | 33 | 59.5 | 40.5 | 622 | |
| | 2023.10- | ET | F | R | SUV 4WD EDFA;EDDA | For right-hand drive vehicles | GDS57678 | Drive Shaft | | 38 | 33 | 59.5 | 40.5 | 721 | |
| | 2023.10- | ET | F | L/R | SUV 4WD EDFA;EDDA | | GCO83674 | Outer Joint | | 38 | 33 | 59.5 | 40.5 | 59 | I |
| | 2023.10- | ET | F | L/R | SUV 4WD EDFA;EDDA | | GCI81546 | Inner Joint | | 33 | 32 | 39.9 | 58.5 | 105 | |
| | 2023.10- | ET | R | L | SUV 4WD EDFA;EDDA | Date to:2024.04,For PR code:N06 | GDS56955 | Drive Shaft | | 38 | 37 | 59.5 | 34 | 634 | |
| | 2023.10- | ET | R | L | SUV 4WD EDFA;EDDA | For PR code:N22/T65 | GDS58102 | Drive Shaft | | 38 | 42 | 59.5 | 34 | 639 | |
| | 2023.10- | ET | R | R | SUV 4WD EDFA;EDDA | Date to:2024.04,For PR code:N06 | GDS56956 | Drive Shaft | | 38 | 37 | 59.5 | 34 | 859 | |
| | 2023.10- | ET | R | R | SUV 4WD EDFA;EDDA | For PR code:N22/T65 | GDS58101 | Drive Shaft | | 38 | 42 | 59.5 | 34 | 853 | |
| | 2023.10- | ET | R | L/R | SUV 4WD EDFA;EDDA | Date to:2024.04,For PR code:N06 | GCO83488 | Outer Joint | | 38 | 28 | 59.5 | 34 | 81 | |
| | 2023.10- | ET | R | L/R | SUV 4WD EDFA;EDDA | For PR code:N22/T65 | GCO83846 | Outer Joint | | 38 | 27 | 59.5 | 34 | 65 | M |
| | 2023.10- | ET | R | L/R | SUV 4WD EDFA;EDDA | Date to:2024.04,For PR code:N06 | GCI83571 | Inner Joint | | 37 | 28 | 39.95 | 69 | 85.5 | |
| **Q4 Sportback** | | | | | | | | | | | | | | | |
| EV (125 kw) | 2021.06- | ET | R | L | SUV RWD EBJA | Date to:2024.04,For PR code:N06 | GDS56955 | Drive Shaft | | 38 | 37 | 59.5 | 34 | 634 | |
| | 2021.06- | ET | R | L | SUV RWD EBJA | For PR code:N22/T65 | GDS58102 | Drive Shaft | | 38 | 42 | 59.5 | 34 | 639 | |
| | 2021.06- | ET | R | R | SUV RWD EBJA | Date to:2024.04,For PR code:N06 | GDS56956 | Drive Shaft | | 38 | 37 | 59.5 | 34 | 859 | |
| | 2021.06- | ET | R | R | SUV RWD EBJA | For PR code:N22/T65 | GDS58101 | Drive Shaft | | 38 | 42 | 59.5 | 34 | 853 | |
| | 2021.06- | ET | R | L/R | SUV RWD EBJA | Date to:2024.04,For PR code:N06 | GCO83488 | Outer Joint | | 38 | 28 | 59.5 | 34 | 81 | |
| | 2021.06- | ET | R | L/R | SUV RWD EBJA | For PR code:N22/T65 | GCO83846 | Outer Joint | | 38 | 27 | 59.5 | 34 | 65 | M |
| | 2021.06- | ET | R | L/R | SUV RWD EBJA | Date to:2024.04,For PR code:N06 | GCI83571 | Inner Joint | | 37 | 28 | 39.95 | 69 | 85.5 | |
| EV (150 kw) | 2021.06- | ET | R | L | SUV RWD EBJA | Date to:2024.04,For PR code:N06 | GDS56955 | Drive Shaft | | 38 | 37 | 59.5 | 34 | 634 | |
| | 2021.06- | ET | R | L | SUV RWD EBJA | For PR code:N22/T65 | GDS58102 | Drive Shaft | | 38 | 42 | 59.5 | 34 | 639 | |
| | 2021.06- | ET | R | R | SUV RWD EBJA | Date to:2024.04,For PR code:N06 | GDS56956 | Drive Shaft | | 38 | 37 | 59.5 | 34 | 859 | |

| | YEAR | TRANSM. | F/R | L/R | BODY STYLE & DRIVE TYPE & ENGINE | REMARKS | G-AP Ref. | PRODUCT | ABS | Technical Specifications A | B | C | H | L | P |
|---|---|---|---|---|---|---|---|---|---|---|---|---|---|---|---|
| **AUDI** **Q4 Sportback** | | | | | | | | | | | | | | | |
| EV (150 kw) | 2021.06- | ET | R | R | SUV RWD EBJA | For PR code:N22/T65 | GDS58101 | Drive Shaft | | 38 | 42 | 59.5 | 34 | 853 | |
| | 2021.06- | ET | R | L/R | SUV RWD EBJA | Date to:2024.04,For PR code:N06 | GCO83488 | Outer Joint | | 38 | 28 | 59.5 | 34 | 81 | |
| | 2021.06- | ET | R | L/R | SUV RWD EBJA | For PR code:N22/T65 | GCO83846 | Outer Joint | | 38 | 27 | 59.5 | 34 | 65 | M |
| | 2021.06- | ET | R | L/R | SUV RWD EBJA | Date to:2024.04,For PR code:N06 | GCI83571 | Inner Joint | | 37 | 28 | 39.95 | 69 | 85.5 | |
| EV (195 kw) | 2021.07- | ET | F | L | SUV 4WD EBRA;EBJA | For left-hand drive vehicles | GDS56405 | Drive Shaft | | 38 | 33 | 59.5 | 40.5 | 663 | |
| | 2021.07- | ET | F | L | SUV 4WD EBRA;EBJA | For right-hand drive vehicles | GDS57677 | Drive Shaft | | 38 | 33 | 59.5 | 40.5 | 565 | |
| | 2021.07- | ET | F | R | SUV 4WD EBRA;EBJA | For left-hand drive vehicles | GDS56971 | Drive Shaft | | 38 | 33 | 59.5 | 40.5 | 622 | |
| | 2021.07- | ET | F | R | SUV 4WD EBRA;EBJA | For right-hand drive vehicles | GDS57678 | Drive Shaft | | 38 | 33 | 59.5 | 40.5 | 721 | |
| | 2021.07- | ET | F | L/R | SUV 4WD EBRA;EBJA | | GCO83674 | Outer Joint | | 38 | 33 | 59.5 | 40.5 | 59 | I |
| | 2021.07- | ET | F | L/R | SUV 4WD EBRA;EBJA | | GCI81546 | Inner Joint | | 33 | 32 | 39.9 | 58.5 | 105 | |
| | 2021.07- | ET | R | L | SUV 4WD EBRA;EBJA | Date to:2024.04,For PR code:N06 | GDS56955 | Drive Shaft | | 38 | 37 | 59.5 | 34 | 634 | |
| | 2021.07- | ET | R | L | SUV 4WD EBRA;EBJA | For PR code:N22/T65 | GDS58102 | Drive Shaft | | 38 | 42 | 59.5 | 34 | 639 | |
| | 2021.07- | ET | R | R | SUV 4WD EBRA;EBJA | Date to:2024.04,For PR code:N06 | GDS56956 | Drive Shaft | | 38 | 37 | 59.5 | 34 | 859 | |
| | 2021.07- | ET | R | R | SUV 4WD EBRA;EBJA | For PR code:N22/T65 | GDS58101 | Drive Shaft | | 38 | 42 | 59.5 | 34 | 853 | |
| | 2021.07- | ET | R | L/R | SUV 4WD EBRA;EBJA | Date to:2024.04,For PR code:N06 | GCO83488 | Outer Joint | | 38 | 28 | 59.5 | 34 | 81 | |
| | 2021.07- | ET | R | L/R | SUV 4WD EBRA;EBJA | For PR code:N22/T65 | GCO83846 | Outer Joint | | 38 | 27 | 59.5 | 34 | 65 | M |
| | 2021.07- | ET | R | L/R | SUV 4WD EBRA;EBJA | Date to:2024.04,For PR code:N06 | GCI83571 | Inner Joint | | 37 | 28 | 39.95 | 69 | 85.5 | |
| EV (210 kw) | 2023.10- | ET | F | L | SUV 4WD EDFA;EDDA | For left-hand drive vehicles | GDS56405 | Drive Shaft | | 38 | 33 | 59.5 | 40.5 | 663 | |
| | 2023.10- | ET | F | L | SUV 4WD EDFA;EDDA | For right-hand drive vehicles | GDS57677 | Drive Shaft | | 38 | 33 | 59.5 | 40.5 | 565 | |
| | 2023.10- | ET | F | R | SUV 4WD EDFA;EDDA | For left-hand drive vehicles | GDS56971 | Drive Shaft | | 38 | 33 | 59.5 | 40.5 | 622 | |
| | 2023.10- | ET | F | R | SUV 4WD EDFA;EDDA | For right-hand drive vehicles | GDS57678 | Drive Shaft | | 38 | 33 | 59.5 | 40.5 | 721 | |
| | 2023.10- | ET | F | L/R | SUV 4WD EDFA;EDDA | | GCO83674 | Outer Joint | | 38 | 33 | 59.5 | 40.5 | 59 | I |
| | 2023.10- | ET | F | L/R | SUV 4WD EDFA;EDDA | | GCI81546 | Inner Joint | | 33 | 32 | 39.9 | 58.5 | 105 | |
| | 2023.10- | ET | R | L | SUV 4WD EDFA;EDDA | Date to:2024.04,For PR code:N06 | GDS56955 | Drive Shaft | | 38 | 37 | 59.5 | 34 | 634 | |
| | 2023.10- | ET | R | L | SUV 4WD EDFA;EDDA | For PR code:N22/T65 | GDS58102 | Drive Shaft | | 38 | 42 | 59.5 | 34 | 639 | |
| | 2023.10- | ET | R | R | SUV 4WD EDFA;EDDA | Date to:2024.04,For PR code:N06 | GDS56956 | Drive Shaft | | 38 | 37 | 59.5 | 34 | 859 | |
| | 2023.10- | ET | R | R | SUV 4WD EDFA;EDDA | For PR code:N22/T65 | GDS58101 | Drive Shaft | | 38 | 42 | 59.5 | 34 | 853 | |
| | 2023.10- | ET | R | L/R | SUV 4WD EDFA;EDDA | Date to:2024.04,For PR code:N06 | GCO83488 | Outer Joint | | 38 | 28 | 59.5 | 34 | 81 | |
| | 2023.10- | ET | R | L/R | SUV 4WD EDFA;EDDA | For PR code:N22/T65 | GCO83846 | Outer Joint | | 38 | 27 | 59.5 | 34 | 65 | M |
| | 2023.10- | ET | R | L/R | SUV 4WD EDFA;EDDA | Date to:2024.04,For PR code:N06 | GCI83571 | Inner Joint | | 37 | 28 | 39.95 | 69 | 85.5 | |
| | 2023.10- | ET | R | L | SUV RWD EDFA | Date to:2024.04,For PR code:N06 | GDS56955 | Drive Shaft | | 38 | 37 | 59.5 | 34 | 634 | |
| | 2023.10- | ET | R | L | SUV RWD EDFA | For PR code:N22/T65 | GDS58102 | Drive Shaft | | 38 | 42 | 59.5 | 34 | 639 | |
| | 2023.10- | ET | R | R | SUV RWD EDFA | Date to:2024.04,For PR code:N06 | GDS56956 | Drive Shaft | | 38 | 37 | 59.5 | 34 | 859 | |
| | 2023.10- | ET | R | R | SUV RWD EDFA | For PR code:N22/T65 | GDS58101 | Drive Shaft | | 38 | 42 | 59.5 | 34 | 853 | |
| | 2023.10- | ET | R | L/R | SUV RWD EDFA | Date to:2024.04,For PR code:N06 | GCO83488 | Outer Joint | | 38 | 28 | 59.5 | 34 | 81 | |
| | 2023.10- | ET | R | L/R | SUV RWD EDFA | For PR code:N22/T65 | GCO83846 | Outer Joint | | 38 | 27 | 59.5 | 34 | 65 | M |
| | 2023.10- | ET | R | L/R | SUV RWD EDFA | Date to:2024.04,For PR code:N06 | GCI83571 | Inner Joint | | 37 | 28 | 39.95 | 69 | 85.5 | |
| EV (220 kw) | 2021.06- | ET | F | L | SUV 4WD EBRA;EBJA | For left-hand drive vehicles | GDS56405 | Drive Shaft | | 38 | 33 | 59.5 | 40.5 | 663 | |
| | 2021.06- | ET | F | L | SUV 4WD EBRA;EBJA | For right-hand drive vehicles | GDS57677 | Drive Shaft | | 38 | 33 | 59.5 | 40.5 | 565 | |
| | 2021.06- | ET | F | R | SUV 4WD EBRA;EBJA | For left-hand drive vehicles | GDS56971 | Drive Shaft | | 38 | 33 | 59.5 | 40.5 | 622 | |
| | 2021.06- | ET | F | R | SUV 4WD EBRA;EBJA | For right-hand drive vehicles | GDS57678 | Drive Shaft | | 38 | 33 | 59.5 | 40.5 | 721 | |
| | 2021.06- | ET | F | L/R | SUV 4WD EBRA;EBJA | | GCO83674 | Outer Joint | | 38 | 33 | 59.5 | 40.5 | 59 | I |
| | 2021.06- | ET | F | L/R | SUV 4WD EBRA;EBJA | | GCI81546 | Inner Joint | | 33 | 32 | 39.9 | 58.5 | 105 | |
| | 2021.06- | ET | R | L | SUV 4WD EBRA;EBJA | Date to:2024.04,For PR code:N06 | GDS56955 | Drive Shaft | | 38 | 37 | 59.5 | 34 | 634 | |
| | 2021.06- | ET | R | L | SUV 4WD EBRA;EBJA | For PR code:N22/T65 | GDS58102 | Drive Shaft | | 38 | 42 | 59.5 | 34 | 639 | |
| | 2021.06- | ET | R | R | SUV 4WD EBRA;EBJA | Date to:2024.04,For PR code:N06 | GDS56956 | Drive Shaft | | 38 | 37 | 59.5 | 34 | 859 | |
| | 2021.06- | ET | R | R | SUV 4WD EBRA;EBJA | For PR code:N22/T65 | GDS58101 | Drive Shaft | | 38 | 42 | 59.5 | 34 | 853 | |
| | 2021.06- | ET | R | L/R | SUV 4WD EBRA;EBJA | Date to:2024.04,For PR code:N06 | GCO83488 | Outer Joint | | 38 | 28 | 59.5 | 34 | 81 | |
| | 2021.06- | ET | R | L/R | SUV 4WD EBRA;EBJA | For PR code:N22/T65 | GCO83846 | Outer Joint | | 38 | 27 | 59.5 | 34 | 65 | M |
| | 2021.06- | ET | R | L/R | SUV 4WD EBRA;EBJA | Date to:2024.04,For PR code:N06 | GCI83571 | Inner Joint | | 37 | 28 | 39.95 | 69 | 85.5 | |
| EV (250 kw) | 2023.10- | ET | F | L | SUV 4WD EDFA;EDDA | For left-hand drive vehicles | GDS56405 | Drive Shaft | | 38 | 33 | 59.5 | 40.5 | 663 | |
| | 2023.10- | ET | F | L | SUV 4WD EDFA;EDDA | For right-hand drive vehicles | GDS57677 | Drive Shaft | | 38 | 33 | 59.5 | 40.5 | 565 | |
| | 2023.10- | ET | F | R | SUV 4WD EDFA;EDDA | For left-hand drive vehicles | GDS56971 | Drive Shaft | | 38 | 33 | 59.5 | 40.5 | 622 | |
| | 2023.10- | ET | F | R | SUV 4WD EDFA;EDDA | For right-hand drive vehicles | GDS57678 | Drive Shaft | | 38 | 33 | 59.5 | 40.5 | 721 | |
| | 2023.10- | ET | F | L/R | SUV 4WD EDFA;EDDA | | GCO83674 | Outer Joint | | 38 | 33 | 59.5 | 40.5 | 59 | I |
| | 2023.10- | ET | F | L/R | SUV 4WD EDFA;EDDA | | GCI81546 | Inner Joint | | 33 | 32 | 39.9 | 58.5 | 105 | |
| | 2023.10- | ET | R | L | SUV 4WD EDFA;EDDA | Date to:2024.04,For PR code:N06 | GDS56955 | Drive Shaft | | 38 | 37 | 59.5 | 34 | 634 | |
| | 2023.10- | ET | R | L | SUV 4WD EDFA;EDDA | For PR code:N22/T65 | GDS58102 | Drive Shaft | | 38 | 42 | 59.5 | 34 | 639 | |
| | 2023.10- | ET | R | R | SUV 4WD EDFA;EDDA | Date to:2024.04,For PR code:N06 | GDS56956 | Drive Shaft | | 38 | 37 | 59.5 | 34 | 859 | |
| | 2023.10- | ET | R | R | SUV 4WD EDFA;EDDA | For PR code:N22/T65 | GDS58101 | Drive Shaft | | 38 | 42 | 59.5 | 34 | 853 | |
| | 2023.10- | ET | R | L/R | SUV 4WD EDFA;EDDA | Date to:2024.04,For PR code:N06 | GCO83488 | Outer Joint | | 38 | 28 | 59.5 | 34 | 81 | |
| | 2023.10- | ET | R | L/R | SUV 4WD EDFA;EDDA | For PR code:N22/T65 | GCO83846 | Outer Joint | | 38 | 27 | 59.5 | 34 | 65 | M |
| | 2023.10- | ET | R | L/R | SUV 4WD EDFA;EDDA | Date to:2024.04,For PR code:N06 | GCI83571 | Inner Joint | | 37 | 28 | 39.95 | 69 | 85.5 | |

| | YEAR | TRANSM. | F/R | L/R | BODY STYLE & DRIVE TYPE & ENGINE | REMARKS | G-AP Ref. | PRODUCT | ABS | Technical Specifications A | B | C | H | L | P |
|---|---|---|---|---|---|---|---|---|---|---|---|---|---|---|---|
| **AUDI** | | | | | | | | | | | | | | | |
| **Q5** | | | | | | | | | | | | | | | |
| 2.0 (100 kw) | 2010.11-2017.05 | AT | F | | SUV FWD CJCB;CSUB | Model year from:2013,for PR code:G1D/G1G | GCI83022 | Inner Joint | | | 34 | | | 88.5 | |
| | 2010.11-2017.05 | MT | F | L | SUV FWD CJCB;CSUB | Date from:2013.01 | GDS83382 | Drive Shaft | | 42 | | 76.5 | 34 | 495 | |
| | 2010.11-2017.05 | MT | F | L/R | SUV FWD CJCB;CSUB | Date to:2012.12 | GDS83316 | Drive Shaft | | 42 | | 76.5 | 34 | 495 | |
| | 2010.11-2017.05 | MT | F | L/R | SUV FWD CJCB;CSUB | Date to:2012.12 | GCO83086 | Outer Joint | | 42 | 33 | 76.5 | 34 | 45.5 | M |
| | 2010.11-2017.05 | MT | F | L/R | SUV FWD CJCB;CSUB | Date from:2013.01 | GCO83102 | Outer Joint | | 42 | 29 | 76.5 | 34 | 60 | I |
| | 2010.11-2017.05 | MT | F | L | SUV FWD CJCB;CSUB | Date from:2013.01 | GCI61077 | Inner Joint | | | 34 | | | 88 | |
| | 2010.11-2017.05 | MT | F | | SUV FWD CJCB;CSUB | Model Year to:2012,for PR code:TH3+G0L/TM4+G0L | GCI81054 | Inner Joint | | | 24 | | | 86 | |
| | 2010.11-2017.05 | | F | L/R | SUV FWD CJCB;CSUB | Chassis no. to:8RDA200000,TJ | GCI61070 | Inner Joint | | | 24 | | | 85 | |
| | 2014.05-2017.05 | 6MT | F | L | SUV Van FWD CSUB | Chassis no. from:8R_DA000001 | GDS83382 | Drive Shaft | | 42 | | 76.5 | 34 | 495 | |
| | 2014.05-2017.05 | 6MT | F | L/R | SUV Van FWD CSUB | Chassis no. to:8R_DA200000 | GDS83316 | Drive Shaft | | 42 | | 76.5 | 34 | 495 | |
| | 2014.05-2017.05 | 6MT | F | L/R | SUV Van FWD CSUB | Chassis no. to:8R_DA200000 | GCO83086 | Outer Joint | | 42 | 33 | 76.5 | 34 | 45.5 | M |
| | 2014.05-2017.05 | 6MT | F | L/R | SUV Van FWD CSUB | Chassis no. from:8R_DA000001 | GCO83102 | Outer Joint | | 42 | 29 | 76.5 | 34 | 60 | I |
| | 2014.05-2017.05 | 6MT | F | L/R | SUV Van FWD CSUB | Chassis no. to:8R_DA200000 | GCI61070 | Inner Joint | | | 24 | | | 85 | |
| | 2014.05-2017.05 | 6MT | F | L/R | SUV Van FWD CSUB | Chassis no. from:8R_DA000001 | GCI83022 | Inner Joint | | | 34 | | | 88.5 | |
| | 2017.01-2020.11 | 7DCT | F | L/R | SUV FWD DEUB | | GDS83206 | Drive Shaft | | 42 | | 76.5 | 34 | 493 | |
| | 2017.01-2020.11 | 7DCT | F | L/R | SUV FWD DEUB | | GCO81750 | Outer Joint | | 42 | 29 | 76.5 | 34 | 60 | I |
| | 2017.01-2020.11 | 7DCT | F | L/R | SUV FWD DEUB | | GCI81397 | Inner Joint | | | 27 | | | 89 | |
| | 2019.09-2020.11 | 7AT | F | L/R | SUV FWD DEZB | | GCO82603 | Outer Joint | | 42 | 30 | 76.5 | 34 | 60 | I |
| 2.0 (105 kw) | 2010.11-2013.05 | 6MT | F | L/R | SUV FWD CJCA | Chassis no. to:8R_DA200000 | GDS83316 | Drive Shaft | | 42 | | 76.5 | 34 | 495 | |
| | 2010.11-2013.05 | 6MT | F | L/R | SUV FWD CJCA | Chassis no. from:8R_DA000001 | GDS83382 | Drive Shaft | | 42 | | 76.5 | 34 | 495 | |
| | 2010.11-2013.05 | 6MT | F | L/R | SUV FWD CJCA | Chassis no. to:8R_DA200000 | GCO83086 | Outer Joint | | 42 | 33 | 76.5 | 34 | 45.5 | M |
| | 2010.11-2013.05 | 6MT | F | L/R | SUV FWD CJCA | Chassis no. from:8R_DA000001 | GCO83102 | Outer Joint | | 42 | 29 | 76.5 | 34 | 60 | I |
| | 2010.11-2013.05 | 6MT | F | L/R | SUV FWD CJCA | Chassis no. from:8R_DA000001 | GCI83022 | Inner Joint | | | 34 | | | 88.5 | |
| | 2010.11-2013.05 | | F | L/R | SUV FWD CJCA | Chassis no. to:8RDA200000,TJ | GCI61070 | Inner Joint | | | 24 | | | 85 | |
| | 2011.11-2013.05 | 6MT | F | L | SUV Van FWD CJCA | Chassis no. from:8R_DA000001 | GDS83382 | Drive Shaft | | 42 | | 76.5 | 34 | 495 | |
| | 2011.11-2013.05 | 6MT | F | L/R | SUV Van FWD CJCA | Chassis no. to:8R_DA200000 | GDS83316 | Drive Shaft | | 42 | | 76.5 | 34 | 495 | |
| | 2011.11-2013.05 | 6MT | F | L/R | SUV Van FWD CJCA | Chassis no. to:8R_DA200000 | GCO83086 | Outer Joint | | 42 | 33 | 76.5 | 34 | 45.5 | M |
| | 2011.11-2013.05 | 6MT | F | L/R | SUV Van FWD CJCA | Chassis no. from:8R_DA000001 | GCO83102 | Outer Joint | | 42 | 29 | 76.5 | 34 | 60 | I |
| | 2011.11-2013.05 | 6MT | F | L/R | SUV Van FWD CJCA | Chassis no. to:8R_DA200000 | GCI61070 | Inner Joint | | | 24 | | | 85 | |
| | 2011.11-2013.05 | 6MT | F | L/R | SUV Van FWD CJCA | Chassis no. from:8R_DA000001 | GCI83022 | Inner Joint | | | 34 | | | 88.5 | |
| 2.0 (110 kw) | 2012.06-2017.05 | 6MT | F | L/R | SUV Van FWD CJCD;CSUA | | GDS83382 | Drive Shaft | | 42 | | 76.5 | 34 | 495 | |
| | 2012.06-2017.05 | 6MT | F | L/R | SUV Van FWD CJCD;CSUA | | GCO83102 | Outer Joint | | 42 | 29 | 76.5 | 34 | 60 | I |
| | 2012.06-2017.05 | 6MT | F | L/R | SUV Van FWD CJCD;CSUA | | GCI83022 | Inner Joint | | | 34 | | | 88.5 | |
| | 2013.05-2017.05 | 6MT | F | L/R | SUV FWD CJCD;CSUA | | GDS83382 | Drive Shaft | | 42 | | 76.5 | 34 | 495 | |
| | 2013.05-2017.05 | 6MT | F | L/R | SUV FWD CJCD;CSUA | | GCO83102 | Outer Joint | | 42 | 29 | 76.5 | 34 | 60 | I |
| | 2013.05-2017.05 | 6MT | F | L/R | SUV FWD CJCD;CSUA | AAR | GCI81054 | Inner Joint | | | 24 | | | 86 | |
| | 2013.05-2017.05 | 6MT | F | L/R | SUV FWD CJCD;CSUA | TJ | GCI83022 | Inner Joint | | | 34 | | | 88.5 | |
| | 2017.01-2020.11 | 7DCT | F | L/R | SUV FWD DEUA | | GDS83206 | Drive Shaft | | 42 | | 76.5 | 34 | 493 | |
| | 2017.01-2020.11 | 7DCT | F | L/R | SUV FWD DEUA | | GCO81750 | Outer Joint | | 42 | 29 | 76.5 | 34 | 60 | I |
| | 2017.01-2020.11 | 7DCT | F | L/R | SUV FWD DEUA | | GCI81397 | Inner Joint | | | 27 | | | 89 | |
| 2.0 (120 kw) | 2019.09- | 7AT | F | L/R | SUV FWD DEZE;DTNA | | GCO82603 | Outer Joint | | 42 | 30 | 76.5 | 34 | 60 | I |
| | 2021.10- | 7AT | F | L/R | SUV FWD DTNA | | GCO82603 | Outer Joint | | 42 | 30 | 76.5 | 34 | 60 | I |
| 2.0 (140 kw) | 2015.05-2017.05 | 7AT | F | L/R | SUV Van FWD CNHA | | GDS83206 | Drive Shaft | | 42 | | 76.5 | 34 | 493 | |
| | 2015.09-2017.05 | 7AT | F | L/R | SUV FWD CNHA | | GDS83206 | Drive Shaft | | 42 | | 76.5 | 34 | 493 | |
| **Q5 Quattro** | | | | | | | | | | | | | | | |
| 2.0 (100 kw) | 2009.08-2017.05 | 6MT | F | L/R | SUV 4WD CAGB;CJCB;CSUB | For Engine code:CAHB/CGLA | GCO83086 | Outer Joint | | 42 | 33 | 76.5 | 34 | 45.5 | M |
| | 2009.08-2017.05 | 6MT | F | L/R | SUV 4WD CAGB;CJCB;CSUB | TJ | GCI61070 | Inner Joint | | | 24 | | | 85 | |
| | 2009.08-2017.05 | 6MT | F | L/R | SUV 4WD CAGB;CJCB;CSUB | AAR | GCI81054 | Inner Joint | | | 24 | | | 86 | |
| | 2009.08-2017.05 | MT | F | L/R | SUV 4WD CAGB;CJCB;CSUB | Date from:2013.01 | GDS82077 | Drive Shaft | | 42 | | 76.5 | 34 | 495 | |
| | 2009.08-2017.05 | MT | F | L/R | SUV 4WD CAGB;CJCB;CSUB | Date to:2012.12 | GDS83316 | Drive Shaft | | 42 | | 76.5 | 34 | 495 | |
| | 2009.08-2017.05 | MT | F | | SUV 4WD CAGB;CJCB;CSUB | | GCI83022 | Inner Joint | | | 34 | | | 88.5 | |
| | 2009.08-2017.05 | | F | L/R | SUV 4WD CAGB;CJCB;CSUB | | GCO83107 | Outer Joint | | 42 | 25 | 76.5 | 34 | 47.5 | I |
| | 2009.08-2017.05 | 6MT | R | L/R | SUV 4WD CAGB;CJCB;CSUB | | GDS82311 | Drive Shaft | | 42 | | 76.5 | 34 | 657 | |
| | 2009.08-2017.05 | 6MT | R | L/R | SUV 4WD CAGB;CJCB;CSUB | | GCI81753 | Outer Joint | | 42 | 33 | 76.5 | 34 | 67.5 | |
| | 2009.08-2017.05 | 6MT | R | L/R | SUV 4WD CAGB;CJCB;CSUB | | GCI81752 | Inner Joint | | | 33 | | | 34 | |
| 2.0 (105 kw) | 2009.08-2013.05 | 6MT | F | L/R | SUV 4WD CAGA;CJCA | For Engine code:CJCA | GDS82077 | Drive Shaft | | 42 | | 76.5 | 34 | 495 | |
| | 2009.08-2013.05 | 6MT | F | L/R | SUV 4WD CAGA;CJCA | For Engine code:CAGA | GDS83316 | Drive Shaft | | 42 | | 76.5 | 34 | 495 | |
| | 2009.08-2013.05 | 6MT | F | L/R | SUV 4WD CAGA;CJCA | For Engine code:CAGA | GCO83086 | Outer Joint | | 42 | 33 | 76.5 | 34 | 45.5 | M |
| | 2009.08-2013.05 | 6MT | F | L/R | SUV 4WD CAGA;CJCA | For Engine code:CJCA,6 balls | GCO83107 | Outer Joint | | 42 | 25 | 76.5 | 34 | 47.5 | I |
| | 2009.08-2013.05 | 6MT | F | L/R | SUV 4WD CAGA;CJCA | For Engine code:CAGA,TJ | GCI61070 | Inner Joint | | | 24 | | | 85 | |
| | 2009.08-2013.05 | 6MT | F | L/R | SUV 4WD CAGA;CJCA | For Engine code:CJCA,AAR | GCI81054 | Inner Joint | | | 24 | | | 86 | |
| | 2009.08-2013.05 | 6MT | F | L/R | SUV 4WD CAGA;CJCA | TJ | GCI83022 | Inner Joint | | | 34 | | | 88.5 | |
| | 2009.08-2013.05 | 6MT | R | L/R | SUV 4WD CAGA;CJCA | | GDS82311 | Drive Shaft | | 42 | | 76.5 | 34 | 657 | |
| | 2009.08-2013.05 | 6MT | R | L/R | SUV 4WD CAGA;CJCA | | GCI81753 | Outer Joint | | 42 | 33 | 76.5 | 34 | 67.5 | |
| | 2009.08-2013.05 | 6MT | R | L/R | SUV 4WD CAGA;CJCA | | GCI81752 | Inner Joint | | | 33 | | | 34 | |

| | YEAR | TRANSM. | F/R | L/R | BODY STYLE & DRIVE TYPE & ENGINE | REMARKS | G-AP Ref. | PRODUCT | ABS | Technical Specifications A | B | C | H | L | P |
|---|---|---|---|---|---|---|---|---|---|---|---|---|---|---|---|
| **AUDI** | | | | | | | | | | | | | | | |
| **Q5 Quattro** | | | | | | | | | | | | | | | |
| 2.0 (110 kw) | 2013.05-2017.05 | 6MT | F | L/R | SUV 4WD CJCD;CSUA | | GDS82077 | Drive Shaft | | 42 | | 76.5 | 34 | 495 | |
| | 2013.05-2017.05 | 6MT | F | L/R | SUV 4WD CJCD;CSUA | 6 balls | GCO83107 | Outer Joint | | 42 | 25 | 76.5 | 34 | 47.5 | I |
| | 2013.05-2017.05 | 6MT | F | L/R | SUV 4WD CJCD;CSUA | | GCI81054 | Inner Joint | | | 24 | | | 86 | |
| | 2013.05-2017.05 | 6MT | F | L/R | SUV 4WD CJCD;CSUA | | GCI83022 | Inner Joint | | | 34 | | | 88.5 | |
| | 2013.05-2017.05 | 6MT | R | L/R | SUV 4WD CJCD;CSUA | | GDS82311 | Drive Shaft | | 42 | | 76.5 | 34 | 657 | |
| | 2013.05-2017.05 | 6MT | R | L/R | SUV 4WD CJCD;CSUA | | GCI81753 | Outer Joint | | 42 | 33 | 76.5 | 34 | 67.5 | |
| | 2013.05-2017.05 | 6MT | R | L/R | SUV 4WD CJCD;CSUA | | GCI81752 | Inner Joint | | | 33 | | | 34 | |
| 2.0 (120 kw) | 2008.11-2017.05 | 6MT | F | L/R | SUV 4WD CAHB;CGLA;CGLD;CNHC | For Engine code:CAHB/CGLA | GCO83086 | Outer Joint | | 42 | 33 | 76.5 | 34 | 45.5 | M |
| | 2008.11-2017.05 | 6MT | F | L/R | SUV 4WD CAHB;CGLA;CGLD;CNHC | For Engine code:CGLD | GCO83107 | Outer Joint | | 42 | 25 | 76.5 | 34 | 47.5 | I |
| | 2008.11-2017.05 | 7AT/6MT | F | L/R | SUV 4WD CAHB;CGLA;CGLD;CNHC | TJ | GCI61070 | Inner Joint | | | 24 | | | 85 | |
| | 2008.11-2017.05 | 7AT/6MT | F | L/R | SUV 4WD CAHB;CGLA;CGLD;CNHC | AAR | GCI81054 | Inner Joint | | | 24 | | | 86 | |
| | 2008.11-2017.05 | 7AT/6MT | F | L/R | SUV 4WD CAHB;CGLA;CGLD;CNHC | TJ | GCI83022 | Inner Joint | | | 34 | | | 88.5 | |
| | 2008.11-2017.05 | 7DCT | F | L/R | SUV 4WD CAHB;CGLA;CGLD;CNHC | | GCO83087 | Outer Joint | | 42 | 27 | 76.5 | 34 | 57 | M |
| | 2008.11-2017.05 | 7DCT | F | L/R | SUV 4WD CAHB;CGLA;CGLD;CNHC | For Engine code:CGLD/CNHC | GCO83103 | Outer Joint | | 42 | 28 | 76.4 | 34 | 54 | I |
| | 2008.11-2017.05 | AT | F | L/R | SUV 4WD CAHB;CGLA;CGLD;CNHC | | GDS61290 | Drive Shaft | | 42 | | 76.4 | 34 | 493 | |
| | 2008.11-2017.05 | MT | F | L/R | SUV 4WD CAHB;CGLA;CGLD;CNHC | Date from:2013.01 | GDS82077 | Drive Shaft | | 42 | | 76.5 | 34 | 495 | |
| | 2008.11-2017.05 | MT | F | L/R | SUV 4WD CAHB;CGLA;CGLD;CNHC | Date to:2012.12 | GDS83316 | Drive Shaft | | 42 | | 76.5 | 34 | 495 | |
| | 2008.11-2017.05 | 7AT/6MT | R | L/R | SUV 4WD CAHB;CGLA;CGLD;CNHC | | GCI83039 | Outer Joint | | 42 | 28 | 76.5 | 34 | 72 | |
| | 2008.11-2017.05 | 7AT/6MT | R | L/R | SUV 4WD CAHB;CGLA;CGLD;CNHC | | GCI61069 | Inner Joint | | | 28 | | | 32 | |
| | 2008.11-2017.05 | AT/MT | R | L/R | SUV 4WD CAHB;CGLA;CGLD;CNHC | | GDS83368 | Drive Shaft | | 42 | | 76.5 | 34 | 660 | |
| | 2016.06-2018.08 | 7DCT | F | L/R | SUV 4WD DETB | | GDS83206 | Drive Shaft | | 42 | | 76.5 | 34 | 493 | |
| | 2016.06-2018.08 | 7DCT | F | L/R | SUV 4WD DETB | | GCO81750 | Outer Joint | | 42 | 29 | 76.5 | 34 | 60 | I |
| | 2016.06-2018.08 | 7DCT | F | L/R | SUV 4WD DETB | | GCI81397 | Inner Joint | | | 27 | | | 89 | |
| | 2016.06-2018.08 | 7AT | R | L | SUV 4WD DETB | For PR code:GH4,For vehicles with AWD & variable torque dist. | GDS56268 | Drive Shaft | | 42 | | | 34 | 683 | |
| | 2016.06-2018.08 | 7AT | R | R | SUV 4WD DETB | For PR code:GH4,For vehicles with AWD & variable torque dist. | GDS56267 | Drive Shaft | | 42 | | | 34 | 581 | |
| | 2018.08-2020.11 | 7DCT | F | L/R | SUV 4WD DETB | | GDS83206 | Drive Shaft | | 42 | | 76.5 | 34 | 493 | |
| | 2018.08-2020.11 | 7DCT | F | L/R | SUV 4WD DETB | | GCO81750 | Outer Joint | | 42 | 29 | 76.5 | 34 | 60 | I |
| | 2018.08-2020.11 | 7DCT | F | L/R | SUV 4WD DETB | | GCI81397 | Inner Joint | | | 27 | | | 89 | |
| | 2018.08-2020.11 | 7AT | R | L | SUV 4WD DETB | For PR code:GH4,For vehicles with AWD & variable torque dist. | GDS56268 | Drive Shaft | | 42 | | | 34 | 683 | |
| | 2018.08-2020.11 | 7AT | R | R | SUV 4WD DETB | For PR code:GH4,For vehicles with AWD & variable torque dist. | GDS56267 | Drive Shaft | | 42 | | | 34 | 581 | |
| 2.0 (125 kw) | 2008.11-2012.09 | 6MT | F | L/R | SUV 4WD CAHA;CGLB;CMGA | | GDS83316 | Drive Shaft | | 42 | | 76.5 | 34 | 495 | |
| | 2008.11-2012.09 | 6MT | F | L/R | SUV 4WD CAHA;CGLB;CMGA | | GCO83086 | Outer Joint | | 42 | 33 | 76.5 | 34 | 45.5 | M |
| | 2008.11-2012.09 | 6MT | F | L/R | SUV 4WD CAHA;CGLB;CMGA | TJ | GCI61070 | Inner Joint | | | 24 | | | 85 | |
| | 2008.11-2012.09 | 6MT | F | L/R | SUV 4WD CAHA;CGLB;CMGA | AAR | GCI81054 | Inner Joint | | | 24 | | | 86 | |
| | 2008.11-2012.09 | 7DCT | F | L/R | SUV 4WD CAHA;CGLB;CMGA | | GDS61290 | Drive Shaft | | 42 | | 76.4 | 34 | 493 | |
| | 2008.11-2012.09 | 7DCT | F | L/R | SUV 4WD CAHA;CGLB;CMGA | | GCO83087 | Outer Joint | | 42 | 27 | 76.5 | 34 | 57 | M |
| | 2008.11-2012.09 | 7DCT | F | L/R | SUV 4WD CAHA;CGLB;CMGA | | GCO83103 | Outer Joint | | 42 | 28 | 76.4 | 34 | 54 | I |
| | 2008.11-2012.09 | 7DCT | F | L/R | SUV 4WD CAHA;CGLB;CMGA | | GCI83022 | Inner Joint | | | 34 | | | 88.5 | |
| | 2008.11-2012.09 | 6MT/7DCT | R | L/R | SUV 4WD CAHA;CGLB;CMGA | | GDS83368 | Drive Shaft | | 42 | | 76.5 | 34 | 660 | |
| | 2008.11-2012.09 | 6MT/7DCT | R | L/R | SUV 4WD CAHA;CGLB;CMGA | | GCI83039 | Outer Joint | | 42 | 28 | 76.5 | 34 | 72 | |
| | 2008.11-2012.09 | 6MT/7DCT | R | L/R | SUV 4WD CAHA;CGLB;CMGA | | GCI61069 | Inner Joint | | | 28 | | | 32 | |
| | 2008.11-2012.09 | 6MT | F | L/R | SUV Van 4WD CAHA;CGLB | | GDS83316 | Drive Shaft | | 42 | | 76.5 | 34 | 495 | |
| | 2008.11-2012.09 | 6MT | F | L/R | SUV Van 4WD CAHA;CGLB | | GCO83086 | Outer Joint | | 42 | 33 | 76.5 | 34 | 45.5 | M |
| | 2008.11-2012.09 | 6MT | F | L/R | SUV Van 4WD CAHA;CGLB | | GCI61070 | Inner Joint | | | 24 | | | 85 | |
| | 2008.11-2012.09 | 7DCT | F | L/R | SUV Van 4WD CAHA;CGLB | | GDS61290 | Drive Shaft | | 42 | | 76.4 | 34 | 493 | |
| | 2008.11-2012.09 | 7DCT | F | L/R | SUV Van 4WD CAHA;CGLB | | GCO83087 | Outer Joint | | 42 | 27 | 76.5 | 34 | 57 | M |
| | 2008.11-2012.09 | 7DCT | F | L/R | SUV Van 4WD CAHA;CGLB | | GCI83022 | Inner Joint | | | 34 | | | 88.5 | |
| | 2008.11-2012.09 | 7AT/6MT | R | L/R | SUV Van 4WD CAHA;CGLB | | GDS83368 | Drive Shaft | | 42 | | 76.5 | 34 | 660 | |
| | 2008.11-2012.09 | 7AT/6MT | R | L/R | SUV Van 4WD CAHA;CGLB | | GCI83039 | Outer Joint | | 42 | 28 | 76.5 | 34 | 72 | |
| | 2008.11-2012.09 | 7AT/6MT | R | L/R | SUV Van 4WD CAHA;CGLB | | GCI61069 | Inner Joint | | | 28 | | | 32 | |
| 2.0 (130 kw) | 2012.06-2017.05 | 6MT | F | L/R | SUV 4WD CGLC;CMGB | 8 balls,Bellows Material of Outer joint:Neoprene | GDS82077 | Drive Shaft | | 42 | | 76.5 | 34 | 495 | |
| | 2012.06-2017.05 | 6MT | F | L/R | SUV 4WD CGLC;CMGB | 6 balls | GCO83107 | Outer Joint | | 42 | 25 | 76.5 | 34 | 47.5 | I |
| | 2012.06-2017.05 | 6MT | F | L/R | SUV 4WD CGLC;CMGB | | GCI81054 | Inner Joint | | | 24 | | | 86 | |
| | 2012.06-2017.05 | 7DCT | F | L/R | SUV 4WD CGLC;CMGB | | GDS61290 | Drive Shaft | | 42 | | 76.4 | 34 | 493 | |
| | 2012.06-2017.05 | 7DCT | F | L/R | SUV 4WD CGLC;CMGB | | GCO83103 | Outer Joint | | 42 | 28 | 76.4 | 34 | 54 | I |
| | 2012.06-2017.05 | 7DCT | F | L/R | SUV 4WD CGLC;CMGB | | GCI83022 | Inner Joint | | | 34 | | | 88.5 | |
| | 2012.06-2017.05 | 6MT/7DCT | R | L/R | SUV 4WD CGLC;CMGB | | GDS83368 | Drive Shaft | | 42 | | 76.5 | 34 | 660 | |
| | 2012.06-2017.05 | 6MT/7DCT | R | L/R | SUV 4WD CGLC;CMGB | | GCI83039 | Outer Joint | | 42 | 28 | 76.5 | 34 | 72 | |
| | 2012.06-2017.05 | 6MT/7DCT | R | L/R | SUV 4WD CGLC;CMGB | | GCI61069 | Inner Joint | | | 28 | | | 32 | |
| | 2012.07-2014.06 | 6MT | F | L/R | SUV Van 4WD CGLC | | GDS82077 | Drive Shaft | | 42 | | 76.5 | 34 | 495 | |
| | 2012.07-2014.06 | 6MT | F | L/R | SUV Van 4WD CGLC | | GCO83107 | Outer Joint | | 42 | 25 | 76.5 | 34 | 47.5 | I |
| | 2012.07-2014.06 | 6MT | F | L/R | SUV Van 4WD CGLC | | GCI81054 | Inner Joint | | | 24 | | | 86 | |
| | 2012.07-2014.06 | 7DCT | F | L/R | SUV Van 4WD CGLC | | GDS61290 | Drive Shaft | | 42 | | 76.4 | 34 | 493 | |
| | 2012.07-2014.06 | 7DCT | F | L/R | SUV Van 4WD CGLC | | GCO83103 | Outer Joint | | 42 | 28 | 76.4 | 34 | 54 | I |
| | 2012.07-2014.06 | 7DCT | F | L/R | SUV Van 4WD CGLC | | GCI83022 | Inner Joint | | | 34 | | | 88.5 | |

| | YEAR | TRANSM. | F/R | L/R | BODY STYLE & DRIVE TYPE & ENGINE | REMARKS | G-AP Ref. | PRODUCT | ABS | Technical Specifications A | B | C | H | L | P |
|---|---|---|---|---|---|---|---|---|---|---|---|---|---|---|---|
| **AUDI** | | | | | | | | | | | | | | | |
| **Q5 Quattro** | | | | | | | | | | | | | | | |
| 2.0 (130 kw) | 2012.07-2014.06 | 7AT/6MT | R | L/R | SUV Van 4WD CGLC | | GDS83368 | Drive Shaft | | 42 | | 76.5 | 34 | 660 | |
| | 2012.07-2014.06 | 7AT/6MT | R | L/R | SUV Van 4WD CGLC | | GCI83039 | Outer Joint | | 42 | 28 | 76.5 | 34 | 72 | |
| | 2012.07-2014.06 | 7AT/6MT | R | L/R | SUV Van 4WD CGLC | | GCI61069 | Inner Joint | | | 28 | | | 32 | |
| 2.0 (132 kw) | 2009.08-2017.05 | 8AT/6MT | F | L/R | SUV 4WD CDNB;CNCB | For Engine code:CNCB | GDS82077 | Drive Shaft | | 42 | | 76.5 | 34 | 495 | |
| | 2009.08-2017.05 | 8AT/6MT | F | L/R | SUV 4WD CDNB;CNCB | For Engine code:CDNB | GDS83316 | Drive Shaft | | 42 | | 76.5 | 34 | 495 | |
| | 2009.08-2017.05 | 8AT/6MT | F | L/R | SUV 4WD CDNB;CNCB | For Engine code:CDNB | GCO83086 | Outer Joint | | 42 | 33 | 76.5 | 34 | 45.5 | M |
| | 2009.08-2017.05 | 8AT/6MT | F | L/R | SUV 4WD CDNB;CNCB | For Engine code:CNCB,6 balls | GCO83107 | Outer Joint | | 42 | 25 | 76.5 | 34 | 47.5 | I |
| | 2009.08-2017.05 | 8AT/6MT | F | L/R | SUV 4WD CDNB;CNCB | For Engine code:CDNB,TJ | GCI61070 | Inner Joint | | | 24 | | | 85 | |
| | 2009.08-2017.05 | 8AT/6MT | F | L/R | SUV 4WD CDNB;CNCB | For Engine code:CNCB,AAR | GCI81054 | Inner Joint | | | 24 | | | 86 | |
| | 2009.08-2017.05 | 8AT/6MT | F | L/R | SUV 4WD CDNB;CNCB | TJ | GCI83022 | Inner Joint | | | 34 | | | 88.5 | |
| | 2009.08-2017.05 | 6MT | R | L/R | SUV 4WD CDNB;CNCB | | GDS82311 | Drive Shaft | | 42 | | 76.5 | 34 | 657 | |
| | 2009.08-2017.05 | 6MT | R | L/R | SUV 4WD CDNB;CNCB | | GCI81753 | Outer Joint | | 42 | 33 | 76.5 | 34 | 67.5 | |
| | 2009.08-2017.05 | 6MT | R | L/R | SUV 4WD CDNB;CNCB | | GCI81752 | Inner Joint | | | 33 | | | 34 | |
| 2.0 (140 kw) | 2013.11-2017.05 | 6MT | F | L/R | SUV 4WD CNHA | 6 balls | GDS81107 | Drive Shaft | | 42 | | 76.5 | 34 | 494 | |
| | 2013.11-2017.05 | 6MT | F | L/R | SUV 4WD CNHA | 8 balls,Bellows Material of Outer joint:Neoprene | GDS82077 | Drive Shaft | | 42 | | 76.5 | 34 | 495 | |
| | 2013.11-2017.05 | 6MT | F | L/R | SUV 4WD CNHA | 6 balls | GCO83107 | Outer Joint | | 42 | 25 | 76.5 | 34 | 47.5 | I |
| | 2013.11-2017.05 | 6MT | F | L/R | SUV 4WD CNHA | | GCI81054 | Inner Joint | | | 24 | | | 86 | |
| | 2013.11-2017.05 | 7DCT | F | L/R | SUV 4WD CNHA | | GDS61290 | Drive Shaft | | 42 | | 76.4 | 34 | 493 | |
| | 2013.11-2017.05 | 7DCT | F | L/R | SUV 4WD CNHA | | GCO83103 | Outer Joint | | 42 | 28 | 76.4 | 34 | 54 | I |
| | 2013.11-2017.05 | 7DCT | F | L/R | SUV 4WD CNHA | | GCI83022 | Inner Joint | | | 34 | | | 88.5 | |
| | 2013.11-2017.05 | 6MT/7DCT | R | L/R | SUV 4WD CNHA | | GDS83368 | Drive Shaft | | 42 | | 76.5 | 34 | 660 | |
| | 2013.11-2017.05 | 6MT/7DCT | R | L/R | SUV 4WD CNHA | | GCI83039 | Outer Joint | | 42 | 28 | 76.5 | 34 | 72 | |
| | 2013.11-2017.05 | 6MT/7DCT | R | L/R | SUV 4WD CNHA | | GCI61069 | Inner Joint | | | 28 | | | 32 | |
| | 2016.06-2018.08 | 7DCT | F | L/R | SUV 4WD DESA;DETA | | GDS83206 | Drive Shaft | | 42 | | 76.5 | 34 | 493 | |
| | 2016.06-2018.08 | 7DCT | F | L/R | SUV 4WD DESA;DETA | | GCO81750 | Outer Joint | | 42 | 29 | 76.5 | 34 | 60 | I |
| | 2016.06-2018.08 | 7DCT | F | L/R | SUV 4WD DESA;DETA | | GCI81397 | Inner Joint | | | 27 | | | 89 | |
| | 2016.06-2018.08 | 7AT | R | L | SUV 4WD DESA;DETA | For PR code:GH4,For vehicles with AWD & variable torque dist. | GDS56268 | Drive Shaft | | 42 | | | 34 | 683 | |
| | 2016.06-2018.08 | 7AT | R | R | SUV 4WD DESA;DETA | For PR code:GH4,For vehicles with AWD & variable torque dist. | GDS56267 | Drive Shaft | | 42 | | | 34 | 581 | |
| | 2018.10- | 7DCT | F | L/R | SUV 4WD DESA;DETA | | GDS83206 | Drive Shaft | | 42 | | 76.5 | 34 | 493 | |
| | 2018.10- | 7DCT | F | L/R | SUV 4WD DESA;DETA | | GCO81750 | Outer Joint | | 42 | 29 | 76.5 | 34 | 60 | I |
| | 2018.10- | 7DCT | F | L/R | SUV 4WD DESA;DETA | | GCI81397 | Inner Joint | | | 27 | | | 89 | |
| | 2018.10- | 7AT/6MT | R | L | SUV 4WD DESA;DETA | For PR code:GH4,For vehicles with AWD & variable torque dist. | GDS56268 | Drive Shaft | | 42 | | | 34 | 683 | |
| | 2018.10- | 7AT/6MT | R | R | SUV 4WD DESA;DETA | For PR code:GH4,For vehicles with AWD & variable torque dist. | GDS56267 | Drive Shaft | | 42 | | | 34 | 581 | |
| 2.0 (150 kw) | 2019.09- | 7DCT | F | L/R | SUV 4WD DFBA;DTPA | | GDS83206 | Drive Shaft | | 42 | | 76.5 | 34 | 493 | |
| | 2019.09- | 7DCT | F | L/R | SUV 4WD DFBA;DTPA | | GCO81750 | Outer Joint | | 42 | 29 | 76.5 | 34 | 60 | I |
| | 2019.09- | 7DCT | F | L/R | SUV 4WD DFBA;DTPA | | GCI81397 | Inner Joint | | | 27 | | | 89 | |
| | 2019.09- | 7AT | R | L | SUV 4WD DFBA;DTPA | | GDS56268 | Drive Shaft | | 42 | | | 34 | 683 | |
| | 2019.09- | 7AT | R | R | SUV 4WD DFBA;DTPA | | GDS56267 | Drive Shaft | | 42 | | | 34 | 581 | |
| | 2021.10- | 7AT | F | L/R | SUV 4WD DMSA | | GDS83206 | Drive Shaft | | 42 | | 76.5 | 34 | 493 | |
| | 2021.10- | 7AT | R | L | SUV 4WD DMSA | | GDS56268 | Drive Shaft | | 42 | | | 34 | 683 | |
| | 2021.10- | 7AT | R | R | SUV 4WD DMSA | | GDS56267 | Drive Shaft | | 42 | | | 34 | 581 | |
| 2.0 (155 kw) | 2008.11-2012.09 | 6MT/7DCT | F | L/R | SUV 4WD CDNC;CAEB | | GDS83316 | Drive Shaft | | 42 | | 76.5 | 34 | 495 | |
| | 2008.11-2012.09 | 6MT/7DCT | F | L/R | SUV 4WD CDNC;CAEB | | GCO83086 | Outer Joint | | 42 | 33 | 76.5 | 34 | 45.5 | M |
| | 2008.11-2012.09 | 6MT/7DCT | F | L/R | SUV 4WD CDNC;CAEB | TJ | GCI61070 | Inner Joint | | | 24 | | | 85 | |
| | 2008.11-2012.09 | 6MT/7DCT | F | L/R | SUV 4WD CDNC;CAEB | AAR | GCI81054 | Inner Joint | | | 24 | | | 86 | |
| | 2008.11-2012.09 | 6MT/7DCT | F | L/R | SUV 4WD CDNC;CAEB | TJ | GCI83022 | Inner Joint | | | 34 | | | 88.5 | |
| | 2008.11-2012.09 | 6MT/7DCT | R | L/R | SUV 4WD CDNC;CAEB | | GDS83368 | Drive Shaft | | 42 | | 76.5 | 34 | 660 | |
| | 2008.11-2012.09 | 6MT/7DCT | R | L/R | SUV 4WD CDNC;CAEB | | GCI83039 | Outer Joint | | 42 | 28 | 76.5 | 34 | 72 | |
| | 2008.11-2012.09 | 6MT/7DCT | R | L/R | SUV 4WD CDNC;CAEB | | GCI61069 | Inner Joint | | | 28 | | | 32 | |
| | 2008.11-2012.09 | 7AT/6MT | F | L/R | SUV Van 4WD CDNC | | GCO83086 | Outer Joint | | 42 | 33 | 76.5 | 34 | 45.5 | M |
| | 2008.11-2012.09 | 7AT/6MT | F | L/R | SUV Van 4WD CDNC | | GCI61070 | Inner Joint | | | 24 | | | 85 | |
| | 2008.11-2012.09 | 7DCT/6MT | F | L/R | SUV Van 4WD CDNC | | GDS83316 | Drive Shaft | | 42 | | 76.5 | 34 | 495 | |
| | 2008.11-2012.09 | 7AT/6MT | R | L/R | SUV Van 4WD CDNC | | GDS83368 | Drive Shaft | | 42 | | 76.5 | 34 | 660 | |
| | 2008.11-2012.09 | 7AT/6MT | R | L/R | SUV Van 4WD CDNC | | GCI83039 | Outer Joint | | 42 | 28 | 76.5 | 34 | 72 | |
| | 2008.11-2012.09 | 7AT/6MT | R | L/R | SUV Van 4WD CDNC | | GCI61069 | Inner Joint | | | 28 | | | 32 | |
| 2.0 (162 kw) | 2013.05-2017.05 | AT | F | L/R | SUV 4WD CPMB | | GDS82077 | Drive Shaft | | 42 | | 76.5 | 34 | 495 | |
| | 2013.05-2017.05 | AT | F | L/R | SUV 4WD CPMB | | GCO83107 | Outer Joint | | 42 | 25 | 76.5 | 34 | 47.5 | I |
| | 2013.05-2017.05 | AT | F | L/R | SUV 4WD CPMB | | GCI81054 | Inner Joint | | | 24 | | | 86 | |
| | 2013.05-2017.05 | AT | F | | SUV 4WD CPMB | | GCI83022 | Inner Joint | | | 34 | | | 88.5 | |
| | 2013.05-2017.05 | AT | R | L/R | SUV 4WD CPMB | | GDS83368 | Drive Shaft | | 42 | | 76.5 | 34 | 660 | |
| | 2013.05-2017.05 | AT | R | L/R | SUV 4WD CPMB | | GCI83039 | Outer Joint | | 42 | 28 | 76.5 | 34 | 72 | |
| | 2013.05-2017.05 | AT | R | L/R | SUV 4WD CPMB | | GCI61069 | Inner Joint | | | 28 | | | 32 | |
| 2.0 (165 kw) | 2012.06-2016.05 | 8AT/6MT | F | L/R | SUV 4WD CNCD | | GDS82077 | Drive Shaft | | 42 | | 76.5 | 34 | 495 | |
| | 2012.06-2016.05 | 8AT/6MT | F | L/R | SUV 4WD CNCD | 6 balls | GCO83107 | Outer Joint | | 42 | 25 | 76.5 | 34 | 47.5 | I |
| | 2012.06-2016.05 | 8AT/6MT | F | L/R | SUV 4WD CNCD | | GCI81054 | Inner Joint | | | 24 | | | 86 | |

| | YEAR | TRANSM. | F/R | L/R | BODY STYLE & DRIVE TYPE & ENGINE | REMARKS | G-AP Ref. | PRODUCT | ABS | Technical Specifications A | B | C | H | L | P |
|---|---|---|---|---|---|---|---|---|---|---|---|---|---|---|---|
| **AUDI** **Q5 Quattro** | | | | | | | | | | | | | | | |
| 2.0 (165 kw) | 2012.06-2016.05 | 8AT/6MT | R | L/R | SUV 4WD CNCD | | GDS83368 | Drive Shaft | | 42 | | 76.5 | 34 | 660 | |
| | 2012.06-2016.05 | 8AT/6MT | R | L/R | SUV 4WD CNCD | | GCI83039 | Outer Joint | | 42 | 28 | 76.5 | 34 | 72 | |
| | 2012.06-2016.05 | 8AT/6MT | R | L/R | SUV 4WD CNCD | | GCI61069 | Inner Joint | | | 28 | | | 32 | |
| 2.0 (169 kw) | 2015.08-2017.05 | 8AT/6MT | F | L/R | SUV 4WD CNCE | | GDS82077 | Drive Shaft | | 42 | | 76.5 | 34 | 495 | |
| | 2015.08-2017.05 | 8AT/6MT | F | L/R | SUV 4WD CNCE | Bellows Material:Neoprene;6 balls | GCO83107 | Outer Joint | | 42 | 25 | 76.5 | 34 | 47.5 | I |
| | 2015.08-2017.05 | 8AT/6MT | F | L/R | SUV 4WD CNCE | TJ | GCI61070 | Inner Joint | | | 24 | | | 85 | |
| | 2015.08-2017.05 | 8AT/6MT | F | L/R | SUV 4WD CNCE | AAR | GCI81054 | Inner Joint | | | 24 | | | 86 | |
| | 2015.08-2017.05 | 8AT/6MT | R | L/R | SUV 4WD CNCE | | GDS83368 | Drive Shaft | | 42 | | 76.5 | 34 | 660 | |
| | 2015.08-2017.05 | 8AT/6MT | R | L/R | SUV 4WD CNCE | | GCI83039 | Outer Joint | | 42 | 28 | 76.5 | 34 | 72 | |
| | 2015.08-2017.05 | 8AT/6MT | R | L/R | SUV 4WD CNCE | | GCI61069 | Inner Joint | | | 28 | | | 32 | |
| 2.0 (180 kw) | 2011.06-2016.06 | 8AT | F | L/R | SUV 4WD CHJA | Date from:2012.12,Date to:2013.01;Chassis no. to:8RDA200000 | GDS61290 | Drive Shaft | | 42 | | 76.4 | 34 | 493 | |
| | 2011.06-2016.06 | 8AT | F | L/R | SUV 4WD CHJA | Date from:2012.12,Date to:2013.01 | GCO83087 | Outer Joint | | 42 | 27 | 76.5 | 34 | 57 | M |
| | 2011.06-2016.06 | 8AT | F | L/R | SUV 4WD CHJA | Date to:2012.11,Date from:2013.02 | GCO83103 | Outer Joint | | 42 | 28 | 76.4 | 34 | 54 | I |
| | 2011.06-2016.06 | AT | F | L/R | SUV 4WD CHJA | | GCI83022 | Inner Joint | | | 34 | | | 88.5 | |
| | 2011.06-2016.06 | 8AT | R | L/R | SUV 4WD CHJA | | GDS83368 | Drive Shaft | | 42 | | 76.5 | 34 | 660 | |
| | 2011.06-2016.06 | 8AT | R | L/R | SUV 4WD CHJA | | GCI83039 | Outer Joint | | 42 | 28 | 76.5 | 34 | 72 | |
| | 2011.06-2016.06 | 8AT | R | L/R | SUV 4WD CHJA | | GCI61069 | Inner Joint | | | 28 | | | 32 | |
| | 2018.12- | 7DCT | F | L/R | SUV 4WD DNTA | | GDS83206 | Drive Shaft | | 42 | | 76.5 | 34 | 493 | |
| | 2018.12- | 7DCT | F | L/R | SUV 4WD DNTA | | GCO81750 | Outer Joint | | 42 | 29 | 76.5 | 34 | 60 | I |
| | 2018.12- | 7DCT | F | L/R | SUV 4WD DNTA | | GCI81397 | Inner Joint | | | 27 | | | 89 | |
| | 2018.12- | 7AT | R | L | SUV 4WD DNTA | | GDS56268 | Drive Shaft | | 42 | | | 34 | 683 | |
| | 2018.12- | 7AT | R | R | SUV 4WD DNTA | | GDS56267 | Drive Shaft | | 42 | | | 34 | 581 | |
| 2.0 (183 kw) | 2017.01-2020.11 | 7DCT | F | L/R | SUV 4WD DAXC | | GDS83206 | Drive Shaft | | 42 | | 76.5 | 34 | 493 | |
| | 2017.01-2020.11 | 7DCT | F | L/R | SUV 4WD DAXC | | GCO81750 | Outer Joint | | 42 | 29 | 76.5 | 34 | 60 | I |
| | 2017.01-2020.11 | 7DCT | F | L/R | SUV 4WD DAXC | | GCI81397 | Inner Joint | | | 27 | | | 89 | |
| | 2017.01-2020.11 | 7AT | R | L | SUV 4WD DAXC | For PR code:GH4,For vehicles with AWD & variable torque dist. | GDS56268 | Drive Shaft | | 42 | | | 34 | 683 | |
| | 2017.01-2020.11 | 7AT | R | R | SUV 4WD DAXC | For PR code:GH4,For vehicles with AWD & variable torque dist. | GDS56267 | Drive Shaft | | 42 | | | 34 | 581 | |
| 2.0 (185 kw) | 2016.06-2020.11 | 7DCT | F | L/R | SUV 4WD DAXB;DAYB;DJYA | | GDS83206 | Drive Shaft | | 42 | | 76.5 | 34 | 493 | |
| | 2016.06-2020.11 | 7DCT | F | L/R | SUV 4WD DAXB;DAYB;DJYA | | GCO81750 | Outer Joint | | 42 | 29 | 76.5 | 34 | 60 | I |
| | 2016.06-2020.11 | 7DCT | F | L/R | SUV 4WD DAXB;DAYB;DJYA | | GCI81397 | Inner Joint | | | 27 | | | 89 | |
| | 2016.06-2020.11 | 7AT | R | L | SUV 4WD DAXB;DAYB;DJYA | For PR code:GH4,For vehicles with AWD & variable torque dist. | GDS56268 | Drive Shaft | | 42 | | | 34 | 683 | |
| | 2016.06-2020.11 | 7AT | R | R | SUV 4WD DAXB;DAYB;DJYA | For PR code:GH4,For vehicles with AWD & variable torque dist. | GDS56267 | Drive Shaft | | 42 | | | 34 | 581 | |
| | 2016.06-2020.11 | 7AT | F | L/R | SUV 4WD DAXB/DAYB | | GDS83206 | Drive Shaft | | 42 | | 76.5 | 34 | 493 | |
| | 2016.06-2020.11 | 7AT | R | L | SUV 4WD DAXB/DAYB | | GDS56268 | Drive Shaft | | 42 | | | 34 | 683 | |
| | 2016.06-2020.11 | 7AT | R | R | SUV 4WD DAXB/DAYB | | GDS56267 | Drive Shaft | | 42 | | | 34 | 581 | |
| 2.0 (195 kw) | 2020.08- | 7DCT | F | L/R | SUV 4WD DPUA;DPVA | | GDS83206 | Drive Shaft | | 42 | | 76.5 | 34 | 493 | |
| | 2020.08- | 7DCT | F | L/R | SUV 4WD DPUA;DPVA | | GCO81750 | Outer Joint | | 42 | 29 | 76.5 | 34 | 60 | I |
| | 2020.08- | 7DCT | F | L/R | SUV 4WD DPUA;DPVA | | GCI81397 | Inner Joint | | | 27 | | | 89 | |
| | 2020.08- | 7AT | R | L | SUV 4WD DPUA;DPVA | | GDS56268 | Drive Shaft | | 42 | | | 34 | 683 | |
| | 2020.08- | 7AT | R | R | SUV 4WD DPUA;DPVA | | GDS56267 | Drive Shaft | | 42 | | | 34 | 581 | |
| 2.0 (220 kw) | 2019.04- | 7AT | F | L/R | SUV 4WD DLGA | | GDS57360 | Drive Shaft | | 42 | | 76.5 | 34 | 496 | |
| | 2019.04- | 7AT | F | L/R | SUV 4WD DLGA | | GCO83511 | Outer Joint | | 42 | 31 | 76.5 | 34 | 65.5 | I |
| | 2019.04- | 8AT | F | L/R | SUV 4WD DLGA | | GCI81397 | Inner Joint | | | 27 | | | 89 | |
| | 2021.02- | 7AT | F | L/R | SUV 4WD DRYA | | GDS57360 | Drive Shaft | | 42 | | 76.5 | 34 | 496 | |
| | 2021.02- | 8AT | F | L/R | SUV 4WD DRYA | | GCI81397 | Inner Joint | | | 27 | | | 89 | |
| 2.0 (270 kw) | 2019.08- | 7AT | F | L/R | SUV 4WD DLGA | | GDS57360 | Drive Shaft | | 42 | | 76.5 | 34 | 496 | |
| | 2019.08- | 7AT | F | L/R | SUV 4WD DLGA | | GCO83511 | Outer Joint | | 42 | 31 | 76.5 | 34 | 65.5 | I |
| | 2019.08- | 8AT | F | L/R | SUV 4WD DLGA | | GCI81397 | Inner Joint | | | 27 | | | 89 | |
| | 2021.02- | 7DCT | F | L/R | SUV 4WD DRYA | | GDS57360 | Drive Shaft | | 42 | | 76.5 | 34 | 496 | |
| | 2021.02- | 8AT | F | L/R | SUV 4WD DRYA | | GCI81397 | Inner Joint | | | 27 | | | 89 | |
| 3.0 (155 kw) | 2008.11-2012.09 | 7AT | F | L/R | SUV 4WD CCWB | | GDS61290 | Drive Shaft | | 42 | | 76.4 | 34 | 493 | |
| | 2008.11-2012.09 | 7AT | F | L/R | SUV 4WD CCWB | | GCO83087 | Outer Joint | | 42 | 27 | 76.5 | 34 | 57 | M |
| | 2008.11-2012.09 | AT | F | L/R | SUV 4WD CCWB | | GCI83022 | Inner Joint | | | 34 | | | 88.5 | |
| | 2008.11-2012.09 | 7AT | R | L/R | SUV 4WD CCWB | | GDS83368 | Drive Shaft | | 42 | | 76.5 | 34 | 660 | |
| | 2008.11-2012.09 | 7AT | R | L/R | SUV 4WD CCWB | | GCI83039 | Outer Joint | | 42 | 28 | 76.5 | 34 | 72 | |
| | 2008.11-2012.09 | 7AT | R | L/R | SUV 4WD CCWB | | GCI61069 | Inner Joint | | | 28 | | | 32 | |
| 3.0 (176 kw) | 2008.11-2013.04 | 7AT | F | L/R | SUV Van 4WD CCWA | | GCI83022 | Inner Joint | | | 34 | | | 88.5 | |
| | 2008.11-2013.04 | 7DCT | F | L/R | SUV Van 4WD CCWA | | GDS61290 | Drive Shaft | | 42 | | 76.4 | 34 | 493 | |
| | 2008.11-2013.04 | 7DCT | F | L/R | SUV Van 4WD CCWA | | GCO83087 | Outer Joint | | 42 | 27 | 76.5 | 34 | 57 | M |
| | 2008.11-2013.04 | 7AT | R | L/R | SUV Van 4WD CCWA | | GDS83368 | Drive Shaft | | 42 | | 76.5 | 34 | 660 | |
| | 2008.11-2013.04 | 7AT | R | L/R | SUV Van 4WD CCWA | | GCI83039 | Outer Joint | | 42 | 28 | 76.5 | 34 | 72 | |
| | 2008.11-2013.04 | 7AT | R | L/R | SUV Van 4WD CCWA | | GCI61069 | Inner Joint | | | 28 | | | 32 | |
| | 2008.11-2017.05 | 7DCT | F | L/R | SUV 4WD CCWA;CPNB | | GCO83087 | Outer Joint | | 42 | 27 | 76.5 | 34 | 57 | M |
| | 2008.11-2017.05 | 8AT | F | L/R | SUV 4WD CCWA;CPNB | | GCO83103 | Outer Joint | | 42 | 28 | 76.4 | 34 | 54 | I |
| | 2008.11-2017.05 | 8AT/7DCT | F | L/R | SUV 4WD CCWA;CPNB | | GDS61290 | Drive Shaft | | 42 | | 76.4 | 34 | 493 | |

| | YEAR | TRANSM. | F/R | L/R | BODY STYLE & DRIVE TYPE & ENGINE | REMARKS | G-AP Ref. | PRODUCT | ABS | Technical Specifications A | B | C | H | L | P |
|---|---|---|---|---|---|---|---|---|---|---|---|---|---|---|---|
| **AUDI** | | | | | | | | | | | | | | | |
| **Q5 Quattro** | | | | | | | | | | | | | | | |
| 3.0 (176 kw) | 2008.11-2017.05 | 8AT/7DCT | F | L/R | SUV 4WD CCWA;CPNB | | GCI81054 | Inner Joint | | | 24 | | | 86 | |
| | 2008.11-2017.05 | 8AT/7DCT | F | L/R | SUV 4WD CCWA;CPNB | | GCI83022 | Inner Joint | | | 34 | | | 88.5 | |
| | 2008.11-2017.05 | 8AT/7DCT | R | L/R | SUV 4WD CCWA;CPNB | | GDS83368 | Drive Shaft | | 42 | | 76.5 | 34 | 660 | |
| | 2008.11-2017.05 | 8AT/7DCT | R | L/R | SUV 4WD CCWA;CPNB | | GCI83039 | Outer Joint | | 42 | 28 | 76.5 | 34 | 72 | |
| | 2008.11-2017.05 | 8AT/7DCT | R | L/R | SUV 4WD CCWA;CPNB | | GCI61069 | Inner Joint | | | 28 | | | 32 | |
| 3.0 (180 kw) | 2012.06-2017.05 | 7AT | F | L/R | SUV 4WD CDUD | | GDS61290 | Drive Shaft | | 42 | | 76.4 | 34 | 493 | |
| | 2012.06-2017.05 | 7AT | F | L/R | SUV 4WD CDUD | | GCO83103 | Outer Joint | | 42 | 28 | 76.4 | 34 | 54 | I |
| | 2012.06-2017.05 | 7AT | F | L/R | SUV 4WD CDUD | | GCI81054 | Inner Joint | | | 24 | | | 86 | |
| | 2012.06-2017.05 | 7AT | F | L/R | SUV 4WD CDUD | | GCI83022 | Inner Joint | | | 34 | | | 88.5 | |
| | 2012.06-2017.05 | 7AT | R | L/R | SUV 4WD CDUD | | GDS83368 | Drive Shaft | | 42 | | 76.5 | 34 | 660 | |
| | 2012.06-2017.05 | 7AT | R | L/R | SUV 4WD CDUD | | GCI83039 | Outer Joint | | 42 | 28 | 76.5 | 34 | 72 | |
| | 2012.06-2017.05 | 7AT | R | L/R | SUV 4WD CDUD | | GCI61069 | Inner Joint | | | 28 | | | 32 | |
| | 2012.06-2017.05 | 7AT | F | L/R | SUV Van 4WD CDUD | | GDS61290 | Drive Shaft | | 42 | | 76.4 | 34 | 493 | |
| | 2012.06-2017.05 | 7AT | F | L/R | SUV Van 4WD CDUD | | GCO83103 | Outer Joint | | 42 | 28 | 76.4 | 34 | 54 | I |
| | 2012.06-2017.05 | 7AT | F | L/R | SUV Van 4WD CDUD | | GCI83022 | Inner Joint | | | 34 | | | 88.5 | |
| | 2012.06-2017.05 | 7AT | R | L/R | SUV Van 4WD CDUD | | GDS83368 | Drive Shaft | | 42 | | 76.5 | 34 | 660 | |
| | 2012.06-2017.05 | 7AT | R | L/R | SUV Van 4WD CDUD | | GCI83039 | Outer Joint | | 42 | 28 | 76.5 | 34 | 72 | |
| | 2012.06-2017.05 | 7AT | R | L/R | SUV Van 4WD CDUD | | GCI61069 | Inner Joint | | | 28 | | | 32 | |
| 3.0 (184 kw) | 2012.06-2017.05 | 7AT | F | L/R | SUV 4WD CTBC | | GCO83103 | Outer Joint | | 42 | 28 | 76.4 | 34 | 54 | I |
| | 2012.06-2017.05 | AT | F | L/R | SUV 4WD CTBC | | GDS61290 | Drive Shaft | | 42 | | 76.4 | 34 | 493 | |
| | 2012.06-2017.05 | AT | F | L/R | SUV 4WD CTBC | | GCI83022 | Inner Joint | | | 34 | | | 88.5 | |
| | 2012.06-2017.05 | | F | | SUV 4WD CTBC | | GCI81054 | Inner Joint | | | 24 | | | 86 | |
| | 2012.06-2017.05 | 7AT | R | L/R | SUV 4WD CTBC | | GCI83039 | Outer Joint | | 42 | 28 | 76.5 | 34 | 72 | |
| | 2012.06-2017.05 | AT | R | L/R | SUV 4WD CTBC | | GDS83368 | Drive Shaft | | 42 | | 76.5 | 34 | 660 | |
| | 2012.06-2017.05 | AT | R | L/R | SUV 4WD CTBC | | GCI61069 | Inner Joint | | | 28 | | | 32 | |
| 3.0 (190 kw) | 2013.11-2017.05 | 7AT | F | L/R | SUV 4WD CTBA | | GDS61290 | Drive Shaft | | 42 | | 76.4 | 34 | 493 | |
| | 2013.11-2017.05 | 7AT | F | L/R | SUV 4WD CTBA | | GCO83103 | Outer Joint | | 42 | 28 | 76.4 | 34 | 54 | I |
| | 2013.11-2017.05 | 7AT | F | L/R | SUV 4WD CTBA | | GCI81054 | Inner Joint | | | 24 | | | 86 | |
| | 2013.11-2017.05 | 7AT | F | L/R | SUV 4WD CTBA | | GCI83022 | Inner Joint | | | 34 | | | 88.5 | |
| | 2013.11-2017.05 | 7AT | R | L/R | SUV 4WD CTBA | | GDS83368 | Drive Shaft | | 42 | | 76.5 | 34 | 660 | |
| | 2013.11-2017.05 | 7AT | R | L/R | SUV 4WD CTBA | | GCI83039 | Outer Joint | | 42 | 28 | 76.5 | 34 | 72 | |
| | 2013.11-2017.05 | 7AT | R | L/R | SUV 4WD CTBA | | GCI61069 | Inner Joint | | | 28 | | | 32 | |
| | 2013.11-2017.05 | 7AT | F | L/R | SUV Van 4WD CTBA | | GDS61290 | Drive Shaft | | 42 | | 76.4 | 34 | 493 | |
| | 2013.11-2017.05 | 7AT | F | L/R | SUV Van 4WD CTBA | | GCO83103 | Outer Joint | | 42 | 28 | 76.4 | 34 | 54 | I |
| | 2013.11-2017.05 | 7AT | F | L/R | SUV Van 4WD CTBA | | GCI83022 | Inner Joint | | | 34 | | | 88.5 | |
| | 2013.11-2017.05 | 7AT | R | L/R | SUV Van 4WD CTBA | | GDS83368 | Drive Shaft | | 42 | | 76.5 | 34 | 660 | |
| | 2013.11-2017.05 | 7AT | R | L/R | SUV Van 4WD CTBA | | GCI83039 | Outer Joint | | 42 | 28 | 76.5 | 34 | 72 | |
| | 2013.11-2017.05 | 7AT | R | L/R | SUV Van 4WD CTBA | | GCI61069 | Inner Joint | | | 28 | | | 32 | |
| 3.0 (200 kw) | 2012.06-2017.05 | 8AT | F | L/R | SUV 4WD CTUC;CTVA | | GDS61290 | Drive Shaft | | 42 | | 76.4 | 34 | 493 | |
| | 2012.06-2017.05 | 8AT | F | L/R | SUV 4WD CTUC;CTVA | | GCI83022 | Inner Joint | | | 34 | | | 88.5 | |
| | 2012.06-2017.05 | AT | F | L/R | SUV 4WD CTUC;CTVA | Date from:2012.12;Date to:2013.01 | GCO83087 | Outer Joint | | 42 | 27 | 76.5 | 34 | 57 | M |
| | 2012.06-2017.05 | AT | F | L/R | SUV 4WD CTUC;CTVA | Date to:2012.11,Date from:2013.02 | GCO83103 | Outer Joint | | 42 | 28 | 76.4 | 34 | 54 | I |
| | 2012.06-2017.05 | 8AT | R | L/R | SUV 4WD CTUC;CTVA | | GDS83368 | Drive Shaft | | 42 | | 76.5 | 34 | 660 | |
| | 2012.06-2017.05 | 8AT | R | L/R | SUV 4WD CTUC;CTVA | | GCI83039 | Outer Joint | | 42 | 28 | 76.5 | 34 | 72 | |
| | 2012.06-2017.05 | 8AT | R | L/R | SUV 4WD CTUC;CTVA | | GCI61069 | Inner Joint | | | 28 | | | 32 | |
| 3.2 (199 kw) | 2008.11-2012.09 | 6AT/7AT | F | L/R | SUV Van 4WD CALB | | GDS61290 | Drive Shaft | | 42 | | 76.4 | 34 | 493 | |
| | 2008.11-2012.09 | 6AT/7AT | F | L/R | SUV Van 4WD CALB | | GCO83087 | Outer Joint | | 42 | 27 | 76.5 | 34 | 57 | M |
| | 2008.11-2012.09 | 6AT/7AT | F | L/R | SUV Van 4WD CALB | | GCI83022 | Inner Joint | | | 34 | | | 88.5 | |
| | 2008.11-2012.09 | 6AT/7AT | R | L/R | SUV Van 4WD CALB | | GDS83368 | Drive Shaft | | 42 | | 76.5 | 34 | 660 | |
| | 2008.11-2012.09 | 6AT/7AT | R | L/R | SUV Van 4WD CALB | | GCI83039 | Outer Joint | | 42 | 28 | 76.5 | 34 | 72 | |
| | 2008.11-2012.09 | 6AT/7AT | R | L/R | SUV Van 4WD CALB | | GCI61069 | Inner Joint | | | 28 | | | 32 | |
| | 2008.11-2012.12 | 6AT/7AT | F | L/R | SUV 4WD CALB | Date to:2012.09 | GDS61290 | Drive Shaft | | 42 | | 76.4 | 34 | 493 | |
| | 2008.11-2012.12 | 6AT/7AT | F | L/R | SUV 4WD CALB | Date to:2012.09 | GCO83087 | Outer Joint | | 42 | 27 | 76.5 | 34 | 57 | M |
| | 2008.11-2012.12 | AT | F | L/R | SUV 4WD CALB | | GCI83022 | Inner Joint | | | 34 | | | 88.5 | |
| | 2008.11-2012.12 | 6AT/7AT | R | L/R | SUV 4WD CALB | | GCI83039 | Outer Joint | | 42 | 28 | 76.5 | 34 | 72 | |
| | 2008.11-2012.12 | 6AT/7AT | R | L/R | SUV 4WD CALB | | GCI61069 | Inner Joint | | | 28 | | | 32 | |
| | 2008.11-2012.12 | | R | L/R | SUV 4WD CALB | | GDS83368 | Drive Shaft | | 42 | | 76.5 | 34 | 660 | |
| **Q5 Quattro Sportback** | | | | | | | | | | | | | | | |
| 2.0 (150 kw) | 2020.11- | 7DCT | F | L/R | SUV 4WD DTPA | | GDS83206 | Drive Shaft | | 42 | | 76.5 | 34 | 493 | |
| | 2020.11- | 7DCT | F | L/R | SUV 4WD DTPA | | GCO81750 | Outer Joint | | 42 | 29 | 76.5 | 34 | 60 | I |
| | 2020.11- | 7DCT | F | L/R | SUV 4WD DTPA | | GCI81397 | Inner Joint | | | 27 | | | 89 | |
| | 2020.11- | 7AT | R | L | SUV 4WD DTPA | | GDS56268 | Drive Shaft | | 42 | | | 34 | 683 | |
| | 2020.11- | 7AT | R | R | SUV 4WD DTPA | | GDS56267 | Drive Shaft | | 42 | | | 34 | 581 | |
| | 2021.10- | 7DCT | F | L/R | SUV 4WD DMSA | | GDS83206 | Drive Shaft | | 42 | | 76.5 | 34 | 493 | |
| | 2021.10- | 7DCT | F | L/R | SUV 4WD DMSA | | GCO81750 | Outer Joint | | 42 | 29 | 76.5 | 34 | 60 | I |

| | YEAR | TRANSM. | F/R | L/R | BODY STYLE & DRIVE TYPE & ENGINE | REMARKS | G-AP Ref. | PRODUCT | ABS | Technical Specifications A | B | C | H | L | P |
|---|---|---|---|---|---|---|---|---|---|---|---|---|---|---|---|
| **AUDI** | | | | | | | | | | | | | | | |
| **Q5 Quattro Sportback** | | | | | | | | | | | | | | | |
| 2.0 (150 kw) | 2021.10- | 7DCT | F | L/R | SUV 4WD DMSA | | GCI81397 | Inner Joint | | | 27 | | | 89 | |
| | 2021.10- | 7AT | R | L | SUV 4WD DMSA | | GDS56268 | Drive Shaft | | 42 | | | 34 | 683 | |
| | 2021.10- | 7AT | R | R | SUV 4WD DMSA | | GDS56267 | Drive Shaft | | 42 | | | 34 | 581 | |
| 2.0 (195 kw) | 2020.11- | 7DCT | F | L/R | SUV 4WD DPUA;DPVA | | GDS83206 | Drive Shaft | | 42 | | 76.5 | 34 | 493 | |
| | 2020.11- | 7DCT | F | L/R | SUV 4WD DPUA;DPVA | | GCO81750 | Outer Joint | | 42 | 29 | 76.5 | 34 | 60 | I |
| | 2020.11- | 7DCT | F | L/R | SUV 4WD DPUA;DPVA | | GCI81397 | Inner Joint | | | 27 | | | 89 | |
| | 2020.11- | 7AT | R | L | SUV 4WD DPUA;DPVA | | GDS56268 | Drive Shaft | | 42 | | | 34 | 683 | |
| | 2020.11- | 7AT | R | R | SUV 4WD DPUA;DPVA | | GDS56267 | Drive Shaft | | 42 | | | 34 | 581 | |
| 2.0 (220 kw) | 2021.02- | 7AT | F | L/R | SUV 4WD DRYA | | GDS57360 | Drive Shaft | | 42 | | 76.5 | 34 | 496 | |
| | 2021.02- | 7AT | F | L/R | SUV 4WD DRYA | | GCO83511 | Outer Joint | | 42 | 31 | 76.5 | 34 | 65.5 | I |
| | 2021.02- | 8AT | F | L/R | SUV 4WD DRYA | | GCI81397 | Inner Joint | | | 27 | | | 89 | |
| 2.0 (270 kw) | 2021.06- | 7AT | F | L/R | SUV 4WD DRYA | | GDS57360 | Drive Shaft | | 42 | | 76.5 | 34 | 496 | |
| | 2021.06- | 7AT | F | L/R | SUV 4WD DRYA | | GCO83511 | Outer Joint | | 42 | 31 | 76.5 | 34 | 65.5 | I |
| | 2021.06- | 8AT | F | L/R | SUV 4WD DRYA | | GCI81397 | Inner Joint | | | 27 | | | 89 | |
| | 2021.07- | 7DCT | F | L/R | SUV 4WD DAXB | | GDS57360 | Drive Shaft | | 42 | | 76.5 | 34 | 496 | |
| | 2021.07- | 8AT | F | L/R | SUV 4WD DAXB | | GCI81397 | Inner Joint | | | 27 | | | 89 | |
| **Q5 Sportback** | | | | | | | | | | | | | | | |
| 2.0 (120 kw) | 2021.04- | 7AT | F | L/R | SUV FWD DTNA | | GCO82603 | Outer Joint | | 42 | 30 | 76.5 | 34 | 60 | I |
| **Q6** | | | | | | | | | | | | | | | |
| EV (185 kw) | 2024.08- | ET | R | L/R | SUV RWD ECCF | Manufacturer:Nexteer | GDS58122 | Drive Shaft | | 44 | 42 | 70 | 38 | 660 | |
| | 2024.08- | ET | R | L/R | SUV RWD ECCF | Manufacturer:Nexteer | GCO83852 | Outer Joint | | 44 | 27 | 70 | 38 | 55.5 | |
| | 2024.08- | ET | R | L/R | SUV RWD ECCF | Manufacturer:Nexteer | GCI84015 | Inner Joint | | 42 | 27 | 55 | 80 | 75 | |
| EV (225 kw) | 2024.08- | ET | R | L/R | SUV RWD ECCE | Manufacturer:Nexteer | GDS58122 | Drive Shaft | | 44 | 42 | 70 | 38 | 660 | |
| | 2024.08- | ET | R | L/R | SUV RWD ECCE | Manufacturer:Nexteer | GCO83852 | Outer Joint | | 44 | 27 | 70 | 38 | 55.5 | |
| | 2024.08- | ET | R | L/R | SUV RWD ECCE | Manufacturer:Nexteer | GCI84015 | Inner Joint | | 42 | 27 | 55 | 80 | 75 | |
| EV (240 kw) | 2024.06- | ET | R | L/R | SUV RWD ECCA | Manufacturer:Nexteer | GDS58122 | Drive Shaft | | 44 | 42 | 70 | 38 | 660 | |
| | 2024.06- | ET | R | L/R | SUV RWD ECCA | Manufacturer:Nexteer | GCO83852 | Outer Joint | | 44 | 27 | 70 | 38 | 55.5 | |
| | 2024.06- | ET | R | L/R | SUV RWD ECCA | Manufacturer:Nexteer | GCI84015 | Inner Joint | | 42 | 27 | 55 | 80 | 75 | |
| **Q6 quattro** | | | | | | | | | | | | | | | |
| EV (285 kw) | 2024.04- | ET | R | L/R | SUV 4WD ECCA, ECFA | Manufacturer:Nexteer | GDS58122 | Drive Shaft | | 44 | 42 | 70 | 38 | 660 | |
| | 2024.04- | ET | R | L/R | SUV 4WD ECCA, ECFA | Manufacturer:Nexteer | GCO83852 | Outer Joint | | 44 | 27 | 70 | 38 | 55.5 | |
| | 2024.04- | ET | R | L/R | SUV 4WD ECCA, ECFA | Manufacturer:Nexteer | GCI84015 | Inner Joint | | 42 | 27 | 55 | 80 | 75 | |
| **Q6 Sportback** | | | | | | | | | | | | | | | |
| EV (215 kw) | 2024.12- | ET | R | L/R | SUV RWD ECCF | Manufacturer:Nexteer | GDS58122 | Drive Shaft | | 44 | 42 | 70 | 38 | 660 | |
| | 2024.12- | ET | R | L/R | SUV RWD ECCF | Manufacturer:Nexteer | GCO83852 | Outer Joint | | 44 | 27 | 70 | 38 | 55.5 | |
| | 2024.12- | ET | R | L/R | SUV RWD ECCF | Manufacturer:Nexteer | GCI84015 | Inner Joint | | 42 | 27 | 55 | 80 | 75 | |
| EV (240 kw) | 2024.12- | ET | R | L/R | SUV RWD ECCA | Manufacturer:Nexteer | GDS58122 | Drive Shaft | | 44 | 42 | 70 | 38 | 660 | |
| | 2024.12- | ET | R | L/R | SUV RWD ECCA | Manufacturer:Nexteer | GCO83852 | Outer Joint | | 44 | 27 | 70 | 38 | 55.5 | |
| | 2024.12- | ET | R | L/R | SUV RWD ECCA | Manufacturer:Nexteer | GCI84015 | Inner Joint | | 42 | 27 | 55 | 80 | 75 | |
| **Q6 Sportback Quattro** | | | | | | | | | | | | | | | |
| EV (285 kw) | 2024.12- | ET | R | L/R | SUV 4WD ECCA, ECFA | Manufacturer:Nexteer | GDS58122 | Drive Shaft | | 44 | 42 | 70 | 38 | 660 | |
| | 2024.12- | ET | R | L/R | SUV 4WD ECCA, ECFA | Manufacturer:Nexteer | GCO83852 | Outer Joint | | 44 | 27 | 70 | 38 | 55.5 | |
| | 2024.12- | ET | R | L/R | SUV 4WD ECCA, ECFA | Manufacturer:Nexteer | GCI84015 | Inner Joint | | 42 | 27 | 55 | 80 | 75 | |
| **Q6/SQ6 quattro** | | | | | | | | | | | | | | | |
| EV (380 kw) | 2024.04- | ET | R | L/R | SUV 4WD ECCA, ECFA | Manufacturer:Nexteer | GDS58122 | Drive Shaft | | 44 | 42 | 70 | 38 | 660 | |
| | 2024.04- | ET | R | L/R | SUV 4WD ECCA, ECFA | Manufacturer:Nexteer | GCO83852 | Outer Joint | | 44 | 27 | 70 | 38 | 55.5 | |
| | 2024.04- | ET | R | L/R | SUV 4WD ECCA, ECFA | Manufacturer:Nexteer | GCI84015 | Inner Joint | | 42 | 27 | 55 | 80 | 75 | |
| **Q6/SQ6 Sportback Quattro** | | | | | | | | | | | | | | | |
| EV (380 kw) | 2024.12- | ET | R | L/R | SUV 4WD ECCA, ECFA | Manufacturer:Nexteer | GDS58122 | Drive Shaft | | 44 | 42 | 70 | 38 | 660 | |
| | 2024.12- | ET | R | L/R | SUV 4WD ECCA, ECFA | Manufacturer:Nexteer | GCO83852 | Outer Joint | | 44 | 27 | 70 | 38 | 55.5 | |
| | 2024.12- | ET | R | L/R | SUV 4WD ECCA, ECFA | Manufacturer:Nexteer | GCI84015 | Inner Joint | | 42 | 27 | 55 | 80 | 75 | |
| **Q7 Quattro** | | | | | | | | | | | | | | | |
| 2.0 (185 kw) | 2015.08- | 8AT | F | L/R | SUV 4WD CYRB;CYMC;DMFB | AAR | GDS81531 | Drive Shaft | | 42 | | 76.5 | 34 | 504 | |
| | 2015.08- | AT | F | L/R | SUV 4WD CYRB;CYMC;DMFB | Date from:2016.01 | GCO83103 | Outer Joint | | 42 | 28 | 76.4 | 34 | 54 | I |
| | 2015.08- | AT | F | L/R | SUV 4WD CYRB;CYMC;DMFB | Date from:2016.01 | GCI83022 | Inner Joint | | | 34 | | | 88.5 | |
| | 2015.08- | 8AT | R | L/R | SUV 4WD CYRB;CYMC;DMFB | VL | GDS84639 | Drive Shaft | | 42 | | 76.5 | 34 | 673 | |
| | 2015.12-2019.12 | 8AT | F | L/R | SUV 4WD CYRB | | GDS81531 | Drive Shaft | | 42 | | 76.5 | 34 | 504 | |
| | 2018.12-2020.12 | 8AT | F | L/R | SUV 4WD CYRB | | GDS81531 | Drive Shaft | | 42 | | 76.5 | 34 | 504 | |
| 2.0 (195 kw) | 2022.11- | 8AT | F | L/R | SUV 4WD DUVA | | GDS81531 | Drive Shaft | | 42 | | 76.5 | 34 | 504 | |
| 3.0 (150 kw) | 2010.05-2015.08 | 8AT | F | L/R | SUV 4WD CJGC;CJMA | | GDS35085 | Drive Shaft | | 30 | | 64.4 | 103.5 | 525 | |
| | 2010.05-2015.08 | 8AT | F | L/R | SUV 4WD CJGC;CJMA | | GCO35045 | Outer Joint | | 30 | 28 | 64.4 | 103.5 | 62.5 | I |
| | 2010.05-2015.08 | 8AT | F | L/R | SUV 4WD CJGC;CJMA | | GCI99148 | Inner Joint | | | 28 | | | 34 | |
| | 2010.05-2015.08 | | F | L/R | SUV 4WD CJGC;CJMA | | GCO83117 | Outer Joint | | 30 | 28 | 64.4 | 103.5 | 62.5 | I |
| | 2010.05-2015.08 | 8AT | R | L/R | SUV 4WD CJGC;CJMA | | GDS85106 | Drive Shaft | | 30 | 37 | 64 | 103.5 | 877 | |
| | 2010.05-2015.08 | 8AT | R | L/R | SUV 4WD CJGC;CJMA | | GCI81160 | Inner Joint | | 30 | 29 | 64 | 103.5 | 93.2 | |

| | YEAR | TRANSM. | F/R | L/R | BODY STYLE & DRIVE TYPE & ENGINE | REMARKS | G-AP Ref. | PRODUCT | ABS | Technical Specifications A | B | C | H | L | P |
|---|---|---|---|---|---|---|---|---|---|---|---|---|---|---|---|
| **AUDI** **Q7 Quattro** | | | | | | | | | | | | | | | |
| 3.0 (150 kw) | 2010.05-2015.08 | 8AT | R | L/R | SUV 4WD CJGC;CJMA | | GCI81161 | Inner Joint | | 37 | 29 | 44.95 | 79.5 | 109.2 | |
| | 2010.11-2015.08 | 8AT | F | L/R | SUV Van 4WD CJMA | | GDS35085 | Drive Shaft | | 30 | | 64.4 | 103.5 | 525 | |
| | 2010.11-2015.08 | 8AT | F | L/R | SUV Van 4WD CJMA | | GCO35045 | Outer Joint | | 30 | 28 | 64.4 | 103.5 | 62.5 | I |
| | 2010.11-2015.08 | 8AT | F | L/R | SUV Van 4WD CJMA | | GCI99148 | Inner Joint | | | 28 | | | 34 | |
| | 2010.11-2015.08 | 8AT | R | L/R | SUV Van 4WD CJMA | | GDS85106 | Drive Shaft | | 30 | 37 | 64 | 103.5 | 877 | |
| | 2010.11-2015.08 | 8AT | R | L/R | SUV Van 4WD CJMA | | GCI81160 | Inner Joint | | 30 | 29 | 64 | 103.5 | 93.2 | |
| 3.0 (155 kw) | 2006.03-2010.05 | 6AT | F | L/R | SUV 4WD BUN;CASB | | GDS35085 | Drive Shaft | | 30 | | 64.4 | 103.5 | 525 | |
| | 2006.03-2010.05 | 6AT | F | L/R | SUV 4WD BUN;CASB | | GCI99148 | Inner Joint | | | 28 | | | 34 | |
| | 2006.03-2010.05 | AT | F | L/R | SUV 4WD BUN;CASB | Date to:2009.12 | GCO61050 | Outer Joint | | 30 | 27 | 64 | 103.5 | 63.5 | M |
| | 2006.03-2010.05 | | F | L/R | SUV 4WD BUN;CASB | Date From:2009.07 | GCO35045 | Outer Joint | | 30 | 28 | 64.4 | 103.5 | 62.5 | I |
| | 2006.03-2010.05 | 6AT | R | L/R | SUV 4WD BUN;CASB | | GDS85098 | Drive Shaft | | 30 | | 64 | 103 | 740 | |
| | 2006.03-2010.05 | 6AT | R | L/R | SUV 4WD BUN;CASB | | GCI83027 | Inner Joint | | | 28 | | | 28 | |
| | 2006.03-2010.05 | 6AT | F | L/R | SUV Van 4WD BUN;CASB | | GDS35085 | Drive Shaft | | 30 | | 64.4 | 103.5 | 525 | |
| | 2006.03-2010.05 | 6AT | F | L/R | SUV Van 4WD BUN;CASB | | GCO61050 | Outer Joint | | 30 | 27 | 64 | 103.5 | 63.5 | M |
| | 2006.03-2010.05 | 6AT | F | L/R | SUV Van 4WD BUN;CASB | | GCI99148 | Inner Joint | | | 28 | | | 34 | |
| | 2006.03-2010.05 | 6AT | R | L/R | SUV Van 4WD BUN;CASB | | GDS85098 | Drive Shaft | | 30 | | 64 | 103 | 740 | |
| | 2006.03-2010.05 | 6AT | R | L/R | SUV Van 4WD BUN;CASB | | GCI83027 | Inner Joint | | | 28 | | | 28 | |
| | 2015.08-2019.12 | 8AT | F | L/R | SUV 4WD CZZB | AAR | GDS81531 | Drive Shaft | | 42 | | 76.5 | 34 | 504 | |
| | 2015.08-2019.12 | AT | F | L/R | SUV 4WD CZZB | Date from:2018.01 | GCO83103 | Outer Joint | | 42 | 28 | 76.4 | 34 | 54 | I |
| | 2015.08-2019.12 | AT | F | L/R | SUV 4WD CZZB | Date from:2018.01 | GCI83022 | Inner Joint | | | 34 | | | 88.5 | |
| | 2015.08-2019.12 | 8AT | R | L/R | SUV 4WD CZZB | VL | GDS84639 | Drive Shaft | | 42 | | 76.5 | 34 | 673 | |
| 3.0 (160 kw) | 2015.06-2019.12 | 8AT | F | L/R | SUV 4WD CRTE;CZZA;CZZB | AAR | GDS81531 | Drive Shaft | | 42 | | 76.5 | 34 | 504 | |
| | 2015.06-2019.12 | 8AT | F | L/R | SUV 4WD CRTE;CZZA;CZZB | | GCO81357 | Outer Joint | | 42 | 28 | 76.5 | 34 | 54 | I |
| | 2015.06-2019.12 | 8AT | F | L/R | SUV 4WD CRTE;CZZA;CZZB | 6 balls | GCO83103 | Outer Joint | | 42 | 28 | 76.4 | 34 | 54 | I |
| | 2015.06-2019.12 | 8AT | F | L/R | SUV 4WD CRTE;CZZA;CZZB | | GCI61077 | Inner Joint | | | 34 | | | 88 | |
| | 2015.06-2019.12 | 8AT | F | L/R | SUV 4WD CRTE;CZZA;CZZB | TJ | GCI83022 | Inner Joint | | | 34 | | | 88.5 | |
| | 2015.06-2019.12 | 8AT | R | L/R | SUV 4WD CRTE;CZZA;CZZB | VL | GDS84639 | Drive Shaft | | 42 | | 76.5 | 34 | 673 | |
| | 2015.08-2019.12 | 8AT | F | L/R | SUV Van 4WD CZZA;CZZB | | GCO81357 | Outer Joint | | 42 | 28 | 76.5 | 34 | 54 | I |
| | 2015.08-2019.12 | AT | F | L/R | SUV Van 4WD CZZA;CZZB | | GDS81531 | Drive Shaft | | 42 | | 76.5 | 34 | 504 | |
| | 2015.08-2019.12 | AT | F | L/R | SUV Van 4WD CZZA;CZZB | Date from:2016.02 | GCI61077 | Inner Joint | | | 34 | | | 88 | |
| | 2015.08-2019.12 | 8AT | R | L/R | SUV Van 4WD CZZA;CZZB | | GDS84639 | Drive Shaft | | 42 | | 76.5 | 34 | 673 | |
| 3.0 (165 kw) | 2009.06-2012.05 | 6AT/8AT | F | L/R | SUV 4WD CATA | | GDS35085 | Drive Shaft | | 30 | | 64.4 | 103.5 | 525 | |
| | 2009.06-2012.05 | 6AT/8AT | F | L/R | SUV 4WD CATA | | GCO35045 | Outer Joint | | 30 | 28 | 64.4 | 103.5 | 62.5 | I |
| | 2009.06-2012.05 | 6AT/8AT | F | L/R | SUV 4WD CATA | | GCI99148 | Inner Joint | | | 28 | | | 34 | |
| | 2009.06-2012.05 | | F | L/R | SUV 4WD CATA | | GCO83117 | Outer Joint | | 30 | 28 | 64.4 | 103.5 | 62.5 | I |
| | 2009.06-2012.05 | 6AT | R | L/R | SUV 4WD CATA | | GDS85098 | Drive Shaft | | 30 | | 64 | 103 | 740 | |
| | 2009.06-2012.05 | 6AT/8AT | R | L/R | SUV 4WD CATA | | GCI81160 | Inner Joint | | 30 | 29 | 64 | 103.5 | 93.2 | |
| | 2009.06-2012.05 | 6AT/8AT | R | L/R | SUV 4WD CATA | | GCI83027 | Inner Joint | | | 28 | | | 28 | |
| | 2009.06-2012.05 | 8AT | R | L/R | SUV 4WD CATA | | GDS85106 | Drive Shaft | | 30 | 37 | 64 | 103.5 | 877 | |
| | 2009.06-2012.05 | 8AT | R | L/R | SUV 4WD CATA | | GCI81161 | Inner Joint | | 37 | 29 | 44.95 | 79.5 | 109.2 | |
| 3.0 (170 kw) | 2018.07- | 8AT | F | L | SUV 4WD DHXC;DPXB | | GDS81531 | Drive Shaft | | 42 | | 76.5 | 34 | 504 | |
| | 2018.07- | 8AT | F | L/R | SUV 4WD DHXC;DPXB | | GCO81357 | Outer Joint | | 42 | 28 | 76.5 | 34 | 54 | I |
| | 2018.07- | 8AT | F | L/R | SUV 4WD DHXC;DPXB | | GCI61077 | Inner Joint | | | 34 | | | 88 | |
| | 2018.07- | AT | F | L/R | SUV 4WD DHXC;DPXB | TJ | GCI83022 | Inner Joint | | | 34 | | | 88.5 | |
| | 2018.07- | 8AT | R | L/R | SUV 4WD DHXC;DPXB | | GDS84639 | Drive Shaft | | 42 | | 76.5 | 34 | 673 | |
| | 2018.07-2019.12 | 8AT | F | L | SUV Van 4WD DHXC | | GDS81531 | Drive Shaft | | 42 | | 76.5 | 34 | 504 | |
| | 2018.07-2019.12 | 8AT | F | L/R | SUV Van 4WD DHXC | | GCI61077 | Inner Joint | | | 34 | | | 88 | |
| | 2018.07-2019.12 | AT | F | L/R | SUV Van 4WD DHXC | | GCO81357 | Outer Joint | | 42 | 28 | 76.5 | 34 | 54 | I |
| | 2018.07-2019.12 | 8AT | R | L/R | SUV Van 4WD DHXC | | GDS84639 | Drive Shaft | | 42 | | 76.5 | 34 | 673 | |
| 3.0 (171 kw) | 2006.03-2008.05 | 6AT | F | L/R | SUV 4WD BUG | | GDS35085 | Drive Shaft | | 30 | | 64.4 | 103.5 | 525 | |
| | 2006.03-2008.05 | 6AT | F | L/R | SUV 4WD BUG | | GCO35045 | Outer Joint | | 30 | 28 | 64.4 | 103.5 | 62.5 | I |
| | 2006.03-2008.05 | 6AT | F | L/R | SUV 4WD BUG | | GCO61050 | Outer Joint | | 30 | 27 | 64 | 103.5 | 63.5 | M |
| | 2006.03-2008.05 | 6AT | F | L/R | SUV 4WD BUG | | GCI99148 | Inner Joint | | | 28 | | | 34 | |
| | 2006.03-2008.05 | 6AT | R | L/R | SUV 4WD BUG | | GDS85098 | Drive Shaft | | 30 | | 64 | 103 | 740 | |
| | 2006.03-2008.05 | 6AT | R | L/R | SUV 4WD BUG | | GCI83027 | Inner Joint | | | 28 | | | 28 | |
| | 2006.03-2008.05 | 6AT | F | L/R | SUV Van 4WD BUG | | GCO61050 | Outer Joint | | 30 | 27 | 64 | 103.5 | 63.5 | M |
| | 2006.03-2008.05 | 6AT | F | L/R | SUV Van 4WD BUG | | GCI99148 | Inner Joint | | | 28 | | | 34 | |
| | 2006.03-2008.05 | 6DCT | F | L/R | SUV Van 4WD BUG | | GDS35085 | Drive Shaft | | 30 | | 64.4 | 103.5 | 525 | |
| | 2006.03-2008.05 | 6AT | R | L/R | SUV Van 4WD BUG | | GDS85098 | Drive Shaft | | 30 | | 64 | 103 | 740 | |
| | 2006.03-2008.05 | 6AT | R | L/R | SUV Van 4WD BUG | | GCI83027 | Inner Joint | | | 28 | | | 28 | |
| 3.0 (176 kw) | 2007.11-2012.05 | 6AT/8AT | F | L/R | SUV Van 4WD CASA;CCMA;CJGA | | GDS35085 | Drive Shaft | | 30 | | 64.4 | 103.5 | 525 | |
| | 2007.11-2012.05 | 6AT/8AT | F | L/R | SUV Van 4WD CASA;CCMA;CJGA | | GCO35045 | Outer Joint | | 30 | 28 | 64.4 | 103.5 | 62.5 | I |
| | 2007.11-2012.05 | 6AT/8AT | F | L/R | SUV Van 4WD CASA;CCMA;CJGA | Model year to:2010 | GCO61050 | Outer Joint | | 30 | 27 | 64 | 103.5 | 63.5 | M |
| | 2007.11-2012.05 | 6AT/8AT | F | L/R | SUV Van 4WD CASA;CCMA;CJGA | | GCI99148 | Inner Joint | | | 28 | | | 34 | |
| | 2007.11-2012.05 | 6AT | R | L/R | SUV Van 4WD CASA;CCMA;CJGA | | GDS85098 | Drive Shaft | | 30 | | 64 | 103 | 740 | |

| | YEAR | TRANSM. | F/R | L/R | BODY STYLE & DRIVE TYPE & ENGINE | REMARKS | G-AP Ref. | PRODUCT | ABS | Technical Specifications A | B | C | H | L | P |
|---|---|---|---|---|---|---|---|---|---|---|---|---|---|---|---|
| **AUDI** | | | | | | | | | | | | | | | |
| **Q7 Quattro** | | | | | | | | | | | | | | | |
| 3.0 (176 kw) | 2007.11-2012.05 | 6AT | R | L/R | SUV Van 4WD CASA;CCMA;CJGA | | GCI83027 | Inner Joint | | | 28 | | | 28 | |
| | 2007.11-2012.05 | 8AT | R | L/R | SUV Van 4WD CASA;CCMA;CJGA | | GDS85106 | Drive Shaft | | 30 | 37 | 64 | 103.5 | 877 | |
| | 2007.11-2012.05 | 8AT | R | L/R | SUV Van 4WD CASA;CCMA;CJGA | | GCI81160 | Inner Joint | | 30 | 29 | 64 | 103.5 | 93.2 | |
| | 2007.11-2015.08 | 6AT/8AT | F | L/R | SUV 4WD CASA;CCMA;CJGA;CNRB | | GDS35085 | Drive Shaft | | 30 | | 64.4 | 103.5 | 525 | |
| | 2007.11-2015.08 | 6AT/8AT | F | L/R | SUV 4WD CASA;CCMA;CJGA;CNRB | Inner teeth:28 | GCO35045 | Outer Joint | | 30 | 28 | 64.4 | 103.5 | 62.5 | I |
| | 2007.11-2015.08 | 6AT/8AT | F | L/R | SUV 4WD CASA;CCMA;CJGA;CNRB | Inner teeth:27 | GCO61050 | Outer Joint | | 30 | 27 | 64 | 103.5 | 63.5 | M |
| | 2007.11-2015.08 | 6AT/8AT | F | L/R | SUV 4WD CASA;CCMA;CJGA;CNRB | Inner teeth:28 | GCO83117 | Outer Joint | | 30 | 28 | 64.4 | 103.5 | 62.5 | I |
| | 2007.11-2015.08 | 6AT/8AT | F | L/R | SUV 4WD CASA;CCMA;CJGA;CNRB | | GCI99148 | Inner Joint | | | 28 | | | 34 | |
| | 2007.11-2015.08 | 6AT | R | L/R | SUV 4WD CASA;CCMA;CJGA;CNRB | | GDS85098 | Drive Shaft | | 30 | | 64 | 103 | 740 | |
| | 2007.11-2015.08 | 6AT | R | L/R | SUV 4WD CASA;CCMA;CJGA;CNRB | | GCI83027 | Inner Joint | | | 28 | | | 28 | |
| | 2007.11-2015.08 | 8AT | R | L/R | SUV 4WD CASA;CCMA;CJGA;CNRB | | GDS85106 | Drive Shaft | | 30 | 37 | 64 | 103.5 | 877 | |
| | 2007.11-2015.08 | 8AT | R | L/R | SUV 4WD CASA;CCMA;CJGA;CNRB | | GCI81160 | Inner Joint | | 30 | 29 | 64 | 103.5 | 93.2 | |
| | 2007.11-2015.08 | 8AT | R | L/R | SUV 4WD CASA;CCMA;CJGA;CNRB | | GCI81161 | Inner Joint | | 37 | 29 | 44.95 | 79.5 | 109.2 | |
| 3.0 (180 kw) | 2011.05-2015.08 | 8AT | F | L/R | SUV 4WD CJGD;CRCA;CLZB | | GDS35085 | Drive Shaft | | 30 | | 64.4 | 103.5 | 525 | |
| | 2011.05-2015.08 | 8AT | F | L/R | SUV 4WD CJGD;CRCA;CLZB | Bellows Material:Neoprene | GCO35045 | Outer Joint | | 30 | 28 | 64.4 | 103.5 | 62.5 | I |
| | 2011.05-2015.08 | 8AT | F | L/R | SUV 4WD CJGD;CRCA;CLZB | Bellows Material:Thermoplastic | GCO83117 | Outer Joint | | 30 | 28 | 64.4 | 103.5 | 62.5 | I |
| | 2011.05-2015.08 | 8AT | F | L/R | SUV 4WD CJGD;CRCA;CLZB | | GCI99148 | Inner Joint | | | 28 | | | 34 | |
| | 2011.05-2015.08 | 8AT | R | L/R | SUV 4WD CJGD;CRCA;CLZB | | GDS85106 | Drive Shaft | | 30 | 37 | 64 | 103.5 | 877 | |
| | 2011.05-2015.08 | 8AT | R | L/R | SUV 4WD CJGD;CRCA;CLZB | | GCI81160 | Inner Joint | | 30 | 29 | 64 | 103.5 | 93.2 | |
| | 2011.05-2015.08 | 8AT | R | L/R | SUV 4WD CJGD;CRCA;CLZB | | GCI81161 | Inner Joint | | 37 | 29 | 44.95 | 79.5 | 109.2 | |
| | 2011.05-2015.08 | 8AT | F | L/R | SUV Van 4WD CRCA;CLZB | | GDS35085 | Drive Shaft | | 30 | | 64.4 | 103.5 | 525 | |
| | 2011.05-2015.08 | 8AT | F | L/R | SUV Van 4WD CRCA;CLZB | | GCO35045 | Outer Joint | | 30 | 28 | 64.4 | 103.5 | 62.5 | I |
| | 2011.05-2015.08 | 8AT | F | L/R | SUV Van 4WD CRCA;CLZB | | GCI99148 | Inner Joint | | | 28 | | | 34 | |
| | 2011.05-2015.08 | 8AT | R | L/R | SUV Van 4WD CRCA;CLZB | | GDS85106 | Drive Shaft | | 30 | 37 | 64 | 103.5 | 877 | |
| | 2011.05-2015.08 | 8AT | R | L/R | SUV Van 4WD CRCA;CLZB | | GCI81160 | Inner Joint | | 30 | 29 | 64 | 103.5 | 93.2 | |
| 3.0 (183 kw) | 2015.06-2019.12 | 8AT | F | L/R | SUV 4WD CVMD | AAR | GDS81531 | Drive Shaft | | 42 | | 76.5 | 34 | 504 | |
| | 2015.06-2019.12 | 8AT | F | L/R | SUV 4WD CVMD | | GCO81357 | Outer Joint | | 42 | 28 | 76.5 | 34 | 54 | I |
| | 2015.06-2019.12 | 8AT | F | L/R | SUV 4WD CVMD | 6 balls | GCO83103 | Outer Joint | | 42 | 28 | 76.4 | 34 | 54 | I |
| | 2015.06-2019.12 | 8AT | F | L/R | SUV 4WD CVMD | | GCI61077 | Inner Joint | | | 34 | | | 88 | |
| | 2015.06-2019.12 | 8AT | F | L/R | SUV 4WD CVMD | TJ | GCI83022 | Inner Joint | | | 34 | | | 88.5 | |
| | 2015.06-2019.12 | 8AT | R | L/R | SUV 4WD CVMD | VL | GDS84639 | Drive Shaft | | 42 | | 76.5 | 34 | 673 | |
| | 2019.07- | 8AT | F | L/R | SUV 4WD CVMD | | GDS81531 | Drive Shaft | | 42 | | 76.5 | 34 | 504 | |
| 3.0 (190 kw) | 2015.08-2019.12 | 8AT | F | L/R | SUV 4WD CUEA | AAR | GDS81531 | Drive Shaft | | 42 | | 76.5 | 34 | 504 | |
| | 2015.08-2019.12 | AT | F | L/R | SUV 4WD CUEA | Date from:2016.01 | GCO83103 | Outer Joint | | 42 | 28 | 76.4 | 34 | 54 | I |
| | 2015.08-2019.12 | AT | F | L/R | SUV 4WD CUEA | Date from:2016.01 | GCI83022 | Inner Joint | | | 34 | | | 88.5 | |
| | 2015.08-2019.12 | 8AT | R | L/R | SUV 4WD CUEA | VL | GDS84639 | Drive Shaft | | 42 | | 76.5 | 34 | 673 | |
| 3.0 (200 kw) | 2010.05-2015.08 | 8AT | F | L/R | SUV 4WD CJTC;CJWC | | GDS35085 | Drive Shaft | | 30 | | 64.4 | 103.5 | 525 | |
| | 2010.05-2015.08 | 8AT | F | L/R | SUV 4WD CJTC;CJWC | | GCO35045 | Outer Joint | | 30 | 28 | 64.4 | 103.5 | 62.5 | I |
| | 2010.05-2015.08 | 8AT | F | L/R | SUV 4WD CJTC;CJWC | | GCI99148 | Inner Joint | | | 28 | | | 34 | |
| | 2010.05-2015.08 | | F | L/R | SUV 4WD CJTC;CJWC | | GCO83117 | Outer Joint | | 30 | 28 | 64.4 | 103.5 | 62.5 | I |
| | 2010.05-2015.08 | 8AT | R | L/R | SUV 4WD CJTC;CJWC | | GDS85106 | Drive Shaft | | 30 | 37 | 64 | 103.5 | 877 | |
| | 2010.05-2015.08 | 8AT | R | L/R | SUV 4WD CJTC;CJWC | | GCI81160 | Inner Joint | | 30 | 29 | 64 | 103.5 | 93.2 | |
| | 2010.05-2015.08 | 8AT | R | L/R | SUV 4WD CJTC;CJWC | | GCI81161 | Inner Joint | | 37 | 29 | 44.95 | 79.5 | 109.2 | |
| | 2015.01-2019.12 | 8AT | F | L/R | SUV 4WD CRTC | AAR | GDS81531 | Drive Shaft | | 42 | | 76.5 | 34 | 504 | |
| | 2015.01-2019.12 | 8AT | F | L/R | SUV 4WD CRTC | | GCO81357 | Outer Joint | | 42 | 28 | 76.5 | 34 | 54 | I |
| | 2015.01-2019.12 | 8AT | F | L/R | SUV 4WD CRTC | 6 balls | GCO83103 | Outer Joint | | 42 | 28 | 76.4 | 34 | 54 | I |
| | 2015.01-2019.12 | 8AT | F | L/R | SUV 4WD CRTC | | GCI61077 | Inner Joint | | | 34 | | | 88 | |
| | 2015.01-2019.12 | 8AT | F | L/R | SUV 4WD CRTC | TJ | GCI83022 | Inner Joint | | | 34 | | | 88.5 | |
| | 2015.01-2019.12 | 8AT | R | L/R | SUV 4WD CRTC | VL | GDS84639 | Drive Shaft | | 42 | | 76.5 | 34 | 673 | |
| | 2015.01-2019.12 | 8AT | F | L/R | SUV Van 4WD CRTC | | GDS81531 | Drive Shaft | | 42 | | 76.5 | 34 | 504 | |
| | 2015.01-2019.12 | 8AT | F | L/R | SUV Van 4WD CRTC | | GCO81357 | Outer Joint | | 42 | 28 | 76.5 | 34 | 54 | I |
| | 2015.01-2019.12 | 8AT | F | L/R | SUV Van 4WD CRTC | Date from:2016.02 | GCI61077 | Inner Joint | | | 34 | | | 88 | |
| | 2015.01-2019.12 | 8AT | R | L/R | SUV Van 4WD CRTC | | GDS84639 | Drive Shaft | | 42 | | 76.5 | 34 | 673 | |
| 3.0 (206 kw) | 2011.05-2015.08 | 8AT | F | L/R | SUV 4WD CJWE;CTWB | | GDS35085 | Drive Shaft | | 30 | | 64.4 | 103.5 | 525 | |
| | 2011.05-2015.08 | 8AT | F | L/R | SUV 4WD CJWE;CTWB | | GCO35045 | Outer Joint | | 30 | 28 | 64.4 | 103.5 | 62.5 | I |
| | 2011.05-2015.08 | 8AT | F | L/R | SUV 4WD CJWE;CTWB | | GCI99148 | Inner Joint | | | 28 | | | 34 | |
| | 2011.05-2015.08 | | F | L/R | SUV 4WD CJWE;CTWB | | GCO83117 | Outer Joint | | 30 | 28 | 64.4 | 103.5 | 62.5 | I |
| | 2011.05-2015.08 | 8AT | R | L/R | SUV 4WD CJWE;CTWB | | GDS85106 | Drive Shaft | | 30 | 37 | 64 | 103.5 | 877 | |
| | 2011.05-2015.08 | 8AT | R | L/R | SUV 4WD CJWE;CTWB | | GCI81160 | Inner Joint | | 30 | 29 | 64 | 103.5 | 93.2 | |
| | 2011.05-2015.08 | 8AT | R | L/R | SUV 4WD CJWE;CTWB | | GCI81161 | Inner Joint | | 37 | 29 | 44.95 | 79.5 | 109.2 | |
| 3.0 (210 kw) | 2018.07- | 8AT | F | L/R | SUV 4WD DHXA;DPXA | | GDS81531 | Drive Shaft | | 42 | | 76.5 | 34 | 504 | |
| | 2018.07- | 8AT | F | L/R | SUV 4WD DHXA;DPXA | | GCO81357 | Outer Joint | | 42 | 28 | 76.5 | 34 | 54 | I |
| | 2018.07- | 8AT | F | L/R | SUV 4WD DHXA;DPXA | | GCI61077 | Inner Joint | | | 34 | | | 88 | |
| | 2018.07- | 8AT | F | L/R | SUV 4WD DHXA;DPXA | TJ | GCI83022 | Inner Joint | | | 34 | | | 88.5 | |
| | 2018.07- | 8AT | R | L/R | SUV 4WD DHXA;DPXA | | GDS84639 | Drive Shaft | | 42 | | 76.5 | 34 | 673 | |

| | YEAR | TRANSM. | F/R | L/R | BODY STYLE & DRIVE TYPE & ENGINE | REMARKS | G-AP Ref. | PRODUCT | ABS | Technical Specifications A | B | C | H | L | P |
|---|---|---|---|---|---|---|---|---|---|---|---|---|---|---|---|
| **AUDI** **Q7 Quattro** | | | | | | | | | | | | | | | |
| 3.0 (210 kw) | 2018.07-2019.12 | 8AT | F | L | SUV Van 4WD DHXA | AAR | GDS81531 | Drive Shaft | | 42 | | 76.5 | 34 | 504 | |
| | 2018.07-2019.12 | 8AT | F | L/R | SUV Van 4WD DHXA | | GCI61077 | Inner Joint | | | 34 | | | 88 | |
| | 2018.07-2019.12 | AT | F | L/R | SUV Van 4WD DHXA | | GCO81357 | Outer Joint | | 42 | 28 | 76.5 | 34 | 54 | I |
| | 2018.07-2019.12 | 8AT | R | L/R | SUV Van 4WD DHXA | VL | GDS84639 | Drive Shaft | | 42 | | 76.5 | 34 | 673 | |
| 3.0 (245 kw) | 2010.05-2015.08 | 8AT | F | L/R | SUV 4WD CJTB;CJWB;CNAA;CTWA | | GDS35085 | Drive Shaft | | 30 | | 64.4 | 103.5 | 525 | |
| | 2010.05-2015.08 | 8AT | F | L/R | SUV 4WD CJTB;CJWB;CNAA;CTWA | | GCI99148 | Inner Joint | | | 28 | | | 34 | |
| | 2010.05-2015.08 | AT | F | L/R | SUV 4WD CJTB;CJWB;CNAA;CTWA | | GCO35045 | Outer Joint | | 30 | 28 | 64.4 | 103.5 | 62.5 | I |
| | 2010.05-2015.08 | | F | L/R | SUV 4WD CJTB;CJWB;CNAA;CTWA | | GCO83117 | Outer Joint | | 30 | 28 | 64.4 | 103.5 | 62.5 | I |
| | 2010.05-2015.08 | 8AT | R | L/R | SUV 4WD CJTB;CJWB;CNAA;CTWA | | GDS85106 | Drive Shaft | | 30 | 37 | 64 | 103.5 | 877 | |
| | 2010.05-2015.08 | 8AT | R | L/R | SUV 4WD CJTB;CJWB;CNAA;CTWA | | GCI81161 | Inner Joint | | 37 | 29 | 44.95 | 79.5 | 109.2 | |
| | 2010.05-2015.08 | | R | L/R | SUV 4WD CJTB;CJWB;CNAA;CTWA | | GCI81160 | Inner Joint | | 30 | 29 | 64 | 103.5 | 93.2 | |
| | 2010.05-2015.08 | 8AT | F | L/R | SUV Van 4WD CJTB | | GDS35085 | Drive Shaft | | 30 | | 64.4 | 103.5 | 525 | |
| | 2010.05-2015.08 | 8AT | F | L/R | SUV Van 4WD CJTB | | GCO35045 | Outer Joint | | 30 | 28 | 64.4 | 103.5 | 62.5 | I |
| | 2010.05-2015.08 | 8AT | F | L/R | SUV Van 4WD CJTB | Model year to:2010 | GCO61050 | Outer Joint | | 30 | 27 | 64 | 103.5 | 63.5 | M |
| | 2010.05-2015.08 | 8AT | F | L/R | SUV Van 4WD CJTB | | GCI99148 | Inner Joint | | | 28 | | | 34 | |
| | 2010.05-2015.08 | 8AT | R | L/R | SUV Van 4WD CJTB | | GDS85106 | Drive Shaft | | 30 | 37 | 64 | 103.5 | 877 | |
| | 2010.05-2015.08 | 8AT | R | L/R | SUV Van 4WD CJTB | | GCI81160 | Inner Joint | | 30 | 29 | 64 | 103.5 | 93.2 | |
| | 2015.01-2019.12 | 8AT | F | L/R | SUV 4WD CREC | AAR | GDS81531 | Drive Shaft | | 42 | | 76.5 | 34 | 504 | |
| | 2015.01-2019.12 | AT | F | L/R | SUV 4WD CREC | | GCO83103 | Outer Joint | | 42 | 28 | 76.4 | 34 | 54 | I |
| | 2015.01-2019.12 | AT | F | L/R | SUV 4WD CREC | | GCI83022 | Inner Joint | | | 34 | | | 88.5 | |
| | 2015.01-2019.12 | 8AT | R | L/R | SUV 4WD CREC | VL | GDS84639 | Drive Shaft | | 42 | | 76.5 | 34 | 673 | |
| | 2015.12-2019.12 | 8AT | F | L/R | SUV 4WD CREC | | GDS81531 | Drive Shaft | | 42 | | 76.5 | 34 | 504 | |
| | 2018.12-2020.12 | 8AT | F | L/R | SUV 4WD CREC | | GDS81531 | Drive Shaft | | 42 | | 76.5 | 34 | 504 | |
| 3.0 (250 kw) | 2019.07- | 8AT | F | L/R | SUV 4WD DCBD | AAR | GDS81531 | Drive Shaft | | 42 | | 76.5 | 34 | 504 | |
| | 2019.07- | 8AT | F | L/R | SUV 4WD DCBD | | GCO81357 | Outer Joint | | 42 | 28 | 76.5 | 34 | 54 | I |
| | 2019.07- | 8AT | F | L/R | SUV 4WD DCBD | | GCI61077 | Inner Joint | | | 34 | | | 88 | |
| | 2019.07- | 8AT | R | L/R | SUV 4WD DCBD | VL | GDS84639 | Drive Shaft | | 42 | | 76.5 | 34 | 673 | |
| | 2021.01- | 8AT | F | L/R | SUV 4WD DCBE | | GDS81531 | Drive Shaft | | 42 | | 76.5 | 34 | 504 | |
| 3.0 (275 kw) | 2015.08-2019.12 | 7AT/8AT | F | L/R | SUV 4WD CVZA | | GCO81750 | Outer Joint | | 42 | 29 | 76.5 | 34 | 60 | I |
| | 2015.08-2019.12 | 8AT | F | L/R | SUV 4WD CVZA | | GDS56876 | Drive Shaft | | 42 | | 76.5 | 34 | 493 | |
| | 2015.08-2019.12 | 8AT | F | L/R | SUV 4WD CVZA | | GCI81397 | Inner Joint | | | 27 | | | 89 | |
| 3.0 (280 kw) | 2019.11- | 8AT | F | L/R | SUV 4WD DCBE | | GDS56876 | Drive Shaft | | 42 | | 76.5 | 34 | 493 | |
| | 2019.11- | 8AT | F | L/R | SUV 4WD DCBE | | GCI81397 | Inner Joint | | | 27 | | | 89 | |
| 3.0 (290 kw) | 2024.04- | 8AT | F | L/R | SUV 4WD DCBD | | GDS56876 | Drive Shaft | | 42 | | 76.5 | 34 | 493 | |
| | 2024.04- | 8AT | F | L/R | SUV 4WD DCBD | | GCI81397 | Inner Joint | | | 27 | | | 89 | |
| 3.0 (335 kw) | 2019.11- | 8AT | F | L/R | SUV 4WD DCBE | | GDS56876 | Drive Shaft | | 42 | | 76.5 | 34 | 493 | |
| | 2019.11- | 8AT | F | L/R | SUV 4WD DCBE | | GCO81750 | Outer Joint | | 42 | 29 | 76.5 | 34 | 60 | I |
| | 2019.11- | 8AT | F | L/R | SUV 4WD DCBE | | GCI81397 | Inner Joint | | | 27 | | | 89 | |
| 3.0 (340 kw) | 2020.10- | 8AT | F | L/R | SUV 4WD DCBE | | GDS56876 | Drive Shaft | | 42 | | 76.5 | 34 | 493 | |
| | 2020.10- | 8AT | F | L/R | SUV 4WD DCBE | | GCI81397 | Inner Joint | | | 27 | | | 89 | |
| 3.0 (360 kw) | 2024.04- | 8AT | F | L/R | SUV 4WD DCBD | | GDS56876 | Drive Shaft | | 42 | | 76.5 | 34 | 493 | |
| | 2024.04- | 8AT | F | L/R | SUV 4WD DCBD | | GCI81397 | Inner Joint | | | 27 | | | 89 | |
| 3.6 (206 kw) | 2006.08-2010.05 | 6AT/6MT | F | L/R | SUV 4WD BHK | | GDS35085 | Drive Shaft | | 30 | | 64.4 | 103.5 | 525 | |
| | 2006.08-2010.05 | 6AT/6MT | F | L/R | SUV 4WD BHK | | GCO35045 | Outer Joint | | 30 | 28 | 64.4 | 103.5 | 62.5 | I |
| | 2006.08-2010.05 | 6AT/6MT | F | L/R | SUV 4WD BHK | | GCO61050 | Outer Joint | | 30 | 27 | 64 | 103.5 | 63.5 | M |
| | 2006.08-2010.05 | 6AT/6MT | F | L/R | SUV 4WD BHK | | GCI99148 | Inner Joint | | | 28 | | | 34 | |
| | 2006.08-2010.05 | 6AT/6MT | R | L/R | SUV 4WD BHK | | GDS85098 | Drive Shaft | | 30 | | 64 | 103 | 740 | |
| | 2006.08-2010.05 | 6AT/6MT | R | L/R | SUV 4WD BHK | | GCI83027 | Inner Joint | | | 28 | | | 28 | |
| | 2006.08-2010.05 | 6AT/6MT | F | L/R | SUV Van 4WD BHK | | GDS35085 | Drive Shaft | | 30 | | 64.4 | 103.5 | 525 | |
| | 2006.08-2010.05 | 6AT/6MT | F | L/R | SUV Van 4WD BHK | | GCO61050 | Outer Joint | | 30 | 27 | 64 | 103.5 | 63.5 | M |
| | 2006.08-2010.05 | 6AT/6MT | F | L/R | SUV Van 4WD BHK | | GCI99148 | Inner Joint | | | 28 | | | 34 | |
| | 2006.08-2010.05 | 6AT/6MT | R | L/R | SUV Van 4WD BHK | | GDS85098 | Drive Shaft | | 30 | | 64 | 103 | 740 | |
| | 2006.08-2010.05 | 6AT/6MT | R | L/R | SUV Van 4WD BHK | | GCI83027 | Inner Joint | | | 28 | | | 28 | |
| 4.2 (240 kw) | 2007.03-2009.06 | 6AT | F | L/R | SUV 4WD BTR | | GDS81127 | Drive Shaft | | 30 | | 64 | 103 | 522 | |
| | 2007.03-2009.06 | 6AT | F | L/R | SUV 4WD BTR | | GCO83085 | Outer Joint | | 30 | 29 | 64 | 103 | 72.5 | M |
| | 2007.03-2009.06 | 6AT | F | L/R | SUV 4WD BTR | | GCI35001 | Inner Joint | | | 30 | | | 36.2 | |
| | 2007.03-2009.06 | 6AT | R | L/R | SUV 4WD BTR | | GDS35086 | Drive Shaft | | 30 | | 64.3 | 103.5 | 724 | |
| | 2007.03-2009.06 | 6AT | R | L/R | SUV 4WD BTR | | GCI35051 | Inner Joint | | | 30 | | | 30.5 | |
| | 2007.03-2009.06 | 6AT | F | L/R | SUV Van 4WD BTR | | GDS81127 | Drive Shaft | | 30 | | 64 | 103 | 522 | |
| | 2007.03-2009.06 | 6AT | F | L/R | SUV Van 4WD BTR | | GCO83085 | Outer Joint | | 30 | 29 | 64 | 103 | 72.5 | M |
| | 2007.03-2009.06 | 6AT | F | L/R | SUV Van 4WD BTR | | GCI35001 | Inner Joint | | | 30 | | | 36.2 | |
| | 2007.03-2009.06 | 6AT | R | L/R | SUV Van 4WD BTR | | GDS35086 | Drive Shaft | | 30 | | 64.3 | 103.5 | 724 | |
| | 2007.03-2009.06 | 6AT | R | L/R | SUV Van 4WD BTR | | GCI35051 | Inner Joint | | | 30 | | | 30.5 | |
| 4.2 (250 kw) | 2007.03-2015.08 | 6AT/8AT | F | L/R | SUV Van 4WD CCFA;CCFC | Model year from:2011 | GDS35085 | Drive Shaft | | 30 | | 64.4 | 103.5 | 525 | |
| | 2007.03-2015.08 | 6AT/8AT | F | L/R | SUV Van 4WD CCFA;CCFC | Model year to:2010 | GDS81127 | Drive Shaft | | 30 | | 64 | 103 | 522 | |

| | YEAR | TRANSM. | F/R | L/R | BODY STYLE & DRIVE TYPE & ENGINE | REMARKS | G-AP Ref. | PRODUCT | ABS | Technical Specifications A | B | C | H | L | P |
|---|---|---|---|---|---|---|---|---|---|---|---|---|---|---|---|
| **AUDI** | | | | | | | | | | | | | | | |
| **Q7 Quattro** | | | | | | | | | | | | | | | |
| 4.2 (250 kw) | 2007.03-2015.08 | 6AT/8AT | F | L/R | SUV Van 4WD CCFA;CCFC | Date from:2010.12 | GCO35045 | Outer Joint | | 30 | 28 | 64.4 | 103.5 | 62.5 | I |
| | 2007.03-2015.08 | 6AT/8AT | F | L/R | SUV Van 4WD CCFA;CCFC | Model year to:2010 | GCO83085 | Outer Joint | | 30 | 29 | 64 | 103 | 72.5 | M |
| | 2007.03-2015.08 | 6AT/8AT | F | L/R | SUV Van 4WD CCFA;CCFC | Date to:2011.03 | GCO83117 | Outer Joint | | 30 | 28 | 64.4 | 103.5 | 62.5 | I |
| | 2007.03-2015.08 | 6AT/8AT | F | L/R | SUV Van 4WD CCFA;CCFC | Model year to:2010 | GCI35001 | Inner Joint | | | 30 | | | 36.2 | |
| | 2007.03-2015.08 | 6AT/8AT | F | L/R | SUV Van 4WD CCFA;CCFC | Model year from:2011 | GCI99148 | Inner Joint | | | 28 | | | 34 | |
| | 2007.03-2015.08 | 6AT | R | L/R | SUV Van 4WD CCFA;CCFC | | GDS35086 | Drive Shaft | | 30 | | 64.3 | 103.5 | 724 | |
| | 2007.03-2015.08 | 6AT | R | L/R | SUV Van 4WD CCFA;CCFC | | GCI35051 | Inner Joint | | | 30 | | | 30.5 | |
| | 2009.05-2015.08 | 6AT/8AT | F | L/R | SUV 4WD CCFA;CCFC | | GDS35085 | Drive Shaft | | 30 | | 64.4 | 103.5 | 525 | |
| | 2009.05-2015.08 | 6AT/8AT | F | L/R | SUV 4WD CCFA;CCFC | | GCO35045 | Outer Joint | | 30 | 28 | 64.4 | 103.5 | 62.5 | I |
| | 2009.05-2015.08 | 6AT/8AT | F | L/R | SUV 4WD CCFA;CCFC | | GCI99148 | Inner Joint | | | 28 | | | 34 | |
| | 2009.05-2015.08 | AT | F | L/R | SUV 4WD CCFA;CCFC | | GDS81127 | Drive Shaft | | 30 | | 64 | 103 | 522 | |
| | 2009.05-2015.08 | AT | F | L/R | SUV 4WD CCFA;CCFC | | GCO83085 | Outer Joint | | 30 | 29 | 64 | 103 | 72.5 | M |
| | 2009.05-2015.08 | AT | F | L/R | SUV 4WD CCFA;CCFC | | GCI35001 | Inner Joint | | | 30 | | | 36.2 | |
| | 2009.05-2015.08 | | F | L/R | SUV 4WD CCFA;CCFC | | GCO83117 | Outer Joint | | 30 | 28 | 64.4 | 103.5 | 62.5 | I |
| | 2009.05-2015.08 | 6AT | R | L/R | SUV 4WD CCFA;CCFC | | GDS35086 | Drive Shaft | | 30 | | 64.3 | 103.5 | 724 | |
| | 2009.05-2015.08 | 6AT | R | L/R | SUV 4WD CCFA;CCFC | | GCI35051 | Inner Joint | | | 30 | | | 30.5 | |
| 4.2 (257 kw) | 2006.03-2010.05 | 6AT | F | L/R | SUV 4WD BAR | | GDS35085 | Drive Shaft | | 30 | | 64.4 | 103.5 | 525 | |
| | 2006.03-2010.05 | 6AT | F | L/R | SUV 4WD BAR | | GCO35045 | Outer Joint | | 30 | 28 | 64.4 | 103.5 | 62.5 | I |
| | 2006.03-2010.05 | 6AT | F | L/R | SUV 4WD BAR | | GCI99148 | Inner Joint | | | 28 | | | 34 | |
| | 2006.03-2010.05 | | F | L/R | SUV 4WD BAR | Date To:2007.01 | GCO61050 | Outer Joint | | 30 | 27 | 64 | 103.5 | 63.5 | M |
| | 2006.03-2010.05 | | F | L/R | SUV 4WD BAR | | GCO61050 | Outer Joint | | 30 | 27 | 64 | 103.5 | 63.5 | M |
| | 2006.03-2010.05 | 6AT | R | L/R | SUV 4WD BAR | | GDS85098 | Drive Shaft | | 30 | | 64 | 103 | 740 | |
| | 2006.03-2010.05 | 6AT | R | L/R | SUV 4WD BAR | | GCI83027 | Inner Joint | | | 28 | | | 28 | |
| | 2006.08-2010.05 | 6AT | F | L/R | SUV Van 4WD BAR | | GDS35085 | Drive Shaft | | 30 | | 64.4 | 103.5 | 525 | |
| | 2006.08-2010.05 | 6AT | F | L/R | SUV Van 4WD BAR | | GCO61050 | Outer Joint | | 30 | 27 | 64 | 103.5 | 63.5 | M |
| | 2006.08-2010.05 | 6AT | R | L/R | SUV Van 4WD BAR | | GDS85098 | Drive Shaft | | 30 | | 64 | 103 | 740 | |
| | 2006.08-2010.05 | 6AT | R | L/R | SUV Van 4WD BAR | | GCI83027 | Inner Joint | | | 28 | | | 28 | |
| 6.0 (368 kw) | 2008.09-2014.05 | AT | F | L/R | SUV 4WD CCGA | | GDS81127 | Drive Shaft | | 30 | | 64 | 103 | 522 | |
| | 2008.09-2014.05 | AT | F | L/R | SUV 4WD CCGA | | GCO83085 | Outer Joint | | 30 | 29 | 64 | 103 | 72.5 | M |
| | 2008.09-2014.05 | AT | F | | SUV 4WD CCGA | Date From:2011.01 | GCO35045 | Outer Joint | | 30 | 28 | 64.4 | 103.5 | 62.5 | I |
| | 2008.09-2014.05 | AT | F | L/R | SUV 4WD CCGA | | GCI35001 | Inner Joint | | | 30 | | | 36.2 | |
| | 2008.09-2014.05 | | F | | SUV 4WD CCGA | | GCO83117 | Outer Joint | | 30 | 28 | 64.4 | 103.5 | 62.5 | I |
| | 2008.09-2014.05 | 6AT | R | L/R | SUV 4WD CCGA | | GDS35086 | Drive Shaft | | 30 | | 64.3 | 103.5 | 724 | |
| | 2008.09-2014.05 | 6AT | R | L/R | SUV 4WD CCGA | | GCI35051 | Inner Joint | | | 30 | | | 30.5 | |
| | 2008.09-2014.05 | 6AT | F | L/R | SUV Van 4WD CCGA | | GDS81127 | Drive Shaft | | 30 | | 64 | 103 | 522 | |
| | 2008.09-2014.05 | 6AT | F | L/R | SUV Van 4WD CCGA | | GCO83085 | Outer Joint | | 30 | 29 | 64 | 103 | 72.5 | M |
| | 2008.09-2014.05 | 6AT | F | L/R | SUV Van 4WD CCGA | | GCI35001 | Inner Joint | | | 30 | | | 36.2 | |
| | 2008.09-2014.05 | 6AT | R | L/R | SUV Van 4WD CCGA | | GDS35086 | Drive Shaft | | 30 | | 64.3 | 103.5 | 724 | |
| | 2008.09-2014.05 | AT | R | L/R | SUV Van 4WD CCGA | | GCI35051 | Inner Joint | | | 30 | | | 30.5 | |
| **Q8 e-tron Quattro** | | | | | | | | | | | | | | | |
| EV (250 kw) | 2022.11-2025.03 | ET | F | L/R | SUV 4WD EASA;EDEA | | GDS84117 | Drive Shaft | | 42 | | 76.5 | 34 | 518 | |
| | 2022.11-2025.03 | ET | F | L/R | SUV 4WD EASA;EDEA | | GCO82603 | Outer Joint | | 42 | 30 | 76.5 | 34 | 60 | I |
| | 2022.11-2025.03 | ET | F | L/R | SUV 4WD EASA;EDEA | | GCI82522 | Inner Joint | | | 29 | | | 83.5 | |
| | 2022.11-2025.03 | ET | R | L | SUV 4WD EASA;EDEA | | GDS84121 | Drive Shaft | | 42 | | 76.5 | 34 | 518 | |
| | 2022.11-2025.03 | ET | R | R | SUV 4WD EASA;EDEA | | GDS84120 | Drive Shaft | | 42 | | 76.5 | 34 | 484 | |
| | 2022.11-2025.03 | ET | R | L/R | SUV 4WD EASA;EDEA | Date to:2023.01 | GCI82524 | Inner Joint | | | 30 | | | 28 | |
| EV (300 kw) | 2022.11- | ET | R | L | SUV 4WD EASA/EDEA | | GDS84121 | Drive Shaft | | 42 | | 76.5 | 34 | 518 | |
| | 2022.11- | ET | R | R | SUV 4WD EASA/EDEA | | GDS84120 | Drive Shaft | | 42 | | 76.5 | 34 | 484 | |
| | 2022.11- | ET | R | L/R | SUV 4WD EASA/EDEA | Date to:2023.01 | GCI82524 | Inner Joint | | | 30 | | | 28 | |
| | 2022.11-2025.03 | ET | F | L/R | SUV 4WD EASA;EDEA | | GDS84117 | Drive Shaft | | 42 | | 76.5 | 34 | 518 | |
| | 2022.11-2025.03 | ET | F | L/R | SUV 4WD EASA;EDEA | | GCO82603 | Outer Joint | | 42 | 30 | 76.5 | 34 | 60 | I |
| | 2022.11-2025.03 | ET | F | L/R | SUV 4WD EASA;EDEA | | GCI82522 | Inner Joint | | | 29 | | | 83.5 | |
| | 2022.11-2025.03 | ET | R | L | SUV 4WD EASA;EDEA | | GDS84121 | Drive Shaft | | 42 | | 76.5 | 34 | 518 | |
| | 2022.11-2025.03 | ET | R | R | SUV 4WD EASA;EDEA | | GDS84120 | Drive Shaft | | 42 | | 76.5 | 34 | 484 | |
| | 2022.11-2025.03 | ET | R | L/R | SUV 4WD EASA;EDEA | Date to:2023.01 | GCI82524 | Inner Joint | | | 30 | | | 28 | |
| **Q8 e-tron Sportback Quattro** | | | | | | | | | | | | | | | |
| EV (250 kw) | 2022.11-2025.03 | ET | F | L/R | SUV 4WD EASA;EDEA | | GDS84117 | Drive Shaft | | 42 | | 76.5 | 34 | 518 | |
| | 2022.11-2025.03 | ET | F | L/R | SUV 4WD EASA;EDEA | | GCO82603 | Outer Joint | | 42 | 30 | 76.5 | 34 | 60 | I |
| | 2022.11-2025.03 | ET | F | L/R | SUV 4WD EASA;EDEA | | GCI82522 | Inner Joint | | | 29 | | | 83.5 | |
| | 2022.11-2025.03 | ET | R | L | SUV 4WD EASA;EDEA | | GDS84121 | Drive Shaft | | 42 | | 76.5 | 34 | 518 | |
| | 2022.11-2025.03 | ET | R | R | SUV 4WD EASA;EDEA | | GDS84120 | Drive Shaft | | 42 | | 76.5 | 34 | 484 | |
| | 2022.11-2025.03 | ET | R | L/R | SUV 4WD EASA;EDEA | Date to:2023.01 | GCI82524 | Inner Joint | | | 30 | | | 28 | |
| EV (300 kw) | 2022.11-2025.03 | ET | F | L/R | SUV 4WD EASA;EDEA | | GDS84117 | Drive Shaft | | 42 | | 76.5 | 34 | 518 | |
| | 2022.11-2025.03 | ET | F | L/R | SUV 4WD EASA;EDEA | | GCO82603 | Outer Joint | | 42 | 30 | 76.5 | 34 | 60 | I |
| | 2022.11-2025.03 | ET | F | L/R | SUV 4WD EASA;EDEA | | GCI82522 | Inner Joint | | | 29 | | | 83.5 | |

| | YEAR | TRANSM. | F/R | L/R | BODY STYLE & DRIVE TYPE & ENGINE | REMARKS | G-AP Ref. | PRODUCT | ABS | Technical Specifications A | B | C | H | L | P |
|---|---|---|---|---|---|---|---|---|---|---|---|---|---|---|---|
| **AUDI** | | | | | | | | | | | | | | | |
| **Q8 e-tron Sportback Quattro** | | | | | | | | | | | | | | | |
| EV (300 kw) | 2022.11-2025.03 | ET | R | L | SUV 4WD EASA;EDEA | | GDS84121 | Drive Shaft | | 42 | | 76.5 | 34 | 518 | |
| | 2022.11-2025.03 | ET | R | R | SUV 4WD EASA;EDEA | | GDS84120 | Drive Shaft | | 42 | | 76.5 | 34 | 484 | |
| | 2022.11-2025.03 | ET | R | L/R | SUV 4WD EASA;EDEA | Date to:2023.01 | GCI82524 | Inner Joint | | | 30 | | | 28 | |
| **Q8 Quattro** | | | | | | | | | | | | | | | |
| 2.0 (180 kw) | 2019.10- | 8AT | F | L/R | SUV 4WD DMFA;DNEA | | GDS81531 | Drive Shaft | | 42 | | 76.5 | 34 | 504 | |
| | 2019.10- | 8AT | F | L/R | SUV 4WD DMFA;DNEA | | GCO81357 | Outer Joint | | 42 | 28 | 76.5 | 34 | 54 | I |
| | 2019.10- | 8AT | R | L/R | SUV 4WD DMFA;DNEA | | GDS84639 | Drive Shaft | | 42 | | 76.5 | 34 | 673 | |
| 2.0 (195 kw) | 2023.04- | 8AT | F | L/R | SUV 4WD DMTA;DUVA | | GDS81531 | Drive Shaft | | 42 | | 76.5 | 34 | 504 | |
| 3.0 (170 kw) | 2018.07- | 8AT | F | L/R | SUV 4WD DHXC;DPXB | | GDS81531 | Drive Shaft | | 42 | | 76.5 | 34 | 504 | |
| | 2018.07- | 8AT | F | L/R | SUV 4WD DHXC;DPXB | | GCO81357 | Outer Joint | | 42 | 28 | 76.5 | 34 | 54 | I |
| | 2018.07- | 8AT | F | L/R | SUV 4WD DHXC;DPXB | | GCI61077 | Inner Joint | | | 34 | | | 88 | |
| | 2018.07- | AT | F | L/R | SUV 4WD DHXC;DPXB | Date from:2019.01,TJ | GCI83022 | Inner Joint | | | 34 | | | 88.5 | |
| | 2018.07- | 8AT | R | L/R | SUV 4WD DHXC;DPXB | | GDS84639 | Drive Shaft | | 42 | | 76.5 | 34 | 673 | |
| 3.0 (183 kw) | 2018.02- | 8AT | F | L/R | SUV 4WD CVMD | AAR | GDS81531 | Drive Shaft | | 42 | | 76.5 | 34 | 504 | |
| | 2018.02- | AT | F | L/R | SUV 4WD CVMD | | GCO81357 | Outer Joint | | 42 | 28 | 76.5 | 34 | 54 | I |
| | 2018.02- | AT | F | L/R | SUV 4WD CVMD | | GCI61077 | Inner Joint | | | 34 | | | 88 | |
| | 2018.02- | 8AT | R | L/R | SUV 4WD CVMD | VL | GDS84639 | Drive Shaft | | 42 | | 76.5 | 34 | 673 | |
| 3.0 (210 kw) | 2018.07- | 8AT | F | L/R | SUV 4WD DHXA;DPXA | | GDS81531 | Drive Shaft | | 42 | | 76.5 | 34 | 504 | |
| | 2018.07- | 8AT | F | L/R | SUV 4WD DHXA;DPXA | | GCO81357 | Outer Joint | | 42 | 28 | 76.5 | 34 | 54 | I |
| | 2018.07- | 8AT | F | L/R | SUV 4WD DHXA;DPXA | | GCI61077 | Inner Joint | | | 34 | | | 88 | |
| | 2018.07- | 8AT | F | L/R | SUV 4WD DHXA;DPXA | TJ | GCI83022 | Inner Joint | | | 34 | | | 88.5 | |
| | 2018.07- | 8AT | R | L/R | SUV 4WD DHXA;DPXA | | GDS84639 | Drive Shaft | | 42 | | 76.5 | 34 | 673 | |
| 3.0 (250 kw) | 2018.02- | 8AT | F | L/R | SUV 4WD DCBD | | GDS81531 | Drive Shaft | | 42 | | 76.5 | 34 | 504 | |
| | 2018.02- | 8AT | F | L/R | SUV 4WD DCBD | | GCO81357 | Outer Joint | | 42 | 28 | 76.5 | 34 | 54 | I |
| | 2018.02- | 8AT | F | L/R | SUV 4WD DCBD | | GCI61077 | Inner Joint | | | 34 | | | 88 | |
| | 2018.02- | AT | F | L/R | SUV 4WD DCBD | TJ | GCI83022 | Inner Joint | | | 34 | | | 88.5 | |
| | 2018.02- | 8AT | R | L/R | SUV 4WD DCBD | | GDS84639 | Drive Shaft | | 42 | | 76.5 | 34 | 673 | |
| 3.0 (280 kw) | 2020.10- | 8AT | F | L/R | SUV 4WD DCBE | | GDS56876 | Drive Shaft | | 42 | | 76.5 | 34 | 493 | |
| | 2020.10- | 8AT | F | L/R | SUV 4WD DCBE | | GCO81750 | Outer Joint | | 42 | 29 | 76.5 | 34 | 60 | I |
| | 2020.10- | 8AT | F | L/R | SUV 4WD DCBE | | GCI81397 | Inner Joint | | | 27 | | | 89 | |
| | 2020.10- | 8AT | R | L/R | SUV 4WD DCBE | | GDS84639 | Drive Shaft | | 42 | | 76.5 | 34 | 673 | |
| 3.0 (290 kw) | 2024.04- | 8AT | F | L/R | SUV 4WD DCBD;ECTA | | GDS56876 | Drive Shaft | | 42 | | 76.5 | 34 | 493 | |
| | 2024.04- | 8AT | F | L/R | SUV 4WD DCBD;ECTA | | GCI81397 | Inner Joint | | | 27 | | | 89 | |
| 3.0 (340 kw) | 2020.10- | 8AT | F | L/R | SUV 4WD DCBE | | GDS56876 | Drive Shaft | | 42 | | 76.5 | 34 | 493 | |
| | 2020.10- | 8AT | F | L/R | SUV 4WD DCBE | | GCO81750 | Outer Joint | | 42 | 29 | 76.5 | 34 | 60 | I |
| | 2020.10- | 8AT | F | L/R | SUV 4WD DCBE | | GCI81397 | Inner Joint | | | 27 | | | 89 | |
| | 2020.10- | 8AT | R | L/R | SUV 4WD DCBE | | GDS84639 | Drive Shaft | | 42 | | 76.5 | 34 | 673 | |
| 3.0 (360 kw) | 2024.04- | 8AT | F | L/R | SUV 4WD DCBD | | GDS56876 | Drive Shaft | | 42 | | 76.5 | 34 | 493 | |
| | 2024.04- | 8AT | F | L/R | SUV 4WD DCBD | | GCI81397 | Inner Joint | | | 27 | | | 89 | |
| **R8 Quattro** | | | | | | | | | | | | | | | |
| 4.2 (309 kw) | 2007.04-2010.09 | 6AT/6MT | F | L/R | Coupe 4WD BYH | | GDS81984 | Drive Shaft | | 38 | | 59.5 | 34 | 700 | |
| | 2007.04-2010.09 | 6AT/6MT | F | L/R | Coupe 4WD BYH | | GCO81599 | Outer Joint | | 38 | 26 | 59.5 | 34 | 44.5 | M |
| | 2007.04-2010.09 | 6AT/6MT | F | L/R | Coupe 4WD BYH | | GCI48007 | Inner Joint | | | 20 | | | 25.5 | |
| | 2007.04-2010.09 | 6AT/6MT | R | L/R | Coupe 4WD BYH | | GCI81399 | Inner Joint | | | 28 | | | 32 | |
| 4.2 (316 kw) | 2010.07-2015.07 | 6AT/7AT/6MT | F | L/R | Coupe 4WD CNDA | | GDS81984 | Drive Shaft | | 38 | | 59.5 | 34 | 700 | |
| | 2010.07-2015.07 | 6AT/7AT/6MT | F | L/R | Coupe 4WD CNDA | | GCO81599 | Outer Joint | | 38 | 26 | 59.5 | 34 | 44.5 | M |
| | 2010.07-2015.07 | 6AT/7AT/6MT | F | L/R | Coupe 4WD CNDA | | GCI48007 | Inner Joint | | | 20 | | | 25.5 | |
| | 2010.07-2015.07 | 6MT/6AMT | R | L/R | Coupe 4WD CNDA | Chassis no. to:42_CN010000 | GCI81399 | Inner Joint | | | 28 | | | 32 | |
| 5.2 (386 kw) | 2009.04-2015.07 | 6AT/7AT/6MT | F | L/R | Coupe 4WD BUJ;CTYA | | GDS81984 | Drive Shaft | | 38 | | 59.5 | 34 | 700 | |
| | 2009.04-2015.07 | 6AT/7AT/6MT | F | L/R | Coupe 4WD BUJ;CTYA | | GCO81599 | Outer Joint | | 38 | 26 | 59.5 | 34 | 44.5 | M |
| | 2009.04-2015.07 | 6AT/7AT/6MT | F | L/R | Coupe 4WD BUJ;CTYA | | GCI48007 | Inner Joint | | | 20 | | | 25.5 | |
| 5.2 (397 kw) | 2015.07- | 7AT | F | L/R | Coupe 4WD CSPB;DKAB | | GDS81984 | Drive Shaft | | 38 | | 59.5 | 34 | 700 | |
| | 2015.07- | | F | L/R | Coupe 4WD CSPB;DKAB | | GCO81599 | Outer Joint | | 38 | 26 | 59.5 | 34 | 44.5 | M |
| 5.2 (404 kw) | 2012.05-2015.07 | 7AT/6MT | F | L/R | Coupe 4WD CTPA | | GDS81984 | Drive Shaft | | 38 | | 59.5 | 34 | 700 | |
| | 2012.05-2015.07 | 7AT/6MT | F | L/R | Coupe 4WD CTPA | | GCO81599 | Outer Joint | | 38 | 26 | 59.5 | 34 | 44.5 | M |
| | 2012.05-2015.07 | 7AT/6MT | F | L/R | Coupe 4WD CTPA | | GCI48007 | Inner Joint | | | 20 | | | 25.5 | |
| 5.2 (412 kw) | 2010.11-2015.07 | 6AT | F | L/R | Coupe 4WD CMPA | | GDS81984 | Drive Shaft | | 38 | | 59.5 | 34 | 700 | |
| | 2010.11-2015.07 | 6AT | F | L/R | Coupe 4WD CMPA | | GCO81599 | Outer Joint | | 38 | 26 | 59.5 | 34 | 44.5 | M |
| | 2010.11-2015.07 | 6AT | F | L/R | Coupe 4WD CMPA | | GCI48007 | Inner Joint | | | 20 | | | 25.5 | |
| 5.2 (419 kw) | 2014.07-2015.07 | 7AT | F | L/R | Coupe 4WD CTPB | | GDS81984 | Drive Shaft | | 38 | | 59.5 | 34 | 700 | |
| | 2014.07-2015.07 | 7AT | F | L/R | Coupe 4WD CTPB | | GCO81599 | Outer Joint | | 38 | 26 | 59.5 | 34 | 44.5 | M |
| | 2014.07-2015.07 | 7AT | F | L/R | Coupe 4WD CTPB | | GCI48007 | Inner Joint | | | 20 | | | 25.5 | |
| | 2018.09- | 7AT | F | L/R | Coupe 4WD DKAC | | GDS81984 | Drive Shaft | | 38 | | 59.5 | 34 | 700 | |
| | 2018.09- | | F | L/R | Coupe 4WD DKAC | | GCO81599 | Outer Joint | | 38 | 26 | 59.5 | 34 | 44.5 | M |
| 5.2 (449 kw) | 2015.07- | 7AT | F | L/R | Coupe 4WD CSPA;DKAA | | GDS81984 | Drive Shaft | | 38 | | 59.5 | 34 | 700 | |

| | YEAR | TRANSM. | F/R | L/R | BODY STYLE & DRIVE TYPE & ENGINE | REMARKS | G-AP Ref. | PRODUCT | ABS | Technical Specifications A | B | C | H | L | P |
|---|---|---|---|---|---|---|---|---|---|---|---|---|---|---|---|
| **AUDI** | | | | | | | | | | | | | | | |
| **R8 Quattro** | | | | | | | | | | | | | | | |
| 5.2 (449 kw) | 2015.07- | | F | L/R | Coupe 4WD CSPA;DKAA | | GCO81599 | Outer Joint | | 38 | 26 | 59.5 | 34 | 44.5 | M |
| 5.2 (456 kw) | 2018.09- | 7AT | F | L/R | Coupe 4WD DMWA;DMWC | | GDS81984 | Drive Shaft | | 38 | | 59.5 | 34 | 700 | |
| | 2018.09- | | F | L/R | Coupe 4WD DMWA;DMWC | | GCO81599 | Outer Joint | | 38 | 26 | 59.5 | 34 | 44.5 | M |
| **R8 Spyder Quattro** | | | | | | | | | | | | | | | |
| 4.2 (316 kw) | 2010.09-2015.07 | 6AT/7AT/6MT | F | L/R | Convertible 4WD CNDA | | GDS81984 | Drive Shaft | | 38 | | 59.5 | 34 | 700 | |
| | 2010.09-2015.07 | 6AT/7AT/6MT | F | L/R | Convertible 4WD CNDA | | GCO81599 | Outer Joint | | 38 | 26 | 59.5 | 34 | 44.5 | M |
| | 2010.09-2015.07 | 6AT/7AT/6MT | F | L/R | Convertible 4WD CNDA | | GCI48007 | Inner Joint | | | 20 | | | 25.5 | |
| | 2010.09-2015.07 | 6MT/6AMT | R | L/R | Convertible 4WD CNDA | Chassis no. to:42_CN010000 | GCI81399 | Inner Joint | | | 28 | | | 32 | |
| 5.2 (386 kw) | 2010.02-2015.07 | 6AT/7AT/6MT | F | L/R | Convertible 4WD BUJ;CTYA | | GDS81984 | Drive Shaft | | 38 | | 59.5 | 34 | 700 | |
| | 2010.02-2015.07 | 6AT/7AT/6MT | F | L/R | Convertible 4WD BUJ;CTYA | | GCO81599 | Outer Joint | | 38 | 26 | 59.5 | 34 | 44.5 | M |
| | 2010.02-2015.07 | 6AT/7AT/6MT | F | L/R | Convertible 4WD BUJ;CTYA | | GCI48007 | Inner Joint | | | 20 | | | 25.5 | |
| 5.2 (397 kw) | 2016.05-2021.11 | 7AT | F | L/R | Convertible 4WD CSPB;DKAB | | GDS81984 | Drive Shaft | | 38 | | 59.5 | 34 | 700 | |
| | 2016.05-2021.11 | | F | L/R | Convertible 4WD CSPB;DKAB | | GCO81599 | Outer Joint | | 38 | 26 | 59.5 | 34 | 44.5 | M |
| 5.2 (404 kw) | 2012.07-2015.07 | 7AT/6MT | F | L/R | Convertible 4WD CTPA | | GCI48007 | Inner Joint | | | 20 | | | 25.5 | |
| | 2012.07-2015.07 | 7DCT/6MT | F | L/R | Convertible 4WD CTPA | | GDS81984 | Drive Shaft | | 38 | | 59.5 | 34 | 700 | |
| | 2012.07-2015.07 | | F | L/R | Convertible 4WD CTPA | | GCO81599 | Outer Joint | | 38 | 26 | 59.5 | 34 | 44.5 | M |
| 5.2 (412 kw) | 2011.11-2015.07 | 6AT/6MT | F | L/R | Convertible 4WD CMPA | | GDS81984 | Drive Shaft | | 38 | | 59.5 | 34 | 700 | |
| | 2011.11-2015.07 | 6AT/6MT | F | L/R | Convertible 4WD CMPA | | GCO81599 | Outer Joint | | 38 | 26 | 59.5 | 34 | 44.5 | M |
| | 2011.11-2015.07 | 6AT/6MT | F | L/R | Convertible 4WD CMPA | | GCI48007 | Inner Joint | | | 20 | | | 25.5 | |
| 5.2 (419 kw) | 2012.07-2015.07 | 7AT | F | L/R | Convertible 4WD CTPB | | GDS81984 | Drive Shaft | | 38 | | 59.5 | 34 | 700 | |
| | 2012.07-2015.07 | 7AT | F | L/R | Convertible 4WD CTPB | | GCO81599 | Outer Joint | | 38 | 26 | 59.5 | 34 | 44.5 | M |
| | 2012.07-2015.07 | 7AT | F | L/R | Convertible 4WD CTPB | | GCI48007 | Inner Joint | | | 20 | | | 25.5 | |
| | 2018.09- | 7AT | F | L/R | Convertible 4WD DKAC | | GDS81984 | Drive Shaft | | 38 | | 59.5 | 34 | 700 | |
| | 2018.09- | | F | L/R | Convertible 4WD DKAC | | GCO81599 | Outer Joint | | 38 | 26 | 59.5 | 34 | 44.5 | M |
| 5.2 (449 kw) | 2017.05- | 7AT | F | L/R | Convertible 4WD CSPA;DKAA | | GDS81984 | Drive Shaft | | 38 | | 59.5 | 34 | 700 | |
| | 2017.05- | | F | L/R | Convertible 4WD CSPA;DKAA | | GCO81599 | Outer Joint | | 38 | 26 | 59.5 | 34 | 44.5 | M |
| 5.2 (456 kw) | 2018.09- | 7AT | F | L/R | Convertible 4WD DMWA | | GDS81984 | Drive Shaft | | 38 | | 59.5 | 34 | 700 | |
| | 2018.09- | | F | L/R | Convertible 4WD DMWA | | GCO81599 | Outer Joint | | 38 | 26 | 59.5 | 34 | 44.5 | M |
| **RS3 Quattro** | | | | | | | | | | | | | | | |
| 2.5 (294 kw) | 2017.04-2020.10 | 7AT | F | L | Saloon 4WD DAZA;DNWA | | GDS81265 | Drive Shaft | | 36 | 37 | 59.5 | 40 | 557 | |
| | 2017.04-2020.10 | 7AT | F | R | Saloon 4WD DAZA;DNWA | | GDS61347 | Drive Shaft | | 36 | 40 | 59.5 | 40 | 593 | |
| | 2017.04-2020.10 | 7AT | F | L/R | Saloon 4WD DAZA;DNWA | | GCO83101 | Outer Joint | | 36 | 27 | 59.5 | 40 | 65 | M |
| | 2017.04-2020.10 | 7AT | F | L | Saloon 4WD DAZA;DNWA | AAR | GCI81158 | Inner Joint | | 37 | 34 | 34.5 | 65.5 | 83 | |
| | 2017.04-2020.10 | 7AT | F | R | Saloon 4WD DAZA;DNWA | TJ | GCI61048 | Inner Joint | | 40 | 34 | 46.9 | | 127.5 | |
| | 2017.04-2020.10 | 7AT | F | R | Saloon 4WD DAZA;DNWA | AAR | GCI61084 | Inner Joint | | 40 | 34 | 46.9 | | 128 | |
| | 2017.04-2020.10 | 7AT | R | L | Saloon 4WD DAZA;DNWA | | GDS82169 | Drive Shaft | | 36 | | 59.5 | 40 | 583 | |
| | 2017.04-2020.10 | 7AT | R | R | Saloon 4WD DAZA;DNWA | | GDS82170 | Drive Shaft | | 36 | | 59.5 | 40 | 620 | |
| | 2017.04-2020.10 | 7AT | R | L/R | Saloon 4WD DAZA;DNWA | | GCO83037 | Outer Joint | | 36 | 30 | 59.5 | 40.5 | 56 | I |
| | 2017.04-2020.10 | 7AT | R | L/R | Saloon 4WD DAZA;DNWA | | GCI53002 | Inner Joint | | | 33 | | | 34 | |
| | 2017.04-2020.10 | 7AT | R | L/R | Saloon 4WD DAZA;DNWA | | GCI82447 | Inner Joint | | | 33 | | | 34 | |
| | 2021.07- | 7DCT | F | L | Saloon 4WD DNWC;DXHB | | GDS81265 | Drive Shaft | | 36 | 37 | 59.5 | 40 | 557 | |
| | 2021.07- | 7DCT | F | R | Saloon 4WD DNWC;DXHB | | GDS61347 | Drive Shaft | | 36 | 40 | 59.5 | 40 | 593 | |
| | 2021.07- | 7DCT | F | L/R | Saloon 4WD DNWC;DXHB | | GCO83101 | Outer Joint | | 36 | 27 | 59.5 | 40 | 65 | M |
| | 2021.07- | 7DCT | F | L | Saloon 4WD DNWC;DXHB | | GCI81158 | Inner Joint | | 37 | 34 | 34.5 | 65.5 | 83 | |
| | 2021.07- | 7DCT | F | R | Saloon 4WD DNWC;DXHB | | GCI61048 | Inner Joint | | 40 | 34 | 46.9 | | 127.5 | |
| | 2021.07- | 7DCT | F | R | Saloon 4WD DNWC;DXHB | | GCI61084 | Inner Joint | | 40 | 34 | 46.9 | | 128 | |
| 2.5 (299 kw) | 2022.01- | 7DCT | F | L | Saloon 4WD DXHA;DNWD | | GDS81265 | Drive Shaft | | 36 | 37 | 59.5 | 40 | 557 | |
| | 2022.01- | 7DCT | F | L | Saloon 4WD DXHA;DNWD | | GCI81158 | Inner Joint | | 37 | 34 | 34.5 | 65.5 | 83 | |
| | 2022.01- | AT | F | L/R | Saloon 4WD DXHA;DNWD | | GCO83101 | Outer Joint | | 36 | 27 | 59.5 | 40 | 65 | M |
| | 2022.01- | AT | F | R | Saloon 4WD DXHA;DNWD | TJ | GCI61048 | Inner Joint | | 40 | 34 | 46.9 | | 127.5 | |
| | 2022.01- | AT | F | R | Saloon 4WD DXHA;DNWD | | GCI61084 | Inner Joint | | 40 | 34 | 46.9 | | 128 | |
| **RS3 Sportback Quattro** | | | | | | | | | | | | | | | |
| 2.5 (250 kw) | 2011.01-2012.12 | 7AT | F | L | Hatchback 4WD CEPA | | GDS81265 | Drive Shaft | | 36 | 37 | 59.5 | 40 | 557 | |
| | 2011.01-2012.12 | 7AT | F | R | Hatchback 4WD CEPA | | GDS61347 | Drive Shaft | | 36 | 40 | 59.5 | 40 | 593 | |
| | 2011.01-2012.12 | 7AT | F | L/R | Hatchback 4WD CEPA | | GCO83101 | Outer Joint | | 36 | 27 | 59.5 | 40 | 65 | M |
| | 2011.01-2012.12 | 7AT | F | L | Hatchback 4WD CEPA | | GCI81158 | Inner Joint | | 37 | 34 | 34.5 | 65.5 | 83 | |
| | 2011.01-2012.12 | 7AT | F | R | Hatchback 4WD CEPA | | GCI61084 | Inner Joint | | 40 | 34 | 46.9 | | 128 | |
| | 2011.01-2012.12 | AT | F | L/R | Hatchback 4WD CEPA | | GCI83006 | Inner Joint | | | 33 | | | 34 | |
| | 2011.01-2012.12 | | F | R | Hatchback 4WD CEPA | | GCI61048 | Inner Joint | | 40 | 34 | 46.9 | | 127.5 | |
| | 2011.01-2012.12 | 7AT | R | L | Hatchback 4WD CEPA | | GDS82169 | Drive Shaft | | 36 | | 59.5 | 40 | 583 | |
| | 2011.01-2012.12 | 7AT | R | R | Hatchback 4WD CEPA | | GDS82170 | Drive Shaft | | 36 | | 59.5 | 40 | 620 | |
| | 2011.01-2012.12 | 7AT | R | L/R | Hatchback 4WD CEPA | | GCO83037 | Outer Joint | | 36 | 30 | 59.5 | 40.5 | 56 | I |
| | 2011.01-2012.12 | 7AT | R | L/R | Hatchback 4WD CEPA | | GCI53002 | Inner Joint | | | 33 | | | 34 | |
| | 2011.01-2012.12 | 7DCT | R | L/R | Hatchback 4WD CEPA | | GCI82447 | Inner Joint | | | 33 | | | 34 | |
| | 2011.01-2012.12 | | R | L/R | Hatchback 4WD CEPA | | GCI83011 | Inner Joint | | | 33 | | | 34 | |

| | YEAR | TRANSM. | F/R | L/R | BODY STYLE & DRIVE TYPE & ENGINE | REMARKS | G-AP Ref. | PRODUCT | ABS | Technical Specifications A | B | C | H | L | P |
|---|---|---|---|---|---|---|---|---|---|---|---|---|---|---|---|
| **AUDI** | | | | | | | | | | | | | | | |
| **RS3 Sportback Quattro** | | | | | | | | | | | | | | | |
| 2.5 (270 kw) | 2015.03-2016.08 | 7AT | F | L | Hatchback 4WD CZGB | | GDS81265 | Drive Shaft | | 36 | 37 | 59.5 | 40 | 557 | |
| | 2015.03-2016.08 | 7AT | F | R | Hatchback 4WD CZGB | | GDS61347 | Drive Shaft | | 36 | 40 | 59.5 | 40 | 593 | |
| | 2015.03-2016.08 | 7AT | F | L/R | Hatchback 4WD CZGB | | GCO83101 | Outer Joint | | 36 | 27 | 59.5 | 40 | 65 | M |
| | 2015.03-2016.08 | 7AT | F | L | Hatchback 4WD CZGB | AAR | GCI81158 | Inner Joint | | 37 | 34 | 34.5 | 65.5 | 83 | |
| | 2015.03-2016.08 | 7AT | F | R | Hatchback 4WD CZGB | TJ | GCI61048 | Inner Joint | | 40 | 34 | 46.9 | | 127.5 | |
| | 2015.03-2016.08 | 7AT | R | L | Hatchback 4WD CZGB | | GDS82169 | Drive Shaft | | 36 | | 59.5 | 40 | 583 | |
| | 2015.03-2016.08 | 7AT | R | R | Hatchback 4WD CZGB | | GDS82170 | Drive Shaft | | 36 | | 59.5 | 40 | 620 | |
| | 2015.03-2016.08 | 7AT | R | L/R | Hatchback 4WD CZGB | | GCO83037 | Outer Joint | | 36 | 30 | 59.5 | 40.5 | 56 | I |
| | 2015.03-2016.08 | 7AT | R | L/R | Hatchback 4WD CZGB | | GCI82447 | Inner Joint | | | 33 | | | 34 | |
| 2.5 (294 kw) | 2017.04-2020.10 | 7AT | F | L | Hatchback 4WD DAZA;DNWA | | GDS81265 | Drive Shaft | | 36 | 37 | 59.5 | 40 | 557 | |
| | 2017.04-2020.10 | 7AT | F | R | Hatchback 4WD DAZA;DNWA | | GDS61347 | Drive Shaft | | 36 | 40 | 59.5 | 40 | 593 | |
| | 2017.04-2020.10 | 7AT | F | L/R | Hatchback 4WD DAZA;DNWA | | GCO83101 | Outer Joint | | 36 | 27 | 59.5 | 40 | 65 | M |
| | 2017.04-2020.10 | 7AT | F | L | Hatchback 4WD DAZA;DNWA | | GCI81158 | Inner Joint | | 37 | 34 | 34.5 | 65.5 | 83 | |
| | 2017.04-2020.10 | 7AT | F | R | Hatchback 4WD DAZA;DNWA | TJ | GCI61048 | Inner Joint | | 40 | 34 | 46.9 | | 127.5 | |
| | 2017.04-2020.10 | 7AT | F | R | Hatchback 4WD DAZA;DNWA | AAR | GCI61084 | Inner Joint | | 40 | 34 | 46.9 | | 128 | |
| | 2017.04-2020.10 | 7AT | R | L | Hatchback 4WD DAZA;DNWA | | GDS82169 | Drive Shaft | | 36 | | 59.5 | 40 | 583 | |
| | 2017.04-2020.10 | 7AT | R | R | Hatchback 4WD DAZA;DNWA | | GDS82170 | Drive Shaft | | 36 | | 59.5 | 40 | 620 | |
| | 2017.04-2020.10 | 7AT | R | L/R | Hatchback 4WD DAZA;DNWA | | GCO83037 | Outer Joint | | 36 | 30 | 59.5 | 40.5 | 56 | I |
| | 2017.04-2020.10 | 7AT | R | L/R | Hatchback 4WD DAZA;DNWA | | GCI53002 | Inner Joint | | | 33 | | | 34 | |
| | 2017.04-2020.10 | 7AT | R | L/R | Hatchback 4WD DAZA;DNWA | | GCI82447 | Inner Joint | | | 33 | | | 34 | |
| | 2021.07- | 7DCT | F | L | Hatchback 4WD DNWC;DXHB | | GDS81265 | Drive Shaft | | 36 | 37 | 59.5 | 40 | 557 | |
| | 2021.07- | 7DCT | F | R | Hatchback 4WD DNWC;DXHB | | GDS61347 | Drive Shaft | | 36 | 40 | 59.5 | 40 | 593 | |
| | 2021.07- | 7DCT | F | L/R | Hatchback 4WD DNWC;DXHB | | GCO83101 | Outer Joint | | 36 | 27 | 59.5 | 40 | 65 | M |
| | 2021.07- | 7DCT | F | L | Hatchback 4WD DNWC;DXHB | | GCI81158 | Inner Joint | | 37 | 34 | 34.5 | 65.5 | 83 | |
| | 2021.07- | 7DCT | F | R | Hatchback 4WD DNWC;DXHB | | GCI61048 | Inner Joint | | 40 | 34 | 46.9 | | 127.5 | |
| | 2021.07- | 7DCT | F | R | Hatchback 4WD DNWC;DXHB | | GCI61084 | Inner Joint | | 40 | 34 | 46.9 | | 128 | |
| 2.5 (299 kw) | 2022.11- | 7DCT | F | L | Hatchback 4WD DNWD | | GDS81265 | Drive Shaft | | 36 | 37 | 59.5 | 40 | 557 | |
| | 2022.11- | 7DCT | F | L | Hatchback 4WD DNWD | | GCI81158 | Inner Joint | | 37 | 34 | 34.5 | 65.5 | 83 | |
| | 2022.11- | AT | F | L/R | Hatchback 4WD DNWD | | GCO83101 | Outer Joint | | 36 | 27 | 59.5 | 40 | 65 | M |
| | 2022.11- | AT | F | R | Hatchback 4WD DNWD | TJ | GCI61048 | Inner Joint | | 40 | 34 | 46.9 | | 127.5 | |
| | 2022.11- | AT | F | R | Hatchback 4WD DNWD | | GCI61084 | Inner Joint | | 40 | 34 | 46.9 | | 128 | |
| **RS4 Cabrio Quattro** | | | | | | | | | | | | | | | |
| 4.2 (309 kw) | 2006.02-2008.12 | 6MT | F | L | Convertible 4WD BNS | | GDS83057 | Drive Shaft | 45W | 38 | | 59.5 | 34.5 | 593 | |
| | 2006.02-2008.12 | 6MT | F | R | Convertible 4WD BNS | | GDS83058 | Drive Shaft | 45W | 38 | | 59.5 | 34.5 | 613 | |
| | 2006.02-2008.12 | | F | L/R | Convertible 4WD BNS | | GCO83067 | Outer Joint | 45W | 38 | 27 | 59.5 | 34 | 68 | M |
| | 2006.02-2008.12 | | F | L | Convertible 4WD BNS | Date To:2008.12 | GCI61076 | Inner Joint | | | 34 | | | 85 | |
| | 2006.02-2008.12 | | F | L/R | Convertible 4WD BNS | TJ | GCI61044 | Inner Joint | | | 34 | | | 85 | |
| | 2006.02-2008.12 | 6MT | R | L/R | Convertible 4WD BNS | Date to:2006.05 | GCI61010 | Inner Joint | | | 28 | | | 32 | |
| | 2006.02-2008.12 | | R | L/R | Convertible 4WD BNS | | GDS82156 | Drive Shaft | 45W | 38 | | 59.5 | 34.5 | 612 | |
| **RS4 Quattro** | | | | | | | | | | | | | | | |
| 2.7 (280 kw) | 2000.06-2001.09 | | F | L/R | Estate 4WD ASJ/AZR | | GCO83019 | Outer Joint | 45W | 38 | 27 | 59.5 | 34.5 | 63 | I |
| | 2000.06-2001.09 | 6MT | R | L/R | Estate 4WD ASJ/AZR | | GCO83026 | Outer Joint | 45T | 33 | 30 | 53 | 30 | 62 | I |
| | 2000.06-2001.09 | | F/R | L/R | Estate 4WD ASJ/AZR | | GCI83001 | Inner Joint | | | 28 | | | 32 | |
| 2.9 (331 kw) | 2017.10- | 8AT | F | L/R | Estate 4WD DECA | | GDS82075 | Drive Shaft | | 42 | | 76.5 | 34 | 463 | |
| | 2017.10- | 8AT | F | L/R | Estate 4WD DECA | | GCO81357 | Outer Joint | | 42 | 28 | 76.5 | 34 | 54 | I |
| | 2017.10- | 8AT | F | L/R | Estate 4WD DECA | | GCI61077 | Inner Joint | | | 34 | | | 88 | |
| | 2017.10- | 8AT | R | L/R | Estate 4WD DECA | For PR code:GH1 | GDS82252 | Drive Shaft | | 38 | | 59.5 | 34 | 627 | |
| | 2017.10- | 8AT | R | L/R | Estate 4WD DECA | Rear differential Torque Vectoring:Without rear differential lock | GCI81702 | Outer Joint | | 38 | 28 | 59.5 | 34 | 81.5 | |
| | 2017.10- | 8AT | R | L/R | Estate 4WD DECA | For PR code:GH1 | GCI61069 | Inner Joint | | | 28 | | | 32 | |
| | 2017.10- | AT | R | L | Estate 4WD DECA | For PR code:GH2;For vehicles with AWD & variable torque dist;Mounting Type:Bolted | GDS58136 | Drive Shaft | | 38 | | 59.5 | 34 | 586 | |
| | 2017.10- | AT | R | R | Estate 4WD DECA | For PR code:GH2;For vehicles with AWD & variable torque dist;Mounting Type:Bolted | GDS58137 | Drive Shaft | | 38 | | 59.5 | 34 | 545 | |
| | 2017.10- | AT | R | L/R | Estate 4WD DECA | For PR code:GH2;For vehicles with AWD & variable torque dist;Mounting Type:Bolted | GCI84020 | Inner Joint | | | 28 | | | 32 | |
| 4.2 (309 kw) | 2005.09-2008.06 | 6MT | F | L | Estate 4WD BNS | | GDS83057 | Drive Shaft | 45W | 38 | | 59.5 | 34.5 | 593 | |
| | 2005.09-2008.06 | 6MT | F | R | Estate 4WD BNS | | GDS83058 | Drive Shaft | 45W | 38 | | 59.5 | 34.5 | 613 | |
| | 2005.09-2008.06 | MT | F | L/R | Estate 4WD BNS | | GCO83078 | Outer Joint | 45W | 38 | 27 | 59.5 | 34.5 | 63 | M |
| | 2005.09-2008.06 | | F | L/R | Estate 4WD BNS | | GCO83067 | Outer Joint | 45W | 38 | 27 | 59.5 | 34 | 68 | M |
| | 2005.09-2008.06 | | F | L | Estate 4WD BNS | Date From:2006.04 | GCI61076 | Inner Joint | | | 34 | | | 85 | |
| | 2005.09-2008.06 | | F | L/R | Estate 4WD BNS | TJ | GCI61044 | Inner Joint | | | 34 | | | 85 | |
| | 2005.09-2008.06 | 6MT | R | L/R | Estate 4WD BNS | Date to:2006.05,Chassis no. to:8E_6_905000 | GCI61010 | Inner Joint | | | 28 | | | 32 | |
| | 2005.09-2008.06 | | R | L/R | Estate 4WD BNS | | GDS82156 | Drive Shaft | 45W | 38 | | 59.5 | 34.5 | 612 | |
| | 2005.09-2008.06 | 6MT | F | L | Saloon 4WD BNS | | GDS83057 | Drive Shaft | 45W | 38 | | 59.5 | 34.5 | 593 | |
| | 2005.09-2008.06 | 6MT | F | R | Saloon 4WD BNS | | GDS83058 | Drive Shaft | 45W | 38 | | 59.5 | 34.5 | 613 | |
| | 2005.09-2008.06 | MT | F | | Saloon 4WD BNS | | GCO83078 | Outer Joint | 45W | 38 | 27 | 59.5 | 34.5 | 63 | M |
| | 2005.09-2008.06 | | F | L/R | Saloon 4WD BNS | | GCO83067 | Outer Joint | 45W | 38 | 27 | 59.5 | 34 | 68 | M |
| | 2005.09-2008.06 | | F | L | Saloon 4WD BNS | AAR | GCI61076 | Inner Joint | | | 34 | | | 85 | |

| | YEAR | TRANSM. | F/R | L/R | BODY STYLE & DRIVE TYPE & ENGINE | REMARKS | G-AP Ref. | PRODUCT | ABS | Technical Specifications A | B | C | H | L | P |
|---|---|---|---|---|---|---|---|---|---|---|---|---|---|---|---|
| **AUDI** | | | | | | | | | | | | | | | |
| **RS4 Quattro** | | | | | | | | | | | | | | | |
| 4.2 (309 kw) | 2005.09-2008.06 | | F | L/R | Saloon 4WD BNS | TJ | GCI61044 | Inner Joint | | | 34 | | | 85 | |
| | 2005.09-2008.06 | 6MT | R | L/R | Saloon 4WD BNS | Date to:2006.05,Chassis no. to:8E_6_905000 | GCI61010 | Inner Joint | | | 28 | | | 32 | |
| | 2005.09-2008.06 | | R | L/R | Saloon 4WD BNS | | GDS82156 | Drive Shaft | 45W | 38 | | 59.5 | 34.5 | 612 | |
| 4.2 (331 kw) | 2012.05-2015.08 | 7AT | F | L/R | Estate 4WD CFSA | | GDS83291 | Drive Shaft | | 42 | | 76.4 | 34 | 464 | |
| | 2012.05-2015.08 | 7AT | F | L/R | Estate 4WD CFSA | | GCO83103 | Outer Joint | | 42 | 28 | 76.4 | 34 | 54 | I |
| | 2012.05-2015.08 | 7AT | F | L/R | Estate 4WD CFSA | | GCI83022 | Inner Joint | | | 34 | | | 88.5 | |
| | 2012.05-2015.08 | 7AT | R | L | Estate 4WD CFSA | For PR code:GH2,For vehicles with electronic limited slip diff. | GDS82078 | Drive Shaft | | 42 | | 76.5 | 34 | 587 | |
| | 2012.05-2015.08 | 7AT | R | R | Estate 4WD CFSA | For PR code:GH2,For vehicles with electronic limited slip diff. | GDS82079 | Drive Shaft | | 42 | | 76.5 | 34 | 545 | |
| | 2012.05-2015.08 | 7AT | R | L/R | Estate 4WD CFSA | For PR code:GH1 | GDS82080 | Drive Shaft | | 42 | | 76.5 | 34 | 629 | |
| | 2012.05-2015.08 | 7AT | R | L/R | Estate 4WD CFSA | | GCI61107 | Inner Joint | | 42 | 28 | 76.5 | 34 | 82 | |
| | 2012.05-2015.08 | 7AT | R | L/R | Estate 4WD CFSA | | GCI81610 | Inner Joint | | | 28 | | | 28 | |
| **RS5 Cabrio Quattro** | | | | | | | | | | | | | | | |
| 4.2 (331 kw) | 2012.11-2015.08 | 7AT | F | L/R | Convertible 4WD CFSA | | GDS83291 | Drive Shaft | | 42 | | 76.4 | 34 | 464 | |
| | 2012.11-2015.08 | 7AT | F | L/R | Convertible 4WD CFSA | | GCO83103 | Outer Joint | | 42 | 28 | 76.4 | 34 | 54 | I |
| | 2012.11-2015.08 | 7AT | F | L/R | Convertible 4WD CFSA | | GCI83022 | Inner Joint | | | 34 | | | 88.5 | |
| | 2012.11-2015.08 | 7AT | R | L | Convertible 4WD CFSA | For PR code:GH2,For vehicles with electronic limited slip diff. | GDS82078 | Drive Shaft | | 42 | | 76.5 | 34 | 587 | |
| | 2012.11-2015.08 | 7AT | R | R | Convertible 4WD CFSA | For PR code:GH2,For vehicles with electronic limited slip diff. | GDS82079 | Drive Shaft | | 42 | | 76.5 | 34 | 545 | |
| | 2012.11-2015.08 | 7AT | R | L/R | Convertible 4WD CFSA | For PR code:GH1 | GDS82080 | Drive Shaft | | 42 | | 76.5 | 34 | 629 | |
| | 2012.11-2015.08 | 7AT | R | L/R | Convertible 4WD CFSA | | GCI61107 | Inner Joint | | 42 | 28 | 76.5 | 34 | 82 | |
| | 2012.11-2015.08 | 7AT | R | L/R | Convertible 4WD CFSA | | GCI81610 | Inner Joint | | | 28 | | | 28 | |
| **RS5 Quattro** | | | | | | | | | | | | | | | |
| 2.9 (331 kw) | 2017.04- | 8AT | F | L/R | Coupe 4WD DECA | | GDS82075 | Drive Shaft | | 42 | | 76.5 | 34 | 463 | |
| | 2017.04- | 8AT | F | L/R | Coupe 4WD DECA | | GCO81357 | Outer Joint | | 42 | 28 | 76.5 | 34 | 54 | I |
| | 2017.04- | 8AT | F | L/R | Coupe 4WD DECA | | GCI61077 | Inner Joint | | | 34 | | | 88 | |
| | 2017.04- | 8AT | R | L/R | Coupe 4WD DECA | For PR code:GH1 | GDS82252 | Drive Shaft | | 38 | | 59.5 | 34 | 627 | |
| | 2017.04- | 8AT | R | L/R | Coupe 4WD DECA | Rear differential Torque Vectoring;Without rear differential lock | GCI81702 | Outer Joint | | 38 | 28 | 59.5 | 34 | 81.5 | |
| | 2017.04- | 8AT | R | L/R | Coupe 4WD DECA | For PR code:GH1 | GCI61069 | Inner Joint | | | 28 | | | 32 | |
| | 2017.04- | AT | R | L | Coupe 4WD DECA | For PR code:GH2;For vehicles with AWD & variable torque dist;Mounting Type:Bolted | GDS58136 | Drive Shaft | | 38 | | 59.5 | 34 | 586 | |
| | 2017.04- | AT | R | R | Coupe 4WD DECA | For PR code:GH2;For vehicles with AWD & variable torque dist;Mounting Type:Bolted | GDS58137 | Drive Shaft | | 38 | | 59.5 | 34 | 545 | |
| | 2017.04- | AT | R | L/R | Coupe 4WD DECA | For PR code:GH2;For vehicles with AWD & variable torque dist;Mounting Type:Bolted | GCI84020 | Inner Joint | | | 28 | | | 32 | |
| 4.2 (331 kw) | 2010.03-2017.01 | 7AT | F | L/R | Coupe 4WD CFSA | Date from:2011.11 | GDS83291 | Drive Shaft | | 42 | | 76.4 | 34 | 464 | |
| | 2010.03-2017.01 | 7AT | F | L/R | Coupe 4WD CFSA | | GCO83087 | Outer Joint | | 42 | 27 | 76.5 | 34 | 57 | M |
| | 2010.03-2017.01 | 7AT | F | L/R | Coupe 4WD CFSA | | GCO83103 | Outer Joint | | 42 | 28 | 76.4 | 34 | 54 | I |
| | 2010.03-2017.01 | 7AT | F | L/R | Coupe 4WD CFSA | | GCI83022 | Inner Joint | | | 34 | | | 88.5 | |
| | 2010.03-2017.01 | 7DCT | F | L/R | Coupe 4WD CFSA | Date to:2011.10 | GDS83273 | Drive Shaft | | 42 | | 76.5 | 34 | 460 | |
| | 2010.03-2017.01 | 7AT | R | L | Coupe 4WD CFSA | Date to:2011.07,For PR code:GH2,For vehicles with electronic limited slip diff. | GDS81886 | Drive Shaft | | 42 | | 76.5 | 34 | 589 | |
| | 2010.03-2017.01 | 7AT | R | L | Coupe 4WD CFSA | Date from:2011.08,For PR code:GH2,For vehicles with electronic limited slip diff. | GDS82078 | Drive Shaft | | 42 | | 76.5 | 34 | 587 | |
| | 2010.03-2017.01 | 7AT | R | R | Coupe 4WD CFSA | Date to:2011.07,For PR code:GH2,For vehicles with electronic limited slip diff. | GDS81885 | Drive Shaft | | 42 | | 76.5 | 34 | 546 | |
| | 2010.03-2017.01 | 7AT | R | R | Coupe 4WD CFSA | Date from:2011.08,For PR code:GH2,For vehicles with electronic limited slip diff. | GDS82079 | Drive Shaft | | 42 | | 76.5 | 34 | 545 | |
| | 2010.03-2017.01 | 7AT | R | L/R | Coupe 4WD CFSA | Date to:2011.07,For PR code:GH1 | GDS81894 | Drive Shaft | | 42 | | 76.5 | 34 | 630 | |
| | 2010.03-2017.01 | 7AT | R | L/R | Coupe 4WD CFSA | Date from:2011.08,For PR code:GH1 | GDS82080 | Drive Shaft | | 42 | | 76.5 | 34 | 629 | |
| | 2010.03-2017.01 | 7AT | R | L/R | Coupe 4WD CFSA | | GCI61069 | Inner Joint | | | 28 | | | 32 | |
| | 2010.03-2017.01 | 7AT | R | L/R | Coupe 4WD CFSA | | GCI61107 | Inner Joint | | 42 | 28 | 76.5 | 34 | 82 | |
| | 2010.03-2017.01 | 7AT | R | L/R | Coupe 4WD CFSA | Date from:2011.08 | GCI81610 | Inner Joint | | | 28 | | | 28 | |
| **RS5 Sportback Quattro** | | | | | | | | | | | | | | | |
| 2.9 (331 kw) | 2018.06- | 8AT | F | L/R | Hatchback 4WD DECA | | GDS82075 | Drive Shaft | | 42 | | 76.5 | 34 | 463 | |
| | 2018.06- | 8AT | F | L/R | Hatchback 4WD DECA | | GCO81357 | Outer Joint | | 42 | 28 | 76.5 | 34 | 54 | I |
| | 2018.06- | 8AT | F | L/R | Hatchback 4WD DECA | | GCI61077 | Inner Joint | | | 34 | | | 88 | |
| | 2018.06- | 8AT | R | L/R | Hatchback 4WD DECA | Rear differential Torque Vectoring;Without rear differential lock | GCI81702 | Outer Joint | | 38 | 28 | 59.5 | 34 | 81.5 | |
| | 2018.06- | AT | R | L | Hatchback 4WD DECA | For PR code:GH2;For vehicles with AWD & variable torque dist;Mounting Type:Bolted | GDS58136 | Drive Shaft | | 38 | | 59.5 | 34 | 586 | |
| | 2018.06- | AT | R | R | Hatchback 4WD DECA | For PR code:GH2;For vehicles with AWD & variable torque dist;Mounting Type:Bolted | GDS58137 | Drive Shaft | | 38 | | 59.5 | 34 | 545 | |
| | 2018.06- | AT | R | L/R | Hatchback 4WD DECA | For PR code:GH2;For vehicles with AWD & variable torque dist;Mounting Type:Bolted | GCI84020 | Inner Joint | | | 28 | | | 32 | |
| | 2018.06- | | R | L/R | Hatchback 4WD DECA | For PR code:GH1 | GDS82252 | Drive Shaft | | 38 | | 59.5 | 34 | 627 | |
| **RS6 Quattro** | | | | | | | | | | | | | | | |
| 4.0 (412 kw) | 2013.01-2018.09 | 8AT | F | L/R | Estate 4WD CRDB;CWUB | | GDS61290 | Drive Shaft | | 42 | | 76.4 | 34 | 493 | |
| | 2013.01-2018.09 | 8AT | F | L/R | Estate 4WD CRDB;CWUB | | GCO83103 | Outer Joint | | 42 | 28 | 76.4 | 34 | 54 | I |
| | 2013.01-2018.09 | 8AT | F | L/R | Estate 4WD CRDB;CWUB | | GCI83022 | Inner Joint | | | 34 | | | 88.5 | |
| | 2013.01-2018.09 | 8AT | R | L | Estate 4WD CRDB;CWUB | For PR code:GH2,For vehicles with electronic LTD slip differential | GDS61291 | Drive Shaft | | 42 | | 76.5 | 34 | 620 | |
| | 2013.01-2018.09 | 8AT | R | R | Estate 4WD CRDB;CWUB | For PR code:GH2,For vehicles with electronic LTD slip differential | GDS82251 | Drive Shaft | | 42 | | 76.5 | 34 | 576 | |
| | 2013.01-2018.09 | 8AT | R | L/R | Estate 4WD CRDB;CWUB | For PR code:GH1 | GDS83368 | Drive Shaft | | 42 | | 76.5 | 34 | 660 | |
| | 2013.01-2018.09 | 8AT | R | L/R | Estate 4WD CRDB;CWUB | | GCI83039 | Outer Joint | | 42 | 28 | 76.5 | 34 | 72 | |
| | 2013.01-2018.09 | 8AT | R | L/R | Estate 4WD CRDB;CWUB | | GCI61069 | Inner Joint | | | 28 | | | 32 | |
| 4.0 (441 kw) | 2019.09- | 8AT | F | L/R | Estate 4WD DJPB;DWLA;DYGB | | GCO82603 | Outer Joint | | 42 | 30 | 76.5 | 34 | 60 | I |
| | 2019.09- | 8AT | F | L/R | Estate 4WD DJPB;DWLA;DYGB | | GCI81397 | Inner Joint | | | 27 | | | 89 | |
| 4.0 (445 kw) | 2015.11-2018.09 | 8AT | F | L/R | Estate 4WD CWUC | | GDS61290 | Drive Shaft | | 42 | | 76.4 | 34 | 493 | |

| | YEAR | TRANSM. | F/R | L/R | BODY STYLE & DRIVE TYPE & ENGINE | REMARKS | G-AP Ref. | PRODUCT | ABS | Technical Specifications A | B | C | H | L | P |
|---|---|---|---|---|---|---|---|---|---|---|---|---|---|---|---|
| **AUDI** | | | | | | | | | | | | | | | |
| **RS6 Quattro** | | | | | | | | | | | | | | | |
| 4.0 (445 kw) | 2015.11-2018.09 | 8AT | F | L/R | Estate 4WD CWUC | | GCO83103 | Outer Joint | | 42 | 28 | 76.4 | 34 | 54 | I |
| | 2015.11-2018.09 | 8AT | F | L/R | Estate 4WD CWUC | | GCI83022 | Inner Joint | | | 34 | | | 88.5 | |
| | 2015.11-2018.09 | 8AT | R | L | Estate 4WD CWUC | For PR code:GH2,For vehicles with electronic LTD slip differential | GDS61291 | Drive Shaft | | 42 | | 76.5 | 34 | 620 | |
| | 2015.11-2018.09 | 8AT | R | R | Estate 4WD CWUC | For PR code:GH2,For vehicles with electronic LTD slip differential | GDS82251 | Drive Shaft | | 42 | | 76.5 | 34 | 576 | |
| | 2015.11-2018.09 | 8AT | R | L/R | Estate 4WD CWUC | For PR code:GH1 | GDS83368 | Drive Shaft | | 42 | | 76.5 | 34 | 660 | |
| | 2015.11-2018.09 | 8AT | R | L/R | Estate 4WD CWUC | | GCI83039 | Outer Joint | | 42 | 28 | 76.5 | 34 | 72 | |
| | 2015.11-2018.09 | 8AT | R | L/R | Estate 4WD CWUC | | GCI61069 | Inner Joint | | | 28 | | | 32 | |
| 4.0 (463 kw) | 2023.01- | 8AT | F | L/R | Estate 4WD DYGA | | GCO82603 | Outer Joint | | 42 | 30 | 76.5 | 34 | 60 | I |
| | 2023.01- | AT | F | L/R | Estate 4WD DYGA | | GCI81397 | Inner Joint | | | 27 | | | 89 | |
| 4.2 (331 kw) | 2002.07-2004.09 | 5AT | F | L | Estate 4WD BCY | | GDS83066 | Drive Shaft | 45W | 38 | | 59.5 | 34.5 | 544 | |
| | 2002.07-2004.09 | 5AT | F | L/R | Estate 4WD BCY | | GCI83007 | Inner Joint | | | 34 | | | 85 | |
| | 2002.07-2004.09 | | F | L/R | Estate 4WD BCY | | GCO83019 | Outer Joint | 45W | 38 | 27 | 59.5 | 34.5 | 63 | I |
| | 2002.07-2004.09 | | F | L/R | Estate 4WD BCY | | GCI61044 | Inner Joint | | | 34 | | | 85 | |
| | 2002.07-2004.09 | | R | L/R | Estate 4WD BCY | Date To:2004.09 | GCI83001 | Inner Joint | | | 28 | | | 32 | |
| | 2002.07-2004.12 | 5AT | F | L | Saloon 4WD BCY | | GDS83066 | Drive Shaft | 45W | 38 | | 59.5 | 34.5 | 544 | |
| | 2002.07-2004.12 | 5AT | F | L/R | Saloon 4WD BCY | | GCI83007 | Inner Joint | | | 34 | | | 85 | |
| | 2002.07-2004.12 | | F | L/R | Saloon 4WD BCY | | GCO83019 | Outer Joint | 45W | 38 | 27 | 59.5 | 34.5 | 63 | I |
| | 2002.07-2004.12 | | F | L/R | Saloon 4WD BCY | | GCI61044 | Inner Joint | | | 34 | | | 85 | |
| | 2002.07-2004.12 | | R | L/R | Saloon 4WD BCY | | GCI83001 | Inner Joint | | | 28 | | | 32 | |
| 4.2 (353 kw) | 2004.04-2004.09 | 5AT | F | L | Estate 4WD BRV | | GDS83066 | Drive Shaft | 45W | 38 | | 59.5 | 34.5 | 544 | |
| | 2004.04-2004.09 | 5AT | F | L/R | Estate 4WD BRV | | GCI83007 | Inner Joint | | | 34 | | | 85 | |
| | 2004.04-2004.09 | AT | F | | Estate 4WD BRV | | GCO99351 | Outer Joint | | 38 | 29 | 59.5 | 34 | 70 | M |
| | 2004.04-2004.09 | | F | L/R | Estate 4WD BRV | | GCO83019 | Outer Joint | 45W | 38 | 27 | 59.5 | 34.5 | 63 | I |
| | 2004.04-2004.09 | | F | L/R | Estate 4WD BRV | | GCI61044 | Inner Joint | | | 34 | | | 85 | |
| | 2004.04-2004.09 | | R | L/R | Estate 4WD BRV | Date To:2004.09 | GCI83001 | Inner Joint | | | 28 | | | 32 | |
| 5.0 (426 kw) | 2008.04-2010.08 | 6AT | F | L | Estate 4WD BUH | | GDS81919 | Drive Shaft | | 38 | | 59.5 | 34 | 552 | |
| | 2008.04-2010.08 | 6AT | F | R | Estate 4WD BUH | | GDS81917 | Drive Shaft | | 38 | | 59.5 | 34 | 470 | |
| | 2008.04-2010.08 | 6AT | F | L/R | Estate 4WD BUH | | GCO99351 | Outer Joint | | 38 | 29 | 59.5 | 34 | 70 | M |
| | 2008.04-2010.08 | 6AT | F | L/R | Estate 4WD BUH | | GCI81545 | Inner Joint | | | 27 | | | 92 | |
| | 2008.04-2010.08 | 6AT | R | L/R | Estate 4WD BUH | | GDS81915 | Drive Shaft | | 38 | | 59.5 | 34 | 650 | |
| | 2008.04-2010.08 | 6AT | R | L/R | Estate 4WD BUH | | GCI61069 | Inner Joint | | | 28 | | | 32 | |
| | 2008.09-2010.08 | 6AT | F | L | Saloon 4WD BUH | | GDS81919 | Drive Shaft | | 38 | | 59.5 | 34 | 552 | |
| | 2008.09-2010.08 | 6AT | F | R | Saloon 4WD BUH | | GDS81917 | Drive Shaft | | 38 | | 59.5 | 34 | 470 | |
| | 2008.09-2010.08 | 6AT | F | L/R | Saloon 4WD BUH | | GCO99351 | Outer Joint | | 38 | 29 | 59.5 | 34 | 70 | M |
| | 2008.09-2010.08 | 6AT | F | L/R | Saloon 4WD BUH | | GCI81545 | Inner Joint | | | 27 | | | 92 | |
| | 2008.09-2010.08 | 6AT | R | L/R | Saloon 4WD BUH | | GDS81915 | Drive Shaft | | 38 | | 59.5 | 34 | 650 | |
| | 2008.09-2010.08 | 6AT | R | L/R | Saloon 4WD BUH | | GCI61069 | Inner Joint | | | 28 | | | 32 | |
| **RS7 Sportback Quattro** | | | | | | | | | | | | | | | |
| 4.0 (412 kw) | 2013.10-2018.04 | AT | F | L/R | Hatchback 4WD CRDB;CWUB | | GDS61290 | Drive Shaft | | 42 | | 76.4 | 34 | 493 | |
| | 2013.10-2018.04 | AT | F | L/R | Hatchback 4WD CRDB;CWUB | | GCO83103 | Outer Joint | | 42 | 28 | 76.4 | 34 | 54 | I |
| | 2013.10-2018.04 | AT | F | L/R | Hatchback 4WD CRDB;CWUB | | GCI83022 | Inner Joint | | | 34 | | | 88.5 | |
| | 2013.10-2018.04 | 8AT | R | L | Hatchback 4WD CRDB;CWUB | For PR code:GH2 | GDS61291 | Drive Shaft | | 42 | | 76.5 | 34 | 620 | |
| | 2013.10-2018.04 | 8AT | R | R | Hatchback 4WD CRDB;CWUB | For PR code:GH2 | GDS82251 | Drive Shaft | | 42 | | 76.5 | 34 | 576 | |
| | 2013.10-2018.04 | 8AT | R | L/R | Hatchback 4WD CRDB;CWUB | For PR code:GH1 | GDS83368 | Drive Shaft | | 42 | | 76.5 | 34 | 660 | |
| | 2013.10-2018.04 | 8AT | R | L/R | Hatchback 4WD CRDB;CWUB | | GCI83039 | Outer Joint | | 42 | 28 | 76.5 | 34 | 72 | |
| | 2013.10-2018.04 | 8AT | R | L/R | Hatchback 4WD CRDB;CWUB | | GCI61069 | Inner Joint | | | 28 | | | 32 | |
| 4.0 (441 kw) | 2019.10- | 8AT | F | L/R | Hatchback 4WD DJPB;DWLA;DYGB | | GCO82603 | Outer Joint | | 42 | 30 | 76.5 | 34 | 60 | I |
| | 2019.10- | 8AT | F | L/R | Hatchback 4WD DJPB;DWLA;DYGB | | GCI81397 | Inner Joint | | | 27 | | | 89 | |
| 4.0 (445 kw) | 2015.11-2018.04 | AT | F | L/R | Hatchback 4WD CWUC | | GDS61290 | Drive Shaft | | 42 | | 76.4 | 34 | 493 | |
| | 2015.11-2018.04 | AT | F | L/R | Hatchback 4WD CWUC | | GCO83103 | Outer Joint | | 42 | 28 | 76.4 | 34 | 54 | I |
| | 2015.11-2018.04 | AT | F | L/R | Hatchback 4WD CWUC | | GCI83022 | Inner Joint | | | 34 | | | 88.5 | |
| | 2015.11-2018.04 | 8AT | R | L | Hatchback 4WD CWUC | For PR code:GH2 | GDS61291 | Drive Shaft | | 42 | | 76.5 | 34 | 620 | |
| | 2015.11-2018.04 | 8AT | R | R | Hatchback 4WD CWUC | For PR code:GH2 | GDS82251 | Drive Shaft | | 42 | | 76.5 | 34 | 576 | |
| | 2015.11-2018.04 | 8AT | R | L/R | Hatchback 4WD CWUC | For PR code:GH1 | GDS83368 | Drive Shaft | | 42 | | 76.5 | 34 | 660 | |
| | 2015.11-2018.04 | 8AT | R | L/R | Hatchback 4WD CWUC | | GCI83039 | Outer Joint | | 42 | 28 | 76.5 | 34 | 72 | |
| | 2015.11-2018.04 | 8AT | R | L/R | Hatchback 4WD CWUC | | GCI61069 | Inner Joint | | | 28 | | | 32 | |
| 4.0 (463 kw) | 2023.01- | 8AT | F | L/R | Hatchback 4WD DYGA | | GCO82603 | Outer Joint | | 42 | 30 | 76.5 | 34 | 60 | I |
| | 2023.01- | AT | F | L/R | Hatchback 4WD DYGA | | GCI81397 | Inner Joint | | | 27 | | | 89 | |
| **RSQ3 Quattro** | | | | | | | | | | | | | | | |
| 2.5 (228 kw) | 2013.10-2018.10 | 7AT | F | L | SUV 4WD CTSA | | GDS81265 | Drive Shaft | | 36 | 37 | 59.5 | 40 | 557 | |
| | 2013.10-2018.10 | 7AT | F | R | SUV 4WD CTSA | | GDS61347 | Drive Shaft | | 36 | 40 | 59.5 | 40 | 593 | |
| | 2013.10-2018.10 | AT | F | L/R | SUV 4WD CTSA | | GCO83101 | Outer Joint | | 36 | 27 | 59.5 | 40 | 65 | M |
| | 2013.10-2018.10 | AT | F | R | SUV 4WD CTSA | | GCI61048 | Inner Joint | | 40 | 34 | 46.9 | | 127.5 | |
| | 2013.10-2018.10 | | F | L | SUV 4WD CTSA | | GCI81158 | Inner Joint | | 37 | 34 | 34.5 | 65.5 | 83 | |
| | 2013.10-2018.10 | 7AT | R | L | SUV 4WD CTSA | | GDS61284 | Drive Shaft | | 36 | | 59.5 | 40 | 594 | |

| | YEAR | TRANSM. | F/R | L/R | BODY STYLE & DRIVE TYPE & ENGINE | REMARKS | G-AP Ref. | PRODUCT | ABS | Technical Specifications A | B | C | H | L | P |
|---|---|---|---|---|---|---|---|---|---|---|---|---|---|---|---|
| **AUDI** | | | | | | | | | | | | | | | |
| **RSQ3 Quattro** | | | | | | | | | | | | | | | |
| 2.5 (228 kw) | 2013.10-2018.10 | 7AT | R | R | SUV 4WD CTSA | | GDS61293 | Drive Shaft | | 36 | | 59.5 | 40 | 631 | |
| | 2013.10-2018.10 | 7AT | R | L/R | SUV 4WD CTSA | | GCO83037 | Outer Joint | | 36 | 30 | 59.5 | 40.5 | 56 | I |
| 2.5 (250 kw) | 2013.05-2018.10 | 7AT | F | L | SUV 4WD CZGA | | GDS81265 | Drive Shaft | | 36 | 37 | 59.5 | 40 | 557 | |
| | 2013.05-2018.10 | 7AT | F | R | SUV 4WD CZGA | | GDS61347 | Drive Shaft | | 36 | 40 | 59.5 | 40 | 593 | |
| | 2013.05-2018.10 | 7AT | F | L/R | SUV 4WD CZGA | | GCO83101 | Outer Joint | | 36 | 27 | 59.5 | 40 | 65 | M |
| | 2013.05-2018.10 | 7AT | F | L | SUV 4WD CZGA | | GCI81158 | Inner Joint | | 37 | 34 | 34.5 | 65.5 | 83 | |
| | 2013.05-2018.10 | 7AT | F | R | SUV 4WD CZGA | TJ | GCI61048 | Inner Joint | | 40 | 34 | 46.9 | | 127.5 | |
| | 2013.05-2018.10 | 7AT | F | R | SUV 4WD CZGA | AAR | GCI61084 | Inner Joint | | 40 | 34 | 46.9 | | 128 | |
| | 2013.05-2018.10 | 7AT | R | L | SUV 4WD CZGA | | GDS61284 | Drive Shaft | | 36 | | 59.5 | 40 | 594 | |
| | 2013.05-2018.10 | 7AT | R | R | SUV 4WD CZGA | | GDS61293 | Drive Shaft | | 36 | | 59.5 | 40 | 631 | |
| | 2013.05-2018.10 | 7AT | R | L/R | SUV 4WD CZGA | | GCO83037 | Outer Joint | | 36 | 30 | 59.5 | 40.5 | 56 | I |
| 2.5 (270 kw) | 2015.01-2018.10 | 7AT | F | L | SUV 4WD CZGB | | GDS81265 | Drive Shaft | | 36 | 37 | 59.5 | 40 | 557 | |
| | 2015.01-2018.10 | 7AT | F | R | SUV 4WD CZGB | | GDS61347 | Drive Shaft | | 36 | 40 | 59.5 | 40 | 593 | |
| | 2015.01-2018.10 | 7AT | F | L/R | SUV 4WD CZGB | | GCO83101 | Outer Joint | | 36 | 27 | 59.5 | 40 | 65 | M |
| | 2015.01-2018.10 | 7AT | F | L | SUV 4WD CZGB | | GCI81158 | Inner Joint | | 37 | 34 | 34.5 | 65.5 | 83 | |
| | 2015.01-2018.10 | 7AT | F | R | SUV 4WD CZGB | | GCI61048 | Inner Joint | | 40 | 34 | 46.9 | | 127.5 | |
| | 2015.01-2018.10 | 7AT | F | R | SUV 4WD CZGB | | GCI61084 | Inner Joint | | 40 | 34 | 46.9 | | 128 | |
| | 2015.01-2018.10 | 7AT | R | L | SUV 4WD CZGB | | GDS61284 | Drive Shaft | | 36 | | 59.5 | 40 | 594 | |
| | 2015.01-2018.10 | 7AT | R | R | SUV 4WD CZGB | | GDS61293 | Drive Shaft | | 36 | | 59.5 | 40 | 631 | |
| | 2015.01-2018.10 | 7AT | R | L/R | SUV 4WD CZGB | | GCI35026 | Outer Joint | | 36 | 33 | 59.5 | 40 | 61 | |
| | 2015.01-2018.10 | 7AT | R | L/R | SUV 4WD CZGB | | GCO83037 | Outer Joint | | 36 | 30 | 59.5 | 40.5 | 56 | I |
| | 2015.01-2018.10 | 7AT | R | L/R | SUV 4WD CZGB | | GCI53002 | Inner Joint | | | 33 | | | 34 | |
| 2.5 (294 kw) | 2019.10- | 7AT | F | L | SUV 4WD DAZA;DNWA | | GDS82351 | Drive Shaft | | 36 | 37 | 59.5 | 40 | 568 | |
| | 2019.10- | 7AT | F | R | SUV 4WD DAZA;DNWA | | GDS84257 | Drive Shaft | | 36 | 40 | 59.5 | 40 | 609 | |
| | 2019.10- | 7AT | F | L/R | SUV 4WD DAZA;DNWA | | GCO83101 | Outer Joint | | 36 | 27 | 59.5 | 40 | 65 | M |
| | 2019.10- | 7AT | F | L | SUV 4WD DAZA;DNWA | | GCI81158 | Inner Joint | | 37 | 34 | 34.5 | 65.5 | 83 | |
| | 2019.10- | 7AT | F | R | SUV 4WD DAZA;DNWA | | GCI61048 | Inner Joint | | 40 | 34 | 46.9 | | 127.5 | |
| | 2019.10- | 7AT | F | R | SUV 4WD DAZA;DNWA | | GCI61084 | Inner Joint | | 40 | 34 | 46.9 | | 128 | |
| **RSQ3 Sportback Quattro** | | | | | | | | | | | | | | | |
| 2.5 (294 kw) | 2019.10- | 7AT | F | L | SUV 4WD DAZA;DNWA | | GDS82351 | Drive Shaft | | 36 | 37 | 59.5 | 40 | 568 | |
| | 2019.10- | 7AT | F | R | SUV 4WD DAZA;DNWA | | GDS84257 | Drive Shaft | | 36 | 40 | 59.5 | 40 | 609 | |
| | 2019.10- | 7AT | F | L/R | SUV 4WD DAZA;DNWA | | GCO83101 | Outer Joint | | 36 | 27 | 59.5 | 40 | 65 | M |
| | 2019.10- | 7AT | F | L | SUV 4WD DAZA;DNWA | | GCI81158 | Inner Joint | | 37 | 34 | 34.5 | 65.5 | 83 | |
| | 2019.10- | 7AT | F | R | SUV 4WD DAZA;DNWA | TJ | GCI61048 | Inner Joint | | 40 | 34 | 46.9 | | 127.5 | |
| | 2019.10- | 7AT | F | R | SUV 4WD DAZA;DNWA | AAR | GCI61084 | Inner Joint | | 40 | 34 | 46.9 | | 128 | |
| **RSQ8 Quattro** | | | | | | | | | | | | | | | |
| 4.0 (441 kw) | 2019.09- | 8AT | F | L/R | SUV 4WD DHUB | | GCO82603 | Outer Joint | | 42 | 30 | 76.5 | 34 | 60 | I |
| | 2019.09- | 8AT | F | L/R | SUV 4WD DHUB | | GCI82522 | Inner Joint | | | 29 | | | 83.5 | |
| | 2019.09- | 8AT | R | L | SUV 4WD DHUB | For PR code:GH2,For vehicles with electronic ltd slip differential | GDS83984 | Drive Shaft | | 42 | | 76.5 | 34 | 603 | |
| | 2019.09- | 8AT | R | R | SUV 4WD DHUB | For PR code:GH2,For vehicles with electronic ltd slip differential | GDS83981 | Drive Shaft | | 42 | | 76.5 | 34 | 569 | |
| | 2019.09- | 8AT | R | L/R | SUV 4WD DHUB | For PR code:GH2,For vehicles with electronic ltd slip differential | GCO82550 | Outer Joint | | 42 | 30 | 76.5 | 34 | 94 | |
| | 2019.09- | 8AT | R | L/R | SUV 4WD DHUB | For PR code:GH2,For vehicles with electronic limited slip diff. | GCI35051 | Inner Joint | | | 30 | | | 30.5 | |
| 4.0 (471 kw) | 2024.07- | 8AT | R | L | SUV 4WD DWNA | For PR code:GH2,For vehicles with AWD & variable torque dist. | GDS83984 | Drive Shaft | | 42 | | 76.5 | 34 | 603 | |
| | 2024.07- | 8AT | R | R | SUV 4WD DWNA | For PR code:GH2,For vehicles with AWD & variable torque dist. | GDS83981 | Drive Shaft | | 42 | | 76.5 | 34 | 569 | |
| **S1 Quattro** | | | | | | | | | | | | | | | |
| 2.0 (170 kw) | 2014.03-2018.10 | 6MT | F | L | Hatchback 4WD CWZA | | GCI61002 | Inner Joint | | | 28 | | | 31.8 | |
| | 2014.03-2018.10 | 6MT | R | R | Hatchback 4WD CWZA | Date from:2015.10 | GDS61284 | Drive Shaft | | 36 | | 59.5 | 40 | 594 | |
| | 2014.03-2018.10 | 6MT | R | R | Hatchback 4WD CWZA | Date to:2015.09 | GDS61286 | Drive Shaft | | 36 | | 59.5 | 40 | 587 | |
| | 2014.03-2018.10 | 6MT | R | R | Hatchback 4WD CWZA | | GCI35026 | Outer Joint | | 36 | 33 | 59.5 | 40 | 61 | |
| | 2014.03-2018.10 | 6MT | R | R | Hatchback 4WD CWZA | Date from:2015.10 | GCI53002 | Inner Joint | | | 33 | | | 34 | |
| | 2014.03-2018.10 | 6MT | R | R | Hatchback 4WD CWZA | Date to:2015.09 | GCI61103 | Inner Joint | | | 33 | | | 32 | |
| **S1 Sportback Quattro** | | | | | | | | | | | | | | | |
| 2.0 (170 kw) | 2014.03-2018.10 | 6MT | F | L | Hatchback 4WD CWZA | | GCI61002 | Inner Joint | | | 28 | | | 31.8 | |
| | 2014.03-2018.10 | 6MT | R | R | Hatchback 4WD CWZA | Date from:2015.10 | GDS61284 | Drive Shaft | | 36 | | 59.5 | 40 | 594 | |
| | 2014.03-2018.10 | 6MT | R | R | Hatchback 4WD CWZA | Date to:2015.09 | GDS61286 | Drive Shaft | | 36 | | 59.5 | 40 | 587 | |
| | 2014.03-2018.10 | 6MT | R | R | Hatchback 4WD CWZA | | GCI35026 | Outer Joint | | 36 | 33 | 59.5 | 40 | 61 | |
| | 2014.03-2018.10 | 6MT | R | R | Hatchback 4WD CWZA | Date from:2015.10 | GCI53002 | Inner Joint | | | 33 | | | 34 | |
| | 2014.03-2018.10 | 6MT | R | R | Hatchback 4WD CWZA | Date to:2015.09 | GCI61103 | Inner Joint | | | 33 | | | 32 | |
| **S3 Cabrio Quattro** | | | | | | | | | | | | | | | |
| 2.0 (210 kw) | 2014.03-2016.07 | 6AT | F | L | Convertible 4WD CJXF | | GDS83295 | Drive Shaft | | 36 | | 59.5 | 40 | 491 | |
| | 2014.03-2016.07 | 6AT | F | R | Convertible 4WD CJXF | Diameter [mm]:42 | GDS81892 | Drive Shaft | | 36 | | 59.5 | 40 | 602 | |
| | 2014.03-2016.07 | 6AT | F | L/R | Convertible 4WD CJXF | | GCO83101 | Outer Joint | | 36 | 27 | 59.5 | 40 | 65 | M |
| | 2014.03-2016.07 | 6AT | F | L/R | Convertible 4WD CJXF | | GCI61069 | Inner Joint | | | 28 | | | 32 | |
| | 2014.03-2016.07 | 6AT | F | L/R | Convertible 4WD CJXF | | GCI82456 | Inner Joint | | | 28 | | | 32 | |
| | 2014.03-2016.07 | 6AT | R | L | Convertible 4WD CJXF | | GDS61286 | Drive Shaft | | 36 | | 59.5 | 40 | 587 | |

| | YEAR | TRANSM. | F/R | L/R | BODY STYLE & DRIVE TYPE & ENGINE | REMARKS | G-AP Ref. | PRODUCT | ABS | Technical Specifications A | B | C | H | L | P |
|---|---|---|---|---|---|---|---|---|---|---|---|---|---|---|---|
| **AUDI** | | | | | | | | | | | | | | | |
| **S3 Cabrio Quattro** | | | | | | | | | | | | | | | |
| 2.0 (210 kw) | 2014.03-2016.07 | 6AT | R | R | Convertible 4WD CJXF | | GDS61287 | Drive Shaft | | 36 | | 59.5 | 40 | 632 | |
| | 2014.03-2016.07 | 6AT | R | L/R | Convertible 4WD CJXF | | GCI35026 | Outer Joint | | 36 | 33 | 59.5 | 40 | 61 | |
| | 2014.03-2016.07 | 6AT | R | L/R | Convertible 4WD CJXF | | GCI61103 | Inner Joint | | | 33 | | | 32 | |
| 2.0 (213 kw) | 2016.07-2020.10 | 7AT | F | R | Convertible 4WD DJHB | Wheel Hub Diam [mm]:42,Date to:2017.09;Wheel Hub Diam [mm]:27,Date from:2017.10 | GDS81892 | Drive Shaft | | 36 | | 59.5 | 40 | 602 | |
| | 2016.07-2020.10 | 7AT | F | L/R | Convertible 4WD DJHB | | GCO83101 | Outer Joint | | 36 | 27 | 59.5 | 40 | 65 | M |
| | 2016.07-2020.10 | 7AT | F | L | Convertible 4WD DJHB | | GCI83028 | Inner Joint | | 37 | 28 | | 65.5 | 90.2 | |
| | 2016.07-2020.10 | 7AT | F | R | Convertible 4WD DJHB | | GCI61069 | Inner Joint | | | 28 | | | 32 | |
| | 2016.07-2020.10 | 7DCT | F | L | Convertible 4WD DJHB | | GDS84237 | Drive Shaft | | 36 | 37 | 59.5 | 40 | 560 | |
| | 2016.07-2020.10 | 7AT/7DCT | R | L/R | Convertible 4WD DJHB | | GCI35026 | Outer Joint | | 36 | 33 | 59.5 | 40 | 61 | |
| | 2016.07-2020.10 | 7DCT | R | L | Convertible 4WD DJHB | | GDS61286 | Drive Shaft | | 36 | | 59.5 | 40 | 587 | |
| | 2016.07-2020.10 | 7DCT | R | R | Convertible 4WD DJHB | | GDS61287 | Drive Shaft | | 36 | | 59.5 | 40 | 632 | |
| | 2016.07-2020.10 | 7DCT | R | L/R | Convertible 4WD DJHB | | GCI61103 | Inner Joint | | | 33 | | | 32 | |
| | 2016.07-2020.10 | 7DCT | R | L/R | Convertible 4WD DJHB | | GCI83008 | Inner Joint | | | 33 | | | 32 | |
| 2.0 (221 kw) | 2014.04-2020.10 | 6DCT | F | L | Convertible 4WD CJXC;DNUE | | GDS83295 | Drive Shaft | | 36 | | 59.5 | 40 | 491 | |
| | 2014.04-2020.10 | 6DCT | F | L/R | Convertible 4WD CJXC;DNUE | | GCO83101 | Outer Joint | | 36 | 27 | 59.5 | 40 | 65 | M |
| | 2014.04-2020.10 | 6DCT | F | L/R | Convertible 4WD CJXC;DNUE | | GCI61069 | Inner Joint | | | 28 | | | 32 | |
| | 2014.04-2020.10 | 6DCT | F | L/R | Convertible 4WD CJXC;DNUE | | GCI82456 | Inner Joint | | | 28 | | | 32 | |
| | 2014.04-2020.10 | 6MT/6DCT | F | R | Convertible 4WD CJXC;DNUE | Wheel Hub Diam [mm]:42 | GDS81892 | Drive Shaft | | 36 | | 59.5 | 40 | 602 | |
| | 2014.04-2020.10 | 7DCT | F | L | Convertible 4WD CJXC;DNUE | | GDS84237 | Drive Shaft | | 36 | 37 | 59.5 | 40 | 560 | |
| | 2014.04-2020.10 | 7DCT | F | R | Convertible 4WD CJXC;DNUE | Diameter [mm]:42,Date to:2017.09;Diameter [mm]:27,Date from:2017.10 | GDS81892 | Drive Shaft | | 36 | | 59.5 | 40 | 602 | |
| | 2014.04-2020.10 | 7DCT | F | L | Convertible 4WD CJXC;DNUE | | GCI83028 | Inner Joint | | 37 | 28 | | 65.5 | 90.2 | |
| | 2014.04-2020.10 | 6DCT/7DCT | R | L | Convertible 4WD CJXC;DNUE | | GDS61286 | Drive Shaft | | 36 | | 59.5 | 40 | 587 | |
| | 2014.04-2020.10 | 6DCT/7DCT | R | R | Convertible 4WD CJXC;DNUE | | GDS61287 | Drive Shaft | | 36 | | 59.5 | 40 | 632 | |
| | 2014.04-2020.10 | 6DCT/7DCT | R | L/R | Convertible 4WD CJXC;DNUE | | GCI35026 | Outer Joint | | 36 | 33 | 59.5 | 40 | 61 | |
| | 2014.04-2020.10 | 6DCT/7DCT | R | L/R | Convertible 4WD CJXC;DNUE | | GCI61103 | Inner Joint | | | 33 | | | 32 | |
| 2.0 (228 kw) | 2016.07-2020.10 | 7AT | F | R | Convertible 4WD DJHA | Wheel Hub Diam [mm]:42,Date to:2017.09;Wheel Hub Diam [mm]:27,Date from:2017.10 | GDS81892 | Drive Shaft | | 36 | | 59.5 | 40 | 602 | |
| | 2016.07-2020.10 | 7AT | F | L | Convertible 4WD DJHA | | GCI83028 | Inner Joint | | 37 | 28 | | 65.5 | 90.2 | |
| | 2016.07-2020.10 | 7AT | F | R | Convertible 4WD DJHA | | GCI61069 | Inner Joint | | | 28 | | | 32 | |
| | 2016.07-2020.10 | 7DCT | F | L | Convertible 4WD DJHA | | GDS84237 | Drive Shaft | | 36 | 37 | 59.5 | 40 | 560 | |
| | 2016.07-2020.10 | 7AT | R | L | Convertible 4WD DJHA | | GDS61286 | Drive Shaft | | 36 | | 59.5 | 40 | 587 | |
| | 2016.07-2020.10 | 7AT | R | R | Convertible 4WD DJHA | | GDS61287 | Drive Shaft | | 36 | | 59.5 | 40 | 632 | |
| | 2016.07-2020.10 | 7AT | R | L/R | Convertible 4WD DJHA | | GCI35026 | Outer Joint | | 36 | 33 | 59.5 | 40 | 61 | |
| | 2016.07-2020.10 | 7AT | R | L/R | Convertible 4WD DJHA | | GCI61103 | Inner Joint | | | 33 | | | 32 | |
| **S3 Quattro** | | | | | | | | | | | | | | | |
| 1.8 (154 kw) | 1998.11-2002.04 | 6MT | F | L | Hatchback 4WD AMK/APY/AUL | Date to:2001.06 | GDS61123 | Drive Shaft | | 36 | | 53 | 77.5 | 520 | |
| | 1998.11-2002.04 | 6MT | F | L | Hatchback 4WD AMK/APY/AUL | Chassis no. from:8L-1-114 001 8L-11002 001 | GDS83304 | Drive Shaft | | 36 | | 59.5 | 40 | 481 | |
| | 1998.11-2002.04 | 6MT | F | R | Hatchback 4WD AMK/APY/AUL | Chassis no. to:8L-1-114 000,8L-11002 000 | GDS61186 | Drive Shaft | | 36 | | 53 | 77.5 | 653 | |
| | 1998.11-2002.04 | 6MT | F | R | Hatchback 4WD AMK/APY/AUL | Chassis no. from:8L-1-114 001 8L-11002 001 | GDS83322 | Drive Shaft | | 36 | | 59.5 | 40 | 613 | |
| | 1998.11-2002.04 | 6MT | F | L/R | Hatchback 4WD AMK/APY/AUL | Date from:2001.07 | GCO61021 | Outer Joint | | 36 | 27 | 53 | 40 | 65 | I |
| | 1998.11-2002.04 | 6MT | F | L/R | Hatchback 4WD AMK/APY/AUL | Date to:2001.06 | GCO83035 | Outer Joint | | 36 | 27 | 53 | 77.5 | 65 | I |
| | 1998.11-2002.04 | | F | L/R | Hatchback 4WD AMK/APY/AUL | Date To:2001.06 | GCI83001 | Inner Joint | | | 28 | | | 32 | |
| | 1998.11-2002.04 | 6MT | R | L | Hatchback 4WD AMK/APY/AUL | | GDS82364 | Drive Shaft | | 36 | | 53 | 78.5 | 651 | |
| | 1998.11-2002.04 | 6MT | R | R | Hatchback 4WD AMK/APY/AUL | | GDS81587 | Drive Shaft | | 36 | | 53 | 78.5 | 522 | |
| | 1998.11-2002.04 | 6MT | R | L/R | Hatchback 4WD AMK/APY/AUL | | GCI53002 | Inner Joint | | | 33 | | | 34 | |
| | 1998.11-2002.04 | | R | L/R | Hatchback 4WD AMK/APY/AUL | | GCO83033 | Outer Joint | | 36 | 30 | 53 | 78.5 | 51 | I |
| | 1998.11-2002.04 | | R | L/R | Hatchback 4WD AMK/APY/AUL | | GCI83011 | Inner Joint | | | 33 | | | 34 | |
| 1.8 (165 kw) | 2001.08-2003.06 | 6MT | F | L | Hatchback 4WD BAM | | GDS83304 | Drive Shaft | | 36 | | 59.5 | 40 | 481 | |
| | 2001.08-2003.06 | 6MT | F | R | Hatchback 4WD BAM | | GDS83322 | Drive Shaft | | 36 | | 59.5 | 40 | 613 | |
| | 2001.08-2003.06 | MT | F | R | Hatchback 4WD BAM | Chassis no. to:8L-1-114 000;Chassis no. to:8L-11002 000 | GDS61186 | Drive Shaft | | 36 | | 53 | 77.5 | 653 | |
| | 2001.08-2003.06 | | F | L/R | Hatchback 4WD BAM | Date From:2001.07 | GCO61021 | Outer Joint | | 36 | 27 | 53 | 40 | 65 | I |
| | 2001.08-2003.06 | 6MT | R | L | Hatchback 4WD BAM | | GDS82364 | Drive Shaft | | 36 | | 53 | 78.5 | 651 | |
| | 2001.08-2003.06 | 6MT | R | R | Hatchback 4WD BAM | | GDS81587 | Drive Shaft | | 36 | | 53 | 78.5 | 522 | |
| | 2001.08-2003.06 | 6MT | R | L/R | Hatchback 4WD BAM | | GCI53002 | Inner Joint | | | 33 | | | 34 | |
| | 2001.08-2003.06 | | R | L/R | Hatchback 4WD BAM | | GCO83033 | Outer Joint | | 36 | 30 | 53 | 78.5 | 51 | I |
| | 2001.08-2003.06 | | R | L/R | Hatchback 4WD BAM | | GCI83011 | Inner Joint | | | 33 | | | 34 | |
| 2.0 (188 kw) | 2007.02-2012.08 | 6AT/6MT | F | L | Hatchback 4WD BZC;CDLC | | GDS83295 | Drive Shaft | | 36 | | 59.5 | 40 | 491 | |
| | 2007.02-2012.08 | 6AT/6MT | F | R | Hatchback 4WD BZC;CDLC | | GDS83266 | Drive Shaft | | 36 | | 59.5 | 40 | 601 | |
| | 2007.02-2012.08 | 6AT/6MT | F | L/R | Hatchback 4WD BZC;CDLC | | GCI83016 | Inner Joint | | | 28 | | | 32 | |
| | 2007.02-2012.08 | MT/Semi-AT | F | L | Hatchback 4WD BZC;CDLC | | GDS83236 | Drive Shaft | | 36 | | 59.5 | 40 | 484 | |
| | 2007.02-2012.08 | | F | L/R | Hatchback 4WD BZC;CDLC | | GCO83002 | Outer Joint | | 36 | 27 | 59.5 | 40 | 66 | I |
| | 2007.02-2012.08 | 6AT/6MT | R | L | Hatchback 4WD BZC;CDLC | | GDS61284 | Drive Shaft | | 36 | | 59.5 | 40 | 594 | |
| | 2007.02-2012.08 | 6AT/6MT | R | R | Hatchback 4WD BZC;CDLC | | GDS61293 | Drive Shaft | | 36 | | 59.5 | 40 | 631 | |
| | 2007.02-2012.08 | 6AT/6MT | R | L/R | Hatchback 4WD BZC;CDLC | | GCI35026 | Outer Joint | | 36 | 33 | 59.5 | 40 | 61 | |
| | 2007.02-2012.08 | 6AT/6MT | R | L/R | Hatchback 4WD BZC;CDLC | | GCO83037 | Outer Joint | | 36 | 30 | 59.5 | 40.5 | 56 | I |
| | 2007.02-2012.08 | 6AT/6MT | R | L/R | Hatchback 4WD BZC;CDLC | | GCI53002 | Inner Joint | | | 33 | | | 34 | |

| | YEAR | TRANSM. | F/R | L/R | BODY STYLE & DRIVE TYPE & ENGINE | REMARKS | G-AP Ref. | PRODUCT | ABS | Technical Specifications A | B | C | H | L | P |
|---|---|---|---|---|---|---|---|---|---|---|---|---|---|---|---|
| **AUDI** | | | | | | | | | | | | | | | |
| **S3 Quattro** | | | | | | | | | | | | | | | |
| 2.0 (188 kw) | 2007.02-2012.08 | 6AT/6MT | R | L/R | Hatchback 4WD BZC;CDLC | Date to:2012.05 | GCI82447 | Inner Joint | | | 33 | | | 34 | |
| 2.0 (195 kw) | 2006.11-2012.08 | 6AT/6MT | F | L | Hatchback 4WD BHZ;CDLA | | GDS83295 | Drive Shaft | | 36 | | 59.5 | 40 | 491 | |
| | 2006.11-2012.08 | 6AT/6MT | F | R | Hatchback 4WD BHZ;CDLA | | GDS83266 | Drive Shaft | | 36 | | 59.5 | 40 | 601 | |
| | 2006.11-2012.08 | 6AT/6MT | F | L/R | Hatchback 4WD BHZ;CDLA | | GCI83016 | Inner Joint | | | 28 | | | 32 | |
| | 2006.11-2012.08 | MT/Semi-AT | F | L | Hatchback 4WD BHZ;CDLA | | GDS83236 | Drive Shaft | | 36 | | 59.5 | 40 | 484 | |
| | 2006.11-2012.08 | | F | L/R | Hatchback 4WD BHZ;CDLA | | GCO83002 | Outer Joint | | 36 | 27 | 59.5 | 40 | 66 | I |
| | 2006.11-2012.08 | 6AT/6MT | R | L | Hatchback 4WD BHZ;CDLA | | GDS61284 | Drive Shaft | | 36 | | 59.5 | 40 | 594 | |
| | 2006.11-2012.08 | 6AT/6MT | R | R | Hatchback 4WD BHZ;CDLA | | GDS61293 | Drive Shaft | | 36 | | 59.5 | 40 | 631 | |
| | 2006.11-2012.08 | 6AT/6MT | R | L/R | Hatchback 4WD BHZ;CDLA | | GCI35026 | Outer Joint | | 36 | 33 | 59.5 | 40 | 61 | |
| | 2006.11-2012.08 | 6AT/6MT | R | L/R | Hatchback 4WD BHZ;CDLA | | GCO83037 | Outer Joint | | 36 | 30 | 59.5 | 40.5 | 56 | I |
| | 2006.11-2012.08 | 6AT/6MT | R | L/R | Hatchback 4WD BHZ;CDLA | | GCI53002 | Inner Joint | | | 33 | | | 34 | |
| | 2006.11-2012.08 | 6AT/6MT | R | L/R | Hatchback 4WD BHZ;CDLA | Date to:2012.05 | GCI82447 | Inner Joint | | | 33 | | | 34 | |
| 2.0 (206 kw) | 2013.02-2014.07 | 6AT | F | L | Hatchback 4WD CJXB | | GDS83295 | Drive Shaft | | 36 | | 59.5 | 40 | 491 | |
| | 2013.02-2014.07 | 6AT | F | R | Hatchback 4WD CJXB | Wheel Hub Diam [mm]:42 | GDS81892 | Drive Shaft | | 36 | | 59.5 | 40 | 602 | |
| | 2013.02-2014.07 | 6AT | F | L/R | Hatchback 4WD CJXB | | GCI61069 | Inner Joint | | | 28 | | | 32 | |
| | 2013.02-2014.07 | 6AT | F | L/R | Hatchback 4WD CJXB | | GCI82456 | Inner Joint | | | 28 | | | 32 | |
| | 2013.02-2014.07 | AT/MT | F | L/R | Hatchback 4WD CJXB | Date to:2014.05 | GCO83101 | Outer Joint | | 36 | 27 | 59.5 | 40 | 65 | M |
| | 2013.02-2014.07 | 6AT | R | L | Hatchback 4WD CJXB | | GDS61286 | Drive Shaft | | 36 | | 59.5 | 40 | 587 | |
| | 2013.02-2014.07 | 6AT | R | R | Hatchback 4WD CJXB | | GDS61287 | Drive Shaft | | 36 | | 59.5 | 40 | 632 | |
| | 2013.02-2014.07 | 6AT | R | L/R | Hatchback 4WD CJXB | | GCI61103 | Inner Joint | | | 33 | | | 32 | |
| | 2013.10-2014.05 | 6AT | F | L | Saloon 4WD CJXB | | GDS83295 | Drive Shaft | | 36 | | 59.5 | 40 | 491 | |
| | 2013.10-2014.05 | 6AT | F | R | Saloon 4WD CJXB | Diameter [mm]:42 | GDS81892 | Drive Shaft | | 36 | | 59.5 | 40 | 602 | |
| | 2013.10-2014.05 | 6AT | F | L/R | Saloon 4WD CJXB | | GCO83101 | Outer Joint | | 36 | 27 | 59.5 | 40 | 65 | M |
| | 2013.10-2014.05 | 6AT | F | L/R | Saloon 4WD CJXB | | GCI61069 | Inner Joint | | | 28 | | | 32 | |
| | 2013.10-2014.05 | 6AT | F | L/R | Saloon 4WD CJXB | | GCI82456 | Inner Joint | | | 28 | | | 32 | |
| | 2013.10-2014.05 | 6AT | R | L | Saloon 4WD CJXB | | GDS61286 | Drive Shaft | | 36 | | 59.5 | 40 | 587 | |
| | 2013.10-2014.05 | 6AT | R | R | Saloon 4WD CJXB | | GDS61287 | Drive Shaft | | 36 | | 59.5 | 40 | 632 | |
| | 2013.10-2014.05 | 6AT | R | L/R | Saloon 4WD CJXB | | GCI35026 | Outer Joint | | 36 | 33 | 59.5 | 40 | 61 | |
| | 2013.10-2014.05 | 6AT | R | L/R | Saloon 4WD CJXB | | GCI61103 | Inner Joint | | | 33 | | | 32 | |
| 2.0 (210 kw) | 2014.05-2016.08 | 6AT/6MT | F | L | Hatchback 4WD CJXF | | GDS83295 | Drive Shaft | | 36 | | 59.5 | 40 | 491 | |
| | 2014.05-2016.08 | 6AT/6MT | F | R | Hatchback 4WD CJXF | Diameter [mm]:42 | GDS81892 | Drive Shaft | | 36 | | 59.5 | 40 | 602 | |
| | 2014.05-2016.08 | 6AT/6MT | F | L/R | Hatchback 4WD CJXF | | GCO83101 | Outer Joint | | 36 | 27 | 59.5 | 40 | 65 | M |
| | 2014.05-2016.08 | 6AT/6MT | F | L/R | Hatchback 4WD CJXF | | GCI61069 | Inner Joint | | | 28 | | | 32 | |
| | 2014.05-2016.08 | 6AT/6MT | F | L/R | Hatchback 4WD CJXF | | GCI82456 | Inner Joint | | | 28 | | | 32 | |
| | 2014.05-2016.08 | 6AT/6MT | R | L | Hatchback 4WD CJXF | | GDS61286 | Drive Shaft | | 36 | | 59.5 | 40 | 587 | |
| | 2014.05-2016.08 | 6AT/6MT | R | R | Hatchback 4WD CJXF | | GDS61287 | Drive Shaft | | 36 | | 59.5 | 40 | 632 | |
| | 2014.05-2016.08 | 6AT/6MT | R | L/R | Hatchback 4WD CJXF | | GCI35026 | Outer Joint | | 36 | 33 | 59.5 | 40 | 61 | |
| | 2014.05-2016.08 | 6AT/6MT | R | L/R | Hatchback 4WD CJXF | | GCI61103 | Inner Joint | | | 33 | | | 32 | |
| | 2014.05-2016.08 | 6AT | F | L | Saloon 4WD CJXF | | GDS83295 | Drive Shaft | | 36 | | 59.5 | 40 | 491 | |
| | 2014.05-2016.08 | 6AT | F | R | Saloon 4WD CJXF | Diameter [mm]:42 | GDS81892 | Drive Shaft | | 36 | | 59.5 | 40 | 602 | |
| | 2014.05-2016.08 | 6AT | F | L/R | Saloon 4WD CJXF | | GCO83101 | Outer Joint | | 36 | 27 | 59.5 | 40 | 65 | M |
| | 2014.05-2016.08 | 6AT | F | L/R | Saloon 4WD CJXF | | GCI61069 | Inner Joint | | | 28 | | | 32 | |
| | 2014.05-2016.08 | 6AT | F | L/R | Saloon 4WD CJXF | | GCI82456 | Inner Joint | | | 28 | | | 32 | |
| | 2014.05-2016.08 | 6DCT | F | L | Saloon 4WD CJXF | | GDS98006 | Stub Axle-Flange | | 37 | | | 67 | 123.5 | |
| | 2014.05-2016.08 | 6AT | R | L | Saloon 4WD CJXF | | GDS61286 | Drive Shaft | | 36 | | 59.5 | 40 | 587 | |
| | 2014.05-2016.08 | 6AT | R | R | Saloon 4WD CJXF | | GDS61287 | Drive Shaft | | 36 | | 59.5 | 40 | 632 | |
| | 2014.05-2016.08 | 6AT | R | L/R | Saloon 4WD CJXF | | GCI35026 | Outer Joint | | 36 | 33 | 59.5 | 40 | 61 | |
| | 2014.05-2016.08 | 6AT | R | L/R | Saloon 4WD CJXF | | GCI61103 | Inner Joint | | | 33 | | | 32 | |
| 2.0 (213 kw) | 2016.07-2017.12 | 7AT | F | R | Hatchback 4WD CJXD;DJHB | Wheel Hub Diam [mm]:42,Date to:2017.08;Wheel Hub Diam [mm]:27,Date from:2017.10 | GDS81892 | Drive Shaft | | 36 | | 59.5 | 40 | 602 | |
| | 2016.07-2017.12 | 7AT | F | L/R | Hatchback 4WD CJXD;DJHB | | GCO83101 | Outer Joint | | 36 | 27 | 59.5 | 40 | 65 | M |
| | 2016.07-2017.12 | 7AT | F | L | Hatchback 4WD CJXD;DJHB | | GCI83028 | Inner Joint | | 37 | 28 | | 65.5 | 90.2 | |
| | 2016.07-2017.12 | 7AT | F | R | Hatchback 4WD CJXD;DJHB | | GCI61069 | Inner Joint | | | 28 | | | 32 | |
| | 2016.07-2017.12 | 7DCT | F | L | Hatchback 4WD CJXD;DJHB | | GDS84237 | Drive Shaft | | 36 | 37 | 59.5 | 40 | 560 | |
| | 2016.07-2017.12 | 7AT | R | L | Hatchback 4WD CJXD;DJHB | | GDS61286 | Drive Shaft | | 36 | | 59.5 | 40 | 587 | |
| | 2016.07-2017.12 | 7AT | R | R | Hatchback 4WD CJXD;DJHB | | GDS61287 | Drive Shaft | | 36 | | 59.5 | 40 | 632 | |
| | 2016.07-2017.12 | 7AT | R | L/R | Hatchback 4WD CJXD;DJHB | | GCI35026 | Outer Joint | | 36 | 33 | 59.5 | 40 | 61 | |
| | 2016.07-2017.12 | 7AT | R | L/R | Hatchback 4WD CJXD;DJHB | | GCI61103 | Inner Joint | | | 33 | | | 32 | |
| | 2016.08-2020.10 | 7AT | F | R | Saloon 4WD CJXD;DJHB | Wheel Hub Diam [mm]:42,Date to:2017.08;Wheel Hub Diam [mm]:27,Date from:2017.10 | GDS81892 | Drive Shaft | | 36 | | 59.5 | 40 | 602 | |
| | 2016.08-2020.10 | 7AT | F | L | Saloon 4WD CJXD;DJHB | | GCI83028 | Inner Joint | | 37 | 28 | | 65.5 | 90.2 | |
| | 2016.08-2020.10 | 7AT | F | R | Saloon 4WD CJXD;DJHB | | GCI61069 | Inner Joint | | | 28 | | | 32 | |
| | 2016.08-2020.10 | 7DCT | F | L | Saloon 4WD CJXD;DJHB | | GDS84237 | Drive Shaft | | 36 | 37 | 59.5 | 40 | 560 | |
| | 2016.08-2020.10 | 7AT | R | L | Saloon 4WD CJXD;DJHB | | GDS61286 | Drive Shaft | | 36 | | 59.5 | 40 | 587 | |
| | 2016.08-2020.10 | 7AT | R | R | Saloon 4WD CJXD;DJHB | | GDS61287 | Drive Shaft | | 36 | | 59.5 | 40 | 632 | |
| | 2016.08-2020.10 | 7AT | R | L/R | Saloon 4WD CJXD;DJHB | | GCI35026 | Outer Joint | | 36 | 33 | 59.5 | 40 | 61 | |
| | 2016.08-2020.10 | 7AT | R | L/R | Saloon 4WD CJXD;DJHB | | GCI61103 | Inner Joint | | | 33 | | | 32 | |

| | YEAR | TRANSM. | F/R | L/R | BODY STYLE & DRIVE TYPE & ENGINE | REMARKS | G-AP Ref. | PRODUCT | ABS | Technical Specifications A | B | C | H | L | P |
|---|---|---|---|---|---|---|---|---|---|---|---|---|---|---|---|
| **AUDI** | | | | | | | | | | | | | | | |
| **S3 Quattro** | | | | | | | | | | | | | | | |
| 2.0 (215 kw) | 2014.05-2020.10 | 6AT | F | L | Saloon 4WD CYFB;DJJA;DLRA | | GDS83295 | Drive Shaft | | 36 | | 59.5 | 40 | 491 | |
| | 2014.05-2020.10 | 6AT | F | R | Saloon 4WD CYFB;DJJA;DLRA | Diameter [mm]:42 | GDS81892 | Drive Shaft | | 36 | | 59.5 | 40 | 602 | |
| | 2014.05-2020.10 | 6AT | F | L/R | Saloon 4WD CYFB;DJJA;DLRA | | GCO83101 | Outer Joint | | 36 | 27 | 59.5 | 40 | 65 | M |
| | 2014.05-2020.10 | 6AT | F | L/R | Saloon 4WD CYFB;DJJA;DLRA | | GCI61069 | Inner Joint | | | 28 | | | 32 | |
| | 2014.05-2020.10 | 6AT | F | L/R | Saloon 4WD CYFB;DJJA;DLRA | | GCI82456 | Inner Joint | | | 28 | | | 32 | |
| | 2014.05-2020.10 | 6AT | R | L | Saloon 4WD CYFB;DJJA;DLRA | | GDS61286 | Drive Shaft | | 36 | | 59.5 | 40 | 587 | |
| | 2014.05-2020.10 | 6AT | R | R | Saloon 4WD CYFB;DJJA;DLRA | | GDS61287 | Drive Shaft | | 36 | | 59.5 | 40 | 632 | |
| | 2014.05-2020.10 | 6AT | R | L/R | Saloon 4WD CYFB;DJJA;DLRA | | GCI35026 | Outer Joint | | 36 | 33 | 59.5 | 40 | 61 | |
| | 2014.05-2020.10 | 6AT | R | L/R | Saloon 4WD CYFB;DJJA;DLRA | | GCI61103 | Inner Joint | | | 33 | | | 32 | |
| 2.0 (221 kw) | 2012.11-2016.08 | 6AT/6MT | F | L | Hatchback 4WD CJXC | | GDS83295 | Drive Shaft | | 36 | | 59.5 | 40 | 491 | |
| | 2012.11-2016.08 | 6AT/6MT | F | R | Hatchback 4WD CJXC | Diameter [mm]:42 | GDS81892 | Drive Shaft | | 36 | | 59.5 | 40 | 602 | |
| | 2012.11-2016.08 | 6AT/6MT | F | L/R | Hatchback 4WD CJXC | | GCO83101 | Outer Joint | | 36 | 27 | 59.5 | 40 | 65 | M |
| | 2012.11-2016.08 | 6AT/6MT | F | L/R | Hatchback 4WD CJXC | | GCI61069 | Inner Joint | | | 28 | | | 32 | |
| | 2012.11-2016.08 | 6AT/6MT | F | L/R | Hatchback 4WD CJXC | | GCI82456 | Inner Joint | | | 28 | | | 32 | |
| | 2012.11-2016.08 | 6AT/6MT | R | L | Hatchback 4WD CJXC | | GDS61286 | Drive Shaft | | 36 | | 59.5 | 40 | 587 | |
| | 2012.11-2016.08 | 6AT/6MT | R | R | Hatchback 4WD CJXC | | GDS61287 | Drive Shaft | | 36 | | 59.5 | 40 | 632 | |
| | 2012.11-2016.08 | 6AT/6MT | R | L/R | Hatchback 4WD CJXC | | GCI35026 | Outer Joint | | 36 | 33 | 59.5 | 40 | 61 | |
| | 2012.11-2016.08 | 6AT/6MT | R | L/R | Hatchback 4WD CJXC | | GCI61103 | Inner Joint | | | 33 | | | 32 | |
| | 2013.10-2020.10 | 6MT/6DCT | F | L | Saloon 4WD CJXC;DNUE | | GDS83295 | Drive Shaft | | 36 | | 59.5 | 40 | 491 | |
| | 2013.10-2020.10 | 6MT/6DCT | F | R | Saloon 4WD CJXC;DNUE | Wheel Hub Diam [mm]:42 | GDS81892 | Drive Shaft | | 36 | | 59.5 | 40 | 602 | |
| | 2013.10-2020.10 | 6MT/6DCT | F | L/R | Saloon 4WD CJXC;DNUE | | GCO83101 | Outer Joint | | 36 | 27 | 59.5 | 40 | 65 | M |
| | 2013.10-2020.10 | 6MT/6DCT | F | L/R | Saloon 4WD CJXC;DNUE | | GCI61069 | Inner Joint | | | 28 | | | 32 | |
| | 2013.10-2020.10 | 6MT/6DCT | F | L/R | Saloon 4WD CJXC;DNUE | | GCI82456 | Inner Joint | | | 28 | | | 32 | |
| | 2013.10-2020.10 | 7DCT | F | L | Saloon 4WD CJXC;DNUE | | GDS84237 | Drive Shaft | | 36 | 37 | 59.5 | 40 | 560 | |
| | 2013.10-2020.10 | 7DCT | F | R | Saloon 4WD CJXC;DNUE | Diameter [mm]:42,Date to:2017.09;Diameter [mm]:27,Date from:2017.10 | GDS81892 | Drive Shaft | | 36 | | 59.5 | 40 | 602 | |
| | 2013.10-2020.10 | 7DCT | F | L | Saloon 4WD CJXC;DNUE | | GCI83028 | Inner Joint | | 37 | 28 | | 65.5 | 90.2 | |
| | 2013.10-2020.10 | 6MT/6DCT/7DCT | R | L | Saloon 4WD CJXC;DNUE | | GDS61286 | Drive Shaft | | 36 | | 59.5 | 40 | 587 | |
| | 2013.10-2020.10 | 6MT/6DCT/7DCT | R | R | Saloon 4WD CJXC;DNUE | | GDS61287 | Drive Shaft | | 36 | | 59.5 | 40 | 632 | |
| | 2013.10-2020.10 | 6MT/6DCT/7DCT | R | L/R | Saloon 4WD CJXC;DNUE | | GCI35026 | Outer Joint | | 36 | 33 | 59.5 | 40 | 61 | |
| | 2013.10-2020.10 | 6MT/6DCT/7DCT | R | L/R | Saloon 4WD CJXC;DNUE | | GCI61103 | Inner Joint | | | 33 | | | 32 | |
| 2.0 (228 kw) | 2016.06-2017.12 | 6MT | F | L | Hatchback 4WD CJXG;DJHA | | GDS83295 | Drive Shaft | | 36 | | 59.5 | 40 | 491 | |
| | 2016.06-2017.12 | 6MT | F | L | Hatchback 4WD CJXG;DJHA | | GCO83101 | Outer Joint | | 36 | 27 | 59.5 | 40 | 65 | M |
| | 2016.06-2017.12 | 6MT | F | L | Hatchback 4WD CJXG;DJHA | | GCI61069 | Inner Joint | | | 28 | | | 32 | |
| | 2016.06-2017.12 | 7AT/6MT | F | R | Hatchback 4WD CJXG;DJHA | Wheel Hub Diam [mm]:42,Date to:2017.08;Wheel Hub Diam [mm]:27,Date from:2017.10 | GDS81892 | Drive Shaft | | 36 | | 59.5 | 40 | 602 | |
| | 2016.06-2017.12 | 7DCT | F | L | Hatchback 4WD CJXG;DJHA | | GDS84237 | Drive Shaft | | 36 | 37 | 59.5 | 40 | 560 | |
| | 2016.06-2017.12 | 7DCT | F | L | Hatchback 4WD CJXG;DJHA | | GCI83028 | Inner Joint | | 37 | 28 | | 65.5 | 90.2 | |
| | 2016.06-2017.12 | 7AT/6MT | R | L | Hatchback 4WD CJXG;DJHA | | GDS61286 | Drive Shaft | | 36 | | 59.5 | 40 | 587 | |
| | 2016.06-2017.12 | 7AT/6MT | R | R | Hatchback 4WD CJXG;DJHA | | GDS61287 | Drive Shaft | | 36 | | 59.5 | 40 | 632 | |
| | 2016.06-2017.12 | 7AT/6MT | R | L/R | Hatchback 4WD CJXG;DJHA | | GCI35026 | Outer Joint | | 36 | 33 | 59.5 | 40 | 61 | |
| | 2016.06-2017.12 | 7AT/6MT | R | L/R | Hatchback 4WD CJXG;DJHA | | GCI61103 | Inner Joint | | | 33 | | | 32 | |
| | 2016.06-2020.10 | 6MT | F | L | Saloon 4WD CJXG;DJHA | | GDS83295 | Drive Shaft | | 36 | | 59.5 | 40 | 491 | |
| | 2016.06-2020.10 | 6MT | F | L | Saloon 4WD CJXG;DJHA | | GCO83101 | Outer Joint | | 36 | 27 | 59.5 | 40 | 65 | M |
| | 2016.06-2020.10 | 6MT | F | L | Saloon 4WD CJXG;DJHA | | GCI61069 | Inner Joint | | | 28 | | | 32 | |
| | 2016.06-2020.10 | 7AT/6MT | F | R | Saloon 4WD CJXG;DJHA | Wheel Hub Diam [mm]:42,Date to:2017.08;Wheel Hub Diam [mm]:27,Date from:2017.10 | GDS81892 | Drive Shaft | | 36 | | 59.5 | 40 | 602 | |
| | 2016.06-2020.10 | 7DCT | F | L | Saloon 4WD CJXG;DJHA | | GDS84237 | Drive Shaft | | 36 | 37 | 59.5 | 40 | 560 | |
| | 2016.06-2020.10 | 7DCT | F | L | Saloon 4WD CJXG;DJHA | | GCI83028 | Inner Joint | | 37 | 28 | | 65.5 | 90.2 | |
| | 2016.06-2020.10 | 7AT/6MT | R | L | Saloon 4WD CJXG;DJHA | | GDS61286 | Drive Shaft | | 36 | | 59.5 | 40 | 587 | |
| | 2016.06-2020.10 | 7AT/6MT | R | R | Saloon 4WD CJXG;DJHA | | GDS61287 | Drive Shaft | | 36 | | 59.5 | 40 | 632 | |
| | 2016.06-2020.10 | 7AT/6MT | R | L/R | Saloon 4WD CJXG;DJHA | | GCI35026 | Outer Joint | | 36 | 33 | 59.5 | 40 | 61 | |
| | 2016.06-2020.10 | 7AT/6MT | R | L/R | Saloon 4WD CJXG;DJHA | | GCI61103 | Inner Joint | | | 33 | | | 32 | |
| | 2020.06- | 7AT | F | L/R | Saloon 4WD DNFB;DSFA | | GCO83101 | Outer Joint | | 36 | 27 | 59.5 | 40 | 65 | M |
| | 2020.06- | 7DCT | F | L | Saloon 4WD DNFB;DSFA | | GDS84237 | Drive Shaft | | 36 | 37 | 59.5 | 40 | 560 | |
| | 2020.06- | 7DCT | R | L | Saloon 4WD DNFB;DSFA | | GDS61286 | Drive Shaft | | 36 | | 59.5 | 40 | 587 | |
| | 2020.06- | 7DCT | R | R | Saloon 4WD DNFB;DSFA | | GDS61287 | Drive Shaft | | 36 | | 59.5 | 40 | 632 | |
| | 2020.06- | 7DCT | R | L/R | Saloon 4WD DNFB;DSFA | | GCI35026 | Outer Joint | | 36 | 33 | 59.5 | 40 | 61 | |
| | 2020.06- | 7DCT | R | L/R | Saloon 4WD DNFB;DSFA | | GCI61103 | Inner Joint | | | 33 | | | 32 | |
| **S3 Sportback Quattro** | | | | | | | | | | | | | | | |
| 2.0 (188 kw) | 2008.07-2013.03 | 6AT/6MT | F | L | Hatchback 4WD CDLC | | GDS83295 | Drive Shaft | | 36 | | 59.5 | 40 | 491 | |
| | 2008.07-2013.03 | 6AT/6MT | F | R | Hatchback 4WD CDLC | | GDS83266 | Drive Shaft | | 36 | | 59.5 | 40 | 601 | |
| | 2008.07-2013.03 | MT/Semi-AT | F | L | Hatchback 4WD CDLC | | GDS83236 | Drive Shaft | | 36 | | 59.5 | 40 | 484 | |
| | 2008.07-2013.03 | | F | L/R | Hatchback 4WD CDLC | | GCO83002 | Outer Joint | | 36 | 27 | 59.5 | 40 | 66 | I |
| | 2008.07-2013.03 | | F | L/R | Hatchback 4WD CDLC | | GCI83006 | Inner Joint | | | 33 | | | 34 | |
| | 2008.07-2013.03 | | F | L/R | Hatchback 4WD CDLC | | GCI83016 | Inner Joint | | | 28 | | | 32 | |
| | 2008.07-2013.03 | 6AT/6MT | R | L | Hatchback 4WD CDLC | | GDS61284 | Drive Shaft | | 36 | | 59.5 | 40 | 594 | |
| | 2008.07-2013.03 | 6AT/6MT | R | R | Hatchback 4WD CDLC | | GDS61293 | Drive Shaft | | 36 | | 59.5 | 40 | 631 | |

| | YEAR | TRANSM. | F/R | L/R | BODY STYLE & DRIVE TYPE & ENGINE | REMARKS | G-AP Ref. | PRODUCT | ABS | Technical Specifications A | B | C | H | L | P |
|---|---|---|---|---|---|---|---|---|---|---|---|---|---|---|---|
| **AUDI** | | | | | | | | | | | | | | | |
| **S3 Sportback Quattro** | | | | | | | | | | | | | | | |
| 2.0 (188 kw) | 2008.07-2013.03 | 6AT/6MT | R | L/R | Hatchback 4WD CDLC | | GCI35026 | Outer Joint | | 36 | 33 | 59.5 | 40 | 61 | |
| | 2008.07-2013.03 | 6AT/6MT | R | L/R | Hatchback 4WD CDLC | | GCO83037 | Outer Joint | | 36 | 30 | 59.5 | 40.5 | 56 | I |
| | 2008.07-2013.03 | 6AT/6MT | R | L/R | Hatchback 4WD CDLC | | GCI53002 | Inner Joint | | | 33 | | | 34 | |
| | 2008.07-2013.03 | 6AT/6MT | R | L/R | Hatchback 4WD CDLC | Date to:2012.05 | GCI82447 | Inner Joint | | | 33 | | | 34 | |
| 2.0 (195 kw) | 2008.06-2013.03 | 6AT/6MT | F | L | Hatchback 4WD BHZ;CDLA | | GDS83295 | Drive Shaft | | 36 | | 59.5 | 40 | 491 | |
| | 2008.06-2013.03 | 6AT/6MT | F | R | Hatchback 4WD BHZ;CDLA | | GDS83266 | Drive Shaft | | 36 | | 59.5 | 40 | 601 | |
| | 2008.06-2013.03 | MT/Semi-AT | F | L | Hatchback 4WD BHZ;CDLA | | GDS83236 | Drive Shaft | | 36 | | 59.5 | 40 | 484 | |
| | 2008.06-2013.03 | | F | L/R | Hatchback 4WD BHZ;CDLA | | GCO83002 | Outer Joint | | 36 | 27 | 59.5 | 40 | 66 | I |
| | 2008.06-2013.03 | | F | L/R | Hatchback 4WD BHZ;CDLA | | GCI83006 | Inner Joint | | | 33 | | | 34 | |
| | 2008.06-2013.03 | | F | L/R | Hatchback 4WD BHZ;CDLA | | GCI83016 | Inner Joint | | | 28 | | | 32 | |
| | 2008.06-2013.03 | 6AT/6MT | R | L | Hatchback 4WD BHZ;CDLA | | GDS61284 | Drive Shaft | | 36 | | 59.5 | 40 | 594 | |
| | 2008.06-2013.03 | 6AT/6MT | R | R | Hatchback 4WD BHZ;CDLA | | GDS61293 | Drive Shaft | | 36 | | 59.5 | 40 | 631 | |
| | 2008.06-2013.03 | 6AT/6MT | R | L/R | Hatchback 4WD BHZ;CDLA | | GCI35026 | Outer Joint | | 36 | 33 | 59.5 | 40 | 61 | |
| | 2008.06-2013.03 | 6AT/6MT | R | L/R | Hatchback 4WD BHZ;CDLA | | GCO83037 | Outer Joint | | 36 | 30 | 59.5 | 40.5 | 56 | I |
| | 2008.06-2013.03 | 6AT/6MT | R | L/R | Hatchback 4WD BHZ;CDLA | | GCI53002 | Inner Joint | | | 33 | | | 34 | |
| | 2008.06-2013.03 | 6AT/6MT | R | L/R | Hatchback 4WD BHZ;CDLA | Date to:2012.05 | GCI82447 | Inner Joint | | | 33 | | | 34 | |
| 2.0 (206 kw) | 2013.05-2016.08 | 6AT | F | L | Hatchback 4WD CJXB | | GDS83295 | Drive Shaft | | 36 | | 59.5 | 40 | 491 | |
| | 2013.05-2016.08 | 6AT | F | R | Hatchback 4WD CJXB | Diameter [mm]:42 | GDS81892 | Drive Shaft | | 36 | | 59.5 | 40 | 602 | |
| | 2013.05-2016.08 | 6AT | F | L/R | Hatchback 4WD CJXB | | GCO83101 | Outer Joint | | 36 | 27 | 59.5 | 40 | 65 | M |
| | 2013.05-2016.08 | 6AT | F | L/R | Hatchback 4WD CJXB | | GCI61069 | Inner Joint | | | 28 | | | 32 | |
| | 2013.05-2016.08 | 6AT | F | L/R | Hatchback 4WD CJXB | | GCI82456 | Inner Joint | | | 28 | | | 32 | |
| | 2013.05-2016.08 | 6AT | R | L | Hatchback 4WD CJXB | | GDS61286 | Drive Shaft | | 36 | | 59.5 | 40 | 587 | |
| | 2013.05-2016.08 | 6AT | R | R | Hatchback 4WD CJXB | | GDS61287 | Drive Shaft | | 36 | | 59.5 | 40 | 632 | |
| | 2013.05-2016.08 | 6AT | R | L/R | Hatchback 4WD CJXB | | GCI35026 | Outer Joint | | 36 | 33 | 59.5 | 40 | 61 | |
| | 2013.05-2016.08 | 6AT | R | L/R | Hatchback 4WD CJXB | | GCI61103 | Inner Joint | | | 33 | | | 32 | |
| 2.0 (210 kw) | 2014.05-2016.08 | 6AT/6MT | F | L | Hatchback 4WD CJXF | | GDS83295 | Drive Shaft | | 36 | | 59.5 | 40 | 491 | |
| | 2014.05-2016.08 | 6AT/6MT | F | R | Hatchback 4WD CJXF | Diameter [mm]:42 | GDS81892 | Drive Shaft | | 36 | | 59.5 | 40 | 602 | |
| | 2014.05-2016.08 | 6AT/6MT | F | L/R | Hatchback 4WD CJXF | | GCO83101 | Outer Joint | | 36 | 27 | 59.5 | 40 | 65 | M |
| | 2014.05-2016.08 | 6AT/6MT | F | L/R | Hatchback 4WD CJXF | | GCI61069 | Inner Joint | | | 28 | | | 32 | |
| | 2014.05-2016.08 | 6AT/6MT | F | L/R | Hatchback 4WD CJXF | | GCI82456 | Inner Joint | | | 28 | | | 32 | |
| | 2014.05-2016.08 | 6AT/6MT | R | L | Hatchback 4WD CJXF | | GDS61286 | Drive Shaft | | 36 | | 59.5 | 40 | 587 | |
| | 2014.05-2016.08 | 6AT/6MT | R | R | Hatchback 4WD CJXF | | GDS61287 | Drive Shaft | | 36 | | 59.5 | 40 | 632 | |
| | 2014.05-2016.08 | 6AT/6MT | R | L/R | Hatchback 4WD CJXF | | GCI35026 | Outer Joint | | 36 | 33 | 59.5 | 40 | 61 | |
| | 2014.05-2016.08 | 6AT/6MT | R | L/R | Hatchback 4WD CJXF | | GCI61103 | Inner Joint | | | 33 | | | 32 | |
| 2.0 (213 kw) | 2016.07-2020.10 | 7AT | F | R | Hatchback 4WD CJXD;DJHB | Wheel Hub Diam [mm]:42,Date to:2017.08;Wheel Hub Diam [mm]:27,Date from:2017.10 | GDS81892 | Drive Shaft | | 36 | | 59.5 | 40 | 602 | |
| | 2016.07-2020.10 | 7AT | F | L/R | Hatchback 4WD CJXD;DJHB | | GCO83101 | Outer Joint | | 36 | 27 | 59.5 | 40 | 65 | M |
| | 2016.07-2020.10 | 7AT | F | L | Hatchback 4WD CJXD;DJHB | | GCI83028 | Inner Joint | | 37 | 28 | | 65.5 | 90.2 | |
| | 2016.07-2020.10 | 7AT | F | R | Hatchback 4WD CJXD;DJHB | | GCI61069 | Inner Joint | | | 28 | | | 32 | |
| | 2016.07-2020.10 | 7DCT | F | L | Hatchback 4WD CJXD;DJHB | | GDS84237 | Drive Shaft | | 36 | 37 | 59.5 | 40 | 560 | |
| | 2016.07-2020.10 | 7AT | R | L | Hatchback 4WD CJXD;DJHB | | GDS61286 | Drive Shaft | | 36 | | 59.5 | 40 | 587 | |
| | 2016.07-2020.10 | 7AT | R | R | Hatchback 4WD CJXD;DJHB | | GDS61287 | Drive Shaft | | 36 | | 59.5 | 40 | 632 | |
| | 2016.07-2020.10 | 7AT | R | L/R | Hatchback 4WD CJXD;DJHB | | GCI35026 | Outer Joint | | 36 | 33 | 59.5 | 40 | 61 | |
| | 2016.07-2020.10 | 7AT | R | L/R | Hatchback 4WD CJXD;DJHB | | GCI61103 | Inner Joint | | | 33 | | | 32 | |
| 2.0 (221 kw) | 2012.11-2020.10 | 6MT/6DCT | F | L | Hatchback 4WD CJXC;DNUE | | GDS83295 | Drive Shaft | | 36 | | 59.5 | 40 | 491 | |
| | 2012.11-2020.10 | 6MT/6DCT | F | R | Hatchback 4WD CJXC;DNUE | Wheel Hub Diam [mm]:42 | GDS81892 | Drive Shaft | | 36 | | 59.5 | 40 | 602 | |
| | 2012.11-2020.10 | 6MT/6DCT | F | L/R | Hatchback 4WD CJXC;DNUE | | GCO83101 | Outer Joint | | 36 | 27 | 59.5 | 40 | 65 | M |
| | 2012.11-2020.10 | 6MT/6DCT | F | L/R | Hatchback 4WD CJXC;DNUE | | GCI61069 | Inner Joint | | | 28 | | | 32 | |
| | 2012.11-2020.10 | 6MT/6DCT | F | L/R | Hatchback 4WD CJXC;DNUE | | GCI82456 | Inner Joint | | | 28 | | | 32 | |
| | 2012.11-2020.10 | 7DCT | F | L | Hatchback 4WD CJXC;DNUE | | GDS84237 | Drive Shaft | | 36 | 37 | 59.5 | 40 | 560 | |
| | 2012.11-2020.10 | 7DCT | F | R | Hatchback 4WD CJXC;DNUE | Diameter [mm]:42,Date to:2017.09;Diameter [mm]:27,Date from:2017.10 | GDS81892 | Drive Shaft | | 36 | | 59.5 | 40 | 602 | |
| | 2012.11-2020.10 | 7DCT | F | L | Hatchback 4WD CJXC;DNUE | | GCI83028 | Inner Joint | | 37 | 28 | | 65.5 | 90.2 | |
| | 2012.11-2020.10 | 6MT/6DCT/7DCT | R | L | Hatchback 4WD CJXC;DNUE | | GDS61286 | Drive Shaft | | 36 | | 59.5 | 40 | 587 | |
| | 2012.11-2020.10 | 6MT/6DCT/7DCT | R | R | Hatchback 4WD CJXC;DNUE | | GDS61287 | Drive Shaft | | 36 | | 59.5 | 40 | 632 | |
| | 2012.11-2020.10 | 6MT/6DCT/7DCT | R | L/R | Hatchback 4WD CJXC;DNUE | | GCI35026 | Outer Joint | | 36 | 33 | 59.5 | 40 | 61 | |
| | 2012.11-2020.10 | 6MT/6DCT/7DCT | R | L/R | Hatchback 4WD CJXC;DNUE | | GCI61103 | Inner Joint | | | 33 | | | 32 | |
| 2.0 (228 kw) | 2016.06-2020.10 | 6MT | F | L | Hatchback 4WD CJXG;DJHA | | GDS83295 | Drive Shaft | | 36 | | 59.5 | 40 | 491 | |
| | 2016.06-2020.10 | 6MT | F | L | Hatchback 4WD CJXG;DJHA | | GCO83101 | Outer Joint | | 36 | 27 | 59.5 | 40 | 65 | M |
| | 2016.06-2020.10 | 6MT | F | L | Hatchback 4WD CJXG;DJHA | | GCI61069 | Inner Joint | | | 28 | | | 32 | |
| | 2016.06-2020.10 | 7AT/6MT | F | R | Hatchback 4WD CJXG;DJHA | Wheel Hub Diam [mm]:42,Date to:2017.08;Wheel Hub Diam [mm]:27,Date from:2017.10 | GDS81892 | Drive Shaft | | 36 | | 59.5 | 40 | 602 | |
| | 2016.06-2020.10 | 7DCT | F | L | Hatchback 4WD CJXG;DJHA | | GDS84237 | Drive Shaft | | 36 | 37 | 59.5 | 40 | 560 | |
| | 2016.06-2020.10 | 7DCT | F | L | Hatchback 4WD CJXG;DJHA | | GCI83028 | Inner Joint | | 37 | 28 | | 65.5 | 90.2 | |
| | 2016.06-2020.10 | 7AT/6MT | R | L | Hatchback 4WD CJXG;DJHA | | GDS61286 | Drive Shaft | | 36 | | 59.5 | 40 | 587 | |
| | 2016.06-2020.10 | 7AT/6MT | R | R | Hatchback 4WD CJXG;DJHA | | GDS61287 | Drive Shaft | | 36 | | 59.5 | 40 | 632 | |
| | 2016.06-2020.10 | 7AT/6MT | R | L/R | Hatchback 4WD CJXG;DJHA | | GCI35026 | Outer Joint | | 36 | 33 | 59.5 | 40 | 61 | |
| | 2016.06-2020.10 | 7AT/6MT | R | L/R | Hatchback 4WD CJXG;DJHA | | GCI61103 | Inner Joint | | | 33 | | | 32 | |

| | YEAR | TRANSM. | F/R | L/R | BODY STYLE & DRIVE TYPE & ENGINE | REMARKS | G-AP Ref. | PRODUCT | ABS | Technical Specifications A | B | C | H | L | P |
|---|---|---|---|---|---|---|---|---|---|---|---|---|---|---|---|
| **AUDI** | | | | | | | | | | | | | | | |
| **S3 Sportback Quattro** | | | | | | | | | | | | | | | |
| 2.0 (228 kw) | 2020.06- | 7AT | F | L/R | Hatchback 4WD DNFB | | GCO83101 | Outer Joint | | 36 | 27 | 59.5 | 40 | 65 | M |
| | 2020.06- | 7DCT | F | L | Hatchback 4WD DNFB | | GDS84237 | Drive Shaft | | 36 | 37 | 59.5 | 40 | 560 | |
| | 2020.06- | 7DCT | R | L | Hatchback 4WD DNFB | | GDS61286 | Drive Shaft | | 36 | | 59.5 | 40 | 587 | |
| | 2020.06- | 7DCT | R | R | Hatchback 4WD DNFB | | GDS61287 | Drive Shaft | | 36 | | 59.5 | 40 | 632 | |
| | 2020.06- | 7DCT | R | L/R | Hatchback 4WD DNFB | | GCI35026 | Outer Joint | | 36 | 33 | 59.5 | 40 | 61 | |
| | 2020.06- | 7DCT | R | L/R | Hatchback 4WD DNFB | | GCI61103 | Inner Joint | | | 33 | | | 32 | |
| **S4 Cabrio Quattro** | | | | | | | | | | | | | | | |
| 4.2 (253 kw) | 2005.11-2009.03 | 6AT | F | L | Convertible 4WD BBK;BHF | | GDS83347 | Drive Shaft | 45W | 38 | | 59.5 | 34.5 | 580 | |
| | 2005.11-2009.03 | 6AT | F | R | Convertible 4WD BBK;BHF | | GDS82239 | Drive Shaft | 45W | 38 | | 59.5 | 34.5 | 493 | |
| | 2005.11-2009.03 | 6AT/6MT | F | L/R | Convertible 4WD BBK;BHF | | GCI61044 | Inner Joint | | | 34 | | | 85 | |
| | 2005.11-2009.03 | 6MT | F | L | Convertible 4WD BBK;BHF | | GDS83057 | Drive Shaft | 45W | 38 | | 59.5 | 34.5 | 593 | |
| | 2005.11-2009.03 | 6MT | F | R | Convertible 4WD BBK;BHF | | GDS83058 | Drive Shaft | 45W | 38 | | 59.5 | 34.5 | 613 | |
| | 2005.11-2009.03 | 6AT | R | L/R | Convertible 4WD BBK;BHF | | GDS82401 | Drive Shaft | 45W | 38 | | 59.5 | 34 | 617 | |
| | 2005.11-2009.03 | 6AT | R | L/R | Convertible 4WD BBK;BHF | | GCO83030 | Outer Joint | | 38 | 33 | 59.5 | 34 | 56.5 | M |
| | 2005.11-2009.03 | 6AT | R | L/R | Convertible 4WD BBK;BHF | | GCO83058 | Outer Joint | 45W | 38 | 33 | 59.5 | 34 | 56.5 | M |
| | 2005.11-2009.03 | 6AT/6MT | R | L/R | Convertible 4WD BBK;BHF | Chassis no. to:8H_6_030000 | GCI61010 | Inner Joint | | | 28 | | | 32 | |
| | 2005.11-2009.03 | 6MT | R | L/R | Convertible 4WD BBK;BHF | | GDS82156 | Drive Shaft | 45W | 38 | | 59.5 | 34.5 | 612 | |
| **S4 Quattro** | | | | | | | | | | | | | | | |
| 2.7 (195 kw) | 1997.10-2001.09 | | F | L/R | Estate 4WD AGB/AZB | | GCO83019 | Outer Joint | 45W | 38 | 27 | 59.5 | 34.5 | 63 | I |
| | 1997.10-2001.09 | 6MT | R | L/R | Estate 4WD AGB/AZB | | GCO83026 | Outer Joint | 45T | 33 | 30 | 53 | 30 | 62 | I |
| | 1997.10-2001.09 | | F/R | L/R | Estate 4WD AGB/AZB | | GCI83001 | Inner Joint | | | 28 | | | 32 | |
| | 1997.10-2001.09 | 5AT | F | L | Saloon 4WD AGB/AZB | | GDS83015 | Drive Shaft | 45W | 38 | | 59.5 | 34.5 | 527 | |
| | 1997.10-2001.09 | 5AT | F | R | Saloon 4WD AGB/AZB | | GDS83048 | Drive Shaft | 45W | 38 | | 59.5 | 34.5 | 502 | |
| | 1997.10-2001.09 | | F | L/R | Saloon 4WD AGB/AZB | | GCO83019 | Outer Joint | 45W | 38 | 27 | 59.5 | 34.5 | 63 | I |
| | 1997.10-2001.09 | 5AT/6MT | R | L/R | Saloon 4WD AGB/AZB | | GCO83026 | Outer Joint | 45T | 33 | 30 | 53 | 30 | 62 | I |
| | 1997.10-2001.09 | | F/R | L/R | Saloon 4WD AGB/AZB | | GCI83001 | Inner Joint | | | 28 | | | 32 | |
| 3.0 (245 kw) | 2008.11-2015.12 | 7DCT/6MT | F | L/R | Estate 4WD CAKA;CCBA;CGXC;CTUB;CGWC;CREC | Date to:2011.10 | GDS83273 | Drive Shaft | | 42 | | 76.5 | 34 | 460 | |
| | 2008.11-2015.12 | 7DCT/6MT | F | L/R | Estate 4WD CAKA;CCBA;CGXC;CTUB;CGWC;CREC | Date from:2011.11 | GDS83291 | Drive Shaft | | 42 | | 76.4 | 34 | 464 | |
| | 2008.11-2015.12 | AT/MT | F | L/R | Estate 4WD CAKA;CCBA;CGXC;CTUB;CGWC;CREC | | GCO83103 | Outer Joint | | 42 | 28 | 76.4 | 34 | 54 | I |
| | 2008.11-2015.12 | AT/MT | F | L/R | Estate 4WD CAKA;CCBA;CGXC;CTUB;CGWC;CREC | | GCI83022 | Inner Joint | | | 34 | | | 88.5 | |
| | 2008.11-2015.12 | | F | L/R | Estate 4WD CAKA;CCBA;CGXC;CTUB;CGWC;CREC | Date To:2011.10 | GCO83087 | Outer Joint | | 42 | 27 | 76.5 | 34 | 57 | M |
| | 2008.11-2015.12 | 7AT/6MT | R | L | Estate 4WD CAKA;CCBA;CGXC;CTUB;CGWC;CREC | Date to:2011.08,For PR code:GH2,For vehicles with electronic limited slip diff. | GDS81886 | Drive Shaft | | 42 | | 76.5 | 34 | 589 | |
| | 2008.11-2015.12 | 7AT/6MT | R | L | Estate 4WD CAKA;CCBA;CGXC;CTUB;CGWC;CREC | Date from:2011.09,For PR code:GH2,For vehicles with electronic limited slip diff. | GDS82078 | Drive Shaft | | 42 | | 76.5 | 34 | 587 | |
| | 2008.11-2015.12 | 7AT/6MT | R | R | Estate 4WD CAKA;CCBA;CGXC;CTUB;CGWC;CREC | Date to:2011.08,For PR code:GH2,For vehicles with electronic limited slip diff. | GDS81885 | Drive Shaft | | 42 | | 76.5 | 34 | 546 | |
| | 2008.11-2015.12 | 7AT/6MT | R | R | Estate 4WD CAKA;CCBA;CGXC;CTUB;CGWC;CREC | Date from:2011.09,For PR code:GH2,For vehicles with electronic limited slip diff. | GDS82079 | Drive Shaft | | 42 | | 76.5 | 34 | 545 | |
| | 2008.11-2015.12 | 7AT/6MT | R | L/R | Estate 4WD CAKA;CCBA;CGXC;CTUB;CGWC;CREC | Date to:2011.08,For PR code:GH1 | GDS81894 | Drive Shaft | | 42 | | 76.5 | 34 | 630 | |
| | 2008.11-2015.12 | 7AT/6MT | R | L/R | Estate 4WD CAKA;CCBA;CGXC;CTUB;CGWC;CREC | Date from:2011.09,For PR code:GH1 | GDS82080 | Drive Shaft | | 42 | | 76.5 | 34 | 629 | |
| | 2008.11-2015.12 | 7AT/6MT | R | L/R | Estate 4WD CAKA;CCBA;CGXC;CTUB;CGWC;CREC | | GCI61069 | Inner Joint | | | 28 | | | 32 | |
| | 2008.11-2015.12 | 7AT/6MT | R | L/R | Estate 4WD CAKA;CCBA;CGXC;CTUB;CGWC;CREC | | GCI61107 | Inner Joint | | 42 | 28 | 76.5 | 34 | 82 | |
| | 2008.11-2015.12 | 7AT/6MT | R | L/R | Estate 4WD CAKA;CCBA;CGXC;CTUB;CGWC;CREC | Date from:2011.09 | GCI81610 | Inner Joint | | | 28 | | | 28 | |
| | 2008.11-2015.12 | 7DCT/6MT | F | L/R | Saloon 4WD CAKA;CCBA;CGXC;CTUB;CGWC;CREC | Date to:2011.10 | GDS83273 | Drive Shaft | | 42 | | 76.5 | 34 | 460 | |
| | 2008.11-2015.12 | 7DCT/6MT | F | L/R | Saloon 4WD CAKA;CCBA;CGXC;CTUB;CGWC;CREC | Date from:2011.11 | GDS83291 | Drive Shaft | | 42 | | 76.4 | 34 | 464 | |
| | 2008.11-2015.12 | AT/MT | F | L/R | Saloon 4WD CAKA;CCBA;CGXC;CTUB;CGWC;CREC | | GCO83103 | Outer Joint | | 42 | 28 | 76.4 | 34 | 54 | I |
| | 2008.11-2015.12 | AT/MT | F | L/R | Saloon 4WD CAKA;CCBA;CGXC;CTUB;CGWC;CREC | | GCI83022 | Inner Joint | | | 34 | | | 88.5 | |
| | 2008.11-2015.12 | | F | L/R | Saloon 4WD CAKA;CCBA;CGXC;CTUB;CGWC;CREC | Date To:2011.10 | GCO83087 | Outer Joint | | 42 | 27 | 76.5 | 34 | 57 | M |
| | 2008.11-2015.12 | 7AT/6MT | R | L | Saloon 4WD CAKA;CCBA;CGXC;CTUB;CGWC;CREC | Date to:2011.08,For PR code:GH2,For vehicles with electronic limited slip diff. | GDS81886 | Drive Shaft | | 42 | | 76.5 | 34 | 589 | |
| | 2008.11-2015.12 | 7AT/6MT | R | L | Saloon 4WD CAKA;CCBA;CGXC;CTUB;CGWC;CREC | Date from:2011.09,For PR code:GH2,For vehicles with electronic limited slip diff. | GDS82078 | Drive Shaft | | 42 | | 76.5 | 34 | 587 | |
| | 2008.11-2015.12 | 7AT/6MT | R | R | Saloon 4WD CAKA;CCBA;CGXC;CTUB;CGWC;CREC | Date to:2011.08,For PR code:GH2,For vehicles with electronic limited slip diff. | GDS81885 | Drive Shaft | | 42 | | 76.5 | 34 | 546 | |
| | 2008.11-2015.12 | 7AT/6MT | R | R | Saloon 4WD CAKA;CCBA;CGXC;CTUB;CGWC;CREC | Date from:2011.09,For PR code:GH2,For vehicles with electronic limited slip diff. | GDS82079 | Drive Shaft | | 42 | | 76.5 | 34 | 545 | |
| | 2008.11-2015.12 | 7AT/6MT | R | L/R | Saloon 4WD CAKA;CCBA;CGXC;CTUB;CGWC;CREC | Date to:2011.08,For PR code:GH1 | GDS81894 | Drive Shaft | | 42 | | 76.5 | 34 | 630 | |
| | 2008.11-2015.12 | 7AT/6MT | R | L/R | Saloon 4WD CAKA;CCBA;CGXC;CTUB;CGWC;CREC | Date from:2011.09,For PR code:GH1 | GDS82080 | Drive Shaft | | 42 | | 76.5 | 34 | 629 | |
| | 2008.11-2015.12 | 7AT/6MT | R | L/R | Saloon 4WD CAKA;CCBA;CGXC;CTUB;CGWC;CREC | | GCI61069 | Inner Joint | | | 28 | | | 32 | |
| | 2008.11-2015.12 | 7AT/6MT | R | L/R | Saloon 4WD CAKA;CCBA;CGXC;CTUB;CGWC;CREC | | GCI61107 | Inner Joint | | 42 | 28 | 76.5 | 34 | 82 | |
| | 2008.11-2015.12 | 7AT/6MT | R | L/R | Saloon 4WD CAKA;CCBA;CGXC;CTUB;CGWC;CREC | Date from:2011.09 | GCI81610 | Inner Joint | | | 28 | | | 28 | |
| 3.0 (251 kw) | 2021.01- | 8AT | F | L/R | Estate 4WD DMKC | | GDS82075 | Drive Shaft | | 42 | | 76.5 | 34 | 463 | |
| | 2021.01- | 8AT | F | L/R | Estate 4WD DMKC | | GCO81357 | Outer Joint | | 42 | 28 | 76.5 | 34 | 54 | I |
| | 2021.01- | 8AT | F | L/R | Estate 4WD DMKC | | GCI61077 | Inner Joint | | | 34 | | | 88 | |
| | 2021.01- | 8AT | R | L/R | Estate 4WD DMKC | For PR code:GH1 | GDS82252 | Drive Shaft | | 38 | | 59.5 | 34 | 627 | |
| | 2021.01- | 8AT | R | L/R | Estate 4WD DMKC | Rear differential Torque Vectoring;Without rear differential lock | GCI81702 | Outer Joint | | 38 | 28 | 59.5 | 34 | 81.5 | |
| | 2021.01- | AT | R | L | Estate 4WD DMKC | For PR code:GH2;For vehicles with AWD & variable torque dist;Mounting Type:Bolted | GDS58136 | Drive Shaft | | 38 | | 59.5 | 34 | 586 | |
| | 2021.01- | AT | R | R | Estate 4WD DMKC | For PR code:GH2;For vehicles with AWD & variable torque dist;Mounting Type:Bolted | GDS58137 | Drive Shaft | | 38 | | 59.5 | 34 | 545 | |
| | 2021.01- | AT | R | L/R | Estate 4WD DMKC | For PR code:GH2;For vehicles with AWD & variable torque dist;Mounting Type:Bolted | GCI84020 | Inner Joint | | | 28 | | | 32 | |
| | 2021.01-2023.03 | 8AT | F | L/R | Saloon 4WD DMKC | | GDS82075 | Drive Shaft | | 42 | | 76.5 | 34 | 463 | |
| | 2021.01-2023.03 | 8AT | F | L/R | Saloon 4WD DMKC | | GCO81357 | Outer Joint | | 42 | 28 | 76.5 | 34 | 54 | I |
| | 2021.01-2023.03 | 8AT | F | L/R | Saloon 4WD DMKC | | GCI61077 | Inner Joint | | | 34 | | | 88 | |

| | YEAR | TRANSM. | F/R | L/R | BODY STYLE & DRIVE TYPE & ENGINE | REMARKS | G-AP Ref. | PRODUCT | ABS | Technical Specifications A | B | C | H | L | P |
|---|---|---|---|---|---|---|---|---|---|---|---|---|---|---|---|
| **AUDI** | | | | | | | | | | | | | | | |
| **S4 Quattro** | | | | | | | | | | | | | | | |
| 3.0 (251 kw) | 2021.01-2023.03 | 8AT | R | L/R | Saloon 4WD DMKC | For PR code:GH1 | GDS82252 | Drive Shaft | | 38 | | 59.5 | 34 | 627 | |
| | 2021.01-2023.03 | 8AT | R | L/R | Saloon 4WD DMKC | Rear differential Torque Vectoring;Without rear differential lock | GCI81702 | Outer Joint | | 38 | 28 | 59.5 | 34 | 81.5 | |
| | 2021.01-2023.03 | AT | R | L | Saloon 4WD DMKC | For PR code:GH2;For vehicles with AWD & variable torque dist;Mounting Type:Bolted | GDS58136 | Drive Shaft | | 38 | | 59.5 | 34 | 586 | |
| | 2021.01-2023.03 | AT | R | R | Saloon 4WD DMKC | For PR code:GH2;For vehicles with AWD & variable torque dist;Mounting Type:Bolted | GDS58137 | Drive Shaft | | 38 | | 59.5 | 34 | 545 | |
| | 2021.01-2023.03 | AT | R | L/R | Saloon 4WD DMKC | For PR code:GH2;For vehicles with AWD & variable torque dist;Mounting Type:Bolted | GCI84020 | Inner Joint | | | 28 | | | 32 | |
| 3.0 (255 kw) | 2019.05- | 8AT | F | L/R | Estate 4WD DEWB | | GDS82075 | Drive Shaft | | 42 | | 76.5 | 34 | 463 | |
| | 2019.05- | 8AT | F | L/R | Estate 4WD DEWB | | GCO81357 | Outer Joint | | 42 | 28 | 76.5 | 34 | 54 | I |
| | 2019.05- | 8AT | F | L/R | Estate 4WD DEWB | | GCI61077 | Inner Joint | | | 34 | | | 88 | |
| | 2019.05- | 8AT | R | L/R | Estate 4WD DEWB | For PR code:GH1 | GDS82252 | Drive Shaft | | 38 | | 59.5 | 34 | 627 | |
| | 2019.05- | 8AT | R | L/R | Estate 4WD DEWB | Rear differential Torque Vectoring;Without rear differential lock | GCI81702 | Outer Joint | | 38 | 28 | 59.5 | 34 | 81.5 | |
| | 2019.05- | AT | R | L | Estate 4WD DEWB | For PR code:GH2;For vehicles with AWD & variable torque dist;Mounting Type:Bolted | GDS58136 | Drive Shaft | | 38 | | 59.5 | 34 | 586 | |
| | 2019.05- | AT | R | R | Estate 4WD DEWB | For PR code:GH2;For vehicles with AWD & variable torque dist;Mounting Type:Bolted | GDS58137 | Drive Shaft | | 38 | | 59.5 | 34 | 545 | |
| | 2019.05- | AT | R | L/R | Estate 4WD DEWB | For PR code:GH2;For vehicles with AWD & variable torque dist;Mounting Type:Bolted | GCI84020 | Inner Joint | | | 28 | | | 32 | |
| | 2019.05- | 8AT | F | L/R | Saloon 4WD DEWB | | GDS82075 | Drive Shaft | | 42 | | 76.5 | 34 | 463 | |
| | 2019.05- | 8AT | F | L/R | Saloon 4WD DEWB | | GCO81357 | Outer Joint | | 42 | 28 | 76.5 | 34 | 54 | I |
| | 2019.05- | 8AT | F | L/R | Saloon 4WD DEWB | | GCI61077 | Inner Joint | | | 34 | | | 88 | |
| | 2019.05- | 8AT | R | L/R | Saloon 4WD DEWB | For PR code:GH1 | GDS82252 | Drive Shaft | | 38 | | 59.5 | 34 | 627 | |
| | 2019.05- | 8AT | R | L/R | Saloon 4WD DEWB | Rear differential Torque Vectoring;Without rear differential lock | GCI81702 | Outer Joint | | 38 | 28 | 59.5 | 34 | 81.5 | |
| | 2019.05- | AT | R | L | Saloon 4WD DEWB | For PR code:GH2;For vehicles with AWD & variable torque dist;Mounting Type:Bolted | GDS58136 | Drive Shaft | | 38 | | 59.5 | 34 | 586 | |
| | 2019.05- | AT | R | R | Saloon 4WD DEWB | For PR code:GH2;For vehicles with AWD & variable torque dist;Mounting Type:Bolted | GDS58137 | Drive Shaft | | 38 | | 59.5 | 34 | 545 | |
| | 2019.05- | AT | R | L/R | Saloon 4WD DEWB | For PR code:GH2;For vehicles with AWD & variable torque dist;Mounting Type:Bolted | GCI84020 | Inner Joint | | | 28 | | | 32 | |
| 3.0 (260 kw) | 2016.05- | 8AT | F | L/R | Estate 4WD CWGD | | GDS82075 | Drive Shaft | | 42 | | 76.5 | 34 | 463 | |
| | 2016.05- | 8AT | F | L/R | Estate 4WD CWGD | | GCO81357 | Outer Joint | | 42 | 28 | 76.5 | 34 | 54 | I |
| | 2016.05- | 8AT | F | L/R | Estate 4WD CWGD | | GCI61077 | Inner Joint | | | 34 | | | 88 | |
| | 2016.05- | 8AT | R | L/R | Estate 4WD CWGD | For PR code:GH1 | GDS82252 | Drive Shaft | | 38 | | 59.5 | 34 | 627 | |
| | 2016.05- | 8AT | R | L/R | Estate 4WD CWGD | Rear differential Torque Vectoring;Without rear differential lock | GCI81702 | Outer Joint | | 38 | 28 | 59.5 | 34 | 81.5 | |
| | 2016.05- | 8AT | R | L/R | Estate 4WD CWGD | For PR code:GH1 | GCI61069 | Inner Joint | | | 28 | | | 32 | |
| | 2016.05- | AT | R | L | Estate 4WD CWGD | For PR code:GH2;For vehicles with AWD & variable torque dist;Mounting Type:Bolted | GDS58136 | Drive Shaft | | 38 | | 59.5 | 34 | 586 | |
| | 2016.05- | AT | R | R | Estate 4WD CWGD | For PR code:GH2;For vehicles with AWD & variable torque dist;Mounting Type:Bolted | GDS58137 | Drive Shaft | | 38 | | 59.5 | 34 | 545 | |
| | 2016.05- | AT | R | L/R | Estate 4WD CWGD | For PR code:GH2;For vehicles with AWD & variable torque dist;Mounting Type:Bolted | GCI84020 | Inner Joint | | | 28 | | | 32 | |
| | 2016.05- | 8AT | F | L/R | Saloon 4WD CWGD | | GDS82075 | Drive Shaft | | 42 | | 76.5 | 34 | 463 | |
| | 2016.05- | AT | F | L/R | Saloon 4WD CWGD | | GCO83103 | Outer Joint | | 42 | 28 | 76.4 | 34 | 54 | I |
| | 2016.05- | AT | F | L/R | Saloon 4WD CWGD | | GCI83022 | Inner Joint | | | 34 | | | 88.5 | |
| | 2016.05- | 8AT | R | L/R | Saloon 4WD CWGD | For PR code:GH1 | GDS82252 | Drive Shaft | | 38 | | 59.5 | 34 | 627 | |
| | 2016.05- | 8AT | R | L/R | Saloon 4WD CWGD | Rear differential Torque Vectoring;Without rear differential lock | GCI81702 | Outer Joint | | 38 | 28 | 59.5 | 34 | 81.5 | |
| | 2016.05- | AT | R | L | Saloon 4WD CWGD | For PR code:GH2;For vehicles with AWD & variable torque dist;Mounting Type:Bolted | GDS58136 | Drive Shaft | | 38 | | 59.5 | 34 | 586 | |
| | 2016.05- | AT | R | R | Saloon 4WD CWGD | For PR code:GH2;For vehicles with AWD & variable torque dist;Mounting Type:Bolted | GDS58137 | Drive Shaft | | 38 | | 59.5 | 34 | 545 | |
| | 2016.05- | AT | R | L/R | Saloon 4WD CWGD | For PR code:GH2;For vehicles with AWD & variable torque dist;Mounting Type:Bolted | GCI84020 | Inner Joint | | | 28 | | | 32 | |
| 4.2 (253 kw) | 2003.03-2004.12 | 6AT | F | R | Estate 4WD BBK;BHF | | GCI83007 | Inner Joint | | | 34 | | | 85 | |
| | 2003.03-2004.12 | 6AT/6MT | F | L/R | Estate 4WD BBK;BHF | TJ | GCI61044 | Inner Joint | | | 34 | | | 85 | |
| | 2003.03-2004.12 | AT | F | L | Estate 4WD BBK;BHF | | GDS83347 | Drive Shaft | 45W | 38 | | 59.5 | 34.5 | 580 | |
| | 2003.03-2004.12 | AT | F | R | Estate 4WD BBK;BHF | | GDS82239 | Drive Shaft | 45W | 38 | | 59.5 | 34.5 | 493 | |
| | 2003.03-2004.12 | AT | F | L/R | Estate 4WD BBK;BHF | | GCO83078 | Outer Joint | 45W | 38 | 27 | 59.5 | 34.5 | 63 | M |
| | 2003.03-2004.12 | MT | F | L | Estate 4WD BBK;BHF | | GDS83057 | Drive Shaft | 45W | 38 | | 59.5 | 34.5 | 593 | |
| | 2003.03-2004.12 | MT | F | R | Estate 4WD BBK;BHF | | GDS83058 | Drive Shaft | 45W | 38 | | 59.5 | 34.5 | 613 | |
| | 2003.03-2004.12 | MT | F | L | Estate 4WD BBK;BHF | AAR | GCI61076 | Inner Joint | | | 34 | | | 85 | |
| | 2003.03-2004.12 | | F | L/R | Estate 4WD BBK;BHF | | GCO83067 | Outer Joint | 45W | 38 | 27 | 59.5 | 34 | 68 | M |
| | 2003.03-2004.12 | 6AT/6MT | R | L/R | Estate 4WD BBK;BHF | | GDS82401 | Drive Shaft | 45W | 38 | | 59.5 | 34 | 617 | |
| | 2003.03-2004.12 | 6AT/6MT | R | L/R | Estate 4WD BBK;BHF | | GCI61010 | Inner Joint | | | 28 | | | 32 | |
| | 2003.03-2004.12 | 6AT | F | R | Saloon 4WD BBK;BHF | | GCI83007 | Inner Joint | | | 34 | | | 85 | |
| | 2003.03-2004.12 | AT | F | L | Saloon 4WD BBK;BHF | | GDS83347 | Drive Shaft | 45W | 38 | | 59.5 | 34.5 | 580 | |
| | 2003.03-2004.12 | AT | F | R | Saloon 4WD BBK;BHF | | GDS82239 | Drive Shaft | 45W | 38 | | 59.5 | 34.5 | 493 | |
| | 2003.03-2004.12 | AT | F | L/R | Saloon 4WD BBK;BHF | | GCO83078 | Outer Joint | 45W | 38 | 27 | 59.5 | 34.5 | 63 | M |
| | 2003.03-2004.12 | AT/MT | F | L/R | Saloon 4WD BBK;BHF | TJ | GCI61044 | Inner Joint | | | 34 | | | 85 | |
| | 2003.03-2004.12 | MT | F | L | Saloon 4WD BBK;BHF | | GDS83057 | Drive Shaft | 45W | 38 | | 59.5 | 34.5 | 593 | |
| | 2003.03-2004.12 | MT | F | R | Saloon 4WD BBK;BHF | | GDS83058 | Drive Shaft | 45W | 38 | | 59.5 | 34.5 | 613 | |
| | 2003.03-2004.12 | MT | F | L | Saloon 4WD BBK;BHF | AAR | GCI61076 | Inner Joint | | | 34 | | | 85 | |
| | 2003.03-2004.12 | | F | L/R | Saloon 4WD BBK;BHF | | GCO83067 | Outer Joint | 45W | 38 | 27 | 59.5 | 34 | 68 | M |
| | 2003.03-2004.12 | 6AT/6MT | R | L/R | Saloon 4WD BBK;BHF | | GDS82401 | Drive Shaft | 45W | 38 | | 59.5 | 34 | 617 | |
| | 2003.03-2004.12 | 6AT/6MT | R | L/R | Saloon 4WD BBK;BHF | | GCI61010 | Inner Joint | | | 28 | | | 32 | |
| | 2004.11-2008.06 | AT/MT | F | L/R | Estate 4WD BBK, BHF | | GCI61044 | Inner Joint | | | 34 | | | 85 | |
| | 2004.11-2008.06 | MT | F | R | Estate 4WD BBK, BHF | | GDS83058 | Drive Shaft | 45W | 38 | | 59.5 | 34.5 | 613 | |
| | 2004.11-2008.06 | | F | L/R | Estate 4WD BBK, BHF | | GCO83067 | Outer Joint | 45W | 38 | 27 | 59.5 | 34 | 68 | M |
| | 2004.11-2008.06 | 6AT | F | R | Saloon 4WD BBK;BHF | | GCI83007 | Inner Joint | | | 34 | | | 85 | |
| | 2004.11-2008.06 | AT | F | L | Saloon 4WD BBK;BHF | | GDS83347 | Drive Shaft | 45W | 38 | | 59.5 | 34.5 | 580 | |

| | YEAR | TRANSM. | F/R | L/R | BODY STYLE & DRIVE TYPE & ENGINE | REMARKS | G-AP Ref. | PRODUCT | ABS | Technical Specifications A | B | C | H | L | P |
|---|---|---|---|---|---|---|---|---|---|---|---|---|---|---|---|
| **AUDI** | | | | | | | | | | | | | | | |
| **S4 Quattro** | | | | | | | | | | | | | | | |
| 4.2 (253 kw) | 2004.11-2008.06 | AT | F | R | Saloon 4WD BBK;BHF | | GDS82239 | Drive Shaft | 45W | 38 | | 59.5 | 34.5 | 493 | |
| | 2004.11-2008.06 | AT | F | L/R | Saloon 4WD BBK;BHF | | GCO83078 | Outer Joint | 45W | 38 | 27 | 59.5 | 34.5 | 63 | M |
| | 2004.11-2008.06 | AT/MT | F | L/R | Saloon 4WD BBK;BHF | TJ | GCI61044 | Inner Joint | | | 34 | | | 85 | |
| | 2004.11-2008.06 | MT | F | L | Saloon 4WD BBK;BHF | | GDS83057 | Drive Shaft | 45W | 38 | | 59.5 | 34.5 | 593 | |
| | 2004.11-2008.06 | MT | F | R | Saloon 4WD BBK;BHF | | GDS83058 | Drive Shaft | 45W | 38 | | 59.5 | 34.5 | 613 | |
| | 2004.11-2008.06 | MT | F | L | Saloon 4WD BBK;BHF | AAR | GCI61076 | Inner Joint | | | 34 | | | 85 | |
| | 2004.11-2008.06 | | F | L/R | Saloon 4WD BBK;BHF | | GCO83067 | Outer Joint | 45W | 38 | 27 | 59.5 | 34 | 68 | M |
| | 2004.11-2008.06 | 6AT/6MT | R | L/R | Saloon 4WD BBK;BHF | Date to:2006.05,Chassis no. to:8E_6_905000 | GCI61010 | Inner Joint | | | 28 | | | 32 | |
| | 2004.11-2008.06 | 6MT | R | L/R | Saloon 4WD BBK;BHF | | GDS82156 | Drive Shaft | 45W | 38 | | 59.5 | 34.5 | 612 | |
| | 2004.11-2008.06 | 6MT | R | L/R | Saloon 4WD BBK;BHF | | GCO83078 | Outer Joint | 45W | 38 | 27 | 59.5 | 34.5 | 63 | M |
| | 2004.11-2008.06 | AT | R | L/R | Saloon 4WD BBK;BHF | | GDS82401 | Drive Shaft | 45W | 38 | | 59.5 | 34 | 617 | |
| **S5 Cabrio Quattro** | | | | | | | | | | | | | | | |
| 3.0 (245 kw) | 2009.06-2017.01 | 7AT | F | L/R | Convertible 4WD CAKA;CCBA;CGXC;CTUB;CGWC;CREC;CTDA | Date to:2011.10 | GCO83087 | Outer Joint | | 42 | 27 | 76.5 | 34 | 57 | M |
| | 2009.06-2017.01 | 7DCT | F | L/R | Convertible 4WD CAKA;CCBA;CGXC;CTUB;CGWC;CREC;CTDA | Date to:2011.10 | GDS83273 | Drive Shaft | | 42 | | 76.5 | 34 | 460 | |
| | 2009.06-2017.01 | 7DCT | F | L/R | Convertible 4WD CAKA;CCBA;CGXC;CTUB;CGWC;CREC;CTDA | Date from:2011.11 | GDS83291 | Drive Shaft | | 42 | | 76.4 | 34 | 464 | |
| | 2009.06-2017.01 | AT/MT | F | L/R | Convertible 4WD CAKA;CCBA;CGXC;CTUB;CGWC;CREC;CTDA | | GCO83103 | Outer Joint | | 42 | 28 | 76.4 | 34 | 54 | I |
| | 2009.06-2017.01 | AT/MT | F | L/R | Convertible 4WD CAKA;CCBA;CGXC;CTUB;CGWC;CREC;CTDA | | GCI83022 | Inner Joint | | | 34 | | | 88.5 | |
| | 2009.06-2017.01 | 7AT | R | L | Convertible 4WD CAKA;CCBA;CGXC;CTUB;CGWC;CREC;CTDA | Date to:2011.08,For PR code:GH2,For vehicles with electronic limited slip diff. | GDS81886 | Drive Shaft | | 42 | | 76.5 | 34 | 589 | |
| | 2009.06-2017.01 | 7AT | R | L | Convertible 4WD CAKA;CCBA;CGXC;CTUB;CGWC;CREC;CTDA | Date from:2011.09,For PR code:GH2,For vehicles with electronic limited slip diff. | GDS82078 | Drive Shaft | | 42 | | 76.5 | 34 | 587 | |
| | 2009.06-2017.01 | 7AT | R | R | Convertible 4WD CAKA;CCBA;CGXC;CTUB;CGWC;CREC;CTDA | Date to:2011.08,For PR code:GH2,For vehicles with electronic limited slip diff. | GDS81885 | Drive Shaft | | 42 | | 76.5 | 34 | 546 | |
| | 2009.06-2017.01 | 7AT | R | R | Convertible 4WD CAKA;CCBA;CGXC;CTUB;CGWC;CREC;CTDA | Date from:2011.09,For PR code:GH2,For vehicles with electronic limited slip diff. | GDS82079 | Drive Shaft | | 42 | | 76.5 | 34 | 545 | |
| | 2009.06-2017.01 | 7AT | R | L/R | Convertible 4WD CAKA;CCBA;CGXC;CTUB;CGWC;CREC;CTDA | Date to:2011.08;For PR code:GH1 | GDS81894 | Drive Shaft | | 42 | | 76.5 | 34 | 630 | |
| | 2009.06-2017.01 | 7AT | R | L/R | Convertible 4WD CAKA;CCBA;CGXC;CTUB;CGWC;CREC;CTDA | Date from:2011.09,For PR code:GH1 | GDS82080 | Drive Shaft | | 42 | | 76.5 | 34 | 629 | |
| | 2009.06-2017.01 | 7AT | R | L/R | Convertible 4WD CAKA;CCBA;CGXC;CTUB;CGWC;CREC;CTDA | | GCI61069 | Inner Joint | | | 28 | | | 32 | |
| | 2009.06-2017.01 | 7AT | R | L/R | Convertible 4WD CAKA;CCBA;CGXC;CTUB;CGWC;CREC;CTDA | | GCI61107 | Inner Joint | | 42 | 28 | 76.5 | 34 | 82 | |
| | 2009.06-2017.01 | 7AT | R | L/R | Convertible 4WD CAKA;CCBA;CGXC;CTUB;CGWC;CREC;CTDA | Date from:2011.09 | GCI81610 | Inner Joint | | | 28 | | | 28 | |
| 3.0 (260 kw) | 2017.03- | 8AT | F | L/R | Convertible 4WD CWGD | | GDS82075 | Drive Shaft | | 42 | | 76.5 | 34 | 463 | |
| | 2017.03- | 8AT | F | L/R | Convertible 4WD CWGD | | GCO81357 | Outer Joint | | 42 | 28 | 76.5 | 34 | 54 | I |
| | 2017.03- | 8AT | F | L/R | Convertible 4WD CWGD | | GCI61077 | Inner Joint | | | 34 | | | 88 | |
| | 2017.03- | 7DCT | R | L/R | Convertible 4WD CWGD | Rear differential Torque Vectoring;Without rear differential lock | GCI81702 | Outer Joint | | 38 | 28 | 59.5 | 34 | 81.5 | |
| | 2017.03- | 8AT | R | L/R | Convertible 4WD CWGD | For PR code:GH1 | GDS82252 | Drive Shaft | | 38 | | 59.5 | 34 | 627 | |
| | 2017.03- | 8AT | R | L/R | Convertible 4WD CWGD | For PR code:GH1 | GCI61069 | Inner Joint | | | 28 | | | 32 | |
| | 2017.03- | AT | R | L | Convertible 4WD CWGD | For PR code:GH2;For vehicles with AWD & variable torque dist;Mounting Type:Bolted | GDS58136 | Drive Shaft | | 38 | | 59.5 | 34 | 586 | |
| | 2017.03- | AT | R | R | Convertible 4WD CWGD | For PR code:GH2;For vehicles with AWD & variable torque dist;Mounting Type:Bolted | GDS58137 | Drive Shaft | | 38 | | 59.5 | 34 | 545 | |
| | 2017.03- | AT | R | L/R | Convertible 4WD CWGD | For PR code:GH2;For vehicles with AWD & variable torque dist;Mounting Type:Bolted | GCI84020 | Inner Joint | | | 28 | | | 32 | |
| **S5 Quattro** | | | | | | | | | | | | | | | |
| 3.0 (245 kw) | 2011.10-2017.01 | 7AT | F | L/R | Coupe 4WD CAKA;CGXC;CTUB;CGWC;CREC;CTDA | Date to:2011.10 | GCO83087 | Outer Joint | | 42 | 27 | 76.5 | 34 | 57 | M |
| | 2011.10-2017.01 | 7AT | F | L/R | Coupe 4WD CAKA;CGXC;CTUB;CGWC;CREC;CTDA | Date from:2011.11 | GCO83103 | Outer Joint | | 42 | 28 | 76.4 | 34 | 54 | I |
| | 2011.10-2017.01 | 7DCT | F | L/R | Coupe 4WD CAKA;CGXC;CTUB;CGWC;CREC;CTDA | Date to:2011.10 | GDS83273 | Drive Shaft | | 42 | | 76.5 | 34 | 460 | |
| | 2011.10-2017.01 | 7DCT | F | L/R | Coupe 4WD CAKA;CGXC;CTUB;CGWC;CREC;CTDA | Date from:2011.11 | GDS83291 | Drive Shaft | | 42 | | 76.4 | 34 | 464 | |
| | 2011.10-2017.01 | AT/MT | F | L/R | Coupe 4WD CAKA;CGXC;CTUB;CGWC;CREC;CTDA | | GCI83022 | Inner Joint | | | 34 | | | 88.5 | |
| | 2011.10-2017.01 | 7AT | R | L | Coupe 4WD CAKA;CGXC;CTUB;CGWC;CREC;CTDA | For PR code:GH2,For vehicles with electronic limited slip diff. | GDS82078 | Drive Shaft | | 42 | | 76.5 | 34 | 587 | |
| | 2011.10-2017.01 | 7AT | R | R | Coupe 4WD CAKA;CGXC;CTUB;CGWC;CREC;CTDA | For PR code:GH2,For vehicles with electronic limited slip diff. | GDS82079 | Drive Shaft | | 42 | | 76.5 | 34 | 545 | |
| | 2011.10-2017.01 | 7AT | R | L/R | Coupe 4WD CAKA;CGXC;CTUB;CGWC;CREC;CTDA | For PR code:GH1 | GDS82080 | Drive Shaft | | 42 | | 76.5 | 34 | 629 | |
| | 2011.10-2017.01 | 7AT | R | L/R | Coupe 4WD CAKA;CGXC;CTUB;CGWC;CREC;CTDA | Wheel Side | GCI61107 | Inner Joint | | 42 | 28 | 76.5 | 34 | 82 | |
| | 2011.10-2017.01 | 7AT | R | L/R | Coupe 4WD CAKA;CGXC;CTUB;CGWC;CREC;CTDA | Transmission side | GCI81610 | Inner Joint | | | 28 | | | 28 | |
| 3.0 (251 kw) | 2021.01- | 8AT | F | L/R | Coupe 4WD DMKC | | GDS82075 | Drive Shaft | | 42 | | 76.5 | 34 | 463 | |
| | 2021.01- | 8AT | F | L/R | Coupe 4WD DMKC | | GCO81357 | Outer Joint | | 42 | 28 | 76.5 | 34 | 54 | I |
| | 2021.01- | 8AT | F | L/R | Coupe 4WD DMKC | | GCI61077 | Inner Joint | | | 34 | | | 88 | |
| | 2021.01- | 8AT | R | L/R | Coupe 4WD DMKC | For PR Code:GH1 | GDS82252 | Drive Shaft | | 38 | | 59.5 | 34 | 627 | |
| | 2021.01- | 8AT | R | L/R | Coupe 4WD DMKC | Rear differential Torque Vectoring;Without rear differential lock | GCI81702 | Outer Joint | | 38 | 28 | 59.5 | 34 | 81.5 | |
| | 2021.01- | AT | R | L | Coupe 4WD DMKC | For PR code:GH2;For vehicles with AWD & variable torque dist;Mounting Type:Bolted | GDS58136 | Drive Shaft | | 38 | | 59.5 | 34 | 586 | |
| | 2021.01- | AT | R | R | Coupe 4WD DMKC | For PR code:GH2;For vehicles with AWD & variable torque dist;Mounting Type:Bolted | GDS58137 | Drive Shaft | | 38 | | 59.5 | 34 | 545 | |
| | 2021.01- | AT | R | L/R | Coupe 4WD DMKC | For PR code:GH2;For vehicles with AWD & variable torque dist;Mounting Type:Bolted | GCI84020 | Inner Joint | | | 28 | | | 32 | |
| 3.0 (255 kw) | 2018.12-2020.11 | 8AT | F | L/R | Coupe 4WD DEWB | | GDS82075 | Drive Shaft | | 42 | | 76.5 | 34 | 463 | |
| | 2018.12-2020.11 | 8AT | F | L/R | Coupe 4WD DEWB | | GCO81357 | Outer Joint | | 42 | 28 | 76.5 | 34 | 54 | I |
| | 2018.12-2020.11 | 8AT | F | L/R | Coupe 4WD DEWB | | GCI61077 | Inner Joint | | | 34 | | | 88 | |
| | 2018.12-2020.11 | 8AT | R | L/R | Coupe 4WD DEWB | For PR code:GH1 | GDS82252 | Drive Shaft | | 38 | | 59.5 | 34 | 627 | |
| | 2018.12-2020.11 | 8AT | R | L/R | Coupe 4WD DEWB | Rear differential Torque Vectoring;Without rear differential lock | GCI81702 | Outer Joint | | 38 | 28 | 59.5 | 34 | 81.5 | |
| | 2018.12-2020.11 | AT | R | L | Coupe 4WD DEWB | For PR code:GH2;For vehicles with AWD & variable torque dist;Mounting Type:Bolted | GDS58136 | Drive Shaft | | 38 | | 59.5 | 34 | 586 | |
| | 2018.12-2020.11 | AT | R | R | Coupe 4WD DEWB | For PR code:GH2;For vehicles with AWD & variable torque dist;Mounting Type:Bolted | GDS58137 | Drive Shaft | | 38 | | 59.5 | 34 | 545 | |
| | 2018.12-2020.11 | AT | R | L/R | Coupe 4WD DEWB | For PR code:GH2;For vehicles with AWD & variable torque dist;Mounting Type:Bolted | GCI84020 | Inner Joint | | | 28 | | | 32 | |
| 3.0 (260 kw) | 2016.07- | 8AT | F | L/R | Coupe 4WD CWGD | | GDS82075 | Drive Shaft | | 42 | | 76.5 | 34 | 463 | |
| | 2016.07- | 8AT | F | L/R | Coupe 4WD CWGD | | GCO81357 | Outer Joint | | 42 | 28 | 76.5 | 34 | 54 | I |
| | 2016.07- | 8AT | F | L/R | Coupe 4WD CWGD | | GCI61077 | Inner Joint | | | 34 | | | 88 | |

| | YEAR | TRANSM. | F/R | L/R | BODY STYLE & DRIVE TYPE & ENGINE | REMARKS | G-AP Ref. | PRODUCT | ABS | Technical Specifications A | B | C | H | L | P |
|---|---|---|---|---|---|---|---|---|---|---|---|---|---|---|---|
| **AUDI** | | | | | | | | | | | | | | | |
| **S5 Quattro** | | | | | | | | | | | | | | | |
| 3.0 (260 kw) | 2016.07- | 8AT | R | L/R | Coupe 4WD CWGD | For PR code:GH1 | GDS82252 | Drive Shaft | | 38 | | 59.5 | 34 | 627 | |
| | 2016.07- | 8AT | R | L/R | Coupe 4WD CWGD | Rear differential Torque Vectoring;Without rear differential lock | GCI81702 | Outer Joint | | 38 | 28 | 59.5 | 34 | 81.5 | |
| | 2016.07- | 8AT | R | L/R | Coupe 4WD CWGD | For PR code:GH1 | GCI61069 | Inner Joint | | | 28 | | | 32 | |
| | 2016.07- | AT | R | L | Coupe 4WD CWGD | For PR code:GH2;For vehicles with AWD & variable torque diet;Mounting Type:Bolted | GDS58136 | Drive Shaft | | 38 | | 59.5 | 34 | 586 | |
| | 2016.07- | AT | R | R | Coupe 4WD CWGD | For PR code:GH2;For vehicles with AWD & variable torque diet;Mounting Type:Bolted | GDS58137 | Drive Shaft | | 38 | | 59.5 | 34 | 545 | |
| | 2016.07- | AT | R | L/R | Coupe 4WD CWGD | For PR code:GH2;For vehicles with AWD & variable torque diet;Mounting Type:Bolted | GCI84020 | Inner Joint | | | 28 | | | 32 | |
| 4.2 (260 kw) | 2007.06-2012.03 | 6AT/6MT | F | L/R | Coupe 4WD CAUA | Date to:2011.10 | GDS83273 | Drive Shaft | | 42 | | 76.5 | 34 | 460 | |
| | 2007.06-2012.03 | 6AT/6MT | F | L/R | Coupe 4WD CAUA | Date from:2011.11 | GDS83291 | Drive Shaft | | 42 | | 76.4 | 34 | 464 | |
| | 2007.06-2012.03 | 6AT/6MT | F | L/R | Coupe 4WD CAUA | Date to:2011.10 | GCO83087 | Outer Joint | | 42 | 27 | 76.5 | 34 | 57 | M |
| | 2007.06-2012.03 | 6AT/6MT | F | L/R | Coupe 4WD CAUA | Date from:2011.11 | GCO83103 | Outer Joint | | 42 | 28 | 76.4 | 34 | 54 | I |
| | 2007.06-2012.03 | AT/MT | F | L/R | Coupe 4WD CAUA | | GCI83022 | Inner Joint | | | 34 | | | 88.5 | |
| | 2007.06-2012.03 | 6AT/6MT | R | L | Coupe 4WD CAUA | Date to:2011.07;For PR code:GH2;For vehicles with electronic limited slip diff. | GDS81886 | Drive Shaft | | 42 | | 76.5 | 34 | 589 | |
| | 2007.06-2012.03 | 6AT/6MT | R | L | Coupe 4WD CAUA | Date from:2011.08;For PR code:GH2;For vehicles with electronic limited slip diff. | GDS82078 | Drive Shaft | | 42 | | 76.5 | 34 | 587 | |
| | 2007.06-2012.03 | 6AT/6MT | R | R | Coupe 4WD CAUA | Date to:2011.07;For PR code:GH2;For vehicles with electronic limited slip diff. | GDS81885 | Drive Shaft | | 42 | | 76.5 | 34 | 546 | |
| | 2007.06-2012.03 | 6AT/6MT | R | R | Coupe 4WD CAUA | Date from:2011.08;For PR code:GH2;For vehicles with electronic limited slip diff. | GDS82079 | Drive Shaft | | 42 | | 76.5 | 34 | 545 | |
| | 2007.06-2012.03 | 6AT/6MT | R | L/R | Coupe 4WD CAUA | For PR code:GH1 | GDS81894 | Drive Shaft | | 42 | | 76.5 | 34 | 630 | |
| | 2007.06-2012.03 | 6AT/6MT | R | L/R | Coupe 4WD CAUA | Wheel Side | GCI61107 | Inner Joint | | 42 | 28 | 76.5 | 34 | 82 | |
| | 2007.06-2012.03 | 6AT/6MT | R | L/R | Coupe 4WD CAUA | Transmission side | GCI81610 | Inner Joint | | | 28 | | | 28 | |
| **S5 Sportback Quattro** | | | | | | | | | | | | | | | |
| 3.0 (245 kw) | 2010.01-2017.01 | 7AT | F | L/R | Hatchback 4WD CAKA;CGWC;CREC;CTDA | | GCI83022 | Inner Joint | | | 34 | | | 88.5 | |
| | 2010.01-2017.01 | 7DCT | F | L/R | Hatchback 4WD CAKA;CGWC;CREC;CTDA | Date to:2011.10 | GDS83273 | Drive Shaft | | 42 | | 76.5 | 34 | 460 | |
| | 2010.01-2017.01 | 7DCT | F | L/R | Hatchback 4WD CAKA;CGWC;CREC;CTDA | Date from:2011.11 | GDS83291 | Drive Shaft | | 42 | | 76.4 | 34 | 464 | |
| | 2010.01-2017.01 | AT/MT | F | L/R | Hatchback 4WD CAKA;CGWC;CREC;CTDA | | GCO83086 | Outer Joint | | 42 | 33 | 76.5 | 34 | 45.5 | M |
| | 2010.01-2017.01 | | F | L/R | Hatchback 4WD CAKA;CGWC;CREC;CTDA | Date To:2011.10 | GCO83087 | Outer Joint | | 42 | 27 | 76.5 | 34 | 57 | M |
| | 2010.01-2017.01 | | F | L/R | Hatchback 4WD CAKA;CGWC;CREC;CTDA | Date From:2011.11 | GCO83103 | Outer Joint | | 42 | 28 | 76.4 | 34 | 54 | I |
| | 2010.01-2017.01 | 7AT | R | L | Hatchback 4WD CAKA;CGWC;CREC;CTDA | Date to:2011.08;for vehicles with limited slip differential | GDS81886 | Drive Shaft | | 42 | | 76.5 | 34 | 589 | |
| | 2010.01-2017.01 | 7AT | R | L | Hatchback 4WD CAKA;CGWC;CREC;CTDA | Date from:2011.09;For PR code:GH2;For vehicles with electronic limited slip diff. | GDS82078 | Drive Shaft | | 42 | | 76.5 | 34 | 587 | |
| | 2010.01-2017.01 | 7AT | R | R | Hatchback 4WD CAKA;CGWC;CREC;CTDA | Date to:2011.08;for vehicles with limited slip differential | GDS81885 | Drive Shaft | | 42 | | 76.5 | 34 | 546 | |
| | 2010.01-2017.01 | 7AT | R | R | Hatchback 4WD CAKA;CGWC;CREC;CTDA | Date from:2011.09;For PR code:GH2;For vehicles with electronic limited slip diff. | GDS82079 | Drive Shaft | | 42 | | 76.5 | 34 | 545 | |
| | 2010.01-2017.01 | 7AT | R | L/R | Hatchback 4WD CAKA;CGWC;CREC;CTDA | Date to:2011.08 | GDS81894 | Drive Shaft | | 42 | | 76.5 | 34 | 630 | |
| | 2010.01-2017.01 | 7AT | R | L/R | Hatchback 4WD CAKA;CGWC;CREC;CTDA | Date from:2011.09,For PR code:GH1 | GDS82080 | Drive Shaft | | 42 | | 76.5 | 34 | 629 | |
| | 2010.01-2017.01 | 7AT | R | L/R | Hatchback 4WD CAKA;CGWC;CREC;CTDA | | GCI61069 | Inner Joint | | | 28 | | | 32 | |
| | 2010.01-2017.01 | 7AT | R | L/R | Hatchback 4WD CAKA;CGWC;CREC;CTDA | | GCI61107 | Inner Joint | | 42 | 28 | 76.5 | 34 | 82 | |
| | 2010.01-2017.01 | 7AT | R | L/R | Hatchback 4WD CAKA;CGWC;CREC;CTDA | Date from:2011.09 | GCI81610 | Inner Joint | | | 28 | | | 28 | |
| 3.0 (251 kw) | 2021.01- | 8AT | F | L/R | Hatchback 4WD DMKC | | GDS82075 | Drive Shaft | | 42 | | 76.5 | 34 | 463 | |
| | 2021.01- | 8AT | F | L/R | Hatchback 4WD DMKC | | GCO81357 | Outer Joint | | 42 | 28 | 76.5 | 34 | 54 | I |
| | 2021.01- | 8AT | F | L/R | Hatchback 4WD DMKC | | GCI61077 | Inner Joint | | | 34 | | | 88 | |
| | 2021.01- | 8AT | R | L/R | Hatchback 4WD DMKC | For PR Code:GH1 | GDS82252 | Drive Shaft | | 38 | | 59.5 | 34 | 627 | |
| | 2021.01- | 8AT | R | L/R | Hatchback 4WD DMKC | Rear differential Torque Vectoring;Without rear differential lock | GCI81702 | Outer Joint | | 38 | 28 | 59.5 | 34 | 81.5 | |
| | 2021.01- | AT | R | L | Hatchback 4WD DMKC | For PR code:GH2;For vehicles with AWD & variable torque diet;Mounting Type:Bolted | GDS58136 | Drive Shaft | | 38 | | 59.5 | 34 | 586 | |
| | 2021.01- | AT | R | R | Hatchback 4WD DMKC | For PR code:GH2;For vehicles with AWD & variable torque diet;Mounting Type:Bolted | GDS58137 | Drive Shaft | | 38 | | 59.5 | 34 | 545 | |
| | 2021.01- | AT | R | L/R | Hatchback 4WD DMKC | For PR code:GH2;For vehicles with AWD & variable torque diet;Mounting Type:Bolted | GCI84020 | Inner Joint | | | 28 | | | 32 | |
| 3.0 (255 kw) | 2018.12- | 8AT | F | L/R | Hatchback 4WD DEWB | | GDS82075 | Drive Shaft | | 42 | | 76.5 | 34 | 463 | |
| | 2018.12- | 8AT | F | L/R | Hatchback 4WD DEWB | | GCO81357 | Outer Joint | | 42 | 28 | 76.5 | 34 | 54 | I |
| | 2018.12- | 8AT | F | L/R | Hatchback 4WD DEWB | | GCI61077 | Inner Joint | | | 34 | | | 88 | |
| | 2018.12- | 8AT | R | L/R | Hatchback 4WD DEWB | For PR code:GH1 | GDS82252 | Drive Shaft | | 38 | | 59.5 | 34 | 627 | |
| | 2018.12- | 8AT | R | L/R | Hatchback 4WD DEWB | Rear differential Torque Vectoring;Without rear differential lock | GCI81702 | Outer Joint | | 38 | 28 | 59.5 | 34 | 81.5 | |
| | 2018.12- | AT | R | L | Hatchback 4WD DEWB | For PR code:GH2;For vehicles with AWD & variable torque diet;Mounting Type:Bolted | GDS58136 | Drive Shaft | | 38 | | 59.5 | 34 | 586 | |
| | 2018.12- | AT | R | R | Hatchback 4WD DEWB | For PR code:GH2;For vehicles with AWD & variable torque diet;Mounting Type:Bolted | GDS58137 | Drive Shaft | | 38 | | 59.5 | 34 | 545 | |
| | 2018.12- | AT | R | L/R | Hatchback 4WD DEWB | For PR code:GH2;For vehicles with AWD & variable torque diet;Mounting Type:Bolted | GCI84020 | Inner Joint | | | 28 | | | 32 | |
| 3.0 (260 kw) | 2016.09- | 8AT | F | L/R | Hatchback 4WD CWGD | | GDS82075 | Drive Shaft | | 42 | | 76.5 | 34 | 463 | |
| | 2016.09- | 8AT | F | L/R | Hatchback 4WD CWGD | | GCO81357 | Outer Joint | | 42 | 28 | 76.5 | 34 | 54 | I |
| | 2016.09- | 8AT | F | L/R | Hatchback 4WD CWGD | | GCI61077 | Inner Joint | | | 34 | | | 88 | |
| | 2016.09- | 8AT | R | L/R | Hatchback 4WD CWGD | For PR code:GH1 | GDS82252 | Drive Shaft | | 38 | | 59.5 | 34 | 627 | |
| | 2016.09- | 8AT | R | L/R | Hatchback 4WD CWGD | Rear differential Torque Vectoring;Without rear differential lock | GCI81702 | Outer Joint | | 38 | 28 | 59.5 | 34 | 81.5 | |
| | 2016.09- | 8AT | R | L/R | Hatchback 4WD CWGD | For PR code:GH1 | GCI61069 | Inner Joint | | | 28 | | | 32 | |
| | 2016.09- | AT | R | L | Hatchback 4WD CWGD | For PR code:GH2;For vehicles with AWD & variable torque diet;Mounting Type:Bolted | GDS58136 | Drive Shaft | | 38 | | 59.5 | 34 | 586 | |
| | 2016.09- | AT | R | R | Hatchback 4WD CWGD | For PR code:GH2;For vehicles with AWD & variable torque diet;Mounting Type:Bolted | GDS58137 | Drive Shaft | | 38 | | 59.5 | 34 | 545 | |
| | 2016.09- | AT | R | L/R | Hatchback 4WD CWGD | For PR code:GH2;For vehicles with AWD & variable torque diet;Mounting Type:Bolted | GCI84020 | Inner Joint | | | 28 | | | 32 | |
| **S6 Plus Quattro** | | | | | | | | | | | | | | | |
| 4.2 (240 kw) | 1996.06-1997.10 | 6MT | F | L/R | Estate 4WD AHK | | GCO83017 | Outer Joint | 45T | 38 | 27 | 59.5 | 34.5 | 68.5 | I |
| | 1996.06-1997.10 | MT | R | L/R | Estate 4WD AHK | | GCO83014 | Outer Joint | 45T | 38 | 25 | 59.5 | 34.5 | 61 | O |
| | 1996.06-1997.10 | | F/R | L/R | Estate 4WD AHK | | GCI83001 | Inner Joint | | | 28 | | | 32 | |
| | 1996.06-1997.10 | 6MT | F | L/R | Saloon 4WD AHK | | GCO83017 | Outer Joint | 45T | 38 | 27 | 59.5 | 34.5 | 68.5 | I |
| | 1996.06-1997.10 | MT | R | L/R | Saloon 4WD AHK | | GCO83014 | Outer Joint | 45T | 38 | 25 | 59.5 | 34.5 | 61 | O |

| | YEAR | TRANSM. | F/R | L/R | BODY STYLE & DRIVE TYPE & ENGINE | REMARKS | G-AP Ref. | PRODUCT | ABS | Technical Specifications A | B | C | H | L | P |
|---|---|---|---|---|---|---|---|---|---|---|---|---|---|---|---|
| **AUDI** | | | | | | | | | | | | | | | |
| **S6 Plus Quattro** | | | | | | | | | | | | | | | |
| 4.2 (240 kw) | 1996.06-1997.10 | | F/R | L/R | Saloon 4WD AHK | | GCI83001 | Inner Joint | | | 28 | | | 32 | |
| **S6 Quattro** | | | | | | | | | | | | | | | |
| 2.2 (169 kw) | 1994.06-1997.04 | 4AT/5MT/6MT | F | L | Saloon 4WD AAN | | GCI61033 | Inner Joint | | | 34 | | | 85 | |
| | 1994.06-1997.04 | AT | F | L | Saloon 4WD AAN | | GDS83060 | Drive Shaft | 45T | 38 | | 59.5 | 34 | 565 | |
| | 1994.06-1997.04 | AT | F | R | Saloon 4WD AAN | | GDS83061 | Drive Shaft | 45T | 38 | | 59.5 | 34 | 488 | |
| | 1994.06-1997.04 | AT | F | L/R | Saloon 4WD AAN | | GCI50019 | Inner Joint | | | 34 | | | 59.5 | |
| | 1994.06-1997.04 | AT/MT | F | L/R | Saloon 4WD AAN | Date to:1997.04 | GCO83017 | Outer Joint | 45T | 38 | 27 | 59.5 | 34.5 | 68.5 | I |
| | 1994.06-1997.04 | AT/MT | R | L/R | Saloon 4WD AAN | | GCO83014 | Outer Joint | 45T | 38 | 25 | 59.5 | 34.5 | 61 | O |
| | 1994.06-1997.04 | AT/MT | F/R | L/R | Saloon 4WD AAN | | GCI83001 | Inner Joint | | | 28 | | | 32 | |
| | 1994.06-1997.07 | 4AT/5MT/6MT | F | L | Estate 4WD AAN | | GCI61033 | Inner Joint | | | 34 | | | 85 | |
| | 1994.06-1997.07 | AT | F | L | Estate 4WD AAN | | GDS83060 | Drive Shaft | 45T | 38 | | 59.5 | 34 | 565 | |
| | 1994.06-1997.07 | AT | F | R | Estate 4WD AAN | | GDS83061 | Drive Shaft | 45T | 38 | | 59.5 | 34 | 488 | |
| | 1994.06-1997.07 | AT | F | L/R | Estate 4WD AAN | | GCI50019 | Inner Joint | | | 34 | | | 59.5 | |
| | 1994.06-1997.07 | AT/MT | F | L/R | Estate 4WD AAN | Date to:1997.07 | GCO83017 | Outer Joint | 45T | 38 | 27 | 59.5 | 34.5 | 68.5 | I |
| | 1994.06-1997.07 | AT/MT | R | L/R | Estate 4WD AAN | | GCO83014 | Outer Joint | 45T | 38 | 25 | 59.5 | 34.5 | 61 | O |
| | 1994.06-1997.07 | AT/MT | F/R | L/R | Estate 4WD AAN | | GCI83001 | Inner Joint | | | 28 | | | 32 | |
| 3.0 (253 kw) | 2020.11- | 8AT | F | L/R | Estate 4WD DMKD | For PR code:GH1/GH2 | GDS84553 | Drive Shaft | | 42 | | 76.5 | 34 | 496 | |
| | 2020.11- | 8AT | F | L/R | Estate 4WD DMKD | For PR code:GH4,For vehicles with AWD & variable torque dist. | GDS84556 | Drive Shaft | | 42 | | 76.5 | 34 | 495 | |
| | 2020.11- | 8AT | F | L/R | Estate 4WD DMKD | For PR code:GH1/GH2 | GCO81357 | Outer Joint | | 42 | 28 | 76.5 | 34 | 54 | I |
| | 2020.11- | 8AT | F | L/R | Estate 4WD DMKD | For PR Code:GH4 | GCO82603 | Outer Joint | | 42 | 30 | 76.5 | 34 | 60 | I |
| | 2020.11- | 8AT | F | L/R | Estate 4WD DMKD | For PR code:GH1/GH2 | GCI61077 | Inner Joint | | | 34 | | | 88 | |
| | 2020.11- | 8AT | R | L | Estate 4WD DMKD | For PR code:GH2,For vehicles with AWD & variable torque dist. | GDS58068 | Drive Shaft | | 42 | | 76.5 | 34 | 618 | |
| | 2020.11- | 8AT | R | R | Estate 4WD DMKD | For PR code:GH2,For vehicles with AWD & variable torque dist. | GDS58054 | Drive Shaft | | 42 | | 76.5 | 34 | 574 | |
| | 2020.11- | 8AT | R | L/R | Estate 4WD DMKD | For PR code:GH1 | GDS83368 | Drive Shaft | | 42 | | 76.5 | 34 | 660 | |
| | 2021.01- | 8AT | F | L/R | Saloon 4WD DMKD | | GDS84553 | Drive Shaft | | 42 | | 76.5 | 34 | 496 | |
| | 2021.01- | 8AT | F | L/R | Saloon 4WD DMKD | For PR code:GH1/GH2 | GCO81357 | Outer Joint | | 42 | 28 | 76.5 | 34 | 54 | I |
| | 2021.01- | 8AT | F | L/R | Saloon 4WD DMKD | For PR Code:GH4 | GCO82603 | Outer Joint | | 42 | 30 | 76.5 | 34 | 60 | I |
| | 2021.01- | 8AT | F | L/R | Saloon 4WD DMKD | For PR code:GH1/GH2 | GCI61077 | Inner Joint | | | 34 | | | 88 | |
| | 2021.01- | 8AT | R | L | Saloon 4WD DMKD | For PR code:GH2,For vehicles with AWD & variable torque dist. | GDS58068 | Drive Shaft | | 42 | | 76.5 | 34 | 618 | |
| | 2021.01- | 8AT | R | R | Saloon 4WD DMKD | For PR code:GH2,For vehicles with AWD & variable torque dist. | GDS58054 | Drive Shaft | | 42 | | 76.5 | 34 | 574 | |
| | 2021.01- | 8AT | R | L/R | Saloon 4WD DMKD | For vehicles without AWD & variable torque dist. | GDS83368 | Drive Shaft | | 42 | | 76.5 | 34 | 660 | |
| 3.0 (257 kw) | 2019.03- | 8AT | F | L/R | Estate 4WD DEWA | | GDS84553 | Drive Shaft | | 42 | | 76.5 | 34 | 496 | |
| | 2019.03- | 8AT | F | L/R | Estate 4WD DEWA | | GCO81357 | Outer Joint | | 42 | 28 | 76.5 | 34 | 54 | I |
| | 2019.03- | 8AT | F | L/R | Estate 4WD DEWA | | GCI61077 | Inner Joint | | | 34 | | | 88 | |
| | 2019.03- | 8AT | R | L | Estate 4WD DEWA | For PR code:GH2,For vehicles with AWD & variable torque dist. | GDS58068 | Drive Shaft | | 42 | | 76.5 | 34 | 618 | |
| | 2019.03- | 8AT | R | R | Estate 4WD DEWA | For PR code:GH2,For vehicles with AWD & variable torque dist. | GDS58054 | Drive Shaft | | 42 | | 76.5 | 34 | 574 | |
| | 2019.03- | 8AT | R | L/R | Estate 4WD DEWA | For PR code:GH1 | GDS83368 | Drive Shaft | | 42 | | 76.5 | 34 | 660 | |
| | 2019.03- | 8AT | F | L/R | Saloon 4WD DEWA | | GDS84553 | Drive Shaft | | 42 | | 76.5 | 34 | 496 | |
| | 2019.03- | 8AT | F | L/R | Saloon 4WD DEWA | | GCO81357 | Outer Joint | | 42 | 28 | 76.5 | 34 | 54 | I |
| | 2019.03- | 8AT | F | L/R | Saloon 4WD DEWA | | GCI61077 | Inner Joint | | | 34 | | | 88 | |
| | 2019.03- | 8AT | R | L | Saloon 4WD DEWA | For PR code:GH2,For vehicles with AWD & variable torque dist. | GDS58068 | Drive Shaft | | 42 | | 76.5 | 34 | 618 | |
| | 2019.03- | 8AT | R | R | Saloon 4WD DEWA | For PR code:GH2,For vehicles with AWD & variable torque dist. | GDS58054 | Drive Shaft | | 42 | | 76.5 | 34 | 574 | |
| | 2019.03- | 8AT | R | L/R | Saloon 4WD DEWA | For PR code:GH1 | GDS83368 | Drive Shaft | | 42 | | 76.5 | 34 | 660 | |
| 4.0 (309 kw) | 2012.02-2018.09 | 7AT | F | L/R | Estate 4WD CEUC | | GDS61290 | Drive Shaft | | 42 | | 76.4 | 34 | 493 | |
| | 2012.02-2018.09 | AT | F | L/R | Estate 4WD CEUC | | GCO83103 | Outer Joint | | 42 | 28 | 76.4 | 34 | 54 | I |
| | 2012.02-2018.09 | AT | F | L/R | Estate 4WD CEUC | | GCI83022 | Inner Joint | | | 34 | | | 88.5 | |
| | 2012.02-2018.09 | 7AT | R | L | Estate 4WD CEUC | For PR code:GH2,For vehicles with electronic ltd slip differential | GDS61291 | Drive Shaft | | 42 | | 76.5 | 34 | 620 | |
| | 2012.02-2018.09 | 7AT | R | R | Estate 4WD CEUC | For PR code:GH2,For vehicles with electronic ltd slip differential | GDS82251 | Drive Shaft | | 42 | | 76.5 | 34 | 576 | |
| | 2012.02-2018.09 | 7AT | R | L/R | Estate 4WD CEUC | For PR code:GH1 | GDS83368 | Drive Shaft | | 42 | | 76.5 | 34 | 660 | |
| | 2012.02-2018.09 | 7AT | R | L/R | Estate 4WD CEUC | | GCI83039 | Outer Joint | | 42 | 28 | 76.5 | 34 | 72 | |
| | 2012.02-2018.09 | 7AT | R | L/R | Estate 4WD CEUC | | GCI61069 | Inner Joint | | | 28 | | | 32 | |
| | 2012.02-2018.09 | 7AT | F | L/R | Saloon 4WD CEUC | | GDS61290 | Drive Shaft | | 42 | | 76.4 | 34 | 493 | |
| | 2012.02-2018.09 | AT | F | L/R | Saloon 4WD CEUC | | GCO83103 | Outer Joint | | 42 | 28 | 76.4 | 34 | 54 | I |
| | 2012.02-2018.09 | AT | F | L/R | Saloon 4WD CEUC | | GCI83022 | Inner Joint | | | 34 | | | 88.5 | |
| | 2012.02-2018.09 | 7AT | R | L | Saloon 4WD CEUC | For PR code:GH2,For vehicles with electronic ltd slip differential | GDS61291 | Drive Shaft | | 42 | | 76.5 | 34 | 620 | |
| | 2012.02-2018.09 | 7AT | R | R | Saloon 4WD CEUC | For PR code:GH2,For vehicles with electronic ltd slip differential | GDS82251 | Drive Shaft | | 42 | | 76.5 | 34 | 576 | |
| | 2012.02-2018.09 | 7AT | R | L/R | Saloon 4WD CEUC | For PR code:GH1 | GDS83368 | Drive Shaft | | 42 | | 76.5 | 34 | 660 | |
| | 2012.02-2018.09 | 7AT | R | L/R | Saloon 4WD CEUC | | GCI83039 | Outer Joint | | 42 | 28 | 76.5 | 34 | 72 | |
| | 2012.02-2018.09 | 7AT | R | L/R | Saloon 4WD CEUC | | GCI61069 | Inner Joint | | | 28 | | | 32 | |
| 4.0 (331 kw) | 2014.10-2018.09 | 7AT | F | L/R | Estate 4WD CTGE | | GDS61290 | Drive Shaft | | 42 | | 76.4 | 34 | 493 | |
| | 2014.10-2018.09 | 7AT | F | L/R | Estate 4WD CTGE | | GCO83103 | Outer Joint | | 42 | 28 | 76.4 | 34 | 54 | I |
| | 2014.10-2018.09 | 7AT | F | L/R | Estate 4WD CTGE | | GCI83022 | Inner Joint | | | 34 | | | 88.5 | |
| | 2014.10-2018.09 | 7AT | R | L | Estate 4WD CTGE | For PR code:GH2,For vehicles with electronic limited slip diff. | GDS61291 | Drive Shaft | | 42 | | 76.5 | 34 | 620 | |
| | 2014.10-2018.09 | 7AT | R | R | Estate 4WD CTGE | For PR code:GH2,For vehicles with electronic limited slip diff. | GDS82251 | Drive Shaft | | 42 | | 76.5 | 34 | 576 | |
| | 2014.10-2018.09 | 7AT | R | L/R | Estate 4WD CTGE | For PR code:GH1 | GDS83368 | Drive Shaft | | 42 | | 76.5 | 34 | 660 | |

| | YEAR | TRANSM. | F/R | L/R | BODY STYLE & DRIVE TYPE & ENGINE | REMARKS | G-AP Ref. | PRODUCT | ABS | Technical Specifications A | B | C | H | L | P |
|---|---|---|---|---|---|---|---|---|---|---|---|---|---|---|---|
| **AUDI** | | | | | | | | | | | | | | | |
| **S6 Quattro** | | | | | | | | | | | | | | | |
| 4.0 (331 kw) | 2014.10-2018.09 | 7AT | R | L/R | Estate 4WD CTGE | | GCI83039 | Outer Joint | | 42 | 28 | 76.5 | 34 | 72 | |
| | 2014.10-2018.09 | 7AT | R | L/R | Estate 4WD CTGE | | GCI61069 | Inner Joint | | | 28 | | | 32 | |
| | 2014.10-2018.09 | 7AT | F | L/R | Saloon 4WD CTGE | | GDS61290 | Drive Shaft | | 42 | | 76.4 | 34 | 493 | |
| | 2014.10-2018.09 | 7AT | F | L/R | Saloon 4WD CTGE | | GCO83103 | Outer Joint | | 42 | 28 | 76.4 | 34 | 54 | I |
| | 2014.10-2018.09 | 7AT | F | L/R | Saloon 4WD CTGE | | GCI83022 | Inner Joint | | | 34 | | | 88.5 | |
| | 2014.10-2018.09 | 7AT | R | L | Saloon 4WD CTGE | For PR code:GH2;For vehicles with electronic limited slip diff. | GDS61291 | Drive Shaft | | 42 | | 76.5 | 34 | 620 | |
| | 2014.10-2018.09 | 7AT | R | R | Saloon 4WD CTGE | For PR code:GH2;For vehicles with electronic limited slip diff. | GDS82251 | Drive Shaft | | 42 | | 76.5 | 34 | 576 | |
| | 2014.10-2018.09 | 7AT | R | L/R | Saloon 4WD CTGE | For PR code:GH1 | GDS83368 | Drive Shaft | | 42 | | 76.5 | 34 | 660 | |
| | 2014.10-2018.09 | 7AT | R | L/R | Saloon 4WD CTGE | | GCI83039 | Outer Joint | | 42 | 28 | 76.5 | 34 | 72 | |
| | 2014.10-2018.09 | 7AT | R | L/R | Saloon 4WD CTGE | | GCI61069 | Inner Joint | | | 28 | | | 32 | |
| 4.2 (213 kw) | 1994.09-1997.04 | 4AT/6MT | F | L | Saloon 4WD AEC | | GCI61033 | Inner Joint | | | 34 | | | 85 | |
| | 1994.09-1997.04 | AT | F | L | Saloon 4WD AEC | | GDS83060 | Drive Shaft | 45T | 38 | | 59.5 | 34 | 565 | |
| | 1994.09-1997.04 | AT | F | R | Saloon 4WD AEC | | GDS83061 | Drive Shaft | 45T | 38 | | 59.5 | 34 | 488 | |
| | 1994.09-1997.04 | AT | F | L/R | Saloon 4WD AEC | | GCI50019 | Inner Joint | | | 34 | | | 59.5 | |
| | 1994.09-1997.04 | AT/MT | F | L/R | Saloon 4WD AEC | Date from:1994.09;Date to:1997.04 | GCO83017 | Outer Joint | 45T | 38 | 27 | 59.5 | 34.5 | 68.5 | I |
| | 1994.09-1997.04 | AT/MT | R | L/R | Saloon 4WD AEC | | GCO83106 | Outer Joint | 45T | 38 | 28 | 59.6 | 34.5 | 66.5 | O |
| | 1994.09-1997.04 | AT/MT | F/R | L/R | Saloon 4WD AEC | | GCI83001 | Inner Joint | | | 28 | | | 32 | |
| | 1994.09-1997.10 | 4AT/6MT | F | L | Estate 4WD AEC | | GCI61033 | Inner Joint | | | 34 | | | 85 | |
| | 1994.09-1997.10 | AT | F | L | Estate 4WD AEC | | GDS83060 | Drive Shaft | 45T | 38 | | 59.5 | 34 | 565 | |
| | 1994.09-1997.10 | AT | F | R | Estate 4WD AEC | | GDS83061 | Drive Shaft | 45T | 38 | | 59.5 | 34 | 488 | |
| | 1994.09-1997.10 | AT/MT | F | L/R | Estate 4WD AEC | Date from:1994.09 | GCO83017 | Outer Joint | 45T | 38 | 27 | 59.5 | 34.5 | 68.5 | I |
| | 1994.09-1997.10 | AT/MT | F | L/R | Estate 4WD AEC | | GCI50019 | Inner Joint | | | 34 | | | 59.5 | |
| | 1994.09-1997.10 | AT/MT | R | L/R | Estate 4WD AEC | | GCO83106 | Outer Joint | 45T | 38 | 28 | 59.6 | 34.5 | 66.5 | O |
| | 1994.09-1997.10 | AT/MT | F/R | L/R | Estate 4WD AEC | | GCI83001 | Inner Joint | | | 28 | | | 32 | |
| 4.2 (250 kw) | 1999.09-2005.01 | 5AT | F | L | Estate 4WD ANK/AQJ | | GDS83066 | Drive Shaft | 45W | 38 | | 59.5 | 34.5 | 544 | |
| | 1999.09-2005.01 | 5AT | F | L/R | Estate 4WD ANK/AQJ | | GCI83007 | Inner Joint | | | 34 | | | 85 | |
| | 1999.09-2005.01 | AT/MT | F | L/R | Estate 4WD ANK/AQJ | | GCO83019 | Outer Joint | 45W | 38 | 27 | 59.5 | 34.5 | 63 | I |
| | 1999.09-2005.01 | MT | F/R | L/R | Estate 4WD ANK/AQJ | | GCI83001 | Inner Joint | | | 28 | | | 32 | |
| | 1999.09-2005.01 | 5AT | F | L | Saloon 4WD ANK/AQJ | | GDS83066 | Drive Shaft | 45W | 38 | | 59.5 | 34.5 | 544 | |
| | 1999.09-2005.01 | 5AT | F | L/R | Saloon 4WD ANK/AQJ | | GCI83007 | Inner Joint | | | 34 | | | 85 | |
| | 1999.09-2005.01 | AT/MT | F | L/R | Saloon 4WD ANK/AQJ | | GCO83019 | Outer Joint | 45W | 38 | 27 | 59.5 | 34.5 | 63 | I |
| | 1999.09-2005.01 | MT | F/R | L/R | Saloon 4WD ANK/AQJ | | GCI83001 | Inner Joint | | | 28 | | | 32 | |
| 5.2 (320 kw) | 2006.03-2011.03 | 6AT | F | L | Saloon 4WD BXA | | GDS82379 | Drive Shaft | | 38 | | 59.5 | 34 | 550 | |
| | 2006.03-2011.03 | 6AT | F | L | Saloon 4WD BXA | | GCI61063 | Inner Joint | | | 34 | | | 91 | |
| | 2006.03-2011.03 | 6AT | R | L/R | Saloon 4WD BXA | | GDS81915 | Drive Shaft | | 38 | | 59.5 | 34 | 650 | |
| | 2006.03-2011.03 | 6AT | R | L/R | Saloon 4WD BXA | | GCI61069 | Inner Joint | | | 28 | | | 32 | |
| | 2006.03-2011.03 | 6AT | F/R | L/R | Saloon 4WD BXA | | GCO83077 | Outer Joint | | 38 | 27 | 59.5 | 34 | 63 | M |
| | 2006.03-2011.08 | 6AT | F | L | Estate 4WD BXA | | GDS82379 | Drive Shaft | | 38 | | 59.5 | 34 | 550 | |
| | 2006.03-2011.08 | 6AT | F | L/R | Estate 4WD BXA | | GCI61063 | Inner Joint | | | 34 | | | 91 | |
| | 2006.03-2011.08 | 6AT | R | L/R | Estate 4WD BXA | | GDS81915 | Drive Shaft | | 38 | | 59.5 | 34 | 650 | |
| | 2006.03-2011.08 | 6AT | R | L/R | Estate 4WD BXA | | GCI61069 | Inner Joint | | | 28 | | | 32 | |
| | 2006.03-2011.08 | 6AT | F/R | L/R | Estate 4WD BXA | | GCO83077 | Outer Joint | | 38 | 27 | 59.5 | 34 | 63 | M |
| **S7 Sportback Quattro** | | | | | | | | | | | | | | | |
| 3.0 (253 kw) | 2020.11- | 8AT | F | L/R | Hatchback 4WD DMKD | For PR code:GH1/GH2 | GDS84553 | Drive Shaft | | 42 | | 76.5 | 34 | 496 | |
| | 2020.11- | 8AT | F | L/R | Hatchback 4WD DMKD | For PR code:GH1/GH2 | GCO81357 | Outer Joint | | 42 | 28 | 76.5 | 34 | 54 | I |
| | 2020.11- | 8AT | F | L/R | Hatchback 4WD DMKD | For PR code:GH1/GH2 | GCI61077 | Inner Joint | | | 34 | | | 88 | |
| | 2020.11- | 8AT | R | L | Hatchback 4WD DMKD | For PR code:GH2;For vehicles with AWD & variable torque dist. | GDS58068 | Drive Shaft | | 42 | | 76.5 | 34 | 618 | |
| | 2020.11- | 8AT | R | R | Hatchback 4WD DMKD | For PR code:GH2;For vehicles with AWD & variable torque dist. | GDS58054 | Drive Shaft | | 42 | | 76.5 | 34 | 574 | |
| | 2020.11- | 8AT | R | L/R | Hatchback 4WD DMKD | For PR code:GH1 | GDS83368 | Drive Shaft | | 42 | | 76.5 | 34 | 660 | |
| 3.0 (257 kw) | 2019.03- | 8AT | F | L/R | Hatchback 4WD DEWA | For PR code:GH1/GH2 | GDS84553 | Drive Shaft | | 42 | | 76.5 | 34 | 496 | |
| | 2019.03- | 8AT | F | L/R | Hatchback 4WD DEWA | For PR code:GH1/GH2 | GCO81357 | Outer Joint | | 42 | 28 | 76.5 | 34 | 54 | I |
| | 2019.03- | 8AT | R | L | Hatchback 4WD DEWA | For PR code:GH2;For vehicles with AWD & variable torque dist. | GDS58068 | Drive Shaft | | 42 | | 76.5 | 34 | 618 | |
| | 2019.03- | 8AT | R | R | Hatchback 4WD DEWA | For PR code:GH2;For vehicles with AWD & variable torque dist. | GDS58054 | Drive Shaft | | 42 | | 76.5 | 34 | 574 | |
| | 2019.03- | 8AT | R | L/R | Hatchback 4WD DEWA | For PR code:GH1 | GDS83368 | Drive Shaft | | 42 | | 76.5 | 34 | 660 | |
| | 2019.03- | 8AT | R | L/R | Hatchback 4WD DEWA | For PR code:GH1/GH2 | GCI84020 | Inner Joint | | | 28 | | | 32 | |
| 4.0 (309 kw) | 2012.02-2015.03 | 7AT | F | L/R | Hatchback 4WD CEUC | | GDS61290 | Drive Shaft | | 42 | | 76.4 | 34 | 493 | |
| | 2012.02-2015.03 | 7AT | F | L/R | Hatchback 4WD CEUC | | GCO83103 | Outer Joint | | 42 | 28 | 76.4 | 34 | 54 | I |
| | 2012.02-2015.03 | AT | F | L/R | Hatchback 4WD CEUC | | GCI83022 | Inner Joint | | | 34 | | | 88.5 | |
| | 2012.02-2015.03 | 7AT | R | L | Hatchback 4WD CEUC | For PR code:GH2 | GDS61291 | Drive Shaft | | 42 | | 76.5 | 34 | 620 | |
| | 2012.02-2015.03 | 7AT | R | R | Hatchback 4WD CEUC | For PR code:GH2 | GDS82251 | Drive Shaft | | 42 | | 76.5 | 34 | 576 | |
| | 2012.02-2015.03 | 7AT | R | L/R | Hatchback 4WD CEUC | For PR code:GH1 | GDS83368 | Drive Shaft | | 42 | | 76.5 | 34 | 660 | |
| | 2012.02-2015.03 | 7AT | R | L/R | Hatchback 4WD CEUC | | GCI83039 | Outer Joint | | 42 | 28 | 76.5 | 34 | 72 | |
| | 2012.02-2015.03 | 7AT | R | L/R | Hatchback 4WD CEUC | | GCI61069 | Inner Joint | | | 28 | | | 32 | |
| | 2012.02-2015.03 | AT | R | R | Hatchback 4WD CEUC | Date from:2013.01;Type:S7 Quattro | GCI35026 | Outer Joint | | 36 | 33 | 59.5 | 40 | 61 | |
| 4.0 (331 kw) | 2014.07-2018.05 | AT | F | L/R | Hatchback 4WD CTGE | | GDS61290 | Drive Shaft | | 42 | | 76.4 | 34 | 493 | |

| | YEAR | TRANSM. | F/R | L/R | BODY STYLE & DRIVE TYPE & ENGINE | REMARKS | G-AP Ref. | PRODUCT | ABS | Technical Specifications A | B | C | H | L | P |
|---|---|---|---|---|---|---|---|---|---|---|---|---|---|---|---|
| **AUDI** | | | | | | | | | | | | | | | |
| **S7 Sportback Quattro** | | | | | | | | | | | | | | | |
| 4.0 (331 kw) | 2014.07-2018.05 | AT | F | L/R | Hatchback 4WD CTGE | | GCO83103 | Outer Joint | | 42 | 28 | 76.4 | 34 | 54 | I |
| | 2014.07-2018.05 | AT | F | L/R | Hatchback 4WD CTGE | | GCI83022 | Inner Joint | | | 34 | | | 88.5 | |
| | 2014.07-2018.05 | 7AT | R | L | Hatchback 4WD CTGE | For PR code:GH2 | GDS61291 | Drive Shaft | | 42 | | 76.5 | 34 | 620 | |
| | 2014.07-2018.05 | 7AT | R | R | Hatchback 4WD CTGE | For PR code:GH2 | GDS82251 | Drive Shaft | | 42 | | 76.5 | 34 | 576 | |
| | 2014.07-2018.05 | 7AT | R | L/R | Hatchback 4WD CTGE | For PR code:GH1 | GDS83368 | Drive Shaft | | 42 | | 76.5 | 34 | 660 | |
| | 2014.07-2018.05 | 7AT | R | L/R | Hatchback 4WD CTGE | | GCI83039 | Outer Joint | | 42 | 28 | 76.5 | 34 | 72 | |
| | 2014.07-2018.05 | 7AT | R | L/R | Hatchback 4WD CTGE | | GCI61069 | Inner Joint | | | 28 | | | 32 | |
| **S8 Plus Quattro** | | | | | | | | | | | | | | | |
| 4.0 (445 kw) | 2015.11-2018.01 | 8AT | F | L/R | Saloon 4WD DDTA | | GDS61290 | Drive Shaft | | 42 | | 76.4 | 34 | 493 | |
| | 2015.11-2018.01 | 8AT | F | L/R | Saloon 4WD DDTA | | GCO83103 | Outer Joint | | 42 | 28 | 76.4 | 34 | 54 | I |
| | 2015.11-2018.01 | 8AT | F | L/R | Saloon 4WD DDTA | | GCI83022 | Inner Joint | | | 34 | | | 88.5 | |
| | 2015.11-2018.01 | 8AT | R | L | Saloon 4WD DDTA | For PR code:GH2,For vehicles with electronic ltd slip differential | GDS61291 | Drive Shaft | | 42 | | 76.5 | 34 | 620 | |
| | 2015.11-2018.01 | 8AT | R | R | Saloon 4WD DDTA | For PR code:GH2,For vehicles with electronic ltd slip differential | GDS82251 | Drive Shaft | | 42 | | 76.5 | 34 | 576 | |
| | 2015.11-2018.01 | 8AT | R | L/R | Saloon 4WD DDTA | For PR code:GH1 | GDS83368 | Drive Shaft | | 42 | | 76.5 | 34 | 660 | |
| | 2015.11-2018.01 | 8AT | R | L/R | Saloon 4WD DDTA | For PR code:GH2,For vehicles with electronic ltd slip differential;For PR code:GH1 | GCI83039 | Outer Joint | | 42 | 28 | 76.5 | 34 | 72 | |
| | 2015.11-2018.01 | 8AT | R | L/R | Saloon 4WD DDTA | For PR code:GH2,For vehicles with electronic ltd slip differential;For PR code:GH1 | GCI61069 | Inner Joint | | | 28 | | | 32 | |
| **S8 Quattro** | | | | | | | | | | | | | | | |
| 4.0 (382 kw) | 2012.04-2018.01 | 8AT | F | L/R | Saloon 4WD CGTA;CTFA | | GDS61290 | Drive Shaft | | 42 | | 76.4 | 34 | 493 | |
| | 2012.04-2018.01 | AT | F | L/R | Saloon 4WD CGTA;CTFA | | GCO83103 | Outer Joint | | 42 | 28 | 76.4 | 34 | 54 | I |
| | 2012.04-2018.01 | AT | F | L/R | Saloon 4WD CGTA;CTFA | | GCI83022 | Inner Joint | | | 34 | | | 88.5 | |
| | 2012.04-2018.01 | 8AT | R | L | Saloon 4WD CGTA;CTFA | For PR code:GH2,For vehicles with electronic ltd slip differential | GDS61291 | Drive Shaft | | 42 | | 76.5 | 34 | 620 | |
| | 2012.04-2018.01 | 8AT | R | R | Saloon 4WD CGTA;CTFA | For PR code:GH2,For vehicles with electronic ltd slip differential | GDS82251 | Drive Shaft | | 42 | | 76.5 | 34 | 576 | |
| | 2012.04-2018.01 | 8AT | R | L/R | Saloon 4WD CGTA;CTFA | For PR code:GH1 | GDS83368 | Drive Shaft | | 42 | | 76.5 | 34 | 660 | |
| | 2012.04-2018.01 | 8AT | R | L/R | Saloon 4WD CGTA;CTFA | For PR code:GH1/GH2 | GCI83039 | Outer Joint | | 42 | 28 | 76.5 | 34 | 72 | |
| | 2012.04-2018.01 | 8AT | R | L/R | Saloon 4WD CGTA;CTFA | For PR code:GH1/GH2 | GCI61069 | Inner Joint | | | 28 | | | 32 | |
| 4.0 (420 kw) | 2019.02- | 8AT | F | L/R | Saloon 4WD CWWB;DWKA | | GCI81397 | Inner Joint | | | 27 | | | 89 | |
| 4.2 (250 kw) | 1996.09-1998.12 | 5AT | F | L | Saloon 4WD AHC/AKH | | GDS83249 | Drive Shaft | 45W | 38 | | 59.5 | 34.5 | 561 | |
| | 1996.09-1998.12 | 5AT | F | R | Saloon 4WD AHC/AKH | | GDS83020 | Drive Shaft | 45W | 38 | | 59.5 | 34.5 | 522 | |
| | 1996.09-1998.12 | AT/MT | R | L/R | Saloon 4WD AHC/AKH | Date to:1998.12;not for armoured vehicles | GCI83001 | Inner Joint | | | 28 | | | 32 | |
| | 1996.09-1998.12 | AT/MT | F/R | L/R | Saloon 4WD AHC/AKH | | GCO83019 | Outer Joint | 45W | 38 | 27 | 59.5 | 34.5 | 63 | I |
| 4.2 (265 kw) | 1999.05-2002.09 | 5AT | F | L | Saloon 4WD AQH/AVP/AYS/BCS | | GDS83249 | Drive Shaft | 45W | 38 | | 59.5 | 34.5 | 561 | |
| | 1999.05-2002.09 | 5AT | F | R | Saloon 4WD AQH/AVP/AYS/BCS | | GDS83020 | Drive Shaft | 45W | 38 | | 59.5 | 34.5 | 522 | |
| | 1999.05-2002.09 | AT/MT | R | L/R | Saloon 4WD AQH/AVP/AYS/BCS | not for armoured vehicles | GCI83001 | Inner Joint | | | 28 | | | 32 | |
| | 1999.05-2002.09 | | F/R | L/R | Saloon 4WD AQH/AVP/AYS/BCS | | GCO83019 | Outer Joint | 45W | 38 | 27 | 59.5 | 34.5 | 63 | I |
| 5.2 (331 kw) | 2006.06-2010.07 | 6AT | F | L | Saloon 4WD BSM | | GDS81596 | Drive Shaft | | 38 | | 59.5 | 34 | 558 | |
| | 2006.06-2010.07 | 6AT | F | R | Saloon 4WD BSM | | GDS81588 | Drive Shaft | | 38 | | 59.5 | 34 | 477 | |
| | 2006.06-2010.07 | 6AT | F | L/R | Saloon 4WD BSM | TJ | GCI61044 | Inner Joint | | | 34 | | | 85 | |
| | 2006.06-2010.07 | 6AT | F | L/R | Saloon 4WD BSM | AAR | GCI61076 | Inner Joint | | | 34 | | | 85 | |
| | 2006.06-2010.07 | 6AT | R | L/R | Saloon 4WD BSM | | GDS81536 | Drive Shaft | | 38 | | 59.5 | 34 | 660 | |
| | 2006.06-2010.07 | 6AT | R | L/R | Saloon 4WD BSM | | GCI81399 | Inner Joint | | | 28 | | | 32 | |
| | 2006.06-2010.07 | 6AT | F/R | L/R | Saloon 4WD BSM | | GCO83077 | Outer Joint | | 38 | 27 | 59.5 | 34 | 63 | M |
| **SQ2 Quattro** | | | | | | | | | | | | | | | |
| 2.0 (221 kw) | 2018.08- | 7AT | F | L | SUV 4WD DNUE;DNFC | For Engine code:DNUE | GCI83028 | Inner Joint | | 37 | 28 | | 65.5 | 90.2 | |
| | 2018.08- | 7DCT | F | L | SUV 4WD DNUE;DNFC | For Engine code:DNFC | GDS81265 | Drive Shaft | | 36 | 37 | 59.5 | 40 | 557 | |
| | 2018.08- | 7DCT | F | L | SUV 4WD DNUE;DNFC | For Engine code:DNUE | GDS84237 | Drive Shaft | | 36 | 37 | 59.5 | 40 | 560 | |
| | 2018.08- | 7DCT | F | R | SUV 4WD DNUE;DNFC | Wheel Hub Diam:27 | GDS81892 | Drive Shaft | | 36 | | 59.5 | 40 | 602 | |
| | 2018.08- | 7DCT | F | L | SUV 4WD DNUE;DNFC | For Engine code:DNFC | GCI81158 | Inner Joint | | 37 | 34 | 34.5 | 65.5 | 83 | |
| | 2018.08- | 7DCT | F | R | SUV 4WD DNUE;DNFC | For Engine code:DNFC | GCI61057 | Inner Joint | | | 34 | | | 89 | |
| | 2018.08- | 7AT | R | L | SUV 4WD DNUE;DNFC | | GDS61331 | Drive Shaft | | 36 | | 59.5 | 40 | 606 | |
| | 2018.08- | 7AT | R | R | SUV 4WD DNUE;DNFC | | GDS61332 | Drive Shaft | | 36 | | 59.5 | 40 | 650 | |
| | 2018.08- | 7AT | R | L/R | SUV 4WD DNUE;DNFC | | GCI35026 | Outer Joint | | 36 | 33 | 59.5 | 40 | 61 | |
| | 2018.08- | 7AT | R | L/R | SUV 4WD DNUE;DNFC | | GCI61103 | Inner Joint | | | 33 | | | 32 | |
| **SQ5 Quattro** | | | | | | | | | | | | | | | |
| 3.0 (230 kw) | 2012.12-2015.05 | 8AT | F | L/R | SUV Van 4WD CGQB | | GDS61290 | Drive Shaft | | 42 | | 76.4 | 34 | 493 | |
| | 2012.12-2015.05 | 8AT | F | L/R | SUV Van 4WD CGQB | | GCO83103 | Outer Joint | | 42 | 28 | 76.4 | 34 | 54 | I |
| | 2012.12-2015.05 | 8AT | F | L/R | SUV Van 4WD CGQB | | GCI83022 | Inner Joint | | | 34 | | | 88.5 | |
| | 2012.12-2015.05 | 8AT | R | L | SUV Van 4WD CGQB | For PR code:GH2 | GDS61291 | Drive Shaft | | 42 | | 76.5 | 34 | 620 | |
| | 2012.12-2015.05 | 8AT | R | R | SUV Van 4WD CGQB | For PR code:GH2 | GDS82251 | Drive Shaft | | 42 | | 76.5 | 34 | 576 | |
| | 2012.12-2015.05 | 8AT | R | L/R | SUV Van 4WD CGQB | For PR code:GH1 | GDS83368 | Drive Shaft | | 42 | | 76.5 | 34 | 660 | |
| | 2012.12-2015.05 | 8AT | R | L/R | SUV Van 4WD CGQB | | GCI83039 | Outer Joint | | 42 | 28 | 76.5 | 34 | 72 | |
| | 2012.12-2015.05 | 8AT | R | L/R | SUV Van 4WD CGQB | | GCI61069 | Inner Joint | | | 28 | | | 32 | |
| | 2012.12-2015.11 | 8AT | F | L/R | SUV 4WD CGQB;CVUC | | GDS61290 | Drive Shaft | | 42 | | 76.4 | 34 | 493 | |
| | 2012.12-2015.11 | 8AT | F | L/R | SUV 4WD CGQB;CVUC | | GCO83103 | Outer Joint | | 42 | 28 | 76.4 | 34 | 54 | I |
| | 2012.12-2015.11 | 8AT | F | L/R | SUV 4WD CGQB;CVUC | | GCI81054 | Inner Joint | | | 24 | | | 86 | |
| | 2012.12-2015.11 | 8AT | F | L/R | SUV 4WD CGQB;CVUC | | GCI83022 | Inner Joint | | | 34 | | | 88.5 | |

| | YEAR | TRANSM. | F/R | L/R | BODY STYLE & DRIVE TYPE & ENGINE | REMARKS | G-AP Ref. | PRODUCT | ABS | Technical Specifications A | B | C | H | L | P |
|---|---|---|---|---|---|---|---|---|---|---|---|---|---|---|---|
| **AUDI** | | | | | | | | | | | | | | | |
| **SQ5 Quattro** | | | | | | | | | | | | | | | |
| 3.0 (230 kw) | 2012.12-2015.11 | 8AT | R | L | SUV 4WD CGQB;CVUC | For PR code:GH2 | GDS61291 | Drive Shaft | | 42 | | 76.5 | 34 | 620 | |
| | 2012.12-2015.11 | 8AT | R | R | SUV 4WD CGQB;CVUC | For PR code:GH2 | GDS82251 | Drive Shaft | | 42 | | 76.5 | 34 | 576 | |
| | 2012.12-2015.11 | 8AT | R | L/R | SUV 4WD CGQB;CVUC | For PR code:GH1 | GDS83368 | Drive Shaft | | 42 | | 76.5 | 34 | 660 | |
| | 2012.12-2015.11 | 8AT | R | L/R | SUV 4WD CGQB;CVUC | | GCI83039 | Outer Joint | | 42 | 28 | 76.5 | 34 | 72 | |
| | 2012.12-2015.11 | 8AT | R | L/R | SUV 4WD CGQB;CVUC | | GCI61069 | Inner Joint | | | 28 | | | 32 | |
| 3.0 (240 kw) | 2015.04-2017.05 | 8AT | F | L/R | SUV 4WD CVUB | | GDS61290 | Drive Shaft | | 42 | | 76.4 | 34 | 493 | |
| | 2015.04-2017.05 | 8AT | F | L/R | SUV 4WD CVUB | | GCO83103 | Outer Joint | | 42 | 28 | 76.4 | 34 | 54 | I |
| | 2015.04-2017.05 | 8AT | F | L/R | SUV 4WD CVUB | | GCI83022 | Inner Joint | | | 34 | | | 88.5 | |
| | 2015.04-2017.05 | 8AT | R | L | SUV 4WD CVUB | For PR code:GH2 | GDS61291 | Drive Shaft | | 42 | | 76.5 | 34 | 620 | |
| | 2015.04-2017.05 | 8AT | R | R | SUV 4WD CVUB | For PR code:GH2 | GDS82251 | Drive Shaft | | 42 | | 76.5 | 34 | 576 | |
| | 2015.04-2017.05 | 8AT | R | L/R | SUV 4WD CVUB | For PR code:GH1 | GDS83368 | Drive Shaft | | 42 | | 76.5 | 34 | 660 | |
| | 2015.04-2017.05 | 8AT | R | L/R | SUV 4WD CVUB | | GCI83039 | Outer Joint | | 42 | 28 | 76.5 | 34 | 72 | |
| | 2015.04-2017.05 | 8AT | R | L/R | SUV 4WD CVUB | | GCI61069 | Inner Joint | | | 28 | | | 32 | |
| | 2015.04-2017.05 | 8AT | F | L/R | SUV Van 4WD CVUB | | GDS61290 | Drive Shaft | | 42 | | 76.4 | 34 | 493 | |
| | 2015.04-2017.05 | 8AT | F | L/R | SUV Van 4WD CVUB | | GCO83103 | Outer Joint | | 42 | 28 | 76.4 | 34 | 54 | I |
| | 2015.04-2017.05 | 8AT | F | L/R | SUV Van 4WD CVUB | | GCI83022 | Inner Joint | | | 34 | | | 88.5 | |
| | 2015.04-2017.05 | 8AT | R | L | SUV Van 4WD CVUB | For PR code:GH2 | GDS61291 | Drive Shaft | | 42 | | 76.5 | 34 | 620 | |
| | 2015.04-2017.05 | 8AT | R | R | SUV Van 4WD CVUB | For PR code:GH2 | GDS82251 | Drive Shaft | | 42 | | 76.5 | 34 | 576 | |
| | 2015.04-2017.05 | 8AT | R | L/R | SUV Van 4WD CVUB | For PR code:GH1 | GDS83368 | Drive Shaft | | 42 | | 76.5 | 34 | 660 | |
| | 2015.04-2017.05 | 8AT | R | L/R | SUV Van 4WD CVUB | | GCI83039 | Outer Joint | | 42 | 28 | 76.5 | 34 | 72 | |
| | 2015.04-2017.05 | 8AT | R | L/R | SUV Van 4WD CVUB | | GCI61069 | Inner Joint | | | 28 | | | 32 | |
| 3.0 (250 kw) | 2015.11-2017.05 | 8AT | F | L/R | SUV 4WD DEHA | | GDS61290 | Drive Shaft | | 42 | | 76.4 | 34 | 493 | |
| | 2015.11-2017.05 | 8AT | F | L/R | SUV 4WD DEHA | | GCO83103 | Outer Joint | | 42 | 28 | 76.4 | 34 | 54 | I |
| | 2015.11-2017.05 | 8AT | F | L/R | SUV 4WD DEHA | | GCI83022 | Inner Joint | | | 34 | | | 88.5 | |
| | 2015.11-2017.05 | 8AT | R | L | SUV 4WD DEHA | For PR code:GH2 | GDS61291 | Drive Shaft | | 42 | | 76.5 | 34 | 620 | |
| | 2015.11-2017.05 | 8AT | R | R | SUV 4WD DEHA | For PR code:GH2 | GDS82251 | Drive Shaft | | 42 | | 76.5 | 34 | 576 | |
| | 2015.11-2017.05 | 8AT | R | L/R | SUV 4WD DEHA | For PR Code:GH1 | GDS83368 | Drive Shaft | | 42 | | 76.5 | 34 | 660 | |
| | 2015.11-2017.05 | 8AT | R | L/R | SUV 4WD DEHA | | GCI83039 | Outer Joint | | 42 | 28 | 76.5 | 34 | 72 | |
| | 2015.11-2017.05 | 8AT | R | L/R | SUV 4WD DEHA | | GCI61069 | Inner Joint | | | 28 | | | 32 | |
| | 2015.11-2017.05 | 8AT | F | L/R | SUV Van 4WD DEHA | | GDS61290 | Drive Shaft | | 42 | | 76.4 | 34 | 493 | |
| | 2015.11-2017.05 | 8AT | F | L/R | SUV Van 4WD DEHA | | GCO83103 | Outer Joint | | 42 | 28 | 76.4 | 34 | 54 | I |
| | 2015.11-2017.05 | 8AT | F | L/R | SUV Van 4WD DEHA | | GCI83022 | Inner Joint | | | 34 | | | 88.5 | |
| | 2015.11-2017.05 | 8AT | R | L | SUV Van 4WD DEHA | For PR code:GH2 | GDS61291 | Drive Shaft | | 42 | | 76.5 | 34 | 620 | |
| | 2015.11-2017.05 | 8AT | R | R | SUV Van 4WD DEHA | For PR code:GH2 | GDS82251 | Drive Shaft | | 42 | | 76.5 | 34 | 576 | |
| | 2015.11-2017.05 | 8AT | R | L/R | SUV Van 4WD DEHA | For PR code:GH1 | GDS83368 | Drive Shaft | | 42 | | 76.5 | 34 | 660 | |
| | 2015.11-2017.05 | AT | R | L/R | SUV Van 4WD DEHA | | GCI83039 | Outer Joint | | 42 | 28 | 76.5 | 34 | 72 | |
| | 2015.11-2017.05 | AT | R | L/R | SUV Van 4WD DEHA | | GCI61069 | Inner Joint | | | 28 | | | 32 | |
| 3.0 (260 kw) | 2013.05-2017.05 | 8AT | F | L/R | SUV 4WD CTUD;CTXA | | GDS61290 | Drive Shaft | | 42 | | 76.4 | 34 | 493 | |
| | 2013.05-2017.05 | 8AT | F | L/R | SUV 4WD CTUD;CTXA | | GCO83103 | Outer Joint | | 42 | 28 | 76.4 | 34 | 54 | I |
| | 2013.05-2017.05 | 8AT | F | L/R | SUV 4WD CTUD;CTXA | | GCI83022 | Inner Joint | | | 34 | | | 88.5 | |
| | 2013.05-2017.05 | 8AT | R | L/R | SUV 4WD CTUD;CTXA | | GDS83368 | Drive Shaft | | 42 | | 76.5 | 34 | 660 | |
| | 2013.05-2017.05 | 8AT | R | L/R | SUV 4WD CTUD;CTXA | | GCI83039 | Outer Joint | | 42 | 28 | 76.5 | 34 | 72 | |
| | 2013.05-2017.05 | 8AT | R | L/R | SUV 4WD CTUD;CTXA | | GCI61069 | Inner Joint | | | 28 | | | 32 | |
| **SQ7 Quattro** | | | | | | | | | | | | | | | |
| 4.0 (320 kw) | 2016.04- | 8AT | R | L | SUV 4WD CZAC;DMVA | For PR code:GH2,For vehicles with electronic ltd slip differential | GDS83984 | Drive Shaft | | 42 | | 76.5 | 34 | 603 | |
| | 2016.04- | 8AT | R | R | SUV 4WD CZAC;DMVA | For PR code:GH2,For vehicles with electronic ltd slip differential | GDS83981 | Drive Shaft | | 42 | | 76.5 | 34 | 569 | |
| | 2016.04- | 8AT | R | L/R | SUV 4WD CZAC;DMVA | For PR code:GH2,For vehicles with electronic ltd slip differential | GCO82550 | Outer Joint | | 42 | 30 | 76.5 | 34 | 94 | |
| | 2016.04- | 8AT | R | L/R | SUV 4WD CZAC;DMVA | | GCI35051 | Inner Joint | | | 30 | | | 30.5 | |
| | 2016.04- | 8AT | R | L | SUV Van 4WD CZAC;DMVA | For PR code:GH2,For vehicles with electronic ltd slip differential | GDS83984 | Drive Shaft | | 42 | | 76.5 | 34 | 603 | |
| | 2016.04- | 8AT | R | R | SUV Van 4WD CZAC;DMVA | For PR code:GH2,For vehicles with electronic ltd slip differential | GDS83981 | Drive Shaft | | 42 | | 76.5 | 34 | 569 | |
| | 2016.04- | 8AT | R | L/R | SUV Van 4WD CZAC;DMVA | For PR code:GH2,For vehicles with electronic ltd slip differential | GCO82550 | Outer Joint | | 42 | 30 | 76.5 | 34 | 94 | |
| | 2016.04- | AT | R | L/R | SUV Van 4WD CZAC;DMVA | | GCI35051 | Inner Joint | | | 30 | | | 30.5 | |
| 4.0 (373 kw) | 2020.02- | 8AT | F | L/R | SUV 4WD DCUE;DWRB | Date to:2022.06 | GCO82603 | Outer Joint | | 42 | 30 | 76.5 | 34 | 60 | I |
| | 2020.02- | 8AT | R | L | SUV 4WD DCUE;DWRB | For PR code:GH2,For vehicles with AWD & variable torque dist. | GDS83984 | Drive Shaft | | 42 | | 76.5 | 34 | 603 | |
| | 2020.02- | 8AT | R | R | SUV 4WD DCUE;DWRB | For PR code:GH2,For vehicles with AWD & variable torque dist. | GDS83981 | Drive Shaft | | 42 | | 76.5 | 34 | 569 | |
| **SQ8 e-tron Quattro** | | | | | | | | | | | | | | | |
| EV (370 kw) | 2022.11-2025.03 | ET | F | L/R | SUV 4WD EAVA;EATA;EAUA | | GDS84117 | Drive Shaft | | 42 | | 76.5 | 34 | 518 | |
| | 2022.11-2025.03 | ET | F | L/R | SUV 4WD EAVA;EATA;EAUA | | GCO82603 | Outer Joint | | 42 | 30 | 76.5 | 34 | 60 | I |
| | 2022.11-2025.03 | ET | F | L/R | SUV 4WD EAVA;EATA;EAUA | | GCI82522 | Inner Joint | | | 29 | | | 83.5 | |
| | 2022.11-2025.03 | ET | R | L/R | SUV 4WD EAVA;EATA;EAUA | | GDS84099 | Drive Shaft | | 42 | | 76.5 | 34 | 493 | |
| | 2022.11-2025.03 | ET | R | L/R | SUV 4WD EAVA;EATA;EAUA | | GCO82550 | Outer Joint | | 42 | 30 | 76.5 | 34 | 94 | |
| | 2022.11-2025.03 | ET | R | L/R | SUV 4WD EAVA;EATA;EAUA | | GCI35051 | Inner Joint | | | 30 | | | 30.5 | |
| **SQ8 e-tron Sportback Quattro** | | | | | | | | | | | | | | | |
| EV (370 kw) | 2022.11-2025.03 | ET | F | L/R | SUV 4WD EAVA;EATA;EAUA | | GDS84117 | Drive Shaft | | 42 | | 76.5 | 34 | 518 | |
| | 2022.11-2025.03 | ET | F | L/R | SUV 4WD EAVA;EATA;EAUA | | GCO82603 | Outer Joint | | 42 | 30 | 76.5 | 34 | 60 | I |

| | YEAR | TRANSM. | F/R | L/R | BODY STYLE & DRIVE TYPE & ENGINE | REMARKS | G-AP Ref. | PRODUCT | ABS | Technical Specifications A | B | C | H | L | P |
|---|---|---|---|---|---|---|---|---|---|---|---|---|---|---|---|
| **AUDI** | | | | | | | | | | | | | | | |
| **SQ8 e-tron Sportback Quattro** | | | | | | | | | | | | | | | |
| EV (370 kw) | 2022.11-2025.03 | ET | F | L/R | SUV 4WD EAVA;EATA;EAUA | | GCI82522 | Inner Joint | | | 29 | | | 83.5 | |
| | 2022.11-2025.03 | ET | R | L/R | SUV 4WD EAVA;EATA;EAUA | | GDS84099 | Drive Shaft | | 42 | | 76.5 | 34 | 493 | |
| | 2022.11-2025.03 | ET | R | L/R | SUV 4WD EAVA;EATA;EAUA | | GCO82550 | Outer Joint | | 42 | 30 | 76.5 | 34 | 94 | |
| | 2022.11-2025.03 | ET | R | L/R | SUV 4WD EAVA;EATA;EAUA | | GCI35051 | Inner Joint | | | 30 | | | 30.5 | |
| **SQ8 Quattro** | | | | | | | | | | | | | | | |
| 4.0 (320 kw) | 2018.05- | 8AT | F | L/R | SUV 4WD DHVA | | GCO82603 | Outer Joint | | 42 | 30 | 76.5 | 34 | 60 | I |
| 4.0 (373 kw) | 2020.02- | 8AT | F | L/R | SUV 4WD DCUE;DWRB | | GCO82603 | Outer Joint | | 42 | 30 | 76.5 | 34 | 60 | I |
| | 2020.02- | 8AT | R | L | SUV 4WD DCUE;DWRB | For PR code:GH2,For vehicles with AWD & variable torque dist. | GDS83984 | Drive Shaft | | 42 | | 76.5 | 34 | 603 | |
| | 2020.02- | 8AT | R | R | SUV 4WD DCUE;DWRB | For PR code:GH2,For vehicles with AWD & variable torque dist. | GDS83981 | Drive Shaft | | 42 | | 76.5 | 34 | 569 | |
| **TT** | | | | | | | | | | | | | | | |
| 1.8 (110 kw) | 2001.01-2006.06 | 5MT | F | L | Cabriolet FWD AUM | For PR code:G78 | GDS61020 | Drive Shaft | | 36 | | 53.2 | 77.5 | 547 | |
| | 2001.01-2006.06 | 5MT | F | R | Cabriolet FWD AUM | For PR code:G78 | GDS83011 | Drive Shaft | | 36 | | 53.2 | 77.5 | 810.5 | |
| | 2001.01-2006.06 | 5MT | F | L/R | Cabriolet FWD AUM | For PR code:G97/G98 | GCO61021 | Outer Joint | | 36 | 27 | 53 | 40 | 65 | I |
| | 2001.01-2006.06 | 5MT | F | L/R | Cabriolet FWD AUM | For PR code:G78 | GCO83070 | Outer Joint | | 36 | 30 | 53 | 78 | 60 | I |
| | 2001.01-2006.06 | 5MT | F | L/R | Cabriolet FWD AUM | | GCI61006 | Inner Joint | | | 30 | | | 57.6 | |
| | 2002.09-2006.06 | 5MT | F | L | Coupe FWD AUM | | GDS61020 | Drive Shaft | | 36 | | 53.2 | 77.5 | 547 | |
| | 2002.09-2006.06 | 5MT | F | R | Coupe FWD AUM | | GDS83011 | Drive Shaft | | 36 | | 53.2 | 77.5 | 810.5 | |
| | 2002.09-2006.06 | 5MT | F | L/R | Coupe FWD AUM | For PR code:G97/G98 | GCO61021 | Outer Joint | | 36 | 27 | 53 | 40 | 65 | I |
| | 2002.09-2006.06 | 5MT | F | L/R | Coupe FWD AUM | For PR code:G78 | GCO83070 | Outer Joint | | 36 | 30 | 53 | 78 | 60 | I |
| | 2002.09-2006.06 | 5MT | F | L/R | Coupe FWD AUM | | GCI61006 | Inner Joint | | | 30 | | | 57.6 | |
| 1.8 (118 kw) | 2008.06-2014.06 | 6MT | F | R | Convertible FWD CDAA | | GDS81890 | Drive Shaft | | 36 | | 59.5 | 40 | 818 | |
| | 2008.06-2014.06 | 6MT/7DCT | F | L | Convertible FWD CDAA | Date to:2013.02 | GDS61281 | Drive Shaft | | 36 | | 59.5 | 40 | 528 | |
| | 2008.06-2014.06 | 6MT/7DCT | F | L | Convertible FWD CDAA | Date from:2013.03 | GDS82387 | Drive Shaft | | 36 | | 59.5 | 40 | 523 | |
| | 2008.06-2014.06 | 7DCT | F | R | Convertible FWD CDAA | | GDS61341 | Drive Shaft | | 36 | | 59.5 | 40 | 806 | |
| | 2008.06-2014.06 | 7DCT/6MT | F | L/R | Convertible FWD CDAA | | GCO83002 | Outer Joint | | 36 | 27 | 59.5 | 40 | 66 | I |
| | 2008.06-2014.06 | 7DCT/6MT | F | L/R | Convertible FWD CDAA | Date From:2013.03 | GCI61069 | Inner Joint | | | 28 | | | 32 | |
| | 2008.06-2014.06 | 7DCT/6MT | F | L/R | Convertible FWD CDAA | Date to:2013.02 | GCI83016 | Inner Joint | | | 28 | | | 32 | |
| | 2008.06-2014.06 | 6MT | F | R | Coupe FWD CDAA | | GDS81890 | Drive Shaft | | 36 | | 59.5 | 40 | 818 | |
| | 2008.06-2014.06 | 6MT/7DCT | F | L | Coupe FWD CDAA | Date to:2013.02 | GDS61281 | Drive Shaft | | 36 | | 59.5 | 40 | 528 | |
| | 2008.06-2014.06 | 6MT/7DCT | F | L | Coupe FWD CDAA | Date from:2013.03 | GDS82387 | Drive Shaft | | 36 | | 59.5 | 40 | 523 | |
| | 2008.06-2014.06 | 7DCT | F | R | Coupe FWD CDAA | | GDS61341 | Drive Shaft | | 36 | | 59.5 | 40 | 806 | |
| | 2008.06-2014.06 | 7DCT/6MT | F | L/R | Coupe FWD CDAA | | GCO83002 | Outer Joint | | 36 | 27 | 59.5 | 40 | 66 | I |
| | 2008.06-2014.06 | 7DCT/6MT | F | L/R | Coupe FWD CDAA | Date From:2013.03 | GCI61069 | Inner Joint | | | 28 | | | 32 | |
| | 2008.06-2014.06 | 7DCT/6MT | F | L/R | Coupe FWD CDAA | Date to:2013.02 | GCI83016 | Inner Joint | | | 28 | | | 32 | |
| 1.8 (120 kw) | 2005.09-2006.06 | 5MT | F | L | Cabriolet FWD BVP | | GDS61020 | Drive Shaft | | 36 | | 53.2 | 77.5 | 547 | |
| | 2005.09-2006.06 | 5MT | F | R | Cabriolet FWD BVP | | GDS83011 | Drive Shaft | | 36 | | 53.2 | 77.5 | 810.5 | |
| | 2005.09-2006.06 | 5MT | F | L/R | Cabriolet FWD BVP | For PR code:G97/G98 | GCO61021 | Outer Joint | | 36 | 27 | 53 | 40 | 65 | I |
| | 2005.09-2006.06 | 5MT | F | L/R | Cabriolet FWD BVP | For PR code:G78 | GCO83070 | Outer Joint | | 36 | 30 | 53 | 78 | 60 | I |
| | 2005.09-2006.06 | 5MT | F | L/R | Cabriolet FWD BVP | | GCI61006 | Inner Joint | | | 30 | | | 57.6 | |
| | 2005.09-2006.06 | 5MT | F | L | Coupe FWD BVP | | GDS61020 | Drive Shaft | | 36 | | 53.2 | 77.5 | 547 | |
| | 2005.09-2006.06 | 5MT | F | R | Coupe FWD BVP | | GDS83011 | Drive Shaft | | 36 | | 53.2 | 77.5 | 810.5 | |
| | 2005.09-2006.06 | 5MT | F | L/R | Coupe FWD BVP | For PR code:G97/G98 | GCO61021 | Outer Joint | | 36 | 27 | 53 | 40 | 65 | I |
| | 2005.09-2006.06 | 5MT | F | L/R | Coupe FWD BVP | | GCI61006 | Inner Joint | | | 30 | | | 57.6 | |
| | 2005.09-2006.06 | AT/MT | F | L/R | Coupe FWD BVP | For PR code:G78 | GCO83070 | Outer Joint | | 36 | 30 | 53 | 78 | 60 | I |
| 1.8 (132 kw) | 1998.10-2006.06 | 6AT | F | L | Cabriolet FWD AJQ/APP/ATC/AUQ | | GDS83339 | Drive Shaft | | 36 | 26 | 53 | 40 | 580 | |
| | 1998.10-2006.06 | 6AT | F | R | Cabriolet FWD AJQ/APP/ATC/AUQ | | GDS83340 | Drive Shaft | | 36 | 26 | 53 | 40 | 859 | |
| | 1998.10-2006.06 | 6AT | F | L/R | Cabriolet FWD AJQ/APP/ATC/AUQ | | GCO61021 | Outer Joint | | 36 | 27 | 53 | 40 | 65 | I |
| | 1998.10-2006.06 | MT | F | L | Cabriolet FWD AJQ/APP/ATC/AUQ | | GDS61020 | Drive Shaft | | 36 | | 53.2 | 77.5 | 547 | |
| | 1998.10-2006.06 | MT | F | R | Cabriolet FWD AJQ/APP/ATC/AUQ | | GDS83011 | Drive Shaft | | 36 | | 53.2 | 77.5 | 810.5 | |
| | 1998.10-2006.06 | MT | F | L/R | Cabriolet FWD AJQ/APP/ATC/AUQ | | GCO83070 | Outer Joint | | 36 | 30 | 53 | 78 | 60 | I |
| | 1998.10-2006.06 | MT | F | L/R | Cabriolet FWD AJQ/APP/ATC/AUQ | | GCI61006 | Inner Joint | | | 30 | | | 57.6 | |
| | 1998.10-2006.06 | 6AT | F | L | Coupe FWD AJQ/APP/ATC/AUQ | | GDS83339 | Drive Shaft | | 36 | 26 | 53 | 40 | 580 | |
| | 1998.10-2006.06 | 6AT | F | R | Coupe FWD AJQ/APP/ATC/AUQ | | GDS83340 | Drive Shaft | | 36 | 26 | 53 | 40 | 859 | |
| | 1998.10-2006.06 | 6AT/5MT | F | L/R | Coupe FWD AJQ/APP/ATC/AUQ | | GCO61021 | Outer Joint | | 36 | 27 | 53 | 40 | 65 | I |
| | 1998.10-2006.06 | 6AT/5MT | F | L/R | Coupe FWD AJQ/APP/ATC/AUQ | For PR code:G78 | GCO83070 | Outer Joint | | 36 | 30 | 53 | 78 | 60 | I |
| | 1998.10-2006.06 | MT | F | L | Coupe FWD AJQ/APP/ATC/AUQ | | GDS61020 | Drive Shaft | | 36 | | 53.2 | 77.5 | 547 | |
| | 1998.10-2006.06 | MT | F | R | Coupe FWD AJQ/APP/ATC/AUQ | | GDS83011 | Drive Shaft | | 36 | | 53.2 | 77.5 | 810.5 | |
| | 1998.10-2006.06 | MT | F | L/R | Coupe FWD AJQ/APP/ATC/AUQ | | GCI61006 | Inner Joint | | | 30 | | | 57.6 | |
| | 2015.07-2018.08 | 6DCT | F | L | Convertible FWD CJSA;CJSB | | GDS81896 | Drive Shaft | | 36 | | 59.5 | 40 | 500 | |
| | 2015.07-2018.08 | 6DCT | F | R | Convertible FWD CJSA;CJSB | Date from:2017.10 | GDS83313 | Drive Shaft | | 36 | | 59.5 | 40 | 792 | |
| | 2015.07-2018.08 | 6MT | F | R | Convertible FWD CJSA;CJSB | | GDS81890 | Drive Shaft | | 36 | | 59.5 | 40 | 818 | |
| | 2015.07-2018.08 | 6MT | F | L/R | Convertible FWD CJSA;CJSB | | GCO83002 | Outer Joint | | 36 | 27 | 59.5 | 40 | 66 | I |
| | 2015.07-2018.08 | 6MT | F | L/R | Convertible FWD CJSA;CJSB | | GCI61069 | Inner Joint | | | 28 | | | 32 | |
| | 2015.07-2018.08 | 6MT/7DCT | F | L | Convertible FWD CJSA;CJSB | Date to:2017.09 | GDS61281 | Drive Shaft | | 36 | | 59.5 | 40 | 528 | |
| | 2015.07-2018.08 | 6MT/7DCT | F | L | Convertible FWD CJSA;CJSB | Date from:2017.10 | GDS82387 | Drive Shaft | | 36 | | 59.5 | 40 | 523 | |

| | YEAR | TRANSM. | F/R | L/R | BODY STYLE & DRIVE TYPE & ENGINE | REMARKS | G-AP Ref. | PRODUCT | ABS | Technical Specifications | | | | | |
|---|---|---|---|---|---|---|---|---|---|---|---|---|---|---|---|
| | | | | | | | | | | A | B | C | H | L | P |
| **AUDI** | | | | | | | | | | | | | | | |
| **TT** | | | | | | | | | | | | | | | |
| 1.8 (132 kw) | 2015.07-2018.08 | 7AT | F | L | Convertible FWD CJSA;CJSB | | GCO83002 | Outer Joint | | 36 | 27 | 59.5 | 40 | 66 | I |
| | 2015.07-2018.08 | 7AT | F | L | Convertible FWD CJSA;CJSB | | GCI61069 | Inner Joint | | | 28 | | | 32 | |
| | 2015.07-2018.08 | 7DCT | F | R | Convertible FWD CJSA;CJSB | | GDS61101 | Drive Shaft | | 36 | | 59.5 | 40 | 803 | |
| | 2015.07-2018.08 | | F | L/R | Convertible FWD CJSA;CJSB | Date From:2017.10 | GCO83101 | Outer Joint | | 36 | 27 | 59.5 | 40 | 65 | M |
| | 2015.07-2018.08 | 6DCT | F | L | Coupe FWD CJSA;CJSB | | GDS81896 | Drive Shaft | | 36 | | 59.5 | 40 | 500 | |
| | 2015.07-2018.08 | 6DCT | F | R | Coupe FWD CJSA;CJSB | Date from:2017.10 | GDS83313 | Drive Shaft | | 36 | | 59.5 | 40 | 792 | |
| | 2015.07-2018.08 | 6DCT | F | L | Coupe FWD CJSA;CJSB | | GDS98006 | Stub Axle-Flange | | 37 | | | 67 | 123.5 | |
| | 2015.07-2018.08 | 6MT | F | R | Coupe FWD CJSA;CJSB | | GDS81890 | Drive Shaft | | 36 | | 59.5 | 40 | 818 | |
| | 2015.07-2018.08 | 6MT | F | L/R | Coupe FWD CJSA;CJSB | | GCO83002 | Outer Joint | | 36 | 27 | 59.5 | 40 | 66 | I |
| | 2015.07-2018.08 | 6MT | F | L/R | Coupe FWD CJSA;CJSB | | GCI61069 | Inner Joint | | | 28 | | | 32 | |
| | 2015.07-2018.08 | 6MT/7DCT | F | L | Coupe FWD CJSA;CJSB | Date to:2017.09 | GDS61281 | Drive Shaft | | 36 | | 59.5 | 40 | 528 | |
| | 2015.07-2018.08 | 6MT/7DCT | F | L | Coupe FWD CJSA;CJSB | Date from:2017.10 | GDS82387 | Drive Shaft | | 36 | | 59.5 | 40 | 523 | |
| | 2015.07-2018.08 | 7AT | F | L | Coupe FWD CJSA;CJSB | | GCO83002 | Outer Joint | | 36 | 27 | 59.5 | 40 | 66 | I |
| | 2015.07-2018.08 | 7AT | F | L | Coupe FWD CJSA;CJSB | | GCI61069 | Inner Joint | | | 28 | | | 32 | |
| | 2015.07-2018.08 | 7DCT | F | R | Coupe FWD CJSA;CJSB | | GDS61101 | Drive Shaft | | 36 | | 59.5 | 40 | 803 | |
| | 2015.07-2018.08 | | F | L/R | Coupe FWD CJSA;CJSB | Date From:2017.10 | GCO83101 | Outer Joint | | 36 | 27 | 59.5 | 40 | 65 | M |
| 1.8 (140 kw) | 2005.07-2006.07 | 6AT | F | L | Coupe FWD BVR | | GDS83339 | Drive Shaft | | 36 | 26 | 53 | 40 | 580 | |
| | 2005.07-2006.07 | 6AT | F | R | Coupe FWD BVR | | GDS83340 | Drive Shaft | | 36 | 26 | 53 | 40 | 859 | |
| | 2005.07-2006.07 | 6AT | F | L/R | Coupe FWD BVR | | GCO61021 | Outer Joint | | 36 | 27 | 53 | 40 | 65 | I |
| | 2005.07-2006.07 | MT | F | L | Coupe FWD BVR | | GDS61020 | Drive Shaft | | 36 | | 53.2 | 77.5 | 547 | |
| | 2005.07-2006.07 | MT | F | R | Coupe FWD BVR | | GDS83011 | Drive Shaft | | 36 | | 53.2 | 77.5 | 810.5 | |
| | 2005.07-2006.07 | MT | F | L/R | Coupe FWD BVR | | GCO83070 | Outer Joint | | 36 | 30 | 53 | 78 | 60 | I |
| | 2005.07-2006.07 | MT | F | L/R | Coupe FWD BVR | | GCI61006 | Inner Joint | | | 30 | | | 57.6 | |
| | 2005.09-2006.06 | 6AT | F | L | Cabriolet FWD BVR | | GDS83339 | Drive Shaft | | 36 | 26 | 53 | 40 | 580 | |
| | 2005.09-2006.06 | 6AT | F | R | Cabriolet FWD BVR | | GDS83340 | Drive Shaft | | 36 | 26 | 53 | 40 | 859 | |
| | 2005.09-2006.06 | 6AT | F | L/R | Cabriolet FWD BVR | | GCO61021 | Outer Joint | | 36 | 27 | 53 | 40 | 65 | I |
| | 2005.09-2006.06 | MT | F | L | Cabriolet FWD BVR | | GDS61020 | Drive Shaft | | 36 | | 53.2 | 77.5 | 547 | |
| | 2005.09-2006.06 | MT | F | R | Cabriolet FWD BVR | | GDS83011 | Drive Shaft | | 36 | | 53.2 | 77.5 | 810.5 | |
| | 2005.09-2006.06 | MT | F | L/R | Cabriolet FWD BVR | | GCO83070 | Outer Joint | | 36 | 30 | 53 | 78 | 60 | I |
| | 2005.09-2006.06 | MT | F | L/R | Cabriolet FWD BVR | | GCI61006 | Inner Joint | | | 30 | | | 57.6 | |
| 2.0 (135 kw) | 2014.07- | 6MT | F | L | Coupe FWD CUNA | | GDS81896 | Drive Shaft | | 36 | | 59.5 | 40 | 500 | |
| | 2014.07- | 6MT | F | R | Coupe FWD CUNA | | GDS61101 | Drive Shaft | | 36 | | 59.5 | 40 | 803 | |
| | 2014.07- | MT | F | L/R | Coupe FWD CUNA | For PR code:TP6/TR1 | GCO83101 | Outer Joint | | 36 | 27 | 59.5 | 40 | 65 | M |
| | 2014.11- | 6MT | F | L | Convertible FWD CUNA | | GDS81896 | Drive Shaft | | 36 | | 59.5 | 40 | 500 | |
| | 2014.11- | 6MT | F | R | Convertible FWD CUNA | | GDS61101 | Drive Shaft | | 36 | | 59.5 | 40 | 803 | |
| | 2014.11- | MT | F | L/R | Convertible FWD CUNA | For PR code:TP6/TR1 | GCO83101 | Outer Joint | | 36 | 27 | 59.5 | 40 | 65 | M |
| 2.0 (147 kw) | 2006.08-2010.06 | 6AT/6MT | F | L | Coupe FWD BWA;BPY;CCTA | | GDS81896 | Drive Shaft | | 36 | | 59.5 | 40 | 500 | |
| | 2006.08-2010.06 | 6DCT | F | R | Coupe FWD BWA;BPY;CCTA | | GDS83322 | Drive Shaft | | 36 | | 59.5 | 40 | 613 | |
| | 2006.08-2010.06 | 6DCT | F | L | Coupe FWD BWA;BPY;CCTA | | GDS98006 | Stub Axle-Flange | | 37 | | | 67 | 123.5 | |
| | 2006.08-2010.06 | 6DCT/6MT | F | L/R | Coupe FWD BWA;BPY;CCTA | | GCO83002 | Outer Joint | | 36 | 27 | 59.5 | 40 | 66 | I |
| | 2006.08-2010.06 | 6DCT/6MT | F | L/R | Coupe FWD BWA;BPY;CCTA | | GCI83016 | Inner Joint | | | 28 | | | 32 | |
| | 2006.08-2010.06 | 6MT | F | R | Coupe FWD BWA;BPY;CCTA | | GDS61341 | Drive Shaft | | 36 | | 59.5 | 40 | 806 | |
| | 2007.03-2010.06 | 6AT/6MT | F | L | Convertible FWD BWA;BPY;CCTA | | GDS81896 | Drive Shaft | | 36 | | 59.5 | 40 | 500 | |
| | 2007.03-2010.06 | 6DCT | F | R | Convertible FWD BWA;BPY;CCTA | | GDS83322 | Drive Shaft | | 36 | | 59.5 | 40 | 613 | |
| | 2007.03-2010.06 | 6DCT | F | L | Convertible FWD BWA;BPY;CCTA | | GDS98006 | Stub Axle-Flange | | 37 | | | 67 | 123.5 | |
| | 2007.03-2010.06 | 6DCT/6MT | F | L/R | Convertible FWD BWA;BPY;CCTA | | GCO83002 | Outer Joint | | 36 | 27 | 59.5 | 40 | 66 | I |
| | 2007.03-2010.06 | 6DCT/6MT | F | L/R | Convertible FWD BWA;BPY;CCTA | | GCI83016 | Inner Joint | | | 28 | | | 32 | |
| | 2007.03-2010.06 | 6MT | F | R | Convertible FWD BWA;BPY;CCTA | | GDS61341 | Drive Shaft | | 36 | | 59.5 | 40 | 806 | |
| 2.0 (155 kw) | 2010.05-2014.06 | 6AT/6MT | F | L | Convertible FWD CESA | | GDS81896 | Drive Shaft | | 36 | | 59.5 | 40 | 500 | |
| | 2010.05-2014.06 | 6DCT | F | L | Convertible FWD CESA | | GDS98006 | Stub Axle-Flange | | 37 | | | 67 | 123.5 | |
| | 2010.05-2014.06 | 6MT/6DCT | F | L/R | Convertible FWD CESA | | GCO83101 | Outer Joint | | 36 | 27 | 59.5 | 40 | 65 | M |
| | 2010.05-2014.06 | 6MT/6DCT | F | L/R | Convertible FWD CESA | Date from:2013.03 | GCI61069 | Inner Joint | | | 28 | | | 32 | |
| | 2010.05-2014.06 | 6MT/6DCT | F | L/R | Convertible FWD CESA | Date to:2013.02 | GCI83016 | Inner Joint | | | 28 | | | 32 | |
| | 2010.05-2014.06 | 6AT/6MT | F | L | Coupe FWD CESA | | GDS81896 | Drive Shaft | | 36 | | 59.5 | 40 | 500 | |
| | 2010.05-2014.06 | 6DCT | F | L | Coupe FWD CESA | | GDS98006 | Stub Axle-Flange | | 37 | | | 67 | 123.5 | |
| | 2010.05-2014.06 | 6MT/6DCT | F | L/R | Coupe FWD CESA | | GCO83101 | Outer Joint | | 36 | 27 | 59.5 | 40 | 65 | M |
| | 2010.05-2014.06 | 6MT/6DCT | F | L/R | Coupe FWD CESA | Date from:2013.03 | GCI61069 | Inner Joint | | | 28 | | | 32 | |
| | 2010.05-2014.06 | 6MT/6DCT | F | L/R | Coupe FWD CESA | Date to:2013.02 | GCI83016 | Inner Joint | | | 28 | | | 32 | |
| | 2010.11-2015.01 | 6AT/6MT | F | L | Coupe FWD CESA | | GDS81896 | Drive Shaft | | 36 | | 59.5 | 40 | 500 | |
| | 2010.11-2015.01 | AT/MT | F | L/R | Coupe FWD CESA | Date to:2013.02,Bellows Material:Plastic | GCI83016 | Inner Joint | | | 28 | | | 32 | |
| 2.0 (169 kw) | 2014.07- | 6AT/6MT | F | L | Coupe FWD CHHC | | GDS81896 | Drive Shaft | | 36 | | 59.5 | 40 | 500 | |
| | 2014.07- | 6DCT | F | R | Coupe FWD CHHC | Date from:2017.10 | GDS83313 | Drive Shaft | | 36 | | 59.5 | 40 | 792 | |
| | 2014.07- | 6DCT | F | L | Coupe FWD CHHC | | GDS98006 | Stub Axle-Flange | | 37 | | | 67 | 123.5 | |
| | 2014.07- | 6MT | F | R | Coupe FWD CHHC | | GDS61101 | Drive Shaft | | 36 | | 59.5 | 40 | 803 | |
| | 2014.07- | MT | F | L/R | Coupe FWD CHHC | For PR code:TP6/TR1 | GCO83101 | Outer Joint | | 36 | 27 | 59.5 | 40 | 65 | M |

| | YEAR | TRANSM. | F/R | L/R | BODY STYLE & DRIVE TYPE & ENGINE | REMARKS | G-AP Ref. | PRODUCT | ABS | Technical Specifications A | B | C | H | L | P |
|---|---|---|---|---|---|---|---|---|---|---|---|---|---|---|---|
| **AUDI** | | | | | | | | | | | | | | | |
| **TT** | | | | | | | | | | | | | | | |
| 2.0 (169 kw) | 2014.11- | 6AT/6MT | F | L | Convertible FWD CHHC | | GDS81896 | Drive Shaft | | 36 | | 59.5 | 40 | 500 | |
| | 2014.11- | 6DCT | F | R | Convertible FWD CHHC | Date from:2017.10 | GDS83313 | Drive Shaft | | 36 | | 59.5 | 40 | 792 | |
| | 2014.11- | 6DCT | F | L | Convertible FWD CHHC | | GDS98006 | Stub Axle-Flange | | 37 | | | 67 | 123.5 | |
| | 2014.11- | 6MT | F | R | Convertible FWD CHHC | | GDS61101 | Drive Shaft | | 36 | | 59.5 | 40 | 803 | |
| | 2014.11- | MT | F | L/R | Convertible FWD CHHC | For PR code:TP6/TR1 | GCO83101 | Outer Joint | | 36 | 27 | 59.5 | 40 | 65 | M |
| 2.0 (180 kw) | 2018.07- | 6MT | F | L | Convertible FWD DKTB;DNPA | | GDS81896 | Drive Shaft | | 36 | | 59.5 | 40 | 500 | |
| | 2018.07- | 6MT | F | R | Convertible FWD DKTB;DNPA | | GDS61101 | Drive Shaft | | 36 | | 59.5 | 40 | 803 | |
| | 2018.07- | 6MT | F | L/R | Convertible FWD DKTB;DNPA | | GCO83101 | Outer Joint | | 36 | 27 | 59.5 | 40 | 65 | M |
| | 2018.07- | 6MT | F | L | Coupe FWD DKTB;DNPA | | GDS81896 | Drive Shaft | | 36 | | 59.5 | 40 | 500 | |
| | 2018.07- | 6MT | F | R | Coupe FWD DKTB;DNPA | | GDS61101 | Drive Shaft | | 36 | | 59.5 | 40 | 803 | |
| | 2018.07- | 6MT | F | L/R | Coupe FWD DKTB;DNPA | | GCO83101 | Outer Joint | | 36 | 27 | 59.5 | 40 | 65 | M |
| **TT Quattro** | | | | | | | | | | | | | | | |
| 1.8 (132 kw) | 1998.10-2006.06 | 6MT | F | L | Cabriolet 4WD AJQ/ARY/AUQ | Chassis no. to:8N_1_046000 | GDS61123 | Drive Shaft | | 36 | | 53 | 77.5 | 520 | |
| | 1998.10-2006.06 | 6MT | F | L | Cabriolet 4WD AJQ/ARY/AUQ | Date from:2003.07 | GDS81913 | Drive Shaft | | 36 | | 53 | 40 | 480 | |
| | 1998.10-2006.06 | 6MT | F | L/R | Cabriolet 4WD AJQ/ARY/AUQ | Chassis no. from:8N1046001 | GCO61021 | Outer Joint | | 36 | 27 | 53 | 40 | 65 | I |
| | 1998.10-2006.06 | 6MT | F | L/R | Cabriolet 4WD AJQ/ARY/AUQ | Chassis no. to:8N_1_046000 | GCO83035 | Outer Joint | | 36 | 27 | 53 | 77.5 | 65 | I |
| | 1998.10-2006.06 | MT | F | L | Cabriolet 4WD AJQ/ARY/AUQ | Chassis no. from:8N-1-046 001 | GDS83304 | Drive Shaft | | 36 | | 59.5 | 40 | 481 | |
| | 1998.10-2006.06 | MT | F | R | Cabriolet 4WD AJQ/ARY/AUQ | Chassis no. to:8N-1-046 000 | GDS61186 | Drive Shaft | | 36 | | 53 | 77.5 | 653 | |
| | 1998.10-2006.06 | MT | F | R | Cabriolet 4WD AJQ/ARY/AUQ | Chassis no. from:8N-1-046 001 | GDS83322 | Drive Shaft | | 36 | | 59.5 | 40 | 613 | |
| | 1998.10-2006.06 | | F | L/R | Cabriolet 4WD AJQ/ARY/AUQ | | GCI83001 | Inner Joint | | | 28 | | | 32 | |
| | 1998.10-2006.06 | | F | L/R | Cabriolet 4WD AJQ/ARY/AUQ | Chassis no. to:8N1046000 | GCI83016 | Inner Joint | | | 28 | | | 32 | |
| | 1998.10-2006.06 | 5MT/6MT | R | L | Cabriolet 4WD AJQ/ARY/AUQ | | GDS82364 | Drive Shaft | | 36 | | 53 | 78.5 | 651 | |
| | 1998.10-2006.06 | 5MT/6MT | R | R | Cabriolet 4WD AJQ/ARY/AUQ | | GDS81587 | Drive Shaft | | 36 | | 53 | 78.5 | 522 | |
| | 1998.10-2006.06 | 5MT/6MT | R | L/R | Cabriolet 4WD AJQ/ARY/AUQ | | GCI53002 | Inner Joint | | | 33 | | | 34 | |
| | 1998.10-2006.06 | 6MT | R | L/R | Cabriolet 4WD AJQ/ARY/AUQ | | GCI82447 | Inner Joint | | | 33 | | | 34 | |
| | 1998.10-2006.06 | | R | L/R | Cabriolet 4WD AJQ/ARY/AUQ | | GCO83033 | Outer Joint | | 36 | 30 | 53 | 78.5 | 51 | I |
| | 1998.10-2006.06 | | R | L/R | Cabriolet 4WD AJQ/ARY/AUQ | | GCI83011 | Inner Joint | | | 33 | | | 34 | |
| | 1998.10-2006.06 | 6MT | F | L | Coupe 4WD AJQ/ARY/ATC/AUQ | Chassis no. to:8N_1_046000 | GDS61123 | Drive Shaft | | 36 | | 53 | 77.5 | 520 | |
| | 1998.10-2006.06 | 6MT | F | L | Coupe 4WD AJQ/ARY/ATC/AUQ | Date from:2003.07 | GDS81913 | Drive Shaft | | 36 | | 53 | 40 | 480 | |
| | 1998.10-2006.06 | 6MT | F | L | Coupe 4WD AJQ/ARY/ATC/AUQ | Chassis no. from:8N-1-046 001,Date to:2003.06 | GDS83304 | Drive Shaft | | 36 | | 59.5 | 40 | 481 | |
| | 1998.10-2006.06 | 6MT | F | L/R | Coupe 4WD AJQ/ARY/ATC/AUQ | Chassis no. from:8N_1_046001 | GCO61021 | Outer Joint | | 36 | 27 | 53 | 40 | 65 | I |
| | 1998.10-2006.06 | 6MT | F | L/R | Coupe 4WD AJQ/ARY/ATC/AUQ | Chassis no. to:8N_1_046000 | GCO83035 | Outer Joint | | 36 | 27 | 53 | 77.5 | 65 | I |
| | 1998.10-2006.06 | MT | F | R | Coupe 4WD AJQ/ARY/ATC/AUQ | Chassis no. to:8N-1-046 000 | GDS61186 | Drive Shaft | | 36 | | 53 | 77.5 | 653 | |
| | 1998.10-2006.06 | MT | F | R | Coupe 4WD AJQ/ARY/ATC/AUQ | Chassis no. from:8N-1-046 001 | GDS83322 | Drive Shaft | | 36 | | 59.5 | 40 | 613 | |
| | 1998.10-2006.06 | | F | L/R | Coupe 4WD AJQ/ARY/ATC/AUQ | | GCI83001 | Inner Joint | | | 28 | | | 32 | |
| | 1998.10-2006.06 | | F | L/R | Coupe 4WD AJQ/ARY/ATC/AUQ | Chassis no. to:8N1046000 | GCI83016 | Inner Joint | | | 28 | | | 32 | |
| | 1998.10-2006.06 | 5MT/6MT | R | L | Coupe 4WD AJQ/ARY/ATC/AUQ | | GDS82364 | Drive Shaft | | 36 | | 53 | 78.5 | 651 | |
| | 1998.10-2006.06 | 5MT/6MT | R | R | Coupe 4WD AJQ/ARY/ATC/AUQ | | GDS81587 | Drive Shaft | | 36 | | 53 | 78.5 | 522 | |
| | 1998.10-2006.06 | 5MT/6MT | R | L/R | Coupe 4WD AJQ/ARY/ATC/AUQ | | GCO83033 | Outer Joint | | 36 | 30 | 53 | 78.5 | 51 | I |
| | 1998.10-2006.06 | 5MT/6MT | R | L/R | Coupe 4WD AJQ/ARY/ATC/AUQ | | GCI53002 | Inner Joint | | | 33 | | | 34 | |
| | 1998.10-2006.06 | 6MT | R | L/R | Coupe 4WD AJQ/ARY/ATC/AUQ | | GCI82447 | Inner Joint | | | 33 | | | 34 | |
| | 1998.10-2006.06 | | R | L/R | Coupe 4WD AJQ/ARY/ATC/AUQ | | GCI83011 | Inner Joint | | | 33 | | | 34 | |
| 1.8 (140 kw) | 2005.09-2006.06 | 6MT | F | L | Cabriolet 4WD BVR | | GDS81913 | Drive Shaft | | 36 | | 53 | 40 | 480 | |
| | 2005.09-2006.06 | | F | | Cabriolet 4WD BVR | | GCO61021 | Outer Joint | | 36 | 27 | 53 | 40 | 65 | I |
| | 2005.09-2006.06 | 6MT | R | L | Cabriolet 4WD BVR | | GDS82364 | Drive Shaft | | 36 | | 53 | 78.5 | 651 | |
| | 2005.09-2006.06 | 6MT | R | R | Cabriolet 4WD BVR | | GDS81587 | Drive Shaft | | 36 | | 53 | 78.5 | 522 | |
| | 2005.09-2006.06 | 6MT | R | L/R | Cabriolet 4WD BVR | | GCO83033 | Outer Joint | | 36 | 30 | 53 | 78.5 | 51 | I |
| | 2005.09-2006.06 | 6MT | R | L/R | Cabriolet 4WD BVR | | GCI53002 | Inner Joint | | | 33 | | | 34 | |
| | 2005.09-2006.06 | 6MT | R | L/R | Cabriolet 4WD BVR | | GCI82447 | Inner Joint | | | 33 | | | 34 | |
| | 2005.09-2006.06 | | R | L/R | Cabriolet 4WD BVR | | GCI83011 | Inner Joint | | | 33 | | | 34 | |
| | 2005.09-2006.06 | 6MT | F | L | Coupe 4WD BVR | | GDS81913 | Drive Shaft | | 36 | | 53 | 40 | 480 | |
| | 2005.09-2006.06 | | F | | Coupe 4WD BVR | | GCO61021 | Outer Joint | | 36 | 27 | 53 | 40 | 65 | I |
| | 2005.09-2006.06 | 6MT | R | L | Coupe 4WD BVR | | GDS82364 | Drive Shaft | | 36 | | 53 | 78.5 | 651 | |
| | 2005.09-2006.06 | 6MT | R | R | Coupe 4WD BVR | | GDS81587 | Drive Shaft | | 36 | | 53 | 78.5 | 522 | |
| | 2005.09-2006.06 | 6MT | R | L/R | Coupe 4WD BVR | | GCO83033 | Outer Joint | | 36 | 30 | 53 | 78.5 | 51 | I |
| | 2005.09-2006.06 | 6MT | R | L/R | Coupe 4WD BVR | | GCI53002 | Inner Joint | | | 33 | | | 34 | |
| | 2005.09-2006.06 | 6MT | R | L/R | Coupe 4WD BVR | | GCI82447 | Inner Joint | | | 33 | | | 34 | |
| | 2005.09-2006.06 | | R | L/R | Coupe 4WD BVR | | GCI83011 | Inner Joint | | | 33 | | | 34 | |
| 1.8 (165 kw) | 1998.10-2006.06 | 6MT | F | L | Cabriolet 4WD APX/BAM | Chassis no. to:8N_1_046000 | GDS61123 | Drive Shaft | | 36 | | 53 | 77.5 | 520 | |
| | 1998.10-2006.06 | 6MT | F | L | Cabriolet 4WD APX/BAM | Date from:2003.07 | GDS81913 | Drive Shaft | | 36 | | 53 | 40 | 480 | |
| | 1998.10-2006.06 | 6MT | F | L | Cabriolet 4WD APX/BAM | Chassis no. from:8N-1-046 001 | GDS83304 | Drive Shaft | | 36 | | 59.5 | 40 | 481 | |
| | 1998.10-2006.06 | 6MT | F | R | Cabriolet 4WD APX/BAM | Chassis no. to:8N-1-046 000 | GDS61186 | Drive Shaft | | 36 | | 53 | 77.5 | 653 | |
| | 1998.10-2006.06 | 6MT | F | R | Cabriolet 4WD APX/BAM | Chassis no. from:8N-1-046 001 | GDS83322 | Drive Shaft | | 36 | | 59.5 | 40 | 613 | |
| | 1998.10-2006.06 | 6MT | F | L/R | Cabriolet 4WD APX/BAM | Chassis no. from:8N1046001 | GCO61021 | Outer Joint | | 36 | 27 | 53 | 40 | 65 | I |
| | 1998.10-2006.06 | 6MT | F | L/R | Cabriolet 4WD APX/BAM | Chassis no. to:8N_1_046000 | GCO83035 | Outer Joint | | 36 | 27 | 53 | 77.5 | 65 | I |

| | YEAR | TRANSM. | F/R | L/R | BODY STYLE & DRIVE TYPE & ENGINE | REMARKS | G-AP Ref. | PRODUCT | ABS | Technical Specifications A | B | C | H | L | P |
|---|---|---|---|---|---|---|---|---|---|---|---|---|---|---|---|
| **AUDI** | | | | | | | | | | | | | | | |
| **TT Quattro** | | | | | | | | | | | | | | | |
| 1.8 (165 kw) | 1998.10-2006.06 | | F | L/R | Cabriolet 4WD APX/BAM | | GCI83001 | Inner Joint | | | 28 | | | 32 | |
| | 1998.10-2006.06 | | F | L/R | Cabriolet 4WD APX/BAM | Chassis no. to:8N1046000 | GCI83016 | Inner Joint | | | 28 | | | 32 | |
| | 1998.10-2006.06 | 6MT | R | L | Cabriolet 4WD APX/BAM | | GDS82364 | Drive Shaft | | 36 | | 53 | 78.5 | 651 | |
| | 1998.10-2006.06 | 6MT | R | R | Cabriolet 4WD APX/BAM | | GDS81587 | Drive Shaft | | 36 | | 53 | 78.5 | 522 | |
| | 1998.10-2006.06 | 6MT | R | L/R | Cabriolet 4WD APX/BAM | | GCI53002 | Inner Joint | | | 33 | | | 34 | |
| | 1998.10-2006.06 | 6MT | R | L/R | Cabriolet 4WD APX/BAM | | GCI82447 | Inner Joint | | | 33 | | | 34 | |
| | 1998.10-2006.06 | | R | L/R | Cabriolet 4WD APX/BAM | | GCO83033 | Outer Joint | | 36 | 30 | 53 | 78.5 | 51 | I |
| | 1998.10-2006.06 | | R | L/R | Cabriolet 4WD APX/BAM | | GCI83011 | Inner Joint | | | 33 | | | 34 | |
| | 1998.10-2006.06 | 6MT | F | L | Coupe 4WD APX/BAM | Chassis no. to:8N_1_046000 | GDS61123 | Drive Shaft | | 36 | | 53 | 77.5 | 520 | |
| | 1998.10-2006.06 | 6MT | F | L | Coupe 4WD APX/BAM | Date from:2003.07 | GDS81913 | Drive Shaft | | 36 | | 53 | 40 | 480 | |
| | 1998.10-2006.06 | 6MT | F | L | Coupe 4WD APX/BAM | Chassis no. from:8N-1-046 001,Date to:2003.06 | GDS83304 | Drive Shaft | | 36 | | 59.5 | 40 | 481 | |
| | 1998.10-2006.06 | 6MT | F | R | Coupe 4WD APX/BAM | Chassis no. to:8N-1-046 000 | GDS61186 | Drive Shaft | | 36 | | 53 | 77.5 | 653 | |
| | 1998.10-2006.06 | 6MT | F | R | Coupe 4WD APX/BAM | Chassis no. from:8N-1-046 001 | GDS83322 | Drive Shaft | | 36 | | 59.5 | 40 | 613 | |
| | 1998.10-2006.06 | 6MT | F | L/R | Coupe 4WD APX/BAM | Chassis no. from:8N_1_046001 | GCO61021 | Outer Joint | | 36 | 27 | 53 | 40 | 65 | I |
| | 1998.10-2006.06 | 6MT | F | L/R | Coupe 4WD APX/BAM | Chassis no. to:8N_1_046000 | GCO83035 | Outer Joint | | 36 | 27 | 53 | 77.5 | 65 | I |
| | 1998.10-2006.06 | | F | L/R | Coupe 4WD APX/BAM | | GCI83001 | Inner Joint | | | 28 | | | 32 | |
| | 1998.10-2006.06 | | F | L/R | Coupe 4WD APX/BAM | Chassis no. to:8N1046000 | GCI83016 | Inner Joint | | | 28 | | | 32 | |
| | 1998.10-2006.06 | 6MT | R | L | Coupe 4WD APX/BAM | | GDS82364 | Drive Shaft | | 36 | | 53 | 78.5 | 651 | |
| | 1998.10-2006.06 | 6MT | R | R | Coupe 4WD APX/BAM | | GDS81587 | Drive Shaft | | 36 | | 53 | 78.5 | 522 | |
| | 1998.10-2006.06 | 6MT | R | L/R | Coupe 4WD APX/BAM | | GCO83033 | Outer Joint | | 36 | 30 | 53 | 78.5 | 51 | I |
| | 1998.10-2006.06 | 6MT | R | L/R | Coupe 4WD APX/BAM | | GCI53002 | Inner Joint | | | 33 | | | 34 | |
| | 1998.10-2006.06 | 6MT | R | L/R | Coupe 4WD APX/BAM | | GCI82447 | Inner Joint | | | 33 | | | 34 | |
| | 1998.10-2006.06 | | R | L/R | Coupe 4WD APX/BAM | | GCI83011 | Inner Joint | | | 33 | | | 34 | |
| 1.8 (180 kw) | 2005.03-2006.06 | 6MT | F | L | Coupe 4WD BFV | | GDS81913 | Drive Shaft | | 36 | | 53 | 40 | 480 | |
| | 2005.03-2006.06 | | F | | Coupe 4WD BFV | | GCO61021 | Outer Joint | | 36 | 27 | 53 | 40 | 65 | I |
| | 2005.03-2006.06 | 6MT | R | L | Coupe 4WD BFV | | GDS82364 | Drive Shaft | | 36 | | 53 | 78.5 | 651 | |
| | 2005.03-2006.06 | 6MT | R | R | Coupe 4WD BFV | | GDS81587 | Drive Shaft | | 36 | | 53 | 78.5 | 522 | |
| | 2005.03-2006.06 | 6MT | R | L/R | Coupe 4WD BFV | | GCO83033 | Outer Joint | | 36 | 30 | 53 | 78.5 | 51 | I |
| | 2005.03-2006.06 | 6MT | R | L/R | Coupe 4WD BFV | | GCI53002 | Inner Joint | | | 33 | | | 34 | |
| | 2005.03-2006.06 | 6MT | R | L/R | Coupe 4WD BFV | | GCI82447 | Inner Joint | | | 33 | | | 34 | |
| 2.0 (125 kw) | 2008.06-2014.06 | 6DCT | F | L | Convertible 4WD CBBB;CFGB | | GDS54013 | Drive Shaft | | 36 | | 59.5 | 40 | 479.5 | |
| | 2008.06-2014.06 | 6DCT | F | L/R | Convertible 4WD CBBB;CFGB | | GCI54004 | Inner Joint | | | 34 | | | 81 | |
| | 2008.06-2014.06 | 6DCT | F | L/R | Convertible 4WD CBBB;CFGB | | GCI61057 | Inner Joint | | | 34 | | | 89 | |
| | 2008.06-2014.06 | 6MT | F | L | Convertible 4WD CBBB;CFGB | | GDS81896 | Drive Shaft | | 36 | | 59.5 | 40 | 500 | |
| | 2008.06-2014.06 | 6MT | F | R | Convertible 4WD CBBB;CFGB | | GDS83322 | Drive Shaft | | 36 | | 59.5 | 40 | 613 | |
| | 2008.06-2014.06 | 6MT | F | L/R | Convertible 4WD CBBB;CFGB | | GCO83002 | Outer Joint | | 36 | 27 | 59.5 | 40 | 66 | I |
| | 2008.06-2014.06 | 6MT | F | L/R | Convertible 4WD CBBB;CFGB | Date from:2013.03 | GCI61069 | Inner Joint | | | 28 | | | 32 | |
| | 2008.06-2014.06 | 6MT | F | L/R | Convertible 4WD CBBB;CFGB | Date to:2013.02 | GCI83016 | Inner Joint | | | 28 | | | 32 | |
| | 2008.06-2014.06 | 6AT/6MT | R | L | Convertible 4WD CBBB;CFGB | | GDS54017 | Drive Shaft | | 36 | | 59.5 | 40 | 609 | |
| | 2008.06-2014.06 | 6AT/6MT | R | R | Convertible 4WD CBBB;CFGB | Date from:2012.06 | GDS61333 | Drive Shaft | | 36 | | 59.5 | 40 | 647 | |
| | 2008.06-2014.06 | 6AT/6MT | R | R | Convertible 4WD CBBB;CFGB | Date to:2012.05 | GDS81597 | Drive Shaft | | 36 | | 59.5 | 40 | 652 | |
| | 2008.06-2014.06 | 6AT/6MT | R | L/R | Convertible 4WD CBBB;CFGB | | GCI35026 | Outer Joint | | 36 | 33 | 59.5 | 40 | 61 | |
| | 2008.06-2014.06 | 6AT/6MT | R | L/R | Convertible 4WD CBBB;CFGB | | GCI82447 | Inner Joint | | | 33 | | | 34 | |
| | 2008.06-2014.06 | 6DCT | F | L | Coupe 4WD CBBB;CFGB | | GDS54013 | Drive Shaft | | 36 | | 59.5 | 40 | 479.5 | |
| | 2008.06-2014.06 | 6DCT | F | L/R | Coupe 4WD CBBB;CFGB | Original Tripod Design | GCI61057 | Inner Joint | | | 34 | | | 89 | |
| | 2008.06-2014.06 | 6MT | F | L | Coupe 4WD CBBB;CFGB | | GDS81896 | Drive Shaft | | 36 | | 59.5 | 40 | 500 | |
| | 2008.06-2014.06 | 6MT | F | R | Coupe 4WD CBBB;CFGB | Date to:2013.02 | GDS83322 | Drive Shaft | | 36 | | 59.5 | 40 | 613 | |
| | 2008.06-2014.06 | 6MT | F | L/R | Coupe 4WD CBBB;CFGB | Date to:2013.02 | GCI61069 | Inner Joint | | | 28 | | | 32 | |
| | 2008.06-2014.06 | 6MT | F | L/R | Coupe 4WD CBBB;CFGB | Date to:2013.02 | GCI83016 | Inner Joint | | | 28 | | | 32 | |
| | 2008.06-2014.06 | 6MT/6DCT | F | L/R | Coupe 4WD CBBB;CFGB | | GCO83002 | Outer Joint | | 36 | 27 | 59.5 | 40 | 66 | I |
| | 2008.06-2014.06 | 6AT/6MT | R | L | Coupe 4WD CBBB;CFGB | | GDS54017 | Drive Shaft | | 36 | | 59.5 | 40 | 609 | |
| | 2008.06-2014.06 | 6AT/6MT | R | R | Coupe 4WD CBBB;CFGB | Date from:2012.06 | GDS61333 | Drive Shaft | | 36 | | 59.5 | 40 | 647 | |
| | 2008.06-2014.06 | 6AT/6MT | R | R | Coupe 4WD CBBB;CFGB | Date to:2012.05 | GDS81597 | Drive Shaft | | 36 | | 59.5 | 40 | 652 | |
| | 2008.06-2014.06 | 6AT/6MT | R | L | Coupe 4WD CBBB;CFGB | | GCI35026 | Outer Joint | | 36 | 33 | 59.5 | 40 | 61 | |
| | 2008.06-2014.06 | 6AT/6MT | R | R | Coupe 4WD CBBB;CFGB | Date from:2012.06 | GCI35026 | Outer Joint | | 36 | 33 | 59.5 | 40 | 61 | |
| | 2008.06-2014.06 | 6AT/6MT | R | R | Coupe 4WD CBBB;CFGB | Date to:2012.05 | GCO83037 | Outer Joint | | 36 | 30 | 59.5 | 40.5 | 56 | I |
| | 2008.06-2014.06 | 6AT/6MT | R | L/R | Coupe 4WD CBBB;CFGB | | GCI53002 | Inner Joint | | | 33 | | | 34 | |
| | 2008.06-2014.06 | 6AT/6MT | R | L/R | Coupe 4WD CBBB;CFGB | | GCI82447 | Inner Joint | | | 33 | | | 34 | |
| 2.0 (135 kw) | 2017.01- | 6AT | F | R | Convertible 4WD CUNA | | GDS61346 | Drive Shaft | | 36 | | 59.5 | 40 | 589 | |
| | 2017.01- | 6AT | F | L/R | Convertible 4WD CUNA | | GCO83101 | Outer Joint | | 36 | 27 | 59.5 | 40 | 65 | M |
| | 2017.01- | 6AT | F | L/R | Convertible 4WD CUNA | | GCI61057 | Inner Joint | | | 34 | | | 89 | |
| | 2017.01- | 6DCT | F | L | Convertible 4WD CUNA | | GDS83381 | Drive Shaft | | 36 | | 59.5 | 40 | 483 | |
| | 2017.01- | 6AT | R | L | Convertible 4WD CUNA | | GDS61331 | Drive Shaft | | 36 | | 59.5 | 40 | 606 | |
| | 2017.01- | 6AT | R | L | Convertible 4WD CUNA | | GCI35026 | Outer Joint | | 36 | 33 | 59.5 | 40 | 61 | |
| | 2017.01- | 6AT | R | L | Convertible 4WD CUNA | | GCI61103 | Inner Joint | | | 33 | | | 32 | |

| | YEAR | TRANSM. | F/R | L/R | BODY STYLE & DRIVE TYPE & ENGINE | REMARKS | G-AP Ref. | PRODUCT | ABS | Technical Specifications A | B | C | H | L | P |
|---|---|---|---|---|---|---|---|---|---|---|---|---|---|---|---|
| **AUDI** | | | | | | | | | | | | | | | |
| **TT Quattro** | | | | | | | | | | | | | | | |
| 2.0 (135 kw) | 2017.01- | 7DCT | R | R | Convertible 4WD CUNA | | GDS61332 | Drive Shaft | | 36 | | 59.5 | 40 | 650 | |
| | 2017.01- | 6AT | F | R | Coupe 4WD CUNA | | GDS61346 | Drive Shaft | | 36 | | 59.5 | 40 | 589 | |
| | 2017.01- | 6AT | F | L/R | Coupe 4WD CUNA | | GCO83101 | Outer Joint | | 36 | 27 | 59.5 | 40 | 65 | M |
| | 2017.01- | 6AT | F | L/R | Coupe 4WD CUNA | | GCI61057 | Inner Joint | | | 34 | | | 89 | |
| | 2017.01- | 6DCT | F | L | Coupe 4WD CUNA | | GDS83381 | Drive Shaft | | 36 | | 59.5 | 40 | 483 | |
| | 2017.01- | 6AT | R | L | Coupe 4WD CUNA | | GDS61331 | Drive Shaft | | 36 | | 59.5 | 40 | 606 | |
| | 2017.01- | 6AT | R | L | Coupe 4WD CUNA | | GCI35026 | Outer Joint | | 36 | 33 | 59.5 | 40 | 61 | |
| | 2017.01- | 6AT | R | L | Coupe 4WD CUNA | | GCI61103 | Inner Joint | | | 33 | | | 32 | |
| | 2017.01- | 7DCT | R | R | Coupe 4WD CUNA | | GDS61332 | Drive Shaft | | 36 | | 59.5 | 40 | 650 | |
| 2.0 (147 kw) | 2008.06-2010.06 | 6AT | F | L | Convertible 4WD CCZA;CCTA | | GDS81896 | Drive Shaft | | 36 | | 59.5 | 40 | 500 | |
| | 2008.06-2010.06 | AT | F | L/R | Convertible 4WD CCZA;CCTA | | GCI83006 | Inner Joint | | | 33 | | | 34 | |
| | 2008.06-2010.06 | | F | R | Convertible 4WD CCZA;CCTA | | GDS83322 | Drive Shaft | | 36 | | 59.5 | 40 | 613 | |
| | 2008.06-2010.06 | | F | L/R | Convertible 4WD CCZA;CCTA | | GCO83002 | Outer Joint | | 36 | 27 | 59.5 | 40 | 66 | I |
| | 2008.06-2010.06 | | F | L/R | Convertible 4WD CCZA;CCTA | | GCI83016 | Inner Joint | | | 28 | | | 32 | |
| | 2008.06-2010.06 | 6AT | R | L/R | Convertible 4WD CCZA;CCTA | | GCI35026 | Outer Joint | | 36 | 33 | 59.5 | 40 | 61 | |
| | 2008.06-2010.06 | 6AT | R | L/R | Convertible 4WD CCZA;CCTA | | GCI82447 | Inner Joint | | | 33 | | | 34 | |
| | 2008.06-2010.06 | | R | L | Convertible 4WD CCZA;CCTA | | GDS54017 | Drive Shaft | | 36 | | 59.5 | 40 | 609 | |
| | 2008.06-2010.06 | | R | R | Convertible 4WD CCZA;CCTA | Date To:2012.05 | GDS81597 | Drive Shaft | | 36 | | 59.5 | 40 | 652 | |
| | 2008.06-2010.06 | 6AT | F | L | Coupe 4WD CCZA;CCTA | | GDS81896 | Drive Shaft | | 36 | | 59.5 | 40 | 500 | |
| | 2008.06-2010.06 | | F | R | Coupe 4WD CCZA;CCTA | | GDS83322 | Drive Shaft | | 36 | | 59.5 | 40 | 613 | |
| | 2008.06-2010.06 | | F | L/R | Coupe 4WD CCZA;CCTA | | GCO83002 | Outer Joint | | 36 | 27 | 59.5 | 40 | 66 | I |
| | 2008.06-2010.06 | | F | L/R | Coupe 4WD CCZA;CCTA | | GCI83016 | Inner Joint | | | 28 | | | 32 | |
| | 2008.06-2010.06 | 6AT | R | L/R | Coupe 4WD CCZA;CCTA | | GCI35026 | Outer Joint | | 36 | 33 | 59.5 | 40 | 61 | |
| | 2008.06-2010.06 | 6AT | R | L/R | Coupe 4WD CCZA;CCTA | | GCI82447 | Inner Joint | | | 33 | | | 34 | |
| | 2008.06-2010.06 | | R | L | Coupe 4WD CCZA;CCTA | | GDS54017 | Drive Shaft | | 36 | | 59.5 | 40 | 609 | |
| | 2008.06-2010.06 | | R | R | Coupe 4WD CCZA;CCTA | Date To:2012.05 | GDS81597 | Drive Shaft | | 36 | | 59.5 | 40 | 652 | |
| 2.0 (155 kw) | 2010.05-2014.06 | 6AT/6MT | F | L | Convertible 4WD CESA;CETA | | GDS81896 | Drive Shaft | | 36 | | 59.5 | 40 | 500 | |
| | 2010.05-2014.06 | 6AT/6MT | F | R | Convertible 4WD CESA;CETA | | GDS81889 | Drive Shaft | | 36 | | 59.5 | 40 | 614 | |
| | 2010.05-2014.06 | 6AT/6MT | F | R | Convertible 4WD CESA;CETA | | GCO83101 | Outer Joint | | 36 | 27 | 59.5 | 40 | 65 | M |
| | 2010.05-2014.06 | 6DCT | F | L | Convertible 4WD CESA;CETA | | GDS98006 | Stub Axle-Flange | | 37 | | | 67 | 123.5 | |
| | 2010.05-2014.06 | | F | L/R | Convertible 4WD CESA;CETA | | GCI83016 | Inner Joint | | | 28 | | | 32 | |
| | 2010.05-2014.06 | 6AT/6MT | R | L | Convertible 4WD CESA;CETA | | GDS54017 | Drive Shaft | | 36 | | 59.5 | 40 | 609 | |
| | 2010.05-2014.06 | 6AT/6MT | R | R | Convertible 4WD CESA;CETA | Date from:2012.06 | GDS61333 | Drive Shaft | | 36 | | 59.5 | 40 | 647 | |
| | 2010.05-2014.06 | 6AT/6MT | R | R | Convertible 4WD CESA;CETA | Date to:2012.05 | GDS81597 | Drive Shaft | | 36 | | 59.5 | 40 | 652 | |
| | 2010.05-2014.06 | 6AT/6MT | R | R | Convertible 4WD CESA;CETA | Date to:2012.05 | GCO83037 | Outer Joint | | 36 | 30 | 59.5 | 40.5 | 56 | I |
| | 2010.05-2014.06 | 6AT/6MT | R | L/R | Convertible 4WD CESA;CETA | | GCI35026 | Outer Joint | | 36 | 33 | 59.5 | 40 | 61 | |
| | 2010.05-2014.06 | 6AT/6MT | R | L/R | Convertible 4WD CESA;CETA | | GCI53002 | Inner Joint | | | 33 | | | 34 | |
| | 2010.05-2014.06 | 6AT/6MT | R | L/R | Convertible 4WD CESA;CETA | | GCI82447 | Inner Joint | | | 33 | | | 34 | |
| | 2010.05-2014.06 | 6AT/6MT | F | L | Coupe 4WD CESA;CETA | | GDS81896 | Drive Shaft | | 36 | | 59.5 | 40 | 500 | |
| | 2010.05-2014.06 | 6AT/6MT | F | R | Coupe 4WD CESA;CETA | Date to:2012.05 | GDS81889 | Drive Shaft | | 36 | | 59.5 | 40 | 614 | |
| | 2010.05-2014.06 | 6AT/6MT | F | R | Coupe 4WD CESA;CETA | Date to:2012.05 | GCO83101 | Outer Joint | | 36 | 27 | 59.5 | 40 | 65 | M |
| | 2010.05-2014.06 | 6DCT | F | L | Coupe 4WD CESA;CETA | | GDS98006 | Stub Axle-Flange | | 37 | | | 67 | 123.5 | |
| | 2010.05-2014.06 | | F | L/R | Coupe 4WD CESA;CETA | | GCI83016 | Inner Joint | | | 28 | | | 32 | |
| | 2010.05-2014.06 | 6AT/6MT | R | L | Coupe 4WD CESA;CETA | Date from:2012.06 | GDS54017 | Drive Shaft | | 36 | | 59.5 | 40 | 609 | |
| | 2010.05-2014.06 | 6AT/6MT | R | R | Coupe 4WD CESA;CETA | Date from:2012.06 | GDS61333 | Drive Shaft | | 36 | | 59.5 | 40 | 647 | |
| | 2010.05-2014.06 | 6AT/6MT | R | R | Coupe 4WD CESA;CETA | Date to:2012.05 | GDS81597 | Drive Shaft | | 36 | | 59.5 | 40 | 652 | |
| | 2010.05-2014.06 | 6AT/6MT | R | R | Coupe 4WD CESA;CETA | Date to:2012.05 | GCO83037 | Outer Joint | | 36 | 30 | 59.5 | 40.5 | 56 | I |
| | 2010.05-2014.06 | 6AT/6MT | R | L/R | Coupe 4WD CESA;CETA | | GCI35026 | Outer Joint | | 36 | 33 | 59.5 | 40 | 61 | |
| | 2010.05-2014.06 | 6AT/6MT | R | L/R | Coupe 4WD CESA;CETA | Date from:2012.06 | GCI53002 | Inner Joint | | | 33 | | | 34 | |
| | 2010.05-2014.06 | 6AT/6MT | R | L/R | Coupe 4WD CESA;CETA | | GCI82447 | Inner Joint | | | 33 | | | 34 | |
| | 2010.11-2015.01 | 6DCT/6MT | F | L | Coupe 4WD CESA | | GDS81896 | Drive Shaft | | 36 | | 59.5 | 40 | 500 | |
| | 2010.11-2015.01 | 6DCT/6MT | F | R | Coupe 4WD CESA | | GDS81889 | Drive Shaft | | 36 | | 59.5 | 40 | 614 | |
| | 2010.11-2015.01 | AT/MT | F | L/R | Coupe 4WD CESA | Date to:2013.02,Bellows Material:Plastic | GCI83016 | Inner Joint | | | 28 | | | 32 | |
| | 2010.11-2015.01 | 6DCT/6MT | R | R | Coupe 4WD CESA | Date from:2012.06 | GDS61333 | Drive Shaft | | 36 | | 59.5 | 40 | 647 | |
| | 2010.11-2015.01 | 6DCT/6MT | R | R | Coupe 4WD CESA | Date to:2012.05 | GDS81597 | Drive Shaft | | 36 | | 59.5 | 40 | 652 | |
| 2.0 (169 kw) | 2014.07- | 6AT | F | L | Coupe 4WD CHHC | | GDS81896 | Drive Shaft | | 36 | | 59.5 | 40 | 500 | |
| | 2014.07- | 6AT | F | R | Coupe 4WD CHHC | | GDS81889 | Drive Shaft | | 36 | | 59.5 | 40 | 614 | |
| | 2014.07- | 6AT | F | R | Coupe 4WD CHHC | | GCI61069 | Inner Joint | | | 28 | | | 32 | |
| | 2014.07- | 6DCT | F | L | Coupe 4WD CHHC | | GDS98006 | Stub Axle-Flange | | 37 | | | 67 | 123.5 | |
| | 2014.07- | AT | F | L/R | Coupe 4WD CHHC | For PR code:TP6/TR1 | GCO83101 | Outer Joint | | 36 | 27 | 59.5 | 40 | 65 | M |
| | 2014.07- | 6AT | R | L | Coupe 4WD CHHC | | GDS61331 | Drive Shaft | | 36 | | 59.5 | 40 | 606 | |
| | 2014.07- | 6AT | R | L | Coupe 4WD CHHC | | GCI61103 | Inner Joint | | | 33 | | | 32 | |
| | 2014.07- | 7DCT | R | R | Coupe 4WD CHHC | Date from:2016.01 | GDS61332 | Drive Shaft | | 36 | | 59.5 | 40 | 650 | |
| | 2014.11- | 6AT | F | L | Convertible 4WD CHHC | | GDS81896 | Drive Shaft | | 36 | | 59.5 | 40 | 500 | |
| | 2014.11- | 6AT | F | R | Convertible 4WD CHHC | | GDS81889 | Drive Shaft | | 36 | | 59.5 | 40 | 614 | |

| | YEAR | TRANSM. | F/R | L/R | BODY STYLE & DRIVE TYPE & ENGINE | REMARKS | G-AP Ref. | PRODUCT | ABS | Technical Specifications A | B | C | H | L | P |
|---|---|---|---|---|---|---|---|---|---|---|---|---|---|---|---|
| **AUDI** | | | | | | | | | | | | | | | |
| **TT Quattro** | | | | | | | | | | | | | | | |
| 2.0 (169 kw) | 2014.11- | 6AT | F | R | Convertible 4WD CHHC | | GCI61069 | Inner Joint | | | 28 | | | 32 | |
| | 2014.11- | 6DCT | F | L | Convertible 4WD CHHC | | GDS98006 | Stub Axle-Flange | | 37 | | | 67 | 123.5 | |
| | 2014.11- | AT | F | L/R | Convertible 4WD CHHC | For PR code:TP6/TR1 | GCO83101 | Outer Joint | | 36 | 27 | 59.5 | 40 | 65 | M |
| | 2014.11- | 6AT | R | L | Convertible 4WD CHHC | | GDS61331 | Drive Shaft | | 36 | | 59.5 | 40 | 606 | |
| | 2014.11- | 6AT | R | L | Convertible 4WD CHHC | | GCI61103 | Inner Joint | | | 33 | | | 32 | |
| | 2014.11- | 7DCT | R | R | Convertible 4WD CHHC | Date from:2016.01 | GDS61332 | Drive Shaft | | 36 | | 59.5 | 40 | 650 | |
| 2.0 (180 kw) | 2018.07- | 7AT | F | R | Convertible 4WD DKTB;DNPA | | GDS81889 | Drive Shaft | | 36 | | 59.5 | 40 | 614 | |
| | 2018.07- | 7AT | F | R | Convertible 4WD DKTB;DNPA | | GCO83101 | Outer Joint | | 36 | 27 | 59.5 | 40 | 65 | M |
| | 2018.07- | 7AT | F | R | Convertible 4WD DKTB;DNPA | | GCI61069 | Inner Joint | | | 28 | | | 32 | |
| | 2018.07- | 7AT | R | L | Convertible 4WD DKTB;DNPA | | GDS61331 | Drive Shaft | | 36 | | 59.5 | 40 | 606 | |
| | 2018.07- | 7AT | R | R | Convertible 4WD DKTB;DNPA | | GDS61332 | Drive Shaft | | 36 | | 59.5 | 40 | 650 | |
| | 2018.07- | 7AT | R | L/R | Convertible 4WD DKTB;DNPA | | GCI35026 | Outer Joint | | 36 | 33 | 59.5 | 40 | 61 | |
| | 2018.07- | 7AT | R | L/R | Convertible 4WD DKTB;DNPA | | GCI61103 | Inner Joint | | | 33 | | | 32 | |
| | 2018.07- | 7AT | F | R | Coupe 4WD DKTB;DNPA | | GDS81889 | Drive Shaft | | 36 | | 59.5 | 40 | 614 | |
| | 2018.07- | 7AT | F | R | Coupe 4WD DKTB;DNPA | | GCO83101 | Outer Joint | | 36 | 27 | 59.5 | 40 | 65 | M |
| | 2018.07- | 7AT | F | R | Coupe 4WD DKTB;DNPA | | GCI61069 | Inner Joint | | | 28 | | | 32 | |
| | 2018.07- | 7AT | R | L | Coupe 4WD DKTB;DNPA | | GDS61331 | Drive Shaft | | 36 | | 59.5 | 40 | 606 | |
| | 2018.07- | 7AT | R | R | Coupe 4WD DKTB;DNPA | | GDS61332 | Drive Shaft | | 36 | | 59.5 | 40 | 650 | |
| | 2018.07- | 7AT | R | L/R | Coupe 4WD DKTB;DNPA | | GCI35026 | Outer Joint | | 36 | 33 | 59.5 | 40 | 61 | |
| | 2018.07- | 7AT | R | L/R | Coupe 4WD DKTB;DNPA | | GCI61103 | Inner Joint | | | 33 | | | 32 | |
| 2.0 (225 kw) | 2018.08- | 7AT | F | R | Convertible 4WD DNUF | | GDS81889 | Drive Shaft | | 36 | | 59.5 | 40 | 614 | |
| | 2018.08- | 7AT | F | R | Convertible 4WD DNUF | | GCO83101 | Outer Joint | | 36 | 27 | 59.5 | 40 | 65 | M |
| | 2018.08- | 7AT | F | R | Convertible 4WD DNUF | | GCI61069 | Inner Joint | | | 28 | | | 32 | |
| | 2018.08- | 7AT | R | L | Convertible 4WD DNUF | | GDS61331 | Drive Shaft | | 36 | | 59.5 | 40 | 606 | |
| | 2018.08- | 7AT | R | R | Convertible 4WD DNUF | | GDS61332 | Drive Shaft | | 36 | | 59.5 | 40 | 650 | |
| | 2018.08- | 7AT | R | L/R | Convertible 4WD DNUF | | GCI35026 | Outer Joint | | 36 | 33 | 59.5 | 40 | 61 | |
| | 2018.08- | 7AT | R | L/R | Convertible 4WD DNUF | | GCI61103 | Inner Joint | | | 33 | | | 32 | |
| | 2018.08- | 7AT | F | R | Coupe 4WD DNUF | | GDS81889 | Drive Shaft | | 36 | | 59.5 | 40 | 614 | |
| | 2018.08- | 7AT | F | R | Coupe 4WD DNUF | | GCO83101 | Outer Joint | | 36 | 27 | 59.5 | 40 | 65 | M |
| | 2018.08- | 7AT | F | R | Coupe 4WD DNUF | | GCI61069 | Inner Joint | | | 28 | | | 32 | |
| | 2018.08- | 7AT | R | L | Coupe 4WD DNUF | | GDS61331 | Drive Shaft | | 36 | | 59.5 | 40 | 606 | |
| | 2018.08- | 7AT | R | R | Coupe 4WD DNUF | | GDS61332 | Drive Shaft | | 36 | | 59.5 | 40 | 650 | |
| | 2018.08- | 7AT | R | L/R | Coupe 4WD DNUF | | GCI35026 | Outer Joint | | 36 | 33 | 59.5 | 40 | 61 | |
| | 2018.08- | 7AT | R | L/R | Coupe 4WD DNUF | | GCI61103 | Inner Joint | | | 33 | | | 32 | |
| 3.2 (184 kw) | 2003.07-2006.12 | 6AT | F | L | Cabriolet 4WD BHE/BPF | | GDS83241 | Drive Shaft | | 36 | | 59.5 | 40 | 475 | |
| | 2003.07-2006.12 | 6DCT | F | L | Cabriolet 4WD BHE/BPF | | GCI61057 | Inner Joint | | | 34 | | | 89 | |
| | 2003.07-2006.12 | 6MT | F | L | Cabriolet 4WD BHE/BPF | | GDS81913 | Drive Shaft | | 36 | | 53 | 40 | 480 | |
| | 2003.07-2006.12 | 6MT | F | L/R | Cabriolet 4WD BHE/BPF | | GCO61021 | Outer Joint | | 36 | 27 | 53 | 40 | 65 | I |
| | 2003.07-2006.12 | AT | F | L | Cabriolet 4WD BHE/BPF | | GDS81912 | Drive Shaft | | 36 | | 53 | 40 | 472 | |
| | 2003.07-2006.12 | AT | F | R | Cabriolet 4WD BHE/BPF | | GDS81138 | Drive Shaft | | 36 | | 53 | 40 | 571 | |
| | 2003.07-2006.12 | 6AT/6MT | R | L | Cabriolet 4WD BHE/BPF | | GDS82364 | Drive Shaft | | 36 | | 53 | 78.5 | 651 | |
| | 2003.07-2006.12 | 6AT/6MT | R | R | Cabriolet 4WD BHE/BPF | | GDS81587 | Drive Shaft | | 36 | | 53 | 78.5 | 522 | |
| | 2003.07-2006.12 | 6AT/6MT | R | L/R | Cabriolet 4WD BHE/BPF | | GCI82447 | Inner Joint | | | 33 | | | 34 | |
| | 2003.07-2006.12 | | R | L/R | Cabriolet 4WD BHE/BPF | | GCO83033 | Outer Joint | | 36 | 30 | 53 | 78.5 | 51 | I |
| | 2003.07-2006.12 | | R | L/R | Cabriolet 4WD BHE/BPF | | GCI83011 | Inner Joint | | | 33 | | | 34 | |
| | 2003.07-2006.12 | 6DCT | F | L | Coupe 4WD BHE/BPF | | GCI61057 | Inner Joint | | | 34 | | | 89 | |
| | 2003.07-2006.12 | 6MT | F | L | Coupe 4WD BHE/BPF | | GDS81913 | Drive Shaft | | 36 | | 53 | 40 | 480 | |
| | 2003.07-2006.12 | 6MT | F | L/R | Coupe 4WD BHE/BPF | | GCO61021 | Outer Joint | | 36 | 27 | 53 | 40 | 65 | I |
| | 2003.07-2006.12 | AT | F | L | Coupe 4WD BHE/BPF | | GDS81912 | Drive Shaft | | 36 | | 53 | 40 | 472 | |
| | 2003.07-2006.12 | AT | F | L | Coupe 4WD BHE/BPF | | GDS83241 | Drive Shaft | | 36 | | 59.5 | 40 | 475 | |
| | 2003.07-2006.12 | AT | F | R | Coupe 4WD BHE/BPF | | GDS81138 | Drive Shaft | | 36 | | 53 | 40 | 571 | |
| | 2003.07-2006.12 | 6AT/6MT | R | L | Coupe 4WD BHE/BPF | | GDS82364 | Drive Shaft | | 36 | | 53 | 78.5 | 651 | |
| | 2003.07-2006.12 | 6AT/6MT | R | R | Coupe 4WD BHE/BPF | | GDS81587 | Drive Shaft | | 36 | | 53 | 78.5 | 522 | |
| | 2003.07-2006.12 | 6AT/6MT | R | L/R | Coupe 4WD BHE/BPF | | GCI82447 | Inner Joint | | | 33 | | | 34 | |
| | 2003.07-2006.12 | | R | L/R | Coupe 4WD BHE/BPF | | GCO83033 | Outer Joint | | 36 | 30 | 53 | 78.5 | 51 | I |
| | 2003.07-2006.12 | | R | L/R | Coupe 4WD BHE/BPF | | GCI83011 | Inner Joint | | | 33 | | | 34 | |
| | 2006.08-2010.06 | 6DCT | F | L | Coupe 4WD BUB;CBRA | | GDS98006 | Stub Axle-Flange | | 37 | | | 67 | 123.5 | |
| | 2006.08-2010.06 | 6MT | F | R | Coupe 4WD BUB;CBRA | Date from:2010.01 | GDS83322 | Drive Shaft | | 36 | | 59.5 | 40 | 613 | |
| | 2006.08-2010.06 | 6MT | F | L/R | Coupe 4WD BUB;CBRA | | GCI83016 | Inner Joint | | | 28 | | | 32 | |
| | 2006.08-2010.06 | 6MT/6DCT | F | L | Coupe 4WD BUB;CBRA | | GDS81896 | Drive Shaft | | 36 | | 59.5 | 40 | 500 | |
| | 2006.08-2010.06 | AT | F | L | Coupe 4WD BUB;CBRA | | GDS83241 | Drive Shaft | | 36 | | 59.5 | 40 | 475 | |
| | 2006.08-2010.06 | AT | F | L | Coupe 4WD BUB;CBRA | | GCI54004 | Inner Joint | | | 34 | | | 81 | |
| | 2006.08-2010.06 | | F | L/R | Coupe 4WD BUB;CBRA | Date To:2009.02 | GCO83002 | Outer Joint | | 36 | 27 | 59.5 | 40 | 66 | I |
| | 2006.08-2010.06 | 6AT/6MT | R | L | Coupe 4WD BUB;CBRA | | GDS82343 | Drive Shaft | | 36 | | 59.5 | 40 | 616 | |
| | 2006.08-2010.06 | 6AT/6MT | R | R | Coupe 4WD BUB;CBRA | | GDS81597 | Drive Shaft | | 36 | | 59.5 | 40 | 652 | |

| | YEAR | TRANSM. | F/R | L/R | BODY STYLE & DRIVE TYPE & ENGINE | REMARKS | G-AP Ref. | PRODUCT | ABS | Technical Specifications A | B | C | H | L | P |
|---|---|---|---|---|---|---|---|---|---|---|---|---|---|---|---|
| **AUDI** | | | | | | | | | | | | | | | |
| **TT Quattro** | | | | | | | | | | | | | | | |
| 3.2 (184 kw) | 2006.08-2010.06 | 6AT/6MT | R | L/R | Coupe 4WD BUB;CBRA | | GCI35026 | Outer Joint | | 36 | 33 | 59.5 | 40 | 61 | |
| | 2006.08-2010.06 | 6AT/6MT | R | L/R | Coupe 4WD BUB;CBRA | | GCO83037 | Outer Joint | | 36 | 30 | 59.5 | 40.5 | 56 | I |
| | 2006.08-2010.06 | 6AT/6MT | R | L/R | Coupe 4WD BUB;CBRA | | GCI82447 | Inner Joint | | | 33 | | | 34 | |
| | 2006.08-2010.06 | | R | L | Coupe 4WD BUB;CBRA | Date From:2008.04 | GDS54017 | Drive Shaft | | 36 | | 59.5 | 40 | 609 | |
| | 2007.03-2010.06 | 6MT | F | R | Convertible 4WD BUB;CBRA | Date from:2010.01 | GDS83322 | Drive Shaft | | 36 | | 59.5 | 40 | 613 | |
| | 2007.03-2010.06 | 6MT | F | L/R | Convertible 4WD BUB;CBRA | | GCI83016 | Inner Joint | | | 28 | | | 32 | |
| | 2007.03-2010.06 | 6MT/6DCT | F | L | Convertible 4WD BUB;CBRA | | GDS81896 | Drive Shaft | | 36 | | 59.5 | 40 | 500 | |
| | 2007.03-2010.06 | MT | F | L | Convertible 4WD BUB;CBRA | | GCI54004 | Inner Joint | | | 34 | | | 81 | |
| | 2007.03-2010.06 | | F | L/R | Convertible 4WD BUB;CBRA | Date To:2009.02 | GCO83002 | Outer Joint | | 36 | 27 | 59.5 | 40 | 66 | I |
| | 2007.03-2010.06 | 6AT/6MT | R | L | Convertible 4WD BUB;CBRA | | GDS82343 | Drive Shaft | | 36 | | 59.5 | 40 | 616 | |
| | 2007.03-2010.06 | 6AT/6MT | R | R | Convertible 4WD BUB;CBRA | | GDS81597 | Drive Shaft | | 36 | | 59.5 | 40 | 652 | |
| | 2007.03-2010.06 | 6AT/6MT | R | L/R | Convertible 4WD BUB;CBRA | | GCI35026 | Outer Joint | | 36 | 33 | 59.5 | 40 | 61 | |
| | 2007.03-2010.06 | 6AT/6MT | R | L/R | Convertible 4WD BUB;CBRA | | GCO83037 | Outer Joint | | 36 | 30 | 59.5 | 40.5 | 56 | I |
| | 2007.03-2010.06 | 6AT/6MT | R | L/R | Convertible 4WD BUB;CBRA | | GCI82447 | Inner Joint | | | 33 | | | 34 | |
| | 2007.03-2010.06 | | R | L | Convertible 4WD BUB;CBRA | Date From:2008.04 | GDS54017 | Drive Shaft | | 36 | | 59.5 | 40 | 609 | |
| **TTRS Quattro** | | | | | | | | | | | | | | | |
| 2.5 (250 kw) | 2009.07-2014.06 | 6MT | F | L | Convertible 4WD CEPA | | GDS83684 | Drive Shaft | | 36 | 40 | 59.5 | 40 | 514 | |
| | 2009.07-2014.06 | 6MT | F | L/R | Convertible 4WD CEPA | Date to:2011.07 | GCO83002 | Outer Joint | | 36 | 27 | 59.5 | 40 | 66 | I |
| | 2009.07-2014.06 | 6MT | F | L/R | Convertible 4WD CEPA | | GCI61054 | Inner Joint | | 40 | 28 | 46.9 | 41 | 101.7 | |
| | 2009.07-2014.06 | 6MT/AT | F | L/R | Convertible 4WD CEPA | Transmission:6MT,Date from:2011.06;Transmission:AT | GCO83101 | Outer Joint | | 36 | 27 | 59.5 | 40 | 65 | M |
| | 2009.07-2014.06 | 7DCT | F | L | Convertible 4WD CEPA | | GDS81265 | Drive Shaft | | 36 | 37 | 59.5 | 40 | 557 | |
| | 2009.07-2014.06 | 7DCT | F | R | Convertible 4WD CEPA | | GDS61347 | Drive Shaft | | 36 | 40 | 59.5 | 40 | 593 | |
| | 2009.07-2014.06 | 7DCT | F | L | Convertible 4WD CEPA | | GCI81158 | Inner Joint | | 37 | 34 | 34.5 | 65.5 | 83 | |
| | 2009.07-2014.06 | 7DCT | F | R | Convertible 4WD CEPA | | GCI61048 | Inner Joint | | 40 | 34 | 46.9 | | 127.5 | |
| | 2009.07-2014.06 | MT | F | L/R | Convertible 4WD CEPA | | GDS61214 | Stub Axle,differential | | 40 | 37 | | | 125 | |
| | 2009.07-2014.06 | 6MT/7AT | R | L | Convertible 4WD CEPA | | GDS61284 | Drive Shaft | | 36 | | 59.5 | 40 | 594 | |
| | 2009.07-2014.06 | 6MT/7AT | R | R | Convertible 4WD CEPA | | GDS61293 | Drive Shaft | | 36 | | 59.5 | 40 | 631 | |
| | 2009.07-2014.06 | 7AT/6MT | R | L/R | Convertible 4WD CEPA | | GCI35026 | Outer Joint | | 36 | 33 | 59.5 | 40 | 61 | |
| | 2009.07-2014.06 | 7AT/6MT | R | L/R | Convertible 4WD CEPA | Date From:02/13 | GCO83037 | Outer Joint | | 36 | 30 | 59.5 | 40.5 | 56 | I |
| | 2009.07-2014.06 | 7DCT/6MT | R | L/R | Convertible 4WD CEPA | Date to:2012.05 | GCI82447 | Inner Joint | | | 33 | | | 34 | |
| | 2009.07-2014.06 | 6MT | F | L | Coupe 4WD CEPA | | GDS83684 | Drive Shaft | | 36 | 40 | 59.5 | 40 | 514 | |
| | 2009.07-2014.06 | 6MT | F | L/R | Coupe 4WD CEPA | Date to:2011.07 | GCO83002 | Outer Joint | | 36 | 27 | 59.5 | 40 | 66 | I |
| | 2009.07-2014.06 | 6MT | F | L/R | Coupe 4WD CEPA | | GCI61054 | Inner Joint | | 40 | 28 | 46.9 | 41 | 101.7 | |
| | 2009.07-2014.06 | 6MT/AT | F | L/R | Coupe 4WD CEPA | Transmission:6MT,Date from:2011.06;Transmission:AT | GCO83101 | Outer Joint | | 36 | 27 | 59.5 | 40 | 65 | M |
| | 2009.07-2014.06 | 7DCT | F | L | Coupe 4WD CEPA | | GDS81265 | Drive Shaft | | 36 | 37 | 59.5 | 40 | 557 | |
| | 2009.07-2014.06 | 7DCT | F | R | Coupe 4WD CEPA | | GDS61347 | Drive Shaft | | 36 | 40 | 59.5 | 40 | 593 | |
| | 2009.07-2014.06 | 7DCT | F | L | Coupe 4WD CEPA | | GCI81158 | Inner Joint | | 37 | 34 | 34.5 | 65.5 | 83 | |
| | 2009.07-2014.06 | 7DCT | F | R | Coupe 4WD CEPA | | GCI61048 | Inner Joint | | 40 | 34 | 46.9 | | 127.5 | |
| | 2009.07-2014.06 | MT | F | L/R | Coupe 4WD CEPA | | GDS61214 | Stub Axle,differential | | 40 | 37 | | | 125 | |
| | 2009.07-2014.06 | 6MT/7AT | R | L | Coupe 4WD CEPA | | GDS61284 | Drive Shaft | | 36 | | 59.5 | 40 | 594 | |
| | 2009.07-2014.06 | 6MT/7AT | R | R | Coupe 4WD CEPA | | GDS61293 | Drive Shaft | | 36 | | 59.5 | 40 | 631 | |
| | 2009.07-2014.06 | 7AT/6MT | R | L/R | Coupe 4WD CEPA | | GCI35026 | Outer Joint | | 36 | 33 | 59.5 | 40 | 61 | |
| | 2009.07-2014.06 | 7AT/6MT | R | L/R | Coupe 4WD CEPA | Date From:02/13 | GCO83037 | Outer Joint | | 36 | 30 | 59.5 | 40.5 | 56 | I |
| | 2009.07-2014.06 | 7DCT/6MT | R | L/R | Coupe 4WD CEPA | Date to:2012.05 | GCI82447 | Inner Joint | | | 33 | | | 34 | |
| 2.5 (265 kw) | 2011.05-2014.06 | 6MT | F | L | Coupe 4WD CEPB | | GDS83684 | Drive Shaft | | 36 | 40 | 59.5 | 40 | 514 | |
| | 2011.05-2014.06 | 6MT | F | L/R | Coupe 4WD CEPB | Date to:2011.07 | GCO83002 | Outer Joint | | 36 | 27 | 59.5 | 40 | 66 | I |
| | 2011.05-2014.06 | 6MT | F | L/R | Coupe 4WD CEPB | Date from:2011.06 | GCO83101 | Outer Joint | | 36 | 27 | 59.5 | 40 | 65 | M |
| | 2011.05-2014.06 | 6MT | F | L/R | Coupe 4WD CEPB | | GCI61054 | Inner Joint | | 40 | 28 | 46.9 | 41 | 101.7 | |
| | 2011.05-2014.06 | 7DCT | F | L | Coupe 4WD CEPB | | GDS81265 | Drive Shaft | | 36 | 37 | 59.5 | 40 | 557 | |
| | 2011.05-2014.06 | 7DCT | F | R | Coupe 4WD CEPB | | GDS61347 | Drive Shaft | | 36 | 40 | 59.5 | 40 | 593 | |
| | 2011.05-2014.06 | 7DCT | F | L | Coupe 4WD CEPB | | GCI81158 | Inner Joint | | 37 | 34 | 34.5 | 65.5 | 83 | |
| | 2011.05-2014.06 | 7DCT | F | R | Coupe 4WD CEPB | | GCI61048 | Inner Joint | | 40 | 34 | 46.9 | | 127.5 | |
| | 2011.05-2014.06 | MT | F | L/R | Coupe 4WD CEPB | | GDS61214 | Stub Axle,differential | | 40 | 37 | | | 125 | |
| | 2011.05-2014.06 | 7AT/6MT | R | L | Coupe 4WD CEPB | | GDS61284 | Drive Shaft | | 36 | | 59.5 | 40 | 594 | |
| | 2011.05-2014.06 | 7AT/6MT | R | R | Coupe 4WD CEPB | | GDS61293 | Drive Shaft | | 36 | | 59.5 | 40 | 631 | |
| | 2011.05-2014.06 | 7AT/6MT | R | L/R | Coupe 4WD CEPB | | GCI35026 | Outer Joint | | 36 | 33 | 59.5 | 40 | 61 | |
| | 2011.05-2014.06 | 7AT/6MT | R | L/R | Coupe 4WD CEPB | Date From:02/13 | GCO83037 | Outer Joint | | 36 | 30 | 59.5 | 40.5 | 56 | I |
| | 2011.05-2014.06 | 7DCT/6MT | R | L/R | Coupe 4WD CEPB | Date to:2012.05 | GCI82447 | Inner Joint | | | 33 | | | 34 | |
| | 2012.03-2014.06 | 6MT | F | L | Convertible 4WD CEPB | | GDS83684 | Drive Shaft | | 36 | 40 | 59.5 | 40 | 514 | |
| | 2012.03-2014.06 | 6MT | F | L/R | Convertible 4WD CEPB | Date to:2011.07 | GCO83002 | Outer Joint | | 36 | 27 | 59.5 | 40 | 66 | I |
| | 2012.03-2014.06 | 6MT | F | L/R | Convertible 4WD CEPB | Date from:2011.06 | GCO83101 | Outer Joint | | 36 | 27 | 59.5 | 40 | 65 | M |
| | 2012.03-2014.06 | 6MT | F | L/R | Convertible 4WD CEPB | | GCI61054 | Inner Joint | | 40 | 28 | 46.9 | 41 | 101.7 | |
| | 2012.03-2014.06 | 7DCT | F | L | Convertible 4WD CEPB | | GDS81265 | Drive Shaft | | 36 | 37 | 59.5 | 40 | 557 | |
| | 2012.03-2014.06 | 7DCT | F | R | Convertible 4WD CEPB | | GDS61347 | Drive Shaft | | 36 | 40 | 59.5 | 40 | 593 | |
| | 2012.03-2014.06 | 7DCT | F | L | Convertible 4WD CEPB | | GCI81158 | Inner Joint | | 37 | 34 | 34.5 | 65.5 | 83 | |

| | YEAR | TRANSM. | F/R | L/R | BODY STYLE & DRIVE TYPE & ENGINE | REMARKS | G-AP Ref. | PRODUCT | ABS | Technical Specifications A | B | C | H | L | P |
|---|---|---|---|---|---|---|---|---|---|---|---|---|---|---|---|
| **AUDI** | | | | | | | | | | | | | | | |
| **TTRS Quattro** | | | | | | | | | | | | | | | |
| 2.5 (265 kw) | 2012.03-2014.06 | 7DCT | F | R | Convertible 4WD CEPB | | GCI61048 | Inner Joint | | 40 | 34 | 46.9 | | 127.5 | |
| | 2012.03-2014.06 | MT | F | L/R | Convertible 4WD CEPB | | GDS61214 | Stub Axle,differential | | 40 | 37 | | | 125 | |
| | 2012.03-2014.06 | 7AT/6MT | R | L | Convertible 4WD CEPB | | GDS61284 | Drive Shaft | | 36 | | 59.5 | 40 | 594 | |
| | 2012.03-2014.06 | 7AT/6MT | R | R | Convertible 4WD CEPB | | GDS61293 | Drive Shaft | | 36 | | 59.5 | 40 | 631 | |
| | 2012.03-2014.06 | 7AT/6MT | R | L/R | Convertible 4WD CEPB | | GCI35026 | Outer Joint | | 36 | 33 | 59.5 | 40 | 61 | |
| | 2012.03-2014.06 | 7AT/6MT | R | L/R | Convertible 4WD CEPB | Date From:02/13 | GCO83037 | Outer Joint | | 36 | 30 | 59.5 | 40.5 | 56 | I |
| | 2012.03-2014.06 | 7DCT/6MT | R | L/R | Convertible 4WD CEPB | Date to:2012.05 | GCI82447 | Inner Joint | | | 33 | | | 34 | |
| 2.5 (294 kw) | 2016.05- | 7AT | F | L | Convertible 4WD DAZA;DNWA | | GDS81265 | Drive Shaft | | 36 | 37 | 59.5 | 40 | 557 | |
| | 2016.05- | 7AT | F | R | Convertible 4WD DAZA;DNWA | | GDS61347 | Drive Shaft | | 36 | 40 | 59.5 | 40 | 593 | |
| | 2016.05- | 7AT | F | L/R | Convertible 4WD DAZA;DNWA | | GCO83101 | Outer Joint | | 36 | 27 | 59.5 | 40 | 65 | M |
| | 2016.05- | 7AT | F | L | Convertible 4WD DAZA;DNWA | | GCI81158 | Inner Joint | | 37 | 34 | 34.5 | 65.5 | 83 | |
| | 2016.05- | 7AT | F | R | Convertible 4WD DAZA;DNWA | | GCI61048 | Inner Joint | | 40 | 34 | 46.9 | | 127.5 | |
| | 2016.05- | 7AT | F | R | Convertible 4WD DAZA;DNWA | | GCI61084 | Inner Joint | | 40 | 34 | 46.9 | | 128 | |
| | 2016.05- | 7AT | F | L | Coupe 4WD DAZA;DNWA | | GDS81265 | Drive Shaft | | 36 | 37 | 59.5 | 40 | 557 | |
| | 2016.05- | 7AT | F | R | Coupe 4WD DAZA;DNWA | | GDS61347 | Drive Shaft | | 36 | 40 | 59.5 | 40 | 593 | |
| | 2016.05- | 7AT | F | L/R | Coupe 4WD DAZA;DNWA | | GCO83101 | Outer Joint | | 36 | 27 | 59.5 | 40 | 65 | M |
| | 2016.05- | 7AT | F | L | Coupe 4WD DAZA;DNWA | | GCI81158 | Inner Joint | | 37 | 34 | 34.5 | 65.5 | 83 | |
| | 2016.05- | 7AT | F | R | Coupe 4WD DAZA;DNWA | | GCI61048 | Inner Joint | | 40 | 34 | 46.9 | | 127.5 | |
| | 2016.05- | 7AT | F | R | Coupe 4WD DAZA;DNWA | | GCI61084 | Inner Joint | | 40 | 34 | 46.9 | | 128 | |
| **TTS Quattro** | | | | | | | | | | | | | | | |
| 2.0 (195 kw) | 2008.05-2014.06 | 6AT/6MT | F | L | Convertible 4WD CDLA;CDMA | Chassis no. from:FK_B_000001/8J_B_00001;Chassis no. to:8J_A_100000 | GDS81896 | Drive Shaft | | 36 | | 59.5 | 40 | 500 | |
| | 2008.05-2014.06 | 6AT/6MT | F | R | Convertible 4WD CDLA;CDMA | | GDS81889 | Drive Shaft | | 36 | | 59.5 | 40 | 614 | |
| | 2008.05-2014.06 | 6AT/6MT | F | R | Convertible 4WD CDLA;CDMA | | GCO83101 | Outer Joint | | 36 | 27 | 59.5 | 40 | 65 | M |
| | 2008.05-2014.06 | | F | L/R | Convertible 4WD CDLA;CDMA | Date To:2013.02 | GCI83016 | Inner Joint | | | 28 | | | 32 | |
| | 2008.05-2014.06 | 6AT/6MT | R | L | Convertible 4WD CDLA;CDMA | | GDS54017 | Drive Shaft | | 36 | | 59.5 | 40 | 609 | |
| | 2008.05-2014.06 | 6AT/6MT | R | R | Convertible 4WD CDLA;CDMA | Date from:2012.06 | GDS61333 | Drive Shaft | | 36 | | 59.5 | 40 | 647 | |
| | 2008.05-2014.06 | 6AT/6MT | R | R | Convertible 4WD CDLA;CDMA | Date to:2012.05 | GDS81597 | Drive Shaft | | 36 | | 59.5 | 40 | 652 | |
| | 2008.05-2014.06 | 6AT/6MT | R | R | Convertible 4WD CDLA;CDMA | Date to:2012.05 | GCO83037 | Outer Joint | | 36 | 30 | 59.5 | 40.5 | 56 | I |
| | 2008.05-2014.06 | 6AT/6MT | R | L/R | Convertible 4WD CDLA;CDMA | | GCI35026 | Outer Joint | | 36 | 33 | 59.5 | 40 | 61 | |
| | 2008.05-2014.06 | 6AT/6MT | R | L/R | Convertible 4WD CDLA;CDMA | | GCI53002 | Inner Joint | | | 33 | | | 34 | |
| | 2008.05-2014.06 | 6AT/6MT | R | L/R | Convertible 4WD CDLA;CDMA | | GCI82447 | Inner Joint | | | 33 | | | 34 | |
| | 2008.05-2014.06 | 6AT/6MT | F | L | Coupe 4WD CDLA;CDMA | Chassis no. from:FK_B_000001/8J_B_00001;Chassis no. to:8J_A_100000 | GDS81896 | Drive Shaft | | 36 | | 59.5 | 40 | 500 | |
| | 2008.05-2014.06 | 6AT/6MT | F | R | Coupe 4WD CDLA;CDMA | | GDS81889 | Drive Shaft | | 36 | | 59.5 | 40 | 614 | |
| | 2008.05-2014.06 | 6AT/6MT | F | R | Coupe 4WD CDLA;CDMA | | GCO83101 | Outer Joint | | 36 | 27 | 59.5 | 40 | 65 | M |
| | 2008.05-2014.06 | | F | L/R | Coupe 4WD CDLA;CDMA | Date To:2013.02 | GCI83016 | Inner Joint | | | 28 | | | 32 | |
| | 2008.05-2014.06 | 6AT/6MT | R | L | Coupe 4WD CDLA;CDMA | | GDS54017 | Drive Shaft | | 36 | | 59.5 | 40 | 609 | |
| | 2008.05-2014.06 | 6AT/6MT | R | R | Coupe 4WD CDLA;CDMA | Date from:2012.06 | GDS61333 | Drive Shaft | | 36 | | 59.5 | 40 | 647 | |
| | 2008.05-2014.06 | 6AT/6MT | R | R | Coupe 4WD CDLA;CDMA | Date to:2012.05 | GDS81597 | Drive Shaft | | 36 | | 59.5 | 40 | 652 | |
| | 2008.05-2014.06 | 6AT/6MT | R | R | Coupe 4WD CDLA;CDMA | Date to:2012.05 | GCO83037 | Outer Joint | | 36 | 30 | 59.5 | 40.5 | 56 | I |
| | 2008.05-2014.06 | 6AT/6MT | R | L/R | Coupe 4WD CDLA;CDMA | | GCI35026 | Outer Joint | | 36 | 33 | 59.5 | 40 | 61 | |
| | 2008.05-2014.06 | 6AT/6MT | R | L/R | Coupe 4WD CDLA;CDMA | | GCI53002 | Inner Joint | | | 33 | | | 34 | |
| | 2008.05-2014.06 | 6AT/6MT | R | L/R | Coupe 4WD CDLA;CDMA | | GCI82447 | Inner Joint | | | 33 | | | 34 | |
| 2.0 (200 kw) | 2008.05-2014.06 | 6AT/6MT | F | L | Convertible 4WD CDLB | Chassis no. from:FK_B_000001/8J_B_00001;Chassis no. to:8J_A_100000 | GDS81896 | Drive Shaft | | 36 | | 59.5 | 40 | 500 | |
| | 2008.05-2014.06 | 6AT/6MT | F | R | Convertible 4WD CDLB | | GDS81889 | Drive Shaft | | 36 | | 59.5 | 40 | 614 | |
| | 2008.05-2014.06 | 6AT/6MT | F | L/R | Convertible 4WD CDLB | | GCO83101 | Outer Joint | | 36 | 27 | 59.5 | 40 | 65 | M |
| | 2008.05-2014.06 | 6AT/6MT | F | L/R | Convertible 4WD CDLB | Date from:2013.03 | GCI61069 | Inner Joint | | | 28 | | | 32 | |
| | 2008.05-2014.06 | 6AT/6MT | F | L/R | Convertible 4WD CDLB | Date to:2013.02 | GCI83016 | Inner Joint | | | 28 | | | 32 | |
| | 2008.05-2014.06 | 6DCT | F | L | Convertible 4WD CDLB | | GDS98006 | Stub Axle-Flange | | 37 | | | 67 | 123.5 | |
| | 2008.05-2014.06 | 6AT/6MT | R | L | Convertible 4WD CDLB | | GDS54017 | Drive Shaft | | 36 | | 59.5 | 40 | 609 | |
| | 2008.05-2014.06 | 6AT/6MT | R | R | Convertible 4WD CDLB | Date from:2012.06 | GDS61333 | Drive Shaft | | 36 | | 59.5 | 40 | 647 | |
| | 2008.05-2014.06 | 6AT/6MT | R | L/R | Convertible 4WD CDLB | | GCI35026 | Outer Joint | | 36 | 33 | 59.5 | 40 | 61 | |
| | 2008.05-2014.06 | 6AT/6MT | R | L/R | Convertible 4WD CDLB | | GCI53002 | Inner Joint | | | 33 | | | 34 | |
| | 2008.05-2014.06 | 6AT/6MT | R | L/R | Convertible 4WD CDLB | | GCI82447 | Inner Joint | | | 33 | | | 34 | |
| | 2008.05-2014.06 | 6AT/6MT | F | L | Coupe 4WD CDLB | Chassis no. from:FK_B_000001/8J_B_00001;Chassis no. to:8J_A_100000 | GDS81896 | Drive Shaft | | 36 | | 59.5 | 40 | 500 | |
| | 2008.05-2014.06 | 6AT/6MT | F | R | Coupe 4WD CDLB | | GDS81889 | Drive Shaft | | 36 | | 59.5 | 40 | 614 | |
| | 2008.05-2014.06 | 6AT/6MT | F | R | Coupe 4WD CDLB | | GCO83101 | Outer Joint | | 36 | 27 | 59.5 | 40 | 65 | M |
| | 2008.05-2014.06 | 6DCT | F | L | Coupe 4WD CDLB | | GDS98006 | Stub Axle-Flange | | 37 | | | 67 | 123.5 | |
| | 2008.05-2014.06 | | F | L/R | Coupe 4WD CDLB | Date To:2013.02 | GCI83016 | Inner Joint | | | 28 | | | 32 | |
| | 2008.05-2014.06 | 6AT/6MT | R | L | Coupe 4WD CDLB | | GDS54017 | Drive Shaft | | 36 | | 59.5 | 40 | 609 | |
| | 2008.05-2014.06 | 6AT/6MT | R | R | Coupe 4WD CDLB | Date from:2012.06 | GDS61333 | Drive Shaft | | 36 | | 59.5 | 40 | 647 | |
| | 2008.05-2014.06 | 6AT/6MT | R | R | Coupe 4WD CDLB | Date to:2015.12 | GDS81597 | Drive Shaft | | 36 | | 59.5 | 40 | 652 | |
| | 2008.05-2014.06 | 6AT/6MT | R | R | Coupe 4WD CDLB | Date to:2015.12 | GCO83037 | Outer Joint | | 36 | 30 | 59.5 | 40.5 | 56 | I |
| | 2008.05-2014.06 | 6AT/6MT | R | L/R | Coupe 4WD CDLB | | GCI35026 | Outer Joint | | 36 | 33 | 59.5 | 40 | 61 | |
| | 2008.05-2014.06 | 6AT/6MT | R | L/R | Coupe 4WD CDLB | | GCI53002 | Inner Joint | | | 33 | | | 34 | |
| | 2008.05-2014.06 | 6AT/6MT | R | L/R | Coupe 4WD CDLB | | GCI82447 | Inner Joint | | | 33 | | | 34 | |

| | YEAR | TRANSM. | F/R | L/R | BODY STYLE & DRIVE TYPE & ENGINE | REMARKS | G-AP Ref. | PRODUCT | ABS | Technical Specifications A | B | C | H | L | P |
|---|---|---|---|---|---|---|---|---|---|---|---|---|---|---|---|
| **AUDI** | | | | | | | | | | | | | | | |
| **TTS Quattro** | | | | | | | | | | | | | | | |
| 2.0 (210 kw) | 2015.02- | 6AT | F | L | Convertible 4WD CJXF | | GDS81896 | Drive Shaft | | 36 | | 59.5 | 40 | 500 | |
| | 2015.02- | 6AT | F | R | Convertible 4WD CJXF | | GDS81889 | Drive Shaft | | 36 | | 59.5 | 40 | 614 | |
| | 2015.02- | 6AT | F | R | Convertible 4WD CJXF | | GCI61069 | Inner Joint | | | 28 | | | 32 | |
| | 2015.02- | 6DCT | F | L | Convertible 4WD CJXF | | GDS98006 | Stub Axle-Flange | | 37 | | | 67 | 123.5 | |
| | 2015.02- | DCT | F | L/R | Convertible 4WD CJXF | | GCO83101 | Outer Joint | | 36 | 27 | 59.5 | 40 | 65 | M |
| | 2015.02- | 6AT | R | L | Convertible 4WD CJXF | | GDS61331 | Drive Shaft | | 36 | | 59.5 | 40 | 606 | |
| | 2015.02- | 6AT | R | L | Convertible 4WD CJXF | | GCI61103 | Inner Joint | | | 33 | | | 32 | |
| | 2015.02- | 7DCT | R | R | Convertible 4WD CJXF | Date from:2016.01 | GDS61332 | Drive Shaft | | 36 | | 59.5 | 40 | 650 | |
| | 2015.02- | 6AT | F | L | Coupe 4WD CJXF | | GDS81896 | Drive Shaft | | 36 | | 59.5 | 40 | 500 | |
| | 2015.02- | 6AT | F | R | Coupe 4WD CJXF | | GDS81889 | Drive Shaft | | 36 | | 59.5 | 40 | 614 | |
| | 2015.02- | 6AT | F | R | Coupe 4WD CJXF | | GCI61069 | Inner Joint | | | 28 | | | 32 | |
| | 2015.02- | 6DCT | F | L | Coupe 4WD CJXF | | GDS98006 | Stub Axle-Flange | | 37 | | | 67 | 123.5 | |
| | 2015.02- | DCT | F | L/R | Coupe 4WD CJXF | | GCO83101 | Outer Joint | | 36 | 27 | 59.5 | 40 | 65 | M |
| | 2015.02- | 6AT | R | L | Coupe 4WD CJXF | | GDS61331 | Drive Shaft | | 36 | | 59.5 | 40 | 606 | |
| | 2015.02- | 6AT | R | L | Coupe 4WD CJXF | | GCI61103 | Inner Joint | | | 33 | | | 32 | |
| | 2015.02- | 7DCT | R | R | Coupe 4WD CJXF | Date from:2016.01 | GDS61332 | Drive Shaft | | 36 | | 59.5 | 40 | 650 | |
| 2.0 (215 kw) | 2015.07- | 6AT | F | L | Coupe 4WD CYFB;DLRA | | GDS81896 | Drive Shaft | | 36 | | 59.5 | 40 | 500 | |
| | 2015.07- | 6AT | F | R | Coupe 4WD CYFB;DLRA | | GDS81889 | Drive Shaft | | 36 | | 59.5 | 40 | 614 | |
| | 2015.07- | 6AT | F | R | Coupe 4WD CYFB;DLRA | | GCO83101 | Outer Joint | | 36 | 27 | 59.5 | 40 | 65 | M |
| | 2015.07- | 6AT | F | R | Coupe 4WD CYFB;DLRA | | GCI61069 | Inner Joint | | | 28 | | | 32 | |
| | 2015.07- | 6AT | R | L | Coupe 4WD CYFB;DLRA | | GDS61331 | Drive Shaft | | 36 | | 59.5 | 40 | 606 | |
| | 2015.07- | 6AT | R | R | Coupe 4WD CYFB;DLRA | | GDS61332 | Drive Shaft | | 36 | | 59.5 | 40 | 650 | |
| | 2015.07- | 6AT | R | L | Coupe 4WD CYFB;DLRA | | GCI35026 | Outer Joint | | 36 | 33 | 59.5 | 40 | 61 | |
| | 2015.07- | 6AT | R | L | Coupe 4WD CYFB;DLRA | | GCI61103 | Inner Joint | | | 33 | | | 32 | |
| 2.0 (228 kw) | 2014.11- | 6AT/6MT | F | L | Convertible 4WD CJXG | | GDS81896 | Drive Shaft | | 36 | | 59.5 | 40 | 500 | |
| | 2014.11- | 6AT/6MT | F | R | Convertible 4WD CJXG | | GDS81889 | Drive Shaft | | 36 | | 59.5 | 40 | 614 | |
| | 2014.11- | 6AT/6MT | F | R | Convertible 4WD CJXG | | GCI61069 | Inner Joint | | | 28 | | | 32 | |
| | 2014.11- | AT/MT | F | L/R | Convertible 4WD CJXG | | GCO83101 | Outer Joint | | 36 | 27 | 59.5 | 40 | 65 | M |
| | 2014.11- | 6AT/6MT | R | L | Convertible 4WD CJXG | | GDS61331 | Drive Shaft | | 36 | | 59.5 | 40 | 606 | |
| | 2014.11- | 6AT/6MT | R | L | Convertible 4WD CJXG | | GCI61103 | Inner Joint | | | 33 | | | 32 | |
| | 2014.11- | 7DCT | R | R | Convertible 4WD CJXG | Date from:2016.01 | GDS61332 | Drive Shaft | | 36 | | 59.5 | 40 | 650 | |
| | 2014.11- | 6AT/6MT | F | L | Coupe 4WD CJXG | | GDS81896 | Drive Shaft | | 36 | | 59.5 | 40 | 500 | |
| | 2014.11- | 6AT/6MT | F | R | Coupe 4WD CJXG | | GDS81889 | Drive Shaft | | 36 | | 59.5 | 40 | 614 | |
| | 2014.11- | 6AT/6MT | F | R | Coupe 4WD CJXG | | GCI61069 | Inner Joint | | | 28 | | | 32 | |
| | 2014.11- | AT/MT | F | L/R | Coupe 4WD CJXG | | GCO83101 | Outer Joint | | 36 | 27 | 59.5 | 40 | 65 | M |
| | 2014.11- | 6AT/6MT | R | L | Coupe 4WD CJXG | | GDS61331 | Drive Shaft | | 36 | | 59.5 | 40 | 606 | |
| | 2014.11- | 6AT/6MT | R | L | Coupe 4WD CJXG | | GCI61103 | Inner Joint | | | 33 | | | 32 | |
| | 2014.11- | 7DCT | R | R | Coupe 4WD CJXG | Date from:2016.01 | GDS61332 | Drive Shaft | | 36 | | 59.5 | 40 | 650 | |
| 2.0 (235 kw) | 2020.11- | 7DCT | F | R | Convertible 4WD DNFD | | GDS81889 | Drive Shaft | | 36 | | 59.5 | 40 | 614 | |
| | 2020.11- | 7DCT | F | L/R | Convertible 4WD DNFD | | GCO83101 | Outer Joint | | 36 | 27 | 59.5 | 40 | 65 | M |
| | 2020.11- | 7DCT | F | R | Convertible 4WD DNFD | | GCI61069 | Inner Joint | | | 28 | | | 32 | |
| | 2020.11- | 7DCT | R | L | Convertible 4WD DNFD | | GDS61331 | Drive Shaft | | 36 | | 59.5 | 40 | 606 | |
| | 2020.11- | 7DCT | R | R | Convertible 4WD DNFD | | GDS61332 | Drive Shaft | | 36 | | 59.5 | 40 | 650 | |
| | 2020.11- | 7DCT | R | L/R | Convertible 4WD DNFD | | GCI35026 | Outer Joint | | 36 | 33 | 59.5 | 40 | 61 | |
| | 2020.11- | 7DCT | R | L/R | Convertible 4WD DNFD | | GCI61103 | Inner Joint | | | 33 | | | 32 | |
| | 2020.11- | 7DCT | R | L/R | Convertible 4WD DNFD | | GCI83008 | Inner Joint | | | 33 | | | 32 | |
| | 2021.01- | 7DCT | F | R | Coupe 4WD DNFD | | GDS81889 | Drive Shaft | | 36 | | 59.5 | 40 | 614 | |
| | 2021.01- | 7DCT | F | L/R | Coupe 4WD DNFD | | GCO83101 | Outer Joint | | 36 | 27 | 59.5 | 40 | 65 | M |
| | 2021.01- | 7DCT | F | R | Coupe 4WD DNFD | | GCI61069 | Inner Joint | | | 28 | | | 32 | |
| | 2021.01- | 7DCT | R | L | Coupe 4WD DNFD | | GDS61331 | Drive Shaft | | 36 | | 59.5 | 40 | 606 | |
| | 2021.01- | 7DCT | R | R | Coupe 4WD DNFD | | GDS61332 | Drive Shaft | | 36 | | 59.5 | 40 | 650 | |
| | 2021.01- | 7DCT | R | L/R | Coupe 4WD DNFD | | GCI35026 | Outer Joint | | 36 | 33 | 59.5 | 40 | 61 | |
| | 2021.01- | 7DCT | R | L/R | Coupe 4WD DNFD | | GCI61103 | Inner Joint | | | 33 | | | 32 | |
| | 2021.01- | 7DCT | R | L/R | Coupe 4WD DNFD | | GCI83008 | Inner Joint | | | 33 | | | 32 | |
| **AUDI (FAW)** | | | | | | | | | | | | | | | |
| **A6** | | | | | | | | | | | | | | | |
| 1.8 (110 kw) | 2000.07-2006.12 | AT | F | L/R | Saloon FWD AWL, BGC | | GCI50019 | Inner Joint | | | 34 | | | 59.5 | |
| **Q3** | | | | | | | | | | | | | | | |
| 1.4 (110 kw) | 2014.04-2020.12 | 6DCT | F | L | SUV FWD CSSA | | GDS98006 | Stub Axle-Flange | | 37 | | | 67 | 123.5 | |
| **BAIC** | | | | | | | | | | | | | | | |
| **X35** | | | | | | | | | | | | | | | |
| 1.5 (85 kw) | 2021.09- | 4AT | F | L | SUV FWD A151 | | GDS57662 | Drive Shaft | 46T | 27 | 23 | 60 | 88.5 | 943 | |
| | 2021.09- | 4AT | F | R | SUV FWD A151 | | GDS57663 | Drive Shaft | 46T | 27 | 23 | 60 | 88.5 | 692 | |
| | 2021.09- | 4AT | F | L/R | SUV FWD A151 | | GCI83800 | Inner Joint | | 23 | 30 | 34 | 60 | 102.5 | |
| | 2021.09- | 4AT/5MT | F | L/R | SUV FWD A151 | | GCO83671 | Outer Joint | 46T | 27 | 21 | 60 | 88.5 | 55.5 | M |

| | YEAR | TRANSM. | F/R | L/R | BODY STYLE & DRIVE TYPE & ENGINE | REMARKS | G-AP Ref. | PRODUCT | ABS | Technical Specifications A | B | C | H | L | P |
|---|---|---|---|---|---|---|---|---|---|---|---|---|---|---|---|
| **BAIC** | | | | | | | | | | | | | | | |
| **X35** | | | | | | | | | | | | | | | |
| 1.5 (85 kw) | 2021.09- | 5MT | F | L | SUV FWD A151 | | GDS57661 | Drive Shaft | 46T | 27 | 33 | 60 | 88.5 | 677 | |
| | 2021.09- | 5MT | F | R | SUV FWD A151 | | GDS57660 | Drive Shaft | 46T | 27 | 33 | 60 | 88.5 | 947 | |
| | 2021.09- | 5MT | F | R | SUV FWD A151 | | GCI83799 | Inner Joint | | 33 | 30 | 35 | 56 | 117.5 | |
| **BENTLEY** | | | | | | | | | | | | | | | |
| **Bentayga** | | | | | | | | | | | | | | | |
| 3.0 (330 kw) | 2019.01- | 8AT | R | L/R | SUV 4WD DCBE | | GDS84639 | Drive Shaft | | 42 | | 76.5 | 34 | 673 | |
| **Continental** | | | | | | | | | | | | | | | |
| 6.0 (448 kw) | 2010.01-2010.07 | 6AT | R | L/R | Coupe 4WD CKHC | | GDS81534 | Drive Shaft | | 38 | | 59.5 | 34 | 636 | |
| | 2010.01-2010.07 | | R | L/R | Coupe 4WD CKHC | | GCO82035 | Outer Joint | | 38 | 27 | 59.5 | 34 | 63 | I |
| **Continental Flying Spur** | | | | | | | | | | | | | | | |
| 6.0 (412 kw) | 2005.03-2010.12 | 6AT | R | L/R | Saloon 4WD BEB;BWR | | GCI81399 | Inner Joint | | | 28 | | | 32 | |
| | 2005.03-2010.12 | AT | R | L/R | Saloon 4WD BEB;BWR | | GCO82035 | Outer Joint | | 38 | 27 | 59.5 | 34 | 63 | I |
| | 2005.03-2010.12 | | R | L/R | Saloon 4WD BEB;BWR | | GDS81534 | Drive Shaft | | 38 | | 59.5 | 34 | 636 | |
| | 2005.03-2010.12 | | R | L/R | Saloon 4WD BEB;BWR | | GCO83019 | Outer Joint | 45W | 38 | 27 | 59.5 | 34.5 | 63 | I |
| | 2010.06-2013.12 | 6AT | R | L/R | Saloon 4WD CKHD | For PR code:G0R | GCO82035 | Outer Joint | | 38 | 27 | 59.5 | 34 | 63 | I |
| | 2010.06-2013.12 | 6AT | R | L/R | Saloon 4WD CKHD | For PR code:G0R | GCO83019 | Outer Joint | 45W | 38 | 27 | 59.5 | 34.5 | 63 | I |
| | 2010.06-2013.12 | 6AT | R | L/R | Saloon 4WD CKHD | | GCI81399 | Inner Joint | | | 28 | | | 32 | |
| | 2010.06-2013.12 | | R | L/R | Saloon 4WD CKHD | | GDS81534 | Drive Shaft | | 38 | | 59.5 | 34 | 636 | |
| 6.0 (449 kw) | 2008.09-2010.12 | 6AT | R | L/R | Saloon 4WD BWRA | | GCI81399 | Inner Joint | | | 28 | | | 32 | |
| | 2008.09-2010.12 | AT | R | L/R | Saloon 4WD BWRA | | GCO82035 | Outer Joint | | 38 | 27 | 59.5 | 34 | 63 | I |
| | 2008.09-2010.12 | | R | L/R | Saloon 4WD BWRA | | GDS81534 | Drive Shaft | | 38 | | 59.5 | 34 | 636 | |
| | 2008.09-2010.12 | | R | L/R | Saloon 4WD BWRA | | GCO83019 | Outer Joint | 45W | 38 | 27 | 59.5 | 34.5 | 63 | I |
| | 2008.09-2013.02 | 6AT | R | L/R | Saloon 4WD BWRA;CKHC | For PR code:G0R | GCO82035 | Outer Joint | | 38 | 27 | 59.5 | 34 | 63 | I |
| | 2008.09-2013.02 | 6AT | R | L/R | Saloon 4WD BWRA;CKHC | For PR code:G0R | GCO83019 | Outer Joint | 45W | 38 | 27 | 59.5 | 34.5 | 63 | I |
| | 2008.09-2013.02 | 6AT | R | L/R | Saloon 4WD BWRA;CKHC | | GCI81399 | Inner Joint | | | 28 | | | 32 | |
| | 2008.09-2013.02 | | R | L/R | Saloon 4WD BWRA;CKHC | | GDS81534 | Drive Shaft | | 38 | | 59.5 | 34 | 636 | |
| **Continental GT** | | | | | | | | | | | | | | | |
| 4.0 (373 kw) | 2011.09-2018.07 | | F | | Coupe 4WD CMMC;CYCB | | GCO99351 | Outer Joint | | 38 | 29 | 59.5 | 34 | 70 | M |
| 4.0 (388 kw) | 2013.12-2018.07 | | F | | Coupe 4WD CMMD, CYCA | | GCO99351 | Outer Joint | | 38 | 29 | 59.5 | 34 | 70 | M |
| 6.0 (412 kw) | 2003.06-2011.12 | 6AT | F | L/R | Coupe 4WD BEB;BWR | | GCO99351 | Outer Joint | | 38 | 29 | 59.5 | 34 | 70 | M |
| | 2003.06-2011.12 | 6AT | R | L/R | Coupe 4WD BEB;BWR | | GDS81534 | Drive Shaft | | 38 | | 59.5 | 34 | 636 | |
| | 2003.06-2011.12 | 6AT | R | L/R | Coupe 4WD BEB;BWR | Date to:2005.10 | GCO82035 | Outer Joint | | 38 | 27 | 59.5 | 34 | 63 | I |
| | 2003.06-2011.12 | 6AT | R | L/R | Coupe 4WD BEB;BWR | | GCO83019 | Outer Joint | 45W | 38 | 27 | 59.5 | 34.5 | 63 | I |
| | 2003.06-2011.12 | 6AT | R | L/R | Coupe 4WD BEB;BWR | | GCI81399 | Inner Joint | | | 28 | | | 32 | |
| 6.0 (423 kw) | 2010.11-2013.12 | | F | | Coupe 4WD CKHB | | GCO99351 | Outer Joint | | 38 | 29 | 59.5 | 34 | 70 | M |
| 6.0 (449 kw) | 2007.09-2011.12 | 6AT | F | L/R | Coupe 4WD BWRA | | GCO99351 | Outer Joint | | 38 | 29 | 59.5 | 34 | 70 | M |
| | 2007.09-2011.12 | 6AT | R | L/R | Coupe 4WD BWRA | | GDS81534 | Drive Shaft | | 38 | | 59.5 | 34 | 636 | |
| | 2007.09-2011.12 | 6AT | R | L/R | Coupe 4WD BWRA | Chassis no. to:3W5035019 | GCO82035 | Outer Joint | | 38 | 27 | 59.5 | 34 | 63 | I |
| | 2007.09-2011.12 | 6AT | R | L/R | Coupe 4WD BWRA | Chassis no. to:3W5035019 | GCO83019 | Outer Joint | 45W | 38 | 27 | 59.5 | 34.5 | 63 | I |
| | 2007.09-2011.12 | 6AT | R | L/R | Coupe 4WD BWRA | | GCI81399 | Inner Joint | | | 28 | | | 32 | |
| 6.0 (460 kw) | 2012.09-2018.07 | | F | | Coupe 4WD CVAA | | GCO99351 | Outer Joint | | 38 | 29 | 59.5 | 34 | 70 | M |
| 6.0 (467 kw) | 2014.05-2018.07 | | F | | Coupe 4WD CVAC | | GCO99351 | Outer Joint | | 38 | 29 | 59.5 | 34 | 70 | M |
| **Continental GT3** | | | | | | | | | | | | | | | |
| 4.0 (426 kw) | 2014.10-2018.07 | | F | | Coupe 4WD DCCA | | GCO99351 | Outer Joint | | 38 | 29 | 59.5 | 34 | 70 | M |
| **Continental GTC** | | | | | | | | | | | | | | | |
| 6.0 (412 kw) | 2006.06-2011.04 | 6AT | R | L/R | Convertible 4WD BEB;BWR;CKHD | | GDS81534 | Drive Shaft | | 38 | | 59.5 | 34 | 636 | |
| | 2006.06-2011.04 | 6AT | R | L/R | Convertible 4WD BEB;BWR;CKHD | | GCO82035 | Outer Joint | | 38 | 27 | 59.5 | 34 | 63 | I |
| | 2006.06-2011.04 | 6AT | R | L/R | Convertible 4WD BEB;BWR;CKHD | | GCO83019 | Outer Joint | 45W | 38 | 27 | 59.5 | 34.5 | 63 | I |
| | 2006.06-2011.04 | 6AT | R | L/R | Convertible 4WD BEB;BWR;CKHD | | GCI81399 | Inner Joint | | | 28 | | | 32 | |
| 6.0 (423 kw) | 2011.11-2018.07 | | F | | Convertible 4WD CVAB;CKHB | | GCO99351 | Outer Joint | | 38 | 29 | 59.5 | 34 | 70 | M |
| 6.0 (448 kw) | 2007.08-2011.04 | 6AT | R | L/R | Convertible 4WD BWRA;CKHC | | GDS81534 | Drive Shaft | | 38 | | 59.5 | 34 | 636 | |
| | 2007.08-2011.04 | 6AT | R | L/R | Convertible 4WD BWRA;CKHC | | GCO82035 | Outer Joint | | 38 | 27 | 59.5 | 34 | 63 | I |
| | 2007.08-2011.04 | 6AT | R | L/R | Convertible 4WD BWRA;CKHC | | GCO83019 | Outer Joint | 45W | 38 | 27 | 59.5 | 34.5 | 63 | I |
| | 2007.08-2011.04 | 6AT | R | L/R | Convertible 4WD BWRA;CKHC | | GCI81399 | Inner Joint | | | 28 | | | 32 | |
| 6.0 (460 kw) | 2012.09-2018.07 | | F | | Convertible 4WD CVAA | | GCO99351 | Outer Joint | | 38 | 29 | 59.5 | 34 | 70 | M |
| 6.0 (467 kw) | 2014.05-2018.07 | | F | | Convertible 4WD CVAC;DBDE | | GCO99351 | Outer Joint | | 38 | 29 | 59.5 | 34 | 70 | M |
| **Continental Supersports** | | | | | | | | | | | | | | | |
| 6.0 (463 kw) | 2008.02-2010.05 | 6AT | R | L/R | Coupe 4WD BWRB;CKHA | | GCI81399 | Inner Joint | | | 28 | | | 32 | |
| | 2008.02-2010.05 | | R | L/R | Coupe 4WD BWRB;CKHA | | GDS81534 | Drive Shaft | | 38 | | 59.5 | 34 | 636 | |
| | 2009.10-2013.12 | | F | | Coupe 4WD BWRB/CKHA | | GCO99351 | Outer Joint | | 38 | 29 | 59.5 | 34 | 70 | M |
| | 2010.03-2013.12 | 6AT | F | L/R | Convertible 4WD CKHA | | GCO99351 | Outer Joint | | 38 | 29 | 59.5 | 34 | 70 | M |
| | 2010.03-2013.12 | 6AT | R | L/R | Convertible 4WD CKHA | | GCO82035 | Outer Joint | | 38 | 27 | 59.5 | 34 | 63 | I |
| | 2010.03-2013.12 | 6AT | R | L/R | Convertible 4WD CKHA | | GCO83019 | Outer Joint | 45W | 38 | 27 | 59.5 | 34.5 | 63 | I |
| | 2010.03-2013.12 | 6AT | R | L/R | Convertible 4WD CKHA | | GCI81399 | Inner Joint | | | 28 | | | 32 | |
| | 2010.03-2013.12 | | R | L/R | Convertible 4WD CKHA | | GDS81534 | Drive Shaft | | 38 | | 59.5 | 34 | 636 | |

| | YEAR | TRANSM. | F/R | L/R | BODY STYLE & DRIVE TYPE & ENGINE | REMARKS | G-AP Ref. | PRODUCT | ABS | Technical Specifications A | B | C | H | L | P |
|---|---|---|---|---|---|---|---|---|---|---|---|---|---|---|---|
| **BENTLEY** | | | | | | | | | | | | | | | |
| **Continental Supersports** | | | | | | | | | | | | | | | |
| 6.0 (471 kw) | 2011.03-2014.06 | 6AT | F | L/R | Convertible 4WD CKHE;CVAC | | GCO99351 | Outer Joint | | 38 | 29 | 59.5 | 34 | 70 | M |
| | 2011.03-2014.06 | 6AT | R | L/R | Convertible 4WD CKHE;CVAC | | GCO82035 | Outer Joint | | 38 | 27 | 59.5 | 34 | 63 | I |
| | 2011.03-2014.06 | 6AT | R | L/R | Convertible 4WD CKHE;CVAC | | GCO83019 | Outer Joint | 45W | 38 | 27 | 59.5 | 34.5 | 63 | I |
| | 2011.03-2014.06 | 6AT | R | L/R | Convertible 4WD CKHE;CVAC | | GCI81399 | Inner Joint | | | 28 | | | 32 | |
| | 2011.03-2014.06 | | R | L/R | Convertible 4WD CKHE;CVAC | | GDS81534 | Drive Shaft | | 38 | | 59.5 | 34 | 636 | |
| **BESTURN (FAW)** | | | | | | | | | | | | | | | |
| **B50** | | | | | | | | | | | | | | | |
| 1.4 (100 kw) | 2016.07- | 6AT | F | L/R | Saloon FWD CA4GB14TD | Model year to:2019 | GCO34065 | Outer Joint | 44T | 28 | 24 | 56.6 | 90 | 60 | M |
| 1.6 (76 kw) | 2009.05- | 5MT | F | L | Saloon FWD BWH | Model year from:2013,Model year to:2016 | GDS75026 | Drive Shaft | 44T | 28 | | 62 | 90 | 639 | |
| | 2009.05- | 5MT | F | R | Saloon FWD BWH | Model year from:2013,Model year to:2016 | GDS75027 | Drive Shaft | 44T | 28 | | 62 | 90 | 807 | |
| | 2009.05- | 5MT | F | L/R | Saloon FWD BWH | Model year from:2013,Model year to:2016 | GCO75020 | Outer Joint | 44T | 28 | 24 | 62 | 90 | 60 | I |
| | 2009.05- | 5MT | F | L/R | Saloon FWD BWH | Model year from:2013,Model year to:2016 | GCI61051 | Inner Joint | | | 33 | | | 34 | |
| | 2009.05- | 6AT | F | L | Saloon FWD BWH | Model year from:2013,Model year to:2016 | GDS75024 | Drive Shaft | 44T | 28 | 26 | 62 | 90 | 681 | |
| | 2009.05- | 6AT | F | R | Saloon FWD BWH | Model year from:2013,Model year to:2016 | GDS75025 | Drive Shaft | 44T | 28 | 26 | 62 | 90 | 891 | |
| | 2009.05- | 6AT | F | L/R | Saloon FWD BWH | Model year from:2013,Model year to:2016 | GCO75019 | Outer Joint | 44T | 28 | 24 | 62 | 90 | 60 | M |
| | 2009.05- | 6AT | F | L/R | Saloon FWD BWH | Model year from:2013,Model year to:2016 | GCI75015 | Inner Joint | | 26 | 24 | 31 | 68.5 | 89 | |
| 1.6 (80 kw) | 2016.07- | 6AT/5MT | F | L/R | Saloon FWD CA4GB16 | Model year to:2017 | GCO34065 | Outer Joint | 44T | 28 | 24 | 56.6 | 90 | 60 | M |
| 1.8 (102 kw) | 2013.09- | 6AT | F | L/R | Saloon FWD CA4GD5 | Model year to:2015 | GCO34065 | Outer Joint | 44T | 28 | 24 | 56.6 | 90 | 60 | M |
| **B70** | | | | | | | | | | | | | | | |
| 1.8 (102 kw) | 2012.06-2014.12 | 6MT | F | L/R | Saloon FWD CA4GD5 | Model year to:2013 | GCO75019 | Outer Joint | 44T | 28 | 24 | 62 | 90 | 60 | M |
| 2.0 (108 kw) | 2006.01-2012.12 | 6MT/5AT | F | L/R | Saloon FWD LF | Transmission:6MT,Model year from:2007,Model year to:2011;Transmission:5AT | GCO34065 | Outer Joint | 44T | 28 | 24 | 56.6 | 90 | 60 | M |
| | 2006.01-2012.12 | 6MT/5AT | F | L/R | Saloon FWD LF | Transmission:6MT,Model year from:2007,Model year to:2011;Transmission:5AT | GCO34070 | Outer Joint | 44T | 28 | 32 | 56 | 90 | 59 | I |
| | 2006.01-2012.12 | 6MT/5AT | F | L/R | Saloon FWD LF | Model year from:2007,Model year to:2011;Inner teeth:24 | GCO75019 | Outer Joint | 44T | 28 | 24 | 62 | 90 | 60 | M |
| 2.3 (120 kw) | 2006.01-2012.12 | 5AT | F | L/R | Saloon FWD L3 | Model year to:2011 | GCO34065 | Outer Joint | 44T | 28 | 24 | 56.6 | 90 | 60 | M |
| | 2006.01-2012.12 | 5AT | F | L/R | Saloon FWD L3 | Model year to:2011 | GCO34070 | Outer Joint | 44T | 28 | 32 | 56 | 90 | 59 | I |
| | 2006.01-2012.12 | 5AT | F | L/R | Saloon FWD L3 | Model year to:2011 | GCO75019 | Outer Joint | 44T | 28 | 24 | 62 | 90 | 60 | M |
| **X80** | | | | | | | | | | | | | | | |
| 1.8 (132 kw) | 2014.09- | 6AT | F | L/R | SUV FWD CA4GC18T | Model year to:2016 | GCO34065 | Outer Joint | 44T | 28 | 24 | 56.6 | 90 | 60 | M |
| 1.8 (137 kw) | 2016.09- | 6AT | F | L/R | SUV FWD CA4GC18T | Model year to:2018 | GCO34065 | Outer Joint | 44T | 28 | 24 | 56.6 | 90 | 60 | M |
| 2.0 (108 kw) | 2013.05- | 6AT/6MT | F | L/R | SUV FWD CA4GD1 | Model year from:2016,Model year to:2020 | GCO34065 | Outer Joint | 44T | 28 | 24 | 56.6 | 90 | 60 | M |
| 2.3 (118 kw) | 2013.05-2014.12 | 6AT | F | L/R | SUV FWD CA4GD3 | | GCO34065 | Outer Joint | 44T | 28 | 24 | 56.6 | 90 | 60 | M |
| **BMW** | | | | | | | | | | | | | | | |
| **114d** | | | | | | | | | | | | | | | |
| 1.5 (70 kw) | 2015.06-2019.05 | 6MT | R | L | Hatchback RWD B37 D15 A | | GDS81118 | Drive Shaft | | 28 | 27 | 57 | 70.5 | 750 | |
| | 2015.06-2019.05 | 6MT | R | R | Hatchback RWD B37 D15 A | | GDS81117 | Drive Shaft | | 28 | 27 | 57 | 70.5 | 805 | |
| | 2015.06-2019.05 | 6MT | R | L/R | Hatchback RWD B37 D15 A | | GCI81056 | Inner Joint | | 27 | 33 | 44 | 75 | 97 | |
| | 2015.06-2019.05 | AT/MT | R | L/R | Hatchback RWD B37 D15 A | | GCO85024 | Outer Joint | | 28 | 33 | 57 | 70.5 | 58 | I |
| | 2015.07-2019.06 | 6MT | R | L | Hatchback RWD B37 D15 A | | GDS81118 | Drive Shaft | | 28 | 27 | 57 | 70.5 | 750 | |
| | 2015.07-2019.06 | 6MT | R | R | Hatchback RWD B37 D15 A | | GDS81117 | Drive Shaft | | 28 | 27 | 57 | 70.5 | 805 | |
| | 2015.07-2019.06 | 6MT | R | L/R | Hatchback RWD B37 D15 A | | GCI81056 | Inner Joint | | 27 | 33 | 44 | 75 | 97 | |
| | 2015.07-2019.06 | AT/MT | R | L/R | Hatchback RWD B37 D15 A | | GCO85024 | Outer Joint | | 28 | 33 | 57 | 70.5 | 58 | I |
| 1.6 (70 kw) | 2012.07-2019.05 | 6MT | R | L | Hatchback RWD N47 D16 A | | GDS85066 | Drive Shaft | | 28 | 27 | 57.4 | 71 | 744 | |
| | 2012.07-2019.05 | 6MT | R | R | Hatchback RWD N47 D16 A | | GDS85067 | Drive Shaft | | 28 | 27 | 57.4 | 71 | 800 | |
| | 2012.07-2019.05 | 6MT | R | R | Hatchback RWD N47 D16 A | Diameter [mm]:25 | GCI83732 | Inner Joint | | 27 | 25 | 43.9 | 75 | 72 | |
| | 2012.11-2015.06 | 6MT | R | L | Hatchback RWD N47 D16 A | | GDS85066 | Drive Shaft | | 28 | 27 | 57.4 | 71 | 744 | |
| | 2012.11-2015.06 | 6MT | R | R | Hatchback RWD N47 D16 A | | GDS85067 | Drive Shaft | | 28 | 27 | 57.4 | 71 | 800 | |
| | 2012.11-2015.06 | 6MT | R | R | Hatchback RWD N47 D16 A | Diameter [mm]:25 | GCI83732 | Inner Joint | | 27 | 25 | 43.9 | 75 | 72 | |
| **114i** | | | | | | | | | | | | | | | |
| 1.6 (75 kw) | 2012.07-2015.01 | 6MT | R | L | Hatchback RWD N13 B16 A | | GDS85066 | Drive Shaft | | 28 | 27 | 57.4 | 71 | 744 | |
| | 2012.07-2015.01 | 6MT | R | R | Hatchback RWD N13 B16 A | | GDS85067 | Drive Shaft | | 28 | 27 | 57.4 | 71 | 800 | |
| | 2012.07-2015.02 | 6MT | R | L | Hatchback RWD N13 B16 A | | GDS85066 | Drive Shaft | | 28 | 27 | 57.4 | 71 | 744 | |
| | 2012.07-2015.02 | 6MT | R | R | Hatchback RWD N13 B16 A | | GDS85067 | Drive Shaft | | 28 | 27 | 57.4 | 71 | 800 | |
| **116d** | | | | | | | | | | | | | | | |
| 1.5 (85 kw) | 2015.03-2019.05 | AT | R | L/R | Hatchback RWD B37 D15 A | 8 balls | GCO85024 | Outer Joint | | 28 | 33 | 57 | 70.5 | 58 | I |
| | 2015.03-2019.05 | AT/MT | R | L | Hatchback RWD B37 D15 A | | GDS85066 | Drive Shaft | | 28 | 27 | 57.4 | 71 | 744 | |
| | 2015.03-2019.05 | AT/MT | R | R | Hatchback RWD B37 D15 A | | GDS85067 | Drive Shaft | | 28 | 27 | 57.4 | 71 | 800 | |
| | 2015.03-2019.06 | 6MT | R | L | Hatchback RWD B37 D15 A | | GDS81118 | Drive Shaft | | 28 | 27 | 57 | 70.5 | 750 | |
| | 2015.03-2019.06 | 6MT | R | R | Hatchback RWD B37 D15 A | | GDS81117 | Drive Shaft | | 28 | 27 | 57 | 70.5 | 805 | |
| | 2015.03-2019.06 | 6MT | R | L/R | Hatchback RWD B37 D15 A | | GCI81056 | Inner Joint | | 27 | 33 | 44 | 75 | 97 | |
| | 2015.03-2019.06 | 8AT | R | L | Hatchback RWD B37 D15 A | | GDS85066 | Drive Shaft | | 28 | 27 | 57.4 | 71 | 744 | |
| | 2015.03-2019.06 | 8AT | R | R | Hatchback RWD B37 D15 A | | GDS85067 | Drive Shaft | | 28 | 27 | 57.4 | 71 | 800 | |
| | 2015.03-2019.06 | AT/MT | R | L/R | Hatchback RWD B37 D15 A | 8 balls | GCO85024 | Outer Joint | | 28 | 33 | 57 | 70.5 | 58 | I |
| | 2019.07- | 6MT | F | L | Hatchback FWD B37 C15 A | | GDS84525 | Drive Shaft | | 31 | 37 | 56 | | 548 | |
| | 2019.07- | 6MT | F | R | Hatchback FWD B37 C15 A | | GDS84526 | Drive Shaft | | 31 | 37 | 56 | | 929 | |
| | 2019.07- | 6MT | F | L/R | Hatchback FWD B37 C15 A | | GCO81811 | Outer Joint | | 31 | 33 | 56 | | 70 | I |

| | YEAR | TRANSM. | F/R | L/R | BODY STYLE & DRIVE TYPE & ENGINE | REMARKS | G-AP Ref. | PRODUCT | ABS | Technical Specifications A | B | C | H | L | P |
|---|---|---|---|---|---|---|---|---|---|---|---|---|---|---|---|
| **BMW** | | | | | | | | | | | | | | | |
| **116d** | | | | | | | | | | | | | | | |
| 1.5 (85 kw) | 2019.07- | 6MT | F | L | Hatchback FWD B37 C15 A | | GCI82835 | Inner Joint | | 37 | 33 | 35 | 58 | 108.5 | |
| | 2019.07- | 6MT | F | R | Hatchback FWD B37 C15 A | | GCI82836 | Inner Joint | | 37 | 33 | 35 | 414 | 103.5 | |
| | 2019.07- | 7DCT | F | L | Hatchback FWD B37 C15 A | | GDS84222 | Drive Shaft | | 31 | 27 | 56 | | 547 | |
| | 2019.07- | 7DCT | F | R | Hatchback FWD B37 C15 A | | GDS84221 | Drive Shaft | | 31 | 27 | 56 | | 938 | |
| | 2019.07- | 7DCT | F | L/R | Hatchback FWD B37 C15 A | | GCO82738 | Outer Joint | | 31 | 26 | 56 | | 73.5 | M |
| | 2019.07- | 7DCT | F | L | Hatchback FWD B37 C15 A | | GCI82649 | Inner Joint | | 27 | 32 | 35 | 58 | 102 | |
| | 2019.07- | 7DCT | F | R | Hatchback FWD B37 C15 A | | GCI82648 | Inner Joint | | 27 | 32 | 35 | 420 | 89 | |
| 1.6 (85 kw) | 2011.12-2015.02 | 6MT | R | L | Hatchback RWD N47 D16 A | | GDS85066 | Drive Shaft | | 28 | 27 | 57.4 | 71 | 744 | |
| | 2011.12-2015.02 | 6MT | R | R | Hatchback RWD N47 D16 A | | GDS85067 | Drive Shaft | | 28 | 27 | 57.4 | 71 | 800 | |
| | 2011.12-2015.02 | 6MT | R | R | Hatchback RWD N47 D16 A | Diameter [mm]:25 | GCI83732 | Inner Joint | | 27 | 25 | 43.9 | 75 | 72 | |
| | 2012.03-2015.02 | 6MT | R | L | Hatchback RWD N47 D16 A | | GDS85066 | Drive Shaft | | 28 | 27 | 57.4 | 71 | 744 | |
| | 2012.03-2015.02 | 6MT | R | R | Hatchback RWD N47 D16 A | | GDS85067 | Drive Shaft | | 28 | 27 | 57.4 | 71 | 800 | |
| | 2012.03-2015.02 | 6MT | R | R | Hatchback RWD N47 D16 A | Diameter [mm]:25 | GCI83732 | Inner Joint | | 27 | 25 | 43.9 | 75 | 72 | |
| 2.0 (66 kw) | 2011.01-2011.12 | 6MT | R | L | Hatchback RWD N47 D20 A;N47 D20 C | | GDS85022 | Drive Shaft | 48W | 27 | | 69 | 68 | 607 | |
| | 2011.01-2011.12 | 6MT | R | R | Hatchback RWD N47 D20 A;N47 D20 C | | GDS85023 | Drive Shaft | 48W | 27 | | 69 | 68 | 660 | |
| | 2011.01-2011.12 | 6MT | R | L/R | Hatchback RWD N47 D20 A;N47 D20 C | | GCI99145 | Outer Joint | 48W | 27 | 25 | 69 | 68 | 58 | I |
| | 2011.01-2011.12 | 6MT | R | L/R | Hatchback RWD N47 D20 A;N47 D20 C | | GCI35025 | Inner Joint | | | 25 | | | 26 | |
| 2.0 (85 kw) | 2008.11-2011.12 | 6MT | R | L | Hatchback RWD N47 D20 A;N47 D20 C | | GDS85022 | Drive Shaft | 48W | 27 | | 69 | 68 | 607 | |
| | 2008.11-2011.12 | 6MT | R | R | Hatchback RWD N47 D20 A;N47 D20 C | | GDS85023 | Drive Shaft | 48W | 27 | | 69 | 68 | 660 | |
| | 2008.11-2011.12 | 6MT | R | L/R | Hatchback RWD N47 D20 A;N47 D20 C | | GCI99145 | Outer Joint | 48W | 27 | 25 | 69 | 68 | 58 | I |
| | 2008.11-2011.12 | 6MT | R | L/R | Hatchback RWD N47 D20 A;N47 D20 C | | GCI35025 | Inner Joint | | | 25 | | | 26 | |
| | 2009.03-2011.06 | 6MT | R | L | Hatchback RWD N47 D20 A;N47 D20 C | | GDS85022 | Drive Shaft | 48W | 27 | | 69 | 68 | 607 | |
| | 2009.03-2011.06 | 6MT | R | R | Hatchback RWD N47 D20 A;N47 D20 C | | GDS85023 | Drive Shaft | 48W | 27 | | 69 | 68 | 660 | |
| | 2009.03-2011.06 | 6MT | R | L/R | Hatchback RWD N47 D20 A;N47 D20 C | | GCI99145 | Outer Joint | 48W | 27 | 25 | 69 | 68 | 58 | I |
| | 2009.03-2011.06 | 6MT | R | L/R | Hatchback RWD N47 D20 A;N47 D20 C | | GCI35025 | Inner Joint | | | 25 | | | 26 | |
| | 2011.07-2015.02 | 6MT | R | R | Hatchback RWD N47 D20 C | Diameter [mm]:25 | GCI83732 | Inner Joint | | 27 | 25 | 43.9 | 75 | 72 | |
| | 2011.07-2015.02 | 6MT/8AT | R | L | Hatchback RWD N47 D20 C | | GDS85066 | Drive Shaft | | 28 | 27 | 57.4 | 71 | 744 | |
| | 2011.07-2015.02 | 6MT/8AT | R | R | Hatchback RWD N47 D20 C | | GDS85067 | Drive Shaft | | 28 | 27 | 57.4 | 71 | 800 | |
| | 2012.07-2015.02 | 6MT | R | R | Hatchback RWD N47 D20 C | Diameter [mm]:25 | GCI83732 | Inner Joint | | 27 | 25 | 43.9 | 75 | 72 | |
| | 2012.07-2015.02 | 6MT/8AT | R | L | Hatchback RWD N47 D20 C | | GDS85066 | Drive Shaft | | 28 | 27 | 57.4 | 71 | 744 | |
| | 2012.07-2015.02 | 6MT/8AT | R | R | Hatchback RWD N47 D20 C | | GDS85067 | Drive Shaft | | 28 | 27 | 57.4 | 71 | 800 | |
| **116i** | | | | | | | | | | | | | | | |
| 1.5 (80 kw) | 2015.03-2019.06 | 6MT | R | L | Hatchback RWD B38 B15 A | | GDS85066 | Drive Shaft | | 28 | 27 | 57.4 | 71 | 744 | |
| | 2015.03-2019.06 | 6MT | R | R | Hatchback RWD B38 B15 A | | GDS85067 | Drive Shaft | | 28 | 27 | 57.4 | 71 | 800 | |
| | 2015.03-2019.06 | 8AT | R | L | Hatchback RWD B38 B15 A | | GDS85107 | Drive Shaft | | 28 | 27 | 57.4 | 71 | 749 | |
| | 2015.03-2019.06 | 8AT/6MT | R | R | Hatchback RWD B38 B15 A | | GDS85067 | Drive Shaft | | 28 | 27 | 57.4 | 71 | 800 | |
| | 2020.11- | 6MT | F | L | Hatchback FWD B38 A15 A | | GDS82631 | Drive Shaft | | 31 | 34 | 56 | | 563 | |
| | 2020.11- | 6MT | F | R | Hatchback FWD B38 A15 A | | GDS82632 | Drive Shaft | | 31 | 34 | 56 | | 920 | |
| | 2020.11- | 6MT | F | L/R | Hatchback FWD B38 A15 A | | GCO81683 | Outer Joint | | 31 | 33 | 56 | | 71 | M |
| | 2020.11- | 6MT | F | L | Hatchback FWD B38 A15 A | | GCI81758 | Inner Joint | | 34 | 33 | 35 | 54.5 | 96 | |
| | 2020.11- | 6MT | F | R | Hatchback FWD B38 A15 A | | GCI81917 | Inner Joint | | 34 | 33 | 35 | 401 | 83 | |
| | 2020.11- | 7DCT | F | L | Hatchback FWD B38 A15 A | | GDS84222 | Drive Shaft | | 31 | 27 | 56 | | 547 | |
| | 2020.11- | 7DCT | F | R | Hatchback FWD B38 A15 A | | GDS84221 | Drive Shaft | | 31 | 27 | 56 | | 938 | |
| | 2020.11- | 7DCT | F | L/R | Hatchback FWD B38 A15 A | | GCO82738 | Outer Joint | | 31 | 26 | 56 | | 73.5 | M |
| | 2020.11- | 7DCT | F | L | Hatchback FWD B38 A15 A | | GCI82649 | Inner Joint | | 27 | 32 | 35 | 58 | 102 | |
| | 2020.11- | 7DCT | F | R | Hatchback FWD B38 A15 A | | GCI82648 | Inner Joint | | 27 | 32 | 35 | 420 | 89 | |
| 1.6 (85 kw) | 2004.06-2011.06 | 5MT/6MT/6AT | R | L | Hatchback RWD N45 B16 A | | GDS85037 | Drive Shaft | 48W | 27 | | 69.3 | 68 | 611 | |
| | 2004.06-2011.06 | 5MT/6MT/6AT | R | R | Hatchback RWD N45 B16 A | | GDS85036 | Drive Shaft | 48W | 27 | | 69.3 | 68 | 664 | |
| | 2004.06-2011.06 | 5MT/6MT/6AT | R | L/R | Hatchback RWD N45 B16 A | | GCI85056 | Outer Joint | 48W | 27 | 24 | 69.3 | 68 | 51 | |
| | 2004.06-2011.06 | 5MT/6MT/6AT | R | L/R | Hatchback RWD N45 B16 A | | GCI85005 | Inner Joint | | | 24 | | | 24 | |
| | 2007.09-2011.12 | 6AT/6MT | R | L | Hatchback RWD N45 B16 A | | GDS85037 | Drive Shaft | 48W | 27 | | 69.3 | 68 | 611 | |
| | 2007.09-2011.12 | 6AT/6MT | R | R | Hatchback RWD N45 B16 A | | GDS85036 | Drive Shaft | 48W | 27 | | 69.3 | 68 | 664 | |
| | 2007.09-2011.12 | 6AT/6MT | R | L/R | Hatchback RWD N45 B16 A | | GCI85056 | Outer Joint | 48W | 27 | 24 | 69.3 | 68 | 51 | |
| | 2007.09-2011.12 | 6AT/6MT | R | L/R | Hatchback RWD N45 B16 A | | GCI85005 | Inner Joint | | | 24 | | | 24 | |
| 1.6 (90 kw) | 2007.03-2011.12 | 6AT/6MT | R | L | Hatchback RWD N43 B16 AA | | GDS85037 | Drive Shaft | 48W | 27 | | 69.3 | 68 | 611 | |
| | 2007.03-2011.12 | 6AT/6MT | R | R | Hatchback RWD N43 B16 AA | | GDS85036 | Drive Shaft | 48W | 27 | | 69.3 | 68 | 664 | |
| | 2007.03-2011.12 | 6AT/6MT | R | L/R | Hatchback RWD N43 B16 AA | | GCI85056 | Outer Joint | 48W | 27 | 24 | 69.3 | 68 | 51 | |
| | 2007.03-2011.12 | 6AT/6MT | R | L/R | Hatchback RWD N43 B16 AA | | GCI85005 | Inner Joint | | | 24 | | | 24 | |
| | 2007.09-2011.06 | 6AT/6MT | R | L | Hatchback RWD N43 B16 AA | | GDS85037 | Drive Shaft | 48W | 27 | | 69.3 | 68 | 611 | |
| | 2007.09-2011.06 | 6AT/6MT | R | R | Hatchback RWD N43 B16 AA | | GDS85036 | Drive Shaft | 48W | 27 | | 69.3 | 68 | 664 | |
| | 2007.09-2011.06 | 6AT/6MT | R | L/R | Hatchback RWD N43 B16 AA | | GCI85056 | Outer Joint | 48W | 27 | 24 | 69.3 | 68 | 51 | |
| | 2007.09-2011.06 | 6AT/6MT | R | L/R | Hatchback RWD N43 B16 AA | | GCI85005 | Inner Joint | | | 24 | | | 24 | |
| 1.6 (100 kw) | 2011.07-2015.02 | 6MT | R | L | Hatchback RWD N13 B16 A | | GDS85066 | Drive Shaft | | 28 | 27 | 57.4 | 71 | 744 | |
| | 2011.07-2015.02 | 8AT | R | L | Hatchback RWD N13 B16 A | | GDS85107 | Drive Shaft | | 28 | 27 | 57.4 | 71 | 749 | |
| | 2011.07-2015.02 | 8AT/6MT | R | R | Hatchback RWD N13 B16 A | | GDS85067 | Drive Shaft | | 28 | 27 | 57.4 | 71 | 800 | |

| | YEAR | TRANSM. | F/R | L/R | BODY STYLE & DRIVE TYPE & ENGINE | REMARKS | G-AP Ref. | PRODUCT | ABS | Technical Specifications A | B | C | H | L | P |
|---|---|---|---|---|---|---|---|---|---|---|---|---|---|---|---|
| **BMW** | | | | | | | | | | | | | | | |
| **116i** | | | | | | | | | | | | | | | |
| 1.6 (100 kw) | 2011.12-2015.02 | 6MT | R | L | Hatchback RWD N13 B16 A | | GDS85066 | Drive Shaft | | 28 | 27 | 57.4 | 71 | 744 | |
| | 2011.12-2015.02 | 6MT/8AT | R | R | Hatchback RWD N13 B16 A | | GDS85067 | Drive Shaft | | 28 | 27 | 57.4 | 71 | 800 | |
| | 2011.12-2015.02 | 8AT | R | L | Hatchback RWD N13 B16 A | | GDS85107 | Drive Shaft | | 28 | 27 | 57.4 | 71 | 749 | |
| | 2011.12-2015.02 | AT | R | R | Hatchback RWD N13 B16 A | | GCI85020 | Inner Joint | | 27 | 25 | 43.9 | 75 | 96 | |
| | 2011.12-2015.02 | MT | R | L/R | Hatchback RWD N13 B16 A | | GCI85020 | Inner Joint | | 27 | 25 | 43.9 | 75 | 96 | |
| 2.0 (90 kw) | 2008.11-2011.12 | 6AT/6MT | R | L | Hatchback RWD N43 B20 A | | GDS85037 | Drive Shaft | 48W | 27 | | 69.3 | 68 | 611 | |
| | 2008.11-2011.12 | 6AT/6MT | R | R | Hatchback RWD N43 B20 A | | GDS85036 | Drive Shaft | 48W | 27 | | 69.3 | 68 | 664 | |
| | 2008.11-2011.12 | 6AT/6MT | R | L/R | Hatchback RWD N43 B20 A | | GCI85056 | Outer Joint | 48W | 27 | 24 | 69.3 | 68 | 51 | |
| | 2008.11-2011.12 | 6AT/6MT | R | L/R | Hatchback RWD N43 B20 A | | GCI85005 | Inner Joint | | | 24 | | | 24 | |
| | 2009.01-2011.06 | 6AT/6MT | R | L | Hatchback RWD N43 B20 A | | GDS85037 | Drive Shaft | 48W | 27 | | 69.3 | 68 | 611 | |
| | 2009.01-2011.06 | 6AT/6MT | R | R | Hatchback RWD N43 B20 A | | GDS85036 | Drive Shaft | 48W | 27 | | 69.3 | 68 | 664 | |
| | 2009.01-2011.06 | 6AT/6MT | R | L/R | Hatchback RWD N43 B20 A | | GCI85056 | Outer Joint | 48W | 27 | 24 | 69.3 | 68 | 51 | |
| | 2009.01-2011.06 | 6AT/6MT | R | L/R | Hatchback RWD N43 B20 A | | GCI85005 | Inner Joint | | | 24 | | | 24 | |
| **118d** | | | | | | | | | | | | | | | |
| 2.0 (90 kw) | 2004.06-2007.02 | 6MT | R | L | Hatchback RWD M47 D20 (204D4) | | GDS85037 | Drive Shaft | 48W | 27 | | 69.3 | 68 | 611 | |
| | 2004.06-2007.02 | 6MT | R | R | Hatchback RWD M47 D20 (204D4) | | GDS85036 | Drive Shaft | 48W | 27 | | 69.3 | 68 | 664 | |
| | 2004.06-2007.02 | 6MT | R | L/R | Hatchback RWD M47 D20 (204D4) | | GCI85056 | Outer Joint | 48W | 27 | 24 | 69.3 | 68 | 51 | |
| | 2004.06-2007.02 | 6MT | R | L/R | Hatchback RWD M47 D20 (204D4) | | GCI85005 | Inner Joint | | | 24 | | | 24 | |
| 2.0 (100 kw) | 2006.09-2011.12 | 6AT/6MT | R | L | Hatchback RWD N47 D20 A;N47 D20 C | | GDS85022 | Drive Shaft | 48W | 27 | | 69 | 68 | 607 | |
| | 2006.09-2011.12 | 6AT/6MT | R | R | Hatchback RWD N47 D20 A;N47 D20 C | | GDS85023 | Drive Shaft | 48W | 27 | | 69 | 68 | 660 | |
| | 2006.09-2011.12 | 6AT/6MT | R | L/R | Hatchback RWD N47 D20 A;N47 D20 C | | GCI99145 | Outer Joint | 48W | 27 | 25 | 69 | 68 | 58 | I |
| | 2006.09-2011.12 | 6AT/6MT | R | L/R | Hatchback RWD N47 D20 A;N47 D20 C | | GCI35025 | Inner Joint | | | 25 | | | 26 | |
| | 2007.03-2011.06 | 6AT/6MT | R | L | Hatchback RWD N47 D20 A;N47 D20 C | | GDS85022 | Drive Shaft | 48W | 27 | | 69 | 68 | 607 | |
| | 2007.03-2011.06 | 6AT/6MT | R | R | Hatchback RWD N47 D20 A;N47 D20 C | | GDS85023 | Drive Shaft | 48W | 27 | | 69 | 68 | 660 | |
| | 2007.03-2011.06 | 6AT/6MT | R | L/R | Hatchback RWD N47 D20 A;N47 D20 C | | GCI99145 | Outer Joint | 48W | 27 | 25 | 69 | 68 | 58 | I |
| | 2007.03-2011.06 | 6AT/6MT | R | L/R | Hatchback RWD N47 D20 A;N47 D20 C | | GCI35025 | Inner Joint | | | 25 | | | 26 | |
| | 2011.07-2019.06 | AT/MT | R | L | Hatchback RWD N47 D20 C;B47 D20 A | | GDS85066 | Drive Shaft | | 28 | 27 | 57.4 | 71 | 744 | |
| | 2011.07-2019.06 | AT/MT | R | R | Hatchback RWD N47 D20 C;B47 D20 A | | GDS85067 | Drive Shaft | | 28 | 27 | 57.4 | 71 | 800 | |
| | 2011.12-2019.06 | AT/MT | R | L | Hatchback RWD N47 D20 C | | GDS85066 | Drive Shaft | | 28 | 27 | 57.4 | 71 | 744 | |
| | 2011.12-2019.06 | AT/MT | R | R | Hatchback RWD N47 D20 C | | GDS85067 | Drive Shaft | | 28 | 27 | 57.4 | 71 | 800 | |
| | 2019.07- | 6MT | F | L | Hatchback FWD B47 C20 B | | GDS56905 | Drive Shaft | | 31 | 37 | 56 | | 546 | |
| | 2019.07- | 6MT | F | R | Hatchback FWD B47 C20 B | | GDS56579 | Drive Shaft | | 31 | 37 | 56 | | 931 | |
| | 2019.07- | 6MT | F | L/R | Hatchback FWD B47 C20 B | | GCO83263 | Outer Joint | | 31 | 26 | 56 | | 73.5 | M |
| | 2019.07- | 6MT | F | L | Hatchback FWD B47 C20 B | | GCI83553 | Inner Joint | | 37 | 32 | 35 | 58 | 102 | |
| | 2019.07- | 6MT | F | R | Hatchback FWD B47 C20 B | | GCI83386 | Inner Joint | | 37 | 32 | 35 | 450 | 90 | |
| 2.0 (105 kw) | 2006.09-2011.12 | 6AT/6MT | R | L | Hatchback RWD N47 D20 A;N47 D20 C | | GDS85022 | Drive Shaft | 48W | 27 | | 69 | 68 | 607 | |
| | 2006.09-2011.12 | 6AT/6MT | R | R | Hatchback RWD N47 D20 A;N47 D20 C | | GDS85023 | Drive Shaft | 48W | 27 | | 69 | 68 | 660 | |
| | 2006.09-2011.12 | 6AT/6MT | R | L/R | Hatchback RWD N47 D20 A;N47 D20 C | | GCI99145 | Outer Joint | 48W | 27 | 25 | 69 | 68 | 58 | I |
| | 2006.09-2011.12 | 6AT/6MT | R | L/R | Hatchback RWD N47 D20 A;N47 D20 C | | GCI35025 | Inner Joint | | | 25 | | | 26 | |
| | 2007.03-2011.06 | 6AT/6MT | R | L | Hatchback RWD N47 D20 A;N47 D20 C | | GDS85022 | Drive Shaft | 48W | 27 | | 69 | 68 | 607 | |
| | 2007.03-2011.06 | 6AT/6MT | R | R | Hatchback RWD N47 D20 A;N47 D20 C | | GDS85023 | Drive Shaft | 48W | 27 | | 69 | 68 | 660 | |
| | 2007.03-2011.06 | 6AT/6MT | R | L/R | Hatchback RWD N47 D20 A;N47 D20 C | | GCI35025 | Inner Joint | | | 25 | | | 26 | |
| | 2007.03-2011.06 | 6MT | R | L/R | Hatchback RWD N47 D20 A;N47 D20 C | | GCI99145 | Outer Joint | 48W | 27 | 25 | 69 | 68 | 58 | I |
| | 2011.07-2015.02 | 8AT/6MT | R | L | Hatchback RWD N47 D20 C | | GDS85066 | Drive Shaft | | 28 | 27 | 57.4 | 71 | 744 | |
| | 2011.07-2015.02 | 8AT/6MT | R | R | Hatchback RWD N47 D20 C | | GDS85067 | Drive Shaft | | 28 | 27 | 57.4 | 71 | 800 | |
| | 2011.12-2015.02 | 8AT/6MT | R | L | Hatchback RWD N47 D20 C | | GDS85066 | Drive Shaft | | 28 | 27 | 57.4 | 71 | 744 | |
| | 2011.12-2015.02 | 8AT/6MT | R | R | Hatchback RWD N47 D20 C | | GDS85067 | Drive Shaft | | 28 | 27 | 57.4 | 71 | 800 | |
| 2.0 (110 kw) | 2015.03-2019.06 | 8AT/6MT | R | L | Hatchback RWD B47 D20 A | | GDS85066 | Drive Shaft | | 28 | 27 | 57.4 | 71 | 744 | |
| | 2015.03-2019.06 | 8AT/6MT | R | R | Hatchback RWD B47 D20 A | | GDS85067 | Drive Shaft | | 28 | 27 | 57.4 | 71 | 800 | |
| | 2015.03-2019.06 | 8AT/6MT | R | L/R | Hatchback RWD B47 D20 A | | GCI85020 | Inner Joint | | 27 | 25 | 43.9 | 75 | 96 | |
| | 2015.03-2019.06 | 6MT | R | L | Hatchback Van RWD B47 D20 A | | GDS85066 | Drive Shaft | | 28 | 27 | 57.4 | 71 | 744 | |
| | 2015.03-2019.06 | 6MT | R | R | Hatchback Van RWD B47 D20 A | | GDS85067 | Drive Shaft | | 28 | 27 | 57.4 | 71 | 800 | |
| | 2019.07- | 6MT | F | L | Hatchback FWD B47 C20 B | | GDS56905 | Drive Shaft | | 31 | 37 | 56 | | 546 | |
| | 2019.07- | 6MT | F | R | Hatchback FWD B47 C20 B | | GDS56579 | Drive Shaft | | 31 | 37 | 56 | | 931 | |
| | 2019.07- | 6MT | F | L/R | Hatchback FWD B47 C20 B | | GCO83263 | Outer Joint | | 31 | 26 | 56 | | 73.5 | M |
| | 2019.07- | 6MT | F | L | Hatchback FWD B47 C20 B | | GCI83553 | Inner Joint | | 37 | 32 | 35 | 58 | 102 | |
| | 2019.07- | 6MT | F | R | Hatchback FWD B47 C20 B | | GCI83386 | Inner Joint | | 37 | 32 | 35 | 450 | 90 | |
| **118d Cabrio** | | | | | | | | | | | | | | | |
| 2.0 (100 kw) | 2008.09-2013.12 | 6AT/6MT | R | L | Convertible RWD N47 D20 A;N47 D20 C | | GDS85022 | Drive Shaft | 48W | 27 | | 69 | 68 | 607 | |
| | 2008.09-2013.12 | 6AT/6MT | R | R | Convertible RWD N47 D20 A;N47 D20 C | | GDS85023 | Drive Shaft | 48W | 27 | | 69 | 68 | 660 | |
| | 2008.09-2013.12 | 6AT/6MT | R | L/R | Convertible RWD N47 D20 A;N47 D20 C | | GCI99145 | Outer Joint | 48W | 27 | 25 | 69 | 68 | 58 | I |
| | 2008.09-2013.12 | 6AT/6MT | R | L/R | Convertible RWD N47 D20 A;N47 D20 C | | GCI35025 | Inner Joint | | | 25 | | | 26 | |
| 2.0 (105 kw) | 2008.09-2013.12 | 6AT/6MT | R | L | Convertible RWD N47 D20 A;N47 D20 C | | GDS85022 | Drive Shaft | 48W | 27 | | 69 | 68 | 607 | |
| | 2008.09-2013.12 | 6AT/6MT | R | R | Convertible RWD N47 D20 A;N47 D20 C | | GDS85023 | Drive Shaft | 48W | 27 | | 69 | 68 | 660 | |
| | 2008.09-2013.12 | 6AT/6MT | R | L/R | Convertible RWD N47 D20 A;N47 D20 C | | GCI99145 | Outer Joint | 48W | 27 | 25 | 69 | 68 | 58 | I |

| | YEAR | TRANSM. | F/R | L/R | BODY STYLE & DRIVE TYPE & ENGINE | REMARKS | G-AP Ref. | PRODUCT | ABS | Technical Specifications A | B | C | H | L | P |
|---|---|---|---|---|---|---|---|---|---|---|---|---|---|---|---|
| **BMW** | | | | | | | | | | | | | | | |
| **118d Cabrio** | | | | | | | | | | | | | | | |
| 2.0 (105 kw) | 2008.09-2013.12 | 6AT/6MT | R | L/R | Convertible RWD N47 D20 A;N47 D20 C | | GCI35025 | Inner Joint | | | 25 | | | 26 | |
| **118d Coupe** | | | | | | | | | | | | | | | |
| 2.0 (100 kw) | 2009.09-2013.10 | 6AT/6MT | R | L | Coupe RWD N47 D20 C | | GDS85022 | Drive Shaft | 48W | 27 | | 69 | 68 | 607 | |
| | 2009.09-2013.10 | 6AT/6MT | R | R | Coupe RWD N47 D20 C | | GDS85023 | Drive Shaft | 48W | 27 | | 69 | 68 | 660 | |
| | 2009.09-2013.10 | 6AT/6MT | R | L/R | Coupe RWD N47 D20 C | | GCI99145 | Outer Joint | 48W | 27 | 25 | 69 | 68 | 58 | I |
| | 2009.09-2013.10 | 6AT/6MT | R | L/R | Coupe RWD N47 D20 C | | GCI35025 | Inner Joint | | | 25 | | | 26 | |
| 2.0 (105 kw) | 2009.09-2013.10 | 6AT/6MT | R | L | Coupe RWD N47 D20 C | | GDS85022 | Drive Shaft | 48W | 27 | | 69 | 68 | 607 | |
| | 2009.09-2013.10 | 6AT/6MT | R | R | Coupe RWD N47 D20 C | | GDS85023 | Drive Shaft | 48W | 27 | | 69 | 68 | 660 | |
| | 2009.09-2013.10 | 6AT/6MT | R | L/R | Coupe RWD N47 D20 C | | GCI99145 | Outer Joint | 48W | 27 | 25 | 69 | 68 | 58 | I |
| | 2009.09-2013.10 | 6AT/6MT | R | L/R | Coupe RWD N47 D20 C | | GCI35025 | Inner Joint | | | 25 | | | 26 | |
| **118d xDrive** | | | | | | | | | | | | | | | |
| 2.0 (105 kw) | 2013.05-2015.02 | MT | F | L | Hatchback 4WD N47 D20 C | | GDS82052 | Drive Shaft | | 31 | 27 | 55.8 | | 550 | |
| | 2013.05-2015.02 | MT | F | R | Hatchback 4WD N47 D20 C | | GDS82053 | Drive Shaft | | 31 | 27 | 55.8 | | 841 | |
| | 2013.05-2015.02 | MT | F | L | Hatchback 4WD N47 D20 C | | GCO81603 | Outer Joint | | 31 | 33 | 55.8 | | 69.5 | M |
| | 2013.05-2015.02 | MT | F | L | Hatchback 4WD N47 D20 C | | GCI81055 | Inner Joint | | 27 | 24 | 43.95 | 60 | 123.5 | |
| | 2013.05-2015.02 | MT | F | R | Hatchback 4WD N47 D20 C | | GCI81597 | Inner Joint | | 27 | 24 | 43.95 | 349.5 | 125 | |
| | 2013.05-2015.02 | MT | R | L | Hatchback 4WD N47 D20 C | | GDS85066 | Drive Shaft | | 28 | 27 | 57.4 | 71 | 744 | |
| | 2013.05-2015.02 | MT | R | R | Hatchback 4WD N47 D20 C | | GDS85067 | Drive Shaft | | 28 | 27 | 57.4 | 71 | 800 | |
| | 2013.07-2015.02 | 6MT | F | L | Hatchback 4WD N47 D20 C | | GDS82052 | Drive Shaft | | 31 | 27 | 55.8 | | 550 | |
| | 2013.07-2015.02 | 6MT | F | R | Hatchback 4WD N47 D20 C | | GDS82053 | Drive Shaft | | 31 | 27 | 55.8 | | 841 | |
| | 2013.07-2015.02 | 6MT | F | L/R | Hatchback 4WD N47 D20 C | | GCO81603 | Outer Joint | | 31 | 33 | 55.8 | | 69.5 | M |
| | 2013.07-2015.02 | 6MT | F | L | Hatchback 4WD N47 D20 C | | GCI81055 | Inner Joint | | 27 | 24 | 43.95 | 60 | 123.5 | |
| | 2013.07-2015.02 | 6MT | F | R | Hatchback 4WD N47 D20 C | | GCI81597 | Inner Joint | | 27 | 24 | 43.95 | 349.5 | 125 | |
| | 2013.07-2015.02 | 6MT | R | L | Hatchback 4WD N47 D20 C | | GDS85066 | Drive Shaft | | 28 | 27 | 57.4 | 71 | 744 | |
| | 2013.07-2015.02 | 6MT | R | R | Hatchback 4WD N47 D20 C | | GDS85067 | Drive Shaft | | 28 | 27 | 57.4 | 71 | 800 | |
| 2.0 (110 kw) | 2015.03-2019.05 | 6MT | F | L | Hatchback 4WD B47 D20 A | | GDS82052 | Drive Shaft | | 31 | 27 | 55.8 | | 550 | |
| | 2015.03-2019.05 | 6MT | F | R | Hatchback 4WD B47 D20 A | | GDS82053 | Drive Shaft | | 31 | 27 | 55.8 | | 841 | |
| | 2015.03-2019.05 | 6MT | F | L/R | Hatchback 4WD B47 D20 A | | GCO81603 | Outer Joint | | 31 | 33 | 55.8 | | 69.5 | M |
| | 2015.03-2019.05 | 6MT | F | L | Hatchback 4WD B47 D20 A | | GCI81055 | Inner Joint | | 27 | 24 | 43.95 | 60 | 123.5 | |
| | 2015.03-2019.05 | 6MT | F | R | Hatchback 4WD B47 D20 A | | GCI81597 | Inner Joint | | 27 | 24 | 43.95 | 349.5 | 125 | |
| | 2015.03-2019.05 | 6MT | R | L | Hatchback 4WD B47 D20 A | | GDS85066 | Drive Shaft | | 28 | 27 | 57.4 | 71 | 744 | |
| | 2015.03-2019.05 | 6MT | R | R | Hatchback 4WD B47 D20 A | | GDS85067 | Drive Shaft | | 28 | 27 | 57.4 | 71 | 800 | |
| | 2015.03-2019.06 | 6MT | F | L | Hatchback 4WD B47 D20 A | | GDS82052 | Drive Shaft | | 31 | 27 | 55.8 | | 550 | |
| | 2015.03-2019.06 | 6MT | F | R | Hatchback 4WD B47 D20 A | | GDS82053 | Drive Shaft | | 31 | 27 | 55.8 | | 841 | |
| | 2015.03-2019.06 | 6MT | F | L/R | Hatchback 4WD B47 D20 A | | GCO81603 | Outer Joint | | 31 | 33 | 55.8 | | 69.5 | M |
| | 2015.03-2019.06 | 6MT | F | L | Hatchback 4WD B47 D20 A | | GCI81055 | Inner Joint | | 27 | 24 | 43.95 | 60 | 123.5 | |
| | 2015.03-2019.06 | 6MT | F | R | Hatchback 4WD B47 D20 A | | GCI81597 | Inner Joint | | 27 | 24 | 43.95 | 349.5 | 125 | |
| | 2015.03-2019.06 | 6MT | R | L | Hatchback 4WD B47 D20 A | | GDS85066 | Drive Shaft | | 28 | 27 | 57.4 | 71 | 744 | |
| | 2015.03-2019.06 | 6MT | R | R | Hatchback 4WD B47 D20 A | | GDS85067 | Drive Shaft | | 28 | 27 | 57.4 | 71 | 800 | |
| **118i** | | | | | | | | | | | | | | | |
| 1.5 (100 kw) | 2015.03-2019.06 | 6MT | R | L | Hatchback RWD B38 B15 A | | GDS85066 | Drive Shaft | | 28 | 27 | 57.4 | 71 | 744 | |
| | 2015.03-2019.06 | 8AT | R | L | Hatchback RWD B38 B15 A | | GDS85107 | Drive Shaft | | 28 | 27 | 57.4 | 71 | 749 | |
| | 2015.03-2019.06 | 8AT/6MT | R | R | Hatchback RWD B38 B15 A | | GDS85067 | Drive Shaft | | 28 | 27 | 57.4 | 71 | 800 | |
| | 2015.07-2019.06 | 6MT | R | L | Hatchback RWD B38 B15 A | | GDS85066 | Drive Shaft | | 28 | 27 | 57.4 | 71 | 744 | |
| | 2015.07-2019.06 | 6MT/8AT | R | R | Hatchback RWD B38 B15 A | | GDS85067 | Drive Shaft | | 28 | 27 | 57.4 | 71 | 800 | |
| | 2015.07-2019.06 | 8AT | R | L | Hatchback RWD B38 B15 A | | GDS85107 | Drive Shaft | | 28 | 27 | 57.4 | 71 | 749 | |
| | 2015.07-2019.06 | 8AT/6MT | R | L/R | Hatchback RWD B38 B15 A | | GCI83732 | Inner Joint | | 27 | 25 | 43.9 | 75 | 72 | |
| | 2015.07-2019.06 | MT | R | L | Hatchback Van RWD B38 B15 A | | GDS85066 | Drive Shaft | | 28 | 27 | 57.4 | 71 | 744 | |
| | 2015.07-2019.06 | MT | R | R | Hatchback Van RWD B38 B15 A | | GDS85067 | Drive Shaft | | 28 | 27 | 57.4 | 71 | 800 | |
| | 2020.11- | 6MT | F | L | Hatchback FWD B38 A15 A;B38A15F | | GDS82631 | Drive Shaft | | 31 | 34 | 56 | | 563 | |
| | 2020.11- | 6MT | F | R | Hatchback FWD B38 A15 A;B38A15F | | GDS82632 | Drive Shaft | | 31 | 34 | 56 | | 920 | |
| | 2020.11- | 6MT | F | L/R | Hatchback FWD B38 A15 A;B38A15F | | GCO81683 | Outer Joint | | 31 | 33 | 56 | | 71 | M |
| | 2020.11- | 6MT | F | L | Hatchback FWD B38 A15 A;B38A15F | | GCI81758 | Inner Joint | | 34 | 33 | 35 | 54.5 | 96 | |
| | 2020.11- | 7DCT | F | L | Hatchback FWD B38 A15 A;B38A15F | | GDS84222 | Drive Shaft | | 31 | 27 | 56 | | 547 | |
| | 2020.11- | 7DCT | F | R | Hatchback FWD B38 A15 A;B38A15F | | GDS84221 | Drive Shaft | | 31 | 27 | 56 | | 938 | |
| | 2020.11- | 7DCT | F | L/R | Hatchback FWD B38 A15 A;B38A15F | | GCO82738 | Outer Joint | | 31 | 26 | 56 | | 73.5 | M |
| | 2020.11- | 7DCT | F | L | Hatchback FWD B38 A15 A;B38A15F | | GCI82649 | Inner Joint | | 27 | 32 | 35 | 58 | 102 | |
| | 2020.11- | 7DCT | F | R | Hatchback FWD B38 A15 A;B38A15F | | GCI82648 | Inner Joint | | 27 | 32 | 35 | 420 | 89 | |
| 1.5 (103 kw) | 2019.07- | 6MT | F | L | Hatchback FWD B38 A15 A;B38A15F | | GDS82631 | Drive Shaft | | 31 | 34 | 56 | | 563 | |
| | 2019.07- | 6MT | F | R | Hatchback FWD B38 A15 A;B38A15F | | GDS82632 | Drive Shaft | | 31 | 34 | 56 | | 920 | |
| | 2019.07- | 6MT | F | L/R | Hatchback FWD B38 A15 A;B38A15F | | GCO81683 | Outer Joint | | 31 | 33 | 56 | | 71 | M |
| | 2019.07- | 6MT | F | L | Hatchback FWD B38 A15 A;B38A15F | | GCI81758 | Inner Joint | | 34 | 33 | 35 | 54.5 | 96 | |
| | 2019.07- | 6MT | F | R | Hatchback FWD B38 A15 A;B38A15F | | GCI81917 | Inner Joint | | 34 | 33 | 35 | 401 | 83 | |
| | 2019.07- | 7DCT | F | L | Hatchback FWD B38 A15 A;B38A15F | | GDS84222 | Drive Shaft | | 31 | 27 | 56 | | 547 | |
| | 2019.07- | 7DCT | F | R | Hatchback FWD B38 A15 A;B38A15F | | GDS84221 | Drive Shaft | | 31 | 27 | 56 | | 938 | |

| | YEAR | TRANSM. | F/R | L/R | BODY STYLE & DRIVE TYPE & ENGINE | REMARKS | G-AP Ref. | PRODUCT | ABS | Technical Specifications A | B | C | H | L | P |
|---|---|---|---|---|---|---|---|---|---|---|---|---|---|---|---|
| **BMW** | | | | | | | | | | | | | | | |
| **118i** | | | | | | | | | | | | | | | |
| 1.5 (103 kw) | 2019.07- | 7DCT | F | L/R | Hatchback FWD B38 A15 A;B38A15F | | GCO82738 | Outer Joint | | 31 | 26 | 56 | | 73.5 | M |
| | 2019.07- | 7DCT | F | L | Hatchback FWD B38 A15 A;B38A15F | | GCI82649 | Inner Joint | | 27 | 32 | 35 | 58 | 102 | |
| | 2019.07- | 7DCT | F | R | Hatchback FWD B38 A15 A;B38A15F | | GCI82648 | Inner Joint | | 27 | 32 | 35 | 420 | 89 | |
| 1.6 (100 kw) | 2015.03-2015.06 | AT | R | L | Hatchback RWD N13 B16 A | | GDS85107 | Drive Shaft | | 28 | 27 | 57.4 | 71 | 749 | |
| | 2015.03-2015.06 | MT | R | L | Hatchback RWD N13 B16 A | | GDS85066 | Drive Shaft | | 28 | 27 | 57.4 | 71 | 744 | |
| | 2015.03-2015.06 | MT | R | R | Hatchback RWD N13 B16 A | | GDS85067 | Drive Shaft | | 28 | 27 | 57.4 | 71 | 800 | |
| | 2015.03-2019.06 | AT | R | L | Hatchback RWD N13 B16 A | | GDS85107 | Drive Shaft | | 28 | 27 | 57.4 | 71 | 749 | |
| | 2015.03-2019.06 | MT | R | L | Hatchback RWD N13 B16 A | | GDS85066 | Drive Shaft | | 28 | 27 | 57.4 | 71 | 744 | |
| | 2015.03-2019.06 | MT | R | R | Hatchback RWD N13 B16 A | | GDS85067 | Drive Shaft | | 28 | 27 | 57.4 | 71 | 800 | |
| 1.6 (125 kw) | 2011.07-2015.02 | 6MT | R | L | Hatchback RWD N13 B16 A | | GDS85066 | Drive Shaft | | 28 | 27 | 57.4 | 71 | 744 | |
| | 2011.07-2015.02 | 6MT/8AT | R | R | Hatchback RWD N13 B16 A | | GDS85067 | Drive Shaft | | 28 | 27 | 57.4 | 71 | 800 | |
| | 2011.07-2015.02 | 8AT | R | L | Hatchback RWD N13 B16 A | | GDS85107 | Drive Shaft | | 28 | 27 | 57.4 | 71 | 749 | |
| | 2011.07-2015.02 | AT/MT | R | L/R | Hatchback RWD N13 B16 A | | GCI85020 | Inner Joint | | 27 | 25 | 43.9 | 75 | 96 | |
| | 2012.07-2019.06 | AT | R | L | Hatchback RWD N13 B16 A | | GDS85107 | Drive Shaft | | 28 | 27 | 57.4 | 71 | 749 | |
| | 2012.07-2019.06 | MT | R | L | Hatchback RWD N13 B16 A | | GDS85066 | Drive Shaft | | 28 | 27 | 57.4 | 71 | 744 | |
| | 2012.07-2019.06 | MT | R | R | Hatchback RWD N13 B16 A | | GDS85067 | Drive Shaft | | 28 | 27 | 57.4 | 71 | 800 | |
| 2.0 (95 kw) | 2004.07-2007.02 | 6AT/6MT | R | L | Hatchback RWD N46 B20 B | | GDS85037 | Drive Shaft | 48W | 27 | | 69.3 | 68 | 611 | |
| | 2004.07-2007.02 | 6AT/6MT | R | R | Hatchback RWD N46 B20 B | | GDS85036 | Drive Shaft | 48W | 27 | | 69.3 | 68 | 664 | |
| | 2004.07-2007.02 | 6AT/6MT | R | L/R | Hatchback RWD N46 B20 B | | GCI85056 | Outer Joint | 48W | 27 | 24 | 69.3 | 68 | 51 | |
| | 2004.07-2007.02 | 6AT/6MT | R | L/R | Hatchback RWD N46 B20 B | | GCI85005 | Inner Joint | | | 24 | | | 24 | |
| | 2006.09-2008.02 | AT/MT | R | L | Hatchback RWD N46 B20 B | | GDS85037 | Drive Shaft | 48W | 27 | | 69.3 | 68 | 611 | |
| | 2006.09-2008.02 | AT/MT | R | R | Hatchback RWD N46 B20 B | | GDS85036 | Drive Shaft | 48W | 27 | | 69.3 | 68 | 664 | |
| | 2006.09-2008.02 | | R | L/R | Hatchback RWD N46 B20 B | | GCI85056 | Outer Joint | 48W | 27 | 24 | 69.3 | 68 | 51 | |
| 2.0 (100 kw) | 2006.09-2011.12 | 6AT/6MT | R | L | Hatchback RWD N46 B20 B | | GDS85037 | Drive Shaft | 48W | 27 | | 69.3 | 68 | 611 | |
| | 2006.09-2011.12 | 6AT/6MT | R | R | Hatchback RWD N46 B20 B | | GDS85036 | Drive Shaft | 48W | 27 | | 69.3 | 68 | 664 | |
| | 2006.10-2011.06 | AT/MT | R | L | Hatchback RWD N46 B20 B | | GDS85037 | Drive Shaft | 48W | 27 | | 69.3 | 68 | 611 | |
| | 2006.10-2011.06 | AT/MT | R | R | Hatchback RWD N46 B20 B | | GDS85036 | Drive Shaft | 48W | 27 | | 69.3 | 68 | 664 | |
| | 2006.10-2011.06 | | R | L/R | Hatchback RWD N46 B20 B | | GCI85056 | Outer Joint | 48W | 27 | 24 | 69.3 | 68 | 51 | |
| 2.0 (105 kw) | 2006.09-2011.06 | 6AT/6MT | R | L | Hatchback RWD N43 B20 A | | GDS85037 | Drive Shaft | 48W | 27 | | 69.3 | 68 | 611 | |
| | 2006.09-2011.06 | 6AT/6MT | R | R | Hatchback RWD N43 B20 A | | GDS85036 | Drive Shaft | 48W | 27 | | 69.3 | 68 | 664 | |
| | 2006.09-2011.06 | 6AT/6MT | R | L/R | Hatchback RWD N43 B20 A | | GCI85056 | Outer Joint | 48W | 27 | 24 | 69.3 | 68 | 51 | |
| | 2006.09-2011.06 | 6AT/6MT | R | L/R | Hatchback RWD N43 B20 A | | GCI85005 | Inner Joint | | | 24 | | | 24 | |
| | 2006.09-2011.12 | 6AT/6MT | R | L | Hatchback RWD N43 B20 A | | GDS85037 | Drive Shaft | 48W | 27 | | 69.3 | 68 | 611 | |
| | 2006.09-2011.12 | 6AT/6MT | R | R | Hatchback RWD N43 B20 A | | GDS85036 | Drive Shaft | 48W | 27 | | 69.3 | 68 | 664 | |
| | 2006.09-2011.12 | 6AT/6MT | R | L/R | Hatchback RWD N43 B20 A | | GCI85056 | Outer Joint | 48W | 27 | 24 | 69.3 | 68 | 51 | |
| | 2006.09-2011.12 | 6AT/6MT | R | L/R | Hatchback RWD N43 B20 A | | GCI85005 | Inner Joint | | | 24 | | | 24 | |
| 2.0 (125 kw) | 2007.03-2007.12 | 6AT/6MT | R | L | Hatchback RWD N43 B20 A | | GDS85037 | Drive Shaft | 48W | 27 | | 69.3 | 68 | 611 | |
| | 2007.03-2007.12 | 6AT/6MT | R | R | Hatchback RWD N43 B20 A | | GDS85036 | Drive Shaft | 48W | 27 | | 69.3 | 68 | 664 | |
| **118i Cabrio** | | | | | | | | | | | | | | | |
| 2.0 (100 kw) | 2008.09-2013.12 | AT/MT | R | L | Convertible RWD N46 B20 B | | GDS85037 | Drive Shaft | 48W | 27 | | 69.3 | 68 | 611 | |
| | 2008.09-2013.12 | AT/MT | R | R | Convertible RWD N46 B20 B | | GDS85036 | Drive Shaft | 48W | 27 | | 69.3 | 68 | 664 | |
| | 2008.09-2013.12 | | R | L/R | Convertible RWD N46 B20 B | | GCI85056 | Outer Joint | 48W | 27 | 24 | 69.3 | 68 | 51 | |
| 2.0 (105 kw) | 2008.03-2013.10 | 6AT/6MT | R | L | Convertible RWD N43 B20 A | | GDS85037 | Drive Shaft | 48W | 27 | | 69.3 | 68 | 611 | |
| | 2008.03-2013.10 | 6AT/6MT | R | R | Convertible RWD N43 B20 A | | GDS85036 | Drive Shaft | 48W | 27 | | 69.3 | 68 | 664 | |
| | 2008.03-2013.10 | 6AT/6MT | R | L/R | Convertible RWD N43 B20 A | | GCI85056 | Outer Joint | 48W | 27 | 24 | 69.3 | 68 | 51 | |
| | 2008.03-2013.10 | 6AT/6MT | R | L/R | Convertible RWD N43 B20 A | | GCI85005 | Inner Joint | | | 24 | | | 24 | |
| **120d** | | | | | | | | | | | | | | | |
| 2.0 (110 kw) | 2004.06-2007.02 | 6AT/6MT | R | L | Hatchback RWD M47 D20 (204D4) | | GDS85022 | Drive Shaft | 48W | 27 | | 69 | 68 | 607 | |
| | 2004.06-2007.02 | 6AT/6MT | R | R | Hatchback RWD M47 D20 (204D4) | | GDS85023 | Drive Shaft | 48W | 27 | | 69 | 68 | 660 | |
| | 2004.06-2007.02 | 6AT/6MT | R | L/R | Hatchback RWD M47 D20 (204D4) | | GCI99145 | Outer Joint | 48W | 27 | 25 | 69 | 68 | 58 | I |
| | 2004.06-2007.02 | 6AT/6MT | R | L/R | Hatchback RWD M47 D20 (204D4) | | GCI35025 | Inner Joint | | | 25 | | | 26 | |
| 2.0 (120 kw) | 2004.06-2011.06 | 6AT/6MT | R | L | Hatchback RWD N47 D20 A;M47 D20 (204D4) | | GDS85022 | Drive Shaft | 48W | 27 | | 69 | 68 | 607 | |
| | 2004.06-2011.06 | 6AT/6MT | R | R | Hatchback RWD N47 D20 A;M47 D20 (204D4) | | GDS85023 | Drive Shaft | 48W | 27 | | 69 | 68 | 660 | |
| | 2004.06-2011.06 | 6AT/6MT | R | L/R | Hatchback RWD N47 D20 A;M47 D20 (204D4) | | GCI99145 | Outer Joint | 48W | 27 | 25 | 69 | 68 | 58 | I |
| | 2004.06-2011.06 | 6AT/6MT | R | L/R | Hatchback RWD N47 D20 A;M47 D20 (204D4) | | GCI35025 | Inner Joint | | | 25 | | | 26 | |
| | 2007.03-2011.12 | 6AT/6MT | R | L | Hatchback RWD N47 D20 A;N47 D20 C | | GDS85022 | Drive Shaft | 48W | 27 | | 69 | 68 | 607 | |
| | 2007.03-2011.12 | 6AT/6MT | R | R | Hatchback RWD N47 D20 A;N47 D20 C | | GDS85023 | Drive Shaft | 48W | 27 | | 69 | 68 | 660 | |
| | 2007.03-2011.12 | 6AT/6MT | R | L/R | Hatchback RWD N47 D20 A;N47 D20 C | | GCI99145 | Outer Joint | 48W | 27 | 25 | 69 | 68 | 58 | I |
| | 2007.03-2011.12 | 6AT/6MT | R | L/R | Hatchback RWD N47 D20 A;N47 D20 C | | GCI35025 | Inner Joint | | | 25 | | | 26 | |
| | 2011.07-2019.06 | AT/MT | R | L | Hatchback RWD N47 D20 C;B47 D20 A | | GDS85066 | Drive Shaft | | 28 | 27 | 57.4 | 71 | 744 | |
| | 2011.07-2019.06 | AT/MT | R | R | Hatchback RWD N47 D20 C;B47 D20 A | | GDS85067 | Drive Shaft | | 28 | 27 | 57.4 | 71 | 800 | |
| | 2012.07-2019.06 | AT/MT | R | L | Hatchback RWD N47 D20 C | | GDS85066 | Drive Shaft | | 28 | 27 | 57.4 | 71 | 744 | |
| | 2012.07-2019.06 | AT/MT | R | R | Hatchback RWD N47 D20 C | | GDS85067 | Drive Shaft | | 28 | 27 | 57.4 | 71 | 800 | |
| | 2024.07- | 7DCT | F | L | Hatchback FWD B47 C20 B | | GDS57952 | Drive Shaft | | 37 | 27 | 65 | | 538 | |
| | 2024.07- | 7DCT | F | R | Hatchback FWD B47 C20 B | | GDS58044 | Drive Shaft | | 37 | 27 | 65 | | 932 | |

| | YEAR | TRANSM. | F/R | L/R | BODY STYLE & DRIVE TYPE & ENGINE | REMARKS | G-AP Ref. | PRODUCT | ABS | Technical Specifications A | B | C | H | L | P |
|---|---|---|---|---|---|---|---|---|---|---|---|---|---|---|---|
| **BMW** | | | | | | | | | | | | | | | |
| **120d** | | | | | | | | | | | | | | | |
| 2.0 (120 kw) | 2024.07- | 7DCT | F | L/R | Hatchback FWD B47 C20 B | | GCO83810 | Outer Joint | | 37 | 28 | 65 | | 76.5 | M |
| | 2024.07- | 7DCT | F | L | Hatchback FWD B47 C20 B | | GCI83960 | Inner Joint | | 27 | 29 | 35 | 73 | 114 | |
| | 2024.07- | 7DCT | F | R | Hatchback FWD B47 C20 B | | GCI83986 | Inner Joint | | 27 | 29 | 35 | 456 | 114 | |
| 2.0 (130 kw) | 2007.03-2011.06 | 6AT/6MT | R | L | Hatchback RWD N47 D20 A;N47 D20 C | | GDS85022 | Drive Shaft | 48W | 27 | | 69 | 68 | 607 | |
| | 2007.03-2011.06 | 6AT/6MT | R | R | Hatchback RWD N47 D20 A;N47 D20 C | | GDS85023 | Drive Shaft | 48W | 27 | | 69 | 68 | 660 | |
| | 2007.03-2011.06 | 6AT/6MT | R | L/R | Hatchback RWD N47 D20 A;N47 D20 C | | GCI99145 | Outer Joint | 48W | 27 | 25 | 69 | 68 | 58 | I |
| | 2007.03-2011.06 | 6AT/6MT | R | L/R | Hatchback RWD N47 D20 A;N47 D20 C | | GCI35025 | Inner Joint | | | 25 | | | 26 | |
| | 2007.03-2011.12 | 6AT/6MT | R | L | Hatchback RWD N47 D20 A;N47 D20 C | | GDS85022 | Drive Shaft | 48W | 27 | | 69 | 68 | 607 | |
| | 2007.03-2011.12 | 6AT/6MT | R | R | Hatchback RWD N47 D20 A;N47 D20 C | | GDS85023 | Drive Shaft | 48W | 27 | | 69 | 68 | 660 | |
| | 2007.03-2011.12 | 6AT/6MT | R | L/R | Hatchback RWD N47 D20 A;N47 D20 C | | GCI99145 | Outer Joint | 48W | 27 | 25 | 69 | 68 | 58 | I |
| | 2007.03-2011.12 | 6AT/6MT | R | L/R | Hatchback RWD N47 D20 A;N47 D20 C | | GCI35025 | Inner Joint | | | 25 | | | 26 | |
| 2.0 (135 kw) | 2011.07-2015.02 | 8AT/6MT | R | L | Hatchback RWD N47 D20 C | | GDS85066 | Drive Shaft | | 28 | 27 | 57.4 | 71 | 744 | |
| | 2011.07-2015.02 | 8AT/6MT | R | R | Hatchback RWD N47 D20 C | | GDS85067 | Drive Shaft | | 28 | 27 | 57.4 | 71 | 800 | |
| | 2011.07-2015.02 | 8AT/6MT | R | L/R | Hatchback RWD N47 D20 C | | GCI85020 | Inner Joint | | 27 | 25 | 43.9 | 75 | 96 | |
| | 2012.07-2015.02 | AT/MT | R | L | Hatchback RWD N47 D20 C | | GDS85066 | Drive Shaft | | 28 | 27 | 57.4 | 71 | 744 | |
| | 2012.07-2015.02 | AT/MT | R | R | Hatchback RWD N47 D20 C | | GDS85067 | Drive Shaft | | 28 | 27 | 57.4 | 71 | 800 | |
| 2.0 (140 kw) | 2015.03-2019.06 | 8AT/6MT | R | L | Hatchback RWD B47 D20 A | | GDS85066 | Drive Shaft | | 28 | 27 | 57.4 | 71 | 744 | |
| | 2015.03-2019.06 | 8AT/6MT | R | R | Hatchback RWD B47 D20 A | | GDS85067 | Drive Shaft | | 28 | 27 | 57.4 | 71 | 800 | |
| | 2015.03-2019.06 | 8AT/6MT | R | L/R | Hatchback RWD B47 D20 A | | GCI85020 | Inner Joint | | 27 | 25 | 43.9 | 75 | 96 | |
| | 2015.03-2019.06 | AT/MT | R | L | Hatchback RWD B47 D20 A | | GDS85066 | Drive Shaft | | 28 | 27 | 57.4 | 71 | 744 | |
| | 2015.03-2019.06 | AT/MT | R | R | Hatchback RWD B47 D20 A | | GDS85067 | Drive Shaft | | 28 | 27 | 57.4 | 71 | 800 | |
| | 2015.03-2019.06 | AT/MT | R | L | Hatchback Van RWD B47 D20 A | | GDS85066 | Drive Shaft | | 28 | 27 | 57.4 | 71 | 744 | |
| | 2015.03-2019.06 | AT/MT | R | R | Hatchback Van RWD B47 D20 A | | GDS85067 | Drive Shaft | | 28 | 27 | 57.4 | 71 | 800 | |
| 2.0 (145 kw) | 2007.03-2011.12 | 6AT/6MT | R | L | Hatchback RWD N47 D20 A;N47 D20 C | | GDS85022 | Drive Shaft | 48W | 27 | | 69 | 68 | 607 | |
| | 2007.03-2011.12 | 6AT/6MT | R | R | Hatchback RWD N47 D20 A;N47 D20 C | | GDS85023 | Drive Shaft | 48W | 27 | | 69 | 68 | 660 | |
| | 2007.03-2011.12 | 6AT/6MT | R | L/R | Hatchback RWD N47 D20 A;N47 D20 C | | GCI99145 | Outer Joint | 48W | 27 | 25 | 69 | 68 | 58 | I |
| | 2007.03-2011.12 | 6AT/6MT | R | L/R | Hatchback RWD N47 D20 A;N47 D20 C | | GCI35025 | Inner Joint | | | 25 | | | 26 | |
| 2.0 (147 kw) | 2011.07-2015.02 | AT/MT | R | L | Hatchback RWD N47 D20 C | | GDS85066 | Drive Shaft | | 28 | 27 | 57.4 | 71 | 744 | |
| | 2011.07-2015.02 | AT/MT | R | R | Hatchback RWD N47 D20 C | | GDS85067 | Drive Shaft | | 28 | 27 | 57.4 | 71 | 800 | |
| | 2012.01-2015.02 | AT/MT | R | L | Hatchback RWD N47 D20 C | | GDS85066 | Drive Shaft | | 28 | 27 | 57.4 | 71 | 744 | |
| | 2012.01-2015.02 | AT/MT | R | R | Hatchback RWD N47 D20 C | | GDS85067 | Drive Shaft | | 28 | 27 | 57.4 | 71 | 800 | |
| 2.0 (151 kw) | 2015.03-2019.06 | | R | L | Hatchback RWD B47 D20 A | | GDS85066 | Drive Shaft | | 28 | 27 | 57.4 | 71 | 744 | |
| | 2015.03-2019.06 | | R | R | Hatchback RWD B47 D20 A | | GDS85067 | Drive Shaft | | 28 | 27 | 57.4 | 71 | 800 | |
| **120d Cabrio** | | | | | | | | | | | | | | | |
| 2.0 (120 kw) | 2008.03-2013.12 | 6AT/6MT | R | L | Convertible RWD N47 D20 A;N47 D20 C | | GDS85022 | Drive Shaft | 48W | 27 | | 69 | 68 | 607 | |
| | 2008.03-2013.12 | 6AT/6MT | R | R | Convertible RWD N47 D20 A;N47 D20 C | | GDS85023 | Drive Shaft | 48W | 27 | | 69 | 68 | 660 | |
| | 2008.03-2013.12 | 6AT/6MT | R | L/R | Convertible RWD N47 D20 A;N47 D20 C | | GCI99145 | Outer Joint | 48W | 27 | 25 | 69 | 68 | 58 | I |
| | 2008.03-2013.12 | 6AT/6MT | R | L/R | Convertible RWD N47 D20 A;N47 D20 C | | GCI35025 | Inner Joint | | | 25 | | | 26 | |
| 2.0 (130 kw) | 2008.03-2013.12 | 6AT/6MT | R | L | Convertible RWD N47 D20 A;N47 D20 C | | GDS85022 | Drive Shaft | 48W | 27 | | 69 | 68 | 607 | |
| | 2008.03-2013.12 | 6AT/6MT | R | R | Convertible RWD N47 D20 A;N47 D20 C | | GDS85023 | Drive Shaft | 48W | 27 | | 69 | 68 | 660 | |
| | 2008.03-2013.12 | 6AT/6MT | R | L/R | Convertible RWD N47 D20 A;N47 D20 C | | GCI99145 | Outer Joint | 48W | 27 | 25 | 69 | 68 | 58 | I |
| | 2008.03-2013.12 | 6AT/6MT | R | L/R | Convertible RWD N47 D20 A;N47 D20 C | | GCI35025 | Inner Joint | | | 25 | | | 26 | |
| 2.0 (145 kw) | 2008.03-2013.12 | 6MT | R | L | Convertible RWD N47 D20 C | | GDS85022 | Drive Shaft | 48W | 27 | | 69 | 68 | 607 | |
| | 2008.03-2013.12 | 6MT | R | R | Convertible RWD N47 D20 C | | GDS85023 | Drive Shaft | 48W | 27 | | 69 | 68 | 660 | |
| | 2008.03-2013.12 | 6MT | R | L/R | Convertible RWD N47 D20 C | | GCI99145 | Outer Joint | 48W | 27 | 25 | 69 | 68 | 58 | I |
| | 2008.03-2013.12 | 6MT | R | L/R | Convertible RWD N47 D20 C | | GCI35025 | Inner Joint | | | 25 | | | 26 | |
| **120d Coupe** | | | | | | | | | | | | | | | |
| 2.0 (120 kw) | 2007.09-2013.10 | 6AT/6MT | R | L | Coupe RWD N47 D20 A;N47 D20 C | | GDS85022 | Drive Shaft | 48W | 27 | | 69 | 68 | 607 | |
| | 2007.09-2013.10 | 6AT/6MT | R | R | Coupe RWD N47 D20 A;N47 D20 C | | GDS85023 | Drive Shaft | 48W | 27 | | 69 | 68 | 660 | |
| | 2007.09-2013.10 | 6AT/6MT | R | L/R | Coupe RWD N47 D20 A;N47 D20 C | | GCI99145 | Outer Joint | 48W | 27 | 25 | 69 | 68 | 58 | I |
| | 2007.09-2013.10 | 6AT/6MT | R | L/R | Coupe RWD N47 D20 A;N47 D20 C | | GCI35025 | Inner Joint | | | 25 | | | 26 | |
| 2.0 (130 kw) | 2007.09-2013.10 | 6AT/6MT | R | L | Coupe RWD N47 D20 A;N47 D20 C | | GDS85022 | Drive Shaft | 48W | 27 | | 69 | 68 | 607 | |
| | 2007.09-2013.10 | 6AT/6MT | R | R | Coupe RWD N47 D20 A;N47 D20 C | | GDS85023 | Drive Shaft | 48W | 27 | | 69 | 68 | 660 | |
| | 2007.09-2013.10 | 6AT/6MT | R | L/R | Coupe RWD N47 D20 A;N47 D20 C | | GCI99145 | Outer Joint | 48W | 27 | 25 | 69 | 68 | 58 | I |
| | 2007.09-2013.10 | 6AT/6MT | R | L/R | Coupe RWD N47 D20 A;N47 D20 C | | GCI35025 | Inner Joint | | | 25 | | | 26 | |
| 2.0 (145 kw) | 2007.09-2013.10 | 6AT/6MT | R | L | Coupe RWD N47 D20 A;N47 D20 C | | GDS85022 | Drive Shaft | 48W | 27 | | 69 | 68 | 607 | |
| | 2007.09-2013.10 | 6AT/6MT | R | R | Coupe RWD N47 D20 A;N47 D20 C | | GDS85023 | Drive Shaft | 48W | 27 | | 69 | 68 | 660 | |
| | 2007.09-2013.10 | 6AT/6MT | R | L/R | Coupe RWD N47 D20 A;N47 D20 C | | GCI99145 | Outer Joint | 48W | 27 | 25 | 69 | 68 | 58 | I |
| | 2007.09-2013.10 | 6AT/6MT | R | L/R | Coupe RWD N47 D20 A;N47 D20 C | | GCI35025 | Inner Joint | | | 25 | | | 26 | |
| **120d xDrive** | | | | | | | | | | | | | | | |
| 2.0 (135 kw) | 2012.02-2015.02 | MT | F | L | Hatchback 4WD N47 D20 C | | GDS82052 | Drive Shaft | | 31 | 27 | 55.8 | | 550 | |
| | 2012.02-2015.02 | MT | F | R | Hatchback 4WD N47 D20 C | | GDS82053 | Drive Shaft | | 31 | 27 | 55.8 | | 841 | |
| | 2012.02-2015.02 | MT | F | L | Hatchback 4WD N47 D20 C | | GCO81603 | Outer Joint | | 31 | 33 | 55.8 | | 69.5 | M |
| | 2012.02-2015.02 | MT | F | L | Hatchback 4WD N47 D20 C | | GCI81055 | Inner Joint | | 27 | 24 | 43.95 | 60 | 123.5 | |
| | 2012.02-2015.02 | MT | F | R | Hatchback 4WD N47 D20 C | | GCI81597 | Inner Joint | | 27 | 24 | 43.95 | 349.5 | 125 | |

| | YEAR | TRANSM. | F/R | L/R | BODY STYLE & DRIVE TYPE & ENGINE | REMARKS | G-AP Ref. | PRODUCT | ABS | Technical Specifications A | B | C | H | L | P |
|---|---|---|---|---|---|---|---|---|---|---|---|---|---|---|---|
| **BMW** | | | | | | | | | | | | | | | |
| **120d xDrive** | | | | | | | | | | | | | | | |
| 2.0 (135 kw) | 2012.02-2015.02 | MT | R | L | Hatchback 4WD N47 D20 C | | GDS85066 | Drive Shaft | | 28 | 27 | 57.4 | 71 | 744 | |
| | 2012.02-2015.02 | MT | R | R | Hatchback 4WD N47 D20 C | | GDS85067 | Drive Shaft | | 28 | 27 | 57.4 | 71 | 800 | |
| | 2012.11-2015.02 | 6MT | F | L | Hatchback 4WD N47 D20 C | | GDS82052 | Drive Shaft | | 31 | 27 | 55.8 | | 550 | |
| | 2012.11-2015.02 | 6MT | F | R | Hatchback 4WD N47 D20 C | | GDS82053 | Drive Shaft | | 31 | 27 | 55.8 | | 841 | |
| | 2012.11-2015.02 | 6MT | F | L/R | Hatchback 4WD N47 D20 C | | GCO81603 | Outer Joint | | 31 | 33 | 55.8 | | 69.5 | M |
| | 2012.11-2015.02 | 6MT | F | L | Hatchback 4WD N47 D20 C | | GCI81055 | Inner Joint | | 27 | 24 | 43.95 | 60 | 123.5 | |
| | 2012.11-2015.02 | 6MT | F | R | Hatchback 4WD N47 D20 C | | GCI81597 | Inner Joint | | 27 | 24 | 43.95 | 349.5 | 125 | |
| | 2012.11-2015.02 | 6MT | R | L | Hatchback 4WD N47 D20 C | | GDS85066 | Drive Shaft | | 28 | 27 | 57.4 | 71 | 744 | |
| | 2012.11-2015.02 | 6MT | R | R | Hatchback 4WD N47 D20 C | | GDS85067 | Drive Shaft | | 28 | 27 | 57.4 | 71 | 800 | |
| 2.0 (140 kw) | 2015.03-2019.06 | 8AT | F | L | Hatchback 4WD B47 D20 A | | GDS82052 | Drive Shaft | | 31 | 27 | 55.8 | | 550 | |
| | 2015.03-2019.06 | 8AT | F | R | Hatchback 4WD B47 D20 A | | GDS82053 | Drive Shaft | | 31 | 27 | 55.8 | | 841 | |
| | 2015.03-2019.06 | 8AT | F | L/R | Hatchback 4WD B47 D20 A | | GCO81603 | Outer Joint | | 31 | 33 | 55.8 | | 69.5 | M |
| | 2015.03-2019.06 | 8AT | F | L | Hatchback 4WD B47 D20 A | | GCI81055 | Inner Joint | | 27 | 24 | 43.95 | 60 | 123.5 | |
| | 2015.03-2019.06 | 8AT | F | R | Hatchback 4WD B47 D20 A | | GCI81597 | Inner Joint | | 27 | 24 | 43.95 | 349.5 | 125 | |
| | 2015.03-2019.06 | AT/MT | F | L | Hatchback 4WD B47 D20 A | | GDS82052 | Drive Shaft | | 31 | 27 | 55.8 | | 550 | |
| | 2015.03-2019.06 | AT/MT | F | R | Hatchback 4WD B47 D20 A | | GDS82053 | Drive Shaft | | 31 | 27 | 55.8 | | 841 | |
| | 2015.03-2019.06 | AT/MT | F | L/R | Hatchback 4WD B47 D20 A | | GCO81603 | Outer Joint | | 31 | 33 | 55.8 | | 69.5 | M |
| | 2015.03-2019.06 | AT/MT | F | L | Hatchback 4WD B47 D20 A | | GCI81055 | Inner Joint | | 27 | 24 | 43.95 | 60 | 123.5 | |
| | 2015.03-2019.06 | AT/MT | F | R | Hatchback 4WD B47 D20 A | | GCI81597 | Inner Joint | | 27 | 24 | 43.95 | 349.5 | 125 | |
| | 2015.03-2019.06 | 8AT | R | L | Hatchback 4WD B47 D20 A | | GDS85066 | Drive Shaft | | 28 | 27 | 57.4 | 71 | 744 | |
| | 2015.03-2019.06 | 8AT | R | R | Hatchback 4WD B47 D20 A | | GDS85067 | Drive Shaft | | 28 | 27 | 57.4 | 71 | 800 | |
| | 2015.03-2019.06 | AT | R | L | Hatchback 4WD B47 D20 A | | GDS85066 | Drive Shaft | | 28 | 27 | 57.4 | 71 | 744 | |
| | 2015.03-2019.06 | AT | R | R | Hatchback 4WD B47 D20 A | | GDS85067 | Drive Shaft | | 28 | 27 | 57.4 | 71 | 800 | |
| | 2019.07- | 8AT | R | L/R | Hatchback 4WD B47 C20 B | | GDS82176 | Drive Shaft | | 31 | 27 | 56 | | 731 | |
| | 2019.07- | 8AT | R | L/R | Hatchback 4WD B47 C20 B | | GCO81685 | Outer Joint | | 31 | 30 | 56 | | 61.5 | I |
| | 2019.07- | 8AT | R | L/R | Hatchback 4WD B47 C20 B | | GCI81658 | Inner Joint | | 27 | 30 | 43.7 | 87 | 100 | |
| 2.0 (147 kw) | 2012.01-2015.02 | MT | F | L | Hatchback 4WD N47 D20 C | | GDS82052 | Drive Shaft | | 31 | 27 | 55.8 | | 550 | |
| | 2012.01-2015.02 | MT | F | R | Hatchback 4WD N47 D20 C | | GDS82053 | Drive Shaft | | 31 | 27 | 55.8 | | 841 | |
| | 2012.01-2015.02 | MT | F | L | Hatchback 4WD N47 D20 C | | GCO81603 | Outer Joint | | 31 | 33 | 55.8 | | 69.5 | M |
| | 2012.01-2015.02 | MT | F | L | Hatchback 4WD N47 D20 C | | GCI81055 | Inner Joint | | 27 | 24 | 43.95 | 60 | 123.5 | |
| | 2012.01-2015.02 | MT | F | R | Hatchback 4WD N47 D20 C | | GCI81597 | Inner Joint | | 27 | 24 | 43.95 | 349.5 | 125 | |
| | 2012.01-2015.02 | MT | R | L | Hatchback 4WD N47 D20 C | | GDS85066 | Drive Shaft | | 28 | 27 | 57.4 | 71 | 744 | |
| | 2012.01-2015.02 | MT | R | R | Hatchback 4WD N47 D20 C | | GDS85067 | Drive Shaft | | 28 | 27 | 57.4 | 71 | 800 | |
| | 2012.11-2015.02 | MT | F | L | Hatchback 4WD N47 D20 C | | GDS82052 | Drive Shaft | | 31 | 27 | 55.8 | | 550 | |
| | 2012.11-2015.02 | MT | F | R | Hatchback 4WD N47 D20 C | | GDS82053 | Drive Shaft | | 31 | 27 | 55.8 | | 841 | |
| | 2012.11-2015.02 | MT | F | L | Hatchback 4WD N47 D20 C | | GCO81603 | Outer Joint | | 31 | 33 | 55.8 | | 69.5 | M |
| | 2012.11-2015.02 | MT | F | L | Hatchback 4WD N47 D20 C | | GCI81055 | Inner Joint | | 27 | 24 | 43.95 | 60 | 123.5 | |
| | 2012.11-2015.02 | MT | F | R | Hatchback 4WD N47 D20 C | | GCI81597 | Inner Joint | | 27 | 24 | 43.95 | 349.5 | 125 | |
| | 2012.11-2015.02 | MT | R | L | Hatchback 4WD N47 D20 C | | GDS85066 | Drive Shaft | | 28 | 27 | 57.4 | 71 | 744 | |
| | 2012.11-2015.02 | MT | R | R | Hatchback 4WD N47 D20 C | | GDS85067 | Drive Shaft | | 28 | 27 | 57.4 | 71 | 800 | |
| 2.0 (151 kw) | 2015.03-2019.06 | 8AT | F | L | Hatchback 4WD B47 D20 A | | GDS82052 | Drive Shaft | | 31 | 27 | 55.8 | | 550 | |
| | 2015.03-2019.06 | 8AT | F | R | Hatchback 4WD B47 D20 A | | GDS82053 | Drive Shaft | | 31 | 27 | 55.8 | | 841 | |
| | 2015.03-2019.06 | AT | R | L | Hatchback 4WD B47 D20 A | | GDS85066 | Drive Shaft | | 28 | 27 | 57.4 | 71 | 744 | |
| | 2015.03-2019.06 | AT | R | R | Hatchback 4WD B47 D20 A | | GDS85067 | Drive Shaft | | 28 | 27 | 57.4 | 71 | 800 | |
| **120i** | | | | | | | | | | | | | | | |
| 1.6 (130 kw) | 2015.03-2016.06 | AT | R | L | Hatchback RWD N13 B16 A | | GDS85107 | Drive Shaft | | 28 | 27 | 57.4 | 71 | 749 | |
| | 2015.03-2016.06 | MT | R | L | Hatchback RWD N13 B16 A | | GDS85066 | Drive Shaft | | 28 | 27 | 57.4 | 71 | 744 | |
| | 2015.03-2016.06 | MT | R | R | Hatchback RWD N13 B16 A | | GDS85067 | Drive Shaft | | 28 | 27 | 57.4 | 71 | 800 | |
| | 2015.03-2019.06 | AT | R | L | Hatchback RWD N13 B16 A | | GDS85107 | Drive Shaft | | 28 | 27 | 57.4 | 71 | 749 | |
| | 2015.03-2019.06 | MT | R | L | Hatchback RWD N13 B16 A | | GDS85066 | Drive Shaft | | 28 | 27 | 57.4 | 71 | 744 | |
| | 2015.03-2019.06 | MT | R | R | Hatchback RWD N13 B16 A | | GDS85067 | Drive Shaft | | 28 | 27 | 57.4 | 71 | 800 | |
| 2.0 (110 kw) | 2004.06-2007.02 | 6AT | R | L | Hatchback RWD N46 B20 C;N46 B20 B;N46 B20 CC;N46 B20 BD | | GDS85037 | Drive Shaft | 48W | 27 | | 69.3 | 68 | 611 | |
| | 2004.06-2007.02 | 6AT | R | R | Hatchback RWD N46 B20 C;N46 B20 B;N46 B20 CC;N46 B20 BD | | GDS85036 | Drive Shaft | 48W | 27 | | 69.3 | 68 | 664 | |
| | 2004.06-2007.02 | 6AT | R | L/R | Hatchback RWD N46 B20 C;N46 B20 B;N46 B20 CC;N46 B20 BD | | GCI85056 | Outer Joint | 48W | 27 | 24 | 69.3 | 68 | 51 | |
| | 2004.06-2007.02 | 6AT | R | L/R | Hatchback RWD N46 B20 C;N46 B20 B;N46 B20 CC;N46 B20 BD | | GCI85005 | Inner Joint | | | 24 | | | 24 | |
| | 2004.06-2007.02 | 6MT | R | L | Hatchback RWD N46 B20 C;N46 B20 B;N46 B20 CC;N46 B20 BD | Date to:2005.08 | GDS85022 | Drive Shaft | 48W | 27 | | 69 | 68 | 607 | |
| | 2004.06-2007.02 | 6MT | R | L | Hatchback RWD N46 B20 C;N46 B20 B;N46 B20 CC;N46 B20 BD | Date from:2005.09 | GDS85037 | Drive Shaft | 48W | 27 | | 69.3 | 68 | 611 | |
| | 2004.06-2007.02 | 6MT | R | R | Hatchback RWD N46 B20 C;N46 B20 B;N46 B20 CC;N46 B20 BD | Date to:2005.08 | GDS85023 | Drive Shaft | 48W | 27 | | 69 | 68 | 660 | |
| | 2004.06-2007.02 | 6MT | R | R | Hatchback RWD N46 B20 C;N46 B20 B;N46 B20 CC;N46 B20 BD | Date from:2005.09 | GDS85036 | Drive Shaft | 48W | 27 | | 69.3 | 68 | 664 | |
| | 2004.06-2007.02 | 6MT | R | L/R | Hatchback RWD N46 B20 C;N46 B20 B;N46 B20 CC;N46 B20 BD | Date from:2005.09 | GCI85056 | Outer Joint | 48W | 27 | 24 | 69.3 | 68 | 51 | |
| | 2004.06-2007.02 | 6MT | R | L/R | Hatchback RWD N46 B20 C;N46 B20 B;N46 B20 CC;N46 B20 BD | Date to:2005.08 | GCI99145 | Outer Joint | 48W | 27 | 25 | 69 | 68 | 58 | I |
| 2.0 (115 kw) | 2007.03-2011.06 | AT/MT | R | L | Hatchback RWD N46 B20 A;N46 B20 C;N46 B20 B;N46 B20 CC;N46 B20 E;N46 B20 BD | | GDS85037 | Drive Shaft | 48W | 27 | | 69.3 | 68 | 611 | |
| | 2007.03-2011.06 | AT/MT | R | R | Hatchback RWD N46 B20 A;N46 B20 C;N46 B20 B;N46 B20 CC;N46 B20 E;N46 B20 BD | | GDS85036 | Drive Shaft | 48W | 27 | | 69.3 | 68 | 664 | |
| | 2007.03-2011.06 | | R | L/R | Hatchback RWD N46 B20 A;N46 B20 C;N46 B20 B;N46 B20 CC;N46 B20 E;N46 B20 BD | | GCI85056 | Outer Joint | 48W | 27 | 24 | 69.3 | 68 | 51 | |
| | 2007.03-2011.12 | AT/MT | R | L | Hatchback RWD N46 B20 C;N46 B20 B | | GDS85037 | Drive Shaft | 48W | 27 | | 69.3 | 68 | 611 | |

| | YEAR | TRANSM. | F/R | L/R | BODY STYLE & DRIVE TYPE & ENGINE | REMARKS | G-AP Ref. | PRODUCT | ABS | Technical Specifications A | B | C | H | L | P |
|---|---|---|---|---|---|---|---|---|---|---|---|---|---|---|---|
| **BMW** | | | | | | | | | | | | | | | |
| **120i** | | | | | | | | | | | | | | | |
| 2.0 (115 kw) | 2007.03-2011.12 | AT/MT | R | R | Hatchback RWD N46 B20 C;N46 B20 B | | GDS85036 | Drive Shaft | 48W | 27 | | 69.3 | 68 | 664 | |
| | 2007.03-2011.12 | | R | L/R | Hatchback RWD N46 B20 C;N46 B20 B | | GCI85056 | Outer Joint | 48W | 27 | 24 | 69.3 | 68 | 51 | |
| 2.0 (120 kw) | 2007.03-2011.06 | MT | R | L | Hatchback RWD N43 B20 A | | GDS85037 | Drive Shaft | 48W | 27 | | 69.3 | 68 | 611 | |
| | 2007.03-2011.06 | MT | R | R | Hatchback RWD N43 B20 A | | GDS85036 | Drive Shaft | 48W | 27 | | 69.3 | 68 | 664 | |
| | 2007.03-2011.06 | | R | L/R | Hatchback RWD N43 B20 A | | GCI85056 | Outer Joint | 48W | 27 | 24 | 69.3 | 68 | 51 | |
| | 2007.03-2011.12 | AT/MT | R | L | Hatchback RWD N43 B20 A | | GDS85037 | Drive Shaft | 48W | 27 | | 69.3 | 68 | 611 | |
| | 2007.03-2011.12 | AT/MT | R | R | Hatchback RWD N43 B20 A | | GDS85036 | Drive Shaft | 48W | 27 | | 69.3 | 68 | 664 | |
| | 2007.03-2011.12 | | R | L/R | Hatchback RWD N43 B20 A | | GCI85056 | Outer Joint | 48W | 27 | 24 | 69.3 | 68 | 51 | |
| 2.0 (125 kw) | 2007.03-2011.06 | 6AT/6MT | R | L | Hatchback RWD N43 B20 A | | GDS85037 | Drive Shaft | 48W | 27 | | 69.3 | 68 | 611 | |
| | 2007.03-2011.06 | 6AT/6MT | R | R | Hatchback RWD N43 B20 A | | GDS85036 | Drive Shaft | 48W | 27 | | 69.3 | 68 | 664 | |
| | 2007.03-2011.06 | 6AT/6MT | R | L/R | Hatchback RWD N43 B20 A | | GCI85056 | Outer Joint | 48W | 27 | 24 | 69.3 | 68 | 51 | |
| | 2007.03-2011.06 | 6AT/6MT | R | L/R | Hatchback RWD N43 B20 A | | GCI85005 | Inner Joint | | | 24 | | | 24 | |
| | 2007.03-2012.09 | AT/MT | R | L | Hatchback RWD N43 B20 A | | GDS85037 | Drive Shaft | 48W | 27 | | 69.3 | 68 | 611 | |
| | 2007.03-2012.09 | AT/MT | R | R | Hatchback RWD N43 B20 A | | GDS85036 | Drive Shaft | 48W | 27 | | 69.3 | 68 | 664 | |
| | 2007.03-2012.09 | | R | L/R | Hatchback RWD N43 B20 A | | GCI85056 | Outer Joint | 48W | 27 | 24 | 69.3 | 68 | 51 | |
| 2.0 (131 kw) | 2020.11- | 7AT | F | L | Hatchback FWD B48 A20 A;B48 A20 F | | GDS84222 | Drive Shaft | | 31 | 27 | 56 | | 547 | |
| | 2020.11- | 7AT | F | R | Hatchback FWD B48 A20 A;B48 A20 F | | GDS84223 | Drive Shaft | | 31 | 27 | 56 | | 936 | |
| | 2020.11- | 7AT | F | L/R | Hatchback FWD B48 A20 A;B48 A20 F | | GCO82738 | Outer Joint | | 31 | 26 | 56 | | 73.5 | M |
| | 2020.11- | 7AT | F | L | Hatchback FWD B48 A20 A;B48 A20 F | | GCI82649 | Inner Joint | | 27 | 32 | 35 | 58 | 102 | |
| | 2020.11- | 7AT | F | R | Hatchback FWD B48 A20 A;B48 A20 F | | GCI82650 | Inner Joint | | 27 | 32 | 35 | 456 | 89 | |
| 2.0 (135 kw) | 2016.07-2019.06 | 8AT | R | L | Hatchback RWD B48 B20 A | | GDS83157 | Drive Shaft | | 28 | 27 | 57 | 71 | 750 | |
| | 2016.07-2019.06 | 8AT | R | R | Hatchback RWD B48 B20 A | | GDS83158 | Drive Shaft | | 28 | 27 | 57 | 71 | 802 | |
| | 2016.07-2019.06 | 8AT | R | L/R | Hatchback RWD B48 B20 A | | GCO82308 | Outer Joint | | 28 | 30 | 57 | 71 | 52.5 | I |
| | 2016.07-2019.06 | 8AT | R | L/R | Hatchback RWD B48 B20 A | | GCI82145 | Inner Joint | | 27 | 30 | 43.9 | 75 | 101 | |
| | 2016.07-2019.06 | 8AT | R | L | Hatchback Van RWD B48 B20 A | | GDS83157 | Drive Shaft | | 28 | 27 | 57 | 71 | 750 | |
| | 2016.07-2019.06 | 8AT | R | R | Hatchback Van RWD B48 B20 A | | GDS83158 | Drive Shaft | | 28 | 27 | 57 | 71 | 802 | |
| | 2016.07-2019.06 | 8AT | R | L/R | Hatchback Van RWD B48 B20 A | | GCO82308 | Outer Joint | | 28 | 30 | 57 | 71 | 52.5 | I |
| | 2016.07-2019.06 | 8AT | R | L/R | Hatchback Van RWD B48 B20 A | | GCI82145 | Inner Joint | | 27 | 30 | 43.9 | 75 | 101 | |
| **120i Cabrio** | | | | | | | | | | | | | | | |
| 2.0 (115 kw) | 2008.03-2013.12 | 6AT/6MT | R | L/R | Convertible RWD N46 B20 C;N46 B20 B;N46 B20 E | | GCI85056 | Outer Joint | 48W | 27 | 24 | 69.3 | 68 | 51 | |
| | 2008.03-2013.12 | AT/MT | R | L | Convertible RWD N46 B20 C;N46 B20 B;N46 B20 E | | GDS85037 | Drive Shaft | 48W | 27 | | 69.3 | 68 | 611 | |
| | 2008.03-2013.12 | AT/MT | R | R | Convertible RWD N46 B20 C;N46 B20 B;N46 B20 E | | GDS85036 | Drive Shaft | 48W | 27 | | 69.3 | 68 | 664 | |
| 2.0 (120 kw) | 2008.03-2013.12 | AT/MT | R | L | Convertible RWD N43 B20 A | | GDS85037 | Drive Shaft | 48W | 27 | | 69.3 | 68 | 611 | |
| | 2008.03-2013.12 | AT/MT | R | R | Convertible RWD N43 B20 A | | GDS85036 | Drive Shaft | 48W | 27 | | 69.3 | 68 | 664 | |
| | 2008.03-2013.12 | | R | L/R | Convertible RWD N43 B20 A | | GCI85056 | Outer Joint | 48W | 27 | 24 | 69.3 | 68 | 51 | |
| 2.0 (125 kw) | 2007.12-2013.10 | 6AT/6MT | R | L | Convertible RWD N43 B20 A | | GDS85037 | Drive Shaft | 48W | 27 | | 69.3 | 68 | 611 | |
| | 2007.12-2013.10 | 6AT/6MT | R | R | Convertible RWD N43 B20 A | | GDS85036 | Drive Shaft | 48W | 27 | | 69.3 | 68 | 664 | |
| | 2007.12-2013.10 | 6AT/6MT | R | L/R | Convertible RWD N43 B20 A | | GCI85056 | Outer Joint | 48W | 27 | 24 | 69.3 | 68 | 51 | |
| | 2007.12-2013.10 | 6AT/6MT | R | L/R | Convertible RWD N43 B20 A | | GCI85005 | Inner Joint | | | 24 | | | 24 | |
| **120i Coupe** | | | | | | | | | | | | | | | |
| 2.0 (115 kw) | 2009.09-2013.10 | AT/MT | R | L | Coupe RWD N46 B20 C;N46 B20 B;N46 B20 E;N46 B20 BD | | GDS85037 | Drive Shaft | 48W | 27 | | 69.3 | 68 | 611 | |
| | 2009.09-2013.10 | AT/MT | R | R | Coupe RWD N46 B20 C;N46 B20 B;N46 B20 E;N46 B20 BD | | GDS85036 | Drive Shaft | 48W | 27 | | 69.3 | 68 | 664 | |
| | 2009.09-2013.10 | | R | L/R | Coupe RWD N46 B20 C;N46 B20 B;N46 B20 E;N46 B20 BD | | GCI85056 | Outer Joint | 48W | 27 | 24 | 69.3 | 68 | 51 | |
| 2.0 (125 kw) | 2007.10-2013.10 | AT/MT | R | L | Coupe RWD N43 B20 A | | GDS85037 | Drive Shaft | 48W | 27 | | 69.3 | 68 | 611 | |
| | 2007.10-2013.10 | AT/MT | R | R | Coupe RWD N43 B20 A | | GDS85036 | Drive Shaft | 48W | 27 | | 69.3 | 68 | 664 | |
| | 2007.10-2013.10 | | R | L/R | Coupe RWD N43 B20 A | | GCI85056 | Outer Joint | 48W | 27 | 24 | 69.3 | 68 | 51 | |
| **123 xDrive** | | | | | | | | | | | | | | | |
| 2.0 (160 kw) | 2024.11- | 7DCT | F | L | Hatchback 4WD B48 A20 P | | GDS57952 | Drive Shaft | | 37 | 27 | 65 | | 538 | |
| | 2024.11- | 7DCT | F | R | Hatchback 4WD B48 A20 P | | GDS58026 | Drive Shaft | | 37 | 35 | 65 | | 495 | |
| | 2024.11- | 7DCT | F | L/R | Hatchback 4WD B48 A20 P | | GCO83810 | Outer Joint | | 37 | 28 | 65 | | 76.5 | M |
| | 2024.11- | 7DCT | F | L | Hatchback 4WD B48 A20 P | | GCI83960 | Inner Joint | | 27 | 29 | 35 | 73 | 114 | |
| | 2024.11- | 7DCT | F | R | Hatchback 4WD B48 A20 P | | GCI83983 | Inner Joint | | 35 | 29 | 44.8 | | 133.5 | |
| **123d** | | | | | | | | | | | | | | | |
| 2.0 (150 kw) | 2007.03-2011.06 | 6AT | R | L | Hatchback RWD N47 D20 B;N47 D20 D | | GDS85039 | Drive Shaft | | 30 | | 58.7 | 73 | 615 | |
| | 2007.03-2011.06 | 6AT | R | R | Hatchback RWD N47 D20 B;N47 D20 D | | GDS85134 | Drive Shaft | | 30 | | 58.7 | 73 | 665 | |
| | 2007.03-2011.06 | 6AT | R | L/R | Hatchback RWD N47 D20 B;N47 D20 D | | GCI35025 | Inner Joint | | | 25 | | | 26 | |
| | 2007.03-2011.06 | 6MT | R | L | Hatchback RWD N47 D20 B;N47 D20 D | | GDS85085 | Drive Shaft | | 30 | | 58.7 | 73 | 598 | |
| | 2007.03-2011.06 | 6MT | R | R | Hatchback RWD N47 D20 B;N47 D20 D | | GDS85073 | Drive Shaft | | 30 | | 58.8 | 73 | 653 | |
| | 2007.03-2011.12 | 6AT | R | L | Hatchback RWD N47 D20 B;N47 D20 D | | GDS85039 | Drive Shaft | | 30 | | 58.7 | 73 | 615 | |
| | 2007.03-2011.12 | 6AT | R | R | Hatchback RWD N47 D20 B;N47 D20 D | | GDS85134 | Drive Shaft | | 30 | | 58.7 | 73 | 665 | |
| | 2007.03-2011.12 | 6AT | R | L/R | Hatchback RWD N47 D20 B;N47 D20 D | | GCI35025 | Inner Joint | | | 25 | | | 26 | |
| | 2007.03-2011.12 | 6MT | R | L | Hatchback RWD N47 D20 B;N47 D20 D | | GDS85085 | Drive Shaft | | 30 | | 58.7 | 73 | 598 | |
| | 2007.03-2011.12 | 6MT | R | R | Hatchback RWD N47 D20 B;N47 D20 D | | GDS85073 | Drive Shaft | | 30 | | 58.8 | 73 | 653 | |

| | YEAR | TRANSM. | F/R | L/R | BODY STYLE & DRIVE TYPE & ENGINE | REMARKS | G-AP Ref. | PRODUCT | ABS | Technical Specifications A | B | C | H | L | P |
|---|---|---|---|---|---|---|---|---|---|---|---|---|---|---|---|
| **BMW** | | | | | | | | | | | | | | | |
| **123d Cabrio** | | | | | | | | | | | | | | | |
| 2.0 (150 kw) | 2008.09-2013.12 | AT | R | L | Convertible RWD N47 D20 B;N47 D20 D | | GDS85039 | Drive Shaft | | 30 | | 58.7 | 73 | 615 | |
| | 2008.09-2013.12 | AT | R | R | Convertible RWD N47 D20 B;N47 D20 D | | GDS85134 | Drive Shaft | | 30 | | 58.7 | 73 | 665 | |
| | 2008.09-2013.12 | AT | R | R | Convertible RWD N47 D20 B;N47 D20 D | Wheel Side | GCI85036 | Outer Joint | | 30 | 25 | 58.7 | 73 | 58 | I |
| | 2008.09-2013.12 | AT | R | R | Convertible RWD N47 D20 B;N47 D20 D | | GCI35025 | Inner Joint | | | 25 | | | 26 | |
| | 2008.09-2013.12 | MT | R | L | Convertible RWD N47 D20 B;N47 D20 D | | GDS85085 | Drive Shaft | | 30 | | 58.7 | 73 | 598 | |
| | 2008.09-2013.12 | MT/6MT | R | R | Convertible RWD N47 D20 B;N47 D20 D | | GDS85073 | Drive Shaft | | 30 | | 58.8 | 73 | 653 | |
| **123d Coupe** | | | | | | | | | | | | | | | |
| 2.0 (150 kw) | 2007.10-2013.09 | 6AT | R | L | Coupe RWD N47 D20 B;N47 D20 D | | GDS85039 | Drive Shaft | | 30 | | 58.7 | 73 | 615 | |
| | 2007.10-2013.09 | 6AT | R | R | Coupe RWD N47 D20 B;N47 D20 D | | GDS85134 | Drive Shaft | | 30 | | 58.7 | 73 | 665 | |
| | 2007.10-2013.09 | 6AT | R | L/R | Coupe RWD N47 D20 B;N47 D20 D | | GCI35025 | Inner Joint | | | 25 | | | 26 | |
| | 2007.10-2013.09 | 6MT | R | L | Coupe RWD N47 D20 B;N47 D20 D | | GDS85085 | Drive Shaft | | 30 | | 58.7 | 73 | 598 | |
| | 2007.10-2013.09 | 6MT | R | R | Coupe RWD N47 D20 B;N47 D20 D | | GDS85073 | Drive Shaft | | 30 | | 58.8 | 73 | 653 | |
| **125d** | | | | | | | | | | | | | | | |
| 2.0 (155 kw) | 2011.12-2019.05 | AT | R | L | Hatchback RWD N47 D20 D | | GDS85110 | Drive Shaft | | 28 | 32 | 57 | 71 | 748 | |
| | 2011.12-2019.05 | AT | R | R | Hatchback RWD N47 D20 D | | GDS85109 | Drive Shaft | | 28 | 32 | 57 | 71 | 802 | |
| | 2011.12-2019.05 | AT | R | R | Hatchback RWD N47 D20 D | | GCI85086 | Inner Joint | | 28 | 28 | 62.5 | 71 | 91 | |
| | 2011.12-2019.05 | AT | R | L/R | Hatchback RWD N47 D20 D | | GCI85087 | Inner Joint | | 32 | 28 | 50 | 85 | 99 | |
| | 2012.03-2019.06 | AT | R | L | Hatchback RWD N47 D20 D;B47 D20 B | | GDS85110 | Drive Shaft | | 28 | 32 | 57 | 71 | 748 | |
| | 2012.03-2019.06 | AT | R | R | Hatchback RWD N47 D20 D;B47 D20 B | | GDS85109 | Drive Shaft | | 28 | 32 | 57 | 71 | 802 | |
| | 2012.03-2019.06 | AT | R | R | Hatchback RWD N47 D20 D;B47 D20 B | | GCI85086 | Inner Joint | | 28 | 28 | 62.5 | 71 | 91 | |
| | 2012.03-2019.06 | AT | R | L/R | Hatchback RWD N47 D20 D;B47 D20 B | | GCI85087 | Inner Joint | | 32 | 28 | 50 | 85 | 99 | |
| 2.0 (160 kw) | 2011.12-2015.02 | AT | R | L | Hatchback RWD N47 D20 D | | GDS85110 | Drive Shaft | | 28 | 32 | 57 | 71 | 748 | |
| | 2011.12-2015.02 | AT | R | R | Hatchback RWD N47 D20 D | | GDS85109 | Drive Shaft | | 28 | 32 | 57 | 71 | 802 | |
| | 2011.12-2015.02 | AT | R | L | Hatchback RWD N47 D20 D | | GCI85086 | Inner Joint | | 28 | 28 | 62.5 | 71 | 91 | |
| | 2011.12-2015.02 | AT | R | L/R | Hatchback RWD N47 D20 D | | GCI85087 | Inner Joint | | 32 | 28 | 50 | 85 | 99 | |
| | 2012.03-2015.02 | 8AT | R | L | Hatchback RWD N47 D20 D | | GDS85110 | Drive Shaft | | 28 | 32 | 57 | 71 | 748 | |
| | 2012.03-2015.02 | AT | R | R | Hatchback RWD N47 D20 D | | GDS85109 | Drive Shaft | | 28 | 32 | 57 | 71 | 802 | |
| | 2012.03-2015.02 | AT | R | R | Hatchback RWD N47 D20 D | | GCI85086 | Inner Joint | | 28 | 28 | 62.5 | 71 | 91 | |
| | 2012.03-2015.02 | AT | R | R | Hatchback RWD N47 D20 D | | GCI85087 | Inner Joint | | 32 | 28 | 50 | 85 | 99 | |
| 2.0 (165 kw) | 2015.03-2019.05 | AT | R | L | Hatchback RWD B47 D20 B | | GDS85110 | Drive Shaft | | 28 | 32 | 57 | 71 | 748 | |
| | 2015.03-2019.05 | AT | R | R | Hatchback RWD B47 D20 B | | GDS85109 | Drive Shaft | | 28 | 32 | 57 | 71 | 802 | |
| | 2015.03-2019.05 | AT | R | L/R | Hatchback RWD B47 D20 B | | GCI85086 | Inner Joint | | 28 | 28 | 62.5 | 71 | 91 | |
| | 2015.03-2019.05 | AT | R | L/R | Hatchback RWD B47 D20 B | | GCI85087 | Inner Joint | | 32 | 28 | 50 | 85 | 99 | |
| | 2015.03-2019.06 | AT | R | L | Hatchback RWD B47 D20 B | | GDS85110 | Drive Shaft | | 28 | 32 | 57 | 71 | 748 | |
| | 2015.03-2019.06 | AT | R | R | Hatchback RWD B47 D20 B | | GDS85109 | Drive Shaft | | 28 | 32 | 57 | 71 | 802 | |
| | 2015.03-2019.06 | AT | R | L/R | Hatchback RWD B47 D20 B | | GCI85086 | Inner Joint | | 28 | 28 | 62.5 | 71 | 91 | |
| | 2015.03-2019.06 | AT | R | L/R | Hatchback RWD B47 D20 B | | GCI85087 | Inner Joint | | 32 | 28 | 50 | 85 | 99 | |
| **125i** | | | | | | | | | | | | | | | |
| 2.0 (160 kw) | 2011.12-2019.12 | 8AT/6MT | R | L | Hatchback RWD N20 B20 A | | GDS85066 | Drive Shaft | | 28 | 27 | 57.4 | 71 | 744 | |
| | 2011.12-2019.12 | 8AT/6MT | R | R | Hatchback RWD N20 B20 A | | GDS85067 | Drive Shaft | | 28 | 27 | 57.4 | 71 | 800 | |
| | 2012.03-2017.11 | 6MT | R | L/R | Hatchback RWD N20 B20 A | Diameter [mm]:35 | GCI83732 | Inner Joint | | 27 | 25 | 43.9 | 75 | 72 | |
| | 2012.03-2017.11 | 8AT/6MT | R | L | Hatchback RWD N20 B20 A | | GDS85066 | Drive Shaft | | 28 | 27 | 57.4 | 71 | 744 | |
| | 2012.03-2017.11 | 8AT/6MT | R | R | Hatchback RWD N20 B20 A | | GDS85067 | Drive Shaft | | 28 | 27 | 57.4 | 71 | 800 | |
| | 2014.11-2017.11 | MT | R | L | Hatchback RWD N20 B20 A | | GDS85066 | Drive Shaft | | 28 | 27 | 57.4 | 71 | 744 | |
| | 2014.11-2017.11 | MT | R | R | Hatchback RWD N20 B20 A | | GDS85067 | Drive Shaft | | 28 | 27 | 57.4 | 71 | 800 | |
| 2.0 (165 kw) | 2015.10-2019.06 | 8AT | R | L | Hatchback RWD B48 B20 B | | GDS85066 | Drive Shaft | | 28 | 27 | 57.4 | 71 | 744 | |
| | 2015.10-2019.06 | 8AT | R | R | Hatchback RWD B48 B20 B | | GDS85067 | Drive Shaft | | 28 | 27 | 57.4 | 71 | 800 | |
| | 2016.07-2019.06 | 8AT | R | L | Hatchback RWD B48 B20 B | | GDS85066 | Drive Shaft | | 28 | 27 | 57.4 | 71 | 744 | |
| | 2016.07-2019.06 | 8AT | R | R | Hatchback RWD B48 B20 B | | GDS85067 | Drive Shaft | | 28 | 27 | 57.4 | 71 | 800 | |
| 2.0 (175 kw) | 2012.03-2017.11 | 6MT | R | L/R | Hatchback RWD N20 B20 A | Diameter [mm]:35 | GCI83732 | Inner Joint | | 27 | 25 | 43.9 | 75 | 72 | |
| | 2012.03-2017.11 | AT/MT | R | L | Hatchback RWD N20 B20 A | | GDS85066 | Drive Shaft | | 28 | 27 | 57.4 | 71 | 744 | |
| | 2012.03-2017.11 | AT/MT | R | R | Hatchback RWD N20 B20 A | | GDS85067 | Drive Shaft | | 28 | 27 | 57.4 | 71 | 800 | |
| | 2013.03-2019.06 | AT/MT | R | L | Hatchback RWD N20 B20 A | | GDS85066 | Drive Shaft | | 28 | 27 | 57.4 | 71 | 744 | |
| | 2013.03-2019.06 | AT/MT | R | R | Hatchback RWD N20 B20 A | | GDS85067 | Drive Shaft | | 28 | 27 | 57.4 | 71 | 800 | |
| **125i Cabrio** | | | | | | | | | | | | | | | |
| 3.0 (160 kw) | 2007.12-2013.10 | 6AT/6MT | R | L | Convertible RWD N52 B30 A;N52 B30 BF;N52 B30 B | | GDS85022 | Drive Shaft | 48W | 27 | | 69 | 68 | 607 | |
| | 2007.12-2013.10 | 6AT/6MT | R | R | Convertible RWD N52 B30 A;N52 B30 BF;N52 B30 B | | GDS85023 | Drive Shaft | 48W | 27 | | 69 | 68 | 660 | |
| | 2007.12-2013.10 | 6AT/6MT | R | L/R | Convertible RWD N52 B30 A;N52 B30 BF;N52 B30 B | | GCI99145 | Outer Joint | 48W | 27 | 25 | 69 | 68 | 58 | I |
| | 2007.12-2013.10 | 6AT/6MT | R | L/R | Convertible RWD N52 B30 A;N52 B30 BF;N52 B30 B | | GCI35025 | Inner Joint | | | 25 | | | 26 | |
| **125i Coupe** | | | | | | | | | | | | | | | |
| 3.0 (160 kw) | 2008.03-2013.10 | 6AT/6MT | R | L | Coupe RWD N52 B30 A;N52 B30 BF;N52 B30 B | | GDS85022 | Drive Shaft | 48W | 27 | | 69 | 68 | 607 | |
| | 2008.03-2013.10 | 6AT/6MT | R | R | Coupe RWD N52 B30 A;N52 B30 BF;N52 B30 B | | GDS85023 | Drive Shaft | 48W | 27 | | 69 | 68 | 660 | |
| | 2008.03-2013.10 | 6AT/6MT | R | L/R | Coupe RWD N52 B30 A;N52 B30 BF;N52 B30 B | | GCI99145 | Outer Joint | 48W | 27 | 25 | 69 | 68 | 58 | I |
| | 2008.03-2013.10 | 6AT/6MT | R | L/R | Coupe RWD N52 B30 A;N52 B30 BF;N52 B30 B | | GCI35025 | Inner Joint | | | 25 | | | 26 | |

| | YEAR | TRANSM. | F/R | L/R | BODY STYLE & DRIVE TYPE & ENGINE | REMARKS | G-AP Ref. | PRODUCT | ABS | Technical Specifications A | B | C | H | L | P |
|---|---|---|---|---|---|---|---|---|---|---|---|---|---|---|---|
| **BMW** | | | | | | | | | | | | | | | |
| **128i Cabrio** | | | | | | | | | | | | | | | |
| 3.0 (172 kw) | 2007.12-2013.10 | 6AT/6MT | R | L | Convertible RWD N52 B30 A;N51 B30 A | | GDS85022 | Drive Shaft | 48W | 27 | | 69 | 68 | 607 | |
| | 2007.12-2013.10 | 6AT/6MT | R | R | Convertible RWD N52 B30 A;N51 B30 A | | GDS85023 | Drive Shaft | 48W | 27 | | 69 | 68 | 660 | |
| | 2007.12-2013.10 | 6AT/6MT | R | L | Convertible RWD N52 B30 A;N51 B30 A | | GCI35025 | Inner Joint | | | 25 | | | 26 | |
| **130i** | | | | | | | | | | | | | | | |
| 3.0 (190 kw) | 2006.09-2011.12 | AT/MT | R | L | Hatchback RWD N52 B30 A;N52 B30 BF;N52 B30 B | | GDS85039 | Drive Shaft | | 30 | | 58.7 | 73 | 615 | |
| | 2006.09-2011.12 | AT/MT | R | R | Hatchback RWD N52 B30 A;N52 B30 BF;N52 B30 B | | GDS85134 | Drive Shaft | | 30 | | 58.7 | 73 | 665 | |
| | 2006.09-2011.12 | AT/MT | R | L/R | Hatchback RWD N52 B30 A;N52 B30 BF;N52 B30 B | | GCI35025 | Inner Joint | | | 25 | | | 26 | |
| | 2007.03-2011.06 | AT/MT | R | L | Hatchback RWD N52 B30 A;N52 B30 BF;N52 B30 B;N52 B30 AF | | GDS85039 | Drive Shaft | | 30 | | 58.7 | 73 | 615 | |
| | 2007.03-2011.06 | AT/MT | R | R | Hatchback RWD N52 B30 A;N52 B30 BF;N52 B30 B;N52 B30 AF | | GDS85134 | Drive Shaft | | 30 | | 58.7 | 73 | 665 | |
| | 2007.03-2011.06 | AT/MT | R | L/R | Hatchback RWD N52 B30 A;N52 B30 BF;N52 B30 B;N52 B30 AF | | GCI35025 | Inner Joint | | | 25 | | | 26 | |
| 3.0 (195 kw) | 2005.09-2007.02 | MT | R | L | Hatchback RWD N52 B30 A;N52 B30 BF;N52 B30 AF | | GDS85039 | Drive Shaft | | 30 | | 58.7 | 73 | 615 | |
| | 2005.09-2007.02 | MT | R | R | Hatchback RWD N52 B30 A;N52 B30 BF;N52 B30 AF | | GDS85134 | Drive Shaft | | 30 | | 58.7 | 73 | 665 | |
| | 2005.09-2007.02 | MT | R | L/R | Hatchback RWD N52 B30 A;N52 B30 BF;N52 B30 AF | | GCI35025 | Inner Joint | | | 25 | | | 26 | |
| | 2006.09-2011.12 | MT | R | L | Hatchback RWD N52 B30 A;N52 B30 BF;N52 B30 B | | GDS85039 | Drive Shaft | | 30 | | 58.7 | 73 | 615 | |
| | 2006.09-2011.12 | MT | R | R | Hatchback RWD N52 B30 A;N52 B30 BF;N52 B30 B | | GDS85134 | Drive Shaft | | 30 | | 58.7 | 73 | 665 | |
| | 2006.09-2011.12 | MT | R | L/R | Hatchback RWD N52 B30 A;N52 B30 BF;N52 B30 B | | GCI35025 | Inner Joint | | | 25 | | | 26 | |
| **135i Cabrio** | | | | | | | | | | | | | | | |
| 3.0 (225 kw) | 2008.03-2013.10 | 6AT/6MT | R | R | Convertible RWD N54 B30 A;N55 B30 A | | GDS85082 | Drive Shaft | | 30 | | 58.7 | 73 | 656 | |
| | 2008.03-2013.10 | 6AT/6MT | R | R | Convertible RWD N54 B30 A;N55 B30 A | | GCI35025 | Inner Joint | | | 25 | | | 26 | |
| | 2008.03-2013.10 | 7DCT | R | L | Convertible RWD N54 B30 A;N55 B30 A | | GDS85039 | Drive Shaft | | 30 | | 58.7 | 73 | 615 | |
| | 2008.03-2013.10 | 7DCT | R | L | Convertible RWD N54 B30 A;N55 B30 A | | GCI35025 | Inner Joint | | | 25 | | | 26 | |
| | 2008.03-2013.10 | AT | R | R | Convertible RWD N54 B30 A;N55 B30 A | | GDS85134 | Drive Shaft | | 30 | | 58.7 | 73 | 665 | |
| 3.0 (240 kw) | 2008.03-2013.12 | 6MT | R | R | Convertible RWD N55 B30 A | | GDS85082 | Drive Shaft | | 30 | | 58.7 | 73 | 656 | |
| | 2008.03-2013.12 | 6MT | R | R | Convertible RWD N55 B30 A | | GCI35025 | Inner Joint | | | 25 | | | 26 | |
| **135i Coupe** | | | | | | | | | | | | | | | |
| 3.0 (225 kw) | 2007.10-2013.10 | 6AT | R | L | Coupe RWD N54 B30 A;N55 B30 A | | GDS85039 | Drive Shaft | | 30 | | 58.7 | 73 | 615 | |
| | 2007.10-2013.10 | 6AT | R | L/R | Coupe RWD N54 B30 A;N55 B30 A | | GCI35025 | Inner Joint | | | 25 | | | 26 | |
| | 2007.10-2013.10 | 6MT | R | R | Coupe RWD N54 B30 A;N55 B30 A | | GCI35025 | Inner Joint | | | 25 | | | 26 | |
| | 2007.10-2013.10 | 6MT/7DCT | R | R | Coupe RWD N54 B30 A;N55 B30 A | | GDS85082 | Drive Shaft | | 30 | | 58.7 | 73 | 656 | |
| | 2007.10-2013.10 | AT | R | R | Coupe RWD N54 B30 A;N55 B30 A | | GDS85134 | Drive Shaft | | 30 | | 58.7 | 73 | 665 | |
| 3.0 (240 kw) | 2007.10-2013.10 | 6MT | R | R | Coupe RWD N54 B30 A;N55 B30 A | | GDS85082 | Drive Shaft | | 30 | | 58.7 | 73 | 656 | |
| | 2007.10-2013.10 | 6MT | R | R | Coupe RWD N54 B30 A;N55 B30 A | | GCI35025 | Inner Joint | | | 25 | | | 26 | |
| **214d Active Tourer** | | | | | | | | | | | | | | | |
| 1.5 (70 kw) | 2014.07-2018.02 | 6MT | F | L | MPV FWD B37 C15 A | | GDS82631 | Drive Shaft | | 31 | 34 | 56 | | 563 | |
| | 2014.07-2018.02 | 6MT | F | R | MPV FWD B37 C15 A | | GDS82632 | Drive Shaft | | 31 | 34 | 56 | | 920 | |
| | 2014.07-2018.02 | 6MT | F | L/R | MPV FWD B37 C15 A | | GCO81683 | Outer Joint | | 31 | 33 | 56 | | 71 | M |
| | 2014.07-2018.02 | 6MT | F | L | MPV FWD B37 C15 A | | GCI81758 | Inner Joint | | 34 | 33 | 35 | 54.5 | 96 | |
| | 2014.07-2018.02 | 6MT | F | R | MPV FWD B37 C15 A | | GCI81917 | Inner Joint | | 34 | 33 | 35 | 401 | 83 | |
| **214d Gran Tourer** | | | | | | | | | | | | | | | |
| 1.5 (70 kw) | 2015.07-2018.02 | 6MT | F | L | MPV FWD B37 C15 A | | GDS82631 | Drive Shaft | | 31 | 34 | 56 | | 563 | |
| | 2015.07-2018.02 | 6MT | F | R | MPV FWD B37 C15 A | | GDS82632 | Drive Shaft | | 31 | 34 | 56 | | 920 | |
| | 2015.07-2018.02 | 6MT | F | L/R | MPV FWD B37 C15 A | | GCO81683 | Outer Joint | | 31 | 33 | 56 | | 71 | M |
| | 2015.07-2018.02 | 6MT | F | L | MPV FWD B37 C15 A | | GCI81758 | Inner Joint | | 34 | 33 | 35 | 54.5 | 96 | |
| | 2015.07-2018.02 | 6MT | F | R | MPV FWD B37 C15 A | | GCI81917 | Inner Joint | | 34 | 33 | 35 | 401 | 83 | |
| **216d Active Tourer** | | | | | | | | | | | | | | | |
| 1.5 (85 kw) | 2014.03-2021.10 | 6AT | F | L | MPV FWD B37 C15 A | | GDS83712 | Drive Shaft | | 31 | 26 | 56 | | 541 | |
| | 2014.03-2021.10 | 6AT | F | R | MPV FWD B37 C15 A | | GDS83713 | Drive Shaft | | 31 | 26 | 56 | | 905 | |
| | 2014.03-2021.10 | 6AT | F | L/R | MPV FWD B37 C15 A | | GCO82471 | Outer Joint | | 31 | 26 | 56 | | 73.5 | M |
| | 2014.03-2021.10 | 6AT | F | L | MPV FWD B37 C15 A | | GCI82347 | Inner Joint | | 26 | 32 | 31 | 65 | 92 | |
| | 2014.03-2021.10 | 6AT | F | R | MPV FWD B37 C15 A | | GCI82348 | Inner Joint | | 26 | 32 | 31 | 388 | 88 | |
| | 2014.03-2021.10 | 6MT | F | L | MPV FWD B37 C15 A | | GDS84525 | Drive Shaft | | 31 | 37 | 56 | | 548 | |
| | 2014.03-2021.10 | 6MT | F | R | MPV FWD B37 C15 A | | GDS84526 | Drive Shaft | | 31 | 37 | 56 | | 929 | |
| | 2014.03-2021.10 | 6MT | F | L/R | MPV FWD B37 C15 A | | GCO81811 | Outer Joint | | 31 | 33 | 56 | | 70 | I |
| | 2014.03-2021.10 | 6MT | F | L | MPV FWD B37 C15 A | | GCI82835 | Inner Joint | | 37 | 33 | 35 | 58 | 108.5 | |
| | 2014.03-2021.10 | 6MT | F | R | MPV FWD B37 C15 A | | GCI82836 | Inner Joint | | 37 | 33 | 35 | 414 | 103.5 | |
| | 2014.03-2021.10 | 7DCT | F | L | MPV FWD B37 C15 A | | GDS84222 | Drive Shaft | | 31 | 27 | 56 | | 547 | |
| | 2014.03-2021.10 | 7DCT | F | R | MPV FWD B37 C15 A | | GDS84221 | Drive Shaft | | 31 | 27 | 56 | | 938 | |
| | 2014.03-2021.10 | 7DCT | F | L/R | MPV FWD B37 C15 A | | GCO82738 | Outer Joint | | 31 | 26 | 56 | | 73.5 | M |
| | 2014.03-2021.10 | 7DCT | F | L | MPV FWD B37 C15 A | | GCI82649 | Inner Joint | | 27 | 32 | 35 | 58 | 102 | |
| | 2014.03-2021.10 | 7DCT | F | R | MPV FWD B37 C15 A | | GCI82648 | Inner Joint | | 27 | 32 | 35 | 420 | 89 | |
| **216d Gran Coupe** | | | | | | | | | | | | | | | |
| 1.5 (85 kw) | 2020.03- | 7AT | F | L | Coupe FWD B37 C15 A | | GDS84222 | Drive Shaft | | 31 | 27 | 56 | | 547 | |
| | 2020.03- | 7AT | F | R | Coupe FWD B37 C15 A | | GDS84221 | Drive Shaft | | 31 | 27 | 56 | | 938 | |
| | 2020.03- | 7AT | F | L/R | Coupe FWD B37 C15 A | | GCO82738 | Outer Joint | | 31 | 26 | 56 | | 73.5 | M |
| | 2020.03- | 7AT | F | L | Coupe FWD B37 C15 A | | GCI82649 | Inner Joint | | 27 | 32 | 35 | 58 | 102 | |

| | YEAR | TRANSM. | F/R | L/R | BODY STYLE & DRIVE TYPE & ENGINE | REMARKS | G-AP Ref. | PRODUCT | ABS | Technical Specifications A | B | C | H | L | P |
|---|---|---|---|---|---|---|---|---|---|---|---|---|---|---|---|
| **BMW** | | | | | | | | | | | | | | | |
| **216d Gran Coupe** | | | | | | | | | | | | | | | |
| 1.5 (85 kw) | 2020.03- | 7AT | F | R | Coupe FWD B37 C15 A | | GCI82648 | Inner Joint | | 27 | 32 | 35 | 420 | 89 | |
| **216d Gran Tourer** | | | | | | | | | | | | | | | |
| 1.5 (85 kw) | 2015.03- | 6AT | F | L | MPV FWD B37 C15 A | | GDS83712 | Drive Shaft | | 31 | 26 | 56 | | 541 | |
| | 2015.03- | 6AT | F | R | MPV FWD B37 C15 A | | GDS83713 | Drive Shaft | | 31 | 26 | 56 | | 905 | |
| | 2015.03- | 6AT | F | L/R | MPV FWD B37 C15 A | | GCO82471 | Outer Joint | | 31 | 26 | 56 | | 73.5 | M |
| | 2015.03- | 6AT | F | L | MPV FWD B37 C15 A | | GCI82347 | Inner Joint | | 26 | 32 | 31 | 65 | 92 | |
| | 2015.03- | 6AT | F | R | MPV FWD B37 C15 A | | GCI82348 | Inner Joint | | 26 | 32 | 31 | 388 | 88 | |
| | 2015.03- | 6MT | F | L | MPV FWD B37 C15 A | | GDS84525 | Drive Shaft | | 31 | 37 | 56 | | 548 | |
| | 2015.03- | 6MT | F | R | MPV FWD B37 C15 A | | GDS84526 | Drive Shaft | | 31 | 37 | 56 | | 929 | |
| | 2015.03- | 6MT | F | L/R | MPV FWD B37 C15 A | | GCO81811 | Outer Joint | | 31 | 33 | 56 | | 70 | I |
| | 2015.03- | 6MT | F | L | MPV FWD B37 C15 A | | GCI82835 | Inner Joint | | 37 | 33 | 35 | 58 | 108.5 | |
| | 2015.03- | 6MT | F | R | MPV FWD B37 C15 A | | GCI82836 | Inner Joint | | 37 | 33 | 35 | 414 | 103.5 | |
| | 2015.03- | 7DCT | F | L | MPV FWD B37 C15 A | | GDS84222 | Drive Shaft | | 31 | 27 | 56 | | 547 | |
| | 2015.03- | 7DCT | F | R | MPV FWD B37 C15 A | | GDS84221 | Drive Shaft | | 31 | 27 | 56 | | 938 | |
| | 2015.03- | 7DCT | F | L/R | MPV FWD B37 C15 A | | GCO82738 | Outer Joint | | 31 | 26 | 56 | | 73.5 | M |
| | 2015.03- | 7DCT | F | L | MPV FWD B37 C15 A | | GCI82649 | Inner Joint | | 27 | 32 | 35 | 58 | 102 | |
| | 2015.03- | 7DCT | F | R | MPV FWD B37 C15 A | | GCI82648 | Inner Joint | | 27 | 32 | 35 | 420 | 89 | |
| **216i Active Tourer** | | | | | | | | | | | | | | | |
| 1.5 (75 kw) | 2015.02-2018.02 | 6MT | F | L | MPV FWD B38 A15 A | | GDS82631 | Drive Shaft | | 31 | 34 | 56 | | 563 | |
| | 2015.02-2018.02 | 6MT | F | R | MPV FWD B38 A15 A | | GDS82632 | Drive Shaft | | 31 | 34 | 56 | | 920 | |
| | 2015.02-2018.02 | 6MT | F | L/R | MPV FWD B38 A15 A | | GCO81683 | Outer Joint | | 31 | 33 | 56 | | 71 | M |
| | 2015.02-2018.02 | 6MT | F | L | MPV FWD B38 A15 A | | GCI81758 | Inner Joint | | 34 | 33 | 35 | 54.5 | 96 | |
| | 2015.02-2018.02 | 6MT | F | R | MPV FWD B38 A15 A | | GCI81917 | Inner Joint | | 34 | 33 | 35 | 401 | 83 | |
| 1.5 (80 kw) | 2018.03-2021.10 | 6MT | F | L | MPV FWD B38 A15 A | | GDS82631 | Drive Shaft | | 31 | 34 | 56 | | 563 | |
| | 2018.03-2021.10 | 6MT | F | R | MPV FWD B38 A15 A | | GDS82632 | Drive Shaft | | 31 | 34 | 56 | | 920 | |
| | 2018.03-2021.10 | 6MT | F | L/R | MPV FWD B38 A15 A | | GCO81683 | Outer Joint | | 31 | 33 | 56 | | 71 | M |
| | 2018.03-2021.10 | 6MT | F | L | MPV FWD B38 A15 A | | GCI81758 | Inner Joint | | 34 | 33 | 35 | 54.5 | 96 | |
| | 2018.03-2021.10 | 6MT | F | R | MPV FWD B38 A15 A | | GCI81917 | Inner Joint | | 34 | 33 | 35 | 401 | 83 | |
| **216i Gran Tourer** | | | | | | | | | | | | | | | |
| 1.5 (75 kw) | 2015.07-2018.02 | 6MT | F | L | MPV FWD B38 A15 A | | GDS82631 | Drive Shaft | | 31 | 34 | 56 | | 563 | |
| | 2015.07-2018.02 | 6MT | F | R | MPV FWD B38 A15 A | | GDS82632 | Drive Shaft | | 31 | 34 | 56 | | 920 | |
| | 2015.07-2018.02 | 6MT | F | L/R | MPV FWD B38 A15 A | | GCO81683 | Outer Joint | | 31 | 33 | 56 | | 71 | M |
| | 2015.07-2018.02 | 6MT | F | L | MPV FWD B38 A15 A | | GCI81758 | Inner Joint | | 34 | 33 | 35 | 54.5 | 96 | |
| | 2015.07-2018.02 | 6MT | F | R | MPV FWD B38 A15 A | | GCI81917 | Inner Joint | | 34 | 33 | 35 | 401 | 83 | |
| 1.5 (80 kw) | 2018.03- | 6MT | F | L | MPV FWD B38 A15 A | | GDS82631 | Drive Shaft | | 31 | 34 | 56 | | 563 | |
| | 2018.03- | 6MT | F | R | MPV FWD B38 A15 A | | GDS82632 | Drive Shaft | | 31 | 34 | 56 | | 920 | |
| | 2018.03- | 6MT | F | L/R | MPV FWD B38 A15 A | | GCO81683 | Outer Joint | | 31 | 33 | 56 | | 71 | M |
| | 2018.03- | 6MT | F | L | MPV FWD B38 A15 A | | GCI81758 | Inner Joint | | 34 | 33 | 35 | 54.5 | 96 | |
| | 2018.03- | 6MT | F | R | MPV FWD B38 A15 A | | GCI81917 | Inner Joint | | 34 | 33 | 35 | 401 | 83 | |
| **218d Active Tourer** | | | | | | | | | | | | | | | |
| 2.0 (100 kw) | 2013.11-2021.10 | 6MT | F | L | MPV FWD B47 C20 A;B47 C20 B | | GDS56905 | Drive Shaft | | 31 | 37 | 56 | | 546 | |
| | 2013.11-2021.10 | 6MT | F | R | MPV FWD B47 C20 A;B47 C20 B | | GDS56579 | Drive Shaft | | 31 | 37 | 56 | | 931 | |
| | 2013.11-2021.10 | 6MT | F | L/R | MPV FWD B47 C20 A;B47 C20 B | | GCO83263 | Outer Joint | | 31 | 26 | 56 | | 73.5 | M |
| | 2013.11-2021.10 | 6MT | F | L | MPV FWD B47 C20 A;B47 C20 B | | GCI83553 | Inner Joint | | 37 | 32 | 35 | 58 | 102 | |
| | 2013.11-2021.10 | 6MT | F | R | MPV FWD B47 C20 A;B47 C20 B | | GCI83386 | Inner Joint | | 37 | 32 | 35 | 450 | 90 | |
| | 2013.11-2021.10 | 8AT | F | L | MPV FWD B47 C20 A;B47 C20 B | For Engine code:B47C20A,Diameter:25mm | GDS82177 | Drive Shaft | | 31 | 28 | 56 | | 538 | |
| | 2013.11-2021.10 | 8AT | F | R | MPV FWD B47 C20 A;B47 C20 B | | GDS84087 | Drive Shaft | | 31 | 28 | 56 | | 904 | |
| | 2013.11-2021.10 | 8AT | F | L/R | MPV FWD B47 C20 A;B47 C20 B | For Engine code:B47C20A | GCO81684 | Outer Joint | | 31 | 28 | 56 | | 77 | M |
| | 2013.11-2021.10 | 8AT | F | L | MPV FWD B47 C20 A;B47 C20 B | For Engine code:B47C20A,Diameter:25mm | GCI81659 | Inner Joint | | 28 | 28 | 33 | 66 | 93.5 | |
| | 2013.11-2021.10 | 8AT | F | R | MPV FWD B47 C20 A;B47 C20 B | For Engine Code:B47C20A | GCI82517 | Inner Joint | | 28 | 28 | 33 | 425 | 106.5 | |
| 2.0 (110 kw) | 2013.11-2021.10 | 6MT | F | L | MPV FWD B47 C20 A;B47 C20 B | | GDS56905 | Drive Shaft | | 31 | 37 | 56 | | 546 | |
| | 2013.11-2021.10 | 6MT | F | R | MPV FWD B47 C20 A;B47 C20 B | | GDS56579 | Drive Shaft | | 31 | 37 | 56 | | 931 | |
| | 2013.11-2021.10 | 6MT | F | L/R | MPV FWD B47 C20 A;B47 C20 B | | GCO83263 | Outer Joint | | 31 | 26 | 56 | | 73.5 | M |
| | 2013.11-2021.10 | 6MT | F | L | MPV FWD B47 C20 A;B47 C20 B | | GCI83553 | Inner Joint | | 37 | 32 | 35 | 58 | 102 | |
| | 2013.11-2021.10 | 6MT | F | R | MPV FWD B47 C20 A;B47 C20 B | | GCI83386 | Inner Joint | | 37 | 32 | 35 | 450 | 90 | |
| | 2013.11-2021.10 | 8AT | F | L | MPV FWD B47 C20 A;B47 C20 B | For Engine code:B47C20A | GDS82177 | Drive Shaft | | 31 | 28 | 56 | | 538 | |
| | 2013.11-2021.10 | 8AT | F | R | MPV FWD B47 C20 A;B47 C20 B | | GDS84087 | Drive Shaft | | 31 | 28 | 56 | | 904 | |
| | 2013.11-2021.10 | 8AT | F | L/R | MPV FWD B47 C20 A;B47 C20 B | For Engine code:B47C20A | GCO81684 | Outer Joint | | 31 | 28 | 56 | | 77 | M |
| | 2013.11-2021.10 | 8AT | F | L | MPV FWD B47 C20 A;B47 C20 B | For Engine code:B47C20A | GCI81659 | Inner Joint | | 28 | 28 | 33 | 66 | 93.5 | |
| | 2013.11-2021.10 | 8AT | F | R | MPV FWD B47 C20 A;B47 C20 B | For Engine code:B47C20A | GCI82517 | Inner Joint | | 28 | 28 | 33 | 425 | 106.5 | |
| | 2014.07-2021.10 | 6MT | F | L | Box Body/MPV FWD B47 C20 A;B47 C20 B | | GDS56905 | Drive Shaft | | 31 | 37 | 56 | | 546 | |
| | 2014.07-2021.10 | 6MT | F | R | Box Body/MPV FWD B47 C20 A;B47 C20 B | | GDS56579 | Drive Shaft | | 31 | 37 | 56 | | 931 | |
| | 2014.07-2021.10 | 6MT | F | L/R | Box Body/MPV FWD B47 C20 A;B47 C20 B | | GCO83263 | Outer Joint | | 31 | 26 | 56 | | 73.5 | M |
| | 2014.07-2021.10 | 6MT | F | L | Box Body/MPV FWD B47 C20 A;B47 C20 B | | GCI83553 | Inner Joint | | 37 | 32 | 35 | 58 | 102 | |
| | 2014.07-2021.10 | 6MT | F | R | Box Body/MPV FWD B47 C20 A;B47 C20 B | | GCI83386 | Inner Joint | | 37 | 32 | 35 | 450 | 90 | |

| | YEAR | TRANSM. | F/R | L/R | BODY STYLE & DRIVE TYPE & ENGINE | REMARKS | G-AP Ref. | PRODUCT | ABS | Technical Specifications A | B | C | H | L | P |
|---|---|---|---|---|---|---|---|---|---|---|---|---|---|---|---|
| **BMW** | | | | | | | | | | | | | | | |
| **218d Cabrio** | | | | | | | | | | | | | | | |
| 2.0 (100 kw) | 2015.07-2020.09 | AT/MT | R | L | Convertible RWD B47 D20 A | | GDS85066 | Drive Shaft | | 28 | 27 | 57.4 | 71 | 744 | |
| | 2015.07-2020.09 | AT/MT | R | R | Convertible RWD B47 D20 A | | GDS85067 | Drive Shaft | | 28 | 27 | 57.4 | 71 | 800 | |
| 2.0 (110 kw) | 2015.07-2020.09 | 8AT/6MT | R | L | Convertible RWD B47 D20 A | | GDS85066 | Drive Shaft | | 28 | 27 | 57.4 | 71 | 744 | |
| | 2015.07-2020.09 | 8AT/6MT | R | R | Convertible RWD B47 D20 A | | GDS85067 | Drive Shaft | | 28 | 27 | 57.4 | 71 | 800 | |
| **218d Coupe** | | | | | | | | | | | | | | | |
| 2.0 (100 kw) | 2014.03-2020.09 | 8AT/6MT | R | L | Coupe RWD N47 D20 C;B47 D20 A | | GDS85066 | Drive Shaft | | 28 | 27 | 57.4 | 71 | 744 | |
| | 2014.03-2020.09 | 8AT/6MT | R | R | Coupe RWD N47 D20 C;B47 D20 A | | GDS85067 | Drive Shaft | | 28 | 27 | 57.4 | 71 | 800 | |
| 2.0 (105 kw) | 2014.03-2015.06 | AT/MT | R | L | Coupe RWD N47 D20 C | | GDS85066 | Drive Shaft | | 28 | 27 | 57.4 | 71 | 744 | |
| | 2014.03-2015.06 | AT/MT | R | R | Coupe RWD N47 D20 C | | GDS85067 | Drive Shaft | | 28 | 27 | 57.4 | 71 | 800 | |
| 2.0 (110 kw) | 2015.07-2020.09 | 8AT/6MT | R | L | Coupe RWD B47 D20 A | | GDS85066 | Drive Shaft | | 28 | 27 | 57.4 | 71 | 744 | |
| | 2015.07-2020.09 | 8AT/6MT | R | R | Coupe RWD B47 D20 A | | GDS85067 | Drive Shaft | | 28 | 27 | 57.4 | 71 | 800 | |
| **218d Gran Coupe** | | | | | | | | | | | | | | | |
| 2.0 (100 kw) | 2020.07-2024.10 | 6MT | F | L | Coupe FWD B47 C20 B | | GDS56905 | Drive Shaft | | 31 | 37 | 56 | | 546 | |
| | 2020.07-2024.10 | 6MT | F | R | Coupe FWD B47 C20 B | | GDS56579 | Drive Shaft | | 31 | 37 | 56 | | 931 | |
| | 2020.07-2024.10 | 6MT | F | L/R | Coupe FWD B47 C20 B | | GCO83263 | Outer Joint | | 31 | 26 | 56 | | 73.5 | M |
| | 2020.07-2024.10 | 6MT | F | L | Coupe FWD B47 C20 B | | GCI83553 | Inner Joint | | 37 | 32 | 35 | 58 | 102 | |
| | 2020.07-2024.10 | 6MT | F | R | Coupe FWD B47 C20 B | | GCI83386 | Inner Joint | | 37 | 32 | 35 | 450 | 90 | |
| 2.0 (110 kw) | 2020.07- | 6MT | F | L | Coupe FWD B47 C20 B | | GDS56905 | Drive Shaft | | 31 | 37 | 56 | | 546 | |
| | 2020.07- | 6MT | F | R | Coupe FWD B47 C20 B | | GDS56579 | Drive Shaft | | 31 | 37 | 56 | | 931 | |
| | 2020.07- | 6MT | F | L/R | Coupe FWD B47 C20 B | | GCO83263 | Outer Joint | | 31 | 26 | 56 | | 73.5 | M |
| | 2020.07- | 6MT | F | L | Coupe FWD B47 C20 B | | GCI83553 | Inner Joint | | 37 | 32 | 35 | 58 | 102 | |
| | 2020.07- | 6MT | F | R | Coupe FWD B47 C20 B | | GCI83386 | Inner Joint | | 37 | 32 | 35 | 450 | 90 | |
| **218d Gran Tourer** | | | | | | | | | | | | | | | |
| 2.0 (100 kw) | 2014.07- | 6MT | F | L | MPV FWD B47 C20 A;B47 C20 B | | GDS56905 | Drive Shaft | | 31 | 37 | 56 | | 546 | |
| | 2014.07- | 6MT | F | R | MPV FWD B47 C20 A;B47 C20 B | | GDS56579 | Drive Shaft | | 31 | 37 | 56 | | 931 | |
| | 2014.07- | 6MT | F | L/R | MPV FWD B47 C20 A;B47 C20 B | | GCO83263 | Outer Joint | | 31 | 26 | 56 | | 73.5 | M |
| | 2014.07- | 6MT | F | L | MPV FWD B47 C20 A;B47 C20 B | | GCI83553 | Inner Joint | | 37 | 32 | 35 | 58 | 102 | |
| | 2014.07- | 6MT | F | R | MPV FWD B47 C20 A;B47 C20 B | | GCI83386 | Inner Joint | | 37 | 32 | 35 | 450 | 90 | |
| | 2014.07- | 8AT | F | L | MPV FWD B47 C20 A;B47 C20 B | For Engine code:B47C20A,Diameter:25mm | GDS82177 | Drive Shaft | | 31 | 28 | 56 | | 538 | |
| | 2014.07- | 8AT | F | R | MPV FWD B47 C20 A;B47 C20 B | | GDS84087 | Drive Shaft | | 31 | 28 | 56 | | 904 | |
| | 2014.07- | 8AT | F | L/R | MPV FWD B47 C20 A;B47 C20 B | For Engine code:B47C20A | GCO81684 | Outer Joint | | 31 | 28 | 56 | | 77 | M |
| | 2014.07- | 8AT | F | L | MPV FWD B47 C20 A;B47 C20 B | For Engine code:B47C20A,Diameter:25mm | GCI81659 | Inner Joint | | 28 | 28 | 33 | 66 | 93.5 | |
| | 2014.07- | 8AT | F | R | MPV FWD B47 C20 A;B47 C20 B | For Engine Code:B47C20A | GCI82517 | Inner Joint | | 28 | 28 | 33 | 425 | 106.5 | |
| 2.0 (110 kw) | 2014.07- | 8AT | F | L | Box Body/MPV FWD B47 C20 A;B47 C20 B | For Engine Code:B47C20A | GDS82177 | Drive Shaft | | 31 | 28 | 56 | | 538 | |
| | 2014.07- | 8AT | F | R | Box Body/MPV FWD B47 C20 A;B47 C20 B | | GDS84087 | Drive Shaft | | 31 | 28 | 56 | | 904 | |
| | 2014.07- | 8AT | F | L/R | Box Body/MPV FWD B47 C20 A;B47 C20 B | For Engine Code:B47C20A | GCO81684 | Outer Joint | | 31 | 28 | 56 | | 77 | M |
| | 2014.07- | 8AT | F | L | Box Body/MPV FWD B47 C20 A;B47 C20 B | For Engine Code:B47C20A | GCI81659 | Inner Joint | | 28 | 28 | 33 | 66 | 93.5 | |
| | 2014.07- | 8AT | F | R | Box Body/MPV FWD B47 C20 A;B47 C20 B | For Engine Code:B47C20A | GCI82517 | Inner Joint | | 28 | 28 | 33 | 425 | 106.5 | |
| | 2014.07- | 6MT | F | L | MPV FWD B47 C20 A;B47 C20 B | | GDS56905 | Drive Shaft | | 31 | 37 | 56 | | 546 | |
| | 2014.07- | 6MT | F | R | MPV FWD B47 C20 A;B47 C20 B | | GDS56579 | Drive Shaft | | 31 | 37 | 56 | | 931 | |
| | 2014.07- | 6MT | F | L/R | MPV FWD B47 C20 A;B47 C20 B | | GCO83263 | Outer Joint | | 31 | 26 | 56 | | 73.5 | M |
| | 2014.07- | 6MT | F | L | MPV FWD B47 C20 A;B47 C20 B | | GCI83553 | Inner Joint | | 37 | 32 | 35 | 58 | 102 | |
| | 2014.07- | 6MT | F | R | MPV FWD B47 C20 A;B47 C20 B | | GCI83386 | Inner Joint | | 37 | 32 | 35 | 450 | 90 | |
| | 2014.07- | 8AT | F | L | MPV FWD B47 C20 A;B47 C20 B | For Engine code:B47C20A | GDS82177 | Drive Shaft | | 31 | 28 | 56 | | 538 | |
| | 2014.07- | 8AT | F | R | MPV FWD B47 C20 A;B47 C20 B | | GDS84087 | Drive Shaft | | 31 | 28 | 56 | | 904 | |
| | 2014.07- | 8AT | F | L/R | MPV FWD B47 C20 A;B47 C20 B | For Engine code:B47C20A | GCO81684 | Outer Joint | | 31 | 28 | 56 | | 77 | M |
| | 2014.07- | 8AT | F | L | MPV FWD B47 C20 A;B47 C20 B | For Engine code:B47C20A | GCI81659 | Inner Joint | | 28 | 28 | 33 | 66 | 93.5 | |
| | 2014.07- | 8AT | F | R | MPV FWD B47 C20 A;B47 C20 B | For Engine code:B47C20A | GCI82517 | Inner Joint | | 28 | 28 | 33 | 425 | 106.5 | |
| **218d xDrive Active Tourer** | | | | | | | | | | | | | | | |
| 2.0 (100 kw) | 2014.12-2021.10 | 6MT | F | R | MPV 4WD B47 C20 A;B47 C20 B | | GCO81684 | Outer Joint | | 31 | 28 | 56 | | 77 | M |
| | 2014.12-2021.10 | 8AT | F | L | MPV 4WD B47 C20 A;B47 C20 B | Diameter:25mm | GDS82177 | Drive Shaft | | 31 | 28 | 56 | | 538 | |
| | 2014.12-2021.10 | 8AT | F | L/R | MPV 4WD B47 C20 A;B47 C20 B | | GCO81684 | Outer Joint | | 31 | 28 | 56 | | 77 | M |
| | 2014.12-2021.10 | 8AT | F | L | MPV 4WD B47 C20 A;B47 C20 B | Diameter:25mm | GCI81659 | Inner Joint | | 28 | 28 | 33 | 66 | 93.5 | |
| | 2014.12-2021.10 | 8AT/6MT | F | R | MPV 4WD B47 C20 A;B47 C20 B | | GDS82633 | Drive Shaft | | 31 | 35 | 56 | | 499 | |
| | 2014.12-2021.10 | 8AT/6MT | F | R | MPV 4WD B47 C20 A;B47 C20 B | | GCI81924 | Inner Joint | | 35 | 28 | 44.5 | | 126 | |
| | 2014.12-2021.10 | 8AT/6MT | R | L/R | MPV 4WD B47 C20 A;B47 C20 B | | GDS82176 | Drive Shaft | | 31 | 27 | 56 | | 731 | |
| | 2014.12-2021.10 | 8AT/6MT | R | L/R | MPV 4WD B47 C20 A;B47 C20 B | | GCO81685 | Outer Joint | | 31 | 30 | 56 | | 61.5 | I |
| | 2014.12-2021.10 | 8AT/6MT | R | L/R | MPV 4WD B47 C20 A;B47 C20 B | | GCI81658 | Inner Joint | | 27 | 30 | 43.7 | 87 | 100 | |
| 2.0 (110 kw) | 2014.12-2021.10 | 8AT | F | L | MPV 4WD B47 C20 A;B47 C20 B | | GDS82177 | Drive Shaft | | 31 | 28 | 56 | | 538 | |
| | 2014.12-2021.10 | 8AT | F | L | MPV 4WD B47 C20 A;B47 C20 B | | GCI81659 | Inner Joint | | 28 | 28 | 33 | 66 | 93.5 | |
| | 2014.12-2021.10 | 8AT/6MT | F | R | MPV 4WD B47 C20 A;B47 C20 B | | GDS82633 | Drive Shaft | | 31 | 35 | 56 | | 499 | |
| | 2014.12-2021.10 | 8AT/6MT | F | L/R | MPV 4WD B47 C20 A;B47 C20 B | | GCO81684 | Outer Joint | | 31 | 28 | 56 | | 77 | M |
| | 2014.12-2021.10 | 8AT/6MT | F | R | MPV 4WD B47 C20 A;B47 C20 B | | GCI81924 | Inner Joint | | 35 | 28 | 44.5 | | 126 | |
| | 2014.12-2021.10 | 8AT/6MT | R | L/R | MPV 4WD B47 C20 A;B47 C20 B | | GDS82176 | Drive Shaft | | 31 | 27 | 56 | | 731 | |
| | 2014.12-2021.10 | 8AT/6MT | R | L/R | MPV 4WD B47 C20 A;B47 C20 B | | GCO81685 | Outer Joint | | 31 | 30 | 56 | | 61.5 | I |

| | YEAR | TRANSM. | F/R | L/R | BODY STYLE & DRIVE TYPE & ENGINE | REMARKS | G-AP Ref. | PRODUCT | ABS | Technical Specifications A | B | C | H | L | P |
|---|---|---|---|---|---|---|---|---|---|---|---|---|---|---|---|
| **BMW** | | | | | | | | | | | | | | | |
| **218d xDrive Active Tourer** | | | | | | | | | | | | | | | |
| 2.0 (110 kw) | 2014.12-2021.10 | 8AT/6MT | R | L/R | MPV 4WD B47 C20 A;B47 C20 B | | GCI81658 | Inner Joint | | 27 | 30 | 43.7 | 87 | 100 | |
| **218d xDrive Gran Tourer** | | | | | | | | | | | | | | | |
| 2.0 (100 kw) | 2015.03- | 6MT | F | R | MPV 4WD B47 C20 A;B47 C20 B | | GDS82633 | Drive Shaft | | 31 | 35 | 56 | | 499 | |
| | 2015.03- | 6MT | F | R | MPV 4WD B47 C20 A;B47 C20 B | | GCO81684 | Outer Joint | | 31 | 28 | 56 | | 77 | M |
| | 2015.03- | 6MT | F | R | MPV 4WD B47 C20 A;B47 C20 B | | GCI81924 | Inner Joint | | 35 | 28 | 44.5 | | 126 | |
| | 2015.03- | 8AT | F | L | MPV 4WD B47 C20 A;B47 C20 B | For Engine code:B47C20A,Diameter:25mm | GDS82177 | Drive Shaft | | 31 | 28 | 56 | | 538 | |
| | 2015.03- | 8AT | F | R | MPV 4WD B47 C20 A;B47 C20 B | For Engine code:B47C20A | GDS82633 | Drive Shaft | | 31 | 35 | 56 | | 499 | |
| | 2015.03- | 8AT | F | L/R | MPV 4WD B47 C20 A;B47 C20 B | For Engine code:B47C20A | GCO81684 | Outer Joint | | 31 | 28 | 56 | | 77 | M |
| | 2015.03- | 8AT | F | L | MPV 4WD B47 C20 A;B47 C20 B | For Engine code:B47C20A,Diameter:25mm | GCI81659 | Inner Joint | | 28 | 28 | 33 | 66 | 93.5 | |
| | 2015.03- | 8AT | F | R | MPV 4WD B47 C20 A;B47 C20 B | For Engine code:B47C20A | GCI81924 | Inner Joint | | 35 | 28 | 44.5 | | 126 | |
| | 2015.03- | 8AT/6MT | R | L/R | MPV 4WD B47 C20 A;B47 C20 B | | GDS82176 | Drive Shaft | | 31 | 27 | 56 | | 731 | |
| | 2015.03- | 8AT/6MT | R | L/R | MPV 4WD B47 C20 A;B47 C20 B | | GCO81685 | Outer Joint | | 31 | 30 | 56 | | 61.5 | I |
| | 2015.03- | 8AT/6MT | R | L/R | MPV 4WD B47 C20 A;B47 C20 B | | GCI81658 | Inner Joint | | 27 | 30 | 43.7 | 87 | 100 | |
| 2.0 (110 kw) | 2015.03- | 6MT | F | R | MPV 4WD B47 C20 A;B47 C20 B | | GDS82633 | Drive Shaft | | 31 | 35 | 56 | | 499 | |
| | 2015.03- | 6MT | F | R | MPV 4WD B47 C20 A;B47 C20 B | | GCO81684 | Outer Joint | | 31 | 28 | 56 | | 77 | M |
| | 2015.03- | 6MT | F | R | MPV 4WD B47 C20 A;B47 C20 B | | GCI81924 | Inner Joint | | 35 | 28 | 44.5 | | 126 | |
| | 2015.03- | 8AT | F | L | MPV 4WD B47 C20 A;B47 C20 B | For Engine code:B47C20A | GDS82177 | Drive Shaft | | 31 | 28 | 56 | | 538 | |
| | 2015.03- | 8AT | F | R | MPV 4WD B47 C20 A;B47 C20 B | For Engine code:B47C20A | GDS82633 | Drive Shaft | | 31 | 35 | 56 | | 499 | |
| | 2015.03- | 8AT | F | L/R | MPV 4WD B47 C20 A;B47 C20 B | For Engine code:B47C20A | GCO81684 | Outer Joint | | 31 | 28 | 56 | | 77 | M |
| | 2015.03- | 8AT | F | L | MPV 4WD B47 C20 A;B47 C20 B | For Engine code:B47C20A | GCI81659 | Inner Joint | | 28 | 28 | 33 | 66 | 93.5 | |
| | 2015.03- | 8AT | F | R | MPV 4WD B47 C20 A;B47 C20 B | For Engine code:B47C20A | GCI81924 | Inner Joint | | 35 | 28 | 44.5 | | 126 | |
| | 2015.03- | 8AT/6MT | R | L/R | MPV 4WD B47 C20 A;B47 C20 B | | GDS82176 | Drive Shaft | | 31 | 27 | 56 | | 731 | |
| | 2015.03- | 8AT/6MT | R | L/R | MPV 4WD B47 C20 A;B47 C20 B | | GCO81685 | Outer Joint | | 31 | 30 | 56 | | 61.5 | I |
| | 2015.03- | 8AT/6MT | R | L/R | MPV 4WD B47 C20 A;B47 C20 B | | GCI81658 | Inner Joint | | 27 | 30 | 43.7 | 87 | 100 | |
| **218i Active Tourer** | | | | | | | | | | | | | | | |
| 1.5 (100 kw) | 2014.07-2021.10 | 6AT | F | L | MPV FWD B38 A15 A | | GDS83712 | Drive Shaft | | 31 | 26 | 56 | | 541 | |
| | 2014.07-2021.10 | 6AT | F | R | MPV FWD B38 A15 A | | GDS83713 | Drive Shaft | | 31 | 26 | 56 | | 905 | |
| | 2014.07-2021.10 | 6AT | F | L/R | MPV FWD B38 A15 A | | GCO82471 | Outer Joint | | 31 | 26 | 56 | | 73.5 | M |
| | 2014.07-2021.10 | 6AT | F | L | MPV FWD B38 A15 A | | GCI82347 | Inner Joint | | 26 | 32 | 31 | 65 | 92 | |
| | 2014.07-2021.10 | 6AT | F | R | MPV FWD B38 A15 A | | GCI82348 | Inner Joint | | 26 | 32 | 31 | 388 | 88 | |
| | 2014.07-2021.10 | 6MT | F | L | MPV FWD B38 A15 A | | GDS82631 | Drive Shaft | | 31 | 34 | 56 | | 563 | |
| | 2014.07-2021.10 | 6MT | F | R | MPV FWD B38 A15 A | | GDS82632 | Drive Shaft | | 31 | 34 | 56 | | 920 | |
| | 2014.07-2021.10 | 6MT | F | L/R | MPV FWD B38 A15 A | | GCO81683 | Outer Joint | | 31 | 33 | 56 | | 71 | M |
| | 2014.07-2021.10 | 6MT | F | L | MPV FWD B38 A15 A | | GCI81758 | Inner Joint | | 34 | 33 | 35 | 54.5 | 96 | |
| | 2014.07-2021.10 | 6MT | F | R | MPV FWD B38 A15 A | | GCI81917 | Inner Joint | | 34 | 33 | 35 | 401 | 83 | |
| | 2014.07-2021.10 | 7DCT | F | L | MPV FWD B38 A15 A | | GDS84222 | Drive Shaft | | 31 | 27 | 56 | | 547 | |
| | 2014.07-2021.10 | 7DCT | F | R | MPV FWD B38 A15 A | | GDS84221 | Drive Shaft | | 31 | 27 | 56 | | 938 | |
| | 2014.07-2021.10 | 7DCT | F | L/R | MPV FWD B38 A15 A | | GCO82738 | Outer Joint | | 31 | 26 | 56 | | 73.5 | M |
| | 2014.07-2021.10 | 7DCT | F | L | MPV FWD B38 A15 A | | GCI82649 | Inner Joint | | 27 | 32 | 35 | 58 | 102 | |
| | 2014.07-2021.10 | 7DCT | F | R | MPV FWD B38 A15 A | | GCI82648 | Inner Joint | | 27 | 32 | 35 | 420 | 89 | |
| 1.5 (103 kw) | 2018.03-2021.10 | 6MT | F | L | Box Body/MPV FWD B38 A15 A | | GDS82631 | Drive Shaft | | 31 | 34 | 56 | | 563 | |
| | 2018.03-2021.10 | 6MT | F | R | Box Body/MPV FWD B38 A15 A | | GDS82632 | Drive Shaft | | 31 | 34 | 56 | | 920 | |
| | 2018.03-2021.10 | 6MT | F | L/R | Box Body/MPV FWD B38 A15 A | | GCO81683 | Outer Joint | | 31 | 33 | 56 | | 71 | M |
| | 2018.03-2021.10 | 6MT | F | L | Box Body/MPV FWD B38 A15 A | | GCI81758 | Inner Joint | | 34 | 33 | 35 | 54.5 | 96 | |
| | 2018.03-2021.10 | 6MT | F | R | Box Body/MPV FWD B38 A15 A | | GCI81917 | Inner Joint | | 34 | 33 | 35 | 401 | 83 | |
| | 2018.03-2021.10 | 6MT | F | L | MPV FWD B38 A15 A;B38A15F | | GDS82631 | Drive Shaft | | 31 | 34 | 56 | | 563 | |
| | 2018.03-2021.10 | 6MT | F | R | MPV FWD B38 A15 A;B38A15F | | GDS82632 | Drive Shaft | | 31 | 34 | 56 | | 920 | |
| | 2018.03-2021.10 | 6MT | F | L/R | MPV FWD B38 A15 A;B38A15F | | GCO81683 | Outer Joint | | 31 | 33 | 56 | | 71 | M |
| | 2018.03-2021.10 | 6MT | F | L | MPV FWD B38 A15 A;B38A15F | | GCI81758 | Inner Joint | | 34 | 33 | 35 | 54.5 | 96 | |
| | 2018.03-2021.10 | 6MT | F | R | MPV FWD B38 A15 A;B38A15F | | GCI81917 | Inner Joint | | 34 | 33 | 35 | 401 | 83 | |
| | 2018.03-2021.10 | 7DCT | F | L | MPV FWD B38 A15 A;B38A15F | | GDS84222 | Drive Shaft | | 31 | 27 | 56 | | 547 | |
| | 2018.03-2021.10 | 7DCT | F | R | MPV FWD B38 A15 A;B38A15F | | GDS84221 | Drive Shaft | | 31 | 27 | 56 | | 938 | |
| | 2018.03-2021.10 | 7DCT | F | L/R | MPV FWD B38 A15 A;B38A15F | | GCO82738 | Outer Joint | | 31 | 26 | 56 | | 73.5 | M |
| | 2018.03-2021.10 | 7DCT | F | L | MPV FWD B38 A15 A;B38A15F | | GCI82649 | Inner Joint | | 27 | 32 | 35 | 58 | 102 | |
| | 2018.03-2021.10 | 7DCT | F | R | MPV FWD B38 A15 A;B38A15F | | GCI82648 | Inner Joint | | 27 | 32 | 35 | 420 | 89 | |
| **218i Cabrio** | | | | | | | | | | | | | | | |
| 1.5 (100 kw) | 2015.03-2021.06 | 6MT | R | L | Convertible RWD B38 B15 A | | GDS85066 | Drive Shaft | | 28 | 27 | 57.4 | 71 | 744 | |
| | 2015.03-2021.06 | 6MT | R | R | Convertible RWD B38 B15 A | | GDS85067 | Drive Shaft | | 28 | 27 | 57.4 | 71 | 800 | |
| | 2015.03-2021.06 | 8AT | R | L | Convertible RWD B38 B15 A | | GDS83157 | Drive Shaft | | 28 | 27 | 57 | 71 | 750 | |
| | 2015.03-2021.06 | 8AT | R | R | Convertible RWD B38 B15 A | | GDS83158 | Drive Shaft | | 28 | 27 | 57 | 71 | 802 | |
| | 2015.03-2021.06 | 8AT | R | L/R | Convertible RWD B38 B15 A | | GCO82308 | Outer Joint | | 28 | 30 | 57 | 71 | 52.5 | I |
| | 2015.03-2021.06 | 8AT | R | L/R | Convertible RWD B38 B15 A | | GCI82145 | Inner Joint | | 27 | 30 | 43.9 | 75 | 101 | |
| 2.0 (100 kw) | 2020.11-2021.06 | 8AT | R | L | Convertible RWD B48 B20 A | | GDS83157 | Drive Shaft | | 28 | 27 | 57 | 71 | 750 | |
| | 2020.11-2021.06 | 8AT | R | L/R | Convertible RWD B48 B20 A | | GCO82308 | Outer Joint | | 28 | 30 | 57 | 71 | 52.5 | I |
| | 2020.11-2021.06 | 8AT | R | L | Convertible RWD B48 B20 A | | GCI82145 | Inner Joint | | 27 | 30 | 43.9 | 75 | 101 | |

| | YEAR | TRANSM. | F/R | L/R | BODY STYLE & DRIVE TYPE & ENGINE | REMARKS | G-AP Ref. | PRODUCT | ABS | Technical Specifications A | B | C | H | L | P |
|---|---|---|---|---|---|---|---|---|---|---|---|---|---|---|---|
| **BMW** | | | | | | | | | | | | | | | |
| **218i Cabrio** | | | | | | | | | | | | | | | |
| 2.0 (100 kw) | 2020.11-2021.06 | 8AT/6MT | R | R | Convertible RWD B48 B20 A | | GDS83158 | Drive Shaft | | 28 | 27 | 57 | 71 | 802 | |
| **218i Coupe** | | | | | | | | | | | | | | | |
| 1.5 (100 kw) | 2015.03-2021.06 | 6MT | R | L | Coupe RWD B38 B15 A | | GDS85066 | Drive Shaft | | 28 | 27 | 57.4 | 71 | 744 | |
| | 2015.03-2021.06 | 6MT | R | L/R | Coupe RWD B38 B15 A | | GCI85020 | Inner Joint | | 27 | 25 | 43.9 | 75 | 96 | |
| | 2015.03-2021.06 | 6MT/8AT | R | R | Coupe RWD B38 B15 A | | GDS85067 | Drive Shaft | | 28 | 27 | 57.4 | 71 | 800 | |
| | 2015.03-2021.06 | 8AT | R | L | Coupe RWD B38 B15 A | | GDS83157 | Drive Shaft | | 28 | 27 | 57 | 71 | 750 | |
| | 2015.03-2021.06 | 8AT | R | L | Coupe RWD B38 B15 A | | GDS85107 | Drive Shaft | | 28 | 27 | 57.4 | 71 | 749 | |
| | 2015.03-2021.06 | 8AT | R | R | Coupe RWD B38 B15 A | | GDS83158 | Drive Shaft | | 28 | 27 | 57 | 71 | 802 | |
| | 2015.03-2021.06 | 8AT | R | L/R | Coupe RWD B38 B15 A | Facelift | GCO82308 | Outer Joint | | 28 | 30 | 57 | 71 | 52.5 | I |
| | 2015.03-2021.06 | 8AT | R | L/R | Coupe RWD B38 B15 A | Facelift | GCI82145 | Inner Joint | | 27 | 30 | 43.9 | 75 | 101 | |
| **218i Gran Coupe** | | | | | | | | | | | | | | | |
| 1.5 (100 kw) | 2020.11- | 6MT | F | L | Coupe FWD B38 A15 A;B38A15F | | GDS82631 | Drive Shaft | | 31 | 34 | 56 | | 563 | |
| | 2020.11- | 6MT | F | R | Coupe FWD B38 A15 A;B38A15F | | GDS82632 | Drive Shaft | | 31 | 34 | 56 | | 920 | |
| | 2020.11- | 6MT | F | L/R | Coupe FWD B38 A15 A;B38A15F | | GCO81683 | Outer Joint | | 31 | 33 | 56 | | 71 | M |
| | 2020.11- | 6MT | F | L | Coupe FWD B38 A15 A;B38A15F | | GCI81758 | Inner Joint | | 34 | 33 | 35 | 54.5 | 96 | |
| | 2020.11- | 6MT | F | R | Coupe FWD B38 A15 A;B38A15F | | GCI81917 | Inner Joint | | 34 | 33 | 35 | 401 | 83 | |
| | 2020.11- | 7DCT | F | L | Coupe FWD B38 A15 A;B38A15F | | GDS84222 | Drive Shaft | | 31 | 27 | 56 | | 547 | |
| | 2020.11- | 7DCT | F | R | Coupe FWD B38 A15 A;B38A15F | | GDS84221 | Drive Shaft | | 31 | 27 | 56 | | 938 | |
| | 2020.11- | 7DCT | F | L/R | Coupe FWD B38 A15 A;B38A15F | | GCO82738 | Outer Joint | | 31 | 26 | 56 | | 73.5 | M |
| | 2020.11- | 7DCT | F | L | Coupe FWD B38 A15 A;B38A15F | | GCI82649 | Inner Joint | | 27 | 32 | 35 | 58 | 102 | |
| | 2020.11- | 7DCT | F | R | Coupe FWD B38 A15 A;B38A15F | | GCI82648 | Inner Joint | | 27 | 32 | 35 | 420 | 89 | |
| 1.5 (103 kw) | 2019.11- | 6MT | F | L | Coupe FWD B38 A15 A;B38A15F | | GDS82631 | Drive Shaft | | 31 | 34 | 56 | | 563 | |
| | 2019.11- | 6MT | F | R | Coupe FWD B38 A15 A;B38A15F | | GDS82632 | Drive Shaft | | 31 | 34 | 56 | | 920 | |
| | 2019.11- | 6MT | F | L/R | Coupe FWD B38 A15 A;B38A15F | | GCO81683 | Outer Joint | | 31 | 33 | 56 | | 71 | M |
| | 2019.11- | 6MT | F | L | Coupe FWD B38 A15 A;B38A15F | | GCI81758 | Inner Joint | | 34 | 33 | 35 | 54.5 | 96 | |
| | 2019.11- | 6MT | F | R | Coupe FWD B38 A15 A;B38A15F | | GCI81917 | Inner Joint | | 34 | 33 | 35 | 401 | 83 | |
| | 2019.11- | 7DCT | F | L | Coupe FWD B38 A15 A;B38A15F | | GDS84222 | Drive Shaft | | 31 | 27 | 56 | | 547 | |
| | 2019.11- | 7DCT | F | R | Coupe FWD B38 A15 A;B38A15F | | GDS84221 | Drive Shaft | | 31 | 27 | 56 | | 938 | |
| | 2019.11- | 7DCT | F | L/R | Coupe FWD B38 A15 A;B38A15F | | GCO82738 | Outer Joint | | 31 | 26 | 56 | | 73.5 | M |
| | 2019.11- | 7DCT | F | L | Coupe FWD B38 A15 A;B38A15F | | GCI82649 | Inner Joint | | 27 | 32 | 35 | 58 | 102 | |
| | 2019.11- | 7DCT | F | R | Coupe FWD B38 A15 A;B38A15F | | GCI82648 | Inner Joint | | 27 | 32 | 35 | 420 | 89 | |
| **218i Gran Tourer** | | | | | | | | | | | | | | | |
| 1.5 (100 kw) | 2015.03- | 6AT | F | L | MPV FWD B38 A15 A | | GDS83712 | Drive Shaft | | 31 | 26 | 56 | | 541 | |
| | 2015.03- | 6AT | F | R | MPV FWD B38 A15 A | | GDS83713 | Drive Shaft | | 31 | 26 | 56 | | 905 | |
| | 2015.03- | 6AT | F | L/R | MPV FWD B38 A15 A | | GCO82471 | Outer Joint | | 31 | 26 | 56 | | 73.5 | M |
| | 2015.03- | 6AT | F | L | MPV FWD B38 A15 A | | GCI82347 | Inner Joint | | 26 | 32 | 31 | 65 | 92 | |
| | 2015.03- | 6AT | F | R | MPV FWD B38 A15 A | | GCI82348 | Inner Joint | | 26 | 32 | 31 | 388 | 88 | |
| | 2015.03- | 6MT | F | L | MPV FWD B38 A15 A | | GDS82631 | Drive Shaft | | 31 | 34 | 56 | | 563 | |
| | 2015.03- | 6MT | F | R | MPV FWD B38 A15 A | | GDS82632 | Drive Shaft | | 31 | 34 | 56 | | 920 | |
| | 2015.03- | 6MT | F | L/R | MPV FWD B38 A15 A | | GCO81683 | Outer Joint | | 31 | 33 | 56 | | 71 | M |
| | 2015.03- | 6MT | F | L | MPV FWD B38 A15 A | | GCI81758 | Inner Joint | | 34 | 33 | 35 | 54.5 | 96 | |
| | 2015.03- | 6MT | F | R | MPV FWD B38 A15 A | | GCI81917 | Inner Joint | | 34 | 33 | 35 | 401 | 83 | |
| 1.5 (103 kw) | 2017.04- | 6MT | F | L | Box Body/MPV FWD B38 A15 A | | GDS82631 | Drive Shaft | | 31 | 34 | 56 | | 563 | |
| | 2017.04- | 6MT | F | R | Box Body/MPV FWD B38 A15 A | | GDS82632 | Drive Shaft | | 31 | 34 | 56 | | 920 | |
| | 2017.04- | 6MT | F | L/R | Box Body/MPV FWD B38 A15 A | | GCO81683 | Outer Joint | | 31 | 33 | 56 | | 71 | M |
| | 2017.04- | 6MT | F | L | Box Body/MPV FWD B38 A15 A | | GCI81758 | Inner Joint | | 34 | 33 | 35 | 54.5 | 96 | |
| | 2017.04- | 6MT | F | R | Box Body/MPV FWD B38 A15 A | | GCI81917 | Inner Joint | | 34 | 33 | 35 | 401 | 83 | |
| | 2017.04- | 6MT | F | L | MPV FWD B38 A15 A;B38A15F | | GDS82631 | Drive Shaft | | 31 | 34 | 56 | | 563 | |
| | 2017.04- | 6MT | F | R | MPV FWD B38 A15 A;B38A15F | | GDS82632 | Drive Shaft | | 31 | 34 | 56 | | 920 | |
| | 2017.04- | 6MT | F | L/R | MPV FWD B38 A15 A;B38A15F | | GCO81683 | Outer Joint | | 31 | 33 | 56 | | 71 | M |
| | 2017.04- | 6MT | F | L | MPV FWD B38 A15 A;B38A15F | | GCI81758 | Inner Joint | | 34 | 33 | 35 | 54.5 | 96 | |
| | 2017.04- | 6MT | F | R | MPV FWD B38 A15 A;B38A15F | | GCI81917 | Inner Joint | | 34 | 33 | 35 | 401 | 83 | |
| | 2017.04- | 7DCT | F | L | MPV FWD B38 A15 A;B38A15F | | GDS84222 | Drive Shaft | | 31 | 27 | 56 | | 547 | |
| | 2017.04- | 7DCT | F | R | MPV FWD B38 A15 A;B38A15F | | GDS84221 | Drive Shaft | | 31 | 27 | 56 | | 938 | |
| | 2017.04- | 7DCT | F | L/R | MPV FWD B38 A15 A;B38A15F | | GCO82738 | Outer Joint | | 31 | 26 | 56 | | 73.5 | M |
| | 2017.04- | 7DCT | F | L | MPV FWD B38 A15 A;B38A15F | | GCI82649 | Inner Joint | | 27 | 32 | 35 | 58 | 102 | |
| | 2017.04- | 7DCT | F | R | MPV FWD B38 A15 A;B38A15F | | GCI82648 | Inner Joint | | 27 | 32 | 35 | 420 | 89 | |
| **220d Active Tourer** | | | | | | | | | | | | | | | |
| 2.0 (120 kw) | 2014.03-2021.10 | 8AT | F | L | MPV FWD B47 C20 A;B47 C20 B | Diameter:25mm | GDS82177 | Drive Shaft | | 31 | 28 | 56 | | 538 | |
| | 2014.03-2021.10 | 8AT | F | R | MPV FWD B47 C20 A;B47 C20 B | | GDS84087 | Drive Shaft | | 31 | 28 | 56 | | 904 | |
| | 2014.03-2021.10 | 8AT | F | L/R | MPV FWD B47 C20 A;B47 C20 B | | GCO81684 | Outer Joint | | 31 | 28 | 56 | | 77 | M |
| | 2014.03-2021.10 | 8AT | F | L | MPV FWD B47 C20 A;B47 C20 B | Diameter:25mm | GCI81659 | Inner Joint | | 28 | 28 | 33 | 66 | 93.5 | |
| | 2014.03-2021.10 | 8AT | F | R | MPV FWD B47 C20 A;B47 C20 B | | GCI82517 | Inner Joint | | 28 | 28 | 33 | 425 | 106.5 | |
| 2.0 (140 kw) | 2014.03-2021.10 | 8AT | F | L | MPV FWD B47 C20 A;B47 C20 B | | GDS82177 | Drive Shaft | | 31 | 28 | 56 | | 538 | |
| | 2014.03-2021.10 | 8AT | F | R | MPV FWD B47 C20 A;B47 C20 B | | GDS84087 | Drive Shaft | | 31 | 28 | 56 | | 904 | |

| | YEAR | TRANSM. | F/R | L/R | BODY STYLE & DRIVE TYPE & ENGINE | REMARKS | G-AP Ref. | PRODUCT | ABS | Technical Specifications A | B | C | H | L | P |
|---|---|---|---|---|---|---|---|---|---|---|---|---|---|---|---|
| **BMW** | | | | | | | | | | | | | | | |
| **220d Active Tourer** | | | | | | | | | | | | | | | |
| 2.0 (140 kw) | 2014.03-2021.10 | 8AT | F | L/R | MPV FWD B47 C20 A;B47 C20 B | | GCO81684 | Outer Joint | | 31 | 28 | 56 | | 77 | M |
| | 2014.03-2021.10 | 8AT | F | L | MPV FWD B47 C20 A;B47 C20 B | | GCI81659 | Inner Joint | | 28 | 28 | 33 | 66 | 93.5 | |
| | 2014.03-2021.10 | 8AT | F | R | MPV FWD B47 C20 A;B47 C20 B | | GCI82517 | Inner Joint | | 28 | 28 | 33 | 425 | 106.5 | |
| | 2014.11-2021.10 | 8AT | F | L | Box Body/MPV FWD B47 C20 A;B47 C20 B | Diameter:25mm | GDS82177 | Drive Shaft | | 31 | 28 | 56 | | 538 | |
| | 2014.11-2021.10 | 8AT | F | R | Box Body/MPV FWD B47 C20 A;B47 C20 B | | GDS84087 | Drive Shaft | | 31 | 28 | 56 | | 904 | |
| | 2014.11-2021.10 | 8AT | F | L/R | Box Body/MPV FWD B47 C20 A;B47 C20 B | | GCO81684 | Outer Joint | | 31 | 28 | 56 | | 77 | M |
| | 2014.11-2021.10 | 8AT | F | L | Box Body/MPV FWD B47 C20 A;B47 C20 B | Diameter:25mm | GCI81659 | Inner Joint | | 28 | 28 | 33 | 66 | 93.5 | |
| | 2014.11-2021.10 | 8AT | F | R | Box Body/MPV FWD B47 C20 A;B47 C20 B | | GCI82517 | Inner Joint | | 28 | 28 | 33 | 425 | 106.5 | |
| **220d Cabrio** | | | | | | | | | | | | | | | |
| 2.0 (120 kw) | 2014.03-2020.09 | AT/MT | R | L | Convertible RWD B47 D20 A | | GDS85066 | Drive Shaft | | 28 | 27 | 57.4 | 71 | 744 | |
| | 2014.03-2020.09 | AT/MT | R | R | Convertible RWD B47 D20 A | | GDS85067 | Drive Shaft | | 28 | 27 | 57.4 | 71 | 800 | |
| 2.0 (140 kw) | 2014.03-2020.09 | 8AT/6MT | R | L | Convertible RWD B47 D20 A | | GDS85066 | Drive Shaft | | 28 | 27 | 57.4 | 71 | 744 | |
| | 2014.03-2020.09 | 8AT/6MT | R | R | Convertible RWD B47 D20 A | | GDS85067 | Drive Shaft | | 28 | 27 | 57.4 | 71 | 800 | |
| 2.0 (151 kw) | 2014.03-2020.09 | AT | R | L | Convertible RWD B47 D20 A | | GDS85066 | Drive Shaft | | 28 | 27 | 57.4 | 71 | 744 | |
| | 2014.03-2020.09 | AT | R | R | Convertible RWD B47 D20 A | | GDS85067 | Drive Shaft | | 28 | 27 | 57.4 | 71 | 800 | |
| **220d Coupe** | | | | | | | | | | | | | | | |
| 2.0 (120 kw) | 2014.11-2020.09 | 6MT | R | L/R | Coupe RWD N47 D20 C;B47 D20 A | For Engine code:B47D20A,Diameter [mm]:35 | GCI83732 | Inner Joint | | 27 | 25 | 43.9 | 75 | 72 | |
| | 2014.11-2020.09 | 8AT/6MT | R | L | Coupe RWD N47 D20 C;B47 D20 A | | GDS85066 | Drive Shaft | | 28 | 27 | 57.4 | 71 | 744 | |
| | 2014.11-2020.09 | 8AT/6MT | R | R | Coupe RWD N47 D20 C;B47 D20 A | | GDS85067 | Drive Shaft | | 28 | 27 | 57.4 | 71 | 800 | |
| 2.0 (135 kw) | 2013.10-2017.06 | AT/MT | R | L | Coupe RWD N47 D20 C | | GDS85066 | Drive Shaft | | 28 | 27 | 57.4 | 71 | 744 | |
| | 2013.10-2017.06 | AT/MT | R | R | Coupe RWD N47 D20 C | | GDS85067 | Drive Shaft | | 28 | 27 | 57.4 | 71 | 800 | |
| 2.0 (140 kw) | 2014.03-2020.09 | 6MT | R | L/R | Coupe RWD B47 D20 A | Diameter [mm]:35 | GCI83732 | Inner Joint | | 27 | 25 | 43.9 | 75 | 72 | |
| | 2014.03-2020.09 | 6MT/8AT | R | L | Coupe RWD B47 D20 A | | GDS85066 | Drive Shaft | | 28 | 27 | 57.4 | 71 | 744 | |
| | 2014.03-2020.09 | 6MT/8AT | R | R | Coupe RWD B47 D20 A | | GDS85067 | Drive Shaft | | 28 | 27 | 57.4 | 71 | 800 | |
| 2.0 (147 kw) | 2012.10-2014.11 | AT/MT | R | L | Coupe RWD N47 D20 C | | GDS85066 | Drive Shaft | | 28 | 27 | 57.4 | 71 | 744 | |
| | 2012.10-2014.11 | AT/MT | R | R | Coupe RWD N47 D20 C | | GDS85067 | Drive Shaft | | 28 | 27 | 57.4 | 71 | 800 | |
| 2.0 (151 kw) | 2014.03-2020.09 | 6MT | R | L/R | Coupe RWD B47 D20 A | No Facelift,Diameter [mm]:35 | GCI83732 | Inner Joint | | 27 | 25 | 43.9 | 75 | 72 | |
| | 2014.03-2020.09 | 8AT/6MT | R | L | Coupe RWD B47 D20 A | | GDS85066 | Drive Shaft | | 28 | 27 | 57.4 | 71 | 744 | |
| | 2014.03-2020.09 | 8AT/6MT | R | R | Coupe RWD B47 D20 A | | GDS85067 | Drive Shaft | | 28 | 27 | 57.4 | 71 | 800 | |
| **220d Gran Coupe** | | | | | | | | | | | | | | | |
| 2.0 (120 kw) | 2024.11- | 7DCT | F | L | Coupe FWD B47 C20 B | | GDS57952 | Drive Shaft | | 37 | 27 | 65 | | 538 | |
| | 2024.11- | 7DCT | F | R | Coupe FWD B47 C20 B | | GDS58044 | Drive Shaft | | 37 | 27 | 65 | | 932 | |
| | 2024.11- | 7DCT | F | L/R | Coupe FWD B47 C20 B | | GCO83810 | Outer Joint | | 37 | 28 | 65 | | 76.5 | M |
| | 2024.11- | 7DCT | F | L | Coupe FWD B47 C20 B | | GCI83960 | Inner Joint | | 27 | 29 | 35 | 73 | 114 | |
| | 2024.11- | 7DCT | F | R | Coupe FWD B47 C20 B | | GCI83986 | Inner Joint | | 27 | 29 | 35 | 456 | 114 | |
| **220d Gran Tourer** | | | | | | | | | | | | | | | |
| 2.0 (120 kw) | 2014.09- | 8AT | F | L | MPV FWD B47 C20 A;B47 C20 B | For Engine code:B47C20A,Diameter:25mm | GDS82177 | Drive Shaft | | 31 | 28 | 56 | | 538 | |
| | 2014.09- | 8AT | F | R | MPV FWD B47 C20 A;B47 C20 B | | GDS84087 | Drive Shaft | | 31 | 28 | 56 | | 904 | |
| | 2014.09- | 8AT | F | L/R | MPV FWD B47 C20 A;B47 C20 B | For Engine code:B47C20A | GCO81684 | Outer Joint | | 31 | 28 | 56 | | 77 | M |
| | 2014.09- | 8AT | F | L | MPV FWD B47 C20 A;B47 C20 B | For Engine code:B47C20A,Diameter:25mm | GCI81659 | Inner Joint | | 28 | 28 | 33 | 66 | 93.5 | |
| | 2014.09- | 8AT | F | R | MPV FWD B47 C20 A;B47 C20 B | For Engine Code:B47C20A | GCI82517 | Inner Joint | | 28 | 28 | 33 | 425 | 106.5 | |
| 2.0 (140 kw) | 2014.07- | 8AT | F | L | Box Body/MPV FWD B47 C20 A;B47 C20 B | For Engine code:B47C20A,Diameter:25mm | GDS82177 | Drive Shaft | | 31 | 28 | 56 | | 538 | |
| | 2014.07- | 8AT | F | R | Box Body/MPV FWD B47 C20 A;B47 C20 B | | GDS84087 | Drive Shaft | | 31 | 28 | 56 | | 904 | |
| | 2014.07- | 8AT | F | L/R | Box Body/MPV FWD B47 C20 A;B47 C20 B | For Engine code:B47C20A | GCO81684 | Outer Joint | | 31 | 28 | 56 | | 77 | M |
| | 2014.07- | 8AT | F | L | Box Body/MPV FWD B47 C20 A;B47 C20 B | For Engine code:B47C20A,Diameter:25mm | GCI81659 | Inner Joint | | 28 | 28 | 33 | 66 | 93.5 | |
| | 2014.07- | 8AT | F | R | Box Body/MPV FWD B47 C20 A;B47 C20 B | For Engine Code:B47C20A | GCI82517 | Inner Joint | | 28 | 28 | 33 | 425 | 106.5 | |
| | 2014.09- | 8AT | F | L | MPV FWD B47 C20 A;B47 C20 B | For Engine code:B47C20A | GDS82177 | Drive Shaft | | 31 | 28 | 56 | | 538 | |
| | 2014.09- | 8AT | F | R | MPV FWD B47 C20 A;B47 C20 B | | GDS84087 | Drive Shaft | | 31 | 28 | 56 | | 904 | |
| | 2014.09- | 8AT | F | L/R | MPV FWD B47 C20 A;B47 C20 B | For Engine code:B47C20A | GCO81684 | Outer Joint | | 31 | 28 | 56 | | 77 | M |
| | 2014.09- | 8AT | F | L | MPV FWD B47 C20 A;B47 C20 B | For Engine code:B47C20A | GCI81659 | Inner Joint | | 28 | 28 | 33 | 66 | 93.5 | |
| | 2014.09- | 8AT | F | R | MPV FWD B47 C20 A;B47 C20 B | For Engine code:B47C20A | GCI82517 | Inner Joint | | 28 | 28 | 33 | 425 | 106.5 | |
| **220d xDrive Active Tourer** | | | | | | | | | | | | | | | |
| 2.0 (120 kw) | 2014.03-2021.10 | 8AT | F | L | MPV 4WD B47 C20 A;B47 C20 B | Diameter:25mm | GDS82177 | Drive Shaft | | 31 | 28 | 56 | | 538 | |
| | 2014.03-2021.10 | 8AT | F | R | MPV 4WD B47 C20 A;B47 C20 B | | GDS82633 | Drive Shaft | | 31 | 35 | 56 | | 499 | |
| | 2014.03-2021.10 | 8AT | F | L/R | MPV 4WD B47 C20 A;B47 C20 B | | GCO81684 | Outer Joint | | 31 | 28 | 56 | | 77 | M |
| | 2014.03-2021.10 | 8AT | F | L | MPV 4WD B47 C20 A;B47 C20 B | Diameter:25mm | GCI81659 | Inner Joint | | 28 | 28 | 33 | 66 | 93.5 | |
| | 2014.03-2021.10 | 8AT | F | R | MPV 4WD B47 C20 A;B47 C20 B | | GCI81924 | Inner Joint | | 35 | 28 | 44.5 | | 126 | |
| | 2014.03-2021.10 | 8AT | R | L/R | MPV 4WD B47 C20 A;B47 C20 B | | GDS82176 | Drive Shaft | | 31 | 27 | 56 | | 731 | |
| | 2014.03-2021.10 | 8AT | R | L/R | MPV 4WD B47 C20 A;B47 C20 B | | GCO81685 | Outer Joint | | 31 | 30 | 56 | | 61.5 | I |
| | 2014.03-2021.10 | 8AT | R | L/R | MPV 4WD B47 C20 A;B47 C20 B | | GCI81658 | Inner Joint | | 27 | 30 | 43.7 | 87 | 100 | |
| 2.0 (140 kw) | 2014.03-2021.10 | 8AT | F | L | MPV 4WD B47 C20 A;B47 C20 B | | GDS82177 | Drive Shaft | | 31 | 28 | 56 | | 538 | |
| | 2014.03-2021.10 | 8AT | F | R | MPV 4WD B47 C20 A;B47 C20 B | | GDS82633 | Drive Shaft | | 31 | 35 | 56 | | 499 | |
| | 2014.03-2021.10 | 8AT | F | L/R | MPV 4WD B47 C20 A;B47 C20 B | | GCO81684 | Outer Joint | | 31 | 28 | 56 | | 77 | M |
| | 2014.03-2021.10 | 8AT | F | L | MPV 4WD B47 C20 A;B47 C20 B | | GCI81659 | Inner Joint | | 28 | 28 | 33 | 66 | 93.5 | |
| | 2014.03-2021.10 | 8AT | F | R | MPV 4WD B47 C20 A;B47 C20 B | | GCI81924 | Inner Joint | | 35 | 28 | 44.5 | | 126 | |

| | YEAR | TRANSM. | F/R | L/R | BODY STYLE & DRIVE TYPE & ENGINE | REMARKS | G-AP Ref. | PRODUCT | ABS | Technical Specifications A | B | C | H | L | P |
|---|---|---|---|---|---|---|---|---|---|---|---|---|---|---|---|
| **BMW** | | | | | | | | | | | | | | | |
| **220d xDrive Active Tourer** | | | | | | | | | | | | | | | |
| 2.0 (140 kw) | 2014.03-2021.10 | 8AT | R | L/R | MPV 4WD B47 C20 A;B47 C20 B | | GDS82176 | Drive Shaft | | 31 | 27 | 56 | | 731 | |
| | 2014.03-2021.10 | 8AT | R | L/R | MPV 4WD B47 C20 A;B47 C20 B | | GCO81685 | Outer Joint | | 31 | 30 | 56 | | 61.5 | I |
| | 2014.03-2021.10 | 8AT | R | L/R | MPV 4WD B47 C20 A;B47 C20 B | | GCI81658 | Inner Joint | | 27 | 30 | 43.7 | 87 | 100 | |
| **220d xDrive Coupe** | | | | | | | | | | | | | | | |
| 2.0 (120 kw) | 2015.03-2020.09 | 8AT | F | L | Coupe 4WD B47 D20 A | | GDS82052 | Drive Shaft | | 31 | 27 | 55.8 | | 550 | |
| | 2015.03-2020.09 | 8AT | F | R | Coupe 4WD B47 D20 A | | GDS82053 | Drive Shaft | | 31 | 27 | 55.8 | | 841 | |
| | 2015.03-2020.09 | 8AT | F | L | Coupe 4WD B47 D20 A | | GCO81603 | Outer Joint | | 31 | 33 | 55.8 | | 69.5 | M |
| | 2015.03-2020.09 | 8AT | F | L | Coupe 4WD B47 D20 A | | GCI81055 | Inner Joint | | 27 | 24 | 43.95 | 60 | 123.5 | |
| | 2015.03-2020.09 | 8AT | F | R | Coupe 4WD B47 D20 A | | GCI81597 | Inner Joint | | 27 | 24 | 43.95 | 349.5 | 125 | |
| | 2015.03-2020.09 | 8AT | R | L | Coupe 4WD B47 D20 A | | GDS85066 | Drive Shaft | | 28 | 27 | 57.4 | 71 | 744 | |
| | 2015.03-2020.09 | 8AT | R | R | Coupe 4WD B47 D20 A | | GDS85067 | Drive Shaft | | 28 | 27 | 57.4 | 71 | 800 | |
| 2.0 (140 kw) | 2014.06-2020.09 | 8AT | F | L | Coupe 4WD B47 D20 A | | GDS82052 | Drive Shaft | | 31 | 27 | 55.8 | | 550 | |
| | 2014.06-2020.09 | 8AT | F | R | Coupe 4WD B47 D20 A | | GDS82053 | Drive Shaft | | 31 | 27 | 55.8 | | 841 | |
| | 2014.06-2020.09 | 8AT | F | L | Coupe 4WD B47 D20 A | | GCO81603 | Outer Joint | | 31 | 33 | 55.8 | | 69.5 | M |
| | 2014.06-2020.09 | 8AT | F | L | Coupe 4WD B47 D20 A | | GCI81055 | Inner Joint | | 27 | 24 | 43.95 | 60 | 123.5 | |
| | 2014.06-2020.09 | 8AT | F | R | Coupe 4WD B47 D20 A | | GCI81597 | Inner Joint | | 27 | 24 | 43.95 | 349.5 | 125 | |
| | 2014.06-2020.09 | AT | R | L | Coupe 4WD B47 D20 A | | GDS85066 | Drive Shaft | | 28 | 27 | 57.4 | 71 | 744 | |
| | 2014.06-2020.09 | AT | R | R | Coupe 4WD B47 D20 A | | GDS85067 | Drive Shaft | | 28 | 27 | 57.4 | 71 | 800 | |
| 2.0 (151 kw) | 2014.06-2020.09 | 8AT | F | L | Coupe 4WD B47 D20 A | | GDS82052 | Drive Shaft | | 31 | 27 | 55.8 | | 550 | |
| | 2014.06-2020.09 | 8AT | F | R | Coupe 4WD B47 D20 A | | GDS82053 | Drive Shaft | | 31 | 27 | 55.8 | | 841 | |
| | 2014.06-2020.09 | AT | R | L | Coupe 4WD B47 D20 A | | GDS85066 | Drive Shaft | | 28 | 27 | 57.4 | 71 | 744 | |
| | 2014.06-2020.09 | AT | R | R | Coupe 4WD B47 D20 A | | GDS85067 | Drive Shaft | | 28 | 27 | 57.4 | 71 | 800 | |
| **220d xDrive Gran Coupe** | | | | | | | | | | | | | | | |
| 2.0 (140 kw) | 2020.07-2024.10 | 8AT | R | L/R | Coupe 4WD B47 C20 B | | GDS82176 | Drive Shaft | | 31 | 27 | 56 | | 731 | |
| | 2020.07-2024.10 | 8AT | R | L/R | Coupe 4WD B47 C20 B | | GCO81685 | Outer Joint | | 31 | 30 | 56 | | 61.5 | I |
| | 2020.07-2024.10 | 8AT | R | L/R | Coupe 4WD B47 C20 B | | GCI81658 | Inner Joint | | 27 | 30 | 43.7 | 87 | 100 | |
| **220d xDrive Gran Tourer** | | | | | | | | | | | | | | | |
| 2.0 (120 kw) | 2015.03- | 8AT | F | L | MPV 4WD B47 C20 A;B47 C20 B | For Engine code:B47C20A,Diameter:25mm | GDS82177 | Drive Shaft | | 31 | 28 | 56 | | 538 | |
| | 2015.03- | 8AT | F | R | MPV 4WD B47 C20 A;B47 C20 B | For Engine code:B47C20A | GDS82633 | Drive Shaft | | 31 | 35 | 56 | | 499 | |
| | 2015.03- | 8AT | F | L/R | MPV 4WD B47 C20 A;B47 C20 B | For Engine code:B47C20A | GCO81684 | Outer Joint | | 31 | 28 | 56 | | 77 | M |
| | 2015.03- | 8AT | F | L | MPV 4WD B47 C20 A;B47 C20 B | For Engine code:B47C20A,Diameter:25mm | GCI81659 | Inner Joint | | 28 | 28 | 33 | 66 | 93.5 | |
| | 2015.03- | 8AT | F | R | MPV 4WD B47 C20 A;B47 C20 B | For Engine code:B47C20A | GCI81924 | Inner Joint | | 35 | 28 | 44.5 | | 126 | |
| | 2015.03- | 8AT | R | L/R | MPV 4WD B47 C20 A;B47 C20 B | | GDS82176 | Drive Shaft | | 31 | 27 | 56 | | 731 | |
| | 2015.03- | 8AT | R | L/R | MPV 4WD B47 C20 A;B47 C20 B | | GCO81685 | Outer Joint | | 31 | 30 | 56 | | 61.5 | I |
| | 2015.03- | 8AT | R | L/R | MPV 4WD B47 C20 A;B47 C20 B | | GCI81658 | Inner Joint | | 27 | 30 | 43.7 | 87 | 100 | |
| 2.0 (140 kw) | 2015.03- | 8AT | F | L | MPV 4WD B47 C20 A;B47 C20 B | For Engine code:B47C20A | GDS82177 | Drive Shaft | | 31 | 28 | 56 | | 538 | |
| | 2015.03- | 8AT | F | R | MPV 4WD B47 C20 A;B47 C20 B | For Engine code:B47C20A | GDS82633 | Drive Shaft | | 31 | 35 | 56 | | 499 | |
| | 2015.03- | 8AT | F | L/R | MPV 4WD B47 C20 A;B47 C20 B | For Engine code:B47C20A | GCO81684 | Outer Joint | | 31 | 28 | 56 | | 77 | M |
| | 2015.03- | 8AT | F | L | MPV 4WD B47 C20 A;B47 C20 B | For Engine code:B47C20A | GCI81659 | Inner Joint | | 28 | 28 | 33 | 66 | 93.5 | |
| | 2015.03- | 8AT | F | R | MPV 4WD B47 C20 A;B47 C20 B | For Engine code:B47C20A | GCI81924 | Inner Joint | | 35 | 28 | 44.5 | | 126 | |
| | 2015.03- | 8AT | R | L/R | MPV 4WD B47 C20 A;B47 C20 B | | GDS82176 | Drive Shaft | | 31 | 27 | 56 | | 731 | |
| | 2015.03- | 8AT | R | L/R | MPV 4WD B47 C20 A;B47 C20 B | | GCO81685 | Outer Joint | | 31 | 30 | 56 | | 61.5 | I |
| | 2015.03- | 8AT | R | L/R | MPV 4WD B47 C20 A;B47 C20 B | | GCI81658 | Inner Joint | | 27 | 30 | 43.7 | 87 | 100 | |
| **220i Active Tourer** | | | | | | | | | | | | | | | |
| 2.0 (120 kw) | 2014.03-2021.10 | 6MT | F | L | MPV FWD B48 A20 A | | GDS56905 | Drive Shaft | | 31 | 37 | 56 | | 546 | |
| | 2014.03-2021.10 | 6MT | F | R | MPV FWD B48 A20 A | | GDS56579 | Drive Shaft | | 31 | 37 | 56 | | 931 | |
| | 2014.03-2021.10 | 6MT | F | L/R | MPV FWD B48 A20 A | | GCO83263 | Outer Joint | | 31 | 26 | 56 | | 73.5 | M |
| | 2014.03-2021.10 | 6MT | F | L | MPV FWD B48 A20 A | | GCI83553 | Inner Joint | | 37 | 32 | 35 | 58 | 102 | |
| | 2014.03-2021.10 | 6MT | F | R | MPV FWD B48 A20 A | | GCI83386 | Inner Joint | | 37 | 32 | 35 | 450 | 90 | |
| | 2014.03-2021.10 | 7DCT | F | L | MPV FWD B48 A20 A | | GDS84222 | Drive Shaft | | 31 | 27 | 56 | | 547 | |
| | 2014.03-2021.10 | 7DCT | F | R | MPV FWD B48 A20 A | | GDS84223 | Drive Shaft | | 31 | 27 | 56 | | 936 | |
| | 2014.03-2021.10 | 7DCT | F | L/R | MPV FWD B48 A20 A | | GCO82738 | Outer Joint | | 31 | 26 | 56 | | 73.5 | M |
| | 2014.03-2021.10 | 7DCT | F | L | MPV FWD B48 A20 A | | GCI82649 | Inner Joint | | 27 | 32 | 35 | 58 | 102 | |
| | 2014.03-2021.10 | 7DCT | F | R | MPV FWD B48 A20 A | | GCI82650 | Inner Joint | | 27 | 32 | 35 | 456 | 89 | |
| | 2014.03-2021.10 | 8AT | F | L | MPV FWD B48 A20 A | Diameter:25mm | GDS82177 | Drive Shaft | | 31 | 28 | 56 | | 538 | |
| | 2014.03-2021.10 | 8AT | F | R | MPV FWD B48 A20 A | | GDS84087 | Drive Shaft | | 31 | 28 | 56 | | 904 | |
| | 2014.03-2021.10 | 8AT | F | L/R | MPV FWD B48 A20 A | | GCO81684 | Outer Joint | | 31 | 28 | 56 | | 77 | M |
| | 2014.03-2021.10 | 8AT | F | L | MPV FWD B48 A20 A | Diameter:25mm | GCI81659 | Inner Joint | | 28 | 28 | 33 | 66 | 93.5 | |
| | 2014.03-2021.10 | 8AT | F | R | MPV FWD B48 A20 A | | GCI82517 | Inner Joint | | 28 | 28 | 33 | 425 | 106.5 | |
| 2.0 (131 kw) | 2020.11-2021.10 | 7AT | F | L | MPV FWD B48 A20 A;B48 A20 F | | GDS84222 | Drive Shaft | | 31 | 27 | 56 | | 547 | |
| | 2020.11-2021.10 | 7AT | F | R | MPV FWD B48 A20 A;B48 A20 F | | GDS84223 | Drive Shaft | | 31 | 27 | 56 | | 936 | |
| | 2020.11-2021.10 | 7AT | F | L/R | MPV FWD B48 A20 A;B48 A20 F | | GCO82738 | Outer Joint | | 31 | 26 | 56 | | 73.5 | M |
| | 2020.11-2021.10 | 7AT | F | L | MPV FWD B48 A20 A;B48 A20 F | | GCI82649 | Inner Joint | | 27 | 32 | 35 | 58 | 102 | |
| | 2020.11-2021.10 | 7AT | F | R | MPV FWD B48 A20 A;B48 A20 F | | GCI82650 | Inner Joint | | 27 | 32 | 35 | 456 | 89 | |
| 2.0 (141 kw) | 2014.03-2021.10 | 6MT | F | L | MPV FWD B48 A20 A;B48 A20 F | | GDS56905 | Drive Shaft | | 31 | 37 | 56 | | 546 | |

| | YEAR | TRANSM. | F/R | L/R | BODY STYLE & DRIVE TYPE & ENGINE | REMARKS | G-AP Ref. | PRODUCT | ABS | Technical Specifications A | B | C | H | L | P |
|---|---|---|---|---|---|---|---|---|---|---|---|---|---|---|---|
| **BMW** | | | | | | | | | | | | | | | |
| **220i Active Tourer** | | | | | | | | | | | | | | | |
| 2.0 (141 kw) | 2014.03-2021.10 | 6MT | F | R | MPV FWD B48 A20 A;B48 A20 F | | GDS56579 | Drive Shaft | | 31 | 37 | 56 | | 931 | |
| | 2014.03-2021.10 | 6MT | F | L/R | MPV FWD B48 A20 A;B48 A20 F | | GCO83263 | Outer Joint | | 31 | 26 | 56 | | 73.5 | M |
| | 2014.03-2021.10 | 6MT | F | L | MPV FWD B48 A20 A;B48 A20 F | | GCI83553 | Inner Joint | | 37 | 32 | 35 | 58 | 102 | |
| | 2014.03-2021.10 | 6MT | F | R | MPV FWD B48 A20 A;B48 A20 F | | GCI83386 | Inner Joint | | 37 | 32 | 35 | 450 | 90 | |
| | 2014.03-2021.10 | 7DCT | F | L | MPV FWD B48 A20 A;B48 A20 F | | GDS84222 | Drive Shaft | | 31 | 27 | 56 | | 547 | |
| | 2014.03-2021.10 | 7DCT | F | R | MPV FWD B48 A20 A;B48 A20 F | | GDS84223 | Drive Shaft | | 31 | 27 | 56 | | 936 | |
| | 2014.03-2021.10 | 7DCT | F | L/R | MPV FWD B48 A20 A;B48 A20 F | | GCO82738 | Outer Joint | | 31 | 26 | 56 | | 73.5 | M |
| | 2014.03-2021.10 | 7DCT | F | L | MPV FWD B48 A20 A;B48 A20 F | | GCI82649 | Inner Joint | | 27 | 32 | 35 | 58 | 102 | |
| | 2014.03-2021.10 | 7DCT | F | R | MPV FWD B48 A20 A;B48 A20 F | | GCI82650 | Inner Joint | | 27 | 32 | 35 | 456 | 89 | |
| | 2014.03-2021.10 | 8AT | F | L | MPV FWD B48 A20 A;B48 A20 F | | GDS82177 | Drive Shaft | | 31 | 28 | 56 | | 538 | |
| | 2014.03-2021.10 | 8AT | F | R | MPV FWD B48 A20 A;B48 A20 F | | GDS84087 | Drive Shaft | | 31 | 28 | 56 | | 904 | |
| | 2014.03-2021.10 | 8AT | F | L/R | MPV FWD B48 A20 A;B48 A20 F | | GCO81684 | Outer Joint | | 31 | 28 | 56 | | 77 | M |
| | 2014.03-2021.10 | 8AT | F | L | MPV FWD B48 A20 A;B48 A20 F | | GCI81659 | Inner Joint | | 28 | 28 | 33 | 66 | 93.5 | |
| | 2014.03-2021.10 | 8AT | F | R | MPV FWD B48 A20 A;B48 A20 F | | GCI82517 | Inner Joint | | 28 | 28 | 33 | 425 | 106.5 | |
| **220i Cabrio** | | | | | | | | | | | | | | | |
| 2.0 (135 kw) | 2014.04-2021.06 | 6MT | R | L | Convertible RWD N20 B20 A;N20 B20 B | | GDS85066 | Drive Shaft | | 28 | 27 | 57.4 | 71 | 744 | |
| | 2014.04-2021.06 | 6MT | R | R | Convertible RWD N20 B20 A;N20 B20 B | | GDS85067 | Drive Shaft | | 28 | 27 | 57.4 | 71 | 800 | |
| | 2014.04-2021.06 | 8AT | R | L | Convertible RWD N20 B20 A;N20 B20 B | | GDS83157 | Drive Shaft | | 28 | 27 | 57 | 71 | 750 | |
| | 2014.04-2021.06 | 8AT | R | R | Convertible RWD N20 B20 A;N20 B20 B | | GDS83158 | Drive Shaft | | 28 | 27 | 57 | 71 | 802 | |
| | 2014.04-2021.06 | 8AT | R | L/R | Convertible RWD N20 B20 A;N20 B20 B | | GCO82308 | Outer Joint | | 28 | 30 | 57 | 71 | 52.5 | I |
| | 2014.04-2021.06 | 8AT | R | L/R | Convertible RWD N20 B20 A;N20 B20 B | | GCI82145 | Inner Joint | | 27 | 30 | 43.9 | 75 | 101 | |
| | 2015.09-2021.06 | 6MT | R | L | Convertible RWD B48 B20 A | | GDS85066 | Drive Shaft | | 28 | 27 | 57.4 | 71 | 744 | |
| | 2015.09-2021.06 | 6MT | R | R | Convertible RWD B48 B20 A | | GDS85067 | Drive Shaft | | 28 | 27 | 57.4 | 71 | 800 | |
| | 2015.09-2021.06 | 8AT | R | L | Convertible RWD B48 B20 A | | GDS83157 | Drive Shaft | | 28 | 27 | 57 | 71 | 750 | |
| | 2015.09-2021.06 | 8AT | R | R | Convertible RWD B48 B20 A | | GDS83158 | Drive Shaft | | 28 | 27 | 57 | 71 | 802 | |
| | 2015.09-2021.06 | 8AT | R | L/R | Convertible RWD B48 B20 A | | GCO82308 | Outer Joint | | 28 | 30 | 57 | 71 | 52.5 | I |
| | 2015.09-2021.06 | 8AT | R | L/R | Convertible RWD B48 B20 A | | GCI82145 | Inner Joint | | 27 | 30 | 43.9 | 75 | 101 | |
| **220i Coupe** | | | | | | | | | | | | | | | |
| 2.0 (135 kw) | 2013.10-2021.06 | 6MT | R | L | Coupe RWD N20 B20 A;N20 B20 B | | GDS85066 | Drive Shaft | | 28 | 27 | 57.4 | 71 | 744 | |
| | 2013.10-2021.06 | 6MT | R | R | Coupe RWD N20 B20 A;N20 B20 B | | GDS85067 | Drive Shaft | | 28 | 27 | 57.4 | 71 | 800 | |
| | 2013.10-2021.06 | 8AT | R | L | Coupe RWD N20 B20 A;N20 B20 B | | GDS83157 | Drive Shaft | | 28 | 27 | 57 | 71 | 750 | |
| | 2013.10-2021.06 | 8AT | R | R | Coupe RWD N20 B20 A;N20 B20 B | | GDS83158 | Drive Shaft | | 28 | 27 | 57 | 71 | 802 | |
| | 2013.10-2021.06 | 8AT | R | L/R | Coupe RWD N20 B20 A;N20 B20 B | | GCO82308 | Outer Joint | | 28 | 30 | 57 | 71 | 52.5 | I |
| | 2013.10-2021.06 | 8AT | R | L/R | Coupe RWD N20 B20 A;N20 B20 B | | GCI82145 | Inner Joint | | 27 | 30 | 43.9 | 75 | 101 | |
| | 2015.09-2021.06 | 6MT | R | L | Coupe RWD B48 B20 A | | GDS85066 | Drive Shaft | | 28 | 27 | 57.4 | 71 | 744 | |
| | 2015.09-2021.06 | 6MT | R | R | Coupe RWD B48 B20 A | | GDS85067 | Drive Shaft | | 28 | 27 | 57.4 | 71 | 800 | |
| | 2015.09-2021.06 | 8AT | R | L | Coupe RWD B48 B20 A | | GDS83157 | Drive Shaft | | 28 | 27 | 57 | 71 | 750 | |
| | 2015.09-2021.06 | 8AT | R | R | Coupe RWD B48 B20 A | | GDS83158 | Drive Shaft | | 28 | 27 | 57 | 71 | 802 | |
| | 2015.09-2021.06 | 8AT | R | L/R | Coupe RWD B48 B20 A | | GCO82308 | Outer Joint | | 28 | 30 | 57 | 71 | 52.5 | I |
| | 2015.09-2021.06 | 8AT | R | L/R | Coupe RWD B48 B20 A | | GCI82145 | Inner Joint | | 27 | 30 | 43.9 | 75 | 101 | |
| **220i Gran Coupe** | | | | | | | | | | | | | | | |
| 2.0 (131 kw) | 2020.11- | 7AT | F | L | Coupe FWD B48 A20 A;B48 A20 F | | GDS84222 | Drive Shaft | | 31 | 27 | 56 | | 547 | |
| | 2020.11- | 7AT | F | R | Coupe FWD B48 A20 A;B48 A20 F | | GDS84223 | Drive Shaft | | 31 | 27 | 56 | | 936 | |
| | 2020.11- | 7AT | F | L/R | Coupe FWD B48 A20 A;B48 A20 F | | GCO82738 | Outer Joint | | 31 | 26 | 56 | | 73.5 | M |
| | 2020.11- | 7AT | F | L | Coupe FWD B48 A20 A;B48 A20 F | | GCI82649 | Inner Joint | | 27 | 32 | 35 | 58 | 102 | |
| | 2020.11- | 7AT | F | R | Coupe FWD B48 A20 A;B48 A20 F | | GCI82650 | Inner Joint | | 27 | 32 | 35 | 456 | 89 | |
| **220i Gran Tourer** | | | | | | | | | | | | | | | |
| 2.0 (120 kw) | 2015.03- | 6MT | F | L | MPV FWD B48 A20 A | | GDS56905 | Drive Shaft | | 31 | 37 | 56 | | 546 | |
| | 2015.03- | 6MT | F | R | MPV FWD B48 A20 A | | GDS56579 | Drive Shaft | | 31 | 37 | 56 | | 931 | |
| | 2015.03- | 6MT | F | L/R | MPV FWD B48 A20 A | | GCO83263 | Outer Joint | | 31 | 26 | 56 | | 73.5 | M |
| | 2015.03- | 6MT | F | L | MPV FWD B48 A20 A | | GCI83553 | Inner Joint | | 37 | 32 | 35 | 58 | 102 | |
| | 2015.03- | 6MT | F | R | MPV FWD B48 A20 A | | GCI83386 | Inner Joint | | 37 | 32 | 35 | 450 | 90 | |
| | 2015.03- | 8AT | F | L | MPV FWD B48 A20 A | Diameter:25mm | GDS82177 | Drive Shaft | | 31 | 28 | 56 | | 538 | |
| | 2015.03- | 8AT | F | R | MPV FWD B48 A20 A | | GDS84087 | Drive Shaft | | 31 | 28 | 56 | | 904 | |
| | 2015.03- | 8AT | F | L/R | MPV FWD B48 A20 A | | GCO81684 | Outer Joint | | 31 | 28 | 56 | | 77 | M |
| | 2015.03- | 8AT | F | L | MPV FWD B48 A20 A | Diameter:25mm | GCI81659 | Inner Joint | | 28 | 28 | 33 | 66 | 93.5 | |
| | 2015.03- | 8AT | F | R | MPV FWD B48 A20 A | | GCI82517 | Inner Joint | | 28 | 28 | 33 | 425 | 106.5 | |
| 2.0 (131 kw) | 2020.11- | 7AT | F | L | MPV FWD B48 A20 A;B48 A20 F | | GDS84222 | Drive Shaft | | 31 | 27 | 56 | | 547 | |
| | 2020.11- | 7AT | F | R | MPV FWD B48 A20 A;B48 A20 F | | GDS84223 | Drive Shaft | | 31 | 27 | 56 | | 936 | |
| | 2020.11- | 7AT | F | L/R | MPV FWD B48 A20 A;B48 A20 F | | GCO82738 | Outer Joint | | 31 | 26 | 56 | | 73.5 | M |
| | 2020.11- | 7AT | F | L | MPV FWD B48 A20 A;B48 A20 F | | GCI82649 | Inner Joint | | 27 | 32 | 35 | 58 | 102 | |
| | 2020.11- | 7AT | F | R | MPV FWD B48 A20 A;B48 A20 F | | GCI82650 | Inner Joint | | 27 | 32 | 35 | 456 | 89 | |
| 2.0 (141 kw) | 2015.03- | 6MT | F | L | MPV FWD B48 A20 A | | GDS56905 | Drive Shaft | | 31 | 37 | 56 | | 546 | |
| | 2015.03- | 6MT | F | R | MPV FWD B48 A20 A | | GDS56579 | Drive Shaft | | 31 | 37 | 56 | | 931 | |
| | 2015.03- | 6MT | F | L/R | MPV FWD B48 A20 A | | GCO83263 | Outer Joint | | 31 | 26 | 56 | | 73.5 | M |

| | YEAR | TRANSM. | F/R | L/R | BODY STYLE & DRIVE TYPE & ENGINE | REMARKS | G-AP Ref. | PRODUCT | ABS | Technical Specifications A | B | C | H | L | P |
|---|---|---|---|---|---|---|---|---|---|---|---|---|---|---|---|
| **BMW** | | | | | | | | | | | | | | | |
| **220i Gran Tourer** | | | | | | | | | | | | | | | |
| 2.0 (141 kw) | 2015.03- | 6MT | F | L | MPV FWD B48 A20 A | | GCI83553 | Inner Joint | | 37 | 32 | 35 | 58 | 102 | |
| | 2015.03- | 6MT | F | R | MPV FWD B48 A20 A | | GCI83386 | Inner Joint | | 37 | 32 | 35 | 450 | 90 | |
| | 2015.03- | 7DCT | F | L | MPV FWD B48 A20 A | | GDS84222 | Drive Shaft | | 31 | 27 | 56 | | 547 | |
| | 2015.03- | 7DCT | F | R | MPV FWD B48 A20 A | | GDS84223 | Drive Shaft | | 31 | 27 | 56 | | 936 | |
| | 2015.03- | 7DCT | F | L/R | MPV FWD B48 A20 A | | GCO82738 | Outer Joint | | 31 | 26 | 56 | | 73.5 | M |
| | 2015.03- | 7DCT | F | L | MPV FWD B48 A20 A | | GCI82649 | Inner Joint | | 27 | 32 | 35 | 58 | 102 | |
| | 2015.03- | 7DCT | F | R | MPV FWD B48 A20 A | | GCI82650 | Inner Joint | | 27 | 32 | 35 | 456 | 89 | |
| | 2015.03- | 8AT | F | L | MPV FWD B48 A20 A | Diameter:25mm | GDS82177 | Drive Shaft | | 31 | 28 | 56 | | 538 | |
| | 2015.03- | 8AT | F | R | MPV FWD B48 A20 A | | GDS84087 | Drive Shaft | | 31 | 28 | 56 | | 904 | |
| | 2015.03- | 8AT | F | L/R | MPV FWD B48 A20 A | | GCO81684 | Outer Joint | | 31 | 28 | 56 | | 77 | M |
| | 2015.03- | 8AT | F | L | MPV FWD B48 A20 A | Diameter:25mm | GCI81659 | Inner Joint | | 28 | 28 | 33 | 66 | 93.5 | |
| | 2015.03- | 8AT | F | R | MPV FWD B48 A20 A | | GCI82517 | Inner Joint | | 28 | 28 | 33 | 425 | 106.5 | |
| **220i xDrive Gran Coupe** | | | | | | | | | | | | | | | |
| 2.0 (131 kw) | 2021.03- | 8AT | R | L/R | Coupe 4WD B48 A20 A | | GDS82176 | Drive Shaft | | 31 | 27 | 56 | | 731 | |
| | 2021.03- | 8AT | R | L/R | Coupe 4WD B48 A20 A | | GCO81685 | Outer Joint | | 31 | 30 | 56 | | 61.5 | I |
| | 2021.03- | 8AT | R | L/R | Coupe 4WD B48 A20 A | | GCI81658 | Inner Joint | | 27 | 30 | 43.7 | 87 | 100 | |
| **223 xDrive Gran Coupe** | | | | | | | | | | | | | | | |
| 2.0 (160 kw) | 2025.03- | 7DCT | F | L | Coupe 4WD B48 A20 P | | GDS57952 | Drive Shaft | | 37 | 27 | 65 | | 538 | |
| | 2025.03- | 7DCT | F | R | Coupe 4WD B48 A20 P | | GDS58026 | Drive Shaft | | 37 | 35 | 65 | | 495 | |
| | 2025.03- | 7DCT | F | L/R | Coupe 4WD B48 A20 P | | GCO83810 | Outer Joint | | 37 | 28 | 65 | | 76.5 | M |
| | 2025.03- | 7DCT | F | L | Coupe 4WD B48 A20 P | | GCI83960 | Inner Joint | | 27 | 29 | 35 | 73 | 114 | |
| | 2025.03- | 7DCT | F | R | Coupe 4WD B48 A20 P | | GCI83983 | Inner Joint | | 35 | 29 | 44.8 | | 133.5 | |
| **223d xDrive Active Tourer** | | | | | | | | | | | | | | | |
| 2.0 (155 kw) | 2022.07- | 7DCT | F | L | MPV 4WD B47 C20 B | | GDS57952 | Drive Shaft | | 37 | 27 | 65 | | 538 | |
| | 2022.07- | 7DCT | F | R | MPV 4WD B47 C20 B | | GDS58026 | Drive Shaft | | 37 | 35 | 65 | | 495 | |
| | 2022.07- | 7DCT | F | L/R | MPV 4WD B47 C20 B | | GCO83810 | Outer Joint | | 37 | 28 | 65 | | 76.5 | M |
| | 2022.07- | 7DCT | F | L | MPV 4WD B47 C20 B | | GCI83960 | Inner Joint | | 27 | 29 | 35 | 73 | 114 | |
| | 2022.07- | 7DCT | F | R | MPV 4WD B47 C20 B | | GCI83983 | Inner Joint | | 35 | 29 | 44.8 | | 133.5 | |
| **223i Active Tourer** | | | | | | | | | | | | | | | |
| 2.0 (160 kw) | 2021.11- | 7DCT | F | L | MPV FWD B48 A20 P | | GDS57952 | Drive Shaft | | 37 | 27 | 65 | | 538 | |
| | 2021.11- | 7DCT | F | R | MPV FWD B48 A20 P | | GDS58044 | Drive Shaft | | 37 | 27 | 65 | | 932 | |
| | 2021.11- | 7DCT | F | L/R | MPV FWD B48 A20 P | | GCO83810 | Outer Joint | | 37 | 28 | 65 | | 76.5 | M |
| | 2021.11- | 7DCT | F | L | MPV FWD B48 A20 P | | GCI83960 | Inner Joint | | 27 | 29 | 35 | 73 | 114 | |
| | 2021.11- | 7DCT | F | R | MPV FWD B48 A20 P | | GCI83986 | Inner Joint | | 27 | 29 | 35 | 456 | 114 | |
| **223i xDrive Active Tourer** | | | | | | | | | | | | | | | |
| 2.0 (160 kw) | 2022.03- | 7DCT | F | L | MPV 4WD B48 A20 P | | GDS57952 | Drive Shaft | | 37 | 27 | 65 | | 538 | |
| | 2022.03- | 7DCT | F | R | MPV 4WD B48 A20 P | | GDS58026 | Drive Shaft | | 37 | 35 | 65 | | 495 | |
| | 2022.03- | 7DCT | F | L/R | MPV 4WD B48 A20 P | | GCO83810 | Outer Joint | | 37 | 28 | 65 | | 76.5 | M |
| | 2022.03- | 7DCT | F | L | MPV 4WD B48 A20 P | | GCI83960 | Inner Joint | | 27 | 29 | 35 | 73 | 114 | |
| | 2022.03- | 7DCT | F | R | MPV 4WD B48 A20 P | | GCI83983 | Inner Joint | | 35 | 29 | 44.8 | | 133.5 | |
| **225d Cabrio** | | | | | | | | | | | | | | | |
| 2.0 (165 kw) | 2015.07-2019.05 | AT | R | L | Convertible RWD B47 D20 B | | GDS85110 | Drive Shaft | | 28 | 32 | 57 | 71 | 748 | |
| | 2015.07-2019.05 | AT | R | R | Convertible RWD B47 D20 B | | GDS85109 | Drive Shaft | | 28 | 32 | 57 | 71 | 802 | |
| | 2015.07-2019.05 | AT | R | L/R | Convertible RWD B47 D20 B | | GCI85086 | Inner Joint | | 28 | 28 | 62.5 | 71 | 91 | |
| | 2015.07-2019.05 | AT | R | L/R | Convertible RWD B47 D20 B | | GCI85087 | Inner Joint | | 32 | 28 | 50 | 85 | 99 | |
| **225d Coupe** | | | | | | | | | | | | | | | |
| 2.0 (160 kw) | 2014.01-2017.06 | AT/MT | R | L | Coupe RWD N47 D20 D | | GDS85110 | Drive Shaft | | 28 | 32 | 57 | 71 | 748 | |
| | 2014.01-2017.06 | AT/MT | R | R | Coupe RWD N47 D20 D | | GDS85109 | Drive Shaft | | 28 | 32 | 57 | 71 | 802 | |
| | 2014.01-2017.06 | AT/MT | R | L/R | Coupe RWD N47 D20 D | | GCI85086 | Inner Joint | | 28 | 28 | 62.5 | 71 | 91 | |
| | 2014.01-2017.06 | AT/MT | R | L/R | Coupe RWD N47 D20 D | | GCI85087 | Inner Joint | | 32 | 28 | 50 | 85 | 99 | |
| 2.0 (165 kw) | 2015.07-2019.05 | AT | R | L | Coupe RWD B47 D20 B | | GDS85110 | Drive Shaft | | 28 | 32 | 57 | 71 | 748 | |
| | 2015.07-2019.05 | AT | R | R | Coupe RWD B47 D20 B | | GDS85109 | Drive Shaft | | 28 | 32 | 57 | 71 | 802 | |
| | 2015.07-2019.05 | AT | R | L/R | Coupe RWD B47 D20 B | | GCI85086 | Inner Joint | | 28 | 28 | 62.5 | 71 | 91 | |
| | 2015.07-2019.05 | AT | R | L/R | Coupe RWD B47 D20 B | | GCI85087 | Inner Joint | | 32 | 28 | 50 | 85 | 99 | |
| **225e xDrive Active Tourer** | | | | | | | | | | | | | | | |
| 1.5 (162 kw) | 2020.11-2021.10 | 6AT | F | L | MPV 4WD B38 A15 A;IA1 | | GDS83712 | Drive Shaft | | 31 | 26 | 56 | | 541 | |
| | 2020.11-2021.10 | 6AT | F | R | MPV 4WD B38 A15 A;IA1 | | GDS83713 | Drive Shaft | | 31 | 26 | 56 | | 905 | |
| | 2020.11-2021.10 | 6AT | F | L/R | MPV 4WD B38 A15 A;IA1 | | GCO82471 | Outer Joint | | 31 | 26 | 56 | | 73.5 | M |
| | 2020.11-2021.10 | 6AT | F | L | MPV 4WD B38 A15 A;IA1 | | GCI82347 | Inner Joint | | 26 | 32 | 31 | 65 | 92 | |
| | 2020.11-2021.10 | 6AT | F | R | MPV 4WD B38 A15 A;IA1 | | GCI82348 | Inner Joint | | 26 | 32 | 31 | 388 | 88 | |
| | 2020.11-2021.10 | 6AT | R | L | MPV 4WD B38 A15 A;IA1 | | GDS56104 | Drive Shaft | | 31 | 25 | 56 | | 752 | |
| | 2020.11-2021.10 | 6AT | R | R | MPV 4WD B38 A15 A;IA1 | | GDS56103 | Drive Shaft | | 31 | 25 | 56 | | 703 | |
| | 2020.11-2021.10 | 6AT | R | L/R | MPV 4WD B38 A15 A;IA1 | | GCO81685 | Outer Joint | | 31 | 30 | 56 | | 61.5 | I |
| | 2020.11-2021.10 | 6AT | R | L | MPV 4WD B38 A15 A;IA1 | | GCI82921 | Inner Joint | | 25 | 30 | 39.95 | 59 | 96.5 | |
| | 2020.11-2021.10 | 6AT | R | R | MPV 4WD B38 A15 A;IA1 | | GCI82920 | Inner Joint | | 25 | 30 | 39.95 | 74.5 | 99.5 | |

| | YEAR | TRANSM. | F/R | L/R | BODY STYLE & DRIVE TYPE & ENGINE | REMARKS | G-AP Ref. | PRODUCT | ABS | Technical Specifications A | B | C | H | L | P |
|---|---|---|---|---|---|---|---|---|---|---|---|---|---|---|---|
| **BMW** | | | | | | | | | | | | | | | |
| **225e xDrive Active Tourer** | | | | | | | | | | | | | | | |
| 1.5 (165 kw) | 2014.11-2021.10 | 6AT | F | L | MPV 4WD B38 A15 A;IA1 | | GDS83712 | Drive Shaft | | 31 | 26 | 56 | | 541 | |
| | 2014.11-2021.10 | 6AT | F | R | MPV 4WD B38 A15 A;IA1 | | GDS83713 | Drive Shaft | | 31 | 26 | 56 | | 905 | |
| | 2014.11-2021.10 | 6AT | F | L/R | MPV 4WD B38 A15 A;IA1 | | GCO82471 | Outer Joint | | 31 | 26 | 56 | | 73.5 | M |
| | 2014.11-2021.10 | 6AT | F | L | MPV 4WD B38 A15 A;IA1 | | GCI82347 | Inner Joint | | 26 | 32 | 31 | 65 | 92 | |
| | 2014.11-2021.10 | 6AT | F | R | MPV 4WD B38 A15 A;IA1 | | GCI82348 | Inner Joint | | 26 | 32 | 31 | 388 | 88 | |
| | 2014.11-2021.10 | 6AT | R | L | MPV 4WD B38 A15 A;IA1 | | GDS56104 | Drive Shaft | | 31 | 25 | 56 | | 752 | |
| | 2014.11-2021.10 | 6AT | R | R | MPV 4WD B38 A15 A;IA1 | | GDS56103 | Drive Shaft | | 31 | 25 | 56 | | 703 | |
| | 2014.11-2021.10 | 6AT | R | L/R | MPV 4WD B38 A15 A;IA1 | | GCO81685 | Outer Joint | | 31 | 30 | 56 | | 61.5 | I |
| | 2014.11-2021.10 | 6AT | R | L | MPV 4WD B38 A15 A;IA1 | | GCI82921 | Inner Joint | | 25 | 30 | 39.95 | 59 | 96.5 | |
| | 2014.11-2021.10 | 6AT | R | R | MPV 4WD B38 A15 A;IA1 | | GCI82920 | Inner Joint | | 25 | 30 | 39.95 | 74.5 | 99.5 | |
| **225i Active Tourer** | | | | | | | | | | | | | | | |
| 2.0 (170 kw) | 2013.11-2019.12 | 8AT | F | L | MPV FWD B48 A20 B | Diameter:25mm | GDS82177 | Drive Shaft | | 31 | 28 | 56 | | 538 | |
| | 2013.11-2019.12 | 8AT | F | R | MPV FWD B48 A20 B | | GDS84087 | Drive Shaft | | 31 | 28 | 56 | | 904 | |
| | 2013.11-2019.12 | 8AT | F | L/R | MPV FWD B48 A20 B | | GCO81684 | Outer Joint | | 31 | 28 | 56 | | 77 | M |
| | 2013.11-2019.12 | 8AT | F | L | MPV FWD B48 A20 B | Diameter:25mm | GCI81659 | Inner Joint | | 28 | 28 | 33 | 66 | 93.5 | |
| | 2013.11-2019.12 | 8AT | F | R | MPV FWD B48 A20 B | | GCI82517 | Inner Joint | | 28 | 28 | 33 | 425 | 106.5 | |
| **225i xDrive Active Tourer** | | | | | | | | | | | | | | | |
| 2.0 (170 kw) | 2014.03-2021.10 | 8AT | F | L | MPV 4WD B48 A20 B | Diameter:25mm | GDS82177 | Drive Shaft | | 31 | 28 | 56 | | 538 | |
| | 2014.03-2021.10 | 8AT | F | R | MPV 4WD B48 A20 B | | GDS82633 | Drive Shaft | | 31 | 35 | 56 | | 499 | |
| | 2014.03-2021.10 | 8AT | F | L/R | MPV 4WD B48 A20 B | | GCO81684 | Outer Joint | | 31 | 28 | 56 | | 77 | M |
| | 2014.03-2021.10 | 8AT | F | L | MPV 4WD B48 A20 B | Diameter:25mm | GCI81659 | Inner Joint | | 28 | 28 | 33 | 66 | 93.5 | |
| | 2014.03-2021.10 | 8AT | F | R | MPV 4WD B48 A20 B | | GCI81924 | Inner Joint | | 35 | 28 | 44.5 | | 126 | |
| | 2014.03-2021.10 | 8AT | R | L/R | MPV 4WD B48 A20 B | | GDS82176 | Drive Shaft | | 31 | 27 | 56 | | 731 | |
| | 2014.03-2021.10 | 8AT | R | L/R | MPV 4WD B48 A20 B | | GCO81685 | Outer Joint | | 31 | 30 | 56 | | 61.5 | I |
| | 2014.03-2021.10 | 8AT | R | L/R | MPV 4WD B48 A20 B | | GCI81658 | Inner Joint | | 27 | 30 | 43.7 | 87 | 100 | |
| **228i Cabrio** | | | | | | | | | | | | | | | |
| 2.0 (180 kw) | 2014.11-2016.06 | 6MT | R | L/R | Convertible RWD N20 B20 A | Diameter [mm]:35 | GCI83732 | Inner Joint | | 27 | 25 | 43.9 | 75 | 72 | |
| | 2014.11-2016.06 | AT/MT | R | L | Convertible RWD N20 B20 A | | GDS85066 | Drive Shaft | | 28 | 27 | 57.4 | 71 | 744 | |
| | 2014.11-2016.06 | AT/MT | R | R | Convertible RWD N20 B20 A | | GDS85067 | Drive Shaft | | 28 | 27 | 57.4 | 71 | 800 | |
| **228i Coupe** | | | | | | | | | | | | | | | |
| 2.0 (180 kw) | 2014.07-2016.06 | 6MT | R | L/R | Coupe RWD N20 B20 A;N26 B20 A | Diameter [mm]:35 | GCI83732 | Inner Joint | | 27 | 25 | 43.9 | 75 | 72 | |
| | 2014.07-2016.06 | AT/MT | R | L | Coupe RWD N20 B20 A;N26 B20 A | | GDS85066 | Drive Shaft | | 28 | 27 | 57.4 | 71 | 744 | |
| | 2014.07-2016.06 | AT/MT | R | R | Coupe RWD N20 B20 A;N26 B20 A | | GDS85067 | Drive Shaft | | 28 | 27 | 57.4 | 71 | 800 | |
| **228i xDrive Gran Coupe** | | | | | | | | | | | | | | | |
| 2.0 (180 kw) | 2024.11- | | F | L | Coupe 4WD B48A20S | | GDS57952 | Drive Shaft | | 37 | 27 | 65 | | 538 | |
| | 2024.11- | | F | R | Coupe 4WD B48A20S | | GDS58026 | Drive Shaft | | 37 | 35 | 65 | | 495 | |
| | 2024.11- | | F | L/R | Coupe 4WD B48A20S | | GCO83810 | Outer Joint | | 37 | 28 | 65 | | 76.5 | M |
| | 2024.11- | | F | L | Coupe 4WD B48A20S | | GCI83960 | Inner Joint | | 27 | 29 | 35 | 73 | 114 | |
| | 2024.11- | | F | R | Coupe 4WD B48A20S | | GCI83983 | Inner Joint | | 35 | 29 | 44.8 | | 133.5 | |
| **230i Cabrio** | | | | | | | | | | | | | | | |
| 2.0 (185 kw) | 2016.07-2021.06 | 8AT | R | L | Convertible RWD B48 B20 B;B46 B20 B | | GDS85066 | Drive Shaft | | 28 | 27 | 57.4 | 71 | 744 | |
| | 2016.07-2021.06 | 8AT | R | R | Convertible RWD B48 B20 B;B46 B20 B | | GDS85067 | Drive Shaft | | 28 | 27 | 57.4 | 71 | 800 | |
| | 2016.07-2021.06 | 8AT | R | L/R | Convertible RWD B48 B20 B;B46 B20 B | Diameter [mm]:35 | GCI83732 | Inner Joint | | 27 | 25 | 43.9 | 75 | 72 | |
| **230i Coupe** | | | | | | | | | | | | | | | |
| 2.0 (185 kw) | 2016.07-2021.06 | 8AT | R | L | Coupe RWD B48 B20 B;B46 B20 B | | GDS85066 | Drive Shaft | | 28 | 27 | 57.4 | 71 | 744 | |
| | 2016.07-2021.06 | 8AT | R | R | Coupe RWD B48 B20 B;B46 B20 B | | GDS85067 | Drive Shaft | | 28 | 27 | 57.4 | 71 | 800 | |
| | 2016.07-2021.06 | 8AT | R | L/R | Coupe RWD B48 B20 B;B46 B20 B | Diameter [mm]:35 | GCI83732 | Inner Joint | | 27 | 25 | 43.9 | 75 | 72 | |
| **3 ActiveHybrid** | | | | | | | | | | | | | | | |
| 3.0 (250 kw) | 2012.07-2015.06 | 8AT | R | L | Saloon RWD N55 B30 A | | GDS85066 | Drive Shaft | | 28 | 27 | 57.4 | 71 | 744 | |
| | 2012.07-2015.06 | 8AT | R | R | Saloon RWD N55 B30 A | | GDS85067 | Drive Shaft | | 28 | 27 | 57.4 | 71 | 800 | |
| **316d** | | | | | | | | | | | | | | | |
| 2.0 (85 kw) | 2009.07-2011.12 | 6MT | R | L | Saloon RWD N47 D20 C | | GDS85022 | Drive Shaft | 48W | 27 | | 69 | 68 | 607 | |
| | 2009.07-2011.12 | 6MT | R | R | Saloon RWD N47 D20 C | | GDS85023 | Drive Shaft | 48W | 27 | | 69 | 68 | 660 | |
| | 2009.07-2011.12 | 6MT | R | L/R | Saloon RWD N47 D20 C | | GCI99145 | Outer Joint | 48W | 27 | 25 | 69 | 68 | 58 | I |
| | 2009.07-2011.12 | 6MT | R | L/R | Saloon RWD N47 D20 C | | GCI35025 | Inner Joint | | | 25 | | | 26 | |
| | 2012.03-2018.10 | 6MT | R | R | Saloon RWD N47 D20 C;B47 D20 A | For Engine code:N47D20C,Diameter [mm]:25 | GCI83732 | Inner Joint | | 27 | 25 | 43.9 | 75 | 72 | |
| | 2012.03-2018.10 | 8AT/6MT | R | L | Saloon RWD N47 D20 C;B47 D20 A | | GDS85066 | Drive Shaft | | 28 | 27 | 57.4 | 71 | 744 | |
| | 2012.03-2018.10 | 8AT/6MT | R | R | Saloon RWD N47 D20 C;B47 D20 A | | GDS85067 | Drive Shaft | | 28 | 27 | 57.4 | 71 | 800 | |
| **316d Touring** | | | | | | | | | | | | | | | |
| 2.0 (85 kw) | 2009.09-2012.06 | 6MT | R | L | Estate RWD N47 D20 C | Not for increased payload | GDS85022 | Drive Shaft | 48W | 27 | | 69 | 68 | 607 | |
| | 2009.09-2012.06 | 6MT | R | L | Estate RWD N47 D20 C | For increased payload | GDS85039 | Drive Shaft | | 30 | | 58.7 | 73 | 615 | |
| | 2009.09-2012.06 | 6MT | R | R | Estate RWD N47 D20 C | Not for increased payload | GDS85023 | Drive Shaft | 48W | 27 | | 69 | 68 | 660 | |
| | 2009.09-2012.06 | 6MT | R | R | Estate RWD N47 D20 C | For increased payload | GDS85134 | Drive Shaft | | 30 | | 58.7 | 73 | 665 | |
| | 2009.09-2012.06 | 6MT | R | L/R | Estate RWD N47 D20 C | | GCI35025 | Inner Joint | | | 25 | | | 26 | |
| | 2012.11-2019.06 | 6MT | R | R | Estate RWD N47 D20 C;B47 D20 A | For Engine code:N47D20C,Diameter [mm]:25 | GCI83732 | Inner Joint | | 27 | 25 | 43.9 | 75 | 72 | |

| | YEAR | TRANSM. | F/R | L/R | BODY STYLE & DRIVE TYPE & ENGINE | REMARKS | G-AP Ref. | PRODUCT | ABS | Technical Specifications A | B | C | H | L | P |
|---|---|---|---|---|---|---|---|---|---|---|---|---|---|---|---|
| **BMW** | | | | | | | | | | | | | | | |
| **316d Touring** | | | | | | | | | | | | | | | |
| 2.0 (85 kw) | 2012.11-2019.06 | 8AT/6MT | R | L | Estate RWD N47 D20 C;B47 D20 A | | GDS85066 | Drive Shaft | | 28 | 27 | 57.4 | 71 | 744 | |
| | 2012.11-2019.06 | 8AT/6MT | R | R | Estate RWD N47 D20 C;B47 D20 A | | GDS85067 | Drive Shaft | | 28 | 27 | 57.4 | 71 | 800 | |
| **316i** | | | | | | | | | | | | | | | |
| 1.6 (75 kw) | 1993.09-1998.05 | AT/MT | R | L/R | Saloon RWD M43B164E2 | | GDS85002 | Drive Shaft | 48W | 27 | | 64 | 68.5 | 623 | |
| | 1993.09-1998.05 | AT/MT | R | L/R | Saloon RWD M43B164E2 | | GDS85014 | Drive Shaft | | 27 | | 64 | 68.5 | 623 | |
| | 1993.09-1998.05 | AT/MT | R | L/R | Saloon RWD M43B164E2 | | GCI85001 | Inner Joint | | | 24 | | | 24 | |
| 1.6 (77 kw) | 2000.04-2005.02 | 5MT | R | L | Saloon RWD M43B164E3 | | GDS85002 | Drive Shaft | 48W | 27 | | 64 | 68.5 | 623 | |
| | 2000.04-2005.02 | 5MT | R | R | Saloon RWD M43B164E3 | | GDS85017 | Drive Shaft | 48W | 27 | | 64 | 68.5 | 672 | |
| | 2000.04-2005.02 | | R | L/R | Saloon RWD M43B164E3 | | GCI85009 | Outer Joint | 48W | 27 | 24 | 64 | 68.5 | 58 | |
| | 2000.04-2005.02 | | R | L/R | Saloon RWD M43B164E3 | | GCI85005 | Inner Joint | | | 24 | | | 24 | |
| 1.6 (85 kw) | 2002.06-2005.02 | AT/MT | R | L | Saloon RWD N40B16A/N45B16A | | GDS85002 | Drive Shaft | 48W | 27 | | 64 | 68.5 | 623 | |
| | 2002.06-2005.02 | AT/MT | R | R | Saloon RWD N40B16A/N45B16A | | GDS85017 | Drive Shaft | 48W | 27 | | 64 | 68.5 | 672 | |
| | 2002.06-2005.02 | | R | L/R | Saloon RWD N40B16A/N45B16A | | GCI85005 | Inner Joint | | | 24 | | | 24 | |
| | 2005.09-2011.10 | MT | R | L | Saloon RWD N45 B16 A;N45 B16 AC | | GDS85037 | Drive Shaft | 48W | 27 | | 69.3 | 68 | 611 | |
| | 2005.09-2011.10 | MT | R | R | Saloon RWD N45 B16 A;N45 B16 AC | | GDS85036 | Drive Shaft | 48W | 27 | | 69.3 | 68 | 664 | |
| | 2005.09-2011.10 | | R | L/R | Saloon RWD N45 B16 A;N45 B16 AC | | GCI85056 | Outer Joint | 48W | 27 | 24 | 69.3 | 68 | 51 | |
| 1.6 (90 kw) | 2007.09-2011.10 | 6AT | R | L/R | Saloon RWD N43 B16 A;N43 B16 AA | | GCI85056 | Outer Joint | 48W | 27 | 24 | 69.3 | 68 | 51 | |
| | 2007.09-2011.10 | 6AT/6MT | R | L | Saloon RWD N43 B16 A;N43 B16 AA | | GDS85037 | Drive Shaft | 48W | 27 | | 69.3 | 68 | 611 | |
| | 2007.09-2011.10 | 6AT/6MT | R | R | Saloon RWD N43 B16 A;N43 B16 AA | | GDS85036 | Drive Shaft | 48W | 27 | | 69.3 | 68 | 664 | |
| 1.6 (100 kw) | 2012.07-2016.08 | 6MT | R | L | Saloon RWD N13 B16 A | | GDS85066 | Drive Shaft | | 28 | 27 | 57.4 | 71 | 744 | |
| | 2012.07-2016.08 | 6MT/8AT | R | R | Saloon RWD N13 B16 A | | GDS85067 | Drive Shaft | | 28 | 27 | 57.4 | 71 | 800 | |
| | 2012.07-2016.08 | 8AT | R | L | Saloon RWD N13 B16 A | | GDS85107 | Drive Shaft | | 28 | 27 | 57.4 | 71 | 749 | |
| | 2012.07-2016.08 | AT | R | R | Saloon RWD N13 B16 A | | GCI85020 | Inner Joint | | 27 | 25 | 43.9 | 75 | 96 | |
| | 2012.07-2016.08 | MT | R | L/R | Saloon RWD N13 B16 A | | GCI85020 | Inner Joint | | 27 | 25 | 43.9 | 75 | 96 | |
| 1.8 (85 kw) | 2001.07-2005.02 | 5MT | R | L | Saloon RWD N42B18A/N46B18A | | GDS85002 | Drive Shaft | 48W | 27 | | 64 | 68.5 | 623 | |
| | 2001.07-2005.02 | 5MT | R | R | Saloon RWD N42B18A/N46B18A | | GDS85017 | Drive Shaft | 48W | 27 | | 64 | 68.5 | 672 | |
| | 2001.07-2005.02 | 5MT | R | L/R | Saloon RWD N42B18A/N46B18A | | GCI85009 | Outer Joint | 48W | 27 | 24 | 64 | 68.5 | 58 | |
| | 2001.07-2005.02 | 5MT | R | L/R | Saloon RWD N42B18A/N46B18A | | GCI85005 | Inner Joint | | | 24 | | | 24 | |
| 1.9 (77 kw) | 1998.12-2002.02 | 5MT | R | L | Saloon RWD M43B194E1 | | GDS85002 | Drive Shaft | 48W | 27 | | 64 | 68.5 | 623 | |
| | 1998.12-2002.02 | 5MT | R | R | Saloon RWD M43B194E1 | | GDS85017 | Drive Shaft | 48W | 27 | | 64 | 68.5 | 672 | |
| | 1998.12-2002.02 | 5MT | R | L/R | Saloon RWD M43B194E1 | | GCI85009 | Outer Joint | 48W | 27 | 24 | 64 | 68.5 | 58 | |
| | 1998.12-2002.02 | 5MT | R | L/R | Saloon RWD M43B194E1 | | GCI85005 | Inner Joint | | | 24 | | | 24 | |
| **316i Compact** | | | | | | | | | | | | | | | |
| 1.6 (75 kw) | 1994.01-2000.08 | 4AT/5MT | R | L/R | Hatchback RWD M43B164E2 | | GDS85006 | Drive Shaft | 48W | 27 | | 64 | 68.5 | 585 | |
| | 1994.01-2000.08 | 4AT/5MT | R | L/R | Hatchback RWD M43B164E2 | | GCI85001 | Inner Joint | | | 24 | | | 24 | |
| | 1996.02-2000.08 | | R | L/R | Hatchback RWD M43B164E2CNG | | GDS85006 | Drive Shaft | 48W | 27 | | 64 | 68.5 | 585 | |
| | 1996.02-2000.08 | | R | R | Hatchback RWD M43B164E2CNG | | GCI85009 | Outer Joint | 48W | 27 | 24 | 64 | 68.5 | 58 | |
| 1.6 (77 kw) | 2002.06-2005.02 | 5MT | R | L | Hatchback RWD N40B16A/N45B16A | | GDS85002 | Drive Shaft | 48W | 27 | | 64 | 68.5 | 623 | |
| | 2002.06-2005.02 | 5MT | R | R | Hatchback RWD N40B16A/N45B16A | | GDS85017 | Drive Shaft | 48W | 27 | | 64 | 68.5 | 672 | |
| | 2002.06-2005.02 | 5MT | R | L | Hatchback RWD N40B16A/N45B16A | | GCI85005 | Inner Joint | | | 24 | | | 24 | |
| 1.6 (85 kw) | 2002.06-2005.02 | 5MT | R | L | Hatchback RWD N40B16A/N45B16A | | GDS85002 | Drive Shaft | 48W | 27 | | 64 | 68.5 | 623 | |
| | 2002.06-2005.02 | 5MT | R | R | Hatchback RWD N40B16A/N45B16A | | GDS85017 | Drive Shaft | 48W | 27 | | 64 | 68.5 | 672 | |
| | 2002.06-2005.02 | 5MT | R | L/R | Hatchback RWD N40B16A/N45B16A | | GCI85001 | Inner Joint | | | 24 | | | 24 | |
| 1.8 (85 kw) | 2001.06-2005.02 | 5MT | R | L | Hatchback RWD N42B18A/N46B18A | | GDS85002 | Drive Shaft | 48W | 27 | | 64 | 68.5 | 623 | |
| | 2001.06-2005.02 | 5MT | R | L/R | Hatchback RWD N42B18A/N46B18A | | GCI85009 | Outer Joint | 48W | 27 | 24 | 64 | 68.5 | 58 | |
| | 2001.06-2005.02 | 5MT | R | L/R | Hatchback RWD N42B18A/N46B18A | | GCI85005 | Inner Joint | | | 24 | | | 24 | |
| | 2001.06-2005.02 | AT/MT | R | R | Hatchback RWD N42B18A/N46B18A | | GDS85017 | Drive Shaft | 48W | 27 | | 64 | 68.5 | 672 | |
| 1.9 (77 kw) | 1999.01-2000.08 | 4AT/5MT | R | L/R | Hatchback RWD M43B194E1 | | GDS85006 | Drive Shaft | 48W | 27 | | 64 | 68.5 | 585 | |
| | 1999.01-2000.08 | 4AT/5MT | R | L/R | Hatchback RWD M43B194E1 | | GCI85009 | Outer Joint | 48W | 27 | 24 | 64 | 68.5 | 58 | |
| **316i Coupe** | | | | | | | | | | | | | | | |
| 1.6 (75 kw) | 1993.09-1998.11 | AT/MT | R | L/R | Coupe RWD M43B164E2 | | GDS85002 | Drive Shaft | 48W | 27 | | 64 | 68.5 | 623 | |
| | 1993.09-1998.11 | AT/MT | R | L/R | Coupe RWD M43B164E2 | | GDS85014 | Drive Shaft | | 27 | | 64 | 68.5 | 623 | |
| | 1993.09-1998.11 | AT/MT | R | L/R | Coupe RWD M43B164E2 | | GCI85009 | Outer Joint | 48W | 27 | 24 | 64 | 68.5 | 58 | |
| | 1993.09-1998.11 | AT/MT | R | L/R | Coupe RWD M43B164E2 | | GCI85001 | Inner Joint | | | 24 | | | 24 | |
| 1.6 (77 kw) | 2000.04-2003.10 | AT/MT | R | L | Coupe RWD M43B164E3 | Date to:2003.10 | GDS85002 | Drive Shaft | 48W | 27 | | 64 | 68.5 | 623 | |
| | 2000.04-2003.10 | AT/MT | R | R | Coupe RWD M43B164E3 | Date to:2003.10 | GDS85017 | Drive Shaft | 48W | 27 | | 64 | 68.5 | 672 | |
| | 2000.04-2003.10 | | R | L/R | Coupe RWD M43B164E3 | | GCI85005 | Inner Joint | | | 24 | | | 24 | |
| 1.6 (85 kw) | 2002.06-2006.07 | AT/MT | R | L | Coupe RWD N45B16A | | GDS85002 | Drive Shaft | 48W | 27 | | 64 | 68.5 | 623 | |
| | 2002.06-2006.07 | AT/MT | R | R | Coupe RWD N45B16A | | GDS85017 | Drive Shaft | 48W | 27 | | 64 | 68.5 | 672 | |
| | 2002.06-2006.07 | | R | L/R | Coupe RWD N45B16A | | GCI85005 | Inner Joint | | | 24 | | | 24 | |
| 1.6 (90 kw) | 2007.09-2013.06 | 6AT/6MT | R | L | Coupe RWD N43 B16 AA | | GDS85037 | Drive Shaft | 48W | 27 | | 69.3 | 68 | 611 | |
| | 2007.09-2013.06 | 6AT/6MT | R | R | Coupe RWD N43 B16 AA | | GDS85036 | Drive Shaft | 48W | 27 | | 69.3 | 68 | 664 | |
| **316i Touring** | | | | | | | | | | | | | | | |
| 1.6 (75 kw) | 1997.03-1999.05 | AT/MT | R | | Estate RWD M43B164E2 | | GDS85014 | Drive Shaft | | 27 | | 64 | 68.5 | 623 | |
| | 1997.03-1999.05 | | R | L/R | Estate RWD M43B164E2 | | GCI85009 | Outer Joint | 48W | 27 | 24 | 64 | 68.5 | 58 | |

| | YEAR | TRANSM. | F/R | L/R | BODY STYLE & DRIVE TYPE & ENGINE | REMARKS | G-AP Ref. | PRODUCT | ABS | Technical Specifications A | B | C | H | L | P |
|---|---|---|---|---|---|---|---|---|---|---|---|---|---|---|---|
| **BMW** | | | | | | | | | | | | | | | |
| **316i Touring** | | | | | | | | | | | | | | | |
| 1.6 (90 kw) | 2008.09-2012.06 | 6MT | R | L | Estate RWD N43 B16 AA | Date to:2009.09 | GDS81121 | Drive Shaft | | 30 | | 58.5 | 73 | 613 | |
| | 2008.09-2012.06 | 6MT | R | L | Estate RWD N43 B16 AA | Date from:2009.10 | GDS85037 | Drive Shaft | 48W | 27 | | 69.3 | 68 | 611 | |
| | 2008.09-2012.06 | 6MT | R | R | Estate RWD N43 B16 AA | Date to:2009.09 | GDS82846 | Drive Shaft | | 30 | | 58.5 | 73 | 667 | |
| | 2008.09-2012.06 | 6MT | R | R | Estate RWD N43 B16 AA | Date from:2009.10 | GDS85036 | Drive Shaft | 48W | 27 | | 69.3 | 68 | 664 | |
| | 2008.09-2012.06 | MT | R | L | Estate RWD N43 B16 AA | | GCI85089 | Inner Joint | | | 24 | | | 24 | |
| 1.6 (100 kw) | 2013.03-2015.06 | AT | R | L | Estate RWD N13 B16 A | | GDS85107 | Drive Shaft | | 28 | 27 | 57.4 | 71 | 749 | |
| | 2013.03-2015.06 | MT | R | L | Estate RWD N13 B16 A | | GDS85066 | Drive Shaft | | 28 | 27 | 57.4 | 71 | 744 | |
| | 2013.03-2015.06 | MT | R | R | Estate RWD N13 B16 A | | GDS85067 | Drive Shaft | | 28 | 27 | 57.4 | 71 | 800 | |
| 1.8 (85 kw) | 2001.07-2005.02 | 5MT | R | L | Estate RWD N42B18A/N46B18A | | GDS85002 | Drive Shaft | 48W | 27 | | 64 | 68.5 | 623 | |
| | 2001.07-2005.02 | 5MT | R | R | Estate RWD N42B18A/N46B18A | | GDS85017 | Drive Shaft | 48W | 27 | | 64 | 68.5 | 672 | |
| | 2001.07-2005.02 | 5MT | R | L/R | Estate RWD N42B18A/N46B18A | | GCI85009 | Outer Joint | 48W | 27 | 24 | 64 | 68.5 | 58 | |
| | 2001.07-2005.02 | 5MT | R | L/R | Estate RWD N42B18A/N46B18A | | GCI85005 | Inner Joint | | | 24 | | | 24 | |
| **318d** | | | | | | | | | | | | | | | |
| 1.7 (66 kw) | 1994.08-1998.01 | MT | R | L/R | Saloon RWD M41D174T1 | | GDS85014 | Drive Shaft | | 27 | | 64 | 68.5 | 623 | |
| 2.0 (85 kw) | 2001.07-2003.02 | 5MT | R | L | Saloon RWD M47D204D1 | | GDS85051 | Drive Shaft | 48W | 27 | | 64 | 69 | 618 | |
| | 2001.07-2003.02 | 5MT | R | R | Saloon RWD M47D204D1 | | GDS85042 | Drive Shaft | 48W | 27 | | 64 | 69 | 672 | |
| | 2001.07-2003.02 | 5MT | R | L/R | Saloon RWD M47D204D1 | | GCI99127 | Inner Joint | | | 25 | | | 26 | |
| | 2003.03-2005.02 | AT/MT | R | L | Saloon RWD M47D204D4 | | GDS85051 | Drive Shaft | 48W | 27 | | 64 | 69 | 618 | |
| | 2003.03-2005.02 | AT/MT | R | R | Saloon RWD M47D204D4 | | GDS85042 | Drive Shaft | 48W | 27 | | 64 | 69 | 672 | |
| 2.0 (90 kw) | 2005.03-2007.08 | SAT/6MT | R | L | Saloon RWD M47 D20 (204D4) | | GDS85022 | Drive Shaft | 48W | 27 | | 69 | 68 | 607 | |
| | 2005.03-2007.08 | SAT/6MT | R | R | Saloon RWD M47 D20 (204D4) | | GDS85023 | Drive Shaft | 48W | 27 | | 69 | 68 | 660 | |
| | 2005.03-2007.08 | SAT/6MT | R | L/R | Saloon RWD M47 D20 (204D4) | | GCI99145 | Outer Joint | 48W | 27 | 25 | 69 | 68 | 58 | I |
| | 2005.03-2007.08 | SAT/6MT | R | L/R | Saloon RWD M47 D20 (204D4) | | GCI35025 | Inner Joint | | | 25 | | | 26 | |
| 2.0 (100 kw) | 2007.09-2011.10 | 6AT/6MT | R | L | Saloon RWD N47 D20 A;N47 D20 C | | GDS85022 | Drive Shaft | 48W | 27 | | 69 | 68 | 607 | |
| | 2007.09-2011.10 | 6AT/6MT | R | R | Saloon RWD N47 D20 A;N47 D20 C | | GDS85023 | Drive Shaft | 48W | 27 | | 69 | 68 | 660 | |
| | 2007.09-2011.10 | 6AT/6MT | R | L/R | Saloon RWD N47 D20 A;N47 D20 C | | GCI99145 | Outer Joint | 48W | 27 | 25 | 69 | 68 | 58 | I |
| | 2007.09-2011.10 | 6AT/6MT | R | L/R | Saloon RWD N47 D20 A;N47 D20 C | | GCI35025 | Inner Joint | | | 25 | | | 26 | |
| | 2012.03-2018.10 | AT/MT | R | L | Saloon RWD N47 D20 C;B47 D20 A | | GDS85066 | Drive Shaft | | 28 | 27 | 57.4 | 71 | 744 | |
| | 2012.03-2018.10 | AT/MT | R | R | Saloon RWD N47 D20 C;B47 D20 A | | GDS85067 | Drive Shaft | | 28 | 27 | 57.4 | 71 | 800 | |
| 2.0 (105 kw) | 2007.02-2011.10 | 6AT/6MT | R | L | Saloon RWD N47 D20 A;N47 D20 C | | GDS85022 | Drive Shaft | 48W | 27 | | 69 | 68 | 607 | |
| | 2007.02-2011.10 | 6AT/6MT | R | R | Saloon RWD N47 D20 A;N47 D20 C | | GDS85023 | Drive Shaft | 48W | 27 | | 69 | 68 | 660 | |
| | 2007.02-2011.10 | 6AT/6MT | R | L/R | Saloon RWD N47 D20 A;N47 D20 C | | GCI99145 | Outer Joint | 48W | 27 | 25 | 69 | 68 | 58 | I |
| | 2007.02-2011.10 | 6AT/6MT | R | L/R | Saloon RWD N47 D20 A;N47 D20 C | | GCI35025 | Inner Joint | | | 25 | | | 26 | |
| | 2012.03-2015.06 | 8AT/6MT | R | L | Saloon RWD N47 D20 C | | GDS85066 | Drive Shaft | | 28 | 27 | 57.4 | 71 | 744 | |
| | 2012.03-2015.06 | 8AT/6MT | R | R | Saloon RWD N47 D20 C | | GDS85067 | Drive Shaft | | 28 | 27 | 57.4 | 71 | 800 | |
| | 2012.03-2015.06 | 8AT/6MT | R | L/R | Saloon RWD N47 D20 C | | GCI85020 | Inner Joint | | 27 | 25 | 43.9 | 75 | 96 | |
| 2.0 (110 kw) | 2015.07-2018.10 | 8AT/6MT | R | L | Saloon RWD B47 D20 A | | GDS85066 | Drive Shaft | | 28 | 27 | 57.4 | 71 | 744 | |
| | 2015.07-2018.10 | 8AT/6MT | R | R | Saloon RWD B47 D20 A | | GDS85067 | Drive Shaft | | 28 | 27 | 57.4 | 71 | 800 | |
| | 2015.07-2018.10 | 8AT/6MT | R | L/R | Saloon RWD B47 D20 A | | GCI85020 | Inner Joint | | 27 | 25 | 43.9 | 75 | 96 | |
| **318d Compact** | | | | | | | | | | | | | | | |
| 1.7 (66 kw) | 1995.06-2000.08 | MT | R | L/R | Hatchback RWD M41D174T1 | | GDS85006 | Drive Shaft | 48W | 27 | | 64 | 68.5 | 585 | |
| | 1995.06-2000.08 | MT | R | L/R | Hatchback RWD M41D174T1 | | GCI85001 | Inner Joint | | | 24 | | | 24 | |
| 2.0 (85 kw) | 2003.02-2005.02 | AT/MT/5MT | R | L | Hatchback RWD M47D204D4 | | GDS85051 | Drive Shaft | 48W | 27 | | 64 | 69 | 618 | |
| | 2003.02-2005.02 | AT/MT/5MT | R | R | Hatchback RWD M47D204D4 | | GDS85042 | Drive Shaft | 48W | 27 | | 64 | 69 | 672 | |
| **318d Gran Turismo** | | | | | | | | | | | | | | | |
| 2.0 (100 kw) | 2013.03-2018.03 | AT/MT | R | L | Hatchback RWD N47 D20 C;B47 D20 A | | GDS85066 | Drive Shaft | | 28 | 27 | 57.4 | 71 | 744 | |
| | 2013.03-2018.03 | AT/MT | R | R | Hatchback RWD N47 D20 C;B47 D20 A | | GDS85067 | Drive Shaft | | 28 | 27 | 57.4 | 71 | 800 | |
| 2.0 (105 kw) | 2013.03-2015.06 | 8AT/6MT | R | L | Hatchback RWD N47 D20 C | | GDS85066 | Drive Shaft | | 28 | 27 | 57.4 | 71 | 744 | |
| | 2013.03-2015.06 | 8AT/6MT | R | R | Hatchback RWD N47 D20 C | | GDS85067 | Drive Shaft | | 28 | 27 | 57.4 | 71 | 800 | |
| 2.0 (110 kw) | 2015.07- | 8AT/6MT | R | L | Hatchback RWD B47 D20 A | | GDS85066 | Drive Shaft | | 28 | 27 | 57.4 | 71 | 744 | |
| | 2015.07- | 8AT/6MT | R | R | Hatchback RWD B47 D20 A | | GDS85067 | Drive Shaft | | 28 | 27 | 57.4 | 71 | 800 | |
| **318d Touring** | | | | | | | | | | | | | | | |
| 1.7 (66 kw) | 1995.03-1999.04 | 5MT | R | L/R | Estate RWD M41D174T1 | | GDS85002 | Drive Shaft | 48W | 27 | | 64 | 68.5 | 623 | |
| | 1995.03-1999.04 | AT/MT | R | L/R | Estate RWD M41D174T1 | | GDS85014 | Drive Shaft | | 27 | | 64 | 68.5 | 623 | |
| | 1995.03-1999.04 | | R | L/R | Estate RWD M41D174T1 | | GCI85009 | Outer Joint | 48W | 27 | 24 | 64 | 68.5 | 58 | |
| | 1995.03-1999.04 | | R | | Estate RWD M41D174T1 | | GCI85001 | Inner Joint | | | 24 | | | 24 | |
| 2.0 (85 kw) | 2001.07-2003.02 | 5MT | R | L | Estate RWD M47D204D1 | | GDS85051 | Drive Shaft | 48W | 27 | | 64 | 69 | 618 | |
| | 2001.07-2003.02 | 5MT | R | R | Estate RWD M47D204D1 | | GDS85042 | Drive Shaft | 48W | 27 | | 64 | 69 | 672 | |
| | 2001.07-2003.02 | 5MT | R | L/R | Estate RWD M47D204D1 | | GCI99127 | Inner Joint | | | 25 | | | 26 | |
| | 2003.03-2005.02 | AT/MT | R | L | Estate RWD M47D204D4 | | GDS85051 | Drive Shaft | 48W | 27 | | 64 | 69 | 618 | |
| | 2003.03-2005.02 | AT/MT | R | R | Estate RWD M47D204D4 | | GDS85042 | Drive Shaft | 48W | 27 | | 64 | 69 | 672 | |
| 2.0 (90 kw) | 2005.09-2007.08 | 6MT | R | L | Estate RWD M47 D20 (204D4) | | GDS85039 | Drive Shaft | | 30 | | 58.7 | 73 | 615 | |
| | 2005.09-2007.08 | 6MT | R | R | Estate RWD M47 D20 (204D4) | | GDS85134 | Drive Shaft | | 30 | | 58.7 | 73 | 665 | |
| | 2005.09-2007.08 | 6MT | R | L/R | Estate RWD M47 D20 (204D4) | | GCI35025 | Inner Joint | | | 25 | | | 26 | |
| 2.0 (100 kw) | 2007.07-2012.06 | 6AT/6MT | R | L | Estate RWD N47 D20 A;N47 D20 C | Not for increased payload,Date from:2009.10 | GDS85022 | Drive Shaft | 48W | 27 | | 69 | 68 | 607 | |

| | YEAR | TRANSM. | F/R | L/R | BODY STYLE & DRIVE TYPE & ENGINE | REMARKS | G-AP Ref. | PRODUCT | ABS | Technical Specifications A | B | C | H | L | P |
|---|---|---|---|---|---|---|---|---|---|---|---|---|---|---|---|
| **BMW** | | | | | | | | | | | | | | | |
| **318d Touring** | | | | | | | | | | | | | | | |
| 2.0 (100 kw) | 2007.07-2012.06 | 6AT/6MT | R | L | Estate RWD N47 D20 A;N47 D20 C | Not for increased payload,Date to:2009.09;For increased payload | GDS85039 | Drive Shaft | | 30 | | 58.7 | 73 | 615 | |
| | 2007.07-2012.06 | 6AT/6MT | R | R | Estate RWD N47 D20 A;N47 D20 C | Not for increased payload,Date from:2009.10 | GDS85023 | Drive Shaft | 48W | 27 | | 69 | 68 | 660 | |
| | 2007.07-2012.06 | 6AT/6MT | R | R | Estate RWD N47 D20 A;N47 D20 C | Not for increased payload,Date to:2009.09;For increased payload | GDS85134 | Drive Shaft | | 30 | | 58.7 | 73 | 665 | |
| | 2007.07-2012.06 | 6AT/6MT | R | L/R | Estate RWD N47 D20 A;N47 D20 C | Not for increased payload,Date To:2009.09;For increased payload | GCI85036 | Outer Joint | | 30 | 25 | 58.7 | 73 | 58 | I |
| | 2007.07-2012.06 | 6AT/6MT | R | L/R | Estate RWD N47 D20 A;N47 D20 C | Not for increased payload,Date From:2009.10 | GCI99145 | Outer Joint | 48W | 27 | 25 | 69 | 68 | 58 | I |
| | 2007.07-2012.06 | 6AT/6MT | R | L/R | Estate RWD N47 D20 A;N47 D20 C | | GCI35025 | Inner Joint | | | 25 | | | 26 | |
| | 2012.11-2019.06 | 8AT/6MT | R | L | Estate RWD N47 D20 C;B47 D20 A | | GDS85066 | Drive Shaft | | 28 | 27 | 57.4 | 71 | 744 | |
| | 2012.11-2019.06 | 8AT/6MT | R | R | Estate RWD N47 D20 C;B47 D20 A | | GDS85067 | Drive Shaft | | 28 | 27 | 57.4 | 71 | 800 | |
| 2.0 (105 kw) | 2007.09-2012.06 | 6AT/6MT | R | L | Estate RWD N47 D20 A;N47 D20 C | Not for increased payload,Date from:2009.10 | GDS85022 | Drive Shaft | 48W | 27 | | 69 | 68 | 607 | |
| | 2007.09-2012.06 | 6AT/6MT | R | L | Estate RWD N47 D20 A;N47 D20 C | Not for increased payload,Date to:2009.09;For increased payload | GDS85039 | Drive Shaft | | 30 | | 58.7 | 73 | 615 | |
| | 2007.09-2012.06 | 6AT/6MT | R | R | Estate RWD N47 D20 A;N47 D20 C | Not for increased payload,Date from:2009.10 | GDS85023 | Drive Shaft | 48W | 27 | | 69 | 68 | 660 | |
| | 2007.09-2012.06 | 6AT/6MT | R | R | Estate RWD N47 D20 A;N47 D20 C | Not for increased payload,Date to:2009.09;For increased payload | GDS85134 | Drive Shaft | | 30 | | 58.7 | 73 | 665 | |
| | 2007.09-2012.06 | 6AT/6MT | R | L/R | Estate RWD N47 D20 A;N47 D20 C | Not for increased payload,Date To:2009.09;For increased payload | GCI85036 | Outer Joint | | 30 | 25 | 58.7 | 73 | 58 | I |
| | 2007.09-2012.06 | 6AT/6MT | R | L/R | Estate RWD N47 D20 A;N47 D20 C | Not for increased payload,Date From:2009.10 | GCI99145 | Outer Joint | 48W | 27 | 25 | 69 | 68 | 58 | I |
| | 2007.09-2012.06 | 6AT/6MT | R | L/R | Estate RWD N47 D20 A;N47 D20 C | | GCI35025 | Inner Joint | | | 25 | | | 26 | |
| | 2012.11-2015.06 | 8AT/6MT | R | L | Estate RWD N47 D20 C | | GDS85066 | Drive Shaft | | 28 | 27 | 57.4 | 71 | 744 | |
| | 2012.11-2015.06 | 8AT/6MT | R | R | Estate RWD N47 D20 C | | GDS85067 | Drive Shaft | | 28 | 27 | 57.4 | 71 | 800 | |
| | 2012.11-2015.06 | 8AT/6MT | R | L/R | Estate RWD N47 D20 C | | GCI85020 | Inner Joint | | 27 | 25 | 43.9 | 75 | 96 | |
| 2.0 (110 kw) | 2015.07-2019.06 | 8AT/6MT | R | L | Estate RWD B47 D20 A | | GDS85066 | Drive Shaft | | 28 | 27 | 57.4 | 71 | 744 | |
| | 2015.07-2019.06 | 8AT/6MT | R | R | Estate RWD B47 D20 A | | GDS85067 | Drive Shaft | | 28 | 27 | 57.4 | 71 | 800 | |
| | 2015.07-2019.06 | 8AT/6MT | R | L/R | Estate RWD B47 D20 A | | GCI85020 | Inner Joint | | 27 | 25 | 43.9 | 75 | 96 | |
| **318d xDrive** | | | | | | | | | | | | | | | |
| 2.0 (105 kw) | 2013.07-2015.06 | 6MT | F | L | Saloon 4WD N47 D20 C | | GDS82052 | Drive Shaft | | 31 | 27 | 55.8 | | 550 | |
| | 2013.07-2015.06 | 6MT | F | R | Saloon 4WD N47 D20 C | | GDS82053 | Drive Shaft | | 31 | 27 | 55.8 | | 841 | |
| | 2013.07-2015.06 | 6MT | F | L/R | Saloon 4WD N47 D20 C | | GCO81603 | Outer Joint | | 31 | 33 | 55.8 | | 69.5 | M |
| | 2013.07-2015.06 | 6MT | F | L | Saloon 4WD N47 D20 C | | GCI81055 | Inner Joint | | 27 | 24 | 43.95 | 60 | 123.5 | |
| | 2013.07-2015.06 | 6MT | F | R | Saloon 4WD N47 D20 C | | GCI81597 | Inner Joint | | 27 | 24 | 43.95 | 349.5 | 125 | |
| | 2013.07-2015.06 | 6MT | R | L | Saloon 4WD N47 D20 C | | GDS85066 | Drive Shaft | | 28 | 27 | 57.4 | 71 | 744 | |
| | 2013.07-2015.06 | 6MT | R | R | Saloon 4WD N47 D20 C | | GDS85067 | Drive Shaft | | 28 | 27 | 57.4 | 71 | 800 | |
| 2.0 (110 kw) | 2015.07-2018.02 | 8AT/6MT | F | L | Saloon 4WD B47 D20 A | | GDS82052 | Drive Shaft | | 31 | 27 | 55.8 | | 550 | |
| | 2015.07-2018.02 | 8AT/6MT | F | R | Saloon 4WD B47 D20 A | | GDS82053 | Drive Shaft | | 31 | 27 | 55.8 | | 841 | |
| | 2015.07-2018.02 | 8AT/6MT | F | L/R | Saloon 4WD B47 D20 A | | GCO81603 | Outer Joint | | 31 | 33 | 55.8 | | 69.5 | M |
| | 2015.07-2018.02 | 8AT/6MT | F | L | Saloon 4WD B47 D20 A | | GCI81055 | Inner Joint | | 27 | 24 | 43.95 | 60 | 123.5 | |
| | 2015.07-2018.02 | 8AT/6MT | F | R | Saloon 4WD B47 D20 A | | GCI81597 | Inner Joint | | 27 | 24 | 43.95 | 349.5 | 125 | |
| | 2015.07-2018.02 | 8AT/6MT | R | L | Saloon 4WD B47 D20 A | | GDS85066 | Drive Shaft | | 28 | 27 | 57.4 | 71 | 744 | |
| | 2015.07-2018.02 | 8AT/6MT | R | R | Saloon 4WD B47 D20 A | | GDS85067 | Drive Shaft | | 28 | 27 | 57.4 | 71 | 800 | |
| **318d xDrive Touring** | | | | | | | | | | | | | | | |
| 2.0 (105 kw) | 2013.07-2015.06 | 6MT | F | L | Estate 4WD N47 D20 C | | GDS82052 | Drive Shaft | | 31 | 27 | 55.8 | | 550 | |
| | 2013.07-2015.06 | 6MT | F | R | Estate 4WD N47 D20 C | | GDS82053 | Drive Shaft | | 31 | 27 | 55.8 | | 841 | |
| | 2013.07-2015.06 | 6MT | F | L/R | Estate 4WD N47 D20 C | | GCO81603 | Outer Joint | | 31 | 33 | 55.8 | | 69.5 | M |
| | 2013.07-2015.06 | 6MT | F | L | Estate 4WD N47 D20 C | | GCI81055 | Inner Joint | | 27 | 24 | 43.95 | 60 | 123.5 | |
| | 2013.07-2015.06 | 6MT | F | R | Estate 4WD N47 D20 C | | GCI81597 | Inner Joint | | 27 | 24 | 43.95 | 349.5 | 125 | |
| | 2013.07-2015.06 | 6MT | R | L | Estate 4WD N47 D20 C | | GDS85066 | Drive Shaft | | 28 | 27 | 57.4 | 71 | 744 | |
| | 2013.07-2015.06 | 6MT | R | R | Estate 4WD N47 D20 C | | GDS85067 | Drive Shaft | | 28 | 27 | 57.4 | 71 | 800 | |
| 2.0 (110 kw) | 2015.07-2018.02 | 6MT | F | L | Estate 4WD B47 D20 A | | GDS82052 | Drive Shaft | | 31 | 27 | 55.8 | | 550 | |
| | 2015.07-2018.02 | 6MT | F | R | Estate 4WD B47 D20 A | | GDS82053 | Drive Shaft | | 31 | 27 | 55.8 | | 841 | |
| | 2015.07-2018.02 | 6MT | F | L/R | Estate 4WD B47 D20 A | | GCO81603 | Outer Joint | | 31 | 33 | 55.8 | | 69.5 | M |
| | 2015.07-2018.02 | 6MT | F | L | Estate 4WD B47 D20 A | | GCI81055 | Inner Joint | | 27 | 24 | 43.95 | 60 | 123.5 | |
| | 2015.07-2018.02 | 6MT | F | R | Estate 4WD B47 D20 A | | GCI81597 | Inner Joint | | 27 | 24 | 43.95 | 349.5 | 125 | |
| | 2015.07-2018.02 | 6MT | R | L | Estate 4WD B47 D20 A | | GDS85066 | Drive Shaft | | 28 | 27 | 57.4 | 71 | 744 | |
| | 2015.07-2018.02 | 6MT | R | R | Estate 4WD B47 D20 A | | GDS85067 | Drive Shaft | | 28 | 27 | 57.4 | 71 | 800 | |
| **318i** | | | | | | | | | | | | | | | |
| 1.5 (100 kw) | 2015.07-2018.10 | 6MT | R | L | Saloon RWD B38 B15 A | | GDS85066 | Drive Shaft | | 28 | 27 | 57.4 | 71 | 744 | |
| | 2015.07-2018.10 | 6MT | R | R | Saloon RWD B38 B15 A | | GDS85067 | Drive Shaft | | 28 | 27 | 57.4 | 71 | 800 | |
| | 2015.07-2018.10 | 6MT | R | L/R | Saloon RWD B38 B15 A | | GCI85020 | Inner Joint | | 27 | 25 | 43.9 | 75 | 96 | |
| | 2015.07-2018.10 | 8AT | R | L | Saloon RWD B38 B15 A | | GDS83157 | Drive Shaft | | 28 | 27 | 57 | 71 | 750 | |
| | 2015.07-2018.10 | 8AT | R | R | Saloon RWD B38 B15 A | | GDS83158 | Drive Shaft | | 28 | 27 | 57 | 71 | 802 | |
| | 2015.07-2018.10 | 8AT | R | L/R | Saloon RWD B38 B15 A | | GCO82308 | Outer Joint | | 28 | 30 | 57 | 71 | 52.5 | I |
| | 2015.07-2018.10 | 8AT | R | L/R | Saloon RWD B38 B15 A | | GCI82145 | Inner Joint | | 27 | 30 | 43.9 | 75 | 101 | |
| 1.8 (85 kw) | 1993.09-1998.11 | AT/MT | R | L/R | Saloon RWD M43B184E2 | | GDS85002 | Drive Shaft | 48W | 27 | | 64 | 68.5 | 623 | |
| | 1993.09-1998.11 | AT/MT | R | L/R | Saloon RWD M43B184E2 | | GDS85014 | Drive Shaft | | 27 | | 64 | 68.5 | 623 | |
| | 1993.09-1998.11 | AT/MT | R | L/R | Saloon RWD M43B184E2 | | GCI85009 | Outer Joint | 48W | 27 | 24 | 64 | 68.5 | 58 | |
| | 1993.09-1998.11 | AT/MT | R | L/R | Saloon RWD M43B184E2 | | GCI85001 | Inner Joint | | | 24 | | | 24 | |
| 1.9 (87 kw) | 1997.12-2001.09 | 4AT/5MT | R | L | Saloon RWD M43B194E1 | | GDS85002 | Drive Shaft | 48W | 27 | | 64 | 68.5 | 623 | |
| | 1997.12-2001.09 | 4AT/5MT | R | R | Saloon RWD M43B194E1 | | GDS85017 | Drive Shaft | 48W | 27 | | 64 | 68.5 | 672 | |

| | YEAR | TRANSM. | F/R | L/R | BODY STYLE & DRIVE TYPE & ENGINE | REMARKS | G-AP Ref. | PRODUCT | ABS | Technical Specifications A | B | C | H | L | P |
|---|---|---|---|---|---|---|---|---|---|---|---|---|---|---|---|
| **BMW** | | | | | | | | | | | | | | | |
| **318i** | | | | | | | | | | | | | | | |
| 1.9 (87 kw) | 1997.12-2001.09 | 4AT/5MT | R | L/R | Saloon RWD M43B194E1 | | GCI85009 | Outer Joint | 48W | 27 | 24 | 64 | 68.5 | 58 | |
| | 1997.12-2001.09 | 4AT/5MT | R | L/R | Saloon RWD M43B194E1 | | GCI85001 | Inner Joint | | | 24 | | | 24 | |
| | 1997.12-2001.09 | 4AT/5MT | R | L/R | Saloon RWD M43B194E1 | | GCI85005 | Inner Joint | | | 24 | | | 24 | |
| 1.9 (103 kw) | 1996.01-1998.05 | AT/MT | R | L/R | Saloon RWD M44B194S1 | | GDS85014 | Drive Shaft | | 27 | | 64 | 68.5 | 623 | |
| | 1996.01-1998.05 | | R | L/R | Saloon RWD M44B194S1 | | GCI85009 | Outer Joint | 48W | 27 | 24 | 64 | 68.5 | 58 | |
| 2.0 (95 kw) | 2005.09-2007.08 | 6MT/SAT | R | L | Saloon RWD N46 B20 B | | GDS85037 | Drive Shaft | 48W | 27 | | 69.3 | 68 | 611 | |
| | 2005.09-2007.08 | 6MT/SAT | R | R | Saloon RWD N46 B20 B | | GDS85036 | Drive Shaft | 48W | 27 | | 69.3 | 68 | 664 | |
| | 2005.09-2007.08 | 6MT/SAT | R | L/R | Saloon RWD N46 B20 B | | GCI85056 | Outer Joint | 48W | 27 | 24 | 69.3 | 68 | 51 | |
| | 2005.09-2007.08 | 6MT/SAT | R | L/R | Saloon RWD N46 B20 B | | GCI85005 | Inner Joint | | | 24 | | | 24 | |
| 2.0 (100 kw) | 2001.09-2005.02 | 5AT/5MT | R | L | Saloon RWD N42B20A | | GDS85002 | Drive Shaft | 48W | 27 | | 64 | 68.5 | 623 | |
| | 2001.09-2005.02 | 5AT/5MT | R | R | Saloon RWD N42B20A | | GDS85017 | Drive Shaft | 48W | 27 | | 64 | 68.5 | 672 | |
| | 2001.09-2005.02 | 5AT/5MT | R | L/R | Saloon RWD N42B20A | | GCI85001 | Inner Joint | | | 24 | | | 24 | |
| | 2007.09-2011.10 | 6AT | R | L/R | Saloon RWD N46 B20 C;N46 B20 B;N46 B20 CC;N46 B20 CD;N46 B20 E | | GCI85056 | Outer Joint | 48W | 27 | 24 | 69.3 | 68 | 51 | |
| | 2007.09-2011.10 | AT | R | L | Saloon RWD N46 B20 C;N46 B20 B;N46 B20 CC;N46 B20 CD;N46 B20 E | | GDS85037 | Drive Shaft | 48W | 27 | | 69.3 | 68 | 611 | |
| | 2007.09-2011.10 | AT | R | R | Saloon RWD N46 B20 C;N46 B20 B;N46 B20 CC;N46 B20 CD;N46 B20 E | | GDS85036 | Drive Shaft | 48W | 27 | | 69.3 | 68 | 664 | |
| 2.0 (105 kw) | 2001.09-2005.02 | 5MT | R | L | Saloon RWD N42B20A/N46B20A/N46B20C | | GDS85002 | Drive Shaft | 48W | 27 | | 64 | 68.5 | 623 | |
| | 2001.09-2005.02 | 5MT | R | R | Saloon RWD N42B20A/N46B20A/N46B20C | | GDS85017 | Drive Shaft | 48W | 27 | | 64 | 68.5 | 672 | |
| | 2001.09-2005.02 | 5MT | R | L/R | Saloon RWD N42B20A/N46B20A/N46B20C | | GCI85009 | Outer Joint | 48W | 27 | 24 | 64 | 68.5 | 58 | |
| | 2001.09-2005.02 | 5MT | R | L/R | Saloon RWD N42B20A/N46B20A/N46B20C | | GCI85005 | Inner Joint | | | 24 | | | 24 | |
| | 2007.09-2011.10 | 6AT/6MT | R | L | Saloon RWD N43 B20 A | | GDS85037 | Drive Shaft | 48W | 27 | | 69.3 | 68 | 611 | |
| | 2007.09-2011.10 | 6AT/6MT | R | R | Saloon RWD N43 B20 A | | GDS85036 | Drive Shaft | 48W | 27 | | 69.3 | 68 | 664 | |
| | 2007.09-2011.10 | 6AT/6MT | R | L/R | Saloon RWD N43 B20 A | | GCI85056 | Outer Joint | 48W | 27 | 24 | 69.3 | 68 | 51 | |
| | 2007.09-2011.10 | 6AT/6MT | R | L/R | Saloon RWD N43 B20 A | | GCI85005 | Inner Joint | | | 24 | | | 24 | |
| 2.0 (115 kw) | 2020.03- | 6MT | R | L | Saloon RWD B48 B20 A | | GDS56455 | Drive Shaft | | 37 | 27 | 65 | | 700 | |
| | 2020.03- | 6MT | R | R | Saloon RWD B48 B20 A | | GDS56456 | Drive Shaft | | 37 | 27 | 65 | | 756 | |
| **318i Cabrio** | | | | | | | | | | | | | | | |
| 1.8 (85 kw) | 1994.03-1999.11 | AT/MT | R | L/R | Cabriolet RWD M43B184E2 | | GDS85002 | Drive Shaft | 48W | 27 | | 64 | 68.5 | 623 | |
| | 1994.03-1999.11 | AT/MT | R | L/R | Cabriolet RWD M43B184E2 | | GDS85014 | Drive Shaft | | 27 | | 64 | 68.5 | 623 | |
| | 1994.03-1999.11 | AT/MT | R | L/R | Cabriolet RWD M43B184E2 | | GCI85009 | Outer Joint | 48W | 27 | 24 | 64 | 68.5 | 58 | |
| | 1994.03-1999.11 | AT/MT | R | L/R | Cabriolet RWD M43B184E2 | | GCI85001 | Inner Joint | | | 24 | | | 24 | |
| 2.0 (100 kw) | 2001.09-2006.12 | 5AT/5MT | R | L/R | Cabriolet RWD N42B20A/N46B20A | | GCI85001 | Inner Joint | | | 24 | | | 24 | |
| | 2001.09-2006.12 | | R | L | Cabriolet RWD N42B20A/N46B20A | | GDS85002 | Drive Shaft | 48W | 27 | | 64 | 68.5 | 623 | |
| | 2001.09-2006.12 | | R | R | Cabriolet RWD N42B20A/N46B20A | | GDS85017 | Drive Shaft | 48W | 27 | | 64 | 68.5 | 672 | |
| 2.0 (105 kw) | 2001.09-2006.12 | 5MT | R | L | Cabriolet RWD N42B20A/N46B20A | | GDS85002 | Drive Shaft | 48W | 27 | | 64 | 68.5 | 623 | |
| | 2001.09-2006.12 | 5MT | R | R | Cabriolet RWD N42B20A/N46B20A | | GDS85017 | Drive Shaft | 48W | 27 | | 64 | 68.5 | 672 | |
| | 2001.09-2006.12 | 5MT | R | L/R | Cabriolet RWD N42B20A/N46B20A | | GCI85009 | Outer Joint | 48W | 27 | 24 | 64 | 68.5 | 58 | |
| | 2001.09-2006.12 | 5MT | R | L/R | Cabriolet RWD N42B20A/N46B20A | | GCI85005 | Inner Joint | | | 24 | | | 24 | |
| | 2010.03-2013.12 | AT/MT | R | L | Convertible RWD N43 B20 A | | GDS85037 | Drive Shaft | 48W | 27 | | 69.3 | 68 | 611 | |
| | 2010.03-2013.12 | AT/MT | R | R | Convertible RWD N43 B20 A | | GDS85036 | Drive Shaft | 48W | 27 | | 69.3 | 68 | 664 | |
| | 2010.03-2013.12 | MT | R | L | Convertible RWD N43 B20 A | | GDS81121 | Drive Shaft | | 30 | | 58.5 | 73 | 613 | |
| | 2010.03-2013.12 | MT | R | L | Convertible RWD N43 B20 A | | GCI85089 | Inner Joint | | | 24 | | | 24 | |
| 2.0 (110 kw) | 2004.03-2006.08 | 5AT/5MT | R | L | Cabriolet RWD N46B20A/N46B20C | | GDS85002 | Drive Shaft | 48W | 27 | | 64 | 68.5 | 623 | |
| | 2004.03-2006.08 | 5AT/5MT | R | R | Cabriolet RWD N46B20A/N46B20C | | GDS85017 | Drive Shaft | 48W | 27 | | 64 | 68.5 | 672 | |
| | 2004.03-2006.08 | 5AT/5MT | R | L/R | Cabriolet RWD N46B20A/N46B20C | | GCI85009 | Outer Joint | 48W | 27 | 24 | 64 | 68.5 | 58 | |
| | 2004.03-2006.08 | 5AT/5MT | R | L/R | Cabriolet RWD N46B20A/N46B20C | | GCI85005 | Inner Joint | | | 24 | | | 24 | |
| **318i Compact** | | | | | | | | | | | | | | | |
| 1.9 (103 kw) | 1996.01-1999.01 | AT/MT | R | L/R | Hatchback RWD M44B194S1 | | GDS85006 | Drive Shaft | 48W | 27 | | 64 | 68.5 | 585 | |
| | 1996.01-1999.01 | AT/MT | R | L/R | Hatchback RWD M44B194S1 | | GCI85001 | Inner Joint | | | 24 | | | 24 | |
| 2.0 (100 kw) | 2001.03-2004.12 | AT/MT | R | L | Hatchback RWD N42B20A/N46B20A | | GDS85002 | Drive Shaft | 48W | 27 | | 64 | 68.5 | 623 | |
| | 2001.03-2004.12 | AT/MT | R | R | Hatchback RWD N42B20A/N46B20A | | GDS85017 | Drive Shaft | 48W | 27 | | 64 | 68.5 | 672 | |
| | 2001.03-2004.12 | AT/MT | R | L/R | Hatchback RWD N42B20A/N46B20A | | GCI85001 | Inner Joint | | | 24 | | | 24 | |
| 2.0 (105 kw) | 2001.09-2005.02 | 5MT | R | L | Hatchback RWD N42B20A/N46B20A | | GDS85002 | Drive Shaft | 48W | 27 | | 64 | 68.5 | 623 | |
| | 2001.09-2005.02 | 5MT | R | L/R | Hatchback RWD N42B20A/N46B20A | | GCI85009 | Outer Joint | 48W | 27 | 24 | 64 | 68.5 | 58 | |
| | 2001.09-2005.02 | 5MT | R | L/R | Hatchback RWD N42B20A/N46B20A | | GCI85005 | Inner Joint | | | 24 | | | 24 | |
| | 2001.09-2005.02 | AT/MT | R | R | Hatchback RWD N42B20A/N46B20A | | GDS85017 | Drive Shaft | 48W | 27 | | 64 | 68.5 | 672 | |
| **318i Coupe** | | | | | | | | | | | | | | | |
| 1.9 (85 kw) | 1999.12-2001.08 | 4AT/5MT | R | L/R | Coupe RWD M43B194E1 | | GCI85001 | Inner Joint | | | 24 | | | 24 | |
| | 1999.12-2001.08 | | R | L | Coupe RWD M43B194E1 | | GDS85002 | Drive Shaft | 48W | 27 | | 64 | 68.5 | 623 | |
| | 1999.12-2001.08 | | R | R | Coupe RWD M43B194E1 | | GDS85017 | Drive Shaft | 48W | 27 | | 64 | 68.5 | 672 | |
| 1.9 (87 kw) | 1999.12-2001.08 | 5MT | R | L | Coupe RWD M43B194E1 | | GDS85002 | Drive Shaft | 48W | 27 | | 64 | 68.5 | 623 | |
| | 1999.12-2001.08 | 5MT | R | R | Coupe RWD M43B194E1 | | GDS85017 | Drive Shaft | 48W | 27 | | 64 | 68.5 | 672 | |
| | 1999.12-2001.08 | 5MT | R | L/R | Coupe RWD M43B194E1 | | GCI85009 | Outer Joint | 48W | 27 | 24 | 64 | 68.5 | 58 | |
| | 1999.12-2001.08 | 5MT | R | L/R | Coupe RWD M43B194E1 | | GCI85005 | Inner Joint | | | 24 | | | 24 | |
| 1.9 (103 kw) | 1995.04-1999.12 | AT/MT | R | L/R | Coupe RWD M44B194S1 | | GDS85002 | Drive Shaft | 48W | 27 | | 64 | 68.5 | 623 | |
| | 1995.04-1999.12 | AT/MT | R | L/R | Coupe RWD M44B194S1 | | GDS85014 | Drive Shaft | | 27 | | 64 | 68.5 | 623 | |

| | YEAR | TRANSM. | F/R | L/R | BODY STYLE & DRIVE TYPE & ENGINE | REMARKS | G-AP Ref. | PRODUCT | ABS | Technical Specifications A | B | C | H | L | P |
|---|---|---|---|---|---|---|---|---|---|---|---|---|---|---|---|
| **BMW** | | | | | | | | | | | | | | | |
| **318i Coupe** | | | | | | | | | | | | | | | |
| 1.9 (103 kw) | 1995.04-1999.12 | | R | L/R | Coupe RWD M44B194S1 | | GCI85009 | Outer Joint | 48W | 27 | 24 | 64 | 68.5 | 58 | |
| | 1995.04-1999.12 | | R | | Coupe RWD M44B194S1 | | GCI85001 | Inner Joint | | | 24 | | | 24 | |
| 2.0 (100 kw) | 2003.01-2004.12 | 5MT | R | L/R | Coupe RWD N42B20A | | GCI85001 | Inner Joint | | | 24 | | | 24 | |
| | 2003.01-2004.12 | | R | L | Coupe RWD N42B20A | | GDS85002 | Drive Shaft | 48W | 27 | | 64 | 68.5 | 623 | |
| | 2003.01-2004.12 | | R | R | Coupe RWD N42B20A | | GDS85017 | Drive Shaft | 48W | 27 | | 64 | 68.5 | 672 | |
| 2.0 (105 kw) | 2001.09-2004.02 | 5MT | R | L | Coupe RWD N42B20A | | GDS85002 | Drive Shaft | 48W | 27 | | 64 | 68.5 | 623 | |
| | 2001.09-2004.02 | 5MT | R | R | Coupe RWD N42B20A | | GDS85017 | Drive Shaft | 48W | 27 | | 64 | 68.5 | 672 | |
| | 2001.09-2004.02 | 5MT | R | L/R | Coupe RWD N42B20A | | GCI85009 | Outer Joint | 48W | 27 | 24 | 64 | 68.5 | 58 | |
| | 2001.09-2004.02 | 5MT | R | L/R | Coupe RWD N42B20A | | GCI85005 | Inner Joint | | | 24 | | | 24 | |
| | 2010.03-2013.12 | AT/MT | R | L | Coupe RWD N43 B20 A | | GDS85037 | Drive Shaft | 48W | 27 | | 69.3 | 68 | 611 | |
| | 2010.03-2013.12 | AT/MT | R | R | Coupe RWD N43 B20 A | | GDS85036 | Drive Shaft | 48W | 27 | | 69.3 | 68 | 664 | |
| 2.0 (110 kw) | 2004.03-2006.05 | AT/MT | R | L | Coupe RWD N46B20A/N46B20C | | GDS85002 | Drive Shaft | 48W | 27 | | 64 | 68.5 | 623 | |
| | 2004.03-2006.05 | AT/MT | R | R | Coupe RWD N46B20A/N46B20C | | GDS85017 | Drive Shaft | 48W | 27 | | 64 | 68.5 | 672 | |
| | 2004.03-2006.05 | | R | L/R | Coupe RWD N46B20A/N46B20C | | GCI85005 | Inner Joint | | | 24 | | | 24 | |
| **318i Touring** | | | | | | | | | | | | | | | |
| 1.5 (100 kw) | 2015.07-2019.06 | 8AT | R | L | Estate RWD B38 B15 A | | GDS83157 | Drive Shaft | | 28 | 27 | 57 | 71 | 750 | |
| | 2015.07-2019.06 | 8AT | R | R | Estate RWD B38 B15 A | | GDS83158 | Drive Shaft | | 28 | 27 | 57 | 71 | 802 | |
| | 2015.07-2019.06 | 8AT | R | L/R | Estate RWD B38 B15 A | | GCO82308 | Outer Joint | | 28 | 30 | 57 | 71 | 52.5 | I |
| | 2015.07-2019.06 | 8AT | R | L/R | Estate RWD B38 B15 A | | GCI82145 | Inner Joint | | 27 | 30 | 43.9 | 75 | 101 | |
| | 2015.07-2019.06 | MT | R | L | Estate RWD B38 B15 A | | GDS85066 | Drive Shaft | | 28 | 27 | 57.4 | 71 | 744 | |
| | 2015.07-2019.06 | MT | R | R | Estate RWD B38 B15 A | | GDS85067 | Drive Shaft | | 28 | 27 | 57.4 | 71 | 800 | |
| 1.8 (85 kw) | 1995.09-1999.04 | 4AT/5MT | R | L/R | Estate RWD M43B184E2 | | GDS85002 | Drive Shaft | 48W | 27 | | 64 | 68.5 | 623 | |
| | 1995.09-1999.04 | AT/MT | R | | Estate RWD M43B184E2 | | GDS85014 | Drive Shaft | | 27 | | 64 | 68.5 | 623 | |
| | 1995.09-1999.04 | | R | L/R | Estate RWD M43B184E2 | | GCI85009 | Outer Joint | 48W | 27 | 24 | 64 | 68.5 | 58 | |
| | 1995.09-1999.04 | | R | | Estate RWD M43B184E2 | | GCI85001 | Inner Joint | | | 24 | | | 24 | |
| 1.9 (85 kw) | 1999.10-2001.09 | 4AT/5MT | R | L | Estate RWD M43B194E1 | | GDS85002 | Drive Shaft | 48W | 27 | | 64 | 68.5 | 623 | |
| | 1999.10-2001.09 | 4AT/5MT | R | R | Estate RWD M43B194E1 | | GDS85017 | Drive Shaft | 48W | 27 | | 64 | 68.5 | 672 | |
| | 1999.10-2001.09 | 4AT/5MT | R | L/R | Estate RWD M43B194E1 | | GCI85001 | Inner Joint | | | 24 | | | 24 | |
| 1.9 (87 kw) | 1999.08-2001.06 | 4AT/5MT | R | L | Estate RWD M43B194E1 | | GDS85002 | Drive Shaft | 48W | 27 | | 64 | 68.5 | 623 | |
| | 1999.08-2001.06 | 4AT/5MT | R | R | Estate RWD M43B194E1 | | GDS85017 | Drive Shaft | 48W | 27 | | 64 | 68.5 | 672 | |
| | 1999.08-2001.06 | 4AT/5MT | R | L/R | Estate RWD M43B194E1 | | GCI85009 | Outer Joint | 48W | 27 | 24 | 64 | 68.5 | 58 | |
| | 1999.08-2001.06 | 4AT/5MT | R | L/R | Estate RWD M43B194E1 | | GCI85005 | Inner Joint | | | 24 | | | 24 | |
| 2.0 (95 kw) | 2006.01-2007.08 | 6AT | R | R | Estate RWD N46 B20 B | | GDS82846 | Drive Shaft | | 30 | | 58.5 | 73 | 667 | |
| | 2006.01-2007.08 | AT | R | L | Estate RWD N46 B20 B | | GDS85037 | Drive Shaft | 48W | 27 | | 69.3 | 68 | 611 | |
| | 2006.01-2007.08 | AT | R | R | Estate RWD N46 B20 B | | GDS85036 | Drive Shaft | 48W | 27 | | 69.3 | 68 | 664 | |
| | 2006.01-2007.08 | MT | R | L | Estate RWD N46 B20 B | | GDS81121 | Drive Shaft | | 30 | | 58.5 | 73 | 613 | |
| | 2006.01-2007.08 | MT | R | L | Estate RWD N46 B20 B | | GCI85089 | Inner Joint | | | 24 | | | 24 | |
| 2.0 (100 kw) | 2007.05-2012.05 | 6AT/6MT | R | L | Estate RWD N43 B20 A | Date To:2009.09 | GDS81121 | Drive Shaft | | 30 | | 58.5 | 73 | 613 | |
| | 2007.05-2012.05 | 6AT/6MT | R | L | Estate RWD N43 B20 A | Date from:2009.10 | GDS85037 | Drive Shaft | 48W | 27 | | 69.3 | 68 | 611 | |
| | 2007.09-2012.03 | 6AT/6MT | R | L | Estate RWD N46 B20 B | Date to:2009.09;Date from:2009.10,For increased payload | GDS81121 | Drive Shaft | | 30 | | 58.5 | 73 | 613 | |
| | 2007.09-2012.03 | 6AT/6MT | R | L | Estate RWD N46 B20 B | Date from:2009.10,Not for increased payload | GDS85037 | Drive Shaft | 48W | 27 | | 69.3 | 68 | 611 | |
| | 2007.09-2012.03 | 6AT/6MT | R | R | Estate RWD N46 B20 B | Date to:2009.09;Date from:2009.10,For increased payload | GDS82846 | Drive Shaft | | 30 | | 58.5 | 73 | 667 | |
| | 2007.09-2012.03 | 6AT/6MT | R | R | Estate RWD N46 B20 B | Date from:2009.10,Not for increased payload | GDS85036 | Drive Shaft | 48W | 27 | | 69.3 | 68 | 664 | |
| | 2007.09-2012.03 | 6AT/6MT | R | L | Estate RWD N46 B20 B | Date to:2009.09;Date from:2009.10,For increased payload | GCI85089 | Inner Joint | | | 24 | | | 24 | |
| | 2007.09-2012.03 | | R | L/R | Estate RWD N46 B20 B | | GCI85056 | Outer Joint | 48W | 27 | 24 | 69.3 | 68 | 51 | |
| 2.0 (105 kw) | 2001.09-2005.07 | 5MT | R | L | Estate RWD N42B20A/N46B20A/N46B20C | | GDS85002 | Drive Shaft | 48W | 27 | | 64 | 68.5 | 623 | |
| | 2001.09-2005.07 | 5MT | R | R | Estate RWD N42B20A/N46B20A/N46B20C | | GDS85017 | Drive Shaft | 48W | 27 | | 64 | 68.5 | 672 | |
| | 2001.09-2005.07 | 5MT | R | L/R | Estate RWD N42B20A/N46B20A/N46B20C | | GCI85009 | Outer Joint | 48W | 27 | 24 | 64 | 68.5 | 58 | |
| | 2001.09-2005.07 | 5MT | R | L/R | Estate RWD N42B20A/N46B20A/N46B20C | | GCI85005 | Inner Joint | | | 24 | | | 24 | |
| | 2007.05-2012.05 | 6AT/6MT | R | L | Estate RWD N43 B20 A | Date to:2009.09;Date from:2009.10,For increased payload | GDS81121 | Drive Shaft | | 30 | | 58.5 | 73 | 613 | |
| | 2007.05-2012.05 | 6AT/6MT | R | L | Estate RWD N43 B20 A | Date from:2009.10,Not for increased payload | GDS85037 | Drive Shaft | 48W | 27 | | 69.3 | 68 | 611 | |
| | 2007.05-2012.05 | 6AT/6MT | R | R | Estate RWD N43 B20 A | Date to:2009.09;Date from:2009.10,For increased payload | GDS82846 | Drive Shaft | | 30 | | 58.5 | 73 | 667 | |
| | 2007.05-2012.05 | 6AT/6MT | R | R | Estate RWD N43 B20 A | Date from:2009.10,Not for increased payload | GDS85036 | Drive Shaft | 48W | 27 | | 69.3 | 68 | 664 | |
| | 2007.05-2012.05 | 6AT/6MT | R | L/R | Estate RWD N43 B20 A | Date from:2009.10,Not for increased payload | GCI85056 | Outer Joint | 48W | 27 | 24 | 69.3 | 68 | 51 | |
| | 2007.05-2012.05 | 6AT/6MT | R | L | Estate RWD N43 B20 A | Date to:2009.09;Date from:2009.10,For increased payload | GCI85089 | Inner Joint | | | 24 | | | 24 | |
| 2.0 (115 kw) | 2020.03- | 6MT | R | L | Estate RWD B48 B20 A | For left-hand drive vehicles | GDS56455 | Drive Shaft | | 37 | 27 | 65 | | 700 | |
| | 2020.03- | 6MT | R | R | Estate RWD B48 B20 A | For left-hand drive vehicles | GDS56456 | Drive Shaft | | 37 | 27 | 65 | | 756 | |
| **320d** | | | | | | | | | | | | | | | |
| 2.0 (95 kw) | 1998.02-2001.08 | AT/MT | R | R | Saloon RWD M47D204D1 | | GDS85042 | Drive Shaft | 48W | 27 | | 64 | 69 | 672 | |
| | 1998.02-2001.08 | AT/MT | R | L/R | Saloon RWD M47D204D1 | | GCI99127 | Inner Joint | | | 25 | | | 26 | |
| | 1998.02-2001.08 | MT | R | L | Saloon RWD M47D204D1 | | GDS85051 | Drive Shaft | 48W | 27 | | 64 | 69 | 618 | |
| 2.0 (100 kw) | 1998.02-2001.06 | 5AT/5MT | R | L | Saloon RWD M47D204D1 | | GDS85051 | Drive Shaft | 48W | 27 | | 64 | 69 | 618 | |
| | 1998.02-2001.06 | 5AT/5MT | R | R | Saloon RWD M47D204D1 | | GDS85042 | Drive Shaft | 48W | 27 | | 64 | 69 | 672 | |
| | 1998.02-2001.06 | 5AT/5MT | R | L/R | Saloon RWD M47D204D1 | | GCI99127 | Inner Joint | | | 25 | | | 26 | |
| 2.0 (110 kw) | 2001.09-2005.05 | MT | R | L/R | Saloon RWD M47D204D4 | Date from:2003.04 | GCI82470 | Outer Joint | 48W | 27 | 25 | 64 | 69 | 65.5 | |

| | YEAR | TRANSM. | F/R | L/R | BODY STYLE & DRIVE TYPE & ENGINE | REMARKS | G-AP Ref. | PRODUCT | ABS | Technical Specifications A | B | C | H | L | P |
|---|---|---|---|---|---|---|---|---|---|---|---|---|---|---|---|
| **BMW** | | | | | | | | | | | | | | | |
| **320d** | | | | | | | | | | | | | | | |
| 2.0 (110 kw) | 2001.09-2005.05 | MT/Semi-AT | R | L | Saloon RWD M47D204D4 | | GDS85051 | Drive Shaft | 48W | 27 | | 64 | 69 | 618 | |
| | 2001.09-2005.05 | MT/Semi-AT | R | R | Saloon RWD M47D204D4 | | GDS85042 | Drive Shaft | 48W | 27 | | 64 | 69 | 672 | |
| | 2001.09-2005.05 | MT/Semi-AT | R | L/R | Saloon RWD M47D204D4 | | GCI99127 | Inner Joint | | | 25 | | | 26 | |
| | 2004.12-2007.09 | SAT/6MT | R | L | Saloon RWD M47 D20 (204D4) | Not for government vehicles | GDS85022 | Drive Shaft | 48W | 27 | | 69 | 68 | 607 | |
| | 2004.12-2007.09 | SAT/6MT | R | L | Saloon RWD M47 D20 (204D4) | For government vehicles | GDS85039 | Drive Shaft | | 30 | | 58.7 | 73 | 615 | |
| | 2004.12-2007.09 | SAT/6MT | R | R | Saloon RWD M47 D20 (204D4) | Not for government vehicles | GDS85023 | Drive Shaft | 48W | 27 | | 69 | 68 | 660 | |
| | 2004.12-2007.09 | SAT/6MT | R | R | Saloon RWD M47 D20 (204D4) | For government vehicles | GDS85134 | Drive Shaft | | 30 | | 58.7 | 73 | 665 | |
| | 2004.12-2007.09 | SAT/6MT | R | L/R | Saloon RWD M47 D20 (204D4) | For government vehicles | GCI85036 | Outer Joint | | 30 | 25 | 58.7 | 73 | 58 | I |
| | 2004.12-2007.09 | SAT/6MT | R | L/R | Saloon RWD M47 D20 (204D4) | Not for government vehicles | GCI99145 | Outer Joint | 48W | 27 | 25 | 69 | 68 | 58 | I |
| | 2004.12-2007.09 | SAT/6MT | R | L/R | Saloon RWD M47 D20 (204D4) | | GCI35025 | Inner Joint | | | 25 | | | 26 | |
| 2.0 (120 kw) | 2004.12-2011.10 | SAT/6AT/6MT | R | L | Saloon RWD N47 D20 A;N47 D20 C;M47 D20 (204D4) | Not for police vehicles | GDS85022 | Drive Shaft | 48W | 27 | | 69 | 68 | 607 | |
| | 2004.12-2011.10 | SAT/6AT/6MT | R | L | Saloon RWD N47 D20 A;N47 D20 C;M47 D20 (204D4) | For police vehicles | GDS85039 | Drive Shaft | | 30 | | 58.7 | 73 | 615 | |
| | 2004.12-2011.10 | SAT/6AT/6MT | R | R | Saloon RWD N47 D20 A;N47 D20 C;M47 D20 (204D4) | Not for police vehicles | GDS85023 | Drive Shaft | 48W | 27 | | 69 | 68 | 660 | |
| | 2004.12-2011.10 | SAT/6AT/6MT | R | R | Saloon RWD N47 D20 A;N47 D20 C;M47 D20 (204D4) | For police vehicles | GDS85134 | Drive Shaft | | 30 | | 58.7 | 73 | 665 | |
| | 2004.12-2011.10 | SAT/6AT/6MT | R | L/R | Saloon RWD N47 D20 A;N47 D20 C;M47 D20 (204D4) | For police vehicles | GCI85036 | Outer Joint | | 30 | 25 | 58.7 | 73 | 58 | I |
| | 2004.12-2011.10 | SAT/6AT/6MT | R | L/R | Saloon RWD N47 D20 A;N47 D20 C;M47 D20 (204D4) | Not for police vehicles | GCI99145 | Outer Joint | 48W | 27 | 25 | 69 | 68 | 58 | I |
| | 2004.12-2011.10 | SAT/6AT/6MT | R | L/R | Saloon RWD N47 D20 A;N47 D20 C;M47 D20 (204D4) | | GCI35025 | Inner Joint | | | 25 | | | 26 | |
| | 2011.11-2018.10 | 8AT/6MT | R | L | Saloon RWD N47 D20 C;B47 D20 A | | GDS85066 | Drive Shaft | | 28 | 27 | 57.4 | 71 | 744 | |
| | 2011.11-2018.10 | 8AT/6MT | R | R | Saloon RWD N47 D20 C;B47 D20 A | | GDS85067 | Drive Shaft | | 28 | 27 | 57.4 | 71 | 800 | |
| | 2011.11-2018.10 | 8AT/6MT | R | L/R | Saloon RWD N47 D20 C;B47 D20 A | | GCI85020 | Inner Joint | | 27 | 25 | 43.9 | 75 | 96 | |
| 2.0 (130 kw) | 2007.09-2010.02 | 6AT/6MT | R | L | Saloon RWD N47 D20 A;N47 D20 C | Not for police vehicles | GDS85022 | Drive Shaft | 48W | 27 | | 69 | 68 | 607 | |
| | 2007.09-2010.02 | 6AT/6MT | R | L | Saloon RWD N47 D20 A;N47 D20 C | For police vehicles | GDS85039 | Drive Shaft | | 30 | | 58.7 | 73 | 615 | |
| | 2007.09-2010.02 | 6AT/6MT | R | R | Saloon RWD N47 D20 A;N47 D20 C | Not for police vehicles | GDS85023 | Drive Shaft | 48W | 27 | | 69 | 68 | 660 | |
| | 2007.09-2010.02 | 6AT/6MT | R | R | Saloon RWD N47 D20 A;N47 D20 C | For police vehicles | GDS85134 | Drive Shaft | | 30 | | 58.7 | 73 | 665 | |
| | 2007.09-2010.02 | 6AT/6MT | R | L/R | Saloon RWD N47 D20 A;N47 D20 C | For police vehicles | GCI85036 | Outer Joint | | 30 | 25 | 58.7 | 73 | 58 | I |
| | 2007.09-2010.02 | 6AT/6MT | R | L/R | Saloon RWD N47 D20 A;N47 D20 C | Not for police vehicles | GCI99145 | Outer Joint | 48W | 27 | 25 | 69 | 68 | 58 | I |
| | 2007.09-2010.02 | 6AT/6MT | R | L/R | Saloon RWD N47 D20 A;N47 D20 C | | GCI35025 | Inner Joint | | | 25 | | | 26 | |
| 2.0 (135 kw) | 2010.03-2011.10 | 6AT/6MT | R | L | Saloon RWD N47 D20 C | Not for police vehicles | GDS85022 | Drive Shaft | 48W | 27 | | 69 | 68 | 607 | |
| | 2010.03-2011.10 | 6AT/6MT | R | L | Saloon RWD N47 D20 C | For police vehicles | GDS85039 | Drive Shaft | | 30 | | 58.7 | 73 | 615 | |
| | 2010.03-2011.10 | 6AT/6MT | R | R | Saloon RWD N47 D20 C | Not for police vehicles | GDS85023 | Drive Shaft | 48W | 27 | | 69 | 68 | 660 | |
| | 2010.03-2011.10 | 6AT/6MT | R | R | Saloon RWD N47 D20 C | For police vehicles | GDS85134 | Drive Shaft | | 30 | | 58.7 | 73 | 665 | |
| | 2010.03-2011.10 | 6AT/6MT | R | L/R | Saloon RWD N47 D20 C | For police vehicles | GCI85036 | Outer Joint | | 30 | 25 | 58.7 | 73 | 58 | I |
| | 2010.03-2011.10 | 6AT/6MT | R | L/R | Saloon RWD N47 D20 C | Not for police vehicles | GCI99145 | Outer Joint | 48W | 27 | 25 | 69 | 68 | 58 | I |
| | 2010.03-2011.10 | 6AT/6MT | R | L/R | Saloon RWD N47 D20 C | | GCI35025 | Inner Joint | | | 25 | | | 26 | |
| | 2011.11-2016.03 | 8AT/6MT | R | L | Saloon RWD N47 D20 C | | GDS85066 | Drive Shaft | | 28 | 27 | 57.4 | 71 | 744 | |
| | 2011.11-2016.03 | 8AT/6MT | R | R | Saloon RWD N47 D20 C | | GDS85067 | Drive Shaft | | 28 | 27 | 57.4 | 71 | 800 | |
| | 2011.11-2016.03 | 8AT/6MT | R | L/R | Saloon RWD N47 D20 C | | GCI85020 | Inner Joint | | 27 | 25 | 43.9 | 75 | 96 | |
| 2.0 (140 kw) | 2015.07-2018.10 | 8AT/6MT | R | L | Saloon RWD B47 D20 A | | GDS85066 | Drive Shaft | | 28 | 27 | 57.4 | 71 | 744 | |
| | 2015.07-2018.10 | 8AT/6MT | R | R | Saloon RWD B47 D20 A | | GDS85067 | Drive Shaft | | 28 | 27 | 57.4 | 71 | 800 | |
| | 2015.07-2018.10 | 8AT/6MT | R | L/R | Saloon RWD B47 D20 A | | GCI85020 | Inner Joint | | 27 | 25 | 43.9 | 75 | 96 | |
| 2.0 (147 kw) | 2011.11-2016.03 | AT/MT | R | L | Saloon RWD N47 D20 C | | GDS85066 | Drive Shaft | | 28 | 27 | 57.4 | 71 | 744 | |
| | 2011.11-2016.03 | AT/MT | R | R | Saloon RWD N47 D20 C | | GDS85067 | Drive Shaft | | 28 | 27 | 57.4 | 71 | 800 | |
| **320d Cabrio** | | | | | | | | | | | | | | | |
| 2.0 (110 kw) | 2004.11-2007.02 | AT | R | L | Cabriolet RWD M47D204D4 | Date to:2007.02 | GDS85051 | Drive Shaft | 48W | 27 | | 64 | 69 | 618 | |
| | 2004.11-2007.02 | AT | R | R | Cabriolet RWD M47D204D4 | Date to:2007.02 | GDS85042 | Drive Shaft | 48W | 27 | | 64 | 69 | 672 | |
| | 2004.11-2007.02 | MT | R | L | Cabriolet RWD M47D204D4 | | GCI82470 | Outer Joint | 48W | 27 | 25 | 64 | 69 | 65.5 | |
| 2.0 (120 kw) | 2008.01-2013.12 | AT/MT | R | L | Convertible RWD N47 D20 C | | GDS85039 | Drive Shaft | | 30 | | 58.7 | 73 | 615 | |
| | 2008.01-2013.12 | AT/MT | R | R | Convertible RWD N47 D20 C | | GDS85134 | Drive Shaft | | 30 | | 58.7 | 73 | 665 | |
| | 2008.01-2013.12 | AT/MT | R | R | Convertible RWD N47 D20 C | | GCI85036 | Outer Joint | | 30 | 25 | 58.7 | 73 | 58 | I |
| | 2008.01-2013.12 | AT/MT | R | R | Convertible RWD N47 D20 C | | GCI35025 | Inner Joint | | | 25 | | | 26 | |
| 2.0 (130 kw) | 2008.03-2010.02 | 6AT/6MT | R | L | Convertible RWD N47 D20 A;N47 D20 C | | GDS85039 | Drive Shaft | | 30 | | 58.7 | 73 | 615 | |
| | 2008.03-2010.02 | 6AT/6MT | R | R | Convertible RWD N47 D20 A;N47 D20 C | | GDS85134 | Drive Shaft | | 30 | | 58.7 | 73 | 665 | |
| | 2008.03-2010.02 | 6AT/6MT | R | R | Convertible RWD N47 D20 A;N47 D20 C | | GCI35025 | Inner Joint | | | 25 | | | 26 | |
| 2.0 (135 kw) | 2010.03-2013.10 | 6AT/6MT | R | L | Convertible RWD N47 D20 C | | GDS85039 | Drive Shaft | | 30 | | 58.7 | 73 | 615 | |
| | 2010.03-2013.10 | 6AT/6MT | R | R | Convertible RWD N47 D20 C | | GDS85134 | Drive Shaft | | 30 | | 58.7 | 73 | 665 | |
| | 2010.03-2013.10 | 6AT/6MT | R | R | Convertible RWD N47 D20 C | | GCI35025 | Inner Joint | | | 25 | | | 26 | |
| 2.0 (145 kw) | 2007.09-2010.02 | AT/MT | R | L | Convertible RWD N47 D20 A;N47 D20 C | | GDS85039 | Drive Shaft | | 30 | | 58.7 | 73 | 615 | |
| | 2007.09-2010.02 | AT/MT | R | R | Convertible RWD N47 D20 A;N47 D20 C | | GDS85134 | Drive Shaft | | 30 | | 58.7 | 73 | 665 | |
| | 2007.09-2010.02 | AT/MT | R | R | Convertible RWD N47 D20 A;N47 D20 C | | GCI85036 | Outer Joint | | 30 | 25 | 58.7 | 73 | 58 | I |
| | 2007.09-2010.02 | AT/MT | R | R | Convertible RWD N47 D20 A;N47 D20 C | | GCI35025 | Inner Joint | | | 25 | | | 26 | |
| 2.0 (147 kw) | 2010.03-2013.10 | AT/MT | R | L | Convertible RWD N47 D20 C | | GDS85039 | Drive Shaft | | 30 | | 58.7 | 73 | 615 | |
| | 2010.03-2013.10 | AT/MT | R | R | Convertible RWD N47 D20 C | | GDS85134 | Drive Shaft | | 30 | | 58.7 | 73 | 665 | |
| | 2010.03-2013.10 | AT/MT | R | R | Convertible RWD N47 D20 C | | GCI85036 | Outer Joint | | 30 | 25 | 58.7 | 73 | 58 | I |
| | 2010.03-2013.10 | AT/MT | R | R | Convertible RWD N47 D20 C | | GCI35025 | Inner Joint | | | 25 | | | 26 | |

| | YEAR | TRANSM. | F/R | L/R | BODY STYLE & DRIVE TYPE & ENGINE | REMARKS | G-AP Ref. | PRODUCT | ABS | Technical Specifications A | B | C | H | L | P |
|---|---|---|---|---|---|---|---|---|---|---|---|---|---|---|---|
| **BMW** | | | | | | | | | | | | | | | |
| **320d Compact** | | | | | | | | | | | | | | | |
| 2.0 (100 kw) | 2001.10-2002.12 | 5MT | R | L/R | Hatchback RWD M47D204D4 | | GCI99127 | Inner Joint | | | 25 | | | 26 | |
| | 2001.10-2002.12 | | R | L | Hatchback RWD M47D204D4 | | GDS85051 | Drive Shaft | 48W | 27 | | 64 | 69 | 618 | |
| | 2001.10-2002.12 | | R | R | Hatchback RWD M47D204D4 | | GDS85042 | Drive Shaft | 48W | 27 | | 64 | 69 | 672 | |
| 2.0 (110 kw) | 2001.10-2005.02 | 5AT | R | L | Hatchback RWD M47D204D4 | | GDS85051 | Drive Shaft | 48W | 27 | | 64 | 69 | 618 | |
| | 2001.10-2005.02 | 5AT/5MT | R | R | Hatchback RWD M47D204D4 | | GDS85042 | Drive Shaft | 48W | 27 | | 64 | 69 | 672 | |
| | 2001.10-2005.02 | 5AT/5MT | R | L/R | Hatchback RWD M47D204D4 | | GCI99127 | Inner Joint | | | 25 | | | 26 | |
| | 2001.10-2005.02 | MT | R | L/R | Hatchback RWD M47D204D4 | Date from:2003.04 | GCI82470 | Outer Joint | 48W | 27 | 25 | 64 | 69 | 65.5 | |
| **320d Coupe** | | | | | | | | | | | | | | | |
| 2.0 (110 kw) | 2003.08-2006.07 | AT | R | L | Coupe RWD M47D204D4 | | GDS85051 | Drive Shaft | 48W | 27 | | 64 | 69 | 618 | |
| | 2003.08-2006.07 | AT | R | R | Coupe RWD M47D204D4 | | GDS85042 | Drive Shaft | 48W | 27 | | 64 | 69 | 672 | |
| | 2003.08-2006.07 | AT/MT | R | L/R | Coupe RWD M47D204D4 | | GCI99127 | Inner Joint | | | 25 | | | 26 | |
| | 2003.08-2006.07 | MT | R | L/R | Coupe RWD M47D204D4 | | GCI82470 | Outer Joint | 48W | 27 | 25 | 64 | 69 | 65.5 | |
| 2.0 (120 kw) | 2007.03-2013.06 | 6AT/6MT | R | L | Coupe RWD N47 D20 A;N47 D20 C | | GDS85022 | Drive Shaft | 48W | 27 | | 69 | 68 | 607 | |
| | 2007.03-2013.06 | 6AT/6MT | R | R | Coupe RWD N47 D20 A;N47 D20 C | | GDS85023 | Drive Shaft | 48W | 27 | | 69 | 68 | 660 | |
| | 2007.03-2013.06 | 6AT/6MT | R | L/R | Coupe RWD N47 D20 A;N47 D20 C | | GCI99145 | Outer Joint | 48W | 27 | 25 | 69 | 68 | 58 | I |
| | 2007.03-2013.06 | 6AT/6MT | R | L/R | Coupe RWD N47 D20 A;N47 D20 C | | GCI35025 | Inner Joint | | | 25 | | | 26 | |
| 2.0 (130 kw) | 2006.09-2010.02 | 6AT/6MT | R | L | Coupe RWD N47 D20 A;N47 D20 C | | GDS85022 | Drive Shaft | 48W | 27 | | 69 | 68 | 607 | |
| | 2006.09-2010.02 | 6AT/6MT | R | R | Coupe RWD N47 D20 A;N47 D20 C | | GDS85023 | Drive Shaft | 48W | 27 | | 69 | 68 | 660 | |
| | 2006.09-2010.02 | 6AT/6MT | R | L/R | Coupe RWD N47 D20 A;N47 D20 C | | GCI35025 | Inner Joint | | | 25 | | | 26 | |
| 2.0 (135 kw) | 2010.03-2013.06 | 6AT/6MT | R | L | Coupe RWD N47 D20 C | | GDS85022 | Drive Shaft | 48W | 27 | | 69 | 68 | 607 | |
| | 2010.03-2013.06 | 6AT/6MT | R | R | Coupe RWD N47 D20 C | | GDS85023 | Drive Shaft | 48W | 27 | | 69 | 68 | 660 | |
| | 2010.03-2013.06 | 6AT/6MT | R | L/R | Coupe RWD N47 D20 C | | GCI35025 | Inner Joint | | | 25 | | | 26 | |
| 2.0 (145 kw) | 2006.09-2010.02 | 6AT/6MT | R | L | Coupe RWD N47 D20 A;N47 D20 C | | GDS85022 | Drive Shaft | 48W | 27 | | 69 | 68 | 607 | |
| | 2006.09-2010.02 | 6AT/6MT | R | R | Coupe RWD N47 D20 A;N47 D20 C | | GDS85023 | Drive Shaft | 48W | 27 | | 69 | 68 | 660 | |
| | 2006.09-2010.02 | 6AT/6MT | R | L/R | Coupe RWD N47 D20 A;N47 D20 C | | GCI99145 | Outer Joint | 48W | 27 | 25 | 69 | 68 | 58 | I |
| | 2006.09-2010.02 | 6AT/6MT | R | L/R | Coupe RWD N47 D20 A;N47 D20 C | | GCI35025 | Inner Joint | | | 25 | | | 26 | |
| 2.0 (147 kw) | 2010.03-2013.06 | 6AT/6MT | R | L | Coupe RWD N47 D20 C | | GDS85022 | Drive Shaft | 48W | 27 | | 69 | 68 | 607 | |
| | 2010.03-2013.06 | 6AT/6MT | R | R | Coupe RWD N47 D20 C | | GDS85023 | Drive Shaft | 48W | 27 | | 69 | 68 | 660 | |
| | 2010.03-2013.06 | 6AT/6MT | R | L/R | Coupe RWD N47 D20 C | | GCI99145 | Outer Joint | 48W | 27 | 25 | 69 | 68 | 58 | I |
| | 2010.03-2013.06 | 6AT/6MT | R | L/R | Coupe RWD N47 D20 C | | GCI35025 | Inner Joint | | | 25 | | | 26 | |
| **320d Gran Turismo** | | | | | | | | | | | | | | | |
| 2.0 (120 kw) | 2013.03-2018.03 | 8AT/6MT | R | L | Hatchback RWD N47 D20 C;B47 D20 A | | GDS85066 | Drive Shaft | | 28 | 27 | 57.4 | 71 | 744 | |
| | 2013.03-2018.03 | 8AT/6MT | R | R | Hatchback RWD N47 D20 C;B47 D20 A | | GDS85067 | Drive Shaft | | 28 | 27 | 57.4 | 71 | 800 | |
| 2.0 (135 kw) | 2013.03-2015.06 | 8AT/6MT | R | L | Hatchback RWD N47 D20 C | | GDS85066 | Drive Shaft | | 28 | 27 | 57.4 | 71 | 744 | |
| | 2013.03-2015.06 | 8AT/6MT | R | R | Hatchback RWD N47 D20 C | | GDS85067 | Drive Shaft | | 28 | 27 | 57.4 | 71 | 800 | |
| | 2013.03-2015.06 | 8AT/6MT | R | L/R | Hatchback RWD N47 D20 C | | GCI85020 | Inner Joint | | 27 | 25 | 43.9 | 75 | 96 | |
| 2.0 (140 kw) | 2015.07- | 8AT/6MT | R | L | Hatchback RWD B47 D20 A | | GDS85066 | Drive Shaft | | 28 | 27 | 57.4 | 71 | 744 | |
| | 2015.07- | 8AT/6MT | R | R | Hatchback RWD B47 D20 A | | GDS85067 | Drive Shaft | | 28 | 27 | 57.4 | 71 | 800 | |
| 2.0 (147 kw) | 2013.03-2015.06 | AT/MT | R | L | Hatchback RWD N47 D20 C | | GDS85066 | Drive Shaft | | 28 | 27 | 57.4 | 71 | 744 | |
| | 2013.03-2015.06 | AT/MT | R | R | Hatchback RWD N47 D20 C | | GDS85067 | Drive Shaft | | 28 | 27 | 57.4 | 71 | 800 | |
| **320d Touring** | | | | | | | | | | | | | | | |
| 2.0 (100 kw) | 1999.08-2001.06 | 4AT/5MT | R | L | Estate RWD M47D204D1 | | GDS85051 | Drive Shaft | 48W | 27 | | 64 | 69 | 618 | |
| | 1999.08-2001.06 | 4AT/5MT | R | R | Estate RWD M47D204D1 | | GDS85042 | Drive Shaft | 48W | 27 | | 64 | 69 | 672 | |
| | 1999.08-2001.06 | 4AT/5MT | R | L/R | Estate RWD M47D204D1 | | GCI82470 | Outer Joint | 48W | 27 | 25 | 64 | 69 | 65.5 | |
| | 1999.08-2001.06 | 4AT/5MT | R | L/R | Estate RWD M47D204D1 | | GCI99127 | Inner Joint | | | 25 | | | 26 | |
| 2.0 (110 kw) | 2001.09-2005.02 | MT | R | L/R | Estate RWD M47D204D4 | Date from:2003.04 | GCI82470 | Outer Joint | 48W | 27 | 25 | 64 | 69 | 65.5 | |
| | 2001.09-2005.02 | MT/Semi-AT | R | R | Estate RWD M47D204D4 | | GDS85042 | Drive Shaft | 48W | 27 | | 64 | 69 | 672 | |
| | 2001.09-2005.02 | MT/Semi-AT | R | L/R | Estate RWD M47D204D4 | | GCI99127 | Inner Joint | | | 25 | | | 26 | |
| | 2001.09-2005.02 | Semi-AT | R | L | Estate RWD M47D204D4 | | GDS85051 | Drive Shaft | 48W | 27 | | 64 | 69 | 618 | |
| | 2004.12-2007.08 | 6AT/6MT | R | L | Estate RWD M47 D20 (204D4) | | GDS85039 | Drive Shaft | | 30 | | 58.7 | 73 | 615 | |
| | 2004.12-2007.08 | 6AT/6MT | R | R | Estate RWD M47 D20 (204D4) | | GDS85134 | Drive Shaft | | 30 | | 58.7 | 73 | 665 | |
| | 2004.12-2007.08 | 6AT/6MT | R | L/R | Estate RWD M47 D20 (204D4) | | GCI35025 | Inner Joint | | | 25 | | | 26 | |
| 2.0 (120 kw) | 2005.06-2012.06 | SAT/6AT/6MT | R | L | Estate RWD N47 D20 A;N47 D20 C;M47 D20 (204D4) | For Engine code:N47D20C;Not for police vehicles,Not for increased payload | GDS85022 | Drive Shaft | 48W | 27 | | 69 | 68 | 607 | |
| | 2005.06-2012.06 | SAT/6AT/6MT | R | L | Estate RWD N47 D20 A;N47 D20 C;M47 D20 (204D4) | For Engine code:N47D20D/E;For Engine code:N47D20C;For police vehicles,For increased payload | GDS85039 | Drive Shaft | | 30 | | 58.7 | 73 | 615 | |
| | 2005.06-2012.06 | SAT/6AT/6MT | R | R | Estate RWD N47 D20 A;N47 D20 C;M47 D20 (204D4) | For Engine code:N47D20C;Not for police vehicles,Not for increased payload | GDS85023 | Drive Shaft | 48W | 27 | | 69 | 68 | 660 | |
| | 2005.06-2012.06 | SAT/6AT/6MT | R | R | Estate RWD N47 D20 A;N47 D20 C;M47 D20 (204D4) | For Engine code:N47D20D/E;For Engine code:N47D20C;For police vehicles,For increased payload | GDS85134 | Drive Shaft | | 30 | | 58.7 | 73 | 665 | |
| | 2005.06-2012.06 | SAT/6AT/6MT | R | L/R | Estate RWD N47 D20 A;N47 D20 C;M47 D20 (204D4) | For Engine Code:M47D20D/E;For Engine Code:N47D20C;For police vehicles,For increased payload | GCI85036 | Outer Joint | | 30 | 25 | 58.7 | 73 | 58 | I |
| | 2005.06-2012.06 | SAT/6AT/6MT | R | L/R | Estate RWD N47 D20 A;N47 D20 C;M47 D20 (204D4) | For Engine Code:N47D20C;Not for police vehicles,Not for increased payload | GCI99145 | Outer Joint | 48W | 27 | 25 | 69 | 68 | 58 | I |
| | 2005.06-2012.06 | SAT/6AT/6MT | R | L/R | Estate RWD N47 D20 A;N47 D20 C;M47 D20 (204D4) | | GCI35025 | Inner Joint | | | 25 | | | 26 | |
| | 2012.07-2019.06 | 8AT/6MT | R | L | Estate RWD N47 D20 C;B47 D20 A | | GDS85066 | Drive Shaft | | 28 | 27 | 57.4 | 71 | 744 | |
| | 2012.07-2019.06 | 8AT/6MT | R | R | Estate RWD N47 D20 C;B47 D20 A | | GDS85067 | Drive Shaft | | 28 | 27 | 57.4 | 71 | 800 | |
| | 2012.07-2019.06 | 8AT/6MT | R | L/R | Estate RWD N47 D20 C;B47 D20 A | | GCI85020 | Inner Joint | | 27 | 25 | 43.9 | 75 | 96 | |
| 2.0 (130 kw) | 2007.02-2010.12 | SAT/6AT/6MT | R | L | Estate RWD N47 D20 A;N47 D20 C | For Engine code:N47D20C;Not for increased payload,for vehicles without active steering | GDS85022 | Drive Shaft | 48W | 27 | | 69 | 68 | 607 | |
| | 2007.02-2010.12 | SAT/6AT/6MT | R | L | Estate RWD N47 D20 A;N47 D20 C | For Engine code:N47D20D/E;For Engine code:N47D20C;For vehicles with active steering | GDS85039 | Drive Shaft | | 30 | | 58.7 | 73 | 615 | |
| | 2007.02-2010.12 | SAT/6AT/6MT | R | R | Estate RWD N47 D20 A;N47 D20 C | For Engine code:N47D20C;Not for increased payload,for vehicles without active steering | GDS85023 | Drive Shaft | 48W | 27 | | 69 | 68 | 660 | |

| | YEAR | TRANSM. | F/R | L/R | BODY STYLE & DRIVE TYPE & ENGINE | REMARKS | G-AP Ref. | PRODUCT | ABS | Technical Specifications A | B | C | H | L | P |
|---|---|---|---|---|---|---|---|---|---|---|---|---|---|---|---|
| **BMW** | | | | | | | | | | | | | | | |
| **320d Touring** | | | | | | | | | | | | | | | |
| 2.0 (130 kw) | 2007.02-2010.12 | SAT/6AT/6MT | R | R | Estate RWD N47 D20 A;N47 D20 C | For Engine code:N47D20A;For Engine code:N47D20C;For increased payload;For Engine code:N47D20A;For vehicles with active steering | GDS85134 | Drive Shaft | | 30 | | 58.7 | 73 | 665 | |
| | 2007.02-2010.12 | SAT/6AT/6MT | R | L/R | Estate RWD N47 D20 A;N47 D20 C | For Engine code:N47D20C;Not for increased payload;Not for vehicles with active steering | GCI99145 | Outer Joint | 48W | 27 | 25 | 69 | 68 | 58 | I |
| | 2007.02-2010.12 | SAT/6AT/6MT | R | L/R | Estate RWD N47 D20 A;N47 D20 C | | GCI35025 | Inner Joint | | | 25 | | | 26 | |
| 2.0 (135 kw) | 2010.03-2012.05 | 6AT/6MT | R | L | Estate RWD N47 D20 C | Not for increased payload;for vehicles without active steering | GDS85022 | Drive Shaft | 48W | 27 | | 69 | 68 | 607 | |
| | 2010.03-2012.05 | 6AT/6MT | R | L | Estate RWD N47 D20 C | For increased payload;For vehicles with active steering | GDS85039 | Drive Shaft | | 30 | | 58.7 | 73 | 615 | |
| | 2010.03-2012.05 | 6AT/6MT | R | R | Estate RWD N47 D20 C | Not for increased payload;for vehicles without active steering | GDS85023 | Drive Shaft | 48W | 27 | | 69 | 68 | 660 | |
| | 2010.03-2012.05 | 6AT/6MT | R | R | Estate RWD N47 D20 C | For increased payload;For vehicles with active steering | GDS85134 | Drive Shaft | | 30 | | 58.7 | 73 | 665 | |
| | 2010.03-2012.05 | 6AT/6MT | R | L/R | Estate RWD N47 D20 C | For increased payload;For vehicles with active steering | GCI85036 | Outer Joint | | 30 | 25 | 58.7 | 73 | 58 | I |
| | 2010.03-2012.05 | 6AT/6MT | R | L/R | Estate RWD N47 D20 C | Not for increased payload;Not for vehicles with active steering | GCI99145 | Outer Joint | 48W | 27 | 25 | 69 | 68 | 58 | I |
| | 2010.03-2012.05 | 6AT/6MT | R | L/R | Estate RWD N47 D20 C | | GCI35025 | Inner Joint | | | 25 | | | 26 | |
| | 2012.07-2016.02 | 8AT/6MT | R | L | Estate RWD N47 D20 C | | GDS85066 | Drive Shaft | | 28 | 27 | 57.4 | 71 | 744 | |
| | 2012.07-2016.02 | 8AT/6MT | R | R | Estate RWD N47 D20 C | | GDS85067 | Drive Shaft | | 28 | 27 | 57.4 | 71 | 800 | |
| | 2012.07-2016.02 | 8AT/6MT | R | L/R | Estate RWD N47 D20 C | | GCI85020 | Inner Joint | | 27 | 25 | 43.9 | 75 | 96 | |
| 2.0 (140 kw) | 2015.07-2019.06 | 8AT/6MT | R | L | Estate RWD B47 D20 A | | GDS85066 | Drive Shaft | | 28 | 27 | 57.4 | 71 | 744 | |
| | 2015.07-2019.06 | 8AT/6MT | R | R | Estate RWD B47 D20 A | | GDS85067 | Drive Shaft | | 28 | 27 | 57.4 | 71 | 800 | |
| | 2015.07-2019.06 | 8AT/6MT | R | L/R | Estate RWD B47 D20 A | | GCI85020 | Inner Joint | | 27 | 25 | 43.9 | 75 | 96 | |
| 2.0 (145 kw) | 2007.02-2010.02 | 6AT/6MT | R | L | Estate RWD N47 D20 A;N47 D20 C | For Engine code:N47D20C;Not for increased payload;for vehicles without active steering | GDS85022 | Drive Shaft | 48W | 27 | | 69 | 68 | 607 | |
| | 2007.02-2010.02 | 6AT/6MT | R | L | Estate RWD N47 D20 A;N47 D20 C | For Engine code:N47D20A;For Engine code:N47D20C;For increased payload;For vehicles with active steering | GDS85039 | Drive Shaft | | 30 | | 58.7 | 73 | 615 | |
| | 2007.02-2010.02 | 6AT/6MT | R | R | Estate RWD N47 D20 A;N47 D20 C | For Engine code:N47D20C;Not for increased payload;for vehicles without active steering | GDS85023 | Drive Shaft | 48W | 27 | | 69 | 68 | 660 | |
| | 2007.02-2010.02 | 6AT/6MT | R | R | Estate RWD N47 D20 A;N47 D20 C | For Engine code:N47D20A;For Engine code:N47D20C;For increased payload;For vehicles with active steering | GDS85134 | Drive Shaft | | 30 | | 58.7 | 73 | 665 | |
| | 2007.02-2010.02 | 6AT/6MT | R | L/R | Estate RWD N47 D20 A;N47 D20 C | | GCI85036 | Outer Joint | | 30 | 25 | 58.7 | 73 | 58 | I |
| | 2007.02-2010.02 | 6AT/6MT | R | L/R | Estate RWD N47 D20 A;N47 D20 C | | GCI99145 | Outer Joint | 48W | 27 | 25 | 69 | 68 | 58 | I |
| | 2007.02-2010.02 | 6AT/6MT | R | L/R | Estate RWD N47 D20 A;N47 D20 C | | GCI35025 | Inner Joint | | | 25 | | | 26 | |
| 2.0 (147 kw) | 2010.03-2012.05 | 6AT/6MT | R | L | Estate RWD N47 D20 C | Not for increased payload;for vehicles without active steering | GDS85022 | Drive Shaft | 48W | 27 | | 69 | 68 | 607 | |
| | 2010.03-2012.05 | 6AT/6MT | R | L | Estate RWD N47 D20 C | For increased payload;For vehicles with active steering | GDS85039 | Drive Shaft | | 30 | | 58.7 | 73 | 615 | |
| | 2010.03-2012.05 | 6AT/6MT | R | R | Estate RWD N47 D20 C | Not for increased payload;for vehicles without active steering | GDS85023 | Drive Shaft | 48W | 27 | | 69 | 68 | 660 | |
| | 2010.03-2012.05 | 6AT/6MT | R | R | Estate RWD N47 D20 C | For increased payload;For vehicles with active steering | GDS85134 | Drive Shaft | | 30 | | 58.7 | 73 | 665 | |
| | 2010.03-2012.05 | 6AT/6MT | R | L/R | Estate RWD N47 D20 C | For increased payload;For vehicles with active steering | GCI85036 | Outer Joint | | 30 | 25 | 58.7 | 73 | 58 | I |
| | 2010.03-2012.05 | 6AT/6MT | R | L/R | Estate RWD N47 D20 C | Not for increased payload;Not for vehicles with active steering | GCI99145 | Outer Joint | 48W | 27 | 25 | 69 | 68 | 58 | I |
| | 2010.03-2012.05 | 6AT/6MT | R | L/R | Estate RWD N47 D20 C | | GCI35025 | Inner Joint | | | 25 | | | 26 | |
| | 2012.07-2016.02 | AT/MT | R | L | Estate RWD N47 D20 C | | GDS85066 | Drive Shaft | | 28 | 27 | 57.4 | 71 | 744 | |
| | 2012.07-2016.02 | AT/MT | R | R | Estate RWD N47 D20 C | | GDS85067 | Drive Shaft | | 28 | 27 | 57.4 | 71 | 800 | |
| **320d xDrive** | | | | | | | | | | | | | | | |
| 2.0 (120 kw) | 2008.09-2011.10 | 6AT/6MT | F | L | Saloon 4WD N47 D20 C | | GDS85124 | Drive Shaft | 48W | 30 | 27 | 64.8 | 77 | 571 | |
| | 2008.09-2011.10 | 6AT/6MT | F | R | Saloon 4WD N47 D20 C | | GDS85125 | Drive Shaft | 48W | 30 | 27 | 64.8 | 77 | 892 | |
| | 2008.09-2011.10 | 6AT/6MT | F | L/R | Saloon 4WD N47 D20 C | | GCO85020 | Outer Joint | 48W | 30 | 33 | 64.8 | 77 | 60 | M |
| | 2008.09-2011.10 | 6AT/6MT | F | L | Saloon 4WD N47 D20 C | | GCI85066 | Inner Joint | | 27 | 24 | 43.95 | 53.5 | 126.5 | |
| | 2008.09-2011.10 | 6AT/6MT | F | R | Saloon 4WD N47 D20 C | | GCI85067 | Inner Joint | | 27 | 24 | 43.95 | 376 | 126 | |
| | 2008.09-2011.10 | 6AT/6MT | R | L | Saloon 4WD N47 D20 C | | GDS85039 | Drive Shaft | | 30 | | 58.7 | 73 | 615 | |
| | 2008.09-2011.10 | 6AT/6MT | R | R | Saloon 4WD N47 D20 C | | GDS85134 | Drive Shaft | | 30 | | 58.7 | 73 | 665 | |
| | 2008.09-2011.10 | 6AT/6MT | R | L/R | Saloon 4WD N47 D20 C | | GCI35025 | Inner Joint | | | 25 | | | 26 | |
| | 2012.08-2018.10 | 8AT/6MT | F | L | Saloon 4WD N47 D20 C;B47 D20 A | | GDS82052 | Drive Shaft | | 31 | 27 | 55.8 | | 550 | |
| | 2012.08-2018.10 | 8AT/6MT | F | R | Saloon 4WD N47 D20 C;B47 D20 A | | GDS82053 | Drive Shaft | | 31 | 27 | 55.8 | | 841 | |
| | 2012.08-2018.10 | 8AT/6MT | F | L | Saloon 4WD N47 D20 C;B47 D20 A | | GCO81603 | Outer Joint | | 31 | 33 | 55.8 | | 69.5 | M |
| | 2012.08-2018.10 | 8AT/6MT | F | L | Saloon 4WD N47 D20 C;B47 D20 A | | GCI81055 | Inner Joint | | 27 | 24 | 43.95 | 60 | 123.5 | |
| | 2012.08-2018.10 | 8AT/6MT | F | R | Saloon 4WD N47 D20 C;B47 D20 A | | GCI81597 | Inner Joint | | 27 | 24 | 43.95 | 349.5 | 125 | |
| | 2012.08-2018.10 | AT/MT | R | L | Saloon 4WD N47 D20 C;B47 D20 A | | GDS85066 | Drive Shaft | | 28 | 27 | 57.4 | 71 | 744 | |
| | 2012.08-2018.10 | AT/MT | R | R | Saloon 4WD N47 D20 C;B47 D20 A | | GDS85067 | Drive Shaft | | 28 | 27 | 57.4 | 71 | 800 | |
| | 2018.11-2020.02 | 8AT | F | L | Saloon 4WD B47 D20 B | | GDS56119 | Drive Shaft | | 37 | 27 | 65 | | 557 | |
| | 2018.11-2020.02 | 8AT | F | R | Saloon 4WD B47 D20 B | | GDS56120 | Drive Shaft | | 37 | 27 | 65 | | 857 | |
| | 2018.11-2020.02 | 8AT | F | L/R | Saloon 4WD B47 D20 B | | GCO83161 | Outer Joint | | 37 | 33 | 65 | | 73 | M |
| | 2018.11-2020.02 | 8AT | F | L | Saloon 4WD B47 D20 B | | GCI81055 | Inner Joint | | 27 | 24 | 43.95 | 60 | 123.5 | |
| | 2018.11-2020.02 | 8AT | F | R | Saloon 4WD B47 D20 B | | GCI81457 | Inner Joint | | 27 | 24 | 43.95 | 359 | 125 | |
| | 2020.03- | AT | F | L | Saloon 4WD B47 D20 B;JA1 | | GDS56119 | Drive Shaft | | 37 | 27 | 65 | | 557 | |
| | 2020.03- | AT | F | R | Saloon 4WD B47 D20 B;JA1 | | GDS56120 | Drive Shaft | | 37 | 27 | 65 | | 857 | |
| | 2020.03- | AT | F | L/R | Saloon 4WD B47 D20 B;JA1 | | GCO83161 | Outer Joint | | 37 | 33 | 65 | | 73 | M |
| | 2020.03- | AT | F | L | Saloon 4WD B47 D20 B;JA1 | | GCI81055 | Inner Joint | | 27 | 24 | 43.95 | 60 | 123.5 | |
| | 2020.03- | AT | F | R | Saloon 4WD B47 D20 B;JA1 | | GCI81457 | Inner Joint | | 27 | 24 | 43.95 | 359 | 125 | |
| 2.0 (130 kw) | 2008.09-2010.02 | 6AT/6MT | F | L | Saloon 4WD N47 D20 A;N47 D20 C | | GDS85124 | Drive Shaft | 48W | 30 | 27 | 64.8 | 77 | 571 | |
| | 2008.09-2010.02 | 6AT/6MT | F | R | Saloon 4WD N47 D20 A;N47 D20 C | | GDS85125 | Drive Shaft | 48W | 30 | 27 | 64.8 | 77 | 892 | |
| | 2008.09-2010.02 | 6AT/6MT | F | L/R | Saloon 4WD N47 D20 A;N47 D20 C | | GCO85020 | Outer Joint | 48W | 30 | 33 | 64.8 | 77 | 60 | M |
| | 2008.09-2010.02 | 6AT/6MT | F | L | Saloon 4WD N47 D20 A;N47 D20 C | | GCI85066 | Inner Joint | | 27 | 24 | 43.95 | 53.5 | 126.5 | |
| | 2008.09-2010.02 | 6AT/6MT | F | R | Saloon 4WD N47 D20 A;N47 D20 C | | GCI85067 | Inner Joint | | 27 | 24 | 43.95 | 376 | 126 | |
| | 2008.09-2010.02 | 6AT/6MT | R | L | Saloon 4WD N47 D20 A;N47 D20 C | | GDS85039 | Drive Shaft | | 30 | | 58.7 | 73 | 615 | |
| | 2008.09-2010.02 | 6AT/6MT | R | R | Saloon 4WD N47 D20 A;N47 D20 C | | GDS85134 | Drive Shaft | | 30 | | 58.7 | 73 | 665 | |

| | YEAR | TRANSM. | F/R | L/R | BODY STYLE & DRIVE TYPE & ENGINE | REMARKS | G-AP Ref. | PRODUCT | ABS | Technical Specifications A | B | C | H | L | P |
|---|---|---|---|---|---|---|---|---|---|---|---|---|---|---|---|
| **BMW** | | | | | | | | | | | | | | | |
| **320d xDrive** | | | | | | | | | | | | | | | |
| 2.0 (130 kw) | 2008.09-2010.02 | 6AT/6MT | R | L/R | Saloon 4WD N47 D20 A;N47 D20 C | | GCI35025 | Inner Joint | | | 25 | | | 26 | |
| 2.0 (135 kw) | 2010.03-2011.10 | 6AT/6MT | F | L | Saloon 4WD N47 D20 C | | GDS85124 | Drive Shaft | 48W | 30 | 27 | 64.8 | 77 | 571 | |
| | 2010.03-2011.10 | 6AT/6MT | F | R | Saloon 4WD N47 D20 C | | GDS85125 | Drive Shaft | 48W | 30 | 27 | 64.8 | 77 | 892 | |
| | 2010.03-2011.10 | 6AT/6MT | F | L/R | Saloon 4WD N47 D20 C | | GCO85020 | Outer Joint | 48W | 30 | 33 | 64.8 | 77 | 60 | M |
| | 2010.03-2011.10 | 6AT/6MT | F | L | Saloon 4WD N47 D20 C | | GCI85066 | Inner Joint | | 27 | 24 | 43.95 | 53.5 | 126.5 | |
| | 2010.03-2011.10 | 6AT/6MT | F | R | Saloon 4WD N47 D20 C | | GCI85067 | Inner Joint | | 27 | 24 | 43.95 | 376 | 126 | |
| | 2010.03-2011.10 | 6AT/6MT | R | L | Saloon 4WD N47 D20 C | | GDS85039 | Drive Shaft | | 30 | | 58.7 | 73 | 615 | |
| | 2010.03-2011.10 | 6AT/6MT | R | R | Saloon 4WD N47 D20 C | | GDS85134 | Drive Shaft | | 30 | | 58.7 | 73 | 665 | |
| | 2010.03-2011.10 | 6AT/6MT | R | L/R | Saloon 4WD N47 D20 C | | GCI85036 | Outer Joint | | 30 | 25 | 58.7 | 73 | 58 | I |
| | 2010.03-2011.10 | 6AT/6MT | R | L/R | Saloon 4WD N47 D20 C | | GCI35025 | Inner Joint | | | 25 | | | 26 | |
| | 2012.08-2015.06 | 8AT/6MT | F | L | Saloon 4WD N47 D20 C | | GDS82052 | Drive Shaft | | 31 | 27 | 55.8 | | 550 | |
| | 2012.08-2015.06 | 8AT/6MT | F | R | Saloon 4WD N47 D20 C | | GDS82053 | Drive Shaft | | 31 | 27 | 55.8 | | 841 | |
| | 2012.08-2015.06 | 8AT/6MT | F | L/R | Saloon 4WD N47 D20 C | | GCO81603 | Outer Joint | | 31 | 33 | 55.8 | | 69.5 | M |
| | 2012.08-2015.06 | 8AT/6MT | F | L | Saloon 4WD N47 D20 C | | GCI81055 | Inner Joint | | 27 | 24 | 43.95 | 60 | 123.5 | |
| | 2012.08-2015.06 | 8AT/6MT | F | R | Saloon 4WD N47 D20 C | | GCI81597 | Inner Joint | | 27 | 24 | 43.95 | 349.5 | 125 | |
| | 2012.08-2015.06 | 8AT/6MT | R | L | Saloon 4WD N47 D20 C | | GDS85066 | Drive Shaft | | 28 | 27 | 57.4 | 71 | 744 | |
| | 2012.08-2015.06 | 8AT/6MT | R | R | Saloon 4WD N47 D20 C | | GDS85067 | Drive Shaft | | 28 | 27 | 57.4 | 71 | 800 | |
| 2.0 (140 kw) | 2015.07-2018.10 | 8AT/6MT | F | L | Saloon 4WD B47 D20 A | | GDS82052 | Drive Shaft | | 31 | 27 | 55.8 | | 550 | |
| | 2015.07-2018.10 | 8AT/6MT | F | R | Saloon 4WD B47 D20 A | | GDS82053 | Drive Shaft | | 31 | 27 | 55.8 | | 841 | |
| | 2015.07-2018.10 | 8AT/6MT | F | L/R | Saloon 4WD B47 D20 A | | GCO81603 | Outer Joint | | 31 | 33 | 55.8 | | 69.5 | M |
| | 2015.07-2018.10 | 8AT/6MT | F | L | Saloon 4WD B47 D20 A | | GCI81055 | Inner Joint | | 27 | 24 | 43.95 | 60 | 123.5 | |
| | 2015.07-2018.10 | 8AT/6MT | F | R | Saloon 4WD B47 D20 A | | GCI81597 | Inner Joint | | 27 | 24 | 43.95 | 349.5 | 125 | |
| | 2015.07-2018.10 | 8AT/6MT | R | L | Saloon 4WD B47 D20 A | | GDS85066 | Drive Shaft | | 28 | 27 | 57.4 | 71 | 744 | |
| | 2015.07-2018.10 | 8AT/6MT | R | R | Saloon 4WD B47 D20 A | | GDS85067 | Drive Shaft | | 28 | 27 | 57.4 | 71 | 800 | |
| | 2018.11-2020.02 | 8AT | F | L | Saloon 4WD B47 D20 B | | GDS56119 | Drive Shaft | | 37 | 27 | 65 | | 557 | |
| | 2018.11-2020.02 | 8AT | F | R | Saloon 4WD B47 D20 B | | GDS56120 | Drive Shaft | | 37 | 27 | 65 | | 857 | |
| | 2018.11-2020.02 | 8AT | F | L/R | Saloon 4WD B47 D20 B | | GCO83161 | Outer Joint | | 37 | 33 | 65 | | 73 | M |
| | 2018.11-2020.02 | 8AT | F | L | Saloon 4WD B47 D20 B | | GCI81055 | Inner Joint | | 27 | 24 | 43.95 | 60 | 123.5 | |
| | 2018.11-2020.02 | 8AT | F | R | Saloon 4WD B47 D20 B | | GCI81457 | Inner Joint | | 27 | 24 | 43.95 | 359 | 125 | |
| | 2020.03- | 8AT | F | L | Saloon 4WD B47 D20 B;JA1 | | GDS56119 | Drive Shaft | | 37 | 27 | 65 | | 557 | |
| | 2020.03- | 8AT | F | R | Saloon 4WD B47 D20 B;JA1 | | GDS56120 | Drive Shaft | | 37 | 27 | 65 | | 857 | |
| | 2020.03- | 8AT | F | L/R | Saloon 4WD B47 D20 B;JA1 | | GCO83161 | Outer Joint | | 37 | 33 | 65 | | 73 | M |
| | 2020.03- | 8AT | F | L | Saloon 4WD B47 D20 B;JA1 | | GCI81055 | Inner Joint | | 27 | 24 | 43.95 | 60 | 123.5 | |
| | 2020.03- | 8AT | F | R | Saloon 4WD B47 D20 B;JA1 | | GCI81457 | Inner Joint | | 27 | 24 | 43.95 | 359 | 125 | |
| 2.0 (147 kw) | 2012.08-2015.06 | 8AT/6MT | F | L | Saloon 4WD N47 D20 C | | GDS82052 | Drive Shaft | | 31 | 27 | 55.8 | | 550 | |
| | 2012.08-2015.06 | 8AT/6MT | F | R | Saloon 4WD N47 D20 C | | GDS82053 | Drive Shaft | | 31 | 27 | 55.8 | | 841 | |
| | 2012.08-2015.06 | 8AT/6MT | F | L | Saloon 4WD N47 D20 C | | GCO81603 | Outer Joint | | 31 | 33 | 55.8 | | 69.5 | M |
| | 2012.08-2015.06 | 8AT/6MT | F | L | Saloon 4WD N47 D20 C | | GCI81055 | Inner Joint | | 27 | 24 | 43.95 | 60 | 123.5 | |
| | 2012.08-2015.06 | 8AT/6MT | F | R | Saloon 4WD N47 D20 C | | GCI81597 | Inner Joint | | 27 | 24 | 43.95 | 349.5 | 125 | |
| | 2012.08-2015.06 | AT/MT | R | L | Saloon 4WD N47 D20 C | | GDS85066 | Drive Shaft | | 28 | 27 | 57.4 | 71 | 744 | |
| | 2012.08-2015.06 | AT/MT | R | R | Saloon 4WD N47 D20 C | | GDS85067 | Drive Shaft | | 28 | 27 | 57.4 | 71 | 800 | |
| **320d xDrive Coupe** | | | | | | | | | | | | | | | |
| 2.0 (120 kw) | 2008.09-2013.06 | 6AT/6MT | F | L | Coupe 4WD N47 D20 C | | GDS85124 | Drive Shaft | 48W | 30 | 27 | 64.8 | 77 | 571 | |
| | 2008.09-2013.06 | 6AT/6MT | F | R | Coupe 4WD N47 D20 C | | GDS85125 | Drive Shaft | 48W | 30 | 27 | 64.8 | 77 | 892 | |
| | 2008.09-2013.06 | 6AT/6MT | F | L | Coupe 4WD N47 D20 C | | GCI85066 | Inner Joint | | 27 | 24 | 43.95 | 53.5 | 126.5 | |
| | 2008.09-2013.06 | 6AT/6MT | F | R | Coupe 4WD N47 D20 C | | GCI85067 | Inner Joint | | 27 | 24 | 43.95 | 376 | 126 | |
| | 2008.09-2013.06 | AT/MT | F | L/R | Coupe 4WD N47 D20 C | | GCO85020 | Outer Joint | 48W | 30 | 33 | 64.8 | 77 | 60 | M |
| | 2008.09-2013.06 | 6AT/6MT | R | L | Coupe 4WD N47 D20 C | Date to:2009.08 | GDS85039 | Drive Shaft | | 30 | | 58.7 | 73 | 615 | |
| | 2008.09-2013.06 | AT/MT | R | R | Coupe 4WD N47 D20 C | | GDS85134 | Drive Shaft | | 30 | | 58.7 | 73 | 665 | |
| | 2008.09-2013.06 | AT/MT | R | R | Coupe 4WD N47 D20 C | | GCI35025 | Inner Joint | | | 25 | | | 26 | |
| 2.0 (130 kw) | 2008.09-2010.02 | 6AT/6MT | F | L | Coupe 4WD N47 D20 C | | GDS85124 | Drive Shaft | 48W | 30 | 27 | 64.8 | 77 | 571 | |
| | 2008.09-2010.02 | 6AT/6MT | F | R | Coupe 4WD N47 D20 C | | GDS85125 | Drive Shaft | 48W | 30 | 27 | 64.8 | 77 | 892 | |
| | 2008.09-2010.02 | 6AT/6MT | F | L/R | Coupe 4WD N47 D20 C | | GCO85020 | Outer Joint | 48W | 30 | 33 | 64.8 | 77 | 60 | M |
| | 2008.09-2010.02 | 6AT/6MT | F | L | Coupe 4WD N47 D20 C | | GCI85066 | Inner Joint | | 27 | 24 | 43.95 | 53.5 | 126.5 | |
| | 2008.09-2010.02 | 6AT/6MT | F | R | Coupe 4WD N47 D20 C | | GCI85067 | Inner Joint | | 27 | 24 | 43.95 | 376 | 126 | |
| | 2008.09-2010.02 | 6AT/6MT | R | L | Coupe 4WD N47 D20 C | | GDS85039 | Drive Shaft | | 30 | | 58.7 | 73 | 615 | |
| | 2008.09-2010.02 | 6AT/6MT | R | R | Coupe 4WD N47 D20 C | | GDS85134 | Drive Shaft | | 30 | | 58.7 | 73 | 665 | |
| 2.0 (135 kw) | 2010.03-2013.06 | 6AT/6MT | F | L | Coupe 4WD N47 D20 C | | GDS85124 | Drive Shaft | 48W | 30 | 27 | 64.8 | 77 | 571 | |
| | 2010.03-2013.06 | 6AT/6MT | F | R | Coupe 4WD N47 D20 C | | GDS85125 | Drive Shaft | 48W | 30 | 27 | 64.8 | 77 | 892 | |
| | 2010.03-2013.06 | 6AT/6MT | F | L/R | Coupe 4WD N47 D20 C | | GCO85020 | Outer Joint | 48W | 30 | 33 | 64.8 | 77 | 60 | M |
| | 2010.03-2013.06 | 6AT/6MT | F | L | Coupe 4WD N47 D20 C | | GCI85066 | Inner Joint | | 27 | 24 | 43.95 | 53.5 | 126.5 | |
| | 2010.03-2013.06 | 6AT/6MT | F | R | Coupe 4WD N47 D20 C | | GCI85067 | Inner Joint | | 27 | 24 | 43.95 | 376 | 126 | |
| | 2010.03-2013.06 | 6AT/6MT | R | L | Coupe 4WD N47 D20 C | | GDS85039 | Drive Shaft | | 30 | | 58.7 | 73 | 615 | |
| | 2010.03-2013.06 | 6AT/6MT | R | R | Coupe 4WD N47 D20 C | | GDS85134 | Drive Shaft | | 30 | | 58.7 | 73 | 665 | |
| | 2010.03-2013.06 | 6AT/6MT | R | L/R | Coupe 4WD N47 D20 C | | GCI85036 | Outer Joint | | 30 | 25 | 58.7 | 73 | 58 | I |

| | YEAR | TRANSM. | F/R | L/R | BODY STYLE & DRIVE TYPE & ENGINE | REMARKS | G-AP Ref. | PRODUCT | ABS | Technical Specifications A | B | C | H | L | P |
|---|---|---|---|---|---|---|---|---|---|---|---|---|---|---|---|
| **BMW** | | | | | | | | | | | | | | | |
| **320d xDrive Coupe** | | | | | | | | | | | | | | | |
| 2.0 (135 kw) | 2010.03-2013.06 | 6AT/6MT | R | L/R | Coupe 4WD N47 D20 C | | GCI35025 | Inner Joint | | | 25 | | | 26 | |
| 2.0 (145 kw) | 2008.09-2010.02 | 6AT/6MT | F | L | Coupe 4WD N47 D20 C | | GDS85124 | Drive Shaft | 48W | 30 | 27 | 64.8 | 77 | 571 | |
| | 2008.09-2010.02 | 6AT/6MT | F | R | Coupe 4WD N47 D20 C | | GDS85125 | Drive Shaft | 48W | 30 | 27 | 64.8 | 77 | 892 | |
| | 2008.09-2010.02 | 6AT/6MT | F | L | Coupe 4WD N47 D20 C | | GCI85066 | Inner Joint | | 27 | 24 | 43.95 | 53.5 | 126.5 | |
| | 2008.09-2010.02 | 6AT/6MT | F | R | Coupe 4WD N47 D20 C | | GCI85067 | Inner Joint | | 27 | 24 | 43.95 | 376 | 126 | |
| | 2008.09-2010.02 | AT/MT | F | L/R | Coupe 4WD N47 D20 C | | GCO85020 | Outer Joint | 48W | 30 | 33 | 64.8 | 77 | 60 | M |
| | 2008.09-2010.02 | 6AT/6MT | R | L | Coupe 4WD N47 D20 C | | GDS85039 | Drive Shaft | | 30 | | 58.7 | 73 | 615 | |
| | 2008.09-2010.02 | 6AT/6MT | R | R | Coupe 4WD N47 D20 C | | GDS85134 | Drive Shaft | | 30 | | 58.7 | 73 | 665 | |
| 2.0 (147 kw) | 2010.03-2013.06 | 6AT/6MT | F | L | Coupe 4WD N47 D20 C | | GDS85124 | Drive Shaft | 48W | 30 | 27 | 64.8 | 77 | 571 | |
| | 2010.03-2013.06 | 6AT/6MT | F | R | Coupe 4WD N47 D20 C | | GDS85125 | Drive Shaft | 48W | 30 | 27 | 64.8 | 77 | 892 | |
| | 2010.03-2013.06 | 6AT/6MT | F | L | Coupe 4WD N47 D20 C | | GCI85066 | Inner Joint | | 27 | 24 | 43.95 | 53.5 | 126.5 | |
| | 2010.03-2013.06 | 6AT/6MT | F | R | Coupe 4WD N47 D20 C | | GCI85067 | Inner Joint | | 27 | 24 | 43.95 | 376 | 126 | |
| | 2010.03-2013.06 | AT/MT | F | L/R | Coupe 4WD N47 D20 C | | GCO85020 | Outer Joint | 48W | 30 | 33 | 64.8 | 77 | 60 | M |
| | 2010.03-2013.06 | 6AT/6MT | R | L | Coupe 4WD N47 D20 C | | GDS85039 | Drive Shaft | | 30 | | 58.7 | 73 | 615 | |
| | 2010.03-2013.06 | AT/MT | R | R | Coupe 4WD N47 D20 C | | GDS85134 | Drive Shaft | | 30 | | 58.7 | 73 | 665 | |
| | 2010.03-2013.06 | AT/MT | R | R | Coupe 4WD N47 D20 C | | GCI35025 | Inner Joint | | | 25 | | | 26 | |
| **320d xDrive Gran Turismo** | | | | | | | | | | | | | | | |
| 2.0 (120 kw) | 2013.07-2018.03 | AT/MT | F | L | Hatchback 4WD N47 D20 C;B47 D20 A | | GDS82052 | Drive Shaft | | 31 | 27 | 55.8 | | 550 | |
| | 2013.07-2018.03 | AT/MT | F | R | Hatchback 4WD N47 D20 C;B47 D20 A | | GDS82053 | Drive Shaft | | 31 | 27 | 55.8 | | 841 | |
| | 2013.07-2018.03 | AT/MT | F | L | Hatchback 4WD N47 D20 C;B47 D20 A | | GCO81603 | Outer Joint | | 31 | 33 | 55.8 | | 69.5 | M |
| | 2013.07-2018.03 | AT/MT | F | L | Hatchback 4WD N47 D20 C;B47 D20 A | | GCI81055 | Inner Joint | | 27 | 24 | 43.95 | 60 | 123.5 | |
| | 2013.07-2018.03 | AT/MT | F | R | Hatchback 4WD N47 D20 C;B47 D20 A | | GCI81597 | Inner Joint | | 27 | 24 | 43.95 | 349.5 | 125 | |
| | 2013.07-2018.03 | AT/MT | R | L | Hatchback 4WD N47 D20 C;B47 D20 A | | GDS85066 | Drive Shaft | | 28 | 27 | 57.4 | 71 | 744 | |
| | 2013.07-2018.03 | AT/MT | R | L | Hatchback 4WD N47 D20 C;B47 D20 A | For SA code:S9XAA | GDS85110 | Drive Shaft | | 28 | 32 | 57 | 71 | 748 | |
| | 2013.07-2018.03 | AT/MT | R | R | Hatchback 4WD N47 D20 C;B47 D20 A | | GDS85067 | Drive Shaft | | 28 | 27 | 57.4 | 71 | 800 | |
| | 2013.07-2018.03 | AT/MT | R | R | Hatchback 4WD N47 D20 C;B47 D20 A | For SA code:S9XAA | GDS85109 | Drive Shaft | | 28 | 32 | 57 | 71 | 802 | |
| | 2013.07-2018.03 | AT/MT | R | L/R | Hatchback 4WD N47 D20 C;B47 D20 A | For SA code:S9XAA | GCI85086 | Inner Joint | | 28 | 28 | 62.5 | 71 | 91 | |
| | 2013.07-2018.03 | AT/MT | R | L/R | Hatchback 4WD N47 D20 C;B47 D20 A | For SA code:S9XAA | GCI85087 | Inner Joint | | 32 | 28 | 50 | 85 | 99 | |
| 2.0 (135 kw) | 2013.07-2015.06 | 8AT/6MT | F | L | Hatchback 4WD N47 D20 C | | GDS82052 | Drive Shaft | | 31 | 27 | 55.8 | | 550 | |
| | 2013.07-2015.06 | 8AT/6MT | F | R | Hatchback 4WD N47 D20 C | | GDS82053 | Drive Shaft | | 31 | 27 | 55.8 | | 841 | |
| | 2013.07-2015.06 | 8AT/6MT | F | L/R | Hatchback 4WD N47 D20 C | | GCO81603 | Outer Joint | | 31 | 33 | 55.8 | | 69.5 | M |
| | 2013.07-2015.06 | 8AT/6MT | F | L | Hatchback 4WD N47 D20 C | | GCI81055 | Inner Joint | | 27 | 24 | 43.95 | 60 | 123.5 | |
| | 2013.07-2015.06 | 8AT/6MT | F | R | Hatchback 4WD N47 D20 C | | GCI81597 | Inner Joint | | 27 | 24 | 43.95 | 349.5 | 125 | |
| | 2013.07-2015.06 | 8AT/6MT | R | L | Hatchback 4WD N47 D20 C | | GDS85066 | Drive Shaft | | 28 | 27 | 57.4 | 71 | 744 | |
| | 2013.07-2015.06 | 8AT/6MT | R | R | Hatchback 4WD N47 D20 C | | GDS85067 | Drive Shaft | | 28 | 27 | 57.4 | 71 | 800 | |
| 2.0 (140 kw) | 2015.07- | 8AT/6MT | F | L | Hatchback 4WD B47 D20 A | | GDS82052 | Drive Shaft | | 31 | 27 | 55.8 | | 550 | |
| | 2015.07- | 8AT/6MT | F | R | Hatchback 4WD B47 D20 A | | GDS82053 | Drive Shaft | | 31 | 27 | 55.8 | | 841 | |
| | 2015.07- | 8AT/6MT | F | L/R | Hatchback 4WD B47 D20 A | | GCO81603 | Outer Joint | | 31 | 33 | 55.8 | | 69.5 | M |
| | 2015.07- | 8AT/6MT | F | L | Hatchback 4WD B47 D20 A | | GCI81055 | Inner Joint | | 27 | 24 | 43.95 | 60 | 123.5 | |
| | 2015.07- | 8AT/6MT | F | R | Hatchback 4WD B47 D20 A | | GCI81597 | Inner Joint | | 27 | 24 | 43.95 | 349.5 | 125 | |
| | 2015.07- | 8AT/6MT | R | L | Hatchback 4WD B47 D20 A | Diameter [mm]:25 | GDS85066 | Drive Shaft | | 28 | 27 | 57.4 | 71 | 744 | |
| | 2015.07- | 8AT/6MT | R | L | Hatchback 4WD B47 D20 A | Diameter [mm]:27 | GDS85110 | Drive Shaft | | 28 | 32 | 57 | 71 | 748 | |
| | 2015.07- | 8AT/6MT | R | R | Hatchback 4WD B47 D20 A | Diameter [mm]:25 | GDS85067 | Drive Shaft | | 28 | 27 | 57.4 | 71 | 800 | |
| | 2015.07- | 8AT/6MT | R | R | Hatchback 4WD B47 D20 A | Diameter [mm]:27 | GDS85109 | Drive Shaft | | 28 | 32 | 57 | 71 | 802 | |
| 2.0 (147 kw) | 2013.07-2015.06 | AT/MT | F | L | Hatchback 4WD N47 D20 C | | GDS82052 | Drive Shaft | | 31 | 27 | 55.8 | | 550 | |
| | 2013.07-2015.06 | AT/MT | F | R | Hatchback 4WD N47 D20 C | | GDS82053 | Drive Shaft | | 31 | 27 | 55.8 | | 841 | |
| | 2013.07-2015.06 | AT/MT | F | L | Hatchback 4WD N47 D20 C | | GCO81603 | Outer Joint | | 31 | 33 | 55.8 | | 69.5 | M |
| | 2013.07-2015.06 | AT/MT | F | L | Hatchback 4WD N47 D20 C | | GCI81055 | Inner Joint | | 27 | 24 | 43.95 | 60 | 123.5 | |
| | 2013.07-2015.06 | AT/MT | F | R | Hatchback 4WD N47 D20 C | | GCI81597 | Inner Joint | | 27 | 24 | 43.95 | 349.5 | 125 | |
| | 2013.07-2015.06 | AT/MT | R | L | Hatchback 4WD N47 D20 C | | GDS85066 | Drive Shaft | | 28 | 27 | 57.4 | 71 | 744 | |
| | 2013.07-2015.06 | AT/MT | R | L | Hatchback 4WD N47 D20 C | For SA code:S9XAA | GDS85110 | Drive Shaft | | 28 | 32 | 57 | 71 | 748 | |
| | 2013.07-2015.06 | AT/MT | R | R | Hatchback 4WD N47 D20 C | | GDS85067 | Drive Shaft | | 28 | 27 | 57.4 | 71 | 800 | |
| | 2013.07-2015.06 | AT/MT | R | R | Hatchback 4WD N47 D20 C | For SA code:S9XAA | GDS85109 | Drive Shaft | | 28 | 32 | 57 | 71 | 802 | |
| | 2013.07-2015.06 | AT/MT | R | R | Hatchback 4WD N47 D20 C | For SA code:S9XAA | GCI85087 | Inner Joint | | 32 | 28 | 50 | 85 | 99 | |
| | 2013.07-2015.06 | AT/MT | R | L/R | Hatchback 4WD N47 D20 C | For SA code:S9XAA | GCI85086 | Inner Joint | | 28 | 28 | 62.5 | 71 | 91 | |
| **320d xDrive Touring** | | | | | | | | | | | | | | | |
| 2.0 (120 kw) | 2009.07-2012.06 | 6AT/6MT | F | L | Estate 4WD N47 D20 C | | GDS85124 | Drive Shaft | 48W | 30 | 27 | 64.8 | 77 | 571 | |
| | 2009.07-2012.06 | 6AT/6MT | F | R | Estate 4WD N47 D20 C | | GDS85125 | Drive Shaft | 48W | 30 | 27 | 64.8 | 77 | 892 | |
| | 2009.07-2012.06 | 6AT/6MT | F | L/R | Estate 4WD N47 D20 C | | GCO85020 | Outer Joint | 48W | 30 | 33 | 64.8 | 77 | 60 | M |
| | 2009.07-2012.06 | 6AT/6MT | F | L | Estate 4WD N47 D20 C | | GCI85066 | Inner Joint | | 27 | 24 | 43.95 | 53.5 | 126.5 | |
| | 2009.07-2012.06 | 6AT/6MT | F | R | Estate 4WD N47 D20 C | | GCI85067 | Inner Joint | | 27 | 24 | 43.95 | 376 | 126 | |
| | 2009.07-2012.06 | 6AT/6MT | R | L | Estate 4WD N47 D20 C | | GDS85039 | Drive Shaft | | 30 | | 58.7 | 73 | 615 | |
| | 2009.07-2012.06 | 6AT/6MT | R | R | Estate 4WD N47 D20 C | | GDS85134 | Drive Shaft | | 30 | | 58.7 | 73 | 665 | |
| | 2009.07-2012.06 | 6AT/6MT | R | L/R | Estate 4WD N47 D20 C | | GCI35025 | Inner Joint | | | 25 | | | 26 | |
| | 2013.03-2019.06 | 8AT/6MT | F | L | Estate 4WD N47 D20 C;B47 D20 A | | GDS82052 | Drive Shaft | | 31 | 27 | 55.8 | | 550 | |

| | YEAR | TRANSM. | F/R | L/R | BODY STYLE & DRIVE TYPE & ENGINE | REMARKS | G-AP Ref. | PRODUCT | ABS | Technical Specifications A | B | C | H | L | P |
|---|---|---|---|---|---|---|---|---|---|---|---|---|---|---|---|
| **BMW** **320d xDrive Touring** | | | | | | | | | | | | | | | |
| 2.0 (120 kw) | 2013.03-2019.06 | 8AT/6MT | F | R | Estate 4WD N47 D20 C;B47 D20 A | | GDS82053 | Drive Shaft | | 31 | 27 | 55.8 | | 841 | |
| | 2013.03-2019.06 | 8AT/6MT | F | L | Estate 4WD N47 D20 C;B47 D20 A | | GCO81603 | Outer Joint | | 31 | 33 | 55.8 | | 69.5 | M |
| | 2013.03-2019.06 | 8AT/6MT | F | L | Estate 4WD N47 D20 C;B47 D20 A | | GCI81055 | Inner Joint | | 27 | 24 | 43.95 | 60 | 123.5 | |
| | 2013.03-2019.06 | 8AT/6MT | F | R | Estate 4WD N47 D20 C;B47 D20 A | | GCI81597 | Inner Joint | | 27 | 24 | 43.95 | 349.5 | 125 | |
| | 2013.03-2019.06 | 8AT/6MT | R | L | Estate 4WD N47 D20 C;B47 D20 A | | GDS85066 | Drive Shaft | | 28 | 27 | 57.4 | 71 | 744 | |
| | 2013.03-2019.06 | 8AT/6MT | R | R | Estate 4WD N47 D20 C;B47 D20 A | | GDS85067 | Drive Shaft | | 28 | 27 | 57.4 | 71 | 800 | |
| | 2019.07-2020.02 | 8AT | F | L | Estate 4WD B47 D20 B | | GDS56119 | Drive Shaft | | 37 | 27 | 65 | | 557 | |
| | 2019.07-2020.02 | 8AT | F | R | Estate 4WD B47 D20 B | | GDS56120 | Drive Shaft | | 37 | 27 | 65 | | 857 | |
| | 2019.07-2020.02 | 8AT | F | L/R | Estate 4WD B47 D20 B | | GCO83161 | Outer Joint | | 37 | 33 | 65 | | 73 | M |
| | 2019.07-2020.02 | 8AT | F | L | Estate 4WD B47 D20 B | | GCI81055 | Inner Joint | | 27 | 24 | 43.95 | 60 | 123.5 | |
| | 2019.07-2020.02 | 8AT | F | R | Estate 4WD B47 D20 B | | GCI81457 | Inner Joint | | 27 | 24 | 43.95 | 359 | 125 | |
| | 2020.03- | AT | F | L | Estate 4WD B47 D20 B;JA1 | | GDS56119 | Drive Shaft | | 37 | 27 | 65 | | 557 | |
| | 2020.03- | AT | F | R | Estate 4WD B47 D20 B;JA1 | | GDS56120 | Drive Shaft | | 37 | 27 | 65 | | 857 | |
| | 2020.03- | AT | F | L/R | Estate 4WD B47 D20 B;JA1 | | GCO83161 | Outer Joint | | 37 | 33 | 65 | | 73 | M |
| | 2020.03- | AT | F | L | Estate 4WD B47 D20 B;JA1 | | GCI81055 | Inner Joint | | 27 | 24 | 43.95 | 60 | 123.5 | |
| | 2020.03- | AT | F | R | Estate 4WD B47 D20 B;JA1 | | GCI81457 | Inner Joint | | 27 | 24 | 43.95 | 359 | 125 | |
| 2.0 (130 kw) | 2008.09-2010.02 | 6AT/6MT | F | L | Estate 4WD N47 D20 C | | GDS85124 | Drive Shaft | 48W | 30 | 27 | 64.8 | 77 | 571 | |
| | 2008.09-2010.02 | 6AT/6MT | F | R | Estate 4WD N47 D20 C | | GDS85125 | Drive Shaft | 48W | 30 | 27 | 64.8 | 77 | 892 | |
| | 2008.09-2010.02 | 6AT/6MT | F | L/R | Estate 4WD N47 D20 C | | GCO85020 | Outer Joint | 48W | 30 | 33 | 64.8 | 77 | 60 | M |
| | 2008.09-2010.02 | 6AT/6MT | F | L | Estate 4WD N47 D20 C | | GCI85066 | Inner Joint | | 27 | 24 | 43.95 | 53.5 | 126.5 | |
| | 2008.09-2010.02 | 6AT/6MT | F | R | Estate 4WD N47 D20 C | | GCI85067 | Inner Joint | | 27 | 24 | 43.95 | 376 | 126 | |
| | 2008.09-2010.02 | 6AT/6MT | R | L | Estate 4WD N47 D20 C | | GDS85039 | Drive Shaft | | 30 | | 58.7 | 73 | 615 | |
| | 2008.09-2010.02 | 6AT/6MT | R | R | Estate 4WD N47 D20 C | | GDS85134 | Drive Shaft | | 30 | | 58.7 | 73 | 665 | |
| | 2008.09-2010.02 | 6AT/6MT | R | L/R | Estate 4WD N47 D20 C | | GCI35025 | Inner Joint | | | 25 | | | 26 | |
| 2.0 (135 kw) | 2010.03-2012.06 | 6AT/6MT | F | L | Estate 4WD N47 D20 C | | GDS85124 | Drive Shaft | 48W | 30 | 27 | 64.8 | 77 | 571 | |
| | 2010.03-2012.06 | 6AT/6MT | F | R | Estate 4WD N47 D20 C | | GDS85125 | Drive Shaft | 48W | 30 | 27 | 64.8 | 77 | 892 | |
| | 2010.03-2012.06 | 6AT/6MT | F | L/R | Estate 4WD N47 D20 C | | GCO85020 | Outer Joint | 48W | 30 | 33 | 64.8 | 77 | 60 | M |
| | 2010.03-2012.06 | 6AT/6MT | F | L | Estate 4WD N47 D20 C | | GCI85066 | Inner Joint | | 27 | 24 | 43.95 | 53.5 | 126.5 | |
| | 2010.03-2012.06 | 6AT/6MT | F | R | Estate 4WD N47 D20 C | | GCI85067 | Inner Joint | | 27 | 24 | 43.95 | 376 | 126 | |
| | 2010.03-2012.06 | 6AT/6MT | R | L | Estate 4WD N47 D20 C | | GDS85039 | Drive Shaft | | 30 | | 58.7 | 73 | 615 | |
| | 2010.03-2012.06 | 6AT/6MT | R | R | Estate 4WD N47 D20 C | | GDS85134 | Drive Shaft | | 30 | | 58.7 | 73 | 665 | |
| | 2010.03-2012.06 | 6AT/6MT | R | L/R | Estate 4WD N47 D20 C | | GCI35025 | Inner Joint | | | 25 | | | 26 | |
| | 2013.03-2015.06 | 8AT/6MT | F | L | Estate 4WD N47 D20 C | | GDS82052 | Drive Shaft | | 31 | 27 | 55.8 | | 550 | |
| | 2013.03-2015.06 | 8AT/6MT | F | R | Estate 4WD N47 D20 C | | GDS82053 | Drive Shaft | | 31 | 27 | 55.8 | | 841 | |
| | 2013.03-2015.06 | 8AT/6MT | F | L/R | Estate 4WD N47 D20 C | | GCO81603 | Outer Joint | | 31 | 33 | 55.8 | | 69.5 | M |
| | 2013.03-2015.06 | 8AT/6MT | F | L | Estate 4WD N47 D20 C | | GCI81055 | Inner Joint | | 27 | 24 | 43.95 | 60 | 123.5 | |
| | 2013.03-2015.06 | 8AT/6MT | F | R | Estate 4WD N47 D20 C | | GCI81597 | Inner Joint | | 27 | 24 | 43.95 | 349.5 | 125 | |
| | 2013.03-2015.06 | 8AT/6MT | R | L | Estate 4WD N47 D20 C | | GDS85066 | Drive Shaft | | 28 | 27 | 57.4 | 71 | 744 | |
| | 2013.03-2015.06 | 8AT/6MT | R | R | Estate 4WD N47 D20 C | | GDS85067 | Drive Shaft | | 28 | 27 | 57.4 | 71 | 800 | |
| 2.0 (140 kw) | 2015.07-2019.06 | 8AT/6MT | F | L | Estate 4WD B47 D20 A | | GDS82052 | Drive Shaft | | 31 | 27 | 55.8 | | 550 | |
| | 2015.07-2019.06 | 8AT/6MT | F | R | Estate 4WD B47 D20 A | | GDS82053 | Drive Shaft | | 31 | 27 | 55.8 | | 841 | |
| | 2015.07-2019.06 | 8AT/6MT | F | L/R | Estate 4WD B47 D20 A | | GCO81603 | Outer Joint | | 31 | 33 | 55.8 | | 69.5 | M |
| | 2015.07-2019.06 | 8AT/6MT | F | L | Estate 4WD B47 D20 A | | GCI81055 | Inner Joint | | 27 | 24 | 43.95 | 60 | 123.5 | |
| | 2015.07-2019.06 | 8AT/6MT | F | R | Estate 4WD B47 D20 A | | GCI81597 | Inner Joint | | 27 | 24 | 43.95 | 349.5 | 125 | |
| | 2015.07-2019.06 | 8AT/6MT | R | L | Estate 4WD B47 D20 A | | GDS85066 | Drive Shaft | | 28 | 27 | 57.4 | 71 | 744 | |
| | 2015.07-2019.06 | 8AT/6MT | R | R | Estate 4WD B47 D20 A | | GDS85067 | Drive Shaft | | 28 | 27 | 57.4 | 71 | 800 | |
| | 2019.07-2020.02 | 8AT | F | L | Estate 4WD B47 D20 B | | GDS56119 | Drive Shaft | | 37 | 27 | 65 | | 557 | |
| | 2019.07-2020.02 | 8AT | F | R | Estate 4WD B47 D20 B | | GDS56120 | Drive Shaft | | 37 | 27 | 65 | | 857 | |
| | 2019.07-2020.02 | 8AT | F | L/R | Estate 4WD B47 D20 B | | GCO83161 | Outer Joint | | 37 | 33 | 65 | | 73 | M |
| | 2019.07-2020.02 | 8AT | F | L | Estate 4WD B47 D20 B | | GCI81055 | Inner Joint | | 27 | 24 | 43.95 | 60 | 123.5 | |
| | 2019.07-2020.02 | 8AT | F | R | Estate 4WD B47 D20 B | | GCI81457 | Inner Joint | | 27 | 24 | 43.95 | 359 | 125 | |
| | 2019.07-2020.02 | 8AT | F | L | Estate Van 4WD B47 D20 B | | GDS56119 | Drive Shaft | | 37 | 27 | 65 | | 557 | |
| | 2019.07-2020.02 | 8AT | F | R | Estate Van 4WD B47 D20 B | | GDS56120 | Drive Shaft | | 37 | 27 | 65 | | 857 | |
| | 2019.07-2020.02 | 8AT | F | L/R | Estate Van 4WD B47 D20 B | | GCO83161 | Outer Joint | | 37 | 33 | 65 | | 73 | M |
| | 2019.07-2020.02 | 8AT | F | L | Estate Van 4WD B47 D20 B | | GCI81055 | Inner Joint | | 27 | 24 | 43.95 | 60 | 123.5 | |
| | 2019.07-2020.02 | 8AT | F | R | Estate Van 4WD B47 D20 B | | GCI81457 | Inner Joint | | 27 | 24 | 43.95 | 359 | 125 | |
| | 2020.03- | 8AT | F | L | Estate 4WD B47 D20 B;JA1 | | GDS56119 | Drive Shaft | | 37 | 27 | 65 | | 557 | |
| | 2020.03- | 8AT | F | R | Estate 4WD B47 D20 B;JA1 | | GDS56120 | Drive Shaft | | 37 | 27 | 65 | | 857 | |
| | 2020.03- | 8AT | F | L/R | Estate 4WD B47 D20 B;JA1 | | GCO83161 | Outer Joint | | 37 | 33 | 65 | | 73 | M |
| | 2020.03- | 8AT | F | L | Estate 4WD B47 D20 B;JA1 | | GCI81055 | Inner Joint | | 27 | 24 | 43.95 | 60 | 123.5 | |
| | 2020.03- | 8AT | F | R | Estate 4WD B47 D20 B;JA1 | | GCI81457 | Inner Joint | | 27 | 24 | 43.95 | 359 | 125 | |
| | 2020.03- | 8AT | F | L | Estate Van 4WD B47 D20 B;JA1 | | GDS56119 | Drive Shaft | | 37 | 27 | 65 | | 557 | |
| | 2020.03- | 8AT | F | R | Estate Van 4WD B47 D20 B;JA1 | | GDS56120 | Drive Shaft | | 37 | 27 | 65 | | 857 | |
| | 2020.03- | 8AT | F | L/R | Estate Van 4WD B47 D20 B;JA1 | | GCO83161 | Outer Joint | | 37 | 33 | 65 | | 73 | M |
| | 2020.03- | 8AT | F | L | Estate Van 4WD B47 D20 B;JA1 | | GCI81055 | Inner Joint | | 27 | 24 | 43.95 | 60 | 123.5 | |

| | YEAR | TRANSM. | F/R | L/R | BODY STYLE & DRIVE TYPE & ENGINE | REMARKS | G-AP Ref. | PRODUCT | ABS | Technical Specifications A | B | C | H | L | P |
|---|---|---|---|---|---|---|---|---|---|---|---|---|---|---|---|
| **BMW** | | | | | | | | | | | | | | | |
| **320d xDrive Touring** | | | | | | | | | | | | | | | |
| 2.0 (140 kw) | 2020.03- | 8AT | F | R | Estate Van 4WD B47 D20 B;JA1 | | GCI81457 | Inner Joint | | 27 | 24 | 43.95 | 359 | 125 | |
| 2.0 (145 kw) | 2008.02-2010.02 | 6AT/6MT | F | L | Estate 4WD N47 D20 C | | GDS85124 | Drive Shaft | 48W | 30 | 27 | 64.8 | 77 | 571 | |
| | 2008.02-2010.02 | 6AT/6MT | F | R | Estate 4WD N47 D20 C | | GDS85125 | Drive Shaft | 48W | 30 | 27 | 64.8 | 77 | 892 | |
| | 2008.02-2010.02 | 6AT/6MT | F | L | Estate 4WD N47 D20 C | | GCI85066 | Inner Joint | | 27 | 24 | 43.95 | 53.5 | 126.5 | |
| | 2008.02-2010.02 | 6AT/6MT | F | R | Estate 4WD N47 D20 C | | GCI85067 | Inner Joint | | 27 | 24 | 43.95 | 376 | 126 | |
| | 2008.02-2010.02 | AT/MT | F | L/R | Estate 4WD N47 D20 C | | GCO85020 | Outer Joint | 48W | 30 | 33 | 64.8 | 77 | 60 | M |
| | 2008.02-2010.02 | 6AT/6MT | R | L | Estate 4WD N47 D20 C | | GDS85039 | Drive Shaft | | 30 | | 58.7 | 73 | 615 | |
| | 2008.02-2010.02 | AT/MT | R | R | Estate 4WD N47 D20 C | | GDS85134 | Drive Shaft | | 30 | | 58.7 | 73 | 665 | |
| | 2008.02-2010.02 | AT/MT | R | R | Estate 4WD N47 D20 C | | GCI35025 | Inner Joint | | | 25 | | | 26 | |
| 2.0 (147 kw) | 2010.03-2012.05 | 6AT/6MT | F | L | Estate 4WD N47 D20 C | | GDS85124 | Drive Shaft | 48W | 30 | 27 | 64.8 | 77 | 571 | |
| | 2010.03-2012.05 | 6AT/6MT | F | R | Estate 4WD N47 D20 C | | GDS85125 | Drive Shaft | 48W | 30 | 27 | 64.8 | 77 | 892 | |
| | 2010.03-2012.05 | 6AT/6MT | F | L | Estate 4WD N47 D20 C | | GCI85066 | Inner Joint | | 27 | 24 | 43.95 | 53.5 | 126.5 | |
| | 2010.03-2012.05 | 6AT/6MT | F | R | Estate 4WD N47 D20 C | | GCI85067 | Inner Joint | | 27 | 24 | 43.95 | 376 | 126 | |
| | 2010.03-2012.05 | AT/MT | F | L/R | Estate 4WD N47 D20 C | | GCO85020 | Outer Joint | 48W | 30 | 33 | 64.8 | 77 | 60 | M |
| | 2010.03-2012.05 | 6AT/6MT | R | L | Estate 4WD N47 D20 C | | GDS85039 | Drive Shaft | | 30 | | 58.7 | 73 | 615 | |
| | 2010.03-2012.05 | AT/MT | R | R | Estate 4WD N47 D20 C | | GDS85134 | Drive Shaft | | 30 | | 58.7 | 73 | 665 | |
| | 2010.03-2012.05 | AT/MT | R | R | Estate 4WD N47 D20 C | | GCI35025 | Inner Joint | | | 25 | | | 26 | |
| | 2013.03-2015.06 | 8AT/6MT | F | L | Estate 4WD N47 D20 C | | GDS82052 | Drive Shaft | | 31 | 27 | 55.8 | | 550 | |
| | 2013.03-2015.06 | 8AT/6MT | F | R | Estate 4WD N47 D20 C | | GDS82053 | Drive Shaft | | 31 | 27 | 55.8 | | 841 | |
| | 2013.03-2015.06 | 8AT/6MT | F | L | Estate 4WD N47 D20 C | | GCO81603 | Outer Joint | | 31 | 33 | 55.8 | | 69.5 | M |
| | 2013.03-2015.06 | 8AT/6MT | F | L | Estate 4WD N47 D20 C | | GCI81055 | Inner Joint | | 27 | 24 | 43.95 | 60 | 123.5 | |
| | 2013.03-2015.06 | 8AT/6MT | F | R | Estate 4WD N47 D20 C | | GCI81597 | Inner Joint | | 27 | 24 | 43.95 | 349.5 | 125 | |
| | 2013.03-2015.06 | AT/MT | R | L | Estate 4WD N47 D20 C | | GDS85066 | Drive Shaft | | 28 | 27 | 57.4 | 71 | 744 | |
| | 2013.03-2015.06 | AT/MT | R | R | Estate 4WD N47 D20 C | | GDS85067 | Drive Shaft | | 28 | 27 | 57.4 | 71 | 800 | |
| **320e xDrive Touring** | | | | | | | | | | | | | | | |
| 2.0 (150 kw) | 2021.03- | 8AT | F | L | Estate 4WD B48 B20 A;GC1 | | GDS56119 | Drive Shaft | | 37 | 27 | 65 | | 557 | |
| | 2021.03- | 8AT | F | R | Estate 4WD B48 B20 A;GC1 | | GDS56120 | Drive Shaft | | 37 | 27 | 65 | | 857 | |
| | 2021.03- | 8AT | F | L/R | Estate 4WD B48 B20 A;GC1 | | GCO83161 | Outer Joint | | 37 | 33 | 65 | | 73 | M |
| | 2021.03- | 8AT | F | L | Estate 4WD B48 B20 A;GC1 | | GCI81055 | Inner Joint | | 27 | 24 | 43.95 | 60 | 123.5 | |
| | 2021.03- | 8AT | F | R | Estate 4WD B48 B20 A;GC1 | | GCI81457 | Inner Joint | | 27 | 24 | 43.95 | 359 | 125 | |
| | 2021.03- | 8AT | R | L | Estate 4WD B48 B20 A;GC1 | | GDS56455 | Drive Shaft | | 37 | 27 | 65 | | 700 | |
| | 2021.03- | 8AT | R | R | Estate 4WD B48 B20 A;GC1 | | GDS56456 | Drive Shaft | | 37 | 27 | 65 | | 756 | |
| **320i** | | | | | | | | | | | | | | | |
| 1.6 (125 kw) | 2012.11-2016.06 | 8AT | R | L | Saloon RWD N13 B16 A | Date from:2015.07 | GDS83157 | Drive Shaft | | 28 | 27 | 57 | 71 | 750 | |
| | 2012.11-2016.06 | 8AT | R | L | Saloon RWD N13 B16 A | Date to:2015.06 | GDS85107 | Drive Shaft | | 28 | 27 | 57.4 | 71 | 749 | |
| | 2012.11-2016.06 | 8AT | R | R | Saloon RWD N13 B16 A | Date from:2015.07 | GDS83158 | Drive Shaft | | 28 | 27 | 57 | 71 | 802 | |
| | 2012.11-2016.06 | 8AT | R | L/R | Saloon RWD N13 B16 A | Date from:2015.07 | GCO82308 | Outer Joint | | 28 | 30 | 57 | 71 | 52.5 | I |
| | 2012.11-2016.06 | 8AT | R | L/R | Saloon RWD N13 B16 A | Date from:2015.07 | GCI82145 | Inner Joint | | 27 | 30 | 43.9 | 75 | 101 | |
| | 2012.11-2016.06 | MT | R | L | Saloon RWD N13 B16 A | | GDS85066 | Drive Shaft | | 28 | 27 | 57.4 | 71 | 744 | |
| | 2012.11-2016.06 | MT | R | R | Saloon RWD N13 B16 A | Date to:2015.06 | GDS85067 | Drive Shaft | | 28 | 27 | 57.4 | 71 | 800 | |
| 2.0 (110 kw) | 1991.01-1998.02 | AT/MT | R | L/R | Saloon RWD M50B206S1/M50B206S2/M52B206S3 | | GDS85002 | Drive Shaft | 48W | 27 | | 64 | 68.5 | 623 | |
| | 1991.01-1998.02 | AT/MT | R | L/R | Saloon RWD M50B206S1/M50B206S2/M52B206S3 | | GDS85014 | Drive Shaft | | 27 | | 64 | 68.5 | 623 | |
| | 1991.01-1998.02 | AT/MT | R | L/R | Saloon RWD M50B206S1/M50B206S2/M52B206S3 | | GCI85001 | Inner Joint | | | 24 | | | 24 | |
| | 1998.02-2000.07 | 5AT/5MT | R | L | Saloon RWD M52B206S4 | | GDS85002 | Drive Shaft | 48W | 27 | | 64 | 68.5 | 623 | |
| | 1998.02-2000.07 | 5AT/5MT | R | R | Saloon RWD M52B206S4 | | GDS85017 | Drive Shaft | 48W | 27 | | 64 | 68.5 | 672 | |
| | 1998.02-2000.07 | 5AT/5MT | R | L/R | Saloon RWD M52B206S4 | | GCI85001 | Inner Joint | | | 24 | | | 24 | |
| | 1998.02-2000.07 | AT/MT | R | L | Saloon RWD M52B206S4 | | GDS85051 | Drive Shaft | 48W | 27 | | 64 | 69 | 618 | |
| | 1998.02-2000.07 | AT/MT | R | R | Saloon RWD M52B206S4 | | GDS85042 | Drive Shaft | 48W | 27 | | 64 | 69 | 672 | |
| | 2004.12-2007.08 | 6AT/6MT | R | L | Saloon RWD N46 B20 C;N46 B20 B;N46 B20 BD;N46 B20 CB | | GDS85037 | Drive Shaft | 48W | 27 | | 69.3 | 68 | 611 | |
| | 2004.12-2007.08 | 6AT/6MT | R | R | Saloon RWD N46 B20 C;N46 B20 B;N46 B20 BD;N46 B20 CB | | GDS85036 | Drive Shaft | 48W | 27 | | 69.3 | 68 | 664 | |
| | 2004.12-2007.08 | 6AT/6MT | R | L/R | Saloon RWD N46 B20 C;N46 B20 B;N46 B20 BD;N46 B20 CB | | GCI85056 | Outer Joint | 48W | 27 | 24 | 69.3 | 68 | 51 | |
| | 2004.12-2007.08 | 6AT/6MT | R | L/R | Saloon RWD N46 B20 C;N46 B20 B;N46 B20 BD;N46 B20 CB | | GCI85005 | Inner Joint | | | 24 | | | 24 | |
| 2.0 (115 kw) | 2007.02-2011.12 | 6AT | R | L/R | Saloon RWD N46 B20 C;N46 B20 B;N46 B20 CC;N46 B20 CD;N46 B20 E | | GCI85056 | Outer Joint | 48W | 27 | 24 | 69.3 | 68 | 51 | |
| | 2007.02-2011.12 | AT/MT | R | L | Saloon RWD N46 B20 C;N46 B20 B;N46 B20 CC;N46 B20 CD;N46 B20 E | | GDS85037 | Drive Shaft | 48W | 27 | | 69.3 | 68 | 611 | |
| | 2007.02-2011.12 | AT/MT | R | R | Saloon RWD N46 B20 C;N46 B20 B;N46 B20 CC;N46 B20 CD;N46 B20 E | | GDS85036 | Drive Shaft | 48W | 27 | | 69.3 | 68 | 664 | |
| 2.0 (120 kw) | 2007.03-2011.12 | 6AT | R | L/R | Saloon RWD N43 B20 A | | GCI85056 | Outer Joint | 48W | 27 | 24 | 69.3 | 68 | 51 | |
| | 2007.03-2011.12 | AT | R | L | Saloon RWD N43 B20 A | | GDS85037 | Drive Shaft | 48W | 27 | | 69.3 | 68 | 611 | |
| | 2007.03-2011.12 | AT | R | R | Saloon RWD N43 B20 A | | GDS85036 | Drive Shaft | 48W | 27 | | 69.3 | 68 | 664 | |
| 2.0 (125 kw) | 2007.09-2011.10 | 6AT/6MT | R | L | Saloon RWD N43 B20 A | | GDS85037 | Drive Shaft | 48W | 27 | | 69.3 | 68 | 611 | |
| | 2007.09-2011.10 | 6AT/6MT | R | R | Saloon RWD N43 B20 A | | GDS85036 | Drive Shaft | 48W | 27 | | 69.3 | 68 | 664 | |
| | 2007.09-2011.10 | 6AT/6MT | R | L/R | Saloon RWD N43 B20 A | | GCI85056 | Outer Joint | 48W | 27 | 24 | 69.3 | 68 | 51 | |
| | 2007.09-2011.10 | 6AT/6MT | R | L/R | Saloon RWD N43 B20 A | | GCI85005 | Inner Joint | | | 24 | | | 24 | |
| 2.0 (127 kw) | 2005.09-2006.08 | AT/MT | R | L | Saloon RWD N45 B20 A | | GDS85037 | Drive Shaft | 48W | 27 | | 69.3 | 68 | 611 | |
| | 2005.09-2006.08 | AT/MT | R | R | Saloon RWD N45 B20 A | | GDS85036 | Drive Shaft | 48W | 27 | | 69.3 | 68 | 664 | |
| | 2005.09-2006.08 | MT | R | L | Saloon RWD N45 B20 A | | GDS85039 | Drive Shaft | | 30 | | 58.7 | 73 | 615 | |

| | YEAR | TRANSM. | F/R | L/R | BODY STYLE & DRIVE TYPE & ENGINE | REMARKS | G-AP Ref. | PRODUCT | ABS | Technical Specifications A | B | C | H | L | P |
|---|---|---|---|---|---|---|---|---|---|---|---|---|---|---|---|
| **BMW** | | | | | | | | | | | | | | | |
| **320i** | | | | | | | | | | | | | | | |
| 2.0 (127 kw) | 2005.09-2006.08 | MT | R | R | Saloon RWD N45 B20 A | | GDS85134 | Drive Shaft | | 30 | | 58.7 | 73 | 665 | |
| | 2005.09-2006.08 | MT | R | L/R | Saloon RWD N45 B20 A | | GCI35025 | Inner Joint | | | 25 | | | 26 | |
| 2.0 (135 kw) | 2012.03-2018.10 | 6MT | R | L | Saloon RWD N20 B20 A;N20 B20 B;N20 B20 D | | GDS85066 | Drive Shaft | | 28 | 27 | 57.4 | 71 | 744 | |
| | 2012.03-2018.10 | 6MT | R | R | Saloon RWD N20 B20 A;N20 B20 B;N20 B20 D | | GDS85067 | Drive Shaft | | 28 | 27 | 57.4 | 71 | 800 | |
| | 2012.03-2018.10 | 6MT | R | L/R | Saloon RWD N20 B20 A;N20 B20 B;N20 B20 D | | GCI85020 | Inner Joint | | 27 | 25 | 43.9 | 75 | 96 | |
| | 2012.03-2018.10 | 8AT | R | L | Saloon RWD N20 B20 A;N20 B20 B;N20 B20 D | | GDS83157 | Drive Shaft | | 28 | 27 | 57 | 71 | 750 | |
| | 2012.03-2018.10 | 8AT | R | R | Saloon RWD N20 B20 A;N20 B20 B;N20 B20 D | | GDS83158 | Drive Shaft | | 28 | 27 | 57 | 71 | 802 | |
| | 2012.03-2018.10 | 8AT | R | L/R | Saloon RWD N20 B20 A;N20 B20 B;N20 B20 D | | GCO82308 | Outer Joint | | 28 | 30 | 57 | 71 | 52.5 | I |
| | 2012.03-2018.10 | 8AT | R | L/R | Saloon RWD N20 B20 A;N20 B20 B;N20 B20 D | | GCI82145 | Inner Joint | | 27 | 30 | 43.9 | 75 | 101 | |
| | 2015.07-2018.10 | 6MT | R | L | Saloon RWD B48 B20 A | | GDS85066 | Drive Shaft | | 28 | 27 | 57.4 | 71 | 744 | |
| | 2015.07-2018.10 | 6MT | R | R | Saloon RWD B48 B20 A | | GDS85067 | Drive Shaft | | 28 | 27 | 57.4 | 71 | 800 | |
| | 2015.07-2018.10 | 8AT | R | L | Saloon RWD B48 B20 A | | GDS83157 | Drive Shaft | | 28 | 27 | 57 | 71 | 750 | |
| | 2015.07-2018.10 | 8AT | R | R | Saloon RWD B48 B20 A | | GDS83158 | Drive Shaft | | 28 | 27 | 57 | 71 | 802 | |
| | 2015.07-2018.10 | 8AT | R | L/R | Saloon RWD B48 B20 A | | GCO82308 | Outer Joint | | 28 | 30 | 57 | 71 | 52.5 | I |
| | 2015.07-2018.10 | 8AT | R | L/R | Saloon RWD B48 B20 A | | GCI82145 | Inner Joint | | 27 | 30 | 43.9 | 75 | 101 | |
| | 2019.03- | 8AT | R | L | Saloon RWD B48 B20 A;B48 B20 B;B46 B20 B | | GDS56455 | Drive Shaft | | 37 | 27 | 65 | | 700 | |
| | 2019.03- | 8AT | R | R | Saloon RWD B48 B20 A;B48 B20 B;B46 B20 B | | GDS56456 | Drive Shaft | | 37 | 27 | 65 | | 756 | |
| 2.2 (120 kw) | 2000.08-2005.02 | 5AT/5MT | R | L | Saloon RWD M54B226S1 | | GDS85002 | Drive Shaft | 48W | 27 | | 64 | 68.5 | 623 | |
| | 2000.08-2005.02 | 5AT/5MT | R | R | Saloon RWD M54B226S1 | | GDS85017 | Drive Shaft | 48W | 27 | | 64 | 68.5 | 672 | |
| | 2000.08-2005.02 | 5AT/5MT | R | L/R | Saloon RWD M54B226S1 | | GCI85001 | Inner Joint | | | 24 | | | 24 | |
| 2.2 (125 kw) | 2000.09-2005.02 | 5AT/5MT | R | L | Saloon RWD M54B226S1 | | GDS85002 | Drive Shaft | 48W | 27 | | 64 | 68.5 | 623 | |
| | 2000.09-2005.02 | 5AT/5MT | R | R | Saloon RWD M54B226S1 | | GDS85017 | Drive Shaft | 48W | 27 | | 64 | 68.5 | 672 | |
| | 2000.09-2005.02 | 5AT/5MT | R | L/R | Saloon RWD M54B226S1 | | GCI85009 | Outer Joint | 48W | 27 | 24 | 64 | 68.5 | 58 | |
| | 2000.09-2005.02 | 5AT/5MT | R | L/R | Saloon RWD M54B226S1 | | GCI85005 | Inner Joint | | | 24 | | | 24 | |
| **320i Cabrio** | | | | | | | | | | | | | | | |
| 2.0 (110 kw) | 1993.12-1999.11 | AT/MT | R | L/R | Cabriolet RWD M50B206S2/M52B206S3 | | GDS85002 | Drive Shaft | 48W | 27 | | 64 | 68.5 | 623 | |
| | 1993.12-1999.11 | AT/MT | R | L/R | Cabriolet RWD M50B206S2/M52B206S3 | | GDS85014 | Drive Shaft | | 27 | | 64 | 68.5 | 623 | |
| 2.0 (115 kw) | 2007.01-2013.08 | 6AT/6MT | R | L | Convertible RWD N46 B20 B;N46 B20 E | Date from:2009.10 | GDS85037 | Drive Shaft | 48W | 27 | | 69.3 | 68 | 611 | |
| | 2007.01-2013.08 | 6AT/6MT | R | R | Convertible RWD N46 B20 B;N46 B20 E | Date from:2009.10 | GDS85036 | Drive Shaft | 48W | 27 | | 69.3 | 68 | 664 | |
| | 2007.01-2013.08 | 6MT | R | L | Convertible RWD N46 B20 B;N46 B20 E | Date to:2009.09 | GDS81121 | Drive Shaft | | 30 | | 58.5 | 73 | 613 | |
| | 2007.01-2013.08 | 6MT | R | R | Convertible RWD N46 B20 B;N46 B20 E | Date to:2009.09 | GDS82846 | Drive Shaft | | 30 | | 58.5 | 73 | 667 | |
| | 2007.01-2013.08 | 6MT | R | L | Convertible RWD N46 B20 B;N46 B20 E | Date to:2009.09 | GCI85089 | Inner Joint | | | 24 | | | 24 | |
| | 2007.01-2013.08 | | R | L/R | Convertible RWD N46 B20 B;N46 B20 E | | GCI85056 | Outer Joint | 48W | 27 | 24 | 69.3 | 68 | 51 | |
| 2.0 (120 kw) | 2006.09-2013.10 | 6AT/6MT | R | L | Convertible RWD N43 B20 A | Transmission:6MT,Date to:2009.09;Transmission:6AT/6MT,Date from:2009.10;For vehicles with active steering | GDS81121 | Drive Shaft | | 30 | | 58.5 | 73 | 613 | |
| | 2006.09-2013.10 | 6AT/6MT | R | L | Convertible RWD N43 B20 A | Date from:2009.10,For vehicles without active steering | GDS85037 | Drive Shaft | 48W | 27 | | 69.3 | 68 | 611 | |
| | 2006.09-2013.10 | 6AT/6MT | R | R | Convertible RWD N43 B20 A | Transmission:6MT,Date to:2009.09;Transmission:6AT/6MT,Date from:2009.10;For vehicles with active steering | GDS82846 | Drive Shaft | | 30 | | 58.5 | 73 | 667 | |
| | 2006.09-2013.10 | 6AT/6MT | R | R | Convertible RWD N43 B20 A | Date from:2009.10,For vehicles without active steering | GDS85036 | Drive Shaft | 48W | 27 | | 69.3 | 68 | 664 | |
| | 2006.09-2013.10 | 6AT/6MT | R | L | Convertible RWD N43 B20 A | Transmission:6MT,Date to:2009.09;Transmission:6AT/6MT,Date from:2009.10;For vehicles with active steering | GCI85089 | Inner Joint | | | 24 | | | 24 | |
| | 2006.09-2013.10 | | R | L/R | Convertible RWD N43 B20 A | | GCI85056 | Outer Joint | 48W | 27 | 24 | 69.3 | 68 | 51 | |
| 2.0 (125 kw) | 2007.03-2013.10 | 6AT/6MT | R | L | Convertible RWD N43 B20 A | Transmission:6MT,Date to:2009.09;Transmission:6AT/6MT,Date from:2009.10;For vehicles with active steering | GDS81121 | Drive Shaft | | 30 | | 58.5 | 73 | 613 | |
| | 2007.03-2013.10 | 6AT/6MT | R | L | Convertible RWD N43 B20 A | Date from:2009.10,for vehicles without active steering | GDS85037 | Drive Shaft | 48W | 27 | | 69.3 | 68 | 611 | |
| | 2007.03-2013.10 | 6AT/6MT | R | R | Convertible RWD N43 B20 A | Transmission:6MT,Date to:2009.09;Transmission:6AT/6MT,Date from:2009.10;For vehicles with active steering | GDS82846 | Drive Shaft | | 30 | | 58.5 | 73 | 667 | |
| | 2007.03-2013.10 | 6AT/6MT | R | R | Convertible RWD N43 B20 A | Date from:2009.10,for vehicles without active steering | GDS85036 | Drive Shaft | 48W | 27 | | 69.3 | 68 | 664 | |
| | 2007.03-2013.10 | 6AT/6MT | R | L/R | Convertible RWD N43 B20 A | Date From:2009.10,Not for vehicles with active steering | GCI85056 | Outer Joint | 48W | 27 | 24 | 69.3 | 68 | 51 | |
| | 2007.03-2013.10 | 6AT/6MT | R | L | Convertible RWD N43 B20 A | Transmission:6MT,Date to:2009.09;Transmission:6AT/6MT,Date from:2009.10;For vehicles with active steering | GCI85089 | Inner Joint | | | 24 | | | 24 | |
| 2.2 (120 kw) | 2000.08-2007.12 | AT/MT | R | L | Cabriolet RWD M54B226S1 | | GDS85002 | Drive Shaft | 48W | 27 | | 64 | 68.5 | 623 | |
| | 2000.08-2007.12 | AT/MT | R | R | Cabriolet RWD M54B226S1 | | GDS85017 | Drive Shaft | 48W | 27 | | 64 | 68.5 | 672 | |
| | 2000.08-2007.12 | AT/MT | R | L | Cabriolet RWD M54B226S1 | | GCI85005 | Inner Joint | | | 24 | | | 24 | |
| 2.2 (125 kw) | 2000.08-2007.02 | 5AT/5MT | R | L | Cabriolet RWD M54B226S1 | | GDS85002 | Drive Shaft | 48W | 27 | | 64 | 68.5 | 623 | |
| | 2000.08-2007.02 | 5AT/5MT | R | L/R | Cabriolet RWD M54B226S1 | | GCI85009 | Outer Joint | 48W | 27 | 24 | 64 | 68.5 | 58 | |
| | 2000.08-2007.02 | 5AT/5MT | R | L/R | Cabriolet RWD M54B226S1 | | GCI85005 | Inner Joint | | | 24 | | | 24 | |
| | 2000.08-2007.02 | AT/MT | R | R | Cabriolet RWD M54B226S1 | | GDS85017 | Drive Shaft | 48W | 27 | | 64 | 68.5 | 672 | |
| **320i Coupe** | | | | | | | | | | | | | | | |
| 2.0 (110 kw) | 1991.12-1998.11 | AT/MT | R | L/R | Coupe RWD M50B206S1/M50B206S2/M52B206S3 | | GDS85002 | Drive Shaft | 48W | 27 | | 64 | 68.5 | 623 | |
| | 1991.12-1998.11 | AT/MT | R | L/R | Coupe RWD M50B206S1/M50B206S2/M52B206S3 | | GDS85014 | Drive Shaft | | 27 | | 64 | 68.5 | 623 | |
| | 1991.12-1998.11 | AT/MT | R | L/R | Coupe RWD M50B206S1/M50B206S2/M52B206S3 | | GCI85009 | Outer Joint | 48W | 27 | 24 | 64 | 68.5 | 58 | |
| | 1991.12-1998.11 | AT/MT | R | L/R | Coupe RWD M50B206S1/M50B206S2/M52B206S3 | | GCI85001 | Inner Joint | | | 24 | | | 24 | |
| | 1999.07-2000.07 | AT/MT | R | L | Coupe RWD M52B206S4 | Date from:1999.07;Date to:2000.07 | GDS85051 | Drive Shaft | 48W | 27 | | 64 | 69 | 618 | |
| | 1999.07-2000.07 | AT/MT | R | R | Coupe RWD M52B206S4 | Date from:1999.07;Date to:2000.07 | GDS85042 | Drive Shaft | 48W | 27 | | 64 | 69 | 672 | |
| | 1999.07-2000.07 | MT | R | L | Coupe RWD M52B206S4 | Date from:1999.07;Date to:2000.07 | GDS85002 | Drive Shaft | 48W | 27 | | 64 | 68.5 | 623 | |
| | 1999.07-2000.07 | MT | R | R | Coupe RWD M52B206S4 | Date from:1999.07;Date to:2000.07 | GDS85017 | Drive Shaft | 48W | 27 | | 64 | 68.5 | 672 | |
| | 1999.07-2000.07 | | R | L/R | Coupe RWD M52B206S4 | | GCI85005 | Inner Joint | | | 24 | | | 24 | |
| 2.0 (115 kw) | 2007.06-2013.12 | AT | R | L | Coupe RWD N46 B20 B | | GDS85037 | Drive Shaft | 48W | 27 | | 69.3 | 68 | 611 | |
| | 2007.06-2013.12 | AT | R | R | Coupe RWD N46 B20 B | | GDS85036 | Drive Shaft | 48W | 27 | | 69.3 | 68 | 664 | |
| | 2007.06-2013.12 | | R | L/R | Coupe RWD N46 B20 B | | GCI85056 | Outer Joint | 48W | 27 | 24 | 69.3 | 68 | 51 | |

| | YEAR | TRANSM. | F/R | L/R | BODY STYLE & DRIVE TYPE & ENGINE | REMARKS | G-AP Ref. | PRODUCT | ABS | Technical Specifications A | B | C | H | L | P |
|---|---|---|---|---|---|---|---|---|---|---|---|---|---|---|---|
| **BMW** | | | | | | | | | | | | | | | |
| **320i Coupe** | | | | | | | | | | | | | | | |
| 2.0 (120 kw) | 2007.01-2013.06 | AT | R | L | Coupe RWD N43 B20 A | | GDS85037 | Drive Shaft | 48W | 27 | | 69.3 | 68 | 611 | |
| | 2007.01-2013.06 | AT | R | R | Coupe RWD N43 B20 A | | GDS85036 | Drive Shaft | 48W | 27 | | 69.3 | 68 | 664 | |
| | 2007.01-2013.06 | | R | L/R | Coupe RWD N43 B20 A | | GCI85056 | Outer Joint | 48W | 27 | 24 | 69.3 | 68 | 51 | |
| 2.0 (125 kw) | 2007.03-2013.06 | 6AT/6MT | R | L | Coupe RWD N43 B20 A | | GDS85037 | Drive Shaft | 48W | 27 | | 69.3 | 68 | 611 | |
| | 2007.03-2013.06 | 6AT/6MT | R | R | Coupe RWD N43 B20 A | | GDS85036 | Drive Shaft | 48W | 27 | | 69.3 | 68 | 664 | |
| | 2007.03-2013.06 | 6AT/6MT | R | L/R | Coupe RWD N43 B20 A | | GCI85056 | Outer Joint | 48W | 27 | 24 | 69.3 | 68 | 51 | |
| | 2007.03-2013.06 | 6AT/6MT | R | L/R | Coupe RWD N43 B20 A | | GCI85005 | Inner Joint | | | 24 | | | 24 | |
| 2.2 (120 kw) | 2001.01-2003.12 | AT/MT | R | L | Coupe RWD M54B226S1 | | GDS85002 | Drive Shaft | 48W | 27 | | 64 | 68.5 | 623 | |
| | 2001.01-2003.12 | AT/MT | R | R | Coupe RWD M54B226S1 | | GDS85017 | Drive Shaft | 48W | 27 | | 64 | 68.5 | 672 | |
| | 2001.01-2003.12 | AT/MT | R | L/R | Coupe RWD M54B226S1 | | GCI85001 | Inner Joint | | | 24 | | | 24 | |
| 2.2 (125 kw) | 2000.08-2006.07 | 5AT/5MT | R | L | Coupe RWD M54B226S1 | | GDS85002 | Drive Shaft | 48W | 27 | | 64 | 68.5 | 623 | |
| | 2000.08-2006.07 | 5AT/5MT | R | R | Coupe RWD M54B226S1 | | GDS85017 | Drive Shaft | 48W | 27 | | 64 | 68.5 | 672 | |
| | 2000.08-2006.07 | 5AT/5MT | R | L/R | Coupe RWD M54B226S1 | | GCI85009 | Outer Joint | 48W | 27 | 24 | 64 | 68.5 | 58 | |
| | 2000.08-2006.07 | 5AT/5MT | R | L/R | Coupe RWD M54B226S1 | | GCI85005 | Inner Joint | | | 24 | | | 24 | |
| **320i Gran Turismo** | | | | | | | | | | | | | | | |
| 2.0 (120 kw) | 2013.03-2016.06 | 8AT | R | L | Hatchback RWD N20 B20 A;N20 B20 B | Diameter [mm]:28 | GDS83157 | Drive Shaft | | 28 | 27 | 57 | 71 | 750 | |
| | 2013.03-2016.06 | 8AT | R | L | Hatchback RWD N20 B20 A;N20 B20 B | Diameter [mm]:25 | GDS85107 | Drive Shaft | | 28 | 27 | 57.4 | 71 | 749 | |
| | 2013.03-2016.06 | 8AT | R | R | Hatchback RWD N20 B20 A;N20 B20 B | | GDS83158 | Drive Shaft | | 28 | 27 | 57 | 71 | 802 | |
| | 2013.03-2016.06 | 8AT | R | L/R | Hatchback RWD N20 B20 A;N20 B20 B | | GCO82308 | Outer Joint | | 28 | 30 | 57 | 71 | 52.5 | I |
| | 2013.03-2016.06 | 8AT | R | L/R | Hatchback RWD N20 B20 A;N20 B20 B | | GCI82145 | Inner Joint | | 27 | 30 | 43.9 | 75 | 101 | |
| | 2013.03-2016.06 | MT | R | L | Hatchback RWD N20 B20 A;N20 B20 B | | GDS85066 | Drive Shaft | | 28 | 27 | 57.4 | 71 | 744 | |
| | 2013.03-2016.06 | MT | R | R | Hatchback RWD N20 B20 A;N20 B20 B | | GDS85067 | Drive Shaft | | 28 | 27 | 57.4 | 71 | 800 | |
| | 2016.07- | 8AT | R | L | Hatchback RWD B48 B20 A | | GDS83157 | Drive Shaft | | 28 | 27 | 57 | 71 | 750 | |
| | 2016.07- | 8AT | R | R | Hatchback RWD B48 B20 A | | GDS83158 | Drive Shaft | | 28 | 27 | 57 | 71 | 802 | |
| | 2016.07- | 8AT | R | L/R | Hatchback RWD B48 B20 A | | GCO82308 | Outer Joint | | 28 | 30 | 57 | 71 | 52.5 | I |
| | 2016.07- | 8AT | R | L/R | Hatchback RWD B48 B20 A | | GCI82145 | Inner Joint | | 27 | 30 | 43.9 | 75 | 101 | |
| 2.0 (135 kw) | 2013.03-2016.06 | 8AT | R | L | Hatchback RWD N20 B20 A;N20 B20 B | Diameter [mm]:28 | GDS83157 | Drive Shaft | | 28 | 27 | 57 | 71 | 750 | |
| | 2013.03-2016.06 | 8AT | R | L | Hatchback RWD N20 B20 A;N20 B20 B | Diameter [mm]:25 | GDS85107 | Drive Shaft | | 28 | 27 | 57.4 | 71 | 749 | |
| | 2013.03-2016.06 | 8AT | R | R | Hatchback RWD N20 B20 A;N20 B20 B | | GDS83158 | Drive Shaft | | 28 | 27 | 57 | 71 | 802 | |
| | 2013.03-2016.06 | 8AT | R | L/R | Hatchback RWD N20 B20 A;N20 B20 B | | GCO82308 | Outer Joint | | 28 | 30 | 57 | 71 | 52.5 | I |
| | 2013.03-2016.06 | 8AT | R | L/R | Hatchback RWD N20 B20 A;N20 B20 B | | GCI82145 | Inner Joint | | 27 | 30 | 43.9 | 75 | 101 | |
| | 2013.03-2016.06 | MT | R | L | Hatchback RWD N20 B20 A;N20 B20 B | | GDS85066 | Drive Shaft | | 28 | 27 | 57.4 | 71 | 744 | |
| | 2013.03-2016.06 | MT | R | R | Hatchback RWD N20 B20 A;N20 B20 B | | GDS85067 | Drive Shaft | | 28 | 27 | 57.4 | 71 | 800 | |
| | 2016.07- | 8AT | R | L | Hatchback RWD B48 B20 A | | GDS83157 | Drive Shaft | | 28 | 27 | 57 | 71 | 750 | |
| | 2016.07- | 8AT | R | R | Hatchback RWD B48 B20 A | | GDS83158 | Drive Shaft | | 28 | 27 | 57 | 71 | 802 | |
| | 2016.07- | 8AT | R | L/R | Hatchback RWD B48 B20 A | | GCO82308 | Outer Joint | | 28 | 30 | 57 | 71 | 52.5 | I |
| | 2016.07- | 8AT | R | L/R | Hatchback RWD B48 B20 A | | GCI82145 | Inner Joint | | 27 | 30 | 43.9 | 75 | 101 | |
| **320i Touring** | | | | | | | | | | | | | | | |
| 2.0 (110 kw) | 1995.01-1999.04 | AT | R | L/R | Estate RWD M52B206S3 | | GDS85002 | Drive Shaft | 48W | 27 | | 64 | 68.5 | 623 | |
| | 1995.01-1999.04 | AT | R | L/R | Estate RWD M52B206S3 | | GDS85014 | Drive Shaft | | 27 | | 64 | 68.5 | 623 | |
| | 1995.01-1999.04 | AT | R | | Estate RWD M52B206S3 | | GCI85001 | Inner Joint | | | 24 | | | 24 | |
| | 1995.01-1999.04 | MT | R | L/R | Estate RWD M52B206S3 | | GDS85007 | Drive Shaft | 48W | 27 | | 64 | 68.5 | 615 | |
| | 1995.01-1999.04 | | R | L/R | Estate RWD M52B206S3 | | GCI85009 | Outer Joint | 48W | 27 | 24 | 64 | 68.5 | 58 | |
| | 1999.08-2000.07 | 5AT/5MT | R | L | Estate RWD M52B206S4 | | GDS85002 | Drive Shaft | 48W | 27 | | 64 | 68.5 | 623 | |
| | 1999.08-2000.07 | 5AT/5MT | R | R | Estate RWD M52B206S4 | | GDS85017 | Drive Shaft | 48W | 27 | | 64 | 68.5 | 672 | |
| | 1999.08-2000.07 | AT/MT | R | L | Estate RWD M52B206S4 | | GDS85051 | Drive Shaft | 48W | 27 | | 64 | 69 | 618 | |
| | 1999.08-2000.07 | AT/MT | R | R | Estate RWD M52B206S4 | | GDS85042 | Drive Shaft | 48W | 27 | | 64 | 69 | 672 | |
| | 1999.08-2000.07 | | R | L/R | Estate RWD M52B206S4 | | GCI85009 | Outer Joint | 48W | 27 | 24 | 64 | 68.5 | 58 | |
| | 1999.08-2000.07 | | R | L/R | Estate RWD M52B206S4 | | GCI85005 | Inner Joint | | | 24 | | | 24 | |
| | 2005.09-2012.06 | 6AT/6MT | R | L | Estate RWD N46 B20 C;N46 B20 B | Date to:2009.09;Date from:2009.10,For increased payload | GDS81121 | Drive Shaft | | 30 | | 58.5 | 73 | 613 | |
| | 2005.09-2012.06 | 6AT/6MT | R | L | Estate RWD N46 B20 C;N46 B20 B | Date from:2009.10,Not for increased payload | GDS85037 | Drive Shaft | 48W | 27 | | 69.3 | 68 | 611 | |
| | 2005.09-2012.06 | 6AT/6MT | R | R | Estate RWD N46 B20 C;N46 B20 B | Date to:2009.09;Date from:2009.10,For increased payload | GDS82846 | Drive Shaft | | 30 | | 58.5 | 73 | 667 | |
| | 2005.09-2012.06 | 6AT/6MT | R | R | Estate RWD N46 B20 C;N46 B20 B | Date from:2009.10,Not for increased payload | GDS85036 | Drive Shaft | 48W | 27 | | 69.3 | 68 | 664 | |
| | 2005.09-2012.06 | 6AT/6MT | R | L/R | Estate RWD N46 B20 C;N46 B20 B | Date From:2009.10,Not for increased payload | GCI85056 | Outer Joint | 48W | 27 | 24 | 69.3 | 68 | 51 | |
| | 2005.09-2012.06 | 6AT/6MT | R | L | Estate RWD N46 B20 C;N46 B20 B | Date to:2009.09;Date from:2009.10,For increased payload | GCI85089 | Inner Joint | | | 24 | | | 24 | |
| | 2005.09-2012.06 | 6AT/6MT | R | L/R | Estate RWD N46 B20 C;N46 B20 B | Date from:2009.10,Not for increased payload | GCI85005 | Inner Joint | | | 24 | | | 24 | |
| 2.0 (115 kw) | 2005.09-2012.06 | 6AT | R | L/R | Estate RWD N46 B20 C;N46 B20 B;N46 B20 BD | Date from:2009.10 | GCI85056 | Outer Joint | 48W | 27 | 24 | 69.3 | 68 | 51 | |
| | 2005.09-2012.06 | 6AT/6MT | R | L | Estate RWD N46 B20 C;N46 B20 B;N46 B20 BD | Date to:2009.09;Date from:2009.10,For increased payload,For vehicles with active steering | GDS81121 | Drive Shaft | | 30 | | 58.5 | 73 | 613 | |
| | 2005.09-2012.06 | 6AT/6MT | R | L | Estate RWD N46 B20 C;N46 B20 B;N46 B20 BD | Date from:2009.10,Not for increased payload,For vehicles without active steering | GDS85037 | Drive Shaft | 48W | 27 | | 69.3 | 68 | 611 | |
| | 2005.09-2012.06 | 6AT/6MT | R | R | Estate RWD N46 B20 C;N46 B20 B;N46 B20 BD | Date to:2009.09;Date from:2009.10,For increased payload,For vehicles with active steering | GDS82846 | Drive Shaft | | 30 | | 58.5 | 73 | 667 | |
| | 2005.09-2012.06 | AT/MT | R | R | Estate RWD N46 B20 C;N46 B20 B;N46 B20 BD | Date from:2009.10,Not for increased payload,For vehicles without active steering | GDS85036 | Drive Shaft | 48W | 27 | | 69.3 | 68 | 664 | |
| 2.0 (120 kw) | 2007.02-2012.05 | 6AT/6MT | R | L | Estate RWD N43 B20 A | Date to:2009.09;Date from:2009.10,For increased payload,For vehicles with active steering | GDS81121 | Drive Shaft | | 30 | | 58.5 | 73 | 613 | |
| | 2007.02-2012.05 | 6AT/6MT | R | L | Estate RWD N43 B20 A | Date from:2009.10,Not for increased payload,For vehicles without active steering | GDS85037 | Drive Shaft | 48W | 27 | | 69.3 | 68 | 611 | |
| | 2007.02-2012.05 | 6AT/6MT | R | R | Estate RWD N43 B20 A | Date to:2009.09;Date from:2009.10,For increased payload,For vehicles with active steering | GDS82846 | Drive Shaft | | 30 | | 58.5 | 73 | 667 | |
| | 2007.02-2012.05 | 6AT/6MT | R | R | Estate RWD N43 B20 A | Date from:2009.10,Not for increased payload,For vehicles without active steering | GDS85036 | Drive Shaft | 48W | 27 | | 69.3 | 68 | 664 | |

| | YEAR | TRANSM. | F/R | L/R | BODY STYLE & DRIVE TYPE & ENGINE | REMARKS | G-AP Ref. | PRODUCT | ABS | Technical Specifications A | B | C | H | L | P |
|---|---|---|---|---|---|---|---|---|---|---|---|---|---|---|---|
| **BMW** | | | | | | | | | | | | | | | |
| **320i Touring** | | | | | | | | | | | | | | | |
| 2.0 (120 kw) | 2007.02-2012.05 | 6AT/6MT | R | L | Estate RWD N43 B20 A | Date to:2009.09;Date from:2009.10;For increased payload;For vehicles with active steering | GCI85089 | Inner Joint | | | 24 | | | 24 | |
| | 2007.02-2012.05 | | R | L/R | Estate RWD N43 B20 A | | GCI85056 | Outer Joint | 48W | 27 | 24 | 69.3 | 68 | 51 | |
| | 2012.11-2015.06 | 8AT | R | L | Estate RWD N20 B20 B | | GDS83157 | Drive Shaft | | 28 | 27 | 57 | 71 | 750 | |
| | 2012.11-2015.06 | 8AT | R | R | Estate RWD N20 B20 B | | GDS83158 | Drive Shaft | | 28 | 27 | 57 | 71 | 802 | |
| | 2012.11-2015.06 | 8AT | R | R | Estate RWD N20 B20 B | | GCO82308 | Outer Joint | | 28 | 30 | 57 | 71 | 52.5 | I |
| | 2012.11-2015.06 | 8AT | R | R | Estate RWD N20 B20 B | | GCI82145 | Inner Joint | | 27 | 30 | 43.9 | 75 | 101 | |
| 2.0 (125 kw) | 2007.02-2012.12 | 6AT/6MT | R | L | Estate RWD N43 B20 A | Date to:2009.09;Date from:2009.10;For increased payload;For vehicles with active steering | GDS81121 | Drive Shaft | | 30 | | 58.5 | 73 | 613 | |
| | 2007.02-2012.12 | 6AT/6MT | R | L | Estate RWD N43 B20 A | Date from:2009.10;Not for increased payload;For vehicles without active steering | GDS85037 | Drive Shaft | 48W | 27 | | 69.3 | 68 | 611 | |
| | 2007.02-2012.12 | 6AT/6MT | R | R | Estate RWD N43 B20 A | Date to:2009.09;Date from:2009.10;For increased payload;For vehicles with active steering | GDS82846 | Drive Shaft | | 30 | | 58.5 | 73 | 667 | |
| | 2007.02-2012.12 | 6AT/6MT | R | R | Estate RWD N43 B20 A | Date from:2009.10;Not for increased payload;For vehicles without active steering | GDS85036 | Drive Shaft | 48W | 27 | | 69.3 | 68 | 664 | |
| | 2007.02-2012.12 | 6AT/6MT | R | L/R | Estate RWD N43 B20 A | Date From:2009.10;Not for increased payload;Not for vehicles with active steering | GCI85056 | Outer Joint | 48W | 27 | 24 | 69.3 | 68 | 51 | |
| | 2007.02-2012.12 | 6AT/6MT | R | L | Estate RWD N43 B20 A | Date to:2009.09;Date from:2009.10;For increased payload;For vehicles with active steering | GCI85089 | Inner Joint | | | 24 | | | 24 | |
| | 2007.02-2012.12 | 6AT/6MT | R | L/R | Estate RWD N43 B20 A | Date from:2009.10;Not for increased payload;For vehicles without active steering | GCI85005 | Inner Joint | | | 24 | | | 24 | |
| 2.0 (135 kw) | 2012.11-2015.06 | 6MT | R | L | Estate RWD N20 B20 B | | GDS85066 | Drive Shaft | | 28 | 27 | 57.4 | 71 | 744 | |
| | 2012.11-2015.06 | 6MT | R | R | Estate RWD N20 B20 B | | GDS85067 | Drive Shaft | | 28 | 27 | 57.4 | 71 | 800 | |
| | 2012.11-2015.06 | 8AT | R | L | Estate RWD N20 B20 B | | GDS83157 | Drive Shaft | | 28 | 27 | 57 | 71 | 750 | |
| | 2012.11-2015.06 | 8AT | R | R | Estate RWD N20 B20 B | | GDS83158 | Drive Shaft | | 28 | 27 | 57 | 71 | 802 | |
| | 2012.11-2015.06 | 8AT | R | L/R | Estate RWD N20 B20 B | | GCO82308 | Outer Joint | | 28 | 30 | 57 | 71 | 52.5 | I |
| | 2012.11-2015.06 | 8AT | R | L/R | Estate RWD N20 B20 B | | GCI82145 | Inner Joint | | 27 | 30 | 43.9 | 75 | 101 | |
| | 2015.07-2019.06 | 8AT | R | L | Estate RWD B48 B20 A | | GDS83157 | Drive Shaft | | 28 | 27 | 57 | 71 | 750 | |
| | 2015.07-2019.06 | 8AT | R | R | Estate RWD B48 B20 A | | GDS83158 | Drive Shaft | | 28 | 27 | 57 | 71 | 802 | |
| | 2015.07-2019.06 | 8AT/6MT | R | L/R | Estate RWD B48 B20 A | | GCO82308 | Outer Joint | | 28 | 30 | 57 | 71 | 52.5 | I |
| | 2015.07-2019.06 | 8AT/6MT | R | L/R | Estate RWD B48 B20 A | | GCI82145 | Inner Joint | | 27 | 30 | 43.9 | 75 | 101 | |
| | 2019.11- | 8AT | R | L | Estate RWD B48 B20 A;B46 B20 B | For Engine code:B46B20B | GDS56455 | Drive Shaft | | 37 | 27 | 65 | | 700 | |
| | 2019.11- | 8AT | R | R | Estate RWD B48 B20 A;B46 B20 B | For Engine code:B46B20B | GDS56456 | Drive Shaft | | 37 | 27 | 65 | | 756 | |
| | 2019.11- | 8AT | R | L | Estate Van RWD B48 B20 A;B46 B20 B | For Engine code:B46B20B | GDS56455 | Drive Shaft | | 37 | 27 | 65 | | 700 | |
| | 2019.11- | 8AT | R | R | Estate Van RWD B48 B20 A;B46 B20 B | For Engine code:B46B20B | GDS56456 | Drive Shaft | | 37 | 27 | 65 | | 756 | |
| 2.2 (120 kw) | 2000.09-2005.02 | 5AT/5MT | R | L | Estate RWD M54B226S1 | | GDS85002 | Drive Shaft | 48W | 27 | | 64 | 68.5 | 623 | |
| | 2000.09-2005.02 | 5AT/5MT | R | R | Estate RWD M54B226S1 | | GDS85017 | Drive Shaft | 48W | 27 | | 64 | 68.5 | 672 | |
| | 2000.09-2005.02 | 5AT/5MT | R | L/R | Estate RWD M54B226S1 | | GCI85001 | Inner Joint | | | 24 | | | 24 | |
| 2.2 (125 kw) | 2000.08-2005.02 | 5AT/5MT | R | L | Estate RWD M54B226S1 | | GDS85002 | Drive Shaft | 48W | 27 | | 64 | 68.5 | 623 | |
| | 2000.08-2005.02 | 5AT/5MT | R | R | Estate RWD M54B226S1 | | GDS85017 | Drive Shaft | 48W | 27 | | 64 | 68.5 | 672 | |
| | 2000.08-2005.02 | 5AT/5MT | R | R | Estate RWD M54B226S1 | | GCI85009 | Outer Joint | 48W | 27 | 24 | 64 | 68.5 | 58 | |
| | 2000.08-2005.02 | 5AT/5MT | R | R | Estate RWD M54B226S1 | | GCI85005 | Inner Joint | | | 24 | | | 24 | |
| | 2000.08-2005.02 | AT/MT | R | L | Estate RWD M54B226S1 | | GDS85051 | Drive Shaft | 48W | 27 | | 64 | 69 | 618 | |
| | 2000.08-2005.02 | AT/MT | R | R | Estate RWD M54B226S1 | | GDS85042 | Drive Shaft | 48W | 27 | | 64 | 69 | 672 | |
| **320i xDrive** | | | | | | | | | | | | | | | |
| 2.0 (135 kw) | 2012.07-2018.10 | 8AT/6MT | F | L | Saloon 4WD N20 B20 A;N20 B20 B | | GDS82052 | Drive Shaft | | 31 | 27 | 55.8 | | 550 | |
| | 2012.07-2018.10 | 8AT/6MT | F | R | Saloon 4WD N20 B20 A;N20 B20 B | | GDS82053 | Drive Shaft | | 31 | 27 | 55.8 | | 841 | |
| | 2012.07-2018.10 | 8AT/6MT | F | L/R | Saloon 4WD N20 B20 A;N20 B20 B | | GCO81603 | Outer Joint | | 31 | 33 | 55.8 | | 69.5 | M |
| | 2012.07-2018.10 | 8AT/6MT | F | L | Saloon 4WD N20 B20 A;N20 B20 B | | GCI81055 | Inner Joint | | 27 | 24 | 43.95 | 60 | 123.5 | |
| | 2012.07-2018.10 | 8AT/6MT | F | R | Saloon 4WD N20 B20 A;N20 B20 B | | GCI81597 | Inner Joint | | 27 | 24 | 43.95 | 349.5 | 125 | |
| | 2012.07-2018.10 | 6MT | R | L | Saloon 4WD N20 B20 A;N20 B20 B | | GDS85066 | Drive Shaft | | 28 | 27 | 57.4 | 71 | 744 | |
| | 2012.07-2018.10 | 6MT | R | R | Saloon 4WD N20 B20 A;N20 B20 B | | GDS85067 | Drive Shaft | | 28 | 27 | 57.4 | 71 | 800 | |
| | 2012.07-2018.10 | 6MT | R | L/R | Saloon 4WD N20 B20 A;N20 B20 B | Diameter [mm]:35 | GCI83732 | Inner Joint | | 27 | 25 | 43.9 | 75 | 72 | |
| | 2012.07-2018.10 | 8AT | R | L | Saloon 4WD N20 B20 A;N20 B20 B | | GDS83157 | Drive Shaft | | 28 | 27 | 57 | 71 | 750 | |
| | 2012.07-2018.10 | 8AT | R | R | Saloon 4WD N20 B20 A;N20 B20 B | | GDS83158 | Drive Shaft | | 28 | 27 | 57 | 71 | 802 | |
| | 2012.07-2018.10 | 8AT | R | L/R | Saloon 4WD N20 B20 A;N20 B20 B | | GCO82308 | Outer Joint | | 28 | 30 | 57 | 71 | 52.5 | I |
| | 2012.07-2018.10 | 8AT | R | L/R | Saloon 4WD N20 B20 A;N20 B20 B | | GCI82145 | Inner Joint | | 27 | 30 | 43.9 | 75 | 101 | |
| | 2015.07-2018.10 | 8AT/6MT | F | L | Saloon 4WD B48 B20 A | | GDS82052 | Drive Shaft | | 31 | 27 | 55.8 | | 550 | |
| | 2015.07-2018.10 | 8AT/6MT | F | R | Saloon 4WD B48 B20 A | | GDS82053 | Drive Shaft | | 31 | 27 | 55.8 | | 841 | |
| | 2015.07-2018.10 | 8AT/6MT | F | L/R | Saloon 4WD B48 B20 A | | GCO81603 | Outer Joint | | 31 | 33 | 55.8 | | 69.5 | M |
| | 2015.07-2018.10 | 8AT/6MT | F | L | Saloon 4WD B48 B20 A | | GCI81055 | Inner Joint | | 27 | 24 | 43.95 | 60 | 123.5 | |
| | 2015.07-2018.10 | 8AT/6MT | F | R | Saloon 4WD B48 B20 A | | GCI81597 | Inner Joint | | 27 | 24 | 43.95 | 349.5 | 125 | |
| | 2015.07-2018.10 | 6MT | R | L | Saloon 4WD B48 B20 A | | GDS85066 | Drive Shaft | | 28 | 27 | 57.4 | 71 | 744 | |
| | 2015.07-2018.10 | 6MT | R | R | Saloon 4WD B48 B20 A | | GDS85067 | Drive Shaft | | 28 | 27 | 57.4 | 71 | 800 | |
| | 2015.07-2018.10 | 6MT | R | L/R | Saloon 4WD B48 B20 A | Diameter [mm]:35 | GCI83732 | Inner Joint | | 27 | 25 | 43.9 | 75 | 72 | |
| | 2015.07-2018.10 | 8AT | R | L | Saloon 4WD B48 B20 A | | GDS83157 | Drive Shaft | | 28 | 27 | 57 | 71 | 750 | |
| | 2015.07-2018.10 | 8AT | R | R | Saloon 4WD B48 B20 A | | GDS83158 | Drive Shaft | | 28 | 27 | 57 | 71 | 802 | |
| | 2015.07-2018.10 | 8AT | R | L/R | Saloon 4WD B48 B20 A | | GCO82308 | Outer Joint | | 28 | 30 | 57 | 71 | 52.5 | I |
| | 2015.07-2018.10 | 8AT | R | L/R | Saloon 4WD B48 B20 A | | GCI82145 | Inner Joint | | 27 | 30 | 43.9 | 75 | 101 | |
| | 2019.07- | 8AT | F | L | Saloon 4WD B48 B20 A | | GDS56119 | Drive Shaft | | 37 | 27 | 65 | | 557 | |
| | 2019.07- | 8AT | F | R | Saloon 4WD B48 B20 A | | GDS56120 | Drive Shaft | | 37 | 27 | 65 | | 857 | |
| | 2019.07- | 8AT | F | L/R | Saloon 4WD B48 B20 A | | GCO83161 | Outer Joint | | 37 | 33 | 65 | | 73 | M |
| | 2019.07- | 8AT | F | L | Saloon 4WD B48 B20 A | | GCI81055 | Inner Joint | | 27 | 24 | 43.95 | 60 | 123.5 | |

| | YEAR | TRANSM. | F/R | L/R | BODY STYLE & DRIVE TYPE & ENGINE | REMARKS | G-AP Ref. | PRODUCT | ABS | Technical Specifications A | B | C | H | L | P |
|---|---|---|---|---|---|---|---|---|---|---|---|---|---|---|---|
| **BMW** | | | | | | | | | | | | | | | |
| **320i xDrive** | | | | | | | | | | | | | | | |
| 2.0 (135 kw) | 2019.07- | 8AT | F | R | Saloon 4WD B48 B20 A | | GCI81457 | Inner Joint | | 27 | 24 | 43.95 | 359 | 125 | |
| **320i xDrive Gran Turismo** | | | | | | | | | | | | | | | |
| 2.0 (120 kw) | 2013.07-2016.06 | AT/MT | F | L | Hatchback 4WD N20 B20 B | | GDS82052 | Drive Shaft | | 31 | 27 | 55.8 | | 550 | |
| | 2013.07-2016.06 | AT/MT | F | R | Hatchback 4WD N20 B20 B | | GDS82053 | Drive Shaft | | 31 | 27 | 55.8 | | 841 | |
| | 2013.07-2016.06 | AT/MT | F | L | Hatchback 4WD N20 B20 B | | GCO81603 | Outer Joint | | 31 | 33 | 55.8 | | 69.5 | M |
| | 2013.07-2016.06 | AT/MT | F | L | Hatchback 4WD N20 B20 B | | GCI81055 | Inner Joint | | 27 | 24 | 43.95 | 60 | 123.5 | |
| | 2013.07-2016.06 | AT/MT | F | R | Hatchback 4WD N20 B20 B | | GCI81597 | Inner Joint | | 27 | 24 | 43.95 | 349.5 | 125 | |
| | 2013.07-2016.06 | 6MT | R | L | Hatchback 4WD N20 B20 B | | GDS85066 | Drive Shaft | | 28 | 27 | 57.4 | 71 | 744 | |
| | 2013.07-2016.06 | 6MT | R | R | Hatchback 4WD N20 B20 B | | GDS85067 | Drive Shaft | | 28 | 27 | 57.4 | 71 | 800 | |
| | 2013.07-2016.06 | 6MT | R | L/R | Hatchback 4WD N20 B20 B | Diameter [mm]:35 | GCI83732 | Inner Joint | | 27 | 25 | 43.9 | 75 | 72 | |
| | 2013.07-2016.06 | 8AT | R | L | Hatchback 4WD N20 B20 B | | GDS83157 | Drive Shaft | | 28 | 27 | 57 | 71 | 750 | |
| | 2013.07-2016.06 | 8AT | R | R | Hatchback 4WD N20 B20 B | | GDS83158 | Drive Shaft | | 28 | 27 | 57 | 71 | 802 | |
| | 2013.07-2016.06 | 8AT | R | L/R | Hatchback 4WD N20 B20 B | | GCO82308 | Outer Joint | | 28 | 30 | 57 | 71 | 52.5 | I |
| | 2013.07-2016.06 | 8AT | R | L/R | Hatchback 4WD N20 B20 B | | GCI82145 | Inner Joint | | 27 | 30 | 43.9 | 75 | 101 | |
| | 2016.07- | 8AT/6MT | F | L | Hatchback 4WD B48 B20 A | | GDS82052 | Drive Shaft | | 31 | 27 | 55.8 | | 550 | |
| | 2016.07- | 8AT/6MT | F | R | Hatchback 4WD B48 B20 A | | GDS82053 | Drive Shaft | | 31 | 27 | 55.8 | | 841 | |
| | 2016.07- | 6MT | R | L | Hatchback 4WD B48 B20 A | | GDS85066 | Drive Shaft | | 28 | 27 | 57.4 | 71 | 744 | |
| | 2016.07- | 6MT | R | R | Hatchback 4WD B48 B20 A | | GDS85067 | Drive Shaft | | 28 | 27 | 57.4 | 71 | 800 | |
| | 2016.07- | 6MT | R | L/R | Hatchback 4WD B48 B20 A | | GCI83732 | Inner Joint | | 27 | 25 | 43.9 | 75 | 72 | |
| | 2016.07- | 8AT | R | L | Hatchback 4WD B48 B20 A | | GDS83157 | Drive Shaft | | 28 | 27 | 57 | 71 | 750 | |
| | 2016.07- | 8AT | R | R | Hatchback 4WD B48 B20 A | | GDS83158 | Drive Shaft | | 28 | 27 | 57 | 71 | 802 | |
| | 2016.07- | 8AT | R | L/R | Hatchback 4WD B48 B20 A | | GCO82308 | Outer Joint | | 28 | 30 | 57 | 71 | 52.5 | I |
| | 2016.07- | 8AT | R | L/R | Hatchback 4WD B48 B20 A | | GCI82145 | Inner Joint | | 27 | 30 | 43.9 | 75 | 101 | |
| 2.0 (135 kw) | 2012.11-2016.06 | 6MT/8AT | F | L | Hatchback 4WD N20 B20 B | | GDS82052 | Drive Shaft | | 31 | 27 | 55.8 | | 550 | |
| | 2012.11-2016.06 | 6MT/8AT | F | R | Hatchback 4WD N20 B20 B | | GDS82053 | Drive Shaft | | 31 | 27 | 55.8 | | 841 | |
| | 2012.11-2016.06 | 6MT | R | L | Hatchback 4WD N20 B20 B | | GDS85066 | Drive Shaft | | 28 | 27 | 57.4 | 71 | 744 | |
| | 2012.11-2016.06 | 6MT | R | R | Hatchback 4WD N20 B20 B | | GDS85067 | Drive Shaft | | 28 | 27 | 57.4 | 71 | 800 | |
| | 2012.11-2016.06 | 6MT | R | L/R | Hatchback 4WD N20 B20 B | Diameter [mm]:35 | GCI83732 | Inner Joint | | 27 | 25 | 43.9 | 75 | 72 | |
| | 2012.11-2016.06 | 8AT | R | L | Hatchback 4WD N20 B20 B | | GDS83157 | Drive Shaft | | 28 | 27 | 57 | 71 | 750 | |
| | 2012.11-2016.06 | 8AT | R | R | Hatchback 4WD N20 B20 B | | GDS83158 | Drive Shaft | | 28 | 27 | 57 | 71 | 802 | |
| | 2012.11-2016.06 | 8AT | R | L/R | Hatchback 4WD N20 B20 B | | GCO82308 | Outer Joint | | 28 | 30 | 57 | 71 | 52.5 | I |
| | 2012.11-2016.06 | 8AT | R | L/R | Hatchback 4WD N20 B20 B | | GCI82145 | Inner Joint | | 27 | 30 | 43.9 | 75 | 101 | |
| | 2016.07- | 6MT/8AT | F | L | Hatchback 4WD B48 B20 A | | GDS82052 | Drive Shaft | | 31 | 27 | 55.8 | | 550 | |
| | 2016.07- | 6MT/8AT | F | R | Hatchback 4WD B48 B20 A | | GDS82053 | Drive Shaft | | 31 | 27 | 55.8 | | 841 | |
| | 2016.07- | 6MT | R | L | Hatchback 4WD B48 B20 A | | GDS85066 | Drive Shaft | | 28 | 27 | 57.4 | 71 | 744 | |
| | 2016.07- | 6MT | R | R | Hatchback 4WD B48 B20 A | | GDS85067 | Drive Shaft | | 28 | 27 | 57.4 | 71 | 800 | |
| | 2016.07- | 6MT | R | L/R | Hatchback 4WD B48 B20 A | | GCI83732 | Inner Joint | | 27 | 25 | 43.9 | 75 | 72 | |
| | 2016.07- | 8AT | R | L | Hatchback 4WD B48 B20 A | | GDS83157 | Drive Shaft | | 28 | 27 | 57 | 71 | 750 | |
| | 2016.07- | 8AT | R | R | Hatchback 4WD B48 B20 A | | GDS83158 | Drive Shaft | | 28 | 27 | 57 | 71 | 802 | |
| | 2016.07- | 8AT | R | L/R | Hatchback 4WD B48 B20 A | | GCO82308 | Outer Joint | | 28 | 30 | 57 | 71 | 52.5 | I |
| | 2016.07- | 8AT | R | L/R | Hatchback 4WD B48 B20 A | | GCI82145 | Inner Joint | | 27 | 30 | 43.9 | 75 | 101 | |
| **320i xDrive Touring** | | | | | | | | | | | | | | | |
| 2.0 (120 kw) | 2013.03-2015.06 | 8AT/6MT | F | L | Estate 4WD N20 B20 B | | GDS82052 | Drive Shaft | | 31 | 27 | 55.8 | | 550 | |
| | 2013.03-2015.06 | 8AT/6MT | F | R | Estate 4WD N20 B20 B | | GDS82053 | Drive Shaft | | 31 | 27 | 55.8 | | 841 | |
| | 2013.03-2015.06 | 8AT/6MT | F | L | Estate 4WD N20 B20 B | | GCO81603 | Outer Joint | | 31 | 33 | 55.8 | | 69.5 | M |
| | 2013.03-2015.06 | 8AT/6MT | F | L | Estate 4WD N20 B20 B | | GCI81055 | Inner Joint | | 27 | 24 | 43.95 | 60 | 123.5 | |
| | 2013.03-2015.06 | 8AT/6MT | F | R | Estate 4WD N20 B20 B | | GCI81597 | Inner Joint | | 27 | 24 | 43.95 | 349.5 | 125 | |
| | 2013.03-2015.06 | 6MT | R | L | Estate 4WD N20 B20 B | | GDS85066 | Drive Shaft | | 28 | 27 | 57.4 | 71 | 744 | |
| | 2013.03-2015.06 | 6MT | R | R | Estate 4WD N20 B20 B | | GDS85067 | Drive Shaft | | 28 | 27 | 57.4 | 71 | 800 | |
| | 2013.03-2015.06 | 6MT | R | L/R | Estate 4WD N20 B20 B | Diameter [mm]:35 | GCI83732 | Inner Joint | | 27 | 25 | 43.9 | 75 | 72 | |
| | 2013.03-2015.06 | 8AT | R | L | Estate 4WD N20 B20 B | | GDS83157 | Drive Shaft | | 28 | 27 | 57 | 71 | 750 | |
| | 2013.03-2015.06 | 8AT | R | R | Estate 4WD N20 B20 B | | GDS83158 | Drive Shaft | | 28 | 27 | 57 | 71 | 802 | |
| | 2013.03-2015.06 | 8AT | R | L/R | Estate 4WD N20 B20 B | | GCO82308 | Outer Joint | | 28 | 30 | 57 | 71 | 52.5 | I |
| | 2013.03-2015.06 | 8AT | R | L/R | Estate 4WD N20 B20 B | | GCI82145 | Inner Joint | | 27 | 30 | 43.9 | 75 | 101 | |
| 2.0 (135 kw) | 2013.03-2015.06 | 8AT/6MT | F | L | Estate 4WD N20 B20 B | | GDS82052 | Drive Shaft | | 31 | 27 | 55.8 | | 550 | |
| | 2013.03-2015.06 | 8AT/6MT | F | R | Estate 4WD N20 B20 B | | GDS82053 | Drive Shaft | | 31 | 27 | 55.8 | | 841 | |
| | 2013.03-2015.06 | 8AT/6MT | F | L | Estate 4WD N20 B20 B | | GCO81603 | Outer Joint | | 31 | 33 | 55.8 | | 69.5 | M |
| | 2013.03-2015.06 | 8AT/6MT | F | L | Estate 4WD N20 B20 B | | GCI81055 | Inner Joint | | 27 | 24 | 43.95 | 60 | 123.5 | |
| | 2013.03-2015.06 | 8AT/6MT | F | R | Estate 4WD N20 B20 B | | GCI81597 | Inner Joint | | 27 | 24 | 43.95 | 349.5 | 125 | |
| | 2013.03-2015.06 | 6MT | R | L | Estate 4WD N20 B20 B | | GDS85066 | Drive Shaft | | 28 | 27 | 57.4 | 71 | 744 | |
| | 2013.03-2015.06 | 6MT | R | R | Estate 4WD N20 B20 B | | GDS85067 | Drive Shaft | | 28 | 27 | 57.4 | 71 | 800 | |
| | 2013.03-2015.06 | 6MT | R | L/R | Estate 4WD N20 B20 B | Diameter [mm]:35 | GCI83732 | Inner Joint | | 27 | 25 | 43.9 | 75 | 72 | |
| | 2013.03-2015.06 | 8AT | R | L | Estate 4WD N20 B20 B | | GDS83157 | Drive Shaft | | 28 | 27 | 57 | 71 | 750 | |
| | 2013.03-2015.06 | 8AT | R | R | Estate 4WD N20 B20 B | | GDS83158 | Drive Shaft | | 28 | 27 | 57 | 71 | 802 | |
| | 2013.03-2015.06 | 8AT | R | L/R | Estate 4WD N20 B20 B | | GCO82308 | Outer Joint | | 28 | 30 | 57 | 71 | 52.5 | I |

| | YEAR | TRANSM. | F/R | L/R | BODY STYLE & DRIVE TYPE & ENGINE | REMARKS | G-AP Ref. | PRODUCT | ABS | Technical Specifications A | B | C | H | L | P |
|---|---|---|---|---|---|---|---|---|---|---|---|---|---|---|---|
| **BMW** | | | | | | | | | | | | | | | |
| **320i xDrive Touring** | | | | | | | | | | | | | | | |
| 2.0 (135 kw) | 2013.03-2015.06 | 8AT | R | L/R | Estate 4WD N20 B20 B | | GCI82145 | Inner Joint | | 27 | 30 | 43.9 | 75 | 101 | |
| | 2015.07-2019.06 | 8AT/6MT | F | L | Estate 4WD B48 B20 A | | GDS82052 | Drive Shaft | | 31 | 27 | 55.8 | | 550 | |
| | 2015.07-2019.06 | 8AT/6MT | F | R | Estate 4WD B48 B20 A | | GDS82053 | Drive Shaft | | 31 | 27 | 55.8 | | 841 | |
| | 2015.07-2019.06 | 8AT/6MT | F | L | Estate 4WD B48 B20 A | | GCO81603 | Outer Joint | | 31 | 33 | 55.8 | | 69.5 | M |
| | 2015.07-2019.06 | 8AT/6MT | F | L | Estate 4WD B48 B20 A | | GCI81055 | Inner Joint | | 27 | 24 | 43.95 | 60 | 123.5 | |
| | 2015.07-2019.06 | 8AT/6MT | F | R | Estate 4WD B48 B20 A | | GCI81597 | Inner Joint | | 27 | 24 | 43.95 | 349.5 | 125 | |
| | 2015.07-2019.06 | 6MT | R | L | Estate 4WD B48 B20 A | | GDS85066 | Drive Shaft | | 28 | 27 | 57.4 | 71 | 744 | |
| | 2015.07-2019.06 | 6MT | R | R | Estate 4WD B48 B20 A | | GDS85067 | Drive Shaft | | 28 | 27 | 57.4 | 71 | 800 | |
| | 2015.07-2019.06 | 6MT | R | L/R | Estate 4WD B48 B20 A | Diameter [mm]:35 | GCI83732 | Inner Joint | | 27 | 25 | 43.9 | 75 | 72 | |
| | 2015.07-2019.06 | 8AT | R | L | Estate 4WD B48 B20 A | | GDS83157 | Drive Shaft | | 28 | 27 | 57 | 71 | 750 | |
| | 2015.07-2019.06 | 8AT | R | R | Estate 4WD B48 B20 A | | GDS83158 | Drive Shaft | | 28 | 27 | 57 | 71 | 802 | |
| | 2015.07-2019.06 | 8AT | R | L/R | Estate 4WD B48 B20 A | | GCO82308 | Outer Joint | | 28 | 30 | 57 | 71 | 52.5 | I |
| | 2015.07-2019.06 | 8AT | R | L/R | Estate 4WD B48 B20 A | | GCI82145 | Inner Joint | | 27 | 30 | 43.9 | 75 | 101 | |
| **323i** | | | | | | | | | | | | | | | |
| 2.5 (120 kw) | 1998.03-2000.09 | 5AT/5MT | R | L/R | Saloon RWD M52B256S4 | | GCI99127 | Inner Joint | | | 25 | | | 26 | |
| | 1998.03-2000.09 | | R | L | Saloon RWD M52B256S4 | | GDS85051 | Drive Shaft | 48W | 27 | | 64 | 69 | 618 | |
| | 1998.03-2000.09 | | R | R | Saloon RWD M52B256S4 | | GDS85042 | Drive Shaft | 48W | 27 | | 64 | 69 | 672 | |
| 2.5 (125 kw) | 1995.05-1998.11 | 5AT/5MT | R | L/R | Saloon RWD M52B256S3 | | GDS85007 | Drive Shaft | 48W | 27 | | 64 | 68.5 | 615 | |
| | 1998.03-2000.09 | AT/MT | R | L | Saloon RWD M52B256S4 | | GDS85051 | Drive Shaft | 48W | 27 | | 64 | 69 | 618 | |
| | 1998.03-2000.09 | AT/MT | R | R | Saloon RWD M52B256S4 | | GDS85042 | Drive Shaft | 48W | 27 | | 64 | 69 | 672 | |
| 2.5 (130 kw) | 2005.09-2007.02 | 6AT/6MT | R | L | Saloon RWD N52 B25 A;N52 B25 B;N52 B25 BF;N52 B25 BE | | GDS85037 | Drive Shaft | 48W | 27 | | 69.3 | 68 | 611 | |
| | 2005.09-2007.02 | 6AT/6MT | R | L/R | Saloon RWD N52 B25 A;N52 B25 B;N52 B25 BF;N52 B25 BE | | GCI85005 | Inner Joint | | | 24 | | | 24 | |
| | 2005.09-2007.02 | 6MT | R | R | Saloon RWD N52 B25 A;N52 B25 B;N52 B25 BF;N52 B25 BE | | GDS85036 | Drive Shaft | 48W | 27 | | 69.3 | 68 | 664 | |
| 2.5 (140 kw) | 2007.03-2011.12 | 6AT | R | L/R | Saloon RWD N52 B25 A;N52 B25 BF | | GDS85037 | Drive Shaft | 48W | 27 | | 69.3 | 68 | 611 | |
| | 2007.03-2011.12 | MT | R | L | Saloon RWD N52 B25 A;N52 B25 BF | | GDS85037 | Drive Shaft | 48W | 27 | | 69.3 | 68 | 611 | |
| | 2007.03-2011.12 | MT | R | R | Saloon RWD N52 B25 A;N52 B25 BF | | GDS85036 | Drive Shaft | 48W | 27 | | 69.3 | 68 | 664 | |
| | 2007.03-2011.12 | MT/6AT | R | L/R | Saloon RWD N52 B25 A;N52 B25 BF | | GCI85005 | Inner Joint | | | 24 | | | 24 | |
| **323i Cabrio** | | | | | | | | | | | | | | | |
| 2.5 (120 kw) | 2000.04-2000.09 | 5AT/5MT | R | L/R | Cabriolet RWD M52B256S4 | | GCI99127 | Inner Joint | | | 25 | | | 26 | |
| | 2000.04-2000.09 | | R | L | Cabriolet RWD M52B256S4 | | GDS85051 | Drive Shaft | 48W | 27 | | 64 | 69 | 618 | |
| | 2000.04-2000.09 | | R | R | Cabriolet RWD M52B256S4 | | GDS85042 | Drive Shaft | 48W | 27 | | 64 | 69 | 672 | |
| 2.5 (125 kw) | 1995.05-1999.11 | 5AT | R | L/R | Cabriolet RWD M52B256S3 | | GDS85007 | Drive Shaft | 48W | 27 | | 64 | 68.5 | 615 | |
| | 1998.01-2000.09 | AT/MT | R | L | Cabriolet RWD M52B256S4 | | GDS85051 | Drive Shaft | 48W | 27 | | 64 | 69 | 618 | |
| | 1998.01-2000.09 | AT/MT | R | R | Cabriolet RWD M52B256S4 | | GDS85042 | Drive Shaft | 48W | 27 | | 64 | 69 | 672 | |
| **323i Coupe** | | | | | | | | | | | | | | | |
| 2.5 (120 kw) | 1999.04-2000.09 | 5AT/5MT | R | L/R | Coupe RWD M52B256S4 | | GCI99127 | Inner Joint | | | 25 | | | 26 | |
| | 1999.04-2000.09 | | R | L | Coupe RWD M52B256S4 | | GDS85051 | Drive Shaft | 48W | 27 | | 64 | 69 | 618 | |
| | 1999.04-2000.09 | | R | R | Coupe RWD M52B256S4 | | GDS85042 | Drive Shaft | 48W | 27 | | 64 | 69 | 672 | |
| 2.5 (125 kw) | 1995.05-1999.05 | AT | R | L/R | Coupe RWD M52B256S3 | | GDS85007 | Drive Shaft | 48W | 27 | | 64 | 68.5 | 615 | |
| | 1999.06-2000.09 | AT/MT | R | L | Coupe RWD M52B256S4 | | GDS85051 | Drive Shaft | 48W | 27 | | 64 | 69 | 618 | |
| | 1999.06-2000.09 | AT/MT | R | R | Coupe RWD M52B256S4 | | GDS85042 | Drive Shaft | 48W | 27 | | 64 | 69 | 672 | |
| 2.5 (140 kw) | 2006.04-2012.02 | AT/MT | R | L | Coupe RWD N52 B25 BE;N52 B25 AE | | GDS85037 | Drive Shaft | 48W | 27 | | 69.3 | 68 | 611 | |
| | 2006.04-2012.02 | AT/MT | R | R | Coupe RWD N52 B25 BE;N52 B25 AE | | GDS85036 | Drive Shaft | 48W | 27 | | 69.3 | 68 | 664 | |
| | 2006.04-2012.02 | AT/MT | R | L/R | Coupe RWD N52 B25 BE;N52 B25 AE | | GCI85005 | Inner Joint | | | 24 | | | 24 | |
| **323i Touring** | | | | | | | | | | | | | | | |
| 2.5 (125 kw) | 1995.12-1999.04 | AT | R | L/R | Estate RWD M52B256S3 | | GDS85007 | Drive Shaft | 48W | 27 | | 64 | 68.5 | 615 | |
| | 1995.12-1999.04 | AT | R | L/R | Estate RWD M52B256S3 | | GCI99127 | Inner Joint | | | 25 | | | 26 | |
| | 1999.10-2000.12 | 5AT/5MT | R | L | Estate RWD M52B256S4 | | GDS85051 | Drive Shaft | 48W | 27 | | 64 | 69 | 618 | |
| | 1999.10-2000.12 | 5AT/5MT | R | R | Estate RWD M52B256S4 | | GDS85042 | Drive Shaft | 48W | 27 | | 64 | 69 | 672 | |
| **325d** | | | | | | | | | | | | | | | |
| 2.0 (155 kw) | 2013.03-2016.02 | AT | R | L | Saloon RWD N47 D20 D | | GDS85110 | Drive Shaft | | 28 | 32 | 57 | 71 | 748 | |
| | 2013.03-2016.02 | AT | R | R | Saloon RWD N47 D20 D | | GDS85109 | Drive Shaft | | 28 | 32 | 57 | 71 | 802 | |
| | 2013.03-2016.02 | AT | R | L/R | Saloon RWD N47 D20 D | | GCI85086 | Inner Joint | | 28 | 28 | 62.5 | 71 | 91 | |
| | 2013.03-2016.02 | AT | R | L/R | Saloon RWD N47 D20 D | | GCI85087 | Inner Joint | | 32 | 28 | 50 | 85 | 99 | |
| 2.0 (160 kw) | 2013.03-2016.02 | AT | R | L | Saloon RWD N47 D20 D | | GDS85110 | Drive Shaft | | 28 | 32 | 57 | 71 | 748 | |
| | 2013.03-2016.02 | AT | R | R | Saloon RWD N47 D20 D | | GDS85109 | Drive Shaft | | 28 | 32 | 57 | 71 | 802 | |
| | 2013.03-2016.02 | AT | R | L/R | Saloon RWD N47 D20 D | | GCI85086 | Inner Joint | | 28 | 28 | 62.5 | 71 | 91 | |
| | 2013.03-2016.02 | AT | R | L/R | Saloon RWD N47 D20 D | | GCI85087 | Inner Joint | | 32 | 28 | 50 | 85 | 99 | |
| 2.0 (165 kw) | 2016.03-2018.02 | AT/MT | R | L | Saloon RWD B47 D20 B | | GDS85110 | Drive Shaft | | 28 | 32 | 57 | 71 | 748 | |
| | 2016.03-2018.02 | AT/MT | R | R | Saloon RWD B47 D20 B | | GDS85109 | Drive Shaft | | 28 | 32 | 57 | 71 | 802 | |
| | 2016.03-2018.02 | AT/MT | R | L | Saloon RWD B47 D20 B | | GCI85086 | Inner Joint | | 28 | 28 | 62.5 | 71 | 91 | |
| | 2016.03-2018.02 | AT/MT | R | L/R | Saloon RWD B47 D20 B | | GCI85087 | Inner Joint | | 32 | 28 | 50 | 85 | 99 | |
| 2.5 (85 kw) | 1991.09-1998.02 | AT/MT | R | L/R | Saloon RWD M51D256T1 | | GDS85007 | Drive Shaft | 48W | 27 | | 64 | 68.5 | 615 | |
| 2.5 (105 kw) | 1993.03-1998.01 | AT/MT | R | L/R | Saloon RWD M51D256T1 | | GDS85007 | Drive Shaft | 48W | 27 | | 64 | 68.5 | 615 | |
| 3.0 (145 kw) | 2006.09-2010.02 | AT | R | L | Saloon RWD M57 D30 (306D3) | | GDS85039 | Drive Shaft | | 30 | | 58.7 | 73 | 615 | |

| | YEAR | TRANSM. | F/R | L/R | BODY STYLE & DRIVE TYPE & ENGINE | REMARKS | G-AP Ref. | PRODUCT | ABS | Technical Specifications A | B | C | H | L | P |
|---|---|---|---|---|---|---|---|---|---|---|---|---|---|---|---|
| **BMW** | | | | | | | | | | | | | | | |
| **325d** | | | | | | | | | | | | | | | |
| 3.0 (145 kw) | 2006.09-2010.02 | AT | R | R | Saloon RWD M57 D30 (306D3) | | GDS85134 | Drive Shaft | | 30 | | 58.7 | 73 | 665 | |
| | 2006.09-2010.02 | AT | R | R | Saloon RWD M57 D30 (306D3) | Wheel Side | GCI85036 | Outer Joint | | 30 | 25 | 58.7 | 73 | 58 | I |
| | 2006.09-2010.02 | AT | R | R | Saloon RWD M57 D30 (306D3) | | GCI35025 | Inner Joint | | | 25 | | | 26 | |
| | 2006.09-2010.02 | MT | R | L | Saloon RWD M57 D30 (306D3) | | GDS85085 | Drive Shaft | | 30 | | 58.7 | 73 | 598 | |
| | 2006.09-2010.02 | MT | R | R | Saloon RWD M57 D30 (306D3) | | GDS85073 | Drive Shaft | | 30 | | 58.8 | 73 | 653 | |
| 3.0 (150 kw) | 2010.03-2011.10 | 6MT | R | R | Saloon RWD N57 D30 A | | GDS85073 | Drive Shaft | | 30 | | 58.8 | 73 | 653 | |
| | 2010.03-2011.10 | 6MT | R | R | Saloon RWD N57 D30 A | | GCI85048 | Inner Joint | | | 28 | | | 28 | |
| | 2010.03-2011.10 | MT | R | L | Saloon RWD N57 D30 A | | GDS85085 | Drive Shaft | | 30 | | 58.7 | 73 | 598 | |
| | 2010.03-2011.10 | MT | R | L | Saloon RWD N57 D30 A | | GCI83027 | Inner Joint | | | 28 | | | 28 | |
| **325d Cabrio** | | | | | | | | | | | | | | | |
| 3.0 (145 kw) | 2007.03-2010.12 | 6AT | R | L | Convertible RWD M57 D30 (306D3) | | GDS85039 | Drive Shaft | | 30 | | 58.7 | 73 | 615 | |
| | 2007.03-2010.12 | 6AT | R | R | Convertible RWD M57 D30 (306D3) | | GDS85134 | Drive Shaft | | 30 | | 58.7 | 73 | 665 | |
| | 2007.03-2010.12 | 6AT | R | L/R | Convertible RWD M57 D30 (306D3) | | GCI35025 | Inner Joint | | | 25 | | | 26 | |
| | 2007.03-2010.12 | 6MT | R | L | Convertible RWD M57 D30 (306D3) | | GDS85085 | Drive Shaft | | 30 | | 58.7 | 73 | 598 | |
| | 2007.03-2010.12 | 6MT | R | R | Convertible RWD M57 D30 (306D3) | | GDS85073 | Drive Shaft | | 30 | | 58.8 | 73 | 653 | |
| 3.0 (150 kw) | 2009.09-2013.09 | 6MT | R | R | Convertible RWD N57 D30 A | | GDS85073 | Drive Shaft | | 30 | | 58.8 | 73 | 653 | |
| | 2009.09-2013.09 | 6MT | R | R | Convertible RWD N57 D30 A | | GCI85048 | Inner Joint | | | 28 | | | 28 | |
| | 2009.09-2013.09 | MT | R | L | Convertible RWD N57 D30 A | | GDS85085 | Drive Shaft | | 30 | | 58.7 | 73 | 598 | |
| | 2009.09-2013.09 | MT | R | L | Convertible RWD N57 D30 A | | GCI83027 | Inner Joint | | | 28 | | | 28 | |
| 3.0 (155 kw) | 2007.03-2010.12 | 6AT | R | R | Convertible RWD M57 D30 (306D3) | | GDS85134 | Drive Shaft | | 30 | | 58.7 | 73 | 665 | |
| | 2007.03-2010.12 | 6AT | R | R | Convertible RWD M57 D30 (306D3) | | GCI35025 | Inner Joint | | | 25 | | | 26 | |
| | 2007.03-2010.12 | 6MT | R | R | Convertible RWD M57 D30 (306D3) | | GDS85073 | Drive Shaft | | 30 | | 58.8 | 73 | 653 | |
| | 2007.03-2010.12 | AT | R | L | Convertible RWD M57 D30 (306D3) | | GDS85039 | Drive Shaft | | 30 | | 58.7 | 73 | 615 | |
| | 2007.03-2010.12 | AT/MT | R | R | Convertible RWD M57 D30 (306D3) | | GCI85036 | Outer Joint | | 30 | 25 | 58.7 | 73 | 58 | I |
| | 2007.03-2010.12 | MT | R | L | Convertible RWD M57 D30 (306D3) | | GDS85085 | Drive Shaft | | 30 | | 58.7 | 73 | 598 | |
| **325d Coupe** | | | | | | | | | | | | | | | |
| 3.0 (145 kw) | 2007.02-2010.02 | 6AT | R | L | Coupe RWD M57 D30 (306D3) | | GDS85039 | Drive Shaft | | 30 | | 58.7 | 73 | 615 | |
| | 2007.02-2010.02 | 6AT | R | R | Coupe RWD M57 D30 (306D3) | | GDS85134 | Drive Shaft | | 30 | | 58.7 | 73 | 665 | |
| | 2007.02-2010.02 | 6AT | R | L/R | Coupe RWD M57 D30 (306D3) | | GCI35025 | Inner Joint | | | 25 | | | 26 | |
| | 2007.02-2010.02 | 6MT | R | L | Coupe RWD M57 D30 (306D3) | | GDS85085 | Drive Shaft | | 30 | | 58.7 | 73 | 598 | |
| | 2007.02-2010.02 | 6MT | R | R | Coupe RWD M57 D30 (306D3) | | GDS85073 | Drive Shaft | | 30 | | 58.8 | 73 | 653 | |
| 3.0 (150 kw) | 2009.09-2013.06 | 6MT | R | R | Coupe RWD N57 D30 A | | GDS85073 | Drive Shaft | | 30 | | 58.8 | 73 | 653 | |
| | 2009.09-2013.06 | 6MT | R | R | Coupe RWD N57 D30 A | | GCI85048 | Inner Joint | | | 28 | | | 28 | |
| | 2009.09-2013.06 | MT | R | L | Coupe RWD N57 D30 A | | GDS85085 | Drive Shaft | | 30 | | 58.7 | 73 | 598 | |
| | 2009.09-2013.06 | MT | R | L | Coupe RWD N57 D30 A | | GCI83027 | Inner Joint | | | 28 | | | 28 | |
| **325d Gran Turismo** | | | | | | | | | | | | | | | |
| 2.0 (155 kw) | 2013.07-2016.06 | AT | R | L | Hatchback RWD N47 D20 D | | GDS85110 | Drive Shaft | | 28 | 32 | 57 | 71 | 748 | |
| | 2013.07-2016.06 | AT | R | R | Hatchback RWD N47 D20 D | | GDS85109 | Drive Shaft | | 28 | 32 | 57 | 71 | 802 | |
| | 2013.07-2016.06 | AT | R | L/R | Hatchback RWD N47 D20 D | | GCI85086 | Inner Joint | | 28 | 28 | 62.5 | 71 | 91 | |
| | 2013.07-2016.06 | AT | R | L/R | Hatchback RWD N47 D20 D | | GCI85087 | Inner Joint | | 32 | 28 | 50 | 85 | 99 | |
| 2.0 (160 kw) | 2013.07-2016.06 | AT | R | L | Hatchback RWD N47 D20 D | | GDS85110 | Drive Shaft | | 28 | 32 | 57 | 71 | 748 | |
| | 2013.07-2016.06 | AT | R | R | Hatchback RWD N47 D20 D | | GDS85109 | Drive Shaft | | 28 | 32 | 57 | 71 | 802 | |
| | 2013.07-2016.06 | AT | R | L | Hatchback RWD N47 D20 D | | GCI85086 | Inner Joint | | 28 | 28 | 62.5 | 71 | 91 | |
| | 2013.07-2016.06 | AT | R | L/R | Hatchback RWD N47 D20 D | | GCI85087 | Inner Joint | | 32 | 28 | 50 | 85 | 99 | |
| 2.0 (165 kw) | 2016.07-2018.02 | 8AT | R | L | Hatchback RWD B47 D20 B | | GDS85110 | Drive Shaft | | 28 | 32 | 57 | 71 | 748 | |
| | 2016.07-2018.02 | 8AT | R | R | Hatchback RWD B47 D20 B | | GDS85109 | Drive Shaft | | 28 | 32 | 57 | 71 | 802 | |
| | 2016.07-2018.02 | 8AT | R | R | Hatchback RWD B47 D20 B | | GCI85086 | Inner Joint | | 28 | 28 | 62.5 | 71 | 91 | |
| | 2016.07-2018.02 | 8AT | R | L/R | Hatchback RWD B47 D20 B | | GCI85087 | Inner Joint | | 32 | 28 | 50 | 85 | 99 | |
| **325d Touring** | | | | | | | | | | | | | | | |
| 2.0 (155 kw) | 2013.03-2016.02 | AT | R | L | Estate RWD N47 D20 D | | GDS85110 | Drive Shaft | | 28 | 32 | 57 | 71 | 748 | |
| | 2013.03-2016.02 | AT | R | R | Estate RWD N47 D20 D | | GDS85109 | Drive Shaft | | 28 | 32 | 57 | 71 | 802 | |
| | 2013.03-2016.02 | AT | R | L | Estate RWD N47 D20 D | | GCI85086 | Inner Joint | | 28 | 28 | 62.5 | 71 | 91 | |
| | 2013.03-2016.02 | AT | R | L/R | Estate RWD N47 D20 D | | GCI85087 | Inner Joint | | 32 | 28 | 50 | 85 | 99 | |
| 2.0 (160 kw) | 2013.03-2016.02 | AT | R | L | Estate RWD N47 D20 D | | GDS85110 | Drive Shaft | | 28 | 32 | 57 | 71 | 748 | |
| | 2013.03-2016.02 | AT | R | R | Estate RWD N47 D20 D | | GDS85109 | Drive Shaft | | 28 | 32 | 57 | 71 | 802 | |
| | 2013.03-2016.02 | AT | R | L | Estate RWD N47 D20 D | | GCI85086 | Inner Joint | | 28 | 28 | 62.5 | 71 | 91 | |
| | 2013.03-2016.02 | AT | R | L/R | Estate RWD N47 D20 D | | GCI85087 | Inner Joint | | 32 | 28 | 50 | 85 | 99 | |
| 2.0 (165 kw) | 2016.03-2018.02 | AT/MT | R | L | Estate RWD B47 D20 B | | GDS85110 | Drive Shaft | | 28 | 32 | 57 | 71 | 748 | |
| | 2016.03-2018.02 | AT/MT | R | R | Estate RWD B47 D20 B | | GDS85109 | Drive Shaft | | 28 | 32 | 57 | 71 | 802 | |
| | 2016.03-2018.02 | AT/MT | R | L | Estate RWD B47 D20 B | | GCI85086 | Inner Joint | | 28 | 28 | 62.5 | 71 | 91 | |
| | 2016.03-2018.02 | AT/MT | R | L/R | Estate RWD B47 D20 B | | GCI85087 | Inner Joint | | 32 | 28 | 50 | 85 | 99 | |
| 2.5 (105 kw) | 1995.03-1999.04 | AT | R | L/R | Estate RWD M51D256T1 | | GDS85007 | Drive Shaft | 48W | 27 | | 64 | 68.5 | 615 | |
| | 1995.03-1999.04 | AT | R | L/R | Estate RWD M51D256T1 | | GCI99127 | Inner Joint | | | 25 | | | 26 | |
| 3.0 (145 kw) | 2006.09-2012.06 | AT | R | L | Estate RWD M57 D30 (306D3) | | GDS85039 | Drive Shaft | | 30 | | 58.7 | 73 | 615 | |
| | 2006.09-2012.06 | AT | R | R | Estate RWD M57 D30 (306D3) | | GDS85134 | Drive Shaft | | 30 | | 58.7 | 73 | 665 | |

| | YEAR | TRANSM. | F/R | L/R | BODY STYLE & DRIVE TYPE & ENGINE | REMARKS | G-AP Ref. | PRODUCT | ABS | Technical Specifications A | B | C | H | L | P |
|---|---|---|---|---|---|---|---|---|---|---|---|---|---|---|---|
| **BMW** | | | | | | | | | | | | | | | |
| **325d Touring** | | | | | | | | | | | | | | | |
| 3.0 (145 kw) | 2006.09-2012.06 | AT | R | R | Estate RWD M57 D30 (306D3) | Wheel Side | GCI85036 | Outer Joint | | 30 | 25 | 58.7 | 73 | 58 | I |
| | 2006.09-2012.06 | AT | R | R | Estate RWD M57 D30 (306D3) | | GCI35025 | Inner Joint | | | 25 | | | 26 | |
| | 2006.09-2012.06 | MT | R | L | Estate RWD M57 D30 (306D3) | | GDS85085 | Drive Shaft | | 30 | | 58.7 | 73 | 598 | |
| | 2006.09-2012.06 | MT | R | R | Estate RWD M57 D30 (306D3) | | GDS85073 | Drive Shaft | | 30 | | 58.8 | 73 | 653 | |
| 3.0 (150 kw) | 2010.02-2012.06 | 6MT | R | R | Estate RWD N57 D30 A | | GDS85073 | Drive Shaft | | 30 | | 58.8 | 73 | 653 | |
| | 2010.02-2012.06 | 6MT | R | R | Estate RWD N57 D30 A | | GCI85048 | Inner Joint | | | 28 | | | 28 | |
| | 2010.02-2012.06 | AT/MT | R | L | Estate RWD N57 D30 A | | GDS85085 | Drive Shaft | | 30 | | 58.7 | 73 | 598 | |
| | 2010.02-2012.06 | AT/MT | R | L | Estate RWD N57 D30 A | | GCI83027 | Inner Joint | | | 28 | | | 28 | |
| **325i** | | | | | | | | | | | | | | | |
| 2.5 (141 kw) | 2000.09-2005.02 | AT/MT | F | L | Saloon 4WD M54B256S5 | | GDS85047 | Drive Shaft | | 30 | 27 | 59 | 73 | 577 | |
| | 2000.09-2005.02 | AT/MT | F | R | Saloon 4WD M54B256S5 | | GDS85048 | Drive Shaft | | 30 | 27 | 59 | 73 | 897 | |
| | 2000.09-2005.02 | | F | L/R | Saloon 4WD M54B256S5 | | GCO85002 | Outer Joint | | 30 | 27 | 59 | 73 | 69 | M |
| | 2000.09-2005.02 | 5MT | R | L | Saloon 4WD M54B256S5 | | GDS57626 | Drive Shaft | 48W | 30 | | 69 | 74.5 | 615 | |
| | 2000.09-2005.02 | AT/MT | R | R | Saloon 4WD M54B256S5 | | GDS85042 | Drive Shaft | 48W | 27 | | 64 | 69 | 672 | |
| | 2000.09-2005.02 | 5AT/5MT | R | L | Saloon RWD M54B256S5 | | GDS85051 | Drive Shaft | 48W | 27 | | 64 | 69 | 618 | |
| | 2000.09-2005.02 | 5AT/5MT | R | R | Saloon RWD M54B256S5 | | GDS85042 | Drive Shaft | 48W | 27 | | 64 | 69 | 672 | |
| | 2000.09-2005.02 | 5AT/5MT | R | L/R | Saloon RWD M54B256S5 | | GCI82470 | Outer Joint | 48W | 27 | 25 | 64 | 69 | 65.5 | |
| | 2000.09-2005.02 | 5AT/5MT | R | L/R | Saloon RWD M54B256S5 | | GCI99127 | Inner Joint | | | 25 | | | 26 | |
| 2.5 (155 kw) | 2006.01-2011.12 | 6AT/6MT | R | L | Saloon RWD N52 B25 A | For increased payload | GDS85039 | Drive Shaft | | 30 | | 58.7 | 73 | 615 | |
| | 2006.01-2011.12 | 6AT/6MT | R | R | Saloon RWD N52 B25 A | For increased payload | GDS85134 | Drive Shaft | | 30 | | 58.7 | 73 | 665 | |
| | 2006.01-2011.12 | 6AT/6MT | R | L/R | Saloon RWD N52 B25 A | For increased payload | GCI85036 | Outer Joint | | 30 | 25 | 58.7 | 73 | 58 | I |
| | 2006.01-2011.12 | 6AT/6MT | R | L/R | Saloon RWD N52 B25 A | | GCI35025 | Inner Joint | | | 25 | | | 26 | |
| | 2006.01-2011.12 | 6MT | R | L | Saloon RWD N52 B25 A | Not for increased payload | GDS85022 | Drive Shaft | 48W | 27 | | 69 | 68 | 607 | |
| | 2006.01-2011.12 | 6MT | R | R | Saloon RWD N52 B25 A | Not for increased payload | GDS85023 | Drive Shaft | 48W | 27 | | 69 | 68 | 660 | |
| | 2006.01-2011.12 | 6MT | R | L/R | Saloon RWD N52 B25 A | Not for increased payload | GCI99145 | Outer Joint | 48W | 27 | 25 | 69 | 68 | 58 | I |
| 2.5 (160 kw) | 2004.12-2011.12 | 6AT/6MT | R | L | Saloon RWD N52 B25 A;N52 B25 B;N52 B25 BF | For increased payload | GDS85039 | Drive Shaft | | 30 | | 58.7 | 73 | 615 | |
| | 2004.12-2011.12 | 6AT/6MT | R | R | Saloon RWD N52 B25 A;N52 B25 B;N52 B25 BF | For increased payload | GDS85134 | Drive Shaft | | 30 | | 58.7 | 73 | 665 | |
| | 2004.12-2011.12 | 6AT/6MT | R | L/R | Saloon RWD N52 B25 A;N52 B25 B;N52 B25 BF | For increased payload | GCI85036 | Outer Joint | | 30 | 25 | 58.7 | 73 | 58 | I |
| | 2004.12-2011.12 | 6AT/6MT | R | L/R | Saloon RWD N52 B25 A;N52 B25 B;N52 B25 BF | | GCI35025 | Inner Joint | | | 25 | | | 26 | |
| | 2004.12-2011.12 | 6MT | R | L | Saloon RWD N52 B25 A;N52 B25 B;N52 B25 BF | Not for increased payload | GDS85022 | Drive Shaft | 48W | 27 | | 69 | 68 | 607 | |
| | 2004.12-2011.12 | 6MT | R | R | Saloon RWD N52 B25 A;N52 B25 B;N52 B25 BF | Not for increased payload | GDS85023 | Drive Shaft | 48W | 27 | | 69 | 68 | 660 | |
| | 2004.12-2011.12 | 6MT | R | L/R | Saloon RWD N52 B25 A;N52 B25 B;N52 B25 BF | Not for increased payload | GCI99145 | Outer Joint | 48W | 27 | 25 | 69 | 68 | 58 | I |
| | 2005.09-2008.08 | 6AT/6MT | F | L | Saloon 4WD N52 B25 A | | GDS85124 | Drive Shaft | 48W | 30 | 27 | 64.8 | 77 | 571 | |
| | 2005.09-2008.08 | 6AT/6MT | F | R | Saloon 4WD N52 B25 A | | GDS85125 | Drive Shaft | 48W | 30 | 27 | 64.8 | 77 | 892 | |
| | 2005.09-2008.08 | 6AT/6MT | F | L | Saloon 4WD N52 B25 A | | GCI85066 | Inner Joint | | 27 | 24 | 43.95 | 53.5 | 126.5 | |
| | 2005.09-2008.08 | 6AT/6MT | F | R | Saloon 4WD N52 B25 A | | GCI85067 | Inner Joint | | 27 | 24 | 43.95 | 376 | 126 | |
| | 2005.09-2008.08 | AT/MT | F | L/R | Saloon 4WD N52 B25 A | | GCO85020 | Outer Joint | 48W | 30 | 33 | 64.8 | 77 | 60 | M |
| | 2005.09-2008.08 | MT | R | L | Saloon 4WD N52 B25 A | | GDS85039 | Drive Shaft | | 30 | | 58.7 | 73 | 615 | |
| | 2005.09-2008.08 | MT | R | R | Saloon 4WD N52 B25 A | | GDS85134 | Drive Shaft | | 30 | | 58.7 | 73 | 665 | |
| 3.0 (155 kw) | 2007.03-2011.12 | 6AT/6MT | R | L | Saloon RWD N53 B30 A | Not for increased payload | GDS85022 | Drive Shaft | 48W | 27 | | 69 | 68 | 607 | |
| | 2007.03-2011.12 | 6AT/6MT | R | L | Saloon RWD N53 B30 A | For increased payload | GDS85039 | Drive Shaft | | 30 | | 58.7 | 73 | 615 | |
| | 2007.03-2011.12 | 6AT/6MT | R | R | Saloon RWD N53 B30 A | Not for increased payload | GDS85023 | Drive Shaft | 48W | 27 | | 69 | 68 | 660 | |
| | 2007.03-2011.12 | 6AT/6MT | R | R | Saloon RWD N53 B30 A | For increased payload | GDS85134 | Drive Shaft | | 30 | | 58.7 | 73 | 665 | |
| | 2007.03-2011.12 | 6AT/6MT | R | L/R | Saloon RWD N53 B30 A | For increased payload | GCI85036 | Outer Joint | | 30 | 25 | 58.7 | 73 | 58 | I |
| | 2007.03-2011.12 | 6AT/6MT | R | L/R | Saloon RWD N53 B30 A | Not for increased payload | GCI99145 | Outer Joint | 48W | 27 | 25 | 69 | 68 | 58 | I |
| | 2007.03-2011.12 | 6AT/6MT | R | L/R | Saloon RWD N53 B30 A | | GCI35025 | Inner Joint | | | 25 | | | 26 | |
| 3.0 (160 kw) | 2005.09-2006.08 | | F | L/R | Saloon 4WD N52 B30 A | | GCO85020 | Outer Joint | 48W | 30 | 33 | 64.8 | 77 | 60 | M |
| | 2005.09-2006.08 | 6AT/6MT | R | L | Saloon 4WD N52 B30 A | | GDS85039 | Drive Shaft | | 30 | | 58.7 | 73 | 615 | |
| | 2007.03-2011.12 | 6AT/6MT | R | L | Saloon RWD N53 B30 A | Not for increased payload | GDS85022 | Drive Shaft | 48W | 27 | | 69 | 68 | 607 | |
| | 2007.03-2011.12 | 6AT/6MT | R | L | Saloon RWD N53 B30 A | For increased payload | GDS85039 | Drive Shaft | | 30 | | 58.7 | 73 | 615 | |
| | 2007.03-2011.12 | 6AT/6MT | R | R | Saloon RWD N53 B30 A | Not for increased payload | GDS85023 | Drive Shaft | 48W | 27 | | 69 | 68 | 660 | |
| | 2007.03-2011.12 | 6AT/6MT | R | R | Saloon RWD N53 B30 A | For increased payload | GDS85134 | Drive Shaft | | 30 | | 58.7 | 73 | 665 | |
| | 2007.03-2011.12 | 6AT/6MT | R | L/R | Saloon RWD N53 B30 A | For increased payload | GCI85036 | Outer Joint | | 30 | 25 | 58.7 | 73 | 58 | I |
| | 2007.03-2011.12 | 6AT/6MT | R | L/R | Saloon RWD N53 B30 A | Not for increased payload | GCI99145 | Outer Joint | 48W | 27 | 25 | 69 | 68 | 58 | I |
| | 2007.03-2011.12 | 6AT/6MT | R | L/R | Saloon RWD N53 B30 A | | GCI35025 | Inner Joint | | | 25 | | | 26 | |
| | 2007.09-2008.08 | 6AT/6MT | F | L | Saloon 4WD N53 B30 A | | GDS85124 | Drive Shaft | 48W | 30 | 27 | 64.8 | 77 | 571 | |
| | 2007.09-2008.08 | 6AT/6MT | F | R | Saloon 4WD N53 B30 A | | GDS85125 | Drive Shaft | 48W | 30 | 27 | 64.8 | 77 | 892 | |
| | 2007.09-2008.08 | 6AT/6MT | F | L | Saloon 4WD N53 B30 A | | GCI85066 | Inner Joint | | 27 | 24 | 43.95 | 53.5 | 126.5 | |
| | 2007.09-2008.08 | 6AT/6MT | F | R | Saloon 4WD N53 B30 A | | GCI85067 | Inner Joint | | 27 | 24 | 43.95 | 376 | 126 | |
| | 2007.09-2008.08 | AT/MT | F | L/R | Saloon 4WD N53 B30 A | | GCO85020 | Outer Joint | 48W | 30 | 33 | 64.8 | 77 | 60 | M |
| | 2007.09-2008.08 | AT/MT | R | L | Saloon 4WD N53 B30 A | | GDS85039 | Drive Shaft | | 30 | | 58.7 | 73 | 615 | |
| | 2007.09-2008.08 | AT/MT | R | R | Saloon 4WD N53 B30 A | | GDS85134 | Drive Shaft | | 30 | | 58.7 | 73 | 665 | |
| **325i Cabrio** | | | | | | | | | | | | | | | |
| 2.5 (141 kw) | 2000.09-2006.08 | 5MT/SAT | R | L | Cabriolet RWD M54B256S5 | | GDS85051 | Drive Shaft | 48W | 27 | | 64 | 69 | 618 | |
| | 2000.09-2006.08 | 5MT/SAT | R | R | Cabriolet RWD M54B256S5 | | GDS85042 | Drive Shaft | 48W | 27 | | 64 | 69 | 672 | |

| | YEAR | TRANSM. | F/R | L/R | BODY STYLE & DRIVE TYPE & ENGINE | REMARKS | G-AP Ref. | PRODUCT | ABS | Technical Specifications A | B | C | H | L | P |
|---|---|---|---|---|---|---|---|---|---|---|---|---|---|---|---|
| **BMW** | | | | | | | | | | | | | | | |
| **325i Cabrio** | | | | | | | | | | | | | | | |
| 2.5 (141 kw) | 2000.09-2006.08 | 5MT/SAT | R | L/R | Cabriolet RWD M54B256S5 | | GCI82470 | Outer Joint | 48W | 27 | 25 | 64 | 69 | 65.5 | |
| | 2000.09-2006.08 | 5MT/SAT | R | L/R | Cabriolet RWD M54B256S5 | | GCI99127 | Inner Joint | | | 25 | | | 26 | |
| 2.5 (160 kw) | 2006.12-2010.02 | 6AT/6MT | R | L | Convertible RWD N52 B25 A | | GDS85039 | Drive Shaft | | 30 | | 58.7 | 73 | 615 | |
| | 2006.12-2010.02 | 6AT/6MT | R | R | Convertible RWD N52 B25 A | | GDS85134 | Drive Shaft | | 30 | | 58.7 | 73 | 665 | |
| | 2006.12-2010.02 | 6AT/6MT | R | L/R | Convertible RWD N52 B25 A | | GCI85036 | Outer Joint | | 30 | 25 | 58.7 | 73 | 58 | I |
| | 2006.12-2010.02 | 6AT/6MT | R | L/R | Convertible RWD N52 B25 A | | GCI35025 | Inner Joint | | | 25 | | | 26 | |
| 3.0 (155 kw) | 2006.10-2013.12 | 6AT/6MT | R | L | Convertible RWD N53 B30 A | | GDS85039 | Drive Shaft | | 30 | | 58.7 | 73 | 615 | |
| | 2006.10-2013.12 | 6AT/6MT | R | R | Convertible RWD N53 B30 A | | GDS85134 | Drive Shaft | | 30 | | 58.7 | 73 | 665 | |
| | 2006.10-2013.12 | 6AT/6MT | R | L/R | Convertible RWD N53 B30 A | | GCI85036 | Outer Joint | | 30 | 25 | 58.7 | 73 | 58 | I |
| | 2006.10-2013.12 | 6AT/6MT | R | L/R | Convertible RWD N53 B30 A | | GCI35025 | Inner Joint | | | 25 | | | 26 | |
| 3.0 (160 kw) | 2007.03-2013.12 | 6AT/6MT | R | L | Convertible RWD N53 B30 A | | GDS85039 | Drive Shaft | | 30 | | 58.7 | 73 | 615 | |
| | 2007.03-2013.12 | 6AT/6MT | R | R | Convertible RWD N53 B30 A | | GDS85134 | Drive Shaft | | 30 | | 58.7 | 73 | 665 | |
| | 2007.03-2013.12 | 6AT/6MT | R | L/R | Convertible RWD N53 B30 A | | GCI85036 | Outer Joint | | 30 | 25 | 58.7 | 73 | 58 | I |
| | 2007.03-2013.12 | 6AT/6MT | R | L/R | Convertible RWD N53 B30 A | | GCI35025 | Inner Joint | | | 25 | | | 26 | |
| **325i Compact** | | | | | | | | | | | | | | | |
| 2.5 (141 kw) | 2001.04-2004.12 | AT/MT | R | R | Hatchback RWD M54B256S5 | | GDS85042 | Drive Shaft | 48W | 27 | | 64 | 69 | 672 | |
| | 2001.04-2004.12 | AT/MT | R | L/R | Hatchback RWD M54B256S5 | | GCI99127 | Inner Joint | | | 25 | | | 26 | |
| | 2001.04-2004.12 | MT/Semi-AT | R | L | Hatchback RWD M54B256S5 | | GDS85051 | Drive Shaft | 48W | 27 | | 64 | 69 | 618 | |
| **325i Coupe** | | | | | | | | | | | | | | | |
| 2.5 (141 kw) | 2000.09-2006.05 | 5AT/5MT | R | L | Coupe RWD M54B256S5 | | GDS85051 | Drive Shaft | 48W | 27 | | 64 | 69 | 618 | |
| | 2000.09-2006.05 | 5AT/5MT | R | R | Coupe RWD M54B256S5 | | GDS85042 | Drive Shaft | 48W | 27 | | 64 | 69 | 672 | |
| | 2000.09-2006.05 | 5AT/5MT | R | L/R | Coupe RWD M54B256S5 | | GCI82470 | Outer Joint | 48W | 27 | 25 | 64 | 69 | 65.5 | |
| | 2000.09-2006.05 | 5AT/5MT | R | L/R | Coupe RWD M54B256S5 | | GCI99127 | Inner Joint | | | 25 | | | 26 | |
| 2.5 (150 kw) | 2010.03-2013.10 | 6AT/6MT | R | L | Coupe RWD N52 B25 A;N52 B25 AF;N52 B25 BF | | GDS85022 | Drive Shaft | 48W | 27 | | 69 | 68 | 607 | |
| | 2010.03-2013.10 | 6AT/6MT | R | R | Coupe RWD N52 B25 A;N52 B25 AF;N52 B25 BF | | GDS85023 | Drive Shaft | 48W | 27 | | 69 | 68 | 660 | |
| | 2010.03-2013.10 | 6AT/6MT | R | L/R | Coupe RWD N52 B25 A;N52 B25 AF;N52 B25 BF | | GCI99145 | Outer Joint | 48W | 27 | 25 | 69 | 68 | 58 | I |
| | 2010.03-2013.10 | 6AT/6MT | R | L/R | Coupe RWD N52 B25 A;N52 B25 AF;N52 B25 BF | | GCI35025 | Inner Joint | | | 25 | | | 26 | |
| 2.5 (155 kw) | 2010.03-2013.06 | 6AT/6MT | R | L | Coupe RWD N52 B25 A;N52 B25 AF;N52 B25 BF | | GDS85022 | Drive Shaft | 48W | 27 | | 69 | 68 | 607 | |
| | 2010.03-2013.06 | 6AT/6MT | R | R | Coupe RWD N52 B25 A;N52 B25 AF;N52 B25 BF | | GDS85023 | Drive Shaft | 48W | 27 | | 69 | 68 | 660 | |
| | 2010.03-2013.06 | 6AT/6MT | R | L/R | Coupe RWD N52 B25 A;N52 B25 AF;N52 B25 BF | | GCI99145 | Outer Joint | 48W | 27 | 25 | 69 | 68 | 58 | I |
| | 2010.03-2013.06 | 6AT/6MT | R | L/R | Coupe RWD N52 B25 A;N52 B25 AF;N52 B25 BF | | GCI35025 | Inner Joint | | | 25 | | | 26 | |
| 2.5 (160 kw) | 2006.06-2010.02 | 6AT/6MT | R | L | Coupe RWD N52 B25 A;N52 B25 AF;N52 B25 BF | | GDS85022 | Drive Shaft | 48W | 27 | | 69 | 68 | 607 | |
| | 2006.06-2010.02 | 6AT/6MT | R | R | Coupe RWD N52 B25 A;N52 B25 AF;N52 B25 BF | | GDS85023 | Drive Shaft | 48W | 27 | | 69 | 68 | 660 | |
| | 2006.06-2010.02 | 6AT/6MT | R | L/R | Coupe RWD N52 B25 A;N52 B25 AF;N52 B25 BF | | GCI99145 | Outer Joint | 48W | 27 | 25 | 69 | 68 | 58 | I |
| | 2006.06-2010.02 | 6AT/6MT | R | L/R | Coupe RWD N52 B25 A;N52 B25 AF;N52 B25 BF | | GCI35025 | Inner Joint | | | 25 | | | 26 | |
| 3.0 (155 kw) | 2007.09-2008.08 | 6AT | F | L | Coupe 4WD N53 B30 A | | GDS85124 | Drive Shaft | 48W | 30 | 27 | 64.8 | 77 | 571 | |
| | 2007.09-2008.08 | 6AT | F | R | Coupe 4WD N53 B30 A | | GDS85125 | Drive Shaft | 48W | 30 | 27 | 64.8 | 77 | 892 | |
| | 2007.09-2008.08 | 6AT | F | L/R | Coupe 4WD N53 B30 A | | GCO85020 | Outer Joint | 48W | 30 | 33 | 64.8 | 77 | 60 | M |
| | 2007.09-2008.08 | 6AT | F | L | Coupe 4WD N53 B30 A | | GCI85066 | Inner Joint | | 27 | 24 | 43.95 | 53.5 | 126.5 | |
| | 2007.09-2008.08 | 6AT | F | R | Coupe 4WD N53 B30 A | | GCI85067 | Inner Joint | | 27 | 24 | 43.95 | 376 | 126 | |
| | 2007.09-2008.08 | AT/MT | R | L | Coupe 4WD N53 B30 A | | GDS85039 | Drive Shaft | | 30 | | 58.7 | 73 | 615 | |
| | 2007.09-2008.08 | AT/MT | R | R | Coupe 4WD N53 B30 A | | GDS85134 | Drive Shaft | | 30 | | 58.7 | 73 | 665 | |
| | 2010.03-2013.06 | 6AT/6MT | R | L | Coupe RWD N53 B30 A | | GDS85022 | Drive Shaft | 48W | 27 | | 69 | 68 | 607 | |
| | 2010.03-2013.06 | 6AT/6MT | R | R | Coupe RWD N53 B30 A | | GDS85023 | Drive Shaft | 48W | 27 | | 69 | 68 | 660 | |
| | 2010.03-2013.06 | 6AT/6MT | R | L/R | Coupe RWD N53 B30 A | | GCI99145 | Outer Joint | 48W | 27 | 25 | 69 | 68 | 58 | I |
| | 2010.03-2013.06 | 6AT/6MT | R | L/R | Coupe RWD N53 B30 A | | GCI35025 | Inner Joint | | | 25 | | | 26 | |
| 3.0 (160 kw) | 2007.09-2008.08 | 6AT/6MT | F | L | Coupe 4WD N53 B30 A | | GDS85124 | Drive Shaft | 48W | 30 | 27 | 64.8 | 77 | 571 | |
| | 2007.09-2008.08 | 6AT/6MT | F | R | Coupe 4WD N53 B30 A | | GDS85125 | Drive Shaft | 48W | 30 | 27 | 64.8 | 77 | 892 | |
| | 2007.09-2008.08 | 6AT/6MT | F | L | Coupe 4WD N53 B30 A | | GCI85066 | Inner Joint | | 27 | 24 | 43.95 | 53.5 | 126.5 | |
| | 2007.09-2008.08 | 6AT/6MT | F | R | Coupe 4WD N53 B30 A | | GCI85067 | Inner Joint | | 27 | 24 | 43.95 | 376 | 126 | |
| | 2007.09-2008.08 | AT/MT | F | L/R | Coupe 4WD N53 B30 A | | GCO85020 | Outer Joint | 48W | 30 | 33 | 64.8 | 77 | 60 | M |
| | 2007.09-2008.08 | AT/MT | R | L | Coupe 4WD N53 B30 A | | GDS85039 | Drive Shaft | | 30 | | 58.7 | 73 | 615 | |
| | 2007.09-2008.08 | AT/MT | R | R | Coupe 4WD N53 B30 A | | GDS85134 | Drive Shaft | | 30 | | 58.7 | 73 | 665 | |
| | 2007.09-2013.06 | 6AT/6MT | R | L | Coupe RWD N53 B30 A | | GDS85022 | Drive Shaft | 48W | 27 | | 69 | 68 | 607 | |
| | 2007.09-2013.06 | 6AT/6MT | R | R | Coupe RWD N53 B30 A | | GDS85023 | Drive Shaft | 48W | 27 | | 69 | 68 | 660 | |
| | 2007.09-2013.06 | 6AT/6MT | R | L/R | Coupe RWD N53 B30 A | | GCI99145 | Outer Joint | 48W | 27 | 25 | 69 | 68 | 58 | I |
| | 2007.09-2013.06 | 6AT/6MT | R | L/R | Coupe RWD N53 B30 A | | GCI35025 | Inner Joint | | | 25 | | | 26 | |
| **325i Touring** | | | | | | | | | | | | | | | |
| 2.5 (141 kw) | 2000.08-2005.02 | AT/MT | F | L | Estate 4WD M54B256S5 | | GDS85047 | Drive Shaft | | 30 | 27 | 59 | 73 | 577 | |
| | 2000.08-2005.02 | AT/MT | F | R | Estate 4WD M54B256S5 | | GDS85048 | Drive Shaft | | 30 | 27 | 59 | 73 | 897 | |
| | 2000.08-2005.02 | | F | L/R | Estate 4WD M54B256S5 | | GCO85002 | Outer Joint | | 30 | 27 | 59 | 73 | 69 | M |
| | 2000.08-2005.02 | 5MT | R | L | Estate 4WD M54B256S5 | | GDS57626 | Drive Shaft | 48W | 30 | | 69 | 74.5 | 615 | |
| | 2000.08-2005.02 | AT/MT | R | R | Estate 4WD M54B256S5 | | GDS85042 | Drive Shaft | 48W | 27 | | 64 | 69 | 672 | |
| | 2000.08-2005.02 | SAT/5MT | R | L | Estate RWD M54B256S5 | | GDS85051 | Drive Shaft | 48W | 27 | | 64 | 69 | 618 | |
| | 2000.08-2005.02 | SAT/5MT | R | R | Estate RWD M54B256S5 | | GDS85042 | Drive Shaft | 48W | 27 | | 64 | 69 | 672 | |

| | YEAR | TRANSM. | F/R | L/R | BODY STYLE & DRIVE TYPE & ENGINE | REMARKS | G-AP Ref. | PRODUCT | ABS | Technical Specifications A | B | C | H | L | P |
|---|---|---|---|---|---|---|---|---|---|---|---|---|---|---|---|
| **BMW** | | | | | | | | | | | | | | | |
| **325i Touring** | | | | | | | | | | | | | | | |
| 2.5 (141 kw) | 2000.08-2005.02 | SAT/5MT | R | L/R | Estate RWD M54B256S5 | | GCI99127 | Inner Joint | | | 25 | | | 26 | |
| 2.5 (155 kw) | 2004.12-2010.12 | 6AT/6MT | R | L | Estate RWD N52 B25 A;N52 B25 AF;N52 B25 B;N52 B25 BF | | GDS85039 | Drive Shaft | | 30 | | 58.7 | 73 | 615 | |
| | 2004.12-2010.12 | 6AT/6MT | R | R | Estate RWD N52 B25 A;N52 B25 AF;N52 B25 B;N52 B25 BF | | GDS85134 | Drive Shaft | | 30 | | 58.7 | 73 | 665 | |
| | 2004.12-2010.12 | 6AT/6MT | R | L/R | Estate RWD N52 B25 A;N52 B25 AF;N52 B25 B;N52 B25 BF | | GCI85036 | Outer Joint | | 30 | 25 | 58.7 | 73 | 58 | I |
| | 2004.12-2010.12 | 6AT/6MT | R | L/R | Estate RWD N52 B25 A;N52 B25 AF;N52 B25 B;N52 B25 BF | | GCI35025 | Inner Joint | | | 25 | | | 26 | |
| 2.5 (160 kw) | 2004.12-2008.08 | 6AT/6MT | R | L | Estate RWD N52 B25 A | | GDS85039 | Drive Shaft | | 30 | | 58.7 | 73 | 615 | |
| | 2004.12-2008.08 | 6AT/6MT | R | R | Estate RWD N52 B25 A | | GDS85134 | Drive Shaft | | 30 | | 58.7 | 73 | 665 | |
| | 2004.12-2008.08 | 6AT/6MT | R | L/R | Estate RWD N52 B25 A | | GCI85036 | Outer Joint | | 30 | 25 | 58.7 | 73 | 58 | I |
| | 2004.12-2008.08 | 6AT/6MT | R | L/R | Estate RWD N52 B25 A | | GCI35025 | Inner Joint | | | 25 | | | 26 | |
| 3.0 (155 kw) | 2007.09-2008.08 | 6AT/6MT | F | L | Estate 4WD N53 B30 A | | GDS85124 | Drive Shaft | 48W | 30 | 27 | 64.8 | 77 | 571 | |
| | 2007.09-2008.08 | 6AT/6MT | F | R | Estate 4WD N53 B30 A | | GDS85125 | Drive Shaft | 48W | 30 | 27 | 64.8 | 77 | 892 | |
| | 2007.09-2008.08 | 6AT/6MT | F | L/R | Estate 4WD N53 B30 A | | GCO85020 | Outer Joint | 48W | 30 | 33 | 64.8 | 77 | 60 | M |
| | 2007.09-2008.08 | 6AT/6MT | F | L | Estate 4WD N53 B30 A | | GCI85066 | Inner Joint | | 27 | 24 | 43.95 | 53.5 | 126.5 | |
| | 2007.09-2008.08 | 6AT/6MT | F | R | Estate 4WD N53 B30 A | | GCI85067 | Inner Joint | | 27 | 24 | 43.95 | 376 | 126 | |
| | 2007.09-2008.08 | AT/MT | R | L | Estate 4WD N53 B30 A | | GDS85039 | Drive Shaft | | 30 | | 58.7 | 73 | 615 | |
| | 2007.09-2008.08 | AT/MT | R | R | Estate 4WD N53 B30 A | | GDS85134 | Drive Shaft | | 30 | | 58.7 | 73 | 665 | |
| | 2007.09-2012.06 | 6AT/6MT | R | L | Estate RWD N53 B30 A | | GDS85039 | Drive Shaft | | 30 | | 58.7 | 73 | 615 | |
| | 2007.09-2012.06 | 6AT/6MT | R | R | Estate RWD N53 B30 A | | GDS85134 | Drive Shaft | | 30 | | 58.7 | 73 | 665 | |
| | 2007.09-2012.06 | 6AT/6MT | R | L/R | Estate RWD N53 B30 A | | GCI85036 | Outer Joint | | 30 | 25 | 58.7 | 73 | 58 | I |
| | 2007.09-2012.06 | 6AT/6MT | R | L/R | Estate RWD N53 B30 A | | GCI35025 | Inner Joint | | | 25 | | | 26 | |
| 3.0 (160 kw) | 2007.09-2008.08 | 6AT/6MT | F | L | Estate 4WD N53 B30 A | | GDS85124 | Drive Shaft | 48W | 30 | 27 | 64.8 | 77 | 571 | |
| | 2007.09-2008.08 | 6AT/6MT | F | R | Estate 4WD N53 B30 A | | GDS85125 | Drive Shaft | 48W | 30 | 27 | 64.8 | 77 | 892 | |
| | 2007.09-2008.08 | 6AT/6MT | F | L | Estate 4WD N53 B30 A | | GCI85066 | Inner Joint | | 27 | 24 | 43.95 | 53.5 | 126.5 | |
| | 2007.09-2008.08 | 6AT/6MT | F | R | Estate 4WD N53 B30 A | | GCI85067 | Inner Joint | | 27 | 24 | 43.95 | 376 | 126 | |
| | 2007.09-2008.08 | AT/MT | F | L/R | Estate 4WD N53 B30 A | | GCO85020 | Outer Joint | 48W | 30 | 33 | 64.8 | 77 | 60 | M |
| | 2007.09-2008.08 | AT/MT | R | L | Estate 4WD N53 B30 A | | GDS85039 | Drive Shaft | | 30 | | 58.7 | 73 | 615 | |
| | 2007.09-2008.08 | AT/MT | R | R | Estate 4WD N53 B30 A | | GDS85134 | Drive Shaft | | 30 | | 58.7 | 73 | 665 | |
| | 2007.09-2012.06 | 6AT/6MT | R | L | Estate RWD N53 B30 A | | GDS85039 | Drive Shaft | | 30 | | 58.7 | 73 | 615 | |
| | 2007.09-2012.06 | 6AT/6MT | R | R | Estate RWD N53 B30 A | | GDS85134 | Drive Shaft | | 30 | | 58.7 | 73 | 665 | |
| | 2007.09-2012.06 | 6AT/6MT | R | L/R | Estate RWD N53 B30 A | | GCI85036 | Outer Joint | | 30 | 25 | 58.7 | 73 | 58 | I |
| | 2007.09-2012.06 | 6AT/6MT | R | L/R | Estate RWD N53 B30 A | | GCI35025 | Inner Joint | | | 25 | | | 26 | |
| **325i xDrive** | | | | | | | | | | | | | | | |
| 3.0 (155 kw) | 2008.09-2011.10 | 6AT/6MT | F | L | Saloon 4WD N53 B30 A | | GDS85124 | Drive Shaft | 48W | 30 | 27 | 64.8 | 77 | 571 | |
| | 2008.09-2011.10 | 6AT/6MT | F | R | Saloon 4WD N53 B30 A | | GDS85125 | Drive Shaft | 48W | 30 | 27 | 64.8 | 77 | 892 | |
| | 2008.09-2011.10 | 6AT/6MT | F | L/R | Saloon 4WD N53 B30 A | | GCO85020 | Outer Joint | 48W | 30 | 33 | 64.8 | 77 | 60 | M |
| | 2008.09-2011.10 | 6AT/6MT | F | L | Saloon 4WD N53 B30 A | | GCI85066 | Inner Joint | | 27 | 24 | 43.95 | 53.5 | 126.5 | |
| | 2008.09-2011.10 | 6AT/6MT | F | R | Saloon 4WD N53 B30 A | | GCI85067 | Inner Joint | | 27 | 24 | 43.95 | 376 | 126 | |
| | 2008.09-2011.10 | AT/MT | R | L | Saloon 4WD N53 B30 A | | GDS85039 | Drive Shaft | | 30 | | 58.7 | 73 | 615 | |
| | 2008.09-2011.10 | AT/MT | R | R | Saloon 4WD N53 B30 A | | GDS85134 | Drive Shaft | | 30 | | 58.7 | 73 | 665 | |
| 3.0 (160 kw) | 2008.09-2011.10 | 6AT/6MT | F | L | Saloon 4WD N53 B30 A | | GDS85124 | Drive Shaft | 48W | 30 | 27 | 64.8 | 77 | 571 | |
| | 2008.09-2011.10 | 6AT/6MT | F | R | Saloon 4WD N53 B30 A | | GDS85125 | Drive Shaft | 48W | 30 | 27 | 64.8 | 77 | 892 | |
| | 2008.09-2011.10 | 6AT/6MT | F | L/R | Saloon 4WD N53 B30 A | | GCO85020 | Outer Joint | 48W | 30 | 33 | 64.8 | 77 | 60 | M |
| | 2008.09-2011.10 | 6AT/6MT | F | L | Saloon 4WD N53 B30 A | | GCI85066 | Inner Joint | | 27 | 24 | 43.95 | 53.5 | 126.5 | |
| | 2008.09-2011.10 | 6AT/6MT | F | R | Saloon 4WD N53 B30 A | | GCI85067 | Inner Joint | | 27 | 24 | 43.95 | 376 | 126 | |
| | 2008.09-2011.10 | 6AT/6MT | R | L | Saloon 4WD N53 B30 A | | GDS85039 | Drive Shaft | | 30 | | 58.7 | 73 | 615 | |
| | 2008.09-2011.10 | 6AT/6MT | R | R | Saloon 4WD N53 B30 A | | GDS85134 | Drive Shaft | | 30 | | 58.7 | 73 | 665 | |
| **325i xDrive Coupe** | | | | | | | | | | | | | | | |
| 2.5 (150 kw) | 2010.03-2013.04 | 6AT/6MT | F | L | Coupe 4WD N52 B25 A | | GDS85124 | Drive Shaft | 48W | 30 | 27 | 64.8 | 77 | 571 | |
| | 2010.03-2013.04 | 6AT/6MT | F | R | Coupe 4WD N52 B25 A | | GDS85125 | Drive Shaft | 48W | 30 | 27 | 64.8 | 77 | 892 | |
| | 2010.03-2013.04 | 6AT/6MT | F | L/R | Coupe 4WD N52 B25 A | | GCO85020 | Outer Joint | 48W | 30 | 33 | 64.8 | 77 | 60 | M |
| | 2010.03-2013.04 | 6AT/6MT | F | L | Coupe 4WD N52 B25 A | | GCI85066 | Inner Joint | | 27 | 24 | 43.95 | 53.5 | 126.5 | |
| | 2010.03-2013.04 | 6AT/6MT | F | R | Coupe 4WD N52 B25 A | | GCI85067 | Inner Joint | | 27 | 24 | 43.95 | 376 | 126 | |
| | 2010.03-2013.04 | AT/MT | R | L | Coupe 4WD N52 B25 A | | GDS85039 | Drive Shaft | | 30 | | 58.7 | 73 | 615 | |
| | 2010.03-2013.04 | AT/MT | R | R | Coupe 4WD N52 B25 A | | GDS85134 | Drive Shaft | | 30 | | 58.7 | 73 | 665 | |
| 2.5 (155 kw) | 2010.03-2013.04 | AT/MT | F | L/R | Coupe 4WD N52B25AF | | GCO85020 | Outer Joint | 48W | 30 | 33 | 64.8 | 77 | 60 | M |
| 3.0 (155 kw) | 2008.09-2013.06 | 6AT/6MT | F | L | Coupe 4WD N53 B30 A | | GDS85124 | Drive Shaft | 48W | 30 | 27 | 64.8 | 77 | 571 | |
| | 2008.09-2013.06 | 6AT/6MT | F | R | Coupe 4WD N53 B30 A | | GDS85125 | Drive Shaft | 48W | 30 | 27 | 64.8 | 77 | 892 | |
| | 2008.09-2013.06 | 6AT/6MT | F | L/R | Coupe 4WD N53 B30 A | | GCO85020 | Outer Joint | 48W | 30 | 33 | 64.8 | 77 | 60 | M |
| | 2008.09-2013.06 | 6AT/6MT | F | L | Coupe 4WD N53 B30 A | | GCI85066 | Inner Joint | | 27 | 24 | 43.95 | 53.5 | 126.5 | |
| | 2008.09-2013.06 | 6AT/6MT | F | R | Coupe 4WD N53 B30 A | | GCI85067 | Inner Joint | | 27 | 24 | 43.95 | 376 | 126 | |
| | 2008.09-2013.06 | AT/MT | R | L | Coupe 4WD N53 B30 A | | GDS85039 | Drive Shaft | | 30 | | 58.7 | 73 | 615 | |
| | 2008.09-2013.06 | AT/MT | R | R | Coupe 4WD N53 B30 A | | GDS85134 | Drive Shaft | | 30 | | 58.7 | 73 | 665 | |
| 3.0 (160 kw) | 2008.09-2013.12 | 6AT/6MT | F | L | Coupe 4WD N53 B30 A | | GDS85124 | Drive Shaft | 48W | 30 | 27 | 64.8 | 77 | 571 | |
| | 2008.09-2013.12 | 6AT/6MT | F | R | Coupe 4WD N53 B30 A | | GDS85125 | Drive Shaft | 48W | 30 | 27 | 64.8 | 77 | 892 | |
| | 2008.09-2013.12 | 6AT/6MT | F | L/R | Coupe 4WD N53 B30 A | | GCO85020 | Outer Joint | 48W | 30 | 33 | 64.8 | 77 | 60 | M |

| | YEAR | TRANSM. | F/R | L/R | BODY STYLE & DRIVE TYPE & ENGINE | REMARKS | G-AP Ref. | PRODUCT | ABS | Technical Specifications A | B | C | H | L | P |
|---|---|---|---|---|---|---|---|---|---|---|---|---|---|---|---|
| **BMW** | | | | | | | | | | | | | | | |
| **325i xDrive Coupe** | | | | | | | | | | | | | | | |
| 3.0 (160 kw) | 2008.09-2013.12 | 6AT/6MT | F | L | Coupe 4WD N53 B30 A | | GCI85066 | Inner Joint | | 27 | 24 | 43.95 | 53.5 | 126.5 | |
| | 2008.09-2013.12 | 6AT/6MT | F | R | Coupe 4WD N53 B30 A | | GCI85067 | Inner Joint | | 27 | 24 | 43.95 | 376 | 126 | |
| | 2008.09-2013.12 | 6AT/6MT | R | L | Coupe 4WD N53 B30 A | | GDS85039 | Drive Shaft | | 30 | | 58.7 | 73 | 615 | |
| | 2008.09-2013.12 | 6AT/6MT | R | R | Coupe 4WD N53 B30 A | | GDS85134 | Drive Shaft | | 30 | | 58.7 | 73 | 665 | |
| **325i xDrive Touring** | | | | | | | | | | | | | | | |
| 3.0 (155 kw) | 2008.09-2012.06 | 6AT/6MT | F | L | Estate 4WD N53 B30 A | | GDS85124 | Drive Shaft | 48W | 30 | 27 | 64.8 | 77 | 571 | |
| | 2008.09-2012.06 | 6AT/6MT | F | R | Estate 4WD N53 B30 A | | GDS85125 | Drive Shaft | 48W | 30 | 27 | 64.8 | 77 | 892 | |
| | 2008.09-2012.06 | 6AT/6MT | F | L/R | Estate 4WD N53 B30 A | | GCO85020 | Outer Joint | 48W | 30 | 33 | 64.8 | 77 | 60 | M |
| | 2008.09-2012.06 | 6AT/6MT | F | L | Estate 4WD N53 B30 A | | GCI85066 | Inner Joint | | 27 | 24 | 43.95 | 53.5 | 126.5 | |
| | 2008.09-2012.06 | 6AT/6MT | F | R | Estate 4WD N53 B30 A | | GCI85067 | Inner Joint | | 27 | 24 | 43.95 | 376 | 126 | |
| | 2008.09-2012.06 | AT/MT | R | L | Estate 4WD N53 B30 A | | GDS85039 | Drive Shaft | | 30 | | 58.7 | 73 | 615 | |
| | 2008.09-2012.06 | AT/MT | R | R | Estate 4WD N53 B30 A | | GDS85134 | Drive Shaft | | 30 | | 58.7 | 73 | 665 | |
| 3.0 (160 kw) | 2008.09-2012.06 | 6AT/6MT | F | L | Estate 4WD N53 B30 A | | GDS85124 | Drive Shaft | 48W | 30 | 27 | 64.8 | 77 | 571 | |
| | 2008.09-2012.06 | 6AT/6MT | F | R | Estate 4WD N53 B30 A | | GDS85125 | Drive Shaft | 48W | 30 | 27 | 64.8 | 77 | 892 | |
| | 2008.09-2012.06 | 6AT/6MT | F | L/R | Estate 4WD N53 B30 A | | GCO85020 | Outer Joint | 48W | 30 | 33 | 64.8 | 77 | 60 | M |
| | 2008.09-2012.06 | 6AT/6MT | F | L | Estate 4WD N53 B30 A | | GCI85066 | Inner Joint | | 27 | 24 | 43.95 | 53.5 | 126.5 | |
| | 2008.09-2012.06 | 6AT/6MT | F | R | Estate 4WD N53 B30 A | | GCI85067 | Inner Joint | | 27 | 24 | 43.95 | 376 | 126 | |
| | 2008.09-2012.06 | 6AT/6MT | R | L | Estate 4WD N53 B30 A | | GDS85039 | Drive Shaft | | 30 | | 58.7 | 73 | 615 | |
| | 2008.09-2012.06 | 6AT/6MT | R | R | Estate 4WD N53 B30 A | | GDS85134 | Drive Shaft | | 30 | | 58.7 | 73 | 665 | |
| **325xi** | | | | | | | | | | | | | | | |
| 2.5 (160 kw) | 2005.08-2008.08 | 6AT/6MT | F | L | Estate 4WD N52 B25 A | | GDS85124 | Drive Shaft | 48W | 30 | 27 | 64.8 | 77 | 571 | |
| | 2005.08-2008.08 | 6AT/6MT | F | R | Estate 4WD N52 B25 A | | GDS85125 | Drive Shaft | 48W | 30 | 27 | 64.8 | 77 | 892 | |
| | 2005.08-2008.08 | 6AT/6MT | F | L | Estate 4WD N52 B25 A | | GCI85066 | Inner Joint | | 27 | 24 | 43.95 | 53.5 | 126.5 | |
| | 2005.08-2008.08 | 6AT/6MT | F | R | Estate 4WD N52 B25 A | | GCI85067 | Inner Joint | | 27 | 24 | 43.95 | 376 | 126 | |
| | 2005.08-2008.08 | AT/MT | F | L/R | Estate 4WD N52 B25 A | | GCO85020 | Outer Joint | 48W | 30 | 33 | 64.8 | 77 | 60 | M |
| | 2005.08-2008.08 | MT | R | L | Estate 4WD N52 B25 A | | GDS85039 | Drive Shaft | | 30 | | 58.7 | 73 | 615 | |
| | 2005.08-2008.08 | MT | R | R | Estate 4WD N52 B25 A | | GDS85134 | Drive Shaft | | 30 | | 58.7 | 73 | 665 | |
| | 2006.09-2010.02 | 6AT/6MT | F | L | Coupe 4WD N52 B25 A | | GDS85124 | Drive Shaft | 48W | 30 | 27 | 64.8 | 77 | 571 | |
| | 2006.09-2010.02 | 6AT/6MT | F | R | Coupe 4WD N52 B25 A | | GDS85125 | Drive Shaft | 48W | 30 | 27 | 64.8 | 77 | 892 | |
| | 2006.09-2010.02 | 6AT/6MT | F | L | Coupe 4WD N52 B25 A | | GCI85066 | Inner Joint | | 27 | 24 | 43.95 | 53.5 | 126.5 | |
| | 2006.09-2010.02 | 6AT/6MT | F | R | Coupe 4WD N52 B25 A | | GCI85067 | Inner Joint | | 27 | 24 | 43.95 | 376 | 126 | |
| | 2006.09-2010.02 | AT/MT | F | L/R | Coupe 4WD N52 B25 A | | GCO85020 | Outer Joint | 48W | 30 | 33 | 64.8 | 77 | 60 | M |
| | 2006.09-2010.02 | MT | R | L | Coupe 4WD N52 B25 A | | GDS85039 | Drive Shaft | | 30 | | 58.7 | 73 | 615 | |
| | 2006.09-2010.02 | MT | R | R | Coupe 4WD N52 B25 A | | GDS85134 | Drive Shaft | | 30 | | 58.7 | 73 | 665 | |
| **328i** | | | | | | | | | | | | | | | |
| 2.0 (160 kw) | 2011.11-2015.06 | 8AT | R | L | Saloon RWD N20 B20 A | | GDS85148 | Drive Shaft | | 28 | 27 | 57 | 70.5 | 749 | |
| | 2011.11-2015.06 | 8AT | R | R | Saloon RWD N20 B20 A | | GDS85147 | Drive Shaft | | 28 | 27 | 57 | 70.5 | 803 | |
| | 2011.11-2015.06 | 8AT | R | L/R | Saloon RWD N20 B20 A | | GCO85024 | Outer Joint | | 28 | 33 | 57 | 70.5 | 58 | I |
| | 2011.11-2015.06 | 8AT | R | L/R | Saloon RWD N20 B20 A | | GCI85082 | Inner Joint | | 27 | 33 | 44 | 75 | 102 | |
| 2.0 (180 kw) | 2011.11-2018.10 | 6MT | R | L | Saloon RWD N20 B20 A;N26 B20 A;N20 B20 C | | GDS85066 | Drive Shaft | | 28 | 27 | 57.4 | 71 | 744 | |
| | 2011.11-2018.10 | 6MT | R | R | Saloon RWD N20 B20 A;N26 B20 A;N20 B20 C | | GDS85067 | Drive Shaft | | 28 | 27 | 57.4 | 71 | 800 | |
| | 2011.11-2018.10 | 6MT | R | L/R | Saloon RWD N20 B20 A;N26 B20 A;N20 B20 C | Diameter [mm]:35 | GCI83732 | Inner Joint | | 27 | 25 | 43.9 | 75 | 72 | |
| | 2011.11-2018.10 | 8AT | R | L | Saloon RWD N20 B20 A;N26 B20 A;N20 B20 C | | GDS85148 | Drive Shaft | | 28 | 27 | 57 | 70.5 | 749 | |
| | 2011.11-2018.10 | 8AT | R | R | Saloon RWD N20 B20 A;N26 B20 A;N20 B20 C | | GDS85147 | Drive Shaft | | 28 | 27 | 57 | 70.5 | 803 | |
| | 2011.11-2018.10 | 8AT | R | L/R | Saloon RWD N20 B20 A;N26 B20 A;N20 B20 C | | GCO85024 | Outer Joint | | 28 | 33 | 57 | 70.5 | 58 | I |
| | 2011.11-2018.10 | 8AT | R | L/R | Saloon RWD N20 B20 A;N26 B20 A;N20 B20 C | | GCI85082 | Inner Joint | | 27 | 33 | 44 | 75 | 102 | |
| 2.8 (142 kw) | 1995.01-1998.04 | 5AT/5MT | R | L/R | Saloon RWD M52B286S1 | | GDS85007 | Drive Shaft | 48W | 27 | | 64 | 68.5 | 615 | |
| | 1997.12-2000.05 | AT/MT/Semi-AT | R | R | Saloon RWD M52B286S2 | | GDS85042 | Drive Shaft | 48W | 27 | | 64 | 69 | 672 | |
| | 1997.12-2000.05 | AT/MT/Semi-AT | R | L/R | Saloon RWD M52B286S2 | | GCI99127 | Inner Joint | | | 25 | | | 26 | |
| | 1997.12-2000.05 | Semi-AT | R | L | Saloon RWD M52B286S2 | | GDS85051 | Drive Shaft | 48W | 27 | | 64 | 69 | 618 | |
| 3.0 (172 kw) | 2006.09-2011.12 | 6AT/6MT | R | L | Saloon RWD N52 B30 A;N51 B30 A | | GDS85022 | Drive Shaft | 48W | 27 | | 69 | 68 | 607 | |
| | 2006.09-2011.12 | 6AT/6MT | R | R | Saloon RWD N52 B30 A;N51 B30 A | | GDS85023 | Drive Shaft | 48W | 27 | | 69 | 68 | 660 | |
| | 2006.09-2011.12 | 6AT/6MT | R | L/R | Saloon RWD N52 B30 A;N51 B30 A | | GCI99145 | Outer Joint | 48W | 27 | 25 | 69 | 68 | 58 | I |
| | 2006.09-2011.12 | 6AT/6MT | R | L/R | Saloon RWD N52 B30 A;N51 B30 A | | GCI35025 | Inner Joint | | | 25 | | | 26 | |
| **328i Cabrio** | | | | | | | | | | | | | | | |
| 2.8 (142 kw) | 1995.01-1999.11 | 5AT/5MT | R | L/R | Cabriolet RWD M52B286S1 | | GDS85007 | Drive Shaft | 48W | 27 | | 64 | 68.5 | 615 | |
| **328i Coupe** | | | | | | | | | | | | | | | |
| 2.8 (142 kw) | 1995.01-1999.04 | AT | R | L/R | Coupe RWD M52B286S1 | | GDS85007 | Drive Shaft | 48W | 27 | | 64 | 68.5 | 615 | |
| | 1998.12-2000.05 | AT | R | L | Coupe RWD M52B286S2 | | GDS85051 | Drive Shaft | 48W | 27 | | 64 | 69 | 618 | |
| | 1998.12-2000.05 | AT/MT | R | R | Coupe RWD M52B286S2 | | GDS85042 | Drive Shaft | 48W | 27 | | 64 | 69 | 672 | |
| 3.0 (172 kw) | 2006.06-2013.06 | 6MT | R | L | Coupe RWD N52 B30 A;N51 B30 A | | GDS85022 | Drive Shaft | 48W | 27 | | 69 | 68 | 607 | |
| | 2006.06-2013.06 | 6MT | R | R | Coupe RWD N52 B30 A;N51 B30 A | | GDS85023 | Drive Shaft | 48W | 27 | | 69 | 68 | 660 | |
| | 2006.06-2013.06 | 6MT | R | L | Coupe RWD N52 B30 A;N51 B30 A | | GCI35025 | Inner Joint | | | 25 | | | 26 | |
| | 2006.09-2008.08 | 6AT/6MT | F | L | Coupe 4WD N52 B30 A;N51 B30 A | | GDS85124 | Drive Shaft | 48W | 30 | 27 | 64.8 | 77 | 571 | |
| | 2006.09-2008.08 | 6AT/6MT | F | R | Coupe 4WD N52 B30 A;N51 B30 A | | GDS85125 | Drive Shaft | 48W | 30 | 27 | 64.8 | 77 | 892 | |

| | YEAR | TRANSM. | F/R | L/R | BODY STYLE & DRIVE TYPE & ENGINE | REMARKS | G-AP Ref. | PRODUCT | ABS | Technical Specifications A | B | C | H | L | P |
|---|---|---|---|---|---|---|---|---|---|---|---|---|---|---|---|
| **BMW** | | | | | | | | | | | | | | | |
| **328i Coupe** | | | | | | | | | | | | | | | |
| 3.0 (172 kw) | 2006.09-2008.08 | 6AT/6MT | F | L/R | Coupe 4WD N52 B30 A;N51 B30 A | | GCO85020 | Outer Joint | 48W | 30 | 33 | 64.8 | 77 | 60 | M |
| | 2006.09-2008.08 | 6AT/6MT | F | L | Coupe 4WD N52 B30 A;N51 B30 A | | GCI85066 | Inner Joint | | 27 | 24 | 43.95 | 53.5 | 126.5 | |
| | 2006.09-2008.08 | 6AT/6MT | F | R | Coupe 4WD N52 B30 A;N51 B30 A | | GCI85067 | Inner Joint | | 27 | 24 | 43.95 | 376 | 126 | |
| | 2006.09-2008.08 | 6AT/6MT | R | L | Coupe 4WD N52 B30 A;N51 B30 A | | GDS85039 | Drive Shaft | | 30 | | 58.7 | 73 | 615 | |
| | 2006.09-2008.08 | 6AT/6MT | R | R | Coupe 4WD N52 B30 A;N51 B30 A | | GDS85134 | Drive Shaft | | 30 | | 58.7 | 73 | 665 | |
| | 2006.09-2008.08 | 6AT/6MT | R | L/R | Coupe 4WD N52 B30 A;N51 B30 A | | GCI35025 | Inner Joint | | | 25 | | | 26 | |
| **328i Gran Turismo** | | | | | | | | | | | | | | | |
| 2.0 (180 kw) | 2013.03-2016.06 | 6MT | R | L | Hatchback RWD N20 B20 A;N26 B20 A | | GDS85066 | Drive Shaft | | 28 | 27 | 57.4 | 71 | 744 | |
| | 2013.03-2016.06 | 6MT | R | R | Hatchback RWD N20 B20 A;N26 B20 A | | GDS85067 | Drive Shaft | | 28 | 27 | 57.4 | 71 | 800 | |
| | 2013.03-2016.06 | 6MT | R | L/R | Hatchback RWD N20 B20 A;N26 B20 A | Diameter [mm]:35 | GCI83732 | Inner Joint | | 27 | 25 | 43.9 | 75 | 72 | |
| | 2013.03-2016.06 | 8AT | R | L | Hatchback RWD N20 B20 A;N26 B20 A | | GDS85148 | Drive Shaft | | 28 | 27 | 57 | 70.5 | 749 | |
| | 2013.03-2016.06 | 8AT | R | R | Hatchback RWD N20 B20 A;N26 B20 A | | GDS85147 | Drive Shaft | | 28 | 27 | 57 | 70.5 | 803 | |
| | 2013.03-2016.06 | 8AT | R | L/R | Hatchback RWD N20 B20 A;N26 B20 A | Date from:2013.03 | GCO85024 | Outer Joint | | 28 | 33 | 57 | 70.5 | 58 | I |
| | 2013.03-2016.06 | 8AT | R | L/R | Hatchback RWD N20 B20 A;N26 B20 A | | GCI85082 | Inner Joint | | 27 | 33 | 44 | 75 | 102 | |
| **328i Touring** | | | | | | | | | | | | | | | |
| 2.0 (180 kw) | 2012.07-2015.06 | 6MT | R | L | Estate RWD N20 B20 A;N26 B20 A | | GDS85066 | Drive Shaft | | 28 | 27 | 57.4 | 71 | 744 | |
| | 2012.07-2015.06 | 6MT | R | R | Estate RWD N20 B20 A;N26 B20 A | | GDS85067 | Drive Shaft | | 28 | 27 | 57.4 | 71 | 800 | |
| | 2012.07-2015.06 | 6MT | R | L/R | Estate RWD N20 B20 A;N26 B20 A | Diameter [mm]:35 | GCI83732 | Inner Joint | | 27 | 25 | 43.9 | 75 | 72 | |
| | 2012.07-2015.06 | 8AT | R | L/R | Estate RWD N20 B20 A;N26 B20 A | | GCO85024 | Outer Joint | | 28 | 33 | 57 | 70.5 | 58 | I |
| | 2012.07-2015.06 | 8AT | R | L/R | Estate RWD N20 B20 A;N26 B20 A | | GCI85082 | Inner Joint | | 27 | 33 | 44 | 75 | 102 | |
| | 2012.07-2015.06 | AT | R | L | Estate RWD N20 B20 A;N26 B20 A | | GDS85148 | Drive Shaft | | 28 | 27 | 57 | 70.5 | 749 | |
| | 2012.07-2015.06 | AT | R | R | Estate RWD N20 B20 A;N26 B20 A | | GDS85147 | Drive Shaft | | 28 | 27 | 57 | 70.5 | 803 | |
| 2.8 (142 kw) | 1995.02-1999.04 | AT | R | L/R | Estate RWD M52B286S1 | | GDS85007 | Drive Shaft | 48W | 27 | | 64 | 68.5 | 615 | |
| | 1995.02-1999.04 | AT | R | L/R | Estate RWD M52B286S1 | | GCI99127 | Inner Joint | | | 25 | | | 26 | |
| | 1999.06-2000.05 | AT/MT/Semi-AT | R | R | Estate RWD M52B286S2 | | GDS85042 | Drive Shaft | 48W | 27 | | 64 | 69 | 672 | |
| | 1999.06-2000.05 | AT/MT/Semi-AT | R | L/R | Estate RWD M52B286S2 | | GCI99127 | Inner Joint | | | 25 | | | 26 | |
| | 1999.06-2000.05 | Semi-AT | R | L | Estate RWD M52B286S2 | | GDS85051 | Drive Shaft | 48W | 27 | | 64 | 69 | 618 | |
| **328i xDrive** | | | | | | | | | | | | | | | |
| 2.0 (180 kw) | 2012.07-2016.08 | 8AT/6MT | F | L | Saloon 4WD N20 B20 A;N26 B20 A | | GDS82052 | Drive Shaft | | 31 | 27 | 55.8 | | 550 | |
| | 2012.07-2016.08 | 8AT/6MT | F | R | Saloon 4WD N20 B20 A;N26 B20 A | | GDS82053 | Drive Shaft | | 31 | 27 | 55.8 | | 841 | |
| | 2012.07-2016.08 | 8AT/6MT | F | L | Saloon 4WD N20 B20 A;N26 B20 A | | GCO81603 | Outer Joint | | 31 | 33 | 55.8 | | 69.5 | M |
| | 2012.07-2016.08 | 8AT/6MT | F | L | Saloon 4WD N20 B20 A;N26 B20 A | | GCI81055 | Inner Joint | | 27 | 24 | 43.95 | 60 | 123.5 | |
| | 2012.07-2016.08 | 8AT/6MT | F | R | Saloon 4WD N20 B20 A;N26 B20 A | | GCI81597 | Inner Joint | | 27 | 24 | 43.95 | 349.5 | 125 | |
| | 2012.07-2016.08 | 6MT | R | L | Saloon 4WD N20 B20 A;N26 B20 A | | GDS85066 | Drive Shaft | | 28 | 27 | 57.4 | 71 | 744 | |
| | 2012.07-2016.08 | 6MT | R | R | Saloon 4WD N20 B20 A;N26 B20 A | | GDS85067 | Drive Shaft | | 28 | 27 | 57.4 | 71 | 800 | |
| | 2012.07-2016.08 | 6MT | R | L/R | Saloon 4WD N20 B20 A;N26 B20 A | Diameter [mm]:35 | GCI83732 | Inner Joint | | 27 | 25 | 43.9 | 75 | 72 | |
| | 2012.07-2016.08 | AT | R | L | Saloon 4WD N20 B20 A;N26 B20 A | Date from:2014.04 | GDS81118 | Drive Shaft | | 28 | 27 | 57 | 70.5 | 750 | |
| | 2012.07-2016.08 | AT | R | L | Saloon 4WD N20 B20 A;N26 B20 A | Date to:2014.03 | GDS85148 | Drive Shaft | | 28 | 27 | 57 | 70.5 | 749 | |
| | 2012.07-2016.08 | AT | R | R | Saloon 4WD N20 B20 A;N26 B20 A | Date from:2014.04 | GDS81117 | Drive Shaft | | 28 | 27 | 57 | 70.5 | 805 | |
| | 2012.07-2016.08 | AT | R | R | Saloon 4WD N20 B20 A;N26 B20 A | Date to:2014.03 | GDS85147 | Drive Shaft | | 28 | 27 | 57 | 70.5 | 803 | |
| | 2012.07-2016.08 | AT | R | L/R | Saloon 4WD N20 B20 A;N26 B20 A | Date from:2012.07 | GCO85024 | Outer Joint | | 28 | 33 | 57 | 70.5 | 58 | I |
| | 2012.07-2016.08 | AT | R | L/R | Saloon 4WD N20 B20 A;N26 B20 A | Date from:2014.04 | GCI81056 | Inner Joint | | 27 | 33 | 44 | 75 | 97 | |
| | 2012.07-2016.08 | AT | R | L/R | Saloon 4WD N20 B20 A;N26 B20 A | Date to:2014.03 | GCI85082 | Inner Joint | | 27 | 33 | 44 | 75 | 102 | |
| **328i xDrive Coupe** | | | | | | | | | | | | | | | |
| 3.0 (172 kw) | 2008.09-2013.06 | 6AT/6MT | F | L | Coupe 4WD N52 B30 A;N51 B30 A | | GDS85124 | Drive Shaft | 48W | 30 | 27 | 64.8 | 77 | 571 | |
| | 2008.09-2013.06 | 6AT/6MT | F | R | Coupe 4WD N52 B30 A;N51 B30 A | | GDS85125 | Drive Shaft | 48W | 30 | 27 | 64.8 | 77 | 892 | |
| | 2008.09-2013.06 | 6AT/6MT | F | L/R | Coupe 4WD N52 B30 A;N51 B30 A | | GCO85020 | Outer Joint | 48W | 30 | 33 | 64.8 | 77 | 60 | M |
| | 2008.09-2013.06 | 6AT/6MT | F | L | Coupe 4WD N52 B30 A;N51 B30 A | | GCI85066 | Inner Joint | | 27 | 24 | 43.95 | 53.5 | 126.5 | |
| | 2008.09-2013.06 | 6AT/6MT | F | R | Coupe 4WD N52 B30 A;N51 B30 A | | GCI85067 | Inner Joint | | 27 | 24 | 43.95 | 376 | 126 | |
| | 2008.09-2013.06 | 6AT/6MT | R | L | Coupe 4WD N52 B30 A;N51 B30 A | | GDS85039 | Drive Shaft | | 30 | | 58.7 | 73 | 615 | |
| | 2008.09-2013.06 | 6AT/6MT | R | R | Coupe 4WD N52 B30 A;N51 B30 A | | GDS85134 | Drive Shaft | | 30 | | 58.7 | 73 | 665 | |
| | 2008.09-2013.06 | 6AT/6MT | R | L/R | Coupe 4WD N52 B30 A;N51 B30 A | | GCI35025 | Inner Joint | | | 25 | | | 26 | |
| **328i xDrive Gran Turismo** | | | | | | | | | | | | | | | |
| 2.0 (180 kw) | 2013.07-2016.06 | AT | F | L | Hatchback 4WD N20 B20 A;N26 B20 A | | GDS82052 | Drive Shaft | | 31 | 27 | 55.8 | | 550 | |
| | 2013.07-2016.06 | AT | F | R | Hatchback 4WD N20 B20 A;N26 B20 A | | GDS82053 | Drive Shaft | | 31 | 27 | 55.8 | | 841 | |
| | 2013.07-2016.06 | AT | F | L | Hatchback 4WD N20 B20 A;N26 B20 A | | GCO81603 | Outer Joint | | 31 | 33 | 55.8 | | 69.5 | M |
| | 2013.07-2016.06 | AT | F | L | Hatchback 4WD N20 B20 A;N26 B20 A | | GCI81055 | Inner Joint | | 27 | 24 | 43.95 | 60 | 123.5 | |
| | 2013.07-2016.06 | AT | F | R | Hatchback 4WD N20 B20 A;N26 B20 A | | GCI81597 | Inner Joint | | 27 | 24 | 43.95 | 349.5 | 125 | |
| | 2013.07-2016.06 | AT | R | L | Hatchback 4WD N20 B20 A;N26 B20 A | | GDS81118 | Drive Shaft | | 28 | 27 | 57 | 70.5 | 750 | |
| | 2013.07-2016.06 | AT | R | L | Hatchback 4WD N20 B20 A;N26 B20 A | | GDS85148 | Drive Shaft | | 28 | 27 | 57 | 70.5 | 749 | |
| | 2013.07-2016.06 | AT | R | R | Hatchback 4WD N20 B20 A;N26 B20 A | | GDS81117 | Drive Shaft | | 28 | 27 | 57 | 70.5 | 805 | |
| | 2013.07-2016.06 | AT | R | R | Hatchback 4WD N20 B20 A;N26 B20 A | | GDS85147 | Drive Shaft | | 28 | 27 | 57 | 70.5 | 803 | |
| | 2013.07-2016.06 | AT | R | L/R | Hatchback 4WD N20 B20 A;N26 B20 A | | GCO85024 | Outer Joint | | 28 | 33 | 57 | 70.5 | 58 | I |
| | 2013.07-2016.06 | AT | R | L/R | Hatchback 4WD N20 B20 A;N26 B20 A | | GCI81056 | Inner Joint | | 27 | 33 | 44 | 75 | 97 | |
| | 2013.07-2016.06 | AT | R | L/R | Hatchback 4WD N20 B20 A;N26 B20 A | | GCI85082 | Inner Joint | | 27 | 33 | 44 | 75 | 102 | |

| | YEAR | TRANSM. | F/R | L/R | BODY STYLE & DRIVE TYPE & ENGINE | REMARKS | G-AP Ref. | PRODUCT | ABS | Technical Specifications A | B | C | H | L | P |
|---|---|---|---|---|---|---|---|---|---|---|---|---|---|---|---|
| **BMW** | | | | | | | | | | | | | | | |
| **328i xDrive Gran Turismo** | | | | | | | | | | | | | | | |
| 2.0 (180 kw) | 2013.07-2016.06 | AT/MT | R | R | Hatchback 4WD N20 B20 A;N26 B20 A | | GDS85067 | Drive Shaft | | 28 | 27 | 57.4 | 71 | 800 | |
| **328i xDrive Touring** | | | | | | | | | | | | | | | |
| 2.0 (180 kw) | 2013.03-2016.06 | 8AT/6MT | F | L | Estate 4WD N20 B20 A;N26 B20 A | | GDS82052 | Drive Shaft | | 31 | 27 | 55.8 | | 550 | |
| | 2013.03-2016.06 | 8AT/6MT | F | R | Estate 4WD N20 B20 A;N26 B20 A | | GDS82053 | Drive Shaft | | 31 | 27 | 55.8 | | 841 | |
| | 2013.03-2016.06 | 8AT/6MT | F | L | Estate 4WD N20 B20 A;N26 B20 A | | GCO81603 | Outer Joint | | 31 | 33 | 55.8 | | 69.5 | M |
| | 2013.03-2016.06 | 8AT/6MT | F | L | Estate 4WD N20 B20 A;N26 B20 A | | GCI81055 | Inner Joint | | 27 | 24 | 43.95 | 60 | 123.5 | |
| | 2013.03-2016.06 | 8AT/6MT | F | R | Estate 4WD N20 B20 A;N26 B20 A | | GCI81597 | Inner Joint | | 27 | 24 | 43.95 | 349.5 | 125 | |
| | 2013.03-2016.06 | 6MT | R | L | Estate 4WD N20 B20 A;N26 B20 A | | GDS85066 | Drive Shaft | | 28 | 27 | 57.4 | 71 | 744 | |
| | 2013.03-2016.06 | 6MT | R | R | Estate 4WD N20 B20 A;N26 B20 A | | GDS85067 | Drive Shaft | | 28 | 27 | 57.4 | 71 | 800 | |
| | 2013.03-2016.06 | 6MT | R | L/R | Estate 4WD N20 B20 A;N26 B20 A | Diameter [mm]:35 | GCI83732 | Inner Joint | | 27 | 25 | 43.9 | 75 | 72 | |
| | 2013.03-2016.06 | 8AT | R | L | Estate 4WD N20 B20 A;N26 B20 A | Date from:2014.03 | GDS81118 | Drive Shaft | | 28 | 27 | 57 | 70.5 | 750 | |
| | 2013.03-2016.06 | 8AT | R | L | Estate 4WD N20 B20 A;N26 B20 A | Date to:2014.02 | GDS85148 | Drive Shaft | | 28 | 27 | 57 | 70.5 | 749 | |
| | 2013.03-2016.06 | 8AT | R | R | Estate 4WD N20 B20 A;N26 B20 A | Date from:2014.03 | GDS81117 | Drive Shaft | | 28 | 27 | 57 | 70.5 | 805 | |
| | 2013.03-2016.06 | 8AT | R | R | Estate 4WD N20 B20 A;N26 B20 A | Date to:2014.02 | GDS85147 | Drive Shaft | | 28 | 27 | 57 | 70.5 | 803 | |
| | 2013.03-2016.06 | 8AT | R | L/R | Estate 4WD N20 B20 A;N26 B20 A | Date from:2014.03 | GCI81056 | Inner Joint | | 27 | 33 | 44 | 75 | 97 | |
| | 2013.03-2016.06 | 8AT | R | L/R | Estate 4WD N20 B20 A;N26 B20 A | Date to:2014.02 | GCI85082 | Inner Joint | | 27 | 33 | 44 | 75 | 102 | |
| | 2013.03-2016.06 | AT | R | L/R | Estate 4WD N20 B20 A;N26 B20 A | Date from:2013.01;Date to:2014.02 | GCO85024 | Outer Joint | | 28 | 33 | 57 | 70.5 | 58 | I |
| **330d** | | | | | | | | | | | | | | | |
| 3.0 (135 kw) | 1999.08-2003.02 | 5MT/SAT | F | L | Saloon 4WD M57D306D1 | | GDS85047 | Drive Shaft | | 30 | 27 | 59 | 73 | 577 | |
| | 1999.08-2003.02 | 5MT/SAT | F | R | Saloon 4WD M57D306D1 | | GDS85048 | Drive Shaft | | 30 | 27 | 59 | 73 | 897 | |
| | 1999.08-2003.02 | 5MT/SAT | F | L/R | Saloon 4WD M57D306D1 | | GCO85002 | Outer Joint | | 30 | 27 | 59 | 73 | 69 | M |
| | 1999.08-2003.02 | 5MT | R | L | Saloon 4WD M57D306D1 | | GDS57626 | Drive Shaft | 48W | 30 | | 69 | 74.5 | 615 | |
| | 1999.08-2003.02 | 5MT | R | L | Saloon RWD M57D306D1 | | GDS57626 | Drive Shaft | 48W | 30 | | 69 | 74.5 | 615 | |
| 3.0 (150 kw) | 2002.09-2004.12 | AT/MT | F | L | Saloon 4WD M57D306D2 | | GDS85047 | Drive Shaft | | 30 | 27 | 59 | 73 | 577 | |
| | 2002.09-2004.12 | AT/MT | F | R | Saloon 4WD M57D306D2 | | GDS85048 | Drive Shaft | | 30 | 27 | 59 | 73 | 897 | |
| | 2002.09-2004.12 | | F | L/R | Saloon 4WD M57D306D2 | | GCO85002 | Outer Joint | | 30 | 27 | 59 | 73 | 69 | M |
| | 2002.09-2004.12 | 5AT/6MT | R | L | Saloon 4WD M57D306D2 | | GDS57626 | Drive Shaft | 48W | 30 | | 69 | 74.5 | 615 | |
| | 2003.03-2005.02 | 5AT/6MT | R | L | Saloon RWD M57D306D2 | | GDS57626 | Drive Shaft | 48W | 30 | | 69 | 74.5 | 615 | |
| 3.0 (155 kw) | 2005.09-2011.12 | 6MT | R | R | Saloon RWD N57 D30 A;M57 D30 (306D3) | | GDS85073 | Drive Shaft | | 30 | | 58.8 | 73 | 653 | |
| | 2005.09-2011.12 | MT | R | L | Saloon RWD N57 D30 A;M57 D30 (306D3) | | GDS85085 | Drive Shaft | | 30 | | 58.7 | 73 | 598 | |
| | 2005.09-2011.12 | MT | R | L | Saloon RWD N57 D30 A;M57 D30 (306D3) | | GCI83027 | Inner Joint | | | 28 | | | 28 | |
| 3.0 (170 kw) | 2005.09-2008.08 | 6AT/6MT | F | L | Saloon 4WD M57 D30 (306D3) | | GDS85124 | Drive Shaft | 48W | 30 | 27 | 64.8 | 77 | 571 | |
| | 2005.09-2008.08 | 6AT/6MT | F | R | Saloon 4WD M57 D30 (306D3) | | GDS85125 | Drive Shaft | 48W | 30 | 27 | 64.8 | 77 | 892 | |
| | 2005.09-2008.08 | 6AT/6MT | F | L/R | Saloon 4WD M57 D30 (306D3) | | GCO85020 | Outer Joint | 48W | 30 | 33 | 64.8 | 77 | 60 | M |
| | 2005.09-2008.08 | 6AT/6MT | F | L | Saloon 4WD M57 D30 (306D3) | | GCI85066 | Inner Joint | | 27 | 24 | 43.95 | 53.5 | 126.5 | |
| | 2005.09-2008.08 | 6AT/6MT | F | R | Saloon 4WD M57 D30 (306D3) | | GCI85067 | Inner Joint | | 27 | 24 | 43.95 | 376 | 126 | |
| | 2005.09-2008.08 | 6AT | R | L | Saloon 4WD M57 D30 (306D3) | Date from:2007.10 | GDS85039 | Drive Shaft | | 30 | | 58.7 | 73 | 615 | |
| | 2005.09-2008.08 | 6AT | R | L | Saloon 4WD M57 D30 (306D3) | Date to:2007.09 | GDS85085 | Drive Shaft | | 30 | | 58.7 | 73 | 598 | |
| | 2005.09-2008.08 | 6AT | R | R | Saloon 4WD M57 D30 (306D3) | Date to:2007.09 | GDS85073 | Drive Shaft | | 30 | | 58.8 | 73 | 653 | |
| | 2005.09-2008.08 | 6AT | R | R | Saloon 4WD M57 D30 (306D3) | Date from:2007.10 | GDS85134 | Drive Shaft | | 30 | | 58.7 | 73 | 665 | |
| | 2005.09-2008.08 | 6AT | R | L/R | Saloon 4WD M57 D30 (306D3) | Date from:2007.10 | GCI35025 | Inner Joint | | | 25 | | | 26 | |
| | 2005.09-2008.08 | 6AT/6MT | R | R | Saloon 4WD M57 D30 (306D3) | Transmission:6AT,Date to:2007.09;Transmission:6MT | GCI85048 | Inner Joint | | | 28 | | | 28 | |
| | 2005.09-2008.08 | 6MT | R | L | Saloon 4WD M57 D30 (306D3) | | GDS85085 | Drive Shaft | | 30 | | 58.7 | 73 | 598 | |
| | 2005.09-2008.08 | 6MT | R | R | Saloon 4WD M57 D30 (306D3) | | GDS85073 | Drive Shaft | | 30 | | 58.8 | 73 | 653 | |
| | 2005.09-2008.08 | 6MT | R | L | Saloon 4WD M57 D30 (306D3) | Transmission:6AT,Date to:2007.09;Transmission:6MT | GCI83027 | Inner Joint | | | 28 | | | 28 | |
| | 2005.09-2008.09 | 6AT/6MT | R | L | Saloon RWD M57 D30 (306D3) | | GDS85085 | Drive Shaft | | 30 | | 58.7 | 73 | 598 | |
| | 2005.09-2008.09 | 6AT/6MT | R | R | Saloon RWD M57 D30 (306D3) | | GDS85073 | Drive Shaft | | 30 | | 58.8 | 73 | 653 | |
| | 2005.09-2008.09 | 6AT/6MT | R | L | Saloon RWD M57 D30 (306D3) | | GCI83027 | Inner Joint | | | 28 | | | 28 | |
| | 2005.09-2008.09 | 6AT/6MT | R | R | Saloon RWD M57 D30 (306D3) | | GCI85048 | Inner Joint | | | 28 | | | 28 | |
| 3.0 (180 kw) | 2008.09-2011.10 | 6AT/6MT | R | L | Saloon RWD N57 D30 A | | GDS85085 | Drive Shaft | | 30 | | 58.7 | 73 | 598 | |
| | 2008.09-2011.10 | 6AT/6MT | R | R | Saloon RWD N57 D30 A | | GDS85073 | Drive Shaft | | 30 | | 58.8 | 73 | 653 | |
| | 2008.09-2011.10 | 6AT/6MT | R | L | Saloon RWD N57 D30 A | | GCI83027 | Inner Joint | | | 28 | | | 28 | |
| | 2008.09-2011.10 | 6AT/6MT | R | R | Saloon RWD N57 D30 A | | GCI85048 | Inner Joint | | | 28 | | | 28 | |
| 3.0 (190 kw) | 2012.07-2018.10 | 8AT | R | L | Saloon RWD N57 D30 A | | GDS85110 | Drive Shaft | | 28 | 32 | 57 | 71 | 748 | |
| | 2012.07-2018.10 | 8AT | R | R | Saloon RWD N57 D30 A | | GDS85109 | Drive Shaft | | 28 | 32 | 57 | 71 | 802 | |
| | 2012.07-2018.10 | 8AT | R | L/R | Saloon RWD N57 D30 A | | GCI85086 | Inner Joint | | 28 | 28 | 62.5 | 71 | 91 | |
| | 2012.07-2018.10 | 8AT | R | L/R | Saloon RWD N57 D30 A | | GCI85087 | Inner Joint | | 32 | 28 | 50 | 85 | 99 | |
| 3.0 (210 kw) | 2012.07-2018.10 | AT | R | L | Saloon RWD N57 D30 A | | GDS85110 | Drive Shaft | | 28 | 32 | 57 | 71 | 748 | |
| | 2012.07-2018.10 | AT | R | R | Saloon RWD N57 D30 A | | GDS85109 | Drive Shaft | | 28 | 32 | 57 | 71 | 802 | |
| | 2012.07-2018.10 | AT | R | L | Saloon RWD N57 D30 A | | GCI85086 | Inner Joint | | 28 | 28 | 62.5 | 71 | 91 | |
| | 2012.07-2018.10 | AT | R | L/R | Saloon RWD N57 D30 A | | GCI85087 | Inner Joint | | 32 | 28 | 50 | 85 | 99 | |
| **330d Cabrio** | | | | | | | | | | | | | | | |
| 3.0 (150 kw) | 2004.10-2007.02 | 6MT | R | L | Cabriolet RWD M57D306D2 | | GDS57626 | Drive Shaft | 48W | 30 | | 69 | 74.5 | 615 | |
| 3.0 (170 kw) | 2007.03-2013.12 | 6AT/6MT | R | L | Convertible RWD M57 D30 (306D3) | | GDS85085 | Drive Shaft | | 30 | | 58.7 | 73 | 598 | |
| | 2007.03-2013.12 | 6AT/6MT | R | R | Convertible RWD M57 D30 (306D3) | | GDS85073 | Drive Shaft | | 30 | | 58.8 | 73 | 653 | |

| | YEAR | TRANSM. | F/R | L/R | BODY STYLE & DRIVE TYPE & ENGINE | REMARKS | G-AP Ref. | PRODUCT | ABS | Technical Specifications A | B | C | H | L | P |
|---|---|---|---|---|---|---|---|---|---|---|---|---|---|---|---|
| **BMW** | | | | | | | | | | | | | | | |
| **330d Cabrio** | | | | | | | | | | | | | | | |
| 3.0 (170 kw) | 2007.03-2013.12 | 6AT/6MT | R | L | Convertible RWD M57 D30 (306D3) | | GCI83027 | Inner Joint | | | 28 | | | 28 | |
| | 2007.03-2013.12 | 6AT/6MT | R | R | Convertible RWD M57 D30 (306D3) | | GCI85048 | Inner Joint | | | 28 | | | 28 | |
| 3.0 (180 kw) | 2009.01-2013.09 | 6AT/6MT | R | L | Convertible RWD N57 D30 A | | GDS85085 | Drive Shaft | | 30 | | 58.7 | 73 | 598 | |
| | 2009.01-2013.09 | 6AT/6MT | R | R | Convertible RWD N57 D30 A | | GDS85073 | Drive Shaft | | 30 | | 58.8 | 73 | 653 | |
| | 2009.01-2013.09 | 6AT/6MT | R | L | Convertible RWD N57 D30 A | | GCI83027 | Inner Joint | | | 28 | | | 28 | |
| | 2009.01-2013.09 | 6AT/6MT | R | R | Convertible RWD N57 D30 A | | GCI85048 | Inner Joint | | | 28 | | | 28 | |
| **330d Coupe** | | | | | | | | | | | | | | | |
| 3.0 (150 kw) | 2003.02-2006.07 | 5AT/5MT | R | L | Coupe RWD M57D306D2 | | GDS57626 | Drive Shaft | 48W | 30 | | 69 | 74.5 | 615 | |
| 3.0 (155 kw) | 2007.02-2010.02 | 6AT/6MT | R | R | Coupe RWD M57 D30 (306D3) | | GDS85073 | Drive Shaft | | 30 | | 58.8 | 73 | 653 | |
| | 2007.02-2010.02 | MT | R | L | Coupe RWD M57 D30 (306D3) | | GDS85085 | Drive Shaft | | 30 | | 58.7 | 73 | 598 | |
| | 2007.02-2010.02 | MT | R | L | Coupe RWD M57 D30 (306D3) | | GCI83027 | Inner Joint | | | 28 | | | 28 | |
| 3.0 (170 kw) | 2006.03-2008.08 | 6AT/6MT | F | L | Coupe 4WD M57 D30 (306D3) | | GDS85124 | Drive Shaft | 48W | 30 | 27 | 64.8 | 77 | 571 | |
| | 2006.03-2008.08 | 6AT/6MT | F | R | Coupe 4WD M57 D30 (306D3) | | GDS85125 | Drive Shaft | 48W | 30 | 27 | 64.8 | 77 | 892 | |
| | 2006.03-2008.08 | 6AT/6MT | F | L/R | Coupe 4WD M57 D30 (306D3) | | GCO85020 | Outer Joint | 48W | 30 | 33 | 64.8 | 77 | 60 | M |
| | 2006.03-2008.08 | 6AT | R | R | Coupe 4WD M57 D30 (306D3) | Date from:2007.10 | GDS85134 | Drive Shaft | | 30 | | 58.7 | 73 | 665 | |
| | 2006.03-2008.08 | 6AT/6MT | R | R | Coupe 4WD M57 D30 (306D3) | Transmission:6MT;Transmission:6AT,Date to:2007.09 | GDS85073 | Drive Shaft | | 30 | | 58.8 | 73 | 653 | |
| | 2006.03-2008.08 | AT | R | L | Coupe 4WD M57 D30 (306D3) | Date from:2006.10 | GDS85039 | Drive Shaft | | 30 | | 58.7 | 73 | 615 | |
| | 2006.03-2008.08 | AT | R | R | Coupe 4WD M57 D30 (306D3) | Wheel Side | GCI85036 | Outer Joint | | 30 | 25 | 58.7 | 73 | 58 | I |
| | 2006.03-2008.08 | AT/MT | R | R | Coupe 4WD M57 D30 (306D3) | | GCI35025 | Inner Joint | | | 25 | | | 26 | |
| | 2006.03-2008.08 | MT | R | L | Coupe 4WD M57 D30 (306D3) | | GDS85085 | Drive Shaft | | 30 | | 58.7 | 73 | 598 | |
| | 2006.03-2008.08 | 6AT/6MT | R | L | Coupe RWD M57 D30 (306D3) | | GDS85085 | Drive Shaft | | 30 | | 58.7 | 73 | 598 | |
| | 2006.03-2008.08 | 6AT/6MT | R | R | Coupe RWD M57 D30 (306D3) | | GDS85073 | Drive Shaft | | 30 | | 58.8 | 73 | 653 | |
| | 2006.03-2008.08 | 6AT/6MT | R | L | Coupe RWD M57 D30 (306D3) | | GCI83027 | Inner Joint | | | 28 | | | 28 | |
| | 2006.03-2008.08 | 6AT/6MT | R | R | Coupe RWD M57 D30 (306D3) | | GCI85048 | Inner Joint | | | 28 | | | 28 | |
| 3.0 (180 kw) | 2009.01-2013.06 | 6AT/6MT | R | L | Coupe RWD N57 D30 A | | GDS85085 | Drive Shaft | | 30 | | 58.7 | 73 | 598 | |
| | 2009.01-2013.06 | 6AT/6MT | R | R | Coupe RWD N57 D30 A | | GDS85073 | Drive Shaft | | 30 | | 58.8 | 73 | 653 | |
| | 2009.01-2013.06 | 6AT/6MT | R | L | Coupe RWD N57 D30 A | | GCI83027 | Inner Joint | | | 28 | | | 28 | |
| | 2009.01-2013.06 | 6AT/6MT | R | R | Coupe RWD N57 D30 A | | GCI85048 | Inner Joint | | | 28 | | | 28 | |
| **330d Gran Turismo** | | | | | | | | | | | | | | | |
| 3.0 (190 kw) | 2014.03- | 8AT | R | L | Hatchback RWD N57 D30 A | | GDS85110 | Drive Shaft | | 28 | 32 | 57 | 71 | 748 | |
| | 2014.03- | 8AT | R | R | Hatchback RWD N57 D30 A | | GDS85109 | Drive Shaft | | 28 | 32 | 57 | 71 | 802 | |
| | 2014.03- | 8AT | R | L/R | Hatchback RWD N57 D30 A | | GCI85086 | Inner Joint | | 28 | 28 | 62.5 | 71 | 91 | |
| | 2014.03- | 8AT | R | L/R | Hatchback RWD N57 D30 A | | GCI85087 | Inner Joint | | 32 | 28 | 50 | 85 | 99 | |
| 3.0 (210 kw) | 2014.03- | AT | R | L | Hatchback RWD N57 D30 A | | GDS85110 | Drive Shaft | | 28 | 32 | 57 | 71 | 748 | |
| | 2014.03- | AT | R | R | Hatchback RWD N57 D30 A | | GDS85109 | Drive Shaft | | 28 | 32 | 57 | 71 | 802 | |
| | 2014.03- | AT | R | L/R | Hatchback RWD N57 D30 A | | GCI85086 | Inner Joint | | 28 | 28 | 62.5 | 71 | 91 | |
| | 2014.03- | AT | R | L/R | Hatchback RWD N57 D30 A | | GCI85087 | Inner Joint | | 32 | 28 | 50 | 85 | 99 | |
| **330d Touring** | | | | | | | | | | | | | | | |
| 3.0 (135 kw) | 1999.08-2003.02 | 5MT | R | L | Estate RWD M57D306D1 | | GDS57626 | Drive Shaft | 48W | 30 | | 69 | 74.5 | 615 | |
| | 2000.08-2003.02 | 5MT/SAT | F | L | Estate 4WD M57D306D1 | | GDS85047 | Drive Shaft | | 30 | 27 | 59 | 73 | 577 | |
| | 2000.08-2003.02 | 5MT/SAT | F | R | Estate 4WD M57D306D1 | | GDS85048 | Drive Shaft | | 30 | 27 | 59 | 73 | 897 | |
| | 2000.08-2003.02 | 5MT/SAT | F | L/R | Estate 4WD M57D306D1 | | GCO85002 | Outer Joint | | 30 | 27 | 59 | 73 | 69 | M |
| | 2000.08-2003.02 | 5MT | R | L | Estate 4WD M57D306D1 | | GDS57626 | Drive Shaft | 48W | 30 | | 69 | 74.5 | 615 | |
| 3.0 (150 kw) | 2002.08-2005.05 | AT/MT | F | L | Estate 4WD M57D306D2 | | GDS85047 | Drive Shaft | | 30 | 27 | 59 | 73 | 577 | |
| | 2002.08-2005.05 | AT/MT | F | R | Estate 4WD M57D306D2 | | GDS85048 | Drive Shaft | | 30 | 27 | 59 | 73 | 897 | |
| | 2002.08-2005.05 | | F | L/R | Estate 4WD M57D306D2 | | GCO85002 | Outer Joint | | 30 | 27 | 59 | 73 | 69 | M |
| | 2002.08-2005.05 | 5AT/6MT | R | L | Estate 4WD M57D306D2 | | GDS57626 | Drive Shaft | 48W | 30 | | 69 | 74.5 | 615 | |
| | 2003.03-2005.02 | 5AT/6MT | R | L | Estate RWD M57D306D2 | | GDS57626 | Drive Shaft | 48W | 30 | | 69 | 74.5 | 615 | |
| 3.0 (155 kw) | 2005.06-2012.05 | 6AT/6MT | R | R | Estate RWD N57 D30 A;M57 D30 (306D3) | | GDS85073 | Drive Shaft | | 30 | | 58.8 | 73 | 653 | |
| | 2005.06-2012.05 | MT | R | L | Estate RWD N57 D30 A;M57 D30 (306D3) | | GDS85085 | Drive Shaft | | 30 | | 58.7 | 73 | 598 | |
| | 2005.06-2012.05 | MT | R | L | Estate RWD N57 D30 A;M57 D30 (306D3) | | GCI83027 | Inner Joint | | | 28 | | | 28 | |
| 3.0 (170 kw) | 2004.12-2008.08 | 6AT/6MT | R | L | Estate RWD M57 D30 (306D3) | | GDS85085 | Drive Shaft | | 30 | | 58.7 | 73 | 598 | |
| | 2004.12-2008.08 | 6AT/6MT | R | R | Estate RWD M57 D30 (306D3) | | GDS85073 | Drive Shaft | | 30 | | 58.8 | 73 | 653 | |
| | 2004.12-2008.08 | 6AT/6MT | R | L | Estate RWD M57 D30 (306D3) | | GCI83027 | Inner Joint | | | 28 | | | 28 | |
| | 2004.12-2008.08 | 6AT/6MT | R | R | Estate RWD M57 D30 (306D3) | | GCI85048 | Inner Joint | | | 28 | | | 28 | |
| | 2005.09-2012.06 | 6AT/6MT | F | L | Estate 4WD M57 D30 (306D3) | | GDS85124 | Drive Shaft | 48W | 30 | 27 | 64.8 | 77 | 571 | |
| | 2005.09-2012.06 | 6AT/6MT | F | R | Estate 4WD M57 D30 (306D3) | | GDS85125 | Drive Shaft | 48W | 30 | 27 | 64.8 | 77 | 892 | |
| | 2005.09-2012.06 | 6AT/6MT | F | L/R | Estate 4WD M57 D30 (306D3) | | GCO85020 | Outer Joint | 48W | 30 | 33 | 64.8 | 77 | 60 | M |
| | 2005.09-2012.06 | 6AT/6MT | F | L | Estate 4WD M57 D30 (306D3) | | GCI85066 | Inner Joint | | 27 | 24 | 43.95 | 53.5 | 126.5 | |
| | 2005.09-2012.06 | 6AT/6MT | F | R | Estate 4WD M57 D30 (306D3) | | GCI85067 | Inner Joint | | 27 | 24 | 43.95 | 376 | 126 | |
| | 2005.09-2012.06 | 6AT | R | L | Estate 4WD M57 D30 (306D3) | Date from:2007.10 | GDS85039 | Drive Shaft | | 30 | | 58.7 | 73 | 615 | |
| | 2005.09-2012.06 | 6AT | R | L | Estate 4WD M57 D30 (306D3) | Date to:2007.09 | GDS85085 | Drive Shaft | | 30 | | 58.7 | 73 | 598 | |
| | 2005.09-2012.06 | 6AT | R | R | Estate 4WD M57 D30 (306D3) | Date to:2007.09 | GDS85073 | Drive Shaft | | 30 | | 58.8 | 73 | 653 | |
| | 2005.09-2012.06 | 6AT | R | R | Estate 4WD M57 D30 (306D3) | Date from:2007.10 | GDS85134 | Drive Shaft | | 30 | | 58.7 | 73 | 665 | |
| | 2005.09-2012.06 | 6AT | R | L/R | Estate 4WD M57 D30 (306D3) | Date From:2007.10 | GCI35025 | Inner Joint | | | 25 | | | 26 | |

| | YEAR | TRANSM. | F/R | L/R | BODY STYLE & DRIVE TYPE & ENGINE | REMARKS | G-AP Ref. | PRODUCT | ABS | Technical Specifications A | B | C | H | L | P |
|---|---|---|---|---|---|---|---|---|---|---|---|---|---|---|---|
| **BMW** | | | | | | | | | | | | | | | |
| **330d Touring** | | | | | | | | | | | | | | | |
| 3.0 (170 kw) | 2005.09-2012.06 | 6AT | R | L/R | Estate 4WD M57 D30 (306D3) | Date to:2007.09 | GCI83027 | Inner Joint | | | 28 | | | 28 | |
| | 2005.09-2012.06 | 6MT | R | L | Estate 4WD M57 D30 (306D3) | | GDS85085 | Drive Shaft | | 30 | | 58.7 | 73 | 598 | |
| | 2005.09-2012.06 | 6MT | R | R | Estate 4WD M57 D30 (306D3) | | GDS85073 | Drive Shaft | | 30 | | 58.8 | 73 | 653 | |
| | 2005.09-2012.06 | 6MT | R | L/R | Estate 4WD M57 D30 (306D3) | | GCI83027 | Inner Joint | | | 28 | | | 28 | |
| 3.0 (180 kw) | 2008.02-2012.05 | 6AT/6MT | R | L | Estate RWD N57 D30 A | | GDS85085 | Drive Shaft | | 30 | | 58.7 | 73 | 598 | |
| | 2008.02-2012.05 | 6AT/6MT | R | R | Estate RWD N57 D30 A | | GDS85073 | Drive Shaft | | 30 | | 58.8 | 73 | 653 | |
| | 2008.02-2012.05 | 6AT/6MT | R | L | Estate RWD N57 D30 A | | GCI83027 | Inner Joint | | | 28 | | | 28 | |
| | 2008.02-2012.05 | 6AT/6MT | R | R | Estate RWD N57 D30 A | | GCI85048 | Inner Joint | | | 28 | | | 28 | |
| 3.0 (190 kw) | 2012.07-2019.06 | AT | R | L | Estate RWD N57 D30 A | | GDS85110 | Drive Shaft | | 28 | 32 | 57 | 71 | 748 | |
| | 2012.07-2019.06 | AT | R | R | Estate RWD N57 D30 A | | GDS85109 | Drive Shaft | | 28 | 32 | 57 | 71 | 802 | |
| | 2012.07-2019.06 | AT | R | L/R | Estate RWD N57 D30 A | Wheel Side | GCI85086 | Inner Joint | | 28 | 28 | 62.5 | 71 | 91 | |
| | 2012.07-2019.06 | AT | R | L/R | Estate RWD N57 D30 A | | GCI85087 | Inner Joint | | 32 | 28 | 50 | 85 | 99 | |
| | 2012.07-2019.06 | AT | R | L | Estate Van RWD N57 D30 A | | GDS85110 | Drive Shaft | | 28 | 32 | 57 | 71 | 748 | |
| | 2012.07-2019.06 | AT | R | R | Estate Van RWD N57 D30 A | | GDS85109 | Drive Shaft | | 28 | 32 | 57 | 71 | 802 | |
| | 2012.07-2019.06 | AT | R | L/R | Estate Van RWD N57 D30 A | | GCI85086 | Inner Joint | | 28 | 28 | 62.5 | 71 | 91 | |
| 3.0 (210 kw) | 2012.07-2019.06 | AT | R | L | Estate RWD N57 D30 A | | GDS85110 | Drive Shaft | | 28 | 32 | 57 | 71 | 748 | |
| | 2012.07-2019.06 | AT | R | R | Estate RWD N57 D30 A | | GDS85109 | Drive Shaft | | 28 | 32 | 57 | 71 | 802 | |
| | 2012.07-2019.06 | AT | R | L | Estate RWD N57 D30 A | | GCI85086 | Inner Joint | | 28 | 28 | 62.5 | 71 | 91 | |
| | 2012.07-2019.06 | AT | R | L/R | Estate RWD N57 D30 A | | GCI85087 | Inner Joint | | 32 | 28 | 50 | 85 | 99 | |
| **330d xDrive** | | | | | | | | | | | | | | | |
| 3.0 (180 kw) | 2008.09-2011.10 | 6AT/6MT | F | L | Saloon 4WD N57 D30 A | | GDS85124 | Drive Shaft | 48W | 30 | 27 | 64.8 | 77 | 571 | |
| | 2008.09-2011.10 | 6AT/6MT | F | R | Saloon 4WD N57 D30 A | | GDS85125 | Drive Shaft | 48W | 30 | 27 | 64.8 | 77 | 892 | |
| | 2008.09-2011.10 | 6AT/6MT | F | L/R | Saloon 4WD N57 D30 A | | GCO85020 | Outer Joint | 48W | 30 | 33 | 64.8 | 77 | 60 | M |
| | 2008.09-2011.10 | 6AT | R | R | Saloon 4WD N57 D30 A | | GDS85134 | Drive Shaft | | 30 | | 58.7 | 73 | 665 | |
| | 2008.09-2011.10 | 6MT | R | L | Saloon 4WD N57 D30 A | | GDS85085 | Drive Shaft | | 30 | | 58.7 | 73 | 598 | |
| | 2008.09-2011.10 | 6MT | R | R | Saloon 4WD N57 D30 A | | GDS85073 | Drive Shaft | | 30 | | 58.8 | 73 | 653 | |
| | 2008.09-2011.10 | AT | R | L | Saloon 4WD N57 D30 A | | GDS85039 | Drive Shaft | | 30 | | 58.7 | 73 | 615 | |
| | 2008.09-2011.10 | AT | R | R | Saloon 4WD N57 D30 A | Wheel Side | GCI85036 | Outer Joint | | 30 | 25 | 58.7 | 73 | 58 | I |
| | 2008.09-2011.10 | AT/6AT | R | R | Saloon 4WD N57 D30 A | | GCI35025 | Inner Joint | | | 25 | | | 26 | |
| 3.0 (190 kw) | 2013.03-2018.10 | 8AT | F | L | Saloon 4WD N57 D30 A | | GDS82052 | Drive Shaft | | 31 | 27 | 55.8 | | 550 | |
| | 2013.03-2018.10 | 8AT | F | R | Saloon 4WD N57 D30 A | | GDS82053 | Drive Shaft | | 31 | 27 | 55.8 | | 841 | |
| | 2013.03-2018.10 | 8AT | F | L/R | Saloon 4WD N57 D30 A | | GCO81603 | Outer Joint | | 31 | 33 | 55.8 | | 69.5 | M |
| | 2013.03-2018.10 | 8AT | F | L | Saloon 4WD N57 D30 A | | GCI81055 | Inner Joint | | 27 | 24 | 43.95 | 60 | 123.5 | |
| | 2013.03-2018.10 | 8AT | F | R | Saloon 4WD N57 D30 A | | GCI81597 | Inner Joint | | 27 | 24 | 43.95 | 349.5 | 125 | |
| | 2013.03-2018.10 | 8AT | R | L | Saloon 4WD N57 D30 A | | GDS85110 | Drive Shaft | | 28 | 32 | 57 | 71 | 748 | |
| | 2013.03-2018.10 | 8AT | R | R | Saloon 4WD N57 D30 A | | GDS85109 | Drive Shaft | | 28 | 32 | 57 | 71 | 802 | |
| | 2013.03-2018.10 | 8AT | R | L/R | Saloon 4WD N57 D30 A | | GCI85086 | Inner Joint | | 28 | 28 | 62.5 | 71 | 91 | |
| | 2013.03-2018.10 | 8AT | R | L/R | Saloon 4WD N57 D30 A | | GCI85087 | Inner Joint | | 32 | 28 | 50 | 85 | 99 | |
| 3.0 (195 kw) | 2019.07- | 8AT | F | L | Saloon 4WD B57 D30 A | | GDS56119 | Drive Shaft | | 37 | 27 | 65 | | 557 | |
| | 2019.07- | 8AT | F | R | Saloon 4WD B57 D30 A | | GDS56120 | Drive Shaft | | 37 | 27 | 65 | | 857 | |
| | 2019.07- | 8AT | F | L/R | Saloon 4WD B57 D30 A | | GCO83161 | Outer Joint | | 37 | 33 | 65 | | 73 | M |
| | 2019.07- | 8AT | F | L | Saloon 4WD B57 D30 A | | GCI81055 | Inner Joint | | 27 | 24 | 43.95 | 60 | 123.5 | |
| | 2019.07- | 8AT | F | R | Saloon 4WD B57 D30 A | | GCI81457 | Inner Joint | | 27 | 24 | 43.95 | 359 | 125 | |
| 3.0 (210 kw) | 2013.03-2018.10 | 8AT | F | L | Saloon 4WD N57 D30 A | | GDS82052 | Drive Shaft | | 31 | 27 | 55.8 | | 550 | |
| | 2013.03-2018.10 | 8AT | F | R | Saloon 4WD N57 D30 A | | GDS82053 | Drive Shaft | | 31 | 27 | 55.8 | | 841 | |
| | 2013.03-2018.10 | 8AT | F | L | Saloon 4WD N57 D30 A | | GCO81603 | Outer Joint | | 31 | 33 | 55.8 | | 69.5 | M |
| | 2013.03-2018.10 | 8AT | F | L | Saloon 4WD N57 D30 A | | GCI81055 | Inner Joint | | 27 | 24 | 43.95 | 60 | 123.5 | |
| | 2013.03-2018.10 | 8AT | F | R | Saloon 4WD N57 D30 A | | GCI81597 | Inner Joint | | 27 | 24 | 43.95 | 349.5 | 125 | |
| | 2013.03-2018.10 | AT | R | L | Saloon 4WD N57 D30 A | | GDS85110 | Drive Shaft | | 28 | 32 | 57 | 71 | 748 | |
| | 2013.03-2018.10 | AT | R | R | Saloon 4WD N57 D30 A | | GDS85109 | Drive Shaft | | 28 | 32 | 57 | 71 | 802 | |
| | 2013.03-2018.10 | AT | R | L | Saloon 4WD N57 D30 A | | GCI85086 | Inner Joint | | 28 | 28 | 62.5 | 71 | 91 | |
| | 2013.03-2018.10 | AT | R | L/R | Saloon 4WD N57 D30 A | | GCI85087 | Inner Joint | | 32 | 28 | 50 | 85 | 99 | |
| | 2020.11- | 8AT | F | L | Saloon 4WD B57 D30 B;JA1 | | GDS56119 | Drive Shaft | | 37 | 27 | 65 | | 557 | |
| | 2020.11- | 8AT | F | R | Saloon 4WD B57 D30 B;JA1 | | GDS56120 | Drive Shaft | | 37 | 27 | 65 | | 857 | |
| | 2020.11- | 8AT | F | L/R | Saloon 4WD B57 D30 B;JA1 | | GCO83161 | Outer Joint | | 37 | 33 | 65 | | 73 | M |
| | 2020.11- | 8AT | F | L | Saloon 4WD B57 D30 B;JA1 | | GCI81055 | Inner Joint | | 27 | 24 | 43.95 | 60 | 123.5 | |
| | 2020.11- | 8AT | F | R | Saloon 4WD B57 D30 B;JA1 | | GCI81457 | Inner Joint | | 27 | 24 | 43.95 | 359 | 125 | |
| **330d xDrive Coupe** | | | | | | | | | | | | | | | |
| 3.0 (180 kw) | 2008.03-2010.02 | 6AT/6MT | F | L | Coupe 4WD N57 D30 A | | GDS85124 | Drive Shaft | 48W | 30 | 27 | 64.8 | 77 | 571 | |
| | 2008.03-2010.02 | 6AT/6MT | F | R | Coupe 4WD N57 D30 A | | GDS85125 | Drive Shaft | 48W | 30 | 27 | 64.8 | 77 | 892 | |
| | 2008.03-2010.02 | 6AT/6MT | F | L/R | Coupe 4WD N57 D30 A | | GCO85020 | Outer Joint | 48W | 30 | 33 | 64.8 | 77 | 60 | M |
| | 2008.03-2010.02 | 6AT | R | R | Coupe 4WD N57 D30 A | | GDS85134 | Drive Shaft | | 30 | | 58.7 | 73 | 665 | |
| | 2008.03-2010.02 | AT | R | L | Coupe 4WD N57 D30 A | | GDS85039 | Drive Shaft | | 30 | | 58.7 | 73 | 615 | |
| | 2008.03-2010.02 | AT | R | R | Coupe 4WD N57 D30 A | Wheel Side | GCI85036 | Outer Joint | | 30 | 25 | 58.7 | 73 | 58 | I |
| | 2008.03-2010.02 | AT/6AT | R | R | Coupe 4WD N57 D30 A | | GCI35025 | Inner Joint | | | 25 | | | 26 | |

| | YEAR | TRANSM. | F/R | L/R | BODY STYLE & DRIVE TYPE & ENGINE | REMARKS | G-AP Ref. | PRODUCT | ABS | Technical Specifications A | B | C | H | L | P |
|---|---|---|---|---|---|---|---|---|---|---|---|---|---|---|---|
| **BMW** | | | | | | | | | | | | | | | |
| **330d xDrive Coupe** | | | | | | | | | | | | | | | |
| 3.0 (180 kw) | 2008.03-2010.02 | MT | R | L | Coupe 4WD N57 D30 A | Date from:2008.09 | GDS85085 | Drive Shaft | | 30 | | 58.7 | 73 | 598 | |
| | 2008.03-2010.02 | MT | R | R | Coupe 4WD N57 D30 A | Date from:2008.09 | GDS85073 | Drive Shaft | | 30 | | 58.8 | 73 | 653 | |
| | 2010.02-2013.06 | 6AT/6MT | F | L/R | Coupe 4WD N57 D30 A | | GCO85020 | Outer Joint | 48W | 30 | 33 | 64.8 | 77 | 60 | M |
| | 2010.02-2013.06 | 6AT | R | L | Coupe 4WD N57 D30 A | | GDS85039 | Drive Shaft | | 30 | | 58.7 | 73 | 615 | |
| | 2010.02-2013.06 | 6MT | R | L | Coupe 4WD N57 D30 A | | GDS85085 | Drive Shaft | | 30 | | 58.7 | 73 | 598 | |
| | 2010.02-2013.06 | 6MT | R | R | Coupe 4WD N57 D30 A | | GDS85073 | Drive Shaft | | 30 | | 58.8 | 73 | 653 | |
| **330d xDrive Gran Turismo** | | | | | | | | | | | | | | | |
| 3.0 (190 kw) | 2014.03- | 8AT | F | L | Hatchback 4WD N57 D30 A | | GDS82052 | Drive Shaft | | 31 | 27 | 55.8 | | 550 | |
| | 2014.03- | 8AT | F | R | Hatchback 4WD N57 D30 A | | GDS82053 | Drive Shaft | | 31 | 27 | 55.8 | | 841 | |
| | 2014.03- | 8AT | F | L/R | Hatchback 4WD N57 D30 A | | GCO81603 | Outer Joint | | 31 | 33 | 55.8 | | 69.5 | M |
| | 2014.03- | 8AT | F | L | Hatchback 4WD N57 D30 A | | GCI81055 | Inner Joint | | 27 | 24 | 43.95 | 60 | 123.5 | |
| | 2014.03- | 8AT | F | R | Hatchback 4WD N57 D30 A | | GCI81597 | Inner Joint | | 27 | 24 | 43.95 | 349.5 | 125 | |
| 3.0 (210 kw) | 2014.03- | AT | F | L | Hatchback 4WD N57 D30 A | | GDS82052 | Drive Shaft | | 31 | 27 | 55.8 | | 550 | |
| | 2014.03- | AT | F | R | Hatchback 4WD N57 D30 A | | GDS82053 | Drive Shaft | | 31 | 27 | 55.8 | | 841 | |
| | 2014.03- | AT | F | L | Hatchback 4WD N57 D30 A | | GCO81603 | Outer Joint | | 31 | 33 | 55.8 | | 69.5 | M |
| | 2014.03- | AT | F | L | Hatchback 4WD N57 D30 A | | GCI81055 | Inner Joint | | 27 | 24 | 43.95 | 60 | 123.5 | |
| | 2014.03- | AT | F | R | Hatchback 4WD N57 D30 A | | GCI81597 | Inner Joint | | 27 | 24 | 43.95 | 349.5 | 125 | |
| **330d xDrive Touring** | | | | | | | | | | | | | | | |
| 3.0 (180 kw) | 2009.01-2012.06 | 6AT/6MT | F | L | Estate 4WD N57 D30 A | | GDS85124 | Drive Shaft | 48W | 30 | 27 | 64.8 | 77 | 571 | |
| | 2009.01-2012.06 | 6AT/6MT | F | R | Estate 4WD N57 D30 A | | GDS85125 | Drive Shaft | 48W | 30 | 27 | 64.8 | 77 | 892 | |
| | 2009.01-2012.06 | 6AT/6MT | F | L/R | Estate 4WD N57 D30 A | | GCO85020 | Outer Joint | 48W | 30 | 33 | 64.8 | 77 | 60 | M |
| | 2009.01-2012.06 | 6AT | R | R | Estate 4WD N57 D30 A | | GDS85134 | Drive Shaft | | 30 | | 58.7 | 73 | 665 | |
| | 2009.01-2012.06 | 6MT | R | L | Estate 4WD N57 D30 A | | GDS85085 | Drive Shaft | | 30 | | 58.7 | 73 | 598 | |
| | 2009.01-2012.06 | 6MT | R | R | Estate 4WD N57 D30 A | | GDS85073 | Drive Shaft | | 30 | | 58.8 | 73 | 653 | |
| | 2009.01-2012.06 | AT | R | L | Estate 4WD N57 D30 A | | GDS85039 | Drive Shaft | | 30 | | 58.7 | 73 | 615 | |
| | 2009.01-2012.06 | AT | R | R | Estate 4WD N57 D30 A | Wheel Side | GCI85036 | Outer Joint | | 30 | 25 | 58.7 | 73 | 58 | I |
| | 2009.01-2012.06 | AT/6AT | R | R | Estate 4WD N57 D30 A | | GCI35025 | Inner Joint | | | 25 | | | 26 | |
| 3.0 (190 kw) | 2013.03-2019.06 | 8AT | F | L | Estate 4WD N57 D30 A | | GDS82052 | Drive Shaft | | 31 | 27 | 55.8 | | 550 | |
| | 2013.03-2019.06 | 8AT | F | R | Estate 4WD N57 D30 A | | GDS82053 | Drive Shaft | | 31 | 27 | 55.8 | | 841 | |
| | 2013.03-2019.06 | 8AT | F | L/R | Estate 4WD N57 D30 A | | GCO81603 | Outer Joint | | 31 | 33 | 55.8 | | 69.5 | M |
| | 2013.03-2019.06 | 8AT | F | L | Estate 4WD N57 D30 A | | GCI81055 | Inner Joint | | 27 | 24 | 43.95 | 60 | 123.5 | |
| | 2013.03-2019.06 | 8AT | F | R | Estate 4WD N57 D30 A | | GCI81597 | Inner Joint | | 27 | 24 | 43.95 | 349.5 | 125 | |
| | 2013.03-2019.06 | 8AT | R | L | Estate 4WD N57 D30 A | | GDS85110 | Drive Shaft | | 28 | 32 | 57 | 71 | 748 | |
| | 2013.03-2019.06 | 8AT | R | R | Estate 4WD N57 D30 A | | GDS85109 | Drive Shaft | | 28 | 32 | 57 | 71 | 802 | |
| | 2013.03-2019.06 | 8AT | R | L/R | Estate 4WD N57 D30 A | | GCI85086 | Inner Joint | | 28 | 28 | 62.5 | 71 | 91 | |
| | 2013.03-2019.06 | 8AT | R | L/R | Estate 4WD N57 D30 A | | GCI85087 | Inner Joint | | 32 | 28 | 50 | 85 | 99 | |
| | 2013.03-2019.06 | 8AT | F | L | Estate Van 4WD N57 D30 A | | GDS82052 | Drive Shaft | | 31 | 27 | 55.8 | | 550 | |
| | 2013.03-2019.06 | 8AT | F | R | Estate Van 4WD N57 D30 A | | GDS82053 | Drive Shaft | | 31 | 27 | 55.8 | | 841 | |
| | 2013.03-2019.06 | 8AT | F | L | Estate Van 4WD N57 D30 A | | GCO81603 | Outer Joint | | 31 | 33 | 55.8 | | 69.5 | M |
| | 2013.03-2019.06 | 8AT | F | L | Estate Van 4WD N57 D30 A | | GCI81055 | Inner Joint | | 27 | 24 | 43.95 | 60 | 123.5 | |
| | 2013.03-2019.06 | 8AT | F | R | Estate Van 4WD N57 D30 A | | GCI81597 | Inner Joint | | 27 | 24 | 43.95 | 349.5 | 125 | |
| | 2013.03-2019.06 | AT | R | L | Estate Van 4WD N57 D30 A | | GDS85110 | Drive Shaft | | 28 | 32 | 57 | 71 | 748 | |
| | 2013.03-2019.06 | AT | R | R | Estate Van 4WD N57 D30 A | | GDS85109 | Drive Shaft | | 28 | 32 | 57 | 71 | 802 | |
| 3.0 (195 kw) | 2019.07- | 8AT | F | L | Estate 4WD B57 D30 A | | GDS56119 | Drive Shaft | | 37 | 27 | 65 | | 557 | |
| | 2019.07- | 8AT | F | R | Estate 4WD B57 D30 A | | GDS56120 | Drive Shaft | | 37 | 27 | 65 | | 857 | |
| | 2019.07- | 8AT | F | L/R | Estate 4WD B57 D30 A | | GCO83161 | Outer Joint | | 37 | 33 | 65 | | 73 | M |
| | 2019.07- | 8AT | F | L | Estate 4WD B57 D30 A | | GCI81055 | Inner Joint | | 27 | 24 | 43.95 | 60 | 123.5 | |
| | 2019.07- | 8AT | F | R | Estate 4WD B57 D30 A | | GCI81457 | Inner Joint | | 27 | 24 | 43.95 | 359 | 125 | |
| | 2019.11- | AT | F | L | Estate Van 4WD B57 D30 A | | GDS56119 | Drive Shaft | | 37 | 27 | 65 | | 557 | |
| | 2019.11- | AT | F | R | Estate Van 4WD B57 D30 A | | GDS56120 | Drive Shaft | | 37 | 27 | 65 | | 857 | |
| | 2019.11- | AT | F | L/R | Estate Van 4WD B57 D30 A | | GCO83161 | Outer Joint | | 37 | 33 | 65 | | 73 | M |
| | 2019.11- | AT | F | L | Estate Van 4WD B57 D30 A | | GCI81055 | Inner Joint | | 27 | 24 | 43.95 | 60 | 123.5 | |
| | 2019.11- | AT | F | R | Estate Van 4WD B57 D30 A | | GCI81457 | Inner Joint | | 27 | 24 | 43.95 | 359 | 125 | |
| 3.0 (210 kw) | 2013.03-2019.06 | 8AT | F | L | Estate 4WD N57 D30 A | | GDS82052 | Drive Shaft | | 31 | 27 | 55.8 | | 550 | |
| | 2013.03-2019.06 | 8AT | F | R | Estate 4WD N57 D30 A | | GDS82053 | Drive Shaft | | 31 | 27 | 55.8 | | 841 | |
| | 2013.03-2019.06 | 8AT | F | L | Estate 4WD N57 D30 A | | GCO81603 | Outer Joint | | 31 | 33 | 55.8 | | 69.5 | M |
| | 2013.03-2019.06 | 8AT | F | L | Estate 4WD N57 D30 A | | GCI81055 | Inner Joint | | 27 | 24 | 43.95 | 60 | 123.5 | |
| | 2013.03-2019.06 | 8AT | F | R | Estate 4WD N57 D30 A | | GCI81597 | Inner Joint | | 27 | 24 | 43.95 | 349.5 | 125 | |
| | 2013.03-2019.06 | AT | R | L | Estate 4WD N57 D30 A | | GDS85110 | Drive Shaft | | 28 | 32 | 57 | 71 | 748 | |
| | 2013.03-2019.06 | AT | R | R | Estate 4WD N57 D30 A | | GDS85109 | Drive Shaft | | 28 | 32 | 57 | 71 | 802 | |
| | 2013.03-2019.06 | AT | R | L | Estate 4WD N57 D30 A | | GCI85086 | Inner Joint | | 28 | 28 | 62.5 | 71 | 91 | |
| | 2013.03-2019.06 | AT | R | L/R | Estate 4WD N57 D30 A | | GCI85087 | Inner Joint | | 32 | 28 | 50 | 85 | 99 | |
| | 2020.11- | 8AT | F | L | Estate 4WD B57 D30 B;JA1 | | GDS56119 | Drive Shaft | | 37 | 27 | 65 | | 557 | |
| | 2020.11- | 8AT | F | R | Estate 4WD B57 D30 B;JA1 | | GDS56120 | Drive Shaft | | 37 | 27 | 65 | | 857 | |
| | 2020.11- | 8AT | F | L/R | Estate 4WD B57 D30 B;JA1 | | GCO83161 | Outer Joint | | 37 | 33 | 65 | | 73 | M |

| | YEAR | TRANSM. | F/R | L/R | BODY STYLE & DRIVE TYPE & ENGINE | REMARKS | G-AP Ref. | PRODUCT | ABS | Technical Specifications A | B | C | H | L | P |
|---|---|---|---|---|---|---|---|---|---|---|---|---|---|---|---|
| **BMW** | | | | | | | | | | | | | | | |
| **330d xDrive Touring** | | | | | | | | | | | | | | | |
| 3.0 (210 kw) | 2020.11- | 8AT | F | L | Estate 4WD B57 D30 B;JA1 | | GCI81055 | Inner Joint | | 27 | 24 | 43.95 | 60 | 123.5 | |
| | 2020.11- | 8AT | F | R | Estate 4WD B57 D30 B;JA1 | | GCI81457 | Inner Joint | | 27 | 24 | 43.95 | 359 | 125 | |
| **330e** | | | | | | | | | | | | | | | |
| 2.0 (185 kw) | 2015.11-2018.10 | 8AT | R | L | Saloon RWD B48 B20 A | | GDS85066 | Drive Shaft | | 28 | 27 | 57.4 | 71 | 744 | |
| | 2015.11-2018.10 | 8AT | R | R | Saloon RWD B48 B20 A | | GDS85067 | Drive Shaft | | 28 | 27 | 57.4 | 71 | 800 | |
| **330e xDrive** | | | | | | | | | | | | | | | |
| 2.0 (215 kw) | 2020.07- | 8AT | F | L | Saloon 4WD B48 B20 A;B46 B20 B;GC1 | | GDS56119 | Drive Shaft | | 37 | 27 | 65 | | 557 | |
| | 2020.07- | 8AT | F | R | Saloon 4WD B48 B20 A;B46 B20 B;GC1 | | GDS56120 | Drive Shaft | | 37 | 27 | 65 | | 857 | |
| | 2020.07- | 8AT | F | L/R | Saloon 4WD B48 B20 A;B46 B20 B;GC1 | | GCO83161 | Outer Joint | | 37 | 33 | 65 | | 73 | M |
| | 2020.07- | 8AT | F | L | Saloon 4WD B48 B20 A;B46 B20 B;GC1 | | GCI81055 | Inner Joint | | 27 | 24 | 43.95 | 60 | 123.5 | |
| | 2020.07- | 8AT | F | R | Saloon 4WD B48 B20 A;B46 B20 B;GC1 | | GCI81457 | Inner Joint | | 27 | 24 | 43.95 | 359 | 125 | |
| | 2020.07- | 8AT | R | L | Saloon 4WD B48 B20 A;B46 B20 B;GC1 | | GDS56455 | Drive Shaft | | 37 | 27 | 65 | | 700 | |
| | 2020.07- | 8AT | R | R | Saloon 4WD B48 B20 A;B46 B20 B;GC1 | | GDS56456 | Drive Shaft | | 37 | 27 | 65 | | 756 | |
| **330e xDrive Touring** | | | | | | | | | | | | | | | |
| 2.0 (215 kw) | 2020.07- | 8AT | F | L | Estate 4WD B48 B20 A;GC1 | | GDS56119 | Drive Shaft | | 37 | 27 | 65 | | 557 | |
| | 2020.07- | 8AT | F | R | Estate 4WD B48 B20 A;GC1 | | GDS56120 | Drive Shaft | | 37 | 27 | 65 | | 857 | |
| | 2020.07- | 8AT | F | L/R | Estate 4WD B48 B20 A;GC1 | | GCO83161 | Outer Joint | | 37 | 33 | 65 | | 73 | M |
| | 2020.07- | 8AT | F | L | Estate 4WD B48 B20 A;GC1 | | GCI81055 | Inner Joint | | 27 | 24 | 43.95 | 60 | 123.5 | |
| | 2020.07- | 8AT | F | R | Estate 4WD B48 B20 A;GC1 | | GCI81457 | Inner Joint | | 27 | 24 | 43.95 | 359 | 125 | |
| | 2020.07- | 8AT | R | L | Estate 4WD B48 B20 A;GC1 | | GDS56455 | Drive Shaft | | 37 | 27 | 65 | | 700 | |
| | 2020.07- | 8AT | R | R | Estate 4WD B48 B20 A;GC1 | | GDS56456 | Drive Shaft | | 37 | 27 | 65 | | 756 | |
| **330i** | | | | | | | | | | | | | | | |
| 2.0 (180 kw) | 2022.07- | 8AT | R | L | Saloon RWD B48 B20 B | Date to:2022.09 | GDS56455 | Drive Shaft | | 37 | 27 | 65 | | 700 | |
| | 2022.07- | 8AT | R | R | Saloon RWD B48 B20 B | Date to:2022.09 | GDS56456 | Drive Shaft | | 37 | 27 | 65 | | 756 | |
| 2.0 (185 kw) | 2015.07-2018.10 | 6MT | R | L | Saloon RWD B48 B20 B;B46 B20 B | | GDS85066 | Drive Shaft | | 28 | 27 | 57.4 | 71 | 744 | |
| | 2015.07-2018.10 | 6MT | R | R | Saloon RWD B48 B20 B;B46 B20 B | | GDS85067 | Drive Shaft | | 28 | 27 | 57.4 | 71 | 800 | |
| | 2015.07-2018.10 | 6MT | R | L/R | Saloon RWD B48 B20 B;B46 B20 B | Diameter [mm]:35 | GCI83732 | Inner Joint | | 27 | 25 | 43.9 | 75 | 72 | |
| | 2015.07-2018.10 | 8AT | R | L | Saloon RWD B48 B20 B;B46 B20 B | | GDS85148 | Drive Shaft | | 28 | 27 | 57 | 70.5 | 749 | |
| | 2015.07-2018.10 | 8AT | R | R | Saloon RWD B48 B20 B;B46 B20 B | | GDS85147 | Drive Shaft | | 28 | 27 | 57 | 70.5 | 803 | |
| | 2015.07-2018.10 | 8AT | R | L/R | Saloon RWD B48 B20 B;B46 B20 B | Date from:2015.09 | GCO85024 | Outer Joint | | 28 | 33 | 57 | 70.5 | 58 | I |
| | 2015.07-2018.10 | 8AT | R | L/R | Saloon RWD B48 B20 B;B46 B20 B | | GCI85082 | Inner Joint | | 27 | 33 | 44 | 75 | 102 | |
| 2.0 (190 kw) | 2018.11- | 8AT | R | L | Saloon RWD B48 B20 B;B46 B20 B | | GDS56455 | Drive Shaft | | 37 | 27 | 65 | | 700 | |
| | 2018.11- | 8AT | R | R | Saloon RWD B48 B20 B;B46 B20 B | | GDS56456 | Drive Shaft | | 37 | 27 | 65 | | 756 | |
| | 2024.09- | | R | L | Saloon RWD B48 B20 S | | GDS56455 | Drive Shaft | | 37 | 27 | 65 | | 700 | |
| | 2024.09- | | R | R | Saloon RWD B48 B20 S | | GDS56456 | Drive Shaft | | 37 | 27 | 65 | | 756 | |
| 3.0 (168 kw) | 2001.01-2005.12 | AT | R | R | Saloon RWD M54B306S3 | | GCI85013 | Inner Joint | | | 28 | | | 26 | |
| 3.0 (170 kw) | 2000.06-2005.02 | AT/MT | F | L | Saloon 4WD M54B306S3 | | GDS85047 | Drive Shaft | | 30 | 27 | 59 | 73 | 577 | |
| | 2000.06-2005.02 | AT/MT | F | R | Saloon 4WD M54B306S3 | | GDS85048 | Drive Shaft | | 30 | 27 | 59 | 73 | 897 | |
| | 2000.06-2005.02 | | F | L/R | Saloon 4WD M54B306S3 | | GCO85002 | Outer Joint | | 30 | 27 | 59 | 73 | 69 | M |
| | 2000.06-2005.02 | 5MT | R | L | Saloon 4WD M54B306S3 | | GDS57626 | Drive Shaft | 48W | 30 | | 69 | 74.5 | 615 | |
| | 2000.06-2005.02 | MT | R | R | Saloon RWD M54B306S3 | | GDS81120 | Drive Shaft | 48W | 30 | | 69 | 73 | 672 | |
| 3.0 (190 kw) | 2004.12-2011.10 | MT | R | L | Saloon RWD N52 B30 A;N52 B30 BF | | GDS85039 | Drive Shaft | | 30 | | 58.7 | 73 | 615 | |
| | 2004.12-2011.10 | MT | R | R | Saloon RWD N52 B30 A;N52 B30 BF | | GDS85134 | Drive Shaft | | 30 | | 58.7 | 73 | 665 | |
| | 2004.12-2011.10 | MT | R | L/R | Saloon RWD N52 B30 A;N52 B30 BF | | GCI35025 | Inner Joint | | | 25 | | | 26 | |
| | 2005.09-2007.08 | 6AT/6MT | F | L | Saloon 4WD N52 B30 A | | GDS85124 | Drive Shaft | 48W | 30 | 27 | 64.8 | 77 | 571 | |
| | 2005.09-2007.08 | 6AT/6MT | F | R | Saloon 4WD N52 B30 A | | GDS85125 | Drive Shaft | 48W | 30 | 27 | 64.8 | 77 | 892 | |
| | 2005.09-2007.08 | 6AT/6MT | F | L | Saloon 4WD N52 B30 A | | GCI85066 | Inner Joint | | 27 | 24 | 43.95 | 53.5 | 126.5 | |
| | 2005.09-2007.08 | 6AT/6MT | F | R | Saloon 4WD N52 B30 A | | GCI85067 | Inner Joint | | 27 | 24 | 43.95 | 376 | 126 | |
| | 2005.09-2007.08 | AT/MT | F | L/R | Saloon 4WD N52 B30 A | | GCO85020 | Outer Joint | 48W | 30 | 33 | 64.8 | 77 | 60 | M |
| | 2005.09-2007.08 | MT | R | L | Saloon 4WD N52 B30 A | | GDS85039 | Drive Shaft | | 30 | | 58.7 | 73 | 615 | |
| | 2005.09-2007.08 | MT | R | R | Saloon 4WD N52 B30 A | | GDS85134 | Drive Shaft | | 30 | | 58.7 | 73 | 665 | |
| 3.0 (200 kw) | 2007.03-2011.12 | AT/MT | R | L | Saloon RWD N52 B30 A;N52 B30 BF | | GDS85039 | Drive Shaft | | 30 | | 58.7 | 73 | 615 | |
| | 2007.03-2011.12 | AT/MT | R | R | Saloon RWD N52 B30 A;N52 B30 BF | | GDS85134 | Drive Shaft | | 30 | | 58.7 | 73 | 665 | |
| | 2007.03-2011.12 | AT/MT | R | L/R | Saloon RWD N52 B30 A;N52 B30 BF | | GCI35025 | Inner Joint | | | 25 | | | 26 | |
| | 2007.09-2008.08 | 6AT/6MT | F | L | Saloon 4WD N53 B30 A | | GDS85124 | Drive Shaft | 48W | 30 | 27 | 64.8 | 77 | 571 | |
| | 2007.09-2008.08 | 6AT/6MT | F | R | Saloon 4WD N53 B30 A | | GDS85125 | Drive Shaft | 48W | 30 | 27 | 64.8 | 77 | 892 | |
| | 2007.09-2008.08 | 6AT/6MT | F | L | Saloon 4WD N53 B30 A | | GCI85066 | Inner Joint | | 27 | 24 | 43.95 | 53.5 | 126.5 | |
| | 2007.09-2008.08 | 6AT/6MT | F | R | Saloon 4WD N53 B30 A | | GCI85067 | Inner Joint | | 27 | 24 | 43.95 | 376 | 126 | |
| | 2007.09-2008.08 | AT/MT | F | L/R | Saloon 4WD N53 B30 A | | GCO85020 | Outer Joint | 48W | 30 | 33 | 64.8 | 77 | 60 | M |
| | 2007.09-2008.08 | AT/MT | R | L | Saloon 4WD N53 B30 A | | GDS85039 | Drive Shaft | | 30 | | 58.7 | 73 | 615 | |
| | 2007.09-2008.08 | AT/MT | R | R | Saloon 4WD N53 B30 A | | GDS85134 | Drive Shaft | | 30 | | 58.7 | 73 | 665 | |
| | 2007.09-2011.10 | AT/MT | R | L | Saloon RWD N53 B30 A | | GDS85039 | Drive Shaft | | 30 | | 58.7 | 73 | 615 | |
| | 2007.09-2011.10 | AT/MT | R | R | Saloon RWD N53 B30 A | | GDS85134 | Drive Shaft | | 30 | | 58.7 | 73 | 665 | |
| | 2007.09-2011.10 | AT/MT | R | L/R | Saloon RWD N53 B30 A | | GCI35025 | Inner Joint | | | 25 | | | 26 | |

| | YEAR | TRANSM. | F/R | L/R | BODY STYLE & DRIVE TYPE & ENGINE | REMARKS | G-AP Ref. | PRODUCT | ABS | Technical Specifications A | B | C | H | L | P |
|---|---|---|---|---|---|---|---|---|---|---|---|---|---|---|---|
| **BMW** | | | | | | | | | | | | | | | |
| **330i Cabrio** | | | | | | | | | | | | | | | |
| 3.0 (170 kw) | 2000.06-2006.08 | 5AT/5MT/6MT | R | L | Cabriolet RWD M54B306S3 | Date from:2000.10 | GDS57626 | Drive Shaft | 48W | 30 | | 69 | 74.5 | 615 | |
| | 2000.06-2006.08 | AT | R | R | Cabriolet RWD M54B306S3 | Date to:2000.09 | GDS81120 | Drive Shaft | 48W | 30 | | 69 | 73 | 672 | |
| 3.0 (190 kw) | 2010.03-2013.10 | AT/MT | R | L | Convertible RWD N52 B30 A;N52 B30 AF | | GDS85039 | Drive Shaft | | 30 | | 58.7 | 73 | 615 | |
| | 2010.03-2013.10 | AT/MT | R | R | Convertible RWD N52 B30 A;N52 B30 AF | | GDS85134 | Drive Shaft | | 30 | | 58.7 | 73 | 665 | |
| | 2010.03-2013.10 | AT/MT | R | L/R | Convertible RWD N52 B30 A;N52 B30 AF | | GCI35025 | Inner Joint | | | 25 | | | 26 | |
| 3.0 (200 kw) | 2007.03-2010.02 | AT/MT | R | L | Convertible RWD N52 B30 A | | GDS85039 | Drive Shaft | | 30 | | 58.7 | 73 | 615 | |
| | 2007.03-2010.02 | AT/MT | R | R | Convertible RWD N52 B30 A | | GDS85134 | Drive Shaft | | 30 | | 58.7 | 73 | 665 | |
| | 2007.03-2013.10 | AT/MT | R | L | Convertible RWD N53 B30 A | | GDS85039 | Drive Shaft | | 30 | | 58.7 | 73 | 615 | |
| | 2007.03-2013.10 | AT/MT | R | R | Convertible RWD N53 B30 A | | GDS85134 | Drive Shaft | | 30 | | 58.7 | 73 | 665 | |
| **330i Coupe** | | | | | | | | | | | | | | | |
| 3.0 (170 kw) | 2000.06-2006.05 | 5AT/5MT | R | L | Coupe RWD M54B306S3 | | GDS57626 | Drive Shaft | 48W | 30 | | 69 | 74.5 | 615 | |
| 3.0 (190 kw) | 2006.09-2007.08 | SAT/6MT | F | L | Coupe 4WD N52 B30 A | | GDS85124 | Drive Shaft | 48W | 30 | 27 | 64.8 | 77 | 571 | |
| | 2006.09-2007.08 | SAT/6MT | F | R | Coupe 4WD N52 B30 A | | GDS85125 | Drive Shaft | 48W | 30 | 27 | 64.8 | 77 | 892 | |
| | 2006.09-2007.08 | SAT/6MT | F | L/R | Coupe 4WD N52 B30 A | | GCO85020 | Outer Joint | 48W | 30 | 33 | 64.8 | 77 | 60 | M |
| | 2006.09-2007.08 | SAT/6MT | F | L | Coupe 4WD N52 B30 A | | GCI85066 | Inner Joint | | 27 | 24 | 43.95 | 53.5 | 126.5 | |
| | 2006.09-2007.08 | SAT/6MT | F | R | Coupe 4WD N52 B30 A | | GCI85067 | Inner Joint | | 27 | 24 | 43.95 | 376 | 126 | |
| | 2006.09-2007.08 | AT/MT | R | L | Coupe 4WD N52 B30 A | | GDS85039 | Drive Shaft | | 30 | | 58.7 | 73 | 615 | |
| | 2006.09-2007.08 | AT/MT | R | R | Coupe 4WD N52 B30 A | | GDS85134 | Drive Shaft | | 30 | | 58.7 | 73 | 665 | |
| | 2010.03-2013.06 | AT/MT | R | L | Coupe RWD N52 B30 A | | GDS85039 | Drive Shaft | | 30 | | 58.7 | 73 | 615 | |
| | 2010.03-2013.06 | AT/MT | R | R | Coupe RWD N52 B30 A | | GDS85134 | Drive Shaft | | 30 | | 58.7 | 73 | 665 | |
| | 2010.03-2013.06 | AT/MT | R | L/R | Coupe RWD N52 B30 A | | GCI35025 | Inner Joint | | | 25 | | | 26 | |
| 3.0 (200 kw) | 2006.09-2007.08 | 6AT/6MT | F | L | Coupe 4WD N52 B30 A | | GDS85124 | Drive Shaft | 48W | 30 | 27 | 64.8 | 77 | 571 | |
| | 2006.09-2007.08 | 6AT/6MT | F | R | Coupe 4WD N52 B30 A | | GDS85125 | Drive Shaft | 48W | 30 | 27 | 64.8 | 77 | 892 | |
| | 2006.09-2007.08 | 6AT/6MT | F | L | Coupe 4WD N52 B30 A | | GCI85066 | Inner Joint | | 27 | 24 | 43.95 | 53.5 | 126.5 | |
| | 2006.09-2007.08 | 6AT/6MT | F | R | Coupe 4WD N52 B30 A | | GCI85067 | Inner Joint | | 27 | 24 | 43.95 | 376 | 126 | |
| | 2006.09-2007.08 | AT/MT | F | L/R | Coupe 4WD N52 B30 A | | GCO85020 | Outer Joint | 48W | 30 | 33 | 64.8 | 77 | 60 | M |
| | 2006.09-2007.08 | AT/MT | R | L | Coupe 4WD N52 B30 A | | GDS85039 | Drive Shaft | | 30 | | 58.7 | 73 | 615 | |
| | 2006.09-2007.08 | AT/MT | R | R | Coupe 4WD N52 B30 A | | GDS85134 | Drive Shaft | | 30 | | 58.7 | 73 | 665 | |
| | 2006.09-2010.02 | AT/MT | R | L | Coupe RWD N52 B30 A;N52 B30 BF;N52 B30 AF | | GDS85039 | Drive Shaft | | 30 | | 58.7 | 73 | 615 | |
| | 2006.09-2010.02 | AT/MT | R | R | Coupe RWD N52 B30 A;N52 B30 BF;N52 B30 AF | | GDS85134 | Drive Shaft | | 30 | | 58.7 | 73 | 665 | |
| | 2007.03-2010.02 | 6AT/6MT | F | L | Coupe 4WD N53 B30 A | | GDS85124 | Drive Shaft | 48W | 30 | 27 | 64.8 | 77 | 571 | |
| | 2007.03-2010.02 | 6AT/6MT | F | R | Coupe 4WD N53 B30 A | | GDS85125 | Drive Shaft | 48W | 30 | 27 | 64.8 | 77 | 892 | |
| | 2007.03-2010.02 | 6AT/6MT | F | L | Coupe 4WD N53 B30 A | | GCI85066 | Inner Joint | | 27 | 24 | 43.95 | 53.5 | 126.5 | |
| | 2007.03-2010.02 | 6AT/6MT | F | R | Coupe 4WD N53 B30 A | | GCI85067 | Inner Joint | | 27 | 24 | 43.95 | 376 | 126 | |
| | 2007.03-2010.02 | AT/MT | F | L/R | Coupe 4WD N53 B30 A | | GCO85020 | Outer Joint | 48W | 30 | 33 | 64.8 | 77 | 60 | M |
| | 2007.03-2010.02 | AT/MT | R | L | Coupe 4WD N53 B30 A | | GDS85039 | Drive Shaft | | 30 | | 58.7 | 73 | 615 | |
| | 2007.03-2010.02 | AT/MT | R | R | Coupe 4WD N53 B30 A | | GDS85134 | Drive Shaft | | 30 | | 58.7 | 73 | 665 | |
| | 2007.09-2013.06 | AT/MT | R | L | Coupe RWD N53 B30 A | | GDS85039 | Drive Shaft | | 30 | | 58.7 | 73 | 615 | |
| | 2007.09-2013.06 | AT/MT | R | R | Coupe RWD N53 B30 A | | GDS85134 | Drive Shaft | | 30 | | 58.7 | 73 | 665 | |
| **330i Gran Turismo** | | | | | | | | | | | | | | | |
| 2.0 (185 kw) | 2016.07- | 8AT | R | L | Hatchback RWD B48 B20 B | | GDS85148 | Drive Shaft | | 28 | 27 | 57 | 70.5 | 749 | |
| | 2016.07- | 8AT | R | R | Hatchback RWD B48 B20 B | | GDS85147 | Drive Shaft | | 28 | 27 | 57 | 70.5 | 803 | |
| | 2016.07- | 8AT | R | L/R | Hatchback RWD B48 B20 B | | GCO85024 | Outer Joint | | 28 | 33 | 57 | 70.5 | 58 | I |
| | 2016.07- | 8AT | R | L/R | Hatchback RWD B48 B20 B | | GCI85082 | Inner Joint | | 27 | 33 | 44 | 75 | 102 | |
| **330i Touring** | | | | | | | | | | | | | | | |
| 2.0 (180 kw) | 2019.07- | 8AT | R | L | Estate RWD B48 B20 B | | GDS56455 | Drive Shaft | | 37 | 27 | 65 | | 700 | |
| | 2019.07- | 8AT | R | R | Estate RWD B48 B20 B | | GDS56456 | Drive Shaft | | 37 | 27 | 65 | | 756 | |
| 2.0 (185 kw) | 2015.07-2019.06 | 6MT | R | L | Estate RWD B48 B20 A | | GDS85066 | Drive Shaft | | 28 | 27 | 57.4 | 71 | 744 | |
| | 2015.07-2019.06 | 6MT | R | R | Estate RWD B48 B20 A | | GDS85067 | Drive Shaft | | 28 | 27 | 57.4 | 71 | 800 | |
| | 2015.07-2019.06 | 6MT | R | L/R | Estate RWD B48 B20 A | Diameter [mm]:35 | GCI83732 | Inner Joint | | 27 | 25 | 43.9 | 75 | 72 | |
| | 2015.07-2019.06 | 8AT | R | L | Estate RWD B48 B20 A | | GDS85148 | Drive Shaft | | 28 | 27 | 57 | 70.5 | 749 | |
| | 2015.07-2019.06 | 8AT | R | R | Estate RWD B48 B20 A | | GDS85147 | Drive Shaft | | 28 | 27 | 57 | 70.5 | 803 | |
| | 2015.07-2019.06 | 8AT | R | L/R | Estate RWD B48 B20 A | | GCO85024 | Outer Joint | | 28 | 33 | 57 | 70.5 | 58 | I |
| | 2015.07-2019.06 | 8AT | R | R | Estate RWD B48 B20 A | | GCI85082 | Inner Joint | | 27 | 33 | 44 | 75 | 102 | |
| | 2015.07-2019.06 | 6MT | R | L | Estate Van RWD B48 B20 A | | GDS85066 | Drive Shaft | | 28 | 27 | 57.4 | 71 | 744 | |
| | 2015.07-2019.06 | 6MT | R | R | Estate Van RWD B48 B20 A | | GDS85067 | Drive Shaft | | 28 | 27 | 57.4 | 71 | 800 | |
| | 2015.07-2019.06 | 6MT | R | L/R | Estate Van RWD B48 B20 A | Diameter [mm]:35 | GCI83732 | Inner Joint | | 27 | 25 | 43.9 | 75 | 72 | |
| | 2015.07-2019.06 | 8AT | R | L | Estate Van RWD B48 B20 A | | GDS85148 | Drive Shaft | | 28 | 27 | 57 | 70.5 | 749 | |
| | 2015.07-2019.06 | 8AT | R | R | Estate Van RWD B48 B20 A | | GDS85147 | Drive Shaft | | 28 | 27 | 57 | 70.5 | 803 | |
| | 2015.07-2019.06 | 8AT | R | R | Estate Van RWD B48 B20 A | | GCO85024 | Outer Joint | | 28 | 33 | 57 | 70.5 | 58 | I |
| | 2015.07-2019.06 | 8AT | R | R | Estate Van RWD B48 B20 A | | GCI85082 | Inner Joint | | 27 | 33 | 44 | 75 | 102 | |
| 2.0 (190 kw) | 2019.07- | 8AT | R | L | Estate RWD B48 B20 B | | GDS56455 | Drive Shaft | | 37 | 27 | 65 | | 700 | |
| | 2019.07- | 8AT | R | R | Estate RWD B48 B20 B | | GDS56456 | Drive Shaft | | 37 | 27 | 65 | | 756 | |
| | 2019.07- | 8AT | R | L | Estate Van RWD B48 B20 B | | GDS56455 | Drive Shaft | | 37 | 27 | 65 | | 700 | |
| | 2019.07- | 8AT | R | R | Estate Van RWD B48 B20 B | | GDS56456 | Drive Shaft | | 37 | 27 | 65 | | 756 | |

| | YEAR | TRANSM. | F/R | L/R | BODY STYLE & DRIVE TYPE & ENGINE | REMARKS | G-AP Ref. | PRODUCT | ABS | Technical Specifications A | B | C | H | L | P |
|---|---|---|---|---|---|---|---|---|---|---|---|---|---|---|---|
| **BMW** | | | | | | | | | | | | | | | |
| **330i Touring** | | | | | | | | | | | | | | | |
| 3.0 (170 kw) | 2000.06-2005.02 | AT/MT | F | L | Estate 4WD M54B306S3 | | GDS85047 | Drive Shaft | | 30 | 27 | 59 | 73 | 577 | |
| | 2000.06-2005.02 | AT/MT | F | R | Estate 4WD M54B306S3 | | GDS85048 | Drive Shaft | | 30 | 27 | 59 | 73 | 897 | |
| | 2000.06-2005.02 | | F | L/R | Estate 4WD M54B306S3 | | GCO85002 | Outer Joint | | 30 | 27 | 59 | 73 | 69 | M |
| | 2000.06-2005.02 | 5MT | R | L | Estate 4WD M54B306S3 | | GDS57626 | Drive Shaft | 48W | 30 | | 69 | 74.5 | 615 | |
| | 2000.06-2005.02 | Semi-AT | R | R | Estate RWD M54B306S3 | | GDS81120 | Drive Shaft | 48W | 30 | | 69 | 73 | 672 | |
| 3.0 (190 kw) | 2005.08-2007.08 | MT | R | L | Estate RWD N52 B30 A | | GDS85039 | Drive Shaft | | 30 | | 58.7 | 73 | 615 | |
| | 2005.08-2007.08 | MT | R | R | Estate RWD N52 B30 A | | GDS85134 | Drive Shaft | | 30 | | 58.7 | 73 | 665 | |
| | 2005.08-2007.08 | MT | R | L/R | Estate RWD N52 B30 A | | GCI35025 | Inner Joint | | | 25 | | | 26 | |
| | 2005.09-2007.08 | 6AT/6MT | F | L | Estate 4WD N52 B30 A | | GDS85124 | Drive Shaft | 48W | 30 | 27 | 64.8 | 77 | 571 | |
| | 2005.09-2007.08 | 6AT/6MT | F | R | Estate 4WD N52 B30 A | | GDS85125 | Drive Shaft | 48W | 30 | 27 | 64.8 | 77 | 892 | |
| | 2005.09-2007.08 | 6AT/6MT | F | L | Estate 4WD N52 B30 A | | GCI85066 | Inner Joint | | 27 | 24 | 43.95 | 53.5 | 126.5 | |
| | 2005.09-2007.08 | 6AT/6MT | F | R | Estate 4WD N52 B30 A | | GCI85067 | Inner Joint | | 27 | 24 | 43.95 | 376 | 126 | |
| | 2005.09-2007.08 | AT/MT | F | L/R | Estate 4WD N52 B30 A | | GCO85020 | Outer Joint | 48W | 30 | 33 | 64.8 | 77 | 60 | M |
| | 2005.09-2007.08 | MT | R | L | Estate 4WD N52 B30 A | | GDS85039 | Drive Shaft | | 30 | | 58.7 | 73 | 615 | |
| | 2005.09-2007.08 | MT | R | R | Estate 4WD N52 B30 A | | GDS85134 | Drive Shaft | | 30 | | 58.7 | 73 | 665 | |
| 3.0 (200 kw) | 2007.03-2012.06 | AT/MT | R | L | Estate RWD N52 B30 A | | GDS85039 | Drive Shaft | | 30 | | 58.7 | 73 | 615 | |
| | 2007.03-2012.06 | AT/MT | R | R | Estate RWD N52 B30 A | | GDS85134 | Drive Shaft | | 30 | | 58.7 | 73 | 665 | |
| | 2007.03-2012.06 | AT/MT | R | L/R | Estate RWD N52 B30 A | | GCI35025 | Inner Joint | | | 25 | | | 26 | |
| | 2007.09-2012.06 | AT/MT | R | L | Estate RWD N53 B30 A | | GDS85039 | Drive Shaft | | 30 | | 58.7 | 73 | 615 | |
| | 2007.09-2012.06 | AT/MT | R | R | Estate RWD N53 B30 A | | GDS85134 | Drive Shaft | | 30 | | 58.7 | 73 | 665 | |
| | 2007.09-2012.06 | AT/MT | R | L/R | Estate RWD N53 B30 A | | GCI35025 | Inner Joint | | | 25 | | | 26 | |
| **330i xDrive** | | | | | | | | | | | | | | | |
| 2.0 (180 kw) | 2022.07- | AT | F | L | Saloon 4WD B48 B20 B | | GDS56119 | Drive Shaft | | 37 | 27 | 65 | | 557 | |
| | 2022.07- | AT | F | R | Saloon 4WD B48 B20 B | | GDS56120 | Drive Shaft | | 37 | 27 | 65 | | 857 | |
| | 2022.07- | AT | F | L/R | Saloon 4WD B48 B20 B | | GCO83161 | Outer Joint | | 37 | 33 | 65 | | 73 | M |
| | 2022.07- | AT | F | L | Saloon 4WD B48 B20 B | | GCI81055 | Inner Joint | | 27 | 24 | 43.95 | 60 | 123.5 | |
| | 2022.07- | AT | F | R | Saloon 4WD B48 B20 B | | GCI81457 | Inner Joint | | 27 | 24 | 43.95 | 359 | 125 | |
| | 2022.07- | 8AT | R | L | Saloon 4WD B48 B20 B | Date to:2022.09 | GDS56455 | Drive Shaft | | 37 | 27 | 65 | | 700 | |
| | 2022.07- | 8AT | R | R | Saloon 4WD B48 B20 B | Date to:2022.09 | GDS56456 | Drive Shaft | | 37 | 27 | 65 | | 756 | |
| 2.0 (185 kw) | 2015.07-2018.10 | 8AT | F | L | Saloon 4WD B48 B20 A;B48 B20 B;B46 B20 B | | GDS82052 | Drive Shaft | | 31 | 27 | 55.8 | | 550 | |
| | 2015.07-2018.10 | 8AT | F | R | Saloon 4WD B48 B20 A;B48 B20 B;B46 B20 B | | GDS82053 | Drive Shaft | | 31 | 27 | 55.8 | | 841 | |
| | 2015.07-2018.10 | 8AT | F | L | Saloon 4WD B48 B20 A;B48 B20 B;B46 B20 B | | GCO81603 | Outer Joint | | 31 | 33 | 55.8 | | 69.5 | M |
| | 2015.07-2018.10 | 8AT | F | L | Saloon 4WD B48 B20 A;B48 B20 B;B46 B20 B | | GCI81055 | Inner Joint | | 27 | 24 | 43.95 | 60 | 123.5 | |
| | 2015.07-2018.10 | 8AT | F | R | Saloon 4WD B48 B20 A;B48 B20 B;B46 B20 B | | GCI81597 | Inner Joint | | 27 | 24 | 43.95 | 349.5 | 125 | |
| | 2015.07-2018.10 | AT | R | L | Saloon 4WD B48 B20 A;B48 B20 B;B46 B20 B | | GDS81118 | Drive Shaft | | 28 | 27 | 57 | 70.5 | 750 | |
| | 2015.07-2018.10 | AT | R | R | Saloon 4WD B48 B20 A;B48 B20 B;B46 B20 B | | GDS81117 | Drive Shaft | | 28 | 27 | 57 | 70.5 | 805 | |
| | 2015.07-2018.10 | AT | R | L/R | Saloon 4WD B48 B20 A;B48 B20 B;B46 B20 B | Date from:2015.09 | GCO85024 | Outer Joint | | 28 | 33 | 57 | 70.5 | 58 | I |
| | 2015.07-2018.10 | AT | R | L/R | Saloon 4WD B48 B20 A;B48 B20 B;B46 B20 B | | GCI81056 | Inner Joint | | 27 | 33 | 44 | 75 | 97 | |
| 2.0 (190 kw) | 2018.11- | 8AT | F | L | Saloon 4WD B48 B20 B;B46 B20 B | | GDS56119 | Drive Shaft | | 37 | 27 | 65 | | 557 | |
| | 2018.11- | 8AT | F | R | Saloon 4WD B48 B20 B;B46 B20 B | | GDS56120 | Drive Shaft | | 37 | 27 | 65 | | 857 | |
| | 2018.11- | 8AT | F | L/R | Saloon 4WD B48 B20 B;B46 B20 B | | GCO83161 | Outer Joint | | 37 | 33 | 65 | | 73 | M |
| | 2018.11- | 8AT | F | L | Saloon 4WD B48 B20 B;B46 B20 B | | GCI81055 | Inner Joint | | 27 | 24 | 43.95 | 60 | 123.5 | |
| | 2018.11- | 8AT | F | R | Saloon 4WD B48 B20 B;B46 B20 B | | GCI81457 | Inner Joint | | 27 | 24 | 43.95 | 359 | 125 | |
| | 2018.11- | 8AT | R | L | Saloon 4WD B48 B20 B;B46 B20 B | | GDS56455 | Drive Shaft | | 37 | 27 | 65 | | 700 | |
| | 2018.11- | 8AT | R | R | Saloon 4WD B48 B20 B;B46 B20 B | | GDS56456 | Drive Shaft | | 37 | 27 | 65 | | 756 | |
| 3.0 (200 kw) | 2008.09-2011.10 | 6AT/6MT | F | L | Saloon 4WD N53 B30 A | | GDS85124 | Drive Shaft | 48W | 30 | 27 | 64.8 | 77 | 571 | |
| | 2008.09-2011.10 | 6AT/6MT | F | R | Saloon 4WD N53 B30 A | | GDS85125 | Drive Shaft | 48W | 30 | 27 | 64.8 | 77 | 892 | |
| | 2008.09-2011.10 | 6AT/6MT | F | L/R | Saloon 4WD N53 B30 A | | GCO85020 | Outer Joint | 48W | 30 | 33 | 64.8 | 77 | 60 | M |
| | 2008.09-2011.10 | 6AT/6MT | F | L | Saloon 4WD N53 B30 A | | GCI85066 | Inner Joint | | 27 | 24 | 43.95 | 53.5 | 126.5 | |
| | 2008.09-2011.10 | 6AT/6MT | F | R | Saloon 4WD N53 B30 A | | GCI85067 | Inner Joint | | 27 | 24 | 43.95 | 376 | 126 | |
| | 2008.09-2011.10 | 6AT/6MT | R | L | Saloon 4WD N53 B30 A | | GDS85039 | Drive Shaft | | 30 | | 58.7 | 73 | 615 | |
| | 2008.09-2011.10 | 6AT/6MT | R | R | Saloon 4WD N53 B30 A | | GDS85134 | Drive Shaft | | 30 | | 58.7 | 73 | 665 | |
| **330i xDrive Coupe** | | | | | | | | | | | | | | | |
| 3.0 (200 kw) | 2010.03-2013.06 | 6AT/6MT | F | L | Coupe 4WD N53 B30 A | | GDS85124 | Drive Shaft | 48W | 30 | 27 | 64.8 | 77 | 571 | |
| | 2010.03-2013.06 | 6AT/6MT | F | R | Coupe 4WD N53 B30 A | | GDS85125 | Drive Shaft | 48W | 30 | 27 | 64.8 | 77 | 892 | |
| | 2010.03-2013.06 | 6AT/6MT | F | L/R | Coupe 4WD N53 B30 A | | GCO85020 | Outer Joint | 48W | 30 | 33 | 64.8 | 77 | 60 | M |
| | 2010.03-2013.06 | 6AT/6MT | F | L | Coupe 4WD N53 B30 A | | GCI85066 | Inner Joint | | 27 | 24 | 43.95 | 53.5 | 126.5 | |
| | 2010.03-2013.06 | 6AT/6MT | F | R | Coupe 4WD N53 B30 A | | GCI85067 | Inner Joint | | 27 | 24 | 43.95 | 376 | 126 | |
| | 2010.03-2013.06 | 6AT/6MT | R | L | Coupe 4WD N53 B30 A | | GDS85039 | Drive Shaft | | 30 | | 58.7 | 73 | 615 | |
| | 2010.03-2013.06 | 6AT/6MT | R | R | Coupe 4WD N53 B30 A | | GDS85134 | Drive Shaft | | 30 | | 58.7 | 73 | 665 | |
| **330i xDrive Gran Turismo** | | | | | | | | | | | | | | | |
| 2.0 (183 kw) | 2016.07- | 8AT | F | L | Hatchback 4WD B48 B20 B | | GDS82052 | Drive Shaft | | 31 | 27 | 55.8 | | 550 | |
| | 2016.07- | 8AT | F | R | Hatchback 4WD B48 B20 B | | GDS82053 | Drive Shaft | | 31 | 27 | 55.8 | | 841 | |
| | 2016.07- | 8AT | F | L | Hatchback 4WD B48 B20 B | | GCO81603 | Outer Joint | | 31 | 33 | 55.8 | | 69.5 | M |
| | 2016.07- | 8AT | F | L | Hatchback 4WD B48 B20 B | | GCI81055 | Inner Joint | | 27 | 24 | 43.95 | 60 | 123.5 | |

| | YEAR | TRANSM. | F/R | L/R | BODY STYLE & DRIVE TYPE & ENGINE | REMARKS | G-AP Ref. | PRODUCT | ABS | Technical Specifications A | B | C | H | L | P |
|---|---|---|---|---|---|---|---|---|---|---|---|---|---|---|---|
| **BMW** | | | | | | | | | | | | | | | |
| **330i xDrive Gran Turismo** | | | | | | | | | | | | | | | |
| 2.0 (183 kw) | 2016.07- | 8AT | F | R | Hatchback 4WD B48 B20 B | | GCI81597 | Inner Joint | | 27 | 24 | 43.95 | 349.5 | 125 | |
| | 2016.07- | 8AT | R | L | Hatchback 4WD B48 B20 B | | GDS83157 | Drive Shaft | | 28 | 27 | 57 | 71 | 750 | |
| | 2016.07- | 8AT | R | R | Hatchback 4WD B48 B20 B | | GDS83158 | Drive Shaft | | 28 | 27 | 57 | 71 | 802 | |
| | 2016.07- | 8AT | R | L/R | Hatchback 4WD B48 B20 B | | GCO82308 | Outer Joint | | 28 | 30 | 57 | 71 | 52.5 | I |
| | 2016.07- | 8AT | R | L/R | Hatchback 4WD B48 B20 B | | GCI82145 | Inner Joint | | 27 | 30 | 43.9 | 75 | 101 | |
| 2.0 (185 kw) | 2016.07- | 8AT | F | L | Hatchback 4WD B48 B20 B;B46 B20 B | | GDS82052 | Drive Shaft | | 31 | 27 | 55.8 | | 550 | |
| | 2016.07- | 8AT | F | R | Hatchback 4WD B48 B20 B;B46 B20 B | | GDS82053 | Drive Shaft | | 31 | 27 | 55.8 | | 841 | |
| | 2016.07- | 8AT | F | L | Hatchback 4WD B48 B20 B;B46 B20 B | | GCO81603 | Outer Joint | | 31 | 33 | 55.8 | | 69.5 | M |
| | 2016.07- | 8AT | F | L | Hatchback 4WD B48 B20 B;B46 B20 B | | GCI81055 | Inner Joint | | 27 | 24 | 43.95 | 60 | 123.5 | |
| | 2016.07- | 8AT | F | R | Hatchback 4WD B48 B20 B;B46 B20 B | | GCI81597 | Inner Joint | | 27 | 24 | 43.95 | 349.5 | 125 | |
| | 2016.07- | 8AT | R | L | Hatchback 4WD B48 B20 B;B46 B20 B | | GDS83157 | Drive Shaft | | 28 | 27 | 57 | 71 | 750 | |
| | 2016.07- | 8AT | R | R | Hatchback 4WD B48 B20 B;B46 B20 B | | GDS83158 | Drive Shaft | | 28 | 27 | 57 | 71 | 802 | |
| | 2016.07- | 8AT | R | L/R | Hatchback 4WD B48 B20 B;B46 B20 B | | GCO82308 | Outer Joint | | 28 | 30 | 57 | 71 | 52.5 | I |
| | 2016.07- | 8AT | R | L/R | Hatchback 4WD B48 B20 B;B46 B20 B | | GCI82145 | Inner Joint | | 27 | 30 | 43.9 | 75 | 101 | |
| **330i xDrive Touring** | | | | | | | | | | | | | | | |
| 2.0 (180 kw) | 2019.07- | AT | F | L | Estate 4WD B48 B20 B | | GDS56119 | Drive Shaft | | 37 | 27 | 65 | | 557 | |
| | 2019.07- | AT | F | R | Estate 4WD B48 B20 B | | GDS56120 | Drive Shaft | | 37 | 27 | 65 | | 857 | |
| | 2019.07- | AT | F | L/R | Estate 4WD B48 B20 B | | GCO83161 | Outer Joint | | 37 | 33 | 65 | | 73 | M |
| | 2019.07- | AT | F | L | Estate 4WD B48 B20 B | | GCI81055 | Inner Joint | | 27 | 24 | 43.95 | 60 | 123.5 | |
| | 2019.07- | AT | F | R | Estate 4WD B48 B20 B | | GCI81457 | Inner Joint | | 27 | 24 | 43.95 | 359 | 125 | |
| | 2019.07- | 8AT | R | L | Estate 4WD B48 B20 B | | GDS56455 | Drive Shaft | | 37 | 27 | 65 | | 700 | |
| | 2019.07- | 8AT | R | R | Estate 4WD B48 B20 B | | GDS56456 | Drive Shaft | | 37 | 27 | 65 | | 756 | |
| 2.0 (185 kw) | 2015.07-2019.06 | 8AT | F | L | Estate 4WD B48 B20 B;B46 B20 B | | GDS82052 | Drive Shaft | | 31 | 27 | 55.8 | | 550 | |
| | 2015.07-2019.06 | 8AT | F | R | Estate 4WD B48 B20 B;B46 B20 B | | GDS82053 | Drive Shaft | | 31 | 27 | 55.8 | | 841 | |
| | 2015.07-2019.06 | 8AT | F | L | Estate 4WD B48 B20 B;B46 B20 B | | GCO81603 | Outer Joint | | 31 | 33 | 55.8 | | 69.5 | M |
| | 2015.07-2019.06 | 8AT | F | L | Estate 4WD B48 B20 B;B46 B20 B | | GCI81055 | Inner Joint | | 27 | 24 | 43.95 | 60 | 123.5 | |
| | 2015.07-2019.06 | 8AT | F | R | Estate 4WD B48 B20 B;B46 B20 B | | GCI81597 | Inner Joint | | 27 | 24 | 43.95 | 349.5 | 125 | |
| | 2015.07-2019.06 | AT | R | L | Estate 4WD B48 B20 B;B46 B20 B | | GDS81118 | Drive Shaft | | 28 | 27 | 57 | 70.5 | 750 | |
| | 2015.07-2019.06 | AT | R | R | Estate 4WD B48 B20 B;B46 B20 B | | GDS81117 | Drive Shaft | | 28 | 27 | 57 | 70.5 | 805 | |
| | 2015.07-2019.06 | AT | R | L/R | Estate 4WD B48 B20 B;B46 B20 B | Date from:2015.09 | GCO85024 | Outer Joint | | 28 | 33 | 57 | 70.5 | 58 | I |
| | 2015.07-2019.06 | AT | R | L/R | Estate 4WD B48 B20 B;B46 B20 B | | GCI81056 | Inner Joint | | 27 | 33 | 44 | 75 | 97 | |
| 2.0 (190 kw) | 2019.07- | 8AT | F | L | Estate 4WD B48 B20 B | | GDS56119 | Drive Shaft | | 37 | 27 | 65 | | 557 | |
| | 2019.07- | 8AT | F | R | Estate 4WD B48 B20 B | | GDS56120 | Drive Shaft | | 37 | 27 | 65 | | 857 | |
| | 2019.07- | 8AT | F | L/R | Estate 4WD B48 B20 B | | GCO83161 | Outer Joint | | 37 | 33 | 65 | | 73 | M |
| | 2019.07- | 8AT | F | L | Estate 4WD B48 B20 B | | GCI81055 | Inner Joint | | 27 | 24 | 43.95 | 60 | 123.5 | |
| | 2019.07- | 8AT | F | R | Estate 4WD B48 B20 B | | GCI81457 | Inner Joint | | 27 | 24 | 43.95 | 359 | 125 | |
| | 2019.07- | 8AT | R | L | Estate 4WD B48 B20 B | | GDS56455 | Drive Shaft | | 37 | 27 | 65 | | 700 | |
| | 2019.07- | 8AT | R | R | Estate 4WD B48 B20 B | | GDS56456 | Drive Shaft | | 37 | 27 | 65 | | 756 | |
| 3.0 (200 kw) | 2007.09-2012.06 | 6AT/6MT | F | L/R | Estate 4WD N53 B30 A | | GCO85020 | Outer Joint | 48W | 30 | 33 | 64.8 | 77 | 60 | M |
| | 2007.09-2012.06 | 6AT/6MT | R | L | Estate 4WD N53 B30 A | | GDS85039 | Drive Shaft | | 30 | | 58.7 | 73 | 615 | |
| **330xi** | | | | | | | | | | | | | | | |
| 3.0 (200 kw) | 2007.09-2012.06 | 6AT/6MT | F | L | Estate 4WD N53 B30 A | | GDS85124 | Drive Shaft | 48W | 30 | 27 | 64.8 | 77 | 571 | |
| | 2007.09-2012.06 | 6AT/6MT | F | R | Estate 4WD N53 B30 A | | GDS85125 | Drive Shaft | 48W | 30 | 27 | 64.8 | 77 | 892 | |
| | 2007.09-2012.06 | 6AT/6MT | F | L | Estate 4WD N53 B30 A | | GCI85066 | Inner Joint | | 27 | 24 | 43.95 | 53.5 | 126.5 | |
| | 2007.09-2012.06 | 6AT/6MT | F | R | Estate 4WD N53 B30 A | | GCI85067 | Inner Joint | | 27 | 24 | 43.95 | 376 | 126 | |
| | 2007.09-2012.06 | AT/MT | F | L/R | Estate 4WD N53 B30 A | | GCO85020 | Outer Joint | 48W | 30 | 33 | 64.8 | 77 | 60 | M |
| | 2007.09-2012.06 | AT/MT | R | L | Estate 4WD N53 B30 A | | GDS85039 | Drive Shaft | | 30 | | 58.7 | 73 | 615 | |
| | 2007.09-2012.06 | AT/MT | R | R | Estate 4WD N53 B30 A | | GDS85134 | Drive Shaft | | 30 | | 58.7 | 73 | 665 | |
| **335d** | | | | | | | | | | | | | | | |
| 3.0 (210 kw) | 2006.09-2011.12 | 6AT | R | R | Saloon RWD M57 D30 (306D5) | | GDS85073 | Drive Shaft | | 30 | | 58.8 | 73 | 653 | |
| | 2006.09-2011.12 | AT | R | L | Saloon RWD M57 D30 (306D5) | | GDS85085 | Drive Shaft | | 30 | | 58.7 | 73 | 598 | |
| | 2006.09-2011.12 | AT | R | L | Saloon RWD M57 D30 (306D5) | | GCI83027 | Inner Joint | | | 28 | | | 28 | |
| **335d Coupe** | | | | | | | | | | | | | | | |
| 3.0 (210 kw) | 2006.03-2013.03 | 6AT | R | L | Coupe RWD M57 D30 (306D5) | | GDS85085 | Drive Shaft | | 30 | | 58.7 | 73 | 598 | |
| | 2006.03-2013.03 | 6AT | R | R | Coupe RWD M57 D30 (306D5) | | GDS85073 | Drive Shaft | | 30 | | 58.8 | 73 | 653 | |
| | 2006.03-2013.03 | 6AT | R | L | Coupe RWD M57 D30 (306D5) | | GCI83027 | Inner Joint | | | 28 | | | 28 | |
| | 2006.03-2013.03 | 6AT | R | R | Coupe RWD M57 D30 (306D5) | | GCI85048 | Inner Joint | | | 28 | | | 28 | |
| **335d Touring** | | | | | | | | | | | | | | | |
| 3.0 (210 kw) | 2006.09-2012.06 | 6AT | R | R | Estate RWD M57 D30 (306D5) | | GDS85073 | Drive Shaft | | 30 | | 58.8 | 73 | 653 | |
| | 2006.09-2012.06 | AT/MT | R | L | Estate RWD M57 D30 (306D5) | | GDS85085 | Drive Shaft | | 30 | | 58.7 | 73 | 598 | |
| | 2006.09-2012.06 | AT/MT | R | L | Estate RWD M57 D30 (306D5) | | GCI83027 | Inner Joint | | | 28 | | | 28 | |
| **335d xDrive** | | | | | | | | | | | | | | | |
| 3.0 (230 kw) | 2013.07-2018.10 | 8AT | F | L | Saloon 4WD N57 D30 B | | GDS82052 | Drive Shaft | | 31 | 27 | 55.8 | | 550 | |
| | 2013.07-2018.10 | 8AT | F | R | Saloon 4WD N57 D30 B | | GDS82053 | Drive Shaft | | 31 | 27 | 55.8 | | 841 | |
| | 2013.07-2018.10 | 8AT | F | L/R | Saloon 4WD N57 D30 B | | GCO81603 | Outer Joint | | 31 | 33 | 55.8 | | 69.5 | M |

| | YEAR | TRANSM. | F/R | L/R | BODY STYLE & DRIVE TYPE & ENGINE | REMARKS | G-AP Ref. | PRODUCT | ABS | Technical Specifications A | B | C | H | L | P |
|---|---|---|---|---|---|---|---|---|---|---|---|---|---|---|---|
| **BMW** | | | | | | | | | | | | | | | |
| **335d xDrive** | | | | | | | | | | | | | | | |
| 3.0 (230 kw) | 2013.07-2018.10 | 8AT | F | L | Saloon 4WD N57 D30 B | | GCI81055 | Inner Joint | | 27 | 24 | 43.95 | 60 | 123.5 | |
| | 2013.07-2018.10 | 8AT | F | R | Saloon 4WD N57 D30 B | | GCI81597 | Inner Joint | | 27 | 24 | 43.95 | 349.5 | 125 | |
| | 2013.07-2018.10 | 8AT | R | L | Saloon 4WD N57 D30 B | | GDS85110 | Drive Shaft | | 28 | 32 | 57 | 71 | 748 | |
| | 2013.07-2018.10 | 8AT | R | R | Saloon 4WD N57 D30 B | | GDS85109 | Drive Shaft | | 28 | 32 | 57 | 71 | 802 | |
| | 2013.07-2018.10 | 8AT | R | L/R | Saloon 4WD N57 D30 B | | GCI85086 | Inner Joint | | 28 | 28 | 62.5 | 71 | 91 | |
| | 2013.07-2018.10 | 8AT | R | L/R | Saloon 4WD N57 D30 B | | GCI85087 | Inner Joint | | 32 | 28 | 50 | 85 | 99 | |
| **335d xDrive Gran Turismo** | | | | | | | | | | | | | | | |
| 3.0 (230 kw) | 2014.03- | 8AT | F | L | Hatchback 4WD N57 D30 B | | GDS82052 | Drive Shaft | | 31 | 27 | 55.8 | | 550 | |
| | 2014.03- | 8AT | F | R | Hatchback 4WD N57 D30 B | | GDS82053 | Drive Shaft | | 31 | 27 | 55.8 | | 841 | |
| | 2014.03- | 8AT | F | L/R | Hatchback 4WD N57 D30 B | | GCO81603 | Outer Joint | | 31 | 33 | 55.8 | | 69.5 | M |
| | 2014.03- | 8AT | F | L | Hatchback 4WD N57 D30 B | | GCI81055 | Inner Joint | | 27 | 24 | 43.95 | 60 | 123.5 | |
| | 2014.03- | 8AT | F | R | Hatchback 4WD N57 D30 B | | GCI81597 | Inner Joint | | 27 | 24 | 43.95 | 349.5 | 125 | |
| **335d xDrive Touring** | | | | | | | | | | | | | | | |
| 3.0 (230 kw) | 2013.11-2019.06 | 8AT | F | L | Estate 4WD N57 D30 B | | GDS82052 | Drive Shaft | | 31 | 27 | 55.8 | | 550 | |
| | 2013.11-2019.06 | 8AT | F | R | Estate 4WD N57 D30 B | | GDS82053 | Drive Shaft | | 31 | 27 | 55.8 | | 841 | |
| | 2013.11-2019.06 | 8AT | F | L/R | Estate 4WD N57 D30 B | | GCO81603 | Outer Joint | | 31 | 33 | 55.8 | | 69.5 | M |
| | 2013.11-2019.06 | 8AT | F | L | Estate 4WD N57 D30 B | | GCI81055 | Inner Joint | | 27 | 24 | 43.95 | 60 | 123.5 | |
| | 2013.11-2019.06 | 8AT | F | R | Estate 4WD N57 D30 B | | GCI81597 | Inner Joint | | 27 | 24 | 43.95 | 349.5 | 125 | |
| | 2013.11-2019.06 | 8AT | R | L | Estate 4WD N57 D30 B | | GDS85110 | Drive Shaft | | 28 | 32 | 57 | 71 | 748 | |
| | 2013.11-2019.06 | 8AT | R | R | Estate 4WD N57 D30 B | | GDS85109 | Drive Shaft | | 28 | 32 | 57 | 71 | 802 | |
| | 2013.11-2019.06 | 8AT | R | L/R | Estate 4WD N57 D30 B | | GCI85086 | Inner Joint | | 28 | 28 | 62.5 | 71 | 91 | |
| | 2013.11-2019.06 | 8AT | R | L/R | Estate 4WD N57 D30 B | | GCI85087 | Inner Joint | | 32 | 28 | 50 | 85 | 99 | |
| **335i** | | | | | | | | | | | | | | | |
| 3.0 (220 kw) | 2006.03-2011.12 | 6AT | R | L | Saloon RWD N54 B30 A;N55 B30 A | Date from:2007.10 | GDS85039 | Drive Shaft | | 30 | | 58.7 | 73 | 615 | |
| | 2006.03-2011.12 | 6AT | R | R | Saloon RWD N54 B30 A;N55 B30 A | Date to:2007.09 | GDS85082 | Drive Shaft | | 30 | | 58.7 | 73 | 656 | |
| | 2006.03-2011.12 | 6AT | R | L/R | Saloon RWD N54 B30 A;N55 B30 A | Front axle left,Date from:2007.10;Front axle right,Date to:2007.09 | GCI35025 | Inner Joint | | | 25 | | | 26 | |
| 3.0 (224 kw) | 2006.03-2011.12 | 6AT | R | L | Saloon RWD N54 B30 A | Date from:2007.10 | GDS85039 | Drive Shaft | | 30 | | 58.7 | 73 | 615 | |
| | 2006.03-2011.12 | 6AT | R | L | Saloon RWD N54 B30 A | Date from:2007.10 | GCI35025 | Inner Joint | | | 25 | | | 26 | |
| | 2006.03-2011.12 | 6AT/6MT | R | R | Saloon RWD N54 B30 A | Transmission:6AT,Date to:2007.09;Transmission:6MT | GDS85082 | Drive Shaft | | 30 | | 58.7 | 73 | 656 | |
| | 2006.03-2011.12 | 6AT/6MT | R | R | Saloon RWD N54 B30 A | Transmission:6AT,Date to:2007.09;Transmission:6MT | GCI35025 | Inner Joint | | | 25 | | | 26 | |
| 3.0 (225 kw) | 2006.09-2011.12 | 6AT | R | L | Saloon RWD N54 B30 A;N55 B30 A | Date from:2007.10 | GDS85039 | Drive Shaft | | 30 | | 58.7 | 73 | 615 | |
| | 2006.09-2011.12 | 6AT | R | R | Saloon RWD N54 B30 A;N55 B30 A | | GDS85134 | Drive Shaft | | 30 | | 58.7 | 73 | 665 | |
| | 2006.09-2011.12 | 6AT | R | L | Saloon RWD N54 B30 A;N55 B30 A | Date from:2007.10,Diameter [mm]:38 | GCI35025 | Inner Joint | | | 25 | | | 26 | |
| | 2006.09-2011.12 | 6AT/6MT | R | R | Saloon RWD N54 B30 A;N55 B30 A | Transmission:6AT,Date to:2007.09;Transmission:6MT | GDS85082 | Drive Shaft | | 30 | | 58.7 | 73 | 656 | |
| | 2006.09-2011.12 | 6AT/6MT | R | R | Saloon RWD N54 B30 A;N55 B30 A | | GCI35025 | Inner Joint | | | 25 | | | 26 | |
| | 2007.03-2008.08 | 6AT/6MT | F | L | Saloon 4WD N54 B30 A | | GDS85124 | Drive Shaft | 48W | 30 | 27 | 64.8 | 77 | 571 | |
| | 2007.03-2008.08 | 6AT/6MT | F | R | Saloon 4WD N54 B30 A | | GDS85125 | Drive Shaft | 48W | 30 | 27 | 64.8 | 77 | 892 | |
| | 2007.03-2008.08 | 6AT/6MT | F | L | Saloon 4WD N54 B30 A | | GCI85066 | Inner Joint | | 27 | 24 | 43.95 | 53.5 | 126.5 | |
| | 2007.03-2008.08 | 6AT/6MT | F | R | Saloon 4WD N54 B30 A | | GCI85067 | Inner Joint | | 27 | 24 | 43.95 | 376 | 126 | |
| | 2007.03-2008.08 | AT/MT | F | L/R | Saloon 4WD N54 B30 A | | GCO85020 | Outer Joint | 48W | 30 | 33 | 64.8 | 77 | 60 | M |
| | 2007.03-2008.08 | 6AT | R | L | Saloon 4WD N54 B30 A | Date from:2007.10 | GDS85039 | Drive Shaft | | 30 | | 58.7 | 73 | 615 | |
| | 2007.03-2008.08 | 6AT | R | R | Saloon 4WD N54 B30 A | Date to:2007.09 | GDS85082 | Drive Shaft | | 30 | | 58.7 | 73 | 656 | |
| | 2007.03-2008.08 | 6AT | R | R | Saloon 4WD N54 B30 A | Date from:2007.10 | GDS85134 | Drive Shaft | | 30 | | 58.7 | 73 | 665 | |
| | 2011.11-2015.07 | 6MT | R | L | Saloon RWD N55 B30 A | | GDS85110 | Drive Shaft | | 28 | 32 | 57 | 71 | 748 | |
| | 2011.11-2015.07 | 6MT | R | R | Saloon RWD N55 B30 A | | GDS85109 | Drive Shaft | | 28 | 32 | 57 | 71 | 802 | |
| | 2011.11-2015.07 | 6MT | R | L/R | Saloon RWD N55 B30 A | | GCI85086 | Inner Joint | | 28 | 28 | 62.5 | 71 | 91 | |
| | 2011.11-2015.07 | 8AT | R | L | Saloon RWD N55 B30 A | | GDS85066 | Drive Shaft | | 28 | 27 | 57.4 | 71 | 744 | |
| | 2011.11-2015.07 | 8AT | R | R | Saloon RWD N55 B30 A | | GDS85067 | Drive Shaft | | 28 | 27 | 57.4 | 71 | 800 | |
| | 2011.11-2015.07 | 8AT | R | L/R | Saloon RWD N55 B30 A | Diameter [mm]:35 | GCI83732 | Inner Joint | | 27 | 25 | 43.9 | 75 | 72 | |
| 3.0 (240 kw) | 2006.03-2011.12 | 6AT | R | L | Saloon RWD N54 B30 A;N55 B30 A | Date from:2007.10 | GDS85039 | Drive Shaft | | 30 | | 58.7 | 73 | 615 | |
| | 2006.03-2011.12 | 6AT | R | L | Saloon RWD N54 B30 A;N55 B30 A | Date from:2007.10,Diameter [mm]:38 | GCI35025 | Inner Joint | | | 25 | | | 26 | |
| | 2006.03-2011.12 | 6AT/6MT | R | R | Saloon RWD N54 B30 A;N55 B30 A | Transmission:6AT,Date to:2007.09;Transmission:6MT | GDS85082 | Drive Shaft | | 30 | | 58.7 | 73 | 656 | |
| | 2006.03-2011.12 | 6AT/6MT | R | R | Saloon RWD N54 B30 A;N55 B30 A | Transmission:6AT,Date to:2007.09;Transmission:6MT | GCI35025 | Inner Joint | | | 25 | | | 26 | |
| | 2011.11-2013.06 | 6MT | R | L | Saloon RWD N55 B30 A | | GDS85110 | Drive Shaft | | 28 | 32 | 57 | 71 | 748 | |
| | 2011.11-2013.06 | 6MT | R | R | Saloon RWD N55 B30 A | | GDS85109 | Drive Shaft | | 28 | 32 | 57 | 71 | 802 | |
| | 2011.11-2013.06 | 6MT | R | L/R | Saloon RWD N55 B30 A | | GCI85086 | Inner Joint | | 28 | 28 | 62.5 | 71 | 91 | |
| | 2011.11-2013.06 | 8AT | R | L | Saloon RWD N55 B30 A | | GDS85066 | Drive Shaft | | 28 | 27 | 57.4 | 71 | 744 | |
| | 2011.11-2013.06 | 8AT | R | R | Saloon RWD N55 B30 A | | GDS85067 | Drive Shaft | | 28 | 27 | 57.4 | 71 | 800 | |
| | 2011.11-2013.06 | 8AT | R | L/R | Saloon RWD N55 B30 A | Diameter [mm]:35 | GCI83732 | Inner Joint | | 27 | 25 | 43.9 | 75 | 72 | |
| 3.0 (250 kw) | 2013.07-2015.07 | 6MT | R | L | Saloon RWD N55 B30 A | | GDS85110 | Drive Shaft | | 28 | 32 | 57 | 71 | 748 | |
| | 2013.07-2015.07 | 6MT | R | R | Saloon RWD N55 B30 A | | GDS85109 | Drive Shaft | | 28 | 32 | 57 | 71 | 802 | |
| | 2013.07-2015.07 | 6MT | R | L/R | Saloon RWD N55 B30 A | | GCI85086 | Inner Joint | | 28 | 28 | 62.5 | 71 | 91 | |
| | 2013.07-2015.07 | 8AT | R | L | Saloon RWD N55 B30 A | | GDS85066 | Drive Shaft | | 28 | 27 | 57.4 | 71 | 744 | |
| | 2013.07-2015.07 | 8AT | R | R | Saloon RWD N55 B30 A | | GDS85067 | Drive Shaft | | 28 | 27 | 57.4 | 71 | 800 | |
| | 2013.07-2015.07 | 8AT | R | L/R | Saloon RWD N55 B30 A | Diameter [mm]:35 | GCI83732 | Inner Joint | | 27 | 25 | 43.9 | 75 | 72 | |

| | YEAR | TRANSM. | F/R | L/R | BODY STYLE & DRIVE TYPE & ENGINE | REMARKS | G-AP Ref. | PRODUCT | ABS | Technical Specifications A | B | C | H | L | P |
|---|---|---|---|---|---|---|---|---|---|---|---|---|---|---|---|
| **BMW** | | | | | | | | | | | | | | | |
| **335i Cabrio** | | | | | | | | | | | | | | | |
| 3.0 (225 kw) | 2006.12-2013.10 | 6AT | R | L | Convertible RWD N54 B30 A;N55 B30 A | Date from:2007.10 | GDS85039 | Drive Shaft | | 30 | | 58.7 | 73 | 615 | |
| | 2006.12-2013.10 | 6AT | R | R | Convertible RWD N54 B30 A;N55 B30 A | Date from:2007.10 | GDS85134 | Drive Shaft | | 30 | | 58.7 | 73 | 665 | |
| | 2006.12-2013.10 | 6AT | R | L/R | Convertible RWD N54 B30 A;N55 B30 A | Date From:2007.10 | GCI35025 | Inner Joint | | | 25 | | | 26 | |
| | 2006.12-2013.10 | 6AT | R | L/R | Convertible RWD N54 B30 A;N55 B30 A | Date to:2007.09 | GCI61075 | Inner Joint | | | 28 | | | 26 | |
| | 2006.12-2013.10 | 6AT/6MT/7DCT | R | R | Convertible RWD N54 B30 A;N55 B30 A | Transmission:6AT,Date to:2007.09;Transmission:7DCT/6MT | GDS85082 | Drive Shaft | | 30 | | 58.7 | 73 | 656 | |
| | 2006.12-2013.10 | 6MT/7DCT | R | L/R | Convertible RWD N54 B30 A;N55 B30 A | | GCI61075 | Inner Joint | | | 28 | | | 26 | |
| 3.0 (240 kw) | 2006.05-2013.10 | 6AT | R | L | Convertible RWD N54 B30 A;N55 B30 A | Date from:2007.10 | GDS85039 | Drive Shaft | | 30 | | 58.7 | 73 | 615 | |
| | 2006.05-2013.10 | 6AT | R | R | Convertible RWD N54 B30 A;N55 B30 A | | GDS85134 | Drive Shaft | | 30 | | 58.7 | 73 | 665 | |
| | 2006.05-2013.10 | 6AT | R | L | Convertible RWD N54 B30 A;N55 B30 A | Date from:2007.10,Diameter [mm]:38 | GCI35025 | Inner Joint | | | 25 | | | 26 | |
| | 2006.05-2013.10 | 6AT/6MT | R | R | Convertible RWD N54 B30 A;N55 B30 A | | GCI35025 | Inner Joint | | | 25 | | | 26 | |
| | 2006.05-2013.10 | 6MT/6AT/7DCT | R | R | Convertible RWD N54 B30 A;N55 B30 A | Transmission:6AT,Date to:2007.09;Transmission:7DCT/6MT | GDS85082 | Drive Shaft | | 30 | | 58.7 | 73 | 656 | |
| **335i Coupe** | | | | | | | | | | | | | | | |
| 3.0 (225 kw) | 2006.06-2013.06 | 6AT | R | L | Coupe RWD N54 B30 A;N55 B30 A | Date from:2007.10 | GDS85039 | Drive Shaft | | 30 | | 58.7 | 73 | 615 | |
| | 2006.06-2013.06 | 6AT | R | R | Coupe RWD N54 B30 A;N55 B30 A | Date from:2007.10 | GDS85134 | Drive Shaft | | 30 | | 58.7 | 73 | 665 | |
| | 2006.06-2013.06 | 6AT | R | L/R | Coupe RWD N54 B30 A;N55 B30 A | Date From:2007.10 | GCI35025 | Inner Joint | | | 25 | | | 26 | |
| | 2006.06-2013.06 | 6AT | R | L/R | Coupe RWD N54 B30 A;N55 B30 A | Date to:2007.09 | GCI61075 | Inner Joint | | | 28 | | | 26 | |
| | 2006.06-2013.06 | 6AT/6MT/7DCT | R | R | Coupe RWD N54 B30 A;N55 B30 A | Transmission:6AT,Date to:2007.09;Transmission:7DCT/6MT | GDS85082 | Drive Shaft | | 30 | | 58.7 | 73 | 656 | |
| | 2006.06-2013.06 | 6MT/7DCT | R | L/R | Coupe RWD N54 B30 A;N55 B30 A | | GCI61075 | Inner Joint | | | 28 | | | 26 | |
| 3.0 (240 kw) | 2006.06-2013.06 | 6AT | R | L | Coupe RWD N54 B30 A;N55 B30 A | Date from:2007.10 | GDS85039 | Drive Shaft | | 30 | | 58.7 | 73 | 615 | |
| | 2006.06-2013.06 | 6AT | R | R | Coupe RWD N54 B30 A;N55 B30 A | | GDS85134 | Drive Shaft | | 30 | | 58.7 | 73 | 665 | |
| | 2006.06-2013.06 | 6AT | R | L | Coupe RWD N54 B30 A;N55 B30 A | Date from:2007.10,Diameter [mm]:38 | GCI35025 | Inner Joint | | | 25 | | | 26 | |
| | 2006.06-2013.06 | 6AT/6MT | R | R | Coupe RWD N54 B30 A;N55 B30 A | | GCI35025 | Inner Joint | | | 25 | | | 26 | |
| | 2006.06-2013.06 | 6MT/6AT/7DCT | R | R | Coupe RWD N54 B30 A;N55 B30 A | Transmission:6AT,Date to:2007.09;Transmission:7DCT/6MT | GDS85082 | Drive Shaft | | 30 | | 58.7 | 73 | 656 | |
| **335i Gran Turismo** | | | | | | | | | | | | | | | |
| 3.0 (225 kw) | 2013.03-2016.06 | 6MT | R | L | Hatchback RWD N55 B30 A | | GDS85110 | Drive Shaft | | 28 | 32 | 57 | 71 | 748 | |
| | 2013.03-2016.06 | 6MT | R | R | Hatchback RWD N55 B30 A | | GDS85109 | Drive Shaft | | 28 | 32 | 57 | 71 | 802 | |
| | 2013.03-2016.06 | 6MT | R | L/R | Hatchback RWD N55 B30 A | | GCI85086 | Inner Joint | | 28 | 28 | 62.5 | 71 | 91 | |
| | 2013.03-2016.06 | 8AT | R | L | Hatchback RWD N55 B30 A | | GDS85066 | Drive Shaft | | 28 | 27 | 57.4 | 71 | 744 | |
| | 2013.03-2016.06 | 8AT | R | R | Hatchback RWD N55 B30 A | | GDS85067 | Drive Shaft | | 28 | 27 | 57.4 | 71 | 800 | |
| | 2013.03-2016.06 | 8AT | R | L/R | Hatchback RWD N55 B30 A | Diameter [mm]:35 | GCI83732 | Inner Joint | | 27 | 25 | 43.9 | 75 | 72 | |
| 3.0 (240 kw) | 2013.03-2014.03 | 6MT | R | L | Hatchback RWD N55 B30 A | | GDS85110 | Drive Shaft | | 28 | 32 | 57 | 71 | 748 | |
| | 2013.03-2014.03 | 6MT | R | R | Hatchback RWD N55 B30 A | | GDS85109 | Drive Shaft | | 28 | 32 | 57 | 71 | 802 | |
| | 2013.03-2014.03 | 6MT | R | L/R | Hatchback RWD N55 B30 A | | GCI85086 | Inner Joint | | 28 | 28 | 62.5 | 71 | 91 | |
| | 2013.03-2014.03 | 8AT | R | L | Hatchback RWD N55 B30 A | | GDS85066 | Drive Shaft | | 28 | 27 | 57.4 | 71 | 744 | |
| | 2013.03-2014.03 | 8AT | R | R | Hatchback RWD N55 B30 A | | GDS85067 | Drive Shaft | | 28 | 27 | 57.4 | 71 | 800 | |
| | 2013.03-2014.03 | 8AT | R | L/R | Hatchback RWD N55 B30 A | Diameter [mm]:35 | GCI83732 | Inner Joint | | 27 | 25 | 43.9 | 75 | 72 | |
| 3.0 (250 kw) | 2014.04-2016.06 | 6MT | R | L | Hatchback RWD N55 B30 A | | GDS85110 | Drive Shaft | | 28 | 32 | 57 | 71 | 748 | |
| | 2014.04-2016.06 | 6MT | R | R | Hatchback RWD N55 B30 A | | GDS85109 | Drive Shaft | | 28 | 32 | 57 | 71 | 802 | |
| | 2014.04-2016.06 | 6MT | R | L/R | Hatchback RWD N55 B30 A | | GCI85086 | Inner Joint | | 28 | 28 | 62.5 | 71 | 91 | |
| | 2014.04-2016.06 | 8AT | R | L | Hatchback RWD N55 B30 A | | GDS85066 | Drive Shaft | | 28 | 27 | 57.4 | 71 | 744 | |
| | 2014.04-2016.06 | 8AT | R | R | Hatchback RWD N55 B30 A | | GDS85067 | Drive Shaft | | 28 | 27 | 57.4 | 71 | 800 | |
| | 2014.04-2016.06 | 8AT | R | L/R | Hatchback RWD N55 B30 A | Diameter [mm]:35 | GCI83732 | Inner Joint | | 27 | 25 | 43.9 | 75 | 72 | |
| **335i Touring** | | | | | | | | | | | | | | | |
| 3.0 (225 kw) | 2006.09-2012.06 | 6AT | R | L | Estate RWD N54 B30 A;N55 B30 A | Date from:2007.10 | GDS85039 | Drive Shaft | | 30 | | 58.7 | 73 | 615 | |
| | 2006.09-2012.06 | 6AT | R | R | Estate RWD N54 B30 A;N55 B30 A | | GDS85134 | Drive Shaft | | 30 | | 58.7 | 73 | 665 | |
| | 2006.09-2012.06 | 6AT | R | L | Estate RWD N54 B30 A;N55 B30 A | Date from:2007.10,Diameter [mm]:38 | GCI35025 | Inner Joint | | | 25 | | | 26 | |
| | 2006.09-2012.06 | 6AT/6MT | R | R | Estate RWD N54 B30 A;N55 B30 A | | GCI35025 | Inner Joint | | | 25 | | | 26 | |
| | 2006.09-2012.06 | 6MT/6AT | R | R | Estate RWD N54 B30 A;N55 B30 A | Transmission:6AT,Date to:2007.09;Transmission:6MT | GDS85082 | Drive Shaft | | 30 | | 58.7 | 73 | 656 | |
| | 2007.03-2008.08 | 6AT/6MT | F | L | Estate 4WD N54 B30 A;N55 B30 A | | GDS85124 | Drive Shaft | 48W | 30 | 27 | 64.8 | 77 | 571 | |
| | 2007.03-2008.08 | 6AT/6MT | F | R | Estate 4WD N54 B30 A;N55 B30 A | | GDS85125 | Drive Shaft | 48W | 30 | 27 | 64.8 | 77 | 892 | |
| | 2007.03-2008.08 | 6AT/6MT | F | L | Estate 4WD N54 B30 A;N55 B30 A | | GCI85066 | Inner Joint | | 27 | 24 | 43.95 | 53.5 | 126.5 | |
| | 2007.03-2008.08 | 6AT/6MT | F | R | Estate 4WD N54 B30 A;N55 B30 A | | GCI85067 | Inner Joint | | 27 | 24 | 43.95 | 376 | 126 | |
| | 2007.03-2008.08 | AT/MT | F | L/R | Estate 4WD N54 B30 A;N55 B30 A | | GCO85020 | Outer Joint | 48W | 30 | 33 | 64.8 | 77 | 60 | M |
| | 2007.03-2008.08 | 6AT | R | L | Estate 4WD N54 B30 A;N55 B30 A | Date from:2007.10 | GDS85039 | Drive Shaft | | 30 | | 58.7 | 73 | 615 | |
| | 2007.03-2008.08 | 6AT | R | R | Estate 4WD N54 B30 A;N55 B30 A | Date to:2007.09 | GDS85082 | Drive Shaft | | 30 | | 58.7 | 73 | 656 | |
| | 2007.03-2008.08 | 6AT | R | R | Estate 4WD N54 B30 A;N55 B30 A | Date from:2007.10 | GDS85134 | Drive Shaft | | 30 | | 58.7 | 73 | 665 | |
| | 2013.03-2015.06 | 6MT | R | L | Estate RWD N55 B30 A | | GDS85110 | Drive Shaft | | 28 | 32 | 57 | 71 | 748 | |
| | 2013.03-2015.06 | 6MT | R | R | Estate RWD N55 B30 A | | GDS85109 | Drive Shaft | | 28 | 32 | 57 | 71 | 802 | |
| | 2013.03-2015.06 | 6MT | R | L/R | Estate RWD N55 B30 A | | GCI85086 | Inner Joint | | 28 | 28 | 62.5 | 71 | 91 | |
| | 2013.03-2015.06 | 8AT | R | L | Estate RWD N55 B30 A | | GDS85066 | Drive Shaft | | 28 | 27 | 57.4 | 71 | 744 | |
| | 2013.03-2015.06 | 8AT | R | R | Estate RWD N55 B30 A | | GDS85067 | Drive Shaft | | 28 | 27 | 57.4 | 71 | 800 | |
| | 2013.03-2015.06 | 8AT | R | L/R | Estate RWD N55 B30 A | Diameter [mm]:35 | GCI83732 | Inner Joint | | 27 | 25 | 43.9 | 75 | 72 | |
| 3.0 (240 kw) | 2006.09-2012.06 | 6AT | R | L | Estate RWD N54 B30 A;N55 B30 A | Date from:2007.10 | GDS85039 | Drive Shaft | | 30 | | 58.7 | 73 | 615 | |
| | 2006.09-2012.06 | 6AT | R | R | Estate RWD N54 B30 A;N55 B30 A | Date from:2007.10 | GDS85134 | Drive Shaft | | 30 | | 58.7 | 73 | 665 | |
| | 2006.09-2012.06 | 6AT | R | L | Estate RWD N54 B30 A;N55 B30 A | Date from:2007.10,Diameter [mm]:38 | GCI35025 | Inner Joint | | | 25 | | | 26 | |

| | YEAR | TRANSM. | F/R | L/R | BODY STYLE & DRIVE TYPE & ENGINE | REMARKS | G-AP Ref. | PRODUCT | ABS | Technical Specifications A | B | C | H | L | P |
|---|---|---|---|---|---|---|---|---|---|---|---|---|---|---|---|
| **BMW** | | | | | | | | | | | | | | | |
| **335i Touring** | | | | | | | | | | | | | | | |
| 3.0 (240 kw) | 2006.09-2012.06 | 6AT/6MT | R | R | Estate RWD N54 B30 A;N55 B30 A | | GCI35025 | Inner Joint | | | 25 | | | 26 | |
| | 2006.09-2012.06 | 6MT/6AT | R | R | Estate RWD N54 B30 A;N55 B30 A | Transmission:6AT,Date to:2007.09;Transmission:6MT | GDS85082 | Drive Shaft | | 30 | | 58.7 | 73 | 656 | |
| | 2007.03-2008.08 | 6AT/6MT | F | L | Estate 4WD N54 B30 A | | GDS85124 | Drive Shaft | 48W | 30 | 27 | 64.8 | 77 | 571 | |
| | 2007.03-2008.08 | 6AT/6MT | F | R | Estate 4WD N54 B30 A | | GDS85125 | Drive Shaft | 48W | 30 | 27 | 64.8 | 77 | 892 | |
| | 2007.03-2008.08 | 6AT/6MT | F | L | Estate 4WD N54 B30 A | | GCI85066 | Inner Joint | | 27 | 24 | 43.95 | 53.5 | 126.5 | |
| | 2007.03-2008.08 | 6AT/6MT | F | R | Estate 4WD N54 B30 A | | GCI85067 | Inner Joint | | 27 | 24 | 43.95 | 376 | 126 | |
| | 2007.03-2008.08 | AT/MT | F | L/R | Estate 4WD N54 B30 A | | GCO85020 | Outer Joint | 48W | 30 | 33 | 64.8 | 77 | 60 | M |
| | 2007.03-2008.08 | 6AT | R | L | Estate 4WD N54 B30 A | Date from:2007.10 | GDS85039 | Drive Shaft | | 30 | | 58.7 | 73 | 615 | |
| | 2007.03-2008.08 | 6AT | R | R | Estate 4WD N54 B30 A | Date to:2007.09 | GDS85082 | Drive Shaft | | 30 | | 58.7 | 73 | 656 | |
| | 2007.03-2008.08 | 6AT | R | R | Estate 4WD N54 B30 A | Date from:2007.10 | GDS85134 | Drive Shaft | | 30 | | 58.7 | 73 | 665 | |
| | 2013.03-2013.06 | 6MT | R | L | Estate RWD N55 B30 A | | GDS85110 | Drive Shaft | | 28 | 32 | 57 | 71 | 748 | |
| | 2013.03-2013.06 | 6MT | R | R | Estate RWD N55 B30 A | | GDS85109 | Drive Shaft | | 28 | 32 | 57 | 71 | 802 | |
| | 2013.03-2013.06 | 8AT | R | L | Estate RWD N55 B30 A | | GDS85066 | Drive Shaft | | 28 | 27 | 57.4 | 71 | 744 | |
| | 2013.03-2013.06 | 8AT | R | R | Estate RWD N55 B30 A | | GDS85067 | Drive Shaft | | 28 | 27 | 57.4 | 71 | 800 | |
| | 2013.03-2013.06 | 8AT | R | L/R | Estate RWD N55 B30 A | Diameter [mm]:35 | GCI83732 | Inner Joint | | 27 | 25 | 43.9 | 75 | 72 | |
| 3.0 (250 kw) | 2013.07-2015.06 | 6MT | R | L | Estate RWD N55 B30 A | | GDS85110 | Drive Shaft | | 28 | 32 | 57 | 71 | 748 | |
| | 2013.07-2015.06 | 6MT | R | R | Estate RWD N55 B30 A | | GDS85109 | Drive Shaft | | 28 | 32 | 57 | 71 | 802 | |
| | 2013.07-2015.06 | 6MT | R | L/R | Estate RWD N55 B30 A | | GCI85086 | Inner Joint | | 28 | 28 | 62.5 | 71 | 91 | |
| | 2013.07-2015.06 | 8AT | R | L | Estate RWD N55 B30 A | | GDS85066 | Drive Shaft | | 28 | 27 | 57.4 | 71 | 744 | |
| | 2013.07-2015.06 | 8AT | R | R | Estate RWD N55 B30 A | | GDS85067 | Drive Shaft | | 28 | 27 | 57.4 | 71 | 800 | |
| | 2013.07-2015.06 | 8AT | R | L/R | Estate RWD N55 B30 A | Diameter [mm]:35 | GCI83732 | Inner Joint | | 27 | 25 | 43.9 | 75 | 72 | |
| **335i xDrive** | | | | | | | | | | | | | | | |
| 3.0 (224 kw) | 2006.09-2008.06 | AT/MT | F | L/R | Saloon 4WD N54 B30 A | | GCO85020 | Outer Joint | 48W | 30 | 33 | 64.8 | 77 | 60 | M |
| | 2006.09-2008.06 | 6AT | R | L | Saloon 4WD N54 B30 A | | GDS85039 | Drive Shaft | | 30 | | 58.7 | 73 | 615 | |
| | 2008.05-2011.10 | | F | L/R | Saloon 4WD N54 B30 A | | GCO85020 | Outer Joint | 48W | 30 | 33 | 64.8 | 77 | 60 | M |
| | 2008.05-2011.10 | 6AT | R | L | Saloon 4WD N54 B30 A | | GDS85039 | Drive Shaft | | 30 | | 58.7 | 73 | 615 | |
| 3.0 (225 kw) | 2008.09-2011.10 | 6AT/6MT | F | L | Saloon 4WD N54 B30 A;N55 B30 A | | GDS85124 | Drive Shaft | 48W | 30 | 27 | 64.8 | 77 | 571 | |
| | 2008.09-2011.10 | 6AT/6MT | F | R | Saloon 4WD N54 B30 A;N55 B30 A | | GDS85125 | Drive Shaft | 48W | 30 | 27 | 64.8 | 77 | 892 | |
| | 2008.09-2011.10 | 6AT/6MT | F | L/R | Saloon 4WD N54 B30 A;N55 B30 A | | GCO85020 | Outer Joint | 48W | 30 | 33 | 64.8 | 77 | 60 | M |
| | 2008.09-2011.10 | 6AT/6MT | F | L | Saloon 4WD N54 B30 A;N55 B30 A | | GCI85066 | Inner Joint | | 27 | 24 | 43.95 | 53.5 | 126.5 | |
| | 2008.09-2011.10 | 6AT/6MT | F | R | Saloon 4WD N54 B30 A;N55 B30 A | | GCI85067 | Inner Joint | | 27 | 24 | 43.95 | 376 | 126 | |
| | 2008.09-2011.10 | 6AT | R | L | Saloon 4WD N54 B30 A;N55 B30 A | | GDS85039 | Drive Shaft | | 30 | | 58.7 | 73 | 615 | |
| | 2008.09-2011.10 | 6AT | R | R | Saloon 4WD N54 B30 A;N55 B30 A | Date from:2007.10 | GDS85134 | Drive Shaft | | 30 | | 58.7 | 73 | 665 | |
| | 2012.07-2015.07 | 6MT/8AT | F | L | Saloon 4WD N55 B30 A | | GDS82052 | Drive Shaft | | 31 | 27 | 55.8 | | 550 | |
| | 2012.07-2015.07 | 6MT/8AT | F | R | Saloon 4WD N55 B30 A | | GDS82053 | Drive Shaft | | 31 | 27 | 55.8 | | 841 | |
| | 2012.07-2015.07 | AT/MT | F | R | Saloon 4WD N55 B30 A | | GCO81603 | Outer Joint | | 31 | 33 | 55.8 | | 69.5 | M |
| | 2012.07-2015.07 | AT/MT | F | R | Saloon 4WD N55 B30 A | | GCI81597 | Inner Joint | | 27 | 24 | 43.95 | 349.5 | 125 | |
| | 2012.07-2015.07 | 6MT | R | L | Saloon 4WD N55 B30 A | Date to:2014.02 | GDS85110 | Drive Shaft | | 28 | 32 | 57 | 71 | 748 | |
| | 2012.07-2015.07 | 6MT | R | R | Saloon 4WD N55 B30 A | Date to:2014.02 | GDS85109 | Drive Shaft | | 28 | 32 | 57 | 71 | 802 | |
| | 2012.07-2015.07 | 6MT/8AT | R | L | Saloon 4WD N55 B30 A | Transmission:6MT,Date from:2014.03,Diameter [mm]:39;Transmission:8AT,Diameter [mm]:39 | GDS85066 | Drive Shaft | | 28 | 27 | 57.4 | 71 | 744 | |
| | 2012.07-2015.07 | 6MT/8AT | R | R | Saloon 4WD N55 B30 A | Transmission:6MT,Date from:2014.03,Diameter [mm]:39;Transmission:8AT,Diameter [mm]:39 | GDS85067 | Drive Shaft | | 28 | 27 | 57.4 | 71 | 800 | |
| | 2012.07-2015.07 | 6MT/8AT | R | L/R | Saloon 4WD N55 B30 A | Transmission:6MT,Date from:2014.03,Diameter [mm]:39;Transmission:8AT,Diameter [mm]:39 | GCI83732 | Inner Joint | | 27 | 25 | 43.9 | 75 | 72 | |
| 3.0 (240 kw) | 2006.09-2008.06 | | F | L/R | Saloon 4WD N54 B30 A | | GCO85020 | Outer Joint | 48W | 30 | 33 | 64.8 | 77 | 60 | M |
| | 2006.09-2008.06 | 6AT | R | L | Saloon 4WD N54 B30 A | Date from:2007.10 | GDS85039 | Drive Shaft | | 30 | | 58.7 | 73 | 615 | |
| | 2006.09-2008.06 | 6AT | R | R | Saloon 4WD N54 B30 A | | GDS85082 | Drive Shaft | | 30 | | 58.7 | 73 | 656 | |
| | 2008.05-2011.10 | 6AT/6MT | F | L | Saloon 4WD N54 B30 A;N55 B30 A | | GDS85124 | Drive Shaft | 48W | 30 | 27 | 64.8 | 77 | 571 | |
| | 2008.05-2011.10 | 6AT/6MT | F | R | Saloon 4WD N54 B30 A;N55 B30 A | | GDS85125 | Drive Shaft | 48W | 30 | 27 | 64.8 | 77 | 892 | |
| | 2008.05-2011.10 | 6AT/6MT | F | L | Saloon 4WD N54 B30 A;N55 B30 A | | GCI85066 | Inner Joint | | 27 | 24 | 43.95 | 53.5 | 126.5 | |
| | 2008.05-2011.10 | 6AT/6MT | F | R | Saloon 4WD N54 B30 A;N55 B30 A | | GCI85067 | Inner Joint | | 27 | 24 | 43.95 | 376 | 126 | |
| | 2008.05-2011.10 | AT/MT | F | L/R | Saloon 4WD N54 B30 A;N55 B30 A | | GCO85020 | Outer Joint | 48W | 30 | 33 | 64.8 | 77 | 60 | M |
| | 2008.05-2011.10 | 6AT | R | L | Saloon 4WD N54 B30 A;N55 B30 A | Date from:2007.10 | GDS85039 | Drive Shaft | | 30 | | 58.7 | 73 | 615 | |
| | 2008.05-2011.10 | 6AT | R | R | Saloon 4WD N54 B30 A;N55 B30 A | Date to:2007.09 | GDS85082 | Drive Shaft | | 30 | | 58.7 | 73 | 656 | |
| | 2008.05-2011.10 | 6AT | R | R | Saloon 4WD N54 B30 A;N55 B30 A | Date from:2007.10 | GDS85134 | Drive Shaft | | 30 | | 58.7 | 73 | 665 | |
| | 2012.07-2013.06 | 6MT/8AT | F | L | Saloon 4WD N55 B30 A | | GDS82052 | Drive Shaft | | 31 | 27 | 55.8 | | 550 | |
| | 2012.07-2013.06 | 6MT/8AT | F | R | Saloon 4WD N55 B30 A | | GDS82053 | Drive Shaft | | 31 | 27 | 55.8 | | 841 | |
| | 2012.07-2013.06 | 6MT | R | L | Saloon 4WD N55 B30 A | | GDS85110 | Drive Shaft | | 28 | 32 | 57 | 71 | 748 | |
| | 2012.07-2013.06 | 6MT | R | R | Saloon 4WD N55 B30 A | | GDS85109 | Drive Shaft | | 28 | 32 | 57 | 71 | 802 | |
| | 2012.07-2013.06 | 8AT | R | L | Saloon 4WD N55 B30 A | | GDS85066 | Drive Shaft | | 28 | 27 | 57.4 | 71 | 744 | |
| | 2012.07-2013.06 | 8AT | R | R | Saloon 4WD N55 B30 A | | GDS85067 | Drive Shaft | | 28 | 27 | 57.4 | 71 | 800 | |
| | 2012.07-2013.06 | 8AT | R | L/R | Saloon 4WD N55 B30 A | Diameter [mm]:35 | GCI83732 | Inner Joint | | 27 | 25 | 43.9 | 75 | 72 | |
| 3.0 (250 kw) | 2012.07-2015.07 | 6MT/8AT | F | L | Saloon 4WD N55 B30 A | | GDS82052 | Drive Shaft | | 31 | 27 | 55.8 | | 550 | |
| | 2012.07-2015.07 | 6MT/8AT | F | R | Saloon 4WD N55 B30 A | | GDS82053 | Drive Shaft | | 31 | 27 | 55.8 | | 841 | |
| | 2012.07-2015.07 | 6MT | R | L | Saloon 4WD N55 B30 A | Date to:2014.02 | GDS85110 | Drive Shaft | | 28 | 32 | 57 | 71 | 748 | |
| | 2012.07-2015.07 | 6MT | R | R | Saloon 4WD N55 B30 A | Date to:2014.02 | GDS85109 | Drive Shaft | | 28 | 32 | 57 | 71 | 802 | |
| | 2012.07-2015.07 | 6MT/8AT | R | L | Saloon 4WD N55 B30 A | Transmission:6MT,Date from:2014.03,Diameter [mm]:39;Transmission:8AT,Diameter [mm]:39 | GDS85066 | Drive Shaft | | 28 | 27 | 57.4 | 71 | 744 | |

| | YEAR | TRANSM. | F/R | L/R | BODY STYLE & DRIVE TYPE & ENGINE | REMARKS | G-AP Ref. | PRODUCT | ABS | Technical Specifications A | B | C | H | L | P |
|---|---|---|---|---|---|---|---|---|---|---|---|---|---|---|---|
| **BMW** | | | | | | | | | | | | | | | |
| **335i xDrive** | | | | | | | | | | | | | | | |
| 3.0 (250 kw) | 2012.07-2015.07 | 6MT/8AT | R | R | Saloon 4WD N55 B30 A | Transmission:6MT,Date from:201 4.03,Diameter [mm]:39;Transmission:8AT,Diameter [mm]:39 | GDS85067 | Drive Shaft | | 28 | 27 | 57.4 | 71 | 800 | |
| | 2012.07-2015.07 | 6MT/8AT | R | L/R | Saloon 4WD N55 B30 A | Transmission:6MT,Date from:201 4.03,Diameter [mm]:39;Transmission:8AT,Diameter [mm]:39 | GCI83732 | Inner Joint | | 27 | 25 | 43.9 | 75 | 72 | |
| **335i xDrive Coupe** | | | | | | | | | | | | | | | |
| 3.0 (224 kw) | 2011.01- | 6AT/6MT | F | L | Coupe 4WD N55B30A | | GDS85124 | Drive Shaft | 48W | 30 | 27 | 64.8 | 77 | 571 | |
| | 2011.01- | 6AT/6MT | F | R | Coupe 4WD N55B30A | | GDS85125 | Drive Shaft | 48W | 30 | 27 | 64.8 | 77 | 892 | |
| | 2011.01- | 6AT/6MT | F | L/R | Coupe 4WD N55B30A | | GCO85020 | Outer Joint | 48W | 30 | 33 | 64.8 | 77 | 60 | M |
| | 2011.01- | 6AT/6MT | F | L | Coupe 4WD N55B30A | | GCI85066 | Inner Joint | | 27 | 24 | 43.95 | 53.5 | 126.5 | |
| | 2011.01- | 6AT/6MT | F | R | Coupe 4WD N55B30A | | GCI85067 | Inner Joint | | 27 | 24 | 43.95 | 376 | 126 | |
| | 2011.01- | AT/MT | R | L | Coupe 4WD N55B30A | | GDS85039 | Drive Shaft | | 30 | | 58.7 | 73 | 615 | |
| | 2011.01- | AT/MT | R | R | Coupe 4WD N55B30A | | GDS85134 | Drive Shaft | | 30 | | 58.7 | 73 | 665 | |
| 3.0 (225 kw) | 2008.11-2013.12 | 6AT/6MT | F | L | Coupe 4WD N54 B30 A;N55 B30 A | | GDS85124 | Drive Shaft | 48W | 30 | 27 | 64.8 | 77 | 571 | |
| | 2008.11-2013.12 | 6AT/6MT | F | R | Coupe 4WD N54 B30 A;N55 B30 A | | GDS85125 | Drive Shaft | 48W | 30 | 27 | 64.8 | 77 | 892 | |
| | 2008.11-2013.12 | 6AT/6MT | F | L/R | Coupe 4WD N54 B30 A;N55 B30 A | | GCO85020 | Outer Joint | 48W | 30 | 33 | 64.8 | 77 | 60 | M |
| | 2008.11-2013.12 | 6AT/6MT | F | L | Coupe 4WD N54 B30 A;N55 B30 A | | GCI85066 | Inner Joint | | 27 | 24 | 43.95 | 53.5 | 126.5 | |
| | 2008.11-2013.12 | 6AT/6MT | F | R | Coupe 4WD N54 B30 A;N55 B30 A | | GCI85067 | Inner Joint | | 27 | 24 | 43.95 | 376 | 126 | |
| | 2008.11-2013.12 | 6AT | R | L | Coupe 4WD N54 B30 A;N55 B30 A | | GDS85039 | Drive Shaft | | 30 | | 58.7 | 73 | 615 | |
| | 2008.11-2013.12 | 6AT | R | R | Coupe 4WD N54 B30 A;N55 B30 A | | GDS85134 | Drive Shaft | | 30 | | 58.7 | 73 | 665 | |
| 3.0 (240 kw) | 2007.03-2010.02 | | F | L/R | Coupe 4WD N54 B30 A | | GCO85020 | Outer Joint | 48W | 30 | 33 | 64.8 | 77 | 60 | M |
| | 2007.03-2010.02 | 6AT | R | L | Coupe 4WD N54 B30 A | | GDS85039 | Drive Shaft | | 30 | | 58.7 | 73 | 615 | |
| | 2008.11-2013.06 | 6AT/6MT | F | L | Coupe 4WD N55 B30 A | | GDS85124 | Drive Shaft | 48W | 30 | 27 | 64.8 | 77 | 571 | |
| | 2008.11-2013.06 | 6AT/6MT | F | R | Coupe 4WD N55 B30 A | | GDS85125 | Drive Shaft | 48W | 30 | 27 | 64.8 | 77 | 892 | |
| | 2008.11-2013.06 | 6AT/6MT | F | L | Coupe 4WD N55 B30 A | | GCI85066 | Inner Joint | | 27 | 24 | 43.95 | 53.5 | 126.5 | |
| | 2008.11-2013.06 | 6AT/6MT | F | R | Coupe 4WD N55 B30 A | | GCI85067 | Inner Joint | | 27 | 24 | 43.95 | 376 | 126 | |
| | 2008.11-2013.06 | AT/MT | F | L/R | Coupe 4WD N55 B30 A | | GCO85020 | Outer Joint | 48W | 30 | 33 | 64.8 | 77 | 60 | M |
| | 2008.11-2013.06 | AT/MT/6AT | R | L | Coupe 4WD N55 B30 A | | GDS85039 | Drive Shaft | | 30 | | 58.7 | 73 | 615 | |
| | 2008.11-2013.06 | AT/MT/6AT | R | R | Coupe 4WD N55 B30 A | | GDS85134 | Drive Shaft | | 30 | | 58.7 | 73 | 665 | |
| **335i xDrive Gran Turismo** | | | | | | | | | | | | | | | |
| 3.0 (225 kw) | 2013.07-2016.06 | AT | F | L | Hatchback 4WD N55 B30 A | | GDS82052 | Drive Shaft | | 31 | 27 | 55.8 | | 550 | |
| | 2013.07-2016.06 | AT | F | R | Hatchback 4WD N55 B30 A | | GDS82053 | Drive Shaft | | 31 | 27 | 55.8 | | 841 | |
| | 2013.07-2016.06 | AT | F | L | Hatchback 4WD N55 B30 A | | GCO81603 | Outer Joint | | 31 | 33 | 55.8 | | 69.5 | M |
| | 2013.07-2016.06 | AT | F | L | Hatchback 4WD N55 B30 A | | GCI81055 | Inner Joint | | 27 | 24 | 43.95 | 60 | 123.5 | |
| | 2013.07-2016.06 | AT | F | R | Hatchback 4WD N55 B30 A | | GCI81597 | Inner Joint | | 27 | 24 | 43.95 | 349.5 | 125 | |
| | 2013.07-2016.06 | 8AT | R | L | Hatchback 4WD N55 B30 A | | GDS85066 | Drive Shaft | | 28 | 27 | 57.4 | 71 | 744 | |
| | 2013.07-2016.06 | 8AT | R | R | Hatchback 4WD N55 B30 A | | GDS85067 | Drive Shaft | | 28 | 27 | 57.4 | 71 | 800 | |
| | 2013.07-2016.06 | 8AT | R | L/R | Hatchback 4WD N55 B30 A | Diameter [mm]:35 | GCI83732 | Inner Joint | | 27 | 25 | 43.9 | 75 | 72 | |
| 3.0 (240 kw) | 2013.03-2014.03 | AT | F | L | Hatchback 4WD N55 B30 A | | GDS82052 | Drive Shaft | | 31 | 27 | 55.8 | | 550 | |
| | 2013.03-2014.03 | AT | F | R | Hatchback 4WD N55 B30 A | | GDS82053 | Drive Shaft | | 31 | 27 | 55.8 | | 841 | |
| | 2013.03-2014.03 | AT | F | L | Hatchback 4WD N55 B30 A | | GCO81603 | Outer Joint | | 31 | 33 | 55.8 | | 69.5 | M |
| | 2013.03-2014.03 | AT | F | L | Hatchback 4WD N55 B30 A | | GCI81055 | Inner Joint | | 27 | 24 | 43.95 | 60 | 123.5 | |
| | 2013.03-2014.03 | AT | F | R | Hatchback 4WD N55 B30 A | | GCI81597 | Inner Joint | | 27 | 24 | 43.95 | 349.5 | 125 | |
| | 2013.03-2014.03 | 8AT | R | L | Hatchback 4WD N55 B30 A | | GDS85066 | Drive Shaft | | 28 | 27 | 57.4 | 71 | 744 | |
| | 2013.03-2014.03 | 8AT | R | R | Hatchback 4WD N55 B30 A | | GDS85067 | Drive Shaft | | 28 | 27 | 57.4 | 71 | 800 | |
| | 2013.03-2014.03 | 8AT | R | L/R | Hatchback 4WD N55 B30 A | Diameter [mm]:35 | GCI83732 | Inner Joint | | 27 | 25 | 43.9 | 75 | 72 | |
| 3.0 (250 kw) | 2014.04-2016.06 | AT | F | L | Hatchback 4WD N55 B30 A | | GDS82052 | Drive Shaft | | 31 | 27 | 55.8 | | 550 | |
| | 2014.04-2016.06 | AT | F | R | Hatchback 4WD N55 B30 A | | GDS82053 | Drive Shaft | | 31 | 27 | 55.8 | | 841 | |
| | 2014.04-2016.06 | AT | F | L | Hatchback 4WD N55 B30 A | | GCO81603 | Outer Joint | | 31 | 33 | 55.8 | | 69.5 | M |
| | 2014.04-2016.06 | AT | F | L | Hatchback 4WD N55 B30 A | | GCI81055 | Inner Joint | | 27 | 24 | 43.95 | 60 | 123.5 | |
| | 2014.04-2016.06 | AT | F | R | Hatchback 4WD N55 B30 A | | GCI81597 | Inner Joint | | 27 | 24 | 43.95 | 349.5 | 125 | |
| | 2014.04-2016.06 | 8AT | R | L | Hatchback 4WD N55 B30 A | | GDS85066 | Drive Shaft | | 28 | 27 | 57.4 | 71 | 744 | |
| | 2014.04-2016.06 | 8AT | R | R | Hatchback 4WD N55 B30 A | | GDS85067 | Drive Shaft | | 28 | 27 | 57.4 | 71 | 800 | |
| | 2014.04-2016.06 | 8AT | R | L/R | Hatchback 4WD N55 B30 A | Diameter [mm]:35 | GCI83732 | Inner Joint | | 27 | 25 | 43.9 | 75 | 72 | |
| **335i xDrive Touring** | | | | | | | | | | | | | | | |
| 3.0 (225 kw) | 2008.09-2012.06 | 6AT/6MT | F | L | Estate 4WD N54 B30 A;N55 B30 A | | GDS85124 | Drive Shaft | 48W | 30 | 27 | 64.8 | 77 | 571 | |
| | 2008.09-2012.06 | 6AT/6MT | F | R | Estate 4WD N54 B30 A;N55 B30 A | | GDS85125 | Drive Shaft | 48W | 30 | 27 | 64.8 | 77 | 892 | |
| | 2008.09-2012.06 | 6AT/6MT | F | L/R | Estate 4WD N54 B30 A;N55 B30 A | | GCO85020 | Outer Joint | 48W | 30 | 33 | 64.8 | 77 | 60 | M |
| | 2008.09-2012.06 | 6AT/6MT | F | L | Estate 4WD N54 B30 A;N55 B30 A | | GCI85066 | Inner Joint | | 27 | 24 | 43.95 | 53.5 | 126.5 | |
| | 2008.09-2012.06 | 6AT/6MT | F | R | Estate 4WD N54 B30 A;N55 B30 A | | GCI85067 | Inner Joint | | 27 | 24 | 43.95 | 376 | 126 | |
| | 2008.09-2012.06 | 6AT | R | L | Estate 4WD N54 B30 A;N55 B30 A | | GDS85039 | Drive Shaft | | 30 | | 58.7 | 73 | 615 | |
| | 2008.09-2012.06 | 6AT | R | R | Estate 4WD N54 B30 A;N55 B30 A | | GDS85134 | Drive Shaft | | 30 | | 58.7 | 73 | 665 | |
| | 2013.03-2015.06 | 8AT | F | L | Estate 4WD N55 B30 A | | GDS82052 | Drive Shaft | | 31 | 27 | 55.8 | | 550 | |
| | 2013.03-2015.06 | 8AT | F | R | Estate 4WD N55 B30 A | | GDS82053 | Drive Shaft | | 31 | 27 | 55.8 | | 841 | |
| | 2013.03-2015.06 | 8AT | F | L | Estate 4WD N55 B30 A | | GCO81603 | Outer Joint | | 31 | 33 | 55.8 | | 69.5 | M |
| | 2013.03-2015.06 | 8AT | F | L | Estate 4WD N55 B30 A | | GCI81055 | Inner Joint | | 27 | 24 | 43.95 | 60 | 123.5 | |
| | 2013.03-2015.06 | 8AT | F | R | Estate 4WD N55 B30 A | | GCI81597 | Inner Joint | | 27 | 24 | 43.95 | 349.5 | 125 | |
| | 2013.03-2015.06 | 8AT | R | L | Estate 4WD N55 B30 A | | GDS85066 | Drive Shaft | | 28 | 27 | 57.4 | 71 | 744 | |

| | YEAR | TRANSM. | F/R | L/R | BODY STYLE & DRIVE TYPE & ENGINE | REMARKS | G-AP Ref. | PRODUCT | ABS | Technical Specifications A | B | C | H | L | P |
|---|---|---|---|---|---|---|---|---|---|---|---|---|---|---|---|
| **BMW** | | | | | | | | | | | | | | | |
| **335i xDrive Touring** | | | | | | | | | | | | | | | |
| 3.0 (225 kw) | 2013.03-2015.06 | 8AT | R | R | Estate 4WD N55 B30 A | | GDS85067 | Drive Shaft | | 28 | 27 | 57.4 | 71 | 800 | |
| | 2013.03-2015.06 | 8AT | R | L/R | Estate 4WD N55 B30 A | Diameter [mm]:35 | GCI83732 | Inner Joint | | 27 | 25 | 43.9 | 75 | 72 | |
| 3.0 (240 kw) | 2008.09-2012.06 | 6AT/6MT | F | L | Estate 4WD N54 B30 A;N55 B30 A | | GDS85124 | Drive Shaft | 48W | 30 | 27 | 64.8 | 77 | 571 | |
| | 2008.09-2012.06 | 6AT/6MT | F | R | Estate 4WD N54 B30 A;N55 B30 A | | GDS85125 | Drive Shaft | 48W | 30 | 27 | 64.8 | 77 | 892 | |
| | 2008.09-2012.06 | 6AT/6MT | F | L | Estate 4WD N54 B30 A;N55 B30 A | | GCI85066 | Inner Joint | | 27 | 24 | 43.95 | 53.5 | 126.5 | |
| | 2008.09-2012.06 | 6AT/6MT | F | R | Estate 4WD N54 B30 A;N55 B30 A | | GCI85067 | Inner Joint | | 27 | 24 | 43.95 | 376 | 126 | |
| | 2008.09-2012.06 | AT/MT | F | L/R | Estate 4WD N54 B30 A;N55 B30 A | | GCO85020 | Outer Joint | 48W | 30 | 33 | 64.8 | 77 | 60 | M |
| | 2008.09-2012.06 | AT/MT | R | L | Estate 4WD N54 B30 A;N55 B30 A | | GDS85039 | Drive Shaft | | 30 | | 58.7 | 73 | 615 | |
| | 2008.09-2012.06 | AT/MT | R | R | Estate 4WD N54 B30 A;N55 B30 A | | GDS85134 | Drive Shaft | | 30 | | 58.7 | 73 | 665 | |
| | 2013.03-2013.06 | 8AT | F | L | Estate 4WD N55 B30 A | | GDS82052 | Drive Shaft | | 31 | 27 | 55.8 | | 550 | |
| | 2013.03-2013.06 | 8AT | F | R | Estate 4WD N55 B30 A | | GDS82053 | Drive Shaft | | 31 | 27 | 55.8 | | 841 | |
| | 2013.03-2013.06 | 8AT | F | L | Estate 4WD N55 B30 A | | GCO81603 | Outer Joint | | 31 | 33 | 55.8 | | 69.5 | M |
| | 2013.03-2013.06 | 8AT | F | L | Estate 4WD N55 B30 A | | GCI81055 | Inner Joint | | 27 | 24 | 43.95 | 60 | 123.5 | |
| | 2013.03-2013.06 | 8AT | F | R | Estate 4WD N55 B30 A | | GCI81597 | Inner Joint | | 27 | 24 | 43.95 | 349.5 | 125 | |
| | 2013.03-2013.06 | 8AT | R | L | Estate 4WD N55 B30 A | | GDS85066 | Drive Shaft | | 28 | 27 | 57.4 | 71 | 744 | |
| | 2013.03-2013.06 | 8AT | R | R | Estate 4WD N55 B30 A | | GDS85067 | Drive Shaft | | 28 | 27 | 57.4 | 71 | 800 | |
| | 2013.03-2013.06 | 8AT | R | L/R | Estate 4WD N55 B30 A | Diameter [mm]:35 | GCI83732 | Inner Joint | | 27 | 25 | 43.9 | 75 | 72 | |
| 3.0 (250 kw) | 2013.07-2015.06 | 8AT | F | L | Estate 4WD N55 B30 A | | GDS82052 | Drive Shaft | | 31 | 27 | 55.8 | | 550 | |
| | 2013.07-2015.06 | 8AT | F | R | Estate 4WD N55 B30 A | | GDS82053 | Drive Shaft | | 31 | 27 | 55.8 | | 841 | |
| | 2013.07-2015.06 | 8AT | F | L | Estate 4WD N55 B30 A | | GCO81603 | Outer Joint | | 31 | 33 | 55.8 | | 69.5 | M |
| | 2013.07-2015.06 | 8AT | F | L | Estate 4WD N55 B30 A | | GCI81055 | Inner Joint | | 27 | 24 | 43.95 | 60 | 123.5 | |
| | 2013.07-2015.06 | 8AT | F | R | Estate 4WD N55 B30 A | | GCI81597 | Inner Joint | | 27 | 24 | 43.95 | 349.5 | 125 | |
| | 2013.07-2015.06 | 8AT | R | L | Estate 4WD N55 B30 A | | GDS85066 | Drive Shaft | | 28 | 27 | 57.4 | 71 | 744 | |
| | 2013.07-2015.06 | 8AT | R | R | Estate 4WD N55 B30 A | | GDS85067 | Drive Shaft | | 28 | 27 | 57.4 | 71 | 800 | |
| | 2013.07-2015.06 | 8AT | R | L/R | Estate 4WD N55 B30 A | Diameter [mm]:35 | GCI83732 | Inner Joint | | 27 | 25 | 43.9 | 75 | 72 | |
| **335xi** | | | | | | | | | | | | | | | |
| 3.0 (225 kw) | 2007.03-2010.02 | 6AT/6MT | F | L | Coupe 4WD N55 B30 A, N54 B30 A | | GDS85124 | Drive Shaft | 48W | 30 | 27 | 64.8 | 77 | 571 | |
| | 2007.03-2010.02 | 6AT/6MT | F | R | Coupe 4WD N55 B30 A, N54 B30 A | | GDS85125 | Drive Shaft | 48W | 30 | 27 | 64.8 | 77 | 892 | |
| | 2007.03-2010.02 | 6AT/6MT | F | L | Coupe 4WD N55 B30 A, N54 B30 A | | GCI85066 | Inner Joint | | 27 | 24 | 43.95 | 53.5 | 126.5 | |
| | 2007.03-2010.02 | 6AT/6MT | F | R | Coupe 4WD N55 B30 A, N54 B30 A | | GCI85067 | Inner Joint | | 27 | 24 | 43.95 | 376 | 126 | |
| | 2007.03-2010.02 | AT/MT | F | L/R | Coupe 4WD N55 B30 A, N54 B30 A | | GCO85020 | Outer Joint | 48W | 30 | 33 | 64.8 | 77 | 60 | M |
| | 2007.03-2010.02 | CVT | R | L | Coupe 4WD N55 B30 A, N54 B30 A | | GDS85039 | Drive Shaft | | 30 | | 58.7 | 73 | 615 | |
| | 2007.03-2010.02 | CVT | R | R | Coupe 4WD N55 B30 A, N54 B30 A | | GDS85134 | Drive Shaft | | 30 | | 58.7 | 73 | 665 | |
| **340i** | | | | | | | | | | | | | | | |
| 3.0 (240 kw) | 2015.07-2018.10 | 8AT/6MT | R | L | Saloon RWD B58 B30 A | | GDS85110 | Drive Shaft | | 28 | 32 | 57 | 71 | 748 | |
| | 2015.07-2018.10 | 8AT/6MT | R | R | Saloon RWD B58 B30 A | | GDS85109 | Drive Shaft | | 28 | 32 | 57 | 71 | 802 | |
| | 2015.07-2018.10 | 8AT/6MT | R | L/R | Saloon RWD B58 B30 A | | GCI85086 | Inner Joint | | 28 | 28 | 62.5 | 71 | 91 | |
| 3.0 (265 kw) | 2015.07-2018.10 | 8AT/6MT | R | L | Saloon RWD B58 B30 A | | GDS85110 | Drive Shaft | | 28 | 32 | 57 | 71 | 748 | |
| | 2015.07-2018.10 | 8AT/6MT | R | R | Saloon RWD B58 B30 A | | GDS85109 | Drive Shaft | | 28 | 32 | 57 | 71 | 802 | |
| | 2015.07-2018.10 | 8AT/6MT | R | L/R | Saloon RWD B58 B30 A | | GCI85086 | Inner Joint | | 28 | 28 | 62.5 | 71 | 91 | |
| **340i Gran Turismo** | | | | | | | | | | | | | | | |
| 3.0 (240 kw) | 2016.07- | 8AT | R | L | Hatchback RWD B58 B30 A | | GDS85110 | Drive Shaft | | 28 | 32 | 57 | 71 | 748 | |
| | 2016.07- | 8AT | R | R | Hatchback RWD B58 B30 A | | GDS85109 | Drive Shaft | | 28 | 32 | 57 | 71 | 802 | |
| | 2016.07- | 8AT | R | L/R | Hatchback RWD B58 B30 A | | GCI85086 | Inner Joint | | 28 | 28 | 62.5 | 71 | 91 | |
| 3.0 (265 kw) | 2016.07- | 8AT | R | L | Hatchback RWD B58 B30 A | | GDS85110 | Drive Shaft | | 28 | 32 | 57 | 71 | 748 | |
| | 2016.07- | 8AT | R | R | Hatchback RWD B58 B30 A | | GDS85109 | Drive Shaft | | 28 | 32 | 57 | 71 | 802 | |
| | 2016.07- | 8AT | R | L/R | Hatchback RWD B58 B30 A | | GCI85086 | Inner Joint | | 28 | 28 | 62.5 | 71 | 91 | |
| **340i Touring** | | | | | | | | | | | | | | | |
| 3.0 (240 kw) | 2015.07-2019.06 | 8AT | R | L | Estate RWD B58 B30 A | | GDS85110 | Drive Shaft | | 28 | 32 | 57 | 71 | 748 | |
| | 2015.07-2019.06 | 8AT | R | R | Estate RWD B58 B30 A | | GDS85109 | Drive Shaft | | 28 | 32 | 57 | 71 | 802 | |
| | 2015.07-2019.06 | 8AT | R | L/R | Estate RWD B58 B30 A | | GCI85086 | Inner Joint | | 28 | 28 | 62.5 | 71 | 91 | |
| | 2015.07-2019.06 | 8AT | R | L | Estate Van RWD B58 B30 A | | GDS85110 | Drive Shaft | | 28 | 32 | 57 | 71 | 748 | |
| | 2015.07-2019.06 | 8AT | R | R | Estate Van RWD B58 B30 A | | GDS85109 | Drive Shaft | | 28 | 32 | 57 | 71 | 802 | |
| | 2015.07-2019.06 | 8AT | R | L/R | Estate Van RWD B58 B30 A | | GCI85086 | Inner Joint | | 28 | 28 | 62.5 | 71 | 91 | |
| 3.0 (265 kw) | 2015.07-2019.06 | 8AT | R | L | Estate RWD B58 B30 A | | GDS85110 | Drive Shaft | | 28 | 32 | 57 | 71 | 748 | |
| | 2015.07-2019.06 | 8AT | R | R | Estate RWD B58 B30 A | | GDS85109 | Drive Shaft | | 28 | 32 | 57 | 71 | 802 | |
| | 2015.07-2019.06 | 8AT | R | L/R | Estate RWD B58 B30 A | | GCI85086 | Inner Joint | | 28 | 28 | 62.5 | 71 | 91 | |
| **340i xDrive** | | | | | | | | | | | | | | | |
| 3.0 (240 kw) | 2015.07-2018.10 | 8AT/6MT | F | L | Saloon 4WD B58 B30 A | | GDS82052 | Drive Shaft | | 31 | 27 | 55.8 | | 550 | |
| | 2015.07-2018.10 | 8AT/6MT | F | R | Saloon 4WD B58 B30 A | | GDS82053 | Drive Shaft | | 31 | 27 | 55.8 | | 841 | |
| | 2015.07-2018.10 | 8AT/6MT | F | L | Saloon 4WD B58 B30 A | | GCO81603 | Outer Joint | | 31 | 33 | 55.8 | | 69.5 | M |
| | 2015.07-2018.10 | 8AT/6MT | F | L | Saloon 4WD B58 B30 A | | GCI81055 | Inner Joint | | 27 | 24 | 43.95 | 60 | 123.5 | |
| | 2015.07-2018.10 | 8AT/6MT | F | R | Saloon 4WD B58 B30 A | | GCI81597 | Inner Joint | | 27 | 24 | 43.95 | 349.5 | 125 | |
| | 2015.07-2018.10 | 8AT | R | L | Saloon 4WD B58 B30 A | | GDS85066 | Drive Shaft | | 28 | 27 | 57.4 | 71 | 744 | |
| | 2015.07-2018.10 | 8AT | R | R | Saloon 4WD B58 B30 A | | GDS85067 | Drive Shaft | | 28 | 27 | 57.4 | 71 | 800 | |

| | YEAR | TRANSM. | F/R | L/R | BODY STYLE & DRIVE TYPE & ENGINE | REMARKS | G-AP Ref. | PRODUCT | ABS | Technical Specifications A | B | C | H | L | P |
|---|---|---|---|---|---|---|---|---|---|---|---|---|---|---|---|
| **BMW** | | | | | | | | | | | | | | | |
| **340i xDrive** | | | | | | | | | | | | | | | |
| 3.0 (240 kw) | 2015.07-2018.10 | 8AT | R | L/R | Saloon 4WD B58 B30 A | Diameter [mm]:35 | GCI83732 | Inner Joint | | 27 | 25 | 43.9 | 75 | 72 | |
| 3.0 (265 kw) | 2015.07-2018.10 | 8AT/6MT | F | L | Saloon 4WD B58 B30 A | | GDS82052 | Drive Shaft | | 31 | 27 | 55.8 | | 550 | |
| | 2015.07-2018.10 | 8AT/6MT | F | R | Saloon 4WD B58 B30 A | | GDS82053 | Drive Shaft | | 31 | 27 | 55.8 | | 841 | |
| | 2015.07-2018.10 | 8AT/6MT | F | L | Saloon 4WD B58 B30 A | | GCO81603 | Outer Joint | | 31 | 33 | 55.8 | | 69.5 | M |
| | 2015.07-2018.10 | 8AT/6MT | F | L | Saloon 4WD B58 B30 A | | GCI81055 | Inner Joint | | 27 | 24 | 43.95 | 60 | 123.5 | |
| | 2015.07-2018.10 | 8AT/6MT | F | R | Saloon 4WD B58 B30 A | | GCI81597 | Inner Joint | | 27 | 24 | 43.95 | 349.5 | 125 | |
| | 2015.07-2018.10 | 8AT | R | L | Saloon 4WD B58 B30 A | | GDS85066 | Drive Shaft | | 28 | 27 | 57.4 | 71 | 744 | |
| | 2015.07-2018.10 | 8AT | R | R | Saloon 4WD B58 B30 A | | GDS85067 | Drive Shaft | | 28 | 27 | 57.4 | 71 | 800 | |
| | 2015.07-2018.10 | 8AT | R | L/R | Saloon 4WD B58 B30 A | Diameter [mm]:35 | GCI83732 | Inner Joint | | 27 | 25 | 43.9 | 75 | 72 | |
| **340i xDrive Gran Turismo** | | | | | | | | | | | | | | | |
| 3.0 (240 kw) | 2016.07- | 8AT | F | L | Hatchback 4WD B58 B30 A | | GDS82052 | Drive Shaft | | 31 | 27 | 55.8 | | 550 | |
| | 2016.07- | 8AT | F | R | Hatchback 4WD B58 B30 A | | GDS82053 | Drive Shaft | | 31 | 27 | 55.8 | | 841 | |
| | 2016.07- | 8AT | F | L | Hatchback 4WD B58 B30 A | | GCO81603 | Outer Joint | | 31 | 33 | 55.8 | | 69.5 | M |
| | 2016.07- | 8AT | F | L | Hatchback 4WD B58 B30 A | | GCI81055 | Inner Joint | | 27 | 24 | 43.95 | 60 | 123.5 | |
| | 2016.07- | 8AT | F | R | Hatchback 4WD B58 B30 A | | GCI81597 | Inner Joint | | 27 | 24 | 43.95 | 349.5 | 125 | |
| | 2016.07- | 8AT | R | L | Hatchback 4WD B58 B30 A | Diameter [mm]:28 | GDS83157 | Drive Shaft | | 28 | 27 | 57 | 71 | 750 | |
| | 2016.07- | 8AT | R | R | Hatchback 4WD B58 B30 A | Diameter [mm]:35 | GDS85067 | Drive Shaft | | 28 | 27 | 57.4 | 71 | 800 | |
| | 2016.07- | 8AT | R | L | Hatchback 4WD B58 B30 A | Diameter [mm]:28 | GCO82308 | Outer Joint | | 28 | 30 | 57 | 71 | 52.5 | I |
| | 2016.07- | 8AT | R | L | Hatchback 4WD B58 B30 A | Diameter [mm]:28 | GCI82145 | Inner Joint | | 27 | 30 | 43.9 | 75 | 101 | |
| | 2016.07- | 8AT | R | R | Hatchback 4WD B58 B30 A | Diameter [mm]:35 | GCI83732 | Inner Joint | | 27 | 25 | 43.9 | 75 | 72 | |
| 3.0 (265 kw) | 2016.07- | 8AT | F | L | Hatchback 4WD B58 B30 A | | GDS82052 | Drive Shaft | | 31 | 27 | 55.8 | | 550 | |
| | 2016.07- | 8AT | F | R | Hatchback 4WD B58 B30 A | | GDS82053 | Drive Shaft | | 31 | 27 | 55.8 | | 841 | |
| | 2016.07- | 8AT | F | L | Hatchback 4WD B58 B30 A | | GCO81603 | Outer Joint | | 31 | 33 | 55.8 | | 69.5 | M |
| | 2016.07- | 8AT | F | L | Hatchback 4WD B58 B30 A | | GCI81055 | Inner Joint | | 27 | 24 | 43.95 | 60 | 123.5 | |
| | 2016.07- | 8AT | F | R | Hatchback 4WD B58 B30 A | | GCI81597 | Inner Joint | | 27 | 24 | 43.95 | 349.5 | 125 | |
| | 2016.07- | 8AT | R | L | Hatchback 4WD B58 B30 A | Diameter [mm]:28 | GDS83157 | Drive Shaft | | 28 | 27 | 57 | 71 | 750 | |
| | 2016.07- | 8AT | R | R | Hatchback 4WD B58 B30 A | Diameter [mm]:35 | GDS85067 | Drive Shaft | | 28 | 27 | 57.4 | 71 | 800 | |
| | 2016.07- | 8AT | R | L | Hatchback 4WD B58 B30 A | Diameter [mm]:28 | GCO82308 | Outer Joint | | 28 | 30 | 57 | 71 | 52.5 | I |
| | 2016.07- | 8AT | R | L | Hatchback 4WD B58 B30 A | Diameter [mm]:28 | GCI82145 | Inner Joint | | 27 | 30 | 43.9 | 75 | 101 | |
| | 2016.07- | 8AT | R | R | Hatchback 4WD B58 B30 A | Diameter [mm]:35 | GCI83732 | Inner Joint | | 27 | 25 | 43.9 | 75 | 72 | |
| **340i xDrive Touring** | | | | | | | | | | | | | | | |
| 3.0 (240 kw) | 2015.07-2019.06 | 8AT | F | L | Estate 4WD B58 B30 A | | GDS82052 | Drive Shaft | | 31 | 27 | 55.8 | | 550 | |
| | 2015.07-2019.06 | 8AT | F | R | Estate 4WD B58 B30 A | | GDS82053 | Drive Shaft | | 31 | 27 | 55.8 | | 841 | |
| | 2015.07-2019.06 | 8AT | F | L | Estate 4WD B58 B30 A | | GCO81603 | Outer Joint | | 31 | 33 | 55.8 | | 69.5 | M |
| | 2015.07-2019.06 | 8AT | F | L | Estate 4WD B58 B30 A | | GCI81055 | Inner Joint | | 27 | 24 | 43.95 | 60 | 123.5 | |
| | 2015.07-2019.06 | 8AT | F | R | Estate 4WD B58 B30 A | | GCI81597 | Inner Joint | | 27 | 24 | 43.95 | 349.5 | 125 | |
| | 2015.07-2019.06 | 8AT | R | L | Estate 4WD B58 B30 A | For vehicles without alpina package | GDS85066 | Drive Shaft | | 28 | 27 | 57.4 | 71 | 744 | |
| | 2015.07-2019.06 | 8AT | R | L | Estate 4WD B58 B30 A | For vehicles with alpina package | GDS85110 | Drive Shaft | | 28 | 32 | 57 | 71 | 748 | |
| | 2015.07-2019.06 | 8AT | R | R | Estate 4WD B58 B30 A | For vehicles without alpina package | GDS85067 | Drive Shaft | | 28 | 27 | 57.4 | 71 | 800 | |
| | 2015.07-2019.06 | 8AT | R | R | Estate 4WD B58 B30 A | For vehicles with alpina package | GDS85109 | Drive Shaft | | 28 | 32 | 57 | 71 | 802 | |
| | 2015.07-2019.06 | 8AT | R | L/R | Estate 4WD B58 B30 A | For vehicles without alpina package | GCI83732 | Inner Joint | | 27 | 25 | 43.9 | 75 | 72 | |
| 3.0 (265 kw) | 2015.07-2019.06 | 8AT | F | L | Estate 4WD B58 B30 A | | GDS82052 | Drive Shaft | | 31 | 27 | 55.8 | | 550 | |
| | 2015.07-2019.06 | 8AT | F | R | Estate 4WD B58 B30 A | | GDS82053 | Drive Shaft | | 31 | 27 | 55.8 | | 841 | |
| | 2015.07-2019.06 | 8AT | F | L | Estate 4WD B58 B30 A | | GCO81603 | Outer Joint | | 31 | 33 | 55.8 | | 69.5 | M |
| | 2015.07-2019.06 | 8AT | F | L | Estate 4WD B58 B30 A | | GCI81055 | Inner Joint | | 27 | 24 | 43.95 | 60 | 123.5 | |
| | 2015.07-2019.06 | 8AT | F | R | Estate 4WD B58 B30 A | | GCI81597 | Inner Joint | | 27 | 24 | 43.95 | 349.5 | 125 | |
| | 2015.07-2019.06 | 8AT | R | L | Estate 4WD B58 B30 A | For vehicles without alpina package | GDS85066 | Drive Shaft | | 28 | 27 | 57.4 | 71 | 744 | |
| | 2015.07-2019.06 | 8AT | R | L | Estate 4WD B58 B30 A | For vehicles with alpina package | GDS85110 | Drive Shaft | | 28 | 32 | 57 | 71 | 748 | |
| | 2015.07-2019.06 | 8AT | R | R | Estate 4WD B58 B30 A | For vehicles without alpina package | GDS85067 | Drive Shaft | | 28 | 27 | 57.4 | 71 | 800 | |
| | 2015.07-2019.06 | 8AT | R | R | Estate 4WD B58 B30 A | For vehicles with alpina package | GDS85109 | Drive Shaft | | 28 | 32 | 57 | 71 | 802 | |
| | 2015.07-2019.06 | 8AT | R | L/R | Estate 4WD B58 B30 A | For vehicles without alpina package | GCI83732 | Inner Joint | | 27 | 25 | 43.9 | 75 | 72 | |
| **418d Coupe** | | | | | | | | | | | | | | | |
| 2.0 (100 kw) | 2015.03-2017.10 | AT/MT | R | L | Coupe RWD B47 D20 A | | GDS85066 | Drive Shaft | | 28 | 27 | 57.4 | 71 | 744 | |
| | 2015.03-2017.10 | AT/MT | R | R | Coupe RWD B47 D20 A | | GDS85067 | Drive Shaft | | 28 | 27 | 57.4 | 71 | 800 | |
| 2.0 (110 kw) | 2015.03-2017.10 | AT/MT | R | L | Coupe RWD B47 D20 A | | GDS85066 | Drive Shaft | | 28 | 27 | 57.4 | 71 | 744 | |
| | 2015.03-2017.10 | AT/MT | R | R | Coupe RWD B47 D20 A | | GDS85067 | Drive Shaft | | 28 | 27 | 57.4 | 71 | 800 | |
| **418d Gran Coupe** | | | | | | | | | | | | | | | |
| 2.0 (100 kw) | 2014.03-2020.12 | 8AT/6MT | R | L | Coupe RWD N47 D20 C;B47 D20 A | | GDS85066 | Drive Shaft | | 28 | 27 | 57.4 | 71 | 744 | |
| | 2014.03-2020.12 | 8AT/6MT | R | R | Coupe RWD N47 D20 C;B47 D20 A | | GDS85067 | Drive Shaft | | 28 | 27 | 57.4 | 71 | 800 | |
| 2.0 (105 kw) | 2014.03-2015.06 | AT/MT | R | L | Coupe RWD N47 D20 C | | GDS85066 | Drive Shaft | | 28 | 27 | 57.4 | 71 | 744 | |
| | 2014.03-2015.06 | AT/MT | R | R | Coupe RWD N47 D20 C | | GDS85067 | Drive Shaft | | 28 | 27 | 57.4 | 71 | 800 | |
| 2.0 (110 kw) | 2015.07-2020.12 | 8AT/6MT | R | L | Coupe RWD B47 D20 A | | GDS85066 | Drive Shaft | | 28 | 27 | 57.4 | 71 | 744 | |
| | 2015.07-2020.12 | 8AT/6MT | R | R | Coupe RWD B47 D20 A | | GDS85067 | Drive Shaft | | 28 | 27 | 57.4 | 71 | 800 | |

| | YEAR | TRANSM. | F/R | L/R | BODY STYLE & DRIVE TYPE & ENGINE | REMARKS | G-AP Ref. | PRODUCT | ABS | Technical Specifications A | B | C | H | L | P |
|---|---|---|---|---|---|---|---|---|---|---|---|---|---|---|---|
| **BMW** | | | | | | | | | | | | | | | |
| **418i Coupe** | | | | | | | | | | | | | | | |
| 1.5 (100 kw) | 2016.03-2020.06 | 6MT | R | L | Coupe RWD B38 B15 A | | GDS85066 | Drive Shaft | | 28 | 27 | 57.4 | 71 | 744 | |
| | 2016.03-2020.06 | 6MT | R | R | Coupe RWD B38 B15 A | | GDS85067 | Drive Shaft | | 28 | 27 | 57.4 | 71 | 800 | |
| | 2016.03-2020.06 | 8AT | R | L | Coupe RWD B38 B15 A | | GDS83157 | Drive Shaft | | 28 | 27 | 57 | 71 | 750 | |
| | 2016.03-2020.06 | 8AT | R | R | Coupe RWD B38 B15 A | | GDS83158 | Drive Shaft | | 28 | 27 | 57 | 71 | 802 | |
| | 2016.03-2020.06 | 8AT | R | L/R | Coupe RWD B38 B15 A | | GCO82308 | Outer Joint | | 28 | 30 | 57 | 71 | 52.5 | I |
| | 2016.03-2020.06 | 8AT | R | L/R | Coupe RWD B38 B15 A | | GCI82145 | Inner Joint | | 27 | 30 | 43.9 | 75 | 101 | |
| **418i Gran Coupe** | | | | | | | | | | | | | | | |
| 1.5 (100 kw) | 2015.07-2020.12 | 8AT | R | L | Coupe RWD B38 B15 A | | GDS83157 | Drive Shaft | | 28 | 27 | 57 | 71 | 750 | |
| | 2015.07-2020.12 | 8AT | R | R | Coupe RWD B38 B15 A | | GDS83158 | Drive Shaft | | 28 | 27 | 57 | 71 | 802 | |
| | 2015.07-2020.12 | 8AT | R | L/R | Coupe RWD B38 B15 A | | GCO82308 | Outer Joint | | 28 | 30 | 57 | 71 | 52.5 | I |
| | 2015.07-2020.12 | 8AT | R | L/R | Coupe RWD B38 B15 A | | GCI82145 | Inner Joint | | 27 | 30 | 43.9 | 75 | 101 | |
| | 2015.07-2020.12 | MT | R | L | Coupe RWD B38 B15 A | | GDS85066 | Drive Shaft | | 28 | 27 | 57.4 | 71 | 744 | |
| | 2015.07-2020.12 | MT | R | R | Coupe RWD B38 B15 A | | GDS85067 | Drive Shaft | | 28 | 27 | 57.4 | 71 | 800 | |
| **420d Cabrio** | | | | | | | | | | | | | | | |
| 2.0 (120 kw) | 2013.11-2020.07 | 8AT/6MT | R | L | Convertible RWD N47 D20 C;B47 D20 A | | GDS85066 | Drive Shaft | | 28 | 27 | 57.4 | 71 | 744 | |
| | 2013.11-2020.07 | 8AT/6MT | R | R | Convertible RWD N47 D20 C;B47 D20 A | | GDS85067 | Drive Shaft | | 28 | 27 | 57.4 | 71 | 800 | |
| 2.0 (135 kw) | 2013.10-2015.06 | 8AT/6MT | R | L | Convertible RWD N47 D20 C | | GDS85066 | Drive Shaft | | 28 | 27 | 57.4 | 71 | 744 | |
| | 2013.10-2015.06 | 8AT/6MT | R | R | Convertible RWD N47 D20 C | | GDS85067 | Drive Shaft | | 28 | 27 | 57.4 | 71 | 800 | |
| 2.0 (140 kw) | 2015.07-2020.07 | 8AT/6MT | R | L | Convertible RWD B47 D20 A | | GDS85066 | Drive Shaft | | 28 | 27 | 57.4 | 71 | 744 | |
| | 2015.07-2020.07 | 8AT/6MT | R | R | Convertible RWD B47 D20 A | | GDS85067 | Drive Shaft | | 28 | 27 | 57.4 | 71 | 800 | |
| 2.0 (147 kw) | 2013.10-2015.06 | AT/MT | R | L | Convertible RWD N47 D20 C | | GDS85066 | Drive Shaft | | 28 | 27 | 57.4 | 71 | 744 | |
| | 2013.10-2015.06 | AT/MT | R | R | Convertible RWD N47 D20 C | | GDS85067 | Drive Shaft | | 28 | 27 | 57.4 | 71 | 800 | |
| 2.0 (151 kw) | 2015.07-2020.07 | AT | R | L | Convertible RWD B47 D20 A | | GDS85066 | Drive Shaft | | 28 | 27 | 57.4 | 71 | 744 | |
| | 2015.07-2020.07 | AT | R | R | Convertible RWD B47 D20 A | | GDS85067 | Drive Shaft | | 28 | 27 | 57.4 | 71 | 800 | |
| **420d Coupe** | | | | | | | | | | | | | | | |
| 2.0 (120 kw) | 2013.07-2020.06 | 8AT/6MT | R | L | Coupe RWD N47 D20 C;B47 D20 A | | GDS85066 | Drive Shaft | | 28 | 27 | 57.4 | 71 | 744 | |
| | 2013.07-2020.06 | 8AT/6MT | R | R | Coupe RWD N47 D20 C;B47 D20 A | | GDS85067 | Drive Shaft | | 28 | 27 | 57.4 | 71 | 800 | |
| 2.0 (135 kw) | 2013.07-2015.02 | 8AT/6MT | R | L | Coupe RWD N47 D20 C | | GDS85066 | Drive Shaft | | 28 | 27 | 57.4 | 71 | 744 | |
| | 2013.07-2015.02 | 8AT/6MT | R | R | Coupe RWD N47 D20 C | | GDS85067 | Drive Shaft | | 28 | 27 | 57.4 | 71 | 800 | |
| 2.0 (140 kw) | 2015.03-2020.06 | 8AT/6MT | R | L | Coupe RWD B47 D20 A | | GDS85066 | Drive Shaft | | 28 | 27 | 57.4 | 71 | 744 | |
| | 2015.03-2020.06 | 8AT/6MT | R | R | Coupe RWD B47 D20 A | | GDS85067 | Drive Shaft | | 28 | 27 | 57.4 | 71 | 800 | |
| | 2015.03-2020.06 | 8AT/6MT | R | L/R | Coupe RWD B47 D20 A | | GCI85020 | Inner Joint | | 27 | 25 | 43.9 | 75 | 96 | |
| 2.0 (147 kw) | 2013.07-2015.03 | AT/MT | R | L | Coupe RWD N47 D20 C | | GDS85066 | Drive Shaft | | 28 | 27 | 57.4 | 71 | 744 | |
| | 2013.07-2015.03 | AT/MT | R | R | Coupe RWD N47 D20 C | | GDS85067 | Drive Shaft | | 28 | 27 | 57.4 | 71 | 800 | |
| **420d Gran Coupe** | | | | | | | | | | | | | | | |
| 2.0 (120 kw) | 2014.03-2020.12 | 8AT/6MT | R | L | Coupe RWD N47 D20 C;B47 D20 A | | GDS85066 | Drive Shaft | | 28 | 27 | 57.4 | 71 | 744 | |
| | 2014.03-2020.12 | 8AT/6MT | R | R | Coupe RWD N47 D20 C;B47 D20 A | | GDS85067 | Drive Shaft | | 28 | 27 | 57.4 | 71 | 800 | |
| 2.0 (135 kw) | 2014.03-2015.02 | 8AT/6MT | R | L | Coupe RWD N47 D20 C | | GDS85066 | Drive Shaft | | 28 | 27 | 57.4 | 71 | 744 | |
| | 2014.03-2015.02 | 8AT/6MT | R | R | Coupe RWD N47 D20 C | | GDS85067 | Drive Shaft | | 28 | 27 | 57.4 | 71 | 800 | |
| 2.0 (140 kw) | 2015.03-2020.12 | 8AT/6MT | R | L | Coupe RWD B47 D20 A | | GDS85066 | Drive Shaft | | 28 | 27 | 57.4 | 71 | 744 | |
| | 2015.03-2020.12 | 8AT/6MT | R | R | Coupe RWD B47 D20 A | | GDS85067 | Drive Shaft | | 28 | 27 | 57.4 | 71 | 800 | |
| | 2015.03-2020.12 | 8AT/6MT | R | L/R | Coupe RWD B47 D20 A | | GCI85020 | Inner Joint | | 27 | 25 | 43.9 | 75 | 96 | |
| 2.0 (147 kw) | 2014.03-2015.02 | AT/MT | R | L | Coupe RWD N47 D20 C | | GDS85066 | Drive Shaft | | 28 | 27 | 57.4 | 71 | 744 | |
| | 2014.03-2015.02 | AT/MT | R | R | Coupe RWD N47 D20 C | | GDS85067 | Drive Shaft | | 28 | 27 | 57.4 | 71 | 800 | |
| **420d xDrive Coupe** | | | | | | | | | | | | | | | |
| 2.0 (120 kw) | 2013.11-2020.06 | 8AT/6MT | F | L | Coupe 4WD N47 D20 C;B47 D20 A | | GDS82052 | Drive Shaft | | 31 | 27 | 55.8 | | 550 | |
| | 2013.11-2020.06 | 8AT/6MT | F | R | Coupe 4WD N47 D20 C;B47 D20 A | | GDS82053 | Drive Shaft | | 31 | 27 | 55.8 | | 841 | |
| | 2013.11-2020.06 | 8AT/6MT | F | L | Coupe 4WD N47 D20 C;B47 D20 A | | GCO81603 | Outer Joint | | 31 | 33 | 55.8 | | 69.5 | M |
| | 2013.11-2020.06 | 8AT/6MT | F | L | Coupe 4WD N47 D20 C;B47 D20 A | | GCI81055 | Inner Joint | | 27 | 24 | 43.95 | 60 | 123.5 | |
| | 2013.11-2020.06 | 8AT/6MT | F | R | Coupe 4WD N47 D20 C;B47 D20 A | | GCI81597 | Inner Joint | | 27 | 24 | 43.95 | 349.5 | 125 | |
| | 2013.11-2020.06 | AT/MT | R | L | Coupe 4WD N47 D20 C;B47 D20 A | | GDS85066 | Drive Shaft | | 28 | 27 | 57.4 | 71 | 744 | |
| | 2013.11-2020.06 | AT/MT | R | R | Coupe 4WD N47 D20 C;B47 D20 A | | GDS85067 | Drive Shaft | | 28 | 27 | 57.4 | 71 | 800 | |
| 2.0 (135 kw) | 2013.11-2015.02 | 8AT/6MT | F | L | Coupe 4WD N47 D20 C | | GDS82052 | Drive Shaft | | 31 | 27 | 55.8 | | 550 | |
| | 2013.11-2015.02 | 8AT/6MT | F | R | Coupe 4WD N47 D20 C | | GDS82053 | Drive Shaft | | 31 | 27 | 55.8 | | 841 | |
| | 2013.11-2015.02 | 8AT/6MT | F | L/R | Coupe 4WD N47 D20 C | | GCO81603 | Outer Joint | | 31 | 33 | 55.8 | | 69.5 | M |
| | 2013.11-2015.02 | 8AT/6MT | F | L | Coupe 4WD N47 D20 C | | GCI81055 | Inner Joint | | 27 | 24 | 43.95 | 60 | 123.5 | |
| | 2013.11-2015.02 | 8AT/6MT | F | R | Coupe 4WD N47 D20 C | | GCI81597 | Inner Joint | | 27 | 24 | 43.95 | 349.5 | 125 | |
| | 2013.11-2015.02 | 8AT/6MT | R | L | Coupe 4WD N47 D20 C | | GDS85066 | Drive Shaft | | 28 | 27 | 57.4 | 71 | 744 | |
| | 2013.11-2015.02 | 8AT/6MT | R | R | Coupe 4WD N47 D20 C | | GDS85067 | Drive Shaft | | 28 | 27 | 57.4 | 71 | 800 | |
| 2.0 (140 kw) | 2015.03-2020.06 | 8AT/6MT | F | L | Coupe 4WD B47 D20 A | | GDS82052 | Drive Shaft | | 31 | 27 | 55.8 | | 550 | |
| | 2015.03-2020.06 | 8AT/6MT | F | R | Coupe 4WD B47 D20 A | | GDS82053 | Drive Shaft | | 31 | 27 | 55.8 | | 841 | |
| | 2015.03-2020.06 | 8AT/6MT | F | L/R | Coupe 4WD B47 D20 A | | GCO81603 | Outer Joint | | 31 | 33 | 55.8 | | 69.5 | M |
| | 2015.03-2020.06 | 8AT/6MT | F | L | Coupe 4WD B47 D20 A | | GCI81055 | Inner Joint | | 27 | 24 | 43.95 | 60 | 123.5 | |
| | 2015.03-2020.06 | 8AT/6MT | F | R | Coupe 4WD B47 D20 A | | GCI81597 | Inner Joint | | 27 | 24 | 43.95 | 349.5 | 125 | |
| | 2015.03-2020.06 | 8AT/6MT | R | L | Coupe 4WD B47 D20 A | | GDS85066 | Drive Shaft | | 28 | 27 | 57.4 | 71 | 744 | |

| | YEAR | TRANSM. | F/R | L/R | BODY STYLE & DRIVE TYPE & ENGINE | REMARKS | G-AP Ref. | PRODUCT | ABS | Technical Specifications A | B | C | H | L | P |
|---|---|---|---|---|---|---|---|---|---|---|---|---|---|---|---|
| **BMW** | | | | | | | | | | | | | | | |
| **420d xDrive Coupe** | | | | | | | | | | | | | | | |
| 2.0 (140 kw) | 2015.03-2020.06 | 8AT/6MT | R | R | Coupe 4WD B47 D20 A | | GDS85067 | Drive Shaft | | 28 | 27 | 57.4 | 71 | 800 | |
| | 2020.07- | 8AT | F | L | Coupe 4WD B47 D20 B;JA1 | | GDS56119 | Drive Shaft | | 37 | 27 | 65 | | 557 | |
| | 2020.07- | 8AT | F | R | Coupe 4WD B47 D20 B;JA1 | | GDS56120 | Drive Shaft | | 37 | 27 | 65 | | 857 | |
| | 2020.07- | 8AT | F | L/R | Coupe 4WD B47 D20 B;JA1 | | GCO83161 | Outer Joint | | 37 | 33 | 65 | | 73 | M |
| | 2020.07- | 8AT | F | L | Coupe 4WD B47 D20 B;JA1 | | GCI81055 | Inner Joint | | 27 | 24 | 43.95 | 60 | 123.5 | |
| | 2020.07- | 8AT | F | R | Coupe 4WD B47 D20 B;JA1 | | GCI81457 | Inner Joint | | 27 | 24 | 43.95 | 359 | 125 | |
| 2.0 (147 kw) | 2013.11-2015.03 | 8AT/6MT | F | L | Coupe 4WD N47 D20 C | | GDS82052 | Drive Shaft | | 31 | 27 | 55.8 | | 550 | |
| | 2013.11-2015.03 | 8AT/6MT | F | R | Coupe 4WD N47 D20 C | | GDS82053 | Drive Shaft | | 31 | 27 | 55.8 | | 841 | |
| | 2013.11-2015.03 | 8AT/6MT | F | L | Coupe 4WD N47 D20 C | | GCO81603 | Outer Joint | | 31 | 33 | 55.8 | | 69.5 | M |
| | 2013.11-2015.03 | 8AT/6MT | F | L | Coupe 4WD N47 D20 C | | GCI81055 | Inner Joint | | 27 | 24 | 43.95 | 60 | 123.5 | |
| | 2013.11-2015.03 | 8AT/6MT | F | R | Coupe 4WD N47 D20 C | | GCI81597 | Inner Joint | | 27 | 24 | 43.95 | 349.5 | 125 | |
| | 2013.11-2015.03 | AT/MT | R | L | Coupe 4WD N47 D20 C | | GDS85066 | Drive Shaft | | 28 | 27 | 57.4 | 71 | 744 | |
| | 2013.11-2015.03 | AT/MT | R | R | Coupe 4WD N47 D20 C | | GDS85067 | Drive Shaft | | 28 | 27 | 57.4 | 71 | 800 | |
| **420d xDrive Gran Coupe** | | | | | | | | | | | | | | | |
| 2.0 (120 kw) | 2014.03-2020.12 | 8AT/6MT | F | L | Coupe 4WD N47 D20 C;B47 D20 A | | GDS82052 | Drive Shaft | | 31 | 27 | 55.8 | | 550 | |
| | 2014.03-2020.12 | 8AT/6MT | F | R | Coupe 4WD N47 D20 C;B47 D20 A | | GDS82053 | Drive Shaft | | 31 | 27 | 55.8 | | 841 | |
| | 2014.03-2020.12 | 8AT/6MT | F | L | Coupe 4WD N47 D20 C;B47 D20 A | | GCO81603 | Outer Joint | | 31 | 33 | 55.8 | | 69.5 | M |
| | 2014.03-2020.12 | 8AT/6MT | F | L | Coupe 4WD N47 D20 C;B47 D20 A | | GCI81055 | Inner Joint | | 27 | 24 | 43.95 | 60 | 123.5 | |
| | 2014.03-2020.12 | 8AT/6MT | F | R | Coupe 4WD N47 D20 C;B47 D20 A | | GCI81597 | Inner Joint | | 27 | 24 | 43.95 | 349.5 | 125 | |
| | 2014.03-2020.12 | 8AT/6MT | R | L | Coupe 4WD N47 D20 C;B47 D20 A | | GDS85066 | Drive Shaft | | 28 | 27 | 57.4 | 71 | 744 | |
| | 2014.03-2020.12 | 8AT/6MT | R | R | Coupe 4WD N47 D20 C;B47 D20 A | | GDS85067 | Drive Shaft | | 28 | 27 | 57.4 | 71 | 800 | |
| 2.0 (135 kw) | 2014.03-2015.02 | 8AT/6MT | F | L | Coupe 4WD N47 D20 C | | GDS82052 | Drive Shaft | | 31 | 27 | 55.8 | | 550 | |
| | 2014.03-2015.02 | 8AT/6MT | F | R | Coupe 4WD N47 D20 C | | GDS82053 | Drive Shaft | | 31 | 27 | 55.8 | | 841 | |
| | 2014.03-2015.02 | 8AT/6MT | F | L | Coupe 4WD N47 D20 C | | GCO81603 | Outer Joint | | 31 | 33 | 55.8 | | 69.5 | M |
| | 2014.03-2015.02 | 8AT/6MT | F | L | Coupe 4WD N47 D20 C | | GCI81055 | Inner Joint | | 27 | 24 | 43.95 | 60 | 123.5 | |
| | 2014.03-2015.02 | 8AT/6MT | F | R | Coupe 4WD N47 D20 C | | GCI81597 | Inner Joint | | 27 | 24 | 43.95 | 349.5 | 125 | |
| | 2014.03-2015.02 | AT/MT | R | L | Coupe 4WD N47 D20 C | | GDS85066 | Drive Shaft | | 28 | 27 | 57.4 | 71 | 744 | |
| | 2014.03-2015.02 | AT/MT | R | R | Coupe 4WD N47 D20 C | | GDS85067 | Drive Shaft | | 28 | 27 | 57.4 | 71 | 800 | |
| 2.0 (140 kw) | 2015.03-2020.12 | 8AT/6MT | F | L | Coupe 4WD B47 D20 A | | GDS82052 | Drive Shaft | | 31 | 27 | 55.8 | | 550 | |
| | 2015.03-2020.12 | 8AT/6MT | F | R | Coupe 4WD B47 D20 A | | GDS82053 | Drive Shaft | | 31 | 27 | 55.8 | | 841 | |
| | 2015.03-2020.12 | 8AT/6MT | F | L/R | Coupe 4WD B47 D20 A | | GCO81603 | Outer Joint | | 31 | 33 | 55.8 | | 69.5 | M |
| | 2015.03-2020.12 | 8AT/6MT | F | L | Coupe 4WD B47 D20 A | | GCI81055 | Inner Joint | | 27 | 24 | 43.95 | 60 | 123.5 | |
| | 2015.03-2020.12 | 8AT/6MT | F | R | Coupe 4WD B47 D20 A | | GCI81597 | Inner Joint | | 27 | 24 | 43.95 | 349.5 | 125 | |
| | 2015.03-2020.12 | 8AT/6MT | R | L | Coupe 4WD B47 D20 A | | GDS85066 | Drive Shaft | | 28 | 27 | 57.4 | 71 | 744 | |
| | 2015.03-2020.12 | 8AT/6MT | R | R | Coupe 4WD B47 D20 A | | GDS85067 | Drive Shaft | | 28 | 27 | 57.4 | 71 | 800 | |
| | 2021.07- | 8AT | F | L | Coupe 4WD B47 D20 B;JA1 | | GDS57555 | Drive Shaft | | 37 | 27 | 65 | | 565 | |
| | 2021.07- | 8AT | F | R | Coupe 4WD B47 D20 B;JA1 | | GDS57556 | Drive Shaft | | 37 | 27 | 65 | | 864 | |
| | 2021.07- | 8AT | F | L/R | Coupe 4WD B47 D20 B;JA1 | | GCO83608 | Outer Joint | | 37 | 33 | 65 | | 70 | M |
| | 2021.07- | 8AT | F | L | Coupe 4WD B47 D20 B;JA1 | | GCI81055 | Inner Joint | | 27 | 24 | 43.95 | 60 | 123.5 | |
| | 2021.07- | 8AT | F | R | Coupe 4WD B47 D20 B;JA1 | | GCI81457 | Inner Joint | | 27 | 24 | 43.95 | 359 | 125 | |
| 2.0 (147 kw) | 2014.03-2015.02 | 8AT/6MT | F | L | Coupe 4WD N47 D20 C | | GDS82052 | Drive Shaft | | 31 | 27 | 55.8 | | 550 | |
| | 2014.03-2015.02 | 8AT/6MT | F | R | Coupe 4WD N47 D20 C | | GDS82053 | Drive Shaft | | 31 | 27 | 55.8 | | 841 | |
| | 2014.03-2015.02 | 8AT/6MT | F | L | Coupe 4WD N47 D20 C | | GCO81603 | Outer Joint | | 31 | 33 | 55.8 | | 69.5 | M |
| | 2014.03-2015.02 | 8AT/6MT | F | L | Coupe 4WD N47 D20 C | | GCI81055 | Inner Joint | | 27 | 24 | 43.95 | 60 | 123.5 | |
| | 2014.03-2015.02 | 8AT/6MT | F | R | Coupe 4WD N47 D20 C | | GCI81597 | Inner Joint | | 27 | 24 | 43.95 | 349.5 | 125 | |
| | 2014.03-2015.02 | AT/MT | R | L | Coupe 4WD N47 D20 C | | GDS85066 | Drive Shaft | | 28 | 27 | 57.4 | 71 | 744 | |
| | 2014.03-2015.02 | AT/MT | R | R | Coupe 4WD N47 D20 C | | GDS85067 | Drive Shaft | | 28 | 27 | 57.4 | 71 | 800 | |
| **420i Cabrio** | | | | | | | | | | | | | | | |
| 2.0 (120 kw) | 2014.07-2016.02 | 8AT | R | L | Convertible RWD N20 B20 B | | GDS83157 | Drive Shaft | | 28 | 27 | 57 | 71 | 750 | |
| | 2014.07-2016.02 | 8AT | R | R | Convertible RWD N20 B20 B | | GDS83158 | Drive Shaft | | 28 | 27 | 57 | 71 | 802 | |
| | 2014.07-2016.02 | 8AT | R | L/R | Convertible RWD N20 B20 B | | GCO82308 | Outer Joint | | 28 | 30 | 57 | 71 | 52.5 | I |
| | 2014.07-2016.02 | 8AT | R | L/R | Convertible RWD N20 B20 B | | GCI82145 | Inner Joint | | 27 | 30 | 43.9 | 75 | 101 | |
| | 2014.07-2016.02 | MT | R | L | Convertible RWD N20 B20 B | | GDS85066 | Drive Shaft | | 28 | 27 | 57.4 | 71 | 744 | |
| | 2014.07-2016.02 | MT | R | R | Convertible RWD N20 B20 B | | GDS85067 | Drive Shaft | | 28 | 27 | 57.4 | 71 | 800 | |
| | 2016.03-2020.07 | 8AT | R | L | Convertible RWD B48 B20 A | | GDS83157 | Drive Shaft | | 28 | 27 | 57 | 71 | 750 | |
| | 2016.03-2020.07 | 8AT | R | R | Convertible RWD B48 B20 A | | GDS83158 | Drive Shaft | | 28 | 27 | 57 | 71 | 802 | |
| | 2016.03-2020.07 | 8AT | R | L/R | Convertible RWD B48 B20 A | | GCO82308 | Outer Joint | | 28 | 30 | 57 | 71 | 52.5 | I |
| | 2016.03-2020.07 | 8AT | R | L/R | Convertible RWD B48 B20 A | | GCI82145 | Inner Joint | | 27 | 30 | 43.9 | 75 | 101 | |
| 2.0 (135 kw) | 2014.07-2016.02 | 8AT | R | L | Convertible RWD N20 B20 B | | GDS83157 | Drive Shaft | | 28 | 27 | 57 | 71 | 750 | |
| | 2014.07-2016.02 | 8AT | R | R | Convertible RWD N20 B20 B | | GDS83158 | Drive Shaft | | 28 | 27 | 57 | 71 | 802 | |
| | 2014.07-2016.02 | 8AT | R | L/R | Convertible RWD N20 B20 B | | GCO82308 | Outer Joint | | 28 | 30 | 57 | 71 | 52.5 | I |
| | 2014.07-2016.02 | 8AT | R | L/R | Convertible RWD N20 B20 B | | GCI82145 | Inner Joint | | 27 | 30 | 43.9 | 75 | 101 | |
| | 2014.07-2016.02 | MT | R | L | Convertible RWD N20 B20 B | | GDS85066 | Drive Shaft | | 28 | 27 | 57.4 | 71 | 744 | |
| | 2014.07-2016.02 | MT | R | R | Convertible RWD N20 B20 B | | GDS85067 | Drive Shaft | | 28 | 27 | 57.4 | 71 | 800 | |
| | 2016.03-2020.07 | 8AT | R | L | Convertible RWD B48 B20 A | | GDS83157 | Drive Shaft | | 28 | 27 | 57 | 71 | 750 | |

| | YEAR | TRANSM. | F/R | L/R | BODY STYLE & DRIVE TYPE & ENGINE | REMARKS | G-AP Ref. | PRODUCT | ABS | Technical Specifications A | B | C | H | L | P |
|---|---|---|---|---|---|---|---|---|---|---|---|---|---|---|---|
| **BMW** | | | | | | | | | | | | | | | |
| **420i Cabrio** | | | | | | | | | | | | | | | |
| 2.0 (135 kw) | 2016.03-2020.07 | 8AT | R | R | Convertible RWD B48 B20 A | | GDS83158 | Drive Shaft | | 28 | 27 | 57 | 71 | 802 | |
| | 2016.03-2020.07 | 8AT | R | L/R | Convertible RWD B48 B20 A | | GCO82308 | Outer Joint | | 28 | 30 | 57 | 71 | 52.5 | I |
| | 2016.03-2020.07 | 8AT | R | L/R | Convertible RWD B48 B20 A | | GCI82145 | Inner Joint | | 27 | 30 | 43.9 | 75 | 101 | |
| **420i Coupe** | | | | | | | | | | | | | | | |
| 2.0 (120 kw) | 2013.11-2017.02 | 8AT | R | L | Coupe RWD N20 B20 A;N20 B20 B | | GDS83157 | Drive Shaft | | 28 | 27 | 57 | 71 | 750 | |
| | 2013.11-2017.02 | 8AT | R | R | Coupe RWD N20 B20 A;N20 B20 B | | GDS83158 | Drive Shaft | | 28 | 27 | 57 | 71 | 802 | |
| | 2013.11-2017.02 | 8AT | R | L/R | Coupe RWD N20 B20 A;N20 B20 B | | GCO82308 | Outer Joint | | 28 | 30 | 57 | 71 | 52.5 | I |
| | 2013.11-2017.02 | 8AT | R | L/R | Coupe RWD N20 B20 A;N20 B20 B | | GCI82145 | Inner Joint | | 27 | 30 | 43.9 | 75 | 101 | |
| | 2013.11-2017.02 | MT | R | L | Coupe RWD N20 B20 A;N20 B20 B | | GDS85066 | Drive Shaft | | 28 | 27 | 57.4 | 71 | 744 | |
| | 2013.11-2017.02 | MT | R | R | Coupe RWD N20 B20 A;N20 B20 B | | GDS85067 | Drive Shaft | | 28 | 27 | 57.4 | 71 | 800 | |
| | 2016.03-2020.06 | 8AT | R | L | Coupe RWD B48 B20 A | | GDS83157 | Drive Shaft | | 28 | 27 | 57 | 71 | 750 | |
| | 2016.03-2020.06 | 8AT | R | R | Coupe RWD B48 B20 A | | GDS83158 | Drive Shaft | | 28 | 27 | 57 | 71 | 802 | |
| | 2016.03-2020.06 | 8AT | R | L/R | Coupe RWD B48 B20 A | | GCO82308 | Outer Joint | | 28 | 30 | 57 | 71 | 52.5 | I |
| | 2016.03-2020.06 | 8AT | R | L/R | Coupe RWD B48 B20 A | | GCI82145 | Inner Joint | | 27 | 30 | 43.9 | 75 | 101 | |
| 2.0 (135 kw) | 2013.11-2017.02 | 8AT | R | L | Coupe RWD N20 B20 A;N20 B20 B | | GDS83157 | Drive Shaft | | 28 | 27 | 57 | 71 | 750 | |
| | 2013.11-2017.02 | 8AT | R | R | Coupe RWD N20 B20 A;N20 B20 B | | GDS83158 | Drive Shaft | | 28 | 27 | 57 | 71 | 802 | |
| | 2013.11-2017.02 | 8AT | R | L/R | Coupe RWD N20 B20 A;N20 B20 B | | GCO82308 | Outer Joint | | 28 | 30 | 57 | 71 | 52.5 | I |
| | 2013.11-2017.02 | 8AT | R | L/R | Coupe RWD N20 B20 A;N20 B20 B | | GCI82145 | Inner Joint | | 27 | 30 | 43.9 | 75 | 101 | |
| | 2013.11-2017.02 | MT | R | L | Coupe RWD N20 B20 A;N20 B20 B | | GDS85066 | Drive Shaft | | 28 | 27 | 57.4 | 71 | 744 | |
| | 2013.11-2017.02 | MT | R | R | Coupe RWD N20 B20 A;N20 B20 B | | GDS85067 | Drive Shaft | | 28 | 27 | 57.4 | 71 | 800 | |
| | 2016.03-2020.06 | 8AT | R | L | Coupe RWD B48 B20 A | | GDS83157 | Drive Shaft | | 28 | 27 | 57 | 71 | 750 | |
| | 2016.03-2020.06 | 8AT | R | R | Coupe RWD B48 B20 A | | GDS83158 | Drive Shaft | | 28 | 27 | 57 | 71 | 802 | |
| | 2016.03-2020.06 | 8AT | R | L/R | Coupe RWD B48 B20 A | | GCO82308 | Outer Joint | | 28 | 30 | 57 | 71 | 52.5 | I |
| | 2016.03-2020.06 | 8AT | R | L/R | Coupe RWD B48 B20 A | | GCI82145 | Inner Joint | | 27 | 30 | 43.9 | 75 | 101 | |
| | 2020.07- | 8AT | R | L | Coupe RWD B48 B20 A;B46 B20 B | For Engine code:B46B20B | GDS56455 | Drive Shaft | | 37 | 27 | 65 | | 700 | |
| | 2020.07- | 8AT | R | R | Coupe RWD B48 B20 A;B46 B20 B | For Engine code:B46B20B | GDS56456 | Drive Shaft | | 37 | 27 | 65 | | 756 | |
| **420i Gran Coupe** | | | | | | | | | | | | | | | |
| 2.0 (120 kw) | 2014.03-2017.02 | 8AT | R | L | Coupe RWD N20 B20 B | | GDS83157 | Drive Shaft | | 28 | 27 | 57 | 71 | 750 | |
| | 2014.03-2017.02 | 8AT | R | L | Coupe RWD N20 B20 B | | GDS85107 | Drive Shaft | | 28 | 27 | 57.4 | 71 | 749 | |
| | 2014.03-2017.02 | 8AT | R | R | Coupe RWD N20 B20 B | | GDS83158 | Drive Shaft | | 28 | 27 | 57 | 71 | 802 | |
| | 2014.03-2017.02 | 8AT | R | R | Coupe RWD N20 B20 B | | GCO82308 | Outer Joint | | 28 | 30 | 57 | 71 | 52.5 | I |
| | 2014.03-2017.02 | 8AT | R | R | Coupe RWD N20 B20 B | | GCI82145 | Inner Joint | | 27 | 30 | 43.9 | 75 | 101 | |
| | 2014.03-2017.02 | MT | R | L | Coupe RWD N20 B20 B | | GDS85066 | Drive Shaft | | 28 | 27 | 57.4 | 71 | 744 | |
| | 2014.03-2017.02 | MT | R | R | Coupe RWD N20 B20 B | | GDS85067 | Drive Shaft | | 28 | 27 | 57.4 | 71 | 800 | |
| | 2016.03-2021.05 | 8AT | R | L | Coupe RWD B48 B20 A | Not For facelift,For right-hand drive vehicles | GDS83157 | Drive Shaft | | 28 | 27 | 57 | 71 | 750 | |
| | 2016.03-2021.05 | 8AT | R | L | Coupe RWD B48 B20 A | Not For facelift,For left-hand drive vehicles;For facelift | GDS85107 | Drive Shaft | | 28 | 27 | 57.4 | 71 | 749 | |
| | 2016.03-2021.05 | 8AT | R | R | Coupe RWD B48 B20 A | Not For facelift,For right-hand drive vehicles | GDS83158 | Drive Shaft | | 28 | 27 | 57 | 71 | 802 | |
| | 2016.03-2021.05 | 8AT | R | R | Coupe RWD B48 B20 A | Not for Facelift,for left-hand drive vehicles;For Facelift | GDS85067 | Drive Shaft | | 28 | 27 | 57.4 | 71 | 800 | |
| | 2016.03-2021.05 | 8AT | R | L | Coupe RWD B48 B20 A | | GCO82308 | Outer Joint | | 28 | 30 | 57 | 71 | 52.5 | I |
| | 2016.03-2021.05 | 8AT | R | L | Coupe RWD B48 B20 A | | GCI82145 | Inner Joint | | 27 | 30 | 43.9 | 75 | 101 | |
| 2.0 (135 kw) | 2014.03-2017.02 | 6MT | R | L | Coupe RWD N20 B20 B | | GDS85066 | Drive Shaft | | 28 | 27 | 57.4 | 71 | 744 | |
| | 2014.03-2017.02 | 6MT/8AT | R | R | Coupe RWD N20 B20 B | | GDS85067 | Drive Shaft | | 28 | 27 | 57.4 | 71 | 800 | |
| | 2014.03-2017.02 | 8AT | R | L | Coupe RWD N20 B20 B | | GDS83157 | Drive Shaft | | 28 | 27 | 57 | 71 | 750 | |
| | 2014.03-2017.02 | 8AT | R | L | Coupe RWD N20 B20 B | | GDS85107 | Drive Shaft | | 28 | 27 | 57.4 | 71 | 749 | |
| | 2014.03-2017.02 | 8AT | R | R | Coupe RWD N20 B20 B | | GDS83158 | Drive Shaft | | 28 | 27 | 57 | 71 | 802 | |
| | 2014.03-2017.02 | 8AT | R | L/R | Coupe RWD N20 B20 B | Facelift | GCO82308 | Outer Joint | | 28 | 30 | 57 | 71 | 52.5 | I |
| | 2014.03-2017.02 | 8AT | R | L/R | Coupe RWD N20 B20 B | Facelift | GCI82145 | Inner Joint | | 27 | 30 | 43.9 | 75 | 101 | |
| | 2016.03-2021.05 | 8AT | R | L | Coupe RWD B48 B20 A | For right-hand drive vehicles | GDS83157 | Drive Shaft | | 28 | 27 | 57 | 71 | 750 | |
| | 2016.03-2021.05 | 8AT | R | L | Coupe RWD B48 B20 A | For left-hand drive vehicles | GDS85107 | Drive Shaft | | 28 | 27 | 57.4 | 71 | 749 | |
| | 2016.03-2021.05 | 8AT | R | R | Coupe RWD B48 B20 A | For right-hand drive vehicles | GDS83158 | Drive Shaft | | 28 | 27 | 57 | 71 | 802 | |
| | 2016.03-2021.05 | 8AT | R | R | Coupe RWD B48 B20 A | For left-hand drive vehicles | GDS85067 | Drive Shaft | | 28 | 27 | 57.4 | 71 | 800 | |
| | 2016.03-2021.05 | 8AT | R | L/R | Coupe RWD B48 B20 A | For right-hand drive vehicles | GCO82308 | Outer Joint | | 28 | 30 | 57 | 71 | 52.5 | I |
| | 2016.03-2021.05 | 8AT | R | L/R | Coupe RWD B48 B20 A | For right-hand drive vehicles | GCI82145 | Inner Joint | | 27 | 30 | 43.9 | 75 | 101 | |
| | 2021.07- | 8AT | R | L | Coupe RWD B48 B20 A;B46 B20 B | For Engine code:B46B20B | GDS56455 | Drive Shaft | | 37 | 27 | 65 | | 700 | |
| | 2021.07- | 8AT | R | R | Coupe RWD B48 B20 A;B46 B20 B | For Engine code:B46B20B | GDS56456 | Drive Shaft | | 37 | 27 | 65 | | 756 | |
| **420i xDrive Coupe** | | | | | | | | | | | | | | | |
| 2.0 (120 kw) | 2013.11-2016.02 | 8AT/6MT | F | L | Coupe 4WD N20 B20 A;N20 B20 B | | GDS82052 | Drive Shaft | | 31 | 27 | 55.8 | | 550 | |
| | 2013.11-2016.02 | 8AT/6MT | F | R | Coupe 4WD N20 B20 A;N20 B20 B | | GDS82053 | Drive Shaft | | 31 | 27 | 55.8 | | 841 | |
| | 2013.11-2016.02 | 8AT/6MT | F | L | Coupe 4WD N20 B20 A;N20 B20 B | | GCO81603 | Outer Joint | | 31 | 33 | 55.8 | | 69.5 | M |
| | 2013.11-2016.02 | 8AT/6MT | F | L | Coupe 4WD N20 B20 A;N20 B20 B | | GCI81055 | Inner Joint | | 27 | 24 | 43.95 | 60 | 123.5 | |
| | 2013.11-2016.02 | 8AT/6MT | F | R | Coupe 4WD N20 B20 A;N20 B20 B | | GCI81597 | Inner Joint | | 27 | 24 | 43.95 | 349.5 | 125 | |
| | 2013.11-2016.02 | 6MT | R | L | Coupe 4WD N20 B20 A;N20 B20 B | | GDS85066 | Drive Shaft | | 28 | 27 | 57.4 | 71 | 744 | |
| | 2013.11-2016.02 | 6MT | R | R | Coupe 4WD N20 B20 A;N20 B20 B | | GDS85067 | Drive Shaft | | 28 | 27 | 57.4 | 71 | 800 | |
| | 2013.11-2016.02 | 6MT | R | L/R | Coupe 4WD N20 B20 A;N20 B20 B | Diameter [mm]:35 | GCI83732 | Inner Joint | | 27 | 25 | 43.9 | 75 | 72 | |
| | 2013.11-2016.02 | 8AT | R | L | Coupe 4WD N20 B20 A;N20 B20 B | | GDS83157 | Drive Shaft | | 28 | 27 | 57 | 71 | 750 | |

| | YEAR | TRANSM. | F/R | L/R | BODY STYLE & DRIVE TYPE & ENGINE | REMARKS | G-AP Ref. | PRODUCT | ABS | Technical Specifications A | B | C | H | L | P |
|---|---|---|---|---|---|---|---|---|---|---|---|---|---|---|---|
| **BMW** | | | | | | | | | | | | | | | |
| **420i xDrive Coupe** | | | | | | | | | | | | | | | |
| 2.0 (120 kw) | 2013.11-2016.02 | 8AT | R | R | Coupe 4WD N20 B20 A;N20 B20 B | | GDS83158 | Drive Shaft | | 28 | 27 | 57 | 71 | 802 | |
| | 2013.11-2016.02 | 8AT | R | L/R | Coupe 4WD N20 B20 A;N20 B20 B | | GCO82308 | Outer Joint | | 28 | 30 | 57 | 71 | 52.5 | I |
| | 2013.11-2016.02 | 8AT | R | L/R | Coupe 4WD N20 B20 A;N20 B20 B | | GCI82145 | Inner Joint | | 27 | 30 | 43.9 | 75 | 101 | |
| | 2016.03-2020.06 | 8AT/6MT | F | L | Coupe 4WD B48 B20 A | | GDS82052 | Drive Shaft | | 31 | 27 | 55.8 | | 550 | |
| | 2016.03-2020.06 | 8AT/6MT | F | R | Coupe 4WD B48 B20 A | | GDS82053 | Drive Shaft | | 31 | 27 | 55.8 | | 841 | |
| | 2016.03-2020.06 | 8AT/6MT | F | L | Coupe 4WD B48 B20 A | | GCO81603 | Outer Joint | | 31 | 33 | 55.8 | | 69.5 | M |
| | 2016.03-2020.06 | 8AT/6MT | F | L | Coupe 4WD B48 B20 A | | GCI81055 | Inner Joint | | 27 | 24 | 43.95 | 60 | 123.5 | |
| | 2016.03-2020.06 | 8AT/6MT | F | R | Coupe 4WD B48 B20 A | | GCI81597 | Inner Joint | | 27 | 24 | 43.95 | 349.5 | 125 | |
| | 2016.03-2020.06 | 6MT | R | L | Coupe 4WD B48 B20 A | | GDS85066 | Drive Shaft | | 28 | 27 | 57.4 | 71 | 744 | |
| | 2016.03-2020.06 | 6MT | R | R | Coupe 4WD B48 B20 A | | GDS85067 | Drive Shaft | | 28 | 27 | 57.4 | 71 | 800 | |
| | 2016.03-2020.06 | 6MT | R | L/R | Coupe 4WD B48 B20 A | Diameter [mm]:35 | GCI83732 | Inner Joint | | 27 | 25 | 43.9 | 75 | 72 | |
| | 2016.03-2020.06 | 8AT | R | L | Coupe 4WD B48 B20 A | | GDS83157 | Drive Shaft | | 28 | 27 | 57 | 71 | 750 | |
| | 2016.03-2020.06 | 8AT | R | R | Coupe 4WD B48 B20 A | | GDS83158 | Drive Shaft | | 28 | 27 | 57 | 71 | 802 | |
| | 2016.03-2020.06 | 8AT | R | L/R | Coupe 4WD B48 B20 A | | GCO82308 | Outer Joint | | 28 | 30 | 57 | 71 | 52.5 | I |
| | 2016.03-2020.06 | 8AT | R | L/R | Coupe 4WD B48 B20 A | | GCI82145 | Inner Joint | | 27 | 30 | 43.9 | 75 | 101 | |
| 2.0 (135 kw) | 2013.11-2016.02 | 8AT/6MT | F | L | Coupe 4WD N20 B20 A;N20 B20 B | | GDS82052 | Drive Shaft | | 31 | 27 | 55.8 | | 550 | |
| | 2013.11-2016.02 | 8AT/6MT | F | R | Coupe 4WD N20 B20 A;N20 B20 B | | GDS82053 | Drive Shaft | | 31 | 27 | 55.8 | | 841 | |
| | 2013.11-2016.02 | 8AT/6MT | F | L | Coupe 4WD N20 B20 A;N20 B20 B | | GCO81603 | Outer Joint | | 31 | 33 | 55.8 | | 69.5 | M |
| | 2013.11-2016.02 | 8AT/6MT | F | L | Coupe 4WD N20 B20 A;N20 B20 B | | GCI81055 | Inner Joint | | 27 | 24 | 43.95 | 60 | 123.5 | |
| | 2013.11-2016.02 | 8AT/6MT | F | R | Coupe 4WD N20 B20 A;N20 B20 B | | GCI81597 | Inner Joint | | 27 | 24 | 43.95 | 349.5 | 125 | |
| | 2013.11-2016.02 | 6MT | R | L | Coupe 4WD N20 B20 A;N20 B20 B | | GDS85066 | Drive Shaft | | 28 | 27 | 57.4 | 71 | 744 | |
| | 2013.11-2016.02 | 6MT | R | R | Coupe 4WD N20 B20 A;N20 B20 B | | GDS85067 | Drive Shaft | | 28 | 27 | 57.4 | 71 | 800 | |
| | 2013.11-2016.02 | 6MT | R | L/R | Coupe 4WD N20 B20 A;N20 B20 B | Diameter [mm]:35 | GCI83732 | Inner Joint | | 27 | 25 | 43.9 | 75 | 72 | |
| | 2013.11-2016.02 | 8AT | R | L | Coupe 4WD N20 B20 A;N20 B20 B | | GDS83157 | Drive Shaft | | 28 | 27 | 57 | 71 | 750 | |
| | 2013.11-2016.02 | 8AT | R | R | Coupe 4WD N20 B20 A;N20 B20 B | | GDS83158 | Drive Shaft | | 28 | 27 | 57 | 71 | 802 | |
| | 2013.11-2016.02 | 8AT | R | L/R | Coupe 4WD N20 B20 A;N20 B20 B | | GCO82308 | Outer Joint | | 28 | 30 | 57 | 71 | 52.5 | I |
| | 2013.11-2016.02 | 8AT | R | L/R | Coupe 4WD N20 B20 A;N20 B20 B | | GCI82145 | Inner Joint | | 27 | 30 | 43.9 | 75 | 101 | |
| | 2016.03-2020.06 | 8AT/6MT | F | L | Coupe 4WD B48 B20 A | | GDS82052 | Drive Shaft | | 31 | 27 | 55.8 | | 550 | |
| | 2016.03-2020.06 | 8AT/6MT | F | R | Coupe 4WD B48 B20 A | | GDS82053 | Drive Shaft | | 31 | 27 | 55.8 | | 841 | |
| | 2016.03-2020.06 | 8AT/6MT | F | L | Coupe 4WD B48 B20 A | | GCO81603 | Outer Joint | | 31 | 33 | 55.8 | | 69.5 | M |
| | 2016.03-2020.06 | 8AT/6MT | F | L | Coupe 4WD B48 B20 A | | GCI81055 | Inner Joint | | 27 | 24 | 43.95 | 60 | 123.5 | |
| | 2016.03-2020.06 | 8AT/6MT | F | R | Coupe 4WD B48 B20 A | | GCI81597 | Inner Joint | | 27 | 24 | 43.95 | 349.5 | 125 | |
| | 2016.03-2020.06 | 6MT | R | L | Coupe 4WD B48 B20 A | | GDS85066 | Drive Shaft | | 28 | 27 | 57.4 | 71 | 744 | |
| | 2016.03-2020.06 | 6MT | R | R | Coupe 4WD B48 B20 A | | GDS85067 | Drive Shaft | | 28 | 27 | 57.4 | 71 | 800 | |
| | 2016.03-2020.06 | 6MT | R | L/R | Coupe 4WD B48 B20 A | Diameter [mm]:35 | GCI83732 | Inner Joint | | 27 | 25 | 43.9 | 75 | 72 | |
| | 2016.03-2020.06 | 8AT | R | L | Coupe 4WD B48 B20 A | | GDS83157 | Drive Shaft | | 28 | 27 | 57 | 71 | 750 | |
| | 2016.03-2020.06 | 8AT | R | R | Coupe 4WD B48 B20 A | | GDS83158 | Drive Shaft | | 28 | 27 | 57 | 71 | 802 | |
| | 2016.03-2020.06 | 8AT | R | L/R | Coupe 4WD B48 B20 A | | GCO82308 | Outer Joint | | 28 | 30 | 57 | 71 | 52.5 | I |
| | 2016.03-2020.06 | 8AT | R | L/R | Coupe 4WD B48 B20 A | | GCI82145 | Inner Joint | | 27 | 30 | 43.9 | 75 | 101 | |
| | 2021.07- | 8AT | F | L | Coupe 4WD B48 B20 A | | GDS56119 | Drive Shaft | | 37 | 27 | 65 | | 557 | |
| | 2021.07- | 8AT | F | R | Coupe 4WD B48 B20 A | | GDS56120 | Drive Shaft | | 37 | 27 | 65 | | 857 | |
| | 2021.07- | 8AT | F | L/R | Coupe 4WD B48 B20 A | | GCO83161 | Outer Joint | | 37 | 33 | 65 | | 73 | M |
| | 2021.07- | 8AT | F | L | Coupe 4WD B48 B20 A | | GCI81055 | Inner Joint | | 27 | 24 | 43.95 | 60 | 123.5 | |
| | 2021.07- | 8AT | F | R | Coupe 4WD B48 B20 A | | GCI81457 | Inner Joint | | 27 | 24 | 43.95 | 359 | 125 | |
| **420i xDrive Gran Coupe** | | | | | | | | | | | | | | | |
| 2.0 (120 kw) | 2014.07-2016.02 | 8AT/6MT | F | L | Coupe 4WD N20 B20 B | | GDS82052 | Drive Shaft | | 31 | 27 | 55.8 | | 550 | |
| | 2014.07-2016.02 | 8AT/6MT | F | R | Coupe 4WD N20 B20 B | | GDS82053 | Drive Shaft | | 31 | 27 | 55.8 | | 841 | |
| | 2014.07-2016.02 | 8AT/6MT | F | L | Coupe 4WD N20 B20 B | | GCO81603 | Outer Joint | | 31 | 33 | 55.8 | | 69.5 | M |
| | 2014.07-2016.02 | 8AT/6MT | F | L | Coupe 4WD N20 B20 B | | GCI81055 | Inner Joint | | 27 | 24 | 43.95 | 60 | 123.5 | |
| | 2014.07-2016.02 | 8AT/6MT | F | R | Coupe 4WD N20 B20 B | | GCI81597 | Inner Joint | | 27 | 24 | 43.95 | 349.5 | 125 | |
| | 2014.07-2016.02 | 6MT | R | L | Coupe 4WD N20 B20 B | | GDS85066 | Drive Shaft | | 28 | 27 | 57.4 | 71 | 744 | |
| | 2014.07-2016.02 | 6MT | R | R | Coupe 4WD N20 B20 B | | GDS85067 | Drive Shaft | | 28 | 27 | 57.4 | 71 | 800 | |
| | 2014.07-2016.02 | 6MT | R | L/R | Coupe 4WD N20 B20 B | Diameter [mm]:35 | GCI83732 | Inner Joint | | 27 | 25 | 43.9 | 75 | 72 | |
| | 2014.07-2016.02 | 8AT | R | L | Coupe 4WD N20 B20 B | | GDS83157 | Drive Shaft | | 28 | 27 | 57 | 71 | 750 | |
| | 2014.07-2016.02 | 8AT | R | R | Coupe 4WD N20 B20 B | | GDS83158 | Drive Shaft | | 28 | 27 | 57 | 71 | 802 | |
| | 2014.07-2016.02 | 8AT | R | L/R | Coupe 4WD N20 B20 B | | GCO82308 | Outer Joint | | 28 | 30 | 57 | 71 | 52.5 | I |
| | 2014.07-2016.02 | 8AT | R | L/R | Coupe 4WD N20 B20 B | | GCI82145 | Inner Joint | | 27 | 30 | 43.9 | 75 | 101 | |
| | 2016.03-2021.05 | 8AT/6MT | F | L | Coupe 4WD B48 B20 A | | GDS82052 | Drive Shaft | | 31 | 27 | 55.8 | | 550 | |
| | 2016.03-2021.05 | 8AT/6MT | F | R | Coupe 4WD B48 B20 A | | GDS82053 | Drive Shaft | | 31 | 27 | 55.8 | | 841 | |
| | 2016.03-2021.05 | 8AT/6MT | F | L | Coupe 4WD B48 B20 A | | GCO81603 | Outer Joint | | 31 | 33 | 55.8 | | 69.5 | M |
| | 2016.03-2021.05 | 8AT/6MT | F | L | Coupe 4WD B48 B20 A | | GCI81055 | Inner Joint | | 27 | 24 | 43.95 | 60 | 123.5 | |
| | 2016.03-2021.05 | 8AT/6MT | F | R | Coupe 4WD B48 B20 A | | GCI81597 | Inner Joint | | 27 | 24 | 43.95 | 349.5 | 125 | |
| | 2016.03-2021.05 | 6MT | R | L | Coupe 4WD B48 B20 A | | GDS85066 | Drive Shaft | | 28 | 27 | 57.4 | 71 | 744 | |
| | 2016.03-2021.05 | 6MT | R | R | Coupe 4WD B48 B20 A | | GDS85067 | Drive Shaft | | 28 | 27 | 57.4 | 71 | 800 | |
| | 2016.03-2021.05 | 6MT | R | L/R | Coupe 4WD B48 B20 A | Diameter [mm]:35 | GCI83732 | Inner Joint | | 27 | 25 | 43.9 | 75 | 72 | |

| | YEAR | TRANSM. | F/R | L/R | BODY STYLE & DRIVE TYPE & ENGINE | REMARKS | G-AP Ref. | PRODUCT | ABS | Technical Specifications A | B | C | H | L | P |
|---|---|---|---|---|---|---|---|---|---|---|---|---|---|---|---|
| **BMW** | | | | | | | | | | | | | | | |
| **420i xDrive Gran Coupe** | | | | | | | | | | | | | | | |
| 2.0 (120 kw) | 2016.03-2021.05 | 8AT | R | L | Coupe 4WD B48 B20 A | | GDS83157 | Drive Shaft | | 28 | 27 | 57 | 71 | 750 | |
| | 2016.03-2021.05 | 8AT | R | R | Coupe 4WD B48 B20 A | | GDS83158 | Drive Shaft | | 28 | 27 | 57 | 71 | 802 | |
| | 2016.03-2021.05 | 8AT | R | L/R | Coupe 4WD B48 B20 A | | GCO82308 | Outer Joint | | 28 | 30 | 57 | 71 | 52.5 | I |
| | 2016.03-2021.05 | 8AT | R | L/R | Coupe 4WD B48 B20 A | | GCI82145 | Inner Joint | | 27 | 30 | 43.9 | 75 | 101 | |
| 2.0 (135 kw) | 2014.07-2016.02 | 8AT/6MT | F | L | Coupe 4WD N20 B20 B | | GDS82052 | Drive Shaft | | 31 | 27 | 55.8 | | 550 | |
| | 2014.07-2016.02 | 8AT/6MT | F | R | Coupe 4WD N20 B20 B | | GDS82053 | Drive Shaft | | 31 | 27 | 55.8 | | 841 | |
| | 2014.07-2016.02 | 8AT/6MT | F | L | Coupe 4WD N20 B20 B | | GCO81603 | Outer Joint | | 31 | 33 | 55.8 | | 69.5 | M |
| | 2014.07-2016.02 | 8AT/6MT | F | L | Coupe 4WD N20 B20 B | | GCI81055 | Inner Joint | | 27 | 24 | 43.95 | 60 | 123.5 | |
| | 2014.07-2016.02 | 8AT/6MT | F | R | Coupe 4WD N20 B20 B | | GCI81597 | Inner Joint | | 27 | 24 | 43.95 | 349.5 | 125 | |
| | 2014.07-2016.02 | 6MT | R | L | Coupe 4WD N20 B20 B | | GDS85066 | Drive Shaft | | 28 | 27 | 57.4 | 71 | 744 | |
| | 2014.07-2016.02 | 6MT | R | R | Coupe 4WD N20 B20 B | | GDS85067 | Drive Shaft | | 28 | 27 | 57.4 | 71 | 800 | |
| | 2014.07-2016.02 | 6MT | R | L/R | Coupe 4WD N20 B20 B | Diameter [mm]:35 | GCI83732 | Inner Joint | | 27 | 25 | 43.9 | 75 | 72 | |
| | 2014.07-2016.02 | 8AT | R | L | Coupe 4WD N20 B20 B | | GDS83157 | Drive Shaft | | 28 | 27 | 57 | 71 | 750 | |
| | 2014.07-2016.02 | 8AT | R | R | Coupe 4WD N20 B20 B | | GDS83158 | Drive Shaft | | 28 | 27 | 57 | 71 | 802 | |
| | 2014.07-2016.02 | 8AT | R | L/R | Coupe 4WD N20 B20 B | | GCO82308 | Outer Joint | | 28 | 30 | 57 | 71 | 52.5 | I |
| | 2014.07-2016.02 | 8AT | R | L/R | Coupe 4WD N20 B20 B | | GCI82145 | Inner Joint | | 27 | 30 | 43.9 | 75 | 101 | |
| | 2016.03-2021.05 | 8AT/6MT | F | L | Coupe 4WD B48 B20 A | | GDS82052 | Drive Shaft | | 31 | 27 | 55.8 | | 550 | |
| | 2016.03-2021.05 | 8AT/6MT | F | R | Coupe 4WD B48 B20 A | | GDS82053 | Drive Shaft | | 31 | 27 | 55.8 | | 841 | |
| | 2016.03-2021.05 | 8AT/6MT | F | L | Coupe 4WD B48 B20 A | | GCO81603 | Outer Joint | | 31 | 33 | 55.8 | | 69.5 | M |
| | 2016.03-2021.05 | 8AT/6MT | F | L | Coupe 4WD B48 B20 A | | GCI81055 | Inner Joint | | 27 | 24 | 43.95 | 60 | 123.5 | |
| | 2016.03-2021.05 | 8AT/6MT | F | R | Coupe 4WD B48 B20 A | | GCI81597 | Inner Joint | | 27 | 24 | 43.95 | 349.5 | 125 | |
| | 2016.03-2021.05 | 6MT | R | L | Coupe 4WD B48 B20 A | | GDS85066 | Drive Shaft | | 28 | 27 | 57.4 | 71 | 744 | |
| | 2016.03-2021.05 | 6MT | R | R | Coupe 4WD B48 B20 A | | GDS85067 | Drive Shaft | | 28 | 27 | 57.4 | 71 | 800 | |
| | 2016.03-2021.05 | 6MT | R | L/R | Coupe 4WD B48 B20 A | Diameter [mm]:35 | GCI83732 | Inner Joint | | 27 | 25 | 43.9 | 75 | 72 | |
| | 2016.03-2021.05 | 8AT | R | L | Coupe 4WD B48 B20 A | | GDS83157 | Drive Shaft | | 28 | 27 | 57 | 71 | 750 | |
| | 2016.03-2021.05 | 8AT | R | R | Coupe 4WD B48 B20 A | | GDS83158 | Drive Shaft | | 28 | 27 | 57 | 71 | 802 | |
| | 2016.03-2021.05 | 8AT | R | L/R | Coupe 4WD B48 B20 A | | GCO82308 | Outer Joint | | 28 | 30 | 57 | 71 | 52.5 | I |
| | 2016.03-2021.05 | 8AT | R | L/R | Coupe 4WD B48 B20 A | | GCI82145 | Inner Joint | | 27 | 30 | 43.9 | 75 | 101 | |
| **425d Cabrio** | | | | | | | | | | | | | | | |
| 2.0 (155 kw) | 2014.07-2016.02 | AT | R | L | Convertible RWD N47 D20 D | | GDS85110 | Drive Shaft | | 28 | 32 | 57 | 71 | 748 | |
| | 2014.07-2016.02 | AT | R | R | Convertible RWD N47 D20 D | | GDS85109 | Drive Shaft | | 28 | 32 | 57 | 71 | 802 | |
| | 2014.07-2016.02 | AT | R | L | Convertible RWD N47 D20 D | | GCI85086 | Inner Joint | | 28 | 28 | 62.5 | 71 | 91 | |
| | 2014.07-2016.02 | AT | R | L/R | Convertible RWD N47 D20 D | | GCI85087 | Inner Joint | | 32 | 28 | 50 | 85 | 99 | |
| 2.0 (160 kw) | 2014.07-2016.02 | AT | R | L | Convertible RWD N47 D20 D | | GDS85110 | Drive Shaft | | 28 | 32 | 57 | 71 | 748 | |
| | 2014.07-2016.02 | AT | R | R | Convertible RWD N47 D20 D | | GDS85109 | Drive Shaft | | 28 | 32 | 57 | 71 | 802 | |
| | 2014.07-2016.02 | AT | R | L | Convertible RWD N47 D20 D | | GCI85086 | Inner Joint | | 28 | 28 | 62.5 | 71 | 91 | |
| | 2014.07-2016.02 | AT | R | L/R | Convertible RWD N47 D20 D | | GCI85087 | Inner Joint | | 32 | 28 | 50 | 85 | 99 | |
| 2.0 (165 kw) | 2016.03-2018.02 | AT/MT | R | L | Convertible RWD B47 D20 B | | GDS85110 | Drive Shaft | | 28 | 32 | 57 | 71 | 748 | |
| | 2016.03-2018.02 | AT/MT | R | R | Convertible RWD B47 D20 B | | GDS85109 | Drive Shaft | | 28 | 32 | 57 | 71 | 802 | |
| | 2016.03-2018.02 | AT/MT | R | L | Convertible RWD B47 D20 B | | GCI85086 | Inner Joint | | 28 | 28 | 62.5 | 71 | 91 | |
| | 2016.03-2018.02 | AT/MT | R | L/R | Convertible RWD B47 D20 B | | GCI85087 | Inner Joint | | 32 | 28 | 50 | 85 | 99 | |
| **425d Coupe** | | | | | | | | | | | | | | | |
| 2.0 (155 kw) | 2014.03-2016.02 | AT | R | L | Coupe RWD N47 D20 D | | GDS85110 | Drive Shaft | | 28 | 32 | 57 | 71 | 748 | |
| | 2014.03-2016.02 | AT | R | R | Coupe RWD N47 D20 D | | GDS85109 | Drive Shaft | | 28 | 32 | 57 | 71 | 802 | |
| | 2014.03-2016.02 | AT | R | L | Coupe RWD N47 D20 D | | GCI85086 | Inner Joint | | 28 | 28 | 62.5 | 71 | 91 | |
| | 2014.03-2016.02 | AT | R | L/R | Coupe RWD N47 D20 D | | GCI85087 | Inner Joint | | 32 | 28 | 50 | 85 | 99 | |
| 2.0 (160 kw) | 2014.03-2016.02 | AT | R | L | Coupe RWD N47 D20 D | | GDS85110 | Drive Shaft | | 28 | 32 | 57 | 71 | 748 | |
| | 2014.03-2016.02 | AT | R | R | Coupe RWD N47 D20 D | | GDS85109 | Drive Shaft | | 28 | 32 | 57 | 71 | 802 | |
| | 2014.03-2016.02 | AT | R | L | Coupe RWD N47 D20 D | | GCI85086 | Inner Joint | | 28 | 28 | 62.5 | 71 | 91 | |
| | 2014.03-2016.02 | AT | R | L/R | Coupe RWD N47 D20 D | | GCI85087 | Inner Joint | | 32 | 28 | 50 | 85 | 99 | |
| 2.0 (165 kw) | 2016.03-2017.10 | AT/MT | R | L | Coupe RWD B47 D20 B | | GDS85110 | Drive Shaft | | 28 | 32 | 57 | 71 | 748 | |
| | 2016.03-2017.10 | AT/MT | R | R | Coupe RWD B47 D20 B | | GDS85109 | Drive Shaft | | 28 | 32 | 57 | 71 | 802 | |
| | 2016.03-2017.10 | AT/MT | R | L | Coupe RWD B47 D20 B | | GCI85086 | Inner Joint | | 28 | 28 | 62.5 | 71 | 91 | |
| | 2016.03-2017.10 | AT/MT | R | L/R | Coupe RWD B47 D20 B | | GCI85087 | Inner Joint | | 32 | 28 | 50 | 85 | 99 | |
| **425d Gran Coupe** | | | | | | | | | | | | | | | |
| 2.0 (155 kw) | 2016.03-2018.02 | 8AT/6MT | R | R | Coupe RWD B47 D20 B | | GCI85086 | Inner Joint | | 28 | 28 | 62.5 | 71 | 91 | |
| | 2016.03-2018.02 | AT/MT | R | L | Coupe RWD B47 D20 B | | GDS85110 | Drive Shaft | | 28 | 32 | 57 | 71 | 748 | |
| | 2016.03-2018.02 | AT/MT | R | R | Coupe RWD B47 D20 B | | GDS85109 | Drive Shaft | | 28 | 32 | 57 | 71 | 802 | |
| | 2016.03-2018.02 | AT/MT | R | L/R | Coupe RWD B47 D20 B | | GCI85087 | Inner Joint | | 32 | 28 | 50 | 85 | 99 | |
| 2.0 (165 kw) | 2016.03-2018.02 | AT/MT | R | L | Coupe RWD B47 D20 B | | GDS85110 | Drive Shaft | | 28 | 32 | 57 | 71 | 748 | |
| | 2016.03-2018.02 | AT/MT | R | R | Coupe RWD B47 D20 B | | GDS85109 | Drive Shaft | | 28 | 32 | 57 | 71 | 802 | |
| | 2016.03-2018.02 | AT/MT | R | L | Coupe RWD B47 D20 B | | GCI85086 | Inner Joint | | 28 | 28 | 62.5 | 71 | 91 | |
| | 2016.03-2018.02 | AT/MT | R | L/R | Coupe RWD B47 D20 B | | GCI85087 | Inner Joint | | 32 | 28 | 50 | 85 | 99 | |

| | YEAR | TRANSM. | F/R | L/R | BODY STYLE & DRIVE TYPE & ENGINE | REMARKS | G-AP Ref. | PRODUCT | ABS | Technical Specifications A | B | C | H | L | P |
|---|---|---|---|---|---|---|---|---|---|---|---|---|---|---|---|
| **BMW** | | | | | | | | | | | | | | | |
| **428i Cabrio** | | | | | | | | | | | | | | | |
| 2.0 (180 kw) | 2013.11-2017.02 | 6MT | R | L | Convertible RWD N20 B20 A;N26 B20 A | | GDS85066 | Drive Shaft | | 28 | 27 | 57.4 | 71 | 744 | |
| | 2013.11-2017.02 | 6MT | R | R | Convertible RWD N20 B20 A;N26 B20 A | | GDS85067 | Drive Shaft | | 28 | 27 | 57.4 | 71 | 800 | |
| | 2013.11-2017.02 | 6MT | R | L/R | Convertible RWD N20 B20 A;N26 B20 A | Diameter [mm]:35 | GCI83732 | Inner Joint | | 27 | 25 | 43.9 | 75 | 72 | |
| | 2013.11-2017.02 | 8AT | R | L | Convertible RWD N20 B20 A;N26 B20 A | | GDS85148 | Drive Shaft | | 28 | 27 | 57 | 70.5 | 749 | |
| | 2013.11-2017.02 | 8AT | R | R | Convertible RWD N20 B20 A;N26 B20 A | | GDS85147 | Drive Shaft | | 28 | 27 | 57 | 70.5 | 803 | |
| | 2013.11-2017.02 | 8AT | R | L/R | Convertible RWD N20 B20 A;N26 B20 A | | GCO85024 | Outer Joint | | 28 | 33 | 57 | 70.5 | 58 | I |
| | 2013.11-2017.02 | 8AT | R | L/R | Convertible RWD N20 B20 A;N26 B20 A | | GCI85082 | Inner Joint | | 27 | 33 | 44 | 75 | 102 | |
| **428i Coupe** | | | | | | | | | | | | | | | |
| 2.0 (180 kw) | 2013.07-2017.02 | AT/MT | R | L | Coupe RWD N20 B20 A;N26 B20 A | | GDS85148 | Drive Shaft | | 28 | 27 | 57 | 70.5 | 749 | |
| | 2013.07-2017.02 | AT/MT | R | R | Coupe RWD N20 B20 A;N26 B20 A | | GDS85147 | Drive Shaft | | 28 | 27 | 57 | 70.5 | 803 | |
| | 2013.07-2017.02 | AT/MT | R | L/R | Coupe RWD N20 B20 A;N26 B20 A | | GCO85024 | Outer Joint | | 28 | 33 | 57 | 70.5 | 58 | I |
| | 2013.07-2017.02 | AT/MT | R | L/R | Coupe RWD N20 B20 A;N26 B20 A | | GCI85082 | Inner Joint | | 27 | 33 | 44 | 75 | 102 | |
| **428i Gran Coupe** | | | | | | | | | | | | | | | |
| 2.0 (180 kw) | 2014.03-2016.06 | 6MT | R | L | Coupe RWD N20 B20 A;N26 B20 A | | GDS85066 | Drive Shaft | | 28 | 27 | 57.4 | 71 | 744 | |
| | 2014.03-2016.06 | 6MT | R | R | Coupe RWD N20 B20 A;N26 B20 A | | GDS85067 | Drive Shaft | | 28 | 27 | 57.4 | 71 | 800 | |
| | 2014.03-2016.06 | 6MT | R | L/R | Coupe RWD N20 B20 A;N26 B20 A | Diameter [mm]:35 | GCI83732 | Inner Joint | | 27 | 25 | 43.9 | 75 | 72 | |
| | 2014.03-2016.06 | 8AT | R | L | Coupe RWD N20 B20 A;N26 B20 A | | GDS85148 | Drive Shaft | | 28 | 27 | 57 | 70.5 | 749 | |
| | 2014.03-2016.06 | 8AT | R | R | Coupe RWD N20 B20 A;N26 B20 A | | GDS85147 | Drive Shaft | | 28 | 27 | 57 | 70.5 | 803 | |
| | 2014.03-2016.06 | 8AT | R | L/R | Coupe RWD N20 B20 A;N26 B20 A | | GCO85024 | Outer Joint | | 28 | 33 | 57 | 70.5 | 58 | I |
| | 2014.03-2016.06 | 8AT | R | L/R | Coupe RWD N20 B20 A;N26 B20 A | | GCI85082 | Inner Joint | | 27 | 33 | 44 | 75 | 102 | |
| **428i xDrive Cabrio** | | | | | | | | | | | | | | | |
| 2.0 (180 kw) | 2014.03-2016.02 | 8AT/6MT | F | L | Convertible 4WD N20 B20 A;N26 B20 A | | GDS82052 | Drive Shaft | | 31 | 27 | 55.8 | | 550 | |
| | 2014.03-2016.02 | 8AT/6MT | F | R | Convertible 4WD N20 B20 A;N26 B20 A | | GDS82053 | Drive Shaft | | 31 | 27 | 55.8 | | 841 | |
| | 2014.03-2016.02 | 8AT/6MT | F | L | Convertible 4WD N20 B20 A;N26 B20 A | | GCO81603 | Outer Joint | | 31 | 33 | 55.8 | | 69.5 | M |
| | 2014.03-2016.02 | 8AT/6MT | F | L | Convertible 4WD N20 B20 A;N26 B20 A | | GCI81055 | Inner Joint | | 27 | 24 | 43.95 | 60 | 123.5 | |
| | 2014.03-2016.02 | 8AT/6MT | F | R | Convertible 4WD N20 B20 A;N26 B20 A | | GCI81597 | Inner Joint | | 27 | 24 | 43.95 | 349.5 | 125 | |
| | 2014.03-2016.02 | AT | R | L | Convertible 4WD N20 B20 A;N26 B20 A | | GDS85148 | Drive Shaft | | 28 | 27 | 57 | 70.5 | 749 | |
| | 2014.03-2016.02 | AT | R | R | Convertible 4WD N20 B20 A;N26 B20 A | | GDS85147 | Drive Shaft | | 28 | 27 | 57 | 70.5 | 803 | |
| | 2014.03-2016.02 | AT | R | L/R | Convertible 4WD N20 B20 A;N26 B20 A | | GCI85082 | Inner Joint | | 27 | 33 | 44 | 75 | 102 | |
| | 2014.03-2016.02 | AT/MT | R | L | Convertible 4WD N20 B20 A;N26 B20 A | | GDS81118 | Drive Shaft | | 28 | 27 | 57 | 70.5 | 750 | |
| | 2014.03-2016.02 | AT/MT | R | R | Convertible 4WD N20 B20 A;N26 B20 A | | GDS81117 | Drive Shaft | | 28 | 27 | 57 | 70.5 | 805 | |
| | 2014.03-2016.02 | AT/MT | R | L/R | Convertible 4WD N20 B20 A;N26 B20 A | | GCO85024 | Outer Joint | | 28 | 33 | 57 | 70.5 | 58 | I |
| | 2014.03-2016.02 | AT/MT | R | L/R | Convertible 4WD N20 B20 A;N26 B20 A | | GCI81056 | Inner Joint | | 27 | 33 | 44 | 75 | 97 | |
| **428i xDrive Coupe** | | | | | | | | | | | | | | | |
| 2.0 (180 kw) | 2013.07-2016.02 | 8AT/6MT | F | L | Coupe 4WD N20 B20 A;N26 B20 A | | GDS82052 | Drive Shaft | | 31 | 27 | 55.8 | | 550 | |
| | 2013.07-2016.02 | 8AT/6MT | F | R | Coupe 4WD N20 B20 A;N26 B20 A | | GDS82053 | Drive Shaft | | 31 | 27 | 55.8 | | 841 | |
| | 2013.07-2016.02 | 8AT/6MT | F | L | Coupe 4WD N20 B20 A;N26 B20 A | | GCO81603 | Outer Joint | | 31 | 33 | 55.8 | | 69.5 | M |
| | 2013.07-2016.02 | 8AT/6MT | F | L | Coupe 4WD N20 B20 A;N26 B20 A | | GCI81055 | Inner Joint | | 27 | 24 | 43.95 | 60 | 123.5 | |
| | 2013.07-2016.02 | 8AT/6MT | F | R | Coupe 4WD N20 B20 A;N26 B20 A | | GCI81597 | Inner Joint | | 27 | 24 | 43.95 | 349.5 | 125 | |
| | 2013.07-2016.02 | 6MT | R | L | Coupe 4WD N20 B20 A;N26 B20 A | | GDS85066 | Drive Shaft | | 28 | 27 | 57.4 | 71 | 744 | |
| | 2013.07-2016.02 | 6MT | R | R | Coupe 4WD N20 B20 A;N26 B20 A | | GDS85067 | Drive Shaft | | 28 | 27 | 57.4 | 71 | 800 | |
| | 2013.07-2016.02 | 6MT | R | L/R | Coupe 4WD N20 B20 A;N26 B20 A | Diameter [mm]:35 | GCI83732 | Inner Joint | | 27 | 25 | 43.9 | 75 | 72 | |
| | 2013.07-2016.02 | 8AT | R | L | Coupe 4WD N20 B20 A;N26 B20 A | Date from:2014.03 | GDS81118 | Drive Shaft | | 28 | 27 | 57 | 70.5 | 750 | |
| | 2013.07-2016.02 | 8AT | R | L | Coupe 4WD N20 B20 A;N26 B20 A | Date to:2014.02 | GDS85148 | Drive Shaft | | 28 | 27 | 57 | 70.5 | 749 | |
| | 2013.07-2016.02 | 8AT | R | R | Coupe 4WD N20 B20 A;N26 B20 A | Date from:2014.03 | GDS81117 | Drive Shaft | | 28 | 27 | 57 | 70.5 | 805 | |
| | 2013.07-2016.02 | 8AT | R | R | Coupe 4WD N20 B20 A;N26 B20 A | Date to:2014.02 | GDS85147 | Drive Shaft | | 28 | 27 | 57 | 70.5 | 803 | |
| | 2013.07-2016.02 | 8AT | R | L/R | Coupe 4WD N20 B20 A;N26 B20 A | Date from:2014.03 | GCI81056 | Inner Joint | | 27 | 33 | 44 | 75 | 97 | |
| | 2013.07-2016.02 | 8AT | R | L/R | Coupe 4WD N20 B20 A;N26 B20 A | Date to:2014.02 | GCI85082 | Inner Joint | | 27 | 33 | 44 | 75 | 102 | |
| | 2013.07-2016.02 | AT | R | L/R | Coupe 4WD N20 B20 A;N26 B20 A | Date to:2014.03 | GCO85024 | Outer Joint | | 28 | 33 | 57 | 70.5 | 58 | I |
| **428i xDrive Gran Coupe** | | | | | | | | | | | | | | | |
| 2.0 (180 kw) | 2014.03-2016.02 | 8AT/6MT | F | L | Coupe 4WD N20 B20 A;N26 B20 A | | GDS82052 | Drive Shaft | | 31 | 27 | 55.8 | | 550 | |
| | 2014.03-2016.02 | 8AT/6MT | F | R | Coupe 4WD N20 B20 A;N26 B20 A | | GDS82053 | Drive Shaft | | 31 | 27 | 55.8 | | 841 | |
| | 2014.03-2016.02 | 8AT/6MT | F | L | Coupe 4WD N20 B20 A;N26 B20 A | | GCO81603 | Outer Joint | | 31 | 33 | 55.8 | | 69.5 | M |
| | 2014.03-2016.02 | 8AT/6MT | F | L | Coupe 4WD N20 B20 A;N26 B20 A | | GCI81055 | Inner Joint | | 27 | 24 | 43.95 | 60 | 123.5 | |
| | 2014.03-2016.02 | 8AT/6MT | F | R | Coupe 4WD N20 B20 A;N26 B20 A | | GCI81597 | Inner Joint | | 27 | 24 | 43.95 | 349.5 | 125 | |
| | 2014.03-2016.02 | AT/MT | R | L | Coupe 4WD N20 B20 A;N26 B20 A | | GDS81118 | Drive Shaft | | 28 | 27 | 57 | 70.5 | 750 | |
| | 2014.03-2016.02 | AT/MT | R | R | Coupe 4WD N20 B20 A;N26 B20 A | | GDS81117 | Drive Shaft | | 28 | 27 | 57 | 70.5 | 805 | |
| | 2014.03-2016.02 | AT/MT | R | L/R | Coupe 4WD N20 B20 A;N26 B20 A | | GCO85024 | Outer Joint | | 28 | 33 | 57 | 70.5 | 58 | I |
| | 2014.03-2016.02 | AT/MT | R | L/R | Coupe 4WD N20 B20 A;N26 B20 A | | GCI81056 | Inner Joint | | 27 | 33 | 44 | 75 | 97 | |
| **430d Cabrio** | | | | | | | | | | | | | | | |
| 3.0 (190 kw) | 2014.07-2020.07 | AT | R | L | Convertible RWD N57 D30 A | | GDS85110 | Drive Shaft | | 28 | 32 | 57 | 71 | 748 | |
| | 2014.07-2020.07 | AT | R | R | Convertible RWD N57 D30 A | | GDS85109 | Drive Shaft | | 28 | 32 | 57 | 71 | 802 | |
| | 2014.07-2020.07 | AT | R | L | Convertible RWD N57 D30 A | | GCI85086 | Inner Joint | | 28 | 28 | 62.5 | 71 | 91 | |
| | 2014.07-2020.07 | AT | R | L/R | Convertible RWD N57 D30 A | | GCI85087 | Inner Joint | | 32 | 28 | 50 | 85 | 99 | |
| 3.0 (210 kw) | 2014.07-2020.07 | AT | R | L | Convertible RWD N57 D30 A | | GDS85110 | Drive Shaft | | 28 | 32 | 57 | 71 | 748 | |

| | YEAR | TRANSM. | F/R | L/R | BODY STYLE & DRIVE TYPE & ENGINE | REMARKS | G-AP Ref. | PRODUCT | ABS | Technical Specifications A | B | C | H | L | P |
|---|---|---|---|---|---|---|---|---|---|---|---|---|---|---|---|
| **BMW** | | | | | | | | | | | | | | | |
| **430d Cabrio** | | | | | | | | | | | | | | | |
| 3.0 (210 kw) | 2014.07-2020.07 | AT | R | R | Convertible RWD N57 D30 A | | GDS85109 | Drive Shaft | | 28 | 32 | 57 | 71 | 802 | |
| | 2014.07-2020.07 | AT | R | L | Convertible RWD N57 D30 A | | GCI85086 | Inner Joint | | 28 | 28 | 62.5 | 71 | 91 | |
| | 2014.07-2020.07 | AT | R | L/R | Convertible RWD N57 D30 A | | GCI85087 | Inner Joint | | 32 | 28 | 50 | 85 | 99 | |
| **430d Coupe** | | | | | | | | | | | | | | | |
| 3.0 (190 kw) | 2013.11-2020.06 | 8AT | R | L | Coupe RWD N57 D30 A | | GDS85110 | Drive Shaft | | 28 | 32 | 57 | 71 | 748 | |
| | 2013.11-2020.06 | 8AT | R | R | Coupe RWD N57 D30 A | | GDS85109 | Drive Shaft | | 28 | 32 | 57 | 71 | 802 | |
| | 2013.11-2020.06 | 8AT | R | L/R | Coupe RWD N57 D30 A | | GCI85086 | Inner Joint | | 28 | 28 | 62.5 | 71 | 91 | |
| 3.0 (210 kw) | 2013.11-2020.06 | 8AT | R | L | Coupe RWD N57 D30 A | | GDS85110 | Drive Shaft | | 28 | 32 | 57 | 71 | 748 | |
| | 2013.11-2020.06 | 8AT | R | R | Coupe RWD N57 D30 A | | GDS85109 | Drive Shaft | | 28 | 32 | 57 | 71 | 802 | |
| | 2013.11-2020.06 | 8AT | R | L/R | Coupe RWD N57 D30 A | | GCI85086 | Inner Joint | | 28 | 28 | 62.5 | 71 | 91 | |
| **430d Gran Coupe** | | | | | | | | | | | | | | | |
| 3.0 (190 kw) | 2014.07-2020.12 | 8AT | R | L | Coupe RWD N57 D30 A | | GDS85110 | Drive Shaft | | 28 | 32 | 57 | 71 | 748 | |
| | 2014.07-2020.12 | 8AT | R | R | Coupe RWD N57 D30 A | | GDS85109 | Drive Shaft | | 28 | 32 | 57 | 71 | 802 | |
| | 2014.07-2020.12 | 8AT | R | L/R | Coupe RWD N57 D30 A | | GCI85086 | Inner Joint | | 28 | 28 | 62.5 | 71 | 91 | |
| | 2014.07-2020.12 | 8AT | R | L/R | Coupe RWD N57 D30 A | | GCI85087 | Inner Joint | | 32 | 28 | 50 | 85 | 99 | |
| 3.0 (210 kw) | 2014.07-2020.12 | AT | R | L | Coupe RWD N57 D30 A | | GDS85110 | Drive Shaft | | 28 | 32 | 57 | 71 | 748 | |
| | 2014.07-2020.12 | AT | R | R | Coupe RWD N57 D30 A | | GDS85109 | Drive Shaft | | 28 | 32 | 57 | 71 | 802 | |
| | 2014.07-2020.12 | AT | R | L/R | Coupe RWD N57 D30 A | | GCI85086 | Inner Joint | | 28 | 28 | 62.5 | 71 | 91 | |
| | 2014.07-2020.12 | AT | R | L/R | Coupe RWD N57 D30 A | | GCI85087 | Inner Joint | | 32 | 28 | 50 | 85 | 99 | |
| **430d xDrive Coupe** | | | | | | | | | | | | | | | |
| 3.0 (190 kw) | 2014.03-2020.06 | 8AT | F | L | Coupe 4WD N57 D30 A | | GDS82052 | Drive Shaft | | 31 | 27 | 55.8 | | 550 | |
| | 2014.03-2020.06 | 8AT | F | R | Coupe 4WD N57 D30 A | | GDS82053 | Drive Shaft | | 31 | 27 | 55.8 | | 841 | |
| | 2014.03-2020.06 | 8AT | F | L | Coupe 4WD N57 D30 A | | GCO81603 | Outer Joint | | 31 | 33 | 55.8 | | 69.5 | M |
| | 2014.03-2020.06 | 8AT | F | L | Coupe 4WD N57 D30 A | | GCI81055 | Inner Joint | | 27 | 24 | 43.95 | 60 | 123.5 | |
| | 2014.03-2020.06 | 8AT | F | R | Coupe 4WD N57 D30 A | | GCI81597 | Inner Joint | | 27 | 24 | 43.95 | 349.5 | 125 | |
| | 2014.03-2020.06 | AT | R | L | Coupe 4WD N57 D30 A | | GDS85110 | Drive Shaft | | 28 | 32 | 57 | 71 | 748 | |
| | 2014.03-2020.06 | AT | R | R | Coupe 4WD N57 D30 A | | GDS85109 | Drive Shaft | | 28 | 32 | 57 | 71 | 802 | |
| | 2014.03-2020.06 | AT | R | L | Coupe 4WD N57 D30 A | | GCI85086 | Inner Joint | | 28 | 28 | 62.5 | 71 | 91 | |
| | 2014.03-2020.06 | AT | R | L/R | Coupe 4WD N57 D30 A | | GCI85087 | Inner Joint | | 32 | 28 | 50 | 85 | 99 | |
| 3.0 (210 kw) | 2014.03-2020.06 | 8AT | F | L | Coupe 4WD N57 D30 A | | GDS82052 | Drive Shaft | | 31 | 27 | 55.8 | | 550 | |
| | 2014.03-2020.06 | 8AT | F | R | Coupe 4WD N57 D30 A | | GDS82053 | Drive Shaft | | 31 | 27 | 55.8 | | 841 | |
| | 2014.03-2020.06 | 8AT | F | L | Coupe 4WD N57 D30 A | | GCO81603 | Outer Joint | | 31 | 33 | 55.8 | | 69.5 | M |
| | 2014.03-2020.06 | 8AT | F | L | Coupe 4WD N57 D30 A | | GCI81055 | Inner Joint | | 27 | 24 | 43.95 | 60 | 123.5 | |
| | 2014.03-2020.06 | 8AT | F | R | Coupe 4WD N57 D30 A | | GCI81597 | Inner Joint | | 27 | 24 | 43.95 | 349.5 | 125 | |
| | 2014.03-2020.06 | AT | R | L | Coupe 4WD N57 D30 A | | GDS85110 | Drive Shaft | | 28 | 32 | 57 | 71 | 748 | |
| | 2014.03-2020.06 | AT | R | R | Coupe 4WD N57 D30 A | | GDS85109 | Drive Shaft | | 28 | 32 | 57 | 71 | 802 | |
| | 2014.03-2020.06 | AT | R | L | Coupe 4WD N57 D30 A | | GCI85086 | Inner Joint | | 28 | 28 | 62.5 | 71 | 91 | |
| | 2014.03-2020.06 | AT | R | L/R | Coupe 4WD N57 D30 A | | GCI85087 | Inner Joint | | 32 | 28 | 50 | 85 | 99 | |
| | 2021.03- | 8AT | F | L | Coupe 4WD B57 D30 B;JA1 | | GDS56119 | Drive Shaft | | 37 | 27 | 65 | | 557 | |
| | 2021.03- | 8AT | F | R | Coupe 4WD B57 D30 B;JA1 | | GDS56120 | Drive Shaft | | 37 | 27 | 65 | | 857 | |
| | 2021.03- | 8AT | F | L/R | Coupe 4WD B57 D30 B;JA1 | | GCO83161 | Outer Joint | | 37 | 33 | 65 | | 73 | M |
| | 2021.03- | 8AT | F | L | Coupe 4WD B57 D30 B;JA1 | | GCI81055 | Inner Joint | | 27 | 24 | 43.95 | 60 | 123.5 | |
| | 2021.03- | 8AT | F | R | Coupe 4WD B57 D30 B;JA1 | | GCI81457 | Inner Joint | | 27 | 24 | 43.95 | 359 | 125 | |
| **430d xDrive Gran Coupe** | | | | | | | | | | | | | | | |
| 3.0 (190 kw) | 2014.07-2020.12 | 8AT | F | L | Coupe 4WD N57 D30 A | | GDS82052 | Drive Shaft | | 31 | 27 | 55.8 | | 550 | |
| | 2014.07-2020.12 | 8AT | F | R | Coupe 4WD N57 D30 A | | GDS82053 | Drive Shaft | | 31 | 27 | 55.8 | | 841 | |
| | 2014.07-2020.12 | 8AT | F | L/R | Coupe 4WD N57 D30 A | | GCO81603 | Outer Joint | | 31 | 33 | 55.8 | | 69.5 | M |
| | 2014.07-2020.12 | 8AT | F | L | Coupe 4WD N57 D30 A | | GCI81055 | Inner Joint | | 27 | 24 | 43.95 | 60 | 123.5 | |
| | 2014.07-2020.12 | 8AT | F | R | Coupe 4WD N57 D30 A | | GCI81597 | Inner Joint | | 27 | 24 | 43.95 | 349.5 | 125 | |
| | 2014.07-2020.12 | 8AT | R | L | Coupe 4WD N57 D30 A | | GDS85110 | Drive Shaft | | 28 | 32 | 57 | 71 | 748 | |
| | 2014.07-2020.12 | 8AT | R | R | Coupe 4WD N57 D30 A | | GDS85109 | Drive Shaft | | 28 | 32 | 57 | 71 | 802 | |
| | 2014.07-2020.12 | 8AT | R | L/R | Coupe 4WD N57 D30 A | | GCI85086 | Inner Joint | | 28 | 28 | 62.5 | 71 | 91 | |
| | 2014.07-2020.12 | 8AT | R | L/R | Coupe 4WD N57 D30 A | | GCI85087 | Inner Joint | | 32 | 28 | 50 | 85 | 99 | |
| 3.0 (210 kw) | 2014.07-2020.12 | 8AT | F | L | Coupe 4WD N57 D30 A | | GDS82052 | Drive Shaft | | 31 | 27 | 55.8 | | 550 | |
| | 2014.07-2020.12 | 8AT | F | R | Coupe 4WD N57 D30 A | | GDS82053 | Drive Shaft | | 31 | 27 | 55.8 | | 841 | |
| | 2014.07-2020.12 | 8AT | F | L | Coupe 4WD N57 D30 A | | GCO81603 | Outer Joint | | 31 | 33 | 55.8 | | 69.5 | M |
| | 2014.07-2020.12 | 8AT | F | L | Coupe 4WD N57 D30 A | | GCI81055 | Inner Joint | | 27 | 24 | 43.95 | 60 | 123.5 | |
| | 2014.07-2020.12 | 8AT | F | R | Coupe 4WD N57 D30 A | | GCI81597 | Inner Joint | | 27 | 24 | 43.95 | 349.5 | 125 | |
| | 2014.07-2020.12 | AT | R | L | Coupe 4WD N57 D30 A | | GDS85110 | Drive Shaft | | 28 | 32 | 57 | 71 | 748 | |
| | 2014.07-2020.12 | AT | R | R | Coupe 4WD N57 D30 A | | GDS85109 | Drive Shaft | | 28 | 32 | 57 | 71 | 802 | |
| | 2014.07-2020.12 | AT | R | L/R | Coupe 4WD N57 D30 A | | GCI85086 | Inner Joint | | 28 | 28 | 62.5 | 71 | 91 | |
| | 2014.07-2020.12 | AT | R | L/R | Coupe 4WD N57 D30 A | | GCI85087 | Inner Joint | | 32 | 28 | 50 | 85 | 99 | |
| | 2022.05- | 8AT | F | L | Coupe 4WD B57 D30 B | | GDS57555 | Drive Shaft | | 37 | 27 | 65 | | 565 | |
| | 2022.05- | 8AT | F | R | Coupe 4WD B57 D30 B | | GDS57556 | Drive Shaft | | 37 | 27 | 65 | | 864 | |
| | 2022.05- | 8AT | F | L/R | Coupe 4WD B57 D30 B | | GCO83608 | Outer Joint | | 37 | 33 | 65 | | 70 | M |

| | YEAR | TRANSM. | F/R | L/R | BODY STYLE & DRIVE TYPE & ENGINE | REMARKS | G-AP Ref. | PRODUCT | ABS | Technical Specifications A | B | C | H | L | P |
|---|---|---|---|---|---|---|---|---|---|---|---|---|---|---|---|
| **BMW** | | | | | | | | | | | | | | | |
| **430d xDrive Gran Coupe** | | | | | | | | | | | | | | | |
| 3.0 (210 kw) | 2022.05- | 8AT | F | L | Coupe 4WD B57 D30 B | | GCI81055 | Inner Joint | | 27 | 24 | 43.95 | 60 | 123.5 | |
| | 2022.05- | 8AT | F | R | Coupe 4WD B57 D30 B | | GCI81457 | Inner Joint | | 27 | 24 | 43.95 | 359 | 125 | |
| **430i Cabrio** | | | | | | | | | | | | | | | |
| 2.0 (180 kw) | 2021.07- | 8AT | R | L | Convertible RWD B48 B20 B;B46 B20 B | | GDS56455 | Drive Shaft | | 37 | 27 | 65 | | 700 | |
| | 2021.07- | 8AT | R | R | Convertible RWD B48 B20 B;B46 B20 B | | GDS56456 | Drive Shaft | | 37 | 27 | 65 | | 756 | |
| 2.0 (185 kw) | 2016.03-2020.07 | 6MT | R | L | Convertible RWD B48 B20 B;B46 B20 B | No Facelift | GDS85066 | Drive Shaft | | 28 | 27 | 57.4 | 71 | 744 | |
| | 2016.03-2020.07 | 6MT | R | R | Convertible RWD B48 B20 B;B46 B20 B | For facelift | GDS83157 | Drive Shaft | | 28 | 27 | 57 | 71 | 750 | |
| | 2016.03-2020.07 | 6MT | R | R | Convertible RWD B48 B20 B;B46 B20 B | No Facelift | GDS85067 | Drive Shaft | | 28 | 27 | 57.4 | 71 | 800 | |
| | 2016.03-2020.07 | 6MT | R | L/R | Convertible RWD B48 B20 B;B46 B20 B | Facelift | GCO82308 | Outer Joint | | 28 | 30 | 57 | 71 | 52.5 | I |
| | 2016.03-2020.07 | 6MT | R | L/R | Convertible RWD B48 B20 B;B46 B20 B | Facelift | GCI82145 | Inner Joint | | 27 | 30 | 43.9 | 75 | 101 | |
| | 2016.03-2020.07 | 6MT | R | L/R | Convertible RWD B48 B20 B;B46 B20 B | No Facelift | GCI83732 | Inner Joint | | 27 | 25 | 43.9 | 75 | 72 | |
| | 2016.03-2020.07 | 8AT | R | L | Convertible RWD B48 B20 B;B46 B20 B | | GDS85148 | Drive Shaft | | 28 | 27 | 57 | 70.5 | 749 | |
| | 2016.03-2020.07 | 8AT | R | R | Convertible RWD B48 B20 B;B46 B20 B | | GDS85147 | Drive Shaft | | 28 | 27 | 57 | 70.5 | 803 | |
| | 2016.03-2020.07 | 8AT | R | L/R | Convertible RWD B48 B20 B;B46 B20 B | | GCO85024 | Outer Joint | | 28 | 33 | 57 | 70.5 | 58 | I |
| | 2016.03-2020.07 | 8AT | R | L/R | Convertible RWD B48 B20 B;B46 B20 B | | GCI85082 | Inner Joint | | 27 | 33 | 44 | 75 | 102 | |
| 2.0 (190 kw) | 2020.11- | 8AT | R | L | Convertible RWD B48 B20 B;B46 B20 B | | GDS56455 | Drive Shaft | | 37 | 27 | 65 | | 700 | |
| | 2020.11- | 8AT | R | R | Convertible RWD B48 B20 B;B46 B20 B | | GDS56456 | Drive Shaft | | 37 | 27 | 65 | | 756 | |
| **430i Coupe** | | | | | | | | | | | | | | | |
| 2.0 (180 kw) | 2021.07- | 8AT | R | L | Coupe RWD B48 B20 B;B46 B20 B | | GDS56455 | Drive Shaft | | 37 | 27 | 65 | | 700 | |
| | 2021.07- | 8AT | R | R | Coupe RWD B48 B20 B;B46 B20 B | | GDS56456 | Drive Shaft | | 37 | 27 | 65 | | 756 | |
| 2.0 (183 kw) | 2016.03-2020.06 | 6MT | R | L | Coupe RWD B48 B20 B | | GDS85066 | Drive Shaft | | 28 | 27 | 57.4 | 71 | 744 | |
| | 2016.03-2020.06 | 6MT | R | R | Coupe RWD B48 B20 B | | GDS85067 | Drive Shaft | | 28 | 27 | 57.4 | 71 | 800 | |
| | 2016.03-2020.06 | 6MT | R | L/R | Coupe RWD B48 B20 B | Diameter [mm]:35 | GCI83732 | Inner Joint | | 27 | 25 | 43.9 | 75 | 72 | |
| | 2016.03-2020.06 | 8AT | R | L | Coupe RWD B48 B20 B | | GDS85148 | Drive Shaft | | 28 | 27 | 57 | 70.5 | 749 | |
| | 2016.03-2020.06 | 8AT | R | R | Coupe RWD B48 B20 B | | GDS85147 | Drive Shaft | | 28 | 27 | 57 | 70.5 | 803 | |
| | 2016.03-2020.06 | 8AT | R | L/R | Coupe RWD B48 B20 B | | GCO85024 | Outer Joint | | 28 | 33 | 57 | 70.5 | 58 | I |
| | 2016.03-2020.06 | 8AT | R | L/R | Coupe RWD B48 B20 B | | GCI85082 | Inner Joint | | 27 | 33 | 44 | 75 | 102 | |
| 2.0 (185 kw) | 2016.03-2020.06 | 6MT | R | L | Coupe RWD B48 B20 B;B46 B20 B | | GDS85066 | Drive Shaft | | 28 | 27 | 57.4 | 71 | 744 | |
| | 2016.03-2020.06 | 6MT | R | R | Coupe RWD B48 B20 B;B46 B20 B | | GDS85067 | Drive Shaft | | 28 | 27 | 57.4 | 71 | 800 | |
| | 2016.03-2020.06 | 6MT | R | L/R | Coupe RWD B48 B20 B;B46 B20 B | Diameter [mm]:35 | GCI83732 | Inner Joint | | 27 | 25 | 43.9 | 75 | 72 | |
| | 2016.03-2020.06 | 8AT | R | L | Coupe RWD B48 B20 B;B46 B20 B | | GDS85148 | Drive Shaft | | 28 | 27 | 57 | 70.5 | 749 | |
| | 2016.03-2020.06 | 8AT | R | R | Coupe RWD B48 B20 B;B46 B20 B | | GDS85147 | Drive Shaft | | 28 | 27 | 57 | 70.5 | 803 | |
| | 2016.03-2020.06 | 8AT | R | L/R | Coupe RWD B48 B20 B;B46 B20 B | | GCO85024 | Outer Joint | | 28 | 33 | 57 | 70.5 | 58 | I |
| | 2016.03-2020.06 | 8AT | R | L/R | Coupe RWD B48 B20 B;B46 B20 B | | GCI85082 | Inner Joint | | 27 | 33 | 44 | 75 | 102 | |
| 2.0 (190 kw) | 2020.07- | 8AT | R | L | Coupe RWD B48 B20 B;B46 B20 B | | GDS56455 | Drive Shaft | | 37 | 27 | 65 | | 700 | |
| | 2020.07- | 8AT | R | R | Coupe RWD B48 B20 B;B46 B20 B | | GDS56456 | Drive Shaft | | 37 | 27 | 65 | | 756 | |
| **430i Gran Coupe** | | | | | | | | | | | | | | | |
| 2.0 (180 kw) | 2021.07- | 8AT | R | L | Coupe RWD B48 B20 B;B46 B20 B | For vehicles w/o electronic limited slip diff. | GDS56455 | Drive Shaft | | 37 | 27 | 65 | | 700 | |
| | 2021.07- | 8AT | R | R | Coupe RWD B48 B20 B;B46 B20 B | For vehicles w/o electronic limited slip diff. | GDS56456 | Drive Shaft | | 37 | 27 | 65 | | 756 | |
| 2.0 (185 kw) | 2016.03-2021.05 | 6MT | R | L | Coupe RWD B48 B20 B;B46 B20 B | | GDS85066 | Drive Shaft | | 28 | 27 | 57.4 | 71 | 744 | |
| | 2016.03-2021.05 | 6MT | R | R | Coupe RWD B48 B20 B;B46 B20 B | | GDS85067 | Drive Shaft | | 28 | 27 | 57.4 | 71 | 800 | |
| | 2016.03-2021.05 | 6MT | R | L/R | Coupe RWD B48 B20 B;B46 B20 B | Diameter [mm]:35 | GCI83732 | Inner Joint | | 27 | 25 | 43.9 | 75 | 72 | |
| | 2016.03-2021.05 | 8AT | R | L | Coupe RWD B48 B20 B;B46 B20 B | | GDS85148 | Drive Shaft | | 28 | 27 | 57 | 70.5 | 749 | |
| | 2016.03-2021.05 | 8AT | R | R | Coupe RWD B48 B20 B;B46 B20 B | | GDS85147 | Drive Shaft | | 28 | 27 | 57 | 70.5 | 803 | |
| | 2016.03-2021.05 | 8AT | R | L/R | Coupe RWD B48 B20 B;B46 B20 B | | GCO85024 | Outer Joint | | 28 | 33 | 57 | 70.5 | 58 | I |
| | 2016.03-2021.05 | 8AT | R | L/R | Coupe RWD B48 B20 B;B46 B20 B | | GCI85082 | Inner Joint | | 27 | 33 | 44 | 75 | 102 | |
| 2.0 (190 kw) | 2024.07- | 8AT | R | L | Coupe RWD B48 B20 B, B48 B20 S | | GDS56455 | Drive Shaft | | 37 | 27 | 65 | | 700 | |
| | 2024.07- | 8AT | R | R | Coupe RWD B48 B20 B, B48 B20 S | | GDS56456 | Drive Shaft | | 37 | 27 | 65 | | 756 | |
| **430i xDrive Cabrio** | | | | | | | | | | | | | | | |
| 2.0 (180 kw) | 2021.07- | AT | F | L | Convertible 4WD B48 B20 B | | GDS56119 | Drive Shaft | | 37 | 27 | 65 | | 557 | |
| | 2021.07- | AT | F | R | Convertible 4WD B48 B20 B | | GDS56120 | Drive Shaft | | 37 | 27 | 65 | | 857 | |
| | 2021.07- | AT | F | L/R | Convertible 4WD B48 B20 B | | GCO83161 | Outer Joint | | 37 | 33 | 65 | | 73 | M |
| | 2021.07- | AT | F | L | Convertible 4WD B48 B20 B | | GCI81055 | Inner Joint | | 27 | 24 | 43.95 | 60 | 123.5 | |
| | 2021.07- | AT | F | R | Convertible 4WD B48 B20 B | | GCI81457 | Inner Joint | | 27 | 24 | 43.95 | 359 | 125 | |
| | 2021.07- | 8AT | R | L | Convertible 4WD B48 B20 B | | GDS56455 | Drive Shaft | | 37 | 27 | 65 | | 700 | |
| | 2021.07- | 8AT | R | R | Convertible 4WD B48 B20 B | | GDS56456 | Drive Shaft | | 37 | 27 | 65 | | 756 | |
| 2.0 (185 kw) | 2016.03-2020.07 | 8AT | F | L | Convertible 4WD B48 B20 B;B46 B20 B | | GDS82052 | Drive Shaft | | 31 | 27 | 55.8 | | 550 | |
| | 2016.03-2020.07 | 8AT | F | R | Convertible 4WD B48 B20 B;B46 B20 B | | GDS82053 | Drive Shaft | | 31 | 27 | 55.8 | | 841 | |
| | 2016.03-2020.07 | 8AT | F | L | Convertible 4WD B48 B20 B;B46 B20 B | | GCO81603 | Outer Joint | | 31 | 33 | 55.8 | | 69.5 | M |
| | 2016.03-2020.07 | 8AT | F | L | Convertible 4WD B48 B20 B;B46 B20 B | | GCI81055 | Inner Joint | | 27 | 24 | 43.95 | 60 | 123.5 | |
| | 2016.03-2020.07 | 8AT | F | R | Convertible 4WD B48 B20 B;B46 B20 B | | GCI81597 | Inner Joint | | 27 | 24 | 43.95 | 349.5 | 125 | |
| | 2016.03-2020.07 | 8AT | R | L | Convertible 4WD B48 B20 B;B46 B20 B | | GDS81118 | Drive Shaft | | 28 | 27 | 57 | 70.5 | 750 | |
| | 2016.03-2020.07 | 8AT | R | R | Convertible 4WD B48 B20 B;B46 B20 B | | GDS81117 | Drive Shaft | | 28 | 27 | 57 | 70.5 | 805 | |
| | 2016.03-2020.07 | 8AT | R | L/R | Convertible 4WD B48 B20 B;B46 B20 B | | GCO85024 | Outer Joint | | 28 | 33 | 57 | 70.5 | 58 | I |
| | 2016.03-2020.07 | 8AT | R | L/R | Convertible 4WD B48 B20 B;B46 B20 B | | GCI81056 | Inner Joint | | 27 | 33 | 44 | 75 | 97 | |

| | YEAR | TRANSM. | F/R | L/R | BODY STYLE & DRIVE TYPE & ENGINE | REMARKS | G-AP Ref. | PRODUCT | ABS | Technical Specifications A | B | C | H | L | P |
|---|---|---|---|---|---|---|---|---|---|---|---|---|---|---|---|
| **BMW** | | | | | | | | | | | | | | | |
| **430i xDrive Coupe** | | | | | | | | | | | | | | | |
| 2.0 (180 kw) | 2021.07- | AT | F | L | Coupe 4WD B48 B20 B | | GDS56119 | Drive Shaft | | 37 | 27 | 65 | | 557 | |
| | 2021.07- | AT | F | R | Coupe 4WD B48 B20 B | | GDS56120 | Drive Shaft | | 37 | 27 | 65 | | 857 | |
| | 2021.07- | AT | F | L/R | Coupe 4WD B48 B20 B | | GCO83161 | Outer Joint | | 37 | 33 | 65 | | 73 | M |
| | 2021.07- | AT | F | L | Coupe 4WD B48 B20 B | | GCI81055 | Inner Joint | | 27 | 24 | 43.95 | 60 | 123.5 | |
| | 2021.07- | AT | F | R | Coupe 4WD B48 B20 B | | GCI81457 | Inner Joint | | 27 | 24 | 43.95 | 359 | 125 | |
| | 2021.07- | 8AT | R | L | Coupe 4WD B48 B20 B | | GDS56455 | Drive Shaft | | 37 | 27 | 65 | | 700 | |
| | 2021.07- | 8AT | R | R | Coupe 4WD B48 B20 B | | GDS56456 | Drive Shaft | | 37 | 27 | 65 | | 756 | |
| 2.0 (183 kw) | 2016.03-2020.06 | 8AT | F | L | Coupe 4WD B48 B20 B | | GDS82052 | Drive Shaft | | 31 | 27 | 55.8 | | 550 | |
| | 2016.03-2020.06 | 8AT | F | R | Coupe 4WD B48 B20 B | | GDS82053 | Drive Shaft | | 31 | 27 | 55.8 | | 841 | |
| | 2016.03-2020.06 | 8AT | F | L | Coupe 4WD B48 B20 B | | GCO81603 | Outer Joint | | 31 | 33 | 55.8 | | 69.5 | M |
| | 2016.03-2020.06 | 8AT | F | L | Coupe 4WD B48 B20 B | | GCI81055 | Inner Joint | | 27 | 24 | 43.95 | 60 | 123.5 | |
| | 2016.03-2020.06 | 8AT | F | R | Coupe 4WD B48 B20 B | | GCI81597 | Inner Joint | | 27 | 24 | 43.95 | 349.5 | 125 | |
| | 2016.03-2020.06 | 8AT | R | L/R | Coupe 4WD B48 B20 B | | GCI81056 | Inner Joint | | 27 | 33 | 44 | 75 | 97 | |
| | 2016.03-2020.06 | | R | L | Coupe 4WD B48 B20 B | | GDS81118 | Drive Shaft | | 28 | 27 | 57 | 70.5 | 750 | |
| | 2016.03-2020.06 | | R | R | Coupe 4WD B48 B20 B | | GDS81117 | Drive Shaft | | 28 | 27 | 57 | 70.5 | 805 | |
| 2.0 (185 kw) | 2016.03-2020.06 | 8AT | F | L | Coupe 4WD B48 B20 B;B46 B20 B | | GDS82052 | Drive Shaft | | 31 | 27 | 55.8 | | 550 | |
| | 2016.03-2020.06 | 8AT | F | R | Coupe 4WD B48 B20 B;B46 B20 B | | GDS82053 | Drive Shaft | | 31 | 27 | 55.8 | | 841 | |
| | 2016.03-2020.06 | 8AT | F | L | Coupe 4WD B48 B20 B;B46 B20 B | | GCO81603 | Outer Joint | | 31 | 33 | 55.8 | | 69.5 | M |
| | 2016.03-2020.06 | 8AT | F | L | Coupe 4WD B48 B20 B;B46 B20 B | | GCI81055 | Inner Joint | | 27 | 24 | 43.95 | 60 | 123.5 | |
| | 2016.03-2020.06 | 8AT | F | R | Coupe 4WD B48 B20 B;B46 B20 B | | GCI81597 | Inner Joint | | 27 | 24 | 43.95 | 349.5 | 125 | |
| | 2016.03-2020.06 | 8AT | R | L | Coupe 4WD B48 B20 B;B46 B20 B | | GDS81118 | Drive Shaft | | 28 | 27 | 57 | 70.5 | 750 | |
| | 2016.03-2020.06 | 8AT | R | R | Coupe 4WD B48 B20 B;B46 B20 B | | GDS81117 | Drive Shaft | | 28 | 27 | 57 | 70.5 | 805 | |
| | 2016.03-2020.06 | 8AT | R | L/R | Coupe 4WD B48 B20 B;B46 B20 B | | GCO85024 | Outer Joint | | 28 | 33 | 57 | 70.5 | 58 | I |
| | 2016.03-2020.06 | 8AT | R | L/R | Coupe 4WD B48 B20 B;B46 B20 B | | GCI81056 | Inner Joint | | 27 | 33 | 44 | 75 | 97 | |
| 2.0 (190 kw) | 2020.07- | 8AT | F | L | Coupe 4WD B48 B20 B;B46 B20 B | | GDS56119 | Drive Shaft | | 37 | 27 | 65 | | 557 | |
| | 2020.07- | 8AT | F | R | Coupe 4WD B48 B20 B;B46 B20 B | | GDS56120 | Drive Shaft | | 37 | 27 | 65 | | 857 | |
| | 2020.07- | 8AT | F | L/R | Coupe 4WD B48 B20 B;B46 B20 B | | GCO83161 | Outer Joint | | 37 | 33 | 65 | | 73 | M |
| | 2020.07- | 8AT | F | L | Coupe 4WD B48 B20 B;B46 B20 B | | GCI81055 | Inner Joint | | 27 | 24 | 43.95 | 60 | 123.5 | |
| | 2020.07- | 8AT | F | R | Coupe 4WD B48 B20 B;B46 B20 B | | GCI81457 | Inner Joint | | 27 | 24 | 43.95 | 359 | 125 | |
| | 2020.07- | 8AT | R | L | Coupe 4WD B48 B20 B;B46 B20 B | | GDS56455 | Drive Shaft | | 37 | 27 | 65 | | 700 | |
| | 2020.07- | 8AT | R | R | Coupe 4WD B48 B20 B;B46 B20 B | | GDS56456 | Drive Shaft | | 37 | 27 | 65 | | 756 | |
| **430i xDrive Gran Coupe** | | | | | | | | | | | | | | | |
| 2 (190 kw) | 2021.07- | 8AT | F | L | Coupe 4WD B46 B20 B | | GDS57555 | Drive Shaft | | 37 | 27 | 65 | | 565 | |
| | 2021.07- | 8AT | F | R | Coupe 4WD B46 B20 B | | GDS57556 | Drive Shaft | | 37 | 27 | 65 | | 864 | |
| | 2021.07- | 8AT | R | L | Coupe 4WD B46 B20 B | | GDS56455 | Drive Shaft | | 37 | 27 | 65 | | 700 | |
| | 2021.07- | 8AT | R | R | Coupe 4WD B46 B20 B | | GDS56456 | Drive Shaft | | 37 | 27 | 65 | | 756 | |
| 2.0 (180 kw) | 2022.03- | 8AT | F | L | Coupe 4WD B48 B20 B | | GDS57555 | Drive Shaft | | 37 | 27 | 65 | | 565 | |
| | 2022.03- | 8AT | F | R | Coupe 4WD B48 B20 B | | GDS57556 | Drive Shaft | | 37 | 27 | 65 | | 864 | |
| | 2022.03- | 8AT | F | L/R | Coupe 4WD B48 B20 B | | GCO83608 | Outer Joint | | 37 | 33 | 65 | | 70 | M |
| | 2022.03- | 8AT | F | L | Coupe 4WD B48 B20 B | | GCI81055 | Inner Joint | | 27 | 24 | 43.95 | 60 | 123.5 | |
| | 2022.03- | 8AT | F | R | Coupe 4WD B48 B20 B | | GCI81457 | Inner Joint | | 27 | 24 | 43.95 | 359 | 125 | |
| | 2022.03- | 8AT | R | L | Coupe 4WD B48 B20 B | | GDS56455 | Drive Shaft | | 37 | 27 | 65 | | 700 | |
| | 2022.03- | 8AT | R | R | Coupe 4WD B48 B20 B | | GDS56456 | Drive Shaft | | 37 | 27 | 65 | | 756 | |
| 2.0 (183 kw) | 2016.03-2021.05 | 8AT | F | L | Coupe 4WD B48 B20 B | | GDS82052 | Drive Shaft | | 31 | 27 | 55.8 | | 550 | |
| | 2016.03-2021.05 | 8AT | F | R | Coupe 4WD B48 B20 B | | GDS82053 | Drive Shaft | | 31 | 27 | 55.8 | | 841 | |
| | 2016.03-2021.05 | 8AT | F | L | Coupe 4WD B48 B20 B | | GCO81603 | Outer Joint | | 31 | 33 | 55.8 | | 69.5 | M |
| | 2016.03-2021.05 | 8AT | F | L | Coupe 4WD B48 B20 B | | GCI81055 | Inner Joint | | 27 | 24 | 43.95 | 60 | 123.5 | |
| | 2016.03-2021.05 | 8AT | F | R | Coupe 4WD B48 B20 B | | GCI81597 | Inner Joint | | 27 | 24 | 43.95 | 349.5 | 125 | |
| | 2016.03-2021.05 | 8AT | R | L/R | Coupe 4WD B48 B20 B | | GCI81056 | Inner Joint | | 27 | 33 | 44 | 75 | 97 | |
| | 2016.03-2021.05 | | R | L | Coupe 4WD B48 B20 B | | GDS81118 | Drive Shaft | | 28 | 27 | 57 | 70.5 | 750 | |
| | 2016.03-2021.05 | | R | R | Coupe 4WD B48 B20 B | | GDS81117 | Drive Shaft | | 28 | 27 | 57 | 70.5 | 805 | |
| 2.0 (185 kw) | 2016.03-2021.05 | 8AT | F | L | Coupe 4WD B48 B20 B;B46 B20 B | | GDS82052 | Drive Shaft | | 31 | 27 | 55.8 | | 550 | |
| | 2016.03-2021.05 | 8AT | F | R | Coupe 4WD B48 B20 B;B46 B20 B | | GDS82053 | Drive Shaft | | 31 | 27 | 55.8 | | 841 | |
| | 2016.03-2021.05 | 8AT | F | L | Coupe 4WD B48 B20 B;B46 B20 B | | GCO81603 | Outer Joint | | 31 | 33 | 55.8 | | 69.5 | M |
| | 2016.03-2021.05 | 8AT | F | L | Coupe 4WD B48 B20 B;B46 B20 B | | GCI81055 | Inner Joint | | 27 | 24 | 43.95 | 60 | 123.5 | |
| | 2016.03-2021.05 | 8AT | F | R | Coupe 4WD B48 B20 B;B46 B20 B | | GCI81597 | Inner Joint | | 27 | 24 | 43.95 | 349.5 | 125 | |
| | 2016.03-2021.05 | 8AT | R | L | Coupe 4WD B48 B20 B;B46 B20 B | | GDS81118 | Drive Shaft | | 28 | 27 | 57 | 70.5 | 750 | |
| | 2016.03-2021.05 | 8AT | R | R | Coupe 4WD B48 B20 B;B46 B20 B | | GDS81117 | Drive Shaft | | 28 | 27 | 57 | 70.5 | 805 | |
| | 2016.03-2021.05 | 8AT | R | L/R | Coupe 4WD B48 B20 B;B46 B20 B | | GCO85024 | Outer Joint | | 28 | 33 | 57 | 70.5 | 58 | I |
| | 2016.03-2021.05 | 8AT | R | L/R | Coupe 4WD B48 B20 B;B46 B20 B | | GCI81056 | Inner Joint | | 27 | 33 | 44 | 75 | 97 | |
| 2.0 (190 kw) | 2024.07- | 8AT | F | L | Coupe 4WD B48 B20 B, B48 B20 S | | GDS57555 | Drive Shaft | | 37 | 27 | 65 | | 565 | |
| | 2024.07- | 8AT | F | R | Coupe 4WD B48 B20 B, B48 B20 S | | GDS57556 | Drive Shaft | | 37 | 27 | 65 | | 864 | |
| | 2024.07- | 8AT | R | L | Coupe 4WD B48 B20 B, B48 B20 S | | GDS56455 | Drive Shaft | | 37 | 27 | 65 | | 700 | |
| | 2024.07- | 8AT | R | R | Coupe 4WD B48 B20 B, B48 B20 S | | GDS56456 | Drive Shaft | | 37 | 27 | 65 | | 756 | |

| | YEAR | TRANSM. | F/R | L/R | BODY STYLE & DRIVE TYPE & ENGINE | REMARKS | G-AP Ref. | PRODUCT | ABS | Technical Specifications A | B | C | H | L | P |
|---|---|---|---|---|---|---|---|---|---|---|---|---|---|---|---|
| **BMW** | | | | | | | | | | | | | | | |
| **435d xDrive Cabrio** | | | | | | | | | | | | | | | |
| 3.0 (230 kw) | 2014.07-2020.07 | 8AT | F | L | Convertible 4WD N57 D30 B | | GDS82052 | Drive Shaft | | 31 | 27 | 55.8 | | 550 | |
| | 2014.07-2020.07 | 8AT | F | R | Convertible 4WD N57 D30 B | | GDS82053 | Drive Shaft | | 31 | 27 | 55.8 | | 841 | |
| | 2014.07-2020.07 | 8AT | F | L/R | Convertible 4WD N57 D30 B | | GCO81603 | Outer Joint | | 31 | 33 | 55.8 | | 69.5 | M |
| | 2014.07-2020.07 | 8AT | F | L | Convertible 4WD N57 D30 B | | GCI81055 | Inner Joint | | 27 | 24 | 43.95 | 60 | 123.5 | |
| | 2014.07-2020.07 | 8AT | F | R | Convertible 4WD N57 D30 B | | GCI81597 | Inner Joint | | 27 | 24 | 43.95 | 349.5 | 125 | |
| | 2014.07-2020.07 | 8AT | R | L | Convertible 4WD N57 D30 B | | GDS85110 | Drive Shaft | | 28 | 32 | 57 | 71 | 748 | |
| | 2014.07-2020.07 | 8AT | R | R | Convertible 4WD N57 D30 B | | GDS85109 | Drive Shaft | | 28 | 32 | 57 | 71 | 802 | |
| | 2014.07-2020.07 | 8AT | R | L/R | Convertible 4WD N57 D30 B | | GCI85086 | Inner Joint | | 28 | 28 | 62.5 | 71 | 91 | |
| | 2014.07-2020.07 | 8AT | R | L/R | Convertible 4WD N57 D30 B | | GCI85087 | Inner Joint | | 32 | 28 | 50 | 85 | 99 | |
| **435d xDrive Coupe** | | | | | | | | | | | | | | | |
| 3.0 (230 kw) | 2013.11-2020.06 | 8AT | F | L | Coupe 4WD N57 D30 B | | GDS82052 | Drive Shaft | | 31 | 27 | 55.8 | | 550 | |
| | 2013.11-2020.06 | 8AT | F | R | Coupe 4WD N57 D30 B | | GDS82053 | Drive Shaft | | 31 | 27 | 55.8 | | 841 | |
| | 2013.11-2020.06 | 8AT | F | L/R | Coupe 4WD N57 D30 B | | GCO81603 | Outer Joint | | 31 | 33 | 55.8 | | 69.5 | M |
| | 2013.11-2020.06 | 8AT | F | L | Coupe 4WD N57 D30 B | | GCI81055 | Inner Joint | | 27 | 24 | 43.95 | 60 | 123.5 | |
| | 2013.11-2020.06 | 8AT | F | R | Coupe 4WD N57 D30 B | | GCI81597 | Inner Joint | | 27 | 24 | 43.95 | 349.5 | 125 | |
| | 2013.11-2020.06 | 8AT | R | L | Coupe 4WD N57 D30 B | | GDS85110 | Drive Shaft | | 28 | 32 | 57 | 71 | 748 | |
| | 2013.11-2020.06 | 8AT | R | R | Coupe 4WD N57 D30 B | | GDS85109 | Drive Shaft | | 28 | 32 | 57 | 71 | 802 | |
| | 2013.11-2020.06 | 8AT | R | L/R | Coupe 4WD N57 D30 B | | GCI85086 | Inner Joint | | 28 | 28 | 62.5 | 71 | 91 | |
| | 2013.11-2020.06 | 8AT | R | L/R | Coupe 4WD N57 D30 B | | GCI85087 | Inner Joint | | 32 | 28 | 50 | 85 | 99 | |
| **435d xDrive Gran Coupe** | | | | | | | | | | | | | | | |
| 3.0 (230 kw) | 2014.07-2020.12 | 8AT | F | L | Coupe 4WD N57 D30 B | | GDS82052 | Drive Shaft | | 31 | 27 | 55.8 | | 550 | |
| | 2014.07-2020.12 | 8AT | F | R | Coupe 4WD N57 D30 B | | GDS82053 | Drive Shaft | | 31 | 27 | 55.8 | | 841 | |
| | 2014.07-2020.12 | 8AT | F | L/R | Coupe 4WD N57 D30 B | | GCO81603 | Outer Joint | | 31 | 33 | 55.8 | | 69.5 | M |
| | 2014.07-2020.12 | 8AT | F | L | Coupe 4WD N57 D30 B | | GCI81055 | Inner Joint | | 27 | 24 | 43.95 | 60 | 123.5 | |
| | 2014.07-2020.12 | 8AT | F | R | Coupe 4WD N57 D30 B | | GCI81597 | Inner Joint | | 27 | 24 | 43.95 | 349.5 | 125 | |
| | 2014.07-2020.12 | 8AT | R | L | Coupe 4WD N57 D30 B | | GDS85110 | Drive Shaft | | 28 | 32 | 57 | 71 | 748 | |
| | 2014.07-2020.12 | 8AT | R | R | Coupe 4WD N57 D30 B | | GDS85109 | Drive Shaft | | 28 | 32 | 57 | 71 | 802 | |
| | 2014.07-2020.12 | 8AT | R | L/R | Coupe 4WD N57 D30 B | | GCI85086 | Inner Joint | | 28 | 28 | 62.5 | 71 | 91 | |
| | 2014.07-2020.12 | 8AT | R | L/R | Coupe 4WD N57 D30 B | | GCI85087 | Inner Joint | | 32 | 28 | 50 | 85 | 99 | |
| **435i Cabrio** | | | | | | | | | | | | | | | |
| 3.0 (225 kw) | 2013.11-2016.02 | 6MT | R | L | Convertible RWD N55 B30 A | | GDS85110 | Drive Shaft | | 28 | 32 | 57 | 71 | 748 | |
| | 2013.11-2016.02 | 6MT | R | R | Convertible RWD N55 B30 A | | GDS85109 | Drive Shaft | | 28 | 32 | 57 | 71 | 802 | |
| | 2013.11-2016.02 | 6MT | R | L/R | Convertible RWD N55 B30 A | | GCI85086 | Inner Joint | | 28 | 28 | 62.5 | 71 | 91 | |
| | 2013.11-2016.02 | 8AT | R | L | Convertible RWD N55 B30 A | | GDS85066 | Drive Shaft | | 28 | 27 | 57.4 | 71 | 744 | |
| | 2013.11-2016.02 | 8AT | R | R | Convertible RWD N55 B30 A | | GDS85067 | Drive Shaft | | 28 | 27 | 57.4 | 71 | 800 | |
| | 2013.11-2016.02 | 8AT | R | L/R | Convertible RWD N55 B30 A | Diameter [mm]:35 | GCI83732 | Inner Joint | | 27 | 25 | 43.9 | 75 | 72 | |
| 3.0 (250 kw) | 2013.11-2016.02 | 6MT | R | L | Convertible RWD N55 B30 A | | GDS85110 | Drive Shaft | | 28 | 32 | 57 | 71 | 748 | |
| | 2013.11-2016.02 | 6MT | R | R | Convertible RWD N55 B30 A | | GDS85109 | Drive Shaft | | 28 | 32 | 57 | 71 | 802 | |
| | 2013.11-2016.02 | 6MT | R | L/R | Convertible RWD N55 B30 A | | GCI85086 | Inner Joint | | 28 | 28 | 62.5 | 71 | 91 | |
| | 2013.11-2016.02 | 8AT | R | L | Convertible RWD N55 B30 A | | GDS85066 | Drive Shaft | | 28 | 27 | 57.4 | 71 | 744 | |
| | 2013.11-2016.02 | 8AT | R | R | Convertible RWD N55 B30 A | | GDS85067 | Drive Shaft | | 28 | 27 | 57.4 | 71 | 800 | |
| | 2013.11-2016.02 | 8AT | R | L/R | Convertible RWD N55 B30 A | Diameter [mm]:35 | GCI83732 | Inner Joint | | 27 | 25 | 43.9 | 75 | 72 | |
| **435i Coupe** | | | | | | | | | | | | | | | |
| 3.0 (225 kw) | 2013.07-2016.02 | 6MT | R | L | Coupe RWD N55 B30 A | | GDS85110 | Drive Shaft | | 28 | 32 | 57 | 71 | 748 | |
| | 2013.07-2016.02 | 6MT | R | R | Coupe RWD N55 B30 A | | GDS85109 | Drive Shaft | | 28 | 32 | 57 | 71 | 802 | |
| | 2013.07-2016.02 | 6MT | R | L/R | Coupe RWD N55 B30 A | | GCI85086 | Inner Joint | | 28 | 28 | 62.5 | 71 | 91 | |
| | 2013.07-2016.02 | 8AT | R | L | Coupe RWD N55 B30 A | | GDS85066 | Drive Shaft | | 28 | 27 | 57.4 | 71 | 744 | |
| | 2013.07-2016.02 | 8AT | R | R | Coupe RWD N55 B30 A | | GDS85067 | Drive Shaft | | 28 | 27 | 57.4 | 71 | 800 | |
| | 2013.07-2016.02 | 8AT | R | L/R | Coupe RWD N55 B30 A | Diameter [mm]:35 | GCI83732 | Inner Joint | | 27 | 25 | 43.9 | 75 | 72 | |
| 3.0 (250 kw) | 2013.07-2016.02 | 6MT | R | L | Coupe RWD N55 B30 A | | GDS85110 | Drive Shaft | | 28 | 32 | 57 | 71 | 748 | |
| | 2013.07-2016.02 | 6MT | R | R | Coupe RWD N55 B30 A | | GDS85109 | Drive Shaft | | 28 | 32 | 57 | 71 | 802 | |
| | 2013.07-2016.02 | 6MT | R | L/R | Coupe RWD N55 B30 A | | GCI85086 | Inner Joint | | 28 | 28 | 62.5 | 71 | 91 | |
| | 2013.07-2016.02 | 8AT | R | L | Coupe RWD N55 B30 A | | GDS85066 | Drive Shaft | | 28 | 27 | 57.4 | 71 | 744 | |
| | 2013.07-2016.02 | 8AT | R | R | Coupe RWD N55 B30 A | | GDS85067 | Drive Shaft | | 28 | 27 | 57.4 | 71 | 800 | |
| | 2013.07-2016.02 | 8AT | R | L/R | Coupe RWD N55 B30 A | Diameter [mm]:35 | GCI83732 | Inner Joint | | 27 | 25 | 43.9 | 75 | 72 | |
| **435i Gran Coupe** | | | | | | | | | | | | | | | |
| 3.0 (225 kw) | 2014.03-2016.02 | 6MT | R | L | Coupe RWD N55 B30 A | | GDS85110 | Drive Shaft | | 28 | 32 | 57 | 71 | 748 | |
| | 2014.03-2016.02 | 6MT | R | R | Coupe RWD N55 B30 A | | GDS85109 | Drive Shaft | | 28 | 32 | 57 | 71 | 802 | |
| | 2014.03-2016.02 | 6MT | R | L/R | Coupe RWD N55 B30 A | | GCI85086 | Inner Joint | | 28 | 28 | 62.5 | 71 | 91 | |
| | 2014.03-2016.02 | 8AT | R | L | Coupe RWD N55 B30 A | | GDS85066 | Drive Shaft | | 28 | 27 | 57.4 | 71 | 744 | |
| | 2014.03-2016.02 | 8AT | R | R | Coupe RWD N55 B30 A | | GDS85067 | Drive Shaft | | 28 | 27 | 57.4 | 71 | 800 | |
| | 2014.03-2016.02 | 8AT | R | L/R | Coupe RWD N55 B30 A | Diameter [mm]:35 | GCI83732 | Inner Joint | | 27 | 25 | 43.9 | 75 | 72 | |
| 3.0 (250 kw) | 2014.03-2016.02 | 6MT | R | L | Coupe RWD N55 B30 A | | GDS85110 | Drive Shaft | | 28 | 32 | 57 | 71 | 748 | |
| | 2014.03-2016.02 | 6MT | R | R | Coupe RWD N55 B30 A | | GDS85109 | Drive Shaft | | 28 | 32 | 57 | 71 | 802 | |
| | 2014.03-2016.02 | 6MT | R | L/R | Coupe RWD N55 B30 A | | GCI85086 | Inner Joint | | 28 | 28 | 62.5 | 71 | 91 | |

| | YEAR | TRANSM. | F/R | L/R | BODY STYLE & DRIVE TYPE & ENGINE | REMARKS | G-AP Ref. | PRODUCT | ABS | Technical Specifications A | B | C | H | L | P |
|---|---|---|---|---|---|---|---|---|---|---|---|---|---|---|---|
| **BMW** | | | | | | | | | | | | | | | |
| **435i Gran Coupe** | | | | | | | | | | | | | | | |
| 3.0 (250 kw) | 2014.03-2016.02 | 8AT | R | L | Coupe RWD N55 B30 A | | GDS85066 | Drive Shaft | | 28 | 27 | 57.4 | 71 | 744 | |
| | 2014.03-2016.02 | 8AT | R | R | Coupe RWD N55 B30 A | | GDS85067 | Drive Shaft | | 28 | 27 | 57.4 | 71 | 800 | |
| | 2014.03-2016.02 | 8AT | R | L/R | Coupe RWD N55 B30 A | Diameter [mm]:35 | GCI83732 | Inner Joint | | 27 | 25 | 43.9 | 75 | 72 | |
| **435i xDrive Cabrio** | | | | | | | | | | | | | | | |
| 3.0 (225 kw) | 2014.07-2016.02 | 8AT/6MT | F | L | Convertible 4WD N55 B30 A | | GDS82052 | Drive Shaft | | 31 | 27 | 55.8 | | 550 | |
| | 2014.07-2016.02 | 8AT/6MT | F | R | Convertible 4WD N55 B30 A | | GDS82053 | Drive Shaft | | 31 | 27 | 55.8 | | 841 | |
| | 2014.07-2016.02 | 8AT/6MT | F | L | Convertible 4WD N55 B30 A | | GCO81603 | Outer Joint | | 31 | 33 | 55.8 | | 69.5 | M |
| | 2014.07-2016.02 | 8AT/6MT | F | L | Convertible 4WD N55 B30 A | | GCI81055 | Inner Joint | | 27 | 24 | 43.95 | 60 | 123.5 | |
| | 2014.07-2016.02 | 8AT/6MT | F | R | Convertible 4WD N55 B30 A | | GCI81597 | Inner Joint | | 27 | 24 | 43.95 | 349.5 | 125 | |
| | 2014.07-2016.02 | 8AT | R | L | Convertible 4WD N55 B30 A | | GDS85066 | Drive Shaft | | 28 | 27 | 57.4 | 71 | 744 | |
| | 2014.07-2016.02 | 8AT | R | R | Convertible 4WD N55 B30 A | | GDS85067 | Drive Shaft | | 28 | 27 | 57.4 | 71 | 800 | |
| | 2014.07-2016.02 | 8AT | R | L/R | Convertible 4WD N55 B30 A | Diameter [mm]:35 | GCI83732 | Inner Joint | | 27 | 25 | 43.9 | 75 | 72 | |
| 3.0 (250 kw) | 2014.07-2016.02 | 8AT/6MT | F | L | Convertible 4WD N55 B30 A | | GDS82052 | Drive Shaft | | 31 | 27 | 55.8 | | 550 | |
| | 2014.07-2016.02 | 8AT/6MT | F | R | Convertible 4WD N55 B30 A | | GDS82053 | Drive Shaft | | 31 | 27 | 55.8 | | 841 | |
| | 2014.07-2016.02 | 8AT/6MT | F | L | Convertible 4WD N55 B30 A | | GCO81603 | Outer Joint | | 31 | 33 | 55.8 | | 69.5 | M |
| | 2014.07-2016.02 | 8AT/6MT | F | L | Convertible 4WD N55 B30 A | | GCI81055 | Inner Joint | | 27 | 24 | 43.95 | 60 | 123.5 | |
| | 2014.07-2016.02 | 8AT/6MT | F | R | Convertible 4WD N55 B30 A | | GCI81597 | Inner Joint | | 27 | 24 | 43.95 | 349.5 | 125 | |
| | 2014.07-2016.02 | 8AT | R | L | Convertible 4WD N55 B30 A | | GDS85066 | Drive Shaft | | 28 | 27 | 57.4 | 71 | 744 | |
| | 2014.07-2016.02 | 8AT | R | R | Convertible 4WD N55 B30 A | | GDS85067 | Drive Shaft | | 28 | 27 | 57.4 | 71 | 800 | |
| | 2014.07-2016.02 | 8AT | R | L/R | Convertible 4WD N55 B30 A | Diameter [mm]:35 | GCI83732 | Inner Joint | | 27 | 25 | 43.9 | 75 | 72 | |
| **435i xDrive Coupe** | | | | | | | | | | | | | | | |
| 3.0 (225 kw) | 2013.07-2016.02 | 8AT/6MT | F | L | Coupe 4WD N55 B30 A | | GDS82052 | Drive Shaft | | 31 | 27 | 55.8 | | 550 | |
| | 2013.07-2016.02 | 8AT/6MT | F | R | Coupe 4WD N55 B30 A | | GDS82053 | Drive Shaft | | 31 | 27 | 55.8 | | 841 | |
| | 2013.07-2016.02 | 8AT/6MT | F | L | Coupe 4WD N55 B30 A | | GCO81603 | Outer Joint | | 31 | 33 | 55.8 | | 69.5 | M |
| | 2013.07-2016.02 | 8AT/6MT | F | L | Coupe 4WD N55 B30 A | | GCI81055 | Inner Joint | | 27 | 24 | 43.95 | 60 | 123.5 | |
| | 2013.07-2016.02 | 8AT/6MT | F | R | Coupe 4WD N55 B30 A | | GCI81597 | Inner Joint | | 27 | 24 | 43.95 | 349.5 | 125 | |
| | 2013.07-2016.02 | 6MT | R | L | Coupe 4WD N55 B30 A | Date to:2014.02 | GDS85110 | Drive Shaft | | 28 | 32 | 57 | 71 | 748 | |
| | 2013.07-2016.02 | 6MT | R | R | Coupe 4WD N55 B30 A | Date to:2014.02 | GDS85109 | Drive Shaft | | 28 | 32 | 57 | 71 | 802 | |
| | 2013.07-2016.02 | 6MT/8AT | R | L | Coupe 4WD N55 B30 A | Transmission 6MT,Date from:2014.03,Diameter [mm]:39;Transmission 8AT,Diameter [mm]:26 | GDS85066 | Drive Shaft | | 28 | 27 | 57.4 | 71 | 744 | |
| | 2013.07-2016.02 | 6MT/8AT | R | R | Coupe 4WD N55 B30 A | Transmission 6MT,Date from:2014.03,Diameter [mm]:39;Transmission 8AT,Diameter [mm]:26 | GDS85067 | Drive Shaft | | 28 | 27 | 57.4 | 71 | 800 | |
| | 2013.07-2016.02 | 6MT/8AT | R | L/R | Coupe 4WD N55 B30 A | Transmission 6MT,Date from:2014.03,Diameter [mm]:39;Transmission 8AT,Diameter [mm]:26 | GCI83732 | Inner Joint | | 27 | 25 | 43.9 | 75 | 72 | |
| 3.0 (250 kw) | 2013.07-2016.02 | 8AT/6MT | F | L | Coupe 4WD N55 B30 A | | GDS82052 | Drive Shaft | | 31 | 27 | 55.8 | | 550 | |
| | 2013.07-2016.02 | 8AT/6MT | F | R | Coupe 4WD N55 B30 A | | GDS82053 | Drive Shaft | | 31 | 27 | 55.8 | | 841 | |
| | 2013.07-2016.02 | 8AT/6MT | F | L | Coupe 4WD N55 B30 A | | GCO81603 | Outer Joint | | 31 | 33 | 55.8 | | 69.5 | M |
| | 2013.07-2016.02 | 8AT/6MT | F | L | Coupe 4WD N55 B30 A | | GCI81055 | Inner Joint | | 27 | 24 | 43.95 | 60 | 123.5 | |
| | 2013.07-2016.02 | 8AT/6MT | F | R | Coupe 4WD N55 B30 A | | GCI81597 | Inner Joint | | 27 | 24 | 43.95 | 349.5 | 125 | |
| | 2013.07-2016.02 | 6MT | R | L | Coupe 4WD N55 B30 A | Date to:2014.02 | GDS85110 | Drive Shaft | | 28 | 32 | 57 | 71 | 748 | |
| | 2013.07-2016.02 | 6MT | R | R | Coupe 4WD N55 B30 A | Date to:2014.02 | GDS85109 | Drive Shaft | | 28 | 32 | 57 | 71 | 802 | |
| | 2013.07-2016.02 | 6MT/8AT | R | L/R | Coupe 4WD N55 B30 A | Transmission 6MT,Date from:2014.03,Diameter [mm]:39;Transmission 8AT,Diameter [mm]:26 | GCI83732 | Inner Joint | | 27 | 25 | 43.9 | 75 | 72 | |
| | 2013.07-2016.02 | AT/MT | R | L | Coupe 4WD N55 B30 A | Transmission 6MT,Date from:2014.03,Diameter [mm]:39;Transmission 8AT,Diameter [mm]:26 | GDS85066 | Drive Shaft | | 28 | 27 | 57.4 | 71 | 744 | |
| | 2013.07-2016.02 | AT/MT | R | R | Coupe 4WD N55 B30 A | Transmission 6MT,Date from:2014.03,Diameter [mm]:39;Transmission 8AT,Diameter [mm]:26 | GDS85067 | Drive Shaft | | 28 | 27 | 57.4 | 71 | 800 | |
| **435i xDrive Gran Coupe** | | | | | | | | | | | | | | | |
| 3.0 (225 kw) | 2014.07-2016.02 | 8AT/6MT | F | L | Coupe 4WD N55 B30 A | | GDS82052 | Drive Shaft | | 31 | 27 | 55.8 | | 550 | |
| | 2014.07-2016.02 | 8AT/6MT | F | R | Coupe 4WD N55 B30 A | | GDS82053 | Drive Shaft | | 31 | 27 | 55.8 | | 841 | |
| | 2014.07-2016.02 | 8AT/6MT | F | L | Coupe 4WD N55 B30 A | | GCO81603 | Outer Joint | | 31 | 33 | 55.8 | | 69.5 | M |
| | 2014.07-2016.02 | 8AT/6MT | F | L | Coupe 4WD N55 B30 A | | GCI81055 | Inner Joint | | 27 | 24 | 43.95 | 60 | 123.5 | |
| | 2014.07-2016.02 | 8AT/6MT | F | R | Coupe 4WD N55 B30 A | | GCI81597 | Inner Joint | | 27 | 24 | 43.95 | 349.5 | 125 | |
| | 2014.07-2016.02 | 8AT | R | L | Coupe 4WD N55 B30 A | | GDS85066 | Drive Shaft | | 28 | 27 | 57.4 | 71 | 744 | |
| | 2014.07-2016.02 | 8AT | R | R | Coupe 4WD N55 B30 A | | GDS85067 | Drive Shaft | | 28 | 27 | 57.4 | 71 | 800 | |
| | 2014.07-2016.02 | 8AT | R | L/R | Coupe 4WD N55 B30 A | Diameter [mm]:35 | GCI83732 | Inner Joint | | 27 | 25 | 43.9 | 75 | 72 | |
| 3.0 (250 kw) | 2014.07-2016.02 | 8AT/6MT | F | L | Coupe 4WD N55 B30 A | | GDS82052 | Drive Shaft | | 31 | 27 | 55.8 | | 550 | |
| | 2014.07-2016.02 | 8AT/6MT | F | R | Coupe 4WD N55 B30 A | | GDS82053 | Drive Shaft | | 31 | 27 | 55.8 | | 841 | |
| | 2014.07-2016.02 | 8AT/6MT | F | L | Coupe 4WD N55 B30 A | | GCO81603 | Outer Joint | | 31 | 33 | 55.8 | | 69.5 | M |
| | 2014.07-2016.02 | 8AT/6MT | F | L | Coupe 4WD N55 B30 A | | GCI81055 | Inner Joint | | 27 | 24 | 43.95 | 60 | 123.5 | |
| | 2014.07-2016.02 | 8AT/6MT | F | R | Coupe 4WD N55 B30 A | | GCI81597 | Inner Joint | | 27 | 24 | 43.95 | 349.5 | 125 | |
| | 2014.07-2016.02 | 8AT | R | L | Coupe 4WD N55 B30 A | | GDS85066 | Drive Shaft | | 28 | 27 | 57.4 | 71 | 744 | |
| | 2014.07-2016.02 | 8AT | R | R | Coupe 4WD N55 B30 A | | GDS85067 | Drive Shaft | | 28 | 27 | 57.4 | 71 | 800 | |
| | 2014.07-2016.02 | 8AT | R | L/R | Coupe 4WD N55 B30 A | Diameter [mm]:35 | GCI83732 | Inner Joint | | 27 | 25 | 43.9 | 75 | 72 | |
| **440i Cabrio** | | | | | | | | | | | | | | | |
| 3.0 (240 kw) | 2016.03-2020.07 | 8AT | R | L | Convertible RWD B58 B30 A | | GDS85110 | Drive Shaft | | 28 | 32 | 57 | 71 | 748 | |
| | 2016.03-2020.07 | 8AT | R | R | Convertible RWD B58 B30 A | | GDS85109 | Drive Shaft | | 28 | 32 | 57 | 71 | 802 | |
| | 2016.03-2020.07 | 8AT | R | L/R | Convertible RWD B58 B30 A | | GCI85086 | Inner Joint | | 28 | 28 | 62.5 | 71 | 91 | |
| 3.0 (265 kw) | 2016.03-2020.07 | 8AT | R | L | Convertible RWD B58 B30 A | | GDS85110 | Drive Shaft | | 28 | 32 | 57 | 71 | 748 | |
| | 2016.03-2020.07 | 8AT | R | R | Convertible RWD B58 B30 A | | GDS85109 | Drive Shaft | | 28 | 32 | 57 | 71 | 802 | |
| | 2016.03-2020.07 | 8AT | R | L/R | Convertible RWD B58 B30 A | | GCI85086 | Inner Joint | | 28 | 28 | 62.5 | 71 | 91 | |

| | YEAR | TRANSM. | F/R | L/R | BODY STYLE & DRIVE TYPE & ENGINE | REMARKS | G-AP Ref. | PRODUCT | ABS | Technical Specifications A | B | C | H | L | P |
|---|---|---|---|---|---|---|---|---|---|---|---|---|---|---|---|
| **BMW** | | | | | | | | | | | | | | | |
| **440i Coupe** | | | | | | | | | | | | | | | |
| 3.0 (240 kw) | 2016.03-2020.06 | 8AT/6MT | R | L | Coupe RWD B58 B30 A | | GDS85110 | Drive Shaft | | 28 | 32 | 57 | 71 | 748 | |
| | 2016.03-2020.06 | 8AT/6MT | R | R | Coupe RWD B58 B30 A | | GDS85109 | Drive Shaft | | 28 | 32 | 57 | 71 | 802 | |
| | 2016.03-2020.06 | 8AT/6MT | R | L/R | Coupe RWD B58 B30 A | | GCI85086 | Inner Joint | | 28 | 28 | 62.5 | 71 | 91 | |
| 3.0 (265 kw) | 2016.03-2020.06 | 8AT/6MT | R | L | Coupe RWD B58 B30 A | | GDS85110 | Drive Shaft | | 28 | 32 | 57 | 71 | 748 | |
| | 2016.03-2020.06 | 8AT/6MT | R | R | Coupe RWD B58 B30 A | | GDS85109 | Drive Shaft | | 28 | 32 | 57 | 71 | 802 | |
| | 2016.03-2020.06 | 8AT/6MT | R | L/R | Coupe RWD B58 B30 A | | GCI85086 | Inner Joint | | 28 | 28 | 62.5 | 71 | 91 | |
| **440i Gran Coupe** | | | | | | | | | | | | | | | |
| 3.0 (240 kw) | 2016.03-2021.05 | 8AT | R | L | Coupe RWD B58 B30 A | | GDS85110 | Drive Shaft | | 28 | 32 | 57 | 71 | 748 | |
| | 2016.03-2021.05 | 8AT | R | R | Coupe RWD B58 B30 A | | GDS85109 | Drive Shaft | | 28 | 32 | 57 | 71 | 802 | |
| | 2016.03-2021.05 | 8AT | R | L/R | Coupe RWD B58 B30 A | | GCI85086 | Inner Joint | | 28 | 28 | 62.5 | 71 | 91 | |
| 3.0 (265 kw) | 2016.03-2021.05 | 8AT | R | L | Coupe RWD B58 B30 A | | GDS85110 | Drive Shaft | | 28 | 32 | 57 | 71 | 748 | |
| | 2016.03-2021.05 | 8AT | R | R | Coupe RWD B58 B30 A | | GDS85109 | Drive Shaft | | 28 | 32 | 57 | 71 | 802 | |
| | 2016.03-2021.05 | 8AT | R | L/R | Coupe RWD B58 B30 A | | GCI85086 | Inner Joint | | 28 | 28 | 62.5 | 71 | 91 | |
| **440i xDrive Cabrio** | | | | | | | | | | | | | | | |
| 3.0 (240 kw) | 2016.03-2020.07 | 8AT | F | L | Convertible 4WD B58 B30 A | | GDS82052 | Drive Shaft | | 31 | 27 | 55.8 | | 550 | |
| | 2016.03-2020.07 | 8AT | F | R | Convertible 4WD B58 B30 A | | GDS82053 | Drive Shaft | | 31 | 27 | 55.8 | | 841 | |
| | 2016.03-2020.07 | 8AT | F | L | Convertible 4WD B58 B30 A | | GCO81603 | Outer Joint | | 31 | 33 | 55.8 | | 69.5 | M |
| | 2016.03-2020.07 | 8AT | F | L | Convertible 4WD B58 B30 A | | GCI81055 | Inner Joint | | 27 | 24 | 43.95 | 60 | 123.5 | |
| | 2016.03-2020.07 | 8AT | F | R | Convertible 4WD B58 B30 A | | GCI81597 | Inner Joint | | 27 | 24 | 43.95 | 349.5 | 125 | |
| | 2016.03-2020.07 | 8AT | R | L | Convertible 4WD B58 B30 A | | GDS85066 | Drive Shaft | | 28 | 27 | 57.4 | 71 | 744 | |
| | 2016.03-2020.07 | 8AT | R | R | Convertible 4WD B58 B30 A | | GDS85067 | Drive Shaft | | 28 | 27 | 57.4 | 71 | 800 | |
| | 2016.03-2020.07 | 8AT | R | L/R | Convertible 4WD B58 B30 A | Diameter [mm]:35 | GCI83732 | Inner Joint | | 27 | 25 | 43.9 | 75 | 72 | |
| 3.0 (265 kw) | 2016.03-2020.07 | 8AT | F | L | Convertible 4WD B58 B30 A | | GDS82052 | Drive Shaft | | 31 | 27 | 55.8 | | 550 | |
| | 2016.03-2020.07 | 8AT | F | R | Convertible 4WD B58 B30 A | | GDS82053 | Drive Shaft | | 31 | 27 | 55.8 | | 841 | |
| | 2016.03-2020.07 | 8AT | F | L | Convertible 4WD B58 B30 A | | GCO81603 | Outer Joint | | 31 | 33 | 55.8 | | 69.5 | M |
| | 2016.03-2020.07 | 8AT | F | L | Convertible 4WD B58 B30 A | | GCI81055 | Inner Joint | | 27 | 24 | 43.95 | 60 | 123.5 | |
| | 2016.03-2020.07 | 8AT | F | R | Convertible 4WD B58 B30 A | | GCI81597 | Inner Joint | | 27 | 24 | 43.95 | 349.5 | 125 | |
| | 2016.03-2020.07 | 8AT | R | L | Convertible 4WD B58 B30 A | | GDS85066 | Drive Shaft | | 28 | 27 | 57.4 | 71 | 744 | |
| | 2016.03-2020.07 | 8AT | R | R | Convertible 4WD B58 B30 A | | GDS85067 | Drive Shaft | | 28 | 27 | 57.4 | 71 | 800 | |
| | 2016.03-2020.07 | 8AT | R | L/R | Convertible 4WD B58 B30 A | Diameter [mm]:35 | GCI83732 | Inner Joint | | 27 | 25 | 43.9 | 75 | 72 | |
| **440i xDrive Coupe** | | | | | | | | | | | | | | | |
| 3.0 (240 kw) | 2016.03-2020.06 | 8AT/6MT | F | L | Coupe 4WD B58 B30 A | | GDS82052 | Drive Shaft | | 31 | 27 | 55.8 | | 550 | |
| | 2016.03-2020.06 | 8AT/6MT | F | R | Coupe 4WD B58 B30 A | | GDS82053 | Drive Shaft | | 31 | 27 | 55.8 | | 841 | |
| | 2016.03-2020.06 | 8AT/6MT | F | L | Coupe 4WD B58 B30 A | | GCO81603 | Outer Joint | | 31 | 33 | 55.8 | | 69.5 | M |
| | 2016.03-2020.06 | 8AT/6MT | F | L | Coupe 4WD B58 B30 A | | GCI81055 | Inner Joint | | 27 | 24 | 43.95 | 60 | 123.5 | |
| | 2016.03-2020.06 | 8AT/6MT | F | R | Coupe 4WD B58 B30 A | | GCI81597 | Inner Joint | | 27 | 24 | 43.95 | 349.5 | 125 | |
| | 2016.03-2020.06 | 6MT | R | L | Coupe 4WD B58 B30 A | | GDS85066 | Drive Shaft | | 28 | 27 | 57.4 | 71 | 744 | |
| | 2016.03-2020.06 | 6MT | R | R | Coupe 4WD B58 B30 A | | GDS85067 | Drive Shaft | | 28 | 27 | 57.4 | 71 | 800 | |
| | 2016.03-2020.06 | 6MT | R | L/R | Coupe 4WD B58 B30 A | Diameter [mm]:35 | GCI83732 | Inner Joint | | 27 | 25 | 43.9 | 75 | 72 | |
| | 2016.03-2020.06 | 8AT | R | L | Coupe 4WD B58 B30 A | | GDS85110 | Drive Shaft | | 28 | 32 | 57 | 71 | 748 | |
| | 2016.03-2020.06 | 8AT | R | R | Coupe 4WD B58 B30 A | | GDS85109 | Drive Shaft | | 28 | 32 | 57 | 71 | 802 | |
| | 2016.03-2020.06 | 8AT | R | L/R | Coupe 4WD B58 B30 A | | GCI85086 | Inner Joint | | 28 | 28 | 62.5 | 71 | 91 | |
| | 2016.03-2020.06 | 8AT | R | L/R | Coupe 4WD B58 B30 A | | GCI85087 | Inner Joint | | 32 | 28 | 50 | 85 | 99 | |
| 3.0 (265 kw) | 2016.03-2020.06 | 8AT/6MT | F | L | Coupe 4WD B58 B30 A | | GDS82052 | Drive Shaft | | 31 | 27 | 55.8 | | 550 | |
| | 2016.03-2020.06 | 8AT/6MT | F | R | Coupe 4WD B58 B30 A | | GDS82053 | Drive Shaft | | 31 | 27 | 55.8 | | 841 | |
| | 2016.03-2020.06 | 8AT/6MT | F | L | Coupe 4WD B58 B30 A | | GCO81603 | Outer Joint | | 31 | 33 | 55.8 | | 69.5 | M |
| | 2016.03-2020.06 | 8AT/6MT | F | L | Coupe 4WD B58 B30 A | | GCI81055 | Inner Joint | | 27 | 24 | 43.95 | 60 | 123.5 | |
| | 2016.03-2020.06 | 8AT/6MT | F | R | Coupe 4WD B58 B30 A | | GCI81597 | Inner Joint | | 27 | 24 | 43.95 | 349.5 | 125 | |
| | 2016.03-2020.06 | 6MT | R | L | Coupe 4WD B58 B30 A | | GDS85066 | Drive Shaft | | 28 | 27 | 57.4 | 71 | 744 | |
| | 2016.03-2020.06 | 6MT | R | R | Coupe 4WD B58 B30 A | | GDS85067 | Drive Shaft | | 28 | 27 | 57.4 | 71 | 800 | |
| | 2016.03-2020.06 | 6MT | R | L/R | Coupe 4WD B58 B30 A | Diameter [mm]:35 | GCI83732 | Inner Joint | | 27 | 25 | 43.9 | 75 | 72 | |
| | 2016.03-2020.06 | 8AT | R | L | Coupe 4WD B58 B30 A | | GDS85110 | Drive Shaft | | 28 | 32 | 57 | 71 | 748 | |
| | 2016.03-2020.06 | 8AT | R | R | Coupe 4WD B58 B30 A | | GDS85109 | Drive Shaft | | 28 | 32 | 57 | 71 | 802 | |
| | 2016.03-2020.06 | 8AT | R | L/R | Coupe 4WD B58 B30 A | | GCI85086 | Inner Joint | | 28 | 28 | 62.5 | 71 | 91 | |
| | 2016.03-2020.06 | 8AT | R | L/R | Coupe 4WD B58 B30 A | | GCI85087 | Inner Joint | | 32 | 28 | 50 | 85 | 99 | |
| **440i xDrive Gran Coupe** | | | | | | | | | | | | | | | |
| 3.0 (240 kw) | 2016.03-2021.05 | 8AT | F | L | Coupe 4WD B58 B30 A | | GDS82052 | Drive Shaft | | 31 | 27 | 55.8 | | 550 | |
| | 2016.03-2021.05 | 8AT | F | R | Coupe 4WD B58 B30 A | | GDS82053 | Drive Shaft | | 31 | 27 | 55.8 | | 841 | |
| | 2016.03-2021.05 | 8AT | F | L | Coupe 4WD B58 B30 A | | GCO81603 | Outer Joint | | 31 | 33 | 55.8 | | 69.5 | M |
| | 2016.03-2021.05 | 8AT | F | L | Coupe 4WD B58 B30 A | | GCI81055 | Inner Joint | | 27 | 24 | 43.95 | 60 | 123.5 | |
| | 2016.03-2021.05 | 8AT | F | R | Coupe 4WD B58 B30 A | | GCI81597 | Inner Joint | | 27 | 24 | 43.95 | 349.5 | 125 | |
| | 2016.03-2021.05 | 8AT | R | L | Coupe 4WD B58 B30 A | | GDS85066 | Drive Shaft | | 28 | 27 | 57.4 | 71 | 744 | |
| | 2016.03-2021.05 | 8AT | R | R | Coupe 4WD B58 B30 A | | GDS85067 | Drive Shaft | | 28 | 27 | 57.4 | 71 | 800 | |
| | 2016.03-2021.05 | 8AT | R | L/R | Coupe 4WD B58 B30 A | Diameter [mm]:35 | GCI83732 | Inner Joint | | 27 | 25 | 43.9 | 75 | 72 | |
| 3.0 (265 kw) | 2016.03-2021.05 | 8AT | F | L | Coupe 4WD B58 B30 A | | GDS82052 | Drive Shaft | | 31 | 27 | 55.8 | | 550 | |

| | YEAR | TRANSM. | F/R | L/R | BODY STYLE & DRIVE TYPE & ENGINE | REMARKS | G-AP Ref. | PRODUCT | ABS | Technical Specifications A | B | C | H | L | P |
|---|---|---|---|---|---|---|---|---|---|---|---|---|---|---|---|
| **BMW** | | | | | | | | | | | | | | | |
| **440i xDrive Gran Coupe** | | | | | | | | | | | | | | | |
| 3.0 (265 kw) | 2016.03-2021.05 | 8AT | F | R | Coupe 4WD B58 B30 A | | GDS82053 | Drive Shaft | | 31 | 27 | 55.8 | | 841 | |
| | 2016.03-2021.05 | 8AT | F | L | Coupe 4WD B58 B30 A | | GCO81603 | Outer Joint | | 31 | 33 | 55.8 | | 69.5 | M |
| | 2016.03-2021.05 | 8AT | F | L | Coupe 4WD B58 B30 A | | GCI81055 | Inner Joint | | 27 | 24 | 43.95 | 60 | 123.5 | |
| | 2016.03-2021.05 | 8AT | F | R | Coupe 4WD B58 B30 A | | GCI81597 | Inner Joint | | 27 | 24 | 43.95 | 349.5 | 125 | |
| | 2016.03-2021.05 | 8AT | R | L | Coupe 4WD B58 B30 A | | GDS85066 | Drive Shaft | | 28 | 27 | 57.4 | 71 | 744 | |
| | 2016.03-2021.05 | 8AT | R | R | Coupe 4WD B58 B30 A | | GDS85067 | Drive Shaft | | 28 | 27 | 57.4 | 71 | 800 | |
| | 2016.03-2021.05 | 8AT | R | L/R | Coupe 4WD B58 B30 A | Diameter [mm]:35 | GCI83732 | Inner Joint | | 27 | 25 | 43.9 | 75 | 72 | |
| **5 ActiveHybrid** | | | | | | | | | | | | | | | |
| 3.0 (250 kw) | 2011.12-2016.10 | 8AT | R | L | Saloon RWD N55 B30 A | | GDS85114 | Drive Shaft | | 30 | 27 | 65 | 77 | 763 | |
| | 2011.12-2016.10 | 8AT | R | R | Saloon RWD N55 B30 A | | GDS85115 | Drive Shaft | | 30 | 27 | 65 | 77 | 817 | |
| | 2011.12-2016.10 | 8AT | R | L/R | Saloon RWD N55 B30 A | | GCI85063 | Inner Joint | | 30 | 28 | 65 | 77 | 89 | |
| | 2011.12-2016.10 | 8AT | R | L/R | Saloon RWD N55 B30 A | | GCI85064 | Inner Joint | | 27 | 28 | 43.95 | 80 | 102 | |
| **518d** | | | | | | | | | | | | | | | |
| 2.0 (100 kw) | 2013.07-2016.10 | 6MT | R | L | Saloon RWD N47 D20 C;B47 D20 A | | GDS85114 | Drive Shaft | | 30 | 27 | 65 | 77 | 763 | |
| | 2013.07-2016.10 | 6MT | R | R | Saloon RWD N47 D20 C;B47 D20 A | | GDS85115 | Drive Shaft | | 30 | 27 | 65 | 77 | 817 | |
| | 2013.07-2016.10 | 6MT | R | L/R | Saloon RWD N47 D20 C;B47 D20 A | | GCI85063 | Inner Joint | | 30 | 28 | 65 | 77 | 89 | |
| | 2013.07-2016.10 | 8AT | R | L | Saloon RWD N47 D20 C;B47 D20 A | | GDS85112 | Drive Shaft | | 30 | 27 | 64.9 | 77 | 758 | |
| | 2013.07-2016.10 | 8AT | R | R | Saloon RWD N47 D20 C;B47 D20 A | | GDS85113 | Drive Shaft | | 30 | 27 | 64.9 | 77 | 811 | |
| | 2013.07-2016.10 | 8AT | R | L/R | Saloon RWD N47 D20 C;B47 D20 A | | GCI85055 | Inner Joint | | 27 | 25 | 43.9 | 80 | 96 | |
| | 2013.07-2016.10 | AT | R | R | Saloon RWD N47 D20 C;B47 D20 A | | GCI85054 | Outer Joint | | 30 | 25 | 64.9 | 77 | 82 | |
| 2.0 (105 kw) | 2013.07-2014.06 | 6MT | R | L | Saloon RWD N47 D20 C | | GDS85114 | Drive Shaft | | 30 | 27 | 65 | 77 | 763 | |
| | 2013.07-2014.06 | 6MT | R | R | Saloon RWD N47 D20 C | | GDS85115 | Drive Shaft | | 30 | 27 | 65 | 77 | 817 | |
| | 2013.07-2014.06 | 6MT | R | L/R | Saloon RWD N47 D20 C | | GCI85063 | Inner Joint | | 30 | 28 | 65 | 77 | 89 | |
| | 2013.07-2014.06 | 8AT | R | L | Saloon RWD N47 D20 C | | GDS85112 | Drive Shaft | | 30 | 27 | 64.9 | 77 | 758 | |
| | 2013.07-2014.06 | 8AT | R | R | Saloon RWD N47 D20 C | | GDS85113 | Drive Shaft | | 30 | 27 | 64.9 | 77 | 811 | |
| | 2013.07-2014.06 | 8AT | R | L/R | Saloon RWD N47 D20 C | | GCI85055 | Inner Joint | | 27 | 25 | 43.9 | 80 | 96 | |
| | 2013.07-2014.06 | AT | R | R | Saloon RWD N47 D20 C | | GCI85054 | Outer Joint | | 30 | 25 | 64.9 | 77 | 82 | |
| 2.0 (110 kw) | 2014.07-2016.10 | 6MT | R | L | Saloon RWD B47 D20 A | | GDS85114 | Drive Shaft | | 30 | 27 | 65 | 77 | 763 | |
| | 2014.07-2016.10 | 6MT | R | R | Saloon RWD B47 D20 A | | GDS85115 | Drive Shaft | | 30 | 27 | 65 | 77 | 817 | |
| | 2014.07-2016.10 | 6MT | R | L/R | Saloon RWD B47 D20 A | | GCI85063 | Inner Joint | | 30 | 28 | 65 | 77 | 89 | |
| | 2014.07-2016.10 | 8AT | R | L | Saloon RWD B47 D20 A | | GDS85112 | Drive Shaft | | 30 | 27 | 64.9 | 77 | 758 | |
| | 2014.07-2016.10 | 8AT | R | R | Saloon RWD B47 D20 A | | GDS85113 | Drive Shaft | | 30 | 27 | 64.9 | 77 | 811 | |
| | 2014.07-2016.10 | 8AT | R | L/R | Saloon RWD B47 D20 A | | GCI85055 | Inner Joint | | 27 | 25 | 43.9 | 80 | 96 | |
| | 2014.07-2016.10 | AT | R | R | Saloon RWD B47 D20 A | | GCI85054 | Outer Joint | | 30 | 25 | 64.9 | 77 | 82 | |
| 2.0 (120 kw) | 2013.10-2016.10 | 6MT | R | L | Saloon RWD B47 D20 A | | GDS85114 | Drive Shaft | | 30 | 27 | 65 | 77 | 763 | |
| | 2013.10-2016.10 | 6MT | R | R | Saloon RWD B47 D20 A | | GDS85115 | Drive Shaft | | 30 | 27 | 65 | 77 | 817 | |
| | 2013.10-2016.10 | 6MT | R | L/R | Saloon RWD B47 D20 A | | GCI85063 | Inner Joint | | 30 | 28 | 65 | 77 | 89 | |
| | 2013.10-2016.10 | 6MT | R | L/R | Saloon RWD B47 D20 A | | GCI85064 | Inner Joint | | 27 | 28 | 43.95 | 80 | 102 | |
| | 2013.10-2016.10 | 8AT | R | L | Saloon RWD B47 D20 A | | GDS85112 | Drive Shaft | | 30 | 27 | 64.9 | 77 | 758 | |
| | 2013.10-2016.10 | 8AT | R | R | Saloon RWD B47 D20 A | | GDS85113 | Drive Shaft | | 30 | 27 | 64.9 | 77 | 811 | |
| | 2013.10-2016.10 | 8AT | R | L/R | Saloon RWD B47 D20 A | | GCI85054 | Outer Joint | | 30 | 25 | 64.9 | 77 | 82 | |
| | 2013.10-2016.10 | 8AT | R | L/R | Saloon RWD B47 D20 A | | GCI85055 | Inner Joint | | 27 | 25 | 43.9 | 80 | 96 | |
| **518d Touring** | | | | | | | | | | | | | | | |
| 2.0 (100 kw) | 2013.07-2017.02 | 6MT | R | L | Estate RWD N47 D20 C;B47 D20 A | | GDS85114 | Drive Shaft | | 30 | 27 | 65 | 77 | 763 | |
| | 2013.07-2017.02 | 6MT | R | R | Estate RWD N47 D20 C;B47 D20 A | | GDS85115 | Drive Shaft | | 30 | 27 | 65 | 77 | 817 | |
| | 2013.07-2017.02 | 6MT | R | L/R | Estate RWD N47 D20 C;B47 D20 A | | GCI85063 | Inner Joint | | 30 | 28 | 65 | 77 | 89 | |
| | 2013.07-2017.02 | 6MT | R | L/R | Estate RWD N47 D20 C;B47 D20 A | | GCI85064 | Inner Joint | | 27 | 28 | 43.95 | 80 | 102 | |
| | 2013.07-2017.02 | 8AT | R | L | Estate RWD N47 D20 C;B47 D20 A | | GDS85112 | Drive Shaft | | 30 | 27 | 64.9 | 77 | 758 | |
| | 2013.07-2017.02 | 8AT | R | R | Estate RWD N47 D20 C;B47 D20 A | | GDS85113 | Drive Shaft | | 30 | 27 | 64.9 | 77 | 811 | |
| | 2013.07-2017.02 | 8AT | R | L/R | Estate RWD N47 D20 C;B47 D20 A | | GCI85054 | Outer Joint | | 30 | 25 | 64.9 | 77 | 82 | |
| | 2013.07-2017.02 | 8AT | R | L/R | Estate RWD N47 D20 C;B47 D20 A | | GCI85055 | Inner Joint | | 27 | 25 | 43.9 | 80 | 96 | |
| 2.0 (105 kw) | 2013.07-2014.06 | 6MT | R | L | Estate RWD N47 D20 C | | GDS85114 | Drive Shaft | | 30 | 27 | 65 | 77 | 763 | |
| | 2013.07-2014.06 | 6MT | R | R | Estate RWD N47 D20 C | | GDS85115 | Drive Shaft | | 30 | 27 | 65 | 77 | 817 | |
| | 2013.07-2014.06 | 6MT | R | L/R | Estate RWD N47 D20 C | | GCI85063 | Inner Joint | | 30 | 28 | 65 | 77 | 89 | |
| | 2013.07-2014.06 | 8AT | R | L | Estate RWD N47 D20 C | | GDS85112 | Drive Shaft | | 30 | 27 | 64.9 | 77 | 758 | |
| | 2013.07-2014.06 | 8AT | R | R | Estate RWD N47 D20 C | | GDS85113 | Drive Shaft | | 30 | 27 | 64.9 | 77 | 811 | |
| | 2013.07-2014.06 | 8AT | R | L/R | Estate RWD N47 D20 C | | GCI85055 | Inner Joint | | 27 | 25 | 43.9 | 80 | 96 | |
| | 2013.07-2014.06 | AT | R | R | Estate RWD N47 D20 C | | GCI85054 | Outer Joint | | 30 | 25 | 64.9 | 77 | 82 | |
| 2.0 (110 kw) | 2014.07-2017.02 | 6MT | R | L | Estate RWD B47 D20 A | | GDS85114 | Drive Shaft | | 30 | 27 | 65 | 77 | 763 | |
| | 2014.07-2017.02 | 6MT | R | R | Estate RWD B47 D20 A | | GDS85115 | Drive Shaft | | 30 | 27 | 65 | 77 | 817 | |
| | 2014.07-2017.02 | 6MT | R | L/R | Estate RWD B47 D20 A | | GCI85063 | Inner Joint | | 30 | 28 | 65 | 77 | 89 | |
| | 2014.07-2017.02 | 6MT | R | L/R | Estate RWD B47 D20 A | | GCI85064 | Inner Joint | | 27 | 28 | 43.95 | 80 | 102 | |
| | 2014.07-2017.02 | 8AT | R | L | Estate RWD B47 D20 A | | GDS85112 | Drive Shaft | | 30 | 27 | 64.9 | 77 | 758 | |
| | 2014.07-2017.02 | 8AT | R | R | Estate RWD B47 D20 A | | GDS85113 | Drive Shaft | | 30 | 27 | 64.9 | 77 | 811 | |
| | 2014.07-2017.02 | 8AT | R | L/R | Estate RWD B47 D20 A | | GCI85054 | Outer Joint | | 30 | 25 | 64.9 | 77 | 82 | |

| | YEAR | TRANSM. | F/R | L/R | BODY STYLE & DRIVE TYPE & ENGINE | REMARKS | G-AP Ref. | PRODUCT | ABS | Technical Specifications A | B | C | H | L | P |
|---|---|---|---|---|---|---|---|---|---|---|---|---|---|---|---|
| **BMW** | | | | | | | | | | | | | | | |
| **518d Touring** | | | | | | | | | | | | | | | |
| 2.0 (110 kw) | 2014.07-2017.02 | 8AT | R | L/R | Estate RWD B47 D20 A | | GCI85055 | Inner Joint | | 27 | 25 | 43.9 | 80 | 96 | |
| 2.0 (120 kw) | 2014.07-2017.02 | 6MT | R | L | Estate RWD B47 D20 A | | GDS85114 | Drive Shaft | | 30 | 27 | 65 | 77 | 763 | |
| | 2014.07-2017.02 | 6MT | R | R | Estate RWD B47 D20 A | | GDS85115 | Drive Shaft | | 30 | 27 | 65 | 77 | 817 | |
| | 2014.07-2017.02 | 6MT | R | L/R | Estate RWD B47 D20 A | | GCI85063 | Inner Joint | | 30 | 28 | 65 | 77 | 89 | |
| | 2014.07-2017.02 | 6MT | R | L/R | Estate RWD B47 D20 A | | GCI85064 | Inner Joint | | 27 | 28 | 43.95 | 80 | 102 | |
| | 2014.07-2017.02 | 8AT | R | L | Estate RWD B47 D20 A | | GDS85112 | Drive Shaft | | 30 | 27 | 64.9 | 77 | 758 | |
| | 2014.07-2017.02 | 8AT | R | R | Estate RWD B47 D20 A | | GDS85113 | Drive Shaft | | 30 | 27 | 64.9 | 77 | 811 | |
| | 2014.07-2017.02 | 8AT | R | L/R | Estate RWD B47 D20 A | | GCI85054 | Outer Joint | | 30 | 25 | 64.9 | 77 | 82 | |
| | 2014.07-2017.02 | 8AT | R | L/R | Estate RWD B47 D20 A | | GCI85055 | Inner Joint | | 27 | 25 | 43.9 | 80 | 96 | |
| **518i Touring** | | | | | | | | | | | | | | | |
| 1.8 (74 kw) | 1996.02-1996.07 | AT/MT | R | L/R | Estate RWD M43 B18 (184E2) | | GDS85001 | Drive Shaft | | | | | | 465 | |
| | 1996.02-1996.07 | AT/MT | R | L/R | Estate RWD M43 B18 (184E2) | | GCI99052 | Inner Joint | | | 25 | | | 32 | |
| **520d** | | | | | | | | | | | | | | | |
| 2.0 (100 kw) | 1999.09-2003.05 | 5MT | R | L/R | Saloon RWD M47D204D1 | | GDS85021 | Drive Shaft | | 30 | | 59 | 73 | 615 | |
| | 1999.09-2003.05 | 5MT | R | L/R | Saloon RWD M47D204D1 | | GCI99127 | Inner Joint | | | 25 | | | 26 | |
| | 2013.01-2014.06 | 6MT | R | L | Saloon RWD N47 D20 C | | GDS85114 | Drive Shaft | | 30 | 27 | 65 | 77 | 763 | |
| | 2013.01-2014.06 | 6MT | R | R | Saloon RWD N47 D20 C | | GDS85115 | Drive Shaft | | 30 | 27 | 65 | 77 | 817 | |
| | 2013.01-2014.06 | 6MT | R | L/R | Saloon RWD N47 D20 C | | GCI85063 | Inner Joint | | 30 | 28 | 65 | 77 | 89 | |
| | 2013.01-2014.06 | 6MT | R | L/R | Saloon RWD N47 D20 C | | GCI85064 | Inner Joint | | 27 | 28 | 43.95 | 80 | 102 | |
| | 2013.01-2014.06 | 8AT | R | L | Saloon RWD N47 D20 C | | GDS85112 | Drive Shaft | | 30 | 27 | 64.9 | 77 | 758 | |
| | 2013.01-2014.06 | 8AT | R | R | Saloon RWD N47 D20 C | | GDS85113 | Drive Shaft | | 30 | 27 | 64.9 | 77 | 811 | |
| | 2013.01-2014.06 | 8AT | R | L/R | Saloon RWD N47 D20 C | | GCI85054 | Outer Joint | | 30 | 25 | 64.9 | 77 | 82 | |
| | 2013.01-2014.06 | 8AT | R | L/R | Saloon RWD N47 D20 C | | GCI85055 | Inner Joint | | 27 | 25 | 43.9 | 80 | 96 | |
| 2.0 (110 kw) | 2005.09-2007.02 | 6AT/6MT | R | L/R | Saloon RWD M47 D20 (204D4) | | GDS85082 | Drive Shaft | | 30 | | 58.7 | 73 | 656 | |
| | 2005.09-2007.02 | MT | R | L/R | Saloon RWD M47 D20 (204D4) | | GCI61075 | Inner Joint | | | 28 | | | 26 | |
| 2.0 (120 kw) | 2005.09-2009.12 | 6AT/6MT | R | L/R | Saloon RWD N47 D20 A;N47 D20 C;M47 D20 (204D4) | | GDS85082 | Drive Shaft | | 30 | | 58.7 | 73 | 656 | |
| | 2005.09-2009.12 | 6AT/6MT | R | L/R | Saloon RWD N47 D20 A;N47 D20 C;M47 D20 (204D4) | | GCI85036 | Outer Joint | | 30 | 25 | 58.7 | 73 | 58 | I |
| | 2005.09-2009.12 | 6AT/6MT | R | L/R | Saloon RWD N47 D20 A;N47 D20 C;M47 D20 (204D4) | | GCI35025 | Inner Joint | | | 25 | | | 26 | |
| | 2010.06-2016.10 | 6MT | R | L | Saloon RWD N47 D20 C;B47 D20 A | | GDS85114 | Drive Shaft | | 30 | 27 | 65 | 77 | 763 | |
| | 2010.06-2016.10 | 6MT | R | R | Saloon RWD N47 D20 C;B47 D20 A | | GDS85115 | Drive Shaft | | 30 | 27 | 65 | 77 | 817 | |
| | 2010.06-2016.10 | 6MT | R | L/R | Saloon RWD N47 D20 C;B47 D20 A | | GCI85063 | Inner Joint | | 30 | 28 | 65 | 77 | 89 | |
| | 2010.06-2016.10 | 8AT | R | L | Saloon RWD N47 D20 C;B47 D20 A | For Engine code:N47D20C | GDS85112 | Drive Shaft | | 30 | 27 | 64.9 | 77 | 758 | |
| | 2010.06-2016.10 | 8AT | R | L | Saloon RWD N47 D20 C;B47 D20 A | code:B47D20A | GDS85114 | Drive Shaft | | 30 | 27 | 65 | 77 | 763 | |
| | 2010.06-2016.10 | 8AT | R | R | Saloon RWD N47 D20 C;B47 D20 A | code:N47D20C | GDS85113 | Drive Shaft | | 30 | 27 | 64.9 | 77 | 811 | |
| | 2010.06-2016.10 | 8AT | R | R | Saloon RWD N47 D20 C;B47 D20 A | For Engine Code:B47D20A | GDS85115 | Drive Shaft | | 30 | 27 | 65 | 77 | 817 | |
| | 2010.06-2016.10 | 8AT | R | L/R | Saloon RWD N47 D20 C;B47 D20 A | For Engine code:N47D20C | GCI85055 | Inner Joint | | 27 | 25 | 43.9 | 80 | 96 | |
| | 2010.06-2016.10 | 8AT | R | L/R | Saloon RWD N47 D20 C;B47 D20 A | For Engine code:B47D20A | GCI85063 | Inner Joint | | 30 | 28 | 65 | 77 | 89 | |
| | 2010.06-2016.10 | AT | R | R | Saloon RWD N47 D20 C;B47 D20 A | | GCI85054 | Outer Joint | | 30 | 25 | 64.9 | 77 | 82 | |
| 2.0 (130 kw) | 2007.09-2009.12 | 6AT/6MT | R | L/R | Saloon RWD N47 D20 A;N47 D20 C | | GDS85082 | Drive Shaft | | 30 | | 58.7 | 73 | 656 | |
| | 2007.09-2009.12 | 6AT/6MT | R | L/R | Saloon RWD N47 D20 A;N47 D20 C | | GCI85036 | Outer Joint | | 30 | 25 | 58.7 | 73 | 58 | I |
| | 2007.09-2009.12 | 6AT/6MT | R | L/R | Saloon RWD N47 D20 A;N47 D20 C | | GCI35025 | Inner Joint | | | 25 | | | 26 | |
| 2.0 (135 kw) | 2010.06-2014.06 | 6MT | R | L | Saloon RWD N47 D20 C | | GDS85114 | Drive Shaft | | 30 | 27 | 65 | 77 | 763 | |
| | 2010.06-2014.06 | 6MT | R | R | Saloon RWD N47 D20 C | | GDS85115 | Drive Shaft | | 30 | 27 | 65 | 77 | 817 | |
| | 2010.06-2014.06 | 6MT | R | L/R | Saloon RWD N47 D20 C | | GCI85063 | Inner Joint | | 30 | 28 | 65 | 77 | 89 | |
| | 2010.06-2014.06 | 6MT | R | L/R | Saloon RWD N47 D20 C | | GCI85064 | Inner Joint | | 27 | 28 | 43.95 | 80 | 102 | |
| | 2010.06-2014.06 | 8AT | R | L | Saloon RWD N47 D20 C | | GDS85112 | Drive Shaft | | 30 | 27 | 64.9 | 77 | 758 | |
| | 2010.06-2014.06 | 8AT | R | R | Saloon RWD N47 D20 C | | GDS85113 | Drive Shaft | | 30 | 27 | 64.9 | 77 | 811 | |
| | 2010.06-2014.06 | 8AT | R | L/R | Saloon RWD N47 D20 C | | GCI85054 | Outer Joint | | 30 | 25 | 64.9 | 77 | 82 | |
| | 2010.06-2014.06 | 8AT | R | L/R | Saloon RWD N47 D20 C | | GCI85055 | Inner Joint | | 27 | 25 | 43.9 | 80 | 96 | |
| 2.0 (140 kw) | 2014.07-2016.10 | 6MT/8AT | R | L | Saloon RWD B47 D20 A | | GDS85114 | Drive Shaft | | 30 | 27 | 65 | 77 | 763 | |
| | 2014.07-2016.10 | 6MT/8AT | R | R | Saloon RWD B47 D20 A | | GDS85115 | Drive Shaft | | 30 | 27 | 65 | 77 | 817 | |
| | 2014.07-2016.10 | 6MT/8AT | R | L/R | Saloon RWD B47 D20 A | | GCI85063 | Inner Joint | | 30 | 28 | 65 | 77 | 89 | |
| | 2014.07-2016.10 | 6MT/8AT | R | L/R | Saloon RWD B47 D20 A | | GCI85064 | Inner Joint | | 27 | 28 | 43.95 | 80 | 102 | |
| 2.0 (147 kw) | 2010.06-2014.06 | 6MT | R | L | Saloon RWD N47 D20 C | | GDS85114 | Drive Shaft | | 30 | 27 | 65 | 77 | 763 | |
| | 2010.06-2014.06 | 6MT | R | R | Saloon RWD N47 D20 C | | GDS85115 | Drive Shaft | | 30 | 27 | 65 | 77 | 817 | |
| | 2010.06-2014.06 | 6MT | R | L/R | Saloon RWD N47 D20 C | | GCI85063 | Inner Joint | | 30 | 28 | 65 | 77 | 89 | |
| | 2010.06-2014.06 | 6MT | R | L/R | Saloon RWD N47 D20 C | | GCI85064 | Inner Joint | | 27 | 28 | 43.95 | 80 | 102 | |
| | 2010.06-2014.06 | 8AT | R | L | Saloon RWD N47 D20 C | | GDS85112 | Drive Shaft | | 30 | 27 | 64.9 | 77 | 758 | |
| | 2010.06-2014.06 | 8AT | R | R | Saloon RWD N47 D20 C | | GDS85113 | Drive Shaft | | 30 | 27 | 64.9 | 77 | 811 | |
| | 2010.06-2014.06 | 8AT | R | L/R | Saloon RWD N47 D20 C | | GCI85054 | Outer Joint | | 30 | 25 | 64.9 | 77 | 82 | |
| | 2010.06-2014.06 | 8AT | R | L/R | Saloon RWD N47 D20 C | | GCI85055 | Inner Joint | | 27 | 25 | 43.9 | 80 | 96 | |
| 2.0 (151 kw) | 2014.07-2016.10 | 8AT/6MT | R | L | Saloon RWD B47 D20 A | | GDS85114 | Drive Shaft | | 30 | 27 | 65 | 77 | 763 | |
| | 2014.07-2016.10 | 8AT/6MT | R | R | Saloon RWD B47 D20 A | | GDS85115 | Drive Shaft | | 30 | 27 | 65 | 77 | 817 | |
| | 2014.07-2016.10 | 8AT/6MT | R | L/R | Saloon RWD B47 D20 A | | GCI85063 | Inner Joint | | 30 | 28 | 65 | 77 | 89 | |
| | 2014.07-2016.10 | 8AT/6MT | R | L/R | Saloon RWD B47 D20 A | | GCI85064 | Inner Joint | | 27 | 28 | 43.95 | 80 | 102 | |

| | YEAR | TRANSM. | F/R | L/R | BODY STYLE & DRIVE TYPE & ENGINE | REMARKS | G-AP Ref. | PRODUCT | ABS | Technical Specifications A | B | C | H | L | P |
|---|---|---|---|---|---|---|---|---|---|---|---|---|---|---|---|
| **BMW** | | | | | | | | | | | | | | | |
| **520d** | | | | | | | | | | | | | | | |
| 2.0 (151 kw) | 2014.07-2016.10 | AT | R | L | Saloon RWD B47 D20 A | Date from:2015.01 | GDS85112 | Drive Shaft | | 30 | 27 | 64.9 | 77 | 758 | |
| | 2014.07-2016.10 | AT | R | R | Saloon RWD B47 D20 A | Date from:2015.01 | GDS85113 | Drive Shaft | | 30 | 27 | 64.9 | 77 | 811 | |
| | 2014.07-2016.10 | AT | R | L/R | Saloon RWD B47 D20 A | Date from:2015.01 | GCI85054 | Outer Joint | | 30 | 25 | 64.9 | 77 | 82 | |
| | 2014.07-2016.10 | AT | R | L/R | Saloon RWD B47 D20 A | Date from:2015.01 | GCI85055 | Inner Joint | | 27 | 25 | 43.9 | 80 | 96 | |
| 2.0 (155 kw) | 2013.10-2016.10 | 8AT/6MT | R | L | Saloon RWD B47 D20 A | | GDS85114 | Drive Shaft | | 30 | 27 | 65 | 77 | 763 | |
| | 2013.10-2016.10 | 8AT/6MT | R | R | Saloon RWD B47 D20 A | | GDS85115 | Drive Shaft | | 30 | 27 | 65 | 77 | 817 | |
| | 2013.10-2016.10 | 8AT/6MT | R | L/R | Saloon RWD B47 D20 A | | GCI85063 | Inner Joint | | 30 | 28 | 65 | 77 | 89 | |
| | 2013.10-2016.10 | 8AT/6MT | R | L/R | Saloon RWD B47 D20 A | | GCI85064 | Inner Joint | | 27 | 28 | 43.95 | 80 | 102 | |
| | 2013.10-2016.10 | AT | R | L | Saloon RWD B47 D20 A | Date from:2014.01 | GDS85112 | Drive Shaft | | 30 | 27 | 64.9 | 77 | 758 | |
| | 2013.10-2016.10 | AT | R | R | Saloon RWD B47 D20 A | Date from:2014.01 | GDS85113 | Drive Shaft | | 30 | 27 | 64.9 | 77 | 811 | |
| | 2013.10-2016.10 | AT | R | L/R | Saloon RWD B47 D20 A | Date from:2014.01 | GCI85054 | Outer Joint | | 30 | 25 | 64.9 | 77 | 82 | |
| | 2013.10-2016.10 | AT | R | L/R | Saloon RWD B47 D20 A | Date from:2014.01 | GCI85055 | Inner Joint | | 27 | 25 | 43.9 | 80 | 96 | |
| **520d Gran Turismo** | | | | | | | | | | | | | | | |
| 2.0 (100 kw) | 2013.07-2017.02 | 8AT | R | L | Hatchback RWD N47 D20 C | | GDS85101 | Drive Shaft | | 30 | 27 | 64.9 | 77 | 764 | |
| | 2013.07-2017.02 | 8AT | R | R | Hatchback RWD N47 D20 C | | GDS82729 | Drive Shaft | | 30 | 27 | 64.9 | 77 | 820 | |
| | 2013.07-2017.02 | 8AT | R | L/R | Hatchback RWD N47 D20 C | | GCI85054 | Outer Joint | | 30 | 25 | 64.9 | 77 | 82 | |
| | 2013.07-2017.02 | 8AT | R | L/R | Hatchback RWD N47 D20 C | | GCI85055 | Inner Joint | | 27 | 25 | 43.9 | 80 | 96 | |
| 2.0 (120 kw) | 2012.07-2013.06 | AT | R | L | Hatchback RWD N47 D20 C | | GDS85101 | Drive Shaft | | 30 | 27 | 64.9 | 77 | 764 | |
| | 2012.07-2013.06 | AT | R | R | Hatchback RWD N47 D20 C | | GDS82729 | Drive Shaft | | 30 | 27 | 64.9 | 77 | 820 | |
| | 2012.07-2013.06 | AT | R | L/R | Hatchback RWD N47 D20 C | | GCI85054 | Outer Joint | | 30 | 25 | 64.9 | 77 | 82 | |
| | 2012.07-2013.06 | AT | R | L/R | Hatchback RWD N47 D20 C | | GCI85055 | Inner Joint | | 27 | 25 | 43.9 | 80 | 96 | |
| 2.0 (135 kw) | 2011.04-2017.02 | 8AT | R | L | Hatchback RWD N47 D20 C | | GDS85101 | Drive Shaft | | 30 | 27 | 64.9 | 77 | 764 | |
| | 2011.04-2017.02 | 8AT | R | R | Hatchback RWD N47 D20 C | | GDS82729 | Drive Shaft | | 30 | 27 | 64.9 | 77 | 820 | |
| | 2011.04-2017.02 | 8AT | R | L/R | Hatchback RWD N47 D20 C | | GCI85054 | Outer Joint | | 30 | 25 | 64.9 | 77 | 82 | |
| | 2011.04-2017.02 | 8AT | R | L/R | Hatchback RWD N47 D20 C | | GCI85055 | Inner Joint | | 27 | 25 | 43.9 | 80 | 96 | |
| **520d Touring** | | | | | | | | | | | | | | | |
| 2.0 (100 kw) | 1999.09-2004.05 | 5MT | R | L/R | Estate RWD M47D204D1 | | GDS85021 | Drive Shaft | | 30 | | 59 | 73 | 615 | |
| | 1999.09-2004.05 | 5MT | R | L/R | Estate RWD M47D204D1 | | GCI99127 | Inner Joint | | | 25 | | | 26 | |
| | 2010.06-2014.06 | 6MT | R | L | Estate RWD N47 D20 C | | GDS85114 | Drive Shaft | | 30 | 27 | 65 | 77 | 763 | |
| | 2010.06-2014.06 | 6MT | R | R | Estate RWD N47 D20 C | | GDS85115 | Drive Shaft | | 30 | 27 | 65 | 77 | 817 | |
| | 2010.06-2014.06 | 6MT | R | L/R | Estate RWD N47 D20 C | | GCI85063 | Inner Joint | | 30 | 28 | 65 | 77 | 89 | |
| | 2010.06-2014.06 | 6MT | R | L/R | Estate RWD N47 D20 C | | GCI85064 | Inner Joint | | 27 | 28 | 43.95 | 80 | 102 | |
| | 2010.06-2014.06 | 8AT | R | L | Estate RWD N47 D20 C | | GDS85112 | Drive Shaft | | 30 | 27 | 64.9 | 77 | 758 | |
| | 2010.06-2014.06 | 8AT | R | R | Estate RWD N47 D20 C | | GDS85113 | Drive Shaft | | 30 | 27 | 64.9 | 77 | 811 | |
| | 2010.06-2014.06 | 8AT | R | L/R | Estate RWD N47 D20 C | | GCI85054 | Outer Joint | | 30 | 25 | 64.9 | 77 | 82 | |
| | 2010.06-2014.06 | 8AT | R | L/R | Estate RWD N47 D20 C | | GCI85055 | Inner Joint | | 27 | 25 | 43.9 | 80 | 96 | |
| 2.0 (110 kw) | 2005.09-2007.02 | 6AT/6MT | R | L/R | Estate RWD M47 D20 (204D4) | | GDS85082 | Drive Shaft | | 30 | | 58.7 | 73 | 656 | |
| | 2005.09-2007.02 | MT | R | L/R | Estate RWD M47 D20 (204D4) | | GCI61075 | Inner Joint | | | 28 | | | 26 | |
| 2.0 (120 kw) | 2005.04-2010.05 | 6AT/6MT | R | L/R | Estate RWD N47 D20 A;N47 D20 C;M47 D20 (204D4) | | GDS85082 | Drive Shaft | | 30 | | 58.7 | 73 | 656 | |
| | 2005.04-2010.05 | 6AT/6MT | R | L/R | Estate RWD N47 D20 A;N47 D20 C;M47 D20 (204D4) | | GCI35025 | Inner Joint | | | 25 | | | 26 | |
| | 2010.06-2017.02 | 6MT | R | L | Estate RWD N47 D20 C;B47 D20 A | | GDS85114 | Drive Shaft | | 30 | 27 | 65 | 77 | 763 | |
| | 2010.06-2017.02 | 6MT | R | R | Estate RWD N47 D20 C;B47 D20 A | | GDS85115 | Drive Shaft | | 30 | 27 | 65 | 77 | 817 | |
| | 2010.06-2017.02 | 6MT | R | L/R | Estate RWD N47 D20 C;B47 D20 A | | GCI85063 | Inner Joint | | 30 | 28 | 65 | 77 | 89 | |
| | 2010.06-2017.02 | 6MT | R | L/R | Estate RWD N47 D20 C;B47 D20 A | | GCI85064 | Inner Joint | | 27 | 28 | 43.95 | 80 | 102 | |
| | 2010.06-2017.02 | 8AT | R | L | Estate RWD N47 D20 C;B47 D20 A | For Engine code:N47D20C | GDS85112 | Drive Shaft | | 30 | 27 | 64.9 | 77 | 758 | |
| | 2010.06-2017.02 | 8AT | R | L | Estate RWD N47 D20 C;B47 D20 A | code:B47D20A | GDS85114 | Drive Shaft | | 30 | 27 | 65 | 77 | 763 | |
| | 2010.06-2017.02 | 8AT | R | R | Estate RWD N47 D20 C;B47 D20 A | code:N47D20C | GDS85113 | Drive Shaft | | 30 | 27 | 64.9 | 77 | 811 | |
| | 2010.06-2017.02 | 8AT | R | R | Estate RWD N47 D20 C;B47 D20 A | For Engine Code:B47D20A | GDS85115 | Drive Shaft | | 30 | 27 | 65 | 77 | 817 | |
| | 2010.06-2017.02 | 8AT | R | L/R | Estate RWD N47 D20 C;B47 D20 A | For Engine code:N47D20C | GCI85054 | Outer Joint | | 30 | 25 | 64.9 | 77 | 82 | |
| | 2010.06-2017.02 | 8AT | R | L/R | Estate RWD N47 D20 C;B47 D20 A | For Engine code:N47D20C | GCI85055 | Inner Joint | | 27 | 25 | 43.9 | 80 | 96 | |
| | 2010.06-2017.02 | 8AT | R | L/R | Estate RWD N47 D20 C;B47 D20 A | For Engine code:B47D20A | GCI85063 | Inner Joint | | 30 | 28 | 65 | 77 | 89 | |
| | 2010.06-2017.02 | 8AT | R | L/R | Estate RWD N47 D20 C;B47 D20 A | For Engine code:B47D20A | GCI85064 | Inner Joint | | 27 | 28 | 43.95 | 80 | 102 | |
| 2.0 (130 kw) | 2007.09-2010.05 | 6AT/6MT | R | L/R | Estate RWD N47 D20 A;N47 D20 C | | GDS85082 | Drive Shaft | | 30 | | 58.7 | 73 | 656 | |
| | 2007.09-2010.05 | 6AT/6MT | R | L/R | Estate RWD N47 D20 A;N47 D20 C | | GCI85036 | Outer Joint | | 30 | 25 | 58.7 | 73 | 58 | I |
| | 2007.09-2010.05 | 6AT/6MT | R | L/R | Estate RWD N47 D20 A;N47 D20 C | | GCI35025 | Inner Joint | | | 25 | | | 26 | |
| 2.0 (135 kw) | 2010.06-2014.06 | 6MT | R | L | Estate RWD N47 D20 C | | GDS85114 | Drive Shaft | | 30 | 27 | 65 | 77 | 763 | |
| | 2010.06-2014.06 | 6MT | R | R | Estate RWD N47 D20 C | | GDS85115 | Drive Shaft | | 30 | 27 | 65 | 77 | 817 | |
| | 2010.06-2014.06 | 6MT | R | L/R | Estate RWD N47 D20 C | | GCI85063 | Inner Joint | | 30 | 28 | 65 | 77 | 89 | |
| | 2010.06-2014.06 | 6MT | R | L/R | Estate RWD N47 D20 C | | GCI85064 | Inner Joint | | 27 | 28 | 43.95 | 80 | 102 | |
| | 2010.06-2014.06 | 8AT | R | L | Estate RWD N47 D20 C | | GDS85112 | Drive Shaft | | 30 | 27 | 64.9 | 77 | 758 | |
| | 2010.06-2014.06 | 8AT | R | R | Estate RWD N47 D20 C | | GDS85113 | Drive Shaft | | 30 | 27 | 64.9 | 77 | 811 | |
| | 2010.06-2014.06 | 8AT | R | L/R | Estate RWD N47 D20 C | | GCI85054 | Outer Joint | | 30 | 25 | 64.9 | 77 | 82 | |
| | 2010.06-2014.06 | 8AT | R | L/R | Estate RWD N47 D20 C | | GCI85055 | Inner Joint | | 27 | 25 | 43.9 | 80 | 96 | |
| 2.0 (140 kw) | 2014.07-2017.02 | 6MT/8AT | R | L | Estate RWD B47 D20 A | | GDS85114 | Drive Shaft | | 30 | 27 | 65 | 77 | 763 | |
| | 2014.07-2017.02 | 6MT/8AT | R | R | Estate RWD B47 D20 A | | GDS85115 | Drive Shaft | | 30 | 27 | 65 | 77 | 817 | |

| | YEAR | TRANSM. | F/R | L/R | BODY STYLE & DRIVE TYPE & ENGINE | REMARKS | G-AP Ref. | PRODUCT | ABS | Technical Specifications A | B | C | H | L | P |
|---|---|---|---|---|---|---|---|---|---|---|---|---|---|---|---|
| **BMW** | | | | | | | | | | | | | | | |
| **520d Touring** | | | | | | | | | | | | | | | |
| 2.0 (140 kw) | 2014.07-2017.02 | 6MT/8AT | R | L/R | Estate RWD B47 D20 A | | GCI85063 | Inner Joint | | 30 | 28 | 65 | 77 | 89 | |
| | 2014.07-2017.02 | 6MT/8AT | R | L/R | Estate RWD B47 D20 A | | GCI85064 | Inner Joint | | 27 | 28 | 43.95 | 80 | 102 | |
| 2.0 (147 kw) | 2010.06-2014.06 | 6MT | R | L | Estate RWD N47 D20 C | | GDS85114 | Drive Shaft | | 30 | 27 | 65 | 77 | 763 | |
| | 2010.06-2014.06 | 6MT | R | R | Estate RWD N47 D20 C | | GDS85115 | Drive Shaft | | 30 | 27 | 65 | 77 | 817 | |
| | 2010.06-2014.06 | 6MT | R | L/R | Estate RWD N47 D20 C | | GCI85063 | Inner Joint | | 30 | 28 | 65 | 77 | 89 | |
| | 2010.06-2014.06 | 6MT | R | L/R | Estate RWD N47 D20 C | | GCI85064 | Inner Joint | | 27 | 28 | 43.95 | 80 | 102 | |
| | 2010.06-2014.06 | 8AT | R | L | Estate RWD N47 D20 C | | GDS85112 | Drive Shaft | | 30 | 27 | 64.9 | 77 | 758 | |
| | 2010.06-2014.06 | 8AT | R | R | Estate RWD N47 D20 C | | GDS85113 | Drive Shaft | | 30 | 27 | 64.9 | 77 | 811 | |
| | 2010.06-2014.06 | 8AT | R | L/R | Estate RWD N47 D20 C | | GCI85054 | Outer Joint | | 30 | 25 | 64.9 | 77 | 82 | |
| | 2010.06-2014.06 | 8AT | R | L/R | Estate RWD N47 D20 C | | GCI85055 | Inner Joint | | 27 | 25 | 43.9 | 80 | 96 | |
| 2.0 (151 kw) | 2014.07-2017.02 | 8AT/6MT | R | L | Estate RWD B47 D20 A | | GDS85114 | Drive Shaft | | 30 | 27 | 65 | 77 | 763 | |
| | 2014.07-2017.02 | 8AT/6MT | R | R | Estate RWD B47 D20 A | | GDS85115 | Drive Shaft | | 30 | 27 | 65 | 77 | 817 | |
| | 2014.07-2017.02 | 8AT/6MT | R | L/R | Estate RWD B47 D20 A | | GCI85063 | Inner Joint | | 30 | 28 | 65 | 77 | 89 | |
| | 2014.07-2017.02 | 8AT/6MT | R | L/R | Estate RWD B47 D20 A | | GCI85064 | Inner Joint | | 27 | 28 | 43.95 | 80 | 102 | |
| | 2014.07-2017.02 | AT | R | L | Estate RWD B47 D20 A | Date from:2015.01 | GDS85112 | Drive Shaft | | 30 | 27 | 64.9 | 77 | 758 | |
| | 2014.07-2017.02 | AT | R | R | Estate RWD B47 D20 A | Date from:2015.01 | GDS85113 | Drive Shaft | | 30 | 27 | 64.9 | 77 | 811 | |
| | 2014.07-2017.02 | AT | R | L/R | Estate RWD B47 D20 A | Date from:2015.01 | GCI85054 | Outer Joint | | 30 | 25 | 64.9 | 77 | 82 | |
| | 2014.07-2017.02 | AT | R | L/R | Estate RWD B47 D20 A | Date from:2015.01 | GCI85055 | Inner Joint | | 27 | 25 | 43.9 | 80 | 96 | |
| 2.0 (155 kw) | 2014.07-2017.02 | 8AT/6MT | R | L | Estate RWD B47 D20 A | | GDS85114 | Drive Shaft | | 30 | 27 | 65 | 77 | 763 | |
| | 2014.07-2017.02 | 8AT/6MT | R | R | Estate RWD B47 D20 A | | GDS85115 | Drive Shaft | | 30 | 27 | 65 | 77 | 817 | |
| | 2014.07-2017.02 | 8AT/6MT | R | L/R | Estate RWD B47 D20 A | | GCI85063 | Inner Joint | | 30 | 28 | 65 | 77 | 89 | |
| | 2014.07-2017.02 | 8AT/6MT | R | L/R | Estate RWD B47 D20 A | | GCI85064 | Inner Joint | | 27 | 28 | 43.95 | 80 | 102 | |
| | 2014.07-2017.02 | AT | R | L | Estate RWD B47 D20 A | Date from:2015.01 | GDS85112 | Drive Shaft | | 30 | 27 | 64.9 | 77 | 758 | |
| | 2014.07-2017.02 | AT | R | R | Estate RWD B47 D20 A | Date from:2015.01 | GDS85113 | Drive Shaft | | 30 | 27 | 64.9 | 77 | 811 | |
| | 2014.07-2017.02 | AT | R | L/R | Estate RWD B47 D20 A | Date from:2015.01 | GCI85054 | Outer Joint | | 30 | 25 | 64.9 | 77 | 82 | |
| | 2014.07-2017.02 | AT | R | L/R | Estate RWD B47 D20 A | Date from:2015.01 | GCI85055 | Inner Joint | | 27 | 25 | 43.9 | 80 | 96 | |
| **520d xDrive** | | | | | | | | | | | | | | | |
| 2.0 (100 kw) | 2013.01-2014.06 | 8AT | F | L | Saloon 4WD N47 D20 C | | GDS81581 | Drive Shaft | | 37 | 27 | 65 | | 562 | |
| | 2013.01-2014.06 | 8AT | F | R | Saloon 4WD N47 D20 C | | GDS81681 | Drive Shaft | | 37 | 27 | 65 | | 862 | |
| | 2013.01-2014.06 | 8AT | F | L/R | Saloon 4WD N47 D20 C | | GCO81413 | Outer Joint | | 37 | 25 | 65 | | 73 | I |
| | 2013.01-2014.06 | 8AT | F | L | Saloon 4WD N47 D20 C | | GCI81055 | Inner Joint | | 27 | 24 | 43.95 | 60 | 123.5 | |
| | 2013.01-2014.06 | 8AT | F | R | Saloon 4WD N47 D20 C | | GCI81457 | Inner Joint | | 27 | 24 | 43.95 | 359 | 125 | |
| | 2013.01-2014.06 | 8AT | R | L | Saloon 4WD N47 D20 C | | GDS85112 | Drive Shaft | | 30 | 27 | 64.9 | 77 | 758 | |
| | 2013.01-2014.06 | 8AT | R | R | Saloon 4WD N47 D20 C | | GDS85113 | Drive Shaft | | 30 | 27 | 64.9 | 77 | 811 | |
| | 2013.01-2014.06 | 8AT | R | L/R | Saloon 4WD N47 D20 C | | GCI85054 | Outer Joint | | 30 | 25 | 64.9 | 77 | 82 | |
| | 2013.01-2014.06 | 8AT | R | L/R | Saloon 4WD N47 D20 C | | GCI85055 | Inner Joint | | 27 | 25 | 43.9 | 80 | 96 | |
| 2.0 (120 kw) | 2013.07-2016.10 | 8AT | F | L | Saloon 4WD N47 D20 C;B47 D20 A | | GDS81581 | Drive Shaft | | 37 | 27 | 65 | | 562 | |
| | 2013.07-2016.10 | 8AT | F | R | Saloon 4WD N47 D20 C;B47 D20 A | | GDS81681 | Drive Shaft | | 37 | 27 | 65 | | 862 | |
| | 2013.07-2016.10 | 8AT | F | L/R | Saloon 4WD N47 D20 C;B47 D20 A | | GCO81413 | Outer Joint | | 37 | 25 | 65 | | 73 | I |
| | 2013.07-2016.10 | 8AT | F | L | Saloon 4WD N47 D20 C;B47 D20 A | | GCI81055 | Inner Joint | | 27 | 24 | 43.95 | 60 | 123.5 | |
| | 2013.07-2016.10 | 8AT | F | R | Saloon 4WD N47 D20 C;B47 D20 A | | GCI81457 | Inner Joint | | 27 | 24 | 43.95 | 359 | 125 | |
| | 2013.07-2016.10 | 8AT | R | L | Saloon 4WD N47 D20 C;B47 D20 A | | GDS85112 | Drive Shaft | | 30 | 27 | 64.9 | 77 | 758 | |
| | 2013.07-2016.10 | 8AT | R | R | Saloon 4WD N47 D20 C;B47 D20 A | | GDS85113 | Drive Shaft | | 30 | 27 | 64.9 | 77 | 811 | |
| | 2013.07-2016.10 | 8AT | R | L/R | Saloon 4WD N47 D20 C;B47 D20 A | | GCI85055 | Inner Joint | | 27 | 25 | 43.9 | 80 | 96 | |
| | 2013.07-2016.10 | AT | R | R | Saloon 4WD N47 D20 C;B47 D20 A | | GCI85054 | Outer Joint | | 30 | 25 | 64.9 | 77 | 82 | |
| | 2016.09-2023.06 | 8AT | F | L | Saloon 4WD B47 D20 A;B47 D20 B | Date to:2019.03 | GDS84216 | Drive Shaft | | 37 | 27 | 65 | | 573 | |
| | 2016.09-2023.06 | 8AT | F | R | Saloon 4WD B47 D20 A;B47 D20 B | Date to:2019.03 | GDS84215 | Drive Shaft | | 37 | 27 | 65 | | 873 | |
| | 2016.09-2023.06 | 8AT | F | L/R | Saloon 4WD B47 D20 A;B47 D20 B | Date to:2019.03 | GCO82734 | Outer Joint | | 37 | 25 | 65 | | 73 | I |
| | 2016.09-2023.06 | 8AT | F | L | Saloon 4WD B47 D20 A;B47 D20 B | Date to:2019.03 | GCI81055 | Inner Joint | | 27 | 24 | 43.95 | 60 | 123.5 | |
| | 2016.09-2023.06 | 8AT | F | R | Saloon 4WD B47 D20 A;B47 D20 B | Date to:2019.03 | GCI81457 | Inner Joint | | 27 | 24 | 43.95 | 359 | 125 | |
| 2.0 (135 kw) | 2013.07-2014.06 | 8AT | F | L | Saloon 4WD N47 D20 C | | GDS81581 | Drive Shaft | | 37 | 27 | 65 | | 562 | |
| | 2013.07-2014.06 | 8AT | F | R | Saloon 4WD N47 D20 C | | GDS81681 | Drive Shaft | | 37 | 27 | 65 | | 862 | |
| | 2013.07-2014.06 | 8AT | F | L/R | Saloon 4WD N47 D20 C | | GCO81413 | Outer Joint | | 37 | 25 | 65 | | 73 | I |
| | 2013.07-2014.06 | 8AT | F | L | Saloon 4WD N47 D20 C | | GCI81055 | Inner Joint | | 27 | 24 | 43.95 | 60 | 123.5 | |
| | 2013.07-2014.06 | 8AT | F | R | Saloon 4WD N47 D20 C | | GCI81457 | Inner Joint | | 27 | 24 | 43.95 | 359 | 125 | |
| | 2013.07-2014.06 | 8AT | R | L | Saloon 4WD N47 D20 C | | GDS85112 | Drive Shaft | | 30 | 27 | 64.9 | 77 | 758 | |
| | 2013.07-2014.06 | 8AT | R | R | Saloon 4WD N47 D20 C | | GDS85113 | Drive Shaft | | 30 | 27 | 64.9 | 77 | 811 | |
| | 2013.07-2014.06 | 8AT | R | L/R | Saloon 4WD N47 D20 C | | GCI85055 | Inner Joint | | 27 | 25 | 43.9 | 80 | 96 | |
| | 2013.07-2014.06 | AT | R | R | Saloon 4WD N47 D20 C | | GCI85054 | Outer Joint | | 30 | 25 | 64.9 | 77 | 82 | |
| 2.0 (140 kw) | 2014.07-2016.10 | 8AT | F | L | Saloon 4WD B47 D20 A | | GDS81581 | Drive Shaft | | 37 | 27 | 65 | | 562 | |
| | 2014.07-2016.10 | 8AT | F | R | Saloon 4WD B47 D20 A | | GDS81681 | Drive Shaft | | 37 | 27 | 65 | | 862 | |
| | 2014.07-2016.10 | 8AT | F | L/R | Saloon 4WD B47 D20 A | | GCO81413 | Outer Joint | | 37 | 25 | 65 | | 73 | I |
| | 2014.07-2016.10 | 8AT | F | L | Saloon 4WD B47 D20 A | | GCI81055 | Inner Joint | | 27 | 24 | 43.95 | 60 | 123.5 | |
| | 2014.07-2016.10 | 8AT | F | R | Saloon 4WD B47 D20 A | | GCI81457 | Inner Joint | | 27 | 24 | 43.95 | 359 | 125 | |
| | 2014.07-2016.10 | 8AT | R | L | Saloon 4WD B47 D20 A | | GDS85112 | Drive Shaft | | 30 | 27 | 64.9 | 77 | 758 | |

| | YEAR | TRANSM. | F/R | L/R | BODY STYLE & DRIVE TYPE & ENGINE | REMARKS | G-AP Ref. | PRODUCT | ABS | Technical Specifications A | B | C | H | L | P |
|---|---|---|---|---|---|---|---|---|---|---|---|---|---|---|---|
| **BMW** | | | | | | | | | | | | | | | |
| **520d xDrive** | | | | | | | | | | | | | | | |
| 2.0 (140 kw) | 2014.07-2016.10 | 8AT | R | R | Saloon 4WD B47 D20 A | | GDS85113 | Drive Shaft | | 30 | 27 | 64.9 | 77 | 811 | |
| | 2014.07-2016.10 | 8AT | R | L/R | Saloon 4WD B47 D20 A | | GCI85055 | Inner Joint | | 27 | 25 | 43.9 | 80 | 96 | |
| | 2014.07-2016.10 | AT | R | R | Saloon 4WD B47 D20 A | | GCI85054 | Outer Joint | | 30 | 25 | 64.9 | 77 | 82 | |
| | 2016.09-2023.06 | 8AT | F | L | Saloon 4WD B47 D20 A;B47 D20 B | Date to:2019.03 | GDS84216 | Drive Shaft | | 37 | 27 | 65 | | 573 | |
| | 2016.09-2023.06 | 8AT | F | R | Saloon 4WD B47 D20 A;B47 D20 B | Date to:2019.03 | GDS84215 | Drive Shaft | | 37 | 27 | 65 | | 873 | |
| | 2016.09-2023.06 | 8AT | F | L/R | Saloon 4WD B47 D20 A;B47 D20 B | Date to:2019.03 | GCO82734 | Outer Joint | | 37 | 25 | 65 | | 73 | I |
| | 2016.09-2023.06 | 8AT | F | L | Saloon 4WD B47 D20 A;B47 D20 B | Date to:2019.03 | GCI81055 | Inner Joint | | 27 | 24 | 43.95 | 60 | 123.5 | |
| | 2016.09-2023.06 | 8AT | F | R | Saloon 4WD B47 D20 A;B47 D20 B | Date to:2019.03 | GCI81457 | Inner Joint | | 27 | 24 | 43.95 | 359 | 125 | |
| | 2019.11-2023.06 | 8AT | F | L | Saloon 4WD B47 D20 B;JA1 | | GDS84216 | Drive Shaft | | 37 | 27 | 65 | | 573 | |
| | 2019.11-2023.06 | 8AT | F | R | Saloon 4WD B47 D20 B;JA1 | | GDS84215 | Drive Shaft | | 37 | 27 | 65 | | 873 | |
| | 2019.11-2023.06 | 8AT | F | L/R | Saloon 4WD B47 D20 B;JA1 | Date from:2020.07 | GCO83166 | Outer Joint | | 37 | 26 | 65 | | 73 | I |
| | 2019.11-2023.06 | 8AT | F | L | Saloon 4WD B47 D20 B;JA1 | Date from:2020.07 | GCI81055 | Inner Joint | | 27 | 24 | 43.95 | 60 | 123.5 | |
| | 2019.11-2023.06 | 8AT | F | R | Saloon 4WD B47 D20 B;JA1 | Date from:2020.07 | GCI81457 | Inner Joint | | 27 | 24 | 43.95 | 359 | 125 | |
| 2.0 (147 kw) | 2013.01-2014.06 | 8AT | F | L | Saloon 4WD N47 D20 C | | GDS81581 | Drive Shaft | | 37 | 27 | 65 | | 562 | |
| | 2013.01-2014.06 | 8AT | F | R | Saloon 4WD N47 D20 C | | GDS81681 | Drive Shaft | | 37 | 27 | 65 | | 862 | |
| | 2013.01-2014.06 | 8AT | F | L/R | Saloon 4WD N47 D20 C | | GCO81413 | Outer Joint | | 37 | 25 | 65 | | 73 | I |
| | 2013.01-2014.06 | 8AT | F | L | Saloon 4WD N47 D20 C | | GCI81055 | Inner Joint | | 27 | 24 | 43.95 | 60 | 123.5 | |
| | 2013.01-2014.06 | 8AT | F | R | Saloon 4WD N47 D20 C | | GCI81457 | Inner Joint | | 27 | 24 | 43.95 | 359 | 125 | |
| | 2013.01-2014.06 | 8AT | R | L | Saloon 4WD N47 D20 C | | GDS85112 | Drive Shaft | | 30 | 27 | 64.9 | 77 | 758 | |
| | 2013.01-2014.06 | 8AT | R | R | Saloon 4WD N47 D20 C | | GDS85113 | Drive Shaft | | 30 | 27 | 64.9 | 77 | 811 | |
| | 2013.01-2014.06 | 8AT | R | L/R | Saloon 4WD N47 D20 C | | GCI85054 | Outer Joint | | 30 | 25 | 64.9 | 77 | 82 | |
| | 2013.01-2014.06 | 8AT | R | L/R | Saloon 4WD N47 D20 C | | GCI85055 | Inner Joint | | 27 | 25 | 43.9 | 80 | 96 | |
| 2.0 (151 kw) | 2014.07-2016.10 | 8AT | F | L | Saloon 4WD B47 D20 A | | GDS81581 | Drive Shaft | | 37 | 27 | 65 | | 562 | |
| | 2014.07-2016.10 | 8AT | F | R | Saloon 4WD B47 D20 A | | GDS81681 | Drive Shaft | | 37 | 27 | 65 | | 862 | |
| | 2014.07-2016.10 | 8AT | F | L/R | Saloon 4WD B47 D20 A | | GCO81413 | Outer Joint | | 37 | 25 | 65 | | 73 | I |
| | 2014.07-2016.10 | 8AT | F | L | Saloon 4WD B47 D20 A | | GCI81055 | Inner Joint | | 27 | 24 | 43.95 | 60 | 123.5 | |
| | 2014.07-2016.10 | 8AT | F | R | Saloon 4WD B47 D20 A | | GCI81457 | Inner Joint | | 27 | 24 | 43.95 | 359 | 125 | |
| | 2014.07-2016.10 | 8AT | R | L | Saloon 4WD B47 D20 A | | GDS85112 | Drive Shaft | | 30 | 27 | 64.9 | 77 | 758 | |
| | 2014.07-2016.10 | 8AT | R | R | Saloon 4WD B47 D20 A | | GDS85113 | Drive Shaft | | 30 | 27 | 64.9 | 77 | 811 | |
| | 2014.07-2016.10 | 8AT | R | L/R | Saloon 4WD B47 D20 A | | GCI85054 | Outer Joint | | 30 | 25 | 64.9 | 77 | 82 | |
| | 2014.07-2016.10 | 8AT | R | L/R | Saloon 4WD B47 D20 A | | GCI85055 | Inner Joint | | 27 | 25 | 43.9 | 80 | 96 | |
| 2.0 (155 kw) | 2013.10-2016.10 | 8AT | F | L | Saloon 4WD B47 D20 A | | GDS81581 | Drive Shaft | | 37 | 27 | 65 | | 562 | |
| | 2013.10-2016.10 | 8AT | F | R | Saloon 4WD B47 D20 A | | GDS81681 | Drive Shaft | | 37 | 27 | 65 | | 862 | |
| | 2013.10-2016.10 | 8AT | F | L/R | Saloon 4WD B47 D20 A | | GCO81413 | Outer Joint | | 37 | 25 | 65 | | 73 | I |
| | 2013.10-2016.10 | 8AT | F | L | Saloon 4WD B47 D20 A | | GCI81055 | Inner Joint | | 27 | 24 | 43.95 | 60 | 123.5 | |
| | 2013.10-2016.10 | 8AT | F | R | Saloon 4WD B47 D20 A | | GCI81457 | Inner Joint | | 27 | 24 | 43.95 | 359 | 125 | |
| | 2013.10-2016.10 | 8AT | R | L | Saloon 4WD B47 D20 A | | GDS85112 | Drive Shaft | | 30 | 27 | 64.9 | 77 | 758 | |
| | 2013.10-2016.10 | 8AT | R | R | Saloon 4WD B47 D20 A | | GDS85113 | Drive Shaft | | 30 | 27 | 64.9 | 77 | 811 | |
| | 2013.10-2016.10 | 8AT | R | L/R | Saloon 4WD B47 D20 A | | GCI85054 | Outer Joint | | 30 | 25 | 64.9 | 77 | 82 | |
| | 2013.10-2016.10 | 8AT | R | L/R | Saloon 4WD B47 D20 A | | GCI85055 | Inner Joint | | 27 | 25 | 43.9 | 80 | 96 | |
| **520d xDrive Touring** | | | | | | | | | | | | | | | |
| 2.0 (100 kw) | 2013.07-2014.06 | 8AT | F | L | Estate 4WD N47 D20 C | | GDS81581 | Drive Shaft | | 37 | 27 | 65 | | 562 | |
| | 2013.07-2014.06 | 8AT | F | R | Estate 4WD N47 D20 C | | GDS81681 | Drive Shaft | | 37 | 27 | 65 | | 862 | |
| | 2013.07-2014.06 | 8AT | F | L/R | Estate 4WD N47 D20 C | | GCO81413 | Outer Joint | | 37 | 25 | 65 | | 73 | I |
| | 2013.07-2014.06 | 8AT | F | L | Estate 4WD N47 D20 C | | GCI81055 | Inner Joint | | 27 | 24 | 43.95 | 60 | 123.5 | |
| | 2013.07-2014.06 | 8AT | F | R | Estate 4WD N47 D20 C | | GCI81457 | Inner Joint | | 27 | 24 | 43.95 | 359 | 125 | |
| | 2013.07-2014.06 | 8AT | R | L | Estate 4WD N47 D20 C | | GDS85112 | Drive Shaft | | 30 | 27 | 64.9 | 77 | 758 | |
| | 2013.07-2014.06 | 8AT | R | R | Estate 4WD N47 D20 C | | GDS85113 | Drive Shaft | | 30 | 27 | 64.9 | 77 | 811 | |
| | 2013.07-2014.06 | 8AT | R | L/R | Estate 4WD N47 D20 C | | GCI85054 | Outer Joint | | 30 | 25 | 64.9 | 77 | 82 | |
| | 2013.07-2014.06 | 8AT | R | L/R | Estate 4WD N47 D20 C | | GCI85055 | Inner Joint | | 27 | 25 | 43.9 | 80 | 96 | |
| 2.0 (120 kw) | 2013.07-2017.02 | 8AT | F | L | Estate 4WD N47 D20 C;B47 D20 A | | GDS81581 | Drive Shaft | | 37 | 27 | 65 | | 562 | |
| | 2013.07-2017.02 | 8AT | F | R | Estate 4WD N47 D20 C;B47 D20 A | | GDS81681 | Drive Shaft | | 37 | 27 | 65 | | 862 | |
| | 2013.07-2017.02 | 8AT | F | L/R | Estate 4WD N47 D20 C;B47 D20 A | | GCO81413 | Outer Joint | | 37 | 25 | 65 | | 73 | I |
| | 2013.07-2017.02 | 8AT | F | L | Estate 4WD N47 D20 C;B47 D20 A | | GCI81055 | Inner Joint | | 27 | 24 | 43.95 | 60 | 123.5 | |
| | 2013.07-2017.02 | 8AT | F | R | Estate 4WD N47 D20 C;B47 D20 A | | GCI81457 | Inner Joint | | 27 | 24 | 43.95 | 359 | 125 | |
| | 2013.07-2017.02 | 8AT | R | L | Estate 4WD N47 D20 C;B47 D20 A | | GDS85112 | Drive Shaft | | 30 | 27 | 64.9 | 77 | 758 | |
| | 2013.07-2017.02 | 8AT | R | R | Estate 4WD N47 D20 C;B47 D20 A | | GDS85113 | Drive Shaft | | 30 | 27 | 64.9 | 77 | 811 | |
| | 2013.07-2017.02 | 8AT | R | L/R | Estate 4WD N47 D20 C;B47 D20 A | | GCI85054 | Outer Joint | | 30 | 25 | 64.9 | 77 | 82 | |
| | 2013.07-2017.02 | 8AT | R | L/R | Estate 4WD N47 D20 C;B47 D20 A | | GCI85055 | Inner Joint | | 27 | 25 | 43.9 | 80 | 96 | |
| | 2017.07- | 8AT | F | L | Estate 4WD B47 D20 A;B47 D20 B | Date to:2019.03 | GDS84216 | Drive Shaft | | 37 | 27 | 65 | | 573 | |
| | 2017.07- | 8AT | F | R | Estate 4WD B47 D20 A;B47 D20 B | Date to:2019.03 | GDS84215 | Drive Shaft | | 37 | 27 | 65 | | 873 | |
| | 2017.07- | 8AT | F | L/R | Estate 4WD B47 D20 A;B47 D20 B | Date to:2019.03 | GCO82734 | Outer Joint | | 37 | 25 | 65 | | 73 | I |
| | 2017.07- | 8AT | F | L/R | Estate 4WD B47 D20 A;B47 D20 B | Date from:2019.04,Trim Level:2 | GCO83166 | Outer Joint | | 37 | 26 | 65 | | 73 | I |
| | 2017.07- | 8AT | F | L | Estate 4WD B47 D20 A;B47 D20 B | | GCI81055 | Inner Joint | | 27 | 24 | 43.95 | 60 | 123.5 | |
| | 2017.07- | 8AT | F | R | Estate 4WD B47 D20 A;B47 D20 B | Date to:2019.03 | GCI81457 | Inner Joint | | 27 | 24 | 43.95 | 359 | 125 | |

| | YEAR | TRANSM. | F/R | L/R | BODY STYLE & DRIVE TYPE & ENGINE | REMARKS | G-AP Ref. | PRODUCT | ABS | Technical Specifications A | B | C | H | L | P |
|---|---|---|---|---|---|---|---|---|---|---|---|---|---|---|---|
| **BMW** | | | | | | | | | | | | | | | |
| **520d xDrive Touring** | | | | | | | | | | | | | | | |
| 2.0 (135 kw) | 2013.07-2014.06 | 8AT | F | L | Estate 4WD N47 D20 C | | GDS81581 | Drive Shaft | | 37 | 27 | 65 | | 562 | |
| | 2013.07-2014.06 | 8AT | F | R | Estate 4WD N47 D20 C | | GDS81681 | Drive Shaft | | 37 | 27 | 65 | | 862 | |
| | 2013.07-2014.06 | 8AT | F | L/R | Estate 4WD N47 D20 C | | GCO81413 | Outer Joint | | 37 | 25 | 65 | | 73 | I |
| | 2013.07-2014.06 | 8AT | F | L | Estate 4WD N47 D20 C | | GCI81055 | Inner Joint | | 27 | 24 | 43.95 | 60 | 123.5 | |
| | 2013.07-2014.06 | 8AT | F | R | Estate 4WD N47 D20 C | | GCI81457 | Inner Joint | | 27 | 24 | 43.95 | 359 | 125 | |
| | 2013.07-2014.06 | 8AT | R | L | Estate 4WD N47 D20 C | | GDS85112 | Drive Shaft | | 30 | 27 | 64.9 | 77 | 758 | |
| | 2013.07-2014.06 | 8AT | R | R | Estate 4WD N47 D20 C | | GDS85113 | Drive Shaft | | 30 | 27 | 64.9 | 77 | 811 | |
| | 2013.07-2014.06 | 8AT | R | L/R | Estate 4WD N47 D20 C | | GCI85055 | Inner Joint | | 27 | 25 | 43.9 | 80 | 96 | |
| | 2013.07-2014.06 | AT | R | R | Estate 4WD N47 D20 C | | GCI85054 | Outer Joint | | 30 | 25 | 64.9 | 77 | 82 | |
| 2.0 (140 kw) | 2014.07-2017.02 | 8AT | F | L | Estate 4WD B47 D20 A | | GDS81581 | Drive Shaft | | 37 | 27 | 65 | | 562 | |
| | 2014.07-2017.02 | 8AT | F | R | Estate 4WD B47 D20 A | | GDS81681 | Drive Shaft | | 37 | 27 | 65 | | 862 | |
| | 2014.07-2017.02 | 8AT | F | L/R | Estate 4WD B47 D20 A | | GCO81413 | Outer Joint | | 37 | 25 | 65 | | 73 | I |
| | 2014.07-2017.02 | 8AT | F | L | Estate 4WD B47 D20 A | | GCI81055 | Inner Joint | | 27 | 24 | 43.95 | 60 | 123.5 | |
| | 2014.07-2017.02 | 8AT | F | R | Estate 4WD B47 D20 A | | GCI81457 | Inner Joint | | 27 | 24 | 43.95 | 359 | 125 | |
| | 2014.07-2017.02 | 8AT | R | L | Estate 4WD B47 D20 A | | GDS85112 | Drive Shaft | | 30 | 27 | 64.9 | 77 | 758 | |
| | 2014.07-2017.02 | 8AT | R | R | Estate 4WD B47 D20 A | | GDS85113 | Drive Shaft | | 30 | 27 | 64.9 | 77 | 811 | |
| | 2014.07-2017.02 | 8AT | R | L/R | Estate 4WD B47 D20 A | | GCI85054 | Outer Joint | | 30 | 25 | 64.9 | 77 | 82 | |
| | 2014.07-2017.02 | 8AT | R | L/R | Estate 4WD B47 D20 A | | GCI85055 | Inner Joint | | 27 | 25 | 43.9 | 80 | 96 | |
| | 2017.07- | 8AT | F | L | Estate 4WD B47 D20 A;B47 D20 B | Date to:2019.03 | GDS84216 | Drive Shaft | | 37 | 27 | 65 | | 573 | |
| | 2017.07- | 8AT | F | R | Estate 4WD B47 D20 A;B47 D20 B | Date to:2019.03 | GDS84215 | Drive Shaft | | 37 | 27 | 65 | | 873 | |
| | 2017.07- | 8AT | F | L/R | Estate 4WD B47 D20 A;B47 D20 B | Date to:2019.03 | GCO82734 | Outer Joint | | 37 | 25 | 65 | | 73 | I |
| | 2017.07- | 8AT | F | L/R | Estate 4WD B47 D20 A;B47 D20 B | Date from:2019.04,Trim Level:2 | GCO83166 | Outer Joint | | 37 | 26 | 65 | | 73 | I |
| | 2017.07- | 8AT | F | L | Estate 4WD B47 D20 A;B47 D20 B | | GCI81055 | Inner Joint | | 27 | 24 | 43.95 | 60 | 123.5 | |
| | 2017.07- | 8AT | F | R | Estate 4WD B47 D20 A;B47 D20 B | Date to:2019.03 | GCI81457 | Inner Joint | | 27 | 24 | 43.95 | 359 | 125 | |
| | 2017.07-2019.11 | 8AT | F | L | Estate Van 4WD B47 D20 A;B47 D20 B | Date to:2019.03 | GDS84216 | Drive Shaft | | 37 | 27 | 65 | | 573 | |
| | 2017.07-2019.11 | 8AT | F | R | Estate Van 4WD B47 D20 A;B47 D20 B | Date to:2019.03 | GDS84215 | Drive Shaft | | 37 | 27 | 65 | | 873 | |
| | 2017.07-2019.11 | 8AT | F | L/R | Estate Van 4WD B47 D20 A;B47 D20 B | Date to:2019.03 | GCO82734 | Outer Joint | | 37 | 25 | 65 | | 73 | I |
| | 2017.07-2019.11 | 8AT | F | L | Estate Van 4WD B47 D20 A;B47 D20 B | | GCI81055 | Inner Joint | | 27 | 24 | 43.95 | 60 | 123.5 | |
| | 2017.07-2019.11 | 8AT | F | R | Estate Van 4WD B47 D20 A;B47 D20 B | Date to:2019.03;Date from:2020.07 | GCI81457 | Inner Joint | | 27 | 24 | 43.95 | 359 | 125 | |
| | 2019.11- | 8AT | F | L | Estate 4WD B47 D20 B;JA1 | | GDS84216 | Drive Shaft | | 37 | 27 | 65 | | 573 | |
| | 2019.11- | 8AT | F | R | Estate 4WD B47 D20 B;JA1 | | GDS84215 | Drive Shaft | | 37 | 27 | 65 | | 873 | |
| | 2019.11- | 8AT | F | L/R | Estate 4WD B47 D20 B;JA1 | Date from:2020.07 | GCO83166 | Outer Joint | | 37 | 26 | 65 | | 73 | I |
| | 2019.11- | 8AT | F | L | Estate 4WD B47 D20 B;JA1 | Date from:2020.07 | GCI81055 | Inner Joint | | 27 | 24 | 43.95 | 60 | 123.5 | |
| | 2019.11- | 8AT | F | R | Estate 4WD B47 D20 B;JA1 | Date from:2020.07 | GCI81457 | Inner Joint | | 27 | 24 | 43.95 | 359 | 125 | |
| 2.0 (147 kw) | 2013.07-2014.06 | 8AT | F | L | Estate 4WD N47 D20 C | | GDS81581 | Drive Shaft | | 37 | 27 | 65 | | 562 | |
| | 2013.07-2014.06 | 8AT | F | R | Estate 4WD N47 D20 C | | GDS81681 | Drive Shaft | | 37 | 27 | 65 | | 862 | |
| | 2013.07-2014.06 | 8AT | F | L/R | Estate 4WD N47 D20 C | | GCO81413 | Outer Joint | | 37 | 25 | 65 | | 73 | I |
| | 2013.07-2014.06 | 8AT | F | L | Estate 4WD N47 D20 C | | GCI81055 | Inner Joint | | 27 | 24 | 43.95 | 60 | 123.5 | |
| | 2013.07-2014.06 | 8AT | F | R | Estate 4WD N47 D20 C | | GCI81457 | Inner Joint | | 27 | 24 | 43.95 | 359 | 125 | |
| | 2013.07-2014.06 | 8AT | R | L | Estate 4WD N47 D20 C | | GDS85112 | Drive Shaft | | 30 | 27 | 64.9 | 77 | 758 | |
| | 2013.07-2014.06 | 8AT | R | R | Estate 4WD N47 D20 C | | GDS85113 | Drive Shaft | | 30 | 27 | 64.9 | 77 | 811 | |
| | 2013.07-2014.06 | 8AT | R | L/R | Estate 4WD N47 D20 C | | GCI85054 | Outer Joint | | 30 | 25 | 64.9 | 77 | 82 | |
| | 2013.07-2014.06 | 8AT | R | L/R | Estate 4WD N47 D20 C | | GCI85055 | Inner Joint | | 27 | 25 | 43.9 | 80 | 96 | |
| 2.0 (151 kw) | 2014.07-2017.02 | 8AT | F | L | Estate 4WD B47 D20 A | | GDS81581 | Drive Shaft | | 37 | 27 | 65 | | 562 | |
| | 2014.07-2017.02 | 8AT | F | R | Estate 4WD B47 D20 A | | GDS81681 | Drive Shaft | | 37 | 27 | 65 | | 862 | |
| | 2014.07-2017.02 | 8AT | F | L/R | Estate 4WD B47 D20 A | | GCO81413 | Outer Joint | | 37 | 25 | 65 | | 73 | I |
| | 2014.07-2017.02 | 8AT | F | L | Estate 4WD B47 D20 A | | GCI81055 | Inner Joint | | 27 | 24 | 43.95 | 60 | 123.5 | |
| | 2014.07-2017.02 | 8AT | F | R | Estate 4WD B47 D20 A | | GCI81457 | Inner Joint | | 27 | 24 | 43.95 | 359 | 125 | |
| | 2014.07-2017.02 | 8AT | R | L | Estate 4WD B47 D20 A | | GDS85112 | Drive Shaft | | 30 | 27 | 64.9 | 77 | 758 | |
| | 2014.07-2017.02 | 8AT | R | R | Estate 4WD B47 D20 A | | GDS85113 | Drive Shaft | | 30 | 27 | 64.9 | 77 | 811 | |
| | 2014.07-2017.02 | 8AT | R | L/R | Estate 4WD B47 D20 A | | GCI85054 | Outer Joint | | 30 | 25 | 64.9 | 77 | 82 | |
| | 2014.07-2017.02 | 8AT | R | L/R | Estate 4WD B47 D20 A | | GCI85055 | Inner Joint | | 27 | 25 | 43.9 | 80 | 96 | |
| 2.0 (155 kw) | 2014.07-2017.02 | 8AT | F | L | Estate 4WD B47 D20 A | | GDS81581 | Drive Shaft | | 37 | 27 | 65 | | 562 | |
| | 2014.07-2017.02 | 8AT | F | R | Estate 4WD B47 D20 A | | GDS81681 | Drive Shaft | | 37 | 27 | 65 | | 862 | |
| | 2014.07-2017.02 | 8AT | F | L/R | Estate 4WD B47 D20 A | | GCO81413 | Outer Joint | | 37 | 25 | 65 | | 73 | I |
| | 2014.07-2017.02 | 8AT | F | L | Estate 4WD B47 D20 A | | GCI81055 | Inner Joint | | 27 | 24 | 43.95 | 60 | 123.5 | |
| | 2014.07-2017.02 | 8AT | F | R | Estate 4WD B47 D20 A | | GCI81457 | Inner Joint | | 27 | 24 | 43.95 | 359 | 125 | |
| | 2014.07-2017.02 | 8AT | R | L | Estate 4WD B47 D20 A | | GDS85112 | Drive Shaft | | 30 | 27 | 64.9 | 77 | 758 | |
| | 2014.07-2017.02 | 8AT | R | R | Estate 4WD B47 D20 A | | GDS85113 | Drive Shaft | | 30 | 27 | 64.9 | 77 | 811 | |
| | 2014.07-2017.02 | 8AT | R | L/R | Estate 4WD B47 D20 A | | GCI85054 | Outer Joint | | 30 | 25 | 64.9 | 77 | 82 | |
| | 2014.07-2017.02 | 8AT | R | L/R | Estate 4WD B47 D20 A | | GCI85055 | Inner Joint | | 27 | 25 | 43.9 | 80 | 96 | |
| **520i** | | | | | | | | | | | | | | | |
| 1.6 (125 kw) | 2013.07-2016.10 | 8AT | R | L | Saloon RWD N20 B16 A | | GDS85112 | Drive Shaft | | 30 | 27 | 64.9 | 77 | 758 | |
| | 2013.07-2016.10 | 8AT | R | R | Saloon RWD N20 B16 A | | GDS85113 | Drive Shaft | | 30 | 27 | 64.9 | 77 | 811 | |
| | 2013.07-2016.10 | 8AT | R | L/R | Saloon RWD N20 B16 A | | GCI85054 | Outer Joint | | 30 | 25 | 64.9 | 77 | 82 | |

| | YEAR | TRANSM. | F/R | L/R | BODY STYLE & DRIVE TYPE & ENGINE | REMARKS | G-AP Ref. | PRODUCT | ABS | Technical Specifications A | B | C | H | L | P |
|---|---|---|---|---|---|---|---|---|---|---|---|---|---|---|---|
| **BMW** | | | | | | | | | | | | | | | |
| **520i** | | | | | | | | | | | | | | | |
| 1.6 (125 kw) | 2013.07-2016.10 | 8AT | R | L/R | Saloon RWD N20 B16 A | | GCI85055 | Inner Joint | | 27 | 25 | 43.9 | 80 | 96 | |
| 2.0 (100 kw) | 1996.01-2003.06 | SAT/5MT | R | L/R | Saloon RWD M52B206S3/M52B206S4 | | GDS81111 | Drive Shaft | | 30 | | 59 | 73 | 629 | |
| | 1996.01-2003.06 | SAT/5MT | R | L/R | Saloon RWD M52B206S3/M52B206S4 | | GCI85089 | Inner Joint | | | 24 | | | 24 | |
| 2.0 (110 kw) | 1996.01-2003.06 | SAT/5MT | R | L/R | Saloon RWD M52B206S3/M52B206S4 | | GDS81111 | Drive Shaft | | 30 | | 59 | 73 | 629 | |
| | 1996.01-2003.06 | SAT/5MT | R | L/R | Saloon RWD M52B206S3/M52B206S4 | | GCI85089 | Inner Joint | | | 24 | | | 24 | |
| 2.0 (115 kw) | 2007.09-2010.02 | 6AT/6MT | R | L/R | Saloon RWD N46 B20 B | | GDS85082 | Drive Shaft | | 30 | | 58.7 | 73 | 656 | |
| | 2007.09-2010.02 | AT/MT | R | L/R | Saloon RWD N46 B20 B | | GCI35025 | Inner Joint | | | 25 | | | 26 | |
| 2.0 (120 kw) | 2006.12-2010.03 | 6AT/6MT | R | L/R | Saloon RWD N43 B20 A | | GDS85082 | Drive Shaft | | 30 | | 58.7 | 73 | 656 | |
| | 2006.12-2010.03 | AT/MT | R | L/R | Saloon RWD N43 B20 A | | GCI35025 | Inner Joint | | | 25 | | | 26 | |
| | 2011.09-2016.10 | 6MT | R | L | Saloon RWD N20 B20 A;N20 B20 B | | GDS85114 | Drive Shaft | | 30 | 27 | 65 | 77 | 763 | |
| | 2011.09-2016.10 | 6MT | R | R | Saloon RWD N20 B20 A;N20 B20 B | | GDS85115 | Drive Shaft | | 30 | 27 | 65 | 77 | 817 | |
| | 2011.09-2016.10 | 6MT | R | L/R | Saloon RWD N20 B20 A;N20 B20 B | | GCI85063 | Inner Joint | | 30 | 28 | 65 | 77 | 89 | |
| | 2011.09-2016.10 | 6MT | R | L/R | Saloon RWD N20 B20 A;N20 B20 B | | GCI85064 | Inner Joint | | 27 | 28 | 43.95 | 80 | 102 | |
| | 2011.09-2016.10 | 8AT | R | L | Saloon RWD N20 B20 A;N20 B20 B | | GDS85112 | Drive Shaft | | 30 | 27 | 64.9 | 77 | 758 | |
| | 2011.09-2016.10 | 8AT | R | R | Saloon RWD N20 B20 A;N20 B20 B | | GDS85113 | Drive Shaft | | 30 | 27 | 64.9 | 77 | 811 | |
| | 2011.09-2016.10 | 8AT | R | L/R | Saloon RWD N20 B20 A;N20 B20 B | | GCI85054 | Outer Joint | | 30 | 25 | 64.9 | 77 | 82 | |
| | 2011.09-2016.10 | 8AT | R | L/R | Saloon RWD N20 B20 A;N20 B20 B | | GCI85055 | Inner Joint | | 27 | 25 | 43.9 | 80 | 96 | |
| 2.0 (125 kw) | 2007.09-2009.12 | 6AT/6MT | R | L/R | Saloon RWD N43 B20 A | | GDS85082 | Drive Shaft | | 30 | | 58.7 | 73 | 656 | |
| | 2007.09-2009.12 | AT/MT | R | L/R | Saloon RWD N43 B20 A | | GCI35025 | Inner Joint | | | 25 | | | 26 | |
| 2.0 (135 kw) | 2011.09-2016.10 | 6MT | R | L | Saloon RWD N20 B20 A;N20 B20 B | | GDS85114 | Drive Shaft | | 30 | 27 | 65 | 77 | 763 | |
| | 2011.09-2016.10 | 6MT | R | R | Saloon RWD N20 B20 A;N20 B20 B | | GDS85115 | Drive Shaft | | 30 | 27 | 65 | 77 | 817 | |
| | 2011.09-2016.10 | 6MT | R | L/R | Saloon RWD N20 B20 A;N20 B20 B | | GCI85063 | Inner Joint | | 30 | 28 | 65 | 77 | 89 | |
| | 2011.09-2016.10 | 6MT | R | L/R | Saloon RWD N20 B20 A;N20 B20 B | | GCI85064 | Inner Joint | | 27 | 28 | 43.95 | 80 | 102 | |
| | 2011.09-2016.10 | 8AT | R | L | Saloon RWD N20 B20 A;N20 B20 B | | GDS85112 | Drive Shaft | | 30 | 27 | 64.9 | 77 | 758 | |
| | 2011.09-2016.10 | 8AT | R | R | Saloon RWD N20 B20 A;N20 B20 B | | GDS85113 | Drive Shaft | | 30 | 27 | 64.9 | 77 | 811 | |
| | 2011.09-2016.10 | 8AT | R | L/R | Saloon RWD N20 B20 A;N20 B20 B | | GCI85054 | Outer Joint | | 30 | 25 | 64.9 | 77 | 82 | |
| | 2011.09-2016.10 | 8AT | R | L/R | Saloon RWD N20 B20 A;N20 B20 B | | GCI85055 | Inner Joint | | 27 | 25 | 43.9 | 80 | 96 | |
| 2.2 (120 kw) | 2000.09-2003.06 | 5AT/5MT | R | L/R | Saloon RWD M54B226S1 | | GCI85089 | Inner Joint | | | 24 | | | 24 | |
| | 2000.09-2003.06 | | R | L/R | Saloon RWD M54B226S1 | | GDS81111 | Drive Shaft | | 30 | | 59 | 73 | 629 | |
| 2.2 (125 kw) | 2000.09-2003.06 | 5AT/5MT | R | L/R | Saloon RWD M54B226S1 | | GDS81111 | Drive Shaft | | 30 | | 59 | 73 | 629 | |
| | 2000.09-2003.06 | 5AT/5MT | R | L/R | Saloon RWD M54B226S1 | | GCI85089 | Inner Joint | | | 24 | | | 24 | |
| | 2003.07-2010.03 | 6AT | R | L/R | Saloon RWD M54 B22 (226S1) | | GDS82846 | Drive Shaft | | 30 | | 58.5 | 73 | 667 | |
| | 2003.07-2010.03 | 6AT | R | L/R | Saloon RWD M54 B22 (226S1) | | GCI85005 | Inner Joint | | | 24 | | | 24 | |
| **520i Touring** | | | | | | | | | | | | | | | |
| 2.0 (100 kw) | 1997.03-2001.08 | AT/Semi-AT | R | L/R | Estate RWD M52B206S3/M52B206S4 | | GDS81111 | Drive Shaft | | 30 | | 59 | 73 | 629 | |
| | 1997.03-2001.08 | AT/Semi-AT | R | L/R | Estate RWD M52B206S3/M52B206S4 | | GCI85089 | Inner Joint | | | 24 | | | 24 | |
| | 1997.03-2001.08 | MT | R | L/R | Estate RWD M52B206S3/M52B206S4 | | GDS85021 | Drive Shaft | | 30 | | 59 | 73 | 615 | |
| 2.0 (110 kw) | 1991.07-1996.07 | AT | R | L/R | Estate RWD M50B206S1/M50B206S2 | | GCI99052 | Inner Joint | | | 25 | | | 32 | |
| | 1991.07-1996.07 | AT/MT | R | L/R | Estate RWD M50B206S1/M50B206S2 | | GDS85001 | Drive Shaft | | | | | | 465 | |
| | 1997.03-2001.08 | MT | R | L/R | Estate RWD M52B206S3/M52B206S4 | | GDS85021 | Drive Shaft | | 30 | | 59 | 73 | 615 | |
| | 1997.03-2001.08 | Semi-AT | R | L/R | Estate RWD M52B206S3/M52B206S4 | | GDS81111 | Drive Shaft | | 30 | | 59 | 73 | 629 | |
| | 1997.03-2001.08 | Semi-AT | R | L/R | Estate RWD M52B206S3/M52B206S4 | | GCI85089 | Inner Joint | | | 24 | | | 24 | |
| 2.0 (120 kw) | 2007.07-2010.08 | 6AT/6MT | R | L/R | Estate RWD N43 B20 A | | GDS85082 | Drive Shaft | | 30 | | 58.7 | 73 | 656 | |
| | 2007.07-2010.08 | AT/MT | R | L/R | Estate RWD N43 B20 A | | GCI35025 | Inner Joint | | | 25 | | | 26 | |
| | 2011.09-2017.02 | 6AT | R | L | Estate RWD N20 B20 A;N20 B20 B | | GDS85112 | Drive Shaft | | 30 | 27 | 64.9 | 77 | 758 | |
| | 2011.09-2017.02 | 6AT | R | R | Estate RWD N20 B20 A;N20 B20 B | | GDS85113 | Drive Shaft | | 30 | 27 | 64.9 | 77 | 811 | |
| | 2011.09-2017.02 | 6AT | R | L/R | Estate RWD N20 B20 A;N20 B20 B | | GCI85054 | Outer Joint | | 30 | 25 | 64.9 | 77 | 82 | |
| | 2011.09-2017.02 | 6AT | R | L/R | Estate RWD N20 B20 A;N20 B20 B | | GCI85055 | Inner Joint | | 27 | 25 | 43.9 | 80 | 96 | |
| | 2011.09-2017.02 | 6MT | R | L | Estate RWD N20 B20 A;N20 B20 B | | GDS85114 | Drive Shaft | | 30 | 27 | 65 | 77 | 763 | |
| | 2011.09-2017.02 | 6MT | R | R | Estate RWD N20 B20 A;N20 B20 B | | GDS85115 | Drive Shaft | | 30 | 27 | 65 | 77 | 817 | |
| | 2011.09-2017.02 | 6MT | R | L/R | Estate RWD N20 B20 A;N20 B20 B | | GCI85063 | Inner Joint | | 30 | 28 | 65 | 77 | 89 | |
| | 2011.09-2017.02 | 6MT | R | L/R | Estate RWD N20 B20 A;N20 B20 B | | GCI85064 | Inner Joint | | 27 | 28 | 43.95 | 80 | 102 | |
| 2.0 (125 kw) | 2007.09-2010.12 | 6AT/6MT | R | L/R | Estate RWD N43 B20 A | | GDS85082 | Drive Shaft | | 30 | | 58.7 | 73 | 656 | |
| | 2007.09-2010.12 | AT/MT | R | L/R | Estate RWD N43 B20 A | | GCI35025 | Inner Joint | | | 25 | | | 26 | |
| 2.0 (135 kw) | 2010.10-2017.02 | 6AT | R | L | Estate RWD N20 B20 A;N20 B20 B | | GDS85112 | Drive Shaft | | 30 | 27 | 64.9 | 77 | 758 | |
| | 2010.10-2017.02 | 6AT | R | R | Estate RWD N20 B20 A;N20 B20 B | | GDS85113 | Drive Shaft | | 30 | 27 | 64.9 | 77 | 811 | |
| | 2010.10-2017.02 | 6AT | R | L/R | Estate RWD N20 B20 A;N20 B20 B | | GCI85054 | Outer Joint | | 30 | 25 | 64.9 | 77 | 82 | |
| | 2010.10-2017.02 | 6AT | R | L/R | Estate RWD N20 B20 A;N20 B20 B | | GCI85055 | Inner Joint | | 27 | 25 | 43.9 | 80 | 96 | |
| | 2010.10-2017.02 | 6MT | R | L | Estate RWD N20 B20 A;N20 B20 B | | GDS85114 | Drive Shaft | | 30 | 27 | 65 | 77 | 763 | |
| | 2010.10-2017.02 | 6MT | R | R | Estate RWD N20 B20 A;N20 B20 B | | GDS85115 | Drive Shaft | | 30 | 27 | 65 | 77 | 817 | |
| | 2010.10-2017.02 | 6MT | R | L/R | Estate RWD N20 B20 A;N20 B20 B | | GCI85063 | Inner Joint | | 30 | 28 | 65 | 77 | 89 | |
| | 2010.10-2017.02 | 6MT | R | L/R | Estate RWD N20 B20 A;N20 B20 B | | GCI85064 | Inner Joint | | 27 | 28 | 43.95 | 80 | 102 | |
| 2.2 (120 kw) | 2000.09-2003.12 | 5AT | R | L/R | Estate RWD M54B226S1 | | GDS81111 | Drive Shaft | | 30 | | 59 | 73 | 629 | |
| | 2000.09-2003.12 | 5AT | R | L/R | Estate RWD M54B226S1 | | GCI85089 | Inner Joint | | | 24 | | | 24 | |
| | 2000.09-2003.12 | 5MT | R | L/R | Estate RWD M54B226S1 | | GDS85021 | Drive Shaft | | 30 | | 59 | 73 | 615 | |

| | YEAR | TRANSM. | F/R | L/R | BODY STYLE & DRIVE TYPE & ENGINE | REMARKS | G-AP Ref. | PRODUCT | ABS | Technical Specifications A | B | C | H | L | P |
|---|---|---|---|---|---|---|---|---|---|---|---|---|---|---|---|
| **BMW** | | | | | | | | | | | | | | | |
| **520i Touring** | | | | | | | | | | | | | | | |
| 2.2 (125 kw) | 2000.09-2003.12 | 5AMT | R | L/R | Estate RWD M54B226S1 | | GDS81111 | Drive Shaft | | 30 | | 59 | 73 | 629 | |
| | 2000.09-2003.12 | 5AMT | R | L/R | Estate RWD M54B226S1 | | GCI85089 | Inner Joint | | | 24 | | | 24 | |
| | 2000.09-2003.12 | 5MT | R | L/R | Estate RWD M54B226S1 | | GDS85021 | Drive Shaft | | 30 | | 59 | 73 | 615 | |
| **523i** | | | | | | | | | | | | | | | |
| 2.5 (125 kw) | 1995.09-2000.08 | MT | R | L/R | Saloon RWD M52B256S3/M52B256S4 | | GDS85021 | Drive Shaft | | 30 | | 59 | 73 | 615 | |
| | 1995.09-2000.08 | MT/Semi-AT | R | L/R | Saloon RWD M52B256S3/M52B256S4 | | GCI99127 | Inner Joint | | | 25 | | | 26 | |
| 2.5 (130 kw) | 2004.10-2007.02 | 6AT/6MT | R | L/R | Saloon RWD N52 B25 A;N52 B25 B;N52 B25 BE | | GDS85082 | Drive Shaft | | 30 | | 58.7 | 73 | 656 | |
| | 2004.10-2007.02 | AT/MT | R | L/R | Saloon RWD N52 B25 A;N52 B25 B;N52 B25 BE | Transmission:AT,Date from:2005.12;Transmission:MT | GCI35025 | Inner Joint | | | 25 | | | 26 | |
| 2.5 (140 kw) | 2007.03-2009.12 | AT | R | L/R | Saloon RWD N52 B25 A;N52 B25 BE | Date from:2005.12 | GDS85082 | Drive Shaft | | 30 | | 58.7 | 73 | 656 | |
| | 2007.03-2009.12 | AT/MT | R | L/R | Saloon RWD N52 B25 A;N52 B25 BE | Transmission:AT,Date from:2005.12;Transmission:MT | GCI35025 | Inner Joint | | | 25 | | | 26 | |
| | 2007.03-2009.12 | MT | R | L/R | Saloon RWD N52 B25 A;N52 B25 BE | | GDS85082 | Drive Shaft | | 30 | | 58.7 | 73 | 656 | |
| | 2007.03-2009.12 | AT | R | L/R | Saloon RWD N53 B25 A | Date from:2005.12 | GDS85082 | Drive Shaft | | 30 | | 58.7 | 73 | 656 | |
| | 2007.03-2009.12 | AT/MT | R | L/R | Saloon RWD N53 B25 A | Transmission:AT,Date from:2005.12;Transmission:MT | GCI35025 | Inner Joint | | | 25 | | | 26 | |
| | 2007.03-2009.12 | MT | R | L/R | Saloon RWD N53 B25 A | | GDS85082 | Drive Shaft | | 30 | | 58.7 | 73 | 656 | |
| 2.5 (150 kw) | 2010.01-2011.08 | 8AT | R | L | Saloon RWD N52 B25 A;N52 B25 AF;N52 B25 B;N52 B25 BF | | GDS85112 | Drive Shaft | | 30 | 27 | 64.9 | 77 | 758 | |
| | 2010.01-2011.08 | 8AT | R | R | Saloon RWD N52 B25 A;N52 B25 AF;N52 B25 B;N52 B25 BF | | GDS85113 | Drive Shaft | | 30 | 27 | 64.9 | 77 | 811 | |
| | 2010.01-2011.08 | 8AT | R | L/R | Saloon RWD N52 B25 A;N52 B25 AF;N52 B25 B;N52 B25 BF | | GCI85054 | Outer Joint | | 30 | 25 | 64.9 | 77 | 82 | |
| | 2010.01-2011.08 | 8AT | R | L/R | Saloon RWD N52 B25 A;N52 B25 AF;N52 B25 B;N52 B25 BF | | GCI85055 | Inner Joint | | 27 | 25 | 43.9 | 80 | 96 | |
| 3.0 (150 kw) | 2009.06-2011.08 | 6MT | R | L | Saloon RWD N53 B30 A | | GDS56272 | Drive Shaft | | 30 | 27 | 65 | 77 | 763 | |
| | 2009.06-2011.08 | 6MT | R | R | Saloon RWD N53 B30 A | hollow shaft | GDS56271 | Drive Shaft | | 30 | 27 | 65 | 77 | 817 | |
| | 2009.06-2011.08 | 6MT | R | R | Saloon RWD N53 B30 A | solid shaft | GDS85115 | Drive Shaft | | 30 | 27 | 65 | 77 | 817 | |
| | 2009.06-2011.08 | 8AT | R | L | Saloon RWD N53 B30 A | | GDS85112 | Drive Shaft | | 30 | 27 | 64.9 | 77 | 758 | |
| | 2009.06-2011.08 | 8AT | R | R | Saloon RWD N53 B30 A | | GDS85113 | Drive Shaft | | 30 | 27 | 64.9 | 77 | 811 | |
| | 2009.06-2011.08 | 8AT | R | L/R | Saloon RWD N53 B30 A | | GCI85054 | Outer Joint | | 30 | 25 | 64.9 | 77 | 82 | |
| | 2009.06-2011.08 | 8AT | R | L/R | Saloon RWD N53 B30 A | | GCI85055 | Inner Joint | | 27 | 25 | 43.9 | 80 | 96 | |
| 3.0 (155 kw) | 2010.01-2011.08 | 6MT | R | L | Saloon RWD N53 B30 A | | GDS56272 | Drive Shaft | | 30 | 27 | 65 | 77 | 763 | |
| | 2010.01-2011.08 | 6MT | R | R | Saloon RWD N53 B30 A | hollow shaft | GDS56271 | Drive Shaft | | 30 | 27 | 65 | 77 | 817 | |
| | 2010.01-2011.08 | 6MT | R | R | Saloon RWD N53 B30 A | solid shaft | GDS85115 | Drive Shaft | | 30 | 27 | 65 | 77 | 817 | |
| | 2010.01-2011.08 | 8AT | R | L | Saloon RWD N53 B30 A | | GDS85112 | Drive Shaft | | 30 | 27 | 64.9 | 77 | 758 | |
| | 2010.01-2011.08 | 8AT | R | R | Saloon RWD N53 B30 A | | GDS85113 | Drive Shaft | | 30 | 27 | 64.9 | 77 | 811 | |
| | 2010.01-2011.08 | 8AT | R | L/R | Saloon RWD N53 B30 A | | GCI85054 | Outer Joint | | 30 | 25 | 64.9 | 77 | 82 | |
| | 2010.01-2011.08 | 8AT | R | L/R | Saloon RWD N53 B30 A | | GCI85055 | Inner Joint | | 27 | 25 | 43.9 | 80 | 96 | |
| **523i Touring** | | | | | | | | | | | | | | | |
| 2.5 (120 kw) | 1996.06-1998.09 | 5MT | R | L/R | Estate RWD M52B256S3 | | GDS85021 | Drive Shaft | | 30 | | 59 | 73 | 615 | |
| | 1996.06-1998.09 | 5MT | R | L/R | Estate RWD M52B256S3 | | GCI99127 | Inner Joint | | | 25 | | | 26 | |
| 2.5 (125 kw) | 1997.03-2000.09 | MT | R | L/R | Estate RWD M52B256S3/M52B256S4 | | GDS85021 | Drive Shaft | | 30 | | 59 | 73 | 615 | |
| | 1997.03-2000.09 | MT/Semi-AT | R | L/R | Estate RWD M52B256S3/M52B256S4 | | GCI99127 | Inner Joint | | | 25 | | | 26 | |
| 2.5 (130 kw) | 2004.10-2007.02 | 6AT/6MT | R | L/R | Estate RWD N52 B25 A;N52 B25 B;N52 B25 BE | | GDS85082 | Drive Shaft | | 30 | | 58.7 | 73 | 656 | |
| | 2004.10-2007.02 | AT/MT | R | L/R | Estate RWD N52 B25 A;N52 B25 B;N52 B25 BE | Transmission:AT,Date from:2005.12;Transmission:MT | GCI35025 | Inner Joint | | | 25 | | | 26 | |
| 2.5 (140 kw) | 2007.01-2010.12 | AT | R | L/R | Estate RWD N53 B25 A | Date from:2005.12 | GDS85082 | Drive Shaft | | 30 | | 58.7 | 73 | 656 | |
| | 2007.01-2010.12 | AT/MT | R | L/R | Estate RWD N53 B25 A | Transmission:AT,Date from:2005.12;Transmission:MT | GCI35025 | Inner Joint | | | 25 | | | 26 | |
| | 2007.01-2010.12 | MT | R | L/R | Estate RWD N53 B25 A | | GDS85082 | Drive Shaft | | 30 | | 58.7 | 73 | 656 | |
| | 2007.03-2010.01 | AT | R | L/R | Estate RWD N52 B25 A | Date from:2005.12 | GDS85082 | Drive Shaft | | 30 | | 58.7 | 73 | 656 | |
| | 2007.03-2010.01 | AT/MT | R | L/R | Estate RWD N52 B25 A | Transmission:AT,Date from:2005.12;Transmission:MT | GCI35025 | Inner Joint | | | 25 | | | 26 | |
| | 2007.03-2010.01 | MT | R | L/R | Estate RWD N52 B25 A | | GDS85082 | Drive Shaft | | 30 | | 58.7 | 73 | 656 | |
| 2.5 (150 kw) | 2009.11-2011.08 | 8AT | R | L | Estate RWD N52 B25 A;N52 B25 AF;N52 B25 B | | GDS85112 | Drive Shaft | | 30 | 27 | 64.9 | 77 | 758 | |
| | 2009.11-2011.08 | 8AT | R | R | Estate RWD N52 B25 A;N52 B25 AF;N52 B25 B | | GDS85113 | Drive Shaft | | 30 | 27 | 64.9 | 77 | 811 | |
| | 2009.11-2011.08 | 8AT | R | L/R | Estate RWD N52 B25 A;N52 B25 AF;N52 B25 B | | GCI85054 | Outer Joint | | 30 | 25 | 64.9 | 77 | 82 | |
| | 2009.11-2011.08 | 8AT | R | L/R | Estate RWD N52 B25 A;N52 B25 AF;N52 B25 B | | GCI85055 | Inner Joint | | 27 | 25 | 43.9 | 80 | 96 | |
| 3.0 (150 kw) | 2009.11-2011.08 | 6MT | R | L | Estate RWD N53 B30 A | | GDS56272 | Drive Shaft | | 30 | 27 | 65 | 77 | 763 | |
| | 2009.11-2011.08 | 6MT | R | R | Estate RWD N53 B30 A | hollow shaft | GDS56271 | Drive Shaft | | 30 | 27 | 65 | 77 | 817 | |
| | 2009.11-2011.08 | 6MT | R | R | Estate RWD N53 B30 A | solid shaft | GDS85115 | Drive Shaft | | 30 | 27 | 65 | 77 | 817 | |
| | 2009.11-2011.08 | 8AT | R | L | Estate RWD N53 B30 A | | GDS85112 | Drive Shaft | | 30 | 27 | 64.9 | 77 | 758 | |
| | 2009.11-2011.08 | 8AT | R | R | Estate RWD N53 B30 A | | GDS85113 | Drive Shaft | | 30 | 27 | 64.9 | 77 | 811 | |
| | 2009.11-2011.08 | 8AT | R | L/R | Estate RWD N53 B30 A | | GCI85054 | Outer Joint | | 30 | 25 | 64.9 | 77 | 82 | |
| | 2009.11-2011.08 | 8AT | R | L/R | Estate RWD N53 B30 A | | GCI85055 | Inner Joint | | 27 | 25 | 43.9 | 80 | 96 | |
| **525d** | | | | | | | | | | | | | | | |
| 2.0 (155 kw) | 2011.09-2016.10 | 8AT | R | L | Saloon RWD N47 D20 D | | GDS85114 | Drive Shaft | | 30 | 27 | 65 | 77 | 763 | |
| | 2011.09-2016.10 | 8AT | R | R | Saloon RWD N47 D20 D | | GDS85115 | Drive Shaft | | 30 | 27 | 65 | 77 | 817 | |
| | 2011.09-2016.10 | 8AT | R | L/R | Saloon RWD N47 D20 D | | GCI85063 | Inner Joint | | 30 | 28 | 65 | 77 | 89 | |
| | 2011.09-2016.10 | 8AT | R | L/R | Saloon RWD N47 D20 D | | GCI85064 | Inner Joint | | 27 | 28 | 43.95 | 80 | 102 | |
| | 2011.09-2016.10 | AT | R | L/R | Saloon RWD N47 D20 D | Date from:2012.01 | GCI85054 | Outer Joint | | 30 | 25 | 64.9 | 77 | 82 | |
| | 2011.09-2016.10 | AT | R | L/R | Saloon RWD N47 D20 D | Date from:2012.01 | GCI85055 | Inner Joint | | 27 | 25 | 43.9 | 80 | 96 | |
| 2.0 (160 kw) | 2011.09-2016.10 | 8AT | R | L | Saloon RWD N47 D20 D | | GDS85114 | Drive Shaft | | 30 | 27 | 65 | 77 | 763 | |
| | 2011.09-2016.10 | 8AT | R | R | Saloon RWD N47 D20 D | | GDS85115 | Drive Shaft | | 30 | 27 | 65 | 77 | 817 | |

| | YEAR | TRANSM. | F/R | L/R | BODY STYLE & DRIVE TYPE & ENGINE | REMARKS | G-AP Ref. | PRODUCT | ABS | Technical Specifications A | B | C | H | L | P |
|---|---|---|---|---|---|---|---|---|---|---|---|---|---|---|---|
| **BMW** | | | | | | | | | | | | | | | |
| **525d** | | | | | | | | | | | | | | | |
| 2.0 (160 kw) | 2011.09-2016.10 | 8AT | R | L/R | Saloon RWD N47 D20 D | | GCI85063 | Inner Joint | | 30 | 28 | 65 | 77 | 89 | |
| | 2011.09-2016.10 | 8AT | R | L/R | Saloon RWD N47 D20 D | | GCI85064 | Inner Joint | | 27 | 28 | 43.95 | 80 | 102 | |
| 2.5 (85 kw) | 1997.01-2003.06 | 5MT | R | L/R | Saloon RWD M51D256T1 | | GDS85021 | Drive Shaft | | 30 | | 59 | 73 | 615 | |
| | 1997.01-2003.06 | 5MT | R | L/R | Saloon RWD M51D256T1 | | GCI99127 | Inner Joint | | | 25 | | | 26 | |
| 2.5 (105 kw) | 1996.01-2003.06 | 5AT/5MT | R | L/R | Saloon RWD M51D256T1 | | GDS85021 | Drive Shaft | | 30 | | 59 | 73 | 615 | |
| | 1996.01-2003.06 | 5AT/5MT | R | L/R | Saloon RWD M51D256T1 | | GCI99127 | Inner Joint | | | 25 | | | 26 | |
| 2.5 (120 kw) | 2000.02-2003.06 | MT/Semi-AT | R | L/R | Saloon RWD M57D256D1 | | GDS85064 | Drive Shaft | | 30 | | 58.9 | 73 | 618 | |
| | 2000.02-2003.06 | MT/Semi-AT | R | L/R | Saloon RWD M57D256D1 | | GCI48002 | Inner Joint | | | 28 | | | 32 | |
| | 2004.12-2010.03 | 6AT/6MT | R | L/R | Saloon RWD M57 D25 (256D2) | Date to:2006.12 | GDS85073 | Drive Shaft | | 30 | | 58.8 | 73 | 653 | |
| | 2004.12-2010.03 | 6AT/6MT | R | L/R | Saloon RWD M57 D25 (256D2) | Date from:2007.01 | GDS85082 | Drive Shaft | | 30 | | 58.7 | 73 | 656 | |
| | 2004.12-2010.03 | 6AT/6MT | R | L/R | Saloon RWD M57 D25 (256D2) | Date from:2007.01 | GCI35025 | Inner Joint | | | 25 | | | 26 | |
| | 2004.12-2010.03 | 6AT/6MT | R | L/R | Saloon RWD M57 D25 (256D2) | Date to:2006.12 | GCI85048 | Inner Joint | | | 28 | | | 28 | |
| 2.5 (130 kw) | 2004.06-2010.03 | 6AT/6MT | R | L/R | Saloon RWD M57 D25 (256D2) | Date to:2006.12 | GDS85073 | Drive Shaft | | 30 | | 58.8 | 73 | 653 | |
| | 2004.06-2010.03 | 6AT/6MT | R | L/R | Saloon RWD M57 D25 (256D2) | Date from:2007.01 | GDS85082 | Drive Shaft | | 30 | | 58.7 | 73 | 656 | |
| | 2004.06-2010.03 | 6AT/6MT | R | L/R | Saloon RWD M57 D25 (256D2) | Date from:2007.01 | GCI35025 | Inner Joint | | | 25 | | | 26 | |
| | 2004.06-2010.03 | 6AT/6MT | R | L/R | Saloon RWD M57 D25 (256D2) | Date to:2006.12 | GCI85048 | Inner Joint | | | 28 | | | 28 | |
| 3.0 (145 kw) | 2007.01-2010.03 | 6AT | R | L/R | Saloon RWD M57 D30 (306D3) | | GDS85082 | Drive Shaft | | 30 | | 58.7 | 73 | 656 | |
| | 2007.01-2010.03 | 6AT | R | L/R | Saloon RWD M57 D30 (306D3) | | GCI85036 | Outer Joint | | 30 | 25 | 58.7 | 73 | 58 | I |
| | 2007.01-2010.03 | 6AT | R | L/R | Saloon RWD M57 D30 (306D3) | | GCI35025 | Inner Joint | | | 25 | | | 26 | |
| | 2007.01-2010.03 | 6MT | R | L/R | Saloon RWD M57 D30 (306D3) | | GDS85073 | Drive Shaft | | 30 | | 58.8 | 73 | 653 | |
| | 2007.01-2010.03 | 6MT | R | L/R | Saloon RWD M57 D30 (306D3) | | GCI85048 | Inner Joint | | | 28 | | | 28 | |
| | 2007.09-2008.08 | AT/MT | F | L | Saloon 4WD M57 D30 (306D3) | | GDS81109 | Drive Shaft | 48W | 30 | 27 | 64.8 | 77 | 610 | |
| | 2007.09-2008.08 | AT/MT | F | R | Saloon 4WD M57 D30 (306D3) | | GDS81108 | Drive Shaft | 48W | 30 | 27 | 64.8 | 77 | 932 | |
| | 2007.09-2008.08 | AT/MT | F | L/R | Saloon 4WD M57 D30 (306D3) | | GCO85020 | Outer Joint | 48W | 30 | 33 | 64.8 | 77 | 60 | M |
| | 2007.09-2008.08 | AT/MT | F | L | Saloon 4WD M57 D30 (306D3) | | GCI85066 | Inner Joint | | 27 | 24 | 43.95 | 53.5 | 126.5 | |
| | 2007.09-2008.08 | AT/MT | F | R | Saloon 4WD M57 D30 (306D3) | | GCI85067 | Inner Joint | | 27 | 24 | 43.95 | 376 | 126 | |
| | 2007.09-2008.08 | AT | R | L/R | Saloon 4WD M57 D30 (306D3) | | GDS85082 | Drive Shaft | | 30 | | 58.7 | 73 | 656 | |
| | 2007.09-2008.08 | MT | R | L/R | Saloon 4WD M57 D30 (306D3) | | GDS85073 | Drive Shaft | | 30 | | 58.8 | 73 | 653 | |
| 3.0 (150 kw) | 2010.03-2011.08 | 6MT | R | L | Saloon RWD N57 D30 A | | GDS85137 | Drive Shaft | | 30 | 32 | 65 | 77 | 758 | |
| | 2010.03-2011.08 | 6MT | R | R | Saloon RWD N57 D30 A | | GDS85139 | Drive Shaft | | 30 | 32 | 65 | 77 | 813 | |
| | 2010.03-2011.08 | 6MT | R | L/R | Saloon RWD N57 D30 A | | GCI85074 | Inner Joint | | 32 | 28 | 49.9 | 85.5 | 100 | |
| | 2010.03-2011.08 | 6MT/8AT | R | L/R | Saloon RWD N57 D30 A | | GCI85063 | Inner Joint | | 30 | 28 | 65 | 77 | 89 | |
| | 2010.03-2011.08 | 8AT | R | L | Saloon RWD N57 D30 A | | GDS85114 | Drive Shaft | | 30 | 27 | 65 | 77 | 763 | |
| | 2010.03-2011.08 | 8AT | R | R | Saloon RWD N57 D30 A | | GDS85115 | Drive Shaft | | 30 | 27 | 65 | 77 | 817 | |
| | 2010.03-2011.08 | 8AT | R | L/R | Saloon RWD N57 D30 A | | GCI85064 | Inner Joint | | 27 | 28 | 43.95 | 80 | 102 | |
| **525d Touring** | | | | | | | | | | | | | | | |
| 2.0 (155 kw) | 2011.09-2017.02 | 8AT | R | L | Estate RWD N47 D20 D | | GDS85114 | Drive Shaft | | 30 | 27 | 65 | 77 | 763 | |
| | 2011.09-2017.02 | 8AT | R | R | Estate RWD N47 D20 D | | GDS85115 | Drive Shaft | | 30 | 27 | 65 | 77 | 817 | |
| | 2011.09-2017.02 | 8AT | R | L/R | Estate RWD N47 D20 D | | GCI85063 | Inner Joint | | 30 | 28 | 65 | 77 | 89 | |
| | 2011.09-2017.02 | 8AT | R | L/R | Estate RWD N47 D20 D | | GCI85064 | Inner Joint | | 27 | 28 | 43.95 | 80 | 102 | |
| | 2011.09-2017.02 | AT | R | L/R | Estate RWD N47 D20 D | Date from:2012.01 | GCI85054 | Outer Joint | | 30 | 25 | 64.9 | 77 | 82 | |
| | 2011.09-2017.02 | AT | R | L/R | Estate RWD N47 D20 D | Date from:2012.01 | GCI85055 | Inner Joint | | 27 | 25 | 43.9 | 80 | 96 | |
| 2.0 (160 kw) | 2011.09-2017.02 | 8AT | R | L | Estate RWD N47 D20 D | | GDS85114 | Drive Shaft | | 30 | 27 | 65 | 77 | 763 | |
| | 2011.09-2017.02 | 8AT | R | R | Estate RWD N47 D20 D | | GDS85115 | Drive Shaft | | 30 | 27 | 65 | 77 | 817 | |
| | 2011.09-2017.02 | 8AT | R | L/R | Estate RWD N47 D20 D | | GCI85063 | Inner Joint | | 30 | 28 | 65 | 77 | 89 | |
| | 2011.09-2017.02 | 8AT | R | L/R | Estate RWD N47 D20 D | | GCI85064 | Inner Joint | | 27 | 28 | 43.95 | 80 | 102 | |
| 2.5 (85 kw) | 1993.03-1996.07 | AT/MT | R | L/R | Estate RWD M51D256T1 | | GDS85001 | Drive Shaft | | | | | | 465 | |
| | 1993.03-1996.07 | AT/MT | R | L/R | Estate RWD M51D256T1 | | GCI99052 | Inner Joint | | | 25 | | | 32 | |
| 2.5 (105 kw) | 1991.12-1996.07 | AT/MT | R | L/R | Estate RWD M51D256T1 | | GDS85001 | Drive Shaft | | | | | | 465 | |
| | 1991.12-1996.07 | AT/MT | R | L/R | Estate RWD M51D256T1 | | GCI99052 | Inner Joint | | | 25 | | | 32 | |
| | 1997.01-2004.05 | 5MT/SAT | R | L/R | Estate RWD M51D256T1 | | GDS85021 | Drive Shaft | | 30 | | 59 | 73 | 615 | |
| | 1997.01-2004.05 | 5MT/SAT | R | L/R | Estate RWD M51D256T1 | | GCI99127 | Inner Joint | | | 25 | | | 26 | |
| 2.5 (120 kw) | 2000.09-2004.05 | MT/Semi-AT | R | L/R | Estate RWD M57D256D1 | | GDS85064 | Drive Shaft | | 30 | | 58.9 | 73 | 618 | |
| | 2000.09-2004.05 | MT/Semi-AT | R | L/R | Estate RWD M57D256D1 | | GCI48002 | Inner Joint | | | 28 | | | 32 | |
| | 2004.03-2007.03 | 6AT | R | L/R | Estate RWD M57 D25 (256D2) | | GDS85073 | Drive Shaft | | 30 | | 58.8 | 73 | 653 | |
| 2.5 (130 kw) | 2004.03-2007.03 | 6AT/6MT | R | L/R | Estate RWD M57 D25 (256D2) | Date to:2006.12 | GDS85073 | Drive Shaft | | 30 | | 58.8 | 73 | 653 | |
| | 2004.03-2007.03 | 6AT/6MT | R | L/R | Estate RWD M57 D25 (256D2) | Date from:2007.01 | GDS85082 | Drive Shaft | | 30 | | 58.7 | 73 | 656 | |
| | 2004.03-2007.03 | 6AT/6MT | R | L/R | Estate RWD M57 D25 (256D2) | Date from:2007.01 | GCI35025 | Inner Joint | | | 25 | | | 26 | |
| | 2004.03-2007.03 | 6AT/6MT | R | L/R | Estate RWD M57 D25 (256D2) | Date to:2006.12 | GCI85048 | Inner Joint | | | 28 | | | 28 | |
| 3.0 (145 kw) | 2007.03-2010.05 | 6AT | R | L/R | Estate RWD M57 D30 (306D3) | | GDS85082 | Drive Shaft | | 30 | | 58.7 | 73 | 656 | |
| | 2007.03-2010.05 | 6AT | R | L/R | Estate RWD M57 D30 (306D3) | | GCI85036 | Outer Joint | | 30 | 25 | 58.7 | 73 | 58 | I |
| | 2007.03-2010.05 | 6AT | R | L/R | Estate RWD M57 D30 (306D3) | | GCI35025 | Inner Joint | | | 25 | | | 26 | |
| | 2007.03-2010.05 | 6MT | R | L/R | Estate RWD M57 D30 (306D3) | | GDS85073 | Drive Shaft | | 30 | | 58.8 | 73 | 653 | |
| | 2007.03-2010.05 | 6MT | R | L/R | Estate RWD M57 D30 (306D3) | | GCI85048 | Inner Joint | | | 28 | | | 28 | |
| | 2007.09-2008.09 | AT/MT | F | L | Estate 4WD M57 D30 (306D3) | | GDS81109 | Drive Shaft | 48W | 30 | 27 | 64.8 | 77 | 610 | |

| | YEAR | TRANSM. | F/R | L/R | BODY STYLE & DRIVE TYPE & ENGINE | REMARKS | G-AP Ref. | PRODUCT | ABS | Technical Specifications A | B | C | H | L | P |
|---|---|---|---|---|---|---|---|---|---|---|---|---|---|---|---|
| **BMW** | | | | | | | | | | | | | | | |
| **525d Touring** | | | | | | | | | | | | | | | |
| 3.0 (145 kw) | 2007.09-2008.09 | AT/MT | F | R | Estate 4WD M57 D30 (306D3) | | GDS81108 | Drive Shaft | 48W | 30 | 27 | 64.8 | 77 | 932 | |
| | 2007.09-2008.09 | AT/MT | F | L/R | Estate 4WD M57 D30 (306D3) | | GCO85020 | Outer Joint | 48W | 30 | 33 | 64.8 | 77 | 60 | M |
| | 2007.09-2008.09 | AT/MT | F | L | Estate 4WD M57 D30 (306D3) | | GCI85066 | Inner Joint | | 27 | 24 | 43.95 | 53.5 | 126.5 | |
| | 2007.09-2008.09 | AT/MT | F | R | Estate 4WD M57 D30 (306D3) | | GCI85067 | Inner Joint | | 27 | 24 | 43.95 | 376 | 126 | |
| | 2007.09-2008.09 | AT | R | L/R | Estate 4WD M57 D30 (306D3) | | GDS85082 | Drive Shaft | | 30 | | 58.7 | 73 | 656 | |
| | 2007.09-2008.09 | MT | R | L/R | Estate 4WD M57 D30 (306D3) | | GDS85073 | Drive Shaft | | 30 | | 58.8 | 73 | 653 | |
| 3.0 (150 kw) | 2010.09-2011.08 | 6MT | R | L | Estate RWD N57 D30 A | | GDS85137 | Drive Shaft | | 30 | 32 | 65 | 77 | 758 | |
| | 2010.09-2011.08 | 6MT | R | R | Estate RWD N57 D30 A | | GDS85139 | Drive Shaft | | 30 | 32 | 65 | 77 | 813 | |
| | 2010.09-2011.08 | 6MT | R | L/R | Estate RWD N57 D30 A | | GCI85074 | Inner Joint | | 32 | 28 | 49.9 | 85.5 | 100 | |
| | 2010.09-2011.08 | 6MT/8AT | R | L/R | Estate RWD N57 D30 A | | GCI85063 | Inner Joint | | 30 | 28 | 65 | 77 | 89 | |
| | 2010.09-2011.08 | 8AT | R | L | Estate RWD N57 D30 A | | GDS85114 | Drive Shaft | | 30 | 27 | 65 | 77 | 763 | |
| | 2010.09-2011.08 | 8AT | R | R | Estate RWD N57 D30 A | | GDS85115 | Drive Shaft | | 30 | 27 | 65 | 77 | 817 | |
| | 2010.09-2011.08 | 8AT | R | L/R | Estate RWD N57 D30 A | | GCI85064 | Inner Joint | | 27 | 28 | 43.95 | 80 | 102 | |
| **525d xDrive** | | | | | | | | | | | | | | | |
| 2.0 (155 kw) | 2011.09-2016.10 | 8AT | F | L | Saloon 4WD N47 D20 D | | GDS81581 | Drive Shaft | | 37 | 27 | 65 | | 562 | |
| | 2011.09-2016.10 | 8AT | F | R | Saloon 4WD N47 D20 D | | GDS81681 | Drive Shaft | | 37 | 27 | 65 | | 862 | |
| | 2011.09-2016.10 | 8AT | F | L/R | Saloon 4WD N47 D20 D | | GCO81413 | Outer Joint | | 37 | 25 | 65 | | 73 | I |
| | 2011.09-2016.10 | 8AT | F | L | Saloon 4WD N47 D20 D | | GCI81055 | Inner Joint | | 27 | 24 | 43.95 | 60 | 123.5 | |
| | 2011.09-2016.10 | 8AT | F | R | Saloon 4WD N47 D20 D | | GCI81457 | Inner Joint | | 27 | 24 | 43.95 | 359 | 125 | |
| | 2011.09-2016.10 | 8AT | R | L | Saloon 4WD N47 D20 D | | GDS85114 | Drive Shaft | | 30 | 27 | 65 | 77 | 763 | |
| | 2011.09-2016.10 | 8AT | R | R | Saloon 4WD N47 D20 D | | GDS85115 | Drive Shaft | | 30 | 27 | 65 | 77 | 817 | |
| | 2011.09-2016.10 | 8AT | R | L/R | Saloon 4WD N47 D20 D | | GCI85063 | Inner Joint | | 30 | 28 | 65 | 77 | 89 | |
| | 2011.09-2016.10 | 8AT | R | L/R | Saloon 4WD N47 D20 D | | GCI85064 | Inner Joint | | 27 | 28 | 43.95 | 80 | 102 | |
| 2.0 (160 kw) | 2011.09-2016.10 | 8AT | F | L | Saloon 4WD N47 D20 D | | GDS81581 | Drive Shaft | | 37 | 27 | 65 | | 562 | |
| | 2011.09-2016.10 | 8AT | F | R | Saloon 4WD N47 D20 D | | GDS81681 | Drive Shaft | | 37 | 27 | 65 | | 862 | |
| | 2011.09-2016.10 | 8AT | F | L/R | Saloon 4WD N47 D20 D | | GCO81413 | Outer Joint | | 37 | 25 | 65 | | 73 | I |
| | 2011.09-2016.10 | 8AT | F | L | Saloon 4WD N47 D20 D | | GCI81055 | Inner Joint | | 27 | 24 | 43.95 | 60 | 123.5 | |
| | 2011.09-2016.10 | 8AT | F | R | Saloon 4WD N47 D20 D | | GCI81457 | Inner Joint | | 27 | 24 | 43.95 | 359 | 125 | |
| | 2011.09-2016.10 | 8AT | R | L | Saloon 4WD N47 D20 D | | GDS85114 | Drive Shaft | | 30 | 27 | 65 | 77 | 763 | |
| | 2011.09-2016.10 | 8AT | R | R | Saloon 4WD N47 D20 D | | GDS85115 | Drive Shaft | | 30 | 27 | 65 | 77 | 817 | |
| | 2011.09-2016.10 | 8AT | R | L/R | Saloon 4WD N47 D20 D | | GCI85063 | Inner Joint | | 30 | 28 | 65 | 77 | 89 | |
| | 2011.09-2016.10 | 8AT | R | L/R | Saloon 4WD N47 D20 D | | GCI85064 | Inner Joint | | 27 | 28 | 43.95 | 80 | 102 | |
| 3.0 (145 kw) | 2008.09-2009.12 | AT/MT | F | L | Saloon 4WD M57 D30 (306D3) | | GDS81109 | Drive Shaft | 48W | 30 | 27 | 64.8 | 77 | 610 | |
| | 2008.09-2009.12 | AT/MT | F | R | Saloon 4WD M57 D30 (306D3) | | GDS81108 | Drive Shaft | 48W | 30 | 27 | 64.8 | 77 | 932 | |
| | 2008.09-2009.12 | AT/MT | F | L/R | Saloon 4WD M57 D30 (306D3) | | GCO85020 | Outer Joint | 48W | 30 | 33 | 64.8 | 77 | 60 | M |
| | 2008.09-2009.12 | AT/MT | F | L | Saloon 4WD M57 D30 (306D3) | | GCI85066 | Inner Joint | | 27 | 24 | 43.95 | 53.5 | 126.5 | |
| | 2008.09-2009.12 | AT/MT | F | R | Saloon 4WD M57 D30 (306D3) | | GCI85067 | Inner Joint | | 27 | 24 | 43.95 | 376 | 126 | |
| | 2008.09-2009.12 | AT | R | L/R | Saloon 4WD M57 D30 (306D3) | | GDS85082 | Drive Shaft | | 30 | | 58.7 | 73 | 656 | |
| | 2008.09-2009.12 | MT | R | L/R | Saloon 4WD M57 D30 (306D3) | | GDS85073 | Drive Shaft | | 30 | | 58.8 | 73 | 653 | |
| **525d xDrive Touring** | | | | | | | | | | | | | | | |
| 2.0 (155 kw) | 2013.07-2017.02 | 8AT | F | L | Estate 4WD N47 D20 D | | GDS81581 | Drive Shaft | | 37 | 27 | 65 | | 562 | |
| | 2013.07-2017.02 | 8AT | F | R | Estate 4WD N47 D20 D | | GDS81681 | Drive Shaft | | 37 | 27 | 65 | | 862 | |
| | 2013.07-2017.02 | 8AT | F | L/R | Estate 4WD N47 D20 D | | GCO81413 | Outer Joint | | 37 | 25 | 65 | | 73 | I |
| | 2013.07-2017.02 | 8AT | F | L | Estate 4WD N47 D20 D | | GCI81055 | Inner Joint | | 27 | 24 | 43.95 | 60 | 123.5 | |
| | 2013.07-2017.02 | 8AT | F | R | Estate 4WD N47 D20 D | | GCI81457 | Inner Joint | | 27 | 24 | 43.95 | 359 | 125 | |
| | 2013.07-2017.02 | 8AT | R | L | Estate 4WD N47 D20 D | | GDS85114 | Drive Shaft | | 30 | 27 | 65 | 77 | 763 | |
| | 2013.07-2017.02 | 8AT | R | R | Estate 4WD N47 D20 D | | GDS85115 | Drive Shaft | | 30 | 27 | 65 | 77 | 817 | |
| | 2013.07-2017.02 | 8AT | R | L/R | Estate 4WD N47 D20 D | | GCI85063 | Inner Joint | | 30 | 28 | 65 | 77 | 89 | |
| | 2013.07-2017.02 | 8AT | R | L/R | Estate 4WD N47 D20 D | | GCI85064 | Inner Joint | | 27 | 28 | 43.95 | 80 | 102 | |
| 2.0 (160 kw) | 2011.09-2017.02 | 8AT | F | L | Estate 4WD N47 D20 D | | GDS81581 | Drive Shaft | | 37 | 27 | 65 | | 562 | |
| | 2011.09-2017.02 | 8AT | F | R | Estate 4WD N47 D20 D | | GDS81681 | Drive Shaft | | 37 | 27 | 65 | | 862 | |
| | 2011.09-2017.02 | 8AT | F | L/R | Estate 4WD N47 D20 D | | GCO81413 | Outer Joint | | 37 | 25 | 65 | | 73 | I |
| | 2011.09-2017.02 | 8AT | F | L | Estate 4WD N47 D20 D | | GCI81055 | Inner Joint | | 27 | 24 | 43.95 | 60 | 123.5 | |
| | 2011.09-2017.02 | 8AT | F | R | Estate 4WD N47 D20 D | | GCI81457 | Inner Joint | | 27 | 24 | 43.95 | 359 | 125 | |
| | 2011.09-2017.02 | 8AT | R | L | Estate 4WD N47 D20 D | | GDS85114 | Drive Shaft | | 30 | 27 | 65 | 77 | 763 | |
| | 2011.09-2017.02 | 8AT | R | R | Estate 4WD N47 D20 D | | GDS85115 | Drive Shaft | | 30 | 27 | 65 | 77 | 817 | |
| | 2011.09-2017.02 | 8AT | R | L/R | Estate 4WD N47 D20 D | | GCI85063 | Inner Joint | | 30 | 28 | 65 | 77 | 89 | |
| | 2011.09-2017.02 | 8AT | R | L/R | Estate 4WD N47 D20 D | | GCI85064 | Inner Joint | | 27 | 28 | 43.95 | 80 | 102 | |
| 3.0 (145 kw) | 2008.09-2010.05 | AT/MT | F | L | Estate 4WD M57 D30 (306D3) | | GDS81109 | Drive Shaft | 48W | 30 | 27 | 64.8 | 77 | 610 | |
| | 2008.09-2010.05 | AT/MT | F | R | Estate 4WD M57 D30 (306D3) | | GDS81108 | Drive Shaft | 48W | 30 | 27 | 64.8 | 77 | 932 | |
| | 2008.09-2010.05 | AT/MT | F | L/R | Estate 4WD M57 D30 (306D3) | | GCO85020 | Outer Joint | 48W | 30 | 33 | 64.8 | 77 | 60 | M |
| | 2008.09-2010.05 | AT/MT | F | L | Estate 4WD M57 D30 (306D3) | | GCI85066 | Inner Joint | | 27 | 24 | 43.95 | 53.5 | 126.5 | |
| | 2008.09-2010.05 | AT/MT | F | R | Estate 4WD M57 D30 (306D3) | | GCI85067 | Inner Joint | | 27 | 24 | 43.95 | 376 | 126 | |
| | 2008.09-2010.05 | AT | R | L/R | Estate 4WD M57 D30 (306D3) | | GDS85082 | Drive Shaft | | 30 | | 58.7 | 73 | 656 | |
| | 2008.09-2010.05 | MT | R | L/R | Estate 4WD M57 D30 (306D3) | | GDS85073 | Drive Shaft | | 30 | | 58.8 | 73 | 653 | |

| | YEAR | TRANSM. | F/R | L/R | BODY STYLE & DRIVE TYPE & ENGINE | REMARKS | G-AP Ref. | PRODUCT | ABS | Technical Specifications A | B | C | H | L | P |
|---|---|---|---|---|---|---|---|---|---|---|---|---|---|---|---|
| **BMW** | | | | | | | | | | | | | | | |
| **525i** | | | | | | | | | | | | | | | |
| 2.5 (141 kw) | 2000.09-2003.06 | AT/MT | R | L/R | Saloon RWD M54B256S5 | | GCI99127 | Inner Joint | | | 25 | | | 26 | |
| | 2000.09-2003.06 | MT | R | L/R | Saloon RWD M54B256S5 | | GDS85021 | Drive Shaft | | 30 | | 59 | 73 | 615 | |
| | 2003.09-2005.02 | 6MT/6AT | R | L/R | Saloon RWD M54 B25 (256S5) | | GDS85082 | Drive Shaft | | 30 | | 58.7 | 73 | 656 | |
| | 2003.09-2005.02 | 6MT/6AT | R | L/R | Saloon RWD M54 B25 (256S5) | | GCI35025 | Inner Joint | | | 25 | | | 26 | |
| 2.5 (155 kw) | 2005.07-2010.03 | 6AT/6MT | R | L/R | Saloon RWD N52 B25 A | | GDS85082 | Drive Shaft | | 30 | | 58.7 | 73 | 656 | |
| | 2005.07-2010.03 | 6AT/6MT | R | L/R | Saloon RWD N52 B25 A | | GCI35025 | Inner Joint | | | 25 | | | 26 | |
| 2.5 (160 kw) | 2005.03-2009.12 | AT/MT | R | L/R | Saloon RWD N52 B25 A;N52 B25 B;N52 B25 BF | | GDS85082 | Drive Shaft | | 30 | | 58.7 | 73 | 656 | |
| | 2005.03-2009.12 | AT/MT | R | L/R | Saloon RWD N52 B25 A;N52 B25 B;N52 B25 BF | | GCI35025 | Inner Joint | | | 25 | | | 26 | |
| | 2005.04-2007.02 | AT/MT | F | L | Saloon 4WD N52 B25 A | | GDS81109 | Drive Shaft | 48W | 30 | 27 | 64.8 | 77 | 610 | |
| | 2005.04-2007.02 | AT/MT | F | R | Saloon 4WD N52 B25 A | | GDS81108 | Drive Shaft | 48W | 30 | 27 | 64.8 | 77 | 932 | |
| | 2005.04-2007.02 | AT/MT | F | L/R | Saloon 4WD N52 B25 A | | GCO85020 | Outer Joint | 48W | 30 | 33 | 64.8 | 77 | 60 | M |
| | 2005.04-2007.02 | AT/MT | F | L | Saloon 4WD N52 B25 A | | GCI85066 | Inner Joint | | 27 | 24 | 43.95 | 53.5 | 126.5 | |
| | 2005.04-2007.02 | AT/MT | F | R | Saloon 4WD N52 B25 A | | GCI85067 | Inner Joint | | 27 | 24 | 43.95 | 376 | 126 | |
| | 2005.04-2007.02 | 6AT/6MT | R | L/R | Saloon 4WD N52 B25 A | | GDS85082 | Drive Shaft | | 30 | | 58.7 | 73 | 656 | |
| 3.0 (155 kw) | 2007.01-2010.03 | 6AT/6MT | R | L/R | Saloon RWD N53 B30 A | | GDS85082 | Drive Shaft | | 30 | | 58.7 | 73 | 656 | |
| | 2007.01-2010.03 | 6AT/6MT | R | L/R | Saloon RWD N53 B30 A | For Engine code:N53B30A | GCI35025 | Inner Joint | | | 25 | | | 26 | |
| 3.0 (160 kw) | 2005.03-2007.03 | 6AT/6MT | R | L/R | Saloon RWD N52 B30 A | | GDS85082 | Drive Shaft | | 30 | | 58.7 | 73 | 656 | |
| | 2007.01-2010.03 | 6AT/6MT | R | L/R | Saloon RWD N53 B30 A | | GDS85082 | Drive Shaft | | 30 | | 58.7 | 73 | 656 | |
| | 2007.01-2010.03 | MT | R | L/R | Saloon RWD N53 B30 A | | GCI61075 | Inner Joint | | | 28 | | | 26 | |
| | 2007.03-2009.12 | AT/MT | F | L | Saloon 4WD N53 B30 A | | GDS81109 | Drive Shaft | 48W | 30 | 27 | 64.8 | 77 | 610 | |
| | 2007.03-2009.12 | AT/MT | F | R | Saloon 4WD N53 B30 A | | GDS81108 | Drive Shaft | 48W | 30 | 27 | 64.8 | 77 | 932 | |
| | 2007.03-2009.12 | AT/MT | F | L/R | Saloon 4WD N53 B30 A | | GCO85020 | Outer Joint | 48W | 30 | 33 | 64.8 | 77 | 60 | M |
| | 2007.03-2009.12 | AT/MT | F | L | Saloon 4WD N53 B30 A | | GCI85066 | Inner Joint | | 27 | 24 | 43.95 | 53.5 | 126.5 | |
| | 2007.03-2009.12 | AT/MT | F | R | Saloon 4WD N53 B30 A | | GCI85067 | Inner Joint | | 27 | 24 | 43.95 | 376 | 126 | |
| | 2007.03-2009.12 | 6AT | R | L/R | Saloon 4WD N53 B30 A | For Engine code:N53B30A | GDS85082 | Drive Shaft | | 30 | | 58.7 | 73 | 656 | |
| **525i Touring** | | | | | | | | | | | | | | | |
| 2.5 (141 kw) | 1991.07-1996.07 | AT | R | L/R | Estate RWD M50256S1/M50256S2 | | GCI99052 | Inner Joint | | | 25 | | | 32 | |
| | 1991.07-1996.07 | AT/MT | R | L/R | Estate RWD M50256S1/M50256S2 | | GDS85001 | Drive Shaft | | | | | | 465 | |
| | 1992.01-1996.03 | AT/MT | R | L/R | Estate 4WD M50B256S1/M50B256S2 | | GDS85001 | Drive Shaft | | | | | | 465 | |
| | 1992.01-1996.03 | AT/MT | R | L/R | Estate 4WD M50B256S1/M50B256S2 | | GCI99052 | Inner Joint | | | 25 | | | 32 | |
| | 2000.08-2004.05 | AT/MT/Semi-AT | R | L/R | Estate RWD M54B256S5 | | GCI99127 | Inner Joint | | | 25 | | | 26 | |
| | 2000.08-2004.05 | MT | R | L/R | Estate RWD M54B256S5 | | GDS85021 | Drive Shaft | | 30 | | 59 | 73 | 615 | |
| | 2004.06-2010.12 | 6MT | R | L/R | Estate RWD M54 B25 (256S5) | | GCI35025 | Inner Joint | | | 25 | | | 26 | |
| | 2004.06-2010.12 | 6MT/6AT | R | L/R | Estate RWD M54 B25 (256S5) | | GDS85082 | Drive Shaft | | 30 | | 58.7 | 73 | 656 | |
| 2.5 (155 kw) | 2005.03-2010.05 | 6AT/6MT | R | L/R | Estate RWD N52 B25 A | | GDS85082 | Drive Shaft | | 30 | | 58.7 | 73 | 656 | |
| | 2005.03-2010.05 | 6AT/6MT | R | L/R | Estate RWD N52 B25 A | | GCI35025 | Inner Joint | | | 25 | | | 26 | |
| 2.5 (160 kw) | 2005.03-2010.05 | 6AT/6MT | R | L/R | Estate RWD N52 B25 A;N52 B25 B;N52 B25 BF | | GDS85082 | Drive Shaft | | 30 | | 58.7 | 73 | 656 | |
| | 2005.03-2010.05 | 6AT/6MT | R | L/R | Estate RWD N52 B25 A;N52 B25 B;N52 B25 BF | | GCI35025 | Inner Joint | | | 25 | | | 26 | |
| | 2005.07-2010.12 | AT/MT | F | L | Estate 4WD N52 B25 A | | GDS81109 | Drive Shaft | 48W | 30 | 27 | 64.8 | 77 | 610 | |
| | 2005.07-2010.12 | AT/MT | F | R | Estate 4WD N52 B25 A | | GDS81108 | Drive Shaft | 48W | 30 | 27 | 64.8 | 77 | 932 | |
| | 2005.07-2010.12 | AT/MT | F | L/R | Estate 4WD N52 B25 A | | GCO85020 | Outer Joint | 48W | 30 | 33 | 64.8 | 77 | 60 | M |
| | 2005.07-2010.12 | AT/MT | F | L | Estate 4WD N52 B25 A | | GCI85066 | Inner Joint | | 27 | 24 | 43.95 | 53.5 | 126.5 | |
| | 2005.07-2010.12 | AT/MT | F | R | Estate 4WD N52 B25 A | | GCI85067 | Inner Joint | | 27 | 24 | 43.95 | 376 | 126 | |
| | 2005.07-2010.12 | 6AT/6MT | R | L/R | Estate 4WD N52 B25 A | | GDS85082 | Drive Shaft | | 30 | | 58.7 | 73 | 656 | |
| 3.0 (155 kw) | 2007.01-2010.12 | 6AT/6MT | R | L/R | Estate RWD N53 B30 A | | GDS85082 | Drive Shaft | | 30 | | 58.7 | 73 | 656 | |
| | 2007.01-2010.12 | 6AT/6MT | R | L/R | Estate RWD N53 B30 A | | GCI35025 | Inner Joint | | | 25 | | | 26 | |
| 3.0 (160 kw) | 2007.01-2010.12 | AT/MT | F | L | Estate 4WD N53 B30 A | | GDS81109 | Drive Shaft | 48W | 30 | 27 | 64.8 | 77 | 610 | |
| | 2007.01-2010.12 | AT/MT | F | R | Estate 4WD N53 B30 A | | GDS81108 | Drive Shaft | 48W | 30 | 27 | 64.8 | 77 | 932 | |
| | 2007.01-2010.12 | AT/MT | F | L/R | Estate 4WD N53 B30 A | | GCO85020 | Outer Joint | 48W | 30 | 33 | 64.8 | 77 | 60 | M |
| | 2007.01-2010.12 | AT/MT | F | L | Estate 4WD N53 B30 A | | GCI85066 | Inner Joint | | 27 | 24 | 43.95 | 53.5 | 126.5 | |
| | 2007.01-2010.12 | AT/MT | F | R | Estate 4WD N53 B30 A | | GCI85067 | Inner Joint | | 27 | 24 | 43.95 | 376 | 126 | |
| | 2007.01-2010.12 | 6AT | R | L/R | Estate 4WD N53 B30 A | | GDS85082 | Drive Shaft | | 30 | | 58.7 | 73 | 656 | |
| | 2007.01-2010.12 | 6AT/6MT | R | L/R | Estate RWD N53 B30 A | | GDS85082 | Drive Shaft | | 30 | | 58.7 | 73 | 656 | |
| | 2007.01-2010.12 | MT | R | L/R | Estate RWD N53 B30 A | | GCI61075 | Inner Joint | | | 28 | | | 26 | |
| **525i xDrive** | | | | | | | | | | | | | | | |
| 3.0 (160 kw) | 2008.09-2010.03 | AT/MT | F | L | Saloon 4WD N53 B30 A | | GDS81109 | Drive Shaft | 48W | 30 | 27 | 64.8 | 77 | 610 | |
| | 2008.09-2010.03 | AT/MT | F | R | Saloon 4WD N53 B30 A | | GDS81108 | Drive Shaft | 48W | 30 | 27 | 64.8 | 77 | 932 | |
| | 2008.09-2010.03 | AT/MT | F | L/R | Saloon 4WD N53 B30 A | | GCO85020 | Outer Joint | 48W | 30 | 33 | 64.8 | 77 | 60 | M |
| | 2008.09-2010.03 | AT/MT | F | L | Saloon 4WD N53 B30 A | | GCI85066 | Inner Joint | | 27 | 24 | 43.95 | 53.5 | 126.5 | |
| | 2008.09-2010.03 | AT/MT | F | R | Saloon 4WD N53 B30 A | | GCI85067 | Inner Joint | | 27 | 24 | 43.95 | 376 | 126 | |
| | 2008.09-2010.03 | 6AT/6MT | R | L/R | Saloon 4WD N53 B30 A | | GDS85082 | Drive Shaft | | 30 | | 58.7 | 73 | 656 | |
| **525i xDrive Touring** | | | | | | | | | | | | | | | |
| 3.0 (160 kw) | 2008.09-2010.12 | AT/MT | F | L | Estate 4WD N53 B30 A | | GDS81109 | Drive Shaft | 48W | 30 | 27 | 64.8 | 77 | 610 | |
| | 2008.09-2010.12 | AT/MT | F | R | Estate 4WD N53 B30 A | | GDS81108 | Drive Shaft | 48W | 30 | 27 | 64.8 | 77 | 932 | |
| | 2008.09-2010.12 | AT/MT | F | L/R | Estate 4WD N53 B30 A | | GCO85020 | Outer Joint | 48W | 30 | 33 | 64.8 | 77 | 60 | M |

| | YEAR | TRANSM. | F/R | L/R | BODY STYLE & DRIVE TYPE & ENGINE | REMARKS | G-AP Ref. | PRODUCT | ABS | Technical Specifications A | B | C | H | L | P |
|---|---|---|---|---|---|---|---|---|---|---|---|---|---|---|---|
| **BMW** | | | | | | | | | | | | | | | |
| **525i xDrive Touring** | | | | | | | | | | | | | | | |
| 3.0 (160 kw) | 2008.09-2010.12 | AT/MT | F | L | Estate 4WD N53 B30 A | | GCI85066 | Inner Joint | | 27 | 24 | 43.95 | 53.5 | 126.5 | |
| | 2008.09-2010.12 | AT/MT | F | R | Estate 4WD N53 B30 A | | GCI85067 | Inner Joint | | 27 | 24 | 43.95 | 376 | 126 | |
| | 2008.09-2010.12 | 6AT/6MT | R | L/R | Estate 4WD N53 B30 A | | GDS85082 | Drive Shaft | | 30 | | 58.7 | 73 | 656 | |
| **528i** | | | | | | | | | | | | | | | |
| 2.0 (180 kw) | 2011.09-2016.10 | 6MT | R | L | Saloon RWD N20 B20 A | | GDS85114 | Drive Shaft | | 30 | 27 | 65 | 77 | 763 | |
| | 2011.09-2016.10 | 6MT | R | R | Saloon RWD N20 B20 A | | GDS85115 | Drive Shaft | | 30 | 27 | 65 | 77 | 817 | |
| | 2011.09-2016.10 | 6MT | R | L/R | Saloon RWD N20 B20 A | | GCI85063 | Inner Joint | | 30 | 28 | 65 | 77 | 89 | |
| | 2011.09-2016.10 | 6MT | R | L/R | Saloon RWD N20 B20 A | | GCI85064 | Inner Joint | | 27 | 28 | 43.95 | 80 | 102 | |
| | 2011.09-2016.10 | 8AT | R | L | Saloon RWD N20 B20 A | | GDS85112 | Drive Shaft | | 30 | 27 | 64.9 | 77 | 758 | |
| | 2011.09-2016.10 | 8AT | R | R | Saloon RWD N20 B20 A | | GDS85113 | Drive Shaft | | 30 | 27 | 64.9 | 77 | 811 | |
| | 2011.09-2016.10 | 8AT | R | L/R | Saloon RWD N20 B20 A | | GCI85054 | Outer Joint | | 30 | 25 | 64.9 | 77 | 82 | |
| | 2011.09-2016.10 | 8AT | R | L/R | Saloon RWD N20 B20 A | | GCI85055 | Inner Joint | | 27 | 25 | 43.9 | 80 | 96 | |
| 2.8 (142 kw) | 1995.09-2000.08 | MT | R | L/R | Saloon RWD M52B286S1/M52B286S2 | | GDS85021 | Drive Shaft | | 30 | | 59 | 73 | 615 | |
| | 1995.09-2000.08 | MT/Semi-AT | R | L/R | Saloon RWD M52B286S1/M52B286S2 | | GCI99127 | Inner Joint | | | 25 | | | 26 | |
| 3.0 (172 kw) | 2007.03-2009.12 | 6AT | R | L/R | Saloon RWD N52 B30 A | | GDS85082 | Drive Shaft | | 30 | | 58.7 | 73 | 656 | |
| | 2007.03-2009.12 | 6AT | R | L/R | Saloon RWD N52 B30 A | | GCI35025 | Inner Joint | | | 25 | | | 26 | |
| 3.0 (190 kw) | 2010.03-2011.08 | 6MT | R | L | Saloon RWD N53 B30 A | | GDS56272 | Drive Shaft | | 30 | 27 | 65 | 77 | 763 | |
| | 2010.03-2011.08 | 6MT | R | R | Saloon RWD N53 B30 A | hollow shaft | GDS56271 | Drive Shaft | | 30 | 27 | 65 | 77 | 817 | |
| | 2010.03-2011.08 | 6MT | R | R | Saloon RWD N53 B30 A | solid shaft | GDS85115 | Drive Shaft | | 30 | 27 | 65 | 77 | 817 | |
| | 2010.03-2011.08 | 8AT | R | L | Saloon RWD N53 B30 A | | GDS85112 | Drive Shaft | | 30 | 27 | 64.9 | 77 | 758 | |
| | 2010.03-2011.08 | 8AT | R | R | Saloon RWD N53 B30 A | | GDS85113 | Drive Shaft | | 30 | 27 | 64.9 | 77 | 811 | |
| | 2010.03-2011.08 | 8AT | R | L/R | Saloon RWD N53 B30 A | | GCI85054 | Outer Joint | | 30 | 25 | 64.9 | 77 | 82 | |
| | 2010.03-2011.08 | 8AT | R | L/R | Saloon RWD N53 B30 A | | GCI85055 | Inner Joint | | 27 | 25 | 43.9 | 80 | 96 | |
| **528i Touring** | | | | | | | | | | | | | | | |
| 2.0 (180 kw) | 2011.09-2017.02 | 6MT | R | L | Estate RWD N20 B20 A | | GDS85114 | Drive Shaft | | 30 | 27 | 65 | 77 | 763 | |
| | 2011.09-2017.02 | 6MT | R | R | Estate RWD N20 B20 A | | GDS85115 | Drive Shaft | | 30 | 27 | 65 | 77 | 817 | |
| | 2011.09-2017.02 | 6MT | R | L/R | Estate RWD N20 B20 A | | GCI85063 | Inner Joint | | 30 | 28 | 65 | 77 | 89 | |
| | 2011.09-2017.02 | 6MT | R | L/R | Estate RWD N20 B20 A | | GCI85064 | Inner Joint | | 27 | 28 | 43.95 | 80 | 102 | |
| | 2011.09-2017.02 | 8AT | R | L | Estate RWD N20 B20 A | | GDS85112 | Drive Shaft | | 30 | 27 | 64.9 | 77 | 758 | |
| | 2011.09-2017.02 | 8AT | R | R | Estate RWD N20 B20 A | | GDS85113 | Drive Shaft | | 30 | 27 | 64.9 | 77 | 811 | |
| | 2011.09-2017.02 | 8AT | R | L/R | Estate RWD N20 B20 A | | GCI85054 | Outer Joint | | 30 | 25 | 64.9 | 77 | 82 | |
| | 2011.09-2017.02 | 8AT | R | L/R | Estate RWD N20 B20 A | | GCI85055 | Inner Joint | | 27 | 25 | 43.9 | 80 | 96 | |
| 2.8 (142 kw) | 1996.11-2000.08 | AT/MT/Semi-AT | R | L/R | Estate RWD M52B286S1/M52B286S2 | | GCI99127 | Inner Joint | | | 25 | | | 26 | |
| | 1996.11-2000.08 | MT | R | L/R | Estate RWD M52B286S1/M52B286S2 | | GDS85021 | Drive Shaft | | 30 | | 59 | 73 | 615 | |
| 3.0 (190 kw) | 2009.11-2011.08 | 6MT | R | L | Estate RWD N53 B30 A | | GDS56272 | Drive Shaft | | 30 | 27 | 65 | 77 | 763 | |
| | 2009.11-2011.08 | 6MT | R | R | Estate RWD N53 B30 A | hollow shaft | GDS56271 | Drive Shaft | | 30 | 27 | 65 | 77 | 817 | |
| | 2009.11-2011.08 | 6MT | R | R | Estate RWD N53 B30 A | solid shaft | GDS85115 | Drive Shaft | | 30 | 27 | 65 | 77 | 817 | |
| | 2009.11-2011.08 | 8AT | R | L | Estate RWD N53 B30 A | | GDS85112 | Drive Shaft | | 30 | 27 | 64.9 | 77 | 758 | |
| | 2009.11-2011.08 | 8AT | R | R | Estate RWD N53 B30 A | | GDS85113 | Drive Shaft | | 30 | 27 | 64.9 | 77 | 811 | |
| | 2009.11-2011.08 | 8AT | R | L/R | Estate RWD N53 B30 A | | GCI85054 | Outer Joint | | 30 | 25 | 64.9 | 77 | 82 | |
| | 2009.11-2011.08 | 8AT | R | L/R | Estate RWD N53 B30 A | | GCI85055 | Inner Joint | | 27 | 25 | 43.9 | 80 | 96 | |
| **528i xDrive** | | | | | | | | | | | | | | | |
| 2.0 (180 kw) | 2011.09-2016.10 | 8AT | F | L | Saloon 4WD N20 B20 A | | GDS81581 | Drive Shaft | | 37 | 27 | 65 | | 562 | |
| | 2011.09-2016.10 | 8AT | F | R | Saloon 4WD N20 B20 A | | GDS81681 | Drive Shaft | | 37 | 27 | 65 | | 862 | |
| | 2011.09-2016.10 | 8AT | F | L/R | Saloon 4WD N20 B20 A | | GCO81413 | Outer Joint | | 37 | 25 | 65 | | 73 | I |
| | 2011.09-2016.10 | 8AT | F | L | Saloon 4WD N20 B20 A | | GCI81055 | Inner Joint | | 27 | 24 | 43.95 | 60 | 123.5 | |
| | 2011.09-2016.10 | 8AT | F | R | Saloon 4WD N20 B20 A | | GCI81457 | Inner Joint | | 27 | 24 | 43.95 | 359 | 125 | |
| | 2011.09-2016.10 | 8AT | R | L | Saloon 4WD N20 B20 A | | GDS85112 | Drive Shaft | | 30 | 27 | 64.9 | 77 | 758 | |
| | 2011.09-2016.10 | 8AT | R | R | Saloon 4WD N20 B20 A | | GDS85113 | Drive Shaft | | 30 | 27 | 64.9 | 77 | 811 | |
| | 2011.09-2016.10 | 8AT | R | L/R | Saloon 4WD N20 B20 A | | GCI85054 | Outer Joint | | 30 | 25 | 64.9 | 77 | 82 | |
| | 2011.09-2016.10 | 8AT | R | L/R | Saloon 4WD N20 B20 A | | GCI85055 | Inner Joint | | 27 | 25 | 43.9 | 80 | 96 | |
| **528i xDrive Touring** | | | | | | | | | | | | | | | |
| 2.0 (180 kw) | 2011.09-2017.02 | 8AT | F | L | Estate 4WD N20 B20 A | | GDS81581 | Drive Shaft | | 37 | 27 | 65 | | 562 | |
| | 2011.09-2017.02 | 8AT | F | R | Estate 4WD N20 B20 A | | GDS81681 | Drive Shaft | | 37 | 27 | 65 | | 862 | |
| | 2011.09-2017.02 | 8AT | F | L/R | Estate 4WD N20 B20 A | | GCO81413 | Outer Joint | | 37 | 25 | 65 | | 73 | I |
| | 2011.09-2017.02 | 8AT | F | L | Estate 4WD N20 B20 A | | GCI81055 | Inner Joint | | 27 | 24 | 43.95 | 60 | 123.5 | |
| | 2011.09-2017.02 | 8AT | F | R | Estate 4WD N20 B20 A | | GCI81457 | Inner Joint | | 27 | 24 | 43.95 | 359 | 125 | |
| | 2011.09-2017.02 | 8AT | R | L | Estate 4WD N20 B20 A | | GDS85112 | Drive Shaft | | 30 | 27 | 64.9 | 77 | 758 | |
| | 2011.09-2017.02 | 8AT | R | R | Estate 4WD N20 B20 A | | GDS85113 | Drive Shaft | | 30 | 27 | 64.9 | 77 | 811 | |
| | 2011.09-2017.02 | 8AT | R | L/R | Estate 4WD N20 B20 A | | GCI85054 | Outer Joint | | 30 | 25 | 64.9 | 77 | 82 | |
| | 2011.09-2017.02 | 8AT | R | L/R | Estate 4WD N20 B20 A | | GCI85055 | Inner Joint | | 27 | 25 | 43.9 | 80 | 96 | |
| **530d** | | | | | | | | | | | | | | | |
| 3.0 (135 kw) | 1998.05-2000.08 | MT/Semi-AT | R | L/R | Saloon RWD M57D306D1 | | GDS85064 | Drive Shaft | | 30 | | 58.9 | 73 | 618 | |
| | 1998.05-2000.08 | MT/Semi-AT | R | L/R | Saloon RWD M57D306D1 | | GCI48002 | Inner Joint | | | 28 | | | 32 | |
| 3.0 (142 kw) | 2000.09-2003.05 | AT/MT | R | L/R | Saloon RWD M57D306D1 | | GDS85064 | Drive Shaft | | 30 | | 58.9 | 73 | 618 | |

| | YEAR | TRANSM. | F/R | L/R | BODY STYLE & DRIVE TYPE & ENGINE | REMARKS | G-AP Ref. | PRODUCT | ABS | Technical Specifications A | B | C | H | L | P |
|---|---|---|---|---|---|---|---|---|---|---|---|---|---|---|---|
| **BMW** | | | | | | | | | | | | | | | |
| **530d** | | | | | | | | | | | | | | | |
| 3.0 (142 kw) | 2000.09-2003.05 | AT/MT | R | L/R | Saloon RWD M57D306D1 | | GCI48002 | Inner Joint | | | 28 | | | 32 | |
| 3.0 (155 kw) | 2002.09-2009.12 | AT | R | L/R | Saloon RWD M57 D30 (306D2);M57 D30 (306D3) | Date to:2006.03 | GDS85073 | Drive Shaft | | 30 | | 58.8 | 73 | 653 | |
| | 2002.09-2009.12 | AT | R | L/R | Saloon RWD M57 D30 (306D2);M57 D30 (306D3) | Date to:2006.03 | GCI85048 | Inner Joint | | | 28 | | | 28 | |
| 3.0 (160 kw) | 2002.09-2005.09 | 6AT/6MT | R | L/R | Saloon RWD M57 D30 (306D2) | | GDS85073 | Drive Shaft | | 30 | | 58.8 | 73 | 653 | |
| | 2002.09-2005.09 | 6AT/6MT | R | L/R | Saloon RWD M57 D30 (306D2) | | GCI85048 | Inner Joint | | | 28 | | | 28 | |
| 3.0 (170 kw) | 2005.02-2007.02 | AT/MT | F | L | Saloon 4WD M57 D30 (306D3) | | GDS81109 | Drive Shaft | 48W | 30 | 27 | 64.8 | 77 | 610 | |
| | 2005.02-2007.02 | AT/MT | F | R | Saloon 4WD M57 D30 (306D3) | | GDS81108 | Drive Shaft | 48W | 30 | 27 | 64.8 | 77 | 932 | |
| | 2005.02-2007.02 | AT/MT | F | L/R | Saloon 4WD M57 D30 (306D3) | | GCO85020 | Outer Joint | 48W | 30 | 33 | 64.8 | 77 | 60 | M |
| | 2005.02-2007.02 | AT/MT | F | L | Saloon 4WD M57 D30 (306D3) | | GCI85066 | Inner Joint | | 27 | 24 | 43.95 | 53.5 | 126.5 | |
| | 2005.02-2007.02 | AT/MT | F | R | Saloon 4WD M57 D30 (306D3) | | GCI85067 | Inner Joint | | 27 | 24 | 43.95 | 376 | 126 | |
| | 2005.02-2007.02 | 6AT | R | L/R | Saloon 4WD M57 D30 (306D3) | Date from:2006.03 | GDS85082 | Drive Shaft | | 30 | | 58.7 | 73 | 656 | |
| | 2005.02-2007.02 | AT | R | L/R | Saloon 4WD M57 D30 (306D3) | Date to:2006.03 | GDS85073 | Drive Shaft | | 30 | | 58.8 | 73 | 653 | |
| | 2005.02-2007.02 | MT | R | L/R | Saloon 4WD M57 D30 (306D3) | | GDS85073 | Drive Shaft | | 30 | | 58.8 | 73 | 653 | |
| | 2005.09-2007.03 | 6AT/6MT | R | L/R | Saloon RWD M57 D30 (306D3) | | GDS85073 | Drive Shaft | | 30 | | 58.8 | 73 | 653 | |
| | 2005.09-2007.03 | 6AT/6MT | R | L/R | Saloon RWD M57 D30 (306D3) | | GCI85048 | Inner Joint | | | 28 | | | 28 | |
| 3.0 (173 kw) | 2007.02-2009.12 | 6AT/6MT | R | L/R | Saloon RWD M57 D30 (306D3) | | GDS85073 | Drive Shaft | | 30 | | 58.8 | 73 | 653 | |
| | 2007.02-2009.12 | 6AT/6MT | R | L/R | Saloon RWD M57 D30 (306D3) | | GCI85048 | Inner Joint | | | 28 | | | 28 | |
| | 2007.03-2007.08 | AT/MT | F | L | Saloon 4WD M57 D30 (306D3) | | GDS81109 | Drive Shaft | 48W | 30 | 27 | 64.8 | 77 | 610 | |
| | 2007.03-2007.08 | AT/MT | F | R | Saloon 4WD M57 D30 (306D3) | | GDS81108 | Drive Shaft | 48W | 30 | 27 | 64.8 | 77 | 932 | |
| | 2007.03-2007.08 | AT/MT | F | L/R | Saloon 4WD M57 D30 (306D3) | | GCO85020 | Outer Joint | 48W | 30 | 33 | 64.8 | 77 | 60 | M |
| | 2007.03-2007.08 | AT/MT | F | L | Saloon 4WD M57 D30 (306D3) | | GCI85066 | Inner Joint | | 27 | 24 | 43.95 | 53.5 | 126.5 | |
| | 2007.03-2007.08 | AT/MT | F | R | Saloon 4WD M57 D30 (306D3) | | GCI85067 | Inner Joint | | 27 | 24 | 43.95 | 376 | 126 | |
| | 2007.03-2007.08 | AT | R | L/R | Saloon 4WD M57 D30 (306D3) | | GDS85082 | Drive Shaft | | 30 | | 58.7 | 73 | 656 | |
| | 2007.03-2007.08 | MT | R | L/R | Saloon 4WD M57 D30 (306D3) | Date from:2005.10 | GDS85073 | Drive Shaft | | 30 | | 58.8 | 73 | 653 | |
| 3.0 (180 kw) | 2010.01-2011.08 | 8AT | R | L | Saloon RWD N57 D30 A | | GDS85137 | Drive Shaft | | 30 | 32 | 65 | 77 | 758 | |
| | 2010.01-2011.08 | 8AT | R | R | Saloon RWD N57 D30 A | | GDS85139 | Drive Shaft | | 30 | 32 | 65 | 77 | 813 | |
| | 2010.01-2011.08 | 8AT | R | R | Saloon RWD N57 D30 A | | GCI85074 | Inner Joint | | 32 | 28 | 49.9 | 85.5 | 100 | |
| | 2010.01-2011.08 | 8AT | R | L/R | Saloon RWD N57 D30 A | | GCI85063 | Inner Joint | | 30 | 28 | 65 | 77 | 89 | |
| 3.0 (190 kw) | 2011.09-2016.10 | 8AT | R | L | Saloon RWD N57 D30 A | | GDS85137 | Drive Shaft | | 30 | 32 | 65 | 77 | 758 | |
| | 2011.09-2016.10 | 8AT | R | R | Saloon RWD N57 D30 A | | GDS85139 | Drive Shaft | | 30 | 32 | 65 | 77 | 813 | |
| | 2011.09-2016.10 | 8AT | R | R | Saloon RWD N57 D30 A | | GCI85074 | Inner Joint | | 32 | 28 | 49.9 | 85.5 | 100 | |
| | 2011.09-2016.10 | 8AT | R | L/R | Saloon RWD N57 D30 A | | GCI85063 | Inner Joint | | 30 | 28 | 65 | 77 | 89 | |
| 3.0 (210 kw) | 2010.09-2016.10 | 8AT | R | L | Saloon RWD N57 D30 A | | GDS85137 | Drive Shaft | | 30 | 32 | 65 | 77 | 758 | |
| | 2010.09-2016.10 | 8AT | R | R | Saloon RWD N57 D30 A | | GDS85139 | Drive Shaft | | 30 | 32 | 65 | 77 | 813 | |
| | 2010.09-2016.10 | 8AT | R | R | Saloon RWD N57 D30 A | | GCI85074 | Inner Joint | | 32 | 28 | 49.9 | 85.5 | 100 | |
| | 2010.09-2016.10 | 8AT | R | L/R | Saloon RWD N57 D30 A | | GCI85063 | Inner Joint | | 30 | 28 | 65 | 77 | 89 | |
| **530d Gran Turismo** | | | | | | | | | | | | | | | |
| 3.0 (155 kw) | 2010.09-2017.02 | 8AT | R | L | Hatchback RWD N57 D30 A | | GDS85116 | Drive Shaft | | 30 | 32 | 65 | 77 | 777 | |
| | 2010.09-2017.02 | 8AT | R | R | Hatchback RWD N57 D30 A | | GDS85111 | Drive Shaft | | 30 | 32 | 65 | 77 | 831 | |
| | 2010.09-2017.02 | 8AT | R | L/R | Hatchback RWD N57 D30 A | | GCI85074 | Inner Joint | | 32 | 28 | 49.9 | 85.5 | 100 | |
| | 2010.09-2017.02 | AT | R | R | Hatchback RWD N57 D30 A | | GCI85063 | Inner Joint | | 30 | 28 | 65 | 77 | 89 | |
| 3.0 (180 kw) | 2009.08-2012.06 | 8AT | R | L | Hatchback RWD N57 D30 A | | GDS85116 | Drive Shaft | | 30 | 32 | 65 | 77 | 777 | |
| | 2009.08-2012.06 | 8AT | R | R | Hatchback RWD N57 D30 A | | GDS85111 | Drive Shaft | | 30 | 32 | 65 | 77 | 831 | |
| | 2009.08-2012.06 | 8AT | R | L/R | Hatchback RWD N57 D30 A | | GCI85074 | Inner Joint | | 32 | 28 | 49.9 | 85.5 | 100 | |
| | 2009.08-2012.06 | AT | R | R | Hatchback RWD N57 D30 A | | GCI85063 | Inner Joint | | 30 | 28 | 65 | 77 | 89 | |
| 3.0 (190 kw) | 2012.07-2017.02 | 8AT | R | L | Hatchback RWD N57 D30 A | | GDS85116 | Drive Shaft | | 30 | 32 | 65 | 77 | 777 | |
| | 2012.07-2017.02 | 8AT | R | R | Hatchback RWD N57 D30 A | | GDS85111 | Drive Shaft | | 30 | 32 | 65 | 77 | 831 | |
| | 2012.07-2017.02 | 8AT | R | L/R | Hatchback RWD N57 D30 A | | GCI85063 | Inner Joint | | 30 | 28 | 65 | 77 | 89 | |
| | 2012.07-2017.02 | 8AT | R | L/R | Hatchback RWD N57 D30 A | | GCI85074 | Inner Joint | | 32 | 28 | 49.9 | 85.5 | 100 | |
| **530d Touring** | | | | | | | | | | | | | | | |
| 3.0 (135 kw) | 1998.05-2000.08 | MT/Semi-AT | R | L/R | Estate RWD M57D306D1 | | GDS85064 | Drive Shaft | | 30 | | 58.9 | 73 | 618 | |
| | 1998.05-2000.08 | MT/Semi-AT | R | L/R | Estate RWD M57D306D1 | | GCI48002 | Inner Joint | | | 28 | | | 32 | |
| 3.0 (142 kw) | 1998.09-2004.05 | MT/Semi-AT | R | L/R | Estate RWD M57D306D1 | | GDS85064 | Drive Shaft | | 30 | | 58.9 | 73 | 618 | |
| | 1998.09-2004.05 | MT/Semi-AT | R | L/R | Estate RWD M57D306D1 | | GCI48002 | Inner Joint | | | 28 | | | 32 | |
| 3.0 (155 kw) | 2004.03-2010.05 | MT | R | L/R | Estate RWD M57 D30 (306D2);M57 D30 (306D3) | | GDS85073 | Drive Shaft | | 30 | | 58.8 | 73 | 653 | |
| | 2004.03-2010.05 | MT | R | L/R | Estate RWD M57 D30 (306D2);M57 D30 (306D3) | | GCI85048 | Inner Joint | | | 28 | | | 28 | |
| 3.0 (160 kw) | 2004.03-2005.09 | 6AT/6MT | R | L/R | Estate RWD M57 D30 (306D2) | | GDS85073 | Drive Shaft | | 30 | | 58.8 | 73 | 653 | |
| | 2004.03-2005.09 | 6AT/6MT | R | L/R | Estate RWD M57 D30 (306D2) | | GCI85048 | Inner Joint | | | 28 | | | 28 | |
| 3.0 (170 kw) | 2005.02-2007.02 | AT/MT | F | L | Estate 4WD M57 D30 (306D3) | | GDS81109 | Drive Shaft | 48W | 30 | 27 | 64.8 | 77 | 610 | |
| | 2005.02-2007.02 | AT/MT | F | R | Estate 4WD M57 D30 (306D3) | | GDS81108 | Drive Shaft | 48W | 30 | 27 | 64.8 | 77 | 932 | |
| | 2005.02-2007.02 | AT/MT | F | L/R | Estate 4WD M57 D30 (306D3) | | GCO85020 | Outer Joint | 48W | 30 | 33 | 64.8 | 77 | 60 | M |
| | 2005.02-2007.02 | AT/MT | F | L | Estate 4WD M57 D30 (306D3) | | GCI85066 | Inner Joint | | 27 | 24 | 43.95 | 53.5 | 126.5 | |
| | 2005.02-2007.02 | AT/MT | F | R | Estate 4WD M57 D30 (306D3) | | GCI85067 | Inner Joint | | 27 | 24 | 43.95 | 376 | 126 | |
| | 2005.02-2007.02 | 6AT | R | L/R | Estate 4WD M57 D30 (306D3) | | GDS85082 | Drive Shaft | | 30 | | 58.7 | 73 | 656 | |
| | 2005.02-2007.02 | 6AT/6MT | R | L/R | Estate 4WD M57 D30 (306D3) | | GDS85073 | Drive Shaft | | 30 | | 58.8 | 73 | 653 | |

| | YEAR | TRANSM. | F/R | L/R | BODY STYLE & DRIVE TYPE & ENGINE | REMARKS | G-AP Ref. | PRODUCT | ABS | Technical Specifications A | B | C | H | L | P |
|---|---|---|---|---|---|---|---|---|---|---|---|---|---|---|---|
| **BMW** | | | | | | | | | | | | | | | |
| **530d Touring** | | | | | | | | | | | | | | | |
| 3.0 (170 kw) | 2005.02-2007.02 | MT | R | L/R | Estate 4WD M57 D30 (306D3) | | GDS85073 | Drive Shaft | | 30 | | 58.8 | 73 | 653 | |
| | 2005.02-2007.02 | 6AT | R | L/R | Estate RWD M57 D30 (306D3) | | GDS85073 | Drive Shaft | | 30 | | 58.8 | 73 | 653 | |
| | 2005.02-2007.02 | 6AT | R | L/R | Estate RWD M57 D30 (306D3) | | GCI85048 | Inner Joint | | | 28 | | | 28 | |
| 3.0 (173 kw) | 2007.02-2010.05 | 6AT/6MT | R | L/R | Estate RWD M57 D30 (306D3) | | GDS85073 | Drive Shaft | | 30 | | 58.8 | 73 | 653 | |
| | 2007.02-2010.05 | 6AT/6MT | R | L/R | Estate RWD M57 D30 (306D3) | | GCI85048 | Inner Joint | | | 28 | | | 28 | |
| | 2007.03-2007.08 | AT/MT | F | L | Estate 4WD M57 D30 (306D3) | | GDS81109 | Drive Shaft | 48W | 30 | 27 | 64.8 | 77 | 610 | |
| | 2007.03-2007.08 | AT/MT | F | R | Estate 4WD M57 D30 (306D3) | | GDS81108 | Drive Shaft | 48W | 30 | 27 | 64.8 | 77 | 932 | |
| | 2007.03-2007.08 | AT/MT | F | L/R | Estate 4WD M57 D30 (306D3) | | GCO85020 | Outer Joint | 48W | 30 | 33 | 64.8 | 77 | 60 | M |
| | 2007.03-2007.08 | AT/MT | F | L | Estate 4WD M57 D30 (306D3) | | GCI85066 | Inner Joint | | 27 | 24 | 43.95 | 53.5 | 126.5 | |
| | 2007.03-2007.08 | AT/MT | F | R | Estate 4WD M57 D30 (306D3) | | GCI85067 | Inner Joint | | 27 | 24 | 43.95 | 376 | 126 | |
| | 2007.03-2007.08 | AT | R | L/R | Estate 4WD M57 D30 (306D3) | Date from:2006.10 | GDS85082 | Drive Shaft | | 30 | | 58.7 | 73 | 656 | |
| | 2007.03-2007.08 | MT | R | L/R | Estate 4WD M57 D30 (306D3) | Date from:2005.10 | GDS85073 | Drive Shaft | | 30 | | 58.8 | 73 | 653 | |
| 3.0 (180 kw) | 2010.06-2011.08 | 8AT | R | L | Estate RWD N57 D30 A | | GDS85137 | Drive Shaft | | 30 | 32 | 65 | 77 | 758 | |
| | 2010.06-2011.08 | 8AT | R | R | Estate RWD N57 D30 A | | GDS85139 | Drive Shaft | | 30 | 32 | 65 | 77 | 813 | |
| | 2010.06-2011.08 | 8AT | R | R | Estate RWD N57 D30 A | | GCI85074 | Inner Joint | | 32 | 28 | 49.9 | 85.5 | 100 | |
| | 2010.06-2011.08 | 8AT | R | L/R | Estate RWD N57 D30 A | | GCI85063 | Inner Joint | | 30 | 28 | 65 | 77 | 89 | |
| 3.0 (190 kw) | 2011.09-2017.02 | 8AT | R | L | Estate RWD N57 D30 A | | GDS85137 | Drive Shaft | | 30 | 32 | 65 | 77 | 758 | |
| | 2011.09-2017.02 | 8AT | R | R | Estate RWD N57 D30 A | | GDS85139 | Drive Shaft | | 30 | 32 | 65 | 77 | 813 | |
| | 2011.09-2017.02 | 8AT | R | R | Estate RWD N57 D30 A | | GCI85074 | Inner Joint | | 32 | 28 | 49.9 | 85.5 | 100 | |
| | 2011.09-2017.02 | 8AT | R | L/R | Estate RWD N57 D30 A | | GCI85063 | Inner Joint | | 30 | 28 | 65 | 77 | 89 | |
| 3.0 (210 kw) | 2011.09-2017.02 | 8AT | R | L | Estate RWD N57 D30 A | | GDS85137 | Drive Shaft | | 30 | 32 | 65 | 77 | 758 | |
| | 2011.09-2017.02 | 8AT | R | R | Estate RWD N57 D30 A | | GDS85139 | Drive Shaft | | 30 | 32 | 65 | 77 | 813 | |
| | 2011.09-2017.02 | 8AT | R | R | Estate RWD N57 D30 A | | GCI85074 | Inner Joint | | 32 | 28 | 49.9 | 85.5 | 100 | |
| | 2011.09-2017.02 | 8AT | R | L/R | Estate RWD N57 D30 A | | GCI85063 | Inner Joint | | 30 | 28 | 65 | 77 | 89 | |
| **530d xDrive** | | | | | | | | | | | | | | | |
| 3.0 (173 kw) | 2007.09-2009.12 | AT/MT | F | L | Saloon 4WD M57 D30 (306D3) | | GDS81109 | Drive Shaft | 48W | 30 | 27 | 64.8 | 77 | 610 | |
| | 2007.09-2009.12 | AT/MT | F | R | Saloon 4WD M57 D30 (306D3) | | GDS81108 | Drive Shaft | 48W | 30 | 27 | 64.8 | 77 | 932 | |
| | 2007.09-2009.12 | AT/MT | F | L/R | Saloon 4WD M57 D30 (306D3) | | GCO85020 | Outer Joint | 48W | 30 | 33 | 64.8 | 77 | 60 | M |
| | 2007.09-2009.12 | AT/MT | F | L | Saloon 4WD M57 D30 (306D3) | | GCI85066 | Inner Joint | | 27 | 24 | 43.95 | 53.5 | 126.5 | |
| | 2007.09-2009.12 | AT/MT | F | R | Saloon 4WD M57 D30 (306D3) | | GCI85067 | Inner Joint | | 27 | 24 | 43.95 | 376 | 126 | |
| | 2007.09-2009.12 | AT | R | L/R | Saloon 4WD M57 D30 (306D3) | | GDS85082 | Drive Shaft | | 30 | | 58.7 | 73 | 656 | |
| | 2007.09-2009.12 | MT | R | L/R | Saloon 4WD M57 D30 (306D3) | | GDS85073 | Drive Shaft | | 30 | | 58.8 | 73 | 653 | |
| 3.0 (183 kw) | 2016.09-2020.06 | 8AT | F | L | Saloon 4WD B57 D30 A | Date to:2019.03 | GDS84216 | Drive Shaft | | 37 | 27 | 65 | | 573 | |
| | 2016.09-2020.06 | 8AT | F | R | Saloon 4WD B57 D30 A | Date to:2019.03 | GDS84215 | Drive Shaft | | 37 | 27 | 65 | | 873 | |
| | 2016.09-2020.06 | 8AT | F | L/R | Saloon 4WD B57 D30 A | Date to:2019.03 | GCO82734 | Outer Joint | | 37 | 25 | 65 | | 73 | I |
| | 2016.09-2020.06 | 8AT | F | L | Saloon 4WD B57 D30 A | Date to:2019.03 | GCI81055 | Inner Joint | | 27 | 24 | 43.95 | 60 | 123.5 | |
| | 2016.09-2020.06 | 8AT | F | R | Saloon 4WD B57 D30 A | Date to:2019.03 | GCI81457 | Inner Joint | | 27 | 24 | 43.95 | 359 | 125 | |
| | 2020.07-2023.06 | 8AT | F | L | Saloon 4WD B57 D30 B;JA1 | | GDS84216 | Drive Shaft | | 37 | 27 | 65 | | 573 | |
| | 2020.07-2023.06 | 8AT | F | R | Saloon 4WD B57 D30 B;JA1 | | GDS84215 | Drive Shaft | | 37 | 27 | 65 | | 873 | |
| | 2020.07-2023.06 | 8AT | F | L/R | Saloon 4WD B57 D30 B;JA1 | | GCO83166 | Outer Joint | | 37 | 26 | 65 | | 73 | I |
| | 2020.07-2023.06 | 8AT | F | L | Saloon 4WD B57 D30 B;JA1 | | GCI81055 | Inner Joint | | 27 | 24 | 43.95 | 60 | 123.5 | |
| | 2020.07-2023.06 | 8AT | F | R | Saloon 4WD B57 D30 B;JA1 | | GCI81457 | Inner Joint | | 27 | 24 | 43.95 | 359 | 125 | |
| 3.0 (190 kw) | 2011.03-2016.10 | 8AT | F | L | Saloon 4WD N57 D30 A | | GDS81581 | Drive Shaft | | 37 | 27 | 65 | | 562 | |
| | 2011.03-2016.10 | 8AT | F | R | Saloon 4WD N57 D30 A | | GDS81681 | Drive Shaft | | 37 | 27 | 65 | | 862 | |
| | 2011.03-2016.10 | 8AT | F | L/R | Saloon 4WD N57 D30 A | | GCO81413 | Outer Joint | | 37 | 25 | 65 | | 73 | I |
| | 2011.03-2016.10 | 8AT | F | L | Saloon 4WD N57 D30 A | | GCI81055 | Inner Joint | | 27 | 24 | 43.95 | 60 | 123.5 | |
| | 2011.03-2016.10 | 8AT | F | R | Saloon 4WD N57 D30 A | | GCI81457 | Inner Joint | | 27 | 24 | 43.95 | 359 | 125 | |
| | 2011.03-2016.10 | 8AT | R | L | Saloon 4WD N57 D30 A | | GDS85137 | Drive Shaft | | 30 | 32 | 65 | 77 | 758 | |
| | 2011.03-2016.10 | 8AT | R | R | Saloon 4WD N57 D30 A | | GDS85139 | Drive Shaft | | 30 | 32 | 65 | 77 | 813 | |
| | 2011.03-2016.10 | 8AT | R | L/R | Saloon 4WD N57 D30 A | | GCI85063 | Inner Joint | | 30 | 28 | 65 | 77 | 89 | |
| | 2011.03-2016.10 | 8AT | R | L/R | Saloon 4WD N57 D30 A | | GCI85074 | Inner Joint | | 32 | 28 | 49.9 | 85.5 | 100 | |
| 3.0 (195 kw) | 2016.09-2020.06 | 8AT | F | L | Saloon 4WD B57 D30 A | Date to:2019.03 | GDS84216 | Drive Shaft | | 37 | 27 | 65 | | 573 | |
| | 2016.09-2020.06 | 8AT | F | R | Saloon 4WD B57 D30 A | Date to:2019.03 | GDS84215 | Drive Shaft | | 37 | 27 | 65 | | 873 | |
| | 2016.09-2020.06 | 8AT | F | L/R | Saloon 4WD B57 D30 A | Date to:2019.03 | GCO82734 | Outer Joint | | 37 | 25 | 65 | | 73 | I |
| | 2016.09-2020.06 | 8AT | F | L | Saloon 4WD B57 D30 A | Date to:2019.03 | GCI81055 | Inner Joint | | 27 | 24 | 43.95 | 60 | 123.5 | |
| | 2016.09-2020.06 | 8AT | F | R | Saloon 4WD B57 D30 A | Date to:2019.03 | GCI81457 | Inner Joint | | 27 | 24 | 43.95 | 359 | 125 | |
| 3.0 (210 kw) | 2011.03-2016.10 | 8AT | F | L | Saloon 4WD N57 D30 A | | GDS81581 | Drive Shaft | | 37 | 27 | 65 | | 562 | |
| | 2011.03-2016.10 | 8AT | F | R | Saloon 4WD N57 D30 A | | GDS81681 | Drive Shaft | | 37 | 27 | 65 | | 862 | |
| | 2011.03-2016.10 | 8AT | F | L/R | Saloon 4WD N57 D30 A | | GCO81413 | Outer Joint | | 37 | 25 | 65 | | 73 | I |
| | 2011.03-2016.10 | 8AT | F | L | Saloon 4WD N57 D30 A | | GCI81055 | Inner Joint | | 27 | 24 | 43.95 | 60 | 123.5 | |
| | 2011.03-2016.10 | 8AT | F | R | Saloon 4WD N57 D30 A | | GCI81457 | Inner Joint | | 27 | 24 | 43.95 | 359 | 125 | |
| | 2011.03-2016.10 | 8AT | R | L | Saloon 4WD N57 D30 A | | GDS85137 | Drive Shaft | | 30 | 32 | 65 | 77 | 758 | |
| | 2011.03-2016.10 | 8AT | R | R | Saloon 4WD N57 D30 A | | GDS85139 | Drive Shaft | | 30 | 32 | 65 | 77 | 813 | |
| | 2011.03-2016.10 | 8AT | R | L/R | Saloon 4WD N57 D30 A | | GCI85074 | Inner Joint | | 32 | 28 | 49.9 | 85.5 | 100 | |
| | 2011.03-2016.10 | AT | R | L | Saloon 4WD N57 D30 A | | GCI85063 | Inner Joint | | 30 | 28 | 65 | 77 | 89 | |

| | YEAR | TRANSM. | F/R | L/R | BODY STYLE & DRIVE TYPE & ENGINE | REMARKS | G-AP Ref. | PRODUCT | ABS | Technical Specifications A | B | C | H | L | P |
|---|---|---|---|---|---|---|---|---|---|---|---|---|---|---|---|
| **BMW** | | | | | | | | | | | | | | | |
| **530d xDrive** | | | | | | | | | | | | | | | |
| 3.0 (210 kw) | 2020.07-2023.06 | 8AT | F | L | Saloon 4WD B57 D30 B;JA1 | | GDS84216 | Drive Shaft | | 37 | 27 | 65 | | 573 | |
| | 2020.07-2023.06 | 8AT | F | R | Saloon 4WD B57 D30 B;JA1 | | GDS84215 | Drive Shaft | | 37 | 27 | 65 | | 873 | |
| | 2020.07-2023.06 | 8AT | F | L/R | Saloon 4WD B57 D30 B;JA1 | | GCO83166 | Outer Joint | | 37 | 26 | 65 | | 73 | I |
| | 2020.07-2023.06 | 8AT | F | L | Saloon 4WD B57 D30 B;JA1 | | GCI81055 | Inner Joint | | 27 | 24 | 43.95 | 60 | 123.5 | |
| | 2020.07-2023.06 | 8AT | F | R | Saloon 4WD B57 D30 B;JA1 | | GCI81457 | Inner Joint | | 27 | 24 | 43.95 | 359 | 125 | |
| **530d xDrive Gran Turismo** | | | | | | | | | | | | | | | |
| 3.0 (180 kw) | 2010.06-2012.06 | 8AT | F | R | Hatchback 4WD N57 D30 A | | GDS83946 | Drive Shaft | | 37 | 27 | 65 | | 871 | |
| | 2010.06-2012.06 | 8AT | F | R | Hatchback 4WD N57 D30 A | | GCI81457 | Inner Joint | | 27 | 24 | 43.95 | 359 | 125 | |
| | 2010.06-2012.06 | AT | F | L | Hatchback 4WD N57 D30 A | | GDS82730 | Drive Shaft | | 37 | 27 | 65 | | 572 | |
| | 2010.06-2012.06 | AT | F | L/R | Hatchback 4WD N57 D30 A | | GCO81413 | Outer Joint | | 37 | 25 | 65 | | 73 | I |
| | 2010.06-2012.06 | AT | F | L | Hatchback 4WD N57 D30 A | | GCI81055 | Inner Joint | | 27 | 24 | 43.95 | 60 | 123.5 | |
| | 2010.06-2012.06 | AT | R | L | Hatchback 4WD N57 D30 A | | GDS85116 | Drive Shaft | | 30 | 32 | 65 | 77 | 777 | |
| | 2010.06-2012.06 | AT | R | R | Hatchback 4WD N57 D30 A | | GDS85111 | Drive Shaft | | 30 | 32 | 65 | 77 | 831 | |
| | 2010.06-2012.06 | AT | R | L/R | Hatchback 4WD N57 D30 A | | GCI85063 | Inner Joint | | 30 | 28 | 65 | 77 | 89 | |
| | 2010.06-2012.06 | AT | R | L/R | Hatchback 4WD N57 D30 A | | GCI85074 | Inner Joint | | 32 | 28 | 49.9 | 85.5 | 100 | |
| 3.0 (190 kw) | 2012.07-2017.02 | 8AT | F | R | Hatchback 4WD N57 D30 A | | GDS83946 | Drive Shaft | | 37 | 27 | 65 | | 871 | |
| | 2012.07-2017.02 | 8AT | F | R | Hatchback 4WD N57 D30 A | | GCI81457 | Inner Joint | | 27 | 24 | 43.95 | 359 | 125 | |
| | 2012.07-2017.02 | AT | F | L | Hatchback 4WD N57 D30 A | | GDS82730 | Drive Shaft | | 37 | 27 | 65 | | 572 | |
| | 2012.07-2017.02 | AT | F | L/R | Hatchback 4WD N57 D30 A | | GCO81413 | Outer Joint | | 37 | 25 | 65 | | 73 | I |
| | 2012.07-2017.02 | AT | F | L | Hatchback 4WD N57 D30 A | | GCI81055 | Inner Joint | | 27 | 24 | 43.95 | 60 | 123.5 | |
| | 2012.07-2017.02 | AT | R | L | Hatchback 4WD N57 D30 A | | GDS85116 | Drive Shaft | | 30 | 32 | 65 | 77 | 777 | |
| | 2012.07-2017.02 | AT | R | R | Hatchback 4WD N57 D30 A | | GDS85111 | Drive Shaft | | 30 | 32 | 65 | 77 | 831 | |
| | 2012.07-2017.02 | AT | R | L/R | Hatchback 4WD N57 D30 A | | GCI85063 | Inner Joint | | 30 | 28 | 65 | 77 | 89 | |
| | 2012.07-2017.02 | AT | R | L/R | Hatchback 4WD N57 D30 A | | GCI85074 | Inner Joint | | 32 | 28 | 49.9 | 85.5 | 100 | |
| **530d xDrive Touring** | | | | | | | | | | | | | | | |
| 3.0 (173 kw) | 2007.09-2010.05 | AT/MT | F | L | Estate 4WD M57 D30 (306D3) | | GDS81109 | Drive Shaft | 48W | 30 | 27 | 64.8 | 77 | 610 | |
| | 2007.09-2010.05 | AT/MT | F | R | Estate 4WD M57 D30 (306D3) | | GDS81108 | Drive Shaft | 48W | 30 | 27 | 64.8 | 77 | 932 | |
| | 2007.09-2010.05 | AT/MT | F | L/R | Estate 4WD M57 D30 (306D3) | | GCO85020 | Outer Joint | 48W | 30 | 33 | 64.8 | 77 | 60 | M |
| | 2007.09-2010.05 | AT/MT | F | L | Estate 4WD M57 D30 (306D3) | | GCI85066 | Inner Joint | | 27 | 24 | 43.95 | 53.5 | 126.5 | |
| | 2007.09-2010.05 | AT/MT | F | R | Estate 4WD M57 D30 (306D3) | | GCI85067 | Inner Joint | | 27 | 24 | 43.95 | 376 | 126 | |
| | 2007.09-2010.05 | AT | R | L/R | Estate 4WD M57 D30 (306D3) | | GDS85082 | Drive Shaft | | 30 | | 58.7 | 73 | 656 | |
| | 2007.09-2010.05 | MT | R | L/R | Estate 4WD M57 D30 (306D3) | | GDS85073 | Drive Shaft | | 30 | | 58.8 | 73 | 653 | |
| 3.0 (183 kw) | 2020.07- | 8AT | F | L | Estate 4WD B57 D30 B;JA1 | | GDS84216 | Drive Shaft | | 37 | 27 | 65 | | 573 | |
| | 2020.07- | 8AT | F | R | Estate 4WD B57 D30 B;JA1 | | GDS84215 | Drive Shaft | | 37 | 27 | 65 | | 873 | |
| | 2020.07- | 8AT | F | L/R | Estate 4WD B57 D30 B;JA1 | | GCO83166 | Outer Joint | | 37 | 26 | 65 | | 73 | I |
| | 2020.07- | 8AT | F | L | Estate 4WD B57 D30 B;JA1 | | GCI81055 | Inner Joint | | 27 | 24 | 43.95 | 60 | 123.5 | |
| | 2020.07- | 8AT | F | R | Estate 4WD B57 D30 B;JA1 | | GCI81457 | Inner Joint | | 27 | 24 | 43.95 | 359 | 125 | |
| 3.0 (190 kw) | 2011.03-2017.02 | 8AT | F | L | Estate 4WD N57 D30 A | | GDS81581 | Drive Shaft | | 37 | 27 | 65 | | 562 | |
| | 2011.03-2017.02 | 8AT | F | R | Estate 4WD N57 D30 A | | GDS81681 | Drive Shaft | | 37 | 27 | 65 | | 862 | |
| | 2011.03-2017.02 | 8AT | F | L/R | Estate 4WD N57 D30 A | | GCO81413 | Outer Joint | | 37 | 25 | 65 | | 73 | I |
| | 2011.03-2017.02 | 8AT | F | L | Estate 4WD N57 D30 A | | GCI81055 | Inner Joint | | 27 | 24 | 43.95 | 60 | 123.5 | |
| | 2011.03-2017.02 | 8AT | F | R | Estate 4WD N57 D30 A | | GCI81457 | Inner Joint | | 27 | 24 | 43.95 | 359 | 125 | |
| | 2011.03-2017.02 | 8AT | R | L | Estate 4WD N57 D30 A | | GDS85137 | Drive Shaft | | 30 | 32 | 65 | 77 | 758 | |
| | 2011.03-2017.02 | 8AT | R | R | Estate 4WD N57 D30 A | | GDS85139 | Drive Shaft | | 30 | 32 | 65 | 77 | 813 | |
| | 2011.03-2017.02 | 8AT | R | R | Estate 4WD N57 D30 A | | GCI85074 | Inner Joint | | 32 | 28 | 49.9 | 85.5 | 100 | |
| | 2011.03-2017.02 | 8AT | R | L/R | Estate 4WD N57 D30 A | | GCI85063 | Inner Joint | | 30 | 28 | 65 | 77 | 89 | |
| 3.0 (195 kw) | 2017.03- | 8AT | F | L | Estate Van 4WD B57 D30 A | Date to:2019.03 | GDS84216 | Drive Shaft | | 37 | 27 | 65 | | 573 | |
| | 2017.03- | 8AT | F | R | Estate Van 4WD B57 D30 A | Date to:2019.03 | GDS84215 | Drive Shaft | | 37 | 27 | 65 | | 873 | |
| | 2017.03- | 8AT | F | L/R | Estate Van 4WD B57 D30 A | Date to:2019.03 | GCO82734 | Outer Joint | | 37 | 25 | 65 | | 73 | I |
| | 2017.03- | 8AT | F | L | Estate Van 4WD B57 D30 A | Date to:2019.03 | GCI81055 | Inner Joint | | 27 | 24 | 43.95 | 60 | 123.5 | |
| | 2017.03- | 8AT | F | R | Estate Van 4WD B57 D30 A | Date to:2019.03 | GCI81457 | Inner Joint | | 27 | 24 | 43.95 | 359 | 125 | |
| | 2017.03-2020.06 | 8AT | F | L | Estate 4WD B57 D30 A | Date to:2019.03 | GDS84216 | Drive Shaft | | 37 | 27 | 65 | | 573 | |
| | 2017.03-2020.06 | 8AT | F | R | Estate 4WD B57 D30 A | Date to:2019.03 | GDS84215 | Drive Shaft | | 37 | 27 | 65 | | 873 | |
| | 2017.03-2020.06 | 8AT | F | L/R | Estate 4WD B57 D30 A | Date to:2019.03 | GCO82734 | Outer Joint | | 37 | 25 | 65 | | 73 | I |
| | 2017.03-2020.06 | 8AT | F | L | Estate 4WD B57 D30 A | Date to:2019.03 | GCI81055 | Inner Joint | | 27 | 24 | 43.95 | 60 | 123.5 | |
| | 2017.03-2020.06 | 8AT | F | R | Estate 4WD B57 D30 A | Date to:2019.03 | GCI81457 | Inner Joint | | 27 | 24 | 43.95 | 359 | 125 | |
| 3.0 (210 kw) | 2011.03-2017.02 | 8AT | F | L | Estate 4WD N57 D30 A | | GDS81581 | Drive Shaft | | 37 | 27 | 65 | | 562 | |
| | 2011.03-2017.02 | 8AT | F | R | Estate 4WD N57 D30 A | | GDS81681 | Drive Shaft | | 37 | 27 | 65 | | 862 | |
| | 2011.03-2017.02 | 8AT | F | L/R | Estate 4WD N57 D30 A | | GCO81413 | Outer Joint | | 37 | 25 | 65 | | 73 | I |
| | 2011.03-2017.02 | 8AT | F | L | Estate 4WD N57 D30 A | | GCI81055 | Inner Joint | | 27 | 24 | 43.95 | 60 | 123.5 | |
| | 2011.03-2017.02 | 8AT | F | R | Estate 4WD N57 D30 A | | GCI81457 | Inner Joint | | 27 | 24 | 43.95 | 359 | 125 | |
| | 2011.03-2017.02 | 8AT | R | L | Estate 4WD N57 D30 A | | GDS85137 | Drive Shaft | | 30 | 32 | 65 | 77 | 758 | |
| | 2011.03-2017.02 | 8AT | R | R | Estate 4WD N57 D30 A | | GDS85139 | Drive Shaft | | 30 | 32 | 65 | 77 | 813 | |
| | 2011.03-2017.02 | 8AT | R | L/R | Estate 4WD N57 D30 A | | GCI85063 | Inner Joint | | 30 | 28 | 65 | 77 | 89 | |
| | 2011.03-2017.02 | 8AT | R | L/R | Estate 4WD N57 D30 A | | GCI85074 | Inner Joint | | 32 | 28 | 49.9 | 85.5 | 100 | |

| | YEAR | TRANSM. | F/R | L/R | BODY STYLE & DRIVE TYPE & ENGINE | REMARKS | G-AP Ref. | PRODUCT | ABS | Technical Specifications A | B | C | H | L | P |
|---|---|---|---|---|---|---|---|---|---|---|---|---|---|---|---|
| **BMW** | | | | | | | | | | | | | | | |
| **530d xDrive Touring** | | | | | | | | | | | | | | | |
| 3.0 (210 kw) | 2020.07- | 8AT | F | L | Estate 4WD B57 D30 B;JA1 | | GDS84216 | Drive Shaft | | 37 | 27 | 65 | | 573 | |
| | 2020.07- | 8AT | F | R | Estate 4WD B57 D30 B;JA1 | | GDS84215 | Drive Shaft | | 37 | 27 | 65 | | 873 | |
| | 2020.07- | 8AT | F | L/R | Estate 4WD B57 D30 B;JA1 | | GCO83166 | Outer Joint | | 37 | 26 | 65 | | 73 | I |
| | 2020.07- | 8AT | F | L | Estate 4WD B57 D30 B;JA1 | | GCI81055 | Inner Joint | | 27 | 24 | 43.95 | 60 | 123.5 | |
| | 2020.07- | 8AT | F | R | Estate 4WD B57 D30 B;JA1 | | GCI81457 | Inner Joint | | 27 | 24 | 43.95 | 359 | 125 | |
| **530e xDrive** | | | | | | | | | | | | | | | |
| 2.0 (170 kw) | 2019.07-2023.06 | 8AT | F | L | Saloon 4WD B48 B20 A;GC1 | | GDS84216 | Drive Shaft | | 37 | 27 | 65 | | 573 | |
| | 2019.07-2023.06 | 8AT | F | R | Saloon 4WD B48 B20 A;GC1 | | GDS84215 | Drive Shaft | | 37 | 27 | 65 | | 873 | |
| | 2019.07-2023.06 | 8AT | F | L/R | Saloon 4WD B48 B20 A;GC1 | Date from:2020.07 | GCO83166 | Outer Joint | | 37 | 26 | 65 | | 73 | I |
| | 2019.07-2023.06 | 8AT | F | L | Saloon 4WD B48 B20 A;GC1 | Date from:2020.07 | GCI81055 | Inner Joint | | 27 | 24 | 43.95 | 60 | 123.5 | |
| | 2019.07-2023.06 | 8AT | F | R | Saloon 4WD B48 B20 A;GC1 | Date from:2020.07 | GCI81457 | Inner Joint | | 27 | 24 | 43.95 | 359 | 125 | |
| 2.0 (185 kw) | 2017.03-2023.06 | 8AT | F | L | Saloon 4WD B48 B20 A;B46 B20 B;GC1 | | GDS84216 | Drive Shaft | | 37 | 27 | 65 | | 573 | |
| | 2017.03-2023.06 | 8AT | F | R | Saloon 4WD B48 B20 A;B46 B20 B;GC1 | | GDS84215 | Drive Shaft | | 37 | 27 | 65 | | 873 | |
| | 2017.03-2023.06 | 8AT | F | L/R | Saloon 4WD B48 B20 A;B46 B20 B;GC1 | Date from:2020.07 | GCO83166 | Outer Joint | | 37 | 26 | 65 | | 73 | I |
| | 2017.03-2023.06 | 8AT | F | L | Saloon 4WD B48 B20 A;B46 B20 B;GC1 | Date from:2020.07 | GCI81055 | Inner Joint | | 27 | 24 | 43.95 | 60 | 123.5 | |
| | 2017.03-2023.06 | 8AT | F | R | Saloon 4WD B48 B20 A;B46 B20 B;GC1 | Date from:2020.07 | GCI81457 | Inner Joint | | 27 | 24 | 43.95 | 359 | 125 | |
| 2.0 (200 kw) | 2020.07-2023.06 | 8AT | F | L | Saloon 4WD B48 B20 A;GC1 | | GDS84216 | Drive Shaft | | 37 | 27 | 65 | | 573 | |
| | 2020.07-2023.06 | 8AT | F | R | Saloon 4WD B48 B20 A;GC1 | | GDS84215 | Drive Shaft | | 37 | 27 | 65 | | 873 | |
| 2.0 (215 kw) | 2020.07-2023.06 | 8AT | F | L | Saloon 4WD B48 B20 A;B46 B20 B;GC1 | | GDS84216 | Drive Shaft | | 37 | 27 | 65 | | 573 | |
| | 2020.07-2023.06 | 8AT | F | R | Saloon 4WD B48 B20 A;B46 B20 B;GC1 | | GDS84215 | Drive Shaft | | 37 | 27 | 65 | | 873 | |
| | 2020.07-2023.06 | 8AT | F | L/R | Saloon 4WD B48 B20 A;B46 B20 B;GC1 | Date from:2020.07 | GCO83166 | Outer Joint | | 37 | 26 | 65 | | 73 | I |
| | 2020.07-2023.06 | 8AT | F | L | Saloon 4WD B48 B20 A;B46 B20 B;GC1 | Date from:2020.07 | GCI81055 | Inner Joint | | 27 | 24 | 43.95 | 60 | 123.5 | |
| | 2020.07-2023.06 | 8AT | F | R | Saloon 4WD B48 B20 A;B46 B20 B;GC1 | Date from:2020.07 | GCI81457 | Inner Joint | | 27 | 24 | 43.95 | 359 | 125 | |
| **530e xDrive Touring** | | | | | | | | | | | | | | | |
| 2.0 (200 kw) | 2020.11- | 8AT | F | L | Estate 4WD B48 B20 A;GC1 | | GDS84216 | Drive Shaft | | 37 | 27 | 65 | | 573 | |
| | 2020.11- | 8AT | F | R | Estate 4WD B48 B20 A;GC1 | | GDS84215 | Drive Shaft | | 37 | 27 | 65 | | 873 | |
| | 2020.11- | 8AT | F | L/R | Estate 4WD B48 B20 A;GC1 | | GCO83166 | Outer Joint | | 37 | 26 | 65 | | 73 | I |
| | 2020.11- | 8AT | F | L | Estate 4WD B48 B20 A;GC1 | | GCI81055 | Inner Joint | | 27 | 24 | 43.95 | 60 | 123.5 | |
| | 2020.11- | 8AT | F | R | Estate 4WD B48 B20 A;GC1 | | GCI81457 | Inner Joint | | 27 | 24 | 43.95 | 359 | 125 | |
| 2.0 (215 kw) | 2020.11- | 8AT | F | L | Estate 4WD B48 B20 A;GC1 | | GDS84216 | Drive Shaft | | 37 | 27 | 65 | | 573 | |
| | 2020.11- | 8AT | F | R | Estate 4WD B48 B20 A;GC1 | | GDS84215 | Drive Shaft | | 37 | 27 | 65 | | 873 | |
| | 2020.11- | 8AT | F | L/R | Estate 4WD B48 B20 A;GC1 | | GCO83166 | Outer Joint | | 37 | 26 | 65 | | 73 | I |
| | 2020.11- | 8AT | F | L | Estate 4WD B48 B20 A;GC1 | | GCI81055 | Inner Joint | | 27 | 24 | 43.95 | 60 | 123.5 | |
| | 2020.11- | 8AT | F | R | Estate 4WD B48 B20 A;GC1 | | GCI81457 | Inner Joint | | 27 | 24 | 43.95 | 359 | 125 | |
| **530i** | | | | | | | | | | | | | | | |
| 3.0 (170 kw) | 2000.09-2003.06 | MT/Semi-AT | R | L/R | Saloon RWD M54B306S3 | | GDS85021 | Drive Shaft | | 30 | | 59 | 73 | 615 | |
| | 2000.09-2003.06 | MT/Semi-AT | R | L/R | Saloon RWD M54B306S3 | | GCI99127 | Inner Joint | | | 25 | | | 26 | |
| | 2001.12-2005.02 | 6MT/6AT | R | L/R | Saloon RWD M54 B30 (306S3) | | GDS85082 | Drive Shaft | | 30 | | 58.7 | 73 | 656 | |
| | 2001.12-2005.02 | MT | R | L/R | Saloon RWD M54 B30 (306S3) | | GCI35025 | Inner Joint | | | 25 | | | 26 | |
| 3.0 (187 kw) | 2005.03-2010.03 | AT/MT | R | L/R | Saloon RWD N52 B30 A | | GDS85082 | Drive Shaft | | 30 | | 58.7 | 73 | 656 | |
| | 2005.03-2010.03 | AT/MT | R | L/R | Saloon RWD N52 B30 A | | GCI35025 | Inner Joint | | | 25 | | | 26 | |
| 3.0 (190 kw) | 2004.09-2007.02 | AT/MT | F | L | Saloon 4WD N52 B30 A | | GDS81109 | Drive Shaft | 48W | 30 | 27 | 64.8 | 77 | 610 | |
| | 2004.09-2007.02 | AT/MT | F | R | Saloon 4WD N52 B30 A | | GDS81108 | Drive Shaft | 48W | 30 | 27 | 64.8 | 77 | 932 | |
| | 2004.09-2007.02 | AT/MT | F | L/R | Saloon 4WD N52 B30 A | | GCO85020 | Outer Joint | 48W | 30 | 33 | 64.8 | 77 | 60 | M |
| | 2004.09-2007.02 | AT/MT | F | L | Saloon 4WD N52 B30 A | | GCI85066 | Inner Joint | | 27 | 24 | 43.95 | 53.5 | 126.5 | |
| | 2004.09-2007.02 | AT/MT | F | R | Saloon 4WD N52 B30 A | | GCI85067 | Inner Joint | | 27 | 24 | 43.95 | 376 | 126 | |
| | 2004.09-2007.02 | AT/MT | R | L/R | Saloon 4WD N52 B30 A | | GDS85082 | Drive Shaft | | 30 | | 58.7 | 73 | 656 | |
| | 2005.03-2007.03 | 6AT/6MT/6AMT | R | L/R | Saloon RWD N52 B30 A;N52 B30 BF | | GDS85082 | Drive Shaft | | 30 | | 58.7 | 73 | 656 | |
| | 2005.03-2007.03 | 6AT/6MT/6AMT | R | L/R | Saloon RWD N52 B30 A;N52 B30 BF | | GCI35025 | Inner Joint | | | 25 | | | 26 | |
| | 2010.03-2013.06 | 6MT | R | L | Saloon RWD N52 B30 BF, N52 B30 A, N52 B30 AF | | GDS56272 | Drive Shaft | | 30 | 27 | 65 | 77 | 763 | |
| | 2010.03-2013.06 | 6MT | R | R | Saloon RWD N52 B30 BF, N52 B30 A, N52 B30 AF | hollow shaft | GDS56271 | Drive Shaft | | 30 | 27 | 65 | 77 | 817 | |
| | 2010.03-2013.06 | 6MT | R | R | Saloon RWD N52 B30 BF, N52 B30 A, N52 B30 AF | solid shaft | GDS85115 | Drive Shaft | | 30 | 27 | 65 | 77 | 817 | |
| | 2010.03-2013.06 | 8AT | R | L | Saloon RWD N52 B30 BF, N52 B30 A, N52 B30 AF | | GDS85112 | Drive Shaft | | 30 | 27 | 64.9 | 77 | 758 | |
| | 2010.03-2013.06 | 8AT | R | R | Saloon RWD N52 B30 BF, N52 B30 A, N52 B30 AF | | GDS85113 | Drive Shaft | | 30 | 27 | 64.9 | 77 | 811 | |
| | 2010.03-2013.06 | 8AT | R | R | Saloon RWD N52 B30 BF, N52 B30 A, N52 B30 AF | | GCI85054 | Outer Joint | | 30 | 25 | 64.9 | 77 | 82 | |
| | 2010.03-2013.06 | 8AT | R | R | Saloon RWD N52 B30 BF, N52 B30 A, N52 B30 AF | | GCI85055 | Inner Joint | | 27 | 25 | 43.9 | 80 | 96 | |
| 3.0 (200 kw) | 2007.02-2008.08 | 6AT/6MT | F | L | Saloon 4WD N53 B30 A | | GDS81109 | Drive Shaft | 48W | 30 | 27 | 64.8 | 77 | 610 | |
| | 2007.02-2008.08 | 6AT/6MT | F | R | Saloon 4WD N53 B30 A | | GDS81108 | Drive Shaft | 48W | 30 | 27 | 64.8 | 77 | 932 | |
| | 2007.02-2008.08 | 6AT/6MT | F | L | Saloon 4WD N53 B30 A | | GCI85066 | Inner Joint | | 27 | 24 | 43.95 | 53.5 | 126.5 | |
| | 2007.02-2008.08 | 6AT/6MT | F | R | Saloon 4WD N53 B30 A | | GCI85067 | Inner Joint | | 27 | 24 | 43.95 | 376 | 126 | |
| | 2007.02-2008.08 | AT/MT | F | L/R | Saloon 4WD N53 B30 A | | GCO85020 | Outer Joint | 48W | 30 | 33 | 64.8 | 77 | 60 | M |
| | 2007.02-2008.08 | 6AT/6MT | R | L/R | Saloon 4WD N53 B30 A | | GDS85082 | Drive Shaft | | 30 | | 58.7 | 73 | 656 | |
| | 2007.03-2009.10 | 6AT/6MT | F | L | Saloon 4WD N52 B30 A | | GDS81109 | Drive Shaft | 48W | 30 | 27 | 64.8 | 77 | 610 | |
| | 2007.03-2009.10 | 6AT/6MT | F | R | Saloon 4WD N52 B30 A | | GDS81108 | Drive Shaft | 48W | 30 | 27 | 64.8 | 77 | 932 | |
| | 2007.03-2009.10 | 6AT/6MT | F | L | Saloon 4WD N52 B30 A | | GCI85066 | Inner Joint | | 27 | 24 | 43.95 | 53.5 | 126.5 | |

| | YEAR | TRANSM. | F/R | L/R | BODY STYLE & DRIVE TYPE & ENGINE | REMARKS | G-AP Ref. | PRODUCT | ABS | Technical Specifications A | B | C | H | L | P |
|---|---|---|---|---|---|---|---|---|---|---|---|---|---|---|---|
| **BMW** | | | | | | | | | | | | | | | |
| **530i** | | | | | | | | | | | | | | | |
| 3.0 (200 kw) | 2007.03-2009.10 | 6AT/6MT | F | R | Saloon 4WD N52 B30 A | | GCI85067 | Inner Joint | | 27 | 24 | 43.95 | 376 | 126 | |
| | 2007.03-2009.10 | AT/MT | F | L/R | Saloon 4WD N52 B30 A | | GCO85020 | Outer Joint | 48W | 30 | 33 | 64.8 | 77 | 60 | M |
| | 2007.03-2009.10 | 6AT/6MT | R | L/R | Saloon 4WD N52 B30 A | | GDS85082 | Drive Shaft | | 30 | | 58.7 | 73 | 656 | |
| | 2007.03-2009.12 | 6AT/6MT | R | L/R | Saloon RWD N52 B30 A;N52 B30 BF | | GDS85082 | Drive Shaft | | 30 | | 58.7 | 73 | 656 | |
| | 2007.03-2009.12 | MT | R | L/R | Saloon RWD N52 B30 A;N52 B30 BF | | GCI61075 | Inner Joint | | | 28 | | | 26 | |
| | 2007.03-2009.12 | 6AT/6MT | R | L/R | Saloon RWD N53 B30 A | | GDS85082 | Drive Shaft | | 30 | | 58.7 | 73 | 656 | |
| | 2007.03-2009.12 | MT | R | L/R | Saloon RWD N53 B30 A | | GCI61075 | Inner Joint | | | 28 | | | 26 | |
| | 2011.05-2013.06 | 6MT | R | L | Saloon RWD N53 B30 A | | GDS56272 | Drive Shaft | | 30 | 27 | 65 | 77 | 763 | |
| | 2011.05-2013.06 | 6MT | R | R | Saloon RWD N53 B30 A | hollow shaft | GDS56271 | Drive Shaft | | 30 | 27 | 65 | 77 | 817 | |
| | 2011.05-2013.06 | 6MT | R | R | Saloon RWD N53 B30 A | solid shaft | GDS85115 | Drive Shaft | | 30 | 27 | 65 | 77 | 817 | |
| | 2011.05-2013.06 | 8AT | R | L | Saloon RWD N53 B30 A | | GDS85112 | Drive Shaft | | 30 | 27 | 64.9 | 77 | 758 | |
| | 2011.05-2013.06 | 8AT | R | R | Saloon RWD N53 B30 A | | GDS85113 | Drive Shaft | | 30 | 27 | 64.9 | 77 | 811 | |
| | 2011.05-2013.06 | 8AT | R | L/R | Saloon RWD N53 B30 A | | GCI85054 | Outer Joint | | 30 | 25 | 64.9 | 77 | 82 | |
| | 2011.05-2013.06 | 8AT | R | L/R | Saloon RWD N53 B30 A | | GCI85055 | Inner Joint | | 27 | 25 | 43.9 | 80 | 96 | |
| **530i Touring** | | | | | | | | | | | | | | | |
| 3.0 (160 kw) | 1992.09-1996.09 | AT | R | L/R | Estate RWD M60B308S1 | | GDS85001 | Drive Shaft | | | | | | 465 | |
| | 1992.09-1996.09 | AT | R | L/R | Estate RWD M60B308S1 | | GCI99052 | Inner Joint | | | 25 | | | 32 | |
| 3.0 (170 kw) | 2000.09-2003.12 | AT/MT/Semi-AT | R | L/R | Estate RWD M54B306S3 | | GDS85021 | Drive Shaft | | 30 | | 59 | 73 | 615 | |
| | 2000.09-2003.12 | AT/MT/Semi-AT | R | L/R | Estate RWD M54B306S3 | | GCI99127 | Inner Joint | | | 25 | | | 26 | |
| 3.0 (190 kw) | 2004.09-2007.02 | AT | R | L/R | Estate RWD N52 B30 A;N52 B30 BF | Date from:2005.10 | GDS85082 | Drive Shaft | | 30 | | 58.7 | 73 | 656 | |
| | 2004.09-2007.02 | MT | R | L/R | Estate RWD N52 B30 A;N52 B30 BF | | GDS85082 | Drive Shaft | | 30 | | 58.7 | 73 | 656 | |
| | 2004.09-2007.02 | MT | R | L/R | Estate RWD N52 B30 A;N52 B30 BF | | GCI61075 | Inner Joint | | | 28 | | | 26 | |
| | 2005.04-2007.02 | AT/MT | F | L | Estate 4WD N52 B30 A | | GDS81109 | Drive Shaft | 48W | 30 | 27 | 64.8 | 77 | 610 | |
| | 2005.04-2007.02 | AT/MT | F | R | Estate 4WD N52 B30 A | | GDS81108 | Drive Shaft | 48W | 30 | 27 | 64.8 | 77 | 932 | |
| | 2005.04-2007.02 | AT/MT | F | L/R | Estate 4WD N52 B30 A | | GCO85020 | Outer Joint | 48W | 30 | 33 | 64.8 | 77 | 60 | M |
| | 2005.04-2007.02 | AT/MT | F | L | Estate 4WD N52 B30 A | | GCI85066 | Inner Joint | | 27 | 24 | 43.95 | 53.5 | 126.5 | |
| | 2005.04-2007.02 | AT/MT | F | R | Estate 4WD N52 B30 A | | GCI85067 | Inner Joint | | 27 | 24 | 43.95 | 376 | 126 | |
| | 2005.04-2007.02 | AT | R | L/R | Estate 4WD N52 B30 A | Date from:2005.10 | GDS85082 | Drive Shaft | | 30 | | 58.7 | 73 | 656 | |
| | 2005.04-2007.02 | MT | R | L/R | Estate 4WD N52 B30 A | | GDS85082 | Drive Shaft | | 30 | | 58.7 | 73 | 656 | |
| | 2010.03-2013.05 | 8AT | R | L | Estate RWD N52 B30 A;N52 B30 AF | | GDS85112 | Drive Shaft | | 30 | 27 | 64.9 | 77 | 758 | |
| | 2010.03-2013.05 | 8AT | R | R | Estate RWD N52 B30 A;N52 B30 AF | | GDS85113 | Drive Shaft | | 30 | 27 | 64.9 | 77 | 811 | |
| | 2010.03-2013.05 | 8AT | R | R | Estate RWD N52 B30 A;N52 B30 AF | | GCI85054 | Outer Joint | | 30 | 25 | 64.9 | 77 | 82 | |
| | 2010.03-2013.05 | 8AT | R | R | Estate RWD N52 B30 A;N52 B30 AF | | GCI85055 | Inner Joint | | 27 | 25 | 43.9 | 80 | 96 | |
| 3.0 (200 kw) | 2006.09-2008.09 | AT/MT | F | L | Estate 4WD N53 B30 A | | GDS81109 | Drive Shaft | 48W | 30 | 27 | 64.8 | 77 | 610 | |
| | 2006.09-2008.09 | AT/MT | F | R | Estate 4WD N53 B30 A | | GDS81108 | Drive Shaft | 48W | 30 | 27 | 64.8 | 77 | 932 | |
| | 2006.09-2008.09 | AT/MT | F | L/R | Estate 4WD N53 B30 A | | GCO85020 | Outer Joint | 48W | 30 | 33 | 64.8 | 77 | 60 | M |
| | 2006.09-2008.09 | AT/MT | F | L | Estate 4WD N53 B30 A | | GCI85066 | Inner Joint | | 27 | 24 | 43.95 | 53.5 | 126.5 | |
| | 2006.09-2008.09 | AT/MT | F | R | Estate 4WD N53 B30 A | | GCI85067 | Inner Joint | | 27 | 24 | 43.95 | 376 | 126 | |
| | 2006.09-2008.09 | 6AT/6MT | R | L/R | Estate 4WD N53 B30 A | | GDS85082 | Drive Shaft | | 30 | | 58.7 | 73 | 656 | |
| | 2006.09-2010.03 | 6AT/6MT | R | L/R | Estate RWD N52 B30 A | | GDS85082 | Drive Shaft | | 30 | | 58.7 | 73 | 656 | |
| | 2007.01-2010.12 | 6AT/6MT | R | L/R | Estate RWD N53 B30 A | | GDS85082 | Drive Shaft | | 30 | | 58.7 | 73 | 656 | |
| | 2007.03-2010.05 | AT/MT | F | L | Estate 4WD N52 B30 A | | GDS81109 | Drive Shaft | 48W | 30 | 27 | 64.8 | 77 | 610 | |
| | 2007.03-2010.05 | AT/MT | F | R | Estate 4WD N52 B30 A | | GDS81108 | Drive Shaft | 48W | 30 | 27 | 64.8 | 77 | 932 | |
| | 2007.03-2010.05 | AT/MT | F | L/R | Estate 4WD N52 B30 A | | GCO85020 | Outer Joint | 48W | 30 | 33 | 64.8 | 77 | 60 | M |
| | 2007.03-2010.05 | AT/MT | F | L | Estate 4WD N52 B30 A | | GCI85066 | Inner Joint | | 27 | 24 | 43.95 | 53.5 | 126.5 | |
| | 2007.03-2010.05 | AT/MT | F | R | Estate 4WD N52 B30 A | | GCI85067 | Inner Joint | | 27 | 24 | 43.95 | 376 | 126 | |
| | 2007.03-2010.05 | 6AT/6MT | R | L/R | Estate 4WD N52 B30 A | | GDS85082 | Drive Shaft | | 30 | | 58.7 | 73 | 656 | |
| | 2011.07-2013.06 | 6MT | R | L | Estate RWD N53 B30 A | | GDS56272 | Drive Shaft | | 30 | 27 | 65 | 77 | 763 | |
| | 2011.07-2013.06 | 6MT | R | R | Estate RWD N53 B30 A | hollow shaft | GDS56271 | Drive Shaft | | 30 | 27 | 65 | 77 | 817 | |
| | 2011.07-2013.06 | 6MT | R | R | Estate RWD N53 B30 A | solid shaft | GDS85115 | Drive Shaft | | 30 | 27 | 65 | 77 | 817 | |
| | 2011.07-2013.06 | 8AT | R | L | Estate RWD N53 B30 A | | GDS85112 | Drive Shaft | | 30 | 27 | 64.9 | 77 | 758 | |
| | 2011.07-2013.06 | 8AT | R | R | Estate RWD N53 B30 A | | GDS85113 | Drive Shaft | | 30 | 27 | 64.9 | 77 | 811 | |
| | 2011.07-2013.06 | 8AT | R | L/R | Estate RWD N53 B30 A | | GCI85054 | Outer Joint | | 30 | 25 | 64.9 | 77 | 82 | |
| | 2011.07-2013.06 | 8AT | R | L/R | Estate RWD N53 B30 A | | GCI85055 | Inner Joint | | 27 | 25 | 43.9 | 80 | 96 | |
| **530i xDrive** | | | | | | | | | | | | | | | |
| 2.0 (180 kw) | 2022.05-2023.06 | 8AT | F | L | Saloon 4WD B48 B20 B;B46 B20 B | | GDS84216 | Drive Shaft | | 37 | 27 | 65 | | 573 | |
| | 2022.05-2023.06 | 8AT | F | R | Saloon 4WD B48 B20 B;B46 B20 B | | GDS84215 | Drive Shaft | | 37 | 27 | 65 | | 873 | |
| 2.0 (183 kw) | 2016.09-2023.06 | 8AT | F | L | Saloon 4WD B48 B20 B | Date to:2019.03 | GDS84216 | Drive Shaft | | 37 | 27 | 65 | | 573 | |
| | 2016.09-2023.06 | 8AT | F | R | Saloon 4WD B48 B20 B | Date to:2019.03 | GDS84215 | Drive Shaft | | 37 | 27 | 65 | | 873 | |
| | 2016.09-2023.06 | 8AT | F | L/R | Saloon 4WD B48 B20 B | Date to:2019.03 | GCO82734 | Outer Joint | | 37 | 25 | 65 | | 73 | I |
| | 2016.09-2023.06 | 8AT | F | L | Saloon 4WD B48 B20 B | Date to:2019.03 | GCI81055 | Inner Joint | | 27 | 24 | 43.95 | 60 | 123.5 | |
| | 2016.09-2023.06 | 8AT | F | R | Saloon 4WD B48 B20 B | Date to:2019.03 | GCI81457 | Inner Joint | | 27 | 24 | 43.95 | 359 | 125 | |
| 2.0 (185 kw) | 2016.09-2020.06 | 8AT | F | L | Saloon 4WD B48 B20 B;B46 B20 B | Date to:2019.03 | GDS84216 | Drive Shaft | | 37 | 27 | 65 | | 573 | |
| | 2016.09-2020.06 | 8AT | F | R | Saloon 4WD B48 B20 B;B46 B20 B | Date to:2019.03 | GDS84215 | Drive Shaft | | 37 | 27 | 65 | | 873 | |
| | 2016.09-2020.06 | 8AT | F | L/R | Saloon 4WD B48 B20 B;B46 B20 B | Date to:2019.03 | GCO82734 | Outer Joint | | 37 | 25 | 65 | | 73 | I |

| | YEAR | TRANSM. | F/R | L/R | BODY STYLE & DRIVE TYPE & ENGINE | REMARKS | G-AP Ref. | PRODUCT | ABS | Technical Specifications A | B | C | H | L | P |
|---|---|---|---|---|---|---|---|---|---|---|---|---|---|---|---|
| **BMW** | | | | | | | | | | | | | | | |
| **530i xDrive** | | | | | | | | | | | | | | | |
| 2.0 (185 kw) | 2016.09-2020.06 | 8AT | F | L | Saloon 4WD B48 B20 B;B46 B20 B | Date to:2019.03 | GCI81055 | Inner Joint | | 27 | 24 | 43.95 | 60 | 123.5 | |
| | 2016.09-2020.06 | 8AT | F | R | Saloon 4WD B48 B20 B;B46 B20 B | Date to:2019.03 | GCI81457 | Inner Joint | | 27 | 24 | 43.95 | 359 | 125 | |
| | 2020.07-2023.06 | 8AT | F | L | Saloon 4WD B48 B20 B;JA1 | | GDS84216 | Drive Shaft | | 37 | 27 | 65 | | 573 | |
| | 2020.07-2023.06 | 8AT | F | R | Saloon 4WD B48 B20 B;JA1 | | GDS84215 | Drive Shaft | | 37 | 27 | 65 | | 873 | |
| | 2020.07-2023.06 | 8AT | F | L/R | Saloon 4WD B48 B20 B;JA1 | | GCO83166 | Outer Joint | | 37 | 26 | 65 | | 73 | I |
| | 2020.07-2023.06 | 8AT | F | L | Saloon 4WD B48 B20 B;JA1 | | GCI81055 | Inner Joint | | 27 | 24 | 43.95 | 60 | 123.5 | |
| | 2020.07-2023.06 | 8AT | F | R | Saloon 4WD B48 B20 B;JA1 | | GCI81457 | Inner Joint | | 27 | 24 | 43.95 | 359 | 125 | |
| 3.0 (200 kw) | 2008.09-2009.12 | AT/MT | F | L | Saloon 4WD N53 B30 A | | GDS81109 | Drive Shaft | 48W | 30 | 27 | 64.8 | 77 | 610 | |
| | 2008.09-2009.12 | AT/MT | F | R | Saloon 4WD N53 B30 A | | GDS81108 | Drive Shaft | 48W | 30 | 27 | 64.8 | 77 | 932 | |
| | 2008.09-2009.12 | AT/MT | F | L/R | Saloon 4WD N53 B30 A | | GCO85020 | Outer Joint | 48W | 30 | 33 | 64.8 | 77 | 60 | M |
| | 2008.09-2009.12 | AT/MT | F | L | Saloon 4WD N53 B30 A | | GCI85066 | Inner Joint | | 27 | 24 | 43.95 | 53.5 | 126.5 | |
| | 2008.09-2009.12 | AT/MT | F | R | Saloon 4WD N53 B30 A | | GCI85067 | Inner Joint | | 27 | 24 | 43.95 | 376 | 126 | |
| | 2008.09-2009.12 | MT | R | L/R | Saloon 4WD N53 B30 A | | GDS85082 | Drive Shaft | | 30 | | 58.7 | 73 | 656 | |
| **530i xDrive Touring** | | | | | | | | | | | | | | | |
| 2.0 (180 kw) | 2022.05- | 8AT | F | L | Estate 4WD B48 B20 B | | GDS84216 | Drive Shaft | | 37 | 27 | 65 | | 573 | |
| | 2022.05- | 8AT | F | R | Estate 4WD B48 B20 B | | GDS84215 | Drive Shaft | | 37 | 27 | 65 | | 873 | |
| | 2022.07- | 8AT | F | L | Estate 4WD B48 B20 B | | GDS84216 | Drive Shaft | | 37 | 27 | 65 | | 573 | |
| | 2022.07- | 8AT | F | R | Estate 4WD B48 B20 B | | GDS84215 | Drive Shaft | | 37 | 27 | 65 | | 873 | |
| 2.0 (185 kw) | 2017.07- | 8AT | F | L | Estate Van 4WD B48 B20 B | Date to:2019.03 | GDS84216 | Drive Shaft | | 37 | 27 | 65 | | 573 | |
| | 2017.07- | 8AT | F | R | Estate Van 4WD B48 B20 B | Date to:2019.03 | GDS84215 | Drive Shaft | | 37 | 27 | 65 | | 873 | |
| | 2017.07- | 8AT | F | L/R | Estate Van 4WD B48 B20 B | Date to:2019.03 | GCO82734 | Outer Joint | | 37 | 25 | 65 | | 73 | I |
| | 2017.07- | 8AT | F | L/R | Estate Van 4WD B48 B20 B | Date from:2019.04,Date to:2020.06,Trim Level:2;Date from:2020.07 | GCO83166 | Outer Joint | | 37 | 26 | 65 | | 73 | I |
| | 2017.07- | 8AT | F | L | Estate Van 4WD B48 B20 B | | GCI81055 | Inner Joint | | 27 | 24 | 43.95 | 60 | 123.5 | |
| | 2017.07- | 8AT | F | R | Estate Van 4WD B48 B20 B | Date to:2019.03;Date from:2020.07 | GCI81457 | Inner Joint | | 27 | 24 | 43.95 | 359 | 125 | |
| | 2017.07-2020.06 | 8AT | F | L | Estate 4WD B48 B20 B | Date to:2019.03 | GDS84216 | Drive Shaft | | 37 | 27 | 65 | | 573 | |
| | 2017.07-2020.06 | 8AT | F | R | Estate 4WD B48 B20 B | Date to:2019.03 | GDS84215 | Drive Shaft | | 37 | 27 | 65 | | 873 | |
| | 2017.07-2020.06 | 8AT | F | L/R | Estate 4WD B48 B20 B | Date to:2019.03 | GCO82734 | Outer Joint | | 37 | 25 | 65 | | 73 | I |
| | 2017.07-2020.06 | 8AT | F | L | Estate 4WD B48 B20 B | | GCI81055 | Inner Joint | | 27 | 24 | 43.95 | 60 | 123.5 | |
| | 2017.07-2020.06 | 8AT | F | R | Estate 4WD B48 B20 B | Date to:2019.03 | GCI81457 | Inner Joint | | 27 | 24 | 43.95 | 359 | 125 | |
| | 2020.07- | 8AT | F | L | Estate 4WD B48 B20 B;JA1 | | GDS84216 | Drive Shaft | | 37 | 27 | 65 | | 573 | |
| | 2020.07- | 8AT | F | R | Estate 4WD B48 B20 B;JA1 | | GDS84215 | Drive Shaft | | 37 | 27 | 65 | | 873 | |
| | 2020.07- | 8AT | F | L/R | Estate 4WD B48 B20 B;JA1 | | GCO83166 | Outer Joint | | 37 | 26 | 65 | | 73 | I |
| | 2020.07- | 8AT | F | L | Estate 4WD B48 B20 B;JA1 | | GCI81055 | Inner Joint | | 27 | 24 | 43.95 | 60 | 123.5 | |
| | 2020.07- | 8AT | F | R | Estate 4WD B48 B20 B;JA1 | | GCI81457 | Inner Joint | | 27 | 24 | 43.95 | 359 | 125 | |
| 3.0 (200 kw) | 2008.09-2010.05 | AT/MT | F | L | Estate 4WD N53 B30 A | | GDS81109 | Drive Shaft | 48W | 30 | 27 | 64.8 | 77 | 610 | |
| | 2008.09-2010.05 | AT/MT | F | R | Estate 4WD N53 B30 A | | GDS81108 | Drive Shaft | 48W | 30 | 27 | 64.8 | 77 | 932 | |
| | 2008.09-2010.05 | AT/MT | F | L/R | Estate 4WD N53 B30 A | | GCO85020 | Outer Joint | 48W | 30 | 33 | 64.8 | 77 | 60 | M |
| | 2008.09-2010.05 | AT/MT | F | L | Estate 4WD N53 B30 A | | GCI85066 | Inner Joint | | 27 | 24 | 43.95 | 53.5 | 126.5 | |
| | 2008.09-2010.05 | AT/MT | F | R | Estate 4WD N53 B30 A | | GCI85067 | Inner Joint | | 27 | 24 | 43.95 | 376 | 126 | |
| | 2008.09-2010.05 | 6AT/6MT | R | L/R | Estate 4WD N53 B30 A | | GDS85082 | Drive Shaft | | 30 | | 58.7 | 73 | 656 | |
| **535d** | | | | | | | | | | | | | | | |
| 3.0 (200 kw) | 2004.09-2010.03 | 6AT | R | L/R | Saloon RWD M57 D30 (306D4) | | GDS85073 | Drive Shaft | | 30 | | 58.8 | 73 | 653 | |
| | 2004.09-2010.03 | 6AT | R | L/R | Saloon RWD M57 D30 (306D4) | | GCI85048 | Inner Joint | | | 28 | | | 28 | |
| 3.0 (210 kw) | 2007.01-2010.03 | 6AT | R | L/R | Saloon RWD M57 D30 (306D5) | | GDS85073 | Drive Shaft | | 30 | | 58.8 | 73 | 653 | |
| | 2007.01-2010.03 | 6AT | R | L/R | Saloon RWD M57 D30 (306D5) | | GCI85048 | Inner Joint | | | 28 | | | 28 | |
| 3.0 (220 kw) | 2010.09-2011.08 | 8AT | R | L | Saloon RWD N57 D30 B | | GDS85137 | Drive Shaft | | 30 | 32 | 65 | 77 | 758 | |
| | 2010.09-2011.08 | 8AT | R | R | Saloon RWD N57 D30 B | | GDS85139 | Drive Shaft | | 30 | 32 | 65 | 77 | 813 | |
| | 2010.09-2011.08 | 8AT | R | R | Saloon RWD N57 D30 B | | GCI85074 | Inner Joint | | 32 | 28 | 49.9 | 85.5 | 100 | |
| | 2010.09-2011.08 | 8AT | R | L/R | Saloon RWD N57 D30 B | | GCI85063 | Inner Joint | | 30 | 28 | 65 | 77 | 89 | |
| 3.0 (230 kw) | 2011.09-2016.10 | 8AT | R | L | Saloon RWD N57 D30 B | | GDS85137 | Drive Shaft | | 30 | 32 | 65 | 77 | 758 | |
| | 2011.09-2016.10 | 8AT | R | R | Saloon RWD N57 D30 B | | GDS85139 | Drive Shaft | | 30 | 32 | 65 | 77 | 813 | |
| | 2011.09-2016.10 | 8AT | R | R | Saloon RWD N57 D30 B | | GCI85074 | Inner Joint | | 32 | 28 | 49.9 | 85.5 | 100 | |
| | 2011.09-2016.10 | 8AT | R | L/R | Saloon RWD N57 D30 B | | GCI85063 | Inner Joint | | 30 | 28 | 65 | 77 | 89 | |
| **535d Gran Turismo** | | | | | | | | | | | | | | | |
| 3.0 (220 kw) | 2010.03-2012.06 | 8AT | R | L | Hatchback RWD N57 D30 B | | GDS85116 | Drive Shaft | | 30 | 32 | 65 | 77 | 777 | |
| | 2010.03-2012.06 | 8AT | R | R | Hatchback RWD N57 D30 B | | GDS85111 | Drive Shaft | | 30 | 32 | 65 | 77 | 831 | |
| | 2010.03-2012.06 | 8AT | R | L/R | Hatchback RWD N57 D30 B | | GCI85074 | Inner Joint | | 32 | 28 | 49.9 | 85.5 | 100 | |
| | 2010.03-2012.06 | AT | R | L/R | Hatchback RWD N57 D30 B | | GCI85063 | Inner Joint | | 30 | 28 | 65 | 77 | 89 | |
| 3.0 (230 kw) | 2012.07-2017.02 | AT | R | L | Hatchback RWD N57 D30 B | | GDS85116 | Drive Shaft | | 30 | 32 | 65 | 77 | 777 | |
| | 2012.07-2017.02 | AT | R | R | Hatchback RWD N57 D30 B | | GDS85111 | Drive Shaft | | 30 | 32 | 65 | 77 | 831 | |
| | 2012.07-2017.02 | AT | R | L/R | Hatchback RWD N57 D30 B | | GCI85063 | Inner Joint | | 30 | 28 | 65 | 77 | 89 | |
| | 2012.07-2017.02 | AT | R | L/R | Hatchback RWD N57 D30 B | | GCI85074 | Inner Joint | | 32 | 28 | 49.9 | 85.5 | 100 | |
| **535d Touring** | | | | | | | | | | | | | | | |
| 3.0 (200 kw) | 2004.09-2010.12 | 6AT | R | L/R | Estate RWD M57 D30 (306D4) | | GDS85073 | Drive Shaft | | 30 | | 58.8 | 73 | 653 | |
| | 2004.09-2010.12 | 6AT | R | L/R | Estate RWD M57 D30 (306D4) | | GCI85048 | Inner Joint | | | 28 | | | 28 | |

| | YEAR | TRANSM. | F/R | L/R | BODY STYLE & DRIVE TYPE & ENGINE | REMARKS | G-AP Ref. | PRODUCT | ABS | Technical Specifications A | B | C | H | L | P |
|---|---|---|---|---|---|---|---|---|---|---|---|---|---|---|---|
| **BMW** | | | | | | | | | | | | | | | |
| **535d Touring** | | | | | | | | | | | | | | | |
| 3.0 (210 kw) | 2007.01-2010.12 | 6AT | R | L/R | Estate RWD M57 D30 (306D5) | | GDS85073 | Drive Shaft | | 30 | | 58.8 | 73 | 653 | |
| 3.0 (220 kw) | 2010.09-2011.08 | 8AT | R | L | Estate RWD N57 D30 B | | GDS85137 | Drive Shaft | | 30 | 32 | 65 | 77 | 758 | |
| | 2010.09-2011.08 | 8AT | R | R | Estate RWD N57 D30 B | | GDS85139 | Drive Shaft | | 30 | 32 | 65 | 77 | 813 | |
| | 2010.09-2011.08 | 8AT | R | R | Estate RWD N57 D30 B | | GCI85074 | Inner Joint | | 32 | 28 | 49.9 | 85.5 | 100 | |
| | 2010.09-2011.08 | 8AT | R | L/R | Estate RWD N57 D30 B | | GCI85063 | Inner Joint | | 30 | 28 | 65 | 77 | 89 | |
| 3.0 (230 kw) | 2011.09-2017.02 | 8AT | R | L | Estate RWD N57 D30 B | | GDS85137 | Drive Shaft | | 30 | 32 | 65 | 77 | 758 | |
| | 2011.09-2017.02 | 8AT | R | R | Estate RWD N57 D30 B | | GDS85139 | Drive Shaft | | 30 | 32 | 65 | 77 | 813 | |
| | 2011.09-2017.02 | 8AT | R | L/R | Estate RWD N57 D30 B | | GCI85063 | Inner Joint | | 30 | 28 | 65 | 77 | 89 | |
| | 2011.09-2017.02 | 8AT | R | L/R | Estate RWD N57 D30 B | | GCI85074 | Inner Joint | | 32 | 28 | 49.9 | 85.5 | 100 | |
| **535d xDrive** | | | | | | | | | | | | | | | |
| 3.0 (230 kw) | 2011.09-2016.10 | 8AT | F | L | Saloon 4WD N57 D30 B | | GDS81581 | Drive Shaft | | 37 | 27 | 65 | | 562 | |
| | 2011.09-2016.10 | 8AT | F | R | Saloon 4WD N57 D30 B | | GDS81681 | Drive Shaft | | 37 | 27 | 65 | | 862 | |
| | 2011.09-2016.10 | 8AT | F | L/R | Saloon 4WD N57 D30 B | | GCO81413 | Outer Joint | | 37 | 25 | 65 | | 73 | I |
| | 2011.09-2016.10 | 8AT | F | L | Saloon 4WD N57 D30 B | | GCI81055 | Inner Joint | | 27 | 24 | 43.95 | 60 | 123.5 | |
| | 2011.09-2016.10 | 8AT | F | R | Saloon 4WD N57 D30 B | | GCI81457 | Inner Joint | | 27 | 24 | 43.95 | 359 | 125 | |
| | 2011.09-2016.10 | 8AT | R | L | Saloon 4WD N57 D30 B | | GDS85137 | Drive Shaft | | 30 | 32 | 65 | 77 | 758 | |
| | 2011.09-2016.10 | 8AT | R | R | Saloon 4WD N57 D30 B | | GDS85139 | Drive Shaft | | 30 | 32 | 65 | 77 | 813 | |
| | 2011.09-2016.10 | 8AT | R | L/R | Saloon 4WD N57 D30 B | | GCI85074 | Inner Joint | | 32 | 28 | 49.9 | 85.5 | 100 | |
| | 2011.09-2016.10 | AT | R | L | Saloon 4WD N57 D30 B | | GCI85063 | Inner Joint | | 30 | 28 | 65 | 77 | 89 | |
| **535d xDrive Gran Turismo** | | | | | | | | | | | | | | | |
| 3.0 (220 kw) | 2010.03-2012.06 | 8AT | F | R | Hatchback 4WD N57 D30 B | | GDS83946 | Drive Shaft | | 37 | 27 | 65 | | 871 | |
| | 2010.03-2012.06 | 8AT | F | R | Hatchback 4WD N57 D30 B | | GCI81457 | Inner Joint | | 27 | 24 | 43.95 | 359 | 125 | |
| | 2010.03-2012.06 | AT | F | L | Hatchback 4WD N57 D30 B | | GDS82730 | Drive Shaft | | 37 | 27 | 65 | | 572 | |
| | 2010.03-2012.06 | AT | F | L/R | Hatchback 4WD N57 D30 B | | GCO81413 | Outer Joint | | 37 | 25 | 65 | | 73 | I |
| | 2010.03-2012.06 | AT | F | L | Hatchback 4WD N57 D30 B | | GCI81055 | Inner Joint | | 27 | 24 | 43.95 | 60 | 123.5 | |
| | 2010.03-2012.06 | AT | R | L | Hatchback 4WD N57 D30 B | | GDS85116 | Drive Shaft | | 30 | 32 | 65 | 77 | 777 | |
| | 2010.03-2012.06 | AT | R | R | Hatchback 4WD N57 D30 B | | GDS85111 | Drive Shaft | | 30 | 32 | 65 | 77 | 831 | |
| | 2010.03-2012.06 | AT | R | L/R | Hatchback 4WD N57 D30 B | | GCI85063 | Inner Joint | | 30 | 28 | 65 | 77 | 89 | |
| | 2010.03-2012.06 | AT | R | L/R | Hatchback 4WD N57 D30 B | | GCI85074 | Inner Joint | | 32 | 28 | 49.9 | 85.5 | 100 | |
| 3.0 (230 kw) | 2012.07-2017.02 | 8AT | F | R | Hatchback 4WD N57 D30 B | | GDS83946 | Drive Shaft | | 37 | 27 | 65 | | 871 | |
| | 2012.07-2017.02 | 8AT | F | R | Hatchback 4WD N57 D30 B | | GCI81457 | Inner Joint | | 27 | 24 | 43.95 | 359 | 125 | |
| | 2012.07-2017.02 | AT | F | L | Hatchback 4WD N57 D30 B | | GDS82730 | Drive Shaft | | 37 | 27 | 65 | | 572 | |
| | 2012.07-2017.02 | AT | F | L/R | Hatchback 4WD N57 D30 B | | GCO81413 | Outer Joint | | 37 | 25 | 65 | | 73 | I |
| | 2012.07-2017.02 | AT | F | L | Hatchback 4WD N57 D30 B | | GCI81055 | Inner Joint | | 27 | 24 | 43.95 | 60 | 123.5 | |
| | 2012.07-2017.02 | AT | R | L | Hatchback 4WD N57 D30 B | | GDS85116 | Drive Shaft | | 30 | 32 | 65 | 77 | 777 | |
| | 2012.07-2017.02 | AT | R | R | Hatchback 4WD N57 D30 B | | GDS85111 | Drive Shaft | | 30 | 32 | 65 | 77 | 831 | |
| | 2012.07-2017.02 | AT | R | L/R | Hatchback 4WD N57 D30 B | | GCI85063 | Inner Joint | | 30 | 28 | 65 | 77 | 89 | |
| | 2012.07-2017.02 | AT | R | L/R | Hatchback 4WD N57 D30 B | | GCI85074 | Inner Joint | | 32 | 28 | 49.9 | 85.5 | 100 | |
| **535d xDrive Touring** | | | | | | | | | | | | | | | |
| 3.0 (230 kw) | 2011.09-2017.02 | 8AT | F | L | Estate 4WD N57 D30 B | | GDS81581 | Drive Shaft | | 37 | 27 | 65 | | 562 | |
| | 2011.09-2017.02 | 8AT | F | R | Estate 4WD N57 D30 B | | GDS81681 | Drive Shaft | | 37 | 27 | 65 | | 862 | |
| | 2011.09-2017.02 | 8AT | F | L/R | Estate 4WD N57 D30 B | | GCO81413 | Outer Joint | | 37 | 25 | 65 | | 73 | I |
| | 2011.09-2017.02 | 8AT | F | L | Estate 4WD N57 D30 B | | GCI81055 | Inner Joint | | 27 | 24 | 43.95 | 60 | 123.5 | |
| | 2011.09-2017.02 | 8AT | F | R | Estate 4WD N57 D30 B | | GCI81457 | Inner Joint | | 27 | 24 | 43.95 | 359 | 125 | |
| | 2011.09-2017.02 | 8AT | R | L | Estate 4WD N57 D30 B | | GDS85137 | Drive Shaft | | 30 | 32 | 65 | 77 | 758 | |
| | 2011.09-2017.02 | 8AT | R | R | Estate 4WD N57 D30 B | | GDS85139 | Drive Shaft | | 30 | 32 | 65 | 77 | 813 | |
| | 2011.09-2017.02 | 8AT | R | R | Estate 4WD N57 D30 B | | GCI85074 | Inner Joint | | 32 | 28 | 49.9 | 85.5 | 100 | |
| | 2011.09-2017.02 | 8AT | R | L/R | Estate 4WD N57 D30 B | | GCI85063 | Inner Joint | | 30 | 28 | 65 | 77 | 89 | |
| **535i** | | | | | | | | | | | | | | | |
| 3.0 (225 kw) | 2006.04-2009.12 | 6AT | R | L/R | Saloon RWD N54 B30 A | | GDS85082 | Drive Shaft | | 30 | | 58.7 | 73 | 656 | |
| | 2006.04-2009.12 | 6AT | R | L/R | Saloon RWD N54 B30 A | | GCI35025 | Inner Joint | | | 25 | | | 26 | |
| | 2006.04-2009.12 | 6MT | R | L/R | Saloon RWD N54 B30 A | | GDS85073 | Drive Shaft | | 30 | | 58.8 | 73 | 653 | |
| | 2006.04-2009.12 | 6MT | R | L/R | Saloon RWD N54 B30 A | | GCI85048 | Inner Joint | | | 28 | | | 28 | |
| | 2010.01-2016.10 | 6MT | R | L | Saloon RWD N55 B30 A | | GDS56272 | Drive Shaft | | 30 | 27 | 65 | 77 | 763 | |
| | 2010.01-2016.10 | 6MT | R | R | Saloon RWD N55 B30 A | hollow shaft | GDS56271 | Drive Shaft | | 30 | 27 | 65 | 77 | 817 | |
| | 2010.01-2016.10 | 6MT | R | R | Saloon RWD N55 B30 A | solid shaft | GDS85115 | Drive Shaft | | 30 | 27 | 65 | 77 | 817 | |
| | 2010.01-2016.10 | 8AT | R | L | Saloon RWD N55 B30 A | Date from:2011.06 | GDS85114 | Drive Shaft | | 30 | 27 | 65 | 77 | 763 | |
| | 2010.01-2016.10 | 8AT | R | L | Saloon RWD N55 B30 A | date to:2011.05 | GDS85137 | Drive Shaft | | 30 | 32 | 65 | 77 | 758 | |
| | 2010.01-2016.10 | 8AT | R | R | Saloon RWD N55 B30 A | Date to:2011.05 | GDS85139 | Drive Shaft | | 30 | 32 | 65 | 77 | 813 | |
| | 2010.01-2016.10 | 8AT | R | L | Saloon RWD N55 B30 A | Date to:2011.05 | GCI85063 | Inner Joint | | 30 | 28 | 65 | 77 | 89 | |
| | 2010.01-2016.10 | 8AT | R | L | Saloon RWD N55 B30 A | Date to:2011.05 | GCI85074 | Inner Joint | | 32 | 28 | 49.9 | 85.5 | 100 | |
| 3.0 (240 kw) | 2013.07-2016.10 | 6MT | R | L | Saloon RWD N55 B30 A | | GDS56272 | Drive Shaft | | 30 | 27 | 65 | 77 | 763 | |
| | 2013.07-2016.10 | 6MT | R | R | Saloon RWD N55 B30 A | hollow shaft | GDS56271 | Drive Shaft | | 30 | 27 | 65 | 77 | 817 | |
| | 2013.07-2016.10 | 6MT | R | R | Saloon RWD N55 B30 A | solid shaft | GDS85115 | Drive Shaft | | 30 | 27 | 65 | 77 | 817 | |
| | 2013.07-2016.10 | 6MT | R | L/R | Saloon RWD N55 B30 A | | GCI85063 | Inner Joint | | 30 | 28 | 65 | 77 | 89 | |

| | YEAR | TRANSM. | F/R | L/R | BODY STYLE & DRIVE TYPE & ENGINE | REMARKS | G-AP Ref. | PRODUCT | ABS | Technical Specifications A | B | C | H | L | P |
|---|---|---|---|---|---|---|---|---|---|---|---|---|---|---|---|
| **BMW** | | | | | | | | | | | | | | | |
| **535i** | | | | | | | | | | | | | | | |
| 3.0 (240 kw) | 2013.07-2016.10 | 8AT | R | L | Saloon RWD N55 B30 A | | GDS85114 | Drive Shaft | | 30 | 27 | 65 | 77 | 763 | |
| 3.5 (173 kw) | 1996.06-1998.08 | AT/Semi-AT | R | L/R | Saloon RWD M62B358S1 | | GDS85021 | Drive Shaft | | 30 | | 59 | 73 | 615 | |
| | 1996.06-1998.08 | AT/Semi-AT | R | L/R | Saloon RWD M62B358S1 | | GCI99127 | Inner Joint | | | 25 | | | 26 | |
| | 1996.06-1998.08 | MT | R | L/R | Saloon RWD M62B358S1 | | GDS85064 | Drive Shaft | | 30 | | 58.9 | 73 | 618 | |
| | 1996.06-1998.08 | MT | R | L/R | Saloon RWD M62B358S1 | | GCI48002 | Inner Joint | | | 28 | | | 32 | |
| 3.5 (180 kw) | 1998.09-2003.06 | AT/MT/Semi-AT | R | L/R | Saloon RWD M62B358S2 | Date from:1998.10 | GDS85064 | Drive Shaft | | 30 | | 58.9 | 73 | 618 | |
| | 1998.09-2003.06 | AT/MT/Semi-AT | R | L/R | Saloon RWD M62B358S2 | Date from:1998.10 | GCI48002 | Inner Joint | | | 28 | | | 32 | |
| | 1998.09-2003.06 | AT/Semi-AT | R | L/R | Saloon RWD M62B358S2 | Date to:1998.09 | GDS85021 | Drive Shaft | | 30 | | 59 | 73 | 615 | |
| | 1998.09-2003.06 | AT/Semi-AT | R | L/R | Saloon RWD M62B358S2 | Date to:1998.09 | GCI99127 | Inner Joint | | | 25 | | | 26 | |
| **535i Gran Turismo** | | | | | | | | | | | | | | | |
| 3.0 (225 kw) | 2009.01-2017.02 | 8AT | R | L | Hatchback RWD N55 B30 A | | GDS85116 | Drive Shaft | | 30 | 32 | 65 | 77 | 777 | |
| | 2009.01-2017.02 | 8AT | R | R | Hatchback RWD N55 B30 A | Date from:2010.10,Facelift:No | GDS85111 | Drive Shaft | | 30 | 32 | 65 | 77 | 831 | |
| | 2009.01-2017.02 | 8AT | R | L | Hatchback RWD N55 B30 A | | GCI85063 | Inner Joint | | 30 | 28 | 65 | 77 | 89 | |
| | 2009.01-2017.02 | 8AT | R | L | Hatchback RWD N55 B30 A | | GCI85074 | Inner Joint | | 32 | 28 | 49.9 | 85.5 | 100 | |
| **535i Touring** | | | | | | | | | | | | | | | |
| 3.0 (225 kw) | 2010.06-2017.02 | 6MT | R | L | Estate RWD N55 B30 A | | GDS56272 | Drive Shaft | | 30 | 27 | 65 | 77 | 763 | |
| | 2010.06-2017.02 | 6MT | R | R | Estate RWD N55 B30 A | hollow shaft | GDS56271 | Drive Shaft | | 30 | 27 | 65 | 77 | 817 | |
| | 2010.06-2017.02 | 6MT | R | R | Estate RWD N55 B30 A | solid shaft | GDS85115 | Drive Shaft | | 30 | 27 | 65 | 77 | 817 | |
| | 2010.06-2017.02 | 8AT | R | L | Estate RWD N55 B30 A | Date from:2011.06 | GDS85114 | Drive Shaft | | 30 | 27 | 65 | 77 | 763 | |
| | 2010.06-2017.02 | 8AT | R | L | Estate RWD N55 B30 A | date to:2011.05 | GDS85137 | Drive Shaft | | 30 | 32 | 65 | 77 | 758 | |
| | 2010.06-2017.02 | 8AT | R | R | Estate RWD N55 B30 A | date from:2011.06 | GDS85113 | Drive Shaft | | 30 | 27 | 64.9 | 77 | 811 | |
| | 2010.06-2017.02 | 8AT | R | R | Estate RWD N55 B30 A | Date to:2011.05 | GDS85139 | Drive Shaft | | 30 | 32 | 65 | 77 | 813 | |
| | 2010.06-2017.02 | 8AT | R | L | Estate RWD N55 B30 A | Date to:2011.05 | GCI85063 | Inner Joint | | 30 | 28 | 65 | 77 | 89 | |
| | 2010.06-2017.02 | 8AT | R | L | Estate RWD N55 B30 A | Date to:2011.05 | GCI85074 | Inner Joint | | 32 | 28 | 49.9 | 85.5 | 100 | |
| | 2010.06-2017.02 | AT | R | L | Estate RWD N55 B30 A | | GDS85112 | Drive Shaft | | 30 | 27 | 64.9 | 77 | 758 | |
| 3.0 (240 kw) | 2013.07-2017.02 | 6MT | R | L | Estate RWD N55 B30 A | | GDS56272 | Drive Shaft | | 30 | 27 | 65 | 77 | 763 | |
| | 2013.07-2017.02 | 6MT | R | R | Estate RWD N55 B30 A | hollow shaft | GDS56271 | Drive Shaft | | 30 | 27 | 65 | 77 | 817 | |
| | 2013.07-2017.02 | 6MT | R | R | Estate RWD N55 B30 A | solid shaft | GDS85115 | Drive Shaft | | 30 | 27 | 65 | 77 | 817 | |
| | 2013.07-2017.02 | 6MT | R | L/R | Estate RWD N55 B30 A | | GCI85063 | Inner Joint | | 30 | 28 | 65 | 77 | 89 | |
| | 2013.07-2017.02 | 8AT | R | L | Estate RWD N55 B30 A | | GDS85114 | Drive Shaft | | 30 | 27 | 65 | 77 | 763 | |
| **535i xDrive** | | | | | | | | | | | | | | | |
| 3.0 (225 kw) | 2011.03-2016.10 | 8AT | F | L | Saloon 4WD N55 B30 A | | GDS81581 | Drive Shaft | | 37 | 27 | 65 | | 562 | |
| | 2011.03-2016.10 | 8AT | F | R | Saloon 4WD N55 B30 A | | GDS81681 | Drive Shaft | | 37 | 27 | 65 | | 862 | |
| | 2011.03-2016.10 | 8AT | F | L/R | Saloon 4WD N55 B30 A | | GCO81413 | Outer Joint | | 37 | 25 | 65 | | 73 | I |
| | 2011.03-2016.10 | 8AT | F | L | Saloon 4WD N55 B30 A | | GCI81055 | Inner Joint | | 27 | 24 | 43.95 | 60 | 123.5 | |
| | 2011.03-2016.10 | 8AT | F | R | Saloon 4WD N55 B30 A | | GCI81457 | Inner Joint | | 27 | 24 | 43.95 | 359 | 125 | |
| | 2011.03-2016.10 | 8AT | R | L | Saloon 4WD N55 B30 A | | GDS85112 | Drive Shaft | | 30 | 27 | 64.9 | 77 | 758 | |
| | 2011.03-2016.10 | 8AT | R | R | Saloon 4WD N55 B30 A | | GDS85113 | Drive Shaft | | 30 | 27 | 64.9 | 77 | 811 | |
| | 2011.03-2016.10 | 8AT | R | L/R | Saloon 4WD N55 B30 A | | GCI85054 | Outer Joint | | 30 | 25 | 64.9 | 77 | 82 | |
| | 2011.03-2016.10 | 8AT | R | L/R | Saloon 4WD N55 B30 A | | GCI85055 | Inner Joint | | 27 | 25 | 43.9 | 80 | 96 | |
| 3.0 (240 kw) | 2013.07-2016.10 | 8AT | F | L | Saloon 4WD N55 B30 A | | GDS81581 | Drive Shaft | | 37 | 27 | 65 | | 562 | |
| | 2013.07-2016.10 | 8AT | F | R | Saloon 4WD N55 B30 A | | GDS81681 | Drive Shaft | | 37 | 27 | 65 | | 862 | |
| | 2013.07-2016.10 | 8AT | F | L/R | Saloon 4WD N55 B30 A | | GCO81413 | Outer Joint | | 37 | 25 | 65 | | 73 | I |
| | 2013.07-2016.10 | 8AT | F | L | Saloon 4WD N55 B30 A | | GCI81055 | Inner Joint | | 27 | 24 | 43.95 | 60 | 123.5 | |
| | 2013.07-2016.10 | 8AT | F | R | Saloon 4WD N55 B30 A | | GCI81457 | Inner Joint | | 27 | 24 | 43.95 | 359 | 125 | |
| | 2013.07-2016.10 | 8AT | R | L | Saloon 4WD N55 B30 A | | GDS85112 | Drive Shaft | | 30 | 27 | 64.9 | 77 | 758 | |
| | 2013.07-2016.10 | 8AT | R | R | Saloon 4WD N55 B30 A | | GDS85113 | Drive Shaft | | 30 | 27 | 64.9 | 77 | 811 | |
| | 2013.07-2016.10 | 8AT | R | L/R | Saloon 4WD N55 B30 A | | GCI85054 | Outer Joint | | 30 | 25 | 64.9 | 77 | 82 | |
| | 2013.07-2016.10 | 8AT | R | L/R | Saloon 4WD N55 B30 A | | GCI85055 | Inner Joint | | 27 | 25 | 43.9 | 80 | 96 | |
| **535i xDrive Gran Turismo** | | | | | | | | | | | | | | | |
| 3.0 (225 kw) | 2010.09-2017.02 | 8AT | F | R | Hatchback 4WD N55 B30 A | | GDS83946 | Drive Shaft | | 37 | 27 | 65 | | 871 | |
| | 2010.09-2017.02 | 8AT | F | R | Hatchback 4WD N55 B30 A | | GCI81457 | Inner Joint | | 27 | 24 | 43.95 | 359 | 125 | |
| | 2010.09-2017.02 | AT | F | L | Hatchback 4WD N55 B30 A | | GDS82730 | Drive Shaft | | 37 | 27 | 65 | | 572 | |
| | 2010.09-2017.02 | AT | F | L/R | Hatchback 4WD N55 B30 A | | GCO81413 | Outer Joint | | 37 | 25 | 65 | | 73 | I |
| | 2010.09-2017.02 | AT | F | L | Hatchback 4WD N55 B30 A | | GCI81055 | Inner Joint | | 27 | 24 | 43.95 | 60 | 123.5 | |
| | 2010.09-2017.02 | AT | R | L | Hatchback 4WD N55 B30 A | Type:215LW | GDS85116 | Drive Shaft | | 30 | 32 | 65 | 77 | 777 | |
| | 2010.09-2017.02 | AT | R | R | Hatchback 4WD N55 B30 A | Type:215LW | GDS85111 | Drive Shaft | | 30 | 32 | 65 | 77 | 831 | |
| | 2010.09-2017.02 | AT | R | L/R | Hatchback 4WD N55 B30 A | Type:215LW | GCI85063 | Inner Joint | | 30 | 28 | 65 | 77 | 89 | |
| | 2010.09-2017.02 | AT | R | L/R | Hatchback 4WD N55 B30 A | Type:215LW | GCI85074 | Inner Joint | | 32 | 28 | 49.9 | 85.5 | 100 | |
| **535i xDrive Touring** | | | | | | | | | | | | | | | |
| 3.0 (225 kw) | 2011.09-2017.02 | 8AT | F | L | Estate 4WD N55 B30 A | | GDS81581 | Drive Shaft | | 37 | 27 | 65 | | 562 | |
| | 2011.09-2017.02 | 8AT | F | R | Estate 4WD N55 B30 A | | GDS81681 | Drive Shaft | | 37 | 27 | 65 | | 862 | |
| | 2011.09-2017.02 | 8AT | F | L/R | Estate 4WD N55 B30 A | | GCO81413 | Outer Joint | | 37 | 25 | 65 | | 73 | I |
| | 2011.09-2017.02 | 8AT | F | L | Estate 4WD N55 B30 A | | GCI81055 | Inner Joint | | 27 | 24 | 43.95 | 60 | 123.5 | |
| | 2011.09-2017.02 | 8AT | F | R | Estate 4WD N55 B30 A | | GCI81457 | Inner Joint | | 27 | 24 | 43.95 | 359 | 125 | |

| | YEAR | TRANSM. | F/R | L/R | BODY STYLE & DRIVE TYPE & ENGINE | REMARKS | G-AP Ref. | PRODUCT | ABS | Technical Specifications A | B | C | H | L | P |
|---|---|---|---|---|---|---|---|---|---|---|---|---|---|---|---|
| **BMW** | | | | | | | | | | | | | | | |
| **535i xDrive Touring** | | | | | | | | | | | | | | | |
| 3.0 (225 kw) | 2011.09-2017.02 | 8AT | R | L | Estate 4WD N55 B30 A | | GDS85112 | Drive Shaft | | 30 | 27 | 64.9 | 77 | 758 | |
| | 2011.09-2017.02 | 8AT | R | R | Estate 4WD N55 B30 A | | GDS85113 | Drive Shaft | | 30 | 27 | 64.9 | 77 | 811 | |
| | 2011.09-2017.02 | 8AT | R | L/R | Estate 4WD N55 B30 A | | GCI85054 | Outer Joint | | 30 | 25 | 64.9 | 77 | 82 | |
| | 2011.09-2017.02 | 8AT | R | L/R | Estate 4WD N55 B30 A | | GCI85055 | Inner Joint | | 27 | 25 | 43.9 | 80 | 96 | |
| 3.0 (240 kw) | 2013.07-2017.02 | 8AT | F | L | Estate 4WD N55 B30 A | | GDS81581 | Drive Shaft | | 37 | 27 | 65 | | 562 | |
| | 2013.07-2017.02 | 8AT | F | R | Estate 4WD N55 B30 A | | GDS81681 | Drive Shaft | | 37 | 27 | 65 | | 862 | |
| | 2013.07-2017.02 | 8AT | F | L/R | Estate 4WD N55 B30 A | | GCO81413 | Outer Joint | | 37 | 25 | 65 | | 73 | I |
| | 2013.07-2017.02 | 8AT | F | L | Estate 4WD N55 B30 A | | GCI81055 | Inner Joint | | 27 | 24 | 43.95 | 60 | 123.5 | |
| | 2013.07-2017.02 | 8AT | F | R | Estate 4WD N55 B30 A | | GCI81457 | Inner Joint | | 27 | 24 | 43.95 | 359 | 125 | |
| | 2013.07-2017.02 | 8AT | R | L | Estate 4WD N55 B30 A | | GDS85112 | Drive Shaft | | 30 | 27 | 64.9 | 77 | 758 | |
| | 2013.07-2017.02 | 8AT | R | R | Estate 4WD N55 B30 A | | GDS85113 | Drive Shaft | | 30 | 27 | 64.9 | 77 | 811 | |
| | 2013.07-2017.02 | 8AT | R | L/R | Estate 4WD N55 B30 A | | GCI85054 | Outer Joint | | 30 | 25 | 64.9 | 77 | 82 | |
| | 2013.07-2017.02 | 8AT | R | L/R | Estate 4WD N55 B30 A | | GCI85055 | Inner Joint | | 27 | 25 | 43.9 | 80 | 96 | |
| **540d xDrive** | | | | | | | | | | | | | | | |
| 3.0 (235 kw) | 2017.07-2020.06 | 8AT | F | L | Saloon 4WD B57 D30 A;B57 D30 B | Date to:2019.03 | GDS84216 | Drive Shaft | | 37 | 27 | 65 | | 573 | |
| | 2017.07-2020.06 | 8AT | F | R | Saloon 4WD B57 D30 A;B57 D30 B | Date to:2019.03 | GDS84215 | Drive Shaft | | 37 | 27 | 65 | | 873 | |
| | 2017.07-2020.06 | 8AT | F | L/R | Saloon 4WD B57 D30 A;B57 D30 B | Date to:2019.03 | GCO82734 | Outer Joint | | 37 | 25 | 65 | | 73 | I |
| | 2017.07-2020.06 | 8AT | F | L | Saloon 4WD B57 D30 A;B57 D30 B | Date to:2019.03 | GCI81055 | Inner Joint | | 27 | 24 | 43.95 | 60 | 123.5 | |
| | 2017.07-2020.06 | 8AT | F | R | Saloon 4WD B57 D30 A;B57 D30 B | Date to:2019.03 | GCI81457 | Inner Joint | | 27 | 24 | 43.95 | 359 | 125 | |
| 3.0 (250 kw) | 2020.07-2023.06 | 8AT | F | L | Saloon 4WD B57 D30 B;JA1 | | GDS84216 | Drive Shaft | | 37 | 27 | 65 | | 573 | |
| | 2020.07-2023.06 | 8AT | F | R | Saloon 4WD B57 D30 B;JA1 | | GDS84215 | Drive Shaft | | 37 | 27 | 65 | | 873 | |
| | 2020.07-2023.06 | 8AT | F | L/R | Saloon 4WD B57 D30 B;JA1 | | GCO83166 | Outer Joint | | 37 | 26 | 65 | | 73 | I |
| | 2020.07-2023.06 | 8AT | F | L | Saloon 4WD B57 D30 B;JA1 | | GCI81055 | Inner Joint | | 27 | 24 | 43.95 | 60 | 123.5 | |
| | 2020.07-2023.06 | 8AT | F | R | Saloon 4WD B57 D30 B;JA1 | | GCI81457 | Inner Joint | | 27 | 24 | 43.95 | 359 | 125 | |
| **540d xDrive Touring** | | | | | | | | | | | | | | | |
| 3.0 (235 kw) | 2017.07- | 8AT | F | L | Estate Van 4WD B57 D30 B | Date to:2019.03 | GDS84216 | Drive Shaft | | 37 | 27 | 65 | | 573 | |
| | 2017.07- | 8AT | F | R | Estate Van 4WD B57 D30 B | Date to:2019.03 | GDS84215 | Drive Shaft | | 37 | 27 | 65 | | 873 | |
| | 2017.07- | 8AT | F | L/R | Estate Van 4WD B57 D30 B | Date to:2019.03 | GCO82734 | Outer Joint | | 37 | 25 | 65 | | 73 | I |
| | 2017.07- | AT | F | L | Estate Van 4WD B57 D30 B | Date to:2019.03;Date from:2020.07 | GCI81055 | Inner Joint | | 27 | 24 | 43.95 | 60 | 123.5 | |
| | 2017.07- | AT | F | R | Estate Van 4WD B57 D30 B | Date to:2019.03;Date from:2020.07 | GCI81457 | Inner Joint | | 27 | 24 | 43.95 | 359 | 125 | |
| | 2017.07-2020.06 | 8AT | F | L | Estate 4WD B57 D30 B | Date to:2019.03 | GDS84216 | Drive Shaft | | 37 | 27 | 65 | | 573 | |
| | 2017.07-2020.06 | 8AT | F | R | Estate 4WD B57 D30 B | Date to:2019.03 | GDS84215 | Drive Shaft | | 37 | 27 | 65 | | 873 | |
| | 2017.07-2020.06 | 8AT | F | L/R | Estate 4WD B57 D30 B | Date to:2019.03 | GCO82734 | Outer Joint | | 37 | 25 | 65 | | 73 | I |
| | 2017.07-2020.06 | 8AT | F | L | Estate 4WD B57 D30 B | Date to:2019.03 | GCI81055 | Inner Joint | | 27 | 24 | 43.95 | 60 | 123.5 | |
| | 2017.07-2020.06 | 8AT | F | R | Estate 4WD B57 D30 B | Date to:2019.03 | GCI81457 | Inner Joint | | 27 | 24 | 43.95 | 359 | 125 | |
| 3.0 (250 kw) | 2020.07- | 8AT | F | L | Estate 4WD B57 D30 B;JA1 | | GDS84216 | Drive Shaft | | 37 | 27 | 65 | | 573 | |
| | 2020.07- | 8AT | F | R | Estate 4WD B57 D30 B;JA1 | | GDS84215 | Drive Shaft | | 37 | 27 | 65 | | 873 | |
| | 2020.07- | 8AT | F | L/R | Estate 4WD B57 D30 B;JA1 | | GCO83166 | Outer Joint | | 37 | 26 | 65 | | 73 | I |
| | 2020.07- | 8AT | F | L | Estate 4WD B57 D30 B;JA1 | | GCI81055 | Inner Joint | | 27 | 24 | 43.95 | 60 | 123.5 | |
| | 2020.07- | 8AT | F | R | Estate 4WD B57 D30 B;JA1 | | GCI81457 | Inner Joint | | 27 | 24 | 43.95 | 359 | 125 | |
| **540i** | | | | | | | | | | | | | | | |
| 4.0 (220 kw) | 2005.09-2007.02 | 6AT/6MT | R | L/R | Saloon RWD N62 B40 A | | GDS85073 | Drive Shaft | | 30 | | 58.8 | 73 | 653 | |
| | 2005.09-2007.02 | 6AT/6MT | R | L/R | Saloon RWD N62 B40 A | | GCI85048 | Inner Joint | | | 28 | | | 28 | |
| 4.0 (225 kw) | 2007.03-2009.12 | 6AT/6MT | R | L/R | Saloon RWD N62 B40 A | | GDS85073 | Drive Shaft | | 30 | | 58.8 | 73 | 653 | |
| 4.4 (210 kw) | 1996.03-2003.06 | MT/Semi-AT | R | L/R | Saloon RWD M62B448S1/M62B448S2 | Joint Diam:94mm | GDS85064 | Drive Shaft | | 30 | | 58.9 | 73 | 618 | |
| | 1996.03-2003.06 | MT/Semi-AT | R | L/R | Saloon RWD M62B448S1/M62B448S2 | | GCI48002 | Inner Joint | | | 28 | | | 32 | |
| **540i Touring** | | | | | | | | | | | | | | | |
| 4.4 (210 kw) | 1997.04-2003.12 | AT/MT/Semi-AT | R | L/R | Estate RWD M62B448S1/M62B448S2 | | GDS85064 | Drive Shaft | | 30 | | 58.9 | 73 | 618 | |
| | 1997.04-2003.12 | AT/MT/Semi-AT | R | L/R | Estate RWD M62B448S1/M62B448S2 | | GCI48002 | Inner Joint | | | 28 | | | 32 | |
| **540i xDrive** | | | | | | | | | | | | | | | |
| 3.0 (245 kw) | 2020.07-2023.06 | 8AT | F | L | Saloon 4WD B58 B30 C;JA1 | | GDS84216 | Drive Shaft | | 37 | 27 | 65 | | 573 | |
| | 2020.07-2023.06 | 8AT | F | R | Saloon 4WD B58 B30 C;JA1 | | GDS84215 | Drive Shaft | | 37 | 27 | 65 | | 873 | |
| | 2020.07-2023.06 | 8AT | F | L/R | Saloon 4WD B58 B30 C;JA1 | | GCO83166 | Outer Joint | | 37 | 26 | 65 | | 73 | I |
| | 2020.07-2023.06 | 8AT | F | L | Saloon 4WD B58 B30 C;JA1 | | GCI81055 | Inner Joint | | 27 | 24 | 43.95 | 60 | 123.5 | |
| | 2020.07-2023.06 | 8AT | F | R | Saloon 4WD B58 B30 C;JA1 | | GCI81457 | Inner Joint | | 27 | 24 | 43.95 | 359 | 125 | |
| 3.0 (250 kw) | 2016.09-2020.06 | 8AT | F | L | Saloon 4WD B58 B30 A;B58 B30 C | Date to:2019.03 | GDS84216 | Drive Shaft | | 37 | 27 | 65 | | 573 | |
| | 2016.09-2020.06 | 8AT | F | R | Saloon 4WD B58 B30 A;B58 B30 C | Date to:2019.03 | GDS84215 | Drive Shaft | | 37 | 27 | 65 | | 873 | |
| | 2016.09-2020.06 | 8AT | F | L/R | Saloon 4WD B58 B30 A;B58 B30 C | Date to:2019.03 | GCO82734 | Outer Joint | | 37 | 25 | 65 | | 73 | I |
| | 2016.09-2020.06 | 8AT | F | L | Saloon 4WD B58 B30 A;B58 B30 C | | GCI81055 | Inner Joint | | 27 | 24 | 43.95 | 60 | 123.5 | |
| | 2016.09-2020.06 | 8AT | F | R | Saloon 4WD B58 B30 A;B58 B30 C | Date to:2019.03 | GCI81457 | Inner Joint | | 27 | 24 | 43.95 | 359 | 125 | |
| 3.0 (265 kw) | 2016.09-2020.06 | 8AT | F | L | Saloon 4WD B58 B30 A | Date to:2019.03 | GDS84216 | Drive Shaft | | 37 | 27 | 65 | | 573 | |
| | 2016.09-2020.06 | 8AT | F | R | Saloon 4WD B58 B30 A | Date to:2019.03 | GDS84215 | Drive Shaft | | 37 | 27 | 65 | | 873 | |
| | 2016.09-2020.06 | 8AT | F | L/R | Saloon 4WD B58 B30 A | Date to:2019.03 | GCO82734 | Outer Joint | | 37 | 25 | 65 | | 73 | I |
| | 2016.09-2020.06 | 8AT | F | L | Saloon 4WD B58 B30 A | | GCI81055 | Inner Joint | | 27 | 24 | 43.95 | 60 | 123.5 | |
| | 2016.09-2020.06 | 8AT | F | R | Saloon 4WD B58 B30 A | Date to:2019.03 | GCI81457 | Inner Joint | | 27 | 24 | 43.95 | 359 | 125 | |

| | YEAR | TRANSM. | F/R | L/R | BODY STYLE & DRIVE TYPE & ENGINE | REMARKS | G-AP Ref. | PRODUCT | ABS | Technical Specifications A | B | C | H | L | P |
|---|---|---|---|---|---|---|---|---|---|---|---|---|---|---|---|
| **BMW** | | | | | | | | | | | | | | | |
| **540i xDrive Touring** | | | | | | | | | | | | | | | |
| 3.0 (245 kw) | 2020.07- | 8AT | F | L | Estate 4WD B58 B30 C;JA1 | | GDS84216 | Drive Shaft | | 37 | 27 | 65 | | 573 | |
| | 2020.07- | 8AT | F | R | Estate 4WD B58 B30 C;JA1 | | GDS84215 | Drive Shaft | | 37 | 27 | 65 | | 873 | |
| | 2020.07- | 8AT | F | L/R | Estate 4WD B58 B30 C;JA1 | | GCO83166 | Outer Joint | | 37 | 26 | 65 | | 73 | I |
| | 2020.07- | 8AT | F | L | Estate 4WD B58 B30 C;JA1 | | GCI81055 | Inner Joint | | 27 | 24 | 43.95 | 60 | 123.5 | |
| | 2020.07- | 8AT | F | R | Estate 4WD B58 B30 C;JA1 | | GCI81457 | Inner Joint | | 27 | 24 | 43.95 | 359 | 125 | |
| 3.0 (250 kw) | 2017.03- | 8AT | F | L | Estate Van 4WD B58 B30 A | Date to:2019.03 | GDS84216 | Drive Shaft | | 37 | 27 | 65 | | 573 | |
| | 2017.03- | 8AT | F | R | Estate Van 4WD B58 B30 A | Date to:2019.03 | GDS84215 | Drive Shaft | | 37 | 27 | 65 | | 873 | |
| | 2017.03- | 8AT | F | L/R | Estate Van 4WD B58 B30 A | Date to:2019.03 | GCO82734 | Outer Joint | | 37 | 25 | 65 | | 73 | I |
| | 2017.03- | 8AT | F | L | Estate Van 4WD B58 B30 A | | GCI81055 | Inner Joint | | 27 | 24 | 43.95 | 60 | 123.5 | |
| | 2017.03- | 8AT | F | R | Estate Van 4WD B58 B30 A | Date to:2019.03 | GCI81457 | Inner Joint | | 27 | 24 | 43.95 | 359 | 125 | |
| | 2017.03-2020.06 | 8AT | F | L | Estate 4WD B58 B30 A | Date to:2019.03 | GDS84216 | Drive Shaft | | 37 | 27 | 65 | | 573 | |
| | 2017.03-2020.06 | 8AT | F | R | Estate 4WD B58 B30 A | Date to:2019.03 | GDS84215 | Drive Shaft | | 37 | 27 | 65 | | 873 | |
| | 2017.03-2020.06 | 8AT | F | L/R | Estate 4WD B58 B30 A | Date to:2019.03 | GCO82734 | Outer Joint | | 37 | 25 | 65 | | 73 | I |
| | 2017.03-2020.06 | 8AT | F | L | Estate 4WD B58 B30 A | | GCI81055 | Inner Joint | | 27 | 24 | 43.95 | 60 | 123.5 | |
| | 2017.03-2020.06 | 8AT | F | R | Estate 4WD B58 B30 A | Date to:2019.03 | GCI81457 | Inner Joint | | 27 | 24 | 43.95 | 359 | 125 | |
| 3.0 (265 kw) | 2017.03-2020.06 | 8AT | F | L | Estate 4WD B58 B30 A | Date to:2019.03 | GDS84216 | Drive Shaft | | 37 | 27 | 65 | | 573 | |
| | 2017.03-2020.06 | 8AT | F | R | Estate 4WD B58 B30 A | Date to:2019.03 | GDS84215 | Drive Shaft | | 37 | 27 | 65 | | 873 | |
| | 2017.03-2020.06 | 8AT | F | L/R | Estate 4WD B58 B30 A | Date to:2019.03 | GCO82734 | Outer Joint | | 37 | 25 | 65 | | 73 | I |
| | 2017.03-2020.06 | 8AT | F | L | Estate 4WD B58 B30 A | | GCI81055 | Inner Joint | | 27 | 24 | 43.95 | 60 | 123.5 | |
| | 2017.03-2020.06 | 8AT | F | R | Estate 4WD B58 B30 A | Date to:2019.03 | GCI81457 | Inner Joint | | 27 | 24 | 43.95 | 359 | 125 | |
| **545e xDrive** | | | | | | | | | | | | | | | |
| 3.0 (290 kw) | 2020.11-2023.06 | 8AT | F | L | Saloon 4WD B58 B30 C;GC1 | | GDS84216 | Drive Shaft | | 37 | 27 | 65 | | 573 | |
| | 2020.11-2023.06 | 8AT | F | R | Saloon 4WD B58 B30 C;GC1 | | GDS84215 | Drive Shaft | | 37 | 27 | 65 | | 873 | |
| | 2020.11-2023.06 | 8AT | F | L/R | Saloon 4WD B58 B30 C;GC1 | | GCO83166 | Outer Joint | | 37 | 26 | 65 | | 73 | I |
| | 2020.11-2023.06 | 8AT | F | L | Saloon 4WD B58 B30 C;GC1 | | GCI81055 | Inner Joint | | 27 | 24 | 43.95 | 60 | 123.5 | |
| | 2020.11-2023.06 | 8AT | F | R | Saloon 4WD B58 B30 C;GC1 | | GCI81457 | Inner Joint | | 27 | 24 | 43.95 | 359 | 125 | |
| **545i** | | | | | | | | | | | | | | | |
| 4.4 (245 kw) | 2003.07-2005.08 | 6AT/6MT | R | L/R | Saloon RWD N62 B44 A | | GDS85073 | Drive Shaft | | 30 | | 58.8 | 73 | 653 | |
| **545i Touring** | | | | | | | | | | | | | | | |
| 4.4 (245 kw) | 2004.06-2010.12 | 6AT/6MT | R | L/R | Estate RWD N62 B44 A | | GDS85073 | Drive Shaft | | 30 | | 58.8 | 73 | 653 | |
| | 2004.06-2010.12 | AT/MT | R | L/R | Estate RWD N62 B44 A | | GCI85048 | Inner Joint | | | 28 | | | 28 | |
| **550i** | | | | | | | | | | | | | | | |
| 4.4 (300 kw) | 2010.03-2013.12 | 8AT | R | L | Saloon RWD N63 B44 A | | GDS85137 | Drive Shaft | | 30 | 32 | 65 | 77 | 758 | |
| | 2010.03-2013.12 | 8AT | R | R | Saloon RWD N63 B44 A | | GDS85139 | Drive Shaft | | 30 | 32 | 65 | 77 | 813 | |
| | 2010.03-2013.12 | 8AT | R | L | Saloon RWD N63 B44 A | | GCI85063 | Inner Joint | | 30 | 28 | 65 | 77 | 89 | |
| | 2010.03-2013.12 | 8AT | R | L | Saloon RWD N63 B44 A | | GCI85074 | Inner Joint | | 32 | 28 | 49.9 | 85.5 | 100 | |
| 4.4 (330 kw) | 2013.07-2016.10 | 8AT | R | L | Saloon RWD N63 B44 B | | GDS85137 | Drive Shaft | | 30 | 32 | 65 | 77 | 758 | |
| | 2013.07-2016.10 | 8AT | R | R | Saloon RWD N63 B44 B | | GDS85139 | Drive Shaft | | 30 | 32 | 65 | 77 | 813 | |
| | 2013.07-2016.10 | 8AT | R | L | Saloon RWD N63 B44 B | | GCI85063 | Inner Joint | | 30 | 28 | 65 | 77 | 89 | |
| | 2013.07-2016.10 | 8AT | R | L | Saloon RWD N63 B44 B | | GCI85074 | Inner Joint | | 32 | 28 | 49.9 | 85.5 | 100 | |
| 4.8 (270 kw) | 2005.09-2009.12 | 6AT/6MT | R | L/R | Saloon RWD N62 B48 B | | GDS85073 | Drive Shaft | | 30 | | 58.8 | 73 | 653 | |
| | 2005.09-2009.12 | AT/MT | R | L/R | Saloon RWD N62 B48 B | | GCI85048 | Inner Joint | | | 28 | | | 28 | |
| **550i Gran Turismo** | | | | | | | | | | | | | | | |
| 4.4 (300 kw) | 2009.08-2012.06 | 8AT | R | L | Hatchback RWD N63 B44 A | | GDS85116 | Drive Shaft | | 30 | 32 | 65 | 77 | 777 | |
| | 2009.08-2012.06 | 8AT | R | R | Hatchback RWD N63 B44 A | | GDS85111 | Drive Shaft | | 30 | 32 | 65 | 77 | 831 | |
| | 2009.08-2012.06 | 8AT | R | L | Hatchback RWD N63 B44 A | | GCI85063 | Inner Joint | | 30 | 28 | 65 | 77 | 89 | |
| | 2009.08-2012.06 | 8AT | R | L | Hatchback RWD N63 B44 A | | GCI85074 | Inner Joint | | 32 | 28 | 49.9 | 85.5 | 100 | |
| 4.4 (330 kw) | 2012.07-2017.02 | 8AT | R | R | Hatchback RWD N63 B44 A;N63 B44 B | | GDS85111 | Drive Shaft | | 30 | 32 | 65 | 77 | 831 | |
| | 2012.07-2017.02 | AT | R | L | Hatchback RWD N63 B44 A;N63 B44 B | | GDS85116 | Drive Shaft | | 30 | 32 | 65 | 77 | 777 | |
| | 2012.07-2017.02 | AT | R | L | Hatchback RWD N63 B44 A;N63 B44 B | | GCI85063 | Inner Joint | | 30 | 28 | 65 | 77 | 89 | |
| | 2012.07-2017.02 | AT | R | L | Hatchback RWD N63 B44 A;N63 B44 B | | GCI85074 | Inner Joint | | 32 | 28 | 49.9 | 85.5 | 100 | |
| **550i Touring** | | | | | | | | | | | | | | | |
| 4.4 (300 kw) | 2010.09-2013.06 | 8AT | R | L | Estate RWD N63 B44 A | | GDS85137 | Drive Shaft | | 30 | 32 | 65 | 77 | 758 | |
| | 2010.09-2013.06 | 8AT | R | R | Estate RWD N63 B44 A | | GDS85139 | Drive Shaft | | 30 | 32 | 65 | 77 | 813 | |
| | 2010.09-2013.06 | 8AT | R | R | Estate RWD N63 B44 A | | GCI85074 | Inner Joint | | 32 | 28 | 49.9 | 85.5 | 100 | |
| | 2010.09-2013.06 | 8AT | R | L/R | Estate RWD N63 B44 A | | GCI85063 | Inner Joint | | 30 | 28 | 65 | 77 | 89 | |
| 4.4 (330 kw) | 2013.07-2017.02 | 8AT | R | L | Estate RWD N63 B44 B | | GDS85137 | Drive Shaft | | 30 | 32 | 65 | 77 | 758 | |
| | 2013.07-2017.02 | 8AT | R | R | Estate RWD N63 B44 B | | GDS85139 | Drive Shaft | | 30 | 32 | 65 | 77 | 813 | |
| | 2013.07-2017.02 | 8AT | R | L/R | Estate RWD N63 B44 B | | GCI85063 | Inner Joint | | 30 | 28 | 65 | 77 | 89 | |
| | 2013.07-2017.02 | 8AT | R | L/R | Estate RWD N63 B44 B | | GCI85074 | Inner Joint | | 32 | 28 | 49.9 | 85.5 | 100 | |
| 4.8 (270 kw) | 2005.07-2010.12 | 6AT/6MT | R | L/R | Estate RWD N62 B48 A;N62 B48 B | | GDS85073 | Drive Shaft | | 30 | | 58.8 | 73 | 653 | |
| | 2005.07-2010.12 | AT/MT | R | L/R | Estate RWD N62 B48 A;N62 B48 B | | GCI85048 | Inner Joint | | | 28 | | | 28 | |
| **550i xDrive** | | | | | | | | | | | | | | | |
| 4.4 (300 kw) | 2010.08-2013.06 | 8AT | F | L | Saloon 4WD N63 B44 A | | GDS81581 | Drive Shaft | | 37 | 27 | 65 | | 562 | |
| | 2010.08-2013.06 | 8AT | F | R | Saloon 4WD N63 B44 A | | GDS81716 | Drive Shaft | | 37 | 27 | 65 | | 869 | |

| | YEAR | TRANSM. | F/R | L/R | BODY STYLE & DRIVE TYPE & ENGINE | REMARKS | G-AP Ref. | PRODUCT | ABS | Technical Specifications A | B | C | H | L | P |
|---|---|---|---|---|---|---|---|---|---|---|---|---|---|---|---|
| **BMW** | | | | | | | | | | | | | | | |
| **550i xDrive** | | | | | | | | | | | | | | | |
| 4.4 (300 kw) | 2010.08-2013.06 | 8AT | F | L | Saloon 4WD N63 B44 A | | GCO81413 | Outer Joint | | 37 | 25 | 65 | | 73 | I |
| | 2010.08-2013.06 | 8AT | F | L | Saloon 4WD N63 B44 A | | GCI81055 | Inner Joint | | 27 | 24 | 43.95 | 60 | 123.5 | |
| | 2010.08-2013.06 | 8AT | F | R | Saloon 4WD N63 B44 A | | GCI81477 | Inner Joint | | 27 | 24 | 43.95 | 366 | 125 | |
| | 2010.08-2013.06 | 8AT | R | L | Saloon 4WD N63 B44 A | | GDS85137 | Drive Shaft | | 30 | 32 | 65 | 77 | 758 | |
| | 2010.08-2013.06 | 8AT | R | R | Saloon 4WD N63 B44 A | | GDS85139 | Drive Shaft | | 30 | 32 | 65 | 77 | 813 | |
| | 2010.08-2013.06 | 8AT | R | L | Saloon 4WD N63 B44 A | | GCI85063 | Inner Joint | | 30 | 28 | 65 | 77 | 89 | |
| | 2010.08-2013.06 | 8AT | R | L | Saloon 4WD N63 B44 A | | GCI85074 | Inner Joint | | 32 | 28 | 49.9 | 85.5 | 100 | |
| 4.4 (330 kw) | 2013.07-2016.10 | 8AT | F | L | Saloon 4WD N63 B44 B | | GDS81581 | Drive Shaft | | 37 | 27 | 65 | | 562 | |
| | 2013.07-2016.10 | 8AT | F | R | Saloon 4WD N63 B44 B | | GDS81716 | Drive Shaft | | 37 | 27 | 65 | | 869 | |
| | 2013.07-2016.10 | 8AT | F | L | Saloon 4WD N63 B44 B | | GCO81413 | Outer Joint | | 37 | 25 | 65 | | 73 | I |
| | 2013.07-2016.10 | 8AT | F | L | Saloon 4WD N63 B44 B | | GCI81055 | Inner Joint | | 27 | 24 | 43.95 | 60 | 123.5 | |
| | 2013.07-2016.10 | 8AT | F | R | Saloon 4WD N63 B44 B | | GCI81477 | Inner Joint | | 27 | 24 | 43.95 | 366 | 125 | |
| | 2013.07-2016.10 | 8AT | R | L | Saloon 4WD N63 B44 B | | GDS85137 | Drive Shaft | | 30 | 32 | 65 | 77 | 758 | |
| | 2013.07-2016.10 | 8AT | R | R | Saloon 4WD N63 B44 B | | GDS85139 | Drive Shaft | | 30 | 32 | 65 | 77 | 813 | |
| | 2013.07-2016.10 | 8AT | R | L | Saloon 4WD N63 B44 B | | GCI85063 | Inner Joint | | 30 | 28 | 65 | 77 | 89 | |
| | 2013.07-2016.10 | 8AT | R | L | Saloon 4WD N63 B44 B | | GCI85074 | Inner Joint | | 32 | 28 | 49.9 | 85.5 | 100 | |
| **550i xDrive Gran Turismo** | | | | | | | | | | | | | | | |
| 4.4 (300 kw) | 2010.06-2012.06 | 8AT | F | L | Hatchback 4WD N63 B44 A | | GDS82730 | Drive Shaft | | 37 | 27 | 65 | | 572 | |
| | 2010.06-2012.06 | 8AT | F | R | Hatchback 4WD N63 B44 A | | GDS81716 | Drive Shaft | | 37 | 27 | 65 | | 869 | |
| | 2010.06-2012.06 | AT | F | L/R | Hatchback 4WD N63 B44 A | | GCO81413 | Outer Joint | | 37 | 25 | 65 | | 73 | I |
| | 2010.06-2012.06 | AT | F | L | Hatchback 4WD N63 B44 A | | GCI81055 | Inner Joint | | 27 | 24 | 43.95 | 60 | 123.5 | |
| | 2010.06-2012.06 | AT | F | R | Hatchback 4WD N63 B44 A | | GCI81477 | Inner Joint | | 27 | 24 | 43.95 | 366 | 125 | |
| | 2010.06-2012.06 | 8AT | R | L | Hatchback 4WD N63 B44 A | | GDS85116 | Drive Shaft | | 30 | 32 | 65 | 77 | 777 | |
| | 2010.06-2012.06 | 8AT | R | R | Hatchback 4WD N63 B44 A | | GDS85111 | Drive Shaft | | 30 | 32 | 65 | 77 | 831 | |
| | 2010.06-2012.06 | AT | R | L/R | Hatchback 4WD N63 B44 A | | GCI85063 | Inner Joint | | 30 | 28 | 65 | 77 | 89 | |
| | 2010.06-2012.06 | AT | R | L/R | Hatchback 4WD N63 B44 A | | GCI85074 | Inner Joint | | 32 | 28 | 49.9 | 85.5 | 100 | |
| 4.4 (330 kw) | 2012.07-2017.02 | 8AT | F | L | Hatchback 4WD N63 B44 B | | GDS82730 | Drive Shaft | | 37 | 27 | 65 | | 572 | |
| | 2012.07-2017.02 | 8AT | F | R | Hatchback 4WD N63 B44 B | | GDS81716 | Drive Shaft | | 37 | 27 | 65 | | 869 | |
| | 2012.07-2017.02 | AT | F | L/R | Hatchback 4WD N63 B44 B | | GCO81413 | Outer Joint | | 37 | 25 | 65 | | 73 | I |
| | 2012.07-2017.02 | AT | F | L | Hatchback 4WD N63 B44 B | | GCI81055 | Inner Joint | | 27 | 24 | 43.95 | 60 | 123.5 | |
| | 2012.07-2017.02 | AT | F | R | Hatchback 4WD N63 B44 B | | GCI81477 | Inner Joint | | 27 | 24 | 43.95 | 366 | 125 | |
| | 2012.07-2017.02 | 8AT | R | L | Hatchback 4WD N63 B44 B | | GDS85116 | Drive Shaft | | 30 | 32 | 65 | 77 | 777 | |
| | 2012.07-2017.02 | 8AT | R | R | Hatchback 4WD N63 B44 B | | GDS85111 | Drive Shaft | | 30 | 32 | 65 | 77 | 831 | |
| | 2012.07-2017.02 | AT | R | L/R | Hatchback 4WD N63 B44 B | | GCI85063 | Inner Joint | | 30 | 28 | 65 | 77 | 89 | |
| | 2012.07-2017.02 | AT | R | L/R | Hatchback 4WD N63 B44 B | | GCI85074 | Inner Joint | | 32 | 28 | 49.9 | 85.5 | 100 | |
| **630i Cabrio** | | | | | | | | | | | | | | | |
| 3.0 (190 kw) | 2004.09-2007.08 | AT/MT/Semi-AT | R | L/R | Convertible RWD N52 B30 A;N52 B30 BF;N52 B30 B | | GDS85082 | Drive Shaft | | 30 | | 58.7 | 73 | 656 | |
| | 2004.09-2007.08 | MT | R | L/R | Convertible RWD N52 B30 A;N52 B30 BF;N52 B30 B | | GCI61075 | Inner Joint | | | 28 | | | 26 | |
| 3.0 (200 kw) | 2007.09-2010.08 | MT/6AT/6MT | R | L/R | Convertible RWD N52 B30 A;N52 B30 BF;N52 B30 B | | GDS85082 | Drive Shaft | | 30 | | 58.7 | 73 | 656 | |
| | 2007.09-2010.08 | | R | L/R | Convertible RWD N52 B30 A;N52 B30 BF;N52 B30 B | | GCI61075 | Inner Joint | | | 28 | | | 26 | |
| | 2007.09-2010.08 | MT/6AT/6MT | R | L/R | Convertible RWD N53 B30 A | | GDS85082 | Drive Shaft | | 30 | | 58.7 | 73 | 656 | |
| | 2007.09-2010.08 | | R | L/R | Convertible RWD N53 B30 A | | GCI61075 | Inner Joint | | | 28 | | | 26 | |
| **630i Coupe** | | | | | | | | | | | | | | | |
| 3.0 (190 kw) | 2004.09-2007.08 | MT/Semi-AT | R | L/R | Coupe RWD N52 B30 A;N52 B30 BF | | GDS85082 | Drive Shaft | | 30 | | 58.7 | 73 | 656 | |
| | 2004.09-2007.08 | MT/Semi-AT | R | L/R | Coupe RWD N52 B30 A;N52 B30 BF | | GCI35025 | Inner Joint | | | 25 | | | 26 | |
| 3.0 (200 kw) | 2007.09-2010.08 | MT/6AT/6MT | R | L/R | Coupe RWD N52 B30 A;N52 B30 BF;N52 B30 B | | GDS85082 | Drive Shaft | | 30 | | 58.7 | 73 | 656 | |
| | 2007.09-2010.08 | | R | L/R | Coupe RWD N52 B30 A;N52 B30 BF;N52 B30 B | | GCI61075 | Inner Joint | | | 28 | | | 26 | |
| | 2007.09-2010.08 | MT/6AT/6MT | R | L/R | Coupe RWD N53 B30 A | | GDS85082 | Drive Shaft | | 30 | | 58.7 | 73 | 656 | |
| | 2007.09-2010.08 | | R | L/R | Coupe RWD N53 B30 A | | GCI61075 | Inner Joint | | | 28 | | | 26 | |
| **635d Cabrio** | | | | | | | | | | | | | | | |
| 3.0 (210 kw) | 2007.07-2010.07 | 6AT | R | L/R | Convertible RWD M57 D30 (306D5) | | GDS85073 | Drive Shaft | | 30 | | 58.8 | 73 | 653 | |
| | 2007.07-2010.07 | 6AT | R | L/R | Convertible RWD M57 D30 (306D5) | | GCI85048 | Inner Joint | | | 28 | | | 28 | |
| **635d Coupe** | | | | | | | | | | | | | | | |
| 3.0 (210 kw) | 2007.07-2010.07 | 6AT | R | L/R | Coupe RWD M57 D30 (306D5) | | GDS85073 | Drive Shaft | | 30 | | 58.8 | 73 | 653 | |
| | 2007.07-2010.07 | 6AT | R | L/R | Coupe RWD M57 D30 (306D5) | | GCI85048 | Inner Joint | | | 28 | | | 28 | |
| **640d Cabrio** | | | | | | | | | | | | | | | |
| 3.0 (230 kw) | 2011.09-2018.06 | 8AT | R | L | Convertible RWD N57 D30 B | | GDS85116 | Drive Shaft | | 30 | 32 | 65 | 77 | 777 | |
| | 2011.09-2018.06 | 8AT | R | R | Convertible RWD N57 D30 B | | GDS85111 | Drive Shaft | | 30 | 32 | 65 | 77 | 831 | |
| | 2011.09-2018.06 | 8AT | R | L/R | Convertible RWD N57 D30 B | | GCI85063 | Inner Joint | | 30 | 28 | 65 | 77 | 89 | |
| | 2011.09-2018.06 | 8AT | R | L/R | Convertible RWD N57 D30 B | | GCI85074 | Inner Joint | | 32 | 28 | 49.9 | 85.5 | 100 | |
| **640d Coupe** | | | | | | | | | | | | | | | |
| 3.0 (230 kw) | 2011.09-2017.10 | 8AT | R | L | Coupe RWD N57 D30 B | | GDS85116 | Drive Shaft | | 30 | 32 | 65 | 77 | 777 | |
| | 2011.09-2017.10 | 8AT | R | R | Coupe RWD N57 D30 B | | GDS85111 | Drive Shaft | | 30 | 32 | 65 | 77 | 831 | |
| | 2011.09-2017.10 | 8AT | R | L/R | Coupe RWD N57 D30 B | | GCI85074 | Inner Joint | | 32 | 28 | 49.9 | 85.5 | 100 | |
| | 2011.09-2017.10 | AT | R | L/R | Coupe RWD N57 D30 B | | GCI85063 | Inner Joint | | 30 | 28 | 65 | 77 | 89 | |

| | YEAR | TRANSM. | F/R | L/R | BODY STYLE & DRIVE TYPE & ENGINE | REMARKS | G-AP Ref. | PRODUCT | ABS | Technical Specifications A | B | C | H | L | P |
|---|---|---|---|---|---|---|---|---|---|---|---|---|---|---|---|
| **BMW** | | | | | | | | | | | | | | | |
| **640d Gran Coupe** | | | | | | | | | | | | | | | |
| 3.0 (230 kw) | 2012.03-2018.10 | 8AT | R | L | Coupe RWD N57 D30 B | | GDS85116 | Drive Shaft | | 30 | 32 | 65 | 77 | 777 | |
| | 2012.03-2018.10 | 8AT | R | R | Coupe RWD N57 D30 B | | GDS85111 | Drive Shaft | | 30 | 32 | 65 | 77 | 831 | |
| | 2012.03-2018.10 | 8AT | R | L/R | Coupe RWD N57 D30 B | | GCI85063 | Inner Joint | | 30 | 28 | 65 | 77 | 89 | |
| | 2012.03-2018.10 | 8AT | R | L/R | Coupe RWD N57 D30 B | | GCI85074 | Inner Joint | | 32 | 28 | 49.9 | 85.5 | 100 | |
| **640d xDrive Cabrio** | | | | | | | | | | | | | | | |
| 3.0 (230 kw) | 2012.03-2018.06 | 8AT | F | L | Convertible 4WD N57 D30 B | | GDS81581 | Drive Shaft | | 37 | 27 | 65 | | 562 | |
| | 2012.03-2018.06 | 8AT | F | R | Convertible 4WD N57 D30 B | | GDS81681 | Drive Shaft | | 37 | 27 | 65 | | 862 | |
| | 2012.03-2018.06 | 8AT | F | L/R | Convertible 4WD N57 D30 B | | GCO81413 | Outer Joint | | 37 | 25 | 65 | | 73 | I |
| | 2012.03-2018.06 | 8AT | F | L | Convertible 4WD N57 D30 B | | GCI81055 | Inner Joint | | 27 | 24 | 43.95 | 60 | 123.5 | |
| | 2012.03-2018.06 | 8AT | F | R | Convertible 4WD N57 D30 B | | GCI81457 | Inner Joint | | 27 | 24 | 43.95 | 359 | 125 | |
| | 2012.03-2018.06 | 8AT | R | L | Convertible 4WD N57 D30 B | | GDS85116 | Drive Shaft | | 30 | 32 | 65 | 77 | 777 | |
| | 2012.03-2018.06 | 8AT | R | R | Convertible 4WD N57 D30 B | | GDS85111 | Drive Shaft | | 30 | 32 | 65 | 77 | 831 | |
| | 2012.03-2018.06 | 8AT | R | L/R | Convertible 4WD N57 D30 B | | GCI85063 | Inner Joint | | 30 | 28 | 65 | 77 | 89 | |
| | 2012.03-2018.06 | 8AT | R | L/R | Convertible 4WD N57 D30 B | | GCI85074 | Inner Joint | | 32 | 28 | 49.9 | 85.5 | 100 | |
| **640d xDrive Coupe** | | | | | | | | | | | | | | | |
| 3.0 (230 kw) | 2012.03-2017.10 | 8AT | F | L | Coupe 4WD N57 D30 B | | GDS81581 | Drive Shaft | | 37 | 27 | 65 | | 562 | |
| | 2012.03-2017.10 | 8AT | F | R | Coupe 4WD N57 D30 B | | GDS81681 | Drive Shaft | | 37 | 27 | 65 | | 862 | |
| | 2012.03-2017.10 | 8AT | F | L/R | Coupe 4WD N57 D30 B | | GCO81413 | Outer Joint | | 37 | 25 | 65 | | 73 | I |
| | 2012.03-2017.10 | 8AT | F | L | Coupe 4WD N57 D30 B | | GCI81055 | Inner Joint | | 27 | 24 | 43.95 | 60 | 123.5 | |
| | 2012.03-2017.10 | 8AT | F | R | Coupe 4WD N57 D30 B | | GCI81457 | Inner Joint | | 27 | 24 | 43.95 | 359 | 125 | |
| | 2012.03-2017.10 | 8AT | R | L | Coupe 4WD N57 D30 B | | GDS85116 | Drive Shaft | | 30 | 32 | 65 | 77 | 777 | |
| | 2012.03-2017.10 | 8AT | R | R | Coupe 4WD N57 D30 B | | GDS85111 | Drive Shaft | | 30 | 32 | 65 | 77 | 831 | |
| | 2012.03-2017.10 | 8AT | R | L/R | Coupe 4WD N57 D30 B | | GCI85063 | Inner Joint | | 30 | 28 | 65 | 77 | 89 | |
| | 2012.03-2017.10 | 8AT | R | L/R | Coupe 4WD N57 D30 B | | GCI85074 | Inner Joint | | 32 | 28 | 49.9 | 85.5 | 100 | |
| **640d xDrive Gran Coupe** | | | | | | | | | | | | | | | |
| 3.0 (230 kw) | 2013.03-2018.10 | 8AT | F | L | Coupe 4WD N57 D30 B | | GDS81581 | Drive Shaft | | 37 | 27 | 65 | | 562 | |
| | 2013.03-2018.10 | 8AT | F | R | Coupe 4WD N57 D30 B | | GDS81681 | Drive Shaft | | 37 | 27 | 65 | | 862 | |
| | 2013.03-2018.10 | 8AT | F | L/R | Coupe 4WD N57 D30 B | | GCO81413 | Outer Joint | | 37 | 25 | 65 | | 73 | I |
| | 2013.03-2018.10 | 8AT | F | L | Coupe 4WD N57 D30 B | | GCI81055 | Inner Joint | | 27 | 24 | 43.95 | 60 | 123.5 | |
| | 2013.03-2018.10 | 8AT | F | R | Coupe 4WD N57 D30 B | | GCI81457 | Inner Joint | | 27 | 24 | 43.95 | 359 | 125 | |
| | 2013.03-2018.10 | 8AT | R | L | Coupe 4WD N57 D30 B | | GDS85116 | Drive Shaft | | 30 | 32 | 65 | 77 | 777 | |
| | 2013.03-2018.10 | 8AT | R | R | Coupe 4WD N57 D30 B | | GDS85111 | Drive Shaft | | 30 | 32 | 65 | 77 | 831 | |
| | 2013.03-2018.10 | 8AT | R | L/R | Coupe 4WD N57 D30 B | | GCI85074 | Inner Joint | | 32 | 28 | 49.9 | 85.5 | 100 | |
| | 2013.03-2018.10 | AT | R | L/R | Coupe 4WD N57 D30 B | | GCI85063 | Inner Joint | | 30 | 28 | 65 | 77 | 89 | |
| **640i xDrive Cabrio** | | | | | | | | | | | | | | | |
| 3.0 (235 kw) | 2013.03-2018.06 | 8AT | F | L | Convertible 4WD N55 B30 A | | GDS81581 | Drive Shaft | | 37 | 27 | 65 | | 562 | |
| | 2013.03-2018.06 | 8AT | F | R | Convertible 4WD N55 B30 A | | GDS81681 | Drive Shaft | | 37 | 27 | 65 | | 862 | |
| | 2013.03-2018.06 | 8AT | F | L/R | Convertible 4WD N55 B30 A | | GCO81413 | Outer Joint | | 37 | 25 | 65 | | 73 | I |
| | 2013.03-2018.06 | 8AT | F | L | Convertible 4WD N55 B30 A | | GCI81055 | Inner Joint | | 27 | 24 | 43.95 | 60 | 123.5 | |
| | 2013.03-2018.06 | 8AT | F | R | Convertible 4WD N55 B30 A | | GCI81457 | Inner Joint | | 27 | 24 | 43.95 | 359 | 125 | |
| | 2013.03-2018.06 | AT | R | L | Convertible 4WD N55 B30 A | | GDS85112 | Drive Shaft | | 30 | 27 | 64.9 | 77 | 758 | |
| | 2013.03-2018.06 | AT | R | R | Convertible 4WD N55 B30 A | | GDS85113 | Drive Shaft | | 30 | 27 | 64.9 | 77 | 811 | |
| | 2013.03-2018.06 | AT | R | L/R | Convertible 4WD N55 B30 A | | GCI85054 | Outer Joint | | 30 | 25 | 64.9 | 77 | 82 | |
| | 2013.03-2018.06 | AT | R | L/R | Convertible 4WD N55 B30 A | | GCI85055 | Inner Joint | | 27 | 25 | 43.9 | 80 | 96 | |
| **640i xDrive Coupe** | | | | | | | | | | | | | | | |
| 3.0 (235 kw) | 2013.03-2017.10 | 8AT | F | L | Coupe 4WD N55 B30 A | | GDS81581 | Drive Shaft | | 37 | 27 | 65 | | 562 | |
| | 2013.03-2017.10 | 8AT | F | R | Coupe 4WD N55 B30 A | | GDS81681 | Drive Shaft | | 37 | 27 | 65 | | 862 | |
| | 2013.03-2017.10 | 8AT | F | L/R | Coupe 4WD N55 B30 A | | GCO81413 | Outer Joint | | 37 | 25 | 65 | | 73 | I |
| | 2013.03-2017.10 | 8AT | F | L | Coupe 4WD N55 B30 A | | GCI81055 | Inner Joint | | 27 | 24 | 43.95 | 60 | 123.5 | |
| | 2013.03-2017.10 | 8AT | F | R | Coupe 4WD N55 B30 A | | GCI81457 | Inner Joint | | 27 | 24 | 43.95 | 359 | 125 | |
| | 2013.03-2017.10 | AT | R | L | Coupe 4WD N55 B30 A | | GDS85112 | Drive Shaft | | 30 | 27 | 64.9 | 77 | 758 | |
| | 2013.03-2017.10 | AT | R | R | Coupe 4WD N55 B30 A | | GDS85113 | Drive Shaft | | 30 | 27 | 64.9 | 77 | 811 | |
| | 2013.03-2017.10 | AT | R | L/R | Coupe 4WD N55 B30 A | | GCI85054 | Outer Joint | | 30 | 25 | 64.9 | 77 | 82 | |
| | 2013.03-2017.10 | AT | R | L/R | Coupe 4WD N55 B30 A | | GCI85055 | Inner Joint | | 27 | 25 | 43.9 | 80 | 96 | |
| **640i xDrive Gran Coupe** | | | | | | | | | | | | | | | |
| 3.0 (235 kw) | 2013.03-2018.10 | 8AT | F | L | Coupe 4WD N55 B30 A | | GDS81581 | Drive Shaft | | 37 | 27 | 65 | | 562 | |
| | 2013.03-2018.10 | 8AT | F | R | Coupe 4WD N55 B30 A | | GDS81681 | Drive Shaft | | 37 | 27 | 65 | | 862 | |
| | 2013.03-2018.10 | 8AT | F | L/R | Coupe 4WD N55 B30 A | | GCO81413 | Outer Joint | | 37 | 25 | 65 | | 73 | I |
| | 2013.03-2018.10 | 8AT | F | L | Coupe 4WD N55 B30 A | | GCI81055 | Inner Joint | | 27 | 24 | 43.95 | 60 | 123.5 | |
| | 2013.03-2018.10 | 8AT | F | R | Coupe 4WD N55 B30 A | | GCI81457 | Inner Joint | | 27 | 24 | 43.95 | 359 | 125 | |
| | 2013.03-2018.10 | AT | R | L | Coupe 4WD N55 B30 A | | GDS85112 | Drive Shaft | | 30 | 27 | 64.9 | 77 | 758 | |
| | 2013.03-2018.10 | AT | R | R | Coupe 4WD N55 B30 A | | GDS85113 | Drive Shaft | | 30 | 27 | 64.9 | 77 | 811 | |
| | 2013.03-2018.10 | AT | R | L/R | Coupe 4WD N55 B30 A | | GCI85054 | Outer Joint | | 30 | 25 | 64.9 | 77 | 82 | |
| | 2013.03-2018.10 | AT | R | L/R | Coupe 4WD N55 B30 A | | GCI85055 | Inner Joint | | 27 | 25 | 43.9 | 80 | 96 | |

| | YEAR | TRANSM. | F/R | L/R | BODY STYLE & DRIVE TYPE & ENGINE | REMARKS | G-AP Ref. | PRODUCT | ABS | Technical Specifications A | B | C | H | L | P |
|---|---|---|---|---|---|---|---|---|---|---|---|---|---|---|---|
| **BMW** | | | | | | | | | | | | | | | |
| **645i Cabrio** | | | | | | | | | | | | | | | |
| 4.4 (245 kw) | 2004.04-2005.08 | 6AT/MT/Semi-AT | R | L/R | Convertible RWD N62 B44 A | | GDS85073 | Drive Shaft | | 30 | | 58.8 | 73 | 653 | |
| | 2004.04-2005.08 | 6AT/MT/Semi-AT | R | L/R | Convertible RWD N62 B44 A | | GCI85048 | Inner Joint | | | 28 | | | 28 | |
| **645i Coupe** | | | | | | | | | | | | | | | |
| 4.4 (245 kw) | 2003.09-2005.08 | 6AT/MT/Semi-AT | R | L/R | Coupe RWD N62 B44 A | | GDS85073 | Drive Shaft | | 30 | | 58.8 | 73 | 653 | |
| | 2003.09-2005.08 | 6AT/MT/Semi-AT | R | L/R | Coupe RWD N62 B44 A | | GCI85048 | Inner Joint | | | 28 | | | 28 | |
| **650i Cabrio** | | | | | | | | | | | | | | | |
| 4.4 (298 kw) | 2011.09-2012.12 | 8AT | R | L | Convertible RWD N63 B44 A | | GDS85116 | Drive Shaft | | 30 | 32 | 65 | 77 | 777 | |
| | 2011.09-2012.12 | 8AT | R | R | Convertible RWD N63 B44 A | | GDS85111 | Drive Shaft | | 30 | 32 | 65 | 77 | 831 | |
| | 2011.09-2012.12 | 8AT | R | L | Convertible RWD N63 B44 A | | GCI85074 | Inner Joint | | 32 | 28 | 49.9 | 85.5 | 100 | |
| 4.4 (300 kw) | 2010.12-2012.06 | 8AT | R | L | Convertible RWD N63 B44 A | | GDS85116 | Drive Shaft | | 30 | 32 | 65 | 77 | 777 | |
| | 2010.12-2012.06 | 8AT | R | R | Convertible RWD N63 B44 A | | GDS85111 | Drive Shaft | | 30 | 32 | 65 | 77 | 831 | |
| | 2010.12-2012.06 | 8AT | R | L | Convertible RWD N63 B44 A | | GCI85063 | Inner Joint | | 30 | 28 | 65 | 77 | 89 | |
| | 2010.12-2012.06 | 8AT | R | L | Convertible RWD N63 B44 A | | GCI85074 | Inner Joint | | 32 | 28 | 49.9 | 85.5 | 100 | |
| 4.4 (330 kw) | 2012.07-2018.06 | 8AT | R | L | Convertible RWD N63 B44 A;N63 B44 B | | GDS85116 | Drive Shaft | | 30 | 32 | 65 | 77 | 777 | |
| | 2012.07-2018.06 | 8AT | R | R | Convertible RWD N63 B44 A;N63 B44 B | | GDS85111 | Drive Shaft | | 30 | 32 | 65 | 77 | 831 | |
| | 2012.07-2018.06 | 8AT | R | L | Convertible RWD N63 B44 A;N63 B44 B | | GCI85063 | Inner Joint | | 30 | 28 | 65 | 77 | 89 | |
| | 2012.07-2018.06 | 8AT | R | L | Convertible RWD N63 B44 A;N63 B44 B | | GCI85074 | Inner Joint | | 32 | 28 | 49.9 | 85.5 | 100 | |
| 4.8 (270 kw) | 2005.09-2010.08 | 6AT/6MT/6AMT | R | L/R | Convertible RWD N62 B48 B | | GDS85073 | Drive Shaft | | 30 | | 58.8 | 73 | 653 | |
| | 2005.09-2010.08 | AT/MT/Semi-AT | R | L/R | Convertible RWD N62 B48 B | | GCI85048 | Inner Joint | | | 28 | | | 28 | |
| **650i Coupe** | | | | | | | | | | | | | | | |
| 4.4 (298 kw) | 2011.09-2012.12 | 6MT | R | L | Coupe RWD N63 B44 A | | GDS85116 | Drive Shaft | | 30 | 32 | 65 | 77 | 777 | |
| | 2011.09-2012.12 | 6MT | R | R | Coupe RWD N63 B44 A | | GDS85111 | Drive Shaft | | 30 | 32 | 65 | 77 | 831 | |
| | 2011.09-2012.12 | 6MT | R | L | Coupe RWD N63 B44 A | | GCI85074 | Inner Joint | | 32 | 28 | 49.9 | 85.5 | 100 | |
| 4.4 (300 kw) | 2011.07-2012.06 | 8AT | R | L | Coupe RWD N63 B44 A | | GDS85116 | Drive Shaft | | 30 | 32 | 65 | 77 | 777 | |
| | 2011.07-2012.06 | 8AT | R | R | Coupe RWD N63 B44 A | | GDS85111 | Drive Shaft | | 30 | 32 | 65 | 77 | 831 | |
| | 2011.07-2012.06 | 8AT | R | L | Coupe RWD N63 B44 A | | GCI85063 | Inner Joint | | 30 | 28 | 65 | 77 | 89 | |
| | 2011.07-2012.06 | 8AT | R | L | Coupe RWD N63 B44 A | | GCI85074 | Inner Joint | | 32 | 28 | 49.9 | 85.5 | 100 | |
| 4.4 (330 kw) | 2012.07-2017.10 | 8AT | R | L | Coupe RWD N63 B44 B | | GDS85116 | Drive Shaft | | 30 | 32 | 65 | 77 | 777 | |
| | 2012.07-2017.10 | 8AT | R | R | Coupe RWD N63 B44 B | | GDS85111 | Drive Shaft | | 30 | 32 | 65 | 77 | 831 | |
| | 2012.07-2017.10 | 8AT | R | L | Coupe RWD N63 B44 B | | GCI85063 | Inner Joint | | 30 | 28 | 65 | 77 | 89 | |
| | 2012.07-2017.10 | 8AT | R | L | Coupe RWD N63 B44 B | | GCI85074 | Inner Joint | | 32 | 28 | 49.9 | 85.5 | 100 | |
| 4.8 (270 kw) | 2005.09-2010.08 | 6AT/6MT/6AMT | R | L/R | Coupe RWD N62 B48 B | | GDS85073 | Drive Shaft | | 30 | | 58.8 | 73 | 653 | |
| | 2005.09-2010.08 | MT | R | L/R | Coupe RWD N62 B48 B | | GCI85048 | Inner Joint | | | 28 | | | 28 | |
| **650i Gran Coupe** | | | | | | | | | | | | | | | |
| 4.4 (330 kw) | 2012.07-2018.10 | 8AT | R | L | Coupe RWD N63 B44 B | | GDS85116 | Drive Shaft | | 30 | 32 | 65 | 77 | 777 | |
| | 2012.07-2018.10 | 8AT | R | R | Coupe RWD N63 B44 B | | GDS85111 | Drive Shaft | | 30 | 32 | 65 | 77 | 831 | |
| | 2012.07-2018.10 | 8AT | R | L | Coupe RWD N63 B44 B | | GCI85063 | Inner Joint | | 30 | 28 | 65 | 77 | 89 | |
| | 2012.07-2018.10 | 8AT | R | L | Coupe RWD N63 B44 B | | GCI85074 | Inner Joint | | 32 | 28 | 49.9 | 85.5 | 100 | |
| **650i xDrive Cabrio** | | | | | | | | | | | | | | | |
| 4.4 (300 kw) | 2011.09-2012.06 | 8AT | F | L | Convertible 4WD N63 B44 A | | GDS81581 | Drive Shaft | | 37 | 27 | 65 | | 562 | |
| | 2011.09-2012.06 | 8AT | F | R | Convertible 4WD N63 B44 A | | GDS81716 | Drive Shaft | | 37 | 27 | 65 | | 869 | |
| | 2011.09-2012.06 | 8AT | F | L | Convertible 4WD N63 B44 A | | GCO81413 | Outer Joint | | 37 | 25 | 65 | | 73 | I |
| | 2011.09-2012.06 | 8AT | F | L | Convertible 4WD N63 B44 A | | GCI81055 | Inner Joint | | 27 | 24 | 43.95 | 60 | 123.5 | |
| | 2011.09-2012.06 | 8AT | F | R | Convertible 4WD N63 B44 A | | GCI81477 | Inner Joint | | 27 | 24 | 43.95 | 366 | 125 | |
| | 2011.09-2012.06 | 8AT | R | L | Convertible 4WD N63 B44 A | | GDS85116 | Drive Shaft | | 30 | 32 | 65 | 77 | 777 | |
| | 2011.09-2012.06 | 8AT | R | R | Convertible 4WD N63 B44 A | | GDS85111 | Drive Shaft | | 30 | 32 | 65 | 77 | 831 | |
| | 2011.09-2012.06 | 8AT | R | L | Convertible 4WD N63 B44 A | | GCI85063 | Inner Joint | | 30 | 28 | 65 | 77 | 89 | |
| | 2011.09-2012.06 | 8AT | R | L | Convertible 4WD N63 B44 A | | GCI85074 | Inner Joint | | 32 | 28 | 49.9 | 85.5 | 100 | |
| 4.4 (330 kw) | 2012.07-2018.06 | 8AT | F | L | Convertible 4WD N63 B44 A;N63 B44 B | | GDS81581 | Drive Shaft | | 37 | 27 | 65 | | 562 | |
| | 2012.07-2018.06 | 8AT | F | R | Convertible 4WD N63 B44 A;N63 B44 B | | GDS81716 | Drive Shaft | | 37 | 27 | 65 | | 869 | |
| | 2012.07-2018.06 | 8AT | F | L | Convertible 4WD N63 B44 A;N63 B44 B | | GCO81413 | Outer Joint | | 37 | 25 | 65 | | 73 | I |
| | 2012.07-2018.06 | 8AT | F | L | Convertible 4WD N63 B44 A;N63 B44 B | | GCI81055 | Inner Joint | | 27 | 24 | 43.95 | 60 | 123.5 | |
| | 2012.07-2018.06 | 8AT | F | R | Convertible 4WD N63 B44 A;N63 B44 B | | GCI81477 | Inner Joint | | 27 | 24 | 43.95 | 366 | 125 | |
| | 2012.07-2018.06 | 8AT | R | L | Convertible 4WD N63 B44 A;N63 B44 B | | GDS85116 | Drive Shaft | | 30 | 32 | 65 | 77 | 777 | |
| | 2012.07-2018.06 | 8AT | R | R | Convertible 4WD N63 B44 A;N63 B44 B | | GDS85111 | Drive Shaft | | 30 | 32 | 65 | 77 | 831 | |
| | 2012.07-2018.06 | 8AT | R | L | Convertible 4WD N63 B44 A;N63 B44 B | | GCI85063 | Inner Joint | | 30 | 28 | 65 | 77 | 89 | |
| | 2012.07-2018.06 | 8AT | R | L | Convertible 4WD N63 B44 A;N63 B44 B | | GCI85074 | Inner Joint | | 32 | 28 | 49.9 | 85.5 | 100 | |
| **650i xDrive Coupe** | | | | | | | | | | | | | | | |
| 4.4 (300 kw) | 2011.09-2015.02 | 8AT | F | L | Coupe 4WD N63 B44 A | | GDS81581 | Drive Shaft | | 37 | 27 | 65 | | 562 | |
| | 2011.09-2015.02 | 8AT | F | R | Coupe 4WD N63 B44 A | | GDS81716 | Drive Shaft | | 37 | 27 | 65 | | 869 | |
| | 2011.09-2015.02 | 8AT | F | L | Coupe 4WD N63 B44 A | | GCO81413 | Outer Joint | | 37 | 25 | 65 | | 73 | I |
| | 2011.09-2015.02 | 8AT | F | L | Coupe 4WD N63 B44 A | | GCI81055 | Inner Joint | | 27 | 24 | 43.95 | 60 | 123.5 | |
| | 2011.09-2015.02 | 8AT | F | R | Coupe 4WD N63 B44 A | | GCI81477 | Inner Joint | | 27 | 24 | 43.95 | 366 | 125 | |
| | 2011.09-2015.02 | 8AT | R | L | Coupe 4WD N63 B44 A | | GDS85116 | Drive Shaft | | 30 | 32 | 65 | 77 | 777 | |
| | 2011.09-2015.02 | 8AT | R | R | Coupe 4WD N63 B44 A | | GDS85111 | Drive Shaft | | 30 | 32 | 65 | 77 | 831 | |

| | YEAR | TRANSM. | F/R | L/R | BODY STYLE & DRIVE TYPE & ENGINE | REMARKS | G-AP Ref. | PRODUCT | ABS | Technical Specifications A | B | C | H | L | P |
|---|---|---|---|---|---|---|---|---|---|---|---|---|---|---|---|
| **BMW** | | | | | | | | | | | | | | | |
| **650i xDrive Coupe** | | | | | | | | | | | | | | | |
| 4.4 (300 kw) | 2011.09-2015.02 | 8AT | R | L | Coupe 4WD N63 B44 A | | GCI85063 | Inner Joint | | 30 | 28 | 65 | 77 | 89 | |
| | 2011.09-2015.02 | 8AT | R | L | Coupe 4WD N63 B44 A | | GCI85074 | Inner Joint | | 32 | 28 | 49.9 | 85.5 | 100 | |
| 4.4 (330 kw) | 2012.07-2017.10 | 8AT | F | L | Coupe 4WD N63 B44 B | | GDS81581 | Drive Shaft | | 37 | 27 | 65 | | 562 | |
| | 2012.07-2017.10 | 8AT | F | R | Coupe 4WD N63 B44 B | | GDS81716 | Drive Shaft | | 37 | 27 | 65 | | 869 | |
| | 2012.07-2017.10 | 8AT | F | L | Coupe 4WD N63 B44 B | | GCO81413 | Outer Joint | | 37 | 25 | 65 | | 73 | I |
| | 2012.07-2017.10 | 8AT | F | L | Coupe 4WD N63 B44 B | | GCI81055 | Inner Joint | | 27 | 24 | 43.95 | 60 | 123.5 | |
| | 2012.07-2017.10 | 8AT | F | R | Coupe 4WD N63 B44 B | | GCI81477 | Inner Joint | | 27 | 24 | 43.95 | 366 | 125 | |
| | 2012.07-2017.10 | 8AT | R | L | Coupe 4WD N63 B44 B | | GDS85116 | Drive Shaft | | 30 | 32 | 65 | 77 | 777 | |
| | 2012.07-2017.10 | 8AT | R | R | Coupe 4WD N63 B44 B | | GDS85111 | Drive Shaft | | 30 | 32 | 65 | 77 | 831 | |
| | 2012.07-2017.10 | 8AT | R | L | Coupe 4WD N63 B44 B | | GCI85063 | Inner Joint | | 30 | 28 | 65 | 77 | 89 | |
| | 2012.07-2017.10 | 8AT | R | L | Coupe 4WD N63 B44 B | | GCI85074 | Inner Joint | | 32 | 28 | 49.9 | 85.5 | 100 | |
| **650i xDrive Gran Coupe** | | | | | | | | | | | | | | | |
| 4.4 (330 kw) | 2012.07-2018.10 | 8AT | F | L | Coupe 4WD N63 B44 B | | GDS81581 | Drive Shaft | | 37 | 27 | 65 | | 562 | |
| | 2012.07-2018.10 | 8AT | F | R | Coupe 4WD N63 B44 B | | GDS81716 | Drive Shaft | | 37 | 27 | 65 | | 869 | |
| | 2012.07-2018.10 | 8AT | F | L | Coupe 4WD N63 B44 B | | GCO81413 | Outer Joint | | 37 | 25 | 65 | | 73 | I |
| | 2012.07-2018.10 | 8AT | F | L | Coupe 4WD N63 B44 B | | GCI81055 | Inner Joint | | 27 | 24 | 43.95 | 60 | 123.5 | |
| | 2012.07-2018.10 | 8AT | F | R | Coupe 4WD N63 B44 B | | GCI81477 | Inner Joint | | 27 | 24 | 43.95 | 366 | 125 | |
| | 2012.07-2018.10 | 8AT | R | L | Coupe 4WD N63 B44 B | | GDS85116 | Drive Shaft | | 30 | 32 | 65 | 77 | 777 | |
| | 2012.07-2018.10 | 8AT | R | R | Coupe 4WD N63 B44 B | | GDS85111 | Drive Shaft | | 30 | 32 | 65 | 77 | 831 | |
| | 2012.07-2018.10 | 8AT | R | L | Coupe 4WD N63 B44 B | | GCI85063 | Inner Joint | | 30 | 28 | 65 | 77 | 89 | |
| | 2012.07-2018.10 | 8AT | R | L | Coupe 4WD N63 B44 B | | GCI85074 | Inner Joint | | 32 | 28 | 49.9 | 85.5 | 100 | |
| **730d** | | | | | | | | | | | | | | | |
| 3.0 (135 kw) | 1998.05-1999.08 | SAT | R | R | Saloon RWD M57D306D1 | | GDS81113 | Drive Shaft | | 30 | | 59 | 73 | 636 | |
| | 1998.05-1999.08 | SAT | R | R | Saloon RWD M57D306D1 | | GCI85081 | Inner Joint | | | 30 | | | 32 | |
| 3.0 (150 kw) | 2002.09-2003.08 | 6AT | R | L/R | Saloon RWD M57 D30 (306D2) | | GDS85073 | Drive Shaft | | 30 | | 58.8 | 73 | 653 | |
| | 2002.09-2003.08 | 6AT | R | L/R | Saloon RWD M57 D30 (306D2) | | GCI85048 | Inner Joint | | | 28 | | | 28 | |
| 3.0 (155 kw) | 2003.09-2008.08 | 6AT | R | L/R | Saloon RWD M57 D30 (306D2);M57 D30 (306D3) | | GDS85073 | Drive Shaft | | 30 | | 58.8 | 73 | 653 | |
| | 2003.09-2008.08 | 6AT | R | L/R | Saloon RWD M57 D30 (306D2);M57 D30 (306D3) | | GCI85048 | Inner Joint | | | 28 | | | 28 | |
| | 2008.02-2015.05 | 6AT | R | L | Saloon RWD N57 D30 A | | GDS85116 | Drive Shaft | | 30 | 32 | 65 | 77 | 777 | |
| | 2008.02-2015.05 | 6AT | R | R | Saloon RWD N57 D30 A | | GDS85111 | Drive Shaft | | 30 | 32 | 65 | 77 | 831 | |
| | 2008.02-2015.05 | 6AT | R | L/R | Saloon RWD N57 D30 A | | GCI85063 | Inner Joint | | 30 | 28 | 65 | 77 | 89 | |
| | 2008.02-2015.05 | 6AT | R | L/R | Saloon RWD N57 D30 A | | GCI85074 | Inner Joint | | 32 | 28 | 49.9 | 85.5 | 100 | |
| 3.0 (160 kw) | 2002.06-2005.02 | 6AT | R | L/R | Saloon RWD M57 D30 (306D2) | | GDS85073 | Drive Shaft | | 30 | | 58.8 | 73 | 653 | |
| 3.0 (180 kw) | 2008.09-2012.06 | 6AT | R | L | Saloon RWD N57 D30 A | | GDS85116 | Drive Shaft | | 30 | 32 | 65 | 77 | 777 | |
| | 2008.09-2012.06 | 6AT | R | R | Saloon RWD N57 D30 A | | GDS85111 | Drive Shaft | | 30 | 32 | 65 | 77 | 831 | |
| | 2008.09-2012.06 | 6AT | R | L/R | Saloon RWD N57 D30 A | | GCI85063 | Inner Joint | | 30 | 28 | 65 | 77 | 89 | |
| | 2008.09-2012.06 | 6AT | R | L/R | Saloon RWD N57 D30 A | | GCI85074 | Inner Joint | | 32 | 28 | 49.9 | 85.5 | 100 | |
| 3.0 (190 kw) | 2012.07-2015.05 | AT | R | L | Saloon RWD N57 D30 A | | GDS85116 | Drive Shaft | | 30 | 32 | 65 | 77 | 777 | |
| | 2012.07-2015.05 | AT | R | R | Saloon RWD N57 D30 A | | GDS85111 | Drive Shaft | | 30 | 32 | 65 | 77 | 831 | |
| | 2012.07-2015.05 | AT | R | L/R | Saloon RWD N57 D30 A | | GCI85063 | Inner Joint | | 30 | 28 | 65 | 77 | 89 | |
| | 2012.07-2015.05 | AT | R | L/R | Saloon RWD N57 D30 A | | GCI85074 | Inner Joint | | 32 | 28 | 49.9 | 85.5 | 100 | |
| **730d xDrive** | | | | | | | | | | | | | | | |
| 3.0 (155 kw) | 2011.11-2015.05 | 8AT | F | R | Saloon 4WD N57 D30 A | | GCI81457 | Inner Joint | | 27 | 24 | 43.95 | 359 | 125 | |
| | 2011.11-2015.05 | AT | F | L | Saloon 4WD N57 D30 A | | GDS82730 | Drive Shaft | | 37 | 27 | 65 | | 572 | |
| | 2011.11-2015.05 | AT | F | R | Saloon 4WD N57 D30 A | | GDS83946 | Drive Shaft | | 37 | 27 | 65 | | 871 | |
| | 2011.11-2015.05 | AT | F | L/R | Saloon 4WD N57 D30 A | | GCO81413 | Outer Joint | | 37 | 25 | 65 | | 73 | I |
| | 2011.11-2015.05 | AT | F | L | Saloon 4WD N57 D30 A | | GCI81055 | Inner Joint | | 27 | 24 | 43.95 | 60 | 123.5 | |
| | 2011.11-2015.05 | AT | R | L | Saloon 4WD N57 D30 A | | GDS85116 | Drive Shaft | | 30 | 32 | 65 | 77 | 777 | |
| | 2011.11-2015.05 | AT | R | R | Saloon 4WD N57 D30 A | | GDS85111 | Drive Shaft | | 30 | 32 | 65 | 77 | 831 | |
| | 2011.11-2015.05 | AT | R | L/R | Saloon 4WD N57 D30 A | | GCI85063 | Inner Joint | | 30 | 28 | 65 | 77 | 89 | |
| | 2011.11-2015.05 | AT | R | L/R | Saloon 4WD N57 D30 A | | GCI85074 | Inner Joint | | 32 | 28 | 49.9 | 85.5 | 100 | |
| 3.0 (190 kw) | 2011.11-2015.05 | 8AT | F | R | Saloon 4WD N57 D30 A | | GCI81457 | Inner Joint | | 27 | 24 | 43.95 | 359 | 125 | |
| | 2011.11-2015.05 | AT | F | L | Saloon 4WD N57 D30 A | | GDS82730 | Drive Shaft | | 37 | 27 | 65 | | 572 | |
| | 2011.11-2015.05 | AT | F | R | Saloon 4WD N57 D30 A | | GDS83946 | Drive Shaft | | 37 | 27 | 65 | | 871 | |
| | 2011.11-2015.05 | AT | F | L/R | Saloon 4WD N57 D30 A | | GCO81413 | Outer Joint | | 37 | 25 | 65 | | 73 | I |
| | 2011.11-2015.05 | AT | F | L | Saloon 4WD N57 D30 A | | GCI81055 | Inner Joint | | 27 | 24 | 43.95 | 60 | 123.5 | |
| | 2011.11-2015.05 | AT | R | L | Saloon 4WD N57 D30 A | | GDS85116 | Drive Shaft | | 30 | 32 | 65 | 77 | 777 | |
| | 2011.11-2015.05 | AT | R | R | Saloon 4WD N57 D30 A | | GDS85111 | Drive Shaft | | 30 | 32 | 65 | 77 | 831 | |
| | 2011.11-2015.05 | AT | R | L/R | Saloon 4WD N57 D30 A | | GCI85063 | Inner Joint | | 30 | 28 | 65 | 77 | 89 | |
| | 2011.11-2015.05 | AT | R | L/R | Saloon 4WD N57 D30 A | | GCI85074 | Inner Joint | | 32 | 28 | 49.9 | 85.5 | 100 | |
| **730i/730Li** | | | | | | | | | | | | | | | |
| 3.0 (170 kw) | 2003.03-2008.07 | 6AT | R | L/R | Saloon RWD M54 B30 (306S3) | | GDS85073 | Drive Shaft | | 30 | | 58.8 | 73 | 653 | |
| | 2003.03-2008.07 | 6AT | R | L/R | Saloon RWD M54 B30 (306S3) | | GCI85048 | Inner Joint | | | 28 | | | 28 | |
| 3.0 (190 kw) | 2005.03-2008.08 | 6AT | R | L/R | Saloon RWD N52 B30 BF, N52 B30 A | | GDS85073 | Drive Shaft | | 30 | | 58.8 | 73 | 653 | |
| | 2005.03-2008.08 | 6AT | R | L/R | Saloon RWD N52 B30 BF, N52 B30 A | | GCI85048 | Inner Joint | | | 28 | | | 28 | |

| | YEAR | TRANSM. | F/R | L/R | BODY STYLE & DRIVE TYPE & ENGINE | REMARKS | G-AP Ref. | PRODUCT | ABS | Technical Specifications A | B | C | H | L | P |
|---|---|---|---|---|---|---|---|---|---|---|---|---|---|---|---|
| **BMW** | | | | | | | | | | | | | | | |
| **730i/730Li** | | | | | | | | | | | | | | | |
| 3.0 (190 kw) | 2009.09-2015.06 | 8AT | R | L | Saloon RWD N52 B30 BF, N52 B30 A, N52 B30 AF | | GDS85101 | Drive Shaft | | 30 | 27 | 64.9 | 77 | 764 | |
| | 2009.09-2015.06 | 8AT | R | R | Saloon RWD N52 B30 BF, N52 B30 A, N52 B30 AF | | GDS82729 | Drive Shaft | | 30 | 27 | 64.9 | 77 | 820 | |
| | 2009.09-2015.06 | 8AT | R | L/R | Saloon RWD N52 B30 BF, N52 B30 A, N52 B30 AF | | GCI85054 | Outer Joint | | 30 | 25 | 64.9 | 77 | 82 | |
| | 2009.09-2015.06 | 8AT | R | L/R | Saloon RWD N52 B30 BF, N52 B30 A, N52 B30 AF | | GCI85055 | Inner Joint | | 27 | 25 | 43.9 | 80 | 96 | |
| **730Ld** | | | | | | | | | | | | | | | |
| 3.0 (170 kw) | 2005.07-2008.08 | 6AT | R | L/R | Saloon RWD M57 D30 (306D3) | | GDS85073 | Drive Shaft | | 30 | | 58.8 | 73 | 653 | |
| | 2005.07-2008.08 | 6AT | R | L/R | Saloon RWD M57 D30 (306D3) | | GCI85048 | Inner Joint | | | 28 | | | 28 | |
| **735i/735Li** | | | | | | | | | | | | | | | |
| 3.6 (200 kw) | 2001.11-2005.02 | 6AT | R | L/R | Saloon RWD N62 B36 A | | GDS85073 | Drive Shaft | | 30 | | 58.8 | 73 | 653 | |
| | 2001.11-2005.02 | 6AT | R | L/R | Saloon RWD N62 B36 A | | GCI85048 | Inner Joint | | | 28 | | | 28 | |
| **740d** | | | | | | | | | | | | | | | |
| 3.0 (225 kw) | 2009.09-2012.06 | 6AT | R | L | Saloon RWD N57 D30 B | | GDS85116 | Drive Shaft | | 30 | 32 | 65 | 77 | 777 | |
| | 2009.09-2012.06 | 6AT | R | R | Saloon RWD N57 D30 B | | GDS85111 | Drive Shaft | | 30 | 32 | 65 | 77 | 831 | |
| | 2009.09-2012.06 | 6AT | R | L/R | Saloon RWD N57 D30 B | | GCI85074 | Inner Joint | | 32 | 28 | 49.9 | 85.5 | 100 | |
| | 2009.09-2012.06 | AT | R | L/R | Saloon RWD N57 D30 B | | GCI85063 | Inner Joint | | 30 | 28 | 65 | 77 | 89 | |
| 3.0 (230 kw) | 2012.07-2015.06 | AT | R | L | Saloon RWD N57 D30 B | | GDS85116 | Drive Shaft | | 30 | 32 | 65 | 77 | 777 | |
| | 2012.07-2015.06 | AT | R | R | Saloon RWD N57 D30 B | | GDS85111 | Drive Shaft | | 30 | 32 | 65 | 77 | 831 | |
| | 2012.07-2015.06 | AT | R | L/R | Saloon RWD N57 D30 B | | GCI85063 | Inner Joint | | 30 | 28 | 65 | 77 | 89 | |
| | 2012.07-2015.06 | AT | R | L/R | Saloon RWD N57 D30 B | | GCI85074 | Inner Joint | | 32 | 28 | 49.9 | 85.5 | 100 | |
| 3.9 (190 kw) | 2002.10-2005.02 | 6AT | R | L/R | Saloon RWD M67 D39 (398D1) | | GDS81114 | Drive Shaft | | 30 | | | 73 | 649 | |
| | 2002.10-2005.02 | 6AT | R | L/R | Saloon RWD M67 D39 (398D1) | | GCI35051 | Inner Joint | | | 30 | | | 30.5 | |
| **740d xDrive** | | | | | | | | | | | | | | | |
| 3.0 (225 kw) | 2010.09-2012.12 | 8AT | F | R | Saloon 4WD N57 D30 B | | GDS83946 | Drive Shaft | | 37 | 27 | 65 | | 871 | |
| | 2010.09-2012.12 | 8AT | F | R | Saloon 4WD N57 D30 B | | GCI81457 | Inner Joint | | 27 | 24 | 43.95 | 359 | 125 | |
| | 2010.09-2012.12 | AT | F | L | Saloon 4WD N57 D30 B | | GDS82730 | Drive Shaft | | 37 | 27 | 65 | | 572 | |
| | 2010.09-2012.12 | AT | F | L/R | Saloon 4WD N57 D30 B | | GCO81413 | Outer Joint | | 37 | 25 | 65 | | 73 | I |
| | 2010.09-2012.12 | AT | F | L | Saloon 4WD N57 D30 B | | GCI81055 | Inner Joint | | 27 | 24 | 43.95 | 60 | 123.5 | |
| | 2010.09-2012.12 | AT | R | L | Saloon 4WD N57 D30 B | | GDS85116 | Drive Shaft | | 30 | 32 | 65 | 77 | 777 | |
| | 2010.09-2012.12 | AT | R | R | Saloon 4WD N57 D30 B | | GDS85111 | Drive Shaft | | 30 | 32 | 65 | 77 | 831 | |
| | 2010.09-2012.12 | AT | R | L/R | Saloon 4WD N57 D30 B | | GCI85063 | Inner Joint | | 30 | 28 | 65 | 77 | 89 | |
| | 2010.09-2012.12 | AT | R | L/R | Saloon 4WD N57 D30 B | | GCI85074 | Inner Joint | | 32 | 28 | 49.9 | 85.5 | 100 | |
| 3.0 (230 kw) | 2012.07-2015.06 | 8AT | F | R | Saloon 4WD N57 D30 B | | GCI81457 | Inner Joint | | 27 | 24 | 43.95 | 359 | 125 | |
| | 2012.07-2015.06 | AT | F | L | Saloon 4WD N57 D30 B | | GDS82730 | Drive Shaft | | 37 | 27 | 65 | | 572 | |
| | 2012.07-2015.06 | AT | F | R | Saloon 4WD N57 D30 B | | GDS83946 | Drive Shaft | | 37 | 27 | 65 | | 871 | |
| | 2012.07-2015.06 | AT | F | L/R | Saloon 4WD N57 D30 B | | GCO81413 | Outer Joint | | 37 | 25 | 65 | | 73 | I |
| | 2012.07-2015.06 | AT | F | L | Saloon 4WD N57 D30 B | | GCI81055 | Inner Joint | | 27 | 24 | 43.95 | 60 | 123.5 | |
| | 2012.07-2015.06 | AT | R | L | Saloon 4WD N57 D30 B | | GDS85116 | Drive Shaft | | 30 | 32 | 65 | 77 | 777 | |
| | 2012.07-2015.06 | AT | R | R | Saloon 4WD N57 D30 B | | GDS85111 | Drive Shaft | | 30 | 32 | 65 | 77 | 831 | |
| | 2012.07-2015.06 | AT | R | L/R | Saloon 4WD N57 D30 B | | GCI85063 | Inner Joint | | 30 | 28 | 65 | 77 | 89 | |
| | 2012.07-2015.06 | AT | R | L/R | Saloon 4WD N57 D30 B | | GCI85074 | Inner Joint | | 32 | 28 | 49.9 | 85.5 | 100 | |
| **740i xDrive** | | | | | | | | | | | | | | | |
| 3.0 (235 kw) | 2012.07-2015.12 | 8AT | F | R | Saloon 4WD N55 B30 A | | GCI81457 | Inner Joint | | 27 | 24 | 43.95 | 359 | 125 | |
| | 2012.07-2015.12 | AT | F | L | Saloon 4WD N55 B30 A | | GDS82730 | Drive Shaft | | 37 | 27 | 65 | | 572 | |
| | 2012.07-2015.12 | AT | F | R | Saloon 4WD N55 B30 A | | GDS83946 | Drive Shaft | | 37 | 27 | 65 | | 871 | |
| | 2012.07-2015.12 | AT | F | L/R | Saloon 4WD N55 B30 A | | GCO81413 | Outer Joint | | 37 | 25 | 65 | | 73 | I |
| | 2012.07-2015.12 | AT | F | L | Saloon 4WD N55 B30 A | | GCI81055 | Inner Joint | | 27 | 24 | 43.95 | 60 | 123.5 | |
| **740i/740Li** | | | | | | | | | | | | | | | |
| 3.0 (235 kw) | 2012.07-2015.12 | 8AT | R | R | Saloon RWD N55 B30 A | For SA code:S2BTA;For vehicles with four wheel steering | GDS85111 | Drive Shaft | | 30 | 32 | 65 | 77 | 831 | |
| | 2012.07-2015.12 | AT | R | L | Saloon RWD N55 B30 A | Performance brk:For vehicles with M-sport package | GDS85116 | Drive Shaft | | 30 | 32 | 65 | 77 | 777 | |
| | 2012.07-2015.12 | AT | R | L | Saloon RWD N55 B30 A | Performance brk:For vehicles with M-sport package | GCI85063 | Inner Joint | | 30 | 28 | 65 | 77 | 89 | |
| | 2012.07-2015.12 | AT | R | L | Saloon RWD N55 B30 A | Performance brk:For vehicles with M-sport package | GCI85074 | Inner Joint | | 32 | 28 | 49.9 | 85.5 | 100 | |
| 4.0 (225 kw) | 2005.03-2008.08 | 6AT | R | L/R | Saloon RWD N62 B40 A | | GDS85073 | Drive Shaft | | 30 | | 58.8 | 73 | 653 | |
| | 2005.03-2008.08 | 6AT | R | L/R | Saloon RWD N62 B40 A | | GCI85048 | Inner Joint | | | 28 | | | 28 | |
| **745d** | | | | | | | | | | | | | | | |
| 4.4 (220 kw) | 2005.03-2005.08 | 6AT | R | L/R | Saloon RWD M67 D44 (448D1) | | GDS81114 | Drive Shaft | | 30 | | | 73 | 649 | |
| | 2005.03-2005.08 | 6AT | R | L/R | Saloon RWD M67 D44 (448D1) | | GCI35051 | Inner Joint | | | 30 | | | 30.5 | |
| 4.4 (242 kw) | 2005.07-2008.07 | 6AT | R | L/R | Saloon RWD M67 D44 (448D1) | | GDS81114 | Drive Shaft | | 30 | | | 73 | 649 | |
| | 2005.07-2008.07 | 6AT | R | L/R | Saloon RWD M67 D44 (448D1) | | GCI35051 | Inner Joint | | | 30 | | | 30.5 | |
| **745i/745Li** | | | | | | | | | | | | | | | |
| 4.4 (245 kw) | 2001.07-2005.03 | 6AT | R | L/R | Saloon RWD N62 B44 A | | GDS85073 | Drive Shaft | | 30 | | 58.8 | 73 | 653 | |
| | 2001.07-2005.03 | 6AT | R | L/R | Saloon RWD N62 B44 A | | GCI85048 | Inner Joint | | | 28 | | | 28 | |
| **750d xDrive** | | | | | | | | | | | | | | | |
| 3.0 (280 kw) | 2012.07-2015.12 | 8AT | F | R | Saloon 4WD N57 D30 C | | GCI81457 | Inner Joint | | 27 | 24 | 43.95 | 359 | 125 | |
| | 2012.07-2015.12 | AT | F | L | Saloon 4WD N57 D30 C | | GDS82730 | Drive Shaft | | 37 | 27 | 65 | | 572 | |
| | 2012.07-2015.12 | AT | F | R | Saloon 4WD N57 D30 C | | GDS83946 | Drive Shaft | | 37 | 27 | 65 | | 871 | |

| | YEAR | TRANSM. | F/R | L/R | BODY STYLE & DRIVE TYPE & ENGINE | REMARKS | G-AP Ref. | PRODUCT | ABS | Technical Specifications A | B | C | H | L | P |
|---|---|---|---|---|---|---|---|---|---|---|---|---|---|---|---|
| **BMW** | | | | | | | | | | | | | | | |
| **750d xDrive** | | | | | | | | | | | | | | | |
| 3.0 (280 kw) | 2012.07-2015.12 | AT | F | L/R | Saloon 4WD N57 D30 C | | GCO81413 | Outer Joint | | 37 | 25 | 65 | | 73 | I |
| | 2012.07-2015.12 | AT | F | L | Saloon 4WD N57 D30 C | | GCI81055 | Inner Joint | | 27 | 24 | 43.95 | 60 | 123.5 | |
| **750i xDrive** | | | | | | | | | | | | | | | |
| 4.0 (330 kw) | 2016.03-2019.02 | AT | F | L | Saloon 4WD N63 B40 B | | GDS84216 | Drive Shaft | | 37 | 27 | 65 | | 573 | |
| | 2016.03-2019.02 | AT | F | R | Saloon 4WD N63 B40 B | | GDS58120 | Drive Shaft | | 37 | 27 | 65 | | 880 | |
| | 2016.03-2019.02 | AT | F | L/R | Saloon 4WD N63 B40 B | | GCO82734 | Outer Joint | | 37 | 25 | 65 | | 73 | I |
| | 2016.03-2019.02 | AT | F | L | Saloon 4WD N63 B40 B | | GCI81055 | Inner Joint | | 27 | 24 | 43.95 | 60 | 123.5 | |
| | 2016.03-2019.02 | AT | F | R | Saloon 4WD N63 B40 B | | GCI81477 | Inner Joint | | 27 | 24 | 43.95 | 366 | 125 | |
| **750i/750Li** | | | | | | | | | | | | | | | |
| 4.4 (300 kw) | 2008.09-2012.06 | 6AT | R | L | Saloon RWD N63 B44 A | | GDS85116 | Drive Shaft | | 30 | 32 | 65 | 77 | 777 | |
| | 2008.09-2012.06 | 6AT | R | R | Saloon RWD N63 B44 A | | GDS85111 | Drive Shaft | | 30 | 32 | 65 | 77 | 831 | |
| | 2008.09-2012.06 | 6AT | R | L | Saloon RWD N63 B44 A | | GCI85063 | Inner Joint | | 30 | 28 | 65 | 77 | 89 | |
| | 2008.09-2012.06 | 6AT | R | L | Saloon RWD N63 B44 A | | GCI85074 | Inner Joint | | 32 | 28 | 49.9 | 85.5 | 100 | |
| 4.4 (330 kw) | 2012.07-2015.06 | 8AT | R | R | Saloon RWD N63 B44 B | | GDS85111 | Drive Shaft | | 30 | 32 | 65 | 77 | 831 | |
| | 2012.07-2015.06 | AT | R | L | Saloon RWD N63 B44 B | | GDS85116 | Drive Shaft | | 30 | 32 | 65 | 77 | 777 | |
| | 2012.07-2015.06 | AT | R | L | Saloon RWD N63 B44 B | | GCI85063 | Inner Joint | | 30 | 28 | 65 | 77 | 89 | |
| | 2012.07-2015.06 | AT | R | L | Saloon RWD N63 B44 B | | GCI85074 | Inner Joint | | 32 | 28 | 49.9 | 85.5 | 100 | |
| 4.8 (270 kw) | 2005.03-2008.08 | 6AT | R | L/R | Saloon RWD N62 B48 B | | GDS85073 | Drive Shaft | | 30 | | 58.8 | 73 | 653 | |
| | 2005.03-2008.08 | 6AT | R | L/R | Saloon RWD N62 B48 B | | GCI85048 | Inner Joint | | | 28 | | | 28 | |
| **750i/750Li xDrive** | | | | | | | | | | | | | | | |
| 4.4 (300 kw) | 2009.09-2012.06 | 8AT | F | L | Saloon 4WD N63 B44 A | | GDS82730 | Drive Shaft | | 37 | 27 | 65 | | 572 | |
| | 2009.09-2012.06 | 8AT | F | R | Saloon 4WD N63 B44 A | | GDS81716 | Drive Shaft | | 37 | 27 | 65 | | 869 | |
| | 2009.09-2012.06 | AT | F | L/R | Saloon 4WD N63 B44 A | | GCO81413 | Outer Joint | | 37 | 25 | 65 | | 73 | I |
| | 2009.09-2012.06 | AT | F | L | Saloon 4WD N63 B44 A | | GCI81055 | Inner Joint | | 27 | 24 | 43.95 | 60 | 123.5 | |
| | 2009.09-2012.06 | AT | F | R | Saloon 4WD N63 B44 A | | GCI81477 | Inner Joint | | 27 | 24 | 43.95 | 366 | 125 | |
| | 2009.09-2012.06 | 8AT | R | L | Saloon 4WD N63 B44 A | | GDS85116 | Drive Shaft | | 30 | 32 | 65 | 77 | 777 | |
| | 2009.09-2012.06 | 8AT | R | R | Saloon 4WD N63 B44 A | | GDS85111 | Drive Shaft | | 30 | 32 | 65 | 77 | 831 | |
| | 2009.09-2012.06 | AT | R | L/R | Saloon 4WD N63 B44 A | | GCI85063 | Inner Joint | | 30 | 28 | 65 | 77 | 89 | |
| | 2009.09-2012.06 | AT | R | L/R | Saloon 4WD N63 B44 A | | GCI85074 | Inner Joint | | 32 | 28 | 49.9 | 85.5 | 100 | |
| 4.4 (330 kw) | 2012.07-2015.06 | 8AT | F | L | Saloon 4WD N63 B44 B | | GDS82730 | Drive Shaft | | 37 | 27 | 65 | | 572 | |
| | 2012.07-2015.06 | 8AT | F | R | Saloon 4WD N63 B44 B | | GDS81716 | Drive Shaft | | 37 | 27 | 65 | | 869 | |
| | 2012.07-2015.06 | AT | F | L/R | Saloon 4WD N63 B44 B | | GCO81413 | Outer Joint | | 37 | 25 | 65 | | 73 | I |
| | 2012.07-2015.06 | AT | F | L | Saloon 4WD N63 B44 B | | GCI81055 | Inner Joint | | 27 | 24 | 43.95 | 60 | 123.5 | |
| | 2012.07-2015.06 | AT | F | R | Saloon 4WD N63 B44 B | | GCI81477 | Inner Joint | | 27 | 24 | 43.95 | 366 | 125 | |
| | 2012.07-2015.06 | 8AT | R | L | Saloon 4WD N63 B44 B | | GDS85116 | Drive Shaft | | 30 | 32 | 65 | 77 | 777 | |
| | 2012.07-2015.06 | 8AT | R | R | Saloon 4WD N63 B44 B | | GDS85111 | Drive Shaft | | 30 | 32 | 65 | 77 | 831 | |
| | 2012.07-2015.06 | AT | R | L/R | Saloon 4WD N63 B44 B | | GCI85063 | Inner Joint | | 30 | 28 | 65 | 77 | 89 | |
| | 2012.07-2015.06 | AT | R | L/R | Saloon 4WD N63 B44 B | | GCI85074 | Inner Joint | | 32 | 28 | 49.9 | 85.5 | 100 | |
| | 2015.09-2019.02 | AT | F | L | Saloon 4WD N63 B44 C | | GDS84216 | Drive Shaft | | 37 | 27 | 65 | | 573 | |
| | 2015.09-2019.02 | AT | F | R | Saloon 4WD N63 B44 C | | GDS58120 | Drive Shaft | | 37 | 27 | 65 | | 880 | |
| | 2015.09-2019.02 | AT | F | L/R | Saloon 4WD N63 B44 C | | GCO82734 | Outer Joint | | 37 | 25 | 65 | | 73 | I |
| | 2015.09-2019.02 | AT | F | L | Saloon 4WD N63 B44 C | | GCI81055 | Inner Joint | | 27 | 24 | 43.95 | 60 | 123.5 | |
| | 2015.09-2019.02 | AT | F | R | Saloon 4WD N63 B44 C | | GCI81477 | Inner Joint | | 27 | 24 | 43.95 | 366 | 125 | |
| **760i/760Li** | | | | | | | | | | | | | | | |
| 6.0 (327 kw) | 2003.01-2008.08 | 6AT | R | L/R | Saloon RWD N73 B60 A, N73 B60 B | | GDS81114 | Drive Shaft | | 30 | | | 73 | 649 | |
| | 2003.01-2008.08 | 6AT | R | L/R | Saloon RWD N73 B60 A, N73 B60 B | | GCI35051 | Inner Joint | | | 30 | | | 30.5 | |
| **i3** | | | | | | | | | | | | | | | |
| 0.6 (125 kw) | 2013.08-2022.07 | ET | F | L/R | Hatchback RWD W20K06A;IB1P25B | | GCO81811 | Outer Joint | | 31 | 33 | 56 | | 70 | I |
| | 2013.08-2022.07 | ET | R | L | Hatchback RWD W20K06A;IB1P25B | | GDS83968 | Drive Shaft | | 31 | 27 | 56 | | 667 | |
| | 2013.08-2022.07 | ET | R | R | Hatchback RWD W20K06A;IB1P25B | | GDS83925 | Drive Shaft | | 31 | 27 | 56 | | 782 | |
| | 2013.08-2022.07 | ET | R | L/R | Hatchback RWD W20K06A;IB1P25B | | GCI82423 | Inner Joint | | 27 | 33 | 44 | 53.5 | 109.5 | |
| 0.6 (135 kw) | 2017.11-2022.07 | ET | F | L/R | Hatchback RWD W20K06A;IB1P25B | | GCO81811 | Outer Joint | | 31 | 33 | 56 | | 70 | I |
| | 2017.11-2022.07 | ET | R | L | Hatchback RWD W20K06A;IB1P25B | | GDS83968 | Drive Shaft | | 31 | 27 | 56 | | 667 | |
| | 2017.11-2022.07 | ET | R | R | Hatchback RWD W20K06A;IB1P25B | | GDS83925 | Drive Shaft | | 31 | 27 | 56 | | 782 | |
| | 2017.11-2022.07 | ET | R | L/R | Hatchback RWD W20K06A;IB1P25B | | GCI82423 | Inner Joint | | 27 | 33 | 44 | 53.5 | 109.5 | |
| EV (75 kw) | 2017.11- | ET | F | L/R | Hatchback RWD IB1P25B | | GCO81811 | Outer Joint | | 31 | 33 | 56 | | 70 | I |
| | 2017.11- | ET | R | L | Hatchback RWD IB1P25B | | GDS83968 | Drive Shaft | | 31 | 27 | 56 | | 667 | |
| | 2017.11- | ET | R | R | Hatchback RWD IB1P25B | | GDS83925 | Drive Shaft | | 31 | 27 | 56 | | 782 | |
| | 2017.11- | ET | R | L/R | Hatchback RWD IB1P25B | | GCI82423 | Inner Joint | | 27 | 33 | 44 | 53.5 | 109.5 | |
| EV (125 kw) | 2013.08- | ET | F | L/R | Hatchback RWD IB1P25B | | GCO81811 | Outer Joint | | 31 | 33 | 56 | | 70 | I |
| | 2013.08- | ET | R | L | Hatchback RWD IB1P25B | | GDS83968 | Drive Shaft | | 31 | 27 | 56 | | 667 | |
| | 2013.08- | ET | R | R | Hatchback RWD IB1P25B | | GDS83925 | Drive Shaft | | 31 | 27 | 56 | | 782 | |
| | 2013.08- | ET | R | L/R | Hatchback RWD IB1P25B | | GCI82423 | Inner Joint | | 27 | 33 | 44 | 53.5 | 109.5 | |
| | 2013.08-2022.07 | ET | F | L/R | Hatchback RWD IB1P25B | | GCO81811 | Outer Joint | | 31 | 33 | 56 | | 70 | I |
| | 2013.08-2022.07 | ET | R | L | Hatchback RWD IB1P25B | | GDS83968 | Drive Shaft | | 31 | 27 | 56 | | 667 | |

| | YEAR | TRANSM. | F/R | L/R | BODY STYLE & DRIVE TYPE & ENGINE | REMARKS | G-AP Ref. | PRODUCT | ABS | Technical Specifications A | B | C | H | L | P |
|---|---|---|---|---|---|---|---|---|---|---|---|---|---|---|---|
| **BMW** | | | | | | | | | | | | | | | |
| **i3** | | | | | | | | | | | | | | | |
| EV (125 kw) | 2013.08-2022.07 | ET | R | R | Hatchback RWD IB1P25B | | GDS83925 | Drive Shaft | | 31 | 27 | 56 | | 782 | |
| | 2013.08-2022.07 | ET | R | L/R | Hatchback RWD IB1P25B | | GCI82423 | Inner Joint | | 27 | 33 | 44 | 53.5 | 109.5 | |
| EV (135 kw) | 2017.11-2022.07 | ET | F | L/R | Hatchback RWD IB1P25B | | GCO81811 | Outer Joint | | 31 | 33 | 56 | | 70 | I |
| | 2017.11-2022.07 | ET | R | L | Hatchback RWD IB1P25B | | GDS83968 | Drive Shaft | | 31 | 27 | 56 | | 667 | |
| | 2017.11-2022.07 | ET | R | R | Hatchback RWD IB1P25B | | GDS83925 | Drive Shaft | | 31 | 27 | 56 | | 782 | |
| | 2017.11-2022.07 | ET | R | L/R | Hatchback RWD IB1P25B | | GCI82423 | Inner Joint | | 27 | 33 | 44 | 53.5 | 109.5 | |
| **iX1 eDrive 20** | | | | | | | | | | | | | | | |
| EV (150 kw) | 2023.11- | ET | F | L | SUV FWD HB0 | | GDS57978 | Drive Shaft | | 37 | 27 | 65 | | 584 | |
| | 2023.11- | ET | F | R | SUV FWD HB0 | | GDS57926 | Drive Shaft | | 37 | 27 | 65 | | 890 | |
| | 2023.11- | ET | F | L/R | SUV FWD HB0 | | GCO83795 | Outer Joint | | 37 | 26 | 65 | | 74 | M |
| | 2023.11- | ET | F | L | SUV FWD HB0 | | GCI83973 | Inner Joint | | 27 | 32 | 43.9 | 70 | 104.5 | |
| | 2023.11- | ET | F | R | SUV FWD HB0 | | GCI83935 | Inner Joint | | 27 | 32 | 43.9 | 393 | 88 | |
| **iX1 xDrive 30** | | | | | | | | | | | | | | | |
| EV (230 kw) | 2022.11- | ET | F | L | SUV 4WD HA0001N0;HA0002N0 | | GDS57978 | Drive Shaft | | 37 | 27 | 65 | | 584 | |
| | 2022.11- | ET | F | R | SUV 4WD HA0001N0;HA0002N0 | | GDS57926 | Drive Shaft | | 37 | 27 | 65 | | 890 | |
| | 2022.11- | ET | F | L/R | SUV 4WD HA0001N0;HA0002N0 | | GCO83795 | Outer Joint | | 37 | 26 | 65 | | 74 | M |
| | 2022.11- | ET | F | L | SUV 4WD HA0001N0;HA0002N0 | | GCI83973 | Inner Joint | | 27 | 32 | 43.9 | 70 | 104.5 | |
| | 2022.11- | ET | F | R | SUV 4WD HA0001N0;HA0002N0 | | GCI83935 | Inner Joint | | 27 | 32 | 43.9 | 393 | 88 | |
| **iX2 eDrive 20** | | | | | | | | | | | | | | | |
| EV (150 kw) | 2024.03- | ET | F | L | SUV FWD HB0 | | GDS57978 | Drive Shaft | | 37 | 27 | 65 | | 584 | |
| | 2024.03- | ET | F | R | SUV FWD HB0 | | GDS57926 | Drive Shaft | | 37 | 27 | 65 | | 890 | |
| | 2024.03- | ET | F | L/R | SUV FWD HB0 | | GCO83795 | Outer Joint | | 37 | 26 | 65 | | 74 | M |
| | 2024.03- | ET | F | L | SUV FWD HB0 | | GCI83973 | Inner Joint | | 27 | 32 | 43.9 | 70 | 104.5 | |
| | 2024.03- | ET | F | R | SUV FWD HB0 | | GCI83935 | Inner Joint | | 27 | 32 | 43.9 | 393 | 88 | |
| **iX2 xDrive 30** | | | | | | | | | | | | | | | |
| EV (230 kw) | 2023.11- | ET | F | L | SUV 4WD XE2 | | GDS57978 | Drive Shaft | | 37 | 27 | 65 | | 584 | |
| | 2023.11- | ET | F | R | SUV 4WD XE2 | | GDS57926 | Drive Shaft | | 37 | 27 | 65 | | 890 | |
| | 2023.11- | ET | F | L/R | SUV 4WD XE2 | | GCO83795 | Outer Joint | | 37 | 26 | 65 | | 74 | M |
| | 2023.11- | ET | F | L | SUV 4WD XE2 | | GCI83973 | Inner Joint | | 27 | 32 | 43.9 | 70 | 104.5 | |
| | 2023.11- | ET | F | R | SUV 4WD XE2 | | GCI83935 | Inner Joint | | 27 | 32 | 43.9 | 393 | 88 | |
| **M Coupe** | | | | | | | | | | | | | | | |
| 3.0 (250 kw) | 2011.03-2012.06 | 6MT | R | L | Coupe RWD N54 B30 A | | GDS85145 | Drive Shaft | | 30 | | 59 | 72.5 | 642 | |
| | 2011.03-2012.06 | | R | R | Coupe RWD N54 B30 A | | GCI85081 | Inner Joint | | | 30 | | | 32 | |
| **M135 xDrive** | | | | | | | | | | | | | | | |
| 2.0 (221 kw) | 2024.07- | 7DCT | F | L | Hatchback 4WD B48 A20 H | | GDS57952 | Drive Shaft | | 37 | 27 | 65 | | 538 | |
| | 2024.07- | 7DCT | F | R | Hatchback 4WD B48 A20 H | | GDS58026 | Drive Shaft | | 37 | 35 | 65 | | 495 | |
| | 2024.07- | 7DCT | F | L/R | Hatchback 4WD B48 A20 H | | GCO83810 | Outer Joint | | 37 | 28 | 65 | | 76.5 | M |
| | 2024.07- | 7DCT | F | L | Hatchback 4WD B48 A20 H | | GCI83960 | Inner Joint | | 27 | 29 | 35 | 73 | 114 | |
| | 2024.07- | 7DCT | F | R | Hatchback 4WD B48 A20 H | | GCI83983 | Inner Joint | | 35 | 29 | 44.8 | | 133.5 | |
| **M135i** | | | | | | | | | | | | | | | |
| 3.0 (235 kw) | 2011.12-2016.06 | 8AT/6MT | R | L | Hatchback RWD N55 B30 A | | GDS85110 | Drive Shaft | | 28 | 32 | 57 | 71 | 748 | |
| | 2011.12-2016.06 | 8AT/6MT | R | R | Hatchback RWD N55 B30 A | | GDS85109 | Drive Shaft | | 28 | 32 | 57 | 71 | 802 | |
| | 2011.12-2016.06 | 8AT/6MT | R | L/R | Hatchback RWD N55 B30 A | | GCI85086 | Inner Joint | | 28 | 28 | 62.5 | 71 | 91 | |
| | 2012.07-2015.02 | 8AT/6MT | R | L | Hatchback RWD N55 B30 A | | GDS85110 | Drive Shaft | | 28 | 32 | 57 | 71 | 748 | |
| | 2012.07-2015.02 | 8AT/6MT | R | R | Hatchback RWD N55 B30 A | | GDS85109 | Drive Shaft | | 28 | 32 | 57 | 71 | 802 | |
| | 2012.07-2015.02 | 8AT/6MT | R | L/R | Hatchback RWD N55 B30 A | | GCI85086 | Inner Joint | | 28 | 28 | 62.5 | 71 | 91 | |
| 3.0 (240 kw) | 2015.03-2016.06 | AT/MT | R | L | Hatchback RWD N55 B30 A | | GDS85110 | Drive Shaft | | 28 | 32 | 57 | 71 | 748 | |
| | 2015.03-2016.06 | AT/MT | R | R | Hatchback RWD N55 B30 A | | GDS85109 | Drive Shaft | | 28 | 32 | 57 | 71 | 802 | |
| | 2015.03-2016.06 | AT/MT | R | L/R | Hatchback RWD N55 B30 A | | GCI85086 | Inner Joint | | 28 | 28 | 62.5 | 71 | 91 | |
| **M135i xDrive** | | | | | | | | | | | | | | | |
| 3.0 (235 kw) | 2012.02-2016.06 | 8AT | F | L | Hatchback 4WD N55 B30 A | | GDS82052 | Drive Shaft | | 31 | 27 | 55.8 | | 550 | |
| | 2012.02-2016.06 | 8AT | F | R | Hatchback 4WD N55 B30 A | | GDS82053 | Drive Shaft | | 31 | 27 | 55.8 | | 841 | |
| | 2012.02-2016.06 | 8AT | F | L | Hatchback 4WD N55 B30 A | | GCO81603 | Outer Joint | | 31 | 33 | 55.8 | | 69.5 | M |
| | 2012.02-2016.06 | 8AT | F | L | Hatchback 4WD N55 B30 A | | GCI81055 | Inner Joint | | 27 | 24 | 43.95 | 60 | 123.5 | |
| | 2012.02-2016.06 | 8AT | F | R | Hatchback 4WD N55 B30 A | | GCI81597 | Inner Joint | | 27 | 24 | 43.95 | 349.5 | 125 | |
| | 2012.02-2016.06 | 8AT | R | L | Hatchback 4WD N55 B30 A | | GDS85066 | Drive Shaft | | 28 | 27 | 57.4 | 71 | 744 | |
| | 2012.02-2016.06 | 8AT | R | R | Hatchback 4WD N55 B30 A | | GDS85067 | Drive Shaft | | 28 | 27 | 57.4 | 71 | 800 | |
| | 2012.02-2016.06 | 8AT | R | L/R | Hatchback 4WD N55 B30 A | Diameter [mm]:35 | GCI83732 | Inner Joint | | 27 | 25 | 43.9 | 75 | 72 | |
| | 2012.11-2015.02 | 8AT | F | L | Hatchback 4WD N55 B30 A | | GDS82052 | Drive Shaft | | 31 | 27 | 55.8 | | 550 | |
| | 2012.11-2015.02 | 8AT | F | R | Hatchback 4WD N55 B30 A | | GDS82053 | Drive Shaft | | 31 | 27 | 55.8 | | 841 | |
| | 2012.11-2015.02 | 8AT | F | L | Hatchback 4WD N55 B30 A | | GCO81603 | Outer Joint | | 31 | 33 | 55.8 | | 69.5 | M |
| | 2012.11-2015.02 | 8AT | F | L | Hatchback 4WD N55 B30 A | | GCI81055 | Inner Joint | | 27 | 24 | 43.95 | 60 | 123.5 | |
| | 2012.11-2015.02 | 8AT | F | R | Hatchback 4WD N55 B30 A | | GCI81597 | Inner Joint | | 27 | 24 | 43.95 | 349.5 | 125 | |
| | 2012.11-2015.02 | 8AT | R | L | Hatchback 4WD N55 B30 A | | GDS85066 | Drive Shaft | | 28 | 27 | 57.4 | 71 | 744 | |
| | 2012.11-2015.02 | 8AT | R | R | Hatchback 4WD N55 B30 A | | GDS85067 | Drive Shaft | | 28 | 27 | 57.4 | 71 | 800 | |

| | YEAR | TRANSM. | F/R | L/R | BODY STYLE & DRIVE TYPE & ENGINE | REMARKS | G-AP Ref. | PRODUCT | ABS | Technical Specifications A | B | C | H | L | P |
|---|---|---|---|---|---|---|---|---|---|---|---|---|---|---|---|
| **BMW** | | | | | | | | | | | | | | | |
| **M135i xDrive** | | | | | | | | | | | | | | | |
| 3.0 (235 kw) | 2012.11-2015.02 | 8AT | R | L/R | Hatchback 4WD N55 B30 A | Diameter [mm]:35 | GCI83732 | Inner Joint | | 27 | 25 | 43.9 | 75 | 72 | |
| 3.0 (240 kw) | 2015.03-2016.06 | AT | F | L | Hatchback 4WD N55 B30 A | | GDS85066 | Drive Shaft | | 28 | 27 | 57.4 | 71 | 744 | |
| | 2015.03-2016.06 | AT/MT | F | L | Hatchback 4WD N55 B30 A | | GDS82052 | Drive Shaft | | 31 | 27 | 55.8 | | 550 | |
| | 2015.03-2016.06 | AT/MT | F | R | Hatchback 4WD N55 B30 A | | GDS82053 | Drive Shaft | | 31 | 27 | 55.8 | | 841 | |
| | 2015.03-2016.06 | AT/MT | F | L/R | Hatchback 4WD N55 B30 A | | GCO81603 | Outer Joint | | 31 | 33 | 55.8 | | 69.5 | M |
| | 2015.03-2016.06 | AT/MT | F | L | Hatchback 4WD N55 B30 A | | GCI81055 | Inner Joint | | 27 | 24 | 43.95 | 60 | 123.5 | |
| | 2015.03-2016.06 | AT/MT | F | R | Hatchback 4WD N55 B30 A | | GCI81597 | Inner Joint | | 27 | 24 | 43.95 | 349.5 | 125 | |
| | 2015.03-2016.06 | 8AT | R | R | Hatchback 4WD N55 B30 A | | GDS85067 | Drive Shaft | | 28 | 27 | 57.4 | 71 | 800 | |
| | 2015.03-2016.06 | 8AT | R | L/R | Hatchback 4WD N55 B30 A | Diameter [mm]:35 | GCI83732 | Inner Joint | | 27 | 25 | 43.9 | 75 | 72 | |
| **M140i** | | | | | | | | | | | | | | | |
| 3.0 (250 kw) | 2015.10-2019.06 | AT/MT | R | L | Hatchback RWD B58 B30 A | | GDS85110 | Drive Shaft | | 28 | 32 | 57 | 71 | 748 | |
| | 2015.10-2019.06 | AT/MT | R | R | Hatchback RWD B58 B30 A | | GDS85109 | Drive Shaft | | 28 | 32 | 57 | 71 | 802 | |
| | 2015.10-2019.06 | AT/MT | R | L/R | Hatchback RWD B58 B30 A | | GCI85086 | Inner Joint | | 28 | 28 | 62.5 | 71 | 91 | |
| | 2016.07-2019.06 | AT/MT | R | L | Hatchback RWD B58 B30 A | | GDS85110 | Drive Shaft | | 28 | 32 | 57 | 71 | 748 | |
| | 2016.07-2019.06 | AT/MT | R | R | Hatchback RWD B58 B30 A | | GDS85109 | Drive Shaft | | 28 | 32 | 57 | 71 | 802 | |
| | 2016.07-2019.06 | AT/MT | R | L/R | Hatchback RWD B58 B30 A | | GCI85086 | Inner Joint | | 28 | 28 | 62.5 | 71 | 91 | |
| | 2016.07-2019.06 | 8AT | R | L | Hatchback Van RWD B58 B30 A | | GDS85110 | Drive Shaft | | 28 | 32 | 57 | 71 | 748 | |
| | 2016.07-2019.06 | 8AT | R | R | Hatchback Van RWD B58 B30 A | | GDS85109 | Drive Shaft | | 28 | 32 | 57 | 71 | 802 | |
| | 2016.07-2019.06 | 8AT | R | L/R | Hatchback Van RWD B58 B30 A | | GCI85086 | Inner Joint | | 28 | 28 | 62.5 | 71 | 91 | |
| **M140i xDrive** | | | | | | | | | | | | | | | |
| 3.0 (250 kw) | 2015.09-2019.06 | 8AT | F | L | Hatchback 4WD B58 B30 A | | GDS82052 | Drive Shaft | | 31 | 27 | 55.8 | | 550 | |
| | 2015.09-2019.06 | 8AT | F | R | Hatchback 4WD B58 B30 A | | GDS82053 | Drive Shaft | | 31 | 27 | 55.8 | | 841 | |
| | 2015.09-2019.06 | 8AT | F | L | Hatchback 4WD B58 B30 A | | GCO81603 | Outer Joint | | 31 | 33 | 55.8 | | 69.5 | M |
| | 2015.09-2019.06 | 8AT | F | L | Hatchback 4WD B58 B30 A | | GCI81055 | Inner Joint | | 27 | 24 | 43.95 | 60 | 123.5 | |
| | 2015.09-2019.06 | 8AT | F | R | Hatchback 4WD B58 B30 A | | GCI81597 | Inner Joint | | 27 | 24 | 43.95 | 349.5 | 125 | |
| | 2015.09-2019.06 | 8AT | R | L | Hatchback 4WD B58 B30 A | Diameter [mm]:28 | GDS83157 | Drive Shaft | | 28 | 27 | 57 | 71 | 750 | |
| | 2015.09-2019.06 | 8AT | R | R | Hatchback 4WD B58 B30 A | Diameter [mm]:35 | GDS85067 | Drive Shaft | | 28 | 27 | 57.4 | 71 | 800 | |
| | 2015.09-2019.06 | 8AT | R | L | Hatchback 4WD B58 B30 A | Diameter [mm]:28 | GCO82308 | Outer Joint | | 28 | 30 | 57 | 71 | 52.5 | I |
| | 2015.09-2019.06 | 8AT | R | L | Hatchback 4WD B58 B30 A | Diameter [mm]:28 | GCI82145 | Inner Joint | | 27 | 30 | 43.9 | 75 | 101 | |
| | 2015.09-2019.06 | 8AT | R | R | Hatchback 4WD B58 B30 A | Diameter [mm]:35 | GCI83732 | Inner Joint | | 27 | 25 | 43.9 | 75 | 72 | |
| | 2016.07-2019.06 | 8AT | F | L | Hatchback 4WD B58 B30 A | | GDS82052 | Drive Shaft | | 31 | 27 | 55.8 | | 550 | |
| | 2016.07-2019.06 | 8AT | F | R | Hatchback 4WD B58 B30 A | | GDS82053 | Drive Shaft | | 31 | 27 | 55.8 | | 841 | |
| | 2016.07-2019.06 | 8AT | F | L | Hatchback 4WD B58 B30 A | | GCO81603 | Outer Joint | | 31 | 33 | 55.8 | | 69.5 | M |
| | 2016.07-2019.06 | 8AT | F | L | Hatchback 4WD B58 B30 A | | GCI81055 | Inner Joint | | 27 | 24 | 43.95 | 60 | 123.5 | |
| | 2016.07-2019.06 | 8AT | F | R | Hatchback 4WD B58 B30 A | | GCI81597 | Inner Joint | | 27 | 24 | 43.95 | 349.5 | 125 | |
| | 2016.07-2019.06 | 8AT | R | L | Hatchback 4WD B58 B30 A | Diameter [mm]:28 | GDS83157 | Drive Shaft | | 28 | 27 | 57 | 71 | 750 | |
| | 2016.07-2019.06 | 8AT | R | R | Hatchback 4WD B58 B30 A | Diameter [mm]:35 | GDS85067 | Drive Shaft | | 28 | 27 | 57.4 | 71 | 800 | |
| | 2016.07-2019.06 | 8AT | R | L | Hatchback 4WD B58 B30 A | Diameter [mm]:28 | GCO82308 | Outer Joint | | 28 | 30 | 57 | 71 | 52.5 | I |
| | 2016.07-2019.06 | 8AT | R | L | Hatchback 4WD B58 B30 A | Diameter [mm]:28 | GCI82145 | Inner Joint | | 27 | 30 | 43.9 | 75 | 101 | |
| | 2016.07-2019.06 | 8AT | R | R | Hatchback 4WD B58 B30 A | Diameter [mm]:35 | GCI83732 | Inner Joint | | 27 | 25 | 43.9 | 75 | 72 | |
| **M235i Cabrio** | | | | | | | | | | | | | | | |
| 3.0 (240 kw) | 2014.11-2016.06 | 8AT/6MT | R | L | Convertible RWD N55 B30 A | | GDS85110 | Drive Shaft | | 28 | 32 | 57 | 71 | 748 | |
| | 2014.11-2016.06 | 8AT/6MT | R | R | Convertible RWD N55 B30 A | | GDS85109 | Drive Shaft | | 28 | 32 | 57 | 71 | 802 | |
| | 2014.11-2016.06 | 8AT/6MT | R | L/R | Convertible RWD N55 B30 A | | GCI85086 | Inner Joint | | 28 | 28 | 62.5 | 71 | 91 | |
| **M235i Coupe** | | | | | | | | | | | | | | | |
| 3.0 (240 kw) | 2013.10-2016.06 | 8AT/6MT | R | L | Coupe RWD N55 B30 A | | GDS85110 | Drive Shaft | | 28 | 32 | 57 | 71 | 748 | |
| | 2013.10-2016.06 | 8AT/6MT | R | R | Coupe RWD N55 B30 A | | GDS85109 | Drive Shaft | | 28 | 32 | 57 | 71 | 802 | |
| | 2013.10-2016.06 | 8AT/6MT | R | L/R | Coupe RWD N55 B30 A | | GCI85086 | Inner Joint | | 28 | 28 | 62.5 | 71 | 91 | |
| **M235i xDrive Cabrio** | | | | | | | | | | | | | | | |
| 3.0 (240 kw) | 2015.07-2016.06 | 8AT | F | L | Convertible 4WD N55 B30 A | | GDS82052 | Drive Shaft | | 31 | 27 | 55.8 | | 550 | |
| | 2015.07-2016.06 | 8AT | F | R | Convertible 4WD N55 B30 A | | GDS82053 | Drive Shaft | | 31 | 27 | 55.8 | | 841 | |
| | 2015.07-2016.06 | 8AT | F | L | Convertible 4WD N55 B30 A | | GCO81603 | Outer Joint | | 31 | 33 | 55.8 | | 69.5 | M |
| | 2015.07-2016.06 | 8AT | F | L | Convertible 4WD N55 B30 A | | GCI81055 | Inner Joint | | 27 | 24 | 43.95 | 60 | 123.5 | |
| | 2015.07-2016.06 | 8AT | F | R | Convertible 4WD N55 B30 A | | GCI81597 | Inner Joint | | 27 | 24 | 43.95 | 349.5 | 125 | |
| | 2015.07-2016.06 | 8AT | R | L | Convertible 4WD N55 B30 A | | GDS85066 | Drive Shaft | | 28 | 27 | 57.4 | 71 | 744 | |
| | 2015.07-2016.06 | 8AT | R | R | Convertible 4WD N55 B30 A | | GDS85067 | Drive Shaft | | 28 | 27 | 57.4 | 71 | 800 | |
| | 2015.07-2016.06 | 8AT | R | L/R | Convertible 4WD N55 B30 A | Diameter [mm]:35 | GCI83732 | Inner Joint | | 27 | 25 | 43.9 | 75 | 72 | |
| **M235i xDrive Coupe** | | | | | | | | | | | | | | | |
| 3.0 (240 kw) | 2014.07-2016.06 | 8AT | F | L | Coupe 4WD N55 B30 A | | GDS82052 | Drive Shaft | | 31 | 27 | 55.8 | | 550 | |
| | 2014.07-2016.06 | 8AT | F | R | Coupe 4WD N55 B30 A | | GDS82053 | Drive Shaft | | 31 | 27 | 55.8 | | 841 | |
| | 2014.07-2016.06 | 8AT | F | L | Coupe 4WD N55 B30 A | | GCO81603 | Outer Joint | | 31 | 33 | 55.8 | | 69.5 | M |
| | 2014.07-2016.06 | 8AT | F | L | Coupe 4WD N55 B30 A | | GCI81055 | Inner Joint | | 27 | 24 | 43.95 | 60 | 123.5 | |
| | 2014.07-2016.06 | 8AT | F | R | Coupe 4WD N55 B30 A | | GCI81597 | Inner Joint | | 27 | 24 | 43.95 | 349.5 | 125 | |
| | 2014.07-2016.06 | 8AT | R | L | Coupe 4WD N55 B30 A | | GDS85066 | Drive Shaft | | 28 | 27 | 57.4 | 71 | 744 | |
| | 2014.07-2016.06 | 8AT | R | R | Coupe 4WD N55 B30 A | | GDS85067 | Drive Shaft | | 28 | 27 | 57.4 | 71 | 800 | |

| | YEAR | TRANSM. | F/R | L/R | BODY STYLE & DRIVE TYPE & ENGINE | REMARKS | G-AP Ref. | PRODUCT | ABS | Technical Specifications A | B | C | H | L | P |
|---|---|---|---|---|---|---|---|---|---|---|---|---|---|---|---|
| **BMW** | | | | | | | | | | | | | | | |
| **M235i xDrive Coupe** | | | | | | | | | | | | | | | |
| 3.0 (240 kw) | 2014.07-2016.06 | 8AT | R | L/R | Coupe 4WD N55 B30 A | Diameter [mm]:35 | GCI83732 | Inner Joint | | 27 | 25 | 43.9 | 75 | 72 | |
| **M235i xDrive Gran Coupe** | | | | | | | | | | | | | | | |
| 2.0 (221 kw) | 2024.11- | 7DCT | F | L | Coupe 4WD B48 A20 H | | GDS57952 | Drive Shaft | | 37 | 27 | 65 | | 538 | |
| | 2024.11- | 7DCT | F | R | Coupe 4WD B48 A20 H | | GDS58026 | Drive Shaft | | 37 | 35 | 65 | | 495 | |
| | 2024.11- | 7DCT | F | L/R | Coupe 4WD B48 A20 H | | GCO83810 | Outer Joint | | 37 | 28 | 65 | | 76.5 | M |
| | 2024.11- | 7DCT | F | L | Coupe 4WD B48 A20 H | | GCI83960 | Inner Joint | | 27 | 29 | 35 | 73 | 114 | |
| | 2024.11- | 7DCT | F | R | Coupe 4WD B48 A20 H | | GCI83983 | Inner Joint | | 35 | 29 | 44.8 | | 133.5 | |
| **M240i Cabrio** | | | | | | | | | | | | | | | |
| 3.0 (250 kw) | 2015.09-2021.06 | 8AT/6MT | R | L | Convertible RWD B58 B30 A | | GDS85110 | Drive Shaft | | 28 | 32 | 57 | 71 | 748 | |
| | 2015.09-2021.06 | 8AT/6MT | R | R | Convertible RWD B58 B30 A | | GDS85109 | Drive Shaft | | 28 | 32 | 57 | 71 | 802 | |
| | 2015.09-2021.06 | 8AT/6MT | R | L/R | Convertible RWD B58 B30 A | | GCI85086 | Inner Joint | | 28 | 28 | 62.5 | 71 | 91 | |
| **M240i Coupe** | | | | | | | | | | | | | | | |
| 3.0 (250 kw) | 2015.09-2021.06 | 8AT/6MT | R | L | Coupe RWD B58 B30 A | | GDS85110 | Drive Shaft | | 28 | 32 | 57 | 71 | 748 | |
| | 2015.09-2021.06 | 8AT/6MT | R | R | Coupe RWD B58 B30 A | | GDS85109 | Drive Shaft | | 28 | 32 | 57 | 71 | 802 | |
| | 2015.09-2021.06 | 8AT/6MT | R | L/R | Coupe RWD B58 B30 A | | GCI85086 | Inner Joint | | 28 | 28 | 62.5 | 71 | 91 | |
| **M240i xDrive Cabrio** | | | | | | | | | | | | | | | |
| 3.0 (250 kw) | 2015.09-2021.06 | 8AT | F | L | Convertible 4WD B58 B30 A | | GDS82052 | Drive Shaft | | 31 | 27 | 55.8 | | 550 | |
| | 2015.09-2021.06 | 8AT | F | R | Convertible 4WD B58 B30 A | | GDS82053 | Drive Shaft | | 31 | 27 | 55.8 | | 841 | |
| | 2015.09-2021.06 | 8AT | F | L | Convertible 4WD B58 B30 A | | GCO81603 | Outer Joint | | 31 | 33 | 55.8 | | 69.5 | M |
| | 2015.09-2021.06 | 8AT | F | L | Convertible 4WD B58 B30 A | | GCI81055 | Inner Joint | | 27 | 24 | 43.95 | 60 | 123.5 | |
| | 2015.09-2021.06 | 8AT | F | R | Convertible 4WD B58 B30 A | | GCI81597 | Inner Joint | | 27 | 24 | 43.95 | 349.5 | 125 | |
| | 2015.09-2021.06 | 8AT | R | L | Convertible 4WD B58 B30 A | Diameter [mm]:28 | GDS83157 | Drive Shaft | | 28 | 27 | 57 | 71 | 750 | |
| | 2015.09-2021.06 | 8AT | R | R | Convertible 4WD B58 B30 A | Diameter [mm]:35 | GDS85067 | Drive Shaft | | 28 | 27 | 57.4 | 71 | 800 | |
| | 2015.09-2021.06 | 8AT | R | L | Convertible 4WD B58 B30 A | Diameter [mm]:28 | GCO82308 | Outer Joint | | 28 | 30 | 57 | 71 | 52.5 | I |
| | 2015.09-2021.06 | 8AT | R | L | Convertible 4WD B58 B30 A | Diameter [mm]:28 | GCI82145 | Inner Joint | | 27 | 30 | 43.9 | 75 | 101 | |
| | 2015.09-2021.06 | 8AT | R | R | Convertible 4WD B58 B30 A | Diameter [mm]:35 | GCI83732 | Inner Joint | | 27 | 25 | 43.9 | 75 | 72 | |
| **M240i xDrive Coupe** | | | | | | | | | | | | | | | |
| 3.0 (250 kw) | 2015.09-2021.06 | 8AT | F | L | Coupe 4WD B58 B30 A | | GDS82052 | Drive Shaft | | 31 | 27 | 55.8 | | 550 | |
| | 2015.09-2021.06 | 8AT | F | R | Coupe 4WD B58 B30 A | | GDS82053 | Drive Shaft | | 31 | 27 | 55.8 | | 841 | |
| | 2015.09-2021.06 | 8AT | F | L | Coupe 4WD B58 B30 A | | GCO81603 | Outer Joint | | 31 | 33 | 55.8 | | 69.5 | M |
| | 2015.09-2021.06 | 8AT | F | L | Coupe 4WD B58 B30 A | | GCI81055 | Inner Joint | | 27 | 24 | 43.95 | 60 | 123.5 | |
| | 2015.09-2021.06 | 8AT | F | R | Coupe 4WD B58 B30 A | | GCI81597 | Inner Joint | | 27 | 24 | 43.95 | 349.5 | 125 | |
| | 2015.09-2021.06 | 8AT | R | L | Coupe 4WD B58 B30 A | Diameter [mm]:28 | GDS83157 | Drive Shaft | | 28 | 27 | 57 | 71 | 750 | |
| | 2015.09-2021.06 | 8AT | R | R | Coupe 4WD B58 B30 A | Diameter [mm]:35 | GDS85067 | Drive Shaft | | 28 | 27 | 57.4 | 71 | 800 | |
| | 2015.09-2021.06 | 8AT | R | L | Coupe 4WD B58 B30 A | Diameter [mm]:28 | GCO82308 | Outer Joint | | 28 | 30 | 57 | 71 | 52.5 | I |
| | 2015.09-2021.06 | 8AT | R | L | Coupe 4WD B58 B30 A | Diameter [mm]:28 | GCI82145 | Inner Joint | | 27 | 30 | 43.9 | 75 | 101 | |
| | 2015.09-2021.06 | 8AT | R | R | Coupe 4WD B58 B30 A | Diameter [mm]:35 | GCI83732 | Inner Joint | | 27 | 25 | 43.9 | 75 | 72 | |
| **M3** | | | | | | | | | | | | | | | |
| 3.2 (236 kw) | 1995.10-1998.01 | MT | R | L/R | Saloon RWD S50B326S1 | | GDS99199 | Drive Shaft | 48W | 30 | | 69 | 73 | 602 | |
| 4.0 (309 kw) | 2007.12-2011.10 | 7AT/6MT | R | L | Saloon RWD S65 B40 A | | GDS85145 | Drive Shaft | | 30 | | 59 | 72.5 | 642 | |
| | 2007.12-2011.10 | | R | R | Saloon RWD S65 B40 A | | GCI85081 | Inner Joint | | | 30 | | | 32 | |
| **M3 Cabrio** | | | | | | | | | | | | | | | |
| 3.2 (236 kw) | 1996.03-1999.09 | MT | R | L/R | Cabriolet RWD S50B326S1 | | GDS99199 | Drive Shaft | 48W | 30 | | 69 | 73 | 602 | |
| 3.2 (252 kw) | 2001.03-2006.08 | 6MT/SAT | R | L | Cabriolet RWD S54B326S4 | | GDS81116 | Drive Shaft | 48W | 30 | | 69 | 73 | 615 | |
| | 2001.03-2006.08 | 6MT/SAT | R | R | Cabriolet RWD S54B326S4 | | GDS85108 | Drive Shaft | 48W | 30 | | 69 | 73 | 655 | |
| 4.0 (309 kw) | 2008.03-2013.10 | 7AT/6MT | R | L | Convertible RWD S65 B40 A | | GDS85145 | Drive Shaft | | 30 | | 59 | 72.5 | 642 | |
| | 2008.03-2013.10 | 7AT/6MT | R | L/R | Convertible RWD S65 B40 A | | GCI85081 | Inner Joint | | | 30 | | | 32 | |
| **M3 Coupe** | | | | | | | | | | | | | | | |
| 3.2 (236 kw) | 1995.10-1998.11 | MT | R | L/R | Coupe RWD S50B326S1 | | GDS99199 | Drive Shaft | 48W | 30 | | 69 | 73 | 602 | |
| 3.2 (252 kw) | 2000.07-2006.05 | 6MT/SAT | R | L | Coupe RWD S54B326S4 | | GDS81116 | Drive Shaft | 48W | 30 | | 69 | 73 | 615 | |
| | 2000.07-2006.05 | 6MT/SAT | R | R | Coupe RWD S54B326S4 | | GDS85108 | Drive Shaft | 48W | 30 | | 69 | 73 | 655 | |
| 3.2 (265 kw) | 2003.05-2003.12 | | R | L | Coupe RWD S54B326S4 | | GDS81116 | Drive Shaft | 48W | 30 | | 69 | 73 | 615 | |
| | 2003.05-2003.12 | | R | R | Coupe RWD S54B326S4 | | GDS85108 | Drive Shaft | 48W | 30 | | 69 | 73 | 655 | |
| 4.0 (309 kw) | 2007.06-2013.06 | 7AT/6MT | R | L | Coupe RWD S65 B40 A | | GDS85145 | Drive Shaft | | 30 | | 59 | 72.5 | 642 | |
| | 2007.06-2013.06 | 7AT/6MT | R | L/R | Coupe RWD S65 B40 A | | GCI85081 | Inner Joint | | | 30 | | | 32 | |
| **M340d xDrive** | | | | | | | | | | | | | | | |
| 3.0 (250 kw) | 2020.04- | 8AT | F | L | Saloon 4WD B57 D30 B;JA1 | | GDS56119 | Drive Shaft | | 37 | 27 | 65 | | 557 | |
| | 2020.04- | 8AT | F | R | Saloon 4WD B57 D30 B;JA1 | | GDS56120 | Drive Shaft | | 37 | 27 | 65 | | 857 | |
| | 2020.04- | 8AT | F | L/R | Saloon 4WD B57 D30 B;JA1 | | GCO83161 | Outer Joint | | 37 | 33 | 65 | | 73 | M |
| | 2020.04- | 8AT | F | L | Saloon 4WD B57 D30 B;JA1 | | GCI81055 | Inner Joint | | 27 | 24 | 43.95 | 60 | 123.5 | |
| | 2020.04- | 8AT | F | R | Saloon 4WD B57 D30 B;JA1 | | GCI81457 | Inner Joint | | 27 | 24 | 43.95 | 359 | 125 | |
| **M340d xDrive Touring** | | | | | | | | | | | | | | | |
| 3.0 (250 kw) | 2020.04- | 8AT | F | L | Estate 4WD B57 D30 B;JA1 | | GDS56119 | Drive Shaft | | 37 | 27 | 65 | | 557 | |
| | 2020.04- | 8AT | F | R | Estate 4WD B57 D30 B;JA1 | | GDS56120 | Drive Shaft | | 37 | 27 | 65 | | 857 | |
| | 2020.04- | 8AT | F | L/R | Estate 4WD B57 D30 B;JA1 | | GCO83161 | Outer Joint | | 37 | 33 | 65 | | 73 | M |

| | YEAR | TRANSM. | F/R | L/R | BODY STYLE & DRIVE TYPE & ENGINE | REMARKS | G-AP Ref. | PRODUCT | ABS | Technical Specifications A | B | C | H | L | P |
|---|---|---|---|---|---|---|---|---|---|---|---|---|---|---|---|
| **BMW** | | | | | | | | | | | | | | | |
| **M340d xDrive Touring** | | | | | | | | | | | | | | | |
| 3.0 (250 kw) | 2020.04- | 8AT | F | L | Estate 4WD B57 D30 B;JA1 | | GCI81055 | Inner Joint | | 27 | 24 | 43.95 | 60 | 123.5 | |
| | 2020.04- | 8AT | F | R | Estate 4WD B57 D30 B;JA1 | | GCI81457 | Inner Joint | | 27 | 24 | 43.95 | 359 | 125 | |
| **M340i xDrive** | | | | | | | | | | | | | | | |
| 3.0 (275 kw) | 2019.07- | 8AT | F | L | Saloon 4WD B58 B30 B | | GDS56119 | Drive Shaft | | 37 | 27 | 65 | | 557 | |
| | 2019.07- | 8AT | F | R | Saloon 4WD B58 B30 B | | GDS56120 | Drive Shaft | | 37 | 27 | 65 | | 857 | |
| | 2019.07- | 8AT | F | L/R | Saloon 4WD B58 B30 B | | GCO83161 | Outer Joint | | 37 | 33 | 65 | | 73 | M |
| | 2019.07- | 8AT | F | L | Saloon 4WD B58 B30 B | | GCI81055 | Inner Joint | | 27 | 24 | 43.95 | 60 | 123.5 | |
| | 2019.07- | 8AT | F | R | Saloon 4WD B58 B30 B | | GCI81457 | Inner Joint | | 27 | 24 | 43.95 | 359 | 125 | |
| | 2020.11- | 8AT | F | L | Saloon 4WD B58 B30 B;JA1 | | GDS56119 | Drive Shaft | | 37 | 27 | 65 | | 557 | |
| | 2020.11- | 8AT | F | R | Saloon 4WD B58 B30 B;JA1 | | GDS56120 | Drive Shaft | | 37 | 27 | 65 | | 857 | |
| | 2020.11- | 8AT | F | L/R | Saloon 4WD B58 B30 B;JA1 | | GCO83161 | Outer Joint | | 37 | 33 | 65 | | 73 | M |
| | 2020.11- | 8AT | F | L | Saloon 4WD B58 B30 B;JA1 | | GCI81055 | Inner Joint | | 27 | 24 | 43.95 | 60 | 123.5 | |
| | 2020.11- | 8AT | F | R | Saloon 4WD B58 B30 B;JA1 | | GCI81457 | Inner Joint | | 27 | 24 | 43.95 | 359 | 125 | |
| 3.0 (285 kw) | 2019.03- | 8AT | F | L | Saloon 4WD B58 B30 B | | GDS56119 | Drive Shaft | | 37 | 27 | 65 | | 557 | |
| | 2019.03- | 8AT | F | R | Saloon 4WD B58 B30 B | | GDS56120 | Drive Shaft | | 37 | 27 | 65 | | 857 | |
| | 2019.03- | 8AT | F | L/R | Saloon 4WD B58 B30 B | | GCO83161 | Outer Joint | | 37 | 33 | 65 | | 73 | M |
| | 2019.03- | 8AT | F | L | Saloon 4WD B58 B30 B | | GCI81055 | Inner Joint | | 27 | 24 | 43.95 | 60 | 123.5 | |
| | 2019.03- | 8AT | F | R | Saloon 4WD B58 B30 B | | GCI81457 | Inner Joint | | 27 | 24 | 43.95 | 359 | 125 | |
| 3.0 (288 kw) | 2024.09- | | F | L | Saloon 4WD B58 B30 P | | GDS56119 | Drive Shaft | | 37 | 27 | 65 | | 557 | |
| | 2024.09- | | F | R | Saloon 4WD B58 B30 P | | GDS56120 | Drive Shaft | | 37 | 27 | 65 | | 857 | |
| | 2024.09- | | F | L/R | Saloon 4WD B58 B30 P | | GCO83161 | Outer Joint | | 37 | 33 | 65 | | 73 | M |
| | 2024.09- | | F | L | Saloon 4WD B58 B30 P | | GCI81055 | Inner Joint | | 27 | 24 | 43.95 | 60 | 123.5 | |
| | 2024.09- | | F | R | Saloon 4WD B58 B30 P | | GCI81457 | Inner Joint | | 27 | 24 | 43.95 | 359 | 125 | |
| **M340i xDrive Touring** | | | | | | | | | | | | | | | |
| 3.0 (275 kw) | 2019.11- | 8AT | F | L | Estate 4WD B58 B30 B | | GDS56119 | Drive Shaft | | 37 | 27 | 65 | | 557 | |
| | 2019.11- | 8AT | F | R | Estate 4WD B58 B30 B | | GDS56120 | Drive Shaft | | 37 | 27 | 65 | | 857 | |
| | 2019.11- | 8AT | F | L/R | Estate 4WD B58 B30 B | | GCO83161 | Outer Joint | | 37 | 33 | 65 | | 73 | M |
| | 2019.11- | 8AT | F | L | Estate 4WD B58 B30 B | | GCI81055 | Inner Joint | | 27 | 24 | 43.95 | 60 | 123.5 | |
| | 2019.11- | 8AT | F | R | Estate 4WD B58 B30 B | | GCI81457 | Inner Joint | | 27 | 24 | 43.95 | 359 | 125 | |
| | 2019.11- | AT | F | L | Estate Van 4WD B58 B30 B | | GDS56119 | Drive Shaft | | 37 | 27 | 65 | | 557 | |
| | 2019.11- | AT | F | R | Estate Van 4WD B58 B30 B | | GDS56120 | Drive Shaft | | 37 | 27 | 65 | | 857 | |
| | 2019.11- | AT | F | L/R | Estate Van 4WD B58 B30 B | | GCO83161 | Outer Joint | | 37 | 33 | 65 | | 73 | M |
| | 2019.11- | AT | F | L | Estate Van 4WD B58 B30 B | | GCI81055 | Inner Joint | | 27 | 24 | 43.95 | 60 | 123.5 | |
| | 2019.11- | AT | F | R | Estate Van 4WD B58 B30 B | | GCI81457 | Inner Joint | | 27 | 24 | 43.95 | 359 | 125 | |
| | 2020.11- | 8AT | F | L | Estate 4WD B58 B30 B;JA1 | | GDS56119 | Drive Shaft | | 37 | 27 | 65 | | 557 | |
| | 2020.11- | 8AT | F | R | Estate 4WD B58 B30 B;JA1 | | GDS56120 | Drive Shaft | | 37 | 27 | 65 | | 857 | |
| | 2020.11- | 8AT | F | L/R | Estate 4WD B58 B30 B;JA1 | | GCO83161 | Outer Joint | | 37 | 33 | 65 | | 73 | M |
| | 2020.11- | 8AT | F | L | Estate 4WD B58 B30 B;JA1 | | GCI81055 | Inner Joint | | 27 | 24 | 43.95 | 60 | 123.5 | |
| | 2020.11- | 8AT | F | R | Estate 4WD B58 B30 B;JA1 | | GCI81457 | Inner Joint | | 27 | 24 | 43.95 | 359 | 125 | |
| 3.0 (285 kw) | 2019.11- | 8AT | F | L | Estate 4WD B58 B30 B | | GDS56119 | Drive Shaft | | 37 | 27 | 65 | | 557 | |
| | 2019.11- | 8AT | F | R | Estate 4WD B58 B30 B | | GDS56120 | Drive Shaft | | 37 | 27 | 65 | | 857 | |
| | 2019.11- | 8AT | F | L/R | Estate 4WD B58 B30 B | | GCO83161 | Outer Joint | | 37 | 33 | 65 | | 73 | M |
| | 2019.11- | 8AT | F | L | Estate 4WD B58 B30 B | | GCI81055 | Inner Joint | | 27 | 24 | 43.95 | 60 | 123.5 | |
| | 2019.11- | 8AT | F | R | Estate 4WD B58 B30 B | | GCI81457 | Inner Joint | | 27 | 24 | 43.95 | 359 | 125 | |
| 3.0 (288 kw) | 2025.09- | | F | L | Estate 4WD B58B30B | | GDS56119 | Drive Shaft | | 37 | 27 | 65 | | 557 | |
| | 2025.09- | | F | R | Estate 4WD B58B30B | | GDS56120 | Drive Shaft | | 37 | 27 | 65 | | 857 | |
| **M440d xDrive Cabrio** | | | | | | | | | | | | | | | |
| 3.0 (250 kw) | 2021.11- | AT | F | L | Convertible 4WD B57 D30 B;JA1 | | GDS56119 | Drive Shaft | | 37 | 27 | 65 | | 557 | |
| | 2021.11- | AT | F | R | Convertible 4WD B57 D30 B;JA1 | | GDS56120 | Drive Shaft | | 37 | 27 | 65 | | 857 | |
| | 2021.11- | AT | F | L/R | Convertible 4WD B57 D30 B;JA1 | | GCO83161 | Outer Joint | | 37 | 33 | 65 | | 73 | M |
| | 2021.11- | AT | F | L | Convertible 4WD B57 D30 B;JA1 | | GCI81055 | Inner Joint | | 27 | 24 | 43.95 | 60 | 123.5 | |
| | 2021.11- | AT | F | R | Convertible 4WD B57 D30 B;JA1 | | GCI81457 | Inner Joint | | 27 | 24 | 43.95 | 359 | 125 | |
| **M440d xDrive Coupe** | | | | | | | | | | | | | | | |
| 3.0 (250 kw) | 2021.03- | 8AT | F | L | Coupe 4WD B57 D30 B;JA1 | | GDS56119 | Drive Shaft | | 37 | 27 | 65 | | 557 | |
| | 2021.03- | 8AT | F | R | Coupe 4WD B57 D30 B;JA1 | | GDS56120 | Drive Shaft | | 37 | 27 | 65 | | 857 | |
| | 2021.03- | 8AT | F | L/R | Coupe 4WD B57 D30 B;JA1 | | GCO83161 | Outer Joint | | 37 | 33 | 65 | | 73 | M |
| | 2021.03- | 8AT | F | L | Coupe 4WD B57 D30 B;JA1 | | GCI81055 | Inner Joint | | 27 | 24 | 43.95 | 60 | 123.5 | |
| | 2021.03- | 8AT | F | R | Coupe 4WD B57 D30 B;JA1 | | GCI81457 | Inner Joint | | 27 | 24 | 43.95 | 359 | 125 | |
| **M440i xDrive Cabrio** | | | | | | | | | | | | | | | |
| 3.0 (275 kw) | 2020.11- | 8AT | F | L | Convertible 4WD B58 B30 B;JA1 | | GDS56119 | Drive Shaft | | 37 | 27 | 65 | | 557 | |
| | 2020.11- | 8AT | F | R | Convertible 4WD B58 B30 B;JA1 | | GDS56120 | Drive Shaft | | 37 | 27 | 65 | | 857 | |
| | 2020.11- | 8AT | F | L/R | Convertible 4WD B58 B30 B;JA1 | | GCO83161 | Outer Joint | | 37 | 33 | 65 | | 73 | M |
| | 2020.11- | 8AT | F | L | Convertible 4WD B58 B30 B;JA1 | | GCI81055 | Inner Joint | | 27 | 24 | 43.95 | 60 | 123.5 | |
| | 2020.11- | 8AT | F | R | Convertible 4WD B58 B30 B;JA1 | | GCI81457 | Inner Joint | | 27 | 24 | 43.95 | 359 | 125 | |
| 3.0 (285 kw) | 2020.11- | AT | F | L | Convertible 4WD B58 B30 B;JA1 | | GDS56119 | Drive Shaft | | 37 | 27 | 65 | | 557 | |

| | YEAR | TRANSM. | F/R | L/R | BODY STYLE & DRIVE TYPE & ENGINE | REMARKS | G-AP Ref. | PRODUCT | ABS | Technical Specifications A | B | C | H | L | P |
|---|---|---|---|---|---|---|---|---|---|---|---|---|---|---|---|
| **BMW** | | | | | | | | | | | | | | | |
| **M440i xDrive Cabrio** | | | | | | | | | | | | | | | |
| 3.0 (285 kw) | 2020.11- | AT | F | R | Convertible 4WD B58 B30 B;JA1 | | GDS56120 | Drive Shaft | | 37 | 27 | 65 | | 857 | |
| | 2020.11- | AT | F | L/R | Convertible 4WD B58 B30 B;JA1 | | GCO83161 | Outer Joint | | 37 | 33 | 65 | | 73 | M |
| | 2020.11- | AT | F | L | Convertible 4WD B58 B30 B;JA1 | | GCI81055 | Inner Joint | | 27 | 24 | 43.95 | 60 | 123.5 | |
| | 2020.11- | AT | F | R | Convertible 4WD B58 B30 B;JA1 | | GCI81457 | Inner Joint | | 27 | 24 | 43.95 | 359 | 125 | |
| **M440i xDrive Coupe** | | | | | | | | | | | | | | | |
| 3.0 (275 kw) | 2020.11- | 8AT | F | L | Coupe 4WD B58 B30 B;JA1 | | GDS56119 | Drive Shaft | | 37 | 27 | 65 | | 557 | |
| | 2020.11- | 8AT | F | R | Coupe 4WD B58 B30 B;JA1 | | GDS56120 | Drive Shaft | | 37 | 27 | 65 | | 857 | |
| | 2020.11- | 8AT | F | L/R | Coupe 4WD B58 B30 B;JA1 | | GCO83161 | Outer Joint | | 37 | 33 | 65 | | 73 | M |
| | 2020.11- | 8AT | F | L | Coupe 4WD B58 B30 B;JA1 | | GCI81055 | Inner Joint | | 27 | 24 | 43.95 | 60 | 123.5 | |
| | 2020.11- | 8AT | F | R | Coupe 4WD B58 B30 B;JA1 | | GCI81457 | Inner Joint | | 27 | 24 | 43.95 | 359 | 125 | |
| 3.0 (285 kw) | 2020.07- | 8AT | F | L | Coupe 4WD B58 B30 B;JA1 | | GDS56119 | Drive Shaft | | 37 | 27 | 65 | | 557 | |
| | 2020.07- | 8AT | F | R | Coupe 4WD B58 B30 B;JA1 | | GDS56120 | Drive Shaft | | 37 | 27 | 65 | | 857 | |
| | 2020.07- | 8AT | F | L/R | Coupe 4WD B58 B30 B;JA1 | | GCO83161 | Outer Joint | | 37 | 33 | 65 | | 73 | M |
| | 2020.07- | 8AT | F | L | Coupe 4WD B58 B30 B;JA1 | | GCI81055 | Inner Joint | | 27 | 24 | 43.95 | 60 | 123.5 | |
| | 2020.07- | 8AT | F | R | Coupe 4WD B58 B30 B;JA1 | | GCI81457 | Inner Joint | | 27 | 24 | 43.95 | 359 | 125 | |
| **M440i xDrive Gran Coupe** | | | | | | | | | | | | | | | |
| 3.0 (275 kw) | 2021.07- | 8AT | F | L | Coupe 4WD B58 B30 B;JA1 | | GDS57555 | Drive Shaft | | 37 | 27 | 65 | | 565 | |
| | 2021.07- | 8AT | F | R | Coupe 4WD B58 B30 B;JA1 | | GDS57556 | Drive Shaft | | 37 | 27 | 65 | | 864 | |
| | 2021.07- | 8AT | F | L/R | Coupe 4WD B58 B30 B;JA1 | | GCO83608 | Outer Joint | | 37 | 33 | 65 | | 70 | M |
| | 2021.07- | 8AT | F | L | Coupe 4WD B58 B30 B;JA1 | | GCI81055 | Inner Joint | | 27 | 24 | 43.95 | 60 | 123.5 | |
| | 2021.07- | 8AT | F | R | Coupe 4WD B58 B30 B;JA1 | | GCI81457 | Inner Joint | | 27 | 24 | 43.95 | 359 | 125 | |
| 3.0 (288 kw) | 2024.07- | 8AT | F | L | Coupe 4WD B58B30B,B58B30P | | GDS57555 | Drive Shaft | | 37 | 27 | 65 | | 565 | |
| | 2024.07- | 8AT | F | R | Coupe 4WD B58B30B,B58B30P | | GDS57556 | Drive Shaft | | 37 | 27 | 65 | | 864 | |
| **M5** | | | | | | | | | | | | | | | |
| 4.4 (412 kw) | 2011.09-2016.10 | 7AT | R | L | Saloon RWD S63 B44 B | | GDS82056 | Drive Shaft | | 37 | 32 | | | 673 | |
| | 2011.09-2016.10 | 7AT | R | R | Saloon RWD S63 B44 B | | GDS82057 | Drive Shaft | | 37 | 32 | | | 759 | |
| | 2011.09-2016.10 | 7AT | R | L/R | Saloon RWD S63 B44 B | | GCI81606 | Outer Joint | | 37 | 30 | | | 81 | |
| | 2011.09-2016.10 | 7AT | R | L | Saloon RWD S63 B44 B | | GCI81607 | Inner Joint | | 32 | 30 | 49.95 | 49.5 | 94 | |
| | 2011.09-2016.10 | 7AT | R | R | Saloon RWD S63 B44 B | | GCI81608 | Inner Joint | | 32 | 30 | 49.95 | 118.5 | 123.2 | |
| 4.4 (423 kw) | 2013.02-2016.10 | 7AT | R | L | Saloon RWD S63 B44 B | | GDS82056 | Drive Shaft | | 37 | 32 | | | 673 | |
| | 2013.02-2016.10 | 7AT | R | R | Saloon RWD S63 B44 B | | GDS82057 | Drive Shaft | | 37 | 32 | | | 759 | |
| | 2013.02-2016.10 | 7AT | R | L/R | Saloon RWD S63 B44 B | | GCI81606 | Outer Joint | | 37 | 30 | | | 81 | |
| | 2013.02-2016.10 | 7AT | R | L | Saloon RWD S63 B44 B | | GCI81607 | Inner Joint | | 32 | 30 | 49.95 | 49.5 | 94 | |
| | 2013.02-2016.10 | 7AT | R | R | Saloon RWD S63 B44 B | | GCI81608 | Inner Joint | | 32 | 30 | 49.95 | 118.5 | 123.2 | |
| 4.4 (441 kw) | 2014.07-2016.10 | 7AT | R | L | Saloon RWD S63 B44 B | | GDS82056 | Drive Shaft | | 37 | 32 | | | 673 | |
| | 2014.07-2016.10 | 7AT | R | R | Saloon RWD S63 B44 B | | GDS82057 | Drive Shaft | | 37 | 32 | | | 759 | |
| | 2014.07-2016.10 | 7AT | R | L/R | Saloon RWD S63 B44 B | | GCI81606 | Outer Joint | | 37 | 30 | | | 81 | |
| | 2014.07-2016.10 | 7AT | R | L | Saloon RWD S63 B44 B | | GCI81607 | Inner Joint | | 32 | 30 | 49.95 | 49.5 | 94 | |
| | 2014.07-2016.10 | 7AT | R | R | Saloon RWD S63 B44 B | | GCI81608 | Inner Joint | | 32 | 30 | 49.95 | 118.5 | 123.2 | |
| 4.9 (294 kw) | 1998.10-2003.06 | 6MT | R | L/R | Saloon RWD S62B508S1 | | GDS85150 | Drive Shaft | | 30 | | 59 | 73 | 620 | |
| | 1998.10-2003.06 | 6MT | R | L/R | Saloon RWD S62B508S1 | | GCI85081 | Inner Joint | | | 30 | | | 32 | |
| 5.0 (373 kw) | 2004.09-2009.12 | | R | L/R | Saloon RWD S85 B50 A | Date To:2008.03 | GDS85144 | Drive Shaft | | 30 | | 59 | 73 | 652 | |
| **M5 Touring** | | | | | | | | | | | | | | | |
| 5.0 (373 kw) | 2007.02-2010.12 | | R | L/R | Estate RWD S85 B50 A | Date To:2008.03 | GDS85144 | Drive Shaft | | 30 | | 59 | 73 | 652 | |
| **M550d xDrive** | | | | | | | | | | | | | | | |
| 3.0 (280 kw) | 2012.03-2016.10 | 8AT | F | L | Saloon 4WD N57 D30 C | | GDS81581 | Drive Shaft | | 37 | 27 | 65 | | 562 | |
| | 2012.03-2016.10 | 8AT | F | R | Saloon 4WD N57 D30 C | | GDS81681 | Drive Shaft | | 37 | 27 | 65 | | 862 | |
| | 2012.03-2016.10 | 8AT | F | L/R | Saloon 4WD N57 D30 C | | GCO81413 | Outer Joint | | 37 | 25 | 65 | | 73 | I |
| | 2012.03-2016.10 | 8AT | F | L | Saloon 4WD N57 D30 C | | GCI81055 | Inner Joint | | 27 | 24 | 43.95 | 60 | 123.5 | |
| | 2012.03-2016.10 | 8AT | F | R | Saloon 4WD N57 D30 C | | GCI81457 | Inner Joint | | 27 | 24 | 43.95 | 359 | 125 | |
| | 2012.03-2016.10 | 8AT | R | L | Saloon 4WD N57 D30 C | | GDS85116 | Drive Shaft | | 30 | 32 | 65 | 77 | 777 | |
| 3.0 (294 kw) | 2017.06-2020.06 | 8AT | F | L | Saloon 4WD B57 D30 C | Date to:2019.03 | GDS84216 | Drive Shaft | | 37 | 27 | 65 | | 573 | |
| | 2017.06-2020.06 | 8AT | F | R | Saloon 4WD B57 D30 C | Date to:2019.03 | GDS84215 | Drive Shaft | | 37 | 27 | 65 | | 873 | |
| | 2017.06-2020.06 | 8AT | F | L/R | Saloon 4WD B57 D30 C | Date to:2019.03 | GCO82734 | Outer Joint | | 37 | 25 | 65 | | 73 | I |
| | 2017.06-2020.06 | 8AT | F | L | Saloon 4WD B57 D30 C | Date to:2019.03 | GCI81055 | Inner Joint | | 27 | 24 | 43.95 | 60 | 123.5 | |
| | 2017.06-2020.06 | 8AT | F | R | Saloon 4WD B57 D30 C | Date to:2019.03 | GCI81457 | Inner Joint | | 27 | 24 | 43.95 | 359 | 125 | |
| **M550d xDrive Touring** | | | | | | | | | | | | | | | |
| 3.0 (280 kw) | 2012.03-2017.02 | 8AT | F | L | Estate 4WD N57 D30 C | | GDS81581 | Drive Shaft | | 37 | 27 | 65 | | 562 | |
| | 2012.03-2017.02 | 8AT | F | R | Estate 4WD N57 D30 C | | GDS81681 | Drive Shaft | | 37 | 27 | 65 | | 862 | |
| | 2012.03-2017.02 | 8AT | F | L/R | Estate 4WD N57 D30 C | | GCO81413 | Outer Joint | | 37 | 25 | 65 | | 73 | I |
| | 2012.03-2017.02 | 8AT | F | L | Estate 4WD N57 D30 C | | GCI81055 | Inner Joint | | 27 | 24 | 43.95 | 60 | 123.5 | |
| | 2012.03-2017.02 | 8AT | F | R | Estate 4WD N57 D30 C | | GCI81457 | Inner Joint | | 27 | 24 | 43.95 | 359 | 125 | |
| | 2012.03-2017.02 | 8AT | R | L | Estate 4WD N57 D30 C | | GDS85116 | Drive Shaft | | 30 | 32 | 65 | 77 | 777 | |
| 3.0 (294 kw) | 2017.07- | 8AT | F | L | Estate 4WD B57 D30 C | Date to:2019.03 | GDS84216 | Drive Shaft | | 37 | 27 | 65 | | 573 | |
| | 2017.07- | 8AT | F | R | Estate 4WD B57 D30 C | Date to:2019.03 | GDS84215 | Drive Shaft | | 37 | 27 | 65 | | 873 | |

| | YEAR | TRANSM. | F/R | L/R | BODY STYLE & DRIVE TYPE & ENGINE | REMARKS | G-AP Ref. | PRODUCT | ABS | Technical Specifications A | B | C | H | L | P |
|---|---|---|---|---|---|---|---|---|---|---|---|---|---|---|---|
| **BMW** | | | | | | | | | | | | | | | |
| **M550d xDrive Touring** | | | | | | | | | | | | | | | |
| 3.0 (294 kw) | 2017.07- | 8AT | F | L/R | Estate 4WD B57 D30 C | Date to:2019.03 | GCO82734 | Outer Joint | | 37 | 25 | 65 | | 73 | I |
| | 2017.07- | 8AT | F | L | Estate 4WD B57 D30 C | Date to:2019.03 | GCI81055 | Inner Joint | | 27 | 24 | 43.95 | 60 | 123.5 | |
| | 2017.07- | 8AT | F | R | Estate 4WD B57 D30 C | Date to:2019.03 | GCI81457 | Inner Joint | | 27 | 24 | 43.95 | 359 | 125 | |
| **M6 Cabrio** | | | | | | | | | | | | | | | |
| 4.4 (412 kw) | 2012.03-2018.06 | 7AT | R | L | Convertible RWD S63 B44 B | | GDS82056 | Drive Shaft | | 37 | 32 | | | 673 | |
| | 2012.03-2018.06 | 7AT | R | R | Convertible RWD S63 B44 B | | GDS82057 | Drive Shaft | | 37 | 32 | | | 759 | |
| | 2012.03-2018.06 | 7AT | R | L/R | Convertible RWD S63 B44 B | | GCI81606 | Outer Joint | | 37 | 30 | | | 81 | |
| | 2012.03-2018.06 | 7AT | R | L | Convertible RWD S63 B44 B | | GCI81607 | Inner Joint | | 32 | 30 | 49.95 | 49.5 | 94 | |
| | 2012.03-2018.06 | 7AT | R | R | Convertible RWD S63 B44 B | | GCI81608 | Inner Joint | | 32 | 30 | 49.95 | 118.5 | 123.2 | |
| 4.4 (423 kw) | 2013.07-2015.02 | 7AT | R | L | Convertible RWD S63 B44 B | | GDS82056 | Drive Shaft | | 37 | 32 | | | 673 | |
| | 2013.07-2015.02 | 7AT | R | R | Convertible RWD S63 B44 B | | GDS82057 | Drive Shaft | | 37 | 32 | | | 759 | |
| | 2013.07-2015.02 | 7AT | R | L/R | Convertible RWD S63 B44 B | | GCI81606 | Outer Joint | | 37 | 30 | | | 81 | |
| | 2013.07-2015.02 | 7AT | R | L | Convertible RWD S63 B44 B | | GCI81607 | Inner Joint | | 32 | 30 | 49.95 | 49.5 | 94 | |
| | 2013.07-2015.02 | 7AT | R | R | Convertible RWD S63 B44 B | | GCI81608 | Inner Joint | | 32 | 30 | 49.95 | 118.5 | 123.2 | |
| 4.4 (441 kw) | 2015.03-2018.06 | 7AT | R | L | Convertible RWD S63 B44 B | | GDS82056 | Drive Shaft | | 37 | 32 | | | 673 | |
| | 2015.03-2018.06 | 7AT | R | R | Convertible RWD S63 B44 B | | GDS82057 | Drive Shaft | | 37 | 32 | | | 759 | |
| | 2015.03-2018.06 | 7AT | R | L/R | Convertible RWD S63 B44 B | | GCI81606 | Outer Joint | | 37 | 30 | | | 81 | |
| | 2015.03-2018.06 | 7AT | R | L | Convertible RWD S63 B44 B | | GCI81607 | Inner Joint | | 32 | 30 | 49.95 | 49.5 | 94 | |
| | 2015.03-2018.06 | 7AT | R | R | Convertible RWD S63 B44 B | | GCI81608 | Inner Joint | | 32 | 30 | 49.95 | 118.5 | 123.2 | |
| 5.0 (373 kw) | 2006.09-2010.08 | 7AT/7MT | R | L/R | Convertible RWD S85 B50 A | | GDS85144 | Drive Shaft | | 30 | | 59 | 73 | 652 | |
| | 2006.09-2010.08 | 7AT/7MT | R | L/R | Convertible RWD S85 B50 A | | GCI85081 | Inner Joint | | | 30 | | | 32 | |
| **M6 Coupe** | | | | | | | | | | | | | | | |
| 4.4 (412 kw) | 2012.07-2017.10 | 7AT | R | L | Coupe RWD S63 B44 B | | GDS82056 | Drive Shaft | | 37 | 32 | | | 673 | |
| | 2012.07-2017.10 | 7AT | R | R | Coupe RWD S63 B44 B | | GDS82057 | Drive Shaft | | 37 | 32 | | | 759 | |
| | 2012.07-2017.10 | 7AT | R | L/R | Coupe RWD S63 B44 B | | GCI81606 | Outer Joint | | 37 | 30 | | | 81 | |
| | 2012.07-2017.10 | 7AT | R | L | Coupe RWD S63 B44 B | | GCI81607 | Inner Joint | | 32 | 30 | 49.95 | 49.5 | 94 | |
| | 2012.07-2017.10 | 7AT | R | R | Coupe RWD S63 B44 B | | GCI81608 | Inner Joint | | 32 | 30 | 49.95 | 118.5 | 123.2 | |
| 4.4 (423 kw) | 2013.07-2015.02 | 7AT | R | L | Coupe RWD S63 B44 B | | GDS82056 | Drive Shaft | | 37 | 32 | | | 673 | |
| | 2013.07-2015.02 | 7AT | R | R | Coupe RWD S63 B44 B | | GDS82057 | Drive Shaft | | 37 | 32 | | | 759 | |
| | 2013.07-2015.02 | 7AT | R | L/R | Coupe RWD S63 B44 B | | GCI81606 | Outer Joint | | 37 | 30 | | | 81 | |
| | 2013.07-2015.02 | 7AT | R | L | Coupe RWD S63 B44 B | | GCI81607 | Inner Joint | | 32 | 30 | 49.95 | 49.5 | 94 | |
| | 2013.07-2015.02 | 7AT | R | R | Coupe RWD S63 B44 B | | GCI81608 | Inner Joint | | 32 | 30 | 49.95 | 118.5 | 123.2 | |
| 4.4 (441 kw) | 2015.03-2017.10 | 7AT | R | L | Coupe RWD S63 B44 B | | GDS82056 | Drive Shaft | | 37 | 32 | | | 673 | |
| | 2015.03-2017.10 | 7AT | R | R | Coupe RWD S63 B44 B | | GDS82057 | Drive Shaft | | 37 | 32 | | | 759 | |
| | 2015.03-2017.10 | 7AT | R | L/R | Coupe RWD S63 B44 B | | GCI81606 | Outer Joint | | 37 | 30 | | | 81 | |
| | 2015.03-2017.10 | 7AT | R | L | Coupe RWD S63 B44 B | | GCI81607 | Inner Joint | | 32 | 30 | 49.95 | 49.5 | 94 | |
| | 2015.03-2017.10 | 7AT | R | R | Coupe RWD S63 B44 B | | GCI81608 | Inner Joint | | 32 | 30 | 49.95 | 118.5 | 123.2 | |
| 5.0 (373 kw) | 2005.09-2010.07 | 7AT/7MT | R | L/R | Coupe RWD S85 B50 A | | GDS85144 | Drive Shaft | | 30 | | 59 | 73 | 652 | |
| | 2005.09-2010.07 | 7AT/7MT | R | L/R | Coupe RWD S85 B50 A | | GCI85081 | Inner Joint | | | 30 | | | 32 | |
| **M6 Gran Coupe** | | | | | | | | | | | | | | | |
| 4.4 (412 kw) | 2013.03-2018.10 | 7AT | R | L | Coupe RWD S63 B44 B | | GDS82056 | Drive Shaft | | 37 | 32 | | | 673 | |
| | 2013.03-2018.10 | 7AT | R | R | Coupe RWD S63 B44 B | | GDS82057 | Drive Shaft | | 37 | 32 | | | 759 | |
| | 2013.03-2018.10 | 7AT | R | L/R | Coupe RWD S63 B44 B | | GCI81606 | Outer Joint | | 37 | 30 | | | 81 | |
| | 2013.03-2018.10 | 7AT | R | L | Coupe RWD S63 B44 B | | GCI81607 | Inner Joint | | 32 | 30 | 49.95 | 49.5 | 94 | |
| | 2013.03-2018.10 | 7AT | R | R | Coupe RWD S63 B44 B | | GCI81608 | Inner Joint | | 32 | 30 | 49.95 | 118.5 | 123.2 | |
| 4.4 (423 kw) | 2013.07-2015.02 | 7AT | R | L | Coupe RWD S63 B44 B | | GDS82056 | Drive Shaft | | 37 | 32 | | | 673 | |
| | 2013.07-2015.02 | 7AT | R | R | Coupe RWD S63 B44 B | | GDS82057 | Drive Shaft | | 37 | 32 | | | 759 | |
| | 2013.07-2015.02 | 7AT | R | L/R | Coupe RWD S63 B44 B | | GCI81606 | Outer Joint | | 37 | 30 | | | 81 | |
| | 2013.07-2015.02 | 7AT | R | L | Coupe RWD S63 B44 B | | GCI81607 | Inner Joint | | 32 | 30 | 49.95 | 49.5 | 94 | |
| | 2013.07-2015.02 | 7AT | R | R | Coupe RWD S63 B44 B | | GCI81608 | Inner Joint | | 32 | 30 | 49.95 | 118.5 | 123.2 | |
| 4.4 (441 kw) | 2015.03-2018.10 | 7AT | R | L | Coupe RWD S63 B44 B | | GDS82056 | Drive Shaft | | 37 | 32 | | | 673 | |
| | 2015.03-2018.10 | 7AT | R | R | Coupe RWD S63 B44 B | | GDS82057 | Drive Shaft | | 37 | 32 | | | 759 | |
| | 2015.03-2018.10 | 7AT | R | L/R | Coupe RWD S63 B44 B | | GCI81606 | Outer Joint | | 37 | 30 | | | 81 | |
| | 2015.03-2018.10 | 7AT | R | L | Coupe RWD S63 B44 B | | GCI81607 | Inner Joint | | 32 | 30 | 49.95 | 49.5 | 94 | |
| | 2015.03-2018.10 | 7AT | R | R | Coupe RWD S63 B44 B | | GCI81608 | Inner Joint | | 32 | 30 | 49.95 | 118.5 | 123.2 | |
| **X1 M35i xDrive** | | | | | | | | | | | | | | | |
| 2.0 (221 kw) | 2023.08- | 7DCT | F | L | SUV 4WD B48 A20 H | | GDS57952 | Drive Shaft | | 37 | 27 | 65 | | 538 | |
| | 2023.08- | 7DCT | F | R | SUV 4WD B48 A20 H | | GDS58026 | Drive Shaft | | 37 | 35 | 65 | | 495 | |
| | 2023.08- | 7DCT | F | L/R | SUV 4WD B48 A20 H | | GCO83810 | Outer Joint | | 37 | 28 | 65 | | 76.5 | M |
| | 2023.08- | 7DCT | F | L | SUV 4WD B48 A20 H | | GCI83960 | Inner Joint | | 27 | 29 | 35 | 73 | 114 | |
| | 2023.08- | 7DCT | F | R | SUV 4WD B48 A20 H | | GCI83983 | Inner Joint | | 35 | 29 | 44.8 | | 133.5 | |
| **X1 sDrive 16d** | | | | | | | | | | | | | | | |
| 1.5 (85 kw) | 2014.11-2022.05 | 6MT | F | L | SUV FWD B37 C15 A | | GDS84525 | Drive Shaft | | 31 | 37 | 56 | | 548 | |
| | 2014.11-2022.05 | 6MT | F | R | SUV FWD B37 C15 A | | GDS84526 | Drive Shaft | | 31 | 37 | 56 | | 929 | |
| | 2014.11-2022.05 | 6MT | F | L/R | SUV FWD B37 C15 A | | GCO81811 | Outer Joint | | 31 | 33 | 56 | | 70 | I |

| | YEAR | TRANSM. | F/R | L/R | BODY STYLE & DRIVE TYPE & ENGINE | REMARKS | G-AP Ref. | PRODUCT | ABS | Technical Specifications A | B | C | H | L | P |
|---|---|---|---|---|---|---|---|---|---|---|---|---|---|---|---|
| **BMW** | | | | | | | | | | | | | | | |
| **X1 sDrive 16d** | | | | | | | | | | | | | | | |
| 1.5 (85 kw) | 2014.11-2022.05 | 6MT | F | L | SUV FWD B37 C15 A | | GCI82835 | Inner Joint | | 37 | 33 | 35 | 58 | 108.5 | |
| | 2014.11-2022.05 | 6MT | F | R | SUV FWD B37 C15 A | | GCI82836 | Inner Joint | | 37 | 33 | 35 | 414 | 103.5 | |
| | 2014.11-2022.05 | 7DCT | F | L | SUV FWD B37 C15 A | | GDS84222 | Drive Shaft | | 31 | 27 | 56 | | 547 | |
| | 2014.11-2022.05 | 7DCT | F | R | SUV FWD B37 C15 A | | GDS84221 | Drive Shaft | | 31 | 27 | 56 | | 938 | |
| | 2014.11-2022.05 | 7DCT | F | L/R | SUV FWD B37 C15 A | | GCO82738 | Outer Joint | | 31 | 26 | 56 | | 73.5 | M |
| | 2014.11-2022.05 | 7DCT | F | L | SUV FWD B37 C15 A | | GCI82649 | Inner Joint | | 27 | 32 | 35 | 58 | 102 | |
| | 2014.11-2022.05 | 7DCT | F | R | SUV FWD B37 C15 A | | GCI82648 | Inner Joint | | 27 | 32 | 35 | 420 | 89 | |
| 2.0 (85 kw) | 2012.04-2015.06 | 8AT/6MT | R | L | SUV RWD N47 D20 C | | GDS85135 | Drive Shaft | | 30 | | 58.7 | 73 | 618 | |
| | 2012.04-2015.06 | 8AT/6MT | R | R | SUV RWD N47 D20 C | | GDS85134 | Drive Shaft | | 30 | | 58.7 | 73 | 665 | |
| | 2012.04-2015.06 | 8AT/6MT | R | L/R | SUV RWD N47 D20 C | | GCI35025 | Inner Joint | | | 25 | | | 26 | |
| **X1 sDrive 18d** | | | | | | | | | | | | | | | |
| 2.0 (100 kw) | 2009.03-2015.06 | AT/MT | R | L | SUV RWD N47 D20 C | | GDS85135 | Drive Shaft | | 30 | | 58.7 | 73 | 618 | |
| | 2009.03-2015.06 | AT/MT | R | R | SUV RWD N47 D20 C | | GDS85134 | Drive Shaft | | 30 | | 58.7 | 73 | 665 | |
| | 2009.03-2015.06 | AT/MT | R | L/R | SUV RWD N47 D20 C | | GCI85036 | Outer Joint | | 30 | 25 | 58.7 | 73 | 58 | I |
| | 2009.03-2015.06 | AT/MT | R | L/R | SUV RWD N47 D20 C | | GCI35025 | Inner Joint | | | 25 | | | 26 | |
| | 2015.07-2022.06 | 6MT | F | L | SUV FWD B47 C20 A | | GDS56905 | Drive Shaft | | 31 | 37 | 56 | | 546 | |
| | 2015.07-2022.06 | 6MT | F | R | SUV FWD B47 C20 A | | GDS56579 | Drive Shaft | | 31 | 37 | 56 | | 931 | |
| | 2015.07-2022.06 | 6MT | F | L/R | SUV FWD B47 C20 A | | GCO83263 | Outer Joint | | 31 | 26 | 56 | | 73.5 | M |
| | 2015.07-2022.06 | 6MT | F | L | SUV FWD B47 C20 A | | GCI83553 | Inner Joint | | 37 | 32 | 35 | 58 | 102 | |
| | 2015.07-2022.06 | 6MT | F | R | SUV FWD B47 C20 A | | GCI83386 | Inner Joint | | 37 | 32 | 35 | 450 | 90 | |
| | 2015.07-2022.06 | 8AT | F | L | SUV FWD B47 C20 A | Diameter:25mm | GDS82177 | Drive Shaft | | 31 | 28 | 56 | | 538 | |
| | 2015.07-2022.06 | 8AT | F | R | SUV FWD B47 C20 A | | GDS84087 | Drive Shaft | | 31 | 28 | 56 | | 904 | |
| | 2015.07-2022.06 | 8AT | F | L/R | SUV FWD B47 C20 A | | GCO81684 | Outer Joint | | 31 | 28 | 56 | | 77 | M |
| | 2015.07-2022.06 | 8AT | F | L | SUV FWD B47 C20 A | Diameter:25mm | GCI81659 | Inner Joint | | 28 | 28 | 33 | 66 | 93.5 | |
| | 2015.07-2022.06 | 8AT | F | R | SUV FWD B47 C20 A | | GCI82517 | Inner Joint | | 28 | 28 | 33 | 425 | 106.5 | |
| | 2022.07- | 7DCT | F | L | SUV FWD B47 C20 B | For vehicles with M-technology;For vehicles with Adaptive Drive | GDS57952 | Drive Shaft | | 37 | 27 | 65 | | 538 | |
| | 2022.07- | 7DCT | F | R | SUV FWD B47 C20 B | For vehicles with M-technology;For vehicles with Adaptive Drive | GDS58044 | Drive Shaft | | 37 | 27 | 65 | | 932 | |
| | 2022.07- | 7DCT | F | L/R | SUV FWD B47 C20 B | For vehicles with M-technology;For vehicles with Adaptive Drive | GCO83810 | Outer Joint | | 37 | 28 | 65 | | 76.5 | M |
| | 2022.07- | 7DCT | F | L | SUV FWD B47 C20 B | For vehicles with M-technology;For vehicles with Adaptive Drive | GCI83960 | Inner Joint | | 27 | 29 | 35 | 73 | 114 | |
| | 2022.07- | 7DCT | F | R | SUV FWD B47 C20 B | For vehicles with M-technology;For vehicles with Adaptive Drive | GCI83986 | Inner Joint | | 27 | 29 | 35 | 456 | 114 | |
| 2.0 (105 kw) | 2009.12-2015.06 | AT/MT | R | L | SUV RWD N47 D20 C | | GDS85135 | Drive Shaft | | 30 | | 58.7 | 73 | 618 | |
| | 2009.12-2015.06 | AT/MT | R | R | SUV RWD N47 D20 C | | GDS85134 | Drive Shaft | | 30 | | 58.7 | 73 | 665 | |
| | 2009.12-2015.06 | AT/MT | R | L/R | SUV RWD N47 D20 C | | GCI35025 | Inner Joint | | | 25 | | | 26 | |
| 2.0 (110 kw) | 2015.07-2022.06 | 6MT | F | L | SUV FWD B47 C20 A;B47 C20 B | | GDS56905 | Drive Shaft | | 31 | 37 | 56 | | 546 | |
| | 2015.07-2022.06 | 6MT | F | R | SUV FWD B47 C20 A;B47 C20 B | | GDS56579 | Drive Shaft | | 31 | 37 | 56 | | 931 | |
| | 2015.07-2022.06 | 6MT | F | L/R | SUV FWD B47 C20 A;B47 C20 B | | GCO83263 | Outer Joint | | 31 | 26 | 56 | | 73.5 | M |
| | 2015.07-2022.06 | 6MT | F | L | SUV FWD B47 C20 A;B47 C20 B | | GCI83553 | Inner Joint | | 37 | 32 | 35 | 58 | 102 | |
| | 2015.07-2022.06 | 6MT | F | R | SUV FWD B47 C20 A;B47 C20 B | | GCI83386 | Inner Joint | | 37 | 32 | 35 | 450 | 90 | |
| | 2015.07-2022.06 | 8AT | F | L | SUV FWD B47 C20 A;B47 C20 B | For Engine code:B47C20A | GDS82177 | Drive Shaft | | 31 | 28 | 56 | | 538 | |
| | 2015.07-2022.06 | 8AT | F | R | SUV FWD B47 C20 A;B47 C20 B | | GDS84087 | Drive Shaft | | 31 | 28 | 56 | | 904 | |
| | 2015.07-2022.06 | 8AT | F | L/R | SUV FWD B47 C20 A;B47 C20 B | For Engine code:B47C20A | GCO81684 | Outer Joint | | 31 | 28 | 56 | | 77 | M |
| | 2015.07-2022.06 | 8AT | F | L | SUV FWD B47 C20 A;B47 C20 B | For Engine code:B47C20A | GCI81659 | Inner Joint | | 28 | 28 | 33 | 66 | 93.5 | |
| | 2015.07-2022.06 | 8AT | F | R | SUV FWD B47 C20 A;B47 C20 B | For Engine code:B47C20A | GCI82517 | Inner Joint | | 28 | 28 | 33 | 425 | 106.5 | |
| | 2015.07-2022.06 | 6MT | F | L | SUV Van FWD B47 C20 A;B47 C20 B | | GDS56905 | Drive Shaft | | 31 | 37 | 56 | | 546 | |
| | 2015.07-2022.06 | 6MT | F | R | SUV Van FWD B47 C20 A;B47 C20 B | | GDS56579 | Drive Shaft | | 31 | 37 | 56 | | 931 | |
| | 2015.07-2022.06 | 6MT | F | L/R | SUV Van FWD B47 C20 A;B47 C20 B | | GCO83263 | Outer Joint | | 31 | 26 | 56 | | 73.5 | M |
| | 2015.07-2022.06 | 6MT | F | L | SUV Van FWD B47 C20 A;B47 C20 B | | GCI83553 | Inner Joint | | 37 | 32 | 35 | 58 | 102 | |
| | 2015.07-2022.06 | 6MT | F | R | SUV Van FWD B47 C20 A;B47 C20 B | | GCI83386 | Inner Joint | | 37 | 32 | 35 | 450 | 90 | |
| | 2022.07- | 7DCT | F | L | SUV FWD B47 C20 B | For vehicles with M-technology;For vehicles with Adaptive Drive | GDS57952 | Drive Shaft | | 37 | 27 | 65 | | 538 | |
| | 2022.07- | 7DCT | F | R | SUV FWD B47 C20 B | For vehicles with M-technology;For vehicles with Adaptive Drive | GDS58044 | Drive Shaft | | 37 | 27 | 65 | | 932 | |
| | 2022.07- | 7DCT | F | L/R | SUV FWD B47 C20 B | For vehicles with M-technology;For vehicles with Adaptive Drive | GCO83810 | Outer Joint | | 37 | 28 | 65 | | 76.5 | M |
| | 2022.07- | 7DCT | F | L | SUV FWD B47 C20 B | For vehicles with M-technology;For vehicles with Adaptive Drive | GCI83960 | Inner Joint | | 27 | 29 | 35 | 73 | 114 | |
| | 2022.07- | 7DCT | F | R | SUV FWD B47 C20 B | For vehicles with M-technology;For vehicles with Adaptive Drive | GCI83986 | Inner Joint | | 27 | 29 | 35 | 456 | 114 | |
| **X1 sDrive 18i** | | | | | | | | | | | | | | | |
| 1.5 (100 kw) | 2015.11-2022.06 | 6AT | F | L | SUV FWD B38 A15 A;B38A15F | | GDS83712 | Drive Shaft | | 31 | 26 | 56 | | 541 | |
| | 2015.11-2022.06 | 6AT | F | R | SUV FWD B38 A15 A;B38A15F | | GDS83713 | Drive Shaft | | 31 | 26 | 56 | | 905 | |
| | 2015.11-2022.06 | 6AT | F | L/R | SUV FWD B38 A15 A;B38A15F | | GCO82471 | Outer Joint | | 31 | 26 | 56 | | 73.5 | M |
| | 2015.11-2022.06 | 6AT | F | L | SUV FWD B38 A15 A;B38A15F | | GCI82347 | Inner Joint | | 26 | 32 | 31 | 65 | 92 | |
| | 2015.11-2022.06 | 6AT | F | R | SUV FWD B38 A15 A;B38A15F | | GCI82348 | Inner Joint | | 26 | 32 | 31 | 388 | 88 | |
| | 2015.11-2022.06 | 6MT | F | L | SUV FWD B38 A15 A;B38A15F | | GDS82631 | Drive Shaft | | 31 | 34 | 56 | | 563 | |
| | 2015.11-2022.06 | 6MT | F | R | SUV FWD B38 A15 A;B38A15F | | GDS82632 | Drive Shaft | | 31 | 34 | 56 | | 920 | |
| | 2015.11-2022.06 | 6MT | F | L/R | SUV FWD B38 A15 A;B38A15F | | GCO81683 | Outer Joint | | 31 | 33 | 56 | | 71 | M |
| | 2015.11-2022.06 | 6MT | F | L | SUV FWD B38 A15 A;B38A15F | | GCI81758 | Inner Joint | | 34 | 33 | 35 | 54.5 | 96 | |
| | 2015.11-2022.06 | 6MT | F | R | SUV FWD B38 A15 A;B38A15F | | GCI81917 | Inner Joint | | 34 | 33 | 35 | 401 | 83 | |
| | 2015.11-2022.06 | 7DCT | F | L | SUV FWD B38 A15 A;B38A15F | | GDS84222 | Drive Shaft | | 31 | 27 | 56 | | 547 | |

| | YEAR | TRANSM. | F/R | L/R | BODY STYLE & DRIVE TYPE & ENGINE | REMARKS | G-AP Ref. | PRODUCT | ABS | Technical Specifications A | B | C | H | L | P |
|---|---|---|---|---|---|---|---|---|---|---|---|---|---|---|---|
| **BMW** | | | | | | | | | | | | | | | |
| **X1 sDrive 18i** | | | | | | | | | | | | | | | |
| 1.5 (100 kw) | 2015.11-2022.06 | 7DCT | F | R | SUV FWD B38 A15 A;B38A15F | | GDS84221 | Drive Shaft | | 31 | 27 | 56 | | 938 | |
| 1.5 (103 kw) | 2017.07-2022.06 | 6MT | F | L | SUV FWD B38 A15 A | | GDS82631 | Drive Shaft | | 31 | 34 | 56 | | 563 | |
| | 2017.07-2022.06 | 6MT | F | R | SUV FWD B38 A15 A | | GDS82632 | Drive Shaft | | 31 | 34 | 56 | | 920 | |
| | 2017.07-2022.06 | 6MT | F | L/R | SUV FWD B38 A15 A | | GCO81683 | Outer Joint | | 31 | 33 | 56 | | 71 | M |
| | 2017.07-2022.06 | 6MT | F | L | SUV FWD B38 A15 A | | GCI81758 | Inner Joint | | 34 | 33 | 35 | 54.5 | 96 | |
| | 2017.07-2022.06 | 6MT | F | R | SUV FWD B38 A15 A | | GCI81917 | Inner Joint | | 34 | 33 | 35 | 401 | 83 | |
| | 2017.07-2022.06 | 7DCT | F | L | SUV FWD B38 A15 A | | GDS84222 | Drive Shaft | | 31 | 27 | 56 | | 547 | |
| | 2017.07-2022.06 | 7DCT | F | R | SUV FWD B38 A15 A | | GDS84221 | Drive Shaft | | 31 | 27 | 56 | | 938 | |
| | 2017.07-2022.06 | 7DCT | F | L/R | SUV FWD B38 A15 A | | GCO82738 | Outer Joint | | 31 | 26 | 56 | | 73.5 | M |
| | 2017.07-2022.06 | 7DCT | F | L | SUV FWD B38 A15 A | | GCI82649 | Inner Joint | | 27 | 32 | 35 | 58 | 102 | |
| | 2017.07-2022.06 | 7DCT | F | R | SUV FWD B38 A15 A | | GCI82648 | Inner Joint | | 27 | 32 | 35 | 420 | 89 | |
| | 2017.07-2022.06 | 6MT | F | L | SUV Van FWD B38 A15 A | | GDS82631 | Drive Shaft | | 31 | 34 | 56 | | 563 | |
| | 2017.07-2022.06 | 6MT | F | R | SUV Van FWD B38 A15 A | | GDS82632 | Drive Shaft | | 31 | 34 | 56 | | 920 | |
| | 2017.07-2022.06 | 6MT | F | L/R | SUV Van FWD B38 A15 A | | GCO81683 | Outer Joint | | 31 | 33 | 56 | | 71 | M |
| | 2017.07-2022.06 | 6MT | F | L | SUV Van FWD B38 A15 A | | GCI81758 | Inner Joint | | 34 | 33 | 35 | 54.5 | 96 | |
| | 2017.07-2022.06 | 6MT | F | R | SUV Van FWD B38 A15 A | | GCI81917 | Inner Joint | | 34 | 33 | 35 | 401 | 83 | |
| **X1 sDrive 20d** | | | | | | | | | | | | | | | |
| 2.0 (120 kw) | 2010.03-2015.06 | 6AT/6MT | R | L | SUV RWD N47 D20 C | | GDS85135 | Drive Shaft | | 30 | | 58.7 | 73 | 618 | |
| | 2010.03-2015.06 | 6AT/6MT | R | R | SUV RWD N47 D20 C | | GDS85134 | Drive Shaft | | 30 | | 58.7 | 73 | 665 | |
| | 2010.03-2015.06 | 6AT/6MT | R | L/R | SUV RWD N47 D20 C | | GCI85036 | Outer Joint | | 30 | 25 | 58.7 | 73 | 58 | I |
| | 2010.03-2015.06 | 6AT/6MT | R | L/R | SUV RWD N47 D20 C | | GCI35025 | Inner Joint | | | 25 | | | 26 | |
| | 2015.11-2022.05 | 8AT | F | L | SUV FWD B47 C20 A;B47 C20 B | For Engine code:B47C20A,Diameter:25mm | GDS82177 | Drive Shaft | | 31 | 28 | 56 | | 538 | |
| | 2015.11-2022.05 | 8AT | F | R | SUV FWD B47 C20 A;B47 C20 B | | GDS84087 | Drive Shaft | | 31 | 28 | 56 | | 904 | |
| | 2015.11-2022.05 | 8AT | F | L/R | SUV FWD B47 C20 A;B47 C20 B | For Engine code:B47C20A | GCO81684 | Outer Joint | | 31 | 28 | 56 | | 77 | M |
| | 2015.11-2022.05 | 8AT | F | L | SUV FWD B47 C20 A;B47 C20 B | For Engine code:B47C20A,Diameter:25mm | GCI81659 | Inner Joint | | 28 | 28 | 33 | 66 | 93.5 | |
| | 2015.11-2022.05 | 8AT | F | R | SUV FWD B47 C20 A;B47 C20 B | For Engine Code:B47C20A | GCI82517 | Inner Joint | | 28 | 28 | 33 | 425 | 106.5 | |
| 2.0 (130 kw) | 2009.10-2015.06 | 6AT/6MT | R | L | SUV RWD N47 D20 C | | GDS85135 | Drive Shaft | | 30 | | 58.7 | 73 | 618 | |
| | 2009.10-2015.06 | 6AT/6MT | R | R | SUV RWD N47 D20 C | | GDS85134 | Drive Shaft | | 30 | | 58.7 | 73 | 665 | |
| | 2009.10-2015.06 | 6AT/6MT | R | L/R | SUV RWD N47 D20 C | | GCI35025 | Inner Joint | | | 25 | | | 26 | |
| 2.0 (135 kw) | 2012.07-2015.06 | 8AT/6MT | R | L | SUV RWD N47 D20 C | | GDS85135 | Drive Shaft | | 30 | | 58.7 | 73 | 618 | |
| | 2012.07-2015.06 | 8AT/6MT | R | R | SUV RWD N47 D20 C | | GDS85134 | Drive Shaft | | 30 | | 58.7 | 73 | 665 | |
| | 2012.07-2015.06 | 8AT/6MT | R | L/R | SUV RWD N47 D20 C | | GCI35025 | Inner Joint | | | 25 | | | 26 | |
| 2.0 (140 kw) | 2015.11-2022.05 | 8AT | F | L | SUV FWD B47 C20 A;B47 C20 B | For Engine code:B47C20A | GDS82177 | Drive Shaft | | 31 | 28 | 56 | | 538 | |
| | 2015.11-2022.05 | 8AT | F | R | SUV FWD B47 C20 A;B47 C20 B | | GDS84087 | Drive Shaft | | 31 | 28 | 56 | | 904 | |
| | 2015.11-2022.05 | 8AT | F | L/R | SUV FWD B47 C20 A;B47 C20 B | For Engine code:B47C20A | GCO81684 | Outer Joint | | 31 | 28 | 56 | | 77 | M |
| | 2015.11-2022.05 | 8AT | F | L | SUV FWD B47 C20 A;B47 C20 B | For Engine code:B47C20A | GCI81659 | Inner Joint | | 28 | 28 | 33 | 66 | 93.5 | |
| | 2015.11-2022.05 | 8AT | F | R | SUV FWD B47 C20 A;B47 C20 B | For Engine code:B47C20A | GCI82517 | Inner Joint | | 28 | 28 | 33 | 425 | 106.5 | |
| | 2015.11-2022.05 | 8AT | F | L | SUV Van FWD B47 C20 A;B47 C20 B | For Engine code:B47C20A,Diameter:25mm | GDS82177 | Drive Shaft | | 31 | 28 | 56 | | 538 | |
| | 2015.11-2022.05 | 8AT | F | R | SUV Van FWD B47 C20 A;B47 C20 B | | GDS84087 | Drive Shaft | | 31 | 28 | 56 | | 904 | |
| | 2015.11-2022.05 | 8AT | F | L/R | SUV Van FWD B47 C20 A;B47 C20 B | For Engine code:B47C20A | GCO81684 | Outer Joint | | 31 | 28 | 56 | | 77 | M |
| | 2015.11-2022.05 | 8AT | F | L | SUV Van FWD B47 C20 A;B47 C20 B | For Engine code:B47C20A,Diameter:25mm | GCI81659 | Inner Joint | | 28 | 28 | 33 | 66 | 93.5 | |
| | 2015.11-2022.05 | 8AT | F | R | SUV Van FWD B47 C20 A;B47 C20 B | For Engine Code:B47C20A | GCI82517 | Inner Joint | | 28 | 28 | 33 | 425 | 106.5 | |
| **X1 sDrive 20i** | | | | | | | | | | | | | | | |
| 2.0 (131 kw) | 2020.11-2022.06 | 7AT | F | L | SUV FWD B48 A20 A;B48 A20 F | | GDS84222 | Drive Shaft | | 31 | 27 | 56 | | 547 | |
| | 2020.11-2022.06 | 7AT | F | R | SUV FWD B48 A20 A;B48 A20 F | | GDS84223 | Drive Shaft | | 31 | 27 | 56 | | 936 | |
| | 2020.11-2022.06 | 7AT | F | L/R | SUV FWD B48 A20 A;B48 A20 F | | GCO82738 | Outer Joint | | 31 | 26 | 56 | | 73.5 | M |
| | 2020.11-2022.06 | 7AT | F | L | SUV FWD B48 A20 A;B48 A20 F | | GCI82649 | Inner Joint | | 27 | 32 | 35 | 58 | 102 | |
| | 2020.11-2022.06 | 7AT | F | R | SUV FWD B48 A20 A;B48 A20 F | | GCI82650 | Inner Joint | | 27 | 32 | 35 | 456 | 89 | |
| 2.0 (141 kw) | 2015.07-2022.06 | 7DCT | F | L | SUV FWD B48 A20 A;B48 A20 F;B42 S20 A | | GDS84222 | Drive Shaft | | 31 | 27 | 56 | | 547 | |
| | 2015.07-2022.06 | 7DCT | F | R | SUV FWD B48 A20 A;B48 A20 F;B42 S20 A | | GDS84223 | Drive Shaft | | 31 | 27 | 56 | | 936 | |
| | 2015.07-2022.06 | 7DCT | F | L/R | SUV FWD B48 A20 A;B48 A20 F;B42 S20 A | | GCO82738 | Outer Joint | | 31 | 26 | 56 | | 73.5 | M |
| | 2015.07-2022.06 | 7DCT | F | L | SUV FWD B48 A20 A;B48 A20 F;B42 S20 A | | GCI82649 | Inner Joint | | 27 | 32 | 35 | 58 | 102 | |
| | 2015.07-2022.06 | 7DCT | F | R | SUV FWD B48 A20 A;B48 A20 F;B42 S20 A | | GCI82650 | Inner Joint | | 27 | 32 | 35 | 456 | 89 | |
| | 2015.07-2022.06 | 8AT | F | L | SUV FWD B48 A20 A;B48 A20 F;B42 S20 A | | GDS82177 | Drive Shaft | | 31 | 28 | 56 | | 538 | |
| | 2015.07-2022.06 | 8AT | F | R | SUV FWD B48 A20 A;B48 A20 F;B42 S20 A | | GDS84087 | Drive Shaft | | 31 | 28 | 56 | | 904 | |
| | 2015.07-2022.06 | 8AT | F | L/R | SUV FWD B48 A20 A;B48 A20 F;B42 S20 A | | GCO81684 | Outer Joint | | 31 | 28 | 56 | | 77 | M |
| | 2015.07-2022.06 | 8AT | F | L | SUV FWD B48 A20 A;B48 A20 F;B42 S20 A | | GCI81659 | Inner Joint | | 28 | 28 | 33 | 66 | 93.5 | |
| | 2015.07-2022.06 | 8AT | F | R | SUV FWD B48 A20 A;B48 A20 F;B42 S20 A | | GCI82517 | Inner Joint | | 28 | 28 | 33 | 425 | 106.5 | |
| | 2017.07-2022.06 | 7DCT | F | L | SUV Van FWD B48 A20 A | | GDS84222 | Drive Shaft | | 31 | 27 | 56 | | 547 | |
| | 2017.07-2022.06 | 7DCT | F | R | SUV Van FWD B48 A20 A | | GDS84223 | Drive Shaft | | 31 | 27 | 56 | | 936 | |
| | 2017.07-2022.06 | 7DCT | F | L/R | SUV Van FWD B48 A20 A | | GCO82738 | Outer Joint | | 31 | 26 | 56 | | 73.5 | M |
| | 2017.07-2022.06 | 7DCT | F | L | SUV Van FWD B48 A20 A | | GCI82649 | Inner Joint | | 27 | 32 | 35 | 58 | 102 | |
| | 2017.07-2022.06 | 7DCT | F | R | SUV Van FWD B48 A20 A | | GCI82650 | Inner Joint | | 27 | 32 | 35 | 456 | 89 | |

| | YEAR | TRANSM. | F/R | L/R | BODY STYLE & DRIVE TYPE & ENGINE | REMARKS | G-AP Ref. | PRODUCT | ABS | Technical Specifications A | B | C | H | L | P |
|---|---|---|---|---|---|---|---|---|---|---|---|---|---|---|---|
| **BMW** | | | | | | | | | | | | | | | |
| **X1 xDrive 18d** | | | | | | | | | | | | | | | |
| 2.0 (100 kw) | 2009.03-2015.06 | 8AT/6MT | F | L | SUV 4WD N47 D20 C | | GDS82058 | Drive Shaft | | 31 | 27 | 55.8 | | 500 | |
| | 2009.03-2015.06 | 8AT/6MT | F | R | SUV 4WD N47 D20 C | | GDS82059 | Drive Shaft | | 31 | 27 | 55.8 | | 822 | |
| | 2009.03-2015.06 | 8AT/6MT | F | L/R | SUV 4WD N47 D20 C | | GCO81603 | Outer Joint | | 31 | 33 | 55.8 | | 69.5 | M |
| | 2009.03-2015.06 | 8AT/6MT | F | L | SUV 4WD N47 D20 C | | GCI85066 | Inner Joint | | 27 | 24 | 43.95 | 53.5 | 126.5 | |
| | 2009.03-2015.06 | 8AT/6MT | F | R | SUV 4WD N47 D20 C | | GCI85067 | Inner Joint | | 27 | 24 | 43.95 | 376 | 126 | |
| | 2009.03-2015.06 | AT/MT | R | L | SUV 4WD N47 D20 C | | GDS85135 | Drive Shaft | | 30 | | 58.7 | 73 | 618 | |
| | 2009.03-2015.06 | AT/MT | R | R | SUV 4WD N47 D20 C | | GDS85134 | Drive Shaft | | 30 | | 58.7 | 73 | 665 | |
| | 2009.03-2015.06 | AT/MT | R | L/R | SUV 4WD N47 D20 C | | GCI85036 | Outer Joint | | 30 | 25 | 58.7 | 73 | 58 | I |
| | 2009.03-2015.06 | AT/MT | R | L/R | SUV 4WD N47 D20 C | | GCI35025 | Inner Joint | | | 25 | | | 26 | |
| | 2014.11-2022.06 | 6MT | F | R | SUV 4WD B47 C20 A | | GCO81684 | Outer Joint | | 31 | 28 | 56 | | 77 | M |
| | 2014.11-2022.06 | 8AT | F | L | SUV 4WD B47 C20 A | Diameter:25mm | GDS82177 | Drive Shaft | | 31 | 28 | 56 | | 538 | |
| | 2014.11-2022.06 | 8AT | F | L/R | SUV 4WD B47 C20 A | | GCO81684 | Outer Joint | | 31 | 28 | 56 | | 77 | M |
| | 2014.11-2022.06 | 8AT | F | L | SUV 4WD B47 C20 A | Diameter:25mm | GCI81659 | Inner Joint | | 28 | 28 | 33 | 66 | 93.5 | |
| | 2014.11-2022.06 | 8AT/6MT | F | R | SUV 4WD B47 C20 A | | GDS82633 | Drive Shaft | | 31 | 35 | 56 | | 499 | |
| | 2014.11-2022.06 | 8AT/6MT | F | R | SUV 4WD B47 C20 A | | GCI81924 | Inner Joint | | 35 | 28 | 44.5 | | 126 | |
| | 2014.11-2022.06 | 8AT/6MT | R | L/R | SUV 4WD B47 C20 A | | GDS82176 | Drive Shaft | | 31 | 27 | 56 | | 731 | |
| | 2014.11-2022.06 | 8AT/6MT | R | L/R | SUV 4WD B47 C20 A | | GCO81685 | Outer Joint | | 31 | 30 | 56 | | 61.5 | I |
| | 2014.11-2022.06 | 8AT/6MT | R | L/R | SUV 4WD B47 C20 A | | GCI81658 | Inner Joint | | 27 | 30 | 43.7 | 87 | 100 | |
| 2.0 (105 kw) | 2009.10-2015.06 | 6AT/8AT/6MT | F | L | SUV 4WD N47 D20 C | | GDS82058 | Drive Shaft | | 31 | 27 | 55.8 | | 500 | |
| | 2009.10-2015.06 | 6AT/8AT/6MT | F | R | SUV 4WD N47 D20 C | | GDS82059 | Drive Shaft | | 31 | 27 | 55.8 | | 822 | |
| | 2009.10-2015.06 | 6AT/8AT/6MT | F | L/R | SUV 4WD N47 D20 C | | GCO81603 | Outer Joint | | 31 | 33 | 55.8 | | 69.5 | M |
| | 2009.10-2015.06 | 6AT/8AT/6MT | F | L | SUV 4WD N47 D20 C | | GCI85066 | Inner Joint | | 27 | 24 | 43.95 | 53.5 | 126.5 | |
| | 2009.10-2015.06 | 6AT/8AT/6MT | F | R | SUV 4WD N47 D20 C | | GCI85067 | Inner Joint | | 27 | 24 | 43.95 | 376 | 126 | |
| | 2009.10-2015.06 | 6AT/8AT/6MT | R | L | SUV 4WD N47 D20 C | | GDS85135 | Drive Shaft | | 30 | | 58.7 | 73 | 618 | |
| | 2009.10-2015.06 | 6AT/8AT/6MT | R | R | SUV 4WD N47 D20 C | | GDS85134 | Drive Shaft | | 30 | | 58.7 | 73 | 665 | |
| | 2009.10-2015.06 | 6AT/8AT/6MT | R | L/R | SUV 4WD N47 D20 C | | GCI35025 | Inner Joint | | | 25 | | | 26 | |
| 2.0 (110 kw) | 2014.11-2022.06 | 6MT | F | R | SUV 4WD B47 C20 A;B47 C20 B | | GDS82633 | Drive Shaft | | 31 | 35 | 56 | | 499 | |
| | 2014.11-2022.06 | 6MT | F | R | SUV 4WD B47 C20 A;B47 C20 B | | GCO81684 | Outer Joint | | 31 | 28 | 56 | | 77 | M |
| | 2014.11-2022.06 | 6MT | F | R | SUV 4WD B47 C20 A;B47 C20 B | | GCI81924 | Inner Joint | | 35 | 28 | 44.5 | | 126 | |
| | 2014.11-2022.06 | 8AT | F | L | SUV 4WD B47 C20 A;B47 C20 B | Engine code:B47C20A | GDS82177 | Drive Shaft | | 31 | 28 | 56 | | 538 | |
| | 2014.11-2022.06 | 8AT | F | R | SUV 4WD B47 C20 A;B47 C20 B | Engine code:B47C20A | GDS82633 | Drive Shaft | | 31 | 35 | 56 | | 499 | |
| | 2014.11-2022.06 | 8AT | F | L/R | SUV 4WD B47 C20 A;B47 C20 B | Engine code:B47C20A | GCO81684 | Outer Joint | | 31 | 28 | 56 | | 77 | M |
| | 2014.11-2022.06 | 8AT | F | L | SUV 4WD B47 C20 A;B47 C20 B | Engine code:B47C20A | GCI81659 | Inner Joint | | 28 | 28 | 33 | 66 | 93.5 | |
| | 2014.11-2022.06 | 8AT | F | R | SUV 4WD B47 C20 A;B47 C20 B | Engine code:B47C20A | GCI81924 | Inner Joint | | 35 | 28 | 44.5 | | 126 | |
| | 2014.11-2022.06 | 8AT/6MT | R | L/R | SUV 4WD B47 C20 A;B47 C20 B | | GDS82176 | Drive Shaft | | 31 | 27 | 56 | | 731 | |
| | 2014.11-2022.06 | 8AT/6MT | R | L/R | SUV 4WD B47 C20 A;B47 C20 B | | GCO81685 | Outer Joint | | 31 | 30 | 56 | | 61.5 | I |
| | 2014.11-2022.06 | 8AT/6MT | R | L/R | SUV 4WD B47 C20 A;B47 C20 B | | GCI81658 | Inner Joint | | 27 | 30 | 43.7 | 87 | 100 | |
| **X1 xDrive 20d** | | | | | | | | | | | | | | | |
| 2.0 (120 kw) | 2010.03-2015.06 | 6AT/6MT | F | L | SUV 4WD N47 D20 C | | GDS82058 | Drive Shaft | | 31 | 27 | 55.8 | | 500 | |
| | 2010.03-2015.06 | 6AT/6MT | F | R | SUV 4WD N47 D20 C | | GDS82059 | Drive Shaft | | 31 | 27 | 55.8 | | 822 | |
| | 2010.03-2015.06 | 6AT/6MT | F | L/R | SUV 4WD N47 D20 C | | GCO81603 | Outer Joint | | 31 | 33 | 55.8 | | 69.5 | M |
| | 2010.03-2015.06 | 6AT/6MT | F | L | SUV 4WD N47 D20 C | | GCI85066 | Inner Joint | | 27 | 24 | 43.95 | 53.5 | 126.5 | |
| | 2010.03-2015.06 | 6AT/6MT | F | R | SUV 4WD N47 D20 C | | GCI85067 | Inner Joint | | 27 | 24 | 43.95 | 376 | 126 | |
| | 2010.03-2015.06 | AT/MT | R | L | SUV 4WD N47 D20 C | | GDS85135 | Drive Shaft | | 30 | | 58.7 | 73 | 618 | |
| | 2010.03-2015.06 | AT/MT | R | R | SUV 4WD N47 D20 C | | GDS85134 | Drive Shaft | | 30 | | 58.7 | 73 | 665 | |
| | 2010.03-2015.06 | AT/MT | R | L/R | SUV 4WD N47 D20 C | | GCI85036 | Outer Joint | | 30 | 25 | 58.7 | 73 | 58 | I |
| | 2010.03-2015.06 | AT/MT | R | L/R | SUV 4WD N47 D20 C | | GCI35025 | Inner Joint | | | 25 | | | 26 | |
| | 2015.07-2022.06 | 6MT | F | R | SUV 4WD B47 C20 A;B47 C20 B | | GDS82633 | Drive Shaft | | 31 | 35 | 56 | | 499 | |
| | 2015.07-2022.06 | 6MT | F | R | SUV 4WD B47 C20 A;B47 C20 B | | GCO81684 | Outer Joint | | 31 | 28 | 56 | | 77 | M |
| | 2015.07-2022.06 | 6MT | F | R | SUV 4WD B47 C20 A;B47 C20 B | | GCI81924 | Inner Joint | | 35 | 28 | 44.5 | | 126 | |
| | 2015.07-2022.06 | 8AT | F | L | SUV 4WD B47 C20 A;B47 C20 B | For Engine code:B47C20A,Diameter:25mm | GDS82177 | Drive Shaft | | 31 | 28 | 56 | | 538 | |
| | 2015.07-2022.06 | 8AT | F | R | SUV 4WD B47 C20 A;B47 C20 B | For Engine code:B47C20A | GDS82633 | Drive Shaft | | 31 | 35 | 56 | | 499 | |
| | 2015.07-2022.06 | 8AT | F | L/R | SUV 4WD B47 C20 A;B47 C20 B | For Engine code:B47C20A | GCO81684 | Outer Joint | | 31 | 28 | 56 | | 77 | M |
| | 2015.07-2022.06 | 8AT | F | L | SUV 4WD B47 C20 A;B47 C20 B | For Engine code:B47C20A,Diameter:25mm | GCI81659 | Inner Joint | | 28 | 28 | 33 | 66 | 93.5 | |
| | 2015.07-2022.06 | 8AT | F | R | SUV 4WD B47 C20 A;B47 C20 B | For Engine code:B47C20A | GCI81924 | Inner Joint | | 35 | 28 | 44.5 | | 126 | |
| | 2015.07-2022.06 | 8AT/6MT | R | L/R | SUV 4WD B47 C20 A;B47 C20 B | | GDS82176 | Drive Shaft | | 31 | 27 | 56 | | 731 | |
| | 2015.07-2022.06 | 8AT/6MT | R | L/R | SUV 4WD B47 C20 A;B47 C20 B | | GCO81685 | Outer Joint | | 31 | 30 | 56 | | 61.5 | I |
| | 2015.07-2022.06 | 8AT/6MT | R | L/R | SUV 4WD B47 C20 A;B47 C20 B | | GCI81658 | Inner Joint | | 27 | 30 | 43.7 | 87 | 100 | |
| | 2022.11- | 7DCT | F | L | SUV 4WD B47 C20 B | For vehicles with M-technology;For vehicles with Adaptive Drive | GDS57952 | Drive Shaft | | 37 | 27 | 65 | | 538 | |
| | 2022.11- | 7DCT | F | R | SUV 4WD B47 C20 B | For vehicles with M-technology | GDS58026 | Drive Shaft | | 37 | 35 | 65 | | 495 | |
| | 2022.11- | 7DCT | F | L/R | SUV 4WD B47 C20 B | For vehicles with M-technology;For vehicles with Adaptive Drive | GCO83810 | Outer Joint | | 37 | 28 | 65 | | 76.5 | M |
| | 2022.11- | 7DCT | F | L | SUV 4WD B47 C20 B | For vehicles with M-technology;For vehicles with Adaptive Drive | GCI83960 | Inner Joint | | 27 | 29 | 35 | 73 | 114 | |
| | 2022.11- | 7DCT | F | R | SUV 4WD B47 C20 B | For vehicles with M-technology | GCI83983 | Inner Joint | | 35 | 29 | 44.8 | | 133.5 | |
| 2.0 (130 kw) | 2009.09-2012.06 | 6AT/6MT | F | L | SUV 4WD N47 D20 C | | GDS82058 | Drive Shaft | | 31 | 27 | 55.8 | | 500 | |
| | 2009.09-2012.06 | 6AT/6MT | F | R | SUV 4WD N47 D20 C | | GDS82059 | Drive Shaft | | 31 | 27 | 55.8 | | 822 | |

| | YEAR | TRANSM. | F/R | L/R | BODY STYLE & DRIVE TYPE & ENGINE | REMARKS | G-AP Ref. | PRODUCT | ABS | Technical Specifications A | B | C | H | L | P |
|---|---|---|---|---|---|---|---|---|---|---|---|---|---|---|---|
| **BMW** | | | | | | | | | | | | | | | |
| **X1 xDrive 20d** | | | | | | | | | | | | | | | |
| 2.0 (130 kw) | 2009.09-2012.06 | 6AT/6MT | F | L/R | SUV 4WD N47 D20 C | | GCO81603 | Outer Joint | | 31 | 33 | 55.8 | | 69.5 | M |
| | 2009.09-2012.06 | 6AT/6MT | F | L | SUV 4WD N47 D20 C | | GCI85066 | Inner Joint | | 27 | 24 | 43.95 | 53.5 | 126.5 | |
| | 2009.09-2012.06 | 6AT/6MT | F | R | SUV 4WD N47 D20 C | | GCI85067 | Inner Joint | | 27 | 24 | 43.95 | 376 | 126 | |
| | 2009.09-2012.06 | 6AT/6MT | R | L | SUV 4WD N47 D20 C | | GDS85135 | Drive Shaft | | 30 | | 58.7 | 73 | 618 | |
| | 2009.09-2012.06 | 6AT/6MT | R | R | SUV 4WD N47 D20 C | | GDS85134 | Drive Shaft | | 30 | | 58.7 | 73 | 665 | |
| | 2009.09-2012.06 | 6AT/6MT | R | L/R | SUV 4WD N47 D20 C | | GCI35025 | Inner Joint | | | 25 | | | 26 | |
| 2.0 (135 kw) | 2012.07-2015.06 | 8AT/6MT | F | L | SUV 4WD N47 D20 C | | GDS82058 | Drive Shaft | | 31 | 27 | 55.8 | | 500 | |
| | 2012.07-2015.06 | 8AT/6MT | F | R | SUV 4WD N47 D20 C | | GDS82059 | Drive Shaft | | 31 | 27 | 55.8 | | 822 | |
| | 2012.07-2015.06 | 8AT/6MT | F | L/R | SUV 4WD N47 D20 C | | GCO81603 | Outer Joint | | 31 | 33 | 55.8 | | 69.5 | M |
| | 2012.07-2015.06 | 8AT/6MT | F | L | SUV 4WD N47 D20 C | | GCI85066 | Inner Joint | | 27 | 24 | 43.95 | 53.5 | 126.5 | |
| | 2012.07-2015.06 | 8AT/6MT | F | R | SUV 4WD N47 D20 C | | GCI85067 | Inner Joint | | 27 | 24 | 43.95 | 376 | 126 | |
| | 2012.07-2015.06 | 8AT/6MT | R | L | SUV 4WD N47 D20 C | | GDS85135 | Drive Shaft | | 30 | | 58.7 | 73 | 618 | |
| | 2012.07-2015.06 | 8AT/6MT | R | R | SUV 4WD N47 D20 C | | GDS85134 | Drive Shaft | | 30 | | 58.7 | 73 | 665 | |
| | 2012.07-2015.06 | 8AT/6MT | R | L/R | SUV 4WD N47 D20 C | | GCI35025 | Inner Joint | | | 25 | | | 26 | |
| 2.0 (140 kw) | 2015.07-2022.06 | 6MT | F | R | SUV 4WD B47 C20 A;B47 C20 B | | GDS82633 | Drive Shaft | | 31 | 35 | 56 | | 499 | |
| | 2015.07-2022.06 | 6MT | F | R | SUV 4WD B47 C20 A;B47 C20 B | | GCO81684 | Outer Joint | | 31 | 28 | 56 | | 77 | M |
| | 2015.07-2022.06 | 6MT | F | R | SUV 4WD B47 C20 A;B47 C20 B | | GCI81924 | Inner Joint | | 35 | 28 | 44.5 | | 126 | |
| | 2015.07-2022.06 | 8AT | F | L | SUV 4WD B47 C20 A;B47 C20 B | For Engine code:B47C20A | GDS82177 | Drive Shaft | | 31 | 28 | 56 | | 538 | |
| | 2015.07-2022.06 | 8AT | F | R | SUV 4WD B47 C20 A;B47 C20 B | For Engine code:B47C20A | GDS82633 | Drive Shaft | | 31 | 35 | 56 | | 499 | |
| | 2015.07-2022.06 | 8AT | F | L/R | SUV 4WD B47 C20 A;B47 C20 B | For Engine code:B47C20A | GCO81684 | Outer Joint | | 31 | 28 | 56 | | 77 | M |
| | 2015.07-2022.06 | 8AT | F | L | SUV 4WD B47 C20 A;B47 C20 B | For Engine code:B47C20A | GCI81659 | Inner Joint | | 28 | 28 | 33 | 66 | 93.5 | |
| | 2015.07-2022.06 | 8AT | F | R | SUV 4WD B47 C20 A;B47 C20 B | For Engine code:B47C20A | GCI81924 | Inner Joint | | 35 | 28 | 44.5 | | 126 | |
| | 2015.07-2022.06 | 8AT/6MT | R | L/R | SUV 4WD B47 C20 A;B47 C20 B | | GDS82176 | Drive Shaft | | 31 | 27 | 56 | | 731 | |
| | 2015.07-2022.06 | 8AT/6MT | R | L/R | SUV 4WD B47 C20 A;B47 C20 B | | GCO81685 | Outer Joint | | 31 | 30 | 56 | | 61.5 | I |
| | 2015.07-2022.06 | 8AT/6MT | R | L/R | SUV 4WD B47 C20 A;B47 C20 B | | GCI81658 | Inner Joint | | 27 | 30 | 43.7 | 87 | 100 | |
| | 2015.07-2022.06 | 8AT | F | L | SUV Van 4WD B47 C20 A;B47 C20 B | For Engine code:B47C20A,Diameter:25mm | GDS82177 | Drive Shaft | | 31 | 28 | 56 | | 538 | |
| | 2015.07-2022.06 | 8AT | F | R | SUV Van 4WD B47 C20 A;B47 C20 B | For Engine code:B47C20A | GDS82633 | Drive Shaft | | 31 | 35 | 56 | | 499 | |
| | 2015.07-2022.06 | 8AT | F | L/R | SUV Van 4WD B47 C20 A;B47 C20 B | For Engine code:B47C20A | GCO81684 | Outer Joint | | 31 | 28 | 56 | | 77 | M |
| | 2015.07-2022.06 | 8AT | F | L | SUV Van 4WD B47 C20 A;B47 C20 B | For Engine code:B47C20A,Diameter:25mm | GCI81659 | Inner Joint | | 28 | 28 | 33 | 66 | 93.5 | |
| | 2015.07-2022.06 | 8AT | F | R | SUV Van 4WD B47 C20 A;B47 C20 B | For Engine code:B47C20A | GCI81924 | Inner Joint | | 35 | 28 | 44.5 | | 126 | |
| | 2015.07-2022.06 | 8AT | R | L/R | SUV Van 4WD B47 C20 A;B47 C20 B | Diameter:24mm | GDS82176 | Drive Shaft | | 31 | 27 | 56 | | 731 | |
| | 2015.07-2022.06 | 8AT | R | L/R | SUV Van 4WD B47 C20 A;B47 C20 B | | GCO81685 | Outer Joint | | 31 | 30 | 56 | | 61.5 | I |
| | 2015.07-2022.06 | 8AT | R | L/R | SUV Van 4WD B47 C20 A;B47 C20 B | | GCI81658 | Inner Joint | | 27 | 30 | 43.7 | 87 | 100 | |
| **X1 xDrive 20i** | | | | | | | | | | | | | | | |
| 2.0 (131 kw) | 2020.11-2022.06 | 8AT | R | L/R | SUV 4WD B48 A20 A;B48 A20 F | | GDS82176 | Drive Shaft | | 31 | 27 | 56 | | 731 | |
| | 2020.11-2022.06 | 8AT | R | L/R | SUV 4WD B48 A20 A;B48 A20 F | | GCO81685 | Outer Joint | | 31 | 30 | 56 | | 61.5 | I |
| | 2020.11-2022.06 | 8AT | R | L/R | SUV 4WD B48 A20 A;B48 A20 F | | GCI81658 | Inner Joint | | 27 | 30 | 43.7 | 87 | 100 | |
| 2.0 (135 kw) | 2011.09-2015.06 | 8AT/6MT | F | L | SUV 4WD N20 B20 A | | GDS82058 | Drive Shaft | | 31 | 27 | 55.8 | | 500 | |
| | 2011.09-2015.06 | 8AT/6MT | F | R | SUV 4WD N20 B20 A | | GDS82059 | Drive Shaft | | 31 | 27 | 55.8 | | 822 | |
| | 2011.09-2015.06 | 8AT/6MT | F | L/R | SUV 4WD N20 B20 A | | GCO81603 | Outer Joint | | 31 | 33 | 55.8 | | 69.5 | M |
| | 2011.09-2015.06 | 8AT/6MT | F | L | SUV 4WD N20 B20 A | | GCI85066 | Inner Joint | | 27 | 24 | 43.95 | 53.5 | 126.5 | |
| | 2011.09-2015.06 | 8AT/6MT | F | R | SUV 4WD N20 B20 A | | GCI85067 | Inner Joint | | 27 | 24 | 43.95 | 376 | 126 | |
| | 2011.09-2015.06 | 8AT | R | L | SUV 4WD N20 B20 A | | GDS85135 | Drive Shaft | | 30 | | 58.7 | 73 | 618 | |
| | 2011.09-2015.06 | 8AT | R | R | SUV 4WD N20 B20 A | | GDS85134 | Drive Shaft | | 30 | | 58.7 | 73 | 665 | |
| | 2011.09-2015.06 | 8AT | R | L/R | SUV 4WD N20 B20 A | | GCI35025 | Inner Joint | | | 25 | | | 26 | |
| 2.0 (141 kw) | 2015.07-2022.06 | 8AT | F | L | SUV 4WD B48 A20 B;B48 A20 A;B48 A20 F | Date to:2018.02 | GDS82177 | Drive Shaft | | 31 | 28 | 56 | | 538 | |
| | 2015.07-2022.06 | 8AT | F | R | SUV 4WD B48 A20 B;B48 A20 A;B48 A20 F | Date to:2018.02 | GDS82633 | Drive Shaft | | 31 | 35 | 56 | | 499 | |
| | 2015.07-2022.06 | 8AT | F | L/R | SUV 4WD B48 A20 B;B48 A20 A;B48 A20 F | Date to:2018.02 | GCO81684 | Outer Joint | | 31 | 28 | 56 | | 77 | M |
| | 2015.07-2022.06 | 8AT | F | L | SUV 4WD B48 A20 B;B48 A20 A;B48 A20 F | Date to:2018.02 | GCI81659 | Inner Joint | | 28 | 28 | 33 | 66 | 93.5 | |
| | 2015.07-2022.06 | 8AT | F | R | SUV 4WD B48 A20 B;B48 A20 A;B48 A20 F | Date to:2018.02 | GCI81924 | Inner Joint | | 35 | 28 | 44.5 | | 126 | |
| | 2015.07-2022.06 | 8AT | R | L/R | SUV 4WD B48 A20 B;B48 A20 A;B48 A20 F | | GDS82176 | Drive Shaft | | 31 | 27 | 56 | | 731 | |
| | 2015.07-2022.06 | 8AT | R | L/R | SUV 4WD B48 A20 B;B48 A20 A;B48 A20 F | | GCO81685 | Outer Joint | | 31 | 30 | 56 | | 61.5 | I |
| | 2015.07-2022.06 | 8AT | R | L/R | SUV 4WD B48 A20 B;B48 A20 A;B48 A20 F | | GCI81658 | Inner Joint | | 27 | 30 | 43.7 | 87 | 100 | |
| **X1 xDrive 23d** | | | | | | | | | | | | | | | |
| 2.0 (150 kw) | 2009.10-2015.06 | 6AT/6MT | F | L | SUV 4WD N47 D20 D | | GDS82058 | Drive Shaft | | 31 | 27 | 55.8 | | 500 | |
| | 2009.10-2015.06 | 6AT/6MT | F | R | SUV 4WD N47 D20 D | | GDS82059 | Drive Shaft | | 31 | 27 | 55.8 | | 822 | |
| | 2009.10-2015.06 | 6AT/6MT | F | L/R | SUV 4WD N47 D20 D | | GCO81603 | Outer Joint | | 31 | 33 | 55.8 | | 69.5 | M |
| | 2009.10-2015.06 | 6AT/6MT | F | L | SUV 4WD N47 D20 D | | GCI85066 | Inner Joint | | 27 | 24 | 43.95 | 53.5 | 126.5 | |
| | 2009.10-2015.06 | 6AT/6MT | F | R | SUV 4WD N47 D20 D | | GCI85067 | Inner Joint | | 27 | 24 | 43.95 | 376 | 126 | |
| | 2009.10-2015.06 | 6AT | R | L | SUV 4WD N47 D20 D | | GDS85135 | Drive Shaft | | 30 | | 58.7 | 73 | 618 | |
| | 2009.10-2015.06 | 6AT | R | R | SUV 4WD N47 D20 D | | GDS85134 | Drive Shaft | | 30 | | 58.7 | 73 | 665 | |
| | 2009.10-2015.06 | 6AT | R | L/R | SUV 4WD N47 D20 D | | GCI35025 | Inner Joint | | | 25 | | | 26 | |
| 2.0 (155 kw) | 2022.07- | 7DCT | F | L | SUV 4WD B47 C20 B | For vehicles with M-technology;For vehicles with Adaptive Drive | GDS57952 | Drive Shaft | | 37 | 27 | 65 | | 538 | |
| | 2022.07- | 7DCT | F | R | SUV 4WD B47 C20 B | For vehicles with M-technology | GDS58026 | Drive Shaft | | 37 | 35 | 65 | | 495 | |
| | 2022.07- | 7DCT | F | L/R | SUV 4WD B47 C20 B | For vehicles with M-technology;For vehicles with Adaptive Drive | GCO83810 | Outer Joint | | 37 | 28 | 65 | | 76.5 | M |

| | YEAR | TRANSM. | F/R | L/R | BODY STYLE & DRIVE TYPE & ENGINE | REMARKS | G-AP Ref. | PRODUCT | ABS | Technical Specifications A | B | C | H | L | P |
|---|---|---|---|---|---|---|---|---|---|---|---|---|---|---|---|
| **BMW** | | | | | | | | | | | | | | | |
| **X1 xDrive 23d** | | | | | | | | | | | | | | | |
| 2.0 (155 kw) | 2022.07- | 7DCT | F | L | SUV 4WD B47 C20 B | For vehicles with M-technology;For vehicles with Adaptive Drive | GCI83960 | Inner Joint | | 27 | 29 | 35 | 73 | 114 | |
| | 2022.07- | 7DCT | F | R | SUV 4WD B47 C20 B | For vehicles with M-technology | GCI83983 | Inner Joint | | 35 | 29 | 44.8 | | 133.5 | |
| **X1 xDrive 23i** | | | | | | | | | | | | | | | |
| 2.0 (160 kw) | 2022.07- | 7DCT | F | L | SUV 4WD B48 A20 P | For vehicles with M-technology;For vehicles with Adaptive Drive | GDS57952 | Drive Shaft | | 37 | 27 | 65 | | 538 | |
| | 2022.07- | 7DCT | F | R | SUV 4WD B48 A20 P | For vehicles with M-technology | GDS58026 | Drive Shaft | | 37 | 35 | 65 | | 495 | |
| | 2022.07- | 7DCT | F | L/R | SUV 4WD B48 A20 P | For vehicles with M-technology;For vehicles with Adaptive Drive | GCO83810 | Outer Joint | | 37 | 28 | 65 | | 76.5 | M |
| | 2022.07- | 7DCT | F | L | SUV 4WD B48 A20 P | For vehicles with M-technology;For vehicles with Adaptive Drive | GCI83960 | Inner Joint | | 27 | 29 | 35 | 73 | 114 | |
| | 2022.07- | 7DCT | F | R | SUV 4WD B48 A20 P | For vehicles with M-technology | GCI83983 | Inner Joint | | 35 | 29 | 44.8 | | 133.5 | |
| **X1 xDrive 25d** | | | | | | | | | | | | | | | |
| 2.0 (160 kw) | 2009.10-2015.06 | 8AT/6MT | F | L | SUV 4WD N47 D20 D | | GDS82058 | Drive Shaft | | 31 | 27 | 55.8 | | 500 | |
| | 2009.10-2015.06 | 8AT/6MT | F | R | SUV 4WD N47 D20 D | | GDS82059 | Drive Shaft | | 31 | 27 | 55.8 | | 822 | |
| | 2009.10-2015.06 | 8AT/6MT | F | L/R | SUV 4WD N47 D20 D | | GCO81603 | Outer Joint | | 31 | 33 | 55.8 | | 69.5 | M |
| | 2009.10-2015.06 | 8AT/6MT | F | L | SUV 4WD N47 D20 D | | GCI85066 | Inner Joint | | 27 | 24 | 43.95 | 53.5 | 126.5 | |
| | 2009.10-2015.06 | 8AT/6MT | F | R | SUV 4WD N47 D20 D | | GCI85067 | Inner Joint | | 27 | 24 | 43.95 | 376 | 126 | |
| | 2009.10-2015.06 | 8AT | R | L | SUV 4WD N47 D20 D | | GDS85135 | Drive Shaft | | 30 | | 58.7 | 73 | 618 | |
| | 2009.10-2015.06 | 8AT | R | R | SUV 4WD N47 D20 D | | GDS85134 | Drive Shaft | | 30 | | 58.7 | 73 | 665 | |
| | 2009.10-2015.06 | 8AT | R | L/R | SUV 4WD N47 D20 D | | GCI35025 | Inner Joint | | | 25 | | | 26 | |
| 2.0 (170 kw) | 2014.11-2022.05 | 8AT | F | L | SUV 4WD B47 C20 B | Date to:2019.06 | GDS82177 | Drive Shaft | | 31 | 28 | 56 | | 538 | |
| | 2014.11-2022.05 | 8AT | F | R | SUV 4WD B47 C20 B | Date to:2019.06 | GDS82633 | Drive Shaft | | 31 | 35 | 56 | | 499 | |
| | 2014.11-2022.05 | 8AT | F | L/R | SUV 4WD B47 C20 B | Date to:2019.06 | GCO81684 | Outer Joint | | 31 | 28 | 56 | | 77 | M |
| | 2014.11-2022.05 | 8AT | F | L | SUV 4WD B47 C20 B | Date to:2019.06 | GCI81659 | Inner Joint | | 28 | 28 | 33 | 66 | 93.5 | |
| | 2014.11-2022.05 | 8AT | F | R | SUV 4WD B47 C20 B | Date to:2019.06 | GCI81924 | Inner Joint | | 35 | 28 | 44.5 | | 126 | |
| | 2014.11-2022.05 | 8AT | R | L/R | SUV 4WD B47 C20 B | | GDS82176 | Drive Shaft | | 31 | 27 | 56 | | 731 | |
| | 2014.11-2022.05 | 8AT | R | L/R | SUV 4WD B47 C20 B | | GCO81685 | Outer Joint | | 31 | 30 | 56 | | 61.5 | I |
| | 2014.11-2022.05 | 8AT | R | L/R | SUV 4WD B47 C20 B | | GCI81658 | Inner Joint | | 27 | 30 | 43.7 | 87 | 100 | |
| **X1 xDrive 25e** | | | | | | | | | | | | | | | |
| 1.5 (162 kw) | 2020.03-2022.06 | 6AT | F | L | SUV 4WD B38 A15 A | | GDS83712 | Drive Shaft | | 31 | 26 | 56 | | 541 | |
| | 2020.03-2022.06 | 6AT | F | R | SUV 4WD B38 A15 A | | GDS83713 | Drive Shaft | | 31 | 26 | 56 | | 905 | |
| | 2020.03-2022.06 | 6AT | R | L | SUV 4WD B38 A15 A | | GDS56104 | Drive Shaft | | 31 | 25 | 56 | | 752 | |
| | 2020.03-2022.06 | 6AT | R | R | SUV 4WD B38 A15 A | | GDS56103 | Drive Shaft | | 31 | 25 | 56 | | 703 | |
| | 2020.03-2022.06 | 6AT | R | L/R | SUV 4WD B38 A15 A | | GCO81685 | Outer Joint | | 31 | 30 | 56 | | 61.5 | I |
| | 2020.03-2022.06 | 6AT | R | L | SUV 4WD B38 A15 A | | GCI82921 | Inner Joint | | 25 | 30 | 39.95 | 59 | 96.5 | |
| | 2020.03-2022.06 | 6AT | R | R | SUV 4WD B38 A15 A | | GCI82920 | Inner Joint | | 25 | 30 | 39.95 | 74.5 | 99.5 | |
| **X1 xDrive 25i** | | | | | | | | | | | | | | | |
| 2.0 (170 kw) | 2015.07-2021.10 | 8AT | F | L | SUV 4WD B48 A20 B;B46 A20 B;B42 S20 A | Date to:2017.10 | GDS82177 | Drive Shaft | | 31 | 28 | 56 | | 538 | |
| | 2015.07-2021.10 | 8AT | F | R | SUV 4WD B48 A20 B;B46 A20 B;B42 S20 A | Date to:2017.10 | GDS82633 | Drive Shaft | | 31 | 35 | 56 | | 499 | |
| | 2015.07-2021.10 | 8AT | F | L/R | SUV 4WD B48 A20 B;B46 A20 B;B42 S20 A | Date to:2017.10 | GCO81684 | Outer Joint | | 31 | 28 | 56 | | 77 | M |
| | 2015.07-2021.10 | 8AT | F | L | SUV 4WD B48 A20 B;B46 A20 B;B42 S20 A | Date to:2017.10 | GCI81659 | Inner Joint | | 28 | 28 | 33 | 66 | 93.5 | |
| | 2015.07-2021.10 | 8AT | F | R | SUV 4WD B48 A20 B;B46 A20 B;B42 S20 A | Date to:2017.10 | GCI81924 | Inner Joint | | 35 | 28 | 44.5 | | 126 | |
| | 2015.07-2021.10 | 8AT | R | L/R | SUV 4WD B48 A20 B;B46 A20 B;B42 S20 A | | GDS82176 | Drive Shaft | | 31 | 27 | 56 | | 731 | |
| | 2015.07-2021.10 | 8AT | R | L/R | SUV 4WD B48 A20 B;B46 A20 B;B42 S20 A | | GCO81685 | Outer Joint | | 31 | 30 | 56 | | 61.5 | I |
| | 2015.07-2021.10 | 8AT | R | L/R | SUV 4WD B48 A20 B;B46 A20 B;B42 S20 A | | GCI81658 | Inner Joint | | 27 | 30 | 43.7 | 87 | 100 | |
| 3.0 (160 kw) | 2010.03-2011.08 | 6AT/6MT | F | L | SUV 4WD N52 B30 A | | GDS82058 | Drive Shaft | | 31 | 27 | 55.8 | | 500 | |
| | 2010.03-2011.08 | 6AT/6MT | F | R | SUV 4WD N52 B30 A | | GDS82059 | Drive Shaft | | 31 | 27 | 55.8 | | 822 | |
| | 2010.03-2011.08 | 6AT/6MT | F | L/R | SUV 4WD N52 B30 A | | GCO81603 | Outer Joint | | 31 | 33 | 55.8 | | 69.5 | M |
| | 2010.03-2011.08 | 6AT/6MT | F | L | SUV 4WD N52 B30 A | | GCI85066 | Inner Joint | | 27 | 24 | 43.95 | 53.5 | 126.5 | |
| | 2010.03-2011.08 | 6AT/6MT | F | R | SUV 4WD N52 B30 A | | GCI85067 | Inner Joint | | 27 | 24 | 43.95 | 376 | 126 | |
| **X1 xDrive 28i** | | | | | | | | | | | | | | | |
| 2.0 (180 kw) | 2011.03-2015.06 | 8AT/6MT | F | L | SUV 4WD N20 B20 A | | GDS82058 | Drive Shaft | | 31 | 27 | 55.8 | | 500 | |
| | 2011.03-2015.06 | 8AT/6MT | F | R | SUV 4WD N20 B20 A | | GDS82059 | Drive Shaft | | 31 | 27 | 55.8 | | 822 | |
| | 2011.03-2015.06 | 8AT/6MT | F | L/R | SUV 4WD N20 B20 A | | GCO81603 | Outer Joint | | 31 | 33 | 55.8 | | 69.5 | M |
| | 2011.03-2015.06 | 8AT/6MT | F | L | SUV 4WD N20 B20 A | | GCI85066 | Inner Joint | | 27 | 24 | 43.95 | 53.5 | 126.5 | |
| | 2011.03-2015.06 | 8AT/6MT | F | R | SUV 4WD N20 B20 A | | GCI85067 | Inner Joint | | 27 | 24 | 43.95 | 376 | 126 | |
| | 2011.03-2015.06 | AT/MT | R | L | SUV 4WD N20 B20 A | | GDS85135 | Drive Shaft | | 30 | | 58.7 | 73 | 618 | |
| | 2011.03-2015.06 | AT/MT | R | R | SUV 4WD N20 B20 A | | GDS85134 | Drive Shaft | | 30 | | 58.7 | 73 | 665 | |
| | 2011.03-2015.06 | AT/MT | R | L/R | SUV 4WD N20 B20 A | Wheel Side | GCI85036 | Outer Joint | | 30 | 25 | 58.7 | 73 | 58 | I |
| | 2011.03-2015.06 | AT/MT | R | L/R | SUV 4WD N20 B20 A | | GCI35025 | Inner Joint | | | 25 | | | 26 | |
| | 2011.04-2015.06 | AT/MT | R | L | SUV 4WD N20 B20 A | | GCI85036 | Outer Joint | | 30 | 25 | 58.7 | 73 | 58 | I |
| | 2011.04-2015.06 | AT/MT | R | L | SUV 4WD N20 B20 A | | GCI35025 | Inner Joint | | | 25 | | | 26 | |
| 3.0 (190 kw) | 2009.09-2011.08 | 6AT/6MT | F | L | SUV 4WD N52 B30 A | | GDS82058 | Drive Shaft | | 31 | 27 | 55.8 | | 500 | |
| | 2009.09-2011.08 | 6AT/6MT | F | R | SUV 4WD N52 B30 A | | GDS82059 | Drive Shaft | | 31 | 27 | 55.8 | | 822 | |
| | 2009.09-2011.08 | 6AT/6MT | F | L/R | SUV 4WD N52 B30 A | | GCO81603 | Outer Joint | | 31 | 33 | 55.8 | | 69.5 | M |
| | 2009.09-2011.08 | 6AT/6MT | F | L | SUV 4WD N52 B30 A | | GCI85066 | Inner Joint | | 27 | 24 | 43.95 | 53.5 | 126.5 | |
| | 2009.09-2011.08 | 6AT/6MT | F | R | SUV 4WD N52 B30 A | | GCI85067 | Inner Joint | | 27 | 24 | 43.95 | 376 | 126 | |
| 3.0 (194 kw) | 2010.03-2011.06 | 6AT | F | L | SUV 4WD N52 B30 A | | GDS82058 | Drive Shaft | | 31 | 27 | 55.8 | | 500 | |

| | YEAR | TRANSM. | F/R | L/R | BODY STYLE & DRIVE TYPE & ENGINE | REMARKS | G-AP Ref. | PRODUCT | ABS | Technical Specifications A | B | C | H | L | P |
|---|---|---|---|---|---|---|---|---|---|---|---|---|---|---|---|
| **BMW** | | | | | | | | | | | | | | | |
| **X1 xDrive 28i** | | | | | | | | | | | | | | | |
| 3.0 (194 kw) | 2010.03-2011.06 | 6AT | F | R | SUV 4WD N52 B30 A | | GDS82059 | Drive Shaft | | 31 | 27 | 55.8 | | 822 | |
| | 2010.03-2011.06 | 6AT | F | L/R | SUV 4WD N52 B30 A | | GCO81603 | Outer Joint | | 31 | 33 | 55.8 | | 69.5 | M |
| | 2010.03-2011.06 | 6AT | F | L | SUV 4WD N52 B30 A | | GCI85066 | Inner Joint | | 27 | 24 | 43.95 | 53.5 | 126.5 | |
| | 2010.03-2011.06 | 6AT | F | R | SUV 4WD N52 B30 A | | GCI85067 | Inner Joint | | 27 | 24 | 43.95 | 376 | 126 | |
| **X1 xDrive 30i** | | | | | | | | | | | | | | | |
| EV (225 kw) | 2023.10- | ET | F | L | SUV 4WD XE2 | | GDS57978 | Drive Shaft | | 37 | 27 | 65 | | 584 | |
| | 2023.10- | ET | F | R | SUV 4WD XE2 | | GDS57926 | Drive Shaft | | 37 | 27 | 65 | | 890 | |
| | 2023.10- | ET | F | L/R | SUV 4WD XE2 | | GCO83795 | Outer Joint | | 37 | 26 | 65 | | 74 | M |
| | 2023.10- | ET | F | L | SUV 4WD XE2 | | GCI83973 | Inner Joint | | 27 | 32 | 43.9 | 70 | 104.5 | |
| | 2023.10- | ET | F | R | SUV 4WD XE2 | | GCI83935 | Inner Joint | | 27 | 32 | 43.9 | 393 | 88 | |
| **X2 sDrive 16d** | | | | | | | | | | | | | | | |
| 1.5 (85 kw) | 2018.11-2023.10 | 6MT | F | L | SUV FWD B37 C15 A | | GDS84525 | Drive Shaft | | 31 | 37 | 56 | | 548 | |
| | 2018.11-2023.10 | 6MT | F | R | SUV FWD B37 C15 A | | GDS84526 | Drive Shaft | | 31 | 37 | 56 | | 929 | |
| | 2018.11-2023.10 | 6MT | F | L/R | SUV FWD B37 C15 A | | GCO81811 | Outer Joint | | 31 | 33 | 56 | | 70 | I |
| | 2018.11-2023.10 | 6MT | F | L | SUV FWD B37 C15 A | | GCI82835 | Inner Joint | | 37 | 33 | 35 | 58 | 108.5 | |
| | 2018.11-2023.10 | 6MT | F | R | SUV FWD B37 C15 A | | GCI82836 | Inner Joint | | 37 | 33 | 35 | 414 | 103.5 | |
| | 2018.11-2023.10 | 7DCT | F | L | SUV FWD B37 C15 A | | GDS84222 | Drive Shaft | | 31 | 27 | 56 | | 547 | |
| | 2018.11-2023.10 | 7DCT | F | R | SUV FWD B37 C15 A | | GDS84221 | Drive Shaft | | 31 | 27 | 56 | | 938 | |
| | 2018.11-2023.10 | 7DCT | F | L/R | SUV FWD B37 C15 A | | GCO82738 | Outer Joint | | 31 | 26 | 56 | | 73.5 | M |
| | 2018.11-2023.10 | 7DCT | F | L | SUV FWD B37 C15 A | | GCI82649 | Inner Joint | | 27 | 32 | 35 | 58 | 102 | |
| | 2018.11-2023.10 | 7DCT | F | R | SUV FWD B37 C15 A | | GCI82648 | Inner Joint | | 27 | 32 | 35 | 420 | 89 | |
| **X2 sDrive 18d** | | | | | | | | | | | | | | | |
| 2.0 (100 kw) | 2018.03-2023.10 | 6MT | F | L | SUV FWD B47 C20 A;B47 C20 B | | GDS56905 | Drive Shaft | | 31 | 37 | 56 | | 546 | |
| | 2018.03-2023.10 | 6MT | F | R | SUV FWD B47 C20 A;B47 C20 B | | GDS56579 | Drive Shaft | | 31 | 37 | 56 | | 931 | |
| | 2018.03-2023.10 | 6MT | F | L/R | SUV FWD B47 C20 A;B47 C20 B | | GCO83263 | Outer Joint | | 31 | 26 | 56 | | 73.5 | M |
| | 2018.03-2023.10 | 6MT | F | L | SUV FWD B47 C20 A;B47 C20 B | | GCI83553 | Inner Joint | | 37 | 32 | 35 | 58 | 102 | |
| | 2018.03-2023.10 | 6MT | F | R | SUV FWD B47 C20 A;B47 C20 B | | GCI83386 | Inner Joint | | 37 | 32 | 35 | 450 | 90 | |
| | 2018.03-2023.10 | 8AT | F | L | SUV FWD B47 C20 A;B47 C20 B | Diameter:25mm | GDS82177 | Drive Shaft | | 31 | 28 | 56 | | 538 | |
| | 2018.03-2023.10 | 8AT | F | R | SUV FWD B47 C20 A;B47 C20 B | | GDS84087 | Drive Shaft | | 31 | 28 | 56 | | 904 | |
| | 2018.03-2023.10 | 8AT | F | L/R | SUV FWD B47 C20 A;B47 C20 B | | GCO81684 | Outer Joint | | 31 | 28 | 56 | | 77 | M |
| | 2018.03-2023.10 | 8AT | F | L | SUV FWD B47 C20 A;B47 C20 B | Diameter:25mm | GCI81659 | Inner Joint | | 28 | 28 | 33 | 66 | 93.5 | |
| | 2018.03-2023.10 | 8AT | F | R | SUV FWD B47 C20 A;B47 C20 B | | GCI82517 | Inner Joint | | 28 | 28 | 33 | 425 | 106.5 | |
| 2.0 (110 kw) | 2018.03-2023.10 | 6MT | F | L | SUV FWD B47 C20 A;B47 C20 B | | GDS56905 | Drive Shaft | | 31 | 37 | 56 | | 546 | |
| | 2018.03-2023.10 | 6MT | F | R | SUV FWD B47 C20 A;B47 C20 B | | GDS56579 | Drive Shaft | | 31 | 37 | 56 | | 931 | |
| | 2018.03-2023.10 | 6MT | F | L/R | SUV FWD B47 C20 A;B47 C20 B | | GCO83263 | Outer Joint | | 31 | 26 | 56 | | 73.5 | M |
| | 2018.03-2023.10 | 6MT | F | L | SUV FWD B47 C20 A;B47 C20 B | | GCI83553 | Inner Joint | | 37 | 32 | 35 | 58 | 102 | |
| | 2018.03-2023.10 | 6MT | F | R | SUV FWD B47 C20 A;B47 C20 B | | GCI83386 | Inner Joint | | 37 | 32 | 35 | 450 | 90 | |
| | 2018.03-2023.10 | 8AT | F | L | SUV FWD B47 C20 A;B47 C20 B | | GDS82177 | Drive Shaft | | 31 | 28 | 56 | | 538 | |
| | 2018.03-2023.10 | 8AT | F | R | SUV FWD B47 C20 A;B47 C20 B | | GDS84087 | Drive Shaft | | 31 | 28 | 56 | | 904 | |
| | 2018.03-2023.10 | 8AT | F | L/R | SUV FWD B47 C20 A;B47 C20 B | | GCO81684 | Outer Joint | | 31 | 28 | 56 | | 77 | M |
| | 2018.03-2023.10 | 8AT | F | L | SUV FWD B47 C20 A;B47 C20 B | | GCI81659 | Inner Joint | | 28 | 28 | 33 | 66 | 93.5 | |
| | 2018.03-2023.10 | 8AT | F | R | SUV FWD B47 C20 A;B47 C20 B | | GCI82517 | Inner Joint | | 28 | 28 | 33 | 425 | 106.5 | |
| | 2023.11- | 7DCT | F | L | SUV FWD B47 C20 B | For vehicles with M-technology;For vehicles with Adaptive Drive | GDS57952 | Drive Shaft | | 37 | 27 | 65 | | 538 | |
| | 2023.11- | 7DCT | F | R | SUV FWD B47 C20 B | For vehicles with M-technology;For vehicles with Adaptive Drive | GDS58044 | Drive Shaft | | 37 | 27 | 65 | | 932 | |
| | 2023.11- | 7DCT | F | L/R | SUV FWD B47 C20 B | For vehicles with M-technology;For vehicles with Adaptive Drive | GCO83810 | Outer Joint | | 37 | 28 | 65 | | 76.5 | M |
| | 2023.11- | 7DCT | F | L | SUV FWD B47 C20 B | For vehicles with M-technology;For vehicles with Adaptive Drive | GCI83960 | Inner Joint | | 27 | 29 | 35 | 73 | 114 | |
| | 2023.11- | 7DCT | F | R | SUV FWD B47 C20 B | For vehicles with M-technology;For vehicles with Adaptive Drive | GCI83986 | Inner Joint | | 27 | 29 | 35 | 456 | 114 | |
| **X2 sDrive 18i** | | | | | | | | | | | | | | | |
| 1.5 (100 kw) | 2018.03-2023.10 | 6AT | F | L | SUV FWD B38 A15 A;B32 S15 A;B38A15F | | GDS82177 | Drive Shaft | | 31 | 28 | 56 | | 538 | |
| | 2018.03-2023.10 | 6AT | F | R | SUV FWD B38 A15 A;B32 S15 A;B38A15F | | GDS83713 | Drive Shaft | | 31 | 26 | 56 | | 905 | |
| | 2018.03-2023.10 | 6AT | F | L/R | SUV FWD B38 A15 A;B32 S15 A;B38A15F | | GCO81684 | Outer Joint | | 31 | 28 | 56 | | 77 | M |
| | 2018.03-2023.10 | 6AT | F | L/R | SUV FWD B38 A15 A;B32 S15 A;B38A15F | | GCO82471 | Outer Joint | | 31 | 26 | 56 | | 73.5 | M |
| | 2018.03-2023.10 | 6AT | F | L | SUV FWD B38 A15 A;B32 S15 A;B38A15F | | GCI81659 | Inner Joint | | 28 | 28 | 33 | 66 | 93.5 | |
| | 2018.03-2023.10 | 6AT | F | R | SUV FWD B38 A15 A;B32 S15 A;B38A15F | | GCI82348 | Inner Joint | | 26 | 32 | 31 | 388 | 88 | |
| | 2018.03-2023.10 | 6MT | F | L | SUV FWD B38 A15 A;B32 S15 A;B38A15F | | GDS82631 | Drive Shaft | | 31 | 34 | 56 | | 563 | |
| | 2018.03-2023.10 | 6MT | F | R | SUV FWD B38 A15 A;B32 S15 A;B38A15F | | GDS82632 | Drive Shaft | | 31 | 34 | 56 | | 920 | |
| | 2018.03-2023.10 | 6MT | F | L/R | SUV FWD B38 A15 A;B32 S15 A;B38A15F | | GCO81683 | Outer Joint | | 31 | 33 | 56 | | 71 | M |
| | 2018.03-2023.10 | 6MT | F | L | SUV FWD B38 A15 A;B32 S15 A;B38A15F | | GCI81758 | Inner Joint | | 34 | 33 | 35 | 54.5 | 96 | |
| | 2018.03-2023.10 | 6MT | F | R | SUV FWD B38 A15 A;B32 S15 A;B38A15F | | GCI81917 | Inner Joint | | 34 | 33 | 35 | 401 | 83 | |
| | 2018.03-2023.10 | 7DCT | F | L | SUV FWD B38 A15 A;B32 S15 A;B38A15F | | GDS84222 | Drive Shaft | | 31 | 27 | 56 | | 547 | |
| | 2018.03-2023.10 | 7DCT | F | R | SUV FWD B38 A15 A;B32 S15 A;B38A15F | | GDS84221 | Drive Shaft | | 31 | 27 | 56 | | 938 | |
| | 2018.03-2023.10 | 7DCT | F | L/R | SUV FWD B38 A15 A;B32 S15 A;B38A15F | | GCO82738 | Outer Joint | | 31 | 26 | 56 | | 73.5 | M |
| | 2018.03-2023.10 | 7DCT | F | L | SUV FWD B38 A15 A;B32 S15 A;B38A15F | | GCI82649 | Inner Joint | | 27 | 32 | 35 | 58 | 102 | |
| | 2018.03-2023.10 | 7DCT | F | R | SUV FWD B38 A15 A;B32 S15 A;B38A15F | | GCI82648 | Inner Joint | | 27 | 32 | 35 | 420 | 89 | |
| 1.5 (103 kw) | 2018.03-2023.10 | 6MT | F | L | SUV FWD B38 A15 A | | GDS82631 | Drive Shaft | | 31 | 34 | 56 | | 563 | |

| | YEAR | TRANSM. | F/R | L/R | BODY STYLE & DRIVE TYPE & ENGINE | REMARKS | G-AP Ref. | PRODUCT | ABS | Technical Specifications A | B | C | H | L | P |
|---|---|---|---|---|---|---|---|---|---|---|---|---|---|---|---|
| **BMW** | | | | | | | | | | | | | | | |
| **X2 sDrive 18i** | | | | | | | | | | | | | | | |
| 1.5 (103 kw) | 2018.03-2023.10 | 6MT | F | R | SUV FWD B38 A15 A | | GDS82632 | Drive Shaft | | 31 | 34 | 56 | | 920 | |
| | 2018.03-2023.10 | 6MT | F | L/R | SUV FWD B38 A15 A | | GCO81683 | Outer Joint | | 31 | 33 | 56 | | 71 | M |
| | 2018.03-2023.10 | 6MT | F | L | SUV FWD B38 A15 A | | GCI81758 | Inner Joint | | 34 | 33 | 35 | 54.5 | 96 | |
| | 2018.03-2023.10 | 6MT | F | R | SUV FWD B38 A15 A | | GCI81917 | Inner Joint | | 34 | 33 | 35 | 401 | 83 | |
| | 2018.03-2023.10 | 7DCT | F | L | SUV FWD B38 A15 A | | GDS84222 | Drive Shaft | | 31 | 27 | 56 | | 547 | |
| | 2018.03-2023.10 | 7DCT | F | R | SUV FWD B38 A15 A | | GDS84221 | Drive Shaft | | 31 | 27 | 56 | | 938 | |
| | 2018.03-2023.10 | 7DCT | F | L/R | SUV FWD B38 A15 A | | GCO82738 | Outer Joint | | 31 | 26 | 56 | | 73.5 | M |
| | 2018.03-2023.10 | 7DCT | F | L | SUV FWD B38 A15 A | | GCI82649 | Inner Joint | | 27 | 32 | 35 | 58 | 102 | |
| | 2018.03-2023.10 | 7DCT | F | R | SUV FWD B38 A15 A | | GCI82648 | Inner Joint | | 27 | 32 | 35 | 420 | 89 | |
| **X2 sDrive 20d** | | | | | | | | | | | | | | | |
| 2.0 (120 kw) | 2018.11-2023.10 | 8AT | F | L | SUV FWD B47 C20 A;B47 C20 B | For Engine code:B47C20A,Diameter:25mm | GDS82177 | Drive Shaft | | 31 | 28 | 56 | | 538 | |
| | 2018.11-2023.10 | 8AT | F | R | SUV FWD B47 C20 A;B47 C20 B | | GDS84087 | Drive Shaft | | 31 | 28 | 56 | | 904 | |
| | 2018.11-2023.10 | 8AT | F | L/R | SUV FWD B47 C20 A;B47 C20 B | For Engine code:B47C20A | GCO81684 | Outer Joint | | 31 | 28 | 56 | | 77 | M |
| | 2018.11-2023.10 | 8AT | F | L | SUV FWD B47 C20 A;B47 C20 B | For Engine code:B47C20A,Diameter:25mm | GCI81659 | Inner Joint | | 28 | 28 | 33 | 66 | 93.5 | |
| | 2018.11-2023.10 | 8AT | F | R | SUV FWD B47 C20 A;B47 C20 B | For Engine Code:B47C20A | GCI82517 | Inner Joint | | 28 | 28 | 33 | 425 | 106.5 | |
| 2.0 (140 kw) | 2018.11-2023.10 | 8AT | F | L | SUV FWD B47 C20 A;B47 C20 B | For Engine code:B47C20A | GDS82177 | Drive Shaft | | 31 | 28 | 56 | | 538 | |
| | 2018.11-2023.10 | 8AT | F | R | SUV FWD B47 C20 A;B47 C20 B | | GDS84087 | Drive Shaft | | 31 | 28 | 56 | | 904 | |
| | 2018.11-2023.10 | 8AT | F | L/R | SUV FWD B47 C20 A;B47 C20 B | For Engine code:B47C20A | GCO81684 | Outer Joint | | 31 | 28 | 56 | | 77 | M |
| | 2018.11-2023.10 | 8AT | F | L | SUV FWD B47 C20 A;B47 C20 B | For Engine code:B47C20A | GCI81659 | Inner Joint | | 28 | 28 | 33 | 66 | 93.5 | |
| | 2018.11-2023.10 | 8AT | F | R | SUV FWD B47 C20 A;B47 C20 B | For Engine code:B47C20A | GCI82517 | Inner Joint | | 28 | 28 | 33 | 425 | 106.5 | |
| **X2 sDrive 20i** | | | | | | | | | | | | | | | |
| 2.0 (131 kw) | 2020.11-2023.10 | 7AT | F | L | SUV FWD B48 A20 A;B48 A20 F | | GDS84222 | Drive Shaft | | 31 | 27 | 56 | | 547 | |
| | 2020.11-2023.10 | 7AT | F | R | SUV FWD B48 A20 A;B48 A20 F | | GDS84223 | Drive Shaft | | 31 | 27 | 56 | | 936 | |
| | 2020.11-2023.10 | 7AT | F | L/R | SUV FWD B48 A20 A;B48 A20 F | | GCO82738 | Outer Joint | | 31 | 26 | 56 | | 73.5 | M |
| | 2020.11-2023.10 | 7AT | F | L | SUV FWD B48 A20 A;B48 A20 F | | GCI82649 | Inner Joint | | 27 | 32 | 35 | 58 | 102 | |
| | 2020.11-2023.10 | 7AT | F | R | SUV FWD B48 A20 A;B48 A20 F | | GCI82650 | Inner Joint | | 27 | 32 | 35 | 456 | 89 | |
| 2.0 (141 kw) | 2017.11-2023.10 | 7DCT | F | L | SUV FWD B48 A20 A;B42 S20 A | | GDS84222 | Drive Shaft | | 31 | 27 | 56 | | 547 | |
| | 2017.11-2023.10 | 7DCT | F | R | SUV FWD B48 A20 A;B42 S20 A | | GDS84223 | Drive Shaft | | 31 | 27 | 56 | | 936 | |
| | 2017.11-2023.10 | 7DCT | F | L/R | SUV FWD B48 A20 A;B42 S20 A | | GCO82738 | Outer Joint | | 31 | 26 | 56 | | 73.5 | M |
| | 2017.11-2023.10 | 7DCT | F | L | SUV FWD B48 A20 A;B42 S20 A | | GCI82649 | Inner Joint | | 27 | 32 | 35 | 58 | 102 | |
| | 2017.11-2023.10 | 7DCT | F | R | SUV FWD B48 A20 A;B42 S20 A | | GCI82650 | Inner Joint | | 27 | 32 | 35 | 456 | 89 | |
| | 2017.11-2023.10 | 8AT | F | L | SUV FWD B48 A20 A;B42 S20 A | | GDS82177 | Drive Shaft | | 31 | 28 | 56 | | 538 | |
| | 2017.11-2023.10 | 8AT | F | R | SUV FWD B48 A20 A;B42 S20 A | | GDS84087 | Drive Shaft | | 31 | 28 | 56 | | 904 | |
| | 2017.11-2023.10 | 8AT | F | L/R | SUV FWD B48 A20 A;B42 S20 A | | GCO81684 | Outer Joint | | 31 | 28 | 56 | | 77 | M |
| | 2017.11-2023.10 | 8AT | F | L | SUV FWD B48 A20 A;B42 S20 A | | GCI81659 | Inner Joint | | 28 | 28 | 33 | 66 | 93.5 | |
| | 2017.11-2023.10 | 8AT | F | R | SUV FWD B48 A20 A;B42 S20 A | | GCI82517 | Inner Joint | | 28 | 28 | 33 | 425 | 106.5 | |
| **X2 xDrive 18d** | | | | | | | | | | | | | | | |
| 2.0 (100 kw) | 2018.03-2023.10 | 6MT | F | R | SUV 4WD B47 C20 A;B47 C20 B | | GDS82633 | Drive Shaft | | 31 | 35 | 56 | | 499 | |
| | 2018.03-2023.10 | 6MT | F | R | SUV 4WD B47 C20 A;B47 C20 B | | GCO81684 | Outer Joint | | 31 | 28 | 56 | | 77 | M |
| | 2018.03-2023.10 | 6MT | F | R | SUV 4WD B47 C20 A;B47 C20 B | | GCI81924 | Inner Joint | | 35 | 28 | 44.5 | | 126 | |
| | 2018.03-2023.10 | 6MT | R | L/R | SUV 4WD B47 C20 A;B47 C20 B | | GDS82176 | Drive Shaft | | 31 | 27 | 56 | | 731 | |
| | 2018.03-2023.10 | 6MT | R | L/R | SUV 4WD B47 C20 A;B47 C20 B | | GCO81685 | Outer Joint | | 31 | 30 | 56 | | 61.5 | I |
| | 2018.03-2023.10 | 6MT | R | L/R | SUV 4WD B47 C20 A;B47 C20 B | | GCI81658 | Inner Joint | | 27 | 30 | 43.7 | 87 | 100 | |
| 2.0 (110 kw) | 2018.03-2023.10 | 8AT | F | L | SUV 4WD B47 C20 B | | GDS82177 | Drive Shaft | | 31 | 28 | 56 | | 538 | |
| | 2018.03-2023.10 | 8AT | F | L | SUV 4WD B47 C20 B | | GCI81659 | Inner Joint | | 28 | 28 | 33 | 66 | 93.5 | |
| | 2018.03-2023.10 | 8AT/6MT | F | R | SUV 4WD B47 C20 B | | GDS82633 | Drive Shaft | | 31 | 35 | 56 | | 499 | |
| | 2018.03-2023.10 | 8AT/6MT | F | L/R | SUV 4WD B47 C20 B | | GCO81684 | Outer Joint | | 31 | 28 | 56 | | 77 | M |
| | 2018.03-2023.10 | 8AT/6MT | F | R | SUV 4WD B47 C20 B | | GCI81924 | Inner Joint | | 35 | 28 | 44.5 | | 126 | |
| | 2018.03-2023.10 | 8AT/6MT | R | L/R | SUV 4WD B47 C20 B | | GDS82176 | Drive Shaft | | 31 | 27 | 56 | | 731 | |
| | 2018.03-2023.10 | 8AT/6MT | R | L/R | SUV 4WD B47 C20 B | | GCO81685 | Outer Joint | | 31 | 30 | 56 | | 61.5 | I |
| | 2018.03-2023.10 | 8AT/6MT | R | L/R | SUV 4WD B47 C20 B | | GCI81658 | Inner Joint | | 27 | 30 | 43.7 | 87 | 100 | |
| **X2 xDrive 20d** | | | | | | | | | | | | | | | |
| 2.0 (120 kw) | 2017.11-2023.10 | 8AT | F | L | SUV 4WD B47 C20 A;B47 C20 B | Diameter:25mm | GDS82177 | Drive Shaft | | 31 | 28 | 56 | | 538 | |
| | 2017.11-2023.10 | 8AT | F | R | SUV 4WD B47 C20 A;B47 C20 B | | GDS82633 | Drive Shaft | | 31 | 35 | 56 | | 499 | |
| | 2017.11-2023.10 | 8AT | F | L/R | SUV 4WD B47 C20 A;B47 C20 B | | GCO81684 | Outer Joint | | 31 | 28 | 56 | | 77 | M |
| | 2017.11-2023.10 | 8AT | F | L | SUV 4WD B47 C20 A;B47 C20 B | Diameter:25mm | GCI81659 | Inner Joint | | 28 | 28 | 33 | 66 | 93.5 | |
| | 2017.11-2023.10 | 8AT | F | R | SUV 4WD B47 C20 A;B47 C20 B | | GCI81924 | Inner Joint | | 35 | 28 | 44.5 | | 126 | |
| | 2017.11-2023.10 | 8AT | R | L/R | SUV 4WD B47 C20 A;B47 C20 B | | GDS82176 | Drive Shaft | | 31 | 27 | 56 | | 731 | |
| | 2017.11-2023.10 | 8AT | R | L/R | SUV 4WD B47 C20 A;B47 C20 B | | GCO81685 | Outer Joint | | 31 | 30 | 56 | | 61.5 | I |
| | 2017.11-2023.10 | 8AT | R | L/R | SUV 4WD B47 C20 A;B47 C20 B | | GCI81658 | Inner Joint | | 27 | 30 | 43.7 | 87 | 100 | |
| | 2024.03- | 7DCT | F | L | SUV 4WD B47 C20 B | For vehicles with M-technology;For vehicles with Adaptive Drive | GDS57952 | Drive Shaft | | 37 | 27 | 65 | | 538 | |
| | 2024.03- | 7DCT | F | R | SUV 4WD B47 C20 B | For vehicles with M-technology | GDS58026 | Drive Shaft | | 37 | 35 | 65 | | 495 | |
| | 2024.03- | 7DCT | F | L/R | SUV 4WD B47 C20 B | For vehicles with M-technology;For vehicles with Adaptive Drive | GCO83810 | Outer Joint | | 37 | 28 | 65 | | 76.5 | M |
| | 2024.03- | 7DCT | F | L | SUV 4WD B47 C20 B | For vehicles with M-technology;For vehicles with Adaptive Drive | GCI83960 | Inner Joint | | 27 | 29 | 35 | 73 | 114 | |
| | 2024.03- | 7DCT | F | R | SUV 4WD B47 C20 B | For vehicles with M-technology | GCI83983 | Inner Joint | | 35 | 29 | 44.8 | | 133.5 | |

| | YEAR | TRANSM. | F/R | L/R | BODY STYLE & DRIVE TYPE & ENGINE | REMARKS | G-AP Ref. | PRODUCT | ABS | Technical Specifications A | B | C | H | L | P |
|---|---|---|---|---|---|---|---|---|---|---|---|---|---|---|---|
| **BMW** | | | | | | | | | | | | | | | |
| **X2 xDrive 20d** | | | | | | | | | | | | | | | |
| 2.0 (140 kw) | 2017.11-2023.10 | 8AT | F | L | SUV 4WD B47 C20 A;B47 C20 B | | GDS82177 | Drive Shaft | | 31 | 28 | 56 | | 538 | |
| | 2017.11-2023.10 | 8AT | F | R | SUV 4WD B47 C20 A;B47 C20 B | | GDS82633 | Drive Shaft | | 31 | 35 | 56 | | 499 | |
| | 2017.11-2023.10 | 8AT | F | L/R | SUV 4WD B47 C20 A;B47 C20 B | | GCO81684 | Outer Joint | | 31 | 28 | 56 | | 77 | M |
| | 2017.11-2023.10 | 8AT | F | L | SUV 4WD B47 C20 A;B47 C20 B | | GCI81659 | Inner Joint | | 28 | 28 | 33 | 66 | 93.5 | |
| | 2017.11-2023.10 | 8AT | F | R | SUV 4WD B47 C20 A;B47 C20 B | | GCI81924 | Inner Joint | | 35 | 28 | 44.5 | | 126 | |
| | 2017.11-2023.10 | 8AT | R | L/R | SUV 4WD B47 C20 A;B47 C20 B | | GDS82176 | Drive Shaft | | 31 | 27 | 56 | | 731 | |
| | 2017.11-2023.10 | 8AT | R | L/R | SUV 4WD B47 C20 A;B47 C20 B | | GCO81685 | Outer Joint | | 31 | 30 | 56 | | 61.5 | I |
| | 2017.11-2023.10 | 8AT | R | L/R | SUV 4WD B47 C20 A;B47 C20 B | | GCI81658 | Inner Joint | | 27 | 30 | 43.7 | 87 | 100 | |
| **X2 xDrive 20i** | | | | | | | | | | | | | | | |
| 2.0 (131 kw) | 2020.11-2023.10 | 8AT | F | L | SUV 4WD B48 A20 A | Diameter:25mm | GDS82177 | Drive Shaft | | 31 | 28 | 56 | | 538 | |
| | 2020.11-2023.10 | 8AT | F | L | SUV 4WD B48 A20 A | | GCO81684 | Outer Joint | | 31 | 28 | 56 | | 77 | M |
| | 2020.11-2023.10 | 8AT | F | L | SUV 4WD B48 A20 A | Diameter:25mm | GCI81659 | Inner Joint | | 28 | 28 | 33 | 66 | 93.5 | |
| | 2020.11-2023.10 | 8AT | R | L/R | SUV 4WD B48 A20 A | Diameter:24mm | GDS82176 | Drive Shaft | | 31 | 27 | 56 | | 731 | |
| | 2020.11-2023.10 | 8AT | R | L/R | SUV 4WD B48 A20 A | | GCO81685 | Outer Joint | | 31 | 30 | 56 | | 61.5 | I |
| | 2020.11-2023.10 | 8AT | R | L/R | SUV 4WD B48 A20 A | | GCI81658 | Inner Joint | | 27 | 30 | 43.7 | 87 | 100 | |
| 2.0 (141 kw) | 2018.03-2023.10 | 8AT | F | L | SUV 4WD B48 A20 A;B46 A20 B | | GDS82177 | Drive Shaft | | 31 | 28 | 56 | | 538 | |
| | 2018.03-2023.10 | 8AT | F | R | SUV 4WD B48 A20 A;B46 A20 B | | GDS82633 | Drive Shaft | | 31 | 35 | 56 | | 499 | |
| | 2018.03-2023.10 | 8AT | F | L/R | SUV 4WD B48 A20 A;B46 A20 B | | GCO81684 | Outer Joint | | 31 | 28 | 56 | | 77 | M |
| | 2018.03-2023.10 | 8AT | F | L | SUV 4WD B48 A20 A;B46 A20 B | | GCI81659 | Inner Joint | | 28 | 28 | 33 | 66 | 93.5 | |
| | 2018.03-2023.10 | 8AT | F | R | SUV 4WD B48 A20 A;B46 A20 B | | GCI81924 | Inner Joint | | 35 | 28 | 44.5 | | 126 | |
| | 2018.03-2023.10 | 8AT | R | L/R | SUV 4WD B48 A20 A;B46 A20 B | | GDS82176 | Drive Shaft | | 31 | 27 | 56 | | 731 | |
| | 2018.03-2023.10 | 8AT | R | L/R | SUV 4WD B48 A20 A;B46 A20 B | | GCO81685 | Outer Joint | | 31 | 30 | 56 | | 61.5 | I |
| | 2018.03-2023.10 | 8AT | R | L/R | SUV 4WD B48 A20 A;B46 A20 B | | GCI81658 | Inner Joint | | 27 | 30 | 43.7 | 87 | 100 | |
| **X2 xDrive 25d** | | | | | | | | | | | | | | | |
| 2.0 (170 kw) | 2017.11-2023.09 | 8AT | F | L | SUV 4WD B47 C20 B | Diameter:25mm | GDS82177 | Drive Shaft | | 31 | 28 | 56 | | 538 | |
| | 2017.11-2023.09 | 8AT | F | R | SUV 4WD B47 C20 B | | GDS82633 | Drive Shaft | | 31 | 35 | 56 | | 499 | |
| | 2017.11-2023.09 | 8AT | F | L/R | SUV 4WD B47 C20 B | | GCO81684 | Outer Joint | | 31 | 28 | 56 | | 77 | M |
| | 2017.11-2023.09 | 8AT | F | L | SUV 4WD B47 C20 B | Diameter:25mm | GCI81659 | Inner Joint | | 28 | 28 | 33 | 66 | 93.5 | |
| | 2017.11-2023.09 | 8AT | F | R | SUV 4WD B47 C20 B | | GCI81924 | Inner Joint | | 35 | 28 | 44.5 | | 126 | |
| | 2017.11-2023.09 | 8AT | R | L/R | SUV 4WD B47 C20 B | | GDS82176 | Drive Shaft | | 31 | 27 | 56 | | 731 | |
| | 2017.11-2023.09 | 8AT | R | L/R | SUV 4WD B47 C20 B | | GCO81685 | Outer Joint | | 31 | 30 | 56 | | 61.5 | I |
| | 2017.11-2023.09 | 8AT | R | L/R | SUV 4WD B47 C20 B | | GCI81658 | Inner Joint | | 27 | 30 | 43.7 | 87 | 100 | |
| **X2 xDrive 25e** | | | | | | | | | | | | | | | |
| 1.5 (162 kw) | 2020.03-2023.10 | 6AT | F | L | SUV 4WD B38 A15 A | | GDS83712 | Drive Shaft | | 31 | 26 | 56 | | 541 | |
| | 2020.03-2023.10 | 6AT | F | R | SUV 4WD B38 A15 A | | GDS83713 | Drive Shaft | | 31 | 26 | 56 | | 905 | |
| | 2020.03-2023.10 | 6AT | R | L | SUV 4WD B38 A15 A | | GDS56104 | Drive Shaft | | 31 | 25 | 56 | | 752 | |
| | 2020.03-2023.10 | 6AT | R | R | SUV 4WD B38 A15 A | | GDS56103 | Drive Shaft | | 31 | 25 | 56 | | 703 | |
| | 2020.03-2023.10 | 6AT | R | L/R | SUV 4WD B38 A15 A | | GCO81685 | Outer Joint | | 31 | 30 | 56 | | 61.5 | I |
| | 2020.03-2023.10 | 6AT | R | L | SUV 4WD B38 A15 A | | GCI82921 | Inner Joint | | 25 | 30 | 39.95 | 59 | 96.5 | |
| | 2020.03-2023.10 | 6AT | R | R | SUV 4WD B38 A15 A | | GCI82920 | Inner Joint | | 25 | 30 | 39.95 | 74.5 | 99.5 | |
| **X2 xDrive M35i** | | | | | | | | | | | | | | | |
| 2.0 (221 kw) | 2023.11- | 7DCT | F | L | SUV 4WD B48 A20 H | | GDS57952 | Drive Shaft | | 37 | 27 | 65 | | 538 | |
| | 2023.11- | 7DCT | F | R | SUV 4WD B48 A20 H | | GDS58026 | Drive Shaft | | 37 | 35 | 65 | | 495 | |
| | 2023.11- | 7DCT | F | L/R | SUV 4WD B48 A20 H | | GCO83810 | Outer Joint | | 37 | 28 | 65 | | 76.5 | M |
| | 2023.11- | 7DCT | F | L | SUV 4WD B48 A20 H | | GCI83960 | Inner Joint | | 27 | 29 | 35 | 73 | 114 | |
| | 2023.11- | 7DCT | F | R | SUV 4WD B48 A20 H | | GCI83983 | Inner Joint | | 35 | 29 | 44.8 | | 133.5 | |
| 2.0 (225 kw) | 2018.11-2023.10 | 8AT | F | R | SUV 4WD B48 A20 E | | GDS82633 | Drive Shaft | | 31 | 35 | 56 | | 499 | |
| | 2018.11-2023.10 | 8AT | F | R | SUV 4WD B48 A20 E | | GCO81684 | Outer Joint | | 31 | 28 | 56 | | 77 | M |
| | 2018.11-2023.10 | 8AT | F | R | SUV 4WD B48 A20 E | | GCI81924 | Inner Joint | | 35 | 28 | 44.5 | | 126 | |
| | 2018.11-2023.10 | 8AT | R | L/R | SUV 4WD B48 A20 E | | GDS82176 | Drive Shaft | | 31 | 27 | 56 | | 731 | |
| | 2018.11-2023.10 | 8AT | R | L/R | SUV 4WD B48 A20 E | | GCO81685 | Outer Joint | | 31 | 30 | 56 | | 61.5 | I |
| | 2018.11-2023.10 | 8AT | R | L/R | SUV 4WD B48 A20 E | | GCI81658 | Inner Joint | | 27 | 30 | 43.7 | 87 | 100 | |
| **X3** | | | | | | | | | | | | | | | |
| 2.0 (110 kw) | 2004.09-2007.08 | MT | F | L | SUV 4WD M47 D20 (204D4) | | GDS99215 | Drive Shaft | | 30 | 27 | 64.8 | 77 | 598 | |
| | 2004.09-2007.08 | MT | F | R | SUV 4WD M47 D20 (204D4) | | GDS85078 | Drive Shaft | | 30 | 27 | 64.8 | 77 | 919 | |
| | 2004.09-2007.08 | MT | F | L/R | SUV 4WD M47 D20 (204D4) | | GCO85010 | Outer Joint | | 30 | 33 | 64.8 | 77 | 60 | M |
| | 2004.09-2007.08 | MT | F | L | SUV 4WD M47 D20 (204D4) | | GCI85026 | Inner Joint | | 27 | 24 | 44 | 60 | 114.5 | |
| | 2004.09-2007.08 | AT | R | L | SUV 4WD M47 D20 (204D4) | | GDS85069 | Drive Shaft | 48W | 30 | | 69 | 73 | 626 | |
| | 2004.09-2007.08 | AT | R | R | SUV 4WD M47 D20 (204D4) | | GDS85093 | Drive Shaft | 48W | 30 | | 69 | 73 | 679 | |
| | 2004.09-2007.08 | MT | R | L | SUV 4WD M47 D20 (204D4) | | GDS85062 | Drive Shaft | 48W | 30 | | 69 | 73 | 618 | |
| | 2004.09-2007.08 | MT | R | R | SUV 4WD M47 D20 (204D4) | | GDS85074 | Drive Shaft | 48W | 30 | | 69 | 73 | 678 | |
| | 2004.09-2007.08 | MT | R | L/R | SUV 4WD M47 D20 (204D4) | | GCI35025 | Inner Joint | | | 25 | | | 26 | |
| | 2005.07-2008.08 | MT | F | L | SUV 4WD N46 B20 B | Date to:2006.12 | GCO85010 | Outer Joint | | 30 | 33 | 64.8 | 77 | 60 | M |
| | 2005.07-2008.08 | MT | F | L | SUV 4WD N46 B20 B | Date to:2006.12 | GCI81892 | Inner Joint | | 27 | 24 | 44 | 53.5 | 108 | |
| | 2005.07-2008.08 | MT | R | L | SUV 4WD N46 B20 B | | GDS85062 | Drive Shaft | 48W | 30 | | 69 | 73 | 618 | |

| | YEAR | TRANSM. | F/R | L/R | BODY STYLE & DRIVE TYPE & ENGINE | REMARKS | G-AP Ref. | PRODUCT | ABS | Technical Specifications A | B | C | H | L | P |
|---|---|---|---|---|---|---|---|---|---|---|---|---|---|---|---|
| **BMW** | | | | | | | | | | | | | | | |
| **X3** | | | | | | | | | | | | | | | |
| 2.0 (110 kw) | 2005.07-2008.08 | MT | R | R | SUV 4WD N46 B20 B | | GDS85074 | Drive Shaft | 48W | 30 | | 69 | 73 | 678 | |
| | 2005.07-2008.08 | MT | R | L/R | SUV 4WD N46 B20 B | | GCI35025 | Inner Joint | | | 25 | | | 26 | |
| 2.0 (130 kw) | 2007.09-2008.08 | AT/MT | F | L | SUV 4WD N47 D20 A | | GDS99215 | Drive Shaft | | 30 | 27 | 64.8 | 77 | 598 | |
| | 2007.09-2008.08 | AT/MT | F | R | SUV 4WD N47 D20 A | | GDS85078 | Drive Shaft | | 30 | 27 | 64.8 | 77 | 919 | |
| | 2007.09-2008.08 | AT/MT | F | L/R | SUV 4WD N47 D20 A | | GCO85010 | Outer Joint | | 30 | 33 | 64.8 | 77 | 60 | M |
| | 2007.09-2008.08 | AT/MT | F | L | SUV 4WD N47 D20 A | | GCI85026 | Inner Joint | | 27 | 24 | 44 | 60 | 114.5 | |
| | 2007.09-2008.08 | AT | R | L | SUV 4WD N47 D20 A | | GDS85069 | Drive Shaft | 48W | 30 | | 69 | 73 | 626 | |
| | 2007.09-2008.08 | AT | R | R | SUV 4WD N47 D20 A | | GDS85093 | Drive Shaft | 48W | 30 | | 69 | 73 | 679 | |
| | 2007.09-2008.08 | AT | R | L/R | SUV 4WD N47 D20 A | | GCI85005 | Inner Joint | | | 24 | | | 24 | |
| | 2007.09-2008.08 | MT | R | L | SUV 4WD N47 D20 A | | GDS85062 | Drive Shaft | 48W | 30 | | 69 | 73 | 618 | |
| | 2007.09-2008.08 | MT | R | R | SUV 4WD N47 D20 A | | GDS85074 | Drive Shaft | 48W | 30 | | 69 | 73 | 678 | |
| | 2007.09-2008.08 | MT | R | L/R | SUV 4WD N47 D20 A | | GCI35025 | Inner Joint | | | 25 | | | 26 | |
| 2.5 (141 kw) | 2004.03-2006.07 | AT/MT | F | L | SUV 4WD M54 B25 (256S5) | | GDS99215 | Drive Shaft | | 30 | 27 | 64.8 | 77 | 598 | |
| | 2004.03-2006.07 | AT/MT | F | R | SUV 4WD M54 B25 (256S5) | | GDS85078 | Drive Shaft | | 30 | 27 | 64.8 | 77 | 919 | |
| | 2004.03-2006.07 | AT/MT | F | L/R | SUV 4WD M54 B25 (256S5) | | GCO85010 | Outer Joint | | 30 | 33 | 64.8 | 77 | 60 | M |
| | 2004.03-2006.07 | AT/MT | F | L | SUV 4WD M54 B25 (256S5) | | GCI85026 | Inner Joint | | 27 | 24 | 44 | 60 | 114.5 | |
| | 2004.03-2006.07 | AT | R | L | SUV 4WD M54 B25 (256S5) | | GDS85069 | Drive Shaft | 48W | 30 | | 69 | 73 | 626 | |
| | 2004.03-2006.07 | AT | R | R | SUV 4WD M54 B25 (256S5) | | GDS85093 | Drive Shaft | 48W | 30 | | 69 | 73 | 679 | |
| | 2004.03-2006.07 | AT | R | L/R | SUV 4WD M54 B25 (256S5) | | GCI85089 | Inner Joint | | | 24 | | | 24 | |
| | 2004.03-2006.07 | MT | R | L | SUV 4WD M54 B25 (256S5) | | GDS85062 | Drive Shaft | 48W | 30 | | 69 | 73 | 618 | |
| | 2004.03-2006.07 | MT | R | R | SUV 4WD M54 B25 (256S5) | | GDS85074 | Drive Shaft | 48W | 30 | | 69 | 73 | 678 | |
| | 2004.03-2006.07 | MT | R | L/R | SUV 4WD M54 B25 (256S5) | | GCI35025 | Inner Joint | | | 25 | | | 26 | |
| 2.5 (155 kw) | 2006.08-2008.08 | AT/MT | F | L | SUV 4WD N52 B25 A;N52 B25 AF;N52 B25 BF | | GDS99215 | Drive Shaft | | 30 | 27 | 64.8 | 77 | 598 | |
| | 2006.08-2008.08 | AT/MT | F | R | SUV 4WD N52 B25 A;N52 B25 AF;N52 B25 BF | | GDS85078 | Drive Shaft | | 30 | 27 | 64.8 | 77 | 919 | |
| | 2006.08-2008.08 | AT/MT | F | L/R | SUV 4WD N52 B25 A;N52 B25 AF;N52 B25 BF | | GCO85010 | Outer Joint | | 30 | 33 | 64.8 | 77 | 60 | M |
| | 2006.08-2008.08 | AT/MT | F | L | SUV 4WD N52 B25 A;N52 B25 AF;N52 B25 BF | | GCI85026 | Inner Joint | | 27 | 24 | 44 | 60 | 114.5 | |
| | 2006.08-2008.08 | AT/MT | R | R | SUV 4WD N52 B25 A;N52 B25 AF;N52 B25 BF | | GDS82294 | Drive Shaft | 48W | 30 | | 69 | 73 | 679 | |
| | 2006.08-2008.08 | MT | R | L | SUV 4WD N52 B25 A;N52 B25 AF;N52 B25 BF | | GDS85062 | Drive Shaft | 48W | 30 | | 69 | 73 | 618 | |
| 2.5 (160 kw) | 2006.08-2008.08 | AT/MT | F | L | SUV 4WD N52 B25 A;N52 B25 AF;N52 B25 BF | | GDS99215 | Drive Shaft | | 30 | 27 | 64.8 | 77 | 598 | |
| | 2006.08-2008.08 | AT/MT | F | R | SUV 4WD N52 B25 A;N52 B25 AF;N52 B25 BF | | GDS85078 | Drive Shaft | | 30 | 27 | 64.8 | 77 | 919 | |
| | 2006.08-2008.08 | AT/MT | F | L/R | SUV 4WD N52 B25 A;N52 B25 AF;N52 B25 BF | | GCO85010 | Outer Joint | | 30 | 33 | 64.8 | 77 | 60 | M |
| | 2006.08-2008.08 | AT/MT | F | L | SUV 4WD N52 B25 A;N52 B25 AF;N52 B25 BF | Date to:2006.11 | GCI85026 | Inner Joint | | 27 | 24 | 44 | 60 | 114.5 | |
| | 2006.08-2008.08 | AT/MT | R | R | SUV 4WD N52 B25 A;N52 B25 AF;N52 B25 BF | | GDS82294 | Drive Shaft | 48W | 30 | | 69 | 73 | 679 | |
| | 2006.08-2008.08 | MT | R | L | SUV 4WD N52 B25 A;N52 B25 AF;N52 B25 BF | | GDS85062 | Drive Shaft | 48W | 30 | | 69 | 73 | 618 | |
| 3.0 (150 kw) | 2004.01-2005.08 | AT/MT | F | L | SUV 4WD M57 D30 (306D2) | | GDS99215 | Drive Shaft | | 30 | 27 | 64.8 | 77 | 598 | |
| | 2004.01-2005.08 | AT/MT | F | R | SUV 4WD M57 D30 (306D2) | | GDS85078 | Drive Shaft | | 30 | 27 | 64.8 | 77 | 919 | |
| | 2004.01-2005.08 | AT/MT | F | L/R | SUV 4WD M57 D30 (306D2) | | GCO85010 | Outer Joint | | 30 | 33 | 64.8 | 77 | 60 | M |
| | 2004.01-2005.08 | AT/MT | R | L | SUV 4WD M57 D30 (306D2) | | GDS85062 | Drive Shaft | 48W | 30 | | 69 | 73 | 618 | |
| | 2004.01-2005.08 | AT/MT | R | R | SUV 4WD M57 D30 (306D2) | | GDS85074 | Drive Shaft | 48W | 30 | | 69 | 73 | 678 | |
| | 2004.01-2005.08 | AT/MT | R | L/R | SUV 4WD M57 D30 (306D2) | | GCI35025 | Inner Joint | | | 25 | | | 26 | |
| 3.0 (155 kw) | 2005.09-2008.08 | AT/MT | F | L | SUV 4WD M57 D30 (306D3) | | GDS99215 | Drive Shaft | | 30 | 27 | 64.8 | 77 | 598 | |
| | 2005.09-2008.08 | AT/MT | F | R | SUV 4WD M57 D30 (306D3) | | GDS85078 | Drive Shaft | | 30 | 27 | 64.8 | 77 | 919 | |
| | 2005.09-2008.08 | AT/MT | F | L/R | SUV 4WD M57 D30 (306D3) | | GCO85010 | Outer Joint | | 30 | 33 | 64.8 | 77 | 60 | M |
| | 2005.09-2008.08 | AT/MT | F | L | SUV 4WD M57 D30 (306D3) | Date to:2006.07 | GCI85026 | Inner Joint | | 27 | 24 | 44 | 60 | 114.5 | |
| | 2005.09-2008.08 | 6AT | R | L | SUV 4WD M57 D30 (306D3) | | GDS85062 | Drive Shaft | 48W | 30 | | 69 | 73 | 618 | |
| | 2005.09-2008.08 | 6AT | R | R | SUV 4WD M57 D30 (306D3) | | GDS85074 | Drive Shaft | 48W | 30 | | 69 | 73 | 678 | |
| | 2005.09-2008.08 | 6MT | R | R | SUV 4WD M57 D30 (306D3) | | GDS82294 | Drive Shaft | 48W | 30 | | 69 | 73 | 679 | |
| 3.0 (160 kw) | 2005.09-2008.08 | 6AT/6MT | F | L | SUV 4WD M57 D30 (306D3) | | GDS99215 | Drive Shaft | | 30 | 27 | 64.8 | 77 | 598 | |
| | 2005.09-2008.08 | 6AT/6MT | F | R | SUV 4WD M57 D30 (306D3) | | GDS85078 | Drive Shaft | | 30 | 27 | 64.8 | 77 | 919 | |
| | 2005.09-2008.08 | 6AT/6MT | F | L/R | SUV 4WD M57 D30 (306D3) | | GCO85010 | Outer Joint | | 30 | 33 | 64.8 | 77 | 60 | M |
| | 2005.09-2008.08 | 6AT/6MT | F | L | SUV 4WD M57 D30 (306D3) | Date from:2006.12 | GCI85026 | Inner Joint | | 27 | 24 | 44 | 60 | 114.5 | |
| | 2005.09-2008.08 | 6AT | R | L | SUV 4WD M57 D30 (306D3) | | GDS85062 | Drive Shaft | 48W | 30 | | 69 | 73 | 618 | |
| | 2005.09-2008.08 | 6AT | R | R | SUV 4WD M57 D30 (306D3) | | GDS85074 | Drive Shaft | 48W | 30 | | 69 | 73 | 678 | |
| | 2005.09-2008.08 | 6AT/6MT | R | L/R | SUV 4WD M57 D30 (306D3) | | GCI35025 | Inner Joint | | | 25 | | | 26 | |
| | 2005.09-2008.08 | 6MT | R | R | SUV 4WD M57 D30 (306D3) | | GDS82294 | Drive Shaft | 48W | 30 | | 69 | 73 | 679 | |
| 3.0 (170 kw) | 2003.09-2006.07 | AT/MT | F | L | SUV 4WD M54 B30 (306S3) | | GDS99215 | Drive Shaft | | 30 | 27 | 64.8 | 77 | 598 | |
| | 2003.09-2006.07 | AT/MT | F | R | SUV 4WD M54 B30 (306S3) | | GDS85078 | Drive Shaft | | 30 | 27 | 64.8 | 77 | 919 | |
| | 2003.09-2006.07 | AT/MT | F | L/R | SUV 4WD M54 B30 (306S3) | | GCO85010 | Outer Joint | | 30 | 33 | 64.8 | 77 | 60 | M |
| | 2003.09-2006.07 | AT/MT | F | L | SUV 4WD M54 B30 (306S3) | | GCI85026 | Inner Joint | | 27 | 24 | 44 | 60 | 114.5 | |
| | 2003.09-2006.07 | AT | R | L | SUV 4WD M54 B30 (306S3) | | GDS85069 | Drive Shaft | 48W | 30 | | 69 | 73 | 626 | |
| | 2003.09-2006.07 | AT | R | R | SUV 4WD M54 B30 (306S3) | | GDS85093 | Drive Shaft | 48W | 30 | | 69 | 73 | 679 | |
| | 2003.09-2006.07 | AT | R | L/R | SUV 4WD M54 B30 (306S3) | | GCI85005 | Inner Joint | | | 24 | | | 24 | |
| | 2003.09-2006.07 | MT | R | L | SUV 4WD M54 B30 (306S3) | | GDS85062 | Drive Shaft | 48W | 30 | | 69 | 73 | 618 | |
| | 2003.09-2006.07 | MT | R | R | SUV 4WD M54 B30 (306S3) | | GDS85074 | Drive Shaft | 48W | 30 | | 69 | 73 | 678 | |
| | 2003.09-2006.07 | MT | R | L/R | SUV 4WD M54 B30 (306S3) | | GCI35025 | Inner Joint | | | 25 | | | 26 | |

| | YEAR | TRANSM. | F/R | L/R | BODY STYLE & DRIVE TYPE & ENGINE | REMARKS | G-AP Ref. | PRODUCT | ABS | Technical Specifications A | B | C | H | L | P |
|---|---|---|---|---|---|---|---|---|---|---|---|---|---|---|---|
| **BMW** | | | | | | | | | | | | | | | |
| **X3** | | | | | | | | | | | | | | | |
| 3.0 (194 kw) | 2006.09-2008.08 | 6AT/6MT | F | L | SUV 4WD N52 B30 A | | GDS99215 | Drive Shaft | | 30 | 27 | 64.8 | 77 | 598 | |
| | 2006.09-2008.08 | 6AT/6MT | F | R | SUV 4WD N52 B30 A | | GDS85078 | Drive Shaft | | 30 | 27 | 64.8 | 77 | 919 | |
| | 2006.09-2008.08 | 6AT/6MT | F | L/R | SUV 4WD N52 B30 A | | GCO85010 | Outer Joint | | 30 | 33 | 64.8 | 77 | 60 | M |
| | 2006.09-2008.08 | 6AT/6MT | F | L | SUV 4WD N52 B30 A | | GCI85026 | Inner Joint | | 27 | 24 | 44 | 60 | 114.5 | |
| | 2006.09-2008.08 | 6AT/6MT | R | L | SUV 4WD N52 B30 A | | GDS85062 | Drive Shaft | 48W | 30 | | 69 | 73 | 618 | |
| | 2006.09-2008.08 | 6AT/6MT | R | R | SUV 4WD N52 B30 A | | GDS82294 | Drive Shaft | 48W | 30 | | 69 | 73 | 679 | |
| | 2006.09-2008.08 | 6AT/6MT | R | L | SUV 4WD N52 B30 A | | GCI35025 | Inner Joint | | | 25 | | | 26 | |
| 3.0 (200 kw) | 2006.08-2008.08 | AT/MT | F | L | SUV 4WD N52 B30 A;N52 B30 BF | | GDS99215 | Drive Shaft | | 30 | 27 | 64.8 | 77 | 598 | |
| | 2006.08-2008.08 | AT/MT | F | R | SUV 4WD N52 B30 A;N52 B30 BF | | GDS85078 | Drive Shaft | | 30 | 27 | 64.8 | 77 | 919 | |
| | 2006.08-2008.08 | AT/MT | F | L/R | SUV 4WD N52 B30 A;N52 B30 BF | | GCO85010 | Outer Joint | | 30 | 33 | 64.8 | 77 | 60 | M |
| | 2006.08-2008.08 | AT/MT | F | L | SUV 4WD N52 B30 A;N52 B30 BF | Date to:2006.11 | GCI85026 | Inner Joint | | 27 | 24 | 44 | 60 | 114.5 | |
| | 2006.08-2008.08 | AT | R | R | SUV 4WD N52 B30 A;N52 B30 BF | | GDS85093 | Drive Shaft | 48W | 30 | | 69 | 73 | 679 | |
| | 2006.08-2008.08 | AT/MT | R | R | SUV 4WD N52 B30 A;N52 B30 BF | | GDS82294 | Drive Shaft | 48W | 30 | | 69 | 73 | 679 | |
| | 2006.08-2008.08 | MT | R | L | SUV 4WD N52 B30 A;N52 B30 BF | | GDS85062 | Drive Shaft | 48W | 30 | | 69 | 73 | 618 | |
| 3.0 (210 kw) | 2006.09-2008.08 | AT | F | L | SUV 4WD M57 D30 (306D5) | | GDS99215 | Drive Shaft | | 30 | 27 | 64.8 | 77 | 598 | |
| | 2006.09-2008.08 | AT | F | R | SUV 4WD M57 D30 (306D5) | | GDS85078 | Drive Shaft | | 30 | 27 | 64.8 | 77 | 919 | |
| | 2006.09-2008.08 | AT | F | L/R | SUV 4WD M57 D30 (306D5) | | GCO85010 | Outer Joint | | 30 | 33 | 64.8 | 77 | 60 | M |
| | 2006.09-2008.08 | AT | F | L | SUV 4WD M57 D30 (306D5) | | GCI85026 | Inner Joint | | 27 | 24 | 44 | 60 | 114.5 | |
| | 2006.09-2008.08 | AT | R | L | SUV 4WD M57 D30 (306D5) | | GDS85062 | Drive Shaft | 48W | 30 | | 69 | 73 | 618 | |
| | 2006.09-2008.08 | AT | R | R | SUV 4WD M57 D30 (306D5) | | GDS85074 | Drive Shaft | 48W | 30 | | 69 | 73 | 678 | |
| **X3 M** | | | | | | | | | | | | | | | |
| 3.0 (353 kw) | 2019.03- | 8AT | F | L | SUV 4WD S58 B30 A | | GDS84375 | Drive Shaft | | 37 | 27 | 65 | | 574 | |
| | 2019.03- | 8AT | F | R | SUV 4WD S58 B30 A | | GDS84374 | Drive Shaft | | 37 | 27 | 65 | | 875 | |
| | 2019.03- | 8AT | F | L/R | SUV 4WD S58 B30 A | | GCO82735 | Outer Joint | | 37 | 33 | 65 | | 74.5 | M |
| | 2019.03- | 8AT | F | L | SUV 4WD S58 B30 A | | GCI82647 | Inner Joint | | 27 | 33 | 43.95 | 60 | 118 | |
| | 2019.03- | 8AT | F | R | SUV 4WD S58 B30 A | | GCI82668 | Inner Joint | | 27 | 33 | 35 | 359.5 | 119.5 | |
| 3.0 (375 kw) | 2019.03- | 8AT | F | L | SUV 4WD S58 B30 A | | GDS84375 | Drive Shaft | | 37 | 27 | 65 | | 574 | |
| | 2019.03- | 8AT | F | R | SUV 4WD S58 B30 A | | GDS84374 | Drive Shaft | | 37 | 27 | 65 | | 875 | |
| | 2019.03- | 8AT | F | L/R | SUV 4WD S58 B30 A | | GCO82735 | Outer Joint | | 37 | 33 | 65 | | 74.5 | M |
| | 2019.03- | 8AT | F | L | SUV 4WD S58 B30 A | | GCI82647 | Inner Joint | | 27 | 33 | 43.95 | 60 | 118 | |
| | 2019.03- | 8AT | F | R | SUV 4WD S58 B30 A | | GCI82668 | Inner Joint | | 27 | 33 | 35 | 359.5 | 119.5 | |
| **X3 sDrive 18d** | | | | | | | | | | | | | | | |
| 2.0 (100 kw) | 2012.10-2014.03 | AT/MT | R | L | SUV RWD N47 D20 C | | GDS85142 | Drive Shaft | | 30 | 27 | 65 | 77 | 772 | |
| | 2012.10-2014.03 | AT/MT | R | R | SUV RWD N47 D20 C | | GDS85118 | Drive Shaft | | 30 | 27 | 65 | 77 | 826 | |
| | 2012.10-2014.03 | AT/MT | R | L/R | SUV RWD N47 D20 C | | GCI85063 | Inner Joint | | 30 | 28 | 65 | 77 | 89 | |
| | 2012.10-2014.03 | AT/MT | R | L/R | SUV RWD N47 D20 C | | GCI85075 | Inner Joint | | 27 | 28 | 44 | 75 | 102 | |
| 2.0 (105 kw) | 2012.10-2014.03 | 8AT/6MT | R | R | SUV RWD N47 D20 C | | GCI85063 | Inner Joint | | 30 | 28 | 65 | 77 | 89 | |
| | 2012.10-2014.03 | AT/MT | R | L | SUV RWD N47 D20 C | | GDS85142 | Drive Shaft | | 30 | 27 | 65 | 77 | 772 | |
| | 2012.10-2014.03 | AT/MT | R | R | SUV RWD N47 D20 C | | GDS85118 | Drive Shaft | | 30 | 27 | 65 | 77 | 826 | |
| | 2012.10-2014.03 | AT/MT | R | L/R | SUV RWD N47 D20 C | | GCI85075 | Inner Joint | | 27 | 28 | 44 | 75 | 102 | |
| 2.0 (110 kw) | 2014.04-2017.08 | 8AT/6MT | R | L | SUV RWD B47 D20 A | | GDS85142 | Drive Shaft | | 30 | 27 | 65 | 77 | 772 | |
| | 2014.04-2017.08 | 8AT/6MT | R | R | SUV RWD B47 D20 A | | GDS85118 | Drive Shaft | | 30 | 27 | 65 | 77 | 826 | |
| | 2014.04-2017.08 | 8AT/6MT | R | L/R | SUV RWD B47 D20 A | | GCI85063 | Inner Joint | | 30 | 28 | 65 | 77 | 89 | |
| | 2014.04-2017.08 | 8AT/6MT | R | L/R | SUV RWD B47 D20 A | | GCI85075 | Inner Joint | | 27 | 28 | 44 | 75 | 102 | |
| **X3 sDrive 20i** | | | | | | | | | | | | | | | |
| 1.6 (125 kw) | 2014.04-2017.08 | 8AT | R | L | SUV RWD N20 B16 A | | GDS85117 | Drive Shaft | | 30 | 27 | 64.9 | 77 | 769 | |
| | 2014.04-2017.08 | 8AT | R | R | SUV RWD N20 B16 A | | GDS85121 | Drive Shaft | | 30 | 27 | 64.9 | 77 | 825 | |
| | 2014.04-2017.08 | 8AT | R | L/R | SUV RWD N20 B16 A | | GCI85054 | Outer Joint | | 30 | 25 | 64.9 | 77 | 82 | |
| | 2014.04-2017.08 | 8AT | R | L/R | SUV RWD N20 B16 A | | GCI85020 | Inner Joint | | 27 | 25 | 43.9 | 75 | 96 | |
| 2.0 (135 kw) | 2014.04-2017.08 | 8AT | R | L | SUV RWD N20 B20 A | | GDS85117 | Drive Shaft | | 30 | 27 | 64.9 | 77 | 769 | |
| | 2014.04-2017.08 | 8AT | R | R | SUV RWD N20 B20 A | | GDS85121 | Drive Shaft | | 30 | 27 | 64.9 | 77 | 825 | |
| | 2014.04-2017.08 | 8AT | R | L/R | SUV RWD N20 B20 A | | GCI85054 | Outer Joint | | 30 | 25 | 64.9 | 77 | 82 | |
| | 2014.04-2017.08 | 8AT | R | L/R | SUV RWD N20 B20 A | | GCI85020 | Inner Joint | | 27 | 25 | 43.9 | 75 | 96 | |
| **X3 xDrive 18d** | | | | | | | | | | | | | | | |
| 2.0 (100 kw) | 2009.04-2011.12 | 6MT | F | L | SUV 4WD N47 D20 C | | GCI85026 | Inner Joint | | 27 | 24 | 44 | 60 | 114.5 | |
| | 2009.04-2011.12 | AT/MT | F | L | SUV 4WD N47 D20 C | | GDS99215 | Drive Shaft | | 30 | 27 | 64.8 | 77 | 598 | |
| | 2009.04-2011.12 | AT/MT | F | R | SUV 4WD N47 D20 C | | GDS85078 | Drive Shaft | | 30 | 27 | 64.8 | 77 | 919 | |
| | 2009.04-2011.12 | MT | F | L/R | SUV 4WD N47 D20 C | | GCO85010 | Outer Joint | | 30 | 33 | 64.8 | 77 | 60 | M |
| | 2009.04-2011.12 | MT | R | L | SUV 4WD N47 D20 C | | GDS85062 | Drive Shaft | 48W | 30 | | 69 | 73 | 618 | |
| | 2009.04-2011.12 | MT | R | R | SUV 4WD N47 D20 C | | GDS85074 | Drive Shaft | 48W | 30 | | 69 | 73 | 678 | |
| 2.0 (105 kw) | 2008.09-2011.12 | 6MT | F | L | SUV 4WD N47 D20 C | | GCI85026 | Inner Joint | | 27 | 24 | 44 | 60 | 114.5 | |
| | 2008.09-2011.12 | MT | F | L | SUV 4WD N47 D20 C | | GDS99215 | Drive Shaft | | 30 | 27 | 64.8 | 77 | 598 | |
| | 2008.09-2011.12 | MT | F | R | SUV 4WD N47 D20 C | | GDS85078 | Drive Shaft | | 30 | 27 | 64.8 | 77 | 919 | |
| | 2008.09-2011.12 | MT | F | L/R | SUV 4WD N47 D20 C | | GCO85010 | Outer Joint | | 30 | 33 | 64.8 | 77 | 60 | M |
| | 2008.09-2011.12 | AT | R | R | SUV 4WD N47 D20 C | | GDS85093 | Drive Shaft | 48W | 30 | | 69 | 73 | 679 | |

| | YEAR | TRANSM. | F/R | L/R | BODY STYLE & DRIVE TYPE & ENGINE | REMARKS | G-AP Ref. | PRODUCT | ABS | Technical Specifications A | B | C | H | L | P |
|---|---|---|---|---|---|---|---|---|---|---|---|---|---|---|---|
| **BMW** | | | | | | | | | | | | | | | |
| **X3 xDrive 18d** | | | | | | | | | | | | | | | |
| 2.0 (105 kw) | 2008.09-2011.12 | MT | R | L | SUV 4WD N47 D20 C | | GDS85062 | Drive Shaft | 48W | 30 | | 69 | 73 | 618 | |
| | 2008.09-2011.12 | MT | R | R | SUV 4WD N47 D20 C | | GDS85074 | Drive Shaft | 48W | 30 | | 69 | 73 | 678 | |
| **X3 xDrive 20d** | | | | | | | | | | | | | | | |
| 2.0 (120 kw) | 2008.09-2010.08 | 6AT/6MT | F | L | SUV 4WD N47 D20 A;N47 D20 C | | GCI85026 | Inner Joint | | 27 | 24 | 44 | 60 | 114.5 | |
| | 2008.09-2010.08 | AT/MT | F | L | SUV 4WD N47 D20 A;N47 D20 C | | GDS99215 | Drive Shaft | | 30 | 27 | 64.8 | 77 | 598 | |
| | 2008.09-2010.08 | AT/MT | F | R | SUV 4WD N47 D20 A;N47 D20 C | | GDS85078 | Drive Shaft | | 30 | 27 | 64.8 | 77 | 919 | |
| | 2008.09-2010.08 | AT/MT | F | L/R | SUV 4WD N47 D20 A;N47 D20 C | | GCO85010 | Outer Joint | | 30 | 33 | 64.8 | 77 | 60 | M |
| | 2008.09-2010.08 | 6AT | R | L | SUV 4WD N47 D20 A;N47 D20 C | | GDS85069 | Drive Shaft | 48W | 30 | | 69 | 73 | 626 | |
| | 2008.09-2010.08 | AT | R | R | SUV 4WD N47 D20 A;N47 D20 C | | GDS85093 | Drive Shaft | 48W | 30 | | 69 | 73 | 679 | |
| | 2008.09-2010.08 | AT | R | L/R | SUV 4WD N47 D20 A;N47 D20 C | | GCI85089 | Inner Joint | | | 24 | | | 24 | |
| | 2008.09-2010.08 | MT | R | L | SUV 4WD N47 D20 A;N47 D20 C | | GDS85062 | Drive Shaft | 48W | 30 | | 69 | 73 | 618 | |
| | 2008.09-2010.08 | MT | R | R | SUV 4WD N47 D20 A;N47 D20 C | | GDS85074 | Drive Shaft | 48W | 30 | | 69 | 73 | 678 | |
| | 2010.09-2017.08 | 8AT/6MT | F | L | SUV 4WD N47 D20 C;B47 D20 A | | GDS82060 | Drive Shaft | | 37 | 27 | 65 | | 590 | |
| | 2010.09-2017.08 | 8AT/6MT | F | R | SUV 4WD N47 D20 C;B47 D20 A | | GDS82061 | Drive Shaft | | 37 | 27 | 65 | | 880 | |
| | 2010.09-2017.08 | 8AT/6MT | F | L/R | SUV 4WD N47 D20 C;B47 D20 A | | GCO81604 | Outer Joint | | 37 | 33 | 65 | | 73 | M |
| | 2010.09-2017.08 | 8AT/6MT | F | L | SUV 4WD N47 D20 C;B47 D20 A | | GCI81598 | Inner Joint | | 27 | 24 | 43.95 | 60 | 111 | |
| | 2010.09-2017.08 | 8AT/6MT | F | R | SUV 4WD N47 D20 C;B47 D20 A | | GCI81605 | Inner Joint | | 27 | 24 | 43.95 | 349 | 112.5 | |
| | 2010.09-2017.08 | 6MT | R | L | SUV 4WD N47 D20 C;B47 D20 A | | GDS85117 | Drive Shaft | | 30 | 27 | 64.9 | 77 | 769 | |
| | 2010.09-2017.08 | 6MT | R | L/R | SUV 4WD N47 D20 C;B47 D20 A | | GCI85054 | Outer Joint | | 30 | 25 | 64.9 | 77 | 82 | |
| | 2010.09-2017.08 | 6MT | R | L/R | SUV 4WD N47 D20 C;B47 D20 A | | GCI85020 | Inner Joint | | 27 | 25 | 43.9 | 75 | 96 | |
| | 2010.09-2017.08 | 8AT | R | L | SUV 4WD N47 D20 C;B47 D20 A | For vehicles with towbar | GDS85142 | Drive Shaft | | 30 | 27 | 65 | 77 | 772 | |
| | 2010.09-2017.08 | 8AT | R | R | SUV 4WD N47 D20 C;B47 D20 A | For vehicles with towbar | GDS85118 | Drive Shaft | | 30 | 27 | 65 | 77 | 826 | |
| | 2010.09-2017.08 | 8AT | R | R | SUV 4WD N47 D20 C;B47 D20 A | | GCI85054 | Outer Joint | | 30 | 25 | 64.9 | 77 | 82 | |
| | 2010.09-2017.08 | 8AT | R | R | SUV 4WD N47 D20 C;B47 D20 A | | GCI85020 | Inner Joint | | 27 | 25 | 43.9 | 75 | 96 | |
| | 2010.09-2017.08 | 8AT | R | L/R | SUV 4WD N47 D20 C;B47 D20 A | For vehicles with towbar | GCI85063 | Inner Joint | | 30 | 28 | 65 | 77 | 89 | |
| | 2010.09-2017.08 | 8AT | R | L/R | SUV 4WD N47 D20 C;B47 D20 A | For vehicles with towbar | GCI85075 | Inner Joint | | 27 | 28 | 44 | 75 | 102 | |
| | 2010.09-2017.08 | 8AT/6MT | R | R | SUV 4WD N47 D20 C;B47 D20 A | | GDS85121 | Drive Shaft | | 30 | 27 | 64.9 | 77 | 825 | |
| | 2017.08-2020.03 | 8AT | F | L | SUV 4WD B47 D20 A;B47 D20 B | | GDS84375 | Drive Shaft | | 37 | 27 | 65 | | 574 | |
| | 2017.08-2020.03 | 8AT | F | R | SUV 4WD B47 D20 A;B47 D20 B | | GDS84374 | Drive Shaft | | 37 | 27 | 65 | | 875 | |
| | 2017.08-2020.03 | 8AT | F | L/R | SUV 4WD B47 D20 A;B47 D20 B | | GCO82735 | Outer Joint | | 37 | 33 | 65 | | 74.5 | M |
| | 2017.08-2020.03 | 8AT | F | L | SUV 4WD B47 D20 A;B47 D20 B | | GCI82647 | Inner Joint | | 27 | 33 | 43.95 | 60 | 118 | |
| | 2017.08-2020.03 | 8AT | F | R | SUV 4WD B47 D20 A;B47 D20 B | | GCI82668 | Inner Joint | | 27 | 33 | 35 | 359.5 | 119.5 | |
| | 2020.04- | 8AT | F | L | SUV 4WD B47 D20 B;JA1 | Type:2 | GDS84375 | Drive Shaft | | 37 | 27 | 65 | | 574 | |
| | 2020.04- | 8AT | F | R | SUV 4WD B47 D20 B;JA1 | Type:2 | GDS84374 | Drive Shaft | | 37 | 27 | 65 | | 875 | |
| | 2020.04- | 8AT | F | L/R | SUV 4WD B47 D20 B;JA1 | Type:2 | GCO82735 | Outer Joint | | 37 | 33 | 65 | | 74.5 | M |
| | 2020.04- | 8AT | F | L | SUV 4WD B47 D20 B;JA1 | Type:2 | GCI82647 | Inner Joint | | 27 | 33 | 43.95 | 60 | 118 | |
| | 2020.04- | 8AT | F | R | SUV 4WD B47 D20 B;JA1 | Type:2 | GCI82668 | Inner Joint | | 27 | 33 | 35 | 359.5 | 119.5 | |
| 2.0 (130 kw) | 2008.09-2010.08 | AT/MT | F | L | SUV 4WD N47 D20 A;N47 D20 C | | GDS99215 | Drive Shaft | | 30 | 27 | 64.8 | 77 | 598 | |
| | 2008.09-2010.08 | AT/MT | F | R | SUV 4WD N47 D20 A;N47 D20 C | | GDS85078 | Drive Shaft | | 30 | 27 | 64.8 | 77 | 919 | |
| | 2008.09-2010.08 | AT/MT | F | L/R | SUV 4WD N47 D20 A;N47 D20 C | | GCO85010 | Outer Joint | | 30 | 33 | 64.8 | 77 | 60 | M |
| | 2008.09-2010.08 | AT/MT | F | L | SUV 4WD N47 D20 A;N47 D20 C | | GCI85026 | Inner Joint | | 27 | 24 | 44 | 60 | 114.5 | |
| | 2008.09-2010.08 | AT | R | L | SUV 4WD N47 D20 A;N47 D20 C | | GDS85069 | Drive Shaft | 48W | 30 | | 69 | 73 | 626 | |
| | 2008.09-2010.08 | AT | R | R | SUV 4WD N47 D20 A;N47 D20 C | | GDS85093 | Drive Shaft | 48W | 30 | | 69 | 73 | 679 | |
| | 2008.09-2010.08 | AT | R | L/R | SUV 4WD N47 D20 A;N47 D20 C | | GCI85005 | Inner Joint | | | 24 | | | 24 | |
| | 2008.09-2010.08 | MT | R | L | SUV 4WD N47 D20 A;N47 D20 C | | GDS85062 | Drive Shaft | 48W | 30 | | 69 | 73 | 618 | |
| | 2008.09-2010.08 | MT | R | R | SUV 4WD N47 D20 A;N47 D20 C | | GDS85074 | Drive Shaft | 48W | 30 | | 69 | 73 | 678 | |
| | 2008.09-2010.08 | MT | R | L/R | SUV 4WD N47 D20 A;N47 D20 C | | GCI35025 | Inner Joint | | | 25 | | | 26 | |
| 2.0 (135 kw) | 2010.09-2014.03 | 8AT/6MT | F | L | SUV 4WD N47 D20 C | | GDS82060 | Drive Shaft | | 37 | 27 | 65 | | 590 | |
| | 2010.09-2014.03 | 8AT/6MT | F | R | SUV 4WD N47 D20 C | | GDS82061 | Drive Shaft | | 37 | 27 | 65 | | 880 | |
| | 2010.09-2014.03 | 8AT/6MT | F | L/R | SUV 4WD N47 D20 C | | GCO81604 | Outer Joint | | 37 | 33 | 65 | | 73 | M |
| | 2010.09-2014.03 | 8AT/6MT | F | L | SUV 4WD N47 D20 C | | GCI81598 | Inner Joint | | 27 | 24 | 43.95 | 60 | 111 | |
| | 2010.09-2014.03 | 8AT/6MT | F | R | SUV 4WD N47 D20 C | | GCI81605 | Inner Joint | | 27 | 24 | 43.95 | 349 | 112.5 | |
| | 2010.09-2014.03 | 6MT | R | L | SUV 4WD N47 D20 C | | GDS85117 | Drive Shaft | | 30 | 27 | 64.9 | 77 | 769 | |
| | 2010.09-2014.03 | 6MT | R | R | SUV 4WD N47 D20 C | | GDS85121 | Drive Shaft | | 30 | 27 | 64.9 | 77 | 825 | |
| | 2010.09-2014.03 | 6MT | R | L/R | SUV 4WD N47 D20 C | | GCI85054 | Outer Joint | | 30 | 25 | 64.9 | 77 | 82 | |
| | 2010.09-2014.03 | 6MT | R | L/R | SUV 4WD N47 D20 C | | GCI85020 | Inner Joint | | 27 | 25 | 43.9 | 75 | 96 | |
| | 2010.09-2014.03 | 8AT | R | L | SUV 4WD N47 D20 C | For vehicles without towbar | GDS85117 | Drive Shaft | | 30 | 27 | 64.9 | 77 | 769 | |
| | 2010.09-2014.03 | 8AT | R | L | SUV 4WD N47 D20 C | For vehicles with towbar | GDS85142 | Drive Shaft | | 30 | 27 | 65 | 77 | 772 | |
| | 2010.09-2014.03 | 8AT | R | R | SUV 4WD N47 D20 C | For vehicles with towbar | GDS85118 | Drive Shaft | | 30 | 27 | 65 | 77 | 826 | |
| | 2010.09-2014.03 | 8AT | R | R | SUV 4WD N47 D20 C | For vehicles without towbar | GDS85121 | Drive Shaft | | 30 | 27 | 64.9 | 77 | 825 | |
| | 2010.09-2014.03 | 8AT | R | L/R | SUV 4WD N47 D20 C | For vehicles without towbar | GCI85054 | Outer Joint | | 30 | 25 | 64.9 | 77 | 82 | |
| | 2010.09-2014.03 | 8AT | R | L/R | SUV 4WD N47 D20 C | For vehicles without towbar | GCI85020 | Inner Joint | | 27 | 25 | 43.9 | 75 | 96 | |
| | 2010.09-2014.03 | 8AT | R | L/R | SUV 4WD N47 D20 C | For vehicles with towbar | GCI85063 | Inner Joint | | 30 | 28 | 65 | 77 | 89 | |
| | 2010.09-2014.03 | 8AT | R | L/R | SUV 4WD N47 D20 C | For vehicles with towbar | GCI85075 | Inner Joint | | 27 | 28 | 44 | 75 | 102 | |
| 2.0 (140 kw) | 2014.04-2017.08 | 8AT/6MT | F | L | SUV 4WD B47 D20 A | | GDS82060 | Drive Shaft | | 37 | 27 | 65 | | 590 | |

| | YEAR | TRANSM. | F/R | L/R | BODY STYLE & DRIVE TYPE & ENGINE | REMARKS | G-AP Ref. | PRODUCT | ABS | Technical Specifications A | B | C | H | L | P |
|---|---|---|---|---|---|---|---|---|---|---|---|---|---|---|---|
| **BMW** | | | | | | | | | | | | | | | |
| **X3 xDrive 20d** | | | | | | | | | | | | | | | |
| 2.0 (140 kw) | 2014.04-2017.08 | 8AT/6MT | F | R | SUV 4WD B47 D20 A | | GDS82061 | Drive Shaft | | 37 | 27 | 65 | | 880 | |
| | 2014.04-2017.08 | 8AT/6MT | F | L/R | SUV 4WD B47 D20 A | | GCO81604 | Outer Joint | | 37 | 33 | 65 | | 73 | M |
| | 2014.04-2017.08 | 8AT/6MT | F | L | SUV 4WD B47 D20 A | | GCI81598 | Inner Joint | | 27 | 24 | 43.95 | 60 | 111 | |
| | 2014.04-2017.08 | 8AT/6MT | F | R | SUV 4WD B47 D20 A | | GCI81605 | Inner Joint | | 27 | 24 | 43.95 | 349 | 112.5 | |
| | 2014.04-2017.08 | 6MT | R | L | SUV 4WD B47 D20 A | | GDS85117 | Drive Shaft | | 30 | 27 | 64.9 | 77 | 769 | |
| | 2014.04-2017.08 | 8AT | R | L | SUV 4WD B47 D20 A | For vehicles with towbar | GDS85142 | Drive Shaft | | 30 | 27 | 65 | 77 | 772 | |
| | 2014.04-2017.08 | 8AT/6MT | R | R | SUV 4WD B47 D20 A | | GDS85121 | Drive Shaft | | 30 | 27 | 64.9 | 77 | 825 | |
| | 2014.04-2017.08 | 8AT/6MT | R | L/R | SUV 4WD B47 D20 A | | GCI85054 | Outer Joint | | 30 | 25 | 64.9 | 77 | 82 | |
| | 2014.04-2017.08 | 8AT/6MT | R | L/R | SUV 4WD B47 D20 A | | GCI85020 | Inner Joint | | 27 | 25 | 43.9 | 75 | 96 | |
| | 2017.08- | 8AT | F | L | SUV Van 4WD B47 D20 A;B47 D20 B | | GDS84375 | Drive Shaft | | 37 | 27 | 65 | | 574 | |
| | 2017.08- | 8AT | F | R | SUV Van 4WD B47 D20 A;B47 D20 B | | GDS84374 | Drive Shaft | | 37 | 27 | 65 | | 875 | |
| | 2017.08- | 8AT | F | L/R | SUV Van 4WD B47 D20 A;B47 D20 B | | GCO82735 | Outer Joint | | 37 | 33 | 65 | | 74.5 | M |
| | 2017.08- | 8AT | F | L | SUV Van 4WD B47 D20 A;B47 D20 B | | GCI82647 | Inner Joint | | 27 | 33 | 43.95 | 60 | 118 | |
| | 2017.08- | 8AT | F | R | SUV Van 4WD B47 D20 A;B47 D20 B | | GCI82668 | Inner Joint | | 27 | 33 | 35 | 359.5 | 119.5 | |
| | 2017.08-2020.03 | 8AT | F | L | SUV 4WD B47 D20 A;B47 D20 B | | GDS84375 | Drive Shaft | | 37 | 27 | 65 | | 574 | |
| | 2017.08-2020.03 | 8AT | F | R | SUV 4WD B47 D20 A;B47 D20 B | | GDS84374 | Drive Shaft | | 37 | 27 | 65 | | 875 | |
| | 2017.08-2020.03 | 8AT | F | L/R | SUV 4WD B47 D20 A;B47 D20 B | | GCO82735 | Outer Joint | | 37 | 33 | 65 | | 74.5 | M |
| | 2017.08-2020.03 | 8AT | F | L | SUV 4WD B47 D20 A;B47 D20 B | | GCI82647 | Inner Joint | | 27 | 33 | 43.95 | 60 | 118 | |
| | 2017.08-2020.03 | 8AT | F | R | SUV 4WD B47 D20 A;B47 D20 B | | GCI82668 | Inner Joint | | 27 | 33 | 35 | 359.5 | 119.5 | |
| | 2020.04- | 8AT | F | L | SUV 4WD B47 D20 B;JA1 | Type:2 | GDS84375 | Drive Shaft | | 37 | 27 | 65 | | 574 | |
| | 2020.04- | 8AT | F | R | SUV 4WD B47 D20 B;JA1 | Type:2 | GDS84374 | Drive Shaft | | 37 | 27 | 65 | | 875 | |
| | 2020.04- | 8AT | F | L/R | SUV 4WD B47 D20 B;JA1 | Type:2 | GCO82735 | Outer Joint | | 37 | 33 | 65 | | 74.5 | M |
| | 2020.04- | 8AT | F | L | SUV 4WD B47 D20 B;JA1 | Type:2 | GCI82647 | Inner Joint | | 27 | 33 | 43.95 | 60 | 118 | |
| | 2020.04- | 8AT | F | R | SUV 4WD B47 D20 B;JA1 | Type:2 | GCI82668 | Inner Joint | | 27 | 33 | 35 | 359.5 | 119.5 | |
| **X3 xDrive 20i** | | | | | | | | | | | | | | | |
| 2.0 (110 kw) | 2008.09-2011.08 | MT | R | L | SUV 4WD N46 B20 B | | GDS85062 | Drive Shaft | 48W | 30 | | 69 | 73 | 618 | |
| | 2008.09-2011.08 | MT | R | R | SUV 4WD N46 B20 B | | GDS85074 | Drive Shaft | 48W | 30 | | 69 | 73 | 678 | |
| | 2008.09-2011.08 | MT | R | L/R | SUV 4WD N46 B20 B | | GCI35025 | Inner Joint | | | 25 | | | 26 | |
| 2.0 (135 kw) | 2011.10-2017.08 | 8AT/6MT | F | L | SUV 4WD N20 B20 A | | GDS82060 | Drive Shaft | | 37 | 27 | 65 | | 590 | |
| | 2011.10-2017.08 | 8AT/6MT | F | R | SUV 4WD N20 B20 A | | GDS82061 | Drive Shaft | | 37 | 27 | 65 | | 880 | |
| | 2011.10-2017.08 | 8AT/6MT | F | L/R | SUV 4WD N20 B20 A | | GCO81604 | Outer Joint | | 37 | 33 | 65 | | 73 | M |
| | 2011.10-2017.08 | 8AT/6MT | F | L | SUV 4WD N20 B20 A | | GCI81598 | Inner Joint | | 27 | 24 | 43.95 | 60 | 111 | |
| | 2011.10-2017.08 | 8AT/6MT | F | R | SUV 4WD N20 B20 A | | GCI81605 | Inner Joint | | 27 | 24 | 43.95 | 349 | 112.5 | |
| | 2011.10-2017.08 | 8AT/6MT | R | L | SUV 4WD N20 B20 A | | GDS85117 | Drive Shaft | | 30 | 27 | 64.9 | 77 | 769 | |
| | 2011.10-2017.08 | 8AT/6MT | R | R | SUV 4WD N20 B20 A | | GDS85121 | Drive Shaft | | 30 | 27 | 64.9 | 77 | 825 | |
| | 2011.10-2017.08 | 8AT/6MT | R | L/R | SUV 4WD N20 B20 A | | GCI85054 | Outer Joint | | 30 | 25 | 64.9 | 77 | 82 | |
| | 2011.10-2017.08 | 8AT/6MT | R | L/R | SUV 4WD N20 B20 A | | GCI85020 | Inner Joint | | 27 | 25 | 43.9 | 75 | 96 | |
| | 2017.12- | 8AT | F | L | SUV 4WD B48 B20 A;B48 B20 B | | GDS84375 | Drive Shaft | | 37 | 27 | 65 | | 574 | |
| | 2017.12- | 8AT | F | R | SUV 4WD B48 B20 A;B48 B20 B | | GDS84374 | Drive Shaft | | 37 | 27 | 65 | | 875 | |
| | 2017.12- | 8AT | F | L/R | SUV 4WD B48 B20 A;B48 B20 B | | GCO82735 | Outer Joint | | 37 | 33 | 65 | | 74.5 | M |
| | 2017.12- | 8AT | F | L | SUV 4WD B48 B20 A;B48 B20 B | | GCI82647 | Inner Joint | | 27 | 33 | 43.95 | 60 | 118 | |
| | 2017.12- | 8AT | F | R | SUV 4WD B48 B20 A;B48 B20 B | | GCI82668 | Inner Joint | | 27 | 33 | 35 | 359.5 | 119.5 | |
| | 2017.12- | 8AT | F | L | SUV Van 4WD B48 B20 A;B48 B20 B | | GDS84375 | Drive Shaft | | 37 | 27 | 65 | | 574 | |
| | 2017.12- | 8AT | F | R | SUV Van 4WD B48 B20 A;B48 B20 B | | GDS84374 | Drive Shaft | | 37 | 27 | 65 | | 875 | |
| | 2017.12- | 8AT | F | L/R | SUV Van 4WD B48 B20 A;B48 B20 B | | GCO82735 | Outer Joint | | 37 | 33 | 65 | | 74.5 | M |
| | 2017.12- | 8AT | F | L | SUV Van 4WD B48 B20 A;B48 B20 B | | GCI82647 | Inner Joint | | 27 | 33 | 43.95 | 60 | 118 | |
| | 2017.12- | 8AT | F | R | SUV Van 4WD B48 B20 A;B48 B20 B | | GCI82668 | Inner Joint | | 27 | 33 | 35 | 359.5 | 119.5 | |
| **X3 xDrive 25d** | | | | | | | | | | | | | | | |
| 2.0 (155 kw) | 2018.04- | 8AT | F | L | SUV 4WD B47 D20 B | Chassis Number:TX61 | GDS84375 | Drive Shaft | | 37 | 27 | 65 | | 574 | |
| | 2018.04- | 8AT | F | R | SUV 4WD B47 D20 B | | GDS84374 | Drive Shaft | | 37 | 27 | 65 | | 875 | |
| | 2018.04- | 8AT | F | L | SUV 4WD B47 D20 B | Chassis Number:TX61 | GCO82735 | Outer Joint | | 37 | 33 | 65 | | 74.5 | M |
| | 2018.04- | 8AT | F | R | SUV 4WD B47 D20 B | | GCO82735 | Outer Joint | | 37 | 33 | 65 | | 74.5 | M |
| | 2018.04- | 8AT | F | L | SUV 4WD B47 D20 B | Chassis Number:TX61 | GCI82647 | Inner Joint | | 27 | 33 | 43.95 | 60 | 118 | |
| | 2018.04- | 8AT | F | R | SUV 4WD B47 D20 B | | GCI82668 | Inner Joint | | 27 | 33 | 35 | 359.5 | 119.5 | |
| 2.0 (170 kw) | 2018.04- | 8AT | F | L | SUV 4WD B47 D20 B | Chassis Number:TX61 | GDS84375 | Drive Shaft | | 37 | 27 | 65 | | 574 | |
| | 2018.04- | 8AT | F | R | SUV 4WD B47 D20 B | | GDS84374 | Drive Shaft | | 37 | 27 | 65 | | 875 | |
| | 2018.04- | 8AT | F | L | SUV 4WD B47 D20 B | Chassis Number:TX61 | GCO82735 | Outer Joint | | 37 | 33 | 65 | | 74.5 | M |
| | 2018.04- | 8AT | F | R | SUV 4WD B47 D20 B | | GCO82735 | Outer Joint | | 37 | 33 | 65 | | 74.5 | M |
| | 2018.04- | 8AT | F | L | SUV 4WD B47 D20 B | Chassis Number:TX61 | GCI82647 | Inner Joint | | 27 | 33 | 43.95 | 60 | 118 | |
| | 2018.04- | 8AT | F | R | SUV 4WD B47 D20 B | | GCI82668 | Inner Joint | | 27 | 33 | 35 | 359.5 | 119.5 | |
| **X3 xDrive 25i** | | | | | | | | | | | | | | | |
| 2.5 (155 kw) | 2008.09-2010.08 | AT/MT | F | L | SUV 4WD N52 B25 A;N52 B25 AF;N52 B25 BF | | GDS99215 | Drive Shaft | | 30 | 27 | 64.8 | 77 | 598 | |
| | 2008.09-2010.08 | AT/MT | F | R | SUV 4WD N52 B25 A;N52 B25 AF;N52 B25 BF | | GDS85078 | Drive Shaft | | 30 | 27 | 64.8 | 77 | 919 | |
| | 2008.09-2010.08 | AT/MT | F | L/R | SUV 4WD N52 B25 A;N52 B25 AF;N52 B25 BF | | GCO85010 | Outer Joint | | 30 | 33 | 64.8 | 77 | 60 | M |
| | 2008.09-2010.08 | AT/MT | F | L | SUV 4WD N52 B25 A;N52 B25 AF;N52 B25 BF | | GCI85026 | Inner Joint | | 27 | 24 | 44 | 60 | 114.5 | |

| | YEAR | TRANSM. | F/R | L/R | BODY STYLE & DRIVE TYPE & ENGINE | REMARKS | G-AP Ref. | PRODUCT | ABS | Technical Specifications A | B | C | H | L | P |
|---|---|---|---|---|---|---|---|---|---|---|---|---|---|---|---|
| **BMW** | | | | | | | | | | | | | | | |
| **X3 xDrive 25i** | | | | | | | | | | | | | | | |
| 2.5 (155 kw) | 2008.09-2010.08 | AT/MT | R | L | SUV 4WD N52 B25 A;N52 B25 AF;N52 B25 BF | | GDS85062 | Drive Shaft | 48W | 30 | | 69 | 73 | 618 | |
| | 2008.09-2010.08 | AT/MT | R | R | SUV 4WD N52 B25 A;N52 B25 AF;N52 B25 BF | | GDS82294 | Drive Shaft | 48W | 30 | | 69 | 73 | 679 | |
| 2.5 (160 kw) | 2008.09-2010.08 | 6AT/6MT | F | L | SUV 4WD N52 B25 A;N52 B25 AF;N52 B25 BF | | GCI85026 | Inner Joint | | 27 | 24 | 44 | 60 | 114.5 | |
| | 2008.09-2010.08 | AT/MT | F | L | SUV 4WD N52 B25 A;N52 B25 AF;N52 B25 BF | | GDS99215 | Drive Shaft | | 30 | 27 | 64.8 | 77 | 598 | |
| | 2008.09-2010.08 | AT/MT | F | R | SUV 4WD N52 B25 A;N52 B25 AF;N52 B25 BF | | GDS85078 | Drive Shaft | | 30 | 27 | 64.8 | 77 | 919 | |
| | 2008.09-2010.08 | AT/MT | F | L/R | SUV 4WD N52 B25 A;N52 B25 AF;N52 B25 BF | | GCO85010 | Outer Joint | | 30 | 33 | 64.8 | 77 | 60 | M |
| | 2008.09-2010.08 | AT/MT | R | L | SUV 4WD N52 B25 A;N52 B25 AF;N52 B25 BF | | GDS85062 | Drive Shaft | 48W | 30 | | 69 | 73 | 618 | |
| | 2008.09-2010.08 | AT/MT | R | R | SUV 4WD N52 B25 A;N52 B25 AF;N52 B25 BF | | GDS82294 | Drive Shaft | 48W | 30 | | 69 | 73 | 679 | |
| **X3 xDrive 28i** | | | | | | | | | | | | | | | |
| 2.0 (180 kw) | 2012.04-2017.08 | 8AT | F | L | SUV 4WD N20 B20 A | | GDS82060 | Drive Shaft | | 37 | 27 | 65 | | 590 | |
| | 2012.04-2017.08 | 8AT | F | R | SUV 4WD N20 B20 A | | GDS82061 | Drive Shaft | | 37 | 27 | 65 | | 880 | |
| | 2012.04-2017.08 | 8AT | F | L/R | SUV 4WD N20 B20 A | | GCO81604 | Outer Joint | | 37 | 33 | 65 | | 73 | M |
| | 2012.04-2017.08 | 8AT | F | L | SUV 4WD N20 B20 A | | GCI81598 | Inner Joint | | 27 | 24 | 43.95 | 60 | 111 | |
| | 2012.04-2017.08 | 8AT | F | R | SUV 4WD N20 B20 A | | GCI81605 | Inner Joint | | 27 | 24 | 43.95 | 349 | 112.5 | |
| | 2012.04-2017.08 | 8AT | R | L | SUV 4WD N20 B20 A | | GDS85117 | Drive Shaft | | 30 | 27 | 64.9 | 77 | 769 | |
| | 2012.04-2017.08 | 8AT | R | R | SUV 4WD N20 B20 A | | GDS85121 | Drive Shaft | | 30 | 27 | 64.9 | 77 | 825 | |
| | 2012.04-2017.08 | 8AT | R | L/R | SUV 4WD N20 B20 A | | GCI85054 | Outer Joint | | 30 | 25 | 64.9 | 77 | 82 | |
| | 2012.04-2017.08 | 8AT | R | L/R | SUV 4WD N20 B20 A | | GCI85020 | Inner Joint | | 27 | 25 | 43.9 | 75 | 96 | |
| 3.0 (190 kw) | 2011.01-2012.10 | 8AT | F | L | SUV 4WD N52 B30 A;N52 B30 BF;N52 B30 AF | | GDS82060 | Drive Shaft | | 37 | 27 | 65 | | 590 | |
| | 2011.01-2012.10 | 8AT | F | R | SUV 4WD N52 B30 A;N52 B30 BF;N52 B30 AF | | GDS82061 | Drive Shaft | | 37 | 27 | 65 | | 880 | |
| | 2011.01-2012.10 | 8AT | F | L/R | SUV 4WD N52 B30 A;N52 B30 BF;N52 B30 AF | | GCO81604 | Outer Joint | | 37 | 33 | 65 | | 73 | M |
| | 2011.01-2012.10 | 8AT | F | L | SUV 4WD N52 B30 A;N52 B30 BF;N52 B30 AF | | GCI81598 | Inner Joint | | 27 | 24 | 43.95 | 60 | 111 | |
| | 2011.01-2012.10 | 8AT | F | R | SUV 4WD N52 B30 A;N52 B30 BF;N52 B30 AF | | GCI81605 | Inner Joint | | 27 | 24 | 43.95 | 349 | 112.5 | |
| | 2011.01-2012.10 | 6AT/8AT | R | L | SUV 4WD N52 B30 A;N52 B30 BF;N52 B30 AF | | GDS85117 | Drive Shaft | | 30 | 27 | 64.9 | 77 | 769 | |
| | 2011.01-2012.10 | 6AT/8AT | R | R | SUV 4WD N52 B30 A;N52 B30 BF;N52 B30 AF | | GDS85121 | Drive Shaft | | 30 | 27 | 64.9 | 77 | 825 | |
| **X3 xDrive 30d** | | | | | | | | | | | | | | | |
| 3.0 (155 kw) | 2008.09-2010.08 | 6AT/6MT | F | L | SUV 4WD M57 D30 (306D3) | | GCI85026 | Inner Joint | | 27 | 24 | 44 | 60 | 114.5 | |
| | 2008.09-2010.08 | AT/MT | F | L | SUV 4WD M57 D30 (306D3) | | GDS99215 | Drive Shaft | | 30 | 27 | 64.8 | 77 | 598 | |
| | 2008.09-2010.08 | AT/MT | F | R | SUV 4WD M57 D30 (306D3) | | GDS85078 | Drive Shaft | | 30 | 27 | 64.8 | 77 | 919 | |
| | 2008.09-2010.08 | AT/MT | F | L/R | SUV 4WD M57 D30 (306D3) | | GCO85010 | Outer Joint | | 30 | 33 | 64.8 | 77 | 60 | M |
| | 2008.09-2010.08 | 6AT | R | R | SUV 4WD M57 D30 (306D3) | | GDS85074 | Drive Shaft | 48W | 30 | | 69 | 73 | 678 | |
| | 2008.09-2010.08 | AT/MT | R | L | SUV 4WD M57 D30 (306D3) | | GDS85062 | Drive Shaft | 48W | 30 | | 69 | 73 | 618 | |
| | 2008.09-2010.08 | MT | R | R | SUV 4WD M57 D30 (306D3) | | GDS82294 | Drive Shaft | 48W | 30 | | 69 | 73 | 679 | |
| | 2011.04-2017.08 | 8AT | F | L | SUV 4WD N57 D30 A | | GDS82060 | Drive Shaft | | 37 | 27 | 65 | | 590 | |
| | 2011.04-2017.08 | 8AT | F | R | SUV 4WD N57 D30 A | | GDS82061 | Drive Shaft | | 37 | 27 | 65 | | 880 | |
| | 2011.04-2017.08 | 8AT | F | L/R | SUV 4WD N57 D30 A | | GCO81604 | Outer Joint | | 37 | 33 | 65 | | 73 | M |
| | 2011.04-2017.08 | 8AT | F | L | SUV 4WD N57 D30 A | | GCI81598 | Inner Joint | | 27 | 24 | 43.95 | 60 | 111 | |
| | 2011.04-2017.08 | 8AT | F | R | SUV 4WD N57 D30 A | | GCI81605 | Inner Joint | | 27 | 24 | 43.95 | 349 | 112.5 | |
| | 2011.04-2017.08 | 8AT | R | L | SUV 4WD N57 D30 A | | GDS85120 | Drive Shaft | | 30 | 32 | 64.9 | 77 | 771 | |
| | 2011.04-2017.08 | 8AT | R | R | SUV 4WD N57 D30 A | | GDS85119 | Drive Shaft | | 30 | 32 | 64.9 | 77 | 827 | |
| 3.0 (160 kw) | 2008.09-2010.08 | 6AT/6MT | F | L | SUV 4WD M57 D30 (306D3) | | GCI85026 | Inner Joint | | 27 | 24 | 44 | 60 | 114.5 | |
| | 2008.09-2010.08 | AT/MT | F | L | SUV 4WD M57 D30 (306D3) | | GDS99215 | Drive Shaft | | 30 | 27 | 64.8 | 77 | 598 | |
| | 2008.09-2010.08 | AT/MT | F | R | SUV 4WD M57 D30 (306D3) | | GDS85078 | Drive Shaft | | 30 | 27 | 64.8 | 77 | 919 | |
| | 2008.09-2010.08 | AT/MT | F | L/R | SUV 4WD M57 D30 (306D3) | | GCO85010 | Outer Joint | | 30 | 33 | 64.8 | 77 | 60 | M |
| | 2008.09-2010.08 | 6AT | R | R | SUV 4WD M57 D30 (306D3) | | GDS85074 | Drive Shaft | 48W | 30 | | 69 | 73 | 678 | |
| | 2008.09-2010.08 | AT/MT | R | L | SUV 4WD M57 D30 (306D3) | | GDS85062 | Drive Shaft | 48W | 30 | | 69 | 73 | 618 | |
| | 2008.09-2010.08 | AT/MT | R | L/R | SUV 4WD M57 D30 (306D3) | | GCI35025 | Inner Joint | | | 25 | | | 26 | |
| | 2008.09-2010.08 | MT | R | R | SUV 4WD M57 D30 (306D3) | | GDS82294 | Drive Shaft | 48W | 30 | | 69 | 73 | 679 | |
| 3.0 (183 kw) | 2011.06-2017.08 | 8AT | F | L | SUV 4WD N57 D30 A | | GDS82060 | Drive Shaft | | 37 | 27 | 65 | | 590 | |
| | 2011.06-2017.08 | 8AT | F | R | SUV 4WD N57 D30 A | | GDS82061 | Drive Shaft | | 37 | 27 | 65 | | 880 | |
| | 2011.06-2017.08 | 8AT | F | L/R | SUV 4WD N57 D30 A | | GCO81604 | Outer Joint | | 37 | 33 | 65 | | 73 | M |
| | 2011.06-2017.08 | 8AT | F | L | SUV 4WD N57 D30 A | | GCI81598 | Inner Joint | | 27 | 24 | 43.95 | 60 | 111 | |
| | 2011.06-2017.08 | 8AT | F | R | SUV 4WD N57 D30 A | | GCI81605 | Inner Joint | | 27 | 24 | 43.95 | 349 | 112.5 | |
| | 2011.06-2017.08 | 8AT | R | L | SUV 4WD N57 D30 A | | GDS85120 | Drive Shaft | | 30 | 32 | 64.9 | 77 | 771 | |
| | 2011.06-2017.08 | 8AT | R | R | SUV 4WD N57 D30 A | | GDS85119 | Drive Shaft | | 30 | 32 | 64.9 | 77 | 827 | |
| | 2017.12-2020.06 | 8AT | F | L | SUV 4WD B57 D30 A | | GDS84375 | Drive Shaft | | 37 | 27 | 65 | | 574 | |
| | 2017.12-2020.06 | 8AT | F | R | SUV 4WD B57 D30 A | | GDS84374 | Drive Shaft | | 37 | 27 | 65 | | 875 | |
| | 2017.12-2020.06 | 8AT | F | L/R | SUV 4WD B57 D30 A | | GCO82735 | Outer Joint | | 37 | 33 | 65 | | 74.5 | M |
| | 2017.12-2020.06 | 8AT | F | L | SUV 4WD B57 D30 A | | GCI82647 | Inner Joint | | 27 | 33 | 43.95 | 60 | 118 | |
| | 2017.12-2020.06 | 8AT | F | R | SUV 4WD B57 D30 A | | GCI82668 | Inner Joint | | 27 | 33 | 35 | 359.5 | 119.5 | |
| | 2020.07- | 8AT | F | L | SUV 4WD B57 D30 B;JA1 | Type:2 | GDS84375 | Drive Shaft | | 37 | 27 | 65 | | 574 | |
| | 2020.07- | 8AT | F | R | SUV 4WD B57 D30 B;JA1 | Type:2 | GDS84374 | Drive Shaft | | 37 | 27 | 65 | | 875 | |
| | 2020.07- | 8AT | F | L/R | SUV 4WD B57 D30 B;JA1 | Type:2 | GCO82735 | Outer Joint | | 37 | 33 | 65 | | 74.5 | M |
| | 2020.07- | 8AT | F | L | SUV 4WD B57 D30 B;JA1 | Type:2 | GCI82647 | Inner Joint | | 27 | 33 | 43.95 | 60 | 118 | |
| | 2020.07- | 8AT | F | R | SUV 4WD B57 D30 B;JA1 | Type:2 | GCI82668 | Inner Joint | | 27 | 33 | 35 | 359.5 | 119.5 | |

| | YEAR | TRANSM. | F/R | L/R | BODY STYLE & DRIVE TYPE & ENGINE | REMARKS | G-AP Ref. | PRODUCT | ABS | Technical Specifications A | B | C | H | L | P |
|---|---|---|---|---|---|---|---|---|---|---|---|---|---|---|---|
| **BMW** | | | | | | | | | | | | | | | |
| **X3 xDrive 30d** | | | | | | | | | | | | | | | |
| 3.0 (190 kw) | 2011.04-2017.08 | 8AT | F | L | SUV 4WD N57 D30 A | | GDS82060 | Drive Shaft | | 37 | 27 | 65 | | 590 | |
| | 2011.04-2017.08 | 8AT | F | R | SUV 4WD N57 D30 A | | GDS82061 | Drive Shaft | | 37 | 27 | 65 | | 880 | |
| | 2011.04-2017.08 | 8AT | F | L/R | SUV 4WD N57 D30 A | | GCO81604 | Outer Joint | | 37 | 33 | 65 | | 73 | M |
| | 2011.04-2017.08 | 8AT | F | L | SUV 4WD N57 D30 A | | GCI81598 | Inner Joint | | 27 | 24 | 43.95 | 60 | 111 | |
| | 2011.04-2017.08 | 8AT | F | R | SUV 4WD N57 D30 A | | GCI81605 | Inner Joint | | 27 | 24 | 43.95 | 349 | 112.5 | |
| | 2011.04-2017.08 | 8AT | R | L | SUV 4WD N57 D30 A | | GDS85120 | Drive Shaft | | 30 | 32 | 64.9 | 77 | 771 | |
| | 2011.04-2017.08 | 8AT | R | R | SUV 4WD N57 D30 A | | GDS85119 | Drive Shaft | | 30 | 32 | 64.9 | 77 | 827 | |
| 3.0 (195 kw) | 2017.08- | 8AT | F | L | SUV Van 4WD B57 D30 A | | GDS84375 | Drive Shaft | | 37 | 27 | 65 | | 574 | |
| | 2017.08- | 8AT | F | R | SUV Van 4WD B57 D30 A | | GDS84374 | Drive Shaft | | 37 | 27 | 65 | | 875 | |
| | 2017.08- | 8AT | F | L/R | SUV Van 4WD B57 D30 A | | GCO82735 | Outer Joint | | 37 | 33 | 65 | | 74.5 | M |
| | 2017.08- | 8AT | F | L | SUV Van 4WD B57 D30 A | | GCI82647 | Inner Joint | | 27 | 33 | 43.95 | 60 | 118 | |
| | 2017.08- | 8AT | F | R | SUV Van 4WD B57 D30 A | | GCI82668 | Inner Joint | | 27 | 33 | 35 | 359.5 | 119.5 | |
| | 2017.08-2020.06 | 8AT | F | L | SUV 4WD B57 D30 A | | GDS84375 | Drive Shaft | | 37 | 27 | 65 | | 574 | |
| | 2017.08-2020.06 | 8AT | F | R | SUV 4WD B57 D30 A | | GDS84374 | Drive Shaft | | 37 | 27 | 65 | | 875 | |
| | 2017.08-2020.06 | 8AT | F | L/R | SUV 4WD B57 D30 A | | GCO82735 | Outer Joint | | 37 | 33 | 65 | | 74.5 | M |
| | 2017.08-2020.06 | 8AT | F | L | SUV 4WD B57 D30 A | | GCI82647 | Inner Joint | | 27 | 33 | 43.95 | 60 | 118 | |
| | 2017.08-2020.06 | 8AT | F | R | SUV 4WD B57 D30 A | | GCI82668 | Inner Joint | | 27 | 33 | 35 | 359.5 | 119.5 | |
| 3.0 (204 kw) | 2016.06-2017.08 | 8AT | F | L | SUV 4WD N57 D30 A | | GDS82060 | Drive Shaft | | 37 | 27 | 65 | | 590 | |
| | 2016.06-2017.08 | 8AT | F | R | SUV 4WD N57 D30 A | | GDS82061 | Drive Shaft | | 37 | 27 | 65 | | 880 | |
| | 2016.06-2017.08 | 8AT | F | L/R | SUV 4WD N57 D30 A | | GCO81604 | Outer Joint | | 37 | 33 | 65 | | 73 | M |
| | 2016.06-2017.08 | 8AT | F | L | SUV 4WD N57 D30 A | | GCI81598 | Inner Joint | | 27 | 24 | 43.95 | 60 | 111 | |
| | 2016.06-2017.08 | 8AT | F | R | SUV 4WD N57 D30 A | | GCI81605 | Inner Joint | | 27 | 24 | 43.95 | 349 | 112.5 | |
| | 2016.06-2017.08 | 8AT | R | L | SUV 4WD N57 D30 A | | GDS85120 | Drive Shaft | | 30 | 32 | 64.9 | 77 | 771 | |
| | 2016.06-2017.08 | 8AT | R | R | SUV 4WD N57 D30 A | | GDS85119 | Drive Shaft | | 30 | 32 | 64.9 | 77 | 827 | |
| 3.0 (210 kw) | 2011.04-2016.05 | 8AT | F | L | SUV 4WD N57 D30 A | | GDS82060 | Drive Shaft | | 37 | 27 | 65 | | 590 | |
| | 2011.04-2016.05 | 8AT | F | R | SUV 4WD N57 D30 A | | GDS82061 | Drive Shaft | | 37 | 27 | 65 | | 880 | |
| | 2011.04-2016.05 | 8AT | F | L/R | SUV 4WD N57 D30 A | | GCO81604 | Outer Joint | | 37 | 33 | 65 | | 73 | M |
| | 2011.04-2016.05 | 8AT | F | L | SUV 4WD N57 D30 A | | GCI81598 | Inner Joint | | 27 | 24 | 43.95 | 60 | 111 | |
| | 2011.04-2016.05 | 8AT | F | R | SUV 4WD N57 D30 A | | GCI81605 | Inner Joint | | 27 | 24 | 43.95 | 349 | 112.5 | |
| | 2011.04-2016.05 | 8AT | R | L | SUV 4WD N57 D30 A | | GDS85120 | Drive Shaft | | 30 | 32 | 64.9 | 77 | 771 | |
| | 2011.04-2016.05 | 8AT | R | R | SUV 4WD N57 D30 A | | GDS85119 | Drive Shaft | | 30 | 32 | 64.9 | 77 | 827 | |
| | 2020.07- | 8AT | F | L | SUV 4WD B57 D30 B;JA1 | Type:2 | GDS84375 | Drive Shaft | | 37 | 27 | 65 | | 574 | |
| | 2020.07- | 8AT | F | R | SUV 4WD B57 D30 B;JA1 | Type:2 | GDS84374 | Drive Shaft | | 37 | 27 | 65 | | 875 | |
| | 2020.07- | 8AT | F | L/R | SUV 4WD B57 D30 B;JA1 | Type:2 | GCO82735 | Outer Joint | | 37 | 33 | 65 | | 74.5 | M |
| | 2020.07- | 8AT | F | L | SUV 4WD B57 D30 B;JA1 | Type:2 | GCI82647 | Inner Joint | | 27 | 33 | 43.95 | 60 | 118 | |
| | 2020.07- | 8AT | F | R | SUV 4WD B57 D30 B;JA1 | Type:2 | GCI82668 | Inner Joint | | 27 | 33 | 35 | 359.5 | 119.5 | |
| **X3 xDrive 30e** | | | | | | | | | | | | | | | |
| 2.0 (200 kw) | 2023.01- | 8AT | F | L | SUV 4WD B48 A20 A;B46 B20 B | | GDS84375 | Drive Shaft | | 37 | 27 | 65 | | 574 | |
| | 2023.01- | 8AT | F | R | SUV 4WD B48 A20 A;B46 B20 B | | GDS84374 | Drive Shaft | | 37 | 27 | 65 | | 875 | |
| | 2023.01- | 8AT | F | L/R | SUV 4WD B48 A20 A;B46 B20 B | | GCO82735 | Outer Joint | | 37 | 33 | 65 | | 74.5 | M |
| | 2023.01- | 8AT | F | L | SUV 4WD B48 A20 A;B46 B20 B | | GCI82647 | Inner Joint | | 27 | 33 | 43.95 | 60 | 118 | |
| | 2023.01- | 8AT | F | R | SUV 4WD B48 A20 A;B46 B20 B | | GCI82668 | Inner Joint | | 27 | 33 | 35 | 359.5 | 119.5 | |
| 2.0 (215 kw) | 2019.12- | 8AT | F | L | SUV 4WD B48 B20 A;B46 B20 B | | GDS84375 | Drive Shaft | | 37 | 27 | 65 | | 574 | |
| | 2019.12- | 8AT | F | R | SUV 4WD B48 B20 A;B46 B20 B | | GDS84374 | Drive Shaft | | 37 | 27 | 65 | | 875 | |
| | 2019.12- | 8AT | F | L/R | SUV 4WD B48 B20 A;B46 B20 B | | GCO82735 | Outer Joint | | 37 | 33 | 65 | | 74.5 | M |
| | 2019.12- | 8AT | F | L | SUV 4WD B48 B20 A;B46 B20 B | | GCI82647 | Inner Joint | | 27 | 33 | 43.95 | 60 | 118 | |
| | 2019.12- | 8AT | F | R | SUV 4WD B48 B20 A;B46 B20 B | | GCI82668 | Inner Joint | | 27 | 33 | 35 | 359.5 | 119.5 | |
| **X3 xDrive 30i** | | | | | | | | | | | | | | | |
| 2.0 (180 kw) | 2021.08- | 8AT | F | L | SUV 4WD B48 B20 B;B46 B20 B | | GDS84375 | Drive Shaft | | 37 | 27 | 65 | | 574 | |
| | 2021.08- | 8AT | F | R | SUV 4WD B48 B20 B;B46 B20 B | | GDS84374 | Drive Shaft | | 37 | 27 | 65 | | 875 | |
| | 2021.08- | 8AT | F | L/R | SUV 4WD B48 B20 B;B46 B20 B | | GCO82735 | Outer Joint | | 37 | 33 | 65 | | 74.5 | M |
| | 2021.08- | 8AT | F | L | SUV 4WD B48 B20 B;B46 B20 B | | GCI82647 | Inner Joint | | 27 | 33 | 43.95 | 60 | 118 | |
| | 2021.08- | 8AT | F | R | SUV 4WD B48 B20 B;B46 B20 B | | GCI82668 | Inner Joint | | 27 | 33 | 35 | 359.5 | 119.5 | |
| 2.0 (183 kw) | 2017.08- | 8AT | F | L | SUV 4WD B48 B20 B | Type:2 | GDS84375 | Drive Shaft | | 37 | 27 | 65 | | 574 | |
| | 2017.08- | 8AT | F | R | SUV 4WD B48 B20 B | Type:2 | GDS84374 | Drive Shaft | | 37 | 27 | 65 | | 875 | |
| | 2017.08- | 8AT | F | L/R | SUV 4WD B48 B20 B | Type:2 | GCO82735 | Outer Joint | | 37 | 33 | 65 | | 74.5 | M |
| | 2017.08- | 8AT | F | L | SUV 4WD B48 B20 B | Type:2 | GCI82647 | Inner Joint | | 27 | 33 | 43.95 | 60 | 118 | |
| | 2017.08- | 8AT | F | R | SUV 4WD B48 B20 B | Type:2 | GCI82668 | Inner Joint | | 27 | 33 | 35 | 359.5 | 119.5 | |
| 2.0 (185 kw) | 2017.08- | 8AT | F | L | SUV 4WD B48 B20 B;B46 B20 B | | GDS84375 | Drive Shaft | | 37 | 27 | 65 | | 574 | |
| | 2017.08- | 8AT | F | R | SUV 4WD B48 B20 B;B46 B20 B | | GDS84374 | Drive Shaft | | 37 | 27 | 65 | | 875 | |
| | 2017.08- | 8AT | F | L/R | SUV 4WD B48 B20 B;B46 B20 B | | GCO82735 | Outer Joint | | 37 | 33 | 65 | | 74.5 | M |
| | 2017.08- | 8AT | F | L | SUV 4WD B48 B20 B;B46 B20 B | | GCI82647 | Inner Joint | | 27 | 33 | 43.95 | 60 | 118 | |
| | 2017.08- | 8AT | F | R | SUV 4WD B48 B20 B;B46 B20 B | | GCI82668 | Inner Joint | | 27 | 33 | 35 | 359.5 | 119.5 | |
| | 2017.08- | 8AT | F | L | SUV Van 4WD B48 B20 B | | GDS84375 | Drive Shaft | | 37 | 27 | 65 | | 574 | |
| | 2017.08- | 8AT | F | R | SUV Van 4WD B48 B20 B | | GDS84374 | Drive Shaft | | 37 | 27 | 65 | | 875 | |

| | YEAR | TRANSM. | F/R | L/R | BODY STYLE & DRIVE TYPE & ENGINE | REMARKS | G-AP Ref. | PRODUCT | ABS | Technical Specifications A | B | C | H | L | P |
|---|---|---|---|---|---|---|---|---|---|---|---|---|---|---|---|
| **BMW** | | | | | | | | | | | | | | | |
| **X3 xDrive 30i** | | | | | | | | | | | | | | | |
| 2.0 (185 kw) | 2017.08- | 8AT | F | L/R | SUV Van 4WD B48 B20 B | | GCO82735 | Outer Joint | | 37 | 33 | 65 | | 74.5 | M |
| | 2017.08- | 8AT | F | L | SUV Van 4WD B48 B20 B | | GCI82647 | Inner Joint | | 27 | 33 | 43.95 | 60 | 118 | |
| | 2017.08- | 8AT | F | R | SUV Van 4WD B48 B20 B | | GCI82668 | Inner Joint | | 27 | 33 | 35 | 359.5 | 119.5 | |
| 3.0 (194 kw) | 2008.09-2010.08 | 6AT/6MT | F | L | SUV 4WD N52 B30 A | | GDS99215 | Drive Shaft | | 30 | 27 | 64.8 | 77 | 598 | |
| | 2008.09-2010.08 | 6AT/6MT | F | R | SUV 4WD N52 B30 A | | GDS85078 | Drive Shaft | | 30 | 27 | 64.8 | 77 | 919 | |
| | 2008.09-2010.08 | 6AT/6MT | F | L/R | SUV 4WD N52 B30 A | | GCO85010 | Outer Joint | | 30 | 33 | 64.8 | 77 | 60 | M |
| | 2008.09-2010.08 | 6AT/6MT | F | L | SUV 4WD N52 B30 A | | GCI85026 | Inner Joint | | 27 | 24 | 44 | 60 | 114.5 | |
| | 2008.09-2010.08 | 6AT/6MT | R | L | SUV 4WD N52 B30 A | | GDS85062 | Drive Shaft | 48W | 30 | | 69 | 73 | 618 | |
| | 2008.09-2010.08 | 6AT/6MT | R | R | SUV 4WD N52 B30 A | | GDS82294 | Drive Shaft | 48W | 30 | | 69 | 73 | 679 | |
| | 2008.09-2010.08 | 6AT/6MT | R | L | SUV 4WD N52 B30 A | | GCI35025 | Inner Joint | | | 25 | | | 26 | |
| 3.0 (200 kw) | 2008.09-2010.08 | 6AT/6MT | F | L | SUV 4WD N52 B30 A;N52 B30 BF | | GCI85026 | Inner Joint | | 27 | 24 | 44 | 60 | 114.5 | |
| | 2008.09-2010.08 | AT/MT | F | L | SUV 4WD N52 B30 A;N52 B30 BF | | GDS99215 | Drive Shaft | | 30 | 27 | 64.8 | 77 | 598 | |
| | 2008.09-2010.08 | AT/MT | F | R | SUV 4WD N52 B30 A;N52 B30 BF | | GDS85078 | Drive Shaft | | 30 | 27 | 64.8 | 77 | 919 | |
| | 2008.09-2010.08 | AT/MT | F | L/R | SUV 4WD N52 B30 A;N52 B30 BF | | GCO85010 | Outer Joint | | 30 | 33 | 64.8 | 77 | 60 | M |
| | 2008.09-2010.08 | AT/MT | R | L | SUV 4WD N52 B30 A;N52 B30 BF | | GDS85062 | Drive Shaft | 48W | 30 | | 69 | 73 | 618 | |
| | 2008.09-2010.08 | AT/MT | R | R | SUV 4WD N52 B30 A;N52 B30 BF | | GDS82294 | Drive Shaft | 48W | 30 | | 69 | 73 | 679 | |
| **X3 xDrive 35d** | | | | | | | | | | | | | | | |
| 3.0 (210 kw) | 2008.09-2011.08 | 6AT | F | L | SUV 4WD M57 D30 (306D5) | | GCI85026 | Inner Joint | | 27 | 24 | 44 | 60 | 114.5 | |
| | 2008.09-2011.08 | AT | F | L | SUV 4WD M57 D30 (306D5) | | GDS99215 | Drive Shaft | | 30 | 27 | 64.8 | 77 | 598 | |
| | 2008.09-2011.08 | AT | F | R | SUV 4WD M57 D30 (306D5) | | GDS85078 | Drive Shaft | | 30 | 27 | 64.8 | 77 | 919 | |
| | 2008.09-2011.08 | AT | F | L/R | SUV 4WD M57 D30 (306D5) | | GCO85010 | Outer Joint | | 30 | 33 | 64.8 | 77 | 60 | M |
| | 2008.09-2011.08 | AT | R | L | SUV 4WD M57 D30 (306D5) | | GDS85062 | Drive Shaft | 48W | 30 | | 69 | 73 | 618 | |
| | 2008.09-2011.08 | AT | R | R | SUV 4WD M57 D30 (306D5) | | GDS85074 | Drive Shaft | 48W | 30 | | 69 | 73 | 678 | |
| 3.0 (230 kw) | 2011.10-2017.08 | 8AT | F | L | SUV 4WD N57 D30 B | | GDS82060 | Drive Shaft | | 37 | 27 | 65 | | 590 | |
| | 2011.10-2017.08 | 8AT | F | R | SUV 4WD N57 D30 B | | GDS82061 | Drive Shaft | | 37 | 27 | 65 | | 880 | |
| | 2011.10-2017.08 | 8AT | F | L/R | SUV 4WD N57 D30 B | | GCO81604 | Outer Joint | | 37 | 33 | 65 | | 73 | M |
| | 2011.10-2017.08 | 8AT | F | L | SUV 4WD N57 D30 B | | GCI81598 | Inner Joint | | 27 | 24 | 43.95 | 60 | 111 | |
| | 2011.10-2017.08 | 8AT | F | R | SUV 4WD N57 D30 B | | GCI81605 | Inner Joint | | 27 | 24 | 43.95 | 349 | 112.5 | |
| | 2011.10-2017.08 | 8AT | R | L | SUV 4WD N57 D30 B | | GDS85120 | Drive Shaft | | 30 | 32 | 64.9 | 77 | 771 | |
| | 2011.10-2017.08 | 8AT | R | R | SUV 4WD N57 D30 B | | GDS85119 | Drive Shaft | | 30 | 32 | 64.9 | 77 | 827 | |
| **X3 xDrive 35i** | | | | | | | | | | | | | | | |
| 3.0 (225 kw) | 2010.09-2017.08 | 8AT | F | L | SUV 4WD N55 B30 A | | GDS82060 | Drive Shaft | | 37 | 27 | 65 | | 590 | |
| | 2010.09-2017.08 | 8AT | F | R | SUV 4WD N55 B30 A | | GDS82061 | Drive Shaft | | 37 | 27 | 65 | | 880 | |
| | 2010.09-2017.08 | 8AT | F | L/R | SUV 4WD N55 B30 A | | GCO81604 | Outer Joint | | 37 | 33 | 65 | | 73 | M |
| | 2010.09-2017.08 | 8AT | F | L | SUV 4WD N55 B30 A | | GCI81598 | Inner Joint | | 27 | 24 | 43.95 | 60 | 111 | |
| | 2010.09-2017.08 | 8AT | F | R | SUV 4WD N55 B30 A | | GCI81605 | Inner Joint | | 27 | 24 | 43.95 | 349 | 112.5 | |
| | 2010.09-2017.08 | 8AT | R | L | SUV 4WD N55 B30 A | | GDS85117 | Drive Shaft | | 30 | 27 | 64.9 | 77 | 769 | |
| | 2010.09-2017.08 | 8AT | R | R | SUV 4WD N55 B30 A | | GDS85121 | Drive Shaft | | 30 | 27 | 64.9 | 77 | 825 | |
| **X3 xDrive M40d** | | | | | | | | | | | | | | | |
| 3.0 (240 kw) | 2018.08-2020.06 | 8AT | F | L | SUV 4WD B57 D30 B | | GDS84375 | Drive Shaft | | 37 | 27 | 65 | | 574 | |
| | 2018.08-2020.06 | 8AT | F | R | SUV 4WD B57 D30 B | | GDS84374 | Drive Shaft | | 37 | 27 | 65 | | 875 | |
| | 2018.08-2020.06 | 8AT | F | L/R | SUV 4WD B57 D30 B | | GCO82735 | Outer Joint | | 37 | 33 | 65 | | 74.5 | M |
| | 2018.08-2020.06 | 8AT | F | L | SUV 4WD B57 D30 B | | GCI82647 | Inner Joint | | 27 | 33 | 43.95 | 60 | 118 | |
| | 2018.08-2020.06 | 8AT | F | R | SUV 4WD B57 D30 B | | GCI82668 | Inner Joint | | 27 | 33 | 35 | 359.5 | 119.5 | |
| 3.0 (250 kw) | 2020.07- | 8AT | F | L | SUV 4WD B57 D30 B;JA1 | | GDS84375 | Drive Shaft | | 37 | 27 | 65 | | 574 | |
| | 2020.07- | 8AT | F | R | SUV 4WD B57 D30 B;JA1 | | GDS84374 | Drive Shaft | | 37 | 27 | 65 | | 875 | |
| | 2020.07- | 8AT | F | L/R | SUV 4WD B57 D30 B;JA1 | | GCO82735 | Outer Joint | | 37 | 33 | 65 | | 74.5 | M |
| | 2020.07- | 8AT | F | L | SUV 4WD B57 D30 B;JA1 | | GCI82647 | Inner Joint | | 27 | 33 | 43.95 | 60 | 118 | |
| | 2020.07- | 8AT | F | R | SUV 4WD B57 D30 B;JA1 | | GCI82668 | Inner Joint | | 27 | 33 | 35 | 359.5 | 119.5 | |
| **X3 xDrive M40i** | | | | | | | | | | | | | | | |
| 3.0 (260 kw) | 2018.09-2019.08 | 8AT | F | L | SUV 4WD B58 B30 A | | GDS84375 | Drive Shaft | | 37 | 27 | 65 | | 574 | |
| | 2018.09-2019.08 | 8AT | F | R | SUV 4WD B58 B30 A | | GDS84374 | Drive Shaft | | 37 | 27 | 65 | | 875 | |
| | 2018.09-2019.08 | 8AT | F | L/R | SUV 4WD B58 B30 A | | GCO82735 | Outer Joint | | 37 | 33 | 65 | | 74.5 | M |
| | 2018.09-2019.08 | 8AT | F | L | SUV 4WD B58 B30 A | | GCI82647 | Inner Joint | | 27 | 33 | 43.95 | 60 | 118 | |
| | 2018.09-2019.08 | 8AT | F | R | SUV 4WD B58 B30 A | | GCI82668 | Inner Joint | | 27 | 33 | 35 | 359.5 | 119.5 | |
| 3.0 (265 kw) | 2017.08- | 8AT | F | L | SUV 4WD B58 B30 A | | GDS84375 | Drive Shaft | | 37 | 27 | 65 | | 574 | |
| | 2017.08- | 8AT | F | R | SUV 4WD B58 B30 A | | GDS84374 | Drive Shaft | | 37 | 27 | 65 | | 875 | |
| | 2017.08- | 8AT | F | L/R | SUV 4WD B58 B30 A | | GCO82735 | Outer Joint | | 37 | 33 | 65 | | 74.5 | M |
| | 2017.08- | 8AT | F | L | SUV 4WD B58 B30 A | | GCI82647 | Inner Joint | | 27 | 33 | 43.95 | 60 | 118 | |
| | 2017.08- | 8AT | F | R | SUV 4WD B58 B30 A | | GCI82668 | Inner Joint | | 27 | 33 | 35 | 359.5 | 119.5 | |
| | 2017.08-2019.08 | 8AT | F | L | SUV Van 4WD B58 B30 A | | GDS84375 | Drive Shaft | | 37 | 27 | 65 | | 574 | |
| | 2017.08-2019.08 | 8AT | F | R | SUV Van 4WD B58 B30 A | | GDS84374 | Drive Shaft | | 37 | 27 | 65 | | 875 | |
| | 2017.08-2019.08 | 8AT | F | L/R | SUV Van 4WD B58 B30 A | | GCO82735 | Outer Joint | | 37 | 33 | 65 | | 74.5 | M |
| | 2017.08-2019.08 | 8AT | F | L | SUV Van 4WD B58 B30 A | | GCI82647 | Inner Joint | | 27 | 33 | 43.95 | 60 | 118 | |
| | 2017.08-2019.08 | 8AT | F | R | SUV Van 4WD B58 B30 A | | GCI82668 | Inner Joint | | 27 | 33 | 35 | 359.5 | 119.5 | |

| | YEAR | TRANSM. | F/R | L/R | BODY STYLE & DRIVE TYPE & ENGINE | REMARKS | G-AP Ref. | PRODUCT | ABS | Technical Specifications A | B | C | H | L | P |
|---|---|---|---|---|---|---|---|---|---|---|---|---|---|---|---|
| **BMW** | | | | | | | | | | | | | | | |
| **X3 xDrive M40i** | | | | | | | | | | | | | | | |
| 3.0 (265 kw) | 2021.08- | 8AT | F | L | SUV 4WD B58 B30 B | | GDS84375 | Drive Shaft | | 37 | 27 | 65 | | 574 | |
| | 2021.08- | 8AT | F | R | SUV 4WD B58 B30 B | | GDS84374 | Drive Shaft | | 37 | 27 | 65 | | 875 | |
| | 2021.08- | 8AT | F | L/R | SUV 4WD B58 B30 B | | GCO82735 | Outer Joint | | 37 | 33 | 65 | | 74.5 | M |
| | 2021.08- | 8AT | F | L | SUV 4WD B58 B30 B | | GCI82647 | Inner Joint | | 27 | 33 | 43.95 | 60 | 118 | |
| | 2021.08- | 8AT | F | R | SUV 4WD B58 B30 B | | GCI82668 | Inner Joint | | 27 | 33 | 35 | 359.5 | 119.5 | |
| 3.0 (285 kw) | 2019.09- | 8AT | F | L | SUV 4WD B58 B30 B | Type:2 | GDS84375 | Drive Shaft | | 37 | 27 | 65 | | 574 | |
| | 2019.09- | 8AT | F | R | SUV 4WD B58 B30 B | Type:2 | GDS84374 | Drive Shaft | | 37 | 27 | 65 | | 875 | |
| | 2019.09- | 8AT | F | L/R | SUV 4WD B58 B30 B | Type:2 | GCO82735 | Outer Joint | | 37 | 33 | 65 | | 74.5 | M |
| | 2019.09- | 8AT | F | L | SUV 4WD B58 B30 B | Type:2 | GCI82647 | Inner Joint | | 27 | 33 | 43.95 | 60 | 118 | |
| | 2019.09- | 8AT | F | R | SUV 4WD B58 B30 B | Type:2 | GCI82668 | Inner Joint | | 27 | 33 | 35 | 359.5 | 119.5 | |
| | 2019.09- | 8AT | F | L | SUV Van 4WD B58 B30 B | Type:2 | GDS84375 | Drive Shaft | | 37 | 27 | 65 | | 574 | |
| | 2019.09- | 8AT | F | R | SUV Van 4WD B58 B30 B | Type:2 | GDS84374 | Drive Shaft | | 37 | 27 | 65 | | 875 | |
| | 2019.09- | 8AT | F | L/R | SUV Van 4WD B58 B30 B | Type:2 | GCO82735 | Outer Joint | | 37 | 33 | 65 | | 74.5 | M |
| | 2019.09- | 8AT | F | L | SUV Van 4WD B58 B30 B | Type:2 | GCI82647 | Inner Joint | | 27 | 33 | 43.95 | 60 | 118 | |
| | 2019.09- | 8AT | F | R | SUV Van 4WD B58 B30 B | Type:2 | GCI82668 | Inner Joint | | 27 | 33 | 35 | 359.5 | 119.5 | |
| **X4 M** | | | | | | | | | | | | | | | |
| 3.0 (353 kw) | 2019.03- | 8AT | F | L | SUV 4WD S58 B30 A | | GDS84375 | Drive Shaft | | 37 | 27 | 65 | | 574 | |
| | 2019.03- | 8AT | F | R | SUV 4WD S58 B30 A | | GDS84374 | Drive Shaft | | 37 | 27 | 65 | | 875 | |
| | 2019.03- | 8AT | F | L/R | SUV 4WD S58 B30 A | | GCO82735 | Outer Joint | | 37 | 33 | 65 | | 74.5 | M |
| | 2019.03- | 8AT | F | L | SUV 4WD S58 B30 A | | GCI82647 | Inner Joint | | 27 | 33 | 43.95 | 60 | 118 | |
| | 2019.03- | 8AT | F | R | SUV 4WD S58 B30 A | | GCI82668 | Inner Joint | | 27 | 33 | 35 | 359.5 | 119.5 | |
| 3.0 (375 kw) | 2019.03- | 8AT | F | L | SUV 4WD S58 B30 A | | GDS84375 | Drive Shaft | | 37 | 27 | 65 | | 574 | |
| | 2019.03- | 8AT | F | R | SUV 4WD S58 B30 A | | GDS84374 | Drive Shaft | | 37 | 27 | 65 | | 875 | |
| | 2019.03- | 8AT | F | L/R | SUV 4WD S58 B30 A | | GCO82735 | Outer Joint | | 37 | 33 | 65 | | 74.5 | M |
| | 2019.03- | 8AT | F | L | SUV 4WD S58 B30 A | | GCI82647 | Inner Joint | | 27 | 33 | 43.95 | 60 | 118 | |
| | 2019.03- | 8AT | F | R | SUV 4WD S58 B30 A | | GCI82668 | Inner Joint | | 27 | 33 | 35 | 359.5 | 119.5 | |
| **X4 xDrive 20d** | | | | | | | | | | | | | | | |
| 2.0 (120 kw) | 2014.04-2018.03 | AT/MT | F | L | SUV 4WD B47 D20 A | | GDS82060 | Drive Shaft | | 37 | 27 | 65 | | 590 | |
| | 2014.04-2018.03 | AT/MT | F | R | SUV 4WD B47 D20 A | | GDS82061 | Drive Shaft | | 37 | 27 | 65 | | 880 | |
| | 2014.04-2018.03 | AT/MT | F | L/R | SUV 4WD B47 D20 A | | GCO81604 | Outer Joint | | 37 | 33 | 65 | | 73 | M |
| | 2014.04-2018.03 | AT/MT | F | L | SUV 4WD B47 D20 A | | GCI81598 | Inner Joint | | 27 | 24 | 43.95 | 60 | 111 | |
| | 2014.04-2018.03 | AT/MT | F | R | SUV 4WD B47 D20 A | | GCI81605 | Inner Joint | | 27 | 24 | 43.95 | 349 | 112.5 | |
| | 2014.04-2018.03 | 6MT | R | L/R | SUV 4WD B47 D20 A | | GCI85020 | Inner Joint | | 27 | 25 | 43.9 | 75 | 96 | |
| | 2014.04-2018.03 | 8AT | R | L | SUV 4WD B47 D20 A | | GDS85118 | Drive Shaft | | 30 | 27 | 65 | 77 | 826 | |
| | 2014.04-2018.03 | 8AT | R | R | SUV 4WD B47 D20 A | | GDS85142 | Drive Shaft | | 30 | 27 | 65 | 77 | 772 | |
| | 2014.04-2018.03 | 8AT | R | L/R | SUV 4WD B47 D20 A | | GCI85063 | Inner Joint | | 30 | 28 | 65 | 77 | 89 | |
| | 2014.04-2018.03 | AT/MT | R | L | SUV 4WD B47 D20 A | | GDS85117 | Drive Shaft | | 30 | 27 | 64.9 | 77 | 769 | |
| | 2014.04-2018.03 | AT/MT | R | R | SUV 4WD B47 D20 A | | GDS85121 | Drive Shaft | | 30 | 27 | 64.9 | 77 | 825 | |
| | 2014.04-2018.03 | AT/MT | R | L/R | SUV 4WD B47 D20 A | | GCI85054 | Outer Joint | | 30 | 25 | 64.9 | 77 | 82 | |
| | 2018.04-2020.03 | 8AT | F | L | SUV 4WD B47 D20 A;B47 D20 B | | GDS84375 | Drive Shaft | | 37 | 27 | 65 | | 574 | |
| | 2018.04-2020.03 | 8AT | F | R | SUV 4WD B47 D20 A;B47 D20 B | | GDS84374 | Drive Shaft | | 37 | 27 | 65 | | 875 | |
| | 2018.04-2020.03 | 8AT | F | L/R | SUV 4WD B47 D20 A;B47 D20 B | | GCO82735 | Outer Joint | | 37 | 33 | 65 | | 74.5 | M |
| | 2018.04-2020.03 | 8AT | F | L | SUV 4WD B47 D20 A;B47 D20 B | | GCI82647 | Inner Joint | | 27 | 33 | 43.95 | 60 | 118 | |
| | 2018.04-2020.03 | 8AT | F | R | SUV 4WD B47 D20 A;B47 D20 B | | GCI82668 | Inner Joint | | 27 | 33 | 35 | 359.5 | 119.5 | |
| | 2020.04- | 8AT | F | L | SUV 4WD B47 D20 B;JA1 | | GDS84375 | Drive Shaft | | 37 | 27 | 65 | | 574 | |
| | 2020.04- | 8AT | F | R | SUV 4WD B47 D20 B;JA1 | | GDS84374 | Drive Shaft | | 37 | 27 | 65 | | 875 | |
| | 2020.04- | 8AT | F | L/R | SUV 4WD B47 D20 B;JA1 | | GCO82735 | Outer Joint | | 37 | 33 | 65 | | 74.5 | M |
| | 2020.04- | 8AT | F | L | SUV 4WD B47 D20 B;JA1 | | GCI82647 | Inner Joint | | 27 | 33 | 43.95 | 60 | 118 | |
| | 2020.04- | 8AT | F | R | SUV 4WD B47 D20 B;JA1 | | GCI82668 | Inner Joint | | 27 | 33 | 35 | 359.5 | 119.5 | |
| 2.0 (140 kw) | 2014.04-2018.03 | 8AT/6MT | F | L | SUV 4WD B47 D20 A | | GDS82060 | Drive Shaft | | 37 | 27 | 65 | | 590 | |
| | 2014.04-2018.03 | 8AT/6MT | F | R | SUV 4WD B47 D20 A | | GDS82061 | Drive Shaft | | 37 | 27 | 65 | | 880 | |
| | 2014.04-2018.03 | 8AT/6MT | F | L/R | SUV 4WD B47 D20 A | | GCO81604 | Outer Joint | | 37 | 33 | 65 | | 73 | M |
| | 2014.04-2018.03 | 8AT/6MT | F | L | SUV 4WD B47 D20 A | | GCI81598 | Inner Joint | | 27 | 24 | 43.95 | 60 | 111 | |
| | 2014.04-2018.03 | 8AT/6MT | F | R | SUV 4WD B47 D20 A | | GCI81605 | Inner Joint | | 27 | 24 | 43.95 | 349 | 112.5 | |
| | 2014.04-2018.03 | 6MT | R | L | SUV 4WD B47 D20 A | | GDS85117 | Drive Shaft | | 30 | 27 | 64.9 | 77 | 769 | |
| | 2014.04-2018.03 | 6MT | R | R | SUV 4WD B47 D20 A | | GDS85121 | Drive Shaft | | 30 | 27 | 64.9 | 77 | 825 | |
| | 2014.04-2018.03 | 6MT | R | L/R | SUV 4WD B47 D20 A | | GCI85020 | Inner Joint | | 27 | 25 | 43.9 | 75 | 96 | |
| | 2014.04-2018.03 | 8AT | R | L | SUV 4WD B47 D20 A | | GDS85118 | Drive Shaft | | 30 | 27 | 65 | 77 | 826 | |
| | 2014.04-2018.03 | 8AT | R | R | SUV 4WD B47 D20 A | | GDS85142 | Drive Shaft | | 30 | 27 | 65 | 77 | 772 | |
| | 2014.04-2018.03 | 8AT | R | L/R | SUV 4WD B47 D20 A | | GCI85063 | Inner Joint | | 30 | 28 | 65 | 77 | 89 | |
| | 2014.04-2018.03 | 8AT/6MT | R | L/R | SUV 4WD B47 D20 A | | GCI85054 | Outer Joint | | 30 | 25 | 64.9 | 77 | 82 | |
| | 2018.04-2020.03 | 8AT | F | L | SUV 4WD B47 D20 A;B47 D20 B | | GDS84375 | Drive Shaft | | 37 | 27 | 65 | | 574 | |
| | 2018.04-2020.03 | 8AT | F | R | SUV 4WD B47 D20 A;B47 D20 B | | GDS84374 | Drive Shaft | | 37 | 27 | 65 | | 875 | |
| | 2018.04-2020.03 | 8AT | F | L/R | SUV 4WD B47 D20 A;B47 D20 B | | GCO82735 | Outer Joint | | 37 | 33 | 65 | | 74.5 | M |
| | 2018.04-2020.03 | 8AT | F | L | SUV 4WD B47 D20 A;B47 D20 B | | GCI82647 | Inner Joint | | 27 | 33 | 43.95 | 60 | 118 | |

| | YEAR | TRANSM. | F/R | L/R | BODY STYLE & DRIVE TYPE & ENGINE | REMARKS | G-AP Ref. | PRODUCT | ABS | Technical Specifications A | B | C | H | L | P |
|---|---|---|---|---|---|---|---|---|---|---|---|---|---|---|---|
| **BMW** | | | | | | | | | | | | | | | |
| **X4 xDrive 20d** | | | | | | | | | | | | | | | |
| 2.0 (140 kw) | 2018.04-2020.03 | 8AT | F | R | SUV 4WD B47 D20 A;B47 D20 B | | GCI82668 | Inner Joint | | 27 | 33 | 35 | 359.5 | 119.5 | |
| | 2020.04- | 8AT | F | L | SUV 4WD B47 D20 B;JA1 | | GDS84375 | Drive Shaft | | 37 | 27 | 65 | | 574 | |
| | 2020.04- | 8AT | F | R | SUV 4WD B47 D20 B;JA1 | | GDS84374 | Drive Shaft | | 37 | 27 | 65 | | 875 | |
| | 2020.04- | 8AT | F | L/R | SUV 4WD B47 D20 B;JA1 | | GCO82735 | Outer Joint | | 37 | 33 | 65 | | 74.5 | M |
| | 2020.04- | 8AT | F | L | SUV 4WD B47 D20 B;JA1 | | GCI82647 | Inner Joint | | 27 | 33 | 43.95 | 60 | 118 | |
| | 2020.04- | 8AT | F | R | SUV 4WD B47 D20 B;JA1 | | GCI82668 | Inner Joint | | 27 | 33 | 35 | 359.5 | 119.5 | |
| **X4 xDrive 20i** | | | | | | | | | | | | | | | |
| 2.0 (135 kw) | 2014.04-2018.03 | 8AT | F | L | SUV 4WD N20 B20 A | | GDS82060 | Drive Shaft | | 37 | 27 | 65 | | 590 | |
| | 2014.04-2018.03 | 8AT | F | R | SUV 4WD N20 B20 A | | GDS82061 | Drive Shaft | | 37 | 27 | 65 | | 880 | |
| | 2014.04-2018.03 | 8AT | F | L/R | SUV 4WD N20 B20 A | | GCO81604 | Outer Joint | | 37 | 33 | 65 | | 73 | M |
| | 2014.04-2018.03 | 8AT | F | L | SUV 4WD N20 B20 A | | GCI81598 | Inner Joint | | 27 | 24 | 43.95 | 60 | 111 | |
| | 2014.04-2018.03 | 8AT | F | R | SUV 4WD N20 B20 A | | GCI81605 | Inner Joint | | 27 | 24 | 43.95 | 349 | 112.5 | |
| | 2014.04-2018.03 | 8AT | R | L | SUV 4WD N20 B20 A | | GDS85117 | Drive Shaft | | 30 | 27 | 64.9 | 77 | 769 | |
| | 2014.04-2018.03 | 8AT | R | R | SUV 4WD N20 B20 A | | GDS85121 | Drive Shaft | | 30 | 27 | 64.9 | 77 | 825 | |
| | 2014.04-2018.03 | 8AT | R | L/R | SUV 4WD N20 B20 A | | GCI85054 | Outer Joint | | 30 | 25 | 64.9 | 77 | 82 | |
| | 2014.04-2018.03 | 8AT | R | L/R | SUV 4WD N20 B20 A | | GCI85020 | Inner Joint | | 27 | 25 | 43.9 | 75 | 96 | |
| | 2018.04- | 8AT | F | L | SUV 4WD B48 B20 A | | GDS84375 | Drive Shaft | | 37 | 27 | 65 | | 574 | |
| | 2018.04- | 8AT | F | R | SUV 4WD B48 B20 A | | GDS84374 | Drive Shaft | | 37 | 27 | 65 | | 875 | |
| | 2018.04- | 8AT | F | L/R | SUV 4WD B48 B20 A | | GCO82735 | Outer Joint | | 37 | 33 | 65 | | 74.5 | M |
| | 2018.04- | 8AT | F | L | SUV 4WD B48 B20 A | | GCI82647 | Inner Joint | | 27 | 33 | 43.95 | 60 | 118 | |
| | 2018.04- | 8AT | F | R | SUV 4WD B48 B20 A | | GCI82668 | Inner Joint | | 27 | 33 | 35 | 359.5 | 119.5 | |
| | 2021.08- | 8AT | F | L | SUV 4WD B48 B20 A;B46 B20 B | | GDS84375 | Drive Shaft | | 37 | 27 | 65 | | 574 | |
| | 2021.08- | 8AT | F | R | SUV 4WD B48 B20 A;B46 B20 B | | GDS84374 | Drive Shaft | | 37 | 27 | 65 | | 875 | |
| | 2021.08- | 8AT | F | L/R | SUV 4WD B48 B20 A;B46 B20 B | | GCO82735 | Outer Joint | | 37 | 33 | 65 | | 74.5 | M |
| | 2021.08- | 8AT | F | L | SUV 4WD B48 B20 A;B46 B20 B | | GCI82647 | Inner Joint | | 27 | 33 | 43.95 | 60 | 118 | |
| | 2021.08- | 8AT | F | R | SUV 4WD B48 B20 A;B46 B20 B | | GCI82668 | Inner Joint | | 27 | 33 | 35 | 359.5 | 119.5 | |
| **X4 xDrive 25d** | | | | | | | | | | | | | | | |
| 2.0 (155 kw) | 2018.04- | 8AT | F | L | SUV 4WD B47 D20 B | | GDS84375 | Drive Shaft | | 37 | 27 | 65 | | 574 | |
| | 2018.04- | 8AT | F | R | SUV 4WD B47 D20 B | | GDS84374 | Drive Shaft | | 37 | 27 | 65 | | 875 | |
| | 2018.04- | 8AT | F | L/R | SUV 4WD B47 D20 B | | GCO82735 | Outer Joint | | 37 | 33 | 65 | | 74.5 | M |
| | 2018.04- | 8AT | F | L | SUV 4WD B47 D20 B | | GCI82647 | Inner Joint | | 27 | 33 | 43.95 | 60 | 118 | |
| | 2018.04- | 8AT | F | R | SUV 4WD B47 D20 B | | GCI82668 | Inner Joint | | 27 | 33 | 35 | 359.5 | 119.5 | |
| 2.0 (170 kw) | 2018.04- | 8AT | F | L | SUV 4WD B47 D20 B | | GDS84375 | Drive Shaft | | 37 | 27 | 65 | | 574 | |
| | 2018.04- | 8AT | F | R | SUV 4WD B47 D20 B | | GDS84374 | Drive Shaft | | 37 | 27 | 65 | | 875 | |
| | 2018.04- | 8AT | F | L/R | SUV 4WD B47 D20 B | | GCO82735 | Outer Joint | | 37 | 33 | 65 | | 74.5 | M |
| | 2018.04- | 8AT | F | L | SUV 4WD B47 D20 B | | GCI82647 | Inner Joint | | 27 | 33 | 43.95 | 60 | 118 | |
| | 2018.04- | 8AT | F | R | SUV 4WD B47 D20 B | | GCI82668 | Inner Joint | | 27 | 33 | 35 | 359.5 | 119.5 | |
| **X4 xDrive 28i** | | | | | | | | | | | | | | | |
| 2.0 (180 kw) | 2014.04-2018.03 | AT/MT | F | L | SUV 4WD N20 B20 A | | GDS82060 | Drive Shaft | | 37 | 27 | 65 | | 590 | |
| | 2014.04-2018.03 | AT/MT | F | R | SUV 4WD N20 B20 A | | GDS82061 | Drive Shaft | | 37 | 27 | 65 | | 880 | |
| | 2014.04-2018.03 | AT/MT | F | L/R | SUV 4WD N20 B20 A | | GCO81604 | Outer Joint | | 37 | 33 | 65 | | 73 | M |
| | 2014.04-2018.03 | AT/MT | F | L | SUV 4WD N20 B20 A | | GCI81598 | Inner Joint | | 27 | 24 | 43.95 | 60 | 111 | |
| | 2014.04-2018.03 | AT/MT | F | R | SUV 4WD N20 B20 A | | GCI81605 | Inner Joint | | 27 | 24 | 43.95 | 349 | 112.5 | |
| | 2014.04-2018.03 | AT | R | L | SUV 4WD N20 B20 A | | GDS85117 | Drive Shaft | | 30 | 27 | 64.9 | 77 | 769 | |
| | 2014.04-2018.03 | AT | R | R | SUV 4WD N20 B20 A | | GDS85121 | Drive Shaft | | 30 | 27 | 64.9 | 77 | 825 | |
| | 2014.04-2018.03 | AT | R | L/R | SUV 4WD N20 B20 A | | GCI85054 | Outer Joint | | 30 | 25 | 64.9 | 77 | 82 | |
| | 2014.04-2018.03 | AT | R | L/R | SUV 4WD N20 B20 A | | GCI85020 | Inner Joint | | 27 | 25 | 43.9 | 75 | 96 | |
| **X4 xDrive 30d** | | | | | | | | | | | | | | | |
| 3.0 (155 kw) | 2014.04-2018.03 | AT | F | L | SUV 4WD N57 D30 A | | GDS82060 | Drive Shaft | | 37 | 27 | 65 | | 590 | |
| | 2014.04-2018.03 | AT | F | R | SUV 4WD N57 D30 A | | GDS82061 | Drive Shaft | | 37 | 27 | 65 | | 880 | |
| | 2014.04-2018.03 | AT | F | L/R | SUV 4WD N57 D30 A | | GCO81604 | Outer Joint | | 37 | 33 | 65 | | 73 | M |
| | 2014.04-2018.03 | AT | F | L | SUV 4WD N57 D30 A | | GCI81598 | Inner Joint | | 27 | 24 | 43.95 | 60 | 111 | |
| | 2014.04-2018.03 | AT | F | R | SUV 4WD N57 D30 A | | GCI81605 | Inner Joint | | 27 | 24 | 43.95 | 349 | 112.5 | |
| | 2014.04-2018.03 | AT | R | L | SUV 4WD N57 D30 A | | GDS85120 | Drive Shaft | | 30 | 32 | 64.9 | 77 | 771 | |
| | 2014.04-2018.03 | AT | R | R | SUV 4WD N57 D30 A | | GDS85119 | Drive Shaft | | 30 | 32 | 64.9 | 77 | 827 | |
| 3.0 (183 kw) | 2015.04-2018.03 | AT | F | L | SUV 4WD N57 D30 A | | GDS82060 | Drive Shaft | | 37 | 27 | 65 | | 590 | |
| | 2015.04-2018.03 | AT | F | R | SUV 4WD N57 D30 A | | GDS82061 | Drive Shaft | | 37 | 27 | 65 | | 880 | |
| | 2015.04-2018.03 | AT | F | L/R | SUV 4WD N57 D30 A | | GCO81604 | Outer Joint | | 37 | 33 | 65 | | 73 | M |
| | 2015.04-2018.03 | AT | F | L | SUV 4WD N57 D30 A | | GCI81598 | Inner Joint | | 27 | 24 | 43.95 | 60 | 111 | |
| | 2015.04-2018.03 | AT | F | R | SUV 4WD N57 D30 A | | GCI81605 | Inner Joint | | 27 | 24 | 43.95 | 349 | 112.5 | |
| | 2015.04-2018.03 | AT | R | L | SUV 4WD N57 D30 A | | GDS85120 | Drive Shaft | | 30 | 32 | 64.9 | 77 | 771 | |
| | 2015.04-2018.03 | AT | R | R | SUV 4WD N57 D30 A | | GDS85119 | Drive Shaft | | 30 | 32 | 64.9 | 77 | 827 | |
| | 2018.09-2020.06 | 8AT | F | L | SUV 4WD B57 D30 A | | GDS84375 | Drive Shaft | | 37 | 27 | 65 | | 574 | |
| | 2018.09-2020.06 | 8AT | F | R | SUV 4WD B57 D30 A | | GDS84374 | Drive Shaft | | 37 | 27 | 65 | | 875 | |
| | 2018.09-2020.06 | 8AT | F | L/R | SUV 4WD B57 D30 A | | GCO82735 | Outer Joint | | 37 | 33 | 65 | | 74.5 | M |

| | YEAR | TRANSM. | F/R | L/R | BODY STYLE & DRIVE TYPE & ENGINE | REMARKS | G-AP Ref. | PRODUCT | ABS | Technical Specifications A | B | C | H | L | P |
|---|---|---|---|---|---|---|---|---|---|---|---|---|---|---|---|
| **BMW** | | | | | | | | | | | | | | | |
| **X4 xDrive 30d** | | | | | | | | | | | | | | | |
| 3.0 (183 kw) | 2018.09-2020.06 | 8AT | F | L | SUV 4WD B57 D30 A | | GCI82647 | Inner Joint | | 27 | 33 | 43.95 | 60 | 118 | |
| | 2018.09-2020.06 | 8AT | F | R | SUV 4WD B57 D30 A | | GCI82668 | Inner Joint | | 27 | 33 | 35 | 359.5 | 119.5 | |
| | 2020.07- | 8AT | F | L | SUV 4WD B57 D30 B;JA1 | | GDS84375 | Drive Shaft | | 37 | 27 | 65 | | 574 | |
| | 2020.07- | 8AT | F | R | SUV 4WD B57 D30 B;JA1 | | GDS84374 | Drive Shaft | | 37 | 27 | 65 | | 875 | |
| | 2020.07- | 8AT | F | L/R | SUV 4WD B57 D30 B;JA1 | | GCO82735 | Outer Joint | | 37 | 33 | 65 | | 74.5 | M |
| | 2020.07- | 8AT | F | L | SUV 4WD B57 D30 B;JA1 | | GCI82647 | Inner Joint | | 27 | 33 | 43.95 | 60 | 118 | |
| | 2020.07- | 8AT | F | R | SUV 4WD B57 D30 B;JA1 | | GCI82668 | Inner Joint | | 27 | 33 | 35 | 359.5 | 119.5 | |
| 3.0 (190 kw) | 2014.04-2018.03 | AT | F | L | SUV 4WD N57 D30 A | | GDS82060 | Drive Shaft | | 37 | 27 | 65 | | 590 | |
| | 2014.04-2018.03 | AT | F | R | SUV 4WD N57 D30 A | | GDS82061 | Drive Shaft | | 37 | 27 | 65 | | 880 | |
| | 2014.04-2018.03 | AT | F | L/R | SUV 4WD N57 D30 A | | GCO81604 | Outer Joint | | 37 | 33 | 65 | | 73 | M |
| | 2014.04-2018.03 | AT | F | L | SUV 4WD N57 D30 A | | GCI81598 | Inner Joint | | 27 | 24 | 43.95 | 60 | 111 | |
| | 2014.04-2018.03 | AT | F | R | SUV 4WD N57 D30 A | | GCI81605 | Inner Joint | | 27 | 24 | 43.95 | 349 | 112.5 | |
| | 2014.04-2018.03 | AT | R | L | SUV 4WD N57 D30 A | For vehicles without towbar | GDS85120 | Drive Shaft | | 30 | 32 | 64.9 | 77 | 771 | |
| | 2014.04-2018.03 | AT | R | R | SUV 4WD N57 D30 A | For vehicles without towbar | GDS85119 | Drive Shaft | | 30 | 32 | 64.9 | 77 | 827 | |
| 3.0 (195 kw) | 2018.04-2020.06 | 8AT | F | L | SUV 4WD B57 D30 A | | GDS84375 | Drive Shaft | | 37 | 27 | 65 | | 574 | |
| | 2018.04-2020.06 | 8AT | F | R | SUV 4WD B57 D30 A | | GDS84374 | Drive Shaft | | 37 | 27 | 65 | | 875 | |
| | 2018.04-2020.06 | 8AT | F | L/R | SUV 4WD B57 D30 A | | GCO82735 | Outer Joint | | 37 | 33 | 65 | | 74.5 | M |
| | 2018.04-2020.06 | 8AT | F | L | SUV 4WD B57 D30 A | | GCI82647 | Inner Joint | | 27 | 33 | 43.95 | 60 | 118 | |
| | 2018.04-2020.06 | 8AT | F | R | SUV 4WD B57 D30 A | | GCI82668 | Inner Joint | | 27 | 33 | 35 | 359.5 | 119.5 | |
| 3.0 (204 kw) | 2014.04-2018.03 | 8AT | F | L | SUV 4WD N57 D30 A | | GDS82060 | Drive Shaft | | 37 | 27 | 65 | | 590 | |
| | 2014.04-2018.03 | 8AT | F | R | SUV 4WD N57 D30 A | | GDS82061 | Drive Shaft | | 37 | 27 | 65 | | 880 | |
| | 2014.04-2018.03 | 8AT | F | L/R | SUV 4WD N57 D30 A | | GCO81604 | Outer Joint | | 37 | 33 | 65 | | 73 | M |
| | 2014.04-2018.03 | 8AT | F | L | SUV 4WD N57 D30 A | | GCI81598 | Inner Joint | | 27 | 24 | 43.95 | 60 | 111 | |
| | 2014.04-2018.03 | 8AT | F | R | SUV 4WD N57 D30 A | | GCI81605 | Inner Joint | | 27 | 24 | 43.95 | 349 | 112.5 | |
| | 2014.04-2018.03 | 8AT | R | L | SUV 4WD N57 D30 A | | GDS85120 | Drive Shaft | | 30 | 32 | 64.9 | 77 | 771 | |
| | 2014.04-2018.03 | 8AT | R | R | SUV 4WD N57 D30 A | | GDS85119 | Drive Shaft | | 30 | 32 | 64.9 | 77 | 827 | |
| 3.0 (210 kw) | 2014.04-2018.03 | AT | F | L | SUV 4WD N57 D30 A | | GDS82060 | Drive Shaft | | 37 | 27 | 65 | | 590 | |
| | 2014.04-2018.03 | AT | F | R | SUV 4WD N57 D30 A | | GDS82061 | Drive Shaft | | 37 | 27 | 65 | | 880 | |
| | 2014.04-2018.03 | AT | F | L/R | SUV 4WD N57 D30 A | | GCO81604 | Outer Joint | | 37 | 33 | 65 | | 73 | M |
| | 2014.04-2018.03 | AT | F | L | SUV 4WD N57 D30 A | | GCI81598 | Inner Joint | | 27 | 24 | 43.95 | 60 | 111 | |
| | 2014.04-2018.03 | AT | F | R | SUV 4WD N57 D30 A | | GCI81605 | Inner Joint | | 27 | 24 | 43.95 | 349 | 112.5 | |
| | 2014.04-2018.03 | AT | R | L | SUV 4WD N57 D30 A | | GDS85120 | Drive Shaft | | 30 | 32 | 64.9 | 77 | 771 | |
| | 2014.04-2018.03 | AT | R | R | SUV 4WD N57 D30 A | | GDS85119 | Drive Shaft | | 30 | 32 | 64.9 | 77 | 827 | |
| | 2020.07- | 8AT | F | L | SUV 4WD B57 D30 B;JA1 | | GDS84375 | Drive Shaft | | 37 | 27 | 65 | | 574 | |
| | 2020.07- | 8AT | F | R | SUV 4WD B57 D30 B;JA1 | | GDS84374 | Drive Shaft | | 37 | 27 | 65 | | 875 | |
| | 2020.07- | 8AT | F | L/R | SUV 4WD B57 D30 B;JA1 | | GCO82735 | Outer Joint | | 37 | 33 | 65 | | 74.5 | M |
| | 2020.07- | 8AT | F | L | SUV 4WD B57 D30 B;JA1 | | GCI82647 | Inner Joint | | 27 | 33 | 43.95 | 60 | 118 | |
| | 2020.07- | 8AT | F | R | SUV 4WD B57 D30 B;JA1 | | GCI82668 | Inner Joint | | 27 | 33 | 35 | 359.5 | 119.5 | |
| **X4 xDrive 30i** | | | | | | | | | | | | | | | |
| 2.0 (180 kw) | 2021.07- | 8AT | F | L | SUV 4WD B48 B20 B;B46 B20 B | | GDS84375 | Drive Shaft | | 37 | 27 | 65 | | 574 | |
| | 2021.07- | 8AT | F | R | SUV 4WD B48 B20 B;B46 B20 B | | GDS84374 | Drive Shaft | | 37 | 27 | 65 | | 875 | |
| | 2021.07- | 8AT | F | L/R | SUV 4WD B48 B20 B;B46 B20 B | | GCO82735 | Outer Joint | | 37 | 33 | 65 | | 74.5 | M |
| | 2021.07- | 8AT | F | L | SUV 4WD B48 B20 B;B46 B20 B | | GCI82647 | Inner Joint | | 27 | 33 | 43.95 | 60 | 118 | |
| | 2021.07- | 8AT | F | R | SUV 4WD B48 B20 B;B46 B20 B | | GCI82668 | Inner Joint | | 27 | 33 | 35 | 359.5 | 119.5 | |
| 2.0 (183 kw) | 2018.04- | 8AT | F | L | SUV 4WD B48 B20 B | | GDS84375 | Drive Shaft | | 37 | 27 | 65 | | 574 | |
| | 2018.04- | 8AT | F | R | SUV 4WD B48 B20 B | | GDS84374 | Drive Shaft | | 37 | 27 | 65 | | 875 | |
| | 2018.04- | 8AT | F | L/R | SUV 4WD B48 B20 B | | GCO82735 | Outer Joint | | 37 | 33 | 65 | | 74.5 | M |
| | 2018.04- | 8AT | F | L | SUV 4WD B48 B20 B | | GCI82647 | Inner Joint | | 27 | 33 | 43.95 | 60 | 118 | |
| | 2018.04- | 8AT | F | R | SUV 4WD B48 B20 B | | GCI82668 | Inner Joint | | 27 | 33 | 35 | 359.5 | 119.5 | |
| 2.0 (185 kw) | 2018.04- | 8AT | F | L | SUV 4WD B48 B20 B;B46 B20 B | | GDS84375 | Drive Shaft | | 37 | 27 | 65 | | 574 | |
| | 2018.04- | 8AT | F | R | SUV 4WD B48 B20 B;B46 B20 B | | GDS84374 | Drive Shaft | | 37 | 27 | 65 | | 875 | |
| | 2018.04- | 8AT | F | L/R | SUV 4WD B48 B20 B;B46 B20 B | | GCO82735 | Outer Joint | | 37 | 33 | 65 | | 74.5 | M |
| | 2018.04- | 8AT | F | L | SUV 4WD B48 B20 B;B46 B20 B | | GCI82647 | Inner Joint | | 27 | 33 | 43.95 | 60 | 118 | |
| | 2018.04- | 8AT | F | R | SUV 4WD B48 B20 B;B46 B20 B | | GCI82668 | Inner Joint | | 27 | 33 | 35 | 359.5 | 119.5 | |
| **X4 xDrive 35d** | | | | | | | | | | | | | | | |
| 3.0 (230 kw) | 2014.04-2018.03 | AT | F | L | SUV 4WD N57 D30 B | | GDS82060 | Drive Shaft | | 37 | 27 | 65 | | 590 | |
| | 2014.04-2018.03 | AT | F | R | SUV 4WD N57 D30 B | | GDS82061 | Drive Shaft | | 37 | 27 | 65 | | 880 | |
| | 2014.04-2018.03 | AT | F | L/R | SUV 4WD N57 D30 B | | GCO81604 | Outer Joint | | 37 | 33 | 65 | | 73 | M |
| | 2014.04-2018.03 | AT | F | L | SUV 4WD N57 D30 B | | GCI81598 | Inner Joint | | 27 | 24 | 43.95 | 60 | 111 | |
| | 2014.04-2018.03 | AT | F | R | SUV 4WD N57 D30 B | | GCI81605 | Inner Joint | | 27 | 24 | 43.95 | 349 | 112.5 | |
| | 2014.04-2018.03 | AT | R | L | SUV 4WD N57 D30 B | | GDS85120 | Drive Shaft | | 30 | 32 | 64.9 | 77 | 771 | |
| | 2014.04-2018.03 | AT | R | R | SUV 4WD N57 D30 B | | GDS85119 | Drive Shaft | | 30 | 32 | 64.9 | 77 | 827 | |
| **X4 xDrive 35i** | | | | | | | | | | | | | | | |
| 3.0 (225 kw) | 2014.04-2018.03 | AT | F | L | SUV 4WD N55 B30 A | | GDS82060 | Drive Shaft | | 37 | 27 | 65 | | 590 | |
| | 2014.04-2018.03 | AT | F | R | SUV 4WD N55 B30 A | | GDS82061 | Drive Shaft | | 37 | 27 | 65 | | 880 | |

| | YEAR | TRANSM. | F/R | L/R | BODY STYLE & DRIVE TYPE & ENGINE | REMARKS | G-AP Ref. | PRODUCT | ABS | Technical Specifications A | B | C | H | L | P |
|---|---|---|---|---|---|---|---|---|---|---|---|---|---|---|---|
| **BMW** | | | | | | | | | | | | | | | |
| **X4 xDrive 35i** | | | | | | | | | | | | | | | |
| 3.0 (225 kw) | 2014.04-2018.03 | AT | F | L/R | SUV 4WD N55 B30 A | | GCO81604 | Outer Joint | | 37 | 33 | 65 | | 73 | M |
| | 2014.04-2018.03 | AT | F | L | SUV 4WD N55 B30 A | | GCI81598 | Inner Joint | | 27 | 24 | 43.95 | 60 | 111 | |
| | 2014.04-2018.03 | AT | F | R | SUV 4WD N55 B30 A | | GCI81605 | Inner Joint | | 27 | 24 | 43.95 | 349 | 112.5 | |
| **X4 xDrive M40d** | | | | | | | | | | | | | | | |
| 3.0 (240 kw) | 2018.04-2020.06 | 8AT | F | L | SUV 4WD B57 D30 B | | GDS84375 | Drive Shaft | | 37 | 27 | 65 | | 574 | |
| | 2018.04-2020.06 | 8AT | F | R | SUV 4WD B57 D30 B | | GDS84374 | Drive Shaft | | 37 | 27 | 65 | | 875 | |
| | 2018.04-2020.06 | 8AT | F | L/R | SUV 4WD B57 D30 B | | GCO82735 | Outer Joint | | 37 | 33 | 65 | | 74.5 | M |
| | 2018.04-2020.06 | 8AT | F | L | SUV 4WD B57 D30 B | | GCI82647 | Inner Joint | | 27 | 33 | 43.95 | 60 | 118 | |
| | 2018.04-2020.06 | 8AT | F | R | SUV 4WD B57 D30 B | | GCI82668 | Inner Joint | | 27 | 33 | 35 | 359.5 | 119.5 | |
| 3.0 (250 kw) | 2020.07- | 8AT | F | L | SUV 4WD B57 D30 B;JA1 | | GDS84375 | Drive Shaft | | 37 | 27 | 65 | | 574 | |
| | 2020.07- | 8AT | F | R | SUV 4WD B57 D30 B;JA1 | | GDS84374 | Drive Shaft | | 37 | 27 | 65 | | 875 | |
| | 2020.07- | 8AT | F | L/R | SUV 4WD B57 D30 B;JA1 | | GCO82735 | Outer Joint | | 37 | 33 | 65 | | 74.5 | M |
| | 2020.07- | 8AT | F | L | SUV 4WD B57 D30 B;JA1 | | GCI82647 | Inner Joint | | 27 | 33 | 43.95 | 60 | 118 | |
| | 2020.07- | 8AT | F | R | SUV 4WD B57 D30 B;JA1 | | GCI82668 | Inner Joint | | 27 | 33 | 35 | 359.5 | 119.5 | |
| **X4 xDrive M40i** | | | | | | | | | | | | | | | |
| 3.0 (260 kw) | 2018.04-2019.08 | 8AT | F | L | SUV 4WD B58 B30 A | | GDS84375 | Drive Shaft | | 37 | 27 | 65 | | 574 | |
| | 2018.04-2019.08 | 8AT | F | R | SUV 4WD B58 B30 A | | GDS84374 | Drive Shaft | | 37 | 27 | 65 | | 875 | |
| | 2018.04-2019.08 | 8AT | F | L/R | SUV 4WD B58 B30 A | | GCO82735 | Outer Joint | | 37 | 33 | 65 | | 74.5 | M |
| | 2018.04-2019.08 | 8AT | F | L | SUV 4WD B58 B30 A | | GCI82647 | Inner Joint | | 27 | 33 | 43.95 | 60 | 118 | |
| | 2018.04-2019.08 | 8AT | F | R | SUV 4WD B58 B30 A | | GCI82668 | Inner Joint | | 27 | 33 | 35 | 359.5 | 119.5 | |
| 3.0 (265 kw) | 2015.12-2018.03 | AT | F | L | SUV 4WD N55 B30 A | | GDS82060 | Drive Shaft | | 37 | 27 | 65 | | 590 | |
| | 2015.12-2018.03 | AT | F | R | SUV 4WD N55 B30 A | | GDS82061 | Drive Shaft | | 37 | 27 | 65 | | 880 | |
| | 2015.12-2018.03 | AT | F | L/R | SUV 4WD N55 B30 A | | GCO81604 | Outer Joint | | 37 | 33 | 65 | | 73 | M |
| | 2015.12-2018.03 | AT | F | L | SUV 4WD N55 B30 A | | GCI81598 | Inner Joint | | 27 | 24 | 43.95 | 60 | 111 | |
| | 2015.12-2018.03 | AT | F | R | SUV 4WD N55 B30 A | | GCI81605 | Inner Joint | | 27 | 24 | 43.95 | 349 | 112.5 | |
| | 2018.04- | 8AT | F | L | SUV 4WD B58 B30 A | | GDS84375 | Drive Shaft | | 37 | 27 | 65 | | 574 | |
| | 2018.04- | 8AT | F | R | SUV 4WD B58 B30 A | | GDS84374 | Drive Shaft | | 37 | 27 | 65 | | 875 | |
| | 2018.04- | 8AT | F | L/R | SUV 4WD B58 B30 A | | GCO82735 | Outer Joint | | 37 | 33 | 65 | | 74.5 | M |
| | 2018.04- | 8AT | F | L | SUV 4WD B58 B30 A | | GCI82647 | Inner Joint | | 27 | 33 | 43.95 | 60 | 118 | |
| | 2018.04- | 8AT | F | R | SUV 4WD B58 B30 A | | GCI82668 | Inner Joint | | 27 | 33 | 35 | 359.5 | 119.5 | |
| | 2021.08- | 8AT | F | L | SUV 4WD B58 B30 B | | GDS84375 | Drive Shaft | | 37 | 27 | 65 | | 574 | |
| | 2021.08- | 8AT | F | R | SUV 4WD B58 B30 B | | GDS84374 | Drive Shaft | | 37 | 27 | 65 | | 875 | |
| | 2021.08- | 8AT | F | L/R | SUV 4WD B58 B30 B | | GCO82735 | Outer Joint | | 37 | 33 | 65 | | 74.5 | M |
| | 2021.08- | 8AT | F | L | SUV 4WD B58 B30 B | | GCI82647 | Inner Joint | | 27 | 33 | 43.95 | 60 | 118 | |
| | 2021.08- | 8AT | F | R | SUV 4WD B58 B30 B | | GCI82668 | Inner Joint | | 27 | 33 | 35 | 359.5 | 119.5 | |
| 3.0 (285 kw) | 2019.09- | 8AT | F | L | SUV 4WD B58 B30 B | | GDS84375 | Drive Shaft | | 37 | 27 | 65 | | 574 | |
| | 2019.09- | 8AT | F | R | SUV 4WD B58 B30 B | | GDS84374 | Drive Shaft | | 37 | 27 | 65 | | 875 | |
| | 2019.09- | 8AT | F | L/R | SUV 4WD B58 B30 B | | GCO82735 | Outer Joint | | 37 | 33 | 65 | | 74.5 | M |
| | 2019.09- | 8AT | F | L | SUV 4WD B58 B30 B | | GCI82647 | Inner Joint | | 27 | 33 | 43.95 | 60 | 118 | |
| | 2019.09- | 8AT | F | R | SUV 4WD B58 B30 B | | GCI82668 | Inner Joint | | 27 | 33 | 35 | 359.5 | 119.5 | |
| **X5** | | | | | | | | | | | | | | | |
| 3.0 (135 kw) | 2001.04-2003.09 | AT/MT | F | L | SUV 4WD M57 D30 (306D1) | | GDS85029 | Drive Shaft | | 30 | 27 | 64.8 | 77 | 586 | |
| | 2001.04-2003.09 | AT/MT | F | R | SUV 4WD M57 D30 (306D1) | | GDS85018 | Drive Shaft | | 30 | 27 | 64.8 | 77 | 970 | |
| | 2001.04-2003.09 | AT/MT | F | L/R | SUV 4WD M57 D30 (306D1) | | GCO85001 | Outer Joint | | 30 | 27 | 64.8 | 77 | 67.5 | M |
| | 2001.04-2003.09 | AT/MT | F | R | SUV 4WD M57 D30 (306D1) | | GCI85019 | Inner Joint | | 27 | 26 | 44 | 449 | 120 | |
| | 2001.04-2003.09 | 5AT | R | L/R | SUV 4WD M57 D30 (306D1) | | GDS85050 | Drive Shaft | | 30 | | 58.8 | 73 | 647 | |
| | 2001.04-2003.09 | AT | R | L/R | SUV 4WD M57 D30 (306D1) | | GCI82463 | Outer Joint | | 30 | 25 | 58.8 | 73 | 64 | |
| | 2001.04-2003.09 | AT | R | L/R | SUV 4WD M57 D30 (306D1) | | GCI99127 | Inner Joint | | | 25 | | | 26 | |
| | 2001.04-2003.09 | MT | R | L/R | SUV 4WD M57 D30 (306D1) | | GDS85049 | Drive Shaft | | 30 | | 58.9 | 73 | 640 | |
| | 2001.04-2003.09 | MT | R | L/R | SUV 4WD M57 D30 (306D1) | | GCI48002 | Inner Joint | | | 28 | | | 32 | |
| 3.0 (155 kw) | 2003.10-2006.09 | AT/MT | F | L | SUV 4WD M57 D30 (306D2) | | GDS85029 | Drive Shaft | | 30 | 27 | 64.8 | 77 | 586 | |
| | 2003.10-2006.09 | AT/MT | F | R | SUV 4WD M57 D30 (306D2) | | GDS85018 | Drive Shaft | | 30 | 27 | 64.8 | 77 | 970 | |
| | 2003.10-2006.09 | AT/MT | F | L/R | SUV 4WD M57 D30 (306D2) | | GCO85001 | Outer Joint | | 30 | 27 | 64.8 | 77 | 67.5 | M |
| | 2003.10-2006.09 | AT/MT | F | L | SUV 4WD M57 D30 (306D2) | | GCI85021 | Inner Joint | | 27 | 26 | 44 | 64 | 114.5 | |
| | 2003.10-2006.09 | AT/MT | F | R | SUV 4WD M57 D30 (306D2) | | GCI85019 | Inner Joint | | 27 | 26 | 44 | 449 | 120 | |
| | 2003.10-2006.09 | AT/MT | R | L/R | SUV 4WD M57 D30 (306D2) | | GDS85049 | Drive Shaft | | 30 | | 58.9 | 73 | 640 | |
| | 2003.10-2006.09 | AT/MT | R | L/R | SUV 4WD M57 D30 (306D2) | | GCI48002 | Inner Joint | | | 28 | | | 32 | |
| | 2003.10-2006.09 | | R | L/R | SUV 4WD M57 D30 (306D2) | | GDS85050 | Drive Shaft | | 30 | | 58.8 | 73 | 647 | |
| | 2007.02-2008.09 | 6AT | F | L | SUV 4WD M57 D30 (306D3) | | GDS85052 | Drive Shaft | | 30 | 27 | 64.8 | 86.5 | 634 | |
| | 2007.02-2008.09 | 6AT | F | R | SUV 4WD M57 D30 (306D3) | | GDS85043 | Drive Shaft | | 30 | 27 | 64.8 | 86.5 | 1020 | |
| | 2007.02-2008.09 | AT/MT | F | L/R | SUV 4WD M57 D30 (306D3) | | GCO85006 | Outer Joint | | 30 | 33 | 64.8 | 86.5 | 59.5 | M |
| | 2007.02-2008.09 | | F | L | SUV 4WD M57 D30 (306D3) | | GCI85030 | Inner Joint | | 27 | 26 | 43.9 | 62 | 121 | |
| | 2007.02-2008.09 | | F | R | SUV 4WD M57 D30 (306D3) | | GCI85014 | Inner Joint | | 27 | 26 | 43.9 | 448 | 121 | |
| | 2007.02-2008.09 | 6AT | R | L/R | SUV 4WD M57 D30 (306D3) | Not for reinforced version | GDS85046 | Drive Shaft | | 30 | 27 | 69 | 84.5 | 799 | |
| | 2007.02-2008.09 | 6AT | R | L/R | SUV 4WD M57 D30 (306D3) | For reinforced version | GDS85070 | Drive Shaft | | 30 | 32 | 68.7 | 84 | 809 | |

| | YEAR | TRANSM. | F/R | L/R | BODY STYLE & DRIVE TYPE & ENGINE | REMARKS | G-AP Ref. | PRODUCT | ABS | Technical Specifications A | B | C | H | L | P |
|---|---|---|---|---|---|---|---|---|---|---|---|---|---|---|---|
| **BMW X5** | | | | | | | | | | | | | | | |
| 3.0 (155 kw) | 2007.02-2008.09 | 6AT | R | L/R | SUV 4WD M57 D30 (306D3) | Not for reinforced version | GDS85081 | Drive Shaft | | 30 | 27 | 68.7 | 84 | 810 | |
| | 2007.02-2008.09 | 6AT | R | L/R | SUV 4WD M57 D30 (306D3) | Not for reinforced version | GCI81169 | Outer Joint | | 30 | 28 | 68.7 | 84 | 89 | |
| | 2007.02-2008.09 | | R | L/R | SUV 4WD M57 D30 (306D3) | Not for reinforced version | GCI85075 | Inner Joint | | 27 | 28 | 44 | 75 | 102 | |
| 3.0 (160 kw) | 2003.10-2006.09 | AT/MT | F | L | SUV 4WD M57 D30 (306D2) | | GDS85029 | Drive Shaft | | 30 | 27 | 64.8 | 77 | 586 | |
| | 2003.10-2006.09 | AT/MT | F | R | SUV 4WD M57 D30 (306D2) | | GDS85018 | Drive Shaft | | 30 | 27 | 64.8 | 77 | 970 | |
| | 2003.10-2006.09 | AT/MT | F | L/R | SUV 4WD M57 D30 (306D2) | | GCO85001 | Outer Joint | | 30 | 27 | 64.8 | 77 | 67.5 | M |
| | 2003.10-2006.09 | AT/MT | F | L | SUV 4WD M57 D30 (306D2) | | GCI85021 | Inner Joint | | 27 | 26 | 44 | 64 | 114.5 | |
| | 2003.10-2006.09 | AT/MT | F | R | SUV 4WD M57 D30 (306D2) | | GCI85019 | Inner Joint | | 27 | 26 | 44 | 449 | 120 | |
| | 2003.10-2006.09 | AT/MT | R | L/R | SUV 4WD M57 D30 (306D2) | | GDS85049 | Drive Shaft | | 30 | | 58.9 | 73 | 640 | |
| | 2003.10-2006.09 | AT/MT | R | L/R | SUV 4WD M57 D30 (306D2) | | GCI48002 | Inner Joint | | | 28 | | | 32 | |
| 3.0 (170 kw) | 2000.04-2006.10 | AT/MT | F | L | SUV 4WD M54 B30 (306S3) | | GDS85029 | Drive Shaft | | 30 | 27 | 64.8 | 77 | 586 | |
| | 2000.04-2006.10 | AT/MT | F | R | SUV 4WD M54 B30 (306S3) | | GDS85018 | Drive Shaft | | 30 | 27 | 64.8 | 77 | 970 | |
| | 2000.04-2006.10 | AT/MT | F | L/R | SUV 4WD M54 B30 (306S3) | | GCO85001 | Outer Joint | | 30 | 27 | 64.8 | 77 | 67.5 | M |
| | 2000.04-2006.10 | AT/MT | F | R | SUV 4WD M54 B30 (306S3) | | GCI85019 | Inner Joint | | 27 | 26 | 44 | 449 | 120 | |
| | 2000.04-2006.10 | 5AT | R | L/R | SUV 4WD M54 B30 (306S3) | | GDS85050 | Drive Shaft | | 30 | | 58.8 | 73 | 647 | |
| | 2000.04-2006.10 | AT | R | L/R | SUV 4WD M54 B30 (306S3) | | GCI82463 | Outer Joint | | 30 | 25 | 58.8 | 73 | 64 | |
| | 2000.04-2006.10 | AT | R | L/R | SUV 4WD M54 B30 (306S3) | | GCI99127 | Inner Joint | | | 25 | | | 26 | |
| | 2000.04-2006.10 | MT | R | L/R | SUV 4WD M54 B30 (306S3) | | GDS85049 | Drive Shaft | | 30 | | 58.9 | 73 | 640 | |
| | 2000.04-2006.10 | MT | R | L/R | SUV 4WD M54 B30 (306S3) | | GCI48002 | Inner Joint | | | 28 | | | 32 | |
| 3.0 (173 kw) | 2006.12-2008.09 | 6AT | F | L | SUV 4WD M57 D30 (306D3) | Inner teeth of tranm.side:26 | GDS85052 | Drive Shaft | | 30 | 27 | 64.8 | 86.5 | 634 | |
| | 2006.12-2008.09 | 6AT | F | R | SUV 4WD M57 D30 (306D3) | | GDS85043 | Drive Shaft | | 30 | 27 | 64.8 | 86.5 | 1020 | |
| | 2006.12-2008.09 | 6AT | F | L/R | SUV 4WD M57 D30 (306D3) | | GCO85006 | Outer Joint | | 30 | 33 | 64.8 | 86.5 | 59.5 | M |
| | 2006.12-2008.09 | 6AT | F | L | SUV 4WD M57 D30 (306D3) | | GCI85030 | Inner Joint | | 27 | 26 | 43.9 | 62 | 121 | |
| | 2006.12-2008.09 | 6AT | F | R | SUV 4WD M57 D30 (306D3) | | GCI85014 | Inner Joint | | 27 | 26 | 43.9 | 448 | 121 | |
| | 2006.12-2008.09 | 6AT | R | L/R | SUV 4WD M57 D30 (306D3) | Not for reinforced version | GDS85046 | Drive Shaft | | 30 | 27 | 69 | 84.5 | 799 | |
| | 2006.12-2008.09 | 6AT | R | L/R | SUV 4WD M57 D30 (306D3) | For reinforced version | GDS85070 | Drive Shaft | | 30 | 32 | 68.7 | 84 | 809 | |
| | 2006.12-2008.09 | 6AT | R | L/R | SUV 4WD M57 D30 (306D3) | Not for reinforced version | GDS85081 | Drive Shaft | | 30 | 27 | 68.7 | 84 | 810 | |
| | 2006.12-2008.09 | 6AT | R | L/R | SUV 4WD M57 D30 (306D3) | Not for reinforced version | GCI81169 | Outer Joint | | 30 | 28 | 68.7 | 84 | 89 | |
| | 2006.12-2008.09 | 6AT | R | L/R | SUV 4WD M57 D30 (306D3) | For reinforced version | GCI85074 | Inner Joint | | 32 | 28 | 49.9 | 85.5 | 100 | |
| | 2006.12-2008.09 | 6AT | R | L/R | SUV 4WD M57 D30 (306D3) | Not for reinforced version | GCI85075 | Inner Joint | | 27 | 28 | 44 | 75 | 102 | |
| 3.0 (200 kw) | 2006.10-2008.09 | AT | F | L | SUV 4WD N52 B30 A;N52 B30 BF;N52 B30 AF | | GDS85052 | Drive Shaft | | 30 | 27 | 64.8 | 86.5 | 634 | |
| | 2006.10-2008.09 | AT | F | R | SUV 4WD N52 B30 A;N52 B30 BF;N52 B30 AF | | GDS85043 | Drive Shaft | | 30 | 27 | 64.8 | 86.5 | 1020 | |
| | 2006.10-2008.09 | AT | F | L/R | SUV 4WD N52 B30 A;N52 B30 BF;N52 B30 AF | | GCO85006 | Outer Joint | | 30 | 33 | 64.8 | 86.5 | 59.5 | M |
| | 2006.10-2008.09 | | F | L | SUV 4WD N52 B30 A;N52 B30 BF;N52 B30 AF | | GCI85030 | Inner Joint | | 27 | 26 | 43.9 | 62 | 121 | |
| | 2006.10-2008.09 | | F | R | SUV 4WD N52 B30 A;N52 B30 BF;N52 B30 AF | | GCI85014 | Inner Joint | | 27 | 26 | 43.9 | 448 | 121 | |
| | 2006.10-2008.09 | 6AT | R | L/R | SUV 4WD N52 B30 A;N52 B30 BF;N52 B30 AF | | GDS85046 | Drive Shaft | | 30 | 27 | 69 | 84.5 | 799 | |
| | 2006.10-2008.09 | 6AT | R | L/R | SUV 4WD N52 B30 A;N52 B30 BF;N52 B30 AF | | GDS85081 | Drive Shaft | | 30 | 27 | 68.7 | 84 | 810 | |
| | 2006.10-2008.09 | 6AT | R | L/R | SUV 4WD N52 B30 A;N52 B30 BF;N52 B30 AF | | GCI81169 | Outer Joint | | 30 | 28 | 68.7 | 84 | 89 | |
| | 2006.10-2008.09 | | R | L/R | SUV 4WD N52 B30 A;N52 B30 BF;N52 B30 AF | | GCI85075 | Inner Joint | | 27 | 28 | 44 | 75 | 102 | |
| 3.0 (210 kw) | 2007.10-2008.09 | 6AT | F | L | SUV 4WD M57 D30 (306D5) | | GDS85052 | Drive Shaft | | 30 | 27 | 64.8 | 86.5 | 634 | |
| | 2007.10-2008.09 | 6AT | F | R | SUV 4WD M57 D30 (306D5) | | GDS85043 | Drive Shaft | | 30 | 27 | 64.8 | 86.5 | 1020 | |
| | 2007.10-2008.09 | 6AT | F | L/R | SUV 4WD M57 D30 (306D5) | | GCO85006 | Outer Joint | | 30 | 33 | 64.8 | 86.5 | 59.5 | M |
| | 2007.10-2008.09 | 6AT | F | L | SUV 4WD M57 D30 (306D5) | | GCI85030 | Inner Joint | | 27 | 26 | 43.9 | 62 | 121 | |
| | 2007.10-2008.09 | 6AT | F | R | SUV 4WD M57 D30 (306D5) | | GCI85014 | Inner Joint | | 27 | 26 | 43.9 | 448 | 121 | |
| | 2007.10-2008.09 | 6AT | R | L/R | SUV 4WD M57 D30 (306D5) | | GDS85070 | Drive Shaft | | 30 | 32 | 68.7 | 84 | 809 | |
| | 2007.10-2008.09 | 6AT | R | L/R | SUV 4WD M57 D30 (306D5) | | GCI81169 | Outer Joint | | 30 | 28 | 68.7 | 84 | 89 | |
| | 2007.10-2008.09 | 6AT | R | L/R | SUV 4WD M57 D30 (306D5) | | GCI85074 | Inner Joint | | 32 | 28 | 49.9 | 85.5 | 100 | |
| 4.4 (210 kw) | 2000.01-2003.09 | AT | F | L | SUV 4WD M62 B44 (448S2) | Date from:2000.05 | GDS85029 | Drive Shaft | | 30 | 27 | 64.8 | 77 | 586 | |
| | 2000.01-2003.09 | AT | F | L | SUV 4WD M62 B44 (448S2) | Date to:2000.04 | GDS85075 | Drive Shaft | | 30 | 27 | 59 | 73 | 584 | |
| | 2000.01-2003.09 | AT | F | R | SUV 4WD M62 B44 (448S2) | Date from:2000.05 | GDS85018 | Drive Shaft | | 30 | 27 | 64.8 | 77 | 970 | |
| | 2000.01-2003.09 | AT | F | R | SUV 4WD M62 B44 (448S2) | Date to:2000.04 | GDS85076 | Drive Shaft | | 30 | 27 | 59 | 73 | 967 | |
| | 2000.01-2003.09 | AT | F | L/R | SUV 4WD M62 B44 (448S2) | Date from:2000.05 | GCO85001 | Outer Joint | | 30 | 27 | 64.8 | 77 | 67.5 | M |
| | 2000.01-2003.09 | AT | F | L | SUV 4WD M62 B44 (448S2) | | GCI85021 | Inner Joint | | 27 | 26 | 44 | 64 | 114.5 | |
| | 2000.01-2003.09 | AT | F | R | SUV 4WD M62 B44 (448S2) | | GCI85019 | Inner Joint | | 27 | 26 | 44 | 449 | 120 | |
| | 2000.01-2003.09 | AT | R | L/R | SUV 4WD M62 B44 (448S2) | | GDS85050 | Drive Shaft | | 30 | | 58.8 | 73 | 647 | |
| | 2000.01-2003.09 | AT | R | L/R | SUV 4WD M62 B44 (448S2) | | GCI82463 | Outer Joint | | 30 | 25 | 58.8 | 73 | 64 | |
| | 2000.01-2003.09 | AT/MT | R | L/R | SUV 4WD M62 B44 (448S2) | Date to:2003.09 | GCI99127 | Inner Joint | | | 25 | | | 26 | |
| | 2000.01-2003.09 | MT | R | L/R | SUV 4WD M62 B44 (448S2) | | GDS85049 | Drive Shaft | | 30 | | 58.9 | 73 | 640 | |
| 4.4 (235 kw) | 2003.10-2006.10 | AT | F | L | SUV 4WD N62 B44 A | | GDS85029 | Drive Shaft | | 30 | 27 | 64.8 | 77 | 586 | |
| | 2003.10-2006.10 | AT | F | R | SUV 4WD N62 B44 A | | GDS85018 | Drive Shaft | | 30 | 27 | 64.8 | 77 | 970 | |
| | 2003.10-2006.10 | AT | F | L/R | SUV 4WD N62 B44 A | | GCO85001 | Outer Joint | | 30 | 27 | 64.8 | 77 | 67.5 | M |
| | 2003.10-2006.10 | AT | F | R | SUV 4WD N62 B44 A | | GCI85019 | Inner Joint | | 27 | 26 | 44 | 449 | 120 | |
| | 2003.10-2006.10 | AT | R | L/R | SUV 4WD N62 B44 A | | GDS85049 | Drive Shaft | | 30 | | 58.9 | 73 | 640 | |
| | 2003.10-2006.10 | AT | R | L/R | SUV 4WD N62 B44 A | | GCI48002 | Inner Joint | | | 28 | | | 32 | |
| 4.6 (255 kw) | 2001.10-2003.09 | AT | F | L | SUV 4WD M62 B46 (468S1) | | GDS85029 | Drive Shaft | | 30 | 27 | 64.8 | 77 | 586 | |

| | YEAR | TRANSM. | F/R | L/R | BODY STYLE & DRIVE TYPE & ENGINE | REMARKS | G-AP Ref. | PRODUCT | ABS | Technical Specifications A | B | C | H | L | P |
|---|---|---|---|---|---|---|---|---|---|---|---|---|---|---|---|
| **BMW** | | | | | | | | | | | | | | | |
| **X5** | | | | | | | | | | | | | | | |
| 4.6 (255 kw) | 2001.10-2003.09 | AT | F | R | SUV 4WD M62 B46 (468S1) | | GDS85018 | Drive Shaft | | 30 | 27 | 64.8 | 77 | 970 | |
| | 2001.10-2003.09 | AT | F | L | SUV 4WD M62 B46 (468S1) | | GCI85021 | Inner Joint | | 27 | 26 | 44 | 64 | 114.5 | |
| | 2001.10-2003.09 | AT | F | R | SUV 4WD M62 B46 (468S1) | | GCI85019 | Inner Joint | | 27 | 26 | 44 | 449 | 120 | |
| | 2001.10-2003.09 | AT/MT | F | L/R | SUV 4WD M62 B46 (468S1) | | GCO85001 | Outer Joint | | 30 | 27 | 64.8 | 77 | 67.5 | M |
| | 2001.10-2003.09 | AT | R | L/R | SUV 4WD M62 B46 (468S1) | | GDS85049 | Drive Shaft | | 30 | | 58.9 | 73 | 640 | |
| 4.8 (261 kw) | 2006.10-2008.09 | AT | F | L | SUV 4WD N62 B48 B | | GDS85052 | Drive Shaft | | 30 | 27 | 64.8 | 86.5 | 634 | |
| | 2006.10-2008.09 | AT | F | R | SUV 4WD N62 B48 B | | GDS85043 | Drive Shaft | | 30 | 27 | 64.8 | 86.5 | 1020 | |
| | 2006.10-2008.09 | AT | F | L/R | SUV 4WD N62 B48 B | | GCO85006 | Outer Joint | | 30 | 33 | 64.8 | 86.5 | 59.5 | M |
| | 2006.10-2008.09 | | F | L | SUV 4WD N62 B48 B | | GCI85030 | Inner Joint | | 27 | 26 | 43.9 | 62 | 121 | |
| | 2006.10-2008.09 | | F | R | SUV 4WD N62 B48 B | | GCI85014 | Inner Joint | | 27 | 26 | 43.9 | 448 | 121 | |
| | 2006.10-2008.09 | 6AT | R | L/R | SUV 4WD N62 B48 B | Not for reinforced version | GDS85046 | Drive Shaft | | 30 | 27 | 69 | 84.5 | 799 | |
| | 2006.10-2008.09 | 6AT | R | L/R | SUV 4WD N62 B48 B | For reinforced version | GDS85070 | Drive Shaft | | 30 | 32 | 68.7 | 84 | 809 | |
| | 2006.10-2008.09 | 6AT | R | L/R | SUV 4WD N62 B48 B | Not for reinforced version | GDS85081 | Drive Shaft | | 30 | 27 | 68.7 | 84 | 810 | |
| | 2006.10-2008.09 | 6AT | R | L/R | SUV 4WD N62 B48 B | Not for reinforced version | GCI81169 | Outer Joint | | 30 | 28 | 68.7 | 84 | 89 | |
| | 2006.10-2008.09 | | R | L/R | SUV 4WD N62 B48 B | Not for reinforced version | GCI85075 | Inner Joint | | 27 | 28 | 44 | 75 | 102 | |
| 4.8 (265 kw) | 2004.04-2006.09 | AT | F | L | SUV 4WD N62 B48 A | | GDS85029 | Drive Shaft | | 30 | 27 | 64.8 | 77 | 586 | |
| | 2004.04-2006.09 | AT | F | R | SUV 4WD N62 B48 A | | GDS85018 | Drive Shaft | | 30 | 27 | 64.8 | 77 | 970 | |
| | 2004.04-2006.09 | AT | F | L | SUV 4WD N62 B48 A | | GCI85021 | Inner Joint | | 27 | 26 | 44 | 64 | 114.5 | |
| | 2004.04-2006.09 | AT | F | R | SUV 4WD N62 B48 A | | GCI85019 | Inner Joint | | 27 | 26 | 44 | 449 | 120 | |
| | 2004.04-2006.09 | AT/MT | F | L/R | SUV 4WD N62 B48 A | | GCO85001 | Outer Joint | | 30 | 27 | 64.8 | 77 | 67.5 | M |
| | 2004.04-2006.09 | AT | R | L/R | SUV 4WD N62 B48 A | | GDS85049 | Drive Shaft | | 30 | | 58.9 | 73 | 640 | |
| **X5 M** | | | | | | | | | | | | | | | |
| 4.4 (408 kw) | 2009.07-2013.07 | 6AT | F | L | SUV 4WD S63 B44 A | | GDS85052 | Drive Shaft | | 30 | 27 | 64.8 | 86.5 | 634 | |
| | 2009.07-2013.07 | 6AT | F | R | SUV 4WD S63 B44 A | | GDS85043 | Drive Shaft | | 30 | 27 | 64.8 | 86.5 | 1020 | |
| | 2009.07-2013.07 | AT/MT | F | L/R | SUV 4WD S63 B44 A | | GCO85006 | Outer Joint | | 30 | 33 | 64.8 | 86.5 | 59.5 | M |
| | 2009.07-2013.07 | | F | L | SUV 4WD S63 B44 A | | GCI85030 | Inner Joint | | 27 | 26 | 43.9 | 62 | 121 | |
| | 2009.07-2013.07 | | F | R | SUV 4WD S63 B44 A | | GCI85014 | Inner Joint | | 27 | 26 | 43.9 | 448 | 121 | |
| 4.4 (414 kw) | 2009.09-2013.06 | 6AT | F | L | SUV 4WD S63 B44 A | | GDS85052 | Drive Shaft | | 30 | 27 | 64.8 | 86.5 | 634 | |
| | 2009.09-2013.06 | 6AT | F | R | SUV 4WD S63 B44 A | | GDS85043 | Drive Shaft | | 30 | 27 | 64.8 | 86.5 | 1020 | |
| | 2009.09-2013.06 | | F | L | SUV 4WD S63 B44 A | | GCI85030 | Inner Joint | | 27 | 26 | 43.9 | 62 | 121 | |
| 4.4 (423 kw) | 2014.12-2018.07 | 8AT | F | L | SUV 4WD S63 B44 B | Inner teeth of tranm.side:26 | GDS85052 | Drive Shaft | | 30 | 27 | 64.8 | 86.5 | 634 | |
| | 2014.12-2018.07 | AT | F | R | SUV 4WD S63 B44 B | | GDS85043 | Drive Shaft | | 30 | 27 | 64.8 | 86.5 | 1020 | |
| | 2014.12-2018.07 | | F | L/R | SUV 4WD S63 B44 B | | GCO85006 | Outer Joint | | 30 | 33 | 64.8 | 86.5 | 59.5 | M |
| | 2014.12-2018.07 | | F | L | SUV 4WD S63 B44 B | | GCI85030 | Inner Joint | | 27 | 26 | 43.9 | 62 | 121 | |
| | 2014.12-2018.07 | | F | R | SUV 4WD S63 B44 B | | GCI85014 | Inner Joint | | 27 | 26 | 43.9 | 448 | 121 | |
| | 2014.12-2018.07 | 8AT | R | L/R | SUV 4WD S63 B44 B | | GDS58081 | Drive Shaft | | 30 | | 68.5 | 84 | 618 | |
| 4.4 (441 kw) | 2019.12-2023.03 | 8AT | F | L | SUV 4WD S63 B44 B | | GDS84220 | Drive Shaft | | 37 | 27 | 65 | | 613 | |
| | 2019.12-2023.03 | 8AT | F | L | SUV 4WD S63 B44 B | | GCO82735 | Outer Joint | | 37 | 33 | 65 | | 74.5 | M |
| | 2019.12-2023.03 | 8AT | F | L | SUV 4WD S63 B44 B | | GCI82647 | Inner Joint | | 27 | 33 | 43.95 | 60 | 118 | |
| 4.4 (460 kw) | 2019.12- | 8AT | F | L | SUV 4WD S63 B44 B | | GDS84220 | Drive Shaft | | 37 | 27 | 65 | | 613 | |
| | 2019.12- | 8AT | F | L | SUV 4WD S63 B44 B | | GCO82735 | Outer Joint | | 37 | 33 | 65 | | 74.5 | M |
| | 2019.12- | 8AT | F | L | SUV 4WD S63 B44 B | | GCI82647 | Inner Joint | | 27 | 33 | 43.95 | 60 | 118 | |
| | 2023.04- | 8AT | F | L | SUV 4WD S68 B44 A | | GDS84220 | Drive Shaft | | 37 | 27 | 65 | | 613 | |
| | 2023.04- | | F | L | SUV 4WD S68 B44 A | | GCO82735 | Outer Joint | | 37 | 33 | 65 | | 74.5 | M |
| | 2023.04- | | F | L | SUV 4WD S68 B44 A | | GCI82647 | Inner Joint | | 27 | 33 | 43.95 | 60 | 118 | |
| **X5 xDrive 25d** | | | | | | | | | | | | | | | |
| 2.0 (155 kw) | 2013.12-2018.07 | 8AT | F | L | SUV 4WD N47 D20 D;B47 D20 B | | GDS81110 | Drive Shaft | | 30 | 27 | 64.8 | 86.5 | 663 | |
| | 2013.12-2018.07 | 8AT | F | R | SUV 4WD N47 D20 D;B47 D20 B | | GDS85123 | Drive Shaft | | 30 | 27 | 64.8 | 86.5 | 973 | |
| | 2013.12-2018.07 | 8AT | F | L | SUV 4WD N47 D20 D;B47 D20 B | | GCI81055 | Inner Joint | | 27 | 24 | 43.95 | 60 | 123.5 | |
| | 2013.12-2018.07 | 8AT | F | R | SUV 4WD N47 D20 D;B47 D20 B | | GCI85068 | Inner Joint | | 27 | 24 | 43.95 | 372 | 125 | |
| | 2013.12-2018.07 | AT | F | L/R | SUV 4WD N47 D20 D;B47 D20 B | Date from:2014.01 | GCO85006 | Outer Joint | | 30 | 33 | 64.8 | 86.5 | 59.5 | M |
| | 2019.08-2023.03 | 8AT | F | L | SUV 4WD B47 D20 B | | GDS84220 | Drive Shaft | | 37 | 27 | 65 | | 613 | |
| | 2019.08-2023.03 | 8AT | F | R | SUV 4WD B47 D20 B | | GDS84269 | Drive Shaft | | 37 | 27 | 65 | | 912 | |
| | 2019.08-2023.03 | 8AT | F | L/R | SUV 4WD B47 D20 B | | GCO82735 | Outer Joint | | 37 | 33 | 65 | | 74.5 | M |
| | 2019.08-2023.03 | 8AT | F | L | SUV 4WD B47 D20 B | | GCI82647 | Inner Joint | | 27 | 33 | 43.95 | 60 | 118 | |
| | 2019.08-2023.03 | 8AT | F | R | SUV 4WD B47 D20 B | | GCI82668 | Inner Joint | | 27 | 33 | 35 | 359.5 | 119.5 | |
| 2.0 (160 kw) | 2013.12-2015.07 | 8AT | F | L | SUV 4WD N47 D20 D | | GDS81110 | Drive Shaft | | 30 | 27 | 64.8 | 86.5 | 663 | |
| | 2013.12-2015.07 | 8AT | F | R | SUV 4WD N47 D20 D | | GDS85123 | Drive Shaft | | 30 | 27 | 64.8 | 86.5 | 973 | |
| | 2013.12-2015.07 | 8AT | F | L/R | SUV 4WD N47 D20 D | Date from:2014.01 | GCO85006 | Outer Joint | | 30 | 33 | 64.8 | 86.5 | 59.5 | M |
| | 2013.12-2015.07 | 8AT | F | L | SUV 4WD N47 D20 D | | GCI81055 | Inner Joint | | 27 | 24 | 43.95 | 60 | 123.5 | |
| | 2013.12-2015.07 | 8AT | F | R | SUV 4WD N47 D20 D | | GCI85068 | Inner Joint | | 27 | 24 | 43.95 | 372 | 125 | |
| 2.0 (170 kw) | 2015.08-2018.07 | 8AT | F | L | SUV 4WD B47 D20 B | | GDS81110 | Drive Shaft | | 30 | 27 | 64.8 | 86.5 | 663 | |
| | 2015.08-2018.07 | 8AT | F | R | SUV 4WD B47 D20 B | | GDS85123 | Drive Shaft | | 30 | 27 | 64.8 | 86.5 | 973 | |
| | 2015.08-2018.07 | 8AT | F | L | SUV 4WD B47 D20 B | | GCI81055 | Inner Joint | | 27 | 24 | 43.95 | 60 | 123.5 | |
| | 2015.08-2018.07 | 8AT | F | R | SUV 4WD B47 D20 B | | GCI85068 | Inner Joint | | 27 | 24 | 43.95 | 372 | 125 | |

| | YEAR | TRANSM. | F/R | L/R | BODY STYLE & DRIVE TYPE & ENGINE | REMARKS | G-AP Ref. | PRODUCT | ABS | Technical Specifications A | B | C | H | L | P |
|---|---|---|---|---|---|---|---|---|---|---|---|---|---|---|---|
| **BMW** | | | | | | | | | | | | | | | |
| **X5 xDrive 25d** | | | | | | | | | | | | | | | |
| 2.0 (170 kw) | 2015.08-2018.07 | AT | F | L/R | SUV 4WD B47 D20 B | | GCO85006 | Outer Joint | | 30 | 33 | 64.8 | 86.5 | 59.5 | M |
| | 2019.08-2023.03 | 8AT | F | L | SUV 4WD B47 D20 B | | GDS84220 | Drive Shaft | | 37 | 27 | 65 | | 613 | |
| | 2019.08-2023.03 | 8AT | F | R | SUV 4WD B47 D20 B | | GDS84269 | Drive Shaft | | 37 | 27 | 65 | | 912 | |
| | 2019.08-2023.03 | 8AT | F | L/R | SUV 4WD B47 D20 B | | GCO82735 | Outer Joint | | 37 | 33 | 65 | | 74.5 | M |
| | 2019.08-2023.03 | 8AT | F | L | SUV 4WD B47 D20 B | | GCI82647 | Inner Joint | | 27 | 33 | 43.95 | 60 | 118 | |
| | 2019.08-2023.03 | 8AT | F | R | SUV 4WD B47 D20 B | | GCI82668 | Inner Joint | | 27 | 33 | 35 | 359.5 | 119.5 | |
| 3.0 (160 kw) | 2014.04-2018.07 | 8AT | F | L | SUV 4WD N57 D30 A | | GDS81110 | Drive Shaft | | 30 | 27 | 64.8 | 86.5 | 663 | |
| | 2014.04-2018.07 | 8AT | F | R | SUV 4WD N57 D30 A | | GDS85123 | Drive Shaft | | 30 | 27 | 64.8 | 86.5 | 973 | |
| | 2014.04-2018.07 | 8AT | F | L/R | SUV 4WD N57 D30 A | | GCO85006 | Outer Joint | | 30 | 33 | 64.8 | 86.5 | 59.5 | M |
| | 2014.04-2018.07 | 8AT | F | L | SUV 4WD N57 D30 A | | GCI81055 | Inner Joint | | 27 | 24 | 43.95 | 60 | 123.5 | |
| | 2014.04-2018.07 | 8AT | F | R | SUV 4WD N57 D30 A | | GCI85068 | Inner Joint | | 27 | 24 | 43.95 | 372 | 125 | |
| | 2014.04-2018.07 | 8AT | R | L/R | SUV 4WD N57 D30 A | For vehicles without electronic suspension control,For vehicles with towbar | GDS85046 | Drive Shaft | | 30 | 27 | 69 | 84.5 | 799 | |
| | 2014.04-2018.07 | 8AT | R | L/R | SUV 4WD N57 D30 A | For vehicles without electronic suspension control,For vehicles with towbar | GDS85070 | Drive Shaft | | 30 | 32 | 68.7 | 84 | 809 | |
| | 2014.04-2018.07 | 8AT | R | L/R | SUV 4WD N57 D30 A | For vehicles without electronic suspension control,For vehicles without towbar | GDS85081 | Drive Shaft | | 30 | 27 | 68.7 | 84 | 810 | |
| | 2014.04-2018.07 | 8AT | R | L/R | SUV 4WD N57 D30 A | For vehicles with electronic suspension control,For vehicles without towbar | GDS85149 | Drive Shaft | | 30 | | 68.7 | 84 | 630 | |
| | 2014.04-2018.07 | 8AT | R | L/R | SUV 4WD N57 D30 A | For vehicles without electronic suspension control | GCI81169 | Outer Joint | | 30 | 28 | 68.7 | 84 | 89 | |
| | 2014.04-2018.07 | 8AT | R | L/R | SUV 4WD N57 D30 A | For vehicles with electronic suspension control,For vehicles without towbar | GCI82468 | Outer Joint | | 30 | 28 | 68.7 | 84 | 62 | |
| | 2014.04-2018.07 | 8AT | R | L/R | SUV 4WD N57 D30 A | For vehicles with electronic suspension control,For vehicles without towbar | GCI61075 | Inner Joint | | | 28 | | | 26 | |
| | 2014.04-2018.07 | 8AT | R | L/R | SUV 4WD N57 D30 A | For vehicles without electronic suspension control,For vehicles with towbar | GCI85074 | Inner Joint | | 32 | 28 | 49.9 | 85.5 | 100 | |
| | 2014.04-2018.07 | 8AT | R | L/R | SUV 4WD N57 D30 A | For vehicles without electronic suspension control,For vehicles without towbar | GCI85075 | Inner Joint | | 27 | 28 | 44 | 75 | 102 | |
| **X5 xDrive 28i** | | | | | | | | | | | | | | | |
| 2.0 (180 kw) | 2015.06-2018.07 | 8AT | F | L | SUV 4WD N20 B20 A | | GDS81110 | Drive Shaft | | 30 | 27 | 64.8 | 86.5 | 663 | |
| | 2015.06-2018.07 | 8AT | F | R | SUV 4WD N20 B20 A | | GDS85123 | Drive Shaft | | 30 | 27 | 64.8 | 86.5 | 973 | |
| | 2015.06-2018.07 | 8AT | F | R | SUV 4WD N20 B20 A | | GCO85006 | Outer Joint | | 30 | 33 | 64.8 | 86.5 | 59.5 | M |
| | 2015.06-2018.07 | 8AT | F | R | SUV 4WD N20 B20 A | | GCI85068 | Inner Joint | | 27 | 24 | 43.95 | 372 | 125 | |
| | 2015.06-2018.07 | 8AT | R | L/R | SUV 4WD N20 B20 A | For vehicles without towbar | GDS85046 | Drive Shaft | | 30 | 27 | 69 | 84.5 | 799 | |
| | 2015.06-2018.07 | 8AT | R | L/R | SUV 4WD N20 B20 A | For vehicles with towbar | GDS85070 | Drive Shaft | | 30 | 32 | 68.7 | 84 | 809 | |
| | 2015.06-2018.07 | 8AT | R | L/R | SUV 4WD N20 B20 A | For vehicles without towbar | GDS85081 | Drive Shaft | | 30 | 27 | 68.7 | 84 | 810 | |
| | 2015.06-2018.07 | 8AT | R | L/R | SUV 4WD N20 B20 A | For vehicles without towbar | GCI81169 | Outer Joint | | 30 | 28 | 68.7 | 84 | 89 | |
| | 2015.06-2018.07 | | R | L/R | SUV 4WD N20 B20 A | For vehicles without towbar | GCI85075 | Inner Joint | | 27 | 28 | 44 | 75 | 102 | |
| **X5 xDrive 30d** | | | | | | | | | | | | | | | |
| 3.0 (155 kw) | 2008.10-2013.07 | 6AT/8AT | F | L | SUV 4WD N57 D30 A;M57 D30 (306D3) | | GDS81110 | Drive Shaft | | 30 | 27 | 64.8 | 86.5 | 663 | |
| | 2008.10-2013.07 | 6AT/8AT | F | L | SUV 4WD N57 D30 A;M57 D30 (306D3) | | GDS85052 | Drive Shaft | | 30 | 27 | 64.8 | 86.5 | 634 | |
| | 2008.10-2013.07 | 6AT/8AT | F | R | SUV 4WD N57 D30 A;M57 D30 (306D3) | | GDS85043 | Drive Shaft | | 30 | 27 | 64.8 | 86.5 | 1020 | |
| | 2008.10-2013.07 | 6AT/8AT | F | R | SUV 4WD N57 D30 A;M57 D30 (306D3) | | GDS85123 | Drive Shaft | | 30 | 27 | 64.8 | 86.5 | 973 | |
| | 2008.10-2013.07 | 6AT/8AT | F | L | SUV 4WD N57 D30 A;M57 D30 (306D3) | | GCI81055 | Inner Joint | | 27 | 24 | 43.95 | 60 | 123.5 | |
| | 2008.10-2013.07 | 6AT/8AT | F | R | SUV 4WD N57 D30 A;M57 D30 (306D3) | | GCI85068 | Inner Joint | | 27 | 24 | 43.95 | 372 | 125 | |
| | 2008.10-2013.07 | AT | F | L/R | SUV 4WD N57 D30 A;M57 D30 (306D3) | | GCO85006 | Outer Joint | | 30 | 33 | 64.8 | 86.5 | 59.5 | M |
| | 2008.10-2013.07 | 6AT | R | L/R | SUV 4WD N57 D30 A;M57 D30 (306D3) | Not for reinforced version | GCI85075 | Inner Joint | | 27 | 28 | 44 | 75 | 102 | |
| | 2008.10-2013.07 | 6AT/8AT | R | L/R | SUV 4WD N57 D30 A;M57 D30 (306D3) | Not for reinforced version | GDS85046 | Drive Shaft | | 30 | 27 | 69 | 84.5 | 799 | |
| | 2008.10-2013.07 | 6AT/8AT | R | L/R | SUV 4WD N57 D30 A;M57 D30 (306D3) | For reinforced version | GDS85070 | Drive Shaft | | 30 | 32 | 68.7 | 84 | 809 | |
| | 2008.10-2013.07 | 6AT/8AT | R | L/R | SUV 4WD N57 D30 A;M57 D30 (306D3) | Not for reinforced version | GDS85081 | Drive Shaft | | 30 | 27 | 68.7 | 84 | 810 | |
| | 2008.10-2013.07 | 6AT/8AT | R | L/R | SUV 4WD N57 D30 A;M57 D30 (306D3) | Not for reinforced version | GCI81169 | Outer Joint | | 30 | 28 | 68.7 | 84 | 89 | |
| 3.0 (173 kw) | 2008.10-2010.03 | 6AT | F | L | SUV 4WD M57 D30 (306D3) | | GDS85052 | Drive Shaft | | 30 | 27 | 64.8 | 86.5 | 634 | |
| | 2008.10-2010.03 | 6AT | F | R | SUV 4WD M57 D30 (306D3) | | GDS85043 | Drive Shaft | | 30 | 27 | 64.8 | 86.5 | 1020 | |
| | 2008.10-2010.03 | 6AT | F | L/R | SUV 4WD M57 D30 (306D3) | | GCO85006 | Outer Joint | | 30 | 33 | 64.8 | 86.5 | 59.5 | M |
| | 2008.10-2010.03 | 6AT | F | L | SUV 4WD M57 D30 (306D3) | | GCI85030 | Inner Joint | | 27 | 26 | 43.9 | 62 | 121 | |
| | 2008.10-2010.03 | 6AT | F | R | SUV 4WD M57 D30 (306D3) | | GCI85014 | Inner Joint | | 27 | 26 | 43.9 | 448 | 121 | |
| | 2008.10-2010.03 | 6AT | R | L/R | SUV 4WD M57 D30 (306D3) | Not for reinforced version | GDS85046 | Drive Shaft | | 30 | 27 | 69 | 84.5 | 799 | |
| | 2008.10-2010.03 | 6AT | R | L/R | SUV 4WD M57 D30 (306D3) | For reinforced version | GDS85070 | Drive Shaft | | 30 | 32 | 68.7 | 84 | 809 | |
| | 2008.10-2010.03 | 6AT | R | L/R | SUV 4WD M57 D30 (306D3) | Not for reinforced version | GDS85081 | Drive Shaft | | 30 | 27 | 68.7 | 84 | 810 | |
| | 2008.10-2010.03 | 6AT | R | L/R | SUV 4WD M57 D30 (306D3) | | GCI81169 | Outer Joint | | 30 | 28 | 68.7 | 84 | 89 | |
| | 2008.10-2010.03 | 6AT | R | L/R | SUV 4WD M57 D30 (306D3) | For reinforced version | GCI85074 | Inner Joint | | 32 | 28 | 49.9 | 85.5 | 100 | |
| | 2008.10-2010.03 | 6AT | R | L/R | SUV 4WD M57 D30 (306D3) | Not for reinforced version | GCI85075 | Inner Joint | | 27 | 28 | 44 | 75 | 102 | |
| 3.0 (180 kw) | 2010.04-2013.07 | 8AT | F | L | SUV 4WD N57 D30 A | | GDS81110 | Drive Shaft | | 30 | 27 | 64.8 | 86.5 | 663 | |
| | 2010.04-2013.07 | 8AT | F | R | SUV 4WD N57 D30 A | | GDS85123 | Drive Shaft | | 30 | 27 | 64.8 | 86.5 | 973 | |
| | 2010.04-2013.07 | 8AT | F | L/R | SUV 4WD N57 D30 A | | GCO85006 | Outer Joint | | 30 | 33 | 64.8 | 86.5 | 59.5 | M |
| | 2010.04-2013.07 | 8AT | F | L | SUV 4WD N57 D30 A | | GCI81055 | Inner Joint | | 27 | 24 | 43.95 | 60 | 123.5 | |
| | 2010.04-2013.07 | 8AT | F | R | SUV 4WD N57 D30 A | | GCI85068 | Inner Joint | | 27 | 24 | 43.95 | 372 | 125 | |
| | 2010.04-2013.07 | 8AT | R | L/R | SUV 4WD N57 D30 A | Not for reinforced version | GDS85046 | Drive Shaft | | 30 | 27 | 69 | 84.5 | 799 | |
| | 2010.04-2013.07 | 8AT | R | L/R | SUV 4WD N57 D30 A | For reinforced version | GDS85070 | Drive Shaft | | 30 | 32 | 68.7 | 84 | 809 | |
| | 2010.04-2013.07 | 8AT | R | L/R | SUV 4WD N57 D30 A | Not for reinforced version | GDS85081 | Drive Shaft | | 30 | 27 | 68.7 | 84 | 810 | |
| | 2010.04-2013.07 | 8AT | R | L/R | SUV 4WD N57 D30 A | | GCI81169 | Outer Joint | | 30 | 28 | 68.7 | 84 | 89 | |
| | 2010.04-2013.07 | 8AT | R | L/R | SUV 4WD N57 D30 A | For reinforced version | GCI85074 | Inner Joint | | 32 | 28 | 49.9 | 85.5 | 100 | |
| | 2010.04-2013.07 | 8AT | R | L/R | SUV 4WD N57 D30 A | Not for reinforced version | GCI85075 | Inner Joint | | 27 | 28 | 44 | 75 | 102 | |

| | YEAR | TRANSM. | F/R | L/R | BODY STYLE & DRIVE TYPE & ENGINE | REMARKS | G-AP Ref. | PRODUCT | ABS | Technical Specifications A | B | C | H | L | P |
|---|---|---|---|---|---|---|---|---|---|---|---|---|---|---|---|
| **BMW** **X5 xDrive 30d** | | | | | | | | | | | | | | | |
| 3.0 (183 kw) | 2013.12-2018.07 | 8AT | F | L | SUV 4WD N57 D30 A | | GDS81110 | Drive Shaft | | 30 | 27 | 64.8 | 86.5 | 663 | |
| | 2013.12-2018.07 | 8AT | F | R | SUV 4WD N57 D30 A | | GDS85123 | Drive Shaft | | 30 | 27 | 64.8 | 86.5 | 973 | |
| | 2013.12-2018.07 | 8AT | F | L/R | SUV 4WD N57 D30 A | | GCO85006 | Outer Joint | | 30 | 33 | 64.8 | 86.5 | 59.5 | M |
| | 2013.12-2018.07 | 8AT | F | L | SUV 4WD N57 D30 A | | GCI81055 | Inner Joint | | 27 | 24 | 43.95 | 60 | 123.5 | |
| | 2013.12-2018.07 | 8AT | F | R | SUV 4WD N57 D30 A | | GCI85068 | Inner Joint | | 27 | 24 | 43.95 | 372 | 125 | |
| | 2013.12-2018.07 | 8AT | R | L/R | SUV 4WD N57 D30 A | For vehicles without electronic suspension control;For vehicles with towbar | GDS85046 | Drive Shaft | | 30 | 27 | 69 | 84.5 | 799 | |
| | 2013.12-2018.07 | 8AT | R | L/R | SUV 4WD N57 D30 A | For vehicles without electronic suspension control;For vehicles with towbar | GDS85070 | Drive Shaft | | 30 | 32 | 68.7 | 84 | 809 | |
| | 2013.12-2018.07 | 8AT | R | L/R | SUV 4WD N57 D30 A | For vehicles without electronic suspension control;For vehicles without towbar | GDS85081 | Drive Shaft | | 30 | 27 | 68.7 | 84 | 810 | |
| | 2013.12-2018.07 | 8AT | R | L/R | SUV 4WD N57 D30 A | For vehicles with electronic suspension control;For vehicles without towbar | GDS85149 | Drive Shaft | | 30 | | 68.7 | 84 | 630 | |
| | 2013.12-2018.07 | 8AT | R | L/R | SUV 4WD N57 D30 A | For vehicles without electronic suspension control | GCI81169 | Outer Joint | | 30 | 28 | 68.7 | 84 | 89 | |
| | 2013.12-2018.07 | 8AT | R | L/R | SUV 4WD N57 D30 A | For vehicles with electronic suspension control;For vehicles without towbar | GCI82468 | Outer Joint | | 30 | 28 | 68.7 | 84 | 62 | |
| | 2013.12-2018.07 | 8AT | R | L/R | SUV 4WD N57 D30 A | For vehicles with electronic suspension control;For vehicles without towbar | GCI61075 | Inner Joint | | | 28 | | | 26 | |
| | 2013.12-2018.07 | 8AT | R | L/R | SUV 4WD N57 D30 A | For vehicles without electronic suspension control;For vehicles with towbar | GCI85074 | Inner Joint | | 32 | 28 | 49.9 | 85.5 | 100 | |
| | 2013.12-2018.07 | 8AT | R | L/R | SUV 4WD N57 D30 A | For vehicles without electronic suspension control;For vehicles without towbar | GCI85075 | Inner Joint | | 27 | 28 | 44 | 75 | 102 | |
| | 2018.08-2020.07 | 8AT | F | L | SUV 4WD B57 D30 A | | GDS84220 | Drive Shaft | | 37 | 27 | 65 | | 613 | |
| | 2018.08-2020.07 | 8AT | F | R | SUV 4WD B57 D30 A | | GDS84269 | Drive Shaft | | 37 | 27 | 65 | | 912 | |
| | 2018.08-2020.07 | 8AT | F | L/R | SUV 4WD B57 D30 A | | GCO82735 | Outer Joint | | 37 | 33 | 65 | | 74.5 | M |
| | 2018.08-2020.07 | 8AT | F | L | SUV 4WD B57 D30 A | | GCI82647 | Inner Joint | | 27 | 33 | 43.95 | 60 | 118 | |
| | 2018.08-2020.07 | 8AT | F | R | SUV 4WD B57 D30 A | | GCI82668 | Inner Joint | | 27 | 33 | 35 | 359.5 | 119.5 | |
| | 2020.08- | 8AT | F | L | SUV 4WD B57 D30 B;JA1 | | GDS84220 | Drive Shaft | | 37 | 27 | 65 | | 613 | |
| | 2020.08- | 8AT | F | R | SUV 4WD B57 D30 B;JA1 | | GDS84269 | Drive Shaft | | 37 | 27 | 65 | | 912 | |
| | 2020.08- | 8AT | F | L/R | SUV 4WD B57 D30 B;JA1 | | GCO82735 | Outer Joint | | 37 | 33 | 65 | | 74.5 | M |
| | 2020.08- | 8AT | F | L | SUV 4WD B57 D30 B;JA1 | | GCI82647 | Inner Joint | | 27 | 33 | 43.95 | 60 | 118 | |
| | 2020.08- | 8AT | F | R | SUV 4WD B57 D30 B;JA1 | | GCI82668 | Inner Joint | | 27 | 33 | 35 | 359.5 | 119.5 | |
| 3.0 (190 kw) | 2013.08-2018.07 | 8AT | F | L | SUV 4WD N57 D30 A | | GDS81110 | Drive Shaft | | 30 | 27 | 64.8 | 86.5 | 663 | |
| | 2013.08-2018.07 | 8AT | F | R | SUV 4WD N57 D30 A | | GDS85123 | Drive Shaft | | 30 | 27 | 64.8 | 86.5 | 973 | |
| | 2013.08-2018.07 | 8AT | F | L/R | SUV 4WD N57 D30 A | | GCO85006 | Outer Joint | | 30 | 33 | 64.8 | 86.5 | 59.5 | M |
| | 2013.08-2018.07 | 8AT | F | L | SUV 4WD N57 D30 A | | GCI81055 | Inner Joint | | 27 | 24 | 43.95 | 60 | 123.5 | |
| | 2013.08-2018.07 | 8AT | F | R | SUV 4WD N57 D30 A | | GCI85068 | Inner Joint | | 27 | 24 | 43.95 | 372 | 125 | |
| | 2013.08-2018.07 | 8AT | R | L/R | SUV 4WD N57 D30 A | For vehicles without electronic suspension control;For vehicles with towbar | GDS85046 | Drive Shaft | | 30 | 27 | 69 | 84.5 | 799 | |
| | 2013.08-2018.07 | 8AT | R | L/R | SUV 4WD N57 D30 A | For vehicles without electronic suspension control;For vehicles with towbar | GDS85070 | Drive Shaft | | 30 | 32 | 68.7 | 84 | 809 | |
| | 2013.08-2018.07 | 8AT | R | L/R | SUV 4WD N57 D30 A | For vehicles without electronic suspension control;For vehicles without towbar | GDS85081 | Drive Shaft | | 30 | 27 | 68.7 | 84 | 810 | |
| | 2013.08-2018.07 | 8AT | R | L/R | SUV 4WD N57 D30 A | For vehicles with electronic suspension control;For vehicles without towbar | GDS85149 | Drive Shaft | | 30 | | 68.7 | 84 | 630 | |
| | 2013.08-2018.07 | 8AT | R | L/R | SUV 4WD N57 D30 A | For vehicles without electronic suspension control | GCI81169 | Outer Joint | | 30 | 28 | 68.7 | 84 | 89 | |
| | 2013.08-2018.07 | 8AT | R | L/R | SUV 4WD N57 D30 A | For vehicles with electronic suspension control;For vehicles without towbar | GCI82468 | Outer Joint | | 30 | 28 | 68.7 | 84 | 62 | |
| | 2013.08-2018.07 | 8AT | R | L/R | SUV 4WD N57 D30 A | For vehicles with electronic suspension control;For vehicles without towbar | GCI61075 | Inner Joint | | | 28 | | | 26 | |
| | 2013.08-2018.07 | 8AT | R | L/R | SUV 4WD N57 D30 A | For vehicles without electronic suspension control;For vehicles with towbar | GCI85074 | Inner Joint | | 32 | 28 | 49.9 | 85.5 | 100 | |
| | 2013.08-2018.07 | 8AT | R | L/R | SUV 4WD N57 D30 A | For vehicles without electronic suspension control;For vehicles without towbar | GCI85075 | Inner Joint | | 27 | 28 | 44 | 75 | 102 | |
| 3.0 (195 kw) | 2018.08-2020.07 | 8AT | F | L | SUV 4WD B57 D30 A | | GDS84220 | Drive Shaft | | 37 | 27 | 65 | | 613 | |
| | 2018.08-2020.07 | 8AT | F | R | SUV 4WD B57 D30 A | | GDS84269 | Drive Shaft | | 37 | 27 | 65 | | 912 | |
| | 2018.08-2020.07 | 8AT | F | L/R | SUV 4WD B57 D30 A | | GCO82735 | Outer Joint | | 37 | 33 | 65 | | 74.5 | M |
| | 2018.08-2020.07 | 8AT | F | L | SUV 4WD B57 D30 A | | GCI82647 | Inner Joint | | 27 | 33 | 43.95 | 60 | 118 | |
| | 2018.08-2020.07 | 8AT | F | R | SUV 4WD B57 D30 A | | GCI82668 | Inner Joint | | 27 | 33 | 35 | 359.5 | 119.5 | |
| | 2019.11-2023.03 | 8AT | F | L | SUV Van 4WD B57 D30 A | | GDS84220 | Drive Shaft | | 37 | 27 | 65 | | 613 | |
| | 2019.11-2023.03 | 8AT | F | R | SUV Van 4WD B57 D30 A | | GDS84269 | Drive Shaft | | 37 | 27 | 65 | | 912 | |
| | 2019.11-2023.03 | 8AT | F | L/R | SUV Van 4WD B57 D30 A | | GCO82735 | Outer Joint | | 37 | 33 | 65 | | 74.5 | M |
| | 2019.11-2023.03 | 8AT | F | L | SUV Van 4WD B57 D30 A | | GCI82647 | Inner Joint | | 27 | 33 | 43.95 | 60 | 118 | |
| | 2019.11-2023.03 | 8AT | F | R | SUV Van 4WD B57 D30 A | | GCI82668 | Inner Joint | | 27 | 33 | 35 | 359.5 | 119.5 | |
| 3.0 (204 kw) | 2013.08-2018.07 | 8AT | F | L | SUV 4WD N57 D30 A | | GDS81110 | Drive Shaft | | 30 | 27 | 64.8 | 86.5 | 663 | |
| | 2013.08-2018.07 | 8AT | F | R | SUV 4WD N57 D30 A | | GDS85123 | Drive Shaft | | 30 | 27 | 64.8 | 86.5 | 973 | |
| | 2013.08-2018.07 | 8AT | F | L | SUV 4WD N57 D30 A | | GCI81055 | Inner Joint | | 27 | 24 | 43.95 | 60 | 123.5 | |
| | 2013.08-2018.07 | 8AT | F | R | SUV 4WD N57 D30 A | | GCI85068 | Inner Joint | | 27 | 24 | 43.95 | 372 | 125 | |
| | 2013.08-2018.07 | AT | F | L/R | SUV 4WD N57 D30 A | | GCO85006 | Outer Joint | | 30 | 33 | 64.8 | 86.5 | 59.5 | M |
| | 2013.08-2018.07 | 8AT | R | L/R | SUV 4WD N57 D30 A | For vehicles without electronic suspension control;For vehicles without towbar | GDS85046 | Drive Shaft | | 30 | 27 | 69 | 84.5 | 799 | |
| | 2013.08-2018.07 | 8AT | R | L/R | SUV 4WD N57 D30 A | For vehicles without electronic suspension control;For vehicles with towbar | GDS85070 | Drive Shaft | | 30 | 32 | 68.7 | 84 | 809 | |
| | 2013.08-2018.07 | 8AT | R | L/R | SUV 4WD N57 D30 A | For vehicles without electronic suspension control;For vehicles without towbar | GDS85081 | Drive Shaft | | 30 | 27 | 68.7 | 84 | 810 | |
| | 2013.08-2018.07 | 8AT | R | L/R | SUV 4WD N57 D30 A | For vehicles with electronic suspension control | GDS85149 | Drive Shaft | | 30 | | 68.7 | 84 | 630 | |
| | 2013.08-2018.07 | 8AT | R | L/R | SUV 4WD N57 D30 A | For vehicles without electronic suspension control;For vehicles without towbar | GCI81169 | Outer Joint | | 30 | 28 | 68.7 | 84 | 89 | |
| | 2013.08-2018.07 | 8AT | R | L/R | SUV 4WD N57 D30 A | For vehicles with electronic suspension control | GCI82468 | Outer Joint | | 30 | 28 | 68.7 | 84 | 62 | |
| | 2013.08-2018.07 | 8AT | R | L/R | SUV 4WD N57 D30 A | For vehicles with electronic suspension control | GCI61075 | Inner Joint | | | 28 | | | 26 | |
| | 2013.08-2018.07 | 8AT | R | L/R | SUV 4WD N57 D30 A | For vehicles with electronic suspension control;For vehicles without towbar | GCI85075 | Inner Joint | | 27 | 28 | 44 | 75 | 102 | |
| 3.0 (210 kw) | 2013.08-2018.07 | 8AT | F | L | SUV 4WD N57 D30 A | | GDS81110 | Drive Shaft | | 30 | 27 | 64.8 | 86.5 | 663 | |
| | 2013.08-2018.07 | 8AT | F | R | SUV 4WD N57 D30 A | | GDS85123 | Drive Shaft | | 30 | 27 | 64.8 | 86.5 | 973 | |
| | 2013.08-2018.07 | 8AT | F | L | SUV 4WD N57 D30 A | | GCI81055 | Inner Joint | | 27 | 24 | 43.95 | 60 | 123.5 | |
| | 2013.08-2018.07 | 8AT | F | R | SUV 4WD N57 D30 A | | GCI85068 | Inner Joint | | 27 | 24 | 43.95 | 372 | 125 | |

| | YEAR | TRANSM. | F/R | L/R | BODY STYLE & DRIVE TYPE & ENGINE | REMARKS | G-AP Ref. | PRODUCT | ABS | Technical Specifications A | B | C | H | L | P |
|---|---|---|---|---|---|---|---|---|---|---|---|---|---|---|---|
| **BMW** | | | | | | | | | | | | | | | |
| **X5 xDrive 30d** | | | | | | | | | | | | | | | |
| 3.0 (210 kw) | 2013.08-2018.07 | AT | F | L/R | SUV 4WD N57 D30 A | | GCO85006 | Outer Joint | | 30 | 33 | 64.8 | 86.5 | 59.5 | M |
| | 2013.08-2018.07 | 8AT | R | L/R | SUV 4WD N57 D30 A | For vehicles without electronic suspension control;For vehicles without towbar | GDS85046 | Drive Shaft | | 30 | 27 | 69 | 84.5 | 799 | |
| | 2013.08-2018.07 | 8AT | R | L/R | SUV 4WD N57 D30 A | For vehicles without electronic suspension control;For vehicles with towbar | GDS85070 | Drive Shaft | | 30 | 32 | 68.7 | 84 | 809 | |
| | 2013.08-2018.07 | 8AT | R | L/R | SUV 4WD N57 D30 A | For vehicles without electronic suspension control;For vehicles without towbar | GDS85081 | Drive Shaft | | 30 | 27 | 68.7 | 84 | 810 | |
| | 2013.08-2018.07 | 8AT | R | L/R | SUV 4WD N57 D30 A | For vehicles with electronic suspension control | GDS85149 | Drive Shaft | | 30 | | 68.7 | 84 | 630 | |
| | 2013.08-2018.07 | 8AT | R | L/R | SUV 4WD N57 D30 A | For vehicles without electronic suspension control;For vehicles without towbar | GCI81169 | Outer Joint | | 30 | 28 | 68.7 | 84 | 89 | |
| | 2013.08-2018.07 | 8AT | R | L/R | SUV 4WD N57 D30 A | For vehicles with electronic suspension control | GCI82468 | Outer Joint | | 30 | 28 | 68.7 | 84 | 62 | |
| | 2013.08-2018.07 | 8AT | R | L/R | SUV 4WD N57 D30 A | For vehicles with electronic suspension control | GCI61075 | Inner Joint | | | 28 | | | 26 | |
| | 2013.08-2018.07 | 8AT | R | L/R | SUV 4WD N57 D30 A | For vehicles without electronic suspension control;For vehicles without towbar | GCI85075 | Inner Joint | | 27 | 28 | 44 | 75 | 102 | |
| | 2020.08- | 8AT | F | L | SUV 4WD B57 D30 B;JA1 | | GDS84220 | Drive Shaft | | 37 | 27 | 65 | | 613 | |
| | 2020.08- | 8AT | F | R | SUV 4WD B57 D30 B;JA1 | | GDS84269 | Drive Shaft | | 37 | 27 | 65 | | 912 | |
| | 2020.08- | 8AT | F | L/R | SUV 4WD B57 D30 B;JA1 | | GCO82735 | Outer Joint | | 37 | 33 | 65 | | 74.5 | M |
| | 2020.08- | 8AT | F | L | SUV 4WD B57 D30 B;JA1 | | GCI82647 | Inner Joint | | 27 | 33 | 43.95 | 60 | 118 | |
| | 2020.08- | 8AT | F | R | SUV 4WD B57 D30 B;JA1 | | GCI82668 | Inner Joint | | 27 | 33 | 35 | 359.5 | 119.5 | |
| 3.0 (219 kw) | 2023.04- | 8AT | F | L | SUV 4WD B57 D30 B | | GDS84220 | Drive Shaft | | 37 | 27 | 65 | | 613 | |
| | 2023.04- | 8AT | F | R | SUV 4WD B57 D30 B | | GDS84269 | Drive Shaft | | 37 | 27 | 65 | | 912 | |
| | 2023.04- | 8AT | F | L | SUV 4WD B57 D30 B | | GCI82647 | Inner Joint | | 27 | 33 | 43.95 | 60 | 118 | |
| | 2023.04- | 8AT | F | R | SUV 4WD B57 D30 B | | GCI82668 | Inner Joint | | 27 | 33 | 35 | 359.5 | 119.5 | |
| | 2023.04- | | F | L/R | SUV 4WD B57 D30 B | | GCO82735 | Outer Joint | | 37 | 33 | 65 | | 74.5 | M |
| **X5 xDrive 30i** | | | | | | | | | | | | | | | |
| 3.0 (172 kw) | 2007.02-2012.12 | 6AT | F | L | SUV 4WD N52 B30 A | | GDS85052 | Drive Shaft | | 30 | 27 | 64.8 | 86.5 | 634 | |
| | 2007.02-2012.12 | 6AT | F | R | SUV 4WD N52 B30 A | | GDS85043 | Drive Shaft | | 30 | 27 | 64.8 | 86.5 | 1020 | |
| | 2007.02-2012.12 | 6AT | F | L/R | SUV 4WD N52 B30 A | | GCO85006 | Outer Joint | | 30 | 33 | 64.8 | 86.5 | 59.5 | M |
| | 2007.02-2012.12 | | F | L | SUV 4WD N52 B30 A | | GCI85030 | Inner Joint | | 27 | 26 | 43.9 | 62 | 121 | |
| | 2007.02-2012.12 | | F | R | SUV 4WD N52 B30 A | | GCI85014 | Inner Joint | | 27 | 26 | 43.9 | 448 | 121 | |
| | 2007.02-2012.12 | 6AT | R | L/R | SUV 4WD N52 B30 A | | GDS85046 | Drive Shaft | | 30 | 27 | 69 | 84.5 | 799 | |
| | 2007.02-2012.12 | 6AT | R | L/R | SUV 4WD N52 B30 A | | GDS85081 | Drive Shaft | | 30 | 27 | 68.7 | 84 | 810 | |
| | 2007.02-2012.12 | 6AT | R | L/R | SUV 4WD N52 B30 A | | GCI81169 | Outer Joint | | 30 | 28 | 68.7 | 84 | 89 | |
| | 2007.02-2012.12 | | R | L/R | SUV 4WD N52 B30 A | | GCI85075 | Inner Joint | | 27 | 28 | 44 | 75 | 102 | |
| 3.0 (194 kw) | 2008.09-2010.12 | 6AT | F | L | SUV 4WD N52 B30 A | | GDS85052 | Drive Shaft | | 30 | 27 | 64.8 | 86.5 | 634 | |
| | 2008.09-2010.12 | 6AT | F | R | SUV 4WD N52 B30 A | | GDS85043 | Drive Shaft | | 30 | 27 | 64.8 | 86.5 | 1020 | |
| | 2008.09-2010.12 | 6AT | R | L/R | SUV 4WD N52 B30 A | | GDS85046 | Drive Shaft | | 30 | 27 | 69 | 84.5 | 799 | |
| | 2008.09-2010.12 | 6AT | R | L/R | SUV 4WD N52 B30 A | | GDS85081 | Drive Shaft | | 30 | 27 | 68.7 | 84 | 810 | |
| | 2008.09-2010.12 | AT | R | L/R | SUV 4WD N52 B30 A | | GCI81169 | Outer Joint | | 30 | 28 | 68.7 | 84 | 89 | |
| | 2008.09-2010.12 | AT | R | L/R | SUV 4WD N52 B30 A | | GCI85075 | Inner Joint | | 27 | 28 | 44 | 75 | 102 | |
| 3.0 (200 kw) | 2008.10-2010.03 | 6AT | F | L | SUV 4WD N52 B30 A | | GDS85052 | Drive Shaft | | 30 | 27 | 64.8 | 86.5 | 634 | |
| | 2008.10-2010.03 | 6AT | F | R | SUV 4WD N52 B30 A | | GDS85043 | Drive Shaft | | 30 | 27 | 64.8 | 86.5 | 1020 | |
| | 2008.10-2010.03 | AT | F | L/R | SUV 4WD N52 B30 A | Date to:2009.12 | GCO85006 | Outer Joint | | 30 | 33 | 64.8 | 86.5 | 59.5 | M |
| | 2008.10-2010.03 | | F | L | SUV 4WD N52 B30 A | | GCI85030 | Inner Joint | | 27 | 26 | 43.9 | 62 | 121 | |
| | 2008.10-2010.03 | | F | R | SUV 4WD N52 B30 A | | GCI85014 | Inner Joint | | 27 | 26 | 43.9 | 448 | 121 | |
| | 2008.10-2010.03 | 6AT | R | L/R | SUV 4WD N52 B30 A | | GDS85046 | Drive Shaft | | 30 | 27 | 69 | 84.5 | 799 | |
| | 2008.10-2010.03 | 6AT | R | L/R | SUV 4WD N52 B30 A | | GDS85081 | Drive Shaft | | 30 | 27 | 68.7 | 84 | 810 | |
| | 2008.10-2010.03 | 6AT | R | L/R | SUV 4WD N52 B30 A | | GCI81169 | Outer Joint | | 30 | 28 | 68.7 | 84 | 89 | |
| | 2008.10-2010.03 | | R | L/R | SUV 4WD N52 B30 A | | GCI85075 | Inner Joint | | 27 | 28 | 44 | 75 | 102 | |
| **X5 xDrive 35d** | | | | | | | | | | | | | | | |
| 3.0 (210 kw) | 2008.10-2013.07 | 6AT | F | L | SUV 4WD M57 D30 (306D5) | | GDS85052 | Drive Shaft | | 30 | 27 | 64.8 | 86.5 | 634 | |
| | 2008.10-2013.07 | 6AT | F | R | SUV 4WD M57 D30 (306D5) | | GDS85043 | Drive Shaft | | 30 | 27 | 64.8 | 86.5 | 1020 | |
| | 2008.10-2013.07 | 6AT | F | L/R | SUV 4WD M57 D30 (306D5) | | GCO85006 | Outer Joint | | 30 | 33 | 64.8 | 86.5 | 59.5 | M |
| | 2008.10-2013.07 | 6AT | F | L | SUV 4WD M57 D30 (306D5) | | GCI85030 | Inner Joint | | 27 | 26 | 43.9 | 62 | 121 | |
| | 2008.10-2013.07 | 6AT | F | R | SUV 4WD M57 D30 (306D5) | | GCI85014 | Inner Joint | | 27 | 26 | 43.9 | 448 | 121 | |
| | 2008.10-2013.07 | 6AT | R | L/R | SUV 4WD M57 D30 (306D5) | | GDS85070 | Drive Shaft | | 30 | 32 | 68.7 | 84 | 809 | |
| | 2008.10-2013.07 | 6AT | R | L/R | SUV 4WD M57 D30 (306D5) | | GCI81169 | Outer Joint | | 30 | 28 | 68.7 | 84 | 89 | |
| | 2008.10-2013.07 | 6AT | R | L/R | SUV 4WD M57 D30 (306D5) | | GCI85074 | Inner Joint | | 32 | 28 | 49.9 | 85.5 | 100 | |
| **X5 xDrive 35i** | | | | | | | | | | | | | | | |
| 3.0 (225 kw) | 2010.04-2013.07 | 8AT | F | L | SUV 4WD N55 B30 A | | GDS85052 | Drive Shaft | | 30 | 27 | 64.8 | 86.5 | 634 | |
| | 2010.04-2013.07 | 8AT | F | R | SUV 4WD N55 B30 A | | GDS85043 | Drive Shaft | | 30 | 27 | 64.8 | 86.5 | 1020 | |
| | 2010.04-2013.07 | 8AT | F | L/R | SUV 4WD N55 B30 A | | GCO85006 | Outer Joint | | 30 | 33 | 64.8 | 86.5 | 59.5 | M |
| | 2010.04-2013.07 | 8AT | F | L | SUV 4WD N55 B30 A | | GCI85030 | Inner Joint | | 27 | 26 | 43.9 | 62 | 121 | |
| | 2010.04-2013.07 | 8AT | F | R | SUV 4WD N55 B30 A | | GCI85014 | Inner Joint | | 27 | 26 | 43.9 | 448 | 121 | |
| | 2010.04-2013.07 | 8AT | R | L/R | SUV 4WD N55 B30 A | Not for reinforced version | GDS85046 | Drive Shaft | | 30 | 27 | 69 | 84.5 | 799 | |
| | 2010.04-2013.07 | 8AT | R | L/R | SUV 4WD N55 B30 A | For reinforced version | GDS85070 | Drive Shaft | | 30 | 32 | 68.7 | 84 | 809 | |
| | 2010.04-2013.07 | 8AT | R | L/R | SUV 4WD N55 B30 A | Not for reinforced version | GDS85081 | Drive Shaft | | 30 | 27 | 68.7 | 84 | 810 | |
| | 2010.04-2013.07 | 8AT | R | L/R | SUV 4WD N55 B30 A | | GCI81169 | Outer Joint | | 30 | 28 | 68.7 | 84 | 89 | |
| | 2010.04-2013.07 | 8AT | R | L/R | SUV 4WD N55 B30 A | For reinforced version | GCI85074 | Inner Joint | | 32 | 28 | 49.9 | 85.5 | 100 | |
| | 2010.04-2013.07 | 8AT | R | L/R | SUV 4WD N55 B30 A | Not for reinforced version | GCI85075 | Inner Joint | | 27 | 28 | 44 | 75 | 102 | |

| | YEAR | TRANSM. | F/R | L/R | BODY STYLE & DRIVE TYPE & ENGINE | REMARKS | G-AP Ref. | PRODUCT | ABS | Technical Specifications A | B | C | H | L | P |
|---|---|---|---|---|---|---|---|---|---|---|---|---|---|---|---|
| **BMW** | | | | | | | | | | | | | | | |
| **X5 xDrive 35i** | | | | | | | | | | | | | | | |
| 3.0 (225 kw) | 2013.12-2018.07 | 8AT | F | L | SUV 4WD N55 B30 A | | GDS81110 | Drive Shaft | | 30 | 27 | 64.8 | 86.5 | 663 | |
| | 2013.12-2018.07 | 8AT | F | R | SUV 4WD N55 B30 A | | GDS85123 | Drive Shaft | | 30 | 27 | 64.8 | 86.5 | 973 | |
| | 2013.12-2018.07 | 8AT | F | L/R | SUV 4WD N55 B30 A | | GCO85006 | Outer Joint | | 30 | 33 | 64.8 | 86.5 | 59.5 | M |
| | 2013.12-2018.07 | 8AT | F | L | SUV 4WD N55 B30 A | | GCI81055 | Inner Joint | | 27 | 24 | 43.95 | 60 | 123.5 | |
| | 2013.12-2018.07 | 8AT | F | R | SUV 4WD N55 B30 A | | GCI85068 | Inner Joint | | 27 | 24 | 43.95 | 372 | 125 | |
| | 2013.12-2018.07 | 8AT | R | L/R | SUV 4WD N55 B30 A | For vehicles without electronic suspension control,For vehicles with towbar | GDS85046 | Drive Shaft | | 30 | 27 | 69 | 84.5 | 799 | |
| | 2013.12-2018.07 | 8AT | R | L/R | SUV 4WD N55 B30 A | For vehicles without electronic suspension control,For vehicles with towbar | GDS85070 | Drive Shaft | | 30 | 32 | 68.7 | 84 | 809 | |
| | 2013.12-2018.07 | 8AT | R | L/R | SUV 4WD N55 B30 A | For vehicles without electronic suspension control,For vehicles without towbar | GDS85081 | Drive Shaft | | 30 | 27 | 68.7 | 84 | 810 | |
| | 2013.12-2018.07 | 8AT | R | L/R | SUV 4WD N55 B30 A | For vehicles with electronic suspension control,For vehicles without towbar | GDS85149 | Drive Shaft | | 30 | | 68.7 | 84 | 630 | |
| | 2013.12-2018.07 | 8AT | R | L/R | SUV 4WD N55 B30 A | For vehicles without electronic suspension control | GCI81169 | Outer Joint | | 30 | 28 | 68.7 | 84 | 89 | |
| | 2013.12-2018.07 | 8AT | R | L/R | SUV 4WD N55 B30 A | For vehicles with electronic suspension control,For vehicles without towbar | GCI82468 | Outer Joint | | 30 | 28 | 68.7 | 84 | 62 | |
| | 2013.12-2018.07 | 8AT | R | L/R | SUV 4WD N55 B30 A | For vehicles with electronic suspension control,For vehicles without towbar | GCI61075 | Inner Joint | | | 28 | | | 26 | |
| | 2013.12-2018.07 | 8AT | R | L/R | SUV 4WD N55 B30 A | For vehicles without electronic suspension control,For vehicles with towbar | GCI85074 | Inner Joint | | 32 | 28 | 49.9 | 85.5 | 100 | |
| | 2013.12-2018.07 | 8AT | R | L/R | SUV 4WD N55 B30 A | For vehicles without electronic suspension control,For vehicles without towbar | GCI85075 | Inner Joint | | 27 | 28 | 44 | 75 | 102 | |
| 3.0 (235 kw) | 2012.02-2013.06 | 8AT | F | L | SUV 4WD N55 B30 A | | GDS85052 | Drive Shaft | | 30 | 27 | 64.8 | 86.5 | 634 | |
| | 2012.02-2013.06 | 8AT | F | R | SUV 4WD N55 B30 A | | GDS85043 | Drive Shaft | | 30 | 27 | 64.8 | 86.5 | 1020 | |
| | 2012.02-2013.06 | AT | F | L/R | SUV 4WD N55 B30 A | | GCO85006 | Outer Joint | | 30 | 33 | 64.8 | 86.5 | 59.5 | M |
| | 2012.02-2013.06 | | F | L | SUV 4WD N55 B30 A | | GCI85030 | Inner Joint | | 27 | 26 | 43.9 | 62 | 121 | |
| | 2012.02-2013.06 | | F | | SUV 4WD N55 B30 A | | GCI85014 | Inner Joint | | 27 | 26 | 43.9 | 448 | 121 | |
| | 2012.02-2013.06 | 8AT | R | L/R | SUV 4WD N55 B30 A | Not for reinforced version | GDS85046 | Drive Shaft | | 30 | 27 | 69 | 84.5 | 799 | |
| | 2012.02-2013.06 | 8AT | R | L/R | SUV 4WD N55 B30 A | For reinforced version | GDS85070 | Drive Shaft | | 30 | 32 | 68.7 | 84 | 809 | |
| | 2012.02-2013.06 | 8AT | R | L/R | SUV 4WD N55 B30 A | Not for reinforced version | GDS85081 | Drive Shaft | | 30 | 27 | 68.7 | 84 | 810 | |
| | 2012.02-2013.06 | 8AT | R | L/R | SUV 4WD N55 B30 A | Not for reinforced version | GCI81169 | Outer Joint | | 30 | 28 | 68.7 | 84 | 89 | |
| | 2012.02-2013.06 | | R | L/R | SUV 4WD N55 B30 A | Not for reinforced version | GCI85075 | Inner Joint | | 27 | 28 | 44 | 75 | 102 | |
| 3.0 (240 kw) | 2013.12-2018.07 | 8AT | F | L | SUV 4WD N55 B30 A | | GDS81110 | Drive Shaft | | 30 | 27 | 64.8 | 86.5 | 663 | |
| | 2013.12-2018.07 | 8AT | F | L | SUV 4WD N55 B30 A | | GCI81055 | Inner Joint | | 27 | 24 | 43.95 | 60 | 123.5 | |
| | 2013.12-2018.07 | 8AT | F | R | SUV 4WD N55 B30 A | | GCI85068 | Inner Joint | | 27 | 24 | 43.95 | 372 | 125 | |
| | 2013.12-2018.07 | AT | F | R | SUV 4WD N55 B30 A | | GDS85123 | Drive Shaft | | 30 | 27 | 64.8 | 86.5 | 973 | |
| | 2013.12-2018.07 | AT | F | L/R | SUV 4WD N55 B30 A | Date from:2014.01 | GCO85006 | Outer Joint | | 30 | 33 | 64.8 | 86.5 | 59.5 | M |
| | 2013.12-2018.07 | 8AT | R | L/R | SUV 4WD N55 B30 A | For vehicles without electronic suspension control,For vehicles without towbar | GDS85046 | Drive Shaft | | 30 | 27 | 69 | 84.5 | 799 | |
| | 2013.12-2018.07 | 8AT | R | L/R | SUV 4WD N55 B30 A | For vehicles without electronic suspension control,For vehicles with towbar | GDS85070 | Drive Shaft | | 30 | 32 | 68.7 | 84 | 809 | |
| | 2013.12-2018.07 | 8AT | R | L/R | SUV 4WD N55 B30 A | For vehicles without electronic suspension control,For vehicles without towbar | GDS85081 | Drive Shaft | | 30 | 27 | 68.7 | 84 | 810 | |
| | 2013.12-2018.07 | 8AT | R | L/R | SUV 4WD N55 B30 A | For vehicles with electronic suspension control | GDS85149 | Drive Shaft | | 30 | | 68.7 | 84 | 630 | |
| | 2013.12-2018.07 | 8AT | R | L/R | SUV 4WD N55 B30 A | For vehicles without electronic suspension control,For vehicles without towbar | GCI81169 | Outer Joint | | 30 | 28 | 68.7 | 84 | 89 | |
| | 2013.12-2018.07 | 8AT | R | L/R | SUV 4WD N55 B30 A | For vehicles with electronic suspension control | GCI82468 | Outer Joint | | 30 | 28 | 68.7 | 84 | 62 | |
| | 2013.12-2018.07 | 8AT | R | L/R | SUV 4WD N55 B30 A | For vehicles without electronic suspension control,For vehicles without towbar | GCI85075 | Inner Joint | | 27 | 28 | 44 | 75 | 102 | |
| **X5 xDrive 40d** | | | | | | | | | | | | | | | |
| 3.0 (225 kw) | 2010.09-2013.06 | 8AT | F | L | SUV 4WD N57 D30 B | | GDS81110 | Drive Shaft | | 30 | 27 | 64.8 | 86.5 | 663 | |
| | 2010.09-2013.06 | 8AT | F | R | SUV 4WD N57 D30 B | | GDS85123 | Drive Shaft | | 30 | 27 | 64.8 | 86.5 | 973 | |
| | 2010.09-2013.06 | 8AT | F | L | SUV 4WD N57 D30 B | | GCI81055 | Inner Joint | | 27 | 24 | 43.95 | 60 | 123.5 | |
| | 2010.09-2013.06 | 8AT | F | R | SUV 4WD N57 D30 B | | GCI85068 | Inner Joint | | 27 | 24 | 43.95 | 372 | 125 | |
| | 2010.09-2013.06 | AT | F | L/R | SUV 4WD N57 D30 B | | GCO85006 | Outer Joint | | 30 | 33 | 64.8 | 86.5 | 59.5 | M |
| | 2010.09-2013.06 | 8AT | R | L/R | SUV 4WD N57 D30 B | | GDS85070 | Drive Shaft | | 30 | 32 | 68.7 | 84 | 809 | |
| 3.0 (230 kw) | 2013.12-2018.07 | 8AT | F | L | SUV 4WD N57 D30 B | | GDS81110 | Drive Shaft | | 30 | 27 | 64.8 | 86.5 | 663 | |
| | 2013.12-2018.07 | 8AT | F | R | SUV 4WD N57 D30 B | | GDS85123 | Drive Shaft | | 30 | 27 | 64.8 | 86.5 | 973 | |
| | 2013.12-2018.07 | 8AT | F | L/R | SUV 4WD N57 D30 B | | GCO85006 | Outer Joint | | 30 | 33 | 64.8 | 86.5 | 59.5 | M |
| | 2013.12-2018.07 | 8AT | F | L | SUV 4WD N57 D30 B | | GCI81055 | Inner Joint | | 27 | 24 | 43.95 | 60 | 123.5 | |
| | 2013.12-2018.07 | 8AT | F | R | SUV 4WD N57 D30 B | | GCI85068 | Inner Joint | | 27 | 24 | 43.95 | 372 | 125 | |
| | 2013.12-2018.07 | 8AT | R | L/R | SUV 4WD N57 D30 B | For vehicles without electronic suspension control | GDS85070 | Drive Shaft | | 30 | 32 | 68.7 | 84 | 809 | |
| | 2013.12-2018.07 | 8AT | R | L/R | SUV 4WD N57 D30 B | For vehicles with electronic suspension control | GDS85149 | Drive Shaft | | 30 | | 68.7 | 84 | 630 | |
| | 2013.12-2018.07 | 8AT | R | L/R | SUV 4WD N57 D30 B | For vehicles without electronic suspension control | GCI81169 | Outer Joint | | 30 | 28 | 68.7 | 84 | 89 | |
| | 2013.12-2018.07 | 8AT | R | L/R | SUV 4WD N57 D30 B | For vehicles without electronic suspension control | GCI85074 | Inner Joint | | 32 | 28 | 49.9 | 85.5 | 100 | |
| 3.0 (250 kw) | 2020.05- | 8AT | F | L | SUV 4WD B57 D30 B;JA1 | | GDS84220 | Drive Shaft | | 37 | 27 | 65 | | 613 | |
| | 2020.05- | 8AT | F | R | SUV 4WD B57 D30 B;JA1 | | GDS84269 | Drive Shaft | | 37 | 27 | 65 | | 912 | |
| | 2020.05- | 8AT | F | L/R | SUV 4WD B57 D30 B;JA1 | | GCO82735 | Outer Joint | | 37 | 33 | 65 | | 74.5 | M |
| | 2020.05- | 8AT | F | L | SUV 4WD B57 D30 B;JA1 | | GCI82647 | Inner Joint | | 27 | 33 | 43.95 | 60 | 118 | |
| | 2020.05- | 8AT | F | R | SUV 4WD B57 D30 B;JA1 | | GCI82668 | Inner Joint | | 27 | 33 | 35 | 359.5 | 119.5 | |
| 3.0 (259 kw) | 2023.06- | 8AT | F | L | SUV 4WD B57 D30 B | | GDS84220 | Drive Shaft | | 37 | 27 | 65 | | 613 | |
| | 2023.06- | 8AT | F | R | SUV 4WD B57 D30 B | | GDS84269 | Drive Shaft | | 37 | 27 | 65 | | 912 | |
| | 2023.06- | 8AT | F | L | SUV 4WD B57 D30 B | | GCI82647 | Inner Joint | | 27 | 33 | 43.95 | 60 | 118 | |
| | 2023.06- | 8AT | F | R | SUV 4WD B57 D30 B | | GCI82668 | Inner Joint | | 27 | 33 | 35 | 359.5 | 119.5 | |
| | 2023.06- | | F | L/R | SUV 4WD B57 D30 B | | GCO82735 | Outer Joint | | 37 | 33 | 65 | | 74.5 | M |
| **X5 xDrive 40e** | | | | | | | | | | | | | | | |
| 2.0 (205 kw) | 2015.08-2018.07 | 8AT | F | L | SUV 4WD N20 B20 A | | GDS81110 | Drive Shaft | | 30 | 27 | 64.8 | 86.5 | 663 | |
| | 2015.08-2018.07 | 8AT | F | L | SUV 4WD N20 B20 A | | GCI81055 | Inner Joint | | 27 | 24 | 43.95 | 60 | 123.5 | |

| | YEAR | TRANSM. | F/R | L/R | BODY STYLE & DRIVE TYPE & ENGINE | REMARKS | G-AP Ref. | PRODUCT | ABS | Technical Specifications A | B | C | H | L | P |
|---|---|---|---|---|---|---|---|---|---|---|---|---|---|---|---|
| **BMW** | | | | | | | | | | | | | | | |
| **X5 xDrive 40e** | | | | | | | | | | | | | | | |
| 2.0 (205 kw) | 2015.08-2018.07 | 8AT | F | R | SUV 4WD N20 B20 A | | GCI85068 | Inner Joint | | 27 | 24 | 43.95 | 372 | 125 | |
| | 2015.08-2018.07 | AT | F | L/R | SUV 4WD N20 B20 A | Date from:2016.01 | GCO85006 | Outer Joint | | 30 | 33 | 64.8 | 86.5 | 59.5 | M |
| | 2015.08-2018.07 | AT/8AT | F | R | SUV 4WD N20 B20 A | | GDS85123 | Drive Shaft | | 30 | 27 | 64.8 | 86.5 | 973 | |
| | 2015.08-2018.07 | 8AT | R | L/R | SUV 4WD N20 B20 A | | GDS85046 | Drive Shaft | | 30 | 27 | 69 | 84.5 | 799 | |
| | 2015.08-2018.07 | 8AT | R | L/R | SUV 4WD N20 B20 A | | GDS85081 | Drive Shaft | | 30 | 27 | 68.7 | 84 | 810 | |
| | 2015.08-2018.07 | 8AT | R | L/R | SUV 4WD N20 B20 A | | GCI81169 | Outer Joint | | 30 | 28 | 68.7 | 84 | 89 | |
| | 2015.08-2018.07 | 8AT | R | L/R | SUV 4WD N20 B20 A | | GCI85075 | Inner Joint | | 27 | 28 | 44 | 75 | 102 | |
| 2.0 (230 kw) | 2015.08-2018.07 | 8AT | F | L | SUV 4WD N20 B20 A | | GDS81110 | Drive Shaft | | 30 | 27 | 64.8 | 86.5 | 663 | |
| | 2015.08-2018.07 | 8AT | F | L | SUV 4WD N20 B20 A | | GCI81055 | Inner Joint | | 27 | 24 | 43.95 | 60 | 123.5 | |
| | 2015.08-2018.07 | 8AT | F | R | SUV 4WD N20 B20 A | | GCI85068 | Inner Joint | | 27 | 24 | 43.95 | 372 | 125 | |
| | 2015.08-2018.07 | AT | F | L/R | SUV 4WD N20 B20 A | | GCO85006 | Outer Joint | | 30 | 33 | 64.8 | 86.5 | 59.5 | M |
| | 2015.08-2018.07 | AT/8AT | F | R | SUV 4WD N20 B20 A | | GDS85123 | Drive Shaft | | 30 | 27 | 64.8 | 86.5 | 973 | |
| | 2015.08-2018.07 | 8AT | R | L/R | SUV 4WD N20 B20 A | | GDS85046 | Drive Shaft | | 30 | 27 | 69 | 84.5 | 799 | |
| | 2015.08-2018.07 | 8AT | R | L/R | SUV 4WD N20 B20 A | | GDS85081 | Drive Shaft | | 30 | 27 | 68.7 | 84 | 810 | |
| | 2015.08-2018.07 | 8AT | R | L/R | SUV 4WD N20 B20 A | | GCI81169 | Outer Joint | | 30 | 28 | 68.7 | 84 | 89 | |
| | 2015.08-2018.07 | 8AT | R | L/R | SUV 4WD N20 B20 A | | GCI85075 | Inner Joint | | 27 | 28 | 44 | 75 | 102 | |
| **X5 xDrive 40i** | | | | | | | | | | | | | | | |
| 3.0 (225 kw) | 2012.01-2013.06 | AT | F | L | SUV 4WD N55 B30 A | | GDS85052 | Drive Shaft | | 30 | 27 | 64.8 | 86.5 | 634 | |
| | 2012.01-2013.06 | AT | F | R | SUV 4WD N55 B30 A | | GDS85043 | Drive Shaft | | 30 | 27 | 64.8 | 86.5 | 1020 | |
| | 2012.01-2013.06 | AT | F | L/R | SUV 4WD N55 B30 A | | GCO85006 | Outer Joint | | 30 | 33 | 64.8 | 86.5 | 59.5 | M |
| | 2012.01-2013.06 | | F | L | SUV 4WD N55 B30 A | | GCI85030 | Inner Joint | | 27 | 26 | 43.9 | 62 | 121 | |
| | 2012.01-2013.06 | | F | R | SUV 4WD N55 B30 A | | GCI85014 | Inner Joint | | 27 | 26 | 43.9 | 448 | 121 | |
| | 2012.01-2013.06 | 8AT | R | L/R | SUV 4WD N55 B30 A | Not for reinforced version | GDS85046 | Drive Shaft | | 30 | 27 | 69 | 84.5 | 799 | |
| | 2012.01-2013.06 | 8AT | R | L/R | SUV 4WD N55 B30 A | For reinforced version | GDS85070 | Drive Shaft | | 30 | 32 | 68.7 | 84 | 809 | |
| | 2012.01-2013.06 | 8AT | R | L/R | SUV 4WD N55 B30 A | Not for reinforced version | GDS85081 | Drive Shaft | | 30 | 27 | 68.7 | 84 | 810 | |
| | 2012.01-2013.06 | 8AT | R | L/R | SUV 4WD N55 B30 A | Not for reinforced version | GCI81169 | Outer Joint | | 30 | 28 | 68.7 | 84 | 89 | |
| | 2012.01-2013.06 | | R | L/R | SUV 4WD N55 B30 A | Not for reinforced version | GCI85075 | Inner Joint | | 27 | 28 | 44 | 75 | 102 | |
| 3.0 (245 kw) | 2020.12-2023.03 | 8AT | F | L | SUV 4WD B58 B30 C;JA1 | | GDS84220 | Drive Shaft | | 37 | 27 | 65 | | 613 | |
| | 2020.12-2023.03 | 8AT | F | R | SUV 4WD B58 B30 C;JA1 | | GDS84269 | Drive Shaft | | 37 | 27 | 65 | | 912 | |
| | 2020.12-2023.03 | 8AT | F | L/R | SUV 4WD B58 B30 C;JA1 | | GCO82735 | Outer Joint | | 37 | 33 | 65 | | 74.5 | M |
| | 2020.12-2023.03 | 8AT | F | L | SUV 4WD B58 B30 C;JA1 | | GCI82647 | Inner Joint | | 27 | 33 | 43.95 | 60 | 118 | |
| | 2020.12-2023.03 | 8AT | F | R | SUV 4WD B58 B30 C;JA1 | | GCI82668 | Inner Joint | | 27 | 33 | 35 | 359.5 | 119.5 | |
| 3.0 (250 kw) | 2018.08-2023.03 | 8AT | F | L | SUV 4WD B58 B30 C | | GDS84220 | Drive Shaft | | 37 | 27 | 65 | | 613 | |
| | 2018.08-2023.03 | 8AT | F | R | SUV 4WD B58 B30 C | | GDS84269 | Drive Shaft | | 37 | 27 | 65 | | 912 | |
| | 2018.08-2023.03 | 8AT | F | L/R | SUV 4WD B58 B30 C | | GCO82735 | Outer Joint | | 37 | 33 | 65 | | 74.5 | M |
| | 2018.08-2023.03 | 8AT | F | L | SUV 4WD B58 B30 C | | GCI82647 | Inner Joint | | 27 | 33 | 43.95 | 60 | 118 | |
| | 2018.08-2023.03 | 8AT | F | R | SUV 4WD B58 B30 C | | GCI82668 | Inner Joint | | 27 | 33 | 35 | 359.5 | 119.5 | |
| | 2019.11-2023.03 | 8AT | F | L | SUV Van 4WD B58 B30 C | | GDS84220 | Drive Shaft | | 37 | 27 | 65 | | 613 | |
| | 2019.11-2023.03 | 8AT | F | R | SUV Van 4WD B58 B30 C | | GDS84269 | Drive Shaft | | 37 | 27 | 65 | | 912 | |
| | 2019.11-2023.03 | 8AT | F | L/R | SUV Van 4WD B58 B30 C | | GCO82735 | Outer Joint | | 37 | 33 | 65 | | 74.5 | M |
| | 2019.11-2023.03 | 8AT | F | L | SUV Van 4WD B58 B30 C | | GCI82647 | Inner Joint | | 27 | 33 | 43.95 | 60 | 118 | |
| | 2019.11-2023.03 | 8AT | F | R | SUV Van 4WD B58 B30 C | | GCI82668 | Inner Joint | | 27 | 33 | 35 | 359.5 | 119.5 | |
| 3.0 (280 kw) | 2023.04- | 8AT | F | L | SUV 4WD B58 B30 P | | GDS84220 | Drive Shaft | | 37 | 27 | 65 | | 613 | |
| | 2023.04- | 8AT | F | R | SUV 4WD B58 B30 P | | GDS84269 | Drive Shaft | | 37 | 27 | 65 | | 912 | |
| | 2023.04- | 8AT | F | L | SUV 4WD B58 B30 P | | GCI82647 | Inner Joint | | 27 | 33 | 43.95 | 60 | 118 | |
| | 2023.04- | 8AT | F | R | SUV 4WD B58 B30 P | | GCI82668 | Inner Joint | | 27 | 33 | 35 | 359.5 | 119.5 | |
| | 2023.04- | | F | L/R | SUV 4WD B58 B30 P | | GCO82735 | Outer Joint | | 37 | 33 | 65 | | 74.5 | M |
| **X5 xDrive 45e** | | | | | | | | | | | | | | | |
| 3.0 (235 kw) | 2019.06-2023.03 | 8AT | F | L | SUV 4WD B58 B30 C | | GDS84220 | Drive Shaft | | 37 | 27 | 65 | | 613 | |
| | 2019.06-2023.03 | 8AT | F | R | SUV 4WD B58 B30 C | | GDS84269 | Drive Shaft | | 37 | 27 | 65 | | 912 | |
| | 2019.06-2023.03 | 8AT | F | L/R | SUV 4WD B58 B30 C | | GCO82735 | Outer Joint | | 37 | 33 | 65 | | 74.5 | M |
| | 2019.06-2023.03 | 8AT | F | L | SUV 4WD B58 B30 C | | GCI82647 | Inner Joint | | 27 | 33 | 43.95 | 60 | 118 | |
| | 2019.06-2023.03 | 8AT | F | R | SUV 4WD B58 B30 C | | GCI82668 | Inner Joint | | 27 | 33 | 35 | 359.5 | 119.5 | |
| 3.0 (290 kw) | 2019.06-2023.03 | 8AT | F | L | SUV 4WD B58 B30 C | | GDS84220 | Drive Shaft | | 37 | 27 | 65 | | 613 | |
| | 2019.06-2023.03 | 8AT | F | R | SUV 4WD B58 B30 C | | GDS84269 | Drive Shaft | | 37 | 27 | 65 | | 912 | |
| | 2019.06-2023.03 | 8AT | F | L/R | SUV 4WD B58 B30 C | | GCO82735 | Outer Joint | | 37 | 33 | 65 | | 74.5 | M |
| | 2019.06-2023.03 | 8AT | F | L | SUV 4WD B58 B30 C | | GCI82647 | Inner Joint | | 27 | 33 | 43.95 | 60 | 118 | |
| | 2019.06-2023.03 | 8AT | F | R | SUV 4WD B58 B30 C | | GCI82668 | Inner Joint | | 27 | 33 | 35 | 359.5 | 119.5 | |
| **X5 xDrive 48i** | | | | | | | | | | | | | | | |
| 4.8 (261 kw) | 2008.10-2010.03 | 6AT | F | L | SUV 4WD N62 B48 B | | GDS85052 | Drive Shaft | | 30 | 27 | 64.8 | 86.5 | 634 | |
| | 2008.10-2010.03 | 6AT | F | R | SUV 4WD N62 B48 B | | GDS85043 | Drive Shaft | | 30 | 27 | 64.8 | 86.5 | 1020 | |
| | 2008.10-2010.03 | AT | F | L/R | SUV 4WD N62 B48 B | | GCO85006 | Outer Joint | | 30 | 33 | 64.8 | 86.5 | 59.5 | M |
| | 2008.10-2010.03 | | F | L | SUV 4WD N62 B48 B | | GCI85030 | Inner Joint | | 27 | 26 | 43.9 | 62 | 121 | |
| | 2008.10-2010.03 | | F | R | SUV 4WD N62 B48 B | | GCI85014 | Inner Joint | | 27 | 26 | 43.9 | 448 | 121 | |
| | 2008.10-2010.03 | 6AT | R | L/R | SUV 4WD N62 B48 B | Date to:2009.08,Not for reinforced version | GDS85046 | Drive Shaft | | 30 | 27 | 69 | 84.5 | 799 | |

| | YEAR | TRANSM. | F/R | L/R | BODY STYLE & DRIVE TYPE & ENGINE | REMARKS | G-AP Ref. | PRODUCT | ABS | Technical Specifications A | B | C | H | L | P |
|---|---|---|---|---|---|---|---|---|---|---|---|---|---|---|---|
| **BMW** | | | | | | | | | | | | | | | |
| **X5 xDrive 48i** | | | | | | | | | | | | | | | |
| 4.8 (261 kw) | 2008.10-2010.03 | 6AT | R | L/R | SUV 4WD N62 B48 B | Date to:2009.08,For reinforced version;Date from:2009.09 | GDS85070 | Drive Shaft | | 30 | 32 | 68.7 | 84 | 809 | |
| | 2008.10-2010.03 | 6AT | R | L/R | SUV 4WD N62 B48 B | Date to:2009.08,Not for reinforced version | GDS85081 | Drive Shaft | | 30 | 27 | 68.7 | 84 | 810 | |
| | 2008.10-2010.03 | 6AT | R | L/R | SUV 4WD N62 B48 B | Date to:2009.08,Not for reinforced version | GCI81169 | Outer Joint | | 30 | 28 | 68.7 | 84 | 89 | |
| | 2008.10-2010.03 | | R | L/R | SUV 4WD N62 B48 B | Date to:2009.08,Not for reinforced version | GCI85075 | Inner Joint | | 27 | 28 | 44 | 75 | 102 | |
| **X5 xDrive 50e** | | | | | | | | | | | | | | | |
| 3.0 (360 kw) | 2023.04- | 8AT | F | L | SUV 4WD B58 B30 S | | GDS84220 | Drive Shaft | | 37 | 27 | 65 | | 613 | |
| | 2023.04- | 8AT | F | R | SUV 4WD B58 B30 S | | GDS84269 | Drive Shaft | | 37 | 27 | 65 | | 912 | |
| | 2023.04- | 8AT | F | L | SUV 4WD B58 B30 S | | GCI82647 | Inner Joint | | 27 | 33 | 43.95 | 60 | 118 | |
| | 2023.04- | 8AT | F | R | SUV 4WD B58 B30 S | | GCI82668 | Inner Joint | | 27 | 33 | 35 | 359.5 | 119.5 | |
| | 2023.04- | | F | L/R | SUV 4WD B58 B30 S | | GCO82735 | Outer Joint | | 37 | 33 | 65 | | 74.5 | M |
| **X5 xDrive 50i** | | | | | | | | | | | | | | | |
| 4.4 (298 kw) | 2009.09-2013.06 | 8AT | F | L | SUV 4WD N63 B44 A | | GDS85052 | Drive Shaft | | 30 | 27 | 64.8 | 86.5 | 634 | |
| | 2009.09-2013.06 | 8AT | F | R | SUV 4WD N63 B44 A | | GDS85043 | Drive Shaft | | 30 | 27 | 64.8 | 86.5 | 1020 | |
| | 2009.09-2013.06 | | F | L | SUV 4WD N63 B44 A | | GCI85030 | Inner Joint | | 27 | 26 | 43.9 | 62 | 121 | |
| | 2009.09-2013.06 | 8AT | R | L/R | SUV 4WD N63 B44 A | | GDS85070 | Drive Shaft | | 30 | 32 | 68.7 | 84 | 809 | |
| 4.4 (300 kw) | 2010.04-2013.07 | 8AT | F | L | SUV 4WD N63 B44 A | | GDS85052 | Drive Shaft | | 30 | 27 | 64.8 | 86.5 | 634 | |
| | 2010.04-2013.07 | 8AT | F | R | SUV 4WD N63 B44 A | | GDS85043 | Drive Shaft | | 30 | 27 | 64.8 | 86.5 | 1020 | |
| | 2010.04-2013.07 | AT | F | L/R | SUV 4WD N63 B44 A | | GCO85006 | Outer Joint | | 30 | 33 | 64.8 | 86.5 | 59.5 | M |
| | 2010.04-2013.07 | | F | L | SUV 4WD N63 B44 A | | GCI85030 | Inner Joint | | 27 | 26 | 43.9 | 62 | 121 | |
| | 2010.04-2013.07 | | F | R | SUV 4WD N63 B44 A | | GCI85014 | Inner Joint | | 27 | 26 | 43.9 | 448 | 121 | |
| | 2010.04-2013.07 | 8AT | R | L/R | SUV 4WD N63 B44 A | | GDS85070 | Drive Shaft | | 30 | 32 | 68.7 | 84 | 809 | |
| 4.4 (330 kw) | 2013.08-2018.07 | 8AT | F | L | SUV 4WD N63 B44 B | | GDS85052 | Drive Shaft | | 30 | 27 | 64.8 | 86.5 | 634 | |
| | 2013.08-2018.07 | 8AT | F | R | SUV 4WD N63 B44 B | | GDS85043 | Drive Shaft | | 30 | 27 | 64.8 | 86.5 | 1020 | |
| | 2013.08-2018.07 | | F | L/R | SUV 4WD N63 B44 B | | GCO85006 | Outer Joint | | 30 | 33 | 64.8 | 86.5 | 59.5 | M |
| | 2013.08-2018.07 | | F | L | SUV 4WD N63 B44 B | | GCI85030 | Inner Joint | | 27 | 26 | 43.9 | 62 | 121 | |
| | 2013.08-2018.07 | | F | R | SUV 4WD N63 B44 B | | GCI85014 | Inner Joint | | 27 | 26 | 43.9 | 448 | 121 | |
| | 2013.08-2018.07 | 8AT | R | L/R | SUV 4WD N63 B44 B | For vehicles without electronic suspension control | GDS85070 | Drive Shaft | | 30 | 32 | 68.7 | 84 | 809 | |
| | 2013.08-2018.07 | 8AT | R | L/R | SUV 4WD N63 B44 B | For vehicles with electronic suspension control | GDS85149 | Drive Shaft | | 30 | | 68.7 | 84 | 630 | |
| | 2013.08-2018.07 | 8AT | R | L/R | SUV 4WD N63 B44 B | For vehicles with electronic suspension control | GCI82468 | Outer Joint | | 30 | 28 | 68.7 | 84 | 62 | |
| | 2013.08-2018.07 | 8AT | R | L/R | SUV 4WD N63 B44 B | For vehicles with electronic suspension control | GCI61075 | Inner Joint | | | 28 | | | 26 | |
| 4.4 (340 kw) | 2018.08-2019.07 | 8AT | F | L | SUV 4WD N63 B44 D | | GDS84220 | Drive Shaft | | 37 | 27 | 65 | | 613 | |
| | 2018.08-2019.07 | 8AT | F | L | SUV 4WD N63 B44 D | | GCO82735 | Outer Joint | | 37 | 33 | 65 | | 74.5 | M |
| | 2018.08-2019.07 | 8AT | F | L | SUV 4WD N63 B44 D | | GCI82647 | Inner Joint | | 27 | 33 | 43.95 | 60 | 118 | |
| **X5 xDrive M50d** | | | | | | | | | | | | | | | |
| 3.0 (280 kw) | 2011.08-2013.06 | 8AT | F | L | SUV 4WD N57 D30 C | Inner teeth of tranm.side:24 | GDS81110 | Drive Shaft | | 30 | 27 | 64.8 | 86.5 | 663 | |
| | 2011.08-2013.06 | 8AT | F | L | SUV 4WD N57 D30 C | | GCI81055 | Inner Joint | | 27 | 24 | 43.95 | 60 | 123.5 | |
| | 2011.08-2013.06 | 8AT | F | R | SUV 4WD N57 D30 C | | GCI85068 | Inner Joint | | 27 | 24 | 43.95 | 372 | 125 | |
| | 2011.08-2013.06 | AT | F | R | SUV 4WD N57 D30 C | | GDS85123 | Drive Shaft | | 30 | 27 | 64.8 | 86.5 | 973 | |
| | 2011.08-2013.06 | AT | F | L/R | SUV 4WD N57 D30 C | | GCO85006 | Outer Joint | | 30 | 33 | 64.8 | 86.5 | 59.5 | M |
| | 2011.08-2013.06 | 8AT | R | L/R | SUV 4WD N57 D30 C | | GCI85074 | Inner Joint | | 32 | 28 | 49.9 | 85.5 | 100 | |
| | 2011.08-2013.06 | AT | R | L/R | SUV 4WD N57 D30 C | | GDS81119 | Drive Shaft | | 30 | 32 | 68.7 | 84 | 820 | |
| | 2013.12-2018.07 | 8AT | F | L | SUV 4WD N57 D30 C | | GDS81110 | Drive Shaft | | 30 | 27 | 64.8 | 86.5 | 663 | |
| | 2013.12-2018.07 | 8AT | F | R | SUV 4WD N57 D30 C | | GDS85123 | Drive Shaft | | 30 | 27 | 64.8 | 86.5 | 973 | |
| | 2013.12-2018.07 | 8AT | F | L | SUV 4WD N57 D30 C | | GCI81055 | Inner Joint | | 27 | 24 | 43.95 | 60 | 123.5 | |
| | 2013.12-2018.07 | 8AT | F | R | SUV 4WD N57 D30 C | | GCI85068 | Inner Joint | | 27 | 24 | 43.95 | 372 | 125 | |
| | 2013.12-2018.07 | AT | F | L/R | SUV 4WD N57 D30 C | Date from:2014.01 | GCO85006 | Outer Joint | | 30 | 33 | 64.8 | 86.5 | 59.5 | M |
| | 2013.12-2018.07 | 8AT | R | L/R | SUV 4WD N57 D30 C | | GCI85074 | Inner Joint | | 32 | 28 | 49.9 | 85.5 | 100 | |
| | 2013.12-2018.07 | AT | R | L/R | SUV 4WD N57 D30 C | | GDS81119 | Drive Shaft | | 30 | 32 | 68.7 | 84 | 820 | |
| 3.0 (294 kw) | 2018.08-2023.03 | 8AT | F | L | SUV 4WD B57 D30 C | | GDS84220 | Drive Shaft | | 37 | 27 | 65 | | 613 | |
| | 2018.08-2023.03 | 8AT | F | R | SUV 4WD B57 D30 C | | GDS84269 | Drive Shaft | | 37 | 27 | 65 | | 912 | |
| | 2018.08-2023.03 | 8AT | F | L/R | SUV 4WD B57 D30 C | | GCO82735 | Outer Joint | | 37 | 33 | 65 | | 74.5 | M |
| | 2018.08-2023.03 | 8AT | F | L | SUV 4WD B57 D30 C | | GCI82647 | Inner Joint | | 27 | 33 | 43.95 | 60 | 118 | |
| | 2018.08-2023.03 | 8AT | F | R | SUV 4WD B57 D30 C | | GCI82668 | Inner Joint | | 27 | 33 | 35 | 359.5 | 119.5 | |
| **X5 xDrive M50i** | | | | | | | | | | | | | | | |
| 4.4 (390 kw) | 2019.08-2023.03 | 8AT | F | L | SUV 4WD N63 B44 D | | GDS84220 | Drive Shaft | | 37 | 27 | 65 | | 613 | |
| | 2019.08-2023.03 | 8AT | F | R | SUV 4WD N63 B44 D | | GDS84269 | Drive Shaft | | 37 | 27 | 65 | | 912 | |
| | 2019.08-2023.03 | 8AT | F | L | SUV 4WD N63 B44 D | | GCO82735 | Outer Joint | | 37 | 33 | 65 | | 74.5 | M |
| | 2019.08-2023.03 | 8AT | F | L | SUV 4WD N63 B44 D | | GCI82647 | Inner Joint | | 27 | 33 | 43.95 | 60 | 118 | |
| | 2019.08-2023.03 | 8AT | F | R | SUV 4WD N63 B44 D | | GCI82668 | Inner Joint | | 27 | 33 | 35 | 359.5 | 119.5 | |
| **X5 xDrive M60i** | | | | | | | | | | | | | | | |
| 4.4 (390 kw) | 2023.04- | 8AT | F | L | SUV 4WD S68 B44 A | | GDS84220 | Drive Shaft | | 37 | 27 | 65 | | 613 | |
| | 2023.04- | | F | L | SUV 4WD S68 B44 A | | GCO82735 | Outer Joint | | 37 | 33 | 65 | | 74.5 | M |
| | 2023.04- | | F | L | SUV 4WD S68 B44 A | | GCI82647 | Inner Joint | | 27 | 33 | 43.95 | 60 | 118 | |

| | YEAR | TRANSM. | F/R | L/R | BODY STYLE & DRIVE TYPE & ENGINE | REMARKS | G-AP Ref. | PRODUCT | ABS | Technical Specifications A | B | C | H | L | P |
|---|---|---|---|---|---|---|---|---|---|---|---|---|---|---|---|
| **BMW** | | | | | | | | | | | | | | | |
| **X6 ActiveHybrid** | | | | | | | | | | | | | | | |
| 4.4 (357 kw) | 2009.01-2011.10 | 7AT | F | L | SUV 4WD N63 B44 A | | GCI85030 | Inner Joint | | 27 | 26 | 43.9 | 62 | 121 | |
| | 2009.01-2011.10 | AT | F | L/R | SUV 4WD N63 B44 A | | GCO85006 | Outer Joint | | 30 | 33 | 64.8 | 86.5 | 59.5 | M |
| | 2009.01-2011.10 | AT/7AT | F | L | SUV 4WD N63 B44 A | | GDS85052 | Drive Shaft | | 30 | 27 | 64.8 | 86.5 | 634 | |
| | 2009.01-2011.10 | AT/7AT | F | R | SUV 4WD N63 B44 A | | GDS85043 | Drive Shaft | | 30 | 27 | 64.8 | 86.5 | 1020 | |
| | 2009.01-2011.10 | | F | R | SUV 4WD N63 B44 A | | GCI85014 | Inner Joint | | 27 | 26 | 43.9 | 448 | 121 | |
| | 2009.01-2011.10 | AT/7AT | R | L/R | SUV 4WD N63 B44 A | | GDS85070 | Drive Shaft | | 30 | 32 | 68.7 | 84 | 809 | |
| **X6 M** | | | | | | | | | | | | | | | |
| 4.4 (408 kw) | 2009.07-2014.07 | AT | F | L | SUV 4WD S63 B44 A | | GDS85052 | Drive Shaft | | 30 | 27 | 64.8 | 86.5 | 634 | |
| | 2009.07-2014.07 | AT | F | R | SUV 4WD S63 B44 A | | GDS85043 | Drive Shaft | | 30 | 27 | 64.8 | 86.5 | 1020 | |
| | 2009.07-2014.07 | AT | F | R | SUV 4WD S63 B44 A | | GCO85006 | Outer Joint | | 30 | 33 | 64.8 | 86.5 | 59.5 | M |
| | 2009.07-2014.07 | AT | F | R | SUV 4WD S63 B44 A | | GCI85014 | Inner Joint | | 27 | 26 | 43.9 | 448 | 121 | |
| | 2009.07-2014.07 | | F | L | SUV 4WD S63 B44 A | | GCI85030 | Inner Joint | | 27 | 26 | 43.9 | 62 | 121 | |
| 4.4 (423 kw) | 2014.12-2019.07 | 8AT | F | L | SUV 4WD S63 B44 B | Inner teeth of tranm.side:26 | GDS85052 | Drive Shaft | | 30 | 27 | 64.8 | 86.5 | 634 | |
| | 2014.12-2019.07 | AT | F | R | SUV 4WD S63 B44 B | | GDS85043 | Drive Shaft | | 30 | 27 | 64.8 | 86.5 | 1020 | |
| | 2014.12-2019.07 | AT | F | R | SUV 4WD S63 B44 B | | GCO85006 | Outer Joint | | 30 | 33 | 64.8 | 86.5 | 59.5 | M |
| | 2014.12-2019.07 | AT | F | L | SUV 4WD S63 B44 B | | GCI85030 | Inner Joint | | 27 | 26 | 43.9 | 62 | 121 | |
| | 2014.12-2019.07 | AT | F | R | SUV 4WD S63 B44 B | | GCI85014 | Inner Joint | | 27 | 26 | 43.9 | 448 | 121 | |
| | 2014.12-2019.07 | 8AT | R | L/R | SUV 4WD S63 B44 B | | GDS58081 | Drive Shaft | | 30 | | 68.5 | 84 | 618 | |
| 4.4 (441 kw) | 2019.12-2023.03 | 8AT | F | L | SUV 4WD S63 B44 B | | GDS84220 | Drive Shaft | | 37 | 27 | 65 | | 613 | |
| | 2019.12-2023.03 | 8AT | F | L | SUV 4WD S63 B44 B | | GCO82735 | Outer Joint | | 37 | 33 | 65 | | 74.5 | M |
| | 2019.12-2023.03 | 8AT | F | L | SUV 4WD S63 B44 B | | GCI82647 | Inner Joint | | 27 | 33 | 43.95 | 60 | 118 | |
| 4.4 (460 kw) | 2019.12-2023.03 | 8AT | F | L | SUV 4WD S63 B44 B | | GDS84220 | Drive Shaft | | 37 | 27 | 65 | | 613 | |
| | 2019.12-2023.03 | 8AT | F | L | SUV 4WD S63 B44 B | | GCO82735 | Outer Joint | | 37 | 33 | 65 | | 74.5 | M |
| | 2019.12-2023.03 | 8AT | F | L | SUV 4WD S63 B44 B | | GCI82647 | Inner Joint | | 27 | 33 | 43.95 | 60 | 118 | |
| | 2023.04- | 8AT | F | L | SUV 4WD S68 B44 A | | GDS84220 | Drive Shaft | | 37 | 27 | 65 | | 613 | |
| | 2023.04- | | F | L | SUV 4WD S68 B44 A | | GCO82735 | Outer Joint | | 37 | 33 | 65 | | 74.5 | M |
| | 2023.04- | | F | L | SUV 4WD S68 B44 A | | GCI82647 | Inner Joint | | 27 | 33 | 43.95 | 60 | 118 | |
| **X6 xDrive 28i** | | | | | | | | | | | | | | | |
| 2.0 (180 kw) | 2015.06-2019.07 | AT | F | L | SUV 4WD N20 B20 A | Date from:2016.01 | GDS81110 | Drive Shaft | | 30 | 27 | 64.8 | 86.5 | 663 | |
| | 2015.06-2019.07 | AT | F | L/R | SUV 4WD N20 B20 A | Date from:2016.01 | GCO85006 | Outer Joint | | 30 | 33 | 64.8 | 86.5 | 59.5 | M |
| | 2015.06-2019.07 | AT | F | L | SUV 4WD N20 B20 A | Date from:2016.01 | GCI81055 | Inner Joint | | 27 | 24 | 43.95 | 60 | 123.5 | |
| | 2015.06-2019.07 | AT | R | L/R | SUV 4WD N20 B20 A | Date from:2016.01;With Enhanced Towing | GDS85070 | Drive Shaft | | 30 | 32 | 68.7 | 84 | 809 | |
| **X6 xDrive 30d** | | | | | | | | | | | | | | | |
| 3.0 (155 kw) | 2010.04-2014.07 | 8AT | F | R | SUV 4WD N57 D30 A | | GDS85123 | Drive Shaft | | 30 | 27 | 64.8 | 86.5 | 973 | |
| | 2010.04-2014.07 | 8AT | F | L/R | SUV 4WD N57 D30 A | | GDS81110 | Drive Shaft | | 30 | 27 | 64.8 | 86.5 | 663 | |
| | 2010.04-2014.07 | 8AT | F | R | SUV 4WD N57 D30 A | | GCI85068 | Inner Joint | | 27 | 24 | 43.95 | 372 | 125 | |
| | 2010.04-2014.07 | AT | F | L/R | SUV 4WD N57 D30 A | | GCO85006 | Outer Joint | | 30 | 33 | 64.8 | 86.5 | 59.5 | M |
| | 2010.04-2014.07 | AT | F | L | SUV 4WD N57 D30 A | | GCI81055 | Inner Joint | | 27 | 24 | 43.95 | 60 | 123.5 | |
| | 2010.04-2014.07 | 8AT | R | L/R | SUV 4WD N57 D30 A | For vehicles with electronic suspension control | GDS85149 | Drive Shaft | | 30 | | 68.7 | 84 | 630 | |
| | 2010.04-2014.07 | 8AT | R | L/R | SUV 4WD N57 D30 A | | GCI82468 | Outer Joint | | 30 | 28 | 68.7 | 84 | 62 | |
| | 2010.04-2014.07 | 8AT | R | L/R | SUV 4WD N57 D30 A | For vehicles with electronic suspension control | GCI61075 | Inner Joint | | | 28 | | | 26 | |
| | 2014.08-2019.07 | 8AT | F | L | SUV 4WD N57 D30 A | | GDS81110 | Drive Shaft | | 30 | 27 | 64.8 | 86.5 | 663 | |
| | 2014.08-2019.07 | 8AT | F | R | SUV 4WD N57 D30 A | | GCI85068 | Inner Joint | | 27 | 24 | 43.95 | 372 | 125 | |
| | 2014.08-2019.07 | AT | F | R | SUV 4WD N57 D30 A | | GDS85123 | Drive Shaft | | 30 | 27 | 64.8 | 86.5 | 973 | |
| | 2014.08-2019.07 | AT | F | L/R | SUV 4WD N57 D30 A | Date from:2015.01 | GCO85006 | Outer Joint | | 30 | 33 | 64.8 | 86.5 | 59.5 | M |
| | 2014.08-2019.07 | 8AT | R | L/R | SUV 4WD N57 D30 A | For vehicles without electronic suspension control;For vehicles without towbar | GDS85081 | Drive Shaft | | 30 | 27 | 68.7 | 84 | 810 | |
| | 2014.08-2019.07 | 8AT | R | L/R | SUV 4WD N57 D30 A | For vehicles without electronic suspension control;For vehicles without towbar | GCI81169 | Outer Joint | | 30 | 28 | 68.7 | 84 | 89 | |
| | 2014.08-2019.07 | 8AT | R | L/R | SUV 4WD N57 D30 A | For SA code:S2VPA;For vehicles with electronic suspension control | GCI61075 | Inner Joint | | | 28 | | | 26 | |
| | 2014.08-2019.07 | 8AT | R | L/R | SUV 4WD N57 D30 A | For vehicles without electronic suspension control;For vehicles without towbar | GCI85075 | Inner Joint | | 27 | 28 | 44 | 75 | 102 | |
| | 2014.08-2019.07 | AT | R | L/R | SUV 4WD N57 D30 A | For vehicles without electronic suspension control;For vehicles without towbar | GDS85046 | Drive Shaft | | 30 | 27 | 69 | 84.5 | 799 | |
| | 2014.08-2019.07 | AT | R | L/R | SUV 4WD N57 D30 A | For vehicles without electronic suspension control;For vehicles with towbar | GDS85070 | Drive Shaft | | 30 | 32 | 68.7 | 84 | 809 | |
| | 2014.08-2019.07 | AT | R | L/R | SUV 4WD N57 D30 A | For vehicles with electronic suspension control | GDS85149 | Drive Shaft | | 30 | | 68.7 | 84 | 630 | |
| | 2014.08-2019.07 | AT | R | L/R | SUV 4WD N57 D30 A | For vehicles with electronic suspension control | GCI82468 | Outer Joint | | 30 | 28 | 68.7 | 84 | 62 | |
| | 2019.08-2020.07 | 8AT | F | L | SUV 4WD B57 D30 A | | GDS84220 | Drive Shaft | | 37 | 27 | 65 | | 613 | |
| | 2019.08-2020.07 | 8AT | F | R | SUV 4WD B57 D30 A | | GDS84269 | Drive Shaft | | 37 | 27 | 65 | | 912 | |
| | 2019.08-2020.07 | 8AT | F | L/R | SUV 4WD B57 D30 A | | GCO82735 | Outer Joint | | 37 | 33 | 65 | | 74.5 | M |
| | 2019.08-2020.07 | 8AT | F | L | SUV 4WD B57 D30 A | | GCI82647 | Inner Joint | | 27 | 33 | 43.95 | 60 | 118 | |
| | 2019.08-2020.07 | 8AT | F | R | SUV 4WD B57 D30 A | | GCI82668 | Inner Joint | | 27 | 33 | 35 | 359.5 | 119.5 | |
| | 2020.08- | 8AT | F | L | SUV 4WD B57 D30 B;JA1 | | GDS84220 | Drive Shaft | | 37 | 27 | 65 | | 613 | |
| | 2020.08- | 8AT | F | R | SUV 4WD B57 D30 B;JA1 | | GDS84269 | Drive Shaft | | 37 | 27 | 65 | | 912 | |
| | 2020.08- | 8AT | F | L/R | SUV 4WD B57 D30 B;JA1 | | GCO82735 | Outer Joint | | 37 | 33 | 65 | | 74.5 | M |
| | 2020.08- | 8AT | F | L | SUV 4WD B57 D30 B;JA1 | | GCI82647 | Inner Joint | | 27 | 33 | 43.95 | 60 | 118 | |
| | 2020.08- | 8AT | F | R | SUV 4WD B57 D30 B;JA1 | | GCI82668 | Inner Joint | | 27 | 33 | 35 | 359.5 | 119.5 | |
| 3.0 (164 kw) | 2023.04- | 8AT | F | R | SUV 4WD B57 D30 B | | GDS84269 | Drive Shaft | | 37 | 27 | 65 | | 912 | |
| | 2023.04- | 8AT | F | L | SUV 4WD B57 D30 B | | GCI82647 | Inner Joint | | 27 | 33 | 43.95 | 60 | 118 | |

| | YEAR | TRANSM. | F/R | L/R | BODY STYLE & DRIVE TYPE & ENGINE | REMARKS | G-AP Ref. | PRODUCT | ABS | Technical Specifications | | | | | |
|---|---|---|---|---|---|---|---|---|---|---|---|---|---|---|---|
| | | | | | | | | | | A | B | C | H | L | P |
| **BMW**<br>**X6 xDrive 30d** | | | | | | | | | | | | | | | |
| 3.0 (164 kw) | 2023.04- | 8AT | F | R | SUV 4WD B57 D30 B | | GCI82668 | Inner Joint | | 27 | 33 | 35 | 359.5 | 119.5 | |
| | 2023.04- | | F | L/R | SUV 4WD B57 D30 B | | GCO82735 | Outer Joint | | 37 | 33 | 65 | | 74.5 | M |
| 3.0 (173 kw) | 2008.04-2010.03 | 6AT | F | L | SUV 4WD M57 D30 (306D3) | | GDS85052 | Drive Shaft | | 30 | 27 | 64.8 | 86.5 | 634 | |
| | 2008.04-2010.03 | 6AT | F | R | SUV 4WD M57 D30 (306D3) | | GDS85043 | Drive Shaft | | 30 | 27 | 64.8 | 86.5 | 1020 | |
| | 2008.04-2010.03 | 6AT | F | L/R | SUV 4WD M57 D30 (306D3) | | GCO85006 | Outer Joint | | 30 | 33 | 64.8 | 86.5 | 59.5 | M |
| | 2008.04-2010.03 | 6AT | F | L | SUV 4WD M57 D30 (306D3) | | GCI85030 | Inner Joint | | 27 | 26 | 43.9 | 62 | 121 | |
| | 2008.04-2010.03 | 6AT | F | R | SUV 4WD M57 D30 (306D3) | | GCI85014 | Inner Joint | | 27 | 26 | 43.9 | 448 | 121 | |
| | 2008.04-2010.03 | 6AT | R | L/R | SUV 4WD M57 D30 (306D3) | | GDS85149 | Drive Shaft | | 30 | | 68.7 | 84 | 630 | |
| | 2008.04-2010.03 | 6AT | R | L/R | SUV 4WD M57 D30 (306D3) | | GCI82468 | Outer Joint | | 30 | 28 | 68.7 | 84 | 62 | |
| | 2008.04-2010.03 | 6AT | R | L/R | SUV 4WD M57 D30 (306D3) | | GCI61075 | Inner Joint | | | 28 | | | 26 | |
| 3.0 (180 kw) | 2010.04-2014.07 | 8AT | F | L | SUV 4WD N57 D30 A | | GDS81110 | Drive Shaft | | 30 | 27 | 64.8 | 86.5 | 663 | |
| | 2010.04-2014.07 | 8AT | F | R | SUV 4WD N57 D30 A | | GDS85123 | Drive Shaft | | 30 | 27 | 64.8 | 86.5 | 973 | |
| | 2010.04-2014.07 | 8AT | F | L/R | SUV 4WD N57 D30 A | | GCO85006 | Outer Joint | | 30 | 33 | 64.8 | 86.5 | 59.5 | M |
| | 2010.04-2014.07 | 8AT | F | L | SUV 4WD N57 D30 A | | GCI81055 | Inner Joint | | 27 | 24 | 43.95 | 60 | 123.5 | |
| | 2010.04-2014.07 | 8AT | F | R | SUV 4WD N57 D30 A | | GCI85068 | Inner Joint | | 27 | 24 | 43.95 | 372 | 125 | |
| | 2010.04-2014.07 | 8AT | R | L/R | SUV 4WD N57 D30 A | | GDS85149 | Drive Shaft | | 30 | | 68.7 | 84 | 630 | |
| | 2010.04-2014.07 | 8AT | R | L/R | SUV 4WD N57 D30 A | | GCI82468 | Outer Joint | | 30 | 28 | 68.7 | 84 | 62 | |
| | 2010.04-2014.07 | 8AT | R | L/R | SUV 4WD N57 D30 A | | GCI61075 | Inner Joint | | | 28 | | | 26 | |
| 3.0 (183 kw) | 2014.12-2019.07 | 8AT | F | L | SUV 4WD N57 D30 A | | GDS81110 | Drive Shaft | | 30 | 27 | 64.8 | 86.5 | 663 | |
| | 2014.12-2019.07 | 8AT | F | R | SUV 4WD N57 D30 A | | GDS85123 | Drive Shaft | | 30 | 27 | 64.8 | 86.5 | 973 | |
| | 2014.12-2019.07 | 8AT | F | L/R | SUV 4WD N57 D30 A | | GCO85006 | Outer Joint | | 30 | 33 | 64.8 | 86.5 | 59.5 | M |
| | 2014.12-2019.07 | 8AT | F | L | SUV 4WD N57 D30 A | | GCI81055 | Inner Joint | | 27 | 24 | 43.95 | 60 | 123.5 | |
| | 2014.12-2019.07 | 8AT | F | R | SUV 4WD N57 D30 A | | GCI85068 | Inner Joint | | 27 | 24 | 43.95 | 372 | 125 | |
| | 2014.12-2019.07 | 8AT | R | L/R | SUV 4WD N57 D30 A | For vehicles without electronic suspension control,For vehicles with towbar | GDS85046 | Drive Shaft | | 30 | 27 | 69 | 84.5 | 799 | |
| | 2014.12-2019.07 | 8AT | R | L/R | SUV 4WD N57 D30 A | For vehicles without electronic suspension control,For vehicles with towbar | GDS85070 | Drive Shaft | | 30 | 32 | 68.7 | 84 | 809 | |
| | 2014.12-2019.07 | 8AT | R | L/R | SUV 4WD N57 D30 A | For vehicles without electronic suspension control,For vehicles without towbar | GDS85081 | Drive Shaft | | 30 | 27 | 68.7 | 84 | 810 | |
| | 2014.12-2019.07 | 8AT | R | L/R | SUV 4WD N57 D30 A | For vehicles with electronic suspension control,For vehicles without towbar | GDS85149 | Drive Shaft | | 30 | | 68.7 | 84 | 630 | |
| | 2014.12-2019.07 | 8AT | R | L/R | SUV 4WD N57 D30 A | For vehicles without electronic suspension control | GCI81169 | Outer Joint | | 30 | 28 | 68.7 | 84 | 89 | |
| | 2014.12-2019.07 | 8AT | R | L/R | SUV 4WD N57 D30 A | For vehicles with electronic suspension control,For vehicles without towbar | GCI82468 | Outer Joint | | 30 | 28 | 68.7 | 84 | 62 | |
| | 2014.12-2019.07 | 8AT | R | L/R | SUV 4WD N57 D30 A | For vehicles with electronic suspension control,For vehicles without towbar | GCI61075 | Inner Joint | | | 28 | | | 26 | |
| | 2014.12-2019.07 | 8AT | R | L/R | SUV 4WD N57 D30 A | For vehicles without electronic suspension control,For vehicles with towbar | GCI85074 | Inner Joint | | 32 | 28 | 49.9 | 85.5 | 100 | |
| | 2014.12-2019.07 | 8AT | R | L/R | SUV 4WD N57 D30 A | For vehicles without electronic suspension control,For vehicles without towbar | GCI85075 | Inner Joint | | 27 | 28 | 44 | 75 | 102 | |
| | 2019.08-2020.07 | 8AT | F | L | SUV 4WD B57 D30 A | | GDS84220 | Drive Shaft | | 37 | 27 | 65 | | 613 | |
| | 2019.08-2020.07 | 8AT | F | R | SUV 4WD B57 D30 A | | GDS84269 | Drive Shaft | | 37 | 27 | 65 | | 912 | |
| | 2019.08-2020.07 | 8AT | F | L/R | SUV 4WD B57 D30 A | | GCO82735 | Outer Joint | | 37 | 33 | 65 | | 74.5 | M |
| | 2019.08-2020.07 | 8AT | F | L | SUV 4WD B57 D30 A | | GCI82647 | Inner Joint | | 27 | 33 | 43.95 | 60 | 118 | |
| | 2019.08-2020.07 | 8AT | F | R | SUV 4WD B57 D30 A | | GCI82668 | Inner Joint | | 27 | 33 | 35 | 359.5 | 119.5 | |
| | 2020.08- | 8AT | F | L | SUV 4WD B57 D30 B;JA1 | | GDS84220 | Drive Shaft | | 37 | 27 | 65 | | 613 | |
| | 2020.08- | 8AT | F | R | SUV 4WD B57 D30 B;JA1 | | GDS84269 | Drive Shaft | | 37 | 27 | 65 | | 912 | |
| | 2020.08- | 8AT | F | L/R | SUV 4WD B57 D30 B;JA1 | | GCO82735 | Outer Joint | | 37 | 33 | 65 | | 74.5 | M |
| | 2020.08- | 8AT | F | L | SUV 4WD B57 D30 B;JA1 | | GCI82647 | Inner Joint | | 27 | 33 | 43.95 | 60 | 118 | |
| | 2020.08- | 8AT | F | R | SUV 4WD B57 D30 B;JA1 | | GCI82668 | Inner Joint | | 27 | 33 | 35 | 359.5 | 119.5 | |
| 3.0 (190 kw) | 2014.08-2019.07 | 8AT | F | L | SUV 4WD N57 D30 A | | GDS81110 | Drive Shaft | | 30 | 27 | 64.8 | 86.5 | 663 | |
| | 2014.08-2019.07 | 8AT | F | R | SUV 4WD N57 D30 A | | GDS85123 | Drive Shaft | | 30 | 27 | 64.8 | 86.5 | 973 | |
| | 2014.08-2019.07 | 8AT | F | L/R | SUV 4WD N57 D30 A | | GCO85006 | Outer Joint | | 30 | 33 | 64.8 | 86.5 | 59.5 | M |
| | 2014.08-2019.07 | 8AT | F | L | SUV 4WD N57 D30 A | | GCI81055 | Inner Joint | | 27 | 24 | 43.95 | 60 | 123.5 | |
| | 2014.08-2019.07 | 8AT | F | R | SUV 4WD N57 D30 A | | GCI85068 | Inner Joint | | 27 | 24 | 43.95 | 372 | 125 | |
| | 2014.08-2019.07 | 8AT | R | L/R | SUV 4WD N57 D30 A | For vehicles without electronic suspension control,For vehicles with towbar | GDS85046 | Drive Shaft | | 30 | 27 | 69 | 84.5 | 799 | |
| | 2014.08-2019.07 | 8AT | R | L/R | SUV 4WD N57 D30 A | For vehicles without electronic suspension control,For vehicles with towbar | GDS85070 | Drive Shaft | | 30 | 32 | 68.7 | 84 | 809 | |
| | 2014.08-2019.07 | 8AT | R | L/R | SUV 4WD N57 D30 A | For vehicles without electronic suspension control,For vehicles without towbar | GDS85081 | Drive Shaft | | 30 | 27 | 68.7 | 84 | 810 | |
| | 2014.08-2019.07 | 8AT | R | L/R | SUV 4WD N57 D30 A | For vehicles with electronic suspension control,For vehicles without towbar | GDS85149 | Drive Shaft | | 30 | | 68.7 | 84 | 630 | |
| | 2014.08-2019.07 | 8AT | R | L/R | SUV 4WD N57 D30 A | For vehicles without electronic suspension control | GCI81169 | Outer Joint | | 30 | 28 | 68.7 | 84 | 89 | |
| | 2014.08-2019.07 | 8AT | R | L/R | SUV 4WD N57 D30 A | For vehicles with electronic suspension control,For vehicles without towbar | GCI82468 | Outer Joint | | 30 | 28 | 68.7 | 84 | 62 | |
| | 2014.08-2019.07 | 8AT | R | L/R | SUV 4WD N57 D30 A | For vehicles with electronic suspension control,For vehicles without towbar | GCI61075 | Inner Joint | | | 28 | | | 26 | |
| | 2014.08-2019.07 | 8AT | R | L/R | SUV 4WD N57 D30 A | For vehicles without electronic suspension control,For vehicles with towbar | GCI85074 | Inner Joint | | 32 | 28 | 49.9 | 85.5 | 100 | |
| | 2014.08-2019.07 | 8AT | R | L/R | SUV 4WD N57 D30 A | For vehicles without electronic suspension control,For vehicles without towbar | GCI85075 | Inner Joint | | 27 | 28 | 44 | 75 | 102 | |
| 3.0 (195 kw) | 2019.08-2020.07 | 8AT | F | L | SUV 4WD B57 D30 A | | GDS84220 | Drive Shaft | | 37 | 27 | 65 | | 613 | |
| | 2019.08-2020.07 | 8AT | F | R | SUV 4WD B57 D30 A | | GDS84269 | Drive Shaft | | 37 | 27 | 65 | | 912 | |
| | 2019.08-2020.07 | 8AT | F | L/R | SUV 4WD B57 D30 A | | GCO82735 | Outer Joint | | 37 | 33 | 65 | | 74.5 | M |
| | 2019.08-2020.07 | 8AT | F | L | SUV 4WD B57 D30 A | | GCI82647 | Inner Joint | | 27 | 33 | 43.95 | 60 | 118 | |
| | 2019.08-2020.07 | 8AT | F | R | SUV 4WD B57 D30 A | | GCI82668 | Inner Joint | | 27 | 33 | 35 | 359.5 | 119.5 | |
| 3.0 (204 kw) | 2014.08-2019.07 | 8AT | F | L | SUV 4WD N57 D30 A | | GDS81110 | Drive Shaft | | 30 | 27 | 64.8 | 86.5 | 663 | |
| | 2014.08-2019.07 | 8AT | F | R | SUV 4WD N57 D30 A | | GCI85068 | Inner Joint | | 27 | 24 | 43.95 | 372 | 125 | |
| | 2014.08-2019.07 | AT | F | R | SUV 4WD N57 D30 A | | GDS85123 | Drive Shaft | | 30 | 27 | 64.8 | 86.5 | 973 | |
| | 2014.08-2019.07 | AT | F | L/R | SUV 4WD N57 D30 A | Date from:2015.01 | GCO85006 | Outer Joint | | 30 | 33 | 64.8 | 86.5 | 59.5 | M |

| | YEAR | TRANSM. | F/R | L/R | BODY STYLE & DRIVE TYPE & ENGINE | REMARKS | G-AP Ref. | PRODUCT | ABS | Technical Specifications A | B | C | H | L | P |
|---|---|---|---|---|---|---|---|---|---|---|---|---|---|---|---|
| **BMW** | | | | | | | | | | | | | | | |
| **X6 xDrive 30d** | | | | | | | | | | | | | | | |
| 3.0 (204 kw) | 2014.08-2019.07 | 8AT | R | L/R | SUV 4WD N57 D30 A | For vehicles without electronic suspension control,For vehicles without towbar | GDS85081 | Drive Shaft | | 30 | 27 | 68.7 | 84 | 810 | |
| | 2014.08-2019.07 | 8AT | R | L/R | SUV 4WD N57 D30 A | For vehicles without electronic suspension control,For vehicles without towbar | GCI81169 | Outer Joint | | 30 | 28 | 68.7 | 84 | 89 | |
| | 2014.08-2019.07 | 8AT | R | L/R | SUV 4WD N57 D30 A | For vehicles with electronic suspension control | GCI61075 | Inner Joint | | | 28 | | | 26 | |
| | 2014.08-2019.07 | 8AT | R | L/R | SUV 4WD N57 D30 A | For vehicles without electronic suspension control,For vehicles without towbar | GCI85075 | Inner Joint | | 27 | 28 | 44 | 75 | 102 | |
| | 2014.08-2019.07 | AT | R | L/R | SUV 4WD N57 D30 A | For vehicles without electronic suspension control,For vehicles without towbar | GDS85046 | Drive Shaft | | 30 | 27 | 69 | 84.5 | 799 | |
| | 2014.08-2019.07 | AT | R | L/R | SUV 4WD N57 D30 A | For vehicles without electronic suspension control,For vehicles with towbar | GDS85070 | Drive Shaft | | 30 | 32 | 68.7 | 84 | 809 | |
| | 2014.08-2019.07 | AT | R | L/R | SUV 4WD N57 D30 A | For vehicles with electronic suspension control | GDS85149 | Drive Shaft | | 30 | | 68.7 | 84 | 630 | |
| | 2014.08-2019.07 | AT | R | L/R | SUV 4WD N57 D30 A | For vehicles with electronic suspension control | GCI82468 | Outer Joint | | 30 | 28 | 68.7 | 84 | 62 | |
| 3.0 (210 kw) | 2020.08-2023.03 | 8AT | F | L | SUV 4WD B57 D30 B;JA1 | | GDS84220 | Drive Shaft | | 37 | 27 | 65 | | 613 | |
| | 2020.08-2023.03 | 8AT | F | R | SUV 4WD B57 D30 B;JA1 | | GDS84269 | Drive Shaft | | 37 | 27 | 65 | | 912 | |
| | 2020.08-2023.03 | 8AT | F | L/R | SUV 4WD B57 D30 B;JA1 | | GCO82735 | Outer Joint | | 37 | 33 | 65 | | 74.5 | M |
| | 2020.08-2023.03 | 8AT | F | L | SUV 4WD B57 D30 B;JA1 | | GCI82647 | Inner Joint | | 27 | 33 | 43.95 | 60 | 118 | |
| | 2020.08-2023.03 | 8AT | F | R | SUV 4WD B57 D30 B;JA1 | | GCI82668 | Inner Joint | | 27 | 33 | 35 | 359.5 | 119.5 | |
| 3.0 (219 kw) | 2023.04- | 8AT | F | L | SUV 4WD B57 D30 B | | GDS84220 | Drive Shaft | | 37 | 27 | 65 | | 613 | |
| | 2023.04- | 8AT | F | R | SUV 4WD B57 D30 B | | GDS84269 | Drive Shaft | | 37 | 27 | 65 | | 912 | |
| | 2023.04- | 8AT | F | L | SUV 4WD B57 D30 B | | GCI82647 | Inner Joint | | 27 | 33 | 43.95 | 60 | 118 | |
| | 2023.04- | 8AT | F | R | SUV 4WD B57 D30 B | | GCI82668 | Inner Joint | | 27 | 33 | 35 | 359.5 | 119.5 | |
| | 2023.04- | | F | L/R | SUV 4WD B57 D30 B | | GCO82735 | Outer Joint | | 37 | 33 | 65 | | 74.5 | M |
| **X6 xDrive 35d** | | | | | | | | | | | | | | | |
| 3.0 (210 kw) | 2008.01-2010.03 | 6AT | F | L | SUV 4WD M57 D30 (306D5) | | GDS85052 | Drive Shaft | | 30 | 27 | 64.8 | 86.5 | 634 | |
| | 2008.01-2010.03 | 6AT | F | R | SUV 4WD M57 D30 (306D5) | | GDS85043 | Drive Shaft | | 30 | 27 | 64.8 | 86.5 | 1020 | |
| | 2008.01-2010.03 | 6AT | F | L/R | SUV 4WD M57 D30 (306D5) | | GCO85006 | Outer Joint | | 30 | 33 | 64.8 | 86.5 | 59.5 | M |
| | 2008.01-2010.03 | 6AT | F | L | SUV 4WD M57 D30 (306D5) | | GCI85030 | Inner Joint | | 27 | 26 | 43.9 | 62 | 121 | |
| | 2008.01-2010.03 | 6AT | F | R | SUV 4WD M57 D30 (306D5) | | GCI85014 | Inner Joint | | 27 | 26 | 43.9 | 448 | 121 | |
| | 2008.01-2010.03 | 6AT | R | L/R | SUV 4WD M57 D30 (306D5) | | GDS85149 | Drive Shaft | | 30 | | 68.7 | 84 | 630 | |
| | 2008.01-2010.03 | 6AT | R | L/R | SUV 4WD M57 D30 (306D5) | | GCI82468 | Outer Joint | | 30 | 28 | 68.7 | 84 | 62 | |
| | 2008.01-2010.03 | 6AT | R | L/R | SUV 4WD M57 D30 (306D5) | | GCI61075 | Inner Joint | | | 28 | | | 26 | |
| **X6 xDrive 35i** | | | | | | | | | | | | | | | |
| 3.0 (224 kw) | 2008.01-2014.06 | 6AT/8AT | F | L | SUV 4WD N54 B30 A;N55 B30 A | | GCI85030 | Inner Joint | | 27 | 26 | 43.9 | 62 | 121 | |
| | 2008.01-2014.06 | AT | F | L | SUV 4WD N54 B30 A;N55 B30 A | | GDS85052 | Drive Shaft | | 30 | 27 | 64.8 | 86.5 | 634 | |
| | 2008.01-2014.06 | AT | F | R | SUV 4WD N54 B30 A;N55 B30 A | | GDS85043 | Drive Shaft | | 30 | 27 | 64.8 | 86.5 | 1020 | |
| | 2008.01-2014.06 | AT | F | L/R | SUV 4WD N54 B30 A;N55 B30 A | | GCO85006 | Outer Joint | | 30 | 33 | 64.8 | 86.5 | 59.5 | M |
| | 2008.01-2014.06 | 6AT/8AT | R | L/R | SUV 4WD N54 B30 A;N55 B30 A | | GDS85149 | Drive Shaft | | 30 | | 68.7 | 84 | 630 | |
| | 2008.01-2014.06 | AT | R | L/R | SUV 4WD N54 B30 A;N55 B30 A | | GCI82468 | Outer Joint | | 30 | 28 | 68.7 | 84 | 62 | |
| 3.0 (225 kw) | 2008.01-2014.07 | AT | F | L | SUV 4WD N54 B30 A;N55 B30 A | | GDS85052 | Drive Shaft | | 30 | 27 | 64.8 | 86.5 | 634 | |
| | 2008.01-2014.07 | AT | F | R | SUV 4WD N54 B30 A;N55 B30 A | | GDS85043 | Drive Shaft | | 30 | 27 | 64.8 | 86.5 | 1020 | |
| | 2008.01-2014.07 | AT | F | L/R | SUV 4WD N54 B30 A;N55 B30 A | | GCO85006 | Outer Joint | | 30 | 33 | 64.8 | 86.5 | 59.5 | M |
| | 2008.01-2014.07 | AT | F | L | SUV 4WD N54 B30 A;N55 B30 A | | GCI85030 | Inner Joint | | 27 | 26 | 43.9 | 62 | 121 | |
| | 2008.01-2014.07 | AT | F | R | SUV 4WD N54 B30 A;N55 B30 A | | GCI85014 | Inner Joint | | 27 | 26 | 43.9 | 448 | 121 | |
| | 2008.01-2014.07 | 8AT | R | L/R | SUV 4WD N54 B30 A;N55 B30 A | | GCI82468 | Outer Joint | | 30 | 28 | 68.7 | 84 | 62 | |
| | 2008.01-2014.07 | AT | R | L/R | SUV 4WD N54 B30 A;N55 B30 A | | GDS85149 | Drive Shaft | | 30 | | 68.7 | 84 | 630 | |
| | 2008.01-2014.07 | | R | L/R | SUV 4WD N54 B30 A;N55 B30 A | Date From:2008.05,Date To:2008.08 | GCI61075 | Inner Joint | | | 28 | | | 26 | |
| | 2014.08-2019.07 | 8AT | F | L | SUV 4WD N55 B30 A | | GDS81110 | Drive Shaft | | 30 | 27 | 64.8 | 86.5 | 663 | |
| | 2014.08-2019.07 | 8AT | F | R | SUV 4WD N55 B30 A | | GCI85068 | Inner Joint | | 27 | 24 | 43.95 | 372 | 125 | |
| | 2014.08-2019.07 | AT | F | R | SUV 4WD N55 B30 A | | GDS85123 | Drive Shaft | | 30 | 27 | 64.8 | 86.5 | 973 | |
| | 2014.08-2019.07 | AT | F | L/R | SUV 4WD N55 B30 A | Date from:2015.01 | GCO85006 | Outer Joint | | 30 | 33 | 64.8 | 86.5 | 59.5 | M |
| | 2014.08-2019.07 | 8AT | R | L/R | SUV 4WD N55 B30 A | For vehicles without electronic suspension control,For vehicles without towbar | GDS85081 | Drive Shaft | | 30 | 27 | 68.7 | 84 | 810 | |
| | 2014.08-2019.07 | 8AT | R | L/R | SUV 4WD N55 B30 A | For vehicles without electronic suspension control,For vehicles without towbar | GCI81169 | Outer Joint | | 30 | 28 | 68.7 | 84 | 89 | |
| | 2014.08-2019.07 | 8AT | R | L/R | SUV 4WD N55 B30 A | For SA code:S2VPA,For vehicles with electronic suspension control | GCI61075 | Inner Joint | | | 28 | | | 26 | |
| | 2014.08-2019.07 | 8AT | R | L/R | SUV 4WD N55 B30 A | For vehicles without electronic suspension control,For vehicles without towbar | GCI85075 | Inner Joint | | 27 | 28 | 44 | 75 | 102 | |
| | 2014.08-2019.07 | AT | R | L/R | SUV 4WD N55 B30 A | For vehicles without electronic suspension control,For vehicles without towbar | GDS85046 | Drive Shaft | | 30 | 27 | 69 | 84.5 | 799 | |
| | 2014.08-2019.07 | AT | R | L/R | SUV 4WD N55 B30 A | For vehicles without electronic suspension control,For vehicles with towbar | GDS85070 | Drive Shaft | | 30 | 32 | 68.7 | 84 | 809 | |
| | 2014.08-2019.07 | AT | R | L/R | SUV 4WD N55 B30 A | For vehicles with electronic suspension control | GDS85149 | Drive Shaft | | 30 | | 68.7 | 84 | 630 | |
| | 2014.08-2019.07 | AT | R | L/R | SUV 4WD N55 B30 A | For vehicles with electronic suspension control | GCI82468 | Outer Joint | | 30 | 28 | 68.7 | 84 | 62 | |
| 3.0 (235 kw) | 2012.08-2014.06 | 8AT | F | L | SUV 4WD N55 B30 A | | GDS85052 | Drive Shaft | | 30 | 27 | 64.8 | 86.5 | 634 | |
| | 2012.08-2014.06 | 8AT | F | R | SUV 4WD N55 B30 A | | GDS85043 | Drive Shaft | | 30 | 27 | 64.8 | 86.5 | 1020 | |
| | 2012.08-2014.06 | 8AT | F | L/R | SUV 4WD N55 B30 A | | GCO85006 | Outer Joint | | 30 | 33 | 64.8 | 86.5 | 59.5 | M |
| | 2012.08-2014.06 | AT/8AT | F | L | SUV 4WD N55 B30 A | | GCI85030 | Inner Joint | | 27 | 26 | 43.9 | 62 | 121 | |
| | 2012.08-2014.06 | AT/8AT | F | R | SUV 4WD N55 B30 A | | GCI85014 | Inner Joint | | 27 | 26 | 43.9 | 448 | 121 | |
| | 2012.08-2014.06 | 8AT | R | L/R | SUV 4WD N55 B30 A | | GDS85149 | Drive Shaft | | 30 | | 68.7 | 84 | 630 | |
| | 2012.08-2014.06 | 8AT | R | L/R | SUV 4WD N55 B30 A | | GCI82468 | Outer Joint | | 30 | 28 | 68.7 | 84 | 62 | |
| | 2012.08-2014.06 | AT | R | L/R | SUV 4WD N55 B30 A | Date from:2012.01 | GCI61075 | Inner Joint | | | 28 | | | 26 | |
| 3.0 (240 kw) | 2007.06-2010.03 | AT | F | L | SUV 4WD N54 B30 A | | GDS85052 | Drive Shaft | | 30 | 27 | 64.8 | 86.5 | 634 | |
| | 2007.06-2010.03 | AT | F | R | SUV 4WD N54 B30 A | | GDS85043 | Drive Shaft | | 30 | 27 | 64.8 | 86.5 | 1020 | |
| | 2007.06-2010.03 | AT | F | L/R | SUV 4WD N54 B30 A | | GCO85006 | Outer Joint | | 30 | 33 | 64.8 | 86.5 | 59.5 | M |

| | YEAR | TRANSM. | F/R | L/R | BODY STYLE & DRIVE TYPE & ENGINE | REMARKS | G-AP Ref. | PRODUCT | ABS | Technical Specifications A | B | C | H | L | P |
|---|---|---|---|---|---|---|---|---|---|---|---|---|---|---|---|
| **BMW** | | | | | | | | | | | | | | | |
| **X6 xDrive 35i** | | | | | | | | | | | | | | | |
| 3.0 (240 kw) | 2007.06-2010.03 | AT | F | L | SUV 4WD N54 B30 A | | GCI85030 | Inner Joint | | 27 | 26 | 43.9 | 62 | 121 | |
| | 2007.06-2010.03 | AT | F | R | SUV 4WD N54 B30 A | | GCI85014 | Inner Joint | | 27 | 26 | 43.9 | 448 | 121 | |
| | 2007.06-2010.03 | 6AT | R | L/R | SUV 4WD N54 B30 A | | GCI82468 | Outer Joint | | 30 | 28 | 68.7 | 84 | 62 | |
| | 2007.06-2010.03 | AT | R | L/R | SUV 4WD N54 B30 A | | GDS85149 | Drive Shaft | | 30 | | 68.7 | 84 | 630 | |
| | 2007.06-2010.03 | AT | R | L/R | SUV 4WD N54 B30 A | Date from:2009.08 | GCI61075 | Inner Joint | | | 28 | | | 26 | |
| | 2014.08-2019.07 | 8AT | F | L | SUV 4WD N55 B30 A | | GDS81110 | Drive Shaft | | 30 | 27 | 64.8 | 86.5 | 663 | |
| | 2014.08-2019.07 | 8AT | F | R | SUV 4WD N55 B30 A | | GCI85068 | Inner Joint | | 27 | 24 | 43.95 | 372 | 125 | |
| | 2014.08-2019.07 | AT | F | R | SUV 4WD N55 B30 A | | GDS85123 | Drive Shaft | | 30 | 27 | 64.8 | 86.5 | 973 | |
| | 2014.08-2019.07 | AT | F | L/R | SUV 4WD N55 B30 A | Date from:2015.01 | GCO85006 | Outer Joint | | 30 | 33 | 64.8 | 86.5 | 59.5 | M |
| | 2014.08-2019.07 | 8AT | R | L/R | SUV 4WD N55 B30 A | For vehicles without electronic suspension control;For vehicles without towbar | GDS85081 | Drive Shaft | | 30 | 27 | 68.7 | 84 | 810 | |
| | 2014.08-2019.07 | 8AT | R | L/R | SUV 4WD N55 B30 A | For vehicles without electronic suspension control;For vehicles without towbar | GCI81169 | Outer Joint | | 30 | 28 | 68.7 | 84 | 89 | |
| | 2014.08-2019.07 | 8AT | R | L/R | SUV 4WD N55 B30 A | For vehicles with electronic suspension control | GCI61075 | Inner Joint | | | 28 | | | 26 | |
| | 2014.08-2019.07 | 8AT | R | L/R | SUV 4WD N55 B30 A | For vehicles without electronic suspension control;For vehicles without towbar | GCI85075 | Inner Joint | | 27 | 28 | 44 | 75 | 102 | |
| | 2014.08-2019.07 | AT | R | L/R | SUV 4WD N55 B30 A | For vehicles without electronic suspension control;For vehicles without towbar | GDS85046 | Drive Shaft | | 30 | 27 | 69 | 84.5 | 799 | |
| | 2014.08-2019.07 | AT | R | L/R | SUV 4WD N55 B30 A | For vehicles without electronic suspension control;For vehicles with towbar | GDS85070 | Drive Shaft | | 30 | 32 | 68.7 | 84 | 809 | |
| | 2014.08-2019.07 | AT | R | L/R | SUV 4WD N55 B30 A | For vehicles with electronic suspension control | GDS85149 | Drive Shaft | | 30 | | 68.7 | 84 | 630 | |
| | 2014.08-2019.07 | AT | R | L/R | SUV 4WD N55 B30 A | For vehicles with electronic suspension control | GCI82468 | Outer Joint | | 30 | 28 | 68.7 | 84 | 62 | |
| **X6 xDrive 40d** | | | | | | | | | | | | | | | |
| 3.0 (225 kw) | 2009.07-2014.06 | 8AT | F | L | SUV 4WD N57 D30 B | | GDS81110 | Drive Shaft | | 30 | 27 | 64.8 | 86.5 | 663 | |
| | 2009.07-2014.06 | 8AT | F | R | SUV 4WD N57 D30 B | | GDS85123 | Drive Shaft | | 30 | 27 | 64.8 | 86.5 | 973 | |
| | 2009.07-2014.06 | 8AT | F | L/R | SUV 4WD N57 D30 B | | GCO85006 | Outer Joint | | 30 | 33 | 64.8 | 86.5 | 59.5 | M |
| | 2009.07-2014.06 | 8AT | F | L | SUV 4WD N57 D30 B | | GCI81055 | Inner Joint | | 27 | 24 | 43.95 | 60 | 123.5 | |
| | 2009.07-2014.06 | 8AT | F | R | SUV 4WD N57 D30 B | | GCI85068 | Inner Joint | | 27 | 24 | 43.95 | 372 | 125 | |
| | 2009.07-2014.06 | 8AT | R | L/R | SUV 4WD N57 D30 B | | GDS85149 | Drive Shaft | | 30 | | 68.7 | 84 | 630 | |
| | 2009.07-2014.06 | 8AT | R | L/R | SUV 4WD N57 D30 B | | GCI82468 | Outer Joint | | 30 | 28 | 68.7 | 84 | 62 | |
| | 2009.07-2014.06 | 8AT | R | L/R | SUV 4WD N57 D30 B | | GCI61075 | Inner Joint | | | 28 | | | 26 | |
| 3.0 (230 kw) | 2014.12-2019.07 | 8AT | F | L | SUV 4WD N57 D30 B | | GDS81110 | Drive Shaft | | 30 | 27 | 64.8 | 86.5 | 663 | |
| | 2014.12-2019.07 | 8AT | F | R | SUV 4WD N57 D30 B | | GDS85123 | Drive Shaft | | 30 | 27 | 64.8 | 86.5 | 973 | |
| | 2014.12-2019.07 | 8AT | F | L/R | SUV 4WD N57 D30 B | | GCO85006 | Outer Joint | | 30 | 33 | 64.8 | 86.5 | 59.5 | M |
| | 2014.12-2019.07 | 8AT | F | L | SUV 4WD N57 D30 B | | GCI81055 | Inner Joint | | 27 | 24 | 43.95 | 60 | 123.5 | |
| | 2014.12-2019.07 | 8AT | F | R | SUV 4WD N57 D30 B | | GCI85068 | Inner Joint | | 27 | 24 | 43.95 | 372 | 125 | |
| | 2014.12-2019.07 | 8AT | R | L/R | SUV 4WD N57 D30 B | For vehicles without electronic suspension control | GDS85070 | Drive Shaft | | 30 | 32 | 68.7 | 84 | 809 | |
| | 2014.12-2019.07 | 8AT | R | L/R | SUV 4WD N57 D30 B | For vehicles with electronic suspension control | GDS85149 | Drive Shaft | | 30 | | 68.7 | 84 | 630 | |
| | 2014.12-2019.07 | 8AT | R | L/R | SUV 4WD N57 D30 B | For vehicles without electronic suspension control | GCI81169 | Outer Joint | | 30 | 28 | 68.7 | 84 | 89 | |
| | 2014.12-2019.07 | 8AT | R | L/R | SUV 4WD N57 D30 B | For vehicles without electronic suspension control | GCI85074 | Inner Joint | | 32 | 28 | 49.9 | 85.5 | 100 | |
| 3.0 (250 kw) | 2020.05-2023.03 | 8AT | F | L | SUV 4WD B57 D30 B;JA1 | | GDS84220 | Drive Shaft | | 37 | 27 | 65 | | 613 | |
| | 2020.05-2023.03 | 8AT | F | R | SUV 4WD B57 D30 B;JA1 | | GDS84269 | Drive Shaft | | 37 | 27 | 65 | | 912 | |
| | 2020.05-2023.03 | 8AT | F | L/R | SUV 4WD B57 D30 B;JA1 | | GCO82735 | Outer Joint | | 37 | 33 | 65 | | 74.5 | M |
| | 2020.05-2023.03 | 8AT | F | L | SUV 4WD B57 D30 B;JA1 | | GCI82647 | Inner Joint | | 27 | 33 | 43.95 | 60 | 118 | |
| | 2020.05-2023.03 | 8AT | F | R | SUV 4WD B57 D30 B;JA1 | | GCI82668 | Inner Joint | | 27 | 33 | 35 | 359.5 | 119.5 | |
| 3.0 (259 kw) | 2023.06- | 8AT | F | R | SUV 4WD B57 D30 B | | GDS84269 | Drive Shaft | | 37 | 27 | 65 | | 912 | |
| | 2023.06- | 8AT | F | L | SUV 4WD B57 D30 B | | GCI82647 | Inner Joint | | 27 | 33 | 43.95 | 60 | 118 | |
| | 2023.06- | 8AT | F | R | SUV 4WD B57 D30 B | | GCI82668 | Inner Joint | | 27 | 33 | 35 | 359.5 | 119.5 | |
| | 2023.06- | | F | L/R | SUV 4WD B57 D30 B | | GCO82735 | Outer Joint | | 37 | 33 | 65 | | 74.5 | M |
| **X6 xDrive 40i** | | | | | | | | | | | | | | | |
| 3.0 (245 kw) | 2020.12-2023.03 | 8AT | F | L | SUV 4WD B58 B30 C;JA1 | | GDS84220 | Drive Shaft | | 37 | 27 | 65 | | 613 | |
| | 2020.12-2023.03 | 8AT | F | R | SUV 4WD B58 B30 C;JA1 | | GDS84269 | Drive Shaft | | 37 | 27 | 65 | | 912 | |
| | 2020.12-2023.03 | 8AT | F | L/R | SUV 4WD B58 B30 C;JA1 | | GCO82735 | Outer Joint | | 37 | 33 | 65 | | 74.5 | M |
| | 2020.12-2023.03 | 8AT | F | L | SUV 4WD B58 B30 C;JA1 | | GCI82647 | Inner Joint | | 27 | 33 | 43.95 | 60 | 118 | |
| | 2020.12-2023.03 | 8AT | F | R | SUV 4WD B58 B30 C;JA1 | | GCI82668 | Inner Joint | | 27 | 33 | 35 | 359.5 | 119.5 | |
| 3.0 (250 kw) | 2019.08-2023.03 | 8AT | F | L | SUV 4WD B58 B30 C | | GDS84220 | Drive Shaft | | 37 | 27 | 65 | | 613 | |
| | 2019.08-2023.03 | 8AT | F | R | SUV 4WD B58 B30 C | | GDS84269 | Drive Shaft | | 37 | 27 | 65 | | 912 | |
| | 2019.08-2023.03 | 8AT | F | L/R | SUV 4WD B58 B30 C | | GCO82735 | Outer Joint | | 37 | 33 | 65 | | 74.5 | M |
| | 2019.08-2023.03 | 8AT | F | L | SUV 4WD B58 B30 C | | GCI82647 | Inner Joint | | 27 | 33 | 43.95 | 60 | 118 | |
| | 2019.08-2023.03 | 8AT | F | R | SUV 4WD B58 B30 C | | GCI82668 | Inner Joint | | 27 | 33 | 35 | 359.5 | 119.5 | |
| 3.0 (280 kw) | 2023.04- | 8AT | F | L | SUV 4WD B58 B30 P | | GDS84220 | Drive Shaft | | 37 | 27 | 65 | | 613 | |
| | 2023.04- | 8AT | F | R | SUV 4WD B58 B30 P | | GDS84269 | Drive Shaft | | 37 | 27 | 65 | | 912 | |
| | 2023.04- | 8AT | F | L | SUV 4WD B58 B30 P | | GCI82647 | Inner Joint | | 27 | 33 | 43.95 | 60 | 118 | |
| | 2023.04- | 8AT | F | R | SUV 4WD B58 B30 P | | GCI82668 | Inner Joint | | 27 | 33 | 35 | 359.5 | 119.5 | |
| | 2023.04- | | F | L/R | SUV 4WD B58 B30 P | | GCO82735 | Outer Joint | | 37 | 33 | 65 | | 74.5 | M |
| **X6 xDrive 50i** | | | | | | | | | | | | | | | |
| 4.4 (300 kw) | 2008.07-2014.07 | AT | F | L | SUV 4WD N63 B44 A | | GDS85052 | Drive Shaft | | 30 | 27 | 64.8 | 86.5 | 634 | |
| | 2008.07-2014.07 | AT | F | R | SUV 4WD N63 B44 A | | GDS85043 | Drive Shaft | | 30 | 27 | 64.8 | 86.5 | 1020 | |
| | 2008.07-2014.07 | AT | F | L/R | SUV 4WD N63 B44 A | | GCO85006 | Outer Joint | | 30 | 33 | 64.8 | 86.5 | 59.5 | M |
| | 2008.07-2014.07 | AT | F | L | SUV 4WD N63 B44 A | | GCI85030 | Inner Joint | | 27 | 26 | 43.9 | 62 | 121 | |

| | YEAR | TRANSM. | F/R | L/R | BODY STYLE & DRIVE TYPE & ENGINE | REMARKS | G-AP Ref. | PRODUCT | ABS | Technical Specifications A | B | C | H | L | P |
|---|---|---|---|---|---|---|---|---|---|---|---|---|---|---|---|
| **BMW** | | | | | | | | | | | | | | | |
| **X6 xDrive 50i** | | | | | | | | | | | | | | | |
| 4.4 (300 kw) | 2008.07-2014.07 | AT | F | R | SUV 4WD N63 B44 A | | GCI85014 | Inner Joint | | 27 | 26 | 43.9 | 448 | 121 | |
| | 2008.07-2014.07 | 8AT | R | L/R | SUV 4WD N63 B44 A | | GCI82468 | Outer Joint | | 30 | 28 | 68.7 | 84 | 62 | |
| | 2008.07-2014.07 | AT | R | L/R | SUV 4WD N63 B44 A | | GDS85149 | Drive Shaft | | 30 | | 68.7 | 84 | 630 | |
| | 2008.07-2014.07 | | R | L/R | SUV 4WD N63 B44 A | Date From:2008.05,Date To:2008.08 | GCI61075 | Inner Joint | | | 28 | | | 26 | |
| 4.4 (330 kw) | 2007.10-2014.06 | AT | F | L | SUV 4WD N63 B44 A | | GDS85052 | Drive Shaft | | 30 | 27 | 64.8 | 86.5 | 634 | |
| | 2007.10-2014.06 | AT | F | R | SUV 4WD N63 B44 A | | GDS85043 | Drive Shaft | | 30 | 27 | 64.8 | 86.5 | 1020 | |
| | 2007.10-2014.06 | AT | F | L/R | SUV 4WD N63 B44 A | | GCO85006 | Outer Joint | | 30 | 33 | 64.8 | 86.5 | 59.5 | M |
| | 2007.10-2014.06 | AT | F | L | SUV 4WD N63 B44 A | | GCI85030 | Inner Joint | | 27 | 26 | 43.9 | 62 | 121 | |
| | 2007.10-2014.06 | AT | F | R | SUV 4WD N63 B44 A | | GCI85014 | Inner Joint | | 27 | 26 | 43.9 | 448 | 121 | |
| | 2007.10-2014.06 | 8AT | R | L/R | SUV 4WD N63 B44 A | | GCI82468 | Outer Joint | | 30 | 28 | 68.7 | 84 | 62 | |
| | 2007.10-2014.06 | AT | R | L/R | SUV 4WD N63 B44 A | | GDS85149 | Drive Shaft | | 30 | | 68.7 | 84 | 630 | |
| | 2007.10-2014.06 | AT | R | L/R | SUV 4WD N63 B44 A | Date from:2009.08 | GCI61075 | Inner Joint | | | 28 | | | 26 | |
| | 2014.08-2019.07 | AT | F | L | SUV 4WD N63 B44 B | | GDS85052 | Drive Shaft | | 30 | 27 | 64.8 | 86.5 | 634 | |
| | 2014.08-2019.07 | AT | F | R | SUV 4WD N63 B44 B | | GDS85043 | Drive Shaft | | 30 | 27 | 64.8 | 86.5 | 1020 | |
| | 2014.08-2019.07 | AT | F | L/R | SUV 4WD N63 B44 B | | GCO85006 | Outer Joint | | 30 | 33 | 64.8 | 86.5 | 59.5 | M |
| | 2014.08-2019.07 | AT | F | L | SUV 4WD N63 B44 B | | GCI85030 | Inner Joint | | 27 | 26 | 43.9 | 62 | 121 | |
| | 2014.08-2019.07 | AT | F | R | SUV 4WD N63 B44 B | | GCI85014 | Inner Joint | | 27 | 26 | 43.9 | 448 | 121 | |
| | 2014.08-2019.07 | AT | R | L/R | SUV 4WD N63 B44 B | For vehicles without electronic suspension control | GDS85070 | Drive Shaft | | 30 | 32 | 68.7 | 84 | 809 | |
| | 2014.08-2019.07 | AT | R | L/R | SUV 4WD N63 B44 B | For vehicles with electronic suspension control | GDS85149 | Drive Shaft | | 30 | | 68.7 | 84 | 630 | |
| | 2014.08-2019.07 | AT | R | L/R | SUV 4WD N63 B44 B | For vehicles with electronic suspension control | GCI82468 | Outer Joint | | 30 | 28 | 68.7 | 84 | 62 | |
| | 2014.08-2019.07 | AT | R | L/R | SUV 4WD N63 B44 B | | GCI61075 | Inner Joint | | | 28 | | | 26 | |
| **X6 xDrive M50d** | | | | | | | | | | | | | | | |
| 3.0 (280 kw) | 2011.08-2014.06 | 8AT | F | L | SUV 4WD N57 D30 C | | GDS81110 | Drive Shaft | | 30 | 27 | 64.8 | 86.5 | 663 | |
| | 2011.08-2014.06 | 8AT | F | R | SUV 4WD N57 D30 C | | GDS85123 | Drive Shaft | | 30 | 27 | 64.8 | 86.5 | 973 | |
| | 2011.08-2014.06 | 8AT | F | L | SUV 4WD N57 D30 C | | GCI81055 | Inner Joint | | 27 | 24 | 43.95 | 60 | 123.5 | |
| | 2011.08-2014.06 | 8AT | F | R | SUV 4WD N57 D30 C | | GCI85068 | Inner Joint | | 27 | 24 | 43.95 | 372 | 125 | |
| | 2011.08-2014.06 | AT | F | L/R | SUV 4WD N57 D30 C | Date to:2013.12 | GCO85006 | Outer Joint | | 30 | 33 | 64.8 | 86.5 | 59.5 | M |
| | 2014.08-2019.07 | 8AT | F | L | SUV 4WD N57 D30 C | | GDS81110 | Drive Shaft | | 30 | 27 | 64.8 | 86.5 | 663 | |
| | 2014.08-2019.07 | AT | F | R | SUV 4WD N57 D30 C | | GDS85123 | Drive Shaft | | 30 | 27 | 64.8 | 86.5 | 973 | |
| | 2014.08-2019.07 | AT | F | L/R | SUV 4WD N57 D30 C | | GCO85006 | Outer Joint | | 30 | 33 | 64.8 | 86.5 | 59.5 | M |
| | 2014.08-2019.07 | AT | F | L | SUV 4WD N57 D30 C | | GCI81055 | Inner Joint | | 27 | 24 | 43.95 | 60 | 123.5 | |
| | 2014.08-2019.07 | AT | F | R | SUV 4WD N57 D30 C | | GCI85068 | Inner Joint | | 27 | 24 | 43.95 | 372 | 125 | |
| | 2014.08-2019.07 | AT | R | L/R | SUV 4WD N57 D30 C | | GDS81119 | Drive Shaft | | 30 | 32 | 68.7 | 84 | 820 | |
| | 2014.08-2019.07 | AT | R | L/R | SUV 4WD N57 D30 C | | GCI85074 | Inner Joint | | 32 | 28 | 49.9 | 85.5 | 100 | |
| 3.0 (294 kw) | 2019.08-2023.03 | 8AT | F | L | SUV 4WD B57 D30 C | | GDS84220 | Drive Shaft | | 37 | 27 | 65 | | 613 | |
| | 2019.08-2023.03 | 8AT | F | R | SUV 4WD B57 D30 C | | GDS84269 | Drive Shaft | | 37 | 27 | 65 | | 912 | |
| | 2019.08-2023.03 | 8AT | F | L/R | SUV 4WD B57 D30 C | | GCO82735 | Outer Joint | | 37 | 33 | 65 | | 74.5 | M |
| | 2019.08-2023.03 | 8AT | F | L | SUV 4WD B57 D30 C | | GCI82647 | Inner Joint | | 27 | 33 | 43.95 | 60 | 118 | |
| | 2019.08-2023.03 | 8AT | F | R | SUV 4WD B57 D30 C | | GCI82668 | Inner Joint | | 27 | 33 | 35 | 359.5 | 119.5 | |
| **X6 xDrive M50i** | | | | | | | | | | | | | | | |
| 4.4 (390 kw) | 2019.08-2023.03 | 8AT | F | L | SUV 4WD N63 B44 D | | GDS84220 | Drive Shaft | | 37 | 27 | 65 | | 613 | |
| | 2019.08-2023.03 | 8AT | F | L | SUV 4WD N63 B44 D | | GCO82735 | Outer Joint | | 37 | 33 | 65 | | 74.5 | M |
| | 2019.08-2023.03 | 8AT | F | L | SUV 4WD N63 B44 D | | GCI82647 | Inner Joint | | 27 | 33 | 43.95 | 60 | 118 | |
| **X6 xDrive M60i** | | | | | | | | | | | | | | | |
| 4.4 (390 kw) | 2023.04- | 8AT | F | L | SUV 4WD S68 B44 A | | GDS84220 | Drive Shaft | | 37 | 27 | 65 | | 613 | |
| | 2023.04- | | F | L | SUV 4WD S68 B44 A | | GCO82735 | Outer Joint | | 37 | 33 | 65 | | 74.5 | M |
| | 2023.04- | | F | L | SUV 4WD S68 B44 A | | GCI82647 | Inner Joint | | 27 | 33 | 43.95 | 60 | 118 | |
| **X7 xDrive 30d** | | | | | | | | | | | | | | | |
| 3.0 (155 kw) | 2019.03-2020.08 | 8AT | F | L | SUV 4WD B57 D30 A | | GDS84220 | Drive Shaft | | 37 | 27 | 65 | | 613 | |
| | 2019.03-2020.08 | 8AT | F | R | SUV 4WD B57 D30 A | | GDS84269 | Drive Shaft | | 37 | 27 | 65 | | 912 | |
| | 2019.03-2020.08 | 8AT | F | L/R | SUV 4WD B57 D30 A | | GCO82735 | Outer Joint | | 37 | 33 | 65 | | 74.5 | M |
| | 2019.03-2020.08 | 8AT | F | L | SUV 4WD B57 D30 A | | GCI82647 | Inner Joint | | 27 | 33 | 43.95 | 60 | 118 | |
| | 2019.03-2020.08 | 8AT | F | R | SUV 4WD B57 D30 A | | GCI82668 | Inner Joint | | 27 | 33 | 35 | 359.5 | 119.5 | |
| 3.0 (183 kw) | 2019.03- | 8AT | F | L | SUV 4WD B57 D30 A | | GDS84220 | Drive Shaft | | 37 | 27 | 65 | | 613 | |
| | 2019.03- | 8AT | F | R | SUV 4WD B57 D30 A | | GDS84269 | Drive Shaft | | 37 | 27 | 65 | | 912 | |
| | 2019.03- | 8AT | F | L/R | SUV 4WD B57 D30 A | | GCO82735 | Outer Joint | | 37 | 33 | 65 | | 74.5 | M |
| | 2019.03- | 8AT | F | L | SUV 4WD B57 D30 A | | GCI82647 | Inner Joint | | 27 | 33 | 43.95 | 60 | 118 | |
| | 2019.03- | 8AT | F | R | SUV 4WD B57 D30 A | | GCI82668 | Inner Joint | | 27 | 33 | 35 | 359.5 | 119.5 | |
| 3.0 (195 kw) | 2019.03- | 8AT | F | L | SUV 4WD B57 D30 A | | GDS84220 | Drive Shaft | | 37 | 27 | 65 | | 613 | |
| | 2019.03- | 8AT | F | R | SUV 4WD B57 D30 A | | GDS84269 | Drive Shaft | | 37 | 27 | 65 | | 912 | |
| | 2019.03- | 8AT | F | L/R | SUV 4WD B57 D30 A | | GCO82735 | Outer Joint | | 37 | 33 | 65 | | 74.5 | M |
| | 2019.03- | 8AT | F | L | SUV 4WD B57 D30 A | | GCI82647 | Inner Joint | | 27 | 33 | 43.95 | 60 | 118 | |
| | 2019.03- | 8AT | F | R | SUV 4WD B57 D30 A | | GCI82668 | Inner Joint | | 27 | 33 | 35 | 359.5 | 119.5 | |

| | YEAR | TRANSM. | F/R | L/R | BODY STYLE & DRIVE TYPE & ENGINE | REMARKS | G-AP Ref. | PRODUCT | ABS | Technical Specifications A | B | C | H | L | P |
|---|---|---|---|---|---|---|---|---|---|---|---|---|---|---|---|
| **BMW** | | | | | | | | | | | | | | | |
| **X7 xDrive 40d** | | | | | | | | | | | | | | | |
| 3.0 (155 kw) | 2020.08- | 8AT | F | L | SUV 4WD B57 D30 B;JA1 | | GDS84220 | Drive Shaft | | 37 | 27 | 65 | | 613 | |
| | 2020.08- | 8AT | F | R | SUV 4WD B57 D30 B;JA1 | | GDS84269 | Drive Shaft | | 37 | 27 | 65 | | 912 | |
| | 2020.08- | 8AT | F | L/R | SUV 4WD B57 D30 B;JA1 | | GCO82735 | Outer Joint | | 37 | 33 | 65 | | 74.5 | M |
| | 2020.08- | 8AT | F | L | SUV 4WD B57 D30 B;JA1 | | GCI82647 | Inner Joint | | 27 | 33 | 43.95 | 60 | 118 | |
| | 2020.08- | 8AT | F | R | SUV 4WD B57 D30 B;JA1 | | GCI82668 | Inner Joint | | 27 | 33 | 35 | 359.5 | 119.5 | |
| 3.0 (250 kw) | 2020.08- | 8AT | F | L | SUV 4WD B57 D30 B;JA1 | | GDS84220 | Drive Shaft | | 37 | 27 | 65 | | 613 | |
| | 2020.08- | 8AT | F | R | SUV 4WD B57 D30 B;JA1 | | GDS84269 | Drive Shaft | | 37 | 27 | 65 | | 912 | |
| | 2020.08- | 8AT | F | L/R | SUV 4WD B57 D30 B;JA1 | | GCO82735 | Outer Joint | | 37 | 33 | 65 | | 74.5 | M |
| | 2020.08- | 8AT | F | L | SUV 4WD B57 D30 B;JA1 | | GCI82647 | Inner Joint | | 27 | 33 | 43.95 | 60 | 118 | |
| | 2020.08- | 8AT | F | R | SUV 4WD B57 D30 B;JA1 | | GCI82668 | Inner Joint | | 27 | 33 | 35 | 359.5 | 119.5 | |
| 3.0 (259 kw) | 2022.07- | AT | F | L | SUV 4WD B57 D30 B | | GDS84220 | Drive Shaft | | 37 | 27 | 65 | | 613 | |
| | 2022.07- | AT | F | R | SUV 4WD B57 D30 B | | GDS84269 | Drive Shaft | | 37 | 27 | 65 | | 912 | |
| | 2022.07- | AT | F | L/R | SUV 4WD B57 D30 B | | GCO82735 | Outer Joint | | 37 | 33 | 65 | | 74.5 | M |
| | 2022.07- | AT | F | L | SUV 4WD B57 D30 B | | GCI82647 | Inner Joint | | 27 | 33 | 43.95 | 60 | 118 | |
| | 2022.07- | AT | F | R | SUV 4WD B57 D30 B | | GCI82668 | Inner Joint | | 27 | 33 | 35 | 359.5 | 119.5 | |
| **X7 xDrive 40i** | | | | | | | | | | | | | | | |
| 3.0 (245 kw) | 2020.12- | 8AT | F | L | SUV 4WD B58 B30 C;JA1 | | GDS84220 | Drive Shaft | | 37 | 27 | 65 | | 613 | |
| | 2020.12- | 8AT | F | R | SUV 4WD B58 B30 C;JA1 | | GDS84269 | Drive Shaft | | 37 | 27 | 65 | | 912 | |
| | 2020.12- | 8AT | F | L/R | SUV 4WD B58 B30 C;JA1 | | GCO82735 | Outer Joint | | 37 | 33 | 65 | | 74.5 | M |
| | 2020.12- | 8AT | F | L | SUV 4WD B58 B30 C;JA1 | | GCI82647 | Inner Joint | | 27 | 33 | 43.95 | 60 | 118 | |
| | 2020.12- | 8AT | F | R | SUV 4WD B58 B30 C;JA1 | | GCI82668 | Inner Joint | | 27 | 33 | 35 | 359.5 | 119.5 | |
| 3.0 (250 kw) | 2019.03- | 8AT | F | L | SUV 4WD B58 B30 C | | GDS84220 | Drive Shaft | | 37 | 27 | 65 | | 613 | |
| | 2019.03- | 8AT | F | R | SUV 4WD B58 B30 C | | GDS84269 | Drive Shaft | | 37 | 27 | 65 | | 912 | |
| | 2019.03- | 8AT | F | L/R | SUV 4WD B58 B30 C | | GCO82735 | Outer Joint | | 37 | 33 | 65 | | 74.5 | M |
| | 2019.03- | 8AT | F | L | SUV 4WD B58 B30 C | | GCI82647 | Inner Joint | | 27 | 33 | 43.95 | 60 | 118 | |
| | 2019.03- | 8AT | F | R | SUV 4WD B58 B30 C | | GCI82668 | Inner Joint | | 27 | 33 | 35 | 359.5 | 119.5 | |
| 3.0 (280 kw) | 2022.07- | AT | F | L | SUV 4WD B58 B30 P | | GDS84220 | Drive Shaft | | 37 | 27 | 65 | | 613 | |
| | 2022.07- | AT | F | R | SUV 4WD B58 B30 P | | GDS84269 | Drive Shaft | | 37 | 27 | 65 | | 912 | |
| | 2022.07- | AT | F | L/R | SUV 4WD B58 B30 P | | GCO82735 | Outer Joint | | 37 | 33 | 65 | | 74.5 | M |
| | 2022.07- | AT | F | L | SUV 4WD B58 B30 P | | GCI82647 | Inner Joint | | 27 | 33 | 43.95 | 60 | 118 | |
| | 2022.07- | AT | F | R | SUV 4WD B58 B30 P | | GCI82668 | Inner Joint | | 27 | 33 | 35 | 359.5 | 119.5 | |
| **X7 xDrive M50d** | | | | | | | | | | | | | | | |
| 3.0 (294 kw) | 2019.03- | 8AT | F | L | SUV 4WD B57 D30 C | | GDS84220 | Drive Shaft | | 37 | 27 | 65 | | 613 | |
| | 2019.03- | 8AT | F | R | SUV 4WD B57 D30 C | | GDS84269 | Drive Shaft | | 37 | 27 | 65 | | 912 | |
| | 2019.03- | 8AT | F | L/R | SUV 4WD B57 D30 C | | GCO82735 | Outer Joint | | 37 | 33 | 65 | | 74.5 | M |
| | 2019.03- | 8AT | F | L | SUV 4WD B57 D30 C | | GCI82647 | Inner Joint | | 27 | 33 | 43.95 | 60 | 118 | |
| | 2019.03- | 8AT | F | R | SUV 4WD B57 D30 C | | GCI82668 | Inner Joint | | 27 | 33 | 35 | 359.5 | 119.5 | |
| **X7 xDrive M50i** | | | | | | | | | | | | | | | |
| 4.4 (390 kw) | 2019.07- | 8AT | F | L | SUV 4WD N63 B44 D | | GDS84220 | Drive Shaft | | 37 | 27 | 65 | | 613 | |
| | 2019.07- | 8AT | F | L | SUV 4WD N63 B44 D | | GCO82735 | Outer Joint | | 37 | 33 | 65 | | 74.5 | M |
| | 2019.07- | 8AT | F | L | SUV 4WD N63 B44 D | | GCI82647 | Inner Joint | | 27 | 33 | 43.95 | 60 | 118 | |
| **X7 xDrive M60i** | | | | | | | | | | | | | | | |
| 4.4 (390 kw) | 2022.07- | 8AT | F | R | SUV 4WD S68 B44 A | | GDS84269 | Drive Shaft | | 37 | 27 | 65 | | 912 | |
| | 2022.07- | 8AT | F | L | SUV 4WD S68 B44 A | | GCI82647 | Inner Joint | | 27 | 33 | 43.95 | 60 | 118 | |
| | 2022.07- | 8AT | F | R | SUV 4WD S68 B44 A | | GCI82668 | Inner Joint | | 27 | 33 | 35 | 359.5 | 119.5 | |
| | 2022.07- | AT | F | L | SUV 4WD S68 B44 A | | GDS84220 | Drive Shaft | | 37 | 27 | 65 | | 613 | |
| | 2022.07- | AT | F | L | SUV 4WD S68 B44 A | | GCO82735 | Outer Joint | | 37 | 33 | 65 | | 74.5 | M |
| | 2022.11- | 8AT | F | R | SUV 4WD | | GCI82668 | Inner Joint | | 27 | 33 | 35 | 359.5 | 119.5 | |
| **Z3 Cabrio** | | | | | | | | | | | | | | | |
| 1.8 (85 kw) | 1995.10-1998.10 | 5MT | R | L/R | Cabriolet RWD M43B184E2 | | GDS85006 | Drive Shaft | 48W | 27 | | 64 | 68.5 | 585 | |
| | 1995.10-1998.10 | 5MT | R | L/R | Cabriolet RWD M43B184E2 | | GCI85001 | Inner Joint | | | 24 | | | 24 | |
| 1.9 (85 kw) | 1999.01-2003.01 | 5MT | R | L/R | Cabriolet RWD M43B194E1 | | GDS85006 | Drive Shaft | 48W | 27 | | 64 | 68.5 | 585 | |
| | 1999.01-2003.01 | | R | R | Cabriolet RWD M43B194E1 | | GCI85009 | Outer Joint | 48W | 27 | 24 | 64 | 68.5 | 58 | |
| 1.9 (87 kw) | 1998.10-2002.10 | 5MT | R | L/R | Cabriolet RWD M43B194E1 | Date to:1999.04 | GDS85006 | Drive Shaft | 48W | 27 | | 64 | 68.5 | 585 | |
| | 1998.10-2002.10 | 5MT | R | L/R | Cabriolet RWD M43B194E1 | Date to:1999.04 | GCI85001 | Inner Joint | | | 24 | | | 24 | |
| 1.9 (103 kw) | 1995.11-1999.03 | 4AT/5MT | R | L/R | Cabriolet RWD M44B194S1 | | GDS85006 | Drive Shaft | 48W | 27 | | 64 | 68.5 | 585 | |
| | 1995.11-1999.03 | 4AT/5MT | R | L/R | Cabriolet RWD M44B194S1 | | GCI85001 | Inner Joint | | | 24 | | | 24 | |
| 2.0 (110 kw) | 1998.09-2000.07 | 4AT/5MT | R | L/R | Cabriolet RWD M52B206S4 | Without differential lock | GDS85006 | Drive Shaft | 48W | 27 | | 64 | 68.5 | 585 | |
| | 1998.09-2000.07 | 4AT/5MT | R | L/R | Cabriolet RWD M52B206S4 | | GCI85001 | Inner Joint | | | 24 | | | 24 | |
| 2.2 (120 kw) | 2000.08-2003.01 | 5AT/5MT | R | L/R | Cabriolet RWD M54B226S1 | | GDS85007 | Drive Shaft | 48W | 27 | | 64 | 68.5 | 615 | |
| 2.2 (125 kw) | 2000.10-2002.06 | 4AT/5AT/5MT | R | L/R | Cabriolet RWD M54B226S1 | | GDS85007 | Drive Shaft | 48W | 27 | | 64 | 68.5 | 615 | |
| 2.8 (142 kw) | 1996.11-2000.05 | 4AT/5MT | R | L/R | Cabriolet RWD M52B286S1 | | GDS85007 | Drive Shaft | 48W | 27 | | 64 | 68.5 | 615 | |
| **Z3 Coupe** | | | | | | | | | | | | | | | |
| 2.8 (142 kw) | 1998.01-2000.05 | 4AT/5MT | R | L/R | Coupe RWD M52B286S1/M52B286S2 | | GDS85007 | Drive Shaft | 48W | 27 | | 64 | 68.5 | 615 | |

| | YEAR | TRANSM. | F/R | L/R | BODY STYLE & DRIVE TYPE & ENGINE | REMARKS | G-AP Ref. | PRODUCT | ABS | Technical Specifications A | B | C | H | L | P |
|---|---|---|---|---|---|---|---|---|---|---|---|---|---|---|---|
| **BMW** | | | | | | | | | | | | | | | |
| **Z4 Cabrio** | | | | | | | | | | | | | | | |
| 2.2 (125 kw) | 2003.10-2005.10 | 5AT/5MT | R | L | Convertible RWD M54 B22 (226S1) | | GDS85002 | Drive Shaft | 48W | 27 | | 64 | 68.5 | 623 | |
| | 2003.10-2005.10 | 5AT/5MT | R | L | Convertible RWD M54 B22 (226S1) | | GCI85001 | Inner Joint | | | 24 | | | 24 | |
| 2.5 (141 kw) | 2002.12-2005.12 | AT/MT | R | L | Convertible RWD M54 B25 (256S5) | | GDS85051 | Drive Shaft | 48W | 27 | | 64 | 69 | 618 | |
| | 2002.12-2005.12 | AT/MT | R | R | Convertible RWD M54 B25 (256S5) | | GDS85042 | Drive Shaft | 48W | 27 | | 64 | 69 | 672 | |
| | 2002.12-2005.12 | AT/MT | R | L/R | Convertible RWD M54 B25 (256S5) | | GCI82470 | Outer Joint | 48W | 27 | 25 | 64 | 69 | 65.5 | |
| | 2002.12-2005.12 | AT/MT | R | L/R | Convertible RWD M54 B25 (256S5) | | GCI99127 | Inner Joint | | | 25 | | | 26 | |
| 2.5 (155 kw) | 2005.09-2009.02 | 6MT | R | L | Convertible RWD N52 B25 A;N52 B25 AF | | GDS85136 | Drive Shaft | 48W | 27 | | 63.7 | 68 | 615 | |
| | 2005.09-2009.02 | 6MT | R | R | Convertible RWD N52 B25 A;N52 B25 AF | | GDS85042 | Drive Shaft | 48W | 27 | | 64 | 69 | 672 | |
| | 2005.09-2009.02 | 6MT | R | L | Convertible RWD N52 B25 A;N52 B25 AF | | GCI35025 | Inner Joint | | | 25 | | | 26 | |
| 2.5 (160 kw) | 2006.01-2008.08 | 6MT | R | L | Convertible RWD N52 B25 A | | GDS85136 | Drive Shaft | 48W | 27 | | 63.7 | 68 | 615 | |
| | 2006.01-2008.08 | AT/MT | R | L | Convertible RWD N52 B25 A | | GDS85051 | Drive Shaft | 48W | 27 | | 64 | 69 | 618 | |
| | 2006.01-2008.08 | AT/MT | R | R | Convertible RWD N52 B25 A | | GDS85042 | Drive Shaft | 48W | 27 | | 64 | 69 | 672 | |
| 3.0 (170 kw) | 2002.12-2005.12 | AT/MT | R | L | Convertible RWD M54 B30 (306S3) | | GDS85051 | Drive Shaft | 48W | 27 | | 64 | 69 | 618 | |
| | 2002.12-2005.12 | AT/MT | R | R | Convertible RWD M54 B30 (306S3) | | GDS85042 | Drive Shaft | 48W | 27 | | 64 | 69 | 672 | |
| | 2002.12-2005.12 | AT/MT | R | L/R | Convertible RWD M54 B30 (306S3) | | GCI82470 | Outer Joint | 48W | 27 | 25 | 64 | 69 | 65.5 | |
| | 2002.12-2005.12 | AT/MT | R | L/R | Convertible RWD M54 B30 (306S3) | | GCI99127 | Inner Joint | | | 25 | | | 26 | |
| 3.0 (195 kw) | 2006.01-2008.08 | 6MT | R | L | Convertible RWD N52 B30 A;N52 B30 BF | | GDS85136 | Drive Shaft | 48W | 27 | | 63.7 | 68 | 615 | |
| | 2006.01-2008.08 | 6MT | R | L | Convertible RWD N52 B30 A;N52 B30 BF | | GCI35025 | Inner Joint | | | 25 | | | 26 | |
| | 2006.01-2008.08 | AT/MT | R | L | Convertible RWD N52 B30 A;N52 B30 BF | | GDS85051 | Drive Shaft | 48W | 27 | | 64 | 69 | 618 | |
| | 2006.01-2008.08 | AT/MT | R | R | Convertible RWD N52 B30 A;N52 B30 BF | | GDS85042 | Drive Shaft | 48W | 27 | | 64 | 69 | 672 | |
| 3.2 (252 kw) | 2006.01-2008.08 | 6MT | R | L | Convertible RWD S54 B32 (326S4) | | GDS81116 | Drive Shaft | 48W | 30 | | 69 | 73 | 615 | |
| | 2006.01-2008.08 | 6MT | R | R | Convertible RWD S54 B32 (326S4) | | GDS85108 | Drive Shaft | 48W | 30 | | 69 | 73 | 655 | |
| **Z4 Coupe** | | | | | | | | | | | | | | | |
| 3.0 (195 kw) | 2006.04-2008.08 | 6MT | R | R | Coupe RWD N52 B30 A;N52 B30 BF | | GDS85042 | Drive Shaft | 48W | 27 | | 64 | 69 | 672 | |
| | 2006.04-2008.08 | MT | R | L | Coupe RWD N52 B30 A;N52 B30 BF | | GDS85136 | Drive Shaft | 48W | 27 | | 63.7 | 68 | 615 | |
| | 2006.04-2008.08 | MT | R | L | Coupe RWD N52 B30 A;N52 B30 BF | | GCI35025 | Inner Joint | | | 25 | | | 26 | |
| 3.2 (252 kw) | 2006.04-2008.08 | MT | R | L | Coupe RWD S54 B32 (326S4) | | GDS81116 | Drive Shaft | 48W | 30 | | 69 | 73 | 615 | |
| | 2006.04-2008.08 | MT | R | R | Coupe RWD S54 B32 (326S4) | | GDS85108 | Drive Shaft | 48W | 30 | | 69 | 73 | 655 | |
| **Z4 sDrive 20i Cabrio** | | | | | | | | | | | | | | | |
| 2.0 (120 kw) | 2018.11- | 8AT | R | L | Convertible RWD B48 B20 B;B46 B20 B | | GDS56455 | Drive Shaft | | 37 | 27 | 65 | | 700 | |
| | 2018.11- | 8AT | R | R | Convertible RWD B48 B20 B;B46 B20 B | | GDS56456 | Drive Shaft | | 37 | 27 | 65 | | 756 | |
| 2.0 (145 kw) | 2018.11- | 8AT | R | L | Convertible RWD B48 B20 B;B46 B20 B | | GDS56455 | Drive Shaft | | 37 | 27 | 65 | | 700 | |
| | 2018.11- | 8AT | R | R | Convertible RWD B48 B20 B;B46 B20 B | | GDS56456 | Drive Shaft | | 37 | 27 | 65 | | 756 | |
| **Z4 sDrive 23i Cabrio** | | | | | | | | | | | | | | | |
| 2.5 (150 kw) | 2009.03-2011.08 | 6AT/6MT | R | R | Convertible RWD N52 B25 A;N52 B25 BF | | GDS81115 | Drive Shaft | 48W | 27 | | 69 | 68 | 676 | |
| | 2009.03-2011.08 | 6AT/6MT | R | R | Convertible RWD N52 B25 A;N52 B25 BF | | GCI99145 | Outer Joint | 48W | 27 | 25 | 69 | 68 | 58 | I |
| | 2009.03-2011.08 | 6AT/6MT | R | R | Convertible RWD N52 B25 A;N52 B25 BF | | GCI35025 | Inner Joint | | | 25 | | | 26 | |
| **Z4 sDrive 30i Cabrio** | | | | | | | | | | | | | | | |
| 2.0 (190 kw) | 2018.11- | 8AT | R | L | Convertible RWD B48 B20 B;B46 B20 B | | GDS56455 | Drive Shaft | | 37 | 27 | 65 | | 700 | |
| | 2018.11- | 8AT | R | R | Convertible RWD B48 B20 B;B46 B20 B | | GDS56456 | Drive Shaft | | 37 | 27 | 65 | | 756 | |
| 3.0 (190 kw) | 2009.02-2011.08 | 6AT/6MT | R | R | Convertible RWD N52 B30 A;N52 B30 BF;N52 B30 B | | GDS81115 | Drive Shaft | 48W | 27 | | 69 | 68 | 676 | |
| | 2009.02-2011.08 | 6AT/6MT | R | R | Convertible RWD N52 B30 A;N52 B30 BF;N52 B30 B | | GCI99145 | Outer Joint | 48W | 27 | 25 | 69 | 68 | 58 | I |
| | 2009.02-2011.08 | 6AT/6MT | R | R | Convertible RWD N52 B30 A;N52 B30 BF;N52 B30 B | | GCI35025 | Inner Joint | | | 25 | | | 26 | |
| 3.0 (195 kw) | 2009.05-2011.08 | 6AT/6MT | R | R | Convertible RWD N52 B30 A | | GCI35025 | Inner Joint | | | 25 | | | 26 | |
| | 2009.05-2011.08 | | R | R | Convertible RWD N52 B30 A | | GDS81115 | Drive Shaft | 48W | 27 | | 69 | 68 | 676 | |
| **Z4 sDrive 35i Cabrio** | | | | | | | | | | | | | | | |
| 3.0 (224 kw) | 2009.02-2016.08 | 6MT | R | R | Cabriolet RWD N54B30A | | GDS85122 | Drive Shaft | 48W | 27 | | 69 | 68 | 667 | |
| | 2009.02-2016.08 | 6MT | R | R | Cabriolet RWD N54B30A | | GCI61075 | Inner Joint | | | 28 | | | 26 | |
| 3.0 (225 kw) | 2009.02-2016.08 | 7AT/6MT | R | L | Convertible RWD N54 B30 A | | GDS85151 | Drive Shaft | 48W | 27 | | 69 | 68 | 624 | |
| | 2009.02-2016.08 | 7AT/6MT | R | R | Convertible RWD N54 B30 A | | GDS85122 | Drive Shaft | 48W | 27 | | 69 | 68 | 667 | |
| **Z4 sDrive 35is Cabrio** | | | | | | | | | | | | | | | |
| 3.0 (250 kw) | 2010.03-2016.08 | 7AT | R | L | Convertible RWD N54 B30 A | | GDS85151 | Drive Shaft | 48W | 27 | | 69 | 68 | 624 | |
| | 2010.03-2016.08 | 7AT | R | R | Convertible RWD N54 B30 A | | GDS85122 | Drive Shaft | 48W | 27 | | 69 | 68 | 667 | |
| **BUICK (SGM)** | | | | | | | | | | | | | | | |
| **Century** | | | | | | | | | | | | | | | |
| 3.0 (126 kw) | 1999.07-2002.12 | AT | F | L | Saloon FWD LW9 | | GDS86029 | Drive Shaft | | 33 | 34 | 50 | 105 | 575 | |
| | 1999.07-2002.12 | AT | F | R | Saloon FWD LW9 | | GDS86028 | Drive Shaft | | 33 | 34 | 50 | 105 | 654 | |
| **Encore** | | | | | | | | | | | | | | | |
| 1.4 (103 kw) | 2013.11-2016.12 | MT | F | R | SUV FWD LFF | | GDS86065 | Drive Shaft | | 25 | 34 | 52.4 | 92 | 585 | |
| **Excelle** | | | | | | | | | | | | | | | |
| 1.6 (78 kw) | 2008.05-2013.02 | MT | F | L | Saloon FWD F16D3 | | GDS86058 | Drive Shaft | 47T | 33 | 34 | 52 | 95.5 | 612.5 | |
| | 2008.05-2013.02 | MT | F | R | Saloon FWD F16D3 | | GDS86059 | Drive Shaft | 47T | 33 | 34 | 52 | 95.5 | 934 | |
| **Excelle GT** | | | | | | | | | | | | | | | |
| 1.6 (89 kw) | 2010.06-2015.12 | | F | | Saloon FWD LDE | | GDS61137 | Drive Shaft | | 30 | 34 | 52.5 | 94.5 | 640 | |
| | 2010.06-2015.12 | | F | | Saloon FWD LDE | | GDS61138 | Drive Shaft | | 30 | 27 | 52.5 | 94.5 | 598 | |

| | YEAR | TRANSM. | F/R | L/R | BODY STYLE & DRIVE TYPE & ENGINE | REMARKS | G-AP Ref. | PRODUCT | ABS | Technical Specifications A | B | C | H | L | P |
|---|---|---|---|---|---|---|---|---|---|---|---|---|---|---|---|
| **BUICK (SGM)** | | | | | | | | | | | | | | | |
| **Excelle GT** | | | | | | | | | | | | | | | |
| 1.6 (135 kw) | 2010.06-2015.12 | | F | | Saloon FWD LLU | | GDS61137 | Drive Shaft | | 30 | 34 | 52.5 | 94.5 | 640 | |
| | 2010.06-2015.12 | | F | | Saloon FWD LLU | | GDS61138 | Drive Shaft | | 30 | 27 | 52.5 | 94.5 | 598 | |
| **Excelle XT** | | | | | | | | | | | | | | | |
| 1.6 (89 kw) | 2010.01-2015.12 | | F | | Hatchback FWD LDE | | GDS61137 | Drive Shaft | | 30 | 34 | 52.5 | 94.5 | 640 | |
| | 2010.01-2015.12 | | F | | Hatchback FWD LDE | | GDS61138 | Drive Shaft | | 30 | 27 | 52.5 | 94.5 | 598 | |
| 1.6 (135 kw) | 2010.01-2015.12 | | F | | Hatchback FWD LLU | | GDS61137 | Drive Shaft | | 30 | 34 | 52.5 | 94.5 | 640 | |
| | 2010.01-2015.12 | | F | | Hatchback FWD LLU | | GDS61138 | Drive Shaft | | 30 | 27 | 52.5 | 94.5 | 598 | |
| **La Crosse** | | | | | | | | | | | | | | | |
| 2.4 (125 kw) | 2009.07-2012.12 | | F | | Saloon FWD LE5 | | GDS21042 | Drive Shaft | | 30 | 34 | 53 | 94.5 | 668 | |
| **Regal** | | | | | | | | | | | | | | | |
| 1.6 (132 kw) | 2009.09-2012.12 | | F | L | Saloon FWD LLU | | GDS21043 | Drive Shaft | | 30 | 25 | 52.5 | 94.5 | 624.5 | |
| 2.0 (108 kw) | 2008.12-2013.12 | AT | F | L | Saloon FWD LTD | | GDS21042 | Drive Shaft | | 30 | 34 | 53 | 94.5 | 668 | |
| 2.0 (162 kw) | 2009.06-2013.12 | AT | F | L | Saloon FWD LDK | | GDS21042 | Drive Shaft | | 30 | 34 | 53 | 94.5 | 668 | |
| 2.4 (125 kw) | 2008.12-2011.12 | AT | F | L | Saloon FWD LE5 | | GDS21042 | Drive Shaft | | 30 | 34 | 53 | 94.5 | 668 | |
| 2.5 (112 kw) | 2002.12-2008.12 | AT | F | L | Saloon FWD LB8(152CUV6) | | GDS86029 | Drive Shaft | | 33 | 34 | 50 | 105 | 575 | |
| | 2002.12-2008.12 | AT | F | R | Saloon FWD LB8(152CUV6) | | GDS86028 | Drive Shaft | | 33 | 34 | 50 | 105 | 654 | |
| 3.0 (126 kw) | 2002.10-2006.05 | AT | F | L | Saloon FWD LW9 | | GDS86029 | Drive Shaft | | 33 | 34 | 50 | 105 | 575 | |
| | 2002.10-2006.05 | AT | F | R | Saloon FWD LW9 | | GDS86028 | Drive Shaft | | 33 | 34 | 50 | 105 | 654 | |
| **BYD** | | | | | | | | | | | | | | | |
| **Atto 2/Yuan Up** | | | | | | | | | | | | | | | |
| EV (130 kw) | 2024.03- | ET | F | L | SUV FWD TZ200XSW | For OE number:13500156-00 | GDS57742 | Drive Shaft | 48T | 30 | 29 | 60 | 97 | 767 | |
| | 2024.03- | ET | F | L | SUV FWD TZ200XSW | For OE number:13143674-00 | GDS57751 | Drive Shaft | 48T | 30 | 29 | 70 | 97.5 | 774 | |
| | 2024.03- | ET | F | L | SUV FWD TZ200XSW | For OE number:13500157-00 | GDS57816 | Drive Shaft | 48T | 30 | 29 | 67 | 97.5 | 765 | |
| | 2024.03- | ET | F | R | SUV FWD TZ200XSW | For OE number:13500159-00 | GDS57741 | Drive Shaft | 48T | 30 | 29 | 60 | 97 | 848 | |
| | 2024.03- | ET | F | R | SUV FWD TZ200XSW | For OE number:13143657-00 | GDS57752 | Drive Shaft | 48T | 30 | 29 | 70 | 97.5 | 851 | |
| | 2024.03- | ET | F | R | SUV FWD TZ200XSW | For OE number:13500158-00 | GDS57817 | Drive Shaft | 48T | 30 | 29 | 67 | 97.5 | 847 | |
| | 2024.03- | ET | F | L/R | SUV FWD TZ200XSW | For OE number:13500159-00/13500156-00 | GCO83684 | Outer Joint | 48T | 30 | 27 | 60 | 97 | 64 | M |
| | 2024.03- | ET | F | L/R | SUV FWD TZ200XSW | For OE number:13143674-00/13143657-00 | GCO83697 | Outer Joint | 48T | 30 | 25 | 70 | 97.5 | 64 | M |
| | 2024.03- | ET | F | L/R | SUV FWD TZ200XSW | For OE number:13500157-00/13500158-00 | GCO83727 | Outer Joint | 48T | 30 | 24 | 67 | 97.5 | 62.5 | M |
| | 2024.03- | ET | F | L/R | SUV FWD TZ200XSW | For OE number:13500159-00/13500156-00 | GCI83558 | Inner Joint | | 29 | 34 | 45 | 62 | 104.5 | |
| | 2024.03- | ET | F | L/R | SUV FWD TZ200XSW | For OE number:13143674-00/13143657-00 | GCI83837 | Inner Joint | | 29 | 24 | 45 | 62.5 | 106.5 | |
| | 2024.03- | ET | F | L/R | SUV FWD TZ200XSW | For OE number:13500157-00/13500158-00 | GCI83869 | Inner Joint | | 29 | 24 | 45 | 62 | 104.5 | |
| **Dolphin** | | | | | | | | | | | | | | | |
| EV (70 kw) | 2021.08- | ET | F | L/R | Hatchback FWD TZ180XSF | | GDS56669 | Drive Shaft | 48T | 26 | 27 | 60 | 98 | 789 | |
| | 2021.08- | ET | F | L/R | Hatchback FWD TZ180XSF | | GCO83375 | Outer Joint | 48T | 26 | 23 | 60 | 98 | 65 | M |
| | 2021.08- | ET | F | L | Hatchback FWD TZ180XSF | | GCI83433 | Inner Joint | | 27 | 23 | 45 | 60 | 103 | |
| EV (130 kw) | 2021.08- | ET | F | L | Hatchback FWD TZ200XSW | For OE number:13502229-00;Data to:2022.11;Data from:2024.02;AAR | GDS57665 | Drive Shaft | 48T | 30 | 29 | 70 | 97.5 | 749 | |
| | 2021.08- | ET | F | L | Hatchback FWD TZ200XSW | For OE number:13490741-00;Data to:2022.11;Data from:2024.02;PTJ | GDS57667 | Drive Shaft | 48T | 30 | 29 | 70 | 97.5 | 750 | |
| | 2021.08- | ET | F | L | Hatchback FWD TZ200XSW | For OE number:13490738-00/13611332-00;Data to:2022.11;Data from:2024.02;TJ | GDS57724 | Drive Shaft | 48T | 30 | 29 | 60 | 97 | 752 | |
| | 2021.08- | ET | F | L | Hatchback FWD TZ200XSW | For OE number:13500156-00;Data from2022.12;Data to:2024.02 | GDS57742 | Drive Shaft | 48T | 30 | 29 | 60 | 97 | 767 | |
| | 2021.08- | ET | F | L | Hatchback FWD TZ200XSW | For OE number:13143674-00;Data from2022.12;Data to:2024.02 | GDS57751 | Drive Shaft | 48T | 30 | 29 | 70 | 97.5 | 774 | |
| | 2021.08- | ET | F | L | Hatchback FWD TZ200XSW | For OE number:13500157-00;Data from2022.12;Data to:2024.02 | GDS57816 | Drive Shaft | 48T | 30 | 29 | 67 | 97.5 | 765 | |
| | 2021.08- | ET | F | R | Hatchback FWD TZ200XSW | For OE number:13502228-00;Data to:2022.11;Data from:2024.02;AAR | GDS57664 | Drive Shaft | 48T | 30 | 29 | 70 | 97.5 | 829 | |
| | 2021.08- | ET | F | R | Hatchback FWD TZ200XSW | For OE number:13490739-00;Data to:2022.11;Data from:2024.02;PTJ | GDS57666 | Drive Shaft | 48T | 30 | 29 | 70 | 97.5 | 829 | |
| | 2021.08- | ET | F | R | Hatchback FWD TZ200XSW | For OE number:13490740-00;Data to:2022.11;Data from:2024.02;TJ | GDS57723 | Drive Shaft | 48T | 30 | 29 | 60 | 97 | 832 | |
| | 2021.08- | ET | F | R | Hatchback FWD TZ200XSW | For OE number:13500159-00;Data from2022.12;Data to:2024.02 | GDS57741 | Drive Shaft | 48T | 30 | 29 | 60 | 97 | 848 | |
| | 2021.08- | ET | F | R | Hatchback FWD TZ200XSW | For OE number:13143657-00;Data from2022.12;Data to:2024.02 | GDS57752 | Drive Shaft | 48T | 30 | 29 | 70 | 97.5 | 851 | |
| | 2021.08- | ET | F | R | Hatchback FWD TZ200XSW | For OE number:13500158-00;Data from2022.12;Data to:2024.02 | GDS57817 | Drive Shaft | 48T | 30 | 29 | 67 | 97.5 | 847 | |
| | 2021.08- | ET | F | L/R | Hatchback FWD TZ200XSW | For OE number:13490739-00/13490741-00;Data to:2022.11;Data from:2024.02 | GCO83672 | Outer Joint | 48T | 30 | 25 | 70 | 97.5 | 64 | I |
| | 2021.08- | ET | F | L/R | Hatchback FWD TZ200XSW | For OE number:13500159-00/13500156-00;Data from2022.12;Data to:2024.02 | GCO83684 | Outer Joint | 48T | 30 | 27 | 60 | 97 | 64 | M |
| | 2021.08- | ET | F | L/R | Hatchback FWD TZ200XSW | For OE number:13143674-00/13143657-00;Data from2022.12;Data to:2024.02 | GCO83697 | Outer Joint | 48T | 30 | 25 | 70 | 97.5 | 64 | M |
| | 2021.08- | ET | F | L/R | Hatchback FWD TZ200XSW | For OE number:13500157-00/13500158-00;Data from2022.12;Data to:2024.02 | GCO83727 | Outer Joint | 48T | 30 | 24 | 67 | 97.5 | 62.5 | M |
| | 2021.08- | ET | F | R | Hatchback FWD TZ200XSW | For OE number:13490740-00;Data to:2022.11 | GCI83558 | Inner Joint | | 29 | 34 | 45 | 62 | 104.5 | |
| | 2021.08- | ET | F | L/R | Hatchback FWD TZ200XSW | For OE number:13502228-00/13502229-00;Data to:2022.11;Data from:2024.02 | GCI83801 | Inner Joint | | 29 | 33 | 45 | 62 | 115.5 | |
| | 2021.08- | ET | F | L/R | Hatchback FWD TZ200XSW | For OE number:13490739-00/13490741-00;Data to:2022.11;Data from:2024.02 | GCI83802 | Inner Joint | | 29 | 25 | 45 | 62 | 110 | |
| | 2021.08- | ET | F | L/R | Hatchback FWD TZ200XSW | For OE number:13143674-00/13143657-00;Data from2022.12;Data to:2024.02 | GCI83837 | Inner Joint | | 29 | 24 | 45 | 62.5 | 106.5 | |
| | 2021.08- | ET | F | L/R | Hatchback FWD TZ200XSW | For OE number:13500157-00/13500158-00;Data from2022.12;Data to:2024.02 | GCI83869 | Inner Joint | | 29 | 24 | 45 | 62 | 104.5 | |
| EV (150 kw) | 2023.05- | ET | F | L/R | Hatchback FWD TZ200XSQ | | GDS56669 | Drive Shaft | 48T | 26 | 27 | 60 | 98 | 789 | |
| | 2023.05- | ET | F | L/R | Hatchback FWD TZ200XSQ | | GCO83375 | Outer Joint | 48T | 26 | 23 | 60 | 98 | 65 | M |
| | 2023.05- | ET | F | L | Hatchback FWD TZ200XSQ | | GCI83433 | Inner Joint | | 27 | 23 | 45 | 60 | 103 | |
| **E6** | | | | | | | | | | | | | | | |
| EV (75 kw) | 2010.05- | ET | F | L | MPV FWD BYDTYC120A | | GDS39328 | Drive Shaft | 48T | 32 | 29 | 70 | 104 | 768 | |
| | 2010.05- | ET | F | R | MPV FWD BYDTYC120A | | GDS39329 | Drive Shaft | 48T | 32 | 29 | 70 | 104 | 899 | |
| | 2010.05- | ET | F | L/R | MPV FWD BYDTYC120A | | GCO39254 | Outer Joint | 48T | 32 | 35 | 70 | 104 | 61.5 | M |
| | 2010.05- | ET | F | L/R | MPV FWD BYDTYC120A | Model year from:2012 | GCI39083 | Inner Joint | | 29 | 34 | 45 | 72.5 | 120.5 | |

| | YEAR | TRANSM. | F/R | L/R | BODY STYLE & DRIVE TYPE & ENGINE | REMARKS | G-AP Ref. | PRODUCT | ABS | Technical Specifications A | B | C | H | L | P |
|---|---|---|---|---|---|---|---|---|---|---|---|---|---|---|---|
| **BYD** | | | | | | | | | | | | | | | |
| **e6** | | | | | | | | | | | | | | | |
| EV (100 kw) | 2021.02- | ET | F | L/R | MPV FWD BYD-1814TZ-XS-D,TZ180XSA | | GDS84183 | Drive Shaft | 48T | 32 | 27 | 68 | 106.5 | 809 | |
| | 2021.02- | ET | F | L/R | MPV FWD BYD-1814TZ-XS-D,TZ180XSA | | GCO82725 | Outer Joint | 48T | 32 | 25 | 68 | 106.5 | 64.5 | I |
| | 2021.02- | ET | F | L/R | MPV FWD BYD-1814TZ-XS-D,TZ180XSA | | GCI82624 | Inner Joint | | 27 | 31 | 45 | 59.5 | 105.5 | |
| **F0** | | | | | | | | | | | | | | | |
| 1.0 (50 kw) | 2008.09-2019.12 | 5MT | F | L | Hatchback FWD 371QA | | GDS69003 | Drive Shaft | 48T | 24 | 24 | 50.9 | 85 | 645 | |
| | 2008.09-2019.12 | 5MT | F | R | Hatchback FWD 371QA | | GDS69004 | Drive Shaft | 48T | 24 | 24 | 50.9 | 85 | 837 | |
| **F3** | | | | | | | | | | | | | | | |
| 1.5 (78 kw) | 2007.09-2011.12 | 5MT | F | L | Saloon FWD 4G15S | for Model year:2011 | GDS82756 | Drive Shaft | 48T | 26 | 25 | 58 | 90.5 | 613 | |
| | 2007.09-2011.12 | 5MT | F | R | Saloon FWD 4G15S | for Model year:2011 | GDS82757 | Drive Shaft | 48T | 26 | 25 | 58 | 90.5 | 936 | |
| | 2007.09-2011.12 | 5MT | F | L/R | Saloon FWD 4G15S | Bellows Material:TPE(thermoplastic elastomer),Model year from:2008,Model year to:2011 | GCO69005 | Outer Joint | 48T | 26 | 32 | 58 | 96.5 | 64.5 | M |
| | 2007.09-2011.12 | 5MT | F | L/R | Saloon FWD 4G15S | for Model year:2011 | GCO82154 | Outer Joint | 48T | 26 | 32 | 58 | 90.5 | 64 | M |
| | 2007.09-2011.12 | 5MT | F | L/R | Saloon FWD 4G15S | for Model year:2011 | GCI81735 | Inner Joint | | 25 | 30 | 35 | 58.5 | 89.5 | |
| | 2007.09-2011.12 | 5MT | F | L/R | Saloon FWD 4G15S | Model year from:2008,Model year to:2011 | GCI99089 | Inner Joint | | 25 | 29 | 41 | 62.5 | 87 | |
| | 2007.09-2012.12 | 5MT | F | L/R | Saloon FWD 4G15S | Bellows Material:TPE(thermoplastic elastomer),Model year to:2010 | GCO69005 | Outer Joint | 48T | 26 | 32 | 58 | 96.5 | 64.5 | M |
| | 2007.09-2012.12 | 5MT | F | L/R | Saloon FWD 4G15S | Model year to:2010 | GCI99089 | Inner Joint | | 25 | 29 | 41 | 62.5 | 87 | |
| 1.5 (79 kw) | 2008.09-2012.12 | 5MT | F | L | Saloon FWD 4G15S, BYD473QB | Model year from:2010 | GDS82756 | Drive Shaft | 48T | 26 | 25 | 58 | 90.5 | 613 | |
| | 2008.09-2012.12 | 5MT | F | R | Saloon FWD 4G15S, BYD473QB | Model year from:2010 | GDS82757 | Drive Shaft | 48T | 26 | 25 | 58 | 90.5 | 936 | |
| | 2008.09-2012.12 | 5MT | F | L/R | Saloon FWD 4G15S, BYD473QB | Model year from:2010 | GCO82154 | Outer Joint | 48T | 26 | 32 | 58 | 90.5 | 64 | M |
| | 2008.09-2012.12 | 5MT | F | L/R | Saloon FWD 4G15S, BYD473QB | Model year from:2010 | GCI81735 | Inner Joint | | 25 | 30 | 35 | 58.5 | 89.5 | |
| | 2008.09-2012.12 | 5MT | F | L/R | Saloon FWD 4G15S, BYD473QB | Model year from:2010,Model year to:2011 | GCI99089 | Inner Joint | | 25 | 29 | 41 | 62.5 | 87 | |
| 1.5 (80 kw) | 2011.01- | 5MT | F | L | Saloon FWD BYD473QD, BYD473QE, BYD473QF | Model year to:2019 | GDS82756 | Drive Shaft | 48T | 26 | 25 | 58 | 90.5 | 613 | |
| | 2011.01- | 5MT | F | R | Saloon FWD BYD473QD, BYD473QE, BYD473QF | Model year to:2019 | GDS82757 | Drive Shaft | 48T | 26 | 25 | 58 | 90.5 | 936 | |
| | 2011.01- | 5MT | F | L/R | Saloon FWD BYD473QD, BYD473QE, BYD473QF | Model year to:2019 | GCO82154 | Outer Joint | 48T | 26 | 32 | 58 | 90.5 | 64 | M |
| | 2011.01- | 5MT | F | L/R | Saloon FWD BYD473QD, BYD473QE, BYD473QF | Model year to:2019 | GCI81735 | Inner Joint | | 25 | 30 | 35 | 58.5 | 89.5 | |
| | 2011.01- | 5MT/6DCT | F | L/R | Saloon FWD BYD473QD, BYD473QE, BYD473QF | Model year from:2016,Model year to:2017 | GCI99089 | Inner Joint | | 25 | 29 | 41 | 62.5 | 87 | |
| | 2011.01- | 6DCT | F | L | Saloon FWD BYD473QD, BYD473QE, BYD473QF | | GDS84598 | Drive Shaft | 48T | 26 | 40 | 58.1 | 90 | 513 | |
| | 2011.01- | 6DCT | F | R | Saloon FWD BYD473QD, BYD473QE, BYD473QF | | GDS84597 | Drive Shaft | 48T | 26 | 40 | 58.1 | 90 | 861 | |
| | 2011.01- | 6DCT | F | L | Saloon FWD BYD473QD, BYD473QE, BYD473QF | | GCI82885 | Inner Joint | | 40 | 32 | 43.3 | | 123 | |
| | 2011.01- | 6DCT | F | R | Saloon FWD BYD473QD, BYD473QE, BYD473QF | | GCI82884 | Inner Joint | | 40 | 32 | 45 | | 138 | |
| 1.6 (74 kw) | 2005.09-2012.07 | 4AT/5MT | F | L/R | Saloon FWD DA4G18 | for model year:2009 | GCI99089 | Inner Joint | | 25 | 29 | 41 | 62.5 | 87 | |
| | 2005.09-2013.12 | 5MT | F | L/R | Saloon FWD DA4G18 | Model year from:2009 | GCO59259 | Outer Joint | 48T | 26 | 33 | 58 | 96 | 64.5 | I |
| **F3-R** | | | | | | | | | | | | | | | |
| 1.5 (79 kw) | 2010.08- | 5MT | F | L | Hatchback FWD BYD473QB | Model year from:2011,Model year to:2016 | GDS82756 | Drive Shaft | 48T | 26 | 25 | 58 | 90.5 | 613 | |
| | 2010.08- | 5MT | F | R | Hatchback FWD BYD473QB | Model year from:2011,Model year to:2016 | GDS82757 | Drive Shaft | 48T | 26 | 25 | 58 | 90.5 | 936 | |
| | 2010.08- | 5MT | F | L/R | Hatchback FWD BYD473QB | Model year to:2013 | GCO59259 | Outer Joint | 48T | 26 | 33 | 58 | 96 | 64.5 | I |
| | 2010.08- | 5MT | F | L/R | Hatchback FWD BYD473QB | Model year from:2011 | GCO82154 | Outer Joint | 48T | 26 | 32 | 58 | 90.5 | 64 | M |
| | 2010.08- | 5MT | F | L/R | Hatchback FWD BYD473QB | Model year to:2013 | GCI81735 | Inner Joint | | 25 | 30 | 35 | 58.5 | 89.5 | |
| 1.6 (74 kw) | 2007.09- | 4AT | F | L/R | Hatchback FWD DA4G18 | Model year from:2008,Model year to:2012 | GCO59259 | Outer Joint | 48T | 26 | 33 | 58 | 96 | 64.5 | I |
| **F3DM** | | | | | | | | | | | | | | | |
| 1.0 (50 kw) | 2009.01- | CVT | F | L/R | Saloon FWD BYD371QA | Model year from:2010,Model year to:2013 | GCI99089 | Inner Joint | | 25 | 29 | 41 | 62.5 | 87 | |
| **F5 Suri** | | | | | | | | | | | | | | | |
| 1.5 (110 kw) | 2012.08- | | F | L | Saloon FWD BYD476ZQA | Model year to:2016 | GDS82295 | Drive Shaft | 48T | 26 | 25 | 70 | 90 | 635 | |
| | 2012.08- | | F | R | Saloon FWD BYD476ZQA | Model year to:2016 | GDS82296 | Drive Shaft | 48T | 26 | 25 | 70 | 90 | 961 | |
| | 2012.08- | | F | L/R | Saloon FWD BYD476ZQA | Model year to:2016 | GCO81791 | Outer Joint | 48T | 26 | 32 | 70 | 90 | 64 | M |
| | 2012.08- | | F | L/R | Saloon FWD BYD476ZQA | Model year to:2016 | GCI81735 | Inner Joint | | 25 | 30 | 35 | 58.5 | 89.5 | |
| **G3** | | | | | | | | | | | | | | | |
| 1.5 (79 kw) | 2010.10-2012.12 | 5MT | F | L | Saloon FWD BYD473QB | Model year from:2011 | GDS82756 | Drive Shaft | 48T | 26 | 25 | 58 | 90.5 | 613 | |
| | 2010.10-2012.12 | 5MT | F | R | Saloon FWD BYD473QB | Model year from:2011 | GDS82757 | Drive Shaft | 48T | 26 | 25 | 58 | 90.5 | 936 | |
| | 2010.10-2012.12 | 5MT | F | L/R | Saloon FWD BYD473QB | Model year from:2011 | GCO82154 | Outer Joint | 48T | 26 | 32 | 58 | 90.5 | 64 | M |
| | 2010.10-2012.12 | 5MT | F | L/R | Saloon FWD BYD473QB | Model year from:2011 | GCI81735 | Inner Joint | | 25 | 30 | 35 | 58.5 | 89.5 | |
| 1.5 (80 kw) | 2011.09-2016.12 | 5MT | F | L | Saloon FWD BYD473QE | | GDS82756 | Drive Shaft | 48T | 26 | 25 | 58 | 90.5 | 613 | |
| | 2011.09-2016.12 | 5MT | F | R | Saloon FWD BYD473QE | | GDS82757 | Drive Shaft | 48T | 26 | 25 | 58 | 90.5 | 936 | |
| | 2011.09-2016.12 | 5MT | F | L/R | Saloon FWD BYD473QE | | GCO82154 | Outer Joint | 48T | 26 | 32 | 58 | 90.5 | 64 | M |
| | 2011.09-2016.12 | 5MT | F | L/R | Saloon FWD BYD473QE | | GCI81735 | Inner Joint | | 25 | 30 | 35 | 58.5 | 89.5 | |
| | 2011.09-2016.12 | 6DCT | F | L | Saloon FWD BYD473QE | | GDS84598 | Drive Shaft | 48T | 26 | 40 | 58.1 | 90 | 513 | |
| | 2011.09-2016.12 | 6DCT | F | R | Saloon FWD BYD473QE | | GDS84597 | Drive Shaft | 48T | 26 | 40 | 58.1 | 90 | 861 | |
| | 2011.09-2016.12 | 6DCT | F | L/R | Saloon FWD BYD473QE | | GCO82896 | Outer Joint | 48T | 26 | 32 | 58.1 | 90 | 63.5 | M |
| | 2011.09-2016.12 | 6DCT | F | L | Saloon FWD BYD473QE | | GCI82885 | Inner Joint | | 40 | 32 | 43.3 | | 123 | |
| | 2011.09-2016.12 | 6DCT | F | R | Saloon FWD BYD473QE | | GCI82884 | Inner Joint | | 40 | 32 | 45 | | 138 | |
| **G3R** | | | | | | | | | | | | | | | |
| 1.5 (80 kw) | 2011.04-2014.12 | 5MT | F | L | Hatchback FWD BYD473QD | | GDS82756 | Drive Shaft | 48T | 26 | 25 | 58 | 90.5 | 613 | |
| | 2011.04-2014.12 | 5MT | F | R | Hatchback FWD BYD473QD | | GDS82757 | Drive Shaft | 48T | 26 | 25 | 58 | 90.5 | 936 | |
| | 2011.04-2014.12 | 5MT | F | L/R | Hatchback FWD BYD473QD | | GCO82154 | Outer Joint | 48T | 26 | 32 | 58 | 90.5 | 64 | M |
| | 2011.04-2014.12 | 5MT | F | L/R | Hatchback FWD BYD473QD | | GCI81735 | Inner Joint | | 25 | 30 | 35 | 58.5 | 89.5 | |

| | YEAR | TRANSM. | F/R | L/R | BODY STYLE & DRIVE TYPE & ENGINE | REMARKS | G-AP Ref. | PRODUCT | ABS | Technical Specifications A | B | C | H | L | P |
|---|---|---|---|---|---|---|---|---|---|---|---|---|---|---|---|
| **BYD** | | | | | | | | | | | | | | | |
| **G6** | | | | | | | | | | | | | | | |
| 2.0 (103 kw) | 2011.09- | 5MT | F | L/R | Saloon FWD BYD483QB | | GCI71001 | Inner Joint | | 25 | 24 | 41 | 62 | 93 | |
| **Haibao** | | | | | | | | | | | | | | | |
| EV (150 kw) | 2022.07- | ET | R | L | Saloon RWD TZ200XYL | For OE number:13371647-00;PTJ | GDS57799 | Drive Shaft | 48T | 32 | 30 | 60 | 114 | 933 | |
| | 2022.07- | ET | R | L | Saloon RWD TZ200XYL | For OE number:13371648-00;AAR | GDS57801 | Drive Shaft | 48T | 32 | 30 | 60 | 114 | 934 | |
| | 2022.07- | ET | R | L | Saloon RWD TZ200XYL | For OE number:13321204-00;PTJ | GDS57826 | Drive Shaft | 48T | 32 | 30 | 60 | 114 | 922 | |
| | 2022.07- | ET | R | L | Saloon RWD TZ200XYL | For OE number:13321225-00;PTJ | GDS57914 | Drive Shaft | 48T | 32 | 30 | 60 | 114.5 | 935 | |
| | 2022.07- | ET | R | R | Saloon RWD TZ200XYL | For OE number:13371624-00;PTJ | GDS57798 | Drive Shaft | 48T | 32 | 30 | 60 | 114 | 751 | |
| | 2022.07- | ET | R | R | Saloon RWD TZ200XYL | For OE number:13371645-00;AAR | GDS57800 | Drive Shaft | 48T | 32 | 30 | 60 | 114 | 751 | |
| | 2022.07- | ET | R | R | Saloon RWD TZ200XYL | For OE number:13321226-00;PTJ | GDS57825 | Drive Shaft | 48T | 32 | 30 | 60 | 114 | 741 | |
| | 2022.07- | ET | R | R | Saloon RWD TZ200XYL | For OE number:13321227-00;PTJ | GDS57915 | Drive Shaft | 48T | 32 | 30 | 60 | 114.5 | 754 | |
| | 2022.07- | ET | R | L/R | Saloon RWD TZ200XYL | For OE number:13371645-00/13371648-00 | GCO83711 | Outer Joint | 48T | 32 | 28 | 60 | 114 | 74 | M |
| | 2022.07- | ET | R | L/R | Saloon RWD TZ200XYL | For OE number:13321226-00/13321204-00 | GCO83734 | Outer Joint | 48T | 32 | 35 | 60 | 114 | 63 | I |
| | 2022.07- | ET | R | L/R | Saloon RWD TZ200XYL | For OE number:13321225-00/13321227-00 | GCO83784 | Outer Joint | 48T | 32 | 37 | 60 | 114.5 | 71.5 | I |
| | 2022.07- | ET | R | L/R | Saloon RWD TZ200XYL | For OE number:13371645-00/13371648-00 | GCI83850 | Inner Joint | | 30 | 27 | 45 | 63 | 120 | |
| | 2022.07- | ET | R | L/R | Saloon RWD TZ200XYL | For OE number:13371649-00/13371646-00;PTJ | GCI83858 | Inner Joint | | 30 | 28 | 45 | 63 | 110 | |
| | 2022.07- | ET | R | L/R | Saloon RWD TZ200XYL | For OE number:13321226-00/13321204-00 | GCI83866 | Inner Joint | | 30 | 35 | 45 | 62.5 | 118 | |
| | 2022.07- | ET | R | L/R | Saloon RWD TZ200XYL | For OE number:13321225-00/13321227-00 | GCI83920 | Inner Joint | | 30 | 38 | 45 | 63 | 111 | |
| EV (230 kw) | 2022.07- | ET | R | L | Saloon RWD TZ200XYC | For OE number:13371647-00;PTJ;Engine Code:TZ200XYT;Date from:2024.08;Engine Code:TZ200XYC;Date to:2026.07 | GDS57799 | Drive Shaft | 48T | 32 | 30 | 60 | 114 | 933 | |
| | 2022.07- | ET | R | L | Saloon RWD TZ200XYC | For OE number:13371648-00;AAR;Engine Code:TZ200XYT;Date from:2024.08;Engine Code:TZ200XYC;Date to:2026.07 | GDS57801 | Drive Shaft | 48T | 32 | 30 | 60 | 114 | 934 | |
| | 2022.07- | ET | R | L | Saloon RWD TZ200XYC | For OE number:13321204-00;PTJ;Engine Code:TZ200XYT;Date from:2024.08;Engine Code:TZ200XYC;Date to:2026.07 | GDS57826 | Drive Shaft | 48T | 32 | 30 | 60 | 114 | 922 | |
| | 2022.07- | ET | R | L | Saloon RWD TZ200XYC | For OE number:13321225-00;PTJ;Engine Code:TZ200XYT;Date from:2024.08;Engine Code:TZ200XYC;Date to:2026.07 | GDS57914 | Drive Shaft | 48T | 32 | 30 | 60 | 114.5 | 935 | |
| | 2022.07- | ET | R | R | Saloon RWD TZ200XYC | For OE number:13371624-00;PTJ;Engine Code:TZ200XYT;Date from:2024.08;Engine Code:TZ200XYC;Date to:2026.07 | GDS57798 | Drive Shaft | 48T | 32 | 30 | 60 | 114 | 751 | |
| | 2022.07- | ET | R | R | Saloon RWD TZ200XYC | For OE number:13371645-00;AAR;Engine Code:TZ200XYT;Date from:2024.08;Engine Code:TZ200XYC;Date to:2026.07 | GDS57800 | Drive Shaft | 48T | 32 | 30 | 60 | 114 | 751 | |
| | 2022.07- | ET | R | R | Saloon RWD TZ200XYC | For OE number:13321226-00;PTJ;Engine Code:TZ200XYT;Date from:2024.08;Engine Code:TZ200XYC;Date to:2026.07 | GDS57825 | Drive Shaft | 48T | 32 | 30 | 60 | 114 | 741 | |
| | 2022.07- | ET | R | R | Saloon RWD TZ200XYC | For OE number:13321227-00;PTJ;Engine Code:TZ200XYT;Date from:2024.08;Engine Code:TZ200XYC;Date to:2026.07 | GDS57915 | Drive Shaft | 48T | 32 | 30 | 60 | 114.5 | 754 | |
| | 2022.07- | ET | R | L/R | Saloon RWD TZ200XYC | For OE number:13371645-00/13371648-00;Engine Code:TZ200XYT;Date from:2024.08;Engine Code:TZ200XYC;Date to:2026.07 | GCO83711 | Outer Joint | 48T | 32 | 28 | 60 | 114 | 74 | M |
| | 2022.07- | ET | R | L/R | Saloon RWD TZ200XYC | For OE number:13321204-00/13321226-00;Engine Code:TZ200XYT;Date from:2024.08;Engine Code:TZ200XYC;Date to:2026.07 | GCO83734 | Outer Joint | 48T | 32 | 35 | 60 | 114 | 63 | I |
| | 2022.07- | ET | R | L/R | Saloon RWD TZ200XYC | For OE number:13321225-00/13321227-00;Engine Code:TZ200XYT;Date from:2024.08;Engine Code:TZ200XYC;Date to:2026.07 | GCO83784 | Outer Joint | 48T | 32 | 37 | 60 | 114.5 | 71.5 | I |
| | 2022.07- | ET | R | L/R | Saloon RWD TZ200XYC | For OE number:13371645-00/13371648-00;Engine Code:TZ200XYT;Date from:2024.08;Engine Code:TZ200XYC;Date to:2026.07 | GCI83850 | Inner Joint | | 30 | 27 | 45 | 63 | 120 | |
| | 2022.07- | ET | R | L/R | Saloon RWD TZ200XYC | For OE number:13371649-00/13371646-00;Engine Code:TZ200XYT;Date from:2024.08;Engine Code:TZ200XYC;Date to:2026.07 | GCI83858 | Inner Joint | | 30 | 28 | 45 | 63 | 110 | |
| | 2022.07- | ET | R | L/R | Saloon RWD TZ200XYC | For OE number:13321204-00/13321226-00;Engine Code:TZ200XYT;Date from:2024.08;Engine Code:TZ200XYC;Date to:2026.07 | GCI83866 | Inner Joint | | 30 | 35 | 45 | 62.5 | 118 | |
| | 2022.07- | ET | R | L/R | Saloon RWD TZ200XYC | For OE number:13321225-00/13321227-00;Engine Code:TZ200XYT;Date from:2024.08;Engine Code:TZ200XYC;Date to:2026.07 | GCI83920 | Inner Joint | | 30 | 38 | 45 | 63 | 111 | |
| EV (390 kw) | 2022.07- | ET | F | L | Saloon 4WD TZ200XYC, YS210XYA | For OE number:13371649-00;Inner teeth of wheel side:27 | GDS57791 | Drive Shaft | 48T | 30 | 30 | 60 | 97 | 939 | |
| | 2022.07- | ET | F | L | Saloon 4WD TZ200XYC, YS210XYA | For OE number:13321228-00;Inner teeth of wheel side:34 | GDS57810 | Drive Shaft | 48T | 30 | 30 | 60 | 98.5 | 938 | |
| | 2022.07- | ET | F | R | Saloon 4WD TZ200XYC, YS210XYA | For OE number:13371646-00;Inner teeth of wheel side:27 | GDS57792 | Drive Shaft | 48T | 30 | 30 | 60 | 97 | 722 | |
| | 2022.07- | ET | F | R | Saloon 4WD TZ200XYC, YS210XYA | For OE number:13321229-00;Inner teeth of wheel side:34 | GDS57811 | Drive Shaft | 48T | 30 | 30 | 60 | 98.5 | 720 | |
| | 2022.07- | ET | F | L/R | Saloon 4WD TZ200XYC, YS210XYA | For OE number:13371649-00/13371646-00 | GCO83707 | Outer Joint | 48T | 30 | 27 | 60 | 97 | 74 | I |
| | 2022.07- | ET | F | L/R | Saloon 4WD TZ200XYC, YS210XYA | For OE number:13321228-00/13321229-00 | GCO83718 | Outer Joint | 48T | 30 | 34 | 60 | 98.5 | 61.5 | I |
| | 2022.07- | ET | F | L/R | Saloon 4WD TZ200XYC, YS210XYA | For OE number:13371649-00/13371646-00 | GCI83858 | Inner Joint | | 30 | 28 | 45 | 63 | 110 | |
| | 2022.07- | ET | F | L/R | Saloon 4WD TZ200XYC, YS210XYA | For OE number:13321228-00/13321229-00 | GCI83866 | Inner Joint | | 30 | 35 | 45 | 62.5 | 118 | |
| | 2022.07- | ET | R | L | Saloon 4WD TZ200XYC, YS210XYA | For OE number:13371647-00;PTJ | GDS57799 | Drive Shaft | 48T | 32 | 30 | 60 | 114 | 933 | |
| | 2022.07- | ET | R | L | Saloon 4WD TZ200XYC, YS210XYA | For OE number:13371648-00;AAR | GDS57801 | Drive Shaft | 48T | 32 | 30 | 60 | 114 | 934 | |
| | 2022.07- | ET | R | L | Saloon 4WD TZ200XYC, YS210XYA | For OE number:13321204-00;PTJ | GDS57826 | Drive Shaft | 48T | 32 | 30 | 60 | 114 | 922 | |
| | 2022.07- | ET | R | L | Saloon 4WD TZ200XYC, YS210XYA | For OE number:13321225-00;PTJ | GDS57914 | Drive Shaft | 48T | 32 | 30 | 60 | 114.5 | 935 | |
| | 2022.07- | ET | R | R | Saloon 4WD TZ200XYC, YS210XYA | For OE number:13371624-00;PTJ | GDS57798 | Drive Shaft | 48T | 32 | 30 | 60 | 114 | 751 | |
| | 2022.07- | ET | R | R | Saloon 4WD TZ200XYC, YS210XYA | For OE number:13371645-00;AAR | GDS57800 | Drive Shaft | 48T | 32 | 30 | 60 | 114 | 751 | |
| | 2022.07- | ET | R | R | Saloon 4WD TZ200XYC, YS210XYA | For OE number:13321226-00;PTJ | GDS57825 | Drive Shaft | 48T | 32 | 30 | 60 | 114 | 741 | |
| | 2022.07- | ET | R | R | Saloon 4WD TZ200XYC, YS210XYA | For OE number:13321227-00;PTJ | GDS57915 | Drive Shaft | 48T | 32 | 30 | 60 | 114.5 | 754 | |
| | 2022.07- | ET | R | L/R | Saloon 4WD TZ200XYC, YS210XYA | For OE number:13371645-00/13371648-00 | GCO83711 | Outer Joint | 48T | 32 | 28 | 60 | 114 | 74 | M |
| | 2022.07- | ET | R | L/R | Saloon 4WD TZ200XYC, YS210XYA | For OE number:13321226-00/13321204-00 | GCO83734 | Outer Joint | 48T | 32 | 35 | 60 | 114 | 63 | I |
| | 2022.07- | ET | R | L/R | Saloon 4WD TZ200XYC, YS210XYA | For OE number:13321225-00/13321227-00 | GCO83784 | Outer Joint | 48T | 32 | 37 | 60 | 114.5 | 71.5 | I |
| | 2022.07- | ET | R | L/R | Saloon 4WD TZ200XYC, YS210XYA | For OE number:13371645-00/13371648-00 | GCI83850 | Inner Joint | | 30 | 27 | 45 | 63 | 120 | |
| | 2022.07- | ET | R | L/R | Saloon 4WD TZ200XYC, YS210XYA | For OE number:13321225-00/13321227-00 | GCI83920 | Inner Joint | | 30 | 38 | 45 | 63 | 111 | |
| **HuWeiJian 07** | | | | | | | | | | | | | | | |
| 1.5 (102 kw) | 2022.12- | | F | L | SUV 4WD BYD476ZQC/TZ200XSV/TZ220XYG | | GDS56198 | Drive Shaft | 48T | 32 | 30 | 60 | 107.5 | 816 | |
| | 2022.12- | | F | R | SUV 4WD BYD476ZQC/TZ200XSV/TZ220XYG | | GDS56196 | Drive Shaft | 48T | 32 | 30 | 60 | 107.5 | 881 | |
| | 2022.12- | | F | L/R | SUV 4WD BYD476ZQC/TZ200XSV/TZ220XYG | | GCO83198 | Outer Joint | 48T | 32 | 28 | 60 | 107.5 | 74 | M |
| | 2022.12- | | F | L/R | SUV 4WD BYD476ZQC/TZ200XSV/TZ220XYG | | GCI83192 | Inner Joint | | 30 | 28 | 45 | 63 | 116 | |
| | 2022.12- | | F | L | SUV FWD BYD476ZQC/TZ220XYG | | GDS56198 | Drive Shaft | 48T | 32 | 30 | 60 | 107.5 | 816 | |
| | 2022.12- | | F | R | SUV FWD BYD476ZQC/TZ220XYG | | GDS56196 | Drive Shaft | 48T | 32 | 30 | 60 | 107.5 | 881 | |
| | 2022.12- | | F | L/R | SUV FWD BYD476ZQC/TZ220XYG | | GCO83198 | Outer Joint | 48T | 32 | 28 | 60 | 107.5 | 74 | M |
| | 2022.12- | | F | L/R | SUV FWD BYD476ZQC/TZ220XYG | | GCI83192 | Inner Joint | | 30 | 28 | 45 | 63 | 116 | |
| **L3** | | | | | | | | | | | | | | | |
| 1.5 (79 kw) | 2010.12-2012.12 | 5MT | F | L | Saloon FWD 4G15S, BYD473QB | Model year from:2011 | GDS82756 | Drive Shaft | 48T | 26 | 25 | 58 | 90.5 | 613 | |
| | 2010.12-2012.12 | 5MT | F | R | Saloon FWD 4G15S, BYD473QB | Model year from:2011 | GDS82757 | Drive Shaft | 48T | 26 | 25 | 58 | 90.5 | 936 | |

| | YEAR | TRANSM. | F/R | L/R | BODY STYLE & DRIVE TYPE & ENGINE | REMARKS | G-AP Ref. | PRODUCT | ABS | Technical Specifications A | B | C | H | L | P |
|---|---|---|---|---|---|---|---|---|---|---|---|---|---|---|---|
| **BYD** | | | | | | | | | | | | | | | |
| **L3** | | | | | | | | | | | | | | | |
| 1.5 (79 kw) | 2010.12-2012.12 | 5MT | F | L/R | Saloon FWD 4G15S, BYD473QB | Model year from:2011 | GCO82154 | Outer Joint | 48T | 26 | 32 | 58 | 90.5 | 64 | M |
| | 2010.12-2012.12 | 5MT | F | L/R | Saloon FWD 4G15S, BYD473QB | Model year to:2011 | GCI81735 | Inner Joint | | 25 | 30 | 35 | 58.5 | 89.5 | |
| 1.5 (80 kw) | 2010.10-2016.12 | 5MT | F | L | Saloon FWD BYD473QD (10.10-10.11), BYD473QE (10.11-) | Model year to:2019 | GDS82756 | Drive Shaft | 48T | 26 | 25 | 58 | 90.5 | 613 | |
| | 2010.10-2016.12 | 5MT | F | R | Saloon FWD BYD473QD (10.10-10.11), BYD473QE (10.11-) | Model year to:2019 | GDS82757 | Drive Shaft | 48T | 26 | 25 | 58 | 90.5 | 936 | |
| | 2010.10-2016.12 | 5MT | F | L/R | Saloon FWD BYD473QD (10.10-10.11), BYD473QE (10.11-) | Model year to:2019 | GCO82154 | Outer Joint | 48T | 26 | 32 | 58 | 90.5 | 64 | M |
| | 2010.10-2016.12 | 5MT | F | L/R | Saloon FWD BYD473QD (10.10-10.11), BYD473QE (10.11-) | Model year to:2019 | GCI81735 | Inner Joint | | 25 | 30 | 35 | 58.5 | 89.5 | |
| | 2010.10-2016.12 | 6DCT | F | L | Saloon FWD BYD473QD (10.10-10.11), BYD473QE (10.11-) | | GDS84598 | Drive Shaft | 48T | 26 | 40 | 58.1 | 90 | 513 | |
| | 2010.10-2016.12 | 6DCT | F | R | Saloon FWD BYD473QD (10.10-10.11), BYD473QE (10.11-) | | GDS84597 | Drive Shaft | 48T | 26 | 40 | 58.1 | 90 | 861 | |
| | 2010.10-2016.12 | 6DCT | F | L/R | Saloon FWD BYD473QD (10.10-10.11), BYD473QE (10.11-) | | GCO82896 | Outer Joint | 48T | 26 | 32 | 58.1 | 90 | 63.5 | M |
| | 2010.10-2016.12 | 6DCT | F | L | Saloon FWD BYD473QD (10.10-10.11), BYD473QE (10.11-) | | GCI82885 | Inner Joint | | 40 | 32 | 43.3 | | 123 | |
| | 2010.10-2016.12 | 6DCT | F | R | Saloon FWD BYD473QD (10.10-10.11), BYD473QE (10.11-) | | GCI82884 | Inner Joint | | 40 | 32 | 45 | | 138 | |
| **M6** | | | | | | | | | | | | | | | |
| 2.0 (103 kw) | 2010.07- | 5MT | F | L/R | MPV FWD BYD483QB | Model year to:2015 | GCO81995 | Outer Joint | 48T | 29 | 32 | 60 | 96 | 69 | M |
| **Qin** | | | | | | | | | | | | | | | |
| 1.5 (80 kw) | 2019.11- | 5MT/CVT | F | L | Saloon FWD BYD473QF | | GDS82295 | Drive Shaft | 48T | 26 | 25 | 70 | 90 | 635 | |
| | 2019.11- | 5MT/CVT | F | R | Saloon FWD BYD473QF | | GDS82296 | Drive Shaft | 48T | 26 | 25 | 70 | 90 | 961 | |
| | 2019.11- | 5MT/CVT | F | L/R | Saloon FWD BYD473QF | | GCO81791 | Outer Joint | 48T | 26 | 32 | 70 | 90 | 64 | M |
| | 2019.11- | 5MT/CVT | F | L/R | Saloon FWD BYD473QF | | GCI81735 | Inner Joint | | 25 | 30 | 35 | 58.5 | 89.5 | |
| 1.5 (113 kw) | 2013.12- | 6DCT | F | L | Saloon FWD BYD476ZQA | Model year to:2019 | GDS84606 | Drive Shaft | 48T | 26 | 36 | 70 | 90 | 574 | |
| | 2013.12- | 6DCT | F | R | Saloon FWD BYD476ZQA | Model year to:2016 | GDS84605 | Drive Shaft | 48T | 26 | 36 | 70 | 90 | 825 | |
| | 2013.12- | 6DCT | F | L/R | Saloon FWD BYD476ZQA | | GCO82900 | Outer Joint | 48T | 26 | 25 | 70 | 90 | 64.5 | M |
| | 2013.12- | 6DCT | F | L/R | Saloon FWD BYD476ZQA | | GCI82889 | Inner Joint | | 36 | 26 | 48 | | 124 | |
| EV (160 kw) | 2016.03-2020.12 | ET | F | L | Saloon FWD BYD-2217TZ-XS-B | | GDS82569 | Drive Shaft | 48T | 29 | 34 | 68 | 90 | 656 | |
| | 2016.03-2020.12 | ET | F | R | Saloon FWD BYD-2217TZ-XS-B | | GDS83498 | Drive Shaft | 48T | 29 | 34 | 68 | 90 | 736 | |
| | 2016.03-2020.12 | ET | F | L/R | Saloon FWD BYD-2217TZ-XS-B | | GCO82048 | Outer Joint | 48T | 29 | 29 | 68 | 90 | 69 | M |
| | 2016.03-2020.12 | ET | F | L/R | Saloon FWD BYD-2217TZ-XS-B | | GCI81886 | Inner Joint | | 34 | 29 | 50 | | 147 | |
| **Qin Plus** | | | | | | | | | | | | | | | |
| EV (100 kw) | 2021.04- | ET | F | L | Saloon FWD TZ180XSA, TZ180XSJ | Engine Code:TZ180XSA | GDS58091 | Drive Shaft | 48T | 30 | 27 | 70 | 91 | 768 | |
| | 2021.04- | ET | F | R | Saloon FWD TZ180XSA, TZ180XSJ | Engine Code:TZ180XSA | GDS58090 | Drive Shaft | 48T | 30 | 27 | 70 | 91 | 872 | |
| | 2021.04- | ET | F | L/R | Saloon FWD TZ180XSA, TZ180XSJ | Engine Code: TZ180XSJ | GDS58346 | Drive Shaft | 48T | 30 | 27 | 65 | 98 | 828 | |
| | 2021.04- | ET | F | L/R | Saloon FWD TZ180XSA, TZ180XSJ | Engine Code:TZ180XSA,TZ180XSJ | GCO83844 | Outer Joint | 48T | 30 | 23 | 70 | 91 | 63.5 | I |
| | 2021.04- | ET | F | L/R | Saloon FWD TZ180XSA, TZ180XSJ | Engine Code:TZ180XSA,TZ180XSJ | GCI82787 | Inner Joint | | 27 | 23 | 45 | 59.5 | 103 | |
| EV (135 kw) | 2021.04- | ET | F | L | Saloon FWD TZ200XSK | | GDS58091 | Drive Shaft | 48T | 30 | 27 | 70 | 91 | 768 | |
| | 2021.04- | ET | F | R | Saloon FWD TZ200XSK | | GDS58090 | Drive Shaft | 48T | 30 | 27 | 70 | 91 | 872 | |
| | 2021.04- | ET | F | L/R | Saloon FWD TZ200XSK | | GCO83844 | Outer Joint | 48T | 30 | 23 | 70 | 91 | 63.5 | I |
| | 2021.04- | ET | F | L/R | Saloon FWD TZ200XSK | | GCI82787 | Inner Joint | | 27 | 23 | 45 | 59.5 | 103 | |
| EV (150 kw) | 2023.04- | ET | F | L/R | Saloon FWD TZ200XYK | Engine Code: TZ180XSJ | GDS58346 | Drive Shaft | 48T | 30 | 27 | 65 | 98 | 828 | |
| | 2023.04- | ET | F | L/R | Saloon FWD TZ200XYK | Engine Code: TZ180XSJ | GCO83884 | Outer Joint | 48T | 30 | 23 | 65 | 98 | 63.5 | I |
| | 2023.04- | ET | F | L/R | Saloon FWD TZ200XYK | Engine Code: TZ180XSJ | GCI82787 | Inner Joint | | 27 | 23 | 45 | 59.5 | 103 | |
| **Qin Pro** | | | | | | | | | | | | | | | |
| 1.5 (228 kw) | 2019.03- | | F | L | Saloon FWD BYD476ZQB | | GDS84584 | Drive Shaft | 48T | 30 | 29 | 60 | 112 | 732 | |
| | 2019.03- | | F | R | Saloon FWD BYD476ZQB | | GDS84601 | Drive Shaft | 48T | 30 | 36 | 67 | 110 | 867 | |
| EV (100 kw) | 2019.05- | ET | F | L | Saloon FWD BYD-1814TZ-XS-B | | GDS58091 | Drive Shaft | 48T | 30 | 27 | 70 | 91 | 768 | |
| | 2019.05- | ET | F | R | Saloon FWD BYD-1814TZ-XS-B | | GDS58090 | Drive Shaft | 48T | 30 | 27 | 70 | 91 | 872 | |
| | 2019.05- | ET | F | L/R | Saloon FWD BYD-1814TZ-XS-B | | GCO83844 | Outer Joint | 48T | 30 | 23 | 70 | 91 | 63.5 | I |
| | 2019.05- | ET | F | L/R | Saloon FWD BYD-1814TZ-XS-B | | GCI82787 | Inner Joint | | 27 | 23 | 45 | 59.5 | 103 | |
| EV (120 kw) | 2018.09- | ET | F | L | Saloon FWD BYD-2015TZ-XS-D | | GDS58091 | Drive Shaft | 48T | 30 | 27 | 70 | 91 | 768 | |
| | 2018.09- | ET | F | R | Saloon FWD BYD-2015TZ-XS-D | | GDS58090 | Drive Shaft | 48T | 30 | 27 | 70 | 91 | 872 | |
| | 2018.09- | ET | F | L/R | Saloon FWD BYD-2015TZ-XS-D | | GCO83844 | Outer Joint | 48T | 30 | 23 | 70 | 91 | 63.5 | I |
| | 2018.09- | ET | F | L/R | Saloon FWD BYD-2015TZ-XS-D | | GCI82787 | Inner Joint | | 27 | 23 | 45 | 59.5 | 103 | |
| EV (135 kw) | 2019.05- | ET | F | L | Saloon FWD BYD-2015TZ-XS-E | | GDS58091 | Drive Shaft | 48T | 30 | 27 | 70 | 91 | 768 | |
| | 2019.05- | ET | F | R | Saloon FWD BYD-2015TZ-XS-E | | GDS58090 | Drive Shaft | 48T | 30 | 27 | 70 | 91 | 872 | |
| | 2019.05- | ET | F | L/R | Saloon FWD BYD-2015TZ-XS-E | | GCO83844 | Outer Joint | 48T | 30 | 23 | 70 | 91 | 63.5 | I |
| | 2019.05- | ET | F | L/R | Saloon FWD BYD-2015TZ-XS-E | | GCI82787 | Inner Joint | | 27 | 23 | 45 | 59.5 | 103 | |
| **S6** | | | | | | | | | | | | | | | |
| 1.5 (113 kw) | 2014.03-2017.12 | 6MT | F | L | SUV FWD BYD476ZQA | | GDS82558 | Drive Shaft | 48T | 29 | 27 | 60 | 96 | 652 | |
| | 2014.03-2017.12 | 6MT | F | R | SUV FWD BYD476ZQA | | GDS82559 | Drive Shaft | 48T | 29 | 28 | 60 | 96 | 641 | |
| | 2014.03-2017.12 | 6MT | F | L/R | SUV FWD BYD476ZQA | Model year to:2015 | GCO81995 | Outer Joint | 48T | 29 | 32 | 60 | 96 | 69 | M |
| | 2014.03-2017.12 | 6MT | F | L | SUV FWD BYD476ZQA | | GCI81415 | Inner Joint | | 27 | 33 | 41 | 62 | 96 | |
| | 2014.03-2017.12 | 6MT | F | R | SUV FWD BYD476ZQA | | GCI81878 | Inner Joint | | 28 | 33 | 43 | | 124 | |
| 2.0 (103 kw) | 2011.05-2017.12 | 5MT | F | L/R | SUV FWD BYD483QB | Model year to:2016 | GCO81995 | Outer Joint | 48T | 29 | 32 | 60 | 96 | 69 | M |
| | 2011.05-2017.12 | 5MT | F | L | SUV FWD BYD483QB | Model year to:2016 | GCI81415 | Inner Joint | | 27 | 33 | 41 | 62 | 96 | |
| | 2011.05-2017.12 | 5MT | F | R | SUV FWD BYD483QB | Model year to:2016 | GCI81878 | Inner Joint | | 28 | 33 | 43 | | 124 | |
| | 2011.05-2017.12 | | F | L | SUV FWD BYD483QB | | GDS82558 | Drive Shaft | 48T | 29 | 27 | 60 | 96 | 652 | |
| | 2011.05-2017.12 | | F | R | SUV FWD BYD483QB | | GDS82559 | Drive Shaft | 48T | 29 | 28 | 60 | 96 | 641 | |

| | YEAR | TRANSM. | F/R | L/R | BODY STYLE & DRIVE TYPE & ENGINE | REMARKS | G-AP Ref. | PRODUCT | ABS | Technical Specifications A | B | C | H | L | P |
|---|---|---|---|---|---|---|---|---|---|---|---|---|---|---|---|
| **BYD** | | | | | | | | | | | | | | | |
| **S6** | | | | | | | | | | | | | | | |
| 2.4 (118 kw) | 2011.05-2014.12 | 4AT | F | L | SUV FWD 4G69-S4M | | GDS82558 | Drive Shaft | 48T | 29 | 27 | 60 | 96 | 652 | |
| | 2011.05-2014.12 | 4AT | F | R | SUV FWD 4G69-S4M | | GDS82559 | Drive Shaft | 48T | 29 | 28 | 60 | 96 | 641 | |
| | 2011.05-2014.12 | 4AT | F | L/R | SUV FWD 4G69-S4M | Model year to:2013 | GCO81995 | Outer Joint | 48T | 29 | 32 | 60 | 96 | 69 | M |
| | 2011.05-2014.12 | 4AT | F | L | SUV FWD 4G69-S4M | | GCI81415 | Inner Joint | | 27 | 33 | 41 | 62 | 96 | |
| | 2011.05-2014.12 | 4AT | F | R | SUV FWD 4G69-S4M | | GCI81878 | Inner Joint | | 28 | 33 | 43 | | 124 | |
| 2.4 (123 kw) | 2011.05- | 6MT/6DCT | F | L | SUV FWD BYD488QA | Transmission:6MT,Model year from:2012,Model year to:2013,Transmission:6DCT,Model year from:2014,Model year to:2017 | GDS82558 | Drive Shaft | 48T | 29 | 27 | 60 | 96 | 652 | |
| | 2011.05- | 6MT/6DCT | F | R | SUV FWD BYD488QA | Transmission:6MT,Model year from:2012,Model year to:2013,Transmission:6DCT,Model year from:2014,Model year to:2017 | GDS82559 | Drive Shaft | 48T | 29 | 28 | 60 | 96 | 641 | |
| | 2011.05- | 6MT/6DCT | F | L/R | SUV FWD BYD488QA | Transmission:6MT,Model year from:2012,Model year to:2013,Transmission:6DCT,Model year from:2014,Model year to:2017 | GCO81995 | Outer Joint | 48T | 29 | 32 | 60 | 96 | 69 | M |
| | 2011.05- | 6MT/6DCT | F | L | SUV FWD BYD488QA | Transmission:6MT,Model year from:2012,Model year to:2013,Transmission:6DCT,Model year from:2014,Model year to:2017 | GCI81415 | Inner Joint | | 27 | 33 | 41 | 62 | 96 | |
| | 2011.05- | 6MT/6DCT | F | R | SUV FWD BYD488QA | Transmission:6MT,Model year from:2012,Model year to:2013,Transmission:6DCT,Model year from:2014,Model year to:2017 | GCI81878 | Inner Joint | | 28 | 33 | 43 | | 124 | |
| **Seal** | | | | | | | | | | | | | | | |
| EV (170 kw) | 2023.05- | ET | R | L | Saloon RWD TZ200XYN/TZ200XYS | For OE number:13371647-00;PTJ;Engine Code:TZ200XYN;Data to:2025.01 | GDS57799 | Drive Shaft | 48T | 32 | 30 | 60 | 114 | 933 | |
| | 2023.05- | ET | R | L | Saloon RWD TZ200XYN/TZ200XYS | For OE number:13371648-00;AAR;Engine Code:TZ200XYN;Data to:2025.01 | GDS57801 | Drive Shaft | 48T | 32 | 30 | 60 | 114 | 934 | |
| | 2023.05- | ET | R | L | Saloon RWD TZ200XYN/TZ200XYS | For OE number:13321204-00;PTJ;Engine Code:TZ200XYN;Data to:2025.01 | GDS57826 | Drive Shaft | 48T | 32 | 30 | 60 | 114 | 922 | |
| | 2023.05- | ET | R | L | Saloon RWD TZ200XYN/TZ200XYS | For OE number:13321225-00;PTJ;Engine Code:TZ200XYN;Data to:2025.01 | GDS57914 | Drive Shaft | 48T | 32 | 30 | 60 | 114.5 | 935 | |
| | 2023.05- | ET | R | R | Saloon RWD TZ200XYN/TZ200XYS | For OE number:13371624-00;PTJ;Engine Code:TZ200XYN;Data to:2025.01 | GDS57798 | Drive Shaft | 48T | 32 | 30 | 60 | 114 | 751 | |
| | 2023.05- | ET | R | R | Saloon RWD TZ200XYN/TZ200XYS | For OE number:13371645-00;AAR;Engine Code:TZ200XYN;Data to:2025.01 | GDS57800 | Drive Shaft | 48T | 32 | 30 | 60 | 114 | 751 | |
| | 2023.05- | ET | R | R | Saloon RWD TZ200XYN/TZ200XYS | For OE number:13321226-00;PTJ;Engine Code:TZ200XYN;Data to:2025.01 | GDS57825 | Drive Shaft | 48T | 32 | 30 | 60 | 114 | 741 | |
| | 2023.05- | ET | R | R | Saloon RWD TZ200XYN/TZ200XYS | For OE number:13321227-00;PTJ;Engine Code:TZ200XYN;Data to:2025.01 | GDS57915 | Drive Shaft | 48T | 32 | 30 | 60 | 114.5 | 754 | |
| | 2023.05- | ET | R | L/R | Saloon RWD TZ200XYN/TZ200XYS | For OE number:13371645-00/13371648-00;Engine Code:TZ200XYN;Data to:2025.01 | GCO83711 | Outer Joint | 48T | 32 | 28 | 60 | 114 | 74 | M |
| | 2023.05- | ET | R | L/R | Saloon RWD TZ200XYN/TZ200XYS | For OE number:13321226-00/13321204-00;Engine Code:TZ200XYN;Data to:2025.01 | GCO83734 | Outer Joint | 48T | 32 | 35 | 60 | 114 | 63 | I |
| | 2023.05- | ET | R | L/R | Saloon RWD TZ200XYN/TZ200XYS | For OE number:13321225-00/13321227-00;Engine Code:TZ200XYN;Data to:2025.01 | GCO83784 | Outer Joint | 48T | 32 | 37 | 60 | 114.5 | 71.5 | I |
| | 2023.05- | ET | R | L/R | Saloon RWD TZ200XYN/TZ200XYS | For OE number:13371645-00/13371648-00;Engine Code:TZ200XYN;Data to:2025.01 | GCI83850 | Inner Joint | | 30 | 27 | 45 | 63 | 120 | |
| | 2023.05- | ET | R | L/R | Saloon RWD TZ200XYN/TZ200XYS | For OE number:13371624-00/13371647-00;Engine Code:TZ200XYN;Data to:2025.01 | GCI83858 | Inner Joint | | 30 | 28 | 45 | 63 | 110 | |
| | 2023.05- | ET | R | L/R | Saloon RWD TZ200XYN/TZ200XYS | For OE number:13321226-00/13321204-00;Engine Code:TZ200XYN;Data to:2025.01 | GCI83866 | Inner Joint | | 30 | 35 | 45 | 62.5 | 118 | |
| | 2023.05- | ET | R | L/R | Saloon RWD TZ200XYN/TZ200XYS | For OE number:13321225-00/13321227-00;Engine Code:TZ200XYN;Data to:2025.01 | GCI83920 | Inner Joint | | 30 | 38 | 45 | 63 | 111 | |
| **Seal 06 GT** | | | | | | | | | | | | | | | |
| EV (310 kw) | 2024.10- | ET | F | L | Hatchback 4WD TZ200XYZ, YS230XYC | | GDS56198 | Drive Shaft | 48T | 32 | 30 | 60 | 107.5 | 816 | |
| | 2024.10- | ET | F | R | Hatchback 4WD TZ200XYZ, YS230XYC | | GDS56196 | Drive Shaft | 48T | 32 | 30 | 60 | 107.5 | 881 | |
| | 2024.10- | ET | F | L/R | Hatchback 4WD TZ200XYZ, YS230XYC | | GCI83192 | Inner Joint | | 30 | 28 | 45 | 63 | 116 | |
| | 2024.10- | ET | R | R | Hatchback 4WD TZ200XYZ, YS230XYC | | GDS56195 | Drive Shaft | 48T | 32 | 30 | 60 | 107.5 | 713 | |
| | 2024.10- | ET | R | L/R | Hatchback 4WD TZ200XYZ, YS230XYC | | GCO83198 | Outer Joint | 48T | 32 | 28 | 60 | 107.5 | 74 | M |
| | 2024.10- | ET | R | R | Hatchback 4WD TZ200XYZ, YS230XYC | | GCI83191 | Inner Joint | | 30 | 28 | 45 | 63 | 117 | |
| **Seal U** | | | | | | | | | | | | | | | |
| 1.5 (160 kw) | 2024.02- | CVT | F | L | SUV FWD BYD472QA, TZ220XYE | Engine code:BYD472QA | GDS56731 | Drive Shaft | 48T | 30 | 30 | 60 | 97.5 | 711 | |
| | 2024.02- | CVT | F | R | SUV FWD BYD472QA, TZ220XYE | Engine code:BYD472QA | GDS56730 | Drive Shaft | 48T | 30 | 30 | 60 | 97.5 | 967 | |
| | 2024.02- | CVT | F | L/R | SUV FWD BYD472QA, TZ220XYE | Engine code:BYD472QA | GCO83410 | Outer Joint | 48T | 30 | 37 | 60 | 97.5 | 70.5 | I |
| | 2024.02- | CVT | F | L | SUV FWD BYD472QA, TZ220XYE | Engine code:BYD472QA | GCI83458 | Inner Joint | | 30 | 36 | 45 | 63 | 116.5 | |
| | 2024.02- | CVT | F | R | SUV FWD BYD472QA, TZ220XYE | Engine code:BYD472QA | GCI83459 | Inner Joint | | 30 | 36 | 45 | 365 | 108 | |
| 1.5 (238 kw) | 2024.02- | CVT | F | L | SUV 4WD BYD-2015TZ-XS-D, BYD476ZQC, TZ220XYS | Engine code:BYD476ZQC | GDS56731 | Drive Shaft | 48T | 30 | 30 | 60 | 97.5 | 711 | |
| | 2024.02- | CVT | F | R | SUV 4WD BYD-2015TZ-XS-D, BYD476ZQC, TZ220XYS | Engine code:BYD476ZQC | GDS56730 | Drive Shaft | 48T | 30 | 30 | 60 | 97.5 | 967 | |
| | 2024.02- | CVT | F | L/R | SUV 4WD BYD-2015TZ-XS-D, BYD476ZQC, TZ220XYS | Engine code:BYD476ZQC | GCO83410 | Outer Joint | 48T | 30 | 37 | 60 | 97.5 | 70.5 | I |
| | 2024.02- | CVT | F | L | SUV 4WD BYD-2015TZ-XS-D, BYD476ZQC, TZ220XYS | Engine code:BYD476ZQC | GCI83458 | Inner Joint | | 30 | 36 | 45 | 63 | 116.5 | |
| | 2024.02- | CVT | F | R | SUV 4WD BYD-2015TZ-XS-D, BYD476ZQC, TZ220XYS | Engine code:BYD476ZQC | GCI83459 | Inner Joint | | 30 | 36 | 45 | 365 | 108 | |
| EV (160 kw) | 2024.02- | ET | F | L | SUV FWD TZ200XYM | | GDS57774 | Drive Shaft | 48T | 30 | 30 | 60 | 97 | 897 | |
| | 2024.02- | ET | F | R | SUV FWD TZ200XYM | | GDS57790 | Drive Shaft | 48T | 30 | 30 | 60 | 97 | 785 | |
| | 2024.02- | ET | F | L/R | SUV FWD TZ200XYM | | GCO83703 | Outer Joint | 48T | 30 | 28 | 60 | 97 | 74 | M |
| | 2024.02- | ET | F | L/R | SUV FWD TZ200XYM | | GCI83850 | Inner Joint | | 30 | 27 | 45 | 63 | 120 | |
| **Song Max** | | | | | | | | | | | | | | | |
| 1.5 (113 kw) | 2017.09-2020.12 | 6DCT | F | L/R | MPV FWD BYD476ZQA | Model year to:2019 | GCO81995 | Outer Joint | 48T | 29 | 32 | 60 | 96 | 69 | M |
| **Song Plus** | | | | | | | | | | | | | | | |
| 1.5 (81 kw) | 2021.03- | CVT | F | L | SUV FWD BYD472QA, TZ220XYE | Engine code:BYD472QA | GDS56731 | Drive Shaft | 48T | 30 | 30 | 60 | 97.5 | 711 | |
| | 2021.03- | CVT | F | R | SUV FWD BYD472QA, TZ220XYE | Engine code:BYD472QA | GDS56730 | Drive Shaft | 48T | 30 | 30 | 60 | 97.5 | 967 | |
| | 2021.03- | CVT | F | L/R | SUV FWD BYD472QA, TZ220XYE | Engine code:BYD472QA | GCO83410 | Outer Joint | 48T | 30 | 37 | 60 | 97.5 | 70.5 | I |
| | 2021.03- | CVT | F | L | SUV FWD BYD472QA, TZ220XYE | Engine code:BYD472QA | GCI83458 | Inner Joint | | 30 | 36 | 45 | 63 | 116.5 | |
| | 2021.03- | CVT | F | R | SUV FWD BYD472QA, TZ220XYE | Engine code:BYD472QA | GCI83459 | Inner Joint | | 30 | 36 | 45 | 365 | 108 | |
| | 2021.03- | CVT | F | L | SUV FWD BYD472QA, TZ220XYF | Engine code:BYD472QA | GDS56731 | Drive Shaft | 48T | 30 | 30 | 60 | 97.5 | 711 | |
| | 2021.03- | CVT | F | R | SUV FWD BYD472QA, TZ220XYF | Engine code:BYD472QA | GDS56730 | Drive Shaft | 48T | 30 | 30 | 60 | 97.5 | 967 | |
| | 2021.03- | CVT | F | L/R | SUV FWD BYD472QA, TZ220XYF | Engine code:BYD472QA | GCO83410 | Outer Joint | 48T | 30 | 37 | 60 | 97.5 | 70.5 | I |
| | 2021.03- | CVT | F | L | SUV FWD BYD472QA, TZ220XYF | Engine code:BYD472QA | GCI83458 | Inner Joint | | 30 | 36 | 45 | 63 | 116.5 | |
| | 2021.03- | CVT | F | R | SUV FWD BYD472QA, TZ220XYF | Engine code:BYD472QA | GCI83459 | Inner Joint | | 30 | 36 | 45 | 365 | 108 | |
| 1.5 (102 kw) | 2021.09- | CVT | F | L | SUV 4WD BYD-2015TZ-XS-D/BYD476ZQC/TZ220XYG | Engine code:BYD476ZQC | GDS56731 | Drive Shaft | 48T | 30 | 30 | 60 | 97.5 | 711 | |
| | 2021.09- | CVT | F | R | SUV 4WD BYD-2015TZ-XS-D/BYD476ZQC/TZ220XYG | Engine code:BYD476ZQC | GDS56730 | Drive Shaft | 48T | 30 | 30 | 60 | 97.5 | 967 | |
| | 2021.09- | CVT | F | L/R | SUV 4WD BYD-2015TZ-XS-D/BYD476ZQC/TZ220XYG | Engine code:BYD476ZQC | GCO83410 | Outer Joint | 48T | 30 | 37 | 60 | 97.5 | 70.5 | I |
| | 2021.09- | CVT | F | L | SUV 4WD BYD-2015TZ-XS-D/BYD476ZQC/TZ220XYG | Engine code:BYD476ZQC | GCI83458 | Inner Joint | | 30 | 36 | 45 | 63 | 116.5 | |

| | YEAR | TRANSM. | F/R | L/R | BODY STYLE & DRIVE TYPE & ENGINE | REMARKS | G-AP Ref. | PRODUCT | ABS | Technical Specifications A | B | C | H | L | P |
|---|---|---|---|---|---|---|---|---|---|---|---|---|---|---|---|
| **BYD** | | | | | | | | | | | | | | | |
| **Song Plus** | | | | | | | | | | | | | | | |
| 1.5 (102 kw) | 2021.09- | CVT | F | R | SUV 4WD BYD-2015TZ-XS-D/BYD476ZQC/TZ220XYG | Engine code:BYD476ZQC | GCI83459 | Inner Joint | | 30 | 36 | 45 | 365 | 108 | |
| EV (150 kw) | 2023.06- | ET | F | L | SUV FWD TZ200XSQ | | GDS57767 | Drive Shaft | 48T | 30 | 29 | 70 | 97.5 | 786 | |
| | 2023.06- | ET | F | R | SUV FWD TZ200XSQ | | GDS57766 | Drive Shaft | 48T | 30 | 29 | 70 | 97.5 | 887 | |
| | 2023.06- | ET | F | L/R | SUV FWD TZ200XSQ | | GCO83672 | Outer Joint | 48T | 30 | 25 | 70 | 97.5 | 64 | I |
| | 2023.06- | ET | F | L/R | SUV FWD TZ200XSQ | | GCI83801 | Inner Joint | | 29 | 33 | 45 | 62 | 115.5 | |
| EV (160 kw) | 2023.06- | ET | F | L | SUV FWD TZ200XYM | | GDS57774 | Drive Shaft | 48T | 30 | 30 | 60 | 97 | 897 | |
| | 2023.06- | ET | F | R | SUV FWD TZ200XYM | | GDS57790 | Drive Shaft | 48T | 30 | 30 | 60 | 97 | 785 | |
| | 2023.06- | ET | F | L/R | SUV FWD TZ200XYM | | GCO83703 | Outer Joint | 48T | 30 | 28 | 60 | 97 | 74 | M |
| | 2023.06- | ET | F | L/R | SUV FWD TZ200XYM | | GCI83850 | Inner Joint | | 30 | 27 | 45 | 63 | 120 | |
| **Song Pro** | | | | | | | | | | | | | | | |
| 1.5 (118 kw) | 2019.07- | 6DCT | F | L/R | SUV FWD BYD476ZQB | Model year to:2021 | GCO81995 | Outer Joint | 48T | 29 | 32 | 60 | 96 | 69 | M |
| 1.5 (238 kw) | 2019.07- | 6DCT | F | L | SUV 4WD BYD-2015TZ-XS-D, BYD476ZQB | | GDS84584 | Drive Shaft | 48T | 30 | 29 | 60 | 112 | 732 | |
| | 2019.07- | 6DCT | F | R | SUV 4WD BYD-2015TZ-XS-D, BYD476ZQB | | GDS84601 | Drive Shaft | 48T | 30 | 36 | 67 | 110 | 867 | |
| | 2019.07- | 6DCT | F | L | SUV 4WD BYD-2015TZ-XS-D, BYD476ZQB | | GCO82880 | Outer Joint | 48T | 30 | 35 | 60 | 112 | 73.5 | I |
| | 2019.07- | 6DCT | F | R | SUV 4WD BYD-2015TZ-XS-D, BYD476ZQB | | GCO82898 | Outer Joint | 48T | 30 | 29 | 67 | 110 | 70.5 | M |
| | 2019.07- | 6DCT | F | L | SUV 4WD BYD-2015TZ-XS-D, BYD476ZQB | | GCI82872 | Inner Joint | | 29 | 33 | 45 | 68 | 116 | |
| | 2019.07- | 6DCT | F | R | SUV 4WD BYD-2015TZ-XS-D, BYD476ZQB | | GCI82886 | Inner Joint | | 36 | 34 | 52 | | 127 | |
| 1.5 (348 kw) | 2019.07- | 6DCT | F | L | SUV 4WD BYD476ZQB | | GDS84584 | Drive Shaft | 48T | 30 | 29 | 60 | 112 | 732 | |
| | 2019.07- | 6DCT | F | R | SUV 4WD BYD476ZQB | | GDS84601 | Drive Shaft | 48T | 30 | 36 | 67 | 110 | 867 | |
| | 2019.07- | 6DCT | F | L | SUV 4WD BYD476ZQB | | GCO82880 | Outer Joint | 48T | 30 | 35 | 60 | 112 | 73.5 | I |
| | 2019.07- | 6DCT | F | R | SUV 4WD BYD476ZQB | | GCO82898 | Outer Joint | 48T | 30 | 29 | 67 | 110 | 70.5 | M |
| | 2019.07- | 6DCT | F | L | SUV 4WD BYD476ZQB | | GCI82872 | Inner Joint | | 29 | 33 | 45 | 68 | 116 | |
| | 2019.07- | 6DCT | F | R | SUV 4WD BYD476ZQB | | GCI82886 | Inner Joint | | 36 | 34 | 52 | | 127 | |
| **Surui** | | | | | | | | | | | | | | | |
| 1.5 (113 kw) | 2012.08-2015.12 | 6DCT | F | L | Saloon FWD BYD476ZQA | Model year to:2014 | GDS82295 | Drive Shaft | 48T | 26 | 25 | 70 | 90 | 635 | |
| | 2012.08-2015.12 | 6DCT | F | R | Saloon FWD BYD476ZQA | Model year to:2014 | GDS82296 | Drive Shaft | 48T | 26 | 25 | 70 | 90 | 961 | |
| | 2012.08-2015.12 | 6DCT | F | L/R | Saloon FWD BYD476ZQA | Model year to:2014 | GCI81735 | Inner Joint | | 25 | 30 | 35 | 58.5 | 89.5 | |
| | 2012.08-2015.12 | 6DCT/6MT | F | L/R | Saloon FWD BYD476ZQA | Model year to:2014 | GCO81791 | Outer Joint | 48T | 26 | 32 | 70 | 90 | 64 | M |
| **Surui/F5 Suri** | | | | | | | | | | | | | | | |
| 1.5 (80 kw) | 2012.08- | 6DCT/5MT | F | L | Saloon FWD BYD473QE | Model year from:2014,Model year to:2016 | GDS82295 | Drive Shaft | 48T | 26 | 25 | 70 | 90 | 635 | |
| | 2012.08- | 6DCT/5MT | F | R | Saloon FWD BYD473QE | Model year from:2014,Model year to:2016 | GDS82296 | Drive Shaft | 48T | 26 | 25 | 70 | 90 | 961 | |
| | 2012.08- | 6DCT/5MT | F | L/R | Saloon FWD BYD473QE | Model year from:2014,Model year to:2016 | GCO81791 | Outer Joint | 48T | 26 | 32 | 70 | 90 | 64 | M |
| | 2012.08- | 6DCT/5MT | F | L/R | Saloon FWD BYD473QE | Model year from:2014,Model year to:2016 | GCI81735 | Inner Joint | | 25 | 30 | 35 | 58.5 | 89.5 | |
| | 2012.08- | | F | L | Saloon FWD BYD473QE | Model year to:2016 | GDS82295 | Drive Shaft | 48T | 26 | 25 | 70 | 90 | 635 | |
| | 2012.08- | | F | R | Saloon FWD BYD473QE | Model year to:2016 | GDS82296 | Drive Shaft | 48T | 26 | 25 | 70 | 90 | 961 | |
| **Tang** | | | | | | | | | | | | | | | |
| 1.5 (452 kw) | 2022.08- | | R | L | SUV 4WD BYD476ZQC/TZ200XSE/TZ220XYH | | GDS56197 | Drive Shaft | 48T | 32 | 30 | 60 | 107.5 | 958 | |
| | 2022.08- | | R | L | SUV 4WD BYD476ZQC/TZ200XSE/TZ220XYH | | GCO83198 | Outer Joint | 48T | 32 | 28 | 60 | 107.5 | 74 | M |
| | 2022.08- | | R | L | SUV 4WD BYD476ZQC/TZ200XSE/TZ220XYH | | GCI83192 | Inner Joint | | 30 | 28 | 45 | 63 | 116 | |
| 2.0 (151 kw) | 2015.06-2018.06 | 6DCT | F | L | SUV 4WD BYD487ZQA | | GDS84596 | Drive Shaft | 48T | 30 | | 67 | 113.5 | 568 | |
| | 2015.06-2018.06 | 6DCT | F | R | SUV 4WD BYD487ZQA | Date from:2017.06 | GDS57970 | Drive Shaft | 48T | 30 | 28 | 67 | 113.5 | 645 | |
| | 2015.06-2018.06 | 6DCT | F | R | SUV 4WD BYD487ZQA | Date to:2017.05 | GDS84595 | Drive Shaft | 48T | 30 | 28 | 67 | 113.5 | 645 | |
| | 2015.06-2018.06 | 6DCT | F | L/R | SUV 4WD BYD487ZQA | | GCO82895 | Outer Joint | 48T | 30 | 24 | 67 | 113.5 | 77 | I |
| | 2015.06-2018.06 | 6DCT | F | L | SUV 4WD BYD487ZQA | | GCI82883 | Inner Joint | | | 28 | | | 32 | |
| | 2015.06-2018.06 | 6DCT | F | R | SUV 4WD BYD487ZQA | Date to:2017.05 | GCI82882 | Inner Joint | | 28 | 28 | 44.9 | | 149 | |
| | 2015.06-2018.06 | 6DCT | F | R | SUV 4WD BYD487ZQA | Date from:2017.06 | GCI83968 | Inner Joint | | 28 | 28 | 44.9 | | 149 | |
| 2.0 (321 kw) | 2019.09- | | R | L | SUV 4WD BYD-2018TZ-XS-B/BYD-2217TZ-XS-F/BYD487ZQB | | GDS56197 | Drive Shaft | 48T | 32 | 30 | 60 | 107.5 | 958 | |
| | 2019.09- | | R | L | SUV 4WD BYD-2018TZ-XS-B/BYD-2217TZ-XS-F/BYD487ZQB | | GCO83198 | Outer Joint | 48T | 32 | 28 | 60 | 107.5 | 74 | M |
| | 2019.09- | | R | L | SUV 4WD BYD-2018TZ-XS-B/BYD-2217TZ-XS-F/BYD487ZQB | | GCI83192 | Inner Joint | | 30 | 28 | 45 | 63 | 116 | |
| 2.0 (431 kw) | 2019.07- | | R | L | SUV 4WD BYD-2011TZ-XS-F, BYD-2018TZ-XS-B, BYD-2217TZ-XS-F, BYD487ZQB | | GDS56197 | Drive Shaft | 48T | 32 | 30 | 60 | 107.5 | 958 | |
| | 2019.07- | | R | L | SUV 4WD BYD-2011TZ-XS-F, BYD-2018TZ-XS-B, BYD-2217TZ-XS-F, BYD487ZQB | | GCO83198 | Outer Joint | 48T | 32 | 28 | 60 | 107.5 | 74 | M |
| | 2019.07- | | R | L | SUV 4WD BYD-2011TZ-XS-F, BYD-2018TZ-XS-B, BYD-2217TZ-XS-F, BYD487ZQB | | GCI83192 | Inner Joint | | 30 | 28 | 45 | 63 | 116 | |
| 2.0 (441 kw) | 2018.06- | | R | L | SUV 4WD BYD-2011TZ-XS-F, BYD-2217TZ-XS-F, BYD487ZQA | | GDS56197 | Drive Shaft | 48T | 32 | 30 | 60 | 107.5 | 958 | |
| | 2018.06- | | R | L | SUV 4WD BYD-2011TZ-XS-F, BYD-2217TZ-XS-F, BYD487ZQA | | GCO83198 | Outer Joint | 48T | 32 | 28 | 60 | 107.5 | 74 | M |
| | 2018.06- | | R | L | SUV 4WD BYD-2011TZ-XS-F, BYD-2217TZ-XS-F, BYD487ZQA | | GCI83192 | Inner Joint | | 30 | 28 | 45 | 63 | 116 | |
| EV (168 kw) | 2022.06- | ET | F | L | SUV FWD TZ200XSAB | | GDS56198 | Drive Shaft | 48T | 32 | 30 | 60 | 107.5 | 816 | |
| | 2022.06- | ET | F | R | SUV FWD TZ200XSAB | | GDS56196 | Drive Shaft | 48T | 32 | 30 | 60 | 107.5 | 881 | |
| | 2022.06- | ET | F | L/R | SUV FWD TZ200XSAB | | GCO83198 | Outer Joint | 48T | 32 | 28 | 60 | 107.5 | 74 | M |
| | 2022.06- | ET | F | L/R | SUV FWD TZ200XSAB | | GCI83192 | Inner Joint | | 30 | 28 | 45 | 63 | 116 | |
| | 2022.06- | ET | R | R | SUV FWD TZ200XSAB | | GDS56195 | Drive Shaft | 48T | 32 | 30 | 60 | 107.5 | 713 | |
| | 2022.06- | ET | R | R | SUV FWD TZ200XSAB | | GCI83191 | Inner Joint | | 30 | 28 | 45 | 63 | 117 | |
| EV (180 kw) | 2019.03- | ET | F | L | SUV FWD BYD-2018TZ-XS-A, TZ200XSN (08.20-.), TZ200XSU | | GDS56198 | Drive Shaft | 48T | 32 | 30 | 60 | 107.5 | 816 | |
| | 2019.03- | ET | F | R | SUV FWD BYD-2018TZ-XS-A, TZ200XSN (08.20-.), TZ200XSU | | GDS56196 | Drive Shaft | 48T | 32 | 30 | 60 | 107.5 | 881 | |
| | 2019.03- | ET | F | L/R | SUV FWD BYD-2018TZ-XS-A, TZ200XSN (08.20-.), TZ200XSU | | GCI83192 | Inner Joint | | 30 | 28 | 45 | 63 | 116 | |
| | 2019.03- | ET | R | R | SUV FWD BYD-2018TZ-XS-A, TZ200XSN (08.20-.), TZ200XSU | | GDS56195 | Drive Shaft | 48T | 32 | 30 | 60 | 107.5 | 713 | |

| | YEAR | TRANSM. | F/R | L/R | BODY STYLE & DRIVE TYPE & ENGINE | REMARKS | G-AP Ref. | PRODUCT | ABS | Technical Specifications A | B | C | H | L | P |
|---|---|---|---|---|---|---|---|---|---|---|---|---|---|---|---|
| **BYD** | | | | | | | | | | | | | | | |
| **Tang** | | | | | | | | | | | | | | | |
| EV (180 kw) | 2019.03- | ET | R | L/R | SUV FWD BYD-2018TZ-XS-A, TZ200XSN (08.20-.), TZ200XSU | | GCO83198 | Outer Joint | 48T | 32 | 28 | 60 | 107.5 | 74 | M |
| | 2019.03- | ET | R | R | SUV FWD BYD-2018TZ-XS-A, TZ200XSN (08.20-.), TZ200XSU | | GCI83191 | Inner Joint | | 30 | 28 | 45 | 63 | 117 | |
| EV (300 kw) | 2023.12- | ET | F | L | SUV 4WD TZ200XSE, TZ200XSU | | GDS56198 | Drive Shaft | 48T | 32 | 30 | 60 | 107.5 | 816 | |
| | 2023.12- | ET | F | R | SUV 4WD TZ200XSE, TZ200XSU | | GDS56196 | Drive Shaft | 48T | 32 | 30 | 60 | 107.5 | 881 | |
| | 2023.12- | ET | F | L/R | SUV 4WD TZ200XSE, TZ200XSU | | GCI83192 | Inner Joint | | 30 | 28 | 45 | 63 | 116 | |
| | 2023.12- | ET | R | R | SUV 4WD TZ200XSE, TZ200XSU | | GDS56195 | Drive Shaft | 48T | 32 | 30 | 60 | 107.5 | 713 | |
| | 2023.12- | ET | R | L/R | SUV 4WD TZ200XSE, TZ200XSU | | GCO83198 | Outer Joint | 48T | 32 | 28 | 60 | 107.5 | 74 | M |
| | 2023.12- | ET | R | R | SUV 4WD TZ200XSE, TZ200XSU | | GCI83191 | Inner Joint | | 30 | 28 | 45 | 63 | 117 | |
| EV (360 kw) | 2019.03- | ET | F | L | SUV 4WD BYD-2018TZ-XS-A, BYD-2018TZ-XS-B | Engine Code:BYD-2018TZ-XS-B | GDS56198 | Drive Shaft | 48T | 32 | 30 | 60 | 107.5 | 816 | |
| | 2019.03- | ET | F | R | SUV 4WD BYD-2018TZ-XS-A, BYD-2018TZ-XS-B | Engine Code:BYD-2018TZ-XS-B | GDS56196 | Drive Shaft | 48T | 32 | 30 | 60 | 107.5 | 881 | |
| | 2019.03- | ET | F | L/R | SUV 4WD BYD-2018TZ-XS-A, BYD-2018TZ-XS-B | Engine Code:BYD-2018TZ-XS-B | GCI83192 | Inner Joint | | 30 | 28 | 45 | 63 | 116 | |
| | 2019.03- | ET | R | R | SUV 4WD BYD-2018TZ-XS-A, BYD-2018TZ-XS-B | Engine Code:BYD-2018TZ-XS-B | GDS56195 | Drive Shaft | 48T | 32 | 30 | 60 | 107.5 | 713 | |
| | 2019.03- | ET | R | L/R | SUV 4WD BYD-2018TZ-XS-A, BYD-2018TZ-XS-B | Engine Code:BYD-2018TZ-XS-B | GCO83198 | Outer Joint | 48T | 32 | 28 | 60 | 107.5 | 74 | M |
| | 2019.03- | ET | R | R | SUV 4WD BYD-2018TZ-XS-A, BYD-2018TZ-XS-B | Engine Code:BYD-2018TZ-XS-B | GCI83191 | Inner Joint | | 30 | 28 | 45 | 63 | 117 | |
| EV (380 kw) | 2020.08- | ET | F | L | SUV 4WD TZ200XSE/TZ200XSN | | GDS56198 | Drive Shaft | 48T | 32 | 30 | 60 | 107.5 | 816 | |
| | 2020.08- | ET | F | R | SUV 4WD TZ200XSE/TZ200XSN | | GDS56196 | Drive Shaft | 48T | 32 | 30 | 60 | 107.5 | 881 | |
| | 2020.08- | ET | F | L/R | SUV 4WD TZ200XSE/TZ200XSN | | GCI83192 | Inner Joint | | 30 | 28 | 45 | 63 | 116 | |
| | 2020.08- | ET | R | L | SUV 4WD TZ200XSE/TZ200XSN | | GDS56197 | Drive Shaft | 48T | 32 | 30 | 60 | 107.5 | 958 | |
| | 2020.08- | ET | R | R | SUV 4WD TZ200XSE/TZ200XSN | | GDS56195 | Drive Shaft | 48T | 32 | 30 | 60 | 107.5 | 713 | |
| | 2020.08- | ET | R | L | SUV 4WD TZ200XSE/TZ200XSN | | GCI83192 | Inner Joint | | 30 | 28 | 45 | 63 | 116 | |
| | 2020.08- | ET | R | R | SUV 4WD TZ200XSE/TZ200XSN | | GCI83191 | Inner Joint | | 30 | 28 | 45 | 63 | 117 | |
| | 2020.08- | ET | F/R | L/R | SUV 4WD TZ200XSE/TZ200XSN | | GCO83198 | Outer Joint | 48T | 32 | 28 | 60 | 107.5 | 74 | M |
| **Yuan Plus/Atto 3** | | | | | | | | | | | | | | | |
| EV (150 kw) | 2022.02- | ET | F | L | SUV FWD TZ200XSQ | For OE number:13456228-00;Data to:2025.02 | GDS57669 | Drive Shaft | 48T | 30 | 29 | 70 | 97.5 | 767 | |
| | 2022.02- | ET | F | L | SUV FWD TZ200XSQ | For OE number:13500156-00 | GDS57742 | Drive Shaft | 48T | 30 | 29 | 60 | 97 | 767 | |
| | 2022.02- | ET | F | L | SUV FWD TZ200XSQ | For OE number:13143674-00 | GDS57751 | Drive Shaft | 48T | 30 | 29 | 70 | 97.5 | 774 | |
| | 2022.02- | ET | F | L | SUV FWD TZ200XSQ | For OE number:13500157-00 | GDS57816 | Drive Shaft | 48T | 30 | 29 | 67 | 97.5 | 765 | |
| | 2022.02- | ET | F | R | SUV FWD TZ200XSQ | For OE number:13456137-00;Data to:2025.02 | GDS57668 | Drive Shaft | 48T | 30 | 29 | 70 | 97.5 | 847 | |
| | 2022.02- | ET | F | R | SUV FWD TZ200XSQ | For OE number:13500159-00 | GDS57741 | Drive Shaft | 48T | 30 | 29 | 60 | 97 | 848 | |
| | 2022.02- | ET | F | R | SUV FWD TZ200XSQ | For OE number:13143657-00 | GDS57752 | Drive Shaft | 48T | 30 | 29 | 70 | 97.5 | 851 | |
| | 2022.02- | ET | F | R | SUV FWD TZ200XSQ | For OE number:13500158-00 | GDS57817 | Drive Shaft | 48T | 30 | 29 | 67 | 97.5 | 847 | |
| | 2022.02- | ET | F | L/R | SUV FWD TZ200XSQ | For OE number:13456137-00/13456228-00;Data to:2025.02 | GCO83672 | Outer Joint | 48T | 30 | 25 | 70 | 97.5 | 64 | I |
| | 2022.02- | ET | F | L/R | SUV FWD TZ200XSQ | For OE number:13500159-00/13500156-00;Groove Type:Middle | GCO83684 | Outer Joint | 48T | 30 | 27 | 60 | 97 | 64 | M |
| | 2022.02- | ET | F | L/R | SUV FWD TZ200XSQ | For OE number:13143674-00/13143657-00;Groove Type:Middle | GCO83697 | Outer Joint | 48T | 30 | 25 | 70 | 97.5 | 64 | M |
| | 2022.02- | ET | F | L/R | SUV FWD TZ200XSQ | For OE number:13500157-00/13500158-00 | GCO83727 | Outer Joint | 48T | 30 | 24 | 67 | 97.5 | 62.5 | M |
| | 2022.02- | ET | F | L/R | SUV FWD TZ200XSQ | For OE number:13500159-00/13500156-00 | GCI83558 | Inner Joint | | 29 | 34 | 45 | 62 | 104.5 | |
| | 2022.02- | ET | F | L/R | SUV FWD TZ200XSQ | For OE number:13456137-00/13456228-00;Data to:2025.02 | GCI83801 | Inner Joint | | 29 | 33 | 45 | 62 | 115.5 | |
| | 2022.02- | ET | F | L/R | SUV FWD TZ200XSQ | For OE number:13143674-00/13143657-00 | GCI83837 | Inner Joint | | 29 | 24 | 45 | 62.5 | 106.5 | |
| | 2022.02- | ET | F | L/R | SUV FWD TZ200XSQ | For OE number:13500157-00/13500158-00 | GCI83869 | Inner Joint | | 29 | 24 | 45 | 62 | 104.5 | |
| **CADILLAC** | | | | | | | | | | | | | | | |
| **BLS** | | | | | | | | | | | | | | | |
| 1.9 (110 kw) | 2006.04- | 6AT | F | L/R | Saloon FWD Z19DTH | | GDS44080 | Drive Shaft | | 30 | 27 | 53.8 | 94.5 | 591 | |
| | 2006.04- | 6MT | F | L/R | Saloon FWD Z19DTH | | GDS21032 | Drive Shaft | | 30 | 27 | 53.8 | 94.5 | 605 | |
| | 2006.04- | 6MT | F | R | Saloon FWD Z19DTH | | GCI99138 | Inner Joint | | 27 | 28 | 35 | 78 | 112 | |
| | 2006.04- | | F | L/R | Saloon FWD Z19DTH | | GCO17051 | Outer Joint | | 30 | 26 | 53.8 | 94.5 | 65.5 | M |
| | 2007.12- | 6AT | F | L/R | Estate FWD Z19DTH | | GDS44080 | Drive Shaft | | 30 | 27 | 53.8 | 94.5 | 591 | |
| | 2007.12- | 6MT | F | L/R | Estate FWD Z19DTH | | GDS21032 | Drive Shaft | | 30 | 27 | 53.8 | 94.5 | 605 | |
| | 2007.12- | 6MT | F | R | Estate FWD Z19DTH | | GCI99138 | Inner Joint | | 27 | 28 | 35 | 78 | 112 | |
| | 2007.12- | | F | L/R | Estate FWD Z19DTH | | GCO17051 | Outer Joint | | 30 | 26 | 53.8 | 94.5 | 65.5 | M |
| 1.9 (132 kw) | 2007.12- | 6AT | F | L/R | Estate FWD Z 19 DTR | | GCO21057 | Outer Joint | | 30 | 27 | 59.1 | 94 | 65 | M |
| | 2007.12- | 6MT | F | L/R | Estate FWD Z 19 DTR | | GDS21036 | Drive Shaft | | 30 | 27 | 55.4 | 100 | 602 | |
| | 2007.12- | 6MT | F | L/R | Estate FWD Z 19 DTR | | GCO21030 | Outer Joint | | 30 | 28 | 55.4 | 96 | 65 | M |
| | 2007.12- | 6AT | F | L/R | Saloon FWD Z 19 DTR | | GCO21057 | Outer Joint | | 30 | 27 | 59.1 | 94 | 65 | M |
| | 2007.12- | 6MT | F | L/R | Saloon FWD Z 19 DTR | | GDS21036 | Drive Shaft | | 30 | 27 | 55.4 | 100 | 602 | |
| | 2007.12- | 6MT | F | L/R | Saloon FWD Z 19 DTR | | GCO21030 | Outer Joint | | 30 | 28 | 55.4 | 96 | 65 | M |
| 2.0 (129 kw) | 2006.04-2010.12 | 6MT | F | L/R | Saloon FWD B207L;Z 20 NET;LK9(122CUL4) | | GCO21030 | Outer Joint | | 30 | 28 | 55.4 | 96 | 65 | M |
| | 2006.04-2010.12 | | F | L/R | Saloon FWD B207L;Z 20 NET;LK9(122CUL4) | | GDS21036 | Drive Shaft | | 30 | 27 | 55.4 | 100 | 602 | |
| | 2007.12-2010.12 | | F | L/R | Estate FWD Z 20 NET | | GDS21036 | Drive Shaft | | 30 | 27 | 55.4 | 100 | 602 | |
| | 2007.12-2010.12 | | F | L/R | Estate FWD Z 20 NET | | GCO21030 | Outer Joint | | 30 | 28 | 55.4 | 96 | 65 | M |
| 2.0 (147 kw) | 2007.12- | 6MT | F | L/R | Estate FWD Z 20 LER | | GDS21036 | Drive Shaft | | 30 | 27 | 55.4 | 100 | 602 | |
| | 2007.12- | | F | L/R | Estate FWD Z 20 LER | | GCO21030 | Outer Joint | | 30 | 28 | 55.4 | 96 | 65 | M |
| | 2007.12- | 6MT | F | L/R | Saloon FWD Z 20 LER | | GDS21036 | Drive Shaft | | 30 | 27 | 55.4 | 100 | 602 | |
| | 2007.12- | | F | L/R | Saloon FWD Z 20 LER | | GCO21030 | Outer Joint | | 30 | 28 | 55.4 | 96 | 65 | M |
| 2.0 (154 kw) | 2006.04- | 6MT | F | L/R | Saloon FWD B207R;LK9(122CUL4) | | GDS21036 | Drive Shaft | | 30 | 27 | 55.4 | 100 | 602 | |
| | 2006.04- | 6MT | F | L/R | Saloon FWD B207R;LK9(122CUL4) | | GCO21030 | Outer Joint | | 30 | 28 | 55.4 | 96 | 65 | M |

| | YEAR | TRANSM. | F/R | L/R | BODY STYLE & DRIVE TYPE & ENGINE | REMARKS | G-AP Ref. | PRODUCT | ABS | Technical Specifications A | B | C | H | L | P |
|---|---|---|---|---|---|---|---|---|---|---|---|---|---|---|---|
| **CADILLAC** | | | | | | | | | | | | | | | |
| **BLS** | | | | | | | | | | | | | | | |
| 2.0 (154 kw) | 2006.04-2010.12 | 5AT | F | L/R | Saloon 4WD B207R;LK9(122CUL4) | | GDS21036 | Drive Shaft | | 30 | 27 | 55.4 | 100 | 602 | |
| | 2006.04-2010.12 | | F | L/R | Saloon 4WD B207R;LK9(122CUL4) | | GCO21030 | Outer Joint | | 30 | 28 | 55.4 | 96 | 65 | M |
| | 2007.12- | 6MT | F | L/R | Estate FWD Z 20 NER | | GDS21036 | Drive Shaft | | 30 | 27 | 55.4 | 100 | 602 | |
| | 2007.12- | 6MT | F | L/R | Estate FWD Z 20 NER | | GCO21030 | Outer Joint | | 30 | 28 | 55.4 | 96 | 65 | M |
| | 2007.12-2010.12 | 5AT | F | L/R | Estate 4WD B207R | | GDS21036 | Drive Shaft | | 30 | 27 | 55.4 | 100 | 602 | |
| | 2007.12-2010.12 | | F | L/R | Estate 4WD B207R | | GCO21030 | Outer Joint | | 30 | 28 | 55.4 | 96 | 65 | M |
| 2.8 (188 kw) | 2006.04- | 6MT | F | L/R | Saloon FWD B284L | | GDS21036 | Drive Shaft | | 30 | 27 | 55.4 | 100 | 602 | |
| | 2006.04- | | F | L/R | Saloon FWD B284L | | GCO21030 | Outer Joint | | 30 | 28 | 55.4 | 96 | 65 | M |
| | 2007.12- | 6MT | F | L/R | Estate FWD Z 28 NET | | GDS21036 | Drive Shaft | | 30 | 27 | 55.4 | 100 | 602 | |
| | 2007.12- | | F | L/R | Estate FWD Z 28 NET | | GCO21030 | Outer Joint | | 30 | 28 | 55.4 | 96 | 65 | M |
| 2.8 (206 kw) | 2008.10- | 6MT | F | L/R | Estate 4WD Z 28 NET | | GDS21036 | Drive Shaft | | 30 | 27 | 55.4 | 100 | 602 | |
| | 2008.10- | 6MT | F | L/R | Estate 4WD Z 28 NET | | GCO21030 | Outer Joint | | 30 | 28 | 55.4 | 96 | 65 | M |
| | 2008.10- | 6MT | F | L/R | Saloon 4WD Z 28 NET | | GDS21036 | Drive Shaft | | 30 | 27 | 55.4 | 100 | 602 | |
| | 2008.10- | 6MT | F | L/R | Saloon 4WD Z 28 NET | | GCO21030 | Outer Joint | | 30 | 28 | 55.4 | 96 | 65 | M |
| | 2010.08- | 6MT | F | L/R | Estate FWD B284R | | GDS21036 | Drive Shaft | | 30 | 27 | 55.4 | 100 | 602 | |
| | 2010.08- | 6MT | F | L/R | Estate FWD B284R | | GCO21030 | Outer Joint | | 30 | 28 | 55.4 | 96 | 65 | M |
| **CTS** | | | | | | | | | | | | | | | |
| 2.8 (155 kw) | 2008.01-2009.12 | 6AT/6MT | R | R | Saloon RWD LP1 | | GDS87018 | Drive Shaft | | 30 | | 54.5 | 105 | 759 | |
| 3.6 (196 kw) | 2008.01-2010.12 | 6AT | R | R | Saloon RWD LY7 | | GDS87018 | Drive Shaft | | 30 | | 54.5 | 105 | 759 | |
| 3.6 (199 kw) | 2010.01-2013.09 | | F | L | Saloon 4WD LLT | | GDS99226 | Drive Shaft | | 30 | 34 | 55 | 103.5 | 678 | |
| 3.6 (227 kw) | 2008.03-2012.12 | | F | L | Saloon 4WD LLT | | GDS99226 | Drive Shaft | | 30 | 34 | 55 | 103.5 | 678 | |
| | 2011.01-2012.12 | | F | L | Coupe 4WD LLT | | GDS99226 | Drive Shaft | | 30 | 34 | 55 | 103.5 | 678 | |
| 3.6 (229 kw) | 2008.01-2011.12 | | F | L | Estate 4WD LLT | | GDS99226 | Drive Shaft | | 30 | 34 | 55 | 103.5 | 678 | |
| | 2008.01-2012.12 | | F | L | Coupe 4WD LLT | | GDS99226 | Drive Shaft | | 30 | 34 | 55 | 103.5 | 678 | |
| | 2008.01-2013.09 | 6AT | F | L | Saloon 4WD LLT | | GDS99226 | Drive Shaft | | 30 | 34 | 55 | 103.5 | 678 | |
| | 2008.01-2013.09 | 6AT | R | R | Saloon 4WD LLT | | GDS87018 | Drive Shaft | | 30 | | 54.5 | 105 | 759 | |
| | 2008.01-2013.09 | 6AT/6MT | R | R | Saloon RWD LLT | | GDS87018 | Drive Shaft | | 30 | | 54.5 | 105 | 759 | |
| 3.6 (237 kw) | 2011.09-2013.09 | 6AT | F | L | Saloon 4WD LLT | | GDS99226 | Drive Shaft | | 30 | 34 | 55 | 103.5 | 678 | |
| | 2011.09-2014.07 | | F | L | Coupe 4WD LLT | Date to:2004.06;Chassis no. to:8E5035000 | GDS99226 | Drive Shaft | | 30 | 34 | 55 | 103.5 | 678 | |
| | 2011.09-2014.07 | | F | L | Estate 4WD LLT | | GDS99226 | Drive Shaft | | 30 | 34 | 55 | 103.5 | 678 | |
| **Escalade** | | | | | | | | | | | | | | | |
| 5.7 (190 kw) | 1998.10-2000.12 | | F | | SUV 4WD L31 | Date from:2002 | GCO44054 | Outer Joint | | 33 | 35 | 72.8 | 112.5 | 73.5 | O |
| 6.0 (283 kw) | 2010.09-2013.12 | | F | | SUV 4WD LZ1 | Date From:2011 | GCO87001 | Outer Joint | | 33 | 41 | 80 | 112 | 88.5 | O |
| | 2010.11-2013.12 | | F | | SUV 4WD LZ1 | Date From:2011 | GCO87001 | Outer Joint | | 33 | 41 | 80 | 112 | 88.5 | O |
| 6.2 (301 kw) | 2006.10-2014.07 | | F | | SUV 4WD L92 | Date from:2007,Date to:2013 | GCO44054 | Outer Joint | | 33 | 35 | 72.8 | 112.5 | 73.5 | O |
| | 2006.10-2014.07 | | F | | SUV 4WD L92 | Date from:2007,Date to:2013 | GCO87001 | Outer Joint | | 33 | 41 | 80 | 112 | 88.5 | O |
| | 2006.10-2014.07 | | F | | SUV 4WD L94/L9H | Date from:2007,Date to:2013 | GCO44054 | Outer Joint | | 33 | 35 | 72.8 | 112.5 | 73.5 | O |
| | 2006.10-2014.07 | | F | | SUV 4WD L94/L9H | Date from:2007,Date to:2013 | GCO87001 | Outer Joint | | 33 | 41 | 80 | 112 | 88.5 | O |
| **Seville** | | | | | | | | | | | | | | | |
| 4.6 (205 kw) | 1997.09-2004.12 | | F | | Saloon FWD LD8 | | GCO88008 | Outer Joint | | 27 | 32 | 61.5 | 120 | 64.5 | O |
| 4.6 (224 kw) | 1997.09-2004.09 | | F | | Saloon FWD L37 | | GCO88008 | Outer Joint | | 27 | 32 | 61.5 | 120 | 64.5 | O |
| **SRX** | | | | | | | | | | | | | | | |
| 2.8 (224 kw) | 2009.01- | 5MT | R | L | SUV 4WD LAU | | GDS87009 | Drive Shaft | | 30 | 27 | 54.5 | 105 | 801 | |
| 3.0 (198 kw) | 2009.01-2016.12 | 5MT | R | L | SUV 4WD LF1 | | GDS87009 | Drive Shaft | | 30 | 27 | 54.5 | 105 | 801 | |
| 3.6 (190 kw) | 2004.01-2009.12 | 5MT | R | L | SUV RWD LY7 | | GDS87009 | Drive Shaft | | 30 | 27 | 54.5 | 105 | 801 | |
| | 2004.01-2010.12 | 5AT | F | L | SUV 4WD LY7 | | GDS99226 | Drive Shaft | | 30 | 34 | 55 | 103.5 | 678 | |
| | 2004.01-2010.12 | 5AT | R | L | SUV 4WD LY7 | | GDS87009 | Drive Shaft | | 30 | 27 | 54.5 | 105 | 801 | |
| 4.6 (239 kw) | 2003.09-2007.12 | 5AT | F | L | SUV 4WD LH2 | | GDS99226 | Drive Shaft | | 30 | 34 | 55 | 103.5 | 678 | |
| | 2003.09-2007.12 | 5AT | F | | SUV 4WD LH2 | for right-hand drive vehicles/for left-hand drive vehicles,Date from:2004,Date to:2005 | GCO21071 | Outer Joint | | 30 | 24 | 55 | 103.5 | 59 | M |
| | 2003.09-2007.12 | 5AT | R | L | SUV 4WD LH2 | | GDS87009 | Drive Shaft | | 30 | 27 | 54.5 | 105 | 801 | |
| **STS** | | | | | | | | | | | | | | | |
| 3.6 (225 kw) | 2005.01-2007.12 | | F | L | Saloon 4WD LLT | | GDS99226 | Drive Shaft | | 30 | 34 | 55 | 103.5 | 678 | |
| 4.6 (239 kw) | 2004.09-2005.12 | 5AT | F | L | Saloon 4WD LH2 | | GDS99226 | Drive Shaft | | 30 | 34 | 55 | 103.5 | 678 | |
| | 2007.09-2010.12 | 5AT | F | L | Saloon 4WD LH2 | | GDS99226 | Drive Shaft | | 30 | 34 | 55 | 103.5 | 678 | |
| **CHANA** | | | | | | | | | | | | | | | |
| **Oushang** | | | | | | | | | | | | | | | |
| 1.5 (84 kw) | 2015.12- | 5MT | F | L | MPV FWD DAM15B | Model year to:2017 | GCI18265 | Inner Joint | | 23 | 22 | 40 | 61 | 91 | |
| **CHANGAN** | | | | | | | | | | | | | | | |
| **Alsvin** | | | | | | | | | | | | | | | |
| 1.5 (79 kw) | 2018.05- | 5DCT | F | L | Saloon FWD JL473QF | | GDS83890 | Drive Shaft | 46T | 23 | 23 | 60 | 89.5 | 626 | |
| | 2018.05- | 5DCT | F | R | Saloon FWD JL473QF | | GDS83889 | Drive Shaft | 46T | 23 | 23 | 60 | 89.5 | 903 | |
| | 2018.05- | 5DCT | F | L/R | Saloon FWD JL473QF | | GCO82519 | Outer Joint | 46T | 23 | 29 | 60 | 89.5 | 58 | I |
| | 2018.05- | 5DCT | F | L/R | Saloon FWD JL473QF | | GCI18264 | Inner Joint | | 23 | 22 | 40 | 61 | 98 | |

| | YEAR | TRANSM. | F/R | L/R | BODY STYLE & DRIVE TYPE & ENGINE | REMARKS | G-AP Ref. | PRODUCT | ABS | Technical Specifications A | B | C | H | L | P |
|---|---|---|---|---|---|---|---|---|---|---|---|---|---|---|---|
| **CHANGAN** | | | | | | | | | | | | | | | |
| **Alsvin V7** | | | | | | | | | | | | | | | |
| 1.0 (85 kw) | 2016.09- | 6MT | F | L/R | Saloon FWD JL372ZQ1 | Model year to:2017 | GCO18315 | Outer Joint | 43T | 27 | 29 | 52.5 | 85.5 | 58 | I |
| 1.6 (91 kw) | 2014.11- | 5MT | F | R | Saloon FWD JL478QEB | Model year to:2017 | GCO18315 | Outer Joint | 43T | 27 | 29 | 52.5 | 85.5 | 58 | I |
| **CS15** | | | | | | | | | | | | | | | |
| 1.5 (79 kw) | 2016.04- | 5DCT | F | L | SUV FWD JL473QF | Model year from:2019,Model year to:2022 | GDS82105 | Drive Shaft | 43T | 27 | 23 | 52.5 | 85.5 | 630 | |
| | 2016.04- | 5DCT | F | R | SUV FWD JL473QF | Model year from:2020,Model year to:2022 | GDS82104 | Drive Shaft | 43T | 27 | 23 | 52.5 | 85.5 | 907 | |
| | 2016.04- | 5DCT | F | L/R | SUV FWD JL473QF | Model year to:2022 | GCO18315 | Outer Joint | 43T | 27 | 29 | 52.5 | 85.5 | 58 | I |
| | 2016.04- | 5DCT | F | L/R | SUV FWD JL473QF | Model year from:2019,Model year to:2022 | GCI18264 | Inner Joint | | 23 | 22 | 40 | 61 | 98 | |
| | 2016.04- | 5MT | F | L | SUV FWD JL473QF | Model year to:2019 | GDS18491 | Drive Shaft | 43T | 27 | 23 | 52.5 | 85.5 | 628 | |
| | 2016.04- | 5MT | F | R | SUV FWD JL473QF | Model year to:2019 | GDS18492 | Drive Shaft | 43T | 27 | 23 | 52.5 | 85.5 | 918 | |
| | 2016.04- | 5MT | F | L/R | SUV FWD JL473QF | Model year to:2019 | GCO18315 | Outer Joint | 43T | 27 | 29 | 52.5 | 85.5 | 58 | I |
| | 2016.04- | 5MT | F | L/R | SUV FWD JL473QF | Model year to:2019 | GCI18265 | Inner Joint | | 23 | 22 | 40 | 61 | 91 | |
| EV (55 kw) | 2017.10- | ET | F | L | SUV FWD XTDM06 | | GDS84323 | Drive Shaft | 43T | 27 | 26 | 60 | 93.5 | 645 | |
| | 2017.10- | ET | F | R | SUV FWD XTDM06 | | GDS84322 | Drive Shaft | 43T | 27 | 26 | 60 | 93.5 | 894 | |
| | 2017.10- | ET | F | L/R | SUV FWD XTDM06 | | GCO82783 | Outer Joint | 43T | 27 | 23 | 60 | 93.5 | 61 | M |
| | 2017.10- | ET | F | L/R | SUV FWD XTDM06 | | GCI82710 | Inner Joint | | 26 | 23 | 35 | 60.5 | 109 | |
| **CS35** | | | | | | | | | | | | | | | |
| 1.5 (115 kw) | 2016.02- | 5MT | F | L | SUV FWD 4G15T | for model year:2016 | GDS18494 | Drive Shaft | 46T | 27 | 27 | 60 | 92.5 | 677 | |
| | 2016.02- | 5MT | F | R | SUV FWD 4G15T | for model year:2016 | GDS18495 | Drive Shaft | 46T | 27 | 27 | 60 | 92.5 | 952 | |
| | 2016.02- | 5MT | F | L/R | SUV FWD 4G15T | for model year:2016 | GCO18325 | Outer Joint | 46T | 27 | 31 | 60 | 92.5 | 60.5 | M |
| | 2016.02- | 5MT | F | L | SUV FWD 4G15T | for model year:2016 | GCI18278 | Inner Joint | | 27 | 31 | 41 | 62 | 99 | |
| | 2016.02- | 5MT | F | R | SUV FWD 4G15T | for model year:2016 | GCI18279 | Inner Joint | | 27 | 31 | 41 | 361.5 | 99 | |
| 1.6 (92 kw) | 2012.10- | 4AT | F | L | SUV FWD JL478QEE, JL478QEG | | GDS75033 | Drive Shaft | 46T | 27 | 23 | 60 | 92.5 | 652 | |
| | 2012.10- | 4AT | F | R | SUV FWD JL478QEE, JL478QEG | | GDS75032 | Drive Shaft | 46T | 27 | 23 | 60 | 92.5 | 979 | |
| | 2012.10- | MT | F | L | SUV FWD JL478QEE, JL478QEG | | GDS75034 | Drive Shaft | 46T | 27 | 23 | 60 | 92.5 | 637 | |
| | 2012.10- | MT | F | R | SUV FWD JL478QEE, JL478QEG | | GDS75035 | Drive Shaft | 46T | 27 | 23 | 60 | 92.5 | 997 | |
| **CS35 Plus** | | | | | | | | | | | | | | | |
| 1.4 (116 kw) | 2019.07- | 7DCT | F | L | SUV FWD JL473ZQ3 | Model year to:2021 | GDS56252 | Drive Shaft | 46T | 27 | 34 | 60 | 93 | 651 | |
| | 2019.07- | 7DCT | F | R | SUV FWD JL473ZQ3 | Model year to:2021 | GDS56409 | Drive Shaft | 46T | 27 | 34 | 60 | 93 | 994 | |
| | 2019.07- | 7DCT | F | L/R | SUV FWD JL473ZQ3 | Model year to:2021 | GCO83227 | Outer Joint | 46T | 27 | 24 | 60 | 93 | 61.5 | I |
| | 2019.07- | 7DCT | F | L | SUV FWD JL473ZQ3 | Model year to:2021 | GCI83215 | Inner Joint | | 34 | 24 | 35 | 64 | 113 | |
| | 2019.07- | 7DCT | F | R | SUV FWD JL473ZQ3 | Model year to:2021 | GCI83293 | Inner Joint | | 34 | 24 | 35 | 392 | 105 | |
| 1.4 (118 kw) | 2021.03- | 7DCT | F | L | SUV FWD JL473ZQ9 | Model year to:2022 | GDS56251 | Drive Shaft | 46T | 27 | 34 | 60 | 93 | 663 | |
| | 2021.03- | 7DCT | F | L | SUV FWD JL473ZQ9 | Model year to:2022;Inner teeth of wheel side:32 | GDS57950 | Drive Shaft | 46T | 27 | 34 | 60 | 93.5 | 652 | |
| | 2021.03- | 7DCT | F | R | SUV FWD JL473ZQ9 | Model year to:2022;Inner teeth of wheel side:24 | GDS56360 | Drive Shaft | 46T | 27 | 34 | 60 | 93 | 983 | |
| | 2021.03- | 7DCT | F | R | SUV FWD JL473ZQ9 | Model year to:2022;Inner teeth of wheel side:32 | GDS58065 | Drive Shaft | 46T | 27 | 34 | 60 | 93.5 | 990 | |
| | 2021.03- | 7DCT | F | L/R | SUV FWD JL473ZQ9 | Model year to:2022 | GCO83227 | Outer Joint | 46T | 27 | 24 | 60 | 93 | 61.5 | I |
| | 2021.03- | 7DCT | F | L/R | SUV FWD JL473ZQ9 | | GCO83809 | Outer Joint | 46T | 27 | 32 | 60 | 93.5 | 64 | I |
| | 2021.03- | 7DCT | F | L | SUV FWD JL473ZQ9 | Model year to:2022;AAR | GCI83214 | Inner Joint | | 34 | 24 | 35 | 55 | 119.5 | |
| | 2021.03- | 7DCT | F | L | SUV FWD JL473ZQ9 | Model year to:2022;TJ | GCI83958 | Inner Joint | | 34 | 24 | 35 | 64 | 112 | |
| | 2021.03- | 7DCT | F | R | SUV FWD JL473ZQ9 | Model year to:2022;AAR | GCI83265 | Inner Joint | | 34 | 24 | 35 | 381 | 105 | |
| | 2021.03- | 7DCT | F | R | SUV FWD JL473ZQ9 | Model year to:2022;TJ | GCI83997 | Inner Joint | | 34 | 24 | 35 | 379 | 99 | |
| **CS55** | | | | | | | | | | | | | | | |
| 1.5 (115 kw) | 2017.07- | 6AT | F | L | SUV FWD JL476ZQCD | | GDS82107 | Drive Shaft | 46T | 28 | 26 | 60 | 93 | 659 | |
| | 2017.07- | 6AT | F | R | SUV FWD JL476ZQCD | | GDS82106 | Drive Shaft | 46T | 28 | 26 | 60 | 93 | 954 | |
| | 2017.07- | 6AT | F | L/R | SUV FWD JL476ZQCD | | GCO81650 | Outer Joint | 46T | 28 | 25 | 60 | 93 | 65.5 | M |
| | 2017.07- | 6AT | F | L | SUV FWD JL476ZQCD | | GCI18286 | Inner Joint | | 26 | 32 | 31 | 68.5 | 87 | |
| | 2017.07- | 6AT | F | R | SUV FWD JL476ZQCD | | GCI81624 | Inner Joint | | 26 | 32 | 31 | 274 | 104 | |
| | 2017.07- | 6MT | F | L | SUV FWD JL476ZQCD | Model year to:2019 | GDS82117 | Drive Shaft | 46T | 28 | 34 | 60 | 92.5 | 660 | |
| | 2017.07- | 6MT | F | R | SUV FWD JL476ZQCD | Model year to:2019 | GDS82116 | Drive Shaft | 46T | 28 | 34 | 60 | 92.5 | 984 | |
| | 2017.07- | 6MT | F | L/R | SUV FWD JL476ZQCD | Model year to:2019 | GCO81656 | Outer Joint | 46T | 28 | 32 | 60 | 92.5 | 65.5 | I |
| | 2017.07- | 6MT | F | L | SUV FWD JL476ZQCD | Model year to:2019 | GCI81628 | Inner Joint | | 34 | 24 | 35 | 55.5 | 114 | |
| | 2017.07- | 6MT | F | R | SUV FWD JL476ZQCD | Model year to:2019 | GCI81627 | Inner Joint | | 34 | 24 | 35 | 328.5 | 95 | |
| **CS55 Plus** | | | | | | | | | | | | | | | |
| 1.5 (115 kw) | 2019.11- | 6MT | F | L | SUV FWD JL476ZQCD | | GDS82117 | Drive Shaft | 46T | 28 | 34 | 60 | 92.5 | 660 | |
| | 2019.11- | 6MT | F | R | SUV FWD JL476ZQCD | | GDS82116 | Drive Shaft | 46T | 28 | 34 | 60 | 92.5 | 984 | |
| | 2019.11- | 6MT | F | L/R | SUV FWD JL476ZQCD | | GCO81656 | Outer Joint | 46T | 28 | 32 | 60 | 92.5 | 65.5 | I |
| | 2019.11- | 6MT | F | L | SUV FWD JL476ZQCD | | GCI81628 | Inner Joint | | 34 | 24 | 35 | 55.5 | 114 | |
| | 2019.11- | 6MT | F | R | SUV FWD JL476ZQCD | | GCI81627 | Inner Joint | | 34 | 24 | 35 | 328.5 | 95 | |
| 1.5 (132 kw) | 2020.08- | 6MT | F | L | SUV FWD JL473ZQ2 | | GDS56296 | Drive Shaft | 46T | 28 | 34 | 62 | 92 | 673 | |
| | 2020.08- | 6MT | F | R | SUV FWD JL473ZQ2 | | GDS56369 | Drive Shaft | 46T | 28 | 34 | 62 | 92 | 964 | |
| | 2020.08- | 6MT | F | L | SUV FWD JL473ZQ2 | | GCI83230 | Inner Joint | | 34 | 26 | 35 | 59.5 | 132.5 | |
| | 2020.08- | 6MT | F | R | SUV FWD JL473ZQ2 | | GCI83269 | Inner Joint | | 34 | 26 | 35 | 382 | 108.5 | |
| | 2020.08- | 6MT/7DCT | F | L/R | SUV FWD JL473ZQ2 | | GCO83244 | Outer Joint | 46T | 28 | 26 | 62 | 92 | 64.5 | I |
| | 2020.08- | 7DCT | F | L | SUV FWD JL473ZQ2 | | GDS57865 | Drive Shaft | 46T | 28 | 34 | 62 | 92 | 670 | |
| | 2020.08- | 7DCT | F | R | SUV FWD JL473ZQ2 | | GDS57864 | Drive Shaft | 46T | 28 | 34 | 62 | 92 | 983 | |

| | YEAR | TRANSM. | F/R | L/R | BODY STYLE & DRIVE TYPE & ENGINE | REMARKS | G-AP Ref. | PRODUCT | ABS | Technical Specifications | | | | | |
|---|---|---|---|---|---|---|---|---|---|---|---|---|---|---|---|
| | | | | | | | | | | A | B | C | H | L | P |
| **CHANGAN** | | | | | | | | | | | | | | | |
| **CS55 Plus** | | | | | | | | | | | | | | | |
| 1.5 (132 kw) | 2020.08- | 7DCT | F | L | SUV FWD JL473ZQ2 | | GCI83899 | Inner Joint | | 34 | 26 | 35 | 64 | 116 | |
| | 2020.08- | 7DCT | F | R | SUV FWD JL473ZQ2 | | GCI83898 | Inner Joint | | 34 | 26 | 35 | 392 | 95.5 | |
| 1.5 (138 kw) | 2021.09- | 7DCT | F | L | SUV FWD JL473ZQ7 | | GDS57968 | Drive Shaft | 46T | 28 | 34 | 60 | 93 | 668 | |
| | 2021.09- | 7DCT | F | R | SUV FWD JL473ZQ7 | | GDS58063 | Drive Shaft | 46T | 28 | 34 | 60 | 93 | 983 | |
| | 2021.09- | 7DCT | F | L/R | SUV FWD JL473ZQ7 | | GCO83813 | Outer Joint | 46T | 28 | 32 | 60 | 93 | 63.5 | I |
| | 2021.09- | 7DCT | F | L | SUV FWD JL473ZQ7 | | GCI83958 | Inner Joint | | 34 | 24 | 35 | 64 | 112 | |
| | 2021.09- | 7DCT | F | R | SUV FWD JL473ZQ7 | | GCI83996 | Inner Joint | | 34 | 24 | 35 | 74 | 122 | |
| 1.5 (141 kw) | 2025.09- | 7DCT | F | L | SUV FWD JL473ZQD | | GDS57968 | Drive Shaft | 46T | 28 | 34 | 60 | 93 | 668 | |
| | 2025.09- | 7DCT | F | R | SUV FWD JL473ZQD | | GDS58063 | Drive Shaft | 46T | 28 | 34 | 60 | 93 | 983 | |
| | 2025.09- | 7DCT | F | L/R | SUV FWD JL473ZQD | | GCO83813 | Outer Joint | 46T | 28 | 32 | 60 | 93 | 63.5 | I |
| | 2025.09- | 7DCT | F | L | SUV FWD JL473ZQD | | GCI83958 | Inner Joint | | 34 | 24 | 35 | 64 | 112 | |
| | 2025.09- | 7DCT | F | R | SUV FWD JL473ZQD | | GCI83996 | Inner Joint | | 34 | 24 | 35 | 74 | 122 | |
| **CS75** | | | | | | | | | | | | | | | |
| 1.5 (125 kw) | 2016.10- | 6MT | F | L | SUV FWD JL476ZQCA | Model year to:2018 | GDS18511 | Drive Shaft | 44T | 28 | 34 | 62 | 92 | 619 | |
| | 2016.10- | 6MT | F | R | SUV FWD JL476ZQCA | Model year to:2018 | GDS18510 | Drive Shaft | 44T | 28 | 34 | 62 | 92 | 997 | |
| | 2016.10- | 6MT | F | L/R | SUV FWD JL476ZQCA | Model year to:2018 | GCO18265 | Outer Joint | 44T | 28 | 32 | 62 | 92 | 66.5 | I |
| | 2016.10- | 6MT | F | L | SUV FWD JL476ZQCA | Model year to:2018 | GCI18283 | Inner Joint | | 34 | 24 | 35 | 55.5 | 120.5 | |
| | 2016.10- | 6MT | F | R | SUV FWD JL476ZQCA | Model year to:2018 | GCI18282 | Inner Joint | | 34 | 24 | 35 | 339 | 104 | |
| 1.8 (130 kw) | 2014.07- | 6AT | F | R | SUV FWD JL486ZQ2 | Model year to:2017 | GCI21039 | Inner Joint | | 26 | 24 | 31 | 426 | 101.5 | |
| | 2015.09- | 6AMT | F | L | SUV 4WD JL486ZQ2 | Model year to:2016 | GDS18505 | Drive Shaft | 44T | 28 | 31 | 62 | 91.5 | 584 | |
| | 2015.09- | 6AMT | F | R | SUV 4WD JL486ZQ2 | Model year to:2016 | GDS18506 | Drive Shaft | 44T | 28 | 28 | 62 | 91.5 | 987 | |
| | 2015.09- | 6AMT | F | L/R | SUV 4WD JL486ZQ2 | Model year to:2016 | GCO18323 | Outer Joint | 44T | 28 | 34 | 62 | 91.5 | 64.5 | M |
| | 2015.09- | 6AMT | F | L | SUV 4WD JL486ZQ2 | Model year to:2016 | GCI18276 | Inner Joint | | 31 | 34 | 36.2 | 67.5 | 114 | |
| | 2015.09- | 6AMT | F | R | SUV 4WD JL486ZQ2 | Model year to:2016 | GCI18275 | Inner Joint | | 28 | 34 | 33 | 436 | 116 | |
| | 2015.09- | 6AMT | R | L | SUV 4WD JL486ZQ2 | Model year to:2016 | GDS18507 | Drive Shaft | 48T | 26 | 25 | 56.8 | 94 | 779 | |
| | 2015.09- | 6AMT | R | R | SUV 4WD JL486ZQ2 | Model year to:2016 | GDS18508 | Drive Shaft | 48T | 26 | 25 | 56.8 | 94 | 821 | |
| | 2015.09- | 6AMT | R | L/R | SUV 4WD JL486ZQ2 | Model year to:2016 | GCO18321 | Outer Joint | 48T | 26 | 21 | 56.8 | 94 | 60.5 | I |
| | 2015.09- | 6AMT | R | L/R | SUV 4WD JL486ZQ2 | Model year to:2016 | GCI24110 | Inner Joint | | 25 | 29 | 35 | 62.5 | 95 | |
| **CS75 Plus** | | | | | | | | | | | | | | | |
| 1.5 (131 kw) | 2019.09- | AT | F | L | SUV FWD JL476ZQCF | | GDS56214 | Drive Shaft | 44T | 28 | 26 | 62 | 92 | 644 | |
| | 2019.09- | AT | F | R | SUV FWD JL476ZQCF | | GDS56213 | Drive Shaft | 44T | 28 | 26 | 62 | 92 | 949 | |
| | 2019.09- | AT | F | L/R | SUV FWD JL476ZQCF | | GCO83204 | Outer Joint | 44T | 28 | 32 | 62 | 92 | 66.5 | I |
| | 2019.09- | AT | F | L | SUV FWD JL476ZQCF | | GCI83195 | Inner Joint | | 26 | 24 | 31 | 68.5 | 86 | |
| | 2019.09- | AT | F | R | SUV FWD JL476ZQCF | | GCI83194 | Inner Joint | | 26 | 24 | 31 | 313 | 101 | |
| 1.5 (138 kw) | 2022.02- | 8AT | F | L | SUV FWD JL473ZQ7 | Date to:2023.03 | GDS56250 | Drive Shaft | 44T | 30 | 28 | 62 | 93 | 650 | |
| | 2022.02- | 8AT | F | L | SUV FWD JL473ZQ7 | Date from:2023.04 | GDS58059 | Drive Shaft | 44T | 30 | 28 | 62 | 93 | 650 | |
| | 2022.02- | 8AT | F | R | SUV FWD JL473ZQ7 | Date to:2023.03 | GDS56319 | Drive Shaft | 44T | 30 | 28 | 62 | 93 | 942 | |
| | 2022.02- | 8AT | F | R | SUV FWD JL473ZQ7 | Date from:2023.04;Inner teeth of wheel side:26 | GDS58058 | Drive Shaft | 44T | 30 | 28 | 62 | 93 | 943 | |
| | 2022.02- | 8AT | F | R | SUV FWD JL473ZQ7 | Date from:2023.04;Inner teeth of wheel side:32 | GDS58060 | Drive Shaft | 44T | 30 | 28 | 62 | 93 | 942 | |
| | 2022.02- | 8AT | F | L/R | SUV FWD JL473ZQ7 | Date to:2023.03 | GCO83224 | Outer Joint | 44T | 30 | 26 | 62 | 93 | 68 | M |
| | 2022.02- | 8AT | F | L/R | SUV FWD JL473ZQ7 | Date from:2023.04 | GCO83830 | Outer Joint | 44T | 30 | 26 | 62 | 93 | 68 | M |
| | 2022.02- | 8AT | F | L/R | SUV FWD JL473ZQ7 | Date from:2023.04 | GCO83831 | Outer Joint | 44T | 30 | 32 | 62 | 93 | 63 | I |
| | 2022.02- | 8AT | F | L | SUV FWD JL473ZQ7 | Date to:2023.03 | GCI83213 | Inner Joint | | 28 | 26 | 33 | 71.5 | 87 | |
| | 2022.02- | 8AT | F | L | SUV FWD JL473ZQ7 | Date from:2023.04 | GCI83992 | Inner Joint | | 28 | 24 | 33 | 71.5 | 82 | |
| | 2022.02- | 8AT | F | R | SUV FWD JL473ZQ7 | Date to:2023.03 | GCI83236 | Inner Joint | | 28 | 26 | 33 | 348 | 92 | |
| | 2022.02- | 8AT | F | R | SUV FWD JL473ZQ7 | Date from:2023.04 | GCI83991 | Inner Joint | | 28 | 26 | 33 | 387 | 92 | |
| | 2022.02- | 8AT | F | R | SUV FWD JL473ZQ7 | Date from:2023.04 | GCI83993 | Inner Joint | | 28 | 24 | 33 | 387 | 91 | |
| 1.5 (141 kw) | 2024.09- | 8AT | F | L | SUV FWD JL473ZQD | | GDS58057 | Drive Shaft | 46T | 30 | 28 | 62 | 93 | 691 | |
| | 2024.09- | 8AT | F | R | SUV FWD JL473ZQD | | GDS58056 | Drive Shaft | 46T | 30 | 28 | 62 | 93 | 954 | |
| | 2024.09- | 8AT | F | L/R | SUV FWD JL473ZQD | | GCO83829 | Outer Joint | 46T | 30 | 26 | 62 | 93 | 66 | M |
| | 2024.09- | 8AT | F | L | SUV FWD JL473ZQD | | GCI83213 | Inner Joint | | 28 | 26 | 33 | 71.5 | 87 | |
| | 2024.09- | 8AT | F | R | SUV FWD JL473ZQD | | GCI83991 | Inner Joint | | 28 | 26 | 33 | 387 | 92 | |
| 2.0 (171 kw) | 2019.09- | 8AT | F | L | SUV FWD JL486ZQ4, JL486ZQ5 | Engine Code:JL486ZQ5,Model year from:2021,Model year to:2023 | GDS56293 | Drive Shaft | 44T | 30 | 31 | 62 | 93 | 605 | |
| | 2019.09- | 8AT | F | L | SUV FWD JL486ZQ4, JL486ZQ5 | Engine Code:JL486ZQ4,Model year to:2021 | GDS84603 | Drive Shaft | 44T | 30 | 31 | 62 | 92 | 593 | |
| | 2019.09- | 8AT | F | R | SUV FWD JL486ZQ4, JL486ZQ5 | Engine Code:JL486ZQ5,Model year from:2021,Model year to:2023 | GDS56366 | Drive Shaft | 44T | 30 | 28 | 62 | 93 | 991 | |
| | 2019.09- | 8AT | F | R | SUV FWD JL486ZQ4, JL486ZQ5 | Engine Code:JL486ZQ4,Model year to:2021 | GDS84602 | Drive Shaft | 44T | 30 | 31 | 62 | 92 | 994 | |
| | 2019.09- | 8AT | F | L/R | SUV FWD JL486ZQ4, JL486ZQ5 | Engine Code:JL486ZQ4,Model year to:2021 | GCO82899 | Outer Joint | 44T | 30 | 27 | 62 | 92 | 67 | M |
| | 2019.09- | 8AT | F | L/R | SUV FWD JL486ZQ4, JL486ZQ5 | Engine Code:JL486ZQ5,Model year from:2021,Model year to:2023 | GCO83388 | Outer Joint | 44T | 30 | 27 | 62 | 93 | 67 | M |
| | 2019.09- | 8AT | F | L | SUV FWD JL486ZQ4, JL486ZQ5 | Engine Code:JL486ZQ4,Model year to:2021 | GCI82888 | Inner Joint | | 31 | 27 | 36.2 | 68 | 97 | |
| | 2019.09- | 8AT | F | R | SUV FWD JL486ZQ4, JL486ZQ5 | Engine Code:JL486ZQ4,Model year to:2021 | GCI82887 | Inner Joint | | 31 | 27 | 36.2 | 451 | 102 | |
| | 2019.09- | 8AT | F | R | SUV FWD JL486ZQ4, JL486ZQ5 | Engine Code:JL486ZQ5,Model year from:2021,Model year to:2023 | GCI83267 | Inner Joint | | 28 | 27 | 33.2 | 398 | 102 | |
| **CS95** | | | | | | | | | | | | | | | |
| 2.0 (171 kw) | 2017.03- | 6AMT | F | L | SUV 4WD JL486ZQ3 | Model year to:2018 | GDS81627 | Drive Shaft | | 26 | 25 | 56 | 99 | 807 | |
| | 2017.03- | 6AMT | F | R | SUV 4WD JL486ZQ3 | Model year to:2018 | GDS81626 | Drive Shaft | | 26 | 25 | 56 | 99 | 837 | |
| | 2017.03- | 6AMT | F | L/R | SUV 4WD JL486ZQ3 | Model year to:2018 | GCO81448 | Outer Joint | | 26 | 21 | 56 | 99 | 58 | I |

| | YEAR | TRANSM. | F/R | L/R | BODY STYLE & DRIVE TYPE & ENGINE | REMARKS | G-AP Ref. | PRODUCT | ABS | Technical Specifications A | B | C | H | L | P |
|---|---|---|---|---|---|---|---|---|---|---|---|---|---|---|---|
| **CHANGAN** | | | | | | | | | | | | | | | |
| **CS95** | | | | | | | | | | | | | | | |
| 2.0 (171 kw) | 2017.03- | 6AMT | F | L/R | SUV 4WD JL486ZQ3 | Model year to:2018 | GCI24110 | Inner Joint | | 25 | 29 | 35 | 62.5 | 95 | |
| | 2017.03- | 6AT | F | L | SUV 4WD JL486ZQ3 | Model year to:2018 | GDS82121 | Drive Shaft | 48T | 30 | 31 | 65.3 | 92 | 618 | |
| | 2017.03- | 6AT | F | R | SUV 4WD JL486ZQ3 | Model year to:2018 | GDS82122 | Drive Shaft | 48T | 30 | 28 | 65.3 | 92 | 1007 | |
| | 2017.03- | 6AT | F | L/R | SUV 4WD JL486ZQ3 | Model year to:2018 | GCO81660 | Outer Joint | 48T | 30 | 27 | 65.3 | 92 | 68 | M |
| | 2017.03- | 6AT | F | L | SUV FWD JL486ZQ3 | Model year to:2018 | GDS82121 | Drive Shaft | 48T | 30 | 31 | 65.3 | 92 | 618 | |
| | 2017.03- | 6AT | F | R | SUV FWD JL486ZQ3 | Model year to:2018 | GDS82120 | Drive Shaft | 48T | 30 | 31 | 65.3 | 92 | 1011 | |
| | 2017.03- | 6AT | F | L/R | SUV FWD JL486ZQ3 | Model year to:2018 | GCO81660 | Outer Joint | 48T | 30 | 27 | 65.3 | 92 | 68 | M |
| **CX20** | | | | | | | | | | | | | | | |
| 1.3 (63 kw) | 2010.10- | AT | F | L | Hatchback FWD JL474QK,JL474QL | | GDS75038 | Drive Shaft | 41T | 23 | 22 | 49 | 78 | 602 | |
| | 2010.10- | AT | F | R | Hatchback FWD JL474QK,JL474QL | | GDS75039 | Drive Shaft | 41T | 23 | 22 | 49 | 78 | 878 | |
| | 2010.10- | MT | F | L | Hatchback FWD JL474QK,JL474QL | | GDS75037 | Drive Shaft | 41T | 23 | 22 | 49 | 78 | 624 | |
| | 2010.10- | MT | F | R | Hatchback FWD JL474QK,JL474QL | | GDS75036 | Drive Shaft | 41T | 23 | 22 | 49 | 78 | 865 | |
| **Eado** | | | | | | | | | | | | | | | |
| 1.6 (92 kw) | 2012.03-2018.12 | 4AT | F | L | Saloon FWD JL478QEA, JL478QEB | | GDS75031 | Drive Shaft | 46T | 27 | 23 | 60 | 92 | 662 | |
| | 2012.03-2018.12 | 4AT | F | R | Saloon FWD JL478QEA, JL478QEB | | GDS75030 | Drive Shaft | 46T | 27 | 23 | 60 | 92 | 939 | |
| | 2012.03-2018.12 | 5MT | F | L | Saloon FWD JL478QEA, JL478QEB | | GDS75029 | Drive Shaft | 46T | 27 | 23 | 60 | 94.5 | 660 | |
| | 2012.03-2018.12 | 5MT | F | R | Saloon FWD JL478QEA, JL478QEB | | GDS75028 | Drive Shaft | 46T | 27 | 23 | 60 | 94.5 | 961 | |
| | 2016.01- | 5MT | F | L | Saloon FWD JL478QEA | Model year to:2017 | GCI81635 | Inner Joint | | 34 | 25 | 35 | 64 | 110 | |
| 1.6 (94 kw) | 2018.03- | 6AT | F | L | Saloon FWD JL478QEN, JL478QEP | | GDS57913 | Drive Shaft | 46T | 27 | 26 | 57.9 | 93 | 626 | |
| | 2018.03- | 6AT | F | R | Saloon FWD JL478QEN, JL478QEP | | GDS57912 | Drive Shaft | 46T | 27 | 26 | 57.9 | 93 | 948 | |
| | 2018.03- | 6AT | F | L/R | Saloon FWD JL478QEN, JL478QEP | | GCO83783 | Outer Joint | 46T | 27 | 22 | 57.9 | 93 | 55.5 | M |
| | 2018.03- | 6AT | F | L | Saloon FWD JL478QEN, JL478QEP | | GCI83919 | Inner Joint | | 26 | 22 | 31 | 68.5 | 90 | |
| | 2018.03- | 6AT | F | R | Saloon FWD JL478QEN, JL478QEP | | GCI83918 | Inner Joint | | 26 | 22 | 31 | 327 | 91.5 | |
| **Eado DT** | | | | | | | | | | | | | | | |
| 1.6 (92 kw) | 2018.03- | 5MT | F | L/R | Saloon FWD JL478QEE | Model year to:2019 | GCO18315 | Outer Joint | 43T | 27 | 29 | 52.5 | 85.5 | 58 | I |
| **Eado Plus** | | | | | | | | | | | | | | | |
| 1.4 (116 kw) | 2020.03- | 7DCT | F | L | Saloon FWD JL473ZQ3 | Date to:2021.02 | GDS56299 | Drive Shaft | 46T | 27 | 34 | 60 | 93 | 645 | |
| | 2020.03- | 7DCT | F | R | Saloon FWD JL473ZQ3 | Date to:2021.02 | GDS56298 | Drive Shaft | 46T | 27 | 34 | 60 | 93 | 956 | |
| | 2020.03- | 7DCT | F | L/R | Saloon FWD JL473ZQ3 | Date to:2021.02 | GCO83431 | Outer Joint | 46T | 27 | 25 | 60 | 93 | 66 | M |
| | 2020.03- | 7DCT | F | L | Saloon FWD JL473ZQ3 | Date to:2021.02 | GCI81635 | Inner Joint | | 34 | 25 | 35 | 64 | 110 | |
| | 2020.03- | 7DCT | F | R | Saloon FWD JL473ZQ3 | Date to:2021.02 | GCI83231 | Inner Joint | | 34 | 25 | 35 | 74 | 133 | |
| 1.4 (118 kw) | 2021.03- | 7DCT | F | L | Saloon FWD JL473ZQ9 | | GDS57913 | Drive Shaft | 46T | 27 | 26 | 57.9 | 93 | 626 | |
| | 2021.03- | 7DCT | F | R | Saloon FWD JL473ZQ9 | | GDS57912 | Drive Shaft | 46T | 27 | 26 | 57.9 | 93 | 948 | |
| | 2021.03- | 7DCT | F | L/R | Saloon FWD JL473ZQ9 | | GCO83783 | Outer Joint | 46T | 27 | 22 | 57.9 | 93 | 55.5 | M |
| | 2021.03- | 7DCT | F | L | Saloon FWD JL473ZQ9 | | GCI83919 | Inner Joint | | 26 | 22 | 31 | 68.5 | 90 | |
| | 2021.03- | 7DCT | F | R | Saloon FWD JL473ZQ9 | | GCI83918 | Inner Joint | | 26 | 22 | 31 | 327 | 91.5 | |
| 1.6 (94 kw) | 2020.03- | 6AT | F | L | Saloon FWD JL478QEP | | GDS57913 | Drive Shaft | 46T | 27 | 26 | 57.9 | 93 | 626 | |
| | 2020.03- | 6AT | F | R | Saloon FWD JL478QEP | | GDS57912 | Drive Shaft | 46T | 27 | 26 | 57.9 | 93 | 948 | |
| | 2020.03- | 6AT | F | L/R | Saloon FWD JL478QEP | | GCO83783 | Outer Joint | 46T | 27 | 22 | 57.9 | 93 | 55.5 | M |
| | 2020.03- | 6AT | F | L | Saloon FWD JL478QEP | | GCI83919 | Inner Joint | | 26 | 22 | 31 | 68.5 | 90 | |
| | 2020.03- | 6AT | F | R | Saloon FWD JL478QEP | | GCI83918 | Inner Joint | | 26 | 22 | 31 | 327 | 91.5 | |
| **Eado XT** | | | | | | | | | | | | | | | |
| 1.6 (92 kw) | 2013.01-2018.08 | 4AT | F | L | Hatchback FWD JL478QEA | | GDS75031 | Drive Shaft | 46T | 27 | 23 | 60 | 92 | 662 | |
| | 2013.01-2018.08 | 4AT | F | R | Hatchback FWD JL478QEA | | GDS75030 | Drive Shaft | 46T | 27 | 23 | 60 | 92 | 939 | |
| | 2013.01-2018.08 | 5MT | F | L | Hatchback FWD JL478QEA | | GDS75029 | Drive Shaft | 46T | 27 | 23 | 60 | 94.5 | 660 | |
| | 2013.01-2018.08 | 5MT | F | R | Hatchback FWD JL478QEA | | GDS75028 | Drive Shaft | 46T | 27 | 23 | 60 | 94.5 | 961 | |
| **Raeton CC** | | | | | | | | | | | | | | | |
| 1.5 (115 kw) | 2017.12-2019.12 | 6AT | F | R | Saloon FWD JL476ZQCD | Model year to:2018 | GCI81624 | Inner Joint | | 26 | 32 | 31 | 274 | 104 | |
| **Uni-K** | | | | | | | | | | | | | | | |
| 2.0 (166 kw) | 2022.03- | 8AT | F | R | SUV 4WD JL486ZQ5 | | GDS58303 | Drive Shaft | 48T | 30 | 28 | 65.3 | 92 | 1016 | |
| | 2022.03- | 8AT | F | L/R | SUV 4WD JL486ZQ5 | | GCO83778 | Outer Joint | 48T | 30 | 27 | 65.3 | 92 | 67.5 | M |
| | 2022.03- | 8AT | F | R | SUV 4WD JL486ZQ5 | | GCI84058 | Inner Joint | | 28 | 27 | 33 | 432 | 102 | |
| 2.0 (171 kw) | 2021.03- | 8AT | F | L | SUV 4WD JL486ZQ5 | | GDS57894 | Drive Shaft | 48T | 30 | 31 | 65.3 | 92 | 619 | |
| | 2021.03- | 8AT | F | L | SUV 4WD JL486ZQ5 | | GCO83778 | Outer Joint | 48T | 30 | 27 | 65.3 | 92 | 67.5 | M |
| | 2021.03- | 8AT | F | L | SUV 4WD JL486ZQ5 | | GCI82888 | Inner Joint | | 31 | 27 | 36.2 | 68 | 97 | |
| | 2021.03- | 8AT | R | L | SUV 4WD JL486ZQ5 | | GDS57870 | Drive Shaft | | 26 | 25 | 56 | 99 | 823 | |
| | 2021.03- | 8AT | R | R | SUV 4WD JL486ZQ5 | | GDS57869 | Drive Shaft | | 26 | 25 | 56 | 99 | 850 | |
| | 2021.03- | 8AT | R | L/R | SUV 4WD JL486ZQ5 | | GCO83757 | Outer Joint | | 26 | 21 | 56 | 99 | 58 | I |
| | 2021.03- | 8AT | R | L/R | SUV 4WD JL486ZQ5 | | GCI83900 | Inner Joint | | 25 | 22 | 35 | 62.5 | 95 | |
| | 2021.03- | 8AT | F | L | SUV FWD JL486ZQ5 | | GDS57894 | Drive Shaft | 48T | 30 | 31 | 65.3 | 92 | 619 | |
| | 2021.03- | 8AT | F | L | SUV FWD JL486ZQ5 | | GCO83778 | Outer Joint | 48T | 30 | 27 | 65.3 | 92 | 67.5 | M |
| | 2021.03- | 8AT | F | L | SUV FWD JL486ZQ5 | | GCI82888 | Inner Joint | | 31 | 27 | 36.2 | 68 | 97 | |
| **Uni-T** | | | | | | | | | | | | | | | |
| 1.5 (138 kw) | 2021.08- | DCT | F | L | SUV FWD JL473ZQ7 | | GDS57376 | Drive Shaft | 46T | 28 | 34 | 62 | 93 | 666 | |
| | 2021.08- | DCT | F | R | SUV FWD JL473ZQ7 | | GDS57375 | Drive Shaft | 46T | 28 | 34 | 62 | 93 | 977 | |

| | YEAR | TRANSM. | F/R | L/R | BODY STYLE & DRIVE TYPE & ENGINE | REMARKS | G-AP Ref. | PRODUCT | ABS | Technical Specifications A | B | C | H | L | P |
|---|---|---|---|---|---|---|---|---|---|---|---|---|---|---|---|
| **CHANGAN** | | | | | | | | | | | | | | | |
| **Uni-T** | | | | | | | | | | | | | | | |
| 1.5 (138 kw) | 2021.08- | DCT | F | L/R | SUV FWD JL473ZQ7 | | GCO83519 | Outer Joint | 46T | 28 | 24 | 62 | 93 | 62 | I |
| | 2021.08- | DCT | F | L | SUV FWD JL473ZQ7 | | GCI83630 | Inner Joint | | 34 | 24 | 35 | 64 | 120 | |
| | 2021.08- | DCT | F | R | SUV FWD JL473ZQ7 | | GCI83629 | Inner Joint | | 34 | 24 | 35 | 74 | 134 | |
| **Uni-V** | | | | | | | | | | | | | | | |
| 1.5 (138 kw) | 2022.03- | 7DCT | F | L | Hatchback FWD JL473ZQ7 | | GDS57945 | Drive Shaft | 46T | 28 | 34 | 60 | 93 | 666 | |
| | 2022.03- | 7DCT | F | R | Hatchback FWD JL473ZQ7 | | GDS57946 | Drive Shaft | 46T | 28 | 34 | 60 | 93 | 978 | |
| | 2022.03- | 7DCT | F | L/R | Hatchback FWD JL473ZQ7 | | GCO83807 | Outer Joint | 46T | 28 | 23 | 60 | 93 | 58.5 | I |
| | 2022.03- | 7DCT | F | L | Hatchback FWD JL473ZQ7 | | GCI83953 | Inner Joint | | 34 | 23 | 35 | 64 | 105.5 | |
| | 2022.03- | 7DCT | F | R | Hatchback FWD JL473ZQ7 | | GCI83954 | Inner Joint | | 34 | 23 | 35 | 74 | 122.5 | |
| 1.5 (141 kw) | 2025.04- | 7DCT | F | L | Hatchback FWD JL473ZQD | | GDS57945 | Drive Shaft | 46T | 28 | 34 | 60 | 93 | 666 | |
| | 2025.04- | 7DCT | F | R | Hatchback FWD JL473ZQD | | GDS57946 | Drive Shaft | 46T | 28 | 34 | 60 | 93 | 978 | |
| | 2025.04- | 7DCT | F | L/R | Hatchback FWD JL473ZQD | | GCO83807 | Outer Joint | 46T | 28 | 23 | 60 | 93 | 58.5 | I |
| | 2025.04- | 7DCT | F | L | Hatchback FWD JL473ZQD | | GCI83953 | Inner Joint | | 34 | 23 | 35 | 64 | 105.5 | |
| | 2025.04- | 7DCT | F | R | Hatchback FWD JL473ZQD | | GCI83954 | Inner Joint | | 34 | 23 | 35 | 74 | 122.5 | |
| **CHERY** | | | | | | | | | | | | | | | |
| **A1** | | | | | | | | | | | | | | | |
| 1.3 (61 kw) | 2007.04-2014.12 | 5AMT/5MT | F | L | Hatchback FWD SQR473F | Transmission 5MT,Model year from:2008,Model year to:2012;Transmission 5MT,Model year to:2013 | GDS82372 | Drive Shaft | 43T | 23 | 25 | 51 | 94 | 569 | |
| | 2007.04-2014.12 | 5AMT/5MT | F | R | Hatchback FWD SQR473F | Transmission 5AMT,Model year from:2008,Model year to:2012;Transmission 5MT,Model year to:2013 | GDS57218 | Drive Shaft | 43T | 23 | 25 | 51 | 94 | 905 | |
| | 2007.04-2014.12 | 5AMT/5MT | F | L/R | Hatchback FWD SQR473F | Transmission 5AMT,Model year from:2008,Model year to:2012;Transmission 5MT,Model year to:2013 | GCO68005 | Outer Joint | 43T | 23 | 21 | 51 | 94 | 54 | I |
| **A3** | | | | | | | | | | | | | | | |
| 1.6 (86 kw) | 2010.01-2015.12 | 5MT | F | L | Saloon FWD SQR481F | Model year to:2012 | GDS56489 | Drive Shaft | | 26 | 25 | 52 | 98 | 634 | |
| | 2010.01-2015.12 | 5MT | F | R | Saloon FWD SQR481F | Model year to:2012 | GDS81640 | Drive Shaft | | 26 | 25 | 52 | 99 | 976 | |
| | 2010.01-2015.12 | 5MT | F | L/R | Saloon FWD SQR481F | Model year to:2012 | GCO81455 | Outer Joint | | 26 | 22 | 52 | 99 | 59.5 | I |
| | 2010.01-2015.12 | 5MT | F | L | Saloon FWD SQR481F | Model year to:2012 | GCI83328 | Inner Joint | | 25 | 22 | 41 | 61.5 | 94 | |
| | 2010.01-2015.12 | 5MT | F | R | Saloon FWD SQR481F | Model year to:2012 | GCI39101 | Inner Joint | | 25 | 29 | 41 | 61 | 101.5 | |
| 1.6 (88 kw) | 2008.09-2010.12 | 5MT | F | L | Saloon FWD SQR481FD, SQR481F | for OE NO.:M11-2203010VA | GDS56489 | Drive Shaft | | 26 | 25 | 52 | 98 | 634 | |
| | 2008.09-2010.12 | 5MT | F | R | Saloon FWD SQR481FD, SQR481F | | GDS81640 | Drive Shaft | | 26 | 25 | 52 | 99 | 976 | |
| | 2008.09-2010.12 | 5MT | F | L | Saloon FWD SQR481FD, SQR481F | | GCO83312 | Outer Joint | | 26 | 23 | 52 | 98 | 58 | I |
| | 2008.09-2010.12 | 5MT | F | R | Saloon FWD SQR481FD, SQR481F | | GCO81455 | Outer Joint | | 26 | 22 | 52 | 99 | 59.5 | I |
| | 2008.09-2010.12 | 5MT | F | L | Saloon FWD SQR481FD, SQR481F | for OE NO.:M11-2203010BA | GCI81603 | Inner Joint | | 25 | 24 | 41 | 61 | 96 | |
| | 2008.09-2010.12 | 5MT | F | L | Saloon FWD SQR481FD, SQR481F | for OE NO.:M11-2203010VA | GCI83328 | Inner Joint | | 25 | 22 | 41 | 61.5 | 94 | |
| | 2008.09-2010.12 | 5MT | F | R | Saloon FWD SQR481FD, SQR481F | | GCI39101 | Inner Joint | | 25 | 29 | 41 | 61 | 101.5 | |
| | 2008.09-2010.12 | MT | F | L | Saloon FWD SQR481FD, SQR481F | for OE NO.:M11-2203010VC | GDS81639 | Drive Shaft | | 26 | 25 | 52 | 99 | 647 | |
| | 2009.01-2014.12 | 5MT | F | L | Hatchback FWD SQR481F | Model year to:2010;for OE NO.:M11-2203010VA | GDS56489 | Drive Shaft | | 26 | 25 | 52 | 98 | 634 | |
| | 2009.01-2014.12 | 5MT | F | R | Hatchback FWD SQR481F | Model year to:2010 | GDS81640 | Drive Shaft | | 26 | 25 | 52 | 99 | 976 | |
| | 2009.01-2014.12 | 5MT | F | L/R | Hatchback FWD SQR481F | Model year to:2010 | GCO81455 | Outer Joint | | 26 | 22 | 52 | 99 | 59.5 | I |
| | 2009.01-2014.12 | 5MT | F | L | Hatchback FWD SQR481F | Model year to:2010;for OE NO.:M11-2203010VA | GCI83328 | Inner Joint | | 25 | 22 | 41 | 61.5 | 94 | |
| | 2009.01-2014.12 | 5MT | F | R | Hatchback FWD SQR481F | Model year to:2010 | GCI39101 | Inner Joint | | 25 | 29 | 41 | 61 | 101.5 | |
| | 2009.01-2014.12 | | F | L | Hatchback FWD SQR481F | for OE NO.:M11-2203010VC | GDS81639 | Drive Shaft | | 26 | 25 | 52 | 99 | 647 | |
| 1.6 (93 kw) | 2010.08-2014.12 | 5MT | F | L | Hatchback FWD SQRE4G16, SQRD4S13 | Model year to:2013;for OE NO.:M11-2203010VA | GDS56489 | Drive Shaft | | 26 | 25 | 52 | 98 | 634 | |
| | 2010.08-2014.12 | 5MT | F | R | Hatchback FWD SQRE4G16, SQRD4S13 | Model year to:2013 | GDS81640 | Drive Shaft | | 26 | 25 | 52 | 99 | 976 | |
| | 2010.08-2014.12 | 5MT | F | L/R | Hatchback FWD SQRE4G16, SQRD4S13 | Model year to:2013 | GCO81455 | Outer Joint | | 26 | 22 | 52 | 99 | 59.5 | I |
| | 2010.08-2014.12 | 5MT | F | L | Hatchback FWD SQRE4G16, SQRD4S13 | Model year to:2013;for OE NO.:M11-2203010VA | GCI83328 | Inner Joint | | 25 | 22 | 41 | 61.5 | 94 | |
| | 2010.08-2014.12 | 5MT | F | R | Hatchback FWD SQRE4G16, SQRD4S13 | Model year to:2013 | GCI39101 | Inner Joint | | 25 | 29 | 41 | 61 | 101.5 | |
| | 2010.08-2014.12 | | F | L | Hatchback FWD SQRE4G16, SQRD4S13 | for OE NO.:M11-2203010VC | GDS81639 | Drive Shaft | | 26 | 25 | 52 | 99 | 647 | |
| | 2010.08-2014.12 | 5MT | F | L | Saloon FWD SQRE4G16 | Model year to:2013;for OE NO.:M11-2203010VA | GDS56489 | Drive Shaft | | 26 | 25 | 52 | 98 | 634 | |
| | 2010.08-2014.12 | 5MT | F | R | Saloon FWD SQRE4G16 | Model year to:2013 | GDS81640 | Drive Shaft | | 26 | 25 | 52 | 99 | 976 | |
| | 2010.08-2014.12 | 5MT | F | L/R | Saloon FWD SQRE4G16 | Model year to:2013;for OE NO.:M11XLB3AF2203030 | GCO81632 | Outer Joint | | 26 | 32 | 52 | 98.5 | 57 | O |
| | 2010.08-2014.12 | 5MT/CVT | F | L/R | Saloon FWD SQRE4G16 | Transmission 5MT,Model year to:2013;Transmission 7DCT,Model year from:2010,Model year to:2013;Transmission CVT,Model year from:2010,Model year to:2013 | GCO81622 | Outer Joint | | 26 | 29 | 52 | 99 | 59.5 | M |
| | 2010.08-2014.12 | CVT | F | L | Saloon FWD SQRE4G16 | Model year from:2012,Model year to:2013 | GDS82015 | Drive Shaft | | 26 | 25 | 52 | 99 | 637 | |
| | 2010.08-2014.12 | CVT | F | R | Saloon FWD SQRE4G16 | Model year from:2012,Model year to:2013 | GDS82016 | Drive Shaft | | 26 | 25 | 52 | 99 | 995 | |
| | 2010.08-2014.12 | CVT | F | L/R | Saloon FWD SQRE4G16 | Model year from:2012,Model year to:2013 | GCI81601 | Inner Joint | | 25 | 28 | 41 | 61.5 | 95.5 | |
| | 2010.08-2014.12 | CVT/5MT | F | L/R | Saloon FWD SQRE4G16 | Transmission 5MT,Model year to:2013;Transmission CVT,Model year from:2010,Model year to:2013;Transmission 7DCT,Model year to:2013,Model year from:2010 | GCO81455 | Outer Joint | | 26 | 22 | 52 | 99 | 59.5 | I |
| | 2010.08-2014.12 | | F | L | Saloon FWD SQRE4G16 | for OE NO.:M11-2203010VC | GDS81639 | Drive Shaft | | 26 | 25 | 52 | 99 | 647 | |
| **A5** | | | | | | | | | | | | | | | |
| 1.6 (80 kw) | 2006.01-2012.12 | 5MT | F | L | Saloon FWD SQR481F | Model year to:2009 | GDS68005 | Drive Shaft | | 28 | 25 | 55.5 | 99 | 620 | |
| | 2006.01-2012.12 | 5MT | F | R | Saloon FWD SQR481F | Model year to:2009 | GDS68006 | Drive Shaft | | 28 | 25 | 55.5 | 99 | 976 | |
| | 2006.01-2012.12 | 5MT | F | L/R | Saloon FWD SQR481F | Model year to:2009 | GCO68002 | Outer Joint | | 28 | 30 | 55.5 | 99 | 61 | I |
| 1.6 (88 kw) | 2006.01-2009.01 | 5MT | F | L | Saloon FWD SQR481F | Model year from:2008 | GDS68005 | Drive Shaft | | 28 | 25 | 55.5 | 99 | 620 | |
| | 2006.01-2009.01 | 5MT | F | R | Saloon FWD SQR481F | Model year from:2008 | GDS68006 | Drive Shaft | | 28 | 25 | 55.5 | 99 | 976 | |
| | 2006.01-2009.01 | 5MT | F | L/R | Saloon FWD SQR481F | Model year from:2008 | GCO68002 | Outer Joint | | 28 | 30 | 55.5 | 99 | 61 | I |
| | 2009.01-2012.12 | MT | F | L | Saloon FWD SQR481F | | GDS68005 | Drive Shaft | | 28 | 25 | 55.5 | 99 | 620 | |
| | 2009.01-2012.12 | MT | F | R | Saloon FWD SQR481F | | GDS68006 | Drive Shaft | | 28 | 25 | 55.5 | 99 | 976 | |
| 1.8 (97 kw) | 2007.09-2012.12 | 5MT | F | L | Saloon FWD SQR481FC | Model year to:2009 | GDS68005 | Drive Shaft | | 28 | 25 | 55.5 | 99 | 620 | |
| | 2007.09-2012.12 | 5MT | F | R | Saloon FWD SQR481FC | Model year to:2009 | GDS68006 | Drive Shaft | | 28 | 25 | 55.5 | 99 | 976 | |

| | YEAR | TRANSM. | F/R | L/R | BODY STYLE & DRIVE TYPE & ENGINE | REMARKS | G-AP Ref. | PRODUCT | ABS | Technical Specifications A | B | C | H | L | P |
|---|---|---|---|---|---|---|---|---|---|---|---|---|---|---|---|
| **CHERY** | | | | | | | | | | | | | | | |
| **A5** | | | | | | | | | | | | | | | |
| 1.8 (97 kw) | 2007.09-2012.12 | 5MT | F | L/R | Saloon FWD SQR481FC | Model year to:2009 | GCO68002 | Outer Joint | | 28 | 30 | 55.5 | 99 | 61 | I |
| **A5/Elara/Alia/Fora** | | | | | | | | | | | | | | | |
| 2.0 (95 kw) | 2006.01-2012.12 | 5MT | F | L | Saloon FWD SQR484F | Model year to:2007 | GDS68005 | Drive Shaft | | 28 | 25 | 55.5 | 99 | 620 | |
| | 2006.01-2012.12 | 5MT | F | R | Saloon FWD SQR484F | Model year to:2007 | GDS68006 | Drive Shaft | | 28 | 25 | 55.5 | 99 | 976 | |
| | 2006.01-2012.12 | 5MT | F | L/R | Saloon FWD SQR484F | Model year to:2007 | GCO68002 | Outer Joint | | 28 | 30 | 55.5 | 99 | 61 | I |
| | 2006.01-2012.12 | 5MT | F | L | Saloon FWD SQR484F | Model year to:2007 | GCI68004 | Inner Joint | | 25 | 28 | 41 | 61.5 | 104.5 | |
| **Arrizo 5** | | | | | | | | | | | | | | | |
| 1.5 (85 kw) | 2016.03- | 5MT | F | L | Saloon FWD SQRE4G15B/SQRE4G15C | Model year from:2019, Model year to:2020, For Engine no.:SQRE4G15C | GDS56476 | Drive Shaft | | 26 | 25 | 52 | 99 | 645 | |
| | 2016.03- | 5MT | F | L | Saloon FWD SQRE4G15B/SQRE4G15C | Model year to:2019 | GDS56487 | Drive Shaft | | 26 | 25 | 52 | 98 | 650 | |
| | 2016.03- | 5MT | F | L | Saloon FWD SQRE4G15B/SQRE4G15C | Model year from:2020,Model year to:2021 | GDS56748 | Drive Shaft | | 26 | 25 | 52 | 98.5 | 644 | |
| | 2016.03- | 5MT | F | R | Saloon FWD SQRE4G15B/SQRE4G15C | Model year from:2019, Model year to:2020, For Engine no.:SQRE4G15C | GDS56475 | Drive Shaft | | 26 | 25 | 52 | 99 | 972 | |
| | 2016.03- | 5MT | F | R | Saloon FWD SQRE4G15B/SQRE4G15C | Model year to:2019 | GDS56486 | Drive Shaft | | 26 | 25 | 52 | 98 | 976 | |
| | 2016.03- | 5MT | F | R | Saloon FWD SQRE4G15B/SQRE4G15C | Model year from:2020,Model year to:2021 | GDS56747 | Drive Shaft | | 26 | 25 | 52 | 98.5 | 982 | |
| | 2016.03- | 5MT | F | L | Saloon FWD SQRE4G15B/SQRE4G15C | Model year from:2020,Model year to:2021 | GCI83470 | Inner Joint | | 25 | 30 | 45 | 57.5 | 110.5 | |
| | 2016.03- | 5MT | F | R | Saloon FWD SQRE4G15B/SQRE4G15C | Model year from:2020,Model year to:2021 | GCI83469 | Inner Joint | | 25 | 30 | 45 | 62.5 | 110.5 | |
| | 2016.03- | 5MT | F | L/R | Saloon FWD SQRE4G15B/SQRE4G15C | Model year from:2019, Model year to:2020, For Engine no.:SQRE4G15C | GCI39101 | Inner Joint | | 25 | 29 | 41 | 61 | 101.5 | |
| | 2016.03- | 5MT | F | L/R | Saloon FWD SQRE4G15B/SQRE4G15C | Model year to:2019 | GCI83327 | Inner Joint | | 25 | 22 | 41 | 61 | 97.5 | |
| | 2016.03- | 5MT/CVT | F | L/R | Saloon FWD SQRE4G15B/SQRE4G15C | Model year to:2019;for OE NO.:M11-XLB3AF2203030A | GCO81455 | Outer Joint | | 26 | 22 | 52 | 99 | 59.5 | I |
| | 2016.03- | 5MT/CVT | F | L/R | Saloon FWD SQRE4G15B/SQRE4G15C | Model year to:2019 | GCO83312 | Outer Joint | | 26 | 23 | 52 | 98 | 58 | I |
| | 2016.03- | CVT | F | L | Saloon FWD SQRE4G15B/SQRE4G15C | Model year to:2019;7CVT | GDS56489 | Drive Shaft | | 26 | 25 | 52 | 98 | 634 | |
| | 2016.03- | CVT | F | L | Saloon FWD SQRE4G15B/SQRE4G15C | Model year from:2019,Model year to:2021;9CVT | GDS56749 | Drive Shaft | | 26 | 25 | 52 | 98.5 | 656 | |
| | 2016.03- | CVT | F | L | Saloon FWD SQRE4G15B/SQRE4G15C | Model year to:2019;7CVT | GDS82015 | Drive Shaft | | 26 | 25 | 52 | 99 | 637 | |
| | 2016.03- | CVT | F | R | Saloon FWD SQRE4G15B/SQRE4G15C | Model year to:2019;7CVT | GDS56468 | Drive Shaft | | 26 | 25 | 52 | 99 | 986 | |
| | 2016.03- | CVT | F | R | Saloon FWD SQRE4G15B/SQRE4G15C | Model year to:2019;7CVT | GDS56488 | Drive Shaft | | 26 | 25 | 52 | 98 | 990 | |
| | 2016.03- | CVT | F | R | Saloon FWD SQRE4G15B/SQRE4G15C | Model year from:2019,Model year to:2021,9CVT | GDS56752 | Drive Shaft | | 26 | 25 | 52 | 98.5 | 974 | |
| | 2016.03- | CVT | F | R | Saloon FWD SQRE4G15B/SQRE4G15C | Model year to:2019;7CVT,For Engine no.:SQRE4G15C | GCI83091 | Inner Joint | | 25 | 29 | 41 | 61.5 | 98.5 | |
| | 2016.03- | CVT | F | L/R | Saloon FWD SQRE4G15B/SQRE4G15C | Model year to:2019;7CVT | GCI81601 | Inner Joint | | 25 | 28 | 41 | 61.5 | 95.5 | |
| | 2016.03- | CVT | F | L/R | Saloon FWD SQRE4G15B/SQRE4G15C | Model year to:2019;7CVT | GCI83328 | Inner Joint | | 25 | 22 | 41 | 61.5 | 94 | |
| | 2016.03- | CVT | F | L/R | Saloon FWD SQRE4G15B/SQRE4G15C | Model year from:2019,Model year to:2021;9CVT | GCI83471 | Inner Joint | | 25 | 30 | 41 | 61.5 | 104 | |
| | 2016.03- | CVT/5MT | F | L/R | Saloon FWD SQRE4G15B/SQRE4G15C | For model year:2016,Transmission:7CVT/5MT,For model year:2020,Transmission:5MT,For Engine no.:SQRE4G15C | GCO81622 | Outer Joint | | 26 | 29 | 52 | 99 | 59.5 | M |
| | 2016.03- | CVT/5MT | F | L/R | Saloon FWD SQRE4G15B/SQRE4G15C | Transmission:CVT,Model year from:2016,Model year to:2021;Transmission:5MT,Model year from:2020,Model year to:2021 | GCO83419 | Outer Joint | | 26 | 22 | 52 | 98.5 | 58.5 | M |
| 1.5 (108 kw) | 2017.03-2019.12 | 5MT | F | L | Saloon FWD SQRE4T15B | Model year to:2018 | GDS82031 | Drive Shaft | | 26 | 27 | 52 | 99 | 647 | |
| | 2017.03-2019.12 | 5MT | F | R | Saloon FWD SQRE4T15B | Model year to:2018 | GDS82032 | Drive Shaft | | 26 | 27 | 52 | 99 | 980 | |
| | 2017.03-2019.12 | 5MT/CVT | F | L/R | Saloon FWD SQRE4T15B | Model year to:2018 | GCO81628 | Outer Joint | | 26 | 34 | 52 | 99 | 61 | M |
| | 2017.03-2019.12 | CVT | F | L | Saloon FWD SQRE4T15B | Model year to:2018,7CVT | GDS56514 | Drive Shaft | | 26 | 25 | 52 | 99 | 650 | |
| | 2017.03-2019.12 | CVT | F | R | Saloon FWD SQRE4T15B | Model year to:2018 | GDS56594 | Drive Shaft | | 26 | 25 | 52 | 99 | 978 | |
| | 2017.03-2019.12 | CVT | F | R | Saloon FWD SQRE4T15B | Model year to:2018 | GCI82911 | Inner Joint | | 25 | 33 | 41 | 62 | 93 | |
| 1.5 (115 kw) | 2020.06-2021.12 | 5MT | F | L | Saloon FWD SQRE4T15C | | GDS82031 | Drive Shaft | | 26 | 27 | 52 | 99 | 647 | |
| | 2020.06-2021.12 | 5MT | F | R | Saloon FWD SQRE4T15C | | GDS82032 | Drive Shaft | | 26 | 27 | 52 | 99 | 980 | |
| | 2020.06-2021.12 | 5MT | F | L/R | Saloon FWD SQRE4T15C | For model year:2020 | GCO81628 | Outer Joint | | 26 | 34 | 52 | 99 | 61 | M |
| 1.6 (66 kw) | 2020.03- | 5MT | F | L/R | Saloon FWD SQRE4G16C | Model year to:2022;for OE NO.:M11-XLB3AF2203030A | GCO81455 | Outer Joint | | 26 | 22 | 52 | 99 | 59.5 | I |
| | 2020.03- | 5MT | F | L/R | Saloon FWD SQRE4G16C | Model year to:2022,for OE NO.:M11XLB3AF2203030V | GCO81622 | Outer Joint | | 26 | 29 | 52 | 99 | 59.5 | M |
| **Arrizo 5 Plus** | | | | | | | | | | | | | | | |
| 1.5 (85 kw) | 2020.11- | 5MT | F | L | Saloon FWD SQRE4G15C | Model year to:2022 | GDS56748 | Drive Shaft | | 26 | 25 | 52 | 98.5 | 644 | |
| | 2020.11- | 5MT | F | R | Saloon FWD SQRE4G15C | Model year to:2022 | GDS56747 | Drive Shaft | | 26 | 25 | 52 | 98.5 | 982 | |
| | 2020.11- | 5MT | F | L | Saloon FWD SQRE4G15C | Model year to:2022 | GCI83470 | Inner Joint | | 25 | 30 | 45 | 57.5 | 110.5 | |
| | 2020.11- | 5MT | F | R | Saloon FWD SQRE4G15C | Model year to:2022 | GCI83469 | Inner Joint | | 25 | 30 | 45 | 62.5 | 110.5 | |
| | 2020.11- | CVT | F | L | Saloon FWD SQRE4G15C | Model year to:2023;9CVT | GDS56749 | Drive Shaft | | 26 | 25 | 52 | 98.5 | 656 | |
| | 2020.11- | CVT | F | R | Saloon FWD SQRE4G15C | Model year to:2023;9CVT | GDS56752 | Drive Shaft | | 26 | 25 | 52 | 98.5 | 974 | |
| | 2020.11- | CVT | F | L/R | Saloon FWD SQRE4G15C | Model year to:2023;9CVT | GCI83471 | Inner Joint | | 25 | 30 | 41 | 61.5 | 104 | |
| | 2020.11- | CVT/5MT | F | L/R | Saloon FWD SQRE4G15C | Transmission:CVT,Model year to:2023;Transmission:5MT,Model year to:2022 | GCO83419 | Outer Joint | | 26 | 22 | 52 | 98.5 | 58.5 | M |
| 1.5 (115 kw) | 2020.11- | 5MT | F | L | Saloon FWD SQRE4T15C | Model year to:2022 | GDS82031 | Drive Shaft | | 26 | 27 | 52 | 99 | 647 | |
| | 2020.11- | 5MT | F | R | Saloon FWD SQRE4T15C | Model year to:2022 | GDS82032 | Drive Shaft | | 26 | 27 | 52 | 99 | 980 | |
| | 2020.11- | 5MT | F | L/R | Saloon FWD SQRE4T15C | Model year to:2022 | GCO81628 | Outer Joint | | 26 | 34 | 52 | 99 | 61 | M |
| | 2020.11- | CVT | F | L | Saloon FWD SQRE4T15C | Model year to:2023,9CVT | GDS56526 | Drive Shaft | | 26 | 27 | 54 | 98.5 | 651 | |
| | 2020.11- | CVT | F | R | Saloon FWD SQRE4T15C | Model year to:2023,9CVT | GDS56525 | Drive Shaft | | 26 | 27 | 54 | 98.5 | 967 | |
| | 2020.11- | CVT | F | L/R | Saloon FWD SQRE4T15C | Model year to:2023,9CVT | GCO83326 | Outer Joint | | 26 | 25 | 54 | 98.5 | 58 | M |
| | 2020.11- | CVT | F | L/R | Saloon FWD SQRE4T15C | Model year to:2023,9CVT | GCI83349 | Inner Joint | | 27 | 25 | 41 | 61.5 | 97.5 | |
| **Arrizo 7** | | | | | | | | | | | | | | | |
| 1.5 (108 kw) | 2017.05- | CVT | F | L | Saloon FWD SQRE4T15B | Model year to:2018,7CVT | GDS56514 | Drive Shaft | | 26 | 25 | 52 | 99 | 650 | |
| | 2017.05- | CVT | F | R | Saloon FWD SQRE4T15B | Model year to:2018 | GDS56594 | Drive Shaft | | 26 | 25 | 52 | 99 | 978 | |
| | 2017.05- | CVT | F | L/R | Saloon FWD SQRE4T15B | Model year to:2018 | GCO81628 | Outer Joint | | 26 | 34 | 52 | 99 | 61 | M |
| | 2017.05- | CVT | F | R | Saloon FWD SQRE4T15B | Model year to:2018 | GCI82911 | Inner Joint | | 25 | 33 | 41 | 62 | 93 | |
| 1.5 (112 kw) | 2014.11- | 5MT | F | L | Saloon FWD SQRE4T15 | Model year from:2015,Model year to:2016 | GDS82031 | Drive Shaft | | 26 | 27 | 52 | 99 | 647 | |
| | 2014.11- | 5MT | F | R | Saloon FWD SQRE4T15 | Model year from:2015,Model year to:2016 | GDS82032 | Drive Shaft | | 26 | 27 | 52 | 99 | 980 | |

| | YEAR | TRANSM. | F/R | L/R | BODY STYLE & DRIVE TYPE & ENGINE | REMARKS | G-AP Ref. | PRODUCT | ABS | Technical Specifications | | | | | |
|---|---|---|---|---|---|---|---|---|---|---|---|---|---|---|---|
| | | | | | | | | | | A | B | C | H | L | P |
| **CHERY** | | | | | | | | | | | | | | | |
| **Arrizo 7** | | | | | | | | | | | | | | | |
| 1.5 (112 kw) | 2014.11- | 5MT | F | L/R | Saloon FWD SQRE4T15 | Model year from:2015,Model year to:2016 | GCO81628 | Outer Joint | | 26 | 34 | 52 | 99 | 61 | M |
| 1.6 (93 kw) | 2013.07- | 5MT | F | L | Saloon FWD SQRE4G16 | Model year to:2016 | GDS56489 | Drive Shaft | | 26 | 25 | 52 | 98 | 634 | |
| | 2013.07- | 5MT | F | R | Saloon FWD SQRE4G16 | Model year to:2016 | GDS81640 | Drive Shaft | | 26 | 25 | 52 | 99 | 976 | |
| | 2013.07- | 5MT/CVT | F | L/R | Saloon FWD SQRE4G16 | Transmission:5MT,Model year to:2016,Transmission:CVT,Model year to:2017,for OE NO.:M11-3U5100AB | GCO81455 | Outer Joint | | 26 | 22 | 52 | 99 | 59.5 | I |
| | 2013.07- | 5MT/CVT | F | L/R | Saloon FWD SQRE4G16 | Transmission:5MT,Model year to:2016,Transmission:CVT,Model year to:2017,Model year from:2018,Model year to:2019,Transmission:CVT,Model year from:2019,Model year to:2021,for OE NO.:M11-3U5100AB | GCO81622 | Outer Joint | | 26 | 29 | 52 | 99 | 59.5 | M |
| | 2013.07- | CVT | F | L | Saloon FWD SQRE4G16 | Transmission:CVT,Model year from:2013,Model year to:2015,Transmission:TCV,Model year from:2016,Model year to:2017 | GDS82015 | Drive Shaft | | 26 | 25 | 52 | 99 | 637 | |
| | 2013.07- | CVT | F | R | Saloon FWD SQRE4G16 | Transmission:CVT,Model year from:2013,Model year to:2015,Transmission:TCV,Model year from:2016,Model year to:2017 | GDS82016 | Drive Shaft | | 26 | 25 | 52 | 99 | 995 | |
| | 2013.07- | CVT | F | L/R | Saloon FWD SQRE4G16 | Model year from:2016,Model year to:2016 | GCO81628 | Outer Joint | | 26 | 34 | 52 | 99 | 61 | M |
| | 2013.07- | CVT | F | L/R | Saloon FWD SQRE4G16 | Transmission:CVT,Model year from:2013,Model year to:2015,Transmission:TCV,Model year from:2016,Model year to:2017 | GCI81601 | Inner Joint | | 25 | 28 | 41 | 61.5 | 95.5 | |
| | 2013.07- | MT | F | L | Saloon FWD SQRE4G16 | for OE NO.:J42-2203010BG | GDS57685 | Drive Shaft | | 26 | 25 | 52 | 99 | 650 | |
| | 2013.07- | MT | F | R | Saloon FWD SQRE4G16 | | GDS57584 | Drive Shaft | | 26 | 25 | 52 | 99 | 978 | |
| | 2013.07- | MT | F | L/R | Saloon FWD SQRE4G16 | | GCO83632 | Outer Joint | | 26 | 32 | 52 | 99 | 61 | O |
| | 2013.07- | MT | F | R | Saloon FWD SQRE4G16 | | GCI81603 | Inner Joint | | 25 | 24 | 41 | 61 | 96 | |
| **Arrizo 7e** | | | | | | | | | | | | | | | |
| 1.6 (93 kw) | 2016.01- | 5MT | F | L | Saloon FWD SQRE4G16 | Model year from:2017, Model year to:2019 | GDS56487 | Drive Shaft | | 26 | 25 | 52 | 98 | 650 | |
| | 2016.01- | 5MT | F | R | Saloon FWD SQRE4G16 | Model year from:2017, Model year to:2019 | GDS56486 | Drive Shaft | | 26 | 25 | 52 | 98 | 976 | |
| | 2016.01- | 5MT | F | L/R | Saloon FWD SQRE4G16 | Model year from:2017,Model year to:2019 | GCO81455 | Outer Joint | | 26 | 22 | 52 | 99 | 59.5 | I |
| | 2016.01- | 5MT | F | L/R | Saloon FWD SQRE4G16 | Model year from:2017,Model year to:2019 | GCO81622 | Outer Joint | | 26 | 29 | 52 | 99 | 59.5 | M |
| | 2016.01- | 5MT | F | L/R | Saloon FWD SQRE4G16 | Model year from:2017, Model year to:2019 | GCO83312 | Outer Joint | | 26 | 23 | 52 | 98 | 58 | I |
| | 2016.01- | 5MT | F | L/R | Saloon FWD SQRE4G16 | Model year from:2017, Model year to:2019 | GCI83327 | Inner Joint | | 25 | 22 | 41 | 61 | 97.5 | |
| | 2016.01- | CVT | F | L/R | Saloon FWD SQRE4G16 | For Model year:2016 | GCO81628 | Outer Joint | | 26 | 34 | 52 | 99 | 61 | M |
| **Arrizo GX** | | | | | | | | | | | | | | | |
| 1.5 (85 kw) | 2019.09- | CVT/5MT | F | L | Saloon FWD SQRE4G15C | Model year to:2020 | GDS82015 | Drive Shaft | | 26 | 25 | 52 | 99 | 637 | |
| | 2019.09- | CVT/5MT | F | R | Saloon FWD SQRE4G15C | Model year to:2020;7CVT | GDS56468 | Drive Shaft | | 26 | 25 | 52 | 99 | 986 | |
| | 2019.09- | CVT/5MT | F | L/R | Saloon FWD SQRE4G15C | Model year to:2020;7CVT | GCO81622 | Outer Joint | | 26 | 29 | 52 | 99 | 59.5 | M |
| | 2019.09- | CVT/5MT | F | R | Saloon FWD SQRE4G15C | Model year to:2020;7CVT | GCI83091 | Inner Joint | | 25 | 29 | 41 | 61.5 | 98.5 | |
| 1.5 (108 kw) | 2018.10- | 5MT | F | L | Saloon FWD SQRE4T15B | Model year to:2019 | GDS82031 | Drive Shaft | | 26 | 27 | 52 | 99 | 647 | |
| | 2018.10- | 5MT | F | R | Saloon FWD SQRE4T15B | Model year to:2019 | GDS82032 | Drive Shaft | | 26 | 27 | 52 | 99 | 980 | |
| | 2018.10- | 5MT | F | L/R | Saloon FWD SQRE4T15B | Model year to:2019 | GCO81628 | Outer Joint | | 26 | 34 | 52 | 99 | 61 | M |
| | 2018.10- | CVT | F | L | Saloon FWD SQRE4T15B | Model year to:2019,9CVT | GDS56526 | Drive Shaft | | 26 | 27 | 54 | 98.5 | 651 | |
| | 2018.10- | CVT | F | R | Saloon FWD SQRE4T15B | Model year to:2019,9CVT | GDS56525 | Drive Shaft | | 26 | 27 | 54 | 98.5 | 967 | |
| | 2018.10- | CVT | F | L/R | Saloon FWD SQRE4T15B | Model year to:2019,9CVT | GCO83326 | Outer Joint | | 26 | 25 | 54 | 98.5 | 58 | M |
| | 2018.10- | CVT | F | L/R | Saloon FWD SQRE4T15B | Model year to:2019,9CVT | GCI83349 | Inner Joint | | 27 | 25 | 41 | 61.5 | 97.5 | |
| 1.5 (115 kw) | 2019.04- | 5MT | F | L | Saloon FWD SQRE4T15C | for Model year:2019 | GDS82031 | Drive Shaft | | 26 | 27 | 52 | 99 | 647 | |
| | 2019.04- | 5MT | F | R | Saloon FWD SQRE4T15C | for Model year:2019 | GDS82032 | Drive Shaft | | 26 | 27 | 52 | 99 | 980 | |
| | 2019.04- | 5MT | F | L/R | Saloon FWD SQRE4T15C | For Model year:2019 | GCO81628 | Outer Joint | | 26 | 34 | 52 | 99 | 61 | M |
| | 2019.04- | CVT | F | L | Saloon FWD SQRE4T15C | Model year to:2020,9CVT | GDS56526 | Drive Shaft | | 26 | 27 | 54 | 98.5 | 651 | |
| | 2019.04- | CVT | F | R | Saloon FWD SQRE4T15C | Model year to:2020,9CVT | GDS56525 | Drive Shaft | | 26 | 27 | 54 | 98.5 | 967 | |
| | 2019.04- | CVT | F | L/R | Saloon FWD SQRE4T15C | Model year to:2020,9CVT | GCO83326 | Outer Joint | | 26 | 25 | 54 | 98.5 | 58 | M |
| | 2019.04- | CVT | F | L/R | Saloon FWD SQRE4T15C | Model year to:2020,9CVT | GCI83349 | Inner Joint | | 27 | 25 | 41 | 61.5 | 97.5 | |
| **Bonus 3** | | | | | | | | | | | | | | | |
| 1.5 (80 kw) | 2013.09-2017.12 | 5MT | F | L | Saloon FWD SQRD4G15 | | GDS82013 | Drive Shaft | | 26 | 25 | 52 | 99 | 608 | |
| | 2013.09-2017.12 | 5MT | F | R | Saloon FWD SQRD4G15 | | GDS82014 | Drive Shaft | | 26 | 25 | 52 | 99 | 973 | |
| | 2013.09-2017.12 | 5MT | F | L/R | Saloon FWD SQRD4G15 | For OE No.:J52XLB3KT2203030 | GCO81621 | Outer Joint | | 26 | 32 | 52 | 99 | 58.5 | M |
| | 2013.09-2017.12 | 5MT | F | L/R | Saloon FWD SQRD4G15 | | GCI81600 | Inner Joint | | 25 | 30 | 41 | 50.5 | 105.5 | |
| **Cowin** | | | | | | | | | | | | | | | |
| 1.3 (60 kw) | 2006.09-2010.12 | 5MT | F | L | Hatchback FWD | Model year to:2008 | GDS68007 | Drive Shaft | | 22 | | 53 | 78 | 524 | |
| | 2006.09-2010.12 | 5MT | F | R | Hatchback FWD | Model year to:2008 | GDS61002 | Drive Shaft | | 22 | | 53 | 78.5 | 793 | |
| | 2006.09-2010.12 | 5MT | F | L/R | Hatchback FWD | Model year to:2008 | GCO68003 | Outer Joint | | 22 | 30 | 53 | 78 | 61 | I |
| | 2006.09-2010.12 | 5MT | F | L | Hatchback FWD | Model year to:2008 | GCI83011 | Inner Joint | | | 33 | | | 34 | |
| | 2006.09-2010.12 | 5MT | F | R | Hatchback FWD | Model year to:2008 | GCI83006 | Inner Joint | | | 33 | | | 34 | |
| 1.5 (80 kw) | 2008.07-2010.05 | 5MT | F | L | Hatchback FWD SQR477F | Model year to:2010,for OE No.:A152203010 | GDS82035 | Drive Shaft | | 22 | 25 | 53.2 | 79 | 571 | |
| | 2008.07-2010.05 | 5MT | F | R | Hatchback FWD SQR477F | Model year to:2010,for OE No.:A152203020 | GDS82036 | Drive Shaft | | 22 | 25 | 53.2 | 79 | 887 | |
| | 2008.07-2010.05 | 5MT | F | L/R | Hatchback FWD SQR477F | | GCO68003 | Outer Joint | | 22 | 30 | 53 | 78 | 61 | I |
| | 2008.07-2010.05 | 5MT | F | L/R | Hatchback FWD SQR477F | Model year to:2010 | GCI81600 | Inner Joint | | 25 | 30 | 41 | 50.5 | 105.5 | |
| 1.6 (65 kw) | 2005.01-2008.06 | 5MT | F | L | Hatchback FWD SQR480EC, SQR480ED, SQR480ES | For Engine code:SQR480ED | GDS68007 | Drive Shaft | | 22 | | 53 | 78 | 524 | |
| | 2005.01-2008.06 | 5MT | F | R | Hatchback FWD SQR480EC, SQR480ED, SQR480ES | For Engine code:SQR480ED | GDS61002 | Drive Shaft | | 22 | | 53 | 78.5 | 793 | |
| | 2005.01-2008.06 | 5MT | F | L/R | Hatchback FWD SQR480EC, SQR480ED, SQR480ES | | GCO68003 | Outer Joint | | 22 | 30 | 53 | 78 | 61 | I |
| | 2005.01-2008.06 | 5MT | F | L | Hatchback FWD SQR480EC, SQR480ED, SQR480ES | For Engine code:SQR480ED | GCI83011 | Inner Joint | | | 33 | | | 34 | |
| | 2005.01-2008.06 | 5MT | F | R | Hatchback FWD SQR480EC, SQR480ED, SQR480ES | For Engine code:SQR480ED | GCI83006 | Inner Joint | | | 33 | | | 34 | |
| 1.6 (71 kw) | 2006.01-2008.06 | 5MT | F | L | Hatchback FWD SQR480EJ | Model year from:2007 | GDS68007 | Drive Shaft | | 22 | | 53 | 78 | 524 | |
| | 2006.01-2008.06 | 5MT | F | R | Hatchback FWD SQR480EJ | Model year from:2007 | GDS61002 | Drive Shaft | | 22 | | 53 | 78.5 | 793 | |
| | 2006.01-2008.06 | 5MT | F | L/R | Hatchback FWD SQR480EJ | Model year from:2007 | GCO68003 | Outer Joint | | 22 | 30 | 53 | 78 | 61 | I |
| | 2006.01-2008.06 | 5MT | F | L | Hatchback FWD SQR480EJ | Model year from:2007 | GCI83011 | Inner Joint | | | 33 | | | 34 | |
| | 2006.01-2008.06 | 5MT | F | R | Hatchback FWD SQR480EJ | Model year from:2007 | GCI83006 | Inner Joint | | | 33 | | | 34 | |

| | YEAR | TRANSM. | F/R | L/R | BODY STYLE & DRIVE TYPE & ENGINE | REMARKS | G-AP Ref. | PRODUCT | ABS | Technical Specifications A | B | C | H | L | P |
|---|---|---|---|---|---|---|---|---|---|---|---|---|---|---|---|
| **CHERY** | | | | | | | | | | | | | | | |
| **Cowin** | | | | | | | | | | | | | | | |
| 1.6 (85 kw) | 2003.08-2010.05 | 5MT | F | L | Hatchback FWD T16B3, TRITEC 1,6 | Model year to:2006 | GDS82012 | Drive Shaft | | 22 | 25 | 53 | 79 | 590 | |
| | 2003.08-2010.05 | 5MT | F | L/R | Hatchback FWD T16B3, TRITEC 1,6 | Model year to:2006,For Engine code:TRITEC1.6 | GCO68003 | Outer Joint | | 22 | 30 | 53 | 78 | 61 | I |
| **Cowin 1** | | | | | | | | | | | | | | | |
| 1.3 (62 kw) | 2010.05-2015.12 | 5AMT/5MT | F | R | Hatchback FWD SQR473F | Transmission:5AMT,Model year to:2013;Transmission:5MT,Model year to:2011 | GDS57218 | Drive Shaft | 43T | 23 | 25 | 51 | 94 | 905 | |
| | 2010.05-2015.12 | 5AMT/5MT | F | L/R | Hatchback FWD SQR473F | Transmission:5AMT,Model year to:2013;Transmission:5MT,Model year to:2011 | GCO68005 | Outer Joint | 43T | 23 | 21 | 51 | 94 | 54 | I |
| **Cowin 2** | | | | | | | | | | | | | | | |
| 1.5 (80 kw) | 2010.05-2014.12 | 5MT | F | L | Hatchback FWD SQR477F | for OE No.:A152203010 | GDS82035 | Drive Shaft | | 22 | 25 | 53.2 | 79 | 571 | |
| | 2010.05-2014.12 | 5MT | F | R | Hatchback FWD SQR477F | for OE No.:A152203020 | GDS82036 | Drive Shaft | | 22 | 25 | 53.2 | 79 | 887 | |
| | 2010.05-2014.12 | 5MT | F | L/R | Hatchback FWD SQR477F | | GCO68003 | Outer Joint | | 22 | 30 | 53 | 78 | 61 | I |
| | 2010.05-2014.12 | 5MT | F | L/R | Hatchback FWD SQR477F | | GCI81600 | Inner Joint | | 25 | 30 | 41 | 50.5 | 105.5 | |
| 1.6 (81 kw) | 2011.05- | 5MT | F | L | Hatchback FWD SQR477FD | Model year to:2016,for OE No.:A152203010 | GDS82035 | Drive Shaft | | 22 | 25 | 53.2 | 79 | 571 | |
| | 2011.05- | 5MT | F | R | Hatchback FWD SQR477FD | Model year to:2016,for OE No.:A152203020 | GDS82036 | Drive Shaft | | 22 | 25 | 53.2 | 79 | 887 | |
| | 2011.05- | 5MT | F | L/R | Hatchback FWD SQR477FD | Model year to:2016 | GCO68003 | Outer Joint | | 22 | 30 | 53 | 78 | 61 | I |
| | 2011.05- | 5MT | F | L/R | Hatchback FWD SQR477FD | Model year to:2016 | GCI81600 | Inner Joint | | 25 | 30 | 41 | 50.5 | 105.5 | |
| **Cowin 3** | | | | | | | | | | | | | | | |
| 1.5 (80 kw) | 2010.05-2014.12 | 5MT | F | L/R | Saloon FWD SQR477F | Model year to:2012 | GCI81600 | Inner Joint | | 25 | 30 | 41 | 50.5 | 105.5 | |
| 1.8 (97 kw) | 2010.05-2012.12 | 5MT | F | R | Saloon FWD SQR481FC | Model year to:2011 | GDS68006 | Drive Shaft | | 28 | 25 | 55.5 | 99 | 976 | |
| | 2010.05-2012.12 | 5MT | F | L | Saloon FWD SQR481FC | Model year for:2010 | GCI68004 | Inner Joint | | 25 | 28 | 41 | 61.5 | 104.5 | |
| **Cowin 5** | | | | | | | | | | | | | | | |
| 1.8 (97 kw) | 2012.03-2015.12 | 5MT | F | R | Saloon FWD SQR481FC | Model year to:2013 | GDS82028 | Drive Shaft | 48T | 28 | 25 | 58 | 99.5 | 973 | |
| | 2012.03-2015.12 | CVT | F | L | Saloon FWD SQR481FC | Model year to:2013 | GDS82030 | Drive Shaft | 48T | 28 | 25 | 58 | 99.5 | 644 | |
| **E5** | | | | | | | | | | | | | | | |
| 1.5 (80 kw) | 2011.07- | 5MT | F | L/R | Saloon FWD SQR477F,SQRD4G15 | Model year to:2015 | GCI81600 | Inner Joint | | 25 | 30 | 41 | 50.5 | 105.5 | |
| 1.8 (97 kw) | 2011.07- | CVT | F | L | Saloon FWD SQR481FC | Model year to:2014 | GDS82020 | Drive Shaft | | 28 | 25 | 55.5 | 98.5 | 611 | |
| | 2011.07- | CVT | F | R | Saloon FWD SQR481FC | Model year to:2014 | GDS82021 | Drive Shaft | | 28 | 25 | 55.5 | 98.5 | 970 | |
| | 2011.07- | CVT | F | L/R | Saloon FWD SQR481FC | Model year to:2014 | GCI71001 | Inner Joint | | 25 | 24 | 41 | 62 | 93 | |
| **Eastar** | | | | | | | | | | | | | | | |
| 1.8 (97 kw) | 2012.05-2014.12 | CVT | F | L | Saloon FWD SQR481FC | | GCI71001 | Inner Joint | | 25 | 24 | 41 | 62 | 93 | |
| 2.0 (102 kw) | 2007.09-2012.12 | CVT | F | L | Saloon FWD SQR484F | for Model year:2012 | GCI71001 | Inner Joint | | 25 | 24 | 41 | 62 | 93 | |
| | 2012.05-2014.12 | CVT | F | L | Saloon FWD SQR484F | for Model year:2012 | GCI71001 | Inner Joint | | 25 | 24 | 41 | 62 | 93 | |
| 2.4 (95 kw) | 2003.06-2007.12 | 4AMT | F | L/R | Saloon FWD 4G64-S4M | | GCO99175 | Outer Joint | | 28 | 25 | 55.5 | 99 | 61 | O |
| | 2003.06-2007.12 | 4AMT | F | L/R | Saloon FWD 4G64-S4M | | GCI74001 | Inner Joint | | 27 | 24 | 41 | 62.5 | 93 | |
| **Eastar Cross** | | | | | | | | | | | | | | | |
| 2.0 (102 kw) | 2007.06-2012.12 | 5MT | F | R | MPV FWD SQR484F | Model year from:2008,Model year to:2009 | GCO99175 | Outer Joint | | 28 | 25 | 55.5 | 99 | 61 | O |
| 2.4 (95 kw) | 2007.06-2008.12 | AT | F | L | MPV FWD 4G64-S4M | | GCO99175 | Outer Joint | | 28 | 25 | 55.5 | 99 | 61 | O |
| | 2007.06-2008.12 | AT | F | L | MPV FWD 4G64-S4M | | GCI74001 | Inner Joint | | 27 | 24 | 41 | 62.5 | 93 | |
| **Elara** | | | | | | | | | | | | | | | |
| 1.5 (80 kw) | 2009.06-2012.12 | 5MT | F | L/R | Saloon FWD SQR477F | Model year to:2010 | GCI81600 | Inner Joint | | 25 | 30 | 41 | 50.5 | 105.5 | |
| **Fulwin 2** | | | | | | | | | | | | | | | |
| 1.5 (80 kw) | 2010.03- | 5MT/5AMT | F | L/R | Hatchback FWD SQR477F | Transmission:5MT,Model year from:2010,Model year to:2016;Transmission:5AMT,Model year from:2013,Model year to:2017 | GCO68010 | Outer Joint | | 22 | 22 | 55 | 84.5 | 61 | I |
| **J11** | | | | | | | | | | | | | | | |
| 1.6 (93 kw) | 2011.06-2014.12 | 5MT | F | L/R | SUV FWD SQRE4G16 | | GCO83155 | Outer Joint | 48T | 26 | 25 | 55.4 | 101 | 58.5 | M |
| **M11** | | | | | | | | | | | | | | | |
| 1.8 (97 kw) | 2008.11-2014.12 | 4AMT | F | L | Saloon FWD SQR481FC | Model year from:2010,Model year to:2012 | GDS82019 | Drive Shaft | | 26 | 27 | 52 | 98.5 | 654 | |
| | 2008.11-2014.12 | 4AMT | F | R | Saloon FWD SQR481FC | Model year from:2010,Model year to:2012 | GDS82023 | Drive Shaft | | 26 | 27 | 52 | 98.5 | 978 | |
| | 2008.11-2014.12 | 5MT | F | L | Saloon FWD SQR481FC | Model year from:2009,Model year to:2010;for OE NO.:M11-2203010VA | GDS56489 | Drive Shaft | | 26 | 25 | 52 | 98 | 634 | |
| | 2008.11-2014.12 | 5MT | F | R | Saloon FWD SQR481FC | Model year from:2009,Model year to:2010 | GDS81640 | Drive Shaft | | 26 | 25 | 52 | 99 | 976 | |
| | 2008.11-2014.12 | 5MT | F | L/R | Saloon FWD SQR481FC | Model year from:2009,Model year to:2010;for OE NO.:M11-XLB3AF2203030A | GCO81455 | Outer Joint | | 26 | 22 | 52 | 99 | 59.5 | I |
| | 2008.11-2014.12 | 5MT | F | L/R | Saloon FWD SQR481FC | Model year from:2009,Model year to:2010;For OE No.:M11XLB3AF2203030Y | GCO81622 | Outer Joint | | 26 | 29 | 52 | 99 | 59.5 | M |
| | 2008.11-2014.12 | 5MT/4AMT | F | L/R | Saloon FWD SQR481FC | Transmission:5MT,Model year from:2010 to:2013;Transmission:4AMT,Model year from:2010 to:2013,Model year to:2013 | GCO81632 | Outer Joint | | 26 | 32 | 52 | 98.5 | 57 | O |
| | 2009.01-2010.08 | 5MT | F | L | Hatchback FWD SQR481FC | | GDS56489 | Drive Shaft | | 26 | 25 | 52 | 98 | 634 | |
| | 2009.01-2010.08 | 5MT | F | R | Hatchback FWD SQR481FC | | GDS81640 | Drive Shaft | | 26 | 25 | 52 | 99 | 976 | |
| | 2009.01-2010.08 | 5MT | F | L/R | Hatchback FWD SQR481FC | | GCO81455 | Outer Joint | | 26 | 22 | 52 | 99 | 59.5 | I |
| | 2009.01-2010.08 | 5MT | F | L | Hatchback FWD SQR481FC | | GCI83328 | Inner Joint | | 25 | 22 | 41 | 61.5 | 94 | |
| | 2009.01-2010.08 | 5MT | F | R | Hatchback FWD SQR481FC | | GCI39101 | Inner Joint | | 25 | 29 | 41 | 61 | 101.5 | |
| **QQ3** | | | | | | | | | | | | | | | |
| 0.8 (38 kw) | 2004.03-2012.12 | MT | F | L/R | Hatchback FWD SQR372 | | GCO99103 | Outer Joint | | 22 | 19 | 51 | 91 | 56.5 | O |
| 1.0 (51 kw) | 2009.12-2014.12 | 5MT | F | R | Hatchback FWD SQR371F | Model year from:2012 | GCO68009 | Outer Joint | 40T | 22 | 19 | 51 | 91 | 56.5 | M |
| 1.1 (39 kw) | 2003.06-2016.12 | 5MT | F | L | Hatchback FWD DA465Q-1A2/D, LJ465Q-1ANE1 | Model year to:2006 | GCO68009 | Outer Joint | 40T | 22 | 19 | 51 | 91 | 56.5 | M |
| 1.1 (50 kw) | 2006.06-2010.12 | 5AMT | F | R | Hatchback FWD SQR472 | Model year from:2007,Model year to:2009 | GDS82371 | Drive Shaft | 40T | 22 | 22 | 51 | 91 | 866 | |
| | 2006.06-2010.12 | 5MT | F | L/R | Hatchback FWD SQR472 | Model year from:2007,Model year to:2009 | GCO68009 | Outer Joint | 40T | 22 | 19 | 51 | 91 | 56.5 | M |
| **QQ6** | | | | | | | | | | | | | | | |
| 1.3 (61 kw) | 2006.08- | 5AMT/5MT | F | R | Hatchback FWD SQR473F | Transmission:5AMT,Model year from:2009,Model year to:2010;Transmission:5MT,Model year to:2009 | GDS57218 | Drive Shaft | 43T | 23 | 25 | 51 | 94 | 905 | |
| | 2006.08- | 5AMT/5MT | F | L/R | Hatchback FWD SQR473F | Transmission:5AMT,Model year from:2009,Model year to:2010;Transmission:5MT,Model year to:2009 | GCO68005 | Outer Joint | 43T | 23 | 21 | 51 | 94 | 54 | I |

| | YEAR | TRANSM. | F/R | L/R | BODY STYLE & DRIVE TYPE & ENGINE | REMARKS | G-AP Ref. | PRODUCT | ABS | Technical Specifications | | | | | |
|---|---|---|---|---|---|---|---|---|---|---|---|---|---|---|---|
| | | | | | | | | | | A | B | C | H | L | P |
| **CHERY** | | | | | | | | | | | | | | | |
| **QQme** | | | | | | | | | | | | | | | |
| 1.3 (61 kw) | 2009.06-2014.12 | 5MT | F | L | Hatchback FWD SQR473F | Model year to:2010 | GDS82372 | Drive Shaft | 43T | 23 | 25 | 51 | 94 | 569 | |
| | 2009.06-2014.12 | 5MT | F | R | Hatchback FWD SQR473F | Model year to:2010 | GDS57218 | Drive Shaft | 43T | 23 | 25 | 51 | 94 | 905 | |
| | 2009.06-2014.12 | 5MT | F | L/R | Hatchback FWD SQR473F | Model year to:2010 | GCO68005 | Outer Joint | 43T | 23 | 21 | 51 | 94 | 54 | I |
| **Tiggo** | | | | | | | | | | | | | | | |
| 1.6 (88 kw) | 2010.09-2014.12 | 5MT | F | L | SUV FWD SQR481F | Date to:2013.02 | GDS81136 | Drive Shaft | 48T | 26 | 25 | 55.3 | 100 | 629 | |
| | 2010.09-2014.12 | 5MT | F | R | SUV FWD SQR481F | Date to:2013.02 | GDS81899 | Drive Shaft | 48T | 26 | 25 | 55.3 | 100 | 959 | |
| | 2010.09-2014.12 | 5MT | F | L/R | SUV FWD SQR481F | Date to:2013.02 | GCO39336 | Outer Joint | 48T | 26 | 25 | 55.3 | 100 | 59 | M |
| | 2010.09-2014.12 | 5MT | F | L/R | SUV FWD SQR481F | Date to:2013.02 | GCI71003 | Inner Joint | | 25 | 24 | 41 | 62.5 | 91 | |
| 1.6 (110 kw) | 2010.09-2013.12 | 5MT | F | L | SUV FWD SQR481FG | | GDS81136 | Drive Shaft | 48T | 26 | 25 | 55.3 | 100 | 629 | |
| | 2010.09-2013.12 | 5MT | F | R | SUV FWD SQR481FG | | GDS81899 | Drive Shaft | 48T | 26 | 25 | 55.3 | 100 | 959 | |
| | 2010.09-2013.12 | 5MT | F | L/R | SUV FWD SQR481FG | | GCO39336 | Outer Joint | 48T | 26 | 25 | 55.3 | 100 | 59 | M |
| | 2010.09-2013.12 | 5MT | F | L/R | SUV FWD SQR481FG | | GCI71003 | Inner Joint | | 25 | 24 | 41 | 62.5 | 91 | |
| 1.8 (97 kw) | 2007.05-2013.12 | 5MT | F | L | SUV FWD SQR481FC | | GDS81136 | Drive Shaft | 48T | 26 | 25 | 55.3 | 100 | 629 | |
| | 2007.05-2013.12 | 5MT | F | R | SUV FWD SQR481FC | | GDS81899 | Drive Shaft | 48T | 26 | 25 | 55.3 | 100 | 959 | |
| | 2007.05-2013.12 | 5MT | F | L/R | SUV FWD SQR481FC | | GCO39336 | Outer Joint | 48T | 26 | 25 | 55.3 | 100 | 59 | M |
| | 2007.05-2013.12 | 5MT | F | L/R | SUV FWD SQR481FC | | GCI71003 | Inner Joint | | 25 | 24 | 41 | 62.5 | 91 | |
| | 2010.04-2014.12 | 5MT | F | L | SUV FWD SQR481FC | | GDS81136 | Drive Shaft | 48T | 26 | 25 | 55.3 | 100 | 629 | |
| | 2010.04-2014.12 | 5MT | F | R | SUV FWD SQR481FC | | GDS81899 | Drive Shaft | 48T | 26 | 25 | 55.3 | 100 | 959 | |
| | 2010.04-2014.12 | 5MT | F | L/R | SUV FWD SQR481FC | | GCO39336 | Outer Joint | 48T | 26 | 25 | 55.3 | 100 | 59 | M |
| | 2010.04-2014.12 | 5MT | F | L/R | SUV FWD SQR481FC | | GCI71003 | Inner Joint | | 25 | 24 | 41 | 62.5 | 91 | |
| 2.0 (92 kw) | 2005.03-2008.12 | 4AMT | F | L | SUV FWD 4G63-S4M | | GDS81136 | Drive Shaft | 48T | 26 | 25 | 55.3 | 100 | 629 | |
| | 2005.03-2008.12 | 4AMT | F | R | SUV FWD 4G63-S4M | | GDS81899 | Drive Shaft | 48T | 26 | 25 | 55.3 | 100 | 959 | |
| | 2005.03-2008.12 | 5MT | F | L | SUV FWD 4G63-S4M | Model year to:2007 | GDS56497 | Drive Shaft | 48T | 26 | 25 | 55.3 | 100 | 628 | |
| | 2005.03-2008.12 | 5MT | F | R | SUV FWD 4G63-S4M | Model year to:2007 | GDS56143 | Drive Shaft | 48T | 26 | 28 | 55.3 | 100 | 646 | |
| | 2005.03-2008.12 | 5MT | F | L/R | SUV FWD 4G63-S4M | Model year to:2007 | GCO83318 | Outer Joint | 48T | 26 | 30 | 55.3 | 100 | 59 | I |
| | 2005.03-2008.12 | 5MT | F | L | SUV FWD 4G63-S4M | Model year to:2007 | GCI71003 | Inner Joint | | 25 | 24 | 41 | 62.5 | 91 | |
| | 2005.03-2008.12 | 5MT | F | R | SUV FWD 4G63-S4M | Model year to:2007 | GCI83104 | Inner Joint | | 28 | 24 | 43 | | 139 | |
| 2.0 (102 kw) | 2010.09-2014.12 | 4AT | F | L | SUV 4WD SQR484F | | GDS56114 | Drive Shaft | 48T | 26 | 26 | 55.4 | 101 | 628 | |
| | 2010.09-2014.12 | 4AT | F | R | SUV 4WD SQR484F | | GDS56124 | Drive Shaft | 48T | 26 | 26 | 55.4 | 101 | 849 | |
| | 2010.09-2014.12 | 4AT | F | L/R | SUV 4WD SQR484F | | GCO83155 | Outer Joint | 48T | 26 | 25 | 55.4 | 101 | 58.5 | M |
| | 2010.09-2014.12 | 4AT | F | L | SUV 4WD SQR484F | | GCI83090 | Inner Joint | | 26 | 24 | 43 | 42 | 107 | |
| | 2010.09-2014.12 | 4AT | F | R | SUV 4WD SQR484F | | GCI83098 | Inner Joint | | 26 | 24 | 43 | | 149 | |
| | 2010.09-2014.12 | 5MT | F | L/R | SUV 4WD SQR484F | | GCO39336 | Outer Joint | 48T | 26 | 25 | 55.3 | 100 | 59 | M |
| 2.4 (95 kw) | 2005.03-2008.12 | 5MT | F | L | SUV FWD 4G64S4M | For model year:2005 | GDS56497 | Drive Shaft | 48T | 26 | 25 | 55.3 | 100 | 628 | |
| | 2005.03-2008.12 | 5MT | F | R | SUV FWD 4G64S4M | For model year:2005 | GDS56143 | Drive Shaft | 48T | 26 | 28 | 55.3 | 100 | 646 | |
| | 2005.03-2008.12 | 5MT | F | L/R | SUV FWD 4G64S4M | For Model year:2005 | GCO83318 | Outer Joint | 48T | 26 | 30 | 55.3 | 100 | 59 | I |
| | 2005.03-2008.12 | 5MT | F | R | SUV FWD 4G64S4M | For Model year:2005 | GCI83104 | Inner Joint | | 28 | 24 | 43 | | 139 | |
| **Tiggo 2** | | | | | | | | | | | | | | | |
| 1.5 (78 kw) | 2016.11- | 4AT/5MT | F | L | SUV FWD SQRD4G15B | | GDS56521 | Drive Shaft | 48T | 26 | 25 | 56.9 | 100.5 | 626 | |
| | 2016.11- | 4AT/5MT | F | R | SUV FWD SQRD4G15B | | GDS56522 | Drive Shaft | 48T | 26 | 25 | 56.9 | 100.5 | 938 | |
| | 2016.11- | 4AT/5MT | F | L/R | SUV FWD SQRD4G15B | | GCO83325 | Outer Joint | 48T | 26 | 23 | 56.9 | 100.5 | 59 | I |
| | 2016.11- | 4AT/5MT | F | L/R | SUV FWD SQRD4G15B | | GCI83348 | Inner Joint | | 25 | 22 | 41 | 51 | 93 | |
| **Tiggo 3** | | | | | | | | | | | | | | | |
| 1.5 (85 kw) | 2019.08- | 5MT | F | L/R | SUV FWD SQRE4G15C | | GCO83155 | Outer Joint | 48T | 26 | 25 | 55.4 | 101 | 58.5 | M |
| 1.6 (92 kw) | 2015.04- | CVT | F | R | SUV FWD SQRE4G16 | Model year from:2016,Model year to:2019 | GCI71001 | Inner Joint | | 25 | 24 | 41 | 62 | 93 | |
| 1.6 (93 kw) | 2015.04- | 5MT | F | L/R | SUV FWD SQRE4G16 | Model year to:2016 | GCO83155 | Outer Joint | 48T | 26 | 25 | 55.4 | 101 | 58.5 | M |
| | 2015.04- | CVT | F | R | SUV FWD SQRE4G16 | Model year from:2016,Model year to:2019 | GCI71001 | Inner Joint | | 25 | 24 | 41 | 62 | 93 | |
| | 2015.04- | CVT | F | R | SUV FWD SQRE4G16 | Model year from:2016,Model year to:2019,7CVT | GCI83091 | Inner Joint | | 25 | 29 | 41 | 61.5 | 98.5 | |
| **Tiggo 4** | | | | | | | | | | | | | | | |
| 1.5 (108 kw) | 2017.09- | 6DCT | F | L | SUV FWD SQRE4T15B;SQRE4T15C | Model year to:2019 | GDS56144 | Drive Shaft | 48T | 28 | 34 | 58 | 101 | 595 | |
| | 2017.09- | 6DCT | F | L | SUV FWD SQRE4T15B;SQRE4T15C | Engine Code:SQRE4T15B,Date from:2019.10,Date to:2023.07 | GDS57718 | Drive Shaft | 48T | 28 | 27 | 58 | 100 | 595 | |
| | 2017.09- | 6DCT | F | R | SUV FWD SQRE4T15B;SQRE4T15C | Model year to:2019 | GDS56546 | Drive Shaft | 48T | 28 | 34 | 58 | 100 | 1009 | |
| | 2017.09- | 6DCT | F | R | SUV FWD SQRE4T15B;SQRE4T15C | Engine Code:SQRE4T15B,Date from:2019.10,Date to:2023.07 | GDS57717 | Drive Shaft | 48T | 28 | 27 | 58 | 100 | 1013 | |
| | 2017.09- | 6DCT | F | L/R | SUV FWD SQRE4T15B;SQRE4T15C | Engine Code:SQRE4T15B,Date from:2019.10,Date to:2023.07 | GCO83164 | Outer Joint | 48T | 28 | 26 | 58 | 100 | 64.5 | M |
| | 2017.09- | 6DCT | F | L | SUV FWD SQRE4T15B;SQRE4T15C | Model year to:2019 | GCI83105 | Inner Joint | | 34 | 34 | 40 | 54.5 | 109 | |
| | 2017.09- | 6DCT | F | L | SUV FWD SQRE4T15B;SQRE4T15C | Engine Code:SQRE4T15B,Date from:2019.10,Date to:2023.07 | GCI83820 | Inner Joint | | 27 | 34 | 40 | 56 | 115 | |
| | 2017.09- | 6DCT | F | R | SUV FWD SQRE4T15B;SQRE4T15C | Model year to:2019 | GCI83363 | Inner Joint | | 34 | 34 | 40 | 104.5 | 147 | |
| | 2017.09- | 6DCT | F | R | SUV FWD SQRE4T15B;SQRE4T15C | Engine Code:SQRE4T15B,Date from:2019.10,Date to:2023.07 | GCI83819 | Inner Joint | | 27 | 34 | 40 | 103 | 145 | |
| | 2017.09- | 6MT | F | L | SUV FWD SQRE4T15B;SQRE4T15C | Model year to:2019 | GDS56587 | Drive Shaft | 48T | 28 | 27 | 58 | 101 | 643 | |
| | 2017.09- | 6MT | F | R | SUV FWD SQRE4T15B;SQRE4T15C | Model year to:2019 | GDS56535 | Drive Shaft | 48T | 28 | 27 | 58 | 101 | 957 | |
| | 2017.09- | 6MT | F | L/R | SUV FWD SQRE4T15B;SQRE4T15C | Model year to:2019 | GCO83351 | Outer Joint | 48T | 28 | 25 | 58 | 101 | 63 | M |
| | 2017.09- | 6MT | F | L | SUV FWD SQRE4T15B;SQRE4T15C | Model year to:2019 | GCI83392 | Inner Joint | | 27 | 25 | 40 | 60 | 119 | |
| | 2017.09- | 6MT | F | L | SUV FWD SQRE4T15B;SQRE4T15C | Model year to:2019 | GCI83393 | Inner Joint | | 27 | 34 | 40 | 60.5 | 113 | |
| | 2017.09- | 6MT | F | R | SUV FWD SQRE4T15B;SQRE4T15C | Model year to:2019 | GCI83087 | Inner Joint | | 27 | 34 | 40 | 75.5 | 127 | |
| | 2017.09- | 6MT/6DCT | F | L/R | SUV FWD SQRE4T15B;SQRE4T15C | Model year to:2019 | GCO83157 | Outer Joint | 48T | 28 | 34 | 58 | 101 | 63 | M |

| | YEAR | TRANSM. | F/R | L/R | BODY STYLE & DRIVE TYPE & ENGINE | REMARKS | G-AP Ref. | PRODUCT | ABS | Technical Specifications A | B | C | H | L | P |
|---|---|---|---|---|---|---|---|---|---|---|---|---|---|---|---|
| **CHERY** | | | | | | | | | | | | | | | |
| **Tiggo 4** | | | | | | | | | | | | | | | |
| 2.0 (90 kw) | 2018.09- | CVT | F | L | SUV FWD SQRD4G20 | | GDS56144 | Drive Shaft | 48T | 28 | 34 | 58 | 101 | 595 | |
| | 2018.09- | CVT | F | R | SUV FWD SQRD4G20 | | GDS56546 | Drive Shaft | 48T | 28 | 34 | 58 | 100 | 1009 | |
| | 2018.09- | CVT | F | L/R | SUV FWD SQRD4G20 | | GCO83164 | Outer Joint | 48T | 28 | 26 | 58 | 100 | 64.5 | M |
| | 2018.09- | CVT | F | L | SUV FWD SQRD4G20 | | GCI83105 | Inner Joint | | 34 | 34 | 40 | 54.5 | 109 | |
| | 2018.09- | CVT | F | R | SUV FWD SQRD4G20 | | GCI83363 | Inner Joint | | 34 | 34 | 40 | 104.5 | 147 | |
| **Tiggo 5** | | | | | | | | | | | | | | | |
| 1.5 (112 kw) | 2015.04- | 5MT | F | L | SUV FWD SQRE4T15 | Model year to:2017 | GDS56470 | Drive Shaft | | 28 | 27 | 58 | 91 | 626 | |
| | 2015.04- | 5MT | F | R | SUV FWD SQRE4T15 | Model year to:2017 | GDS56469 | Drive Shaft | | 28 | 27 | 58 | 91 | 959 | |
| | 2015.04- | 5MT | F | L/R | SUV FWD SQRE4T15 | Model year to:2017 | GCO83306 | Outer Joint | | 28 | 34 | 58 | 91 | 63 | M |
| | 2015.04- | 5MT | F | L/R | SUV FWD SQRE4T15 | Model year to:2017 | GCI83319 | Inner Joint | | 27 | 34 | 41 | 62 | 107.5 | |
| | 2015.04- | CVT | F | L | SUV FWD SQRE4T15 | Model year from:2016, Model year to:2017 | GDS56461 | Drive Shaft | | 28 | 25 | 58 | 91 | 628 | |
| | 2015.04- | CVT | F | R | SUV FWD SQRE4T15 | Model year from:2016, Model year to:2017 | GDS56460 | Drive Shaft | | 28 | 25 | 58 | 91 | 950 | |
| | 2015.04- | CVT | F | L/R | SUV FWD SQRE4T15 | Model year from:2016, Model year to:2017 | GCO83303 | Outer Joint | | 28 | 31 | 58 | 91 | 64 | M |
| | 2015.04- | CVT | F | L/R | SUV FWD SQRE4T15 | Model year from:2016, Model year to:2017 | GCI82911 | Inner Joint | | 25 | 33 | 41 | 62 | 93 | |
| 2.0 (102 kw) | 2013.11- | 5MT | F | L | SUV FWD SQR484F | Model year to:2016 | GDS56529 | Drive Shaft | | 28 | 27 | 58 | 91 | 625 | |
| | 2013.11- | 5MT | F | R | SUV FWD SQR484F | Model year to:2016 | GDS56528 | Drive Shaft | | 28 | 27 | 58 | 91 | 958 | |
| | 2013.11- | 5MT | F | L/R | SUV FWD SQR484F | Model year to:2016 | GCO83327 | Outer Joint | | 28 | 32 | 58 | 91 | 63 | O |
| | 2013.11- | 5MT | F | L/R | SUV FWD SQR484F | Model year to:2016 | GCI83350 | Inner Joint | | 27 | 24 | 41 | 61.5 | 95 | |
| | 2013.11- | CVT | F | L | SUV FWD SQR484F | Model year from:2014, Model year to:2016 | GDS56463 | Drive Shaft | | 28 | 25 | 58 | 91 | 610 | |
| | 2013.11- | CVT | F | R | SUV FWD SQR484F | Model year from:2014, Model year to:2016 | GDS56462 | Drive Shaft | | 28 | 25 | 58 | 91 | 965 | |
| | 2013.11- | CVT | F | L/R | SUV FWD SQR484F | Model year from:2014, Model year to:2016 | GCO83303 | Outer Joint | | 28 | 31 | 58 | 91 | 64 | M |
| | 2013.11- | CVT | F | L/R | SUV FWD SQR484F | Model year from:2014, Model year to:2016 | GCI71001 | Inner Joint | | 25 | 24 | 41 | 62 | 93 | |
| **Tiggo 5X** | | | | | | | | | | | | | | | |
| 1.5 (85 kw) | 2018.10- | 5MT | F | L | SUV FWD SQRE4G15B, SQRE4G15C (06.19-.) | Date to:2020.06 | GDS57699 | Drive Shaft | 48T | 28 | 25 | 58 | 100 | 638 | |
| | 2018.10- | 5MT | F | L | SUV FWD SQRE4G15B, SQRE4G15C (06.19-.) | Engine code:SQRE4G15C,Date from:2020.07,Date to:2021.07 | GDS57706 | Drive Shaft | 48T | 28 | 25 | 57.9 | 100.5 | 630 | |
| | 2018.10- | 5MT | F | R | SUV FWD SQRE4G15B, SQRE4G15C (06.19-.) | Date to:2020.06 | GDS56142 | Drive Shaft | 48T | 28 | 25 | 58 | 100 | 967 | |
| | 2018.10- | 5MT | F | R | SUV FWD SQRE4G15B, SQRE4G15C (06.19-.) | Engine code:SQRE4G15C,Date from:2020.07,Date to:2021.07 | GDS57705 | Drive Shaft | 48T | 28 | 25 | 57.9 | 100.5 | 974 | |
| | 2018.10- | 5MT | F | L/R | SUV FWD SQRE4G15B, SQRE4G15C (06.19-.) | Date to:2020.06 | GCO83170 | Outer Joint | 48T | 28 | 32 | 58 | 100 | 58.5 | M |
| | 2018.10- | 5MT | F | L/R | SUV FWD SQRE4G15B, SQRE4G15C (06.19-.) | Engine code:SQRE4G15C,Date from:2020.07,Date to:2021.07 | GCO83680 | Outer Joint | 48T | 28 | 23 | 57.9 | 100.5 | 59.5 | M |
| | 2018.10- | 5MT | F | L | SUV FWD SQRE4G15B, SQRE4G15C (06.19-.) | Engine code:SQRE4G15C,Date from:2020.07,Date to:2021.07 | GCI83812 | Inner Joint | | 25 | 23 | 45 | 58 | 106.5 | |
| | 2018.10- | 5MT | F | R | SUV FWD SQRE4G15B, SQRE4G15C (06.19-.) | Engine code:SQRE4G15C,Date from:2020.07,Date to:2021.07 | GCI83811 | Inner Joint | | 25 | 23 | 45 | 63 | 108 | |
| | 2018.10- | 5MT | F | L/R | SUV FWD SQRE4G15B, SQRE4G15C (06.19-.) | Date to:2020.06 | GCI83103 | Inner Joint | | 25 | 30 | 41 | 61 | 97.5 | |
| | 2018.10- | CVT | F | L | SUV FWD SQRE4G15B, SQRE4G15C (06.19-.) | Model year from:2020,Model year to:2021 | GDS56115 | Drive Shaft | 48T | 28 | 25 | 57.9 | 100.5 | 631 | |
| | 2018.10- | CVT | F | R | SUV FWD SQRE4G15B, SQRE4G15C (06.19-.) | Model year from:2020,Model year to:2021 | GDS56159 | Drive Shaft | 48T | 28 | 25 | 57.9 | 100.5 | 961 | |
| | 2018.10- | CVT | F | L/R | SUV FWD SQRE4G15B, SQRE4G15C (06.19-.) | Model year from:2020,Model year to:2021 | GCO83159 | Outer Joint | 48T | 28 | 29 | 57.9 | 100.5 | 59.5 | M |
| | 2018.10- | CVT | F | L/R | SUV FWD SQRE4G15B, SQRE4G15C (06.19-.) | Model year from:2020,Model year to:2021 | GCI83091 | Inner Joint | | 25 | 29 | 41 | 61.5 | 98.5 | |
| 1.5 (115 kw) | 2019.09- | 6DCT | F | L | SUV FWD SQRE4T15C | Model year to:2020 | GDS56144 | Drive Shaft | 48T | 28 | 34 | 58 | 101 | 595 | |
| | 2019.09- | 6DCT | F | R | SUV FWD SQRE4T15C | | GDS56546 | Drive Shaft | 48T | 28 | 34 | 58 | 100 | 1009 | |
| | 2019.09- | 6DCT | F | L/R | SUV FWD SQRE4T15C | Model year to:2020 | GCO83157 | Outer Joint | 48T | 28 | 34 | 58 | 101 | 63 | M |
| | 2019.09- | 6DCT | F | L | SUV FWD SQRE4T15C | Model year to:2020 | GCI83105 | Inner Joint | | 34 | 34 | 40 | 54.5 | 109 | |
| | 2019.09- | 6DCT | F | R | SUV FWD SQRE4T15C | Model year to:2020 | GCI83363 | Inner Joint | | 34 | 34 | 40 | 104.5 | 147 | |
| | 2019.09- | CVT | F | L | SUV FWD SQRE4T15C | Model year from:2020;Inner teeth of wheel side:26 | GDS56125 | Drive Shaft | 48T | 28 | 27 | 58 | 100 | 647 | |
| | 2019.09- | CVT | F | L | SUV FWD SQRE4T15C | Model year from:2020;Inner teeth of wheel side:34 | GDS56152 | Drive Shaft | 48T | 28 | 27 | 58 | 101 | 649 | |
| | 2019.09- | CVT | F | R | SUV FWD SQRE4T15C | Model year from:2020;Inner teeth of wheel side:26 | GDS56126 | Drive Shaft | 48T | 28 | 27 | 58 | 100 | 947 | |
| | 2019.09- | CVT | F | R | SUV FWD SQRE4T15C | Model year from:2020;Inner teeth of wheel side:34 | GDS56151 | Drive Shaft | 48T | 28 | 27 | 58 | 101 | 948 | |
| | 2019.09- | CVT | F | L/R | SUV FWD SQRE4T15C | Model year from:2020 | GCO83157 | Outer Joint | 48T | 28 | 34 | 58 | 101 | 63 | M |
| | 2019.09- | CVT | F | L/R | SUV FWD SQRE4T15C | Model year from:2020 | GCO83164 | Outer Joint | 48T | 28 | 26 | 58 | 100 | 64.5 | M |
| | 2019.09- | CVT | F | L/R | SUV FWD SQRE4T15C | Model year from:2020 | GCI83099 | Inner Joint | | 27 | 34 | 41 | 61.5 | 109 | |
| | 2019.09- | CVT | F | L/R | SUV FWD SQRE4T15C | Model year from:2020 | GCI83109 | Inner Joint | | 27 | 33 | 41 | 61.5 | 109 | |
| **Tiggo 7** | | | | | | | | | | | | | | | |
| 1.5 (108 kw) | 2016.09- | 6DCT | F | L | SUV FWD SQRE4T15B | Model year from:2017,Model year to:2018 | GDS56144 | Drive Shaft | 48T | 28 | 34 | 58 | 101 | 595 | |
| | 2016.09- | 6DCT | F | R | SUV FWD SQRE4T15B | | GDS56546 | Drive Shaft | 48T | 28 | 34 | 58 | 100 | 1009 | |
| | 2016.09- | 6DCT | F | L/R | SUV FWD SQRE4T15B | Model year from:2017,Model year to:2018 | GCO83164 | Outer Joint | 48T | 28 | 26 | 58 | 100 | 64.5 | M |
| | 2016.09- | 6DCT | F | L | SUV FWD SQRE4T15B | Model year from:2017,Model year to:2018 | GCI83105 | Inner Joint | | 34 | 34 | 40 | 54.5 | 109 | |
| | 2016.09- | 6DCT | F | R | SUV FWD SQRE4T15B | Model year from:2017,Model year to:2018 | GCI83363 | Inner Joint | | 34 | 34 | 40 | 104.5 | 147 | |
| | 2016.09- | 6MT | F | L | SUV FWD SQRE4T15B | Model year to:2018 | GDS56587 | Drive Shaft | 48T | 28 | 27 | 58 | 101 | 643 | |
| | 2016.09- | 6MT | F | R | SUV FWD SQRE4T15B | Model year from:2017,Model year to:2018 | GDS56535 | Drive Shaft | 48T | 28 | 27 | 58 | 101 | 957 | |
| | 2016.09- | 6MT | F | L/R | SUV FWD SQRE4T15B | Model year to:2018 | GCO83351 | Outer Joint | 48T | 28 | 25 | 58 | 101 | 63 | M |
| | 2016.09- | 6MT | F | L | SUV FWD SQRE4T15B | Model year to:2018 | GCI83392 | Inner Joint | | 27 | 25 | 40 | 60 | 119 | |
| | 2016.09- | 6MT | F | L | SUV FWD SQRE4T15B | Model year from:2017,Model year to:2018 | GCI83393 | Inner Joint | | 27 | 34 | 40 | 60.5 | 113 | |
| | 2016.09- | 6MT | F | R | SUV FWD SQRE4T15B | Model year from:2017,Model year to:2018 | GCI83087 | Inner Joint | | 27 | 34 | 40 | 75.5 | 127 | |
| | 2016.09- | 6MT/6DCT | F | L/R | SUV FWD SQRE4T15B | Model year from:2017,Model year to:2018 | GCO83157 | Outer Joint | 48T | 28 | 34 | 58 | 101 | 63 | M |
| 1.5 (112 kw) | 2016.09- | 6MT | F | L | SUV FWD SQRE4T15 | Model year to:2017 | GDS56587 | Drive Shaft | 48T | 28 | 27 | 58 | 101 | 643 | |
| | 2016.09- | 6MT | F | R | SUV FWD SQRE4T15 | Model year to:2017 | GDS56535 | Drive Shaft | 48T | 28 | 27 | 58 | 101 | 957 | |
| | 2016.09- | 6MT | F | L/R | SUV FWD SQRE4T15 | Model year to:2017 | GCO83157 | Outer Joint | 48T | 28 | 34 | 58 | 101 | 63 | M |

| | YEAR | TRANSM. | F/R | L/R | BODY STYLE & DRIVE TYPE & ENGINE | REMARKS | G-AP Ref. | PRODUCT | ABS | Technical Specifications A | B | C | H | L | P |
|---|---|---|---|---|---|---|---|---|---|---|---|---|---|---|---|
| **CHERY** | | | | | | | | | | | | | | | |
| **Tiggo 7** | | | | | | | | | | | | | | | |
| 1.5 (112 kw) | 2016.09- | 6MT | F | L/R | SUV FWD SQRE4T15 | Model year to:2017 | GCO83351 | Outer Joint | 48T | 28 | 25 | 58 | 101 | 63 | M |
| | 2016.09- | 6MT | F | L | SUV FWD SQRE4T15 | Model year to:2017 | GCI83392 | Inner Joint | | 27 | 25 | 40 | 60 | 119 | |
| | 2016.09- | 6MT | F | L | SUV FWD SQRE4T15 | Model year to:2017 | GCI83393 | Inner Joint | | 27 | 34 | 40 | 60.5 | 113 | |
| | 2016.09- | 6MT | F | R | SUV FWD SQRE4T15 | Model year to:2017 | GCI83087 | Inner Joint | | 27 | 34 | 40 | 75.5 | 127 | |
| 1.5 (115 kw) | 2019.06- | 6DCT | F | L | SUV FWD SQRE4T15C | Model Year to:2021 | GDS56144 | Drive Shaft | 48T | 28 | 34 | 58 | 101 | 595 | |
| | 2019.06- | 6DCT | F | R | SUV FWD SQRE4T15C | | GDS56546 | Drive Shaft | 48T | 28 | 34 | 58 | 100 | 1009 | |
| | 2019.06- | 6DCT | F | L/R | SUV FWD SQRE4T15C | Model Year to:2021 | GCO83157 | Outer Joint | 48T | 28 | 34 | 58 | 101 | 63 | M |
| | 2019.06- | 6DCT | F | L/R | SUV FWD SQRE4T15C | Model year to:2021 | GCO83164 | Outer Joint | 48T | 28 | 26 | 58 | 100 | 64.5 | M |
| | 2019.06- | 6DCT | F | L | SUV FWD SQRE4T15C | Model Year to:2021 | GCI83105 | Inner Joint | | 34 | 34 | 40 | 54.5 | 109 | |
| | 2019.06- | 6DCT | F | R | SUV FWD SQRE4T15C | Model year to:2021 | GCI83363 | Inner Joint | | 34 | 34 | 40 | 104.5 | 147 | |
| | 2019.06- | 6MT | F | R | SUV FWD SQRE4T15C | Model year to:2022 | GDS56535 | Drive Shaft | 48T | 28 | 27 | 58 | 101 | 957 | |
| | 2019.06- | 6MT | F | L/R | SUV FWD SQRE4T15C | Model year to:2022 | GCO83157 | Outer Joint | 48T | 28 | 34 | 58 | 101 | 63 | M |
| | 2020.03- | 6DCT | F | R | SUV FWD SQRE4T15C | | GDS56546 | Drive Shaft | 48T | 28 | 34 | 58 | 100 | 1009 | |
| | 2020.03- | 6DCT | F | R | SUV FWD SQRE4T15C | Model year to:2021 | GCI83363 | Inner Joint | | 34 | 34 | 40 | 104.5 | 147 | |
| | 2020.03- | 6MT | F | L | SUV FWD SQRE4T15C | Model year to:2022 | GDS56587 | Drive Shaft | 48T | 28 | 27 | 58 | 101 | 643 | |
| | 2020.03- | 6MT | F | R | SUV FWD SQRE4T15C | Model year to:2022 | GDS56535 | Drive Shaft | 48T | 28 | 27 | 58 | 101 | 957 | |
| | 2020.03- | 6MT | F | L/R | SUV FWD SQRE4T15C | Model year to:2022 | GCO83157 | Outer Joint | 48T | 28 | 34 | 58 | 101 | 63 | M |
| | 2020.03- | 6MT | F | L/R | SUV FWD SQRE4T15C | Model year to:2022 | GCO83351 | Outer Joint | 48T | 28 | 25 | 58 | 101 | 63 | M |
| | 2020.03- | 6MT | F | L | SUV FWD SQRE4T15C | Model year to:2022 | GCI83392 | Inner Joint | | 27 | 25 | 40 | 60 | 119 | |
| | 2020.03- | 6MT | F | L | SUV FWD SQRE4T15C | Model year from:2019,Model year to:2022 | GCI83393 | Inner Joint | | 27 | 34 | 40 | 60.5 | 113 | |
| | 2020.03- | 6MT | F | R | SUV FWD SQRE4T15C | Model year to:2022 | GCI83087 | Inner Joint | | 27 | 34 | 40 | 75.5 | 127 | |
| | 2020.03- | CVT | F | L | SUV FWD SQRE4T15C | Model year to:2023;Inner teeth of wheel side:26 | GDS56125 | Drive Shaft | 48T | 28 | 27 | 58 | 100 | 647 | |
| | 2020.03- | CVT | F | L | SUV FWD SQRE4T15C | Model year to:2023;Inner teeth of wheel side:34 | GDS56152 | Drive Shaft | 48T | 28 | 27 | 58 | 101 | 649 | |
| | 2020.03- | CVT | F | R | SUV FWD SQRE4T15C | Model year to:2023;Inner teeth of wheel side:26 | GDS56126 | Drive Shaft | 48T | 28 | 27 | 58 | 100 | 947 | |
| | 2020.03- | CVT | F | R | SUV FWD SQRE4T15C | Model year to:2023;Inner teeth of wheel side:34 | GDS56151 | Drive Shaft | 48T | 28 | 27 | 58 | 101 | 948 | |
| | 2020.03- | CVT | F | L/R | SUV FWD SQRE4T15C | Model year to:2023 | GCO83157 | Outer Joint | 48T | 28 | 34 | 58 | 101 | 63 | M |
| | 2020.03- | CVT | F | L/R | SUV FWD SQRE4T15C | Model year to:2023 | GCO83164 | Outer Joint | 48T | 28 | 26 | 58 | 100 | 64.5 | M |
| | 2020.03- | CVT | F | L/R | SUV FWD SQRE4T15C | Model year to:2023 | GCI83099 | Inner Joint | | 27 | 34 | 41 | 61.5 | 109 | |
| | 2020.03- | CVT | F | L/R | SUV FWD SQRE4T15C | Model year to:2023 | GCI83109 | Inner Joint | | 27 | 33 | 41 | 61.5 | 109 | |
| 1.6 (145 kw) | 2020.03- | 7DCT | F | L | SUV FWD SQRF4J16 | Model year from:2019,Model year to:2023 | GDS56921 | Drive Shaft | 48T | 28 | 27 | 58 | 100 | 599 | |
| | 2020.03- | 7DCT | F | R | SUV FWD SQRF4J16 | Model year from:2019,Model year to:2023 | GDS56922 | Drive Shaft | 48T | 28 | 27 | 58 | 100 | 1002 | |
| | 2020.03- | 7DCT | F | L/R | SUV FWD SQRF4J16 | Model year from:2019,Model year to:2023 | GCO83487 | Outer Joint | 48T | 28 | 33 | 58 | 100 | 61 | M |
| | 2020.03- | 7DCT | F | L | SUV FWD SQRF4J16 | Model year to:2023 | GCI83560 | Inner Joint | | 27 | 33 | 40 | 56 | 115 | |
| | 2020.03- | 7DCT | F | R | SUV FWD SQRF4J16 | Model year to:2023 | GCI83561 | Inner Joint | | 27 | 33 | 40 | 445 | 101 | |
| 2.0 (90 kw) | 2016.09- | CVT | F | L | SUV FWD SQRD4G20 | Model year to:2017,7CVT | GDS56513 | Drive Shaft | 48T | 28 | 25 | 58 | 100.5 | 620 | |
| | 2016.09- | CVT | F | R | SUV FWD SQRD4G20 | Model year to:2017,7CVT | GDS56524 | Drive Shaft | 48T | 28 | 25 | 58 | 100.5 | 981 | |
| | 2016.09- | CVT | F | L/R | SUV FWD SQRD4G20 | Model year to:2017,7CVT | GCO83323 | Outer Joint | 48T | 28 | 31 | 58 | 100.5 | 64 | M |
| | 2016.09- | CVT | F | L/R | SUV FWD SQRD4G20 | Model year to:2017,7CVT | GCI82911 | Inner Joint | | 25 | 33 | 41 | 62 | 93 | |
| **Tiggo 7 Plus** | | | | | | | | | | | | | | | |
| 1.6 (145 kw) | 2021.09- | 7DCT | F | L | SUV FWD SQRF4J16, SQRF4J16C | | GDS57718 | Drive Shaft | 48T | 28 | 27 | 58 | 100 | 595 | |
| | 2021.09- | 7DCT | F | L/R | SUV FWD SQRF4J16, SQRF4J16C | | GCO83164 | Outer Joint | 48T | 28 | 26 | 58 | 100 | 64.5 | M |
| | 2021.09- | 7DCT | F | L | SUV FWD SQRF4J16, SQRF4J16C | | GCI83820 | Inner Joint | | 27 | 34 | 40 | 56 | 115 | |
| **Tiggo 7 Plus/Tiggo 7 Pro Max** | | | | | | | | | | | | | | | |
| 1.6 (145 kw) | 2023.10- | 7DCT | F | L | SUV 4WD SQRF4J16, SQRF4J16C | | GDS57718 | Drive Shaft | 48T | 28 | 27 | 58 | 100 | 595 | |
| | 2023.10- | 7DCT | F | L/R | SUV 4WD SQRF4J16, SQRF4J16C | | GCO83164 | Outer Joint | 48T | 28 | 26 | 58 | 100 | 64.5 | M |
| | 2023.10- | 7DCT | F | L | SUV 4WD SQRF4J16, SQRF4J16C | | GCI83820 | Inner Joint | | 27 | 34 | 40 | 56 | 115 | |
| **Tiggo 8** | | | | | | | | | | | | | | | |
| 1.5 (108 kw) | 2018.04- | 6DCT | F | L | SUV FWD SQRE4T15B | Model year to:2019 | GDS56146 | Drive Shaft | 48T | 28 | 34 | 58 | 101 | 621 | |
| | 2018.04- | 6DCT | F | R | SUV FWD SQRE4T15B | Model year to:2019 | GDS56145 | Drive Shaft | 48T | 28 | 34 | 58 | 101 | 1040 | |
| | 2018.04- | 6DCT | F | L/R | SUV FWD SQRE4T15B | Model year to:2019 | GCO83157 | Outer Joint | 48T | 28 | 34 | 58 | 101 | 63 | M |
| | 2018.04- | 6DCT | F | L | SUV FWD SQRE4T15B | Model year to:2019 | GCI83105 | Inner Joint | | 34 | 34 | 40 | 54.5 | 109 | |
| | 2018.04- | 6DCT | F | R | SUV FWD SQRE4T15B | Model year to:2019 | GCI83106 | Inner Joint | | 34 | 34 | 40 | 104.5 | 149 | |
| | 2018.04- | 6MT | F | L | SUV FWD SQRE4T15B | Model year from:2019 | GDS56160 | Drive Shaft | 48T | 28 | 27 | 58 | 101 | 655 | |
| | 2018.04- | 6MT | F | L | SUV FWD SQRE4T15B | Model year to:2019 | GDS56590 | Drive Shaft | 48T | 28 | 27 | 58 | 101 | 674 | |
| | 2018.04- | 6MT | F | R | SUV FWD SQRE4T15B | Model year from:2019 | GDS56183 | Drive Shaft | 48T | 28 | 27 | 58 | 101 | 1002 | |
| | 2018.04- | 6MT | F | R | SUV FWD SQRE4T15B | Model year to:2019 | GDS56589 | Drive Shaft | 48T | 28 | 27 | 58 | 101 | 992 | |
| | 2018.04- | 6MT | F | L/R | SUV FWD SQRE4T15B | | GCO83157 | Outer Joint | 48T | 28 | 34 | 58 | 101 | 63 | M |
| | 2018.04- | 6MT | F | L | SUV FWD SQRE4T15B | Model year from:2019 | GCI83109 | Inner Joint | | 27 | 33 | 41 | 61.5 | 109 | |
| | 2018.04- | 6MT | F | L | SUV FWD SQRE4T15B | Model year to:2019 | GCI83393 | Inner Joint | | 27 | 34 | 40 | 60.5 | 113 | |
| | 2018.04- | 6MT | F | R | SUV FWD SQRE4T15B | Model year to:2019 | GCI83087 | Inner Joint | | 27 | 34 | 40 | 75.5 | 127 | |
| | 2018.04- | 6MT | F | R | SUV FWD SQRE4T15B | Model year from:2019 | GCI83184 | Inner Joint | | 27 | 33 | 41 | 415 | 102 | |
| | 2018.04- | 6MT/6DCT | F | L/R | SUV FWD SQRE4T15B | Model year to:2019 | GCO83351 | Outer Joint | 48T | 28 | 25 | 58 | 101 | 63 | M |
| 1.5 (115 kw) | 2019.05- | 6DCT | F | L | SUV FWD SQRE4T15C | Model year from:2020,Model year to:2023 | GDS56146 | Drive Shaft | 48T | 28 | 34 | 58 | 101 | 621 | |
| | 2019.05- | 6DCT | F | R | SUV FWD SQRE4T15C | Model year from:2020,Model year to:2023 | GDS56145 | Drive Shaft | 48T | 28 | 34 | 58 | 101 | 1040 | |
| | 2019.05- | 6DCT | F | L/R | SUV FWD SQRE4T15C | Model year from:2020,Model year to:2023 | GCO83157 | Outer Joint | 48T | 28 | 34 | 58 | 101 | 63 | M |

| | YEAR | TRANSM. | F/R | L/R | BODY STYLE & DRIVE TYPE & ENGINE | REMARKS | G-AP Ref. | PRODUCT | ABS | Technical Specifications A | B | C | H | L | P |
|---|---|---|---|---|---|---|---|---|---|---|---|---|---|---|---|
| **CHERY** | | | | | | | | | | | | | | | |
| **Tiggo 8** | | | | | | | | | | | | | | | |
| 1.5 (115 kw) | 2019.05- | 6DCT | F | L | SUV FWD SQRE4T15C | Model year from:2020,Model year to:2023 | GCI83105 | Inner Joint | | 34 | 34 | 40 | 54.5 | 109 | |
| | 2019.05- | 6DCT | F | R | SUV FWD SQRE4T15C | Model year from:2020,Model year to:2023 | GCI83106 | Inner Joint | | 34 | 34 | 40 | 104.5 | 149 | |
| | 2019.05- | 6MT | F | L | SUV FWD SQRE4T15C | Model year from:2019 | GDS56160 | Drive Shaft | 48T | 28 | 27 | 58 | 101 | 655 | |
| | 2019.05- | 6MT | F | L | SUV FWD SQRE4T15C | Model year from:2020,Model year to:2023 | GDS56590 | Drive Shaft | 48T | 28 | 27 | 58 | 101 | 674 | |
| | 2019.05- | 6MT | F | R | SUV FWD SQRE4T15C | Model year from:2019 | GDS56183 | Drive Shaft | 48T | 28 | 27 | 58 | 101 | 1002 | |
| | 2019.05- | 6MT | F | R | SUV FWD SQRE4T15C | Model year from:2020,Model year to:2023 | GDS56589 | Drive Shaft | 48T | 28 | 27 | 58 | 101 | 992 | |
| | 2019.05- | 6MT | F | L/R | SUV FWD SQRE4T15C | Model year from:2019 | GCO83157 | Outer Joint | 48T | 28 | 34 | 58 | 101 | 63 | M |
| | 2019.05- | 6MT | F | L | SUV FWD SQRE4T15C | Model year from:2019 | GCI83109 | Inner Joint | | 27 | 33 | 41 | 61.5 | 109 | |
| | 2019.05- | 6MT | F | L | SUV FWD SQRE4T15C | Model year from:2020,Model year to:2023 | GCI83393 | Inner Joint | | 27 | 34 | 40 | 60.5 | 113 | |
| | 2019.05- | 6MT | F | R | SUV FWD SQRE4T15C | Model year from:2020,Model year to:2023 | GCI83087 | Inner Joint | | 27 | 34 | 40 | 75.5 | 127 | |
| | 2019.05- | 6MT | F | R | SUV FWD SQRE4T15C | Model year from:2019 | GCI83184 | Inner Joint | | 27 | 33 | 41 | 415 | 102 | |
| | 2019.05- | 6MT/6DCT | F | L/R | SUV FWD SQRE4T15C | Model year to:2023 | GCO83351 | Outer Joint | 48T | 28 | 25 | 58 | 101 | 63 | M |
| 1.6 (145 kw) | 2019.05- | 7DCT | F | L | SUV FWD SQRF4J16, SQRF4J16C | Model year from:2020,Model year to:2021 | GDS56148 | Drive Shaft | 48T | 28 | 27 | 58 | 100 | 626 | |
| | 2019.05- | 7DCT | F | R | SUV FWD SQRF4J16, SQRF4J16C | Model year from:2020,Model year to:2021 | GDS56147 | Drive Shaft | 48T | 28 | 27 | 58 | 100 | 1029 | |
| | 2019.05- | 7DCT | F | L/R | SUV FWD SQRF4J16, SQRF4J16C | Model year from:2020,Model year to:2021 | GCO83171 | Outer Joint | 48T | 28 | 28 | 58 | 100 | 70 | M |
| | 2019.05- | 7DCT | F | L | SUV FWD SQRF4J16, SQRF4J16C | Model year from:2020,Model year to:2021 | GCI83108 | Inner Joint | | 27 | 28 | 40 | 56 | 112.5 | |
| | 2019.05- | 7DCT | F | R | SUV FWD SQRF4J16, SQRF4J16C | Model year from:2020,Model year to:2021 | GCI83107 | Inner Joint | | 27 | 28 | 40 | 465 | 97.5 | |
| | 2019.05- | MT | F | L | SUV FWD SQRF4J16, SQRF4J16C | Model year from:2019 | GDS56160 | Drive Shaft | 48T | 28 | 27 | 58 | 101 | 655 | |
| | 2019.05- | MT | F | R | SUV FWD SQRF4J16, SQRF4J16C | Model year from:2019 | GDS56183 | Drive Shaft | 48T | 28 | 27 | 58 | 101 | 1002 | |
| | 2019.05- | MT | F | L/R | SUV FWD SQRF4J16, SQRF4J16C | Model year from:2019 | GCO83157 | Outer Joint | 48T | 28 | 34 | 58 | 101 | 63 | M |
| | 2019.05- | MT | F | L | SUV FWD SQRF4J16, SQRF4J16C | Model year from:2019 | GCI83109 | Inner Joint | | 27 | 33 | 41 | 61.5 | 109 | |
| | 2019.05- | MT | F | R | SUV FWD SQRF4J16, SQRF4J16C | Model year from:2019 | GCI83184 | Inner Joint | | 27 | 33 | 41 | 415 | 102 | |
| 2.0 (187 kw) | 2021.07- | MT | F | L | SUV FWD SQRF4J20 | Model year from:2019 | GDS56160 | Drive Shaft | 48T | 28 | 27 | 58 | 101 | 655 | |
| | 2021.07- | MT | F | R | SUV FWD SQRF4J20 | Model year from:2019 | GDS56183 | Drive Shaft | 48T | 28 | 27 | 58 | 101 | 1002 | |
| | 2021.07- | MT | F | L/R | SUV FWD SQRF4J20 | Model year from:2019 | GCO83157 | Outer Joint | 48T | 28 | 34 | 58 | 101 | 63 | M |
| | 2021.07- | MT | F | L | SUV FWD SQRF4J20 | Model year from:2019 | GCI83109 | Inner Joint | | 27 | 33 | 41 | 61.5 | 109 | |
| | 2021.07- | MT | F | R | SUV FWD SQRF4J20 | Model year from:2019 | GCI83184 | Inner Joint | | 27 | 33 | 41 | 415 | 102 | |
| **Tiggo 8 Plus** | | | | | | | | | | | | | | | |
| 1.5 (115 kw) | 2020.10- | CVT | F | L | SUV FWD SQRE4T15C | Model year to:2021 | GDS56150 | Drive Shaft | 48T | 28 | 27 | 58 | 101 | 677 | |
| | 2020.10- | CVT | F | R | SUV FWD SQRE4T15C | Model year to:2021 | GDS56149 | Drive Shaft | 48T | 28 | 27 | 58 | 101 | 979 | |
| | 2020.10- | CVT | F | L/R | SUV FWD SQRE4T15C | Model year to:2021 | GCO83157 | Outer Joint | 48T | 28 | 34 | 58 | 101 | 63 | M |
| | 2020.10- | CVT | F | L/R | SUV FWD SQRE4T15C | Model year to:2021 | GCI83109 | Inner Joint | | 27 | 33 | 41 | 61.5 | 109 | |
| 1.6 (145 kw) | 2020.10- | 7DCT | F | L | SUV FWD SQRF4J16, SQRF4J16C | Model year to:2022 | GDS56148 | Drive Shaft | 48T | 28 | 27 | 58 | 100 | 626 | |
| | 2020.10- | 7DCT | F | R | SUV FWD SQRF4J16, SQRF4J16C | Model year to:2022 | GDS56147 | Drive Shaft | 48T | 28 | 27 | 58 | 100 | 1029 | |
| | 2020.10- | 7DCT | F | L/R | SUV FWD SQRF4J16, SQRF4J16C | Model year to:2022 | GCO83171 | Outer Joint | 48T | 28 | 28 | 58 | 100 | 70 | M |
| | 2020.10- | 7DCT | F | L | SUV FWD SQRF4J16, SQRF4J16C | Model year to:2022 | GCI83108 | Inner Joint | | 27 | 28 | 40 | 56 | 112.5 | |
| | 2020.10- | 7DCT | F | R | SUV FWD SQRF4J16, SQRF4J16C | Model year to:2022 | GCI83107 | Inner Joint | | 27 | 28 | 40 | 465 | 97.5 | |
| **Tiggo FL** | | | | | | | | | | | | | | | |
| 1.8 (97 kw) | 2013.10- | 5MT | F | L | SUV FWD SQR481FC | | GDS81136 | Drive Shaft | 48T | 26 | 25 | 55.3 | 100 | 629 | |
| | 2013.10- | 5MT | F | R | SUV FWD SQR481FC | | GDS81899 | Drive Shaft | 48T | 26 | 25 | 55.3 | 100 | 959 | |
| | 2013.10- | 5MT | F | L/R | SUV FWD SQR481FC | | GCO39336 | Outer Joint | 48T | 26 | 25 | 55.3 | 100 | 59 | M |
| | 2013.10- | 5MT | F | L/R | SUV FWD SQR481FC | | GCI71003 | Inner Joint | | 25 | 24 | 41 | 62.5 | 91 | |
| **X1** | | | | | | | | | | | | | | | |
| 1.3 (62 kw) | 2010.01-2014.06 | 5AMT/5MT | F | L | Hatchback FWD SQR473F, SQR473 | | GDS82372 | Drive Shaft | 43T | 23 | 25 | 51 | 94 | 569 | |
| | 2010.01-2014.06 | 5AMT/5MT | F | L/R | Hatchback FWD SQR473F, SQR473 | | GCO68005 | Outer Joint | 43T | 23 | 21 | 51 | 94 | 54 | I |
| **CHEVROLET** | | | | | | | | | | | | | | | |
| **Avalanche 1500** | | | | | | | | | | | | | | | |
| 5.3 (231 kw) | 2009.01-2013.12 | | F | | Pickup 4WD LMG | Date to:2013 | GCO44054 | Outer Joint | | 33 | 35 | 72.8 | 112.5 | 73.5 | O |
| | 2009.01-2013.12 | | F | | Pickup 4WD LMG | Date to:2013 | GCO87001 | Outer Joint | | 33 | 41 | 80 | 112 | 88.5 | O |
| **Aveo** | | | | | | | | | | | | | | | |
| 1.2 (55 kw) | 2008.01- | MT | F | L | Saloon FWD LMU | | GDS44069 | Drive Shaft | 47T | 22 | 22 | 52 | 96.5 | 657 | |
| | 2008.01- | MT | F | R | Saloon FWD LMU | | GDS44070 | Drive Shaft | 47T | 22 | 22 | 52 | 96.5 | 875 | |
| | 2008.01- | MT | F | L/R | Saloon FWD LMU | | GCO12042 | Outer Joint | 47T | 22 | 22 | 52 | 96.5 | 53.5 | O |
| | 2008.04- | 5MT | F | L | Hatchback FWD LMU | | GDS44069 | Drive Shaft | 47T | 22 | 22 | 52 | 96.5 | 657 | |
| | 2008.04- | 5MT | F | R | Hatchback FWD LMU | | GDS44070 | Drive Shaft | 47T | 22 | 22 | 52 | 96.5 | 875 | |
| | 2008.04- | 5MT | F | L/R | Hatchback FWD LMU | | GCO12042 | Outer Joint | 47T | 22 | 22 | 52 | 96.5 | 53.5 | O |
| | 2008.04- | 5MT | F | L/R | Hatchback FWD LMU | | GCI88021 | Inner Joint | | 22 | 22 | 35 | 50 | 105.5 | |
| | 2008.04- | | F | L/R | Hatchback FWD LMU | | GCO99013 | Outer Joint | | 22 | 22 | 56 | 95.5 | 53 | O |
| 1.2 (60 kw) | 2008.06-2012.11 | 5MT | F | L | Hatchback FWD LMU | | GDS44069 | Drive Shaft | 47T | 22 | 22 | 52 | 96.5 | 657 | |
| | 2008.06-2012.11 | 5MT | F | R | Hatchback FWD LMU | | GDS44070 | Drive Shaft | 47T | 22 | 22 | 52 | 96.5 | 875 | |
| | 2008.06-2012.11 | 5MT | F | L/R | Hatchback FWD LMU | | GCO12042 | Outer Joint | 47T | 22 | 22 | 52 | 96.5 | 53.5 | O |
| | 2008.06-2012.11 | 5MT | F | L/R | Hatchback FWD LMU | | GCI88021 | Inner Joint | | 22 | 22 | 35 | 50 | 105.5 | |
| | 2008.06-2012.11 | | F | L/R | Hatchback FWD LMU | | GCO99013 | Outer Joint | | 22 | 22 | 56 | 95.5 | 53 | O |
| 1.2 (62 kw) | 2008.01- | 5MT | F | L | Saloon FWD LMU | | GDS44069 | Drive Shaft | 47T | 22 | 22 | 52 | 96.5 | 657 | |
| | 2008.01- | 5MT | F | R | Saloon FWD LMU | | GDS44070 | Drive Shaft | 47T | 22 | 22 | 52 | 96.5 | 875 | |

| | YEAR | TRANSM. | F/R | L/R | BODY STYLE & DRIVE TYPE & ENGINE | REMARKS | G-AP Ref. | PRODUCT | ABS | Technical Specifications A | B | C | H | L | P |
|---|---|---|---|---|---|---|---|---|---|---|---|---|---|---|---|
| **CHEVROLET** | | | | | | | | | | | | | | | |
| **Aveo** | | | | | | | | | | | | | | | |
| 1.2 (62 kw) | 2008.01- | 5MT | F | L/R | Saloon FWD LMU | | GCO12042 | Outer Joint | 47T | 22 | 22 | 52 | 96.5 | 53.5 | O |
| | 2008.01- | 5MT | F | L/R | Saloon FWD LMU | | GCO88021 | Outer Joint | 47T | 22 | 22 | 52 | 96.5 | 53.5 | O |
| | 2008.01- | 5MT | F | L/R | Saloon FWD LMU | | GCO99013 | Outer Joint | | 22 | 22 | 56 | 95.5 | 53 | O |
| | 2008.01- | 5MT | F | L/R | Saloon FWD LMU | | GCI88021 | Inner Joint | | 22 | 22 | 35 | 50 | 105.5 | |
| | 2008.04- | 5MT | F | L | Hatchback FWD LMU | | GDS44069 | Drive Shaft | 47T | 22 | 22 | 52 | 96.5 | 657 | |
| | 2008.04- | 5MT | F | R | Hatchback FWD LMU | | GDS44070 | Drive Shaft | 47T | 22 | 22 | 52 | 96.5 | 875 | |
| | 2008.04- | 5MT | F | L/R | Hatchback FWD LMU | | GCO12042 | Outer Joint | 47T | 22 | 22 | 52 | 96.5 | 53.5 | O |
| | 2008.04- | 5MT | F | L/R | Hatchback FWD LMU | | GCO88021 | Outer Joint | 47T | 22 | 22 | 52 | 96.5 | 53.5 | O |
| | 2008.04- | 5MT | F | L/R | Hatchback FWD LMU | | GCO99013 | Outer Joint | | 22 | 22 | 56 | 95.5 | 53 | O |
| | 2008.04- | 5MT | F | L/R | Hatchback FWD LMU | | GCI88021 | Inner Joint | | 22 | 22 | 35 | 50 | 105.5 | |
| | 2008.04-2011.12 | 5MT | F | L | Hatchback FWD LMU | | GDS44069 | Drive Shaft | 47T | 22 | 22 | 52 | 96.5 | 657 | |
| | 2008.04-2011.12 | 5MT | F | R | Hatchback FWD LMU | | GDS44070 | Drive Shaft | 47T | 22 | 22 | 52 | 96.5 | 875 | |
| | 2008.04-2011.12 | 5MT | F | L/R | Hatchback FWD LMU | | GCO12042 | Outer Joint | 47T | 22 | 22 | 52 | 96.5 | 53.5 | O |
| | 2008.04-2011.12 | 5MT | F | L/R | Hatchback FWD LMU | | GCO88021 | Outer Joint | 47T | 22 | 22 | 52 | 96.5 | 53.5 | O |
| | 2008.04-2011.12 | 5MT | F | L/R | Hatchback FWD LMU | | GCO99013 | Outer Joint | | 22 | 22 | 56 | 95.5 | 53 | O |
| | 2008.04-2011.12 | 5MT | F | L/R | Hatchback FWD LMU | | GCI88021 | Inner Joint | | 22 | 22 | 35 | 50 | 105.5 | |
| 1.3 (55 kw) | 2011.07-2015.12 | 5MT | F | L | Hatchback FWD LDV | | GDS82513 | Drive Shaft | | 25 | 22 | 52.5 | 92 | 598 | |
| | 2011.07-2015.12 | 5MT | F | R | Hatchback FWD LDV | | GDS82797 | Drive Shaft | | 25 | 22 | 52.5 | 92 | 956 | |
| | 2011.07-2015.12 | 5MT | F | L/R | Hatchback FWD LDV | | GCO21076 | Outer Joint | | 25 | 30 | 52.5 | 92 | 58.5 | I |
| | 2011.07-2015.12 | 5MT | F | L/R | Hatchback FWD LDV | | GCI81850 | Inner Joint | | 22 | 30 | 34.9 | 57 | 105.5 | |
| | 2011.07-2015.12 | 5MT | F | L | Saloon FWD LDV | | GDS82513 | Drive Shaft | | 25 | 22 | 52.5 | 92 | 598 | |
| | 2011.07-2015.12 | 5MT | F | R | Saloon FWD LDV | | GDS82797 | Drive Shaft | | 25 | 22 | 52.5 | 92 | 956 | |
| | 2011.07-2015.12 | 5MT | F | L/R | Saloon FWD LDV | | GCO21076 | Outer Joint | | 25 | 30 | 52.5 | 92 | 58.5 | I |
| | 2011.07-2015.12 | 5MT | F | L/R | Saloon FWD LDV | | GCI81850 | Inner Joint | | 22 | 30 | 34.9 | 57 | 105.5 | |
| 1.3 (70 kw) | 2011.07-2015.12 | 5MT | F | L | Hatchback FWD LSF | | GDS82513 | Drive Shaft | | 25 | 22 | 52.5 | 92 | 598 | |
| | 2011.07-2015.12 | 5MT | F | R | Hatchback FWD LSF | | GDS82797 | Drive Shaft | | 25 | 22 | 52.5 | 92 | 956 | |
| | 2011.07-2015.12 | 5MT | F | L/R | Hatchback FWD LSF | | GCI81850 | Inner Joint | | 22 | 30 | 34.9 | 57 | 105.5 | |
| | 2011.07-2015.12 | 5MT/6MT | F | L/R | Hatchback FWD LSF | | GCO21076 | Outer Joint | | 25 | 30 | 52.5 | 92 | 58.5 | I |
| | 2011.07-2015.12 | 6MT | F | L | Hatchback FWD LSF | | GDS56670 | Drive Shaft | | 25 | 25 | 52.5 | 92 | 591 | |
| | 2011.07-2015.12 | 6MT | F | R | Hatchback FWD LSF | | GDS56660 | Drive Shaft | | 25 | 34 | 52.5 | 92 | 554 | |
| | 2011.07-2015.12 | 6MT | F | L | Hatchback FWD LSF | | GCI83434 | Inner Joint | | 25 | 30 | 34.9 | 57.5 | 108.5 | |
| | 2011.07-2015.12 | 6MT | F | R | Hatchback FWD LSF | | GCI83432 | Inner Joint | | 34 | 30 | 37.5 | | 126 | |
| | 2011.07-2015.12 | 5MT | F | L | Saloon FWD LSF | | GDS82513 | Drive Shaft | | 25 | 22 | 52.5 | 92 | 598 | |
| | 2011.07-2015.12 | 5MT | F | R | Saloon FWD LSF | | GDS82797 | Drive Shaft | | 25 | 22 | 52.5 | 92 | 956 | |
| | 2011.07-2015.12 | 5MT | F | L/R | Saloon FWD LSF | | GCI81850 | Inner Joint | | 22 | 30 | 34.9 | 57 | 105.5 | |
| | 2011.07-2015.12 | 6MT | F | L | Saloon FWD LSF | | GDS56670 | Drive Shaft | | 25 | 25 | 52.5 | 92 | 591 | |
| | 2011.07-2015.12 | 6MT | F | R | Saloon FWD LSF | | GDS56660 | Drive Shaft | | 25 | 34 | 52.5 | 92 | 554 | |
| | 2011.07-2015.12 | 6MT | F | L/R | Saloon FWD LSF | | GCO21076 | Outer Joint | | 25 | 30 | 52.5 | 92 | 58.5 | I |
| | 2011.07-2015.12 | 6MT | F | L | Saloon FWD LSF | | GCI83434 | Inner Joint | | 25 | 30 | 34.9 | 57.5 | 108.5 | |
| | 2011.07-2015.12 | 6MT | F | R | Saloon FWD LSF | | GCI83432 | Inner Joint | | 34 | 30 | 37.5 | | 126 | |
| 1.4 (74 kw) | 2008.04- | 5MT | F | L/R | Hatchback FWD LDT | | GCO99013 | Outer Joint | | 22 | 22 | 56 | 95.5 | 53 | O |
| | 2008.04- | AT | F | L | Hatchback FWD LDT | | GDS12040 | Drive Shaft | | 22 | 22 | 56 | 95.5 | 602 | |
| | 2008.04- | AT | F | L | Hatchback FWD LDT | | GDS57093 | Drive Shaft | 47T | 22 | 22 | 52 | 96 | 603 | |
| | 2008.04- | AT | F | L | Hatchback FWD LDT | For vehicles without ABS | GDS88012 | Drive Shaft | 48T | 22 | 22 | 56 | 95.5 | 602 | |
| | 2008.04- | AT | F | R | Hatchback FWD LDT | | GDS12042 | Drive Shaft | | 22 | 22 | 56 | 95.5 | 930 | |
| | 2008.04- | AT | F | R | Hatchback FWD LDT | | GDS57094 | Drive Shaft | 47T | 22 | 22 | 52 | 96 | 933 | |
| | 2008.04- | AT | F | R | Hatchback FWD LDT | For vehicles without ABS | GDS88013 | Drive Shaft | 48T | 22 | 22 | 56 | 95.5 | 930 | |
| | 2008.04- | AT | F | L/R | Hatchback FWD LDT | | GCI24068 | Inner Joint | | 22 | 29 | 38 | 59.5 | 97.5 | |
| | 2008.04- | MT | F | L | Hatchback FWD LDT | | GDS12058 | Drive Shaft | 47T | 22 | 34 | 52 | 96.5 | 606 | |
| | 2008.04- | MT | F | R | Hatchback FWD LDT | | GDS12057 | Drive Shaft | 47T | 22 | 34 | 52 | 96.5 | 918 | |
| | 2008.04- | MT | F | L/R | Hatchback FWD LDT | | GCO88021 | Outer Joint | 47T | 22 | 22 | 52 | 96.5 | 53.5 | O |
| | 2008.04- | MT | F | L/R | Hatchback FWD LDT | | GCI99025 | Inner Joint | | 34 | 22 | 35 | 56.2 | 111.3 | |
| | 2008.09- | 5MT | F | L/R | Saloon FWD LDT | | GCO99013 | Outer Joint | | 22 | 22 | 56 | 95.5 | 53 | O |
| | 2008.09- | AT | F | L | Saloon FWD LDT | | GDS12040 | Drive Shaft | | 22 | 22 | 56 | 95.5 | 602 | |
| | 2008.09- | AT | F | L | Saloon FWD LDT | | GDS57093 | Drive Shaft | 47T | 22 | 22 | 52 | 96 | 603 | |
| | 2008.09- | AT | F | L | Saloon FWD LDT | For vehicles without ABS | GDS88012 | Drive Shaft | 48T | 22 | 22 | 56 | 95.5 | 602 | |
| | 2008.09- | AT | F | R | Saloon FWD LDT | | GDS12042 | Drive Shaft | | 22 | 22 | 56 | 95.5 | 930 | |
| | 2008.09- | AT | F | R | Saloon FWD LDT | | GDS57094 | Drive Shaft | 47T | 22 | 22 | 52 | 96 | 933 | |
| | 2008.09- | AT | F | R | Saloon FWD LDT | For vehicles without ABS | GDS88013 | Drive Shaft | 48T | 22 | 22 | 56 | 95.5 | 930 | |
| | 2008.09- | AT | F | L/R | Saloon FWD LDT | | GCI24068 | Inner Joint | | 22 | 29 | 38 | 59.5 | 97.5 | |
| | 2008.09- | MT | F | L | Saloon FWD LDT | | GDS12058 | Drive Shaft | 47T | 22 | 34 | 52 | 96.5 | 606 | |
| | 2008.09- | MT | F | R | Saloon FWD LDT | | GDS12057 | Drive Shaft | 47T | 22 | 34 | 52 | 96.5 | 918 | |
| | 2008.09- | MT | F | L/R | Saloon FWD LDT | | GCO88021 | Outer Joint | 47T | 22 | 22 | 52 | 96.5 | 53.5 | O |
| | 2008.09- | MT | F | L/R | Saloon FWD LDT | | GCI99025 | Inner Joint | | 34 | 22 | 35 | 56.2 | 111.3 | |
| | 2011.03- | 6MT | F | L/R | Hatchback FWD LDD | | GCO21076 | Outer Joint | | 25 | 30 | 52.5 | 92 | 58.5 | I |

| | YEAR | TRANSM. | F/R | L/R | BODY STYLE & DRIVE TYPE & ENGINE | REMARKS | G-AP Ref. | PRODUCT | ABS | Technical Specifications A | B | C | H | L | P |
|---|---|---|---|---|---|---|---|---|---|---|---|---|---|---|---|
| **CHEVROLET** | | | | | | | | | | | | | | | |
| **Aveo** | | | | | | | | | | | | | | | |
| 1.4 (74 kw) | 2011.03- | AT | F | L | Hatchback FWD LDD | | GDS88160 | Drive Shaft | | 25 | 22 | 52.5 | 92 | 628 | |
| | 2011.03- | AT | F | L | Hatchback FWD LDD | | GCI21057 | Inner Joint | | 22 | 30 | 35 | 131.5 | 87.5 | |
| | 2011.07- | AT | F | L | Saloon FWD A 14 XER;LDD | | GDS88160 | Drive Shaft | | 25 | 22 | 52.5 | 92 | 628 | |
| | 2011.07- | AT | F | L/R | Saloon FWD A 14 XER;LDD | | GCO21076 | Outer Joint | | 25 | 30 | 52.5 | 92 | 58.5 | I |
| | 2011.07- | AT | F | L | Saloon FWD A 14 XER;LDD | | GCI21057 | Inner Joint | | 22 | 30 | 35 | 131.5 | 87.5 | |
| 1.5 (62 kw) | 2005.01-2008.05 | AT | F | L | Hatchback FWD A15SMS | | GDS12040 | Drive Shaft | | 22 | 22 | 56 | 95.5 | 602 | |
| | 2005.01-2008.05 | AT | F | L | Hatchback FWD A15SMS | | GDS57093 | Drive Shaft | 47T | 22 | 22 | 52 | 96 | 603 | |
| | 2005.01-2008.05 | AT | F | L | Hatchback FWD A15SMS | For vehicles with ABS | GDS88012 | Drive Shaft | 48T | 22 | 22 | 56 | 95.5 | 602 | |
| | 2005.01-2008.05 | AT | F | R | Hatchback FWD A15SMS | | GDS12042 | Drive Shaft | | 22 | 22 | 56 | 95.5 | 930 | |
| | 2005.01-2008.05 | AT | F | R | Hatchback FWD A15SMS | | GDS57094 | Drive Shaft | 47T | 22 | 22 | 52 | 96 | 933 | |
| | 2005.01-2008.05 | AT | F | R | Hatchback FWD A15SMS | For vehicles with ABS | GDS88013 | Drive Shaft | 48T | 22 | 22 | 56 | 95.5 | 930 | |
| | 2005.01-2008.05 | AT | F | L/R | Hatchback FWD A15SMS | | GCI12004 | Inner Joint | | 22 | 29 | 38 | 59 | 116 | |
| | 2005.01-2008.05 | AT/MT | F | L/R | Hatchback FWD A15SMS | | GCO88021 | Outer Joint | 47T | 22 | 22 | 52 | 96.5 | 53.5 | O |
| | 2005.01-2008.05 | MT | F | L | Hatchback FWD A15SMS | | GDS12058 | Drive Shaft | 47T | 22 | 34 | 52 | 96.5 | 606 | |
| | 2005.01-2008.05 | MT | F | R | Hatchback FWD A15SMS | | GDS12057 | Drive Shaft | 47T | 22 | 34 | 52 | 96.5 | 918 | |
| | 2005.01-2008.05 | MT | F | L/R | Hatchback FWD A15SMS | | GCO99013 | Outer Joint | | 22 | 22 | 56 | 95.5 | 53 | O |
| | 2005.01-2008.05 | MT | F | L/R | Hatchback FWD A15SMS | | GCI99025 | Inner Joint | | 34 | 22 | 35 | 56.2 | 111.3 | |
| 1.5 (63 kw) | 2004.10-2006.05 | 5MT | F | L/R | Saloon FWD LV8(91CUL4) | | GCO99013 | Outer Joint | | 22 | 22 | 56 | 95.5 | 53 | O |
| | 2004.10-2006.05 | AT | F | L | Saloon FWD LV8(91CUL4) | | GDS12040 | Drive Shaft | | 22 | 22 | 56 | 95.5 | 602 | |
| | 2004.10-2006.05 | AT | F | L | Saloon FWD LV8(91CUL4) | | GDS57093 | Drive Shaft | 47T | 22 | 22 | 52 | 96 | 603 | |
| | 2004.10-2006.05 | AT | F | L | Saloon FWD LV8(91CUL4) | For vehicles without ABS | GDS88012 | Drive Shaft | 48T | 22 | 22 | 56 | 95.5 | 602 | |
| | 2004.10-2006.05 | AT | F | R | Saloon FWD LV8(91CUL4) | | GDS12042 | Drive Shaft | | 22 | 22 | 56 | 95.5 | 930 | |
| | 2004.10-2006.05 | AT | F | R | Saloon FWD LV8(91CUL4) | | GDS57094 | Drive Shaft | 47T | 22 | 22 | 52 | 96 | 933 | |
| | 2004.10-2006.05 | AT | F | R | Saloon FWD LV8(91CUL4) | For vehicles without ABS | GDS88013 | Drive Shaft | 48T | 22 | 22 | 56 | 95.5 | 930 | |
| | 2004.10-2006.05 | AT | F | L/R | Saloon FWD LV8(91CUL4) | | GCI12004 | Inner Joint | | 22 | 29 | 38 | 59 | 116 | |
| | 2004.10-2006.05 | MT | F | L | Saloon FWD LV8(91CUL4) | | GDS12058 | Drive Shaft | 47T | 22 | 34 | 52 | 96.5 | 606 | |
| | 2004.10-2006.05 | MT | F | R | Saloon FWD LV8(91CUL4) | | GDS12057 | Drive Shaft | 47T | 22 | 34 | 52 | 96.5 | 918 | |
| | 2004.10-2006.05 | MT | F | L/R | Saloon FWD LV8(91CUL4) | | GCO88021 | Outer Joint | 47T | 22 | 22 | 52 | 96.5 | 53.5 | O |
| | 2004.10-2006.05 | MT | F | L/R | Saloon FWD LV8(91CUL4) | | GCI99025 | Inner Joint | | 34 | 22 | 35 | 56.2 | 111.3 | |
| 1.6 (85 kw) | 2011.03- | 5MT | F | L | Hatchback FWD F16D4;LDE | | GDS81427 | Drive Shaft | | 25 | 34 | 52.5 | 91.5 | 617 | |
| | 2011.03- | 5MT | F | R | Hatchback FWD F16D4;LDE | | GDS81429 | Drive Shaft | | 25 | 34 | 52.5 | 91.5 | 934 | |
| | 2011.03- | AT | F | L | Hatchback FWD F16D4;LDE | | GDS88160 | Drive Shaft | | 25 | 22 | 52.5 | 92 | 628 | |
| | 2011.03- | AT | F | L/R | Hatchback FWD F16D4;LDE | | GCO21076 | Outer Joint | | 25 | 30 | 52.5 | 92 | 58.5 | I |
| | 2011.03- | AT | F | L | Hatchback FWD F16D4;LDE | | GCI21057 | Inner Joint | | 22 | 30 | 35 | 131.5 | 87.5 | |
| | 2011.03- | MT | F | L/R | Hatchback FWD F16D4;LDE | | GCO81192 | Outer Joint | | 25 | 29 | 52.5 | 91.5 | 55.5 | M |
| | 2011.03- | 5MT | F | L | Saloon FWD F16D4;LDE | | GDS81427 | Drive Shaft | | 25 | 34 | 52.5 | 91.5 | 617 | |
| | 2011.03- | 5MT | F | R | Saloon FWD F16D4;LDE | | GDS81429 | Drive Shaft | | 25 | 34 | 52.5 | 91.5 | 934 | |
| | 2011.03- | AT | F | L | Saloon FWD F16D4;LDE | | GDS88160 | Drive Shaft | | 25 | 22 | 52.5 | 92 | 628 | |
| | 2011.03- | AT | F | L/R | Saloon FWD F16D4;LDE | | GCO21076 | Outer Joint | | 25 | 30 | 52.5 | 92 | 58.5 | I |
| | 2011.03- | AT | F | L | Saloon FWD F16D4;LDE | | GCI21057 | Inner Joint | | 22 | 30 | 35 | 131.5 | 87.5 | |
| | 2011.03- | MT | F | L/R | Saloon FWD F16D4;LDE | | GCO81192 | Outer Joint | | 25 | 29 | 52.5 | 91.5 | 55.5 | M |
| **Aveo/Kalos** | | | | | | | | | | | | | | | |
| 1.2 (53 kw) | 2004.01-2008.05 | 4AT | F | L | Hatchback FWD LY4 | | GDS44071 | Drive Shaft | 47T | 22 | 22 | 52 | 95.5 | 661 | |
| | 2004.01-2008.05 | 4AT | F | R | Hatchback FWD LY4 | | GDS44072 | Drive Shaft | 47T | 22 | 22 | 52 | 95.5 | 880 | |
| | 2004.01-2008.05 | 4AT | F | L/R | Hatchback FWD LY4 | | GCO88034 | Outer Joint | 47T | 22 | 19 | 52 | 95.5 | 53 | O |
| | 2004.01-2008.05 | 4AT | F | L/R | Hatchback FWD LY4 | | GCO88037 | Outer Joint | | 22 | 19 | 52 | 95.5 | 53 | O |
| | 2004.01-2008.05 | 4AT | F | L/R | Hatchback FWD LY4 | | GCI99107 | Inner Joint | | 22 | 19 | 35 | 50.5 | 78 | |
| | 2005.03-2007.12 | 4AT/5MT | F | L | Saloon FWD LY4 | | GDS44071 | Drive Shaft | 47T | 22 | 22 | 52 | 95.5 | 661 | |
| | 2005.03-2007.12 | 4AT/5MT | F | R | Saloon FWD LY4 | | GDS44072 | Drive Shaft | 47T | 22 | 22 | 52 | 95.5 | 880 | |
| | 2005.03-2007.12 | 4AT/5MT | F | L/R | Saloon FWD LY4 | | GCO88034 | Outer Joint | 47T | 22 | 19 | 52 | 95.5 | 53 | O |
| | 2005.03-2007.12 | 4AT/5MT | F | L/R | Saloon FWD LY4 | | GCO88037 | Outer Joint | | 22 | 19 | 52 | 95.5 | 53 | O |
| | 2005.03-2007.12 | 4AT/5MT | F | L/R | Saloon FWD LY4 | | GCI99107 | Inner Joint | | 22 | 19 | 35 | 50.5 | 78 | |
| | 2006.06- | 5MT | F | L | Hatchback FWD LY4 | | GDS44071 | Drive Shaft | 47T | 22 | 22 | 52 | 95.5 | 661 | |
| | 2006.06- | 5MT | F | R | Hatchback FWD LY4 | | GDS44072 | Drive Shaft | 47T | 22 | 22 | 52 | 95.5 | 880 | |
| | 2006.06- | 5MT | F | L/R | Hatchback FWD LY4 | | GCO88034 | Outer Joint | 47T | 22 | 19 | 52 | 95.5 | 53 | O |
| | 2006.06- | 5MT | F | L/R | Hatchback FWD LY4 | | GCO88037 | Outer Joint | | 22 | 19 | 52 | 95.5 | 53 | O |
| | 2006.06- | 5MT | F | L/R | Hatchback FWD LY4 | | GCI99107 | Inner Joint | | 22 | 19 | 35 | 50.5 | 78 | |
| 1.4 (69 kw) | 2003.05-2008.05 | 5MT | F | L/R | Hatchback FWD L14(85CUL4) | | GCO99013 | Outer Joint | | 22 | 22 | 56 | 95.5 | 53 | O |
| | 2003.05-2008.05 | AT | F | L | Hatchback FWD L14(85CUL4) | | GDS12040 | Drive Shaft | | 22 | 22 | 56 | 95.5 | 602 | |
| | 2003.05-2008.05 | AT | F | L | Hatchback FWD L14(85CUL4) | | GDS57093 | Drive Shaft | 47T | 22 | 22 | 52 | 96 | 603 | |
| | 2003.05-2008.05 | AT | F | L | Hatchback FWD L14(85CUL4) | For vehicles with ABS | GDS88012 | Drive Shaft | 48T | 22 | 22 | 56 | 95.5 | 602 | |
| | 2003.05-2008.05 | AT | F | R | Hatchback FWD L14(85CUL4) | | GDS12042 | Drive Shaft | | 22 | 22 | 56 | 95.5 | 930 | |
| | 2003.05-2008.05 | AT | F | R | Hatchback FWD L14(85CUL4) | | GDS57094 | Drive Shaft | 47T | 22 | 22 | 52 | 96 | 933 | |
| | 2003.05-2008.05 | AT | F | R | Hatchback FWD L14(85CUL4) | For vehicles with ABS | GDS88013 | Drive Shaft | 48T | 22 | 22 | 56 | 95.5 | 930 | |
| | 2003.05-2008.05 | AT | F | L/R | Hatchback FWD L14(85CUL4) | | GCI12004 | Inner Joint | | 22 | 29 | 38 | 59 | 116 | |

| | YEAR | TRANSM. | F/R | L/R | BODY STYLE & DRIVE TYPE & ENGINE | REMARKS | G-AP Ref. | PRODUCT | ABS | Technical Specifications A | B | C | H | L | P |
|---|---|---|---|---|---|---|---|---|---|---|---|---|---|---|---|
| **CHEVROLET** | | | | | | | | | | | | | | | |
| **Aveo/Kalos** | | | | | | | | | | | | | | | |
| 1.4 (69 kw) | 2003.05-2008.05 | MT | F | L | Hatchback FWD L14(85CUL4) | | GDS12058 | Drive Shaft | 47T | 22 | 34 | 52 | 96.5 | 606 | |
| | 2003.05-2008.05 | MT | F | R | Hatchback FWD L14(85CUL4) | | GDS12057 | Drive Shaft | 47T | 22 | 34 | 52 | 96.5 | 918 | |
| | 2003.05-2008.05 | MT | F | L/R | Hatchback FWD L14(85CUL4) | | GCO88021 | Outer Joint | 47T | 22 | 22 | 52 | 96.5 | 53.5 | O |
| | 2003.05-2008.05 | MT | F | L/R | Hatchback FWD L14(85CUL4) | | GCI99025 | Inner Joint | | 34 | 22 | 35 | 56.2 | 111.3 | |
| | 2003.05-2008.05 | 4AT/5MT | F | L/R | Saloon FWD L14(85CUL4) | | GCO88021 | Outer Joint | 47T | 22 | 22 | 52 | 96.5 | 53.5 | O |
| | 2003.05-2008.05 | 5MT | F | L/R | Saloon FWD L14(85CUL4) | | GCO99013 | Outer Joint | | 22 | 22 | 56 | 95.5 | 53 | O |
| | 2003.05-2008.05 | AT | F | L | Saloon FWD L14(85CUL4) | | GDS12040 | Drive Shaft | | 22 | 22 | 56 | 95.5 | 602 | |
| | 2003.05-2008.05 | AT | F | L | Saloon FWD L14(85CUL4) | | GDS57093 | Drive Shaft | 47T | 22 | 22 | 52 | 96 | 603 | |
| | 2003.05-2008.05 | AT | F | L | Saloon FWD L14(85CUL4) | For vehicles with ABS | GDS88012 | Drive Shaft | 48T | 22 | 22 | 56 | 95.5 | 602 | |
| | 2003.05-2008.05 | AT | F | R | Saloon FWD L14(85CUL4) | | GDS12042 | Drive Shaft | | 22 | 22 | 56 | 95.5 | 930 | |
| | 2003.05-2008.05 | AT | F | R | Saloon FWD L14(85CUL4) | | GDS57094 | Drive Shaft | 47T | 22 | 22 | 52 | 96 | 933 | |
| | 2003.05-2008.05 | AT | F | R | Saloon FWD L14(85CUL4) | For vehicles with ABS | GDS88013 | Drive Shaft | 48T | 22 | 22 | 56 | 95.5 | 930 | |
| | 2003.05-2008.05 | AT | F | L/R | Saloon FWD L14(85CUL4) | | GCI12004 | Inner Joint | | 22 | 29 | 38 | 59 | 116 | |
| | 2003.05-2008.05 | MT | F | L | Saloon FWD L14(85CUL4) | | GDS12058 | Drive Shaft | 47T | 22 | 34 | 52 | 96.5 | 606 | |
| | 2003.05-2008.05 | MT | F | R | Saloon FWD L14(85CUL4) | | GDS12057 | Drive Shaft | 47T | 22 | 34 | 52 | 96.5 | 918 | |
| | 2003.05-2008.05 | MT | F | L/R | Saloon FWD L14(85CUL4) | | GCO12042 | Outer Joint | 47T | 22 | 22 | 52 | 96.5 | 53.5 | O |
| | 2003.05-2008.05 | MT | F | L/R | Saloon FWD L14(85CUL4) | | GCI99025 | Inner Joint | | 34 | 22 | 35 | 56.2 | 111.3 | |
| | 2005.03-2013.05 | 5MT | F | L/R | Saloon FWD L14(85CUL4), L95 | | GCO99013 | Outer Joint | | 22 | 22 | 56 | 95.5 | 53 | O |
| | 2005.03-2013.05 | AT | F | L | Saloon FWD L14(85CUL4), L95 | | GDS12040 | Drive Shaft | | 22 | 22 | 56 | 95.5 | 602 | |
| | 2005.03-2013.05 | AT | F | L | Saloon FWD L14(85CUL4), L95 | | GDS57093 | Drive Shaft | 47T | 22 | 22 | 52 | 96 | 603 | |
| | 2005.03-2013.05 | AT | F | L | Saloon FWD L14(85CUL4), L95 | For vehicles with ABS | GDS88012 | Drive Shaft | 48T | 22 | 22 | 56 | 95.5 | 602 | |
| | 2005.03-2013.05 | AT | F | R | Saloon FWD L14(85CUL4), L95 | | GDS12042 | Drive Shaft | | 22 | 22 | 56 | 95.5 | 930 | |
| | 2005.03-2013.05 | AT | F | R | Saloon FWD L14(85CUL4), L95 | | GDS57094 | Drive Shaft | 47T | 22 | 22 | 52 | 96 | 933 | |
| | 2005.03-2013.05 | AT | F | R | Saloon FWD L14(85CUL4), L95 | For vehicles with ABS | GDS88013 | Drive Shaft | 48T | 22 | 22 | 56 | 95.5 | 930 | |
| | 2005.03-2013.05 | AT | F | L/R | Saloon FWD L14(85CUL4), L95 | Chassis no. to:B119868 | GCI12004 | Inner Joint | | 22 | 29 | 38 | 59 | 116 | |
| | 2005.03-2013.05 | AT | F | L/R | Saloon FWD L14(85CUL4), L95 | Chassis no. from:B119869 | GCI24068 | Inner Joint | | 22 | 29 | 38 | 59.5 | 97.5 | |
| | 2005.03-2013.05 | AT/MT | F | L/R | Saloon FWD L14(85CUL4), L95 | Model:Kalos | GCO12042 | Outer Joint | 47T | 22 | 22 | 52 | 96.5 | 53.5 | O |
| | 2005.03-2013.05 | MT | F | L | Saloon FWD L14(85CUL4), L95 | | GDS12058 | Drive Shaft | 47T | 22 | 34 | 52 | 96.5 | 606 | |
| | 2005.03-2013.05 | MT | F | R | Saloon FWD L14(85CUL4), L95 | | GDS12057 | Drive Shaft | 47T | 22 | 34 | 52 | 96.5 | 918 | |
| | 2005.03-2013.05 | MT | F | L/R | Saloon FWD L14(85CUL4), L95 | | GCO88021 | Outer Joint | 47T | 22 | 22 | 52 | 96.5 | 53.5 | O |
| | 2005.03-2013.05 | MT | F | L/R | Saloon FWD L14(85CUL4), L95 | | GCI99025 | Inner Joint | | 34 | 22 | 35 | 56.2 | 111.3 | |
| **Aveo/Kalos/Gentra/Lova** | | | | | | | | | | | | | | | |
| 1.2 (62 kw) | 2009.01- | MT | F | L | Saloon FWD LMU | | GDS44069 | Drive Shaft | 47T | 22 | 22 | 52 | 96.5 | 657 | |
| | 2009.01- | MT | F | R | Saloon FWD LMU | | GDS44070 | Drive Shaft | 47T | 22 | 22 | 52 | 96.5 | 875 | |
| | 2009.01- | MT | F | L/R | Saloon FWD LMU | | GCO12042 | Outer Joint | 47T | 22 | 22 | 52 | 96.5 | 53.5 | O |
| **Camaro** | | | | | | | | | | | | | | | |
| 3.6 (224 kw) | 2009.09-2010.12 | MT | R | L | Coupe RWD LLT | | GDS83445 | Drive Shaft | | 33 | 32 | 62 | 94 | 853 | |
| | 2009.09-2010.12 | MT | R | L | Coupe RWD LLT | | GCO82375 | Outer Joint | | 33 | 36 | 62 | 94 | 63 | M |
| | 2009.09-2010.12 | MT | R | L | Coupe RWD LLT | | GCI82218 | Inner Joint | | 32 | 36 | 49.95 | 94 | 113.2 | |
| 3.6 (227 kw) | 2009.09-2010.12 | MT | R | L | Coupe RWD LLT | | GDS83445 | Drive Shaft | | 33 | 32 | 62 | 94 | 853 | |
| | 2009.09-2010.12 | MT | R | L | Coupe RWD LLT | | GCO82375 | Outer Joint | | 33 | 36 | 62 | 94 | 63 | M |
| | 2009.09-2010.12 | MT | R | L | Coupe RWD LLT | | GCI82218 | Inner Joint | | 32 | 36 | 49.95 | 94 | 113.2 | |
| 3.6 (232 kw) | 2011.01-2015.12 | MT | R | L | Coupe RWD LLT | | GDS83445 | Drive Shaft | | 33 | 32 | 62 | 94 | 853 | |
| | 2011.01-2015.12 | MT | R | L | Coupe RWD LLT | | GCO82375 | Outer Joint | | 33 | 36 | 62 | 94 | 63 | M |
| | 2011.01-2015.12 | MT | R | L | Coupe RWD LLT | | GCI82218 | Inner Joint | | 32 | 36 | 49.95 | 94 | 113.2 | |
| 6.2 (298 kw) | 2009.09-2015.12 | AT | R | L | Coupe RWD L99(376CUV8) | | GDS83445 | Drive Shaft | | 33 | 32 | 62 | 94 | 853 | |
| | 2009.09-2015.12 | AT | R | L | Coupe RWD L99(376CUV8) | | GCO82375 | Outer Joint | | 33 | 36 | 62 | 94 | 63 | M |
| | 2009.09-2015.12 | AT | R | L | Coupe RWD L99(376CUV8) | | GCI82218 | Inner Joint | | 32 | 36 | 49.95 | 94 | 113.2 | |
| | 2011.01- | AT | R | L | Convertible RWD L99(376CUV8) | | GDS83445 | Drive Shaft | | 33 | 32 | 62 | 94 | 853 | |
| | 2011.01- | AT | R | L | Convertible RWD L99(376CUV8) | | GCO82375 | Outer Joint | | 33 | 36 | 62 | 94 | 63 | M |
| | 2011.01- | AT | R | L | Convertible RWD L99(376CUV8) | | GCI82218 | Inner Joint | | 32 | 36 | 49.95 | 94 | 113.2 | |
| 6.2 (318 kw) | 2009.09-2015.12 | 6AT/6MT | R | L | Coupe RWD LS3(376CUV8) | | GDS83445 | Drive Shaft | | 33 | 32 | 62 | 94 | 853 | |
| | 2009.09-2015.12 | 6AT/6MT | R | R | Coupe RWD LS3(376CUV8) | | GDS83446 | Drive Shaft | | 33 | 32 | 62 | 94 | 818 | |
| | 2009.09-2015.12 | 6AT/6MT | R | L/R | Coupe RWD LS3(376CUV8) | | GCO82375 | Outer Joint | | 33 | 36 | 62 | 94 | 63 | M |
| | 2009.09-2015.12 | 6AT/6MT | R | L/R | Coupe RWD LS3(376CUV8) | | GCI82218 | Inner Joint | | 32 | 36 | 49.95 | 94 | 113.2 | |
| | 2011.01- | MT | R | L | Convertible RWD LS3(376CUV8) | | GDS83445 | Drive Shaft | | 33 | 32 | 62 | 94 | 853 | |
| | 2011.01- | MT | R | R | Convertible RWD LS3(376CUV8) | | GDS83446 | Drive Shaft | | 33 | 32 | 62 | 94 | 818 | |
| | 2011.01- | MT | R | L/R | Convertible RWD LS3(376CUV8) | | GCO82375 | Outer Joint | | 33 | 36 | 62 | 94 | 63 | M |
| | 2011.01- | MT | R | L/R | Convertible RWD LS3(376CUV8) | | GCI82218 | Inner Joint | | 32 | 36 | 49.95 | 94 | 113.2 | |
| **Captiva** | | | | | | | | | | | | | | | |
| 2.0 (93 kw) | 2006.10-2009.12 | 5MT | F | L/R | SUV 4WD LLW | | GCO22009 | Outer Joint | | 30 | 34 | 54 | 105.5 | 64.5 | O |
| | 2006.10-2009.12 | AT | F | L | SUV 4WD LLW | | GDS22008 | Drive Shaft | | 30 | 27 | 54 | 105.5 | 629.5 | |
| | 2006.10-2009.12 | AT | F | R | SUV 4WD LLW | | GDS22009 | Drive Shaft | | 30 | 27 | 54 | 105.5 | 551 | |
| | 2006.10-2009.12 | AT | F | L | SUV 4WD LLW | | GCI21023 | Inner Joint | | 27 | 34 | 35 | 104 | 87 | |
| | 2006.10-2009.12 | AT | F | R | SUV 4WD LLW | | GCI88035 | Inner Joint | | 27 | 34 | 43.3 | | 128 | |

| | YEAR | TRANSM. | F/R | L/R | BODY STYLE & DRIVE TYPE & ENGINE | REMARKS | G-AP Ref. | PRODUCT | ABS | Technical Specifications A | B | C | H | L | P |
|---|---|---|---|---|---|---|---|---|---|---|---|---|---|---|---|
| **CHEVROLET** | | | | | | | | | | | | | | | |
| **Captiva** | | | | | | | | | | | | | | | |
| 2.0 (93 kw) | 2006.10-2009.12 | MT | F | L | SUV 4WD LLW | | GDS88093 | Drive Shaft | | 30 | 27 | 54 | 105.5 | 618.5 | |
| | 2006.10-2009.12 | MT | F | R | SUV 4WD LLW | | GDS88094 | Drive Shaft | | 30 | 27 | 54 | 105.5 | 542 | |
| | 2006.10-2009.12 | MT | F | L | SUV 4WD LLW | | GCI88034 | Inner Joint | | 27 | 34 | 35 | 68.5 | 111.5 | |
| | 2006.10-2009.12 | 4AT/5MT | R | R | SUV 4WD LLW | | GDS44106 | Drive Shaft | | 30 | 34 | 55 | 105.5 | 859 | |
| | 2006.10-2009.12 | 5MT | R | L | SUV 4WD LLW | | GDS44107 | Drive Shaft | | 30 | 34 | 55 | 105.5 | 756 | |
| | 2006.10-2009.12 | 5MT | R | L/R | SUV 4WD LLW | | GCO21047 | Outer Joint | | 30 | 22 | 55 | 105.5 | 53.5 | O |
| | 2006.10-2009.12 | 5MT | R | L/R | SUV 4WD LLW | | GCI12009 | Inner Joint | | 34 | 22 | 35 | 56.5 | 111.5 | |
| | 2006.10-2009.12 | 5MT | F | L | SUV FWD LLW | | GDS88093 | Drive Shaft | | 30 | 27 | 54 | 105.5 | 618.5 | |
| | 2006.10-2009.12 | 5MT | F | R | SUV FWD LLW | | GDS88094 | Drive Shaft | | 30 | 27 | 54 | 105.5 | 542 | |
| | 2006.10-2009.12 | 5MT | F | L/R | SUV FWD LLW | | GCO22009 | Outer Joint | | 30 | 34 | 54 | 105.5 | 64.5 | O |
| | 2006.10-2009.12 | 5MT | F | L | SUV FWD LLW | | GCI88034 | Inner Joint | | 27 | 34 | 35 | 68.5 | 111.5 | |
| | 2006.10-2009.12 | 5MT | F | R | SUV FWD LLW | | GCI88035 | Inner Joint | | 27 | 34 | 43.3 | | 128 | |
| | 2006.10-2009.12 | 5MT | F | L | SUV Van FWD LLW | | GDS88093 | Drive Shaft | | 30 | 27 | 54 | 105.5 | 618.5 | |
| | 2006.10-2009.12 | 5MT | F | R | SUV Van FWD LLW | | GDS88094 | Drive Shaft | | 30 | 27 | 54 | 105.5 | 542 | |
| | 2006.10-2009.12 | 5MT | F | L/R | SUV Van FWD LLW | | GCO22009 | Outer Joint | | 30 | 34 | 54 | 105.5 | 64.5 | O |
| | 2006.10-2009.12 | 5MT | F | L | SUV Van FWD LLW | | GCI88034 | Inner Joint | | 27 | 34 | 35 | 68.5 | 111.5 | |
| | 2006.10-2009.12 | 5MT | F | R | SUV Van FWD LLW | | GCI88035 | Inner Joint | | 27 | 34 | 43.3 | | 128 | |
| 2.0 (110 kw) | 2006.07-2011.02 | 4AT | F | L/R | SUV Van 4WD LLW | | GCO22009 | Outer Joint | | 30 | 34 | 54 | 105.5 | 64.5 | O |
| | 2006.07-2011.02 | 4AT | F | R | SUV Van 4WD LLW | | GCI88035 | Inner Joint | | 27 | 34 | 43.3 | | 128 | |
| | 2006.07-2011.02 | AT | F | L | SUV Van 4WD LLW | | GDS22008 | Drive Shaft | | 30 | 27 | 54 | 105.5 | 629.5 | |
| | 2006.07-2011.02 | AT | F | R | SUV Van 4WD LLW | | GDS22009 | Drive Shaft | | 30 | 27 | 54 | 105.5 | 551 | |
| | 2006.07-2011.02 | AT | F | L | SUV Van 4WD LLW | | GCI21023 | Inner Joint | | 27 | 34 | 35 | 104 | 87 | |
| | 2006.07-2011.02 | 4AT | R | L | SUV Van 4WD LLW | | GDS44107 | Drive Shaft | | 30 | 34 | 55 | 105.5 | 756 | |
| | 2006.07-2011.02 | 4AT | R | R | SUV Van 4WD LLW | | GDS44106 | Drive Shaft | | 30 | 34 | 55 | 105.5 | 859 | |
| | 2006.07-2011.02 | 4AT | R | L/R | SUV Van 4WD LLW | | GCO21047 | Outer Joint | | 30 | 22 | 55 | 105.5 | 53.5 | O |
| | 2006.07-2011.02 | 4AT | R | L/R | SUV Van 4WD LLW | | GCI12009 | Inner Joint | | 34 | 22 | 35 | 56.5 | 111.5 | |
| | 2006.10- | 4AT | F | L/R | SUV 4WD Z 20 S | | GCO22009 | Outer Joint | | 30 | 34 | 54 | 105.5 | 64.5 | O |
| | 2006.10- | AT | F | L | SUV 4WD Z 20 S | | GDS22008 | Drive Shaft | | 30 | 27 | 54 | 105.5 | 629.5 | |
| | 2006.10- | AT | F | R | SUV 4WD Z 20 S | | GDS22009 | Drive Shaft | | 30 | 27 | 54 | 105.5 | 551 | |
| | 2006.10- | AT | F | L | SUV 4WD Z 20 S | | GCI21023 | Inner Joint | | 27 | 34 | 35 | 104 | 87 | |
| | 2006.10- | AT | F | R | SUV 4WD Z 20 S | | GCI88035 | Inner Joint | | 27 | 34 | 43.3 | | 128 | |
| | 2006.10- | MT | F | L | SUV 4WD Z 20 S | | GDS88093 | Drive Shaft | | 30 | 27 | 54 | 105.5 | 618.5 | |
| | 2006.10- | MT | F | R | SUV 4WD Z 20 S | | GDS88094 | Drive Shaft | | 30 | 27 | 54 | 105.5 | 542 | |
| | 2006.10- | MT | F | L | SUV 4WD Z 20 S | | GCI88034 | Inner Joint | | 27 | 34 | 35 | 68.5 | 111.5 | |
| | 2006.10- | 4AT | R | L | SUV 4WD Z 20 S | | GDS44107 | Drive Shaft | | 30 | 34 | 55 | 105.5 | 756 | |
| | 2006.10- | 4AT | R | L/R | SUV 4WD Z 20 S | | GCO21047 | Outer Joint | | 30 | 22 | 55 | 105.5 | 53.5 | O |
| | 2006.10- | 4AT | R | L/R | SUV 4WD Z 20 S | | GCI12009 | Inner Joint | | 34 | 22 | 35 | 56.5 | 111.5 | |
| | 2006.10- | 4AT/5AT/5MT | R | R | SUV 4WD Z 20 S | | GDS44106 | Drive Shaft | | 30 | 34 | 55 | 105.5 | 859 | |
| | 2007.09- | 5AT | F | L | SUV FWD LLW | | GDS88093 | Drive Shaft | | 30 | 27 | 54 | 105.5 | 618.5 | |
| | 2007.09- | 5AT | F | R | SUV FWD LLW | | GDS88094 | Drive Shaft | | 30 | 27 | 54 | 105.5 | 542 | |
| | 2007.09- | 5AT | F | R | SUV FWD LLW | | GCI88035 | Inner Joint | | 27 | 34 | 43.3 | | 128 | |
| 2.0 (120 kw) | 2011.01- | 6AT | F | L | SUV 4WD Z 20 D1;LNP | | GDS83815 | Drive Shaft | | 30 | 34 | 56 | 105 | 666 | |
| | 2011.01- | 6AT | F | R | SUV 4WD Z 20 D1;LNP | | GDS83816 | Drive Shaft | | 30 | 27 | 56 | 105 | 546 | |
| | 2011.01- | 6AT | F | L/R | SUV 4WD Z 20 D1;LNP | | GCO81163 | Outer Joint | | 30 | 34 | 56 | 105 | 64.5 | M |
| | 2011.01- | 6AT | F | L | SUV 4WD Z 20 D1;LNP | | GCI21041 | Inner Joint | | 34 | 34 | 35 | 138 | 92 | |
| | 2011.01- | 6AT | F | R | SUV 4WD Z 20 D1;LNP | | GCI82378 | Inner Joint | | 27 | 34 | 42 | | 134 | |
| | 2011.01- | 6AT | R | L | SUV 4WD Z 20 D1;LNP | | GDS44107 | Drive Shaft | | 30 | 34 | 55 | 105.5 | 756 | |
| | 2011.01- | 6AT | R | R | SUV 4WD Z 20 D1;LNP | | GDS44106 | Drive Shaft | | 30 | 34 | 55 | 105.5 | 859 | |
| | 2011.01- | 6AT | R | L/R | SUV 4WD Z 20 D1;LNP | | GCO21047 | Outer Joint | | 30 | 22 | 55 | 105.5 | 53.5 | O |
| | 2011.01- | | R | L/R | SUV 4WD Z 20 D1;LNP | | GCI12009 | Inner Joint | | 34 | 22 | 35 | 56.5 | 111.5 | |
| | 2011.01- | 6AT | F | L | SUV FWD LNP | | GDS83815 | Drive Shaft | | 30 | 34 | 56 | 105 | 666 | |
| | 2011.01- | 6AT | F | R | SUV FWD LNP | | GDS83816 | Drive Shaft | | 30 | 27 | 56 | 105 | 546 | |
| | 2011.01- | 6AT | F | L/R | SUV FWD LNP | | GCO81163 | Outer Joint | | 30 | 34 | 56 | 105 | 64.5 | M |
| | 2011.01- | 6AT | F | L | SUV FWD LNP | | GCI21041 | Inner Joint | | 34 | 34 | 35 | 138 | 92 | |
| | 2011.01- | 6AT | F | R | SUV FWD LNP | | GCI82378 | Inner Joint | | 27 | 34 | 42 | | 134 | |
| 2.2 (120 kw) | 2011.03- | MT | F | L | SUV 4WD LNQ | | GDS88093 | Drive Shaft | | 30 | 27 | 54 | 105.5 | 618.5 | |
| | 2011.03- | MT | F | R | SUV 4WD LNQ | | GDS88094 | Drive Shaft | | 30 | 27 | 54 | 105.5 | 542 | |
| | 2011.03- | MT | F | L | SUV 4WD LNQ | | GCI88034 | Inner Joint | | 27 | 34 | 35 | 68.5 | 111.5 | |
| | 2011.03- | MT | F | R | SUV 4WD LNQ | | GCI88035 | Inner Joint | | 27 | 34 | 43.3 | | 128 | |
| | 2011.03- | 4AT/6MT | R | L/R | SUV 4WD LNQ | | GCO21047 | Outer Joint | | 30 | 22 | 55 | 105.5 | 53.5 | O |
| | 2011.03- | 6MT | R | L | SUV 4WD LNQ | | GDS44107 | Drive Shaft | | 30 | 34 | 55 | 105.5 | 756 | |
| | 2011.03- | 6MT | R | R | SUV 4WD LNQ | | GDS44106 | Drive Shaft | | 30 | 34 | 55 | 105.5 | 859 | |
| | 2011.03- | | R | L/R | SUV 4WD LNQ | | GCI12009 | Inner Joint | | 34 | 22 | 35 | 56.5 | 111.5 | |
| | 2011.03- | AT | F | L | SUV FWD LNQ | | GDS83815 | Drive Shaft | | 30 | 34 | 56 | 105 | 666 | |
| | 2011.03- | AT | F | R | SUV FWD LNQ | | GDS83816 | Drive Shaft | | 30 | 27 | 56 | 105 | 546 | |

| | YEAR | TRANSM. | F/R | L/R | BODY STYLE & DRIVE TYPE & ENGINE | REMARKS | G-AP Ref. | PRODUCT | ABS | Technical Specifications A | B | C | H | L | P |
|---|---|---|---|---|---|---|---|---|---|---|---|---|---|---|---|
| **CHEVROLET** | | | | | | | | | | | | | | | |
| **Captiva** | | | | | | | | | | | | | | | |
| 2.2 (120 kw) | 2011.03- | AT | F | L/R | SUV FWD LNQ | | GCO81163 | Outer Joint | | 30 | 34 | 56 | 105 | 64.5 | M |
| | 2011.03- | AT | F | L | SUV FWD LNQ | | GCI21041 | Inner Joint | | 34 | 34 | 35 | 138 | 92 | |
| | 2011.03- | AT | F | R | SUV FWD LNQ | | GCI82378 | Inner Joint | | 27 | 34 | 42 | | 134 | |
| | 2011.03- | MT | F | L | SUV FWD LNQ | | GDS88093 | Drive Shaft | | 30 | 27 | 54 | 105.5 | 618.5 | |
| | 2011.03- | MT | F | R | SUV FWD LNQ | | GDS88094 | Drive Shaft | | 30 | 27 | 54 | 105.5 | 542 | |
| | 2011.03- | MT | F | L | SUV FWD LNQ | | GCI88034 | Inner Joint | | 27 | 34 | 35 | 68.5 | 111.5 | |
| | 2011.03- | MT | F | R | SUV FWD LNQ | | GCI88035 | Inner Joint | | 27 | 34 | 43.3 | | 128 | |
| 2.2 (135 kw) | 2011.02-2018.09 | MT | F | R | SUV FWD LNQ | | GDS88094 | Drive Shaft | | 30 | 27 | 54 | 105.5 | 542 | |
| | 2011.03- | AT | F | L | SUV 4WD LNQ | | GDS83815 | Drive Shaft | | 30 | 34 | 56 | 105 | 666 | |
| | 2011.03- | AT | F | R | SUV 4WD LNQ | | GDS83816 | Drive Shaft | | 30 | 27 | 56 | 105 | 546 | |
| | 2011.03- | AT | F | L/R | SUV 4WD LNQ | | GCO81163 | Outer Joint | | 30 | 34 | 56 | 105 | 64.5 | M |
| | 2011.03- | AT | F | L | SUV 4WD LNQ | | GCI21041 | Inner Joint | | 34 | 34 | 35 | 138 | 92 | |
| | 2011.03- | AT | F | R | SUV 4WD LNQ | | GCI82378 | Inner Joint | | 27 | 34 | 42 | | 134 | |
| | 2011.03- | MT | F | L | SUV 4WD LNQ | | GDS88093 | Drive Shaft | | 30 | 27 | 54 | 105.5 | 618.5 | |
| | 2011.03- | MT | F | R | SUV 4WD LNQ | | GDS88094 | Drive Shaft | | 30 | 27 | 54 | 105.5 | 542 | |
| | 2011.03- | 6AT/6MT | R | L | SUV 4WD LNQ | | GDS44107 | Drive Shaft | | 30 | 34 | 55 | 105.5 | 756 | |
| | 2011.03- | 6AT/6MT | R | R | SUV 4WD LNQ | | GDS44106 | Drive Shaft | | 30 | 34 | 55 | 105.5 | 859 | |
| | 2011.03- | 6AT/6MT | R | L/R | SUV 4WD LNQ | | GCO21047 | Outer Joint | | 30 | 22 | 55 | 105.5 | 53.5 | O |
| | 2011.03- | 6AT/6MT | R | L/R | SUV 4WD LNQ | | GCI12009 | Inner Joint | | 34 | 22 | 35 | 56.5 | 111.5 | |
| 2.4 (100 kw) | 2006.06-2011.02 | 5AT | F | L | SUV 4WD LD9(146CUL4) | | GDS22008 | Drive Shaft | | 30 | 27 | 54 | 105.5 | 629.5 | |
| | 2006.06-2011.02 | 5AT | F | R | SUV 4WD LD9(146CUL4) | | GDS22009 | Drive Shaft | | 30 | 27 | 54 | 105.5 | 551 | |
| | 2006.06-2011.02 | 5AT | F | L | SUV 4WD LD9(146CUL4) | | GCI21023 | Inner Joint | | 27 | 34 | 35 | 104 | 87 | |
| | 2006.06-2011.02 | 5AT | F | R | SUV 4WD LD9(146CUL4) | | GCI88035 | Inner Joint | | 27 | 34 | 43.3 | | 128 | |
| | 2006.06-2011.02 | 5MT | F | L | SUV 4WD LD9(146CUL4) | | GDS88093 | Drive Shaft | | 30 | 27 | 54 | 105.5 | 618.5 | |
| | 2006.06-2011.02 | 5MT | F | R | SUV 4WD LD9(146CUL4) | | GDS88094 | Drive Shaft | | 30 | 27 | 54 | 105.5 | 542 | |
| | 2006.06-2011.02 | 5MT | F | L/R | SUV 4WD LD9(146CUL4) | | GCO22009 | Outer Joint | | 30 | 34 | 54 | 105.5 | 64.5 | O |
| | 2006.06-2011.02 | 5MT | F | L | SUV 4WD LD9(146CUL4) | | GCI88034 | Inner Joint | | 27 | 34 | 35 | 68.5 | 111.5 | |
| | 2006.06-2011.02 | 5AT/5MT | R | R | SUV 4WD LD9(146CUL4) | | GDS44106 | Drive Shaft | | 30 | 34 | 55 | 105.5 | 859 | |
| | 2006.06-2011.02 | 5MT | R | L | SUV 4WD LD9(146CUL4) | | GDS44107 | Drive Shaft | | 30 | 34 | 55 | 105.5 | 756 | |
| | 2006.06-2011.02 | 5MT | R | L/R | SUV 4WD LD9(146CUL4) | | GCO21047 | Outer Joint | | 30 | 22 | 55 | 105.5 | 53.5 | O |
| | 2006.06-2011.02 | 5MT | R | L/R | SUV 4WD LD9(146CUL4) | | GCI12009 | Inner Joint | | 34 | 22 | 35 | 56.5 | 111.5 | |
| | 2006.06-2011.02 | 5MT | F | L | SUV FWD LD9(146CUL4) | | GDS88093 | Drive Shaft | | 30 | 27 | 54 | 105.5 | 618.5 | |
| | 2006.06-2011.02 | 5MT | F | R | SUV FWD LD9(146CUL4) | | GDS88094 | Drive Shaft | | 30 | 27 | 54 | 105.5 | 542 | |
| | 2006.06-2011.02 | 5MT | F | R | SUV FWD LD9(146CUL4) | | GCI88035 | Inner Joint | | 27 | 34 | 43.3 | | 128 | |
| | 2007.01- | 5MT | F | L | SUV FWD LD9(146CUL4) | | GDS88093 | Drive Shaft | | 30 | 27 | 54 | 105.5 | 618.5 | |
| | 2007.01- | 5MT | F | R | SUV FWD LD9(146CUL4) | | GDS88094 | Drive Shaft | | 30 | 27 | 54 | 105.5 | 542 | |
| | 2007.01- | 5MT | F | L/R | SUV FWD LD9(146CUL4) | | GCO22009 | Outer Joint | | 30 | 34 | 54 | 105.5 | 64.5 | O |
| | 2007.01- | | F | L | SUV FWD LD9(146CUL4) | | GCI88034 | Inner Joint | | 27 | 34 | 35 | 68.5 | 111.5 | |
| | 2007.01- | | F | R | SUV FWD LD9(146CUL4) | | GCI88035 | Inner Joint | | 27 | 34 | 43.3 | | 128 | |
| | 2007.01-2011.02 | 5AT | F | L | SUV 4WD LD9(146CUL4) | | GDS22008 | Drive Shaft | | 30 | 27 | 54 | 105.5 | 629.5 | |
| | 2007.01-2011.02 | 5AT | F | R | SUV 4WD LD9(146CUL4) | | GDS22009 | Drive Shaft | | 30 | 27 | 54 | 105.5 | 551 | |
| | 2007.01-2011.02 | 5AT | F | L/R | SUV 4WD LD9(146CUL4) | | GCO22009 | Outer Joint | | 30 | 34 | 54 | 105.5 | 64.5 | O |
| | 2007.01-2011.02 | MT | F | L | SUV 4WD LD9(146CUL4) | | GDS88093 | Drive Shaft | | 30 | 27 | 54 | 105.5 | 618.5 | |
| | 2007.01-2011.02 | MT | F | L | SUV 4WD LD9(146CUL4) | | GCI88034 | Inner Joint | | 27 | 34 | 35 | 68.5 | 111.5 | |
| | 2007.01-2011.02 | | F | R | SUV 4WD LD9(146CUL4) | | GCI88035 | Inner Joint | | 27 | 34 | 43.3 | | 128 | |
| | 2007.01-2011.02 | 5AT | R | L | SUV 4WD LD9(146CUL4) | | GDS44107 | Drive Shaft | | 30 | 34 | 55 | 105.5 | 756 | |
| | 2007.01-2011.02 | 5AT | R | R | SUV 4WD LD9(146CUL4) | | GDS44106 | Drive Shaft | | 30 | 34 | 55 | 105.5 | 859 | |
| | 2007.01-2011.02 | | R | R | SUV 4WD LD9(146CUL4) | | GCO21047 | Outer Joint | | 30 | 22 | 55 | 105.5 | 53.5 | O |
| | 2007.01-2011.02 | | R | L/R | SUV 4WD LD9(146CUL4) | | GCI12009 | Inner Joint | | 34 | 22 | 35 | 56.5 | 111.5 | |
| 2.4 (123 kw) | 2011.03- | 6AT/6MT | F | R | SUV 4WD LE5 | | GDS86076 | Drive Shaft | | 30 | 27 | 56 | 105 | 550 | |
| | 2011.03- | AT | F | L | SUV 4WD LE5 | | GDS86075 | Drive Shaft | | 30 | 34 | 56 | 105 | 655 | |
| | 2011.03- | 6AT/6MT | R | R | SUV 4WD LE5 | | GDS44106 | Drive Shaft | | 30 | 34 | 55 | 105.5 | 859 | |
| | 2011.03- | 6AT/6MT | R | L/R | SUV 4WD LE5 | | GCO21047 | Outer Joint | | 30 | 22 | 55 | 105.5 | 53.5 | O |
| | 2011.03- | AT | R | L | SUV 4WD LE5 | | GDS44107 | Drive Shaft | | 30 | 34 | 55 | 105.5 | 756 | |
| | 2011.03- | AT | R | L | SUV 4WD LE5 | | GCI12009 | Inner Joint | | 34 | 22 | 35 | 56.5 | 111.5 | |
| | 2011.03- | 6MT | F | R | SUV FWD LE5 | | GDS86076 | Drive Shaft | | 30 | 27 | 56 | 105 | 550 | |
| 3.0 (186 kw) | 2012.01- | AT | F | L | SUV 4WD LFW | | GDS83815 | Drive Shaft | | 30 | 34 | 56 | 105 | 666 | |
| | 2012.01- | AT | F | R | SUV 4WD LFW | | GDS83816 | Drive Shaft | | 30 | 27 | 56 | 105 | 546 | |
| | 2012.01- | AT | F | L/R | SUV 4WD LFW | | GCO81163 | Outer Joint | | 30 | 34 | 56 | 105 | 64.5 | M |
| | 2012.01- | AT | F | L | SUV 4WD LFW | | GCI21041 | Inner Joint | | 34 | 34 | 35 | 138 | 92 | |
| | 2012.01- | AT | F | R | SUV 4WD LFW | | GCI82378 | Inner Joint | | 27 | 34 | 42 | | 134 | |
| | 2012.01- | AT | R | L | SUV 4WD LFW | | GDS44107 | Drive Shaft | | 30 | 34 | 55 | 105.5 | 756 | |
| | 2012.01- | AT | R | R | SUV 4WD LFW | | GDS44106 | Drive Shaft | | 30 | 34 | 55 | 105.5 | 859 | |
| | 2012.01- | AT | R | L/R | SUV 4WD LFW | | GCO21047 | Outer Joint | | 30 | 22 | 55 | 105.5 | 53.5 | O |
| | 2012.01- | AT | R | L/R | SUV 4WD LFW | | GCI12009 | Inner Joint | | 34 | 22 | 35 | 56.5 | 111.5 | |

| | YEAR | TRANSM. | F/R | L/R | BODY STYLE & DRIVE TYPE & ENGINE | REMARKS | G-AP Ref. | PRODUCT | ABS | Technical Specifications A | B | C | H | L | P |
|---|---|---|---|---|---|---|---|---|---|---|---|---|---|---|---|
| **CHEVROLET** | | | | | | | | | | | | | | | |
| **Captiva** | | | | | | | | | | | | | | | |
| 3.0 (190 kw) | 2010.11-2018.09 | 6AT | F | L | SUV 4WD LF1;LFW | | GDS83815 | Drive Shaft | | 30 | 34 | 56 | 105 | 666 | |
| | 2010.11-2018.09 | 6AT | F | R | SUV 4WD LF1;LFW | | GDS83816 | Drive Shaft | | 30 | 27 | 56 | 105 | 546 | |
| | 2010.11-2018.09 | 6AT | F | L/R | SUV 4WD LF1;LFW | | GCO81163 | Outer Joint | | 30 | 34 | 56 | 105 | 64.5 | M |
| | 2010.11-2018.09 | 6AT | F | L | SUV 4WD LF1;LFW | | GCI21041 | Inner Joint | | 34 | 34 | 35 | 138 | 92 | |
| | 2010.11-2018.09 | 6AT | F | R | SUV 4WD LF1;LFW | | GCI82378 | Inner Joint | | 27 | 34 | 42 | | 134 | |
| | 2010.11-2018.09 | 6AT | R | R | SUV 4WD LF1;LFW | | GDS44106 | Drive Shaft | | 30 | 34 | 55 | 105.5 | 859 | |
| | 2010.11-2018.09 | 6AT | R | L/R | SUV 4WD LF1;LFW | | GCO21047 | Outer Joint | | 30 | 22 | 55 | 105.5 | 53.5 | O |
| | 2010.11-2018.09 | AT | R | L | SUV 4WD LF1;LFW | | GDS44107 | Drive Shaft | | 30 | 34 | 55 | 105.5 | 756 | |
| | 2010.11-2018.09 | AT | R | L/R | SUV 4WD LF1;LFW | | GCI12009 | Inner Joint | | 34 | 22 | 35 | 56.5 | 111.5 | |
| 3.2 (169 kw) | 2006.06- | 5AT | F | L | SUV 4WD LU1 | | GDS22008 | Drive Shaft | | 30 | 27 | 54 | 105.5 | 629.5 | |
| | 2006.06- | 5AT | F | R | SUV 4WD LU1 | | GDS22009 | Drive Shaft | | 30 | 27 | 54 | 105.5 | 551 | |
| | 2006.06- | 5AT | F | L/R | SUV 4WD LU1 | | GCO22009 | Outer Joint | | 30 | 34 | 54 | 105.5 | 64.5 | O |
| | 2006.06- | 5AT | F | L | SUV 4WD LU1 | | GCI21023 | Inner Joint | | 27 | 34 | 35 | 104 | 87 | |
| | 2006.06- | 5AT | F | R | SUV 4WD LU1 | | GCI88035 | Inner Joint | | 27 | 34 | 43.3 | | 128 | |
| | 2006.06- | 5AT | R | L | SUV 4WD LU1 | | GDS44107 | Drive Shaft | | 30 | 34 | 55 | 105.5 | 756 | |
| | 2006.06- | 5AT | R | R | SUV 4WD LU1 | | GDS44106 | Drive Shaft | | 30 | 34 | 55 | 105.5 | 859 | |
| | 2006.06- | 5AT | R | L/R | SUV 4WD LU1 | | GCO21047 | Outer Joint | | 30 | 22 | 55 | 105.5 | 53.5 | O |
| | 2006.06- | 5AT | R | L/R | SUV 4WD LU1 | | GCI12009 | Inner Joint | | 34 | 22 | 35 | 56.5 | 111.5 | |
| **Cobalt** | | | | | | | | | | | | | | | |
| 1.5 (77 kw) | 2013.01- | 6AT | F | L | Saloon FWD L2C | | GDS88160 | Drive Shaft | | 25 | 22 | 52.5 | 92 | 628 | |
| | 2013.01- | 6AT | F | L | Saloon FWD L2C | | GCI21057 | Inner Joint | | 22 | 30 | 35 | 131.5 | 87.5 | |
| | 2013.01- | MT | F | L/R | Saloon FWD L2C | | GCO21058 | Outer Joint | | 25 | 22 | 51 | 92 | 54.5 | M |
| **Colorado** | | | | | | | | | | | | | | | |
| 2.5 (132 kw) | 2016.08- | 5MT | F | L/R | Pickup 4WD XLD25 | | GDS82706 | Drive Shaft | | 33 | 28 | 62 | 112 | 612 | |
| | 2016.08- | 5MT | F | L/R | Pickup 4WD XLD25 | | GCO82129 | Outer Joint | | 33 | 26 | 62 | 112 | 61 | I |
| | 2016.08- | 5MT | F | L/R | Pickup 4WD XLD25 | | GCI81960 | Inner Joint | | 28 | 28 | 40 | 109 | 93 | |
| 3.0 (88 kw) | 2004.01-2006.09 | AT/MT | F | L/R | Pickup 4WD 4JJ1 | Date from:2005.09 | GDS26017 | Drive Shaft | | 17 | 17 | 53 | 136.5 | 611 | |
| 3.0 (107 kw) | 2004.01-2012.08 | AT/MT | F | L/R | Pickup 4WD 4JJ1 | Date from:2005.09 | GDS26017 | Drive Shaft | | 17 | 17 | 53 | 136.5 | 611 | |
| **Colorado Crew Cab Pickup** | | | | | | | | | | | | | | | |
| 2.5 (110 kw) | 2012.09- | 5MT | F | L/R | Pickup 4WD XLD25 | Date to:2016.12 | GDS26016 | Drive Shaft | | 17 | 28 | 53 | 136.5 | 650 | |
| | 2012.09- | 5MT | F | L/R | Pickup 4WD XLD25 | Date from:2017.01 | GDS82706 | Drive Shaft | | 33 | 28 | 62 | 112 | 612 | |
| | 2012.09- | 5MT | F | L/R | Pickup 4WD XLD25 | Date from:2017.01 | GCO82129 | Outer Joint | | 33 | 26 | 62 | 112 | 61 | I |
| | 2012.09- | 5MT | F | L/R | Pickup 4WD XLD25 | Date from:2017.01 | GCI81960 | Inner Joint | | 28 | 28 | 40 | 109 | 93 | |
| **Colorado Standard Cab Pickup** | | | | | | | | | | | | | | | |
| 2.8 (132 kw) | 2012.09- | AT/MT | F | L/R | Pickup 4WD XLD28 | Date to:2016.12 | GDS26016 | Drive Shaft | | 17 | 28 | 53 | 136.5 | 650 | |
| | 2012.09- | AT/MT | F | L/R | Pickup 4WD XLD28 | Date from:2017.01 | GDS82706 | Drive Shaft | | 33 | 28 | 62 | 112 | 612 | |
| | 2012.09- | AT/MT | F | L/R | Pickup 4WD XLD28 | Date from:2017.01 | GCO82129 | Outer Joint | | 33 | 26 | 62 | 112 | 61 | I |
| | 2012.09- | AT/MT | F | L/R | Pickup 4WD XLD28 | Date from:2017.01 | GCI81960 | Inner Joint | | 28 | 28 | 40 | 109 | 93 | |
| **Colorado/S10/Luv D-Max** | | | | | | | | | | | | | | | |
| 2.8 (132 kw) | 2004.01-2012.08 | AT/MT | F | L/R | Pickup 4WD LWH | Date from:2005.09 | GDS26017 | Drive Shaft | | 17 | 17 | 53 | 136.5 | 611 | |
| **Corvette** | | | | | | | | | | | | | | | |
| 6.2 (343 kw) | 2014.04-2019.12 | AT | R | L/R | Convertible RWD LT1(376CUV8) | Chassis no. from:1G1YJ3D72F5110353 | GDS83675 | Drive Shaft | | 33 | 41 | 55.5 | 106 | 739 | |
| | 2014.04-2019.12 | AT | R | L/R | Convertible RWD LT1(376CUV8) | Chassis no. from:1G1YJ3D72F5110353 | GCO82455 | Outer Joint | | 33 | 28 | 55.5 | 106 | 64.5 | I |
| | 2014.04-2019.12 | AT | R | L/R | Convertible RWD LT1(376CUV8) | Chassis no. from:1G1YJ3D72F5110353 | GCI82329 | Inner Joint | | 41 | 27 | 40 | | 156.5 | |
| | 2014.04-2019.12 | MT | R | L | Convertible RWD LT1(376CUV8) | Chassis no. from:1G1YJ3D72F5110353 | GDS83580 | Drive Shaft | | 33 | 41 | 55.5 | 106 | 744 | |
| | 2014.04-2019.12 | MT | R | R | Convertible RWD LT1(376CUV8) | Chassis no. from:1G1YJ3D72F5110353 | GDS83581 | Drive Shaft | | 33 | 41 | 55.5 | 106 | 745 | |
| | 2014.04-2019.12 | MT | R | L/R | Convertible RWD LT1(376CUV8) | Chassis no. from:1G1YJ3D72F5110353 | GCO82427 | Outer Joint | | 33 | 30 | 55.5 | 106 | 67 | I |
| | 2014.04-2019.12 | MT | R | L/R | Convertible RWD LT1(376CUV8) | Chassis no. from:1G1YJ3D72F5110353 | GCI82284 | Inner Joint | | 41 | 29 | 40 | | 156.5 | |
| | 2014.04-2019.12 | AT | R | L/R | Coupe RWD LT1(376CUV8) | Chassis no. from:1G1YJ3D72F5110353 | GDS83675 | Drive Shaft | | 33 | 41 | 55.5 | 106 | 739 | |
| | 2014.04-2019.12 | AT | R | L/R | Coupe RWD LT1(376CUV8) | Chassis no. from:1G1YJ3D72F5110353 | GCO82455 | Outer Joint | | 33 | 28 | 55.5 | 106 | 64.5 | I |
| | 2014.04-2019.12 | AT | R | L/R | Coupe RWD LT1(376CUV8) | Chassis no. from:1G1YJ3D72F5110353 | GCI82329 | Inner Joint | | 41 | 27 | 40 | | 156.5 | |
| | 2014.04-2019.12 | MT | R | L | Coupe RWD LT1(376CUV8) | Chassis no. from:1G1YJ3D72F5110353 | GDS83580 | Drive Shaft | | 33 | 41 | 55.5 | 106 | 744 | |
| | 2014.04-2019.12 | MT | R | R | Coupe RWD LT1(376CUV8) | Chassis no. from:1G1YJ3D72F5110353 | GDS83581 | Drive Shaft | | 33 | 41 | 55.5 | 106 | 745 | |
| | 2014.04-2019.12 | MT | R | L/R | Coupe RWD LT1(376CUV8) | Chassis no. from:1G1YJ3D72F5110353 | GCO82427 | Outer Joint | | 33 | 30 | 55.5 | 106 | 67 | I |
| | 2014.04-2019.12 | MT | R | L/R | Coupe RWD LT1(376CUV8) | Chassis no. from:1G1YJ3D72F5110353 | GCI82284 | Inner Joint | | 41 | 29 | 40 | | 156.5 | |
| 6.2 (485 kw) | 2014.09-2019.11 | AT | R | L/R | Convertible RWD LT4(376CUV8) | | GDS83675 | Drive Shaft | | 33 | 41 | 55.5 | 106 | 739 | |
| | 2014.09-2019.11 | AT | R | L/R | Convertible RWD LT4(376CUV8) | | GCO82455 | Outer Joint | | 33 | 28 | 55.5 | 106 | 64.5 | I |
| | 2014.09-2019.11 | AT | R | L/R | Convertible RWD LT4(376CUV8) | | GCI82329 | Inner Joint | | 41 | 27 | 40 | | 156.5 | |
| | 2014.09-2019.11 | MT | R | L | Convertible RWD LT4(376CUV8) | | GDS83580 | Drive Shaft | | 33 | 41 | 55.5 | 106 | 744 | |
| | 2014.09-2019.11 | MT | R | R | Convertible RWD LT4(376CUV8) | | GDS83581 | Drive Shaft | | 33 | 41 | 55.5 | 106 | 745 | |
| | 2014.09-2019.11 | MT | R | L/R | Convertible RWD LT4(376CUV8) | | GCO82427 | Outer Joint | | 33 | 30 | 55.5 | 106 | 67 | I |
| | 2014.09-2019.11 | MT | R | L/R | Convertible RWD LT4(376CUV8) | | GCI82284 | Inner Joint | | 41 | 29 | 40 | | 156.5 | |
| | 2014.09-2019.11 | AT | R | L/R | Coupe RWD LT4(376CUV8) | | GDS83675 | Drive Shaft | | 33 | 41 | 55.5 | 106 | 739 | |
| | 2014.09-2019.11 | AT | R | L/R | Coupe RWD LT4(376CUV8) | | GCO82455 | Outer Joint | | 33 | 28 | 55.5 | 106 | 64.5 | I |
| | 2014.09-2019.11 | AT | R | L/R | Coupe RWD LT4(376CUV8) | | GCI82329 | Inner Joint | | 41 | 27 | 40 | | 156.5 | |

| | YEAR | TRANSM. | F/R | L/R | BODY STYLE & DRIVE TYPE & ENGINE | REMARKS | G-AP Ref. | PRODUCT | ABS | Technical Specifications A | B | C | H | L | P |
|---|---|---|---|---|---|---|---|---|---|---|---|---|---|---|---|
| **CHEVROLET** | | | | | | | | | | | | | | | |
| **Corvette** | | | | | | | | | | | | | | | |
| 6.2 (485 kw) | 2014.09-2019.11 | MT | R | L | Coupe RWD LT4(376CUV8) | Chassis no. from:1G1YJ3D72F5110353 | GDS83580 | Drive Shaft | | 33 | 41 | 55.5 | 106 | 744 | |
| | 2014.09-2019.11 | MT | R | R | Coupe RWD LT4(376CUV8) | Chassis no. from:1G1YJ3D72F5110353 | GDS83581 | Drive Shaft | | 33 | 41 | 55.5 | 106 | 745 | |
| | 2014.09-2019.11 | MT | R | L/R | Coupe RWD LT4(376CUV8) | Chassis no. from:1G1YJ3D72F5110353 | GCO82427 | Outer Joint | | 33 | 30 | 55.5 | 106 | 67 | I |
| | 2014.09-2019.11 | MT | R | L/R | Coupe RWD LT4(376CUV8) | Chassis no. from:1G1YJ3D72F5110353 | GCI82284 | Inner Joint | | 41 | 29 | 40 | | 156.5 | |
| **Cruze** | | | | | | | | | | | | | | | |
| 1.4 (74 kw) | 2013.07- | 5MT | F | L | Saloon FWD LDD | | GCO88066 | Outer Joint | | 30 | 34 | 59 | 95 | 65 | M |
| | 2013.07- | 5MT | F | R | Saloon FWD LDD | | GCO21043 | Outer Joint | | 33 | 31 | 59 | 94.5 | 62.5 | M |
| | 2013.07-2015.12 | 5MT | F | L | Estate FWD LDD | | GCI88039 | Inner Joint | | 34 | 31 | 35 | 56.5 | 141.5 | |
| | 2013.07-2015.12 | MT | F | L | Estate FWD LDD | | GDS99246 | Drive Shaft | | 33 | 34 | 59 | 94.5 | 621 | |
| | 2013.07-2015.12 | 5MT | F | L | Hatchback FWD LDD | | GCI88039 | Inner Joint | | 34 | 31 | 35 | 56.5 | 141.5 | |
| 1.4 (103 kw) | 2010.09- | 6AT | F | L | Saloon FWD LUJ | | GDS88107 | Drive Shaft | | 33 | 34 | 59 | 94.5 | 640 | |
| | 2010.09- | 6AT | F | L/R | Saloon FWD LUJ | | GCO88066 | Outer Joint | | 30 | 34 | 59 | 95 | 65 | M |
| | 2010.09- | 6MT | F | L/R | Saloon FWD LUJ | | GCO21043 | Outer Joint | | 33 | 31 | 59 | 94.5 | 62.5 | M |
| | 2012.06- | 6AT/6MT | F | L | Hatchback FWD LUJ;A 14 NET | | GCO21043 | Outer Joint | | 33 | 31 | 59 | 94.5 | 62.5 | M |
| | 2012.08- | 6AT | F | L | Estate FWD LUJ | | GDS88107 | Drive Shaft | | 33 | 34 | 59 | 94.5 | 640 | |
| | 2012.08- | 6AT/6MT | F | L/R | Estate FWD LUJ | | GCO21043 | Outer Joint | | 33 | 31 | 59 | 94.5 | 62.5 | M |
| 1.6 (80 kw) | 2009.05- | 5MT | F | L | Saloon FWD F16D3;LXT | | GCO88066 | Outer Joint | | 30 | 34 | 59 | 95 | 65 | M |
| | 2009.05- | 5MT | F | L/R | Saloon FWD F16D3;LXT | | GCI88039 | Inner Joint | | 34 | 31 | 35 | 56.5 | 141.5 | |
| | 2009.05- | AT | F | L | Saloon FWD F16D3;LXT | Trans. code:X23F | GDS88107 | Drive Shaft | | 33 | 34 | 59 | 94.5 | 640 | |
| | 2009.05- | AT | F | R | Saloon FWD F16D3;LXT | Trans. code:X23F | GDS88108 | Drive Shaft | | 33 | 34 | 59 | 94.5 | 951 | |
| | 2009.05- | AT | F | L | Saloon FWD F16D3;LXT | | GCI88041 | Inner Joint | | 34 | 31 | 35 | 138 | 98 | |
| | 2009.05- | AT | F | R | Saloon FWD F16D3;LXT | | GCI88040 | Inner Joint | | 34 | 31 | 35 | 55.5 | 142 | |
| | 2009.05- | AT/MT | F | L/R | Saloon FWD F16D3;LXT | | GCO21043 | Outer Joint | | 33 | 31 | 59 | 94.5 | 62.5 | M |
| | 2009.05- | MT | F | L | Saloon FWD F16D3;LXT | | GDS82616 | Drive Shaft | | 33 | 25 | 59 | 94.5 | 597 | |
| | 2009.05- | MT | F | L | Saloon FWD F16D3;LXT | | GDS99246 | Drive Shaft | | 33 | 34 | 59 | 94.5 | 621 | |
| | 2009.05- | MT | F | R | Saloon FWD F16D3;LXT | | GDS82579 | Drive Shaft | | 33 | 25 | 59 | 94.5 | 992 | |
| | 2009.05- | MT | F | R | Saloon FWD F16D3;LXT | | GDS99247 | Drive Shaft | | 33 | 34 | 59 | 94.5 | 970 | |
| | 2012.01- | 5MT | F | L | Hatchback FWD LXT | | GCI88039 | Inner Joint | | 34 | 31 | 35 | 56.5 | 141.5 | |
| | 2012.01- | 6AT | F | R | Hatchback FWD LXT | | GCI81079 | Inner Joint | | 22 | 31 | 35 | 57.5 | 144 | |
| | 2012.01- | AT/MT | F | L/R | Hatchback FWD LXT | | GCO21043 | Outer Joint | | 33 | 31 | 59 | 94.5 | 62.5 | M |
| | 2012.01- | MT | F | R | Hatchback FWD LXT | | GDS99247 | Drive Shaft | | 33 | 34 | 59 | 94.5 | 970 | |
| 1.6 (83 kw) | 2009.05- | 5MT | F | L/R | Saloon FWD F16D4;LDE | | GCI88039 | Inner Joint | | 34 | 31 | 35 | 56.5 | 141.5 | |
| | 2009.05- | 6AT | F | R | Saloon FWD F16D4;LDE | | GCI81079 | Inner Joint | | 22 | 31 | 35 | 57.5 | 144 | |
| | 2009.05- | AT/MT | F | L/R | Saloon FWD F16D4;LDE | | GCO21043 | Outer Joint | | 33 | 31 | 59 | 94.5 | 62.5 | M |
| | 2009.05- | MT | F | L | Saloon FWD F16D4;LDE | | GDS82616 | Drive Shaft | | 33 | 25 | 59 | 94.5 | 597 | |
| | 2009.05- | MT | F | L | Saloon FWD F16D4;LDE | | GDS99246 | Drive Shaft | | 33 | 34 | 59 | 94.5 | 621 | |
| | 2009.05- | MT | F | R | Saloon FWD F16D4;LDE | | GDS82579 | Drive Shaft | | 33 | 25 | 59 | 94.5 | 992 | |
| | 2009.05- | MT | F | R | Saloon FWD F16D4;LDE | | GDS99247 | Drive Shaft | | 33 | 34 | 59 | 94.5 | 970 | |
| 1.6 (86 kw) | 2012.12- | 5MT | F | L/R | Hatchback FWD LDE | | GCO21043 | Outer Joint | | 33 | 31 | 59 | 94.5 | 62.5 | M |
| | 2012.12- | 5MT | F | L | Hatchback FWD LDE | | GCI88039 | Inner Joint | | 34 | 31 | 35 | 56.5 | 141.5 | |
| | 2012.12- | 6AT | F | L/R | Hatchback FWD LDE | | GCO88066 | Outer Joint | | 30 | 34 | 59 | 95 | 65 | M |
| | 2012.12- | 6AT | F | R | Hatchback FWD LDE | | GCI81079 | Inner Joint | | 22 | 31 | 35 | 57.5 | 144 | |
| | 2012.12- | MT | F | L | Hatchback FWD LDE | | GDS99246 | Drive Shaft | | 33 | 34 | 59 | 94.5 | 621 | |
| | 2012.12- | MT | F | R | Hatchback FWD LDE | | GDS99247 | Drive Shaft | | 33 | 34 | 59 | 94.5 | 970 | |
| | 2012.12- | 5MT | F | L/R | Saloon FWD LDE | | GCI88039 | Inner Joint | | 34 | 31 | 35 | 56.5 | 141.5 | |
| | 2012.12- | 6AT | F | R | Saloon FWD LDE | | GCI81079 | Inner Joint | | 22 | 31 | 35 | 57.5 | 144 | |
| | 2012.12- | MT | F | L | Saloon FWD LDE | | GDS99246 | Drive Shaft | | 33 | 34 | 59 | 94.5 | 621 | |
| | 2012.12- | MT | F | R | Saloon FWD LDE | | GDS99247 | Drive Shaft | | 33 | 34 | 59 | 94.5 | 970 | |
| | 2012.12-2015.12 | 5MT | F | L | Estate FWD LDE | | GCI88039 | Inner Joint | | 34 | 31 | 35 | 56.5 | 141.5 | |
| | 2012.12-2015.12 | MT | F | L | Estate FWD LDE | | GDS99246 | Drive Shaft | | 33 | 34 | 59 | 94.5 | 621 | |
| | 2012.12-2015.12 | MT | F | R | Estate FWD LDE | | GDS99247 | Drive Shaft | | 33 | 34 | 59 | 94.5 | 970 | |
| 1.6 (91 kw) | 2009.05- | 5MT | F | L/R | Saloon FWD F16D4;LDE | | GCI88039 | Inner Joint | | 34 | 31 | 35 | 56.5 | 141.5 | |
| | 2009.05- | 6AT | F | R | Saloon FWD F16D4;LDE | | GCI81079 | Inner Joint | | 22 | 31 | 35 | 57.5 | 144 | |
| | 2009.05- | 6AT/5MT | F | L | Saloon FWD F16D4;LDE | | GDS99246 | Drive Shaft | | 33 | 34 | 59 | 94.5 | 621 | |
| | 2009.05- | 6AT/5MT | F | R | Saloon FWD F16D4;LDE | | GDS99247 | Drive Shaft | | 33 | 34 | 59 | 94.5 | 970 | |
| | 2009.05- | 6AT/5MT | F | L/R | Saloon FWD F16D4;LDE | | GCO21043 | Outer Joint | | 33 | 31 | 59 | 94.5 | 62.5 | M |
| | 2011.06- | 5MT | F | L/R | Hatchback FWD LDE | | GCO21043 | Outer Joint | | 33 | 31 | 59 | 94.5 | 62.5 | M |
| | 2011.06- | 5MT | F | L | Hatchback FWD LDE | | GCI88039 | Inner Joint | | 34 | 31 | 35 | 56.5 | 141.5 | |
| | 2011.06- | 6AT | F | L/R | Hatchback FWD LDE | | GCO88066 | Outer Joint | | 30 | 34 | 59 | 95 | 65 | M |
| | 2011.06- | 6AT | F | R | Hatchback FWD LDE | | GCI81079 | Inner Joint | | 22 | 31 | 35 | 57.5 | 144 | |
| | 2011.06- | MT | F | L | Hatchback FWD LDE | | GDS99246 | Drive Shaft | | 33 | 34 | 59 | 94.5 | 621 | |
| | 2011.06- | MT | F | R | Hatchback FWD LDE | | GDS99247 | Drive Shaft | | 33 | 34 | 59 | 94.5 | 970 | |
| | 2012.08-2015.12 | 5MT | F | R | Estate FWD LDE | | GDS99247 | Drive Shaft | | 33 | 34 | 59 | 94.5 | 970 | |
| | 2012.08-2015.12 | 5MT | F | L/R | Estate FWD LDE | | GCO21043 | Outer Joint | | 33 | 31 | 59 | 94.5 | 62.5 | M |
| | 2012.08-2015.12 | 5MT | F | L | Estate FWD LDE | | GCI88039 | Inner Joint | | 34 | 31 | 35 | 56.5 | 141.5 | |

| | YEAR | TRANSM. | F/R | L/R | BODY STYLE & DRIVE TYPE & ENGINE | REMARKS | G-AP Ref. | PRODUCT | ABS | Technical Specifications | | | | | |
|---|---|---|---|---|---|---|---|---|---|---|---|---|---|---|---|
| | | | | | | | | | | A | B | C | H | L | P |
| **CHEVROLET** | | | | | | | | | | | | | | | |
| **Cruze** | | | | | | | | | | | | | | | |
| 1.6 (91 kw) | 2012.08-2015.12 | MT | F | L | Estate FWD LDE | | GDS99246 | Drive Shaft | | 33 | 34 | 59 | 94.5 | 621 | |
| 1.7 (81 kw) | 2013.08-2015.12 | 6MT | F | L | Hatchback FWD LKR | | GCO88066 | Outer Joint | | 30 | 34 | 59 | 95 | 65 | M |
| | 2013.08-2015.12 | 6MT | F | R | Hatchback FWD LKR | | GCO21043 | Outer Joint | | 33 | 31 | 59 | 94.5 | 62.5 | M |
| 1.7 (96 kw) | 2012.01- | 6MT | F | L/R | Saloon FWD LUD | | GCO88066 | Outer Joint | | 30 | 34 | 59 | 95 | 65 | M |
| | 2012.01-2015.12 | 6MT | F | L/R | Hatchback FWD LUD | | GCO88066 | Outer Joint | | 30 | 34 | 59 | 95 | 65 | M |
| 1.8 (103 kw) | 2009.11- | MT | F | L | Saloon FWD LUW | | GDS82616 | Drive Shaft | | 33 | 25 | 59 | 94.5 | 597 | |
| | 2009.11- | MT | F | R | Saloon FWD LUW | | GDS82579 | Drive Shaft | | 33 | 25 | 59 | 94.5 | 992 | |
| | 2009.11- | MT | F | R | Saloon FWD LUW | | GDS99247 | Drive Shaft | | 33 | 34 | 59 | 94.5 | 970 | |
| | 2011.10- | 5MT | F | L/R | Hatchback FWD 2H0 | | GCO21043 | Outer Joint | | 33 | 31 | 59 | 94.5 | 62.5 | M |
| | 2011.10- | 5MT | F | L | Hatchback FWD 2H0 | | GCI88039 | Inner Joint | | 34 | 31 | 35 | 56.5 | 141.5 | |
| | 2011.10- | 6AT | F | L/R | Hatchback FWD 2H0 | | GCO88066 | Outer Joint | | 30 | 34 | 59 | 95 | 65 | M |
| | 2011.10- | 6MT | F | R | Hatchback FWD 2H0 | | GDS99247 | Drive Shaft | | 33 | 34 | 59 | 94.5 | 970 | |
| | 2011.10- | MT | F | L | Hatchback FWD 2H0 | | GDS82616 | Drive Shaft | | 33 | 25 | 59 | 94.5 | 597 | |
| | 2011.10- | MT | F | L | Hatchback FWD 2H0 | | GDS99246 | Drive Shaft | | 33 | 34 | 59 | 94.5 | 621 | |
| | 2011.10- | MT | F | R | Hatchback FWD 2H0 | | GDS82579 | Drive Shaft | | 33 | 25 | 59 | 94.5 | 992 | |
| 1.8 (104 kw) | 2009.05- | 5MT | F | L/R | Saloon FWD 2H0 | | GCI88039 | Inner Joint | | 34 | 31 | 35 | 56.5 | 141.5 | |
| | 2009.05- | 6AT | F | R | Saloon FWD 2H0 | | GCI88040 | Inner Joint | | 34 | 31 | 35 | 55.5 | 142 | |
| | 2009.05- | AT | F | L | Saloon FWD 2H0 | | GDS88107 | Drive Shaft | | 33 | 34 | 59 | 94.5 | 640 | |
| | 2009.05- | AT | F | R | Saloon FWD 2H0 | | GDS88108 | Drive Shaft | | 33 | 34 | 59 | 94.5 | 951 | |
| | 2009.05- | AT | F | L | Saloon FWD 2H0 | Model year to:2010 | GCI88041 | Inner Joint | | 34 | 31 | 35 | 138 | 98 | |
| | 2009.05- | AT/MT | F | L/R | Saloon FWD 2H0 | | GCO21043 | Outer Joint | | 33 | 31 | 59 | 94.5 | 62.5 | M |
| | 2009.05- | MT | F | L | Saloon FWD 2H0 | | GDS82616 | Drive Shaft | | 33 | 25 | 59 | 94.5 | 597 | |
| | 2009.05- | MT | F | L | Saloon FWD 2H0 | | GDS99246 | Drive Shaft | | 33 | 34 | 59 | 94.5 | 621 | |
| | 2009.05- | MT | F | R | Saloon FWD 2H0 | | GDS82579 | Drive Shaft | | 33 | 25 | 59 | 94.5 | 992 | |
| | 2009.05- | MT | F | R | Saloon FWD 2H0 | | GDS99247 | Drive Shaft | | 33 | 34 | 59 | 94.5 | 970 | |
| | 2011.06- | 5MT | F | L | Hatchback FWD 2H0 | | GDS99246 | Drive Shaft | | 33 | 34 | 59 | 94.5 | 621 | |
| | 2011.06- | 5MT | F | R | Hatchback FWD 2H0 | | GDS99247 | Drive Shaft | | 33 | 34 | 59 | 94.5 | 970 | |
| | 2011.06- | 5MT | F | L/R | Hatchback FWD 2H0 | | GCO21043 | Outer Joint | | 33 | 31 | 59 | 94.5 | 62.5 | M |
| | 2011.06- | 5MT | F | L | Hatchback FWD 2H0 | | GCI88039 | Inner Joint | | 34 | 31 | 35 | 56.5 | 141.5 | |
| | 2011.06- | 6AT | F | L/R | Hatchback FWD 2H0 | | GCO88066 | Outer Joint | | 30 | 34 | 59 | 95 | 65 | M |
| | 2011.06- | 6MT | F | L | Hatchback FWD 2H0 | | GDS82616 | Drive Shaft | | 33 | 25 | 59 | 94.5 | 597 | |
| | 2011.06- | 6MT | F | R | Hatchback FWD 2H0 | | GDS82579 | Drive Shaft | | 33 | 25 | 59 | 94.5 | 992 | |
| | 2011.06- | 5MT | F | L | Saloon FWD 2H0 | | GCI88039 | Inner Joint | | 34 | 31 | 35 | 56.5 | 141.5 | |
| | 2011.06- | 6AT | F | R | Saloon FWD 2H0 | | GCI88040 | Inner Joint | | 34 | 31 | 35 | 55.5 | 142 | |
| | 2011.06- | AT | F | L | Saloon FWD 2H0 | | GDS88107 | Drive Shaft | | 33 | 34 | 59 | 94.5 | 640 | |
| | 2011.06- | AT | F | R | Saloon FWD 2H0 | | GDS88108 | Drive Shaft | | 33 | 34 | 59 | 94.5 | 951 | |
| | 2011.06- | AT | F | L | Saloon FWD 2H0 | | GCI88041 | Inner Joint | | 34 | 31 | 35 | 138 | 98 | |
| | 2011.06- | AT/MT | F | L/R | Saloon FWD 2H0 | | GCO21043 | Outer Joint | | 33 | 31 | 59 | 94.5 | 62.5 | M |
| | 2011.06- | MT | F | L | Saloon FWD 2H0 | | GDS99246 | Drive Shaft | | 33 | 34 | 59 | 94.5 | 621 | |
| | 2011.06- | MT | F | R | Saloon FWD 2H0 | | GDS99247 | Drive Shaft | | 33 | 34 | 59 | 94.5 | 970 | |
| | 2011.06-2015.12 | 5MT | F | R | Hatchback FWD 2H0 | | GDS99247 | Drive Shaft | | 33 | 34 | 59 | 94.5 | 970 | |
| | 2011.06-2015.12 | 5MT | F | L/R | Hatchback FWD 2H0 | | GCO21043 | Outer Joint | | 33 | 31 | 59 | 94.5 | 62.5 | M |
| | 2011.06-2015.12 | 5MT | F | L | Hatchback FWD 2H0 | | GCI88039 | Inner Joint | | 34 | 31 | 35 | 56.5 | 141.5 | |
| | 2011.06-2015.12 | | F | L | Hatchback FWD 2H0 | | GDS99246 | Drive Shaft | | 33 | 34 | 59 | 94.5 | 621 | |
| | 2012.08- | 5MT | F | L/R | Estate FWD 2H0 | | GCI88039 | Inner Joint | | 34 | 31 | 35 | 56.5 | 141.5 | |
| | 2012.08- | 6AT | F | R | Estate FWD 2H0 | | GCI88040 | Inner Joint | | 34 | 31 | 35 | 55.5 | 142 | |
| | 2012.08- | 6AT/5MT | F | L/R | Estate FWD 2H0 | | GCO21043 | Outer Joint | | 33 | 31 | 59 | 94.5 | 62.5 | M |
| | 2012.08- | MT | F | L | Estate FWD 2H0 | | GDS82616 | Drive Shaft | | 33 | 25 | 59 | 94.5 | 597 | |
| | 2012.08- | MT | F | L | Estate FWD 2H0 | | GDS99246 | Drive Shaft | | 33 | 34 | 59 | 94.5 | 621 | |
| | 2012.08- | MT | F | R | Estate FWD 2H0 | | GDS82579 | Drive Shaft | | 33 | 25 | 59 | 94.5 | 992 | |
| | 2012.08- | MT | F | R | Estate FWD 2H0 | | GDS99247 | Drive Shaft | | 33 | 34 | 59 | 94.5 | 970 | |
| 2.0 (92 kw) | 2009.05-2011.05 | 5MT | F | L | Saloon FWD LLW | | GDS88095 | Drive Shaft | | 30 | 27 | 57.5 | 95 | 582 | |
| | 2009.05-2011.05 | 5MT | F | R | Saloon FWD LLW | | GDS88128 | Drive Shaft | | 30 | 27 | 59 | 95 | 597 | |
| | 2009.05-2011.05 | 5MT | F | L/R | Saloon FWD LLW | | GCO88066 | Outer Joint | | 30 | 34 | 59 | 95 | 65 | M |
| 2.0 (110 kw) | 2009.05- | 6AT/5MT | F | R | Saloon FWD LLW;Z 20 DMH | | GDS88128 | Drive Shaft | | 30 | 27 | 59 | 95 | 597 | |
| | 2009.05- | AT | F | L | Saloon FWD LLW;Z 20 DMH | | GDS84552 | Drive Shaft | | 30 | 34 | 59 | 95 | 638 | |
| | 2009.05- | AT | F | L/R | Saloon FWD LLW;Z 20 DMH | | GCO88066 | Outer Joint | | 30 | 34 | 59 | 95 | 65 | M |
| | 2009.05- | AT | F | L | Saloon FWD LLW;Z 20 DMH | | GCI82850 | Inner Joint | | 34 | 34 | 35 | 138 | 104.5 | |
| | 2009.05- | MT | F | L | Saloon FWD LLW;Z 20 DMH | | GDS88095 | Drive Shaft | | 30 | 27 | 57.5 | 95 | 582 | |
| 2.0 (120 kw) | 2010.08- | 6AT | F | L | Saloon FWD LNP | | GDS84552 | Drive Shaft | | 30 | 34 | 59 | 95 | 638 | |
| | 2010.08- | 6AT/6MT | F | L/R | Saloon FWD LNP | Transmission:MT;Position:Front axle left and right;Transmission:AAT;Position:Front axle right | GDS84551 | Drive Shaft | | 30 | 27 | 59 | 95 | 596 | |
| | 2010.08- | AT/MT | F | L/R | Saloon FWD LNP | | GCO88066 | Outer Joint | | 30 | 34 | 59 | 95 | 65 | M |
| | 2010.08- | AT/MT | F | L/R | Saloon FWD LNP | | GCI82849 | Inner Joint | | 27 | 34 | 34.95 | 111 | 104.5 | |
| | 2011.06- | 6AT | F | L | Hatchback FWD LNP | | GCI88039 | Inner Joint | | 34 | 31 | 35 | 56.5 | 141.5 | |
| | 2011.06- | AT | F | L | Hatchback FWD LNP | | GDS84552 | Drive Shaft | | 30 | 34 | 59 | 95 | 638 | |

| | YEAR | TRANSM. | F/R | L/R | BODY STYLE & DRIVE TYPE & ENGINE | REMARKS | G-AP Ref. | PRODUCT | ABS | Technical Specifications A | B | C | H | L | P |
|---|---|---|---|---|---|---|---|---|---|---|---|---|---|---|---|
| **CHEVROLET** | | | | | | | | | | | | | | | |
| **Cruze** | | | | | | | | | | | | | | | |
| 2.0 (120 kw) | 2011.06- | AT | F | R | Hatchback FWD LNP | | GDS84551 | Drive Shaft | | 30 | 27 | 59 | 95 | 596 | |
| | 2011.06- | AT | F | L/R | Hatchback FWD LNP | | GCO88066 | Outer Joint | | 30 | 34 | 59 | 95 | 65 | M |
| | 2011.06- | AT | F | L | Hatchback FWD LNP | | GCI82850 | Inner Joint | | 34 | 34 | 35 | 138 | 104.5 | |
| | 2011.06- | AT | F | R | Hatchback FWD LNP | | GCI82849 | Inner Joint | | 27 | 34 | 34.95 | 111 | 104.5 | |
| | 2011.06- | MT | F | L | Hatchback FWD LNP | | GDS84551 | Drive Shaft | | 30 | 27 | 59 | 95 | 596 | |
| | 2011.06- | MT | F | L | Hatchback FWD LNP | | GCI82849 | Inner Joint | | 27 | 34 | 34.95 | 111 | 104.5 | |
| | 2012.08- | AT | F | L/R | Estate FWD LNP | | GDS84552 | Drive Shaft | | 30 | 34 | 59 | 95 | 638 | |
| | 2012.08- | AT | F | L/R | Estate FWD LNP | | GCO88066 | Outer Joint | | 30 | 34 | 59 | 95 | 65 | M |
| | 2012.08- | AT | F | L/R | Estate FWD LNP | | GCI82850 | Inner Joint | | 34 | 34 | 35 | 138 | 104.5 | |
| | 2012.08- | MT | F | L/R | Estate FWD LNP | | GDS84551 | Drive Shaft | | 30 | 27 | 59 | 95 | 596 | |
| | 2012.08- | MT | F | L/R | Estate FWD LNP | | GCI82849 | Inner Joint | | 27 | 34 | 34.95 | 111 | 104.5 | |
| **Epica** | | | | | | | | | | | | | | | |
| 2.0 (94 kw) | 2005.01-2006.12 | AT | F | L/R | Saloon FWD L88 | | GCO24021 | Outer Joint | | 28 | 29 | 55.5 | 99 | 61 | O |
| | 2005.01-2006.12 | AT | F | L | Saloon FWD L88 | | GCI21005 | Inner Joint | | 34 | 29 | 40 | 64 | 110 | |
| | 2005.01-2006.12 | MT | F | L | Saloon FWD L88 | | GDS12027 | Drive Shaft | | 28 | 34 | 55.5 | 99 | 643 | |
| | 2005.01-2006.12 | MT | F | R | Saloon FWD L88 | | GDS12026 | Drive Shaft | | 28 | 26 | 55.5 | 99 | 682 | |
| | 2005.01-2006.12 | MT | F | L/R | Saloon FWD L88 | | GCO14030 | Outer Joint | | 28 | 32 | 55.5 | 99 | 61 | O |
| | 2005.01-2006.12 | MT | F | R | Saloon FWD L88 | | GCI88019 | Inner Joint | | 26 | 32 | 43 | | 130 | |
| 2.0 (98 kw) | 2005.01-2006.12 | AT | F | L/R | Saloon FWD L88 | | GCO24021 | Outer Joint | | 28 | 29 | 55.5 | 99 | 61 | O |
| | 2005.01-2006.12 | AT | F | L | Saloon FWD L88 | | GCI21005 | Inner Joint | | 34 | 29 | 40 | 64 | 110 | |
| | 2005.01-2006.12 | MT | F | L | Saloon FWD L88 | | GDS12027 | Drive Shaft | | 28 | 34 | 55.5 | 99 | 643 | |
| | 2005.01-2006.12 | MT | F | R | Saloon FWD L88 | | GDS12026 | Drive Shaft | | 28 | 26 | 55.5 | 99 | 682 | |
| | 2005.01-2006.12 | MT | F | L/R | Saloon FWD L88 | | GCO14030 | Outer Joint | | 28 | 32 | 55.5 | 99 | 61 | O |
| | 2005.01-2006.12 | MT | F | R | Saloon FWD L88 | | GCI88019 | Inner Joint | | 26 | 32 | 43 | | 130 | |
| 2.0 (105 kw) | 2006.06-2011.12 | 5AT | F | L/R | Saloon FWD LBM;LF3(121CUL6) | | GCO24021 | Outer Joint | | 28 | 29 | 55.5 | 99 | 61 | O |
| | 2006.06-2011.12 | 5AT/6AT | F | R | Saloon FWD LBM;LF3(121CUL6) | | GCI21050 | Inner Joint | | 26 | 23 | 43 | | 140.5 | |
| | 2006.06-2011.12 | 5MT | F | L/R | Saloon FWD LBM;LF3(121CUL6) | | GCO14030 | Outer Joint | | 28 | 32 | 55.5 | 99 | 61 | O |
| | 2006.06-2011.12 | 5MT | F | L/R | Saloon FWD LBM;LF3(121CUL6) | | GCO88038 | Outer Joint | | 28 | 32 | 55.5 | 99 | 66 | O |
| | 2006.06-2011.12 | 5MT | F | R | Saloon FWD LBM;LF3(121CUL6) | | GCI88019 | Inner Joint | | 26 | 32 | 43 | | 130 | |
| | 2006.06-2011.12 | MT | F | L | Saloon FWD LBM;LF3(121CUL6) | | GDS88072 | Drive Shaft | | 28 | 34 | 55.5 | 99 | 622 | |
| | 2006.06-2011.12 | MT | F | R | Saloon FWD LBM;LF3(121CUL6) | | GDS88071 | Drive Shaft | | 28 | 26 | 55.5 | 99 | 554 | |
| | 2007.04-2010.12 | MT | F | L | Saloon FWD LBM;LF3(121CUL6) | | GDS88072 | Drive Shaft | | 28 | 34 | 55.5 | 99 | 622 | |
| | 2007.04-2010.12 | MT | F | R | Saloon FWD LBM;LF3(121CUL6) | | GDS88071 | Drive Shaft | | 28 | 26 | 55.5 | 99 | 554 | |
| | 2007.04-2010.12 | MT | F | L/R | Saloon FWD LBM;LF3(121CUL6) | | GCO14030 | Outer Joint | | 28 | 32 | 55.5 | 99 | 61 | O |
| | 2007.04-2010.12 | MT | F | R | Saloon FWD LBM;LF3(121CUL6) | | GCI88019 | Inner Joint | | 26 | 32 | 43 | | 130 | |
| 2.0 (110 kw) | 2007.01-2011.12 | 6AT | F | L/R | Saloon FWD LLW | | GCO14030 | Outer Joint | | 28 | 32 | 55.5 | 99 | 61 | O |
| | 2007.01-2011.12 | MT | F | L | Saloon FWD LLW | | GDS39183 | Drive Shaft | | 28 | 27 | 55.5 | 99 | 622 | |
| | 2007.01-2011.12 | MT | F | R | Saloon FWD LLW | | GDS39182 | Drive Shaft | | 28 | 27 | 55.5 | 99 | 529 | |
| | 2007.01-2011.12 | MT | F | L/R | Saloon FWD LLW | | GCO68008 | Outer Joint | | 28 | 34 | 55.5 | 99 | 66 | O |
| | 2007.01-2011.12 | MT | F | R | Saloon FWD LLW | | GCI88035 | Inner Joint | | 27 | 34 | 43.3 | | 128 | |
| | 2007.01-2011.12 | MT | F | R | Saloon FWD LLW | | GDS87101 | Intermediate Shaft | | 27 | 27 | | | 528 | |
| 2.5 (115 kw) | 2006.06-2011.12 | 5AT | F | L | Saloon FWD LF4(152CUL6);LBK | | GDS22012 | Drive Shaft | | 28 | 27 | 55.5 | 99 | 599 | |
| | 2006.06-2011.12 | 5AT | F | R | Saloon FWD LF4(152CUL6);LBK | | GDS22013 | Drive Shaft | | 28 | 26 | 55.5 | 99 | 551 | |
| | 2006.06-2011.12 | 5AT | F | L/R | Saloon FWD LF4(152CUL6);LBK | | GCO14030 | Outer Joint | | 28 | 32 | 55.5 | 99 | 61 | O |
| | 2006.06-2011.12 | 5AT | F | L | Saloon FWD LF4(152CUL6);LBK | | GCI21051 | Inner Joint | | 27 | 23 | 34.95 | 104 | 91 | |
| | 2006.06-2011.12 | 5AT/6AT | F | R | Saloon FWD LF4(152CUL6);LBK | | GCI21050 | Inner Joint | | 26 | 23 | 43 | | 140.5 | |
| **Evanda** | | | | | | | | | | | | | | | |
| 2.0 (96 kw) | 2005.03-2006.12 | AT | F | L/R | Saloon FWD L88 | | GCO24021 | Outer Joint | | 28 | 29 | 55.5 | 99 | 61 | O |
| | 2005.03-2006.12 | AT | F | L | Saloon FWD L88 | | GCI21005 | Inner Joint | | 34 | 29 | 40 | 64 | 110 | |
| | 2005.03-2006.12 | MT | F | L | Saloon FWD L88 | | GDS12027 | Drive Shaft | | 28 | 34 | 55.5 | 99 | 643 | |
| | 2005.03-2006.12 | MT | F | R | Saloon FWD L88 | | GDS12026 | Drive Shaft | | 28 | 26 | 55.5 | 99 | 682 | |
| | 2005.03-2006.12 | MT | F | L/R | Saloon FWD L88 | | GCO14030 | Outer Joint | | 28 | 32 | 55.5 | 99 | 61 | O |
| | 2005.03-2006.12 | MT | F | R | Saloon FWD L88 | | GCI88019 | Inner Joint | | 26 | 32 | 43 | | 130 | |
| | 2005.03-2006.12 | | F | | Saloon FWD L88 | | GCO12018 | Outer Joint | | 33 | 29 | 52 | 95.5 | 62.5 | O |
| **HHR** | | | | | | | | | | | | | | | |
| 2.2 (111 kw) | 2005.09-2008.12 | AT | F | L/R | Estate FWD L61 | | GDS82731 | Drive Shaft | | 33 | 34 | 57 | 98 | 528 | |
| | 2005.09-2008.12 | AT | F | L/R | Estate FWD L61 | | GCO82139 | Outer Joint | | 33 | 32 | 57 | 98 | 54 | I |
| | 2005.09-2008.12 | AT | F | L/R | Estate FWD L61 | | GCI81973 | Inner Joint | | 34 | 32 | 36.7 | | 123 | |
| 2.4 (125 kw) | 2007.10-2011.12 | AT | F | L/R | Estate FWD LE5 | | GDS82731 | Drive Shaft | | 33 | 34 | 57 | 98 | 528 | |
| | 2007.10-2011.12 | AT | F | L/R | Estate FWD LE5 | | GCO82139 | Outer Joint | | 33 | 32 | 57 | 98 | 54 | I |
| | 2007.10-2011.12 | AT | F | L/R | Estate FWD LE5 | | GCI81973 | Inner Joint | | 34 | 32 | 36.7 | | 123 | |
| 2.4 (128 kw) | 2006.01-2011.12 | AT | F | L/R | Estate FWD LE5 | | GDS82731 | Drive Shaft | | 33 | 34 | 57 | 98 | 528 | |
| | 2006.01-2011.12 | AT | F | L/R | Estate FWD LE5 | | GCO82139 | Outer Joint | | 33 | 32 | 57 | 98 | 54 | I |
| | 2006.01-2011.12 | AT | F | L/R | Estate FWD LE5 | | GCI81973 | Inner Joint | | 34 | 32 | 36.7 | | 123 | |

| | YEAR | TRANSM. | F/R | L/R | BODY STYLE & DRIVE TYPE & ENGINE | REMARKS | G-AP Ref. | PRODUCT | ABS | Technical Specifications A | B | C | H | L | P |
|---|---|---|---|---|---|---|---|---|---|---|---|---|---|---|---|
| **CHEVROLET** | | | | | | | | | | | | | | | |
| **Kalos** | | | | | | | | | | | | | | | |
| 1.2 (53 kw) | 2005.01-2008.05 | 5MT | F | L/R | Hatchback FWD LY4 | | GCO88034 | Outer Joint | 47T | 22 | 19 | 52 | 95.5 | 53 | O |
| | 2005.01-2008.05 | | F | L | Hatchback FWD LY4 | | GDS44071 | Drive Shaft | 47T | 22 | 22 | 52 | 95.5 | 661 | |
| | 2005.01-2008.05 | | F | R | Hatchback FWD LY4 | | GDS44072 | Drive Shaft | 47T | 22 | 22 | 52 | 95.5 | 880 | |
| | 2005.01-2008.05 | | F | R | Hatchback FWD LY4 | | GCO88037 | Outer Joint | | 22 | 19 | 52 | 95.5 | 53 | O |
| | 2005.01-2008.05 | | F | L/R | Hatchback FWD LY4 | | GCI99107 | Inner Joint | | 22 | 19 | 35 | 50.5 | 78 | |
| 1.4 (61 kw) | 2005.03- | 5MT | F | L | Saloon FWD LX5(85CUL4) | | GDS12058 | Drive Shaft | 47T | 22 | 34 | 52 | 96.5 | 606 | |
| | 2005.03- | 5MT | F | R | Saloon FWD LX5(85CUL4) | | GDS12057 | Drive Shaft | 47T | 22 | 34 | 52 | 96.5 | 918 | |
| | 2005.03- | 5MT | F | L/R | Saloon FWD LX5(85CUL4) | | GCO88021 | Outer Joint | 47T | 22 | 22 | 52 | 96.5 | 53.5 | O |
| | 2005.03- | 5MT | F | L/R | Saloon FWD LX5(85CUL4) | | GCO99013 | Outer Joint | | 22 | 22 | 56 | 95.5 | 53 | O |
| | 2005.03- | 5MT | F | L/R | Saloon FWD LX5(85CUL4) | | GCI99025 | Inner Joint | | 34 | 22 | 35 | 56.2 | 111.3 | |
| | 2005.03-2008.05 | 5MT | F | L | Hatchback FWD LX5(85CUL4) | | GDS12058 | Drive Shaft | 47T | 22 | 34 | 52 | 96.5 | 606 | |
| | 2005.03-2008.05 | 5MT | F | R | Hatchback FWD LX5(85CUL4) | | GDS12057 | Drive Shaft | 47T | 22 | 34 | 52 | 96.5 | 918 | |
| | 2005.03-2008.05 | 5MT | F | L/R | Hatchback FWD LX5(85CUL4) | | GCO12042 | Outer Joint | 47T | 22 | 22 | 52 | 96.5 | 53.5 | O |
| | 2005.03-2008.05 | 5MT | F | L/R | Hatchback FWD LX5(85CUL4) | | GCI99025 | Inner Joint | | 34 | 22 | 35 | 56.2 | 111.3 | |
| | 2005.03-2008.05 | | F | L/R | Hatchback FWD LX5(85CUL4) | | GCO99013 | Outer Joint | | 22 | 22 | 56 | 95.5 | 53 | O |
| 1.4 (69 kw) | 2006.06-2008.05 | 4AT | F | L | Hatchback FWD L14(85CUL4) | | GDS12040 | Drive Shaft | | 22 | 22 | 56 | 95.5 | 602 | |
| | 2006.06-2008.05 | 4AT | F | L | Hatchback FWD L14(85CUL4) | | GDS57093 | Drive Shaft | 47T | 22 | 22 | 52 | 96 | 603 | |
| | 2006.06-2008.05 | 4AT | F | L | Hatchback FWD L14(85CUL4) | For vehicles with ABS | GDS88012 | Drive Shaft | 48T | 22 | 22 | 56 | 95.5 | 602 | |
| | 2006.06-2008.05 | 4AT | F | R | Hatchback FWD L14(85CUL4) | | GDS12042 | Drive Shaft | | 22 | 22 | 56 | 95.5 | 930 | |
| | 2006.06-2008.05 | 4AT | F | R | Hatchback FWD L14(85CUL4) | | GDS57094 | Drive Shaft | 47T | 22 | 22 | 52 | 96 | 933 | |
| | 2006.06-2008.05 | 4AT | F | R | Hatchback FWD L14(85CUL4) | For vehicles with ABS | GDS88013 | Drive Shaft | 48T | 22 | 22 | 56 | 95.5 | 930 | |
| | 2006.06-2008.05 | 4AT | F | L/R | Hatchback FWD L14(85CUL4) | | GCI12004 | Inner Joint | | 22 | 29 | 38 | 59 | 116 | |
| | 2006.06-2008.05 | 5MT | F | L | Hatchback FWD L14(85CUL4) | | GDS12058 | Drive Shaft | 47T | 22 | 34 | 52 | 96.5 | 606 | |
| | 2006.06-2008.05 | 5MT | F | R | Hatchback FWD L14(85CUL4) | | GDS12057 | Drive Shaft | 47T | 22 | 34 | 52 | 96.5 | 918 | |
| | 2006.06-2008.05 | 5MT | F | L/R | Hatchback FWD L14(85CUL4) | | GCO88021 | Outer Joint | 47T | 22 | 22 | 52 | 96.5 | 53.5 | O |
| | 2006.06-2008.05 | 5MT | F | L/R | Hatchback FWD L14(85CUL4) | | GCO99013 | Outer Joint | | 22 | 22 | 56 | 95.5 | 53 | O |
| | 2006.06-2008.05 | 5MT | F | L/R | Hatchback FWD L14(85CUL4) | | GCI99025 | Inner Joint | | 34 | 22 | 35 | 56.2 | 111.3 | |
| 1.6 (77 kw) | 2006.06-2008.05 | | F | | Hatchback FWD F16D3, LXV | | GCO81192 | Outer Joint | | 25 | 29 | 52.5 | 91.5 | 55.5 | M |
| | 2006.06-2008.05 | | F | | Hatchback FWD F16D3, LXV | | GCO99013 | Outer Joint | | 22 | 22 | 56 | 95.5 | 53 | O |
| **Lacetti** | | | | | | | | | | | | | | | |
| 1.4 (69 kw) | 2005.01-2012.12 | 5MT | F | L | Hatchback FWD L14(85CUL4) | | GDS86058 | Drive Shaft | 47T | 33 | 34 | 52 | 95.5 | 612.5 | |
| | 2005.01-2012.12 | 5MT | F | R | Hatchback FWD L14(85CUL4) | | GDS86059 | Drive Shaft | 47T | 33 | 34 | 52 | 95.5 | 934 | |
| | 2005.01-2012.12 | | F | L/R | Hatchback FWD L14(85CUL4) | | GCO88019 | Outer Joint | 47T | 33 | 22 | 52 | 95.5 | 53 | O |
| | 2005.01-2012.12 | | F | L/R | Hatchback FWD L14(85CUL4) | | GCI99025 | Inner Joint | | 34 | 22 | 35 | 56.2 | 111.3 | |
| | 2005.03-2013.03 | 5MT | F | L | Saloon FWD L14(85CUL4) | | GDS86058 | Drive Shaft | 47T | 33 | 34 | 52 | 95.5 | 612.5 | |
| | 2005.03-2013.03 | 5MT | F | R | Saloon FWD L14(85CUL4) | | GDS86059 | Drive Shaft | 47T | 33 | 34 | 52 | 95.5 | 934 | |
| | 2005.03-2013.03 | MT | F | L/R | Saloon FWD L14(85CUL4) | | GCO88019 | Outer Joint | 47T | 33 | 22 | 52 | 95.5 | 53 | O |
| | 2005.03-2013.03 | MT | F | L/R | Saloon FWD L14(85CUL4) | | GCI99025 | Inner Joint | | 34 | 22 | 35 | 56.2 | 111.3 | |
| 1.4 (70 kw) | 2005.03-2013.03 | 5MT | F | L | Hatchback FWD L14(85CUL4) | | GDS86058 | Drive Shaft | 47T | 33 | 34 | 52 | 95.5 | 612.5 | |
| | 2005.03-2013.03 | 5MT | F | R | Hatchback FWD L14(85CUL4) | | GDS86059 | Drive Shaft | 47T | 33 | 34 | 52 | 95.5 | 934 | |
| | 2005.03-2013.03 | 5MT | F | L/R | Hatchback FWD L14(85CUL4) | | GCO12011 | Outer Joint | | 33 | 22 | 52 | 95.5 | 53 | O |
| | 2005.03-2013.03 | 5MT | F | L/R | Hatchback FWD L14(85CUL4) | | GCO88019 | Outer Joint | 47T | 33 | 22 | 52 | 95.5 | 53 | O |
| | 2005.03-2013.03 | 5MT | F | L/R | Hatchback FWD L14(85CUL4) | | GCI99025 | Inner Joint | | 34 | 22 | 35 | 56.2 | 111.3 | |
| 1.6 (80 kw) | 2005.03- | 5MT | F | L | Estate FWD LXT;L44(96CUL4) | | GDS12045 | Drive Shaft | | 33 | 34 | 52 | 95.5 | 612.5 | |
| | 2005.03- | 5MT | F | L | Estate FWD LXT;L44(96CUL4) | | GDS86058 | Drive Shaft | 47T | 33 | 34 | 52 | 95.5 | 612.5 | |
| | 2005.03- | 5MT | F | R | Estate FWD LXT;L44(96CUL4) | | GDS12046 | Drive Shaft | | 33 | 34 | 52 | 95.5 | 934 | |
| | 2005.03- | 5MT | F | R | Estate FWD LXT;L44(96CUL4) | | GDS86059 | Drive Shaft | 47T | 33 | 34 | 52 | 95.5 | 934 | |
| | 2005.03- | 5MT | F | L/R | Estate FWD LXT;L44(96CUL4) | | GCO12011 | Outer Joint | | 33 | 22 | 52 | 95.5 | 53 | O |
| | 2005.03- | 5MT | F | L/R | Estate FWD LXT;L44(96CUL4) | | GCO88019 | Outer Joint | 47T | 33 | 22 | 52 | 95.5 | 53 | O |
| | 2005.03- | 5MT | F | L/R | Estate FWD LXT;L44(96CUL4) | | GCI99025 | Inner Joint | | 34 | 22 | 35 | 56.2 | 111.3 | |
| | 2005.03- | 5MT | F | L/R | Hatchback FWD LXT;L44(96CUL4) | | GCO12002 | Outer Joint | 47T | 33 | 29 | 52 | 95.5 | 63 | O |
| | 2005.03- | 5MT | F | L/R | Hatchback FWD LXT;L44(96CUL4) | | GCO88019 | Outer Joint | 47T | 33 | 22 | 52 | 95.5 | 53 | O |
| | 2005.03- | AT | F | R | Hatchback FWD LXT;L44(96CUL4) | | GDS21021 | Drive Shaft | | 33 | 22 | 52 | 95.5 | 945 | |
| | 2005.03- | AT | F | L/R | Hatchback FWD LXT;L44(96CUL4) | | GCI12004 | Inner Joint | | 22 | 29 | 38 | 59 | 116 | |
| | 2005.03- | MT | F | L | Hatchback FWD LXT;L44(96CUL4) | | GDS12045 | Drive Shaft | | 33 | 34 | 52 | 95.5 | 612.5 | |
| | 2005.03- | MT | F | L | Hatchback FWD LXT;L44(96CUL4) | | GDS86058 | Drive Shaft | 47T | 33 | 34 | 52 | 95.5 | 612.5 | |
| | 2005.03- | MT | F | R | Hatchback FWD LXT;L44(96CUL4) | | GDS12046 | Drive Shaft | | 33 | 34 | 52 | 95.5 | 934 | |
| | 2005.03- | MT | F | R | Hatchback FWD LXT;L44(96CUL4) | | GDS86059 | Drive Shaft | 47T | 33 | 34 | 52 | 95.5 | 934 | |
| | 2005.03- | MT | F | L/R | Hatchback FWD LXT;L44(96CUL4) | | GCO12011 | Outer Joint | | 33 | 22 | 52 | 95.5 | 53 | O |
| | 2005.03- | MT | F | L/R | Hatchback FWD LXT;L44(96CUL4) | | GCI99025 | Inner Joint | | 34 | 22 | 35 | 56.2 | 111.3 | |
| | 2005.03-2013.03 | 5MT | F | L/R | Saloon FWD LXT;L44(96CUL4) | | GCO88019 | Outer Joint | 47T | 33 | 22 | 52 | 95.5 | 53 | O |
| | 2005.03-2013.03 | AT | F | R | Saloon FWD LXT;L44(96CUL4) | | GDS21021 | Drive Shaft | | 33 | 22 | 52 | 95.5 | 945 | |
| | 2005.03-2013.03 | AT | F | L/R | Saloon FWD LXT;L44(96CUL4) | | GCI12004 | Inner Joint | | 22 | 29 | 38 | 59 | 116 | |
| | 2005.03-2013.03 | MT | F | L | Saloon FWD LXT;L44(96CUL4) | | GDS12045 | Drive Shaft | | 33 | 34 | 52 | 95.5 | 612.5 | |
| | 2005.03-2013.03 | MT | F | L | Saloon FWD LXT;L44(96CUL4) | | GDS86058 | Drive Shaft | 47T | 33 | 34 | 52 | 95.5 | 612.5 | |

| | YEAR | TRANSM. | F/R | L/R | BODY STYLE & DRIVE TYPE & ENGINE | REMARKS | G-AP Ref. | PRODUCT | ABS | Technical Specifications A | B | C | H | L | P |
|---|---|---|---|---|---|---|---|---|---|---|---|---|---|---|---|
| **CHEVROLET** | | | | | | | | | | | | | | | |
| **Lacetti** | | | | | | | | | | | | | | | |
| 1.6 (80 kw) | 2005.03-2013.03 | MT | F | R | Saloon FWD LXT;L44(96CUL4) | | GDS12046 | Drive Shaft | | 33 | 34 | 52 | 95.5 | 934 | |
| | 2005.03-2013.03 | MT | F | R | Saloon FWD LXT;L44(96CUL4) | | GDS86059 | Drive Shaft | 47T | 33 | 34 | 52 | 95.5 | 934 | |
| | 2005.03-2013.03 | MT | F | L/R | Saloon FWD LXT;L44(96CUL4) | | GCO12011 | Outer Joint | | 33 | 22 | 52 | 95.5 | 53 | O |
| | 2005.03-2013.03 | MT | F | L/R | Saloon FWD LXT;L44(96CUL4) | | GCI99025 | Inner Joint | | 34 | 22 | 35 | 56.2 | 111.3 | |
| | 2009.06-2011.12 | 5MT | F | L | Estate FWD LXT | | GDS86058 | Drive Shaft | 47T | 33 | 34 | 52 | 95.5 | 612.5 | |
| | 2009.06-2011.12 | MT | F | R | Estate FWD LXT | | GDS86059 | Drive Shaft | 47T | 33 | 34 | 52 | 95.5 | 934 | |
| | 2009.06-2011.12 | | F | L/R | Estate FWD LXT | | GCO88019 | Outer Joint | 47T | 33 | 22 | 52 | 95.5 | 53 | O |
| | 2009.06-2011.12 | | F | L/R | Estate FWD LXT | | GCI99025 | Inner Joint | | 34 | 22 | 35 | 56.2 | 111.3 | |
| 1.8 (66 kw) | 2005.08-2009.12 | 5MT | F | L/R | Saloon FWD LDA | | GCO12027 | Outer Joint | 47T | 33 | 29 | 52 | 95.5 | 63 | O |
| | 2005.08-2009.12 | 5MT | F | L/R | Saloon FWD LDA | | GCI12003 | Inner Joint | | 34 | 29 | 35 | 56.5 | 119 | |
| 1.8 (67 kw) | 2005.03-2009.12 | 5MT | F | L/R | Hatchback FWD LDA | | GCO12027 | Outer Joint | 47T | 33 | 29 | 52 | 95.5 | 63 | O |
| | 2005.03-2009.12 | 5MT | F | L/R | Hatchback FWD LDA | | GCI12003 | Inner Joint | | 34 | 29 | 35 | 56.5 | 119 | |
| 1.8 (89 kw) | 2005.08- | MT | F | L/R | Estate FWD LDA | | GCO12002 | Outer Joint | 47T | 33 | 29 | 52 | 95.5 | 63 | O |
| | 2005.08- | MT | F | L/R | Estate FWD LDA | | GCO12011 | Outer Joint | | 33 | 22 | 52 | 95.5 | 53 | O |
| | 2005.08- | MT | F | L/R | Estate FWD LDA | | GCO12027 | Outer Joint | 47T | 33 | 29 | 52 | 95.5 | 63 | O |
| | 2005.08- | MT | F | L/R | Estate FWD LDA | | GCI12003 | Inner Joint | | 34 | 29 | 35 | 56.5 | 119 | |
| | 2005.08-2011.12 | AT | F | L/R | Hatchback FWD LDA | | GCI21005 | Inner Joint | | 34 | 29 | 40 | 64 | 110 | |
| | 2005.08-2011.12 | AT/MT | F | L/R | Hatchback FWD LDA | | GCO12002 | Outer Joint | 47T | 33 | 29 | 52 | 95.5 | 63 | O |
| | 2005.08-2011.12 | AT/MT | F | L/R | Hatchback FWD LDA | | GCO12011 | Outer Joint | | 33 | 22 | 52 | 95.5 | 53 | O |
| | 2005.08-2011.12 | AT/MT | F | L/R | Hatchback FWD LDA | | GCO12027 | Outer Joint | 47T | 33 | 29 | 52 | 95.5 | 63 | O |
| | 2005.08-2011.12 | AT/MT | F | L/R | Hatchback FWD LDA | | GCO88019 | Outer Joint | 47T | 33 | 22 | 52 | 95.5 | 53 | O |
| | 2005.08-2011.12 | MT | F | L/R | Hatchback FWD LDA | | GCI12003 | Inner Joint | | 34 | 29 | 35 | 56.5 | 119 | |
| 1.8 (90 kw) | 2005.03- | AT | F | L/R | Hatchback FWD LDA | | GCI21005 | Inner Joint | | 34 | 29 | 40 | 64 | 110 | |
| | 2005.03- | AT/MT | F | L/R | Hatchback FWD LDA | | GCO12002 | Outer Joint | 47T | 33 | 29 | 52 | 95.5 | 63 | O |
| | 2005.03- | AT/MT | F | L/R | Hatchback FWD LDA | | GCO12027 | Outer Joint | 47T | 33 | 29 | 52 | 95.5 | 63 | O |
| | 2005.03- | AT/MT | F | L/R | Hatchback FWD LDA | | GCO88019 | Outer Joint | 47T | 33 | 22 | 52 | 95.5 | 53 | O |
| | 2005.03- | MT | F | L/R | Hatchback FWD LDA | | GCI12003 | Inner Joint | | 34 | 29 | 35 | 56.5 | 119 | |
| | 2005.08-2013.03 | 5MT | F | L/R | Estate FWD LDA | | GCO12002 | Outer Joint | 47T | 33 | 29 | 52 | 95.5 | 63 | O |
| | 2005.08-2013.03 | 5MT | F | L/R | Estate FWD LDA | | GCO12011 | Outer Joint | | 33 | 22 | 52 | 95.5 | 53 | O |
| | 2005.08-2013.03 | 5MT | F | L/R | Estate FWD LDA | | GCO12027 | Outer Joint | 47T | 33 | 29 | 52 | 95.5 | 63 | O |
| | 2005.08-2013.03 | 5MT | F | L/R | Estate FWD LDA | | GCI12003 | Inner Joint | | 34 | 29 | 35 | 56.5 | 119 | |
| | 2005.08-2013.03 | 4AT | F | L/R | Saloon FWD LDA | | GCI21005 | Inner Joint | | 34 | 29 | 40 | 64 | 110 | |
| | 2005.08-2013.03 | 4AT/5MT | F | L/R | Saloon FWD LDA | | GCO12027 | Outer Joint | 47T | 33 | 29 | 52 | 95.5 | 63 | O |
| | 2005.08-2013.03 | 5MT | F | L/R | Saloon FWD LDA | | GCI12003 | Inner Joint | | 34 | 29 | 35 | 56.5 | 119 | |
| 2.0 (89 kw) | 2007.01- | | F | R | Estate FWD LMN | | GCO12023 | Outer Joint | 47T | 33 | 32 | 52 | 95.5 | 66 | O |
| | 2007.01- | MT | F | L/R | Hatchback FWD LMN | | GCO12023 | Outer Joint | 47T | 33 | 32 | 52 | 95.5 | 66 | O |
| **Lanos** | | | | | | | | | | | | | | | |
| 1.5 (63 kw) | 2005.11-2010.12 | AT | F | R | Saloon FWD LX6 | | GCO12005 | Outer Joint | 47T | 22 | 22 | 52 | 96 | 56 | I |
| | 2005.11-2010.12 | AT | F | L/R | Saloon FWD LX6 | Date to:2003.12 | GCO88021 | Outer Joint | 47T | 22 | 22 | 52 | 96.5 | 53.5 | O |
| | 2005.11-2010.12 | AT | F | L/R | Saloon FWD LX6 | | GCI12002 | Inner Joint | | 34 | 29 | 34.6 | | 127 | |
| | 2005.11-2010.12 | MT | F | L | Saloon FWD LX6 | Chassis no. from:069312 | GDS12003 | Drive Shaft | | 22 | 34 | 52 | 95 | 573 | |
| | 2005.11-2010.12 | MT | F | R | Saloon FWD LX6 | Chassis no. from:069312 | GDS12004 | Drive Shaft | | 22 | 34 | 52 | 95 | 906 | |
| | 2005.11-2010.12 | MT | F | L/R | Saloon FWD LX6 | | GCO12020 | Outer Joint | | 22 | 29 | 52 | 95.5 | 63 | O |
| | 2005.11-2010.12 | MT | F | L/R | Saloon FWD LX6 | | GCO88002 | Outer Joint | 47T | 22 | 29 | 52 | 95.5 | 63 | O |
| | 2005.11-2010.12 | MT | F | L/R | Saloon FWD LX6 | | GCI99025 | Inner Joint | | 34 | 22 | 35 | 56.2 | 111.3 | |
| 1.5 (64 kw) | 2005.11-2018.12 | 5MT | F | L/R | Saloon FWD LX6 | | GCO12020 | Outer Joint | | 22 | 29 | 52 | 95.5 | 63 | O |
| | 2005.11-2018.12 | 5MT | F | L/R | Saloon FWD LX6 | | GCO88002 | Outer Joint | 47T | 22 | 29 | 52 | 95.5 | 63 | O |
| **Lumina APV** | | | | | | | | | | | | | | | |
| 2.3 (101 kw) | 1992.10-1996.09 | AT/MT | F | L/R | MPV FWD LD2 | | GCO59005 | Outer Joint | | 26 | 23 | 56 | 95.5 | 55 | I |
| 3.1 (119 kw) | 1992.10-1996.07 | | F | | MPV FWD L82(191CUV6) | | GCO88008 | Outer Joint | | 27 | 32 | 61.5 | 120 | 64.5 | O |
| 3.8 (129 kw) | 1992.12-1996.07 | | F | | MPV FWD L27 | | GCO88008 | Outer Joint | | 27 | 32 | 61.5 | 120 | 64.5 | O |
| **Malibu** | | | | | | | | | | | | | | | |
| 3.0 (196 kw) | 2013.04- | AT | F | L/R | Saloon FWD LFW | | GCO88066 | Outer Joint | | 30 | 34 | 59 | 95 | 65 | M |
| **Matiz** | | | | | | | | | | | | | | | |
| 0.8 (38 kw) | 2005.03-2007.12 | 5MT | F | R | Hatchback FWD LQ2(49CUL3);LBF(49CUL3) | For vehicles with ABS | GDS12012 | Drive Shaft | 40T | 23 | 22 | 46 | 92 | 785 | |
| | 2005.03-2007.12 | 5MT | F | R | Hatchback FWD LQ2(49CUL3);LBF(49CUL3) | For vehicles without ABS | GDS12025 | Drive Shaft | 40T | 23 | 22 | 46 | 92 | 616 | |
| | 2005.03-2007.12 | 5MT | F | L/R | Hatchback FWD LQ2(49CUL3);LBF(49CUL3) | | GCO12021 | Outer Joint | 40T | 23 | 19 | 46 | 92 | 56.5 | O |
| | 2005.03-2007.12 | 5MT | F | L/R | Hatchback FWD LQ2(49CUL3);LBF(49CUL3) | | GCI12001 | Inner Joint | | 22 | 19 | 35 | 54.5 | 79 | |
| | 2005.03-2013.12 | MT | F | L | Hatchback FWD LQ2(49CUL3);LBF(49CUL3) | | GDS12011 | Drive Shaft | | 23 | 22 | 46 | 92 | 616 | |
| | 2005.03-2013.12 | MT | F | L | Hatchback FWD LQ2(49CUL3);LBF(49CUL3) | | GDS12025 | Drive Shaft | 40T | 23 | 22 | 46 | 92 | 616 | |
| | 2005.03-2013.12 | MT | F | R | Hatchback FWD LQ2(49CUL3);LBF(49CUL3) | | GDS12012 | Drive Shaft | 40T | 23 | 22 | 46 | 92 | 785 | |
| | 2005.03-2013.12 | MT | F | R | Hatchback FWD LQ2(49CUL3);LBF(49CUL3) | | GDS88059 | Drive Shaft | | 23 | 22 | 46 | 92 | 785 | |
| | 2005.03-2013.12 | MT | F | L/R | Hatchback FWD LQ2(49CUL3);LBF(49CUL3) | | GCO12021 | Outer Joint | 40T | 23 | 19 | 46 | 92 | 56.5 | O |
| | 2005.03-2013.12 | MT | F | L/R | Hatchback FWD LQ2(49CUL3);LBF(49CUL3) | | GCI12001 | Inner Joint | | 22 | 19 | 35 | 54.5 | 79 | |
| 1.0 (47 kw) | 2005.03-2007.12 | 5MT | F | L | Hatchback FWD LQ4(61CUL4) | | GDS57177 | Drive Shaft | 40T | 23 | 22 | 46 | 92 | 562 | |

| | YEAR | TRANSM. | F/R | L/R | BODY STYLE & DRIVE TYPE & ENGINE | REMARKS | G-AP Ref. | PRODUCT | ABS | Technical Specifications A | B | C | H | L | P |
|---|---|---|---|---|---|---|---|---|---|---|---|---|---|---|---|
| **CHEVROLET** | | | | | | | | | | | | | | | |
| **Matiz** | | | | | | | | | | | | | | | |
| 1.0 (47 kw) | 2005.03-2007.12 | 5MT | F | R | Hatchback FWD LQ4(61CUL4) | | GDS57176 | Drive Shaft | 40T | 23 | 22 | 46 | 92 | 831 | |
| | 2005.03-2007.12 | 5MT | F | L/R | Hatchback FWD LQ4(61CUL4) | | GCO12021 | Outer Joint | 40T | 23 | 19 | 46 | 92 | 56.5 | O |
| | 2005.03-2007.12 | 5MT | F | L/R | Hatchback FWD LQ4(61CUL4) | | GCI99107 | Inner Joint | | 22 | 19 | 35 | 50.5 | 78 | |
| 1.0 (48 kw) | 2007.01- | 5MT | F | L | Hatchback FWD LA2, B10S1 | | GDS57177 | Drive Shaft | 40T | 23 | 22 | 46 | 92 | 562 | |
| | 2007.01- | 5MT | F | R | Hatchback FWD LA2, B10S1 | | GDS57176 | Drive Shaft | 40T | 23 | 22 | 46 | 92 | 831 | |
| | 2007.01- | 5MT | F | L/R | Hatchback FWD LA2, B10S1 | Thread Size:M20×1 | GCO12021 | Outer Joint | 40T | 23 | 19 | 46 | 92 | 56.5 | O |
| | 2007.01- | 5MT | F | R | Hatchback FWD LA2, B10S1 | | GCI99107 | Inner Joint | | 22 | 19 | 35 | 50.5 | 78 | |
| 1.0 (49 kw) | 2005.03- | 5MT | F | L | Hatchback FWD LQ4(61CUL4) | | GDS57177 | Drive Shaft | 40T | 23 | 22 | 46 | 92 | 562 | |
| | 2005.03- | 5MT | F | R | Hatchback FWD LQ4(61CUL4) | | GDS57176 | Drive Shaft | 40T | 23 | 22 | 46 | 92 | 831 | |
| | 2005.03- | 5MT | F | L/R | Hatchback FWD LQ4(61CUL4) | | GCO12021 | Outer Joint | 40T | 23 | 19 | 46 | 92 | 56.5 | O |
| | 2005.03- | 5MT | F | L/R | Hatchback FWD LQ4(61CUL4) | | GCI99107 | Inner Joint | | 22 | 19 | 35 | 50.5 | 78 | |
| | 2005.03-2011.03 | 5MT | F | L | Hatchback FWD LA2;LQ4(61CUL4) | | GDS57177 | Drive Shaft | 40T | 23 | 22 | 46 | 92 | 562 | |
| | 2005.03-2011.03 | 5MT | F | R | Hatchback FWD LA2;LQ4(61CUL4) | | GDS57176 | Drive Shaft | 40T | 23 | 22 | 46 | 92 | 831 | |
| | 2005.03-2011.03 | 5MT | F | L/R | Hatchback FWD LA2;LQ4(61CUL4) | | GCO12021 | Outer Joint | 40T | 23 | 19 | 46 | 92 | 56.5 | O |
| | 2005.03-2011.03 | 5MT | F | L/R | Hatchback FWD LA2;LQ4(61CUL4) | | GCI99107 | Inner Joint | | 22 | 19 | 35 | 50.5 | 78 | |
| **Niva** | | | | | | | | | | | | | | | |
| 1.7 (59 kw) | 2002.09- | MT | F | L | Closed Off-Road Vehicle 4WD B05C | | GCI28019 | Inner Joint | | 24 | 22 | 40 | 93.5 | 114.5 | |
| | 2002.09- | MT | F | R | Closed Off-Road Vehicle 4WD B05C | | GCI28016 | Inner Joint | | 24 | 22 | 40 | 218 | 114.5 | |
| 1.7 (61 kw) | 2010.01- | MT | F | L | Closed Off-Road Vehicle 4WD B05C | | GCI28019 | Inner Joint | | 24 | 22 | 40 | 93.5 | 114.5 | |
| | 2010.01- | MT | F | R | Closed Off-Road Vehicle 4WD B05C | | GCI28016 | Inner Joint | | 24 | 22 | 40 | 218 | 114.5 | |
| **Nubira** | | | | | | | | | | | | | | | |
| 1.4 (69 kw) | 2005.01-2007.12 | 5MT | F | L | Saloon FWD L14(85CUL4) | | GDS86058 | Drive Shaft | 47T | 33 | 34 | 52 | 95.5 | 612.5 | |
| | 2005.01-2007.12 | 5MT | F | R | Saloon FWD L14(85CUL4) | | GDS86059 | Drive Shaft | 47T | 33 | 34 | 52 | 95.5 | 934 | |
| | 2005.01-2007.12 | | F | L/R | Saloon FWD L14(85CUL4) | | GCO88019 | Outer Joint | 47T | 33 | 22 | 52 | 95.5 | 53 | O |
| | 2005.01-2007.12 | | F | L/R | Saloon FWD L14(85CUL4) | | GCI99025 | Inner Joint | | 34 | 22 | 35 | 56.2 | 111.3 | |
| 1.4 (70 kw) | 2006.01-2008.12 | 5MT | F | L | Saloon FWD L14(85CUL4) | | GDS86058 | Drive Shaft | 47T | 33 | 34 | 52 | 95.5 | 612.5 | |
| | 2006.01-2008.12 | 5MT | F | R | Saloon FWD L14(85CUL4) | | GDS86059 | Drive Shaft | 47T | 33 | 34 | 52 | 95.5 | 934 | |
| | 2006.01-2008.12 | | F | L/R | Saloon FWD L14(85CUL4) | | GCO88019 | Outer Joint | 47T | 33 | 22 | 52 | 95.5 | 53 | O |
| | 2006.01-2008.12 | | F | | Saloon FWD L14(85CUL4) | | GCO12011 | Outer Joint | | 33 | 22 | 52 | 95.5 | 53 | O |
| | 2006.01-2008.12 | | F | L/R | Saloon FWD L14(85CUL4) | | GCI99025 | Inner Joint | | 34 | 22 | 35 | 56.2 | 111.3 | |
| 1.6 (80 kw) | 2005.03-2010.12 | 5MT | F | L | Estate FWD LXT;L44(96CUL4) | | GDS12045 | Drive Shaft | | 33 | 34 | 52 | 95.5 | 612.5 | |
| | 2005.03-2010.12 | 5MT | F | L | Estate FWD LXT;L44(96CUL4) | | GDS86058 | Drive Shaft | 47T | 33 | 34 | 52 | 95.5 | 612.5 | |
| | 2005.03-2010.12 | 5MT | F | R | Estate FWD LXT;L44(96CUL4) | | GDS12046 | Drive Shaft | | 33 | 34 | 52 | 95.5 | 934 | |
| | 2005.03-2010.12 | 5MT | F | R | Estate FWD LXT;L44(96CUL4) | | GDS86059 | Drive Shaft | 47T | 33 | 34 | 52 | 95.5 | 934 | |
| | 2005.03-2010.12 | 5MT | F | L/R | Estate FWD LXT;L44(96CUL4) | | GCO12011 | Outer Joint | | 33 | 22 | 52 | 95.5 | 53 | O |
| | 2005.03-2010.12 | 5MT | F | L/R | Estate FWD LXT;L44(96CUL4) | | GCO88019 | Outer Joint | 47T | 33 | 22 | 52 | 95.5 | 53 | O |
| | 2005.03-2010.12 | 5MT | F | L/R | Estate FWD LXT;L44(96CUL4) | | GCI99025 | Inner Joint | | 34 | 22 | 35 | 56.2 | 111.3 | |
| | 2005.03-2011.12 | 5MT | F | L | Estate FWD LXT;L44(96CUL4) | | GDS12045 | Drive Shaft | | 33 | 34 | 52 | 95.5 | 612.5 | |
| | 2005.03-2011.12 | 5MT | F | L | Estate FWD LXT;L44(96CUL4) | | GDS86058 | Drive Shaft | 47T | 33 | 34 | 52 | 95.5 | 612.5 | |
| | 2005.03-2011.12 | 5MT | F | R | Estate FWD LXT;L44(96CUL4) | | GDS12046 | Drive Shaft | | 33 | 34 | 52 | 95.5 | 934 | |
| | 2005.03-2011.12 | 5MT | F | R | Estate FWD LXT;L44(96CUL4) | | GDS86059 | Drive Shaft | 47T | 33 | 34 | 52 | 95.5 | 934 | |
| | 2005.03-2011.12 | 5MT | F | L/R | Estate FWD LXT;L44(96CUL4) | | GCO12011 | Outer Joint | | 33 | 22 | 52 | 95.5 | 53 | O |
| | 2005.03-2011.12 | 5MT | F | L/R | Estate FWD LXT;L44(96CUL4) | | GCO88019 | Outer Joint | 47T | 33 | 22 | 52 | 95.5 | 53 | O |
| | 2005.03-2011.12 | 5MT | F | L/R | Estate FWD LXT;L44(96CUL4) | | GCI99025 | Inner Joint | | 34 | 22 | 35 | 56.2 | 111.3 | |
| | 2005.03-2011.12 | | F | R | Estate FWD LXT;L44(96CUL4) | | GDS21021 | Drive Shaft | | 33 | 22 | 52 | 95.5 | 945 | |
| | 2005.03-2011.12 | MT | F | L | Saloon FWD LXT;L44(96CUL4) | | GDS12045 | Drive Shaft | | 33 | 34 | 52 | 95.5 | 612.5 | |
| | 2005.03-2011.12 | MT | F | L | Saloon FWD LXT;L44(96CUL4) | | GDS86058 | Drive Shaft | 47T | 33 | 34 | 52 | 95.5 | 612.5 | |
| | 2005.03-2011.12 | MT | F | R | Saloon FWD LXT;L44(96CUL4) | | GDS12046 | Drive Shaft | | 33 | 34 | 52 | 95.5 | 934 | |
| | 2005.03-2011.12 | MT | F | R | Saloon FWD LXT;L44(96CUL4) | | GDS86059 | Drive Shaft | 47T | 33 | 34 | 52 | 95.5 | 934 | |
| | 2005.03-2011.12 | MT | F | L/R | Saloon FWD LXT;L44(96CUL4) | | GCO12011 | Outer Joint | | 33 | 22 | 52 | 95.5 | 53 | O |
| | 2005.03-2011.12 | MT | F | L/R | Saloon FWD LXT;L44(96CUL4) | | GCO88019 | Outer Joint | 47T | 33 | 22 | 52 | 95.5 | 53 | O |
| | 2005.03-2011.12 | MT | F | L/R | Saloon FWD LXT;L44(96CUL4) | | GCI99025 | Inner Joint | | 34 | 22 | 35 | 56.2 | 111.3 | |
| 1.8 (89 kw) | 2005.08-2011.12 | AT | F | L/R | Estate FWD LDA | | GCI21005 | Inner Joint | | 34 | 29 | 40 | 64 | 110 | |
| | 2005.08-2011.12 | AT/MT | F | L/R | Estate FWD LDA | | GCO12027 | Outer Joint | 47T | 33 | 29 | 52 | 95.5 | 63 | O |
| | 2005.08-2011.12 | MT | F | L/R | Estate FWD LDA | | GCI12003 | Inner Joint | | 34 | 29 | 35 | 56.5 | 119 | |
| | 2006.01-2007.09 | AT | F | L/R | Saloon FWD LDA | | GCI21005 | Inner Joint | | 34 | 29 | 40 | 64 | 110 | |
| | 2006.01-2007.09 | AT/MT | F | L/R | Saloon FWD LDA | | GCO12027 | Outer Joint | 47T | 33 | 29 | 52 | 95.5 | 63 | O |
| | 2006.01-2007.09 | MT | F | L/R | Saloon FWD LDA | | GCI12003 | Inner Joint | | 34 | 29 | 35 | 56.5 | 119 | |
| 1.8 (90 kw) | 2005.03-2009.12 | AT | F | L/R | Estate FWD LDA | | GCI21005 | Inner Joint | | 34 | 29 | 40 | 64 | 110 | |
| | 2005.03-2009.12 | AT/MT | F | L/R | Estate FWD LDA | | GCO12027 | Outer Joint | 47T | 33 | 29 | 52 | 95.5 | 63 | O |
| | 2005.03-2009.12 | MT | F | L/R | Estate FWD LDA | | GCI12003 | Inner Joint | | 34 | 29 | 35 | 56.5 | 119 | |
| | 2005.03-2009.12 | AT | F | L/R | Saloon FWD LDA | | GCI21005 | Inner Joint | | 34 | 29 | 40 | 64 | 110 | |
| | 2005.03-2009.12 | AT/MT | F | L/R | Saloon FWD LDA | | GCO12027 | Outer Joint | 47T | 33 | 29 | 52 | 95.5 | 63 | O |
| | 2005.03-2009.12 | MT | F | L/R | Saloon FWD LDA | | GCI12003 | Inner Joint | | 34 | 29 | 35 | 56.5 | 119 | |
| 2.0 (89 kw) | 2005.01-2011.12 | MT | F | R | Saloon FWD LMN | Chassis no. to:913918 | GCO12023 | Outer Joint | 47T | 33 | 32 | 52 | 95.5 | 66 | O |

| | YEAR | TRANSM. | F/R | L/R | BODY STYLE & DRIVE TYPE & ENGINE | REMARKS | G-AP Ref. | PRODUCT | ABS | Technical Specifications A | B | C | H | L | P |
|---|---|---|---|---|---|---|---|---|---|---|---|---|---|---|---|
| **CHEVROLET** | | | | | | | | | | | | | | | |
| **Nubira** | | | | | | | | | | | | | | | |
| 2.0 (89 kw) | 2007.01-2011.12 | MT | F | R | Estate FWD LMN | Chassis no. to:913918 | GCO12023 | Outer Joint | 47T | 33 | 32 | 52 | 95.5 | 66 | O |
| **Optra** | | | | | | | | | | | | | | | |
| 1.8 (90 kw) | 2003.08-2008.12 | AT | F | L/R | Saloon FWD LDA | | GCI21005 | Inner Joint | | 34 | 29 | 40 | 64 | 110 | |
| | 2003.08-2008.12 | MT | F | L/R | Saloon FWD LDA | | GCI12003 | Inner Joint | | 34 | 29 | 35 | 56.5 | 119 | |
| **Orlando** | | | | | | | | | | | | | | | |
| 1.8 (104 kw) | 2011.06-2015.12 | 5MT | F | L | MPV FWD 2H0 | Date from:2013.01 | GCI88039 | Inner Joint | | 34 | 31 | 35 | 56.5 | 141.5 | |
| 2.0 (96 kw) | 2011.02-2015.12 | 6MT | F | L/R | MPV FWD LNP | | GCO88066 | Outer Joint | | 30 | 34 | 59 | 95 | 65 | M |
| 2.0 (120 kw) | 2011.02- | 6MT/6AT | F | L/R | MPV FWD LNP | | GCO88066 | Outer Joint | | 30 | 34 | 59 | 95 | 65 | M |
| **Rezzo** | | | | | | | | | | | | | | | |
| 1.6 (66 kw) | 2005.03-2009.03 | 5MT | F | L/R | MPV FWD L44(96CUL4) | | GCO12027 | Outer Joint | 47T | 33 | 29 | 52 | 95.5 | 63 | O |
| | 2005.03-2009.03 | 5MT | F | L/R | MPV FWD L44(96CUL4) | | GCI99025 | Inner Joint | | 34 | 22 | 35 | 56.2 | 111.3 | |
| 1.6 (77 kw) | 2005.03- | 5MT | F | L/R | MPV FWD L44(96CUL4) | | GCO12027 | Outer Joint | 47T | 33 | 29 | 52 | 95.5 | 63 | O |
| | 2005.03- | 5MT | F | L/R | MPV FWD L44(96CUL4) | | GCI99025 | Inner Joint | | 34 | 22 | 35 | 56.2 | 111.3 | |
| | 2005.03- | MT | F | L/R | MPV FWD L44(96CUL4) | | GCO12002 | Outer Joint | 47T | 33 | 29 | 52 | 95.5 | 63 | O |
| 1.6 (79 kw) | 2005.08- | 5MT | F | L/R | MPV FWD L44(96CUL4) | | GCO12027 | Outer Joint | 47T | 33 | 29 | 52 | 95.5 | 63 | O |
| | 2005.08- | 5MT | F | L/R | MPV FWD L44(96CUL4) | | GCI99025 | Inner Joint | | 34 | 22 | 35 | 56.2 | 111.3 | |
| | 2005.08- | MT | F | L/R | MPV FWD L44(96CUL4) | | GCO12002 | Outer Joint | 47T | 33 | 29 | 52 | 95.5 | 63 | O |
| 2.0 (89 kw) | 2005.03- | 4AT | F | L/R | MPV FWD L88 | | GCO12001 | Outer Joint | | 33 | 29 | 52 | 95.5 | 63 | O |
| | 2005.03- | 4AT | F | L/R | MPV FWD L88 | | GCO12002 | Outer Joint | 47T | 33 | 29 | 52 | 95.5 | 63 | O |
| | 2005.03- | 4AT | F | L/R | MPV FWD L88 | | GCO12027 | Outer Joint | 47T | 33 | 29 | 52 | 95.5 | 63 | O |
| | 2005.03- | 4AT | F | L/R | MPV FWD L88 | | GCI21005 | Inner Joint | | 34 | 29 | 40 | 64 | 110 | |
| | 2005.03- | 5MT | F | L/R | MPV FWD L88 | | GCO12023 | Outer Joint | 47T | 33 | 32 | 52 | 95.5 | 66 | O |
| 2.0 (90 kw) | 2005.08-2009.09 | 4AT | F | L/R | MPV FWD L88 | | GCO12001 | Outer Joint | | 33 | 29 | 52 | 95.5 | 63 | O |
| | 2005.08-2009.09 | 4AT | F | L/R | MPV FWD L88 | | GCO12002 | Outer Joint | 47T | 33 | 29 | 52 | 95.5 | 63 | O |
| | 2005.08-2009.09 | 4AT | F | L/R | MPV FWD L88 | | GCO12027 | Outer Joint | 47T | 33 | 29 | 52 | 95.5 | 63 | O |
| | 2005.08-2009.09 | 4AT | F | L/R | MPV FWD L88 | | GCI21005 | Inner Joint | | 34 | 29 | 40 | 64 | 110 | |
| | 2005.08-2009.09 | 5MT | F | L/R | MPV FWD L88 | | GCO12023 | Outer Joint | 47T | 33 | 32 | 52 | 95.5 | 66 | O |
| | 2005.08-2009.09 | | F | L/R | MPV FWD L88 | | GCO12009 | Outer Joint | | 33 | 29 | 52 | 109 | 63 | O |
| **Silverado 1500** | | | | | | | | | | | | | | | |
| 5.3 (232 kw) | 2007.01- | | F | | Pickup 4WD LMG | Date to:2013 | GCO44054 | Outer Joint | | 33 | 35 | 72.8 | 112.5 | 73.5 | O |
| | 2007.01- | | F | | Pickup 4WD LMG | Date to:2013 | GCO87001 | Outer Joint | | 33 | 41 | 80 | 112 | 88.5 | O |
| | 2007.01-2013.12 | | F | | Pickup 4WD LH6(325CUV8) | Date to:2013 | GCO44054 | Outer Joint | | 33 | 35 | 72.8 | 112.5 | 73.5 | O |
| | 2007.01-2013.12 | | F | | Pickup 4WD LH6(325CUV8) | Date to:2013 | GCO87001 | Outer Joint | | 33 | 41 | 80 | 112 | 88.5 | O |
| **Silverado 2500 Crew Cab Pickup** | | | | | | | | | | | | | | | |
| 6.0 (224 kw) | 2003.09-2004.12 | | F | | Pickup 4WD LQ4(364CUV8) | | GCO44054 | Outer Joint | | 33 | 35 | 72.8 | 112.5 | 73.5 | O |
| | 2003.09-2004.12 | | F | | Pickup 4WD LQ4(364CUV8) | Date To:2013 | GCO87001 | Outer Joint | | 33 | 41 | 80 | 112 | 88.5 | O |
| **Spark** | | | | | | | | | | | | | | | |
| 0.8 (37 kw) | 2005.05-2010.02 | 4AT/5MT | F | L/R | Hatchback FWD LQ2(49CUL3);LBF(49CUL3) | | GCO12021 | Outer Joint | 40T | 23 | 19 | 46 | 92 | 56.5 | O |
| | 2005.05-2010.02 | MT | F | L | Hatchback FWD LQ2(49CUL3);LBF(49CUL3) | For vehicles with ABS | GDS12025 | Drive Shaft | 40T | 23 | 22 | 46 | 92 | 616 | |
| | 2005.05-2010.02 | MT | F | R | Hatchback FWD LQ2(49CUL3);LBF(49CUL3) | | GDS12012 | Drive Shaft | 40T | 23 | 22 | 46 | 92 | 785 | |
| | 2005.05-2010.02 | MT | F | L/R | Hatchback FWD LQ2(49CUL3);LBF(49CUL3) | | GCI12001 | Inner Joint | | 22 | 19 | 35 | 54.5 | 79 | |
| 1.0 (44 kw) | 2009.06- | 5MT | F | L | Hatchback FWD LA2 | For vehicles with ABS | GDS57177 | Drive Shaft | 40T | 23 | 22 | 46 | 92 | 562 | |
| | 2009.06- | 5MT | F | R | Hatchback FWD LA2 | | GDS57176 | Drive Shaft | 40T | 23 | 22 | 46 | 92 | 831 | |
| | 2009.06- | 5MT | F | R | Hatchback FWD LA2 | | GCI99107 | Inner Joint | | 22 | 19 | 35 | 50.5 | 78 | |
| 1.0 (46 kw) | 2008.01-2013.12 | MT | F | L | Hatchback FWD B10S | | GDS57177 | Drive Shaft | 40T | 23 | 22 | 46 | 92 | 562 | |
| | 2008.01-2013.12 | MT | F | R | Hatchback FWD B10S | | GDS57176 | Drive Shaft | 40T | 23 | 22 | 46 | 92 | 831 | |
| | 2008.01-2013.12 | MT | F | L/R | Hatchback FWD B10S | | GCO12021 | Outer Joint | 40T | 23 | 19 | 46 | 92 | 56.5 | O |
| | 2008.01-2013.12 | MT | F | L/R | Hatchback FWD B10S | | GCI99107 | Inner Joint | | 22 | 19 | 35 | 50.5 | 78 | |
| 1.0 (48 kw) | 2010.07- | 5MT | F | L | Hatchback FWD LMT | | GDS88164 | Drive Shaft | 47T | 22 | 22 | 52 | 96 | 621 | |
| | 2010.07- | 5MT | F | R | Hatchback FWD LMT | | GDS88165 | Drive Shaft | 47T | 22 | 22 | 52 | 96 | 868 | |
| | 2010.07- | 5MT | F | L/R | Hatchback FWD LMT | | GCO44090 | Outer Joint | 47T | 22 | 20 | 52 | 96 | 52 | M |
| | 2010.07- | 5MT | F | L/R | Hatchback FWD LMT | | GCI44024 | Inner Joint | | 22 | 20 | 35 | 50 | 85 | |
| | 2010.07- | | F | L | Hatchback FWD LMT | Type:IDENT CP/CQ/CR48 | GDS88119 | Drive Shaft | | 22 | 22 | 52 | 96 | 621 | |
| 1.0 (49 kw) | 2005.05- | 5MT | F | L | Hatchback FWD LQ4(61CUL4) | For vehicles with ABS | GDS57177 | Drive Shaft | 40T | 23 | 22 | 46 | 92 | 562 | |
| | 2005.05- | 5MT | F | R | Hatchback FWD LQ4(61CUL4) | | GDS57176 | Drive Shaft | 40T | 23 | 22 | 46 | 92 | 831 | |
| 1.0 (50 kw) | 2010.03- | 4AT | F | R | Hatchback FWD B10D1;LMT | Model year from:2016 | GDS44090 | Drive Shaft | 47T | 22 | 23 | 52 | 96 | 883 | |
| | 2010.03- | 4AT | F | L/R | Hatchback FWD B10D1;LMT | Model year from:2016 | GCI81349 | Inner Joint | | 23 | 20 | 38 | 59.5 | 91 | |
| | 2010.03- | 5MT | F | L | Hatchback FWD B10D1;LMT | For RPO:POC:NT2;For vehicles without ABS;Production Number:CP/CQ48 Ident | GDS88119 | Drive Shaft | | 22 | 22 | 52 | 96 | 621 | |
| | 2010.03- | 5MT | F | L | Hatchback FWD B10D1;LMT | For RPO:POC:NT3/NT4;Production Number:CP/CQ48 Ident;For vehicles without ABS | GDS88164 | Drive Shaft | 47T | 22 | 22 | 52 | 96 | 621 | |
| | 2010.03- | 5MT | F | R | Hatchback FWD B10D1;LMT | Model year to:2015 | GDS88165 | Drive Shaft | 47T | 22 | 22 | 52 | 96 | 868 | |
| | 2010.03- | 5MT | F | L/R | Hatchback FWD B10D1;LMT | Model year to:2015 | GCO44090 | Outer Joint | 47T | 22 | 20 | 52 | 96 | 52 | M |
| | 2010.03- | 5MT | F | L/R | Hatchback FWD B10D1;LMT | Model year to:2015 | GCI44024 | Inner Joint | | 22 | 20 | 35 | 50 | 85 | |
| | 2010.03- | 5MT | F | L | Hatchback FWD LMT | Production Number:CP/CQ/CR48/CQ48 Ident | GDS88119 | Drive Shaft | | 22 | 22 | 52 | 96 | 621 | |
| | 2010.03- | 5MT | F | L | Hatchback FWD LMT | For RPO:POC:J41;JM4/NT3/NT4;Production Number:CP/CQ48 Ident | GDS88164 | Drive Shaft | 47T | 22 | 22 | 52 | 96 | 621 | |
| | 2010.03- | 5MT | F | L | Hatchback FWD LMT | For RPO:POC:J41;IF5;Production Number:CP/CQ/CR48/CQ48 Ident | GDS88165 | Drive Shaft | 47T | 22 | 22 | 52 | 96 | 868 | |

| YEAR | TRANSM. | F/R | L/R | BODY STYLE & DRIVE TYPE & ENGINE | REMARKS | G-AP Ref. | PRODUCT | ABS | Technical Specifications A | B | C | H | L | P |
|---|---|---|---|---|---|---|---|---|---|---|---|---|---|---|
| **CHEVROLET** | | | | | | | | | | | | | | |
| **Spark** | | | | | | | | | | | | | | |
| 1.0 (50 kw) | | | | | | | | | | | | | | |
| 2010.03- | 5MT | F | R | Hatchback FWD LMT | For RPO/PDC:J8/ EFI/VIN,,Production Number:CP/CR48/CQ48 Ident/Production Number:CP/CQ/CR48/CQ48 Ident | GDS88165 | Drive Shaft | 47T | 22 | 22 | 52 | 96 | 868 | |
| 2010.03- | 5MT | F | L | Hatchback FWD LMT | Production Number:CP/CQ48 Ident | GCO44090 | Outer Joint | 47T | 22 | 20 | 52 | 96 | 52 | M |
| 2010.03- | 5MT | F | R | Hatchback FWD LMT | For RPO/PDC:JM4,Production Number:CP/CQ/CR48/CQ48 Ident | GCO44090 | Outer Joint | 47T | 22 | 20 | 52 | 96 | 52 | M |
| 2010.03- | 5MT | F | L | Hatchback FWD LMT | For RPO/PDC:J41/EFV5,Production Number:CP/CQ/CR48/CQ48 Ident | GCI44024 | Inner Joint | | 22 | 20 | 35 | 50 | 85 | |
| 2010.03- | 5MT | F | R | Hatchback FWD LMT | Production Number:CP/CQ/CR48/CQ48 Ident/For RPO/PDC:J8/ EFI/VIN,,Production Number:CP/CR48/CQ48 Ident | GCI44024 | Inner Joint | | 22 | 20 | 35 | 50 | 85 | |
| 1.2 (60 kw) | | | | | | | | | | | | | | |
| 2010.03- | 5MT | F | L | Hatchback FWD B12D1;LMU | Date from:2013.01,For RPO/PDC:U0/FJ/J41/IN72,Production Number:CP/CQ/CR48/CQ48 Ident | GDS88119 | Drive Shaft | | 22 | 22 | 52 | 96 | 621 | |
| 2010.03- | 5MT | F | L | Hatchback FWD B12D1;LMU | Date from:2013.01,For RPO/PDC:U0/FJ/J41/IN72,Production Number:CP/CQ/CR48/CQ48 Ident | GCO44090 | Outer Joint | 47T | 22 | 20 | 52 | 96 | 52 | M |
| 2010.03- | 5MT | F | L | Hatchback FWD B12D1;LMU | Date from:2013.01,For RPO/PDC:U0/FJ/J41/IN72,Production Number:CP/CQ/CR48/CQ48 Ident | GCI44024 | Inner Joint | | 22 | 20 | 35 | 50 | 85 | |
| 2010.03- | MT | F | L | Hatchback FWD B12D1;LMU | | GDS88164 | Drive Shaft | 47T | 22 | 22 | 52 | 96 | 621 | |
| 2010.03- | MT | F | R | Hatchback FWD B12D1;LMU | | GDS88165 | Drive Shaft | 47T | 22 | 22 | 52 | 96 | 868 | |
| 2010.03- | 5MT | F | L | Hatchback FWD LMU | Production Number:CP/CQ/CR48/CQ48 Ident | GDS88119 | Drive Shaft | | 22 | 22 | 52 | 96 | 621 | |
| 2010.03- | 5MT | F | L | Hatchback FWD LMU | Production Number:CP/CQ48 Ident | GDS88164 | Drive Shaft | 47T | 22 | 22 | 52 | 96 | 621 | |
| 2010.03- | 5MT | F | R | Hatchback FWD LMU | ——————————————————————————————————————— | GDS88165 | Drive Shaft | 47T | 22 | 22 | 52 | 96 | 868 | |
| 2010.03- | 5MT | F | L | Hatchback FWD LMU | Production Number:CP/CQ48 Ident | GCO44090 | Outer Joint | 47T | 22 | 20 | 52 | 96 | 52 | M |
| 2010.03- | 5MT | F | R | Hatchback FWD LMU | Model year to:2015,Production Number:CP/CQ/CR48/CQ48 Ident | GCO44090 | Outer Joint | 47T | 22 | 20 | 52 | 96 | 52 | M |
| 2010.03- | 5MT | F | R | Hatchback FWD LMU | ——————————————————————————————————————— | GCI44024 | Inner Joint | | 22 | 20 | 35 | 50 | 85 | |
| **Spark Lite** | | | | | | | | | | | | | | |
| 1.0 (46 kw) | | | | | | | | | | | | | | |
| 2005.05- | MT | F | L | Hatchback FWD B10S;LA2 | | GDS57177 | Drive Shaft | 40T | 23 | 22 | 46 | 92 | 562 | |
| 2005.05- | MT | F | L | Hatchback FWD B10S;LA2 | | GDS88164 | Drive Shaft | 47T | 22 | 22 | 52 | 96 | 621 | |
| 2005.05- | MT | F | R | Hatchback FWD B10S;LA2 | | GDS57176 | Drive Shaft | 40T | 23 | 22 | 46 | 92 | 831 | |
| 2005.05- | MT | F | L | Hatchback FWD B10S;LA2 | | GCO44090 | Outer Joint | 47T | 22 | 20 | 52 | 96 | 52 | M |
| 2005.05- | MT | F | L/R | Hatchback FWD B10S;LA2 | | GCO12021 | Outer Joint | 40T | 23 | 19 | 46 | 92 | 56.5 | O |
| 2005.05- | MT | F | L | Hatchback FWD B10S;LA2 | | GCI44024 | Inner Joint | | 22 | 20 | 35 | 50 | 85 | |
| **Suburban 1500** | | | | | | | | | | | | | | |
| 5.3 (228 kw) | | | | | | | | | | | | | | |
| 2007.01-2014.06 | | F | | SUV 4WD LMG | Date to:2013 | GCO44054 | Outer Joint | | 33 | 35 | 72.8 | 112.5 | 73.5 | O |
| 2007.01-2014.06 | | F | | SUV 4WD LMG | Date to:2013 | GCO87001 | Outer Joint | | 33 | 41 | 80 | 112 | 88.5 | O |
| **Trailblazer** | | | | | | | | | | | | | | |
| 2.5 (132 kw) | | | | | | | | | | | | | | |
| 2016.08- | 6AT | F | L/R | SUV 4WD XLD25 | | GDS82706 | Drive Shaft | | 33 | 28 | 62 | 112 | 612 | |
| 2016.08- | 6AT | F | L/R | SUV 4WD XLD25 | | GCO82129 | Outer Joint | | 33 | 26 | 62 | 112 | 61 | I |
| 2016.08- | 6AT | F | L/R | SUV 4WD XLD25 | | GCI81960 | Inner Joint | | 28 | 28 | 40 | 109 | 93 | |
| 2.8 (132 kw) | | | | | | | | | | | | | | |
| 2012.08- | 6AT | F | L/R | SUV 4WD LWH | Date to:2016.12 | GDS26016 | Drive Shaft | | 17 | 28 | 53 | 136.5 | 650 | |
| 2012.08- | 6AT | F | L/R | SUV 4WD LWH | Date from:2017.01 | GDS82706 | Drive Shaft | | 33 | 28 | 62 | 112 | 612 | |
| 2012.08- | 6AT | F | L/R | SUV 4WD LWH | Date from:2017.01 | GCO82129 | Outer Joint | | 33 | 26 | 62 | 112 | 61 | I |
| 2012.08- | 6AT | F | L/R | SUV 4WD LWH | Date from:2017.01 | GCI81960 | Inner Joint | | 28 | 28 | 40 | 109 | 93 | |
| 3.6 (176 kw) | | | | | | | | | | | | | | |
| 2013.01- | 6AT | F | L/R | SUV 4WD LY7 | | GDS26016 | Drive Shaft | | 17 | 28 | 53 | 136.5 | 650 | |
| **Trax** | | | | | | | | | | | | | | |
| 1.4 (103 kw) | | | | | | | | | | | | | | |
| 2012.12- | MT | F | L | SUV 4WD LUJ | | GDS21114 | Drive Shaft | | 25 | 25 | 52.4 | 92 | 603 | |
| 2012.12- | MT | F | R | SUV 4WD LUJ | | GDS86065 | Drive Shaft | | 25 | 34 | 52.4 | 92 | 585 | |
| 2012.12- | MT | F | L/R | SUV 4WD LUJ | Enginecode:LUJ | GCO21059 | Outer Joint | | 25 | 23 | 52.4 | 92 | 61 | I |
| 2012.12- | MT | F | L | SUV 4WD LUJ | | GCI86028 | Inner Joint | | 25 | 24 | 34.9 | 57 | 101 | |
| 2012.12- | 6MT | R | L/R | SUV 4WD LUJ | | GDS82614 | Drive Shaft | | 25 | | 60 | 91.5 | 700 | |
| 2012.12- | 6MT | R | L/R | SUV 4WD LUJ | | GCO83590 | Outer Joint | | 25 | 20 | 60 | 91.5 | 58 | M |
| 2012.12- | 6MT | R | L/R | SUV 4WD LUJ | | GCI83731 | Inner Joint | | | 19 | | | 77 | |
| 2012.12- | AT/MT | F | L | SUV FWD LUJ | | GDS21114 | Drive Shaft | | 25 | 25 | 52.4 | 92 | 603 | |
| 2012.12- | AT/MT | F | R | SUV FWD LUJ | | GDS86065 | Drive Shaft | | 25 | 34 | 52.4 | 92 | 585 | |
| 2012.12- | AT/MT | F | L/R | SUV FWD LUJ | | GCO21059 | Outer Joint | | 25 | 23 | 52.4 | 92 | 61 | I |
| 2012.12- | AT/MT | F | L | SUV FWD LUJ | | GCI86028 | Inner Joint | | 25 | 24 | 34.9 | 57 | 101 | |
| 2013.04- | MT | F | L | SUV FWD | | GDS21114 | Drive Shaft | | 25 | 25 | 52.4 | 92 | 603 | |
| 2013.04- | MT | F | R | SUV FWD | | GDS86065 | Drive Shaft | | 25 | 34 | 52.4 | 92 | 585 | |
| 2013.04- | MT | F | L/R | SUV FWD | | GCO21059 | Outer Joint | | 25 | 23 | 52.4 | 92 | 61 | I |
| 2013.04- | MT | F | L | SUV FWD | | GCI86028 | Inner Joint | | 25 | 24 | 34.9 | 57 | 101 | |
| 1.6 (85 kw) | | | | | | | | | | | | | | |
| 2012.12- | 5MT | F | L | SUV FWD LDE | | GDS81425 | Drive Shaft | | 25 | 34 | 52.5 | 92 | 625 | |
| 2012.12- | 5MT | F | R | SUV FWD LDE | | GDS81761 | Drive Shaft | | 25 | 34 | 52.5 | 92 | 584 | |
| 2012.12- | 5MT | F | L/R | SUV FWD LDE | | GCO88077 | Outer Joint | | 25 | 23 | 52.5 | 92 | 59 | M |
| 2012.12- | 5MT | F | L | SUV FWD LDE | | GCI88070 | Inner Joint | | 34 | 23 | 35 | 56 | 99.5 | |
| 2012.12- | 5MT | F | R | SUV FWD LDE | | GCI88071 | Inner Joint | | 34 | 23 | 41 | | 120 | |
| 2012.12- | 5MT | F | R | SUV FWD LDE | | GDS82868 | Intermediate Shaft | | 34 | 34 | | | 420.5 | |
| 1.6 (100 kw) | | | | | | | | | | | | | | |
| 2014.11-2015.12 | 6MT | F | L | SUV 4WD LVL | | GDS21114 | Drive Shaft | | 25 | 25 | 52.4 | 92 | 603 | |
| 2014.11-2015.12 | 6MT | F | R | SUV 4WD LVL | | GDS86065 | Drive Shaft | | 25 | 34 | 52.4 | 92 | 585 | |
| 2014.11-2015.12 | 6MT | F | L/R | SUV 4WD LVL | | GCO21059 | Outer Joint | | 25 | 23 | 52.4 | 92 | 61 | I |
| 2014.11-2015.12 | 6MT | F | L | SUV 4WD LVL | | GCI86028 | Inner Joint | | 25 | 24 | 34.9 | 57 | 101 | |
| 2014.11-2015.12 | 6MT | R | L/R | SUV 4WD LVL | | GDS82614 | Drive Shaft | | 25 | | 60 | 91.5 | 700 | |
| 2014.11-2015.12 | 6MT | R | L/R | SUV 4WD LVL | | GCO83590 | Outer Joint | | 25 | 20 | 60 | 91.5 | 58 | M |
| 2014.11-2015.12 | 6MT | R | L/R | SUV 4WD LVL | | GCI83731 | Inner Joint | | | 19 | | | 77 | |
| 2014.11-2015.12 | 6MT | F | L | SUV FWD LVL | | GDS21114 | Drive Shaft | | 25 | 25 | 52.4 | 92 | 603 | |

| | YEAR | TRANSM. | F/R | L/R | BODY STYLE & DRIVE TYPE & ENGINE | REMARKS | G-AP Ref. | PRODUCT | ABS | Technical Specifications A | B | C | H | L | P |
|---|---|---|---|---|---|---|---|---|---|---|---|---|---|---|---|
| **CHEVROLET** | | | | | | | | | | | | | | | |
| **Trax** | | | | | | | | | | | | | | | |
| 1.6 (100 kw) | 2014.11-2015.12 | 6MT | F | R | SUV FWD LVL | Neoprene;Inner Joint TJ | GDS21094 | Drive Shaft | | 25 | 34 | 52.4 | 92 | 587 | |
| | 2014.11-2015.12 | 6MT | F | R | SUV FWD LVL | | GDS86065 | Drive Shaft | | 25 | 34 | 52.4 | 92 | 585 | |
| | 2014.11-2015.12 | 6MT | F | L/R | SUV FWD LVL | | GCO21059 | Outer Joint | | 25 | 23 | 52.4 | 92 | 61 | I |
| | 2014.11-2015.12 | 6MT | F | L | SUV FWD LVL | | GCI86028 | Inner Joint | | 25 | 24 | 34.9 | 57 | 101 | |
| 1.7 (96 kw) | 2012.12- | 6MT | F | L | SUV 4WD LUD | | GDS21114 | Drive Shaft | | 25 | 25 | 52.4 | 92 | 603 | |
| | 2012.12- | 6MT | F | R | SUV 4WD LUD | | GDS86065 | Drive Shaft | | 25 | 34 | 52.4 | 92 | 585 | |
| | 2012.12- | 6MT | F | L/R | SUV 4WD LUD | | GCO21059 | Outer Joint | | 25 | 23 | 52.4 | 92 | 61 | I |
| | 2012.12- | 6MT | F | L | SUV 4WD LUD | | GCI86028 | Inner Joint | | 25 | 24 | 34.9 | 57 | 101 | |
| | 2012.12- | 6MT | R | L/R | SUV 4WD LUD | | GDS82614 | Drive Shaft | | 25 | | 60 | 91.5 | 700 | |
| | 2012.12- | 6MT | R | L/R | SUV 4WD LUD | | GCO83590 | Outer Joint | | 25 | 20 | 60 | 91.5 | 58 | M |
| | 2012.12- | 6MT | R | L/R | SUV 4WD LUD | | GCI83731 | Inner Joint | | | 19 | | | 77 | |
| | 2012.12- | 6AT/6MT | F | R | SUV FWD LUD | | GDS21094 | Drive Shaft | | 25 | 34 | 52.4 | 92 | 587 | |
| | 2012.12- | 6AT/6MT | F | R | SUV FWD LUD | | GDS86065 | Drive Shaft | | 25 | 34 | 52.4 | 92 | 585 | |
| | 2012.12- | 6AT/6MT | F | L/R | SUV FWD LUD | | GCO21059 | Outer Joint | | 25 | 23 | 52.4 | 92 | 61 | I |
| | 2012.12- | AT | F | L | SUV FWD LUD | | GDS82044 | Drive Shaft | | 25 | 34 | 52.4 | 92 | 650 | |
| | 2012.12- | AT | F | L | SUV FWD LUD | | GCI81612 | Inner Joint | | 34 | 24 | 35 | 136.5 | 78 | |
| | 2012.12- | MT | F | L | SUV FWD LUD | | GDS21114 | Drive Shaft | | 25 | 25 | 52.4 | 92 | 603 | |
| | 2012.12- | MT | F | L | SUV FWD LUD | | GCI86028 | Inner Joint | | 25 | 24 | 34.9 | 57 | 101 | |
| 1.8 (103 kw) | 2013.03- | AT | F | L/R | SUV 4WD 2H0 | | GCO88077 | Outer Joint | | 25 | 23 | 52.5 | 92 | 59 | M |
| | 2013.03- | AT | F | R | SUV 4WD 2H0 | | GCI88071 | Inner Joint | | 34 | 23 | 41 | | 120 | |
| | 2013.03- | 6AT | R | L/R | SUV 4WD 2H0 | | GDS82614 | Drive Shaft | | 25 | | 60 | 91.5 | 700 | |
| | 2013.03- | 6AT | R | L/R | SUV 4WD 2H0 | | GCO83590 | Outer Joint | | 25 | 20 | 60 | 91.5 | 58 | M |
| | 2013.03- | 6AT | R | L/R | SUV 4WD 2H0 | | GCI83731 | Inner Joint | | | 19 | | | 77 | |
| | 2013.03- | 5MT | F | R | SUV FWD 2H0 | | GDS81761 | Drive Shaft | | 25 | 34 | 52.5 | 92 | 584 | |
| | 2013.03- | 5MT | F | L/R | SUV FWD 2H0 | | GCO88077 | Outer Joint | | 25 | 23 | 52.5 | 92 | 59 | M |
| | 2013.03- | 5MT | F | R | SUV FWD 2H0 | | GCI88071 | Inner Joint | | 34 | 23 | 41 | | 120 | |
| | 2013.03- | 5MT | F | R | SUV FWD 2H0 | | GDS82868 | Intermediate Shaft | | 34 | 34 | | | 420.5 | |
| **Vectra** | | | | | | | | | | | | | | | |
| 2.0 (81 kw) | 1996.03-2005.12 | AT/MT | F | L/R | Saloon FWD LE4(122CUL4) | | GCO44006 | Outer Joint | 29T | 33 | 25 | 52 | 103.5 | 61 | O |
| | 1996.03-2005.12 | | F | L | Saloon FWD LE4(122CUL4) | | GDS44038 | Drive Shaft | 29T | 33 | 34 | 52 | 103.5 | 595 | |
| | 1996.03-2005.12 | | F | R | Saloon FWD LE4(122CUL4) | | GDS44039 | Drive Shaft | 29T | 33 | 34 | 52 | 103.5 | 959 | |
| **Volt** | | | | | | | | | | | | | | | |
| 1.4 (111 kw) | 2011.11- | ET | F | L | Hatchback FWD LUU | | GDS83771 | Drive Shaft | | 30 | 34 | 52.3 | 94 | 508 | |
| | 2011.11- | ET | F | R | Hatchback FWD LUU | | GDS57907 | Drive Shaft | | 30 | 34 | 52.3 | 94 | 512 | |
| | 2011.11- | ET | F | L/R | Hatchback FWD LUU | | GCO81171 | Outer Joint | | 30 | 23 | 52.3 | 94 | 59.5 | M |
| | 2011.11- | ET | F | L | Hatchback FWD LUU | | GCI82371 | Inner Joint | | 34 | 24 | 35 | | 131.5 | |
| | 2011.11- | ET | F | R | Hatchback FWD LUU | | GCI83915 | Inner Joint | | 34 | 24 | 38 | | 136 | |
| **Zafira** | | | | | | | | | | | | | | | |
| 2.2 (108 kw) | 2000.01-2005.12 | 4AT | F | L | MPV FWD Z22SE | | GDS44044 | Drive Shaft | | 33 | 34 | 52 | 103.5 | 595 | |
| | 2000.01-2005.12 | 4AT | F | L | MPV FWD Z22SE | | GCO44032 | Outer Joint | | 33 | 25 | 52 | 103.5 | 61 | O |
| | 2000.01-2005.12 | 4AT | F | L | MPV FWD Z22SE | | GCI21011 | Inner Joint | | 34 | 25 | 35 | 56.5 | 114.7 | |
| **CHRYSLER** | | | | | | | | | | | | | | | |
| **300C** | | | | | | | | | | | | | | | |
| 2.7 (130 kw) | 2007.01-2010.12 | 4AT | R | L | Estate RWD EES | | GDS83512 | Drive Shaft | 48NS | 32 | 27 | 62 | 104.5 | 800 | |
| | 2007.01-2010.12 | 4AT | R | L | Estate RWD EES | | GCO82398 | Outer Joint | 48NS | 32 | 34 | 62 | 104.5 | 61.5 | O |
| | 2007.01-2010.12 | 4AT | R | L | Estate RWD EES | | GCI82250 | Inner Joint | | 27 | 34 | 45 | 73.5 | 111 | |
| | 2007.01-2012.11 | 4AT | R | L | Saloon RWD EES | | GDS83512 | Drive Shaft | 48NS | 32 | 27 | 62 | 104.5 | 800 | |
| | 2007.01-2012.11 | 4AT | R | L | Saloon RWD EES | | GCO82398 | Outer Joint | 48NS | 32 | 34 | 62 | 104.5 | 61.5 | O |
| | 2007.01-2012.11 | 4AT | R | L | Saloon RWD EES | | GCI82250 | Inner Joint | | 27 | 34 | 45 | 73.5 | 111 | |
| 2.7 (142 kw) | 2004.09-2010.12 | 4AT | R | L | Estate RWD EER | Date from:2009.01 | GDS83512 | Drive Shaft | 48NS | 32 | 27 | 62 | 104.5 | 800 | |
| | 2004.09-2010.12 | 4AT | R | L | Estate RWD EER | Date from:2009.01 | GCO82398 | Outer Joint | 48NS | 32 | 34 | 62 | 104.5 | 61.5 | O |
| | 2004.09-2010.12 | 4AT | R | L | Estate RWD EER | Date from:2009.01 | GCI82250 | Inner Joint | | 27 | 34 | 45 | 73.5 | 111 | |
| | 2004.09-2012.12 | 4AT | R | L | Saloon RWD EER | Date from:2009.01 | GDS83512 | Drive Shaft | 48NS | 32 | 27 | 62 | 104.5 | 800 | |
| | 2004.09-2012.12 | 4AT | R | L | Saloon RWD EER | Date from:2009.01 | GCO82398 | Outer Joint | 48NS | 32 | 34 | 62 | 104.5 | 61.5 | O |
| | 2004.09-2012.12 | 4AT | R | L | Saloon RWD EER | Date from:2009.01 | GCI82250 | Inner Joint | | 27 | 34 | 45 | 73.5 | 111 | |
| 3.5 (183 kw) | 2004.09-2010.12 | 5AT | F | L | Estate 4WD EGG | | GDS84016 | Drive Shaft | 48NS | 27 | 34 | 62.5 | 90 | 581 | |
| | 2004.09-2010.12 | 5AT | F | R | Estate 4WD EGG | | GDS83812 | Drive Shaft | 48NS | 27 | 24 | 62.5 | 90 | 607 | |
| | 2004.09-2010.12 | 5AT | F | L/R | Estate 4WD EGG | | GCO82491 | Outer Joint | 48NS | 27 | 30 | 62.5 | 90 | 55 | I |
| | 2004.09-2010.12 | 5AT | F | L | Estate 4WD EGG | | GCI82453 | Inner Joint | | 34 | 30 | 40.1 | | 132 | |
| | 2004.09-2010.12 | 5AT | F | R | Estate 4WD EGG | | GCI82373 | Inner Joint | | 24 | 30 | 38 | 58.5 | 99.5 | |
| | 2004.09-2010.12 | 5AT | R | L | Estate RWD EGG | Date from:2009.01 | GDS83512 | Drive Shaft | 48NS | 32 | 27 | 62 | 104.5 | 800 | |
| | 2004.09-2010.12 | 5AT | R | L | Estate RWD EGG | Date from:2009.01 | GCO82398 | Outer Joint | 48NS | 32 | 34 | 62 | 104.5 | 61.5 | O |
| | 2004.09-2010.12 | 5AT | R | L | Estate RWD EGG | Date from:2009.01 | GCI82250 | Inner Joint | | 27 | 34 | 45 | 73.5 | 111 | |
| | 2004.09-2012.11 | 5AT | R | L | Saloon RWD EGG | Date from:2009.01 | GDS83512 | Drive Shaft | 48NS | 32 | 27 | 62 | 104.5 | 800 | |
| | 2004.09-2012.11 | 5AT | R | L | Saloon RWD EGG | Date from:2009.01 | GCO82398 | Outer Joint | 48NS | 32 | 34 | 62 | 104.5 | 61.5 | O |

| | YEAR | TRANSM. | F/R | L/R | BODY STYLE & DRIVE TYPE & ENGINE | REMARKS | G-AP Ref. | PRODUCT | ABS | Technical Specifications A | B | C | H | L | P |
|---|---|---|---|---|---|---|---|---|---|---|---|---|---|---|---|
| **CHRYSLER** | | | | | | | | | | | | | | | |
| **300C** | | | | | | | | | | | | | | | |
| 3.5 (183 kw) | 2004.09-2012.11 | 5AT | R | L | Saloon RWD EGG | Date from:2009.01 | GCI82250 | Inner Joint | | 27 | 34 | 45 | 73.5 | 111 | |
| 3.5 (186 kw) | 2004.09-2010.12 | 4AT/5AT | F | R | Saloon 4WD EGG | | GDS83812 | Drive Shaft | 48NS | 27 | 24 | 62.5 | 90 | 607 | |
| | 2004.09-2010.12 | 5AT | F | L | Saloon 4WD EGG | | GDS84016 | Drive Shaft | 48NS | 27 | 34 | 62.5 | 90 | 581 | |
| | 2004.09-2010.12 | 5AT | F | L | Saloon 4WD EGG | | GCO82491 | Outer Joint | 48NS | 27 | 30 | 62.5 | 90 | 55 | I |
| | 2004.09-2010.12 | 5AT | F | L | Saloon 4WD EGG | | GCI82453 | Inner Joint | | 34 | 30 | 40.1 | | 132 | |
| 5.7 (250 kw) | 2005.04-2010.12 | 5AT | F | L | Estate 4WD EZH;EZB | | GDS84016 | Drive Shaft | 48NS | 27 | 34 | 62.5 | 90 | 581 | |
| | 2005.04-2010.12 | 5AT | F | R | Estate 4WD EZH;EZB | | GDS83812 | Drive Shaft | 48NS | 27 | 24 | 62.5 | 90 | 607 | |
| | 2005.04-2010.12 | 5AT | F | L/R | Estate 4WD EZH;EZB | | GCO82491 | Outer Joint | 48NS | 27 | 30 | 62.5 | 90 | 55 | I |
| | 2005.04-2010.12 | 5AT | F | L | Estate 4WD EZH;EZB | | GCI82453 | Inner Joint | | 34 | 30 | 40.1 | | 132 | |
| | 2005.04-2010.12 | 5AT | F | R | Estate 4WD EZH;EZB | | GCI82373 | Inner Joint | | 24 | 30 | 38 | 58.5 | 99.5 | |
| 5.7 (265 kw) | 2009.05-2010.12 | 5AT | R | L | Saloon RWD EZH | | GDS83512 | Drive Shaft | 48NS | 32 | 27 | 62 | 104.5 | 800 | |
| | 2009.05-2010.12 | 5AT | R | L | Saloon RWD EZH | | GCO82398 | Outer Joint | 48NS | 32 | 34 | 62 | 104.5 | 61.5 | O |
| | 2009.05-2010.12 | 5AT | R | L | Saloon RWD EZH | | GCI82250 | Inner Joint | | 27 | 34 | 45 | 73.5 | 111 | |
| 5.7 (268 kw) | 2008.09- | 5AT | F | L | Saloon 4WD EZH | | GDS84016 | Drive Shaft | 48NS | 27 | 34 | 62.5 | 90 | 581 | |
| | 2008.09- | 5AT | F | R | Saloon 4WD EZH | | GDS83812 | Drive Shaft | 48NS | 27 | 24 | 62.5 | 90 | 607 | |
| | 2008.09- | 5AT | F | L/R | Saloon 4WD EZH | | GCO82491 | Outer Joint | 48NS | 27 | 30 | 62.5 | 90 | 55 | I |
| | 2008.09- | 5AT | F | L | Saloon 4WD EZH | | GCI82453 | Inner Joint | | 34 | 30 | 40.1 | | 132 | |
| | 2008.09- | 5AT | F | R | Saloon 4WD EZH | | GCI82373 | Inner Joint | | 24 | 30 | 38 | 58.5 | 99.5 | |
| | 2008.09- | 5AT | R | L | Saloon RWD EZH | | GDS83512 | Drive Shaft | 48NS | 32 | 27 | 62 | 104.5 | 800 | |
| | 2008.09- | 5AT | R | L | Saloon RWD EZH | | GCO82398 | Outer Joint | 48NS | 32 | 34 | 62 | 104.5 | 61.5 | O |
| | 2008.09- | 5AT | R | L | Saloon RWD EZH | | GCI82250 | Inner Joint | | 27 | 34 | 45 | 73.5 | 111 | |
| 6.1 (317 kw) | 2005.06-2010.12 | 5AT | R | L | Estate RWD ESF | Date from:2009.01 | GDS35131 | Drive Shaft | 48NS | 32 | 31 | 63 | 105.5 | 797 | |
| | 2005.06-2010.12 | 5AT | R | R | Estate RWD ESF | Date from:2009.01 | GDS35130 | Drive Shaft | 48NS | 32 | 31 | 63 | 105.5 | 822 | |
| | 2005.06-2012.11 | 5AT | R | L | Saloon RWD ESF | Date from:2009.01 | GDS35131 | Drive Shaft | 48NS | 32 | 31 | 63 | 105.5 | 797 | |
| | 2005.06-2012.11 | 5AT | R | R | Saloon RWD ESF | Date from:2009.01 | GDS35130 | Drive Shaft | 48NS | 32 | 31 | 63 | 105.5 | 822 | |
| 6.4 (347 kw) | 2011.09-2023.12 | 5AT | R | L | Saloon RWD ESG | | GDS35131 | Drive Shaft | 48NS | 32 | 31 | 63 | 105.5 | 797 | |
| | 2011.09-2023.12 | 5AT | R | R | Saloon RWD ESG | | GDS35130 | Drive Shaft | 48NS | 32 | 31 | 63 | 105.5 | 822 | |
| | 2011.09-2023.12 | 5AT | R | R | Saloon RWD ESG | | GCI35072 | Inner Joint | 48NS | 32 | 37 | 63 | 105.5 | 96 | |
| **300M** | | | | | | | | | | | | | | | |
| 2.7 (149 kw) | 1998.11-2002.12 | 4AT | F | L | Saloon FWD EER | | GDS46007 | Drive Shaft | 50T | 33 | 27 | 49.6 | 102.5 | 698 | |
| | 1998.11-2002.12 | 4AT | F | R | Saloon FWD EER | | GDS16005 | Drive Shaft | 50T | 33 | 27 | 49.6 | 102.5 | 537 | |
| 2.7 (150 kw) | 2000.01-2001.12 | 4AT | F | L | Saloon FWD EER | | GDS46007 | Drive Shaft | 50T | 33 | 27 | 49.6 | 102.5 | 698 | |
| | 2000.01-2001.12 | 4AT | F | R | Saloon FWD EER | | GDS16005 | Drive Shaft | 50T | 33 | 27 | 49.6 | 102.5 | 537 | |
| 3.5 (185 kw) | 1998.09-2004.09 | 4AT | F | L | Saloon FWD EGG | | GDS46007 | Drive Shaft | 50T | 33 | 27 | 49.6 | 102.5 | 698 | |
| | 1998.09-2004.09 | 4AT | F | R | Saloon FWD EGG | | GDS16005 | Drive Shaft | 50T | 33 | 27 | 49.6 | 102.5 | 537 | |
| 3.5 (187 kw) | 1998.07-2000.08 | 4AT | F | L | Saloon FWD EGG | | GDS46007 | Drive Shaft | 50T | 33 | 27 | 49.6 | 102.5 | 698 | |
| | 1998.07-2000.08 | 4AT | F | R | Saloon FWD EGG | | GDS16005 | Drive Shaft | 50T | 33 | 27 | 49.6 | 102.5 | 537 | |
| **Caravan** | | | | | | | | | | | | | | | |
| 2.4 (110 kw) | 1994.09-2000.08 | | F | L | MPV FWD EDZ | | GDS88024 | Drive Shaft | 47T | 26 | 25 | 54 | 98.5 | 640 | |
| | 1994.09-2000.08 | | F | R | MPV FWD EDZ | | GDS89039 | Drive Shaft | 47T | 26 | 25 | 54 | 98.5 | 1028 | |
| | 1994.09-2000.08 | | F | L/R | MPV FWD EDZ | | GCO89029 | Outer Joint | 47T | 26 | 32 | 54 | 98.5 | 61.5 | I |
| | 1994.09-2000.08 | | F | L | MPV FWD EDZ | | GCI99059 | Inner Joint | | 25 | 32 | 40 | 71.5 | 107 | |
| **Delta** | | | | | | | | | | | | | | | |
| 1.4 (88 kw) | 2011.08- | 6MT | F | L/R | Hatchback FWD 198 A4.000 | Equipment code:PCC635 | GCO17063 | Outer Joint | | 25 | 25 | 51.1 | 84.5 | 61 | M |
| | 2011.08- | 6MT | F | L | Hatchback FWD 198 A4.000 | Equipment code:PCC544 | GCI17083 | Inner Joint | | 25 | 24 | 34.9 | 57 | 107.5 | |
| | 2011.08- | MT | F | R | Hatchback FWD 198 A4.000 | Date to:2012.07;Equipment code:PCC635 | GDS17226 | Drive Shaft | | 25 | 25 | 51.1 | 84.5 | 955 | |
| | 2011.08- | MT | F | R | Hatchback FWD 198 A4.000 | Equipment code:PCC544 | GDS81768 | Drive Shaft | | 25 | 25 | 51 | 84.5 | 930 | |
| | 2011.08- | MT | F | R | Hatchback FWD 198 A4.000 | Date to:2012.07;Equipment code:PCC635 | GCI17123 | Inner Joint | | 25 | 26 | 29.75 | 409 | 108.5 | |
| 1.4 (103 kw) | 2011.08- | 6MT | F | L/R | Hatchback FWD 198 A7.000 | | GCO17063 | Outer Joint | | 25 | 25 | 51.1 | 84.5 | 61 | M |
| | 2011.08- | MT | F | R | Hatchback FWD 198 A7.000 | Date to:2012.07 | GDS17226 | Drive Shaft | | 25 | 25 | 51.1 | 84.5 | 955 | |
| | 2011.08- | MT | F | R | Hatchback FWD 198 A7.000 | Date to:2012.07 | GCI17123 | Inner Joint | | 25 | 26 | 29.75 | 409 | 108.5 | |
| 1.6 (88 kw) | 2011.08- | 6MT | F | L/R | Hatchback FWD 198 A2.000 | | GDS17194 | Drive Shaft | | 25 | 39 | 51 | 84.5 | 523 | |
| | 2011.08- | 6MT | F | L/R | Hatchback FWD 198 A2.000 | Date to:2012.06,Equipment code:PCC635 | GDS17226 | Drive Shaft | | 25 | 25 | 51.1 | 84.5 | 955 | |
| | 2011.08- | 6MT | F | L/R | Hatchback FWD 198 A2.000 | Equipment code:PCC635 | GCO17063 | Outer Joint | | 25 | 25 | 51.1 | 84.5 | 61 | M |
| | 2011.08- | 6MT | F | L | Hatchback FWD 198 A2.000 | VET no. from:1040238;Equipment code:PCC530 | GCI17084 | Inner Joint | | 25 | 24 | 31.95 | 91 | 87 | |
| | 2011.08- | AT | F | L/R | Hatchback FWD 198 A2.000 | | GCO17030 | Outer Joint | | 25 | 26 | 51 | 84.5 | 64.5 | M |
| | 2011.08- | MT | F | R | Hatchback FWD 198 A2.000 | Date to:2012.07 | GCI17123 | Inner Joint | | 25 | 26 | 29.75 | 409 | 108.5 | |
| 2.0 (121 kw) | 2011.08- | 6MT | F | L/R | Hatchback FWD 198 A5.000 | Equipment code:PCC542 | GDS17121 | Drive Shaft | | 25 | 25 | 59 | 84 | 630 | |
| | 2011.08- | 6MT | F | R | Hatchback FWD 198 A5.000 | Equipment code:PCC635 | GCI17123 | Inner Joint | | 25 | 26 | 29.75 | 409 | 108.5 | |
| | 2011.08- | MT | F | L/R | Hatchback FWD 198 A5.000 | | GCO17064 | Outer Joint | | 27 | 27 | 59 | 84.5 | 64 | M |
| **Grand Voyager** | | | | | | | | | | | | | | | |
| 2.4 (111 kw) | 1997.02-2000.09 | 4AT | F | L | MPV 4WD EDZ | | GDS88024 | Drive Shaft | 47T | 26 | 25 | 54 | 98.5 | 640 | |
| | 1997.02-2000.09 | 4AT | F | L | MPV 4WD EDZ | | GCI99059 | Inner Joint | | 25 | 32 | 40 | 71.5 | 107 | |
| | 1997.02-2000.09 | 5MT | F | | MPV 4WD EDZ | Model year to:2000 | GCO89029 | Outer Joint | 47T | 26 | 32 | 54 | 98.5 | 61.5 | I |
| | 1998.01-2001.12 | 4AT | F | R | MPV Van FWD EDZ | For vehicles with ABS | GDS89039 | Drive Shaft | 47T | 26 | 25 | 54 | 98.5 | 1028 | |

| | YEAR | TRANSM. | F/R | L/R | BODY STYLE & DRIVE TYPE & ENGINE | REMARKS | G-AP Ref. | PRODUCT | ABS | Technical Specifications A | B | C | H | L | P |
|---|---|---|---|---|---|---|---|---|---|---|---|---|---|---|---|
| **CHRYSLER** | | | | | | | | | | | | | | | |
| **Grand Voyager** | | | | | | | | | | | | | | | |
| 2.4 (111 kw) | 1998.01-2001.12 | 4AT | F | L/R | MPV Van FWD EDZ | | GCO89029 | Outer Joint | 47T | 26 | 32 | 54 | 98.5 | 61.5 | I |
| | 1998.01-2001.12 | 4AT/5MT | F | L | MPV Van FWD EDZ | For vehicles with ABS | GDS88024 | Drive Shaft | 47T | 26 | 25 | 54 | 98.5 | 640 | |
| 2.5 (85 kw) | 1995.01-2001.03 | 4AT | F | L | MPV Van FWD ENC | For vehicles with ABS | GDS88024 | Drive Shaft | 47T | 26 | 25 | 54 | 98.5 | 640 | |
| | 1995.01-2001.03 | 4AT | F | R | MPV Van FWD ENC | For vehicles with ABS | GDS89039 | Drive Shaft | 47T | 26 | 25 | 54 | 98.5 | 1028 | |
| | 1995.10-2000.09 | 5MT | F | L | MPV 4WD ENC | | GDS88024 | Drive Shaft | 47T | 26 | 25 | 54 | 98.5 | 640 | |
| | 1995.10-2000.09 | 5MT | F | | MPV 4WD ENC | Model year from:1997,Model year to:2000 | GCO89029 | Outer Joint | 47T | 26 | 32 | 54 | 98.5 | 61.5 | I |
| | 1995.10-2000.09 | 5MT | F | L | MPV 4WD ENC | | GCI99059 | Inner Joint | | 25 | 32 | 40 | 71.5 | 107 | |
| 2.8 (120 kw) | 2007.10- | 6AT | F | L | MPV FWD ENS | | GDS15057 | Drive Shaft | | 32 | 29 | 55 | 105.5 | 667 | |
| | 2007.10- | 6AT | F | R | MPV FWD ENS | | GDS88137 | Drive Shaft | | 32 | 29 | 55 | 105.5 | 1058 | |
| | 2007.10- | 6AT | F | L | MPV FWD ENS | | GCO89051 | Outer Joint | | 32 | 34 | 55 | 105.5 | 60 | M |
| | 2008.01-2011.12 | 6AT | F | L | Box Body/MPV FWD ENS | | GDS15057 | Drive Shaft | | 32 | 29 | 55 | 105.5 | 667 | |
| | 2008.01-2011.12 | 6AT | F | R | Box Body/MPV FWD ENS | | GDS88137 | Drive Shaft | | 32 | 29 | 55 | 105.5 | 1058 | |
| 2.8 (133 kw) | 2012.09- | AT | F | R | MPV FWD ENS | | GDS88137 | Drive Shaft | | 32 | 29 | 55 | 105.5 | 1058 | |
| | 2012.09- | AT | F | | MPV FWD ENS | | GCO89051 | Outer Joint | | 32 | 34 | 55 | 105.5 | 60 | M |
| 3.3 (116 kw) | 1995.01-2001.03 | 4AT | F | L | MPV Van FWD EGA | | GDS88024 | Drive Shaft | 47T | 26 | 25 | 54 | 98.5 | 640 | |
| | 1995.01-2001.03 | 4AT | F | R | MPV Van FWD EGA | For vehicles with ABS | GDS89039 | Drive Shaft | 47T | 26 | 25 | 54 | 98.5 | 1028 | |
| 3.3 (125 kw) | 2008.01- | 6AT | F | L | MPV FWD EGV | | GDS15057 | Drive Shaft | | 32 | 29 | 55 | 105.5 | 667 | |
| | 2008.01- | AT | F | R | MPV FWD EGV | | GDS88137 | Drive Shaft | | 32 | 29 | 55 | 105.5 | 1058 | |
| | 2008.01- | | F | | MPV FWD EGV | | GCO89051 | Outer Joint | | 32 | 34 | 55 | 105.5 | 60 | M |
| 3.6 (208 kw) | 2011.02- | 6AT | F | L | MPV FWD ERB | | GDS15057 | Drive Shaft | | 32 | 29 | 55 | 105.5 | 667 | |
| | 2011.02- | 6AT | F | R | MPV FWD ERB | | GDS56403 | Drive Shaft | | 32 | 27 | 55 | 105.5 | 582 | |
| | 2011.02- | 6AT | F | L/R | MPV FWD ERB | | GCO89051 | Outer Joint | | 32 | 34 | 55 | 105.5 | 60 | M |
| | 2011.02- | 6AT | F | R | MPV FWD ERB | | GCI83291 | Inner Joint | | 27 | 34 | 41.8 | | 133 | |
| 3.8 (131 kw) | 1999.01-1999.12 | 4AT | F | L | MPV Van 4WD EGH | | GDS88024 | Drive Shaft | 47T | 26 | 25 | 54 | 98.5 | 640 | |
| | 1999.01-1999.12 | 4AT | F | L/R | MPV Van 4WD EGH | | GCO89029 | Outer Joint | 47T | 26 | 32 | 54 | 98.5 | 61.5 | I |
| 3.8 (142 kw) | 2007.10- | AT | F | R | MPV FWD EGL | | GDS88137 | Drive Shaft | | 32 | 29 | 55 | 105.5 | 1058 | |
| | 2007.10- | | F | L | MPV FWD EGL | | GDS15057 | Drive Shaft | | 32 | 29 | 55 | 105.5 | 667 | |
| | 2007.10- | | F | | MPV FWD EGL | | GCO89051 | Outer Joint | | 32 | 34 | 55 | 105.5 | 60 | M |
| | 2008.01-2011.12 | 6AT | F | L | Box Body/MPV FWD EGL | | GDS15057 | Drive Shaft | | 32 | 29 | 55 | 105.5 | 667 | |
| | 2008.01-2011.12 | 6AT | F | R | Box Body/MPV FWD EGL | | GDS88137 | Drive Shaft | | 32 | 29 | 55 | 105.5 | 1058 | |
| | 2008.01-2011.12 | | F | L | Box Body/MPV FWD EGL | | GCO89051 | Outer Joint | | 32 | 34 | 55 | 105.5 | 60 | M |
| 4.0 (179 kw) | 2007.10- | 6AT | F | L | MPV FWD EMM | | GDS15057 | Drive Shaft | | 32 | 29 | 55 | 105.5 | 667 | |
| | 2007.10- | 6AT | F | R | MPV FWD EMM | | GDS56403 | Drive Shaft | | 32 | 27 | 55 | 105.5 | 582 | |
| | 2007.10- | 6AT | F | L/R | MPV FWD EMM | | GCO89051 | Outer Joint | | 32 | 34 | 55 | 105.5 | 60 | M |
| | 2007.10- | 6AT | F | R | MPV FWD EMM | | GCI83291 | Inner Joint | | 27 | 34 | 41.8 | | 133 | |
| **Neon** | | | | | | | | | | | | | | | |
| 1.8 (85 kw) | 1994.06-1999.12 | MT | F | L/R | Saloon FWD EBD | | GCO89036 | Outer Joint | 56T | 23 | 28 | 57.7 | 91.8 | 58 | I |
| 2.0 (97 kw) | 2002.10-2006.12 | | F | | Saloon FWD ECB | | GCO89040 | Outer Joint | 46T | 26 | 23 | 57.7 | 92.5 | 58 | M |
| 2.0 (98 kw) | 1994.06-1999.09 | AT/MT | F | L/R | Saloon FWD ECB | | GCO89036 | Outer Joint | 56T | 23 | 28 | 57.7 | 91.8 | 58 | I |
| | 1999.08-2006.12 | | F | | Saloon FWD 420H;ECB | | GCO89040 | Outer Joint | 46T | 26 | 23 | 57.7 | 92.5 | 58 | M |
| 2.0 (107 kw) | 1994.06-1999.09 | AT/MT | F | L/R | Saloon FWD ECC | | GCO89036 | Outer Joint | 56T | 23 | 28 | 57.7 | 91.8 | 58 | I |
| 2.0 (109 kw) | 1996.04-1999.08 | AT/MT | F | L/R | Saloon FWD ECC | | GCO89036 | Outer Joint | 56T | 23 | 28 | 57.7 | 91.8 | 58 | I |
| 2.0 (110 kw) | 2001.10-2006.12 | AT/MT | F | L/R | Saloon FWD ECH | | GCO89040 | Outer Joint | 46T | 26 | 23 | 57.7 | 92.5 | 58 | M |
| **New Yorker** | | | | | | | | | | | | | | | |
| 3.5 (155 kw) | 1993.06-1998.09 | AT | F | L/R | Saloon FWD EGE | | GCO89029 | Outer Joint | 47T | 26 | 32 | 54 | 98.5 | 61.5 | I |
| **Pacifica** | | | | | | | | | | | | | | | |
| 3.5 (186 kw) | 2003.08-2008.09 | AT | F | L | MPV 4WD EGN | Date From:2004.01 | GDS89050 | Drive Shaft | | 26 | 25 | 54 | 111 | 690 | |
| | 2003.08-2008.09 | AT | F | R | MPV 4WD EGN | Date From:2004.01 | GDS89051 | Drive Shaft | | 26 | 25 | 54 | 111 | 1081 | |
| | 2003.08-2008.09 | AT | F | L | MPV FWD EGN | Date From:2004.01 | GDS89050 | Drive Shaft | | 26 | 25 | 54 | 111 | 690 | |
| 4.0 (190 kw) | 2006.06-2008.09 | AT | F | L | MPV 4WD EMM | Date From:2007.01 | GDS89050 | Drive Shaft | | 26 | 25 | 54 | 111 | 690 | |
| | 2006.06-2008.09 | AT | F | R | MPV 4WD EMM | Date From:2007.01 | GDS89051 | Drive Shaft | | 26 | 25 | 54 | 111 | 1081 | |
| | 2006.06-2008.09 | AT | F | L | MPV FWD EMM | Date From:2007.01 | GDS89050 | Drive Shaft | | 26 | 25 | 54 | 111 | 690 | |
| **PT Cruiser** | | | | | | | | | | | | | | | |
| 1.6 (85 kw) | 2001.11-2010.12 | 5MT | F | L | Estate FWD EJD | | GDS83213 | Drive Shaft | 46T | 26 | 25 | 57.7 | 95.5 | 598 | |
| | 2001.11-2010.12 | 5MT | F | R | Estate FWD EJD | | GDS83444 | Drive Shaft | 46T | 26 | 25 | 57.7 | 95.5 | 952 | |
| | 2001.11-2010.12 | 5MT | F | L/R | Estate FWD EJD | | GCO82374 | Outer Joint | 46T | 26 | 23 | 57.7 | 95.5 | 58.5 | M |
| | 2001.11-2010.12 | 5MT | F | L | Estate FWD EJD | | GCI68007 | Inner Joint | | 25 | 23 | 40 | 74.5 | 111 | |
| | 2001.11-2010.12 | 5MT | F | R | Estate FWD EJD | | GCI88057 | Inner Joint | | 25 | 23 | 40 | 73.5 | 111 | |
| | 2002.10-2007.09 | 5MT | F | R | Estate Van FWD EJD | | GDS83444 | Drive Shaft | 46T | 26 | 25 | 57.7 | 95.5 | 952 | |
| | 2002.10-2007.09 | 5MT | F | R | Estate Van FWD EJD | | GCO82374 | Outer Joint | 46T | 26 | 23 | 57.7 | 95.5 | 58.5 | M |
| | 2002.10-2007.09 | 5MT | F | R | Estate Van FWD EJD | | GCI88057 | Inner Joint | | 25 | 23 | 40 | 73.5 | 111 | |
| | 2002.10-2007.09 | MT | F | L | Estate Van FWD EJD | | GDS83213 | Drive Shaft | 46T | 26 | 25 | 57.7 | 95.5 | 598 | |
| | 2002.10-2007.09 | MT | F | L | Estate Van FWD EJD | | GCI68007 | Inner Joint | | 25 | 23 | 40 | 74.5 | 111 | |
| 2.0 (100 kw) | 2004.10-2010.12 | MT | F | L | Estate FWD ECC | | GDS83213 | Drive Shaft | 46T | 26 | 25 | 57.7 | 95.5 | 598 | |
| | 2004.10-2010.12 | MT | F | R | Estate FWD ECC | | GDS83444 | Drive Shaft | 46T | 26 | 25 | 57.7 | 95.5 | 952 | |

| | YEAR | TRANSM. | F/R | L/R | BODY STYLE & DRIVE TYPE & ENGINE | REMARKS | G-AP Ref. | PRODUCT | ABS | Technical Specifications A | B | C | H | L | P |
|---|---|---|---|---|---|---|---|---|---|---|---|---|---|---|---|
| **CHRYSLER** | | | | | | | | | | | | | | | |
| **PT Cruiser** | | | | | | | | | | | | | | | |
| 2.0 (100 kw) | 2004.10-2010.12 | MT | F | L/R | Estate FWD ECC | | GCO82374 | Outer Joint | 46T | 26 | 23 | 57.7 | 95.5 | 58.5 | M |
| | 2004.10-2010.12 | MT | F | L | Estate FWD ECC | | GCI68007 | Inner Joint | | 25 | 23 | 40 | 74.5 | 111 | |
| | 2004.10-2010.12 | MT | F | R | Estate FWD ECC | | GCI88057 | Inner Joint | | 25 | 23 | 40 | 73.5 | 111 | |
| 2.0 (104 kw) | 2000.06-2004.09 | AT/MT | F | L/R | Estate FWD ECC | | GCO89040 | Outer Joint | 46T | 26 | 23 | 57.7 | 92.5 | 58 | M |
| | 2002.10-2004.03 | 5MT | F | R | Estate Van FWD ECC | | GDS83444 | Drive Shaft | 46T | 26 | 25 | 57.7 | 95.5 | 952 | |
| | 2002.10-2004.03 | 5MT | F | R | Estate Van FWD ECC | | GCO82374 | Outer Joint | 46T | 26 | 23 | 57.7 | 95.5 | 58.5 | M |
| | 2002.10-2004.03 | 5MT | F | R | Estate Van FWD ECC | | GCI88057 | Inner Joint | | 25 | 23 | 40 | 73.5 | 111 | |
| | 2002.10-2004.03 | MT | F | L | Estate Van FWD ECC | | GDS83213 | Drive Shaft | 46T | 26 | 25 | 57.7 | 95.5 | 598 | |
| | 2002.10-2004.03 | MT | F | L | Estate Van FWD ECC | | GCI68007 | Inner Joint | | 25 | 23 | 40 | 74.5 | 111 | |
| 2.2 (89 kw) | 2002.03-2010.12 | 5MT | F | L/R | Estate FWD EDJ | | GCO89032 | Outer Joint | 46T | 26 | 24 | 57.7 | 92.5 | 58 | M |
| | 2002.03-2010.12 | 5MT | F | L/R | Estate FWD EDJ | | GCO89040 | Outer Joint | 46T | 26 | 23 | 57.7 | 92.5 | 58 | M |
| | 2002.03-2010.12 | MT | F | L | Estate FWD EDJ | | GDS89074 | Drive Shaft | 46T | 26 | 28 | 57.7 | 92.5 | 556 | |
| | 2002.03-2010.12 | MT | F | R | Estate FWD EDJ | | GDS89073 | Drive Shaft | 46T | 26 | 32 | 57.7 | 92.5 | 490 | |
| | 2002.10-2008.08 | | F | L | Estate Van FWD EDJ | | GDS89074 | Drive Shaft | 46T | 26 | 28 | 57.7 | 92.5 | 556 | |
| | 2002.10-2008.08 | | F | R | Estate Van FWD EDJ | | GDS89073 | Drive Shaft | 46T | 26 | 32 | 57.7 | 92.5 | 490 | |
| | 2002.10-2008.08 | | F | L/R | Estate Van FWD EDJ | | GCO89032 | Outer Joint | 46T | 26 | 24 | 57.7 | 92.5 | 58 | M |
| 2.2 (110 kw) | 2005.08-2010.12 | 5MT | F | L/R | Estate FWD EDJ | | GCO89032 | Outer Joint | 46T | 26 | 24 | 57.7 | 92.5 | 58 | M |
| | 2005.08-2010.12 | 5MT | F | L/R | Estate FWD EDJ | | GCO89040 | Outer Joint | 46T | 26 | 23 | 57.7 | 92.5 | 58 | M |
| | 2005.08-2010.12 | MT | F | L | Estate FWD EDJ | | GDS89074 | Drive Shaft | 46T | 26 | 28 | 57.7 | 92.5 | 556 | |
| | 2005.08-2010.12 | MT | F | R | Estate FWD EDJ | | GDS89073 | Drive Shaft | 46T | 26 | 32 | 57.7 | 92.5 | 490 | |
| 2.4 (105 kw) | 2004.03-2008.03 | MT | F | L | Convertible FWD EDZ | | GDS83213 | Drive Shaft | 46T | 26 | 25 | 57.7 | 95.5 | 598 | |
| | 2004.03-2008.03 | MT | F | R | Convertible FWD EDZ | | GDS83444 | Drive Shaft | 46T | 26 | 25 | 57.7 | 95.5 | 952 | |
| | 2004.03-2008.03 | MT | F | L/R | Convertible FWD EDZ | | GCO82374 | Outer Joint | 46T | 26 | 23 | 57.7 | 95.5 | 58.5 | M |
| | 2004.03-2008.03 | MT | F | L | Convertible FWD EDZ | | GCI68007 | Inner Joint | | 25 | 23 | 40 | 74.5 | 111 | |
| | 2004.03-2008.03 | MT | F | R | Convertible FWD EDZ | | GCI88057 | Inner Joint | | 25 | 23 | 40 | 73.5 | 111 | |
| | 2005.08-2010.12 | 5MT | F | L | Estate FWD EDZ | | GDS83213 | Drive Shaft | 46T | 26 | 25 | 57.7 | 95.5 | 598 | |
| | 2005.08-2010.12 | 5MT | F | R | Estate FWD EDZ | | GDS83444 | Drive Shaft | 46T | 26 | 25 | 57.7 | 95.5 | 952 | |
| | 2005.08-2010.12 | 5MT | F | L/R | Estate FWD EDZ | | GCO82374 | Outer Joint | 46T | 26 | 23 | 57.7 | 95.5 | 58.5 | M |
| | 2005.08-2010.12 | 5MT | F | L | Estate FWD EDZ | | GCI68007 | Inner Joint | | 25 | 23 | 40 | 74.5 | 111 | |
| | 2005.08-2010.12 | 5MT | F | R | Estate FWD EDZ | | GCI88057 | Inner Joint | | 25 | 23 | 40 | 73.5 | 111 | |
| 2.4 (110 kw) | 2000.06-2010.12 | AT/MT | F | L/R | Estate FWD EDZ | | GCO89040 | Outer Joint | 46T | 26 | 23 | 57.7 | 92.5 | 58 | M |
| 2.4 (164 kw) | 2003.08-2010.12 | 4AT/5MT | F | L/R | Estate FWD EDV | | GDS15042 | Drive Shaft | 46T | 26 | 32 | 57.7 | 92.5 | 520 | |
| | 2004.03-2008.03 | 4AT/5MT | F | L/R | Convertible FWD EDV | For Engine code:EDT | GDS15042 | Drive Shaft | 46T | 26 | 32 | 57.7 | 92.5 | 520 | |
| 2.4 (169 kw) | 2004.09-2010.12 | 4AT/5MT | F | L/R | Estate FWD EDV | For Engine code:EDT | GDS15042 | Drive Shaft | 46T | 26 | 32 | 57.7 | 92.5 | 520 | |
| **Sebring** | | | | | | | | | | | | | | | |
| 2.0 (103 kw) | 2007.07-2010.12 | 6MT | F | R | Convertible FWD ECD | Date to:2008.12 | GDS89084 | Drive Shaft | | 32 | 28 | 56.7 | 105 | 620 | |
| | 2007.07-2010.12 | 6AT/6MT | F | R | Saloon FWD ECD | Date to:2008.12 | GDS89084 | Drive Shaft | | 32 | 28 | 56.7 | 105 | 620 | |
| 2.0 (104 kw) | 2001.04-2007.06 | AT/MT | F | L/R | Convertible FWD ECC | | GCO89040 | Outer Joint | 46T | 26 | 23 | 57.7 | 92.5 | 58 | M |
| 2.0 (115 kw) | 2007.07-2010.12 | 5MT | F | R | Saloon FWD ECN | Date From:2009.01 | GDS83857 | Drive Shaft | | 32 | 28 | 57 | 104.5 | 583 | |
| | 2007.07-2010.12 | 5MT | F | R | Saloon FWD ECN | Date from:2009.01 | GCO82522 | Outer Joint | | 32 | 32 | 57 | 104.5 | 62 | I |
| | 2007.07-2010.12 | 5MT | F | R | Saloon FWD ECN | Date from:2009.01 | GCI82400 | Inner Joint | | 28 | 24 | 42.5 | | 123 | |
| 2.4 (105 kw) | 2001.04-2007.06 | 4AT/5MT | F | L | Saloon FWD EDZ | | GDS83484 | Drive Shaft | 46T | 26 | 25 | 54 | 89.5 | 617 | |
| | 2001.04-2007.06 | 4AT/5MT | F | L | Saloon FWD EDZ | | GCO82388 | Outer Joint | 46T | 26 | 32 | 54 | 89.5 | 63 | I |
| | 2001.04-2007.06 | 4AT/5MT | F | L | Saloon FWD EDZ | | GCI82239 | Inner Joint | | 25 | 32 | 40 | 73.5 | 110.5 | |
| | 2001.04-2007.06 | AT/MT | F | R | Saloon FWD EDZ | | GDS89033 | Drive Shaft | 46T | 26 | 25 | 54.1 | 95 | 985 | |
| | 2001.04-2007.06 | AT/MT | F | R | Saloon FWD EDZ | | GCI89010 | Inner Joint | | 25 | 32 | 40 | 74 | 113 | |
| 2.4 (112 kw) | 2000.09-2007.06 | AT/MT | F | L/R | Cabriolet FWD EY7 | | GCO89040 | Outer Joint | 46T | 26 | 23 | 57.7 | 92.5 | 58 | M |
| | 2001.04-2007.06 | 4AT/5MT | F | L | Saloon FWD EDZ | | GDS83484 | Drive Shaft | 46T | 26 | 25 | 54 | 89.5 | 617 | |
| | 2001.04-2007.06 | 4AT/5MT | F | L | Saloon FWD EDZ | | GCO82388 | Outer Joint | 46T | 26 | 32 | 54 | 89.5 | 63 | I |
| | 2001.04-2007.06 | 4AT/5MT | F | L | Saloon FWD EDZ | | GCI82239 | Inner Joint | | 25 | 32 | 40 | 73.5 | 110.5 | |
| | 2001.04-2007.06 | AT/MT | F | R | Saloon FWD EDZ | | GDS89033 | Drive Shaft | 46T | 26 | 25 | 54.1 | 95 | 985 | |
| | 2001.04-2007.06 | AT/MT | F | R | Saloon FWD EDZ | | GCI89010 | Inner Joint | | 25 | 32 | 40 | 74 | 113 | |
| 2.4 (125 kw) | 2007.07-2010.12 | 4AT/6AT | F | L/R | Convertible FWD ED3 | | GCI81929 | Inner Joint | | 25 | 24 | 40 | 73.5 | 111.5 | |
| | 2007.07-2010.12 | AT | F | L | Convertible FWD ED3 | | GDS82646 | Drive Shaft | | 32 | 25 | 56.7 | 104.5 | 646 | |
| | 2007.07-2010.12 | AT | F | R | Convertible FWD ED3 | | GDS82639 | Drive Shaft | | 32 | 25 | 56.7 | 104.5 | 994 | |
| | 2007.07-2010.12 | AT | F | L/R | Convertible FWD ED3 | | GCO82522 | Outer Joint | | 32 | 32 | 57 | 104.5 | 62 | I |
| | 2007.07-2010.12 | 4AT | F | R | Saloon FWD EDG;ED3 | | GDS83857 | Drive Shaft | | 32 | 28 | 57 | 104.5 | 583 | |
| | 2007.07-2010.12 | 4AT | F | L/R | Saloon FWD EDG;ED3 | | GCO82522 | Outer Joint | | 32 | 32 | 57 | 104.5 | 62 | I |
| | 2007.07-2010.12 | 4AT | F | R | Saloon FWD EDG;ED3 | | GCI82400 | Inner Joint | | 28 | 24 | 42.5 | | 123 | |
| | 2007.07-2010.12 | AT | F | L | Saloon FWD EDG;ED3 | | GDS82646 | Drive Shaft | | 32 | 25 | 56.7 | 104.5 | 646 | |
| | 2007.07-2010.12 | AT | F | L | Saloon FWD EDG;ED3 | | GCI81929 | Inner Joint | | 25 | 24 | 40 | 73.5 | 111.5 | |
| 2.4 (128 kw) | 2006.09-2010.12 | 4AT | F | R | Saloon FWD EDG | | GDS83857 | Drive Shaft | | 32 | 28 | 57 | 104.5 | 583 | |
| | 2006.09-2010.12 | 4AT | F | L/R | Saloon FWD EDG | | GCO82522 | Outer Joint | | 32 | 32 | 57 | 104.5 | 62 | I |
| | 2006.09-2010.12 | 4AT | F | R | Saloon FWD EDG | | GCI82400 | Inner Joint | | 28 | 24 | 42.5 | | 123 | |
| | 2006.09-2010.12 | AT | F | L | Saloon FWD EDG | | GDS82646 | Drive Shaft | | 32 | 25 | 56.7 | 104.5 | 646 | |

| | YEAR | TRANSM. | F/R | L/R | BODY STYLE & DRIVE TYPE & ENGINE | REMARKS | G-AP Ref. | PRODUCT | ABS | Technical Specifications A | B | C | H | L | P |
|---|---|---|---|---|---|---|---|---|---|---|---|---|---|---|---|
| **CHRYSLER** | | | | | | | | | | | | | | | |
| **Sebring** | | | | | | | | | | | | | | | |
| 2.4 (128 kw) | 2007.05-2010.12 | 4AT/6AT | F | L/R | Convertible FWD EDG | | GCI81929 | Inner Joint | | 25 | 24 | 40 | 73.5 | 111.5 | |
| | 2007.05-2010.12 | AT | F | L | Convertible FWD EDG | | GDS82646 | Drive Shaft | | 32 | 25 | 56.7 | 104.5 | 646 | |
| | 2007.05-2010.12 | AT | F | R | Convertible FWD EDG | | GDS82639 | Drive Shaft | | 32 | 25 | 56.7 | 104.5 | 994 | |
| 2.4 (164 kw) | 2001.09-2007.06 | 4AT/5MT | F | L | Convertible FWD EDV | | GDS83484 | Drive Shaft | 46T | 26 | 25 | 54 | 89.5 | 617 | |
| | 2001.09-2007.06 | 4AT/5MT | F | L | Convertible FWD EDV | | GCO82388 | Outer Joint | 46T | 26 | 32 | 54 | 89.5 | 63 | I |
| | 2001.09-2007.06 | 4AT/5MT | F | L | Convertible FWD EDV | | GCI82239 | Inner Joint | | 25 | 32 | 40 | 73.5 | 110.5 | |
| | 2001.09-2007.06 | AT/MT | F | R | Convertible FWD EDV | | GDS89033 | Drive Shaft | 46T | 26 | 25 | 54.1 | 95 | 985 | |
| | 2001.09-2007.06 | AT/MT | F | R | Convertible FWD EDV | | GCI89010 | Inner Joint | | 25 | 32 | 40 | 74 | 113 | |
| | 2001.09-2007.06 | 4AT/5MT | F | L | Saloon FWD EDV | | GDS83484 | Drive Shaft | 46T | 26 | 25 | 54 | 89.5 | 617 | |
| | 2001.09-2007.06 | 4AT/5MT | F | L | Saloon FWD EDV | | GCO82388 | Outer Joint | 46T | 26 | 32 | 54 | 89.5 | 63 | I |
| | 2001.09-2007.06 | 4AT/5MT | F | L | Saloon FWD EDV | | GCI82239 | Inner Joint | | 25 | 32 | 40 | 73.5 | 110.5 | |
| | 2001.09-2007.06 | AT/MT | F | R | Saloon FWD EDV | | GDS89033 | Drive Shaft | 46T | 26 | 25 | 54.1 | 95 | 985 | |
| | 2001.09-2007.06 | AT/MT | F | R | Saloon FWD EDV | | GCI89010 | Inner Joint | | 25 | 32 | 40 | 74 | 113 | |
| 2.7 (137 kw) | 2007.05-2010.09 | 4AT | F | L | Convertible FWD EER | | GDS89079 | Drive Shaft | | 32 | 29 | 56.7 | 104.5 | 643 | |
| | 2007.05-2010.09 | 4AT | F | L | Convertible FWD EER | | GCI81929 | Inner Joint | | 25 | 24 | 40 | 73.5 | 111.5 | |
| | 2007.05-2010.09 | AT | F | L | Convertible FWD EER | | GDS82646 | Drive Shaft | | 32 | 25 | 56.7 | 104.5 | 646 | |
| | 2007.05-2010.09 | AT | F | R | Convertible FWD EER | Date from:2008.01 | GDS89080 | Drive Shaft | | 32 | 28 | 56.7 | 104.5 | 521 | |
| | 2007.05-2010.09 | AT | F | L/R | Convertible FWD EER | | GCO82522 | Outer Joint | | 32 | 32 | 57 | 104.5 | 62 | I |
| | 2007.07-2010.09 | 6AT | F | L | Saloon FWD EER | Date from:2009.01 | GDS89079 | Drive Shaft | | 32 | 29 | 56.7 | 104.5 | 643 | |
| | 2007.07-2010.09 | 6AT | F | R | Saloon FWD EER | Date from:2009.01 | GDS89080 | Drive Shaft | | 32 | 28 | 56.7 | 104.5 | 521 | |
| | 2007.07-2010.09 | 6AT | F | L | Saloon FWD EER | Date to:2008.12 | GCI81929 | Inner Joint | | 25 | 24 | 40 | 73.5 | 111.5 | |
| | 2007.07-2010.09 | AT | F | L | Saloon FWD EER | Date to:2008.12 | GDS82646 | Drive Shaft | | 32 | 25 | 56.7 | 104.5 | 646 | |
| | 2007.07-2010.09 | AT | F | L/R | Saloon FWD EER | | GCO82522 | Outer Joint | | 32 | 32 | 57 | 104.5 | 62 | I |
| | 2007.07-2010.12 | 4AT/6AT | F | L | Convertible FWD EER | | GDS89079 | Drive Shaft | | 32 | 29 | 56.7 | 104.5 | 643 | |
| | 2007.07-2010.12 | 4AT/6AT | F | L | Convertible FWD EER | | GCI81929 | Inner Joint | | 25 | 24 | 40 | 73.5 | 111.5 | |
| | 2007.07-2010.12 | AT | F | L | Convertible FWD EER | | GDS82646 | Drive Shaft | | 32 | 25 | 56.7 | 104.5 | 646 | |
| | 2007.07-2010.12 | AT | F | R | Convertible FWD EER | Date from:2008.01 | GDS89080 | Drive Shaft | | 32 | 28 | 56.7 | 104.5 | 521 | |
| | 2007.07-2010.12 | AT | F | L/R | Convertible FWD EER | | GCO82522 | Outer Joint | | 32 | 32 | 57 | 104.5 | 62 | I |
| 2.7 (138 kw) | 2007.07-2010.12 | 6AT | F | L | Saloon FWD EER | Date from:2009.01 | GDS89079 | Drive Shaft | | 32 | 29 | 56.7 | 104.5 | 643 | |
| | 2007.07-2010.12 | 6AT | F | R | Saloon FWD EER | Date from:2009.01 | GDS89080 | Drive Shaft | | 32 | 28 | 56.7 | 104.5 | 521 | |
| | 2007.07-2010.12 | 6AT | F | L | Saloon FWD EER | Date to:2008.12 | GCI81929 | Inner Joint | | 25 | 24 | 40 | 73.5 | 111.5 | |
| | 2007.07-2010.12 | AT | F | L | Saloon FWD EER | Date to:2008.12 | GDS82646 | Drive Shaft | | 32 | 25 | 56.7 | 104.5 | 646 | |
| | 2007.07-2010.12 | AT | F | L/R | Saloon FWD EER | Date to:2008.12 | GCO82522 | Outer Joint | | 32 | 32 | 57 | 104.5 | 62 | I |
| 2.7 (141 kw) | 2006.09-2010.12 | 4AT | F | L | Saloon FWD EER | | GDS89079 | Drive Shaft | | 32 | 29 | 56.7 | 104.5 | 643 | |
| | 2006.09-2010.12 | 4AT | F | L | Saloon FWD EER | | GCI81929 | Inner Joint | | 25 | 24 | 40 | 73.5 | 111.5 | |
| | 2006.09-2010.12 | AT | F | L | Saloon FWD EER | | GDS82646 | Drive Shaft | | 32 | 25 | 56.7 | 104.5 | 646 | |
| | 2006.09-2010.12 | AT | F | R | Saloon FWD EER | Date from:2008.01 | GDS89080 | Drive Shaft | | 32 | 28 | 56.7 | 104.5 | 521 | |
| | 2006.09-2010.12 | AT | F | L/R | Saloon FWD EER | | GCO82522 | Outer Joint | | 32 | 32 | 57 | 104.5 | 62 | I |
| | 2007.07-2010.12 | 4AT | F | L | Convertible FWD EER | | GDS89079 | Drive Shaft | | 32 | 29 | 56.7 | 104.5 | 643 | |
| | 2007.07-2010.12 | 4AT | F | L | Convertible FWD EER | | GCI81929 | Inner Joint | | 25 | 24 | 40 | 73.5 | 111.5 | |
| | 2007.07-2010.12 | AT | F | L | Convertible FWD EER | | GDS82646 | Drive Shaft | | 32 | 25 | 56.7 | 104.5 | 646 | |
| | 2007.07-2010.12 | AT | F | R | Convertible FWD EER | Date from:2008.01 | GDS89080 | Drive Shaft | | 32 | 28 | 56.7 | 104.5 | 521 | |
| | 2007.07-2010.12 | AT | F | L/R | Convertible FWD EER | | GCO82522 | Outer Joint | | 32 | 32 | 57 | 104.5 | 62 | I |
| 2.7 (149 kw) | 2001.04-2007.06 | 4AT | F | L | Convertible FWD EER;EES | | GDS83484 | Drive Shaft | 46T | 26 | 25 | 54 | 89.5 | 617 | |
| | 2001.04-2007.06 | 4AT | F | L | Convertible FWD EER;EES | | GCO82388 | Outer Joint | 46T | 26 | 32 | 54 | 89.5 | 63 | I |
| | 2001.04-2007.06 | 4AT | F | L | Convertible FWD EER;EES | | GCI82239 | Inner Joint | | 25 | 32 | 40 | 73.5 | 110.5 | |
| | 2001.04-2007.06 | 4AT | F | L | Saloon FWD EER;EES | | GDS83484 | Drive Shaft | 46T | 26 | 25 | 54 | 89.5 | 617 | |
| | 2001.04-2007.06 | 4AT | F | L | Saloon FWD EER;EES | | GCO82388 | Outer Joint | 46T | 26 | 32 | 54 | 89.5 | 63 | I |
| | 2001.04-2007.06 | 4AT | F | L | Saloon FWD EER;EES | | GCI82239 | Inner Joint | | 25 | 32 | 40 | 73.5 | 110.5 | |
| 3.5 (175 kw) | 2006.09-2008.12 | 6AT | F | L | Saloon FWD EGF | Date from:2008.01 | GDS89079 | Drive Shaft | | 32 | 29 | 56.7 | 104.5 | 643 | |
| | 2006.09-2008.12 | 6AT | F | L | Saloon FWD EGF | Date to:2007.12 | GCI81929 | Inner Joint | | 25 | 24 | 40 | 73.5 | 111.5 | |
| | 2006.09-2008.12 | AT | F | L | Saloon FWD EGF | Date to:2007.12 | GDS82646 | Drive Shaft | | 32 | 25 | 56.7 | 104.5 | 646 | |
| | 2006.09-2008.12 | AT | F | R | Saloon FWD EGF | Date from:2008.01 | GDS89080 | Drive Shaft | | 32 | 28 | 56.7 | 104.5 | 521 | |
| | 2006.09-2008.12 | AT | F | L/R | Saloon FWD EGF | Date to:2007.12 | GCO82522 | Outer Joint | | 32 | 32 | 57 | 104.5 | 62 | I |
| | 2007.05-2010.12 | 6AT | F | L | Convertible FWD EGG | Date from:2008.01 | GDS89079 | Drive Shaft | | 32 | 29 | 56.7 | 104.5 | 643 | |
| | 2007.05-2010.12 | 6AT | F | R | Convertible FWD EGG | | GDS89080 | Drive Shaft | | 32 | 28 | 56.7 | 104.5 | 521 | |
| | 2007.05-2010.12 | 6AT | F | L | Convertible FWD EGG | Date to:2007.12 | GCI81929 | Inner Joint | | 25 | 24 | 40 | 73.5 | 111.5 | |
| | 2007.05-2010.12 | AT | F | L | Convertible FWD EGG | Date to:2007.12 | GDS82646 | Drive Shaft | | 32 | 25 | 56.7 | 104.5 | 646 | |
| | 2007.05-2010.12 | AT | F | L/R | Convertible FWD EGG | Date to:2007.12 | GCO82522 | Outer Joint | | 32 | 32 | 57 | 104.5 | 62 | I |
| **Town & Country** | | | | | | | | | | | | | | | |
| 3.8 (147 kw) | 2008.09- | 6AT | F | L | MPV FWD EGL | | GDS15057 | Drive Shaft | | 32 | 29 | 55 | 105.5 | 667 | |
| | 2008.09- | 6AT | F | R | MPV FWD EGL | | GDS88137 | Drive Shaft | | 32 | 29 | 55 | 105.5 | 1058 | |
| | 2008.09- | | F | L | MPV FWD EGL | | GCO89051 | Outer Joint | | 32 | 34 | 55 | 105.5 | 60 | M |
| 3.8 (148 kw) | 2007.10- | 6AT | F | L | MPV FWD EGL | | GDS15057 | Drive Shaft | | 32 | 29 | 55 | 105.5 | 667 | |
| | 2007.10- | 6AT | F | R | MPV FWD EGL | | GDS88137 | Drive Shaft | | 32 | 29 | 55 | 105.5 | 1058 | |

| | YEAR | TRANSM. | F/R | L/R | BODY STYLE & DRIVE TYPE & ENGINE | REMARKS | G-AP Ref. | PRODUCT | ABS | Technical Specifications A | B | C | H | L | P |
|---|---|---|---|---|---|---|---|---|---|---|---|---|---|---|---|
| **CHRYSLER** | | | | | | | | | | | | | | | |
| **Town & Country** | | | | | | | | | | | | | | | |
| 3.8 (148 kw) | 2007.10- | | F | L | MPV FWD EGL | | GCO89051 | Outer Joint | | 32 | 34 | 55 | 105.5 | 60 | M |
| 3.8 (160 kw) | 2000.01-2004.12 | AT/MT | F | R | MPV 4WD EGH | Vehicle Production Country:USA;Date from:2001.01;Date to:2006.12 | GDS89005 | Drive Shaft | 47T | 26 | 25 | 54 | 98.5 | 1030 | |
| | 2000.01-2004.12 | AT/MT | F | L/R | MPV 4WD EGH | Vehicle Production Country:USA;Date from:2001.01;Date to:2006.12 | GCO89029 | Outer Joint | 47T | 26 | 32 | 54 | 98.5 | 61.5 | I |
| | 2000.01-2007.12 | AT/MT | F | R | MPV FWD EGH | Vehicle Production Country:USA;Date from:2001.01;Date to:2006.12 | GDS89005 | Drive Shaft | 47T | 26 | 25 | 54 | 98.5 | 1030 | |
| | 2000.01-2007.12 | AT/MT | F | L/R | MPV FWD EGH | Vehicle Production Country:USA;Date from:2001.01;Date to:2006.12 | GCO89029 | Outer Joint | 47T | 26 | 32 | 54 | 98.5 | 61.5 | I |
| **Voyager** | | | | | | | | | | | | | | | |
| 2.0 (98 kw) | 1995.01-2001.03 | MT | F | L | MPV FWD ECB | | GDS88024 | Drive Shaft | 47T | 26 | 25 | 54 | 98.5 | 640 | |
| | 1995.01-2001.03 | MT | F | R | MPV FWD ECB | | GDS89039 | Drive Shaft | 47T | 26 | 25 | 54 | 98.5 | 1028 | |
| | 1995.01-2001.03 | MT | F | L/R | MPV FWD ECB | Manufacturer Restriction:European Production | GCO89029 | Outer Joint | 47T | 26 | 32 | 54 | 98.5 | 61.5 | I |
| | 1995.01-2001.03 | MT | F | L | MPV FWD ECB | | GCI99059 | Inner Joint | | 25 | 32 | 40 | 71.5 | 107 | |
| 2.4 (108 kw) | 2000.02-2008.12 | 4AT/5MT | F | R | MPV FWD EDZ | Inner teeth of wheel side:25 | GDS89066 | Drive Shaft | 47T | 26 | 27 | 54.1 | 98 | 1032 | |
| | 2000.02-2008.12 | MT | F | L | MPV FWD EDZ | | GDS89067 | Drive Shaft | 47T | 26 | 27 | 54.1 | 98 | 639 | |
| | 2000.02-2008.12 | MT | F | R | MPV FWD EDZ | Inner teeth of wheel side:32 | GDS89082 | Drive Shaft | 47T | 26 | 27 | 54 | 98.5 | 1031 | |
| | 2000.02-2008.12 | MT | F | L/R | MPV FWD EDZ | Model year from:2001,Model year to:2008 | GCO89029 | Outer Joint | 47T | 26 | 32 | 54 | 98.5 | 61.5 | I |
| 2.5 (88 kw) | 2005.08-2008.12 | AT/MT | F | L/R | MPV FWD EDK | | GCO89005 | Outer Joint | | 26 | 32 | 54.1 | 98 | 62 | I |
| | 2005.08-2008.12 | MT | F | L | MPV FWD EDK | | GDS89067 | Drive Shaft | 47T | 26 | 27 | 54.1 | 98 | 639 | |
| | 2005.08-2008.12 | MT | F | R | MPV FWD EDK | | GDS89082 | Drive Shaft | 47T | 26 | 27 | 54 | 98.5 | 1031 | |
| 2.5 (105 kw) | 2000.02-2008.12 | 5MT | F | R | MPV FWD ENJ | Inner teeth of wheel side:25 | GDS89066 | Drive Shaft | 47T | 26 | 27 | 54.1 | 98 | 1032 | |
| | 2000.02-2008.12 | MT | F | L | MPV FWD ENJ | | GDS89067 | Drive Shaft | 47T | 26 | 27 | 54.1 | 98 | 639 | |
| | 2000.02-2008.12 | MT | F | R | MPV FWD ENJ | Inner teeth of wheel side:32 | GDS89082 | Drive Shaft | 47T | 26 | 27 | 54 | 98.5 | 1031 | |
| | 2000.02-2008.12 | MT | F | L/R | MPV FWD ENJ | Model year from:2001,Model year to:2008 | GCO89029 | Outer Joint | 47T | 26 | 32 | 54 | 98.5 | 61.5 | I |
| 2.8 (110 kw) | 2004.06-2008.12 | 4AT | F | L/R | MPV FWD ENR | Model year from:2004,Model year to:2008 | GCO89029 | Outer Joint | 47T | 26 | 32 | 54 | 98.5 | 61.5 | I |
| | 2004.06-2008.12 | AT | F | L | MPV FWD ENR | | GDS89004 | Drive Shaft | 47T | 26 | 25 | 54 | 98.5 | 638 | |
| | 2004.06-2008.12 | AT | F | R | MPV FWD ENR | | GDS89005 | Drive Shaft | 47T | 26 | 25 | 54 | 98.5 | 1030 | |
| 3.3 (128 kw) | 2000.02-2008.12 | AT | F | L | MPV 4WD EGA | | GDS89004 | Drive Shaft | 47T | 26 | 25 | 54 | 98.5 | 638 | |
| | 2000.02-2008.12 | AT | F | R | MPV 4WD EGA | | GDS89005 | Drive Shaft | 47T | 26 | 25 | 54 | 98.5 | 1030 | |
| | 2000.02-2008.12 | AT | F | L/R | MPV 4WD EGA | Vehicle Production Country:USA;Date to:2006.12 | GCO89029 | Outer Joint | 47T | 26 | 32 | 54 | 98.5 | 61.5 | I |
| | 2000.02-2008.12 | AT | F | L | MPV FWD EGA, EGM | | GDS89004 | Drive Shaft | 47T | 26 | 25 | 54 | 98.5 | 638 | |
| | 2000.02-2008.12 | AT | F | R | MPV FWD EGA, EGM | | GDS89005 | Drive Shaft | 47T | 26 | 25 | 54 | 98.5 | 1030 | |
| | 2000.02-2008.12 | AT | F | L/R | MPV FWD EGA, EGM | Vehicle Production Country:USA;Date to:2006.12 | GCO89029 | Outer Joint | 47T | 26 | 32 | 54 | 98.5 | 61.5 | I |
| 3.8 (131 kw) | 1997.10-2001.03 | 4AT | F | L | MPV Van 4WD EGH | | GDS88024 | Drive Shaft | 47T | 26 | 25 | 54 | 98.5 | 640 | |
| | 1997.10-2001.03 | 4AT | F | L/R | MPV Van 4WD EGH | | GCO89029 | Outer Joint | 47T | 26 | 32 | 54 | 98.5 | 61.5 | I |
| **Voyager/Grand Voyager** | | | | | | | | | | | | | | | |
| 2.4 (111 kw) | 1995.01-2001.03 | 5MT | F | L | MPV FWD B00 | | GDS88024 | Drive Shaft | 47T | 26 | 25 | 54 | 98.5 | 640 | |
| | 1995.01-2001.03 | 5MT | F | L/R | MPV FWD B00 | | GCO89029 | Outer Joint | 47T | 26 | 32 | 54 | 98.5 | 61.5 | I |
| | 1995.01-2001.03 | 5MT | F | L | MPV FWD B00 | | GCI99059 | Inner Joint | | 25 | 32 | 40 | 71.5 | 107 | |
| | 1995.01-2001.03 | MT | F | R | MPV FWD B00 | | GDS89039 | Drive Shaft | 47T | 26 | 25 | 54 | 98.5 | 1028 | |
| 2.5 (85 kw) | 1995.01-2001.03 | 5MT | F | L | MPV FWD 425 CLIRS/X, ENC | | GDS88024 | Drive Shaft | 47T | 26 | 25 | 54 | 98.5 | 640 | |
| | 1995.01-2001.03 | 5MT | F | L | MPV FWD 425 CLIRS/X, ENC | | GCI99059 | Inner Joint | | 25 | 32 | 40 | 71.5 | 107 | |
| | 1995.01-2001.03 | MT | F | R | MPV FWD 425 CLIRS/X, ENC | | GDS89039 | Drive Shaft | 47T | 26 | 25 | 54 | 98.5 | 1028 | |
| | 1995.01-2001.03 | MT | F | L/R | MPV FWD 425 CLIRS/X, ENC | Manufacturer Restriction:European Production | GCO89029 | Outer Joint | 47T | 26 | 32 | 54 | 98.5 | 61.5 | I |
| 3.3 (116 kw) | 1995.01-2001.03 | 4AT | F | L | MPV FWD R00 | | GDS88024 | Drive Shaft | 47T | 26 | 25 | 54 | 98.5 | 640 | |
| | 1995.01-2001.03 | 4AT | F | R | MPV FWD R00 | | GDS89039 | Drive Shaft | 47T | 26 | 25 | 54 | 98.5 | 1028 | |
| | 1995.01-2001.03 | 4AT | F | L | MPV FWD R00 | | GCI99059 | Inner Joint | | 25 | 32 | 40 | 71.5 | 107 | |
| | 1995.01-2001.03 | AT | F | L | MPV FWD R00 | | GDS89004 | Drive Shaft | 47T | 26 | 25 | 54 | 98.5 | 638 | |
| | 1995.01-2001.03 | AT | F | L/R | MPV FWD R00 | | GCO89029 | Outer Joint | 47T | 26 | 32 | 54 | 98.5 | 61.5 | I |
| 3.8 (122 kw) | 1995.01-2001.03 | 4AT | F | L | MPV 4WD L00 | | GDS88024 | Drive Shaft | 47T | 26 | 25 | 54 | 98.5 | 640 | |
| | 1995.01-2001.03 | 4AT | F | L | MPV 4WD L00 | | GCI99059 | Inner Joint | | 25 | 32 | 40 | 71.5 | 107 | |
| | 1995.01-2001.03 | AT | F | R | MPV 4WD L00 | Date From:1995.10;Date To:1997.09 | GDS89039 | Drive Shaft | 47T | 26 | 25 | 54 | 98.5 | 1028 | |
| | 1995.01-2001.03 | AT | F | L/R | MPV 4WD L00 | Vehicle Production Country:USA | GCO89029 | Outer Joint | 47T | 26 | 32 | 54 | 98.5 | 61.5 | I |
| 3.8 (131 kw) | 1995.01-2001.03 | 4AT | F | L | MPV 4WD EGH | | GDS88024 | Drive Shaft | 47T | 26 | 25 | 54 | 98.5 | 640 | |
| | 1995.01-2001.03 | 4AT | F | L | MPV 4WD EGH | | GCI99059 | Inner Joint | | 25 | 32 | 40 | 71.5 | 107 | |
| | 1995.01-2001.03 | AT | F | R | MPV 4WD EGH | Date From:1997.10 | GDS89039 | Drive Shaft | 47T | 26 | 25 | 54 | 98.5 | 1028 | |
| | 1995.01-2001.03 | AT | F | L/R | MPV 4WD EGH | Vehicle Production Country:USA | GCO89029 | Outer Joint | 47T | 26 | 32 | 54 | 98.5 | 61.5 | I |
| **Voyager/Tacuma** | | | | | | | | | | | | | | | |
| 3.0 (112 kw) | 1995.01-2001.03 | AT | F | L | MPV FWD EFA | | GDS88024 | Drive Shaft | 47T | 26 | 25 | 54 | 98.5 | 640 | |
| | 1995.01-2001.03 | AT | F | R | MPV FWD EFA | Vehicle Production Country:USA | GDS89039 | Drive Shaft | 47T | 26 | 25 | 54 | 98.5 | 1028 | |
| | 1995.01-2001.03 | AT | F | L/R | MPV FWD EFA | Vehicle Production Country:USA | GCO89029 | Outer Joint | 47T | 26 | 32 | 54 | 98.5 | 61.5 | I |
| | 1995.01-2001.03 | AT | F | L | MPV FWD EFA | | GCI99059 | Inner Joint | | 25 | 32 | 40 | 71.5 | 107 | |
| **Ypsilon** | | | | | | | | | | | | | | | |
| 0.9 (63 kw) | 2011.05-2018.12 | 5AT/5MT | F | L | Hatchback FWD 312 A2.000 | | GDS17119 | Drive Shaft | | 25 | 22 | 51 | 84 | 615 | |
| | 2011.05-2018.12 | 5AT/5MT | F | L/R | Hatchback FWD 312 A2.000 | | GCO17026 | Outer Joint | | 25 | 22 | 51 | 84 | 57 | M |
| | 2011.05-2018.12 | 5AT/5MT | F | L/R | Hatchback FWD 312 A2.000 | | GCI17027 | Inner Joint | | 22 | 22 | 36 | 61.5 | 93.5 | |
| | 2011.05-2018.12 | 5MT | F | R | Hatchback FWD 312 A2.000 | | GDS17120 | Drive Shaft | | 25 | 22 | 51 | 84 | 846 | |
| 1.2 (51 kw) | 2011.05-2021.12 | 5MT | F | L/R | Hatchback FWD 169 A4.000 | | GCI17001 | Inner Joint | | 22 | 19 | 36 | 61.5 | 88.5 | |

| | YEAR | TRANSM. | F/R | L/R | BODY STYLE & DRIVE TYPE & ENGINE | REMARKS | G-AP Ref. | PRODUCT | ABS | Technical Specifications A | B | C | H | L | P |
|---|---|---|---|---|---|---|---|---|---|---|---|---|---|---|---|
| **CHRYSLER** | | | | | | | | | | | | | | | |
| **Ypsilon** | | | | | | | | | | | | | | | |
| 1.2 (51 kw) | 2011.05-2021.12 | MT | F | L | Hatchback FWD 169 A4.000 | | GDS17101 | Drive Shaft | | 22 | 22 | 47 | 75.5 | 613 | |
| | 2011.05-2021.12 | MT | F | R | Hatchback FWD 169 A4.000 | | GDS17112 | Drive Shaft | | 22 | 22 | 47 | 75.5 | 846 | |
| | 2011.05-2021.12 | MT | F | L/R | Hatchback FWD 169 A4.000 | | GCO17043 | Outer Joint | | 22 | 20 | 47 | 75.5 | 54.5 | M |
| | 2011.05-2021.12 | MT | F | L/R | Hatchback FWD 169 A4.000 | | GCI17046 | Inner Joint | | 22 | 20 | 36 | 61.5 | 88.5 | |
| 1.3 (70 kw) | 2011.05- | 5MT | F | L | Hatchback FWD 199 B1.000 | | GCI17011 | Inner Joint | | 24 | 23 | 29.7 | 86.5 | 93 | |
| | 2011.05- | MT | F | L/R | Hatchback FWD 199 B1.000 | | GCO17079 | Outer Joint | | 25 | 22 | 51 | 85 | 53.5 | I |
| **CITROËN** | | | | | | | | | | | | | | | |
| **AX** | | | | | | | | | | | | | | | |
| 1.0 (37 kw) | 1987.02-1997.04 | MT | F | L | Hatchback FWD TU9M | | GDS10009 | Drive Shaft | | 21 | 22 | 50 | 81.5 | 618 | |
| | 1987.02-1997.04 | MT | F | R | Hatchback FWD TU9M | Inner teeth of wheel side:22 | GDS10003 | Drive Shaft | | 21 | 22 | 49 | 81 | 798 | |
| | 1987.02-1997.04 | MT | F | R | Hatchback FWD TU9M | Date to:1997.04;Inner teeth of wheel side:20 | GDS10008 | Drive Shaft | | 21 | 22 | 50 | 81.5 | 800 | |
| 1.1 (44 kw) | 1986.09-1997.04 | MT | F | L | Hatchback FWD H1B/HDZ/TU1M | | GDS10009 | Drive Shaft | | 21 | 22 | 50 | 81.5 | 618 | |
| | 1986.09-1997.04 | MT | F | R | Hatchback FWD H1B/HDZ/TU1M | Date to:1991.07 | GDS10008 | Drive Shaft | | 21 | 22 | 50 | 81.5 | 800 | |
| 1.4 (37 kw) | 1991.08-1997.12 | MT | F | L | Hatchback FWD TUD3 | | GDS10009 | Drive Shaft | | 21 | 22 | 50 | 81.5 | 618 | |
| | 1991.08-1997.12 | MT | F | L | Hatchback FWD TUD3 | Inner teeth of wheel side:22 | GDS10038 | Drive Shaft | 48T | 21 | 22 | 58.5 | 76 | 614 | |
| | 1991.08-1997.12 | MT | F | L | Hatchback FWD TUD3 | Inner teeth of wheel side:20,Inner teeth of tranm.side:22 | GDS10088 | Drive Shaft | | 21 | 22 | 56.4 | 76 | 613 | |
| | 1991.08-1997.12 | MT | F | L | Hatchback FWD TUD3 | Inner teeth of wheel side:22,Inner teeth of tranm.side:22 | GDS10164 | Drive Shaft | | 21 | 22 | 58.5 | 76 | 614 | |
| | 1991.08-1997.12 | MT | F | R | Hatchback FWD TUD3 | | GDS10003 | Drive Shaft | | 21 | 22 | 49 | 81 | 798 | |
| | 1991.08-1997.12 | MT | F | R | Hatchback FWD TUD3 | Rim Hole Number:3 | GDS10008 | Drive Shaft | | 21 | 22 | 50 | 81.5 | 800 | |
| | 1991.08-1997.12 | MT | F | R | Hatchback FWD TUD3 | | GDS10042 | Drive Shaft | 48T | 21 | 22 | 56.4 | 76 | 798 | |
| | 1991.08-1997.12 | MT | F | R | Hatchback FWD TUD3 | Rim Hole Number:4 | GDS10089 | Drive Shaft | | 21 | 22 | 56.4 | 76 | 790 | |
| | 1991.08-1997.12 | MT | F | L | Hatchback FWD TUD3 | | GCO10034 | Outer Joint | | 21 | 20 | 50 | 81.5 | 54 | O |
| 1.4 (55 kw) | 1986.09-1997.04 | MT | F | L | Hatchback FWD K1G/KDZ/TU32/TU3F/TU3FM | | GDS10009 | Drive Shaft | | 21 | 22 | 50 | 81.5 | 618 | |
| | 1986.09-1997.04 | MT | F | L | Hatchback FWD K1G/KDZ/TU32/TU3F/TU3FM | Inner teeth of wheel side:22 | GDS10038 | Drive Shaft | 48T | 21 | 22 | 58.5 | 76 | 614 | |
| | 1986.09-1997.04 | MT | F | L | Hatchback FWD K1G/KDZ/TU32/TU3F/TU3FM | Date from:1991.08,Inner teeth of wheel side:20,Inner teeth of tranm.side:22 | GDS10088 | Drive Shaft | | 21 | 22 | 56.4 | 76 | 613 | |
| | 1986.09-1997.04 | MT | F | L | Hatchback FWD K1G/KDZ/TU32/TU3F/TU3FM | Date from:1991.08,Inner teeth of wheel side:22,Inner teeth of tranm.side:22 | GDS10164 | Drive Shaft | | 21 | 22 | 58.5 | 76 | 614 | |
| | 1986.09-1997.04 | MT | F | R | Hatchback FWD K1G/KDZ/TU32/TU3F/TU3FM | | GDS10003 | Drive Shaft | | 21 | 22 | 49 | 81 | 798 | |
| | 1986.09-1997.04 | MT | F | R | Hatchback FWD K1G/KDZ/TU32/TU3F/TU3FM | Date to:1991.07 | GDS10008 | Drive Shaft | | 21 | 22 | 50 | 81.5 | 800 | |
| | 1986.09-1997.04 | MT | F | R | Hatchback FWD K1G/KDZ/TU32/TU3F/TU3FM | | GDS10042 | Drive Shaft | 48T | 21 | 22 | 56.4 | 76 | 798 | |
| | 1986.09-1997.04 | MT | F | R | Hatchback FWD K1G/KDZ/TU32/TU3F/TU3FM | Date from:1991.08 | GDS10089 | Drive Shaft | | 21 | 22 | 56.4 | 76 | 790 | |
| | 1986.09-1997.04 | MT | F | L | Hatchback FWD K1G/KDZ/TU32/TU3F/TU3FM | Date to:1991.07 | GCO10034 | Outer Joint | | 21 | 20 | 50 | 81.5 | 54 | O |
| 1.4 (69 kw) | 1991.06-1996.12 | MT | F | L | Hatchback FWD TU3FJ2 | | GDS10054 | Drive Shaft | | 21 | 22 | 56.4 | 76 | 610 | |
| 1.5 (40 kw) | 1994.05-1997.04 | MT | F | L | Hatchback FWD TUD5 | | GDS10020 | Drive Shaft | 48T | 21 | 22 | 58.5 | 76 | 615 | |
| | 1994.05-1997.04 | MT | F | L | Hatchback FWD TUD5 | Inner teeth of wheel side:22 | GDS10038 | Drive Shaft | 48T | 21 | 22 | 58.5 | 76 | 614 | |
| | 1994.05-1997.04 | MT | F | L | Hatchback FWD TUD5 | Date to:1996.02,Inner teeth of wheel side:20,Inner teeth of tranm.side:22 | GDS10088 | Drive Shaft | | 21 | 22 | 56.4 | 76 | 613 | |
| | 1994.05-1997.04 | MT | F | L | Hatchback FWD TUD5 | Date to:1996.02,Inner teeth of wheel side:22,Inner teeth of tranm.side:22 | GDS10164 | Drive Shaft | | 21 | 22 | 58.5 | 76 | 614 | |
| | 1994.05-1997.04 | MT | F | R | Hatchback FWD TUD5 | | GDS10042 | Drive Shaft | 48T | 21 | 22 | 56.4 | 76 | 798 | |
| | 1994.05-1997.04 | MT | F | R | Hatchback FWD TUD5 | | GDS10089 | Drive Shaft | | 21 | 22 | 56.4 | 76 | 790 | |
| 1.5 (43 kw) | 1994.08-1997.12 | MT | F | L | Hatchback FWD TUD5 | Inner teeth of wheel side:22 | GDS10038 | Drive Shaft | 48T | 21 | 22 | 58.5 | 76 | 614 | |
| | 1994.08-1997.12 | MT | F | L | Hatchback FWD TUD5 | Inner teeth of wheel side:20,Inner teeth of tranm.side:22 | GDS10088 | Drive Shaft | | 21 | 22 | 56.4 | 76 | 613 | |
| | 1994.08-1997.12 | MT | F | L | Hatchback FWD TUD5 | Inner teeth of wheel side:22,Inner teeth of tranm.side:22 | GDS10164 | Drive Shaft | | 21 | 22 | 58.5 | 76 | 614 | |
| | 1994.08-1997.12 | MT | F | R | Hatchback FWD TUD5 | Date to:1996.02 | GDS10042 | Drive Shaft | 48T | 21 | 22 | 56.4 | 76 | 798 | |
| | 1994.08-1997.12 | MT | F | R | Hatchback FWD TUD5 | | GDS10089 | Drive Shaft | | 21 | 22 | 56.4 | 76 | 790 | |
| **Berlingo** | | | | | | | | | | | | | | | |
| 1.1 (44 kw) | 1996.07-2008.03 | 4MT/5MT | F | L | MPV Van FWD TU1JP/TU1M+ | | GDS10026 | Drive Shaft | | 25 | 22 | 56.7 | 79 | 594 | |
| | 1996.07-2008.03 | 5MT | F | R | MPV Van FWD TU1JP/TU1M+ | | GDS10019 | Drive Shaft | 29T | 25 | 22 | 60 | 80 | 867 | |
| | 1996.07-2008.03 | 5MT | F | R | MPV Van FWD TU1JP/TU1M+ | Date from:2004.04 | GDS82450 | Drive Shaft | 48T | 25 | 22 | 58.5 | 79.5 | 865 | |
| | 1996.07-2008.03 | 5MT | F | R | MPV Van FWD TU1JP/TU1M+ | | GCO45036 | Outer Joint | 29T | 25 | 22 | 60 | 80 | 54 | I |
| | 1996.07-2008.03 | MT | F | L | MPV Van FWD TU1JP/TU1M+ | Date to:2004.03 | GDS10021 | Drive Shaft | 29T | 25 | 22 | 60 | 80 | 593 | |
| | 1996.07-2008.03 | MT | F | L | MPV Van FWD TU1JP/TU1M+ | | GDS10075 | Drive Shaft | 29T | 25 | 22 | 54.5 | 79.5 | 587 | |
| | 1996.07-2008.03 | MT | F | L | MPV Van FWD TU1JP/TU1M+ | Date to:2004.03 | GDS10187 | Drive Shaft | 29T | 25 | 22 | 54.5 | 79.5 | 590.5 | |
| | 1996.07-2008.03 | MT | F | R | MPV Van FWD TU1JP/TU1M+ | | GDS10205 | Drive Shaft | | 25 | 22 | 58.5 | 79 | 866 | |
| 1.2 (81 kw) | 2018.01-2018.12 | 5MT | F | L | Box Body/MPV FWD HNZ (EB2DT) | | GDS45105 | Drive Shaft | | 25 | 24 | 58 | 79 | 625 | |
| | 2018.01-2018.12 | 5MT | F | R | Box Body/MPV FWD HNZ (EB2DT) | | GDS45104 | Drive Shaft | | 25 | 24 | 58 | 79 | 925 | |
| | 2018.06- | 5MT | F | R | Box Body/MPV FWD HNP (EB2ADT) | | GDS84457 | Drive Shaft | | 28 | 24 | 58.5 | 92.5 | 921 | |
| | 2018.06- | 6MT | F | L | Box Body/MPV FWD HNP (EB2ADT) | | GDS83616 | Drive Shaft | | 28 | 24 | 58.5 | 92.5 | 681 | |
| | 2018.06- | 6MT | F | R | Box Body/MPV FWD HNP (EB2ADT) | | GDS83663 | Drive Shaft | | 28 | 24 | 58.5 | 92.5 | 919 | |
| | 2018.06- | 6MT | F | L | Box Body/MPV FWD HNP (EB2ADT) | | GCO82273 | Outer Joint | | 28 | 34 | 58.5 | 92.5 | 56 | I |
| | 2018.06- | 6MT | F | L | Box Body/MPV FWD HNP (EB2ADT) | | GCI82301 | Inner Joint | | 37 | 34 | 40 | 65.5 | 89.5 | |
| | 2018.06- | 6MT | F | R | Box Body/MPV FWD HNP (EB2ADT) | | GCI82769 | Inner Joint | | 24 | 34 | 40 | 61 | 103 | |
| | 2018.06- | 5MT | F | R | MPV FWD HNP (EB2ADT) | | GDS84457 | Drive Shaft | | 28 | 24 | 58.5 | 92.5 | 921 | |
| | 2018.06- | 5MT/6MT | F | L | MPV FWD HNP (EB2ADT) | Trans. code:MB6 | GDS83616 | Drive Shaft | | 28 | 24 | 58.5 | 92.5 | 681 | |
| | 2018.06- | 6MT | F | R | MPV FWD HNP (EB2ADT) | Trans. code:MB6 | GDS83663 | Drive Shaft | | 28 | 24 | 58.5 | 92.5 | 919 | |
| | 2018.06- | 6MT | F | L | MPV FWD HNP (EB2ADT) | | GCO82273 | Outer Joint | | 28 | 34 | 58.5 | 92.5 | 56 | I |
| | 2018.06- | 6MT | F | R | MPV FWD HNP (EB2ADT) | | GCO81397 | Outer Joint | | 28 | 34 | 58.5 | 92.5 | 56 | I |

| | YEAR | TRANSM. | F/R | L/R | BODY STYLE & DRIVE TYPE & ENGINE | REMARKS | G-AP Ref. | PRODUCT | ABS | Technical Specifications A | B | C | H | L | P |
|---|---|---|---|---|---|---|---|---|---|---|---|---|---|---|---|
| **CITROËN** **Berlingo** | | | | | | | | | | | | | | | |
| 1.2 (81 kw) | 2018.06- | 6MT | F | L | MPV FWD HNP (EB2ADT) | | GCI82131 | Inner Joint | | 24 | 34 | 40 | 62 | 89 | |
| | 2018.06- | 6MT | F | L | MPV FWD HNP (EB2ADT) | | GCI82301 | Inner Joint | | 37 | 34 | 40 | 65.5 | 89.5 | |
| | 2018.06- | 6MT | F | R | MPV FWD HNP (EB2ADT) | | GCI82769 | Inner Joint | | 24 | 34 | 40 | 61 | 103 | |
| 1.2 (96 kw) | 2019.07- | 8AT | F | L | MPV FWD HNS (EB2ADTS) | | GDS84579 | Drive Shaft | | 28 | 37 | 58.5 | 92.5 | 641 | |
| | 2019.07- | 8AT | F | R | MPV FWD HNS (EB2ADTS) | | GDS84582 | Drive Shaft | | 28 | 37 | 58.5 | 92.5 | 918 | |
| | 2019.07- | 8AT | F | L/R | MPV FWD HNS (EB2ADTS) | | GCO82273 | Outer Joint | | 28 | 34 | 58.5 | 92.5 | 56 | I |
| | 2019.07- | 8AT | F | L | MPV FWD HNS (EB2ADTS) | | GCI82119 | Inner Joint | | 37 | 34 | 41.5 | 58.5 | 94 | |
| | 2019.07- | 8AT | F | R | MPV FWD HNS (EB2ADTS) | | GCI82118 | Inner Joint | | 37 | 34 | | 290 | 88 | |
| | 2019.10- | 8AT | F | L | Box Body/MPV FWD HNS (EB2ADTS) | | GDS84579 | Drive Shaft | | 28 | 37 | 58.5 | 92.5 | 641 | |
| | 2019.10- | 8AT | F | R | Box Body/MPV FWD HNS (EB2ADTS) | | GDS84582 | Drive Shaft | | 28 | 37 | 58.5 | 92.5 | 918 | |
| | 2019.10- | 8AT | F | L/R | Box Body/MPV FWD HNS (EB2ADTS) | | GCO82273 | Outer Joint | | 28 | 34 | 58.5 | 92.5 | 56 | I |
| | 2019.10- | 8AT | F | L | Box Body/MPV FWD HNS (EB2ADTS) | | GCI82119 | Inner Joint | | 37 | 34 | 41.5 | 58.5 | 94 | |
| | 2019.10- | 8AT | F | R | Box Body/MPV FWD HNS (EB2ADTS) | | GCI82118 | Inner Joint | | 37 | 34 | | 290 | 88 | |
| 1.4 (55 kw) | 1996.07-2002.10 | 5MT | F | L | MPV Van FWD TU3JP | | GDS10026 | Drive Shaft | | 25 | 22 | 56.7 | 79 | 594 | |
| | 1996.07-2002.10 | 5MT | F | R | MPV Van FWD TU3JP | | GDS10019 | Drive Shaft | 29T | 25 | 22 | 60 | 80 | 867 | |
| | 1996.07-2002.10 | 5MT | F | R | MPV Van FWD TU3JP | | GCO45036 | Outer Joint | 29T | 25 | 22 | 60 | 80 | 54 | I |
| | 1996.07-2002.10 | | F | L | MPV Van FWD TU3JP | | GDS10021 | Drive Shaft | 29T | 25 | 22 | 60 | 80 | 593 | |
| | 1996.07-2002.10 | | F | L | MPV Van FWD TU3JP | | GDS10187 | Drive Shaft | 29T | 25 | 22 | 54.5 | 79.5 | 590.5 | |
| | 1996.07-2002.10 | | F | R | MPV Van FWD TU3JP | | GDS10205 | Drive Shaft | | 25 | 22 | 58.5 | 79 | 866 | |
| | 1996.07-2008.05 | 5MT | F | L | MPV Van FWD TU3A/TU3JP | | GDS10026 | Drive Shaft | | 25 | 22 | 56.7 | 79 | 594 | |
| | 1996.07-2008.05 | 5MT | F | R | MPV Van FWD TU3A/TU3JP | Date to:2004.03,hollow shaft | GDS10019 | Drive Shaft | 29T | 25 | 22 | 60 | 80 | 867 | |
| | 1996.07-2008.05 | 5MT | F | R | MPV Van FWD TU3A/TU3JP | Date to:2008.05 | GDS10205 | Drive Shaft | | 25 | 22 | 58.5 | 79 | 866 | |
| | 1996.07-2008.05 | 5MT | F | R | MPV Van FWD TU3A/TU3JP | Date from:2004.04 | GDS82450 | Drive Shaft | 48T | 25 | 22 | 58.5 | 79.5 | 865 | |
| | 1996.07-2008.05 | MT | F | L | MPV Van FWD TU3A/TU3JP | Date to:2004.03 | GDS10021 | Drive Shaft | 29T | 25 | 22 | 60 | 80 | 593 | |
| | 1996.07-2008.05 | MT | F | L | MPV Van FWD TU3A/TU3JP | Inner teeth of wheel side:22,solid shaft | GDS10075 | Drive Shaft | 29T | 25 | 22 | 54.5 | 79.5 | 587 | |
| | 1996.07-2008.05 | MT | F | L | MPV Van FWD TU3A/TU3JP | Date to:2004.03 | GDS10187 | Drive Shaft | 29T | 25 | 22 | 54.5 | 79.5 | 590.5 | |
| | 2003.04-2005.10 | 5MT | F | L | MPV Van FWD TU3JPCNG | | GDS10026 | Drive Shaft | | 25 | 22 | 56.7 | 79 | 594 | |
| | 2003.04-2005.10 | 5MT | F | L | MPV Van FWD TU3JPCNG | | GDS10187 | Drive Shaft | 29T | 25 | 22 | 54.5 | 79.5 | 590.5 | |
| | 2003.04-2005.10 | 5MT | F | R | MPV Van FWD TU3JPCNG | | GDS10019 | Drive Shaft | 29T | 25 | 22 | 60 | 80 | 867 | |
| | 2003.04-2005.10 | 5MT | F | L | MPV Van FWD TU3JPCNG | | GCI10006 | Inner Joint | | 22 | 22 | 40 | 58.5 | 87 | |
| | 2003.04-2005.10 | MT | F | | MPV Van FWD TU3JPCNG | for vehicles with ESP | GCO10067 | Outer Joint | 48W | 25 | 34 | 58.5 | 79 | 55 | I |
| | 2003.04-2005.10 | | F | L | MPV Van FWD TU3JPCNG | | GDS10021 | Drive Shaft | 29T | 25 | 22 | 60 | 80 | 593 | |
| | 2003.04-2005.10 | | F | R | MPV Van FWD TU3JPCNG | | GDS10205 | Drive Shaft | | 25 | 22 | 58.5 | 79 | 866 | |
| 1.4 (57 kw) | 1999.08-2008.05 | 5MT | F | L | MPV Van FWD TU3JP | Date to:2004.03 | GDS10021 | Drive Shaft | 29T | 25 | 22 | 60 | 80 | 593 | |
| | 1999.08-2008.05 | 5MT | F | L | MPV Van FWD TU3JP | | GDS10026 | Drive Shaft | | 25 | 22 | 56.7 | 79 | 594 | |
| | 1999.08-2008.05 | 5MT | F | L | MPV Van FWD TU3JP | Date to:2004.03 | GDS10187 | Drive Shaft | 29T | 25 | 22 | 54.5 | 79.5 | 590.5 | |
| | 1999.08-2008.05 | 5MT | F | R | MPV Van FWD TU3JP | Date to:2004.03 | GDS10019 | Drive Shaft | 29T | 25 | 22 | 60 | 80 | 867 | |
| | 1999.08-2008.05 | 5MT | F | R | MPV Van FWD TU3JP | | GDS10205 | Drive Shaft | | 25 | 22 | 58.5 | 79 | 866 | |
| | 1999.08-2008.05 | 5MT | F | R | MPV Van FWD TU3JP | Date from:2004.04 | GDS82450 | Drive Shaft | 48T | 25 | 22 | 58.5 | 79.5 | 865 | |
| | 1999.08-2008.05 | | F | R | MPV Van FWD TU3JP | Date from:1998.12 | GCO45036 | Outer Joint | 29T | 25 | 22 | 60 | 80 | 54 | I |
| 1.5 (55 kw) | 2019.10- | 5MT | F | R | Box Body/MPV FWD YHW (DV5RE) | | GDS84457 | Drive Shaft | | 28 | 24 | 58.5 | 92.5 | 921 | |
| | 2019.10- | 5MT | F | L | Box Body/MPV FWD YHW (DV5RE) | | GCO82273 | Outer Joint | | 28 | 34 | 58.5 | 92.5 | 56 | I |
| | 2019.10- | 5MT | F | R | Box Body/MPV FWD YHW (DV5RE) | | GCO81397 | Outer Joint | | 28 | 34 | 58.5 | 92.5 | 56 | I |
| | 2019.10- | 5MT | F | L | Box Body/MPV FWD YHW (DV5RE) | | GCI82131 | Inner Joint | | 24 | 34 | 40 | 62 | 89 | |
| | 2019.10- | 5MT | F | R | Box Body/MPV FWD YHW (DV5RE) | | GCI82769 | Inner Joint | | 24 | 34 | 40 | 61 | 103 | |
| | 2019.10- | 6MT | F | R | Box Body/MPV FWD YHW (DV5RE) | Trans. code:MB6 | GDS83663 | Drive Shaft | | 28 | 24 | 58.5 | 92.5 | 919 | |
| | 2019.10- | 6MT/5MT | F | L | Box Body/MPV FWD YHW (DV5RE) | Trans. code:MB6 | GDS83616 | Drive Shaft | | 28 | 24 | 58.5 | 92.5 | 681 | |
| 1.5 (56 kw) | 2018.06- | 5MT | F | R | MPV FWD YHW (DV5RE) | | GDS84457 | Drive Shaft | | 28 | 24 | 58.5 | 92.5 | 921 | |
| | 2018.06- | 5MT | F | L | MPV FWD YHW (DV5RE) | | GCO82273 | Outer Joint | | 28 | 34 | 58.5 | 92.5 | 56 | I |
| | 2018.06- | 5MT | F | R | MPV FWD YHW (DV5RE) | | GCO81397 | Outer Joint | | 28 | 34 | 58.5 | 92.5 | 56 | I |
| | 2018.06- | 5MT | F | L | MPV FWD YHW (DV5RE) | | GCI82131 | Inner Joint | | 24 | 34 | 40 | 62 | 89 | |
| | 2018.06- | 5MT | F | R | MPV FWD YHW (DV5RE) | | GCI82769 | Inner Joint | | 24 | 34 | 40 | 61 | 103 | |
| | 2018.06- | 6MT | F | R | MPV FWD YHW (DV5RE) | Trans. code:MB6 | GDS83663 | Drive Shaft | | 28 | 24 | 58.5 | 92.5 | 919 | |
| | 2018.06- | 6MT/5MT | F | L | MPV FWD YHW (DV5RE) | Trans. code:MB6 | GDS83616 | Drive Shaft | | 28 | 24 | 58.5 | 92.5 | 681 | |
| 1.5 (75 kw) | 2018.06- | 5MT | F | L | Box Body/MPV FWD YHY (DV5RD);YHT (DV5RCF) | | GDS83616 | Drive Shaft | | 28 | 24 | 58.5 | 92.5 | 681 | |
| | 2018.06- | 5MT | F | R | Box Body/MPV FWD YHY (DV5RD);YHT (DV5RCF) | | GDS84457 | Drive Shaft | | 28 | 24 | 58.5 | 92.5 | 921 | |
| | 2018.06- | 5MT | F | L | Box Body/MPV FWD YHY (DV5RD);YHT (DV5RCF) | | GCO82273 | Outer Joint | | 28 | 34 | 58.5 | 92.5 | 56 | I |
| | 2018.06- | 5MT | F | R | Box Body/MPV FWD YHY (DV5RD);YHT (DV5RCF) | | GCO81397 | Outer Joint | | 28 | 34 | 58.5 | 92.5 | 56 | I |
| | 2018.06- | 5MT | F | L | Box Body/MPV FWD YHY (DV5RD);YHT (DV5RCF) | | GCI82131 | Inner Joint | | 24 | 34 | 40 | 62 | 89 | |
| | 2018.06- | 5MT | F | R | Box Body/MPV FWD YHY (DV5RD);YHT (DV5RCF) | | GCI82769 | Inner Joint | | 24 | 34 | 40 | 61 | 103 | |
| | 2018.06- | 6MT | F | R | Box Body/MPV FWD YHY (DV5RD);YHT (DV5RCF) | | GDS83663 | Drive Shaft | | 28 | 24 | 58.5 | 92.5 | 919 | |
| | 2018.06- | 5MT | F | L | MPV FWD YHY (DV5RD);YHT (DV5RCF) | | GDS83616 | Drive Shaft | | 28 | 24 | 58.5 | 92.5 | 681 | |
| | 2018.06- | 5MT | F | R | MPV FWD YHY (DV5RD);YHT (DV5RCF) | | GDS84457 | Drive Shaft | | 28 | 24 | 58.5 | 92.5 | 921 | |
| | 2018.06- | 5MT | F | L | MPV FWD YHY (DV5RD);YHT (DV5RCF) | | GCO82273 | Outer Joint | | 28 | 34 | 58.5 | 92.5 | 56 | I |
| | 2018.06- | 5MT | F | R | MPV FWD YHY (DV5RD);YHT (DV5RCF) | | GCO81397 | Outer Joint | | 28 | 34 | 58.5 | 92.5 | 56 | I |

| | YEAR | TRANSM. | F/R | L/R | BODY STYLE & DRIVE TYPE & ENGINE | REMARKS | G-AP Ref. | PRODUCT | ABS | Technical Specifications A | B | C | H | L | P |
|---|---|---|---|---|---|---|---|---|---|---|---|---|---|---|---|
| **CITROËN** **Berlingo** | | | | | | | | | | | | | | | |
| 1.5 (75 kw) | 2018.06- | 5MT | F | L | MPV FWD YHY (DV5RD);YHT (DV5RCF) | | GCI82131 | Inner Joint | | 24 | 34 | 40 | 62 | 89 | |
| | 2018.06- | 5MT | F | R | MPV FWD YHY (DV5RD);YHT (DV5RCF) | | GCI82769 | Inner Joint | | 24 | 34 | 40 | 61 | 103 | |
| | 2018.06- | 6MT | F | R | MPV FWD YHY (DV5RD);YHT (DV5RCF) | | GDS83663 | Drive Shaft | | 28 | 24 | 58.5 | 92.5 | 919 | |
| 1.5 (96 kw) | 2018.06- | 5MT | F | R | Box Body/MPV FWD YHZ (DV5RC);YHP (DV5RC) | | GDS84457 | Drive Shaft | | 28 | 24 | 58.5 | 92.5 | 921 | |
| | 2018.06- | 5MT/6MT | F | L | Box Body/MPV FWD YHZ (DV5RC);YHP (DV5RC) | Trans. code:MB6 | GDS83616 | Drive Shaft | | 28 | 24 | 58.5 | 92.5 | 681 | |
| | 2018.06- | 6MT | F | L | Box Body/MPV FWD YHZ (DV5RC);YHP (DV5RC) | Trans. code:ML6C | GDS84170 | Drive Shaft | | 28 | 37 | 58.5 | 92.5 | 670 | |
| | 2018.06- | 6MT | F | R | Box Body/MPV FWD YHZ (DV5RC);YHP (DV5RC) | Trans. code:MB6 | GDS83663 | Drive Shaft | | 28 | 24 | 58.5 | 92.5 | 919 | |
| | 2018.06- | 6MT | F | R | Box Body/MPV FWD YHZ (DV5RC);YHP (DV5RC) | Trans. code:ML6C | GDS84336 | Drive Shaft | | 28 | 37 | 58.5 | 92.5 | 930 | |
| | 2018.06- | 6MT | F | L/R | Box Body/MPV FWD YHZ (DV5RC);YHP (DV5RC) | | GCO82273 | Outer Joint | | 28 | 34 | 58.5 | 92.5 | 56 | I |
| | 2018.06- | 6MT | F | L | Box Body/MPV FWD YHZ (DV5RC);YHP (DV5RC) | | GCI82301 | Inner Joint | | 37 | 34 | 40 | 65.5 | 89.5 | |
| | 2018.06- | 6MT | F | R | Box Body/MPV FWD YHZ (DV5RC);YHP (DV5RC) | Trans. code:ML6C | GCI82300 | Inner Joint | | 37 | 34 | 31.9 | 302 | 88 | |
| | 2018.06- | 6MT | F | R | Box Body/MPV FWD YHZ (DV5RC);YHP (DV5RC) | Trans. code:MB6 | GCI82769 | Inner Joint | | 24 | 34 | 40 | 61 | 103 | |
| | 2018.06- | 8AT | F | L | Box Body/MPV FWD YHZ (DV5RC);YHP (DV5RC) | | GDS84579 | Drive Shaft | | 28 | 37 | 58.5 | 92.5 | 641 | |
| | 2018.06- | 8AT | F | R | Box Body/MPV FWD YHZ (DV5RC);YHP (DV5RC) | | GDS84582 | Drive Shaft | | 28 | 37 | 58.5 | 92.5 | 918 | |
| | 2018.06- | 8AT | F | L | Box Body/MPV FWD YHZ (DV5RC);YHP (DV5RC) | | GCI82119 | Inner Joint | | 37 | 34 | 41.5 | 58.5 | 94 | |
| | 2018.06- | 8AT | F | R | Box Body/MPV FWD YHZ (DV5RC);YHP (DV5RC) | | GCI82118 | Inner Joint | | 37 | 34 | | 290 | 88 | |
| | 2018.06- | 5MT | F | R | MPV FWD YHZ (DV5RC);YHP (DV5RC) | | GDS84457 | Drive Shaft | | 28 | 24 | 58.5 | 92.5 | 921 | |
| | 2018.06- | 5MT/6MT | F | L | MPV FWD YHZ (DV5RC);YHP (DV5RC) | Trans. code:MB6 | GDS83616 | Drive Shaft | | 28 | 24 | 58.5 | 92.5 | 681 | |
| | 2018.06- | 6MT | F | L | MPV FWD YHZ (DV5RC);YHP (DV5RC) | Trans. code:MC | GDS84170 | Drive Shaft | | 28 | 37 | 58.5 | 92.5 | 670 | |
| | 2018.06- | 6MT | F | R | MPV FWD YHZ (DV5RC);YHP (DV5RC) | Trans. code:MB6 | GDS83663 | Drive Shaft | | 28 | 24 | 58.5 | 92.5 | 919 | |
| | 2018.06- | 6MT | F | R | MPV FWD YHZ (DV5RC);YHP (DV5RC) | Trans. code:MC | GDS84336 | Drive Shaft | | 28 | 37 | 58.5 | 92.5 | 930 | |
| | 2018.06- | 6MT | F | L/R | MPV FWD YHZ (DV5RC);YHP (DV5RC) | | GCO82273 | Outer Joint | | 28 | 34 | 58.5 | 92.5 | 56 | I |
| | 2018.06- | 6MT | F | L | MPV FWD YHZ (DV5RC);YHP (DV5RC) | | GCI82301 | Inner Joint | | 37 | 34 | 40 | 65.5 | 89.5 | |
| | 2018.06- | 6MT | F | R | MPV FWD YHZ (DV5RC);YHP (DV5RC) | Trans. code:ML6C | GCI82300 | Inner Joint | | 37 | 34 | 31.9 | 302 | 88 | |
| | 2018.06- | 6MT | F | R | MPV FWD YHZ (DV5RC);YHP (DV5RC) | Trans. code:MB6 | GCI82769 | Inner Joint | | 24 | 34 | 40 | 61 | 103 | |
| | 2018.06- | 8AT | F | L | MPV FWD YHZ (DV5RC);YHP (DV5RC) | | GDS84579 | Drive Shaft | | 28 | 37 | 58.5 | 92.5 | 641 | |
| | 2018.06- | 8AT | F | R | MPV FWD YHZ (DV5RC);YHP (DV5RC) | | GDS84582 | Drive Shaft | | 28 | 37 | 58.5 | 92.5 | 918 | |
| | 2018.06- | 8AT | F | L | MPV FWD YHZ (DV5RC);YHP (DV5RC) | | GCI82119 | Inner Joint | | 37 | 34 | 41.5 | 58.5 | 94 | |
| | 2018.06- | 8AT | F | R | MPV FWD YHZ (DV5RC);YHP (DV5RC) | | GCI82118 | Inner Joint | | 37 | 34 | | 290 | 88 | |
| 1.6 (55 kw) | 2005.07-2008.03 | 5MT | F | L | MPV Van FWD DV6BTED4 | | GDS99195 | Drive Shaft | 48W | 25 | 24 | 58.5 | 79 | 585 | |
| | 2005.07-2008.03 | 5MT | F | R | MPV Van FWD DV6BTED4 | | GDS99196 | Drive Shaft | 48W | 25 | 24 | 58.5 | 79 | 869 | |
| | 2005.07-2008.03 | 5MT | F | L/R | MPV Van FWD DV6BTED4 | | GCO10067 | Outer Joint | 48W | 25 | 34 | 58.5 | 79 | 55 | I |
| | 2005.07-2008.03 | 5MT | F | L | MPV Van FWD DV6BTED4 | | GCI10020 | Inner Joint | | 24 | 34 | 40 | 62.5 | 99 | |
| | 2005.07-2008.03 | MT | F | L | MPV Van FWD DV6BTED4 | | GDS10080 | Drive Shaft | 29W | 25 | 24 | 55.7 | 79 | 597 | |
| | 2005.07-2008.03 | MT | F | R | MPV Van FWD DV6BTED4 | | GDS10078 | Drive Shaft | 29W | 25 | 24 | 55.7 | 79 | 872 | |
| | 2005.07-2008.03 | MT | F | L/R | MPV Van FWD DV6BTED4 | | GCO10027 | Outer Joint | 48T | 25 | 34 | 55.7 | 79 | 55 | I |
| | 2005.07-2008.03 | | F | | MPV Van FWD DV6BTED4 | | GCO10022 | Outer Joint | 29W | 25 | 34 | 55.7 | 79 | 55 | I |
| | 2005.07-2008.03 | | F | | MPV Van FWD DV6BTED4 | | GCO10042 | Outer Joint | | 25 | 34 | 54.8 | 78.5 | 56 | I |
| | 2008.04-2018.12 | 5MT | F | L | Box Body/MPV FWD 9HT (DV6BTED4);9HT (DV6BUTED4) | | GDS45126 | Drive Shaft | | 25 | 24 | 58.5 | 89 | 630 | |
| | 2008.04-2018.12 | 5MT | F | R | Box Body/MPV FWD 9HT (DV6BTED4);9HT (DV6BUTED4) | | GDS45104 | Drive Shaft | | 25 | 24 | 58 | 79 | 925 | |
| | 2008.04-2018.12 | 5MT | F | R | Box Body/MPV FWD 9HT (DV6BTED4);9HT (DV6BUTED4) | | GCO45027 | Outer Joint | | 25 | 34 | 58 | 79 | 55.5 | I |
| | 2008.04-2018.12 | 5MT | F | L/R | Box Body/MPV FWD 9HT (DV6BTED4);9HT (DV6BUTED4) | | GCO10042 | Outer Joint | | 25 | 34 | 54.8 | 78.5 | 56 | I |
| | 2008.04-2018.12 | 5MT | F | L/R | Box Body/MPV FWD 9HT (DV6BTED4);9HT (DV6BUTED4) | | GCO99366 | Outer Joint | | 25 | 34 | 58.5 | 79 | 55 | I |
| | 2008.04-2018.12 | MT | F | L | Box Body/MPV FWD 9HT (DV6BTED4);9HT (DV6BUTED4) | Trans. code:BE4R;Type:8MN04 | GDS45105 | Drive Shaft | | 25 | 24 | 58 | 79 | 625 | |
| | 2008.04-2018.12 | MT | F | L | Box Body/MPV FWD 9HT (DV6BTED4);9HT (DV6BUTED4) | Trans. code:BE4R;Type:8MN04 | GCI10020 | Inner Joint | | 24 | 34 | 40 | 62.5 | 99 | |
| | 2010.07-2020.04 | 5MT | F | L | Box Body/MPV FWD 9HN (DV6ETED);BHW (DV6FE) | Transm.Type:BE4R | GDS45105 | Drive Shaft | | 25 | 24 | 58 | 79 | 625 | |
| | 2010.07-2020.04 | 5MT | F | R | Box Body/MPV FWD 9HN (DV6ETED);BHW (DV6FE) | | GDS45104 | Drive Shaft | | 25 | 24 | 58 | 79 | 925 | |
| | 2010.07-2020.04 | 5MT | F | R | Box Body/MPV FWD 9HN (DV6ETED);BHW (DV6FE) | | GCO45027 | Outer Joint | | 25 | 34 | 58 | 79 | 55.5 | I |
| | 2010.07-2020.04 | 5MT | F | L | Box Body/MPV FWD 9HN (DV6ETED);BHW (DV6FE) | Transm.Type:BE4R | GCI10020 | Inner Joint | | 24 | 34 | 40 | 62.5 | 99 | |
| | 2010.07-2020.04 | AT | F | L | Box Body/MPV FWD 9HN (DV6ETED);BHW (DV6FE) | Date from:2011.01 | GDS10255 | Drive Shaft | | 25 | 24 | 58.5 | 79 | 616 | |
| | 2010.07-2020.04 | AT | F | R | Box Body/MPV FWD 9HN (DV6ETED);BHW (DV6FE) | Date from:2011.01 | GDS10254 | Drive Shaft | | 25 | 24 | 58.5 | 79 | 939 | |
| | 2010.07-2020.04 | MT | F | L | Box Body/MPV FWD 9HN (DV6ETED);BHW (DV6FE) | | GDS45126 | Drive Shaft | | 25 | 24 | 58.5 | 89 | 630 | |
| | 2010.07-2020.04 | MT | F | L/R | Box Body/MPV FWD 9HN (DV6ETED);BHW (DV6FE) | | GCO99366 | Outer Joint | | 25 | 34 | 58.5 | 79 | 55 | I |
| | 2010.07-2020.04 | | F | L/R | Box Body/MPV FWD 9HN (DV6ETED);BHW (DV6FE) | | GCO10042 | Outer Joint | | 25 | 34 | 54.8 | 78.5 | 56 | I |
| | 2012.02- | | F | L/R | MPV Van 4WD DV6ETED | | GCO10042 | Outer Joint | | 25 | 34 | 54.8 | 78.5 | 56 | I |
| | 2012.02- | | F | | MPV Van 4WD DV6ETED | | GCO99366 | Outer Joint | | 25 | 34 | 58.5 | 79 | 55 | I |
| | 2018.06-2020.04 | 5MT | F | L | Box Body/MPV FWD BHW (DV6FE) | | GDS83616 | Drive Shaft | | 28 | 24 | 58.5 | 92.5 | 681 | |
| | 2018.06-2020.04 | 5MT | F | R | Box Body/MPV FWD BHW (DV6FE) | | GDS84457 | Drive Shaft | | 28 | 24 | 58.5 | 92.5 | 921 | |
| | 2018.06-2020.04 | 5MT | F | L | Box Body/MPV FWD BHW (DV6FE) | | GCO82273 | Outer Joint | | 28 | 34 | 58.5 | 92.5 | 56 | I |
| | 2018.06-2020.04 | 5MT | F | R | Box Body/MPV FWD BHW (DV6FE) | | GCO81397 | Outer Joint | | 28 | 34 | 58.5 | 92.5 | 56 | I |
| | 2018.06-2020.04 | 5MT | F | L | Box Body/MPV FWD BHW (DV6FE) | | GCI82131 | Inner Joint | | 24 | 34 | 40 | 62 | 89 | |
| | 2018.06-2020.04 | 5MT | F | R | Box Body/MPV FWD BHW (DV6FE) | | GCI82769 | Inner Joint | | 24 | 34 | 40 | 61 | 103 | |
| 1.6 (66 kw) | 2008.04-2018.12 | 5MT | F | L | Box Body/MPV FWD 9HX (DV6AUTED4);9HS (DV6TED4BU) | Trans. code:BE4R | GDS45105 | Drive Shaft | | 25 | 24 | 58 | 79 | 625 | |
| | 2008.04-2018.12 | 5MT | F | L | Box Body/MPV FWD 9HX (DV6AUTED4);9HS (DV6TED4BU) | | GDS45126 | Drive Shaft | | 25 | 24 | 58.5 | 89 | 630 | |
| | 2008.04-2018.12 | 5MT | F | R | Box Body/MPV FWD 9HX (DV6AUTED4);9HS (DV6TED4BU) | | GDS45104 | Drive Shaft | | 25 | 24 | 58 | 79 | 925 | |

| | YEAR | TRANSM. | F/R | L/R | BODY STYLE & DRIVE TYPE & ENGINE | REMARKS | G-AP Ref. | PRODUCT | ABS | Technical Specifications A | B | C | H | L | P |
|---|---|---|---|---|---|---|---|---|---|---|---|---|---|---|---|
| **CITROËN** **Berlingo** | | | | | | | | | | | | | | | |
| 1.6 (66 kw) | 2008.04-2018.12 | 5MT | F | R | Box Body/MPV FWD 9HX (DV6AUTED4);9HS (DV6TED4BU) | | GCO45027 | Outer Joint | | 25 | 34 | 58 | 79 | 55.5 | I |
| | 2008.04-2018.12 | 5MT | F | L/R | Box Body/MPV FWD 9HX (DV6AUTED4);9HS (DV6TED4BU) | | GCO10042 | Outer Joint | | 25 | 34 | 54.8 | 78.5 | 56 | I |
| | 2008.04-2018.12 | 5MT | F | L/R | Box Body/MPV FWD 9HX (DV6AUTED4);9HS (DV6TED4BU) | | GCO99366 | Outer Joint | | 25 | 34 | 58.5 | 79 | 55 | I |
| | 2008.04-2018.12 | 5MT | F | L | Box Body/MPV FWD 9HX (DV6AUTED4);9HS (DV6TED4BU) | Trans. code:BE4R | GCI10020 | Inner Joint | | 24 | 34 | 40 | 62.5 | 99 | |
| | 2008.04-2018.12 | AT | F | L | Box Body/MPV FWD 9HX (DV6AUTED4);9HS (DV6TED4BU) | | GDS10255 | Drive Shaft | | 25 | 24 | 58.5 | 79 | 616 | |
| | 2008.04-2018.12 | AT | F | R | Box Body/MPV FWD 9HX (DV6AUTED4);9HS (DV6TED4BU) | | GDS10254 | Drive Shaft | | 25 | 24 | 58.5 | 79 | 939 | |
| | 2008.04-2018.12 | 5MT | F | L | Box Body/MPV FWD NFR (TU5JP4B) | | GDS45126 | Drive Shaft | | 25 | 24 | 58.5 | 89 | 630 | |
| | 2008.04-2018.12 | 5MT | F | R | Box Body/MPV FWD NFR (TU5JP4B) | | GDS45104 | Drive Shaft | | 25 | 24 | 58 | 79 | 925 | |
| | 2008.04-2018.12 | 5MT | F | R | Box Body/MPV FWD NFR (TU5JP4B) | | GCO45027 | Outer Joint | | 25 | 34 | 58 | 79 | 55.5 | I |
| | 2008.04-2018.12 | 5MT | F | L/R | Box Body/MPV FWD NFR (TU5JP4B) | | GCO99366 | Outer Joint | | 25 | 34 | 58.5 | 79 | 55 | I |
| | 2008.04-2018.12 | MT | F | L | Box Body/MPV FWD NFR (TU5JP4B) | Trans. code:BE4R;Type:8MN04 | GDS45105 | Drive Shaft | | 25 | 24 | 58 | 79 | 625 | |
| | 2008.04-2018.12 | | F | L/R | Box Body/MPV FWD NFR (TU5JP4B) | | GCO10042 | Outer Joint | | 25 | 34 | 54.8 | 78.5 | 56 | I |
| | 2008.04-2018.12 | 5MT | F | R | Platform/Chassis FWD 9HX (DV6ATED4) | | GDS45104 | Drive Shaft | | 25 | 24 | 58 | 79 | 925 | |
| | 2008.04-2018.12 | AT | F | L | Platform/Chassis FWD 9HX (DV6ATED4) | | GDS10255 | Drive Shaft | | 25 | 24 | 58.5 | 79 | 616 | |
| | 2008.04-2018.12 | AT | F | R | Platform/Chassis FWD 9HX (DV6ATED4) | | GDS10254 | Drive Shaft | | 25 | 24 | 58.5 | 79 | 939 | |
| | 2008.04-2018.12 | MT | F | L | Platform/Chassis FWD 9HX (DV6ATED4) | | GDS45105 | Drive Shaft | | 25 | 24 | 58 | 79 | 625 | |
| | 2008.04-2018.12 | MT | F | L | Platform/Chassis FWD 9HX (DV6ATED4) | | GDS45126 | Drive Shaft | | 25 | 24 | 58.5 | 89 | 630 | |
| | 2008.04-2018.12 | MT | F | R | Platform/Chassis FWD 9HX (DV6ATED4) | | GCO45027 | Outer Joint | | 25 | 34 | 58 | 79 | 55.5 | I |
| | 2008.04-2018.12 | MT | F | L/R | Platform/Chassis FWD 9HX (DV6ATED4) | | GCO10042 | Outer Joint | | 25 | 34 | 54.8 | 78.5 | 56 | I |
| | 2008.04-2018.12 | MT | F | L/R | Platform/Chassis FWD 9HX (DV6ATED4) | | GCO99366 | Outer Joint | | 25 | 34 | 58.5 | 79 | 55 | I |
| | 2010.07-2017.12 | 5MT | F | L | Box Body/MPV FWD 9HF (DV6DTED);9HE (DV6DBM) | Trans. code:BE4R | GDS45105 | Drive Shaft | | 25 | 24 | 58 | 79 | 625 | |
| | 2010.07-2017.12 | 5MT | F | L | Box Body/MPV FWD 9HF (DV6DTED);9HE (DV6DBM) | | GDS45126 | Drive Shaft | | 25 | 24 | 58.5 | 89 | 630 | |
| | 2010.07-2017.12 | 5MT | F | R | Box Body/MPV FWD 9HF (DV6DTED);9HE (DV6DBM) | | GDS45104 | Drive Shaft | | 25 | 24 | 58 | 79 | 925 | |
| | 2010.07-2017.12 | 5MT | F | L/R | Box Body/MPV FWD 9HF (DV6DTED);9HE (DV6DBM) | | GCO10042 | Outer Joint | | 25 | 34 | 54.8 | 78.5 | 56 | I |
| | 2010.07-2017.12 | 5MT | F | L/R | Box Body/MPV FWD 9HF (DV6DTED);9HE (DV6DBM) | | GCO99366 | Outer Joint | | 25 | 34 | 58.5 | 79 | 55 | I |
| | 2010.07-2017.12 | 6AMT | F | L/R | Box Body/MPV FWD 9HF (DV6DTED);9HE (DV6DBM) | | GCO10075 | Outer Joint | | 25 | 26 | 58.5 | 89 | 63 | M |
| | 2010.07-2017.12 | 6MT | F | L | Box Body/MPV FWD 9HF (DV6DTED);9HE (DV6DBM) | | GDS10255 | Drive Shaft | | 25 | 24 | 58.5 | 79 | 616 | |
| | 2010.07-2017.12 | 6MT | F | R | Box Body/MPV FWD 9HF (DV6DTED);9HE (DV6DBM) | | GDS10254 | Drive Shaft | | 25 | 24 | 58.5 | 79 | 939 | |
| | 2010.07-2017.12 | AT | F | L | Box Body/MPV FWD 9HF (DV6DTED);9HE (DV6DBM) | | GCI10057 | Inner Joint | | 24 | 34 | 40 | 52.5 | 90 | |
| | 2010.07-2017.12 | MT | F | R | Box Body/MPV FWD 9HF (DV6DTED);9HE (DV6DBM) | | GCI10058 | Inner Joint | | 24 | 34 | 29.8 | 365 | 88 | |
| | 2010.07-2018.12 | 5MT | F | R | Platform/Chassis FWD 9HF (DV6DTED) | | GCO45027 | Outer Joint | | 25 | 34 | 58 | 79 | 55.5 | I |
| | 2010.07-2018.12 | AT | F | L | Platform/Chassis FWD 9HF (DV6DTED) | Date from:2011.01 | GDS10255 | Drive Shaft | | 25 | 24 | 58.5 | 79 | 616 | |
| | 2010.07-2018.12 | AT | F | R | Platform/Chassis FWD 9HF (DV6DTED) | Date from:2011.01 | GDS10254 | Drive Shaft | | 25 | 24 | 58.5 | 79 | 939 | |
| | 2010.07-2018.12 | MT | F | L | Platform/Chassis FWD 9HF (DV6DTED) | Trans. code:BE4R | GDS45105 | Drive Shaft | | 25 | 24 | 58 | 79 | 625 | |
| | 2010.07-2018.12 | MT | F | L | Platform/Chassis FWD 9HF (DV6DTED) | Trans. code:BE4R | GDS45126 | Drive Shaft | | 25 | 24 | 58.5 | 89 | 630 | |
| | 2010.07-2018.12 | MT | F | R | Platform/Chassis FWD 9HF (DV6DTED) | | GDS45104 | Drive Shaft | | 25 | 24 | 58 | 79 | 925 | |
| | 2010.07-2018.12 | MT | F | L/R | Platform/Chassis FWD 9HF (DV6DTED) | | GCO99366 | Outer Joint | | 25 | 34 | 58.5 | 79 | 55 | I |
| | 2010.07-2018.12 | | F | L/R | Platform/Chassis FWD 9HF (DV6DTED) | | GCO10042 | Outer Joint | | 25 | 34 | 54.8 | 78.5 | 56 | I |
| | 2012.02-2014.12 | 5MT | F | R | MPV Van 4WD DV6DTED | Date to:2014.12 | GDS45104 | Drive Shaft | | 25 | 24 | 58 | 79 | 925 | |
| | 2012.02-2014.12 | MT | F | L | MPV Van 4WD DV6DTED | Date to:2014.12 | GDS45105 | Drive Shaft | | 25 | 24 | 58 | 79 | 625 | |
| | 2012.02-2014.12 | MT | F | L | MPV Van 4WD DV6DTED | Date to:2014.12 | GDS45126 | Drive Shaft | | 25 | 24 | 58.5 | 89 | 630 | |
| | 2012.02-2014.12 | | F | L/R | MPV Van 4WD DV6DTED | | GCO10042 | Outer Joint | | 25 | 34 | 54.8 | 78.5 | 56 | I |
| | 2012.02-2014.12 | | F | | MPV Van 4WD DV6DTED | | GCO99366 | Outer Joint | | 25 | 34 | 58.5 | 79 | 55 | I |
| 1.6 (68 kw) | 2009.11-2010.12 | 5MT | F | L | MPV Van FWD DV6DTED/DV6DTEDM | | GCI10020 | Inner Joint | | 24 | 34 | 40 | 62.5 | 99 | |
| | 2009.11-2010.12 | | F | L | MPV Van FWD DV6DTED/DV6DTEDM | | GDS99195 | Drive Shaft | 48W | 25 | 24 | 58.5 | 79 | 585 | |
| | 2009.11-2010.12 | | F | R | MPV Van FWD DV6DTED/DV6DTEDM | | GDS99196 | Drive Shaft | 48W | 25 | 24 | 58.5 | 79 | 869 | |
| | 2009.11-2010.12 | | F | L | MPV Van FWD DV6DTED/DV6DTEDM | | GCO10067 | Outer Joint | 48W | 25 | 34 | 58.5 | 79 | 55 | I |
| | 2010.07-2017.12 | 6AT | F | L | Platform/Chassis FWD 9HJ (DV6DTEDM) | | GDS10255 | Drive Shaft | | 25 | 24 | 58.5 | 79 | 616 | |
| | 2010.07-2017.12 | 6AT | F | R | Platform/Chassis FWD 9HJ (DV6DTEDM) | | GDS10254 | Drive Shaft | | 25 | 24 | 58.5 | 79 | 939 | |
| | 2010.07-2017.12 | 6AT | F | L | Platform/Chassis FWD 9HJ (DV6DTEDM) | | GCO99366 | Outer Joint | | 25 | 34 | 58.5 | 79 | 55 | I |
| | 2010.07-2017.12 | 6AT | F | L | Platform/Chassis FWD 9HJ (DV6DTEDM) | | GCI10057 | Inner Joint | | 24 | 34 | 40 | 52.5 | 90 | |
| | 2010.07-2017.12 | 6AT | F | R | Platform/Chassis FWD 9HJ (DV6DTEDM) | | GCI10058 | Inner Joint | | 24 | 34 | 29.8 | 365 | 88 | |
| | 2010.07-2017.12 | MT | F | L | Platform/Chassis FWD 9HJ (DV6DTEDM) | Date from:2011.01 | GDS45105 | Drive Shaft | | 25 | 24 | 58 | 79 | 625 | |
| | 2010.07-2017.12 | MT | F | R | Platform/Chassis FWD 9HJ (DV6DTEDM) | Date from:2011.01 | GDS45104 | Drive Shaft | | 25 | 24 | 58 | 79 | 925 | |
| | 2010.07-2017.12 | | F | L/R | Platform/Chassis FWD 9HJ (DV6DTEDM) | | GCO10042 | Outer Joint | | 25 | 34 | 54.8 | 78.5 | 56 | I |
| | 2010.07-2017.12 | | F | L/R | Platform/Chassis FWD 9HJ (DV6DTEDM) | | GCO10075 | Outer Joint | | 25 | 26 | 58.5 | 89 | 63 | M |
| | 2010.07-2018.12 | 5MT | F | L/R | Box Body/MPV FWD 9HP (DV6DTED);9HJ (DV6DTEDM) | | GCO99366 | Outer Joint | | 25 | 34 | 58.5 | 79 | 55 | I |
| | 2010.07-2018.12 | 6AT | F | L | Box Body/MPV FWD 9HP (DV6DTED);9HJ (DV6DTEDM) | | GDS45126 | Drive Shaft | | 25 | 24 | 58.5 | 89 | 630 | |
| | 2010.07-2018.12 | 6MT | F | L | Box Body/MPV FWD 9HP (DV6DTED);9HJ (DV6DTEDM) | | GDS10255 | Drive Shaft | | 25 | 24 | 58.5 | 79 | 616 | |
| | 2010.07-2018.12 | 6MT | F | R | Box Body/MPV FWD 9HP (DV6DTED);9HJ (DV6DTEDM) | | GDS10254 | Drive Shaft | | 25 | 24 | 58.5 | 79 | 939 | |
| | 2010.07-2018.12 | 6MT | F | L | Box Body/MPV FWD 9HP (DV6DTED);9HJ (DV6DTEDM) | | GCI10057 | Inner Joint | | 24 | 34 | 40 | 52.5 | 90 | |
| | 2010.07-2018.12 | 6MT | F | R | Box Body/MPV FWD 9HP (DV6DTED);9HJ (DV6DTEDM) | | GCI10058 | Inner Joint | | 24 | 34 | 29.8 | 365 | 88 | |
| | 2010.07-2018.12 | MT | F | L | Box Body/MPV FWD 9HP (DV6DTED);9HJ (DV6DTEDM) | Date from:2011.01 | GDS45105 | Drive Shaft | | 25 | 24 | 58 | 79 | 625 | |
| | 2010.07-2018.12 | | F | L/R | Box Body/MPV FWD 9HP (DV6DTED);9HJ (DV6DTEDM) | | GCO10042 | Outer Joint | | 25 | 34 | 54.8 | 78.5 | 56 | I |
| | 2010.07-2018.12 | | F | L/R | Box Body/MPV FWD 9HP (DV6DTED);9HJ (DV6DTEDM) | | GCO10075 | Outer Joint | | 25 | 26 | 58.5 | 89 | 63 | M |

| | YEAR | TRANSM. | F/R | L/R | BODY STYLE & DRIVE TYPE & ENGINE | REMARKS | G-AP Ref. | PRODUCT | ABS | Technical Specifications A | B | C | H | L | P |
|---|---|---|---|---|---|---|---|---|---|---|---|---|---|---|---|
| **CITROËN** **Berlingo** | | | | | | | | | | | | | | | |
| 1.6 (68 kw) | 2018.09- | 5MT | F | R | MPV FWD 9HP (DV6DTED);BHN (DV6DR) | | GDS84457 | Drive Shaft | | 28 | 24 | 58.5 | 92.5 | 921 | |
| | 2018.09- | 6MT | F | R | MPV FWD 9HP (DV6DTED);BHN (DV6DR) | Trans. code:MB6 | GDS83663 | Drive Shaft | | 28 | 24 | 58.5 | 92.5 | 919 | |
| | 2018.09- | 6MT/5MT | F | L | MPV FWD 9HP (DV6DTED);BHN (DV6DR) | Trans. code:MB6 | GDS83616 | Drive Shaft | | 28 | 24 | 58.5 | 92.5 | 681 | |
| | 2018.09- | MT | F | L | MPV FWD 9HP (DV6DTED);BHN (DV6DR) | | GCO82273 | Outer Joint | | 28 | 34 | 58.5 | 92.5 | 56 | I |
| | 2018.09- | MT | F | R | MPV FWD 9HP (DV6DTED);BHN (DV6DR) | | GCO81397 | Outer Joint | | 28 | 34 | 58.5 | 92.5 | 56 | I |
| | 2018.09- | MT | F | L | MPV FWD 9HP (DV6DTED);BHN (DV6DR) | | GCI82131 | Inner Joint | | 24 | 34 | 40 | 62 | 89 | |
| | 2018.09- | MT | F | R | MPV FWD 9HP (DV6DTED);BHN (DV6DR) | | GCI82769 | Inner Joint | | 24 | 34 | 40 | 61 | 103 | |
| 1.6 (72 kw) | 2010.07-2018.12 | 5MT | F | L | Box Body/MPV FWD 5FK (EP6CB) | | GDS45105 | Drive Shaft | | 25 | 24 | 58 | 79 | 625 | |
| | 2010.07-2018.12 | 5MT | F | L | Box Body/MPV FWD 5FK (EP6CB) | | GDS45126 | Drive Shaft | | 25 | 24 | 58.5 | 89 | 630 | |
| | 2010.07-2018.12 | 5MT | F | R | Box Body/MPV FWD 5FK (EP6CB) | | GDS45104 | Drive Shaft | | 25 | 24 | 58 | 79 | 925 | |
| | 2010.07-2018.12 | 5MT | F | R | Box Body/MPV FWD 5FK (EP6CB) | | GCO45027 | Outer Joint | | 25 | 34 | 58 | 79 | 55.5 | I |
| | 2010.07-2018.12 | | F | L | Box Body/MPV FWD 5FK (EP6CB) | | GCO99366 | Outer Joint | | 25 | 34 | 58.5 | 79 | 55 | I |
| | 2010.07-2018.12 | | F | L/R | Box Body/MPV FWD 5FK (EP6CB) | | GCO10042 | Outer Joint | | 25 | 34 | 54.8 | 78.5 | 56 | I |
| 1.6 (73 kw) | 2014.12- | MT | F | | MPV Van 4WD DV6FD | | GCO99366 | Outer Joint | | 25 | 34 | 58.5 | 79 | 55 | I |
| | 2014.12- | | F | L/R | MPV Van 4WD DV6FD | | GCO10042 | Outer Joint | | 25 | 34 | 54.8 | 78.5 | 56 | I |
| | 2014.12-2021.04 | 5MT | F | L | Box Body/MPV FWD BHY (DV6FD) | Trans. code:BE4R | GDS45105 | Drive Shaft | | 25 | 24 | 58 | 79 | 625 | |
| | 2014.12-2021.04 | 5MT | F | L | Box Body/MPV FWD BHY (DV6FD) | | GDS45126 | Drive Shaft | | 25 | 24 | 58.5 | 89 | 630 | |
| | 2014.12-2021.04 | 5MT | F | R | Box Body/MPV FWD BHY (DV6FD) | | GDS45104 | Drive Shaft | | 25 | 24 | 58 | 79 | 925 | |
| | 2014.12-2021.04 | 5MT | F | L/R | Box Body/MPV FWD BHY (DV6FD) | | GCO10042 | Outer Joint | | 25 | 34 | 54.8 | 78.5 | 56 | I |
| | 2014.12-2021.04 | 5MT | F | L/R | Box Body/MPV FWD BHY (DV6FD) | | GCO10075 | Outer Joint | | 25 | 26 | 58.5 | 89 | 63 | M |
| | 2014.12-2021.04 | 5MT | F | L | Box Body/MPV FWD BHY (DV6FD) | Transm.Type:BE4R | GCI10020 | Inner Joint | | 24 | 34 | 40 | 62.5 | 99 | |
| | 2014.12-2021.04 | 6MT | F | L | Box Body/MPV FWD BHY (DV6FD) | | GDS10255 | Drive Shaft | | 25 | 24 | 58.5 | 79 | 616 | |
| | 2014.12-2021.04 | 6MT | F | R | Box Body/MPV FWD BHY (DV6FD) | | GDS10254 | Drive Shaft | | 25 | 24 | 58.5 | 79 | 939 | |
| | 2014.12-2021.04 | 6MT | F | L | Box Body/MPV FWD BHY (DV6FD) | | GCI10057 | Inner Joint | | 24 | 34 | 40 | 52.5 | 90 | |
| | 2014.12-2021.04 | 6MT | F | R | Box Body/MPV FWD BHY (DV6FD) | | GCI10058 | Inner Joint | | 24 | 34 | 29.8 | 365 | 88 | |
| | 2014.12-2021.04 | MT | F | L/R | Box Body/MPV FWD BHY (DV6FD) | | GCO99366 | Outer Joint | | 25 | 34 | 58.5 | 79 | 55 | I |
| | 2014.12-2021.04 | 5MT | F | R | Platform/Chassis FWD BHY (DV6FD) | | GDS45104 | Drive Shaft | | 25 | 24 | 58 | 79 | 925 | |
| | 2014.12-2021.04 | 5MT | F | R | Platform/Chassis FWD BHY (DV6FD) | | GCO45027 | Outer Joint | | 25 | 34 | 58 | 79 | 55.5 | I |
| | 2014.12-2021.04 | AT | F | L | Platform/Chassis FWD BHY (DV6FD) | Date from:2015.01 | GDS10255 | Drive Shaft | | 25 | 24 | 58.5 | 79 | 616 | |
| | 2014.12-2021.04 | AT | F | R | Platform/Chassis FWD BHY (DV6FD) | Date from:2015.01 | GDS10254 | Drive Shaft | | 25 | 24 | 58.5 | 79 | 939 | |
| | 2014.12-2021.04 | MT | F | L | Platform/Chassis FWD BHY (DV6FD) | | GDS45105 | Drive Shaft | | 25 | 24 | 58 | 79 | 625 | |
| | 2014.12-2021.04 | MT | F | L | Platform/Chassis FWD BHY (DV6FD) | | GDS45126 | Drive Shaft | | 25 | 24 | 58.5 | 89 | 630 | |
| | 2014.12-2021.04 | MT | F | L/R | Platform/Chassis FWD BHY (DV6FD) | | GCO99366 | Outer Joint | | 25 | 34 | 58.5 | 79 | 55 | I |
| | 2014.12-2021.04 | | F | L/R | Platform/Chassis FWD BHY (DV6FD) | | GCO10042 | Outer Joint | | 25 | 34 | 54.8 | 78.5 | 56 | I |
| | 2018.06-2021.04 | 5MT | F | L | Box Body/MPV FWD BHY (DV6FD) | | GDS83616 | Drive Shaft | | 28 | 24 | 58.5 | 92.5 | 681 | |
| | 2018.06-2021.04 | 5MT | F | R | Box Body/MPV FWD BHY (DV6FD) | | GDS84457 | Drive Shaft | | 28 | 24 | 58.5 | 92.5 | 921 | |
| | 2018.06-2021.04 | 5MT | F | L | Box Body/MPV FWD BHY (DV6FD) | | GCO82273 | Outer Joint | | 28 | 34 | 58.5 | 92.5 | 56 | I |
| | 2018.06-2021.04 | 5MT | F | R | Box Body/MPV FWD BHY (DV6FD) | | GCO81397 | Outer Joint | | 28 | 34 | 58.5 | 92.5 | 56 | I |
| | 2018.06-2021.04 | 5MT | F | L | Box Body/MPV FWD BHY (DV6FD) | | GCI82131 | Inner Joint | | 24 | 34 | 40 | 62 | 89 | |
| | 2018.06-2021.04 | 5MT | F | R | Box Body/MPV FWD BHY (DV6FD) | | GCI82769 | Inner Joint | | 24 | 34 | 40 | 61 | 103 | |
| | 2019.01- | 5MT | F | R | MPV FWD BHY (DV6FD) | | GDS84457 | Drive Shaft | | 28 | 24 | 58.5 | 92.5 | 921 | |
| | 2019.01- | 5MT | F | R | MPV FWD BHY (DV6FD) | | GCI82769 | Inner Joint | | 24 | 34 | 40 | 61 | 103 | |
| | 2019.01- | 5MT/6MT | F | L | MPV FWD BHY (DV6FD) | Trans. code:MB6 | GDS83616 | Drive Shaft | | 28 | 24 | 58.5 | 92.5 | 681 | |
| | 2019.01- | 6MT | F | R | MPV FWD BHY (DV6FD) | Trans. code:MB6 | GDS83663 | Drive Shaft | | 28 | 24 | 58.5 | 92.5 | 919 | |
| 1.6 (80 kw) | 2000.10-2008.03 | 5MT | F | L | MPV Van FWD TU5JP4 | | GDS10131 | Drive Shaft | 29T | 25 | 24 | 54.8 | 78.5 | 583 | |
| | 2000.10-2008.03 | 5MT | F | L | MPV Van FWD TU5JP4 | | GDS10163 | Drive Shaft | | 25 | 24 | 54.8 | 78.5 | 583 | |
| | 2000.10-2008.03 | 5MT | F | L | MPV Van FWD TU5JP4 | | GDS99195 | Drive Shaft | 48W | 25 | 24 | 58.5 | 79 | 585 | |
| | 2000.10-2008.03 | 5MT | F | R | MPV Van FWD TU5JP4 | | GDS99196 | Drive Shaft | 48W | 25 | 24 | 58.5 | 79 | 869 | |
| | 2000.10-2008.03 | 5MT | F | L/R | MPV Van FWD TU5JP4 | for ESP | GCO10067 | Outer Joint | 48W | 25 | 34 | 58.5 | 79 | 55 | I |
| | 2000.10-2008.03 | 5MT | F | L | MPV Van FWD TU5JP4 | | GCI10018 | Inner Joint | | 24 | 29 | 40 | 62.5 | 99 | |
| | 2000.10-2008.03 | 5MT | F | L | MPV Van FWD TU5JP4 | | GCI10020 | Inner Joint | | 24 | 34 | 40 | 62.5 | 99 | |
| | 2000.10-2008.03 | MT | F | L | MPV Van FWD TU5JP4 | | GDS99025 | Drive Shaft | 29W | 25 | 24 | 55.7 | 79 | 597 | |
| | 2000.10-2008.03 | MT | F | R | MPV Van FWD TU5JP4 | | GDS10078 | Drive Shaft | 29W | 25 | 24 | 55.7 | 79 | 872 | |
| | 2000.10-2008.03 | | F | L | MPV Van FWD TU5JP4 | Differential ID:77 | GDS10025 | Drive Shaft | 29T | 25 | 24 | 54.8 | 78.5 | 593 | |
| | 2000.10-2008.03 | | F | L | MPV Van FWD TU5JP4 | Differential ID:77 | GDS10090 | Drive Shaft | | 25 | 24 | 54.8 | 78.5 | 593 | |
| | 2000.10-2008.03 | | F | R | MPV Van FWD TU5JP4 | Differential ID:77 | GDS10077 | Drive Shaft | | 25 | 24 | 55.7 | 79 | 872 | |
| | 2000.10-2008.03 | | F | R | MPV Van FWD TU5JP4 | Differential ID:77 | GDS10193 | Drive Shaft | 29T | 25 | 24 | 54.8 | 78.5 | 868 | |
| | 2000.10-2008.03 | | F | L | MPV Van FWD TU5JP4 | | GCO10049 | Outer Joint | | 25 | 34 | 55.7 | 79 | 55 | I |
| | 2000.10-2008.03 | | F | L | MPV Van FWD TU5JP4 | Date From:2004.01,Without Stability Control System | GCO10049 | Outer Joint | | 25 | 34 | 55.7 | 79 | 55 | I |
| | 2000.10-2008.03 | | F | | MPV Van FWD TU5JP4 | | GCO10042 | Outer Joint | | 25 | 34 | 54.8 | 78.5 | 56 | I |
| | 2000.10-2008.03 | | F | | MPV Van FWD TU5JP4 | | GCO10076 | Outer Joint | 29W | 25 | 34 | 58.5 | 79 | 55 | I |
| | 2008.04-2018.12 | 5MT | F | L | Box Body/MPV FWD 9HZ (DV6TED4) | | GDS45126 | Drive Shaft | | 25 | 24 | 58.5 | 89 | 630 | |
| | 2008.04-2018.12 | 5MT | F | R | Box Body/MPV FWD 9HZ (DV6TED4) | | GDS45104 | Drive Shaft | | 25 | 24 | 58 | 79 | 925 | |
| | 2008.04-2018.12 | 5MT | F | R | Box Body/MPV FWD 9HZ (DV6TED4) | | GCO45027 | Outer Joint | | 25 | 34 | 58 | 79 | 55.5 | I |
| | 2008.04-2018.12 | 5MT | F | L/R | Box Body/MPV FWD 9HZ (DV6TED4) | | GCO99366 | Outer Joint | | 25 | 34 | 58.5 | 79 | 55 | I |

| | YEAR | TRANSM. | F/R | L/R | BODY STYLE & DRIVE TYPE & ENGINE | REMARKS | G-AP Ref. | PRODUCT | ABS | Technical Specifications | | | | | |
|---|---|---|---|---|---|---|---|---|---|---|---|---|---|---|---|
| | | | | | | | | | | A | B | C | H | L | P |
| **CITROËN** | | | | | | | | | | | | | | | |
| **Berlingo** | | | | | | | | | | | | | | | |
| 1.6 (80 kw) | 2008.04-2018.12 | AT | F | L | Box Body/MPV FWD 9HZ (DV6TED4) | | GDS10255 | Drive Shaft | | 25 | 24 | 58.5 | 79 | 616 | |
| | 2008.04-2018.12 | AT | F | R | Box Body/MPV FWD 9HZ (DV6TED4) | | GDS10254 | Drive Shaft | | 25 | 24 | 58.5 | 79 | 939 | |
| | 2008.04-2018.12 | MT | F | L | Box Body/MPV FWD 9HZ (DV6TED4) | Trans. code:BE4R;Type:8MN04 | GDS45105 | Drive Shaft | | 25 | 24 | 58 | 79 | 625 | |
| | 2008.04-2018.12 | MT | F | L/R | Box Body/MPV FWD 9HZ (DV6TED4) | | GCO10042 | Outer Joint | | 25 | 34 | 54.8 | 78.5 | 56 | I |
| | 2008.04-2018.12 | 5MT | F | L | Box Body/MPV FWD NFU (TU5JP4) | | GDS45126 | Drive Shaft | | 25 | 24 | 58.5 | 89 | 630 | |
| | 2008.04-2018.12 | 5MT | F | R | Box Body/MPV FWD NFU (TU5JP4) | | GDS45104 | Drive Shaft | | 25 | 24 | 58 | 79 | 925 | |
| | 2008.04-2018.12 | 5MT | F | R | Box Body/MPV FWD NFU (TU5JP4) | | GCO45027 | Outer Joint | | 25 | 34 | 58 | 79 | 55.5 | I |
| | 2008.04-2018.12 | 5MT | F | L/R | Box Body/MPV FWD NFU (TU5JP4) | | GCO99366 | Outer Joint | | 25 | 34 | 58.5 | 79 | 55 | I |
| | 2008.04-2018.12 | AT | F | L | Box Body/MPV FWD NFU (TU5JP4) | | GDS10255 | Drive Shaft | | 25 | 24 | 58.5 | 79 | 616 | |
| | 2008.04-2018.12 | AT | F | R | Box Body/MPV FWD NFU (TU5JP4) | | GDS10254 | Drive Shaft | | 25 | 24 | 58.5 | 79 | 939 | |
| | 2008.04-2018.12 | MT | F | L | Box Body/MPV FWD NFU (TU5JP4) | Trans. code:BE4R;Type:8MN04 | GDS45105 | Drive Shaft | | 25 | 24 | 58 | 79 | 625 | |
| | 2008.04-2018.12 | | F | L/R | Box Body/MPV FWD NFU (TU5JP4) | | GCO10042 | Outer Joint | | 25 | 34 | 54.8 | 78.5 | 56 | I |
| 1.6 (81 kw) | 2005.08-2008.03 | 5MT | F | L | MPV Van FWD TU5JP4 | | GDS10025 | Drive Shaft | 29T | 25 | 24 | 54.8 | 78.5 | 593 | |
| | 2005.08-2008.03 | 5MT | F | L | MPV Van FWD TU5JP4 | | GDS99195 | Drive Shaft | 48W | 25 | 24 | 58.5 | 79 | 585 | |
| | 2005.08-2008.03 | 5MT | F | R | MPV Van FWD TU5JP4 | | GDS10077 | Drive Shaft | | 25 | 24 | 55.7 | 79 | 872 | |
| | 2005.08-2008.03 | 5MT | F | R | MPV Van FWD TU5JP4 | | GDS10078 | Drive Shaft | 29W | 25 | 24 | 55.7 | 79 | 872 | |
| | 2005.08-2008.03 | 5MT | F | R | MPV Van FWD TU5JP4 | | GDS10193 | Drive Shaft | 29T | 25 | 24 | 54.8 | 78.5 | 868 | |
| | 2005.08-2008.03 | 5MT | F | R | MPV Van FWD TU5JP4 | | GDS99196 | Drive Shaft | 48W | 25 | 24 | 58.5 | 79 | 869 | |
| | 2005.08-2008.03 | 5MT | F | L | MPV Van FWD TU5JP4 | Differential ID:77 | GCI10018 | Inner Joint | | 24 | 29 | 40 | 62.5 | 99 | |
| | 2005.08-2008.03 | 5MT | F | L | MPV Van FWD TU5JP4 | | GCI10020 | Inner Joint | | 24 | 34 | 40 | 62.5 | 99 | |
| | 2005.08-2008.03 | | F | L | MPV Van FWD TU5JP4 | Differential ID:77 | GDS10090 | Drive Shaft | | 25 | 24 | 54.8 | 78.5 | 593 | |
| | 2005.08-2008.03 | | F | L | MPV Van FWD TU5JP4 | Differential ID:77 | GDS10131 | Drive Shaft | 29T | 25 | 24 | 54.8 | 78.5 | 583 | |
| | 2005.08-2008.03 | | F | L | MPV Van FWD TU5JP4 | Differential ID:77 | GCO10022 | Outer Joint | 29W | 25 | 34 | 55.7 | 79 | 55 | I |
| | 2005.08-2008.03 | | F | L | MPV Van FWD TU5JP4 | Differential ID:77 | GCO10049 | Outer Joint | | 25 | 34 | 55.7 | 79 | 55 | I |
| | 2005.08-2008.03 | | F | L | MPV Van FWD TU5JP4 | Differential ID:77;Type:BOSCH 8 0/8 1 | GCO10067 | Outer Joint | 48W | 25 | 34 | 58.5 | 79 | 55 | I |
| | 2005.08-2008.03 | | F | L/R | MPV Van FWD TU5JP4 | Differential ID:77 | GCO10076 | Outer Joint | 29W | 25 | 34 | 58.5 | 79 | 55 | I |
| 1.6 (82 kw) | 2010.07-2018.12 | 5MT | F | L | Box Body/MPV FWD 9HR (DV6C);9HL (DV6C) | | GDS45126 | Drive Shaft | | 25 | 24 | 58.5 | 89 | 630 | |
| | 2010.07-2018.12 | 5MT | F | R | Box Body/MPV FWD 9HR (DV6C);9HL (DV6C) | | GDS45104 | Drive Shaft | | 25 | 24 | 58 | 79 | 925 | |
| | 2010.07-2018.12 | 5MT | F | R | Box Body/MPV FWD 9HR (DV6C);9HL (DV6C) | | GCO45027 | Outer Joint | | 25 | 34 | 58 | 79 | 55.5 | I |
| | 2010.07-2018.12 | 5MT | F | L/R | Box Body/MPV FWD 9HR (DV6C);9HL (DV6C) | | GCO99366 | Outer Joint | | 25 | 34 | 58.5 | 79 | 55 | I |
| | 2010.07-2018.12 | AT | F | L | Box Body/MPV FWD 9HR (DV6C);9HL (DV6C) | Date from:2011.01 | GDS10255 | Drive Shaft | | 25 | 24 | 58.5 | 79 | 616 | |
| | 2010.07-2018.12 | AT | F | R | Box Body/MPV FWD 9HR (DV6C);9HL (DV6C) | Date from:2011.01 | GDS10254 | Drive Shaft | | 25 | 24 | 58.5 | 79 | 939 | |
| | 2010.07-2018.12 | MT | F | L | Box Body/MPV FWD 9HR (DV6C);9HL (DV6C) | Date from:2011.01 | GDS45105 | Drive Shaft | | 25 | 24 | 58 | 79 | 625 | |
| | 2010.07-2018.12 | MT | F | L/R | Box Body/MPV FWD 9HR (DV6C);9HL (DV6C) | | GCO10042 | Outer Joint | | 25 | 34 | 54.8 | 78.5 | 56 | I |
| | 2010.07-2018.12 | | F | L | Box Body/MPV FWD 9HR (DV6C);9HL (DV6C) | | GCI10057 | Inner Joint | | 24 | 34 | 40 | 52.5 | 90 | |
| | 2010.07-2018.12 | | F | R | Box Body/MPV FWD 9HR (DV6C);9HL (DV6C) | | GCI10058 | Inner Joint | | 24 | 34 | 29.8 | 365 | 88 | |
| 1.6 (84 kw) | 2010.07-2018.12 | 6AT/5MT | F | L | Box Body/MPV FWD 9HL (DV6C) | | GDS45126 | Drive Shaft | | 25 | 24 | 58.5 | 89 | 630 | |
| | 2010.07-2018.12 | 6AT/5MT | F | R | Box Body/MPV FWD 9HL (DV6C) | | GDS45104 | Drive Shaft | | 25 | 24 | 58 | 79 | 925 | |
| | 2010.07-2018.12 | AT | F | L | Box Body/MPV FWD 9HL (DV6C) | Date from:2011.01 | GDS10255 | Drive Shaft | | 25 | 24 | 58.5 | 79 | 616 | |
| | 2010.07-2018.12 | AT | F | R | Box Body/MPV FWD 9HL (DV6C) | Date from:2011.01 | GDS10254 | Drive Shaft | | 25 | 24 | 58.5 | 79 | 939 | |
| | 2010.07-2018.12 | MT | F | L | Box Body/MPV FWD 9HL (DV6C) | | GDS45105 | Drive Shaft | | 25 | 24 | 58 | 79 | 625 | |
| | 2010.07-2018.12 | MT | F | R | Box Body/MPV FWD 9HL (DV6C) | | GCO45027 | Outer Joint | | 25 | 34 | 58 | 79 | 55.5 | I |
| | 2010.07-2018.12 | MT | F | L/R | Box Body/MPV FWD 9HL (DV6C) | | GCO10042 | Outer Joint | | 25 | 34 | 54.8 | 78.5 | 56 | I |
| | 2010.07-2018.12 | MT | F | L/R | Box Body/MPV FWD 9HL (DV6C) | | GCO99366 | Outer Joint | | 25 | 34 | 58.5 | 79 | 55 | I |
| | 2010.07-2018.12 | | F | L | Box Body/MPV FWD 9HL (DV6C) | | GCI10057 | Inner Joint | | 24 | 34 | 40 | 52.5 | 90 | |
| | 2010.07-2018.12 | | F | R | Box Body/MPV FWD 9HL (DV6C) | | GCI10058 | Inner Joint | | 24 | 34 | 29.8 | 365 | 88 | |
| 1.6 (88 kw) | 2009.11-2018.12 | 5MT | F | L | Box Body/MPV FWD 5FS (EP6C) | | GDS45105 | Drive Shaft | | 25 | 24 | 58 | 79 | 625 | |
| | 2009.11-2018.12 | 5MT | F | L | Box Body/MPV FWD 5FS (EP6C) | | GDS45126 | Drive Shaft | | 25 | 24 | 58.5 | 89 | 630 | |
| | 2009.11-2018.12 | 5MT | F | R | Box Body/MPV FWD 5FS (EP6C) | | GDS45104 | Drive Shaft | | 25 | 24 | 58 | 79 | 925 | |
| | 2009.11-2018.12 | 5MT | F | R | Box Body/MPV FWD 5FS (EP6C) | | GCO45027 | Outer Joint | | 25 | 34 | 58 | 79 | 55.5 | I |
| | 2009.11-2018.12 | 5MT | F | L/R | Box Body/MPV FWD 5FS (EP6C) | | GCO99366 | Outer Joint | | 25 | 34 | 58.5 | 79 | 55 | I |
| | 2009.11-2018.12 | | F | L/R | Box Body/MPV FWD 5FS (EP6C) | | GCO10042 | Outer Joint | | 25 | 34 | 54.8 | 78.5 | 56 | I |
| | 2014.12-2018.08 | 6AT | F | L | Box Body/MPV FWD BHZ (DV6FC) | | GCO99366 | Outer Joint | | 25 | 34 | 58.5 | 79 | 55 | I |
| | 2014.12-2018.08 | 6MT | F | L | Box Body/MPV FWD BHZ (DV6FC) | | GDS10255 | Drive Shaft | | 25 | 24 | 58.5 | 79 | 616 | |
| | 2014.12-2018.08 | 6MT | F | R | Box Body/MPV FWD BHZ (DV6FC) | | GDS10254 | Drive Shaft | | 25 | 24 | 58.5 | 79 | 939 | |
| | 2014.12-2018.08 | MT | F | L | Box Body/MPV FWD BHZ (DV6FC) | Date from:2015.01 | GDS45105 | Drive Shaft | | 25 | 24 | 58 | 79 | 625 | |
| | 2014.12-2018.08 | MT | F | R | Box Body/MPV FWD BHZ (DV6FC) | Date from:2015.01 | GDS45104 | Drive Shaft | | 25 | 24 | 58 | 79 | 925 | |
| | 2014.12-2018.08 | MT | F | L | Box Body/MPV FWD BHZ (DV6FC) | | GCI10057 | Inner Joint | | 24 | 34 | 40 | 52.5 | 90 | |
| | 2014.12-2018.08 | MT | F | R | Box Body/MPV FWD BHZ (DV6FC) | | GCI10058 | Inner Joint | | 24 | 34 | 29.8 | 365 | 88 | |
| | 2014.12-2018.08 | | F | L/R | Box Body/MPV FWD BHZ (DV6FC) | | GCO10042 | Outer Joint | | 25 | 34 | 54.8 | 78.5 | 56 | I |
| | 2014.12-2018.08 | | F | L/R | Box Body/MPV FWD BHZ (DV6FC) | | GCO10075 | Outer Joint | | 25 | 26 | 58.5 | 89 | 63 | M |
| 1.8 (43 kw) | 1996.07-2002.10 | 5MT | F | L | MPV Van FWD XUD7 | | GDS10025 | Drive Shaft | 29T | 25 | 24 | 54.8 | 78.5 | 593 | |
| | 1996.07-2002.10 | 5MT | F | L | MPV Van FWD XUD7 | | GDS10090 | Drive Shaft | | 25 | 24 | 54.8 | 78.5 | 593 | |
| | 1996.07-2002.10 | 5MT | F | R | MPV Van FWD XUD7 | | GDS10077 | Drive Shaft | | 25 | 24 | 55.7 | 79 | 872 | |
| | 1996.07-2002.10 | MT | F | L | MPV Van FWD XUD7 | | GDS10227 | Drive Shaft | | 25 | 24 | 58.5 | 78.5 | 595 | |

| | YEAR | TRANSM. | F/R | L/R | BODY STYLE & DRIVE TYPE & ENGINE | REMARKS | G-AP Ref. | PRODUCT | ABS | Technical Specifications A | B | C | H | L | P |
|---|---|---|---|---|---|---|---|---|---|---|---|---|---|---|---|
| **CITROËN** **Berlingo** | | | | | | | | | | | | | | | |
| 1.8 (43 kw) | 1996.07-2002.10 | MT | F | L | MPV Van FWD XUD7 | | GDS99025 | Drive Shaft | 29W | 25 | 24 | 55.7 | 79 | 597 | |
| | 1996.07-2002.10 | MT | F | R | MPV Van FWD XUD7 | | GDS10078 | Drive Shaft | 29W | 25 | 24 | 55.7 | 79 | 872 | |
| | 1996.07-2002.10 | MT | F | R | MPV Van FWD XUD7 | Transm. code: BE3 | GDS10193 | Drive Shaft | 29T | 25 | 24 | 54.8 | 78.5 | 868 | |
| | 1996.07-2002.10 | MT | F | L | MPV Van FWD XUD7 | | GCO10022 | Outer Joint | 29W | 25 | 34 | 55.7 | 79 | 55 | I |
| | 1996.07-2002.10 | MT | F | L/R | MPV Van FWD XUD7 | Date from:1997.01 | GCO10002 | Outer Joint | | 25 | 23 | 54.8 | 78.5 | 56 | I |
| | 1996.07-2002.10 | MT | F | L/R | MPV Van FWD XUD7 | Date from:1997.01 | GCO10003 | Outer Joint | 29T | 25 | 23 | 54.8 | 78.5 | 56 | I |
| | 1996.07-2002.10 | MT | F | | MPV Van FWD XUD7 | | GCO10042 | Outer Joint | | 25 | 34 | 54.8 | 78.5 | 56 | I |
| | 1996.07-2002.10 | | F | L | MPV Van FWD XUD7 | | GCO10049 | Outer Joint | | 25 | 34 | 55.7 | 79 | 55 | I |
| 1.8 (66 kw) | 1997.08-2002.10 | 5MT | F | L | MPV Van FWD XU7JB | | GDS10025 | Drive Shaft | 29T | 25 | 24 | 54.8 | 78.5 | 593 | |
| | 1997.08-2002.10 | 5MT | F | L | MPV Van FWD XU7JB | | GDS10090 | Drive Shaft | | 25 | 24 | 54.8 | 78.5 | 593 | |
| | 1997.08-2002.10 | 5MT | F | R | MPV Van FWD XU7JB | | GDS10077 | Drive Shaft | | 25 | 24 | 55.7 | 79 | 872 | |
| | 1997.08-2002.10 | MT | F | L | MPV Van FWD XU7JB | | GDS10227 | Drive Shaft | | 25 | 24 | 58.5 | 78.5 | 595 | |
| | 1997.08-2002.10 | MT | F | L | MPV Van FWD XU7JB | | GDS99025 | Drive Shaft | 29W | 25 | 24 | 55.7 | 79 | 597 | |
| | 1997.08-2002.10 | MT | F | R | MPV Van FWD XU7JB | | GDS10078 | Drive Shaft | 29W | 25 | 24 | 55.7 | 79 | 872 | |
| | 1997.08-2002.10 | MT | F | R | MPV Van FWD XU7JB | Transm. code: BE3 | GDS10193 | Drive Shaft | 29T | 25 | 24 | 54.8 | 78.5 | 868 | |
| | 1997.08-2002.10 | MT | F | L/R | MPV Van FWD XU7JB | | GCO10022 | Outer Joint | 29W | 25 | 34 | 55.7 | 79 | 55 | I |
| | 1997.08-2002.10 | | F | L | MPV Van FWD XU7JB | | GCO10049 | Outer Joint | | 25 | 34 | 55.7 | 79 | 55 | I |
| 1.9 (51 kw) | 1996.07-2003.12 | 5MT | F | L | MPV Van FWD XUD9/XUD9A | | GDS10025 | Drive Shaft | 29T | 25 | 24 | 54.8 | 78.5 | 593 | |
| | 1996.07-2003.12 | 5MT | F | L | MPV Van FWD XUD9/XUD9A | | GDS10090 | Drive Shaft | | 25 | 24 | 54.8 | 78.5 | 593 | |
| | 1996.07-2003.12 | 5MT | F | R | MPV Van FWD XUD9/XUD9A | | GDS10077 | Drive Shaft | | 25 | 24 | 55.7 | 79 | 872 | |
| | 1996.07-2003.12 | MT | F | L | MPV Van FWD XUD9/XUD9A | | GDS10227 | Drive Shaft | | 25 | 24 | 58.5 | 78.5 | 595 | |
| | 1996.07-2003.12 | MT | F | L/R | MPV Van FWD XUD9/XUD9A | Date to:1999.12 | GCO10027 | Outer Joint | 48T | 25 | 34 | 55.7 | 79 | 55 | I |
| | 1996.07-2003.12 | MT | F | L/R | MPV Van FWD XUD9/XUD9A | Date to:1999.12 | GCO10043 | Outer Joint | | 25 | 34 | 54.8 | 78.5 | 56 | I |
| | 1996.07-2003.12 | | F | L | MPV Van FWD XUD9/XUD9A | | GDS99025 | Drive Shaft | 29W | 25 | 24 | 55.7 | 79 | 597 | |
| | 1996.07-2003.12 | | F | R | MPV Van FWD XUD9/XUD9A | | GDS10078 | Drive Shaft | 29W | 25 | 24 | 55.7 | 79 | 872 | |
| | 1996.07-2003.12 | | F | L | MPV Van FWD XUD9/XUD9A | | GCO10022 | Outer Joint | 29W | 25 | 34 | 55.7 | 79 | 55 | I |
| | 1996.07-2003.12 | | F | L | MPV Van FWD XUD9/XUD9A | | GCO10049 | Outer Joint | | 25 | 34 | 55.7 | 79 | 55 | I |
| | 1996.07-2003.12 | | F | L/R | MPV Van FWD XUD9/XUD9A | | GCO45036 | Outer Joint | 29T | 25 | 22 | 60 | 80 | 54 | I |
| | 1996.07-2003.12 | | F | | MPV Van FWD XUD9/XUD9A | | GCO10042 | Outer Joint | | 25 | 34 | 54.8 | 78.5 | 56 | I |
| | 1998.07-2006.03 | MT | F | L | MPV Van 4WD DW8/DW8B | | GDS10227 | Drive Shaft | | 25 | 24 | 58.5 | 78.5 | 595 | |
| | 1998.07-2006.03 | MT | F | R | MPV Van 4WD DW8/DW8B | Transm. code: BE3 | GDS10193 | Drive Shaft | 29T | 25 | 24 | 54.8 | 78.5 | 868 | |
| | 1998.07-2006.03 | | F | L | MPV Van 4WD DW8/DW8B | | GDS10025 | Drive Shaft | 29T | 25 | 24 | 54.8 | 78.5 | 593 | |
| | 1998.07-2006.03 | | F | L | MPV Van 4WD DW8/DW8B | | GDS10090 | Drive Shaft | | 25 | 24 | 54.8 | 78.5 | 593 | |
| | 1998.07-2006.03 | | F | L | MPV Van 4WD DW8/DW8B | | GDS99025 | Drive Shaft | 29W | 25 | 24 | 55.7 | 79 | 597 | |
| | 1998.07-2006.03 | | F | R | MPV Van 4WD DW8/DW8B | | GDS10077 | Drive Shaft | | 25 | 24 | 55.7 | 79 | 872 | |
| | 1998.07-2006.03 | | F | R | MPV Van 4WD DW8/DW8B | | GDS10078 | Drive Shaft | 29W | 25 | 24 | 55.7 | 79 | 872 | |
| | 1998.07-2006.03 | | F | L/R | MPV Van 4WD DW8/DW8B | | GCO10042 | Outer Joint | | 25 | 34 | 54.8 | 78.5 | 56 | I |
| | 1998.07-2006.03 | | F | | MPV Van 4WD DW8/DW8B | | GCO10022 | Outer Joint | 29W | 25 | 34 | 55.7 | 79 | 55 | I |
| | 1998.07-2006.03 | | F | | MPV Van 4WD DW8/DW8B | | GCO45036 | Outer Joint | 29T | 25 | 22 | 60 | 80 | 54 | I |
| | 1998.07-2006.03 | | F | L | MPV Van 4WD DW8/DW8B | | GCI10018 | Inner Joint | | 24 | 29 | 40 | 62.5 | 99 | |
| | 1998.09-2008.05 | 5MT | F | L | MPV Van FWD DW8/DW8B | Trim Level:ABS BOSCH 5 3 | GDS10021 | Drive Shaft | 29T | 25 | 22 | 60 | 80 | 593 | |
| | 1998.09-2008.05 | 5MT | F | L | MPV Van FWD DW8/DW8B | | GDS10025 | Drive Shaft | 29T | 25 | 24 | 54.8 | 78.5 | 593 | |
| | 1998.09-2008.05 | 5MT | F | L | MPV Van FWD DW8/DW8B | Inner teeth of wheel side:23 | GDS10090 | Drive Shaft | | 25 | 24 | 54.8 | 78.5 | 593 | |
| | 1998.09-2008.05 | 5MT | F | L | MPV Van FWD DW8/DW8B | Trim Level:ABS BOSCH 5 3 | GDS10187 | Drive Shaft | 29T | 25 | 22 | 54.5 | 79.5 | 590.5 | |
| | 1998.09-2008.05 | 5MT | F | L | MPV Van FWD DW8/DW8B | Date to:2001.12 | GDS99025 | Drive Shaft | 29W | 25 | 24 | 55.7 | 79 | 597 | |
| | 1998.09-2008.05 | 5MT | F | R | MPV Van FWD DW8/DW8B | Trim Level:ABS BOSCH 5 3 | GDS10019 | Drive Shaft | 29T | 25 | 22 | 60 | 80 | 867 | |
| | 1998.09-2008.05 | 5MT | F | R | MPV Van FWD DW8/DW8B | | GDS10077 | Drive Shaft | | 25 | 24 | 55.7 | 79 | 872 | |
| | 1998.09-2008.05 | 5MT | F | R | MPV Van FWD DW8/DW8B | Date to:2001.12 | GDS10078 | Drive Shaft | 29W | 25 | 24 | 55.7 | 79 | 872 | |
| | 1998.09-2008.05 | 5MT | F | L | MPV Van FWD DW8/DW8B | | GCO10049 | Outer Joint | | 25 | 34 | 55.7 | 79 | 55 | I |
| | 1998.09-2008.05 | 5MT | F | L/R | MPV Van FWD DW8/DW8B | | GCO10042 | Outer Joint | | 25 | 34 | 54.8 | 78.5 | 56 | I |
| | 1998.09-2008.05 | 5MT | F | L/R | MPV Van FWD DW8/DW8B | | GCO45036 | Outer Joint | 29T | 25 | 22 | 60 | 80 | 54 | I |
| | 1998.09-2008.05 | MT | F | L | MPV Van FWD DW8/DW8B | Inner teeth of wheel side:34 | GDS10227 | Drive Shaft | | 25 | 24 | 58.5 | 78.5 | 595 | |
| | 1998.09-2008.05 | MT | F | L/R | MPV Van FWD DW8/DW8B | | GCO10022 | Outer Joint | 29W | 25 | 34 | 55.7 | 79 | 55 | I |
| | 1998.09-2008.05 | MT | F | L/R | MPV Van FWD DW8/DW8B | Date to:2001.12 | GCO10027 | Outer Joint | 48T | 25 | 34 | 55.7 | 79 | 55 | I |
| | 1998.09-2008.05 | MT | F | L/R | MPV Van FWD DW8/DW8B | Date to:2001.12 | GCO10043 | Outer Joint | | 25 | 34 | 54.8 | 78.5 | 56 | I |
| 2.0 (66 kw) | 1999.12-2005.10 | 5MT | F | L | MPV Van FWD DW10TD | | GDS10080 | Drive Shaft | 29W | 25 | 24 | 55.7 | 79 | 597 | |
| | 1999.12-2005.10 | 5MT | F | L | MPV Van FWD DW10TD | | GDS10131 | Drive Shaft | 29T | 25 | 24 | 54.8 | 78.5 | 583 | |
| | 1999.12-2005.10 | 5MT | F | L | MPV Van FWD DW10TD | | GDS99195 | Drive Shaft | 48W | 25 | 24 | 58.5 | 79 | 585 | |
| | 1999.12-2005.10 | 5MT | F | R | MPV Van FWD DW10TD | | GDS10077 | Drive Shaft | | 25 | 24 | 55.7 | 79 | 872 | |
| | 1999.12-2005.10 | 5MT | F | R | MPV Van FWD DW10TD | | GDS10078 | Drive Shaft | 29W | 25 | 24 | 55.7 | 79 | 872 | |
| | 1999.12-2005.10 | 5MT | F | R | MPV Van FWD DW10TD | | GDS99196 | Drive Shaft | 48W | 25 | 24 | 58.5 | 79 | 869 | |
| | 1999.12-2005.10 | 5MT | F | L | MPV Van FWD DW10TD | Without Stability Control System (ESP/DSC) | GCO10022 | Outer Joint | 29W | 25 | 34 | 55.7 | 79 | 55 | I |
| | 1999.12-2005.10 | 5MT | F | L | MPV Van FWD DW10TD | Without Stability Control System | GCO10049 | Outer Joint | | 25 | 34 | 55.7 | 79 | 55 | I |
| | 1999.12-2005.10 | 5MT | F | L/R | MPV Van FWD DW10TD | | GCO10067 | Outer Joint | 48W | 25 | 34 | 58.5 | 79 | 55 | I |
| | 1999.12-2005.10 | 5MT | F | | MPV Van FWD DW10TD | | GCO10042 | Outer Joint | | 25 | 34 | 54.8 | 78.5 | 56 | I |

| | YEAR | TRANSM. | F/R | L/R | BODY STYLE & DRIVE TYPE & ENGINE | REMARKS | G-AP Ref. | PRODUCT | ABS | Technical Specifications A | B | C | H | L | P |
|---|---|---|---|---|---|---|---|---|---|---|---|---|---|---|---|
| **CITROËN** | | | | | | | | | | | | | | | |
| **Berlingo** | | | | | | | | | | | | | | | |
| 2.0 (66 kw) | 1999.12-2005.10 | MT | F | L | MPV Van FWD DW10TD | | GDS10163 | Drive Shaft | | 25 | 24 | 54.8 | 78.5 | 583 | |
| | 1999.12-2005.10 | MT | F | L/R | MPV Van FWD DW10TD | Date to:2003.12 | GCO10002 | Outer Joint | | 25 | 23 | 54.8 | 78.5 | 56 | I |
| | 1999.12-2005.10 | MT | F | L/R | MPV Van FWD DW10TD | Date to:2003.12 | GCO10003 | Outer Joint | 29T | 25 | 23 | 54.8 | 78.5 | 56 | I |
| | 1999.12-2005.10 | MT | F | L/R | MPV Van FWD DW10TD | Date to:2003.12 | GCO10027 | Outer Joint | 48T | 25 | 34 | 55.7 | 79 | 55 | I |
| | 1999.12-2005.10 | MT | F | L | MPV Van FWD DW10TD | | GCI10018 | Inner Joint | | 24 | 29 | 40 | 62.5 | 99 | |
| | 2000.11-2005.10 | MT | F | L | MPV Van 4WD DW10TD | | GDS10025 | Drive Shaft | 29T | 25 | 24 | 54.8 | 78.5 | 593 | |
| | 2000.11-2005.10 | MT | F | L | MPV Van 4WD DW10TD | | GDS10090 | Drive Shaft | | 25 | 24 | 54.8 | 78.5 | 593 | |
| | 2000.11-2005.10 | MT | F | R | MPV Van 4WD DW10TD | | GDS10077 | Drive Shaft | | 25 | 24 | 55.7 | 79 | 872 | |
| | 2000.11-2005.10 | MT | F | R | MPV Van 4WD DW10TD | Transm. code: BE3 | GDS10193 | Drive Shaft | 29T | 25 | 24 | 54.8 | 78.5 | 868 | |
| | 2000.11-2005.10 | MT | F | L/R | MPV Van 4WD DW10TD | | GCO10002 | Outer Joint | | 25 | 23 | 54.8 | 78.5 | 56 | I |
| | 2000.11-2005.10 | MT | F | L/R | MPV Van 4WD DW10TD | | GCO10003 | Outer Joint | 29T | 25 | 23 | 54.8 | 78.5 | 56 | I |
| | 2000.11-2005.10 | | F | L | MPV Van 4WD DW10TD | | GDS10080 | Drive Shaft | 29W | 25 | 24 | 55.7 | 79 | 597 | |
| | 2000.11-2005.10 | | F | L | MPV Van 4WD DW10TD | not for ESP | GDS10131 | Drive Shaft | 29T | 25 | 24 | 54.8 | 78.5 | 583 | |
| | 2000.11-2005.10 | | F | L | MPV Van 4WD DW10TD | not for ESP | GDS10163 | Drive Shaft | | 25 | 24 | 54.8 | 78.5 | 583 | |
| | 2000.11-2005.10 | | F | L | MPV Van 4WD DW10TD | for ESP | GDS99195 | Drive Shaft | 48W | 25 | 24 | 58.5 | 79 | 585 | |
| | 2000.11-2005.10 | | F | R | MPV Van 4WD DW10TD | | GDS10078 | Drive Shaft | 29W | 25 | 24 | 55.7 | 79 | 872 | |
| | 2000.11-2005.10 | | F | R | MPV Van 4WD DW10TD | for ESP | GDS99196 | Drive Shaft | 48W | 25 | 24 | 58.5 | 79 | 869 | |
| | 2000.11-2005.10 | | F | L/R | MPV Van 4WD DW10TD | | GCO10042 | Outer Joint | | 25 | 34 | 54.8 | 78.5 | 56 | I |
| | 2000.11-2005.10 | | F | | MPV Van 4WD DW10TD | | GCO10022 | Outer Joint | 29W | 25 | 34 | 55.7 | 79 | 55 | I |
| **Berlingo MultiSpace** | | | | | | | | | | | | | | | |
| 1.1 (44 kw) | 1996.07-2008.05 | 5MT | F | L | MPV FWD TU1JP/TU1M+ | Date to:2004.03 | GDS10021 | Drive Shaft | 29T | 25 | 22 | 60 | 80 | 593 | |
| | 1996.07-2008.05 | 5MT | F | L | MPV FWD TU1JP/TU1M+ | | GDS10026 | Drive Shaft | | 25 | 22 | 56.7 | 79 | 594 | |
| | 1996.07-2008.05 | 5MT | F | L | MPV FWD TU1JP/TU1M+ | Date to:2004.03 | GDS10187 | Drive Shaft | 29T | 25 | 22 | 54.5 | 79.5 | 590.5 | |
| | 1996.07-2008.05 | 5MT | F | R | MPV FWD TU1JP/TU1M+ | Date to:2004.03 | GDS10019 | Drive Shaft | 29T | 25 | 22 | 60 | 80 | 867 | |
| | 1996.07-2008.05 | 5MT | F | R | MPV FWD TU1JP/TU1M+ | | GDS10205 | Drive Shaft | | 25 | 22 | 58.5 | 79 | 866 | |
| | 1996.07-2008.05 | 5MT | F | R | MPV FWD TU1JP/TU1M+ | Date from:2004.04 | GDS82450 | Drive Shaft | 48T | 25 | 22 | 58.5 | 79.5 | 865 | |
| | 1996.07-2008.05 | 5MT | F | R | MPV FWD TU1JP/TU1M+ | | GCO45036 | Outer Joint | 29T | 25 | 22 | 60 | 80 | 54 | I |
| | 1996.07-2008.05 | MT | F | L | MPV FWD TU1JP/TU1M+ | | GDS10075 | Drive Shaft | 29T | 25 | 22 | 54.5 | 79.5 | 587 | |
| 1.2 (81 kw) | 2016.03-2018.12 | 5MT | F | L | MPV FWD HNZ (EB2DT) | Transm. Type:MC | GDS10255 | Drive Shaft | | 25 | 24 | 58.5 | 79 | 616 | |
| | 2016.03-2018.12 | 5MT | F | L | MPV FWD HNZ (EB2DT) | Transm. Type:BE4R | GDS45105 | Drive Shaft | | 25 | 24 | 58 | 79 | 625 | |
| | 2016.03-2018.12 | 5MT | F | L | MPV FWD HNZ (EB2DT) | | GDS45126 | Drive Shaft | | 25 | 24 | 58.5 | 89 | 630 | |
| | 2016.03-2018.12 | 5MT | F | R | MPV FWD HNZ (EB2DT) | Transm. Type:MC | GDS10254 | Drive Shaft | | 25 | 24 | 58.5 | 79 | 939 | |
| | 2016.03-2018.12 | 5MT | F | R | MPV FWD HNZ (EB2DT) | Transm. Type:BE4R | GDS45104 | Drive Shaft | | 25 | 24 | 58 | 79 | 925 | |
| | 2016.03-2018.12 | 5MT | F | R | MPV FWD HNZ (EB2DT) | Transm. Type:BE4R | GCO45027 | Outer Joint | | 25 | 34 | 58 | 79 | 55.5 | I |
| | 2016.03-2018.12 | 5MT | F | L/R | MPV FWD HNZ (EB2DT) | Transm. Type:MC | GCO99366 | Outer Joint | | 25 | 34 | 58.5 | 79 | 55 | I |
| | 2016.03-2018.12 | 5MT | F | L | MPV FWD HNZ (EB2DT) | Transm. Type:BE4R | GCI10020 | Inner Joint | | 24 | 34 | 40 | 62.5 | 99 | |
| | 2016.03-2018.12 | 5MT | F | L | MPV FWD HNZ (EB2DT) | Transm. Type:MC | GCI10057 | Inner Joint | | 24 | 34 | 40 | 52.5 | 90 | |
| | 2016.03-2018.12 | 5MT | F | R | MPV FWD HNZ (EB2DT) | Transm. Type:MC | GCI10058 | Inner Joint | | 24 | 34 | 29.8 | 365 | 88 | |
| 1.4 (53 kw) | 2002.11-2005.10 | 5MT | F | L | MPV FWD TU3JP | Date to:2004.03 | GDS10021 | Drive Shaft | 29T | 25 | 22 | 60 | 80 | 593 | |
| | 2002.11-2005.10 | 5MT | F | L | MPV FWD TU3JP | | GDS10026 | Drive Shaft | | 25 | 22 | 56.7 | 79 | 594 | |
| | 2002.11-2005.10 | 5MT | F | L | MPV FWD TU3JP | Date to:2004.03 | GDS10187 | Drive Shaft | 29T | 25 | 22 | 54.5 | 79.5 | 590.5 | |
| | 2002.11-2005.10 | 5MT | F | R | MPV FWD TU3JP | Date to:2004.03 | GDS10019 | Drive Shaft | 29T | 25 | 22 | 60 | 80 | 867 | |
| | 2002.11-2005.10 | 5MT | F | R | MPV FWD TU3JP | | GDS10205 | Drive Shaft | | 25 | 22 | 58.5 | 79 | 866 | |
| | 2002.11-2005.10 | 5MT | F | R | MPV FWD TU3JP | Date from:2004.04 | GDS82450 | Drive Shaft | 48T | 25 | 22 | 58.5 | 79.5 | 865 | |
| | 2002.11-2005.10 | 5MT | F | R | MPV FWD TU3JP | | GCO45036 | Outer Joint | 29T | 25 | 22 | 60 | 80 | 54 | I |
| 1.4 (55 kw) | 1996.07-2008.10 | 5MT | F | L | MPV FWD TU3JPCNG | | GDS10026 | Drive Shaft | | 25 | 22 | 56.7 | 79 | 594 | |
| | 1996.07-2008.10 | 5MT | F | L | MPV FWD TU3JPCNG | | GDS10187 | Drive Shaft | 29T | 25 | 22 | 54.5 | 79.5 | 590.5 | |
| | 1996.07-2008.10 | 5MT | F | R | MPV FWD TU3JPCNG | | GDS10019 | Drive Shaft | 29T | 25 | 22 | 60 | 80 | 867 | |
| | 1996.07-2008.10 | 5MT | F | R | MPV FWD TU3JPCNG | | GDS10205 | Drive Shaft | | 25 | 22 | 58.5 | 79 | 866 | |
| | 1996.07-2008.10 | 5MT | F | L | MPV FWD TU3JPCNG | | GCI10006 | Inner Joint | | 22 | 22 | 40 | 58.5 | 87 | |
| | 1996.07-2008.10 | | F | L | MPV FWD TU3JPCNG | | GDS10021 | Drive Shaft | 29T | 25 | 22 | 60 | 80 | 593 | |
| | 1996.07-2008.10 | | F | | MPV FWD TU3JPCNG | for vehicles with ESP | GCO10067 | Outer Joint | 48W | 25 | 34 | 58.5 | 79 | 55 | I |
| 1.6 (55 kw) | 2008.04-2018.12 | 5MT | F | L | MPV FWD 9HT (DV6BTED4) | | GDS45126 | Drive Shaft | | 25 | 24 | 58.5 | 89 | 630 | |
| | 2008.04-2018.12 | 5MT | F | R | MPV FWD 9HT (DV6BTED4) | | GDS45104 | Drive Shaft | | 25 | 24 | 58 | 79 | 925 | |
| | 2008.04-2018.12 | 5MT | F | L/R | MPV FWD 9HT (DV6BTED4) | | GCO10042 | Outer Joint | | 25 | 34 | 54.8 | 78.5 | 56 | I |
| | 2008.04-2018.12 | 5MT | F | L/R | MPV FWD 9HT (DV6BTED4) | | GCO99366 | Outer Joint | | 25 | 34 | 58.5 | 79 | 55 | I |
| | 2008.04-2018.12 | AT | F | L | MPV FWD 9HT (DV6BTED4) | | GDS10255 | Drive Shaft | | 25 | 24 | 58.5 | 79 | 616 | |
| | 2008.04-2018.12 | AT | F | R | MPV FWD 9HT (DV6BTED4) | | GDS10254 | Drive Shaft | | 25 | 24 | 58.5 | 79 | 939 | |
| | 2008.04-2018.12 | MT | F | L | MPV FWD 9HT (DV6BTED4) | Trans. code:BE4R | GDS45105 | Drive Shaft | | 25 | 24 | 58 | 79 | 625 | |
| | 2008.04-2020.04 | 5MT | F | L | MPV FWD 9HN (DV6ETED);BHW (DV6FE) | | GDS45126 | Drive Shaft | | 25 | 24 | 58.5 | 89 | 630 | |
| | 2008.04-2020.04 | 5MT | F | R | MPV FWD 9HN (DV6ETED);BHW (DV6FE) | | GDS45104 | Drive Shaft | | 25 | 24 | 58 | 79 | 925 | |
| | 2008.04-2020.04 | 5MT | F | L/R | MPV FWD 9HN (DV6ETED);BHW (DV6FE) | | GCO10042 | Outer Joint | | 25 | 34 | 54.8 | 78.5 | 56 | I |
| | 2008.04-2020.04 | 5MT | F | L/R | MPV FWD 9HN (DV6ETED);BHW (DV6FE) | | GCO99366 | Outer Joint | | 25 | 34 | 58.5 | 79 | 55 | I |
| | 2008.04-2020.04 | AT | F | L | MPV FWD 9HN (DV6ETED);BHW (DV6FE) | | GDS10255 | Drive Shaft | | 25 | 24 | 58.5 | 79 | 616 | |
| | 2008.04-2020.04 | AT | F | R | MPV FWD 9HN (DV6ETED);BHW (DV6FE) | | GDS10254 | Drive Shaft | | 25 | 24 | 58.5 | 79 | 939 | |

| | YEAR | TRANSM. | F/R | L/R | BODY STYLE & DRIVE TYPE & ENGINE | REMARKS | G-AP Ref. | PRODUCT | ABS | Technical Specifications A | B | C | H | L | P |
|---|---|---|---|---|---|---|---|---|---|---|---|---|---|---|---|
| **CITROËN** **Berlingo MultiSpace** | | | | | | | | | | | | | | | |
| 1.6 (55 kw) | 2008.04-2020.04 | MT | F | L | MPV FWD 9HN (DV6ETED);BHW (DV6FE) | Trans. code:BE4R | GDS45105 | Drive Shaft | | 25 | 24 | 58 | 79 | 625 | |
| | 2008.04-2020.04 | MT | F | L | MPV FWD 9HN (DV6ETED);BHW (DV6FE) | Trans. code:BE4R | GCI10020 | Inner Joint | | 24 | 34 | 40 | 62.5 | 99 | |
| 1.6 (66 kw) | 2005.07-2008.05 | 5MT | F | L | MPV FWD DV6ATED4 | | GDS10080 | Drive Shaft | 29W | 25 | 24 | 55.7 | 79 | 597 | |
| | 2005.07-2008.05 | 5MT | F | L | MPV FWD DV6ATED4 | | GDS99195 | Drive Shaft | 48W | 25 | 24 | 58.5 | 79 | 585 | |
| | 2005.07-2008.05 | 5MT | F | R | MPV FWD DV6ATED4 | | GDS10078 | Drive Shaft | 29W | 25 | 24 | 55.7 | 79 | 872 | |
| | 2005.07-2008.05 | 5MT | F | R | MPV FWD DV6ATED4 | | GDS99196 | Drive Shaft | 48W | 25 | 24 | 58.5 | 79 | 869 | |
| | 2005.07-2008.05 | 5MT | F | L/R | MPV FWD DV6ATED4 | | GCO10022 | Outer Joint | 29W | 25 | 34 | 55.7 | 79 | 55 | I |
| | 2005.07-2008.05 | 5MT | F | L/R | MPV FWD DV6ATED4 | | GCO10042 | Outer Joint | | 25 | 34 | 54.8 | 78.5 | 56 | I |
| | 2005.07-2008.05 | 5MT | F | L/R | MPV FWD DV6ATED4 | | GCO10067 | Outer Joint | 48W | 25 | 34 | 58.5 | 79 | 55 | I |
| | 2005.07-2008.05 | 5MT | F | L | MPV FWD DV6ATED4 | | GCI10020 | Inner Joint | | 24 | 34 | 40 | 62.5 | 99 | |
| | 2005.07-2008.05 | AT | F | L | MPV FWD DV6ATED4 | Date to:2007.12 | GDS10255 | Drive Shaft | | 25 | 24 | 58.5 | 79 | 616 | |
| | 2005.07-2008.05 | AT | F | R | MPV FWD DV6ATED4 | Date to:2007.12 | GDS10254 | Drive Shaft | | 25 | 24 | 58.5 | 79 | 939 | |
| | 2005.07-2008.05 | MT | F | L/R | MPV FWD DV6ATED4 | Date to:2007.12 | GCO10027 | Outer Joint | 48T | 25 | 34 | 55.7 | 79 | 55 | I |
| | 2008.04-2018.12 | 5MT | F | L | MPV FWD 9HX (DV6ATED4);9HV (DV6TED4B) | Trans. code:BE4R | GDS45105 | Drive Shaft | | 25 | 24 | 58 | 79 | 625 | |
| | 2008.04-2018.12 | 5MT | F | L | MPV FWD 9HX (DV6ATED4);9HV (DV6TED4B) | | GDS45126 | Drive Shaft | | 25 | 24 | 58.5 | 89 | 630 | |
| | 2008.04-2018.12 | 5MT | F | R | MPV FWD 9HX (DV6ATED4);9HV (DV6TED4B) | | GDS45104 | Drive Shaft | | 25 | 24 | 58 | 79 | 925 | |
| | 2008.04-2018.12 | 5MT | F | R | MPV FWD 9HX (DV6ATED4);9HV (DV6TED4B) | | GCO45027 | Outer Joint | | 25 | 34 | 58 | 79 | 55.5 | I |
| | 2008.04-2018.12 | 5MT | F | L/R | MPV FWD 9HX (DV6ATED4);9HV (DV6TED4B) | | GCO10042 | Outer Joint | | 25 | 34 | 54.8 | 78.5 | 56 | I |
| | 2008.04-2018.12 | 5MT | F | L/R | MPV FWD 9HX (DV6ATED4);9HV (DV6TED4B) | | GCO99366 | Outer Joint | | 25 | 34 | 58.5 | 79 | 55 | I |
| | 2008.04-2018.12 | 5MT | F | L | MPV FWD 9HX (DV6ATED4);9HV (DV6TED4B) | Trans. code:BE4R | GCI10020 | Inner Joint | | 24 | 34 | 40 | 62.5 | 99 | |
| | 2008.04-2018.12 | AT | F | L | MPV FWD 9HX (DV6ATED4);9HV (DV6TED4B) | | GDS10255 | Drive Shaft | | 25 | 24 | 58.5 | 79 | 616 | |
| | 2008.04-2018.12 | AT | F | R | MPV FWD 9HX (DV6ATED4);9HV (DV6TED4B) | | GDS10254 | Drive Shaft | | 25 | 24 | 58.5 | 79 | 939 | |
| | 2008.04-2018.12 | 5MT | F | L | MPV FWD NFR (TU5JP4B) | | GDS45105 | Drive Shaft | | 25 | 24 | 58 | 79 | 625 | |
| | 2008.04-2018.12 | 5MT | F | L | MPV FWD NFR (TU5JP4B) | Trans. code:BE4R | GDS45126 | Drive Shaft | | 25 | 24 | 58.5 | 89 | 630 | |
| | 2008.04-2018.12 | 5MT | F | R | MPV FWD NFR (TU5JP4B) | | GDS45104 | Drive Shaft | | 25 | 24 | 58 | 79 | 925 | |
| | 2008.04-2018.12 | 5MT | F | R | MPV FWD NFR (TU5JP4B) | | GCO45027 | Outer Joint | | 25 | 34 | 58 | 79 | 55.5 | I |
| | 2008.04-2018.12 | 5MT | F | L/R | MPV FWD NFR (TU5JP4B) | | GCO99366 | Outer Joint | | 25 | 34 | 58.5 | 79 | 55 | I |
| | 2008.04-2018.12 | | F | L/R | MPV FWD NFR (TU5JP4B) | | GCO10042 | Outer Joint | | 25 | 34 | 54.8 | 78.5 | 56 | I |
| | 2012.02-2014.12 | | F | L/R | MPV 4WD 9HF (DV6DTED) | | GCO10042 | Outer Joint | | 25 | 34 | 54.8 | 78.5 | 56 | I |
| | 2012.02-2014.12 | | F | | MPV 4WD 9HF (DV6DTED) | | GCO99366 | Outer Joint | | 25 | 34 | 58.5 | 79 | 55 | I |
| 1.6 (68 kw) | 2009.11-2010.12 | 5MT | F | L | MPV FWD DV6DTED/DV6DTEDM | | GCI10020 | Inner Joint | | 24 | 34 | 40 | 62.5 | 99 | |
| | 2009.11-2010.12 | | F | L | MPV FWD DV6DTED/DV6DTEDM | | GDS99195 | Drive Shaft | 48W | 25 | 24 | 58.5 | 79 | 585 | |
| | 2009.11-2010.12 | | F | R | MPV FWD DV6DTED/DV6DTEDM | | GDS99196 | Drive Shaft | 48W | 25 | 24 | 58.5 | 79 | 869 | |
| | 2009.11-2010.12 | | F | L | MPV FWD DV6DTED/DV6DTEDM | | GCO10067 | Outer Joint | 48W | 25 | 34 | 58.5 | 79 | 55 | I |
| | 2010.07-2018.12 | 5MT | F | L | MPV FWD 9HP (DV6DTED);9HJ (DV6DTEDM) | Trans. code:BE4R | GDS45105 | Drive Shaft | | 25 | 24 | 58 | 79 | 625 | |
| | 2010.07-2018.12 | 5MT | F | L | MPV FWD 9HP (DV6DTED);9HJ (DV6DTEDM) | | GDS45126 | Drive Shaft | | 25 | 24 | 58.5 | 89 | 630 | |
| | 2010.07-2018.12 | 5MT | F | R | MPV FWD 9HP (DV6DTED);9HJ (DV6DTEDM) | | GDS45104 | Drive Shaft | | 25 | 24 | 58 | 79 | 925 | |
| | 2010.07-2018.12 | 5MT | F | L/R | MPV FWD 9HP (DV6DTED);9HJ (DV6DTEDM) | | GCO10042 | Outer Joint | | 25 | 34 | 54.8 | 78.5 | 56 | I |
| | 2010.07-2018.12 | 5MT | F | L | MPV FWD 9HP (DV6DTED);9HJ (DV6DTEDM) | Transm.Type:BE4R | GCI10020 | Inner Joint | | 24 | 34 | 40 | 62.5 | 99 | |
| | 2010.07-2018.12 | 6AT | F | L/R | MPV FWD 9HP (DV6DTED);9HJ (DV6DTEDM) | | GCO10075 | Outer Joint | | 25 | 26 | 58.5 | 89 | 63 | M |
| | 2010.07-2018.12 | 6MT | F | L | MPV FWD 9HP (DV6DTED);9HJ (DV6DTEDM) | | GDS10255 | Drive Shaft | | 25 | 24 | 58.5 | 79 | 616 | |
| | 2010.07-2018.12 | 6MT | F | R | MPV FWD 9HP (DV6DTED);9HJ (DV6DTEDM) | | GDS10254 | Drive Shaft | | 25 | 24 | 58.5 | 79 | 939 | |
| | 2010.07-2018.12 | 6MT | F | L | MPV FWD 9HP (DV6DTED);9HJ (DV6DTEDM) | | GCI10057 | Inner Joint | | 24 | 34 | 40 | 52.5 | 90 | |
| | 2010.07-2018.12 | 6MT | F | R | MPV FWD 9HP (DV6DTED);9HJ (DV6DTEDM) | | GCI10058 | Inner Joint | | 24 | 34 | 29.8 | 365 | 88 | |
| | 2010.07-2018.12 | MT | F | R | MPV FWD 9HP (DV6DTED);9HJ (DV6DTEDM) | | GCO45027 | Outer Joint | | 25 | 34 | 58 | 79 | 55.5 | I |
| | 2010.07-2018.12 | MT | F | L/R | MPV FWD 9HP (DV6DTED);9HJ (DV6DTEDM) | | GCO99366 | Outer Joint | | 25 | 34 | 58.5 | 79 | 55 | I |
| 1.6 (72 kw) | 2010.07-2018.12 | 5MT | F | L | MPV FWD 5FK (EP6CB) | | GDS45105 | Drive Shaft | | 25 | 24 | 58 | 79 | 625 | |
| | 2010.07-2018.12 | 5MT | F | L | MPV FWD 5FK (EP6CB) | | GDS45126 | Drive Shaft | | 25 | 24 | 58.5 | 89 | 630 | |
| | 2010.07-2018.12 | 5MT | F | R | MPV FWD 5FK (EP6CB) | | GDS45104 | Drive Shaft | | 25 | 24 | 58 | 79 | 925 | |
| | 2010.07-2018.12 | 5MT | F | R | MPV FWD 5FK (EP6CB) | | GCO45027 | Outer Joint | | 25 | 34 | 58 | 79 | 55.5 | I |
| | 2010.07-2018.12 | | F | L/R | MPV FWD 5FK (EP6CB) | | GCO10042 | Outer Joint | | 25 | 34 | 54.8 | 78.5 | 56 | I |
| | 2010.07-2018.12 | | F | L/R | MPV FWD 5FK (EP6CB) | | GCO99366 | Outer Joint | | 25 | 34 | 58.5 | 79 | 55 | I |
| 1.6 (73 kw) | 2014.12-2021.04 | 5MT | F | L | MPV FWD BHY (DV6FD) | | GDS45126 | Drive Shaft | | 25 | 24 | 58.5 | 89 | 630 | |
| | 2014.12-2021.04 | 5MT | F | R | MPV FWD BHY (DV6FD) | | GDS45104 | Drive Shaft | | 25 | 24 | 58 | 79 | 925 | |
| | 2014.12-2021.04 | 5MT | F | R | MPV FWD BHY (DV6FD) | | GCO45027 | Outer Joint | | 25 | 34 | 58 | 79 | 55.5 | I |
| | 2014.12-2021.04 | 5MT | F | L/R | MPV FWD BHY (DV6FD) | | GCO10042 | Outer Joint | | 25 | 34 | 54.8 | 78.5 | 56 | I |
| | 2014.12-2021.04 | 5MT/Semi-6AT | F | L/R | MPV FWD BHY (DV6FD) | | GCO99366 | Outer Joint | | 25 | 34 | 58.5 | 79 | 55 | I |
| | 2014.12-2021.04 | 6AT | F | L/R | MPV FWD BHY (DV6FD) | | GCO10075 | Outer Joint | | 25 | 26 | 58.5 | 89 | 63 | M |
| | 2014.12-2021.04 | 6MT | F | L | MPV FWD BHY (DV6FD) | | GDS10255 | Drive Shaft | | 25 | 24 | 58.5 | 79 | 616 | |
| | 2014.12-2021.04 | 6MT | F | R | MPV FWD BHY (DV6FD) | | GDS10254 | Drive Shaft | | 25 | 24 | 58.5 | 79 | 939 | |
| | 2014.12-2021.04 | 6MT | F | L | MPV FWD BHY (DV6FD) | | GCI10057 | Inner Joint | | 24 | 34 | 40 | 52.5 | 90 | |
| | 2014.12-2021.04 | 6MT | F | R | MPV FWD BHY (DV6FD) | | GCI10058 | Inner Joint | | 24 | 34 | 29.8 | 365 | 88 | |
| | 2014.12-2021.04 | MT | F | L | MPV FWD BHY (DV6FD) | Date from:2015.01;Transm.Type:BE4R | GDS45105 | Drive Shaft | | 25 | 24 | 58 | 79 | 625 | |
| 1.6 (80 kw) | 2008.04-2018.12 | 5MT | F | L | MPV FWD 9HZ (DV6TED4) | | GDS45126 | Drive Shaft | | 25 | 24 | 58.5 | 89 | 630 | |
| | 2008.04-2018.12 | 5MT | F | R | MPV FWD 9HZ (DV6TED4) | | GDS45104 | Drive Shaft | | 25 | 24 | 58 | 79 | 925 | |

| | YEAR | TRANSM. | F/R | L/R | BODY STYLE & DRIVE TYPE & ENGINE | REMARKS | G-AP Ref. | PRODUCT | ABS | Technical Specifications A | B | C | H | L | P |
|---|---|---|---|---|---|---|---|---|---|---|---|---|---|---|---|
| **CITROËN** **Berlingo MultiSpace** | | | | | | | | | | | | | | | |
| 1.6 (80 kw) | 2008.04-2018.12 | 5MT | F | R | MPV FWD 9HZ (DV6TED4) | | GCO45027 | Outer Joint | | 25 | 34 | 58 | 79 | 55.5 | I |
| | 2008.04-2018.12 | 5MT | F | L/R | MPV FWD 9HZ (DV6TED4) | | GCO99366 | Outer Joint | | 25 | 34 | 58.5 | 79 | 55 | I |
| | 2008.04-2018.12 | AT | F | L | MPV FWD 9HZ (DV6TED4) | | GDS10255 | Drive Shaft | | 25 | 24 | 58.5 | 79 | 616 | |
| | 2008.04-2018.12 | AT | F | R | MPV FWD 9HZ (DV6TED4) | | GDS10254 | Drive Shaft | | 25 | 24 | 58.5 | 79 | 939 | |
| | 2008.04-2018.12 | MT | F | L | MPV FWD 9HZ (DV6TED4) | | GDS45105 | Drive Shaft | | 25 | 24 | 58 | 79 | 625 | |
| | 2008.04-2018.12 | MT | F | L/R | MPV FWD 9HZ (DV6TED4) | | GCO10042 | Outer Joint | | 25 | 34 | 54.8 | 78.5 | 56 | I |
| | 2008.04-2018.12 | 5MT | F | L | MPV FWD NFU (TU5JP4) | | GDS45105 | Drive Shaft | | 25 | 24 | 58 | 79 | 625 | |
| | 2008.04-2018.12 | 5MT | F | L | MPV FWD NFU (TU5JP4) | | GDS45126 | Drive Shaft | | 25 | 24 | 58.5 | 89 | 630 | |
| | 2008.04-2018.12 | 5MT | F | R | MPV FWD NFU (TU5JP4) | | GDS45104 | Drive Shaft | | 25 | 24 | 58 | 79 | 925 | |
| | 2008.04-2018.12 | 5MT | F | R | MPV FWD NFU (TU5JP4) | | GCO45027 | Outer Joint | | 25 | 34 | 58 | 79 | 55.5 | I |
| | 2008.04-2018.12 | 5MT | F | L/R | MPV FWD NFU (TU5JP4) | | GCO99366 | Outer Joint | | 25 | 34 | 58.5 | 79 | 55 | I |
| | 2008.04-2018.12 | | F | L/R | MPV FWD NFU (TU5JP4) | | GCO10042 | Outer Joint | | 25 | 34 | 54.8 | 78.5 | 56 | I |
| 1.6 (81 kw) | 2002.11-2008.10 | 5MT | F | L | MPV FWD TU5JP4 | | GDS10163 | Drive Shaft | | 25 | 24 | 54.8 | 78.5 | 583 | |
| | 2002.11-2008.10 | 5MT | F | L | MPV FWD TU5JP4 | | GDS99195 | Drive Shaft | 48W | 25 | 24 | 58.5 | 79 | 585 | |
| | 2002.11-2008.10 | 5MT | F | R | MPV FWD TU5JP4 | | GDS10193 | Drive Shaft | 29T | 25 | 24 | 54.8 | 78.5 | 868 | |
| | 2002.11-2008.10 | 5MT | F | R | MPV FWD TU5JP4 | | GDS99196 | Drive Shaft | 48W | 25 | 24 | 58.5 | 79 | 869 | |
| | 2002.11-2008.10 | 5MT | F | L/R | MPV FWD TU5JP4 | for vehicles with ESP | GCO10067 | Outer Joint | 48W | 25 | 34 | 58.5 | 79 | 55 | I |
| | 2002.11-2008.10 | 5MT | F | L | MPV FWD TU5JP4 | | GCI10018 | Inner Joint | | 24 | 29 | 40 | 62.5 | 99 | |
| | 2002.11-2008.10 | 5MT | F | L | MPV FWD TU5JP4 | | GCI10020 | Inner Joint | | 24 | 34 | 40 | 62.5 | 99 | |
| | 2002.11-2008.10 | MT | F | L | MPV FWD TU5JP4 | | GDS99025 | Drive Shaft | 29W | 25 | 24 | 55.7 | 79 | 597 | |
| | 2002.11-2008.10 | MT | F | R | MPV FWD TU5JP4 | | GDS10078 | Drive Shaft | 29W | 25 | 24 | 55.7 | 79 | 872 | |
| | 2002.11-2008.10 | | F | L | MPV FWD TU5JP4 | | GDS10025 | Drive Shaft | 29T | 25 | 24 | 54.8 | 78.5 | 593 | |
| | 2002.11-2008.10 | | F | L | MPV FWD TU5JP4 | | GDS10090 | Drive Shaft | | 25 | 24 | 54.8 | 78.5 | 593 | |
| | 2002.11-2008.10 | | F | L | MPV FWD TU5JP4 | | GDS10131 | Drive Shaft | 29T | 25 | 24 | 54.8 | 78.5 | 583 | |
| | 2002.11-2008.10 | | F | R | MPV FWD TU5JP4 | | GDS10077 | Drive Shaft | | 25 | 24 | 55.7 | 79 | 872 | |
| | 2002.11-2008.10 | | F | L | MPV FWD TU5JP4 | | GCO10022 | Outer Joint | 29W | 25 | 34 | 55.7 | 79 | 55 | I |
| | 2002.11-2008.10 | | F | L | MPV FWD TU5JP4 | | GCO10049 | Outer Joint | | 25 | 34 | 55.7 | 79 | 55 | I |
| | 2002.11-2008.10 | | F | L/R | MPV FWD TU5JP4 | | GCO10076 | Outer Joint | 29W | 25 | 34 | 58.5 | 79 | 55 | I |
| | 2002.11-2008.10 | | F | | MPV FWD TU5JP4 | | GCO10042 | Outer Joint | | 25 | 34 | 54.8 | 78.5 | 56 | I |
| | 2008.11-2018.12 | 5MT | F | L | MPV FWD NFU (TU5JP4) | | GDS45105 | Drive Shaft | | 25 | 24 | 58 | 79 | 625 | |
| | 2008.11-2018.12 | 5MT | F | R | MPV FWD NFU (TU5JP4) | | GDS45104 | Drive Shaft | | 25 | 24 | 58 | 79 | 925 | |
| | 2008.11-2018.12 | 5MT | F | L | MPV FWD NFU (TU5JP4) | | GCI10020 | Inner Joint | | 24 | 34 | 40 | 62.5 | 99 | |
| | 2008.11-2018.12 | | F | | MPV FWD NFU (TU5JP4) | | GCO99366 | Outer Joint | | 25 | 34 | 58.5 | 79 | 55 | I |
| 1.6 (82 kw) | 2010.07-2018.12 | 5MT | F | L | MPV FWD 9HR (DV6C);9HL (DV6C) | | GDS45126 | Drive Shaft | | 25 | 24 | 58.5 | 89 | 630 | |
| | 2010.07-2018.12 | 5MT | F | R | MPV FWD 9HR (DV6C);9HL (DV6C) | | GDS45104 | Drive Shaft | | 25 | 24 | 58 | 79 | 925 | |
| | 2010.07-2018.12 | 5MT | F | R | MPV FWD 9HR (DV6C);9HL (DV6C) | | GCO45027 | Outer Joint | | 25 | 34 | 58 | 79 | 55.5 | I |
| | 2010.07-2018.12 | 5MT | F | R | MPV FWD 9HR (DV6C);9HL (DV6C) | | GCO99366 | Outer Joint | | 25 | 34 | 58.5 | 79 | 55 | I |
| | 2010.07-2018.12 | AT | F | L | MPV FWD 9HR (DV6C);9HL (DV6C) | Date from:2011.01 | GDS10255 | Drive Shaft | | 25 | 24 | 58.5 | 79 | 616 | |
| | 2010.07-2018.12 | AT | F | R | MPV FWD 9HR (DV6C);9HL (DV6C) | Date from:2011.01 | GDS10254 | Drive Shaft | | 25 | 24 | 58.5 | 79 | 939 | |
| | 2010.07-2018.12 | MT | F | L | MPV FWD 9HR (DV6C);9HL (DV6C) | Date from:2011.01 | GDS45105 | Drive Shaft | | 25 | 24 | 58 | 79 | 625 | |
| | 2010.07-2018.12 | | F | L/R | MPV FWD 9HR (DV6C);9HL (DV6C) | | GCO10042 | Outer Joint | | 25 | 34 | 54.8 | 78.5 | 56 | I |
| | 2010.07-2018.12 | | F | L | MPV FWD 9HR (DV6C);9HL (DV6C) | | GCI10057 | Inner Joint | | 24 | 34 | 40 | 52.5 | 90 | |
| | 2010.07-2018.12 | | F | R | MPV FWD 9HR (DV6C);9HL (DV6C) | | GCI10058 | Inner Joint | | 24 | 34 | 29.8 | 365 | 88 | |
| 1.6 (84 kw) | 2010.07-2018.12 | 5MT | F | L | MPV FWD 9HR (DV6C) | | GDS45126 | Drive Shaft | | 25 | 24 | 58.5 | 89 | 630 | |
| | 2010.07-2018.12 | 5MT | F | R | MPV FWD 9HR (DV6C) | | GDS45104 | Drive Shaft | | 25 | 24 | 58 | 79 | 925 | |
| | 2010.07-2018.12 | AT | F | L | MPV FWD 9HR (DV6C) | Date from:2011.01 | GDS10255 | Drive Shaft | | 25 | 24 | 58.5 | 79 | 616 | |
| | 2010.07-2018.12 | AT | F | R | MPV FWD 9HR (DV6C) | Date from:2011.01 | GDS10254 | Drive Shaft | | 25 | 24 | 58.5 | 79 | 939 | |
| | 2010.07-2018.12 | AT | F | L | MPV FWD 9HR (DV6C) | | GCI10057 | Inner Joint | | 24 | 34 | 40 | 52.5 | 90 | |
| | 2010.07-2018.12 | AT | F | R | MPV FWD 9HR (DV6C) | | GCI10058 | Inner Joint | | 24 | 34 | 29.8 | 365 | 88 | |
| | 2010.07-2018.12 | MT | F | L | MPV FWD 9HR (DV6C) | Date from:2011.01 | GDS45105 | Drive Shaft | | 25 | 24 | 58 | 79 | 625 | |
| | 2010.07-2018.12 | MT | F | R | MPV FWD 9HR (DV6C) | | GCO45027 | Outer Joint | | 25 | 34 | 58 | 79 | 55.5 | I |
| | 2010.07-2018.12 | MT | F | L/R | MPV FWD 9HR (DV6C) | | GCO10042 | Outer Joint | | 25 | 34 | 54.8 | 78.5 | 56 | I |
| | 2010.07-2018.12 | MT | F | L/R | MPV FWD 9HR (DV6C) | | GCO99366 | Outer Joint | | 25 | 34 | 58.5 | 79 | 55 | I |
| | 2012.02-2018.12 | MT | F | | MPV 4WD 9HR (DV6C) | | GCO99366 | Outer Joint | | 25 | 34 | 58.5 | 79 | 55 | I |
| | 2012.02-2018.12 | | F | L/R | MPV 4WD 9HR (DV6C) | | GCO10042 | Outer Joint | | 25 | 34 | 54.8 | 78.5 | 56 | I |
| 1.6 (88 kw) | 2009.11-2018.12 | 5MT | F | L | MPV FWD 5FS (EP6C) | | GDS45105 | Drive Shaft | | 25 | 24 | 58 | 79 | 625 | |
| | 2009.11-2018.12 | 5MT | F | R | MPV FWD 5FS (EP6C) | | GDS45104 | Drive Shaft | | 25 | 24 | 58 | 79 | 925 | |
| | 2009.11-2018.12 | 5MT | F | L/R | MPV FWD 5FS (EP6C) | | GCO45027 | Outer Joint | | 25 | 34 | 58 | 79 | 55.5 | I |
| | 2009.11-2018.12 | 5MT | F | L/R | MPV FWD 5FS (EP6C) | | GCO99366 | Outer Joint | | 25 | 34 | 58.5 | 79 | 55 | I |
| | 2009.11-2018.12 | 5MT | F | L | MPV FWD 5FS (EP6C) | | GCI10020 | Inner Joint | | 24 | 34 | 40 | 62.5 | 99 | |
| | 2014.12-2018.08 | 6MT | F | L | MPV FWD BHZ (DV6FC) | angular | GDS10255 | Drive Shaft | | 25 | 24 | 58.5 | 79 | 616 | |
| | 2014.12-2018.08 | 6MT | F | R | MPV FWD BHZ (DV6FC) | angular | GDS10254 | Drive Shaft | | 25 | 24 | 58.5 | 79 | 939 | |
| | 2014.12-2018.08 | 6MT | F | L/R | MPV FWD BHZ (DV6FC) | | GCO10042 | Outer Joint | | 25 | 34 | 54.8 | 78.5 | 56 | I |
| | 2014.12-2018.08 | 6MT | F | L/R | MPV FWD BHZ (DV6FC) | | GCO10075 | Outer Joint | | 25 | 26 | 58.5 | 89 | 63 | M |
| | 2014.12-2018.08 | 6MT | F | L/R | MPV FWD BHZ (DV6FC) | | GCO99366 | Outer Joint | | 25 | 34 | 58.5 | 79 | 55 | I |

| | YEAR | TRANSM. | F/R | L/R | BODY STYLE & DRIVE TYPE & ENGINE | REMARKS | G-AP Ref. | PRODUCT | ABS | Technical Specifications A | B | C | H | L | P |
|---|---|---|---|---|---|---|---|---|---|---|---|---|---|---|---|
| **CITROËN** **Berlingo MultiSpace** | | | | | | | | | | | | | | | |
| 1.6 (88 kw) | 2014.12-2018.08 | 6MT | F | L | MPV FWD BHZ (DV6FC) | | GCI10057 | Inner Joint | | 24 | 34 | 40 | 52.5 | 90 | |
| | 2014.12-2018.08 | 6MT | F | R | MPV FWD BHZ (DV6FC) | | GCI10058 | Inner Joint | | 24 | 34 | 29.8 | 365 | 88 | |
| | 2014.12-2018.08 | MT | F | L | MPV FWD BHZ (DV6FC) | Date from:2015.01,round | GDS45105 | Drive Shaft | | 25 | 24 | 58 | 79 | 625 | |
| | 2014.12-2018.08 | MT | F | R | MPV FWD BHZ (DV6FC) | Date from:2015.01,round | GDS45104 | Drive Shaft | | 25 | 24 | 58 | 79 | 925 | |
| 1.8 (43 kw) | 1998.07-2002.10 | 5MT | F | L | MPV FWD XUD7 | | GDS10025 | Drive Shaft | 29T | 25 | 24 | 54.8 | 78.5 | 593 | |
| | 1998.07-2002.10 | 5MT | F | L | MPV FWD XUD7 | | GDS10090 | Drive Shaft | | 25 | 24 | 54.8 | 78.5 | 593 | |
| | 1998.07-2002.10 | 5MT | F | R | MPV FWD XUD7 | | GDS10077 | Drive Shaft | | 25 | 24 | 55.7 | 79 | 872 | |
| | 1998.07-2002.10 | MT | F | L | MPV FWD XUD7 | | GDS10227 | Drive Shaft | | 25 | 24 | 58.5 | 78.5 | 595 | |
| | 1998.07-2002.10 | MT | F | L | MPV FWD XUD7 | | GDS99025 | Drive Shaft | 29W | 25 | 24 | 55.7 | 79 | 597 | |
| | 1998.07-2002.10 | MT | F | R | MPV FWD XUD7 | | GDS10078 | Drive Shaft | 29W | 25 | 24 | 55.7 | 79 | 872 | |
| | 1998.07-2002.10 | MT | F | R | MPV FWD XUD7 | Transm. code: BE3 | GDS10193 | Drive Shaft | 29T | 25 | 24 | 54.8 | 78.5 | 868 | |
| | 1998.07-2002.10 | MT | F | L/R | MPV FWD XUD7 | | GCO10002 | Outer Joint | | 25 | 23 | 54.8 | 78.5 | 56 | I |
| | 1998.07-2002.10 | MT | F | L/R | MPV FWD XUD7 | | GCO10003 | Outer Joint | 29T | 25 | 23 | 54.8 | 78.5 | 56 | I |
| | 1998.07-2002.10 | MT | F | L/R | MPV FWD XUD7 | | GCO10022 | Outer Joint | 29W | 25 | 34 | 55.7 | 79 | 55 | I |
| | 1998.07-2002.10 | MT | F | | MPV FWD XUD7 | | GCO10042 | Outer Joint | | 25 | 34 | 54.8 | 78.5 | 56 | I |
| | 1998.07-2002.10 | | F | L | MPV FWD XUD7 | | GCO10049 | Outer Joint | | 25 | 34 | 55.7 | 79 | 55 | I |
| 1.8 (66 kw) | 1997.04-2001.10 | MT | F | L | MPV 4WD XU7JB | | GDS10025 | Drive Shaft | 29T | 25 | 24 | 54.8 | 78.5 | 593 | |
| | 1997.04-2001.10 | MT | F | L | MPV 4WD XU7JB | | GDS10090 | Drive Shaft | | 25 | 24 | 54.8 | 78.5 | 593 | |
| | 1997.04-2001.10 | MT | F | L | MPV 4WD XU7JB | | GDS10131 | Drive Shaft | 29T | 25 | 24 | 54.8 | 78.5 | 583 | |
| | 1997.04-2001.10 | MT | F | L | MPV 4WD XU7JB | | GDS10227 | Drive Shaft | | 25 | 24 | 58.5 | 78.5 | 595 | |
| | 1997.04-2001.10 | MT | F | L | MPV 4WD XU7JB | | GDS99025 | Drive Shaft | 29W | 25 | 24 | 55.7 | 79 | 597 | |
| | 1997.04-2001.10 | MT | F | R | MPV 4WD XU7JB | | GDS10077 | Drive Shaft | | 25 | 24 | 55.7 | 79 | 872 | |
| | 1997.04-2001.10 | MT | F | R | MPV 4WD XU7JB | | GDS10078 | Drive Shaft | 29W | 25 | 24 | 55.7 | 79 | 872 | |
| | 1997.04-2001.10 | MT | F | R | MPV 4WD XU7JB | Transm. code: BE3 | GDS10193 | Drive Shaft | 29T | 25 | 24 | 54.8 | 78.5 | 868 | |
| | 1997.04-2001.10 | MT | F | L/R | MPV 4WD XU7JB | | GCO10002 | Outer Joint | | 25 | 23 | 54.8 | 78.5 | 56 | I |
| | 1997.04-2001.10 | MT | F | L/R | MPV 4WD XU7JB | | GCO10003 | Outer Joint | 29T | 25 | 23 | 54.8 | 78.5 | 56 | I |
| | 1997.04-2001.10 | MT | F | L/R | MPV 4WD XU7JB | | GCO10042 | Outer Joint | | 25 | 34 | 54.8 | 78.5 | 56 | I |
| | 1997.04-2001.10 | MT | F | | MPV 4WD XU7JB | | GCO10022 | Outer Joint | 29W | 25 | 34 | 55.7 | 79 | 55 | I |
| | 1997.05-2002.10 | 5MT | F | L | MPV FWD XU7JB | | GDS10025 | Drive Shaft | 29T | 25 | 24 | 54.8 | 78.5 | 593 | |
| | 1997.05-2002.10 | 5MT | F | L | MPV FWD XU7JB | | GDS10090 | Drive Shaft | | 25 | 24 | 54.8 | 78.5 | 593 | |
| | 1997.05-2002.10 | 5MT | F | R | MPV FWD XU7JB | | GDS10077 | Drive Shaft | | 25 | 24 | 55.7 | 79 | 872 | |
| | 1997.05-2002.10 | MT | F | L | MPV FWD XU7JB | | GDS10227 | Drive Shaft | | 25 | 24 | 58.5 | 78.5 | 595 | |
| | 1997.05-2002.10 | MT | F | L | MPV FWD XU7JB | | GDS99025 | Drive Shaft | 29W | 25 | 24 | 55.7 | 79 | 597 | |
| | 1997.05-2002.10 | MT | F | R | MPV FWD XU7JB | | GDS10078 | Drive Shaft | 29W | 25 | 24 | 55.7 | 79 | 872 | |
| | 1997.05-2002.10 | MT | F | R | MPV FWD XU7JB | Transm. code: BE3 | GDS10193 | Drive Shaft | 29T | 25 | 24 | 54.8 | 78.5 | 868 | |
| | 1997.05-2002.10 | MT | F | L | MPV FWD XU7JB | | GCO10022 | Outer Joint | 29W | 25 | 34 | 55.7 | 79 | 55 | I |
| | 1997.05-2002.10 | MT | F | L/R | MPV FWD XU7JB | | GCO10002 | Outer Joint | | 25 | 23 | 54.8 | 78.5 | 56 | I |
| | 1997.05-2002.10 | MT | F | L/R | MPV FWD XU7JB | | GCO10003 | Outer Joint | 29T | 25 | 23 | 54.8 | 78.5 | 56 | I |
| | 1997.05-2002.10 | MT | F | | MPV FWD XU7JB | | GCO10042 | Outer Joint | | 25 | 34 | 54.8 | 78.5 | 56 | I |
| | 1997.05-2002.10 | | F | L | MPV FWD XU7JB | | GCO10049 | Outer Joint | | 25 | 34 | 55.7 | 79 | 55 | I |
| 1.9 (50 kw) | 1996.07-2003.12 | 5MT | F | L | MPV FWD XUD9 | | GDS10025 | Drive Shaft | 29T | 25 | 24 | 54.8 | 78.5 | 593 | |
| | 1996.07-2003.12 | 5MT | F | L | MPV FWD XUD9 | | GDS10090 | Drive Shaft | | 25 | 24 | 54.8 | 78.5 | 593 | |
| | 1996.07-2003.12 | 5MT | F | R | MPV FWD XUD9 | | GDS10077 | Drive Shaft | | 25 | 24 | 55.7 | 79 | 872 | |
| | 1996.07-2003.12 | 5MT | F | R | MPV FWD XUD9 | | GDS10193 | Drive Shaft | 29T | 25 | 24 | 54.8 | 78.5 | 868 | |
| | 1996.07-2003.12 | MT | F | L | MPV FWD XUD9 | | GDS10227 | Drive Shaft | | 25 | 24 | 58.5 | 78.5 | 595 | |
| | 1996.07-2003.12 | MT | F | L | MPV FWD XUD9 | | GCO10022 | Outer Joint | 29W | 25 | 34 | 55.7 | 79 | 55 | I |
| | 1996.07-2003.12 | MT | F | L/R | MPV FWD XUD9 | | GCO10027 | Outer Joint | 48T | 25 | 34 | 55.7 | 79 | 55 | I |
| | 1996.07-2003.12 | MT | F | L/R | MPV FWD XUD9 | | GCO10043 | Outer Joint | | 25 | 34 | 54.8 | 78.5 | 56 | I |
| | 1996.07-2003.12 | | F | L | MPV FWD XUD9 | | GDS99025 | Drive Shaft | 29W | 25 | 24 | 55.7 | 79 | 597 | |
| | 1996.07-2003.12 | | F | R | MPV FWD XUD9 | | GDS10078 | Drive Shaft | 29W | 25 | 24 | 55.7 | 79 | 872 | |
| | 1996.07-2003.12 | | F | L | MPV FWD XUD9 | | GCO10049 | Outer Joint | | 25 | 34 | 55.7 | 79 | 55 | I |
| | 1996.07-2003.12 | | F | L/R | MPV FWD XUD9 | | GCO45036 | Outer Joint | 29T | 25 | 22 | 60 | 80 | 54 | I |
| | 1996.07-2003.12 | | F | | MPV FWD XUD9 | | GCO10042 | Outer Joint | | 25 | 34 | 54.8 | 78.5 | 56 | I |
| 1.9 (51 kw) | 1998.07-2005.10 | MT | F | L | MPV 4WD DW8/DW8B | Date to:2002.10;length2:69 | GDS10025 | Drive Shaft | 29T | 25 | 24 | 54.8 | 78.5 | 593 | |
| | 1998.07-2005.10 | MT | F | L | MPV 4WD DW8/DW8B | Date to:2002.10;length2:62.5 | GDS10131 | Drive Shaft | 29T | 25 | 24 | 54.8 | 78.5 | 583 | |
| | 1998.07-2005.10 | MT | F | L | MPV 4WD DW8/DW8B | | GDS10227 | Drive Shaft | | 25 | 24 | 58.5 | 78.5 | 595 | |
| | 1998.07-2005.10 | MT | F | L | MPV 4WD DW8/DW8B | | GDS99025 | Drive Shaft | 29W | 25 | 24 | 55.7 | 79 | 597 | |
| | 1998.07-2005.10 | MT | F | R | MPV 4WD DW8/DW8B | | GDS10077 | Drive Shaft | | 25 | 24 | 55.7 | 79 | 872 | |
| | 1998.07-2005.10 | MT | F | R | MPV 4WD DW8/DW8B | | GDS10078 | Drive Shaft | 29W | 25 | 24 | 55.7 | 79 | 872 | |
| | 1998.07-2005.10 | MT | F | R | MPV 4WD DW8/DW8B | Transm. code: BE3 | GDS10193 | Drive Shaft | 29T | 25 | 24 | 54.8 | 78.5 | 868 | |
| | 1998.07-2005.10 | MT | F | L/R | MPV 4WD DW8/DW8B | | GCO10022 | Outer Joint | 29W | 25 | 34 | 55.7 | 79 | 55 | I |
| | 1998.07-2005.10 | MT | F | L/R | MPV 4WD DW8/DW8B | | GCO10042 | Outer Joint | | 25 | 34 | 54.8 | 78.5 | 56 | I |
| | 1998.07-2005.10 | MT | F | L/R | MPV 4WD DW8/DW8B | | GCO45036 | Outer Joint | 29T | 25 | 22 | 60 | 80 | 54 | I |
| 2.0 (66 kw) | 1999.12-2005.10 | 5MT | F | L | MPV FWD DW10TD | Without Stability Control System | GDS10131 | Drive Shaft | 29T | 25 | 24 | 54.8 | 78.5 | 583 | |
| | 1999.12-2005.10 | 5MT | F | L | MPV FWD DW10TD | With Stability Control System | GDS99195 | Drive Shaft | 48W | 25 | 24 | 58.5 | 79 | 585 | |

| | YEAR | TRANSM. | F/R | L/R | BODY STYLE & DRIVE TYPE & ENGINE | REMARKS | G-AP Ref. | PRODUCT | ABS | Technical Specifications A | B | C | H | L | P |
|---|---|---|---|---|---|---|---|---|---|---|---|---|---|---|---|
| **CITROËN** | | | | | | | | | | | | | | | |
| **Berlingo MultiSpace** | | | | | | | | | | | | | | | |
| 2.0 (66 kw) | 1999.12-2005.10 | 5MT | F | R | MPV FWD DW10TD | | GDS10077 | Drive Shaft | | 25 | 24 | 55.7 | 79 | 872 | |
| | 1999.12-2005.10 | 5MT | F | R | MPV FWD DW10TD | | GDS10078 | Drive Shaft | 29W | 25 | 24 | 55.7 | 79 | 872 | |
| | 1999.12-2005.10 | 5MT | F | R | MPV FWD DW10TD | Inner teeth of tranm.side:23 | GDS10193 | Drive Shaft | 29T | 25 | 24 | 54.8 | 78.5 | 868 | |
| | 1999.12-2005.10 | 5MT | F | R | MPV FWD DW10TD | | GDS99196 | Drive Shaft | 48W | 25 | 24 | 58.5 | 79 | 869 | |
| | 1999.12-2005.10 | 5MT | F | L | MPV FWD DW10TD | Without Stability Control System (ESP/DSC) | GCO10022 | Outer Joint | 29W | 25 | 34 | 55.7 | 79 | 55 | I |
| | 1999.12-2005.10 | 5MT | F | L | MPV FWD DW10TD | Without Stability Control System | GCO10049 | Outer Joint | | 25 | 34 | 55.7 | 79 | 55 | I |
| | 1999.12-2005.10 | 5MT | F | L/R | MPV FWD DW10TD | | GCO10067 | Outer Joint | 48W | 25 | 34 | 58.5 | 79 | 55 | I |
| | 1999.12-2005.10 | 5MT | F | | MPV FWD DW10TD | | GCO10042 | Outer Joint | | 25 | 34 | 54.8 | 78.5 | 56 | I |
| | 1999.12-2005.10 | MT | F | L | MPV FWD DW10TD | | GDS10163 | Drive Shaft | | 25 | 24 | 54.8 | 78.5 | 583 | |
| | 1999.12-2005.10 | MT | F | L/R | MPV FWD DW10TD | Date to:2003.12 | GCO10002 | Outer Joint | | 25 | 23 | 54.8 | 78.5 | 56 | I |
| | 1999.12-2005.10 | MT | F | L/R | MPV FWD DW10TD | Date to:2003.12 | GCO10003 | Outer Joint | 29T | 25 | 23 | 54.8 | 78.5 | 56 | I |
| | 1999.12-2005.10 | MT | F | L/R | MPV FWD DW10TD | Date to:2003.12 | GCO10027 | Outer Joint | 48T | 25 | 34 | 55.7 | 79 | 55 | I |
| | 1999.12-2005.10 | MT | F | L | MPV FWD DW10TD | | GCI10018 | Inner Joint | | 24 | 29 | 40 | 62.5 | 99 | |
| | 1999.12-2005.10 | | F | L | MPV FWD DW10TD | | GDS10080 | Drive Shaft | 29W | 25 | 24 | 55.7 | 79 | 597 | |
| **Berlingo/Berlingo First** | | | | | | | | | | | | | | | |
| 1.4 (48 kw) | 2002.11-2011.12 | 5MT | F | L | Box Body/MPV FWD KFW (TU3JP) | Date to:2004.03 | GDS10021 | Drive Shaft | 29T | 25 | 22 | 60 | 80 | 593 | |
| | 2002.11-2011.12 | 5MT | F | L | Box Body/MPV FWD KFW (TU3JP) | | GDS10026 | Drive Shaft | | 25 | 22 | 56.7 | 79 | 594 | |
| | 2002.11-2011.12 | 5MT | F | R | Box Body/MPV FWD KFW (TU3JP) | Date to:2004.03 | GDS10019 | Drive Shaft | 29T | 25 | 22 | 60 | 80 | 867 | |
| | 2002.11-2011.12 | 5MT | F | R | Box Body/MPV FWD KFW (TU3JP) | Date from:2004.04 | GDS82450 | Drive Shaft | 48T | 25 | 22 | 58.5 | 79.5 | 865 | |
| | 2002.11-2011.12 | 5MT | F | L/R | Box Body/MPV FWD KFW (TU3JP) | | GCO45036 | Outer Joint | 29T | 25 | 22 | 60 | 80 | 54 | I |
| | 2002.11-2011.12 | 5MT | F | L | Box Body/MPV FWD KFW (TU3JP) | | GCI10006 | Inner Joint | | 22 | 22 | 40 | 58.5 | 87 | |
| | 2002.11-2011.12 | MT | F | L | Box Body/MPV FWD KFW (TU3JP) | Date to:2004.03 | GDS10187 | Drive Shaft | 29T | 25 | 22 | 54.5 | 79.5 | 590.5 | |
| | 2002.11-2011.12 | MT | F | R | Box Body/MPV FWD KFW (TU3JP) | | GDS10205 | Drive Shaft | | 25 | 22 | 58.5 | 79 | 866 | |
| | 2002.11-2011.12 | 5MT | F | L | MPV FWD KFW (TU3JP) | Date to:2004.03 | GDS10021 | Drive Shaft | 29T | 25 | 22 | 60 | 80 | 593 | |
| | 2002.11-2011.12 | 5MT | F | L | MPV FWD KFW (TU3JP) | | GDS10026 | Drive Shaft | | 25 | 22 | 56.7 | 79 | 594 | |
| | 2002.11-2011.12 | 5MT | F | L | MPV FWD KFW (TU3JP) | Date to:2004.03 | GDS10187 | Drive Shaft | 29T | 25 | 22 | 54.5 | 79.5 | 590.5 | |
| | 2002.11-2011.12 | 5MT | F | R | MPV FWD KFW (TU3JP) | Date to:2004.03 | GDS10019 | Drive Shaft | 29T | 25 | 22 | 60 | 80 | 867 | |
| | 2002.11-2011.12 | 5MT | F | R | MPV FWD KFW (TU3JP) | | GDS10205 | Drive Shaft | | 25 | 22 | 58.5 | 79 | 866 | |
| | 2002.11-2011.12 | 5MT | F | R | MPV FWD KFW (TU3JP) | | GDS82450 | Drive Shaft | 48T | 25 | 22 | 58.5 | 79.5 | 865 | |
| | 2002.11-2011.12 | 5MT | F | R | MPV FWD KFW (TU3JP) | | GCO45036 | Outer Joint | 29T | 25 | 22 | 60 | 80 | 54 | I |
| 1.4 (55 kw) | 1996.07-2011.12 | 4MT/5MT | F | L | MPV FWD KFX (TU3JP), KFW (TU3A), KFW (TU3JP) | | GDS10026 | Drive Shaft | | 25 | 22 | 56.7 | 79 | 594 | |
| | 1996.07-2011.12 | 4MT/5MT | F | R | MPV FWD KFX (TU3JP), KFW (TU3A), KFW (TU3JP) | | GDS10205 | Drive Shaft | | 25 | 22 | 58.5 | 79 | 866 | |
| | 1996.07-2011.12 | 4MT/5MT | F | L | MPV FWD KFX (TU3JP), KFW (TU3A), KFW (TU3JP) | | GCO99008 | Outer Joint | 48T | 25 | 22 | 60 | 78.5 | 54 | I |
| | 1996.07-2011.12 | 4MT/5MT | F | L | MPV FWD KFX (TU3JP), KFW (TU3A), KFW (TU3JP) | | GCI10006 | Inner Joint | | 22 | 22 | 40 | 58.5 | 87 | |
| | 1996.07-2011.12 | 5MT | F | L | MPV FWD KFX (TU3JP), KFW (TU3A), KFW (TU3JP) | Trim Level::ABS BOSCH 53 | GDS10021 | Drive Shaft | 29T | 25 | 22 | 60 | 80 | 593 | |
| | 1996.07-2011.12 | 5MT | F | L | MPV FWD KFX (TU3JP), KFW (TU3A), KFW (TU3JP) | | GDS10075 | Drive Shaft | 29T | 25 | 22 | 54.5 | 79.5 | 587 | |
| | 1996.07-2011.12 | 5MT | F | L | MPV FWD KFX (TU3JP), KFW (TU3A), KFW (TU3JP) | Trim Level::ABS BOSCH 53 | GDS10187 | Drive Shaft | 29T | 25 | 22 | 54.5 | 79.5 | 590.5 | |
| | 1996.07-2011.12 | 5MT | F | R | MPV FWD KFX (TU3JP), KFW (TU3A), KFW (TU3JP) | Type:ABS BOSCH 53 | GDS10019 | Drive Shaft | 29T | 25 | 22 | 60 | 80 | 867 | |
| | 1996.07-2011.12 | 5MT | F | R | MPV FWD KFX (TU3JP), KFW (TU3A), KFW (TU3JP) | | GDS82450 | Drive Shaft | 48T | 25 | 22 | 58.5 | 79.5 | 865 | |
| | 1996.07-2011.12 | 5MT | F | L/R | MPV FWD KFX (TU3JP), KFW (TU3A), KFW (TU3JP) | Type:ABS BOSCH 53 | GCO45036 | Outer Joint | 29T | 25 | 22 | 60 | 80 | 54 | I |
| 1.6 (55 kw) | 2005.07-2011.12 | 5MT | F | L | MPV FWD DV6B, 9HW (DV6BTED4) | Trim Level::ABS BOSCH 53 | GDS10021 | Drive Shaft | 29T | 25 | 22 | 60 | 80 | 593 | |
| | 2005.07-2011.12 | 5MT | F | L | MPV FWD DV6B, 9HW (DV6BTED4) | | GDS10080 | Drive Shaft | 29W | 25 | 24 | 55.7 | 79 | 597 | |
| | 2005.07-2011.12 | 5MT | F | L | MPV FWD DV6B, 9HW (DV6BTED4) | Trim Level::ABS BOSCH 53 | GDS10187 | Drive Shaft | 29T | 25 | 22 | 54.5 | 79.5 | 590.5 | |
| | 2005.07-2011.12 | 5MT | F | L | MPV FWD DV6B, 9HW (DV6BTED4) | | GDS99195 | Drive Shaft | 48W | 25 | 24 | 58.5 | 79 | 585 | |
| | 2005.07-2011.12 | 5MT | F | R | MPV FWD DV6B, 9HW (DV6BTED4) | Trim Level::ABS BOSCH 53 | GDS10019 | Drive Shaft | 29T | 25 | 22 | 60 | 80 | 867 | |
| | 2005.07-2011.12 | 5MT | F | R | MPV FWD DV6B, 9HW (DV6BTED4) | | GDS10078 | Drive Shaft | 29W | 25 | 24 | 55.7 | 79 | 872 | |
| | 2005.07-2011.12 | 5MT | F | R | MPV FWD DV6B, 9HW (DV6BTED4) | | GDS82450 | Drive Shaft | 48T | 25 | 22 | 58.5 | 79.5 | 865 | |
| | 2005.07-2011.12 | 5MT | F | R | MPV FWD DV6B, 9HW (DV6BTED4) | | GDS99196 | Drive Shaft | 48W | 25 | 24 | 58.5 | 79 | 869 | |
| | 2005.07-2011.12 | 5MT | F | L/R | MPV FWD DV6B, 9HW (DV6BTED4) | | GCO10067 | Outer Joint | 48W | 25 | 34 | 58.5 | 79 | 55 | I |
| | 2005.07-2011.12 | 5MT | F | L | MPV FWD DV6B, 9HW (DV6BTED4) | | GCI10023 | Inner Joint | | 22 | 22 | 40 | 58.5 | 86 | |
| | 2005.07-2011.12 | MT | F | L/R | MPV FWD DV6B, 9HW (DV6BTED4) | Date to:2007.12 | GCO10027 | Outer Joint | 48T | 25 | 34 | 55.7 | 79 | 55 | I |
| | 2005.07-2011.12 | | F | | MPV FWD DV6B, 9HW (DV6BTED4) | | GCO10022 | Outer Joint | 29W | 25 | 34 | 55.7 | 79 | 55 | I |
| | 2005.07-2011.12 | | F | | MPV FWD DV6B, 9HW (DV6BTED4) | | GCO10042 | Outer Joint | | 25 | 34 | 54.8 | 78.5 | 56 | I |
| 1.6 (66 kw) | 2005.07-2011.12 | 5MT | F | L | Box Body/MPV FWD 9HX (DV6ATED4) | | GDS10080 | Drive Shaft | 29W | 25 | 24 | 55.7 | 79 | 597 | |
| | 2005.07-2011.12 | 5MT | F | L | Box Body/MPV FWD 9HX (DV6ATED4) | | GDS99195 | Drive Shaft | 48W | 25 | 24 | 58.5 | 79 | 585 | |
| | 2005.07-2011.12 | 5MT | F | R | Box Body/MPV FWD 9HX (DV6ATED4) | | GDS10078 | Drive Shaft | 29W | 25 | 24 | 55.7 | 79 | 872 | |
| | 2005.07-2011.12 | 5MT | F | R | Box Body/MPV FWD 9HX (DV6ATED4) | | GDS99196 | Drive Shaft | 48W | 25 | 24 | 58.5 | 79 | 869 | |
| | 2005.07-2011.12 | 5MT | F | L | Box Body/MPV FWD 9HX (DV6ATED4) | | GCI10020 | Inner Joint | | 24 | 34 | 40 | 62.5 | 99 | |
| | 2005.07-2011.12 | AT | F | L | Box Body/MPV FWD 9HX (DV6ATED4) | | GDS10255 | Drive Shaft | | 25 | 24 | 58.5 | 79 | 616 | |
| | 2005.07-2011.12 | AT | F | R | Box Body/MPV FWD 9HX (DV6ATED4) | | GDS10254 | Drive Shaft | | 25 | 24 | 58.5 | 79 | 939 | |
| | 2005.07-2011.12 | MT | F | L | Box Body/MPV FWD 9HX (DV6ATED4) | Date to:2008.05;Trans. code:BE4R;Type:8MN04 | GDS45105 | Drive Shaft | | 25 | 24 | 58 | 79 | 625 | |
| | 2005.07-2011.12 | MT | F | R | Box Body/MPV FWD 9HX (DV6ATED4) | Date to:2008.05;Trans. code:BE4R;Type:8MN05 | GDS45104 | Drive Shaft | | 25 | 24 | 58 | 79 | 925 | |
| | 2005.07-2011.12 | MT | F | L/R | Box Body/MPV FWD 9HX (DV6ATED4) | | GCO10027 | Outer Joint | 48T | 25 | 34 | 55.7 | 79 | 55 | I |
| | 2005.07-2011.12 | MT | F | L/R | Box Body/MPV FWD 9HX (DV6ATED4) | | GCO10067 | Outer Joint | 48W | 25 | 34 | 58.5 | 79 | 55 | I |
| | 2005.07-2011.12 | | F | | Box Body/MPV FWD 9HX (DV6ATED4) | | GCO10022 | Outer Joint | 29W | 25 | 34 | 55.7 | 79 | 55 | I |

| | YEAR | TRANSM. | F/R | L/R | BODY STYLE & DRIVE TYPE & ENGINE | REMARKS | G-AP Ref. | PRODUCT | ABS | Technical Specifications A | B | C | H | L | P |
|---|---|---|---|---|---|---|---|---|---|---|---|---|---|---|---|
| **CITROËN** | | | | | | | | | | | | | | | |
| **Berlingo/Berlingo First** | | | | | | | | | | | | | | | |
| 1.6 (66 kw) | 2005.07-2011.12 | | F | | Box Body/MPV FWD 9HX (DV6ATED4) | | GCO10042 | Outer Joint | | 25 | 34 | 54.8 | 78.5 | 56 | I |
| 1.6 (80 kw) | 2000.10-2011.12 | 5MT | F | L | MPV FWD NFU (TU5JP4) | | GDS99195 | Drive Shaft | 48W | 25 | 24 | 58.5 | 79 | 585 | |
| | 2000.10-2011.12 | 5MT | F | R | MPV FWD NFU (TU5JP4) | | GDS10193 | Drive Shaft | 29T | 25 | 24 | 54.8 | 78.5 | 868 | |
| | 2000.10-2011.12 | 5MT | F | R | MPV FWD NFU (TU5JP4) | | GDS99196 | Drive Shaft | 48W | 25 | 24 | 58.5 | 79 | 869 | |
| | 2000.10-2011.12 | 5MT | F | L/R | MPV FWD NFU (TU5JP4) | for vehicles with ESP | GCO10067 | Outer Joint | 48W | 25 | 34 | 58.5 | 79 | 55 | I |
| | 2000.10-2011.12 | 5MT | F | L/R | MPV FWD NFU (TU5JP4) | | GCO10076 | Outer Joint | 29W | 25 | 34 | 58.5 | 79 | 55 | I |
| | 2000.10-2011.12 | 5MT | F | L | MPV FWD NFU (TU5JP4) | | GCI10018 | Inner Joint | | 24 | 29 | 40 | 62.5 | 99 | |
| | 2000.10-2011.12 | 5MT | F | L | MPV FWD NFU (TU5JP4) | | GCI10020 | Inner Joint | | 24 | 34 | 40 | 62.5 | 99 | |
| | 2000.10-2011.12 | MT | F | L | MPV FWD NFU (TU5JP4) | Date To:2008.05;Type:Berlingo MultiSpace | GDS10025 | Drive Shaft | 29T | 25 | 24 | 54.8 | 78.5 | 593 | |
| | 2000.10-2011.12 | MT | F | L | MPV FWD NFU (TU5JP4) | | GDS10090 | Drive Shaft | | 25 | 24 | 54.8 | 78.5 | 593 | |
| | 2000.10-2011.12 | MT | F | L | MPV FWD NFU (TU5JP4) | | GDS99025 | Drive Shaft | 29W | 25 | 24 | 55.7 | 79 | 597 | |
| | 2000.10-2011.12 | MT | F | R | MPV FWD NFU (TU5JP4) | | GDS10077 | Drive Shaft | | 25 | 24 | 55.7 | 79 | 872 | |
| | 2000.10-2011.12 | MT | F | R | MPV FWD NFU (TU5JP4) | | GDS10078 | Drive Shaft | 29W | 25 | 24 | 55.7 | 79 | 872 | |
| | 2000.10-2011.12 | MT | F | L/R | MPV FWD NFU (TU5JP4) | | GCO10002 | Outer Joint | | 25 | 23 | 54.8 | 78.5 | 56 | I |
| | 2000.10-2011.12 | MT | F | L/R | MPV FWD NFU (TU5JP4) | | GCO10003 | Outer Joint | 29T | 25 | 23 | 54.8 | 78.5 | 56 | I |
| | 2000.10-2011.12 | | F | L | MPV FWD NFU (TU5JP4) | Date From:2008.06;Type:ABS BOSCH 53 | GDS10021 | Drive Shaft | 29T | 25 | 22 | 60 | 80 | 593 | |
| | 2000.10-2011.12 | | F | L | MPV FWD NFU (TU5JP4) | | GDS10131 | Drive Shaft | 29T | 25 | 24 | 54.8 | 78.5 | 583 | |
| | 2000.10-2011.12 | | F | R | MPV FWD NFU (TU5JP4) | Date From:2008.06;Type:ABS BOSCH 53 | GDS10019 | Drive Shaft | 29T | 25 | 22 | 60 | 80 | 867 | |
| | 2000.10-2011.12 | | F | L | MPV FWD NFU (TU5JP4) | | GCO10022 | Outer Joint | 29W | 25 | 34 | 55.7 | 79 | 55 | I |
| | 2000.10-2011.12 | | F | L | MPV FWD NFU (TU5JP4) | | GCO10049 | Outer Joint | | 25 | 34 | 55.7 | 79 | 55 | I |
| | 2000.10-2011.12 | | F | | MPV FWD NFU (TU5JP4) | | GCO10042 | Outer Joint | | 25 | 34 | 54.8 | 78.5 | 56 | I |
| 1.9 (51 kw) | 1998.07-2005.10 | 5MT | F | L | MPV FWD WJZ (DW8), WJY (DW8B) | | GDS10025 | Drive Shaft | 29T | 25 | 24 | 54.8 | 78.5 | 593 | |
| | 1998.07-2005.10 | 5MT | F | L | MPV FWD WJZ (DW8), WJY (DW8B) | Inner teeth of wheel side:23 | GDS10090 | Drive Shaft | | 25 | 24 | 54.8 | 78.5 | 593 | |
| | 1998.07-2005.10 | 5MT | F | L | MPV FWD WJZ (DW8), WJY (DW8B) | | GDS45012 | Drive Shaft | 48T | 25 | 22 | 60 | 78.5 | 601 | |
| | 1998.07-2005.10 | 5MT | F | L | MPV FWD WJZ (DW8), WJY (DW8B) | | GDS99025 | Drive Shaft | 29W | 25 | 24 | 55.7 | 79 | 597 | |
| | 1998.07-2005.10 | 5MT | F | R | MPV FWD WJZ (DW8), WJY (DW8B) | Type:ABS BOSCH 53 | GDS10019 | Drive Shaft | 29T | 25 | 22 | 60 | 80 | 867 | |
| | 1998.07-2005.10 | 5MT | F | R | MPV FWD WJZ (DW8), WJY (DW8B) | | GDS10077 | Drive Shaft | | 25 | 24 | 55.7 | 79 | 872 | |
| | 1998.07-2005.10 | 5MT | F | R | MPV FWD WJZ (DW8), WJY (DW8B) | | GDS10078 | Drive Shaft | 29W | 25 | 24 | 55.7 | 79 | 872 | |
| | 1998.07-2005.10 | 5MT | F | R | MPV FWD WJZ (DW8), WJY (DW8B) | | GDS82450 | Drive Shaft | 48T | 25 | 22 | 58.5 | 79.5 | 865 | |
| | 1998.07-2005.10 | 5MT | F | L | MPV FWD WJZ (DW8), WJY (DW8B) | | GCO10049 | Outer Joint | | 25 | 34 | 55.7 | 79 | 55 | I |
| | 1998.07-2005.10 | MT | F | L | MPV FWD WJZ (DW8), WJY (DW8B) | Inner teeth of wheel side:34 | GDS10227 | Drive Shaft | | 25 | 24 | 58.5 | 78.5 | 595 | |
| | 1998.07-2005.10 | MT | F | L | MPV FWD WJZ (DW8), WJY (DW8B) | | GDS99195 | Drive Shaft | 48W | 25 | 24 | 58.5 | 79 | 585 | |
| | 1998.07-2005.10 | MT | F | R | MPV FWD WJZ (DW8), WJY (DW8B) | Transm. code: BE3 | GDS10193 | Drive Shaft | 29T | 25 | 24 | 54.8 | 78.5 | 868 | |
| | 1998.07-2005.10 | MT | F | R | MPV FWD WJZ (DW8), WJY (DW8B) | | GDS99196 | Drive Shaft | 48W | 25 | 24 | 58.5 | 79 | 869 | |
| | 1998.07-2005.10 | MT | F | L/R | MPV FWD WJZ (DW8), WJY (DW8B) | | GCO10022 | Outer Joint | 29W | 25 | 34 | 55.7 | 79 | 55 | I |
| | 1998.07-2005.10 | MT | F | L/R | MPV FWD WJZ (DW8), WJY (DW8B) | | GCO10027 | Outer Joint | 48T | 25 | 34 | 55.7 | 79 | 55 | I |
| | 1998.07-2005.10 | MT | F | L/R | MPV FWD WJZ (DW8), WJY (DW8B) | | GCO10043 | Outer Joint | | 25 | 34 | 54.8 | 78.5 | 56 | I |
| | 1998.07-2005.10 | | F | L | MPV FWD WJZ (DW8), WJY (DW8B) | Type:ABS BOSCH 53 | GDS10021 | Drive Shaft | 29T | 25 | 22 | 60 | 80 | 593 | |
| | 1998.07-2005.10 | | F | L | MPV FWD WJZ (DW8), WJY (DW8B) | Type:ABS BOSCH 53 | GDS10187 | Drive Shaft | 29T | 25 | 22 | 54.5 | 79.5 | 590.5 | |
| | 1998.07-2005.10 | | F | L/R | MPV FWD WJZ (DW8), WJY (DW8B) | | GCO45036 | Outer Joint | 29T | 25 | 22 | 60 | 80 | 54 | I |
| | 1998.07-2005.10 | | F | | MPV FWD WJZ (DW8), WJY (DW8B) | | GCO10042 | Outer Joint | | 25 | 34 | 54.8 | 78.5 | 56 | I |
| | 1998.07-2005.10 | | F | | MPV FWD WJZ (DW8), WJY (DW8B) | | GCO10076 | Outer Joint | 29W | 25 | 34 | 58.5 | 79 | 55 | I |
| **C-Crosser** | | | | | | | | | | | | | | | |
| 2.0 (108 kw) | 2010.11-2012.12 | AT | F | L/R | SUV 4WD 4B11 | | GCO39117 | Outer Joint | | 28 | 35 | 59.5 | 95 | 65 | I |
| | 2010.11-2012.12 | CVT | F | R | SUV 4WD 4B11 | | GDS39120 | Drive Shaft | | 28 | 27 | 59.5 | 95 | 965 | |
| | 2010.11-2012.12 | CVT | F | L | SUV 4WD 4B11 | | GCI51034 | Inner Joint | | 27 | 35 | 40 | 62 | 113 | |
| | 2010.11-2012.12 | CVT/5MT | F | R | SUV 4WD 4B11 | | GCI81083 | Inner Joint | | 27 | 35 | 50 | 255.5 | 120 | |
| | 2010.11-2012.12 | AT | F | L | SUV FWD 4B11 | | GCO39117 | Outer Joint | | 28 | 35 | 59.5 | 95 | 65 | I |
| | 2010.11-2012.12 | CVT | F | L | SUV FWD 4B11 | | GCI51034 | Inner Joint | | 27 | 35 | 40 | 62 | 113 | |
| | 2010.11-2012.12 | CVT/5MT | F | R | SUV FWD 4B11 | | GCI81083 | Inner Joint | | 27 | 35 | 50 | 255.5 | 120 | |
| 2.2 (115 kw) | 2007.02-2012.12 | MT | F | L | SUV 4WD 4HN (DW12MTED4);4HK (DW12ME5) | | GDS51047 | Drive Shaft | | 28 | 24 | 59.5 | 94.5 | 631 | |
| | 2007.02-2012.12 | MT | F | R | SUV 4WD 4HN (DW12MTED4);4HK (DW12ME5) | | GDS51050 | Drive Shaft | | 28 | 24 | 59.5 | 94.5 | 993 | |
| | 2007.02-2012.12 | MT | F | L/R | SUV 4WD 4HN (DW12MTED4);4HK (DW12ME5) | | GCO39117 | Outer Joint | | 28 | 35 | 59.5 | 95 | 65 | I |
| | 2007.02-2012.12 | MT | F | L | SUV 4WD 4HN (DW12MTED4);4HK (DW12ME5) | | GCI59140 | Inner Joint | | 24 | 36 | 50 | 67 | 116 | |
| | 2007.02-2012.12 | MT | F | R | SUV 4WD 4HN (DW12MTED4);4HK (DW12ME5) | | GCI51021 | Inner Joint | | 24 | 36 | 50 | 280.5 | 129 | |
| | 2007.02-2012.12 | 6AT/6MT | R | L | SUV 4WD 4HN (DW12MTED4);4HK (DW12ME5) | | GDS39169 | Drive Shaft | | 27 | 23 | 58 | 94.5 | 754.5 | |
| | 2007.02-2012.12 | 6DCT/6MT | R | R | SUV 4WD 4HN (DW12MTED4);4HK (DW12ME5) | | GDS57586 | Drive Shaft | | 27 | 23 | 58 | 95 | 834 | |
| | 2007.02-2012.12 | 6DCT/6MT | R | L/R | SUV 4WD 4HN (DW12MTED4);4HK (DW12ME5) | | GCO83634 | Outer Joint | | 27 | 26 | 58 | 95 | 52.5 | I |
| | 2007.02-2012.12 | 6DCT/6MT | R | L/R | SUV 4WD 4HN (DW12MTED4);4HK (DW12ME5) | | GCI39050 | Inner Joint | | 23 | 26 | 35 | 64 | 96 | |
| | 2007.06-2012.12 | 6MT | F | L | SUV Van 4WD 4HN (DW12MTED4) | | GDS51047 | Drive Shaft | | 28 | 24 | 59.5 | 94.5 | 631 | |
| | 2007.06-2012.12 | 6MT | F | R | SUV Van 4WD 4HN (DW12MTED4) | | GDS51050 | Drive Shaft | | 28 | 24 | 59.5 | 94.5 | 993 | |
| | 2007.06-2012.12 | 6MT | F | R | SUV Van 4WD 4HN (DW12MTED4) | | GCI51021 | Inner Joint | | 24 | 36 | 50 | 280.5 | 129 | |
| | 2007.06-2012.12 | 6MT | R | L | SUV Van 4WD 4HN (DW12MTED4) | | GDS39169 | Drive Shaft | | 27 | 23 | 58 | 94.5 | 754.5 | |
| | 2007.06-2012.12 | 6MT | R | R | SUV Van 4WD 4HN (DW12MTED4) | | GDS57586 | Drive Shaft | | 27 | 23 | 58 | 95 | 834 | |
| | 2007.06-2012.12 | 6MT | R | L/R | SUV Van 4WD 4HN (DW12MTED4) | | GCO83634 | Outer Joint | | 27 | 26 | 58 | 95 | 52.5 | I |

| | YEAR | TRANSM. | F/R | L/R | BODY STYLE & DRIVE TYPE & ENGINE | REMARKS | G-AP Ref. | PRODUCT | ABS | Technical Specifications A | B | C | H | L | P |
|---|---|---|---|---|---|---|---|---|---|---|---|---|---|---|---|
| **CITROËN** | | | | | | | | | | | | | | | |
| **C-Crosser** | | | | | | | | | | | | | | | |
| 2.2 (115 kw) | 2007.06-2012.12 | 6MT | R | L/R | SUV Van 4WD 4HN (DW12MTED4) | | GCI39050 | Inner Joint | | 23 | 26 | 35 | 64 | 96 | |
| 2.4 (125 kw) | 2008.08-2012.12 | AT | F | L | SUV 4WD SFZ (4B12 MMC) | | GDS82991 | Drive Shaft | | 28 | 27 | 59.6 | 95 | 651 | |
| | 2008.08-2012.12 | CVT | F | R | SUV 4WD SFZ (4B12 MMC) | | GDS39120 | Drive Shaft | | 28 | 27 | 59.5 | 95 | 965 | |
| | 2008.08-2012.12 | CVT | F | L | SUV 4WD SFZ (4B12 MMC) | | GCO39117 | Outer Joint | | 28 | 35 | 59.5 | 95 | 65 | I |
| | 2008.08-2012.12 | CVT/5MT | F | R | SUV 4WD SFZ (4B12 MMC) | | GCI81083 | Inner Joint | | 27 | 35 | 50 | 255.5 | 120 | |
| | 2008.08-2012.12 | 5MT/CVT | R | L | SUV 4WD SFZ (4B12 MMC) | | GDS39169 | Drive Shaft | | 27 | 23 | 58 | 94.5 | 754.5 | |
| | 2008.08-2012.12 | CVT | R | R | SUV 4WD SFZ (4B12 MMC) | | GDS57586 | Drive Shaft | | 27 | 23 | 58 | 95 | 834 | |
| | 2008.08-2012.12 | CVT | R | L/R | SUV 4WD SFZ (4B12 MMC) | | GCO83634 | Outer Joint | | 27 | 26 | 58 | 95 | 52.5 | I |
| | 2008.08-2012.12 | CVT | R | L/R | SUV 4WD SFZ (4B12 MMC) | | GCI39050 | Inner Joint | | 23 | 26 | 35 | 64 | 96 | |
| **C-Crosser Enterprise** | | | | | | | | | | | | | | | |
| 2.2 (115 kw) | 2009.01- | 6MT | F | L | SUV Van 4WD 4HN (DW12MTED4) | | GDS51047 | Drive Shaft | | 28 | 24 | 59.5 | 94.5 | 631 | |
| | 2009.01- | 6MT | F | R | SUV Van 4WD 4HN (DW12MTED4) | | GDS51050 | Drive Shaft | | 28 | 24 | 59.5 | 94.5 | 993 | |
| | 2009.01- | MT | F | L | SUV Van 4WD 4HN (DW12MTED4) | | GCI59140 | Inner Joint | | 24 | 36 | 50 | 67 | 116 | |
| | 2009.01- | MT | F | R | SUV Van 4WD 4HN (DW12MTED4) | | GCI51021 | Inner Joint | | 24 | 36 | 50 | 280.5 | 129 | |
| | 2009.01- | 6MT | R | L | SUV Van 4WD 4HN (DW12MTED4) | | GDS39169 | Drive Shaft | | 27 | 23 | 58 | 94.5 | 754.5 | |
| | 2009.01- | 6MT | R | R | SUV Van 4WD 4HN (DW12MTED4) | | GDS57586 | Drive Shaft | | 27 | 23 | 58 | 95 | 834 | |
| | 2009.01- | 6MT | R | L/R | SUV Van 4WD 4HN (DW12MTED4) | | GCO83634 | Outer Joint | | 27 | 26 | 58 | 95 | 52.5 | I |
| | 2009.01- | 6MT | R | L/R | SUV Van 4WD 4HN (DW12MTED4) | | GCI39050 | Inner Joint | | 23 | 26 | 35 | 64 | 96 | |
| 2.4 (125 kw) | 2009.01- | CVT | F | R | SUV Van 4WD 4B12 | | GDS39120 | Drive Shaft | | 28 | 27 | 59.5 | 95 | 965 | |
| | 2009.01- | CVT | F | L/R | SUV Van 4WD 4B12 | | GCO39117 | Outer Joint | | 28 | 35 | 59.5 | 95 | 65 | I |
| | 2009.01- | CVT/5MT | F | R | SUV Van 4WD 4B12 | | GCI81083 | Inner Joint | | 27 | 35 | 50 | 255.5 | 120 | |
| | 2009.01- | 5MT/CVT | R | L | SUV Van 4WD 4B12 | | GDS39169 | Drive Shaft | | 27 | 23 | 58 | 94.5 | 754.5 | |
| | 2009.01- | CVT | R | R | SUV Van 4WD 4B12 | | GDS57586 | Drive Shaft | | 27 | 23 | 58 | 95 | 834 | |
| | 2009.01- | CVT | R | L/R | SUV Van 4WD 4B12 | | GCO83634 | Outer Joint | | 27 | 26 | 58 | 95 | 52.5 | I |
| | 2009.01- | CVT | R | L/R | SUV Van 4WD 4B12 | | GCI39050 | Inner Joint | | 23 | 26 | 35 | 64 | 96 | |
| **C-Elysee** | | | | | | | | | | | | | | | |
| 1.2 (53 kw) | 2012.11-2017.01 | 5AT/5MT | F | L | Saloon FWD HMY (EB2M) | | GDS10346 | Drive Shaft | | 21 | 22 | 49 | 86 | 668 | |
| | 2012.11-2017.01 | 5AT/5MT | F | R | Saloon FWD HMY (EB2M) | | GDS10347 | Drive Shaft | | 21 | 22 | 49 | 86 | 884 | |
| | 2012.11-2017.01 | 5AT/5MT | F | L/R | Saloon FWD HMY (EB2M) | | GCO50211 | Outer Joint | | 21 | 21 | 49 | 86 | 49 | M |
| | 2012.11-2017.01 | 5AT/5MT | F | L | Saloon FWD HMY (EB2M) | | GCI10098 | Inner Joint | | 22 | 21 | 40 | 60 | 88 | |
| | 2012.11-2017.01 | 5AT/5MT | F | R | Saloon FWD HMY (EB2M) | | GCI10159 | Inner Joint | | 22 | 21 | 30 | 96.5 | 88 | |
| 1.2 (60 kw) | 2014.12- | 5AT/5MT | F | L | Saloon FWD HMZ (EB2F);HMZ (EB2) | | GDS10346 | Drive Shaft | | 21 | 22 | 49 | 86 | 668 | |
| | 2014.12- | 5AT/5MT | F | R | Saloon FWD HMZ (EB2F);HMZ (EB2) | | GDS10347 | Drive Shaft | | 21 | 22 | 49 | 86 | 884 | |
| | 2014.12- | 5AT/5MT | F | L/R | Saloon FWD HMZ (EB2F);HMZ (EB2) | | GCO50211 | Outer Joint | | 21 | 21 | 49 | 86 | 49 | M |
| | 2014.12- | 5AT/5MT | F | L | Saloon FWD HMZ (EB2F);HMZ (EB2) | | GCI10098 | Inner Joint | | 22 | 21 | 40 | 60 | 88 | |
| | 2014.12- | 5AT/5MT | F | R | Saloon FWD HMZ (EB2F);HMZ (EB2) | | GCI10159 | Inner Joint | | 22 | 21 | 30 | 96.5 | 88 | |
| 1.2 (61 kw) | 2018.02- | 5MT | F | L | Saloon FWD HMR (EB2FA) | | GDS83858 | Drive Shaft | | 21 | 22 | 49 | 86 | 673 | |
| | 2018.02- | 5MT | F | R | Saloon FWD HMR (EB2FA) | | GDS84081 | Drive Shaft | | 21 | 22 | 49 | 86 | 877 | |
| | 2018.02- | 5MT | F | L/R | Saloon FWD HMR (EB2FA) | | GCO50211 | Outer Joint | | 21 | 21 | 49 | 86 | 49 | M |
| | 2018.02- | 5MT | F | L | Saloon FWD HMR (EB2FA) | | GCI45042 | Inner Joint | | 22 | 21 | 40 | 58.5 | 88 | |
| | 2018.02- | 5MT | F | R | Saloon FWD HMR (EB2FA) | | GCI81325 | Inner Joint | | 22 | 21 | 30 | 93 | 88 | |
| 1.5 (75 kw) | 2018.05- | 6MT | F | L | Saloon FWD YHY (DV5RD);YHT (DV5RCF) | | GDS56473 | Drive Shaft | | 21 | 24 | 48.2 | 85.5 | 657 | |
| | 2018.05- | 6MT | F | R | Saloon FWD YHY (DV5RD);YHT (DV5RCF) | | GDS56472 | Drive Shaft | | 21 | 24 | 48.2 | 85.5 | 889 | |
| | 2018.05- | 6MT | F | L/R | Saloon FWD YHY (DV5RD);YHT (DV5RCF) | | GCO82278 | Outer Joint | | 21 | 34 | 48.2 | 85.5 | 56.5 | I |
| 1.6 (68 kw) | 2012.11- | 5MT | F | L | Saloon FWD 9HP (DV6DTED);9HJ (DV6DTEDM) | | GDS10307 | Drive Shaft | | 21 | 24 | 48.2 | 85.5 | 660 | |
| | 2012.11- | 5MT | F | R | Saloon FWD 9HP (DV6DTED);9HJ (DV6DTEDM) | | GDS10308 | Drive Shaft | | 21 | 24 | 48.2 | 85.5 | 890 | |
| | 2012.11- | 5MT | F | L/R | Saloon FWD 9HP (DV6DTED);9HJ (DV6DTEDM) | | GCO10143 | Outer Joint | | 21 | 34 | 48.2 | 85.5 | 56.5 | I |
| | 2012.11- | 5MT | F | L | Saloon FWD 9HP (DV6DTED);9HJ (DV6DTEDM) | | GCI10129 | Inner Joint | | 24 | 34 | 40 | 62 | 89 | |
| | 2012.11- | 5MT | F | R | Saloon FWD 9HP (DV6DTED);9HJ (DV6DTEDM) | | GCI10082 | Inner Joint | | 24 | 34 | 29.8 | 291 | 88 | |
| 1.6 (73 kw) | 2014.11-2016.12 | 5MT | F | L | Saloon FWD BHY (DV6FD) | | GDS82411 | Drive Shaft | | 25 | 24 | 58.5 | 79 | 657 | |
| | 2014.11-2016.12 | 5MT | F | R | Saloon FWD BHY (DV6FD) | | GDS82412 | Drive Shaft | | 25 | 24 | 58.5 | 79 | 886 | |
| | 2014.11-2016.12 | 5MT | F | L/R | Saloon FWD BHY (DV6FD) | | GCO10148 | Outer Joint | | 25 | 34 | 58.5 | 79 | 55.5 | I |
| | 2014.11-2016.12 | 5MT | F | L | Saloon FWD BHY (DV6FD) | | GCI10129 | Inner Joint | | 24 | 34 | 40 | 62 | 89 | |
| | 2014.11-2016.12 | 5MT | F | R | Saloon FWD BHY (DV6FD) | | GCI10082 | Inner Joint | | 24 | 34 | 29.8 | 291 | 88 | |
| | 2014.11-2016.12 | MT | F | L | Saloon FWD BHY (DV6FD) | | GDS84007 | Drive Shaft | | 25 | 24 | 58.5 | 79 | 654 | |
| 1.6 (85 kw) | 2012.11- | 4AT | F | L | Saloon FWD NFP (EC5) | | GDS56127 | Drive Shaft | | 21 | 26 | 49 | 86 | 651 | |
| | 2012.11- | 4AT | F | R | Saloon FWD NFP (EC5) | | GDS83970 | Drive Shaft | | 21 | 26 | 49 | 86 | 786 | |
| | 2012.11- | 4AT | F | L | Saloon FWD NFP (EC5) | | GCO50211 | Outer Joint | | 21 | 21 | 49 | 86 | 49 | M |
| | 2012.11- | 4AT | F | R | Saloon FWD NFP (EC5) | | GCO82546 | Outer Joint | | 21 | 21 | 49 | 86 | 49 | M |
| | 2012.11- | 4AT | F | L | Saloon FWD NFP (EC5) | | GCI10162 | Inner Joint | | 26 | 21 | 41.8 | 46 | 87.5 | |
| | 2012.11- | 4AT | F | R | Saloon FWD NFP (EC5) | | GCI45040 | Inner Joint | | 26 | 21 | 42 | | 117 | |
| | 2012.11- | 5MT | F | L | Saloon FWD NFP (EC5) | | GDS83858 | Drive Shaft | | 21 | 22 | 49 | 86 | 673 | |
| | 2012.11- | 5MT | F | R | Saloon FWD NFP (EC5) | | GDS84081 | Drive Shaft | | 21 | 22 | 49 | 86 | 877 | |
| | 2012.11- | 5MT | F | L/R | Saloon FWD NFP (EC5) | | GCO50211 | Outer Joint | | 21 | 21 | 49 | 86 | 49 | M |
| | 2012.11- | 5MT | F | L | Saloon FWD NFP (EC5) | | GCI45042 | Inner Joint | | 22 | 21 | 40 | 58.5 | 88 | |

| | YEAR | TRANSM. | F/R | L/R | BODY STYLE & DRIVE TYPE & ENGINE | REMARKS | G-AP Ref. | PRODUCT | ABS | Technical Specifications A | B | C | H | L | P |
|---|---|---|---|---|---|---|---|---|---|---|---|---|---|---|---|
| **CITROËN** | | | | | | | | | | | | | | | |
| **C-Elysee** | | | | | | | | | | | | | | | |
| 1.6 (85 kw) | 2012.11- | 5MT | F | R | Saloon FWD NFP (EC5) | | GCI81325 | Inner Joint | | 22 | 21 | 30 | 93 | 88 | |
| **C1** | | | | | | | | | | | | | | | |
| 1.0 (50 kw) | 2005.06-2014.09 | 5AT/5MT | F | L | Hatchback FWD CFA (384F);CFB (1KR) | | GDS10232 | Drive Shaft | | 24 | 23 | 49.5 | 91 | 650 | |
| | 2005.06-2014.09 | 5AT/5MT | F | R | Hatchback FWD CFA (384F);CFB (1KR) | | GDS10231 | Drive Shaft | | 24 | 23 | 49.5 | 91 | 841 | |
| | 2005.06-2014.09 | 5AT/5MT | F | L/R | Hatchback FWD CFA (384F);CFB (1KR) | | GCO99128 | Outer Joint | | 24 | 19 | 49.5 | 91 | 46 | M |
| | 2005.06-2014.09 | 5AT/5MT | F | L/R | Hatchback FWD CFA (384F);CFB (1KR) | | GCI59069 | Inner Joint | | 23 | 19 | 34 | 60 | 101 | |
| 1.0 (51 kw) | 2014.04-2018.04 | 5AT/5MT | F | L | Hatchback FWD CFB (1KR) | | GDS82094 | Drive Shaft | | 24 | 23 | 49.5 | 91 | 651 | |
| | 2014.04-2018.04 | 5AT/5MT | F | R | Hatchback FWD CFB (1KR) | | GDS10231 | Drive Shaft | | 24 | 23 | 49.5 | 91 | 841 | |
| | 2014.04-2018.04 | 5AT/5MT | F | L/R | Hatchback FWD CFB (1KR) | | GCI59069 | Inner Joint | | 23 | 19 | 34 | 60 | 101 | |
| | 2014.04-2018.04 | AT/MT | F | L/R | Hatchback FWD CFB (1KR) | | GCO45058 | Outer Joint | | 24 | 20 | 49.5 | 91 | 46 | M |
| 1.0 (53 kw) | 2018.06-2021.07 | 5AT/5MT | F | L | Hatchback FWD CFB (1KR) | | GDS82094 | Drive Shaft | | 24 | 23 | 49.5 | 91 | 651 | |
| | 2018.06-2021.07 | 5AT/5MT | F | R | Hatchback FWD CFB (1KR) | | GDS10231 | Drive Shaft | | 24 | 23 | 49.5 | 91 | 841 | |
| | 2018.06-2021.07 | 5AT/5MT | F | L | Hatchback FWD CFB (1KR) | | GCO81642 | Outer Joint | | 24 | 20 | 49.5 | 91 | 46 | M |
| | 2018.06-2021.07 | 5AT/5MT | F | R | Hatchback FWD CFB (1KR) | | GCO99128 | Outer Joint | | 24 | 19 | 49.5 | 91 | 46 | M |
| | 2018.06-2021.07 | 5AT/5MT | F | L/R | Hatchback FWD CFB (1KR) | | GCI59069 | Inner Joint | | 23 | 19 | 34 | 60 | 101 | |
| 1.2 (60 kw) | 2014.04-2018.04 | 5MT | F | L | Hatchback FWD HMZ (EB2F);HMT (EB2D);HMZ (EB2) | | GDS81194 | Drive Shaft | | 24 | 22 | 49.5 | 88.5 | 670 | |
| | 2014.04-2018.04 | 5MT | F | R | Hatchback FWD HMZ (EB2F);HMT (EB2D);HMZ (EB2) | | GDS81497 | Drive Shaft | | 24 | 22 | 49.5 | 88.5 | 799 | |
| | 2014.04-2018.04 | 5MT | F | L/R | Hatchback FWD HMZ (EB2F);HMT (EB2D);HMZ (EB2) | | GCO81068 | Outer Joint | | 24 | 21 | 49.5 | 88.5 | 50 | M |
| 1.4 (40 kw) | 2005.06-2014.09 | 5MT | F | L | Hatchback FWD 8HT (DV4TD) | | GDS59495 | Drive Shaft | | 24 | 23 | 49.5 | 91 | 593 | |
| | 2005.06-2014.09 | 5MT | F | R | Hatchback FWD 8HT (DV4TD) | | GDS81476 | Drive Shaft | | 24 | 23 | 49.5 | 91 | 897 | |
| | 2005.06-2014.09 | 5MT | F | L/R | Hatchback FWD 8HT (DV4TD) | | GCO45058 | Outer Joint | | 24 | 20 | 49.5 | 91 | 46 | M |
| | 2005.06-2014.09 | 5MT | F | R | Hatchback FWD 8HT (DV4TD) | | GCI59069 | Inner Joint | | 23 | 19 | 34 | 60 | 101 | |
| **C15** | | | | | | | | | | | | | | | |
| 1.0 (33 kw) | 1984.10-1997.12 | MT | F | L | MPV Van FWD TU9K/TU9W/XV8 | Chassis no. from:4196;For Engine code:TU | GDS45015 | Drive Shaft | | 21 | 22 | 56.4 | 76 | 576 | |
| | 1984.10-1997.12 | MT | F | R | MPV Van FWD TU9K/TU9W/XV8 | Chassis no. from:4196;For Engine code:TU | GDS10044 | Drive Shaft | | 21 | 22 | 56.4 | 76 | 832.5 | |
| | 1984.10-1997.12 | | F | | MPV Van FWD TU9K/TU9W/XV8 | | GCO10048 | Outer Joint | | 21 | 22 | 56 | 76 | 58 | I |
| 1.0 (37 kw) | 1992.11-1996.07 | | F | L | MPV Van FWD TU9K | | GDS45015 | Drive Shaft | | 21 | 22 | 56.4 | 76 | 576 | |
| | 1992.11-1996.07 | | F | R | MPV Van FWD TU9K | | GDS10044 | Drive Shaft | | 21 | 22 | 56.4 | 76 | 832.5 | |
| 1.1 (44 kw) | 1988.08-1996.07 | | F | L | Estate FWD HDZ/TU1MZ | | GDS10039 | Drive Shaft | | 21 | 24 | 56.4 | 76 | 567 | |
| | 1988.08-1996.07 | | F | L | Estate FWD HDZ/TU1MZ | | GDS45015 | Drive Shaft | | 21 | 22 | 56.4 | 76 | 576 | |
| | 1988.08-1996.07 | | F | R | Estate FWD HDZ/TU1MZ | | GDS10044 | Drive Shaft | | 21 | 22 | 56.4 | 76 | 832.5 | |
| | 1988.08-1996.07 | MT | F | L | MPV Van FWD HDZ/TU1MZ | | GDS45015 | Drive Shaft | | 21 | 22 | 56.4 | 76 | 576 | |
| | 1988.08-1996.07 | MT | F | R | MPV Van FWD HDZ/TU1MZ | Date to:1996.07;Chassis no. from:4196 | GDS10044 | Drive Shaft | | 21 | 22 | 56.4 | 76 | 832.5 | |
| | 1988.08-1996.07 | | F | L | MPV Van FWD HDZ/TU1MZ | | GDS10039 | Drive Shaft | | 21 | 24 | 56.4 | 76 | 567 | |
| 1.4 (49 kw) | 1987.07-1996.12 | MT | F | L | MPV Van FWD TU3A | Chassis no. from:4196;For Engine code:TU | GDS45015 | Drive Shaft | | 21 | 22 | 56.4 | 76 | 576 | |
| | 1987.07-1996.12 | MT | F | R | MPV Van FWD TU3A | Trans. code:BE | GDS10007 | Drive Shaft | | 21 | 24 | 48 | 75.5 | 845 | |
| | 1987.07-1996.12 | MT | F | R | MPV Van FWD TU3A | Chassis no. from:4196;For Engine code:TU | GDS10044 | Drive Shaft | | 21 | 22 | 56.4 | 76 | 832.5 | |
| | 1987.07-1996.12 | | F | L | MPV Van FWD TU3A | | GDS10039 | Drive Shaft | | 21 | 24 | 56.4 | 76 | 567 | |
| 1.4 (55 kw) | 1987.05-1996.07 | | F | R | Estate FWD TU3/TU3M | | GDS10044 | Drive Shaft | | 21 | 22 | 56.4 | 76 | 832.5 | |
| | 1992.11-1996.07 | MT | F | L | MPV Van FWD TU3M | | GDS45015 | Drive Shaft | | 21 | 22 | 56.4 | 76 | 576 | |
| | 1992.11-1996.07 | MT | F | R | MPV Van FWD TU3M | Date from:1992.11;Date to:1996.07;Chassis no. from:4196 | GDS10044 | Drive Shaft | | 21 | 22 | 56.4 | 76 | 832.5 | |
| 1.8 (44 kw) | 1986.07-2000.12 | 4MT/5MT | F | | Box Body/MPV FWD 161A (XUD7) | | GCO10048 | Outer Joint | | 21 | 22 | 56 | 76 | 58 | I |
| | 1986.07-2000.12 | MT | F | L | Box Body/MPV FWD 161A (XUD7) | | GDS10039 | Drive Shaft | | 21 | 24 | 56.4 | 76 | 567 | |
| | 1986.07-2000.12 | MT | F | R | Box Body/MPV FWD 161A (XUD7) | Inner teeth of tranm side:22 | GDS10007 | Drive Shaft | | 21 | 24 | 48 | 75.5 | 845 | |
| | 1986.07-2000.12 | MT | F | L/R | Box Body/MPV FWD 161A (XUD7) | Trans. code:BE;length:139 | GCO10009 | Outer Joint | | 21 | 22 | 56 | 79 | 60 | I |
| | 1987.04-2000.08 | MT | F | L | Estate FWD 161A (XUD7) | | GDS10039 | Drive Shaft | | 21 | 24 | 56.4 | 76 | 567 | |
| | 1987.04-2000.08 | MT | F | R | Estate FWD 161A (XUD7) | | GDS10007 | Drive Shaft | | 21 | 24 | 48 | 75.5 | 845 | |
| 1.9 (44 kw) | 2000.12-2005.12 | 5MT | F | L | MPV Van FWD DW8B | | GDS10039 | Drive Shaft | | 21 | 24 | 56.4 | 76 | 567 | |
| | 2000.12-2005.12 | MT | F | R | MPV Van FWD DW8B | Trans. code:BE | GDS10007 | Drive Shaft | | 21 | 24 | 48 | 75.5 | 845 | |
| | 2000.12-2005.12 | MT | F | L/R | MPV Van FWD DW8B | | GCO10009 | Outer Joint | | 21 | 22 | 56 | 79 | 60 | I |
| 1.9 (51 kw) | 2000.01-2005.07 | 5MT | F | L | Box Body/MPV FWD WJY (DW8B) | Date To:2004.04;Type:C15 Champ | GDS10039 | Drive Shaft | | 21 | 24 | 56.4 | 76 | 567 | |
| | 2000.01-2005.07 | 5MT | F | R | Box Body/MPV FWD WJY (DW8B) | Date To:2004.04;Type:C15 Champ | GDS10007 | Drive Shaft | | 21 | 24 | 48 | 75.5 | 845 | |
| **C2** | | | | | | | | | | | | | | | |
| 1.1 (44 kw) | 2003.09-2012.09 | 5MT | F | L | Hatchback FWD HFX (TU1JP);HFX (TU1A) | | GDS10125 | Drive Shaft | | 21 | 22 | 48 | 86.5 | 649 | |
| | 2003.09-2012.09 | 5MT | F | R | Hatchback FWD HFX (TU1JP);HFX (TU1A) | | GDS10124 | Drive Shaft | | 21 | 22 | 48 | 86.5 | 840 | |
| | 2003.09-2012.09 | 5MT | F | L/R | Hatchback FWD HFX (TU1JP);HFX (TU1A) | | GCO10069 | Outer Joint | | 21 | 21 | 48 | 86.5 | 54 | I |
| | 2003.09-2012.09 | 5MT | F | L/R | Hatchback FWD HFX (TU1JP);HFX (TU1A) | | GCO10077 | Outer Joint | | 21 | 28 | 49 | 86 | 56.5 | O |
| | 2003.09-2012.09 | 5MT | F | L | Hatchback FWD HFX (TU1JP);HFX (TU1A) | | GCI10068 | Inner Joint | | 22 | 21 | 40 | 65 | 87.5 | |
| | 2003.09-2012.09 | MT | F | L/R | Hatchback FWD HFX (TU1JP);HFX (TU1A) | | GCO10053 | Outer Joint | | 21 | 20 | 49 | 86 | 51 | M |
| | 2003.11-2009.12 | 5MT | F | L | Hatchback Van FWD HFX (TU1JP);HFX (TU1A) | | GDS10125 | Drive Shaft | | 21 | 22 | 48 | 86.5 | 649 | |
| | 2003.11-2009.12 | 5MT | F | R | Hatchback Van FWD HFX (TU1JP);HFX (TU1A) | | GDS10124 | Drive Shaft | | 21 | 22 | 48 | 86.5 | 840 | |
| | 2003.11-2009.12 | 5MT | F | L/R | Hatchback Van FWD HFX (TU1JP);HFX (TU1A) | | GCO10053 | Outer Joint | | 21 | 20 | 49 | 86 | 51 | M |
| | 2003.11-2009.12 | 5MT | F | L/R | Hatchback Van FWD HFX (TU1JP);HFX (TU1A) | | GCO10069 | Outer Joint | | 21 | 21 | 48 | 86.5 | 54 | I |
| | 2003.11-2009.12 | 5MT | F | L/R | Hatchback Van FWD HFX (TU1JP);HFX (TU1A) | | GCO10077 | Outer Joint | | 21 | 28 | 49 | 86 | 56.5 | O |
| | 2003.11-2009.12 | 5MT | F | L | Hatchback Van FWD HFX (TU1JP);HFX (TU1A) | | GCI10068 | Inner Joint | | 22 | 21 | 40 | 65 | 87.5 | |

| | YEAR | TRANSM. | F/R | L/R | BODY STYLE & DRIVE TYPE & ENGINE | REMARKS | G-AP Ref. | PRODUCT | ABS | Technical Specifications A | B | C | H | L | P |
|---|---|---|---|---|---|---|---|---|---|---|---|---|---|---|---|
| **CITROËN** | | | | | | | | | | | | | | | |
| **C2** | | | | | | | | | | | | | | | |
| 1.4 (50 kw) | 2003.07-2009.12 | 5AT/5MT | F | L | Hatchback FWD 8HX (DV4TD);8HZ (DV4TD) | Date to:2003.09,To ORG/OPR:09800,Differential ID:77 | GDS10001 | Drive Shaft | | 21 | 22 | 48 | 86.5 | 636 | |
| | 2003.07-2009.12 | 5AT/5MT | F | L | Hatchback FWD 8HX (DV4TD);8HZ (DV4TD) | Differential ID:68 | GDS10125 | Drive Shaft | | 21 | 22 | 48 | 86.5 | 649 | |
| | 2003.07-2009.12 | 5AT/5MT | F | R | Hatchback FWD 8HX (DV4TD);8HZ (DV4TD) | Differential ID:77 | GDS10002 | Drive Shaft | | 21 | 22 | 48 | 86.5 | 852 | |
| | 2003.07-2009.12 | 5AT/5MT | F | R | Hatchback FWD 8HX (DV4TD);8HZ (DV4TD) | Date from:2003.09,Differential ID:68,From ORG/OPR:09801 | GDS10124 | Drive Shaft | | 21 | 22 | 48 | 86.5 | 840 | |
| | 2003.07-2009.12 | 5AT/5MT | F | L/R | Hatchback FWD 8HX (DV4TD);8HZ (DV4TD) | Date to:2003.09,To ORG/OPR:09800,Trans. ID:77 | GCO10026 | Outer Joint | | 21 | 21 | 48 | 86.5 | 54 | I |
| | 2003.07-2009.12 | 5AT/5MT | F | L/R | Hatchback FWD 8HX (DV4TD);8HZ (DV4TD) | Date from:2003.09,From ORG/OPR:09801,Trans. code:68 | GCO10053 | Outer Joint | | 21 | 20 | 49 | 86 | 51 | M |
| | 2003.07-2009.12 | 5AT/5MT | F | L/R | Hatchback FWD 8HX (DV4TD);8HZ (DV4TD) | Trans. ID:68 | GCO10069 | Outer Joint | | 21 | 21 | 48 | 86.5 | 54 | I |
| | 2003.07-2009.12 | 5AT/5MT | F | L | Hatchback FWD 8HX (DV4TD);8HZ (DV4TD) | Differential ID:68 | GCI10068 | Inner Joint | | 22 | 21 | 40 | 65 | 87.5 | |
| | 2003.07-2009.12 | 5AT/5MT | F | L | Hatchback FWD 8HX (DV4TD);8HZ (DV4TD) | Date to:2003.09,To ORG/OPR:09800,Differential ID:77 | GCI10098 | Inner Joint | | 22 | 21 | 40 | 60 | 88 | |
| | 2003.07-2009.12 | 5AT/5MT | F | R | Hatchback FWD 8HX (DV4TD);8HZ (DV4TD) | Differential ID:77 | GCI10159 | Inner Joint | | 22 | 21 | 30 | 96.5 | 88 | |
| | 2003.07-2009.12 | 5MT | F | L/R | Hatchback FWD 8HX (DV4TD);8HZ (DV4TD) | Date from:2003.09,From ORG/OPR:09801,Trans. code:68 | GCO10077 | Outer Joint | | 21 | 28 | 49 | 86 | 56.5 | O |
| | 2006.09-2009.12 | 5MT | F | L | Hatchback Van FWD 8HX (DV4TD) | Trans. code:68 | GDS10125 | Drive Shaft | | 21 | 22 | 48 | 86.5 | 649 | |
| | 2006.09-2009.12 | 5MT | F | R | Hatchback Van FWD 8HX (DV4TD) | | GDS10002 | Drive Shaft | | 21 | 22 | 48 | 86.5 | 852 | |
| | 2006.09-2009.12 | 5MT | F | R | Hatchback Van FWD 8HX (DV4TD) | Trans. code:68 | GDS10124 | Drive Shaft | | 21 | 22 | 48 | 86.5 | 840 | |
| | 2006.09-2009.12 | 5MT | F | L/R | Hatchback Van FWD 8HX (DV4TD) | Trans. code:68 | GCO10053 | Outer Joint | | 21 | 20 | 49 | 86 | 51 | M |
| | 2006.09-2009.12 | 5MT | F | L/R | Hatchback Van FWD 8HX (DV4TD) | Trans. code:68 | GCO10077 | Outer Joint | | 21 | 28 | 49 | 86 | 56.5 | O |
| | 2006.09-2009.12 | 5MT | F | L | Hatchback Van FWD 8HX (DV4TD) | Trans. code:68 | GCI10068 | Inner Joint | | 22 | 21 | 40 | 65 | 87.5 | |
| | 2006.09-2009.12 | 5MT | F | L | Hatchback Van FWD 8HX (DV4TD) | Trans. code:77 | GCI10098 | Inner Joint | | 22 | 21 | 40 | 60 | 88 | |
| | 2006.09-2009.12 | 5MT | F | R | Hatchback Van FWD 8HX (DV4TD) | | GCI10159 | Inner Joint | | 22 | 21 | 30 | 96.5 | 88 | |
| | 2006.09-2009.12 | AT/MT | F | L/R | Hatchback Van FWD 8HX (DV4TD) | | GCO10069 | Outer Joint | | 21 | 21 | 48 | 86.5 | 54 | I |
| 1.4 (51 kw) | 2003.09-2005.04 | 5MT | F | L | Hatchback FWD 8HX (DV4TD) | Trans. code:68 | GDS10125 | Drive Shaft | | 21 | 22 | 48 | 86.5 | 649 | |
| | 2003.09-2005.04 | 5MT | F | R | Hatchback FWD 8HX (DV4TD) | | GDS10002 | Drive Shaft | | 21 | 22 | 48 | 86.5 | 852 | |
| | 2003.09-2005.04 | 5MT | F | R | Hatchback FWD 8HX (DV4TD) | Trans. code:68 | GDS10124 | Drive Shaft | | 21 | 22 | 48 | 86.5 | 840 | |
| | 2003.09-2005.04 | 5MT | F | L/R | Hatchback FWD 8HX (DV4TD) | Trans. code:68 | GCO10053 | Outer Joint | | 21 | 20 | 49 | 86 | 51 | M |
| | 2003.09-2005.04 | 5MT | F | L/R | Hatchback FWD 8HX (DV4TD) | | GCO10069 | Outer Joint | | 21 | 21 | 48 | 86.5 | 54 | I |
| | 2003.09-2005.04 | 5MT | F | L/R | Hatchback FWD 8HX (DV4TD) | Trans. code:68 | GCO10077 | Outer Joint | | 21 | 28 | 49 | 86 | 56.5 | O |
| | 2003.09-2005.04 | 5MT | F | L | Hatchback FWD 8HX (DV4TD) | Trans. code:68 | GCI10068 | Inner Joint | | 22 | 21 | 40 | 65 | 87.5 | |
| | 2003.09-2005.04 | 5MT | F | L | Hatchback FWD 8HX (DV4TD) | Trans. code:77 | GCI10098 | Inner Joint | | 22 | 21 | 40 | 60 | 88 | |
| | 2003.09-2005.04 | 5MT | F | R | Hatchback FWD 8HX (DV4TD) | | GCI10159 | Inner Joint | | 22 | 21 | 30 | 96.5 | 88 | |
| | 2003.11-2005.04 | 5MT | F | R | Hatchback Van FWD 8HZ (DV4TD) | Trans. code:68 | GDS10124 | Drive Shaft | | 21 | 22 | 48 | 86.5 | 840 | |
| | 2003.11-2005.04 | 5MT | F | L/R | Hatchback Van FWD 8HZ (DV4TD) | Trans. code:68 | GCO10053 | Outer Joint | | 21 | 20 | 49 | 86 | 51 | M |
| | 2003.11-2005.04 | 5MT | F | L/R | Hatchback Van FWD 8HZ (DV4TD) | Trans. code:68 | GCO10077 | Outer Joint | | 21 | 28 | 49 | 86 | 56.5 | O |
| | 2003.11-2005.04 | 5MT | F | L | Hatchback Van FWD 8HZ (DV4TD) | Trans. code:77 | GCI10098 | Inner Joint | | 22 | 21 | 40 | 60 | 88 | |
| | 2003.11-2005.04 | MT | F | L | Hatchback Van FWD 8HZ (DV4TD) | Trans. code:68 | GDS10125 | Drive Shaft | | 21 | 22 | 48 | 86.5 | 649 | |
| | 2003.11-2005.04 | MT | F | R | Hatchback Van FWD 8HZ (DV4TD) | | GDS10002 | Drive Shaft | | 21 | 22 | 48 | 86.5 | 852 | |
| | 2003.11-2005.04 | MT | F | L/R | Hatchback Van FWD 8HZ (DV4TD) | | GCO10069 | Outer Joint | | 21 | 21 | 48 | 86.5 | 54 | I |
| | 2003.11-2005.04 | MT | F | L | Hatchback Van FWD 8HZ (DV4TD) | Trans. code:68 | GCI10068 | Inner Joint | | 22 | 21 | 40 | 65 | 87.5 | |
| | 2003.11-2005.04 | MT | F | R | Hatchback Van FWD 8HZ (DV4TD) | | GCI10159 | Inner Joint | | 22 | 21 | 30 | 96.5 | 88 | |
| 1.4 (54 kw) | 2003.09-2009.12 | 5MT | F | L/R | Hatchback FWD KFV (TU3JP);KFV (TU3A) | | GCO10077 | Outer Joint | | 21 | 28 | 49 | 86 | 56.5 | O |
| | 2003.09-2009.12 | AT | F | L | Hatchback FWD KFV (TU3JP);KFV (TU3A) | Date to:2009.12;Trans. code:AL4 | GDS10181 | Drive Shaft | | 21 | 26 | 48.5 | 86 | 618 | |
| | 2003.09-2009.12 | AT | F | R | Hatchback FWD KFV (TU3JP);KFV (TU3A) | Date to:2009.12;Trans. code:AL4 | GDS10206 | Drive Shaft | | 21 | 26 | 48.5 | 86 | 754 | |
| | 2003.09-2009.12 | AT/MT | F | L | Hatchback FWD KFV (TU3JP);KFV (TU3A) | Outer teeth of tranm side:22 | GDS10125 | Drive Shaft | | 21 | 22 | 48 | 86.5 | 649 | |
| | 2003.09-2009.12 | AT/MT | F | R | Hatchback FWD KFV (TU3JP);KFV (TU3A) | | GDS10124 | Drive Shaft | | 21 | 22 | 48 | 86.5 | 840 | |
| | 2003.09-2009.12 | AT/MT | F | L/R | Hatchback FWD KFV (TU3JP);KFV (TU3A) | | GCO10069 | Outer Joint | | 21 | 21 | 48 | 86.5 | 54 | I |
| | 2003.09-2009.12 | AT/MT | F | L | Hatchback FWD KFV (TU3JP);KFV (TU3A) | | GCI10068 | Inner Joint | | 22 | 21 | 40 | 65 | 87.5 | |
| | 2003.09-2009.12 | MT | F | L/R | Hatchback FWD KFV (TU3JP);KFV (TU3A) | | GCO10053 | Outer Joint | | 21 | 20 | 49 | 86 | 51 | M |
| 1.4 (55 kw) | 2006.10-2009.12 | 5AT/5MT | F | L | Hatchback FWD KFV (TU3JP) | | GDS10125 | Drive Shaft | | 21 | 22 | 48 | 86.5 | 649 | |
| | 2006.10-2009.12 | 5AT/5MT | F | R | Hatchback FWD KFV (TU3JP) | | GDS10124 | Drive Shaft | | 21 | 22 | 48 | 86.5 | 840 | |
| | 2006.10-2009.12 | 5AT/5MT | F | L | Hatchback FWD KFV (TU3JP) | | GCI10068 | Inner Joint | | 22 | 21 | 40 | 65 | 87.5 | |
| | 2006.10-2009.12 | 5MT | F | L/R | Hatchback FWD KFV (TU3JP) | | GCO10077 | Outer Joint | | 21 | 28 | 49 | 86 | 56.5 | O |
| | 2006.10-2009.12 | Semi-AT | F | L/R | Hatchback FWD KFV (TU3JP) | | GCO10069 | Outer Joint | | 21 | 21 | 48 | 86.5 | 54 | I |
| | 2006.10-2009.12 | | F | L/R | Hatchback FWD KFV (TU3JP) | | GCO10053 | Outer Joint | | 21 | 20 | 49 | 86 | 51 | M |
| 1.4 (65 kw) | 2005.04-2009.12 | 5AT/5MT | F | L | Hatchback FWD KFU (ET3J4) | | GDS10001 | Drive Shaft | | 21 | 22 | 48 | 86.5 | 636 | |
| | 2005.04-2009.12 | 5AT/5MT | F | R | Hatchback FWD KFU (ET3J4) | | GDS10242 | Drive Shaft | | 21 | 22 | 48 | 86.5 | 844 | |
| | 2005.04-2009.12 | 5AT/5MT | F | L/R | Hatchback FWD KFU (ET3J4) | Date to:2007.03 | GCO10077 | Outer Joint | | 21 | 28 | 49 | 86 | 56.5 | O |
| | 2005.04-2009.12 | 5AT/5MT | F | L/R | Hatchback FWD KFU (ET3J4) | Date from:2007.04 | GCO45057 | Outer Joint | | 21 | 22 | 48 | 86.5 | 54 | I |
| | 2005.04-2009.12 | 5AT/5MT | F | L | Hatchback FWD KFU (ET3J4) | | GCI10098 | Inner Joint | | 22 | 21 | 40 | 60 | 88 | |
| | 2005.04-2009.12 | | F | L/R | Hatchback FWD KFU (ET3J4) | | GCO10069 | Outer Joint | | 21 | 21 | 48 | 86.5 | 54 | I |
| 1.6 (80 kw) | 2003.07-2010.10 | 5AT/5MT | F | L | Hatchback FWD NFU (TU5JP4) | | GDS10001 | Drive Shaft | | 21 | 22 | 48 | 86.5 | 636 | |
| | 2003.07-2010.10 | 5AT/5MT | F | R | Hatchback FWD NFU (TU5JP4) | | GDS10242 | Drive Shaft | | 21 | 22 | 48 | 86.5 | 844 | |
| | 2003.07-2010.10 | 5AT/5MT | F | L/R | Hatchback FWD NFU (TU5JP4) | Date from:2005.11,Date to:2007.04 | GCO10077 | Outer Joint | | 21 | 28 | 49 | 86 | 56.5 | O |
| | 2003.07-2010.10 | 5AT/5MT | F | L/R | Hatchback FWD NFU (TU5JP4) | Date to:2005.10 | GCO45057 | Outer Joint | | 21 | 22 | 48 | 86.5 | 54 | I |
| | 2003.07-2010.10 | 5AT/5MT | F | L | Hatchback FWD NFU (TU5JP4) | | GCI10098 | Inner Joint | | 22 | 21 | 40 | 60 | 88 | |
| | 2005.09-2009.12 | 5MT | F | L | Hatchback FWD 9HZ (DV6TED4) | | GDS10364 | Drive Shaft | | 21 | 24 | 50 | 85 | 631 | |
| | 2005.09-2009.12 | 5MT | F | R | Hatchback FWD 9HZ (DV6TED4) | | GDS45103 | Drive Shaft | | 21 | 24 | 48 | 86.5 | 854 | |

| | YEAR | TRANSM. | F/R | L/R | BODY STYLE & DRIVE TYPE & ENGINE | REMARKS | G-AP Ref. | PRODUCT | ABS | Technical Specifications A | B | C | H | L | P |
|---|---|---|---|---|---|---|---|---|---|---|---|---|---|---|---|
| **CITROËN** | | | | | | | | | | | | | | | |
| **C2** | | | | | | | | | | | | | | | |
| 1.6 (80 kw) | 2005.09-2009.12 | 5MT | F | L | Hatchback FWD 9HZ (DV6TED4) | Date from:2007.04,Date to:2009.12 | GCO99301 | Outer Joint | | 21 | 22 | 50 | 85 | 53 | I |
| | 2005.09-2009.12 | 5MT | F | L/R | Hatchback FWD 9HZ (DV6TED4) | | GCO10130 | Outer Joint | | 21 | 34 | 48.3 | 86.5 | 55.5 | I |
| | 2005.09-2009.12 | 5MT | F | L | Hatchback FWD 9HZ (DV6TED4) | Date from:2007.04,Date to:2009.12 | GCI10092 | Inner Joint | | 24 | 22 | 39.95 | 69 | 86 | |
| | 2005.09-2009.12 | | F | L | Hatchback FWD 9HZ (DV6TED4) | | GCI10080 | Inner Joint | | 24 | 34 | 40 | 69 | 89.5 | |
| | 2005.09-2009.12 | | F | R | Hatchback FWD 9HZ (DV6TED4) | | GCI10082 | Inner Joint | | 24 | 34 | 29.8 | 291 | 88 | |
| 1.6 (90 kw) | 2004.10-2009.12 | 5MT | F | L | Hatchback FWD NFS (TU5JP4S) | | GDS10001 | Drive Shaft | | 21 | 22 | 48 | 86.5 | 636 | |
| | 2004.10-2009.12 | 5MT | F | R | Hatchback FWD NFS (TU5JP4S) | | GDS10242 | Drive Shaft | | 21 | 22 | 48 | 86.5 | 844 | |
| | 2004.10-2009.12 | 5MT | F | L/R | Hatchback FWD NFS (TU5JP4S) | Date from:2005.11,Date to:2007.04 | GCO10077 | Outer Joint | | 21 | 28 | 49 | 86 | 56.5 | O |
| | 2004.10-2009.12 | 5MT | F | L/R | Hatchback FWD NFS (TU5JP4S) | Date to:2005.10 | GCO45057 | Outer Joint | | 21 | 22 | 48 | 86.5 | 54 | I |
| | 2004.10-2009.12 | 5MT | F | L | Hatchback FWD NFS (TU5JP4S) | | GCI10098 | Inner Joint | | 22 | 21 | 40 | 60 | 88 | |
| **C3** | | | | | | | | | | | | | | | |
| 1.0 (50 kw) | 2012.08-2016.09 | 5MT | F | L | Hatchback FWD ZMZ (EB0) | | GDS10340 | Drive Shaft | | 21 | 22 | 49 | 86 | 655 | |
| | 2012.08-2016.09 | 5MT | F | R | Hatchback FWD ZMZ (EB0) | | GDS10339 | Drive Shaft | | 21 | 22 | 49 | 86 | 868 | |
| | 2012.08-2016.09 | 5MT | F | L | Hatchback FWD ZMZ (EB0) | Outer teeth of wheel side:21 | GCO10151 | Outer Joint | | 21 | 28 | 49 | 86 | 49 | I |
| 1.1 (44 kw) | 2002.02-2009.12 | 5MT | F | L | Hatchback FWD HFX (TU1JP);HFX (TU1A) | | GDS10125 | Drive Shaft | | 21 | 22 | 48 | 86.5 | 649 | |
| | 2002.02-2009.12 | 5MT | F | R | Hatchback FWD HFX (TU1JP);HFX (TU1A) | | GDS10124 | Drive Shaft | | 21 | 22 | 48 | 86.5 | 840 | |
| | 2002.02-2009.12 | 5MT | F | R | Hatchback FWD HFX (TU1JP);HFX (TU1A) | Date to:2009.12,Transmission Type:MA | GCO45065 | Outer Joint | | 21 | 21 | 48.5 | 86 | 54 | I |
| | 2002.02-2009.12 | 5MT | F | L/R | Hatchback FWD HFX (TU1JP);HFX (TU1A) | | GCO10077 | Outer Joint | | 21 | 28 | 49 | 86 | 56.5 | O |
| | 2002.02-2009.12 | MT | F | L/R | Hatchback FWD HFX (TU1JP);HFX (TU1A) | | GCO10053 | Outer Joint | | 21 | 20 | 49 | 86 | 51 | M |
| | 2002.02-2009.12 | MT | F | L/R | Hatchback FWD HFX (TU1JP);HFX (TU1A) | | GCO10069 | Outer Joint | | 21 | 21 | 48 | 86.5 | 54 | I |
| | 2006.06-2009.12 | 5MT | F | L | Hatchback FWD HFX (TU1A) | | GDS10125 | Drive Shaft | | 21 | 22 | 48 | 86.5 | 649 | |
| | 2006.06-2009.12 | 5MT | F | R | Hatchback FWD HFX (TU1A) | | GDS10124 | Drive Shaft | | 21 | 22 | 48 | 86.5 | 840 | |
| | 2006.06-2009.12 | 5MT | F | L/R | Hatchback FWD HFX (TU1A) | | GCO10069 | Outer Joint | | 21 | 21 | 48 | 86.5 | 54 | I |
| | 2006.06-2009.12 | 5MT | F | L/R | Hatchback FWD HFX (TU1A) | | GCO10077 | Outer Joint | | 21 | 28 | 49 | 86 | 56.5 | O |
| | 2006.06-2009.12 | 5MT | F | L | Hatchback FWD HFX (TU1A) | | GCI10068 | Inner Joint | | 22 | 21 | 40 | 65 | 87.5 | |
| | 2006.06-2009.12 | MT | F | L/R | Hatchback FWD HFX (TU1A) | | GCO10053 | Outer Joint | | 21 | 20 | 49 | 86 | 51 | M |
| | 2009.09-2013.01 | MT | F | L/R | Hatchback FWD HFX (TU1A);HFV (TU1A) | | GCO10077 | Outer Joint | | 21 | 28 | 49 | 86 | 56.5 | O |
| 1.2 (50 kw) | 2016.07- | 5MT | F | L | Hatchback FWD HMP (EB2FB);HMM (EB2FAD) | | GDS83807 | Drive Shaft | | 21 | 22 | 48.2 | 85.5 | 652 | |
| | 2016.07- | 5MT | F | R | Hatchback FWD HMP (EB2FB);HMM (EB2FAD) | | GDS82810 | Drive Shaft | | 21 | 22 | 48.2 | 85.5 | 865 | |
| | 2016.07- | 5MT | F | L | Hatchback FWD HMP (EB2FB);HMM (EB2FAD) | | GCO82278 | Outer Joint | | 21 | 34 | 48.2 | 85.5 | 56.5 | I |
| | 2016.07- | 5MT | F | R | Hatchback FWD HMP (EB2FB);HMM (EB2FAD) | | GCO10143 | Outer Joint | | 21 | 34 | 48.2 | 85.5 | 56.5 | I |
| | 2016.07- | 5MT | F | L | Hatchback FWD HMP (EB2FB);HMM (EB2FAD) | | GCI82092 | Inner Joint | | 22 | 34 | 40 | 57.5 | 91 | |
| | 2016.07- | 5MT | F | R | Hatchback FWD HMP (EB2FB);HMM (EB2FAD) | | GCI82122 | Inner Joint | | 22 | 34 | 30.05 | 98.5 | 89.5 | |
| 1.2 (60 kw) | 2012.06-2016.09 | 5AT/5MT | F | L | Hatchback FWD HMZ (EB2F);HMZ (EB2) | | GDS10340 | Drive Shaft | | 21 | 22 | 49 | 86 | 655 | |
| | 2012.06-2016.09 | 5AT/5MT | F | R | Hatchback FWD HMZ (EB2F);HMZ (EB2) | | GDS10339 | Drive Shaft | | 21 | 22 | 49 | 86 | 868 | |
| | 2012.06-2016.09 | 5AT/5MT | F | L | Hatchback FWD HMZ (EB2F);HMZ (EB2) | Outer teeth of wheel side:21 | GCO10151 | Outer Joint | | 21 | 28 | 49 | 86 | 49 | I |
| | 2016.07- | 5MT | F | L | Hatchback FWD HMZ (EB2F) | Inner teeth of wheel side:21 | GDS10306 | Drive Shaft | | 21 | 22 | 49 | 86 | 652 | |
| | 2016.07- | 5MT | F | L | Hatchback FWD HMZ (EB2F) | AXLE JOINT GI2000I | GDS10306 | Drive Shaft | | 21 | 22 | 49 | 86 | 652 | |
| | 2016.07- | 5MT | F | L | Hatchback FWD HMZ (EB2F) | Inner teeth of wheel side:34 | GDS83807 | Drive Shaft | | 21 | 22 | 48.2 | 85.5 | 652 | |
| | 2016.07- | 5MT | F | L | Hatchback FWD HMZ (EB2F) | | GDS83807 | Drive Shaft | | 21 | 22 | 48.2 | 85.5 | 652 | |
| | 2016.07- | 5MT | F | R | Hatchback FWD HMZ (EB2F) | | GDS45222 | Drive Shaft | | 21 | 22 | 48 | 86.5 | 864 | |
| | 2016.07- | 5MT | F | R | Hatchback FWD HMZ (EB2F) | Date to:2020.03,Chassis no. to:15847;Inner teeth of wheel side:21 | GDS45222 | Drive Shaft | | 21 | 22 | 48 | 86.5 | 864 | |
| | 2016.07- | 5MT | F | R | Hatchback FWD HMZ (EB2F) | Inner teeth of wheel side:34 | GDS82810 | Drive Shaft | | 21 | 22 | 48.2 | 85.5 | 865 | |
| | 2016.07- | 5MT | F | R | Hatchback FWD HMZ (EB2F) | Inner teeth of wheel side:21 | GDS83941 | Drive Shaft | | 21 | 22 | 49 | 86 | 866 | |
| | 2016.07- | 5MT | F | R | Hatchback FWD HMZ (EB2F) | Date to:2020.03,Chassis no. to:15847;Inner teeth of wheel side:21 | GDS83941 | Drive Shaft | | 21 | 22 | 49 | 86 | 866 | |
| | 2016.07- | 5MT | F | L | Hatchback FWD HMZ (EB2F) | | GCO10125 | Outer Joint | | 21 | 21 | 49 | 86 | 49 | I |
| | 2016.07- | 5MT | F | L | Hatchback FWD HMZ (EB2F) | AXLE JOINT GI2000I | GCO10125 | Outer Joint | | 21 | 21 | 49 | 86 | 49 | I |
| | 2016.07- | 5MT | F | L | Hatchback FWD HMZ (EB2F) | | GCO82278 | Outer Joint | | 21 | 34 | 48.2 | 85.5 | 56.5 | I |
| | 2016.07- | 5MT | F | R | Hatchback FWD HMZ (EB2F) | | GCO10143 | Outer Joint | | 21 | 34 | 48.2 | 85.5 | 56.5 | I |
| | 2016.07- | 5MT | F | R | Hatchback FWD HMZ (EB2F) | | GCO45011 | Outer Joint | | 21 | 22 | 48 | 86.5 | 54 | I |
| | 2016.07- | 5MT | F | R | Hatchback FWD HMZ (EB2F) | | GCO82376 | Outer Joint | | 21 | 21 | 49 | 86 | 49 | I |
| | 2016.07- | 5MT | F | R | Hatchback FWD HMZ (EB2F) | AXLE JOINT GI2000I | GCO82376 | Outer Joint | | 21 | 21 | 49 | 86 | 49 | I |
| | 2016.07- | 5MT | F | L | Hatchback FWD HMZ (EB2F) | | GCI10054 | Inner Joint | | 22 | 21 | 40 | 60 | 88 | |
| | 2016.07- | 5MT | F | L | Hatchback FWD HMZ (EB2F) | AXLE JOINT GI2000I | GCI10054 | Inner Joint | | 22 | 21 | 40 | 60 | 88 | |
| | 2016.07- | 5MT | F | L | Hatchback FWD HMZ (EB2F) | | GCI82092 | Inner Joint | | 22 | 34 | 40 | 57.5 | 91 | |
| | 2016.07- | 5MT | F | R | Hatchback FWD HMZ (EB2F) | | GCI17030 | Inner Joint | | 22 | 22 | 30 | 96.5 | 99 | |
| | 2016.07- | 5MT | F | R | Hatchback FWD HMZ (EB2F) | | GCI45041 | Inner Joint | | 22 | 21 | 30 | 96.5 | 88 | |
| | 2016.07- | 5MT | F | R | Hatchback FWD HMZ (EB2F) | AXLE JOINT GI2000I | GCI45041 | Inner Joint | | 22 | 21 | 30 | 96.5 | 88 | |
| | 2016.07- | 5MT | F | R | Hatchback FWD HMZ (EB2F) | | GCI82122 | Inner Joint | | 22 | 34 | 30.05 | 98.5 | 89.5 | |
| | 2016.07- | 5MT | F | R | Hatchback Van FWD HMZ (EB2F) | Date to:2020.03,To ORG/OPR:15847;hollow shaft | GDS45222 | Drive Shaft | | 21 | 22 | 48 | 86.5 | 864 | |
| | 2016.07- | 5MT | F | R | Hatchback Van FWD HMZ (EB2F) | Date from:2020.04,From ORG/OPR:15848 | GDS82810 | Drive Shaft | | 21 | 22 | 48.2 | 85.5 | 865 | |
| | 2016.07- | 5MT | F | R | Hatchback Van FWD HMZ (EB2F) | Date to:2020.03,To ORG/OPR:15847;solid shaft | GDS83941 | Drive Shaft | | 21 | 22 | 49 | 86 | 866 | |
| | 2016.07- | MT | F | L | Hatchback Van FWD HMZ (EB2F) | Date to:2020.03 | GDS10306 | Drive Shaft | | 21 | 22 | 49 | 86 | 652 | |
| | 2016.07- | MT | F | L | Hatchback Van FWD HMZ (EB2F) | Date from:2020.04 | GDS83807 | Drive Shaft | | 21 | 22 | 48.2 | 85.5 | 652 | |
| | 2016.07- | MT | F | L | Hatchback Van FWD HMZ (EB2F) | Date to:2020.03 | GCO10125 | Outer Joint | | 21 | 21 | 49 | 86 | 49 | I |

| | YEAR | TRANSM. | F/R | L/R | BODY STYLE & DRIVE TYPE & ENGINE | REMARKS | G-AP Ref. | PRODUCT | ABS | Technical Specifications A | B | C | H | L | P |
|---|---|---|---|---|---|---|---|---|---|---|---|---|---|---|---|
| **CITROËN** | | | | | | | | | | | | | | | |
| **C3** | | | | | | | | | | | | | | | |
| 1.2 (60 kw) | 2016.07- | MT | F | L | Hatchback Van FWD HMZ (EB2F) | Date from:2020.04 | GCO82278 | Outer Joint | | 21 | 34 | 48.2 | 85.5 | 56.5 | I |
| | 2016.07- | MT | F | L | Hatchback Van FWD HMZ (EB2F) | Date to:2020.03 | GCI10054 | Inner Joint | | 22 | 21 | 40 | 60 | 88 | |
| | 2016.07- | MT | F | L | Hatchback Van FWD HMZ (EB2F) | Date from:2020.04 | GCI82092 | Inner Joint | | 22 | 34 | 40 | 57.5 | 91 | |
| | 2016.07- | | F | R | Hatchback Van FWD HMZ (EB2F) | Date from:2020.04,From ORG/OPR:15848 | GCO10143 | Outer Joint | | 21 | 34 | 48.2 | 85.5 | 56.5 | I |
| | 2016.07- | | F | R | Hatchback Van FWD HMZ (EB2F) | Date to:2020.03,To ORG/OPR:15847 | GCO45011 | Outer Joint | | 21 | 22 | 48 | 86.5 | 54 | I |
| | 2016.07- | | F | R | Hatchback Van FWD HMZ (EB2F) | Date to:2020.03,To ORG/OPR:15847 | GCO82376 | Outer Joint | | 21 | 21 | 49 | 86 | 49 | I |
| | 2016.07- | | F | R | Hatchback Van FWD HMZ (EB2F) | Date to:2020.03,To ORG/OPR:15847;hollow shaft | GCI17030 | Inner Joint | | 22 | 22 | 30 | 96.5 | 99 | |
| | 2016.07- | | F | R | Hatchback Van FWD HMZ (EB2F) | Date to:2020.03,To ORG/OPR:15847;solid shaft | GCI45041 | Inner Joint | | 22 | 21 | 30 | 96.5 | 88 | |
| | 2016.07- | | F | R | Hatchback Van FWD HMZ (EB2F) | Date from:2020.04,From ORG/OPR:15848 | GCI82122 | Inner Joint | | 22 | 34 | 30.05 | 98.5 | 89.5 | |
| | 2021.03- | 5MT | F | L | Hatchback FWD HMR (EB2FA) | Date to:2020.03,To ORG/OPR:15847 | GDS10306 | Drive Shaft | | 21 | 22 | 49 | 86 | 652 | |
| | 2021.03- | 5MT | F | R | Hatchback FWD HMR (EB2FA) | Date to:2020.03,To ORG/OPR:15847 | GDS45222 | Drive Shaft | | 21 | 22 | 48 | 86.5 | 864 | |
| | 2021.03- | 5MT | F | R | Hatchback FWD HMR (EB2FA) | Date From:2020.04 | GDS82810 | Drive Shaft | | 21 | 22 | 48.2 | 85.5 | 865 | |
| | 2021.03- | 5MT | F | R | Hatchback FWD HMR (EB2FA) | Date to:2020.03,To ORG/OPR:15847 | GCI45041 | Inner Joint | | 22 | 21 | 30 | 96.5 | 88 | |
| 1.2 (61 kw) | 2018.05- | 5MT | F | L | Hatchback FWD HMR (EB2FA) | Inner teeth of wheel side:21 | GDS10306 | Drive Shaft | | 21 | 22 | 49 | 86 | 652 | |
| | 2018.05- | 5MT | F | L | Hatchback FWD HMR (EB2FA) | Inner teeth of wheel side:34 | GDS83807 | Drive Shaft | | 21 | 22 | 48.2 | 85.5 | 652 | |
| | 2018.05- | 5MT | F | L | Hatchback FWD HMR (EB2FA) | Date from:2020.04 | GDS83807 | Drive Shaft | | 21 | 22 | 48.2 | 85.5 | 652 | |
| | 2018.05- | 5MT | F | R | Hatchback FWD HMR (EB2FA) | Inner teeth of wheel side:22 | GDS45222 | Drive Shaft | | 21 | 22 | 48 | 86.5 | 864 | |
| | 2018.05- | 5MT | F | R | Hatchback FWD HMR (EB2FA) | Date to:2020.03,Chassis no. to:15847;Inner teeth of wheel side:22 | GDS45222 | Drive Shaft | | 21 | 22 | 48 | 86.5 | 864 | |
| | 2018.05- | 5MT | F | R | Hatchback FWD HMR (EB2FA) | Inner teeth of wheel side:34 | GDS82810 | Drive Shaft | | 21 | 22 | 48.2 | 85.5 | 865 | |
| | 2018.05- | 5MT | F | R | Hatchback FWD HMR (EB2FA) | | GDS83941 | Drive Shaft | | 21 | 22 | 49 | 86 | 866 | |
| | 2018.05- | 5MT | F | R | Hatchback FWD HMR (EB2FA) | Date to:2020.03,Chassis no. to:15847;Inner teeth of wheel side:21 | GDS83941 | Drive Shaft | | 21 | 22 | 49 | 86 | 866 | |
| | 2018.05- | 5MT | F | L | Hatchback FWD HMR (EB2FA) | | GCO10125 | Outer Joint | | 21 | 21 | 49 | 86 | 49 | I |
| | 2018.05- | 5MT | F | L | Hatchback FWD HMR (EB2FA) | | GCO82278 | Outer Joint | | 21 | 34 | 48.2 | 85.5 | 56.5 | I |
| | 2018.05- | 5MT | F | R | Hatchback FWD HMR (EB2FA) | | GCO10143 | Outer Joint | | 21 | 34 | 48.2 | 85.5 | 56.5 | I |
| | 2018.05- | 5MT | F | R | Hatchback FWD HMR (EB2FA) | Inner teeth:34 | GCO10143 | Outer Joint | | 21 | 34 | 48.2 | 85.5 | 56.5 | I |
| | 2018.05- | 5MT | F | R | Hatchback FWD HMR (EB2FA) | | GCO45011 | Outer Joint | | 21 | 22 | 48 | 86.5 | 54 | I |
| | 2018.05- | 5MT | F | R | Hatchback FWD HMR (EB2FA) | | GCO82376 | Outer Joint | | 21 | 21 | 49 | 86 | 49 | I |
| | 2018.05- | 5MT | F | L | Hatchback FWD HMR (EB2FA) | | GCI10054 | Inner Joint | | 22 | 21 | 40 | 60 | 88 | |
| | 2018.05- | 5MT | F | L | Hatchback FWD HMR (EB2FA) | | GCI82092 | Inner Joint | | 22 | 34 | 40 | 57.5 | 91 | |
| | 2018.05- | 5MT | F | L | Hatchback FWD HMR (EB2FA) | Date from:2020.04 | GCI82092 | Inner Joint | | 22 | 34 | 40 | 57.5 | 91 | |
| | 2018.05- | 5MT | F | R | Hatchback FWD HMR (EB2FA) | | GCI17030 | Inner Joint | | 22 | 22 | 30 | 96.5 | 99 | |
| | 2018.05- | 5MT | F | R | Hatchback FWD HMR (EB2FA) | AXLE JOINT GI2000I;Inner teeth:22 | GCI17030 | Inner Joint | | 22 | 22 | 30 | 96.5 | 99 | |
| | 2018.05- | 5MT | F | R | Hatchback FWD HMR (EB2FA) | | GCI45041 | Inner Joint | | 22 | 21 | 30 | 96.5 | 88 | |
| | 2018.05- | 5MT | F | R | Hatchback FWD HMR (EB2FA) | Date to:2020.03,To ORG/OPR:15847 | GCI45041 | Inner Joint | | 22 | 21 | 30 | 96.5 | 88 | |
| | 2018.05- | 5MT | F | R | Hatchback FWD HMR (EB2FA) | | GCI82122 | Inner Joint | | 22 | 34 | 30.05 | 98.5 | 89.5 | |
| | 2018.05- | 5MT | F | R | Hatchback FWD HMR (EB2FA) | Inner teeth:34 | GCI82122 | Inner Joint | | 22 | 34 | 30.05 | 98.5 | 89.5 | |
| | 2018.05- | MT | F | L | Hatchback FWD HMR (EB2FA) | Date to:2020.03 | GDS10306 | Drive Shaft | | 21 | 22 | 49 | 86 | 652 | |
| | 2018.05- | MT | F | L | Hatchback FWD HMR (EB2FA) | Date to:2020.03 | GCI10054 | Inner Joint | | 22 | 21 | 40 | 60 | 88 | |
| | 2019.03- | 5MT | F | L | Hatchback Van FWD HMR (EB2FA) | Date to:2020.03 | GDS10306 | Drive Shaft | | 21 | 22 | 49 | 86 | 652 | |
| | 2019.03- | 5MT | F | L | Hatchback Van FWD HMR (EB2FA) | Date from:2020.04 | GDS83807 | Drive Shaft | | 21 | 22 | 48.2 | 85.5 | 652 | |
| | 2019.03- | 5MT | F | R | Hatchback Van FWD HMR (EB2FA) | Date to:2020.03,Chassis no. to:15847;Inner teeth of wheel side:22 | GDS45222 | Drive Shaft | | 21 | 22 | 48 | 86.5 | 864 | |
| | 2019.03- | 5MT | F | R | Hatchback Van FWD HMR (EB2FA) | Date to:2020.03,Chassis no. to:15847;Inner teeth of wheel side:21 | GDS83941 | Drive Shaft | | 21 | 22 | 49 | 86 | 866 | |
| | 2019.03- | 5MT | F | L | Hatchback Van FWD HMR (EB2FA) | | GCO82278 | Outer Joint | | 21 | 34 | 48.2 | 85.5 | 56.5 | I |
| | 2019.03- | 5MT | F | R | Hatchback Van FWD HMR (EB2FA) | Inner teeth:34 | GCO10143 | Outer Joint | | 21 | 34 | 48.2 | 85.5 | 56.5 | I |
| | 2019.03- | 5MT | F | L | Hatchback Van FWD HMR (EB2FA) | Date to:2020.03 | GCI10054 | Inner Joint | | 22 | 21 | 40 | 60 | 88 | |
| | 2019.03- | 5MT | F | L | Hatchback Van FWD HMR (EB2FA) | Date from:2020.04 | GCI82092 | Inner Joint | | 22 | 34 | 40 | 57.5 | 91 | |
| | 2019.03- | 5MT | F | R | Hatchback Van FWD HMR (EB2FA) | AXLE JOINT GI2000I;Inner teeth:22 | GCI17030 | Inner Joint | | 22 | 22 | 30 | 96.5 | 99 | |
| | 2019.03- | 5MT | F | R | Hatchback Van FWD HMR (EB2FA) | Date to:2020.03,To ORG/OPR:15847 | GCI45041 | Inner Joint | | 22 | 21 | 30 | 96.5 | 88 | |
| | 2019.03- | 5MT | F | R | Hatchback Van FWD HMR (EB2FA) | Inner teeth:34 | GCI82122 | Inner Joint | | 22 | 34 | 30.05 | 98.5 | 89.5 | |
| 1.2 (81 kw) | 2014.10-2016.09 | 5MT | F | L | Hatchback FWD HNZ (EB2DT) | | GCO82278 | Outer Joint | | 21 | 34 | 48.2 | 85.5 | 56.5 | I |
| | 2014.10-2016.09 | 5MT | F | L | Hatchback FWD HNZ (EB2DT) | | GCI10129 | Inner Joint | | 24 | 34 | 40 | 62 | 89 | |
| | 2014.10-2016.09 | | F | L | Hatchback FWD HNZ (EB2DT) | | GDS10309 | Drive Shaft | | 21 | 24 | 48.3 | 86.5 | 641 | |
| | 2016.07- | AT/MT | F | L | Hatchback FWD HNV (EB2DTM), HNZ (EB2DT), HNP (EB2ADT) | | GDS10250 | Drive Shaft | | 25 | 24 | 58.5 | 79 | 630 | |
| | 2016.07- | AT/MT | F | L | Hatchback FWD HNV (EB2DTM), HNZ (EB2DT), HNP (EB2ADT) | | GDS83645 | Drive Shaft | | 25 | 24 | 58.5 | 79 | 638 | |
| | 2016.07- | AT/MT | F | R | Hatchback FWD HNV (EB2DTM), HNZ (EB2DT), HNP (EB2ADT) | | GDS83806 | Drive Shaft | | 25 | 24 | 58.5 | 79 | 867 | |
| | 2016.07- | AT/MT | F | L/R | Hatchback FWD HNV (EB2DTM), HNZ (EB2DT), HNP (EB2ADT) | | GCO82355 | Outer Joint | | 25 | 34 | 58.5 | 79 | 55.5 | I |
| | 2016.07- | AT/MT | F | L | Hatchback FWD HNV (EB2DTM), HNZ (EB2DT), HNP (EB2ADT) | | GCI82131 | Inner Joint | | 24 | 34 | 40 | 62 | 89 | |
| | 2016.07- | AT/MT | F | R | Hatchback FWD HNV (EB2DTM), HNZ (EB2DT), HNP (EB2ADT) | | GCI82374 | Inner Joint | | 24 | 34 | 29.8 | 291 | 88 | |
| | 2016.07- | MT | F | L | Hatchback FWD HNV (EB2DTM), HNZ (EB2DT), HNP (EB2ADT) | Trans. code:MC | GDS10253 | Drive Shaft | | 25 | 24 | 58.5 | 79 | 626 | |
| | 2016.07- | MT | F | L | Hatchback FWD HNV (EB2DTM), HNZ (EB2DT), HNP (EB2ADT) | Trans. code:BE4R | GDS10309 | Drive Shaft | | 21 | 24 | 48.3 | 86.5 | 641 | |
| | 2016.07- | MT | F | R | Hatchback FWD HNV (EB2DTM), HNZ (EB2DT), HNP (EB2ADT) | Trans. code:BE4R | GDS10301 | Drive Shaft | | 21 | 24 | 48.3 | 86.5 | 871 | |
| | 2016.07- | MT | F | R | Hatchback FWD HNV (EB2DTM), HNZ (EB2DT), HNP (EB2ADT) | Trans. code:MA | GDS45222 | Drive Shaft | | 21 | 22 | 48 | 86.5 | 864 | |
| | 2019.03- | 5MT | F | L | Hatchback Van FWD HNZ (EB2DT) | Wheel Hub Diam:82mm | GDS83645 | Drive Shaft | | 25 | 24 | 58.5 | 79 | 638 | |
| | 2019.03- | 5MT | F | R | Hatchback Van FWD HNZ (EB2DT) | Wheel Hub Diam:82mm | GDS83806 | Drive Shaft | | 25 | 24 | 58.5 | 79 | 867 | |
| | 2019.03- | 5MT | F | L/R | Hatchback Van FWD HNZ (EB2DT) | Wheel Hub Diam:82mm | GCO82355 | Outer Joint | | 25 | 34 | 58.5 | 79 | 55.5 | I |

| | YEAR | TRANSM. | F/R | L/R | BODY STYLE & DRIVE TYPE & ENGINE | REMARKS | G-AP Ref. | PRODUCT | ABS | Technical Specifications A | B | C | H | L | P |
|---|---|---|---|---|---|---|---|---|---|---|---|---|---|---|---|
| **CITROËN** **C3** | | | | | | | | | | | | | | | |
| 1.2 (81 kw) | 2019.03- | 5MT | F | L | Hatchback Van FWD HNZ (EB2DT) | Wheel Hub Diam:82mm | GCI82131 | Inner Joint | | 24 | 34 | 40 | 62 | 89 | |
| | 2019.03- | 5MT | F | R | Hatchback Van FWD HNZ (EB2DT) | Wheel Hub Diam:82mm | GCI82374 | Inner Joint | | 24 | 34 | 29.8 | 291 | 88 | |
| | 2019.03- | 6AT | F | L | Hatchback Van FWD HNZ (EB2DT) | | GDS83216 | Drive Shaft | | 25 | 37 | 58.5 | 79 | 598 | |
| | 2019.03- | 6AT | F | R | Hatchback Van FWD HNZ (EB2DT) | | GDS83217 | Drive Shaft | | 25 | 37 | 58.5 | 79 | 862 | |
| | 2019.03- | 6AT | F | L | Hatchback Van FWD HNZ (EB2DT) | | GCO82355 | Outer Joint | | 25 | 34 | 58.5 | 79 | 55.5 | I |
| | 2019.03- | 6AT | F | R | Hatchback Van FWD HNZ (EB2DT) | | GCO82351 | Outer Joint | | 25 | 34 | 58.5 | 79 | 55.5 | I |
| | 2019.03- | 6AT | F | L | Hatchback Van FWD HNZ (EB2DT) | | GCI82119 | Inner Joint | | 37 | 34 | 41.5 | 58.5 | 94 | |
| | 2019.03- | 6AT | F | R | Hatchback Van FWD HNZ (EB2DT) | | GCI82182 | Inner Joint | | 37 | 34 | | 290 | 88 | |
| | 2019.03- | 6MT | F | L | Hatchback Van FWD HNZ (EB2DT) | Wheel Hub Diam:72mm | GDS10309 | Drive Shaft | | 21 | 24 | 48.3 | 86.5 | 641 | |
| | 2019.03- | 6MT | F | R | Hatchback Van FWD HNZ (EB2DT) | Wheel Hub Diam:72mm | GDS10301 | Drive Shaft | | 21 | 24 | 48.3 | 86.5 | 871 | |
| | 2019.03- | 6MT | F | L/R | Hatchback Van FWD HNZ (EB2DT) | | GCO82278 | Outer Joint | | 21 | 34 | 48.2 | 85.5 | 56.5 | I |
| | 2019.03- | 6MT | F | L | Hatchback Van FWD HNZ (EB2DT) | | GCI10129 | Inner Joint | | 24 | 34 | 40 | 62 | 89 | |
| | 2019.03- | 6MT | F | R | Hatchback Van FWD HNZ (EB2DT) | | GCI10082 | Inner Joint | | 24 | 34 | 29.8 | 291 | 88 | |
| | 2021.03- | 5MT/6MT | F | L | Hatchback FWD HNZ (EB2DT) | | GDS83645 | Drive Shaft | | 25 | 24 | 58.5 | 79 | 638 | |
| | 2021.03- | 5MT/6MT | F | R | Hatchback FWD HNZ (EB2DT) | | GDS83806 | Drive Shaft | | 25 | 24 | 58.5 | 79 | 867 | |
| | 2021.03- | AT/MT | F | L | Hatchback FWD HNZ (EB2DT) | | GCI10070 | Inner Joint | | 24 | 34 | 40 | 62 | 88 | |
| 1.4 (49 kw) | 2008.01-2009.12 | 5MT | F | L | Hatchback FWD | | GDS10001 | Drive Shaft | | 21 | 22 | 48 | 86.5 | 636 | |
| | 2008.01-2009.12 | 5MT | F | R | Hatchback FWD | | GDS10242 | Drive Shaft | | 21 | 22 | 48 | 86.5 | 844 | |
| | 2008.01-2009.12 | 5MT | F | L/R | Hatchback FWD | | GCO10053 | Outer Joint | | 21 | 20 | 49 | 86 | 51 | M |
| | 2008.01-2009.12 | 5MT | F | L/R | Hatchback FWD | | GCO10069 | Outer Joint | | 21 | 21 | 48 | 86.5 | 54 | I |
| | 2008.01-2009.12 | 5MT | F | L/R | Hatchback FWD | | GCO10077 | Outer Joint | | 21 | 28 | 49 | 86 | 56.5 | O |
| | 2008.01-2009.12 | 5MT | F | L | Hatchback FWD | | GCI10098 | Inner Joint | | 22 | 21 | 40 | 60 | 88 | |
| | 2008.01-2009.12 | AT | F | L/R | Hatchback FWD | | GDS10181 | Drive Shaft | | 21 | 26 | 48.5 | 86 | 618 | |
| | 2008.01-2009.12 | MT | F | L | Hatchback FWD | Date from:2006.08 | GDS10125 | Drive Shaft | | 21 | 22 | 48 | 86.5 | 649 | |
| | 2008.01-2009.12 | MT | F | R | Hatchback FWD | Date from:2006.08 | GDS10124 | Drive Shaft | | 21 | 22 | 48 | 86.5 | 840 | |
| | 2008.01-2009.12 | MT | F | L | Hatchback FWD | Date from:2006.08 | GCI10068 | Inner Joint | | 22 | 21 | 40 | 65 | 87.5 | |
| 1.4 (50 kw) | 2002.02-2009.12 | 5AMT/5MT | F | L/R | Hatchback FWD 8HX (DV4TD);8HZ (DV4TD) | Date to:2007.09,To ORG/OPR:11269,Not For facelift,Trans. ID:68;For facelift,Trans. ID:68 | GCO10077 | Outer Joint | | 21 | 28 | 49 | 86 | 56.5 | O |
| | 2002.02-2009.12 | 5AT/5MT | F | L | Hatchback FWD 8HX (DV4TD);8HZ (DV4TD) | Date From:2009.02,Differential ID:77 | GDS10001 | Drive Shaft | | 21 | 22 | 48 | 86.5 | 636 | |
| | 2002.02-2009.12 | 5AT/5MT | F | L | Hatchback FWD 8HX (DV4TD);8HZ (DV4TD) | Date to:2007.10;Inner teeth of wheel side:21 | GDS10125 | Drive Shaft | | 21 | 22 | 48 | 86.5 | 649 | |
| | 2002.02-2009.12 | 5AT/5MT | F | R | Hatchback FWD 8HX (DV4TD);8HZ (DV4TD) | | GDS10002 | Drive Shaft | | 21 | 22 | 48 | 86.5 | 852 | |
| | 2002.02-2009.12 | 5AT/5MT | F | L | Hatchback FWD 8HX (DV4TD);8HZ (DV4TD) | Date from:2009.02,Trans. ID:77 | GCO45057 | Outer Joint | | 21 | 22 | 48 | 86.5 | 54 | I |
| | 2002.02-2009.12 | 5AT/5MT | F | L/R | Hatchback FWD 8HX (DV4TD);8HZ (DV4TD) | Date to:2007.10,Trans. ID:68 | GCO10069 | Outer Joint | | 21 | 21 | 48 | 86.5 | 54 | I |
| | 2002.02-2009.12 | 5AT/5MT | F | L | Hatchback FWD 8HX (DV4TD);8HZ (DV4TD) | Date to:2007.10,Differential ID:68 | GCI10068 | Inner Joint | | 22 | 21 | 40 | 65 | 87.5 | |
| | 2002.02-2009.12 | 5AT/5MT | F | L | Hatchback FWD 8HX (DV4TD);8HZ (DV4TD) | Date From:2009.02,Differential ID:77 | GCI10098 | Inner Joint | | 22 | 21 | 40 | 60 | 88 | |
| | 2002.02-2009.12 | 5AT/5MT | F | R | Hatchback FWD 8HX (DV4TD);8HZ (DV4TD) | | GCI10159 | Inner Joint | | 22 | 21 | 30 | 96.5 | 88 | |
| | 2002.02-2009.12 | 5MT/5AMT | F | L/R | Hatchback FWD 8HX (DV4TD);8HZ (DV4TD) | Trans. ID:68 | GCO10053 | Outer Joint | | 21 | 20 | 49 | 86 | 51 | M |
| | 2002.02-2009.12 | MT | F | R | Hatchback FWD 8HX (DV4TD);8HZ (DV4TD) | Date To:2009.12,Trans. code:MA | GCO45065 | Outer Joint | | 21 | 21 | 48.5 | 86 | 54 | I |
| | 2009.11-2016.09 | 5AT/5MT | F | L | Hatchback FWD 8HZ (DV4TD);8HR (DV4C);8HP (DV4C) | For Engine code:DV4TD,Date from:2011.12,Org. no. from:12775,For cold climate zones | GDS10311 | Drive Shaft | | 21 | 22 | 48 | 86.5 | 647 | |
| | 2009.11-2016.09 | 5AT/5MT | F | L | Hatchback FWD 8HZ (DV4TD);8HR (DV4C);8HP (DV4C) | For Engine code:DV4C;For Engine code:DV4TD,Date from:2011.12,Org. no. from:12775,Not for cold climate zones | GDS10340 | Drive Shaft | | 21 | 22 | 49 | 86 | 655 | |
| | 2009.11-2016.09 | 5AT/5MT | F | R | Hatchback FWD 8HZ (DV4TD);8HR (DV4C);8HP (DV4C) | For Engine code:DV4C;For Engine code:DV4TD,Date from:2011.12,Org. no. from:12775,Not for cold climate zones | GDS10339 | Drive Shaft | | 21 | 22 | 49 | 86 | 868 | |
| | 2009.11-2016.09 | 5AT/5MT | F | R | Hatchback FWD 8HZ (DV4TD);8HR (DV4C);8HP (DV4C) | For Engine code:DV4TD,Date from:2011.12,Org. no. from:12775,For cold climate zones | GDS99271 | Drive Shaft | | 21 | 22 | 48 | 86.5 | 860 | |
| | 2009.11-2016.09 | 5AT/5MT | F | L | Hatchback FWD 8HZ (DV4TD);8HR (DV4C);8HP (DV4C) | For Engine Code:DV4C;For Engine Code:DV4TD,Date To:2011.11,Org. no. to:12774;For Engine Code:DV4TD,Date From:2011.12,Org. no. from:12775,Not for cold climate zones | GCO10151 | Outer Joint | | 21 | 28 | 49 | 86 | 49 | I |
| | 2009.11-2016.09 | 5AT/5MT | F | L | Hatchback FWD 8HZ (DV4TD);8HR (DV4C);8HP (DV4C) | For Engine code:DV4TD,Date from:2011.12,Org. no. from:12775,For cold climate zones | GCO45057 | Outer Joint | | 21 | 22 | 48 | 86.5 | 54 | I |
| | 2009.11-2016.09 | 5AT/5MT | F | R | Hatchback FWD 8HZ (DV4TD);8HR (DV4C);8HP (DV4C) | For Engine code:DV4TD,Date from:2011.12,Org. no. from:12775,For cold climate zones | GCO45011 | Outer Joint | | 21 | 22 | 48 | 86.5 | 54 | I |
| | 2009.11-2016.09 | 5AT/5MT | F | L | Hatchback FWD 8HZ (DV4TD);8HR (DV4C);8HP (DV4C) | For Engine code:DV4TD,Date from:2011.12,Org. no. from:12775,For cold climate zones | GCI17029 | Inner Joint | | 22 | 22 | 40 | 58.5 | 101 | |
| | 2009.11-2016.09 | 5AT/5MT | F | R | Hatchback FWD 8HZ (DV4TD);8HR (DV4C);8HP (DV4C) | For Engine code:DV4TD,Date from:2011.12,Org. no. from:12775,For cold climate zones | GCI17030 | Inner Joint | | 22 | 22 | 30 | 96.5 | 99 | |
| | 2010.06-2016.09 | 5MT | F | L | Hatchback Van FWD 8HR (DV4C) | Climate Zones:For cold climate zones,Date From:2011.12,,From ORG/OPR:12775 | GDS10311 | Drive Shaft | | 21 | 22 | 48 | 86.5 | 647 | |
| | 2010.06-2016.09 | 5MT | F | L | Hatchback Van FWD 8HR (DV4C) | Date to:2011.06 | GDS10340 | Drive Shaft | | 21 | 22 | 49 | 86 | 655 | |
| | 2010.06-2016.09 | 5MT | F | L | Hatchback Van FWD 8HR (DV4C) | Date to:2011.06 | GCO10151 | Outer Joint | | 21 | 28 | 49 | 86 | 49 | I |
| | 2010.06-2016.09 | 5MT | F | L | Hatchback Van FWD 8HR (DV4C) | Climate Zones:For cold climate zones,Date from:2011.12,,From ORG/OPR:12775 | GCO45057 | Outer Joint | | 21 | 22 | 48 | 86.5 | 54 | I |
| | 2010.06-2016.09 | 5MT | F | L | Hatchback Van FWD 8HR (DV4C) | Climate Zones:For cold climate zones,Date from:2011.12,,From ORG/OPR:12775 | GCI17029 | Inner Joint | | 22 | 22 | 40 | 58.5 | 101 | |
| | 2010.06-2016.09 | 5MT | F | R | Hatchback Van FWD 8HR (DV4C) | Climate Zones:For cold climate zones;Date from:2011.12;From ORG/OPR:12775 | GCI17030 | Inner Joint | | 22 | 22 | 30 | 96.5 | 99 | |
| | 2010.06-2016.09 | | F | R | Hatchback Van FWD 8HR (DV4C) | Date To:2011.11;To ORG/OPR:12774 | GDS10339 | Drive Shaft | | 21 | 22 | 49 | 86 | 868 | |
| | 2010.06-2016.09 | | F | R | Hatchback Van FWD 8HR (DV4C) | Climate Zones:For cold climate zones;Date From:2011.12;From ORG/OPR:12775 | GDS99271 | Drive Shaft | | 21 | 22 | 48 | 86.5 | 860 | |
| | 2010.06-2016.09 | | F | R | Hatchback Van FWD 8HR (DV4C) | Climate Zones:For cold climate zones;Date from:2011.12;From ORG/OPR:12775 | GCO45011 | Outer Joint | | 21 | 22 | 48 | 86.5 | 54 | I |
| 1.4 (52 kw) | 2003.07-2011.02 | 5MT | F | L | Hatchback FWD 8HZ (DV4TD) | Axle Version:77;Inner teeth of wheel side:21 | GDS10001 | Drive Shaft | | 21 | 22 | 48 | 86.5 | 636 | |
| | 2003.07-2011.02 | 5MT | F | L | Hatchback FWD 8HZ (DV4TD) | Axle Version:68;Inner teeth of wheel side:21 | GDS10125 | Drive Shaft | | 21 | 22 | 48 | 86.5 | 649 | |
| | 2003.07-2011.02 | 5MT | F | R | Hatchback FWD 8HZ (DV4TD) | | GDS10002 | Drive Shaft | | 21 | 22 | 48 | 86.5 | 852 | |
| | 2003.07-2011.02 | 5MT | F | L/R | Hatchback FWD 8HZ (DV4TD) | Not For facelift | GCO10026 | Outer Joint | | 21 | 21 | 48 | 86.5 | 54 | I |
| | 2003.07-2011.02 | 5MT | F | L/R | Hatchback FWD 8HZ (DV4TD) | Trans. ID:68 | GCO10053 | Outer Joint | | 21 | 20 | 49 | 86 | 51 | M |
| | 2003.07-2011.02 | 5MT | F | L/R | Hatchback FWD 8HZ (DV4TD) | | GCO10069 | Outer Joint | | 21 | 21 | 48 | 86.5 | 54 | I |
| | 2003.07-2011.02 | 5MT | F | L/R | Hatchback FWD 8HZ (DV4TD) | Date to:2007.09,To ORG/OPR:11269,Not For facelift,Trans. ID:68;For facelift,Trans. ID:68 | GCO10077 | Outer Joint | | 21 | 28 | 49 | 86 | 56.5 | O |
| | 2003.07-2011.02 | 5MT | F | L | Hatchback FWD 8HZ (DV4TD) | Axle Version:68 | GCI10068 | Inner Joint | | 22 | 21 | 40 | 65 | 87.5 | |
| | 2003.07-2011.02 | 5MT | F | L | Hatchback FWD 8HZ (DV4TD) | Axle Version:77 | GCI10098 | Inner Joint | | 22 | 21 | 40 | 60 | 88 | |
| | 2003.07-2011.02 | 5MT | F | R | Hatchback FWD 8HZ (DV4TD) | | GCI10159 | Inner Joint | | 22 | 21 | 30 | 96.5 | 88 | |

| | YEAR | TRANSM. | F/R | L/R | BODY STYLE & DRIVE TYPE & ENGINE | REMARKS | G-AP Ref. | PRODUCT | ABS | Technical Specifications A | B | C | H | L | P |
|---|---|---|---|---|---|---|---|---|---|---|---|---|---|---|---|
| **CITROËN** | | | | | | | | | | | | | | | |
| **C3** | | | | | | | | | | | | | | | |
| 1.4 (54 kw) | 2002.02-2009.12 | 5MT | F | L/R | Hatchback FWD KFV (TU3JP) | Date to:2006.08,To ORG/OPR:10828,Not For facelift;For facelift | GCO10077 | Outer Joint | | 21 | 28 | 49 | 86 | 56.5 | O |
| | 2002.02-2009.12 | AT | F | L | Hatchback FWD KFV (TU3JP) | Date to:2009.12 | GDS10181 | Drive Shaft | | 21 | 26 | 48.5 | 86 | 618 | |
| | 2002.02-2009.12 | AT | F | R | Hatchback FWD KFV (TU3JP) | Date to:2009.12 | GDS10206 | Drive Shaft | | 21 | 26 | 48.5 | 86 | 754 | |
| | 2002.02-2009.12 | AT/MT | F | L | Hatchback FWD KFV (TU3JP) | Date to:2009.12;Trans. code:MA;Trans. code:AL4 | GCO10026 | Outer Joint | | 21 | 21 | 48 | 86.5 | 54 | I |
| | 2002.02-2009.12 | AT/MT | F | R | Hatchback FWD KFV (TU3JP) | Date to:2009.12;Trans. code:MA;Trans. code:AL4 | GCO45065 | Outer Joint | | 21 | 21 | 48.5 | 86 | 54 | I |
| | 2002.02-2009.12 | AT/MT | F | L/R | Hatchback FWD KFV (TU3JP) | | GCO10069 | Outer Joint | | 21 | 21 | 48 | 86.5 | 54 | I |
| | 2002.02-2009.12 | MT | F | L | Hatchback FWD KFV (TU3JP) | Date from:2007.07;Date to:2009.12 | GDS10001 | Drive Shaft | | 21 | 22 | 48 | 86.5 | 636 | |
| | 2002.02-2009.12 | MT | F | L | Hatchback FWD KFV (TU3JP) | Date from:2006.08;Date to:2007.06 | GDS10125 | Drive Shaft | | 21 | 22 | 48 | 86.5 | 649 | |
| | 2002.02-2009.12 | MT | F | R | Hatchback FWD KFV (TU3JP) | Date to:2006.07 | GDS10124 | Drive Shaft | | 21 | 22 | 48 | 86.5 | 840 | |
| | 2002.02-2009.12 | MT | F | R | Hatchback FWD KFV (TU3JP) | Date from:2007.07;Date to:2009.12 | GDS10242 | Drive Shaft | | 21 | 22 | 48 | 86.5 | 844 | |
| | 2002.02-2009.12 | MT | F | L/R | Hatchback FWD KFV (TU3JP) | Date to:2006.07 | GCO10053 | Outer Joint | | 21 | 20 | 49 | 86 | 51 | M |
| | 2002.02-2009.12 | MT | F | L/R | Hatchback FWD KFV (TU3JP) | Date from:2006.08,Date to:2007.06 | GCO45056 | Outer Joint | | 21 | 27 | 49 | 86 | 53 | O |
| | 2002.02-2009.12 | MT | F | L/R | Hatchback FWD KFV (TU3JP) | Date from:2008.06 | GCO45057 | Outer Joint | | 21 | 22 | 48 | 86.5 | 54 | I |
| | 2002.02-2010.11 | 5MT | F | L/R | Hatchback FWD KFV (TU3JP);KFV (TU3A) | Date to:2006.08,To ORG/OPR:10828,Not For facelift;For facelift | GCO10077 | Outer Joint | | 21 | 28 | 49 | 86 | 56.5 | O |
| | 2002.02-2010.11 | AT | F | L | Hatchback FWD KFV (TU3JP);KFV (TU3A) | | GDS10181 | Drive Shaft | | 21 | 26 | 48.5 | 86 | 618 | |
| | 2002.02-2010.11 | AT | F | R | Hatchback FWD KFV (TU3JP);KFV (TU3A) | | GDS10206 | Drive Shaft | | 21 | 26 | 48.5 | 86 | 754 | |
| | 2002.02-2010.11 | AT | F | L | Hatchback FWD KFV (TU3JP);KFV (TU3A) | | GCO10100 | Outer Joint | | 21 | 21 | 48.5 | 86 | 54 | I |
| | 2002.02-2010.11 | AT | F | L | Hatchback FWD KFV (TU3JP);KFV (TU3A) | | GCI10162 | Inner Joint | | 26 | 21 | 41.8 | 46 | 87.5 | |
| | 2002.02-2010.11 | AT | F | R | Hatchback FWD KFV (TU3JP);KFV (TU3A) | | GCI10148 | Inner Joint | | 26 | 21 | 42 | | 117 | |
| | 2002.02-2010.11 | AT/MT | F | L | Hatchback FWD KFV (TU3JP);KFV (TU3A) | Date to:2009.12,Trans. code:MA/AL4 | GCO10026 | Outer Joint | | 21 | 21 | 48 | 86.5 | 54 | I |
| | 2002.02-2010.11 | AT/MT | F | R | Hatchback FWD KFV (TU3JP);KFV (TU3A) | Date to:2009.12,Trans. code:MA/AL4 | GCO45065 | Outer Joint | | 21 | 21 | 48.5 | 86 | 54 | I |
| | 2002.02-2010.11 | MT | F | L | Hatchback FWD KFV (TU3JP);KFV (TU3A) | Date from:2007.07 | GDS10001 | Drive Shaft | | 21 | 22 | 48 | 86.5 | 636 | |
| | 2002.02-2010.11 | MT | F | L | Hatchback FWD KFV (TU3JP);KFV (TU3A) | Date from:2006.08 to 2007.06 | GDS10125 | Drive Shaft | | 21 | 22 | 48 | 86.5 | 649 | |
| | 2002.02-2010.11 | MT | F | R | Hatchback FWD KFV (TU3JP);KFV (TU3A) | Solid Shaft | GDS10124 | Drive Shaft | | 21 | 22 | 48 | 86.5 | 840 | |
| | 2002.02-2010.11 | MT | F | R | Hatchback FWD KFV (TU3JP);KFV (TU3A) | Hollow Shaft | GDS10242 | Drive Shaft | | 21 | 22 | 48 | 86.5 | 844 | |
| | 2002.02-2010.11 | MT | F | R | Hatchback FWD KFV (TU3JP);KFV (TU3A) | | GCO45011 | Outer Joint | | 21 | 22 | 48 | 86.5 | 54 | I |
| | 2002.02-2010.11 | MT | F | L/R | Hatchback FWD KFV (TU3JP);KFV (TU3A) | Date to:2006.07 | GCO10053 | Outer Joint | | 21 | 20 | 49 | 86 | 51 | M |
| | 2002.02-2010.11 | MT | F | L/R | Hatchback FWD KFV (TU3JP);KFV (TU3A) | Date to:2007.06 | GCO10069 | Outer Joint | | 21 | 21 | 48 | 86.5 | 54 | I |
| | 2002.02-2010.11 | MT | F | L/R | Hatchback FWD KFV (TU3JP);KFV (TU3A) | Date from:2006.08,Date to:2007.06 | GCO45056 | Outer Joint | | 21 | 27 | 49 | 86 | 53 | O |
| | 2002.02-2010.11 | MT | F | L | Hatchback FWD KFV (TU3JP);KFV (TU3A) | Date to:2006.07 | GCI10006 | Inner Joint | | 22 | 22 | 40 | 58.5 | 87 | |
| | 2002.02-2010.11 | MT | F | L | Hatchback FWD KFV (TU3JP);KFV (TU3A) | Date from:2006.08 to 2007.06 | GCI10068 | Inner Joint | | 22 | 21 | 40 | 65 | 87.5 | |
| | 2002.02-2010.11 | MT | F | L | Hatchback FWD KFV (TU3JP);KFV (TU3A) | Date from:2007.07 | GCI10098 | Inner Joint | | 22 | 21 | 40 | 60 | 88 | |
| | 2008.09-2009.12 | 5MT | F | L | Hatchback FWD KFV (TU3JP) | | GDS10125 | Drive Shaft | | 21 | 22 | 48 | 86.5 | 649 | |
| | 2008.09-2009.12 | 5MT | F | R | Hatchback FWD KFV (TU3JP) | | GDS10124 | Drive Shaft | | 21 | 22 | 48 | 86.5 | 840 | |
| | 2008.09-2009.12 | 5MT | F | L/R | Hatchback FWD KFV (TU3JP) | | GCO10053 | Outer Joint | | 21 | 20 | 49 | 86 | 51 | M |
| | 2008.09-2009.12 | 5MT | F | L/R | Hatchback FWD KFV (TU3JP) | | GCO10069 | Outer Joint | | 21 | 21 | 48 | 86.5 | 54 | I |
| | 2008.09-2009.12 | 5MT | F | L/R | Hatchback FWD KFV (TU3JP) | | GCO10077 | Outer Joint | | 21 | 28 | 49 | 86 | 56.5 | O |
| | 2008.09-2009.12 | 5MT | F | L | Hatchback FWD KFV (TU3JP) | | GCI10068 | Inner Joint | | 22 | 21 | 40 | 65 | 87.5 | |
| | 2008.09-2009.12 | AT | F | L | Hatchback FWD KFV (TU3JP) | | GDS10181 | Drive Shaft | | 21 | 26 | 48.5 | 86 | 618 | |
| | 2008.09-2009.12 | AT | F | R | Hatchback FWD KFV (TU3JP) | | GDS10206 | Drive Shaft | | 21 | 26 | 48.5 | 86 | 754 | |
| 1.4 (55 kw) | 2005.05-2009.12 | 5AMT/5MT | F | L/R | Hatchback FWD 8HX (DV4TD) | Date to:2007.09,To ORG/OPR:11369,Not For facelift;Trans. ID:68;For facelift;Trans. ID:68 | GCO10077 | Outer Joint | | 21 | 28 | 49 | 86 | 56.5 | O |
| | 2005.05-2009.12 | 5MT/5AMT | F | L | Hatchback FWD 8HX (DV4TD) | Date to:2007.10,Trans. code:68 | GDS10125 | Drive Shaft | | 21 | 22 | 48 | 86.5 | 649 | |
| | 2005.05-2009.12 | 5MT/5AMT | F | L/R | Hatchback FWD 8HX (DV4TD) | Not For facelift | GCO10026 | Outer Joint | | 21 | 21 | 48 | 86.5 | 54 | I |
| | 2005.05-2009.12 | 5MT/5AMT | F | L/R | Hatchback FWD 8HX (DV4TD) | Trans. ID:68 | GCO10053 | Outer Joint | | 21 | 20 | 49 | 86 | 51 | M |
| | 2005.05-2009.12 | 5MT/5AMT | F | L/R | Hatchback FWD 8HX (DV4TD) | Date to:2007.08,To ORG/OPR:11369,Trans. ID:68;Not For facelift;Trans. ID:77;Not For facelift | GCO10069 | Outer Joint | | 21 | 21 | 48 | 86.5 | 54 | I |
| | 2005.05-2009.12 | 5MT/5AMT | F | L | Hatchback FWD 8HX (DV4TD) | Date to:2007.10,Trans. code:68 | GCI10068 | Inner Joint | | 22 | 21 | 40 | 65 | 87.5 | |
| | 2005.05-2009.12 | 5MT/5AMT | F | L | Hatchback FWD 8HX (DV4TD) | Trans. code:77 | GCI10098 | Inner Joint | | 22 | 21 | 40 | 60 | 88 | |
| | 2005.05-2009.12 | SAT/5MT | F | R | Hatchback FWD 8HX (DV4TD) | | GDS10002 | Drive Shaft | | 21 | 22 | 48 | 86.5 | 852 | |
| | 2005.05-2009.12 | SAT/5MT | F | R | Hatchback FWD 8HX (DV4TD) | | GCI10159 | Inner Joint | | 22 | 21 | 30 | 96.5 | 88 | |
| | 2005.05-2009.12 | | F | L | Hatchback FWD 8HX (DV4TD) | Date From:2009.02;Date To:2009.12;Trans. code:77 | GDS10001 | Drive Shaft | | 21 | 22 | 48 | 86.5 | 636 | |
| 1.4 (65 kw) | 2003.12-2010.08 | AT | F | L | Hatchback FWD KFU (ET3J4) | | GDS10181 | Drive Shaft | | 21 | 26 | 48.5 | 86 | 618 | |
| | 2003.12-2010.08 | AT | F | R | Hatchback FWD KFU (ET3J4) | | GDS10206 | Drive Shaft | | 21 | 26 | 48.5 | 86 | 754 | |
| | 2003.12-2010.08 | AT | F | L/R | Hatchback FWD KFU (ET3J4) | | GCO10069 | Outer Joint | | 21 | 21 | 48 | 86.5 | 54 | I |
| | 2003.12-2010.08 | SAT/5MT | F | L | Hatchback FWD KFU (ET3J4) | Inner teeth of wheel side:21 | GDS10001 | Drive Shaft | | 21 | 22 | 48 | 86.5 | 636 | |
| | 2003.12-2010.08 | SAT/5MT | F | R | Hatchback FWD KFU (ET3J4) | | GDS10242 | Drive Shaft | | 21 | 22 | 48 | 86.5 | 844 | |
| | 2003.12-2010.08 | SAT/5MT | F | L/R | Hatchback FWD KFU (ET3J4) | Date from:2005.11,Date to:2007.03 | GCO10077 | Outer Joint | | 21 | 28 | 49 | 86 | 56.5 | O |
| | 2003.12-2010.08 | SAT/5MT | F | L/R | Hatchback FWD KFU (ET3J4) | Date to:2005.10 | GCO45057 | Outer Joint | | 21 | 22 | 48 | 86.5 | 54 | I |
| | 2003.12-2010.08 | SAT/5MT | F | L | Hatchback FWD KFU (ET3J4) | | GCI10098 | Inner Joint | | 22 | 21 | 40 | 60 | 88 | |
| 1.4 (66 kw) | 2002.02-2008.06 | MT | F | L | Hatchback FWD 8HY (DV4TED4) | Date to:2008.06;Trans. code:MA | GDS10001 | Drive Shaft | | 21 | 22 | 48 | 86.5 | 636 | |
| | 2002.02-2008.06 | MT | F | L | Hatchback FWD 8HY (DV4TED4) | Trans. code:MA | GDS10125 | Drive Shaft | | 21 | 22 | 48 | 86.5 | 649 | |
| | 2002.02-2008.06 | MT | F | L | Hatchback FWD 8HY (DV4TED4) | | GDS10364 | Drive Shaft | | 21 | 24 | 50 | 85 | 631 | |
| | 2002.02-2008.06 | MT | F | R | Hatchback FWD 8HY (DV4TED4) | Trans. code:MA | GDS10002 | Drive Shaft | | 21 | 22 | 48 | 86.5 | 852 | |
| | 2002.02-2008.06 | MT | F | R | Hatchback FWD 8HY (DV4TED4) | | GDS45103 | Drive Shaft | | 21 | 24 | 48 | 86.5 | 854 | |
| | 2002.02-2008.06 | MT | F | L | Hatchback FWD 8HY (DV4TED4) | | GCO45057 | Outer Joint | | 21 | 22 | 48 | 86.5 | 54 | I |
| | 2002.02-2008.06 | MT | F | R | Hatchback FWD 8HY (DV4TED4) | Date to:2008.06;Trans. code:MA;Inner teeth:21 | GCO45065 | Outer Joint | | 21 | 21 | 48.5 | 86 | 54 | I |

| | YEAR | TRANSM. | F/R | L/R | BODY STYLE & DRIVE TYPE & ENGINE | REMARKS | G-AP Ref. | PRODUCT | ABS | Technical Specifications | | | | | |
|---|---|---|---|---|---|---|---|---|---|---|---|---|---|---|---|
| | | | | | | | | | | A | B | C | H | L | P |
| **CITROËN** | | | | | | | | | | | | | | | |
| **C3** | | | | | | | | | | | | | | | |
| 1.4 (66 kw) | 2002.02-2008.06 | MT | F | L | Hatchback FWD 8HY (DV4TED4) | | GCI10092 | Inner Joint | | 24 | 22 | 39.95 | 69 | 86 | |
| 1.4 (70 kw) | 2009.11-2016.09 | 5AT/5MT | F | L | Hatchback FWD 8FP (EP3C) | Date from:2011.07,For cold climate zones | GDS10311 | Drive Shaft | | 21 | 22 | 48 | 86.5 | 647 | |
| | 2009.11-2016.09 | 5AT/5MT | F | L | Hatchback FWD 8FP (EP3C) | Date to:2011.06 | GDS10340 | Drive Shaft | | 21 | 22 | 49 | 86 | 655 | |
| | 2009.11-2016.09 | 5AT/5MT | F | R | Hatchback FWD 8FP (EP3C) | Date to:2011.06;Date from:2011.07,Not for cold climate zones | GDS10339 | Drive Shaft | | 21 | 22 | 49 | 86 | 868 | |
| | 2009.11-2016.09 | 5AT/5MT | F | R | Hatchback FWD 8FP (EP3C) | Date from:2011.07,For cold climate zones | GDS99271 | Drive Shaft | | 21 | 22 | 48 | 86.5 | 860 | |
| | 2009.11-2016.09 | 5AT/5MT | F | L | Hatchback FWD 8FP (EP3C) | Date from:2012.10;From ORG/OPR:13111;Not for cold climate zones | GCO10151 | Outer Joint | | 21 | 28 | 49 | 86 | 49 | I |
| | 2009.11-2016.09 | 5AT/5MT | F | L | Hatchback FWD 8FP (EP3C) | Date from:2011.07,For cold climate zones | GCO45057 | Outer Joint | | 21 | 22 | 48 | 86.5 | 54 | I |
| | 2009.11-2016.09 | 5AT/5MT | F | R | Hatchback FWD 8FP (EP3C) | Date from:2011.07,For cold climate zones | GCO45011 | Outer Joint | | 21 | 22 | 48 | 86.5 | 54 | I |
| | 2009.11-2016.09 | 5AT/5MT | F | L | Hatchback FWD 8FP (EP3C) | Date from:2011.07,For cold climate zones | GCI17029 | Inner Joint | | 22 | 22 | 40 | 58.5 | 101 | |
| | 2009.11-2016.09 | 5AT/5MT | F | R | Hatchback FWD 8FP (EP3C) | Date from:2011.07,For cold climate zones | GCI17030 | Inner Joint | | 22 | 22 | 30 | 96.5 | 99 | |
| | 2013.06-2016.09 | 5MT | F | L | Hatchback FWD 8FN (EP3) | Date from:2011.07 | GDS10311 | Drive Shaft | | 21 | 22 | 48 | 86.5 | 647 | |
| | 2013.06-2016.09 | 5MT | F | L | Hatchback FWD 8FN (EP3) | Date to:2011.06 | GDS10340 | Drive Shaft | | 21 | 22 | 49 | 86 | 655 | |
| | 2013.06-2016.09 | 5MT | F | R | Hatchback FWD 8FN (EP3) | | GDS99271 | Drive Shaft | | 21 | 22 | 48 | 86.5 | 860 | |
| | 2013.06-2016.09 | 5MT | F | L | Hatchback FWD 8FN (EP3) | Date to:2011.06 | GCO10151 | Outer Joint | | 21 | 28 | 49 | 86 | 49 | I |
| | 2013.06-2016.09 | 5MT | F | L | Hatchback FWD 8FN (EP3) | Date from:2011.07 | GCO45057 | Outer Joint | | 21 | 22 | 48 | 86.5 | 54 | I |
| | 2013.06-2016.09 | 5MT | F | R | Hatchback FWD 8FN (EP3) | | GCO45011 | Outer Joint | | 21 | 22 | 48 | 86.5 | 54 | I |
| | 2013.06-2016.09 | 5MT | F | L | Hatchback FWD 8FN (EP3) | Date from:2011.07 | GCI17029 | Inner Joint | | 22 | 22 | 40 | 58.5 | 101 | |
| | 2013.06-2016.09 | 5MT | F | R | Hatchback FWD 8FN (EP3) | | GCI17030 | Inner Joint | | 22 | 22 | 30 | 96.5 | 99 | |
| | 2013.06-2016.09 | | F | R | Hatchback FWD 8FN (EP3) | Climate Zones:Not for cold climate zones;Date From:2012.10;From ORG/OPR:13111 | GDS10339 | Drive Shaft | | 21 | 22 | 49 | 86 | 868 | |
| | 2013.06-2016.09 | | F | R | Hatchback FWD 8FN (EP3) | Date To:2011.06;To ORG/OPR:12641 | GDS10339 | Drive Shaft | | 21 | 22 | 49 | 86 | 868 | |
| 1.4 (72 kw) | 2009.11-2016.09 | 5MT | F | L | Hatchback FWD 8FR (EP3) | Date from:2011.07 | GDS10311 | Drive Shaft | | 21 | 22 | 48 | 86.5 | 647 | |
| | 2009.11-2016.09 | 5MT | F | L | Hatchback FWD 8FR (EP3) | Date to:2011.06 | GDS10340 | Drive Shaft | | 21 | 22 | 49 | 86 | 655 | |
| | 2009.11-2016.09 | 5MT | F | R | Hatchback FWD 8FR (EP3) | | GDS99271 | Drive Shaft | | 21 | 22 | 48 | 86.5 | 860 | |
| | 2009.11-2016.09 | 5MT | F | L | Hatchback FWD 8FR (EP3) | Date to:2011.06 | GCO10151 | Outer Joint | | 21 | 28 | 49 | 86 | 49 | I |
| | 2009.11-2016.09 | 5MT | F | L | Hatchback FWD 8FR (EP3) | Date from:2011.07 | GCO45057 | Outer Joint | | 21 | 22 | 48 | 86.5 | 54 | I |
| | 2009.11-2016.09 | 5MT | F | R | Hatchback FWD 8FR (EP3) | | GCO45011 | Outer Joint | | 21 | 22 | 48 | 86.5 | 54 | I |
| | 2009.11-2016.09 | 5MT | F | L | Hatchback FWD 8FR (EP3) | Date from:2011.07 | GCI17029 | Inner Joint | | 22 | 22 | 40 | 58.5 | 101 | |
| | 2009.11-2016.09 | 5MT | F | R | Hatchback FWD 8FR (EP3) | | GCI17030 | Inner Joint | | 22 | 22 | 30 | 96.5 | 99 | |
| | 2009.11-2016.09 | | F | R | Hatchback FWD 8FR (EP3) | Climate Zones:Not for cold climate zones;Date From:2012.10;From ORG/OPR:13111 | GDS10339 | Drive Shaft | | 21 | 22 | 49 | 86 | 868 | |
| | 2009.11-2016.09 | | F | R | Hatchback FWD 8FR (EP3) | Date To:2011.06;To ORG/OPR:12641 | GDS10339 | Drive Shaft | | 21 | 22 | 49 | 86 | 868 | |
| 1.5 (75 kw) | 2018.05- | 6MT | F | L | Hatchback FWD YHY (DV5RD);YHT (DV5RCF) | Wheel Hub Diam:72mm | GDS10309 | Drive Shaft | | 21 | 24 | 48.3 | 86.5 | 641 | |
| | 2018.05- | 6MT | F | L | Hatchback FWD YHY (DV5RD);YHT (DV5RCF) | Wheel Hub Diam:82mm | GDS83645 | Drive Shaft | | 25 | 24 | 58.5 | 79 | 638 | |
| | 2018.05- | 6MT | F | R | Hatchback FWD YHY (DV5RD);YHT (DV5RCF) | Wheel Hub Diam:72mm | GDS10301 | Drive Shaft | | 21 | 24 | 48.3 | 86.5 | 871 | |
| | 2018.05- | 6MT | F | R | Hatchback FWD YHY (DV5RD);YHT (DV5RCF) | Wheel Hub Diam:82mm | GDS83806 | Drive Shaft | | 25 | 24 | 58.5 | 79 | 867 | |
| | 2018.05- | 6MT | F | L/R | Hatchback FWD YHY (DV5RD);YHT (DV5RCF) | Wheel Hub Diam:72mm | GCO82278 | Outer Joint | | 21 | 34 | 48.2 | 85.5 | 56.5 | I |
| | 2018.05- | 6MT | F | L/R | Hatchback FWD YHY (DV5RD);YHT (DV5RCF) | Wheel Hub Diam:82mm | GCO82355 | Outer Joint | | 25 | 34 | 58.5 | 79 | 55.5 | I |
| | 2018.05- | 6MT | F | L | Hatchback FWD YHY (DV5RD);YHT (DV5RCF) | Wheel Hub Diam:82mm | GCI82131 | Inner Joint | | 24 | 34 | 40 | 62 | 89 | |
| | 2018.05- | 6MT | F | R | Hatchback FWD YHY (DV5RD);YHT (DV5RCF) | Wheel Hub Diam:82mm | GCI82374 | Inner Joint | | 24 | 34 | 29.8 | 291 | 88 | |
| | 2019.03- | 6MT | F | L | Hatchback Van FWD YHY (DV5RD) | Wheel Hub Diam:72mm | GDS10309 | Drive Shaft | | 21 | 24 | 48.3 | 86.5 | 641 | |
| | 2019.03- | 6MT | F | L | Hatchback Van FWD YHY (DV5RD) | Wheel Hub Diam:82mm | GDS83645 | Drive Shaft | | 25 | 24 | 58.5 | 79 | 638 | |
| | 2019.03- | 6MT | F | R | Hatchback Van FWD YHY (DV5RD) | Wheel Hub Diam:72mm | GDS10301 | Drive Shaft | | 21 | 24 | 48.3 | 86.5 | 871 | |
| | 2019.03- | 6MT | F | R | Hatchback Van FWD YHY (DV5RD) | Wheel Hub Diam:82mm | GDS83806 | Drive Shaft | | 25 | 24 | 58.5 | 79 | 867 | |
| | 2019.03- | 6MT | F | L/R | Hatchback Van FWD YHY (DV5RD) | Wheel Hub Diam:72mm | GCO82278 | Outer Joint | | 21 | 34 | 48.2 | 85.5 | 56.5 | I |
| | 2019.03- | 6MT | F | L/R | Hatchback Van FWD YHY (DV5RD) | Wheel Hub Diam:82mm | GCO82355 | Outer Joint | | 25 | 34 | 58.5 | 79 | 55.5 | I |
| | 2019.03- | 6MT | F | L | Hatchback Van FWD YHY (DV5RD) | Wheel Hub Diam:82mm | GCI82131 | Inner Joint | | 24 | 34 | 40 | 62 | 89 | |
| | 2019.03- | 6MT | F | R | Hatchback Van FWD YHY (DV5RD) | Wheel Hub Diam:82mm | GCI82374 | Inner Joint | | 24 | 34 | 29.8 | 291 | 88 | |
| 1.6 (55 kw) | 2015.03-2016.09 | 5MT | F | R | Hatchback Van FWD BHW (DV6FE) | | GDS10249 | Drive Shaft | | 25 | 24 | 58.5 | 79 | 864 | |
| | 2015.03-2016.09 | 5MT | F | R | Hatchback Van FWD BHW (DV6FE) | | GCI10082 | Inner Joint | | 24 | 34 | 29.8 | 291 | 88 | |
| | 2015.03-2016.09 | MT | F | L | Hatchback Van FWD BHW (DV6FE) | | GDS10250 | Drive Shaft | | 25 | 24 | 58.5 | 79 | 630 | |
| | 2015.04-2016.09 | 5MT | F | L | Hatchback FWD 9HK (DV6ETEDM);BHW (DV6FE) | | GDS10250 | Drive Shaft | | 25 | 24 | 58.5 | 79 | 630 | |
| | 2015.04-2016.09 | 5MT | F | L | Hatchback FWD 9HK (DV6ETEDM);BHW (DV6FE) | | GDS10309 | Drive Shaft | | 21 | 24 | 48.3 | 86.5 | 641 | |
| | 2015.04-2016.09 | 5MT | F | R | Hatchback FWD 9HK (DV6ETEDM);BHW (DV6FE) | | GDS10249 | Drive Shaft | | 25 | 24 | 58.5 | 79 | 864 | |
| | 2015.04-2016.09 | 5MT | F | R | Hatchback FWD 9HK (DV6ETEDM);BHW (DV6FE) | | GDS10301 | Drive Shaft | | 21 | 24 | 48.3 | 86.5 | 871 | |
| | 2015.04-2016.09 | 5MT | F | L/R | Hatchback FWD 9HK (DV6ETEDM);BHW (DV6FE) | | GCO10042 | Outer Joint | | 25 | 34 | 54.8 | 78.5 | 56 | I |
| | 2015.04-2016.09 | 5MT | F | L | Hatchback FWD 9HK (DV6ETEDM);BHW (DV6FE) | | GCI10070 | Inner Joint | | 24 | 34 | 40 | 62 | 88 | |
| | 2015.04-2016.09 | 5MT | F | L | Hatchback FWD 9HK (DV6ETEDM);BHW (DV6FE) | | GCI10129 | Inner Joint | | 24 | 34 | 40 | 62 | 89 | |
| | 2015.04-2016.09 | 5MT | F | R | Hatchback FWD 9HK (DV6ETEDM);BHW (DV6FE) | | GCI10082 | Inner Joint | | 24 | 34 | 29.8 | 291 | 88 | |
| | 2015.04-2016.09 | MT | F | L/R | Hatchback FWD 9HK (DV6ETEDM);BHW (DV6FE) | Wheel Hub Diam:72 | GCO10130 | Outer Joint | | 21 | 34 | 48.3 | 86.5 | 55.5 | I |
| | 2016.07-2018.05 | 5MT | F | L | Hatchback FWD BHW (DV6FE) | | GDS10248 | Drive Shaft | | 25 | 24 | 58.5 | 79 | 642 | |
| | 2016.07-2018.05 | 5MT | F | L | Hatchback FWD BHW (DV6FE) | | GDS10250 | Drive Shaft | | 25 | 24 | 58.5 | 79 | 630 | |
| | 2016.07-2018.05 | 5MT | F | L | Hatchback FWD BHW (DV6FE) | | GDS10309 | Drive Shaft | | 21 | 24 | 48.3 | 86.5 | 641 | |
| | 2016.07-2018.05 | 5MT | F | R | Hatchback FWD BHW (DV6FE) | | GDS10301 | Drive Shaft | | 21 | 24 | 48.3 | 86.5 | 871 | |
| | 2016.07-2018.05 | 5MT | F | L | Hatchback FWD BHW (DV6FE) | Wheel Hub Diam:72 | GCO82278 | Outer Joint | | 21 | 34 | 48.2 | 85.5 | 56.5 | I |
| | 2016.07-2018.05 | MT | F | L | Hatchback FWD BHW (DV6FE) | Date from:2017.01;Trans. code:MC | GDS10253 | Drive Shaft | | 25 | 24 | 58.5 | 79 | 626 | |
| | 2016.07-2018.05 | MT | F | R | Hatchback FWD BHW (DV6FE) | Date from:2017.01;Trans. code:MA | GDS45222 | Drive Shaft | | 21 | 22 | 48 | 86.5 | 864 | |

| | YEAR | TRANSM. | F/R | L/R | BODY STYLE & DRIVE TYPE & ENGINE | REMARKS | G-AP Ref. | PRODUCT | ABS | Technical Specifications A | B | C | H | L | P |
|---|---|---|---|---|---|---|---|---|---|---|---|---|---|---|---|
| **CITROËN** | | | | | | | | | | | | | | | |
| **C3** | | | | | | | | | | | | | | | |
| 1.6 (55 kw) | 2016.07-2018.05 | MT | F | R | Hatchback FWD BHW (DV6FE) | Date from:2017.01;Trans. code:MA | GCO45011 | Outer Joint | | 21 | 22 | 48 | 86.5 | 54 | I |
| | 2016.07-2018.05 | MT | F | R | Hatchback FWD BHW (DV6FE) | Date from:2017.01;Trans. code:MA | GCI17030 | Inner Joint | | 22 | 22 | 30 | 96.5 | 99 | |
| | 2019.03- | 5MT | F | L | Hatchback Van FWD BHW (DV6FE) | | GDS10250 | Drive Shaft | | 25 | 24 | 58.5 | 79 | 630 | |
| | 2019.03- | 5MT | F | L | Hatchback Van FWD BHW (DV6FE) | Wheel Hub Diam:72mm | GCO82278 | Outer Joint | | 21 | 34 | 48.2 | 85.5 | 56.5 | I |
| | 2019.03- | MT | F | L | Hatchback Van FWD BHW (DV6FE) | Trans. code:MC | GDS10253 | Drive Shaft | | 25 | 24 | 58.5 | 79 | 626 | |
| | 2019.03- | MT | F | R | Hatchback Van FWD BHW (DV6FE) | Trans. code:MA | GDS45222 | Drive Shaft | | 21 | 22 | 48 | 86.5 | 864 | |
| | 2019.03- | MT | F | R | Hatchback Van FWD BHW (DV6FE) | Trans. code:MA | GCO45011 | Outer Joint | | 21 | 22 | 48 | 86.5 | 54 | I |
| | 2019.03- | MT | F | R | Hatchback Van FWD BHW (DV6FE) | Trans. code:MA | GCI17030 | Inner Joint | | 22 | 22 | 30 | 96.5 | 99 | |
| | 2019.03- | | F | L | Hatchback Van FWD BHW (DV6FE) | | GDS10248 | Drive Shaft | | 25 | 24 | 58.5 | 79 | 642 | |
| | 2019.03- | | F | L | Hatchback Van FWD BHW (DV6FE) | Wheel Hub Diam:72mm | GDS10309 | Drive Shaft | | 21 | 24 | 48.3 | 86.5 | 641 | |
| 1.6 (66 kw) | 2005.10-2009.12 | 5MT | F | L | Hatchback FWD 9HX (DV6ATED4) | | GDS10364 | Drive Shaft | | 21 | 24 | 50 | 85 | 631 | |
| | 2005.10-2009.12 | 5MT | F | L | Hatchback FWD 9HX (DV6ATED4) | Date from:2006.07,Date to:2009.12 | GCO99301 | Outer Joint | | 21 | 22 | 50 | 85 | 53 | I |
| | 2005.10-2009.12 | 5MT | F | L/R | Hatchback FWD 9HX (DV6ATED4) | Date from:2006.07 | GCO10130 | Outer Joint | | 21 | 34 | 48.3 | 86.5 | 55.5 | I |
| | 2005.10-2009.12 | 5MT | F | L/R | Hatchback FWD 9HX (DV6ATED4) | Date to:2006.06 | GCO45057 | Outer Joint | | 21 | 22 | 48 | 86.5 | 54 | I |
| | 2005.10-2009.12 | 5MT | F | L | Hatchback FWD 9HX (DV6ATED4) | Date from:2006.07,Date to:2009.12 | GCI10092 | Inner Joint | | 24 | 22 | 39.95 | 69 | 86 | |
| | 2005.10-2009.12 | MT | F | R | Hatchback FWD 9HX (DV6ATED4) | | GDS45103 | Drive Shaft | | 21 | 24 | 48 | 86.5 | 854 | |
| | 2005.10-2009.12 | | F | L/R | Hatchback FWD 9HX (DV6ATED4) | | GCO10069 | Outer Joint | | 21 | 21 | 48 | 86.5 | 54 | I |
| | 2009.11-2016.09 | 5MT | F | L | Hatchback FWD 9HX (DV6ATED4) | Inner teeth of wheel side:34 | GDS10309 | Drive Shaft | | 21 | 24 | 48.3 | 86.5 | 641 | |
| | 2009.11-2016.09 | 5MT | F | L | Hatchback FWD 9HX (DV6ATED4) | Inner teeth of wheel side:32 | GDS10364 | Drive Shaft | | 21 | 24 | 50 | 85 | 631 | |
| | 2009.11-2016.09 | 5MT | F | L | Hatchback FWD 9HX (DV6ATED4) | | GCO99301 | Outer Joint | | 21 | 22 | 50 | 85 | 53 | I |
| | 2009.11-2016.09 | 5MT | F | L/R | Hatchback FWD 9HX (DV6ATED4) | | GCO10130 | Outer Joint | | 21 | 34 | 48.3 | 86.5 | 55.5 | I |
| | 2009.11-2016.09 | 5MT | F | L | Hatchback FWD 9HX (DV6ATED4) | | GCI10092 | Inner Joint | | 24 | 22 | 39.95 | 69 | 86 | |
| | 2009.11-2016.09 | MT | F | L | Hatchback FWD 9HX (DV6ATED4) | Trans. code:BVA6 | GDS10253 | Drive Shaft | | 25 | 24 | 58.5 | 79 | 626 | |
| | 2009.11-2016.09 | MT | F | R | Hatchback FWD 9HX (DV6ATED4) | Trans. code:BVM5 | GDS10301 | Drive Shaft | | 21 | 24 | 48.3 | 86.5 | 871 | |
| | 2009.11-2016.09 | MT | F | L/R | Hatchback FWD 9HX (DV6ATED4) | | GCO45012 | Outer Joint | | 21 | 34 | 48.5 | 86 | 55.5 | I |
| 1.6 (68 kw) | 2009.11-2016.09 | 5MT | F | L | Hatchback FWD 9HP (DV6DTED);9HJ (DV6DTEDM) | | GDS10309 | Drive Shaft | | 21 | 24 | 48.3 | 86.5 | 641 | |
| | 2009.11-2016.09 | 5MT | F | R | Hatchback FWD 9HP (DV6DTED);9HJ (DV6DTEDM) | | GDS10301 | Drive Shaft | | 21 | 24 | 48.3 | 86.5 | 871 | |
| | 2009.11-2016.09 | 5MT | F | L/R | Hatchback FWD 9HP (DV6DTED);9HJ (DV6DTEDM) | | GCO10130 | Outer Joint | | 21 | 34 | 48.3 | 86.5 | 55.5 | I |
| | 2009.11-2016.09 | 6AMT | F | L | Hatchback FWD 9HP (DV6DTED);9HJ (DV6DTEDM) | | GDS10340 | Drive Shaft | | 21 | 22 | 49 | 86 | 655 | |
| | 2009.11-2016.09 | 6AMT | F | R | Hatchback FWD 9HP (DV6DTED);9HJ (DV6DTEDM) | | GDS10339 | Drive Shaft | | 21 | 22 | 49 | 86 | 868 | |
| | 2009.11-2016.09 | 6AMT | F | L | Hatchback FWD 9HP (DV6DTED);9HJ (DV6DTEDM) | | GCO10151 | Outer Joint | | 21 | 28 | 49 | 86 | 49 | I |
| | 2009.11-2016.09 | 6MT | F | L | Hatchback FWD 9HP (DV6DTED);9HJ (DV6DTEDM) | | GDS10253 | Drive Shaft | | 25 | 24 | 58.5 | 79 | 626 | |
| | 2009.11-2016.09 | 6MT | F | R | Hatchback FWD 9HP (DV6DTED);9HJ (DV6DTEDM) | | GDS45221 | Drive Shaft | | 25 | 24 | 58.5 | 79 | 881 | |
| | 2009.11-2016.09 | 6MT | F | R | Hatchback FWD 9HP (DV6DTED);9HJ (DV6DTEDM) | | GCO10148 | Outer Joint | | 25 | 34 | 58.5 | 79 | 55.5 | I |
| | 2009.11-2016.09 | 6MT | F | R | Hatchback FWD 9HP (DV6DTED);9HJ (DV6DTEDM) | | GCO82351 | Outer Joint | | 25 | 34 | 58.5 | 79 | 55.5 | I |
| | 2009.11-2016.09 | 6MT | F | L | Hatchback FWD 9HP (DV6DTED);9HJ (DV6DTEDM) | | GCI10057 | Inner Joint | | 24 | 34 | 40 | 52.5 | 90 | |
| | 2009.11-2016.09 | 6MT | F | R | Hatchback FWD 9HP (DV6DTED);9HJ (DV6DTEDM) | | GCI10165 | Inner Joint | | 24 | 34 | 29.8 | 305.5 | 87.5 | |
| | 2009.11-2016.09 | MT | F | L/R | Hatchback FWD 9HP (DV6DTED);9HJ (DV6DTEDM) | | GCO45012 | Outer Joint | | 21 | 34 | 48.5 | 86 | 55.5 | I |
| 1.6 (73 kw) | 2014.07-2016.09 | 5MT | F | L | Hatchback FWD BHY (DV6FD) | | GDS10250 | Drive Shaft | | 25 | 24 | 58.5 | 79 | 630 | |
| | 2014.07-2016.09 | 5MT | F | R | Hatchback FWD BHY (DV6FD) | Date to:2016.01 | GDS10249 | Drive Shaft | | 25 | 24 | 58.5 | 79 | 864 | |
| | 2014.07-2016.09 | 5MT | F | L/R | Hatchback FWD BHY (DV6FD) | | GCO99366 | Outer Joint | | 25 | 34 | 58.5 | 79 | 55 | I |
| | 2014.07-2016.09 | 5MT | F | L | Hatchback FWD BHY (DV6FD) | | GCI10070 | Inner Joint | | 24 | 34 | 40 | 62 | 88 | |
| | 2014.07-2016.09 | 5MT | F | R | Hatchback FWD BHY (DV6FD) | Date to:2016.01 | GCI10082 | Inner Joint | | 24 | 34 | 29.8 | 291 | 88 | |
| | 2016.07-2018.05 | 5MT | F | L | Hatchback FWD BHY (DV6FD) | Wheel Hub Diam:82mm | GDS10250 | Drive Shaft | | 25 | 24 | 58.5 | 79 | 630 | |
| | 2016.07-2018.05 | 5MT | F | L | Hatchback FWD BHY (DV6FD) | Wheel Hub Diam:72mm | GDS10309 | Drive Shaft | | 21 | 24 | 48.3 | 86.5 | 641 | |
| | 2016.07-2018.05 | 5MT | F | R | Hatchback FWD BHY (DV6FD) | Wheel Hub Diam:72mm | GDS10301 | Drive Shaft | | 21 | 24 | 48.3 | 86.5 | 871 | |
| | 2016.07-2018.05 | 5MT | F | L | Hatchback FWD BHY (DV6FD) | Wheel Hub Diam:72mm | GCO82278 | Outer Joint | | 21 | 34 | 48.2 | 85.5 | 56.5 | I |
| | 2016.07-2018.05 | MT | F | L | Hatchback FWD BHY (DV6FD) | | GDS10248 | Drive Shaft | | 25 | 24 | 58.5 | 79 | 642 | |
| | 2016.07-2018.05 | MT | F | L | Hatchback FWD BHY (DV6FD) | Date from:2017.01;Trans. code:MC | GDS10253 | Drive Shaft | | 25 | 24 | 58.5 | 79 | 626 | |
| | 2016.07-2018.05 | MT | F | R | Hatchback FWD BHY (DV6FD) | Date from:2017.01;Trans. code:MA | GDS45222 | Drive Shaft | | 21 | 22 | 48 | 86.5 | 864 | |
| | 2016.07-2018.05 | MT | F | R | Hatchback FWD BHY (DV6FD) | Date from:2017.01;Trans. code:MA | GCO45011 | Outer Joint | | 21 | 22 | 48 | 86.5 | 54 | I |
| | 2016.07-2018.05 | MT | F | R | Hatchback FWD BHY (DV6FD) | Date from:2017.01;Trans. code:MA | GCI17030 | Inner Joint | | 22 | 22 | 30 | 96.5 | 99 | |
| | 2019.03- | 5MT | F | L | Hatchback Van FWD BHY (DV6FD) | Wheel Hub Diam:82mm | GDS10250 | Drive Shaft | | 25 | 24 | 58.5 | 79 | 630 | |
| | 2019.03- | 5MT | F | L | Hatchback Van FWD BHY (DV6FD) | Wheel Hub Diam:72mm | GDS10309 | Drive Shaft | | 21 | 24 | 48.3 | 86.5 | 641 | |
| | 2019.03- | 5MT | F | L | Hatchback Van FWD BHY (DV6FD) | Wheel Hub Diam:72mm | GCO82278 | Outer Joint | | 21 | 34 | 48.2 | 85.5 | 56.5 | I |
| | 2019.03- | MT | F | L | Hatchback Van FWD BHY (DV6FD) | Trans. code:MC | GDS10253 | Drive Shaft | | 25 | 24 | 58.5 | 79 | 626 | |
| | 2019.03- | MT | F | R | Hatchback Van FWD BHY (DV6FD) | Trans. code:MA | GDS45222 | Drive Shaft | | 21 | 22 | 48 | 86.5 | 864 | |
| | 2019.03- | MT | F | R | Hatchback Van FWD BHY (DV6FD) | Trans. code:MA | GCO45011 | Outer Joint | | 21 | 22 | 48 | 86.5 | 54 | I |
| | 2019.03- | MT | F | R | Hatchback Van FWD BHY (DV6FD) | Trans. code:MA | GCI17030 | Inner Joint | | 22 | 22 | 30 | 96.5 | 99 | |
| | 2019.03- | | F | L | Hatchback Van FWD BHY (DV6FD) | | GDS10248 | Drive Shaft | | 25 | 24 | 58.5 | 79 | 642 | |
| 1.6 (80 kw) | 2002.02-2010.08 | AT | F | L | Hatchback FWD NFU (TU5JP4) | | GDS10181 | Drive Shaft | | 21 | 26 | 48.5 | 86 | 618 | |
| | 2002.02-2010.08 | AT | F | R | Hatchback FWD NFU (TU5JP4) | | GDS10206 | Drive Shaft | | 21 | 26 | 48.5 | 86 | 754 | |
| | 2002.02-2010.08 | AT | F | L | Hatchback FWD NFU (TU5JP4) | Date from:2006.07,Date to:2008.02,Inner teeth:21 | GCO10100 | Outer Joint | | 21 | 21 | 48.5 | 86 | 54 | I |
| | 2002.02-2010.08 | AT | F | L | Hatchback FWD NFU (TU5JP4) | | GCI10162 | Inner Joint | | 26 | 21 | 41.8 | 46 | 87.5 | |
| | 2002.02-2010.08 | AT | F | R | Hatchback FWD NFU (TU5JP4) | | GCI10148 | Inner Joint | | 26 | 21 | 42 | | 117 | |

| | YEAR | TRANSM. | F/R | L/R | BODY STYLE & DRIVE TYPE & ENGINE | REMARKS | G-AP Ref. | PRODUCT | ABS | Technical Specifications | | | | | |
|---|---|---|---|---|---|---|---|---|---|---|---|---|---|---|---|
| | | | | | | | | | | A | B | C | H | L | P |
| **CITROËN** | | | | | | | | | | | | | | | |
| **C3** | | | | | | | | | | | | | | | |
| 1.6 (80 kw) | 2002.02-2010.08 | AT/MT | F | L/R | Hatchback FWD NFU (TU5JP4) | | GCO10069 | Outer Joint | | 21 | 21 | 48 | 86.5 | 54 | I |
| | 2002.02-2010.08 | MT | F | L | Hatchback FWD NFU (TU5JP4) | Date to:2007.09 | GDS10001 | Drive Shaft | | 21 | 22 | 48 | 86.5 | 636 | |
| | 2002.02-2010.08 | MT | F | R | Hatchback FWD NFU (TU5JP4) | | GDS10242 | Drive Shaft | | 21 | 22 | 48 | 86.5 | 844 | |
| | 2002.02-2010.08 | MT | F | L/R | Hatchback FWD NFU (TU5JP4) | Date from:2005.11,Date to:2007.09;Inner teeth:28 | GCO10077 | Outer Joint | | 21 | 28 | 49 | 86 | 56.5 | O |
| | 2002.02-2010.08 | MT | F | L/R | Hatchback FWD NFU (TU5JP4) | Date to:2005.10;Inner teeth:22 | GCO45057 | Outer Joint | | 21 | 22 | 48 | 86.5 | 54 | I |
| | 2002.02-2010.08 | MT | F | L | Hatchback FWD NFU (TU5JP4) | Date to:2007.09 | GCI10098 | Inner Joint | | 22 | 21 | 40 | 60 | 88 | |
| | 2005.09-2009.12 | 5MT | F | L | Hatchback FWD 9HZ (DV6TED4) | Date from:2006.07,Trans.code:BE4R | GDS10364 | Drive Shaft | | 21 | 24 | 50 | 85 | 631 | |
| | 2005.09-2009.12 | 5MT | F | L | Hatchback FWD 9HZ (DV6TED4) | Date To:2006.05;To ORG/OPR:10800;hollow shaft | GDS45026 | Drive Shaft | 48T | 25 | 24 | 55.7 | 79 | 620 | |
| | 2005.09-2009.12 | 5MT | F | L | Hatchback FWD 9HZ (DV6TED4) | Date to:2006.05,To ORG/OPR:10800;solid shaft | GDS45152 | Drive Shaft | 48T | 25 | 24 | 55.7 | 79 | 630 | |
| | 2005.09-2009.12 | 5MT | F | R | Hatchback FWD 9HZ (DV6TED4) | | GDS45103 | Drive Shaft | | 21 | 24 | 48 | 86.5 | 854 | |
| | 2005.09-2009.12 | 5MT | F | L | Hatchback FWD 9HZ (DV6TED4) | Date from:2006.07,Date to:2009.12 | GCO99301 | Outer Joint | | 21 | 22 | 50 | 85 | 53 | I |
| | 2005.09-2009.12 | 5MT | F | L/R | Hatchback FWD 9HZ (DV6TED4) | Date from:2006.06;From ORG/OPR:10801 | GCO10130 | Outer Joint | | 21 | 34 | 48.3 | 86.5 | 55.5 | I |
| | 2005.09-2009.12 | 5MT | F | L | Hatchback FWD 9HZ (DV6TED4) | Date from:2006.07,Date to:2009.12 | GCI10092 | Inner Joint | | 24 | 22 | 39.95 | 69 | 86 | |
| | 2005.09-2009.12 | | F | L | Hatchback FWD 9HZ (DV6TED4) | | GCI10080 | Inner Joint | | 24 | 34 | 40 | 69 | 89.5 | |
| | 2005.09-2009.12 | | F | R | Hatchback FWD 9HZ (DV6TED4) | | GCI10082 | Inner Joint | | 24 | 34 | 29.8 | 291 | 88 | |
| 1.6 (81 kw) | 2003.05-2005.09 | AT | F | L | Hatchback FWD NFU (TU5JP4) | | GDS10181 | Drive Shaft | | 21 | 26 | 48.5 | 86 | 618 | |
| | 2003.05-2005.09 | AT | F | R | Hatchback FWD NFU (TU5JP4) | | GDS10206 | Drive Shaft | | 21 | 26 | 48.5 | 86 | 754 | |
| | 2003.05-2005.09 | AT | F | L | Hatchback FWD NFU (TU5JP4) | Date From:2006.07 | GCO10100 | Outer Joint | | 21 | 21 | 48.5 | 86 | 54 | I |
| | 2003.05-2005.09 | AT | F | L | Hatchback FWD NFU (TU5JP4) | | GCI10162 | Inner Joint | | 26 | 21 | 41.8 | 46 | 87.5 | |
| | 2003.05-2005.09 | AT | F | R | Hatchback FWD NFU (TU5JP4) | | GCI10148 | Inner Joint | | 26 | 21 | 42 | | 117 | |
| | 2003.05-2005.09 | MT | F | L | Hatchback FWD NFU (TU5JP4) | Date to:2007.09,Date to:2009.09,To ORG/OPR:10928,Date from:2007.09,From ORG/OPR:11236 | GDS10001 | Drive Shaft | | 21 | 22 | 48 | 86.5 | 636 | |
| | 2003.05-2005.09 | MT | F | R | Hatchback FWD NFU (TU5JP4) | Date from:2007.09,From ORG/OPR:11236,Date to:2009.09,To ORG/OPR:10928,Date from:2008.02 | GDS10242 | Drive Shaft | | 21 | 22 | 48 | 86.5 | 844 | |
| | 2003.05-2005.09 | MT | F | L | Hatchback FWD NFU (TU5JP4) | | GCO10077 | Outer Joint | | 21 | 28 | 49 | 86 | 56.5 | O |
| | 2003.05-2005.09 | MT | F | L/R | Hatchback FWD NFU (TU5JP4) | | GCO45057 | Outer Joint | | 21 | 22 | 48 | 86.5 | 54 | I |
| | 2003.05-2005.09 | MT | F | L | Hatchback FWD NFU (TU5JP4) | Date to:2007.09,Date to:2009.09,To ORG/OPR:10928,Date from:2007.09,From ORG/OPR:11236 | GCI10098 | Inner Joint | | 22 | 21 | 40 | 60 | 88 | |
| | 2003.05-2005.09 | | F | L/R | Hatchback FWD NFU (TU5JP4) | | GCO10069 | Outer Joint | | 21 | 21 | 48 | 86.5 | 54 | I |
| 1.6 (82 kw) | 2009.11-2016.09 | 6MT | F | L | Hatchback FWD 9HR (DV6C) | Technical Information no.:8NN48,Trans. code:MC | GDS10253 | Drive Shaft | | 25 | 24 | 58.5 | 79 | 626 | |
| | 2009.11-2016.09 | 6MT | F | R | Hatchback FWD 9HR (DV6C) | | GDS45221 | Drive Shaft | | 25 | 24 | 58.5 | 79 | 881 | |
| | 2009.11-2016.09 | 6MT | F | R | Hatchback FWD 9HR (DV6C) | | GCO10148 | Outer Joint | | 25 | 34 | 58.5 | 79 | 55.5 | I |
| | 2009.11-2016.09 | 6MT | F | R | Hatchback FWD 9HR (DV6C) | | GCI10165 | Inner Joint | | 24 | 34 | 29.8 | 305.5 | 87.5 | |
| | 2009.11-2016.09 | | F | L/R | Hatchback FWD 9HR (DV6C) | | GCO10042 | Outer Joint | | 25 | 34 | 54.8 | 78.5 | 56 | I |
| | 2009.11-2016.09 | | F | L | Hatchback FWD 9HR (DV6C) | Date To:2016.09 | GCI10057 | Inner Joint | | 24 | 34 | 40 | 52.5 | 90 | |
| 1.6 (84 kw) | 2012.09-2016.09 | 6MT | F | R | Hatchback FWD 9HD (DV6C) | | GDS45221 | Drive Shaft | | 25 | 24 | 58.5 | 79 | 881 | |
| | 2012.09-2016.09 | MT | F | L | Hatchback FWD 9HD (DV6C) | Date to:2016.09 | GDS10253 | Drive Shaft | | 25 | 24 | 58.5 | 79 | 626 | |
| | 2012.09-2016.09 | MT | F | L | Hatchback FWD 9HD (DV6C) | Date to:2016.09 | GCO10148 | Outer Joint | | 25 | 34 | 58.5 | 79 | 55.5 | I |
| | 2012.09-2016.09 | MT | F | L | Hatchback FWD 9HD (DV6C) | Date to:2016.09 | GCI10057 | Inner Joint | | 24 | 34 | 40 | 52.5 | 90 | |
| | 2012.09-2016.09 | | F | L/R | Hatchback FWD 9HD (DV6C) | | GCO10042 | Outer Joint | | 25 | 34 | 54.8 | 78.5 | 56 | I |
| | 2012.09-2016.09 | | F | R | Hatchback FWD 9HD (DV6C) | | GCI10165 | Inner Joint | | 24 | 34 | 29.8 | 305.5 | 87.5 | |
| 1.6 (85 kw) | 2017.02- | 6AT | F | L | Hatchback FWD NFP (EC5) | vehicle production country:Not Slovakia | GDS81075 | Drive Shaft | | 25 | 37 | 58.6 | 79 | 601 | |
| | 2017.02- | 6AT | F | L | Hatchback FWD NFP (EC5) | vehicle production country:Slovakia | GDS83216 | Drive Shaft | | 25 | 37 | 58.5 | 79 | 598 | |
| | 2017.02- | 6AT | F | R | Hatchback FWD NFP (EC5) | vehicle production country:Not Slovakia | GDS81864 | Drive Shaft | | 25 | 37 | 58.6 | 79 | 859 | |
| | 2017.02- | 6AT | F | R | Hatchback FWD NFP (EC5) | vehicle production country:Slovakia;TJ,6balls | GDS83217 | Drive Shaft | | 25 | 37 | 58.5 | 79 | 862 | |
| | 2017.02- | 6AT | F | L | Hatchback FWD NFP (EC5) | vehicle production country:Slovakia | GCO82355 | Outer Joint | | 25 | 34 | 58.5 | 79 | 55.5 | I |
| | 2017.02- | 6AT | F | R | Hatchback FWD NFP (EC5) | vehicle production country:Slovakia | GCO82351 | Outer Joint | | 25 | 34 | 58.5 | 79 | 55.5 | I |
| | 2017.02- | 6AT | F | L/R | Hatchback FWD NFP (EC5) | vehicle production country:Not Slovakia | GCO81018 | Outer Joint | | 25 | 25 | 58.6 | 79 | 58.5 | I |
| | 2017.02- | 6AT | F | L | Hatchback FWD NFP (EC5) | vehicle production country:Not Slovakia | GCI81023 | Inner Joint | | 37 | 24 | 40.1 | 58.5 | 111.5 | |
| | 2017.02- | 6AT | F | R | Hatchback FWD NFP (EC5) | vehicle production country:Not Slovakia | GCI81595 | Inner Joint | | 37 | 24 | 38.2 | 285 | 111.5 | |
| | 2017.02- | 6AT | F | R | Hatchback FWD NFP (EC5) | vehicle production country:Slovakia | GCI82182 | Inner Joint | | 37 | 34 | | 290 | 88 | |
| 1.6 (87 kw) | 2016.10- | AT | F | L | Hatchback FWD EC5 | | GDS82733 | Drive Shaft | | 25 | 26 | 58.3 | 79 | 626 | |
| | 2016.10- | AT | F | R | Hatchback FWD EC5 | | GDS82734 | Drive Shaft | | 25 | 26 | 58.3 | 79 | 757 | |
| 1.6 (88 kw) | 2009.11-2016.09 | 4AT | F | L | Hatchback FWD 5FS (EP6C) | | GDS83515 | Drive Shaft | | 25 | 26 | 58.5 | 80 | 629 | |
| | 2009.11-2016.09 | 4AT | F | R | Hatchback FWD 5FS (EP6C) | | GDS83516 | Drive Shaft | | 25 | 26 | 58.5 | 80 | 770 | |
| | 2009.11-2016.09 | 4AT | F | L/R | Hatchback FWD 5FS (EP6C) | 8 balls | GCO82399 | Outer Joint | | 25 | 30 | 58.5 | 80 | 53.5 | I |
| | 2009.11-2016.09 | 4AT | F | L | Hatchback FWD 5FS (EP6C) | | GCI82252 | Inner Joint | | 26 | 29 | 43 | 45.5 | 91 | |
| | 2009.11-2016.09 | 4AT | F | R | Hatchback FWD 5FS (EP6C) | | GCI82253 | Inner Joint | | 26 | 29 | 36.3 | | 117 | |
| | 2009.11-2016.09 | 5MT | F | L | Hatchback FWD 5FS (EP6C) | | GDS10340 | Drive Shaft | | 21 | 22 | 49 | 86 | 655 | |
| | 2009.11-2016.09 | 5MT | F | R | Hatchback FWD 5FS (EP6C) | | GDS10339 | Drive Shaft | | 21 | 22 | 49 | 86 | 868 | |
| | 2009.11-2016.09 | 5MT | F | L | Hatchback FWD 5FS (EP6C) | Date from:2012.10;From ORG/OPR:13111;Groove Type:Inner | GCO10151 | Outer Joint | | 21 | 28 | 49 | 86 | 49 | I |
| | 2009.11-2016.09 | AT | F | L/R | Hatchback FWD 5FS (EP6C) | 6 balls | GCO10097 | Outer Joint | | 25 | 30 | 58.5 | 79.5 | 55 | I |
| | 2009.11-2016.09 | MT | F | L | Hatchback FWD 5FS (EP6C) | Trans. code:MC | GDS10253 | Drive Shaft | | 25 | 24 | 58.5 | 79 | 626 | |
| | 2009.11-2016.09 | MT | F | R | Hatchback FWD 5FS (EP6C) | Trans. code:MA | GDS45222 | Drive Shaft | | 21 | 22 | 48 | 86.5 | 864 | |
| | 2009.11-2016.09 | MT | F | L/R | Hatchback FWD 5FS (EP6C) | Groove Type:Outer | GCO10077 | Outer Joint | | 21 | 28 | 49 | 86 | 56.5 | O |
| | 2009.11-2016.09 | MT | F | R | Hatchback FWD 5FS (EP6C) | Trans. code:MA | GCI17030 | Inner Joint | | 22 | 22 | 30 | 96.5 | 99 | |
| 1.6 (90 kw) | 2012.01-2016.03 | AT | F | L | Hatchback FWD EC5 | | GDS82733 | Drive Shaft | | 25 | 26 | 58.3 | 79 | 626 | |
| | 2012.01-2016.03 | AT | F | R | Hatchback FWD EC5 | | GDS82734 | Drive Shaft | | 25 | 26 | 58.3 | 79 | 757 | |

| | YEAR | TRANSM. | F/R | L/R | BODY STYLE & DRIVE TYPE & ENGINE | REMARKS | G-AP Ref. | PRODUCT | ABS | Technical Specifications A | B | C | H | L | P |
|---|---|---|---|---|---|---|---|---|---|---|---|---|---|---|---|
| **CITROËN** | | | | | | | | | | | | | | | |
| **C3 Aircross** | | | | | | | | | | | | | | | |
| 1.2 (60 kw) | 2017.06- | 5MT | F | L/R | SUV FWD HMZ (EB2F);HMR (EB2FA) | | GCO99366 | Outer Joint | | 25 | 34 | 58.5 | 79 | 55 | I |
| | 2019.05- | 5MT | F | L/R | SUV Van FWD HMZ (EB2F) | | GCO99366 | Outer Joint | | 25 | 34 | 58.5 | 79 | 55 | I |
| 1.2 (81 kw) | 2017.06- | 5MT/6MT | F | L | SUV FWD HNZ (EB2DT);HNV (EB2DTM);HNP (EB2ADT) | | GDS84007 | Drive Shaft | | 25 | 24 | 58.5 | 79 | 654 | |
| | 2017.06- | 5MT/6MT | F | R | SUV FWD HNZ (EB2DT);HNV (EB2DTM);HNP (EB2ADT) | | GDS83947 | Drive Shaft | | 25 | 24 | 58.5 | 79 | 878 | |
| | 2017.06- | 6AT | F | L | SUV FWD HNZ (EB2DT);HNV (EB2DTM);HNP (EB2ADT) | | GDS83614 | Drive Shaft | | 25 | 37 | 58.5 | 79 | 615 | |
| | 2017.06- | 6AT | F | R | SUV FWD HNZ (EB2DT);HNV (EB2DTM);HNP (EB2ADT) | | GDS83615 | Drive Shaft | | 25 | 37 | 58.5 | 79 | 880 | |
| | 2017.06- | 6AT | F | L | SUV FWD HNZ (EB2DT);HNV (EB2DTM);HNP (EB2ADT) | | GCO82355 | Outer Joint | | 25 | 34 | 58.5 | 79 | 55.5 | I |
| | 2017.06- | 6AT | F | R | SUV FWD HNZ (EB2DT);HNV (EB2DTM);HNP (EB2ADT) | | GCO82351 | Outer Joint | | 25 | 34 | 58.5 | 79 | 55.5 | I |
| | 2017.06- | 6AT | F | L | SUV FWD HNZ (EB2DT);HNV (EB2DTM);HNP (EB2ADT) | | GCI82119 | Inner Joint | | 37 | 34 | 41.5 | 58.5 | 94 | |
| | 2017.06- | 6AT | F | R | SUV FWD HNZ (EB2DT);HNV (EB2DTM);HNP (EB2ADT) | | GCI82182 | Inner Joint | | 37 | 34 | | 290 | 88 | |
| | 2019.05- | 5MT/6MT | F | L | SUV Van FWD HNZ (EB2DT) | | GDS84007 | Drive Shaft | | 25 | 24 | 58.5 | 79 | 654 | |
| | 2019.05- | 5MT/6MT | F | R | SUV Van FWD HNZ (EB2DT) | | GDS83947 | Drive Shaft | | 25 | 24 | 58.5 | 79 | 878 | |
| | 2019.05- | 6AT | F | L | SUV Van FWD HNZ (EB2DT) | | GDS83614 | Drive Shaft | | 25 | 37 | 58.5 | 79 | 615 | |
| | 2019.05- | 6AT | F | R | SUV Van FWD HNZ (EB2DT) | | GDS83615 | Drive Shaft | | 25 | 37 | 58.5 | 79 | 880 | |
| | 2019.05- | 6AT | F | L | SUV Van FWD HNZ (EB2DT) | | GCO82355 | Outer Joint | | 25 | 34 | 58.5 | 79 | 55.5 | I |
| | 2019.05- | 6AT | F | R | SUV Van FWD HNZ (EB2DT) | | GCO82351 | Outer Joint | | 25 | 34 | 58.5 | 79 | 55.5 | I |
| | 2019.05- | 6AT | F | L | SUV Van FWD HNZ (EB2DT) | | GCI82119 | Inner Joint | | 37 | 34 | 41.5 | 58.5 | 94 | |
| | 2019.05- | 6AT | F | R | SUV Van FWD HNZ (EB2DT) | | GCI82182 | Inner Joint | | 37 | 34 | | 290 | 88 | |
| 1.2 (96 kw) | 2017.07- | 6AT/6MT | F | L | SUV FWD HNY (EB2DTS);HNS (EB2ADTS) | | GDS84126 | Drive Shaft | | 25 | 24 | 58.5 | 79 | 644 | |
| | 2017.07- | 6AT/6MT | F | R | SUV FWD HNY (EB2DTS);HNS (EB2ADTS) | | GDS84129 | Drive Shaft | | 25 | 24 | 58.5 | 79 | 893 | |
| | 2017.07- | 6AT/6MT | F | L/R | SUV FWD HNY (EB2DTS);HNS (EB2ADTS) | | GCO82355 | Outer Joint | | 25 | 34 | 58.5 | 79 | 55.5 | I |
| | 2017.07- | 6AT/6MT | F | L | SUV FWD HNY (EB2DTS);HNS (EB2ADTS) | | GCI82181 | Inner Joint | | 24 | 34 | 40 | 52.5 | 90 | |
| | 2017.07- | 6AT/6MT | F | R | SUV FWD HNY (EB2DTS);HNS (EB2ADTS) | | GCI82323 | Inner Joint | | 24 | 34 | 29.8 | 306 | 88 | |
| 1.2 (100 kw) | 2024.10-2025.04 | 6DCT | F | R | SUV FWD HPY(EB2LTDH2) | | GDS56753 | Drive Shaft | | 25 | 37 | 55.7 | 84 | 911 | |
| | 2024.10-2025.04 | 6DCT | F | R | SUV FWD HPY(EB2LTDH2) | | GCI83474 | Inner Joint | | 37 | 34 | 29.8 | 290 | 99 | |
| 1.2 (107 kw) | 2025.04- | 6DCT | F | R | SUV FWD HPY(EB2LTDH2) | | GDS56753 | Drive Shaft | | 25 | 37 | 55.7 | 84 | 911 | |
| | 2025.04- | 6DCT | F | R | SUV FWD HPY(EB2LTDH2) | | GCI83474 | Inner Joint | | 37 | 34 | 29.8 | 290 | 99 | |
| 1.5 (73 kw) | 2018.08- | 6MT | F | L | SUV FWD YHY (DV5RD) | | GDS84007 | Drive Shaft | | 25 | 24 | 58.5 | 79 | 654 | |
| | 2018.08- | 6MT | F | R | SUV FWD YHY (DV5RD) | | GDS83947 | Drive Shaft | | 25 | 24 | 58.5 | 79 | 878 | |
| | 2018.08- | 6MT | F | L/R | SUV FWD YHY (DV5RD) | | GCO82355 | Outer Joint | | 25 | 34 | 58.5 | 79 | 55.5 | I |
| | 2018.08- | 6MT | F | L | SUV FWD YHY (DV5RD) | | GCI82131 | Inner Joint | | 24 | 34 | 40 | 62 | 89 | |
| | 2018.08- | 6MT | F | R | SUV FWD YHY (DV5RD) | | GCI82374 | Inner Joint | | 24 | 34 | 29.8 | 291 | 88 | |
| | 2019.05- | 6MT | F | L | SUV Van FWD YHY (DV5RD) | | GDS84007 | Drive Shaft | | 25 | 24 | 58.5 | 79 | 654 | |
| | 2019.05- | 6MT | F | R | SUV Van FWD YHY (DV5RD) | | GDS83947 | Drive Shaft | | 25 | 24 | 58.5 | 79 | 878 | |
| | 2019.05- | 6MT | F | L/R | SUV Van FWD YHY (DV5RD) | | GCO82355 | Outer Joint | | 25 | 34 | 58.5 | 79 | 55.5 | I |
| | 2019.05- | 6MT | F | L | SUV Van FWD YHY (DV5RD) | | GCI82131 | Inner Joint | | 24 | 34 | 40 | 62 | 89 | |
| | 2019.05- | 6MT | F | R | SUV Van FWD YHY (DV5RD) | | GCI82374 | Inner Joint | | 24 | 34 | 29.8 | 291 | 88 | |
| 1.5 (75 kw) | 2018.08- | 6MT | F | L | SUV FWD YHY (DV5RD) | | GDS84007 | Drive Shaft | | 25 | 24 | 58.5 | 79 | 654 | |
| | 2018.08- | 6MT | F | R | SUV FWD YHY (DV5RD) | | GDS83947 | Drive Shaft | | 25 | 24 | 58.5 | 79 | 878 | |
| | 2018.08- | 6MT | F | L/R | SUV FWD YHY (DV5RD) | | GCO82355 | Outer Joint | | 25 | 34 | 58.5 | 79 | 55.5 | I |
| | 2018.08- | 6MT | F | L | SUV FWD YHY (DV5RD) | | GCI82131 | Inner Joint | | 24 | 34 | 40 | 62 | 89 | |
| | 2018.08- | 6MT | F | R | SUV FWD YHY (DV5RD) | | GCI82374 | Inner Joint | | 24 | 34 | 29.8 | 291 | 88 | |
| 1.5 (81 kw) | 2020.10- | 6MT | F | L | SUV FWD YHS (DV5RCE) | | GDS84007 | Drive Shaft | | 25 | 24 | 58.5 | 79 | 654 | |
| | 2020.10- | 6MT | F | R | SUV FWD YHS (DV5RCE) | | GDS83947 | Drive Shaft | | 25 | 24 | 58.5 | 79 | 878 | |
| | 2020.10- | 6MT | F | L/R | SUV FWD YHS (DV5RCE) | | GCO82355 | Outer Joint | | 25 | 34 | 58.5 | 79 | 55.5 | I |
| | 2020.10- | 6MT | F | L | SUV FWD YHS (DV5RCE) | | GCI82131 | Inner Joint | | 24 | 34 | 40 | 62 | 89 | |
| | 2020.10- | 6MT | F | R | SUV FWD YHS (DV5RCE) | | GCI82374 | Inner Joint | | 24 | 34 | 29.8 | 291 | 88 | |
| 1.5 (88 kw) | 2018.08- | 6AT | F | L | SUV FWD YHX (DV5RC) | | GDS83614 | Drive Shaft | | 25 | 37 | 58.5 | 79 | 615 | |
| | 2018.08- | 6AT | F | R | SUV FWD YHX (DV5RC) | | GDS83615 | Drive Shaft | | 25 | 37 | 58.5 | 79 | 880 | |
| | 2018.08- | 6AT | F | L | SUV FWD YHX (DV5RC) | | GCO82355 | Outer Joint | | 25 | 34 | 58.5 | 79 | 55.5 | I |
| | 2018.08- | 6AT | F | R | SUV FWD YHX (DV5RC) | | GCO82351 | Outer Joint | | 25 | 34 | 58.5 | 79 | 55.5 | I |
| | 2018.08- | 6AT | F | L | SUV FWD YHX (DV5RC) | | GCI82119 | Inner Joint | | 37 | 34 | 41.5 | 58.5 | 94 | |
| | 2018.08- | 6AT | F | R | SUV FWD YHX (DV5RC) | | GCI82182 | Inner Joint | | 37 | 34 | | 290 | 88 | |
| | 2019.05- | 6AT | F | L | SUV Van FWD YHX (DV5RC) | | GDS83614 | Drive Shaft | | 25 | 37 | 58.5 | 79 | 615 | |
| | 2019.05- | 6AT | F | R | SUV Van FWD YHX (DV5RC) | | GDS83615 | Drive Shaft | | 25 | 37 | 58.5 | 79 | 880 | |
| | 2019.05- | 6AT | F | L | SUV Van FWD YHX (DV5RC) | | GCO82355 | Outer Joint | | 25 | 34 | 58.5 | 79 | 55.5 | I |
| | 2019.05- | 6AT | F | R | SUV Van FWD YHX (DV5RC) | | GCO82351 | Outer Joint | | 25 | 34 | 58.5 | 79 | 55.5 | I |
| | 2019.05- | 6AT | F | L | SUV Van FWD YHX (DV5RC) | | GCI82119 | Inner Joint | | 37 | 34 | 41.5 | 58.5 | 94 | |
| | 2019.05- | 6AT | F | R | SUV Van FWD YHX (DV5RC) | | GCI82182 | Inner Joint | | 37 | 34 | | 290 | 88 | |
| 1.6 (68 kw) | 2017.10- | 5MT | F | L | SUV FWD 9HP (DV6DTED);9HP (DV6D) | | GDS84007 | Drive Shaft | | 25 | 24 | 58.5 | 79 | 654 | |
| | 2017.10- | 5MT | F | R | SUV FWD 9HP (DV6DTED);9HP (DV6D) | | GDS83947 | Drive Shaft | | 25 | 24 | 58.5 | 79 | 878 | |
| | 2017.10- | 5MT | F | L/R | SUV FWD 9HP (DV6DTED);9HP (DV6D) | | GCO82355 | Outer Joint | | 25 | 34 | 58.5 | 79 | 55.5 | I |
| | 2017.10- | 5MT | F | L | SUV FWD 9HP (DV6DTED);9HP (DV6D) | | GCI82131 | Inner Joint | | 24 | 34 | 40 | 62 | 89 | |
| | 2017.10- | 5MT | F | R | SUV FWD 9HP (DV6DTED);9HP (DV6D) | | GCI82374 | Inner Joint | | 24 | 34 | 29.8 | 291 | 88 | |
| 1.6 (73 kw) | 2017.07-2018.08 | 5MT | F | L | SUV FWD BHY (DV6FD) | | GDS84007 | Drive Shaft | | 25 | 24 | 58.5 | 79 | 654 | |

| | YEAR | TRANSM. | F/R | L/R | BODY STYLE & DRIVE TYPE & ENGINE | REMARKS | G-AP Ref. | PRODUCT | ABS | Technical Specifications A | B | C | H | L | P |
|---|---|---|---|---|---|---|---|---|---|---|---|---|---|---|---|
| **CITROËN** | | | | | | | | | | | | | | | |
| **C3 Aircross** | | | | | | | | | | | | | | | |
| 1.6 (73 kw) | 2017.07-2018.08 | 5MT | F | R | SUV FWD BHY (DV6FD) | | GDS83947 | Drive Shaft | | 25 | 24 | 58.5 | 79 | 878 | |
| | 2017.07-2018.08 | 5MT | F | L/R | SUV FWD BHY (DV6FD) | | GCO82355 | Outer Joint | | 25 | 34 | 58.5 | 79 | 55.5 | I |
| | 2017.07-2018.08 | 5MT | F | L | SUV FWD BHY (DV6FD) | | GCI82131 | Inner Joint | | 24 | 34 | 40 | 62 | 89 | |
| | 2017.07-2018.08 | 5MT | F | R | SUV FWD BHY (DV6FD) | | GCI82374 | Inner Joint | | 24 | 34 | 29.8 | 291 | 88 | |
| | 2019.05- | 5MT | F | L | SUV Van FWD BHY (DV6FD) | | GDS84007 | Drive Shaft | | 25 | 24 | 58.5 | 79 | 654 | |
| | 2019.05- | 5MT | F | R | SUV Van FWD BHY (DV6FD) | | GDS83947 | Drive Shaft | | 25 | 24 | 58.5 | 79 | 878 | |
| | 2019.05- | 5MT | F | L/R | SUV Van FWD BHY (DV6FD) | | GCO82355 | Outer Joint | | 25 | 34 | 58.5 | 79 | 55.5 | I |
| | 2019.05- | 5MT | F | L | SUV Van FWD BHY (DV6FD) | | GCI82131 | Inner Joint | | 24 | 34 | 40 | 62 | 89 | |
| | 2019.05- | 5MT | F | R | SUV Van FWD BHY (DV6FD) | | GCI82374 | Inner Joint | | 24 | 34 | 29.8 | 291 | 88 | |
| 1.6 (85 kw) | 2017.06-2018.05 | 6MT | F | L | SUV FWD BHX (DV6FC) | | GDS84126 | Drive Shaft | | 25 | 24 | 58.5 | 79 | 644 | |
| | 2017.06-2018.05 | 6MT | F | R | SUV FWD BHX (DV6FC) | | GDS84129 | Drive Shaft | | 25 | 24 | 58.5 | 79 | 893 | |
| | 2017.06-2018.05 | 6MT | F | L/R | SUV FWD BHX (DV6FC) | | GCO82355 | Outer Joint | | 25 | 34 | 58.5 | 79 | 55.5 | I |
| | 2017.06-2018.05 | 6MT | F | L | SUV FWD BHX (DV6FC) | | GCI82181 | Inner Joint | | 24 | 34 | 40 | 52.5 | 90 | |
| | 2017.06-2018.05 | 6MT | F | R | SUV FWD BHX (DV6FC) | | GCI82323 | Inner Joint | | 24 | 34 | 29.8 | 306 | 88 | |
| 1.6 (88 kw) | 2017.07-2018.05 | 6MT | F | L | SUV FWD BHZ (DV6FC) | | GDS84126 | Drive Shaft | | 25 | 24 | 58.5 | 79 | 644 | |
| | 2017.07-2018.05 | 6MT | F | R | SUV FWD BHZ (DV6FC) | | GDS84129 | Drive Shaft | | 25 | 24 | 58.5 | 79 | 893 | |
| | 2017.07-2018.05 | 6MT | F | L/R | SUV FWD BHZ (DV6FC) | | GCO82355 | Outer Joint | | 25 | 34 | 58.5 | 79 | 55.5 | I |
| | 2017.07-2018.05 | 6MT | F | L | SUV FWD BHZ (DV6FC) | | GCI82181 | Inner Joint | | 24 | 34 | 40 | 52.5 | 90 | |
| | 2017.07-2018.05 | 6MT | F | R | SUV FWD BHZ (DV6FC) | | GCI82323 | Inner Joint | | 24 | 34 | 29.8 | 306 | 88 | |
| **C3 Origin** | | | | | | | | | | | | | | | |
| 1.2 (61 kw) | 2024.03- | 5MT | F | R | Hatchback FWD HMR (EB2FA) | | GDS82810 | Drive Shaft | | 21 | 22 | 48.2 | 85.5 | 865 | |
| 1.2 (81 kw) | 2024.03- | 6AT | F | L | Hatchback FWD HNP (EB2ADT) | | GDS83216 | Drive Shaft | | 25 | 37 | 58.5 | 79 | 598 | |
| | 2024.03- | 6AT | F | R | Hatchback FWD HNP (EB2ADT) | | GDS83217 | Drive Shaft | | 25 | 37 | 58.5 | 79 | 862 | |
| | 2024.03- | 6MT | F | L | Hatchback FWD HNP (EB2ADT) | | GDS10309 | Drive Shaft | | 21 | 24 | 48.3 | 86.5 | 641 | |
| | 2024.03- | 6MT | F | R | Hatchback FWD HNP (EB2ADT) | | GDS10301 | Drive Shaft | | 21 | 24 | 48.3 | 86.5 | 871 | |
| 1.5 (75 kw) | 2024.03- | 6MT | F | L | Hatchback FWD YHT(DV5RCF) | | GDS10309 | Drive Shaft | | 21 | 24 | 48.3 | 86.5 | 641 | |
| | 2024.03- | 6MT | F | R | Hatchback FWD YHT(DV5RCF) | | GDS10301 | Drive Shaft | | 21 | 24 | 48.3 | 86.5 | 871 | |
| **C3 Picasso** | | | | | | | | | | | | | | | |
| 1.2 (81 kw) | 2015.01-2017.12 | 5MT | F | L | MPV FWD HNZ (EB2DT) | | GDS83645 | Drive Shaft | | 25 | 24 | 58.5 | 79 | 638 | |
| | 2015.01-2017.12 | 5MT | F | R | MPV FWD HNZ (EB2DT) | | GDS83806 | Drive Shaft | | 25 | 24 | 58.5 | 79 | 867 | |
| | 2015.01-2017.12 | 5MT | F | L/R | MPV FWD HNZ (EB2DT) | | GCO82355 | Outer Joint | | 25 | 34 | 58.5 | 79 | 55.5 | I |
| | 2015.01-2017.12 | 5MT | F | L | MPV FWD HNZ (EB2DT) | | GCI82131 | Inner Joint | | 24 | 34 | 40 | 62 | 89 | |
| | 2015.01-2017.12 | 5MT | F | R | MPV FWD HNZ (EB2DT) | | GCI82374 | Inner Joint | | 24 | 34 | 29.8 | 291 | 88 | |
| 1.4 (70 kw) | 2008.12-2015.12 | 5MT | F | L | MPV FWD 8FS (EP3);8FP (EP3C) | Transm.code:77,For Engine code:EP3C;Inner teeth of wheel side:22 | GDS10415 | Drive Shaft | | 25 | 24 | 58.5 | 78.5 | 637 | |
| | 2008.12-2015.12 | 5MT | F | R | MPV FWD 8FS (EP3);8FP (EP3C) | Inner teeth of wheel side:22 | GDS10413 | Drive Shaft | | 25 | 24 | 58.5 | 78.5 | 860 | |
| | 2008.12-2015.12 | 5MT | F | L/R | MPV FWD 8FS (EP3);8FP (EP3C) | For Engine code:EP3C,Transm.code:77,For Engine code:EP3 | GCO10156 | Outer Joint | | 25 | 22 | 58.5 | 78.5 | 55 | I |
| | 2008.12-2015.12 | 5MT | F | L | MPV FWD 8FS (EP3);8FP (EP3C) | Transm.code:77,For Engine code:EP3C | GCI10143 | Inner Joint | | 24 | 22 | 40 | 69 | 101 | |
| | 2008.12-2015.12 | 5MT | F | R | MPV FWD 8FS (EP3);8FP (EP3C) | | GCI10144 | Inner Joint | | 24 | 22 | 29.82 | 291 | 101 | |
| | 2008.12-2015.12 | MT | F | L | MPV FWD 8FS (EP3);8FP (EP3C) | Date from:2014.11;For Engine code:EP3C;Inner teeth of wheel side:34 | GDS10250 | Drive Shaft | | 25 | 24 | 58.5 | 79 | 630 | |
| | 2008.12-2015.12 | MT | F | L | MPV FWD 8FS (EP3);8FP (EP3C) | Trans. code:MC;Inner teeth of wheel side:34 | GDS10253 | Drive Shaft | | 25 | 24 | 58.5 | 79 | 626 | |
| | 2008.12-2015.12 | MT | F | R | MPV FWD 8FS (EP3);8FP (EP3C) | Date from:2014.11;For Engine code:EP3C;Inner teeth of wheel side:34 | GDS10249 | Drive Shaft | | 25 | 24 | 58.5 | 79 | 864 | |
| | 2008.12-2015.12 | MT | F | L/R | MPV FWD 8FS (EP3);8FP (EP3C) | | GCO10025 | Outer Joint | | 25 | 22 | 60 | 80 | 54 | I |
| | 2008.12-2015.12 | MT | F | L | MPV FWD 8FS (EP3);8FP (EP3C) | Date from:2014.11;For Engine code:EP3C | GCI10070 | Inner Joint | | 24 | 34 | 40 | 62 | 88 | |
| | 2008.12-2015.12 | MT | F | R | MPV FWD 8FS (EP3);8FP (EP3C) | Date from:2014.11;For Engine code:EP3C | GCI10082 | Inner Joint | | 24 | 34 | 29.8 | 291 | 88 | |
| | 2008.12-2015.12 | | F | L/R | MPV FWD 8FS (EP3);8FP (EP3C) | | GCO10042 | Outer Joint | | 25 | 34 | 54.8 | 78.5 | 56 | I |
| | 2010.09-2015.11 | 5MT | F | L | MPV FWD 8FN (EP3) | Date to:2011.06 | GDS10340 | Drive Shaft | | 21 | 22 | 49 | 86 | 655 | |
| | 2010.09-2015.11 | 5MT | F | L | MPV FWD 8FN (EP3) | Wheel Hub Diam:77mm | GDS10415 | Drive Shaft | | 25 | 24 | 58.5 | 78.5 | 637 | |
| | 2010.09-2015.11 | 5MT | F | L | MPV FWD 8FN (EP3) | | GCO10151 | Outer Joint | | 21 | 28 | 49 | 86 | 49 | I |
| | 2010.09-2015.11 | 5MT | F | L/R | MPV FWD 8FN (EP3) | | GCO10025 | Outer Joint | | 25 | 22 | 60 | 80 | 54 | I |
| | 2010.09-2015.11 | 5MT | F | L/R | MPV FWD 8FN (EP3) | | GCO10042 | Outer Joint | | 25 | 34 | 54.8 | 78.5 | 56 | I |
| | 2010.09-2015.11 | 5MT | F | L | MPV FWD 8FN (EP3) | | GCI10143 | Inner Joint | | 24 | 22 | 40 | 69 | 101 | |
| | 2010.09-2015.11 | MT | F | L | MPV FWD 8FN (EP3) | Trans. code:MC | GDS10253 | Drive Shaft | | 25 | 24 | 58.5 | 79 | 626 | |
| | 2010.09-2015.11 | MT | F | R | MPV FWD 8FN (EP3) | Date from:2012.09;Trans. code:BE4R | GDS10249 | Drive Shaft | | 25 | 24 | 58.5 | 79 | 864 | |
| | 2010.09-2015.11 | MT | F | R | MPV FWD 8FN (EP3) | Date to:2012.09;Trans. code:BE4R | GDS10413 | Drive Shaft | | 25 | 24 | 58.5 | 78.5 | 860 | |
| | 2010.09-2015.11 | | F | L | MPV FWD 8FN (EP3) | | GDS10250 | Drive Shaft | | 25 | 24 | 58.5 | 79 | 630 | |
| | 2010.09-2015.11 | | F | R | MPV FWD 8FN (EP3) | Type:LPG | GDS10339 | Drive Shaft | | 21 | 22 | 49 | 86 | 868 | |
| 1.6 (66 kw) | 2009.02-2015.03 | 5MT | F | L | MPV FWD 9HX (DV6ATED4) | round | GDS10250 | Drive Shaft | | 25 | 24 | 58.5 | 79 | 630 | |
| | 2009.02-2015.03 | 5MT | F | R | MPV FWD 9HX (DV6ATED4) | | GDS10249 | Drive Shaft | | 25 | 24 | 58.5 | 79 | 864 | |
| | 2009.02-2015.03 | 5MT | F | L/R | MPV FWD 9HX (DV6ATED4) | | GCO99366 | Outer Joint | | 25 | 34 | 58.5 | 79 | 55 | I |
| | 2009.02-2015.03 | 5MT | F | L | MPV FWD 9HX (DV6ATED4) | | GCI10070 | Inner Joint | | 24 | 34 | 40 | 62 | 88 | |
| | 2009.02-2015.03 | 5MT | F | R | MPV FWD 9HX (DV6ATED4) | | GCI10082 | Inner Joint | | 24 | 34 | 29.8 | 291 | 88 | |
| | 2009.02-2015.03 | MT | F | L | MPV FWD 9HX (DV6ATED4) | Trans. code:MC;angular | GDS10253 | Drive Shaft | | 25 | 24 | 58.5 | 79 | 626 | |
| 1.6 (68 kw) | 2010.07-2015.03 | 5MT | F | R | MPV FWD 9HP (DV6DTED) | | GDS10249 | Drive Shaft | | 25 | 24 | 58.5 | 79 | 864 | |
| | 2010.07-2015.03 | 6AMT | F | L | MPV FWD 9HP (DV6DTED) | | GDS10253 | Drive Shaft | | 25 | 24 | 58.5 | 79 | 626 | |
| | 2010.07-2015.03 | 6AMT | F | R | MPV FWD 9HP (DV6DTED) | | GDS45221 | Drive Shaft | | 25 | 24 | 58.5 | 79 | 881 | |

| | YEAR | TRANSM. | F/R | L/R | BODY STYLE & DRIVE TYPE & ENGINE | REMARKS | G-AP Ref. | PRODUCT | ABS | Technical Specifications A | B | C | H | L | P |
|---|---|---|---|---|---|---|---|---|---|---|---|---|---|---|---|
| **CITROËN** | | | | | | | | | | | | | | | |
| **C3 Picasso** | | | | | | | | | | | | | | | |
| 1.6 (68 kw) | 2010.07-2015.03 | 6AT/5MT/6MT | F | L | MPV FWD 9HP (DV6DTED) | | GDS10250 | Drive Shaft | | 25 | 24 | 58.5 | 79 | 630 | |
| | 2010.07-2015.03 | 6AT/5MT/6MT | F | L/R | MPV FWD 9HP (DV6DTED) | | GCO10067 | Outer Joint | 48W | 25 | 34 | 58.5 | 79 | 55 | I |
| | 2010.07-2015.03 | 6AT/5MT/6MT | F | L/R | MPV FWD 9HP (DV6DTED) | | GCO99366 | Outer Joint | | 25 | 34 | 58.5 | 79 | 55 | I |
| | 2010.07-2015.03 | 6AT/5MT/6MT | F | L | MPV FWD 9HP (DV6DTED) | | GCI10070 | Inner Joint | | 24 | 34 | 40 | 62 | 88 | |
| | 2010.07-2015.03 | 6AT/5MT/6MT | F | R | MPV FWD 9HP (DV6DTED) | | GCI10082 | Inner Joint | | 24 | 34 | 29.8 | 291 | 88 | |
| | 2010.07-2015.03 | MT | F | L | MPV FWD 9HP (DV6DTED) | | GCO10148 | Outer Joint | | 25 | 34 | 58.5 | 79 | 55.5 | I |
| | 2010.07-2015.03 | MT | F | L | MPV FWD 9HP (DV6DTED) | | GCI10057 | Inner Joint | | 24 | 34 | 40 | 52.5 | 90 | |
| 1.6 (73 kw) | 2015.01-2017.08 | 5MT | F | L | MPV FWD BHY (DV6FD) | | GDS10250 | Drive Shaft | | 25 | 24 | 58.5 | 79 | 630 | |
| | 2015.01-2017.08 | 5MT | F | R | MPV FWD BHY (DV6FD) | | GDS10249 | Drive Shaft | | 25 | 24 | 58.5 | 79 | 864 | |
| | 2015.01-2017.08 | 5MT | F | L/R | MPV FWD BHY (DV6FD) | | GCO99366 | Outer Joint | | 25 | 34 | 58.5 | 79 | 55 | I |
| | 2015.01-2017.08 | 5MT | F | L | MPV FWD BHY (DV6FD) | | GCI10070 | Inner Joint | | 24 | 34 | 40 | 62 | 88 | |
| | 2015.01-2017.08 | 5MT | F | R | MPV FWD BHY (DV6FD) | | GCI10082 | Inner Joint | | 24 | 34 | 29.8 | 291 | 88 | |
| 1.6 (80 kw) | 2009.02-2010.12 | 5MT | F | R | MPV FWD 9HZ (DV6TED4) | | GDS10249 | Drive Shaft | | 25 | 24 | 58.5 | 79 | 864 | |
| | 2009.02-2010.12 | 5MT | F | R | MPV FWD 9HZ (DV6TED4) | | GCI10082 | Inner Joint | | 24 | 34 | 29.8 | 291 | 88 | |
| | 2009.02-2010.12 | MT | F | L | MPV FWD 9HZ (DV6TED4) | Date from:2010.10;Date to:2009.10,Trans. code:BE4R | GDS10250 | Drive Shaft | | 25 | 24 | 58.5 | 79 | 630 | |
| | 2009.02-2010.12 | MT | F | L | MPV FWD 9HZ (DV6TED4) | Trans. code:MC | GDS10253 | Drive Shaft | | 25 | 24 | 58.5 | 79 | 626 | |
| | 2009.02-2010.12 | | F | L/R | MPV FWD 9HZ (DV6TED4) | | GCO10042 | Outer Joint | | 25 | 34 | 54.8 | 78.5 | 56 | I |
| 1.6 (82 kw) | 2010.05-2013.02 | 6MT | F | L | MPV FWD 9HR (DV6C) | | GDS10253 | Drive Shaft | | 25 | 24 | 58.5 | 79 | 626 | |
| | 2010.05-2013.02 | 6MT | F | R | MPV FWD 9HR (DV6C) | | GDS45221 | Drive Shaft | | 25 | 24 | 58.5 | 79 | 881 | |
| | 2010.05-2013.02 | 6MT | F | R | MPV FWD 9HR (DV6C) | | GCI10165 | Inner Joint | | 24 | 34 | 29.8 | 305.5 | 87.5 | |
| | 2010.05-2013.02 | MT | F | L | MPV FWD 9HR (DV6C) | | GCO99366 | Outer Joint | | 25 | 34 | 58.5 | 79 | 55 | I |
| | 2010.05-2013.02 | | F | L | MPV FWD 9HR (DV6C) | Date From:2010.09 | GCO10148 | Outer Joint | | 25 | 34 | 58.5 | 79 | 55.5 | I |
| | 2010.05-2013.02 | | F | L/R | MPV FWD 9HR (DV6C) | | GCO10042 | Outer Joint | | 25 | 34 | 54.8 | 78.5 | 56 | I |
| | 2010.05-2013.02 | | F | L | MPV FWD 9HR (DV6C) | Date From:2010.09 | GCI10057 | Inner Joint | | 24 | 34 | 40 | 52.5 | 90 | |
| 1.6 (84 kw) | 2009.07-2015.12 | 6AT/5MT | F | L | MPV FWD 5FP (EP6) | Transm.code:77 | GDS10415 | Drive Shaft | | 25 | 24 | 58.5 | 78.5 | 637 | |
| | 2009.07-2015.12 | 6AT/5MT | F | R | MPV FWD 5FP (EP6) | | GDS10413 | Drive Shaft | | 25 | 24 | 58.5 | 78.5 | 860 | |
| | 2009.07-2015.12 | 6AT/5MT | F | L/R | MPV FWD 5FP (EP6) | Transm.code:77 | GCO10156 | Outer Joint | | 25 | 22 | 58.5 | 78.5 | 55 | I |
| | 2009.07-2015.12 | 6AT/5MT | F | L | MPV FWD 5FP (EP6) | Transm.code:77 | GCI10143 | Inner Joint | | 24 | 22 | 40 | 69 | 101 | |
| | 2009.07-2015.12 | 6AT/5MT | F | R | MPV FWD 5FP (EP6) | | GCI10144 | Inner Joint | | 24 | 22 | 29.82 | 291 | 101 | |
| | 2009.07-2015.12 | AT/MT | F | L/R | MPV FWD 5FP (EP6) | Date from:2010.01 | GCO10025 | Outer Joint | | 25 | 22 | 60 | 80 | 54 | I |
| | 2009.07-2015.12 | MT | F | L | MPV FWD 5FP (EP6) | Date from:2010.01;Trans. code:MC | GDS10253 | Drive Shaft | | 25 | 24 | 58.5 | 79 | 626 | |
| | 2009.07-2015.12 | | F | L | MPV FWD 5FP (EP6) | | GDS10250 | Drive Shaft | | 25 | 24 | 58.5 | 79 | 630 | |
| | 2013.01-2015.03 | MT | F | L | MPV FWD 9HD (DV6C) | | GDS10253 | Drive Shaft | | 25 | 24 | 58.5 | 79 | 626 | |
| | 2013.01-2015.03 | MT | F | R | MPV FWD 9HD (DV6C) | | GDS45221 | Drive Shaft | | 25 | 24 | 58.5 | 79 | 881 | |
| | 2013.01-2015.03 | MT | F | L | MPV FWD 9HD (DV6C) | | GCO10148 | Outer Joint | | 25 | 34 | 58.5 | 79 | 55.5 | I |
| | 2013.01-2015.03 | MT | F | L | MPV FWD 9HD (DV6C) | | GCI10057 | Inner Joint | | 24 | 34 | 40 | 52.5 | 90 | |
| | 2013.01-2015.03 | MT | F | R | MPV FWD 9HD (DV6C) | | GCI10165 | Inner Joint | | 24 | 34 | 29.8 | 305.5 | 87.5 | |
| | 2013.01-2015.03 | | F | L | MPV FWD 9HD (DV6C) | | GCO99366 | Outer Joint | | 25 | 34 | 58.5 | 79 | 55 | I |
| | 2013.01-2015.03 | | F | L/R | MPV FWD 9HD (DV6C) | | GCO10042 | Outer Joint | | 25 | 34 | 54.8 | 78.5 | 56 | I |
| 1.6 (88 kw) | 2009.02-2015.07 | 5MT | F | R | MPV FWD 5FW (EP6);5FS (EP6C) | Date from:2014.11;For Engine code:EP6C | GDS10249 | Drive Shaft | | 25 | 24 | 58.5 | 79 | 864 | |
| | 2009.02-2015.07 | 5MT | F | R | MPV FWD 5FW (EP6);5FS (EP6C) | For Engine code:EP6;Date from:2012.08;For Engine code:EP6C | GDS10413 | Drive Shaft | | 25 | 24 | 58.5 | 78.5 | 860 | |
| | 2009.02-2015.07 | 5MT | F | R | MPV FWD 5FW (EP6);5FS (EP6C) | For Engine code:EP6;Date from:2012.08;For Engine code:EP6C | GCI10144 | Inner Joint | | 24 | 22 | 29.82 | 291 | 101 | |
| | 2009.02-2015.07 | 5MT/6AMT | F | R | MPV FWD 5FW (EP6);5FS (EP6C) | | GDS45221 | Drive Shaft | | 25 | 24 | 58.5 | 79 | 881 | |
| | 2009.02-2015.07 | 6AMT | F | L | MPV FWD 5FW (EP6);5FS (EP6C) | | GDS10253 | Drive Shaft | | 25 | 24 | 58.5 | 79 | 626 | |
| | 2009.02-2015.07 | 6AT/5MT/6MT | F | L | MPV FWD 5FW (EP6);5FS (EP6C) | Transm.code:77,For Engine Code:EP6 | GDS10415 | Drive Shaft | | 25 | 24 | 58.5 | 78.5 | 637 | |
| | 2009.02-2015.07 | 6AT/5MT/6MT | F | L/R | MPV FWD 5FW (EP6);5FS (EP6C) | For Engine Code:EP6,Transm.code:77 | GCO10156 | Outer Joint | | 25 | 22 | 58.5 | 78.5 | 55 | I |
| | 2009.02-2015.07 | 6AT/5MT/6MT | F | L | MPV FWD 5FW (EP6);5FS (EP6C) | Transm.code:77,For Engine Code:EP6 | GCI10143 | Inner Joint | | 24 | 22 | 40 | 69 | 101 | |
| | 2009.02-2015.07 | AT | F | L | MPV FWD 5FW (EP6);5FS (EP6C) | Trans. code:AL4 | GDS10286 | Drive Shaft | | 25 | 26 | 58.5 | 79 | 613 | |
| | 2009.02-2015.07 | AT | F | L | MPV FWD 5FW (EP6);5FS (EP6C) | Trans. code:AL4 | GCI99001 | Inner Joint | | 26 | 34 | 30.2 | 46.5 | 103.5 | |
| | 2009.02-2015.07 | AT/MT | F | L/R | MPV FWD 5FW (EP6);5FS (EP6C) | | GCO10025 | Outer Joint | | 25 | 22 | 60 | 80 | 54 | I |
| | 2009.02-2015.07 | MT | F | L | MPV FWD 5FW (EP6);5FS (EP6C) | Date from:2014.11;For Engine code:EP6C | GDS10250 | Drive Shaft | | 25 | 24 | 58.5 | 79 | 630 | |
| | 2009.02-2015.07 | | F | L/R | MPV FWD 5FW (EP6);5FS (EP6C) | | GCO10042 | Outer Joint | | 25 | 34 | 54.8 | 78.5 | 56 | I |
| **C3 Pluriel** | | | | | | | | | | | | | | | |
| 1.4 (50 kw) | 2004.04- | 5MT | F | L | Convertible FWD 8HX (DV4TD);8HZ (DV4TD) | | GDS10001 | Drive Shaft | | 21 | 22 | 48 | 86.5 | 636 | |
| | 2004.04- | 5MT | F | L | Convertible FWD 8HX (DV4TD);8HZ (DV4TD) | | GCO45057 | Outer Joint | | 21 | 22 | 48 | 86.5 | 54 | I |
| | 2004.04- | 5MT | F | L | Convertible FWD 8HX (DV4TD);8HZ (DV4TD) | | GCI10098 | Inner Joint | | 22 | 21 | 40 | 60 | 88 | |
| | 2004.04- | MT | F | L | Convertible FWD 8HX (DV4TD);8HZ (DV4TD) | Trans. code:MA;Inner teeth of wheel side:21 | GDS10125 | Drive Shaft | | 21 | 22 | 48 | 86.5 | 649 | |
| | 2004.04- | MT | F | R | Convertible FWD 8HX (DV4TD);8HZ (DV4TD) | Trans. code:MA | GDS10002 | Drive Shaft | | 21 | 22 | 48 | 86.5 | 852 | |
| | 2004.04- | MT | F | L/R | Convertible FWD 8HX (DV4TD);8HZ (DV4TD) | | GCO10069 | Outer Joint | | 21 | 21 | 48 | 86.5 | 54 | I |
| | 2004.04- | | F | R | Convertible FWD 8HX (DV4TD);8HZ (DV4TD) | Date To:2011.12;Trans. code:MA | GCO45065 | Outer Joint | | 21 | 21 | 48.5 | 86 | 54 | I |
| 1.4 (54 kw) | 2003.05- | AT | F | L | Convertible FWD KFV (TU3JP);KFV (TU3A) | Date to:2011.12,Trans. code:AL4 | GDS10181 | Drive Shaft | | 21 | 26 | 48.5 | 86 | 618 | |
| | 2003.05- | AT | F | R | Convertible FWD KFV (TU3JP);KFV (TU3A) | Date to:2011.12,Trans. code:AL4 | GDS10206 | Drive Shaft | | 21 | 26 | 48.5 | 86 | 754 | |
| | 2003.05- | AT/MT | F | R | Convertible FWD KFV (TU3JP);KFV (TU3A) | Date to:2011.12,Trans. code:MA,Trans. code:AL4 | GCO45065 | Outer Joint | | 21 | 21 | 48.5 | 86 | 54 | I |
| | 2003.05- | AT/MT | F | L/R | Convertible FWD KFV (TU3JP);KFV (TU3A) | | GCO10069 | Outer Joint | | 21 | 21 | 48 | 86.5 | 54 | I |
| | 2003.05- | MT | F | R | Convertible FWD KFV (TU3JP);KFV (TU3A) | Date to:2004.06,Trans. code:MA | GDS10124 | Drive Shaft | | 21 | 22 | 48 | 86.5 | 840 | |

| | YEAR | TRANSM. | F/R | L/R | BODY STYLE & DRIVE TYPE & ENGINE | REMARKS | G-AP Ref. | PRODUCT | ABS | Technical Specifications A | B | C | H | L | P |
|---|---|---|---|---|---|---|---|---|---|---|---|---|---|---|---|
| **CITROËN** | | | | | | | | | | | | | | | |
| **C3 Pluriel** | | | | | | | | | | | | | | | |
| 1.4 (54 kw) | 2003.05- | SAT/5MT | F | L | Convertible FWD KFV (TU3JP);KFV (TU3A) | | GDS10001 | Drive Shaft | | 21 | 22 | 48 | 86.5 | 636 | |
| | 2003.05- | SAT/5MT | F | R | Convertible FWD KFV (TU3JP);KFV (TU3A) | | GDS10242 | Drive Shaft | | 21 | 22 | 48 | 86.5 | 844 | |
| | 2003.05- | SAT/5MT | F | L/R | Convertible FWD KFV (TU3JP);KFV (TU3A) | | GCO45057 | Outer Joint | | 21 | 22 | 48 | 86.5 | 54 | I |
| | 2003.05- | SAT/5MT | F | L | Convertible FWD KFV (TU3JP);KFV (TU3A) | | GCI10098 | Inner Joint | | 22 | 21 | 40 | 60 | 88 | |
| | 2003.05- | | F | L | Convertible FWD KFV (TU3JP);KFV (TU3A) | | GCO10077 | Outer Joint | | 21 | 28 | 49 | 86 | 56.5 | O |
| | 2003.05- | | F | | Convertible FWD KFV (TU3JP);KFV (TU3A) | | GCO10053 | Outer Joint | | 21 | 20 | 49 | 86 | 51 | M |
| 1.4 (55 kw) | 2003.07- | 5MT | F | L | Convertible FWD KFV (TU3A) | | GDS10001 | Drive Shaft | | 21 | 22 | 48 | 86.5 | 636 | |
| | 2003.07- | 5MT | F | R | Convertible FWD KFV (TU3A) | | GDS10242 | Drive Shaft | | 21 | 22 | 48 | 86.5 | 844 | |
| | 2003.07- | 5MT | F | L/R | Convertible FWD KFV (TU3A) | | GCO45057 | Outer Joint | | 21 | 22 | 48 | 86.5 | 54 | I |
| | 2003.07- | 5MT | F | L | Convertible FWD KFV (TU3A) | | GCI10098 | Inner Joint | | 22 | 21 | 40 | 60 | 88 | |
| | 2003.07- | AT | F | L | Convertible FWD KFV (TU3A) | Date to:2011.12;Trans. code:AL4 | GDS10181 | Drive Shaft | | 21 | 26 | 48.5 | 86 | 618 | |
| | 2003.07- | AT | F | R | Convertible FWD KFV (TU3A) | Date to:2011.12;Trans. code:AL4 | GDS10206 | Drive Shaft | | 21 | 26 | 48.5 | 86 | 754 | |
| | 2003.07- | AT/MT | F | L | Convertible FWD KFV (TU3A) | Date to:2011.12;Trans. code:MA;Trans. code:AL4 | GCO10026 | Outer Joint | | 21 | 21 | 48 | 86.5 | 54 | I |
| | 2003.07- | AT/MT | F | R | Convertible FWD KFV (TU3A) | Date to:2011.12;Trans. code:MA;Trans. code:AL4 | GCO45065 | Outer Joint | | 21 | 21 | 48.5 | 86 | 54 | I |
| | 2003.07- | MT | F | R | Convertible FWD KFV (TU3A) | Date to:2004.06;Trans. code:MA | GDS10124 | Drive Shaft | | 21 | 22 | 48 | 86.5 | 840 | |
| | 2003.07- | | F | L | Convertible FWD KFV (TU3A) | | GCO10077 | Outer Joint | | 21 | 28 | 49 | 86 | 56.5 | O |
| 1.6 (80 kw) | 2003.05- | MT | F | L/R | Convertible FWD NFU (TU5JP4) | | GCO10077 | Outer Joint | | 21 | 28 | 49 | 86 | 56.5 | O |
| | 2003.05- | SAT/5MT | F | L | Convertible FWD NFU (TU5JP4) | | GDS10001 | Drive Shaft | | 21 | 22 | 48 | 86.5 | 636 | |
| | 2003.05- | SAT/5MT | F | R | Convertible FWD NFU (TU5JP4) | | GDS10242 | Drive Shaft | | 21 | 22 | 48 | 86.5 | 844 | |
| | 2003.05- | SAT/5MT | F | L | Convertible FWD NFU (TU5JP4) | | GCO45057 | Outer Joint | | 21 | 22 | 48 | 86.5 | 54 | I |
| | 2003.05- | SAT/5MT | F | L | Convertible FWD NFU (TU5JP4) | | GCI10098 | Inner Joint | | 22 | 21 | 40 | 60 | 88 | |
| | 2003.05- | | F | L/R | Convertible FWD NFU (TU5JP4) | | GCO10069 | Outer Joint | | 21 | 21 | 48 | 86.5 | 54 | I |
| **C4** | | | | | | | | | | | | | | | |
| 1.2 (74 kw) | 2021.04- | 6MT | F | L | Hatchback FWD HNE (EB2ADTD);HNK (EB2ADTD) | | GDS84174 | Drive Shaft | | 25 | 24 | 55.7 | 84 | 685 | |
| | 2021.04- | 6MT | F | R | Hatchback FWD HNE (EB2ADTD);HNK (EB2ADTD) | | GDS84335 | Drive Shaft | | 25 | 24 | 55.7 | 84 | 910 | |
| | 2021.04- | 6MT | F | L/R | Hatchback FWD HNE (EB2ADTD);HNK (EB2ADTD) | | GCO82279 | Outer Joint | | 25 | 34 | 55.7 | 84 | 55.5 | I |
| | 2021.04- | 6MT | F | L | Hatchback FWD HNE (EB2ADTD);HNK (EB2ADTD) | | GCI82131 | Inner Joint | | 24 | 34 | 40 | 62 | 89 | |
| | 2021.04- | 6MT | F | R | Hatchback FWD HNE (EB2ADTD);HNK (EB2ADTD) | | GCI82130 | Inner Joint | | 24 | 34 | 29.8 | 291 | 88 | |
| | 2024.04- | 6DCT | F | R | Hatchback FWD HPX (EB2LTEDH2) | | GDS56753 | Drive Shaft | | 25 | 37 | 55.7 | 84 | 911 | |
| | 2024.04- | | F | R | Hatchback FWD HPX (EB2LTEDH2) | | GCI83474 | Inner Joint | | 37 | 34 | 29.8 | 290 | 99 | |
| 1.2 (81 kw) | 2015.02-2017.12 | 5MT | F | L | Hatchback FWD HNZ (EB2DT);HNV (EB2DTM) | | GDS83645 | Drive Shaft | | 25 | 24 | 58.5 | 79 | 638 | |
| | 2015.02-2017.12 | 5MT | F | L | Hatchback FWD HNZ (EB2DT);HNV (EB2DTM) | | GCO82355 | Outer Joint | | 25 | 34 | 58.5 | 79 | 55.5 | I |
| | 2015.02-2017.12 | 5MT | F | L | Hatchback FWD HNZ (EB2DT);HNV (EB2DTM) | | GCI82131 | Inner Joint | | 24 | 34 | 40 | 62 | 89 | |
| | 2015.02-2017.12 | MT | F | L | Hatchback FWD HNZ (EB2DT);HNV (EB2DTM) | | GDS10250 | Drive Shaft | | 25 | 24 | 58.5 | 79 | 630 | |
| | 2015.02-2017.12 | MT | F | L/R | Hatchback FWD HNZ (EB2DT);HNV (EB2DTM) | | GCO99366 | Outer Joint | | 25 | 34 | 58.5 | 79 | 55 | I |
| | 2015.02-2017.12 | MT | F | L | Hatchback FWD HNZ (EB2DT);HNV (EB2DTM) | | GCI10070 | Inner Joint | | 24 | 34 | 40 | 62 | 88 | |
| | 2015.02-2017.12 | MT | F | R | Hatchback FWD HNZ (EB2DT);HNV (EB2DTM) | | GCI99159 | Inner Joint | | 24 | 34 | 29.8 | 350 | 87.5 | |
| 1.2 (96 kw) | 2014.04-2017.12 | 6MT | F | L | Hatchback FWD HNY (EB2DTS) | | GDS10253 | Drive Shaft | | 25 | 24 | 58.5 | 79 | 626 | |
| | 2020.10- | 6MT | F | L | Hatchback FWD HNS (EB2ADTS) | | GDS84174 | Drive Shaft | | 25 | 24 | 55.7 | 84 | 685 | |
| | 2020.10- | 6MT | F | R | Hatchback FWD HNS (EB2ADTS) | | GDS84335 | Drive Shaft | | 25 | 24 | 55.7 | 84 | 910 | |
| | 2020.10- | 6MT | F | L/R | Hatchback FWD HNS (EB2ADTS) | | GCO82279 | Outer Joint | | 25 | 34 | 55.7 | 84 | 55.5 | I |
| | 2020.10- | 6MT | F | L | Hatchback FWD HNS (EB2ADTS) | | GCI82131 | Inner Joint | | 24 | 34 | 40 | 62 | 89 | |
| | 2020.10- | 6MT | F | R | Hatchback FWD HNS (EB2ADTS) | | GCI82130 | Inner Joint | | 24 | 34 | 29.8 | 291 | 88 | |
| | 2020.10- | 8AT | F | L | Hatchback FWD HNS (EB2ADTS) | | GDS56654 | Drive Shaft | | 25 | 37 | 56 | 83.5 | 642 | |
| | 2020.10- | 8AT | F | R | Hatchback FWD HNS (EB2ADTS) | | GDS84423 | Drive Shaft | | 25 | 37 | 56 | 83.5 | 903 | |
| | 2020.10- | 8AT | F | L/R | Hatchback FWD HNS (EB2ADTS) | | GCO82810 | Outer Joint | | 25 | 25 | 56 | 83.5 | 56 | I |
| | 2020.10- | 8AT | F | L | Hatchback FWD HNS (EB2ADTS) | | GCI83423 | Inner Joint | | 37 | 26 | 42 | 59 | 103 | |
| | 2020.10- | 8AT | F | R | Hatchback FWD HNS (EB2ADTS) | | GCI82748 | Inner Joint | | 37 | 26 | 29.85 | 285 | 104 | |
| 1.2 (100 kw) | 2024.02- | 8AT | F | R | Hatchback FWD HPY (EB2LTDH2) | | GDS56753 | Drive Shaft | | 25 | 37 | 55.7 | 84 | 911 | |
| | 2024.02- | 8AT | F | R | Hatchback FWD HPY (EB2LTDH2) | | GCO82279 | Outer Joint | | 25 | 34 | 55.7 | 84 | 55.5 | I |
| | 2024.02- | 8AT | F | R | Hatchback FWD HPY (EB2LTDH2) | | GCI83474 | Inner Joint | | 37 | 34 | 29.8 | 290 | 99 | |
| 1.2 (107 kw) | 2025.04- | 6DCT | F | R | Hatchback FWD | | GDS56753 | Drive Shaft | | 25 | 37 | 55.7 | 84 | 911 | |
| | 2025.04- | | F | R | Hatchback FWD | | GCI83474 | Inner Joint | | 37 | 34 | 29.8 | 290 | 99 | |
| 1.2 (114 kw) | 2021.01- | 8AT | F | L | Hatchback FWD HNN (EB2ADTX);HNJ (EB2ADTXM) | | GDS56654 | Drive Shaft | | 25 | 37 | 56 | 83.5 | 642 | |
| | 2021.01- | 8AT | F | R | Hatchback FWD HNN (EB2ADTX);HNJ (EB2ADTXM) | | GDS84423 | Drive Shaft | | 25 | 37 | 56 | 83.5 | 903 | |
| | 2021.01- | 8AT | F | L/R | Hatchback FWD HNN (EB2ADTX);HNJ (EB2ADTXM) | | GCO82810 | Outer Joint | | 25 | 25 | 56 | 83.5 | 56 | I |
| | 2021.01- | 8AT | F | L | Hatchback FWD HNN (EB2ADTX);HNJ (EB2ADTXM) | | GCI83423 | Inner Joint | | 37 | 26 | 42 | 59 | 103 | |
| | 2021.01- | 8AT | F | R | Hatchback FWD HNN (EB2ADTX);HNJ (EB2ADTXM) | | GCI82748 | Inner Joint | | 37 | 26 | 29.85 | 285 | 104 | |
| 1.4 (65 kw) | 2004.11-2011.07 | AT | F | L | Coupe FWD KFU (ET3J4) | | GCI10057 | Inner Joint | | 24 | 34 | 40 | 52.5 | 90 | |
| | 2004.11-2011.07 | AT | F | R | Coupe FWD KFU (ET3J4) | | GCI10058 | Inner Joint | | 24 | 34 | 29.8 | 365 | 88 | |
| | 2004.11-2011.07 | MT | F | L | Coupe FWD KFU (ET3J4) | | GDS45119 | Drive Shaft | | 25 | 22 | 58.5 | 79.5 | 633 | |
| | 2004.11-2011.07 | MT | F | R | Coupe FWD KFU (ET3J4) | Trans. code:BE | GDS45104 | Drive Shaft | | 25 | 24 | 58 | 79 | 925 | |
| | 2004.11-2011.07 | MT | F | R | Coupe FWD KFU (ET3J4) | | GDS45113 | Drive Shaft | | 25 | 22 | 58.5 | 79.5 | 915 | |
| | 2004.11-2011.07 | MT | F | L/R | Coupe FWD KFU (ET3J4) | Date to:2007.06;To ORG/OPR:11192 | GCO10025 | Outer Joint | | 25 | 22 | 60 | 80 | 54 | I |
| | 2004.11-2011.07 | MT | F | L/R | Coupe FWD KFU (ET3J4) | Trans. code:MA | GCO10097 | Outer Joint | | 25 | 30 | 58.5 | 79.5 | 55 | I |

| | YEAR | TRANSM. | F/R | L/R | BODY STYLE & DRIVE TYPE & ENGINE | REMARKS | G-AP Ref. | PRODUCT | ABS | Technical Specifications A | B | C | H | L | P |
|---|---|---|---|---|---|---|---|---|---|---|---|---|---|---|---|
| **CITROËN** | | | | | | | | | | | | | | | |
| **C4** | | | | | | | | | | | | | | | |
| 1.4 (65 kw) | 2004.11-2011.07 | 5MT | F | L | Hatchback FWD KFU (ET3J4) | | GDS45119 | Drive Shaft | | 25 | 22 | 58.5 | 79.5 | 633 | |
| | 2004.11-2011.07 | AT | F | L | Hatchback FWD KFU (ET3J4) | | GCI10057 | Inner Joint | | 24 | 34 | 40 | 52.5 | 90 | |
| | 2004.11-2011.07 | AT | F | R | Hatchback FWD KFU (ET3J4) | | GCI10058 | Inner Joint | | 24 | 34 | 29.8 | 365 | 88 | |
| | 2004.11-2011.07 | MT | F | R | Hatchback FWD KFU (ET3J4) | | GDS45113 | Drive Shaft | | 25 | 22 | 58.5 | 79.5 | 915 | |
| | 2004.11-2011.07 | MT | F | L/R | Hatchback FWD KFU (ET3J4) | Date to:2007.06 | GCO10025 | Outer Joint | | 25 | 22 | 60 | 80 | 54 | I |
| | 2004.11-2011.07 | MT | F | L/R | Hatchback FWD KFU (ET3J4) | Trans. code:MA | GCO10097 | Outer Joint | | 25 | 30 | 58.5 | 79.5 | 55 | I |
| 1.4 (70 kw) | 2009.11-2015.11 | 5MT | F | R | Hatchback FWD 8FP (EP3C) | | GDS10251 | Drive Shaft | | 25 | 24 | 58.5 | 79 | 935 | |
| | 2009.11-2015.11 | 5MT | F | R | Hatchback FWD 8FP (EP3C) | | GCI99159 | Inner Joint | | 24 | 34 | 29.8 | 350 | 87.5 | |
| | 2009.11-2015.11 | MT | F | L | Hatchback FWD 8FP (EP3C) | | GDS10250 | Drive Shaft | | 25 | 24 | 58.5 | 79 | 630 | |
| | 2009.11-2015.11 | MT | F | L | Hatchback FWD 8FP (EP3C) | | GDS10312 | Drive Shaft | | 25 | 37 | 58.5 | 89 | 625 | |
| | 2009.11-2015.11 | | F | L/R | Hatchback FWD 8FP (EP3C) | | GCO10042 | Outer Joint | | 25 | 34 | 54.8 | 78.5 | 56 | I |
| 1.5 (81 kw) | 2020.12- | 6MT | F | L | Hatchback FWD YHS (DV5RCE) | | GDS84174 | Drive Shaft | | 25 | 24 | 55.7 | 84 | 685 | |
| | 2020.12- | 6MT | F | R | Hatchback FWD YHS (DV5RCE) | | GDS84335 | Drive Shaft | | 25 | 24 | 55.7 | 84 | 910 | |
| | 2020.12- | 6MT | F | L/R | Hatchback FWD YHS (DV5RCE) | | GCO82279 | Outer Joint | | 25 | 34 | 55.7 | 84 | 55.5 | I |
| | 2020.12- | 6MT | F | L | Hatchback FWD YHS (DV5RCE) | | GCI82131 | Inner Joint | | 24 | 34 | 40 | 62 | 89 | |
| | 2020.12- | 6MT | F | R | Hatchback FWD YHS (DV5RCE) | | GCI82130 | Inner Joint | | 24 | 34 | 29.8 | 291 | 88 | |
| 1.5 (96 kw) | 2020.10- | 8AT | F | L | Hatchback FWD YHZ (DV5RC) | | GDS56654 | Drive Shaft | | 25 | 37 | 56 | 83.5 | 642 | |
| | 2020.10- | 8AT | F | R | Hatchback FWD YHZ (DV5RC) | | GDS84423 | Drive Shaft | | 25 | 37 | 56 | 83.5 | 903 | |
| | 2020.10- | 8AT | F | L/R | Hatchback FWD YHZ (DV5RC) | | GCO82810 | Outer Joint | | 25 | 25 | 56 | 83.5 | 56 | I |
| | 2020.10- | 8AT | F | L | Hatchback FWD YHZ (DV5RC) | | GCI83423 | Inner Joint | | 37 | 26 | 42 | 59 | 103 | |
| | 2020.10- | 8AT | F | R | Hatchback FWD YHZ (DV5RC) | | GCI82748 | Inner Joint | | 37 | 26 | 29.85 | 285 | 104 | |
| 1.6 (66 kw) | 2004.11-2011.07 | 5MT | F | L | Coupe FWD 9HX (DV6ATED4);9HV (DV6TED4B);9HV (DV6TED4BU) | | GDS45126 | Drive Shaft | | 25 | 24 | 58.5 | 89 | 630 | |
| | 2004.11-2011.07 | 5MT | F | R | Coupe FWD 9HX (DV6ATED4);9HV (DV6TED4B);9HV (DV6TED4BU) | | GDS45104 | Drive Shaft | | 25 | 24 | 58 | 79 | 925 | |
| | 2004.11-2011.07 | 5MT | F | L/R | Coupe FWD 9HX (DV6ATED4);9HV (DV6TED4B);9HV (DV6TED4BU) | | GCO10042 | Outer Joint | | 25 | 34 | 54.8 | 78.5 | 56 | I |
| | 2004.11-2011.07 | 5MT | F | L/R | Coupe FWD 9HX (DV6ATED4);9HV (DV6TED4B);9HV (DV6TED4BU) | | GCO99366 | Outer Joint | | 25 | 34 | 58.5 | 79 | 55 | I |
| | 2004.11-2011.07 | AT | F | L | Coupe FWD 9HX (DV6ATED4);9HV (DV6TED4B);9HV (DV6TED4BU) | | GDS10255 | Drive Shaft | | 25 | 24 | 58.5 | 79 | 616 | |
| | 2004.11-2011.07 | AT | F | R | Coupe FWD 9HX (DV6ATED4);9HV (DV6TED4B);9HV (DV6TED4BU) | | GDS10254 | Drive Shaft | | 25 | 24 | 58.5 | 79 | 939 | |
| | 2004.11-2011.07 | MT | F | L | Coupe FWD 9HX (DV6ATED4);9HV (DV6TED4B);9HV (DV6TED4BU) | Trans. code:BE4R | GDS45105 | Drive Shaft | | 25 | 24 | 58 | 79 | 625 | |
| | 2004.11-2011.07 | MT | F | R | Coupe FWD 9HX (DV6ATED4);9HV (DV6TED4B);9HV (DV6TED4BU) | | GDS10173 | Drive Shaft | 29W | 25 | 24 | 58.5 | 79 | 921 | |
| | 2004.11-2011.07 | MT | F | L | Coupe FWD 9HX (DV6ATED4);9HV (DV6TED4B);9HV (DV6TED4BU) | Trans. code:BE4R | GCI10020 | Inner Joint | | 24 | 34 | 40 | 62.5 | 99 | |
| | 2004.11-2011.07 | 5MT | F | L | Hatchback FWD 9HX (DV6ATED4);9HV (DV6TED4B);9HV (DV6TED4BU) | | GDS45126 | Drive Shaft | | 25 | 24 | 58.5 | 89 | 630 | |
| | 2004.11-2011.07 | 5MT | F | R | Hatchback FWD 9HX (DV6ATED4);9HV (DV6TED4B);9HV (DV6TED4BU) | | GDS45104 | Drive Shaft | | 25 | 24 | 58 | 79 | 925 | |
| | 2004.11-2011.07 | 5MT | F | R | Hatchback FWD 9HX (DV6ATED4);9HV (DV6TED4B);9HV (DV6TED4BU) | | GCO45027 | Outer Joint | | 25 | 34 | 58 | 79 | 55.5 | I |
| | 2004.11-2011.07 | 5MT | F | L/R | Hatchback FWD 9HX (DV6ATED4);9HV (DV6TED4B);9HV (DV6TED4BU) | | GCO99366 | Outer Joint | | 25 | 34 | 58.5 | 79 | 55 | I |
| | 2004.11-2011.07 | AT | F | L | Hatchback FWD 9HX (DV6ATED4);9HV (DV6TED4B);9HV (DV6TED4BU) | | GDS10255 | Drive Shaft | | 25 | 24 | 58.5 | 79 | 616 | |
| | 2004.11-2011.07 | AT | F | R | Hatchback FWD 9HX (DV6ATED4);9HV (DV6TED4B);9HV (DV6TED4BU) | | GDS10254 | Drive Shaft | | 25 | 24 | 58.5 | 79 | 939 | |
| | 2004.11-2011.07 | MT | F | L | Hatchback FWD 9HX (DV6ATED4);9HV (DV6TED4B);9HV (DV6TED4BU) | | GDS45105 | Drive Shaft | | 25 | 24 | 58 | 79 | 625 | |
| | 2004.11-2011.07 | MT | F | R | Hatchback FWD 9HX (DV6ATED4);9HV (DV6TED4B);9HV (DV6TED4BU) | | GDS10173 | Drive Shaft | 29W | 25 | 24 | 58.5 | 79 | 921 | |
| | 2004.11-2011.07 | MT | F | L/R | Hatchback FWD 9HX (DV6ATED4);9HV (DV6TED4B);9HV (DV6TED4BU) | | GCO10042 | Outer Joint | | 25 | 34 | 54.8 | 78.5 | 56 | I |
| | 2004.11-2011.07 | MT | F | L | Hatchback FWD 9HX (DV6ATED4);9HV (DV6TED4B);9HV (DV6TED4BU) | | GCI10020 | Inner Joint | | 24 | 34 | 40 | 62.5 | 99 | |
| 1.6 (68 kw) | 2009.11- | 5MT | F | L | Hatchback FWD 9HP (DV6DTED);9HJ (DV6DTEDM) | | GDS10250 | Drive Shaft | | 25 | 24 | 58.5 | 79 | 630 | |
| | 2009.11- | 5MT | F | L | Hatchback FWD 9HP (DV6DTED);9HJ (DV6DTEDM) | | GDS10312 | Drive Shaft | | 25 | 37 | 58.5 | 89 | 625 | |
| | 2009.11- | 5MT | F | R | Hatchback FWD 9HP (DV6DTED);9HJ (DV6DTEDM) | | GDS10251 | Drive Shaft | | 25 | 24 | 58.5 | 79 | 935 | |
| | 2009.11- | 5MT | F | L/R | Hatchback FWD 9HP (DV6DTED);9HJ (DV6DTEDM) | | GCO10042 | Outer Joint | | 25 | 34 | 54.8 | 78.5 | 56 | I |
| | 2009.11- | 5MT | F | L/R | Hatchback FWD 9HP (DV6DTED);9HJ (DV6DTEDM) | | GCO99366 | Outer Joint | | 25 | 34 | 58.5 | 79 | 55 | I |
| | 2009.11- | 5MT | F | R | Hatchback FWD 9HP (DV6DTED);9HJ (DV6DTEDM) | | GCI99159 | Inner Joint | | 24 | 34 | 29.8 | 350 | 87.5 | |
| | 2010.06- | 5MT | F | L | Hatchback Van FWD 9HP (DV6DTED) | | GDS10250 | Drive Shaft | | 25 | 24 | 58.5 | 79 | 630 | |
| | 2010.06- | 5MT | F | R | Hatchback Van FWD 9HP (DV6DTED) | | GDS10251 | Drive Shaft | | 25 | 24 | 58.5 | 79 | 935 | |
| | 2010.06- | 5MT | F | L/R | Hatchback Van FWD 9HP (DV6DTED) | | GCO99366 | Outer Joint | | 25 | 34 | 58.5 | 79 | 55 | I |
| | 2010.06- | 5MT | F | L | Hatchback Van FWD 9HP (DV6DTED) | | GCI10070 | Inner Joint | | 24 | 34 | 40 | 62 | 88 | |
| | 2010.06- | 5MT | F | R | Hatchback Van FWD 9HP (DV6DTED) | | GCI99159 | Inner Joint | | 24 | 34 | 29.8 | 350 | 87.5 | |
| | 2010.06- | | F | L | Hatchback Van FWD 9HP (DV6DTED) | | GDS10248 | Drive Shaft | | 25 | 24 | 58.5 | 79 | 642 | |
| 1.6 (73 kw) | 2014.07- | 5MT | F | L | Hatchback Van FWD BHY (DV6FD) | | GDS10250 | Drive Shaft | | 25 | 24 | 58.5 | 79 | 630 | |
| | 2014.07- | 5MT | F | R | Hatchback Van FWD BHY (DV6FD) | | GDS10251 | Drive Shaft | | 25 | 24 | 58.5 | 79 | 935 | |
| | 2014.07- | 5MT | F | L/R | Hatchback Van FWD BHY (DV6FD) | | GCO99366 | Outer Joint | | 25 | 34 | 58.5 | 79 | 55 | I |
| | 2014.07- | 5MT | F | L | Hatchback Van FWD BHY (DV6FD) | | GCI10070 | Inner Joint | | 24 | 34 | 40 | 62 | 88 | |
| | 2014.07- | 5MT | F | R | Hatchback Van FWD BHY (DV6FD) | | GCI99159 | Inner Joint | | 24 | 34 | 29.8 | 350 | 87.5 | |
| | 2014.07- | | F | L | Hatchback Van FWD BHY (DV6FD) | | GDS10248 | Drive Shaft | | 25 | 24 | 58.5 | 79 | 642 | |
| | 2014.07-2018.05 | 5MT | F | L | Hatchback FWD BHY (DV6FD) | | GDS10250 | Drive Shaft | | 25 | 24 | 58.5 | 79 | 630 | |
| | 2014.07-2018.05 | 5MT | F | R | Hatchback FWD BHY (DV6FD) | | GDS10251 | Drive Shaft | | 25 | 24 | 58.5 | 79 | 935 | |
| | 2014.07-2018.05 | 5MT | F | L/R | Hatchback FWD BHY (DV6FD) | | GCO99366 | Outer Joint | | 25 | 34 | 58.5 | 79 | 55 | I |
| | 2014.07-2018.05 | 5MT | F | L | Hatchback FWD BHY (DV6FD) | | GCI10070 | Inner Joint | | 24 | 34 | 40 | 62 | 88 | |
| | 2014.07-2018.05 | 5MT | F | R | Hatchback FWD BHY (DV6FD) | | GCI99159 | Inner Joint | | 24 | 34 | 29.8 | 350 | 87.5 | |
| 1.6 (80 kw) | 2004.11-2011.07 | AT | F | L | Coupe FWD 9HZ (DV6TED4);9HY (DV6TED4) | | GDS10255 | Drive Shaft | | 25 | 24 | 58.5 | 79 | 616 | |
| | 2004.11-2011.07 | AT | F | R | Coupe FWD 9HZ (DV6TED4);9HY (DV6TED4) | | GDS10254 | Drive Shaft | | 25 | 24 | 58.5 | 79 | 939 | |

| | YEAR | TRANSM. | F/R | L/R | BODY STYLE & DRIVE TYPE & ENGINE | REMARKS | G-AP Ref. | PRODUCT | ABS | Technical Specifications | | | | | |
|---|---|---|---|---|---|---|---|---|---|---|---|---|---|---|---|
| | | | | | | | | | | A | B | C | H | L | P |
| **CITROËN** | | | | | | | | | | | | | | | |
| **C4** | | | | | | | | | | | | | | | |
| 1.6 (80 kw) | 2004.11-2011.07 | AT | F | L/R | Coupe FWD 9HZ (DV6TED4);9HY (DV6TED4) | | GCO10075 | Outer Joint | | 25 | 26 | 58.5 | 89 | 63 | M |
| | 2004.11-2011.07 | AT | F | L | Coupe FWD 9HZ (DV6TED4);9HY (DV6TED4) | | GCI10057 | Inner Joint | | 24 | 34 | 40 | 52.5 | 90 | |
| | 2004.11-2011.07 | MT | F | L | Coupe FWD 9HZ (DV6TED4);9HY (DV6TED4) | | GDS45105 | Drive Shaft | | 25 | 24 | 58 | 79 | 625 | |
| | 2004.11-2011.07 | MT | F | L | Coupe FWD 9HZ (DV6TED4);9HY (DV6TED4) | for OE number:3272LV | GDS45126 | Drive Shaft | | 25 | 24 | 58.5 | 89 | 630 | |
| | 2004.11-2011.07 | MT | F | R | Coupe FWD 9HZ (DV6TED4);9HY (DV6TED4) | | GDS10173 | Drive Shaft | 29W | 25 | 24 | 58.5 | 79 | 921 | |
| | 2004.11-2011.07 | MT | F | R | Coupe FWD 9HZ (DV6TED4);9HY (DV6TED4) | | GDS45104 | Drive Shaft | | 25 | 24 | 58 | 79 | 925 | |
| | 2004.11-2011.07 | MT | F | L/R | Coupe FWD 9HZ (DV6TED4);9HY (DV6TED4) | | GCO10042 | Outer Joint | | 25 | 34 | 54.8 | 78.5 | 56 | I |
| | 2004.11-2011.07 | MT | F | L/R | Coupe FWD 9HZ (DV6TED4);9HY (DV6TED4) | | GCO99366 | Outer Joint | | 25 | 34 | 58.5 | 79 | 55 | I |
| | 2004.11-2011.07 | AT | F | L | Coupe FWD NFU (TU5JP4) | | GDS10286 | Drive Shaft | | 25 | 26 | 58.5 | 79 | 613 | |
| | 2004.11-2011.07 | AT | F | R | Coupe FWD NFU (TU5JP4) | | GDS10291 | Drive Shaft | | 25 | 26 | 58.5 | 79 | 833 | |
| | 2004.11-2011.07 | AT | F | L | Coupe FWD NFU (TU5JP4) | | GCI99001 | Inner Joint | | 26 | 34 | 30.2 | 46.5 | 103.5 | |
| | 2004.11-2011.07 | AT/MT | F | L/R | Coupe FWD NFU (TU5JP4) | | GCO10042 | Outer Joint | | 25 | 34 | 54.8 | 78.5 | 56 | I |
| | 2004.11-2011.07 | MT | F | L | Coupe FWD NFU (TU5JP4) | Trans. code:BE4R | GDS45105 | Drive Shaft | | 25 | 24 | 58 | 79 | 625 | |
| | 2004.11-2011.07 | MT | F | L | Coupe FWD NFU (TU5JP4) | Date to:2007.06,To ORG/OPR:11192,Trans. code:MA | GDS45119 | Drive Shaft | | 25 | 22 | 58.5 | 79.5 | 633 | |
| | 2004.11-2011.07 | MT | F | L | Coupe FWD NFU (TU5JP4) | Trans. code:BE4 84 | GDS45126 | Drive Shaft | | 25 | 24 | 58.5 | 89 | 630 | |
| | 2004.11-2011.07 | MT | F | R | Coupe FWD NFU (TU5JP4) | Trans. code:BE4R | GDS45104 | Drive Shaft | | 25 | 24 | 58 | 79 | 925 | |
| | 2004.11-2011.07 | MT | F | R | Coupe FWD NFU (TU5JP4) | Date to:2007.06,To ORG/OPR:11192,Trans. code:MA | GDS45113 | Drive Shaft | | 25 | 22 | 58.5 | 79.5 | 915 | |
| | 2004.11-2011.07 | MT | F | L/R | Coupe FWD NFU (TU5JP4) | Trans. code:MA,Date to:2007.06 | GCO10025 | Outer Joint | | 25 | 22 | 60 | 80 | 54 | I |
| | 2004.11-2011.07 | MT | F | L/R | Coupe FWD NFU (TU5JP4) | Trans. code:MA | GCO10097 | Outer Joint | | 25 | 30 | 58.5 | 79.5 | 55 | I |
| | 2004.11-2011.07 | MT | F | L/R | Coupe FWD NFU (TU5JP4) | Trans. code:BE4R | GCO45027 | Outer Joint | | 25 | 34 | 58 | 79 | 55.5 | I |
| | 2004.11-2011.07 | MT | F | L/R | Coupe FWD NFU (TU5JP4) | Trans. code:BE4R | GCO99366 | Outer Joint | | 25 | 34 | 58.5 | 79 | 55 | I |
| | 2004.11-2011.07 | 5MT | F | L/R | Hatchback FWD 9HZ (DV6TED4);9HY (DV6TED4) | | GCO10042 | Outer Joint | | 25 | 34 | 54.8 | 78.5 | 56 | I |
| | 2004.11-2011.07 | AT | F | L | Hatchback FWD 9HZ (DV6TED4);9HY (DV6TED4) | | GDS10255 | Drive Shaft | | 25 | 24 | 58.5 | 79 | 616 | |
| | 2004.11-2011.07 | AT | F | R | Hatchback FWD 9HZ (DV6TED4);9HY (DV6TED4) | | GDS10254 | Drive Shaft | | 25 | 24 | 58.5 | 79 | 939 | |
| | 2004.11-2011.07 | AT | F | L/R | Hatchback FWD 9HZ (DV6TED4);9HY (DV6TED4) | | GCO10075 | Outer Joint | | 25 | 26 | 58.5 | 89 | 63 | M |
| | 2004.11-2011.07 | AT | F | L | Hatchback FWD 9HZ (DV6TED4);9HY (DV6TED4) | | GCI10057 | Inner Joint | | 24 | 34 | 40 | 52.5 | 90 | |
| | 2004.11-2011.07 | AT | F | R | Hatchback FWD 9HZ (DV6TED4);9HY (DV6TED4) | | GCI10058 | Inner Joint | | 24 | 34 | 29.8 | 365 | 88 | |
| | 2004.11-2011.07 | AT/MT | F | L/R | Hatchback FWD 9HZ (DV6TED4);9HY (DV6TED4) | | GCO99366 | Outer Joint | | 25 | 34 | 58.5 | 79 | 55 | I |
| | 2004.11-2011.07 | MT | F | L | Hatchback FWD 9HZ (DV6TED4);9HY (DV6TED4) | Trans. code:BE4R | GDS45105 | Drive Shaft | | 25 | 24 | 58 | 79 | 625 | |
| | 2004.11-2011.07 | MT | F | L | Hatchback FWD 9HZ (DV6TED4);9HY (DV6TED4) | | GDS45126 | Drive Shaft | | 25 | 24 | 58.5 | 89 | 630 | |
| | 2004.11-2011.07 | MT | F | R | Hatchback FWD 9HZ (DV6TED4);9HY (DV6TED4) | | GDS10173 | Drive Shaft | 29W | 25 | 24 | 58.5 | 79 | 921 | |
| | 2004.11-2011.07 | MT | F | R | Hatchback FWD 9HZ (DV6TED4);9HY (DV6TED4) | | GDS45104 | Drive Shaft | | 25 | 24 | 58 | 79 | 925 | |
| | 2004.11-2011.07 | MT | F | R | Hatchback FWD 9HZ (DV6TED4);9HY (DV6TED4) | | GCO45027 | Outer Joint | | 25 | 34 | 58 | 79 | 55.5 | I |
| | 2004.11-2011.07 | AT | F | L | Hatchback FWD NFU (TU5JP4) | | GDS10286 | Drive Shaft | | 25 | 26 | 58.5 | 79 | 613 | |
| | 2004.11-2011.07 | AT | F | R | Hatchback FWD NFU (TU5JP4) | | GDS10291 | Drive Shaft | | 25 | 26 | 58.5 | 79 | 833 | |
| | 2004.11-2011.07 | AT | F | L | Hatchback FWD NFU (TU5JP4) | | GCI99001 | Inner Joint | | 26 | 34 | 30.2 | 46.5 | 103.5 | |
| | 2004.11-2011.07 | AT/MT | F | L/R | Hatchback FWD NFU (TU5JP4) | | GCO10042 | Outer Joint | | 25 | 34 | 54.8 | 78.5 | 56 | I |
| | 2004.11-2011.07 | AT/MT | F | L/R | Hatchback FWD NFU (TU5JP4) | | GCO99366 | Outer Joint | | 25 | 34 | 58.5 | 79 | 55 | I |
| | 2004.11-2011.07 | MT | F | L | Hatchback FWD NFU (TU5JP4) | Transm.Type:BE4R | GDS45105 | Drive Shaft | | 25 | 24 | 58 | 79 | 625 | |
| | 2004.11-2011.07 | MT | F | L | Hatchback FWD NFU (TU5JP4) | Date to:2007.06;To ORG/OPR:11192;Trans. code:MA | GDS45119 | Drive Shaft | | 25 | 22 | 58.5 | 79.5 | 633 | |
| | 2004.11-2011.07 | MT | F | L | Hatchback FWD NFU (TU5JP4) | | GDS45126 | Drive Shaft | | 25 | 24 | 58.5 | 89 | 630 | |
| | 2004.11-2011.07 | MT | F | R | Hatchback FWD NFU (TU5JP4) | Trans. code:BE4R | GDS45104 | Drive Shaft | | 25 | 24 | 58 | 79 | 925 | |
| | 2004.11-2011.07 | MT | F | R | Hatchback FWD NFU (TU5JP4) | Date to:2007.06;To ORG/OPR:11192;Trans. code:MA | GDS45113 | Drive Shaft | | 25 | 22 | 58.5 | 79.5 | 915 | |
| | 2004.11-2011.07 | MT | F | R | Hatchback FWD NFU (TU5JP4) | Trans. code:BE4R | GCO45027 | Outer Joint | | 25 | 34 | 58 | 79 | 55.5 | I |
| | 2004.11-2011.07 | MT | F | L/R | Hatchback FWD NFU (TU5JP4) | Transm. type:MA,Date to:2007.06 | GCO10025 | Outer Joint | | 25 | 22 | 60 | 80 | 54 | I |
| | 2004.11-2011.07 | MT | F | L/R | Hatchback FWD NFU (TU5JP4) | Trans. code:MA | GCO10097 | Outer Joint | | 25 | 30 | 58.5 | 79.5 | 55 | I |
| | 2006.07-2011.07 | AT | F | L | Saloon FWD 9HZ (DV6TED4);9HY (DV6TED4) | | GDS10255 | Drive Shaft | | 25 | 24 | 58.5 | 79 | 616 | |
| | 2006.07-2011.07 | AT | F | R | Saloon FWD 9HZ (DV6TED4);9HY (DV6TED4) | | GDS10254 | Drive Shaft | | 25 | 24 | 58.5 | 79 | 939 | |
| | 2006.07-2011.07 | AT | F | L/R | Saloon FWD 9HZ (DV6TED4);9HY (DV6TED4) | | GCO10075 | Outer Joint | | 25 | 26 | 58.5 | 89 | 63 | M |
| | 2006.07-2011.07 | AT | F | L/R | Saloon FWD 9HZ (DV6TED4);9HY (DV6TED4) | | GCO99366 | Outer Joint | | 25 | 34 | 58.5 | 79 | 55 | I |
| | 2006.07-2011.07 | AT | F | L | Saloon FWD 9HZ (DV6TED4);9HY (DV6TED4) | | GCI10057 | Inner Joint | | 24 | 34 | 40 | 52.5 | 90 | |
| | 2006.07-2011.07 | AT | F | R | Saloon FWD 9HZ (DV6TED4);9HY (DV6TED4) | | GCI10058 | Inner Joint | | 24 | 34 | 29.8 | 365 | 88 | |
| | 2006.07-2011.07 | MT | F | L | Saloon FWD 9HZ (DV6TED4);9HY (DV6TED4) | | GDS45105 | Drive Shaft | | 25 | 24 | 58 | 79 | 625 | |
| | 2006.07-2011.07 | MT | F | L | Saloon FWD 9HZ (DV6TED4);9HY (DV6TED4) | | GDS45126 | Drive Shaft | | 25 | 24 | 58.5 | 89 | 630 | |
| | 2006.07-2011.07 | MT | F | R | Saloon FWD 9HZ (DV6TED4);9HY (DV6TED4) | | GDS45104 | Drive Shaft | | 25 | 24 | 58 | 79 | 925 | |
| | 2006.07-2011.07 | MT | F | R | Saloon FWD 9HZ (DV6TED4);9HY (DV6TED4) | | GCO45027 | Outer Joint | | 25 | 34 | 58 | 79 | 55.5 | I |
| | 2006.07-2011.07 | MT | F | R | Saloon FWD 9HZ (DV6TED4);9HY (DV6TED4) | | GCO99366 | Outer Joint | | 25 | 34 | 58.5 | 79 | 55 | I |
| | 2006.07-2011.07 | | F | L/R | Saloon FWD 9HZ (DV6TED4);9HY (DV6TED4) | | GCO10042 | Outer Joint | | 25 | 34 | 54.8 | 78.5 | 56 | I |
| | 2006.07-2011.07 | 5MT | F | L | Saloon FWD NFU (TU5JP4) | | GDS45126 | Drive Shaft | | 25 | 24 | 58.5 | 89 | 630 | |
| | 2006.07-2011.07 | 5MT | F | R | Saloon FWD NFU (TU5JP4) | | GDS45104 | Drive Shaft | | 25 | 24 | 58 | 79 | 925 | |
| | 2006.07-2011.07 | 5MT | F | R | Saloon FWD NFU (TU5JP4) | | GCO45027 | Outer Joint | | 25 | 34 | 58 | 79 | 55.5 | I |
| | 2006.07-2011.07 | AT | F | R | Saloon FWD NFU (TU5JP4) | | GDS10291 | Drive Shaft | | 25 | 26 | 58.5 | 79 | 833 | |
| | 2006.07-2011.07 | AT/MT | F | L/R | Saloon FWD NFU (TU5JP4) | | GCO10042 | Outer Joint | | 25 | 34 | 54.8 | 78.5 | 56 | I |
| | 2006.07-2011.07 | MT | F | L | Saloon FWD NFU (TU5JP4) | Trans. code:BE4R | GDS45105 | Drive Shaft | | 25 | 24 | 58 | 79 | 625 | |
| | 2006.07-2011.07 | MT | F | R | Saloon FWD NFU (TU5JP4) | | GDS45113 | Drive Shaft | | 25 | 22 | 58.5 | 79.5 | 915 | |

| | YEAR | TRANSM. | F/R | L/R | BODY STYLE & DRIVE TYPE & ENGINE | REMARKS | G-AP Ref. | PRODUCT | ABS | Technical Specifications | | | | | |
|---|---|---|---|---|---|---|---|---|---|---|---|---|---|---|---|
| | | | | | | | | | | A | B | C | H | L | P |
| **CITROËN** | | | | | | | | | | | | | | | |
| **C4** | | | | | | | | | | | | | | | |
| 1.6 (80 kw) | 2006.07-2011.07 | MT | F | R | Saloon FWD NFU (TU5JP4) | Trans. code:BE4R | GCO99366 | Outer Joint | | 25 | 34 | 58.5 | 79 | 55 | I |
| | 2006.07-2011.07 | MT | F | | Saloon FWD NFU (TU5JP4) | | GCO10097 | Outer Joint | | 25 | 30 | 58.5 | 79.5 | 55 | I |
| | 2006.07-2011.07 | MT | F | L | Saloon FWD NFU (TU5JP4) | Trans. code:BE4R | GCI10020 | Inner Joint | | 24 | 34 | 40 | 62.5 | 99 | |
| | 2007.09-2008.07 | AT | F | L | Hatchback FWD NFU (TU5JP4) | | GDS10286 | Drive Shaft | | 25 | 26 | 58.5 | 79 | 613 | |
| | 2007.09-2008.07 | AT | F | R | Hatchback FWD NFU (TU5JP4) | | GDS10291 | Drive Shaft | | 25 | 26 | 58.5 | 79 | 833 | |
| | 2007.09-2008.07 | AT | F | L | Hatchback FWD NFU (TU5JP4) | | GCI99001 | Inner Joint | | 26 | 34 | 30.2 | 46.5 | 103.5 | |
| | 2007.09-2008.07 | AT/MT | F | L/R | Hatchback FWD NFU (TU5JP4) | | GCO10042 | Outer Joint | | 25 | 34 | 54.8 | 78.5 | 56 | I |
| | 2007.09-2008.07 | AT/MT | F | L/R | Hatchback FWD NFU (TU5JP4) | | GCO99366 | Outer Joint | | 25 | 34 | 58.5 | 79 | 55 | I |
| | 2007.09-2008.07 | MT | F | L | Hatchback FWD NFU (TU5JP4) | Trans. code:BE4R | GDS45105 | Drive Shaft | | 25 | 24 | 58 | 79 | 625 | |
| | 2007.09-2008.07 | MT | F | L | Hatchback FWD NFU (TU5JP4) | Trans. code:MA;Vehicle Production Country:France | GDS45119 | Drive Shaft | | 25 | 22 | 58.5 | 79.5 | 633 | |
| | 2007.09-2008.07 | MT | F | L | Hatchback FWD NFU (TU5JP4) | Trans. code:BE4R | GDS45126 | Drive Shaft | | 25 | 24 | 58.5 | 89 | 630 | |
| | 2007.09-2008.07 | MT | F | R | Hatchback FWD NFU (TU5JP4) | | GDS45104 | Drive Shaft | | 25 | 24 | 58 | 79 | 925 | |
| | 2007.09-2008.07 | MT | F | R | Hatchback FWD NFU (TU5JP4) | Trans. code:MA;Vehicle Production Country:France | GDS45113 | Drive Shaft | | 25 | 22 | 58.5 | 79.5 | 915 | |
| | 2007.09-2008.07 | MT | F | R | Hatchback FWD NFU (TU5JP4) | Trans. code:BE4R | GCO45027 | Outer Joint | | 25 | 34 | 58 | 79 | 55.5 | I |
| | 2007.09-2008.07 | MT | F | | Hatchback FWD NFU (TU5JP4) | | GCO10097 | Outer Joint | | 25 | 30 | 58.5 | 79.5 | 55 | I |
| | 2010.04-2012.11 | 5MT | F | L | Hatchback FWD 9HG (DV6C M) | | GDS45105 | Drive Shaft | | 25 | 24 | 58 | 79 | 625 | |
| | 2010.04-2012.11 | 5MT | F | R | Hatchback FWD 9HG (DV6C M) | | GDS45104 | Drive Shaft | | 25 | 24 | 58 | 79 | 925 | |
| | 2010.04-2012.11 | 5MT | F | L | Saloon FWD 9HG (DV6C M) | | GDS45105 | Drive Shaft | | 25 | 24 | 58 | 79 | 625 | |
| | 2010.04-2012.11 | 5MT | F | R | Saloon FWD 9HG (DV6C M) | | GDS45104 | Drive Shaft | | 25 | 24 | 58 | 79 | 925 | |
| 1.6 (82 kw) | 2009.11- | 6AT | F | L | Hatchback FWD 9HR (DV6C) | Technical Information no.:8PN05 | GDS58072 | Drive Shaft | | 25 | 37 | 58.5 | 79 | 598 | |
| | 2009.11- | 6AT | F | R | Hatchback FWD 9HR (DV6C) | Technical Information no.:8PN06 | GDS84640 | Drive Shaft | | 25 | 37 | 58.5 | 79 | 931 | |
| | 2009.11- | 6AT | F | L | Hatchback FWD 9HR (DV6C) | | GCO82355 | Outer Joint | | 25 | 34 | 58.5 | 79 | 55.5 | I |
| | 2009.11- | 6AT | F | L/R | Hatchback FWD 9HR (DV6C) | Technical Information no.:8PN06 | GCO82351 | Outer Joint | | 25 | 34 | 58.5 | 79 | 55.5 | I |
| | 2009.11- | 6AT | F | L | Hatchback FWD 9HR (DV6C) | | GCI82119 | Inner Joint | | 37 | 34 | 41.5 | 58.5 | 94 | |
| | 2009.11- | 6AT/6MT | F | L/R | Hatchback FWD 9HR (DV6C) | | GCO10042 | Outer Joint | | 25 | 34 | 54.8 | 78.5 | 56 | I |
| | 2009.11- | 6MT | F | L | Hatchback FWD 9HR (DV6C) | | GDS10253 | Drive Shaft | | 25 | 24 | 58.5 | 79 | 626 | |
| | 2009.11- | 6MT | F | R | Hatchback FWD 9HR (DV6C) | | GDS10325 | Drive Shaft | | 25 | 24 | 58.5 | 79 | 940 | |
| | 2009.11- | 6MT | F | L/R | Hatchback FWD 9HR (DV6C) | for OE No.:3642357 | GCO10148 | Outer Joint | | 25 | 34 | 58.5 | 79 | 55.5 | I |
| | 2009.11- | 6MT | F | L/R | Hatchback FWD 9HR (DV6C) | for OE No.:3272PZ/3273QK | GCO99366 | Outer Joint | | 25 | 34 | 58.5 | 79 | 55 | I |
| | 2009.11- | 6MT | F | L | Hatchback FWD 9HR (DV6C) | | GCI10057 | Inner Joint | | 24 | 34 | 40 | 52.5 | 90 | |
| | 2009.11- | 6MT | F | R | Hatchback FWD 9HR (DV6C) | | GCI10058 | Inner Joint | | 24 | 34 | 29.8 | 365 | 88 | |
| | 2009.11- | MT | F | L | Hatchback FWD 9HR (DV6C) | Trans. code:ML6C | GDS10312 | Drive Shaft | | 25 | 37 | 58.5 | 89 | 625 | |
| | 2009.11- | 6AT | F | L | Hatchback Van FWD 9HR (DV6C) | Technical Information no.:8PN05 | GDS58072 | Drive Shaft | | 25 | 37 | 58.5 | 79 | 598 | |
| | 2009.11- | 6AT | F | R | Hatchback Van FWD 9HR (DV6C) | | GDS84640 | Drive Shaft | | 25 | 37 | 58.5 | 79 | 931 | |
| | 2009.11- | 6MT | F | L | Hatchback Van FWD 9HR (DV6C) | | GDS10253 | Drive Shaft | | 25 | 24 | 58.5 | 79 | 626 | |
| | 2009.11- | 6MT | F | R | Hatchback Van FWD 9HR (DV6C) | | GDS10325 | Drive Shaft | | 25 | 24 | 58.5 | 79 | 940 | |
| | 2009.11- | 6MT | F | R | Hatchback Van FWD 9HR (DV6C) | | GCO99366 | Outer Joint | | 25 | 34 | 58.5 | 79 | 55 | I |
| | 2009.11- | 6MT | F | L | Hatchback Van FWD 9HR (DV6C) | | GCI10057 | Inner Joint | | 24 | 34 | 40 | 52.5 | 90 | |
| | 2009.11- | 6MT | F | R | Hatchback Van FWD 9HR (DV6C) | | GCI10058 | Inner Joint | | 24 | 34 | 29.8 | 365 | 88 | |
| 1.6 (84 kw) | 2010.04-2012.11 | 5MT | F | L | Hatchback FWD 9HG (DV6C M) | | GDS45105 | Drive Shaft | | 25 | 24 | 58 | 79 | 625 | |
| | 2010.04-2012.11 | 5MT | F | R | Hatchback FWD 9HG (DV6C M) | | GDS45104 | Drive Shaft | | 25 | 24 | 58 | 79 | 925 | |
| | 2010.04-2012.11 | 5MT | F | L | Saloon FWD 9HG (DV6C M) | | GDS45105 | Drive Shaft | | 25 | 24 | 58 | 79 | 625 | |
| | 2010.04-2012.11 | 5MT | F | R | Saloon FWD 9HG (DV6C M) | | GDS45104 | Drive Shaft | | 25 | 24 | 58 | 79 | 925 | |
| | 2012.07- | 6AT | F | L | Hatchback FWD 9HD (DV6C) | Technical Information no.:8PN05 | GDS58072 | Drive Shaft | | 25 | 37 | 58.5 | 79 | 598 | |
| | 2012.07- | 6AT | F | R | Hatchback FWD 9HD (DV6C) | Technical Information no.:8PN06 | GDS84640 | Drive Shaft | | 25 | 37 | 58.5 | 79 | 931 | |
| | 2012.07- | 6AT | F | L | Hatchback FWD 9HD (DV6C) | | GCO82355 | Outer Joint | | 25 | 34 | 58.5 | 79 | 55.5 | I |
| | 2012.07- | 6AT | F | L/R | Hatchback FWD 9HD (DV6C) | Technical Information no.:8PN06 | GCO82351 | Outer Joint | | 25 | 34 | 58.5 | 79 | 55.5 | I |
| | 2012.07- | 6AT | F | L | Hatchback FWD 9HD (DV6C) | | GCI82119 | Inner Joint | | 37 | 34 | 41.5 | 58.5 | 94 | |
| | 2012.07- | 6AT/6MT | F | L/R | Hatchback FWD 9HD (DV6C) | | GCO10042 | Outer Joint | | 25 | 34 | 54.8 | 78.5 | 56 | I |
| | 2012.07- | 6MT | F | L | Hatchback FWD 9HD (DV6C) | | GDS10253 | Drive Shaft | | 25 | 24 | 58.5 | 79 | 626 | |
| | 2012.07- | 6MT | F | R | Hatchback FWD 9HD (DV6C) | | GDS10325 | Drive Shaft | | 25 | 24 | 58.5 | 79 | 940 | |
| | 2012.07- | 6MT | F | L/R | Hatchback FWD 9HD (DV6C) | for OE No.:3642357 | GCO10148 | Outer Joint | | 25 | 34 | 58.5 | 79 | 55.5 | I |
| | 2012.07- | 6MT | F | L/R | Hatchback FWD 9HD (DV6C) | | GCO99366 | Outer Joint | | 25 | 34 | 58.5 | 79 | 55 | I |
| | 2012.07- | 6MT | F | L | Hatchback FWD 9HD (DV6C) | | GCI10057 | Inner Joint | | 24 | 34 | 40 | 52.5 | 90 | |
| | 2012.07- | 6MT | F | R | Hatchback FWD 9HD (DV6C) | | GCI10058 | Inner Joint | | 24 | 34 | 29.8 | 365 | 88 | |
| | 2012.07- | MT | F | L | Hatchback FWD 9HD (DV6C) | Trans.code:ML6C | GDS10312 | Drive Shaft | | 25 | 37 | 58.5 | 89 | 625 | |
| 1.6 (85 kw) | 2013.01-2015.05 | 6AT | F | L | Hatchback FWD BHX (DV6FC) | | GCO99366 | Outer Joint | | 25 | 34 | 58.5 | 79 | 55 | I |
| | 2013.01-2015.05 | 6MT | F | L | Hatchback FWD BHX (DV6FC) | | GDS10253 | Drive Shaft | | 25 | 24 | 58.5 | 79 | 626 | |
| | 2013.01-2015.05 | 6MT | F | R | Hatchback FWD BHX (DV6FC) | | GDS10325 | Drive Shaft | | 25 | 24 | 58.5 | 79 | 940 | |
| | 2013.01-2015.05 | 6MT | F | R | Hatchback FWD BHX (DV6FC) | | GCO99366 | Outer Joint | | 25 | 34 | 58.5 | 79 | 55 | I |
| | 2013.01-2015.05 | AT | F | L | Hatchback FWD BHX (DV6FC) | Technical Information no.:8PN05 | GDS58072 | Drive Shaft | | 25 | 37 | 58.5 | 79 | 598 | |
| | 2013.01-2015.05 | MT | F | L | Hatchback FWD BHX (DV6FC) | | GCO10148 | Outer Joint | | 25 | 34 | 58.5 | 79 | 55.5 | I |
| | 2013.01-2015.05 | MT | F | L | Hatchback FWD BHX (DV6FC) | | GCI10057 | Inner Joint | | 24 | 34 | 40 | 52.5 | 90 | |
| | 2013.01-2015.05 | MT | F | R | Hatchback FWD BHX (DV6FC) | | GCI10058 | Inner Joint | | 24 | 34 | 29.8 | 365 | 88 | |
| | 2013.01-2015.05 | | F | L/R | Hatchback FWD BHX (DV6FC) | | GCO10042 | Outer Joint | | 25 | 34 | 54.8 | 78.5 | 56 | I |

| | YEAR | TRANSM. | F/R | L/R | BODY STYLE & DRIVE TYPE & ENGINE | REMARKS | G-AP Ref. | PRODUCT | ABS | Technical Specifications | | | | | |
|---|---|---|---|---|---|---|---|---|---|---|---|---|---|---|---|
| | | | | | | | | | | A | B | C | H | L | P |
| **CITROËN** | | | | | | | | | | | | | | | |
| **C4** | | | | | | | | | | | | | | | |
| 1.6 (88 kw) | 2008.07-2011.07 | AT | F | L | Coupe FWD 5FW (EP6) | | GDS10286 | Drive Shaft | | 25 | 26 | 58.5 | 79 | 613 | |
| | 2008.07-2011.07 | AT | F | R | Coupe FWD 5FW (EP6) | | GDS10291 | Drive Shaft | | 25 | 26 | 58.5 | 79 | 833 | |
| | 2008.07-2011.07 | AT | F | L | Coupe FWD 5FW (EP6) | | GCI99001 | Inner Joint | | 26 | 34 | 30.2 | 46.5 | 103.5 | |
| | 2008.07-2011.07 | MT | F | L | Coupe FWD 5FW (EP6) | Trans. code:BE4R | GDS45105 | Drive Shaft | | 25 | 24 | 58 | 79 | 625 | |
| | 2008.07-2011.07 | MT | F | L | Coupe FWD 5FW (EP6) | | GDS45126 | Drive Shaft | | 25 | 24 | 58.5 | 89 | 630 | |
| | 2008.07-2011.07 | MT | F | R | Coupe FWD 5FW (EP6) | | GDS45104 | Drive Shaft | | 25 | 24 | 58 | 79 | 925 | |
| | 2008.07-2011.07 | MT | F | R | Coupe FWD 5FW (EP6) | | GCO45027 | Outer Joint | | 25 | 34 | 58 | 79 | 55.5 | I |
| | 2008.07-2011.07 | MT | F | L/R | Coupe FWD 5FW (EP6) | | GCO99366 | Outer Joint | | 25 | 34 | 58.5 | 79 | 55 | I |
| | 2008.07-2011.07 | | F | L/R | Coupe FWD 5FW (EP6) | | GCO10042 | Outer Joint | | 25 | 34 | 54.8 | 78.5 | 56 | I |
| | 2008.07-2011.07 | AT | F | L | Hatchback FWD 5FW (EP6) | | GDS10286 | Drive Shaft | | 25 | 26 | 58.5 | 79 | 613 | |
| | 2008.07-2011.07 | AT | F | R | Hatchback FWD 5FW (EP6) | | GDS10291 | Drive Shaft | | 25 | 26 | 58.5 | 79 | 833 | |
| | 2008.07-2011.07 | AT | F | L/R | Hatchback FWD 5FW (EP6) | | GCO10042 | Outer Joint | | 25 | 34 | 54.8 | 78.5 | 56 | I |
| | 2008.07-2011.07 | AT | F | L | Hatchback FWD 5FW (EP6) | | GCI99001 | Inner Joint | | 26 | 34 | 30.2 | 46.5 | 103.5 | |
| | 2008.07-2011.07 | MT | F | L | Hatchback FWD 5FW (EP6) | Trans. code:BE4R | GDS45105 | Drive Shaft | | 25 | 24 | 58 | 79 | 625 | |
| | 2008.07-2011.07 | MT | F | L | Hatchback FWD 5FW (EP6) | | GDS45126 | Drive Shaft | | 25 | 24 | 58.5 | 89 | 630 | |
| | 2008.07-2011.07 | MT | F | R | Hatchback FWD 5FW (EP6) | | GDS45104 | Drive Shaft | | 25 | 24 | 58 | 79 | 925 | |
| | 2008.07-2011.07 | MT | F | R | Hatchback FWD 5FW (EP6) | | GCO45027 | Outer Joint | | 25 | 34 | 58 | 79 | 55.5 | I |
| | 2008.07-2011.07 | MT | F | L/R | Hatchback FWD 5FW (EP6) | | GCO99366 | Outer Joint | | 25 | 34 | 58.5 | 79 | 55 | I |
| | 2009.11-2016.12 | 4AT | F | L | Hatchback FWD 5FS (EP6C) | | GDS10362 | Drive Shaft | | 25 | 26 | 58.5 | 79 | 624 | |
| | 2009.11-2016.12 | 4AT | F | R | Hatchback FWD 5FS (EP6C) | | GDS10383 | Drive Shaft | | 25 | 26 | 58 | 79 | 842 | |
| | 2009.11-2016.12 | 4AT | F | L | Hatchback FWD 5FS (EP6C) | | GCO99366 | Outer Joint | | 25 | 34 | 58.5 | 79 | 55 | I |
| | 2009.11-2016.12 | 5MT | F | L | Hatchback FWD 5FS (EP6C) | | GDS10250 | Drive Shaft | | 25 | 24 | 58.5 | 79 | 630 | |
| | 2009.11-2016.12 | 5MT | F | R | Hatchback FWD 5FS (EP6C) | | GDS10251 | Drive Shaft | | 25 | 24 | 58.5 | 79 | 935 | |
| | 2009.11-2016.12 | AT | F | R | Hatchback FWD 5FS (EP6C) | | GCO10035 | Outer Joint | | 25 | 34 | 58 | 79 | 55.5 | I |
| | 2009.11-2016.12 | AT | F | L | Hatchback FWD 5FS (EP6C) | | GCI99001 | Inner Joint | | 26 | 34 | 30.2 | 46.5 | 103.5 | |
| | 2009.11-2016.12 | MT | F | L | Hatchback FWD 5FS (EP6C) | | GDS10312 | Drive Shaft | | 25 | 37 | 58.5 | 89 | 625 | |
| | 2011.09- | 5MT | F | R | Hatchback FWD 5FS (EP6C) | | GDS10251 | Drive Shaft | | 25 | 24 | 58.5 | 79 | 935 | |
| | 2011.09- | 5MT | F | R | Hatchback FWD 5FS (EP6C) | | GCI99159 | Inner Joint | | 24 | 34 | 29.8 | 350 | 87.5 | |
| | 2011.09- | MT | F | L | Hatchback FWD 5FS (EP6C) | | GDS10250 | Drive Shaft | | 25 | 24 | 58.5 | 79 | 630 | |
| | 2011.09- | MT | F | L | Hatchback FWD 5FS (EP6C) | | GDS10312 | Drive Shaft | | 25 | 37 | 58.5 | 89 | 625 | |
| | 2011.09- | | F | L/R | Hatchback FWD 5FS (EP6C) | | GCO10042 | Outer Joint | | 25 | 34 | 54.8 | 78.5 | 56 | I |
| | 2015.02- | 6MT | F | L | Hatchback Van FWD BHZ (DV6FC) | | GDS10253 | Drive Shaft | | 25 | 24 | 58.5 | 79 | 626 | |
| | 2015.02- | 6MT | F | R | Hatchback Van FWD BHZ (DV6FC) | | GDS10325 | Drive Shaft | | 25 | 24 | 58.5 | 79 | 940 | |
| | 2015.02- | 6MT | F | R | Hatchback Van FWD BHZ (DV6FC) | | GCO99366 | Outer Joint | | 25 | 34 | 58.5 | 79 | 55 | I |
| | 2015.02- | 6MT | F | L | Hatchback Van FWD BHZ (DV6FC) | | GCI10057 | Inner Joint | | 24 | 34 | 40 | 52.5 | 90 | |
| | 2015.02- | 6MT | F | R | Hatchback Van FWD BHZ (DV6FC) | | GCI10058 | Inner Joint | | 24 | 34 | 29.8 | 365 | 88 | |
| | 2015.02-2018.05 | 6AT | F | R | Hatchback FWD BHZ (DV6FC) | Technical Information no.:8PN06 | GDS84640 | Drive Shaft | | 25 | 37 | 58.5 | 79 | 931 | |
| | 2015.02-2018.05 | 6AT | F | R | Hatchback FWD BHZ (DV6FC) | Technical Information no.:8PN06 | GCO82351 | Outer Joint | | 25 | 34 | 58.5 | 79 | 55.5 | I |
| | 2015.02-2018.05 | 6AT | F | L | Hatchback FWD BHZ (DV6FC) | | GCI82119 | Inner Joint | | 37 | 34 | 41.5 | 58.5 | 94 | |
| | 2015.02-2018.05 | 6MT | F | L | Hatchback FWD BHZ (DV6FC) | | GDS10253 | Drive Shaft | | 25 | 24 | 58.5 | 79 | 626 | |
| | 2015.02-2018.05 | 6MT | F | R | Hatchback FWD BHZ (DV6FC) | | GDS10325 | Drive Shaft | | 25 | 24 | 58.5 | 79 | 940 | |
| | 2015.02-2018.05 | 6MT/6AT | F | L | Hatchback FWD BHZ (DV6FC) | Transmission:6AT,Technical Information no.:8PN05 | GCO99366 | Outer Joint | | 25 | 34 | 58.5 | 79 | 55 | I |
| | 2015.02-2018.05 | AT | F | L | Hatchback FWD BHZ (DV6FC) | Technical Information no.:8PN05 | GDS58072 | Drive Shaft | | 25 | 37 | 58.5 | 79 | 598 | |
| 1.6 (103 kw) | 2008.06-2011.07 | 6MT | F | R | Coupe FWD 5FT (EP6DT) | | GDS45104 | Drive Shaft | | 25 | 24 | 58 | 79 | 925 | |
| | 2008.06-2011.07 | 6MT | F | R | Coupe FWD 5FT (EP6DT) | | GCO45027 | Outer Joint | | 25 | 34 | 58 | 79 | 55.5 | I |
| | 2008.06-2011.07 | MT | F | L | Coupe FWD 5FT (EP6DT) | Trans. code:BE4R | GDS45105 | Drive Shaft | | 25 | 24 | 58 | 79 | 625 | |
| | 2008.06-2011.07 | MT | F | L | Coupe FWD 5FT (EP6DT) | | GDS45126 | Drive Shaft | | 25 | 24 | 58.5 | 89 | 630 | |
| | 2008.06-2011.07 | MT | F | R | Coupe FWD 5FT (EP6DT) | Trans. code:BE4R | GCO99366 | Outer Joint | | 25 | 34 | 58.5 | 79 | 55 | I |
| | 2008.06-2011.07 | MT | F | L | Coupe FWD 5FT (EP6DT) | Trans. code:BE4R | GCI10020 | Inner Joint | | 24 | 34 | 40 | 62.5 | 99 | |
| | 2008.07-2011.07 | 4AT/6MT | F | L | Hatchback FWD 5FT (EP6DT) | | GDS10286 | Drive Shaft | | 25 | 26 | 58.5 | 79 | 613 | |
| | 2008.07-2011.07 | 4AT/6MT | F | L | Hatchback FWD 5FT (EP6DT) | | GDS45105 | Drive Shaft | | 25 | 24 | 58 | 79 | 625 | |
| | 2008.07-2011.07 | 4AT/6MT | F | L | Hatchback FWD 5FT (EP6DT) | | GDS45126 | Drive Shaft | | 25 | 24 | 58.5 | 89 | 630 | |
| | 2008.07-2011.07 | 4AT/6MT | F | R | Hatchback FWD 5FT (EP6DT) | | GDS45104 | Drive Shaft | | 25 | 24 | 58 | 79 | 925 | |
| | 2008.07-2011.07 | 4AT/6MT | F | L/R | Hatchback FWD 5FT (EP6DT) | | GCO99366 | Outer Joint | | 25 | 34 | 58.5 | 79 | 55 | I |
| | 2008.07-2011.07 | 6MT | F | R | Hatchback FWD 5FT (EP6DT) | | GCO45027 | Outer Joint | | 25 | 34 | 58 | 79 | 55.5 | I |
| | 2008.07-2011.07 | AT | F | L | Hatchback FWD 5FT (EP6DT) | | GDS10255 | Drive Shaft | | 25 | 24 | 58.5 | 79 | 616 | |
| | 2008.07-2011.07 | AT | F | R | Hatchback FWD 5FT (EP6DT) | | GDS10254 | Drive Shaft | | 25 | 24 | 58.5 | 79 | 939 | |
| | 2008.07-2011.07 | AT | F | L | Hatchback FWD 5FT (EP6DT) | | GCI99001 | Inner Joint | | 26 | 34 | 30.2 | 46.5 | 103.5 | |
| 1.6 (110 kw) | 2008.07-2011.07 | 4AT/6MT | F | L | Coupe FWD 5FX (EP6DT) | | GDS10286 | Drive Shaft | | 25 | 26 | 58.5 | 79 | 613 | |
| | 2008.07-2011.07 | 4AT/6MT | F | L | Coupe FWD 5FX (EP6DT) | | GDS45126 | Drive Shaft | | 25 | 24 | 58.5 | 89 | 630 | |
| | 2008.07-2011.07 | 4AT/6MT | F | R | Coupe FWD 5FX (EP6DT) | | GDS45104 | Drive Shaft | | 25 | 24 | 58 | 79 | 925 | |
| | 2008.07-2011.07 | 4AT/6MT | F | L/R | Coupe FWD 5FX (EP6DT) | | GCO99366 | Outer Joint | | 25 | 34 | 58.5 | 79 | 55 | I |
| | 2008.07-2011.07 | 6MT | F | R | Coupe FWD 5FX (EP6DT) | | GCO45027 | Outer Joint | | 25 | 34 | 58 | 79 | 55.5 | I |
| | 2008.07-2011.07 | AT | F | L | Coupe FWD 5FX (EP6DT) | | GDS10255 | Drive Shaft | | 25 | 24 | 58.5 | 79 | 616 | |
| | 2008.07-2011.07 | AT | F | R | Coupe FWD 5FX (EP6DT) | | GDS10254 | Drive Shaft | | 25 | 24 | 58.5 | 79 | 939 | |

| | YEAR | TRANSM. | F/R | L/R | BODY STYLE & DRIVE TYPE & ENGINE | REMARKS | G-AP Ref. | PRODUCT | ABS | Technical Specifications A | B | C | H | L | P |
|---|---|---|---|---|---|---|---|---|---|---|---|---|---|---|---|
| **CITROËN** **C4** | | | | | | | | | | | | | | | |
| 1.6 (110 kw) | 2008.07-2011.07 | AT | F | L | Coupe FWD 5FX (EP6DT) | | GCI99001 | Inner Joint | | 26 | 34 | 30.2 | 46.5 | 103.5 | |
| | 2008.07-2011.07 | MT | F | L | Coupe FWD 5FX (EP6DT) | | GDS45105 | Drive Shaft | | 25 | 24 | 58 | 79 | 625 | |
| | 2008.07-2011.07 | | F | L/R | Coupe FWD 5FX (EP6DT) | | GCO10042 | Outer Joint | | 25 | 34 | 54.8 | 78.5 | 56 | I |
| | 2008.07-2011.07 | 6AT | F | L/R | Hatchback FWD 5FX (EP6DT) | | GCO99366 | Outer Joint | | 25 | 34 | 58.5 | 79 | 55 | I |
| | 2008.07-2011.07 | 6MT | F | L | Hatchback FWD 5FX (EP6DT) | | GDS10286 | Drive Shaft | | 25 | 26 | 58.5 | 79 | 613 | |
| | 2008.07-2011.07 | 6MT | F | L | Hatchback FWD 5FX (EP6DT) | | GDS45126 | Drive Shaft | | 25 | 24 | 58.5 | 89 | 630 | |
| | 2008.07-2011.07 | 6MT | F | R | Hatchback FWD 5FX (EP6DT) | | GDS45104 | Drive Shaft | | 25 | 24 | 58 | 79 | 925 | |
| | 2008.07-2011.07 | 6MT | F | R | Hatchback FWD 5FX (EP6DT) | | GCO45027 | Outer Joint | | 25 | 34 | 58 | 79 | 55.5 | I |
| | 2008.07-2011.07 | AT | F | L | Hatchback FWD 5FX (EP6DT) | | GCI99001 | Inner Joint | | 26 | 34 | 30.2 | 46.5 | 103.5 | |
| | 2008.07-2011.07 | MT | F | L | Hatchback FWD 5FX (EP6DT) | Trans. code:BE4R | GDS45105 | Drive Shaft | | 25 | 24 | 58 | 79 | 625 | |
| | 2008.07-2011.07 | | F | L/R | Hatchback FWD 5FX (EP6DT) | | GCO10042 | Outer Joint | | 25 | 34 | 54.8 | 78.5 | 56 | I |
| 1.6 (115 kw) | 2009.11-2016.12 | 6AT | F | L | Hatchback FWD 5FV (EP6CDT) | Technical Information no.:8PN05 | GDS58072 | Drive Shaft | | 25 | 37 | 58.5 | 79 | 598 | |
| | 2009.11-2016.12 | 6AT | F | R | Hatchback FWD 5FV (EP6CDT) | Technical Information no.:8PN06 | GDS84640 | Drive Shaft | | 25 | 37 | 58.5 | 79 | 931 | |
| | 2009.11-2016.12 | 6AT | F | L | Hatchback FWD 5FV (EP6CDT) | Technical Information no.:8PN05 | GCO99366 | Outer Joint | | 25 | 34 | 58.5 | 79 | 55 | I |
| | 2009.11-2016.12 | 6AT | F | R | Hatchback FWD 5FV (EP6CDT) | Technical Information no.:8PN06 | GCO82351 | Outer Joint | | 25 | 34 | 58.5 | 79 | 55.5 | I |
| | 2009.11-2016.12 | 6AT | F | L | Hatchback FWD 5FV (EP6CDT) | | GCI82119 | Inner Joint | | 37 | 34 | 41.5 | 58.5 | 94 | |
| | 2009.11-2016.12 | 6MT | F | L | Hatchback FWD 5FV (EP6CDT) | | GDS10253 | Drive Shaft | | 25 | 24 | 58.5 | 79 | 626 | |
| | 2009.11-2016.12 | 6MT | F | R | Hatchback FWD 5FV (EP6CDT) | | GDS10325 | Drive Shaft | | 25 | 24 | 58.5 | 79 | 940 | |
| | 2009.11-2016.12 | 6MT | F | L/R | Hatchback FWD 5FV (EP6CDT) | | GCO10148 | Outer Joint | | 25 | 34 | 58.5 | 79 | 55.5 | I |
| | 2009.11-2016.12 | 6MT | F | L | Hatchback FWD 5FV (EP6CDT) | | GCI10057 | Inner Joint | | 24 | 34 | 40 | 52.5 | 90 | |
| | 2009.11-2016.12 | 6MT | F | R | Hatchback FWD 5FV (EP6CDT) | | GCI10058 | Inner Joint | | 24 | 34 | 29.8 | 365 | 88 | |
| | 2009.11-2016.12 | MT | F | L | Hatchback FWD 5FV (EP6CDT) | Trans. code:ML6C | GDS10312 | Drive Shaft | | 25 | 37 | 58.5 | 89 | 625 | |
| 2.0 (81 kw) | 2007.04-2008.07 | 5MT | F | L | Hatchback FWD RHZ (DW10ATED) | | GDS45105 | Drive Shaft | | 25 | 24 | 58 | 79 | 625 | |
| | 2007.04-2008.07 | 5MT | F | L | Hatchback FWD RHZ (DW10ATED) | | GDS45126 | Drive Shaft | | 25 | 24 | 58.5 | 89 | 630 | |
| | 2007.04-2008.07 | 5MT | F | R | Hatchback FWD RHZ (DW10ATED) | | GDS45104 | Drive Shaft | | 25 | 24 | 58 | 79 | 925 | |
| | 2007.04-2008.07 | MT | F | L/R | Hatchback FWD RHZ (DW10ATED) | | GCO99366 | Outer Joint | | 25 | 34 | 58.5 | 79 | 55 | I |
| 2.0 (100 kw) | 2004.11-2007.07 | 5MT | F | L | Coupe FWD RFN (EW10J4) | | GDS45105 | Drive Shaft | | 25 | 24 | 58 | 79 | 625 | |
| | 2004.11-2007.07 | 5MT | F | L | Coupe FWD RFN (EW10J4) | | GDS45126 | Drive Shaft | | 25 | 24 | 58.5 | 89 | 630 | |
| | 2004.11-2007.07 | 5MT | F | R | Coupe FWD RFN (EW10J4) | | GDS45104 | Drive Shaft | | 25 | 24 | 58 | 79 | 925 | |
| | 2004.11-2007.07 | 5MT | F | R | Coupe FWD RFN (EW10J4) | | GCO45027 | Outer Joint | | 25 | 34 | 58 | 79 | 55.5 | I |
| | 2004.11-2007.07 | 5MT | F | L/R | Coupe FWD RFN (EW10J4) | | GCO99366 | Outer Joint | | 25 | 34 | 58.5 | 79 | 55 | I |
| | 2004.11-2007.07 | 5MT | F | L | Coupe FWD RFN (EW10J4) | | GCI10020 | Inner Joint | | 24 | 34 | 40 | 62.5 | 99 | |
| | 2004.11-2007.07 | AT | F | L | Coupe FWD RFN (EW10J4) | | GDS10286 | Drive Shaft | | 25 | 26 | 58.5 | 79 | 613 | |
| | 2004.11-2007.07 | AT | F | R | Coupe FWD RFN (EW10J4) | | GDS10291 | Drive Shaft | | 25 | 26 | 58.5 | 79 | 833 | |
| | 2004.11-2007.07 | MT | F | R | Coupe FWD RFN (EW10J4) | | GDS10173 | Drive Shaft | 29W | 25 | 24 | 58.5 | 79 | 921 | |
| | 2004.11-2007.07 | | F | L/R | Coupe FWD RFN (EW10J4) | | GCO10042 | Outer Joint | | 25 | 34 | 54.8 | 78.5 | 56 | I |
| | 2004.11-2007.07 | 5MT | F | L | Hatchback FWD RFN (EW10J4) | | GDS45105 | Drive Shaft | | 25 | 24 | 58 | 79 | 625 | |
| | 2004.11-2007.07 | 5MT | F | L | Hatchback FWD RFN (EW10J4) | | GDS45126 | Drive Shaft | | 25 | 24 | 58.5 | 89 | 630 | |
| | 2004.11-2007.07 | 5MT | F | R | Hatchback FWD RFN (EW10J4) | | GDS45104 | Drive Shaft | | 25 | 24 | 58 | 79 | 925 | |
| | 2004.11-2007.07 | 5MT | F | R | Hatchback FWD RFN (EW10J4) | | GCO45027 | Outer Joint | | 25 | 34 | 58 | 79 | 55.5 | I |
| | 2004.11-2007.07 | 5MT | F | L/R | Hatchback FWD RFN (EW10J4) | | GCO99366 | Outer Joint | | 25 | 34 | 58.5 | 79 | 55 | I |
| | 2004.11-2007.07 | 5MT | F | L | Hatchback FWD RFN (EW10J4) | | GCI10020 | Inner Joint | | 24 | 34 | 40 | 62.5 | 99 | |
| | 2004.11-2007.07 | AT | F | L | Hatchback FWD RFN (EW10J4) | | GDS10286 | Drive Shaft | | 25 | 26 | 58.5 | 79 | 613 | |
| | 2004.11-2007.07 | AT | F | R | Hatchback FWD RFN (EW10J4) | | GDS10291 | Drive Shaft | | 25 | 26 | 58.5 | 79 | 833 | |
| | 2004.11-2007.07 | MT | F | R | Hatchback FWD RFN (EW10J4) | | GDS10173 | Drive Shaft | 29W | 25 | 24 | 58.5 | 79 | 921 | |
| | 2004.11-2007.07 | | F | L/R | Hatchback FWD RFN (EW10J4) | | GCO10042 | Outer Joint | | 25 | 34 | 54.8 | 78.5 | 56 | I |
| | 2004.11-2010.12 | 6MT | F | R | Coupe FWD RHR (DW10BTED4) | | GCI10041 | Inner Joint | | 37 | 39 | 32 | 399 | 95.5 | |
| | 2004.11-2010.12 | AT | F | L | Coupe FWD RHR (DW10BTED4) | | GDS56611 | Drive Shaft | | 25 | 37 | 58.4 | 89 | 603 | |
| | 2004.11-2010.12 | AT | F | R | Coupe FWD RHR (DW10BTED4) | | GDS83400 | Drive Shaft | | 25 | 37 | 58.4 | 89 | 917 | |
| | 2004.11-2010.12 | AT | F | L/R | Coupe FWD RHR (DW10BTED4) | | GCO10170 | Outer Joint | | 25 | 39 | 58.4 | 89 | 63 | I |
| | 2004.11-2010.12 | AT | F | L | Coupe FWD RHR (DW10BTED4) | | GCI10120 | Inner Joint | | 37 | 39 | 42.2 | 60 | 95.5 | |
| | 2004.11-2010.12 | AT | F | R | Coupe FWD RHR (DW10BTED4) | | GCI82199 | Inner Joint | | 37 | 39 | | 365 | 95 | |
| | 2004.11-2010.12 | AT/MT | F | R | Coupe FWD RHR (DW10BTED4) | Trans. code:BE4R | GDS45104 | Drive Shaft | | 25 | 24 | 58 | 79 | 925 | |
| | 2004.11-2010.12 | MT | F | L | Coupe FWD RHR (DW10BTED4) | | GDS10268 | Drive Shaft | | 25 | 37 | 58.5 | 89 | 621 | |
| | 2004.11-2010.12 | MT | F | L | Coupe FWD RHR (DW10BTED4) | Trans. code:BE4R | GDS45105 | Drive Shaft | | 25 | 24 | 58 | 79 | 625 | |
| | 2004.11-2010.12 | MT | F | R | Coupe FWD RHR (DW10BTED4) | | GDS88082 | Drive Shaft | | 25 | 37 | 58.5 | 89 | 949 | |
| | 2004.11-2010.12 | MT | F | L/R | Coupe FWD RHR (DW10BTED4) | | GCO10085 | Outer Joint | | 25 | 39 | 59 | 89 | 63.5 | I |
| | 2004.11-2011.07 | 6MT | F | R | Hatchback FWD RHR (DW10BTED4) | | GCI10041 | Inner Joint | | 37 | 39 | 32 | 399 | 95.5 | |
| | 2004.11-2011.07 | AT | F | L | Hatchback FWD RHR (DW10BTED4) | | GDS56611 | Drive Shaft | | 25 | 37 | 58.4 | 89 | 603 | |
| | 2004.11-2011.07 | AT | F | R | Hatchback FWD RHR (DW10BTED4) | | GDS83400 | Drive Shaft | | 25 | 37 | 58.4 | 89 | 917 | |
| | 2004.11-2011.07 | AT | F | L/R | Hatchback FWD RHR (DW10BTED4) | | GCO10170 | Outer Joint | | 25 | 39 | 58.4 | 89 | 63 | I |
| | 2004.11-2011.07 | AT | F | L | Hatchback FWD RHR (DW10BTED4) | | GCI10120 | Inner Joint | | 37 | 39 | 42.2 | 60 | 95.5 | |
| | 2004.11-2011.07 | AT | F | R | Hatchback FWD RHR (DW10BTED4) | | GCI82199 | Inner Joint | | 37 | 39 | | 365 | 95 | |
| | 2004.11-2011.07 | AT/MT | F | R | Hatchback FWD RHR (DW10BTED4) | Trans. code:BE4R | GDS45104 | Drive Shaft | | 25 | 24 | 58 | 79 | 925 | |
| | 2004.11-2011.07 | MT | F | L | Hatchback FWD RHR (DW10BTED4) | | GDS10268 | Drive Shaft | | 25 | 37 | 58.5 | 89 | 621 | |

| | YEAR | TRANSM. | F/R | L/R | BODY STYLE & DRIVE TYPE & ENGINE | REMARKS | G-AP Ref. | PRODUCT | ABS | Technical Specifications A | B | C | H | L | P |
|---|---|---|---|---|---|---|---|---|---|---|---|---|---|---|---|
| **CITROËN** | | | | | | | | | | | | | | | |
| **C4** | | | | | | | | | | | | | | | |
| 2.0 (100 kw) | 2004.11-2011.07 | MT | F | L | Hatchback FWD RHR (DW10BTED4) | Trans. code:BE4R | GDS45105 | Drive Shaft | | 25 | 24 | 58 | 79 | 625 | |
| | 2004.11-2011.07 | MT | F | R | Hatchback FWD RHR (DW10BTED4) | | GDS88082 | Drive Shaft | | 25 | 37 | 58.5 | 89 | 949 | |
| | 2004.11-2011.07 | MT | F | L/R | Hatchback FWD RHR (DW10BTED4) | | GCO10085 | Outer Joint | | 25 | 39 | 59 | 89 | 63.5 | I |
| | 2005.02-2010.12 | AT | F | L | Hatchback Van FWD RHR (DW10BTED4) | | GDS56611 | Drive Shaft | | 25 | 37 | 58.4 | 89 | 603 | |
| | 2005.02-2010.12 | AT | F | R | Hatchback Van FWD RHR (DW10BTED4) | | GDS83400 | Drive Shaft | | 25 | 37 | 58.4 | 89 | 917 | |
| | 2005.02-2010.12 | AT | F | L/R | Hatchback Van FWD RHR (DW10BTED4) | | GCO10170 | Outer Joint | | 25 | 39 | 58.4 | 89 | 63 | I |
| | 2005.02-2010.12 | AT | F | L | Hatchback Van FWD RHR (DW10BTED4) | | GCI10120 | Inner Joint | | 37 | 39 | 42.2 | 60 | 95.5 | |
| | 2005.02-2010.12 | AT | F | R | Hatchback Van FWD RHR (DW10BTED4) | | GCI82199 | Inner Joint | | 37 | 39 | | 365 | 95 | |
| | 2005.02-2010.12 | MT | F | L | Hatchback Van FWD RHR (DW10BTED4) | | GDS10268 | Drive Shaft | | 25 | 37 | 58.5 | 89 | 621 | |
| | 2005.02-2010.12 | MT | F | R | Hatchback Van FWD RHR (DW10BTED4) | | GDS88082 | Drive Shaft | | 25 | 37 | 58.5 | 89 | 949 | |
| | 2005.02-2010.12 | MT | F | L/R | Hatchback Van FWD RHR (DW10BTED4) | | GCO10085 | Outer Joint | | 25 | 39 | 59 | 89 | 63.5 | I |
| 2.0 (103 kw) | 2004.11-2011.07 | 5MT | F | L | Hatchback FWD RFJ (EW10A) | | GDS45105 | Drive Shaft | | 25 | 24 | 58 | 79 | 625 | |
| | 2004.11-2011.07 | AT | F | L | Hatchback FWD RFJ (EW10A) | | GDS10286 | Drive Shaft | | 25 | 26 | 58.5 | 79 | 613 | |
| | 2004.11-2011.07 | AT | F | R | Hatchback FWD RFJ (EW10A) | | GDS10291 | Drive Shaft | | 25 | 26 | 58.5 | 79 | 833 | |
| | 2004.11-2011.07 | AT | F | L | Hatchback FWD RFJ (EW10A) | | GCI99001 | Inner Joint | | 26 | 34 | 30.2 | 46.5 | 103.5 | |
| | 2004.11-2011.07 | MT | F | L | Hatchback FWD RFJ (EW10A) | | GDS45126 | Drive Shaft | | 25 | 24 | 58.5 | 89 | 630 | |
| | 2004.11-2011.07 | MT | F | R | Hatchback FWD RFJ (EW10A) | | GDS10173 | Drive Shaft | 29W | 25 | 24 | 58.5 | 79 | 921 | |
| | 2004.11-2011.07 | MT | F | R | Hatchback FWD RFJ (EW10A) | | GDS45104 | Drive Shaft | | 25 | 24 | 58 | 79 | 925 | |
| | 2004.11-2011.07 | MT | F | R | Hatchback FWD RFJ (EW10A) | | GCO45027 | Outer Joint | | 25 | 34 | 58 | 79 | 55.5 | I |
| | 2004.11-2011.07 | MT | F | L/R | Hatchback FWD RFJ (EW10A) | | GCO99366 | Outer Joint | | 25 | 34 | 58.5 | 79 | 55 | I |
| | 2004.11-2011.07 | | F | L/R | Hatchback FWD RFJ (EW10A) | | GCO10042 | Outer Joint | | 25 | 34 | 54.8 | 78.5 | 56 | I |
| | 2006.10-2007.12 | 5MT | F | L | Coupe FWD RFJ (EW10A) | | GDS45105 | Drive Shaft | | 25 | 24 | 58 | 79 | 625 | |
| | 2006.10-2007.12 | 5MT | F | L | Coupe FWD RFJ (EW10A) | | GCI10020 | Inner Joint | | 24 | 34 | 40 | 62.5 | 99 | |
| | 2006.10-2007.12 | MT | F | L | Coupe FWD RFJ (EW10A) | | GDS45126 | Drive Shaft | | 25 | 24 | 58.5 | 89 | 630 | |
| | 2006.10-2007.12 | MT | F | R | Coupe FWD RFJ (EW10A) | | GDS45104 | Drive Shaft | | 25 | 24 | 58 | 79 | 925 | |
| | 2006.10-2007.12 | MT | F | R | Coupe FWD RFJ (EW10A) | | GCO45027 | Outer Joint | | 25 | 34 | 58 | 79 | 55.5 | I |
| | 2006.10-2007.12 | MT | F | L/R | Coupe FWD RFJ (EW10A) | | GCO10042 | Outer Joint | | 25 | 34 | 54.8 | 78.5 | 56 | I |
| | 2006.10-2007.12 | MT | F | L/R | Coupe FWD RFJ (EW10A) | | GCO99366 | Outer Joint | | 25 | 34 | 58.5 | 79 | 55 | I |
| | 2008.07-2011.07 | AT | F | L | Coupe FWD RHF (DW10BTED4) | | GDS56611 | Drive Shaft | | 25 | 37 | 58.4 | 89 | 603 | |
| | 2008.07-2011.07 | AT | F | R | Coupe FWD RHF (DW10BTED4) | | GDS83400 | Drive Shaft | | 25 | 37 | 58.4 | 89 | 917 | |
| | 2008.07-2011.07 | AT | F | L/R | Coupe FWD RHF (DW10BTED4) | | GCO10170 | Outer Joint | | 25 | 39 | 58.4 | 89 | 63 | I |
| | 2008.07-2011.07 | AT | F | L | Coupe FWD RHF (DW10BTED4) | | GCI10120 | Inner Joint | | 37 | 39 | 42.2 | 60 | 95.5 | |
| | 2008.07-2011.07 | AT | F | R | Coupe FWD RHF (DW10BTED4) | | GCI82199 | Inner Joint | | 37 | 39 | | 365 | 95 | |
| | 2008.07-2011.07 | MT | F | L | Coupe FWD RHF (DW10BTED4) | | GDS10268 | Drive Shaft | | 25 | 37 | 58.5 | 89 | 621 | |
| | 2008.07-2011.07 | MT | F | R | Coupe FWD RHF (DW10BTED4) | | GDS88082 | Drive Shaft | | 25 | 37 | 58.5 | 89 | 949 | |
| | 2008.07-2011.07 | MT | F | L/R | Coupe FWD RHF (DW10BTED4) | | GCO10085 | Outer Joint | | 25 | 39 | 59 | 89 | 63.5 | I |
| | 2008.07-2011.07 | MT | F | R | Coupe FWD RHF (DW10BTED4) | | GCI10041 | Inner Joint | | 37 | 39 | 32 | 399 | 95.5 | |
| | 2008.07-2011.07 | AT | F | L | Hatchback FWD RHF (DW10BTED4) | | GDS56611 | Drive Shaft | | 25 | 37 | 58.4 | 89 | 603 | |
| | 2008.07-2011.07 | AT | F | R | Hatchback FWD RHF (DW10BTED4) | | GDS83400 | Drive Shaft | | 25 | 37 | 58.4 | 89 | 917 | |
| | 2008.07-2011.07 | AT | F | L/R | Hatchback FWD RHF (DW10BTED4) | | GCO10170 | Outer Joint | | 25 | 39 | 58.4 | 89 | 63 | I |
| | 2008.07-2011.07 | AT | F | L | Hatchback FWD RHF (DW10BTED4) | | GCI10120 | Inner Joint | | 37 | 39 | 42.2 | 60 | 95.5 | |
| | 2008.07-2011.07 | AT | F | R | Hatchback FWD RHF (DW10BTED4) | | GCI82199 | Inner Joint | | 37 | 39 | | 365 | 95 | |
| | 2008.07-2011.07 | MT | F | L | Hatchback FWD RHF (DW10BTED4) | | GDS10268 | Drive Shaft | | 25 | 37 | 58.5 | 89 | 621 | |
| | 2008.07-2011.07 | MT | F | R | Hatchback FWD RHF (DW10BTED4) | | GDS88082 | Drive Shaft | | 25 | 37 | 58.5 | 89 | 949 | |
| | 2008.07-2011.07 | MT | F | L/R | Hatchback FWD RHF (DW10BTED4) | | GCO10085 | Outer Joint | | 25 | 39 | 59 | 89 | 63.5 | I |
| | 2008.07-2011.07 | MT | F | R | Hatchback FWD RHF (DW10BTED4) | | GCI10041 | Inner Joint | | 37 | 39 | 32 | 399 | 95.5 | |
| 2.0 (105 kw) | 2006.09-2009.07 | 5MT | F | L | Hatchback FWD RFJ (EW10A) | | GDS45105 | Drive Shaft | | 25 | 24 | 58 | 79 | 625 | |
| | 2006.09-2009.07 | 5MT | F | L | Hatchback FWD RFJ (EW10A) | | GDS45126 | Drive Shaft | | 25 | 24 | 58.5 | 89 | 630 | |
| | 2006.09-2009.07 | 5MT | F | R | Hatchback FWD RFJ (EW10A) | | GDS45104 | Drive Shaft | | 25 | 24 | 58 | 79 | 925 | |
| | 2006.09-2009.07 | 5MT | F | R | Hatchback FWD RFJ (EW10A) | | GCO45027 | Outer Joint | | 25 | 34 | 58 | 79 | 55.5 | I |
| | 2006.09-2009.07 | 5MT | F | L/R | Hatchback FWD RFJ (EW10A) | | GCO99366 | Outer Joint | | 25 | 34 | 58.5 | 79 | 55 | I |
| | 2006.09-2009.07 | 5MT | F | L | Hatchback FWD RFJ (EW10A) | | GCI10020 | Inner Joint | | 24 | 34 | 40 | 62.5 | 99 | |
| | 2006.09-2009.07 | | F | L/R | Hatchback FWD RFJ (EW10A) | | GCO10042 | Outer Joint | | 25 | 34 | 54.8 | 78.5 | 56 | I |
| | 2006.10-2008.07 | 5MT | F | L | Coupe FWD RFJ (EW10A) | | GDS45105 | Drive Shaft | | 25 | 24 | 58 | 79 | 625 | |
| | 2006.10-2008.07 | 5MT | F | R | Coupe FWD RFJ (EW10A) | | GDS45104 | Drive Shaft | | 25 | 24 | 58 | 79 | 925 | |
| 2.0 (110 kw) | 2009.11- | 6AT | F | L | Hatchback FWD RHE (DW10CTED4);AHR (DW10FD) | Technical Information no.:8PN05 | GDS58072 | Drive Shaft | | 25 | 37 | 58.5 | 79 | 598 | |
| | 2009.11- | 6AT | F | R | Hatchback FWD RHE (DW10CTED4);AHR (DW10FD) | Technical Information no.:8PN06 | GDS84640 | Drive Shaft | | 25 | 37 | 58.5 | 79 | 931 | |
| | 2009.11- | 6AT | F | L | Hatchback FWD RHE (DW10CTED4);AHR (DW10FD) | Technical Information no.:8PN05 | GCO99366 | Outer Joint | | 25 | 34 | 58.5 | 79 | 55 | I |
| | 2009.11- | 6AT | F | R | Hatchback FWD RHE (DW10CTED4);AHR (DW10FD) | Technical Information no.:8PN06 | GCO82351 | Outer Joint | | 25 | 34 | 58.5 | 79 | 55.5 | I |
| | 2009.11- | 6AT | F | L | Hatchback FWD RHE (DW10CTED4);AHR (DW10FD) | | GCI82119 | Inner Joint | | 37 | 34 | 41.5 | 58.5 | 94 | |
| | 2009.11- | 6MT | F | L | Hatchback FWD RHE (DW10CTED4);AHR (DW10FD) | Technical Information no.:8NN75;solid shaft | GDS10427 | Drive Shaft | | 25 | 37 | 58.5 | 89 | 638 | |
| | 2009.11- | 6MT | F | R | Hatchback FWD RHE (DW10CTED4);AHR (DW10FD) | hollow shaft | GDS10313 | Drive Shaft | | 25 | 37 | 58.5 | 89 | 950 | |
| | 2009.11- | 6MT | F | R | Hatchback FWD RHE (DW10CTED4);AHR (DW10FD) | Technical Information no.:8NN74/8NN53;solid shaft | GDS10421 | Drive Shaft | | 25 | 37 | 58.5 | 89 | 972 | |
| | 2009.11- | 6MT | F | L/R | Hatchback FWD RHE (DW10CTED4);AHR (DW10FD) | Technical Information no.:8NN75/8NN74 | GCO10155 | Outer Joint | | 25 | 39 | 58.5 | 89 | 63.5 | I |
| | 2009.11- | AT | F | L | Hatchback FWD RHE (DW10CTED4);AHR (DW10FD) | Date from:2010.01 | GDS10380 | Drive Shaft | | 25 | 37 | 58.5 | 89 | 635 | |

| | YEAR | TRANSM. | F/R | L/R | BODY STYLE & DRIVE TYPE & ENGINE | REMARKS | G-AP Ref. | PRODUCT | ABS | Technical Specifications A | B | C | H | L | P |
|---|---|---|---|---|---|---|---|---|---|---|---|---|---|---|---|
| **CITROËN** | | | | | | | | | | | | | | | |
| **C4** | | | | | | | | | | | | | | | |
| 2.0 (110 kw) | 2009.11- | AT | F | R | Hatchback FWD RHE (DW10CTED4);AHR (DW10FD) | Date from:2010.01 | GDS10363 | Drive Shaft | | 25 | 37 | 58.5 | 89 | 935 | |
| | 2009.11- | MT | F | L | Hatchback FWD RHE (DW10CTED4);AHR (DW10FD) | inner teeth of wheel side:39 | GDS10210 | Drive Shaft | | 25 | 37 | 58.5 | 89 | 638 | |
| | 2009.11- | MT | F | L | Hatchback FWD RHE (DW10CTED4);AHR (DW10FD) | Trans. code:ML6C;inner teeth of wheel side:26 | GDS10312 | Drive Shaft | | 25 | 37 | 58.5 | 89 | 625 | |
| | 2009.11- | MT | F | R | Hatchback FWD RHE (DW10CTED4);AHR (DW10FD) | | GDS10361 | Drive Shaft | | 25 | 37 | 58.5 | 89 | 959 | |
| 2.0 (120 kw) | 2010.10- | 6AT | F | L | Hatchback FWD RHH (DW10CTED4) | | GDS10380 | Drive Shaft | | 25 | 37 | 58.5 | 89 | 635 | |
| | 2010.10- | 6AT | F | R | Hatchback FWD RHH (DW10CTED4) | | GDS10363 | Drive Shaft | | 25 | 37 | 58.5 | 89 | 935 | |
| | 2010.10- | 6AT | F | R | Hatchback FWD RHH (DW10CTED4) | | GCO10158 | Outer Joint | | 25 | 26 | 58.5 | 89 | 61.5 | M |
| | 2010.10- | 6AT | F | R | Hatchback FWD RHH (DW10CTED4) | | GCI10091 | Inner Joint | | 37 | 26 | | 366 | 100 | |
| | 2010.10- | MT | F | L | Hatchback FWD RHH (DW10CTED4) | Date from:2011.01 | GDS10427 | Drive Shaft | | 25 | 37 | 58.5 | 89 | 638 | |
| | 2010.10- | MT | F | R | Hatchback FWD RHH (DW10CTED4) | Date from:2011.01 | GDS10421 | Drive Shaft | | 25 | 37 | 58.5 | 89 | 972 | |
| | 2010.10- | | F | L/R | Hatchback FWD RHH (DW10CTED4) | Wheel Hub Diam:82mm | GCO10155 | Outer Joint | | 25 | 39 | 58.5 | 89 | 63.5 | I |
| 2.0 (130 kw) | 2004.11-2008.07 | 5MT | F | L | Hatchback FWD RFK (EW10J4S) | | GDS45105 | Drive Shaft | | 25 | 24 | 58 | 79 | 625 | |
| | 2004.11-2008.07 | 5MT | F | L | Hatchback FWD RFK (EW10J4S) | | GDS45126 | Drive Shaft | | 25 | 24 | 58.5 | 89 | 630 | |
| | 2004.11-2008.07 | 5MT | F | R | Hatchback FWD RFK (EW10J4S) | | GDS45104 | Drive Shaft | | 25 | 24 | 58 | 79 | 925 | |
| | 2004.11-2008.07 | 5MT | F | R | Hatchback FWD RFK (EW10J4S) | | GCO45027 | Outer Joint | | 25 | 34 | 58 | 79 | 55.5 | I |
| | 2004.11-2008.07 | 5MT | F | L/R | Hatchback FWD RFK (EW10J4S) | | GCO99366 | Outer Joint | | 25 | 34 | 58.5 | 79 | 55 | I |
| | 2004.11-2008.07 | 5MT | F | L | Hatchback FWD RFK (EW10J4S) | | GCI10020 | Inner Joint | | 24 | 34 | 40 | 62.5 | 99 | |
| | 2004.11-2008.07 | MT | F | R | Hatchback FWD RFK (EW10J4S) | | GDS10173 | Drive Shaft | 29W | 25 | 24 | 58.5 | 79 | 921 | |
| | 2004.11-2008.07 | | F | L/R | Hatchback FWD RFK (EW10J4S) | | GCO10042 | Outer Joint | | 25 | 34 | 54.8 | 78.5 | 56 | I |
| | 2004.11-2010.12 | 5MT | F | L | Coupe FWD RFK (EW10J4S) | | GDS45105 | Drive Shaft | | 25 | 24 | 58 | 79 | 625 | |
| | 2004.11-2010.12 | 5MT | F | L | Coupe FWD RFK (EW10J4S) | | GDS45126 | Drive Shaft | | 25 | 24 | 58.5 | 89 | 630 | |
| | 2004.11-2010.12 | 5MT | F | R | Coupe FWD RFK (EW10J4S) | | GDS45104 | Drive Shaft | | 25 | 24 | 58 | 79 | 925 | |
| | 2004.11-2010.12 | 5MT | F | R | Coupe FWD RFK (EW10J4S) | | GCO45027 | Outer Joint | | 25 | 34 | 58 | 79 | 55.5 | I |
| | 2004.11-2010.12 | 5MT | F | L/R | Coupe FWD RFK (EW10J4S) | | GCO99366 | Outer Joint | | 25 | 34 | 58.5 | 79 | 55 | I |
| | 2004.11-2010.12 | 5MT | F | L | Coupe FWD RFK (EW10J4S) | | GCI10020 | Inner Joint | | 24 | 34 | 40 | 62.5 | 99 | |
| | 2004.11-2010.12 | AT | F | L | Coupe FWD RFK (EW10J4S) | | GDS10286 | Drive Shaft | | 25 | 26 | 58.5 | 79 | 613 | |
| | 2004.11-2010.12 | AT | F | R | Coupe FWD RFK (EW10J4S) | | GDS10291 | Drive Shaft | | 25 | 26 | 58.5 | 79 | 833 | |
| | 2004.11-2010.12 | MT | F | R | Coupe FWD RFK (EW10J4S) | | GDS10173 | Drive Shaft | 29W | 25 | 24 | 58.5 | 79 | 921 | |
| | 2004.11-2010.12 | | F | L/R | Coupe FWD RFK (EW10J4S) | | GCO10042 | Outer Joint | | 25 | 34 | 54.8 | 78.5 | 56 | I |
| **C4 Aircross** | | | | | | | | | | | | | | | |
| 1.6 (84 kw) | 2012.04- | MT | F | L/R | SUV FWD 9HD (DV6C) | | GCO39117 | Outer Joint | | 28 | 35 | 59.5 | 95 | 65 | I |
| | 2012.05- | MT | F | L/R | SUV 4WD 9HL (DV6C) | | GCO39117 | Outer Joint | | 28 | 35 | 59.5 | 95 | 65 | I |
| 1.6 (86 kw) | 2012.04- | 5MT | F | R | SUV FWD 4A92;NKZ (4A92) | | GCI81083 | Inner Joint | | 27 | 35 | 50 | 255.5 | 120 | |
| 1.8 (110 kw) | 2012.04- | 6MT | F | L | SUV 4WD 4N13 | | GDS51047 | Drive Shaft | | 28 | 24 | 59.5 | 94.5 | 631 | |
| | 2012.04- | 6MT | F | R | SUV 4WD 4N13 | | GDS51050 | Drive Shaft | | 28 | 24 | 59.5 | 94.5 | 993 | |
| | 2012.04- | 6MT | F | L/R | SUV 4WD 4N13 | | GCO39137 | Outer Joint | | 28 | 37 | 59.5 | 94.5 | 71.5 | I |
| | 2012.04- | 6MT | F | L | SUV 4WD 4N13 | | GCI59140 | Inner Joint | | 24 | 36 | 50 | 67 | 116 | |
| | 2012.04- | 6MT | F | R | SUV 4WD 4N13 | | GCI51021 | Inner Joint | | 24 | 36 | 50 | 280.5 | 129 | |
| | 2012.04- | 6MT | F | L | SUV FWD 4N13 | | GDS51047 | Drive Shaft | | 28 | 24 | 59.5 | 94.5 | 631 | |
| | 2012.04- | 6MT | F | R | SUV FWD 4N13 | | GDS51050 | Drive Shaft | | 28 | 24 | 59.5 | 94.5 | 993 | |
| | 2012.04- | 6MT | F | L | SUV FWD 4N13 | | GCI59140 | Inner Joint | | 24 | 36 | 50 | 67 | 116 | |
| | 2012.04- | 6MT | F | R | SUV FWD 4N13 | | GCI51021 | Inner Joint | | 24 | 36 | 50 | 280.5 | 129 | |
| | 2012.04- | | F | L | SUV FWD 4N13 | | GCO39137 | Outer Joint | | 28 | 37 | 59.5 | 94.5 | 71.5 | I |
| 2.0 (110 kw) | 2012.04- | CVT | F | R | SUV 4WD 4B11 | | GDS39120 | Drive Shaft | | 28 | 27 | 59.5 | 95 | 965 | |
| | 2012.04- | CVT | F | L/R | SUV 4WD 4B11 | | GCO39117 | Outer Joint | | 28 | 35 | 59.5 | 95 | 65 | I |
| | 2012.04- | CVT/5MT | F | R | SUV 4WD 4B11 | | GCI81083 | Inner Joint | | 27 | 35 | 50 | 255.5 | 120 | |
| **C4 Cactus** | | | | | | | | | | | | | | | |
| 1.2 (55 kw) | 2014.09- | 5MT | F | L | Hatchback FWD HMU (EB2D);HMU (EB2FD) | | GDS83807 | Drive Shaft | | 21 | 22 | 48.2 | 85.5 | 652 | |
| | 2014.09- | 5MT | F | R | Hatchback FWD HMU (EB2D);HMU (EB2FD) | | GDS82810 | Drive Shaft | | 21 | 22 | 48.2 | 85.5 | 865 | |
| | 2014.09- | 5MT | F | L | Hatchback FWD HMU (EB2D);HMU (EB2FD) | | GCO82278 | Outer Joint | | 21 | 34 | 48.2 | 85.5 | 56.5 | I |
| | 2014.09- | 5MT | F | R | Hatchback FWD HMU (EB2D);HMU (EB2FD) | | GCO10143 | Outer Joint | | 21 | 34 | 48.2 | 85.5 | 56.5 | I |
| | 2014.09- | 5MT | F | L | Hatchback FWD HMU (EB2D);HMU (EB2FD) | | GCI82092 | Inner Joint | | 22 | 34 | 40 | 57.5 | 91 | |
| | 2014.09- | 5MT | F | R | Hatchback FWD HMU (EB2D);HMU (EB2FD) | | GCI82122 | Inner Joint | | 22 | 34 | 30.05 | 98.5 | 89.5 | |
| 1.2 (60 kw) | 2014.09- | 5AT/5MT | F | L | Hatchback FWD HMZ (EB2F) | | GDS83807 | Drive Shaft | | 21 | 22 | 48.2 | 85.5 | 652 | |
| | 2014.09- | 5AT/5MT | F | R | Hatchback FWD HMZ (EB2F) | | GDS82810 | Drive Shaft | | 21 | 22 | 48.2 | 85.5 | 865 | |
| | 2014.09- | 5AT/5MT | F | L | Hatchback FWD HMZ (EB2F) | | GCO82278 | Outer Joint | | 21 | 34 | 48.2 | 85.5 | 56.5 | I |
| | 2014.09- | 5AT/5MT | F | R | Hatchback FWD HMZ (EB2F) | | GCO10143 | Outer Joint | | 21 | 34 | 48.2 | 85.5 | 56.5 | I |
| | 2014.09- | 5AT/5MT | F | L | Hatchback FWD HMZ (EB2F) | | GCI82092 | Inner Joint | | 22 | 34 | 40 | 57.5 | 91 | |
| | 2014.09- | 5AT/5MT | F | R | Hatchback FWD HMZ (EB2F) | | GCI82122 | Inner Joint | | 22 | 34 | 30.05 | 98.5 | 89.5 | |
| | 2019.05- | 5MT | F | L | Hatchback Van FWD HMZ (EB2) | | GDS83807 | Drive Shaft | | 21 | 22 | 48.2 | 85.5 | 652 | |
| | 2019.05- | 5MT | F | R | Hatchback Van FWD HMZ (EB2) | | GDS82810 | Drive Shaft | | 21 | 22 | 48.2 | 85.5 | 865 | |
| | 2019.05- | 5MT | F | L | Hatchback Van FWD HMZ (EB2) | | GCO82278 | Outer Joint | | 21 | 34 | 48.2 | 85.5 | 56.5 | I |
| | 2019.05- | 5MT | F | R | Hatchback Van FWD HMZ (EB2) | | GCO10143 | Outer Joint | | 21 | 34 | 48.2 | 85.5 | 56.5 | I |
| | 2019.05- | 5MT | F | L | Hatchback Van FWD HMZ (EB2) | | GCI82092 | Inner Joint | | 22 | 34 | 40 | 57.5 | 91 | |
| | 2019.05- | 5MT | F | R | Hatchback Van FWD HMZ (EB2) | | GCI82122 | Inner Joint | | 22 | 34 | 30.05 | 98.5 | 89.5 | |

| | YEAR | TRANSM. | F/R | L/R | BODY STYLE & DRIVE TYPE & ENGINE | REMARKS | G-AP Ref. | PRODUCT | ABS | Technical Specifications A | B | C | H | L | P |
|---|---|---|---|---|---|---|---|---|---|---|---|---|---|---|---|
| **CITROËN** **C4 Cactus** | | | | | | | | | | | | | | | |
| 1.2 (81 kw) | 2014.09- | 5MT | F | L | Hatchback FWD HNZ (EB2DT);HNV (EB2DTM);HNP (EB2ADT) | Trans. Type:BE4R | GDS10309 | Drive Shaft | | 21 | 24 | 48.3 | 86.5 | 641 | |
| | 2014.09- | 5MT | F | R | Hatchback FWD HNZ (EB2DT);HNV (EB2DTM);HNP (EB2ADT) | Trans. Type:BE4R | GDS10301 | Drive Shaft | | 21 | 24 | 48.3 | 86.5 | 871 | |
| | 2014.09- | 5MT | F | L | Hatchback FWD HNZ (EB2DT);HNV (EB2DTM);HNP (EB2ADT) | | GCO82278 | Outer Joint | | 21 | 34 | 48.2 | 85.5 | 56.5 | I |
| | 2014.09- | 5MT | F | L/R | Hatchback FWD HNZ (EB2DT);HNV (EB2DTM);HNP (EB2ADT) | Trans. Type:BE4R | GCO10130 | Outer Joint | | 21 | 34 | 48.3 | 86.5 | 55.5 | I |
| | 2014.09- | 5MT | F | L | Hatchback FWD HNZ (EB2DT);HNV (EB2DTM);HNP (EB2ADT) | Trans. Type:BE4R | GCI10129 | Inner Joint | | 24 | 34 | 40 | 62 | 89 | |
| | 2014.09- | 5MT | F | R | Hatchback FWD HNZ (EB2DT);HNV (EB2DTM);HNP (EB2ADT) | Trans. Type:BE4R | GCI10082 | Inner Joint | | 24 | 34 | 29.8 | 291 | 88 | |
| | 2014.09- | 6AT | F | L | Hatchback FWD HNZ (EB2DT);HNV (EB2DTM);HNP (EB2ADT) | | GDS83216 | Drive Shaft | | 25 | 37 | 58.5 | 79 | 598 | |
| | 2014.09- | 6AT | F | R | Hatchback FWD HNZ (EB2DT);HNV (EB2DTM);HNP (EB2ADT) | | GDS83217 | Drive Shaft | | 25 | 37 | 58.5 | 79 | 862 | |
| | 2014.09- | 6AT | F | L | Hatchback FWD HNZ (EB2DT);HNV (EB2DTM);HNP (EB2ADT) | | GCO82355 | Outer Joint | | 25 | 34 | 58.5 | 79 | 55.5 | I |
| | 2014.09- | 6AT | F | R | Hatchback FWD HNZ (EB2DT);HNV (EB2DTM);HNP (EB2ADT) | | GCO82351 | Outer Joint | | 25 | 34 | 58.5 | 79 | 55.5 | I |
| | 2014.09- | 6AT | F | L | Hatchback FWD HNZ (EB2DT);HNV (EB2DTM);HNP (EB2ADT) | | GCI82119 | Inner Joint | | 37 | 34 | 41.5 | 58.5 | 94 | |
| | 2014.09- | 6AT | F | R | Hatchback FWD HNZ (EB2DT);HNV (EB2DTM);HNP (EB2ADT) | | GCI82182 | Inner Joint | | 37 | 34 | | 290 | 88 | |
| | 2014.09- | 6MT | F | L | Hatchback FWD HNZ (EB2DT);HNV (EB2DTM);HNP (EB2ADT) | | GDS83862 | Drive Shaft | | 21 | 24 | 48.2 | 85.5 | 632 | |
| | 2014.09- | 6MT | F | R | Hatchback FWD HNZ (EB2DT);HNV (EB2DTM);HNP (EB2ADT) | | GDS83861 | Drive Shaft | | 21 | 24 | 48.2 | 85.5 | 880 | |
| | 2014.09- | 6MT | F | L | Hatchback FWD HNZ (EB2DT);HNV (EB2DTM);HNP (EB2ADT) | | GCI10057 | Inner Joint | | 24 | 34 | 40 | 52.5 | 90 | |
| | 2014.09- | 6MT | F | R | Hatchback FWD HNZ (EB2DT);HNV (EB2DTM);HNP (EB2ADT) | | GCI10165 | Inner Joint | | 24 | 34 | 29.8 | 305.5 | 87.5 | |
| | 2019.05- | 5MT | F | L | Hatchback Van FWD HNZ (EB2DT);HNP (EB2ADT) | | GDS10309 | Drive Shaft | | 21 | 24 | 48.3 | 86.5 | 641 | |
| | 2019.05- | 5MT | F | R | Hatchback Van FWD HNZ (EB2DT);HNP (EB2ADT) | Trans. code:BE4R | GDS10301 | Drive Shaft | | 21 | 24 | 48.3 | 86.5 | 871 | |
| | 2019.05- | 5MT | F | L | Hatchback Van FWD HNZ (EB2DT);HNP (EB2ADT) | | GCO82278 | Outer Joint | | 21 | 34 | 48.2 | 85.5 | 56.5 | I |
| | 2019.05- | 6AT | F | L | Hatchback Van FWD HNZ (EB2DT);HNP (EB2ADT) | | GDS83216 | Drive Shaft | | 25 | 37 | 58.5 | 79 | 598 | |
| | 2019.05- | 6AT | F | R | Hatchback Van FWD HNZ (EB2DT);HNP (EB2ADT) | | GDS83217 | Drive Shaft | | 25 | 37 | 58.5 | 79 | 862 | |
| | 2019.05- | 6AT | F | L | Hatchback Van FWD HNZ (EB2DT);HNP (EB2ADT) | | GCO82355 | Outer Joint | | 25 | 34 | 58.5 | 79 | 55.5 | I |
| | 2019.05- | 6AT | F | R | Hatchback Van FWD HNZ (EB2DT);HNP (EB2ADT) | | GCO82351 | Outer Joint | | 25 | 34 | 58.5 | 79 | 55.5 | I |
| | 2019.05- | 6AT | F | R | Hatchback Van FWD HNZ (EB2DT);HNP (EB2ADT) | | GCI82182 | Inner Joint | | 37 | 34 | | 290 | 88 | |
| | 2019.05- | 6MT | F | L | Hatchback Van FWD HNZ (EB2DT);HNP (EB2ADT) | | GDS83862 | Drive Shaft | | 21 | 24 | 48.2 | 85.5 | 632 | |
| | 2019.05- | 6MT | F | R | Hatchback Van FWD HNZ (EB2DT);HNP (EB2ADT) | | GDS83861 | Drive Shaft | | 21 | 24 | 48.2 | 85.5 | 880 | |
| | 2019.05- | 6MT | F | L | Hatchback Van FWD HNZ (EB2DT);HNP (EB2ADT) | | GCI10057 | Inner Joint | | 24 | 34 | 40 | 52.5 | 90 | |
| | 2019.05- | 6MT | F | R | Hatchback Van FWD HNZ (EB2DT);HNP (EB2ADT) | | GCI10165 | Inner Joint | | 24 | 34 | 29.8 | 305.5 | 87.5 | |
| 1.2 (96 kw) | 2017.11- | 6AT/6MT | F | L | Hatchback FWD HNY (EB2DTS);HNS (EB2ADTS) | | GDS83862 | Drive Shaft | | 21 | 24 | 48.2 | 85.5 | 632 | |
| | 2017.11- | 6AT/6MT | F | R | Hatchback FWD HNY (EB2DTS);HNS (EB2ADTS) | | GDS83861 | Drive Shaft | | 21 | 24 | 48.2 | 85.5 | 880 | |
| | 2017.11- | 6AT/6MT | F | L/R | Hatchback FWD HNY (EB2DTS);HNS (EB2ADTS) | | GCO10143 | Outer Joint | | 21 | 34 | 48.2 | 85.5 | 56.5 | I |
| | 2017.11- | 6AT/6MT | F | L | Hatchback FWD HNY (EB2DTS);HNS (EB2ADTS) | | GCI10057 | Inner Joint | | 24 | 34 | 40 | 52.5 | 90 | |
| | 2017.11- | 6AT/6MT | F | R | Hatchback FWD HNY (EB2DTS);HNS (EB2ADTS) | | GCI10165 | Inner Joint | | 24 | 34 | 29.8 | 305.5 | 87.5 | |
| | 2019.05- | 6MT | F | L | Hatchback Van FWD HNY (EB2DTS) | | GDS83862 | Drive Shaft | | 21 | 24 | 48.2 | 85.5 | 632 | |
| | 2019.05- | 6MT | F | R | Hatchback Van FWD HNY (EB2DTS) | | GDS83861 | Drive Shaft | | 21 | 24 | 48.2 | 85.5 | 880 | |
| | 2019.05- | 6MT | F | L/R | Hatchback Van FWD HNY (EB2DTS) | | GCO10143 | Outer Joint | | 21 | 34 | 48.2 | 85.5 | 56.5 | I |
| | 2019.05- | 6MT | F | L | Hatchback Van FWD HNY (EB2DTS) | | GCI10057 | Inner Joint | | 24 | 34 | 40 | 52.5 | 90 | |
| | 2019.05- | 6MT | F | R | Hatchback Van FWD HNY (EB2DTS) | | GCI10165 | Inner Joint | | 24 | 34 | 29.8 | 305.5 | 87.5 | |
| 1.5 (73 kw) | 2018.06- | 6MT | F | L | Hatchback FWD YHY (DV5RD) | | GDS10309 | Drive Shaft | | 21 | 24 | 48.3 | 86.5 | 641 | |
| | 2018.06- | 6MT | F | R | Hatchback FWD YHY (DV5RD) | | GDS10301 | Drive Shaft | | 21 | 24 | 48.3 | 86.5 | 871 | |
| | 2018.06- | 6MT | F | L | Hatchback FWD YHY (DV5RD) | | GCO82278 | Outer Joint | | 21 | 34 | 48.2 | 85.5 | 56.5 | I |
| | 2018.06- | 6MT | F | L | Hatchback FWD YHY (DV5RD) | | GCI10129 | Inner Joint | | 24 | 34 | 40 | 62 | 89 | |
| | 2019.05- | 6MT | F | L | Hatchback Van FWD YHY (DV5RD) | | GDS10309 | Drive Shaft | | 21 | 24 | 48.3 | 86.5 | 641 | |
| | 2019.05- | 6MT | F | R | Hatchback Van FWD YHY (DV5RD) | | GDS10301 | Drive Shaft | | 21 | 24 | 48.3 | 86.5 | 871 | |
| | 2019.05- | 6MT | F | L | Hatchback Van FWD YHY (DV5RD) | | GCO82278 | Outer Joint | | 21 | 34 | 48.2 | 85.5 | 56.5 | I |
| 1.5 (75 kw) | 2018.06- | 6MT | F | L | Hatchback FWD YHY (DV5RD) | | GDS10309 | Drive Shaft | | 21 | 24 | 48.3 | 86.5 | 641 | |
| | 2018.06- | 6MT | F | R | Hatchback FWD YHY (DV5RD) | | GDS10301 | Drive Shaft | | 21 | 24 | 48.3 | 86.5 | 871 | |
| | 2018.06- | 6MT | F | L | Hatchback FWD YHY (DV5RD) | | GCO82278 | Outer Joint | | 21 | 34 | 48.2 | 85.5 | 56.5 | I |
| | 2018.06- | 6MT | F | L | Hatchback FWD YHY (DV5RD) | | GCI10129 | Inner Joint | | 24 | 34 | 40 | 62 | 89 | |
| 1.5 (88 kw) | 2018.09- | 6AT | F | L | Hatchback FWD YHX (DV5RC) | | GDS83110 | Drive Shaft | | 28 | 37 | 58.5 | 92.5 | 662 | |
| | 2018.09- | 6AT | F | R | Hatchback FWD YHX (DV5RC) | | GDS83109 | Drive Shaft | | 28 | 37 | 58.5 | 92.5 | 933 | |
| | 2018.09- | 6AT | F | L/R | Hatchback FWD YHX (DV5RC) | | GCO82273 | Outer Joint | | 28 | 34 | 58.5 | 92.5 | 56 | I |
| | 2018.09- | 6AT | F | L | Hatchback FWD YHX (DV5RC) | | GCI82119 | Inner Joint | | 37 | 34 | 41.5 | 58.5 | 94 | |
| | 2018.09- | 6AT | F | R | Hatchback FWD YHX (DV5RC) | | GCI82118 | Inner Joint | | 37 | 34 | | 290 | 88 | |
| 1.6 (68 kw) | 2014.09- | 6AT | F | L | Hatchback FWD 9HP (DV6DTED);9HJ (DV6DTEDM);9HP (DV6D) | Transm. code:MA | GDS83807 | Drive Shaft | | 21 | 22 | 48.2 | 85.5 | 652 | |
| | 2014.09- | 6AT | F | L | Hatchback FWD 9HP (DV6DTED);9HJ (DV6DTEDM);9HP (DV6D) | | GDS83862 | Drive Shaft | | 21 | 24 | 48.2 | 85.5 | 632 | |
| | 2014.09- | 6AT | F | R | Hatchback FWD 9HP (DV6DTED);9HJ (DV6DTEDM);9HP (DV6D) | | GDS83861 | Drive Shaft | | 21 | 24 | 48.2 | 85.5 | 880 | |
| | 2014.09- | 6AT | F | L/R | Hatchback FWD 9HP (DV6DTED);9HJ (DV6DTEDM);9HP (DV6D) | | GCO10143 | Outer Joint | | 21 | 34 | 48.2 | 85.5 | 56.5 | I |
| | 2014.09- | 6AT | F | R | Hatchback FWD 9HP (DV6DTED);9HJ (DV6DTEDM);9HP (DV6D) | | GCI10165 | Inner Joint | | 24 | 34 | 29.8 | 305.5 | 87.5 | |
| 1.6 (73 kw) | 2014.09-2018.06 | 5MT | F | L | Hatchback FWD BHY (DV6FD) | Wheel Hub Diam:72mm | GDS10309 | Drive Shaft | | 21 | 24 | 48.3 | 86.5 | 641 | |
| | 2014.09-2018.06 | 5MT | F | L | Hatchback FWD BHY (DV6FD) | Wheel Hub Diam:82mm | GDS83645 | Drive Shaft | | 25 | 24 | 58.5 | 79 | 638 | |
| | 2014.09-2018.06 | 5MT | F | R | Hatchback FWD BHY (DV6FD) | Wheel Hub Diam:72mm | GDS10301 | Drive Shaft | | 21 | 24 | 48.3 | 86.5 | 871 | |
| | 2014.09-2018.06 | 5MT | F | R | Hatchback FWD BHY (DV6FD) | Wheel Hub Diam:82mm | GDS83806 | Drive Shaft | | 25 | 24 | 58.5 | 79 | 867 | |
| | 2014.09-2018.06 | 5MT | F | L/R | Hatchback FWD BHY (DV6FD) | | GCO82355 | Outer Joint | | 25 | 34 | 58.5 | 79 | 55.5 | I |
| | 2014.09-2018.06 | 5MT | F | L | Hatchback FWD BHY (DV6FD) | | GCI82131 | Inner Joint | | 24 | 34 | 40 | 62 | 89 | |

| | YEAR | TRANSM. | F/R | L/R | BODY STYLE & DRIVE TYPE & ENGINE | REMARKS | G-AP Ref. | PRODUCT | ABS | Technical Specifications A | B | C | H | L | P |
|---|---|---|---|---|---|---|---|---|---|---|---|---|---|---|---|
| **CITROËN** | | | | | | | | | | | | | | | |
| **C4 Cactus** | | | | | | | | | | | | | | | |
| 1.6 (73 kw) | 2014.09-2018.06 | 5MT | F | R | Hatchback FWD BHY (DV6FD) | | GCI82374 | Inner Joint | | 24 | 34 | 29.8 | 291 | 88 | |
| | 2014.09-2018.06 | Semi-6AT | F | L | Hatchback FWD BHY (DV6FD) | | GDS83862 | Drive Shaft | | 21 | 24 | 48.2 | 85.5 | 632 | |
| | 2014.09-2018.06 | Semi-6AT | F | R | Hatchback FWD BHY (DV6FD) | | GDS83861 | Drive Shaft | | 21 | 24 | 48.2 | 85.5 | 880 | |
| | 2014.09-2018.06 | Semi-6AT | F | L | Hatchback FWD BHY (DV6FD) | | GCI10057 | Inner Joint | | 24 | 34 | 40 | 52.5 | 90 | |
| | 2014.09-2018.06 | Semi-6AT | F | R | Hatchback FWD BHY (DV6FD) | | GCI10165 | Inner Joint | | 24 | 34 | 29.8 | 305.5 | 87.5 | |
| | 2019.05- | 5MT | F | L | Hatchback Van FWD BHY (DV6FD) | | GDS83645 | Drive Shaft | | 25 | 24 | 58.5 | 79 | 638 | |
| | 2019.05- | 5MT | F | R | Hatchback Van FWD BHY (DV6FD) | | GDS83806 | Drive Shaft | | 25 | 24 | 58.5 | 79 | 867 | |
| | 2019.05- | 5MT | F | L/R | Hatchback Van FWD BHY (DV6FD) | | GCO82355 | Outer Joint | | 25 | 34 | 58.5 | 79 | 55.5 | I |
| | 2019.05- | 5MT | F | L | Hatchback Van FWD BHY (DV6FD) | | GCI82131 | Inner Joint | | 24 | 34 | 40 | 62 | 89 | |
| | 2019.05- | 5MT | F | R | Hatchback Van FWD BHY (DV6FD) | | GCI82374 | Inner Joint | | 24 | 34 | 29.8 | 291 | 88 | |
| | 2019.05- | MT | F | L | Hatchback Van FWD BHY (DV6FD) | Trans. code:BE4R | GDS10309 | Drive Shaft | | 21 | 24 | 48.3 | 86.5 | 641 | |
| | 2019.05- | MT | F | R | Hatchback Van FWD BHY (DV6FD) | Trans. code:BE4R | GDS10301 | Drive Shaft | | 21 | 24 | 48.3 | 86.5 | 871 | |
| **C4 Grand Picasso** | | | | | | | | | | | | | | | |
| 1.2 (96 kw) | 2014.04- | 6AT | F | L | MPV FWD HNY (EB2DTS) | | GDS83110 | Drive Shaft | | 28 | 37 | 58.5 | 92.5 | 662 | |
| | 2014.04- | 6AT | F | R | MPV FWD HNY (EB2DTS) | | GDS83109 | Drive Shaft | | 28 | 37 | 58.5 | 92.5 | 933 | |
| | 2014.04- | 6AT | F | L | MPV FWD HNY (EB2DTS) | | GCO82273 | Outer Joint | | 28 | 34 | 58.5 | 92.5 | 56 | I |
| | 2014.04- | 6AT | F | L | MPV FWD HNY (EB2DTS) | | GCI82119 | Inner Joint | | 37 | 34 | 41.5 | 58.5 | 94 | |
| | 2014.04- | 6AT | F | R | MPV FWD HNY (EB2DTS) | | GCI82118 | Inner Joint | | 37 | 34 | | 290 | 88 | |
| | 2014.04- | 6MT | F | L | MPV FWD HNY (EB2DTS) | | GDS83617 | Drive Shaft | | 28 | 24 | 58.5 | 92.5 | 688 | |
| | 2014.04- | 6MT | F | R | MPV FWD HNY (EB2DTS) | | GDS83618 | Drive Shaft | | 28 | 24 | 58.5 | 92.5 | 950 | |
| | 2014.04- | 6MT | F | L | MPV FWD HNY (EB2DTS) | | GCI82181 | Inner Joint | | 24 | 34 | 40 | 52.5 | 90 | |
| | 2014.04- | 6MT | F | R | MPV FWD HNY (EB2DTS) | | GCI82323 | Inner Joint | | 24 | 34 | 29.8 | 306 | 88 | |
| | 2014.04- | 6MT | F | L/R | MPV FWD HNY (EB2DTS) | | GCI82119 | Inner Joint | | 37 | 34 | 41.5 | 58.5 | 94 | |
| 1.6 (68 kw) | 2013.09- | 6AMT | F | R | MPV FWD 9HP (DV6DTED) | | GDS56855 | Drive Shaft | | 28 | 24 | 58.5 | 92.5 | 948 | |
| | 2013.09- | 6AMT | F | L/R | MPV FWD 9HP (DV6DTED) | | GCO81397 | Outer Joint | | 28 | 34 | 58.5 | 92.5 | 56 | I |
| | 2013.09- | 6AMT | F | R | MPV FWD 9HP (DV6DTED) | | GCI83529 | Inner Joint | | 24 | 34 | 29.8 | 306 | 88 | |
| 1.6 (73 kw) | 2015.01-2016.04 | 5MT | F | L | MPV FWD BHY (DV6FD) | | GDS83067 | Drive Shaft | | 28 | 24 | 58.5 | 92.5 | 696 | |
| | 2015.01-2016.04 | 5MT | F | R | MPV FWD BHY (DV6FD) | | GDS57671 | Drive Shaft | | 28 | 24 | 58.5 | 92.5 | 936 | |
| | 2015.01-2016.04 | 5MT | F | L | MPV FWD BHY (DV6FD) | | GCO82273 | Outer Joint | | 28 | 34 | 58.5 | 92.5 | 56 | I |
| | 2015.01-2016.04 | 5MT | F | R | MPV FWD BHY (DV6FD) | | GCO81397 | Outer Joint | | 28 | 34 | 58.5 | 92.5 | 56 | I |
| | 2015.01-2016.04 | 5MT | F | L | MPV FWD BHY (DV6FD) | | GCI82131 | Inner Joint | | 24 | 34 | 40 | 62 | 89 | |
| 1.6 (80 kw) | 2006.10-2011.06 | 6AT/5MT | F | L | MPV FWD 9HZ (DV6TED4);9HY (DV6TED4) | | GDS10286 | Drive Shaft | | 25 | 26 | 58.5 | 79 | 613 | |
| | 2006.10-2011.06 | AT | F | L | MPV FWD 9HZ (DV6TED4);9HY (DV6TED4) | | GDS10255 | Drive Shaft | | 25 | 24 | 58.5 | 79 | 616 | |
| | 2006.10-2011.06 | AT | F | R | MPV FWD 9HZ (DV6TED4);9HY (DV6TED4) | | GDS10254 | Drive Shaft | | 25 | 24 | 58.5 | 79 | 939 | |
| | 2006.10-2011.06 | AT | F | L/R | MPV FWD 9HZ (DV6TED4);9HY (DV6TED4) | | GCO10075 | Outer Joint | | 25 | 26 | 58.5 | 89 | 63 | M |
| | 2006.10-2011.06 | AT | F | L | MPV FWD 9HZ (DV6TED4);9HY (DV6TED4) | Date to:2011.06 | GCI10057 | Inner Joint | | 24 | 34 | 40 | 52.5 | 90 | |
| | 2006.10-2011.06 | AT | F | R | MPV FWD 9HZ (DV6TED4);9HY (DV6TED4) | Date to:2011.06 | GCI10058 | Inner Joint | | 24 | 34 | 29.8 | 365 | 88 | |
| | 2006.10-2011.06 | AT/MT | F | L/R | MPV FWD 9HZ (DV6TED4);9HY (DV6TED4) | | GCO99366 | Outer Joint | | 25 | 34 | 58.5 | 79 | 55 | I |
| | 2006.10-2011.06 | MT | F | L | MPV FWD 9HZ (DV6TED4);9HY (DV6TED4) | Date from:2007.01 | GDS45105 | Drive Shaft | | 25 | 24 | 58 | 79 | 625 | |
| | 2006.10-2011.06 | MT | F | L | MPV FWD 9HZ (DV6TED4);9HY (DV6TED4) | for OE number:3272LV,Date from:2006.10 | GDS45126 | Drive Shaft | | 25 | 24 | 58.5 | 89 | 630 | |
| | 2006.10-2011.06 | MT | F | R | MPV FWD 9HZ (DV6TED4);9HY (DV6TED4) | | GDS45104 | Drive Shaft | | 25 | 24 | 58 | 79 | 925 | |
| | 2006.10-2011.06 | MT | F | R | MPV FWD 9HZ (DV6TED4);9HY (DV6TED4) | | GCO45027 | Outer Joint | | 25 | 34 | 58 | 79 | 55.5 | I |
| 1.6 (82 kw) | 2010.09-2013.08 | 6AT/6MT | F | L/R | MPV FWD 9HR (DV6C) | | GCO10042 | Outer Joint | | 25 | 34 | 54.8 | 78.5 | 56 | I |
| | 2010.09-2013.08 | AT | F | L | MPV FWD 9HR (DV6C) | | GDS10255 | Drive Shaft | | 25 | 24 | 58.5 | 79 | 616 | |
| | 2010.09-2013.08 | AT | F | R | MPV FWD 9HR (DV6C) | | GDS10254 | Drive Shaft | | 25 | 24 | 58.5 | 79 | 939 | |
| | 2010.09-2013.08 | AT | F | L/R | MPV FWD 9HR (DV6C) | | GCO10075 | Outer Joint | | 25 | 26 | 58.5 | 89 | 63 | M |
| | 2010.09-2013.08 | AT | F | L | MPV FWD 9HR (DV6C) | Date to:2013.08 | GCI10057 | Inner Joint | | 24 | 34 | 40 | 52.5 | 90 | |
| | 2010.09-2013.08 | AT | F | R | MPV FWD 9HR (DV6C) | Date to:2013.08 | GCI10058 | Inner Joint | | 24 | 34 | 29.8 | 365 | 88 | |
| | 2010.09-2013.08 | MT | F | L | MPV FWD 9HR (DV6C) | Trans. code:BE4R | GDS45105 | Drive Shaft | | 25 | 24 | 58 | 79 | 625 | |
| | 2010.09-2013.08 | MT | F | L | MPV FWD 9HR (DV6C) | | GDS45126 | Drive Shaft | | 25 | 24 | 58.5 | 89 | 630 | |
| | 2010.09-2013.08 | MT | F | R | MPV FWD 9HR (DV6C) | | GDS45104 | Drive Shaft | | 25 | 24 | 58 | 79 | 925 | |
| | 2010.09-2013.08 | MT | F | L/R | MPV FWD 9HR (DV6C) | | GCO99366 | Outer Joint | | 25 | 34 | 58.5 | 79 | 55 | I |
| 1.6 (85 kw) | 2013.09-2018.03 | 6AMT | F | R | MPV FWD BHX (DV6FC);9HC (DV6C) | | GDS56855 | Drive Shaft | | 28 | 24 | 58.5 | 92.5 | 948 | |
| | 2013.09-2018.03 | 6AMT | F | R | MPV FWD BHX (DV6FC);9HC (DV6C) | | GCI83529 | Inner Joint | | 24 | 34 | 29.8 | 306 | 88 | |
| | 2013.09-2018.03 | 6AT | F | L | MPV FWD BHX (DV6FC);9HC (DV6C) | | GCI82119 | Inner Joint | | 37 | 34 | 41.5 | 58.5 | 94 | |
| | 2013.09-2018.03 | 6AT | F | R | MPV FWD BHX (DV6FC);9HC (DV6C) | | GCI82118 | Inner Joint | | 37 | 34 | | 290 | 88 | |
| | 2013.09-2018.03 | 6AT/6MT | F | L/R | MPV FWD BHX (DV6FC);9HC (DV6C) | Thread Size:M22×1.5 | GCO82273 | Outer Joint | | 28 | 34 | 58.5 | 92.5 | 56 | I |
| | 2013.09-2018.03 | 6MT | F | L | MPV FWD BHX (DV6FC);9HC (DV6C) | Date from:2015.11 | GDS83608 | Drive Shaft | | 28 | 37 | 58.5 | 92.5 | 683 | |
| | 2013.09-2018.03 | 6MT | F | R | MPV FWD BHX (DV6FC);9HC (DV6C) | | GDS83969 | Drive Shaft | | 28 | 37 | 58.5 | 92.5 | 945 | |
| | 2013.09-2018.03 | 6MT | F | L/R | MPV FWD BHX (DV6FC);9HC (DV6C) | Thread Size:M22×1.5 | GCO81397 | Outer Joint | | 28 | 34 | 58.5 | 92.5 | 56 | I |
| | 2013.09-2018.03 | 6MT | F | L | MPV FWD BHX (DV6FC);9HC (DV6C) | Date from:2015.11 | GCI82301 | Inner Joint | | 37 | 34 | 40 | 65.5 | 89.5 | |
| | 2013.09-2018.03 | 6MT | F | R | MPV FWD BHX (DV6FC);9HC (DV6C) | | GCI81759 | Inner Joint | | 37 | 34 | 31.9 | 302 | 88 | |
| 1.6 (88 kw) | 2008.07-2013.08 | 5MT | F | L | MPV FWD 5FW (EP6);5FS (EP6C) | | GDS10286 | Drive Shaft | | 25 | 26 | 58.5 | 79 | 613 | |
| | 2008.07-2013.08 | 5MT | F | L | MPV FWD 5FW (EP6);5FS (EP6C) | | GDS45126 | Drive Shaft | | 25 | 24 | 58.5 | 89 | 630 | |
| | 2008.07-2013.08 | 5MT | F | R | MPV FWD 5FW (EP6);5FS (EP6C) | | GDS45104 | Drive Shaft | | 25 | 24 | 58 | 79 | 925 | |

| | YEAR | TRANSM. | F/R | L/R | BODY STYLE & DRIVE TYPE & ENGINE | REMARKS | G-AP Ref. | PRODUCT | ABS | Technical Specifications A | B | C | H | L | P |
|---|---|---|---|---|---|---|---|---|---|---|---|---|---|---|---|
| **CITROËN** **C4 Grand Picasso** | | | | | | | | | | | | | | | |
| 1.6 (88 kw) | 2008.07-2013.08 | 5MT | F | R | MPV FWD 5FW (EP6);5FS (EP6C) | | GCO45027 | Outer Joint | | 25 | 34 | 58 | 79 | 55.5 | I |
| | 2008.07-2013.08 | 5MT | F | L/R | MPV FWD 5FW (EP6);5FS (EP6C) | | GCO99366 | Outer Joint | | 25 | 34 | 58.5 | 79 | 55 | I |
| | 2008.07-2013.08 | AT | F | L | MPV FWD 5FW (EP6);5FS (EP6C) | | GCI99001 | Inner Joint | | 26 | 34 | 30.2 | 46.5 | 103.5 | |
| | 2008.07-2013.08 | MT | F | L | MPV FWD 5FW (EP6);5FS (EP6C) | Date from:2009.01 | GDS45105 | Drive Shaft | | 25 | 24 | 58 | 79 | 625 | |
| | 2008.07-2013.08 | | F | L/R | MPV FWD 5FW (EP6);5FS (EP6C) | | GCO10042 | Outer Joint | | 25 | 34 | 54.8 | 78.5 | 56 | I |
| | 2013.09- | 5MT | F | L | MPV FWD 5FS (EP6C) | Date From:2015.11,ORG/OPR From:14239 | GDS83067 | Drive Shaft | | 28 | 24 | 58.5 | 92.5 | 696 | |
| | 2013.09- | 5MT | F | R | MPV FWD 5FS (EP6C) | | GDS57671 | Drive Shaft | | 28 | 24 | 58.5 | 92.5 | 936 | |
| | 2013.09- | 5MT | F | L | MPV FWD 5FS (EP6C) | Date From:2015.11,ORG/OPR From:14239 | GCO82273 | Outer Joint | | 28 | 34 | 58.5 | 92.5 | 56 | I |
| | 2013.09- | 5MT | F | R | MPV FWD 5FS (EP6C) | | GCO81397 | Outer Joint | | 28 | 34 | 58.5 | 92.5 | 56 | I |
| | 2013.09- | 5MT | F | L | MPV FWD 5FS (EP6C) | Date From:2015.11,ORG/OPR From:14239 | GCI82131 | Inner Joint | | 24 | 34 | 40 | 62 | 89 | |
| | 2014.07-2018.12 | 6AT | F | L | MPV FWD BHZ (DV6FC) | | GDS83110 | Drive Shaft | | 28 | 37 | 58.5 | 92.5 | 662 | |
| | 2014.07-2018.12 | 6AT | F | R | MPV FWD BHZ (DV6FC) | | GDS83109 | Drive Shaft | | 28 | 37 | 58.5 | 92.5 | 933 | |
| | 2014.07-2018.12 | 6AT | F | L | MPV FWD BHZ (DV6FC) | | GCI82119 | Inner Joint | | 37 | 34 | 41.5 | 58.5 | 94 | |
| | 2014.07-2018.12 | 6AT/6MT | F | L | MPV FWD BHZ (DV6FC) | | GCO82273 | Outer Joint | | 28 | 34 | 58.5 | 92.5 | 56 | I |
| | 2014.07-2018.12 | 6MT | F | L | MPV FWD BHZ (DV6FC) | | GDS83608 | Drive Shaft | | 28 | 37 | 58.5 | 92.5 | 683 | |
| | 2014.07-2018.12 | 6MT | F | R | MPV FWD BHZ (DV6FC) | | GDS83969 | Drive Shaft | | 28 | 37 | 58.5 | 92.5 | 945 | |
| | 2014.07-2018.12 | 6MT | F | R | MPV FWD BHZ (DV6FC) | | GCO81397 | Outer Joint | | 28 | 34 | 58.5 | 92.5 | 56 | I |
| | 2014.07-2018.12 | 6MT | F | L | MPV FWD BHZ (DV6FC) | | GCI82301 | Inner Joint | | 37 | 34 | 40 | 65.5 | 89.5 | |
| | 2014.07-2018.12 | 6MT | F | R | MPV FWD BHZ (DV6FC) | | GCI81759 | Inner Joint | | 37 | 34 | 31.9 | 302 | 88 | |
| 1.6 (103 kw) | 2008.07-2010.12 | 4AT | F | L | MPV FWD 5FT (EP6DT) | | GDS10286 | Drive Shaft | | 25 | 26 | 58.5 | 79 | 613 | |
| | 2008.07-2010.12 | 4AT | F | L/R | MPV FWD 5FT (EP6DT) | | GCO99366 | Outer Joint | | 25 | 34 | 58.5 | 79 | 55 | I |
| | 2008.07-2010.12 | AT | F | L/R | MPV FWD 5FT (EP6DT) | | GCO10042 | Outer Joint | | 25 | 34 | 54.8 | 78.5 | 56 | I |
| | 2008.07-2010.12 | AT | F | L | MPV FWD 5FT (EP6DT) | | GCI99001 | Inner Joint | | 26 | 34 | 30.2 | 46.5 | 103.5 | |
| | 2008.07-2010.12 | | F | R | MPV FWD 5FT (EP6DT) | | GDS10291 | Drive Shaft | | 25 | 26 | 58.5 | 79 | 833 | |
| 1.6 (110 kw) | 2008.10-2013.08 | AT | F | L | MPV FWD 5FX (EP6DT) | | GCI99001 | Inner Joint | | 26 | 34 | 30.2 | 46.5 | 103.5 | |
| | 2008.10-2013.08 | AT/MT | F | L | MPV FWD 5FX (EP6DT) | | GDS10255 | Drive Shaft | | 25 | 24 | 58.5 | 79 | 616 | |
| | 2008.10-2013.08 | AT/MT | F | R | MPV FWD 5FX (EP6DT) | | GDS10254 | Drive Shaft | | 25 | 24 | 58.5 | 79 | 939 | |
| | 2008.10-2013.08 | MT | F | L/R | MPV FWD 5FX (EP6DT) | | GCO10075 | Outer Joint | | 25 | 26 | 58.5 | 89 | 63 | M |
| | 2008.10-2013.08 | MT | F | L/R | MPV FWD 5FX (EP6DT) | | GCO99366 | Outer Joint | | 25 | 34 | 58.5 | 79 | 55 | I |
| | 2008.10-2013.08 | | F | L | MPV FWD 5FX (EP6DT) | Date To:2013.08 | GCI10057 | Inner Joint | | 24 | 34 | 40 | 52.5 | 90 | |
| | 2008.10-2013.08 | | F | R | MPV FWD 5FX (EP6DT) | Date To:2013.08 | GCI10058 | Inner Joint | | 24 | 34 | 29.8 | 365 | 88 | |
| | 2014.09- | 6AT | F | L | MPV FWD 5FX (EP6DT) | Date from:2015.11 | GDS83110 | Drive Shaft | | 28 | 37 | 58.5 | 92.5 | 662 | |
| | 2014.09- | 6AT | F | R | MPV FWD 5FX (EP6DT) | | GDS83109 | Drive Shaft | | 28 | 37 | 58.5 | 92.5 | 933 | |
| | 2014.09- | 6AT | F | L | MPV FWD 5FX (EP6DT) | Date from:2015.11 | GCO82273 | Outer Joint | | 28 | 34 | 58.5 | 92.5 | 56 | I |
| | 2014.09- | 6AT | F | L | MPV FWD 5FX (EP6DT) | Date from:2015.11 | GCI82119 | Inner Joint | | 37 | 34 | 41.5 | 58.5 | 94 | |
| 1.6 (115 kw) | 2010.09-2013.08 | 6AT/6MT | F | L | MPV FWD 5FV (EP6CDT) | | GDS10255 | Drive Shaft | | 25 | 24 | 58.5 | 79 | 616 | |
| | 2010.09-2013.08 | 6AT/6MT | F | R | MPV FWD 5FV (EP6CDT) | | GDS10254 | Drive Shaft | | 25 | 24 | 58.5 | 79 | 939 | |
| | 2010.09-2013.08 | MT | F | L/R | MPV FWD 5FV (EP6CDT) | | GCO99366 | Outer Joint | | 25 | 34 | 58.5 | 79 | 55 | I |
| | 2010.09-2013.08 | | F | L/R | MPV FWD 5FV (EP6CDT) | | GCO10042 | Outer Joint | | 25 | 34 | 54.8 | 78.5 | 56 | I |
| | 2010.09-2013.08 | | F | L | MPV FWD 5FV (EP6CDT) | Date To:2013.08 | GCI10057 | Inner Joint | | 24 | 34 | 40 | 52.5 | 90 | |
| | 2010.09-2013.08 | | F | R | MPV FWD 5FV (EP6CDT) | Date To:2013.08 | GCI10058 | Inner Joint | | 24 | 34 | 29.8 | 365 | 88 | |
| | 2013.09- | 6AMT | F | R | MPV FWD 5FV (EP6CDT) | | GDS56855 | Drive Shaft | | 28 | 24 | 58.5 | 92.5 | 948 | |
| | 2013.09- | 6AMT | F | R | MPV FWD 5FV (EP6CDT) | | GCO81397 | Outer Joint | | 28 | 34 | 58.5 | 92.5 | 56 | I |
| | 2013.09- | 6AMT | F | R | MPV FWD 5FV (EP6CDT) | | GCI83529 | Inner Joint | | 24 | 34 | 29.8 | 306 | 88 | |
| 1.6 (121 kw) | 2014.07- | 6AT | F | L | MPV FWD 5GZ (EP6FDT) | Date from:2015.11 | GDS83110 | Drive Shaft | | 28 | 37 | 58.5 | 92.5 | 662 | |
| | 2014.07- | 6AT | F | R | MPV FWD 5GZ (EP6FDT) | | GDS83109 | Drive Shaft | | 28 | 37 | 58.5 | 92.5 | 933 | |
| | 2014.07- | 6AT | F | L | MPV FWD 5GZ (EP6FDT) | Date from:2015.11 | GCO82273 | Outer Joint | | 28 | 34 | 58.5 | 92.5 | 56 | I |
| | 2014.07- | 6AT | F | L | MPV FWD 5GZ (EP6FDT) | Date from:2015.11 | GCI82119 | Inner Joint | | 37 | 34 | 41.5 | 58.5 | 94 | |
| 1.8 (86 kw) | 2009.03-2011.12 | MT | F | L | MPV FWD | | GDS45105 | Drive Shaft | | 25 | 24 | 58 | 79 | 625 | |
| | 2009.03-2011.12 | MT | F | L | MPV FWD | | GDS45126 | Drive Shaft | | 25 | 24 | 58.5 | 89 | 630 | |
| | 2009.03-2011.12 | MT | F | R | MPV FWD | | GDS45104 | Drive Shaft | | 25 | 24 | 58 | 79 | 925 | |
| | 2009.03-2011.12 | MT | F | R | MPV FWD | | GCO45027 | Outer Joint | | 25 | 34 | 58 | 79 | 55.5 | I |
| | 2009.03-2011.12 | MT | F | L/R | MPV FWD | | GCO99366 | Outer Joint | | 25 | 34 | 58.5 | 79 | 55 | I |
| | 2009.03-2011.12 | MT | F | L | MPV FWD | | GCI10020 | Inner Joint | | 24 | 34 | 40 | 62.5 | 99 | |
| | 2009.06-2013.01 | MT | F | L | MPV FWD 6FY (EW7A) | | GDS45105 | Drive Shaft | | 25 | 24 | 58 | 79 | 625 | |
| | 2009.06-2013.01 | MT | F | L | MPV FWD 6FY (EW7A) | | GDS45126 | Drive Shaft | | 25 | 24 | 58.5 | 89 | 630 | |
| | 2009.06-2013.01 | MT | F | R | MPV FWD 6FY (EW7A) | | GDS45104 | Drive Shaft | | 25 | 24 | 58 | 79 | 925 | |
| | 2009.06-2013.01 | MT | F | R | MPV FWD 6FY (EW7A) | | GCO45027 | Outer Joint | | 25 | 34 | 58 | 79 | 55.5 | I |
| | 2009.06-2013.01 | MT | F | L/R | MPV FWD 6FY (EW7A) | | GCO99366 | Outer Joint | | 25 | 34 | 58.5 | 79 | 55 | I |
| | 2009.06-2013.01 | MT | F | L | MPV FWD 6FY (EW7A) | | GCI10020 | Inner Joint | | 24 | 34 | 40 | 62.5 | 99 | |
| 1.8 (92 kw) | 2006.10-2010.12 | 5MT | F | L | MPV FWD 6FY (EW7A) | | GDS45126 | Drive Shaft | | 25 | 24 | 58.5 | 89 | 630 | |
| | 2006.10-2010.12 | 5MT | F | R | MPV FWD 6FY (EW7A) | | GDS45104 | Drive Shaft | | 25 | 24 | 58 | 79 | 925 | |
| | 2006.10-2010.12 | 5MT | F | R | MPV FWD 6FY (EW7A) | | GCO45027 | Outer Joint | | 25 | 34 | 58 | 79 | 55.5 | I |
| | 2006.10-2010.12 | 5MT | F | L/R | MPV FWD 6FY (EW7A) | | GCO99366 | Outer Joint | | 25 | 34 | 58.5 | 79 | 55 | I |
| | 2006.10-2010.12 | MT | F | L | MPV FWD 6FY (EW7A) | Date from:2007.01 | GDS45105 | Drive Shaft | | 25 | 24 | 58 | 79 | 625 | |

| | YEAR | TRANSM. | F/R | L/R | BODY STYLE & DRIVE TYPE & ENGINE | REMARKS | G-AP Ref. | PRODUCT | ABS | Technical Specifications A | B | C | H | L | P |
|---|---|---|---|---|---|---|---|---|---|---|---|---|---|---|---|
| **CITROËN** **C4 Grand Picasso** | | | | | | | | | | | | | | | |
| 1.8 (92 kw) | 2006.10-2010.12 | | F | L/R | MPV FWD 6FY (EW7A) | | GCO10042 | Outer Joint | | 25 | 34 | 54.8 | 78.5 | 56 | I |
| 2.0 (100 kw) | 2006.10-2013.12 | AT | F | L | MPV FWD RHJ (DW10BTED4);RHR (DW10BTED4) | | GDS56611 | Drive Shaft | | 25 | 37 | 58.4 | 89 | 603 | |
| | 2006.10-2013.12 | AT | F | R | MPV FWD RHJ (DW10BTED4);RHR (DW10BTED4) | | GDS83400 | Drive Shaft | | 25 | 37 | 58.4 | 89 | 917 | |
| | 2006.10-2013.12 | AT | F | L/R | MPV FWD RHJ (DW10BTED4);RHR (DW10BTED4) | | GCO10170 | Outer Joint | | 25 | 39 | 58.4 | 89 | 63 | I |
| | 2006.10-2013.12 | AT | F | L | MPV FWD RHJ (DW10BTED4);RHR (DW10BTED4) | | GCI10120 | Inner Joint | | 37 | 39 | 42.2 | 60 | 95.5 | |
| | 2006.10-2013.12 | AT | F | R | MPV FWD RHJ (DW10BTED4);RHR (DW10BTED4) | | GCI82199 | Inner Joint | | 37 | 39 | | 365 | 95 | |
| | 2006.10-2013.12 | MT | F | L | MPV FWD RHJ (DW10BTED4);RHR (DW10BTED4) | | GDS10268 | Drive Shaft | | 25 | 37 | 58.5 | 89 | 621 | |
| | 2006.10-2013.12 | MT | F | R | MPV FWD RHJ (DW10BTED4);RHR (DW10BTED4) | | GDS88082 | Drive Shaft | | 25 | 37 | 58.5 | 89 | 949 | |
| | 2006.10-2013.12 | MT | F | L/R | MPV FWD RHJ (DW10BTED4);RHR (DW10BTED4) | From OE | GCO10085 | Outer Joint | | 25 | 39 | 59 | 89 | 63.5 | I |
| | 2006.10-2013.12 | MT | F | L | MPV FWD RHJ (DW10BTED4);RHR (DW10BTED4) | | GCI45032 | Inner Joint | | 37 | 39 | 40 | 68.5 | 100 | |
| | 2006.10-2013.12 | MT | F | R | MPV FWD RHJ (DW10BTED4);RHR (DW10BTED4) | | GCI10041 | Inner Joint | | 37 | 39 | 32 | 399 | 95.5 | |
| | 2006.10-2013.12 | Semi-AT | F | L | MPV FWD RHJ (DW10BTED4);RHR (DW10BTED4) | | GDS10293 | Drive Shaft | | 25 | 24 | 58.7 | 79 | 610 | |
| | 2006.10-2013.12 | Semi-AT | F | R | MPV FWD RHJ (DW10BTED4);RHR (DW10BTED4) | | GDS10295 | Drive Shaft | | 25 | 24 | 58.7 | 79 | 948 | |
| | 2006.10-2013.12 | Semi-AT | F | L/R | MPV FWD RHJ (DW10BTED4);RHR (DW10BTED4) | | GCO10118 | Outer Joint | | 25 | 26 | 58.7 | 79 | 61.5 | M |
| | 2013.09- | 6AT | F | L | MPV FWD AHV (DW10FD);RHD (DW10CB) | | GDS56288 | Drive Shaft | | 28 | 37 | 58.5 | 93 | 619 | |
| | 2013.09- | 6AT | F | R | MPV FWD AHV (DW10FD);RHD (DW10CB) | | GDS56634 | Drive Shaft | | 28 | 37 | 58.5 | 93 | 948 | |
| | 2013.09- | 6AT | F | L/R | MPV FWD AHV (DW10FD);RHD (DW10CB) | | GCO82489 | Outer Joint | | 28 | 39 | 58.5 | 93 | 63.5 | I |
| | 2013.09- | 6AT | F | L | MPV FWD AHV (DW10FD);RHD (DW10CB) | | GCI10120 | Inner Joint | | 37 | 39 | 42.2 | 60 | 95.5 | |
| | 2013.09- | 6AT | F | R | MPV FWD AHV (DW10FD);RHD (DW10CB) | | GCI83415 | Inner Joint | | 37 | 39 | | 379 | 96 | |
| 2.0 (103 kw) | 2006.10-2013.08 | 4AT | F | L | MPV FWD RFJ (EW10A) | | GDS10286 | Drive Shaft | | 25 | 26 | 58.5 | 79 | 613 | |
| | 2006.10-2013.08 | 4AT | F | R | MPV FWD RFJ (EW10A) | | GDS10291 | Drive Shaft | | 25 | 26 | 58.5 | 79 | 833 | |
| | 2006.10-2013.08 | 4AT/6AT | F | L/R | MPV FWD RFJ (EW10A) | | GCO99366 | Outer Joint | | 25 | 34 | 58.5 | 79 | 55 | I |
| | 2006.10-2013.08 | 6AT | F | L | MPV FWD RFJ (EW10A) | | GDS10255 | Drive Shaft | | 25 | 24 | 58.5 | 79 | 616 | |
| | 2006.10-2013.08 | 6AT | F | R | MPV FWD RFJ (EW10A) | | GDS10254 | Drive Shaft | | 25 | 24 | 58.5 | 79 | 939 | |
| | 2006.10-2013.08 | 6AT | F | L/R | MPV FWD RFJ (EW10A) | | GCO10075 | Outer Joint | | 25 | 26 | 58.5 | 89 | 63 | M |
| | 2006.10-2013.08 | 6AT | F | L | MPV FWD RFJ (EW10A) | Date from:2007.02,Date to:2013.08 | GCI10057 | Inner Joint | | 24 | 34 | 40 | 52.5 | 90 | |
| | 2006.10-2013.08 | 6AT | F | R | MPV FWD RFJ (EW10A) | Date from:2007.02,Date to:2013.08 | GCI10058 | Inner Joint | | 24 | 34 | 29.8 | 365 | 88 | |
| | 2006.10-2013.08 | AT | F | L | MPV FWD RFJ (EW10A) | | GCI99001 | Inner Joint | | 26 | 34 | 30.2 | 46.5 | 103.5 | |
| | 2006.10-2013.08 | MT | F | L | MPV FWD RFJ (EW10A) | Date from:2007.01 | GDS45105 | Drive Shaft | | 25 | 24 | 58 | 79 | 625 | |
| | 2006.10-2013.08 | MT | F | R | MPV FWD RFJ (EW10A) | Date from:2007.01 | GDS45104 | Drive Shaft | | 25 | 24 | 58 | 79 | 925 | |
| | 2006.10-2013.08 | | F | L/R | MPV FWD RFJ (EW10A) | | GCO10042 | Outer Joint | | 25 | 34 | 54.8 | 78.5 | 56 | I |
| 2.0 (105 kw) | 2008.05-2013.12 | 4AT | F | L | MPV FWD RFJ (EW10A) | | GDS10286 | Drive Shaft | | 25 | 26 | 58.5 | 79 | 613 | |
| | 2008.05-2013.12 | 4AT | F | R | MPV FWD RFJ (EW10A) | | GDS10291 | Drive Shaft | | 25 | 26 | 58.5 | 79 | 833 | |
| | 2008.05-2013.12 | | F | L/R | MPV FWD RFJ (EW10A) | | GCO10042 | Outer Joint | | 25 | 34 | 54.8 | 78.5 | 56 | I |
| 2.0 (110 kw) | 2009.07-2013.08 | 6AMT | F | R | MPV FWD RHE (DW10CTED4) | | GDS10295 | Drive Shaft | | 25 | 24 | 58.7 | 79 | 948 | |
| | 2009.07-2013.08 | 6AT | F | L | MPV FWD RHE (DW10CTED4) | | GDS56611 | Drive Shaft | | 25 | 37 | 58.4 | 89 | 603 | |
| | 2009.07-2013.08 | 6AT | F | R | MPV FWD RHE (DW10CTED4) | | GDS83400 | Drive Shaft | | 25 | 37 | 58.4 | 89 | 917 | |
| | 2009.07-2013.08 | 6AT | F | L | MPV FWD RHE (DW10CTED4) | | GCI10120 | Inner Joint | | 37 | 39 | 42.2 | 60 | 95.5 | |
| | 2009.07-2013.08 | 6AT/6MT | F | R | MPV FWD RHE (DW10CTED4) | | GCI10041 | Inner Joint | | 37 | 39 | 32 | 399 | 95.5 | |
| | 2009.07-2013.08 | 6MT | F | L | MPV FWD RHE (DW10CTED4) | | GDS10268 | Drive Shaft | | 25 | 37 | 58.5 | 89 | 621 | |
| | 2009.07-2013.08 | 6MT | F | R | MPV FWD RHE (DW10CTED4) | | GDS88082 | Drive Shaft | | 25 | 37 | 58.5 | 89 | 949 | |
| | 2009.07-2013.08 | 6MT | F | L | MPV FWD RHE (DW10CTED4) | | GCI45032 | Inner Joint | | 37 | 39 | 40 | 68.5 | 100 | |
| | 2009.07-2013.08 | AT/4MT | F | | MPV FWD RHE (DW10CTED4) | | GCO99366 | Outer Joint | | 25 | 34 | 58.5 | 79 | 55 | I |
| | 2009.07-2013.08 | MT/Semi-AT | F | L | MPV FWD RHE (DW10CTED4) | | GDS10293 | Drive Shaft | | 25 | 24 | 58.7 | 79 | 610 | |
| | 2009.07-2013.08 | | F | L | MPV FWD RHE (DW10CTED4) | | GCO10085 | Outer Joint | | 25 | 39 | 59 | 89 | 63.5 | I |
| | 2009.07-2013.08 | | F | L/R | MPV FWD RHE (DW10CTED4) | | GCO10042 | Outer Joint | | 25 | 34 | 54.8 | 78.5 | 56 | I |
| | 2013.06- | 6AT | F | L | MPV FWD AHX (DW10FD);AHR (DW10FD) | For vehicles without off-road suspension | GDS56288 | Drive Shaft | | 28 | 37 | 58.5 | 93 | 619 | |
| | 2013.06- | 6AT | F | L | MPV FWD AHX (DW10FD);AHR (DW10FD) | For vehicles with off-road suspension | GDS83646 | Drive Shaft | | 28 | 37 | 58.5 | 92 | 622 | |
| | 2013.06- | 6AT | F | R | MPV FWD AHX (DW10FD);AHR (DW10FD) | For vehicles without off-road suspension | GDS56634 | Drive Shaft | | 28 | 37 | 58.5 | 93 | 948 | |
| | 2013.06- | 6AT | F | R | MPV FWD AHX (DW10FD);AHR (DW10FD) | For vehicles with off-road suspension | GDS83652 | Drive Shaft | | 28 | 37 | 58.5 | 92 | 951 | |
| | 2013.06- | 6AT | F | L/R | MPV FWD AHX (DW10FD);AHR (DW10FD) | For vehicles with off-road suspension | GCO82449 | Outer Joint | | 28 | 36 | 58.5 | 92 | 60 | I |
| | 2013.06- | 6AT | F | L/R | MPV FWD AHX (DW10FD);AHR (DW10FD) | For vehicles without off-road suspension | GCO82489 | Outer Joint | | 28 | 39 | 58.5 | 93 | 63.5 | I |
| | 2013.06- | 6AT | F | L | MPV FWD AHX (DW10FD);AHR (DW10FD) | For vehicles without off-road suspension | GCI10120 | Inner Joint | | 37 | 39 | 42.2 | 60 | 95.5 | |
| | 2013.06- | 6AT | F | L | MPV FWD AHX (DW10FD);AHR (DW10FD) | For vehicles with off-road suspension | GCI82321 | Inner Joint | | 37 | 36 | 42.5 | 59.5 | 108 | |
| | 2013.06- | 6AT | F | R | MPV FWD AHX (DW10FD);AHR (DW10FD) | For vehicles with off-road suspension | GCI82322 | Inner Joint | | 37 | 36 | | 379 | 108.5 | |
| | 2013.06- | 6AT | F | R | MPV FWD AHX (DW10FD);AHR (DW10FD) | For vehicles without off-road suspension | GCI83415 | Inner Joint | | 37 | 39 | | 379 | 96 | |
| 2.0 (120 kw) | 2010.09-2013.08 | 6AMT | F | L | MPV FWD RHH (DW10CTED4) | | GDS10293 | Drive Shaft | | 25 | 24 | 58.7 | 79 | 610 | |
| | 2010.09-2013.08 | 6AMT | F | R | MPV FWD RHH (DW10CTED4) | | GDS10295 | Drive Shaft | | 25 | 24 | 58.7 | 79 | 948 | |
| | 2010.09-2013.08 | 6AT | F | L | MPV FWD RHH (DW10CTED4) | | GDS56611 | Drive Shaft | | 25 | 37 | 58.4 | 89 | 603 | |
| | 2010.09-2013.08 | 6AT | F | R | MPV FWD RHH (DW10CTED4) | | GDS83400 | Drive Shaft | | 25 | 37 | 58.4 | 89 | 917 | |
| | 2010.09-2013.08 | 6AT | F | L/R | MPV FWD RHH (DW10CTED4) | | GCO10170 | Outer Joint | | 25 | 39 | 58.4 | 89 | 63 | I |
| | 2010.09-2013.08 | 6AT | F | L | MPV FWD RHH (DW10CTED4) | | GCI10120 | Inner Joint | | 37 | 39 | 42.2 | 60 | 95.5 | |
| | 2010.09-2013.08 | 6AT | F | R | MPV FWD RHH (DW10CTED4) | | GCI82199 | Inner Joint | | 37 | 39 | | 365 | 95 | |

| | YEAR | TRANSM. | F/R | L/R | BODY STYLE & DRIVE TYPE & ENGINE | REMARKS | G-AP Ref. | PRODUCT | ABS | Technical Specifications A | B | C | H | L | P |
|---|---|---|---|---|---|---|---|---|---|---|---|---|---|---|---|
| **CITROËN** | | | | | | | | | | | | | | | |
| **C4 Pallas** | | | | | | | | | | | | | | | |
| 2.0 (103 kw) | 2006.07-2011.07 | 4AT | F | L | Saloon FWD RFJ (EW10A) | | GDS10286 | Drive Shaft | | 25 | 26 | 58.5 | 79 | 613 | |
| | 2006.07-2011.07 | 5MT | F | L | Saloon FWD RFJ (EW10A) | | GDS45105 | Drive Shaft | | 25 | 24 | 58 | 79 | 625 | |
| | 2006.07-2011.07 | 5MT | F | L | Saloon FWD RFJ (EW10A) | | GDS45126 | Drive Shaft | | 25 | 24 | 58.5 | 89 | 630 | |
| | 2006.07-2011.07 | 5MT | F | R | Saloon FWD RFJ (EW10A) | | GDS45104 | Drive Shaft | | 25 | 24 | 58 | 79 | 925 | |
| | 2006.07-2011.07 | AT | F | R | Saloon FWD RFJ (EW10A) | | GDS10291 | Drive Shaft | | 25 | 26 | 58.5 | 79 | 833 | |
| | 2006.07-2011.07 | | F | L/R | Saloon FWD RFJ (EW10A) | | GCO10042 | Outer Joint | | 25 | 34 | 54.8 | 78.5 | 56 | I |
| **C4 Picasso** | | | | | | | | | | | | | | | |
| 1.2 (81 kw) | 2016.04- | 6MT | F | L | MPV FWD HNZ (EB2DT) | | GDS83067 | Drive Shaft | | 28 | 24 | 58.5 | 92.5 | 696 | |
| | 2016.04- | 6MT | F | R | MPV FWD HNZ (EB2DT) | | GDS84363 | Drive Shaft | | 28 | 24 | 58.5 | 92.5 | 933 | |
| | 2016.04- | 6MT | F | L/R | MPV FWD HNZ (EB2DT) | | GCO82273 | Outer Joint | | 28 | 34 | 58.5 | 92.5 | 56 | I |
| 1.2 (96 kw) | 2014.04- | 6AT | F | L | MPV FWD HNY (EB2DTS) | | GDS83110 | Drive Shaft | | 28 | 37 | 58.5 | 92.5 | 662 | |
| | 2014.04- | 6AT | F | R | MPV FWD HNY (EB2DTS) | | GDS83109 | Drive Shaft | | 28 | 37 | 58.5 | 92.5 | 933 | |
| | 2014.04- | 6AT | F | L | MPV FWD HNY (EB2DTS) | | GCO82273 | Outer Joint | | 28 | 34 | 58.5 | 92.5 | 56 | I |
| | 2014.04- | 6AT | F | L | MPV FWD HNY (EB2DTS) | | GCI82119 | Inner Joint | | 37 | 34 | 41.5 | 58.5 | 94 | |
| | 2014.04- | 6AT | F | R | MPV FWD HNY (EB2DTS) | | GCI82118 | Inner Joint | | 37 | 34 | | 290 | 88 | |
| | 2014.04- | 6MT | F | L | MPV FWD HNY (EB2DTS) | | GDS83617 | Drive Shaft | | 28 | 24 | 58.5 | 92.5 | 688 | |
| | 2014.04- | 6MT | F | R | MPV FWD HNY (EB2DTS) | | GDS83618 | Drive Shaft | | 28 | 24 | 58.5 | 92.5 | 950 | |
| | 2014.04- | 6MT | F | L/R | MPV FWD HNY (EB2DTS) | | GCO82273 | Outer Joint | | 28 | 34 | 58.5 | 92.5 | 56 | I |
| | 2014.04- | 6MT | F | L | MPV FWD HNY (EB2DTS) | | GCI82181 | Inner Joint | | 24 | 34 | 40 | 52.5 | 90 | |
| | 2014.04- | 6MT | F | R | MPV FWD HNY (EB2DTS) | | GCI82323 | Inner Joint | | 24 | 34 | 29.8 | 306 | 88 | |
| 1.6 (68 kw) | 2013.02- | 5MT | F | L | Box Body/MPV FWD 9HP (DV6DTED) | | GDS83067 | Drive Shaft | | 28 | 24 | 58.5 | 92.5 | 696 | |
| | 2013.02- | 5MT | F | R | Box Body/MPV FWD 9HP (DV6DTED) | | GDS57671 | Drive Shaft | | 28 | 24 | 58.5 | 92.5 | 936 | |
| | 2013.02- | 5MT/6AMT | F | R | Box Body/MPV FWD 9HP (DV6DTED) | | GCO81397 | Outer Joint | | 28 | 34 | 58.5 | 92.5 | 56 | I |
| | 2013.02- | 6AMT | F | R | Box Body/MPV FWD 9HP (DV6DTED) | | GDS56855 | Drive Shaft | | 28 | 24 | 58.5 | 92.5 | 948 | |
| | 2013.02- | 6AMT | F | R | Box Body/MPV FWD 9HP (DV6DTED) | | GCI83529 | Inner Joint | | 24 | 34 | 29.8 | 306 | 88 | |
| | 2013.02- | 6AT | F | L | Box Body/MPV FWD 9HP (DV6DTED) | | GCO82273 | Outer Joint | | 28 | 34 | 58.5 | 92.5 | 56 | I |
| | 2013.02- | 6AT | F | L | Box Body/MPV FWD 9HP (DV6DTED) | | GCI82119 | Inner Joint | | 37 | 34 | 41.5 | 58.5 | 94 | |
| | 2013.02- | 5MT | F | L | MPV FWD 9HP (DV6DTED) | | GDS83067 | Drive Shaft | | 28 | 24 | 58.5 | 92.5 | 696 | |
| | 2013.02- | 5MT | F | R | MPV FWD 9HP (DV6DTED) | | GDS57671 | Drive Shaft | | 28 | 24 | 58.5 | 92.5 | 936 | |
| | 2013.02- | 5MT | F | L | MPV FWD 9HP (DV6DTED) | | GCI82131 | Inner Joint | | 24 | 34 | 40 | 62 | 89 | |
| | 2013.02- | 5MT/6AMT | F | R | MPV FWD 9HP (DV6DTED) | | GCO81397 | Outer Joint | | 28 | 34 | 58.5 | 92.5 | 56 | I |
| | 2013.02- | 6AMT | F | R | MPV FWD 9HP (DV6DTED) | | GDS56855 | Drive Shaft | | 28 | 24 | 58.5 | 92.5 | 948 | |
| | 2013.02- | 6AMT | F | R | MPV FWD 9HP (DV6DTED) | | GCI83529 | Inner Joint | | 24 | 34 | 29.8 | 306 | 88 | |
| | 2013.02- | 6AT | F | L | MPV FWD 9HP (DV6DTED) | | GCI82119 | Inner Joint | | 37 | 34 | 41.5 | 58.5 | 94 | |
| | 2013.02- | 6AT/5MT | F | L | MPV FWD 9HP (DV6DTED) | | GCO82273 | Outer Joint | | 28 | 34 | 58.5 | 92.5 | 56 | I |
| 1.6 (73 kw) | 2014.12-2018.12 | 5MT | F | L | MPV FWD BHY (DV6FD) | | GDS83067 | Drive Shaft | | 28 | 24 | 58.5 | 92.5 | 696 | |
| | 2014.12-2018.12 | 5MT | F | R | MPV FWD BHY (DV6FD) | | GDS57671 | Drive Shaft | | 28 | 24 | 58.5 | 92.5 | 936 | |
| | 2014.12-2018.12 | 5MT | F | L | MPV FWD BHY (DV6FD) | | GCO82273 | Outer Joint | | 28 | 34 | 58.5 | 92.5 | 56 | I |
| | 2014.12-2018.12 | 5MT | F | R | MPV FWD BHY (DV6FD) | | GCO81397 | Outer Joint | | 28 | 34 | 58.5 | 92.5 | 56 | I |
| | 2014.12-2018.12 | 5MT | F | L | MPV FWD BHY (DV6FD) | | GCI82131 | Inner Joint | | 24 | 34 | 40 | 62 | 89 | |
| 1.6 (80 kw) | 2007.02-2013.08 | 6AT/5MT | F | L | MPV FWD 9HZ (DV6TED4);9HY (DV6TED4) | Trans. code:AL4 | GDS10286 | Drive Shaft | | 25 | 26 | 58.5 | 79 | 613 | |
| | 2007.02-2013.08 | 6AT/5MT | F | L/R | MPV FWD 9HZ (DV6TED4);9HY (DV6TED4) | | GCO10042 | Outer Joint | | 25 | 34 | 54.8 | 78.5 | 56 | I |
| | 2007.02-2013.08 | AT | F | L | MPV FWD 9HZ (DV6TED4);9HY (DV6TED4) | | GDS10255 | Drive Shaft | | 25 | 24 | 58.5 | 79 | 616 | |
| | 2007.02-2013.08 | AT | F | R | MPV FWD 9HZ (DV6TED4);9HY (DV6TED4) | | GDS10254 | Drive Shaft | | 25 | 24 | 58.5 | 79 | 939 | |
| | 2007.02-2013.08 | AT | F | L/R | MPV FWD 9HZ (DV6TED4);9HY (DV6TED4) | | GCO10075 | Outer Joint | | 25 | 26 | 58.5 | 89 | 63 | M |
| | 2007.02-2013.08 | AT | F | L | MPV FWD 9HZ (DV6TED4);9HY (DV6TED4) | | GCI10057 | Inner Joint | | 24 | 34 | 40 | 52.5 | 90 | |
| | 2007.02-2013.08 | AT | F | R | MPV FWD 9HZ (DV6TED4);9HY (DV6TED4) | | GCI10058 | Inner Joint | | 24 | 34 | 29.8 | 365 | 88 | |
| | 2007.02-2013.08 | AT/MT | F | L/R | MPV FWD 9HZ (DV6TED4);9HY (DV6TED4) | | GCO99366 | Outer Joint | | 25 | 34 | 58.5 | 79 | 55 | I |
| | 2007.02-2013.08 | MT | F | L | MPV FWD 9HZ (DV6TED4);9HY (DV6TED4) | | GDS45105 | Drive Shaft | | 25 | 24 | 58 | 79 | 625 | |
| | 2007.02-2013.08 | MT | F | L | MPV FWD 9HZ (DV6TED4);9HY (DV6TED4) | | GDS45126 | Drive Shaft | | 25 | 24 | 58.5 | 89 | 630 | |
| | 2007.02-2013.08 | MT | F | R | MPV FWD 9HZ (DV6TED4);9HY (DV6TED4) | | GDS45104 | Drive Shaft | | 25 | 24 | 58 | 79 | 925 | |
| | 2007.02-2013.08 | MT | F | R | MPV FWD 9HZ (DV6TED4);9HY (DV6TED4) | | GCO45027 | Outer Joint | | 25 | 34 | 58 | 79 | 55.5 | I |
| 1.6 (82 kw) | 2010.09-2013.08 | 6AT/6MT | F | L | MPV FWD 9HR (DV6C) | | GDS10286 | Drive Shaft | | 25 | 26 | 58.5 | 79 | 613 | |
| | 2010.09-2013.08 | 6AT/6MT | F | L/R | MPV FWD 9HR (DV6C) | | GCO10042 | Outer Joint | | 25 | 34 | 54.8 | 78.5 | 56 | I |
| | 2010.09-2013.08 | AT | F | L | MPV FWD 9HR (DV6C) | | GDS10255 | Drive Shaft | | 25 | 24 | 58.5 | 79 | 616 | |
| | 2010.09-2013.08 | AT | F | R | MPV FWD 9HR (DV6C) | | GDS10254 | Drive Shaft | | 25 | 24 | 58.5 | 79 | 939 | |
| | 2010.09-2013.08 | AT | F | L/R | MPV FWD 9HR (DV6C) | | GCO10075 | Outer Joint | | 25 | 26 | 58.5 | 89 | 63 | M |
| | 2010.09-2013.08 | AT | F | L | MPV FWD 9HR (DV6C) | | GCI10057 | Inner Joint | | 24 | 34 | 40 | 52.5 | 90 | |
| | 2010.09-2013.08 | AT | F | L | MPV FWD 9HR (DV6C) | | GCI99001 | Inner Joint | | 26 | 34 | 30.2 | 46.5 | 103.5 | |
| | 2010.09-2013.08 | AT | F | R | MPV FWD 9HR (DV6C) | | GCI10058 | Inner Joint | | 24 | 34 | 29.8 | 365 | 88 | |
| | 2010.09-2013.08 | MT | F | L | MPV FWD 9HR (DV6C) | Trans. code:BE4R | GDS45105 | Drive Shaft | | 25 | 24 | 58 | 79 | 625 | |
| | 2010.09-2013.08 | MT | F | L | MPV FWD 9HR (DV6C) | | GDS45126 | Drive Shaft | | 25 | 24 | 58.5 | 89 | 630 | |
| | 2010.09-2013.08 | MT | F | R | MPV FWD 9HR (DV6C) | | GDS45104 | Drive Shaft | | 25 | 24 | 58 | 79 | 925 | |
| | 2010.09-2013.08 | MT | F | L/R | MPV FWD 9HR (DV6C) | | GCO99366 | Outer Joint | | 25 | 34 | 58.5 | 79 | 55 | I |
| 1.6 (85 kw) | 2013.02- | 6AMT | F | R | Box Body/MPV FWD 9HC (DV6C) | | GDS56855 | Drive Shaft | | 28 | 24 | 58.5 | 92.5 | 948 | |

| | YEAR | TRANSM. | F/R | L/R | BODY STYLE & DRIVE TYPE & ENGINE | REMARKS | G-AP Ref. | PRODUCT | ABS | Technical Specifications | | | | | |
|---|---|---|---|---|---|---|---|---|---|---|---|---|---|---|---|
| | | | | | | | | | | A | B | C | H | L | P |
| **CITROËN** **C4 Picasso** | | | | | | | | | | | | | | | |
| 1.6 (85 kw) | 2013.02- | 6AMT | F | R | Box Body/MPV FWD 9HC (DV6C) | | GCI83529 | Inner Joint | | 24 | 34 | 29.8 | 306 | 88 | |
| | 2013.02- | 6AT | F | L | Box Body/MPV FWD 9HC (DV6C) | | GCI82119 | Inner Joint | | 37 | 34 | 41.5 | 58.5 | 94 | |
| | 2013.02- | 6AT/6MT | F | L | Box Body/MPV FWD 9HC (DV6C) | | GCO82273 | Outer Joint | | 28 | 34 | 58.5 | 92.5 | 56 | I |
| | 2013.02- | 6MT | F | L | Box Body/MPV FWD 9HC (DV6C) | Date from:2015.11,From ORG/OPR:14239 | GDS83608 | Drive Shaft | | 28 | 37 | 58.5 | 92.5 | 683 | |
| | 2013.02- | 6MT | F | R | Box Body/MPV FWD 9HC (DV6C) | | GDS83969 | Drive Shaft | | 28 | 37 | 58.5 | 92.5 | 945 | |
| | 2013.02- | 6MT | F | R | Box Body/MPV FWD 9HC (DV6C) | | GCO81397 | Outer Joint | | 28 | 34 | 58.5 | 92.5 | 56 | I |
| | 2013.02- | 6MT | F | L | Box Body/MPV FWD 9HC (DV6C) | Date from:2015.11,From ORG/OPR:14239 | GCI82301 | Inner Joint | | 37 | 34 | 40 | 65.5 | 89.5 | |
| | 2013.02- | 6MT | F | R | Box Body/MPV FWD 9HC (DV6C) | | GCI81759 | Inner Joint | | 37 | 34 | 31.9 | 302 | 88 | |
| | 2013.02-2018.03 | 6AMT | F | R | MPV FWD BHX (DV6FC);9HC (DV6C) | | GDS56855 | Drive Shaft | | 28 | 24 | 58.5 | 92.5 | 948 | |
| | 2013.02-2018.03 | 6AMT | F | R | MPV FWD BHX (DV6FC);9HC (DV6C) | | GCI83529 | Inner Joint | | 24 | 34 | 29.8 | 306 | 88 | |
| | 2013.02-2018.03 | 6AT | F | L | MPV FWD BHX (DV6FC);9HC (DV6C) | | GDS83110 | Drive Shaft | | 28 | 37 | 58.5 | 92.5 | 662 | |
| | 2013.02-2018.03 | 6AT | F | R | MPV FWD BHX (DV6FC);9HC (DV6C) | | GDS83109 | Drive Shaft | | 28 | 37 | 58.5 | 92.5 | 933 | |
| | 2013.02-2018.03 | 6AT | F | L | MPV FWD BHX (DV6FC);9HC (DV6C) | | GCI82119 | Inner Joint | | 37 | 34 | 41.5 | 58.5 | 94 | |
| | 2013.02-2018.03 | 6AT | F | R | MPV FWD BHX (DV6FC);9HC (DV6C) | | GCI82118 | Inner Joint | | 37 | 34 | | 290 | 88 | |
| | 2013.02-2018.03 | 6AT/6MT | F | L | MPV FWD BHX (DV6FC);9HC (DV6C) | | GCO82273 | Outer Joint | | 28 | 34 | 58.5 | 92.5 | 56 | I |
| | 2013.02-2018.03 | 6MT | F | L | MPV FWD BHX (DV6FC);9HC (DV6C) | Date from:2015.11 | GDS83608 | Drive Shaft | | 28 | 37 | 58.5 | 92.5 | 683 | |
| | 2013.02-2018.03 | 6MT | F | R | MPV FWD BHX (DV6FC);9HC (DV6C) | | GDS83969 | Drive Shaft | | 28 | 37 | 58.5 | 92.5 | 945 | |
| | 2013.02-2018.03 | 6MT | F | R | MPV FWD BHX (DV6FC);9HC (DV6C) | | GCO81397 | Outer Joint | | 28 | 34 | 58.5 | 92.5 | 56 | I |
| | 2013.02-2018.03 | 6MT | F | L | MPV FWD BHX (DV6FC);9HC (DV6C) | Date from:2015.11 | GCI82301 | Inner Joint | | 37 | 34 | 40 | 65.5 | 89.5 | |
| | 2013.02-2018.03 | 6MT | F | R | MPV FWD BHX (DV6FC);9HC (DV6C) | | GCI81759 | Inner Joint | | 37 | 34 | 31.9 | 302 | 88 | |
| 1.6 (88 kw) | 2008.07-2013.08 | 5MT | F | R | MPV FWD 5FW (EP6) | | GCO45027 | Outer Joint | | 25 | 34 | 58 | 79 | 55.5 | I |
| | 2008.07-2013.08 | 5MT/6MT | F | L | MPV FWD 5FW (EP6) | | GDS10286 | Drive Shaft | | 25 | 26 | 58.5 | 79 | 613 | |
| | 2008.07-2013.08 | 5MT/6MT | F | L | MPV FWD 5FW (EP6) | | GDS45126 | Drive Shaft | | 25 | 24 | 58.5 | 89 | 630 | |
| | 2008.07-2013.08 | 5MT/6MT | F | R | MPV FWD 5FW (EP6) | | GDS45104 | Drive Shaft | | 25 | 24 | 58 | 79 | 925 | |
| | 2008.07-2013.08 | 5MT/6MT | F | L/R | MPV FWD 5FW (EP6) | | GCO99366 | Outer Joint | | 25 | 34 | 58.5 | 79 | 55 | I |
| | 2008.07-2013.08 | AT | F | L | MPV FWD 5FW (EP6) | | GCI99001 | Inner Joint | | 26 | 34 | 30.2 | 46.5 | 103.5 | |
| | 2008.07-2013.08 | AT/MT | F | L | MPV FWD 5FW (EP6) | | GDS45105 | Drive Shaft | | 25 | 24 | 58 | 79 | 625 | |
| | 2008.07-2013.08 | | F | L/R | MPV FWD 5FW (EP6) | | GCO10042 | Outer Joint | | 25 | 34 | 54.8 | 78.5 | 56 | I |
| | 2013.02- | 5MT | F | L | Box Body/MPV FWD 5FS (EP6C) | Date from:2015.11,From ORG/OPR:14239 | GDS83067 | Drive Shaft | | 28 | 24 | 58.5 | 92.5 | 696 | |
| | 2013.02- | 5MT | F | R | Box Body/MPV FWD 5FS (EP6C) | | GDS57671 | Drive Shaft | | 28 | 24 | 58.5 | 92.5 | 936 | |
| | 2013.02- | 5MT | F | L | Box Body/MPV FWD 5FS (EP6C) | Date from:2015.11,From ORG/OPR:14239 | GCO82273 | Outer Joint | | 28 | 34 | 58.5 | 92.5 | 56 | I |
| | 2013.02- | 5MT | F | R | Box Body/MPV FWD 5FS (EP6C) | | GCO81397 | Outer Joint | | 28 | 34 | 58.5 | 92.5 | 56 | I |
| | 2013.02- | 5MT | F | L | Box Body/MPV FWD 5FS (EP6C) | Date from:2015.11,From ORG/OPR:14239 | GCI82131 | Inner Joint | | 24 | 34 | 40 | 62 | 89 | |
| | 2013.02- | 5MT | F | L | MPV FWD 5FS (EP6C) | Date From:2015.11,ORG/OPR From:14239 | GDS83067 | Drive Shaft | | 28 | 24 | 58.5 | 92.5 | 696 | |
| | 2013.02- | 5MT | F | R | MPV FWD 5FS (EP6C) | | GDS57671 | Drive Shaft | | 28 | 24 | 58.5 | 92.5 | 936 | |
| | 2013.02- | 5MT | F | L | MPV FWD 5FS (EP6C) | Date From:2015.11,ORG/OPR From:14239 | GCO82273 | Outer Joint | | 28 | 34 | 58.5 | 92.5 | 56 | I |
| | 2013.02- | 5MT | F | R | MPV FWD 5FS (EP6C) | | GCO81397 | Outer Joint | | 28 | 34 | 58.5 | 92.5 | 56 | I |
| | 2013.02- | 5MT | F | L | MPV FWD 5FS (EP6C) | Date From:2015.11,ORG/OPR From:14239 | GCI82131 | Inner Joint | | 24 | 34 | 40 | 62 | 89 | |
| | 2014.07-2018.12 | 6AT | F | L | MPV FWD BHZ (DV6FC) | | GDS83110 | Drive Shaft | | 28 | 37 | 58.5 | 92.5 | 662 | |
| | 2014.07-2018.12 | 6AT | F | R | MPV FWD BHZ (DV6FC) | | GDS83109 | Drive Shaft | | 28 | 37 | 58.5 | 92.5 | 933 | |
| | 2014.07-2018.12 | 6AT | F | L | MPV FWD BHZ (DV6FC) | | GCI82119 | Inner Joint | | 37 | 34 | 41.5 | 58.5 | 94 | |
| | 2014.07-2018.12 | 6AT/6MT | F | L | MPV FWD BHZ (DV6FC) | | GCO82273 | Outer Joint | | 28 | 34 | 58.5 | 92.5 | 56 | I |
| | 2014.07-2018.12 | 6MT | F | L | MPV FWD BHZ (DV6FC) | | GDS83608 | Drive Shaft | | 28 | 37 | 58.5 | 92.5 | 683 | |
| | 2014.07-2018.12 | 6MT | F | R | MPV FWD BHZ (DV6FC) | | GDS83969 | Drive Shaft | | 28 | 37 | 58.5 | 92.5 | 945 | |
| | 2014.07-2018.12 | 6MT | F | R | MPV FWD BHZ (DV6FC) | | GCO81397 | Outer Joint | | 28 | 34 | 58.5 | 92.5 | 56 | I |
| | 2014.07-2018.12 | 6MT | F | L | MPV FWD BHZ (DV6FC) | | GCI82301 | Inner Joint | | 37 | 34 | 40 | 65.5 | 89.5 | |
| | 2014.07-2018.12 | 6MT | F | R | MPV FWD BHZ (DV6FC) | | GCI81759 | Inner Joint | | 37 | 34 | 31.9 | 302 | 88 | |
| 1.6 (103 kw) | 2008.07-2013.08 | 4AT | F | L | MPV FWD 5FT (EP6DT) | | GDS10286 | Drive Shaft | | 25 | 26 | 58.5 | 79 | 613 | |
| | 2008.07-2013.08 | 4AT | F | L/R | MPV FWD 5FT (EP6DT) | | GCO99366 | Outer Joint | | 25 | 34 | 58.5 | 79 | 55 | I |
| | 2008.07-2013.08 | AT | F | L | MPV FWD 5FT (EP6DT) | | GCI99001 | Inner Joint | | 26 | 34 | 30.2 | 46.5 | 103.5 | |
| | 2008.07-2013.08 | | F | R | MPV FWD 5FT (EP6DT) | | GDS10291 | Drive Shaft | | 25 | 26 | 58.5 | 79 | 833 | |
| | 2008.07-2013.08 | | F | L/R | MPV FWD 5FT (EP6DT) | | GCO10042 | Outer Joint | | 25 | 34 | 54.8 | 78.5 | 56 | I |
| 1.6 (110 kw) | 2008.07-2013.08 | 4AT | F | L | MPV FWD 5FX (EP6DT) | Trans. code:AL4 | GDS10286 | Drive Shaft | | 25 | 26 | 58.5 | 79 | 613 | |
| | 2008.07-2013.08 | 6MT | F | L | MPV FWD 5FX (EP6DT) | | GDS10255 | Drive Shaft | | 25 | 24 | 58.5 | 79 | 616 | |
| | 2008.07-2013.08 | 6MT | F | R | MPV FWD 5FX (EP6DT) | | GDS10254 | Drive Shaft | | 25 | 24 | 58.5 | 79 | 939 | |
| | 2008.07-2013.08 | AT | F | L | MPV FWD 5FX (EP6DT) | | GCI99001 | Inner Joint | | 26 | 34 | 30.2 | 46.5 | 103.5 | |
| | 2008.07-2013.08 | | F | L/R | MPV FWD 5FX (EP6DT) | | GCO10075 | Outer Joint | | 25 | 26 | 58.5 | 89 | 63 | M |
| | 2008.07-2013.08 | | F | L/R | MPV FWD 5FX (EP6DT) | | GCO99366 | Outer Joint | | 25 | 34 | 58.5 | 79 | 55 | I |
| | 2008.07-2013.08 | | F | L | MPV FWD 5FX (EP6DT) | | GCI10057 | Inner Joint | | 24 | 34 | 40 | 52.5 | 90 | |
| | 2008.07-2013.08 | | F | R | MPV FWD 5FX (EP6DT) | | GCI10058 | Inner Joint | | 24 | 34 | 29.8 | 365 | 88 | |
| | 2014.09- | 6AT | F | L | MPV FWD 5FX (EP6DT) | Date from:2015.11 | GDS83110 | Drive Shaft | | 28 | 37 | 58.5 | 92.5 | 662 | |
| | 2014.09- | 6AT | F | R | MPV FWD 5FX (EP6DT) | | GDS83109 | Drive Shaft | | 28 | 37 | 58.5 | 92.5 | 933 | |
| | 2014.09- | 6AT | F | L | MPV FWD 5FX (EP6DT) | Date from:2015.11 | GCO82273 | Outer Joint | | 28 | 34 | 58.5 | 92.5 | 56 | I |
| | 2014.09- | 6AT | F | L | MPV FWD 5FX (EP6DT) | Date from:2015.11 | GCI82119 | Inner Joint | | 37 | 34 | 41.5 | 58.5 | 94 | |
| 1.6 (115 kw) | 2010.09-2013.08 | 6AT/6MT | F | L | MPV FWD 5FV (EP6CDT) | | GDS10255 | Drive Shaft | | 25 | 24 | 58.5 | 79 | 616 | |

| | YEAR | TRANSM. | F/R | L/R | BODY STYLE & DRIVE TYPE & ENGINE | REMARKS | G-AP Ref. | PRODUCT | ABS | Technical Specifications A | B | C | H | L | P |
|---|---|---|---|---|---|---|---|---|---|---|---|---|---|---|---|
| **CITROËN** **C4 Picasso** | | | | | | | | | | | | | | | |
| 1.6 (115 kw) | 2010.09-2013.08 | 6AT/6MT | F | R | MPV FWD 5FV (EP6CDT) | | GDS10254 | Drive Shaft | | 25 | 24 | 58.5 | 79 | 939 | |
| | 2010.09-2013.08 | MT | F | L/R | MPV FWD 5FV (EP6CDT) | | GCO99366 | Outer Joint | | 25 | 34 | 58.5 | 79 | 55 | I |
| | 2010.09-2013.08 | | F | L/R | MPV FWD 5FV (EP6CDT) | | GCO10042 | Outer Joint | | 25 | 34 | 54.8 | 78.5 | 56 | I |
| | 2010.09-2013.08 | | F | L | MPV FWD 5FV (EP6CDT) | | GCI10057 | Inner Joint | | 24 | 34 | 40 | 52.5 | 90 | |
| | 2010.09-2013.08 | | F | R | MPV FWD 5FV (EP6CDT) | | GCI10058 | Inner Joint | | 24 | 34 | 29.8 | 365 | 88 | |
| | 2013.02- | 6AMT | F | R | Box Body/MPV FWD 5FV (EP6CDT) | | GDS56855 | Drive Shaft | | 28 | 24 | 58.5 | 92.5 | 948 | |
| | 2013.02- | 6AMT | F | R | Box Body/MPV FWD 5FV (EP6CDT) | | GCO81397 | Outer Joint | | 28 | 34 | 58.5 | 92.5 | 56 | I |
| | 2013.02- | 6AMT | F | R | Box Body/MPV FWD 5FV (EP6CDT) | | GCI83529 | Inner Joint | | 24 | 34 | 29.8 | 306 | 88 | |
| | 2013.02- | 6AMT | F | R | MPV FWD 5FV (EP6CDT) | | GDS56855 | Drive Shaft | | 28 | 24 | 58.5 | 92.5 | 948 | |
| | 2013.02- | 6AMT | F | R | MPV FWD 5FV (EP6CDT) | | GCO81397 | Outer Joint | | 28 | 34 | 58.5 | 92.5 | 56 | I |
| | 2013.02- | 6AMT | F | R | MPV FWD 5FV (EP6CDT) | | GCI83529 | Inner Joint | | 24 | 34 | 29.8 | 306 | 88 | |
| 1.6 (121 kw) | 2014.07- | 6AT | F | L | MPV FWD 5GZ (EP6FDT) | Date from:2015.11 | GDS83110 | Drive Shaft | | 28 | 37 | 58.5 | 92.5 | 662 | |
| | 2014.07- | 6AT | F | R | MPV FWD 5GZ (EP6FDT) | | GDS83109 | Drive Shaft | | 28 | 37 | 58.5 | 92.5 | 933 | |
| | 2014.07- | 6AT | F | L | MPV FWD 5GZ (EP6FDT) | Date from:2015.11 | GCO82273 | Outer Joint | | 28 | 34 | 58.5 | 92.5 | 56 | I |
| | 2014.07- | 6AT | F | L | MPV FWD 5GZ (EP6FDT) | Date from:2015.11 | GCI82119 | Inner Joint | | 37 | 34 | 41.5 | 58.5 | 94 | |
| 1.8 (92 kw) | 2007.02-2011.12 | 5MT | F | L | MPV FWD 6FY (EW7A) | | GDS45126 | Drive Shaft | | 25 | 24 | 58.5 | 89 | 630 | |
| | 2007.02-2011.12 | 5MT | F | R | MPV FWD 6FY (EW7A) | | GDS45104 | Drive Shaft | | 25 | 24 | 58 | 79 | 925 | |
| | 2007.02-2011.12 | 5MT | F | R | MPV FWD 6FY (EW7A) | | GCO45027 | Outer Joint | | 25 | 34 | 58 | 79 | 55.5 | I |
| | 2007.02-2011.12 | 5MT | F | L/R | MPV FWD 6FY (EW7A) | | GCO99366 | Outer Joint | | 25 | 34 | 58.5 | 79 | 55 | I |
| | 2007.02-2011.12 | MT | F | L | MPV FWD 6FY (EW7A) | | GDS45105 | Drive Shaft | | 25 | 24 | 58 | 79 | 625 | |
| | 2007.02-2011.12 | | F | L/R | MPV FWD 6FY (EW7A) | | GCO10042 | Outer Joint | | 25 | 34 | 54.8 | 78.5 | 56 | I |
| | 2009.01-2012.10 | 5MT | F | L | MPV FWD 6FY (EW7A) | | GDS45105 | Drive Shaft | | 25 | 24 | 58 | 79 | 625 | |
| | 2009.01-2012.10 | 5MT | F | L | MPV FWD 6FY (EW7A) | | GDS45126 | Drive Shaft | | 25 | 24 | 58.5 | 89 | 630 | |
| | 2009.01-2012.10 | 5MT | F | R | MPV FWD 6FY (EW7A) | | GDS45104 | Drive Shaft | | 25 | 24 | 58 | 79 | 925 | |
| | 2009.01-2012.10 | 5MT | F | R | MPV FWD 6FY (EW7A) | | GCO45027 | Outer Joint | | 25 | 34 | 58 | 79 | 55.5 | I |
| | 2009.01-2012.10 | 5MT | F | L/R | MPV FWD 6FY (EW7A) | | GCO99366 | Outer Joint | | 25 | 34 | 58.5 | 79 | 55 | I |
| | 2009.01-2012.10 | 5MT | F | L | MPV FWD 6FY (EW7A) | | GCI10020 | Inner Joint | | 24 | 34 | 40 | 62.5 | 99 | |
| 2.0 (100 kw) | 2006.10-2013.08 | 6AMT | F | L | MPV FWD RHJ (DW10BTED4);RHR (DW10BTED4) | | GDS10293 | Drive Shaft | | 25 | 24 | 58.7 | 79 | 610 | |
| | 2006.10-2013.08 | 6AMT | F | R | MPV FWD RHJ (DW10BTED4);RHR (DW10BTED4) | | GDS10295 | Drive Shaft | | 25 | 24 | 58.7 | 79 | 948 | |
| | 2006.10-2013.08 | 6AT | F | L | MPV FWD RHJ (DW10BTED4);RHR (DW10BTED4) | | GDS56611 | Drive Shaft | | 25 | 37 | 58.4 | 89 | 603 | |
| | 2006.10-2013.08 | 6AT | F | R | MPV FWD RHJ (DW10BTED4);RHR (DW10BTED4) | | GDS83400 | Drive Shaft | | 25 | 37 | 58.4 | 89 | 917 | |
| | 2006.10-2013.08 | 6AT | F | L | MPV FWD RHJ (DW10BTED4);RHR (DW10BTED4) | | GCI10120 | Inner Joint | | 37 | 39 | 42.2 | 60 | 95.5 | |
| | 2006.10-2013.08 | 6MT | F | L | MPV FWD RHJ (DW10BTED4);RHR (DW10BTED4) | | GDS10268 | Drive Shaft | | 25 | 37 | 58.5 | 89 | 621 | |
| | 2006.10-2013.08 | 6MT | F | R | MPV FWD RHJ (DW10BTED4);RHR (DW10BTED4) | | GDS88082 | Drive Shaft | | 25 | 37 | 58.5 | 89 | 949 | |
| | 2006.10-2013.08 | 6MT | F | L/R | MPV FWD RHJ (DW10BTED4);RHR (DW10BTED4) | | GCO10085 | Outer Joint | | 25 | 39 | 59 | 89 | 63.5 | I |
| | 2006.10-2013.08 | AT | F | R | MPV FWD RHJ (DW10BTED4);RHR (DW10BTED4) | | GCO10118 | Outer Joint | | 25 | 26 | 58.7 | 79 | 61.5 | M |
| | 2006.10-2013.08 | AT | F | L | MPV FWD RHJ (DW10BTED4);RHR (DW10BTED4) | | GCI99001 | Inner Joint | | 26 | 34 | 30.2 | 46.5 | 103.5 | |
| | 2006.10-2013.08 | MT | F | R | MPV FWD RHJ (DW10BTED4);RHR (DW10BTED4) | | GCO10075 | Outer Joint | | 25 | 26 | 58.5 | 89 | 63 | M |
| 2.0 (103 kw) | 2007.09-2013.08 | 4AT | F | L | MPV FWD RFJ (EW10A) | | GDS10286 | Drive Shaft | | 25 | 26 | 58.5 | 79 | 613 | |
| | 2007.09-2013.08 | 4AT | F | R | MPV FWD RFJ (EW10A) | | GDS10291 | Drive Shaft | | 25 | 26 | 58.5 | 79 | 833 | |
| | 2007.09-2013.08 | 4AT/6AT | F | L/R | MPV FWD RFJ (EW10A) | | GCO99366 | Outer Joint | | 25 | 34 | 58.5 | 79 | 55 | I |
| | 2007.09-2013.08 | 6AT | F | L | MPV FWD RFJ (EW10A) | | GDS10255 | Drive Shaft | | 25 | 24 | 58.5 | 79 | 616 | |
| | 2007.09-2013.08 | 6AT | F | R | MPV FWD RFJ (EW10A) | | GDS10254 | Drive Shaft | | 25 | 24 | 58.5 | 79 | 939 | |
| | 2007.09-2013.08 | 6AT | F | L/R | MPV FWD RFJ (EW10A) | | GCO10075 | Outer Joint | | 25 | 26 | 58.5 | 89 | 63 | M |
| | 2007.09-2013.08 | 6AT | F | L | MPV FWD RFJ (EW10A) | | GCI10057 | Inner Joint | | 24 | 34 | 40 | 52.5 | 90 | |
| | 2007.09-2013.08 | 6AT | F | R | MPV FWD RFJ (EW10A) | | GCI10058 | Inner Joint | | 24 | 34 | 29.8 | 365 | 88 | |
| | 2007.09-2013.08 | AT | F | L | MPV FWD RFJ (EW10A) | | GCI99001 | Inner Joint | | 26 | 34 | 30.2 | 46.5 | 103.5 | |
| | 2007.09-2013.08 | MT | F | L | MPV FWD RFJ (EW10A) | | GDS45105 | Drive Shaft | | 25 | 24 | 58 | 79 | 625 | |
| | 2007.09-2013.08 | MT | F | R | MPV FWD RFJ (EW10A) | | GDS45104 | Drive Shaft | | 25 | 24 | 58 | 79 | 925 | |
| | 2007.09-2013.08 | | F | L/R | MPV FWD RFJ (EW10A) | | GCO10042 | Outer Joint | | 25 | 34 | 54.8 | 78.5 | 56 | I |
| 2.0 (105 kw) | 2008.05-2013.05 | 4AT | F | L | MPV FWD RFN (EW10J4) | | GDS10286 | Drive Shaft | | 25 | 26 | 58.5 | 79 | 613 | |
| | 2008.05-2013.05 | 4AT | F | R | MPV FWD RFN (EW10J4) | | GDS10291 | Drive Shaft | | 25 | 26 | 58.5 | 79 | 833 | |
| | 2008.05-2013.05 | | F | L/R | MPV FWD RFN (EW10J4) | | GCO10042 | Outer Joint | | 25 | 34 | 54.8 | 78.5 | 56 | I |
| | 2013.06-2014.12 | 4AT | F | L | MPV FWD | | GDS10286 | Drive Shaft | | 25 | 26 | 58.5 | 79 | 613 | |
| | 2013.06-2014.12 | 4AT | F | R | MPV FWD | | GDS10291 | Drive Shaft | | 25 | 26 | 58.5 | 79 | 833 | |
| 2.0 (110 kw) | 2009.07-2013.08 | AT | F | L | MPV FWD RHE (DW10CTED4) | | GDS56611 | Drive Shaft | | 25 | 37 | 58.4 | 89 | 603 | |
| | 2009.07-2013.08 | AT | F | R | MPV FWD RHE (DW10CTED4) | | GDS83400 | Drive Shaft | | 25 | 37 | 58.4 | 89 | 917 | |
| | 2009.07-2013.08 | AT | F | L/R | MPV FWD RHE (DW10CTED4) | | GCO10170 | Outer Joint | | 25 | 39 | 58.4 | 89 | 63 | I |
| | 2009.07-2013.08 | AT | F | L | MPV FWD RHE (DW10CTED4) | | GCI10120 | Inner Joint | | 37 | 39 | 42.2 | 60 | 95.5 | |
| | 2009.07-2013.08 | AT | F | R | MPV FWD RHE (DW10CTED4) | | GCI82199 | Inner Joint | | 37 | 39 | | 365 | 95 | |
| | 2009.07-2013.08 | MT | F | L | MPV FWD RHE (DW10CTED4) | | GDS10268 | Drive Shaft | | 25 | 37 | 58.5 | 89 | 621 | |
| | 2009.07-2013.08 | MT | F | R | MPV FWD RHE (DW10CTED4) | | GDS88082 | Drive Shaft | | 25 | 37 | 58.5 | 89 | 949 | |
| | 2009.07-2013.08 | MT | F | L/R | MPV FWD RHE (DW10CTED4) | | GCO10085 | Outer Joint | | 25 | 39 | 59 | 89 | 63.5 | I |
| | 2009.07-2013.08 | MT | F | L | MPV FWD RHE (DW10CTED4) | | GCI45032 | Inner Joint | | 37 | 39 | 40 | 68.5 | 100 | |
| | 2009.07-2013.08 | MT | F | R | MPV FWD RHE (DW10CTED4) | | GCI10041 | Inner Joint | | 37 | 39 | 32 | 399 | 95.5 | |

| | YEAR | TRANSM. | F/R | L/R | BODY STYLE & DRIVE TYPE & ENGINE | REMARKS | G-AP Ref. | PRODUCT | ABS | Technical Specifications A | B | C | H | L | P |
|---|---|---|---|---|---|---|---|---|---|---|---|---|---|---|---|
| **CITROËN** | | | | | | | | | | | | | | | |
| **C4 Picasso** | | | | | | | | | | | | | | | |
| 2.0 (110 kw) | 2009.07-2013.08 | Semi-AT | F | L | MPV FWD RHE (DW10CTED4) | | GDS10293 | Drive Shaft | | 25 | 24 | 58.7 | 79 | 610 | |
| | 2009.07-2013.08 | Semi-AT | F | R | MPV FWD RHE (DW10CTED4) | | GDS10295 | Drive Shaft | | 25 | 24 | 58.7 | 79 | 948 | |
| | 2009.07-2013.08 | Semi-AT | F | L/R | MPV FWD RHE (DW10CTED4) | | GCO10118 | Outer Joint | | 25 | 26 | 58.7 | 79 | 61.5 | M |
| | 2013.09- | 6AT | F | L | MPV FWD AHX (DW10FD);AHR (DW10FD);AHE (DW10FD) | For vehicles without off-road suspension | GDS56288 | Drive Shaft | | 28 | 37 | 58.5 | 93 | 619 | |
| | 2013.09- | 6AT | F | L | MPV FWD AHX (DW10FD);AHR (DW10FD);AHE (DW10FD) | For vehicles with off-road suspension | GDS83646 | Drive Shaft | | 28 | 37 | 58.5 | 92 | 622 | |
| | 2013.09- | 6AT | F | R | MPV FWD AHX (DW10FD);AHR (DW10FD);AHE (DW10FD) | For vehicles without off-road suspension | GDS56634 | Drive Shaft | | 28 | 37 | 58.5 | 93 | 948 | |
| | 2013.09- | 6AT | F | R | MPV FWD AHX (DW10FD);AHR (DW10FD);AHE (DW10FD) | For vehicles with off-road suspension | GDS83652 | Drive Shaft | | 28 | 37 | 58.5 | 92 | 951 | |
| | 2013.09- | 6AT | F | L/R | MPV FWD AHX (DW10FD);AHR (DW10FD);AHE (DW10FD) | For vehicles with off-road suspension | GCO82449 | Outer Joint | | 28 | 36 | 58.5 | 92 | 60 | I |
| | 2013.09- | 6AT | F | L/R | MPV FWD AHX (DW10FD);AHR (DW10FD);AHE (DW10FD) | For vehicles without off-road suspension | GCO82489 | Outer Joint | | 28 | 39 | 58.5 | 93 | 63.5 | I |
| | 2013.09- | 6AT | F | L | MPV FWD AHX (DW10FD);AHR (DW10FD);AHE (DW10FD) | For vehicles without off-road suspension | GCI10120 | Inner Joint | | 37 | 39 | 42.2 | 60 | 95.5 | |
| | 2013.09- | 6AT | F | L | MPV FWD AHX (DW10FD);AHR (DW10FD);AHE (DW10FD) | For vehicles with off-road suspension | GCI82321 | Inner Joint | | 37 | 36 | 42.5 | 59.5 | 108 | |
| | 2013.09- | 6AT | F | R | MPV FWD AHX (DW10FD);AHR (DW10FD);AHE (DW10FD) | For vehicles with off-road suspension | GCI82322 | Inner Joint | | 37 | 36 | | 379 | 108.5 | |
| | 2013.09- | 6AT | F | R | MPV FWD AHX (DW10FD);AHR (DW10FD);AHE (DW10FD) | For vehicles without off-road suspension | GCI83415 | Inner Joint | | 37 | 39 | | 379 | 96 | |
| 2.0 (120 kw) | 2010.09-2013.08 | 6AMT | F | L | MPV FWD RHH (DW10CTED4) | | GDS10293 | Drive Shaft | | 25 | 24 | 58.7 | 79 | 610 | |
| | 2010.09-2013.08 | 6AMT | F | R | MPV FWD RHH (DW10CTED4) | | GDS10295 | Drive Shaft | | 25 | 24 | 58.7 | 79 | 948 | |
| | 2010.09-2013.08 | 6AT | F | L | MPV FWD RHH (DW10CTED4) | | GDS56611 | Drive Shaft | | 25 | 37 | 58.4 | 89 | 603 | |
| | 2010.09-2013.08 | 6AT | F | R | MPV FWD RHH (DW10CTED4) | | GDS83400 | Drive Shaft | | 25 | 37 | 58.4 | 89 | 917 | |
| | 2010.09-2013.08 | 6AT | F | L/R | MPV FWD RHH (DW10CTED4) | | GCO10170 | Outer Joint | | 25 | 39 | 58.4 | 89 | 63 | I |
| | 2010.09-2013.08 | 6AT | F | L | MPV FWD RHH (DW10CTED4) | | GCI10120 | Inner Joint | | 37 | 39 | 42.2 | 60 | 95.5 | |
| | 2010.09-2013.08 | 6AT | F | R | MPV FWD RHH (DW10CTED4) | | GCI82199 | Inner Joint | | 37 | 39 | | 365 | 95 | |
| **C4 SD** | | | | | | | | | | | | | | | |
| 1.6 (84 kw) | 2016.06- | MT | F | L | Saloon FWD DV6C | Date from:2014.01 | GDS10253 | Drive Shaft | | 25 | 24 | 58.5 | 79 | 626 | |
| | 2016.06- | MT | F | R | Saloon FWD DV6C | Date from:2014.01 | GDS10325 | Drive Shaft | | 25 | 24 | 58.5 | 79 | 940 | |
| 1.6 (88 kw) | 2013.01- | AT | F | L | Saloon FWD 5FS (EP6C) | | GDS10362 | Drive Shaft | | 25 | 26 | 58.5 | 79 | 624 | |
| | 2013.01- | AT | F | R | Saloon FWD 5FS (EP6C) | | GDS10383 | Drive Shaft | | 25 | 26 | 58 | 79 | 842 | |
| | 2013.01- | AT | F | L | Saloon FWD 5FS (EP6C) | | GCO99366 | Outer Joint | | 25 | 34 | 58.5 | 79 | 55 | I |
| | 2013.01- | AT | F | L | Saloon FWD 5FS (EP6C) | | GCI99001 | Inner Joint | | 26 | 34 | 30.2 | 46.5 | 103.5 | |
| **C4 SpaceTourer** | | | | | | | | | | | | | | | |
| 1.2 (81 kw) | 2018.04- | 6MT | F | L | MPV FWD HNX (EB2DTSD) | | GDS83617 | Drive Shaft | | 28 | 24 | 58.5 | 92.5 | 688 | |
| | 2018.04- | 6MT | F | R | MPV FWD HNX (EB2DTSD) | | GDS83618 | Drive Shaft | | 28 | 24 | 58.5 | 92.5 | 950 | |
| | 2018.04- | 6MT | F | L/R | MPV FWD HNX (EB2DTSD) | | GCO82273 | Outer Joint | | 28 | 34 | 58.5 | 92.5 | 56 | I |
| | 2018.04- | 6MT | F | L | MPV FWD HNX (EB2DTSD) | | GCI82181 | Inner Joint | | 24 | 34 | 40 | 52.5 | 90 | |
| | 2018.04- | 6MT | F | R | MPV FWD HNX (EB2DTSD) | | GCI82323 | Inner Joint | | 24 | 34 | 29.8 | 306 | 88 | |
| 1.2 (96 kw) | 2018.04- | 6AT/8AT | F | L | MPV FWD HNY (EB2DTS);HNS (EB2ADTS) | | GDS83110 | Drive Shaft | | 28 | 37 | 58.5 | 92.5 | 662 | |
| | 2018.04- | 6AT/8AT | F | L | MPV FWD HNY (EB2DTS);HNS (EB2ADTS) | | GCI82119 | Inner Joint | | 37 | 34 | 41.5 | 58.5 | 94 | |
| | 2018.04- | 6AT/8AT/6MT | F | L/R | MPV FWD HNY (EB2DTS);HNS (EB2ADTS) | | GCO82273 | Outer Joint | | 28 | 34 | 58.5 | 92.5 | 56 | I |
| | 2018.04- | 6MT | F | L | MPV FWD HNY (EB2DTS);HNS (EB2ADTS) | | GDS83617 | Drive Shaft | | 28 | 24 | 58.5 | 92.5 | 688 | |
| | 2018.04- | 6MT | F | R | MPV FWD HNY (EB2DTS);HNS (EB2ADTS) | | GDS83618 | Drive Shaft | | 28 | 24 | 58.5 | 92.5 | 950 | |
| | 2018.04- | 6MT | F | L | MPV FWD HNY (EB2DTS);HNS (EB2ADTS) | | GCI82181 | Inner Joint | | 24 | 34 | 40 | 52.5 | 90 | |
| | 2018.04- | 6MT | F | R | MPV FWD HNY (EB2DTS);HNS (EB2ADTS) | | GCI82323 | Inner Joint | | 24 | 34 | 29.8 | 306 | 88 | |
| | 2018.04- | 8AT | F | R | MPV FWD HNY (EB2DTS);HNS (EB2ADTS) | | GDS83109 | Drive Shaft | | 28 | 37 | 58.5 | 92.5 | 933 | |
| | 2018.04- | 8AT | F | R | MPV FWD HNY (EB2DTS);HNS (EB2ADTS) | | GCI82118 | Inner Joint | | 37 | 34 | | 290 | 88 | |
| | 2019.05- | 6MT | F | L | Box Body/MPV FWD HNY (EB2DTS) | | GDS83617 | Drive Shaft | | 28 | 24 | 58.5 | 92.5 | 688 | |
| | 2019.05- | 6MT | F | R | Box Body/MPV FWD HNY (EB2DTS) | | GDS83618 | Drive Shaft | | 28 | 24 | 58.5 | 92.5 | 950 | |
| | 2019.05- | 6MT | F | L/R | Box Body/MPV FWD HNY (EB2DTS) | | GCO82273 | Outer Joint | | 28 | 34 | 58.5 | 92.5 | 56 | I |
| | 2019.05- | 6MT | F | L | Box Body/MPV FWD HNY (EB2DTS) | | GCI82181 | Inner Joint | | 24 | 34 | 40 | 52.5 | 90 | |
| | 2019.05- | 6MT | F | R | Box Body/MPV FWD HNY (EB2DTS) | | GCI82323 | Inner Joint | | 24 | 34 | 29.8 | 306 | 88 | |
| 1.5 (96 kw) | 2018.05- | 6MT | F | L | MPV FWD YHZ (DV5RC) | | GDS83608 | Drive Shaft | | 28 | 37 | 58.5 | 92.5 | 683 | |
| | 2018.05- | 6MT | F | R | MPV FWD YHZ (DV5RC) | | GDS83607 | Drive Shaft | | 28 | 37 | 58.5 | 92.5 | 944 | |
| | 2018.05- | 6MT | F | L | MPV FWD YHZ (DV5RC) | | GCO82273 | Outer Joint | | 28 | 34 | 58.5 | 92.5 | 56 | I |
| | 2018.05- | 6MT | F | R | MPV FWD YHZ (DV5RC) | | GCO81397 | Outer Joint | | 28 | 34 | 58.5 | 92.5 | 56 | I |
| | 2018.05- | 6MT | F | L | MPV FWD YHZ (DV5RC) | | GCI82301 | Inner Joint | | 37 | 34 | 40 | 65.5 | 89.5 | |
| | 2018.05- | 6MT | F | R | MPV FWD YHZ (DV5RC) | | GCI81759 | Inner Joint | | 37 | 34 | 31.9 | 302 | 88 | |
| | 2018.05- | 8AT | F | L | MPV FWD YHZ (DV5RC) | | GDS83110 | Drive Shaft | | 28 | 37 | 58.5 | 92.5 | 662 | |
| | 2018.05- | 8AT | F | R | MPV FWD YHZ (DV5RC) | | GDS83109 | Drive Shaft | | 28 | 37 | 58.5 | 92.5 | 933 | |
| | 2018.05- | 8AT | F | L/R | MPV FWD YHZ (DV5RC) | | GCO82273 | Outer Joint | | 28 | 34 | 58.5 | 92.5 | 56 | I |
| | 2018.05- | 8AT | F | L | MPV FWD YHZ (DV5RC) | | GCI82119 | Inner Joint | | 37 | 34 | 41.5 | 58.5 | 94 | |
| | 2018.05- | 8AT | F | R | MPV FWD YHZ (DV5RC) | | GCI82118 | Inner Joint | | 37 | 34 | | 290 | 88 | |
| | 2019.05- | 6MT | F | L | Box Body/MPV FWD YHZ (DV5RC) | | GDS83608 | Drive Shaft | | 28 | 37 | 58.5 | 92.5 | 683 | |
| | 2019.05- | 6MT | F | R | Box Body/MPV FWD YHZ (DV5RC) | | GDS83607 | Drive Shaft | | 28 | 37 | 58.5 | 92.5 | 944 | |
| | 2019.05- | 6MT | F | L | Box Body/MPV FWD YHZ (DV5RC) | | GCO82273 | Outer Joint | | 28 | 34 | 58.5 | 92.5 | 56 | I |
| | 2019.05- | 6MT | F | R | Box Body/MPV FWD YHZ (DV5RC) | | GCO81397 | Outer Joint | | 28 | 34 | 58.5 | 92.5 | 56 | I |
| | 2019.05- | 6MT | F | L | Box Body/MPV FWD YHZ (DV5RC) | | GCI82301 | Inner Joint | | 37 | 34 | 40 | 65.5 | 89.5 | |
| | 2019.05- | 6MT | F | R | Box Body/MPV FWD YHZ (DV5RC) | | GCI81759 | Inner Joint | | 37 | 34 | 31.9 | 302 | 88 | |
| | 2019.05- | 8AT | F | L | Box Body/MPV FWD YHZ (DV5RC) | | GDS83110 | Drive Shaft | | 28 | 37 | 58.5 | 92.5 | 662 | |

| | YEAR | TRANSM. | F/R | L/R | BODY STYLE & DRIVE TYPE & ENGINE | REMARKS | G-AP Ref. | PRODUCT | ABS | Technical Specifications A | B | C | H | L | P |
|---|---|---|---|---|---|---|---|---|---|---|---|---|---|---|---|
| **CITROËN** | | | | | | | | | | | | | | | |
| **C4 SpaceTourer** | | | | | | | | | | | | | | | |
| 1.5 (96 kw) | 2019.05- | 8AT | F | R | Box Body/MPV FWD YHZ (DV5RC) | | GDS83109 | Drive Shaft | | 28 | 37 | 58.5 | 92.5 | 933 | |
| | 2019.05- | 8AT | F | L/R | Box Body/MPV FWD YHZ (DV5RC) | | GCO82273 | Outer Joint | | 28 | 34 | 58.5 | 92.5 | 56 | I |
| | 2019.05- | 8AT | F | L | Box Body/MPV FWD YHZ (DV5RC) | | GCI82119 | Inner Joint | | 37 | 34 | 41.5 | 58.5 | 94 | |
| | 2019.05- | 8AT | F | R | Box Body/MPV FWD YHZ (DV5RC) | | GCI82118 | Inner Joint | | 37 | 34 | | 290 | 88 | |
| 1.6 (73 kw) | 2018.04-2019.04 | 5MT | F | L | MPV FWD BHY (DV6FD) | | GDS83067 | Drive Shaft | | 28 | 24 | 58.5 | 92.5 | 696 | |
| | 2018.04-2019.04 | 5MT | F | R | MPV FWD BHY (DV6FD) | | GDS57671 | Drive Shaft | | 28 | 24 | 58.5 | 92.5 | 936 | |
| | 2018.04-2019.04 | 5MT | F | L | MPV FWD BHY (DV6FD) | | GCO82273 | Outer Joint | | 28 | 34 | 58.5 | 92.5 | 56 | I |
| | 2018.04-2019.04 | 5MT | F | R | MPV FWD BHY (DV6FD) | | GCO81397 | Outer Joint | | 28 | 34 | 58.5 | 92.5 | 56 | I |
| | 2018.04-2019.04 | 5MT | F | L | MPV FWD BHY (DV6FD) | | GCI82131 | Inner Joint | | 24 | 34 | 40 | 62 | 89 | |
| 1.6 (88 kw) | 2018.04-2019.04 | 6AT | F | L | MPV FWD BHZ (DV6FC) | | GDS83110 | Drive Shaft | | 28 | 37 | 58.5 | 92.5 | 662 | |
| | 2018.04-2019.04 | 6AT | F | R | MPV FWD BHZ (DV6FC) | | GDS83109 | Drive Shaft | | 28 | 37 | 58.5 | 92.5 | 933 | |
| | 2018.04-2019.04 | 6AT | F | L | MPV FWD BHZ (DV6FC) | | GCI82119 | Inner Joint | | 37 | 34 | 41.5 | 58.5 | 94 | |
| | 2018.04-2019.04 | 6AT/6MT | F | L | MPV FWD BHZ (DV6FC) | | GCO82273 | Outer Joint | | 28 | 34 | 58.5 | 92.5 | 56 | I |
| | 2018.04-2019.04 | 6MT | F | L | MPV FWD BHZ (DV6FC) | | GDS83608 | Drive Shaft | | 28 | 37 | 58.5 | 92.5 | 683 | |
| | 2018.04-2019.04 | 6MT | F | R | MPV FWD BHZ (DV6FC) | | GDS83969 | Drive Shaft | | 28 | 37 | 58.5 | 92.5 | 945 | |
| | 2018.04-2019.04 | 6MT | F | R | MPV FWD BHZ (DV6FC) | | GCO81397 | Outer Joint | | 28 | 34 | 58.5 | 92.5 | 56 | I |
| | 2018.04-2019.04 | 6MT | F | L | MPV FWD BHZ (DV6FC) | | GCI82301 | Inner Joint | | 37 | 34 | 40 | 65.5 | 89.5 | |
| | 2018.04-2019.04 | 6MT | F | R | MPV FWD BHZ (DV6FC) | | GCI81759 | Inner Joint | | 37 | 34 | 31.9 | 302 | 88 | |
| | 2019.05- | 6MT | F | L | Box Body/MPV FWD BHZ (DV6FC) | | GDS83608 | Drive Shaft | | 28 | 37 | 58.5 | 92.5 | 683 | |
| | 2019.05- | 6MT | F | R | Box Body/MPV FWD BHZ (DV6FC) | | GDS83969 | Drive Shaft | | 28 | 37 | 58.5 | 92.5 | 945 | |
| | 2019.05- | 6MT | F | L | Box Body/MPV FWD BHZ (DV6FC) | | GCO82273 | Outer Joint | | 28 | 34 | 58.5 | 92.5 | 56 | I |
| | 2019.05- | 6MT | F | R | Box Body/MPV FWD BHZ (DV6FC) | | GCO81397 | Outer Joint | | 28 | 34 | 58.5 | 92.5 | 56 | I |
| | 2019.05- | 6MT | F | L | Box Body/MPV FWD BHZ (DV6FC) | | GCI82301 | Inner Joint | | 37 | 34 | 40 | 65.5 | 89.5 | |
| | 2019.05- | 6MT | F | R | Box Body/MPV FWD BHZ (DV6FC) | | GCI81759 | Inner Joint | | 37 | 34 | 31.9 | 302 | 88 | |
| 1.6 (121 kw) | 2018.04- | 6AT | F | L | MPV FWD 5GZ (EP6FDT) | | GDS83110 | Drive Shaft | | 28 | 37 | 58.5 | 92.5 | 662 | |
| | 2018.04- | 6AT | F | R | MPV FWD 5GZ (EP6FDT) | | GDS83109 | Drive Shaft | | 28 | 37 | 58.5 | 92.5 | 933 | |
| | 2018.04- | 6AT | F | L | MPV FWD 5GZ (EP6FDT) | | GCO82273 | Outer Joint | | 28 | 34 | 58.5 | 92.5 | 56 | I |
| | 2018.04- | 6AT | F | L | MPV FWD 5GZ (EP6FDT) | | GCI82119 | Inner Joint | | 37 | 34 | 41.5 | 58.5 | 94 | |
| 2.0 (110 kw) | 2018.04- | 6AT | F | L | MPV FWD AHX (DW10FD) | For vehicles without off-road suspension | GDS56288 | Drive Shaft | | 28 | 37 | 58.5 | 93 | 619 | |
| | 2018.04- | 6AT | F | L | MPV FWD AHX (DW10FD) | For vehicles with off-road suspension | GDS83646 | Drive Shaft | | 28 | 37 | 58.5 | 92 | 622 | |
| | 2018.04- | 6AT | F | R | MPV FWD AHX (DW10FD) | For vehicles without off-road suspension | GDS56634 | Drive Shaft | | 28 | 37 | 58.5 | 93 | 948 | |
| | 2018.04- | 6AT | F | R | MPV FWD AHX (DW10FD) | For vehicles with off-road suspension | GDS83652 | Drive Shaft | | 28 | 37 | 58.5 | 92 | 951 | |
| | 2018.04- | 6AT | F | L/R | MPV FWD AHX (DW10FD) | For vehicles with off-road suspension | GCO82449 | Outer Joint | | 28 | 36 | 58.5 | 92 | 60 | I |
| | 2018.04- | 6AT | F | L/R | MPV FWD AHX (DW10FD) | For vehicles without off-road suspension | GCO82489 | Outer Joint | | 28 | 39 | 58.5 | 93 | 63.5 | I |
| | 2018.04- | 6AT | F | L | MPV FWD AHX (DW10FD) | For vehicles without off-road suspension | GCI10120 | Inner Joint | | 37 | 39 | 42.2 | 60 | 95.5 | |
| | 2018.04- | 6AT | F | L | MPV FWD AHX (DW10FD) | For vehicles with off-road suspension | GCI82321 | Inner Joint | | 37 | 36 | 42.5 | 59.5 | 108 | |
| | 2018.04- | 6AT | F | R | MPV FWD AHX (DW10FD) | For vehicles with off-road suspension | GCI82322 | Inner Joint | | 37 | 36 | | 379 | 108.5 | |
| | 2018.04- | 6AT | F | R | MPV FWD AHX (DW10FD) | For vehicles without off-road suspension | GCI83415 | Inner Joint | | 37 | 39 | | 379 | 96 | |
| 2.0 (120 kw) | 2018.04- | 8AT | F | L | MPV FWD EHY (DW10FCC) | | GDS56288 | Drive Shaft | | 28 | 37 | 58.5 | 93 | 619 | |
| | 2018.04- | 8AT | F | R | MPV FWD EHY (DW10FCC) | | GDS56634 | Drive Shaft | | 28 | 37 | 58.5 | 93 | 948 | |
| | 2018.04- | 8AT | F | L/R | MPV FWD EHY (DW10FCC) | | GCO82489 | Outer Joint | | 28 | 39 | 58.5 | 93 | 63.5 | I |
| | 2018.04- | 8AT | F | L | MPV FWD EHY (DW10FCC) | | GCI10120 | Inner Joint | | 37 | 39 | 42.2 | 60 | 95.5 | |
| | 2018.04- | 8AT | F | R | MPV FWD EHY (DW10FCC) | | GCI83415 | Inner Joint | | 37 | 39 | | 379 | 96 | |
| **C4 X** | | | | | | | | | | | | | | | |
| 1.2 (74 kw) | 2022.09- | 6MT | F | L | Hatchback FWD HNE (EB2ADTD) | | GDS84174 | Drive Shaft | | 25 | 24 | 55.7 | 84 | 685 | |
| | 2022.09- | 6MT | F | R | Hatchback FWD HNE (EB2ADTD) | | GDS84335 | Drive Shaft | | 25 | 24 | 55.7 | 84 | 910 | |
| | 2022.09- | 6MT | F | R | Hatchback FWD HNE (EB2ADTD) | | GCI82130 | Inner Joint | | 24 | 34 | 29.8 | 291 | 88 | |
| 1.2 (96 kw) | 2022.09- | 8AT | F | L | Hatchback FWD HNS (EB2ADTS) | | GDS56754 | Drive Shaft | | 25 | 37 | 55.7 | 84 | 644 | |
| | 2022.09- | 8AT | F | R | Hatchback FWD HNS (EB2ADTS) | | GDS56753 | Drive Shaft | | 25 | 37 | 55.7 | 84 | 911 | |
| | 2022.09- | 8AT | F | L/R | Hatchback FWD HNS (EB2ADTS) | | GCO82279 | Outer Joint | | 25 | 34 | 55.7 | 84 | 55.5 | I |
| | 2022.09- | 8AT | F | L | Hatchback FWD HNS (EB2ADTS) | | GCI83475 | Inner Joint | | 37 | 34 | 42.5 | 59 | 99.5 | |
| | 2022.09- | 8AT | F | R | Hatchback FWD HNS (EB2ADTS) | | GCI83474 | Inner Joint | | 37 | 34 | 29.8 | 290 | 99 | |
| 1.2 (100 kw) | 2024.02- | 8AT | F | R | Hatchback FWD HPY (EB2LTDH2) | | GDS56753 | Drive Shaft | | 25 | 37 | 55.7 | 84 | 911 | |
| | 2024.02- | 8AT | F | R | Hatchback FWD HPY (EB2LTDH2) | | GCO82279 | Outer Joint | | 25 | 34 | 55.7 | 84 | 55.5 | I |
| | 2024.02- | 8AT | F | R | Hatchback FWD HPY (EB2LTDH2) | | GCI83474 | Inner Joint | | 37 | 34 | 29.8 | 290 | 99 | |
| 1.5 (96 kw) | 2022.09- | 8AT | F | L | Hatchback FWD YHZ (DV5RC) | | GDS56754 | Drive Shaft | | 25 | 37 | 55.7 | 84 | 644 | |
| | 2022.09- | 8AT | F | R | Hatchback FWD YHZ (DV5RC) | | GDS56753 | Drive Shaft | | 25 | 37 | 55.7 | 84 | 911 | |
| | 2022.09- | 8AT | F | L/R | Hatchback FWD YHZ (DV5RC) | | GCO82279 | Outer Joint | | 25 | 34 | 55.7 | 84 | 55.5 | I |
| | 2022.09- | 8AT | F | L | Hatchback FWD YHZ (DV5RC) | | GCI83475 | Inner Joint | | 37 | 34 | 42.5 | 59 | 99.5 | |
| | 2022.09- | 8AT | F | R | Hatchback FWD YHZ (DV5RC) | | GCI83474 | Inner Joint | | 37 | 34 | 29.8 | 290 | 99 | |
| **C5** | | | | | | | | | | | | | | | |
| 1.2 (107 kw) | 2024.04- | 6DCT | F | R | Estate FWD | | GDS83109 | Drive Shaft | | 28 | 37 | 58.5 | 92.5 | 933 | |
| | 2024.04- | 6DCT | F | R | Estate FWD | | GCI82118 | Inner Joint | | 37 | 34 | | 290 | 88 | |
| 1.6 (80 kw) | 2004.09-2008.01 | 5MT | F | L | Hatchback FWD 9HZ (DV6TED4);9HY (DV6TED4) | | GDS10142 | Drive Shaft | | 25 | 24 | 58.5 | 89 | 648 | |
| | 2004.09-2008.01 | 5MT | F | L | Hatchback FWD 9HZ (DV6TED4);9HY (DV6TED4) | | GDS10192 | Drive Shaft | | 25 | 24 | 58.5 | 89 | 655 | |

| | YEAR | TRANSM. | F/R | L/R | BODY STYLE & DRIVE TYPE & ENGINE | REMARKS | G-AP Ref. | PRODUCT | ABS | Technical Specifications A | B | C | H | L | P |
|---|---|---|---|---|---|---|---|---|---|---|---|---|---|---|---|
| **CITROËN** | | | | | | | | | | | | | | | |
| **C5** | | | | | | | | | | | | | | | |
| 1.6 (80 kw) | 2004.09-2008.01 | 5MT | F | R | Hatchback FWD 9HZ (DV6TED4);9HY (DV6TED4) | Inner teeth of wheel side:26 | GDS10143 | Drive Shaft | | 25 | 24 | 58.5 | 89 | 936 | |
| | 2004.09-2008.01 | 5MT | F | R | Hatchback FWD 9HZ (DV6TED4);9HY (DV6TED4) | | GCI10004 | Inner Joint | | 24 | 34 | 29.8 | 348 | 99.5 | |
| | 2004.09-2008.01 | MT | F | L | Hatchback FWD 9HZ (DV6TED4);9HY (DV6TED4) | Date to:2008.01 | GCO10158 | Outer Joint | | 25 | 26 | 58.5 | 89 | 61.5 | M |
| | 2004.09-2008.01 | MT | F | L/R | Hatchback FWD 9HZ (DV6TED4);9HY (DV6TED4) | Date to:2007.12 | GCO45038 | Outer Joint | | 25 | 34 | 58.5 | 89 | 55 | I |
| | 2004.09-2008.01 | MT | F | L/R | Hatchback FWD 9HZ (DV6TED4);9HY (DV6TED4) | | GCO45041 | Outer Joint | 48T | 25 | 34 | 58.5 | 89 | 55 | I |
| | 2008.02-2010.10 | 5MT | F | L | Saloon FWD 9HZ (DV6TED4) | Date from:2010.07 | GDS10238 | Drive Shaft | | 28 | 24 | 58.5 | 92 | 669 | |
| | 2008.02-2010.10 | 5MT | F | L | Saloon FWD 9HZ (DV6TED4) | Trans. code:BE | GDS10310 | Drive Shaft | | 28 | 24 | 59 | 91 | 670 | |
| | 2008.02-2010.10 | 5MT | F | R | Saloon FWD 9HZ (DV6TED4) | Date from:2010.07 | GDS10239 | Drive Shaft | | 28 | 24 | 58.5 | 92 | 955 | |
| | 2008.02-2010.10 | 5MT | F | R | Saloon FWD 9HZ (DV6TED4) | Trans. code:BE | GDS10265 | Drive Shaft | | 28 | 24 | 59 | 91 | 951 | |
| | 2008.02-2010.10 | 5MT | F | L/R | Saloon FWD 9HZ (DV6TED4) | | GCO10052 | Outer Joint | | 28 | 34 | 58.5 | 92 | 55 | I |
| | 2008.02-2010.10 | 5MT | F | L/R | Saloon FWD 9HZ (DV6TED4) | | GCO10124 | Outer Joint | | 28 | 34 | 58.5 | 92 | 55 | I |
| | 2008.02-2010.10 | 5MT | F | L/R | Saloon FWD 9HZ (DV6TED4) | | GCO45074 | Outer Joint | | 28 | 26 | 59 | 91 | 61.5 | M |
| | 2008.02-2010.10 | 5MT | F | L | Saloon FWD 9HZ (DV6TED4) | Trans. code:BE | GCI45018 | Inner Joint | | 24 | 34 | 40 | 62 | 88 | |
| | 2008.02-2010.10 | 5MT | F | R | Saloon FWD 9HZ (DV6TED4) | Date from:2010.07 | GCI99159 | Inner Joint | | 24 | 34 | 29.8 | 350 | 87.5 | |
| 1.6 (82 kw) | 2010.07-2012.05 | 5MT | F | L | Saloon FWD 9HR (DV6C);9HL (DV6C) | | GDS10238 | Drive Shaft | | 28 | 24 | 58.5 | 92 | 669 | |
| | 2010.07-2012.05 | 5MT | F | R | Saloon FWD 9HR (DV6C);9HL (DV6C) | | GDS10239 | Drive Shaft | | 28 | 24 | 58.5 | 92 | 955 | |
| | 2010.07-2012.05 | 5MT | F | L/R | Saloon FWD 9HR (DV6C);9HL (DV6C) | | GCO10052 | Outer Joint | | 28 | 34 | 58.5 | 92 | 55 | I |
| | 2010.07-2012.05 | 5MT | F | L/R | Saloon FWD 9HR (DV6C);9HL (DV6C) | | GCO10124 | Outer Joint | | 28 | 34 | 58.5 | 92 | 55 | I |
| | 2010.07-2012.05 | 5MT | F | R | Saloon FWD 9HR (DV6C);9HL (DV6C) | | GCI99159 | Inner Joint | | 24 | 34 | 29.8 | 350 | 87.5 | |
| | 2010.07-2012.05 | 6AMT | F | L | Saloon FWD 9HR (DV6C);9HL (DV6C) | | GDS84333 | Drive Shaft | | 28 | 24 | 58.6 | 93 | 668 | |
| | 2010.07-2012.05 | 6AMT | F | R | Saloon FWD 9HR (DV6C);9HL (DV6C) | | GDS84332 | Drive Shaft | | 28 | 24 | 58.6 | 93 | 978 | |
| | 2010.07-2012.05 | 6AMT | F | L/R | Saloon FWD 9HR (DV6C);9HL (DV6C) | | GCO10098 | Outer Joint | | 28 | 39 | 58.6 | 93 | 63 | I |
| | 2010.07-2012.05 | 6AMT | F | L | Saloon FWD 9HR (DV6C);9HL (DV6C) | | GCI10057 | Inner Joint | | 24 | 34 | 40 | 52.5 | 90 | |
| | 2010.07-2012.05 | 6AMT | F | R | Saloon FWD 9HR (DV6C);9HL (DV6C) | | GCI10058 | Inner Joint | | 24 | 34 | 29.8 | 365 | 88 | |
| 1.6 (84 kw) | 2012.01-2015.06 | 5MT | F | L | Saloon FWD 9HR (DV6C);9HL (DV6C) | | GDS10238 | Drive Shaft | | 28 | 24 | 58.5 | 92 | 669 | |
| | 2012.01-2015.06 | 5MT | F | R | Saloon FWD 9HR (DV6C);9HL (DV6C) | | GDS10239 | Drive Shaft | | 28 | 24 | 58.5 | 92 | 955 | |
| | 2012.01-2015.06 | 5MT | F | L/R | Saloon FWD 9HR (DV6C);9HL (DV6C) | | GCO10052 | Outer Joint | | 28 | 34 | 58.5 | 92 | 55 | I |
| | 2012.01-2015.06 | 5MT | F | L/R | Saloon FWD 9HR (DV6C);9HL (DV6C) | | GCO10124 | Outer Joint | | 28 | 34 | 58.5 | 92 | 55 | I |
| | 2012.01-2015.06 | 5MT | F | R | Saloon FWD 9HR (DV6C);9HL (DV6C) | | GCI99159 | Inner Joint | | 24 | 34 | 29.8 | 350 | 87.5 | |
| | 2012.01-2015.06 | 6AMT | F | L | Saloon FWD 9HR (DV6C);9HL (DV6C) | | GDS84333 | Drive Shaft | | 28 | 24 | 58.6 | 93 | 668 | |
| | 2012.01-2015.06 | 6AMT | F | R | Saloon FWD 9HR (DV6C);9HL (DV6C) | | GDS84332 | Drive Shaft | | 28 | 24 | 58.6 | 93 | 978 | |
| | 2012.01-2015.06 | 6AMT | F | L/R | Saloon FWD 9HR (DV6C);9HL (DV6C) | | GCO10098 | Outer Joint | | 28 | 39 | 58.6 | 93 | 63 | I |
| | 2012.01-2015.06 | 6AMT | F | L | Saloon FWD 9HR (DV6C);9HL (DV6C) | | GCI10057 | Inner Joint | | 24 | 34 | 40 | 52.5 | 90 | |
| | 2012.01-2015.06 | 6AMT | F | R | Saloon FWD 9HR (DV6C);9HL (DV6C) | | GCI10058 | Inner Joint | | 24 | 34 | 29.8 | 365 | 88 | |
| 1.6 (88 kw) | 2010.07-2015.06 | 6AT | F | L | Saloon FWD 5FS (EP6C) | Date To:2011.02,To ORG/OPR:12529 | GDS84333 | Drive Shaft | | 28 | 24 | 58.6 | 93 | 668 | |
| | 2010.07-2015.06 | 6AT | F | R | Saloon FWD 5FS (EP6C) | Date To:2011.02,To ORG/OPR:12529 | GDS84332 | Drive Shaft | | 28 | 24 | 58.6 | 93 | 978 | |
| | 2010.07-2015.06 | 6AT | F | L/R | Saloon FWD 5FS (EP6C) | Date To:2011.02,To ORG/OPR:12529 | GCO10098 | Outer Joint | | 28 | 39 | 58.6 | 93 | 63 | I |
| | 2010.07-2015.06 | 6AT | F | L | Saloon FWD 5FS (EP6C) | Date To:2011.02,To ORG/OPR:12529 | GCI10057 | Inner Joint | | 24 | 34 | 40 | 52.5 | 90 | |
| | 2010.07-2015.06 | 6AT | F | R | Saloon FWD 5FS (EP6C) | Date To:2011.02,To ORG/OPR:12529 | GCI10058 | Inner Joint | | 24 | 34 | 29.8 | 365 | 88 | |
| 1.6 (110 kw) | 2010.07-2016.07 | 6MT | F | L | Saloon FWD 5FN (EP6CDT) | | GDS84333 | Drive Shaft | | 28 | 24 | 58.6 | 93 | 668 | |
| | 2010.07-2016.07 | 6MT | F | R | Saloon FWD 5FN (EP6CDT) | | GDS84332 | Drive Shaft | | 28 | 24 | 58.6 | 93 | 978 | |
| | 2010.07-2016.07 | 6MT | F | L/R | Saloon FWD 5FN (EP6CDT) | | GCO10098 | Outer Joint | | 28 | 39 | 58.6 | 93 | 63 | I |
| | 2010.07-2016.07 | 6MT | F | L | Saloon FWD 5FN (EP6CDT) | | GCI10057 | Inner Joint | | 24 | 34 | 40 | 52.5 | 90 | |
| | 2010.07-2016.07 | 6MT | F | R | Saloon FWD 5FN (EP6CDT) | | GCI10058 | Inner Joint | | 24 | 34 | 29.8 | 365 | 88 | |
| 1.6 (115 kw) | 2009.04-2016.07 | 6MT | F | L | Saloon FWD 5FV (EP6CDT) | Date From:2010.07,From ORG/OPR:12292 | GDS84333 | Drive Shaft | | 28 | 24 | 58.6 | 93 | 668 | |
| | 2009.04-2016.07 | 6MT | F | R | Saloon FWD 5FV (EP6CDT) | Date From:2010.07,From ORG/OPR:12292 | GDS84332 | Drive Shaft | | 28 | 24 | 58.6 | 93 | 978 | |
| | 2009.04-2016.07 | 6MT | F | L/R | Saloon FWD 5FV (EP6CDT) | Date From:2010.07,From ORG/OPR:12292 | GCO10098 | Outer Joint | | 28 | 39 | 58.6 | 93 | 63 | I |
| | 2009.04-2016.07 | 6MT | F | L | Saloon FWD 5FV (EP6CDT) | Date From:2010.07,From ORG/OPR:12292 | GCI10057 | Inner Joint | | 24 | 34 | 40 | 52.5 | 90 | |
| | 2009.04-2016.07 | 6MT | F | R | Saloon FWD 5FV (EP6CDT) | Date From:2010.07,From ORG/OPR:12292 | GCI10058 | Inner Joint | | 24 | 34 | 29.8 | 365 | 88 | |
| 1.8 (85 kw) | 2001.03-2004.08 | AT | F | L | Hatchback FWD 6FZ (EW7J4) | | GDS10443 | Drive Shaft | | 25 | 26 | 58 | 89 | 635 | |
| | 2001.03-2004.08 | AT | F | R | Hatchback FWD 6FZ (EW7J4) | | GDS10444 | Drive Shaft | | 25 | 26 | 58 | 89 | 843 | |
| | 2001.03-2004.08 | AT | F | L | Hatchback FWD 6FZ (EW7J4) | | GCI99001 | Inner Joint | | 26 | 34 | 30.2 | 46.5 | 103.5 | |
| | 2001.03-2004.08 | AT/MT | F | L/R | Hatchback FWD 6FZ (EW7J4) | | GCO45038 | Outer Joint | | 25 | 34 | 58.5 | 89 | 55 | I |
| | 2001.03-2004.08 | AT/MT | F | L/R | Hatchback FWD 6FZ (EW7J4) | | GCO45041 | Outer Joint | 48T | 25 | 34 | 58.5 | 89 | 55 | I |
| | 2001.03-2004.08 | MT | F | L | Hatchback FWD 6FZ (EW7J4) | | GDS10142 | Drive Shaft | | 25 | 24 | 58.5 | 89 | 648 | |
| | 2001.03-2004.08 | MT | F | L | Hatchback FWD 6FZ (EW7J4) | | GDS10192 | Drive Shaft | | 25 | 24 | 58.5 | 89 | 655 | |
| | 2001.03-2004.08 | MT | F | R | Hatchback FWD 6FZ (EW7J4) | | GDS10143 | Drive Shaft | | 25 | 24 | 58.5 | 89 | 936 | |
| | 2001.03-2004.08 | MT | F | L | Hatchback FWD 6FZ (EW7J4) | | GCO10158 | Outer Joint | | 25 | 26 | 58.5 | 89 | 61.5 | M |
| | 2004.09-2005.08 | 5MT | F | L | Hatchback FWD 6FZ (EW7J4) | | GDS10142 | Drive Shaft | | 25 | 24 | 58.5 | 89 | 648 | |
| | 2004.09-2005.08 | 5MT | F | L | Hatchback FWD 6FZ (EW7J4) | | GDS10192 | Drive Shaft | | 25 | 24 | 58.5 | 89 | 655 | |
| | 2004.09-2005.08 | 5MT | F | R | Hatchback FWD 6FZ (EW7J4) | | GDS10143 | Drive Shaft | | 25 | 24 | 58.5 | 89 | 936 | |
| | 2004.09-2005.08 | 5MT | F | R | Hatchback FWD 6FZ (EW7J4) | | GCI10004 | Inner Joint | | 24 | 34 | 29.8 | 348 | 99.5 | |
| | 2004.09-2005.08 | MT | F | L | Hatchback FWD 6FZ (EW7J4) | Date to:2005.08 | GCO10158 | Outer Joint | | 25 | 26 | 58.5 | 89 | 61.5 | M |
| | 2004.09-2005.08 | MT | F | L/R | Hatchback FWD 6FZ (EW7J4) | Date to:2007.12 | GCO45038 | Outer Joint | | 25 | 34 | 58.5 | 89 | 55 | I |
| | 2004.09-2005.08 | MT | F | L/R | Hatchback FWD 6FZ (EW7J4) | | GCO45041 | Outer Joint | 48T | 25 | 34 | 58.5 | 89 | 55 | I |

| | YEAR | TRANSM. | F/R | L/R | BODY STYLE & DRIVE TYPE & ENGINE | REMARKS | G-AP Ref. | PRODUCT | ABS | Technical Specifications A | B | C | H | L | P |
|---|---|---|---|---|---|---|---|---|---|---|---|---|---|---|---|
| **CITROËN** | | | | | | | | | | | | | | | |
| **C5** | | | | | | | | | | | | | | | |
| 1.8 (92 kw) | 2005.09-2008.01 | 5MT | F | L | Hatchback FWD 6FY (EW7A) | length2:62.5mm | GDS10142 | Drive Shaft | | 25 | 24 | 58.5 | 89 | 648 | |
| | 2005.09-2008.01 | 5MT | F | L | Hatchback FWD 6FY (EW7A) | length2:69mm | GDS10192 | Drive Shaft | | 25 | 24 | 58.5 | 89 | 655 | |
| | 2005.09-2008.01 | 5MT | F | R | Hatchback FWD 6FY (EW7A) | | GDS10143 | Drive Shaft | | 25 | 24 | 58.5 | 89 | 936 | |
| | 2005.09-2008.01 | 5MT | F | L/R | Hatchback FWD 6FY (EW7A) | Inner teeth:26 | GCO10158 | Outer Joint | | 25 | 26 | 58.5 | 89 | 61.5 | M |
| | 2005.09-2008.01 | 5MT | F | L/R | Hatchback FWD 6FY (EW7A) | Inner teeth:34 | GCO45038 | Outer Joint | | 25 | 34 | 58.5 | 89 | 55 | I |
| | 2005.09-2008.01 | 5MT | F | R | Hatchback FWD 6FY (EW7A) | | GCI10004 | Inner Joint | | 24 | 34 | 29.8 | 348 | 99.5 | |
| | 2008.02-2010.10 | 5MT | F | L | Saloon FWD 6FY (EW7A) | Inner teeth of wheel side:34 | GDS10238 | Drive Shaft | | 28 | 24 | 58.5 | 92 | 669 | |
| | 2008.02-2010.10 | 5MT | F | L | Saloon FWD 6FY (EW7A) | Inner teeth of wheel side:26 | GDS10310 | Drive Shaft | | 28 | 24 | 59 | 91 | 670 | |
| | 2008.02-2010.10 | 5MT | F | R | Saloon FWD 6FY (EW7A) | Inner teeth of wheel side:34 | GDS10239 | Drive Shaft | | 28 | 24 | 58.5 | 92 | 955 | |
| | 2008.02-2010.10 | 5MT | F | R | Saloon FWD 6FY (EW7A) | Inner teeth of wheel side:26 | GDS10265 | Drive Shaft | | 28 | 24 | 59 | 91 | 951 | |
| | 2008.02-2010.10 | 5MT | F | L/R | Saloon FWD 6FY (EW7A) | | GCO10052 | Outer Joint | | 28 | 34 | 58.5 | 92 | 55 | I |
| | 2008.02-2010.10 | 5MT | F | L/R | Saloon FWD 6FY (EW7A) | | GCO10124 | Outer Joint | | 28 | 34 | 58.5 | 92 | 55 | I |
| | 2008.02-2010.10 | 5MT | F | L/R | Saloon FWD 6FY (EW7A) | | GCO45074 | Outer Joint | | 28 | 26 | 59 | 91 | 61.5 | M |
| | 2008.02-2010.10 | 5MT | F | R | Saloon FWD 6FY (EW7A) | | GCI99159 | Inner Joint | | 24 | 34 | 29.8 | 350 | 87.5 | |
| 2.0 (66 kw) | 2001.03-2004.08 | 5MT | F | L | Hatchback FWD RHY (DW10TD) | | GDS10142 | Drive Shaft | | 25 | 24 | 58.5 | 89 | 648 | |
| | 2001.03-2004.08 | 5MT | F | L | Hatchback FWD RHY (DW10TD) | | GDS10192 | Drive Shaft | | 25 | 24 | 58.5 | 89 | 655 | |
| | 2001.03-2004.08 | 5MT | F | R | Hatchback FWD RHY (DW10TD) | | GDS10143 | Drive Shaft | | 25 | 24 | 58.5 | 89 | 936 | |
| | 2001.03-2004.08 | AT | F | L | Hatchback FWD RHY (DW10TD) | | GDS10443 | Drive Shaft | | 25 | 26 | 58 | 89 | 635 | |
| | 2001.03-2004.08 | AT | F | R | Hatchback FWD RHY (DW10TD) | | GDS10444 | Drive Shaft | | 25 | 26 | 58 | 89 | 843 | |
| | 2001.03-2004.08 | AT | F | L/R | Hatchback FWD RHY (DW10TD) | | GCO45038 | Outer Joint | | 25 | 34 | 58.5 | 89 | 55 | I |
| | 2001.03-2004.08 | AT | F | L | Hatchback FWD RHY (DW10TD) | | GCI99001 | Inner Joint | | 26 | 34 | 30.2 | 46.5 | 103.5 | |
| | 2001.03-2004.08 | AT/MT | F | L/R | Hatchback FWD RHY (DW10TD) | | GCO45041 | Outer Joint | 48T | 25 | 34 | 58.5 | 89 | 55 | I |
| | 2001.03-2004.08 | MT | F | L | Hatchback FWD RHY (DW10TD) | Date to:2003.10 | GCO10158 | Outer Joint | | 25 | 26 | 58.5 | 89 | 61.5 | M |
| 2.0 (79 kw) | 2001.03-2004.08 | AT | F | L | Hatchback FWD RHZ (DW10ATED);RHS (DW10ATED) | | GDS10443 | Drive Shaft | | 25 | 26 | 58 | 89 | 635 | |
| | 2001.03-2004.08 | AT | F | R | Hatchback FWD RHZ (DW10ATED);RHS (DW10ATED) | | GDS10444 | Drive Shaft | | 25 | 26 | 58 | 89 | 843 | |
| | 2001.03-2004.08 | AT | F | L/R | Hatchback FWD RHZ (DW10ATED);RHS (DW10ATED) | | GCO45038 | Outer Joint | | 25 | 34 | 58.5 | 89 | 55 | I |
| | 2001.03-2004.08 | AT | F | L/R | Hatchback FWD RHZ (DW10ATED);RHS (DW10ATED) | | GCO45041 | Outer Joint | 48T | 25 | 34 | 58.5 | 89 | 55 | I |
| | 2001.03-2004.08 | AT | F | L | Hatchback FWD RHZ (DW10ATED);RHS (DW10ATED) | | GCI99001 | Inner Joint | | 26 | 34 | 30.2 | 46.5 | 103.5 | |
| | 2001.03-2004.08 | MT | F | L | Hatchback FWD RHZ (DW10ATED);RHS (DW10ATED) | | GDS10141 | Drive Shaft | | 25 | 37 | 58.5 | 89 | 638 | |
| | 2001.03-2004.08 | MT | F | R | Hatchback FWD RHZ (DW10ATED);RHS (DW10ATED) | | GDS10139 | Drive Shaft | | 25 | 37 | 58.5 | 89 | 944 | |
| | 2001.03-2004.08 | MT | F | L/R | Hatchback FWD RHZ (DW10ATED);RHS (DW10ATED) | | GCO10075 | Outer Joint | | 25 | 26 | 58.5 | 89 | 63 | M |
| | 2001.03-2004.08 | MT | F | L/R | Hatchback FWD RHZ (DW10ATED);RHS (DW10ATED) | | GCO10085 | Outer Joint | | 25 | 39 | 59 | 89 | 63.5 | I |
| | 2001.03-2004.08 | | F | | Hatchback FWD RHZ (DW10ATED);RHS (DW10ATED) | | GCO10096 | Outer Joint | | 25 | 26 | 58.5 | 89 | 61.5 | M |
| 2.0 (80 kw) | 2001.03-2004.08 | 4AT/5MT | F | L/R | Hatchback FWD RHZ (DW10ATED) | | GCO10096 | Outer Joint | | 25 | 26 | 58.5 | 89 | 61.5 | M |
| | 2001.03-2004.08 | AT | F | L | Hatchback FWD RHZ (DW10ATED) | | GDS10443 | Drive Shaft | | 25 | 26 | 58 | 89 | 635 | |
| | 2001.03-2004.08 | AT | F | R | Hatchback FWD RHZ (DW10ATED) | | GDS10444 | Drive Shaft | | 25 | 26 | 58 | 89 | 843 | |
| | 2001.03-2004.08 | AT | F | L/R | Hatchback FWD RHZ (DW10ATED) | | GCO45038 | Outer Joint | | 25 | 34 | 58.5 | 89 | 55 | I |
| | 2001.03-2004.08 | AT | F | L/R | Hatchback FWD RHZ (DW10ATED) | | GCO45041 | Outer Joint | 48T | 25 | 34 | 58.5 | 89 | 55 | I |
| | 2001.03-2004.08 | AT | F | L | Hatchback FWD RHZ (DW10ATED) | | GCI99001 | Inner Joint | | 26 | 34 | 30.2 | 46.5 | 103.5 | |
| | 2001.03-2004.08 | MT | F | L | Hatchback FWD RHZ (DW10ATED) | | GDS10141 | Drive Shaft | | 25 | 37 | 58.5 | 89 | 638 | |
| | 2001.03-2004.08 | MT | F | R | Hatchback FWD RHZ (DW10ATED) | | GDS10139 | Drive Shaft | | 25 | 37 | 58.5 | 89 | 944 | |
| | 2001.03-2004.08 | MT | F | L/R | Hatchback FWD RHZ (DW10ATED) | | GCO10075 | Outer Joint | | 25 | 26 | 58.5 | 89 | 63 | M |
| | 2001.03-2004.08 | MT | F | L/R | Hatchback FWD RHZ (DW10ATED) | Trans. code:ML5T | GCO10085 | Outer Joint | | 25 | 39 | 59 | 89 | 63.5 | I |
| 2.0 (100 kw) | 2001.03-2004.08 | AT | F | L | Hatchback FWD RFN (EW10J4) | | GDS10443 | Drive Shaft | | 25 | 26 | 58 | 89 | 635 | |
| | 2001.03-2004.08 | AT | F | R | Hatchback FWD RFN (EW10J4) | | GDS10444 | Drive Shaft | | 25 | 26 | 58 | 89 | 843 | |
| | 2001.03-2004.08 | AT | F | L/R | Hatchback FWD RFN (EW10J4) | | GCO10075 | Outer Joint | | 25 | 26 | 58.5 | 89 | 63 | M |
| | 2001.03-2004.08 | AT | F | L | Hatchback FWD RFN (EW10J4) | | GCI99001 | Inner Joint | | 26 | 34 | 30.2 | 46.5 | 103.5 | |
| | 2001.03-2004.08 | AT/MT | F | L/R | Hatchback FWD RFN (EW10J4) | | GCO45038 | Outer Joint | | 25 | 34 | 58.5 | 89 | 55 | I |
| | 2001.03-2004.08 | MT | F | L | Hatchback FWD RFN (EW10J4) | | GDS10142 | Drive Shaft | | 25 | 24 | 58.5 | 89 | 648 | |
| | 2001.03-2004.08 | MT | F | L | Hatchback FWD RFN (EW10J4) | | GDS10192 | Drive Shaft | | 25 | 24 | 58.5 | 89 | 655 | |
| | 2001.03-2004.08 | MT | F | R | Hatchback FWD RFN (EW10J4) | | GDS10143 | Drive Shaft | | 25 | 24 | 58.5 | 89 | 936 | |
| | 2001.03-2004.08 | MT | F | L | Hatchback FWD RFN (EW10J4) | | GCO10158 | Outer Joint | | 25 | 26 | 58.5 | 89 | 61.5 | M |
| | 2001.03-2004.08 | MT | F | L/R | Hatchback FWD RFN (EW10J4) | | GCO45041 | Outer Joint | 48T | 25 | 34 | 58.5 | 89 | 55 | I |
| | 2004.09-2008.01 | AT | F | L | Hatchback FWD RHR (DW10BTED4) | angular | GDS10381 | Drive Shaft | | 25 | 37 | 58.5 | 89 | 595 | |
| | 2004.09-2008.01 | AT | F | R | Hatchback FWD RHR (DW10BTED4) | | GDS10348 | Drive Shaft | | 25 | 37 | 58.5 | 89 | 923 | |
| | 2004.09-2008.01 | AT | F | R | Hatchback FWD RHR (DW10BTED4) | Date to:2008.01 | GCI10090 | Inner Joint | | 37 | 26 | | 379.5 | 112 | |
| | 2004.09-2008.01 | AT/MT | F | L/R | Hatchback FWD RHR (DW10BTED4) | Date to:2008.12 | GCO10075 | Outer Joint | | 25 | 26 | 58.5 | 89 | 63 | M |
| | 2004.09-2008.01 | MT | F | L | Hatchback FWD RHR (DW10BTED4) | | GDS10121 | Drive Shaft | | 25 | 37 | 58.5 | 89 | 628 | |
| | 2004.09-2008.01 | MT | F | R | Hatchback FWD RHR (DW10BTED4) | | GDS99197 | Drive Shaft | | 25 | 37 | 58.5 | 89 | 947 | |
| | 2008.02-2014.06 | 6AT | F | L | Saloon FWD RHR (DW10BTED4);RHF (DW10BTED4);RHD (DW10CTED4) | | GDS10335 | Drive Shaft | | 28 | 37 | 58.5 | 92.5 | 618 | |
| | 2008.02-2014.06 | 6AT | F | R | Saloon FWD RHR (DW10BTED4);RHF (DW10BTED4);RHD (DW10CTED4) | | GDS10435 | Drive Shaft | | 28 | 37 | 58.6 | 94 | 952 | |
| | 2008.02-2014.06 | 6AT | F | L | Saloon FWD RHR (DW10BTED4);RHF (DW10BTED4);RHD (DW10CTED4) | | GCI10043 | Inner Joint | | 37 | 26 | 40.5 | 67.5 | 104 | |
| | 2008.02-2014.06 | 6AT | F | R | Saloon FWD RHR (DW10BTED4);RHF (DW10BTED4);RHD (DW10CTED4) | | GCI81492 | Inner Joint | | 37 | 26 | | 380 | 100 | |
| | 2008.02-2014.06 | AT | F | L/R | Saloon FWD RHR (DW10BTED4);RHF (DW10BTED4);RHD (DW10CTED4) | | GCO10115 | Outer Joint | | 28 | 26 | 58.5 | 92.5 | 61.5 | M |
| | 2008.02-2014.06 | MT | F | L | Saloon FWD RHR (DW10BTED4);RHF (DW10BTED4);RHD (DW10CTED4) | | GDS45133 | Drive Shaft | | 28 | 37 | 58.6 | 94 | 653 | |

| | YEAR | TRANSM. | F/R | L/R | BODY STYLE & DRIVE TYPE & ENGINE | REMARKS | G-AP Ref. | PRODUCT | ABS | Technical Specifications | | | | | |
|---|---|---|---|---|---|---|---|---|---|---|---|---|---|---|---|
| | | | | | | | | | | A | B | C | H | L | P |
| **CITROËN** | | | | | | | | | | | | | | | |
| **C5** | | | | | | | | | | | | | | | |
| 2.0 (100 kw) | 2008.02-2014.06 | MT | F | R | Saloon FWD RHR (DW10BTED4);RHF (DW10BTED4);RHD (DW10CTED4) | | GDS10302 | Drive Shaft | | 28 | 37 | 58.6 | 94 | 969 | |
| | 2008.02-2014.06 | MT | F | L/R | Saloon FWD RHR (DW10BTED4);RHF (DW10BTED4);RHD (DW10CTED4) | | GCO10051 | Outer Joint | | 28 | 39 | 58.6 | 94 | 63 | I |
| | 2008.02-2014.06 | MT | F | L/R | Saloon FWD RHR (DW10BTED4);RHF (DW10BTED4);RHD (DW10CTED4) | | GCO10098 | Outer Joint | | 28 | 39 | 58.6 | 93 | 63 | I |
| | 2008.02-2014.06 | MT | F | L | Saloon FWD RHR (DW10BTED4);RHF (DW10BTED4);RHD (DW10CTED4) | | GCI45032 | Inner Joint | | 37 | 39 | 40 | 68.5 | 100 | |
| | 2008.02-2014.06 | MT | F | R | Saloon FWD RHR (DW10BTED4);RHF (DW10BTED4);RHD (DW10CTED4) | | GCI10041 | Inner Joint | | 37 | 39 | 32 | 399 | 95.5 | |
| 2.0 (103 kw) | 2001.03-2004.08 | 5MT | F | L | Hatchback FWD RLZ (EW10D) | | GDS10142 | Drive Shaft | | 25 | 24 | 58.5 | 89 | 648 | |
| | 2001.03-2004.08 | 5MT | F | L | Hatchback FWD RLZ (EW10D) | | GDS10192 | Drive Shaft | | 25 | 24 | 58.5 | 89 | 655 | |
| | 2001.03-2004.08 | 5MT | F | R | Hatchback FWD RLZ (EW10D) | | GDS10143 | Drive Shaft | | 25 | 24 | 58.5 | 89 | 936 | |
| | 2001.03-2004.08 | AT | F | L | Hatchback FWD RLZ (EW10D) | | GDS10443 | Drive Shaft | | 25 | 26 | 58 | 89 | 635 | |
| | 2001.03-2004.08 | AT | F | R | Hatchback FWD RLZ (EW10D) | | GDS10444 | Drive Shaft | | 25 | 26 | 58 | 89 | 843 | |
| | 2001.03-2004.08 | AT | F | L | Hatchback FWD RLZ (EW10D) | | GCI99001 | Inner Joint | | 26 | 34 | 30.2 | 46.5 | 103.5 | |
| | 2001.03-2004.08 | AT/MT | F | L/R | Hatchback FWD RLZ (EW10D) | | GCO45038 | Outer Joint | | 25 | 34 | 58.5 | 89 | 55 | I |
| | 2001.03-2004.08 | MT | F | L | Hatchback FWD RLZ (EW10D) | Date to:2002.08 | GCO10158 | Outer Joint | | 25 | 26 | 58.5 | 89 | 61.5 | M |
| | 2001.03-2004.08 | MT | F | L/R | Hatchback FWD RLZ (EW10D) | | GCO45041 | Outer Joint | 48T | 25 | 34 | 58.5 | 89 | 55 | I |
| | 2004.09-2008.08 | 4AT | F | R | Hatchback FWD RFJ (EW10A) | | GDS10444 | Drive Shaft | | 25 | 26 | 58 | 89 | 843 | |
| | 2004.09-2008.08 | AT | F | L | Hatchback FWD RFJ (EW10A) | | GDS10443 | Drive Shaft | | 25 | 26 | 58 | 89 | 635 | |
| | 2004.09-2008.08 | AT | F | L/R | Hatchback FWD RFJ (EW10A) | | GCO10075 | Outer Joint | | 25 | 26 | 58.5 | 89 | 63 | M |
| | 2004.09-2008.08 | AT | F | L | Hatchback FWD RFJ (EW10A) | | GCI99001 | Inner Joint | | 26 | 34 | 30.2 | 46.5 | 103.5 | |
| | 2004.09-2008.08 | AT/MT | F | L/R | Hatchback FWD RFJ (EW10A) | | GCO45038 | Outer Joint | | 25 | 34 | 58.5 | 89 | 55 | I |
| | 2004.09-2008.08 | MT | F | L | Hatchback FWD RFJ (EW10A) | | GDS10142 | Drive Shaft | | 25 | 24 | 58.5 | 89 | 648 | |
| | 2004.09-2008.08 | MT | F | L | Hatchback FWD RFJ (EW10A) | | GDS10192 | Drive Shaft | | 25 | 24 | 58.5 | 89 | 655 | |
| | 2004.09-2008.08 | MT | F | R | Hatchback FWD RFJ (EW10A) | | GDS10143 | Drive Shaft | | 25 | 24 | 58.5 | 89 | 936 | |
| | 2004.09-2008.08 | MT | F | L | Hatchback FWD RFJ (EW10A) | Date to:2008.01 | GCO10158 | Outer Joint | | 25 | 26 | 58.5 | 89 | 61.5 | M |
| | 2008.02-2012.12 | 5MT | F | L | Saloon FWD RFJ (EW10A) | | GDS10238 | Drive Shaft | | 28 | 24 | 58.5 | 92 | 669 | |
| | 2008.02-2012.12 | 5MT | F | R | Saloon FWD RFJ (EW10A) | Date from:2009.01,ORG/OPR from:11754;Date from:2010.07,ORG/OPR from:12292 | GDS10239 | Drive Shaft | | 28 | 24 | 58.5 | 92 | 955 | |
| | 2008.02-2012.12 | 5MT | F | R | Saloon FWD RFJ (EW10A) | Date To:2008.12,ORG/OPR To:11753 | GDS10265 | Drive Shaft | | 28 | 24 | 59 | 91 | 951 | |
| | 2008.02-2012.12 | 5MT | F | R | Saloon FWD RFJ (EW10A) | Date to:2008.12,ORG/OPR to:11753 | GCO45074 | Outer Joint | | 28 | 26 | 59 | 91 | 61.5 | M |
| | 2008.02-2012.12 | 5MT | F | L/R | Saloon FWD RFJ (EW10A) | | GCO10052 | Outer Joint | | 28 | 34 | 58.5 | 92 | 55 | I |
| | 2008.02-2012.12 | 5MT | F | L/R | Saloon FWD RFJ (EW10A) | Reconditioned,Date From:2010.07,ORG/OPR From:12292 | GCO10124 | Outer Joint | | 28 | 34 | 58.5 | 92 | 55 | I |
| | 2008.02-2012.12 | 5MT | F | R | Saloon FWD RFJ (EW10A) | Reconditioned,Date From:2010.07,ORG/OPR From:12292 | GCI99159 | Inner Joint | | 24 | 34 | 29.8 | 350 | 87.5 | |
| | 2008.02-2012.12 | 5MT | F | R | Saloon FWD RFJ (EW10A) | Date From:2009.01,ORG/OPR From:11754 | GCI99159 | Inner Joint | | 24 | 34 | 29.8 | 350 | 87.5 | |
| | 2008.02-2014.10 | 5MT | F | L | Saloon FWD RFJ (EW10A) | Inner teeth of wheel side:26 | GDS10310 | Drive Shaft | | 28 | 24 | 59 | 91 | 670 | |
| | 2008.02-2014.10 | 5MT | F | R | Saloon FWD RFJ (EW10A) | Inner teeth of wheel side:26 | GDS10265 | Drive Shaft | | 28 | 24 | 59 | 91 | 951 | |
| | 2008.02-2014.10 | 5MT | F | L/R | Saloon FWD RFJ (EW10A) | Inner teeth:26 | GCO45074 | Outer Joint | | 28 | 26 | 59 | 91 | 61.5 | M |
| | 2008.02-2014.10 | AT | F | L | Saloon FWD RFJ (EW10A) | | GDS10285 | Drive Shaft | | 28 | 26 | 58.5 | 92 | 661 | |
| | 2008.02-2014.10 | AT | F | R | Saloon FWD RFJ (EW10A) | | GDS10283 | Drive Shaft | | 28 | 26 | 58.5 | 92 | 866 | |
| | 2008.02-2014.10 | AT | F | L/R | Saloon FWD RFJ (EW10A) | | GCO10052 | Outer Joint | | 28 | 34 | 58.5 | 92 | 55 | I |
| | 2008.02-2014.10 | AT | F | L | Saloon FWD RFJ (EW10A) | | GCI99001 | Inner Joint | | 26 | 34 | 30.2 | 46.5 | 103.5 | |
| | 2008.02-2014.10 | MT | F | L | Saloon FWD RFJ (EW10A) | Inner teeth of wheel side:34 | GDS10238 | Drive Shaft | | 28 | 24 | 58.5 | 92 | 669 | |
| | 2008.02-2014.10 | MT | F | R | Saloon FWD RFJ (EW10A) | Inner teeth of wheel side:34 | GDS10239 | Drive Shaft | | 28 | 24 | 58.5 | 92 | 955 | |
| | 2008.02-2014.10 | MT | F | L/R | Saloon FWD RFJ (EW10A) | Inner teeth:34 | GCO10124 | Outer Joint | | 28 | 34 | 58.5 | 92 | 55 | I |
| | 2008.02-2014.10 | MT | F | R | Saloon FWD RFJ (EW10A) | | GCI99159 | Inner Joint | | 24 | 34 | 29.8 | 350 | 87.5 | |
| | 2008.11-2015.06 | 6AT | F | L | Saloon FWD RHF (DW10BTED4);RHA (DW10CTED4) | | GDS10335 | Drive Shaft | | 28 | 37 | 58.5 | 92.5 | 618 | |
| | 2008.11-2015.06 | 6AT | F | R | Saloon FWD RHF (DW10BTED4);RHA (DW10CTED4) | | GDS10435 | Drive Shaft | | 28 | 37 | 58.6 | 94 | 952 | |
| | 2008.11-2015.06 | 6AT | F | L | Saloon FWD RHF (DW10BTED4);RHA (DW10CTED4) | | GCI10043 | Inner Joint | | 37 | 26 | 40.5 | 67.5 | 104 | |
| | 2008.11-2015.06 | 6AT | F | R | Saloon FWD RHF (DW10BTED4);RHA (DW10CTED4) | | GCI81492 | Inner Joint | | 37 | 26 | | 380 | 100 | |
| | 2008.11-2015.06 | AT | F | L/R | Saloon FWD RHF (DW10BTED4);RHA (DW10CTED4) | | GCO10115 | Outer Joint | | 28 | 26 | 58.5 | 92.5 | 61.5 | M |
| | 2008.11-2015.06 | MT | F | L | Saloon FWD RHF (DW10BTED4);RHA (DW10CTED4) | | GDS45133 | Drive Shaft | | 28 | 37 | 58.6 | 94 | 653 | |
| | 2008.11-2015.06 | MT | F | R | Saloon FWD RHF (DW10BTED4);RHA (DW10CTED4) | | GDS10302 | Drive Shaft | | 28 | 37 | 58.6 | 94 | 969 | |
| | 2008.11-2015.06 | MT | F | L/R | Saloon FWD RHF (DW10BTED4);RHA (DW10CTED4) | | GCO10051 | Outer Joint | | 28 | 39 | 58.6 | 94 | 63 | I |
| | 2008.11-2015.06 | MT | F | L/R | Saloon FWD RHF (DW10BTED4);RHA (DW10CTED4) | | GCO10098 | Outer Joint | | 28 | 39 | 58.6 | 93 | 63 | I |
| | 2008.11-2015.06 | MT | F | L | Saloon FWD RHF (DW10BTED4);RHA (DW10CTED4) | | GCI45032 | Inner Joint | | 37 | 39 | 40 | 68.5 | 100 | |
| | 2008.11-2015.06 | MT | F | R | Saloon FWD RHF (DW10BTED4);RHA (DW10CTED4) | | GCI10041 | Inner Joint | | 37 | 39 | 32 | 399 | 95.5 | |
| 2.0 (105 kw) | 2008.04-2012.12 | 4AT | F | L | Saloon FWD RFJ (EW10A) | | GDS10285 | Drive Shaft | | 28 | 26 | 58.5 | 92 | 661 | |
| | 2008.04-2012.12 | 4AT | F | R | Saloon FWD RFJ (EW10A) | | GDS10283 | Drive Shaft | | 28 | 26 | 58.5 | 92 | 866 | |
| 2.0 (110 kw) | 2009.04-2017.05 | 6MT | F | L | Saloon FWD RHE (DW10CTED4);AHX (DW10FD);AHR (DW10FD) | For vehicles with Height-Adjustable Suspension;For Engine Code:DW10CTED4 | GDS10314 | Drive Shaft | | 28 | 37 | 59 | 91 | 655 | |
| | 2009.04-2017.05 | 6MT | F | L | Saloon FWD RHE (DW10CTED4);AHX (DW10FD);AHR (DW10FD) | For vehicles with Height-Adjustable Suspension;For Engine Code:DW10CTED4 | GCI10095 | Inner Joint | | 37 | 26 | 40 | 68 | 100 | |
| | 2009.04-2017.05 | AT | F | L | Saloon FWD RHE (DW10CTED4);AHX (DW10FD);AHR (DW10FD) | | GDS45225 | Drive Shaft | | 28 | 37 | 59 | 91 | 621 | |
| | 2009.04-2017.05 | AT | F | R | Saloon FWD RHE (DW10CTED4);AHX (DW10FD);AHR (DW10FD) | | GDS10416 | Drive Shaft | | 28 | 37 | 59 | 91 | 955 | |
| | 2009.04-2017.05 | AT | F | L/R | Saloon FWD RHE (DW10CTED4);AHX (DW10FD);AHR (DW10FD) | | GCO45074 | Outer Joint | | 28 | 26 | 59 | 91 | 61.5 | M |
| | 2009.04-2017.05 | AT | F | L | Saloon FWD RHE (DW10CTED4);AHX (DW10FD);AHR (DW10FD) | | GCI10161 | Inner Joint | | 37 | 26 | 40.5 | 65.5 | 100 | |
| | 2009.04-2017.05 | AT | F | R | Saloon FWD RHE (DW10CTED4);AHX (DW10FD);AHR (DW10FD) | | GCI10157 | Inner Joint | | 37 | 26 | | 380 | 100 | |
| | 2009.04-2017.05 | MT | F | L | Saloon FWD RHE (DW10CTED4);AHX (DW10FD);AHR (DW10FD) | For vehicles without electronic suspension control;For Engine Code:DW10CTED4;DW10FD | GDS45133 | Drive Shaft | | 28 | 37 | 58.6 | 94 | 653 | |
| | 2009.04-2017.05 | MT | F | R | Saloon FWD RHE (DW10CTED4);AHX (DW10FD);AHR (DW10FD) | For vehicles without electronic suspension control;For Engine Code:DW10CTED4 | GDS10302 | Drive Shaft | | 28 | 37 | 58.6 | 94 | 969 | |
| | 2009.04-2017.05 | MT | F | L | Saloon FWD RHE (DW10CTED4);AHX (DW10FD);AHR (DW10FD) | For vehicles with electronic suspension control;For Engine Code:DW10CTED4 | GCO45074 | Outer Joint | | 28 | 26 | 59 | 91 | 61.5 | M |

| | YEAR | TRANSM. | F/R | L/R | BODY STYLE & DRIVE TYPE & ENGINE | REMARKS | G-AP Ref. | PRODUCT | ABS | Technical Specifications A | B | C | H | L | P |
|---|---|---|---|---|---|---|---|---|---|---|---|---|---|---|---|
| **CITROËN** | | | | | | | | | | | | | | | |
| **C5** | | | | | | | | | | | | | | | |
| 2.0 (110 kw) | 2009.04-2017.05 | MT | F | L/R | Saloon FWD RHE (DW10CTED4);AHX (DW10FD);AHR (DW10FD) | For vehicles without electronic suspension control;For Engine Code:DW10CTED4(DW10FD) | GCO10051 | Outer Joint | | 28 | 39 | 58.6 | 94 | 63 | I |
| | 2009.04-2017.05 | MT | F | L | Saloon FWD RHE (DW10CTED4);AHX (DW10FD);AHR (DW10FD) | For vehicles without electronic suspension control;For Engine Code:DW10CTED4(DW10FD) | GCI45032 | Inner Joint | | 37 | 39 | 40 | 68.5 | 100 | |
| | 2009.04-2017.05 | MT | F | R | Saloon FWD RHE (DW10CTED4);AHX (DW10FD);AHR (DW10FD) | For vehicles without electronic suspension control;For Engine Code:DW10CTED4 | GCI10041 | Inner Joint | | 37 | 39 | 32 | 399 | 95.5 | |
| 2.0 (120 kw) | 2009.04-2016.07 | 6MT | F | L | Saloon FWD RHH (DW10CTED4) | For vehicles with Height-Adjustable Suspension | GDS10314 | Drive Shaft | | 28 | 37 | 59 | 91 | 655 | |
| | 2009.04-2016.07 | 6MT | F | L | Saloon FWD RHH (DW10CTED4) | For vehicles with Height-Adjustable Suspension | GCI10095 | Inner Joint | | 37 | 26 | 40 | 68 | 100 | |
| | 2009.04-2016.07 | AT | F | L | Saloon FWD RHH (DW10CTED4) | | GDS45225 | Drive Shaft | | 28 | 37 | 59 | 91 | 621 | |
| | 2009.04-2016.07 | AT | F | R | Saloon FWD RHH (DW10CTED4) | | GDS10416 | Drive Shaft | | 28 | 37 | 59 | 91 | 955 | |
| | 2009.04-2016.07 | AT | F | L | Saloon FWD RHH (DW10CTED4) | | GCI10161 | Inner Joint | | 37 | 26 | 40.5 | 65.5 | 100 | |
| | 2009.04-2016.07 | AT | F | R | Saloon FWD RHH (DW10CTED4) | | GCI10157 | Inner Joint | | 37 | 26 | | 380 | 100 | |
| | 2009.04-2016.07 | AT/MT | F | L/R | Saloon FWD RHH (DW10CTED4) | | GCO45074 | Outer Joint | | 28 | 26 | 59 | 91 | 61.5 | M |
| | 2009.04-2016.07 | MT | F | L | Saloon FWD RHH (DW10CTED4) | For vehicles without Height-Adjustable Suspension | GDS45133 | Drive Shaft | | 28 | 37 | 58.6 | 94 | 653 | |
| | 2009.04-2016.07 | MT | F | R | Saloon FWD RHH (DW10CTED4) | | GDS10302 | Drive Shaft | | 28 | 37 | 58.6 | 94 | 969 | |
| | 2009.04-2016.07 | MT | F | L/R | Saloon FWD RHH (DW10CTED4) | | GCO10051 | Outer Joint | | 28 | 39 | 58.6 | 94 | 63 | I |
| | 2009.04-2016.07 | MT | F | L | Saloon FWD RHH (DW10CTED4) | For vehicles without Height-Adjustable Suspension | GCI45032 | Inner Joint | | 37 | 39 | 40 | 68.5 | 100 | |
| | 2009.04-2016.07 | MT | F | R | Saloon FWD RHH (DW10CTED4) | | GCI10041 | Inner Joint | | 37 | 39 | 32 | 399 | 95.5 | |
| 2.2 (98 kw) | 2001.03-2004.08 | AT | F | L | Hatchback FWD 4HX (DW12TED4) | | GDS10207 | Drive Shaft | | 25 | 37 | 58.5 | 89 | 602 | |
| | 2001.03-2004.08 | AT | F | R | Hatchback FWD 4HX (DW12TED4) | | GDS10208 | Drive Shaft | | 25 | 37 | 58.5 | 89 | 908 | |
| | 2001.03-2004.08 | AT | F | L | Hatchback FWD 4HX (DW12TED4) | | GCI10043 | Inner Joint | | 37 | 26 | 40.5 | 67.5 | 104 | |
| | 2001.03-2004.08 | MT | F | L | Hatchback FWD 4HX (DW12TED4) | | GDS10121 | Drive Shaft | | 25 | 37 | 58.5 | 89 | 628 | |
| | 2001.03-2004.08 | MT | F | L | Hatchback FWD 4HX (DW12TED4) | | GDS10312 | Drive Shaft | | 25 | 37 | 58.5 | 89 | 625 | |
| | 2001.03-2004.08 | MT | F | R | Hatchback FWD 4HX (DW12TED4) | | GDS10140 | Drive Shaft | | 25 | 37 | 58.5 | 89 | 948 | |
| | 2001.03-2004.08 | MT | F | L | Hatchback FWD 4HX (DW12TED4) | | GCO10096 | Outer Joint | | 25 | 26 | 58.5 | 89 | 61.5 | M |
| | 2001.03-2004.08 | MT | F | L/R | Hatchback FWD 4HX (DW12TED4) | | GCO10075 | Outer Joint | | 25 | 26 | 58.5 | 89 | 63 | M |
| | 2004.09-2008.08 | AT | F | L | Hatchback FWD 4HX (DW12TED4) | | GDS10207 | Drive Shaft | | 25 | 37 | 58.5 | 89 | 602 | |
| | 2004.09-2008.08 | AT | F | R | Hatchback FWD 4HX (DW12TED4) | | GDS10208 | Drive Shaft | | 25 | 37 | 58.5 | 89 | 908 | |
| | 2004.09-2008.08 | AT | F | L | Hatchback FWD 4HX (DW12TED4) | Date to:2005.08 | GCI10043 | Inner Joint | | 37 | 26 | 40.5 | 67.5 | 104 | |
| | 2004.09-2008.08 | AT/MT | F | L/R | Hatchback FWD 4HX (DW12TED4) | Date to:2008.12 | GCO10075 | Outer Joint | | 25 | 26 | 58.5 | 89 | 63 | M |
| | 2004.09-2008.08 | MT | F | L | Hatchback FWD 4HX (DW12TED4) | | GDS10121 | Drive Shaft | | 25 | 37 | 58.5 | 89 | 628 | |
| | 2004.09-2008.08 | MT | F | L | Hatchback FWD 4HX (DW12TED4) | | GDS10312 | Drive Shaft | | 25 | 37 | 58.5 | 89 | 625 | |
| | 2004.09-2008.08 | MT | F | R | Hatchback FWD 4HX (DW12TED4) | | GDS10140 | Drive Shaft | | 25 | 37 | 58.5 | 89 | 948 | |
| | 2004.09-2008.08 | MT | F | L | Hatchback FWD 4HX (DW12TED4) | | GCO10096 | Outer Joint | | 25 | 26 | 58.5 | 89 | 61.5 | M |
| 2.2 (120 kw) | 2006.05-2008.01 | AT | F | L | Hatchback FWD 4HP (DW12BTED4);4HR (DW12BTED4) | | GDS10381 | Drive Shaft | | 25 | 37 | 58.5 | 89 | 595 | |
| | 2006.05-2008.01 | MT | F | L | Hatchback FWD 4HP (DW12BTED4);4HR (DW12BTED4) | | GDS10312 | Drive Shaft | | 25 | 37 | 58.5 | 89 | 625 | |
| | 2006.05-2008.01 | MT | F | R | Hatchback FWD 4HP (DW12BTED4);4HR (DW12BTED4) | | GDS10313 | Drive Shaft | | 25 | 37 | 58.5 | 89 | 950 | |
| | 2009.04-2011.12 | 6MT | F | L | Saloon FWD 4HP (DW12BTED4);4HR (DW12BTED4) | | GDS10314 | Drive Shaft | | 28 | 37 | 59 | 91 | 655 | |
| | 2009.04-2011.12 | 6MT | F | R | Saloon FWD 4HP (DW12BTED4);4HR (DW12BTED4) | | GDS10320 | Drive Shaft | | 28 | 37 | 59 | 91 | 980 | |
| | 2009.04-2011.12 | 6MT | F | L/R | Saloon FWD 4HP (DW12BTED4);4HR (DW12BTED4) | | GCO45074 | Outer Joint | | 28 | 26 | 59 | 91 | 61.5 | M |
| | 2009.04-2011.12 | 6MT | F | L | Saloon FWD 4HP (DW12BTED4);4HR (DW12BTED4) | | GCI10095 | Inner Joint | | 37 | 26 | 40 | 68 | 100 | |
| | 2009.04-2011.12 | 6MT | F | R | Saloon FWD 4HP (DW12BTED4);4HR (DW12BTED4) | | GCI10096 | Inner Joint | | 37 | 26 | 31.95 | 400 | 100 | |
| 2.2 (125 kw) | 2006.04-2008.08 | AT | F | L | Hatchback FWD 4HT (DW12BTED4) | | GDS10381 | Drive Shaft | | 25 | 37 | 58.5 | 89 | 595 | |
| | 2006.04-2008.08 | AT | F | L/R | Hatchback FWD 4HT (DW12BTED4) | | GCO10075 | Outer Joint | | 25 | 26 | 58.5 | 89 | 63 | M |
| | 2006.04-2008.08 | AT/MT | F | L/R | Hatchback FWD 4HT (DW12BTED4) | Date to:2008.12 | GCO10085 | Outer Joint | | 25 | 39 | 59 | 89 | 63.5 | I |
| | 2006.04-2008.08 | MT | F | L | Hatchback FWD 4HT (DW12BTED4) | | GDS10312 | Drive Shaft | | 25 | 37 | 58.5 | 89 | 625 | |
| | 2006.04-2008.08 | MT | F | R | Hatchback FWD 4HT (DW12BTED4) | | GDS10313 | Drive Shaft | | 25 | 37 | 58.5 | 89 | 950 | |
| | 2008.02-2011.12 | 6MT | F | L | Saloon FWD 4HS (DW12BTED4) | | GDS10314 | Drive Shaft | | 28 | 37 | 59 | 91 | 655 | |
| | 2008.02-2011.12 | 6MT | F | R | Saloon FWD 4HS (DW12BTED4) | | GDS10320 | Drive Shaft | | 28 | 37 | 59 | 91 | 980 | |
| | 2008.02-2011.12 | 6MT | F | L | Saloon FWD 4HS (DW12BTED4) | | GCI10095 | Inner Joint | | 37 | 26 | 40 | 68 | 100 | |
| | 2008.02-2011.12 | 6MT | F | R | Saloon FWD 4HS (DW12BTED4) | | GCI10096 | Inner Joint | | 37 | 26 | 31.95 | 400 | 100 | |
| 2.2 (150 kw) | 2010.07-2015.06 | 6AT | F | L | Saloon FWD 4HL (DW12C) | | GDS45225 | Drive Shaft | | 28 | 37 | 59 | 91 | 621 | |
| | 2010.07-2015.06 | 6AT | F | R | Saloon FWD 4HL (DW12C) | | GDS10416 | Drive Shaft | | 28 | 37 | 59 | 91 | 955 | |
| | 2010.07-2015.06 | 6AT | F | L | Saloon FWD 4HL (DW12C) | | GCO45074 | Outer Joint | | 28 | 26 | 59 | 91 | 61.5 | M |
| | 2010.07-2015.06 | 6AT | F | L | Saloon FWD 4HL (DW12C) | | GCI10161 | Inner Joint | | 37 | 26 | 40.5 | 65.5 | 100 | |
| 2.7 (150 kw) | 2008.02-2009.12 | 6AT | F | L | Saloon FWD UHZ (DT17TED4) | | GDS10335 | Drive Shaft | | 28 | 37 | 58.5 | 92.5 | 618 | |
| | 2008.02-2009.12 | 6AT | F | L | Saloon FWD UHZ (DT17TED4) | | GCI10043 | Inner Joint | | 37 | 26 | 40.5 | 67.5 | 104 | |
| | 2008.02-2009.12 | AT | F | R | Saloon FWD UHZ (DT17TED4) | | GDS10396 | Drive Shaft | | 28 | 37 | 58.6 | 94 | 925 | |
| | 2008.02-2009.12 | AT | F | R | Saloon FWD UHZ (DT17TED4) | | GCO10098 | Outer Joint | | 28 | 39 | 58.6 | 93 | 63 | I |
| 3.0 (152 kw) | 2001.03-2004.08 | 4AT | F | R | Hatchback FWD XFX (ES9J4S) | | GDS83416 | Drive Shaft | | 25 | 37 | 58.5 | 89 | 915 | |
| | 2001.03-2004.08 | AT | F | L | Hatchback FWD XFX (ES9J4S) | | GDS10344 | Drive Shaft | | 25 | 37 | 58.5 | 89 | 607 | |
| | 2001.03-2004.08 | AT | F | R | Hatchback FWD XFX (ES9J4S) | | GCO10075 | Outer Joint | | 25 | 26 | 58.5 | 89 | 63 | M |
| | 2001.03-2004.08 | AT | F | L | Hatchback FWD XFX (ES9J4S) | | GCI10043 | Inner Joint | | 37 | 26 | 40.5 | 67.5 | 104 | |
| | 2001.03-2004.08 | MT | F | L | Hatchback FWD XFX (ES9J4S) | | GDS10141 | Drive Shaft | | 25 | 37 | 58.5 | 89 | 638 | |
| | 2001.03-2004.08 | MT | F | R | Hatchback FWD XFX (ES9J4S) | | GDS10139 | Drive Shaft | | 25 | 37 | 58.5 | 89 | 944 | |
| | 2001.03-2004.08 | | F | | Hatchback FWD XFX (ES9J4S) | | GCO10096 | Outer Joint | | 25 | 26 | 58.5 | 89 | 61.5 | M |
| | 2004.09-2008.09 | 6AT | F | L | Hatchback FWD XFX (ES9J4S);XFU (ES9A) | | GDS10381 | Drive Shaft | | 25 | 37 | 58.5 | 89 | 595 | |
| | 2004.09-2008.09 | 6AT | F | R | Hatchback FWD XFX (ES9J4S);XFU (ES9A) | | GDS10382 | Drive Shaft | | 25 | 37 | 58.5 | 89 | 929 | |

| | YEAR | TRANSM. | F/R | L/R | BODY STYLE & DRIVE TYPE & ENGINE | REMARKS | G-AP Ref. | PRODUCT | ABS | Technical Specifications A | B | C | H | L | P |
|---|---|---|---|---|---|---|---|---|---|---|---|---|---|---|---|
| **CITROËN** | | | | | | | | | | | | | | | |
| **C5** | | | | | | | | | | | | | | | |
| 3.0 (152 kw) | 2004.09-2008.09 | AT | F | L | Hatchback FWD XFX (ES9J4S);XFU (ES9A) | Date to:2008.12 | GDS10344 | Drive Shaft | | 25 | 37 | 58.5 | 89 | 607 | |
| | 2004.09-2008.09 | AT | F | L/R | Hatchback FWD XFX (ES9J4S);XFU (ES9A) | Date to:2008.12 | GCO10075 | Outer Joint | | 25 | 26 | 58.5 | 89 | 63 | M |
| | 2004.09-2008.09 | AT | F | L | Hatchback FWD XFX (ES9J4S);XFU (ES9A) | | GCI10043 | Inner Joint | | 37 | 26 | 40.5 | 67.5 | 104 | |
| 3.0 (155 kw) | 2004.10-2007.04 | 6AT | F | L | Hatchback FWD XFV (ES9A) | | GDS10381 | Drive Shaft | | 25 | 37 | 58.5 | 89 | 595 | |
| | 2004.10-2007.04 | 6AT | F | R | Hatchback FWD XFV (ES9A) | Date from:2006.12,From ORG/OPR:10990 | GDS10382 | Drive Shaft | | 25 | 37 | 58.5 | 89 | 929 | |
| | 2004.10-2007.04 | AT | F | L/R | Hatchback FWD XFV (ES9A) | | GCO10075 | Outer Joint | | 25 | 26 | 58.5 | 89 | 63 | M |
| | 2004.10-2007.04 | AT | F | L | Hatchback FWD XFV (ES9A) | | GCI10043 | Inner Joint | | 37 | 26 | 40.5 | 67.5 | 104 | |
| | 2008.02-2010.12 | 6AT | F | L | Saloon FWD XFV (ES9A);XFU (ES9A) | | GDS10335 | Drive Shaft | | 28 | 37 | 58.5 | 92.5 | 618 | |
| | 2008.02-2010.12 | 6AT | F | L | Saloon FWD XFV (ES9A);XFU (ES9A) | | GCI10043 | Inner Joint | | 37 | 26 | 40.5 | 67.5 | 104 | |
| | 2008.02-2010.12 | AT | F | R | Saloon FWD XFV (ES9A);XFU (ES9A) | | GDS10243 | Drive Shaft | | 28 | 37 | 58.5 | 92.5 | 957 | |
| 3.0 (157 kw) | 2001.05-2004.08 | 4AT | F | L | Hatchback FWD XFX (ES9J4S) | | GDS10344 | Drive Shaft | | 25 | 37 | 58.5 | 89 | 607 | |
| | 2001.05-2004.08 | 4AT | F | R | Hatchback FWD XFX (ES9J4S) | | GDS83416 | Drive Shaft | | 25 | 37 | 58.5 | 89 | 915 | |
| | 2001.05-2004.08 | 4AT | F | R | Hatchback FWD XFX (ES9J4S) | | GCO10075 | Outer Joint | | 25 | 26 | 58.5 | 89 | 63 | M |
| 3.0 (173 kw) | 2004.09-2008.01 | | F | L | Hatchback FWD XFX (ES9J4S) | | GDS10381 | Drive Shaft | | 25 | 37 | 58.5 | 89 | 595 | |
| | 2004.09-2008.01 | | F | R | Hatchback FWD XFX (ES9J4S) | | GDS10382 | Drive Shaft | | 25 | 37 | 58.5 | 89 | 929 | |
| 3.0 (177 kw) | 2009.04-2014.10 | 6AT | F | L | Saloon FWD DT20C | | GDS45225 | Drive Shaft | | 28 | 37 | 59 | 91 | 621 | |
| | 2009.04-2014.10 | 6AT | F | L | Saloon FWD DT20C | | GCO45074 | Outer Joint | | 28 | 26 | 59 | 91 | 61.5 | M |
| | 2009.04-2014.10 | 6AT | F | L | Saloon FWD DT20C | | GCI10161 | Inner Joint | | 37 | 26 | 40.5 | 65.5 | 100 | |
| | 2009.04-2014.10 | AT | F | R | Saloon FWD DT20C | | GDS10416 | Drive Shaft | | 28 | 37 | 59 | 91 | 955 | |
| **C5 Aircross** | | | | | | | | | | | | | | | |
| 1.2 (96 kw) | 2018.11- | 6MT | F | L | SUV FWD HNS (EB2ADTS) | | GDS83067 | Drive Shaft | | 28 | 24 | 58.5 | 92.5 | 696 | |
| | 2018.11- | 6MT | F | R | SUV FWD HNS (EB2ADTS) | | GDS84363 | Drive Shaft | | 28 | 24 | 58.5 | 92.5 | 933 | |
| | 2018.11- | 6MT | F | L/R | SUV FWD HNS (EB2ADTS) | | GCO82273 | Outer Joint | | 28 | 34 | 58.5 | 92.5 | 56 | I |
| | 2018.11- | 6MT | F | L | SUV FWD HNS (EB2ADTS) | | GCI82131 | Inner Joint | | 24 | 34 | 40 | 62 | 89 | |
| | 2018.11- | 6MT | F | R | SUV FWD HNS (EB2ADTS) | | GCI82320 | Inner Joint | | 24 | 34 | 29.8 | 290 | 88 | |
| | 2018.11- | 8AT | F | L | SUV FWD HNS (EB2ADTS) | | GDS83110 | Drive Shaft | | 28 | 37 | 58.5 | 92.5 | 662 | |
| | 2018.11- | 8AT | F | R | SUV FWD HNS (EB2ADTS) | | GDS83109 | Drive Shaft | | 28 | 37 | 58.5 | 92.5 | 933 | |
| | 2018.11- | 8AT | F | L/R | SUV FWD HNS (EB2ADTS) | | GCO82449 | Outer Joint | | 28 | 36 | 58.5 | 92 | 60 | I |
| | 2018.11- | 8AT | F | L | SUV FWD HNS (EB2ADTS) | | GCI82119 | Inner Joint | | 37 | 34 | 41.5 | 58.5 | 94 | |
| | 2018.11- | 8AT | F | L | SUV FWD HNS (EB2ADTS) | | GCI82321 | Inner Joint | | 37 | 36 | 42.5 | 59.5 | 108 | |
| | 2018.11- | 8AT | F | R | SUV FWD HNS (EB2ADTS) | | GCI82118 | Inner Joint | | 37 | 34 | | 290 | 88 | |
| | 2018.11- | 8AT | F | R | SUV FWD HNS (EB2ADTS) | | GCI82322 | Inner Joint | | 37 | 36 | | 379 | 108.5 | |
| 1.2 (100 kw) | 2023.05- | 6AT | F | R | SUV FWD HPY (EB2LTDH2) | | GDS83109 | Drive Shaft | | 28 | 37 | 58.5 | 92.5 | 933 | |
| | 2023.05- | 6DCT | F | R | SUV FWD HPY (EB2LTDH2) | | GCI82118 | Inner Joint | | 37 | 34 | | 290 | 88 | |
| 1.2 (107 kw) | 2025.04- | 6DCT | F | R | SUV FWD | | GCI82118 | Inner Joint | | 37 | 34 | | 290 | 88 | |
| | 2025.04- | 8AT | F | R | SUV FWD | | GDS83109 | Drive Shaft | | 28 | 37 | 58.5 | 92.5 | 933 | |
| 1.5 (96 kw) | 2018.11- | 6MT | F | L | SUV FWD YHZ (DV5RC) | | GDS83608 | Drive Shaft | | 28 | 37 | 58.5 | 92.5 | 683 | |
| | 2018.11- | 6MT | F | R | SUV FWD YHZ (DV5RC) | | GDS83607 | Drive Shaft | | 28 | 37 | 58.5 | 92.5 | 944 | |
| | 2018.11- | 6MT | F | L/R | SUV FWD YHZ (DV5RC) | | GCO82273 | Outer Joint | | 28 | 34 | 58.5 | 92.5 | 56 | I |
| | 2018.11- | 6MT | F | L | SUV FWD YHZ (DV5RC) | | GCI82301 | Inner Joint | | 37 | 34 | 40 | 65.5 | 89.5 | |
| | 2018.11- | 6MT | F | R | SUV FWD YHZ (DV5RC) | | GCI82300 | Inner Joint | | 37 | 34 | 31.9 | 302 | 88 | |
| | 2018.11- | 8AT | F | L | SUV FWD YHZ (DV5RC) | Trans. code:ATN8 | GDS83110 | Drive Shaft | | 28 | 37 | 58.5 | 92.5 | 662 | |
| | 2018.11- | 8AT | F | R | SUV FWD YHZ (DV5RC) | Trans. code:ATN8 | GDS83109 | Drive Shaft | | 28 | 37 | 58.5 | 92.5 | 933 | |
| | 2018.11- | 8AT | F | L/R | SUV FWD YHZ (DV5RC) | Trans. code:ATN8 | GCO82273 | Outer Joint | | 28 | 34 | 58.5 | 92.5 | 56 | I |
| | 2018.11- | 8AT | F | L | SUV FWD YHZ (DV5RC) | Trans. code:ATN8 | GCI82119 | Inner Joint | | 37 | 34 | 41.5 | 58.5 | 94 | |
| | 2018.11- | 8AT | F | R | SUV FWD YHZ (DV5RC) | Trans. code:ATN8 | GCI82118 | Inner Joint | | 37 | 34 | | 290 | 88 | |
| 1.6 (110 kw) | 2019.09- | 6AT | F | L | SUV FWD 5GX (EP6FDTMD) | | GDS83110 | Drive Shaft | | 28 | 37 | 58.5 | 92.5 | 662 | |
| | 2019.09- | 6AT | F | R | SUV FWD 5GX (EP6FDTMD) | | GDS83109 | Drive Shaft | | 28 | 37 | 58.5 | 92.5 | 933 | |
| | 2019.09- | 6AT | F | L/R | SUV FWD 5GX (EP6FDTMD) | | GCO82273 | Outer Joint | | 28 | 34 | 58.5 | 92.5 | 56 | I |
| | 2019.09- | 6AT | F | L | SUV FWD 5GX (EP6FDTMD) | | GCI82119 | Inner Joint | | 37 | 34 | 41.5 | 58.5 | 94 | |
| | 2019.09- | 6AT | F | R | SUV FWD 5GX (EP6FDTMD) | | GCI82118 | Inner Joint | | 37 | 34 | | 290 | 88 | |
| 1.6 (121 kw) | 2019.05- | 6AT | F | L | SUV FWD 5GY (EP6FDTM) | | GDS83110 | Drive Shaft | | 28 | 37 | 58.5 | 92.5 | 662 | |
| | 2019.05- | 6AT | F | R | SUV FWD 5GY (EP6FDTM) | | GDS83109 | Drive Shaft | | 28 | 37 | 58.5 | 92.5 | 933 | |
| | 2019.05- | 6AT | F | L/R | SUV FWD 5GY (EP6FDTM) | | GCO82273 | Outer Joint | | 28 | 34 | 58.5 | 92.5 | 56 | I |
| | 2019.05- | 6AT | F | L | SUV FWD 5GY (EP6FDTM) | | GCI82119 | Inner Joint | | 37 | 34 | 41.5 | 58.5 | 94 | |
| | 2019.05- | 6AT | F | R | SUV FWD 5GY (EP6FDTM) | | GCI82118 | Inner Joint | | 37 | 34 | | 290 | 88 | |
| 1.6 (133 kw) | 2018.11- | 8AT | F | L | SUV FWD 5GF (EP6FADTXD) | Trans. code:ATN8 | GDS83110 | Drive Shaft | | 28 | 37 | 58.5 | 92.5 | 662 | |
| | 2018.11- | 8AT | F | R | SUV FWD 5GF (EP6FADTXD) | Trans. code:ATN8 | GDS83109 | Drive Shaft | | 28 | 37 | 58.5 | 92.5 | 933 | |
| | 2018.11- | 8AT | F | L/R | SUV FWD 5GF (EP6FADTXD) | Trans. code:ATN8 | GCO82273 | Outer Joint | | 28 | 34 | 58.5 | 92.5 | 56 | I |
| | 2018.11- | 8AT | F | L | SUV FWD 5GF (EP6FADTXD) | Trans. code:ATN8 | GCI82119 | Inner Joint | | 37 | 34 | 41.5 | 58.5 | 94 | |
| | 2018.11- | 8AT | F | R | SUV FWD 5GF (EP6FADTXD) | Trans. code:ATN8 | GCI82118 | Inner Joint | | 37 | 34 | | 290 | 88 | |
| 2.0 (130 kw) | 2018.11- | 8AT | F | L | SUV FWD EHZ (DW10FC) | Trans. code:AMN8 | GDS83646 | Drive Shaft | | 28 | 37 | 58.5 | 92 | 622 | |
| | 2018.11- | 8AT | F | R | SUV FWD EHZ (DW10FC) | Trans. code:AMN8 | GDS83652 | Drive Shaft | | 28 | 37 | 58.5 | 92 | 951 | |
| | 2018.11- | 8AT | F | L/R | SUV FWD EHZ (DW10FC) | Trans. code:ATN8 | GCO82273 | Outer Joint | | 28 | 34 | 58.5 | 92.5 | 56 | I |
| | 2018.11- | 8AT | F | L/R | SUV FWD EHZ (DW10FC) | Trans. code:AMN8 | GCO82449 | Outer Joint | | 28 | 36 | 58.5 | 92 | 60 | I |

| | YEAR | TRANSM. | F/R | L/R | BODY STYLE & DRIVE TYPE & ENGINE | REMARKS | G-AP Ref. | PRODUCT | ABS | Technical Specifications A | B | C | H | L | P |
|---|---|---|---|---|---|---|---|---|---|---|---|---|---|---|---|
| **CITROËN** | | | | | | | | | | | | | | | |
| **C5 Aircross** | | | | | | | | | | | | | | | |
| 2.0 (130 kw) | 2018.11- | 8AT | F | L | SUV FWD EHZ (DW10FC) | Trans. code:ATN8 | GCI82119 | Inner Joint | | 37 | 34 | 41.5 | 58.5 | 94 | |
| | 2018.11- | 8AT | F | L | SUV FWD EHZ (DW10FC) | Trans. code:AMN8 | GCI82321 | Inner Joint | | 37 | 36 | 42.5 | 59.5 | 108 | |
| | 2018.11- | 8AT | F | R | SUV FWD EHZ (DW10FC) | Trans. code:ATN8 | GCI82118 | Inner Joint | | 37 | 34 | | 290 | 88 | |
| | 2018.11- | 8AT | F | R | SUV FWD EHZ (DW10FC) | Trans. code:AMN8 | GCI82322 | Inner Joint | | 37 | 36 | | 379 | 108.5 | |
| **C5 Estate/Break** | | | | | | | | | | | | | | | |
| 1.6 (80 kw) | 2004.09-2008.01 | 5MT | F | L | Estate FWD 9HZ (DV6TED4);9HY (DV6TED4) | | GDS10142 | Drive Shaft | | 25 | 24 | 58.5 | 89 | 648 | |
| | 2004.09-2008.01 | 5MT | F | L | Estate FWD 9HZ (DV6TED4);9HY (DV6TED4) | | GDS10192 | Drive Shaft | | 25 | 24 | 58.5 | 89 | 655 | |
| | 2004.09-2008.01 | 5MT | F | R | Estate FWD 9HZ (DV6TED4);9HY (DV6TED4) | | GDS10143 | Drive Shaft | | 25 | 24 | 58.5 | 89 | 936 | |
| | 2004.09-2008.01 | 5MT | F | R | Estate FWD 9HZ (DV6TED4);9HY (DV6TED4) | | GCI10004 | Inner Joint | | 24 | 34 | 29.8 | 348 | 99.5 | |
| | 2004.09-2008.01 | MT | F | L | Estate FWD 9HZ (DV6TED4);9HY (DV6TED4) | Date to:2008.01 | GCO10158 | Outer Joint | | 25 | 26 | 58.5 | 89 | 61.5 | M |
| | 2004.09-2008.01 | MT | F | L/R | Estate FWD 9HZ (DV6TED4);9HY (DV6TED4) | Date to:2007.12 | GCO45038 | Outer Joint | | 25 | 34 | 58.5 | 89 | 55 | I |
| | 2004.09-2008.01 | MT | F | L/R | Estate FWD 9HZ (DV6TED4);9HY (DV6TED4) | | GCO45041 | Outer Joint | 48T | 25 | 34 | 58.5 | 89 | 55 | I |
| | 2004.09-2008.01 | 5MT | F | L | Estate Van FWD 9HZ (DV6TED4);9HY (DV6TED4) | | GDS10142 | Drive Shaft | | 25 | 24 | 58.5 | 89 | 648 | |
| | 2004.09-2008.01 | 5MT | F | L | Estate Van FWD 9HZ (DV6TED4);9HY (DV6TED4) | | GDS10192 | Drive Shaft | | 25 | 24 | 58.5 | 89 | 655 | |
| | 2004.09-2008.01 | 5MT | F | R | Estate Van FWD 9HZ (DV6TED4);9HY (DV6TED4) | | GDS10143 | Drive Shaft | | 25 | 24 | 58.5 | 89 | 936 | |
| | 2004.09-2008.01 | 5MT | F | R | Estate Van FWD 9HZ (DV6TED4);9HY (DV6TED4) | | GCI10004 | Inner Joint | | 24 | 34 | 29.8 | 348 | 99.5 | |
| | 2004.09-2008.01 | | F | L/R | Estate Van FWD 9HZ (DV6TED4);9HY (DV6TED4) | | GCO45038 | Outer Joint | | 25 | 34 | 58.5 | 89 | 55 | I |
| | 2008.02-2010.10 | 5MT | F | L | Estate FWD 9HZ (DV6TED4) | Date from:2010.07 | GDS10238 | Drive Shaft | | 28 | 24 | 58.5 | 92 | 669 | |
| | 2008.02-2010.10 | 5MT | F | L | Estate FWD 9HZ (DV6TED4) | | GDS10310 | Drive Shaft | | 28 | 24 | 59 | 91 | 670 | |
| | 2008.02-2010.10 | 5MT | F | R | Estate FWD 9HZ (DV6TED4) | Date from:2010.07 | GDS10239 | Drive Shaft | | 28 | 24 | 58.5 | 92 | 955 | |
| | 2008.02-2010.10 | 5MT | F | R | Estate FWD 9HZ (DV6TED4) | | GDS10265 | Drive Shaft | | 28 | 24 | 59 | 91 | 951 | |
| | 2008.02-2010.10 | 5MT | F | L/R | Estate FWD 9HZ (DV6TED4) | | GCO10052 | Outer Joint | | 28 | 34 | 58.5 | 92 | 55 | I |
| | 2008.02-2010.10 | 5MT | F | L/R | Estate FWD 9HZ (DV6TED4) | | GCO10124 | Outer Joint | | 28 | 34 | 58.5 | 92 | 55 | I |
| | 2008.02-2010.10 | 5MT | F | L/R | Estate FWD 9HZ (DV6TED4) | | GCO45074 | Outer Joint | | 28 | 26 | 59 | 91 | 61.5 | M |
| | 2008.02-2010.10 | 5MT | F | L | Estate FWD 9HZ (DV6TED4) | | GCI45018 | Inner Joint | | 24 | 34 | 40 | 62 | 88 | |
| | 2008.02-2010.10 | 5MT | F | R | Estate FWD 9HZ (DV6TED4) | | GCI99159 | Inner Joint | | 24 | 34 | 29.8 | 350 | 87.5 | |
| 1.6 (82 kw) | 2010.07-2012.05 | 5MT | F | L | Estate FWD 9HR (DV6C);9HL (DV6C) | | GDS10238 | Drive Shaft | | 28 | 24 | 58.5 | 92 | 669 | |
| | 2010.07-2012.05 | 5MT | F | R | Estate FWD 9HR (DV6C);9HL (DV6C) | | GDS10239 | Drive Shaft | | 28 | 24 | 58.5 | 92 | 955 | |
| | 2010.07-2012.05 | 5MT | F | L/R | Estate FWD 9HR (DV6C);9HL (DV6C) | | GCO10124 | Outer Joint | | 28 | 34 | 58.5 | 92 | 55 | I |
| | 2010.07-2012.05 | 5MT | F | R | Estate FWD 9HR (DV6C);9HL (DV6C) | | GCI99159 | Inner Joint | | 24 | 34 | 29.8 | 350 | 87.5 | |
| | 2010.07-2012.05 | 6AMT | F | L | Estate FWD 9HR (DV6C);9HL (DV6C) | | GDS84333 | Drive Shaft | | 28 | 24 | 58.6 | 93 | 668 | |
| | 2010.07-2012.05 | 6AMT | F | R | Estate FWD 9HR (DV6C);9HL (DV6C) | | GDS84332 | Drive Shaft | | 28 | 24 | 58.6 | 93 | 978 | |
| | 2010.07-2012.05 | 6AMT | F | L/R | Estate FWD 9HR (DV6C);9HL (DV6C) | | GCO10098 | Outer Joint | | 28 | 39 | 58.6 | 93 | 63 | I |
| | 2010.07-2012.05 | 6AMT | F | L | Estate FWD 9HR (DV6C);9HL (DV6C) | | GCI10057 | Inner Joint | | 24 | 34 | 40 | 52.5 | 90 | |
| | 2010.07-2012.05 | 6AMT | F | R | Estate FWD 9HR (DV6C);9HL (DV6C) | | GCI10058 | Inner Joint | | 24 | 34 | 29.8 | 365 | 88 | |
| | 2010.07-2012.05 | AT/MT | F | L/R | Estate FWD 9HR (DV6C);9HL (DV6C) | | GCO10052 | Outer Joint | | 28 | 34 | 58.5 | 92 | 55 | I |
| 1.6 (84 kw) | 2012.06-2015.06 | 5MT | F | L | Estate FWD 9HR (DV6C);9HL (DV6C) | | GDS10238 | Drive Shaft | | 28 | 24 | 58.5 | 92 | 669 | |
| | 2012.06-2015.06 | 5MT | F | R | Estate FWD 9HR (DV6C);9HL (DV6C) | | GDS10239 | Drive Shaft | | 28 | 24 | 58.5 | 92 | 955 | |
| | 2012.06-2015.06 | 5MT | F | L/R | Estate FWD 9HR (DV6C);9HL (DV6C) | | GCO10052 | Outer Joint | | 28 | 34 | 58.5 | 92 | 55 | I |
| | 2012.06-2015.06 | 5MT | F | L/R | Estate FWD 9HR (DV6C);9HL (DV6C) | | GCO10124 | Outer Joint | | 28 | 34 | 58.5 | 92 | 55 | I |
| | 2012.06-2015.06 | 5MT | F | R | Estate FWD 9HR (DV6C);9HL (DV6C) | | GCI99159 | Inner Joint | | 24 | 34 | 29.8 | 350 | 87.5 | |
| | 2012.06-2015.06 | 6AMT | F | L | Estate FWD 9HR (DV6C);9HL (DV6C) | | GDS84333 | Drive Shaft | | 28 | 24 | 58.6 | 93 | 668 | |
| | 2012.06-2015.06 | 6AMT | F | R | Estate FWD 9HR (DV6C);9HL (DV6C) | | GDS84332 | Drive Shaft | | 28 | 24 | 58.6 | 93 | 978 | |
| | 2012.06-2015.06 | 6AMT | F | L/R | Estate FWD 9HR (DV6C);9HL (DV6C) | | GCO10098 | Outer Joint | | 28 | 39 | 58.6 | 93 | 63 | I |
| | 2012.06-2015.06 | 6AMT | F | L | Estate FWD 9HR (DV6C);9HL (DV6C) | | GCI10057 | Inner Joint | | 24 | 34 | 40 | 52.5 | 90 | |
| | 2012.06-2015.06 | 6AMT | F | R | Estate FWD 9HR (DV6C);9HL (DV6C) | | GCI10058 | Inner Joint | | 24 | 34 | 29.8 | 365 | 88 | |
| 1.6 (88 kw) | 2010.07-2015.06 | 6AT | F | L | Estate FWD 5FS (EP6C) | Date To:2011.02,To ORG/OPR:12529 | GDS84333 | Drive Shaft | | 28 | 24 | 58.6 | 93 | 668 | |
| | 2010.07-2015.06 | 6AT | F | R | Estate FWD 5FS (EP6C) | Date To:2011.02,To ORG/OPR:12529 | GDS84332 | Drive Shaft | | 28 | 24 | 58.6 | 93 | 978 | |
| | 2010.07-2015.06 | 6AT | F | L/R | Estate FWD 5FS (EP6C) | Date To:2011.02,To ORG/OPR:12529 | GCO10098 | Outer Joint | | 28 | 39 | 58.6 | 93 | 63 | I |
| | 2010.07-2015.06 | 6AT | F | L | Estate FWD 5FS (EP6C) | Date To:2011.02,To ORG/OPR:12529 | GCI10057 | Inner Joint | | 24 | 34 | 40 | 52.5 | 90 | |
| | 2010.07-2015.06 | 6AT | F | R | Estate FWD 5FS (EP6C) | Date To:2011.02,To ORG/OPR:12529 | GCI10058 | Inner Joint | | 24 | 34 | 29.8 | 365 | 88 | |
| 1.6 (110 kw) | 2009.04-2016.07 | 6MT | F | L | Estate FWD 5FN (EP6CDT) | Date From:2010.07,From ORG/OPR:12292 | GDS84333 | Drive Shaft | | 28 | 24 | 58.6 | 93 | 668 | |
| | 2009.04-2016.07 | 6MT | F | R | Estate FWD 5FN (EP6CDT) | Date From:2010.07,From ORG/OPR:12292 | GDS84332 | Drive Shaft | | 28 | 24 | 58.6 | 93 | 978 | |
| | 2009.04-2016.07 | 6MT | F | L/R | Estate FWD 5FN (EP6CDT) | Date From:2010.07,From ORG/OPR:12292 | GCO10098 | Outer Joint | | 28 | 39 | 58.6 | 93 | 63 | I |
| | 2009.04-2016.07 | 6MT | F | L | Estate FWD 5FN (EP6CDT) | Date From:2010.07,From ORG/OPR:12292 | GCI10057 | Inner Joint | | 24 | 34 | 40 | 52.5 | 90 | |
| | 2009.04-2016.07 | 6MT | F | R | Estate FWD 5FN (EP6CDT) | Date From:2010.07,From ORG/OPR:12292 | GCI10058 | Inner Joint | | 24 | 34 | 29.8 | 365 | 88 | |
| 1.6 (115 kw) | 2009.04-2016.07 | 6MT | F | L | Estate FWD 5FV (EP6CDT) | Date From:2010.07,From ORG/OPR:12292 | GDS84333 | Drive Shaft | | 28 | 24 | 58.6 | 93 | 668 | |
| | 2009.04-2016.07 | 6MT | F | R | Estate FWD 5FV (EP6CDT) | Date From:2010.07,From ORG/OPR:12292 | GDS84332 | Drive Shaft | | 28 | 24 | 58.6 | 93 | 978 | |
| | 2009.04-2016.07 | 6MT | F | L/R | Estate FWD 5FV (EP6CDT) | Date From:2010.07,From ORG/OPR:12292 | GCO10098 | Outer Joint | | 28 | 39 | 58.6 | 93 | 63 | I |
| | 2009.04-2016.07 | 6MT | F | L | Estate FWD 5FV (EP6CDT) | Date From:2010.07,From ORG/OPR:12292 | GCI10057 | Inner Joint | | 24 | 34 | 40 | 52.5 | 90 | |
| | 2009.04-2016.07 | 6MT | F | R | Estate FWD 5FV (EP6CDT) | Date From:2010.07,From ORG/OPR:12292 | GCI10058 | Inner Joint | | 24 | 34 | 29.8 | 365 | 88 | |
| 1.8 (85 kw) | 2001.06-2004.08 | AT | F | L | Estate FWD 6FZ (EW7J4) | | GDS10443 | Drive Shaft | | 25 | 26 | 58 | 89 | 635 | |
| | 2001.06-2004.08 | AT | F | R | Estate FWD 6FZ (EW7J4) | | GDS10444 | Drive Shaft | | 25 | 26 | 58 | 89 | 843 | |
| | 2001.06-2004.08 | AT | F | L | Estate FWD 6FZ (EW7J4) | | GCI99001 | Inner Joint | | 26 | 34 | 30.2 | 46.5 | 103.5 | |
| | 2001.06-2004.08 | AT/MT | F | L/R | Estate FWD 6FZ (EW7J4) | | GCO45038 | Outer Joint | | 25 | 34 | 58.5 | 89 | 55 | I |

| | YEAR | TRANSM. | F/R | L/R | BODY STYLE & DRIVE TYPE & ENGINE | REMARKS | G-AP Ref. | PRODUCT | ABS | Technical Specifications A | B | C | H | L | P |
|---|---|---|---|---|---|---|---|---|---|---|---|---|---|---|---|
| **CITROËN** **C5 Estate/Break** | | | | | | | | | | | | | | | |
| 1.8 (85 kw) | 2001.06-2004.08 | AT/MT | F | L/R | Estate FWD 6FZ (EW7J4) | | GCO45041 | Outer Joint | 48T | 25 | 34 | 58.5 | 89 | 55 | I |
| | 2001.06-2004.08 | MT | F | L | Estate FWD 6FZ (EW7J4) | | GDS10142 | Drive Shaft | | 25 | 24 | 58.5 | 89 | 648 | |
| | 2001.06-2004.08 | MT | F | L | Estate FWD 6FZ (EW7J4) | | GDS10192 | Drive Shaft | | 25 | 24 | 58.5 | 89 | 655 | |
| | 2001.06-2004.08 | MT | F | R | Estate FWD 6FZ (EW7J4) | | GDS10143 | Drive Shaft | | 25 | 24 | 58.5 | 89 | 936 | |
| | 2001.06-2004.08 | MT | F | L | Estate FWD 6FZ (EW7J4) | | GCO10158 | Outer Joint | | 25 | 26 | 58.5 | 89 | 61.5 | M |
| | 2004.09-2005.08 | 5MT | F | L | Estate FWD 6FZ (EW7J4) | | GDS10142 | Drive Shaft | | 25 | 24 | 58.5 | 89 | 648 | |
| | 2004.09-2005.08 | 5MT | F | L | Estate FWD 6FZ (EW7J4) | | GDS10192 | Drive Shaft | | 25 | 24 | 58.5 | 89 | 655 | |
| | 2004.09-2005.08 | 5MT | F | R | Estate FWD 6FZ (EW7J4) | | GDS10143 | Drive Shaft | | 25 | 24 | 58.5 | 89 | 936 | |
| | 2004.09-2005.08 | 5MT | F | R | Estate FWD 6FZ (EW7J4) | | GCI10004 | Inner Joint | | 24 | 34 | 29.8 | 348 | 99.5 | |
| | 2004.09-2005.08 | MT | F | L | Estate FWD 6FZ (EW7J4) | Date to:2005.08 | GCO10158 | Outer Joint | | 25 | 26 | 58.5 | 89 | 61.5 | M |
| | 2004.09-2005.08 | MT | F | L/R | Estate FWD 6FZ (EW7J4) | | GCO45038 | Outer Joint | | 25 | 34 | 58.5 | 89 | 55 | I |
| | 2004.09-2005.08 | MT | F | L/R | Estate FWD 6FZ (EW7J4) | | GCO45041 | Outer Joint | 48T | 25 | 34 | 58.5 | 89 | 55 | I |
| | 2004.09-2005.08 | 5MT | F | L | Estate Van FWD 6FZ (EW7J4) | | GDS10142 | Drive Shaft | | 25 | 24 | 58.5 | 89 | 648 | |
| | 2004.09-2005.08 | 5MT | F | L | Estate Van FWD 6FZ (EW7J4) | | GDS10192 | Drive Shaft | | 25 | 24 | 58.5 | 89 | 655 | |
| | 2004.09-2005.08 | 5MT | F | R | Estate Van FWD 6FZ (EW7J4) | | GDS10143 | Drive Shaft | | 25 | 24 | 58.5 | 89 | 936 | |
| | 2004.09-2005.08 | 5MT | F | R | Estate Van FWD 6FZ (EW7J4) | | GCI10004 | Inner Joint | | 24 | 34 | 29.8 | 348 | 99.5 | |
| | 2004.09-2005.08 | MT | F | L/R | Estate Van FWD 6FZ (EW7J4) | | GCO45038 | Outer Joint | | 25 | 34 | 58.5 | 89 | 55 | I |
| 1.8 (92 kw) | 2005.09-2008.01 | 5MT | F | L | Estate FWD 6FY (EW7A) | length2:62.5mm | GDS10142 | Drive Shaft | | 25 | 24 | 58.5 | 89 | 648 | |
| | 2005.09-2008.01 | 5MT | F | L | Estate FWD 6FY (EW7A) | length2:69mm | GDS10192 | Drive Shaft | | 25 | 24 | 58.5 | 89 | 655 | |
| | 2005.09-2008.01 | 5MT | F | R | Estate FWD 6FY (EW7A) | | GDS10143 | Drive Shaft | | 25 | 24 | 58.5 | 89 | 936 | |
| | 2005.09-2008.01 | 5MT | F | L/R | Estate FWD 6FY (EW7A) | Inner teeth:26 | GCO10158 | Outer Joint | | 25 | 26 | 58.5 | 89 | 61.5 | M |
| | 2005.09-2008.01 | 5MT | F | L/R | Estate FWD 6FY (EW7A) | Inner teeth:34 | GCO45038 | Outer Joint | | 25 | 34 | 58.5 | 89 | 55 | I |
| | 2005.09-2008.01 | 5MT | F | R | Estate FWD 6FY (EW7A) | | GCI10004 | Inner Joint | | 24 | 34 | 29.8 | 348 | 99.5 | |
| | 2008.02-2010.10 | 5MT | F | L | Estate FWD 6FY (EW7A) | | GDS10238 | Drive Shaft | | 28 | 24 | 58.5 | 92 | 669 | |
| | 2008.02-2010.10 | 5MT | F | R | Estate FWD 6FY (EW7A) | Date From:2009.01,ORG/OPR From:11754 | GDS10239 | Drive Shaft | | 28 | 24 | 58.5 | 92 | 955 | |
| | 2008.02-2010.10 | 5MT | F | L/R | Estate FWD 6FY (EW7A) | | GCO10052 | Outer Joint | | 28 | 34 | 58.5 | 92 | 55 | I |
| | 2008.02-2010.10 | 5MT | F | L/R | Estate FWD 6FY (EW7A) | Reconditioned,Date From:2010.07,ORG/OPR From:12292 | GCO10124 | Outer Joint | | 28 | 34 | 58.5 | 92 | 55 | I |
| | 2008.02-2010.10 | 5MT | F | R | Estate FWD 6FY (EW7A) | Reconditioned,Date From:2010.07,ORG/OPR From:12292 | GCI99159 | Inner Joint | | 24 | 34 | 29.8 | 350 | 87.5 | |
| | 2008.02-2010.10 | 5MT | F | R | Estate FWD 6FY (EW7A) | Date From:2009.01,ORG/OPR From:11754 | GCI99159 | Inner Joint | | 24 | 34 | 29.8 | 350 | 87.5 | |
| 2.0 (66 kw) | 2001.06-2004.08 | 5MT | F | L | Estate FWD RHY (DW10TD) | | GDS10142 | Drive Shaft | | 25 | 24 | 58.5 | 89 | 648 | |
| | 2001.06-2004.08 | 5MT | F | L | Estate FWD RHY (DW10TD) | | GDS10192 | Drive Shaft | | 25 | 24 | 58.5 | 89 | 655 | |
| | 2001.06-2004.08 | 5MT | F | R | Estate FWD RHY (DW10TD) | | GDS10143 | Drive Shaft | | 25 | 24 | 58.5 | 89 | 936 | |
| | 2001.06-2004.08 | 5MT | F | R | Estate FWD RHY (DW10TD) | | GCI10004 | Inner Joint | | 24 | 34 | 29.8 | 348 | 99.5 | |
| | 2001.06-2004.08 | AT/MT | F | L/R | Estate FWD RHY (DW10TD) | | GCO45038 | Outer Joint | | 25 | 34 | 58.5 | 89 | 55 | I |
| | 2001.06-2004.08 | MT | F | L | Estate FWD RHY (DW10TD) | Date to:2003.10 | GCO10158 | Outer Joint | | 25 | 26 | 58.5 | 89 | 61.5 | M |
| | 2001.06-2004.08 | MT | F | L/R | Estate FWD RHY (DW10TD) | | GCO45041 | Outer Joint | 48T | 25 | 34 | 58.5 | 89 | 55 | I |
| | 2002.06-2004.08 | 5MT | F | L | Estate Van FWD RHY (DW10TD) | | GDS10142 | Drive Shaft | | 25 | 24 | 58.5 | 89 | 648 | |
| | 2002.06-2004.08 | 5MT | F | L | Estate Van FWD RHY (DW10TD) | | GDS10192 | Drive Shaft | | 25 | 24 | 58.5 | 89 | 655 | |
| | 2002.06-2004.08 | 5MT | F | R | Estate Van FWD RHY (DW10TD) | | GDS10143 | Drive Shaft | | 25 | 24 | 58.5 | 89 | 936 | |
| | 2002.06-2004.08 | 5MT | F | R | Estate Van FWD RHY (DW10TD) | | GCI10004 | Inner Joint | | 24 | 34 | 29.8 | 348 | 99.5 | |
| | 2002.06-2004.08 | | F | L/R | Estate Van FWD RHY (DW10TD) | | GCO45038 | Outer Joint | | 25 | 34 | 58.5 | 89 | 55 | I |
| 2.0 (79 kw) | 2001.06-2004.08 | AT | F | L | Estate FWD RHS (DW10ATED) | | GDS10443 | Drive Shaft | | 25 | 26 | 58 | 89 | 635 | |
| | 2001.06-2004.08 | AT | F | R | Estate FWD RHS (DW10ATED) | | GDS10444 | Drive Shaft | | 25 | 26 | 58 | 89 | 843 | |
| | 2001.06-2004.08 | AT | F | L/R | Estate FWD RHS (DW10ATED) | | GCO45041 | Outer Joint | 48T | 25 | 34 | 58.5 | 89 | 55 | I |
| | 2001.06-2004.08 | AT | F | L | Estate FWD RHS (DW10ATED) | | GCI99001 | Inner Joint | | 26 | 34 | 30.2 | 46.5 | 103.5 | |
| | 2001.06-2004.08 | MT | F | L | Estate FWD RHS (DW10ATED) | | GDS10141 | Drive Shaft | | 25 | 37 | 58.5 | 89 | 638 | |
| | 2001.06-2004.08 | MT | F | R | Estate FWD RHS (DW10ATED) | | GDS10139 | Drive Shaft | | 25 | 37 | 58.5 | 89 | 944 | |
| | 2001.06-2004.08 | MT | F | L/R | Estate FWD RHS (DW10ATED) | | GCO10075 | Outer Joint | | 25 | 26 | 58.5 | 89 | 63 | M |
| | 2001.06-2004.08 | | F | | Estate FWD RHS (DW10ATED) | | GCO10096 | Outer Joint | | 25 | 26 | 58.5 | 89 | 61.5 | M |
| | 2002.06-2004.08 | AT | F | L | Estate Van FWD RHS (DW10ATED) | | GDS10443 | Drive Shaft | | 25 | 26 | 58 | 89 | 635 | |
| | 2002.06-2004.08 | AT | F | R | Estate Van FWD RHS (DW10ATED) | | GDS10444 | Drive Shaft | | 25 | 26 | 58 | 89 | 843 | |
| | 2002.06-2004.08 | AT | F | L | Estate Van FWD RHS (DW10ATED) | | GCI99001 | Inner Joint | | 26 | 34 | 30.2 | 46.5 | 103.5 | |
| | 2002.06-2004.08 | MT/5MT | F | L | Estate Van FWD RHS (DW10ATED) | | GDS10141 | Drive Shaft | | 25 | 37 | 58.5 | 89 | 638 | |
| | 2002.06-2004.08 | MT/5MT | F | R | Estate Van FWD RHS (DW10ATED) | | GDS10139 | Drive Shaft | | 25 | 37 | 58.5 | 89 | 944 | |
| 2.0 (80 kw) | 2001.06-2004.08 | AT | F | L | Estate FWD RHZ (DW10ATED) | | GDS10443 | Drive Shaft | | 25 | 26 | 58 | 89 | 635 | |
| | 2001.06-2004.08 | AT | F | R | Estate FWD RHZ (DW10ATED) | | GDS10444 | Drive Shaft | | 25 | 26 | 58 | 89 | 843 | |
| | 2001.06-2004.08 | AT | F | L/R | Estate FWD RHZ (DW10ATED) | | GCO45041 | Outer Joint | 48T | 25 | 34 | 58.5 | 89 | 55 | I |
| | 2001.06-2004.08 | AT | F | L | Estate FWD RHZ (DW10ATED) | | GCI99001 | Inner Joint | | 26 | 34 | 30.2 | 46.5 | 103.5 | |
| | 2001.06-2004.08 | MT | F | L | Estate FWD RHZ (DW10ATED) | | GDS10141 | Drive Shaft | | 25 | 37 | 58.5 | 89 | 638 | |
| | 2001.06-2004.08 | MT | F | R | Estate FWD RHZ (DW10ATED) | | GDS10139 | Drive Shaft | | 25 | 37 | 58.5 | 89 | 944 | |
| | 2001.06-2004.08 | MT | F | L/R | Estate FWD RHZ (DW10ATED) | | GCO10075 | Outer Joint | | 25 | 26 | 58.5 | 89 | 63 | M |
| | 2001.06-2004.08 | | F | | Estate FWD RHZ (DW10ATED) | | GCO10096 | Outer Joint | | 25 | 26 | 58.5 | 89 | 61.5 | M |
| | 2002.06-2004.08 | AT | F | L | Estate Van FWD RHZ (DW10ATED) | | GDS10443 | Drive Shaft | | 25 | 26 | 58 | 89 | 635 | |
| | 2002.06-2004.08 | AT | F | R | Estate Van FWD RHZ (DW10ATED) | | GDS10444 | Drive Shaft | | 25 | 26 | 58 | 89 | 843 | |
| | 2002.06-2004.08 | AT | F | L | Estate Van FWD RHZ (DW10ATED) | | GCI99001 | Inner Joint | | 26 | 34 | 30.2 | 46.5 | 103.5 | |

| | YEAR | TRANSM. | F/R | L/R | BODY STYLE & DRIVE TYPE & ENGINE | REMARKS | G-AP Ref. | PRODUCT | ABS | Technical Specifications A | B | C | H | L | P |
|---|---|---|---|---|---|---|---|---|---|---|---|---|---|---|---|
| **CITROËN** **C5 Estate/Break** | | | | | | | | | | | | | | | |
| 2.0 (80 kw) | 2002.06-2004.08 | MT | F | L | Estate Van FWD RHZ (DW10ATED) | | GDS10141 | Drive Shaft | | 25 | 37 | 58.5 | 89 | 638 | |
| | 2002.06-2004.08 | MT | F | R | Estate Van FWD RHZ (DW10ATED) | | GDS10139 | Drive Shaft | | 25 | 37 | 58.5 | 89 | 944 | |
| 2.0 (100 kw) | 2001.06-2004.08 | AT | F | L | Estate FWD RFN (EW10J4) | | GDS10443 | Drive Shaft | | 25 | 26 | 58 | 89 | 635 | |
| | 2001.06-2004.08 | AT | F | R | Estate FWD RFN (EW10J4) | | GDS10444 | Drive Shaft | | 25 | 26 | 58 | 89 | 843 | |
| | 2001.06-2004.08 | AT | F | L/R | Estate FWD RFN (EW10J4) | | GCO10075 | Outer Joint | | 25 | 26 | 58.5 | 89 | 63 | M |
| | 2001.06-2004.08 | AT | F | L | Estate FWD RFN (EW10J4) | | GCI99001 | Inner Joint | | 26 | 34 | 30.2 | 46.5 | 103.5 | |
| | 2001.06-2004.08 | AT/MT | F | L/R | Estate FWD RFN (EW10J4) | | GCO45038 | Outer Joint | | 25 | 34 | 58.5 | 89 | 55 | I |
| | 2001.06-2004.08 | MT | F | L | Estate FWD RFN (EW10J4) | | GDS10142 | Drive Shaft | | 25 | 24 | 58.5 | 89 | 648 | |
| | 2001.06-2004.08 | MT | F | L | Estate FWD RFN (EW10J4) | | GDS10192 | Drive Shaft | | 25 | 24 | 58.5 | 89 | 655 | |
| | 2001.06-2004.08 | MT | F | R | Estate FWD RFN (EW10J4) | | GDS10143 | Drive Shaft | | 25 | 24 | 58.5 | 89 | 936 | |
| | 2001.06-2004.08 | MT | F | L | Estate FWD RFN (EW10J4) | | GCO10158 | Outer Joint | | 25 | 26 | 58.5 | 89 | 61.5 | M |
| | 2001.06-2004.08 | MT | F | L/R | Estate FWD RFN (EW10J4) | | GCO45041 | Outer Joint | 48T | 25 | 34 | 58.5 | 89 | 55 | I |
| | 2004.09-2008.01 | AT | F | L | Estate FWD RHR (DW10BTED4) | | GDS10344 | Drive Shaft | | 25 | 37 | 58.5 | 89 | 607 | |
| | 2004.09-2008.01 | AT | F | L | Estate FWD RHR (DW10BTED4) | | GDS10381 | Drive Shaft | | 25 | 37 | 58.5 | 89 | 595 | |
| | 2004.09-2008.01 | AT | F | R | Estate FWD RHR (DW10BTED4) | | GDS10348 | Drive Shaft | | 25 | 37 | 58.5 | 89 | 923 | |
| | 2004.09-2008.01 | AT | F | L | Estate FWD RHR (DW10BTED4) | | GCI10043 | Inner Joint | | 37 | 26 | 40.5 | 67.5 | 104 | |
| | 2004.09-2008.01 | AT | F | R | Estate FWD RHR (DW10BTED4) | Date to:2008.01 | GCI10090 | Inner Joint | | 37 | 26 | | 379.5 | 112 | |
| | 2004.09-2008.01 | AT/MT | F | L/R | Estate FWD RHR (DW10BTED4) | Date to:2008.12 | GCO10075 | Outer Joint | | 25 | 26 | 58.5 | 89 | 63 | M |
| | 2004.09-2008.01 | MT | F | L | Estate FWD RHR (DW10BTED4) | | GDS10121 | Drive Shaft | | 25 | 37 | 58.5 | 89 | 628 | |
| | 2004.09-2008.01 | MT | F | L | Estate FWD RHR (DW10BTED4) | | GDS10312 | Drive Shaft | | 25 | 37 | 58.5 | 89 | 625 | |
| | 2004.09-2008.01 | MT | F | R | Estate FWD RHR (DW10BTED4) | | GDS99197 | Drive Shaft | | 25 | 37 | 58.5 | 89 | 947 | |
| | 2004.09-2008.01 | AT | F | L | Estate Van FWD RHR (DW10BTED4) | | GDS10381 | Drive Shaft | | 25 | 37 | 58.5 | 89 | 595 | |
| | 2004.09-2008.01 | AT | F | R | Estate Van FWD RHR (DW10BTED4) | | GDS10348 | Drive Shaft | | 25 | 37 | 58.5 | 89 | 923 | |
| | 2004.09-2008.01 | AT | F | R | Estate Van FWD RHR (DW10BTED4) | | GCI10090 | Inner Joint | | 37 | 26 | | 379.5 | 112 | |
| | 2004.09-2008.01 | MT | F | L | Estate Van FWD RHR (DW10BTED4) | | GDS10121 | Drive Shaft | | 25 | 37 | 58.5 | 89 | 628 | |
| | 2004.09-2008.01 | MT | F | R | Estate Van FWD RHR (DW10BTED4) | | GDS99197 | Drive Shaft | | 25 | 37 | 58.5 | 89 | 947 | |
| | 2008.02-2014.06 | 6AT | F | L | Estate FWD RHR (DW10BTED4);RHD (DW10CTED4) | | GDS10335 | Drive Shaft | | 28 | 37 | 58.5 | 92.5 | 618 | |
| | 2008.02-2014.06 | 6AT | F | R | Estate FWD RHR (DW10BTED4);RHD (DW10CTED4) | | GDS10435 | Drive Shaft | | 28 | 37 | 58.6 | 94 | 952 | |
| | 2008.02-2014.06 | 6AT | F | L | Estate FWD RHR (DW10BTED4);RHD (DW10CTED4) | | GCI10043 | Inner Joint | | 37 | 26 | 40.5 | 67.5 | 104 | |
| | 2008.02-2014.06 | 6AT | F | R | Estate FWD RHR (DW10BTED4);RHD (DW10CTED4) | | GCI81492 | Inner Joint | | 37 | 26 | | 380 | 100 | |
| | 2008.02-2014.06 | AT | F | L/R | Estate FWD RHR (DW10BTED4);RHD (DW10CTED4) | | GCO10115 | Outer Joint | | 28 | 26 | 58.5 | 92.5 | 61.5 | M |
| | 2008.02-2014.06 | MT | F | L | Estate FWD RHR (DW10BTED4);RHD (DW10CTED4) | | GDS45133 | Drive Shaft | | 28 | 37 | 58.6 | 94 | 653 | |
| | 2008.02-2014.06 | MT | F | R | Estate FWD RHR (DW10BTED4);RHD (DW10CTED4) | | GDS10302 | Drive Shaft | | 28 | 37 | 58.6 | 94 | 969 | |
| | 2008.02-2014.06 | MT | F | L/R | Estate FWD RHR (DW10BTED4);RHD (DW10CTED4) | | GCO10051 | Outer Joint | | 28 | 39 | 58.6 | 94 | 63 | I |
| | 2008.02-2014.06 | MT | F | L/R | Estate FWD RHR (DW10BTED4);RHD (DW10CTED4) | | GCO10098 | Outer Joint | | 28 | 39 | 58.6 | 93 | 63 | I |
| | 2008.02-2014.06 | MT | F | L | Estate FWD RHR (DW10BTED4);RHD (DW10CTED4) | | GCI45032 | Inner Joint | | 37 | 39 | 40 | 68.5 | 100 | |
| | 2008.02-2014.06 | MT | F | R | Estate FWD RHR (DW10BTED4);RHD (DW10CTED4) | | GCI10041 | Inner Joint | | 37 | 39 | 32 | 399 | 95.5 | |
| 2.0 (103 kw) | 2001.06-2004.08 | 5MT | F | L | Estate FWD RLZ (EW10D) | | GDS10142 | Drive Shaft | | 25 | 24 | 58.5 | 89 | 648 | |
| | 2001.06-2004.08 | 5MT | F | L | Estate FWD RLZ (EW10D) | | GDS10192 | Drive Shaft | | 25 | 24 | 58.5 | 89 | 655 | |
| | 2001.06-2004.08 | 5MT | F | R | Estate FWD RLZ (EW10D) | | GDS10143 | Drive Shaft | | 25 | 24 | 58.5 | 89 | 936 | |
| | 2001.06-2004.08 | AT | F | L | Estate FWD RLZ (EW10D) | | GDS10443 | Drive Shaft | | 25 | 26 | 58 | 89 | 635 | |
| | 2001.06-2004.08 | AT | F | R | Estate FWD RLZ (EW10D) | | GDS10444 | Drive Shaft | | 25 | 26 | 58 | 89 | 843 | |
| | 2001.06-2004.08 | AT | F | L | Estate FWD RLZ (EW10D) | | GCI99001 | Inner Joint | | 26 | 34 | 30.2 | 46.5 | 103.5 | |
| | 2001.06-2004.08 | AT/MT | F | L/R | Estate FWD RLZ (EW10D) | | GCO45038 | Outer Joint | | 25 | 34 | 58.5 | 89 | 55 | I |
| | 2001.06-2004.08 | MT | F | L | Estate FWD RLZ (EW10D) | Date to:2002.08 | GCO10158 | Outer Joint | | 25 | 26 | 58.5 | 89 | 61.5 | M |
| | 2001.06-2004.08 | MT | F | L/R | Estate FWD RLZ (EW10D) | | GCO45041 | Outer Joint | 48T | 25 | 34 | 58.5 | 89 | 55 | I |
| | 2004.09-2008.01 | 4AT | F | R | Estate FWD RFJ (EW10A) | | GDS10444 | Drive Shaft | | 25 | 26 | 58 | 89 | 843 | |
| | 2004.09-2008.01 | AT | F | L | Estate FWD RFJ (EW10A) | | GDS10443 | Drive Shaft | | 25 | 26 | 58 | 89 | 635 | |
| | 2004.09-2008.01 | AT | F | L/R | Estate FWD RFJ (EW10A) | | GCO10075 | Outer Joint | | 25 | 26 | 58.5 | 89 | 63 | M |
| | 2004.09-2008.01 | AT | F | L | Estate FWD RFJ (EW10A) | | GCI99001 | Inner Joint | | 26 | 34 | 30.2 | 46.5 | 103.5 | |
| | 2004.09-2008.01 | AT/MT | F | L/R | Estate FWD RFJ (EW10A) | | GCO45038 | Outer Joint | | 25 | 34 | 58.5 | 89 | 55 | I |
| | 2004.09-2008.01 | MT | F | L | Estate FWD RFJ (EW10A) | | GDS10142 | Drive Shaft | | 25 | 24 | 58.5 | 89 | 648 | |
| | 2004.09-2008.01 | MT | F | L | Estate FWD RFJ (EW10A) | | GDS10192 | Drive Shaft | | 25 | 24 | 58.5 | 89 | 655 | |
| | 2004.09-2008.01 | MT | F | R | Estate FWD RFJ (EW10A) | | GDS10143 | Drive Shaft | | 25 | 24 | 58.5 | 89 | 936 | |
| | 2004.09-2008.01 | MT | F | L | Estate FWD RFJ (EW10A) | Date to:2008.01 | GCO10158 | Outer Joint | | 25 | 26 | 58.5 | 89 | 61.5 | M |
| | 2004.09-2008.01 | MT | F | R | Estate FWD RFJ (EW10A) | | GCI10004 | Inner Joint | | 24 | 34 | 29.8 | 348 | 99.5 | |
| | 2004.11-2008.01 | AT | F | L | Estate Van FWD RFJ (EW10A) | | GDS10443 | Drive Shaft | | 25 | 26 | 58 | 89 | 635 | |
| | 2004.11-2008.01 | AT | F | R | Estate Van FWD RFJ (EW10A) | | GDS10444 | Drive Shaft | | 25 | 26 | 58 | 89 | 843 | |
| | 2004.11-2008.01 | AT | F | L | Estate Van FWD RFJ (EW10A) | | GCI99001 | Inner Joint | | 26 | 34 | 30.2 | 46.5 | 103.5 | |
| | 2004.11-2008.01 | MT | F | L | Estate Van FWD RFJ (EW10A) | | GDS10142 | Drive Shaft | | 25 | 24 | 58.5 | 89 | 648 | |
| | 2004.11-2008.01 | MT | F | L | Estate Van FWD RFJ (EW10A) | | GDS10192 | Drive Shaft | | 25 | 24 | 58.5 | 89 | 655 | |
| | 2004.11-2008.01 | MT | F | R | Estate Van FWD RFJ (EW10A) | | GDS10143 | Drive Shaft | | 25 | 24 | 58.5 | 89 | 936 | |
| | 2004.11-2008.01 | MT | F | L/R | Estate Van FWD RFJ (EW10A) | | GCO45038 | Outer Joint | | 25 | 34 | 58.5 | 89 | 55 | I |
| | 2004.11-2008.01 | MT | F | R | Estate Van FWD RFJ (EW10A) | | GCI10004 | Inner Joint | | 24 | 34 | 29.8 | 348 | 99.5 | |
| | 2008.02-2010.06 | 5MT | F | L | Estate FWD RFJ (EW10A) | | GDS10238 | Drive Shaft | | 28 | 24 | 58.5 | 92 | 669 | |

| | YEAR | TRANSM. | F/R | L/R | BODY STYLE & DRIVE TYPE & ENGINE | REMARKS | G-AP Ref. | PRODUCT | ABS | Technical Specifications A | B | C | H | L | P |
|---|---|---|---|---|---|---|---|---|---|---|---|---|---|---|---|
| **CITROËN** **C5 Estate/Break** | | | | | | | | | | | | | | | |
| 2.0 (103 kw) | 2008.02-2010.06 | 5MT | F | R | Estate FWD RFJ (EW10A) | Date from:2009.01,ORG/OPR from:11754;Date from:2010.07,ORG/OPR from:12292 | GDS10239 | Drive Shaft | | 28 | 24 | 58.5 | 92 | 955 | |
| | 2008.02-2010.06 | 5MT | F | R | Estate FWD RFJ (EW10A) | Date To:2008.12,ORG/OPR To:11753 | GDS10265 | Drive Shaft | | 28 | 24 | 59 | 91 | 951 | |
| | 2008.02-2010.06 | 5MT | F | R | Estate FWD RFJ (EW10A) | Date to:2008.12,ORG/OPR to:11753 | GCO45074 | Outer Joint | | 28 | 26 | 59 | 91 | 61.5 | M |
| | 2008.02-2010.06 | 5MT | F | L/R | Estate FWD RFJ (EW10A) | | GCO10052 | Outer Joint | | 28 | 34 | 58.5 | 92 | 55 | I |
| | 2008.02-2010.06 | 5MT | F | L/R | Estate FWD RFJ (EW10A) | Reconditioned,Date From:2010.07,ORG/OPR From:12292 | GCO10124 | Outer Joint | | 28 | 34 | 58.5 | 92 | 55 | I |
| | 2008.02-2010.06 | 5MT | F | R | Estate FWD RFJ (EW10A) | Reconditioned,Date From:2010.07,ORG/OPR From:12292 | GCI99159 | Inner Joint | | 24 | 34 | 29.8 | 350 | 87.5 | |
| | 2008.02-2010.06 | 5MT | F | R | Estate FWD RFJ (EW10A) | Date From:2009.01,ORG/OPR From:11754 | GCI99159 | Inner Joint | | 24 | 34 | 29.8 | 350 | 87.5 | |
| | 2008.02-2014.10 | 5MT | F | L | Estate FWD RFJ (EW10A) | Inner teeth of wheel side:26 | GDS10310 | Drive Shaft | | 28 | 24 | 59 | 91 | 670 | |
| | 2008.02-2014.10 | 5MT | F | R | Estate FWD RFJ (EW10A) | Inner teeth of wheel side:26 | GDS10265 | Drive Shaft | | 28 | 24 | 59 | 91 | 951 | |
| | 2008.02-2014.10 | 5MT | F | L/R | Estate FWD RFJ (EW10A) | Inner teeth:26 | GCO45074 | Outer Joint | | 28 | 26 | 59 | 91 | 61.5 | M |
| | 2008.02-2014.10 | AT | F | L | Estate FWD RFJ (EW10A) | | GDS10285 | Drive Shaft | | 28 | 26 | 58.5 | 92 | 661 | |
| | 2008.02-2014.10 | AT | F | R | Estate FWD RFJ (EW10A) | | GDS10283 | Drive Shaft | | 28 | 26 | 58.5 | 92 | 866 | |
| | 2008.02-2014.10 | AT | F | L/R | Estate FWD RFJ (EW10A) | | GCO10052 | Outer Joint | | 28 | 34 | 58.5 | 92 | 55 | I |
| | 2008.02-2014.10 | AT | F | L | Estate FWD RFJ (EW10A) | | GCI99001 | Inner Joint | | 26 | 34 | 30.2 | 46.5 | 103.5 | |
| | 2008.02-2014.10 | MT | F | L | Estate FWD RFJ (EW10A) | Inner teeth of wheel side:34 | GDS10238 | Drive Shaft | | 28 | 24 | 58.5 | 92 | 669 | |
| | 2008.02-2014.10 | MT | F | R | Estate FWD RFJ (EW10A) | Inner teeth of wheel side:34 | GDS10239 | Drive Shaft | | 28 | 24 | 58.5 | 92 | 955 | |
| | 2008.02-2014.10 | MT | F | L/R | Estate FWD RFJ (EW10A) | Inner teeth:34 | GCO10124 | Outer Joint | | 28 | 34 | 58.5 | 92 | 55 | I |
| | 2008.02-2014.10 | MT | F | R | Estate FWD RFJ (EW10A) | | GCI99159 | Inner Joint | | 24 | 34 | 29.8 | 350 | 87.5 | |
| | 2009.04-2015.06 | 6AT | F | L | Estate FWD RHF (DW10BTED4);RHA (DW10CTED4) | | GDS10335 | Drive Shaft | | 28 | 37 | 58.5 | 92.5 | 618 | |
| | 2009.04-2015.06 | 6AT | F | R | Estate FWD RHF (DW10BTED4);RHA (DW10CTED4) | | GDS10435 | Drive Shaft | | 28 | 37 | 58.6 | 94 | 952 | |
| | 2009.04-2015.06 | 6AT | F | L/R | Estate FWD RHF (DW10BTED4);RHA (DW10CTED4) | | GCO10115 | Outer Joint | | 28 | 26 | 58.5 | 92.5 | 61.5 | M |
| | 2009.04-2015.06 | 6AT | F | L | Estate FWD RHF (DW10BTED4);RHA (DW10CTED4) | | GCI10043 | Inner Joint | | 37 | 26 | 40.5 | 67.5 | 104 | |
| | 2009.04-2015.06 | 6AT | F | R | Estate FWD RHF (DW10BTED4);RHA (DW10CTED4) | | GCI81492 | Inner Joint | | 37 | 26 | | 380 | 100 | |
| | 2009.04-2015.06 | MT | F | L | Estate FWD RHF (DW10BTED4);RHA (DW10CTED4) | | GDS45133 | Drive Shaft | | 28 | 37 | 58.6 | 94 | 653 | |
| | 2009.04-2015.06 | MT | F | R | Estate FWD RHF (DW10BTED4);RHA (DW10CTED4) | | GDS10302 | Drive Shaft | | 28 | 37 | 58.6 | 94 | 969 | |
| | 2009.04-2015.06 | MT | F | L/R | Estate FWD RHF (DW10BTED4);RHA (DW10CTED4) | | GCO10051 | Outer Joint | | 28 | 39 | 58.6 | 94 | 63 | I |
| | 2009.04-2015.06 | MT | F | L/R | Estate FWD RHF (DW10BTED4);RHA (DW10CTED4) | | GCO10098 | Outer Joint | | 28 | 39 | 58.6 | 93 | 63 | I |
| | 2009.04-2015.06 | MT | F | L | Estate FWD RHF (DW10BTED4);RHA (DW10CTED4) | | GCI45032 | Inner Joint | | 37 | 39 | 40 | 68.5 | 100 | |
| | 2009.04-2015.06 | MT | F | R | Estate FWD RHF (DW10BTED4);RHA (DW10CTED4) | | GCI10041 | Inner Joint | | 37 | 39 | 32 | 399 | 95.5 | |
| 2.0 (105 kw) | 2008.04-2012.12 | 4AT | F | L | Estate FWD RFJ (EW10A) | | GDS10285 | Drive Shaft | | 28 | 26 | 58.5 | 92 | 661 | |
| | 2008.04-2012.12 | 4AT | F | R | Estate FWD RFJ (EW10A) | | GDS10283 | Drive Shaft | | 28 | 26 | 58.5 | 92 | 866 | |
| 2.0 (110 kw) | 2009.04-2017.05 | 6MT | F | L | Estate FWD RHE (DW10CTED4);AHR (DW10FD) | For vehicles with Height-Adjustable Suspension;For Engine Code:DW10CTED4 | GDS10314 | Drive Shaft | | 28 | 37 | 59 | 91 | 655 | |
| | 2009.04-2017.05 | 6MT | F | L | Estate FWD RHE (DW10CTED4);AHR (DW10FD) | For vehicles with Height-Adjustable Suspension;For Engine Code:DW10CTED4 | GCI10095 | Inner Joint | | 37 | 26 | 40 | 68 | 100 | |
| | 2009.04-2017.05 | AT | F | L | Estate FWD RHE (DW10CTED4);AHR (DW10FD) | | GDS45225 | Drive Shaft | | 28 | 37 | 59 | 91 | 621 | |
| | 2009.04-2017.05 | AT | F | R | Estate FWD RHE (DW10CTED4);AHR (DW10FD) | | GDS10416 | Drive Shaft | | 28 | 37 | 59 | 91 | 955 | |
| | 2009.04-2017.05 | AT | F | L/R | Estate FWD RHE (DW10CTED4);AHR (DW10FD) | | GCO45074 | Outer Joint | | 28 | 26 | 59 | 91 | 61.5 | M |
| | 2009.04-2017.05 | AT | F | L | Estate FWD RHE (DW10CTED4);AHR (DW10FD) | | GCI10161 | Inner Joint | | 37 | 26 | 40.5 | 65.5 | 100 | |
| | 2009.04-2017.05 | AT | F | R | Estate FWD RHE (DW10CTED4);AHR (DW10FD) | | GCI10157 | Inner Joint | | 37 | 26 | | 380 | 100 | |
| | 2009.04-2017.05 | MT | F | L | Estate FWD RHE (DW10CTED4);AHR (DW10FD) | For vehicles without electronic suspension control;For Engine Code:DW10CTED4;DW10FD | GDS45133 | Drive Shaft | | 28 | 37 | 58.6 | 94 | 653 | |
| | 2009.04-2017.05 | MT | F | R | Estate FWD RHE (DW10CTED4);AHR (DW10FD) | For vehicles without electronic suspension control;For Engine Code:DW10CTED4 | GDS10302 | Drive Shaft | | 28 | 37 | 58.6 | 94 | 969 | |
| | 2009.04-2017.05 | MT | F | L | Estate FWD RHE (DW10CTED4);AHR (DW10FD) | For vehicles with electronic suspension control;For Engine Code:DW10CTED4 | GCO45074 | Outer Joint | | 28 | 26 | 59 | 91 | 61.5 | M |
| | 2009.04-2017.05 | MT | F | L/R | Estate FWD RHE (DW10CTED4);AHR (DW10FD) | For vehicles without electronic suspension control;For Engine Code:DW10CTED4;DW10FD | GCO10051 | Outer Joint | | 28 | 39 | 58.6 | 94 | 63 | I |
| | 2009.04-2017.05 | MT | F | L | Estate FWD RHE (DW10CTED4);AHR (DW10FD) | For vehicles without electronic suspension control;For Engine Code:DW10CTED4;DW10FD | GCI45032 | Inner Joint | | 37 | 39 | 40 | 68.5 | 100 | |
| | 2009.04-2017.05 | MT | F | R | Estate FWD RHE (DW10CTED4);AHR (DW10FD) | For vehicles without electronic suspension control;For Engine Code:DW10CTED4 | GCI10041 | Inner Joint | | 37 | 39 | 32 | 399 | 95.5 | |
| 2.0 (120 kw) | 2009.04-2016.07 | 6MT | F | L | Estate FWD RHH (DW10CTED4) | For vehicles with Height-Adjustable Suspension | GDS10314 | Drive Shaft | | 28 | 37 | 59 | 91 | 655 | |
| | 2009.04-2016.07 | 6MT | F | L | Estate FWD RHH (DW10CTED4) | For vehicles with Height-Adjustable Suspension | GCI10095 | Inner Joint | | 37 | 26 | 40 | 68 | 100 | |
| | 2009.04-2016.07 | AT | F | L | Estate FWD RHH (DW10CTED4) | | GDS45225 | Drive Shaft | | 28 | 37 | 59 | 91 | 621 | |
| | 2009.04-2016.07 | AT | F | R | Estate FWD RHH (DW10CTED4) | | GDS10416 | Drive Shaft | | 28 | 37 | 59 | 91 | 955 | |
| | 2009.04-2016.07 | AT | F | L/R | Estate FWD RHH (DW10CTED4) | | GCO45074 | Outer Joint | | 28 | 26 | 59 | 91 | 61.5 | M |
| | 2009.04-2016.07 | AT | F | L | Estate FWD RHH (DW10CTED4) | | GCI10161 | Inner Joint | | 37 | 26 | 40.5 | 65.5 | 100 | |
| | 2009.04-2016.07 | MT | F | L | Estate FWD RHH (DW10CTED4) | | GDS45133 | Drive Shaft | | 28 | 37 | 58.6 | 94 | 653 | |
| | 2009.04-2016.07 | MT | F | R | Estate FWD RHH (DW10CTED4) | | GDS10302 | Drive Shaft | | 28 | 37 | 58.6 | 94 | 969 | |
| | 2009.04-2016.07 | MT | F | L/R | Estate FWD RHH (DW10CTED4) | | GCO10051 | Outer Joint | | 28 | 39 | 58.6 | 94 | 63 | I |
| | 2009.04-2016.07 | MT | F | L | Estate FWD RHH (DW10CTED4) | | GCI45032 | Inner Joint | | 37 | 39 | 40 | 68.5 | 100 | |
| | 2009.04-2016.07 | MT | F | R | Estate FWD RHH (DW10CTED4) | | GCI10041 | Inner Joint | | 37 | 39 | 32 | 399 | 95.5 | |
| 2.2 (98 kw) | 2001.06-2004.08 | AT | F | L | Estate FWD 4HX (DW12TED4) | | GDS10207 | Drive Shaft | | 25 | 37 | 58.5 | 89 | 602 | |
| | 2001.06-2004.08 | AT | F | R | Estate FWD 4HX (DW12TED4) | | GDS10208 | Drive Shaft | | 25 | 37 | 58.5 | 89 | 908 | |
| | 2001.06-2004.08 | AT | F | L | Estate FWD 4HX (DW12TED4) | | GCI10043 | Inner Joint | | 37 | 26 | 40.5 | 67.5 | 104 | |
| | 2001.06-2004.08 | MT | F | L | Estate FWD 4HX (DW12TED4) | | GDS10121 | Drive Shaft | | 25 | 37 | 58.5 | 89 | 628 | |
| | 2001.06-2004.08 | MT | F | L | Estate FWD 4HX (DW12TED4) | | GDS10312 | Drive Shaft | | 25 | 37 | 58.5 | 89 | 625 | |
| | 2001.06-2004.08 | MT | F | R | Estate FWD 4HX (DW12TED4) | | GDS10140 | Drive Shaft | | 25 | 37 | 58.5 | 89 | 948 | |
| | 2001.06-2004.08 | MT | F | L | Estate FWD 4HX (DW12TED4) | | GCO10096 | Outer Joint | | 25 | 26 | 58.5 | 89 | 61.5 | M |
| | 2001.06-2004.08 | MT | F | L/R | Estate FWD 4HX (DW12TED4) | | GCO10075 | Outer Joint | | 25 | 26 | 58.5 | 89 | 63 | M |
| | 2002.06-2004.08 | AT | F | L | Estate Van FWD | | GDS10207 | Drive Shaft | | 25 | 37 | 58.5 | 89 | 602 | |
| | 2002.06-2004.08 | AT | F | R | Estate Van FWD | | GDS10208 | Drive Shaft | | 25 | 37 | 58.5 | 89 | 908 | |

| | YEAR | TRANSM. | F/R | L/R | BODY STYLE & DRIVE TYPE & ENGINE | REMARKS | G-AP Ref. | PRODUCT | ABS | Technical Specifications A | B | C | H | L | P |
|---|---|---|---|---|---|---|---|---|---|---|---|---|---|---|---|
| **CITROËN** **C5 Estate/Break** | | | | | | | | | | | | | | | |
| 2.2 (98 kw) | 2002.06-2004.08 | AT | F | L | Estate Van FWD | | GCI10043 | Inner Joint | | 37 | 26 | 40.5 | 67.5 | 104 | |
| | 2002.06-2004.08 | MT | F | L | Estate Van FWD | | GDS10121 | Drive Shaft | | 25 | 37 | 58.5 | 89 | 628 | |
| | 2002.06-2004.08 | MT | F | R | Estate Van FWD | | GDS10140 | Drive Shaft | | 25 | 37 | 58.5 | 89 | 948 | |
| | 2002.06-2004.08 | MT | F | L | Estate Van FWD | | GCO10096 | Outer Joint | | 25 | 26 | 58.5 | 89 | 61.5 | M |
| | 2004.09-2006.09 | AT | F | L | Estate FWD 4HX (DW12TED4) | | GDS10207 | Drive Shaft | | 25 | 37 | 58.5 | 89 | 602 | |
| | 2004.09-2006.09 | AT | F | R | Estate FWD 4HX (DW12TED4) | | GDS10208 | Drive Shaft | | 25 | 37 | 58.5 | 89 | 908 | |
| | 2004.09-2006.09 | AT | F | L/R | Estate FWD 4HX (DW12TED4) | | GCO10075 | Outer Joint | | 25 | 26 | 58.5 | 89 | 63 | M |
| | 2004.09-2006.09 | AT | F | L | Estate FWD 4HX (DW12TED4) | Date to:2006.09 | GCI10043 | Inner Joint | | 37 | 26 | 40.5 | 67.5 | 104 | |
| | 2004.09-2006.09 | MT | F | L | Estate FWD 4HX (DW12TED4) | | GDS10121 | Drive Shaft | | 25 | 37 | 58.5 | 89 | 628 | |
| | 2004.09-2006.09 | MT | F | L | Estate FWD 4HX (DW12TED4) | | GDS10312 | Drive Shaft | | 25 | 37 | 58.5 | 89 | 625 | |
| | 2004.09-2006.09 | MT | F | R | Estate FWD 4HX (DW12TED4) | | GDS10140 | Drive Shaft | | 25 | 37 | 58.5 | 89 | 948 | |
| | 2004.09-2006.09 | MT | F | L | Estate FWD 4HX (DW12TED4) | | GCO10096 | Outer Joint | | 25 | 26 | 58.5 | 89 | 61.5 | M |
| 2.2 (120 kw) | 2006.05-2008.01 | AT | F | L | Estate FWD 4HP (DW12BTED4);4HR (DW12BTED4) | | GDS10381 | Drive Shaft | | 25 | 37 | 58.5 | 89 | 595 | |
| | 2006.05-2008.01 | AT/MT | F | L/R | Estate FWD 4HP (DW12BTED4);4HR (DW12BTED4) | Date to:2008.12 | GCO10085 | Outer Joint | | 25 | 39 | 59 | 89 | 63.5 | I |
| | 2006.05-2008.01 | MT | F | L | Estate FWD 4HP (DW12BTED4);4HR (DW12BTED4) | | GDS10312 | Drive Shaft | | 25 | 37 | 58.5 | 89 | 625 | |
| | 2006.05-2008.01 | MT | F | R | Estate FWD 4HP (DW12BTED4);4HR (DW12BTED4) | | GDS10313 | Drive Shaft | | 25 | 37 | 58.5 | 89 | 950 | |
| | 2008.02-2009.08 | 6MT | F | L | Estate FWD 4HP (DW12BTED4) | | GDS10314 | Drive Shaft | | 28 | 37 | 59 | 91 | 655 | |
| | 2008.02-2009.08 | 6MT | F | R | Estate FWD 4HP (DW12BTED4) | | GDS10320 | Drive Shaft | | 28 | 37 | 59 | 91 | 980 | |
| | 2008.02-2009.08 | 6MT | F | L | Estate FWD 4HP (DW12BTED4) | | GCI10095 | Inner Joint | | 37 | 26 | 40 | 68 | 100 | |
| | 2008.02-2009.08 | 6MT | F | R | Estate FWD 4HP (DW12BTED4) | | GCI10096 | Inner Joint | | 37 | 26 | 31.95 | 400 | 100 | |
| 2.2 (125 kw) | 2006.04-2008.08 | AT | F | L | Estate FWD 4HT (DW12BTED4) | | GDS10381 | Drive Shaft | | 25 | 37 | 58.5 | 89 | 595 | |
| | 2006.04-2008.08 | AT | F | L/R | Estate FWD 4HT (DW12BTED4) | | GCO10075 | Outer Joint | | 25 | 26 | 58.5 | 89 | 63 | M |
| | 2006.04-2008.08 | AT/MT | F | L/R | Estate FWD 4HT (DW12BTED4) | Date to:2008.12 | GCO10085 | Outer Joint | | 25 | 39 | 59 | 89 | 63.5 | I |
| | 2006.04-2008.08 | MT | F | L | Estate FWD 4HT (DW12BTED4) | | GDS10312 | Drive Shaft | | 25 | 37 | 58.5 | 89 | 625 | |
| | 2006.04-2008.08 | MT | F | R | Estate FWD 4HT (DW12BTED4) | | GDS10313 | Drive Shaft | | 25 | 37 | 58.5 | 89 | 950 | |
| | 2008.02-2011.12 | 6MT | F | L | Estate FWD 4HT (DW12BTED4) | | GDS10314 | Drive Shaft | | 28 | 37 | 59 | 91 | 655 | |
| | 2008.02-2011.12 | 6MT | F | R | Estate FWD 4HT (DW12BTED4) | | GDS10320 | Drive Shaft | | 28 | 37 | 59 | 91 | 980 | |
| | 2008.02-2011.12 | 6MT | F | L | Estate FWD 4HT (DW12BTED4) | | GCI10095 | Inner Joint | | 37 | 26 | 40 | 68 | 100 | |
| | 2008.02-2011.12 | 6MT | F | R | Estate FWD 4HT (DW12BTED4) | | GCI10096 | Inner Joint | | 37 | 26 | 31.95 | 400 | 100 | |
| 2.2 (150 kw) | 2010.07-2015.06 | 6AT | F | L | Estate FWD 4HL (DW12C) | | GDS45225 | Drive Shaft | | 28 | 37 | 59 | 91 | 621 | |
| | 2010.07-2015.06 | 6AT | F | R | Estate FWD 4HL (DW12C) | | GDS10416 | Drive Shaft | | 28 | 37 | 59 | 91 | 955 | |
| | 2010.07-2015.06 | 6AT | F | L | Estate FWD 4HL (DW12C) | | GCO45074 | Outer Joint | | 28 | 26 | 59 | 91 | 61.5 | M |
| | 2010.07-2015.06 | 6AT | F | L | Estate FWD 4HL (DW12C) | | GCI10161 | Inner Joint | | 37 | 26 | 40.5 | 65.5 | 100 | |
| 2.7 (150 kw) | 2008.02-2009.10 | 6AT | F | L | Estate FWD UHZ (DT17TED4) | | GDS10335 | Drive Shaft | | 28 | 37 | 58.5 | 92.5 | 618 | |
| | 2008.02-2009.10 | 6AT | F | L | Estate FWD UHZ (DT17TED4) | | GCI10043 | Inner Joint | | 37 | 26 | 40.5 | 67.5 | 104 | |
| | 2008.02-2009.10 | AT | F | R | Estate FWD UHZ (DT17TED4) | | GDS10243 | Drive Shaft | | 28 | 37 | 58.5 | 92.5 | 957 | |
| 3.0 (152 kw) | 2001.06-2004.08 | 4AT | F | R | Estate FWD XFX (ES9J4S) | | GDS83416 | Drive Shaft | | 25 | 37 | 58.5 | 89 | 915 | |
| | 2001.06-2004.08 | AT | F | L | Estate FWD XFX (ES9J4S) | | GDS10344 | Drive Shaft | | 25 | 37 | 58.5 | 89 | 607 | |
| | 2001.06-2004.08 | AT | F | R | Estate FWD XFX (ES9J4S) | | GCO10075 | Outer Joint | | 25 | 26 | 58.5 | 89 | 63 | M |
| | 2001.06-2004.08 | AT | F | L | Estate FWD XFX (ES9J4S) | | GCI10043 | Inner Joint | | 37 | 26 | 40.5 | 67.5 | 104 | |
| | 2001.06-2004.08 | MT | F | L | Estate FWD XFX (ES9J4S) | | GDS10141 | Drive Shaft | | 25 | 37 | 58.5 | 89 | 638 | |
| | 2001.06-2004.08 | MT | F | R | Estate FWD XFX (ES9J4S) | | GDS10139 | Drive Shaft | | 25 | 37 | 58.5 | 89 | 944 | |
| | 2001.06-2004.08 | | F | | Estate FWD XFX (ES9J4S) | | GCO10096 | Outer Joint | | 25 | 26 | 58.5 | 89 | 61.5 | M |
| | 2004.09-2008.01 | 6AT | F | L | Estate FWD XFU (ES9A) | | GDS10381 | Drive Shaft | | 25 | 37 | 58.5 | 89 | 595 | |
| | 2004.09-2008.01 | 6AT | F | R | Estate FWD XFU (ES9A) | | GDS10382 | Drive Shaft | | 25 | 37 | 58.5 | 89 | 929 | |
| | 2004.09-2008.01 | AT | F | L | Estate FWD XFU (ES9A) | Date to:2008.12 | GDS10344 | Drive Shaft | | 25 | 37 | 58.5 | 89 | 607 | |
| | 2004.09-2008.01 | AT | F | L/R | Estate FWD XFU (ES9A) | Date to:2008.12 | GCO10075 | Outer Joint | | 25 | 26 | 58.5 | 89 | 63 | M |
| | 2004.09-2008.01 | AT | F | L | Estate FWD XFU (ES9A) | | GCI10043 | Inner Joint | | 37 | 26 | 40.5 | 67.5 | 104 | |
| 3.0 (155 kw) | 2004.10-2007.04 | AT | F | L | Estate FWD XFU (ES9A) | | GDS10344 | Drive Shaft | | 25 | 37 | 58.5 | 89 | 607 | |
| | 2004.10-2007.04 | AT | F | L | Estate FWD XFU (ES9A) | | GDS10381 | Drive Shaft | | 25 | 37 | 58.5 | 89 | 595 | |
| | 2004.10-2007.04 | AT | F | R | Estate FWD XFU (ES9A) | | GDS10382 | Drive Shaft | | 25 | 37 | 58.5 | 89 | 929 | |
| | 2004.10-2007.04 | AT | F | L | Estate FWD XFU (ES9A) | | GCI10043 | Inner Joint | | 37 | 26 | 40.5 | 67.5 | 104 | |
| | 2004.10-2007.04 | | F | L/R | Estate FWD XFU (ES9A) | | GCO10075 | Outer Joint | | 25 | 26 | 58.5 | 89 | 63 | M |
| | 2008.02-2010.12 | 6AT | F | L | Estate FWD XFV (ES9A);XFU (ES9A) | | GDS10335 | Drive Shaft | | 28 | 37 | 58.5 | 92.5 | 618 | |
| | 2008.02-2010.12 | 6AT | F | L | Estate FWD XFV (ES9A);XFU (ES9A) | Date to:2010.12 | GCI10043 | Inner Joint | | 37 | 26 | 40.5 | 67.5 | 104 | |
| | 2008.02-2010.12 | AT | F | R | Estate FWD XFV (ES9A);XFU (ES9A) | | GDS10243 | Drive Shaft | | 28 | 37 | 58.5 | 92.5 | 957 | |
| 3.0 (173 kw) | 2003.09-2004.08 | 4AT | F | R | Estate FWD XFX (ES9J4S) | | GDS83416 | Drive Shaft | | 25 | 37 | 58.5 | 89 | 915 | |
| | 2003.09-2004.08 | AT | F | L | Estate FWD XFX (ES9J4S) | | GDS10344 | Drive Shaft | | 25 | 37 | 58.5 | 89 | 607 | |
| | 2003.09-2004.08 | AT | F | R | Estate FWD XFX (ES9J4S) | | GCO10075 | Outer Joint | | 25 | 26 | 58.5 | 89 | 63 | M |
| | 2003.09-2004.08 | MT | F | L | Estate FWD XFX (ES9J4S) | | GDS10141 | Drive Shaft | | 25 | 37 | 58.5 | 89 | 638 | |
| | 2003.09-2004.08 | MT | F | R | Estate FWD XFX (ES9J4S) | | GDS10139 | Drive Shaft | | 25 | 37 | 58.5 | 89 | 944 | |
| | 2004.09-2008.01 | AT | F | L | Estate FWD XFX (ES9J4S) | Date to:2008.12 | GDS10344 | Drive Shaft | | 25 | 37 | 58.5 | 89 | 607 | |
| | 2004.09-2008.01 | AT | F | L | Estate FWD XFX (ES9J4S) | Date to:2008.01;Trans. code:AM6 | GDS10381 | Drive Shaft | | 25 | 37 | 58.5 | 89 | 595 | |
| | 2004.09-2008.01 | AT | F | R | Estate FWD XFX (ES9J4S) | Date to:2008.01;Trans. code:AM6 | GDS10382 | Drive Shaft | | 25 | 37 | 58.5 | 89 | 929 | |
| | 2004.09-2008.01 | AT | F | L/R | Estate FWD XFX (ES9J4S) | Date to:2008.12 | GCO10075 | Outer Joint | | 25 | 26 | 58.5 | 89 | 63 | M |

| | YEAR | TRANSM. | F/R | L/R | BODY STYLE & DRIVE TYPE & ENGINE | REMARKS | G-AP Ref. | PRODUCT | ABS | Technical Specifications A | B | C | H | L | P |
|---|---|---|---|---|---|---|---|---|---|---|---|---|---|---|---|
| **CITROËN** | | | | | | | | | | | | | | | |
| **C5 Estate/Break** | | | | | | | | | | | | | | | |
| 3.0 (173 kw) | 2004.09-2008.01 | AT | F | L | Estate FWD XFX (ES9J4S) | | GCI10043 | Inner Joint | | 37 | 26 | 40.5 | 67.5 | 104 | |
| 3.0 (177 kw) | 2009.04-2014.10 | 6AT | F | L | Estate FWD DT20C | | GDS45225 | Drive Shaft | | 28 | 37 | 59 | 91 | 621 | |
| | 2009.04-2014.10 | 6AT | F | L | Estate FWD DT20C | | GCO45074 | Outer Joint | | 28 | 26 | 59 | 91 | 61.5 | M |
| | 2009.04-2014.10 | 6AT | F | L | Estate FWD DT20C | | GCI10161 | Inner Joint | | 37 | 26 | 40.5 | 65.5 | 100 | |
| | 2009.04-2014.10 | AT | F | R | Estate FWD DT20C | | GDS10416 | Drive Shaft | | 28 | 37 | 59 | 91 | 955 | |
| **C5 X** | | | | | | | | | | | | | | | |
| 1.2 (96 kw) | 2021.09- | | F | L | Estate FWD HNS (EB2ADTS) | | GDS83075 | Drive Shaft | | 28 | 37 | 58.5 | 93 | 659 | |
| | 2021.09- | | F | R | Estate FWD HNS (EB2ADTS) | | GDS83074 | Drive Shaft | | 28 | 37 | 58.5 | 93 | 928 | |
| | 2021.09- | | F | L/R | Estate FWD HNS (EB2ADTS) | | GCO10199 | Outer Joint | | 28 | 23 | 58.5 | 93 | 50.5 | I |
| | 2021.09- | | F | L | Estate FWD HNS (EB2ADTS) | | GCI82106 | Inner Joint | | 37 | 24 | 40.3 | 59 | 95 | |
| | 2021.09- | | F | R | Estate FWD HNS (EB2ADTS) | | GCI82107 | Inner Joint | | 37 | 24 | | 284 | 95 | |
| 1.6 (133 kw) | 2021.09- | | F | L | Estate FWD 5GF (EP6FADTXD) | | GDS83075 | Drive Shaft | | 28 | 37 | 58.5 | 93 | 659 | |
| | 2021.09- | | F | R | Estate FWD 5GF (EP6FADTXD) | | GDS83074 | Drive Shaft | | 28 | 37 | 58.5 | 93 | 928 | |
| | 2021.09- | | F | L/R | Estate FWD 5GF (EP6FADTXD) | | GCO10199 | Outer Joint | | 28 | 23 | 58.5 | 93 | 50.5 | I |
| | 2021.09- | | F | L | Estate FWD 5GF (EP6FADTXD) | | GCI82106 | Inner Joint | | 37 | 24 | 40.3 | 59 | 95 | |
| | 2021.09- | | F | R | Estate FWD 5GF (EP6FADTXD) | | GCI82107 | Inner Joint | | 37 | 24 | | 284 | 95 | |
| **C6** | | | | | | | | | | | | | | | |
| 2.2 (120 kw) | 2006.06-2010.12 | 6MT | F | L | Saloon FWD 4HP (DW12BTED4) | Date from:2008.09 | GDS10314 | Drive Shaft | | 28 | 37 | 59 | 91 | 655 | |
| | 2006.06-2010.12 | 6MT | F | R | Saloon FWD 4HP (DW12BTED4) | Date to:2008.08,Chassis no. to:11619 | GDS10302 | Drive Shaft | | 28 | 37 | 58.6 | 94 | 969 | |
| | 2006.06-2010.12 | 6MT | F | R | Saloon FWD 4HP (DW12BTED4) | Date from:2008.09,Chassis no. from:11620 | GDS10320 | Drive Shaft | | 28 | 37 | 59 | 91 | 980 | |
| | 2006.06-2010.12 | 6MT | F | R | Saloon FWD 4HP (DW12BTED4) | Date to:2008.08,Chassis no. to:11619 | GCO10051 | Outer Joint | | 28 | 39 | 58.6 | 94 | 63 | I |
| | 2006.06-2010.12 | 6MT | F | L/R | Saloon FWD 4HP (DW12BTED4) | | GCO45074 | Outer Joint | | 28 | 26 | 59 | 91 | 61.5 | M |
| | 2006.06-2010.12 | 6MT | F | L | Saloon FWD 4HP (DW12BTED4) | Date from:2008.09 | GCI10095 | Inner Joint | | 37 | 26 | 40 | 68 | 100 | |
| | 2006.06-2010.12 | 6MT | F | R | Saloon FWD 4HP (DW12BTED4) | Date to:2008.08,Chassis no. to:11619 | GCI10041 | Inner Joint | | 37 | 39 | 32 | 399 | 95.5 | |
| | 2006.06-2010.12 | 6MT | F | R | Saloon FWD 4HP (DW12BTED4) | Date from:2008.09,Chassis no. from:11620 | GCI10096 | Inner Joint | | 37 | 26 | 31.95 | 400 | 100 | |
| 2.2 (125 kw) | 2006.06-2012.12 | 6AT | F | L | Saloon FWD 4HT (DW12BTED4);4HS (DW12BTED4) | | GDS45225 | Drive Shaft | | 28 | 37 | 59 | 91 | 621 | |
| | 2006.06-2012.12 | 6AT | F | R | Saloon FWD 4HT (DW12BTED4);4HS (DW12BTED4) | | GDS10416 | Drive Shaft | | 28 | 37 | 59 | 91 | 955 | |
| | 2006.06-2012.12 | 6AT | F | L | Saloon FWD 4HT (DW12BTED4);4HS (DW12BTED4) | | GCI10161 | Inner Joint | | 37 | 26 | 40.5 | 65.5 | 100 | |
| | 2006.06-2012.12 | 6MT | F | L | Saloon FWD 4HT (DW12BTED4);4HS (DW12BTED4) | Date from:2008.09 | GDS10314 | Drive Shaft | | 28 | 37 | 59 | 91 | 655 | |
| | 2006.06-2012.12 | 6MT | F | R | Saloon FWD 4HT (DW12BTED4);4HS (DW12BTED4) | Date to:2008.08,Chassis no. to:11619 | GDS10302 | Drive Shaft | | 28 | 37 | 58.6 | 94 | 969 | |
| | 2006.06-2012.12 | 6MT | F | R | Saloon FWD 4HT (DW12BTED4);4HS (DW12BTED4) | Date from:2008.09,Chassis no. from:11620 | GDS10320 | Drive Shaft | | 28 | 37 | 59 | 91 | 980 | |
| | 2006.06-2012.12 | 6MT | F | R | Saloon FWD 4HT (DW12BTED4);4HS (DW12BTED4) | Date to:2008.08,Chassis no. to:11619 | GCO10051 | Outer Joint | | 28 | 39 | 58.6 | 94 | 63 | I |
| | 2006.06-2012.12 | 6MT | F | L/R | Saloon FWD 4HT (DW12BTED4);4HS (DW12BTED4) | | GCO45074 | Outer Joint | | 28 | 26 | 59 | 91 | 61.5 | M |
| | 2006.06-2012.12 | 6MT | F | L | Saloon FWD 4HT (DW12BTED4);4HS (DW12BTED4) | Date from:2008.09 | GCI10095 | Inner Joint | | 37 | 26 | 40 | 68 | 100 | |
| | 2006.06-2012.12 | 6MT | F | R | Saloon FWD 4HT (DW12BTED4);4HS (DW12BTED4) | Date to:2008.08,Chassis no. to:11619 | GCI10041 | Inner Joint | | 37 | 39 | 32 | 399 | 95.5 | |
| | 2006.06-2012.12 | 6MT | F | R | Saloon FWD 4HT (DW12BTED4);4HS (DW12BTED4) | Date from:2008.09,Chassis no. from:11620 | GCI10096 | Inner Joint | | 37 | 26 | 31.95 | 400 | 100 | |
| 2.7 (150 kw) | 2005.09-2011.12 | 6AT | F | L | Saloon FWD UHZ (DT17TED4) | | GDS10335 | Drive Shaft | | 28 | 37 | 58.5 | 92.5 | 618 | |
| | 2005.09-2011.12 | 6AT | F | L | Saloon FWD UHZ (DT17TED4) | | GCO10115 | Outer Joint | | 28 | 26 | 58.5 | 92.5 | 61.5 | M |
| | 2005.09-2011.12 | 6AT | F | L | Saloon FWD UHZ (DT17TED4) | Date from:2008.09,Date to:2011.12 | GCI10043 | Inner Joint | | 37 | 26 | 40.5 | 67.5 | 104 | |
| | 2005.09-2011.12 | AT | F | R | Saloon FWD UHZ (DT17TED4) | | GDS10243 | Drive Shaft | | 28 | 37 | 58.5 | 92.5 | 957 | |
| 3.0 (155 kw) | 2005.09-2012.12 | 6AT | F | L | Saloon FWD XFX (ES9J4S);XFV (ES9A) | | GDS10335 | Drive Shaft | | 28 | 37 | 58.5 | 92.5 | 618 | |
| | 2005.09-2012.12 | 6AT | F | R | Saloon FWD XFX (ES9J4S);XFV (ES9A) | | GDS10243 | Drive Shaft | | 28 | 37 | 58.5 | 92.5 | 957 | |
| | 2005.09-2012.12 | 6AT | F | L/R | Saloon FWD XFX (ES9J4S);XFV (ES9A) | | GCO10115 | Outer Joint | | 28 | 26 | 58.5 | 92.5 | 61.5 | M |
| | 2005.09-2012.12 | 6AT | F | L | Saloon FWD XFX (ES9J4S);XFV (ES9A) | | GCI10043 | Inner Joint | | 37 | 26 | 40.5 | 67.5 | 104 | |
| | 2009.06-2010.12 | 6AT | F | L | Saloon FWD DT20C | | GDS45225 | Drive Shaft | | 28 | 37 | 59 | 91 | 621 | |
| | 2009.06-2010.12 | 6AT | F | R | Saloon FWD DT20C | | GDS10416 | Drive Shaft | | 28 | 37 | 59 | 91 | 955 | |
| | 2009.06-2010.12 | 6AT | F | L | Saloon FWD DT20C | | GCO45074 | Outer Joint | | 28 | 26 | 59 | 91 | 61.5 | M |
| | 2009.06-2010.12 | 6AT | F | L | Saloon FWD DT20C | | GCI10161 | Inner Joint | | 37 | 26 | 40.5 | 65.5 | 100 | |
| 3.0 (177 kw) | 2009.04-2012.12 | 6AT | F | L | Saloon FWD DT20C | | GDS45225 | Drive Shaft | | 28 | 37 | 59 | 91 | 621 | |
| | 2009.04-2012.12 | 6AT | F | R | Saloon FWD DT20C | | GDS10416 | Drive Shaft | | 28 | 37 | 59 | 91 | 955 | |
| | 2009.04-2012.12 | 6AT | F | L | Saloon FWD DT20C | | GCO45074 | Outer Joint | | 28 | 26 | 59 | 91 | 61.5 | M |
| | 2009.04-2012.12 | 6AT | F | L | Saloon FWD DT20C | | GCI10161 | Inner Joint | | 37 | 26 | 40.5 | 65.5 | 100 | |
| **C8** | | | | | | | | | | | | | | | |
| 2.0 (79 kw) | 2002.07- | 5MT | F | L/R | MPV FWD RHT (DW10ATED4);RHM (DW10ATED4) | | GCO10015 | Outer Joint | 48T | 27 | 39 | 59 | 82 | 63 | I |
| | 2002.07- | AT | F | L | MPV FWD RHT (DW10ATED4);RHM (DW10ATED4) | | GDS10423 | Drive Shaft | | 27 | 26 | 58 | 81.5 | 635 | |
| | 2002.07- | AT | F | R | MPV FWD RHT (DW10ATED4);RHM (DW10ATED4) | | GDS10425 | Drive Shaft | | 27 | 26 | 59 | 82 | 855 | |
| | 2002.07- | AT | F | L | MPV FWD RHT (DW10ATED4);RHM (DW10ATED4) | | GCO45059 | Outer Joint | | 27 | 34 | 58 | 81.5 | 56.5 | I |
| | 2002.07- | AT | F | R | MPV FWD RHT (DW10ATED4);RHM (DW10ATED4) | | GCO10016 | Outer Joint | | 27 | 34 | 59 | 82 | 56.5 | I |
| | 2002.07- | AT | F | L | MPV FWD RHT (DW10ATED4);RHM (DW10ATED4) | | GCI81321 | Inner Joint | | 26 | 34 | 30.2 | 46.5 | 103.5 | |
| | 2002.07- | AT | F | R | MPV FWD RHT (DW10ATED4);RHM (DW10ATED4) | | GCI10105 | Inner Joint | | 26 | 34 | | 259 | 87 | |
| | 2002.07- | MT | F | L | MPV FWD RHT (DW10ATED4);RHM (DW10ATED4) | | GDS10072 | Drive Shaft | | 27 | 37 | 59 | 82 | 641 | |
| | 2002.07- | MT | F | R | MPV FWD RHT (DW10ATED4);RHM (DW10ATED4) | | GDS10284 | Drive Shaft | | 27 | 37 | 59 | 82 | 964 | |
| | 2002.07- | MT | F | L | MPV FWD RHT (DW10ATED4);RHM (DW10ATED4) | | GCO10014 | Outer Joint | | 27 | 39 | 59 | 82 | 63 | I |
| | 2002.07- | MT | F | R | MPV FWD RHT (DW10ATED4);RHM (DW10ATED4) | | GCO18098 | Outer Joint | | 27 | 29 | 58 | 81 | 71 | M |
| | 2002.07- | MT | F | L | MPV FWD RHT (DW10ATED4);RHM (DW10ATED4) | | GCI10015 | Inner Joint | | 37 | 39 | 40 | 68.5 | 104 | |

| | YEAR | TRANSM. | F/R | L/R | BODY STYLE & DRIVE TYPE & ENGINE | REMARKS | G-AP Ref. | PRODUCT | ABS | Technical Specifications A | B | C | H | L | P |
|---|---|---|---|---|---|---|---|---|---|---|---|---|---|---|---|
| **CITROËN** | | | | | | | | | | | | | | | |
| **C8** | | | | | | | | | | | | | | | |
| 2.0 (80 kw) | 2002.07- | 5MT | F | L | MPV FWD RHW (DW10ATED4) | | GDS10072 | Drive Shaft | | 27 | 37 | 59 | 82 | 641 | |
| | 2002.07- | 5MT | F | R | MPV FWD RHW (DW10ATED4) | | GDS10284 | Drive Shaft | | 27 | 37 | 59 | 82 | 964 | |
| | 2002.07- | 5MT | F | L/R | MPV FWD RHW (DW10ATED4) | | GCO10015 | Outer Joint | 48T | 27 | 39 | 59 | 82 | 63 | I |
| | 2002.07- | 6MT | F | R | MPV FWD RHW (DW10ATED4) | | GDS10440 | Drive Shaft | | 27 | 37 | 58 | 81 | 973 | |
| | 2002.07- | 6MT | F | R | MPV FWD RHW (DW10ATED4) | | GCO18098 | Outer Joint | | 27 | 29 | 58 | 81 | 71 | M |
| | 2002.07- | 6MT | F | R | MPV FWD RHW (DW10ATED4) | | GCI10160 | Inner Joint | | 37 | 28 | 32 | 399 | 95.5 | |
| 2.0 (81 kw) | 2002.07- | 5MT | F | L/R | MPV FWD RHT (DW10ATED4) | | GCO10015 | Outer Joint | 48T | 27 | 39 | 59 | 82 | 63 | I |
| | 2002.07- | AT | F | L | MPV FWD RHT (DW10ATED4) | | GDS10423 | Drive Shaft | | 27 | 26 | 58 | 81.5 | 635 | |
| | 2002.07- | AT | F | R | MPV FWD RHT (DW10ATED4) | | GDS10425 | Drive Shaft | | 27 | 26 | 59 | 82 | 855 | |
| | 2002.07- | AT | F | L | MPV FWD RHT (DW10ATED4) | | GCO45059 | Outer Joint | | 27 | 34 | 58 | 81.5 | 56.5 | I |
| | 2002.07- | AT | F | R | MPV FWD RHT (DW10ATED4) | | GCO10016 | Outer Joint | | 27 | 34 | 59 | 82 | 56.5 | I |
| | 2002.07- | AT | F | L | MPV FWD RHT (DW10ATED4) | | GCI81321 | Inner Joint | | 26 | 34 | 30.2 | 46.5 | 103.5 | |
| | 2002.07- | AT | F | R | MPV FWD RHT (DW10ATED4) | | GCI10105 | Inner Joint | | 26 | 34 | | 259 | 87 | |
| | 2002.07- | MT | F | L | MPV FWD RHT (DW10ATED4) | | GDS10072 | Drive Shaft | | 27 | 37 | 59 | 82 | 641 | |
| | 2002.07- | MT | F | R | MPV FWD RHT (DW10ATED4) | | GDS10284 | Drive Shaft | | 27 | 37 | 59 | 82 | 964 | |
| | 2002.07- | MT | F | L | MPV FWD RHT (DW10ATED4) | | GCO10014 | Outer Joint | | 27 | 39 | 59 | 82 | 63 | I |
| | 2002.07- | MT | F | R | MPV FWD RHT (DW10ATED4) | | GCO18098 | Outer Joint | | 27 | 29 | 58 | 81 | 71 | M |
| | 2002.07- | MT | F | L | MPV FWD RHT (DW10ATED4) | | GCI10015 | Inner Joint | | 37 | 39 | 40 | 68.5 | 104 | |
| | 2003.11-2009.12 | 5MT | F | L | Box Body/MPV FWD RHT (DW10ATED4) | | GDS10072 | Drive Shaft | | 27 | 37 | 59 | 82 | 641 | |
| | 2003.11-2009.12 | 5MT | F | L/R | Box Body/MPV FWD RHT (DW10ATED4) | | GCO10015 | Outer Joint | 48T | 27 | 39 | 59 | 82 | 63 | I |
| | 2003.11-2009.12 | MT | F | R | Box Body/MPV FWD RHT (DW10ATED4) | | GDS10284 | Drive Shaft | | 27 | 37 | 59 | 82 | 964 | |
| | 2003.11-2009.12 | MT | F | R | Box Body/MPV FWD RHT (DW10ATED4) | | GCO10014 | Outer Joint | | 27 | 39 | 59 | 82 | 63 | I |
| 2.0 (88 kw) | 2006.07- | 6MT | F | L | MPV FWD RHK (DW10UTED4) | | GDS10072 | Drive Shaft | | 27 | 37 | 59 | 82 | 641 | |
| | 2006.07- | 6MT | F | R | MPV FWD RHK (DW10UTED4) | | GDS10440 | Drive Shaft | | 27 | 37 | 58 | 81 | 973 | |
| | 2006.07- | 6MT | F | R | MPV FWD RHK (DW10UTED4) | | GCO18098 | Outer Joint | | 27 | 29 | 58 | 81 | 71 | M |
| | 2006.07- | 6MT | F | L/R | MPV FWD RHK (DW10UTED4) | | GCO10015 | Outer Joint | 48T | 27 | 39 | 59 | 82 | 63 | I |
| | 2006.07- | 6MT | F | R | MPV FWD RHK (DW10UTED4) | | GCI10160 | Inner Joint | | 37 | 28 | 32 | 399 | 95.5 | |
| 2.0 (100 kw) | 2002.07- | AT | F | L/R | MPV FWD RFN (EW10J4) | | GCO45059 | Outer Joint | | 27 | 34 | 58 | 81.5 | 56.5 | I |
| | 2002.07- | AT | F | L | MPV FWD RFN (EW10J4) | | GCI81321 | Inner Joint | | 26 | 34 | 30.2 | 46.5 | 103.5 | |
| | 2002.07- | AT/MT | F | L/R | MPV FWD RFN (EW10J4) | | GCO10016 | Outer Joint | | 27 | 34 | 59 | 82 | 56.5 | I |
| | 2002.07- | MT | F | L | MPV FWD RFN (EW10J4) | | GDS10422 | Drive Shaft | | 27 | 24 | 58 | 81.5 | 659 | |
| | 2002.07- | MT | F | R | MPV FWD RFN (EW10J4) | | GDS10431 | Drive Shaft | | 27 | 24 | 59 | 82 | 944 | |
| | 2002.07- | | F | R | MPV FWD RFN (EW10J4) | | GDS17218 | Drive Shaft | | 27 | 26 | 58 | 81.5 | 855 | |
| | 2003.11-2004.11 | AT | F | L | Box Body/MPV FWD RFN (EW10J4) | | GDS17220 | Drive Shaft | | 27 | 26 | 58 | 81.5 | 648 | |
| | 2003.11-2004.11 | AT | F | R | Box Body/MPV FWD RFN (EW10J4) | | GDS10425 | Drive Shaft | | 27 | 26 | 59 | 82 | 855 | |
| | 2003.11-2004.11 | AT | F | L | Box Body/MPV FWD RFN (EW10J4) | | GCO45059 | Outer Joint | | 27 | 34 | 58 | 81.5 | 56.5 | I |
| | 2003.11-2004.11 | AT | F | L | Box Body/MPV FWD RFN (EW10J4) | | GCI81321 | Inner Joint | | 26 | 34 | 30.2 | 46.5 | 103.5 | |
| | 2003.11-2004.11 | AT | F | R | Box Body/MPV FWD RFN (EW10J4) | | GCI10105 | Inner Joint | | 26 | 34 | | 259 | 87 | |
| | 2003.11-2004.11 | AT/MT | F | R | Box Body/MPV FWD RFN (EW10J4) | | GCO10016 | Outer Joint | | 27 | 34 | 59 | 82 | 56.5 | I |
| | 2003.11-2004.11 | MT | F | L | Box Body/MPV FWD RFN (EW10J4) | | GDS10422 | Drive Shaft | | 27 | 24 | 58 | 81.5 | 659 | |
| | 2003.11-2004.11 | MT | F | R | Box Body/MPV FWD RFN (EW10J4) | | GDS10431 | Drive Shaft | | 27 | 24 | 59 | 82 | 944 | |
| | 2003.11-2004.11 | MT | F | L | Box Body/MPV FWD RFN (EW10J4) | | GCI10020 | Inner Joint | | 24 | 34 | 40 | 62.5 | 99 | |
| | 2006.03- | 6AT | F | R | MPV FWD RHR (DW10BTED4)/RHD (DW10CTED4)/RHD (DW10CB) | | GCO82523 | Outer Joint | | 27 | 39 | 61.3 | 84 | 64 | I |
| | 2006.03- | 6AT | F | R | MPV FWD RHR (DW10BTED4)/RHD (DW10CTED4)/RHD (DW10CB) | | GCI45033 | Inner Joint | | 37 | 39 | | 379 | 96 | |
| | 2006.03- | 6MT | F | L | MPV FWD RHR (DW10BTED4)/RHD (DW10CTED4)/RHD (DW10CB) | For Engine code:DW10BTED4/DW10CB | GDS10072 | Drive Shaft | | 27 | 37 | 59 | 82 | 641 | |
| | 2006.03- | 6MT | F | L | MPV FWD RHR (DW10BTED4)/RHD (DW10CTED4)/RHD (DW10CB) | For Engine code:DW10CTED4 | GDS10424 | Drive Shaft | | 27 | 37 | 61.3 | 84 | 637 | |
| | 2006.03- | 6MT | F | R | MPV FWD RHR (DW10BTED4)/RHD (DW10CTED4)/RHD (DW10CB) | | GDS10440 | Drive Shaft | | 27 | 37 | 58 | 81 | 973 | |
| | 2006.03- | 6MT | F | R | MPV FWD RHR (DW10BTED4)/RHD (DW10CTED4)/RHD (DW10CB) | | GCO18098 | Outer Joint | | 27 | 29 | 58 | 81 | 71 | M |
| | 2006.03- | 6MT | F | L/R | MPV FWD RHR (DW10BTED4)/RHD (DW10CTED4)/RHD (DW10CB) | For Enginecode:DW10BTED4/DW10CB | GCO10015 | Outer Joint | 48T | 27 | 39 | 59 | 82 | 63 | I |
| | 2006.03- | 6MT | F | R | MPV FWD RHR (DW10BTED4)/RHD (DW10CTED4)/RHD (DW10CB) | | GCI10160 | Inner Joint | | 37 | 28 | 32 | 399 | 95.5 | |
| 2.0 (103 kw) | 2004.06-2011.12 | MT | F | L | Box Body/MPV FWD RFJ (EW10A) | | GDS10422 | Drive Shaft | | 27 | 24 | 58 | 81.5 | 659 | |
| | 2004.06-2011.12 | MT | F | R | Box Body/MPV FWD RFJ (EW10A) | | GDS10431 | Drive Shaft | | 27 | 24 | 59 | 82 | 944 | |
| | 2004.06-2011.12 | MT | F | R | Box Body/MPV FWD RFJ (EW10A) | | GCO10016 | Outer Joint | | 27 | 34 | 59 | 82 | 56.5 | I |
| | 2004.06-2011.12 | MT | F | L | Box Body/MPV FWD RFJ (EW10A) | | GCI10020 | Inner Joint | | 24 | 34 | 40 | 62.5 | 99 | |
| | 2005.09- | AT | F | L | MPV FWD RFJ (EW10A) | | GDS17220 | Drive Shaft | | 27 | 26 | 58 | 81.5 | 648 | |
| | 2005.09- | AT | F | R | MPV FWD RFJ (EW10A) | | GDS10425 | Drive Shaft | | 27 | 26 | 59 | 82 | 855 | |
| | 2005.09- | AT | F | L | MPV FWD RFJ (EW10A) | | GCI81321 | Inner Joint | | 26 | 34 | 30.2 | 46.5 | 103.5 | |
| | 2005.09- | AT/MT | F | L/R | MPV FWD RFJ (EW10A) | | GCO10016 | Outer Joint | | 27 | 34 | 59 | 82 | 56.5 | I |
| | 2005.09- | AT/MT | F | L/R | MPV FWD RFJ (EW10A) | Date to:2011.12 | GCO10059 | Outer Joint | 48T | 27 | 34 | 59 | 82 | 56.5 | I |
| | 2005.09- | AT/MT | F | L/R | MPV FWD RFJ (EW10A) | | GCO45059 | Outer Joint | | 27 | 34 | 58 | 81.5 | 56.5 | I |
| | 2005.09- | MT | F | L | MPV FWD RFJ (EW10A) | | GDS10422 | Drive Shaft | | 27 | 24 | 58 | 81.5 | 659 | |
| | 2005.09- | MT | F | R | MPV FWD RFJ (EW10A) | | GDS10431 | Drive Shaft | | 27 | 24 | 59 | 82 | 944 | |
| | 2005.09- | | F | R | MPV FWD RFJ (EW10A) | | GDS17218 | Drive Shaft | | 27 | 26 | 58 | 81.5 | 855 | |
| 2.0 (120 kw) | 2006.03- | 6AT | F | R | MPV FWD RHH (DW10CTED4) | | GCO82523 | Outer Joint | | 27 | 39 | 61.3 | 84 | 64 | I |
| | 2006.03- | 6AT | F | R | MPV FWD RHH (DW10CTED4) | | GCI45033 | Inner Joint | | 37 | 39 | | 379 | 96 | |

| | YEAR | TRANSM. | F/R | L/R | BODY STYLE & DRIVE TYPE & ENGINE | REMARKS | G-AP Ref. | PRODUCT | ABS | Technical Specifications A | B | C | H | L | P |
|---|---|---|---|---|---|---|---|---|---|---|---|---|---|---|---|
| **CITROËN** | | | | | | | | | | | | | | | |
| **C8** | | | | | | | | | | | | | | | |
| 2.0 (120 kw) | 2006.03- | 6MT | F | L | MPV FWD RHH (DW10CTED4) | | GDS10424 | Drive Shaft | | 27 | 37 | 61.3 | 84 | 637 | |
| | 2006.03- | MT | F | L | MPV FWD RHH (DW10CTED4) | Date from:2010.04 | GCI10015 | Inner Joint | | 37 | 39 | 40 | 68.5 | 104 | |
| 2.2 (94 kw) | 2002.07- | 5MT/6MT | F | L | MPV FWD 4HW (DW12TED4) | | GDS10430 | Drive Shaft | | 27 | 37 | 59 | 82 | 630 | |
| | 2002.07- | 5MT/6MT | F | R | MPV FWD 4HW (DW12TED4) | | GDS18291 | Drive Shaft | | 27 | 37 | 58 | 81 | 977 | |
| | 2002.07- | 5MT/6MT | F | L | MPV FWD 4HW (DW12TED4) | Chassis no. to:09961 | GCI10006 | Inner Joint | | 22 | 22 | 40 | 58.5 | 87 | |
| | 2002.07- | 5MT/6MT | F | L | MPV FWD 4HW (DW12TED4) | Chassis no. from:09962 | GCI10015 | Inner Joint | | 37 | 39 | 40 | 68.5 | 104 | |
| | 2002.07- | AT/MT | F | L/R | MPV FWD 4HW (DW12TED4) | Date to:2006.12 | GCO18098 | Outer Joint | | 27 | 29 | 58 | 81 | 71 | M |
| | 2002.07- | | F | L | MPV FWD 4HW (DW12TED4) | | GDS10020 | Drive Shaft | 48T | 21 | 22 | 58.5 | 76 | 615 | |
| | 2003.11-2006.07 | 5MT | F | L | Box Body/MPV FWD 4HW (DW12TED4) | | GDS10430 | Drive Shaft | | 27 | 37 | 59 | 82 | 630 | |
| | 2003.11-2006.07 | 5MT | F | R | Box Body/MPV FWD 4HW (DW12TED4) | | GDS18291 | Drive Shaft | | 27 | 37 | 58 | 81 | 977 | |
| | 2003.11-2006.07 | 5MT | F | L | Box Body/MPV FWD 4HW (DW12TED4) | | GCO10014 | Outer Joint | | 27 | 39 | 59 | 82 | 63 | I |
| | 2003.11-2006.07 | 5MT | F | R | Box Body/MPV FWD 4HW (DW12TED4) | | GCO18098 | Outer Joint | | 27 | 29 | 58 | 81 | 71 | M |
| | 2003.11-2006.07 | 5MT | F | L | Box Body/MPV FWD 4HW (DW12TED4) | | GCI10015 | Inner Joint | | 37 | 39 | 40 | 68.5 | 104 | |
| 2.2 (116 kw) | 2002.07- | 5MT | F | L | MPV FWD 3FZ (EW12J4) | | GDS10072 | Drive Shaft | | 27 | 37 | 59 | 82 | 641 | |
| | 2002.07- | 5MT | F | R | MPV FWD 3FZ (EW12J4) | | GDS10284 | Drive Shaft | | 27 | 37 | 59 | 82 | 964 | |
| | 2002.07- | 5MT | F | L | MPV FWD 3FZ (EW12J4) | | GCO10014 | Outer Joint | | 27 | 39 | 59 | 82 | 63 | I |
| | 2002.07- | 5MT | F | L | MPV FWD 3FZ (EW12J4) | | GCO10015 | Outer Joint | 48T | 27 | 39 | 59 | 82 | 63 | I |
| | 2002.07- | 5MT | F | R | MPV FWD 3FZ (EW12J4) | | GCO18098 | Outer Joint | | 27 | 29 | 58 | 81 | 71 | M |
| | 2002.07- | 5MT | F | L | MPV FWD 3FZ (EW12J4) | | GCI10015 | Inner Joint | | 37 | 39 | 40 | 68.5 | 104 | |
| | 2002.07- | MT | F | L/R | MPV FWD 3FZ (EW12J4) | | GCO17044 | Outer Joint | | 27 | 28 | 58 | 81.5 | 62 | M |
| | 2003.11-2007.08 | 5MT | F | L | Box Body/MPV FWD 3FZ (EW12J4) | | GDS10072 | Drive Shaft | | 27 | 37 | 59 | 82 | 641 | |
| | 2003.11-2007.08 | 5MT | F | R | Box Body/MPV FWD 3FZ (EW12J4) | | GDS10284 | Drive Shaft | | 27 | 37 | 59 | 82 | 964 | |
| | 2003.11-2007.08 | 5MT | F | R | Box Body/MPV FWD 3FZ (EW12J4) | | GCO10014 | Outer Joint | | 27 | 39 | 59 | 82 | 63 | I |
| | 2003.11-2007.08 | 5MT | F | L/R | Box Body/MPV FWD 3FZ (EW12J4) | | GCO10015 | Outer Joint | 48T | 27 | 39 | 59 | 82 | 63 | I |
| 2.2 (120 kw) | 2007.06- | 6AT | F | R | MPV FWD 4HP (DW12BTED4);4HR (DW12BTED4) | | GCO82523 | Outer Joint | | 27 | 39 | 61.3 | 84 | 64 | I |
| | 2007.06- | 6AT | F | R | MPV FWD 4HP (DW12BTED4);4HR (DW12BTED4) | | GCI45033 | Inner Joint | | 37 | 39 | | 379 | 96 | |
| | 2007.06- | 6MT | F | L | MPV FWD 4HP (DW12BTED4);4HR (DW12BTED4) | | GDS10424 | Drive Shaft | | 27 | 37 | 61.3 | 84 | 637 | |
| | 2007.06- | MT | F | L | MPV FWD 4HP (DW12BTED4);4HR (DW12BTED4) | | GCI10015 | Inner Joint | | 37 | 39 | 40 | 68.5 | 104 | |
| 2.2 (125 kw) | 2006.06-2012.12 | 6AT | F | R | MPV FWD 4HT (DW12BTED4);4HS (DW12BTED4) | | GCO82523 | Outer Joint | | 27 | 39 | 61.3 | 84 | 64 | I |
| | 2006.06-2012.12 | 6AT | F | R | MPV FWD 4HT (DW12BTED4);4HS (DW12BTED4) | | GCI45033 | Inner Joint | | 37 | 39 | | 379 | 96 | |
| | 2006.06-2012.12 | 6MT | F | L | MPV FWD 4HT (DW12BTED4);4HS (DW12BTED4) | | GDS10424 | Drive Shaft | | 27 | 37 | 61.3 | 84 | 637 | |
| | 2006.06-2012.12 | MT | F | L | MPV FWD 4HT (DW12BTED4);4HS (DW12BTED4) | Date to:2012.12 | GCI10015 | Inner Joint | | 37 | 39 | 40 | 68.5 | 104 | |
| 3.0 (150 kw) | 2002.07- | 4AT | F | L | MPV FWD XFX (ES9J4S) | | GDS17221 | Drive Shaft | | 27 | 37 | 58 | 81.5 | 624 | |
| | 2002.07- | 4AT | F | R | MPV FWD XFX (ES9J4S) | | GDS17217 | Drive Shaft | | 27 | 37 | 58 | 81.5 | 924 | |
| | 2002.07- | 4AT | F | L/R | MPV FWD XFX (ES9J4S) | | GCO17044 | Outer Joint | | 27 | 28 | 58 | 81.5 | 62 | M |
| | 2002.07- | 4AT | F | L | MPV FWD XFX (ES9J4S) | | GCI10168 | Inner Joint | | 37 | 28 | 40.3 | 60 | 94 | |
| | 2002.07- | 4AT | F | R | MPV FWD XFX (ES9J4S) | | GCI10167 | Inner Joint | | 37 | 28 | | 340 | 93 | |
| | 2003.11-2007.10 | 4AT | F | L | Box Body/MPV FWD XFX (ES9J4S) | | GDS17221 | Drive Shaft | | 27 | 37 | 58 | 81.5 | 624 | |
| | 2003.11-2007.10 | 4AT | F | R | Box Body/MPV FWD XFX (ES9J4S) | | GDS17217 | Drive Shaft | | 27 | 37 | 58 | 81.5 | 924 | |
| | 2003.11-2007.10 | 4AT | F | L/R | Box Body/MPV FWD XFX (ES9J4S) | | GCO17044 | Outer Joint | | 27 | 28 | 58 | 81.5 | 62 | M |
| | 2003.11-2007.10 | 4AT | F | L | Box Body/MPV FWD XFX (ES9J4S) | | GCI10168 | Inner Joint | | 37 | 28 | 40.3 | 60 | 94 | |
| | 2003.11-2007.10 | 4AT | F | R | Box Body/MPV FWD XFX (ES9J4S) | | GCI10167 | Inner Joint | | 37 | 28 | | 340 | 93 | |
| **Dispatch** | | | | | | | | | | | | | | | |
| 1.9 (51 kw) | 1995.10-1998.08 | 5MT | F | L | Van FWD D9B (XUD9A/U) | | GDS10082 | Drive Shaft | 48T | 27 | 24 | 59 | 82 | 648 | |
| | 1995.10-1998.08 | 5MT | F | R | Van FWD D9B (XUD9A/U) | | GDS10081 | Drive Shaft | 48T | 27 | 24 | 59 | 82 | 935 | |
| | 1995.10-1998.08 | 5MT | F | R | Van FWD D9B (XUD9A/U) | | GDS10120 | Drive Shaft | | 27 | 24 | 59 | 82 | 928 | |
| | 1995.10-1998.08 | 5MT | F | L/R | Van FWD D9B (XUD9A/U) | Date from:1996.01 | GCO10018 | Outer Joint | 48T | 27 | 34 | 61 | 82 | 56.5 | I |
| | 1995.10-1998.08 | MT | F | L | Van FWD D9B (XUD9A/U) | Trans. code:BE3R | GDS10112 | Drive Shaft | | 27 | 24 | 59 | 82 | 648 | |
| | 1995.10-1998.08 | MT | F | L/R | Van FWD D9B (XUD9A/U) | Trans. code:BE3R | GCO10059 | Outer Joint | 48T | 27 | 34 | 59 | 82 | 56.5 | I |
| | 1998.04-2003.11 | 5MT | F | L | Bus FWD WJY (DW8B), WJZ (DW8) | | GDS10082 | Drive Shaft | 48T | 27 | 24 | 59 | 82 | 648 | |
| | 1998.04-2003.11 | 5MT | F | R | Bus FWD WJY (DW8B), WJZ (DW8) | | GDS10081 | Drive Shaft | 48T | 27 | 24 | 59 | 82 | 935 | |
| | 1998.04-2003.11 | 5MT | F | R | Bus FWD WJY (DW8B), WJZ (DW8) | | GCI10004 | Inner Joint | | 24 | 34 | 29.8 | 348 | 99.5 | |
| | 1998.04-2003.11 | MT | F | L | Bus FWD WJY (DW8B), WJZ (DW8) | | GDS10112 | Drive Shaft | | 27 | 24 | 59 | 82 | 648 | |
| | 1998.04-2003.11 | MT | F | L/R | Bus FWD WJY (DW8B), WJZ (DW8) | | GCO10016 | Outer Joint | | 27 | 34 | 59 | 82 | 56.5 | I |
| | 1998.04-2003.11 | MT | F | L/R | Bus FWD WJY (DW8B), WJZ (DW8) | | GCO10018 | Outer Joint | 48T | 27 | 34 | 61 | 82 | 56.5 | I |
| | 1998.04-2003.11 | MT | F | L/R | Bus FWD WJY (DW8B), WJZ (DW8) | Date from:2003.01 | GCO10059 | Outer Joint | 48T | 27 | 34 | 59 | 82 | 56.5 | I |
| | 1998.04-2003.11 | | F | R | Bus FWD WJY (DW8B), WJZ (DW8) | | GDS10111 | Drive Shaft | | 27 | 24 | 59 | 82 | 935 | |
| | 1998.04-2006.10 | 5MT | F | L | Van FWD WJY (DW8B), WJZ (DW8) | | GDS10082 | Drive Shaft | 48T | 27 | 24 | 59 | 82 | 648 | |
| | 1998.04-2006.10 | 5MT | F | R | Van FWD WJY (DW8B), WJZ (DW8) | | GDS10081 | Drive Shaft | 48T | 27 | 24 | 59 | 82 | 935 | |
| | 1998.04-2006.10 | 5MT | F | R | Van FWD WJY (DW8B), WJZ (DW8) | | GCI10004 | Inner Joint | | 24 | 34 | 29.8 | 348 | 99.5 | |
| | 1998.04-2006.10 | MT | F | L | Van FWD WJY (DW8B), WJZ (DW8) | | GDS10112 | Drive Shaft | | 27 | 24 | 59 | 82 | 648 | |
| | 1998.04-2006.10 | MT | F | L/R | Van FWD WJY (DW8B), WJZ (DW8) | | GCO10016 | Outer Joint | | 27 | 34 | 59 | 82 | 56.5 | I |
| | 1998.04-2006.10 | MT | F | L/R | Van FWD WJY (DW8B), WJZ (DW8) | | GCO10018 | Outer Joint | 48T | 27 | 34 | 61 | 82 | 56.5 | I |
| | 1998.04-2006.10 | MT | F | L/R | Van FWD WJY (DW8B), WJZ (DW8) | | GCO10059 | Outer Joint | 48T | 27 | 34 | 59 | 82 | 56.5 | I |
| | 1998.04-2006.10 | | F | R | Van FWD WJY (DW8B), WJZ (DW8) | | GDS10111 | Drive Shaft | | 27 | 24 | 59 | 82 | 935 | |

| | YEAR | TRANSM. | F/R | L/R | BODY STYLE & DRIVE TYPE & ENGINE | REMARKS | G-AP Ref. | PRODUCT | ABS | Technical Specifications A | B | C | H | L | P |
|---|---|---|---|---|---|---|---|---|---|---|---|---|---|---|---|
| **CITROËN** | | | | | | | | | | | | | | | |
| **Dispatch** | | | | | | | | | | | | | | | |
| 1.9 (66 kw) | 1995.10-2000.08 | 5MT | F | L | Van FWD DHX (XUD9BTF), DHX (XUD9TF) | | GDS10016 | Drive Shaft | 48T | 27 | 37 | 59 | 82 | 641 | |
| | 1995.10-2000.08 | 5MT | F | L | Van FWD DHX (XUD9BTF), DHX (XUD9TF) | | GDS10072 | Drive Shaft | | 27 | 37 | 59 | 82 | 641 | |
| | 1995.10-2000.08 | 5MT | F | R | Van FWD DHX (XUD9BTF), DHX (XUD9TF) | | GDS10014 | Drive Shaft | 48T | 27 | 37 | 59 | 82 | 947 | |
| | 1995.10-2000.08 | 5MT | F | R | Van FWD DHX (XUD9BTF), DHX (XUD9TF) | | GDS10155 | Drive Shaft | | 27 | 37 | 59 | 82 | 947 | |
| | 1995.10-2000.08 | 5MT | F | L/R | Van FWD DHX (XUD9BTF), DHX (XUD9TF) | | GCO10014 | Outer Joint | | 27 | 39 | 59 | 82 | 63 | I |
| | 1995.10-2000.08 | 5MT | F | L/R | Van FWD DHX (XUD9BTF), DHX (XUD9TF) | | GCO10015 | Outer Joint | 48T | 27 | 39 | 59 | 82 | 63 | I |
| | 1995.10-2000.08 | 5MT | F | L | Van FWD DHX (XUD9BTF), DHX (XUD9TF) | | GCI10015 | Inner Joint | | 37 | 39 | 40 | 68.5 | 104 | |
| | 1995.10-2000.08 | 5MT | F | R | Van FWD DHX (XUD9BTF), DHX (XUD9TF) | | GCI10034 | Inner Joint | | 37 | 39 | 31.9 | 369.5 | 99 | |
| 1.9 (68 kw) | 1996.04-2003.11 | 5MT | F | L | Bus FWD D8B (XUD9TF) | | GDS10016 | Drive Shaft | 48T | 27 | 37 | 59 | 82 | 641 | |
| | 1996.04-2003.11 | 5MT | F | L | Bus FWD D8B (XUD9TF) | | GDS10072 | Drive Shaft | | 27 | 37 | 59 | 82 | 641 | |
| | 1996.04-2003.11 | 5MT | F | R | Bus FWD D8B (XUD9TF) | | GDS10014 | Drive Shaft | 48T | 27 | 37 | 59 | 82 | 947 | |
| | 1996.04-2003.11 | 5MT | F | R | Bus FWD D8B (XUD9TF) | | GDS10155 | Drive Shaft | | 27 | 37 | 59 | 82 | 947 | |
| | 1996.04-2003.11 | 5MT | F | L/R | Bus FWD D8B (XUD9TF) | | GCO10014 | Outer Joint | | 27 | 39 | 59 | 82 | 63 | I |
| | 1996.04-2003.11 | 5MT | F | L/R | Bus FWD D8B (XUD9TF) | | GCO10015 | Outer Joint | 48T | 27 | 39 | 59 | 82 | 63 | I |
| | 1996.04-2003.11 | 5MT | F | L | Bus FWD D8B (XUD9TF) | | GCI10015 | Inner Joint | | 37 | 39 | 40 | 68.5 | 104 | |
| | 1996.04-2003.11 | 5MT | F | R | Bus FWD D8B (XUD9TF) | | GCI10034 | Inner Joint | | 37 | 39 | 31.9 | 369.5 | 99 | |
| 2.0 (69 kw) | 1999.10-2006.10 | 5MT | F | L | Bus FWD RHX (DW10BTED), RHX (DW10BTED+) | | GDS10264 | Drive Shaft | 48T | 27 | 37 | 59 | 82 | 630 | |
| | 1999.10-2006.10 | 5MT | F | L | Bus FWD RHX (DW10BTED), RHX (DW10BTED+) | | GDS10430 | Drive Shaft | | 27 | 37 | 59 | 82 | 630 | |
| | 1999.10-2006.10 | 5MT | F | R | Bus FWD RHX (DW10BTED), RHX (DW10BTED+) | | GDS10057 | Drive Shaft | | 27 | 37 | 59 | 82 | 960 | |
| | 1999.10-2006.10 | 5MT | F | R | Bus FWD RHX (DW10BTED), RHX (DW10BTED+) | | GDS45120 | Drive Shaft | 48T | 27 | 37 | 59 | 82 | 960 | |
| | 1999.10-2006.10 | 5MT | F | L/R | Bus FWD RHX (DW10BTED), RHX (DW10BTED+) | | GCO10014 | Outer Joint | | 27 | 39 | 59 | 82 | 63 | I |
| | 1999.10-2006.10 | 5MT | F | L/R | Bus FWD RHX (DW10BTED), RHX (DW10BTED+) | | GCO10015 | Outer Joint | 48T | 27 | 39 | 59 | 82 | 63 | I |
| | 1999.10-2006.10 | 5MT | F | L | Bus FWD RHX (DW10BTED), RHX (DW10BTED+) | | GCI10015 | Inner Joint | | 37 | 39 | 40 | 68.5 | 104 | |
| | 1999.10-2006.10 | 5MT | F | R | Bus FWD RHX (DW10BTED), RHX (DW10BTED+) | | GCI10034 | Inner Joint | | 37 | 39 | 31.9 | 369.5 | 99 | |
| | 1999.10-2006.10 | 5MT | F | L | Platform/Chassis FWD RHX (DW10BTED), RHX (DW10BTED+) | | GDS10264 | Drive Shaft | 48T | 27 | 37 | 59 | 82 | 630 | |
| | 1999.10-2006.10 | 5MT | F | L | Platform/Chassis FWD RHX (DW10BTED), RHX (DW10BTED+) | | GDS10430 | Drive Shaft | | 27 | 37 | 59 | 82 | 630 | |
| | 1999.10-2006.10 | 5MT | F | R | Platform/Chassis FWD RHX (DW10BTED), RHX (DW10BTED+) | | GDS10057 | Drive Shaft | | 27 | 37 | 59 | 82 | 960 | |
| | 1999.10-2006.10 | 5MT | F | R | Platform/Chassis FWD RHX (DW10BTED), RHX (DW10BTED+) | | GDS45120 | Drive Shaft | 48T | 27 | 37 | 59 | 82 | 960 | |
| | 1999.10-2006.10 | 5MT | F | L/R | Platform/Chassis FWD RHX (DW10BTED), RHX (DW10BTED+) | | GCO10014 | Outer Joint | | 27 | 39 | 59 | 82 | 63 | I |
| | 1999.10-2006.10 | 5MT | F | L/R | Platform/Chassis FWD RHX (DW10BTED), RHX (DW10BTED+) | | GCO10015 | Outer Joint | 48T | 27 | 39 | 59 | 82 | 63 | I |
| | 1999.10-2006.10 | 5MT | F | L | Platform/Chassis FWD RHX (DW10BTED), RHX (DW10BTED+) | | GCI10015 | Inner Joint | | 37 | 39 | 40 | 68.5 | 104 | |
| | 1999.10-2006.10 | 5MT | F | R | Platform/Chassis FWD RHX (DW10BTED), RHX (DW10BTED+) | | GCI10034 | Inner Joint | | 37 | 39 | 31.9 | 369.5 | 99 | |
| | 1999.10-2006.10 | 5MT | F | L | Van FWD RHX (DW10BTED), RHX (DW10BTED+) | | GDS10264 | Drive Shaft | 48T | 27 | 37 | 59 | 82 | 630 | |
| | 1999.10-2006.10 | 5MT | F | L | Van FWD RHX (DW10BTED), RHX (DW10BTED+) | | GDS10430 | Drive Shaft | | 27 | 37 | 59 | 82 | 630 | |
| | 1999.10-2006.10 | 5MT | F | R | Van FWD RHX (DW10BTED), RHX (DW10BTED+) | | GDS10057 | Drive Shaft | | 27 | 37 | 59 | 82 | 960 | |
| | 1999.10-2006.10 | 5MT | F | R | Van FWD RHX (DW10BTED), RHX (DW10BTED+) | | GDS45120 | Drive Shaft | 48T | 27 | 37 | 59 | 82 | 960 | |
| | 1999.10-2006.10 | 5MT | F | L/R | Van FWD RHX (DW10BTED), RHX (DW10BTED+) | | GCO10014 | Outer Joint | | 27 | 39 | 59 | 82 | 63 | I |
| | 1999.10-2006.10 | 5MT | F | L/R | Van FWD RHX (DW10BTED), RHX (DW10BTED+) | | GCO10015 | Outer Joint | 48T | 27 | 39 | 59 | 82 | 63 | I |
| | 1999.10-2006.10 | 5MT | F | L | Van FWD RHX (DW10BTED), RHX (DW10BTED+) | | GCI10015 | Inner Joint | | 37 | 39 | 40 | 68.5 | 104 | |
| | 1999.10-2006.10 | 5MT | F | R | Van FWD RHX (DW10BTED), RHX (DW10BTED+) | | GCI10034 | Inner Joint | | 37 | 39 | 31.9 | 369.5 | 99 | |
| 2.0 (80 kw) | 2000.03-2006.10 | 5MT | F | L | Bus FWD RHW (DW10ATED4) | | GDS10264 | Drive Shaft | 48T | 27 | 37 | 59 | 82 | 630 | |
| | 2000.03-2006.10 | 5MT | F | L | Bus FWD RHW (DW10ATED4) | | GDS10430 | Drive Shaft | | 27 | 37 | 59 | 82 | 630 | |
| | 2000.03-2006.10 | 5MT | F | R | Bus FWD RHW (DW10ATED4) | | GDS10057 | Drive Shaft | | 27 | 37 | 59 | 82 | 960 | |
| | 2000.03-2006.10 | 5MT | F | R | Bus FWD RHW (DW10ATED4) | | GDS45120 | Drive Shaft | 48T | 27 | 37 | 59 | 82 | 960 | |
| | 2000.03-2006.10 | 5MT | F | L/R | Bus FWD RHW (DW10ATED4) | | GCO10014 | Outer Joint | | 27 | 39 | 59 | 82 | 63 | I |
| | 2000.03-2006.10 | 5MT | F | L/R | Bus FWD RHW (DW10ATED4) | | GCO10015 | Outer Joint | 48T | 27 | 39 | 59 | 82 | 63 | I |
| | 2000.03-2006.10 | 5MT | F | L | Bus FWD RHW (DW10ATED4) | | GCI10015 | Inner Joint | | 37 | 39 | 40 | 68.5 | 104 | |
| | 2000.03-2006.10 | 5MT | F | R | Bus FWD RHW (DW10ATED4) | | GCI10034 | Inner Joint | | 37 | 39 | 31.9 | 369.5 | 99 | |
| | 2000.03-2006.10 | 5MT | F | L | Bus FWD RHZ (DW10ATED) | | GDS10264 | Drive Shaft | 48T | 27 | 37 | 59 | 82 | 630 | |
| | 2000.03-2006.10 | 5MT | F | L | Bus FWD RHZ (DW10ATED) | | GDS10430 | Drive Shaft | | 27 | 37 | 59 | 82 | 630 | |
| | 2000.03-2006.10 | 5MT | F | R | Bus FWD RHZ (DW10ATED) | | GDS10057 | Drive Shaft | | 27 | 37 | 59 | 82 | 960 | |
| | 2000.03-2006.10 | 5MT | F | R | Bus FWD RHZ (DW10ATED) | | GDS45120 | Drive Shaft | 48T | 27 | 37 | 59 | 82 | 960 | |
| | 2000.03-2006.10 | 5MT | F | L/R | Bus FWD RHZ (DW10ATED) | | GCO10014 | Outer Joint | | 27 | 39 | 59 | 82 | 63 | I |
| | 2000.03-2006.10 | 5MT | F | L/R | Bus FWD RHZ (DW10ATED) | | GCO10015 | Outer Joint | 48T | 27 | 39 | 59 | 82 | 63 | I |
| | 2000.03-2006.10 | 5MT | F | L | Bus FWD RHZ (DW10ATED) | | GCI10015 | Inner Joint | | 37 | 39 | 40 | 68.5 | 104 | |
| | 2000.03-2006.10 | 5MT | F | R | Bus FWD RHZ (DW10ATED) | | GCI10034 | Inner Joint | | 37 | 39 | 31.9 | 369.5 | 99 | |
| | 2001.10-2006.10 | MT | F | L | Van FWD RHZ (DW10ATED), RHZ (DW10BTED), RHZ (DW10BTED+), RHZ (DW10CTED), RHZ (DW10CTED+) | | GDS10264 | Drive Shaft | 48T | 27 | 37 | 59 | 82 | 630 | |
| | 2001.10-2006.10 | MT | F | L | Van FWD RHZ (DW10ATED), RHZ (DW10BTED), RHZ (DW10BTED+), RHZ (DW10CTED), RHZ (DW10CTED+) | | GDS10430 | Drive Shaft | | 27 | 37 | 59 | 82 | 630 | |
| | 2001.10-2006.10 | MT | F | R | Van FWD RHZ (DW10ATED), RHZ (DW10BTED), RHZ (DW10BTED+), RHZ (DW10CTED), RHZ (DW10CTED+) | | GDS10057 | Drive Shaft | | 27 | 37 | 59 | 82 | 960 | |
| | 2001.10-2006.10 | MT | F | R | Van FWD RHZ (DW10ATED), RHZ (DW10BTED), RHZ (DW10BTED+), RHZ (DW10CTED), RHZ (DW10CTED+) | | GDS45120 | Drive Shaft | 48T | 27 | 37 | 59 | 82 | 960 | |
| | 2001.10-2006.10 | MT | F | L/R | Van FWD RHZ (DW10ATED), RHZ (DW10BTED), RHZ (DW10BTED+), RHZ (DW10CTED), RHZ (DW10CTED+) | | GCO10014 | Outer Joint | | 27 | 39 | 59 | 82 | 63 | I |
| | 2001.10-2006.10 | MT | F | L/R | Van FWD RHZ (DW10ATED), RHZ (DW10BTED), RHZ (DW10BTED+), RHZ (DW10CTED), RHZ (DW10CTED+) | | GCO10015 | Outer Joint | 48T | 27 | 39 | 59 | 82 | 63 | I |
| | 2001.10-2006.10 | MT | F | L | Van FWD RHZ (DW10ATED), RHZ (DW10BTED), RHZ (DW10BTED+), RHZ (DW10CTED), RHZ (DW10CTED+) | | GCI10015 | Inner Joint | | 37 | 39 | 40 | 68.5 | 104 | |
| | 2001.10-2006.10 | MT | F | R | Van FWD RHZ (DW10ATED), RHZ (DW10BTED), RHZ (DW10BTED+), RHZ (DW10CTED), RHZ (DW10CTED+) | | GCI10034 | Inner Joint | | 37 | 39 | 31.9 | 369.5 | 99 | |
| | 2002.01-2006.10 | MT | F | L | Van FWD RHW (DW10ATED4) | | GDS10264 | Drive Shaft | 48T | 27 | 37 | 59 | 82 | 630 | |

| | YEAR | TRANSM. | F/R | L/R | BODY STYLE & DRIVE TYPE & ENGINE | REMARKS | G-AP Ref. | PRODUCT | ABS | Technical Specifications A | B | C | H | L | P |
|---|---|---|---|---|---|---|---|---|---|---|---|---|---|---|---|
| **CITROËN** | | | | | | | | | | | | | | | |
| **Dispatch** | | | | | | | | | | | | | | | |
| 2.0 (80 kw) | 2002.01-2006.10 | MT | F | L | Van FWD RHW (DW10ATED4) | | GDS10430 | Drive Shaft | | 27 | 37 | 59 | 82 | 630 | |
| | 2002.01-2006.10 | MT | F | R | Van FWD RHW (DW10ATED4) | | GDS10057 | Drive Shaft | | 27 | 37 | 59 | 82 | 960 | |
| | 2002.01-2006.10 | MT | F | R | Van FWD RHW (DW10ATED4) | | GDS45120 | Drive Shaft | 48T | 27 | 37 | 59 | 82 | 960 | |
| | 2002.01-2006.10 | MT | F | L/R | Van FWD RHW (DW10ATED4) | | GCO10014 | Outer Joint | | 27 | 39 | 59 | 82 | 63 | I |
| | 2002.01-2006.10 | MT | F | L/R | Van FWD RHW (DW10ATED4) | | GCO10015 | Outer Joint | 48T | 27 | 39 | 59 | 82 | 63 | I |
| | 2002.01-2006.10 | MT | F | L | Van FWD RHW (DW10ATED4) | | GCI10015 | Inner Joint | | 37 | 39 | 40 | 68.5 | 104 | |
| | 2002.01-2006.10 | MT | F | R | Van FWD RHW (DW10ATED4) | | GCI10034 | Inner Joint | | 37 | 39 | 31.9 | 369.5 | 99 | |
| | 2003.12-2006.10 | 5MT | F | L | Platform/Chassis FWD RHW (DW10ATED4) | | GDS10264 | Drive Shaft | 48T | 27 | 37 | 59 | 82 | 630 | |
| | 2003.12-2006.10 | 5MT | F | L | Platform/Chassis FWD RHW (DW10ATED4) | | GDS10430 | Drive Shaft | | 27 | 37 | 59 | 82 | 630 | |
| | 2003.12-2006.10 | 5MT | F | R | Platform/Chassis FWD RHW (DW10ATED4) | | GDS10057 | Drive Shaft | | 27 | 37 | 59 | 82 | 960 | |
| | 2003.12-2006.10 | 5MT | F | R | Platform/Chassis FWD RHW (DW10ATED4) | | GDS45120 | Drive Shaft | 48T | 27 | 37 | 59 | 82 | 960 | |
| | 2003.12-2006.10 | 5MT | F | L/R | Platform/Chassis FWD RHW (DW10ATED4) | | GCO10014 | Outer Joint | | 27 | 39 | 59 | 82 | 63 | I |
| | 2003.12-2006.10 | 5MT | F | L/R | Platform/Chassis FWD RHW (DW10ATED4) | | GCO10015 | Outer Joint | 48T | 27 | 39 | 59 | 82 | 63 | I |
| | 2003.12-2006.10 | 5MT | F | L | Platform/Chassis FWD RHW (DW10ATED4) | | GCI10015 | Inner Joint | | 37 | 39 | 40 | 68.5 | 104 | |
| | 2003.12-2006.10 | 5MT | F | R | Platform/Chassis FWD RHW (DW10ATED4) | | GCI10034 | Inner Joint | | 37 | 39 | 31.9 | 369.5 | 99 | |
| | 2003.12-2006.10 | MT | F | L | Platform/Chassis FWD RHZ (DW10ATED), RHZ (DW8BTED), RHZ (DW8BTED4), RHZ (DW10BTED), RHZ (DW10BTED4), RHZ (DW10CTED), RHZ (DW10CTED4) | | GDS10264 | Drive Shaft | 48T | 27 | 37 | 59 | 82 | 630 | |
| | 2003.12-2006.10 | MT | F | L | Platform/Chassis FWD RHZ (DW10ATED), RHZ (DW8BTED), RHZ (DW8BTED4), RHZ (DW10BTED), RHZ (DW10BTED4), RHZ (DW10CTED), RHZ (DW10CTED4) | | GDS10430 | Drive Shaft | | 27 | 37 | 59 | 82 | 630 | |
| | 2003.12-2006.10 | MT | F | R | Platform/Chassis FWD RHZ (DW10ATED), RHZ (DW8BTED), RHZ (DW8BTED4), RHZ (DW10BTED), RHZ (DW10BTED4), RHZ (DW10CTED), RHZ (DW10CTED4) | | GDS10057 | Drive Shaft | | 27 | 37 | 59 | 82 | 960 | |
| | 2003.12-2006.10 | MT | F | R | Platform/Chassis FWD RHZ (DW10ATED), RHZ (DW8BTED), RHZ (DW8BTED4), RHZ (DW10BTED), RHZ (DW10BTED4), RHZ (DW10CTED), RHZ (DW10CTED4) | | GDS45120 | Drive Shaft | 48T | 27 | 37 | 59 | 82 | 960 | |
| | 2003.12-2006.10 | MT | F | L/R | Platform/Chassis FWD RHZ (DW10ATED), RHZ (DW8BTED), RHZ (DW8BTED4), RHZ (DW10BTED), RHZ (DW10BTED4), RHZ (DW10CTED), RHZ (DW10CTED4) | | GCO10014 | Outer Joint | | 27 | 39 | 59 | 82 | 63 | I |
| | 2003.12-2006.10 | MT | F | L/R | Platform/Chassis FWD RHZ (DW10ATED), RHZ (DW8BTED), RHZ (DW8BTED4), RHZ (DW10BTED), RHZ (DW10BTED4), RHZ (DW10CTED), RHZ (DW10CTED4) | | GCO10015 | Outer Joint | 48T | 27 | 39 | 59 | 82 | 63 | I |
| | 2003.12-2006.10 | MT | F | L | Platform/Chassis FWD RHZ (DW10ATED), RHZ (DW8BTED), RHZ (DW8BTED4), RHZ (DW10BTED), RHZ (DW10BTED4), RHZ (DW10CTED), RHZ (DW10CTED4) | | GCI10015 | Inner Joint | | 37 | 39 | 40 | 68.5 | 104 | |
| | 2003.12-2006.10 | MT | F | R | Platform/Chassis FWD RHZ (DW10ATED), RHZ (DW8BTED), RHZ (DW8BTED4), RHZ (DW10BTED), RHZ (DW10BTED4), RHZ (DW10CTED), RHZ (DW10CTED4) | | GCI10034 | Inner Joint | | 37 | 39 | 31.9 | 369.5 | 99 | |
| 2.0 (100 kw) | 2000.04-2006.12 | 5MT | F | L | Bus FWD RFN (EW10J4) | | GDS10082 | Drive Shaft | 48T | 27 | 24 | 59 | 82 | 648 | |
| | 2000.04-2006.12 | MT | F | L | Bus FWD RFN (EW10J4) | | GDS10112 | Drive Shaft | | 27 | 24 | 59 | 82 | 648 | |
| | 2000.04-2006.12 | MT | F | R | Bus FWD RFN (EW10J4) | | GDS10081 | Drive Shaft | 48T | 27 | 24 | 59 | 82 | 935 | |
| | 2000.04-2006.12 | MT | F | L/R | Bus FWD RFN (EW10J4) | | GCO10018 | Outer Joint | 48T | 27 | 34 | 61 | 82 | 56.5 | I |
| | 2000.04-2006.12 | MT | F | R | Bus FWD RFN (EW10J4) | | GCI10004 | Inner Joint | | 24 | 34 | 29.8 | 348 | 99.5 | |
| **DS3** | | | | | | | | | | | | | | | |
| 1.2 (60 kw) | 2013.01-2015.03 | 5AT/5MT | F | L | Hatchback FWD HMZ (EB2F);HMZ (EB2) | | GDS10340 | Drive Shaft | | 21 | 22 | 49 | 86 | 655 | |
| | 2013.01-2015.03 | 5AT/5MT | F | R | Hatchback FWD HMZ (EB2F);HMZ (EB2) | Inner teeth of wheel side:29 | GDS10339 | Drive Shaft | | 21 | 22 | 49 | 86 | 868 | |
| | 2013.01-2015.03 | 5AT/5MT | F | L | Hatchback FWD HMZ (EB2F);HMZ (EB2) | | GCO10151 | Outer Joint | | 21 | 28 | 49 | 86 | 49 | I |
| | 2013.01-2015.03 | 5MT | F | | Hatchback FWD HMZ (EB2F);HMZ (EB2) | | GCO10130 | Outer Joint | | 21 | 34 | 48.3 | 86.5 | 55.5 | I |
| | 2013.01-2015.03 | MT | F | L | Hatchback FWD HMZ (EB2F);HMZ (EB2) | Trans. code:MC | GDS10253 | Drive Shaft | | 25 | 24 | 58.5 | 79 | 626 | |
| | 2013.01-2015.03 | MT | F | L | Hatchback FWD HMZ (EB2F);HMZ (EB2) | Trans. code:BE4R | GDS10309 | Drive Shaft | | 21 | 24 | 48.3 | 86.5 | 641 | |
| | 2013.01-2015.03 | MT | F | R | Hatchback FWD HMZ (EB2F);HMZ (EB2) | Trans. code:BE4R | GDS10301 | Drive Shaft | | 21 | 24 | 48.3 | 86.5 | 871 | |
| | 2013.01-2015.03 | MT | F | R | Hatchback FWD HMZ (EB2F);HMZ (EB2) | Trans. code:MA;Inner teeth of wheel side:22 | GDS45222 | Drive Shaft | | 21 | 22 | 48 | 86.5 | 864 | |
| | 2013.01-2015.03 | MT | F | R | Hatchback FWD HMZ (EB2F);HMZ (EB2) | Trans. code:MA | GCI17030 | Inner Joint | | 22 | 22 | 30 | 96.5 | 99 | |
| | 2013.01-2015.07 | 5MT | F | L | Convertible FWD HMZ (EB2F) | | GDS10340 | Drive Shaft | | 21 | 22 | 49 | 86 | 655 | |
| | 2013.01-2015.07 | 5MT | F | R | Convertible FWD HMZ (EB2F) | | GDS10339 | Drive Shaft | | 21 | 22 | 49 | 86 | 868 | |
| | 2013.01-2015.07 | 5MT | F | L | Convertible FWD HMZ (EB2F) | | GCO10151 | Outer Joint | | 21 | 28 | 49 | 86 | 49 | I |
| | 2013.01-2015.07 | 5MT | F | L/R | Convertible FWD HMZ (EB2F) | | GCO10130 | Outer Joint | | 21 | 34 | 48.3 | 86.5 | 55.5 | I |
| | 2013.01-2015.07 | MT | F | L | Convertible FWD HMZ (EB2F) | Trans. code:MC | GDS10253 | Drive Shaft | | 25 | 24 | 58.5 | 79 | 626 | |
| | 2013.01-2015.07 | MT | F | L | Convertible FWD HMZ (EB2F) | Trans. code:BE4R | GDS10309 | Drive Shaft | | 21 | 24 | 48.3 | 86.5 | 641 | |
| | 2013.01-2015.07 | MT | F | R | Convertible FWD HMZ (EB2F) | Trans. code:BE4R | GDS10301 | Drive Shaft | | 21 | 24 | 48.3 | 86.5 | 871 | |
| | 2013.01-2015.07 | MT | F | R | Convertible FWD HMZ (EB2F) | Trans. code:MA | GDS45222 | Drive Shaft | | 21 | 22 | 48 | 86.5 | 864 | |
| | 2013.01-2015.07 | MT | F | R | Convertible FWD HMZ (EB2F) | Trans. code:MA | GCO45011 | Outer Joint | | 21 | 22 | 48 | 86.5 | 54 | I |
| | 2013.01-2015.07 | MT | F | R | Convertible FWD HMZ (EB2F) | Trans. code:MA | GCI17030 | Inner Joint | | 22 | 22 | 30 | 96.5 | 99 | |
| 1.2 (81 kw) | 2014.10-2015.03 | 5MT | F | L | Hatchback FWD HNZ (EB2DT) | Wheel Hub Diam:82;Length2:62mm | GDS10250 | Drive Shaft | | 25 | 24 | 58.5 | 79 | 630 | |
| | 2014.10-2015.03 | 5MT | F | L | Hatchback FWD HNZ (EB2DT) | To ORG/OPR:13873,Wheel Hub Diam:72 | GDS10309 | Drive Shaft | | 21 | 24 | 48.3 | 86.5 | 641 | |
| | 2014.10-2015.03 | 5MT | F | R | Hatchback FWD HNZ (EB2DT) | Wheel Hub Diam:82 | GDS10249 | Drive Shaft | | 25 | 24 | 58.5 | 79 | 864 | |
| | 2014.10-2015.03 | 5MT | F | R | Hatchback FWD HNZ (EB2DT) | Date to:2014.10;To ORG/OPR:13873;Wheel Hub Diam:72 | GDS10301 | Drive Shaft | | 21 | 24 | 48.3 | 86.5 | 871 | |
| | 2014.10-2015.03 | 5MT | F | L | Hatchback FWD HNZ (EB2DT) | Date from:2014.11 | GCO82278 | Outer Joint | | 21 | 34 | 48.2 | 85.5 | 56.5 | I |
| | 2014.10-2015.03 | 6AT | F | L | Hatchback FWD HNZ (EB2DT) | | GDS83216 | Drive Shaft | | 25 | 37 | 58.5 | 79 | 598 | |
| | 2014.10-2015.03 | 6AT | F | R | Hatchback FWD HNZ (EB2DT) | | GDS83217 | Drive Shaft | | 25 | 37 | 58.5 | 79 | 862 | |
| | 2014.10-2015.03 | 6AT | F | L | Hatchback FWD HNZ (EB2DT) | | GCO82355 | Outer Joint | | 25 | 34 | 58.5 | 79 | 55.5 | I |
| | 2014.10-2015.03 | 6AT | F | R | Hatchback FWD HNZ (EB2DT) | | GCO82351 | Outer Joint | | 25 | 34 | 58.5 | 79 | 55.5 | I |
| | 2014.10-2015.03 | 6AT | F | L | Hatchback FWD HNZ (EB2DT) | | GCI82119 | Inner Joint | | 37 | 34 | 41.5 | 58.5 | 94 | |
| | 2014.10-2015.03 | 6AT | F | R | Hatchback FWD HNZ (EB2DT) | | GCI82182 | Inner Joint | | 37 | 34 | | 290 | 88 | |
| | 2014.10-2015.03 | 6AT/5MT | F | L/R | Hatchback FWD HNZ (EB2DT) | | GCO45012 | Outer Joint | | 21 | 34 | 48.5 | 86 | 55.5 | I |
| | 2014.10-2015.03 | MT | F | L | Hatchback FWD HNZ (EB2DT) | Date from:2015.01;Trans. code:MC;Length2:52.5mm | GDS10253 | Drive Shaft | | 25 | 24 | 58.5 | 79 | 626 | |
| | 2014.10-2015.03 | MT | F | R | Hatchback FWD HNZ (EB2DT) | Date from:2015.01;Trans. code:MA | GDS45222 | Drive Shaft | | 21 | 22 | 48 | 86.5 | 864 | |
| | 2014.10-2015.03 | MT | F | L/R | Hatchback FWD HNZ (EB2DT) | Date to:2014.10,Wheel Hub Diam:72 | GCO10130 | Outer Joint | | 21 | 34 | 48.3 | 86.5 | 55.5 | I |
| | 2014.10-2015.07 | 5MT | F | L | Convertible FWD HNZ (EB2DT) | Wheel Hub Diam:82mm | GDS10250 | Drive Shaft | | 25 | 24 | 58.5 | 79 | 630 | |
| | 2014.10-2015.07 | 5MT | F | L | Convertible FWD HNZ (EB2DT) | Date From:2014.11;Date To:2014.10;To ORG/OPR:13873,Wheel Hub Diam:72mm | GDS10309 | Drive Shaft | | 21 | 24 | 48.3 | 86.5 | 641 | |

| | YEAR | TRANSM. | F/R | L/R | BODY STYLE & DRIVE TYPE & ENGINE | REMARKS | G-AP Ref. | PRODUCT | ABS | Technical Specifications A | B | C | H | L | P |
|---|---|---|---|---|---|---|---|---|---|---|---|---|---|---|---|
| **CITROËN** | | | | | | | | | | | | | | | |
| **DS3** | | | | | | | | | | | | | | | |
| 1.2 (81 kw) | 2014.10-2015.07 | 5MT | F | R | Convertible FWD HNZ (EB2DT) | Wheel Hub Diam:82mm | GDS10249 | Drive Shaft | | 25 | 24 | 58.5 | 79 | 864 | |
| | 2014.10-2015.07 | 5MT | F | L | Convertible FWD HNZ (EB2DT) | Date from:2014.11 | GCO82278 | Outer Joint | | 21 | 34 | 48.2 | 85.5 | 56.5 | I |
| | 2014.10-2015.07 | 6AT | F | L | Convertible FWD HNZ (EB2DT) | | GDS83216 | Drive Shaft | | 25 | 37 | 58.5 | 79 | 598 | |
| | 2014.10-2015.07 | 6AT | F | R | Convertible FWD HNZ (EB2DT) | | GDS83217 | Drive Shaft | | 25 | 37 | 58.5 | 79 | 862 | |
| | 2014.10-2015.07 | 6AT | F | L | Convertible FWD HNZ (EB2DT) | | GCO82355 | Outer Joint | | 25 | 34 | 58.5 | 79 | 55.5 | I |
| | 2014.10-2015.07 | 6AT | F | R | Convertible FWD HNZ (EB2DT) | | GCO82351 | Outer Joint | | 25 | 34 | 58.5 | 79 | 55.5 | I |
| | 2014.10-2015.07 | 6AT | F | R | Convertible FWD HNZ (EB2DT) | | GCI82182 | Inner Joint | | 37 | 34 | | 290 | 88 | |
| | 2014.10-2015.07 | MT | F | L | Convertible FWD HNZ (EB2DT) | Date from:2015.01;Trans. code:MC | GDS10253 | Drive Shaft | | 25 | 24 | 58.5 | 79 | 626 | |
| | 2014.10-2015.07 | MT | F | R | Convertible FWD HNZ (EB2DT) | Date From:2015.01;Trans. code:BE4R | GDS10301 | Drive Shaft | | 21 | 24 | 48.3 | 86.5 | 871 | |
| | 2014.10-2015.07 | MT | F | R | Convertible FWD HNZ (EB2DT) | Date from:2015.01;Trans. code:MA | GDS45222 | Drive Shaft | | 21 | 22 | 48 | 86.5 | 864 | |
| | 2014.10-2015.07 | MT | F | L/R | Convertible FWD HNZ (EB2DT) | Date To:2014.10,Wheel Hub Diam:72mm | GCO10130 | Outer Joint | | 21 | 34 | 48.3 | 86.5 | 55.5 | I |
| | 2014.10-2015.07 | MT | F | R | Convertible FWD HNZ (EB2DT) | Date from:2015.01;Trans. code:MA | GCI17030 | Inner Joint | | 22 | 22 | 30 | 96.5 | 99 | |
| | 2014.10-2015.07 | | F | L/R | Convertible FWD HNZ (EB2DT) | | GCO45012 | Outer Joint | | 21 | 34 | 48.5 | 86 | 55.5 | I |
| 1.4 (50 kw) | 2010.04-2015.07 | 5AT/5MT | F | L | Hatchback FWD 8HR (DV4C);8HP (DV4C) | | GDS10340 | Drive Shaft | | 21 | 22 | 49 | 86 | 655 | |
| | 2010.04-2015.07 | 5AT/5MT | F | R | Hatchback FWD 8HR (DV4C);8HP (DV4C) | | GDS10339 | Drive Shaft | | 21 | 22 | 49 | 86 | 868 | |
| | 2010.04-2015.07 | 5AT/5MT | F | L | Hatchback FWD 8HR (DV4C);8HP (DV4C) | Date from:2012.10;From ORG/OPR:13111 | GCO10151 | Outer Joint | | 21 | 28 | 49 | 86 | 49 | I |
| | 2010.04-2015.07 | MT | F | L | Hatchback FWD 8HR (DV4C);8HP (DV4C) | Trans. code:BE4R | GDS10309 | Drive Shaft | | 21 | 24 | 48.3 | 86.5 | 641 | |
| | 2010.04-2015.07 | MT | F | R | Hatchback FWD 8HR (DV4C);8HP (DV4C) | Trans. code:BE4R | GDS10301 | Drive Shaft | | 21 | 24 | 48.3 | 86.5 | 871 | |
| | 2010.04-2015.07 | MT | F | R | Hatchback FWD 8HR (DV4C);8HP (DV4C) | Trans. code:MA | GDS45222 | Drive Shaft | | 21 | 22 | 48 | 86.5 | 864 | |
| | 2010.04-2015.07 | MT | F | R | Hatchback FWD 8HR (DV4C);8HP (DV4C) | Trans. code:MA | GCO45011 | Outer Joint | | 21 | 22 | 48 | 86.5 | 54 | I |
| | 2010.04-2015.07 | MT | F | R | Hatchback FWD 8HR (DV4C);8HP (DV4C) | Trans. code:MA | GCI17030 | Inner Joint | | 22 | 22 | 30 | 96.5 | 99 | |
| 1.4 (70 kw) | 2010.04-2015.07 | 5AT/5MT | F | L | Hatchback FWD 8FP (EP3C) | Date from:2011.07 | GDS10311 | Drive Shaft | | 21 | 22 | 48 | 86.5 | 647 | |
| | 2010.04-2015.07 | 5AT/5MT | F | L | Hatchback FWD 8FP (EP3C) | Date to:2011.06 | GDS10340 | Drive Shaft | | 21 | 22 | 49 | 86 | 655 | |
| | 2010.04-2015.07 | 5AT/5MT | F | R | Hatchback FWD 8FP (EP3C) | | GDS99271 | Drive Shaft | | 21 | 22 | 48 | 86.5 | 860 | |
| | 2010.04-2015.07 | 5AT/5MT | F | L | Hatchback FWD 8FP (EP3C) | Date from:2012.10;From ORG/OPR:13111;Not for cold climate zones | GCO10151 | Outer Joint | | 21 | 28 | 49 | 86 | 49 | I |
| | 2010.04-2015.07 | MT | F | L | Hatchback FWD 8FP (EP3C) | Trans. code:MC | GDS10253 | Drive Shaft | | 25 | 24 | 58.5 | 79 | 626 | |
| | 2010.04-2015.07 | MT | F | L | Hatchback FWD 8FP (EP3C) | Wheel Hub Diameter 1:72mm;Trans. code:BE4R | GDS10309 | Drive Shaft | | 21 | 24 | 48.3 | 86.5 | 641 | |
| | 2010.04-2015.07 | MT | F | R | Hatchback FWD 8FP (EP3C) | Wheel Hub Diameter 2:82mm;Trans. code:BE4R | GDS10249 | Drive Shaft | | 25 | 24 | 58.5 | 79 | 864 | |
| | 2010.04-2015.07 | MT | F | R | Hatchback FWD 8FP (EP3C) | Wheel Hub Diameter 1:72mm;Trans. code:BE4R | GDS10301 | Drive Shaft | | 21 | 24 | 48.3 | 86.5 | 871 | |
| | 2010.04-2015.07 | MT | F | R | Hatchback FWD 8FP (EP3C) | Trans. code:MA | GDS45222 | Drive Shaft | | 21 | 22 | 48 | 86.5 | 864 | |
| | 2010.04-2015.07 | MT | F | R | Hatchback FWD 8FP (EP3C) | Trans. code:MA | GCO45011 | Outer Joint | | 21 | 22 | 48 | 86.5 | 54 | I |
| | 2010.04-2015.07 | MT | F | R | Hatchback FWD 8FP (EP3C) | Trans. code:MA | GCI17030 | Inner Joint | | 22 | 22 | 30 | 96.5 | 99 | |
| | 2010.04-2015.07 | | F | R | Hatchback FWD 8FP (EP3C) | Climate Zones:Not for cold climate zones;Date From:2012.10;From ORG/OPR:13111 | GDS10339 | Drive Shaft | | 21 | 22 | 49 | 86 | 868 | |
| | 2010.04-2015.07 | | F | R | Hatchback FWD 8FP (EP3C) | Date To:2011.06;To ORG/OPR:12641 | GDS10339 | Drive Shaft | | 21 | 22 | 49 | 86 | 868 | |
| | 2012.08-2015.07 | 5MT | F | L | Hatchback FWD 8FR (EP3C) | Date from:2011.07 | GDS10311 | Drive Shaft | | 21 | 22 | 48 | 86.5 | 647 | |
| | 2012.08-2015.07 | 5MT | F | L | Hatchback FWD 8FR (EP3C) | Date to:2011.06 | GDS10340 | Drive Shaft | | 21 | 22 | 49 | 86 | 655 | |
| | 2012.08-2015.07 | 5MT | F | R | Hatchback FWD 8FR (EP3C) | | GDS99271 | Drive Shaft | | 21 | 22 | 48 | 86.5 | 860 | |
| | 2012.08-2015.07 | 5MT | F | L | Hatchback FWD 8FR (EP3C) | Date from:2012.10;From ORG/OPR:13111;Not for cold climate zones | GCO10151 | Outer Joint | | 21 | 28 | 49 | 86 | 49 | I |
| | 2012.08-2015.07 | MT | F | L | Hatchback FWD 8FR (EP3C) | Trans. code:MC | GDS10253 | Drive Shaft | | 25 | 24 | 58.5 | 79 | 626 | |
| | 2012.08-2015.07 | MT | F | L | Hatchback FWD 8FR (EP3C) | Wheel Hub Diameter 1:72mm;Trans. code:BE4R | GDS10309 | Drive Shaft | | 21 | 24 | 48.3 | 86.5 | 641 | |
| | 2012.08-2015.07 | MT | F | R | Hatchback FWD 8FR (EP3C) | Wheel Hub Diameter 2:82mm;Trans. code:BE4R | GDS10249 | Drive Shaft | | 25 | 24 | 58.5 | 79 | 864 | |
| | 2012.08-2015.07 | MT | F | R | Hatchback FWD 8FR (EP3C) | Wheel Hub Diameter 1:72mm;Trans. code:BE4R | GDS10301 | Drive Shaft | | 21 | 24 | 48.3 | 86.5 | 871 | |
| | 2012.08-2015.07 | MT | F | R | Hatchback FWD 8FR (EP3C) | Trans. code:MA | GDS45222 | Drive Shaft | | 21 | 22 | 48 | 86.5 | 864 | |
| | 2012.08-2015.07 | MT | F | R | Hatchback FWD 8FR (EP3C) | Trans. code:MA | GCO45011 | Outer Joint | | 21 | 22 | 48 | 86.5 | 54 | I |
| | 2012.08-2015.07 | MT | F | R | Hatchback FWD 8FR (EP3C) | Trans. code:MA | GCI17030 | Inner Joint | | 22 | 22 | 30 | 96.5 | 99 | |
| | 2012.08-2015.07 | | F | R | Hatchback FWD 8FR (EP3C) | Climate Zones:Not for cold climate zones;Date From:2012.10;From ORG/OPR:13111 | GDS10339 | Drive Shaft | | 21 | 22 | 49 | 86 | 868 | |
| | 2012.08-2015.07 | | F | R | Hatchback FWD 8FR (EP3C) | Date To:2011.06;To ORG/OPR:12641 | GDS10339 | Drive Shaft | | 21 | 22 | 49 | 86 | 868 | |
| 1.4 (72 kw) | 2009.11-2015.07 | 5MT | F | L | Hatchback FWD 8FR (EP3C) | Date from:2011.07 | GDS10311 | Drive Shaft | | 21 | 22 | 48 | 86.5 | 647 | |
| | 2009.11-2015.07 | 5MT | F | L | Hatchback FWD 8FR (EP3C) | Date to:2011.06 | GDS10340 | Drive Shaft | | 21 | 22 | 49 | 86 | 655 | |
| | 2009.11-2015.07 | 5MT | F | R | Hatchback FWD 8FR (EP3C) | | GDS99271 | Drive Shaft | | 21 | 22 | 48 | 86.5 | 860 | |
| | 2009.11-2015.07 | 5MT | F | L | Hatchback FWD 8FR (EP3C) | Date to:2011.06 | GCO10151 | Outer Joint | | 21 | 28 | 49 | 86 | 49 | I |
| | 2009.11-2015.07 | 5MT | F | L | Hatchback FWD 8FR (EP3C) | Date from:2011.07 | GCO45057 | Outer Joint | | 21 | 22 | 48 | 86.5 | 54 | I |
| | 2009.11-2015.07 | 5MT | F | R | Hatchback FWD 8FR (EP3C) | | GCO45011 | Outer Joint | | 21 | 22 | 48 | 86.5 | 54 | I |
| | 2009.11-2015.07 | 5MT | F | L | Hatchback FWD 8FR (EP3C) | Date from:2011.07 | GCI17029 | Inner Joint | | 22 | 22 | 40 | 58.5 | 101 | |
| | 2009.11-2015.07 | 5MT | F | R | Hatchback FWD 8FR (EP3C) | | GCI17030 | Inner Joint | | 22 | 22 | 30 | 96.5 | 99 | |
| | 2009.11-2015.07 | | F | R | Hatchback FWD 8FR (EP3C) | Climate Zones:Not for cold climate zones;Date From:2012.10;From ORG/OPR:13111 | GDS10339 | Drive Shaft | | 21 | 22 | 49 | 86 | 868 | |
| | 2009.11-2015.07 | | F | R | Hatchback FWD 8FR (EP3C) | Date To:2011.06;To ORG/OPR:12641 | GDS10339 | Drive Shaft | | 21 | 22 | 49 | 86 | 868 | |
| 1.6 (55 kw) | 2015.03-2015.07 | 5MT | F | L | Hatchback FWD BHW (DV6FE) | Wheel Hub Diam:82 mm | GDS10250 | Drive Shaft | | 25 | 24 | 58.5 | 79 | 630 | |
| | 2015.03-2015.07 | 5MT | F | L | Hatchback FWD BHW (DV6FE) | Wheel Hub Diam:72 mm | GDS10309 | Drive Shaft | | 21 | 24 | 48.3 | 86.5 | 641 | |
| | 2015.03-2015.07 | 5MT | F | R | Hatchback FWD BHW (DV6FE) | Wheel Hub Diam:82 mm | GDS10249 | Drive Shaft | | 25 | 24 | 58.5 | 79 | 864 | |
| | 2015.03-2015.07 | 5MT | F | R | Hatchback FWD BHW (DV6FE) | Wheel Hub Diam:72 mm | GDS10301 | Drive Shaft | | 21 | 24 | 48.3 | 86.5 | 871 | |
| | 2015.03-2015.07 | 5MT | F | L | Hatchback FWD BHW (DV6FE) | | GCO82278 | Outer Joint | | 21 | 34 | 48.2 | 85.5 | 56.5 | I |
| | 2015.03-2015.07 | 5MT | F | L | Hatchback FWD BHW (DV6FE) | | GCI10070 | Inner Joint | | 24 | 34 | 40 | 62 | 88 | |
| | 2015.03-2015.07 | 5MT | F | L | Hatchback FWD BHW (DV6FE) | Date from:2014.11 | GCI10129 | Inner Joint | | 24 | 34 | 40 | 62 | 89 | |
| | 2015.03-2015.07 | 5MT | F | R | Hatchback FWD BHW (DV6FE) | | GCI10082 | Inner Joint | | 24 | 34 | 29.8 | 291 | 88 | |

| | YEAR | TRANSM. | F/R | L/R | BODY STYLE & DRIVE TYPE & ENGINE | REMARKS | G-AP Ref. | PRODUCT | ABS | Technical Specifications | | | | | |
|---|---|---|---|---|---|---|---|---|---|---|---|---|---|---|---|
| | | | | | | | | | | A | B | C | H | L | P |
| **CITROËN** | | | | | | | | | | | | | | | |
| **DS3** | | | | | | | | | | | | | | | |
| 1.6 (68 kw) | 2009.11-2015.07 | 5MT | F | L | Hatchback FWD 9HP (DV6DTED) | Wheel Hub Diameter [mm]:82 | GDS10250 | Drive Shaft | | 25 | 24 | 58.5 | 79 | 630 | |
| | 2009.11-2015.07 | 5MT | F | L | Hatchback FWD 9HP (DV6DTED) | Wheel Hub Diameter [mm]:72 | GDS10309 | Drive Shaft | | 21 | 24 | 48.3 | 86.5 | 641 | |
| | 2009.11-2015.07 | 5MT | F | R | Hatchback FWD 9HP (DV6DTED) | Wheel Hub Diameter [mm]:82 | GDS10249 | Drive Shaft | | 25 | 24 | 58.5 | 79 | 864 | |
| | 2009.11-2015.07 | 5MT | F | R | Hatchback FWD 9HP (DV6DTED) | Wheel Hub Diameter [mm]:72 | GDS10301 | Drive Shaft | | 21 | 24 | 48.3 | 86.5 | 871 | |
| | 2009.11-2015.07 | 5MT | F | L/R | Hatchback FWD 9HP (DV6DTED) | Wheel Hub Diameter [mm]:72 | GCO82278 | Outer Joint | | 21 | 34 | 48.2 | 85.5 | 56.5 | I |
| | 2009.11-2015.07 | 5MT | F | L/R | Hatchback FWD 9HP (DV6DTED) | Wheel Hub Diameter [mm]:82 | GCO99366 | Outer Joint | | 25 | 34 | 58.5 | 79 | 55 | I |
| | 2009.11-2015.07 | 6AMT/6MT | F | R | Hatchback FWD 9HP (DV6DTED) | | GCI10165 | Inner Joint | | 24 | 34 | 29.8 | 305.5 | 87.5 | |
| | 2009.11-2015.07 | 6AT/6MT | F | L | Hatchback FWD 9HP (DV6DTED) | | GDS10253 | Drive Shaft | | 25 | 24 | 58.5 | 79 | 626 | |
| | 2009.11-2015.07 | 6AT/6MT | F | R | Hatchback FWD 9HP (DV6DTED) | | GDS45221 | Drive Shaft | | 25 | 24 | 58.5 | 79 | 881 | |
| | 2009.11-2015.07 | 6AT/6MT | F | R | Hatchback FWD 9HP (DV6DTED) | | GCO82351 | Outer Joint | | 25 | 34 | 58.5 | 79 | 55.5 | I |
| | 2013.01-2015.07 | 5MT | F | L | Convertible FWD 9HP (DV6DTED) | Wheel Hub Diam:82mm | GDS10250 | Drive Shaft | | 25 | 24 | 58.5 | 79 | 630 | |
| | 2013.01-2015.07 | 5MT | F | L | Convertible FWD 9HP (DV6DTED) | Wheel Hub Diam:72mm | GDS10309 | Drive Shaft | | 21 | 24 | 48.3 | 86.5 | 641 | |
| | 2013.01-2015.07 | 5MT | F | R | Convertible FWD 9HP (DV6DTED) | Wheel Hub Diam:82mm | GDS10249 | Drive Shaft | | 25 | 24 | 58.5 | 79 | 864 | |
| | 2013.01-2015.07 | 5MT | F | R | Convertible FWD 9HP (DV6DTED) | Wheel Hub Diam:72mm | GDS10301 | Drive Shaft | | 21 | 24 | 48.3 | 86.5 | 871 | |
| | 2013.01-2015.07 | 5MT | F | L/R | Convertible FWD 9HP (DV6DTED) | Wheel Hub Diam:72mm | GCO82278 | Outer Joint | | 21 | 34 | 48.2 | 85.5 | 56.5 | I |
| | 2013.01-2015.07 | 5MT | F | L/R | Convertible FWD 9HP (DV6DTED) | Wheel Hub Diam:82mm | GCO99366 | Outer Joint | | 25 | 34 | 58.5 | 79 | 55 | I |
| | 2013.01-2015.07 | 5MT | F | L | Convertible FWD 9HP (DV6DTED) | Wheel Hub Diam:82mm | GCI10070 | Inner Joint | | 24 | 34 | 40 | 62 | 88 | |
| | 2013.01-2015.07 | 5MT | F | R | Convertible FWD 9HP (DV6DTED) | Wheel Hub Diam:82mm | GCI10082 | Inner Joint | | 24 | 34 | 29.8 | 291 | 88 | |
| | 2013.01-2015.07 | 6AMT | F | R | Convertible FWD 9HP (DV6DTED) | | GCI10165 | Inner Joint | | 24 | 34 | 29.8 | 305.5 | 87.5 | |
| | 2013.01-2015.07 | 6AT | F | L | Convertible FWD 9HP (DV6DTED) | | GDS10253 | Drive Shaft | | 25 | 24 | 58.5 | 79 | 626 | |
| | 2013.01-2015.07 | 6AT | F | R | Convertible FWD 9HP (DV6DTED) | | GDS45221 | Drive Shaft | | 25 | 24 | 58.5 | 79 | 881 | |
| | 2013.01-2015.07 | MT | F | L | Convertible FWD 9HP (DV6DTED) | Trans. code:MA | GDS99272 | Drive Shaft | | 21 | 22 | 48 | 86.5 | 655 | |
| | 2013.01-2015.07 | MT | F | R | Convertible FWD 9HP (DV6DTED) | Trans. code:MA | GDS45222 | Drive Shaft | | 21 | 22 | 48 | 86.5 | 864 | |
| 1.6 (73 kw) | 2014.07-2015.07 | 5MT | F | L | Convertible FWD BHY (DV6FD) | Wheel Hub Diam:82mm | GDS10250 | Drive Shaft | | 25 | 24 | 58.5 | 79 | 630 | |
| | 2014.07-2015.07 | 5MT | F | L | Convertible FWD BHY (DV6FD) | Date From:2014.11,Date To:2014.10,To ORG/OPR:13873,Wheel Hub Diam:72mm | GDS10309 | Drive Shaft | | 21 | 24 | 48.3 | 86.5 | 641 | |
| | 2014.07-2015.07 | 5MT | F | R | Convertible FWD BHY (DV6FD) | Wheel Hub Diam:82mm | GDS10249 | Drive Shaft | | 25 | 24 | 58.5 | 79 | 864 | |
| | 2014.07-2015.07 | 5MT | F | L | Convertible FWD BHY (DV6FD) | Date from:2014.11 | GCO82278 | Outer Joint | | 21 | 34 | 48.2 | 85.5 | 56.5 | I |
| | 2014.07-2015.07 | MT | F | L | Convertible FWD BHY (DV6FD) | Trans. code:MC | GDS10253 | Drive Shaft | | 25 | 24 | 58.5 | 79 | 626 | |
| | 2014.07-2015.07 | MT | F | R | Convertible FWD BHY (DV6FD) | Trans. code:BE4R | GDS10301 | Drive Shaft | | 21 | 24 | 48.3 | 86.5 | 871 | |
| | 2014.07-2015.07 | MT | F | R | Convertible FWD BHY (DV6FD) | Trans. code:MA | GDS45222 | Drive Shaft | | 21 | 22 | 48 | 86.5 | 864 | |
| | 2014.07-2015.07 | MT | F | L/R | Convertible FWD BHY (DV6FD) | Date To:2014.10,Wheel Hub Diam:72mm | GCO10130 | Outer Joint | | 21 | 34 | 48.3 | 86.5 | 55.5 | I |
| | 2014.07-2015.07 | MT | F | R | Convertible FWD BHY (DV6FD) | Trans. code:MA | GCI17030 | Inner Joint | | 22 | 22 | 30 | 96.5 | 99 | |
| | 2014.07-2015.07 | 5MT | F | L | Hatchback FWD BHY (DV6FD) | Wheel Hub Diam:82mm | GDS10250 | Drive Shaft | | 25 | 24 | 58.5 | 79 | 630 | |
| | 2014.07-2015.07 | 5MT | F | L | Hatchback FWD BHY (DV6FD) | Date From:2014.11,Date To:2014.10,To ORG/OPR:13873,Wheel Hub Diam:72mm | GDS10309 | Drive Shaft | | 21 | 24 | 48.3 | 86.5 | 641 | |
| | 2014.07-2015.07 | 5MT | F | R | Hatchback FWD BHY (DV6FD) | Wheel Hub Diam:82mm | GDS10249 | Drive Shaft | | 25 | 24 | 58.5 | 79 | 864 | |
| | 2014.07-2015.07 | 5MT | F | L | Hatchback FWD BHY (DV6FD) | Date from:2014.11 | GCO82278 | Outer Joint | | 21 | 34 | 48.2 | 85.5 | 56.5 | I |
| | 2014.07-2015.07 | 5MT | F | L/R | Hatchback FWD BHY (DV6FD) | Wheel Hub Diam:82mm | GCO99366 | Outer Joint | | 25 | 34 | 58.5 | 79 | 55 | I |
| | 2014.07-2015.07 | MT | F | L | Hatchback FWD BHY (DV6FD) | Trans. code:MC | GDS10253 | Drive Shaft | | 25 | 24 | 58.5 | 79 | 626 | |
| | 2014.07-2015.07 | MT | F | R | Hatchback FWD BHY (DV6FD) | Trans. code:BE4R | GDS10301 | Drive Shaft | | 21 | 24 | 48.3 | 86.5 | 871 | |
| | 2014.07-2015.07 | MT | F | R | Hatchback FWD BHY (DV6FD) | Trans. code:MA | GDS45222 | Drive Shaft | | 21 | 22 | 48 | 86.5 | 864 | |
| | 2014.07-2015.07 | MT | F | L/R | Hatchback FWD BHY (DV6FD) | Date To:2014.10,Wheel Hub Diam:72mm | GCO10130 | Outer Joint | | 21 | 34 | 48.3 | 86.5 | 55.5 | I |
| | 2014.07-2015.07 | MT | F | R | Hatchback FWD BHY (DV6FD) | Trans. code:MA | GCI17030 | Inner Joint | | 22 | 22 | 30 | 96.5 | 99 | |
| 1.6 (75 kw) | 2014.07-2015.07 | 5MT | F | L | Convertible FWD BHY (DV6FD) | Wheel Hub Diam:82mm | GDS10250 | Drive Shaft | | 25 | 24 | 58.5 | 79 | 630 | |
| | 2014.07-2015.07 | 5MT | F | L | Convertible FWD BHY (DV6FD) | Wheel Hub Diam:72mm | GDS10309 | Drive Shaft | | 21 | 24 | 48.3 | 86.5 | 641 | |
| | 2014.07-2015.07 | 5MT | F | R | Convertible FWD BHY (DV6FD) | Wheel Hub Diam:82mm | GDS10249 | Drive Shaft | | 25 | 24 | 58.5 | 79 | 864 | |
| | 2014.07-2015.07 | 5MT | F | R | Convertible FWD BHY (DV6FD) | Wheel Hub Diam:72mm | GDS10301 | Drive Shaft | | 21 | 24 | 48.3 | 86.5 | 871 | |
| | 2014.07-2015.07 | 5MT | F | L/R | Convertible FWD BHY (DV6FD) | Wheel Hub Diam:72mm | GCO82278 | Outer Joint | | 21 | 34 | 48.2 | 85.5 | 56.5 | I |
| | 2014.07-2015.07 | 5MT | F | L/R | Convertible FWD BHY (DV6FD) | Wheel Hub Diam:82mm | GCO99366 | Outer Joint | | 25 | 34 | 58.5 | 79 | 55 | I |
| | 2014.07-2015.07 | 5MT | F | L | Convertible FWD BHY (DV6FD) | Wheel Hub Diam:82mm | GCI10070 | Inner Joint | | 24 | 34 | 40 | 62 | 88 | |
| | 2014.07-2015.07 | 5MT | F | R | Convertible FWD BHY (DV6FD) | Wheel Hub Diam:82mm | GCI10082 | Inner Joint | | 24 | 34 | 29.8 | 291 | 88 | |
| 1.6 (82 kw) | 2009.11-2015.07 | 6MT | F | R | Hatchback FWD 9HR (DV6C) | | GDS45221 | Drive Shaft | | 25 | 24 | 58.5 | 79 | 881 | |
| | 2009.11-2015.07 | 6MT | F | R | Hatchback FWD 9HR (DV6C) | | GCO82351 | Outer Joint | | 25 | 34 | 58.5 | 79 | 55.5 | I |
| | 2009.11-2015.07 | 6MT | F | L/R | Hatchback FWD 9HR (DV6C) | | GCO10042 | Outer Joint | | 25 | 34 | 54.8 | 78.5 | 56 | I |
| | 2009.11-2015.07 | 6MT | F | L | Hatchback FWD 9HR (DV6C) | | GCI10057 | Inner Joint | | 24 | 34 | 40 | 52.5 | 90 | |
| | 2009.11-2015.07 | 6MT | F | R | Hatchback FWD 9HR (DV6C) | | GCI10165 | Inner Joint | | 24 | 34 | 29.8 | 305.5 | 87.5 | |
| | 2009.11-2015.07 | MT | F | L | Hatchback FWD 9HR (DV6C) | Trans. code:MC | GDS10253 | Drive Shaft | | 25 | 24 | 58.5 | 79 | 626 | |
| | 2009.11-2015.07 | MT | F | L | Hatchback FWD 9HR (DV6C) | Trans. code:BE4R | GDS10309 | Drive Shaft | | 21 | 24 | 48.3 | 86.5 | 641 | |
| | 2009.11-2015.07 | MT | F | R | Hatchback FWD 9HR (DV6C) | Trans. code:BE4R | GDS10301 | Drive Shaft | | 21 | 24 | 48.3 | 86.5 | 871 | |
| | 2009.11-2015.07 | MT | F | R | Hatchback FWD 9HR (DV6C) | Trans. code:MA | GDS45222 | Drive Shaft | | 21 | 22 | 48 | 86.5 | 864 | |
| | 2009.11-2015.07 | MT | F | | Hatchback FWD 9HR (DV6C) | | GCO99366 | Outer Joint | | 25 | 34 | 58.5 | 79 | 55 | I |
| 1.6 (84 kw) | 2012.08-2015.07 | 6MT | F | L | Hatchback FWD 9HD (DV6C) | Technical Information no.:8NN48,Trans. code:MC | GDS10253 | Drive Shaft | | 25 | 24 | 58.5 | 79 | 626 | |
| | 2012.08-2015.07 | 6MT | F | R | Hatchback FWD 9HD (DV6C) | | GDS45221 | Drive Shaft | | 25 | 24 | 58.5 | 79 | 881 | |
| | 2012.08-2015.07 | 6MT | F | R | Hatchback FWD 9HD (DV6C) | | GCO10148 | Outer Joint | | 25 | 34 | 58.5 | 79 | 55.5 | I |
| | 2012.08-2015.07 | 6MT | F | L | Hatchback FWD 9HD (DV6C) | | GCI10057 | Inner Joint | | 24 | 34 | 40 | 52.5 | 90 | |
| | 2012.08-2015.07 | 6MT | F | R | Hatchback FWD 9HD (DV6C) | | GCI10165 | Inner Joint | | 24 | 34 | 29.8 | 305.5 | 87.5 | |

| | YEAR | TRANSM. | F/R | L/R | BODY STYLE & DRIVE TYPE & ENGINE | REMARKS | G-AP Ref. | PRODUCT | ABS | Technical Specifications | | | | | |
|---|---|---|---|---|---|---|---|---|---|---|---|---|---|---|---|
| | | | | | | | | | | A | B | C | H | L | P |
| **CITROËN** | | | | | | | | | | | | | | | |
| **DS3** | | | | | | | | | | | | | | | |
| 1.6 (84 kw) | 2012.08-2015.07 | MT | F | R | Hatchback FWD 9HD (DV6C) | Trans. code:MA | GCO45011 | Outer Joint | | 21 | 22 | 48 | 86.5 | 54 | I |
| | 2012.08-2015.07 | | F | L/R | Hatchback FWD 9HD (DV6C) | | GCO10042 | Outer Joint | | 25 | 34 | 54.8 | 78.5 | 56 | I |
| 1.6 (85 kw) | 2013.10-2015.07 | 6MT | F | R | Convertible FWD BHX (DV6FC) | | GDS45221 | Drive Shaft | | 25 | 24 | 58.5 | 79 | 881 | |
| | 2013.10-2015.07 | 6MT | F | L | Convertible FWD BHX (DV6FC) | | GCI10057 | Inner Joint | | 24 | 34 | 40 | 52.5 | 90 | |
| | 2013.10-2015.07 | 6MT | F | R | Convertible FWD BHX (DV6FC) | | GCI10165 | Inner Joint | | 24 | 34 | 29.8 | 305.5 | 87.5 | |
| | 2013.10-2015.07 | MT | F | L | Convertible FWD BHX (DV6FC) | | GDS10253 | Drive Shaft | | 25 | 24 | 58.5 | 79 | 626 | |
| | 2013.10-2015.07 | MT | F | L | Convertible FWD BHX (DV6FC) | | GCO10148 | Outer Joint | | 25 | 34 | 58.5 | 79 | 55.5 | I |
| | 2013.10-2015.07 | 6MT | F | R | Hatchback FWD BHX (DV6FC) | | GDS45221 | Drive Shaft | | 25 | 24 | 58.5 | 79 | 881 | |
| | 2013.10-2015.07 | 6MT | F | L | Hatchback FWD BHX (DV6FC) | | GCI10057 | Inner Joint | | 24 | 34 | 40 | 52.5 | 90 | |
| | 2013.10-2015.07 | 6MT | F | R | Hatchback FWD BHX (DV6FC) | | GCI10165 | Inner Joint | | 24 | 34 | 29.8 | 305.5 | 87.5 | |
| | 2013.10-2015.07 | MT | F | L | Hatchback FWD BHX (DV6FC) | | GDS10253 | Drive Shaft | | 25 | 24 | 58.5 | 79 | 626 | |
| | 2013.10-2015.07 | MT | F | L | Hatchback FWD BHX (DV6FC) | | GCO10148 | Outer Joint | | 25 | 34 | 58.5 | 79 | 55.5 | I |
| | 2013.10-2015.07 | | F | L/R | Hatchback FWD BHX (DV6FC) | | GCO10042 | Outer Joint | | 25 | 34 | 54.8 | 78.5 | 56 | I |
| 1.6 (88 kw) | 2010.04-2015.07 | 4AT | F | L | Hatchback FWD 5FS (EP6C) | | GDS83515 | Drive Shaft | | 25 | 26 | 58.5 | 80 | 629 | |
| | 2010.04-2015.07 | 4AT | F | R | Hatchback FWD 5FS (EP6C) | | GDS83516 | Drive Shaft | | 25 | 26 | 58.5 | 80 | 770 | |
| | 2010.04-2015.07 | 4AT | F | L/R | Hatchback FWD 5FS (EP6C) | | GCO82399 | Outer Joint | | 25 | 30 | 58.5 | 80 | 53.5 | I |
| | 2010.04-2015.07 | 4AT | F | L | Hatchback FWD 5FS (EP6C) | | GCI82252 | Inner Joint | | 26 | 29 | 43 | 45.5 | 91 | |
| | 2010.04-2015.07 | 4AT | F | R | Hatchback FWD 5FS (EP6C) | | GCI82253 | Inner Joint | | 26 | 29 | 36.3 | | 117 | |
| | 2010.04-2015.07 | 5MT | F | L | Hatchback FWD 5FS (EP6C) | | GDS10340 | Drive Shaft | | 21 | 22 | 49 | 86 | 655 | |
| | 2010.04-2015.07 | 5MT | F | R | Hatchback FWD 5FS (EP6C) | Inner teeth of wheel side:29 | GDS10339 | Drive Shaft | | 21 | 22 | 49 | 86 | 868 | |
| | 2010.04-2015.07 | 5MT | F | L | Hatchback FWD 5FS (EP6C) | Date from:2012.10;From ORG/OPR:13111 | GCO10151 | Outer Joint | | 21 | 28 | 49 | 86 | 49 | I |
| | 2010.04-2015.07 | 5MT | F | L/R | Hatchback FWD 5FS (EP6C) | | GCO10130 | Outer Joint | | 21 | 34 | 48.3 | 86.5 | 55.5 | I |
| | 2010.04-2015.07 | MT | F | L | Hatchback FWD 5FS (EP6C) | Trans. code:MC | GDS10253 | Drive Shaft | | 25 | 24 | 58.5 | 79 | 626 | |
| | 2010.04-2015.07 | MT | F | R | Hatchback FWD 5FS (EP6C) | Trans. code:MA;Inner teeth of wheel side:22 | GDS45222 | Drive Shaft | | 21 | 22 | 48 | 86.5 | 864 | |
| | 2010.04-2015.07 | MT | F | R | Hatchback FWD 5FS (EP6C) | Trans. code:MA | GCO45011 | Outer Joint | | 21 | 22 | 48 | 86.5 | 54 | I |
| | 2010.04-2015.07 | MT | F | R | Hatchback FWD 5FS (EP6C) | Trans. code:MA | GCI17030 | Inner Joint | | 22 | 22 | 30 | 96.5 | 99 | |
| | 2013.01-2015.07 | 4AT | F | L | Convertible FWD 5FS (EP6C) | | GDS83515 | Drive Shaft | | 25 | 26 | 58.5 | 80 | 629 | |
| | 2013.01-2015.07 | 4AT | F | R | Convertible FWD 5FS (EP6C) | | GDS83516 | Drive Shaft | | 25 | 26 | 58.5 | 80 | 770 | |
| | 2013.01-2015.07 | 4AT | F | L/R | Convertible FWD 5FS (EP6C) | | GCO82399 | Outer Joint | | 25 | 30 | 58.5 | 80 | 53.5 | I |
| | 2013.01-2015.07 | 4AT | F | L | Convertible FWD 5FS (EP6C) | | GCI82252 | Inner Joint | | 26 | 29 | 43 | 45.5 | 91 | |
| | 2013.01-2015.07 | 4AT | F | R | Convertible FWD 5FS (EP6C) | | GCI82253 | Inner Joint | | 26 | 29 | 36.3 | | 117 | |
| | 2013.01-2015.07 | 5MT | F | L | Convertible FWD 5FS (EP6C) | | GDS10340 | Drive Shaft | | 21 | 22 | 49 | 86 | 655 | |
| | 2013.01-2015.07 | 5MT | F | R | Convertible FWD 5FS (EP6C) | | GDS10339 | Drive Shaft | | 21 | 22 | 49 | 86 | 868 | |
| | 2013.01-2015.07 | 5MT | F | L | Convertible FWD 5FS (EP6C) | | GCO10151 | Outer Joint | | 21 | 28 | 49 | 86 | 49 | I |
| | 2013.01-2015.07 | 5MT | F | L/R | Convertible FWD 5FS (EP6C) | | GCO10130 | Outer Joint | | 21 | 34 | 48.3 | 86.5 | 55.5 | I |
| | 2013.01-2015.07 | MT | F | L | Convertible FWD 5FS (EP6C) | Trans. code:MC | GDS10253 | Drive Shaft | | 25 | 24 | 58.5 | 79 | 626 | |
| | 2013.01-2015.07 | MT | F | L | Convertible FWD 5FS (EP6C) | Trans. code:BE4R | GDS10309 | Drive Shaft | | 21 | 24 | 48.3 | 86.5 | 641 | |
| | 2013.01-2015.07 | MT | F | R | Convertible FWD 5FS (EP6C) | Trans. code:BE4R | GDS10301 | Drive Shaft | | 21 | 24 | 48.3 | 86.5 | 871 | |
| | 2013.01-2015.07 | MT | F | R | Convertible FWD 5FS (EP6C) | Trans. code:MA | GDS45222 | Drive Shaft | | 21 | 22 | 48 | 86.5 | 864 | |
| | 2013.01-2015.07 | MT | F | R | Convertible FWD 5FS (EP6C) | Trans. code:MA | GCO45011 | Outer Joint | | 21 | 22 | 48 | 86.5 | 54 | I |
| | 2013.01-2015.07 | MT | F | R | Convertible FWD 5FS (EP6C) | Trans. code:MA | GCI17030 | Inner Joint | | 22 | 22 | 30 | 96.5 | 99 | |
| | 2013.10-2015.07 | 6MT | F | R | Hatchback FWD BHZ (DV6FC) | | GDS45221 | Drive Shaft | | 25 | 24 | 58.5 | 79 | 881 | |
| | 2013.10-2015.07 | 6MT | F | L | Hatchback FWD BHZ (DV6FC) | | GCI10057 | Inner Joint | | 24 | 34 | 40 | 52.5 | 90 | |
| | 2013.10-2015.07 | 6MT | F | R | Hatchback FWD BHZ (DV6FC) | | GCI10165 | Inner Joint | | 24 | 34 | 29.8 | 305.5 | 87.5 | |
| | 2013.10-2015.07 | MT | F | L | Hatchback FWD BHZ (DV6FC) | | GDS10253 | Drive Shaft | | 25 | 24 | 58.5 | 79 | 626 | |
| | 2013.10-2015.07 | MT | F | L | Hatchback FWD BHZ (DV6FC) | | GCO10148 | Outer Joint | | 25 | 34 | 58.5 | 79 | 55.5 | I |
| | 2014.07-2015.07 | 6MT | F | R | Convertible FWD BHZ (DV6FC) | | GDS45221 | Drive Shaft | | 25 | 24 | 58.5 | 79 | 881 | |
| | 2014.07-2015.07 | 6MT | F | L | Convertible FWD BHZ (DV6FC) | | GCI10057 | Inner Joint | | 24 | 34 | 40 | 52.5 | 90 | |
| | 2014.07-2015.07 | 6MT | F | R | Convertible FWD BHZ (DV6FC) | | GCI10165 | Inner Joint | | 24 | 34 | 29.8 | 305.5 | 87.5 | |
| | 2014.07-2015.07 | MT | F | L | Convertible FWD BHZ (DV6FC) | | GDS10253 | Drive Shaft | | 25 | 24 | 58.5 | 79 | 626 | |
| | 2014.07-2015.07 | MT | F | L | Convertible FWD BHZ (DV6FC) | | GCO10148 | Outer Joint | | 25 | 34 | 58.5 | 79 | 55.5 | I |
| 1.6 (110 kw) | 2010.01-2015.07 | 6MT | F | L | Hatchback FWD 5FX (EP6DT);5FN (EP6CDT) | Technical Information no.:8NN48,Trans. code:MC | GDS10253 | Drive Shaft | | 25 | 24 | 58.5 | 79 | 626 | |
| | 2010.01-2015.07 | 6MT | F | R | Hatchback FWD 5FX (EP6DT);5FN (EP6CDT) | | GDS45221 | Drive Shaft | | 25 | 24 | 58.5 | 79 | 881 | |
| | 2010.01-2015.07 | 6MT | F | R | Hatchback FWD 5FX (EP6DT);5FN (EP6CDT) | | GCO10148 | Outer Joint | | 25 | 34 | 58.5 | 79 | 55.5 | I |
| | 2010.01-2015.07 | 6MT | F | L | Hatchback FWD 5FX (EP6DT);5FN (EP6CDT) | | GCI10057 | Inner Joint | | 24 | 34 | 40 | 52.5 | 90 | |
| | 2010.01-2015.07 | 6MT | F | R | Hatchback FWD 5FX (EP6DT);5FN (EP6CDT) | | GCI10165 | Inner Joint | | 24 | 34 | 29.8 | 305.5 | 87.5 | |
| | 2010.01-2015.07 | MT | F | R | Hatchback FWD 5FX (EP6DT);5FN (EP6CDT) | Trans. code:MA | GCO45011 | Outer Joint | | 21 | 22 | 48 | 86.5 | 54 | I |
| | 2010.01-2015.07 | | F | L/R | Hatchback FWD 5FX (EP6DT);5FN (EP6CDT) | | GCO10042 | Outer Joint | | 25 | 34 | 54.8 | 78.5 | 56 | I |
| | 2013.01-2015.07 | 6MT | F | L | Convertible FWD 5FN (EP6CDT) | | GDS10253 | Drive Shaft | | 25 | 24 | 58.5 | 79 | 626 | |
| | 2013.01-2015.07 | 6MT | F | R | Convertible FWD 5FN (EP6CDT) | | GDS45221 | Drive Shaft | | 25 | 24 | 58.5 | 79 | 881 | |
| | 2013.01-2015.07 | 6MT | F | L | Convertible FWD 5FN (EP6CDT) | | GCI10057 | Inner Joint | | 24 | 34 | 40 | 52.5 | 90 | |
| | 2013.01-2015.07 | 6MT | F | R | Convertible FWD 5FN (EP6CDT) | | GCI10165 | Inner Joint | | 24 | 34 | 29.8 | 305.5 | 87.5 | |
| | 2013.01-2015.07 | MT | F | L | Convertible FWD 5FN (EP6CDT) | Trans. code:BE4R | GDS10309 | Drive Shaft | | 21 | 24 | 48.3 | 86.5 | 641 | |
| | 2013.01-2015.07 | MT | F | R | Convertible FWD 5FN (EP6CDT) | Wheel Hub Diameter 1:82mm;Trans. code:BE4R | GDS10249 | Drive Shaft | | 25 | 24 | 58.5 | 79 | 864 | |
| | 2013.01-2015.07 | MT | F | R | Convertible FWD 5FN (EP6CDT) | Wheel Hub Diameter 1:72mm;Trans. code:BE4R | GDS10301 | Drive Shaft | | 21 | 24 | 48.3 | 86.5 | 871 | |

| | YEAR | TRANSM. | F/R | L/R | BODY STYLE & DRIVE TYPE & ENGINE | REMARKS | G-AP Ref. | PRODUCT | ABS | Technical Specifications | | | | | |
|---|---|---|---|---|---|---|---|---|---|---|---|---|---|---|---|
| | | | | | | | | | | A | B | C | H | L | P |
| **CITROËN** | | | | | | | | | | | | | | | |
| **DS3** | | | | | | | | | | | | | | | |
| 1.6 (110 kw) | 2013.01-2015.07 | MT | F | R | Convertible FWD 5FN (EP6CDT) | Trans. code:MA | GDS45222 | Drive Shaft | | 21 | 22 | 48 | 86.5 | 864 | |
| | 2013.01-2015.07 | MT | F | L | Convertible FWD 5FN (EP6CDT) | | GCO10148 | Outer Joint | | 25 | 34 | 58.5 | 79 | 55.5 | I |
| | 2013.01-2015.07 | | F | L/R | Convertible FWD 5FN (EP6CDT) | | GCO10042 | Outer Joint | | 25 | 34 | 54.8 | 78.5 | 56 | I |
| 1.6 (115 kw) | 2010.04-2015.07 | 5MT | F | | Hatchback FWD 5FR (EP6DT);5FV (EP6CDT) | | GCO10130 | Outer Joint | | 21 | 34 | 48.3 | 86.5 | 55.5 | I |
| | 2010.04-2015.07 | 6MT | F | L | Hatchback FWD 5FR (EP6DT);5FV (EP6CDT) | Technical Information no.:8NN48,Trans. code:MC | GDS10253 | Drive Shaft | | 25 | 24 | 58.5 | 79 | 626 | |
| | 2010.04-2015.07 | 6MT | F | R | Hatchback FWD 5FR (EP6DT);5FV (EP6CDT) | | GDS45221 | Drive Shaft | | 25 | 24 | 58.5 | 79 | 881 | |
| | 2010.04-2015.07 | 6MT | F | L | Hatchback FWD 5FR (EP6DT);5FV (EP6CDT) | | GCI10057 | Inner Joint | | 24 | 34 | 40 | 52.5 | 90 | |
| | 2010.04-2015.07 | 6MT | F | R | Hatchback FWD 5FR (EP6DT);5FV (EP6CDT) | | GCI10165 | Inner Joint | | 24 | 34 | 29.8 | 305.5 | 87.5 | |
| | 2010.04-2015.07 | MT | F | L | Hatchback FWD 5FR (EP6DT);5FV (EP6CDT) | Trans. code:MC | GCO10148 | Outer Joint | | 25 | 34 | 58.5 | 79 | 55.5 | I |
| | 2010.04-2015.07 | MT | F | R | Hatchback FWD 5FR (EP6DT);5FV (EP6CDT) | Trans. code:MA | GCO45011 | Outer Joint | | 21 | 22 | 48 | 86.5 | 54 | I |
| | 2010.04-2015.07 | MT | F | L/R | Hatchback FWD 5FR (EP6DT);5FV (EP6CDT) | | GCO10042 | Outer Joint | | 25 | 34 | 54.8 | 78.5 | 56 | I |
| | 2010.04-2015.07 | MT | F | | Hatchback FWD 5FR (EP6DT);5FV (EP6CDT) | | GCO99366 | Outer Joint | | 25 | 34 | 58.5 | 79 | 55 | I |
| | 2013.01-2015.07 | 5MT | F | | Convertible FWD 5FV (EP6CDT) | | GCO10130 | Outer Joint | | 21 | 34 | 48.3 | 86.5 | 55.5 | I |
| | 2013.01-2015.07 | 6MT | F | R | Convertible FWD 5FV (EP6CDT) | | GDS45221 | Drive Shaft | | 25 | 24 | 58.5 | 79 | 881 | |
| | 2013.01-2015.07 | 6MT | F | L | Convertible FWD 5FV (EP6CDT) | | GCI10057 | Inner Joint | | 24 | 34 | 40 | 52.5 | 90 | |
| | 2013.01-2015.07 | 6MT | F | R | Convertible FWD 5FV (EP6CDT) | | GCI10165 | Inner Joint | | 24 | 34 | 29.8 | 305.5 | 87.5 | |
| | 2013.01-2015.07 | | F | L | Convertible FWD 5FV (EP6CDT) | | GDS10253 | Drive Shaft | | 25 | 24 | 58.5 | 79 | 626 | |
| | 2013.01-2015.07 | | F | L | Convertible FWD 5FV (EP6CDT) | | GCO10148 | Outer Joint | | 25 | 34 | 58.5 | 79 | 55.5 | I |
| | 2013.01-2015.07 | | F | L/R | Convertible FWD 5FV (EP6CDT) | | GCO10042 | Outer Joint | | 25 | 34 | 54.8 | 78.5 | 56 | I |
| 1.6 (120 kw) | 2012.01-2015.07 | 6MT | F | R | Hatchback FWD 5FM (EP6DT) | | GDS45221 | Drive Shaft | | 25 | 24 | 58.5 | 79 | 881 | |
| | 2012.01-2015.07 | 6MT | F | L | Hatchback FWD 5FM (EP6DT) | | GCI10057 | Inner Joint | | 24 | 34 | 40 | 52.5 | 90 | |
| | 2012.01-2015.07 | 6MT | F | R | Hatchback FWD 5FM (EP6DT) | | GCI10165 | Inner Joint | | 24 | 34 | 29.8 | 305.5 | 87.5 | |
| | 2012.01-2015.07 | MT | F | L | Hatchback FWD 5FM (EP6DT) | | GDS10253 | Drive Shaft | | 25 | 24 | 58.5 | 79 | 626 | |
| | 2012.01-2015.07 | MT | F | L | Hatchback FWD 5FM (EP6DT) | | GCO10148 | Outer Joint | | 25 | 34 | 58.5 | 79 | 55.5 | I |
| | 2015.02-2015.07 | 6MT | F | R | Convertible FWD 5FM (EP6DT) | | GDS45221 | Drive Shaft | | 25 | 24 | 58.5 | 79 | 881 | |
| | 2015.02-2015.07 | 6MT | F | L | Convertible FWD 5FM (EP6DT) | | GCI10057 | Inner Joint | | 24 | 34 | 40 | 52.5 | 90 | |
| | 2015.02-2015.07 | 6MT | F | R | Convertible FWD 5FM (EP6DT) | | GCI10165 | Inner Joint | | 24 | 34 | 29.8 | 305.5 | 87.5 | |
| | 2015.02-2015.07 | MT | F | L | Convertible FWD 5FM (EP6DT) | | GDS10253 | Drive Shaft | | 25 | 24 | 58.5 | 79 | 626 | |
| | 2015.02-2015.07 | MT | F | L | Convertible FWD 5FM (EP6DT) | | GCO10148 | Outer Joint | | 25 | 34 | 58.5 | 79 | 55.5 | I |
| 1.6 (121 kw) | 2014.10-2015.06 | 6MT | F | R | Hatchback FWD 5FM (EP6DT);5GZ (EP6FDT) | | GDS45221 | Drive Shaft | | 25 | 24 | 58.5 | 79 | 881 | |
| | 2014.10-2015.06 | 6MT | F | L | Hatchback FWD 5FM (EP6DT);5GZ (EP6FDT) | | GCI10057 | Inner Joint | | 24 | 34 | 40 | 52.5 | 90 | |
| | 2014.10-2015.06 | 6MT | F | R | Hatchback FWD 5FM (EP6DT);5GZ (EP6FDT) | | GCI10165 | Inner Joint | | 24 | 34 | 29.8 | 305.5 | 87.5 | |
| | 2014.10-2015.06 | MT | F | L | Hatchback FWD 5FM (EP6DT);5GZ (EP6FDT) | | GDS10253 | Drive Shaft | | 25 | 24 | 58.5 | 79 | 626 | |
| | 2014.10-2015.06 | MT | F | L | Hatchback FWD 5FM (EP6DT);5GZ (EP6FDT) | | GCO10148 | Outer Joint | | 25 | 34 | 58.5 | 79 | 55.5 | I |
| | 2014.10-2015.07 | 6MT | F | R | Convertible FWD 5GZ (EP6FDT) | | GDS45221 | Drive Shaft | | 25 | 24 | 58.5 | 79 | 881 | |
| | 2014.10-2015.07 | 6MT | F | L | Convertible FWD 5GZ (EP6FDT) | | GCI10057 | Inner Joint | | 24 | 34 | 40 | 52.5 | 90 | |
| | 2014.10-2015.07 | 6MT | F | R | Convertible FWD 5GZ (EP6FDT) | | GCI10165 | Inner Joint | | 24 | 34 | 29.8 | 305.5 | 87.5 | |
| | 2014.10-2015.07 | MT | F | L | Convertible FWD 5GZ (EP6FDT) | | GDS10253 | Drive Shaft | | 25 | 24 | 58.5 | 79 | 626 | |
| | 2014.10-2015.07 | MT | F | L | Convertible FWD 5GZ (EP6FDT) | | GCO10148 | Outer Joint | | 25 | 34 | 58.5 | 79 | 55.5 | I |
| 1.6 (149 kw) | 2011.02-2015.07 | 6MT | F | L | Hatchback FWD 5FF (EP6DTS) | Technical Information no.:8NN48,Trans. code:MC | GDS10253 | Drive Shaft | | 25 | 24 | 58.5 | 79 | 626 | |
| | 2011.02-2015.07 | 6MT | F | R | Hatchback FWD 5FF (EP6DTS) | | GDS45221 | Drive Shaft | | 25 | 24 | 58.5 | 79 | 881 | |
| | 2011.02-2015.07 | 6MT | F | R | Hatchback FWD 5FF (EP6DTS) | | GCO10148 | Outer Joint | | 25 | 34 | 58.5 | 79 | 55.5 | I |
| | 2011.02-2015.07 | 6MT | F | L | Hatchback FWD 5FF (EP6DTS) | | GCI10057 | Inner Joint | | 24 | 34 | 40 | 52.5 | 90 | |
| | 2011.02-2015.07 | 6MT | F | R | Hatchback FWD 5FF (EP6DTS) | | GCI10165 | Inner Joint | | 24 | 34 | 29.8 | 305.5 | 87.5 | |
| | 2011.02-2015.07 | MT | F | R | Hatchback FWD 5FF (EP6DTS) | Trans. code:MA | GCO45011 | Outer Joint | | 21 | 22 | 48 | 86.5 | 54 | I |
| | 2011.02-2015.07 | | F | L/R | Hatchback FWD 5FF (EP6DTS) | | GCO45012 | Outer Joint | | 21 | 34 | 48.5 | 86 | 55.5 | I |
| | 2014.03-2015.07 | 6MT | F | R | Convertible FWD 5FF (EP6DTS) | | GDS45221 | Drive Shaft | | 25 | 24 | 58.5 | 79 | 881 | |
| | 2014.03-2015.07 | MT | F | L | Convertible FWD 5FF (EP6DTS) | | GDS10253 | Drive Shaft | | 25 | 24 | 58.5 | 79 | 626 | |
| | 2014.03-2015.07 | MT | F | L | Convertible FWD 5FF (EP6DTS) | | GCO10148 | Outer Joint | | 25 | 34 | 58.5 | 79 | 55.5 | I |
| | 2014.03-2015.07 | MT | F | L | Convertible FWD 5FF (EP6DTS) | | GCI10057 | Inner Joint | | 24 | 34 | 40 | 52.5 | 90 | |
| | 2014.03-2015.07 | MT | F | R | Convertible FWD 5FF (EP6DTS) | | GCI10165 | Inner Joint | | 24 | 34 | 29.8 | 305.5 | 87.5 | |
| 1.6 (152 kw) | 2011.02-2015.07 | 6MT | F | L | Hatchback FWD 5FD (EP6DTS) | Technical Information no.:8NN48,Trans. code:MC | GDS10253 | Drive Shaft | | 25 | 24 | 58.5 | 79 | 626 | |
| | 2011.02-2015.07 | 6MT | F | R | Hatchback FWD 5FD (EP6DTS) | | GDS45221 | Drive Shaft | | 25 | 24 | 58.5 | 79 | 881 | |
| | 2011.02-2015.07 | 6MT | F | R | Hatchback FWD 5FD (EP6DTS) | | GCO10148 | Outer Joint | | 25 | 34 | 58.5 | 79 | 55.5 | I |
| | 2011.02-2015.07 | 6MT | F | L | Hatchback FWD 5FD (EP6DTS) | | GCI10057 | Inner Joint | | 24 | 34 | 40 | 52.5 | 90 | |
| | 2011.02-2015.07 | 6MT | F | R | Hatchback FWD 5FD (EP6DTS) | | GCI10165 | Inner Joint | | 24 | 34 | 29.8 | 305.5 | 87.5 | |
| | 2011.02-2015.07 | MT | F | R | Hatchback FWD 5FD (EP6DTS) | Date to:2013.12;Trans. code:MA | GCO45011 | Outer Joint | | 21 | 22 | 48 | 86.5 | 54 | I |
| | 2011.02-2015.07 | | F | L/R | Hatchback FWD 5FD (EP6DTS) | | GCO45012 | Outer Joint | | 21 | 34 | 48.5 | 86 | 55.5 | I |
| | 2014.03-2015.07 | 6MT | F | L | Convertible FWD 5FD (EP6DTS) | Technical Information no.:8NN48,Trans. code:MC | GDS10253 | Drive Shaft | | 25 | 24 | 58.5 | 79 | 626 | |
| | 2014.03-2015.07 | 6MT | F | R | Convertible FWD 5FD (EP6DTS) | | GDS45221 | Drive Shaft | | 25 | 24 | 58.5 | 79 | 881 | |
| | 2014.03-2015.07 | 6MT | F | R | Convertible FWD 5FD (EP6DTS) | | GCO10148 | Outer Joint | | 25 | 34 | 58.5 | 79 | 55.5 | I |
| | 2014.03-2015.07 | 6MT | F | L | Convertible FWD 5FD (EP6DTS) | | GCI10057 | Inner Joint | | 24 | 34 | 40 | 52.5 | 90 | |
| | 2014.03-2015.07 | 6MT | F | R | Convertible FWD 5FD (EP6DTS) | | GCI10165 | Inner Joint | | 24 | 34 | 29.8 | 305.5 | 87.5 | |
| | 2014.03-2015.07 | MT | F | R | Convertible FWD 5FD (EP6DTS) | Trans. code:MA | GCO45011 | Outer Joint | | 21 | 22 | 48 | 86.5 | 54 | I |
| | 2014.03-2015.07 | | F | L/R | Convertible FWD 5FD (EP6DTS) | | GCO45012 | Outer Joint | | 21 | 34 | 48.5 | 86 | 55.5 | I |

| | YEAR | TRANSM. | F/R | L/R | BODY STYLE & DRIVE TYPE & ENGINE | REMARKS | G-AP Ref. | PRODUCT | ABS | Technical Specifications | | | | | |
|---|---|---|---|---|---|---|---|---|---|---|---|---|---|---|---|
| | | | | | | | | | | A | B | C | H | L | P |
| **CITROËN** | | | | | | | | | | | | | | | |
| **DS4** | | | | | | | | | | | | | | | |
| 1.2 (96 kw) | 2014.07-2015.07 | 6MT | F | L | Hatchback FWD HNY (EB2DTS) | | GDS10253 | Drive Shaft | | 25 | 24 | 58.5 | 79 | 626 | |
| 1.6 (68 kw) | 2011.05-2015.07 | 5MT | F | R | Hatchback FWD 9HP (DV6DTED) | | GDS10251 | Drive Shaft | | 25 | 24 | 58.5 | 79 | 935 | |
| | 2011.05-2015.07 | 5MT | F | L | Hatchback FWD 9HP (DV6DTED) | | GCI10070 | Inner Joint | | 24 | 34 | 40 | 62 | 88 | |
| | 2011.05-2015.07 | 5MT | F | R | Hatchback FWD 9HP (DV6DTED) | | GCI99159 | Inner Joint | | 24 | 34 | 29.8 | 350 | 87.5 | |
| | 2011.05-2015.07 | MT | F | L | Hatchback FWD 9HP (DV6DTED) | | GDS10253 | Drive Shaft | | 25 | 24 | 58.5 | 79 | 626 | |
| | 2011.05-2015.07 | MT | F | R | Hatchback FWD 9HP (DV6DTED) | | GDS10325 | Drive Shaft | | 25 | 24 | 58.5 | 79 | 940 | |
| | 2011.05-2015.07 | | F | L | Hatchback FWD 9HP (DV6DTED) | | GDS10250 | Drive Shaft | | 25 | 24 | 58.5 | 79 | 630 | |
| | 2011.05-2015.07 | | F | L/R | Hatchback FWD 9HP (DV6DTED) | | GCO10042 | Outer Joint | | 25 | 34 | 54.8 | 78.5 | 56 | I |
| 1.6 (82 kw) | 2011.04-2015.07 | 6AT | F | L | Hatchback FWD 9HR (DV6C) | Technical Information no.:8PN05 | GDS58072 | Drive Shaft | | 25 | 37 | 58.5 | 79 | 598 | |
| | 2011.04-2015.07 | 6AT | F | R | Hatchback FWD 9HR (DV6C) | Technical Information no.:8PN06 | GDS84640 | Drive Shaft | | 25 | 37 | 58.5 | 79 | 931 | |
| | 2011.04-2015.07 | 6AT | F | L | Hatchback FWD 9HR (DV6C) | | GCO82355 | Outer Joint | | 25 | 34 | 58.5 | 79 | 55.5 | I |
| | 2011.04-2015.07 | 6AT | F | L/R | Hatchback FWD 9HR (DV6C) | Technical Information no.:8PN06 | GCO82351 | Outer Joint | | 25 | 34 | 58.5 | 79 | 55.5 | I |
| | 2011.04-2015.07 | 6AT | F | L | Hatchback FWD 9HR (DV6C) | | GCI82119 | Inner Joint | | 37 | 34 | 41.5 | 58.5 | 94 | |
| | 2011.04-2015.07 | 6AT/6MT | F | L/R | Hatchback FWD 9HR (DV6C) | | GCO10042 | Outer Joint | | 25 | 34 | 54.8 | 78.5 | 56 | I |
| | 2011.04-2015.07 | 6MT | F | L | Hatchback FWD 9HR (DV6C) | | GDS10253 | Drive Shaft | | 25 | 24 | 58.5 | 79 | 626 | |
| | 2011.04-2015.07 | 6MT | F | R | Hatchback FWD 9HR (DV6C) | | GDS10325 | Drive Shaft | | 25 | 24 | 58.5 | 79 | 940 | |
| | 2011.04-2015.07 | 6MT | F | L/R | Hatchback FWD 9HR (DV6C) | | GCO10155 | Outer Joint | | 25 | 39 | 58.5 | 89 | 63.5 | I |
| | 2011.04-2015.07 | 6MT | F | L/R | Hatchback FWD 9HR (DV6C) | for OE No.:3272PZ/3273QK | GCO99366 | Outer Joint | | 25 | 34 | 58.5 | 79 | 55 | I |
| | 2011.04-2015.07 | MT | F | L | Hatchback FWD 9HR (DV6C) | Trans. code:ML6C | GDS10312 | Drive Shaft | | 25 | 37 | 58.5 | 89 | 625 | |
| 1.6 (84 kw) | 2012.08-2015.07 | 6AT | F | R | Hatchback FWD 9HD (DV6C) | | GDS84640 | Drive Shaft | | 25 | 37 | 58.5 | 79 | 931 | |
| | 2012.08-2015.07 | 6AT | F | L/R | Hatchback FWD 9HD (DV6C) | | GCO82351 | Outer Joint | | 25 | 34 | 58.5 | 79 | 55.5 | I |
| | 2012.08-2015.07 | 6AT | F | L | Hatchback FWD 9HD (DV6C) | | GCI82119 | Inner Joint | | 37 | 34 | 41.5 | 58.5 | 94 | |
| | 2012.08-2015.07 | 6MT | F | L | Hatchback FWD 9HD (DV6C) | | GDS10253 | Drive Shaft | | 25 | 24 | 58.5 | 79 | 626 | |
| | 2012.08-2015.07 | 6MT | F | R | Hatchback FWD 9HD (DV6C) | | GDS10325 | Drive Shaft | | 25 | 24 | 58.5 | 79 | 940 | |
| | 2012.08-2015.07 | 6MT | F | L/R | Hatchback FWD 9HD (DV6C) | for OE No.:3642357 | GCO10148 | Outer Joint | | 25 | 34 | 58.5 | 79 | 55.5 | I |
| | 2012.08-2015.07 | 6MT | F | L/R | Hatchback FWD 9HD (DV6C) | for OE No.:3272PZ/3273QK | GCO99366 | Outer Joint | | 25 | 34 | 58.5 | 79 | 55 | I |
| | 2012.08-2015.07 | 6MT | F | L | Hatchback FWD 9HD (DV6C) | | GCI10057 | Inner Joint | | 24 | 34 | 40 | 52.5 | 90 | |
| | 2012.08-2015.07 | 6MT | F | R | Hatchback FWD 9HD (DV6C) | | GCI10058 | Inner Joint | | 24 | 34 | 29.8 | 365 | 88 | |
| | 2012.08-2015.07 | AT | F | L | Hatchback FWD 9HD (DV6C) | Technical Information no.:8PN05 | GDS58072 | Drive Shaft | | 25 | 37 | 58.5 | 79 | 598 | |
| | 2012.08-2015.07 | MT | F | L | Hatchback FWD 9HD (DV6C) | Trans. code:ML6C | GDS10312 | Drive Shaft | | 25 | 37 | 58.5 | 89 | 625 | |
| | 2012.08-2015.07 | | F | L/R | Hatchback FWD 9HD (DV6C) | | GCO10042 | Outer Joint | | 25 | 34 | 54.8 | 78.5 | 56 | I |
| 1.6 (85 kw) | 2014.07-2015.07 | 6AT | F | L | Hatchback FWD BHX (DV6FC) | Transm. Type:AT6 3;Technical Information no.:8PN05 | GDS58072 | Drive Shaft | | 25 | 37 | 58.5 | 79 | 598 | |
| | 2014.07-2015.07 | 6AT | F | R | Hatchback FWD BHX (DV6FC) | Technical Information no.:8PN06 | GDS84640 | Drive Shaft | | 25 | 37 | 58.5 | 79 | 931 | |
| | 2014.07-2015.07 | 6AT | F | L | Hatchback FWD BHX (DV6FC) | Trans. code:AT6 3 | GCO99366 | Outer Joint | | 25 | 34 | 58.5 | 79 | 55 | I |
| | 2014.07-2015.07 | 6AT | F | L/R | Hatchback FWD BHX (DV6FC) | Technical Information no.:8PN06 | GCO82351 | Outer Joint | | 25 | 34 | 58.5 | 79 | 55.5 | I |
| | 2014.07-2015.07 | 6AT | F | L | Hatchback FWD BHX (DV6FC) | Trans. code:AT6 3 | GCI82119 | Inner Joint | | 37 | 34 | 41.5 | 58.5 | 94 | |
| | 2014.07-2015.07 | 6MT | F | L | Hatchback FWD BHX (DV6FC) | | GDS10253 | Drive Shaft | | 25 | 24 | 58.5 | 79 | 626 | |
| | 2014.07-2015.07 | 6MT | F | R | Hatchback FWD BHX (DV6FC) | | GDS10325 | Drive Shaft | | 25 | 24 | 58.5 | 79 | 940 | |
| | 2014.07-2015.07 | 6MT | F | L/R | Hatchback FWD BHX (DV6FC) | for OE No.:3272PZ/3273QK | GCO99366 | Outer Joint | | 25 | 34 | 58.5 | 79 | 55 | I |
| | 2014.07-2015.07 | | F | L/R | Hatchback FWD BHX (DV6FC) | | GCO10042 | Outer Joint | | 25 | 34 | 54.8 | 78.5 | 56 | I |
| 1.6 (88 kw) | 2011.04-2015.07 | 5MT | F | R | Hatchback FWD 5FS (EP6C) | | GDS10251 | Drive Shaft | | 25 | 24 | 58.5 | 79 | 935 | |
| | 2011.04-2015.07 | 5MT | F | R | Hatchback FWD 5FS (EP6C) | | GCI99159 | Inner Joint | | 24 | 34 | 29.8 | 350 | 87.5 | |
| | 2011.04-2015.07 | 6AT | F | | Hatchback FWD 5FS (EP6C) | | GCO99366 | Outer Joint | | 25 | 34 | 58.5 | 79 | 55 | I |
| | 2011.04-2015.07 | 6MT | F | | Hatchback FWD 5FS (EP6C) | | GCO10155 | Outer Joint | | 25 | 39 | 58.5 | 89 | 63.5 | I |
| | 2011.04-2015.07 | MT | F | L | Hatchback FWD 5FS (EP6C) | | GDS10250 | Drive Shaft | | 25 | 24 | 58.5 | 79 | 630 | |
| | 2011.04-2015.07 | | F | L/R | Hatchback FWD 5FS (EP6C) | | GCO10042 | Outer Joint | | 25 | 34 | 54.8 | 78.5 | 56 | I |
| | 2014.07-2015.07 | 6AT | F | L | Hatchback FWD BHZ (DV6FC) | Transm. Type:AT6 3;Technical Information no.:8PN05 | GDS58072 | Drive Shaft | | 25 | 37 | 58.5 | 79 | 598 | |
| | 2014.07-2015.07 | 6AT | F | R | Hatchback FWD BHZ (DV6FC) | Technical Information no.:8PN06 | GDS84640 | Drive Shaft | | 25 | 37 | 58.5 | 79 | 931 | |
| | 2014.07-2015.07 | 6AT | F | L | Hatchback FWD BHZ (DV6FC) | Trans. code:AT6 3 | GCO99366 | Outer Joint | | 25 | 34 | 58.5 | 79 | 55 | I |
| | 2014.07-2015.07 | 6AT | F | L/R | Hatchback FWD BHZ (DV6FC) | Technical Information no.:8PN06 | GCO82351 | Outer Joint | | 25 | 34 | 58.5 | 79 | 55.5 | I |
| | 2014.07-2015.07 | 6AT | F | L | Hatchback FWD BHZ (DV6FC) | Trans. code:AT6 3 | GCI82119 | Inner Joint | | 37 | 34 | 41.5 | 58.5 | 94 | |
| | 2014.07-2015.07 | 6MT | F | L | Hatchback FWD BHZ (DV6FC) | | GDS10253 | Drive Shaft | | 25 | 24 | 58.5 | 79 | 626 | |
| | 2014.07-2015.07 | 6MT | F | R | Hatchback FWD BHZ (DV6FC) | | GDS10325 | Drive Shaft | | 25 | 24 | 58.5 | 79 | 940 | |
| | 2014.07-2015.07 | 6MT | F | L/R | Hatchback FWD BHZ (DV6FC) | for OE No.:3272PZ/3273QK | GCO99366 | Outer Joint | | 25 | 34 | 58.5 | 79 | 55 | I |
| | 2014.07-2015.07 | MT | F | L | Hatchback FWD BHZ (DV6FC) | for OE No.:3642357 | GCO10148 | Outer Joint | | 25 | 34 | 58.5 | 79 | 55.5 | I |
| | 2014.07-2015.07 | MT | F | L | Hatchback FWD BHZ (DV6FC) | | GCI10057 | Inner Joint | | 24 | 34 | 40 | 52.5 | 90 | |
| | 2014.07-2015.07 | MT | F | R | Hatchback FWD BHZ (DV6FC) | | GCI10058 | Inner Joint | | 24 | 34 | 29.8 | 365 | 88 | |
| | 2014.07-2015.07 | | F | L/R | Hatchback FWD BHZ (DV6FC) | | GCO10042 | Outer Joint | | 25 | 34 | 54.8 | 78.5 | 56 | I |
| 1.6 (110 kw) | 2011.04-2015.07 | 6AT | F | L | Hatchback FWD 5FE (EP6CDTMD) | | GDS83216 | Drive Shaft | | 25 | 37 | 58.5 | 79 | 598 | |
| | 2011.04-2015.07 | 6AT | F | R | Hatchback FWD 5FE (EP6CDTMD) | | GDS83217 | Drive Shaft | | 25 | 37 | 58.5 | 79 | 862 | |
| | 2011.04-2015.07 | 6AT | F | L | Hatchback FWD 5FE (EP6CDTMD) | | GCO82355 | Outer Joint | | 25 | 34 | 58.5 | 79 | 55.5 | I |
| | 2011.04-2015.07 | 6AT | F | R | Hatchback FWD 5FE (EP6CDTMD) | | GCO82351 | Outer Joint | | 25 | 34 | 58.5 | 79 | 55.5 | I |
| | 2011.04-2015.07 | 6AT | F | R | Hatchback FWD 5FE (EP6CDTMD) | | GCI82182 | Inner Joint | | 37 | 34 | | 290 | 88 | |
| | 2011.04-2015.07 | MT | F | L | Hatchback FWD 5FE (EP6CDTMD) | Trans. code:MC | GDS10253 | Drive Shaft | | 25 | 24 | 58.5 | 79 | 626 | |
| | 2011.04-2015.07 | MT | F | L | Hatchback FWD 5FE (EP6CDTMD) | Trans. code:ML6C | GDS10427 | Drive Shaft | | 25 | 37 | 58.5 | 89 | 638 | |

| | YEAR | TRANSM. | F/R | L/R | BODY STYLE & DRIVE TYPE & ENGINE | REMARKS | G-AP Ref. | PRODUCT | ABS | Technical Specifications A | B | C | H | L | P |
|---|---|---|---|---|---|---|---|---|---|---|---|---|---|---|---|
| **CITROËN** | | | | | | | | | | | | | | | |
| **DS4** | | | | | | | | | | | | | | | |
| 1.6 (110 kw) | 2011.04-2015.07 | MT | F | R | Hatchback FWD 5FE (EP6CDTMD) | Trans. code:MC | GDS10325 | Drive Shaft | | 25 | 24 | 58.5 | 79 | 940 | |
| | 2011.04-2015.07 | MT | F | R | Hatchback FWD 5FE (EP6CDTMD) | Trans. code:ML6C | GDS10421 | Drive Shaft | | 25 | 37 | 58.5 | 89 | 972 | |
| 1.6 (115 kw) | 2011.04-2015.07 | 6MT | F | | Hatchback FWD 5FV (EP6CDT) | | GCO10155 | Outer Joint | | 25 | 39 | 58.5 | 89 | 63.5 | I |
| | 2011.04-2015.07 | MT | F | L | Hatchback FWD 5FV (EP6CDT) | | GDS10253 | Drive Shaft | | 25 | 24 | 58.5 | 79 | 626 | |
| | 2011.04-2015.07 | MT | F | R | Hatchback FWD 5FV (EP6CDT) | | GDS10325 | Drive Shaft | | 25 | 24 | 58.5 | 79 | 940 | |
| | 2011.04-2015.07 | | F | L | Hatchback FWD 5FV (EP6CDT) | | GCO10148 | Outer Joint | | 25 | 34 | 58.5 | 79 | 55.5 | I |
| | 2011.04-2015.07 | | F | L/R | Hatchback FWD 5FV (EP6CDT) | | GCO10042 | Outer Joint | | 25 | 34 | 54.8 | 78.5 | 56 | I |
| | 2011.04-2015.07 | | F | L | Hatchback FWD 5FV (EP6CDT) | | GCI10057 | Inner Joint | | 24 | 34 | 40 | 52.5 | 90 | |
| | 2011.04-2015.07 | | F | R | Hatchback FWD 5FV (EP6CDT) | | GCI10058 | Inner Joint | | 24 | 34 | 29.8 | 365 | 88 | |
| 1.6 (120 kw) | 2012.04-2015.07 | 6AT | F | L | Hatchback FWD 5FM (EP6CDTM) | Technical Information no.:8PN05 | GDS58072 | Drive Shaft | | 25 | 37 | 58.5 | 79 | 598 | |
| | 2012.04-2015.07 | 6AT | F | R | Hatchback FWD 5FM (EP6CDTM) | Technical Information no.:8PN06 | GDS84640 | Drive Shaft | | 25 | 37 | 58.5 | 79 | 931 | |
| | 2012.04-2015.07 | 6AT | F | L/R | Hatchback FWD 5FM (EP6CDTM) | Technical Information no.:8PN06 | GCO82351 | Outer Joint | | 25 | 34 | 58.5 | 79 | 55.5 | I |
| | 2012.04-2015.07 | 6AT | F | L/R | Hatchback FWD 5FM (EP6CDTM) | | GCO99366 | Outer Joint | | 25 | 34 | 58.5 | 79 | 55 | I |
| | 2012.04-2015.07 | 6AT | F | L | Hatchback FWD 5FM (EP6CDTM) | | GCI82119 | Inner Joint | | 37 | 34 | 41.5 | 58.5 | 94 | |
| | 2012.04-2015.07 | | F | L/R | Hatchback FWD 5FM (EP6CDTM) | | GCO10042 | Outer Joint | | 25 | 34 | 54.8 | 78.5 | 56 | I |
| 1.6 (121 kw) | 2012.01-2015.07 | 6AT | F | R | Hatchback FWD 5GZ (EP6FDT);5FM (EP6CDTM) | Technical Information no.:8PN06 | GDS84640 | Drive Shaft | | 25 | 37 | 58.5 | 79 | 931 | |
| | 2012.01-2015.07 | 6AT | F | L/R | Hatchback FWD 5GZ (EP6FDT);5FM (EP6CDTM) | Technical Information no.:8PN06 | GCO82351 | Outer Joint | | 25 | 34 | 58.5 | 79 | 55.5 | I |
| | 2012.01-2015.07 | 6AT | F | L/R | Hatchback FWD 5GZ (EP6FDT);5FM (EP6CDTM) | for OE No.:3272TN | GCO99366 | Outer Joint | | 25 | 34 | 58.5 | 79 | 55 | I |
| | 2012.01-2015.07 | 6AT | F | L | Hatchback FWD 5GZ (EP6FDT);5FM (EP6CDTM) | | GCI82119 | Inner Joint | | 37 | 34 | 41.5 | 58.5 | 94 | |
| | 2012.01-2015.07 | AT | F | L | Hatchback FWD 5GZ (EP6FDT);5FM (EP6CDTM) | Technical Information no.:8PN05 | GDS58072 | Drive Shaft | | 25 | 37 | 58.5 | 79 | 598 | |
| | 2012.01-2015.07 | | F | L/R | Hatchback FWD 5GZ (EP6FDT);5FM (EP6CDTM) | | GCO10042 | Outer Joint | | 25 | 34 | 54.8 | 78.5 | 56 | I |
| 1.6 (147 kw) | 2011.04-2015.07 | 6MT | F | | Hatchback FWD 5FU (EP6DTX);5FU (EP6CDTX) | | GCO10155 | Outer Joint | | 25 | 39 | 58.5 | 89 | 63.5 | I |
| 2.0 (100 kw) | 2011.09-2015.07 | 6MT | F | L | Hatchback FWD 4HV (DW10FD);RHD (DW10CTED4);RHD (DW10CB);AHS (DW10FD) | | GDS10427 | Drive Shaft | | 25 | 37 | 58.5 | 89 | 638 | |
| | 2011.09-2015.07 | 6MT | F | R | Hatchback FWD 4HV (DW10FD);RHD (DW10CTED4);RHD (DW10CB);AHS (DW10FD) | | GDS10421 | Drive Shaft | | 25 | 37 | 58.5 | 89 | 972 | |
| | 2011.09-2015.07 | 6MT | F | L/R | Hatchback FWD 4HV (DW10FD);RHD (DW10CTED4);RHD (DW10CB);AHS (DW10FD) | | GCO10155 | Outer Joint | | 25 | 39 | 58.5 | 89 | 63.5 | I |
| | 2011.09-2015.07 | 6MT | F | L/R | Hatchback FWD 4HV (DW10FD);RHD (DW10CTED4);RHD (DW10CB);AHS (DW10FD) | | GCO10158 | Outer Joint | | 25 | 26 | 58.5 | 89 | 61.5 | M |
| | 2011.09-2015.07 | 6MT | F | L | Hatchback FWD 4HV (DW10FD);RHD (DW10CTED4);RHD (DW10CB);AHS (DW10FD) | | GCI10095 | Inner Joint | | 37 | 26 | 40 | 68 | 100 | |
| 2.0 (110 kw) | 2014.07-2015.07 | 6MT | F | L | Hatchback FWD AHX (DW10FD);AHR (DW10FD) | | GDS10427 | Drive Shaft | | 25 | 37 | 58.5 | 89 | 638 | |
| | 2014.07-2015.07 | 6MT | F | R | Hatchback FWD AHX (DW10FD);AHR (DW10FD) | | GDS10421 | Drive Shaft | | 25 | 37 | 58.5 | 89 | 972 | |
| | 2014.07-2015.07 | 6MT | F | L/R | Hatchback FWD AHX (DW10FD);AHR (DW10FD) | | GCO10155 | Outer Joint | | 25 | 39 | 58.5 | 89 | 63.5 | I |
| | 2014.07-2015.07 | 6MT | F | L/R | Hatchback FWD AHX (DW10FD);AHR (DW10FD) | | GCO10158 | Outer Joint | | 25 | 26 | 58.5 | 89 | 61.5 | M |
| | 2014.07-2015.07 | 6MT | F | L | Hatchback FWD AHX (DW10FD);AHR (DW10FD) | | GCI10095 | Inner Joint | | 37 | 26 | 40 | 68 | 100 | |
| 2.0 (120 kw) | 2011.04-2015.07 | 6AT | F | L | Hatchback FWD RHH (DW10CTED4) | Technical Information no.:8PN05 | GDS58072 | Drive Shaft | | 25 | 37 | 58.5 | 79 | 598 | |
| | 2011.04-2015.07 | 6AT | F | R | Hatchback FWD RHH (DW10CTED4) | Technical Information no.:8PN06 | GDS84640 | Drive Shaft | | 25 | 37 | 58.5 | 79 | 931 | |
| | 2011.04-2015.07 | 6AT | F | L | Hatchback FWD RHH (DW10CTED4) | | GCO99366 | Outer Joint | | 25 | 34 | 58.5 | 79 | 55 | I |
| | 2011.04-2015.07 | 6AT | F | L/R | Hatchback FWD RHH (DW10CTED4) | Technical Information no.:8PN06 | GCO82351 | Outer Joint | | 25 | 34 | 58.5 | 79 | 55.5 | I |
| | 2011.04-2015.07 | 6AT | F | L | Hatchback FWD RHH (DW10CTED4) | | GCI82119 | Inner Joint | | 37 | 34 | 41.5 | 58.5 | 94 | |
| | 2011.04-2015.07 | 6MT | F | L | Hatchback FWD RHH (DW10CTED4) | hollow shaft | GDS10312 | Drive Shaft | | 25 | 37 | 58.5 | 89 | 625 | |
| | 2011.04-2015.07 | 6MT | F | L | Hatchback FWD RHH (DW10CTED4) | Technical Information no.:8NN75;solid shaft | GDS10427 | Drive Shaft | | 25 | 37 | 58.5 | 89 | 638 | |
| | 2011.04-2015.07 | 6MT | F | R | Hatchback FWD RHH (DW10CTED4) | hollow shaft | GDS10313 | Drive Shaft | | 25 | 37 | 58.5 | 89 | 950 | |
| | 2011.04-2015.07 | 6MT | F | R | Hatchback FWD RHH (DW10CTED4) | Technical Information no.:8NN74/8NN53;solid shaft | GDS10421 | Drive Shaft | | 25 | 37 | 58.5 | 89 | 972 | |
| | 2011.04-2015.07 | 6MT | F | L/R | Hatchback FWD RHH (DW10CTED4) | for OE No.:3273TT/3272TH | GCO10155 | Outer Joint | | 25 | 39 | 58.5 | 89 | 63.5 | I |
| | 2011.04-2015.07 | AT | F | L | Hatchback FWD RHH (DW10CTED4) | Trans. code:AM6 | GDS10375 | Drive Shaft | | 25 | 37 | 58.4 | 89 | 619 | |
| | 2011.04-2015.07 | AT/MT | F | L/R | Hatchback FWD RHH (DW10CTED4) | for OE No.:3272FT | GCO10085 | Outer Joint | | 25 | 39 | 59 | 89 | 63.5 | I |
| 2.0 (133 kw) | 2014.07-2015.07 | AT | F | L | Hatchback FWD AHW (DW10FC) | Transm. code:AT8 | GDS45202 | Drive Shaft | | 25 | 26 | 58.5 | 78.5 | 620 | |
| | 2014.07-2015.07 | AT | F | L | Hatchback FWD AHW (DW10FC) | Transm. code:AT6/AT6 3 | GDS83216 | Drive Shaft | | 25 | 37 | 58.5 | 79 | 598 | |
| | 2014.07-2015.07 | AT | F | R | Hatchback FWD AHW (DW10FC) | Transm. code:AT8 | GDS10383 | Drive Shaft | | 25 | 26 | 58 | 79 | 842 | |
| **DS5** | | | | | | | | | | | | | | | |
| 1.6 (82 kw) | 2011.11-2015.07 | 6AT/6MT | F | R | Hatchback FWD 9HR (DV6C) | Wheel Hub Diameter [mm]:83 | GDS84332 | Drive Shaft | | 28 | 24 | 58.6 | 93 | 978 | |
| | 2011.11-2015.07 | 6MT | F | L/R | Hatchback FWD 9HR (DV6C) | | GCO99366 | Outer Joint | | 25 | 34 | 58.5 | 79 | 55 | I |
| 1.6 (84 kw) | 2012.06-2015.07 | 6AT/6MT | F | R | Hatchback FWD 9HD (DV6C) | Wheel Hub Diameter [mm]:83 | GDS84332 | Drive Shaft | | 28 | 24 | 58.6 | 93 | 978 | |
| | 2012.06-2015.07 | MT | F | R | Hatchback FWD 9HD (DV6C) | Climate Zones:Not for cold climate zones;Wheel Hub Diam:82mm | GCO99366 | Outer Joint | | 25 | 34 | 58.5 | 79 | 55 | I |
| 1.6 (85 kw) | 2013.11-2015.07 | 6MT | F | R | Hatchback FWD BHX (DV6FC) | Wheel Hub Diameter [mm]:83 | GDS84332 | Drive Shaft | | 28 | 24 | 58.6 | 93 | 978 | |
| | 2013.11-2015.07 | MT | F | L/R | Hatchback FWD BHX (DV6FC) | Not for cold climate zones | GCO99366 | Outer Joint | | 25 | 34 | 58.5 | 79 | 55 | I |
| 1.6 (88 kw) | 2014.07-2015.07 | 6MT | F | R | Hatchback FWD BHZ (DV6FC) | Wheel Hub Diameter [mm]:83 | GDS84332 | Drive Shaft | | 28 | 24 | 58.6 | 93 | 978 | |
| | 2014.07-2015.07 | MT | F | R | Hatchback FWD BHZ (DV6FC) | Climate Zones:Not for cold climate zones;Wheel Hub Diam:82mm | GCO99366 | Outer Joint | | 25 | 34 | 58.5 | 79 | 55 | I |
| 1.6 (115 kw) | 2011.11-2015.07 | MT | F | | Hatchback FWD 5FV (EP6CDT) | | GCO99366 | Outer Joint | | 25 | 34 | 58.5 | 79 | 55 | I |
| 1.6 (147 kw) | 2011.11-2015.07 | 6MT | F | R | Hatchback FWD 5FU (EP6DTX);5FU (EP6CDTX) | Wheel Hub Diameter [mm]:83 | GDS84332 | Drive Shaft | | 28 | 24 | 58.6 | 93 | 978 | |
| | 2011.11-2015.07 | 6MT | F | L/R | Hatchback FWD 5FU (EP6DTX);5FU (EP6CDTX) | | GCO99366 | Outer Joint | | 25 | 34 | 58.5 | 79 | 55 | I |
| 2.0 (100 kw) | 2011.11-2015.07 | 6MT | F | L | Hatchback FWD RHD (DW10CB) | Wheel Hub Diam:83 mm | GDS45133 | Drive Shaft | | 28 | 37 | 58.6 | 94 | 653 | |
| | 2011.11-2015.07 | 6MT | F | R | Hatchback FWD RHD (DW10CB) | Wheel Hub Diam:83 mm | GDS10302 | Drive Shaft | | 28 | 37 | 58.6 | 94 | 969 | |
| | 2011.11-2015.07 | 6MT | F | L/R | Hatchback FWD RHD (DW10CB) | | GCO10051 | Outer Joint | | 28 | 39 | 58.6 | 94 | 63 | I |
| | 2011.11-2015.07 | 6MT | F | R | Hatchback FWD RHD (DW10CB) | | GCI10041 | Inner Joint | | 37 | 39 | 32 | 399 | 95.5 | |
| 2.0 (110 kw) | 2014.07-2015.07 | 6MT | F | L | Hatchback FWD AHX (DW10FD) | Wheel Hub Diam:83 mm | GDS45133 | Drive Shaft | | 28 | 37 | 58.6 | 94 | 653 | |
| | 2014.07-2015.07 | 6MT | F | R | Hatchback FWD AHX (DW10FD) | Wheel Hub Diam:83 mm | GDS10302 | Drive Shaft | | 28 | 37 | 58.6 | 94 | 969 | |

| | YEAR | TRANSM. | F/R | L/R | BODY STYLE & DRIVE TYPE & ENGINE | REMARKS | G-AP Ref. | PRODUCT | ABS | Technical Specifications A | B | C | H | L | P |
|---|---|---|---|---|---|---|---|---|---|---|---|---|---|---|---|
| **CITROËN** | | | | | | | | | | | | | | | |
| **DS5** | | | | | | | | | | | | | | | |
| 2.0 (110 kw) | 2014.07-2015.07 | MT | F | R | Hatchback FWD AHX (DW10FD) | Wheel Hub Diam:83mm | GCO10051 | Outer Joint | | 28 | 39 | 58.6 | 94 | 63 | I |
| | 2014.07-2015.07 | MT | F | R | Hatchback FWD AHX (DW10FD) | Wheel Hub Diam:83mm | GCO10098 | Outer Joint | | 28 | 39 | 58.6 | 93 | 63 | I |
| | 2014.07-2015.07 | MT | F | L/R | Hatchback FWD AHX (DW10FD) | Wheel Hub Diam:82mm | GCO10155 | Outer Joint | | 25 | 39 | 58.5 | 89 | 63.5 | I |
| | 2014.07-2015.07 | MT | F | R | Hatchback FWD AHX (DW10FD) | Wheel Hub Diam:83mm | GCI10041 | Inner Joint | | 37 | 39 | 32 | 399 | 95.5 | |
| 2.0 (120 kw) | 2011.11-2015.07 | 6MT | F | L | Hatchback FWD RHH (DW10CTED4) | Wheel Hub Diam:83 mm | GDS45133 | Drive Shaft | | 28 | 37 | 58.6 | 94 | 653 | |
| | 2011.11-2015.07 | 6MT | F | R | Hatchback FWD RHH (DW10CTED4) | Wheel Hub Diam:83 mm | GDS10302 | Drive Shaft | | 28 | 37 | 58.6 | 94 | 969 | |
| | 2011.11-2015.07 | MT | F | R | Hatchback FWD RHH (DW10CTED4) | Trans. code:ML6C,Wheel Hub Diam:83mm | GCO10051 | Outer Joint | | 28 | 39 | 58.6 | 94 | 63 | I |
| | 2011.11-2015.07 | MT | F | R | Hatchback FWD RHH (DW10CTED4) | Trans. code:ML6C,Wheel Hub Diam:83mm | GCO10098 | Outer Joint | | 28 | 39 | 58.6 | 93 | 63 | I |
| | 2011.11-2015.07 | MT | F | L/R | Hatchback FWD RHH (DW10CTED4) | Trans. code:ML6C,Wheel Hub Diam:82mm | GCO10155 | Outer Joint | | 25 | 39 | 58.5 | 89 | 63.5 | I |
| | 2011.11-2015.07 | MT | F | R | Hatchback FWD RHH (DW10CTED4) | Trans. code:ML6C,Wheel Hub Diam:83mm | GCI10041 | Inner Joint | | 37 | 39 | 32 | 399 | 95.5 | |
| 2.0 (133 kw) | 2013.08-2015.07 | 6AT | F | R | Hatchback FWD AHW (DW10FC) | | GDS56859 | Drive Shaft | | 28 | 37 | 58.6 | 93 | 961 | |
| | 2013.08-2015.07 | 6AT | F | R | Hatchback FWD AHW (DW10FC) | | GCI45033 | Inner Joint | | 37 | 39 | | 379 | 96 | |
| 2.0 (147 kw) | 2011.12-2015.07 | 6MT | F | L | Hatchback 4WD RHC (DW10CTED4) | Wheel Hub Diam:83 mm | GDS45133 | Drive Shaft | | 28 | 37 | 58.6 | 94 | 653 | |
| | 2011.12-2015.07 | 6MT | F | R | Hatchback 4WD RHC (DW10CTED4) | Wheel Hub Diam:83 mm | GDS10302 | Drive Shaft | | 28 | 37 | 58.6 | 94 | 969 | |
| | 2011.12-2015.07 | MT | F | R | Hatchback 4WD RHC (DW10CTED4) | Trans. code:ML6C,Wheel Hub Diam:83mm | GCO10051 | Outer Joint | | 28 | 39 | 58.6 | 94 | 63 | I |
| | 2011.12-2015.07 | MT | F | R | Hatchback 4WD RHC (DW10CTED4) | Trans. code:ML6C,Wheel Hub Diam:83mm | GCI10041 | Inner Joint | | 37 | 39 | 32 | 399 | 95.5 | |
| **ë-Berlingo** | | | | | | | | | | | | | | | |
| EV (28 kw) | 1998.01-2005.12 | ET | F | L | MPV Van FWD SA18 | | GDS57840 | Drive Shaft | | 25 | 22 | 56.7 | 79 | 926 | |
| | 1998.01-2005.12 | ET | F | R | MPV Van FWD SA18 | | GDS57841 | Drive Shaft | | 25 | 22 | 56.7 | 79 | 540 | |
| EV (100 kw) | 2021.07- | ET | F | L | Box Body/MPV FWD ZKX (ZK01) | | GDS57969 | Drive Shaft | | 28 | 37 | 58.5 | 92.5 | 675 | |
| | 2021.07- | ET | F | R | Box Body/MPV FWD ZKX (ZK01) | | GDS58244 | Drive Shaft | | 28 | 37 | 58.5 | 92.5 | 927 | |
| | 2021.07- | ET | F | L | Box Body/MPV FWD ZKX (ZK01) | | GCO83814 | Outer Joint | | 28 | 34 | 58.5 | 92.5 | 56 | I |
| | 2021.07- | ET | F | L | Box Body/MPV FWD ZKX (ZK01) | | GCI82301 | Inner Joint | | 37 | 34 | 40 | 65.5 | 89.5 | |
| | 2021.07- | ET | F | L | MPV FWD ZKX (ZK01) | | GDS57969 | Drive Shaft | | 28 | 37 | 58.5 | 92.5 | 675 | |
| | 2021.07- | ET | F | R | MPV FWD ZKX (ZK01) | | GDS58244 | Drive Shaft | | 28 | 37 | 58.5 | 92.5 | 927 | |
| | 2021.07- | ET | F | L | MPV FWD ZKX (ZK01) | | GCO83814 | Outer Joint | | 28 | 34 | 58.5 | 92.5 | 56 | I |
| | 2021.07- | ET | F | L | MPV FWD ZKX (ZK01) | | GCI82301 | Inner Joint | | 37 | 34 | 40 | 65.5 | 89.5 | |
| | 2023.11- | ET | F | L | Box Body/MPV FWD ZKU (ZK02) | | GDS57969 | Drive Shaft | | 28 | 37 | 58.5 | 92.5 | 675 | |
| | 2023.11- | ET | F | R | Box Body/MPV FWD ZKU (ZK02) | | GDS58244 | Drive Shaft | | 28 | 37 | 58.5 | 92.5 | 927 | |
| | 2023.11- | ET | F | L | Box Body/MPV FWD ZKU (ZK02) | | GCO83814 | Outer Joint | | 28 | 34 | 58.5 | 92.5 | 56 | I |
| | 2023.11- | ET | F | L | Box Body/MPV FWD ZKU (ZK02) | | GCI82301 | Inner Joint | | 37 | 34 | 40 | 65.5 | 89.5 | |
| | 2023.11- | ET | F | L | MPV FWD ZKU (ZK02) | | GDS57969 | Drive Shaft | | 28 | 37 | 58.5 | 92.5 | 675 | |
| | 2023.11- | ET | F | R | MPV FWD ZKU (ZK02) | | GDS58244 | Drive Shaft | | 28 | 37 | 58.5 | 92.5 | 927 | |
| | 2023.11- | ET | F | L | MPV FWD ZKU (ZK02) | | GCO83814 | Outer Joint | | 28 | 34 | 58.5 | 92.5 | 56 | I |
| | 2023.11- | ET | F | L | MPV FWD ZKU (ZK02) | | GCI82301 | Inner Joint | | 37 | 34 | 40 | 65.5 | 89.5 | |
| **ë-Berlingo First** | | | | | | | | | | | | | | | |
| EV (42 kw) | 2011.01-2011.12 | ET | F | L | MPV Van FWD MD200175 | | GDS56709 | Drive Shaft | 48T | 25 | 23 | 58.5 | 79 | 730 | |
| | 2011.01-2011.12 | ET | F | L | MPV Van FWD MD200175 | | GCO83404 | Outer Joint | 48T | 25 | 22 | 58.5 | 79 | 55 | I |
| **ë-Berlingo MultiSpace** | | | | | | | | | | | | | | | |
| EV (16 kw) | 2000.05-2002.10 | ET | F | L | MPV FWD SA18 | | GDS57840 | Drive Shaft | | 25 | 22 | 56.7 | 79 | 926 | |
| | 2000.05-2002.10 | ET | F | R | MPV FWD SA18 | | GDS57841 | Drive Shaft | | 25 | 22 | 56.7 | 79 | 540 | |
| EV (28 kw) | 1998.01-2005.12 | ET | F | L | MPV FWD SA18 | | GDS57840 | Drive Shaft | | 25 | 22 | 56.7 | 79 | 926 | |
| | 1998.01-2005.12 | ET | F | R | MPV FWD SA18 | | GDS57841 | Drive Shaft | | 25 | 22 | 56.7 | 79 | 540 | |
| **ë-C4** | | | | | | | | | | | | | | | |
| EV (100 kw) | 2020.10- | ET | F | L | Hatchback FWD ZKX (ZK01) | | GDS56582 | Drive Shaft | | 25 | 24 | 56 | 83.5 | 675 | |
| | 2020.10- | ET | F | R | Hatchback FWD ZKX (ZK01) | | GDS56581 | Drive Shaft | | 25 | 24 | 56 | 83.5 | 902 | |
| | 2020.10- | ET | F | L/R | Hatchback FWD ZKX (ZK01) | | GCO82749 | Outer Joint | | 25 | 23 | 56 | 83.5 | 50 | I |
| | 2020.10- | ET | F | L | Hatchback FWD ZKX (ZK01) | | GCI83389 | Inner Joint | | 24 | 23 | 40 | 61.5 | 110.5 | |
| | 2020.10- | ET | F | R | Hatchback FWD ZKX (ZK01) | | GCI83388 | Inner Joint | | 24 | 23 | 29.8 | 290.5 | 110.5 | |
| EV (115 kw) | 2023.06- | ET | F | L | Hatchback FWD ZKW (ZK02) | Trans. code:RG1 | GDS56582 | Drive Shaft | | 25 | 24 | 56 | 83.5 | 675 | |
| | 2023.06- | ET | F | R | Hatchback FWD ZKW (ZK02) | Trans. code:RG1 | GDS56581 | Drive Shaft | | 25 | 24 | 56 | 83.5 | 902 | |
| **ë-C4 X** | | | | | | | | | | | | | | | |
| EV (100 kw) | 2022.09- | ET | F | L | Hatchback FWD ZKX (ZK01) | Trans. code:RG1 | GDS56582 | Drive Shaft | | 25 | 24 | 56 | 83.5 | 675 | |
| | 2022.09- | ET | F | R | Hatchback FWD ZKX (ZK01) | Trans. code:RG1 | GDS56581 | Drive Shaft | | 25 | 24 | 56 | 83.5 | 902 | |
| | 2022.09- | ET | F | L/R | Hatchback FWD ZKX (ZK01) | Trans. code:RG1 | GCO82749 | Outer Joint | | 25 | 23 | 56 | 83.5 | 50 | I |
| | 2022.09- | ET | F | L | Hatchback FWD ZKX (ZK01) | Trans. code:RG1 | GCI83389 | Inner Joint | | 24 | 23 | 40 | 61.5 | 110.5 | |
| | 2022.09- | ET | F | R | Hatchback FWD ZKX (ZK01) | Trans. code:RG1 | GCI83388 | Inner Joint | | 24 | 23 | 29.8 | 290.5 | 110.5 | |
| EV (115 kw) | 2023.07- | ET | F | L | Hatchback FWD ZKW (ZK02) | Trans. code:RG1 | GDS56582 | Drive Shaft | | 25 | 24 | 56 | 83.5 | 675 | |
| | 2023.07- | ET | F | R | Hatchback FWD ZKW (ZK02) | Trans. code:RG1 | GDS56581 | Drive Shaft | | 25 | 24 | 56 | 83.5 | 902 | |
| **ë-Jumper** | | | | | | | | | | | | | | | |
| EV (100 kw) | 2022.03-2023.10 | 6MT | F | L | Platform/Chassis FWD A3H256B42G000 | | GDS56467 | Drive Shaft | | 35 | 41 | 71.5 | 127 | 824 | |
| | 2022.03-2023.10 | 6MT | F | R | Platform/Chassis FWD A3H256B42G000 | | GDS57538 | Drive Shaft | | 35 | 41 | 71.5 | 127 | 1127 | |
| | 2022.03-2023.10 | 6MT | F | L | Platform/Chassis FWD A3H256B42G000 | | GCI17028 | Inner Joint | | 41 | 29 | 43 | 69.5 | 109.5 | |

| | YEAR | TRANSM. | F/R | L/R | BODY STYLE & DRIVE TYPE & ENGINE | REMARKS | G-AP Ref. | PRODUCT | ABS | Technical Specifications A | B | C | H | L | P |
|---|---|---|---|---|---|---|---|---|---|---|---|---|---|---|---|
| **CITROËN** | | | | | | | | | | | | | | | |
| **ë-Jumpy** | | | | | | | | | | | | | | | |
| 0.0 (100 kw) | 2024.10- | ET | F | L | Van FWD ZKU (ZK02) | | GDS57725 | Drive Shaft | | 28 | 37 | 58.5 | 96 | 724 | |
| | 2024.10- | ET | F | R | Van FWD ZKU (ZK02) | | GDS82316 | Drive Shaft | | 28 | 37 | 58.6 | 93 | 974 | |
| | 2024.10- | ET | F | L/R | Van FWD ZKU (ZK02) | | GCO10098 | Outer Joint | | 28 | 39 | 58.6 | 93 | 63 | I |
| EV (100 kw) | 2020.09- | ET | F | L | Van FWD ZKX (ZK01) | | GDS57725 | Drive Shaft | | 28 | 37 | 58.5 | 96 | 724 | |
| | 2020.09- | ET | F | R | Van FWD ZKX (ZK01) | | GDS82316 | Drive Shaft | | 28 | 37 | 58.6 | 93 | 974 | |
| | 2020.09- | ET | F | L/R | Van FWD ZKX (ZK01) | | GCO10098 | Outer Joint | | 28 | 39 | 58.6 | 93 | 63 | I |
| | 2020.09- | ET | F | R | Van FWD ZKX (ZK01) | | GCI81759 | Inner Joint | | 37 | 34 | 31.9 | 302 | 88 | |
| | 2020.09-2023.10 | ET | F | L | Bus FWD ZKX (ZK01) | | GDS57725 | Drive Shaft | | 28 | 37 | 58.5 | 96 | 724 | |
| | 2020.09-2023.10 | ET | F | R | Bus FWD ZKX (ZK01) | | GDS82316 | Drive Shaft | | 28 | 37 | 58.6 | 93 | 974 | |
| | 2020.09-2023.10 | ET | F | L/R | Bus FWD ZKX (ZK01) | | GCO10098 | Outer Joint | | 28 | 39 | 58.6 | 93 | 63 | I |
| | 2023.01-2023.10 | ET | F | L | Platform/Chassis FWD ZKX (ZK01) | | GDS57725 | Drive Shaft | | 28 | 37 | 58.5 | 96 | 724 | |
| | 2023.01-2023.10 | ET | F | R | Platform/Chassis FWD ZKX (ZK01) | | GDS82316 | Drive Shaft | | 28 | 37 | 58.6 | 93 | 974 | |
| | 2023.01-2023.10 | ET | F | L/R | Platform/Chassis FWD ZKX (ZK01) | | GCO10098 | Outer Joint | | 28 | 39 | 58.6 | 93 | 63 | I |
| | 2023.11- | ET | F | L | Bus FWD ZKU (ZK02) | | GDS57725 | Drive Shaft | | 28 | 37 | 58.5 | 96 | 724 | |
| | 2023.11- | ET | F | R | Bus FWD ZKU (ZK02) | | GDS82316 | Drive Shaft | | 28 | 37 | 58.6 | 93 | 974 | |
| | 2023.11- | ET | F | L/R | Bus FWD ZKU (ZK02) | | GCO10098 | Outer Joint | | 28 | 39 | 58.6 | 93 | 63 | I |
| | 2023.11- | ET | F | L | Platform/Chassis FWD ZKU (ZK02) | | GDS57725 | Drive Shaft | | 28 | 37 | 58.5 | 96 | 724 | |
| | 2023.11- | ET | F | R | Platform/Chassis FWD ZKU (ZK02) | | GDS82316 | Drive Shaft | | 28 | 37 | 58.6 | 93 | 974 | |
| | 2023.11- | ET | F | L/R | Platform/Chassis FWD ZKU (ZK02) | | GCO10098 | Outer Joint | | 28 | 39 | 58.6 | 93 | 63 | I |
| | 2023.11- | ET | F | L | Van FWD ZKU (ZK02) | | GDS57725 | Drive Shaft | | 28 | 37 | 58.5 | 96 | 724 | |
| | 2023.11- | ET | F | R | Van FWD ZKU (ZK02) | | GDS82316 | Drive Shaft | | 28 | 37 | 58.6 | 93 | 974 | |
| | 2023.11- | ET | F | L/R | Van FWD ZKU (ZK02) | | GCO10098 | Outer Joint | | 28 | 39 | 58.6 | 93 | 63 | I |
| **ë-Spacetourer** | | | | | | | | | | | | | | | |
| EV (100 kw) | 2020.09-2023.10 | ET | F | L | Bus FWD ZKX (ZK01) | | GDS57725 | Drive Shaft | | 28 | 37 | 58.5 | 96 | 724 | |
| | 2020.09-2023.10 | ET | F | R | Bus FWD ZKX (ZK01) | | GDS82316 | Drive Shaft | | 28 | 37 | 58.6 | 93 | 974 | |
| | 2020.09-2023.10 | ET | F | L/R | Bus FWD ZKX (ZK01) | | GCO10098 | Outer Joint | | 28 | 39 | 58.6 | 93 | 63 | I |
| | 2020.09-2023.10 | ET | F | R | Bus FWD ZKX (ZK01) | | GCI81759 | Inner Joint | | 37 | 34 | 31.9 | 302 | 88 | |
| | 2023.11- | ET | F | L | Bus FWD ZKU (ZK02) | | GDS57725 | Drive Shaft | | 28 | 37 | 58.5 | 96 | 724 | |
| | 2023.11- | ET | F | R | Bus FWD ZKU (ZK02) | | GDS82316 | Drive Shaft | | 28 | 37 | 58.6 | 93 | 974 | |
| | 2023.11- | ET | F | L/R | Bus FWD ZKU (ZK02) | | GCO10098 | Outer Joint | | 28 | 39 | 58.6 | 93 | 63 | I |
| **Evasion** | | | | | | | | | | | | | | | |
| 1.8 (76 kw) | 1996.02-1996.12 | 5MT | F | L | MPV FWD XU7JP | | GDS10082 | Drive Shaft | 48T | 27 | 24 | 59 | 82 | 648 | |
| | 1996.02-1996.12 | 5MT | F | L | MPV FWD XU7JP | | GDS10112 | Drive Shaft | | 27 | 24 | 59 | 82 | 648 | |
| | 1996.02-1996.12 | 5MT | F | R | MPV FWD XU7JP | | GDS10081 | Drive Shaft | 48T | 27 | 24 | 59 | 82 | 935 | |
| | 1996.02-1996.12 | 5MT | F | R | MPV FWD XU7JP | | GDS10120 | Drive Shaft | | 27 | 24 | 59 | 82 | 928 | |
| | 1996.02-1996.12 | 5MT | F | L/R | MPV FWD XU7JP | | GCO10059 | Outer Joint | 48T | 27 | 34 | 59 | 82 | 56.5 | I |
| | 1996.02-1996.12 | 5MT | F | R | MPV FWD XU7JP | | GCI10004 | Inner Joint | | 24 | 34 | 29.8 | 348 | 99.5 | |
| 1.9 (66 kw) | 1994.11-2002.07 | 5MT | F | L | MPV Van FWD XUD9TE | | GDS10016 | Drive Shaft | 48T | 27 | 37 | 59 | 82 | 641 | |
| | 1994.11-2002.07 | 5MT | F | L | MPV Van FWD XUD9TE | | GDS10072 | Drive Shaft | | 27 | 37 | 59 | 82 | 641 | |
| | 1994.11-2002.07 | 5MT | F | R | MPV Van FWD XUD9TE | | GDS10014 | Drive Shaft | 48T | 27 | 37 | 59 | 82 | 947 | |
| | 1994.11-2002.07 | 5MT | F | R | MPV Van FWD XUD9TE | | GDS10155 | Drive Shaft | | 27 | 37 | 59 | 82 | 947 | |
| | 1994.11-2002.07 | 5MT | F | L/R | MPV Van FWD XUD9TE | Date from:1996.09 | GCO10015 | Outer Joint | 48T | 27 | 39 | 59 | 82 | 63 | I |
| | 1994.11-2002.07 | 5MT | F | R | MPV Van FWD XUD9TE | | GCI10034 | Inner Joint | | 37 | 39 | 31.9 | 369.5 | 99 | |
| 1.9 (68 kw) | 1995.10-1998.12 | 5MT | F | L | MPV FWD D8B (XUD9TF) | | GDS10016 | Drive Shaft | 48T | 27 | 37 | 59 | 82 | 641 | |
| | 1995.10-1998.12 | 5MT | F | L | MPV FWD D8B (XUD9TF) | | GDS10072 | Drive Shaft | | 27 | 37 | 59 | 82 | 641 | |
| | 1995.10-1998.12 | 5MT | F | R | MPV FWD D8B (XUD9TF) | | GDS10014 | Drive Shaft | 48T | 27 | 37 | 59 | 82 | 947 | |
| | 1995.10-1998.12 | 5MT | F | R | MPV FWD D8B (XUD9TF) | | GDS10155 | Drive Shaft | | 27 | 37 | 59 | 82 | 947 | |
| | 1995.10-1998.12 | 5MT | F | L/R | MPV FWD D8B (XUD9TF) | | GCO10014 | Outer Joint | | 27 | 39 | 59 | 82 | 63 | I |
| | 1995.10-1998.12 | 5MT | F | L/R | MPV FWD D8B (XUD9TF) | | GCO10015 | Outer Joint | 48T | 27 | 39 | 59 | 82 | 63 | I |
| | 1995.10-1998.12 | 5MT | F | L | MPV FWD D8B (XUD9TF) | | GCI10015 | Inner Joint | | 37 | 39 | 40 | 68.5 | 104 | |
| | 1995.10-1998.12 | 5MT | F | R | MPV FWD D8B (XUD9TF) | | GCI10034 | Inner Joint | | 37 | 39 | 31.9 | 369.5 | 99 | |
| | 1995.10-1998.12 | 5MT | F | L | MPV Van FWD XUD9TE | | GDS10016 | Drive Shaft | 48T | 27 | 37 | 59 | 82 | 641 | |
| | 1995.10-1998.12 | 5MT | F | L | MPV Van FWD XUD9TE | | GDS10072 | Drive Shaft | | 27 | 37 | 59 | 82 | 641 | |
| | 1995.10-1998.12 | 5MT | F | R | MPV Van FWD XUD9TE | | GDS10014 | Drive Shaft | 48T | 27 | 37 | 59 | 82 | 947 | |
| | 1995.10-1998.12 | 5MT | F | R | MPV Van FWD XUD9TE | | GDS10155 | Drive Shaft | | 27 | 37 | 59 | 82 | 947 | |
| | 1995.10-1998.12 | 5MT | F | L/R | MPV Van FWD XUD9TE | Date from:1996.09 | GCO10015 | Outer Joint | 48T | 27 | 39 | 59 | 82 | 63 | I |
| | 1995.10-1998.12 | 5MT | F | R | MPV Van FWD XUD9TE | | GCI10034 | Inner Joint | | 37 | 39 | 31.9 | 369.5 | 99 | |
| 2.0 (80 kw) | 1999.08-2002.07 | 5MT | F | L | MPV FWD RHZ (DW10ATED) | | GDS10264 | Drive Shaft | 48T | 27 | 37 | 59 | 82 | 630 | |
| | 1999.08-2002.07 | 5MT | F | L | MPV FWD RHZ (DW10ATED) | | GDS10430 | Drive Shaft | | 27 | 37 | 59 | 82 | 630 | |
| | 1999.08-2002.07 | 5MT | F | R | MPV FWD RHZ (DW10ATED) | | GDS10057 | Drive Shaft | | 27 | 37 | 59 | 82 | 960 | |
| | 1999.08-2002.07 | 5MT | F | R | MPV FWD RHZ (DW10ATED) | | GDS45120 | Drive Shaft | 48T | 27 | 37 | 59 | 82 | 960 | |
| | 1999.08-2002.07 | 5MT | F | L/R | MPV FWD RHZ (DW10ATED) | | GCO10014 | Outer Joint | | 27 | 39 | 59 | 82 | 63 | I |
| | 1999.08-2002.07 | 5MT | F | L/R | MPV FWD RHZ (DW10ATED) | | GCO10015 | Outer Joint | 48T | 27 | 39 | 59 | 82 | 63 | I |
| | 1999.08-2002.07 | 5MT | F | L | MPV FWD RHZ (DW10ATED) | | GCI10015 | Inner Joint | | 37 | 39 | 40 | 68.5 | 104 | |
| | 1999.08-2002.07 | 5MT | F | R | MPV FWD RHZ (DW10ATED) | | GCI10034 | Inner Joint | | 37 | 39 | 31.9 | 369.5 | 99 | |

| | YEAR | TRANSM. | F/R | L/R | BODY STYLE & DRIVE TYPE & ENGINE | REMARKS | G-AP Ref. | PRODUCT | ABS | Technical Specifications A | B | C | H | L | P |
|---|---|---|---|---|---|---|---|---|---|---|---|---|---|---|---|
| **CITROËN** **Evasion** | | | | | | | | | | | | | | | |
| 2.0 (80 kw) | 1999.09-2002.10 | 5MT | F | L | MPV FWD DW10ATED4 | | GDS10264 | Drive Shaft | 48T | 27 | 37 | 59 | 82 | 630 | |
| | 1999.09-2002.10 | 5MT | F | L | MPV FWD DW10ATED4 | | GDS10430 | Drive Shaft | | 27 | 37 | 59 | 82 | 630 | |
| | 1999.09-2002.10 | 5MT | F | R | MPV FWD DW10ATED4 | | GDS10057 | Drive Shaft | | 27 | 37 | 59 | 82 | 960 | |
| | 1999.09-2002.10 | 5MT | F | R | MPV FWD DW10ATED4 | | GDS45120 | Drive Shaft | 48T | 27 | 37 | 59 | 82 | 960 | |
| | 1999.09-2002.10 | 5MT | F | L/R | MPV FWD DW10ATED4 | | GCO10014 | Outer Joint | | 27 | 39 | 59 | 82 | 63 | I |
| | 1999.09-2002.10 | 5MT | F | L/R | MPV FWD DW10ATED4 | | GCO10015 | Outer Joint | 48T | 27 | 39 | 59 | 82 | 63 | I |
| | 1999.09-2002.10 | 5MT | F | L | MPV FWD DW10ATED4 | | GCI10015 | Inner Joint | | 37 | 39 | 40 | 68.5 | 104 | |
| | 1999.09-2002.10 | 5MT | F | R | MPV FWD DW10ATED4 | | GCI10034 | Inner Joint | | 37 | 39 | 31.9 | 369.5 | 99 | |
| | 1999.09-2002.10 | 5MT | F | L | MPV Van FWD DW10ATED | | GDS10264 | Drive Shaft | 48T | 27 | 37 | 59 | 82 | 630 | |
| | 1999.09-2002.10 | 5MT | F | R | MPV Van FWD DW10ATED | | GDS10057 | Drive Shaft | | 27 | 37 | 59 | 82 | 960 | |
| | 1999.09-2002.10 | 5MT | F | R | MPV Van FWD DW10ATED | | GDS45120 | Drive Shaft | 48T | 27 | 37 | 59 | 82 | 960 | |
| | 1999.09-2002.10 | 5MT | F | L/R | MPV Van FWD DW10ATED | | GCO10015 | Outer Joint | 48T | 27 | 39 | 59 | 82 | 63 | I |
| | 1999.09-2002.10 | 5MT | F | R | MPV Van FWD DW10ATED | | GCI10034 | Inner Joint | | 37 | 39 | 31.9 | 369.5 | 99 | |
| 2.0 (89 kw) | 1994.06-2002.07 | 5MT | F | L | MPV FWD RFU (XU10J2/C) | | GDS10072 | Drive Shaft | | 27 | 37 | 59 | 82 | 641 | |
| | 1994.06-2002.07 | 5MT | F | R | MPV FWD RFU (XU10J2/C) | Trans. code:ME/ML5T | GDS10014 | Drive Shaft | 48T | 27 | 37 | 59 | 82 | 947 | |
| | 1994.06-2002.07 | 5MT | F | R | MPV FWD RFU (XU10J2/C) | Trans. code:BE3/BE3R | GDS10081 | Drive Shaft | 48T | 27 | 24 | 59 | 82 | 935 | |
| | 1994.06-2002.07 | 5MT | F | R | MPV FWD RFU (XU10J2/C) | Trans. code:BE3/BE3R | GDS10120 | Drive Shaft | | 27 | 24 | 59 | 82 | 928 | |
| | 1994.06-2002.07 | 5MT | F | R | MPV FWD RFU (XU10J2/C) | Trans. code:ME/ML5T | GDS10155 | Drive Shaft | | 27 | 37 | 59 | 82 | 947 | |
| | 1994.06-2002.07 | 5MT | F | L/R | MPV FWD RFU (XU10J2/C) | Date from:1996.09,Trans. code:ME/ML5T | GCO10015 | Outer Joint | 48T | 27 | 39 | 59 | 82 | 63 | I |
| | 1994.06-2002.07 | 5MT | F | R | MPV FWD RFU (XU10J2/C) | Trans. code:ME/ML5T | GCI10034 | Inner Joint | | 37 | 39 | 31.9 | 369.5 | 99 | |
| | 1994.06-2002.07 | MT | F | L | MPV FWD RFU (XU10J2/C) | | GDS10082 | Drive Shaft | 48T | 27 | 24 | 59 | 82 | 648 | |
| | 1994.06-2002.07 | MT | F | L | MPV FWD RFU (XU10J2/C) | | GDS10112 | Drive Shaft | | 27 | 24 | 59 | 82 | 648 | |
| | 1994.06-2002.07 | MT | F | L/R | MPV FWD RFU (XU10J2/C) | | GCO10016 | Outer Joint | | 27 | 34 | 59 | 82 | 56.5 | I |
| | 1994.06-2002.07 | MT | F | L/R | MPV FWD RFU (XU10J2/C) | | GCO10018 | Outer Joint | 48T | 27 | 34 | 61 | 82 | 56.5 | I |
| | 1994.06-2002.07 | MT | F | L/R | MPV FWD RFU (XU10J2/C) | Trans. code:BE3R | GCO10059 | Outer Joint | 48T | 27 | 34 | 59 | 82 | 56.5 | I |
| | 1994.06-2002.07 | | F | L | MPV FWD RFU (XU10J2/C) | Trans. code:ME/ML5T | GDS10016 | Drive Shaft | 48T | 27 | 37 | 59 | 82 | 641 | |
| | 1994.06-2002.07 | | F | L | MPV FWD RFU (XU10J2/C) | Trans. code:ME/ML5T | GDS45027 | Drive Shaft | 48T | 21 | 22 | 48 | 86.5 | 610 | |
| | 1994.06-2002.07 | | F | R | MPV FWD RFU (XU10J2/C) | | GDS10111 | Drive Shaft | | 27 | 24 | 59 | 82 | 935 | |
| | 1994.06-2002.07 | | F | L | MPV FWD RFU (XU10J2/C) | Date From:1995.10,Date To:2000.08 | GCI10015 | Inner Joint | | 37 | 39 | 40 | 68.5 | 104 | |
| 2.0 (97 kw) | 1998.05-2000.04 | MT | F | L | MPV FWD XU10J4R | | GDS10016 | Drive Shaft | 48T | 27 | 37 | 59 | 82 | 641 | |
| | 1998.05-2000.04 | MT | F | L | MPV FWD XU10J4R | | GDS10072 | Drive Shaft | | 27 | 37 | 59 | 82 | 641 | |
| | 1998.05-2000.04 | MT | F | R | MPV FWD XU10J4R | | GDS10014 | Drive Shaft | 48T | 27 | 37 | 59 | 82 | 947 | |
| | 1998.05-2000.04 | MT | F | R | MPV FWD XU10J4R | | GDS10155 | Drive Shaft | | 27 | 37 | 59 | 82 | 947 | |
| | 1998.05-2000.04 | MT | F | L/R | MPV FWD XU10J4R | | GCO10014 | Outer Joint | | 27 | 39 | 59 | 82 | 63 | I |
| | 1998.05-2000.04 | MT | F | L/R | MPV FWD XU10J4R | | GCO10015 | Outer Joint | 48T | 27 | 39 | 59 | 82 | 63 | I |
| | 1998.05-2000.04 | MT | F | L/R | MPV FWD XU10J4R | | GCO10018 | Outer Joint | 48T | 27 | 34 | 61 | 82 | 56.5 | I |
| | 1998.05-2000.04 | MT | F | L | MPV FWD XU10J4R | | GCI10015 | Inner Joint | | 37 | 39 | 40 | 68.5 | 104 | |
| | 1998.05-2000.04 | MT | F | R | MPV FWD XU10J4R | | GCI10034 | Inner Joint | | 37 | 39 | 31.9 | 369.5 | 99 | |
| 2.0 (100 kw) | 2000.05-2002.07 | MT | F | L | MPV FWD RFN (EW10J4) | | GDS10082 | Drive Shaft | 48T | 27 | 24 | 59 | 82 | 648 | |
| | 2000.05-2002.07 | MT | F | L | MPV FWD RFN (EW10J4) | | GDS10112 | Drive Shaft | | 27 | 24 | 59 | 82 | 648 | |
| | 2000.05-2002.07 | MT | F | R | MPV FWD RFN (EW10J4) | | GDS10081 | Drive Shaft | 48T | 27 | 24 | 59 | 82 | 935 | |
| | 2000.05-2002.07 | MT | F | R | MPV FWD RFN (EW10J4) | | GDS10111 | Drive Shaft | | 27 | 24 | 59 | 82 | 935 | |
| | 2000.05-2002.07 | MT | F | R | MPV FWD RFN (EW10J4) | | GDS10120 | Drive Shaft | | 27 | 24 | 59 | 82 | 928 | |
| | 2000.05-2002.07 | MT | F | L/R | MPV FWD RFN (EW10J4) | | GCO10016 | Outer Joint | | 27 | 34 | 59 | 82 | 56.5 | I |
| | 2000.05-2002.07 | MT | F | L/R | MPV FWD RFN (EW10J4) | | GCO10018 | Outer Joint | 48T | 27 | 34 | 61 | 82 | 56.5 | I |
| | 2000.05-2002.07 | MT | F | L/R | MPV FWD RFN (EW10J4) | Date from:2000.09 | GCO10059 | Outer Joint | 48T | 27 | 34 | 59 | 82 | 56.5 | I |
| | 2000.05-2002.07 | MT | F | R | MPV FWD RFN (EW10J4) | | GCI10004 | Inner Joint | | 24 | 34 | 29.8 | 348 | 99.5 | |
| 2.0 (108 kw) | 1994.06-2000.08 | 5MT | F | L | MPV FWD XU10J2TE | | GDS10016 | Drive Shaft | 48T | 27 | 37 | 59 | 82 | 641 | |
| | 1994.06-2000.08 | 5MT | F | L | MPV FWD XU10J2TE | | GDS10072 | Drive Shaft | | 27 | 37 | 59 | 82 | 641 | |
| | 1994.06-2000.08 | 5MT | F | R | MPV FWD XU10J2TE | | GDS10014 | Drive Shaft | 48T | 27 | 37 | 59 | 82 | 947 | |
| | 1994.06-2000.08 | 5MT | F | R | MPV FWD XU10J2TE | | GDS10155 | Drive Shaft | | 27 | 37 | 59 | 82 | 947 | |
| | 1994.06-2000.08 | 5MT | F | L/R | MPV FWD XU10J2TE | | GCO10014 | Outer Joint | | 27 | 39 | 59 | 82 | 63 | I |
| | 1994.06-2000.08 | 5MT | F | L/R | MPV FWD XU10J2TE | | GCO10015 | Outer Joint | 48T | 27 | 39 | 59 | 82 | 63 | I |
| | 1994.06-2000.08 | 5MT | F | L | MPV FWD XU10J2TE | | GCI10015 | Inner Joint | | 37 | 39 | 40 | 68.5 | 104 | |
| | 1994.06-2000.08 | 5MT | F | R | MPV FWD XU10J2TE | | GCI10034 | Inner Joint | | 37 | 39 | 31.9 | 369.5 | 99 | |
| 2.1 (80 kw) | 1996.06-1999.12 | 5MT | F | L | MPV FWD XUD11BTE | | GDS10016 | Drive Shaft | 48T | 27 | 37 | 59 | 82 | 641 | |
| | 1996.06-1999.12 | 5MT | F | L | MPV FWD XUD11BTE | | GDS10072 | Drive Shaft | | 27 | 37 | 59 | 82 | 641 | |
| | 1996.06-1999.12 | 5MT | F | R | MPV FWD XUD11BTE | | GDS10014 | Drive Shaft | 48T | 27 | 37 | 59 | 82 | 947 | |
| | 1996.06-1999.12 | 5MT | F | R | MPV FWD XUD11BTE | | GDS10155 | Drive Shaft | | 27 | 37 | 59 | 82 | 947 | |
| | 1996.06-1999.12 | 5MT | F | L/R | MPV FWD XUD11BTE | | GCO10014 | Outer Joint | | 27 | 39 | 59 | 82 | 63 | I |
| | 1996.06-1999.12 | 5MT | F | L/R | MPV FWD XUD11BTE | | GCO10015 | Outer Joint | 48T | 27 | 39 | 59 | 82 | 63 | I |
| | 1996.06-1999.12 | 5MT | F | L | MPV FWD XUD11BTE | | GCI10015 | Inner Joint | | 37 | 39 | 40 | 68.5 | 104 | |
| | 1996.06-1999.12 | 5MT | F | R | MPV FWD XUD11BTE | | GCI10034 | Inner Joint | | 37 | 39 | 31.9 | 369.5 | 99 | |
| | 1996.11-2000.08 | 5MT | F | L | MPV Van FWD XUD11BTE | | GDS10016 | Drive Shaft | 48T | 27 | 37 | 59 | 82 | 641 | |
| | 1996.11-2000.08 | 5MT | F | L | MPV Van FWD XUD11BTE | | GDS10072 | Drive Shaft | | 27 | 37 | 59 | 82 | 641 | |

| | YEAR | TRANSM. | F/R | L/R | BODY STYLE & DRIVE TYPE & ENGINE | REMARKS | G-AP Ref. | PRODUCT | ABS | Technical Specifications A | B | C | H | L | P |
|---|---|---|---|---|---|---|---|---|---|---|---|---|---|---|---|
| **CITROËN** | | | | | | | | | | | | | | | |
| **Evasion** | | | | | | | | | | | | | | | |
| 2.1 (80 kw) | 1996.11-2000.08 | 5MT | F | R | MPV Van FWD XUD11BTE | | GDS10014 | Drive Shaft | 48T | 27 | 37 | 59 | 82 | 947 | |
| | 1996.11-2000.08 | 5MT | F | R | MPV Van FWD XUD11BTE | | GDS10155 | Drive Shaft | | 27 | 37 | 59 | 82 | 947 | |
| | 1996.11-2000.08 | 5MT | F | L/R | MPV Van FWD XUD11BTE | | GCO10015 | Outer Joint | 48T | 27 | 39 | 59 | 82 | 63 | I |
| | 1996.11-2000.08 | 5MT | F | R | MPV Van FWD XUD11BTE | | GCI10034 | Inner Joint | | 37 | 39 | 31.9 | 369.5 | 99 | |
| **Grand C4 SpaceTourer** | | | | | | | | | | | | | | | |
| 1.2 (96 kw) | 2018.04- | 6AT/8AT | F | L | MPV FWD HNY (EB2DTS);HNS (EB2ADTS) | | GDS83110 | Drive Shaft | | 28 | 37 | 58.5 | 92.5 | 662 | |
| | 2018.04- | 6AT/8AT | F | L | MPV FWD HNY (EB2DTS);HNS (EB2ADTS) | | GCI82119 | Inner Joint | | 37 | 34 | 41.5 | 58.5 | 94 | |
| | 2018.04- | 6AT/8AT/6MT | F | L/R | MPV FWD HNY (EB2DTS);HNS (EB2ADTS) | | GCO82273 | Outer Joint | | 28 | 34 | 58.5 | 92.5 | 56 | I |
| | 2018.04- | 6MT | F | L | MPV FWD HNY (EB2DTS);HNS (EB2ADTS) | | GDS83617 | Drive Shaft | | 28 | 24 | 58.5 | 92.5 | 688 | |
| | 2018.04- | 6MT | F | R | MPV FWD HNY (EB2DTS);HNS (EB2ADTS) | | GDS83618 | Drive Shaft | | 28 | 24 | 58.5 | 92.5 | 950 | |
| | 2018.04- | 6MT | F | L | MPV FWD HNY (EB2DTS);HNS (EB2ADTS) | | GCI82181 | Inner Joint | | 24 | 34 | 40 | 52.5 | 90 | |
| | 2018.04- | 6MT | F | R | MPV FWD HNY (EB2DTS);HNS (EB2ADTS) | | GCI82323 | Inner Joint | | 24 | 34 | 29.8 | 306 | 88 | |
| | 2018.04- | 8AT | F | R | MPV FWD HNY (EB2DTS);HNS (EB2ADTS) | | GDS83109 | Drive Shaft | | 28 | 37 | 58.5 | 92.5 | 933 | |
| | 2018.04- | 8AT | F | R | MPV FWD HNY (EB2DTS);HNS (EB2ADTS) | | GCI82118 | Inner Joint | | 37 | 34 | | 290 | 88 | |
| | 2019.05- | 6MT | F | L | Box Body/MPV FWD HNY (EB2DTS) | | GDS83617 | Drive Shaft | | 28 | 24 | 58.5 | 92.5 | 688 | |
| | 2019.05- | 6MT | F | R | Box Body/MPV FWD HNY (EB2DTS) | | GDS83618 | Drive Shaft | | 28 | 24 | 58.5 | 92.5 | 950 | |
| | 2019.05- | 6MT | F | L/R | Box Body/MPV FWD HNY (EB2DTS) | | GCO82273 | Outer Joint | | 28 | 34 | 58.5 | 92.5 | 56 | I |
| | 2019.05- | 6MT | F | L | Box Body/MPV FWD HNY (EB2DTS) | | GCI82181 | Inner Joint | | 24 | 34 | 40 | 52.5 | 90 | |
| | 2019.05- | 6MT | F | R | Box Body/MPV FWD HNY (EB2DTS) | | GCI82323 | Inner Joint | | 24 | 34 | 29.8 | 306 | 88 | |
| 1.5 (96 kw) | 2018.05- | 6MT | F | L | MPV FWD YHZ (DV5RC) | | GDS83608 | Drive Shaft | | 28 | 37 | 58.5 | 92.5 | 683 | |
| | 2018.05- | 6MT | F | R | MPV FWD YHZ (DV5RC) | | GDS83607 | Drive Shaft | | 28 | 37 | 58.5 | 92.5 | 944 | |
| | 2018.05- | 6MT | F | L | MPV FWD YHZ (DV5RC) | | GCO82273 | Outer Joint | | 28 | 34 | 58.5 | 92.5 | 56 | I |
| | 2018.05- | 6MT | F | R | MPV FWD YHZ (DV5RC) | | GCO81397 | Outer Joint | | 28 | 34 | 58.5 | 92.5 | 56 | I |
| | 2018.05- | 6MT | F | L | MPV FWD YHZ (DV5RC) | | GCI82301 | Inner Joint | | 37 | 34 | 40 | 65.5 | 89.5 | |
| | 2018.05- | 6MT | F | R | MPV FWD YHZ (DV5RC) | | GCI81759 | Inner Joint | | 37 | 34 | 31.9 | 302 | 88 | |
| | 2018.05- | 8AT | F | L | MPV FWD YHZ (DV5RC) | | GDS83110 | Drive Shaft | | 28 | 37 | 58.5 | 92.5 | 662 | |
| | 2018.05- | 8AT | F | R | MPV FWD YHZ (DV5RC) | | GDS83109 | Drive Shaft | | 28 | 37 | 58.5 | 92.5 | 933 | |
| | 2018.05- | 8AT | F | L/R | MPV FWD YHZ (DV5RC) | | GCO82273 | Outer Joint | | 28 | 34 | 58.5 | 92.5 | 56 | I |
| | 2018.05- | 8AT | F | L | MPV FWD YHZ (DV5RC) | | GCI82119 | Inner Joint | | 37 | 34 | 41.5 | 58.5 | 94 | |
| | 2018.05- | 8AT | F | R | MPV FWD YHZ (DV5RC) | | GCI82118 | Inner Joint | | 37 | 34 | | 290 | 88 | |
| | 2019.05- | 6MT | F | L | Box Body/MPV FWD YHZ (DV5RC) | | GDS83608 | Drive Shaft | | 28 | 37 | 58.5 | 92.5 | 683 | |
| | 2019.05- | 6MT | F | R | Box Body/MPV FWD YHZ (DV5RC) | | GDS83607 | Drive Shaft | | 28 | 37 | 58.5 | 92.5 | 944 | |
| | 2019.05- | 6MT | F | L | Box Body/MPV FWD YHZ (DV5RC) | | GCO82273 | Outer Joint | | 28 | 34 | 58.5 | 92.5 | 56 | I |
| | 2019.05- | 6MT | F | R | Box Body/MPV FWD YHZ (DV5RC) | | GCO81397 | Outer Joint | | 28 | 34 | 58.5 | 92.5 | 56 | I |
| | 2019.05- | 6MT | F | L | Box Body/MPV FWD YHZ (DV5RC) | | GCI82301 | Inner Joint | | 37 | 34 | 40 | 65.5 | 89.5 | |
| | 2019.05- | 6MT | F | R | Box Body/MPV FWD YHZ (DV5RC) | | GCI81759 | Inner Joint | | 37 | 34 | 31.9 | 302 | 88 | |
| | 2019.05- | 8AT | F | L | Box Body/MPV FWD YHZ (DV5RC) | | GDS83110 | Drive Shaft | | 28 | 37 | 58.5 | 92.5 | 662 | |
| | 2019.05- | 8AT | F | R | Box Body/MPV FWD YHZ (DV5RC) | | GDS83109 | Drive Shaft | | 28 | 37 | 58.5 | 92.5 | 933 | |
| | 2019.05- | 8AT | F | L/R | Box Body/MPV FWD YHZ (DV5RC) | | GCO82273 | Outer Joint | | 28 | 34 | 58.5 | 92.5 | 56 | I |
| | 2019.05- | 8AT | F | L | Box Body/MPV FWD YHZ (DV5RC) | | GCI82119 | Inner Joint | | 37 | 34 | 41.5 | 58.5 | 94 | |
| | 2019.05- | 8AT | F | R | Box Body/MPV FWD YHZ (DV5RC) | | GCI82118 | Inner Joint | | 37 | 34 | | 290 | 88 | |
| 1.6 (73 kw) | 2018.04-2019.04 | 5MT | F | L | MPV FWD BHY (DV6FD) | | GDS83067 | Drive Shaft | | 28 | 24 | 58.5 | 92.5 | 696 | |
| | 2018.04-2019.04 | 5MT | F | R | MPV FWD BHY (DV6FD) | | GDS57671 | Drive Shaft | | 28 | 24 | 58.5 | 92.5 | 936 | |
| | 2018.04-2019.04 | 5MT | F | L | MPV FWD BHY (DV6FD) | | GCO82273 | Outer Joint | | 28 | 34 | 58.5 | 92.5 | 56 | I |
| | 2018.04-2019.04 | 5MT | F | R | MPV FWD BHY (DV6FD) | | GCO81397 | Outer Joint | | 28 | 34 | 58.5 | 92.5 | 56 | I |
| | 2018.04-2019.04 | 5MT | F | L | MPV FWD BHY (DV6FD) | | GCI82131 | Inner Joint | | 24 | 34 | 40 | 62 | 89 | |
| 1.6 (85 kw) | 2018.04- | 6MT | F | L | MPV FWD 9HC (DV6C) | | GDS83608 | Drive Shaft | | 28 | 37 | 58.5 | 92.5 | 683 | |
| | 2018.04- | 6MT | F | R | MPV FWD 9HC (DV6C) | | GDS83969 | Drive Shaft | | 28 | 37 | 58.5 | 92.5 | 945 | |
| | 2018.04- | 6MT | F | L | MPV FWD 9HC (DV6C) | | GCO82273 | Outer Joint | | 28 | 34 | 58.5 | 92.5 | 56 | I |
| | 2018.04- | 6MT | F | R | MPV FWD 9HC (DV6C) | | GCO81397 | Outer Joint | | 28 | 34 | 58.5 | 92.5 | 56 | I |
| | 2018.04- | 6MT | F | L | MPV FWD 9HC (DV6C) | | GCI82301 | Inner Joint | | 37 | 34 | 40 | 65.5 | 89.5 | |
| | 2018.04- | 6MT | F | R | MPV FWD 9HC (DV6C) | | GCI81759 | Inner Joint | | 37 | 34 | 31.9 | 302 | 88 | |
| 1.6 (88 kw) | 2018.04-2018.08 | 6AT | F | L | MPV FWD BHZ (DV6FC) | | GDS83110 | Drive Shaft | | 28 | 37 | 58.5 | 92.5 | 662 | |
| | 2018.04-2018.08 | 6AT | F | R | MPV FWD BHZ (DV6FC) | | GDS83109 | Drive Shaft | | 28 | 37 | 58.5 | 92.5 | 933 | |
| | 2018.04-2018.08 | 6AT | F | L | MPV FWD BHZ (DV6FC) | | GCI82119 | Inner Joint | | 37 | 34 | 41.5 | 58.5 | 94 | |
| | 2018.04-2018.08 | 6AT/6MT | F | L | MPV FWD BHZ (DV6FC) | | GCO82273 | Outer Joint | | 28 | 34 | 58.5 | 92.5 | 56 | I |
| | 2018.04-2018.08 | 6MT | F | L | MPV FWD BHZ (DV6FC) | | GDS83608 | Drive Shaft | | 28 | 37 | 58.5 | 92.5 | 683 | |
| | 2018.04-2018.08 | 6MT | F | R | MPV FWD BHZ (DV6FC) | | GDS83969 | Drive Shaft | | 28 | 37 | 58.5 | 92.5 | 945 | |
| | 2018.04-2018.08 | 6MT | F | R | MPV FWD BHZ (DV6FC) | | GCO81397 | Outer Joint | | 28 | 34 | 58.5 | 92.5 | 56 | I |
| | 2018.04-2018.08 | 6MT | F | L | MPV FWD BHZ (DV6FC) | | GCI82301 | Inner Joint | | 37 | 34 | 40 | 65.5 | 89.5 | |
| | 2018.04-2018.08 | 6MT | F | R | MPV FWD BHZ (DV6FC) | | GCI81759 | Inner Joint | | 37 | 34 | 31.9 | 302 | 88 | |
| 1.6 (110 kw) | 2018.04- | 6AT | F | L | MPV FWD 5GX (EP6FDTMD) | | GDS83110 | Drive Shaft | | 28 | 37 | 58.5 | 92.5 | 662 | |
| | 2018.04- | 6AT | F | R | MPV FWD 5GX (EP6FDTMD) | | GDS83109 | Drive Shaft | | 28 | 37 | 58.5 | 92.5 | 933 | |
| | 2018.04- | 6AT | F | L | MPV FWD 5GX (EP6FDTMD) | | GCO82273 | Outer Joint | | 28 | 34 | 58.5 | 92.5 | 56 | I |
| | 2018.04- | 6AT | F | L | MPV FWD 5GX (EP6FDTMD) | | GCI82119 | Inner Joint | | 37 | 34 | 41.5 | 58.5 | 94 | |

| | YEAR | TRANSM. | F/R | L/R | BODY STYLE & DRIVE TYPE & ENGINE | REMARKS | G-AP Ref. | PRODUCT | ABS | Technical Specifications A | B | C | H | L | P |
|---|---|---|---|---|---|---|---|---|---|---|---|---|---|---|---|
| **CITROËN** | | | | | | | | | | | | | | | |
| **Grand C4 SpaceTourer** | | | | | | | | | | | | | | | |
| 1.6 (121 kw) | 2018.04- | 6AT | F | L | MPV FWD 5GZ (EP6FDT) | | GDS83110 | Drive Shaft | | 28 | 37 | 58.5 | 92.5 | 662 | |
| | 2018.04- | 6AT | F | R | MPV FWD 5GZ (EP6FDT) | | GDS83109 | Drive Shaft | | 28 | 37 | 58.5 | 92.5 | 933 | |
| | 2018.04- | 6AT | F | L | MPV FWD 5GZ (EP6FDT) | | GCO82273 | Outer Joint | | 28 | 34 | 58.5 | 92.5 | 56 | I |
| | 2018.04- | 6AT | F | L | MPV FWD 5GZ (EP6FDT) | | GCI82119 | Inner Joint | | 37 | 34 | 41.5 | 58.5 | 94 | |
| 1.6 (133 kw) | 2018.04- | 8AT | F | L | MPV FWD 5GF (EP6FADTXD) | | GDS83110 | Drive Shaft | | 28 | 37 | 58.5 | 92.5 | 662 | |
| | 2018.04- | 8AT | F | R | MPV FWD 5GF (EP6FADTXD) | | GDS83109 | Drive Shaft | | 28 | 37 | 58.5 | 92.5 | 933 | |
| | 2018.04- | 8AT | F | L | MPV FWD 5GF (EP6FADTXD) | | GCO82273 | Outer Joint | | 28 | 34 | 58.5 | 92.5 | 56 | I |
| | 2018.04- | 8AT | F | L | MPV FWD 5GF (EP6FADTXD) | | GCI82119 | Inner Joint | | 37 | 34 | 41.5 | 58.5 | 94 | |
| 2.0 (110 kw) | 2018.04- | 6AT | F | L | MPV FWD AHX (DW10FD);AHR (DW10FD) | For vehicles without off-road suspension | GDS56288 | Drive Shaft | | 28 | 37 | 58.5 | 93 | 619 | |
| | 2018.04- | 6AT | F | L | MPV FWD AHX (DW10FD);AHR (DW10FD) | For vehicles with off-road suspension | GDS83646 | Drive Shaft | | 28 | 37 | 58.5 | 92 | 622 | |
| | 2018.04- | 6AT | F | R | MPV FWD AHX (DW10FD);AHR (DW10FD) | For vehicles without off-road suspension | GDS56634 | Drive Shaft | | 28 | 37 | 58.5 | 93 | 948 | |
| | 2018.04- | 6AT | F | R | MPV FWD AHX (DW10FD);AHR (DW10FD) | For vehicles with off-road suspension | GDS83652 | Drive Shaft | | 28 | 37 | 58.5 | 92 | 951 | |
| | 2018.04- | 6AT | F | L/R | MPV FWD AHX (DW10FD);AHR (DW10FD) | For vehicles with off-road suspension | GCO82449 | Outer Joint | | 28 | 36 | 58.5 | 92 | 60 | I |
| | 2018.04- | 6AT | F | L/R | MPV FWD AHX (DW10FD);AHR (DW10FD) | For vehicles without off-road suspension | GCO82489 | Outer Joint | | 28 | 39 | 58.5 | 93 | 63.5 | I |
| | 2018.04- | 6AT | F | L | MPV FWD AHX (DW10FD);AHR (DW10FD) | For vehicles without off-road suspension | GCI10120 | Inner Joint | | 37 | 39 | 42.2 | 60 | 95.5 | |
| | 2018.04- | 6AT | F | L | MPV FWD AHX (DW10FD);AHR (DW10FD) | For vehicles with off-road suspension | GCI82321 | Inner Joint | | 37 | 36 | 42.5 | 59.5 | 108 | |
| | 2018.04- | 6AT | F | R | MPV FWD AHX (DW10FD);AHR (DW10FD) | For vehicles with off-road suspension | GCI82322 | Inner Joint | | 37 | 36 | | 379 | 108.5 | |
| | 2018.04- | 6AT | F | R | MPV FWD AHX (DW10FD);AHR (DW10FD) | For vehicles without off-road suspension | GCI83415 | Inner Joint | | 37 | 39 | | 379 | 96 | |
| 2.0 (120 kw) | 2018.04- | 8AT | F | L | MPV FWD EHY (DW10FCC) | | GDS56288 | Drive Shaft | | 28 | 37 | 58.5 | 93 | 619 | |
| | 2018.04- | 8AT | F | R | MPV FWD EHY (DW10FCC) | | GDS56634 | Drive Shaft | | 28 | 37 | 58.5 | 93 | 948 | |
| | 2018.04- | 8AT | F | L/R | MPV FWD EHY (DW10FCC) | | GCO82489 | Outer Joint | | 28 | 39 | 58.5 | 93 | 63.5 | I |
| | 2018.04- | 8AT | F | L | MPV FWD EHY (DW10FCC) | | GCI10120 | Inner Joint | | 37 | 39 | 42.2 | 60 | 95.5 | |
| | 2018.04- | 8AT | F | R | MPV FWD EHY (DW10FCC) | | GCI83415 | Inner Joint | | 37 | 39 | | 379 | 96 | |
| | 2019.05- | AT | F | L | Box Body/MPV FWD EHY (DW10FCC) | | GDS56288 | Drive Shaft | | 28 | 37 | 58.5 | 93 | 619 | |
| | 2019.05- | AT | F | R | Box Body/MPV FWD EHY (DW10FCC) | | GDS56634 | Drive Shaft | | 28 | 37 | 58.5 | 93 | 948 | |
| | 2019.05- | AT | F | L/R | Box Body/MPV FWD EHY (DW10FCC) | | GCO82489 | Outer Joint | | 28 | 39 | 58.5 | 93 | 63.5 | I |
| | 2019.05- | AT | F | L | Box Body/MPV FWD EHY (DW10FCC) | | GCI10120 | Inner Joint | | 37 | 39 | 42.2 | 60 | 95.5 | |
| | 2019.05- | AT | F | R | Box Body/MPV FWD EHY (DW10FCC) | | GCI83415 | Inner Joint | | 37 | 39 | | 379 | 96 | |
| **Jumper** | | | | | | | | | | | | | | | |
| 2.0 (62 kw) | 2002.04-2006.06 | 5MT | F | L | Bus FWD RHV (DW10UTD), RHV (DW10TD) | | GDS10037 | Drive Shaft | 54T | 28 | 37 | 63 | 112.5 | 771 | |
| | 2002.04-2006.06 | 5MT | F | L | Bus FWD RHV (DW10UTD), RHV (DW10TD) | | GDS10105 | Drive Shaft | | 28 | 37 | 63 | 112.5 | 771 | |
| | 2002.04-2006.06 | 5MT | F | R | Bus FWD RHV (DW10UTD), RHV (DW10TD) | | GDS10069 | Drive Shaft | | 28 | 37 | 63 | 112.5 | 1072 | |
| | 2002.04-2006.06 | 5MT | F | R | Bus FWD RHV (DW10UTD), RHV (DW10TD) | | GDS10104 | Drive Shaft | 54T | 28 | 37 | 63 | 112.5 | 1072 | |
| | 2002.04-2006.06 | 5MT | F | L/R | Bus FWD RHV (DW10UTD), RHV (DW10TD) | | GCO10012 | Outer Joint | | 28 | 39 | 63 | 112.5 | 63 | I |
| | 2002.04-2006.06 | 5MT | F | L/R | Bus FWD RHV (DW10UTD), RHV (DW10TD) | | GCO10013 | Outer Joint | 54T | 28 | 39 | 63 | 112.5 | 63 | I |
| | 2002.04-2006.06 | 5MT | F | L | Bus FWD RHV (DW10UTD), RHV (DW10TD) | | GCI10015 | Inner Joint | | 37 | 39 | 40 | 68.5 | 104 | |
| | 2002.04-2006.06 | 5MT | F | L | Bus FWD RHV (DW10UTD), RHV (DW10TD) | | GCI45013 | Inner Joint | | 37 | 39 | 40 | 68.5 | 100 | |
| | 2002.04-2006.06 | 5MT | F | R | Bus FWD RHV (DW10UTD), RHV (DW10TD) | | GCI10034 | Inner Joint | | 37 | 39 | 31.9 | 369.5 | 99 | |
| | 2002.04-2006.06 | 5MT | F | L | Platform/Chassis FWD RHV (DW10UTD) | | GDS10037 | Drive Shaft | 54T | 28 | 37 | 63 | 112.5 | 771 | |
| | 2002.04-2006.06 | 5MT | F | L | Platform/Chassis FWD RHV (DW10UTD) | | GDS10105 | Drive Shaft | | 28 | 37 | 63 | 112.5 | 771 | |
| | 2002.04-2006.06 | 5MT | F | R | Platform/Chassis FWD RHV (DW10UTD) | | GDS10069 | Drive Shaft | | 28 | 37 | 63 | 112.5 | 1072 | |
| | 2002.04-2006.06 | 5MT | F | R | Platform/Chassis FWD RHV (DW10UTD) | | GDS10104 | Drive Shaft | 54T | 28 | 37 | 63 | 112.5 | 1072 | |
| | 2002.04-2006.06 | 5MT | F | L/R | Platform/Chassis FWD RHV (DW10UTD) | | GCO10012 | Outer Joint | | 28 | 39 | 63 | 112.5 | 63 | I |
| | 2002.04-2006.06 | 5MT | F | L/R | Platform/Chassis FWD RHV (DW10UTD) | | GCO10013 | Outer Joint | 54T | 28 | 39 | 63 | 112.5 | 63 | I |
| | 2002.04-2006.06 | 5MT | F | L | Platform/Chassis FWD RHV (DW10UTD) | | GCI10015 | Inner Joint | | 37 | 39 | 40 | 68.5 | 104 | |
| | 2002.04-2006.06 | 5MT | F | L | Platform/Chassis FWD RHV (DW10UTD) | | GCI45013 | Inner Joint | | 37 | 39 | 40 | 68.5 | 100 | |
| | 2002.04-2006.06 | 5MT | F | R | Platform/Chassis FWD RHV (DW10UTD) | | GCI10034 | Inner Joint | | 37 | 39 | 31.9 | 369.5 | 99 | |
| | 2002.04-2006.06 | 5MT | F | L | Van FWD RHV (DW10UTD) | | GDS10037 | Drive Shaft | 54T | 28 | 37 | 63 | 112.5 | 771 | |
| | 2002.04-2006.06 | 5MT | F | L | Van FWD RHV (DW10UTD) | | GDS10105 | Drive Shaft | | 28 | 37 | 63 | 112.5 | 771 | |
| | 2002.04-2006.06 | 5MT | F | R | Van FWD RHV (DW10UTD) | | GDS10069 | Drive Shaft | | 28 | 37 | 63 | 112.5 | 1072 | |
| | 2002.04-2006.06 | 5MT | F | R | Van FWD RHV (DW10UTD) | | GDS10104 | Drive Shaft | 54T | 28 | 37 | 63 | 112.5 | 1072 | |
| | 2002.04-2006.06 | 5MT | F | L/R | Van FWD RHV (DW10UTD) | | GCO10012 | Outer Joint | | 28 | 39 | 63 | 112.5 | 63 | I |
| | 2002.04-2006.06 | 5MT | F | L/R | Van FWD RHV (DW10UTD) | | GCO10013 | Outer Joint | 54T | 28 | 39 | 63 | 112.5 | 63 | I |
| | 2002.04-2006.06 | 5MT | F | L | Van FWD RHV (DW10UTD) | | GCI10015 | Inner Joint | | 37 | 39 | 40 | 68.5 | 104 | |
| | 2002.04-2006.06 | 5MT | F | L | Van FWD RHV (DW10UTD) | | GCI45013 | Inner Joint | | 37 | 39 | 40 | 68.5 | 100 | |
| | 2002.04-2006.06 | 5MT | F | R | Van FWD RHV (DW10UTD) | | GCI10034 | Inner Joint | | 37 | 39 | 31.9 | 369.5 | 99 | |
| 2.0 (81 kw) | 2002.04-2006.06 | 5MT | F | L | Bus FWD XU10J2 | Gross Vehicle:3500 | GDS10033 | Drive Shaft | 54T | 35 | 41 | 70 | 117 | 762 | |
| | 2002.04-2006.06 | 5MT | F | L | Bus FWD XU10J2 | Gross Vehicle:3300 | GDS10035 | Drive Shaft | 54T | 28 | 41 | 63 | 112.5 | 757.5 | |
| | 2002.04-2006.06 | 5MT | F | R | Bus FWD XU10J2 | Gross Vehicle:3500 | GDS10032 | Drive Shaft | 54T | 35 | 41 | 70 | 117 | 1085 | |
| | 2002.04-2006.06 | 5MT | F | R | Bus FWD XU10J2 | Gross Vehicle:3300 | GDS10036 | Drive Shaft | 54T | 28 | 41 | 63 | 112.5 | 1079 | |
| | 2002.04-2006.06 | 5MT | F | L/R | Bus FWD XU10J2 | Gross Vehicle:3500 | GCO10011 | Outer Joint | 54T | 35 | 45 | 70 | 117 | 73 | I |
| | 2002.04-2006.06 | 5MT | F | L/R | Bus FWD XU10J2 | Gross Vehicle:3300 | GCO10013 | Outer Joint | 54T | 28 | 39 | 63 | 112.5 | 63 | I |
| | 2002.04-2006.06 | 5MT | F | L | Bus FWD XU10J2 | Gross Vehicle:3500 | GCI10010 | Inner Joint | | 41 | 45 | 43 | 70 | 115.5 | |
| | 2002.04-2006.06 | 5MT | F | L | Bus FWD XU10J2 | Gross Vehicle:3300 | GCI10013 | Inner Joint | | 41 | 39 | 43 | 70 | 104 | |
| | 2002.04-2006.06 | 5MT | F | R | Bus FWD XU10J2 | Gross Vehicle:3500 | GCI10009 | Inner Joint | | 41 | 45 | 34.9 | 393 | 115.6 | |

| | YEAR | TRANSM. | F/R | L/R | BODY STYLE & DRIVE TYPE & ENGINE | REMARKS | G-AP Ref. | PRODUCT | ABS | Technical Specifications A | B | C | H | L | P |
|---|---|---|---|---|---|---|---|---|---|---|---|---|---|---|---|
| **CITROËN** | | | | | | | | | | | | | | | |
| **Jumper** | | | | | | | | | | | | | | | |
| 2.0 (81 kw) | 2002.04-2006.06 | MT | F | L | Van FWD XU10J2 | Gross Vehicle:3500 | GDS10033 | Drive Shaft | 54T | 35 | 41 | 70 | 117 | 762 | |
| | 2002.04-2006.06 | MT | F | L | Van FWD XU10J2 | Gross Vehicle:2900/3300 | GDS10035 | Drive Shaft | 54T | 28 | 41 | 63 | 112.5 | 757.5 | |
| | 2002.04-2006.06 | MT | F | R | Van FWD XU10J2 | Gross Vehicle:3500 | GDS10032 | Drive Shaft | 54T | 35 | 41 | 70 | 117 | 1085 | |
| | 2002.04-2006.06 | MT | F | R | Van FWD XU10J2 | Gross Vehicle:2900/3300 | GDS10036 | Drive Shaft | 54T | 28 | 41 | 63 | 112.5 | 1079 | |
| | 2002.04-2006.06 | MT | F | L/R | Van FWD XU10J2 | Gross Vehicle:3500 | GCO10011 | Outer Joint | 54T | 35 | 45 | 70 | 117 | 73 | I |
| | 2002.04-2006.06 | MT | F | L/R | Van FWD XU10J2 | Gross Vehicle:2900/3300 | GCO10013 | Outer Joint | 54T | 28 | 39 | 63 | 112.5 | 63 | I |
| | 2002.04-2006.06 | MT | F | L | Van FWD XU10J2 | Gross Vehicle:3500 | GCI10010 | Inner Joint | | 41 | 45 | 43 | 70 | 115.5 | |
| | 2002.04-2006.06 | MT | F | L | Van FWD XU10J2 | Gross Vehicle:2900/3300 | GCI10013 | Inner Joint | | 41 | 39 | 43 | 70 | 104 | |
| | 2002.04-2006.06 | MT | F | R | Van FWD XU10J2 | Gross Vehicle:3500 | GCI10009 | Inner Joint | | 41 | 45 | 34.9 | 393 | 115.6 | |
| | 2003.02-2006.06 | 5MT | F | L | Bus FWD XU10J2 | Payload [kg]:1800 | GDS10033 | Drive Shaft | 54T | 35 | 41 | 70 | 117 | 762 | |
| | 2003.02-2006.06 | 5MT | F | L | Bus FWD XU10J2 | Payload [kg]:1000/1400 | GDS10035 | Drive Shaft | 54T | 28 | 41 | 63 | 112.5 | 757.5 | |
| | 2003.02-2006.06 | 5MT | F | R | Bus FWD XU10J2 | Payload [kg]:1000/1400 | GDS10036 | Drive Shaft | 54T | 28 | 41 | 63 | 112.5 | 1079 | |
| | 2003.02-2006.06 | 5MT | F | L/R | Bus FWD XU10J2 | Gross Vehicle:3300 | GCO10013 | Outer Joint | 54T | 28 | 39 | 63 | 112.5 | 63 | I |
| | 2003.02-2006.06 | 5MT | F | L | Bus FWD XU10J2 | Gross Vehicle:3300 | GCI10013 | Inner Joint | | 41 | 39 | 43 | 70 | 104 | |
| | 2003.02-2006.06 | 5MT | F | L | Van FWD XU10J2 | Gross Vehicle:3500 | GDS10033 | Drive Shaft | 54T | 35 | 41 | 70 | 117 | 762 | |
| | 2003.02-2006.06 | 5MT | F | L | Van FWD XU10J2 | Gross Vehicle:2900/3300 | GDS10035 | Drive Shaft | 54T | 28 | 41 | 63 | 112.5 | 757.5 | |
| | 2003.02-2006.06 | 5MT | F | R | Van FWD XU10J2 | Gross Vehicle:3500 | GDS10032 | Drive Shaft | 54T | 35 | 41 | 70 | 117 | 1085 | |
| | 2003.02-2006.06 | 5MT | F | R | Van FWD XU10J2 | Gross Vehicle:2900/3300 | GDS10036 | Drive Shaft | 54T | 28 | 41 | 63 | 112.5 | 1079 | |
| | 2003.02-2006.06 | 5MT | F | L/R | Van FWD XU10J2 | Gross Vehicle:3500 | GCO10011 | Outer Joint | 54T | 35 | 45 | 70 | 117 | 73 | I |
| | 2003.02-2006.06 | 5MT | F | L/R | Van FWD XU10J2 | Gross Vehicle:2900/3300 | GCO10013 | Outer Joint | 54T | 28 | 39 | 63 | 112.5 | 63 | I |
| | 2003.02-2006.06 | 5MT | F | L | Van FWD XU10J2 | Gross Vehicle:3500 | GCI10010 | Inner Joint | | 41 | 45 | 43 | 70 | 115.5 | |
| | 2003.02-2006.06 | 5MT | F | L | Van FWD XU10J2 | Gross Vehicle:2900/3300 | GCI10013 | Inner Joint | | 41 | 39 | 43 | 70 | 104 | |
| | 2003.02-2006.06 | 5MT | F | R | Van FWD XU10J2 | Gross Vehicle:3500 | GCI10009 | Inner Joint | | 41 | 45 | 34.9 | 393 | 115.6 | |
| | 2015.07-2019.09 | 6MT | F | L | Bus FWD AHM (DW10FUE) | | GDS83907 | Drive Shaft | | 35 | 41 | 71.5 | 127 | 822 | |
| | 2015.07-2019.09 | 6MT | F | R | Bus FWD AHM (DW10FUE) | | GDS83906 | Drive Shaft | | 35 | 41 | 71.5 | 127 | 1125 | |
| | 2015.07-2019.09 | 6MT | F | L/R | Bus FWD AHM (DW10FUE) | | GCO17045 | Outer Joint | | 35 | 29 | 71.5 | 127 | 71 | M |
| | 2015.07-2019.09 | 6MT | F | L | Bus FWD AHM (DW10FUE) | | GCI17028 | Inner Joint | | 41 | 29 | 43 | 69.5 | 109.5 | |
| | 2015.07-2019.09 | 6MT | F | R | Bus FWD AHM (DW10FUE) | | GCI82445 | Inner Joint | | 41 | 29 | 34.85 | 372 | 110 | |
| | 2015.11-2019.09 | 6MT | F | L | Platform/Chassis FWD AHM (DW10FUE) | | GDS83907 | Drive Shaft | | 35 | 41 | 71.5 | 127 | 822 | |
| | 2015.11-2019.09 | 6MT | F | R | Platform/Chassis FWD AHM (DW10FUE) | | GDS83906 | Drive Shaft | | 35 | 41 | 71.5 | 127 | 1125 | |
| | 2015.11-2019.09 | 6MT | F | L/R | Platform/Chassis FWD AHM (DW10FUE) | | GCO17045 | Outer Joint | | 35 | 29 | 71.5 | 127 | 71 | M |
| | 2015.11-2019.09 | 6MT | F | L | Platform/Chassis FWD AHM (DW10FUE) | | GCI17028 | Inner Joint | | 41 | 29 | 43 | 69.5 | 109.5 | |
| | 2015.11-2019.09 | 6MT | F | R | Platform/Chassis FWD AHM (DW10FUE) | | GCI82445 | Inner Joint | | 41 | 29 | 34.85 | 372 | 110 | |
| | 2015.11-2019.09 | 6MT | F | L | Van FWD AHM (DW10FUE) | | GDS83907 | Drive Shaft | | 35 | 41 | 71.5 | 127 | 822 | |
| | 2015.11-2019.09 | 6MT | F | R | Van FWD AHM (DW10FUE) | | GDS83906 | Drive Shaft | | 35 | 41 | 71.5 | 127 | 1125 | |
| | 2015.11-2019.09 | 6MT | F | L/R | Van FWD AHM (DW10FUE) | | GCO17045 | Outer Joint | | 35 | 29 | 71.5 | 127 | 71 | M |
| | 2015.11-2019.09 | 6MT | F | L | Van FWD AHM (DW10FUE) | | GCI17028 | Inner Joint | | 41 | 29 | 43 | 69.5 | 109.5 | |
| | 2015.11-2019.09 | 6MT | F | R | Van FWD AHM (DW10FUE) | | GCI82445 | Inner Joint | | 41 | 29 | 34.85 | 372 | 110 | |
| 2.0 (96 kw) | 2015.07-2019.09 | 6MT | F | L | Bus FWD AHN (DW10FUD) | | GDS83907 | Drive Shaft | | 35 | 41 | 71.5 | 127 | 822 | |
| | 2015.07-2019.09 | 6MT | F | R | Bus FWD AHN (DW10FUD) | | GDS83906 | Drive Shaft | | 35 | 41 | 71.5 | 127 | 1125 | |
| | 2015.07-2019.09 | 6MT | F | L/R | Bus FWD AHN (DW10FUD) | | GCO17045 | Outer Joint | | 35 | 29 | 71.5 | 127 | 71 | M |
| | 2015.07-2019.09 | 6MT | F | L | Bus FWD AHN (DW10FUD) | | GCI17028 | Inner Joint | | 41 | 29 | 43 | 69.5 | 109.5 | |
| | 2015.07-2019.09 | 6MT | F | R | Bus FWD AHN (DW10FUD) | | GCI82445 | Inner Joint | | 41 | 29 | 34.85 | 372 | 110 | |
| | 2015.11-2019.09 | 6MT | F | L | Platform/Chassis FWD AHN (DW10FUD) | | GDS83907 | Drive Shaft | | 35 | 41 | 71.5 | 127 | 822 | |
| | 2015.11-2019.09 | 6MT | F | R | Platform/Chassis FWD AHN (DW10FUD) | | GDS83906 | Drive Shaft | | 35 | 41 | 71.5 | 127 | 1125 | |
| | 2015.11-2019.09 | 6MT | F | L/R | Platform/Chassis FWD AHN (DW10FUD) | | GCO17045 | Outer Joint | | 35 | 29 | 71.5 | 127 | 71 | M |
| | 2015.11-2019.09 | 6MT | F | L | Platform/Chassis FWD AHN (DW10FUD) | | GCI17028 | Inner Joint | | 41 | 29 | 43 | 69.5 | 109.5 | |
| | 2015.11-2019.09 | 6MT | F | R | Platform/Chassis FWD AHN (DW10FUD) | | GCI82445 | Inner Joint | | 41 | 29 | 34.85 | 372 | 110 | |
| | 2015.11-2019.09 | 6MT | F | L | Van FWD AHN (DW10FUD) | | GDS83907 | Drive Shaft | | 35 | 41 | 71.5 | 127 | 822 | |
| | 2015.11-2019.09 | 6MT | F | R | Van FWD AHN (DW10FUD) | | GDS83906 | Drive Shaft | | 35 | 41 | 71.5 | 127 | 1125 | |
| | 2015.11-2019.09 | 6MT | F | L/R | Van FWD AHN (DW10FUD) | | GCO17045 | Outer Joint | | 35 | 29 | 71.5 | 127 | 71 | M |
| | 2015.11-2019.09 | 6MT | F | L | Van FWD AHN (DW10FUD) | | GCI17028 | Inner Joint | | 41 | 29 | 43 | 69.5 | 109.5 | |
| | 2015.11-2019.09 | 6MT | F | R | Van FWD AHN (DW10FUD) | | GCI82445 | Inner Joint | | 41 | 29 | 34.85 | 372 | 110 | |
| 2.0 (120 kw) | 2015.07-2019.09 | 6MT | F | L | Bus FWD AHP (DW10FUC) | | GDS56467 | Drive Shaft | | 35 | 41 | 71.5 | 127 | 824 | |
| | 2015.07-2019.09 | 6MT | F | R | Bus FWD AHP (DW10FUC) | | GDS57538 | Drive Shaft | | 35 | 41 | 71.5 | 127 | 1127 | |
| | 2015.07-2019.09 | 6MT | F | L/R | Bus FWD AHP (DW10FUC) | | GCO17060 | Outer Joint | | 35 | 29 | 71.5 | 127 | 71 | I |
| | 2015.07-2019.09 | 6MT | F | L | Bus FWD AHP (DW10FUC) | | GCI17028 | Inner Joint | | 41 | 29 | 43 | 69.5 | 109.5 | |
| | 2015.11-2019.09 | 6MT | F | L | Platform/Chassis FWD AHP (DW10FUC) | | GDS56467 | Drive Shaft | | 35 | 41 | 71.5 | 127 | 824 | |
| | 2015.11-2019.09 | 6MT | F | R | Platform/Chassis FWD AHP (DW10FUC) | | GDS57538 | Drive Shaft | | 35 | 41 | 71.5 | 127 | 1127 | |
| | 2015.11-2019.09 | 6MT | F | L/R | Platform/Chassis FWD AHP (DW10FUC) | | GCO17060 | Outer Joint | | 35 | 29 | 71.5 | 127 | 71 | I |
| | 2015.11-2019.09 | 6MT | F | L | Platform/Chassis FWD AHP (DW10FUC) | | GCI17028 | Inner Joint | | 41 | 29 | 43 | 69.5 | 109.5 | |
| | 2015.11-2019.09 | 6MT | F | L | Van FWD AHP (DW10FUC) | | GDS56467 | Drive Shaft | | 35 | 41 | 71.5 | 127 | 824 | |
| | 2015.11-2019.09 | 6MT | F | R | Van FWD AHP (DW10FUC) | | GDS57538 | Drive Shaft | | 35 | 41 | 71.5 | 127 | 1127 | |
| | 2015.11-2019.09 | 6MT | F | L/R | Van FWD AHP (DW10FUC) | | GCO17060 | Outer Joint | | 35 | 29 | 71.5 | 127 | 71 | I |
| | 2015.11-2019.09 | 6MT | F | L | Van FWD AHP (DW10FUC) | | GCI17028 | Inner Joint | | 41 | 29 | 43 | 69.5 | 109.5 | |

| | YEAR | TRANSM. | F/R | L/R | BODY STYLE & DRIVE TYPE & ENGINE | REMARKS | G-AP Ref. | PRODUCT | ABS | Technical Specifications A | B | C | H | L | P |
|---|---|---|---|---|---|---|---|---|---|---|---|---|---|---|---|
| **CITROËN** | | | | | | | | | | | | | | | |
| **Jumper** | | | | | | | | | | | | | | | |
| 2.2 (74 kw) | 2002.04-2006.06 | 5MT | F | L | Bus FWD 4HY (DW12UTED) | Gross Vehicle:3500 | GDS10033 | Drive Shaft | 54T | 35 | 41 | 70 | 117 | 762 | |
| | 2002.04-2006.06 | 5MT | F | L | Bus FWD 4HY (DW12UTED) | Gross Vehicle:2900/3300 | GDS10035 | Drive Shaft | 54T | 28 | 41 | 63 | 112.5 | 757.5 | |
| | 2002.04-2006.06 | 5MT | F | R | Bus FWD 4HY (DW12UTED) | Gross Vehicle:3500 | GDS10032 | Drive Shaft | 54T | 35 | 41 | 70 | 117 | 1085 | |
| | 2002.04-2006.06 | 5MT | F | R | Bus FWD 4HY (DW12UTED) | Gross Vehicle:2900/3300 | GDS10036 | Drive Shaft | 54T | 28 | 41 | 63 | 112.5 | 1079 | |
| | 2002.04-2006.06 | 5MT | F | L/R | Bus FWD 4HY (DW12UTED) | Gross Vehicle:3500 | GCO10011 | Outer Joint | 54T | 35 | 45 | 70 | 117 | 73 | I |
| | 2002.04-2006.06 | 5MT | F | L/R | Bus FWD 4HY (DW12UTED) | Gross Vehicle:2900/3300 | GCO10013 | Outer Joint | 54T | 28 | 39 | 63 | 112.5 | 63 | I |
| | 2002.04-2006.06 | 5MT | F | L | Bus FWD 4HY (DW12UTED) | Gross Vehicle:3500 | GCI10010 | Inner Joint | | 41 | 45 | 43 | 70 | 115.5 | |
| | 2002.04-2006.06 | 5MT | F | L | Bus FWD 4HY (DW12UTED) | Gross Vehicle:2900/3300 | GCI10013 | Inner Joint | | 41 | 39 | 43 | 70 | 104 | |
| | 2002.04-2006.06 | 5MT | F | R | Bus FWD 4HY (DW12UTED) | Gross Vehicle:3500 | GCI10009 | Inner Joint | | 41 | 45 | 34.9 | 393 | 115.6 | |
| | 2002.04-2006.06 | MT | F | L | Platform/Chassis FWD 4HY (DW12UTED) | for vehicles with tolerated total weight above [kg]:1800 | GDS10033 | Drive Shaft | 54T | 35 | 41 | 70 | 117 | 762 | |
| | 2002.04-2006.06 | MT | F | L | Platform/Chassis FWD 4HY (DW12UTED) | for vehicles with tolerated total weight to [kg]:1800 | GDS10035 | Drive Shaft | 54T | 28 | 41 | 63 | 112.5 | 757.5 | |
| | 2002.04-2006.06 | MT | F | R | Platform/Chassis FWD 4HY (DW12UTED) | for vehicles with tolerated total weight above [kg]:1800 | GDS10032 | Drive Shaft | 54T | 35 | 41 | 70 | 117 | 1085 | |
| | 2002.04-2006.06 | MT | F | R | Platform/Chassis FWD 4HY (DW12UTED) | for vehicles with tolerated total weight to [kg]:1800 | GDS10036 | Drive Shaft | 54T | 28 | 41 | 63 | 112.5 | 1079 | |
| | 2002.04-2006.06 | MT | F | L/R | Platform/Chassis FWD 4HY (DW12UTED) | for vehicles with tolerated total weight above [kg]:1800 | GCO10011 | Outer Joint | 54T | 35 | 45 | 70 | 117 | 73 | I |
| | 2002.04-2006.06 | MT | F | L/R | Platform/Chassis FWD 4HY (DW12UTED) | for vehicles with tolerated total weight to [kg]:1800 | GCO10013 | Outer Joint | 54T | 28 | 39 | 63 | 112.5 | 63 | I |
| | 2002.04-2006.06 | MT | F | L/R | Platform/Chassis FWD 4HY (DW12UTED) | for vehicles with tolerated total weight above [kg]:1800 | GCO10050 | Outer Joint | | 35 | 45 | 70 | 117 | 73 | I |
| | 2002.04-2006.06 | MT | F | L | Platform/Chassis FWD 4HY (DW12UTED) | for vehicles with tolerated total weight above [kg]:1800 | GCI10010 | Inner Joint | | 41 | 45 | 43 | 70 | 115.5 | |
| | 2002.04-2006.06 | MT | F | L | Platform/Chassis FWD 4HY (DW12UTED) | for vehicles with tolerated total weight to [kg]:1800 | GCI10013 | Inner Joint | | 41 | 39 | 43 | 70 | 104 | |
| | 2002.04-2006.06 | MT | F | R | Platform/Chassis FWD 4HY (DW12UTED) | for vehicles with tolerated total weight above [kg]:1800 | GCI10009 | Inner Joint | | 41 | 45 | 34.9 | 393 | 115.6 | |
| | 2002.04-2006.06 | 5MT | F | L | Van FWD 4HY (DW12UTED) | Gross Vehicle:3500 | GDS10033 | Drive Shaft | 54T | 35 | 41 | 70 | 117 | 762 | |
| | 2002.04-2006.06 | 5MT | F | L | Van FWD 4HY (DW12UTED) | Gross Vehicle:2900/3300 | GDS10035 | Drive Shaft | 54T | 28 | 41 | 63 | 112.5 | 757.5 | |
| | 2002.04-2006.06 | 5MT | F | L | Van FWD 4HY (DW12UTED) | Gross Vehicle:2900/3300 | GDS10102 | Drive Shaft | | 28 | 41 | 63 | 112.5 | 757.5 | |
| | 2002.04-2006.06 | 5MT | F | R | Van FWD 4HY (DW12UTED) | Gross Vehicle:3500 | GDS10032 | Drive Shaft | 54T | 35 | 41 | 70 | 117 | 1085 | |
| | 2002.04-2006.06 | 5MT | F | R | Van FWD 4HY (DW12UTED) | Gross Vehicle:2900/3300 | GDS10036 | Drive Shaft | 54T | 28 | 41 | 63 | 112.5 | 1079 | |
| | 2002.04-2006.06 | 5MT | F | R | Van FWD 4HY (DW12UTED) | Gross Vehicle:2900/3300 | GDS10103 | Drive Shaft | | 28 | 41 | 63 | 112.5 | 1079 | |
| | 2002.04-2006.06 | 5MT | F | L/R | Van FWD 4HY (DW12UTED) | Gross Vehicle:3500 | GCO10011 | Outer Joint | 54T | 35 | 45 | 70 | 117 | 73 | I |
| | 2002.04-2006.06 | 5MT | F | L/R | Van FWD 4HY (DW12UTED) | Gross Vehicle:2900/3300 | GCO10013 | Outer Joint | 54T | 28 | 39 | 63 | 112.5 | 63 | I |
| | 2002.04-2006.06 | 5MT | F | L | Van FWD 4HY (DW12UTED) | Gross Vehicle:3500 | GCI10010 | Inner Joint | | 41 | 45 | 43 | 70 | 115.5 | |
| | 2002.04-2006.06 | 5MT | F | L | Van FWD 4HY (DW12UTED) | Gross Vehicle:2900/3300 | GCI10013 | Inner Joint | | 41 | 39 | 43 | 70 | 104 | |
| | 2002.04-2006.06 | 5MT | F | R | Van FWD 4HY (DW12UTED) | Gross Vehicle:3500 | GCI10009 | Inner Joint | | 41 | 45 | 34.9 | 393 | 115.6 | |
| | 2006.04- | 5MT | F | L | Bus FWD 4HV (P22DTE) | | GDS45176 | Drive Shaft | | 35 | 41 | 71.5 | 127 | 808 | |
| | 2006.04- | 5MT | F | R | Bus FWD 4HV (P22DTE) | | GDS17050 | Drive Shaft | | 35 | 41 | 71.5 | 127 | 1140 | |
| | 2006.04- | 5MT/6MT | F | L/R | Bus FWD 4HV (P22DTE) | Date from:2006.07,Trans. code:MLGU | GCO17054 | Outer Joint | | 35 | 29 | 71.5 | 127 | 71 | M |
| | 2006.04- | 5MT/6MT | F | L | Bus FWD 4HV (P22DTE) | Date from:2006.07,Trans. code:MLGU | GCI17028 | Inner Joint | | 41 | 29 | 43 | 69.5 | 109.5 | |
| | 2006.04- | 5MT/6MT | F | L | Bus FWD 4HV (P22DTE) | Date from:2006.07,Trans. code:MLGU | GCI17042 | Inner Joint | | 41 | 27 | 43 | 70 | 102 | |
| | 2006.04- | 5MT/6MT | F | R | Bus FWD 4HV (P22DTE) | Date From:2006.07,Trans. code:MLGU | GCI10038 | Inner Joint | | 41 | 27 | 34.85 | 403 | 102 | |
| | 2006.04- | 5MT/6MT | F | R | Bus FWD 4HV (P22DTE) | Date From:2006.07,Trans. code:MLGU | GCI17020 | Inner Joint | | 41 | 29 | 34.85 | 403 | 109 | |
| | 2006.04- | MT | F | L | Bus FWD 4HV (P22DTE) | | GDS17053 | Drive Shaft | | 35 | 41 | 71.5 | 127 | 806 | |
| | 2006.04- | MT | F | L/R | Bus FWD 4HV (P22DTE) | | GCO17055 | Outer Joint | | 35 | 27 | 71.5 | 127 | 66.5 | I |
| | 2006.04- | 5MT | F | L | Platform/Chassis FWD 4HV (P22DTE) | | GDS45176 | Drive Shaft | | 35 | 41 | 71.5 | 127 | 808 | |
| | 2006.04- | 5MT | F | R | Platform/Chassis FWD 4HV (P22DTE) | | GDS17050 | Drive Shaft | | 35 | 41 | 71.5 | 127 | 1140 | |
| | 2006.04- | 5MT/6MT | F | L/R | Platform/Chassis FWD 4HV (P22DTE) | Trans. code:MLGU | GCO17054 | Outer Joint | | 35 | 29 | 71.5 | 127 | 71 | M |
| | 2006.04- | 5MT/6MT | F | L/R | Platform/Chassis FWD 4HV (P22DTE) | Trans. code:MLGU | GCO17055 | Outer Joint | | 35 | 27 | 71.5 | 127 | 66.5 | I |
| | 2006.04- | 5MT/6MT | F | L | Platform/Chassis FWD 4HV (P22DTE) | Trans. code:MLGU | GCI17028 | Inner Joint | | 41 | 29 | 43 | 69.5 | 109.5 | |
| | 2006.04- | 5MT/6MT | F | L | Platform/Chassis FWD 4HV (P22DTE) | Trans. code:MLGU | GCI17042 | Inner Joint | | 41 | 27 | 43 | 70 | 102 | |
| | 2006.04- | 5MT/6MT | F | R | Platform/Chassis FWD 4HV (P22DTE) | Trans. code:MLGU | GCI10038 | Inner Joint | | 41 | 27 | 34.85 | 403 | 102 | |
| | 2006.04- | 5MT/6MT | F | R | Platform/Chassis FWD 4HV (P22DTE) | Trans. code:MLGU | GCI17020 | Inner Joint | | 41 | 29 | 34.85 | 403 | 109 | |
| | 2006.04- | MT | F | L | Platform/Chassis FWD 4HV (P22DTE) | | GDS17053 | Drive Shaft | | 35 | 41 | 71.5 | 127 | 806 | |
| | 2006.04-2012.12 | 5MT | F | L | Van FWD 4HV (P22DTE) | Inner teeth of wheel side:29 | GDS17053 | Drive Shaft | | 35 | 41 | 71.5 | 127 | 806 | |
| | 2006.04-2012.12 | 5MT | F | L | Van FWD 4HV (P22DTE) | Inner teeth of wheel side:27 | GDS45176 | Drive Shaft | | 35 | 41 | 71.5 | 127 | 808 | |
| | 2006.04-2012.12 | 5MT | F | R | Van FWD 4HV (P22DTE) | | GDS17050 | Drive Shaft | | 35 | 41 | 71.5 | 127 | 1140 | |
| | 2006.04-2012.12 | 5MT | F | L/R | Van FWD 4HV (P22DTE) | Trans. code:MLGU | GCO17054 | Outer Joint | | 35 | 29 | 71.5 | 127 | 71 | M |
| | 2006.04-2012.12 | 5MT | F | L/R | Van FWD 4HV (P22DTE) | Trans. code:MLGU | GCO17055 | Outer Joint | | 35 | 27 | 71.5 | 127 | 66.5 | I |
| | 2006.04-2012.12 | 5MT | F | L | Van FWD 4HV (P22DTE) | Trans. code:MLGU | GCI17028 | Inner Joint | | 41 | 29 | 43 | 69.5 | 109.5 | |
| | 2006.04-2012.12 | 5MT | F | L | Van FWD 4HV (P22DTE) | Trans. code:MLGU | GCI17042 | Inner Joint | | 41 | 27 | 43 | 70 | 102 | |
| | 2006.04-2012.12 | 5MT | F | R | Van FWD 4HV (P22DTE) | Trans. code:MLGU | GCI10038 | Inner Joint | | 41 | 27 | 34.85 | 403 | 102 | |
| | 2006.04-2012.12 | 5MT | F | R | Van FWD 4HV (P22DTE) | Trans. code:MLGU | GCI17020 | Inner Joint | | 41 | 29 | 34.85 | 403 | 109 | |
| 2.2 (81 kw) | 2011.07-2020.12 | 6MT | F | L | Bus FWD 4HG (P22DTE) | | GDS17053 | Drive Shaft | | 35 | 41 | 71.5 | 127 | 806 | |
| | 2011.07-2020.12 | 6MT | F | L | Bus FWD 4HG (P22DTE) | | GDS45176 | Drive Shaft | | 35 | 41 | 71.5 | 127 | 808 | |
| | 2011.07-2020.12 | 6MT | F | R | Bus FWD 4HG (P22DTE) | | GDS17050 | Drive Shaft | | 35 | 41 | 71.5 | 127 | 1140 | |
| | 2011.07-2020.12 | 6MT | F | L | Bus FWD 4HG (P22DTE) | | GCI17028 | Inner Joint | | 41 | 29 | 43 | 69.5 | 109.5 | |
| | 2011.07-2020.12 | MT | F | L/R | Bus FWD 4HG (P22DTE) | | GCO17055 | Outer Joint | | 35 | 27 | 71.5 | 127 | 66.5 | I |
| | 2011.07-2020.12 | | F | L/R | Bus FWD 4HG (P22DTE) | For motor home | GCO17045 | Outer Joint | | 35 | 29 | 71.5 | 127 | 71 | M |
| | 2011.07-2020.12 | | F | R | Bus FWD 4HG (P22DTE) | For motor home | GCI17020 | Inner Joint | | 41 | 29 | 34.85 | 403 | 109 | |
| | 2011.07-2020.12 | 6MT | F | L | Platform/Chassis FWD 4HG (P22DTE) | | GDS17053 | Drive Shaft | | 35 | 41 | 71.5 | 127 | 806 | |

| | YEAR | TRANSM. | F/R | L/R | BODY STYLE & DRIVE TYPE & ENGINE | REMARKS | G-AP Ref. | PRODUCT | ABS | Technical Specifications A | B | C | H | L | P |
|---|---|---|---|---|---|---|---|---|---|---|---|---|---|---|---|
| **CITROËN** **Jumper** | | | | | | | | | | | | | | | |
| 2.2 (81 kw) | 2011.07-2020.12 | 6MT | F | L | Platform/Chassis FWD 4HG (P22DTE) | | GDS45176 | Drive Shaft | | 35 | 41 | 71.5 | 127 | 808 | |
| | 2011.07-2020.12 | 6MT | F | R | Platform/Chassis FWD 4HG (P22DTE) | | GDS17050 | Drive Shaft | | 35 | 41 | 71.5 | 127 | 1140 | |
| | 2011.07-2020.12 | 6MT | F | L | Platform/Chassis FWD 4HG (P22DTE) | | GCI17028 | Inner Joint | | 41 | 29 | 43 | 69.5 | 109.5 | |
| | 2011.07-2020.12 | MT | F | L/R | Platform/Chassis FWD 4HG (P22DTE) | | GCO17045 | Outer Joint | | 35 | 29 | 71.5 | 127 | 71 | M |
| | 2011.07-2020.12 | | F | L/R | Platform/Chassis FWD 4HG (P22DTE) | | GCO17055 | Outer Joint | | 35 | 27 | 71.5 | 127 | 66.5 | I |
| | 2011.07-2020.12 | | F | R | Platform/Chassis FWD 4HG (P22DTE) | For motor home | GCI17020 | Inner Joint | | 41 | 29 | 34.85 | 403 | 109 | |
| | 2011.07-2020.12 | 6MT | F | L | Van FWD 4HG (P22DTE) | Inner teeth of wheel side:29 | GDS17053 | Drive Shaft | | 35 | 41 | 71.5 | 127 | 806 | |
| | 2011.07-2020.12 | 6MT | F | L | Van FWD 4HG (P22DTE) | Inner teeth of wheel side:27 | GDS45176 | Drive Shaft | | 35 | 41 | 71.5 | 127 | 808 | |
| | 2011.07-2020.12 | 6MT | F | R | Van FWD 4HG (P22DTE) | | GDS17050 | Drive Shaft | | 35 | 41 | 71.5 | 127 | 1140 | |
| | 2011.07-2020.12 | 6MT | F | L/R | Van FWD 4HG (P22DTE) | For motor home | GCO17045 | Outer Joint | | 35 | 29 | 71.5 | 127 | 71 | M |
| | 2011.07-2020.12 | 6MT | F | L | Van FWD 4HG (P22DTE) | | GCI17028 | Inner Joint | | 41 | 29 | 43 | 69.5 | 109.5 | |
| | 2011.07-2020.12 | 6MT | F | R | Van FWD 4HG (P22DTE) | For motor home | GCI17020 | Inner Joint | | 41 | 29 | 34.85 | 403 | 109 | |
| | 2011.07-2020.12 | MT | F | L/R | Van FWD 4HG (P22DTE) | | GCO17055 | Outer Joint | | 35 | 27 | 71.5 | 127 | 66.5 | I |
| 2.2 (88 kw) | 2006.04-2016.12 | 5MT/6MT | F | L/R | Bus FWD 4HU (P22DTE) | Date from:2006.07,Trans. code:MLGU | GCO17055 | Outer Joint | | 35 | 27 | 71.5 | 127 | 66.5 | I |
| | 2006.04-2016.12 | 5MT/6MT | F | L | Bus FWD 4HU (P22DTE) | Date from:2006.07,Trans. code:MLGU | GCI17042 | Inner Joint | | 41 | 27 | 43 | 70 | 102 | |
| | 2006.04-2016.12 | 5MT/6MT | F | R | Bus FWD 4HU (P22DTE) | Date From:2006.07,Trans. code:MLGU | GCI10038 | Inner Joint | | 41 | 27 | 34.85 | 403 | 102 | |
| | 2006.04-2016.12 | 5MT/6MT | F | R | Bus FWD 4HU (P22DTE) | Date From:2006.07,Trans. code:MLGU | GCI17020 | Inner Joint | | 41 | 29 | 34.85 | 403 | 109 | |
| | 2006.04-2016.12 | 6MT | F | L | Bus FWD 4HU (P22DTE) | | GDS17053 | Drive Shaft | | 35 | 41 | 71.5 | 127 | 806 | |
| | 2006.04-2016.12 | 6MT | F | R | Bus FWD 4HU (P22DTE) | | GDS17050 | Drive Shaft | | 35 | 41 | 71.5 | 127 | 1140 | |
| | 2006.04-2016.12 | 6MT | F | L | Bus FWD 4HU (P22DTE) | | GCI17028 | Inner Joint | | 41 | 29 | 43 | 69.5 | 109.5 | |
| | 2006.04-2016.12 | MT | F | L/R | Bus FWD 4HU (P22DTE) | | GCO17045 | Outer Joint | | 35 | 29 | 71.5 | 127 | 71 | M |
| | 2006.04-2016.12 | 5MT/6MT | F | L/R | Platform/Chassis FWD 4HU (P22DTE) | Date from:2006.07,Trans. code:MLGU | GCO17054 | Outer Joint | | 35 | 29 | 71.5 | 127 | 71 | M |
| | 2006.04-2016.12 | 5MT/6MT | F | L/R | Platform/Chassis FWD 4HU (P22DTE) | Date from:2006.07,Trans. code:MLGU | GCO17055 | Outer Joint | | 35 | 27 | 71.5 | 127 | 66.5 | I |
| | 2006.04-2016.12 | 5MT/6MT | F | L | Platform/Chassis FWD 4HU (P22DTE) | Date from:2006.07,Trans. code:MLGU | GCI17042 | Inner Joint | | 41 | 27 | 43 | 70 | 102 | |
| | 2006.04-2016.12 | 5MT/6MT | F | R | Platform/Chassis FWD 4HU (P22DTE) | Date From:2006.07,Trans. code:MLGU | GCI10038 | Inner Joint | | 41 | 27 | 34.85 | 403 | 102 | |
| | 2006.04-2016.12 | 5MT/6MT | F | R | Platform/Chassis FWD 4HU (P22DTE) | Date From:2006.07,Trans. code:MLGU | GCI17020 | Inner Joint | | 41 | 29 | 34.85 | 403 | 109 | |
| | 2006.04-2016.12 | 6MT | F | L | Platform/Chassis FWD 4HU (P22DTE) | | GDS17053 | Drive Shaft | | 35 | 41 | 71.5 | 127 | 806 | |
| | 2006.04-2016.12 | 6MT | F | R | Platform/Chassis FWD 4HU (P22DTE) | | GDS17050 | Drive Shaft | | 35 | 41 | 71.5 | 127 | 1140 | |
| | 2006.04-2016.12 | 6MT | F | L | Platform/Chassis FWD 4HU (P22DTE) | | GCI17028 | Inner Joint | | 41 | 29 | 43 | 69.5 | 109.5 | |
| | 2006.04-2016.12 | 5MT/6MT | F | L/R | Van FWD 4HU (P22DTE) | Trans. code:MLGU | GCO17054 | Outer Joint | | 35 | 29 | 71.5 | 127 | 71 | M |
| | 2006.04-2016.12 | 5MT/6MT | F | L/R | Van FWD 4HU (P22DTE) | Trans. code:MLGU | GCO17055 | Outer Joint | | 35 | 27 | 71.5 | 127 | 66.5 | I |
| | 2006.04-2016.12 | 5MT/6MT | F | L | Van FWD 4HU (P22DTE) | Trans. code:MLGU | GCI17042 | Inner Joint | | 41 | 27 | 43 | 70 | 102 | |
| | 2006.04-2016.12 | 5MT/6MT | F | R | Van FWD 4HU (P22DTE) | Trans. code:MLGU | GCI10038 | Inner Joint | | 41 | 27 | 34.85 | 403 | 102 | |
| | 2006.04-2016.12 | 5MT/6MT | F | R | Van FWD 4HU (P22DTE) | Trans. code:MLGU | GCI17020 | Inner Joint | | 41 | 29 | 34.85 | 403 | 109 | |
| | 2006.04-2016.12 | 6MT | F | L | Van FWD 4HU (P22DTE) | | GDS17053 | Drive Shaft | | 35 | 41 | 71.5 | 127 | 806 | |
| | 2006.04-2016.12 | 6MT | F | R | Van FWD 4HU (P22DTE) | | GDS17050 | Drive Shaft | | 35 | 41 | 71.5 | 127 | 1140 | |
| | 2006.04-2016.12 | 6MT | F | L | Van FWD 4HU (P22DTE) | | GCI17028 | Inner Joint | | 41 | 29 | 43 | 69.5 | 109.5 | |
| | 2019.08-2023.10 | 6MT | F | L | Bus FWD 4HA (DW12RUE) | | GDS83907 | Drive Shaft | | 35 | 41 | 71.5 | 127 | 822 | |
| | 2019.08-2023.10 | 6MT | F | R | Bus FWD 4HA (DW12RUE) | | GDS83906 | Drive Shaft | | 35 | 41 | 71.5 | 127 | 1125 | |
| | 2019.08-2023.10 | 6MT | F | L/R | Bus FWD 4HA (DW12RUE) | | GCO17045 | Outer Joint | | 35 | 29 | 71.5 | 127 | 71 | M |
| | 2019.08-2023.10 | 6MT | F | L | Bus FWD 4HA (DW12RUE) | | GCI17028 | Inner Joint | | 41 | 29 | 43 | 69.5 | 109.5 | |
| | 2019.08-2023.10 | 6MT | F | R | Bus FWD 4HA (DW12RUE) | | GCI82445 | Inner Joint | | 41 | 29 | 34.85 | 372 | 110 | |
| | 2019.08-2023.10 | 6MT | F | L | Platform/Chassis FWD 4HA (DW12RUE) | | GDS83907 | Drive Shaft | | 35 | 41 | 71.5 | 127 | 822 | |
| | 2019.08-2023.10 | 6MT | F | R | Platform/Chassis FWD 4HA (DW12RUE) | | GDS83906 | Drive Shaft | | 35 | 41 | 71.5 | 127 | 1125 | |
| | 2019.08-2023.10 | 6MT | F | L/R | Platform/Chassis FWD 4HA (DW12RUE) | | GCO17045 | Outer Joint | | 35 | 29 | 71.5 | 127 | 71 | M |
| | 2019.08-2023.10 | 6MT | F | L | Platform/Chassis FWD 4HA (DW12RUE) | | GCI17028 | Inner Joint | | 41 | 29 | 43 | 69.5 | 109.5 | |
| | 2019.08-2023.10 | 6MT | F | R | Platform/Chassis FWD 4HA (DW12RUE) | | GCI82445 | Inner Joint | | 41 | 29 | 34.85 | 372 | 110 | |
| | 2019.08-2023.10 | 6MT | F | L | Van FWD 4HA (DW12RUE) | | GDS83907 | Drive Shaft | | 35 | 41 | 71.5 | 127 | 822 | |
| | 2019.08-2023.10 | 6MT | F | R | Van FWD 4HA (DW12RUE) | | GDS83906 | Drive Shaft | | 35 | 41 | 71.5 | 127 | 1125 | |
| | 2019.08-2023.10 | 6MT | F | L/R | Van FWD 4HA (DW12RUE) | | GCO17045 | Outer Joint | | 35 | 29 | 71.5 | 127 | 71 | M |
| | 2019.08-2023.10 | 6MT | F | L | Van FWD 4HA (DW12RUE) | | GCI17028 | Inner Joint | | 41 | 29 | 43 | 69.5 | 109.5 | |
| | 2019.08-2023.10 | 6MT | F | R | Van FWD 4HA (DW12RUE) | | GCI82445 | Inner Joint | | 41 | 29 | 34.85 | 372 | 110 | |
| 2.2 (96 kw) | 2006.07- | 6MT | F | L | Platform/Chassis FWD 4HM (P22DTE+), 4HH (P22DTE) | | GDS17053 | Drive Shaft | | 35 | 41 | 71.5 | 127 | 806 | |
| | 2006.07- | 6MT | F | R | Platform/Chassis FWD 4HM (P22DTE+), 4HH (P22DTE) | | GDS17050 | Drive Shaft | | 35 | 41 | 71.5 | 127 | 1140 | |
| | 2006.07- | 6MT | F | L | Platform/Chassis FWD 4HM (P22DTE+), 4HH (P22DTE) | | GCI17028 | Inner Joint | | 41 | 29 | 43 | 69.5 | 109.5 | |
| | 2006.07- | MT | F | L/R | Platform/Chassis FWD 4HM (P22DTE+), 4HH (P22DTE) | | GCO17045 | Outer Joint | | 35 | 29 | 71.5 | 127 | 71 | M |
| | 2006.07- | | F | R | Platform/Chassis FWD 4HM (P22DTE+), 4HH (P22DTE) | For motor home | GCI17020 | Inner Joint | | 41 | 29 | 34.85 | 403 | 109 | |
| | 2011.07- | 6MT | F | L | Van FWD 4HH (P22DTE) | | GDS17053 | Drive Shaft | | 35 | 41 | 71.5 | 127 | 806 | |
| | 2011.07- | 6MT | F | R | Van FWD 4HH (P22DTE) | | GDS17050 | Drive Shaft | | 35 | 41 | 71.5 | 127 | 1140 | |
| | 2011.07- | 6MT | F | L/R | Van FWD 4HH (P22DTE) | | GCO17045 | Outer Joint | | 35 | 29 | 71.5 | 127 | 71 | M |
| | 2011.07- | 6MT | F | L | Van FWD 4HH (P22DTE) | | GCI17028 | Inner Joint | | 41 | 29 | 43 | 69.5 | 109.5 | |
| | 2011.07- | 6MT | F | R | Van FWD 4HH (P22DTE) | | GCI17020 | Inner Joint | | 41 | 29 | 34.85 | 403 | 109 | |
| | 2011.07- | MT | F | L/R | Van FWD 4HH (P22DTE) | | GCO17055 | Outer Joint | | 35 | 27 | 71.5 | 127 | 66.5 | I |
| | 2011.07-2016.05 | 6MT | F | L | Bus FWD 4HH (P22DTE) | | GDS17053 | Drive Shaft | | 35 | 41 | 71.5 | 127 | 806 | |
| | 2011.07-2016.05 | 6MT | F | R | Bus FWD 4HH (P22DTE) | | GDS17050 | Drive Shaft | | 35 | 41 | 71.5 | 127 | 1140 | |

| | YEAR | TRANSM. | F/R | L/R | BODY STYLE & DRIVE TYPE & ENGINE | REMARKS | G-AP Ref. | PRODUCT | ABS | Technical Specifications A | B | C | H | L | P |
|---|---|---|---|---|---|---|---|---|---|---|---|---|---|---|---|
| **CITROËN** **Jumper** | | | | | | | | | | | | | | | |
| 2.2 (96 kw) | 2011.07-2016.05 | 6MT | F | L | Bus FWD 4HH (P22DTE) | | GCI17028 | Inner Joint | | 41 | 29 | 43 | 69.5 | 109.5 | |
| | 2011.07-2016.05 | MT | F | L/R | Bus FWD 4HH (P22DTE) | | GCO17055 | Outer Joint | | 35 | 27 | 71.5 | 127 | 66.5 | I |
| | 2011.07-2016.05 | | F | L/R | Bus FWD 4HH (P22DTE) | | GCO17045 | Outer Joint | | 35 | 29 | 71.5 | 127 | 71 | M |
| | 2011.07-2016.05 | | F | R | Bus FWD 4HH (P22DTE) | For motor home | GCI17020 | Inner Joint | | 41 | 29 | 34.85 | 403 | 109 | |
| 2.2 (103 kw) | 2019.08-2023.10 | 6MT | F | L | Bus FWD 4HB (DW12RUD) | | GDS56467 | Drive Shaft | | 35 | 41 | 71.5 | 127 | 824 | |
| | 2019.08-2023.10 | 6MT | F | R | Bus FWD 4HB (DW12RUD) | | GDS57538 | Drive Shaft | | 35 | 41 | 71.5 | 127 | 1127 | |
| | 2019.08-2023.10 | 6MT | F | L | Bus FWD 4HB (DW12RUD) | | GCI17028 | Inner Joint | | 41 | 29 | 43 | 69.5 | 109.5 | |
| | 2019.08-2023.10 | 6MT | F | L | Platform/Chassis FWD 4HB (DW12RUD) | | GDS56467 | Drive Shaft | | 35 | 41 | 71.5 | 127 | 824 | |
| | 2019.08-2023.10 | 6MT | F | R | Platform/Chassis FWD 4HB (DW12RUD) | | GDS57538 | Drive Shaft | | 35 | 41 | 71.5 | 127 | 1127 | |
| | 2019.08-2023.10 | 6MT | F | L | Platform/Chassis FWD 4HB (DW12RUD) | | GCI17028 | Inner Joint | | 41 | 29 | 43 | 69.5 | 109.5 | |
| | 2019.08-2023.10 | 6MT | F | L | Van FWD 4HB (DW12RUD), BNF (DW12RUD) | | GDS56467 | Drive Shaft | | 35 | 41 | 71.5 | 127 | 824 | |
| | 2019.08-2023.10 | 6MT | F | R | Van FWD 4HB (DW12RUD), BNF (DW12RUD) | | GDS57538 | Drive Shaft | | 35 | 41 | 71.5 | 127 | 1127 | |
| | 2019.08-2023.10 | 6MT | F | L | Van FWD 4HB (DW12RUD), BNF (DW12RUD) | | GCI17028 | Inner Joint | | 41 | 29 | 43 | 69.5 | 109.5 | |
| | 2025.07- | 6MT | F | L | Bus FWD | | GDS56467 | Drive Shaft | | 35 | 41 | 71.5 | 127 | 824 | |
| | 2025.07- | 6MT | F | R | Bus FWD | | GDS57538 | Drive Shaft | | 35 | 41 | 71.5 | 127 | 1127 | |
| 2.2 (110 kw) | 2011.07- | AT/MT | F | L | Platform/Chassis FWD 4HJ (P22DTE) | | GDS17053 | Drive Shaft | | 35 | 41 | 71.5 | 127 | 806 | |
| | 2011.07- | AT/MT | F | R | Platform/Chassis FWD 4HJ (P22DTE) | | GDS17050 | Drive Shaft | | 35 | 41 | 71.5 | 127 | 1140 | |
| | 2011.07- | AT/MT | F | L/R | Platform/Chassis FWD 4HJ (P22DTE) | | GCO17045 | Outer Joint | | 35 | 29 | 71.5 | 127 | 71 | M |
| | 2011.07- | MT | F | L | Platform/Chassis FWD 4HJ (P22DTE) | | GDS45176 | Drive Shaft | | 35 | 41 | 71.5 | 127 | 808 | |
| | 2011.07- | | F | L | Platform/Chassis FWD 4HJ (P22DTE) | | GCI17022 | Inner Joint | | 31 | 29 | 44.95 | 77 | 109.5 | |
| | 2011.07- | AT/MT | F | L | Van FWD 4HJ (P22DTE) | | GDS17053 | Drive Shaft | | 35 | 41 | 71.5 | 127 | 806 | |
| | 2011.07- | AT/MT | F | R | Van FWD 4HJ (P22DTE) | | GDS17050 | Drive Shaft | | 35 | 41 | 71.5 | 127 | 1140 | |
| | 2011.07- | MT | F | L | Van FWD 4HJ (P22DTE) | | GDS45176 | Drive Shaft | | 35 | 41 | 71.5 | 127 | 808 | |
| | 2011.07- | MT | F | L/R | Van FWD 4HJ (P22DTE) | | GCO17055 | Outer Joint | | 35 | 27 | 71.5 | 127 | 66.5 | I |
| | 2011.07- | | F | L | Van FWD 4HJ (P22DTE) | | GCI17022 | Inner Joint | | 31 | 29 | 44.95 | 77 | 109.5 | |
| | 2011.07-2016.12 | AT/MT | F | L | Bus FWD 4HJ (P22DTE) | | GDS17053 | Drive Shaft | | 35 | 41 | 71.5 | 127 | 806 | |
| | 2011.07-2016.12 | AT/MT | F | R | Bus FWD 4HJ (P22DTE) | | GDS17050 | Drive Shaft | | 35 | 41 | 71.5 | 127 | 1140 | |
| | 2011.07-2016.12 | MT | F | L | Bus FWD 4HJ (P22DTE) | | GDS45176 | Drive Shaft | | 35 | 41 | 71.5 | 127 | 808 | |
| | 2011.07-2016.12 | MT | F | L/R | Bus FWD 4HJ (P22DTE) | | GCO17055 | Outer Joint | | 35 | 27 | 71.5 | 127 | 66.5 | I |
| | 2011.07-2016.12 | | F | L | Bus FWD 4HJ (P22DTE) | | GCI17022 | Inner Joint | | 31 | 29 | 44.95 | 77 | 109.5 | |
| 2.2 (121 kw) | 2019.08-2023.10 | 6MT | F | L | Bus FWD 4HH (DW12RUC) | | GDS56467 | Drive Shaft | | 35 | 41 | 71.5 | 127 | 824 | |
| | 2019.08-2023.10 | 6MT | F | R | Bus FWD 4HH (DW12RUC) | | GDS57538 | Drive Shaft | | 35 | 41 | 71.5 | 127 | 1127 | |
| | 2019.08-2023.10 | 6MT | F | L | Bus FWD 4HH (DW12RUC) | | GCI17028 | Inner Joint | | 41 | 29 | 43 | 69.5 | 109.5 | |
| | 2019.08-2023.10 | 6MT | F | L | Platform/Chassis FWD 4HH (DW12RUC) | | GDS56467 | Drive Shaft | | 35 | 41 | 71.5 | 127 | 824 | |
| | 2019.08-2023.10 | 6MT | F | R | Platform/Chassis FWD 4HH (DW12RUC) | | GDS57538 | Drive Shaft | | 35 | 41 | 71.5 | 127 | 1127 | |
| | 2019.08-2023.10 | 6MT | F | L | Platform/Chassis FWD 4HH (DW12RUC) | | GCI17028 | Inner Joint | | 41 | 29 | 43 | 69.5 | 109.5 | |
| | 2019.08-2023.10 | 6MT | F | L | Van FWD 4HH (DW12RUC) | | GDS56467 | Drive Shaft | | 35 | 41 | 71.5 | 127 | 824 | |
| | 2019.08-2023.10 | 6MT | F | R | Van FWD 4HH (DW12RUC) | | GDS57538 | Drive Shaft | | 35 | 41 | 71.5 | 127 | 1127 | |
| | 2019.08-2023.10 | 6MT | F | L | Van FWD 4HH (DW12RUC) | | GCI17028 | Inner Joint | | 41 | 29 | 43 | 69.5 | 109.5 | |
| 2.8 (94 kw) | 2002.02-2006.06 | 5MT | F | L | Platform/Chassis 4WD 8140.43S | Gross Vehicle W:3500 | GDS10033 | Drive Shaft | 54T | 35 | 41 | 70 | 117 | 762 | |
| | 2002.02-2006.06 | 5MT | F | L | Platform/Chassis 4WD 8140.43S | Gross Vehicle W:3300 | GDS10035 | Drive Shaft | 54T | 28 | 41 | 63 | 112.5 | 757.5 | |
| | 2002.02-2006.06 | 5MT | F | R | Platform/Chassis 4WD 8140.43S | Gross Vehicle W:3500 | GDS10032 | Drive Shaft | 54T | 35 | 41 | 70 | 117 | 1085 | |
| | 2002.02-2006.06 | 5MT | F | R | Platform/Chassis 4WD 8140.43S | Gross Vehicle W:3300 | GDS10036 | Drive Shaft | 54T | 28 | 41 | 63 | 112.5 | 1079 | |
| | 2002.02-2006.06 | 5MT | F | R | Platform/Chassis 4WD 8140.43S | Payload [kg]:1800 | GDS10066 | Drive Shaft | | 35 | 41 | 70 | 117 | 1085 | |
| | 2002.02-2006.06 | 5MT | F | L/R | Platform/Chassis 4WD 8140.43S | Chassis no. from:5235558,Rim Size [in]:16,Payload [kg]:1800 | GCO10011 | Outer Joint | 54T | 35 | 45 | 70 | 117 | 73 | I |
| | 2002.02-2006.06 | | F | R | Platform/Chassis 4WD 8140.43S | Gross Vehicle W:3500 | GCI10009 | Inner Joint | | 41 | 45 | 34.9 | 393 | 115.6 | |
| | 2002.04-2006.06 | 5MT | F | L | Bus 4WD 8140.43S | Payload [kg]:1800 | GDS10033 | Drive Shaft | 54T | 35 | 41 | 70 | 117 | 762 | |
| | 2002.04-2006.06 | 5MT | F | L | Bus 4WD 8140.43S | Payload [kg]:1000/1400 | GDS10035 | Drive Shaft | 54T | 28 | 41 | 63 | 112.5 | 757.5 | |
| | 2002.04-2006.06 | 5MT | F | R | Bus 4WD 8140.43S | Payload [kg]:1800 | GDS10032 | Drive Shaft | 54T | 35 | 41 | 70 | 117 | 1085 | |
| | 2002.04-2006.06 | 5MT | F | R | Bus 4WD 8140.43S | Payload [kg]:1000/1400 | GDS10036 | Drive Shaft | 54T | 28 | 41 | 63 | 112.5 | 1079 | |
| | 2002.04-2006.06 | 5MT | F | L | Bus FWD 8140.43S | Trans. Code:Mlgu5C6 | GDS10033 | Drive Shaft | 54T | 35 | 41 | 70 | 117 | 762 | |
| | 2002.04-2006.06 | 5MT | F | L | Bus FWD 8140.43S | Trans. Code:Mlgu | GDS10035 | Drive Shaft | 54T | 28 | 41 | 63 | 112.5 | 757.5 | |
| | 2002.04-2006.06 | 5MT | F | R | Bus FWD 8140.43S | Trans. code:MLGU5C6 | GDS10032 | Drive Shaft | 54T | 35 | 41 | 70 | 117 | 1085 | |
| | 2002.04-2006.06 | 5MT | F | R | Bus FWD 8140.43S | Trans. Code:Mlgu | GDS10036 | Drive Shaft | 54T | 28 | 41 | 63 | 112.5 | 1079 | |
| | 2002.04-2006.06 | 5MT | F | R | Bus FWD 8140.43S | Trans. code:MLGU5C6 | GDS10066 | Drive Shaft | | 35 | 41 | 70 | 117 | 1085 | |
| | 2002.04-2006.06 | MT | F | L/R | Bus FWD 8140.43S | for vehicles with tolerated total weight above [kg]:1800 | GCO10011 | Outer Joint | 54T | 35 | 45 | 70 | 117 | 73 | I |
| | 2002.04-2006.06 | MT | F | L/R | Bus FWD 8140.43S | for vehicles with tolerated total weight to [kg]:1800 | GCO10013 | Outer Joint | 54T | 28 | 39 | 63 | 112.5 | 63 | I |
| | 2002.04-2006.06 | MT | F | L/R | Bus FWD 8140.43S | for vehicles with tolerated total weight above [kg]:1800 | GCO10050 | Outer Joint | | 35 | 45 | 70 | 117 | 73 | I |
| | 2002.04-2006.06 | MT | F | L | Bus FWD 8140.43S | for vehicles with tolerated total weight above [kg]:1800 | GCI10010 | Inner Joint | | 41 | 45 | 43 | 70 | 115.5 | |
| | 2002.04-2006.06 | MT | F | L | Bus FWD 8140.43S | for vehicles with tolerated total weight to [kg]:1800 | GCI10013 | Inner Joint | | 41 | 39 | 43 | 70 | 104 | |
| | 2002.04-2006.06 | MT | F | R | Bus FWD 8140.43S | for vehicles with tolerated total weight above [kg]:1800 | GCI10009 | Inner Joint | | 41 | 45 | 34.9 | 393 | 115.6 | |
| | 2002.04-2006.06 | 5MT | F | L | Platform/Chassis FWD 8140.43S | Trans. Code:Mlgu5C6 | GDS10033 | Drive Shaft | 54T | 35 | 41 | 70 | 117 | 762 | |
| | 2002.04-2006.06 | 5MT | F | L | Platform/Chassis FWD 8140.43S | Trans. Code:Mlgu | GDS10035 | Drive Shaft | 54T | 28 | 41 | 63 | 112.5 | 757.5 | |
| | 2002.04-2006.06 | 5MT | F | R | Platform/Chassis FWD 8140.43S | Trans. code:MLGU5C6 | GDS10032 | Drive Shaft | 54T | 35 | 41 | 70 | 117 | 1085 | |
| | 2002.04-2006.06 | 5MT | F | R | Platform/Chassis FWD 8140.43S | Trans. Code:Mlgu | GDS10036 | Drive Shaft | 54T | 28 | 41 | 63 | 112.5 | 1079 | |

| | YEAR | TRANSM. | F/R | L/R | BODY STYLE & DRIVE TYPE & ENGINE | REMARKS | G-AP Ref. | PRODUCT | ABS | Technical Specifications A | B | C | H | L | P |
|---|---|---|---|---|---|---|---|---|---|---|---|---|---|---|---|
| **CITROËN** **Jumper** | | | | | | | | | | | | | | | |
| 2.8 (94 kw) | 2002.04-2006.06 | 5MT | F | R | Platform/Chassis FWD 8140.43S | Trans. code:MLGU5C6 | GDS10066 | Drive Shaft | | 35 | 41 | 70 | 117 | 1085 | |
| | 2002.04-2006.06 | MT | F | L/R | Platform/Chassis FWD 8140.43S | for vehicles with tolerated total weight above [kg]:1800 | GCO10011 | Outer Joint | 54T | 35 | 45 | 70 | 117 | 73 | I |
| | 2002.04-2006.06 | MT | F | L/R | Platform/Chassis FWD 8140.43S | for vehicles with tolerated total weight to [kg]:1800 | GCO10013 | Outer Joint | 54T | 28 | 39 | 63 | 112.5 | 63 | I |
| | 2002.04-2006.06 | MT | F | L/R | Platform/Chassis FWD 8140.43S | for vehicles with tolerated total weight above [kg]:1800 | GCO10050 | Outer Joint | | 35 | 45 | 70 | 117 | 73 | I |
| | 2002.04-2006.06 | MT | F | L | Platform/Chassis FWD 8140.43S | for vehicles with tolerated total weight above [kg]:1800 | GCI10010 | Inner Joint | | 41 | 45 | 43 | 70 | 115.5 | |
| | 2002.04-2006.06 | MT | F | L | Platform/Chassis FWD 8140.43S | for vehicles with tolerated total weight to [kg]:1800 | GCI10013 | Inner Joint | | 41 | 39 | 43 | 70 | 104 | |
| | 2002.04-2006.06 | MT | F | R | Platform/Chassis FWD 8140.43S | for vehicles with tolerated total weight above [kg]:1800 | GCI10009 | Inner Joint | | 41 | 45 | 34.9 | 393 | 115.6 | |
| | 2002.04-2006.06 | 5MT | F | L | Van 4WD 8140.43S | Gross Vehicle:3500 | GDS10033 | Drive Shaft | 54T | 35 | 41 | 70 | 117 | 762 | |
| | 2002.04-2006.06 | 5MT | F | L | Van 4WD 8140.43S | Gross Vehicle:3300 | GDS10035 | Drive Shaft | 54T | 28 | 41 | 63 | 112.5 | 757.5 | |
| | 2002.04-2006.06 | 5MT | F | R | Van 4WD 8140.43S | Gross Vehicle:3500 | GDS10032 | Drive Shaft | 54T | 35 | 41 | 70 | 117 | 1085 | |
| | 2002.04-2006.06 | 5MT | F | R | Van 4WD 8140.43S | Gross Vehicle:3300 | GDS10036 | Drive Shaft | 54T | 28 | 41 | 63 | 112.5 | 1079 | |
| | 2002.04-2006.06 | 5MT | F | L/R | Van 4WD 8140.43S | Gross Vehicle:3500 | GCO10011 | Outer Joint | 54T | 35 | 45 | 70 | 117 | 73 | I |
| | 2002.04-2006.06 | 5MT | F | L/R | Van 4WD 8140.43S | Gross Vehicle:3300 | GCO10013 | Outer Joint | 54T | 28 | 39 | 63 | 112.5 | 63 | I |
| | 2002.04-2006.06 | 5MT | F | L | Van 4WD 8140.43S | Gross Vehicle:3500 | GCI10010 | Inner Joint | | 41 | 45 | 43 | 70 | 115.5 | |
| | 2002.04-2006.06 | 5MT | F | L | Van 4WD 8140.43S | Gross Vehicle:3300 | GCI10013 | Inner Joint | | 41 | 39 | 43 | 70 | 104 | |
| | 2002.04-2006.06 | 5MT | F | R | Van 4WD 8140.43S | Gross Vehicle:3500 | GCI10009 | Inner Joint | | 41 | 45 | 34.9 | 393 | 115.6 | |
| | 2002.04-2006.06 | 5MT | F | L | Van FWD 8140.43S | Trans. Code:Mlgu5C6 | GDS10033 | Drive Shaft | 54T | 35 | 41 | 70 | 117 | 762 | |
| | 2002.04-2006.06 | 5MT | F | L | Van FWD 8140.43S | Trans. Code:Mlgu | GDS10035 | Drive Shaft | 54T | 28 | 41 | 63 | 112.5 | 757.5 | |
| | 2002.04-2006.06 | 5MT | F | R | Van FWD 8140.43S | Trans. code:MLGU5C6 | GDS10032 | Drive Shaft | 54T | 35 | 41 | 70 | 117 | 1085 | |
| | 2002.04-2006.06 | 5MT | F | R | Van FWD 8140.43S | Trans. code:MLGU5C6 | GDS10066 | Drive Shaft | | 35 | 41 | 70 | 117 | 1085 | |
| | 2002.04-2006.06 | MT | F | R | Van FWD 8140.43S | Trans. Code:Mlgu | GDS10036 | Drive Shaft | 54T | 28 | 41 | 63 | 112.5 | 1079 | |
| | 2002.04-2006.06 | MT | F | L/R | Van FWD 8140.43S | for vehicles with tolerated total weight above [kg]:1800 | GCO10011 | Outer Joint | 54T | 35 | 45 | 70 | 117 | 73 | I |
| | 2002.04-2006.06 | MT | F | L/R | Van FWD 8140.43S | for vehicles with tolerated total weight to [kg]:1800 | GCO10013 | Outer Joint | 54T | 28 | 39 | 63 | 112.5 | 63 | I |
| | 2002.04-2006.06 | MT | F | L/R | Van FWD 8140.43S | for vehicles with tolerated total weight above [kg]:1800 | GCO10050 | Outer Joint | | 35 | 45 | 70 | 117 | 73 | I |
| | 2002.04-2006.06 | MT | F | L | Van FWD 8140.43S | for vehicles with tolerated total weight above [kg]:1800 | GCI10010 | Inner Joint | | 41 | 45 | 43 | 70 | 115.5 | |
| | 2002.04-2006.06 | MT | F | L | Van FWD 8140.43S | for vehicles with tolerated total weight to [kg]:1800 | GCI10013 | Inner Joint | | 41 | 39 | 43 | 70 | 104 | |
| | 2002.04-2006.06 | MT | F | R | Van FWD 8140.43S | for vehicles with tolerated total weight above [kg]:1800 | GCI10009 | Inner Joint | | 41 | 45 | 34.9 | 393 | 115.6 | |
| 2.8 (107 kw) | 2004.04-2006.06 | 5MT | F | L | Van FWD 8140.43N | Gross Vehicle:3500 | GDS10033 | Drive Shaft | 54T | 35 | 41 | 70 | 117 | 762 | |
| | 2004.04-2006.06 | 5MT | F | L | Van FWD 8140.43N | Gross Vehicle:3300 | GDS10035 | Drive Shaft | 54T | 28 | 41 | 63 | 112.5 | 757.5 | |
| | 2004.04-2006.06 | 5MT | F | R | Van FWD 8140.43N | Gross Vehicle:3500 | GDS10032 | Drive Shaft | 54T | 35 | 41 | 70 | 117 | 1085 | |
| | 2004.04-2006.06 | 5MT | F | R | Van FWD 8140.43N | Gross Vehicle:3300 | GDS10036 | Drive Shaft | 54T | 28 | 41 | 63 | 112.5 | 1079 | |
| | 2004.04-2006.06 | 5MT | F | L/R | Van FWD 8140.43N | Gross Vehicle:3500 | GCO10011 | Outer Joint | 54T | 35 | 45 | 70 | 117 | 73 | I |
| | 2004.04-2006.06 | 5MT | F | L/R | Van FWD 8140.43N | Gross Vehicle:3300 | GCO10013 | Outer Joint | 54T | 28 | 39 | 63 | 112.5 | 63 | I |
| | 2004.04-2006.06 | 5MT | F | L | Van FWD 8140.43N | Gross Vehicle:3500 | GCI10010 | Inner Joint | | 41 | 45 | 43 | 70 | 115.5 | |
| | 2004.04-2006.06 | 5MT | F | L | Van FWD 8140.43N | Gross Vehicle:3300 | GCI10013 | Inner Joint | | 41 | 39 | 43 | 70 | 104 | |
| | 2004.04-2006.06 | 5MT | F | R | Van FWD 8140.43N | Gross Vehicle:3500 | GCI10009 | Inner Joint | | 41 | 45 | 34.9 | 393 | 115.6 | |
| | 2004.05-2006.06 | 5MT | F | L | Platform/Chassis FWD 8140.43N | Gross Vehicle:3500 | GDS10033 | Drive Shaft | 54T | 35 | 41 | 70 | 117 | 762 | |
| | 2004.05-2006.06 | 5MT | F | L | Platform/Chassis FWD 8140.43N | Gross Vehicle:3300 | GDS10035 | Drive Shaft | 54T | 28 | 41 | 63 | 112.5 | 757.5 | |
| | 2004.05-2006.06 | 5MT | F | R | Platform/Chassis FWD 8140.43N | Gross Vehicle:3500 | GDS10032 | Drive Shaft | 54T | 35 | 41 | 70 | 117 | 1085 | |
| | 2004.05-2006.06 | 5MT | F | R | Platform/Chassis FWD 8140.43N | Gross Vehicle:3300 | GDS10036 | Drive Shaft | 54T | 28 | 41 | 63 | 112.5 | 1079 | |
| | 2004.05-2006.06 | 5MT | F | L/R | Platform/Chassis FWD 8140.43N | Gross Vehicle:3500 | GCO10011 | Outer Joint | 54T | 35 | 45 | 70 | 117 | 73 | I |
| | 2004.05-2006.06 | 5MT | F | L/R | Platform/Chassis FWD 8140.43N | Gross Vehicle:3300 | GCO10013 | Outer Joint | 54T | 28 | 39 | 63 | 112.5 | 63 | I |
| | 2004.05-2006.06 | 5MT | F | L | Platform/Chassis FWD 8140.43N | Gross Vehicle:3500 | GCI10010 | Inner Joint | | 41 | 45 | 43 | 70 | 115.5 | |
| | 2004.05-2006.06 | 5MT | F | L | Platform/Chassis FWD 8140.43N | Gross Vehicle:3300 | GCI10013 | Inner Joint | | 41 | 39 | 43 | 70 | 104 | |
| | 2004.05-2006.06 | 5MT | F | R | Platform/Chassis FWD 8140.43N | Gross Vehicle:3500 | GCI10009 | Inner Joint | | 41 | 45 | 34.9 | 393 | 115.6 | |
| 3.0 (107 kw) | 2010.07-2013.12 | 6MT | F | L | Platform/Chassis FWD F30DTE (F1CE3481N) | | GDS45175 | Drive Shaft | | 35 | 31 | 71.5 | 127 | 749.5 | |
| | 2010.07-2013.12 | 6MT | F | R | Platform/Chassis FWD F30DTE (F1CE3481N) | | GDS45174 | Drive Shaft | | 35 | 31 | 71.5 | 127 | 1199 | |
| | 2010.07-2013.12 | 6MT | F | L/R | Platform/Chassis FWD F30DTE (F1CE3481N) | | GCO17060 | Outer Joint | | 35 | 29 | 71.5 | 127 | 71 | I |
| | 2010.07-2013.12 | 6MT | F | L | Platform/Chassis FWD F30DTE (F1CE3481N) | | GCI17022 | Inner Joint | | 31 | 29 | 44.95 | 77 | 109.5 | |
| | 2010.07-2013.12 | 6MT | F | R | Platform/Chassis FWD F30DTE (F1CE3481N) | | GCI17021 | Inner Joint | | 31 | 29 | 34.85 | 530 | 109 | |
| | 2010.07-2013.12 | 6MT | F | L | Van FWD F30DTE (F1CE3481N) | | GDS45175 | Drive Shaft | | 35 | 31 | 71.5 | 127 | 749.5 | |
| | 2010.07-2013.12 | 6MT | F | R | Van FWD F30DTE (F1CE3481N) | | GDS45174 | Drive Shaft | | 35 | 31 | 71.5 | 127 | 1199 | |
| | 2010.07-2013.12 | 6MT | F | L/R | Van FWD F30DTE (F1CE3481N) | | GCO17060 | Outer Joint | | 35 | 29 | 71.5 | 127 | 71 | I |
| | 2010.07-2013.12 | 6MT | F | L | Van FWD F30DTE (F1CE3481N) | | GCI17022 | Inner Joint | | 31 | 29 | 44.95 | 77 | 109.5 | |
| | 2010.07-2013.12 | 6MT | F | R | Van FWD F30DTE (F1CE3481N) | | GCI17021 | Inner Joint | | 31 | 29 | 34.85 | 530 | 109 | |
| 3.0 (115 kw) | 2006.07- | 6MT | F | L | Bus FWD F1CE0481D (F30DT) | | GDS45175 | Drive Shaft | | 35 | 31 | 71.5 | 127 | 749.5 | |
| | 2006.07- | 6MT | F | R | Bus FWD F1CE0481D (F30DT) | | GDS45174 | Drive Shaft | | 35 | 31 | 71.5 | 127 | 1199 | |
| | 2006.07- | 6MT | F | L/R | Bus FWD F1CE0481D (F30DT) | | GCO17060 | Outer Joint | | 35 | 29 | 71.5 | 127 | 71 | I |
| | 2006.07- | 6MT | F | L | Bus FWD F1CE0481D (F30DT) | | GCI17022 | Inner Joint | | 31 | 29 | 44.95 | 77 | 109.5 | |
| | 2006.07- | 6MT | F | R | Bus FWD F1CE0481D (F30DT) | | GCI17021 | Inner Joint | | 31 | 29 | 34.85 | 530 | 109 | |
| | 2006.07-2015.12 | 6MT | F | L | Van FWD F1CE0481D (F30DT) | | GDS45175 | Drive Shaft | | 35 | 31 | 71.5 | 127 | 749.5 | |
| | 2006.07-2015.12 | 6MT | F | R | Van FWD F1CE0481D (F30DT) | | GDS45174 | Drive Shaft | | 35 | 31 | 71.5 | 127 | 1199 | |
| | 2006.07-2015.12 | 6MT | F | L/R | Van FWD F1CE0481D (F30DT) | | GCO17060 | Outer Joint | | 35 | 29 | 71.5 | 127 | 71 | I |
| | 2006.07-2015.12 | 6MT | F | L | Van FWD F1CE0481D (F30DT) | | GCI17022 | Inner Joint | | 31 | 29 | 44.95 | 77 | 109.5 | |
| | 2006.07-2015.12 | 6MT | F | R | Van FWD F1CE0481D (F30DT) | | GCI17021 | Inner Joint | | 31 | 29 | 34.85 | 530 | 109 | |

| | YEAR | TRANSM. | F/R | L/R | BODY STYLE & DRIVE TYPE & ENGINE | REMARKS | G-AP Ref. | PRODUCT | ABS | Technical Specifications A | B | C | H | L | P |
|---|---|---|---|---|---|---|---|---|---|---|---|---|---|---|---|
| **CITROËN** | | | | | | | | | | | | | | | |
| **Jumper** | | | | | | | | | | | | | | | |
| 3.0 (116 kw) | 2006.09- | 6MT | F | L | Bus FWD F1CE0481D (F30DT) | | GDS45175 | Drive Shaft | | 35 | 31 | 71.5 | 127 | 749.5 | |
| | 2006.09- | 6MT | F | R | Bus FWD F1CE0481D (F30DT) | | GDS45174 | Drive Shaft | | 35 | 31 | 71.5 | 127 | 1199 | |
| | 2006.09- | 6MT | F | L/R | Bus FWD F1CE0481D (F30DT) | | GCO17060 | Outer Joint | | 35 | 29 | 71.5 | 127 | 71 | I |
| | 2006.09- | 6MT | F | L | Bus FWD F1CE0481D (F30DT) | | GCI17022 | Inner Joint | | 31 | 29 | 44.95 | 77 | 109.5 | |
| | 2006.09- | 6MT | F | R | Bus FWD F1CE0481D (F30DT) | | GCI17021 | Inner Joint | | 31 | 29 | 34.85 | 530 | 109 | |
| | 2006.09-2015.12 | 6MT | F | L | Platform/Chassis FWD F1CE0481D (F30DT) | | GDS45175 | Drive Shaft | | 35 | 31 | 71.5 | 127 | 749.5 | |
| | 2006.09-2015.12 | 6MT | F | R | Platform/Chassis FWD F1CE0481D (F30DT) | | GDS45174 | Drive Shaft | | 35 | 31 | 71.5 | 127 | 1199 | |
| | 2006.09-2015.12 | 6MT | F | L/R | Platform/Chassis FWD F1CE0481D (F30DT) | | GCO17060 | Outer Joint | | 35 | 29 | 71.5 | 127 | 71 | I |
| | 2006.09-2015.12 | 6MT | F | L | Platform/Chassis FWD F1CE0481D (F30DT) | | GCI17022 | Inner Joint | | 31 | 29 | 44.95 | 77 | 109.5 | |
| | 2006.09-2015.12 | 6MT | F | R | Platform/Chassis FWD F1CE0481D (F30DT) | | GCI17021 | Inner Joint | | 31 | 29 | 34.85 | 530 | 109 | |
| | 2006.09-2015.12 | 6MT | F | L | Van FWD F1CE0481D (F30DT) | | GDS45175 | Drive Shaft | | 35 | 31 | 71.5 | 127 | 749.5 | |
| | 2006.09-2015.12 | 6MT | F | R | Van FWD F1CE0481D (F30DT) | | GDS45174 | Drive Shaft | | 35 | 31 | 71.5 | 127 | 1199 | |
| | 2006.09-2015.12 | 6MT | F | L/R | Van FWD F1CE0481D (F30DT) | | GCO17060 | Outer Joint | | 35 | 29 | 71.5 | 127 | 71 | I |
| | 2006.09-2015.12 | 6MT | F | L | Van FWD F1CE0481D (F30DT) | | GCI17022 | Inner Joint | | 31 | 29 | 44.95 | 77 | 109.5 | |
| | 2006.09-2015.12 | 6MT | F | R | Van FWD F1CE0481D (F30DT) | | GCI17021 | Inner Joint | | 31 | 29 | 34.85 | 530 | 109 | |
| 3.0 (130 kw) | 2011.07- | 6MT | F | L | Platform/Chassis FWD F1CE3481E (F30DT) | | GDS45175 | Drive Shaft | | 35 | 31 | 71.5 | 127 | 749.5 | |
| | 2011.07- | 6MT | F | R | Platform/Chassis FWD F1CE3481E (F30DT) | | GDS45174 | Drive Shaft | | 35 | 31 | 71.5 | 127 | 1199 | |
| | 2011.07- | 6MT | F | L/R | Platform/Chassis FWD F1CE3481E (F30DT) | | GCO17060 | Outer Joint | | 35 | 29 | 71.5 | 127 | 71 | I |
| | 2011.07- | 6MT | F | L | Platform/Chassis FWD F1CE3481E (F30DT) | | GCI17022 | Inner Joint | | 31 | 29 | 44.95 | 77 | 109.5 | |
| | 2011.07- | 6MT | F | R | Platform/Chassis FWD F1CE3481E (F30DT) | | GCI17021 | Inner Joint | | 31 | 29 | 34.85 | 530 | 109 | |
| | 2011.07- | 6MT | F | L | Van FWD F1CE3481E (F30DT) | | GDS45175 | Drive Shaft | | 35 | 31 | 71.5 | 127 | 749.5 | |
| | 2011.07- | 6MT | F | R | Van FWD F1CE3481E (F30DT) | | GDS45174 | Drive Shaft | | 35 | 31 | 71.5 | 127 | 1199 | |
| | 2011.07- | 6MT | F | L/R | Van FWD F1CE3481E (F30DT) | | GCO17060 | Outer Joint | | 35 | 29 | 71.5 | 127 | 71 | I |
| | 2011.07- | 6MT | F | L | Van FWD F1CE3481E (F30DT) | | GCI17022 | Inner Joint | | 31 | 29 | 44.95 | 77 | 109.5 | |
| | 2011.07- | 6MT | F | R | Van FWD F1CE3481E (F30DT) | | GCI17021 | Inner Joint | | 31 | 29 | 34.85 | 530 | 109 | |
| | 2011.07-2016.12 | 6MT | F | L | Bus FWD F1CE3481E (F30DT) | | GDS45175 | Drive Shaft | | 35 | 31 | 71.5 | 127 | 749.5 | |
| | 2011.07-2016.12 | 6MT | F | R | Bus FWD F1CE3481E (F30DT) | | GDS45174 | Drive Shaft | | 35 | 31 | 71.5 | 127 | 1199 | |
| | 2011.07-2016.12 | 6MT | F | L/R | Bus FWD F1CE3481E (F30DT) | | GCO17060 | Outer Joint | | 35 | 29 | 71.5 | 127 | 71 | I |
| | 2011.07-2016.12 | 6MT | F | L | Bus FWD F1CE3481E (F30DT) | | GCI17022 | Inner Joint | | 31 | 29 | 44.95 | 77 | 109.5 | |
| | 2011.07-2016.12 | 6MT | F | R | Bus FWD F1CE3481E (F30DT) | | GCI17021 | Inner Joint | | 31 | 29 | 34.85 | 530 | 109 | |
| EV (100 kw) | 2021.07-2023.10 | 6MT | F | L | Van FWD A3H256B42G000 | | GDS56467 | Drive Shaft | | 35 | 41 | 71.5 | 127 | 824 | |
| | 2021.07-2023.10 | 6MT | F | L | Van FWD A3H256B42G000 | | GCI17028 | Inner Joint | | 41 | 29 | 43 | 69.5 | 109.5 | |
| | 2021.07-2023.10 | ET | F | R | Van FWD A3H256B42G000 | | GDS57538 | Drive Shaft | | 35 | 41 | 71.5 | 127 | 1127 | |
| **Jumper 27** | | | | | | | | | | | | | | | |
| 1.9 (50 kw) | 1999.07-2002.04 | MT | F | L | Van FWD DJY (XUD9A) | Payload:1800kg,Trans. code:MG | GDS10033 | Drive Shaft | 54T | 35 | 41 | 70 | 117 | 762 | |
| | 1999.07-2002.04 | MT | F | L | Van FWD DJY (XUD9A) | Payload:1000/1400kg,Trans. code:MG | GDS10035 | Drive Shaft | 54T | 28 | 41 | 63 | 112.5 | 757.5 | |
| | 1999.07-2002.04 | MT | F | L | Van FWD DJY (XUD9A) | Payload:1000/1400kg,Trans. code:ME/ML | GDS10037 | Drive Shaft | 54T | 28 | 37 | 63 | 112.5 | 771 | |
| | 1999.07-2002.04 | MT | F | L | Van FWD DJY (XUD9A) | Payload:1800kg,Trans. code:MG | GDS10067 | Drive Shaft | | 35 | 41 | 70 | 117 | 762 | |
| | 1999.07-2002.04 | MT | F | L | Van FWD DJY (XUD9A) | Payload:1000/1400kg,Trans. code:MG | GDS10102 | Drive Shaft | | 28 | 41 | 63 | 112.5 | 757.5 | |
| | 1999.07-2002.04 | MT | F | L | Van FWD DJY (XUD9A) | Payload:1000/1400kg,Trans. code:ME/ML | GDS10105 | Drive Shaft | | 28 | 37 | 63 | 112.5 | 771 | |
| | 1999.07-2002.04 | MT | F | R | Van FWD DJY (XUD9A) | Payload:1800kg,Trans. code:MG | GDS10032 | Drive Shaft | 54T | 35 | 41 | 70 | 117 | 1085 | |
| | 1999.07-2002.04 | MT | F | R | Van FWD DJY (XUD9A) | Payload:1000/1400kg,Trans. code:MG | GDS10036 | Drive Shaft | 54T | 28 | 41 | 63 | 112.5 | 1079 | |
| | 1999.07-2002.04 | MT | F | R | Van FWD DJY (XUD9A) | Payload:1800kg,Trans. code:MG | GDS10066 | Drive Shaft | | 35 | 41 | 70 | 117 | 1085 | |
| | 1999.07-2002.04 | MT | F | R | Van FWD DJY (XUD9A) | Payload:1000/1400kg,Trans. code:ME/ML | GDS10069 | Drive Shaft | | 28 | 37 | 63 | 112.5 | 1072 | |
| | 1999.07-2002.04 | MT | F | R | Van FWD DJY (XUD9A) | Payload:1000/1400kg,Trans. code:MG | GDS10103 | Drive Shaft | | 28 | 41 | 63 | 112.5 | 1079 | |
| | 1999.07-2002.04 | MT | F | R | Van FWD DJY (XUD9A) | Payload:1000/1400kg,Trans. code:ME/ML | GDS10104 | Drive Shaft | 54T | 28 | 37 | 63 | 112.5 | 1072 | |
| | 1999.07-2002.04 | MT | F | L/R | Van FWD DJY (XUD9A) | Payload:1800kg,Trans. code:MG | GCO10011 | Outer Joint | 54T | 35 | 45 | 70 | 117 | 73 | I |
| | 1999.07-2002.04 | MT | F | L/R | Van FWD DJY (XUD9A) | Payload:1000/1400kg,Trans. code:ME/ML/MG | GCO10012 | Outer Joint | | 28 | 39 | 63 | 112.5 | 63 | I |
| | 1999.07-2002.04 | MT | F | L/R | Van FWD DJY (XUD9A) | Payload:1000/1400kg,Trans. code:ME/ML/MG | GCO10013 | Outer Joint | 54T | 28 | 39 | 63 | 112.5 | 63 | I |
| | 1999.07-2002.04 | MT | F | L/R | Van FWD DJY (XUD9A) | Payload:1800kg,Trans. code:MG | GCO10050 | Outer Joint | | 35 | 45 | 70 | 117 | 73 | I |
| | 1999.07-2002.04 | MT | F | L | Van FWD DJY (XUD9A) | Payload:1800kg,Trans. code:MG | GCI10010 | Inner Joint | | 41 | 45 | 43 | 70 | 115.5 | |
| | 1999.07-2002.04 | MT | F | L | Van FWD DJY (XUD9A) | Payload:1000/1400kg,Trans. code:MG | GCI10013 | Inner Joint | | 41 | 39 | 43 | 70 | 104 | |
| | 1999.07-2002.04 | MT | F | L | Van FWD DJY (XUD9A) | Payload:1000/1400kg,Trans. code:ME/ML | GCI10015 | Inner Joint | | 37 | 39 | 40 | 68.5 | 104 | |
| | 1999.07-2002.04 | MT | F | L | Van FWD DJY (XUD9A) | Payload:1000/1400kg,Trans. code:ME/ML | GCI45013 | Inner Joint | | 37 | 39 | 40 | 68.5 | 100 | |
| | 1999.07-2002.04 | MT | F | R | Van FWD DJY (XUD9A) | Payload:1800kg,Trans. code:MG | GCI10009 | Inner Joint | | 41 | 45 | 34.9 | 393 | 115.6 | |
| | 1999.07-2002.04 | MT | F | R | Van FWD DJY (XUD9A) | Payload:1000/1400kg,Trans. code:ME/ML | GCI10034 | Inner Joint | | 37 | 39 | 31.9 | 369.5 | 99 | |
| 1.9 (51 kw) | 1994.02-2002.04 | MT | F | L | Van FWD D9B (XUD9A/U) | Payload:1800kg,Trans. code:MG | GDS10033 | Drive Shaft | 54T | 35 | 41 | 70 | 117 | 762 | |
| | 1994.02-2002.04 | MT | F | L | Van FWD D9B (XUD9A/U) | Payload:1000/1400kg,Trans. code:MG | GDS10035 | Drive Shaft | 54T | 28 | 41 | 63 | 112.5 | 757.5 | |
| | 1994.02-2002.04 | MT | F | L | Van FWD D9B (XUD9A/U) | Payload:1000/1400kg,Trans. code:ME/ML | GDS10037 | Drive Shaft | 54T | 28 | 37 | 63 | 112.5 | 771 | |
| | 1994.02-2002.04 | MT | F | L | Van FWD D9B (XUD9A/U) | Payload:1800kg,Trans. code:MG | GDS10067 | Drive Shaft | | 35 | 41 | 70 | 117 | 762 | |
| | 1994.02-2002.04 | MT | F | L | Van FWD D9B (XUD9A/U) | Payload:1000/1400kg,Trans. code:MG | GDS10102 | Drive Shaft | | 28 | 41 | 63 | 112.5 | 757.5 | |
| | 1994.02-2002.04 | MT | F | L | Van FWD D9B (XUD9A/U) | Payload:1000/1400kg,Trans. code:ME/ML | GDS10105 | Drive Shaft | | 28 | 37 | 63 | 112.5 | 771 | |
| | 1994.02-2002.04 | MT | F | R | Van FWD D9B (XUD9A/U) | Payload:1800kg,Trans. code:MG | GDS10032 | Drive Shaft | 54T | 35 | 41 | 70 | 117 | 1085 | |
| | 1994.02-2002.04 | MT | F | R | Van FWD D9B (XUD9A/U) | Payload:1000/1400kg,Trans. code:MG | GDS10036 | Drive Shaft | 54T | 28 | 41 | 63 | 112.5 | 1079 | |
| | 1994.02-2002.04 | MT | F | R | Van FWD D9B (XUD9A/U) | Payload:1800kg,Trans. code:MG | GDS10066 | Drive Shaft | | 35 | 41 | 70 | 117 | 1085 | |

| | YEAR | TRANSM. | F/R | L/R | BODY STYLE & DRIVE TYPE & ENGINE | REMARKS | G-AP Ref. | PRODUCT | ABS | Technical Specifications A | B | C | H | L | P |
|---|---|---|---|---|---|---|---|---|---|---|---|---|---|---|---|
| **CITROËN Jumper 27** | | | | | | | | | | | | | | | |
| 1.9 (51 kw) | 1994.02-2002.04 | MT | F | R | Van FWD D9B (XUD9A/U) | Payload:1000/1400kg,Trans. code:ME/ML | GDS10069 | Drive Shaft | | 28 | 37 | 63 | 112.5 | 1072 | |
| | 1994.02-2002.04 | MT | F | R | Van FWD D9B (XUD9A/U) | Payload:1000/1400kg,Trans. code:MG | GDS10103 | Drive Shaft | | 28 | 41 | 63 | 112.5 | 1079 | |
| | 1994.02-2002.04 | MT | F | R | Van FWD D9B (XUD9A/U) | Payload:1000/1400kg,Trans. code:ME/ML | GDS10104 | Drive Shaft | 54T | 28 | 37 | 63 | 112.5 | 1072 | |
| | 1994.02-2002.04 | MT | F | L/R | Van FWD D9B (XUD9A/U) | Payload:1800kg,Trans. code:MG | GCO10011 | Outer Joint | 54T | 35 | 45 | 70 | 117 | 73 | I |
| | 1994.02-2002.04 | MT | F | L/R | Van FWD D9B (XUD9A/U) | Payload:1000/1400kg,Trans. code:ME/ML/MG | GCO10012 | Outer Joint | | 28 | 39 | 63 | 112.5 | 63 | I |
| | 1994.02-2002.04 | MT | F | L/R | Van FWD D9B (XUD9A/U) | Payload:1000/1400kg,Trans. code:ME/ML/MG | GCO10013 | Outer Joint | 54T | 28 | 39 | 63 | 112.5 | 63 | I |
| | 1994.02-2002.04 | MT | F | L/R | Van FWD D9B (XUD9A/U) | Payload:1800kg,Trans. code:MG | GCO10050 | Outer Joint | | 35 | 45 | 70 | 117 | 73 | I |
| | 1994.02-2002.04 | MT | F | L | Van FWD D9B (XUD9A/U) | Payload:1800kg,Trans. code:MG | GCI10010 | Inner Joint | | 41 | 45 | 43 | 70 | 115.5 | |
| | 1994.02-2002.04 | MT | F | L | Van FWD D9B (XUD9A/U) | Payload:1000/1400kg,Trans. code:MG | GCI10013 | Inner Joint | | 41 | 39 | 43 | 70 | 104 | |
| | 1994.02-2002.04 | MT | F | L | Van FWD D9B (XUD9A/U) | Payload:1000/1400kg,Trans. code:ME/ML | GCI10015 | Inner Joint | | 37 | 39 | 40 | 68.5 | 104 | |
| | 1994.02-2002.04 | MT | F | L | Van FWD D9B (XUD9A/U) | Payload:1000/1400kg,Trans. code:ME/ML | GCI45013 | Inner Joint | | 37 | 39 | 40 | 68.5 | 100 | |
| | 1994.02-2002.04 | MT | F | R | Van FWD D9B (XUD9A/U) | Payload:1800kg,Trans. code:MG | GCI10009 | Inner Joint | | 41 | 45 | 34.9 | 393 | 115.6 | |
| | 1994.02-2002.04 | MT | F | R | Van FWD D9B (XUD9A/U) | Payload:1000/1400kg,Trans. code:ME/ML | GCI10034 | Inner Joint | | 37 | 39 | 31.9 | 369.5 | 99 | |
| | 1999.01-2002.04 | MT | F | L | Bus FWD D9B (XUD9A/U) | Payload:1800kg,Trans. code:MG | GDS10033 | Drive Shaft | 54T | 35 | 41 | 70 | 117 | 762 | |
| | 1999.01-2002.04 | MT | F | L | Bus FWD D9B (XUD9A/U) | Payload:1000/1400kg,Trans. code:MG | GDS10035 | Drive Shaft | 54T | 28 | 41 | 63 | 112.5 | 757.5 | |
| | 1999.01-2002.04 | MT | F | L | Bus FWD D9B (XUD9A/U) | Payload:1000/1400kg,Trans. code:ME/ML | GDS10037 | Drive Shaft | 54T | 28 | 37 | 63 | 112.5 | 771 | |
| | 1999.01-2002.04 | MT | F | L | Bus FWD D9B (XUD9A/U) | Payload:1800kg,Trans. code:MG | GDS10067 | Drive Shaft | | 35 | 41 | 70 | 117 | 762 | |
| | 1999.01-2002.04 | MT | F | L | Bus FWD D9B (XUD9A/U) | Payload:1000/1400kg,Trans. code:MG | GDS10102 | Drive Shaft | | 28 | 41 | 63 | 112.5 | 757.5 | |
| | 1999.01-2002.04 | MT | F | L | Bus FWD D9B (XUD9A/U) | Payload:1000/1400kg,Trans. code:ME/ML | GDS10105 | Drive Shaft | | 28 | 37 | 63 | 112.5 | 771 | |
| | 1999.01-2002.04 | MT | F | R | Bus FWD D9B (XUD9A/U) | Payload:1800kg,Trans. code:MG | GDS10032 | Drive Shaft | 54T | 35 | 41 | 70 | 117 | 1085 | |
| | 1999.01-2002.04 | MT | F | R | Bus FWD D9B (XUD9A/U) | Payload:1000/1400kg,Trans. code:MG | GDS10036 | Drive Shaft | 54T | 28 | 41 | 63 | 112.5 | 1079 | |
| | 1999.01-2002.04 | MT | F | R | Bus FWD D9B (XUD9A/U) | Payload:1800kg,Trans. code:MG | GDS10066 | Drive Shaft | | 35 | 41 | 70 | 117 | 1085 | |
| | 1999.01-2002.04 | MT | F | R | Bus FWD D9B (XUD9A/U) | Payload:1000/1400kg,Trans. code:ME/ML | GDS10069 | Drive Shaft | | 28 | 37 | 63 | 112.5 | 1072 | |
| | 1999.01-2002.04 | MT | F | R | Bus FWD D9B (XUD9A/U) | Payload:1000/1400kg,Trans. code:MG | GDS10103 | Drive Shaft | | 28 | 41 | 63 | 112.5 | 1079 | |
| | 1999.01-2002.04 | MT | F | R | Bus FWD D9B (XUD9A/U) | Payload:1000/1400kg,Trans. code:ME/ML | GDS10104 | Drive Shaft | 54T | 28 | 37 | 63 | 112.5 | 1072 | |
| | 1999.01-2002.04 | MT | F | L/R | Bus FWD D9B (XUD9A/U) | Payload:1800kg,Trans. code:MG | GCO10011 | Outer Joint | 54T | 35 | 45 | 70 | 117 | 73 | I |
| | 1999.01-2002.04 | MT | F | L/R | Bus FWD D9B (XUD9A/U) | Payload:1000/1400kg,Trans. code:ME/ML/MG | GCO10012 | Outer Joint | | 28 | 39 | 63 | 112.5 | 63 | I |
| | 1999.01-2002.04 | MT | F | L/R | Bus FWD D9B (XUD9A/U) | Payload:1000/1400kg,Trans. code:ME/ML/MG | GCO10013 | Outer Joint | 54T | 28 | 39 | 63 | 112.5 | 63 | I |
| | 1999.01-2002.04 | MT | F | L/R | Bus FWD D9B (XUD9A/U) | Payload:1800kg,Trans. code:MG | GCO10050 | Outer Joint | | 35 | 45 | 70 | 117 | 73 | I |
| | 1999.01-2002.04 | MT | F | L | Bus FWD D9B (XUD9A/U) | Payload:1800kg,Trans. code:MG | GCI10010 | Inner Joint | | 41 | 45 | 43 | 70 | 115.5 | |
| | 1999.01-2002.04 | MT | F | L | Bus FWD D9B (XUD9A/U) | Payload:1000/1400kg,Trans. code:MG | GCI10013 | Inner Joint | | 41 | 39 | 43 | 70 | 104 | |
| | 1999.01-2002.04 | MT | F | L | Bus FWD D9B (XUD9A/U) | Payload:1000/1400kg,Trans. code:ME/ML | GCI10015 | Inner Joint | | 37 | 39 | 40 | 68.5 | 104 | |
| | 1999.01-2002.04 | MT | F | L | Bus FWD D9B (XUD9A/U) | Payload:1000/1400kg,Trans. code:ME/ML | GCI45013 | Inner Joint | | 37 | 39 | 40 | 68.5 | 100 | |
| | 1999.01-2002.04 | MT | F | R | Bus FWD D9B (XUD9A/U) | Payload:1800kg,Trans. code:MG | GCI10009 | Inner Joint | | 41 | 45 | 34.9 | 393 | 115.6 | |
| | 1999.01-2002.04 | MT | F | R | Bus FWD D9B (XUD9A/U) | Payload:1000/1400kg,Trans. code:ME/ML | GCI10034 | Inner Joint | | 37 | 39 | 31.9 | 369.5 | 99 | |
| 1.9 (66 kw) | 1994.03-2002.04 | MT | F | L | Van FWD DHX (XUD9BTF), DHX (XUD9TF) | Payload:1800kg,Trans. code:MG | GDS10033 | Drive Shaft | 54T | 35 | 41 | 70 | 117 | 762 | |
| | 1994.03-2002.04 | MT | F | L | Van FWD DHX (XUD9BTF), DHX (XUD9TF) | Payload:1000/1400kg,Trans. code:MG | GDS10035 | Drive Shaft | 54T | 28 | 41 | 63 | 112.5 | 757.5 | |
| | 1994.03-2002.04 | MT | F | L | Van FWD DHX (XUD9BTF), DHX (XUD9TF) | Payload:1000/1400kg,Trans. code:ME/ML | GDS10037 | Drive Shaft | 54T | 28 | 37 | 63 | 112.5 | 771 | |
| | 1994.03-2002.04 | MT | F | L | Van FWD DHX (XUD9BTF), DHX (XUD9TF) | Payload:1800kg,Trans. code:MG | GDS10067 | Drive Shaft | | 35 | 41 | 70 | 117 | 762 | |
| | 1994.03-2002.04 | MT | F | L | Van FWD DHX (XUD9BTF), DHX (XUD9TF) | Payload:1000/1400kg,Trans. code:MG | GDS10102 | Drive Shaft | | 28 | 41 | 63 | 112.5 | 757.5 | |
| | 1994.03-2002.04 | MT | F | L | Van FWD DHX (XUD9BTF), DHX (XUD9TF) | Payload:1000/1400kg,Trans. code:ME/ML | GDS10105 | Drive Shaft | | 28 | 37 | 63 | 112.5 | 771 | |
| | 1994.03-2002.04 | MT | F | R | Van FWD DHX (XUD9BTF), DHX (XUD9TF) | Payload:1800kg,Trans. code:MG | GDS10032 | Drive Shaft | 54T | 35 | 41 | 70 | 117 | 1085 | |
| | 1994.03-2002.04 | MT | F | R | Van FWD DHX (XUD9BTF), DHX (XUD9TF) | Payload:1000/1400kg,Trans. code:MG | GDS10036 | Drive Shaft | 54T | 28 | 41 | 63 | 112.5 | 1079 | |
| | 1994.03-2002.04 | MT | F | R | Van FWD DHX (XUD9BTF), DHX (XUD9TF) | Payload:1800kg,Trans. code:MG | GDS10066 | Drive Shaft | | 35 | 41 | 70 | 117 | 1085 | |
| | 1994.03-2002.04 | MT | F | R | Van FWD DHX (XUD9BTF), DHX (XUD9TF) | Payload:1000/1400kg,Trans. code:ME/ML | GDS10069 | Drive Shaft | | 28 | 37 | 63 | 112.5 | 1072 | |
| | 1994.03-2002.04 | MT | F | R | Van FWD DHX (XUD9BTF), DHX (XUD9TF) | Payload:1000/1400kg,Trans. code:MG | GDS10103 | Drive Shaft | | 28 | 41 | 63 | 112.5 | 1079 | |
| | 1994.03-2002.04 | MT | F | R | Van FWD DHX (XUD9BTF), DHX (XUD9TF) | Payload:1000/1400kg,Trans. code:ME/ML | GDS10104 | Drive Shaft | 54T | 28 | 37 | 63 | 112.5 | 1072 | |
| | 1994.03-2002.04 | MT | F | L/R | Van FWD DHX (XUD9BTF), DHX (XUD9TF) | Payload:1800kg,Trans. code:MG | GCO10011 | Outer Joint | 54T | 35 | 45 | 70 | 117 | 73 | I |
| | 1994.03-2002.04 | MT | F | L/R | Van FWD DHX (XUD9BTF), DHX (XUD9TF) | Payload:1000/1400kg,Trans. code:ME/ML/MG | GCO10012 | Outer Joint | | 28 | 39 | 63 | 112.5 | 63 | I |
| | 1994.03-2002.04 | MT | F | L/R | Van FWD DHX (XUD9BTF), DHX (XUD9TF) | Payload:1000/1400kg,Trans. code:ME/ML/MG | GCO10013 | Outer Joint | 54T | 28 | 39 | 63 | 112.5 | 63 | I |
| | 1994.03-2002.04 | MT | F | L/R | Van FWD DHX (XUD9BTF), DHX (XUD9TF) | Payload:1800kg,Trans. code:MG | GCO10050 | Outer Joint | | 35 | 45 | 70 | 117 | 73 | I |
| | 1994.03-2002.04 | MT | F | L | Van FWD DHX (XUD9BTF), DHX (XUD9TF) | Payload:1800kg,Trans. code:MG | GCI10010 | Inner Joint | | 41 | 45 | 43 | 70 | 115.5 | |
| | 1994.03-2002.04 | MT | F | L | Van FWD DHX (XUD9BTF), DHX (XUD9TF) | Payload:1000/1400kg,Trans. code:MG | GCI10013 | Inner Joint | | 41 | 39 | 43 | 70 | 104 | |
| | 1994.03-2002.04 | MT | F | L | Van FWD DHX (XUD9BTF), DHX (XUD9TF) | Payload:1000/1400kg,Trans. code:ME/ML | GCI10015 | Inner Joint | | 37 | 39 | 40 | 68.5 | 104 | |
| | 1994.03-2002.04 | MT | F | L | Van FWD DHX (XUD9BTF), DHX (XUD9TF) | Payload:1000/1400kg,Trans. code:ME/ML | GCI45013 | Inner Joint | | 37 | 39 | 40 | 68.5 | 100 | |
| | 1994.03-2002.04 | MT | F | R | Van FWD DHX (XUD9BTF), DHX (XUD9TF) | Payload:1800kg,Trans. code:MG | GCI10009 | Inner Joint | | 41 | 45 | 34.9 | 393 | 115.6 | |
| | 1994.03-2002.04 | MT | F | R | Van FWD DHX (XUD9BTF), DHX (XUD9TF) | Payload:1000/1400kg,Trans. code:ME/ML | GCI10034 | Inner Joint | | 37 | 39 | 31.9 | 369.5 | 99 | |
| | 1994.08-2002.04 | MT | F | L | Bus FWD D8C (XUD9UTF) | Payload:1800kg,Trans. code:MG | GDS10033 | Drive Shaft | 54T | 35 | 41 | 70 | 117 | 762 | |
| | 1994.08-2002.04 | MT | F | L | Bus FWD D8C (XUD9UTF) | Payload:1000/1400kg,Trans. code:MG | GDS10035 | Drive Shaft | 54T | 28 | 41 | 63 | 112.5 | 757.5 | |
| | 1994.08-2002.04 | MT | F | L | Bus FWD D8C (XUD9UTF) | Payload:1000/1400kg,Trans. code:ME/ML | GDS10037 | Drive Shaft | 54T | 28 | 37 | 63 | 112.5 | 771 | |
| | 1994.08-2002.04 | MT | F | L | Bus FWD D8C (XUD9UTF) | Payload:1800kg,Trans. code:MG | GDS10067 | Drive Shaft | | 35 | 41 | 70 | 117 | 762 | |
| | 1994.08-2002.04 | MT | F | L | Bus FWD D8C (XUD9UTF) | Payload:1000/1400kg,Trans. code:MG | GDS10102 | Drive Shaft | | 28 | 41 | 63 | 112.5 | 757.5 | |
| | 1994.08-2002.04 | MT | F | L | Bus FWD D8C (XUD9UTF) | Payload:1000/1400kg,Trans. code:ME/ML | GDS10105 | Drive Shaft | | 28 | 37 | 63 | 112.5 | 771 | |
| | 1994.08-2002.04 | MT | F | R | Bus FWD D8C (XUD9UTF) | Payload:1800kg,Trans. code:MG | GDS10032 | Drive Shaft | 54T | 35 | 41 | 70 | 117 | 1085 | |
| | 1994.08-2002.04 | MT | F | R | Bus FWD D8C (XUD9UTF) | Payload:1000/1400kg,Trans. code:MG | GDS10036 | Drive Shaft | 54T | 28 | 41 | 63 | 112.5 | 1079 | |

| | YEAR | TRANSM. | F/R | L/R | BODY STYLE & DRIVE TYPE & ENGINE | REMARKS | G-AP Ref. | PRODUCT | ABS | Technical Specifications A | B | C | H | L | P |
|---|---|---|---|---|---|---|---|---|---|---|---|---|---|---|---|
| **CITROËN Jumper 27** | | | | | | | | | | | | | | | |
| 1.9 (66 kw) | 1994.08-2002.04 | MT | F | R | Bus FWD D8C (XUD9UTF) | Payload:1800kg,Trans. code:MG | GDS10066 | Drive Shaft | | 35 | 41 | 70 | 117 | 1085 | |
| | 1994.08-2002.04 | MT | F | R | Bus FWD D8C (XUD9UTF) | Payload:1000/1400kg,Trans. code:ME/ML | GDS10069 | Drive Shaft | | 28 | 37 | 63 | 112.5 | 1072 | |
| | 1994.08-2002.04 | MT | F | R | Bus FWD D8C (XUD9UTF) | Payload:1000/1400kg,Trans. code:MG | GDS10103 | Drive Shaft | | 28 | 41 | 63 | 112.5 | 1079 | |
| | 1994.08-2002.04 | MT | F | R | Bus FWD D8C (XUD9UTF) | Payload:1000/1400kg,Trans. code:ME/ML | GDS10104 | Drive Shaft | 54T | 28 | 37 | 63 | 112.5 | 1072 | |
| | 1994.08-2002.04 | MT | F | L/R | Bus FWD D8C (XUD9UTF) | Payload:1800kg,Trans. code:MG | GCO10011 | Outer Joint | 54T | 35 | 45 | 70 | 117 | 73 | I |
| | 1994.08-2002.04 | MT | F | L/R | Bus FWD D8C (XUD9UTF) | Payload:1000/1400kg,Trans. code:ME/ML/MG | GCO10012 | Outer Joint | | 28 | 39 | 63 | 112.5 | 63 | I |
| | 1994.08-2002.04 | MT | F | L/R | Bus FWD D8C (XUD9UTF) | Payload:1000/1400kg,Trans. code:ME/ML/MG | GCO10013 | Outer Joint | 54T | 28 | 39 | 63 | 112.5 | 63 | I |
| | 1994.08-2002.04 | MT | F | L/R | Bus FWD D8C (XUD9UTF) | Payload:1800kg,Trans. code:MG | GCO10050 | Outer Joint | | 35 | 45 | 70 | 117 | 73 | I |
| | 1994.08-2002.04 | MT | F | L | Bus FWD D8C (XUD9UTF) | Payload:1800kg,Trans. code:MG | GCI10010 | Inner Joint | | 41 | 45 | 43 | 70 | 115.5 | |
| | 1994.08-2002.04 | MT | F | L | Bus FWD D8C (XUD9UTF) | Payload:1000/1400kg,Trans. code:MG | GCI10013 | Inner Joint | | 41 | 39 | 43 | 70 | 104 | |
| | 1994.08-2002.04 | MT | F | L | Bus FWD D8C (XUD9UTF) | Payload:1000/1400kg,Trans. code:ME/ML | GCI10015 | Inner Joint | | 37 | 39 | 40 | 68.5 | 104 | |
| | 1994.08-2002.04 | MT | F | L | Bus FWD D8C (XUD9UTF) | Payload:1000/1400kg,Trans. code:ME/ML | GCI45013 | Inner Joint | | 37 | 39 | 40 | 68.5 | 100 | |
| | 1994.08-2002.04 | MT | F | R | Bus FWD D8C (XUD9UTF) | Payload:1800kg,Trans. code:MG | GCI10009 | Inner Joint | | 41 | 45 | 34.9 | 393 | 115.6 | |
| | 1994.08-2002.04 | MT | F | R | Bus FWD D8C (XUD9UTF) | Payload:1000/1400kg,Trans. code:ME/ML | GCI10034 | Inner Joint | | 37 | 39 | 31.9 | 369.5 | 99 | |
| 1.9 (68 kw) | 1994.03-2002.04 | MT | F | L | Van FWD D8C (XUD9UTF) | Payload:1800kg,Trans. code:MG | GDS10033 | Drive Shaft | 54T | 35 | 41 | 70 | 117 | 762 | |
| | 1994.03-2002.04 | MT | F | L | Van FWD D8C (XUD9UTF) | Payload:1000/1400kg,Trans. code:MG | GDS10035 | Drive Shaft | 54T | 28 | 41 | 63 | 112.5 | 757.5 | |
| | 1994.03-2002.04 | MT | F | L | Van FWD D8C (XUD9UTF) | Payload:1000/1400kg,Trans. code:ME/ML | GDS10037 | Drive Shaft | 54T | 28 | 37 | 63 | 112.5 | 771 | |
| | 1994.03-2002.04 | MT | F | L | Van FWD D8C (XUD9UTF) | Payload:1800kg,Trans. code:MG | GDS10067 | Drive Shaft | | 35 | 41 | 70 | 117 | 762 | |
| | 1994.03-2002.04 | MT | F | L | Van FWD D8C (XUD9UTF) | Payload:1000/1400kg,Trans. code:MG | GDS10102 | Drive Shaft | | 28 | 41 | 63 | 112.5 | 757.5 | |
| | 1994.03-2002.04 | MT | F | L | Van FWD D8C (XUD9UTF) | Payload:1000/1400kg,Trans. code:ME/ML | GDS10105 | Drive Shaft | | 28 | 37 | 63 | 112.5 | 771 | |
| | 1994.03-2002.04 | MT | F | R | Van FWD D8C (XUD9UTF) | Payload:1800kg,Trans. code:MG | GDS10032 | Drive Shaft | 54T | 35 | 41 | 70 | 117 | 1085 | |
| | 1994.03-2002.04 | MT | F | R | Van FWD D8C (XUD9UTF) | Payload:1000/1400kg,Trans. code:MG | GDS10036 | Drive Shaft | 54T | 28 | 41 | 63 | 112.5 | 1079 | |
| | 1994.03-2002.04 | MT | F | R | Van FWD D8C (XUD9UTF) | Payload:1800kg,Trans. code:MG | GDS10066 | Drive Shaft | | 35 | 41 | 70 | 117 | 1085 | |
| | 1994.03-2002.04 | MT | F | R | Van FWD D8C (XUD9UTF) | Payload:1000/1400kg,Trans. code:ME/ML | GDS10069 | Drive Shaft | | 28 | 37 | 63 | 112.5 | 1072 | |
| | 1994.03-2002.04 | MT | F | R | Van FWD D8C (XUD9UTF) | Payload:1000/1400kg,Trans. code:MG | GDS10103 | Drive Shaft | | 28 | 41 | 63 | 112.5 | 1079 | |
| | 1994.03-2002.04 | MT | F | R | Van FWD D8C (XUD9UTF) | Payload:1000/1400kg,Trans. code:ME/ML | GDS10104 | Drive Shaft | 54T | 28 | 37 | 63 | 112.5 | 1072 | |
| | 1994.03-2002.04 | MT | F | L/R | Van FWD D8C (XUD9UTF) | Payload:1800kg,Trans. code:MG | GCO10011 | Outer Joint | 54T | 35 | 45 | 70 | 117 | 73 | I |
| | 1994.03-2002.04 | MT | F | L/R | Van FWD D8C (XUD9UTF) | Payload:1000/1400kg,Trans. code:ME/ML/MG | GCO10012 | Outer Joint | | 28 | 39 | 63 | 112.5 | 63 | I |
| | 1994.03-2002.04 | MT | F | L/R | Van FWD D8C (XUD9UTF) | Payload:1000/1400kg,Trans. code:ME/ML/MG | GCO10013 | Outer Joint | 54T | 28 | 39 | 63 | 112.5 | 63 | I |
| | 1994.03-2002.04 | MT | F | L/R | Van FWD D8C (XUD9UTF) | Payload:1800kg,Trans. code:MG | GCO10050 | Outer Joint | | 35 | 45 | 70 | 117 | 73 | I |
| | 1994.03-2002.04 | MT | F | L | Van FWD D8C (XUD9UTF) | Payload:1800kg,Trans. code:MG | GCI10010 | Inner Joint | | 41 | 45 | 43 | 70 | 115.5 | |
| | 1994.03-2002.04 | MT | F | L | Van FWD D8C (XUD9UTF) | Payload:1000/1400kg,Trans. code:MG | GCI10013 | Inner Joint | | 41 | 39 | 43 | 70 | 104 | |
| | 1994.03-2002.04 | MT | F | L | Van FWD D8C (XUD9UTF) | Payload:1000/1400kg,Trans. code:ME/ML | GCI10015 | Inner Joint | | 37 | 39 | 40 | 68.5 | 104 | |
| | 1994.03-2002.04 | MT | F | L | Van FWD D8C (XUD9UTF) | Payload:1000/1400kg,Trans. code:ME/ML | GCI45013 | Inner Joint | | 37 | 39 | 40 | 68.5 | 100 | |
| | 1994.03-2002.04 | MT | F | R | Van FWD D8C (XUD9UTF) | Payload:1800kg,Trans. code:MG | GCI10009 | Inner Joint | | 41 | 45 | 34.9 | 393 | 115.6 | |
| | 1994.03-2002.04 | MT | F | R | Van FWD D8C (XUD9UTF) | Payload:1000/1400kg,Trans. code:ME/ML | GCI10034 | Inner Joint | | 37 | 39 | 31.9 | 369.5 | 99 | |
| 2.0 (80 kw) | 1994.02-2002.04 | MT | F | L | Bus FWD RFW (XU10J2U) | Payload:1800kg,Trans. code:MG | GDS10033 | Drive Shaft | 54T | 35 | 41 | 70 | 117 | 762 | |
| | 1994.02-2002.04 | MT | F | L | Bus FWD RFW (XU10J2U) | Payload:1000/1400kg,Trans. code:MG | GDS10035 | Drive Shaft | 54T | 28 | 41 | 63 | 112.5 | 757.5 | |
| | 1994.02-2002.04 | MT | F | L | Bus FWD RFW (XU10J2U) | Payload:1000/1400kg,Trans. code:ME/ML | GDS10037 | Drive Shaft | 54T | 28 | 37 | 63 | 112.5 | 771 | |
| | 1994.02-2002.04 | MT | F | L | Bus FWD RFW (XU10J2U) | Payload:1800kg,Trans. code:MG | GDS10067 | Drive Shaft | | 35 | 41 | 70 | 117 | 762 | |
| | 1994.02-2002.04 | MT | F | L | Bus FWD RFW (XU10J2U) | Payload:1000/1400kg,Trans. code:MG | GDS10102 | Drive Shaft | | 28 | 41 | 63 | 112.5 | 757.5 | |
| | 1994.02-2002.04 | MT | F | L | Bus FWD RFW (XU10J2U) | Payload:1000/1400kg,Trans. code:ME/ML | GDS10105 | Drive Shaft | | 28 | 37 | 63 | 112.5 | 771 | |
| | 1994.02-2002.04 | MT | F | R | Bus FWD RFW (XU10J2U) | Payload:1800kg,Trans. code:MG | GDS10032 | Drive Shaft | 54T | 35 | 41 | 70 | 117 | 1085 | |
| | 1994.02-2002.04 | MT | F | R | Bus FWD RFW (XU10J2U) | Payload:1000/1400kg,Trans. code:MG | GDS10036 | Drive Shaft | 54T | 28 | 41 | 63 | 112.5 | 1079 | |
| | 1994.02-2002.04 | MT | F | R | Bus FWD RFW (XU10J2U) | Payload:1800kg,Trans. code:MG | GDS10066 | Drive Shaft | | 35 | 41 | 70 | 117 | 1085 | |
| | 1994.02-2002.04 | MT | F | R | Bus FWD RFW (XU10J2U) | Payload:1000/1400kg,Trans. code:ME/ML | GDS10069 | Drive Shaft | | 28 | 37 | 63 | 112.5 | 1072 | |
| | 1994.02-2002.04 | MT | F | R | Bus FWD RFW (XU10J2U) | Payload:1000/1400kg,Trans. code:MG | GDS10103 | Drive Shaft | | 28 | 41 | 63 | 112.5 | 1079 | |
| | 1994.02-2002.04 | MT | F | R | Bus FWD RFW (XU10J2U) | Payload:1000/1400kg,Trans. code:ME/ML | GDS10104 | Drive Shaft | 54T | 28 | 37 | 63 | 112.5 | 1072 | |
| | 1994.02-2002.04 | MT | F | L/R | Bus FWD RFW (XU10J2U) | Payload:1800kg,Trans. code:MG | GCO10011 | Outer Joint | 54T | 35 | 45 | 70 | 117 | 73 | I |
| | 1994.02-2002.04 | MT | F | L/R | Bus FWD RFW (XU10J2U) | Payload:1000/1400kg,Trans. code:ME/ML/MG | GCO10012 | Outer Joint | | 28 | 39 | 63 | 112.5 | 63 | I |
| | 1994.02-2002.04 | MT | F | L/R | Bus FWD RFW (XU10J2U) | Payload:1000/1400kg,Trans. code:ME/ML/MG | GCO10013 | Outer Joint | 54T | 28 | 39 | 63 | 112.5 | 63 | I |
| | 1994.02-2002.04 | MT | F | L/R | Bus FWD RFW (XU10J2U) | Payload:1800kg,Trans. code:MG | GCO10050 | Outer Joint | | 35 | 45 | 70 | 117 | 73 | I |
| | 1994.02-2002.04 | MT | F | L | Bus FWD RFW (XU10J2U) | Payload:1800kg,Trans. code:MG | GCI10010 | Inner Joint | | 41 | 45 | 43 | 70 | 115.5 | |
| | 1994.02-2002.04 | MT | F | L | Bus FWD RFW (XU10J2U) | Payload:1000/1400kg,Trans. code:MG | GCI10013 | Inner Joint | | 41 | 39 | 43 | 70 | 104 | |
| | 1994.02-2002.04 | MT | F | L | Bus FWD RFW (XU10J2U) | Payload:1000/1400kg,Trans. code:ME/ML | GCI10015 | Inner Joint | | 37 | 39 | 40 | 68.5 | 104 | |
| | 1994.02-2002.04 | MT | F | L | Bus FWD RFW (XU10J2U) | Payload:1000/1400kg,Trans. code:ME/ML | GCI45013 | Inner Joint | | 37 | 39 | 40 | 68.5 | 100 | |
| | 1994.02-2002.04 | MT | F | R | Bus FWD RFW (XU10J2U) | Payload:1800kg,Trans. code:MG | GCI10009 | Inner Joint | | 41 | 45 | 34.9 | 393 | 115.6 | |
| | 1994.02-2002.04 | MT | F | R | Bus FWD RFW (XU10J2U) | Payload:1000/1400kg,Trans. code:ME/ML | GCI10034 | Inner Joint | | 37 | 39 | 31.9 | 369.5 | 99 | |
| | 1994.03-2002.04 | MT | F | L | Van FWD RFW (XU10J2U) | Payload:1800kg,Trans. code:MG | GDS10033 | Drive Shaft | 54T | 35 | 41 | 70 | 117 | 762 | |
| | 1994.03-2002.04 | MT | F | L | Van FWD RFW (XU10J2U) | Payload:1000/1400kg,Trans. code:MG | GDS10035 | Drive Shaft | 54T | 28 | 41 | 63 | 112.5 | 757.5 | |
| | 1994.03-2002.04 | MT | F | L | Van FWD RFW (XU10J2U) | Payload:1000/1400kg,Trans. code:ME/ML | GDS10037 | Drive Shaft | 54T | 28 | 37 | 63 | 112.5 | 771 | |
| | 1994.03-2002.04 | MT | F | L | Van FWD RFW (XU10J2U) | Payload:1800kg,Trans. code:MG | GDS10067 | Drive Shaft | | 35 | 41 | 70 | 117 | 762 | |
| | 1994.03-2002.04 | MT | F | L | Van FWD RFW (XU10J2U) | Payload:1000/1400kg,Trans. code:MG | GDS10102 | Drive Shaft | | 28 | 41 | 63 | 112.5 | 757.5 | |
| | 1994.03-2002.04 | MT | F | L | Van FWD RFW (XU10J2U) | Payload:1000/1400kg,Trans. code:ME/ML | GDS10105 | Drive Shaft | | 28 | 37 | 63 | 112.5 | 771 | |
| | 1994.03-2002.04 | MT | F | R | Van FWD RFW (XU10J2U) | Payload:1800kg,Trans. code:MG | GDS10032 | Drive Shaft | 54T | 35 | 41 | 70 | 117 | 1085 | |

| | YEAR | TRANSM. | F/R | L/R | BODY STYLE & DRIVE TYPE & ENGINE | REMARKS | G-AP Ref. | PRODUCT | ABS | Technical Specifications A | B | C | H | L | P |
|---|---|---|---|---|---|---|---|---|---|---|---|---|---|---|---|
| **CITROËN Jumper 27** | | | | | | | | | | | | | | | |
| 2.0 (80 kw) | 1994.03-2002.04 | MT | F | R | Van FWD RFW (XU10J2U) | Payload:1000/1400kg,Trans. code:MG | GDS10036 | Drive Shaft | 54T | 28 | 41 | 63 | 112.5 | 1079 | |
| | 1994.03-2002.04 | MT | F | R | Van FWD RFW (XU10J2U) | Payload:1800kg,Trans. code:MG | GDS10066 | Drive Shaft | | 35 | 41 | 70 | 117 | 1085 | |
| | 1994.03-2002.04 | MT | F | R | Van FWD RFW (XU10J2U) | Payload:1000/1400kg,Trans. code:ME/ML | GDS10069 | Drive Shaft | | 28 | 37 | 63 | 112.5 | 1072 | |
| | 1994.03-2002.04 | MT | F | R | Van FWD RFW (XU10J2U) | Payload:1000/1400kg,Trans. code:MG | GDS10103 | Drive Shaft | | 28 | 41 | 63 | 112.5 | 1079 | |
| | 1994.03-2002.04 | MT | F | R | Van FWD RFW (XU10J2U) | Payload:1000/1400kg,Trans. code:ME/ML | GDS10104 | Drive Shaft | 54T | 28 | 37 | 63 | 112.5 | 1072 | |
| | 1994.03-2002.04 | MT | F | L/R | Van FWD RFW (XU10J2U) | Payload:1800kg,Trans. code:MG | GCO10011 | Outer Joint | 54T | 35 | 45 | 70 | 117 | 73 | I |
| | 1994.03-2002.04 | MT | F | L/R | Van FWD RFW (XU10J2U) | Payload:1000/1400kg,Trans. code:ME/ML/MG | GCO10012 | Outer Joint | | 28 | 39 | 63 | 112.5 | 63 | I |
| | 1994.03-2002.04 | MT | F | L/R | Van FWD RFW (XU10J2U) | Payload:1000/1400kg,Trans. code:ME/ML/MG | GCO10013 | Outer Joint | 54T | 28 | 39 | 63 | 112.5 | 63 | I |
| | 1994.03-2002.04 | MT | F | L/R | Van FWD RFW (XU10J2U) | Payload:1800kg,Trans. code:MG | GCO10050 | Outer Joint | | 35 | 45 | 70 | 117 | 73 | I |
| | 1994.03-2002.04 | MT | F | L | Van FWD RFW (XU10J2U) | Payload:1800kg,Trans. code:MG | GCI10010 | Inner Joint | | 41 | 45 | 43 | 70 | 115.5 | |
| | 1994.03-2002.04 | MT | F | L | Van FWD RFW (XU10J2U) | Payload:1000/1400kg,Trans. code:MG | GCI10013 | Inner Joint | | 41 | 39 | 43 | 70 | 104 | |
| | 1994.03-2002.04 | MT | F | L | Van FWD RFW (XU10J2U) | Payload:1000/1400kg,Trans. code:ME/ML | GCI10015 | Inner Joint | | 37 | 39 | 40 | 68.5 | 104 | |
| | 1994.03-2002.04 | MT | F | L | Van FWD RFW (XU10J2U) | Payload:1000/1400kg,Trans. code:ME/ML | GCI45013 | Inner Joint | | 37 | 39 | 40 | 68.5 | 100 | |
| | 1994.03-2002.04 | MT | F | R | Van FWD RFW (XU10J2U) | Payload:1800kg,Trans. code:MG | GCI10009 | Inner Joint | | 41 | 45 | 34.9 | 393 | 115.6 | |
| | 1994.03-2002.04 | MT | F | R | Van FWD RFW (XU10J2U) | Payload:1000/1400kg,Trans. code:ME/ML | GCI10034 | Inner Joint | | 37 | 39 | 31.9 | 369.5 | 99 | |
| | 1996.08-2002.04 | MT | F | L | Bus 4WD RFW (XU10J2U) | Payload:1800kg,Trans. code:MG | GDS10033 | Drive Shaft | 54T | 35 | 41 | 70 | 117 | 762 | |
| | 1996.08-2002.04 | MT | F | L | Bus 4WD RFW (XU10J2U) | Payload:1000/1400kg,Trans. code:MG | GDS10035 | Drive Shaft | 54T | 28 | 41 | 63 | 112.5 | 757.5 | |
| | 1996.08-2002.04 | MT | F | L | Bus 4WD RFW (XU10J2U) | Payload:1000/1400kg,Trans. code:ME/ML | GDS10037 | Drive Shaft | 54T | 28 | 37 | 63 | 112.5 | 771 | |
| | 1996.08-2002.04 | MT | F | L | Bus 4WD RFW (XU10J2U) | Payload:1800kg,Trans. code:MG | GDS10067 | Drive Shaft | | 35 | 41 | 70 | 117 | 762 | |
| | 1996.08-2002.04 | MT | F | L | Bus 4WD RFW (XU10J2U) | Payload:1000/1400kg,Trans. code:MG | GDS10102 | Drive Shaft | | 28 | 41 | 63 | 112.5 | 757.5 | |
| | 1996.08-2002.04 | MT | F | L | Bus 4WD RFW (XU10J2U) | Payload:1000/1400kg,Trans. code:ME/ML | GDS10105 | Drive Shaft | | 28 | 37 | 63 | 112.5 | 771 | |
| | 1996.08-2002.04 | MT | F | R | Bus 4WD RFW (XU10J2U) | Payload:1800kg,Trans. code:MG | GDS10032 | Drive Shaft | 54T | 35 | 41 | 70 | 117 | 1085 | |
| | 1996.08-2002.04 | MT | F | R | Bus 4WD RFW (XU10J2U) | Payload:1000/1400kg,Trans. code:MG | GDS10036 | Drive Shaft | 54T | 28 | 41 | 63 | 112.5 | 1079 | |
| | 1996.08-2002.04 | MT | F | R | Bus 4WD RFW (XU10J2U) | Payload:1800kg,Trans. code:MG | GDS10066 | Drive Shaft | | 35 | 41 | 70 | 117 | 1085 | |
| | 1996.08-2002.04 | MT | F | R | Bus 4WD RFW (XU10J2U) | Payload:1000/1400kg,Trans. code:ME/ML | GDS10069 | Drive Shaft | | 28 | 37 | 63 | 112.5 | 1072 | |
| | 1996.08-2002.04 | MT | F | R | Bus 4WD RFW (XU10J2U) | Payload:1000/1400kg,Trans. code:MG | GDS10103 | Drive Shaft | | 28 | 41 | 63 | 112.5 | 1079 | |
| | 1996.08-2002.04 | MT | F | R | Bus 4WD RFW (XU10J2U) | Payload:1000/1400kg,Trans. code:ME/ML | GDS10104 | Drive Shaft | 54T | 28 | 37 | 63 | 112.5 | 1072 | |
| | 1996.08-2002.04 | MT | F | L/R | Bus 4WD RFW (XU10J2U) | Payload:1800kg,Trans. code:MG | GCO10011 | Outer Joint | 54T | 35 | 45 | 70 | 117 | 73 | I |
| | 1996.08-2002.04 | MT | F | L/R | Bus 4WD RFW (XU10J2U) | Payload:1000/1400kg,Trans. code:ME/ML/MG | GCO10012 | Outer Joint | | 28 | 39 | 63 | 112.5 | 63 | I |
| | 1996.08-2002.04 | MT | F | L/R | Bus 4WD RFW (XU10J2U) | Payload:1000/1400kg,Trans. code:ME/ML/MG | GCO10013 | Outer Joint | 54T | 28 | 39 | 63 | 112.5 | 63 | I |
| | 1996.08-2002.04 | MT | F | L/R | Bus 4WD RFW (XU10J2U) | Payload:1800kg,Trans. code:MG | GCO10050 | Outer Joint | | 35 | 45 | 70 | 117 | 73 | I |
| | 1996.08-2002.04 | MT | F | L | Bus 4WD RFW (XU10J2U) | Payload:1800kg,Trans. code:MG | GCI10010 | Inner Joint | | 41 | 45 | 43 | 70 | 115.5 | |
| | 1996.08-2002.04 | MT | F | L | Bus 4WD RFW (XU10J2U) | Payload:1000/1400kg,Trans. code:MG | GCI10013 | Inner Joint | | 41 | 39 | 43 | 70 | 104 | |
| | 1996.08-2002.04 | MT | F | L | Bus 4WD RFW (XU10J2U) | Payload:1000/1400kg,Trans. code:ME/ML | GCI10015 | Inner Joint | | 37 | 39 | 40 | 68.5 | 104 | |
| | 1996.08-2002.04 | MT | F | L | Bus 4WD RFW (XU10J2U) | Payload:1000/1400kg,Trans. code:ME/ML | GCI45013 | Inner Joint | | 37 | 39 | 40 | 68.5 | 100 | |
| | 1996.08-2002.04 | MT | F | R | Bus 4WD RFW (XU10J2U) | Payload:1800kg,Trans. code:MG | GCI10009 | Inner Joint | | 41 | 45 | 34.9 | 393 | 115.6 | |
| | 1996.08-2002.04 | MT | F | R | Bus 4WD RFW (XU10J2U) | Payload:1000/1400kg,Trans. code:ME/ML | GCI10034 | Inner Joint | | 37 | 39 | 31.9 | 369.5 | 99 | |
| 2.5 (63 kw) | 1994.03-2002.04 | MT | F | L | Van FWD T9A (DJ5) | Payload:1800kg,Trans. code:MG | GDS10033 | Drive Shaft | 54T | 35 | 41 | 70 | 117 | 762 | |
| | 1994.03-2002.04 | MT | F | L | Van FWD T9A (DJ5) | Payload:1000/1400kg,Trans. code:MG | GDS10035 | Drive Shaft | 54T | 28 | 41 | 63 | 112.5 | 757.5 | |
| | 1994.03-2002.04 | MT | F | L | Van FWD T9A (DJ5) | Payload:1000/1400kg,Trans. code:ME/ML | GDS10037 | Drive Shaft | 54T | 28 | 37 | 63 | 112.5 | 771 | |
| | 1994.03-2002.04 | MT | F | L | Van FWD T9A (DJ5) | Payload:1800kg,Trans. code:MG | GDS10067 | Drive Shaft | | 35 | 41 | 70 | 117 | 762 | |
| | 1994.03-2002.04 | MT | F | L | Van FWD T9A (DJ5) | Payload:1000/1400kg,Trans. code:ME/ML | GDS10102 | Drive Shaft | | 28 | 41 | 63 | 112.5 | 757.5 | |
| | 1994.03-2002.04 | MT | F | L | Van FWD T9A (DJ5) | Payload:1000/1400kg,Trans. code:ME/ML | GDS10105 | Drive Shaft | | 28 | 37 | 63 | 112.5 | 771 | |
| | 1994.03-2002.04 | MT | F | R | Van FWD T9A (DJ5) | Payload:1800kg,Trans. code:MG | GDS10032 | Drive Shaft | 54T | 35 | 41 | 70 | 117 | 1085 | |
| | 1994.03-2002.04 | MT | F | R | Van FWD T9A (DJ5) | Payload:1000/1400kg,Trans. code:MG | GDS10036 | Drive Shaft | 54T | 28 | 41 | 63 | 112.5 | 1079 | |
| | 1994.03-2002.04 | MT | F | R | Van FWD T9A (DJ5) | Payload:1000/1400kg,Trans. code:ME/ML | GDS10066 | Drive Shaft | | 35 | 41 | 70 | 117 | 1085 | |
| | 1994.03-2002.04 | MT | F | R | Van FWD T9A (DJ5) | Payload:1800kg,Trans. code:MG | GDS10069 | Drive Shaft | | 28 | 37 | 63 | 112.5 | 1072 | |
| | 1994.03-2002.04 | MT | F | R | Van FWD T9A (DJ5) | Payload:1000/1400kg,Trans. code:MG | GDS10103 | Drive Shaft | | 28 | 41 | 63 | 112.5 | 1079 | |
| | 1994.03-2002.04 | MT | F | R | Van FWD T9A (DJ5) | Payload:1000/1400kg,Trans. code:MG | GDS10104 | Drive Shaft | 54T | 28 | 37 | 63 | 112.5 | 1072 | |
| | 1994.03-2002.04 | MT | F | L/R | Van FWD T9A (DJ5) | Payload:1800kg,Trans. code:MG | GCO10011 | Outer Joint | 54T | 35 | 45 | 70 | 117 | 73 | I |
| | 1994.03-2002.04 | MT | F | L/R | Van FWD T9A (DJ5) | Payload:1000/1400kg,Trans. code:ME/ML/MG | GCO10012 | Outer Joint | | 28 | 39 | 63 | 112.5 | 63 | I |
| | 1994.03-2002.04 | MT | F | L/R | Van FWD T9A (DJ5) | Payload:1000/1400kg,Trans. code:ME/ML/MG | GCO10013 | Outer Joint | 54T | 28 | 39 | 63 | 112.5 | 63 | I |
| | 1994.03-2002.04 | MT | F | L/R | Van FWD T9A (DJ5) | Payload:1800kg,Trans. code:MG | GCO10050 | Outer Joint | | 35 | 45 | 70 | 117 | 73 | I |
| | 1994.03-2002.04 | MT | F | L | Van FWD T9A (DJ5) | Payload:1800kg,Trans. code:MG | GCI10010 | Inner Joint | | 41 | 45 | 43 | 70 | 115.5 | |
| | 1994.03-2002.04 | MT | F | L | Van FWD T9A (DJ5) | Payload:1000/1400kg,Trans. code:MG | GCI10013 | Inner Joint | | 41 | 39 | 43 | 70 | 104 | |
| | 1994.03-2002.04 | MT | F | L | Van FWD T9A (DJ5) | Payload:1000/1400kg,Trans. code:ME/ML | GCI10015 | Inner Joint | | 37 | 39 | 40 | 68.5 | 104 | |
| | 1994.03-2002.04 | MT | F | L | Van FWD T9A (DJ5) | Payload:1000/1400kg,Trans. code:ME/ML | GCI45013 | Inner Joint | | 37 | 39 | 40 | 68.5 | 100 | |
| | 1994.03-2002.04 | MT | F | R | Van FWD T9A (DJ5) | Payload:1800kg,Trans. code:MG | GCI10009 | Inner Joint | | 41 | 45 | 34.9 | 393 | 115.6 | |
| | 1994.03-2002.04 | MT | F | R | Van FWD T9A (DJ5) | Payload:1000/1400kg,Trans. code:ME/ML | GCI10034 | Inner Joint | | 37 | 39 | 31.9 | 369.5 | 99 | |
| 2.5 (76 kw) | 1994.08-2002.04 | MT | F | L | Bus FWD T8A (DJ5T) | Payload:1800kg,Trans. code:MG | GDS10033 | Drive Shaft | 54T | 35 | 41 | 70 | 117 | 762 | |
| | 1994.08-2002.04 | MT | F | L | Bus FWD T8A (DJ5T) | Payload:1000/1400kg,Trans. code:MG | GDS10035 | Drive Shaft | 54T | 28 | 41 | 63 | 112.5 | 757.5 | |
| | 1994.08-2002.04 | MT | F | L | Bus FWD T8A (DJ5T) | Payload:1000/1400kg,Trans. code:ME/ML | GDS10037 | Drive Shaft | 54T | 28 | 37 | 63 | 112.5 | 771 | |
| | 1994.08-2002.04 | MT | F | L | Bus FWD T8A (DJ5T) | Payload:1800kg,Trans. code:MG | GDS10067 | Drive Shaft | | 35 | 41 | 70 | 117 | 762 | |
| | 1994.08-2002.04 | MT | F | L | Bus FWD T8A (DJ5T) | Payload:1000/1400kg,Trans. code:MG | GDS10102 | Drive Shaft | | 28 | 41 | 63 | 112.5 | 757.5 | |
| | 1994.08-2002.04 | MT | F | L | Bus FWD T8A (DJ5T) | Payload:1000/1400kg,Trans. code:ME/ML | GDS10105 | Drive Shaft | | 28 | 37 | 63 | 112.5 | 771 | |

| | YEAR | TRANSM. | F/R | L/R | BODY STYLE & DRIVE TYPE & ENGINE | REMARKS | G-AP Ref. | PRODUCT | ABS | Technical Specifications A | B | C | H | L | P |
|---|---|---|---|---|---|---|---|---|---|---|---|---|---|---|---|
| **CITROËN Jumper 27** | | | | | | | | | | | | | | | |
| 2.5 (76 kw) | 1994.08-2002.04 | MT | F | R | Bus FWD T8A (DJ5T) | Payload:1800kg,Trans. code:MG | GDS10032 | Drive Shaft | 54T | 35 | 41 | 70 | 117 | 1085 | |
| | 1994.08-2002.04 | MT | F | R | Bus FWD T8A (DJ5T) | Payload:1000/1400kg,Trans. code:MG | GDS10036 | Drive Shaft | 54T | 28 | 41 | 63 | 112.5 | 1079 | |
| | 1994.08-2002.04 | MT | F | R | Bus FWD T8A (DJ5T) | Payload:1800kg,Trans. code:MG | GDS10066 | Drive Shaft | | 35 | 41 | 70 | 117 | 1085 | |
| | 1994.08-2002.04 | MT | F | R | Bus FWD T8A (DJ5T) | Payload:1000/1400kg,Trans. code:ME/ML | GDS10069 | Drive Shaft | | 28 | 37 | 63 | 112.5 | 1072 | |
| | 1994.08-2002.04 | MT | F | R | Bus FWD T8A (DJ5T) | Payload:1000/1400kg,Trans. code:MG | GDS10103 | Drive Shaft | | 28 | 41 | 63 | 112.5 | 1079 | |
| | 1994.08-2002.04 | MT | F | R | Bus FWD T8A (DJ5T) | Payload:1000/1400kg,Trans. code:ME/ML | GDS10104 | Drive Shaft | 54T | 28 | 37 | 63 | 112.5 | 1072 | |
| | 1994.08-2002.04 | MT | F | L/R | Bus FWD T8A (DJ5T) | Payload:1800kg,Trans. code:MG | GCO10011 | Outer Joint | 54T | 35 | 45 | 70 | 117 | 73 | I |
| | 1994.08-2002.04 | MT | F | L/R | Bus FWD T8A (DJ5T) | Payload:1000/1400kg,Trans. code:ME/ML/MG | GCO10012 | Outer Joint | | 28 | 39 | 63 | 112.5 | 63 | I |
| | 1994.08-2002.04 | MT | F | L/R | Bus FWD T8A (DJ5T) | Payload:1000/1400kg,Trans. code:ME/ML/MG | GCO10013 | Outer Joint | 54T | 28 | 39 | 63 | 112.5 | 63 | I |
| | 1994.08-2002.04 | MT | F | L/R | Bus FWD T8A (DJ5T) | Payload:1800kg,Trans. code:MG | GCO10050 | Outer Joint | | 35 | 45 | 70 | 117 | 73 | I |
| | 1994.08-2002.04 | MT | F | L | Bus FWD T8A (DJ5T) | Payload:1800kg,Trans. code:MG | GCI10010 | Inner Joint | | 41 | 45 | 43 | 70 | 115.5 | |
| | 1994.08-2002.04 | MT | F | L | Bus FWD T8A (DJ5T) | Payload:1000/1400kg,Trans. code:MG | GCI10013 | Inner Joint | | 41 | 39 | 43 | 70 | 104 | |
| | 1994.08-2002.04 | MT | F | L | Bus FWD T8A (DJ5T) | Payload:1000/1400kg,Trans. code:ME/ML | GCI10015 | Inner Joint | | 37 | 39 | 40 | 68.5 | 104 | |
| | 1994.08-2002.04 | MT | F | L | Bus FWD T8A (DJ5T) | Payload:1000/1400kg,Trans. code:ME/ML | GCI45013 | Inner Joint | | 37 | 39 | 40 | 68.5 | 100 | |
| | 1994.08-2002.04 | MT | F | R | Bus FWD T8A (DJ5T) | Payload:1800kg,Trans. code:MG | GCI10009 | Inner Joint | | 41 | 45 | 34.9 | 393 | 115.6 | |
| | 1994.08-2002.04 | MT | F | R | Bus FWD T8A (DJ5T) | Payload:1000/1400kg,Trans. code:ME/ML | GCI10034 | Inner Joint | | 37 | 39 | 31.9 | 369.5 | 99 | |
| 2.5 (79 kw) | 1996.12-2000.11 | MT | F | L | Bus FWD THX (DJ5TED) | Payload:1800kg,Trans. code:MG | GDS10033 | Drive Shaft | 54T | 35 | 41 | 70 | 117 | 762 | |
| | 1996.12-2000.11 | MT | F | L | Bus FWD THX (DJ5TED) | Payload:1000/1400kg,Trans. code:MG | GDS10035 | Drive Shaft | 54T | 28 | 41 | 63 | 112.5 | 757.5 | |
| | 1996.12-2000.11 | MT | F | L | Bus FWD THX (DJ5TED) | Payload:1000/1400kg,Trans. code:ME/ML | GDS10037 | Drive Shaft | 54T | 28 | 37 | 63 | 112.5 | 771 | |
| | 1996.12-2000.11 | MT | F | L | Bus FWD THX (DJ5TED) | Payload:1800kg,Trans. code:MG | GDS10067 | Drive Shaft | | 35 | 41 | 70 | 117 | 762 | |
| | 1996.12-2000.11 | MT | F | L | Bus FWD THX (DJ5TED) | Payload:1000/1400kg,Trans. code:MG | GDS10102 | Drive Shaft | | 28 | 41 | 63 | 112.5 | 757.5 | |
| | 1996.12-2000.11 | MT | F | L | Bus FWD THX (DJ5TED) | Payload:1000/1400kg,Trans. code:ME/ML | GDS10105 | Drive Shaft | | 28 | 37 | 63 | 112.5 | 771 | |
| | 1996.12-2000.11 | MT | F | R | Bus FWD THX (DJ5TED) | Payload:1800kg,Trans. code:MG | GDS10032 | Drive Shaft | 54T | 35 | 41 | 70 | 117 | 1085 | |
| | 1996.12-2000.11 | MT | F | R | Bus FWD THX (DJ5TED) | Payload:1000/1400kg,Trans. code:MG | GDS10036 | Drive Shaft | 54T | 28 | 41 | 63 | 112.5 | 1079 | |
| | 1996.12-2000.11 | MT | F | R | Bus FWD THX (DJ5TED) | Payload:1800kg,Trans. code:MG | GDS10066 | Drive Shaft | | 35 | 41 | 70 | 117 | 1085 | |
| | 1996.12-2000.11 | MT | F | R | Bus FWD THX (DJ5TED) | Payload:1000/1400kg,Trans. code:ME/ML | GDS10069 | Drive Shaft | | 28 | 37 | 63 | 112.5 | 1072 | |
| | 1996.12-2000.11 | MT | F | R | Bus FWD THX (DJ5TED) | Payload:1000/1400kg,Trans. code:MG | GDS10103 | Drive Shaft | | 28 | 41 | 63 | 112.5 | 1079 | |
| | 1996.12-2000.11 | MT | F | R | Bus FWD THX (DJ5TED) | Payload:1000/1400kg,Trans. code:ME/ML | GDS10104 | Drive Shaft | 54T | 28 | 37 | 63 | 112.5 | 1072 | |
| | 1996.12-2000.11 | MT | F | L/R | Bus FWD THX (DJ5TED) | Payload:1800kg,Trans. code:MG | GCO10011 | Outer Joint | 54T | 35 | 45 | 70 | 117 | 73 | I |
| | 1996.12-2000.11 | MT | F | L/R | Bus FWD THX (DJ5TED) | Payload:1000/1400kg,Trans. code:ME/ML/MG | GCO10012 | Outer Joint | | 28 | 39 | 63 | 112.5 | 63 | I |
| | 1996.12-2000.11 | MT | F | L/R | Bus FWD THX (DJ5TED) | Payload:1000/1400kg,Trans. code:ME/ML/MG | GCO10013 | Outer Joint | 54T | 28 | 39 | 63 | 112.5 | 63 | I |
| | 1996.12-2000.11 | MT | F | L/R | Bus FWD THX (DJ5TED) | Payload:1800kg,Trans. code:MG | GCO10050 | Outer Joint | | 35 | 45 | 70 | 117 | 73 | I |
| | 1996.12-2000.11 | MT | F | L | Bus FWD THX (DJ5TED) | Payload:1800kg,Trans. code:MG | GCI10010 | Inner Joint | | 41 | 45 | 43 | 70 | 115.5 | |
| | 1996.12-2000.11 | MT | F | L | Bus FWD THX (DJ5TED) | Payload:1000/1400kg,Trans. code:MG | GCI10013 | Inner Joint | | 41 | 39 | 43 | 70 | 104 | |
| | 1996.12-2000.11 | MT | F | L | Bus FWD THX (DJ5TED) | Payload:1000/1400kg,Trans. code:ME/ML | GCI10015 | Inner Joint | | 37 | 39 | 40 | 68.5 | 104 | |
| | 1996.12-2000.11 | MT | F | L | Bus FWD THX (DJ5TED) | Payload:1000/1400kg,Trans. code:ME/ML | GCI45013 | Inner Joint | | 37 | 39 | 40 | 68.5 | 100 | |
| | 1996.12-2000.11 | MT | F | R | Bus FWD THX (DJ5TED) | Payload:1800kg,Trans. code:MG | GCI10009 | Inner Joint | | 41 | 45 | 34.9 | 393 | 115.6 | |
| | 1996.12-2000.11 | MT | F | R | Bus FWD THX (DJ5TED) | Payload:1000/1400kg,Trans. code:ME/ML | GCI10034 | Inner Joint | | 37 | 39 | 31.9 | 369.5 | 99 | |
| | 1996.12-2000.11 | MT | F | L | Van FWD THX (DJ5TED) | Payload:1800kg,Trans. code:MG | GDS10033 | Drive Shaft | 54T | 35 | 41 | 70 | 117 | 762 | |
| | 1996.12-2000.11 | MT | F | L | Van FWD THX (DJ5TED) | Payload:1000/1400kg,Trans. code:MG | GDS10035 | Drive Shaft | 54T | 28 | 41 | 63 | 112.5 | 757.5 | |
| | 1996.12-2000.11 | MT | F | L | Van FWD THX (DJ5TED) | Payload:1000/1400kg,Trans. code:ME/ML | GDS10037 | Drive Shaft | 54T | 28 | 37 | 63 | 112.5 | 771 | |
| | 1996.12-2000.11 | MT | F | L | Van FWD THX (DJ5TED) | Payload:1800kg,Trans. code:MG | GDS10067 | Drive Shaft | | 35 | 41 | 70 | 117 | 762 | |
| | 1996.12-2000.11 | MT | F | L | Van FWD THX (DJ5TED) | Payload:1000/1400kg,Trans. code:MG | GDS10102 | Drive Shaft | | 28 | 41 | 63 | 112.5 | 757.5 | |
| | 1996.12-2000.11 | MT | F | L | Van FWD THX (DJ5TED) | Payload:1000/1400kg,Trans. code:ME/ML | GDS10105 | Drive Shaft | | 28 | 37 | 63 | 112.5 | 771 | |
| | 1996.12-2000.11 | MT | F | R | Van FWD THX (DJ5TED) | Payload:1800kg,Trans. code:MG | GDS10032 | Drive Shaft | 54T | 35 | 41 | 70 | 117 | 1085 | |
| | 1996.12-2000.11 | MT | F | R | Van FWD THX (DJ5TED) | Payload:1000/1400kg,Trans. code:MG | GDS10036 | Drive Shaft | 54T | 28 | 41 | 63 | 112.5 | 1079 | |
| | 1996.12-2000.11 | MT | F | R | Van FWD THX (DJ5TED) | Payload:1800kg,Trans. code:MG | GDS10066 | Drive Shaft | | 35 | 41 | 70 | 117 | 1085 | |
| | 1996.12-2000.11 | MT | F | R | Van FWD THX (DJ5TED) | Payload:1000/1400kg,Trans. code:ME/ML | GDS10069 | Drive Shaft | | 28 | 37 | 63 | 112.5 | 1072 | |
| | 1996.12-2000.11 | MT | F | R | Van FWD THX (DJ5TED) | Payload:1000/1400kg,Trans. code:MG | GDS10103 | Drive Shaft | | 28 | 41 | 63 | 112.5 | 1079 | |
| | 1996.12-2000.11 | MT | F | R | Van FWD THX (DJ5TED) | Payload:1000/1400kg,Trans. code:ME/ML | GDS10104 | Drive Shaft | 54T | 28 | 37 | 63 | 112.5 | 1072 | |
| | 1996.12-2000.11 | MT | F | L/R | Van FWD THX (DJ5TED) | Payload:1800kg,Trans. code:MG | GCO10011 | Outer Joint | 54T | 35 | 45 | 70 | 117 | 73 | I |
| | 1996.12-2000.11 | MT | F | L/R | Van FWD THX (DJ5TED) | Payload:1000/1400kg,Trans. code:ME/ML/MG | GCO10012 | Outer Joint | | 28 | 39 | 63 | 112.5 | 63 | I |
| | 1996.12-2000.11 | MT | F | L/R | Van FWD THX (DJ5TED) | Payload:1000/1400kg,Trans. code:ME/ML/MG | GCO10013 | Outer Joint | 54T | 28 | 39 | 63 | 112.5 | 63 | I |
| | 1996.12-2000.11 | MT | F | L/R | Van FWD THX (DJ5TED) | Payload:1800kg,Trans. code:MG | GCO10050 | Outer Joint | | 35 | 45 | 70 | 117 | 73 | I |
| | 1996.12-2000.11 | MT | F | L | Van FWD THX (DJ5TED) | Payload:1800kg,Trans. code:MG | GCI10010 | Inner Joint | | 41 | 45 | 43 | 70 | 115.5 | |
| | 1996.12-2000.11 | MT | F | L | Van FWD THX (DJ5TED) | Payload:1000/1400kg,Trans. code:MG | GCI10013 | Inner Joint | | 41 | 39 | 43 | 70 | 104 | |
| | 1996.12-2000.11 | MT | F | L | Van FWD THX (DJ5TED) | Payload:1000/1400kg,Trans. code:ME/ML | GCI10015 | Inner Joint | | 37 | 39 | 40 | 68.5 | 104 | |
| | 1996.12-2000.11 | MT | F | L | Van FWD THX (DJ5TED) | Payload:1000/1400kg,Trans. code:ME/ML | GCI45013 | Inner Joint | | 37 | 39 | 40 | 68.5 | 100 | |
| | 1996.12-2000.11 | MT | F | R | Van FWD THX (DJ5TED) | Payload:1800kg,Trans. code:MG | GCI10009 | Inner Joint | | 41 | 45 | 34.9 | 393 | 115.6 | |
| | 1996.12-2000.11 | MT | F | R | Van FWD THX (DJ5TED) | Payload:1000/1400kg,Trans. code:ME/ML | GCI10034 | Inner Joint | | 37 | 39 | 31.9 | 369.5 | 99 | |
| 2.8 (94 kw) | 2000.09-2002.04 | MT | F | L | Bus FWD 8140.43S | Payload:1800kg,Trans. code:MG | GDS10033 | Drive Shaft | 54T | 35 | 41 | 70 | 117 | 762 | |
| | 2000.09-2002.04 | MT | F | L | Bus FWD 8140.43S | Payload:1800kg,Trans. code:MG | GDS10067 | Drive Shaft | | 35 | 41 | 70 | 117 | 762 | |
| | 2000.09-2002.04 | MT | F | R | Bus FWD 8140.43S | Payload:1800kg,Trans. code:MG | GDS10032 | Drive Shaft | 54T | 35 | 41 | 70 | 117 | 1085 | |
| | 2000.09-2002.04 | MT | F | R | Bus FWD 8140.43S | Payload:1800kg,Trans. code:MG | GDS10066 | Drive Shaft | | 35 | 41 | 70 | 117 | 1085 | |
| | 2000.09-2002.04 | MT | F | L/R | Bus FWD 8140.43S | Payload:1800kg,Trans. code:MG | GCO10011 | Outer Joint | 54T | 35 | 45 | 70 | 117 | 73 | I |

| | YEAR | TRANSM. | F/R | L/R | BODY STYLE & DRIVE TYPE & ENGINE | REMARKS | G-AP Ref. | PRODUCT | ABS | Technical Specifications A | B | C | H | L | P |
|---|---|---|---|---|---|---|---|---|---|---|---|---|---|---|---|
| **CITROËN** | | | | | | | | | | | | | | | |
| **Jumper 27** | | | | | | | | | | | | | | | |
| 2.8 (94 kw) | 2000.09-2002.04 | MT | F | L/R | Bus FWD 8140.43S | Payload:1800kg,Trans. code:MG | GCO10050 | Outer Joint | | 35 | 45 | 70 | 117 | 73 | I |
| | 2000.09-2002.04 | MT | F | L | Bus FWD 8140.43S | Payload:1800kg,Trans. code:MG | GCI10010 | Inner Joint | | 41 | 45 | 43 | 70 | 115.5 | |
| | 2000.09-2002.04 | MT | F | R | Bus FWD 8140.43S | Payload:1800kg,Trans. code:MG | GCI10009 | Inner Joint | | 41 | 45 | 34.9 | 393 | 115.6 | |
| | 2000.09-2002.04 | MT | F | L | Van FWD 8140.43S | Payload:1800kg,Trans. code:MG | GDS10033 | Drive Shaft | 54T | 35 | 41 | 70 | 117 | 762 | |
| | 2000.09-2002.04 | MT | F | L | Van FWD 8140.43S | Payload:1000/1400kg,Trans. code:MG | GDS10035 | Drive Shaft | 54T | 28 | 41 | 63 | 112.5 | 757.5 | |
| | 2000.09-2002.04 | MT | F | L | Van FWD 8140.43S | Payload:1800kg,Trans. code:MG | GDS10067 | Drive Shaft | | 35 | 41 | 70 | 117 | 762 | |
| | 2000.09-2002.04 | MT | F | L | Van FWD 8140.43S | Payload:1000/1400kg,Trans. code:MG | GDS10102 | Drive Shaft | | 28 | 41 | 63 | 112.5 | 757.5 | |
| | 2000.09-2002.04 | MT | F | R | Van FWD 8140.43S | Payload:1800kg,Trans. code:MG | GDS10032 | Drive Shaft | 54T | 35 | 41 | 70 | 117 | 1085 | |
| | 2000.09-2002.04 | MT | F | R | Van FWD 8140.43S | Payload:1000/1400kg,Trans. code:MG | GDS10036 | Drive Shaft | 54T | 28 | 41 | 63 | 112.5 | 1079 | |
| | 2000.09-2002.04 | MT | F | R | Van FWD 8140.43S | Payload:1800kg,Trans. code:MG | GDS10066 | Drive Shaft | | 35 | 41 | 70 | 117 | 1085 | |
| | 2000.09-2002.04 | MT | F | R | Van FWD 8140.43S | Payload:1000/1400kg,Trans. code:MG | GDS10103 | Drive Shaft | | 28 | 41 | 63 | 112.5 | 1079 | |
| | 2000.09-2002.04 | MT | F | L/R | Van FWD 8140.43S | Payload:1800kg,Trans. code:MG | GCO10011 | Outer Joint | 54T | 35 | 45 | 70 | 117 | 73 | I |
| | 2000.09-2002.04 | MT | F | L/R | Van FWD 8140.43S | Payload:1000/1400kg,Trans. code:ME/ML/MG | GCO10012 | Outer Joint | | 28 | 39 | 63 | 112.5 | 63 | I |
| | 2000.09-2002.04 | MT | F | L/R | Van FWD 8140.43S | Payload:1000/1400kg,Trans. code:ME/ML/MG | GCO10013 | Outer Joint | 54T | 28 | 39 | 63 | 112.5 | 63 | I |
| | 2000.09-2002.04 | MT | F | L/R | Van FWD 8140.43S | Payload:1800kg,Trans. code:MG | GCO10050 | Outer Joint | | 35 | 45 | 70 | 117 | 73 | I |
| | 2000.09-2002.04 | MT | F | L | Van FWD 8140.43S | Payload:1800kg,Trans. code:MG | GCI10010 | Inner Joint | | 41 | 45 | 43 | 70 | 115.5 | |
| | 2000.09-2002.04 | MT | F | L | Van FWD 8140.43S | Payload:1000/1400kg,Trans. code:MG | GCI10013 | Inner Joint | | 41 | 39 | 43 | 70 | 104 | |
| | 2000.09-2002.04 | MT | F | R | Van FWD 8140.43S | Payload:1800kg,Trans. code:MG | GCI10009 | Inner Joint | | 41 | 45 | 34.9 | 393 | 115.6 | |
| **Jumper 31** | | | | | | | | | | | | | | | |
| 1.9 (66 kw) | 1994.03-2002.04 | MT | F | L | Platform/Chassis FWD DHX (XUD9BTF), DHX (XUD9TF) | Payload:1800kg,Trans. code:MG | GDS10033 | Drive Shaft | 54T | 35 | 41 | 70 | 117 | 762 | |
| | 1994.03-2002.04 | MT | F | L | Platform/Chassis FWD DHX (XUD9BTF), DHX (XUD9TF) | Payload:1000/1400kg,Trans. code:MG | GDS10035 | Drive Shaft | 54T | 28 | 41 | 63 | 112.5 | 757.5 | |
| | 1994.03-2002.04 | MT | F | L | Platform/Chassis FWD DHX (XUD9BTF), DHX (XUD9TF) | Payload:1000/1400kg,Trans. code:ME/ML | GDS10037 | Drive Shaft | 54T | 28 | 37 | 63 | 112.5 | 771 | |
| | 1994.03-2002.04 | MT | F | L | Platform/Chassis FWD DHX (XUD9BTF), DHX (XUD9TF) | Payload:1800kg,Trans. code:MG | GDS10067 | Drive Shaft | | 35 | 41 | 70 | 117 | 762 | |
| | 1994.03-2002.04 | MT | F | L | Platform/Chassis FWD DHX (XUD9BTF), DHX (XUD9TF) | Payload:1000/1400kg,Trans. code:MG | GDS10102 | Drive Shaft | | 28 | 41 | 63 | 112.5 | 757.5 | |
| | 1994.03-2002.04 | MT | F | L | Platform/Chassis FWD DHX (XUD9BTF), DHX (XUD9TF) | Payload:1000/1400kg,Trans. code:ME/ML | GDS10105 | Drive Shaft | | 28 | 37 | 63 | 112.5 | 771 | |
| | 1994.03-2002.04 | MT | F | R | Platform/Chassis FWD DHX (XUD9BTF), DHX (XUD9TF) | Payload:1800kg,Trans. code:MG | GDS10032 | Drive Shaft | 54T | 35 | 41 | 70 | 117 | 1085 | |
| | 1994.03-2002.04 | MT | F | R | Platform/Chassis FWD DHX (XUD9BTF), DHX (XUD9TF) | Payload:1000/1400kg,Trans. code:MG | GDS10036 | Drive Shaft | 54T | 28 | 41 | 63 | 112.5 | 1079 | |
| | 1994.03-2002.04 | MT | F | R | Platform/Chassis FWD DHX (XUD9BTF), DHX (XUD9TF) | Payload:1800kg,Trans. code:MG | GDS10066 | Drive Shaft | | 35 | 41 | 70 | 117 | 1085 | |
| | 1994.03-2002.04 | MT | F | R | Platform/Chassis FWD DHX (XUD9BTF), DHX (XUD9TF) | Payload:1000/1400kg,Trans. code:ME/ML | GDS10069 | Drive Shaft | | 28 | 37 | 63 | 112.5 | 1072 | |
| | 1994.03-2002.04 | MT | F | R | Platform/Chassis FWD DHX (XUD9BTF), DHX (XUD9TF) | Payload:1000/1400kg,Trans. code:MG | GDS10103 | Drive Shaft | | 28 | 41 | 63 | 112.5 | 1079 | |
| | 1994.03-2002.04 | MT | F | R | Platform/Chassis FWD DHX (XUD9BTF), DHX (XUD9TF) | Payload:1000/1400kg,Trans. code:ME/ML | GDS10104 | Drive Shaft | 54T | 28 | 37 | 63 | 112.5 | 1072 | |
| | 1994.03-2002.04 | MT | F | L/R | Platform/Chassis FWD DHX (XUD9BTF), DHX (XUD9TF) | Payload:1800kg,Trans. code:MG | GCO10011 | Outer Joint | 54T | 35 | 45 | 70 | 117 | 73 | I |
| | 1994.03-2002.04 | MT | F | L/R | Platform/Chassis FWD DHX (XUD9BTF), DHX (XUD9TF) | Payload:1000/1400kg,Trans. code:ME/ML/MG | GCO10012 | Outer Joint | | 28 | 39 | 63 | 112.5 | 63 | I |
| | 1994.03-2002.04 | MT | F | L/R | Platform/Chassis FWD DHX (XUD9BTF), DHX (XUD9TF) | Payload:1000/1400kg,Trans. code:ME/ML/MG | GCO10013 | Outer Joint | 54T | 28 | 39 | 63 | 112.5 | 63 | I |
| | 1994.03-2002.04 | MT | F | L/R | Platform/Chassis FWD DHX (XUD9BTF), DHX (XUD9TF) | Payload:1800kg,Trans. code:MG | GCO10050 | Outer Joint | | 35 | 45 | 70 | 117 | 73 | I |
| | 1994.03-2002.04 | MT | F | L | Platform/Chassis FWD DHX (XUD9BTF), DHX (XUD9TF) | Payload:1800kg,Trans. code:MG | GCI10010 | Inner Joint | | 41 | 45 | 43 | 70 | 115.5 | |
| | 1994.03-2002.04 | MT | F | L | Platform/Chassis FWD DHX (XUD9BTF), DHX (XUD9TF) | Payload:1000/1400kg,Trans. code:MG | GCI10013 | Inner Joint | | 41 | 39 | 43 | 70 | 104 | |
| | 1994.03-2002.04 | MT | F | L | Platform/Chassis FWD DHX (XUD9BTF), DHX (XUD9TF) | Payload:1000/1400kg,Trans. code:ME/ML | GCI10015 | Inner Joint | | 37 | 39 | 40 | 68.5 | 104 | |
| | 1994.03-2002.04 | MT | F | L | Platform/Chassis FWD DHX (XUD9BTF), DHX (XUD9TF) | Payload:1000/1400kg,Trans. code:ME/ML | GCI45013 | Inner Joint | | 37 | 39 | 40 | 68.5 | 100 | |
| | 1994.03-2002.04 | MT | F | R | Platform/Chassis FWD DHX (XUD9BTF), DHX (XUD9TF) | Payload:1800kg,Trans. code:MG | GCI10009 | Inner Joint | | 41 | 45 | 34.9 | 393 | 115.6 | |
| | 1994.03-2002.04 | MT | F | R | Platform/Chassis FWD DHX (XUD9BTF), DHX (XUD9TF) | Payload:1000/1400kg,Trans. code:ME/ML | GCI10034 | Inner Joint | | 37 | 39 | 31.9 | 369.5 | 99 | |
| 1.9 (68 kw) | 1994.02-2002.04 | MT | F | L | Bus FWD D8C (XUD9UTF) | Payload:1800kg,Trans. code:MG | GDS10033 | Drive Shaft | 54T | 35 | 41 | 70 | 117 | 762 | |
| | 1994.02-2002.04 | MT | F | L | Bus FWD D8C (XUD9UTF) | Payload:1000/1400kg,Trans. code:MG | GDS10035 | Drive Shaft | 54T | 28 | 41 | 63 | 112.5 | 757.5 | |
| | 1994.02-2002.04 | MT | F | L | Bus FWD D8C (XUD9UTF) | Payload:1000/1400kg,Trans. code:ME/ML | GDS10037 | Drive Shaft | 54T | 28 | 37 | 63 | 112.5 | 771 | |
| | 1994.02-2002.04 | MT | F | L | Bus FWD D8C (XUD9UTF) | Payload:1800kg,Trans. code:MG | GDS10067 | Drive Shaft | | 35 | 41 | 70 | 117 | 762 | |
| | 1994.02-2002.04 | MT | F | L | Bus FWD D8C (XUD9UTF) | Payload:1000/1400kg,Trans. code:MG | GDS10102 | Drive Shaft | | 28 | 41 | 63 | 112.5 | 757.5 | |
| | 1994.02-2002.04 | MT | F | L | Bus FWD D8C (XUD9UTF) | Payload:1000/1400kg,Trans. code:ME/ML | GDS10105 | Drive Shaft | | 28 | 37 | 63 | 112.5 | 771 | |
| | 1994.02-2002.04 | MT | F | R | Bus FWD D8C (XUD9UTF) | Payload:1800kg,Trans. code:MG | GDS10032 | Drive Shaft | 54T | 35 | 41 | 70 | 117 | 1085 | |
| | 1994.02-2002.04 | MT | F | R | Bus FWD D8C (XUD9UTF) | Payload:1000/1400kg,Trans. code:MG | GDS10036 | Drive Shaft | 54T | 28 | 41 | 63 | 112.5 | 1079 | |
| | 1994.02-2002.04 | MT | F | R | Bus FWD D8C (XUD9UTF) | Payload:1800kg,Trans. code:MG | GDS10066 | Drive Shaft | | 35 | 41 | 70 | 117 | 1085 | |
| | 1994.02-2002.04 | MT | F | R | Bus FWD D8C (XUD9UTF) | Payload:1000/1400kg,Trans. code:ME/ML | GDS10069 | Drive Shaft | | 28 | 37 | 63 | 112.5 | 1072 | |
| | 1994.02-2002.04 | MT | F | R | Bus FWD D8C (XUD9UTF) | Payload:1000/1400kg,Trans. code:MG | GDS10103 | Drive Shaft | | 28 | 41 | 63 | 112.5 | 1079 | |
| | 1994.02-2002.04 | MT | F | R | Bus FWD D8C (XUD9UTF) | Payload:1000/1400kg,Trans. code:ME/ML | GDS10104 | Drive Shaft | 54T | 28 | 37 | 63 | 112.5 | 1072 | |
| | 1994.02-2002.04 | MT | F | L/R | Bus FWD D8C (XUD9UTF) | Payload:1800kg,Trans. code:MG | GCO10011 | Outer Joint | 54T | 35 | 45 | 70 | 117 | 73 | I |
| | 1994.02-2002.04 | MT | F | L/R | Bus FWD D8C (XUD9UTF) | Payload:1000/1400kg,Trans. code:ME/ML/MG | GCO10012 | Outer Joint | | 28 | 39 | 63 | 112.5 | 63 | I |
| | 1994.02-2002.04 | MT | F | L/R | Bus FWD D8C (XUD9UTF) | Payload:1000/1400kg,Trans. code:ME/ML/MG | GCO10013 | Outer Joint | 54T | 28 | 39 | 63 | 112.5 | 63 | I |
| | 1994.02-2002.04 | MT | F | L/R | Bus FWD D8C (XUD9UTF) | Payload:1800kg,Trans. code:MG | GCO10050 | Outer Joint | | 35 | 45 | 70 | 117 | 73 | I |
| | 1994.02-2002.04 | MT | F | L | Bus FWD D8C (XUD9UTF) | Payload:1800kg,Trans. code:MG | GCI10010 | Inner Joint | | 41 | 45 | 43 | 70 | 115.5 | |
| | 1994.02-2002.04 | MT | F | L | Bus FWD D8C (XUD9UTF) | Payload:1000/1400kg,Trans. code:MG | GCI10013 | Inner Joint | | 41 | 39 | 43 | 70 | 104 | |
| | 1994.02-2002.04 | MT | F | L | Bus FWD D8C (XUD9UTF) | Payload:1000/1400kg,Trans. code:ME/ML | GCI10015 | Inner Joint | | 37 | 39 | 40 | 68.5 | 104 | |
| | 1994.02-2002.04 | MT | F | L | Bus FWD D8C (XUD9UTF) | Payload:1000/1400kg,Trans. code:ME/ML | GCI45013 | Inner Joint | | 37 | 39 | 40 | 68.5 | 100 | |
| | 1994.02-2002.04 | MT | F | R | Bus FWD D8C (XUD9UTF) | Payload:1800kg,Trans. code:MG | GCI10009 | Inner Joint | | 41 | 45 | 34.9 | 393 | 115.6 | |
| | 1994.02-2002.04 | MT | F | R | Bus FWD D8C (XUD9UTF) | Payload:1000/1400kg,Trans. code:ME/ML | GCI10034 | Inner Joint | | 37 | 39 | 31.9 | 369.5 | 99 | |
| | 1994.03-2002.04 | MT | F | L | Platform/Chassis FWD D8C (XUD9UTF) | Payload:1800kg,Trans. code:MG | GDS10033 | Drive Shaft | 54T | 35 | 41 | 70 | 117 | 762 | |
| | 1994.03-2002.04 | MT | F | L | Platform/Chassis FWD D8C (XUD9UTF) | Payload:1000/1400kg,Trans. code:MG | GDS10035 | Drive Shaft | 54T | 28 | 41 | 63 | 112.5 | 757.5 | |

| | YEAR | TRANSM. | F/R | L/R | BODY STYLE & DRIVE TYPE & ENGINE | REMARKS | G-AP Ref. | PRODUCT | ABS | Technical Specifications A | B | C | H | L | P |
|---|---|---|---|---|---|---|---|---|---|---|---|---|---|---|---|
| **CITROËN Jumper 31** | | | | | | | | | | | | | | | |
| 1.9 (68 kw) | 1994.03-2002.04 | MT | F | L | Platform/Chassis FWD D8C (XUD9UTF) | Payload:1000/1400kg,Trans. code:ME/ML | GDS10037 | Drive Shaft | 54T | 28 | 37 | 63 | 112.5 | 771 | |
| | 1994.03-2002.04 | MT | F | L | Platform/Chassis FWD D8C (XUD9UTF) | Payload:1800kg,Trans. code:MG | GDS10067 | Drive Shaft | | 35 | 41 | 70 | 117 | 762 | |
| | 1994.03-2002.04 | MT | F | L | Platform/Chassis FWD D8C (XUD9UTF) | Payload:1000/1400kg,Trans. code:MG | GDS10102 | Drive Shaft | | 28 | 41 | 63 | 112.5 | 757.5 | |
| | 1994.03-2002.04 | MT | F | L | Platform/Chassis FWD D8C (XUD9UTF) | Payload:1000/1400kg,Trans. code:ME/ML | GDS10105 | Drive Shaft | | 28 | 37 | 63 | 112.5 | 771 | |
| | 1994.03-2002.04 | MT | F | R | Platform/Chassis FWD D8C (XUD9UTF) | Payload:1800kg,Trans. code:MG | GDS10032 | Drive Shaft | 54T | 35 | 41 | 70 | 117 | 1085 | |
| | 1994.03-2002.04 | MT | F | R | Platform/Chassis FWD D8C (XUD9UTF) | Payload:1000/1400kg,Trans. code:MG | GDS10036 | Drive Shaft | 54T | 28 | 41 | 63 | 112.5 | 1079 | |
| | 1994.03-2002.04 | MT | F | R | Platform/Chassis FWD D8C (XUD9UTF) | Payload:1800kg,Trans. code:MG | GDS10066 | Drive Shaft | | 35 | 41 | 70 | 117 | 1085 | |
| | 1994.03-2002.04 | MT | F | R | Platform/Chassis FWD D8C (XUD9UTF) | Payload:1000/1400kg,Trans. code:ME/ML | GDS10069 | Drive Shaft | | 28 | 37 | 63 | 112.5 | 1072 | |
| | 1994.03-2002.04 | MT | F | R | Platform/Chassis FWD D8C (XUD9UTF) | Payload:1000/1400kg,Trans. code:MG | GDS10103 | Drive Shaft | | 28 | 41 | 63 | 112.5 | 1079 | |
| | 1994.03-2002.04 | MT | F | R | Platform/Chassis FWD D8C (XUD9UTF) | Payload:1000/1400kg,Trans. code:ME/ML | GDS10104 | Drive Shaft | 54T | 28 | 37 | 63 | 112.5 | 1072 | |
| | 1994.03-2002.04 | MT | F | L/R | Platform/Chassis FWD D8C (XUD9UTF) | Payload:1800kg,Trans. code:MG | GCO10011 | Outer Joint | 54T | 35 | 45 | 70 | 117 | 73 | I |
| | 1994.03-2002.04 | MT | F | L/R | Platform/Chassis FWD D8C (XUD9UTF) | Payload:1000/1400kg,Trans. code:ME/ML/MG | GCO10012 | Outer Joint | | 28 | 39 | 63 | 112.5 | 63 | I |
| | 1994.03-2002.04 | MT | F | L/R | Platform/Chassis FWD D8C (XUD9UTF) | Payload:1000/1400kg,Trans. code:ME/ML/MG | GCO10013 | Outer Joint | 54T | 28 | 39 | 63 | 112.5 | 63 | I |
| | 1994.03-2002.04 | MT | F | L/R | Platform/Chassis FWD D8C (XUD9UTF) | Payload:1800kg,Trans. code:MG | GCO10050 | Outer Joint | | 35 | 45 | 70 | 117 | 73 | I |
| | 1994.03-2002.04 | MT | F | L | Platform/Chassis FWD D8C (XUD9UTF) | Payload:1800kg,Trans. code:MG | GCI10010 | Inner Joint | | 41 | 45 | 43 | 70 | 115.5 | |
| | 1994.03-2002.04 | MT | F | L | Platform/Chassis FWD D8C (XUD9UTF) | Payload:1000/1400kg,Trans. code:MG | GCI10013 | Inner Joint | | 41 | 39 | 43 | 70 | 104 | |
| | 1994.03-2002.04 | MT | F | L | Platform/Chassis FWD D8C (XUD9UTF) | Payload:1000/1400kg,Trans. code:ME/ML | GCI10015 | Inner Joint | | 37 | 39 | 40 | 68.5 | 104 | |
| | 1994.03-2002.04 | MT | F | L | Platform/Chassis FWD D8C (XUD9UTF) | Payload:1000/1400kg,Trans. code:ME/ML | GCI45013 | Inner Joint | | 37 | 39 | 40 | 68.5 | 100 | |
| | 1994.03-2002.04 | MT | F | R | Platform/Chassis FWD D8C (XUD9UTF) | Payload:1800kg,Trans. code:MG | GCI10009 | Inner Joint | | 41 | 45 | 34.9 | 393 | 115.6 | |
| | 1994.03-2002.04 | MT | F | R | Platform/Chassis FWD D8C (XUD9UTF) | Payload:1000/1400kg,Trans. code:ME/ML | GCI10034 | Inner Joint | | 37 | 39 | 31.9 | 369.5 | 99 | |
| | 1996.08-2002.04 | MT | F | L | Bus 4WD D8C (XUD9UTF) | Payload:1800kg,Trans. code:MG | GDS10033 | Drive Shaft | 54T | 35 | 41 | 70 | 117 | 762 | |
| | 1996.08-2002.04 | MT | F | L | Bus 4WD D8C (XUD9UTF) | Payload:1000/1400kg,Trans. code:MG | GDS10035 | Drive Shaft | 54T | 28 | 41 | 63 | 112.5 | 757.5 | |
| | 1996.08-2002.04 | MT | F | L | Bus 4WD D8C (XUD9UTF) | Payload:1000/1400kg,Trans. code:ME/ML | GDS10037 | Drive Shaft | 54T | 28 | 37 | 63 | 112.5 | 771 | |
| | 1996.08-2002.04 | MT | F | L | Bus 4WD D8C (XUD9UTF) | Payload:1800kg,Trans. code:MG | GDS10067 | Drive Shaft | | 35 | 41 | 70 | 117 | 762 | |
| | 1996.08-2002.04 | MT | F | L | Bus 4WD D8C (XUD9UTF) | Payload:1000/1400kg,Trans. code:MG | GDS10102 | Drive Shaft | | 28 | 41 | 63 | 112.5 | 757.5 | |
| | 1996.08-2002.04 | MT | F | L | Bus 4WD D8C (XUD9UTF) | Payload:1000/1400kg,Trans. code:ME/ML | GDS10105 | Drive Shaft | | 28 | 37 | 63 | 112.5 | 771 | |
| | 1996.08-2002.04 | MT | F | R | Bus 4WD D8C (XUD9UTF) | Payload:1800kg,Trans. code:MG | GDS10032 | Drive Shaft | 54T | 35 | 41 | 70 | 117 | 1085 | |
| | 1996.08-2002.04 | MT | F | R | Bus 4WD D8C (XUD9UTF) | Payload:1000/1400kg,Trans. code:MG | GDS10036 | Drive Shaft | 54T | 28 | 41 | 63 | 112.5 | 1079 | |
| | 1996.08-2002.04 | MT | F | R | Bus 4WD D8C (XUD9UTF) | Payload:1800kg,Trans. code:MG | GDS10066 | Drive Shaft | | 35 | 41 | 70 | 117 | 1085 | |
| | 1996.08-2002.04 | MT | F | R | Bus 4WD D8C (XUD9UTF) | Payload:1000/1400kg,Trans. code:ME/ML | GDS10069 | Drive Shaft | | 28 | 37 | 63 | 112.5 | 1072 | |
| | 1996.08-2002.04 | MT | F | R | Bus 4WD D8C (XUD9UTF) | Payload:1000/1400kg,Trans. code:MG | GDS10103 | Drive Shaft | | 28 | 41 | 63 | 112.5 | 1079 | |
| | 1996.08-2002.04 | MT | F | R | Bus 4WD D8C (XUD9UTF) | Payload:1000/1400kg,Trans. code:ME/ML | GDS10104 | Drive Shaft | 54T | 28 | 37 | 63 | 112.5 | 1072 | |
| | 1996.08-2002.04 | MT | F | L/R | Bus 4WD D8C (XUD9UTF) | Payload:1800kg,Trans. code:MG | GCO10011 | Outer Joint | 54T | 35 | 45 | 70 | 117 | 73 | I |
| | 1996.08-2002.04 | MT | F | L/R | Bus 4WD D8C (XUD9UTF) | Payload:1000/1400kg,Trans. code:ME/ML/MG | GCO10012 | Outer Joint | | 28 | 39 | 63 | 112.5 | 63 | I |
| | 1996.08-2002.04 | MT | F | L/R | Bus 4WD D8C (XUD9UTF) | Payload:1000/1400kg,Trans. code:ME/ML/MG | GCO10013 | Outer Joint | 54T | 28 | 39 | 63 | 112.5 | 63 | I |
| | 1996.08-2002.04 | MT | F | L/R | Bus 4WD D8C (XUD9UTF) | Payload:1800kg,Trans. code:MG | GCO10050 | Outer Joint | | 35 | 45 | 70 | 117 | 73 | I |
| | 1996.08-2002.04 | MT | F | L | Bus 4WD D8C (XUD9UTF) | Payload:1800kg,Trans. code:MG | GCI10010 | Inner Joint | | 41 | 45 | 43 | 70 | 115.5 | |
| | 1996.08-2002.04 | MT | F | L | Bus 4WD D8C (XUD9UTF) | Payload:1000/1400kg,Trans. code:MG | GCI10013 | Inner Joint | | 41 | 39 | 43 | 70 | 104 | |
| | 1996.08-2002.04 | MT | F | L | Bus 4WD D8C (XUD9UTF) | Payload:1000/1400kg,Trans. code:ME/ML | GCI10015 | Inner Joint | | 37 | 39 | 40 | 68.5 | 104 | |
| | 1996.08-2002.04 | MT | F | L | Bus 4WD D8C (XUD9UTF) | Payload:1000/1400kg,Trans. code:ME/ML | GCI45013 | Inner Joint | | 37 | 39 | 40 | 68.5 | 100 | |
| | 1996.08-2002.04 | MT | F | R | Bus 4WD D8C (XUD9UTF) | Payload:1800kg,Trans. code:MG | GCI10009 | Inner Joint | | 41 | 45 | 34.9 | 393 | 115.6 | |
| | 1996.08-2002.04 | MT | F | R | Bus 4WD D8C (XUD9UTF) | Payload:1000/1400kg,Trans. code:ME/ML | GCI10034 | Inner Joint | | 37 | 39 | 31.9 | 369.5 | 99 | |
| 2.0 (62 kw) | 2001.11-2002.04 | 5MT | F | L | Van FWD RHV (DW10TD) | Transm. code:MG5T/ML5C,Payload:1800kg | GDS10033 | Drive Shaft | 54T | 35 | 41 | 70 | 117 | 762 | |
| | 2001.11-2002.04 | 5MT | F | L | Van FWD RHV (DW10TD) | Transm. code:MG5T/ML5C,Payload:1000kg/1400kg | GDS10035 | Drive Shaft | 54T | 28 | 41 | 63 | 112.5 | 757.5 | |
| | 2001.11-2002.04 | 5MT | F | L | Van FWD RHV (DW10TD) | Transm. code:ME/ML5T/MLGU | GDS10037 | Drive Shaft | 54T | 28 | 37 | 63 | 112.5 | 771 | |
| | 2001.11-2002.04 | 5MT | F | R | Van FWD RHV (DW10TD) | Transm. code:MG5T/ML5C,Payload:1800kg | GDS10032 | Drive Shaft | 54T | 35 | 41 | 70 | 117 | 1085 | |
| | 2001.11-2002.04 | 5MT | F | R | Van FWD RHV (DW10TD) | Transm. code:MG5T/ML5C,Payload:1000kg/1400kg | GDS10036 | Drive Shaft | 54T | 28 | 41 | 63 | 112.5 | 1079 | |
| | 2001.11-2002.04 | 5MT | F | R | Van FWD RHV (DW10TD) | Transm. code:ME/ML5T/MLGU | GDS10104 | Drive Shaft | 54T | 28 | 37 | 63 | 112.5 | 1072 | |
| | 2001.11-2002.04 | 5MT | F | L/R | Van FWD RHV (DW10TD) | Payload [kg]:1800,Trans. code:MG5T/ML5C/MLGU | GCO10011 | Outer Joint | 54T | 35 | 45 | 70 | 117 | 73 | I |
| | 2001.11-2002.04 | 5MT | F | L/R | Van FWD RHV (DW10TD) | Payload [kg]:1000/1400,Trans. code:MG5T/ML5C | GCO10013 | Outer Joint | 54T | 28 | 39 | 63 | 112.5 | 63 | I |
| | 2001.11-2002.04 | 5MT | F | L/R | Van FWD RHV (DW10TD) | Trans. code:ME/ML5T/MLGU | GCO10013 | Outer Joint | 54T | 28 | 39 | 63 | 112.5 | 63 | I |
| 2.0 (80 kw) | 1994.03-2002.04 | MT | F | L | Platform/Chassis FWD RFW (XU10J2U) | Payload:1800kg,Trans. code:MG | GDS10033 | Drive Shaft | 54T | 35 | 41 | 70 | 117 | 762 | |
| | 1994.03-2002.04 | MT | F | L | Platform/Chassis FWD RFW (XU10J2U) | Payload:1000/1400kg,Trans. code:MG | GDS10035 | Drive Shaft | 54T | 28 | 41 | 63 | 112.5 | 757.5 | |
| | 1994.03-2002.04 | MT | F | L | Platform/Chassis FWD RFW (XU10J2U) | Payload:1000/1400kg,Trans. code:ME/ML | GDS10037 | Drive Shaft | 54T | 28 | 37 | 63 | 112.5 | 771 | |
| | 1994.03-2002.04 | MT | F | L | Platform/Chassis FWD RFW (XU10J2U) | Payload:1800kg,Trans. code:MG | GDS10067 | Drive Shaft | | 35 | 41 | 70 | 117 | 762 | |
| | 1994.03-2002.04 | MT | F | L | Platform/Chassis FWD RFW (XU10J2U) | Payload:1000/1400kg,Trans. code:MG | GDS10102 | Drive Shaft | | 28 | 41 | 63 | 112.5 | 757.5 | |
| | 1994.03-2002.04 | MT | F | L | Platform/Chassis FWD RFW (XU10J2U) | Payload:1000/1400kg,Trans. code:ME/ML | GDS10105 | Drive Shaft | | 28 | 37 | 63 | 112.5 | 771 | |
| | 1994.03-2002.04 | MT | F | R | Platform/Chassis FWD RFW (XU10J2U) | Payload:1800kg,Trans. code:MG | GDS10032 | Drive Shaft | 54T | 35 | 41 | 70 | 117 | 1085 | |
| | 1994.03-2002.04 | MT | F | R | Platform/Chassis FWD RFW (XU10J2U) | Payload:1000/1400kg,Trans. code:MG | GDS10036 | Drive Shaft | 54T | 28 | 41 | 63 | 112.5 | 1079 | |
| | 1994.03-2002.04 | MT | F | R | Platform/Chassis FWD RFW (XU10J2U) | Payload:1800kg,Trans. code:MG | GDS10066 | Drive Shaft | | 35 | 41 | 70 | 117 | 1085 | |
| | 1994.03-2002.04 | MT | F | R | Platform/Chassis FWD RFW (XU10J2U) | Payload:1000/1400kg,Trans. code:ME/ML | GDS10069 | Drive Shaft | | 28 | 37 | 63 | 112.5 | 1072 | |
| | 1994.03-2002.04 | MT | F | R | Platform/Chassis FWD RFW (XU10J2U) | Payload:1000/1400kg,Trans. code:MG | GDS10103 | Drive Shaft | | 28 | 41 | 63 | 112.5 | 1079 | |
| | 1994.03-2002.04 | MT | F | R | Platform/Chassis FWD RFW (XU10J2U) | Payload:1000/1400kg,Trans. code:ME/ML | GDS10104 | Drive Shaft | 54T | 28 | 37 | 63 | 112.5 | 1072 | |
| | 1994.03-2002.04 | MT | F | L/R | Platform/Chassis FWD RFW (XU10J2U) | Payload:1800kg,Trans. code:MG | GCO10011 | Outer Joint | 54T | 35 | 45 | 70 | 117 | 73 | I |
| | 1994.03-2002.04 | MT | F | L/R | Platform/Chassis FWD RFW (XU10J2U) | Payload:1000/1400kg,Trans. code:ME/ML/MG | GCO10012 | Outer Joint | | 28 | 39 | 63 | 112.5 | 63 | I |

| | YEAR | TRANSM. | F/R | L/R | BODY STYLE & DRIVE TYPE & ENGINE | REMARKS | G-AP Ref. | PRODUCT | ABS | Technical Specifications A | B | C | H | L | P |
|---|---|---|---|---|---|---|---|---|---|---|---|---|---|---|---|
| **CITROËN Jumper 31** | | | | | | | | | | | | | | | |
| 2.0 (80 kw) | 1994.03-2002.04 | MT | F | L/R | Platform/Chassis FWD RFW (XU10J2U) | Payload:1000/1400kg,Trans. code:ME/ML/MG | GCO10013 | Outer Joint | 54T | 28 | 39 | 63 | 112.5 | 63 | I |
| | 1994.03-2002.04 | MT | F | L/R | Platform/Chassis FWD RFW (XU10J2U) | Payload:1800kg,Trans. code:MG | GCO10050 | Outer Joint | | 35 | 45 | 70 | 117 | 73 | I |
| | 1994.03-2002.04 | MT | F | L | Platform/Chassis FWD RFW (XU10J2U) | Payload:1800kg,Trans. code:MG | GCI10010 | Inner Joint | | 41 | 45 | 43 | 70 | 115.5 | |
| | 1994.03-2002.04 | MT | F | L | Platform/Chassis FWD RFW (XU10J2U) | Payload:1000/1400kg,Trans. code:MG | GCI10013 | Inner Joint | | 41 | 39 | 43 | 70 | 104 | |
| | 1994.03-2002.04 | MT | F | L | Platform/Chassis FWD RFW (XU10J2U) | Payload:1000/1400kg,Trans. code:ME/ML | GCI10015 | Inner Joint | | 37 | 39 | 40 | 68.5 | 104 | |
| | 1994.03-2002.04 | MT | F | L | Platform/Chassis FWD RFW (XU10J2U) | Payload:1000/1400kg,Trans. code:ME/ML | GCI45013 | Inner Joint | | 37 | 39 | 40 | 68.5 | 100 | |
| | 1994.03-2002.04 | MT | F | R | Platform/Chassis FWD RFW (XU10J2U) | Payload:1800kg,Trans. code:MG | GCI10009 | Inner Joint | | 41 | 45 | 34.9 | 393 | 115.6 | |
| | 1994.03-2002.04 | MT | F | R | Platform/Chassis FWD RFW (XU10J2U) | Payload:1000/1400kg,Trans. code:ME/ML | GCI10034 | Inner Joint | | 37 | 39 | 31.9 | 369.5 | 99 | |
| 2.5 (63 kw) | 1994.03-2002.04 | MT | F | L | Platform/Chassis FWD T9A (DJ5) | Payload:1800kg,Trans. code:MG | GDS10033 | Drive Shaft | 54T | 35 | 41 | 70 | 117 | 762 | |
| | 1994.03-2002.04 | MT | F | L | Platform/Chassis FWD T9A (DJ5) | Payload:1000/1400kg,Trans. code:MG | GDS10035 | Drive Shaft | 54T | 28 | 41 | 63 | 112.5 | 757.5 | |
| | 1994.03-2002.04 | MT | F | L | Platform/Chassis FWD T9A (DJ5) | Payload:1000/1400kg,Trans. code:ME/ML | GDS10037 | Drive Shaft | 54T | 28 | 37 | 63 | 112.5 | 771 | |
| | 1994.03-2002.04 | MT | F | L | Platform/Chassis FWD T9A (DJ5) | Payload:1800kg,Trans. code:MG | GDS10067 | Drive Shaft | | 35 | 41 | 70 | 117 | 762 | |
| | 1994.03-2002.04 | MT | F | L | Platform/Chassis FWD T9A (DJ5) | Payload:1000/1400kg,Trans. code:MG | GDS10102 | Drive Shaft | | 28 | 41 | 63 | 112.5 | 757.5 | |
| | 1994.03-2002.04 | MT | F | L | Platform/Chassis FWD T9A (DJ5) | Payload:1000/1400kg,Trans. code:ME/ML | GDS10105 | Drive Shaft | | 28 | 37 | 63 | 112.5 | 771 | |
| | 1994.03-2002.04 | MT | F | R | Platform/Chassis FWD T9A (DJ5) | Payload:1800kg,Trans. code:MG | GDS10032 | Drive Shaft | 54T | 35 | 41 | 70 | 117 | 1085 | |
| | 1994.03-2002.04 | MT | F | R | Platform/Chassis FWD T9A (DJ5) | Payload:1000/1400kg,Trans. code:MG | GDS10036 | Drive Shaft | 54T | 28 | 41 | 63 | 112.5 | 1079 | |
| | 1994.03-2002.04 | MT | F | R | Platform/Chassis FWD T9A (DJ5) | Payload:1800kg,Trans. code:MG | GDS10066 | Drive Shaft | | 35 | 41 | 70 | 117 | 1085 | |
| | 1994.03-2002.04 | MT | F | R | Platform/Chassis FWD T9A (DJ5) | Payload:1000/1400kg,Trans. code:ME/ML | GDS10069 | Drive Shaft | | 28 | 37 | 63 | 112.5 | 1072 | |
| | 1994.03-2002.04 | MT | F | R | Platform/Chassis FWD T9A (DJ5) | Payload:1000/1400kg,Trans. code:MG | GDS10103 | Drive Shaft | | 28 | 41 | 63 | 112.5 | 1079 | |
| | 1994.03-2002.04 | MT | F | R | Platform/Chassis FWD T9A (DJ5) | Payload:1000/1400kg,Trans. code:ME/ML | GDS10104 | Drive Shaft | 54T | 28 | 37 | 63 | 112.5 | 1072 | |
| | 1994.03-2002.04 | MT | F | L/R | Platform/Chassis FWD T9A (DJ5) | Payload:1800kg,Trans. code:MG | GCO10011 | Outer Joint | 54T | 35 | 45 | 70 | 117 | 73 | I |
| | 1994.03-2002.04 | MT | F | L/R | Platform/Chassis FWD T9A (DJ5) | Payload:1000/1400kg,Trans. code:ME/ML/MG | GCO10012 | Outer Joint | | 28 | 39 | 63 | 112.5 | 63 | I |
| | 1994.03-2002.04 | MT | F | L/R | Platform/Chassis FWD T9A (DJ5) | Payload:1000/1400kg,Trans. code:ME/ML/MG | GCO10013 | Outer Joint | 54T | 28 | 39 | 63 | 112.5 | 63 | I |
| | 1994.03-2002.04 | MT | F | L/R | Platform/Chassis FWD T9A (DJ5) | Payload:1800kg,Trans. code:MG | GCO10050 | Outer Joint | | 35 | 45 | 70 | 117 | 73 | I |
| | 1994.03-2002.04 | MT | F | L | Platform/Chassis FWD T9A (DJ5) | Payload:1800kg,Trans. code:MG | GCI10010 | Inner Joint | | 41 | 45 | 43 | 70 | 115.5 | |
| | 1994.03-2002.04 | MT | F | L | Platform/Chassis FWD T9A (DJ5) | Payload:1000/1400kg,Trans. code:MG | GCI10013 | Inner Joint | | 41 | 39 | 43 | 70 | 104 | |
| | 1994.03-2002.04 | MT | F | L | Platform/Chassis FWD T9A (DJ5) | Payload:1000/1400kg,Trans. code:ME/ML | GCI10015 | Inner Joint | | 37 | 39 | 40 | 68.5 | 104 | |
| | 1994.03-2002.04 | MT | F | L | Platform/Chassis FWD T9A (DJ5) | Payload:1000/1400kg,Trans. code:ME/ML | GCI45013 | Inner Joint | | 37 | 39 | 40 | 68.5 | 100 | |
| | 1994.03-2002.04 | MT | F | R | Platform/Chassis FWD T9A (DJ5) | Payload:1800kg,Trans. code:MG | GCI10009 | Inner Joint | | 41 | 45 | 34.9 | 393 | 115.6 | |
| | 1994.03-2002.04 | MT | F | R | Platform/Chassis FWD T9A (DJ5) | Payload:1000/1400kg,Trans. code:ME/ML | GCI10034 | Inner Joint | | 37 | 39 | 31.9 | 369.5 | 99 | |
| | 1994.08-2002.04 | MT | F | L | Bus FWD T9A (DJ5) | Payload:1800kg,Trans. code:MG | GDS10033 | Drive Shaft | 54T | 35 | 41 | 70 | 117 | 762 | |
| | 1994.08-2002.04 | MT | F | L | Bus FWD T9A (DJ5) | Payload:1000/1400kg,Trans. code:MG | GDS10035 | Drive Shaft | 54T | 28 | 41 | 63 | 112.5 | 757.5 | |
| | 1994.08-2002.04 | MT | F | L | Bus FWD T9A (DJ5) | Payload:1000/1400kg,Trans. code:ME/ML | GDS10037 | Drive Shaft | 54T | 28 | 37 | 63 | 112.5 | 771 | |
| | 1994.08-2002.04 | MT | F | L | Bus FWD T9A (DJ5) | Payload:1800kg,Trans. code:MG | GDS10067 | Drive Shaft | | 35 | 41 | 70 | 117 | 762 | |
| | 1994.08-2002.04 | MT | F | L | Bus FWD T9A (DJ5) | Payload:1000/1400kg,Trans. code:MG | GDS10102 | Drive Shaft | | 28 | 41 | 63 | 112.5 | 757.5 | |
| | 1994.08-2002.04 | MT | F | L | Bus FWD T9A (DJ5) | Payload:1000/1400kg,Trans. code:ME/ML | GDS10105 | Drive Shaft | | 28 | 37 | 63 | 112.5 | 771 | |
| | 1994.08-2002.04 | MT | F | R | Bus FWD T9A (DJ5) | Payload:1800kg,Trans. code:MG | GDS10032 | Drive Shaft | 54T | 35 | 41 | 70 | 117 | 1085 | |
| | 1994.08-2002.04 | MT | F | R | Bus FWD T9A (DJ5) | Payload:1000/1400kg,Trans. code:MG | GDS10036 | Drive Shaft | 54T | 28 | 41 | 63 | 112.5 | 1079 | |
| | 1994.08-2002.04 | MT | F | R | Bus FWD T9A (DJ5) | Payload:1800kg,Trans. code:MG | GDS10066 | Drive Shaft | | 35 | 41 | 70 | 117 | 1085 | |
| | 1994.08-2002.04 | MT | F | R | Bus FWD T9A (DJ5) | Payload:1000/1400kg,Trans. code:ME/ML | GDS10069 | Drive Shaft | | 28 | 37 | 63 | 112.5 | 1072 | |
| | 1994.08-2002.04 | MT | F | R | Bus FWD T9A (DJ5) | Payload:1000/1400kg,Trans. code:MG | GDS10103 | Drive Shaft | | 28 | 41 | 63 | 112.5 | 1079 | |
| | 1994.08-2002.04 | MT | F | R | Bus FWD T9A (DJ5) | Payload:1000/1400kg,Trans. code:ME/ML | GDS10104 | Drive Shaft | 54T | 28 | 37 | 63 | 112.5 | 1072 | |
| | 1994.08-2002.04 | MT | F | L/R | Bus FWD T9A (DJ5) | Payload:1800kg,Trans. code:MG | GCO10011 | Outer Joint | 54T | 35 | 45 | 70 | 117 | 73 | I |
| | 1994.08-2002.04 | MT | F | L/R | Bus FWD T9A (DJ5) | Payload:1000/1400kg,Trans. code:ME/ML/MG | GCO10012 | Outer Joint | | 28 | 39 | 63 | 112.5 | 63 | I |
| | 1994.08-2002.04 | MT | F | L/R | Bus FWD T9A (DJ5) | Payload:1000/1400kg,Trans. code:ME/ML/MG | GCO10013 | Outer Joint | 54T | 28 | 39 | 63 | 112.5 | 63 | I |
| | 1994.08-2002.04 | MT | F | L/R | Bus FWD T9A (DJ5) | Payload:1800kg,Trans. code:MG | GCO10050 | Outer Joint | | 35 | 45 | 70 | 117 | 73 | I |
| | 1994.08-2002.04 | MT | F | L | Bus FWD T9A (DJ5) | Payload:1800kg,Trans. code:MG | GCI10010 | Inner Joint | | 41 | 45 | 43 | 70 | 115.5 | |
| | 1994.08-2002.04 | MT | F | L | Bus FWD T9A (DJ5) | Payload:1000/1400kg,Trans. code:MG | GCI10013 | Inner Joint | | 41 | 39 | 43 | 70 | 104 | |
| | 1994.08-2002.04 | MT | F | L | Bus FWD T9A (DJ5) | Payload:1000/1400kg,Trans. code:ME/ML | GCI10015 | Inner Joint | | 37 | 39 | 40 | 68.5 | 104 | |
| | 1994.08-2002.04 | MT | F | L | Bus FWD T9A (DJ5) | Payload:1000/1400kg,Trans. code:ME/ML | GCI45013 | Inner Joint | | 37 | 39 | 40 | 68.5 | 100 | |
| | 1994.08-2002.04 | MT | F | R | Bus FWD T9A (DJ5) | Payload:1800kg,Trans. code:MG | GCI10009 | Inner Joint | | 41 | 45 | 34.9 | 393 | 115.6 | |
| | 1994.08-2002.04 | MT | F | R | Bus FWD T9A (DJ5) | Payload:1000/1400kg,Trans. code:ME/ML | GCI10034 | Inner Joint | | 37 | 39 | 31.9 | 369.5 | 99 | |
| | 1996.08-2002.04 | MT | F | L | Bus 4WD T9A (DJ5) | Payload:1800kg,Trans. code:MG | GDS10033 | Drive Shaft | 54T | 35 | 41 | 70 | 117 | 762 | |
| | 1996.08-2002.04 | MT | F | L | Bus 4WD T9A (DJ5) | Payload:1000/1400kg,Trans. code:MG | GDS10035 | Drive Shaft | 54T | 28 | 41 | 63 | 112.5 | 757.5 | |
| | 1996.08-2002.04 | MT | F | L | Bus 4WD T9A (DJ5) | Payload:1000/1400kg,Trans. code:ME/ML | GDS10037 | Drive Shaft | 54T | 28 | 37 | 63 | 112.5 | 771 | |
| | 1996.08-2002.04 | MT | F | L | Bus 4WD T9A (DJ5) | Payload:1800kg,Trans. code:MG | GDS10067 | Drive Shaft | | 35 | 41 | 70 | 117 | 762 | |
| | 1996.08-2002.04 | MT | F | L | Bus 4WD T9A (DJ5) | Payload:1000/1400kg,Trans. code:MG | GDS10102 | Drive Shaft | | 28 | 41 | 63 | 112.5 | 757.5 | |
| | 1996.08-2002.04 | MT | F | L | Bus 4WD T9A (DJ5) | Payload:1000/1400kg,Trans. code:ME/ML | GDS10105 | Drive Shaft | | 28 | 37 | 63 | 112.5 | 771 | |
| | 1996.08-2002.04 | MT | F | R | Bus 4WD T9A (DJ5) | Payload:1800kg,Trans. code:MG | GDS10032 | Drive Shaft | 54T | 35 | 41 | 70 | 117 | 1085 | |
| | 1996.08-2002.04 | MT | F | R | Bus 4WD T9A (DJ5) | Payload:1000/1400kg,Trans. code:MG | GDS10036 | Drive Shaft | 54T | 28 | 41 | 63 | 112.5 | 1079 | |
| | 1996.08-2002.04 | MT | F | R | Bus 4WD T9A (DJ5) | Payload:1800kg,Trans. code:MG | GDS10066 | Drive Shaft | | 35 | 41 | 70 | 117 | 1085 | |
| | 1996.08-2002.04 | MT | F | R | Bus 4WD T9A (DJ5) | Payload:1000/1400kg,Trans. code:ME/ML | GDS10069 | Drive Shaft | | 28 | 37 | 63 | 112.5 | 1072 | |
| | 1996.08-2002.04 | MT | F | R | Bus 4WD T9A (DJ5) | Payload:1000/1400kg,Trans. code:MG | GDS10103 | Drive Shaft | | 28 | 41 | 63 | 112.5 | 1079 | |
| | 1996.08-2002.04 | MT | F | R | Bus 4WD T9A (DJ5) | Payload:1000/1400kg,Trans. code:ME/ML | GDS10104 | Drive Shaft | 54T | 28 | 37 | 63 | 112.5 | 1072 | |
| | 1996.08-2002.04 | MT | F | L/R | Bus 4WD T9A (DJ5) | Payload:1800kg,Trans. code:MG | GCO10011 | Outer Joint | 54T | 35 | 45 | 70 | 117 | 73 | I |

| | YEAR | TRANSM. | F/R | L/R | BODY STYLE & DRIVE TYPE & ENGINE | REMARKS | G-AP Ref. | PRODUCT | ABS | Technical Specifications A | B | C | H | L | P |
|---|---|---|---|---|---|---|---|---|---|---|---|---|---|---|---|
| **CITROËN** **Jumper 31** | | | | | | | | | | | | | | | |
| 2.5 (63 kw) | 1996.08-2002.04 | MT | F | L/R | Bus 4WD T9A (DJ5) | Payload:1000/1400kg,Trans. code:ME/ML/MG | GCO10012 | Outer Joint | | 28 | 39 | 63 | 112.5 | 63 | I |
| | 1996.08-2002.04 | MT | F | L/R | Bus 4WD T9A (DJ5) | Payload:1000/1400kg,Trans. code:ME/ML/MG | GCO10013 | Outer Joint | 54T | 28 | 39 | 63 | 112.5 | 63 | I |
| | 1996.08-2002.04 | MT | F | L/R | Bus 4WD T9A (DJ5) | Payload:1800kg,Trans. code:MG | GCO10050 | Outer Joint | | 35 | 45 | 70 | 117 | 73 | I |
| | 1996.08-2002.04 | MT | F | L | Bus 4WD T9A (DJ5) | Payload:1800kg,Trans. code:MG | GCI10010 | Inner Joint | | 41 | 45 | 43 | 70 | 115.5 | |
| | 1996.08-2002.04 | MT | F | L | Bus 4WD T9A (DJ5) | Payload:1000/1400kg,Trans. code:MG | GCI10013 | Inner Joint | | 41 | 39 | 43 | 70 | 104 | |
| | 1996.08-2002.04 | MT | F | L | Bus 4WD T9A (DJ5) | Payload:1000/1400kg,Trans. code:ME/ML | GCI10015 | Inner Joint | | 37 | 39 | 40 | 68.5 | 104 | |
| | 1996.08-2002.04 | MT | F | L | Bus 4WD T9A (DJ5) | Payload:1000/1400kg,Trans. code:ME/ML | GCI45013 | Inner Joint | | 37 | 39 | 40 | 68.5 | 100 | |
| | 1996.08-2002.04 | MT | F | R | Bus 4WD T9A (DJ5) | Payload:1800kg,Trans. code:MG | GCI10009 | Inner Joint | | 41 | 45 | 34.9 | 393 | 115.6 | |
| | 1996.08-2002.04 | MT | F | R | Bus 4WD T9A (DJ5) | Payload:1000/1400kg,Trans. code:ME/ML | GCI10034 | Inner Joint | | 37 | 39 | 31.9 | 369.5 | 99 | |
| | 2000.03-2002.04 | MT | F | L | Platform/Chassis 4WD T9A (DJ5) | Payload:1800kg,Trans. code:MG | GDS10033 | Drive Shaft | 54T | 35 | 41 | 70 | 117 | 762 | |
| | 2000.03-2002.04 | MT | F | L | Platform/Chassis 4WD T9A (DJ5) | Payload:1000/1400kg,Trans. code:MG | GDS10035 | Drive Shaft | 54T | 28 | 41 | 63 | 112.5 | 757.5 | |
| | 2000.03-2002.04 | MT | F | L | Platform/Chassis 4WD T9A (DJ5) | Payload:1000/1400kg,Trans. code:ME/ML | GDS10037 | Drive Shaft | 54T | 28 | 37 | 63 | 112.5 | 771 | |
| | 2000.03-2002.04 | MT | F | L | Platform/Chassis 4WD T9A (DJ5) | Payload:1800kg,Trans. code:MG | GDS10067 | Drive Shaft | | 35 | 41 | 70 | 117 | 762 | |
| | 2000.03-2002.04 | MT | F | L | Platform/Chassis 4WD T9A (DJ5) | Payload:1000/1400kg,Trans. code:MG | GDS10102 | Drive Shaft | | 28 | 41 | 63 | 112.5 | 757.5 | |
| | 2000.03-2002.04 | MT | F | L | Platform/Chassis 4WD T9A (DJ5) | Payload:1000/1400kg,Trans. code:ME/ML | GDS10105 | Drive Shaft | | 28 | 37 | 63 | 112.5 | 771 | |
| | 2000.03-2002.04 | MT | F | R | Platform/Chassis 4WD T9A (DJ5) | Payload:1800kg,Trans. code:MG | GDS10032 | Drive Shaft | 54T | 35 | 41 | 70 | 117 | 1085 | |
| | 2000.03-2002.04 | MT | F | R | Platform/Chassis 4WD T9A (DJ5) | Payload:1000/1400kg,Trans. code:MG | GDS10036 | Drive Shaft | 54T | 28 | 41 | 63 | 112.5 | 1079 | |
| | 2000.03-2002.04 | MT | F | R | Platform/Chassis 4WD T9A (DJ5) | Payload:1800kg,Trans. code:MG | GDS10066 | Drive Shaft | | 35 | 41 | 70 | 117 | 1085 | |
| | 2000.03-2002.04 | MT | F | R | Platform/Chassis 4WD T9A (DJ5) | Payload:1000/1400kg,Trans. code:ME/ML | GDS10069 | Drive Shaft | | 28 | 37 | 63 | 112.5 | 1072 | |
| | 2000.03-2002.04 | MT | F | R | Platform/Chassis 4WD T9A (DJ5) | Payload:1000/1400kg,Trans. code:MG | GDS10103 | Drive Shaft | | 28 | 41 | 63 | 112.5 | 1079 | |
| | 2000.03-2002.04 | MT | F | R | Platform/Chassis 4WD T9A (DJ5) | Payload:1000/1400kg,Trans. code:ME/ML | GDS10104 | Drive Shaft | 54T | 28 | 37 | 63 | 112.5 | 1072 | |
| | 2000.03-2002.04 | MT | F | L/R | Platform/Chassis 4WD T9A (DJ5) | Payload:1800kg,Trans. code:MG | GCO10011 | Outer Joint | 54T | 35 | 45 | 70 | 117 | 73 | I |
| | 2000.03-2002.04 | MT | F | L/R | Platform/Chassis 4WD T9A (DJ5) | Payload:1000/1400kg,Trans. code:ME/ML/MG | GCO10012 | Outer Joint | | 28 | 39 | 63 | 112.5 | 63 | I |
| | 2000.03-2002.04 | MT | F | L/R | Platform/Chassis 4WD T9A (DJ5) | Payload:1000/1400kg,Trans. code:ME/ML/MG | GCO10013 | Outer Joint | 54T | 28 | 39 | 63 | 112.5 | 63 | I |
| | 2000.03-2002.04 | MT | F | L/R | Platform/Chassis 4WD T9A (DJ5) | Payload:1800kg,Trans. code:MG | GCO10050 | Outer Joint | | 35 | 45 | 70 | 117 | 73 | I |
| | 2000.03-2002.04 | MT | F | L | Platform/Chassis 4WD T9A (DJ5) | Payload:1800kg,Trans. code:MG | GCI10010 | Inner Joint | | 41 | 45 | 43 | 70 | 115.5 | |
| | 2000.03-2002.04 | MT | F | L | Platform/Chassis 4WD T9A (DJ5) | Payload:1000/1400kg,Trans. code:MG | GCI10013 | Inner Joint | | 41 | 39 | 43 | 70 | 104 | |
| | 2000.03-2002.04 | MT | F | L | Platform/Chassis 4WD T9A (DJ5) | Payload:1000/1400kg,Trans. code:ME/ML | GCI10015 | Inner Joint | | 37 | 39 | 40 | 68.5 | 104 | |
| | 2000.03-2002.04 | MT | F | L | Platform/Chassis 4WD T9A (DJ5) | Payload:1000/1400kg,Trans. code:ME/ML | GCI45013 | Inner Joint | | 37 | 39 | 40 | 68.5 | 100 | |
| | 2000.03-2002.04 | MT | F | R | Platform/Chassis 4WD T9A (DJ5) | Payload:1800kg,Trans. code:MG | GCI10009 | Inner Joint | | 41 | 45 | 34.9 | 393 | 115.6 | |
| | 2000.03-2002.04 | MT | F | R | Platform/Chassis 4WD T9A (DJ5) | Payload:1000/1400kg,Trans. code:ME/ML | GCI10034 | Inner Joint | | 37 | 39 | 31.9 | 369.5 | 99 | |
| | 2000.03-2002.04 | MT | F | L | Van 4WD T9A (DJ5) | Payload:1800kg,Trans. code:MG | GDS10033 | Drive Shaft | 54T | 35 | 41 | 70 | 117 | 762 | |
| | 2000.03-2002.04 | MT | F | L | Van 4WD T9A (DJ5) | Payload:1000/1400kg,Trans. code:MG | GDS10035 | Drive Shaft | 54T | 28 | 41 | 63 | 112.5 | 757.5 | |
| | 2000.03-2002.04 | MT | F | L | Van 4WD T9A (DJ5) | Payload:1000/1400kg,Trans. code:ME/ML | GDS10037 | Drive Shaft | 54T | 28 | 37 | 63 | 112.5 | 771 | |
| | 2000.03-2002.04 | MT | F | L | Van 4WD T9A (DJ5) | Payload:1800kg,Trans. code:MG | GDS10067 | Drive Shaft | | 35 | 41 | 70 | 117 | 762 | |
| | 2000.03-2002.04 | MT | F | L | Van 4WD T9A (DJ5) | Payload:1000/1400kg,Trans. code:MG | GDS10102 | Drive Shaft | | 28 | 41 | 63 | 112.5 | 757.5 | |
| | 2000.03-2002.04 | MT | F | L | Van 4WD T9A (DJ5) | Payload:1000/1400kg,Trans. code:ME/ML | GDS10105 | Drive Shaft | | 28 | 37 | 63 | 112.5 | 771 | |
| | 2000.03-2002.04 | MT | F | R | Van 4WD T9A (DJ5) | Payload:1800kg,Trans. code:MG | GDS10032 | Drive Shaft | 54T | 35 | 41 | 70 | 117 | 1085 | |
| | 2000.03-2002.04 | MT | F | R | Van 4WD T9A (DJ5) | Payload:1000/1400kg,Trans. code:MG | GDS10036 | Drive Shaft | 54T | 28 | 41 | 63 | 112.5 | 1079 | |
| | 2000.03-2002.04 | MT | F | R | Van 4WD T9A (DJ5) | Payload:1800kg,Trans. code:MG | GDS10066 | Drive Shaft | | 35 | 41 | 70 | 117 | 1085 | |
| | 2000.03-2002.04 | MT | F | R | Van 4WD T9A (DJ5) | Payload:1000/1400kg,Trans. code:ME/ML | GDS10069 | Drive Shaft | | 28 | 37 | 63 | 112.5 | 1072 | |
| | 2000.03-2002.04 | MT | F | R | Van 4WD T9A (DJ5) | Payload:1000/1400kg,Trans. code:MG | GDS10103 | Drive Shaft | | 28 | 41 | 63 | 112.5 | 1079 | |
| | 2000.03-2002.04 | MT | F | R | Van 4WD T9A (DJ5) | Payload:1000/1400kg,Trans. code:ME/ML | GDS10104 | Drive Shaft | 54T | 28 | 37 | 63 | 112.5 | 1072 | |
| | 2000.03-2002.04 | MT | F | L/R | Van 4WD T9A (DJ5) | Payload:1800kg,Trans. code:MG | GCO10011 | Outer Joint | 54T | 35 | 45 | 70 | 117 | 73 | I |
| | 2000.03-2002.04 | MT | F | L/R | Van 4WD T9A (DJ5) | Payload:1000/1400kg,Trans. code:ME/ML/MG | GCO10012 | Outer Joint | | 28 | 39 | 63 | 112.5 | 63 | I |
| | 2000.03-2002.04 | MT | F | L/R | Van 4WD T9A (DJ5) | Payload:1000/1400kg,Trans. code:ME/ML/MG | GCO10013 | Outer Joint | 54T | 28 | 39 | 63 | 112.5 | 63 | I |
| | 2000.03-2002.04 | MT | F | L/R | Van 4WD T9A (DJ5) | Payload:1800kg,Trans. code:MG | GCO10050 | Outer Joint | | 35 | 45 | 70 | 117 | 73 | I |
| | 2000.03-2002.04 | MT | F | L | Van 4WD T9A (DJ5) | Payload:1800kg,Trans. code:MG | GCI10010 | Inner Joint | | 41 | 45 | 43 | 70 | 115.5 | |
| | 2000.03-2002.04 | MT | F | L | Van 4WD T9A (DJ5) | Payload:1000/1400kg,Trans. code:MG | GCI10013 | Inner Joint | | 41 | 39 | 43 | 70 | 104 | |
| | 2000.03-2002.04 | MT | F | L | Van 4WD T9A (DJ5) | Payload:1000/1400kg,Trans. code:ME/ML | GCI10015 | Inner Joint | | 37 | 39 | 40 | 68.5 | 104 | |
| | 2000.03-2002.04 | MT | F | L | Van 4WD T9A (DJ5) | Payload:1000/1400kg,Trans. code:ME/ML | GCI45013 | Inner Joint | | 37 | 39 | 40 | 68.5 | 100 | |
| | 2000.03-2002.04 | MT | F | R | Van 4WD T9A (DJ5) | Payload:1800kg,Trans. code:MG | GCI10009 | Inner Joint | | 41 | 45 | 34.9 | 393 | 115.6 | |
| | 2000.03-2002.04 | MT | F | R | Van 4WD T9A (DJ5) | Payload:1000/1400kg,Trans. code:ME/ML | GCI10034 | Inner Joint | | 37 | 39 | 31.9 | 369.5 | 99 | |
| 2.5 (76 kw) | 1994.03-2002.04 | MT | F | L | Platform/Chassis FWD T8A (DJ5T) | Payload:1800kg,Trans. code:MG | GDS10033 | Drive Shaft | 54T | 35 | 41 | 70 | 117 | 762 | |
| | 1994.03-2002.04 | MT | F | L | Platform/Chassis FWD T8A (DJ5T) | Payload:1000/1400kg,Trans. code:MG | GDS10035 | Drive Shaft | 54T | 28 | 41 | 63 | 112.5 | 757.5 | |
| | 1994.03-2002.04 | MT | F | L | Platform/Chassis FWD T8A (DJ5T) | Payload:1000/1400kg,Trans. code:ME/ML | GDS10037 | Drive Shaft | 54T | 28 | 37 | 63 | 112.5 | 771 | |
| | 1994.03-2002.04 | MT | F | L | Platform/Chassis FWD T8A (DJ5T) | Payload:1800kg,Trans. code:MG | GDS10067 | Drive Shaft | | 35 | 41 | 70 | 117 | 762 | |
| | 1994.03-2002.04 | MT | F | L | Platform/Chassis FWD T8A (DJ5T) | Payload:1000/1400kg,Trans. code:MG | GDS10102 | Drive Shaft | | 28 | 41 | 63 | 112.5 | 757.5 | |
| | 1994.03-2002.04 | MT | F | L | Platform/Chassis FWD T8A (DJ5T) | Payload:1000/1400kg,Trans. code:ME/ML | GDS10105 | Drive Shaft | | 28 | 37 | 63 | 112.5 | 771 | |
| | 1994.03-2002.04 | MT | F | R | Platform/Chassis FWD T8A (DJ5T) | Payload:1800kg,Trans. code:MG | GDS10032 | Drive Shaft | 54T | 35 | 41 | 70 | 117 | 1085 | |
| | 1994.03-2002.04 | MT | F | R | Platform/Chassis FWD T8A (DJ5T) | Payload:1000/1400kg,Trans. code:MG | GDS10036 | Drive Shaft | 54T | 28 | 41 | 63 | 112.5 | 1079 | |
| | 1994.03-2002.04 | MT | F | R | Platform/Chassis FWD T8A (DJ5T) | Payload:1800kg,Trans. code:MG | GDS10066 | Drive Shaft | | 35 | 41 | 70 | 117 | 1085 | |
| | 1994.03-2002.04 | MT | F | R | Platform/Chassis FWD T8A (DJ5T) | Payload:1000/1400kg,Trans. code:ME/ML | GDS10069 | Drive Shaft | | 28 | 37 | 63 | 112.5 | 1072 | |
| | 1994.03-2002.04 | MT | F | R | Platform/Chassis FWD T8A (DJ5T) | Payload:1000/1400kg,Trans. code:MG | GDS10103 | Drive Shaft | | 28 | 41 | 63 | 112.5 | 1079 | |
| | 1994.03-2002.04 | MT | F | R | Platform/Chassis FWD T8A (DJ5T) | Payload:1000/1400kg,Trans. code:ME/ML | GDS10104 | Drive Shaft | 54T | 28 | 37 | 63 | 112.5 | 1072 | |

| | YEAR | TRANSM. | F/R | L/R | BODY STYLE & DRIVE TYPE & ENGINE | REMARKS | G-AP Ref. | PRODUCT | ABS | Technical Specifications | | | | | |
|---|---|---|---|---|---|---|---|---|---|---|---|---|---|---|---|
| | | | | | | | | | | A | B | C | H | L | P |
| **CITROËN** | | | | | | | | | | | | | | | |
| **Jumper 31** | | | | | | | | | | | | | | | |
| 2.5 (76 kw) | 1994.03-2002.04 | MT | F | L/R | Platform/Chassis FWD T8A (DJ5T) | Payload:1800kg,Trans. code:MG | GCO10011 | Outer Joint | 54T | 35 | 45 | 70 | 117 | 73 | I |
| | 1994.03-2002.04 | MT | F | L/R | Platform/Chassis FWD T8A (DJ5T) | Payload:1000/1400kg,Trans. code:ME/ML/MG | GCO10012 | Outer Joint | | 28 | 39 | 63 | 112.5 | 63 | I |
| | 1994.03-2002.04 | MT | F | L/R | Platform/Chassis FWD T8A (DJ5T) | Payload:1000/1400kg,Trans. code:ME/ML/MG | GCO10013 | Outer Joint | 54T | 28 | 39 | 63 | 112.5 | 63 | I |
| | 1994.03-2002.04 | MT | F | L/R | Platform/Chassis FWD T8A (DJ5T) | Payload:1800kg,Trans. code:MG | GCO10050 | Outer Joint | | 35 | 45 | 70 | 117 | 73 | I |
| | 1994.03-2002.04 | MT | F | L | Platform/Chassis FWD T8A (DJ5T) | Payload:1800kg,Trans. code:MG | GCI10010 | Inner Joint | | 41 | 45 | 43 | 70 | 115.5 | |
| | 1994.03-2002.04 | MT | F | L | Platform/Chassis FWD T8A (DJ5T) | Payload:1000/1400kg,Trans. code:MG | GCI10013 | Inner Joint | | 41 | 39 | 43 | 70 | 104 | |
| | 1994.03-2002.04 | MT | F | L | Platform/Chassis FWD T8A (DJ5T) | Payload:1000/1400kg,Trans. code:ME/ML | GCI10015 | Inner Joint | | 37 | 39 | 40 | 68.5 | 104 | |
| | 1994.03-2002.04 | MT | F | L | Platform/Chassis FWD T8A (DJ5T) | Payload:1000/1400kg,Trans. code:ME/ML | GCI45013 | Inner Joint | | 37 | 39 | 40 | 68.5 | 100 | |
| | 1994.03-2002.04 | MT | F | R | Platform/Chassis FWD T8A (DJ5T) | Payload:1800kg,Trans. code:MG | GCI10009 | Inner Joint | | 41 | 45 | 34.9 | 393 | 115.6 | |
| | 1994.03-2002.04 | MT | F | R | Platform/Chassis FWD T8A (DJ5T) | Payload:1000/1400kg,Trans. code:ME/ML | GCI10034 | Inner Joint | | 37 | 39 | 31.9 | 369.5 | 99 | |
| | 1994.03-2002.04 | MT | F | L | Van FWD T8A (DJ5T) | Payload:1800kg,Trans. code:MG | GDS10033 | Drive Shaft | 54T | 35 | 41 | 70 | 117 | 762 | |
| | 1994.03-2002.04 | MT | F | L | Van FWD T8A (DJ5T) | Payload:1000/1400kg,Trans. code:MG | GDS10035 | Drive Shaft | 54T | 28 | 41 | 63 | 112.5 | 757.5 | |
| | 1994.03-2002.04 | MT | F | L | Van FWD T8A (DJ5T) | Payload:1000/1400kg,Trans. code:ME/ML | GDS10037 | Drive Shaft | 54T | 28 | 37 | 63 | 112.5 | 771 | |
| | 1994.03-2002.04 | MT | F | L | Van FWD T8A (DJ5T) | Payload:1800kg,Trans. code:MG | GDS10067 | Drive Shaft | | 35 | 41 | 70 | 117 | 762 | |
| | 1994.03-2002.04 | MT | F | L | Van FWD T8A (DJ5T) | Payload:1000/1400kg,Trans. code:ME/ML | GDS10102 | Drive Shaft | | 28 | 41 | 63 | 112.5 | 757.5 | |
| | 1994.03-2002.04 | MT | F | L | Van FWD T8A (DJ5T) | Payload:1000/1400kg,Trans. code:ME/ML | GDS10105 | Drive Shaft | | 28 | 37 | 63 | 112.5 | 771 | |
| | 1994.03-2002.04 | MT | F | R | Van FWD T8A (DJ5T) | Payload:1800kg,Trans. code:MG | GDS10032 | Drive Shaft | 54T | 35 | 41 | 70 | 117 | 1085 | |
| | 1994.03-2002.04 | MT | F | R | Van FWD T8A (DJ5T) | Payload:1000/1400kg,Trans. code:MG | GDS10036 | Drive Shaft | 54T | 28 | 41 | 63 | 112.5 | 1079 | |
| | 1994.03-2002.04 | MT | F | R | Van FWD T8A (DJ5T) | Payload:1000/1400kg,Trans. code:ME/ML | GDS10066 | Drive Shaft | | 35 | 41 | 70 | 117 | 1085 | |
| | 1994.03-2002.04 | MT | F | R | Van FWD T8A (DJ5T) | Payload:1800kg,Trans. code:MG | GDS10069 | Drive Shaft | | 28 | 37 | 63 | 112.5 | 1072 | |
| | 1994.03-2002.04 | MT | F | R | Van FWD T8A (DJ5T) | Payload:1000/1400kg,Trans. code:MG | GDS10103 | Drive Shaft | | 28 | 41 | 63 | 112.5 | 1079 | |
| | 1994.03-2002.04 | MT | F | R | Van FWD T8A (DJ5T) | Payload:1000/1400kg,Trans. code:MG | GDS10104 | Drive Shaft | 54T | 28 | 37 | 63 | 112.5 | 1072 | |
| | 1994.03-2002.04 | MT | F | L/R | Van FWD T8A (DJ5T) | Payload:1800kg,Trans. code:MG | GCO10011 | Outer Joint | 54T | 35 | 45 | 70 | 117 | 73 | I |
| | 1994.03-2002.04 | MT | F | L/R | Van FWD T8A (DJ5T) | Payload:1000/1400kg,Trans. code:ME/ML/MG | GCO10012 | Outer Joint | | 28 | 39 | 63 | 112.5 | 63 | I |
| | 1994.03-2002.04 | MT | F | L/R | Van FWD T8A (DJ5T) | Payload:1000/1400kg,Trans. code:ME/ML/MG | GCO10013 | Outer Joint | 54T | 28 | 39 | 63 | 112.5 | 63 | I |
| | 1994.03-2002.04 | MT | F | L/R | Van FWD T8A (DJ5T) | Payload:1800kg,Trans. code:MG | GCO10050 | Outer Joint | | 35 | 45 | 70 | 117 | 73 | I |
| | 1994.03-2002.04 | MT | F | L | Van FWD T8A (DJ5T) | Payload:1800kg,Trans. code:MG | GCI10010 | Inner Joint | | 41 | 45 | 43 | 70 | 115.5 | |
| | 1994.03-2002.04 | MT | F | L | Van FWD T8A (DJ5T) | Payload:1000/1400kg,Trans. code:MG | GCI10013 | Inner Joint | | 41 | 39 | 43 | 70 | 104 | |
| | 1994.03-2002.04 | MT | F | L | Van FWD T8A (DJ5T) | Payload:1000/1400kg,Trans. code:ME/ML | GCI10015 | Inner Joint | | 37 | 39 | 40 | 68.5 | 104 | |
| | 1994.03-2002.04 | MT | F | L | Van FWD T8A (DJ5T) | Payload:1000/1400kg,Trans. code:ME/ML | GCI45013 | Inner Joint | | 37 | 39 | 40 | 68.5 | 100 | |
| | 1994.03-2002.04 | MT | F | R | Van FWD T8A (DJ5T) | Payload:1800kg,Trans. code:MG | GCI10009 | Inner Joint | | 41 | 45 | 34.9 | 393 | 115.6 | |
| | 1994.03-2002.04 | MT | F | R | Van FWD T8A (DJ5T) | Payload:1000/1400kg,Trans. code:ME/ML | GCI10034 | Inner Joint | | 37 | 39 | 31.9 | 369.5 | 99 | |
| | 1996.08-2002.04 | MT | F | L | Bus 4WD T8A (DJ5T) | Payload:1800kg,Trans. code:MG | GDS10033 | Drive Shaft | 54T | 35 | 41 | 70 | 117 | 762 | |
| | 1996.08-2002.04 | MT | F | L | Bus 4WD T8A (DJ5T) | Payload:1000/1400kg,Trans. code:MG | GDS10035 | Drive Shaft | 54T | 28 | 41 | 63 | 112.5 | 757.5 | |
| | 1996.08-2002.04 | MT | F | L | Bus 4WD T8A (DJ5T) | Payload:1000/1400kg,Trans. code:ME/ML | GDS10037 | Drive Shaft | 54T | 28 | 37 | 63 | 112.5 | 771 | |
| | 1996.08-2002.04 | MT | F | L | Bus 4WD T8A (DJ5T) | Payload:1800kg,Trans. code:MG | GDS10067 | Drive Shaft | | 35 | 41 | 70 | 117 | 762 | |
| | 1996.08-2002.04 | MT | F | L | Bus 4WD T8A (DJ5T) | Payload:1000/1400kg,Trans. code:MG | GDS10102 | Drive Shaft | | 28 | 41 | 63 | 112.5 | 757.5 | |
| | 1996.08-2002.04 | MT | F | L | Bus 4WD T8A (DJ5T) | Payload:1000/1400kg,Trans. code:ME/ML | GDS10105 | Drive Shaft | | 28 | 37 | 63 | 112.5 | 771 | |
| | 1996.08-2002.04 | MT | F | R | Bus 4WD T8A (DJ5T) | Payload:1800kg,Trans. code:MG | GDS10032 | Drive Shaft | 54T | 35 | 41 | 70 | 117 | 1085 | |
| | 1996.08-2002.04 | MT | F | R | Bus 4WD T8A (DJ5T) | Payload:1000/1400kg,Trans. code:MG | GDS10036 | Drive Shaft | 54T | 28 | 41 | 63 | 112.5 | 1079 | |
| | 1996.08-2002.04 | MT | F | R | Bus 4WD T8A (DJ5T) | Payload:1800kg,Trans. code:MG | GDS10066 | Drive Shaft | | 35 | 41 | 70 | 117 | 1085 | |
| | 1996.08-2002.04 | MT | F | R | Bus 4WD T8A (DJ5T) | Payload:1000/1400kg,Trans. code:ME/ML | GDS10069 | Drive Shaft | | 28 | 37 | 63 | 112.5 | 1072 | |
| | 1996.08-2002.04 | MT | F | R | Bus 4WD T8A (DJ5T) | Payload:1000/1400kg,Trans. code:MG | GDS10103 | Drive Shaft | | 28 | 41 | 63 | 112.5 | 1079 | |
| | 1996.08-2002.04 | MT | F | R | Bus 4WD T8A (DJ5T) | Payload:1000/1400kg,Trans. code:ME/ML | GDS10104 | Drive Shaft | 54T | 28 | 37 | 63 | 112.5 | 1072 | |
| | 1996.08-2002.04 | MT | F | L/R | Bus 4WD T8A (DJ5T) | Payload:1800kg,Trans. code:MG | GCO10011 | Outer Joint | 54T | 35 | 45 | 70 | 117 | 73 | I |
| | 1996.08-2002.04 | MT | F | L/R | Bus 4WD T8A (DJ5T) | Payload:1000/1400kg,Trans. code:ME/ML/MG | GCO10012 | Outer Joint | | 28 | 39 | 63 | 112.5 | 63 | I |
| | 1996.08-2002.04 | MT | F | L/R | Bus 4WD T8A (DJ5T) | Payload:1000/1400kg,Trans. code:ME/ML/MG | GCO10013 | Outer Joint | 54T | 28 | 39 | 63 | 112.5 | 63 | I |
| | 1996.08-2002.04 | MT | F | L/R | Bus 4WD T8A (DJ5T) | Payload:1800kg,Trans. code:MG | GCO10050 | Outer Joint | | 35 | 45 | 70 | 117 | 73 | I |
| | 1996.08-2002.04 | MT | F | L | Bus 4WD T8A (DJ5T) | Payload:1800kg,Trans. code:MG | GCI10010 | Inner Joint | | 41 | 45 | 43 | 70 | 115.5 | |
| | 1996.08-2002.04 | MT | F | L | Bus 4WD T8A (DJ5T) | Payload:1000/1400kg,Trans. code:MG | GCI10013 | Inner Joint | | 41 | 39 | 43 | 70 | 104 | |
| | 1996.08-2002.04 | MT | F | L | Bus 4WD T8A (DJ5T) | Payload:1000/1400kg,Trans. code:ME/ML | GCI10015 | Inner Joint | | 37 | 39 | 40 | 68.5 | 104 | |
| | 1996.08-2002.04 | MT | F | L | Bus 4WD T8A (DJ5T) | Payload:1000/1400kg,Trans. code:ME/ML | GCI45013 | Inner Joint | | 37 | 39 | 40 | 68.5 | 100 | |
| | 1996.08-2002.04 | MT | F | R | Bus 4WD T8A (DJ5T) | Payload:1800kg,Trans. code:MG | GCI10009 | Inner Joint | | 41 | 45 | 34.9 | 393 | 115.6 | |
| | 1996.08-2002.04 | MT | F | R | Bus 4WD T8A (DJ5T) | Payload:1000/1400kg,Trans. code:ME/ML | GCI10034 | Inner Joint | | 37 | 39 | 31.9 | 369.5 | 99 | |
| | 1996.10-1997.08 | MT | F | L | Van 4WD THZ (DJ5T) | Payload:1800kg,Trans. code:MG | GDS10033 | Drive Shaft | 54T | 35 | 41 | 70 | 117 | 762 | |
| | 1996.10-1997.08 | MT | F | R | Van 4WD THZ (DJ5T) | Payload:1800kg,Trans. code:MG | GDS10032 | Drive Shaft | 54T | 35 | 41 | 70 | 117 | 1085 | |
| | 1996.10-1997.08 | MT | F | L/R | Van 4WD THZ (DJ5T) | Payload:1800kg,Trans. code:MG | GCO10011 | Outer Joint | 54T | 35 | 45 | 70 | 117 | 73 | I |
| | 1996.10-1997.08 | MT | F | L/R | Van 4WD THZ (DJ5T) | Payload:1800kg,Trans. code:MG | GCO10050 | Outer Joint | | 35 | 45 | 70 | 117 | 73 | I |
| | 1996.10-1997.08 | MT | F | L | Van 4WD THZ (DJ5T) | Payload:1800kg,Trans. code:MG | GCI10010 | Inner Joint | | 41 | 45 | 43 | 70 | 115.5 | |
| | 1996.10-1997.08 | MT | F | R | Van 4WD THZ (DJ5T) | Payload:1800kg,Trans. code:MG | GCI10009 | Inner Joint | | 41 | 45 | 34.9 | 393 | 115.6 | |
| 2.5 (79 kw) | 1996.12-2000.11 | MT | F | L | Bus 4WD THX (DJ5TED) | Payload:1800kg,Trans. code:MG | GDS10033 | Drive Shaft | 54T | 35 | 41 | 70 | 117 | 762 | |
| | 1996.12-2000.11 | MT | F | L | Bus 4WD THX (DJ5TED) | Payload:1000/1400kg,Trans. code:MG | GDS10035 | Drive Shaft | 54T | 28 | 41 | 63 | 112.5 | 757.5 | |
| | 1996.12-2000.11 | MT | F | L | Bus 4WD THX (DJ5TED) | Payload:1000/1400kg,Trans. code:ME/ML | GDS10037 | Drive Shaft | 54T | 28 | 37 | 63 | 112.5 | 771 | |
| | 1996.12-2000.11 | MT | F | L | Bus 4WD THX (DJ5TED) | Payload:1800kg,Trans. code:MG | GDS10067 | Drive Shaft | | 35 | 41 | 70 | 117 | 762 | |
| | 1996.12-2000.11 | MT | F | L | Bus 4WD THX (DJ5TED) | Payload:1000/1400kg,Trans. code:MG | GDS10102 | Drive Shaft | | 28 | 41 | 63 | 112.5 | 757.5 | |

| | YEAR | TRANSM. | F/R | L/R | BODY STYLE & DRIVE TYPE & ENGINE | REMARKS | G-AP Ref. | PRODUCT | ABS | Technical Specifications A | B | C | H | L | P |
|---|---|---|---|---|---|---|---|---|---|---|---|---|---|---|---|
| **CITROËN** | | | | | | | | | | | | | | | |
| **Jumper 31** | | | | | | | | | | | | | | | |
| 2.5 (79 kw) | 1996.12-2000.11 | MT | F | L | Bus 4WD THX (DJ5TED) | Payload:1000/1400kg,Trans. code:ME/ML | GDS10105 | Drive Shaft | | 28 | 37 | 63 | 112.5 | 771 | |
| | 1996.12-2000.11 | MT | F | R | Bus 4WD THX (DJ5TED) | Payload:1800kg,Trans. code:MG | GDS10032 | Drive Shaft | 54T | 35 | 41 | 70 | 117 | 1085 | |
| | 1996.12-2000.11 | MT | F | R | Bus 4WD THX (DJ5TED) | Payload:1000/1400kg,Trans. code:MG | GDS10036 | Drive Shaft | 54T | 28 | 41 | 63 | 112.5 | 1079 | |
| | 1996.12-2000.11 | MT | F | R | Bus 4WD THX (DJ5TED) | Payload:1800kg,Trans. code:MG | GDS10066 | Drive Shaft | | 35 | 41 | 70 | 117 | 1085 | |
| | 1996.12-2000.11 | MT | F | R | Bus 4WD THX (DJ5TED) | Payload:1000/1400kg,Trans. code:ME/ML | GDS10069 | Drive Shaft | | 28 | 37 | 63 | 112.5 | 1072 | |
| | 1996.12-2000.11 | MT | F | R | Bus 4WD THX (DJ5TED) | Payload:1000/1400kg,Trans. code:MG | GDS10103 | Drive Shaft | | 28 | 41 | 63 | 112.5 | 1079 | |
| | 1996.12-2000.11 | MT | F | R | Bus 4WD THX (DJ5TED) | Payload:1000/1400kg,Trans. code:ME/ML | GDS10104 | Drive Shaft | 54T | 28 | 37 | 63 | 112.5 | 1072 | |
| | 1996.12-2000.11 | MT | F | L/R | Bus 4WD THX (DJ5TED) | Payload:1800kg,Trans. code:MG | GCO10011 | Outer Joint | 54T | 35 | 45 | 70 | 117 | 73 | I |
| | 1996.12-2000.11 | MT | F | L/R | Bus 4WD THX (DJ5TED) | Payload:1000/1400kg,Trans. code:ME/ML/MG | GCO10012 | Outer Joint | | 28 | 39 | 63 | 112.5 | 63 | I |
| | 1996.12-2000.11 | MT | F | L/R | Bus 4WD THX (DJ5TED) | Payload:1000/1400kg,Trans. code:ME/ML/MG | GCO10013 | Outer Joint | 54T | 28 | 39 | 63 | 112.5 | 63 | I |
| | 1996.12-2000.11 | MT | F | L/R | Bus 4WD THX (DJ5TED) | Payload:1800kg,Trans. code:MG | GCO10050 | Outer Joint | | 35 | 45 | 70 | 117 | 73 | I |
| | 1996.12-2000.11 | MT | F | L | Bus 4WD THX (DJ5TED) | Payload:1800kg,Trans. code:MG | GCI10010 | Inner Joint | | 41 | 45 | 43 | 70 | 115.5 | |
| | 1996.12-2000.11 | MT | F | L | Bus 4WD THX (DJ5TED) | Payload:1000/1400kg,Trans. code:MG | GCI10013 | Inner Joint | | 41 | 39 | 43 | 70 | 104 | |
| | 1996.12-2000.11 | MT | F | L | Bus 4WD THX (DJ5TED) | Payload:1000/1400kg,Trans. code:ME/ML | GCI10015 | Inner Joint | | 37 | 39 | 40 | 68.5 | 104 | |
| | 1996.12-2000.11 | MT | F | L | Bus 4WD THX (DJ5TED) | Payload:1000/1400kg,Trans. code:ME/ML | GCI45013 | Inner Joint | | 37 | 39 | 40 | 68.5 | 100 | |
| | 1996.12-2000.11 | MT | F | R | Bus 4WD THX (DJ5TED) | Payload:1800kg,Trans. code:MG | GCI10009 | Inner Joint | | 41 | 45 | 34.9 | 393 | 115.6 | |
| | 1996.12-2000.11 | MT | F | R | Bus 4WD THX (DJ5TED) | Payload:1000/1400kg,Trans. code:ME/ML | GCI10034 | Inner Joint | | 37 | 39 | 31.9 | 369.5 | 99 | |
| | 1996.12-2002.04 | MT | F | L | Platform/Chassis FWD THX (DJ5TED) | Payload:1800kg,Trans. code:MG | GDS10033 | Drive Shaft | 54T | 35 | 41 | 70 | 117 | 762 | |
| | 1996.12-2002.04 | MT | F | L | Platform/Chassis FWD THX (DJ5TED) | Payload:1000/1400kg,Trans. code:MG | GDS10035 | Drive Shaft | 54T | 28 | 41 | 63 | 112.5 | 757.5 | |
| | 1996.12-2002.04 | MT | F | L | Platform/Chassis FWD THX (DJ5TED) | Payload:1000/1400kg,Trans. code:ME/ML | GDS10037 | Drive Shaft | 54T | 28 | 37 | 63 | 112.5 | 771 | |
| | 1996.12-2002.04 | MT | F | L | Platform/Chassis FWD THX (DJ5TED) | Payload:1800kg,Trans. code:MG | GDS10067 | Drive Shaft | | 35 | 41 | 70 | 117 | 762 | |
| | 1996.12-2002.04 | MT | F | L | Platform/Chassis FWD THX (DJ5TED) | Payload:1000/1400kg,Trans. code:MG | GDS10102 | Drive Shaft | | 28 | 41 | 63 | 112.5 | 757.5 | |
| | 1996.12-2002.04 | MT | F | L | Platform/Chassis FWD THX (DJ5TED) | Payload:1000/1400kg,Trans. code:ME/ML | GDS10105 | Drive Shaft | | 28 | 37 | 63 | 112.5 | 771 | |
| | 1996.12-2002.04 | MT | F | R | Platform/Chassis FWD THX (DJ5TED) | Payload:1800kg,Trans. code:MG | GDS10032 | Drive Shaft | 54T | 35 | 41 | 70 | 117 | 1085 | |
| | 1996.12-2002.04 | MT | F | R | Platform/Chassis FWD THX (DJ5TED) | Payload:1000/1400kg,Trans. code:MG | GDS10036 | Drive Shaft | 54T | 28 | 41 | 63 | 112.5 | 1079 | |
| | 1996.12-2002.04 | MT | F | R | Platform/Chassis FWD THX (DJ5TED) | Payload:1800kg,Trans. code:MG | GDS10066 | Drive Shaft | | 35 | 41 | 70 | 117 | 1085 | |
| | 1996.12-2002.04 | MT | F | R | Platform/Chassis FWD THX (DJ5TED) | Payload:1000/1400kg,Trans. code:ME/ML | GDS10069 | Drive Shaft | | 28 | 37 | 63 | 112.5 | 1072 | |
| | 1996.12-2002.04 | MT | F | R | Platform/Chassis FWD THX (DJ5TED) | Payload:1000/1400kg,Trans. code:MG | GDS10103 | Drive Shaft | | 28 | 41 | 63 | 112.5 | 1079 | |
| | 1996.12-2002.04 | MT | F | R | Platform/Chassis FWD THX (DJ5TED) | Payload:1000/1400kg,Trans. code:ME/ML | GDS10104 | Drive Shaft | 54T | 28 | 37 | 63 | 112.5 | 1072 | |
| | 1996.12-2002.04 | MT | F | L/R | Platform/Chassis FWD THX (DJ5TED) | Payload:1800kg,Trans. code:MG | GCO10011 | Outer Joint | 54T | 35 | 45 | 70 | 117 | 73 | I |
| | 1996.12-2002.04 | MT | F | L/R | Platform/Chassis FWD THX (DJ5TED) | Payload:1000/1400kg,Trans. code:ME/ML/MG | GCO10012 | Outer Joint | | 28 | 39 | 63 | 112.5 | 63 | I |
| | 1996.12-2002.04 | MT | F | L/R | Platform/Chassis FWD THX (DJ5TED) | Payload:1000/1400kg,Trans. code:ME/ML/MG | GCO10013 | Outer Joint | 54T | 28 | 39 | 63 | 112.5 | 63 | I |
| | 1996.12-2002.04 | MT | F | L/R | Platform/Chassis FWD THX (DJ5TED) | Payload:1800kg,Trans. code:MG | GCO10050 | Outer Joint | | 35 | 45 | 70 | 117 | 73 | I |
| | 1996.12-2002.04 | MT | F | L | Platform/Chassis FWD THX (DJ5TED) | Payload:1800kg,Trans. code:MG | GCI10010 | Inner Joint | | 41 | 45 | 43 | 70 | 115.5 | |
| | 1996.12-2002.04 | MT | F | L | Platform/Chassis FWD THX (DJ5TED) | Payload:1000/1400kg,Trans. code:MG | GCI10013 | Inner Joint | | 41 | 39 | 43 | 70 | 104 | |
| | 1996.12-2002.04 | MT | F | L | Platform/Chassis FWD THX (DJ5TED) | Payload:1000/1400kg,Trans. code:ME/ML | GCI10015 | Inner Joint | | 37 | 39 | 40 | 68.5 | 104 | |
| | 1996.12-2002.04 | MT | F | L | Platform/Chassis FWD THX (DJ5TED) | Payload:1000/1400kg,Trans. code:ME/ML | GCI45013 | Inner Joint | | 37 | 39 | 40 | 68.5 | 100 | |
| | 1996.12-2002.04 | MT | F | R | Platform/Chassis FWD THX (DJ5TED) | Payload:1800kg,Trans. code:MG | GCI10009 | Inner Joint | | 41 | 45 | 34.9 | 393 | 115.6 | |
| | 1996.12-2002.04 | MT | F | R | Platform/Chassis FWD THX (DJ5TED) | Payload:1000/1400kg,Trans. code:ME/ML | GCI10034 | Inner Joint | | 37 | 39 | 31.9 | 369.5 | 99 | |
| | 2000.03-2000.11 | MT | F | L | Van 4WD THX (DJ5TED) | Payload:1800kg,Trans. code:MG | GDS10033 | Drive Shaft | 54T | 35 | 41 | 70 | 117 | 762 | |
| | 2000.03-2000.11 | MT | F | L | Van 4WD THX (DJ5TED) | Payload:1000/1400kg,Trans. code:MG | GDS10035 | Drive Shaft | 54T | 28 | 41 | 63 | 112.5 | 757.5 | |
| | 2000.03-2000.11 | MT | F | L | Van 4WD THX (DJ5TED) | Payload:1000/1400kg,Trans. code:ME/ML | GDS10037 | Drive Shaft | 54T | 28 | 37 | 63 | 112.5 | 771 | |
| | 2000.03-2000.11 | MT | F | L | Van 4WD THX (DJ5TED) | Payload:1800kg,Trans. code:MG | GDS10067 | Drive Shaft | | 35 | 41 | 70 | 117 | 762 | |
| | 2000.03-2000.11 | MT | F | L | Van 4WD THX (DJ5TED) | Payload:1000/1400kg,Trans. code:MG | GDS10102 | Drive Shaft | | 28 | 41 | 63 | 112.5 | 757.5 | |
| | 2000.03-2000.11 | MT | F | L | Van 4WD THX (DJ5TED) | Payload:1000/1400kg,Trans. code:ME/ML | GDS10105 | Drive Shaft | | 28 | 37 | 63 | 112.5 | 771 | |
| | 2000.03-2000.11 | MT | F | R | Van 4WD THX (DJ5TED) | Payload:1800kg,Trans. code:MG | GDS10032 | Drive Shaft | 54T | 35 | 41 | 70 | 117 | 1085 | |
| | 2000.03-2000.11 | MT | F | R | Van 4WD THX (DJ5TED) | Payload:1000/1400kg,Trans. code:MG | GDS10036 | Drive Shaft | 54T | 28 | 41 | 63 | 112.5 | 1079 | |
| | 2000.03-2000.11 | MT | F | R | Van 4WD THX (DJ5TED) | Payload:1800kg,Trans. code:MG | GDS10066 | Drive Shaft | | 35 | 41 | 70 | 117 | 1085 | |
| | 2000.03-2000.11 | MT | F | R | Van 4WD THX (DJ5TED) | Payload:1000/1400kg,Trans. code:ME/ML | GDS10069 | Drive Shaft | | 28 | 37 | 63 | 112.5 | 1072 | |
| | 2000.03-2000.11 | MT | F | R | Van 4WD THX (DJ5TED) | Payload:1000/1400kg,Trans. code:MG | GDS10103 | Drive Shaft | | 28 | 41 | 63 | 112.5 | 1079 | |
| | 2000.03-2000.11 | MT | F | R | Van 4WD THX (DJ5TED) | Payload:1000/1400kg,Trans. code:ME/ML | GDS10104 | Drive Shaft | 54T | 28 | 37 | 63 | 112.5 | 1072 | |
| | 2000.03-2000.11 | MT | F | L/R | Van 4WD THX (DJ5TED) | Payload:1800kg,Trans. code:MG | GCO10011 | Outer Joint | 54T | 35 | 45 | 70 | 117 | 73 | I |
| | 2000.03-2000.11 | MT | F | L/R | Van 4WD THX (DJ5TED) | Payload:1000/1400kg,Trans. code:ME/ML/MG | GCO10012 | Outer Joint | | 28 | 39 | 63 | 112.5 | 63 | I |
| | 2000.03-2000.11 | MT | F | L/R | Van 4WD THX (DJ5TED) | Payload:1000/1400kg,Trans. code:ME/ML/MG | GCO10013 | Outer Joint | 54T | 28 | 39 | 63 | 112.5 | 63 | I |
| | 2000.03-2000.11 | MT | F | L/R | Van 4WD THX (DJ5TED) | Payload:1800kg,Trans. code:MG | GCO10050 | Outer Joint | | 35 | 45 | 70 | 117 | 73 | I |
| | 2000.03-2000.11 | MT | F | L | Van 4WD THX (DJ5TED) | Payload:1800kg,Trans. code:MG | GCI10010 | Inner Joint | | 41 | 45 | 43 | 70 | 115.5 | |
| | 2000.03-2000.11 | MT | F | L | Van 4WD THX (DJ5TED) | Payload:1000/1400kg,Trans. code:MG | GCI10013 | Inner Joint | | 41 | 39 | 43 | 70 | 104 | |
| | 2000.03-2000.11 | MT | F | L | Van 4WD THX (DJ5TED) | Payload:1000/1400kg,Trans. code:ME/ML | GCI10015 | Inner Joint | | 37 | 39 | 40 | 68.5 | 104 | |
| | 2000.03-2000.11 | MT | F | L | Van 4WD THX (DJ5TED) | Payload:1000/1400kg,Trans. code:ME/ML | GCI45013 | Inner Joint | | 37 | 39 | 40 | 68.5 | 100 | |
| | 2000.03-2000.11 | MT | F | R | Van 4WD THX (DJ5TED) | Payload:1800kg,Trans. code:MG | GCI10009 | Inner Joint | | 41 | 45 | 34.9 | 393 | 115.6 | |
| | 2000.03-2000.11 | MT | F | R | Van 4WD THX (DJ5TED) | Payload:1000/1400kg,Trans. code:ME/ML | GCI10034 | Inner Joint | | 37 | 39 | 31.9 | 369.5 | 99 | |
| | 2000.03-2002.04 | MT | F | L | Platform/Chassis 4WD THX (DJ5TED) | Payload:1800kg,Trans. code:MG | GDS10033 | Drive Shaft | 54T | 35 | 41 | 70 | 117 | 762 | |
| | 2000.03-2002.04 | MT | F | L | Platform/Chassis 4WD THX (DJ5TED) | Payload:1000/1400kg,Trans. code:MG | GDS10035 | Drive Shaft | 54T | 28 | 41 | 63 | 112.5 | 757.5 | |
| | 2000.03-2002.04 | MT | F | L | Platform/Chassis 4WD THX (DJ5TED) | Payload:1000/1400kg,Trans. code:ME/ML | GDS10037 | Drive Shaft | 54T | 28 | 37 | 63 | 112.5 | 771 | |
| | 2000.03-2002.04 | MT | F | L | Platform/Chassis 4WD THX (DJ5TED) | Payload:1800kg,Trans. code:MG | GDS10067 | Drive Shaft | | 35 | 41 | 70 | 117 | 762 | |

| | YEAR | TRANSM. | F/R | L/R | BODY STYLE & DRIVE TYPE & ENGINE | REMARKS | G-AP Ref. | PRODUCT | ABS | Technical Specifications A | B | C | H | L | P |
|---|---|---|---|---|---|---|---|---|---|---|---|---|---|---|---|
| **CITROËN** | | | | | | | | | | | | | | | |
| **Jumper 31** | | | | | | | | | | | | | | | |
| 2.5 (79 kw) | 2000.03-2002.04 | MT | F | L | Platform/Chassis 4WD THX (DJ5TED) | Payload:1000/1400kg,Trans. code:MG | GDS10102 | Drive Shaft | | 28 | 41 | 63 | 112.5 | 757.5 | |
| | 2000.03-2002.04 | MT | F | L | Platform/Chassis 4WD THX (DJ5TED) | Payload:1000/1400kg,Trans. code:ME/ML | GDS10105 | Drive Shaft | | 28 | 37 | 63 | 112.5 | 771 | |
| | 2000.03-2002.04 | MT | F | R | Platform/Chassis 4WD THX (DJ5TED) | Payload:1800kg,Trans. code:MG | GDS10032 | Drive Shaft | 54T | 35 | 41 | 70 | 117 | 1085 | |
| | 2000.03-2002.04 | MT | F | R | Platform/Chassis 4WD THX (DJ5TED) | Payload:1000/1400kg,Trans. code:MG | GDS10036 | Drive Shaft | 54T | 28 | 41 | 63 | 112.5 | 1079 | |
| | 2000.03-2002.04 | MT | F | R | Platform/Chassis 4WD THX (DJ5TED) | Payload:1800kg,Trans. code:MG | GDS10066 | Drive Shaft | | 35 | 41 | 70 | 117 | 1085 | |
| | 2000.03-2002.04 | MT | F | R | Platform/Chassis 4WD THX (DJ5TED) | Payload:1000/1400kg,Trans. code:ME/ML | GDS10069 | Drive Shaft | | 28 | 37 | 63 | 112.5 | 1072 | |
| | 2000.03-2002.04 | MT | F | R | Platform/Chassis 4WD THX (DJ5TED) | Payload:1000/1400kg,Trans. code:MG | GDS10103 | Drive Shaft | | 28 | 41 | 63 | 112.5 | 1079 | |
| | 2000.03-2002.04 | MT | F | R | Platform/Chassis 4WD THX (DJ5TED) | Payload:1000/1400kg,Trans. code:ME/ML | GDS10104 | Drive Shaft | 54T | 28 | 37 | 63 | 112.5 | 1072 | |
| | 2000.03-2002.04 | MT | F | L/R | Platform/Chassis 4WD THX (DJ5TED) | Payload:1800kg,Trans. code:MG | GCO10011 | Outer Joint | 54T | 35 | 45 | 70 | 117 | 73 | I |
| | 2000.03-2002.04 | MT | F | L/R | Platform/Chassis 4WD THX (DJ5TED) | Payload:1000/1400kg,Trans. code:ME/ML/MG | GCO10012 | Outer Joint | | 28 | 39 | 63 | 112.5 | 63 | I |
| | 2000.03-2002.04 | MT | F | L/R | Platform/Chassis 4WD THX (DJ5TED) | Payload:1000/1400kg,Trans. code:ME/ML/MG | GCO10013 | Outer Joint | 54T | 28 | 39 | 63 | 112.5 | 63 | I |
| | 2000.03-2002.04 | MT | F | L/R | Platform/Chassis 4WD THX (DJ5TED) | Payload:1800kg,Trans. code:MG | GCO10050 | Outer Joint | | 35 | 45 | 70 | 117 | 73 | I |
| | 2000.03-2002.04 | MT | F | L | Platform/Chassis 4WD THX (DJ5TED) | Payload:1800kg,Trans. code:MG | GCI10010 | Inner Joint | | 41 | 45 | 43 | 70 | 115.5 | |
| | 2000.03-2002.04 | MT | F | L | Platform/Chassis 4WD THX (DJ5TED) | Payload:1000/1400kg,Trans. code:MG | GCI10013 | Inner Joint | | 41 | 39 | 43 | 70 | 104 | |
| | 2000.03-2002.04 | MT | F | L | Platform/Chassis 4WD THX (DJ5TED) | Payload:1000/1400kg,Trans. code:ME/ML | GCI10015 | Inner Joint | | 37 | 39 | 40 | 68.5 | 104 | |
| | 2000.03-2002.04 | MT | F | L | Platform/Chassis 4WD THX (DJ5TED) | Payload:1000/1400kg,Trans. code:ME/ML | GCI45013 | Inner Joint | | 37 | 39 | 40 | 68.5 | 100 | |
| | 2000.03-2002.04 | MT | F | R | Platform/Chassis 4WD THX (DJ5TED) | Payload:1800kg,Trans. code:MG | GCI10009 | Inner Joint | | 41 | 45 | 34.9 | 393 | 115.6 | |
| | 2000.03-2002.04 | MT | F | R | Platform/Chassis 4WD THX (DJ5TED) | Payload:1000/1400kg,Trans. code:ME/ML | GCI10034 | Inner Joint | | 37 | 39 | 31.9 | 369.5 | 99 | |
| 2.8 (94 kw) | 2000.09-2002.04 | MT | F | L | Platform/Chassis FWD 8140.43S | Payload:1800kg,Trans. code:MG | GDS10033 | Drive Shaft | 54T | 35 | 41 | 70 | 117 | 762 | |
| | 2000.09-2002.04 | MT | F | L | Platform/Chassis FWD 8140.43S | Payload:1800kg,Trans. code:MG | GDS10067 | Drive Shaft | | 35 | 41 | 70 | 117 | 762 | |
| | 2000.09-2002.04 | MT | F | R | Platform/Chassis FWD 8140.43S | Payload:1800kg,Trans. code:MG | GDS10032 | Drive Shaft | 54T | 35 | 41 | 70 | 117 | 1085 | |
| | 2000.09-2002.04 | MT | F | R | Platform/Chassis FWD 8140.43S | Payload:1800kg,Trans. code:MG | GDS10066 | Drive Shaft | | 35 | 41 | 70 | 117 | 1085 | |
| | 2000.09-2002.04 | MT | F | L/R | Platform/Chassis FWD 8140.43S | Payload:1800kg,Trans. code:MG | GCO10011 | Outer Joint | 54T | 35 | 45 | 70 | 117 | 73 | I |
| | 2000.09-2002.04 | MT | F | L/R | Platform/Chassis FWD 8140.43S | Payload:1800kg,Trans. code:MG | GCO10050 | Outer Joint | | 35 | 45 | 70 | 117 | 73 | I |
| | 2000.09-2002.04 | MT | F | L | Platform/Chassis FWD 8140.43S | Payload:1800kg,Trans. code:MG | GCI10010 | Inner Joint | | 41 | 45 | 43 | 70 | 115.5 | |
| | 2000.09-2002.04 | MT | F | R | Platform/Chassis FWD 8140.43S | Payload:1800kg,Trans. code:MG | GCI10009 | Inner Joint | | 41 | 45 | 34.9 | 393 | 115.6 | |
| | 2000.09-2002.04 | MT | F | L | Van 4WD 8140.43S | Payload:1000/1400kg,Trans. code:MG | GDS10035 | Drive Shaft | 54T | 28 | 41 | 63 | 112.5 | 757.5 | |
| | 2000.09-2002.04 | MT | F | L | Van 4WD 8140.43S | Payload:1000/1400kg,Trans. code:MG | GDS10102 | Drive Shaft | | 28 | 41 | 63 | 112.5 | 757.5 | |
| | 2000.09-2002.04 | MT | F | R | Van 4WD 8140.43S | Payload:1000/1400kg,Trans. code:MG | GDS10036 | Drive Shaft | 54T | 28 | 41 | 63 | 112.5 | 1079 | |
| | 2000.09-2002.04 | MT | F | R | Van 4WD 8140.43S | Payload:1000/1400kg,Trans. code:MG | GDS10103 | Drive Shaft | | 28 | 41 | 63 | 112.5 | 1079 | |
| | 2000.09-2002.04 | MT | F | L/R | Van 4WD 8140.43S | Payload:1000/1400kg,Trans. code:MG | GCO10012 | Outer Joint | | 28 | 39 | 63 | 112.5 | 63 | I |
| | 2000.09-2002.04 | MT | F | L/R | Van 4WD 8140.43S | Payload:1000/1400kg,Trans. code:MG | GCO10013 | Outer Joint | 54T | 28 | 39 | 63 | 112.5 | 63 | I |
| | 2000.09-2002.04 | MT | F | L | Van 4WD 8140.43S | Payload:1000/1400kg,Trans. code:MG | GCI10013 | Inner Joint | | 41 | 39 | 43 | 70 | 104 | |
| **Jumper 35** | | | | | | | | | | | | | | | |
| 2.8 (94 kw) | 2000.09-2002.04 | 5MT | F | L | Bus 4WD 8140.43S | Transm. code:MG5T/ML5C,Payload:1800kg | GDS10033 | Drive Shaft | 54T | 35 | 41 | 70 | 117 | 762 | |
| | 2000.09-2002.04 | 5MT | F | L | Bus 4WD 8140.43S | Transm. code:MG5T/ML5C,Payload:1000kg/1400kg | GDS10035 | Drive Shaft | 54T | 28 | 41 | 63 | 112.5 | 757.5 | |
| | 2000.09-2002.04 | 5MT | F | L | Bus 4WD 8140.43S | Transm. code:ME/ML5T/MLGU | GDS10037 | Drive Shaft | 54T | 28 | 37 | 63 | 112.5 | 771 | |
| | 2000.09-2002.04 | 5MT | F | R | Bus 4WD 8140.43S | Transm. code:MG5T/ML5C,Payload:1800kg | GDS10032 | Drive Shaft | 54T | 35 | 41 | 70 | 117 | 1085 | |
| | 2000.09-2002.04 | 5MT | F | R | Bus 4WD 8140.43S | Transm. code:MG5T/ML5C,Payload:1000kg/1400kg | GDS10036 | Drive Shaft | 54T | 28 | 41 | 63 | 112.5 | 1079 | |
| | 2000.09-2002.04 | 5MT | F | R | Bus 4WD 8140.43S | Transm. code:ME/ML5T/MLGU | GDS10104 | Drive Shaft | 54T | 28 | 37 | 63 | 112.5 | 1072 | |
| | 2000.09-2002.04 | 5MT | F | L/R | Bus 4WD 8140.43S | Payload [kg]:1800,Trans. code:MG5T/ML5C | GCO10011 | Outer Joint | 54T | 35 | 45 | 70 | 117 | 73 | I |
| | 2000.09-2002.04 | 5MT | F | L/R | Bus 4WD 8140.43S | Payload [kg]:1000/1400,Trans. code:MG5T/ML5C | GCO10013 | Outer Joint | 54T | 28 | 39 | 63 | 112.5 | 63 | I |
| | 2000.09-2002.04 | 5MT | F | L/R | Bus 4WD 8140.43S | Trans. code:ME/ML5T/MLGU | GCO10013 | Outer Joint | 54T | 28 | 39 | 63 | 112.5 | 63 | I |
| **Jumpy** | | | | | | | | | | | | | | | |
| 1.5 (75 kw) | 2018.06-2025.04 | 6MT | F | L | Bus FWD YHR (DV5RUCd) | | GDS82315 | Drive Shaft | | 28 | 37 | 58.6 | 93 | 719 | |
| | 2018.06-2025.04 | 6MT | F | R | Bus FWD YHR (DV5RUCd) | | GDS82316 | Drive Shaft | | 28 | 37 | 58.6 | 93 | 974 | |
| | 2018.06-2025.04 | 6MT | F | L/R | Bus FWD YHR (DV5RUCd) | | GCO10098 | Outer Joint | | 28 | 39 | 58.6 | 93 | 63 | I |
| | 2018.06-2025.04 | 6MT | F | R | Bus FWD YHR (DV5RUCd) | | GCI81759 | Inner Joint | | 37 | 34 | 31.9 | 302 | 88 | |
| | 2018.06-2025.04 | 6MT | F | L | Van FWD YHR (DV5RUCd) | | GDS82315 | Drive Shaft | | 28 | 37 | 58.6 | 93 | 719 | |
| | 2018.06-2025.04 | 6MT | F | R | Van FWD YHR (DV5RUCd) | | GDS82316 | Drive Shaft | | 28 | 37 | 58.6 | 93 | 974 | |
| | 2018.06-2025.04 | 6MT | F | L/R | Van FWD YHR (DV5RUCd) | | GCO10098 | Outer Joint | | 28 | 39 | 58.6 | 93 | 63 | I |
| | 2018.06-2025.04 | 6MT | F | R | Van FWD YHR (DV5RUCd) | | GCI81759 | Inner Joint | | 37 | 34 | 31.9 | 302 | 88 | |
| 1.5 (88 kw) | 2018.06- | 6MT | F | L | Van FWD YHV (DV5RUC) | | GDS82315 | Drive Shaft | | 28 | 37 | 58.6 | 93 | 719 | |
| | 2018.06- | 6MT | F | R | Van FWD YHV (DV5RUC) | | GDS82316 | Drive Shaft | | 28 | 37 | 58.6 | 93 | 974 | |
| | 2018.06- | 6MT | F | L/R | Van FWD YHV (DV5RUC) | | GCO10098 | Outer Joint | | 28 | 39 | 58.6 | 93 | 63 | I |
| | 2018.06- | 6MT | F | R | Van FWD YHV (DV5RUC) | | GCI81759 | Inner Joint | | 37 | 34 | 31.9 | 302 | 88 | |
| | 2018.06-2025.04 | 6MT | F | L | Bus FWD YHV (DV5RUC) | | GDS82315 | Drive Shaft | | 28 | 37 | 58.6 | 93 | 719 | |
| | 2018.06-2025.04 | 6MT | F | R | Bus FWD YHV (DV5RUC) | | GDS82316 | Drive Shaft | | 28 | 37 | 58.6 | 93 | 974 | |
| | 2018.06-2025.04 | 6MT | F | L/R | Bus FWD YHV (DV5RUC) | | GCO10098 | Outer Joint | | 28 | 39 | 58.6 | 93 | 63 | I |
| | 2018.06-2025.04 | 6MT | F | R | Bus FWD YHV (DV5RUC) | | GCI81759 | Inner Joint | | 37 | 34 | 31.9 | 302 | 88 | |
| 1.6 (58 kw) | 1995.10-2000.08 | 5MT | F | L | Bus FWD 1580 SPI, 220 A2.000 | | GDS10082 | Drive Shaft | 48T | 27 | 24 | 59 | 82 | 648 | |
| | 1995.10-2000.08 | 5MT | F | R | Bus FWD 1580 SPI, 220 A2.000 | | GDS10081 | Drive Shaft | 48T | 27 | 24 | 59 | 82 | 935 | |
| | 1995.10-2000.08 | 5MT | F | R | Bus FWD 1580 SPI, 220 A2.000 | | GCI10004 | Inner Joint | | 24 | 34 | 29.8 | 348 | 99.5 | |
| | 1995.10-2000.08 | MT | F | L | Bus FWD 1580 SPI, 220 A2.000 | Trans. code:BE3 | GDS10112 | Drive Shaft | | 27 | 24 | 59 | 82 | 648 | |
| | 1995.10-2000.08 | MT | F | L/R | Bus FWD 1580 SPI, 220 A2.000 | Date from:1996.01 | GCO10018 | Outer Joint | 48T | 27 | 34 | 61 | 82 | 56.5 | I |

| | YEAR | TRANSM. | F/R | L/R | BODY STYLE & DRIVE TYPE & ENGINE | REMARKS | G-AP Ref. | PRODUCT | ABS | Technical Specifications A | B | C | H | L | P |
|---|---|---|---|---|---|---|---|---|---|---|---|---|---|---|---|
| **CITROËN** | | | | | | | | | | | | | | | |
| **Jumpy** | | | | | | | | | | | | | | | |
| 1.6 (58 kw) | 1995.10-2000.08 | MT | F | L/R | Bus FWD 1580 SPI, 220 A2.000 | Trans. code:BE3R | GCO10059 | Outer Joint | 48T | 27 | 34 | 59 | 82 | 56.5 | I |
| | 1995.10-2000.08 | 5MT | F | L | Van FWD 1580 SPI, 220 A2.000 | | GDS10082 | Drive Shaft | 48T | 27 | 24 | 59 | 82 | 648 | |
| | 1995.10-2000.08 | 5MT | F | R | Van FWD 1580 SPI, 220 A2.000 | | GDS10081 | Drive Shaft | 48T | 27 | 24 | 59 | 82 | 935 | |
| | 1995.10-2000.08 | 5MT | F | R | Van FWD 1580 SPI, 220 A2.000 | | GDS10120 | Drive Shaft | | 27 | 24 | 59 | 82 | 928 | |
| | 1995.10-2000.08 | 5MT | F | R | Van FWD 1580 SPI, 220 A2.000 | | GCI10004 | Inner Joint | | 24 | 34 | 29.8 | 348 | 99.5 | |
| | 1995.10-2000.08 | MT | F | L | Van FWD 1580 SPI, 220 A2.000 | Trans. code:BE3 | GDS10112 | Drive Shaft | | 27 | 24 | 59 | 82 | 648 | |
| | 1995.10-2000.08 | MT | F | L/R | Van FWD 1580 SPI, 220 A2.000 | Date from:1996.01 | GCO10018 | Outer Joint | 48T | 27 | 34 | 61 | 82 | 56.5 | I |
| | 1995.10-2000.08 | MT | F | L/R | Van FWD 1580 SPI, 220 A2.000 | | GCO10059 | Outer Joint | 48T | 27 | 34 | 59 | 82 | 56.5 | I |
| 1.6 (66 kw) | 2007.01-2016.03 | MT | F | L | Bus FWD 9HM (DV6UC);9HH (DV6DUM) | | GDS10238 | Drive Shaft | | 28 | 24 | 58.5 | 92 | 669 | |
| | 2007.01-2016.03 | MT | F | R | Bus FWD 9HM (DV6UC);9HH (DV6DUM) | | GDS10239 | Drive Shaft | | 28 | 24 | 58.5 | 92 | 955 | |
| | 2007.01-2016.03 | MT | F | L/R | Bus FWD 9HM (DV6UC);9HH (DV6DUM) | | GCO10052 | Outer Joint | | 28 | 34 | 58.5 | 92 | 55 | I |
| | 2007.01-2016.03 | MT | F | L/R | Bus FWD 9HM (DV6UC);9HH (DV6DUM) | | GCO10124 | Outer Joint | | 28 | 34 | 58.5 | 92 | 55 | I |
| | 2007.01-2016.03 | MT | F | R | Bus FWD 9HM (DV6UC);9HH (DV6DUM) | | GCI99159 | Inner Joint | | 24 | 34 | 29.8 | 350 | 87.5 | |
| | 2007.01-2016.03 | MT | F | L | Bus FWD 9HU (DV6UTED4) | | GDS10238 | Drive Shaft | | 28 | 24 | 58.5 | 92 | 669 | |
| | 2007.01-2016.03 | MT | F | R | Bus FWD 9HU (DV6UTED4) | | GDS10239 | Drive Shaft | | 28 | 24 | 58.5 | 92 | 955 | |
| | 2007.01-2016.03 | MT | F | L/R | Bus FWD 9HU (DV6UTED4) | | GCO10052 | Outer Joint | | 28 | 34 | 58.5 | 92 | 55 | I |
| | 2007.01-2016.03 | MT | F | L/R | Bus FWD 9HU (DV6UTED4) | | GCO10124 | Outer Joint | | 28 | 34 | 58.5 | 92 | 55 | I |
| | 2007.01-2016.03 | MT | F | L | Bus FWD 9HU (DV6UTED4) | | GCI45032 | Inner Joint | | 37 | 39 | 40 | 68.5 | 100 | |
| | 2007.01-2016.03 | MT | F | R | Bus FWD 9HU (DV6UTED4) | | GCI99159 | Inner Joint | | 24 | 34 | 29.8 | 350 | 87.5 | |
| | 2007.01-2016.03 | MT | F | L | Van FWD 9HH (DV6DUM), 9HM (DV6UC) | | GDS10238 | Drive Shaft | | 28 | 24 | 58.5 | 92 | 669 | |
| | 2007.01-2016.03 | MT | F | R | Van FWD 9HH (DV6DUM), 9HM (DV6UC) | | GDS10239 | Drive Shaft | | 28 | 24 | 58.5 | 92 | 955 | |
| | 2007.01-2016.03 | MT | F | L/R | Van FWD 9HH (DV6DUM), 9HM (DV6UC) | | GCO10052 | Outer Joint | | 28 | 34 | 58.5 | 92 | 55 | I |
| | 2007.01-2016.03 | MT | F | L/R | Van FWD 9HH (DV6DUM), 9HM (DV6UC) | | GCO10124 | Outer Joint | | 28 | 34 | 58.5 | 92 | 55 | I |
| | 2007.01-2016.03 | MT | F | R | Van FWD 9HH (DV6DUM), 9HM (DV6UC) | | GCI99159 | Inner Joint | | 24 | 34 | 29.8 | 350 | 87.5 | |
| | 2007.01-2016.03 | MT | F | L | Van FWD 9HU (DV6UTED4) | | GDS10238 | Drive Shaft | | 28 | 24 | 58.5 | 92 | 669 | |
| | 2007.01-2016.03 | MT | F | R | Van FWD 9HU (DV6UTED4) | | GDS10239 | Drive Shaft | | 28 | 24 | 58.5 | 92 | 955 | |
| | 2007.01-2016.03 | MT | F | L/R | Van FWD 9HU (DV6UTED4) | | GCO10052 | Outer Joint | | 28 | 34 | 58.5 | 92 | 55 | I |
| | 2007.01-2016.03 | MT | F | L/R | Van FWD 9HU (DV6UTED4) | | GCO10124 | Outer Joint | | 28 | 34 | 58.5 | 92 | 55 | I |
| | 2007.06-2016.03 | MT | F | L | Platform/Chassis FWD 9HH (DV6DUM) | | GDS10238 | Drive Shaft | | 28 | 24 | 58.5 | 92 | 669 | |
| | 2007.06-2016.03 | MT | F | R | Platform/Chassis FWD 9HH (DV6DUM) | | GDS10239 | Drive Shaft | | 28 | 24 | 58.5 | 92 | 955 | |
| | 2007.06-2016.03 | MT | F | L/R | Platform/Chassis FWD 9HH (DV6DUM) | | GCO10124 | Outer Joint | | 28 | 34 | 58.5 | 92 | 55 | I |
| | 2007.06-2016.03 | MT | F | R | Platform/Chassis FWD 9HH (DV6DUM) | | GCI99159 | Inner Joint | | 24 | 34 | 29.8 | 350 | 87.5 | |
| | 2007.06-2016.03 | MT | F | L | Platform/Chassis FWD 9HU (DV6UTED4) | | GDS10238 | Drive Shaft | | 28 | 24 | 58.5 | 92 | 669 | |
| | 2007.06-2016.03 | MT | F | R | Platform/Chassis FWD 9HU (DV6UTED4) | | GDS10239 | Drive Shaft | | 28 | 24 | 58.5 | 92 | 955 | |
| | 2007.06-2016.03 | MT | F | L/R | Platform/Chassis FWD 9HU (DV6UTED4) | | GCO10124 | Outer Joint | | 28 | 34 | 58.5 | 92 | 55 | I |
| | 2007.06-2016.03 | MT | F | R | Platform/Chassis FWD 9HU (DV6UTED4) | | GCI99159 | Inner Joint | | 24 | 34 | 29.8 | 350 | 87.5 | |
| | 2018.09- | 5MT | F | L | Van FWD 9HF (DV6DU) | Normal Suspension;Exhaust Emis Nm:Euro 5;Exhaust Emis Nm:Euro 6.1 | GDS84395 | Drive Shaft | | 28 | 24 | 58.6 | 93 | 732 | |
| | 2018.09- | 5MT | F | R | Van FWD 9HF (DV6DU) | Date to:2021.01;for DAM no. to:16155LT;Vehicle Production Country:Great Britain | GDS84394 | Drive Shaft | | 28 | 24 | 58.6 | 93 | 965 | |
| | 2018.09- | 5MT | F | L | Van FWD 9HF (DV6DU) | Normal Suspension;Exhaust Emis Nm:Euro 5;Exhaust Emis Nm:Euro 6.1 | GCO82805 | Outer Joint | | 28 | 39 | 58.6 | 93 | 63 | I |
| | 2018.09- | 5MT | F | R | Van FWD 9HF (DV6DU) | Date to:2021.01;for DAM no. to:16155LT;Vehicle Production Country:Great Britain | GCO82805 | Outer Joint | | 28 | 39 | 58.6 | 93 | 63 | I |
| | 2018.09- | 5MT | F | L/R | Van FWD 9HF (DV6DU) | For vehicles with increased ground clearance | GCO10019 | Outer Joint | 48T | 25 | 39 | 59 | 89 | 63.5 | I |
| | 2018.09- | 5MT | F | L | Van FWD 9HF (DV6DU) | Normal Suspension;Exhaust Emis Nm:Euro 5;Exhaust Emis Nm:Euro 6.1 | GCI10129 | Inner Joint | | 24 | 34 | 40 | 62 | 89 | |
| | 2018.09- | 5MT | F | R | Van FWD 9HF (DV6DU) | Date to:2021.01;for DAM no. to:16155LT;Vehicle Production Country:Great Britain | GCI82740 | Inner Joint | | 24 | 34 | 29.8 | 290 | 88 | |
| 1.6 (70 kw) | 2016.04- | 5MT | F | L | Bus FWD BHS (DV6FDU) | Normal Suspension;Exhaust Emis Nm:Euro 6.1;Vehicle Production Country:Great Britain | GDS84395 | Drive Shaft | | 28 | 24 | 58.6 | 93 | 732 | |
| | 2016.04- | 5MT | F | R | Bus FWD BHS (DV6FDU) | Date to:2021.01;for DAM no. to:16155LT;Vehicle Production Country:Great Britain | GDS84394 | Drive Shaft | | 28 | 24 | 58.6 | 93 | 965 | |
| | 2016.04- | 5MT | F | L | Bus FWD BHS (DV6FDU) | Normal Suspension;Exhaust Emis Nm:Euro 6.1;Vehicle Production Country:Great Britain | GCO82805 | Outer Joint | | 28 | 39 | 58.6 | 93 | 63 | I |
| | 2016.04- | 5MT | F | R | Bus FWD BHS (DV6FDU) | Date to:2021.01;for DAM no. to:16155LT;Vehicle Production Country:Great Britain | GCO82805 | Outer Joint | | 28 | 39 | 58.6 | 93 | 63 | I |
| | 2016.04- | 5MT | F | L/R | Bus FWD BHS (DV6FDU) | For vehicles with increased ground clearance | GCO10019 | Outer Joint | 48T | 25 | 39 | 59 | 89 | 63.5 | I |
| | 2016.04- | 5MT | F | L | Bus FWD BHS (DV6FDU) | Normal Suspension;Exhaust Emis Nm:Euro 6.1;Vehicle Production Country:Great Britain | GCI10129 | Inner Joint | | 24 | 34 | 40 | 62 | 89 | |
| | 2016.04- | 5MT | F | R | Bus FWD BHS (DV6FDU) | Date to:2021.01;for DAM no. to:16155LT;Vehicle Production Country:Great Britain | GCI82740 | Inner Joint | | 24 | 34 | 29.8 | 290 | 88 | |
| | 2016.04-2020.04 | 5MT | F | L | Van FWD BHV (DV6FDU), BHS (DV6FDU) | Normal Suspension,Exhaust Emis Nm:Euro 6.1 | GDS84395 | Drive Shaft | | 28 | 24 | 58.6 | 93 | 732 | |
| | 2016.04-2020.04 | 5MT | F | R | Van FWD BHV (DV6FDU), BHS (DV6FDU) | Date to:2021.01;for DAM no. to:16155LT;Vehicle Production Country:Great Britain | GDS84394 | Drive Shaft | | 28 | 24 | 58.6 | 93 | 965 | |
| | 2016.04-2020.04 | 5MT | F | L/R | Van FWD BHV (DV6FDU), BHS (DV6FDU) | For vehicles with increased ground clearance | GCO10019 | Outer Joint | 48T | 25 | 39 | 59 | 89 | 63.5 | I |
| | 2016.04-2020.04 | 5MT | F | L/R | Van FWD BHV (DV6FDU), BHS (DV6FDU) | Date to:2021.01;for DAM no. to:16155LT;Vehicle Production Country:Great Britain | GCO82805 | Outer Joint | | 28 | 39 | 58.6 | 93 | 63 | I |
| | 2016.04-2020.04 | 5MT | F | L | Van FWD BHV (DV6FDU), BHS (DV6FDU) | Normal Suspension,Exhaust Emis Nm:Euro 6.1 | GCI10129 | Inner Joint | | 24 | 34 | 40 | 62 | 89 | |
| | 2016.04-2020.04 | 5MT | F | R | Van FWD BHV (DV6FDU), BHS (DV6FDU) | Date to:2021.01;for DAM no. to:16155LT;Vehicle Production Country:Great Britain | GCI82740 | Inner Joint | | 24 | 34 | 29.8 | 290 | 88 | |
| | 2016.04-2020.04 | MT | F | L/R | Van FWD BHV (DV6FDU), BHS (DV6FDU) | Date to:2016.04 | GCO10052 | Outer Joint | | 28 | 34 | 58.5 | 92 | 55 | I |
| | 2016.09-2020.04 | 5MT | F | L | Platform/Chassis FWD BHV (DV6FDU);BHS (DV6FDU) | Normal Suspension,Exhaust Emis Nm:Euro 6.1 | GDS84395 | Drive Shaft | | 28 | 24 | 58.6 | 93 | 732 | |
| | 2016.09-2020.04 | 5MT | F | R | Platform/Chassis FWD BHV (DV6FDU);BHS (DV6FDU) | Date to:2021.01;for DAM no. to:16155LT;Vehicle Production Country:Great Britain | GDS84394 | Drive Shaft | | 28 | 24 | 58.6 | 93 | 965 | |
| | 2016.09-2020.04 | 5MT | F | L | Platform/Chassis FWD BHV (DV6FDU);BHS (DV6FDU) | Normal Suspension,Exhaust Emis Nm:Euro 6.1 | GCO82805 | Outer Joint | | 28 | 39 | 58.6 | 93 | 63 | I |
| | 2016.09-2020.04 | 5MT | F | R | Platform/Chassis FWD BHV (DV6FDU);BHS (DV6FDU) | Date to:2021.01;for DAM no. to:16155LT;Vehicle Production Country:Great Britain | GCO82805 | Outer Joint | | 28 | 39 | 58.6 | 93 | 63 | I |
| | 2016.09-2020.04 | 5MT | F | L/R | Platform/Chassis FWD BHV (DV6FDU);BHS (DV6FDU) | For vehicles with increased ground clearance | GCO10019 | Outer Joint | 48T | 25 | 39 | 59 | 89 | 63.5 | I |
| | 2016.09-2020.04 | 5MT | F | L | Platform/Chassis FWD BHV (DV6FDU);BHS (DV6FDU) | Normal Suspension,Exhaust Emis Nm:Euro 6.1 | GCI10129 | Inner Joint | | 24 | 34 | 40 | 62 | 89 | |
| | 2016.09-2020.04 | 5MT | F | R | Platform/Chassis FWD BHV (DV6FDU);BHS (DV6FDU) | Date to:2021.01;for DAM no. to:16155LT;Vehicle Production Country:Great Britain | GCI82740 | Inner Joint | | 24 | 34 | 29.8 | 290 | 88 | |
| 1.6 (85 kw) | 2016.04-2022.06 | 6MT | F | L | Bus FWD BHX (DV6FCU) | | GDS82315 | Drive Shaft | | 28 | 37 | 58.6 | 93 | 719 | |

| | YEAR | TRANSM. | F/R | L/R | BODY STYLE & DRIVE TYPE & ENGINE | REMARKS | G-AP Ref. | PRODUCT | ABS | Technical Specifications A | B | C | H | L | P |
|---|---|---|---|---|---|---|---|---|---|---|---|---|---|---|---|
| **CITROËN** | | | | | | | | | | | | | | | |
| **Jumpy** | | | | | | | | | | | | | | | |
| 1.6 (85 kw) | 2016.04-2022.06 | 6MT | F | R | Bus FWD BHX (DV6FCU) | | GDS82316 | Drive Shaft | | 28 | 37 | 58.6 | 93 | 974 | |
| | 2016.04-2022.06 | 6MT | F | L/R | Bus FWD BHX (DV6FCU) | | GCO10098 | Outer Joint | | 28 | 39 | 58.6 | 93 | 63 | I |
| | 2016.04-2022.06 | 6MT | F | R | Bus FWD BHX (DV6FCU) | | GCI81759 | Inner Joint | | 37 | 34 | 31.9 | 302 | 88 | |
| | 2016.04-2022.06 | MT | F | L/R | Bus FWD BHX (DV6FCU) | | GCO10052 | Outer Joint | | 28 | 34 | 58.5 | 92 | 55 | I |
| | 2016.04-2022.06 | 6MT | F | L | Van FWD BHX (DV6FCU) | | GDS82315 | Drive Shaft | | 28 | 37 | 58.6 | 93 | 719 | |
| | 2016.04-2022.06 | 6MT | F | R | Van FWD BHX (DV6FCU) | | GDS82316 | Drive Shaft | | 28 | 37 | 58.6 | 93 | 974 | |
| | 2016.04-2022.06 | 6MT | F | L/R | Van FWD BHX (DV6FCU) | | GCO10098 | Outer Joint | | 28 | 39 | 58.6 | 93 | 63 | I |
| | 2016.04-2022.06 | 6MT | F | R | Van FWD BHX (DV6FCU) | | GCI81759 | Inner Joint | | 37 | 34 | 31.9 | 302 | 88 | |
| | 2016.04-2022.06 | MT | F | L/R | Van FWD BHX (DV6FCU) | | GCO10052 | Outer Joint | | 28 | 34 | 58.5 | 92 | 55 | I |
| 1.9 (51 kw) | 1995.10-1998.08 | 5MT | F | L | Bus FWD D9B (XUD9A/U) | | GDS10082 | Drive Shaft | 48T | 27 | 24 | 59 | 82 | 648 | |
| | 1995.10-1998.08 | 5MT | F | R | Bus FWD D9B (XUD9A/U) | | GDS10081 | Drive Shaft | 48T | 27 | 24 | 59 | 82 | 935 | |
| | 1995.10-1998.08 | 5MT | F | R | Bus FWD D9B (XUD9A/U) | | GCI10004 | Inner Joint | | 24 | 34 | 29.8 | 348 | 99.5 | |
| | 1995.10-1998.08 | MT | F | L | Bus FWD D9B (XUD9A/U) | | GDS10112 | Drive Shaft | | 27 | 24 | 59 | 82 | 648 | |
| | 1995.10-1998.08 | MT | F | L/R | Bus FWD D9B (XUD9A/U) | Date from:1996.01 | GCO10018 | Outer Joint | 48T | 27 | 34 | 61 | 82 | 56.5 | I |
| | 1995.10-1998.08 | MT | F | L/R | Bus FWD D9B (XUD9A/U) | | GCO10059 | Outer Joint | 48T | 27 | 34 | 59 | 82 | 56.5 | I |
| | 1995.10-1998.08 | | F | R | Bus FWD D9B (XUD9A/U) | | GDS10111 | Drive Shaft | | 27 | 24 | 59 | 82 | 935 | |
| | 1995.10-1998.08 | | F | | Bus FWD D9B (XUD9A/U) | | GCO10016 | Outer Joint | | 27 | 34 | 59 | 82 | 56.5 | I |
| | 2000.11-2006.10 | 5MT | F | L | Platform/Chassis FWD WJY (DW8B) | | GDS10082 | Drive Shaft | 48T | 27 | 24 | 59 | 82 | 648 | |
| | 2000.11-2006.10 | 5MT | F | L | Platform/Chassis FWD WJY (DW8B) | | GDS10112 | Drive Shaft | | 27 | 24 | 59 | 82 | 648 | |
| | 2000.11-2006.10 | 5MT | F | R | Platform/Chassis FWD WJY (DW8B) | | GDS10081 | Drive Shaft | 48T | 27 | 24 | 59 | 82 | 935 | |
| | 2000.11-2006.10 | 5MT | F | R | Platform/Chassis FWD WJY (DW8B) | | GDS10120 | Drive Shaft | | 27 | 24 | 59 | 82 | 928 | |
| | 2000.11-2006.10 | 5MT | F | L/R | Platform/Chassis FWD WJY (DW8B) | | GCO10059 | Outer Joint | 48T | 27 | 34 | 59 | 82 | 56.5 | I |
| | 2000.11-2006.10 | 5MT | F | R | Platform/Chassis FWD WJY (DW8B) | | GCI10004 | Inner Joint | | 24 | 34 | 29.8 | 348 | 99.5 | |
| 1.9 (65 kw) | 1995.10-2000.08 | 5MT | F | L | Van FWD | | GDS10016 | Drive Shaft | 48T | 27 | 37 | 59 | 82 | 641 | |
| | 1995.10-2000.08 | 5MT | F | L | Van FWD | | GDS10072 | Drive Shaft | | 27 | 37 | 59 | 82 | 641 | |
| | 1995.10-2000.08 | 5MT | F | L | Van FWD | | GCO10014 | Outer Joint | | 27 | 39 | 59 | 82 | 63 | I |
| | 1995.10-2000.08 | 5MT | F | L | Van FWD | | GCO10015 | Outer Joint | 48T | 27 | 39 | 59 | 82 | 63 | I |
| | 1995.10-2000.08 | | F | L | Van FWD | Date From:1996.09;From ORG/OPR:07250 | GDS45027 | Drive Shaft | 48T | 21 | 22 | 48 | 86.5 | 610 | |
| | 1995.10-2000.08 | | F | R | Van FWD | | GDS10014 | Drive Shaft | 48T | 27 | 37 | 59 | 82 | 947 | |
| | 1995.10-2000.08 | | F | R | Van FWD | | GDS10155 | Drive Shaft | | 27 | 37 | 59 | 82 | 947 | |
| | 1995.10-2000.08 | | F | L | Van FWD | Date from:1996.09;From ORG/OPR:07250 | GCO45033 | Outer Joint | 48T | 21 | 22 | 48 | 86.5 | 54 | I |
| | 1995.10-2000.08 | | F | R | Van FWD | | GCI10034 | Inner Joint | | 37 | 39 | 31.9 | 369.5 | 99 | |
| 1.9 (66 kw) | 1995.10-2000.08 | 5MT | F | L | Bus FWD DHX (XUD9BTF), DHX (XUD9TF) | | GDS10016 | Drive Shaft | 48T | 27 | 37 | 59 | 82 | 641 | |
| | 1995.10-2000.08 | 5MT | F | L | Bus FWD DHX (XUD9BTF), DHX (XUD9TF) | | GDS10072 | Drive Shaft | | 27 | 37 | 59 | 82 | 641 | |
| | 1995.10-2000.08 | 5MT | F | R | Bus FWD DHX (XUD9BTF), DHX (XUD9TF) | | GDS10014 | Drive Shaft | 48T | 27 | 37 | 59 | 82 | 947 | |
| | 1995.10-2000.08 | 5MT | F | R | Bus FWD DHX (XUD9BTF), DHX (XUD9TF) | | GDS10155 | Drive Shaft | | 27 | 37 | 59 | 82 | 947 | |
| | 1995.10-2000.08 | 5MT | F | L/R | Bus FWD DHX (XUD9BTF), DHX (XUD9TF) | | GCO10014 | Outer Joint | | 27 | 39 | 59 | 82 | 63 | I |
| | 1995.10-2000.08 | 5MT | F | L/R | Bus FWD DHX (XUD9BTF), DHX (XUD9TF) | | GCO10015 | Outer Joint | 48T | 27 | 39 | 59 | 82 | 63 | I |
| | 1995.10-2000.08 | 5MT | F | L | Bus FWD DHX (XUD9BTF), DHX (XUD9TF) | | GCI10015 | Inner Joint | | 37 | 39 | 40 | 68.5 | 104 | |
| | 1995.10-2000.08 | 5MT | F | R | Bus FWD DHX (XUD9BTF), DHX (XUD9TF) | | GCI10034 | Inner Joint | | 37 | 39 | 31.9 | 369.5 | 99 | |
| 1.9 (68 kw) | 1995.10-2000.08 | | F | L | Van FWD D8B (XUD9TE) | | GDS10016 | Drive Shaft | 48T | 27 | 37 | 59 | 82 | 641 | |
| | 1995.10-2000.08 | | F | L | Van FWD D8B (XUD9TE) | | GDS10072 | Drive Shaft | | 27 | 37 | 59 | 82 | 641 | |
| | 1995.10-2000.08 | | F | L | Van FWD D8B (XUD9TE) | Date From:1996.09;From ORG/OPR:07250 | GDS45027 | Drive Shaft | 48T | 21 | 22 | 48 | 86.5 | 610 | |
| | 1995.10-2000.08 | | F | R | Van FWD D8B (XUD9TE) | | GDS10014 | Drive Shaft | 48T | 27 | 37 | 59 | 82 | 947 | |
| | 1995.10-2000.08 | | F | R | Van FWD D8B (XUD9TE) | | GDS10155 | Drive Shaft | | 27 | 37 | 59 | 82 | 947 | |
| | 1995.10-2000.08 | | F | L | Van FWD D8B (XUD9TE) | | GCO10014 | Outer Joint | | 27 | 39 | 59 | 82 | 63 | I |
| | 1995.10-2000.08 | | F | L | Van FWD D8B (XUD9TE) | Date from:1996.09;From ORG/OPR:07250 | GCO45033 | Outer Joint | 48T | 21 | 22 | 48 | 86.5 | 54 | I |
| | 1995.10-2000.08 | | F | L/R | Van FWD D8B (XUD9TE) | | GCO10015 | Outer Joint | 48T | 27 | 39 | 59 | 82 | 63 | I |
| | 1995.10-2000.08 | | F | R | Van FWD D8B (XUD9TE) | | GCI10034 | Inner Joint | | 37 | 39 | 31.9 | 369.5 | 99 | |
| | 1999.10-2006.10 | 5MT | F | L | Platform/Chassis FWD D8B (XUD9TE) | | GDS10016 | Drive Shaft | 48T | 27 | 37 | 59 | 82 | 641 | |
| | 1999.10-2006.10 | 5MT | F | L | Platform/Chassis FWD D8B (XUD9TE) | | GDS10072 | Drive Shaft | | 27 | 37 | 59 | 82 | 641 | |
| | 1999.10-2006.10 | 5MT | F | L | Platform/Chassis FWD D8B (XUD9TE) | | GCO10014 | Outer Joint | | 27 | 39 | 59 | 82 | 63 | I |
| | 1999.10-2006.10 | 5MT | F | L | Platform/Chassis FWD D8B (XUD9TE) | | GCO10015 | Outer Joint | 48T | 27 | 39 | 59 | 82 | 63 | I |
| | 1999.10-2006.10 | MT | F | R | Platform/Chassis FWD D8B (XUD9TE) | Trans. code:ME5/ML | GDS10014 | Drive Shaft | 48T | 27 | 37 | 59 | 82 | 947 | |
| | 1999.10-2006.10 | MT | F | R | Platform/Chassis FWD D8B (XUD9TE) | | GDS10155 | Drive Shaft | | 27 | 37 | 59 | 82 | 947 | |
| | 1999.10-2006.10 | MT | F | L | Platform/Chassis FWD D8B (XUD9TE) | | GCI10015 | Inner Joint | | 37 | 39 | 40 | 68.5 | 104 | |
| | 1999.10-2006.10 | | F | L | Platform/Chassis FWD D8B (XUD9TE) | Date From:1996.09;From ORG/OPR:07250 | GDS45027 | Drive Shaft | 48T | 21 | 22 | 48 | 86.5 | 610 | |
| | 1999.10-2006.10 | | F | R | Platform/Chassis FWD D8B (XUD9TE) | | GDS10108 | Drive Shaft | 48T | 27 | 37 | 59 | 82 | 939 | |
| | 1999.10-2006.10 | | F | L | Platform/Chassis FWD D8B (XUD9TE) | Date from:1996.09;From ORG/OPR:07250 | GCO45033 | Outer Joint | 48T | 21 | 22 | 48 | 86.5 | 54 | I |
| | 1999.10-2006.10 | | F | R | Platform/Chassis FWD D8B (XUD9TE) | | GCI10034 | Inner Joint | | 37 | 39 | 31.9 | 369.5 | 99 | |
| 2.0 (72 kw) | 2011.07-2016.03 | MT | F | L | Bus FWD AHY (DW10CE) | | GDS45133 | Drive Shaft | | 28 | 37 | 58.6 | 94 | 653 | |
| | 2011.07-2016.03 | MT | F | R | Bus FWD AHY (DW10CE) | | GDS99214 | Drive Shaft | | 28 | 37 | 58.6 | 94 | 978 | |
| | 2011.07-2016.03 | MT | F | L | Bus FWD AHY (DW10CE) | | GCO10051 | Outer Joint | | 28 | 39 | 58.6 | 94 | 63 | I |
| | 2011.07-2016.03 | MT | F | R | Bus FWD AHY (DW10CE) | | GCO10098 | Outer Joint | | 28 | 39 | 58.6 | 93 | 63 | I |
| | 2011.07-2016.03 | MT | F | L | Bus FWD AHY (DW10CE) | | GCI45032 | Inner Joint | | 37 | 39 | 40 | 68.5 | 100 | |

| | YEAR | TRANSM. | F/R | L/R | BODY STYLE & DRIVE TYPE & ENGINE | REMARKS | G-AP Ref. | PRODUCT | ABS | Technical Specifications A | B | C | H | L | P |
|---|---|---|---|---|---|---|---|---|---|---|---|---|---|---|---|
| **CITROËN** | | | | | | | | | | | | | | | |
| **Jumpy** | | | | | | | | | | | | | | | |
| 2.0 (72 kw) | 2011.07-2016.03 | MT | F | R | Bus FWD AHY (DW10CE) | | GCI10041 | Inner Joint | | 37 | 39 | 32 | 399 | 95.5 | |
| | 2011.07-2016.03 | 6MT | F | L | Platform/Chassis FWD AHY (DW10CE) | | GDS45133 | Drive Shaft | | 28 | 37 | 58.6 | 94 | 653 | |
| | 2011.07-2016.03 | 6MT | F | R | Platform/Chassis FWD AHY (DW10CE) | | GDS99214 | Drive Shaft | | 28 | 37 | 58.6 | 94 | 978 | |
| | 2011.07-2016.03 | 6MT | F | L/R | Platform/Chassis FWD AHY (DW10CE) | | GCO10098 | Outer Joint | | 28 | 39 | 58.6 | 93 | 63 | I |
| | 2011.07-2016.03 | 6MT | F | L | Platform/Chassis FWD AHY (DW10CE) | | GCI45032 | Inner Joint | | 37 | 39 | 40 | 68.5 | 100 | |
| | 2011.07-2016.03 | 6MT | F | R | Platform/Chassis FWD AHY (DW10CE) | | GCI10041 | Inner Joint | | 37 | 39 | 32 | 399 | 95.5 | |
| | 2011.07-2016.03 | MT | F | L | Van FWD AHY (DW10CE) | | GDS45133 | Drive Shaft | | 28 | 37 | 58.6 | 94 | 653 | |
| | 2011.07-2016.03 | MT | F | R | Van FWD AHY (DW10CE) | | GDS99214 | Drive Shaft | | 28 | 37 | 58.6 | 94 | 978 | |
| | 2011.07-2016.03 | MT | F | L | Van FWD AHY (DW10CE) | | GCO10051 | Outer Joint | | 28 | 39 | 58.6 | 94 | 63 | I |
| | 2011.07-2016.03 | MT | F | R | Van FWD AHY (DW10CE) | | GCO10098 | Outer Joint | | 28 | 39 | 58.6 | 93 | 63 | I |
| | 2011.07-2016.03 | MT | F | L | Van FWD AHY (DW10CE) | | GCI45032 | Inner Joint | | 37 | 39 | 40 | 68.5 | 100 | |
| | 2011.07-2016.03 | MT | F | R | Van FWD AHY (DW10CE) | | GCI10041 | Inner Joint | | 37 | 39 | 32 | 399 | 95.5 | |
| 2.0 (88 kw) | 2007.01-2016.03 | 6MT | F | L | Bus FWD RHK (DW10UTED4) | | GDS45133 | Drive Shaft | | 28 | 37 | 58.6 | 94 | 653 | |
| | 2007.01-2016.03 | 6MT | F | R | Bus FWD RHK (DW10UTED4) | | GDS99214 | Drive Shaft | | 28 | 37 | 58.6 | 94 | 978 | |
| | 2007.01-2016.03 | MT | F | L | Bus FWD RHK (DW10UTED4) | | GCO10051 | Outer Joint | | 28 | 39 | 58.6 | 94 | 63 | I |
| | 2007.01-2016.03 | MT | F | R | Bus FWD RHK (DW10UTED4) | | GCO10098 | Outer Joint | | 28 | 39 | 58.6 | 93 | 63 | I |
| | 2007.01-2016.03 | MT | F | L | Bus FWD RHK (DW10UTED4) | | GCI45032 | Inner Joint | | 37 | 39 | 40 | 68.5 | 100 | |
| | 2007.01-2016.03 | MT | F | R | Bus FWD RHK (DW10UTED4) | | GCI10041 | Inner Joint | | 37 | 39 | 32 | 399 | 95.5 | |
| | 2007.01-2016.03 | 6MT | F | L | Van FWD RHK (DW10UTED4) | | GDS45133 | Drive Shaft | | 28 | 37 | 58.6 | 94 | 653 | |
| | 2007.01-2016.03 | 6MT | F | R | Van FWD RHK (DW10UTED4) | | GDS99214 | Drive Shaft | | 28 | 37 | 58.6 | 94 | 978 | |
| | 2007.01-2016.03 | MT | F | L | Van FWD RHK (DW10UTED4) | | GCO10051 | Outer Joint | | 28 | 39 | 58.6 | 94 | 63 | I |
| | 2007.01-2016.03 | MT | F | R | Van FWD RHK (DW10UTED4) | | GCO10098 | Outer Joint | | 28 | 39 | 58.6 | 93 | 63 | I |
| | 2007.01-2016.03 | MT | F | L | Van FWD RHK (DW10UTED4) | | GCI45032 | Inner Joint | | 37 | 39 | 40 | 68.5 | 100 | |
| | 2007.01-2016.03 | MT | F | R | Van FWD RHK (DW10UTED4) | | GCI10041 | Inner Joint | | 37 | 39 | 32 | 399 | 95.5 | |
| | 2009.01-2016.03 | 6MT | F | L | Platform/Chassis FWD RHK (DW10UTED4) | | GDS45133 | Drive Shaft | | 28 | 37 | 58.6 | 94 | 653 | |
| | 2009.01-2016.03 | 6MT | F | R | Platform/Chassis FWD RHK (DW10UTED4) | | GDS99214 | Drive Shaft | | 28 | 37 | 58.6 | 94 | 978 | |
| | 2009.01-2016.03 | 6MT | F | L/R | Platform/Chassis FWD RHK (DW10UTED4) | | GCO10098 | Outer Joint | | 28 | 39 | 58.6 | 93 | 63 | I |
| | 2009.01-2016.03 | 6MT | F | L | Platform/Chassis FWD RHK (DW10UTED4) | | GCI45032 | Inner Joint | | 37 | 39 | 40 | 68.5 | 100 | |
| | 2009.01-2016.03 | 6MT | F | R | Platform/Chassis FWD RHK (DW10UTED4) | | GCI10041 | Inner Joint | | 37 | 39 | 32 | 399 | 95.5 | |
| | 2010.01-2016.03 | 6MT | F | L | Van 4WD RHK (DW10UTED4) | Transm. code:ML6C | GDS10314 | Drive Shaft | | 28 | 37 | 59 | 91 | 655 | |
| | 2010.01-2016.03 | 6MT | F | R | Van 4WD RHK (DW10UTED4) | Transm. code:ML6C | GDS10320 | Drive Shaft | | 28 | 37 | 59 | 91 | 980 | |
| 2.0 (90 kw) | 2016.04- | 6MT | F | L/R | Van 4WD AHK (DW10FE) | | GCO10098 | Outer Joint | | 28 | 39 | 58.6 | 93 | 63 | I |
| | 2016.04-2022.12 | 6MT | F | L | Bus FWD AHK (DW10FE) | | GDS83778 | Drive Shaft | | 28 | 37 | 58.5 | 92.5 | 699 | |
| | 2016.04-2022.12 | 6MT | F | L | Bus FWD AHK (DW10FE) | For vehicles with standard suspension | GDS84397 | Drive Shaft | | 28 | 37 | 58.6 | 93 | 696 | |
| | 2016.04-2022.12 | 6MT | F | R | Bus FWD AHK (DW10FE) | For vehicles with standard suspension | GDS82847 | Drive Shaft | | 28 | 37 | 58.6 | 93 | 1005 | |
| | 2016.04-2022.12 | 6MT | F | R | Bus FWD AHK (DW10FE) | | GDS83775 | Drive Shaft | | 28 | 37 | 58.5 | 92.5 | 1002 | |
| | 2016.04-2022.12 | 6MT | F | L/R | Bus FWD AHK (DW10FE) | | GCO10098 | Outer Joint | | 28 | 39 | 58.6 | 93 | 63 | I |
| | 2016.04-2022.12 | 6MT | F | L | Bus FWD AHK (DW10FE) | | GCI10040 | Inner Joint | | 37 | 39 | 40 | 69 | 95.5 | |
| | 2016.04-2022.12 | 6MT | F | R | Bus FWD AHK (DW10FE) | | GCI10041 | Inner Joint | | 37 | 39 | 32 | 399 | 95.5 | |
| | 2016.04-2022.12 | 8AT | F | L | Bus FWD AHK (DW10FE) | For vehicles with standard suspension | GDS56191 | Drive Shaft | | 28 | 37 | 58.6 | 93 | 649 | |
| | 2016.04-2022.12 | 8AT | F | R | Bus FWD AHK (DW10FE) | Normal Suspension | GDS56190 | Drive Shaft | | 28 | 37 | 58.6 | 93 | 989 | |
| | 2016.04-2022.12 | 8AT | F | L/R | Bus FWD AHK (DW10FE) | For vehicles with standard suspension | GCO82805 | Outer Joint | | 28 | 39 | 58.6 | 93 | 63 | I |
| | 2016.04-2022.12 | 6MT | F | L | Van FWD AHK (DW10FE) | For vehicles with increased ground clearance,Reinforced wheel suspension | GDS83778 | Drive Shaft | | 28 | 37 | 58.5 | 92.5 | 699 | |
| | 2016.04-2022.12 | 6MT | F | L | Van FWD AHK (DW10FE) | Normal Suspension;6 balls,TJ | GDS84397 | Drive Shaft | | 28 | 37 | 58.6 | 93 | 696 | |
| | 2016.04-2022.12 | 6MT | F | R | Van FWD AHK (DW10FE) | Normal Suspension | GDS82847 | Drive Shaft | | 28 | 37 | 58.6 | 93 | 1005 | |
| | 2016.04-2022.12 | 6MT | F | R | Van FWD AHK (DW10FE) | For vehicles with increased ground clearance,Reinforced wheel suspension | GDS83775 | Drive Shaft | | 28 | 37 | 58.5 | 92.5 | 1002 | |
| | 2016.04-2022.12 | 6MT | F | L/R | Van FWD AHK (DW10FE) | Normal Suspension;6 balls | GCO10098 | Outer Joint | | 28 | 39 | 58.6 | 93 | 63 | I |
| | 2016.04-2022.12 | 6MT | F | L/R | Van FWD AHK (DW10FE) | For vehicles with increased ground clearance,Reinforced wheel suspension | GCO82483 | Outer Joint | | 28 | 36 | 58.5 | 92.5 | 60.5 | I |
| | 2016.04-2022.12 | 6MT | F | L | Van FWD AHK (DW10FE) | Normal Suspension;TJ | GCI10040 | Inner Joint | | 37 | 39 | 40 | 69 | 95.5 | |
| | 2016.04-2022.12 | 6MT | F | L | Van FWD AHK (DW10FE) | For vehicles with increased ground clearance,Reinforced wheel suspension | GCI82363 | Inner Joint | | 37 | 36 | 40 | 68 | 108 | |
| | 2016.04-2022.12 | 6MT | F | R | Van FWD AHK (DW10FE) | Normal Suspension;TJ | GCI10041 | Inner Joint | | 37 | 39 | 32 | 399 | 95.5 | |
| | 2016.04-2022.12 | 6MT | F | R | Van FWD AHK (DW10FE) | For vehicles with increased ground clearance,Reinforced wheel suspension | GCI82364 | Inner Joint | | 37 | 36 | 32 | 400 | 108 | |
| | 2016.04-2022.12 | 8AT | F | L | Van FWD AHK (DW10FE) | For vehicles with standard suspension | GDS56191 | Drive Shaft | | 28 | 37 | 58.6 | 93 | 649 | |
| | 2016.04-2022.12 | 8AT | F | R | Van FWD AHK (DW10FE) | | GDS56190 | Drive Shaft | | 28 | 37 | 58.6 | 93 | 989 | |
| | 2016.04-2022.12 | 8AT | F | L/R | Van FWD AHK (DW10FE) | For vehicles with standard suspension | GCO82805 | Outer Joint | | 28 | 39 | 58.6 | 93 | 63 | I |
| | 2016.09-2022.12 | 6MT | F | L | Platform/Chassis FWD AHK (DW10FE) | For vehicles with increased ground clearance,Reinforced wheel suspension;6 balls | GDS83778 | Drive Shaft | | 28 | 37 | 58.5 | 92.5 | 699 | |
| | 2016.09-2022.12 | 6MT | F | L | Platform/Chassis FWD AHK (DW10FE) | 6 balls,TJ | GDS84397 | Drive Shaft | | 28 | 37 | 58.6 | 93 | 696 | |
| | 2016.09-2022.12 | 6MT | F | R | Platform/Chassis FWD AHK (DW10FE) | Normal Suspension | GDS82847 | Drive Shaft | | 28 | 37 | 58.6 | 93 | 1005 | |
| | 2016.09-2022.12 | 6MT | F | R | Platform/Chassis FWD AHK (DW10FE) | For vehicles with increased ground clearance,Reinforced wheel suspension;6 balls | GDS83775 | Drive Shaft | | 28 | 37 | 58.5 | 92.5 | 1002 | |
| | 2016.09-2022.12 | 6MT | F | L/R | Platform/Chassis FWD AHK (DW10FE) | 6 balls | GCO10098 | Outer Joint | | 28 | 39 | 58.6 | 93 | 63 | I |
| | 2016.09-2022.12 | 6MT | F | L/R | Platform/Chassis FWD AHK (DW10FE) | For vehicles with increased ground clearance,Reinforced wheel suspension;6 balls | GCO82483 | Outer Joint | | 28 | 36 | 58.5 | 92.5 | 60.5 | I |
| | 2016.09-2022.12 | 6MT | F | L | Platform/Chassis FWD AHK (DW10FE) | TJ | GCI10040 | Inner Joint | | 37 | 39 | 40 | 69 | 95.5 | |
| | 2016.09-2022.12 | 6MT | F | L | Platform/Chassis FWD AHK (DW10FE) | For vehicles with increased ground clearance,Reinforced wheel suspension;PTJ | GCI82363 | Inner Joint | | 37 | 36 | 40 | 68 | 108 | |
| | 2016.09-2022.12 | 6MT | F | R | Platform/Chassis FWD AHK (DW10FE) | TJ | GCI10041 | Inner Joint | | 37 | 39 | 32 | 399 | 95.5 | |
| | 2016.09-2022.12 | 6MT | F | R | Platform/Chassis FWD AHK (DW10FE) | For vehicles with increased ground clearance,Reinforced wheel suspension;PTJ | GCI82364 | Inner Joint | | 37 | 36 | 32 | 400 | 108 | |

| | YEAR | TRANSM. | F/R | L/R | BODY STYLE & DRIVE TYPE & ENGINE | REMARKS | G-AP Ref. | PRODUCT | ABS | Technical Specifications | | | | | |
|---|---|---|---|---|---|---|---|---|---|---|---|---|---|---|---|
| | | | | | | | | | | A | B | C | H | L | P |
| **CITROËN** | | | | | | | | | | | | | | | |
| **Jumpy** | | | | | | | | | | | | | | | |
| 2.0 (94 kw) | 2011.07- | MT | F | L | Platform/Chassis FWD AHZ (DW10CD) | | GDS45133 | Drive Shaft | | 28 | 37 | 58.6 | 94 | 653 | |
| | 2011.07- | MT | F | R | Platform/Chassis FWD AHZ (DW10CD) | | GDS99214 | Drive Shaft | | 28 | 37 | 58.6 | 94 | 978 | |
| | 2011.07- | MT | F | L | Platform/Chassis FWD AHZ (DW10CD) | | GCO10051 | Outer Joint | | 28 | 39 | 58.6 | 94 | 63 | I |
| | 2011.07- | MT | F | R | Platform/Chassis FWD AHZ (DW10CD) | | GCO10098 | Outer Joint | | 28 | 39 | 58.6 | 93 | 63 | I |
| | 2011.07- | MT | F | L | Platform/Chassis FWD AHZ (DW10CD) | | GCI45032 | Inner Joint | | 37 | 39 | 40 | 68.5 | 100 | |
| | 2011.07- | MT | F | R | Platform/Chassis FWD AHZ (DW10CD) | | GCI10041 | Inner Joint | | 37 | 39 | 32 | 399 | 95.5 | |
| | 2011.07-2016.03 | 6AT | F | L | Bus FWD AHZ (DW10CD) | | GCO82534 | Outer Joint | | 28 | 36 | 59.5 | 94 | 60.5 | I |
| | 2011.07-2016.03 | 6AT | F | R | Bus FWD AHZ (DW10CD) | | GCO45074 | Outer Joint | | 28 | 26 | 59 | 91 | 61.5 | M |
| | 2011.07-2016.03 | 6AT | F | L | Bus FWD AHZ (DW10CD) | | GCI82416 | Inner Joint | | 37 | 36 | 42.3 | 59.5 | 126 | |
| | 2011.07-2016.03 | 6AT | F | R | Bus FWD AHZ (DW10CD) | | GCI10157 | Inner Joint | | 37 | 26 | | 380 | 100 | |
| | 2011.07-2016.03 | MT | F | L | Bus FWD AHZ (DW10CD) | | GDS45133 | Drive Shaft | | 28 | 37 | 58.6 | 94 | 653 | |
| | 2011.07-2016.03 | MT | F | R | Bus FWD AHZ (DW10CD) | | GDS99214 | Drive Shaft | | 28 | 37 | 58.6 | 94 | 978 | |
| | 2011.07-2016.03 | MT | F | L | Bus FWD AHZ (DW10CD) | | GCO10051 | Outer Joint | | 28 | 39 | 58.6 | 94 | 63 | I |
| | 2011.07-2016.03 | MT | F | R | Bus FWD AHZ (DW10CD) | | GCO10098 | Outer Joint | | 28 | 39 | 58.6 | 93 | 63 | I |
| | 2011.07-2016.03 | MT | F | L | Bus FWD AHZ (DW10CD) | | GCI45032 | Inner Joint | | 37 | 39 | 40 | 68.5 | 100 | |
| | 2011.07-2016.03 | MT | F | R | Bus FWD AHZ (DW10CD) | | GCI10041 | Inner Joint | | 37 | 39 | 32 | 399 | 95.5 | |
| | 2011.07-2016.03 | 6MT | F | L | Van 4WD AHZ (DW10CD) | Transm. code:ML6C | GDS10314 | Drive Shaft | | 28 | 37 | 59 | 91 | 655 | |
| | 2011.07-2016.03 | 6MT | F | R | Van 4WD AHZ (DW10CD) | Transm. code:ML6C | GDS10320 | Drive Shaft | | 28 | 37 | 59 | 91 | 980 | |
| | 2011.07-2016.03 | MT | F | L | Van FWD AHZ (DW10CD) | | GDS45133 | Drive Shaft | | 28 | 37 | 58.6 | 94 | 653 | |
| | 2011.07-2016.03 | MT | F | R | Van FWD AHZ (DW10CD) | | GDS99214 | Drive Shaft | | 28 | 37 | 58.6 | 94 | 978 | |
| | 2011.07-2016.03 | MT | F | L | Van FWD AHZ (DW10CD) | | GCO10051 | Outer Joint | | 28 | 39 | 58.6 | 94 | 63 | I |
| | 2011.07-2016.03 | MT | F | R | Van FWD AHZ (DW10CD) | | GCO10098 | Outer Joint | | 28 | 39 | 58.6 | 93 | 63 | I |
| | 2011.07-2016.03 | MT | F | L | Van FWD AHZ (DW10CD) | | GCI45032 | Inner Joint | | 37 | 39 | 40 | 68.5 | 100 | |
| | 2011.07-2016.03 | MT | F | R | Van FWD AHZ (DW10CD) | | GCI10041 | Inner Joint | | 37 | 39 | 32 | 399 | 95.5 | |
| 2.0 (100 kw) | 2003.12-2006.10 | 4AT/5MT | F | L/R | Platform/Chassis FWD RFN (EW10J4) | | GCO10018 | Outer Joint | 48T | 27 | 34 | 61 | 82 | 56.5 | I |
| | 2003.12-2006.10 | MT | F | L | Platform/Chassis FWD RFN (EW10J4) | | GDS10082 | Drive Shaft | 48T | 27 | 24 | 59 | 82 | 648 | |
| | 2003.12-2006.10 | MT | F | L | Platform/Chassis FWD RFN (EW10J4) | | GDS10112 | Drive Shaft | | 27 | 24 | 59 | 82 | 648 | |
| | 2003.12-2006.10 | MT | F | R | Platform/Chassis FWD RFN (EW10J4) | | GDS10081 | Drive Shaft | 48T | 27 | 24 | 59 | 82 | 935 | |
| | 2003.12-2006.10 | MT | F | R | Platform/Chassis FWD RFN (EW10J4) | | GDS10120 | Drive Shaft | | 27 | 24 | 59 | 82 | 928 | |
| | 2003.12-2006.10 | MT | F | R | Platform/Chassis FWD RFN (EW10J4) | | GCI10004 | Inner Joint | | 24 | 34 | 29.8 | 348 | 99.5 | |
| | 2007.01-2016.03 | 6MT | F | L | Bus FWD RHR (DW10BTED4) | | GDS45133 | Drive Shaft | | 28 | 37 | 58.6 | 94 | 653 | |
| | 2007.01-2016.03 | 6MT | F | R | Bus FWD RHR (DW10BTED4) | | GDS99214 | Drive Shaft | | 28 | 37 | 58.6 | 94 | 978 | |
| | 2007.01-2016.03 | MT | F | L | Bus FWD RHR (DW10BTED4) | | GCO10051 | Outer Joint | | 28 | 39 | 58.6 | 94 | 63 | I |
| | 2007.01-2016.03 | MT | F | R | Bus FWD RHR (DW10BTED4) | | GCO10098 | Outer Joint | | 28 | 39 | 58.6 | 93 | 63 | I |
| | 2007.01-2016.03 | MT | F | L | Bus FWD RHR (DW10BTED4) | | GCI45032 | Inner Joint | | 37 | 39 | 40 | 68.5 | 100 | |
| | 2007.01-2016.03 | MT | F | R | Bus FWD RHR (DW10BTED4) | | GCI10041 | Inner Joint | | 37 | 39 | 32 | 399 | 95.5 | |
| | 2007.01-2016.03 | 6MT | F | L | Van FWD RHR (DW10BTED4) | | GDS45133 | Drive Shaft | | 28 | 37 | 58.6 | 94 | 653 | |
| | 2007.01-2016.03 | 6MT | F | R | Van FWD RHR (DW10BTED4) | | GDS99214 | Drive Shaft | | 28 | 37 | 58.6 | 94 | 978 | |
| | 2007.01-2016.03 | MT | F | L | Van FWD RHR (DW10BTED4) | | GCO10051 | Outer Joint | | 28 | 39 | 58.6 | 94 | 63 | I |
| | 2007.01-2016.03 | MT | F | R | Van FWD RHR (DW10BTED4) | | GCO10098 | Outer Joint | | 28 | 39 | 58.6 | 93 | 63 | I |
| | 2007.01-2016.03 | MT | F | L | Van FWD RHR (DW10BTED4) | | GCI45032 | Inner Joint | | 37 | 39 | 40 | 68.5 | 100 | |
| | 2007.01-2016.03 | MT | F | R | Van FWD RHR (DW10BTED4) | | GCI10041 | Inner Joint | | 37 | 39 | 32 | 399 | 95.5 | |
| 2.0 (102 kw) | 2000.03-2006.10 | MT | F | L | Bus FWD RFN (EW10J4) | | GDS10082 | Drive Shaft | 48T | 27 | 24 | 59 | 82 | 648 | |
| | 2000.03-2006.10 | MT | F | L | Bus FWD RFN (EW10J4) | | GDS10112 | Drive Shaft | | 27 | 24 | 59 | 82 | 648 | |
| | 2000.03-2006.10 | MT | F | R | Bus FWD RFN (EW10J4) | | GDS10081 | Drive Shaft | 48T | 27 | 24 | 59 | 82 | 935 | |
| | 2000.03-2006.10 | MT | F | R | Bus FWD RFN (EW10J4) | | GDS10120 | Drive Shaft | | 27 | 24 | 59 | 82 | 928 | |
| | 2000.03-2006.10 | MT | F | L/R | Bus FWD RFN (EW10J4) | | GCO10018 | Outer Joint | 48T | 27 | 34 | 61 | 82 | 56.5 | I |
| | 2000.03-2006.10 | MT | F | R | Bus FWD RFN (EW10J4) | | GCI10004 | Inner Joint | | 24 | 34 | 29.8 | 348 | 99.5 | |
| | 2000.03-2006.10 | MT | F | L | Van FWD RFN (EW10J4) | | GDS10082 | Drive Shaft | 48T | 27 | 24 | 59 | 82 | 648 | |
| | 2000.03-2006.10 | MT | F | L | Van FWD RFN (EW10J4) | | GDS10112 | Drive Shaft | | 27 | 24 | 59 | 82 | 648 | |
| | 2000.03-2006.10 | MT | F | R | Van FWD RFN (EW10J4) | | GDS10081 | Drive Shaft | 48T | 27 | 24 | 59 | 82 | 935 | |
| | 2000.03-2006.10 | MT | F | R | Van FWD RFN (EW10J4) | | GDS10120 | Drive Shaft | | 27 | 24 | 59 | 82 | 928 | |
| | 2000.03-2006.10 | MT | F | L/R | Van FWD RFN (EW10J4) | | GCO10018 | Outer Joint | 48T | 27 | 34 | 61 | 82 | 56.5 | I |
| | 2000.03-2006.10 | MT | F | R | Van FWD RFN (EW10J4) | | GCI10004 | Inner Joint | | 24 | 34 | 29.8 | 348 | 99.5 | |
| 2.0 (103 kw) | 2006.11-2016.03 | 5MT | F | L | Platform/Chassis FWD | | GDS10238 | Drive Shaft | | 28 | 24 | 58.5 | 92 | 669 | |
| | 2006.11-2016.03 | 5MT | F | R | Platform/Chassis FWD | | GDS10239 | Drive Shaft | | 28 | 24 | 58.5 | 92 | 955 | |
| | 2006.11-2016.03 | 5MT | F | L/R | Platform/Chassis FWD | | GCO10124 | Outer Joint | | 28 | 34 | 58.5 | 92 | 55 | I |
| | 2006.11-2016.03 | 5MT | F | R | Platform/Chassis FWD | | GCI99159 | Inner Joint | | 24 | 34 | 29.8 | 350 | 87.5 | |
| | 2007.01-2016.03 | MT | F | L | Bus FWD RFH (EW10A), RFJ (EW10A) | | GDS10238 | Drive Shaft | | 28 | 24 | 58.5 | 92 | 669 | |
| | 2007.01-2016.03 | MT | F | R | Bus FWD RFH (EW10A), RFJ (EW10A) | | GDS10239 | Drive Shaft | | 28 | 24 | 58.5 | 92 | 955 | |
| | 2007.01-2016.03 | MT | F | L/R | Bus FWD RFH (EW10A), RFJ (EW10A) | | GCO10052 | Outer Joint | | 28 | 34 | 58.5 | 92 | 55 | I |
| | 2007.01-2016.03 | MT | F | L/R | Bus FWD RFH (EW10A), RFJ (EW10A) | | GCO10124 | Outer Joint | | 28 | 34 | 58.5 | 92 | 55 | I |
| | 2007.01-2016.03 | MT | F | L | Bus FWD RFH (EW10A), RFJ (EW10A) | | GCI45032 | Inner Joint | | 37 | 39 | 40 | 68.5 | 100 | |
| | 2007.01-2016.03 | MT | F | R | Bus FWD RFH (EW10A), RFJ (EW10A) | | GCI99159 | Inner Joint | | 24 | 34 | 29.8 | 350 | 87.5 | |
| | 2007.01-2016.03 | MT | F | L | Van FWD RFH (EW10A) | | GDS10238 | Drive Shaft | | 28 | 24 | 58.5 | 92 | 669 | |

| | YEAR | TRANSM. | F/R | L/R | BODY STYLE & DRIVE TYPE & ENGINE | REMARKS | G-AP Ref. | PRODUCT | ABS | Technical Specifications A | B | C | H | L | P |
|---|---|---|---|---|---|---|---|---|---|---|---|---|---|---|---|
| **CITROËN** | | | | | | | | | | | | | | | |
| **Jumpy** | | | | | | | | | | | | | | | |
| 2.0 (103 kw) | 2007.01-2016.03 | MT | F | R | Van FWD RFH (EW10A) | | GDS10239 | Drive Shaft | | 28 | 24 | 58.5 | 92 | 955 | |
| | 2007.01-2016.03 | MT | F | L/R | Van FWD RFH (EW10A) | | GCO10052 | Outer Joint | | 28 | 34 | 58.5 | 92 | 55 | I |
| | 2007.01-2016.03 | MT | F | L/R | Van FWD RFH (EW10A) | | GCO10124 | Outer Joint | | 28 | 34 | 58.5 | 92 | 55 | I |
| | 2007.01-2016.03 | MT | F | R | Van FWD RFH (EW10A) | | GCI99159 | Inner Joint | | 24 | 34 | 29.8 | 350 | 87.5 | |
| 2.0 (106 kw) | 2020.09-2025.04 | 6MT | F | L | Bus FWD EHS (DW10FDDU370),EHT (DW10FDDU340) | For vehicles with increased ground clearance | GDS83778 | Drive Shaft | | 28 | 37 | 58.5 | 92.5 | 699 | |
| | 2020.09-2025.04 | 6MT | F | R | Bus FWD EHS (DW10FDDU370),EHT (DW10FDDU340) | For vehicles with standard suspension | GDS82847 | Drive Shaft | | 28 | 37 | 58.6 | 93 | 1005 | |
| | 2020.09-2025.04 | 6MT | F | R | Bus FWD EHS (DW10FDDU370),EHT (DW10FDDU340) | For vehicles with increased ground clearance | GDS83775 | Drive Shaft | | 28 | 37 | 58.5 | 92.5 | 1002 | |
| | 2020.09-2025.04 | 8AT | F | L | Bus FWD EHS (DW10FDDU370),EHT (DW10FDDU340) | | GDS56191 | Drive Shaft | | 28 | 37 | 58.6 | 93 | 649 | |
| | 2021.08-2025.04 | 6MT | F | L | Van FWD EHS (DW10FDDU370), EHT (DW10FDDU340) | For vehicles with increased ground clearance,Reinforced wheel suspension | GDS83778 | Drive Shaft | | 28 | 37 | 58.5 | 92.5 | 699 | |
| | 2021.08-2025.04 | 6MT | F | L | Van FWD EHS (DW10FDDU370), EHT (DW10FDDU340) | For vehicles with standard suspension | GDS84397 | Drive Shaft | | 28 | 37 | 58.6 | 93 | 696 | |
| | 2021.08-2025.04 | 6MT | F | R | Van FWD EHS (DW10FDDU370), EHT (DW10FDDU340) | For vehicles with standard suspension | GDS82847 | Drive Shaft | | 28 | 37 | 58.6 | 93 | 1005 | |
| | 2021.08-2025.04 | 6MT | F | R | Van FWD EHS (DW10FDDU370), EHT (DW10FDDU340) | For vehicles with increased ground clearance,Reinforced wheel suspension | GDS83775 | Drive Shaft | | 28 | 37 | 58.5 | 92.5 | 1002 | |
| | 2021.08-2025.04 | 6MT | F | L | Van FWD EHS (DW10FDDU370), EHT (DW10FDDU340) | For vehicles with standard suspension | GCI10040 | Inner Joint | | 37 | 39 | 40 | 69 | 95.5 | |
| | 2021.08-2025.04 | 6MT | F | L | Van FWD EHS (DW10FDDU370), EHT (DW10FDDU340) | For vehicles with increased ground clearance,Reinforced wheel suspension | GCI82363 | Inner Joint | | 37 | 36 | 40 | 68 | 108 | |
| | 2021.08-2025.04 | 6MT | F | R | Van FWD EHS (DW10FDDU370), EHT (DW10FDDU340) | For vehicles with standard suspension | GCI10041 | Inner Joint | | 37 | 39 | 32 | 399 | 95.5 | |
| | 2021.08-2025.04 | 6MT | F | R | Van FWD EHS (DW10FDDU370), EHT (DW10FDDU340) | For vehicles with increased ground clearance,Reinforced wheel suspension | GCI82364 | Inner Joint | | 37 | 36 | 32 | 400 | 108 | |
| | 2021.08-2025.04 | 8AT | F | L | Van FWD EHS (DW10FDDU370), EHT (DW10FDDU340) | For vehicles with standard suspension | GDS56191 | Drive Shaft | | 28 | 37 | 58.6 | 93 | 649 | |
| | 2021.08-2025.04 | 8AT | F | R | Van FWD EHS (DW10FDDU370), EHT (DW10FDDU340) | For vehicles with standard suspension | GDS56190 | Drive Shaft | | 28 | 37 | 58.6 | 93 | 989 | |
| | 2021.08-2025.04 | 8AT | F | L/R | Van FWD EHS (DW10FDDU370), EHT (DW10FDDU340) | For vehicles with standard suspension | GCO82805 | Outer Joint | | 28 | 39 | 58.6 | 93 | 63 | I |
| | 2021.08-2025.04 | 8AT | F | L | Van FWD EHS (DW10FDDU370), EHT (DW10FDDU340) | For vehicles with standard suspension | GCI10120 | Inner Joint | | 37 | 39 | 42.2 | 60 | 95.5 | |
| | 2021.08-2025.04 | 8AT | F | R | Van FWD EHS (DW10FDDU370), EHT (DW10FDDU340) | For vehicles with standard suspension | GCI45033 | Inner Joint | | 37 | 39 | | 379 | 96 | |
| | 2023.01-2025.04 | 6MT | F | L | Platform/Chassis FWD EHT (DW10FDDU340) | For vehicles with increased ground clearance | GDS83778 | Drive Shaft | | 28 | 37 | 58.5 | 92.5 | 699 | |
| | 2023.01-2025.04 | 6MT | F | L | Platform/Chassis FWD EHT (DW10FDDU340) | For vehicles with standard suspension | GDS84397 | Drive Shaft | | 28 | 37 | 58.6 | 93 | 696 | |
| | 2023.01-2025.04 | 6MT | F | R | Platform/Chassis FWD EHT (DW10FDDU340) | For vehicles with standard suspension | GDS82847 | Drive Shaft | | 28 | 37 | 58.6 | 93 | 1005 | |
| | 2023.01-2025.04 | 6MT | F | R | Platform/Chassis FWD EHT (DW10FDDU340) | For vehicles with increased ground clearance | GDS83775 | Drive Shaft | | 28 | 37 | 58.5 | 92.5 | 1002 | |
| | 2023.01-2025.04 | 6MT | F | R | Platform/Chassis FWD EHT (DW10FDDU340) | For vehicles with standard suspension | GCI10041 | Inner Joint | | 37 | 39 | 32 | 399 | 95.5 | |
| 2.0 (110 kw) | 2016.04-2022.12 | 6MT | F | L | Bus FWD AHX (DW10FD) | Reinforced wheel suspension,For vehicles with increased ground clearance | GDS83778 | Drive Shaft | | 28 | 37 | 58.5 | 92.5 | 699 | |
| | 2016.04-2022.12 | 6MT | F | L | Bus FWD AHX (DW10FD) | For vehicles with standard suspension | GDS84397 | Drive Shaft | | 28 | 37 | 58.6 | 93 | 696 | |
| | 2016.04-2022.12 | 6MT | F | R | Bus FWD AHX (DW10FD) | For vehicles with standard suspension | GDS82847 | Drive Shaft | | 28 | 37 | 58.6 | 93 | 1005 | |
| | 2016.04-2022.12 | 6MT | F | R | Bus FWD AHX (DW10FD) | Reinforced wheel suspension,For vehicles with increased ground clearance | GDS83775 | Drive Shaft | | 28 | 37 | 58.5 | 92.5 | 1002 | |
| | 2016.04-2022.12 | 6MT | F | L/R | Bus FWD AHX (DW10FD) | Reinforced wheel suspension,For vehicles with increased ground clearance | GCO82483 | Outer Joint | | 28 | 36 | 58.5 | 92.5 | 60.5 | I |
| | 2016.04-2022.12 | 6MT | F | L | Bus FWD AHX (DW10FD) | Reinforced wheel suspension,For vehicles with increased ground clearance | GCI82363 | Inner Joint | | 37 | 36 | 40 | 68 | 108 | |
| | 2016.04-2022.12 | 6MT | F | R | Bus FWD AHX (DW10FD) | Reinforced wheel suspension,For vehicles with increased ground clearance | GCI82364 | Inner Joint | | 37 | 36 | 32 | 400 | 108 | |
| | 2016.04-2022.12 | 6MT | F | L | Van FWD AHX (DW10FD) | 8 balls | GDS83778 | Drive Shaft | | 28 | 37 | 58.5 | 92.5 | 699 | |
| | 2016.04-2022.12 | 6MT | F | L | Van FWD AHX (DW10FD) | Normal Suspension;6 balls,TJ | GDS84397 | Drive Shaft | | 28 | 37 | 58.6 | 93 | 696 | |
| | 2016.04-2022.12 | 6MT | F | R | Van FWD AHX (DW10FD) | Normal Suspension | GDS82847 | Drive Shaft | | 28 | 37 | 58.6 | 93 | 1005 | |
| | 2016.04-2022.12 | 6MT | F | R | Van FWD AHX (DW10FD) | 8 balls | GDS83775 | Drive Shaft | | 28 | 37 | 58.5 | 92.5 | 1002 | |
| | 2016.04-2022.12 | 6MT | F | L/R | Van FWD AHX (DW10FD) | Normal Suspension;6 balls | GCO10098 | Outer Joint | | 28 | 39 | 58.6 | 93 | 63 | I |
| | 2016.04-2022.12 | 6MT | F | L/R | Van FWD AHX (DW10FD) | 8 balls | GCO82483 | Outer Joint | | 28 | 36 | 58.5 | 92.5 | 60.5 | I |
| | 2016.04-2022.12 | 6MT | F | L | Van FWD AHX (DW10FD) | Normal Suspension;TJ | GCI10040 | Inner Joint | | 37 | 39 | 40 | 69 | 95.5 | |
| | 2016.04-2022.12 | 6MT | F | L | Van FWD AHX (DW10FD) | PTJ | GCI82363 | Inner Joint | | 37 | 36 | 40 | 68 | 108 | |
| | 2016.04-2022.12 | 6MT | F | R | Van FWD AHX (DW10FD) | Normal Suspension;TJ | GCI10041 | Inner Joint | | 37 | 39 | 32 | 399 | 95.5 | |
| | 2016.04-2022.12 | 6MT | F | R | Van FWD AHX (DW10FD) | PTJ | GCI82364 | Inner Joint | | 37 | 36 | 32 | 400 | 108 | |
| | 2016.09-2022.12 | 6MT | F | L | Platform/Chassis FWD AHX (DW10FD) | 8 balls | GDS83778 | Drive Shaft | | 28 | 37 | 58.5 | 92.5 | 699 | |
| | 2016.09-2022.12 | 6MT | F | L | Platform/Chassis FWD AHX (DW10FD) | Normal Suspension;6 balls,TJ | GDS84397 | Drive Shaft | | 28 | 37 | 58.6 | 93 | 696 | |
| | 2016.09-2022.12 | 6MT | F | R | Platform/Chassis FWD AHX (DW10FD) | Normal Suspension | GDS82847 | Drive Shaft | | 28 | 37 | 58.6 | 93 | 1005 | |
| | 2016.09-2022.12 | 6MT | F | R | Platform/Chassis FWD AHX (DW10FD) | 8 balls | GDS83775 | Drive Shaft | | 28 | 37 | 58.5 | 92.5 | 1002 | |
| | 2016.09-2022.12 | 6MT | F | L/R | Platform/Chassis FWD AHX (DW10FD) | Normal Suspension;6 balls | GCO10098 | Outer Joint | | 28 | 39 | 58.6 | 93 | 63 | I |
| | 2016.09-2022.12 | 6MT | F | L/R | Platform/Chassis FWD AHX (DW10FD) | 8 balls | GCO82483 | Outer Joint | | 28 | 36 | 58.5 | 92.5 | 60.5 | I |
| | 2016.09-2022.12 | 6MT | F | L | Platform/Chassis FWD AHX (DW10FD) | Normal Suspension;TJ | GCI10040 | Inner Joint | | 37 | 39 | 40 | 69 | 95.5 | |
| | 2016.09-2022.12 | 6MT | F | L | Platform/Chassis FWD AHX (DW10FD) | PTJ | GCI82363 | Inner Joint | | 37 | 36 | 40 | 68 | 108 | |
| | 2016.09-2022.12 | 6MT | F | R | Platform/Chassis FWD AHX (DW10FD) | Normal Suspension;TJ | GCI10041 | Inner Joint | | 37 | 39 | 32 | 399 | 95.5 | |
| | 2016.09-2022.12 | 6MT | F | R | Platform/Chassis FWD AHX (DW10FD) | PTJ | GCI82364 | Inner Joint | | 37 | 36 | 32 | 400 | 108 | |
| 2.0 (120 kw) | 2010.07-2016.03 | 6AT | F | L | Bus FWD RHH (DW10CTED4) | | GDS83137 | Drive Shaft | | 28 | 37 | 59.5 | 94 | 609 | |
| | 2010.07-2016.03 | 6AT | F | R | Bus FWD RHH (DW10CTED4) | | GDS10416 | Drive Shaft | | 28 | 37 | 59 | 91 | 955 | |
| | 2010.07-2016.03 | 6AT | F | L | Bus FWD RHH (DW10CTED4) | | GCO82534 | Outer Joint | | 28 | 36 | 59.5 | 94 | 60.5 | I |
| | 2010.07-2016.03 | 6AT | F | R | Bus FWD RHH (DW10CTED4) | | GCO45074 | Outer Joint | | 28 | 26 | 59 | 91 | 61.5 | M |
| | 2010.07-2016.03 | 6AT | F | L | Bus FWD RHH (DW10CTED4) | | GCI82416 | Inner Joint | | 37 | 36 | 42.3 | 59.5 | 126 | |
| | 2010.07-2016.03 | 6AT | F | R | Bus FWD RHH (DW10CTED4) | | GCI10157 | Inner Joint | | 37 | 26 | | 380 | 100 | |
| | 2010.07-2016.03 | MT | F | L | Bus FWD RHH (DW10CTED4) | | GDS45133 | Drive Shaft | | 28 | 37 | 58.6 | 94 | 653 | |
| | 2010.07-2016.03 | MT | F | R | Bus FWD RHH (DW10CTED4) | | GDS99214 | Drive Shaft | | 28 | 37 | 58.6 | 94 | 978 | |
| | 2010.07-2016.03 | MT | F | L | Bus FWD RHH (DW10CTED4) | | GCO10051 | Outer Joint | | 28 | 39 | 58.6 | 94 | 63 | I |
| | 2010.07-2016.03 | MT | F | R | Bus FWD RHH (DW10CTED4) | | GCO10098 | Outer Joint | | 28 | 39 | 58.6 | 93 | 63 | I |
| | 2010.07-2016.03 | MT | F | L | Bus FWD RHH (DW10CTED4) | | GCI45032 | Inner Joint | | 37 | 39 | 40 | 68.5 | 100 | |
| | 2010.07-2016.03 | MT | F | R | Bus FWD RHH (DW10CTED4) | | GCI10041 | Inner Joint | | 37 | 39 | 32 | 399 | 95.5 | |

| | YEAR | TRANSM. | F/R | L/R | BODY STYLE & DRIVE TYPE & ENGINE | REMARKS | G-AP Ref. | PRODUCT | ABS | Technical Specifications A | B | C | H | L | P |
|---|---|---|---|---|---|---|---|---|---|---|---|---|---|---|---|
| **CITROËN** | | | | | | | | | | | | | | | |
| **Jumpy** | | | | | | | | | | | | | | | |
| 2.0 (120 kw) | 2010.07-2016.03 | 6MT | F | L | Platform/Chassis FWD | | GDS45133 | Drive Shaft | | 28 | 37 | 58.6 | 94 | 653 | |
| | 2010.07-2016.03 | 6MT | F | R | Platform/Chassis FWD | | GDS99214 | Drive Shaft | | 28 | 37 | 58.6 | 94 | 978 | |
| | 2010.07-2016.03 | 6MT | F | L/R | Platform/Chassis FWD | | GCO10098 | Outer Joint | | 28 | 39 | 58.6 | 93 | 63 | I |
| | 2010.07-2016.03 | 6MT | F | L | Platform/Chassis FWD | | GCI45032 | Inner Joint | | 37 | 39 | 40 | 68.5 | 100 | |
| | 2010.07-2016.03 | 6MT | F | R | Platform/Chassis FWD | | GCI10041 | Inner Joint | | 37 | 39 | 32 | 399 | 95.5 | |
| | 2010.07-2016.03 | 6AT | F | L | Van FWD RHH (DW10CTED4) | | GDS83137 | Drive Shaft | | 28 | 37 | 59.5 | 94 | 609 | |
| | 2010.07-2016.03 | 6AT | F | R | Van FWD RHH (DW10CTED4) | | GDS10416 | Drive Shaft | | 28 | 37 | 59 | 91 | 955 | |
| | 2010.07-2016.03 | 6AT | F | L | Van FWD RHH (DW10CTED4) | | GCO82534 | Outer Joint | | 28 | 36 | 59.5 | 94 | 60.5 | I |
| | 2010.07-2016.03 | 6AT | F | R | Van FWD RHH (DW10CTED4) | | GCO45074 | Outer Joint | | 28 | 26 | 59 | 91 | 61.5 | M |
| | 2010.07-2016.03 | 6AT | F | L | Van FWD RHH (DW10CTED4) | | GCI82416 | Inner Joint | | 37 | 36 | 42.3 | 59.5 | 126 | |
| | 2010.07-2016.03 | 6AT | F | R | Van FWD RHH (DW10CTED4) | | GCI10157 | Inner Joint | | 37 | 26 | | 380 | 100 | |
| | 2010.07-2016.03 | 6MT | F | L | Van FWD RHH (DW10CTED4) | | GDS45133 | Drive Shaft | | 28 | 37 | 58.6 | 94 | 653 | |
| | 2010.07-2016.03 | 6MT | F | R | Van FWD RHH (DW10CTED4) | | GDS99214 | Drive Shaft | | 28 | 37 | 58.6 | 94 | 978 | |
| | 2010.07-2016.03 | 6MT | F | L | Van FWD RHH (DW10CTED4) | | GCO10051 | Outer Joint | | 28 | 39 | 58.6 | 94 | 63 | I |
| | 2010.07-2016.03 | 6MT | F | R | Van FWD RHH (DW10CTED4) | | GCO10098 | Outer Joint | | 28 | 39 | 58.6 | 93 | 63 | I |
| | 2010.07-2016.03 | 6MT | F | L | Van FWD RHH (DW10CTED4) | | GCI45032 | Inner Joint | | 37 | 39 | 40 | 68.5 | 100 | |
| | 2010.07-2016.03 | 6MT | F | R | Van FWD RHH (DW10CTED4) | | GCI10041 | Inner Joint | | 37 | 39 | 32 | 399 | 95.5 | |
| 2.0 (130 kw) | 2016.04-2025.04 | 6AT | F | L | Bus FWD AHH (DW10FC) | For vehicles with standard suspension | GDS56191 | Drive Shaft | | 28 | 37 | 58.6 | 93 | 649 | |
| | 2016.04-2025.04 | 6AT | F | R | Bus FWD AHH (DW10FC) | | GDS56190 | Drive Shaft | | 28 | 37 | 58.6 | 93 | 989 | |
| | 2016.04-2025.04 | 6AT | F | L/R | Bus FWD AHH (DW10FC) | For vehicles with standard suspension | GCO82805 | Outer Joint | | 28 | 39 | 58.6 | 93 | 63 | I |
| | 2016.04-2025.04 | 6AT | F | L | Bus FWD AHH (DW10FC) | For vehicles with standard suspension | GCI10120 | Inner Joint | | 37 | 39 | 42.2 | 60 | 95.5 | |
| | 2016.04-2025.04 | 6AT | F | R | Bus FWD AHH (DW10FC) | | GCI45033 | Inner Joint | | 37 | 39 | | 379 | 96 | |
| | 2016.04-2025.04 | 6AT/8AT | F | L | Van FWD AHH (DW10FC), EHZ (DW10FDCU) | Transmission:6AT,Vehicle Production Country:Great Britain;Transmission:8AT | GDS56191 | Drive Shaft | | 28 | 37 | 58.6 | 93 | 649 | |
| | 2016.04-2025.04 | 6AT/8AT | F | R | Van FWD AHH (DW10FC), EHZ (DW10FDCU) | Transmission:6AT,Vehicle Production Country:Great Britain;Transmission:8AT | GDS56190 | Drive Shaft | | 28 | 37 | 58.6 | 93 | 989 | |
| | 2016.04-2025.04 | 6AT/8AT | F | L/R | Van FWD AHH (DW10FC), EHZ (DW10FDCU) | Transmission:6AT,Vehicle Production Country:Great Britain;Transmission:8AT | GCO82805 | Outer Joint | | 28 | 39 | 58.6 | 93 | 63 | I |
| **Jumpy/Dispatch** | | | | | | | | | | | | | | | |
| 2.0 (100 kw) | 2000.04-2006.10 | MT | F | L/R | Van FWD RFN(EW10J4) | | GCO10018 | Outer Joint | 48T | 27 | 34 | 61 | 82 | 56.5 | I |
| **Nemo** | | | | | | | | | | | | | | | |
| 1.3 (55 kw) | 2010.10- | MT | F | L | Box Body/MPV FWD FHZ (F13DTE5) | | GDS17166 | Drive Shaft | | 25 | 24 | 51 | 84.5 | 605 | |
| | 2010.10- | MT | F | R | Box Body/MPV FWD FHZ (F13DTE5) | | GDS17167 | Drive Shaft | | 25 | 24 | 51 | 84.5 | 919 | |
| | 2010.10- | MT | F | L/R | Box Body/MPV FWD FHZ (F13DTE5) | | GCO17028 | Outer Joint | | 25 | 24 | 51 | 84.5 | 62 | M |
| | 2010.10- | MT | F | L | Box Body/MPV FWD FHZ (F13DTE5) | | GCI17106 | Inner Joint | | 24 | 24 | 29.7 | 93 | 86 | |
| | 2010.10- | MT | F | R | Box Body/MPV FWD FHZ (F13DTE5) | | GCI17107 | Inner Joint | | 24 | 24 | 29.7 | 394 | 99 | |
| | 2010.10- | MT | F | L | MPV FWD FHZ (F13DTE5) | | GDS17166 | Drive Shaft | | 25 | 24 | 51 | 84.5 | 605 | |
| | 2010.10- | MT | F | R | MPV FWD FHZ (F13DTE5) | | GDS17167 | Drive Shaft | | 25 | 24 | 51 | 84.5 | 919 | |
| | 2010.10- | MT | F | L/R | MPV FWD FHZ (F13DTE5) | | GCO17028 | Outer Joint | | 25 | 24 | 51 | 84.5 | 62 | M |
| | 2010.10- | MT | F | L | MPV FWD FHZ (F13DTE5) | | GCI17106 | Inner Joint | | 24 | 24 | 29.7 | 93 | 86 | |
| | 2010.10- | MT | F | R | MPV FWD FHZ (F13DTE5) | | GCI17107 | Inner Joint | | 24 | 24 | 29.7 | 394 | 99 | |
| 1.3 (59 kw) | 2015.10- | AT/MT | F | L/R | MPV FWD FHY (F13DTE6) | | GDS17167 | Drive Shaft | | 25 | 24 | 51 | 84.5 | 919 | |
| | 2015.10- | AT/MT | F | L/R | MPV FWD FHY (F13DTE6) | | GCO17028 | Outer Joint | | 25 | 24 | 51 | 84.5 | 62 | M |
| | 2015.10- | AT/MT | F | L/R | MPV FWD FHY (F13DTE6) | | GCI17107 | Inner Joint | | 24 | 24 | 29.7 | 394 | 99 | |
| | 2016.02- | AT/MT | F | L/R | Box Body/MPV FWD FHY (F13DTE6) | | GDS17167 | Drive Shaft | | 25 | 24 | 51 | 84.5 | 919 | |
| | 2016.02- | AT/MT | F | L/R | Box Body/MPV FWD FHY (F13DTE6) | | GCO17028 | Outer Joint | | 25 | 24 | 51 | 84.5 | 62 | M |
| | 2016.02- | AT/MT | F | L/R | Box Body/MPV FWD FHY (F13DTE6) | | GCI17107 | Inner Joint | | 24 | 24 | 29.7 | 394 | 99 | |
| 1.4 (50 kw) | 2008.02- | 5AT | F | L | Box Body/MPV FWD 8HS (DV4TED) | | GDS17151 | Drive Shaft | | 25 | 22 | 51 | 84 | 656 | |
| | 2008.02- | 5AT | F | L | Box Body/MPV FWD 8HS (DV4TED) | | GCI17029 | Inner Joint | | 22 | 22 | 40 | 58.5 | 101 | |
| | 2008.02- | 5AT/5MT | F | R | Box Body/MPV FWD 8HS (DV4TED) | | GDS17052 | Drive Shaft | | 25 | 22 | 51 | 84 | 881 | |
| | 2008.02- | 5AT/5MT | F | L | Box Body/MPV FWD 8HS (DV4TED) | | GCO83423 | Outer Joint | | 25 | 22 | 51 | 84 | 57.5 | M |
| | 2008.02- | 5AT/5MT | F | R | Box Body/MPV FWD 8HS (DV4TED) | | GCO17068 | Outer Joint | | 25 | 22 | 51 | 84 | 57.5 | M |
| | 2008.02- | 5AT/5MT | F | R | Box Body/MPV FWD 8HS (DV4TED) | | GCI17030 | Inner Joint | | 22 | 22 | 30 | 96.5 | 99 | |
| | 2009.04- | 5AT/5MT | F | L | MPV FWD 8HS (DV4TED) | | GDS17151 | Drive Shaft | | 25 | 22 | 51 | 84 | 656 | |
| | 2009.04- | 5AT/5MT | F | R | MPV FWD 8HS (DV4TED) | | GDS17052 | Drive Shaft | | 25 | 22 | 51 | 84 | 881 | |
| | 2009.04- | 5AT/5MT | F | L | MPV FWD 8HS (DV4TED) | | GCO83423 | Outer Joint | | 25 | 22 | 51 | 84 | 57.5 | M |
| | 2009.04- | 5AT/5MT | F | R | MPV FWD 8HS (DV4TED) | | GCO17068 | Outer Joint | | 25 | 22 | 51 | 84 | 57.5 | M |
| | 2009.04- | 5AT/5MT | F | L | MPV FWD 8HS (DV4TED) | | GCI17029 | Inner Joint | | 22 | 22 | 40 | 58.5 | 101 | |
| | 2009.04- | 5AT/5MT | F | R | MPV FWD 8HS (DV4TED) | | GCI17030 | Inner Joint | | 22 | 22 | 30 | 96.5 | 99 | |
| 1.4 (54 kw) | 2008.02- | 5MT | F | L | Box Body/MPV FWD KFV (TU3A);KFT (TU3AE5) | | GDS84233 | Drive Shaft | | 22 | 22 | 51 | 79 | 651 | |
| | 2008.02- | 5MT | F | R | Box Body/MPV FWD KFV (TU3A);KFT (TU3AE5) | | GDS83558 | Drive Shaft | | 22 | 22 | 51 | 79 | 880 | |
| | 2008.02- | 5MT | F | R | Box Body/MPV FWD KFV (TU3A);KFT (TU3AE5) | | GCO82416 | Outer Joint | | 22 | 22 | 51 | 79 | 57.5 | M |
| | 2008.02- | 5MT | F | L/R | Box Body/MPV FWD KFV (TU3A);KFT (TU3AE5) | | GCO17070 | Outer Joint | | 22 | 22 | 51 | 79 | 57.5 | M |
| | 2008.02- | 5MT | F | L | Box Body/MPV FWD KFV (TU3A);KFT (TU3AE5) | | GCI17029 | Inner Joint | | 22 | 22 | 40 | 58.5 | 101 | |
| | 2008.02- | 5MT | F | R | Box Body/MPV FWD KFV (TU3A);KFT (TU3AE5) | | GCI17030 | Inner Joint | | 22 | 22 | 30 | 96.5 | 99 | |
| | 2009.04- | 5MT | F | L | MPV FWD KFV (TU3A);KFT (TU3AE5) | | GDS84233 | Drive Shaft | | 22 | 22 | 51 | 79 | 651 | |
| | 2009.04- | 5MT | F | R | MPV FWD KFV (TU3A);KFT (TU3AE5) | | GDS83558 | Drive Shaft | | 22 | 22 | 51 | 79 | 880 | |
| | 2009.04- | 5MT | F | R | MPV FWD KFV (TU3A);KFT (TU3AE5) | | GCO82416 | Outer Joint | | 22 | 22 | 51 | 79 | 57.5 | M |

| | YEAR | TRANSM. | F/R | L/R | BODY STYLE & DRIVE TYPE & ENGINE | REMARKS | G-AP Ref. | PRODUCT | ABS | Technical Specifications A | B | C | H | L | P |
|---|---|---|---|---|---|---|---|---|---|---|---|---|---|---|---|
| **CITROËN** | | | | | | | | | | | | | | | |
| **Nemo** | | | | | | | | | | | | | | | |
| 1.4 (54 kw) | 2009.04- | 5MT | F | L/R | MPV FWD KFV (TU3A);KFT (TU3AE5) | | GCO17070 | Outer Joint | | 22 | 22 | 51 | 79 | 57.5 | M |
| | 2009.04- | 5MT | F | L | MPV FWD KFV (TU3A);KFT (TU3AE5) | | GCI17029 | Inner Joint | | 22 | 22 | 40 | 58.5 | 101 | |
| | 2009.04- | 5MT | F | R | MPV FWD KFV (TU3A);KFT (TU3AE5) | | GCI17030 | Inner Joint | | 22 | 22 | 30 | 96.5 | 99 | |
| **Saxo** | | | | | | | | | | | | | | | |
| 1.0 (33 kw) | 1996.02-1998.11 | 5MT | F | L | Hatchback FWD TU9M | Inner teeth of wheel side:20,Inner teeth of tranm.side:22 | GDS10088 | Drive Shaft | | 21 | 22 | 56.4 | 76 | 613 | |
| | 1996.02-1998.11 | 5MT | F | L | Hatchback FWD TU9M | Inner teeth of wheel side:22,Inner teeth of tranm.side:22 | GDS10164 | Drive Shaft | | 21 | 22 | 58.5 | 76 | 614 | |
| | 1996.02-1998.11 | 5MT | F | R | Hatchback FWD TU9M | | GDS10089 | Drive Shaft | | 21 | 22 | 56.4 | 76 | 790 | |
| | 1996.02-1998.11 | MT | F | R | Hatchback FWD TU9M | | GDS10003 | Drive Shaft | | 21 | 22 | 49 | 81 | 798 | |
| | 1996.02-1998.11 | MT | F | R | Hatchback FWD TU9M | Number of Holes:3 | GDS10008 | Drive Shaft | | 21 | 22 | 50 | 81.5 | 800 | |
| | 1996.02-1998.11 | | F | L | Hatchback FWD TU9M | | GDS10009 | Drive Shaft | | 21 | 22 | 50 | 81.5 | 618 | |
| | 1996.02-1998.11 | | F | L | Hatchback FWD TU9M | | GCO10034 | Outer Joint | | 21 | 20 | 50 | 81.5 | 54 | O |
| | 1997.10-1998.11 | 5MT | F | L | Hatchback Van FWD TU9M | Inner teeth of wheel side:20,Inner teeth of tranm.side:22 | GDS10088 | Drive Shaft | | 21 | 22 | 56.4 | 76 | 613 | |
| | 1997.10-1998.11 | 5MT | F | L | Hatchback Van FWD TU9M | Inner teeth of wheel side:22,Inner teeth of tranm.side:22 | GDS10164 | Drive Shaft | | 21 | 22 | 58.5 | 76 | 614 | |
| | 1997.10-1998.11 | 5MT | F | R | Hatchback Van FWD TU9M | | GDS10089 | Drive Shaft | | 21 | 22 | 56.4 | 76 | 790 | |
| | 1997.10-1998.11 | | F | L | Hatchback Van FWD TU9M | | GDS10009 | Drive Shaft | | 21 | 22 | 50 | 81.5 | 618 | |
| | 1997.10-1998.11 | | F | R | Hatchback Van FWD TU9M | | GDS10008 | Drive Shaft | | 21 | 22 | 50 | 81.5 | 800 | |
| | 1997.10-1998.11 | | F | L/R | Hatchback Van FWD TU9M | Rim:3-Hole | GCO10034 | Outer Joint | | 21 | 20 | 50 | 81.5 | 54 | O |
| 1.0 (37 kw) | 1996.02-2004.04 | 5MT | F | L | Hatchback FWD TU9M | Rim Hole no.:3;Inner teeth of wheel side:20 | GDS10009 | Drive Shaft | | 21 | 22 | 50 | 81.5 | 618 | |
| | 1996.02-2004.04 | 5MT | F | L | Hatchback FWD TU9M | Rim Hole no.:4,Date to:1999.01;Inner teeth of wheel side:22 | GDS10164 | Drive Shaft | | 21 | 22 | 58.5 | 76 | 614 | |
| | 1996.02-2004.04 | 5MT | F | L/R | Hatchback FWD TU9M | Rim Hole no.:3 | GCO10034 | Outer Joint | | 21 | 20 | 50 | 81.5 | 54 | O |
| | 1996.02-2004.04 | MT | F | L | Hatchback FWD TU9M | Rim Hole no.:4,Date from:1999.02;Inner teeth of wheel side:22 | GDS10161 | Drive Shaft | | 21 | 22 | 58.5 | 86 | 624 | |
| | 1996.02-2004.04 | MT | F | L | Hatchback FWD TU9M | Date from:1999.05;Inner teeth of wheel side:22 | GDS45071 | Drive Shaft | | 21 | 22 | 48 | 86.5 | 622 | |
| | 1996.02-2004.04 | MT | F | L | Hatchback FWD TU9M | | GDS99006 | Drive Shaft | 48T | 21 | 22 | 58.5 | 86 | 624 | |
| | 1996.02-2004.04 | MT | F | R | Hatchback FWD TU9M | Date to:1999.04;Inner teeth of wheel side:22 | GDS10003 | Drive Shaft | | 21 | 22 | 49 | 81 | 798 | |
| | 1996.02-2004.04 | MT | F | R | Hatchback FWD TU9M | Rim Hole Number:3;Inner teeth of wheel side:20 | GDS10008 | Drive Shaft | | 21 | 22 | 50 | 81.5 | 800 | |
| | 1996.02-2004.04 | MT | F | R | Hatchback FWD TU9M | Rim Hole no.:4,Date to:1999.01;Inner teeth of wheel side:20 | GDS10089 | Drive Shaft | | 21 | 22 | 56.4 | 76 | 790 | |
| | 1996.02-2004.04 | MT | F | R | Hatchback FWD TU9M | Rim Hole no.:4,Date from:1999.02;Inner teeth of wheel side:22 | GDS10156 | Drive Shaft | | 21 | 22 | 58.5 | 86 | 807 | |
| | 1996.02-2004.04 | MT | F | R | Hatchback FWD TU9M | Date from:1999.05;Inner teeth of wheel side:22 | GDS45072 | Drive Shaft | | 21 | 22 | 48 | 86.5 | 798.5 | |
| | 1996.02-2004.04 | MT | F | R | Hatchback FWD TU9M | | GDS99010 | Drive Shaft | 48T | 21 | 22 | 58.5 | 86 | 807 | |
| | 1999.08-2003.06 | 5MT | F | L | Hatchback Van FWD TU9M | | GDS10161 | Drive Shaft | | 21 | 22 | 58.5 | 86 | 624 | |
| | 1999.08-2003.06 | 5MT | F | R | Hatchback Van FWD TU9M | | GDS10156 | Drive Shaft | | 21 | 22 | 58.5 | 86 | 807 | |
| | 1999.08-2003.06 | 5MT | F | L/R | Hatchback Van FWD TU9M | | GCO10034 | Outer Joint | | 21 | 20 | 50 | 81.5 | 54 | O |
| | 1999.08-2003.06 | | F | L | Hatchback Van FWD TU9M | | GDS10009 | Drive Shaft | | 21 | 22 | 50 | 81.5 | 618 | |
| | 1999.08-2003.06 | | F | R | Hatchback Van FWD TU9M | | GDS10008 | Drive Shaft | | 21 | 22 | 50 | 81.5 | 800 | |
| 1.1 (40 kw) | 1996.05-2003.09 | 5MT | F | L | Hatchback FWD TU1M+ | For vehicles without ABS | GDS10009 | Drive Shaft | | 21 | 22 | 50 | 81.5 | 618 | |
| | 1996.05-2003.09 | 5MT | F | L | Hatchback FWD TU1M+ | For vehicles with ABS | GDS10038 | Drive Shaft | 48T | 21 | 22 | 58.5 | 76 | 614 | |
| | 1996.05-2003.09 | 5MT | F | L | Hatchback FWD TU1M+ | For vehicles with ABS,Date to:1999.12;Rim:4;Hole:Inner teeth of wheel side:20;Inner teeth of tranm.side:22 | GDS10088 | Drive Shaft | | 21 | 22 | 56.4 | 76 | 613 | |
| | 1996.05-2003.09 | 5MT | F | L | Hatchback FWD TU1M+ | For vehicles with ABS,Date to:1999.12;Rim:4;Hole:Inner teeth of wheel side:22;Inner teeth of tranm.side:22 | GDS10164 | Drive Shaft | | 21 | 22 | 58.5 | 76 | 614 | |
| | 1996.05-2003.09 | 5MT | F | R | Hatchback FWD TU1M+ | | GDS10008 | Drive Shaft | | 21 | 22 | 50 | 81.5 | 800 | |
| | 1996.05-2003.09 | 5MT | F | R | Hatchback FWD TU1M+ | | GDS10042 | Drive Shaft | 48T | 21 | 22 | 56.4 | 76 | 798 | |
| | 1996.05-2003.09 | 5MT | F | L/R | Hatchback FWD TU1M+ | | GCO10034 | Outer Joint | | 21 | 20 | 50 | 81.5 | 54 | O |
| 1.1 (44 kw) | 1996.05-2003.09 | 5MT | F | L | Hatchback FWD TU1JP/TU1M+ | Inner teeth of wheel side:22 | GDS10038 | Drive Shaft | 48T | 21 | 22 | 58.5 | 76 | 614 | |
| | 1996.05-2003.09 | 5MT | F | L | Hatchback FWD TU1JP/TU1M+ | Rim Hole Number:4;Inner teeth of wheel side:20 | GDS10088 | Drive Shaft | | 21 | 22 | 56.4 | 76 | 613 | |
| | 1996.05-2003.09 | 5MT | F | L | Hatchback FWD TU1JP/TU1M+ | Rim Hole Number:4;Inner teeth of wheel side:22 | GDS10164 | Drive Shaft | | 21 | 22 | 58.5 | 76 | 614 | |
| | 1996.05-2003.09 | 5MT | F | R | Hatchback FWD TU1JP/TU1M+ | Rim Hole Number:4,Date from:1996.05 | GDS10042 | Drive Shaft | 48T | 21 | 22 | 56.4 | 76 | 798 | |
| | 1996.05-2003.09 | MT | F | L | Hatchback FWD TU1JP/TU1M+ | Rim Hole Number:3;Inner teeth of wheel side:20 | GDS10009 | Drive Shaft | | 21 | 22 | 50 | 81.5 | 618 | |
| | 1996.05-2003.09 | MT | F | L | Hatchback FWD TU1JP/TU1M+ | Date from:1999.01,Rim Hole Number:4;Inner teeth of wheel side:22 | GDS10161 | Drive Shaft | | 21 | 22 | 58.5 | 86 | 624 | |
| | 1996.05-2003.09 | MT | F | L | Hatchback FWD TU1JP/TU1M+ | Date from:1999.05;Inner teeth of wheel side:22 | GDS45071 | Drive Shaft | | 21 | 22 | 48 | 86.5 | 622 | |
| | 1996.05-2003.09 | MT | F | L | Hatchback FWD TU1JP/TU1M+ | Date from:1999.01;Inner teeth of wheel side:22 | GDS99006 | Drive Shaft | 48T | 21 | 22 | 58.5 | 86 | 624 | |
| | 1996.05-2003.09 | MT | F | R | Hatchback FWD TU1JP/TU1M+ | Date to:1999.04;Inner teeth of wheel side:22 | GDS10003 | Drive Shaft | | 21 | 22 | 49 | 81 | 798 | |
| | 1996.05-2003.09 | MT | F | R | Hatchback FWD TU1JP/TU1M+ | Rim Hole Number:3;Inner teeth of wheel side:20 | GDS10008 | Drive Shaft | | 21 | 22 | 50 | 81.5 | 800 | |
| | 1996.05-2003.09 | MT | F | R | Hatchback FWD TU1JP/TU1M+ | Date to:1999.04;Inner teeth of wheel side:20 | GDS10089 | Drive Shaft | | 21 | 22 | 56.4 | 76 | 790 | |
| | 1996.05-2003.09 | MT | F | R | Hatchback FWD TU1JP/TU1M+ | Date from:1999.01,Rim Hole Number:4 | GDS10156 | Drive Shaft | | 21 | 22 | 58.5 | 86 | 807 | |
| | 1996.05-2003.09 | MT | F | R | Hatchback FWD TU1JP/TU1M+ | Date from:1999.05 | GDS45072 | Drive Shaft | | 21 | 22 | 48 | 86.5 | 798.5 | |
| | 1996.05-2003.09 | MT | F | R | Hatchback FWD TU1JP/TU1M+ | Date from:1999.01 | GDS99010 | Drive Shaft | 48T | 21 | 22 | 58.5 | 86 | 807 | |
| | 1996.05-2003.09 | MT | F | L | Hatchback FWD TU1JP/TU1M+ | Date to:1998.12 | GCO10034 | Outer Joint | | 21 | 20 | 50 | 81.5 | 54 | O |
| | 2000.07-2003.06 | 5MT | F | L | Hatchback FWD TU1M+ | | GDS99006 | Drive Shaft | 48T | 21 | 22 | 58.5 | 86 | 624 | |
| | 2000.07-2003.06 | 5MT | F | R | Hatchback FWD TU1M+ | | GDS99010 | Drive Shaft | 48T | 21 | 22 | 58.5 | 86 | 807 | |
| 1.4 (55 kw) | 1996.02-2003.06 | AT | F | L | Hatchback FWD TU3JP | Date from:1999.01;Length1:86mm | GDS10138 | Drive Shaft | 48T | 21 | | 50 | 86 | 603.5 | |
| | 1996.02-2003.06 | AT | F | L | Hatchback FWD TU3JP | Length1:76.5mm | GDS10200 | Drive Shaft | 48T | 21 | | 50.5 | 76.5 | 592 | |
| | 1996.02-2003.06 | AT | F | R | Hatchback FWD TU3JP | Transm. Type:MB3 | GDS10028 | Drive Shaft | 48T | 21 | 23 | 50.5 | 76.5 | 693.5 | |
| | 1996.02-2003.06 | MT | F | L | Hatchback FWD TU3JP | Inner teeth of wheel side:20;Inner teeth of tranm.side:19;Length1:81.5mm | GDS10009 | Drive Shaft | | 21 | 22 | 50 | 81.5 | 618 | |
| | 1996.02-2003.06 | MT | F | L | Hatchback FWD TU3JP | Inner teeth of wheel side:22 | GDS10038 | Drive Shaft | 48T | 21 | 22 | 58.5 | 76 | 614 | |
| | 1996.02-2003.06 | MT | F | L | Hatchback FWD TU3JP | Date to:1998.12;Inner teeth of wheel side:20;Inner teeth of tranm.side:22;Length1:76mm | GDS10088 | Drive Shaft | | 21 | 22 | 56.4 | 76 | 613 | |
| | 1996.02-2003.06 | MT | F | L | Hatchback FWD TU3JP | Inner teeth of wheel side:22 | GDS10161 | Drive Shaft | | 21 | 22 | 58.5 | 86 | 624 | |

| | YEAR | TRANSM. | F/R | L/R | BODY STYLE & DRIVE TYPE & ENGINE | REMARKS | G-AP Ref. | PRODUCT | ABS | Technical Specifications A | B | C | H | L | P |
|---|---|---|---|---|---|---|---|---|---|---|---|---|---|---|---|
| **CITROËN** | | | | | | | | | | | | | | | |
| **Saxo** | | | | | | | | | | | | | | | |
| 1.4 (55 kw) | 1996.02-2003.06 | MT | F | L | Hatchback FWD TU3JP | Date to:1998.12;Inner teeth of wheel side:22 | GDS10164 | Drive Shaft | | 21 | 22 | 58.5 | 76 | 614 | |
| | 1996.02-2003.06 | MT | F | L | Hatchback FWD TU3JP | Inner teeth of wheel side:22 | GDS45071 | Drive Shaft | | 21 | 22 | 48 | 86.5 | 622 | |
| | 1996.02-2003.06 | MT | F | L | Hatchback FWD TU3JP | Date from:1999.01;Inner teeth of wheel side:22 | GDS99006 | Drive Shaft | 48T | 21 | 22 | 58.5 | 86 | 624 | |
| | 1996.02-2003.06 | MT | F | R | Hatchback FWD TU3JP | Inner teeth of wheel side:22 | GDS10003 | Drive Shaft | | 21 | 22 | 49 | 81 | 798 | |
| | 1996.02-2003.06 | MT | F | R | Hatchback FWD TU3JP | Date to:1998.12 | GDS10042 | Drive Shaft | 48T | 21 | 22 | 56.4 | 76 | 798 | |
| | 1996.02-2003.06 | MT | F | R | Hatchback FWD TU3JP | Date to:1998.12;Inner teeth of wheel side:20 | GDS10089 | Drive Shaft | | 21 | 22 | 56.4 | 76 | 790 | |
| | 1996.02-2003.06 | MT | F | R | Hatchback FWD TU3JP | Inner teeth of wheel side:22 | GDS10156 | Drive Shaft | | 21 | 22 | 58.5 | 86 | 807 | |
| | 1996.02-2003.06 | MT | F | R | Hatchback FWD TU3JP | Inner teeth of wheel side:22 | GDS45072 | Drive Shaft | | 21 | 22 | 48 | 86.5 | 798.5 | |
| | 1996.02-2003.06 | MT | F | R | Hatchback FWD TU3JP | Date from:1999.01 | GDS99010 | Drive Shaft | 48T | 21 | 22 | 58.5 | 86 | 807 | |
| 1.5 (40 kw) | 1996.09-2003.09 | 5MT | F | L | Hatchback FWD TUD5 | Inner teeth of wheel side:20;Inner teeth of tranm.side:22 | GDS10088 | Drive Shaft | | 21 | 22 | 56.4 | 76 | 613 | |
| | 1996.09-2003.09 | 5MT | F | L | Hatchback FWD TUD5 | Inner teeth of wheel side:22;Inner teeth of tranm.side:22 | GDS10164 | Drive Shaft | | 21 | 22 | 58.5 | 76 | 614 | |
| | 1996.09-2003.09 | 5MT | F | R | Hatchback FWD TUD5 | | GDS10089 | Drive Shaft | | 21 | 22 | 56.4 | 76 | 790 | |
| | 1996.09-2003.09 | MT | F | L | Hatchback FWD TUD5 | | GDS10009 | Drive Shaft | | 21 | 22 | 50 | 81.5 | 618 | |
| | 1996.09-2003.09 | MT | F | L | Hatchback FWD TUD5 | | GDS10020 | Drive Shaft | 48T | 21 | 22 | 58.5 | 76 | 615 | |
| | 1996.09-2003.09 | MT | F | L | Hatchback FWD TUD5 | Date To:1999.12;Number of Holes:4 | GDS10038 | Drive Shaft | 48T | 21 | 22 | 58.5 | 76 | 614 | |
| | 1996.09-2003.09 | MT | F | L | Hatchback FWD TUD5 | | GDS45071 | Drive Shaft | | 21 | 22 | 48 | 86.5 | 622 | |
| | 1996.09-2003.09 | MT | F | L | Hatchback FWD TUD5 | Number of Holes:3 | GDS99006 | Drive Shaft | 48T | 21 | 22 | 58.5 | 86 | 624 | |
| | 1996.09-2003.09 | MT | F | R | Hatchback FWD TUD5 | | GDS10003 | Drive Shaft | | 21 | 22 | 49 | 81 | 798 | |
| | 1996.09-2003.09 | MT | F | R | Hatchback FWD TUD5 | | GDS10186 | Drive Shaft | 48T | 21 | 22 | 54 | 75.5 | 799 | |
| | 1996.09-2003.09 | MT | F | R | Hatchback FWD TUD5 | | GDS45072 | Drive Shaft | | 21 | 22 | 48 | 86.5 | 798.5 | |
| | 1996.09-2003.09 | MT | F | R | Hatchback FWD TUD5 | Number of Holes:3 | GDS99010 | Drive Shaft | 48T | 21 | 22 | 58.5 | 86 | 807 | |
| 1.5 (42 kw) | 1996.05-2001.06 | 5MT | F | L | Hatchback FWD TUD5 | Inner teeth of wheel side:20;Inner teeth of tranm.side:22 | GDS10088 | Drive Shaft | | 21 | 22 | 56.4 | 76 | 613 | |
| | 1996.05-2001.06 | 5MT | F | L | Hatchback FWD TUD5 | Inner teeth of wheel side:22;Inner teeth of tranm.side:22 | GDS10164 | Drive Shaft | | 21 | 22 | 58.5 | 76 | 614 | |
| | 1996.05-2001.06 | 5MT | F | R | Hatchback FWD TUD5 | Inner teeth of wheel side:20 | GDS10089 | Drive Shaft | | 21 | 22 | 56.4 | 76 | 790 | |
| | 1996.05-2001.06 | MT | F | L | Hatchback FWD TUD5 | Inner teeth of wheel side:20;Inner teeth of tranm.side:19 | GDS10009 | Drive Shaft | | 21 | 22 | 50 | 81.5 | 618 | |
| | 1996.05-2001.06 | MT | F | L | Hatchback FWD TUD5 | | GDS10020 | Drive Shaft | 48T | 21 | 22 | 58.5 | 76 | 615 | |
| | 1996.05-2001.06 | MT | F | L | Hatchback FWD TUD5 | Date to:1999.09;Number of Holes:4 | GDS10038 | Drive Shaft | 48T | 21 | 22 | 58.5 | 76 | 614 | |
| | 1996.05-2001.06 | MT | F | L | Hatchback FWD TUD5 | Inner teeth of wheel side:22;Inner teeth of tranm.side:22 | GDS45071 | Drive Shaft | | 21 | 22 | 48 | 86.5 | 622 | |
| | 1996.05-2001.06 | MT | F | L | Hatchback FWD TUD5 | Date from;1999.09 | GDS99006 | Drive Shaft | 48T | 21 | 22 | 58.5 | 86 | 624 | |
| | 1996.05-2001.06 | MT | F | R | Hatchback FWD TUD5 | Date to:1999.04;Inner teeth of wheel side:22 | GDS10003 | Drive Shaft | | 21 | 22 | 49 | 81 | 798 | |
| | 1996.05-2001.06 | MT | F | R | Hatchback FWD TUD5 | Date from:1999.05;Inner teeth of wheel side:22 | GDS45072 | Drive Shaft | | 21 | 22 | 48 | 86.5 | 798.5 | |
| | 1996.05-2001.06 | MT | F | R | Hatchback FWD TUD5 | Date from:1999.09 | GDS99010 | Drive Shaft | 48T | 21 | 22 | 58.5 | 86 | 807 | |
| | 1999.08-2001.06 | 5MT | F | L | Hatchback Van FWD TUD5 | Inner teeth of wheel side:20;Inner teeth of tranm.side:22 | GDS10088 | Drive Shaft | | 21 | 22 | 56.4 | 76 | 613 | |
| | 1999.08-2001.06 | 5MT | F | L | Hatchback Van FWD TUD5 | Inner teeth of wheel side:22;Inner teeth of tranm.side:22 | GDS10164 | Drive Shaft | | 21 | 22 | 58.5 | 76 | 614 | |
| | 1999.08-2001.06 | 5MT | F | R | Hatchback Van FWD TUD5 | | GDS10089 | Drive Shaft | | 21 | 22 | 56.4 | 76 | 790 | |
| 1.5 (43 kw) | 2001.07-2003.06 | 5MT | F | L | Hatchback Van FWD TUD5B | Inner teeth of wheel side:20;Inner teeth of tranm.side:22 | GDS10088 | Drive Shaft | | 21 | 22 | 56.4 | 76 | 613 | |
| | 2001.07-2003.06 | 5MT | F | L | Hatchback Van FWD TUD5B | Inner teeth of wheel side:22;Inner teeth of tranm.side:22 | GDS10164 | Drive Shaft | | 21 | 22 | 58.5 | 76 | 614 | |
| | 2001.07-2003.06 | | F | R | Hatchback Van FWD TUD5B | | GDS10089 | Drive Shaft | | 21 | 22 | 56.4 | 76 | 790 | |
| | 2001.07-2004.04 | 5MT | F | L | Hatchback FWD TUD5B | Inner teeth of wheel side:20;Inner teeth of tranm.side:22 | GDS10088 | Drive Shaft | | 21 | 22 | 56.4 | 76 | 613 | |
| | 2001.07-2004.04 | 5MT | F | L | Hatchback FWD TUD5B | Inner teeth of wheel side:22;Inner teeth of tranm.side:22 | GDS10164 | Drive Shaft | | 21 | 22 | 58.5 | 76 | 614 | |
| | 2001.07-2004.04 | 5MT | F | R | Hatchback FWD TUD5B | Inner teeth of wheel side:20 | GDS10089 | Drive Shaft | | 21 | 22 | 56.4 | 76 | 790 | |
| | 2001.07-2004.04 | MT | F | L | Hatchback FWD TUD5B | Inner teeth of wheel side:22;Inner teeth of tranm.side:22 | GDS45071 | Drive Shaft | | 21 | 22 | 48 | 86.5 | 622 | |
| | 2001.07-2004.04 | MT | F | R | Hatchback FWD TUD5B | Inner teeth of wheel side:22 | GDS45072 | Drive Shaft | | 21 | 22 | 48 | 86.5 | 798.5 | |
| 1.6 (65 kw) | 1996.05-2003.06 | AT | F | L | Hatchback FWD TU5JP | | GDS10200 | Drive Shaft | 48T | 21 | | 50.5 | 76.5 | 592 | |
| | 1996.05-2003.06 | AT | F | R | Hatchback FWD TU5JP | | GDS10028 | Drive Shaft | 48T | 21 | 23 | 50.5 | 76.5 | 693.5 | |
| | 1996.05-2003.06 | MT | F | L | Hatchback FWD TU5JP | Date to:1999.01 | GDS10020 | Drive Shaft | 48T | 21 | 22 | 58.5 | 76 | 615 | |
| | 1996.05-2003.06 | MT | F | L | Hatchback FWD TU5JP | Date from:1999.02 | GDS10048 | Drive Shaft | 48T | 21 | 22 | 58.5 | 86 | 616 | |
| | 1996.05-2003.06 | MT | F | L | Hatchback FWD TU5JP | Date from:1999.02 | GDS10157 | Drive Shaft | | 21 | 22 | 58.5 | 86 | 616 | |
| | 1996.05-2003.06 | MT | F | R | Hatchback FWD TU5JP | Date from:1999.02 | GDS10049 | Drive Shaft | 48T | 21 | 22 | 58.5 | 86 | 811.5 | |
| | 1996.05-2003.06 | MT | F | R | Hatchback FWD TU5JP | Date to:1999.01 | GDS10118 | Drive Shaft | | 21 | 22 | 56.4 | 76 | 800 | |
| | 1996.05-2003.06 | MT | F | R | Hatchback FWD TU5JP | Date to:1999.01 | GDS10174 | Drive Shaft | 48T | 21 | 22 | 58.5 | 76 | 800 | |
| | 1996.05-2003.06 | MT | F | L | Hatchback FWD TU5JP | | GCI10006 | Inner Joint | | 22 | 22 | 40 | 58.5 | 87 | |
| 1.6 (66 kw) | 1996.02-2003.06 | AT | F | L | Hatchback FWD TU5JP | | GDS10200 | Drive Shaft | 48T | 21 | | 50.5 | 76.5 | 592 | |
| | 1996.02-2003.06 | AT | F | R | Hatchback FWD TU5JP | | GDS10028 | Drive Shaft | 48T | 21 | 23 | 50.5 | 76.5 | 693.5 | |
| | 1996.02-2003.06 | MT | F | L | Hatchback FWD TU5JP | Date to:1999.01 | GDS10020 | Drive Shaft | 48T | 21 | 22 | 58.5 | 76 | 615 | |
| | 1996.02-2003.06 | MT | F | L | Hatchback FWD TU5JP | Date from:1999.02 | GDS10048 | Drive Shaft | 48T | 21 | 22 | 58.5 | 86 | 616 | |
| | 1996.02-2003.06 | MT | F | L | Hatchback FWD TU5JP | Date from:1999.02 | GDS10157 | Drive Shaft | | 21 | 22 | 58.5 | 86 | 616 | |
| | 1996.02-2003.06 | MT | F | R | Hatchback FWD TU5JP | Date from:1999.02 | GDS10049 | Drive Shaft | 48T | 21 | 22 | 58.5 | 86 | 811.5 | |
| | 1996.02-2003.06 | MT | F | R | Hatchback FWD TU5JP | Date to:1999.01 | GDS10118 | Drive Shaft | | 21 | 22 | 56.4 | 76 | 800 | |
| | 1996.02-2003.06 | MT | F | R | Hatchback FWD TU5JP | Date to:1999.01 | GDS10174 | Drive Shaft | 48T | 21 | 22 | 58.5 | 76 | 800 | |
| | 1996.02-2003.06 | MT | F | L | Hatchback FWD TU5JP | | GCI10006 | Inner Joint | | 22 | 22 | 40 | 58.5 | 87 | |
| 1.6 (72 kw) | 2000.09-2003.09 | 5MT | F | L | Hatchback FWD TU5JP | | GDS10048 | Drive Shaft | 48T | 21 | 22 | 58.5 | 86 | 616 | |
| | 2000.09-2003.09 | 5MT | F | L | Hatchback FWD TU5JP | | GDS10157 | Drive Shaft | | 21 | 22 | 58.5 | 86 | 616 | |
| | 2000.09-2003.09 | 5MT | F | R | Hatchback FWD TU5JP | | GDS10049 | Drive Shaft | 48T | 21 | 22 | 58.5 | 86 | 811.5 | |
| | 2000.09-2003.09 | 5MT | F | R | Hatchback FWD TU5JP | | GDS10152 | Drive Shaft | | 21 | 22 | 50 | 85 | 812 | |

| | YEAR | TRANSM. | F/R | L/R | BODY STYLE & DRIVE TYPE & ENGINE | REMARKS | G-AP Ref. | PRODUCT | ABS | Technical Specifications A | B | C | H | L | P |
|---|---|---|---|---|---|---|---|---|---|---|---|---|---|---|---|
| **CITROËN** | | | | | | | | | | | | | | | |
| **Saxo** | | | | | | | | | | | | | | | |
| 1.6 (74 kw) | 2001.02-2004.04 | 5MT | F | L | Hatchback FWD TU5JP | | GDS10048 | Drive Shaft | 48T | 21 | 22 | 58.5 | 86 | 616 | |
| | 2001.02-2004.04 | 5MT | F | L | Hatchback FWD TU5JP | | GDS10157 | Drive Shaft | | 21 | 22 | 58.5 | 86 | 616 | |
| | 2001.02-2004.04 | 5MT | F | R | Hatchback FWD TU5JP | | GDS10049 | Drive Shaft | 48T | 21 | 22 | 58.5 | 86 | 811.5 | |
| | 2001.02-2004.04 | 5MT | F | R | Hatchback FWD TU5JP | | GDS10152 | Drive Shaft | | 21 | 22 | 50 | 85 | 812 | |
| 1.6 (87 kw) | 1996.06-2003.09 | 5MT | F | L | Hatchback FWD TU5J4 | Date to:1999.01 | GDS10020 | Drive Shaft | 48T | 21 | 22 | 58.5 | 76 | 615 | |
| | 1996.06-2003.09 | 5MT | F | L | Hatchback FWD TU5J4 | Date from:1999.02 | GDS10048 | Drive Shaft | 48T | 21 | 22 | 58.5 | 86 | 616 | |
| | 1996.06-2003.09 | 5MT | F | L | Hatchback FWD TU5J4 | Date from:1999.02 | GDS10157 | Drive Shaft | | 21 | 22 | 58.5 | 86 | 616 | |
| | 1996.06-2003.09 | 5MT | F | R | Hatchback FWD TU5J4 | Date from:1999.02 | GDS10049 | Drive Shaft | 48T | 21 | 22 | 58.5 | 86 | 811.5 | |
| | 1996.06-2003.09 | 5MT | F | R | Hatchback FWD TU5J4 | Date to:1999.01 | GDS10118 | Drive Shaft | | 21 | 22 | 56.4 | 76 | 800 | |
| | 1996.06-2003.09 | 5MT | F | R | Hatchback FWD TU5J4 | Date from:1999.02 | GDS10152 | Drive Shaft | | 21 | 22 | 50 | 85 | 812 | |
| | 1996.06-2003.09 | 5MT | F | R | Hatchback FWD TU5J4 | Date to:1999.01 | GDS10174 | Drive Shaft | 48T | 21 | 22 | 58.5 | 76 | 800 | |
| | 1996.06-2003.09 | MT | F | L | Hatchback FWD TU5J4 | | GDS10054 | Drive Shaft | | 21 | 22 | 56.4 | 76 | 610 | |
| 1.6 (88 kw) | 1996.02-2004.04 | 5MT | F | L | Hatchback FWD TU5J4 | Date to:1999.01 | GDS10020 | Drive Shaft | 48T | 21 | 22 | 58.5 | 76 | 615 | |
| | 1996.02-2004.04 | 5MT | F | L | Hatchback FWD TU5J4 | Date from:1999.02 | GDS10048 | Drive Shaft | 48T | 21 | 22 | 58.5 | 86 | 616 | |
| | 1996.02-2004.04 | 5MT | F | L | Hatchback FWD TU5J4 | Date from:1999.02 | GDS10157 | Drive Shaft | | 21 | 22 | 58.5 | 86 | 616 | |
| | 1996.02-2004.04 | 5MT | F | R | Hatchback FWD TU5J4 | Date from:1999.02 | GDS10049 | Drive Shaft | 48T | 21 | 22 | 58.5 | 86 | 811.5 | |
| | 1996.02-2004.04 | 5MT | F | R | Hatchback FWD TU5J4 | Date to:1999.01 | GDS10118 | Drive Shaft | | 21 | 22 | 56.4 | 76 | 800 | |
| | 1996.02-2004.04 | 5MT | F | R | Hatchback FWD TU5J4 | Date to:1999.01 | GDS10174 | Drive Shaft | 48T | 21 | 22 | 58.5 | 76 | 800 | |
| | 1996.02-2004.04 | 5MT | F | L | Hatchback FWD TU5J4 | | GCI10006 | Inner Joint | | 22 | 22 | 40 | 58.5 | 87 | |
| **Spacetourer** | | | | | | | | | | | | | | | |
| 1.5 (75 kw) | 2018.06-2025.04 | 6MT | F | L | Bus FWD YHR (DV5RUCd) | | GDS82315 | Drive Shaft | | 28 | 37 | 58.6 | 93 | 719 | |
| | 2018.06-2025.04 | 6MT | F | R | Bus FWD YHR (DV5RUCd) | | GDS82316 | Drive Shaft | | 28 | 37 | 58.6 | 93 | 974 | |
| | 2018.06-2025.04 | 6MT | F | L/R | Bus FWD YHR (DV5RUCd) | | GCO10098 | Outer Joint | | 28 | 39 | 58.6 | 93 | 63 | I |
| | 2018.06-2025.04 | 6MT | F | R | Bus FWD YHR (DV5RUCd) | | GCI81759 | Inner Joint | | 37 | 34 | 31.9 | 302 | 88 | |
| 1.5 (88 kw) | 2018.06-2025.04 | 6MT | F | L | Bus FWD YHV (DV5RUC) | | GDS82315 | Drive Shaft | | 28 | 37 | 58.6 | 93 | 719 | |
| | 2018.06-2025.04 | 6MT | F | R | Bus FWD YHV (DV5RUC) | | GDS82316 | Drive Shaft | | 28 | 37 | 58.6 | 93 | 974 | |
| | 2018.06-2025.04 | 6MT | F | L/R | Bus FWD YHV (DV5RUC) | | GCO10098 | Outer Joint | | 28 | 39 | 58.6 | 93 | 63 | I |
| | 2018.06-2025.04 | 6MT | F | R | Bus FWD YHV (DV5RUC) | | GCI81759 | Inner Joint | | 37 | 34 | 31.9 | 302 | 88 | |
| 1.6 (66 kw) | 2018.07- | 5MT | F | L | Bus FWD 9HF (DV6DU) | Normal Suspension,Exhaust Emis Nm Euro 6,\Vehicle Production Country:Great Britain | GDS84395 | Drive Shaft | | 28 | 24 | 58.6 | 93 | 732 | |
| | 2018.07- | 5MT | F | R | Bus FWD 9HF (DV6DU) | Date to:2021.01,for DAM no. to:16155LT,\Vehicle Production Country:Great Britain | GDS84394 | Drive Shaft | | 28 | 24 | 58.6 | 93 | 965 | |
| | 2018.07- | 5MT | F | L | Bus FWD 9HF (DV6DU) | Normal Suspension,Exhaust Emis Nm Euro 6,\Vehicle Production Country:Great Britain | GCO82805 | Outer Joint | | 28 | 39 | 58.6 | 93 | 63 | I |
| | 2018.07- | 5MT | F | R | Bus FWD 9HF (DV6DU) | Date to:2021.01,for DAM no. to:16155LT,\Vehicle Production Country:Great Britain | GCO82805 | Outer Joint | | 28 | 39 | 58.6 | 93 | 63 | I |
| | 2018.07- | 5MT | F | L/R | Bus FWD 9HF (DV6DU) | For vehicles with increased ground clearance | GCO10019 | Outer Joint | 48T | 25 | 39 | 59 | 89 | 63.5 | I |
| | 2018.07- | 5MT | F | L | Bus FWD 9HF (DV6DU) | Normal Suspension,Exhaust Emis Nm Euro 6,\Vehicle Production Country:Great Britain | GCI10129 | Inner Joint | | 24 | 34 | 40 | 62 | 89 | |
| | 2018.07- | 5MT | F | R | Bus FWD 9HF (DV6DU) | Date to:2021.01,for DAM no. to:16155LT,\Vehicle Production Country:Great Britain | GCI82740 | Inner Joint | | 24 | 34 | 29.8 | 290 | 88 | |
| 1.6 (70 kw) | 2016.04-2019.04 | 5MT | F | L | Bus FWD BHV (DV6FDU);BHS (DV6FDU) | Normal Suspension,Exhaust Emis Nm Euro 6,\Vehicle Production Country:Great Britain | GDS84395 | Drive Shaft | | 28 | 24 | 58.6 | 93 | 732 | |
| | 2016.04-2019.04 | 5MT | F | R | Bus FWD BHV (DV6FDU);BHS (DV6FDU) | Date to:2021.01,for DAM no. to:16155LT,\Vehicle Production Country:Great Britain | GDS84394 | Drive Shaft | | 28 | 24 | 58.6 | 93 | 965 | |
| | 2016.04-2019.04 | 5MT | F | L | Bus FWD BHV (DV6FDU);BHS (DV6FDU) | Normal Suspension,Exhaust Emis Nm Euro 6,\Vehicle Production Country:Great Britain | GCO82805 | Outer Joint | | 28 | 39 | 58.6 | 93 | 63 | I |
| | 2016.04-2019.04 | 5MT | F | R | Bus FWD BHV (DV6FDU);BHS (DV6FDU) | Date to:2021.01,for DAM no. to:16155LT,\Vehicle Production Country:Great Britain | GCO82805 | Outer Joint | | 28 | 39 | 58.6 | 93 | 63 | I |
| | 2016.04-2019.04 | 5MT | F | L/R | Bus FWD BHV (DV6FDU);BHS (DV6FDU) | For vehicles with increased ground clearance | GCO10019 | Outer Joint | 48T | 25 | 39 | 59 | 89 | 63.5 | I |
| | 2016.04-2019.04 | 5MT | F | L | Bus FWD BHV (DV6FDU);BHS (DV6FDU) | Normal Suspension,Exhaust Emis Nm Euro 6,\Vehicle Production Country:Great Britain | GCI10129 | Inner Joint | | 24 | 34 | 40 | 62 | 89 | |
| | 2016.04-2019.04 | 5MT | F | R | Bus FWD BHV (DV6FDU);BHS (DV6FDU) | Date to:2021.01,for DAM no. to:16155LT,\Vehicle Production Country:Great Britain | GCI82740 | Inner Joint | | 24 | 34 | 29.8 | 290 | 88 | |
| 1.6 (85 kw) | 2016.04-2019.04 | 6MT | F | L | Bus FWD BHX (DV6FCU) | | GDS82315 | Drive Shaft | | 28 | 37 | 58.6 | 93 | 719 | |
| | 2016.04-2019.04 | 6MT | F | R | Bus FWD BHX (DV6FCU) | | GDS82316 | Drive Shaft | | 28 | 37 | 58.6 | 93 | 974 | |
| | 2016.04-2019.04 | 6MT | F | L/R | Bus FWD BHX (DV6FCU) | | GCO10098 | Outer Joint | | 28 | 39 | 58.6 | 93 | 63 | I |
| | 2016.04-2019.04 | 6MT | F | R | Bus FWD BHX (DV6FCU) | | GCI81759 | Inner Joint | | 37 | 34 | 31.9 | 302 | 88 | |
| | 2016.04-2019.04 | MT | F | L/R | Bus FWD BHX (DV6FCU) | | GCO10052 | Outer Joint | | 28 | 34 | 58.5 | 92 | 55 | I |
| 2.0 (90 kw) | 2019.12-2022.12 | 8AT | F | L | Bus FWD AHK (DW10FE) | For vehicles with standard suspension | GDS56191 | Drive Shaft | | 28 | 37 | 58.6 | 93 | 649 | |
| | 2019.12-2022.12 | 8AT | F | R | Bus FWD AHK (DW10FE) | For vehicles with standard suspension | GDS56190 | Drive Shaft | | 28 | 37 | 58.6 | 93 | 989 | |
| | 2019.12-2022.12 | 8AT | F | L/R | Bus FWD AHK (DW10FE) | For vehicles with standard suspension | GCO82805 | Outer Joint | | 28 | 39 | 58.6 | 93 | 63 | I |
| | 2019.12-2022.12 | 8AT | F | L | Bus FWD AHK (DW10FE) | For vehicles with standard suspension | GCI10120 | Inner Joint | | 37 | 39 | 42.2 | 60 | 95.5 | |
| | 2019.12-2022.12 | 8AT | F | R | Bus FWD AHK (DW10FE) | For vehicles with standard suspension | GCI45033 | Inner Joint | | 37 | 39 | | 379 | 96 | |
| 2.0 (106 kw) | 2020.09-2025.04 | 6MT | F | L | Bus FWD EHS (DW10FDDU370);EHT (DW10FDDU340) | For vehicles with increased ground clearance,Reinforced wheel suspension | GDS83778 | Drive Shaft | | 28 | 37 | 58.5 | 92.5 | 699 | |
| | 2020.09-2025.04 | 6MT | F | L | Bus FWD EHS (DW10FDDU370);EHT (DW10FDDU340) | For vehicles with standard suspension | GDS84397 | Drive Shaft | | 28 | 37 | 58.6 | 93 | 696 | |
| | 2020.09-2025.04 | 6MT | F | R | Bus FWD EHS (DW10FDDU370);EHT (DW10FDDU340) | For vehicles with standard suspension | GDS82847 | Drive Shaft | | 28 | 37 | 58.6 | 93 | 1005 | |
| | 2020.09-2025.04 | 6MT | F | R | Bus FWD EHS (DW10FDDU370);EHT (DW10FDDU340) | For vehicles with increased ground clearance,Reinforced wheel suspension | GDS83775 | Drive Shaft | | 28 | 37 | 58.5 | 92.5 | 1002 | |
| | 2020.09-2025.04 | 6MT | F | L | Bus FWD EHS (DW10FDDU370);EHT (DW10FDDU340) | For vehicles with standard suspension | GCI10040 | Inner Joint | | 37 | 39 | 40 | 69 | 95.5 | |
| | 2020.09-2025.04 | 6MT | F | L | Bus FWD EHS (DW10FDDU370);EHT (DW10FDDU340) | For vehicles with increased ground clearance,Reinforced wheel suspension | GCI82363 | Inner Joint | | 37 | 36 | 40 | 68 | 108 | |
| | 2020.09-2025.04 | 6MT | F | R | Bus FWD EHS (DW10FDDU370);EHT (DW10FDDU340) | For vehicles with standard suspension | GCI10041 | Inner Joint | | 37 | 39 | 32 | 399 | 95.5 | |
| | 2020.09-2025.04 | 6MT | F | R | Bus FWD EHS (DW10FDDU370);EHT (DW10FDDU340) | For vehicles with increased ground clearance,Reinforced wheel suspension | GCI82364 | Inner Joint | | 37 | 36 | 32 | 400 | 108 | |
| | 2020.09-2025.04 | 8AT | F | L | Bus FWD EHS (DW10FDDU370);EHT (DW10FDDU340) | For vehicles with standard suspension | GDS56191 | Drive Shaft | | 28 | 37 | 58.6 | 93 | 649 | |
| | 2020.09-2025.04 | 8AT | F | R | Bus FWD EHS (DW10FDDU370);EHT (DW10FDDU340) | For vehicles with standard suspension | GDS56190 | Drive Shaft | | 28 | 37 | 58.6 | 93 | 989 | |
| | 2020.09-2025.04 | 8AT | F | L/R | Bus FWD EHS (DW10FDDU370);EHT (DW10FDDU340) | For vehicles with standard suspension | GCO82805 | Outer Joint | | 28 | 39 | 58.6 | 93 | 63 | I |
| | 2020.09-2025.04 | 8AT | F | L | Bus FWD EHS (DW10FDDU370);EHT (DW10FDDU340) | For vehicles with standard suspension | GCI10120 | Inner Joint | | 37 | 39 | 42.2 | 60 | 95.5 | |
| | 2020.09-2025.04 | 8AT | F | R | Bus FWD EHS (DW10FDDU370);EHT (DW10FDDU340) | For vehicles with standard suspension | GCI45033 | Inner Joint | | 37 | 39 | | 379 | 96 | |

| | YEAR | TRANSM. | F/R | L/R | BODY STYLE & DRIVE TYPE & ENGINE | REMARKS | G-AP Ref. | PRODUCT | ABS | Technical Specifications A | B | C | H | L | P |
|---|---|---|---|---|---|---|---|---|---|---|---|---|---|---|---|
| **CITROËN** | | | | | | | | | | | | | | | |
| **Spacetourer** | | | | | | | | | | | | | | | |
| 2.0 (110 kw) | 2016.04-2022.12 | 6MT | F | L | Bus FWD AHX (DW10FD) | For vehicles with increased ground clearance,Reinforced wheel suspension | GDS83778 | Drive Shaft | | 28 | 37 | 58.5 | 92.5 | 699 | |
| | 2016.04-2022.12 | 6MT | F | L | Bus FWD AHX (DW10FD) | For vehicles with standard suspension | GDS84397 | Drive Shaft | | 28 | 37 | 58.6 | 93 | 696 | |
| | 2016.04-2022.12 | 6MT | F | R | Bus FWD AHX (DW10FD) | For vehicles with standard suspension | GDS82847 | Drive Shaft | | 28 | 37 | 58.6 | 93 | 1005 | |
| | 2016.04-2022.12 | 6MT | F | R | Bus FWD AHX (DW10FD) | For vehicles with increased ground clearance,Reinforced wheel suspension | GDS83775 | Drive Shaft | | 28 | 37 | 58.5 | 92.5 | 1002 | |
| | 2016.04-2022.12 | 6MT | F | L/R | Bus FWD AHX (DW10FD) | For vehicles with increased ground clearance,Reinforced wheel suspension | GCO82483 | Outer Joint | | 28 | 36 | 58.5 | 92.5 | 60.5 | I |
| | 2016.04-2022.12 | 6MT | F | L | Bus FWD AHX (DW10FD) | For vehicles with increased ground clearance,Reinforced wheel suspension | GCI82363 | Inner Joint | | 37 | 36 | 40 | 68 | 108 | |
| | 2016.04-2022.12 | 6MT | F | R | Bus FWD AHX (DW10FD) | For vehicles with increased ground clearance,Reinforced wheel suspension | GCI82364 | Inner Joint | | 37 | 36 | 32 | 400 | 108 | |
| 2.0 (130 kw) | 2016.04-2025.04 | 6AT | F | L | Bus FWD AHH (DW10FC);EHZ (DW10FDCU) | For vehicles with standard suspension | GDS56191 | Drive Shaft | | 28 | 37 | 58.6 | 93 | 649 | |
| | 2016.04-2025.04 | 6AT | F | R | Bus FWD AHH (DW10FC);EHZ (DW10FDCU) | For vehicles with standard suspension | GDS56190 | Drive Shaft | | 28 | 37 | 58.6 | 93 | 989 | |
| | 2016.04-2025.04 | 6AT | F | L/R | Bus FWD AHH (DW10FC);EHZ (DW10FDCU) | For vehicles with standard suspension | GCO82805 | Outer Joint | | 28 | 39 | 58.6 | 93 | 63 | I |
| | 2016.04-2025.04 | 6AT | F | L | Bus FWD AHH (DW10FC);EHZ (DW10FDCU) | For vehicles with standard suspension | GCI10120 | Inner Joint | | 37 | 39 | 42.2 | 60 | 95.5 | |
| | 2016.04-2025.04 | 6AT | F | R | Bus FWD AHH (DW10FC);EHZ (DW10FDCU) | For vehicles with standard suspension | GCI45033 | Inner Joint | | 37 | 39 | | 379 | 96 | |
| **Synergie** | | | | | | | | | | | | | | | |
| 1.8 (73 kw) | 1997.05-2002.07 | 5MT | F | L | MPV FWD XU7JP | | GDS10082 | Drive Shaft | 48T | 27 | 24 | 59 | 82 | 648 | |
| | 1997.05-2002.07 | 5MT | F | R | MPV FWD XU7JP | | GDS10081 | Drive Shaft | 48T | 27 | 24 | 59 | 82 | 935 | |
| | 1997.05-2002.07 | 5MT | F | R | MPV FWD XU7JP | | GCI10004 | Inner Joint | | 24 | 34 | 29.8 | 348 | 99.5 | |
| | 1997.05-2002.07 | MT | F | L | MPV FWD XU7JP | Trans. code:BE3 | GDS10112 | Drive Shaft | | 27 | 24 | 59 | 82 | 648 | |
| | 1997.05-2002.07 | MT | F | L/R | MPV FWD XU7JP | | GCO10018 | Outer Joint | 48T | 27 | 34 | 61 | 82 | 56.5 | I |
| | 1997.05-2002.07 | MT | F | L/R | MPV FWD XU7JP | Trans. code:BE3R | GCO10059 | Outer Joint | 48T | 27 | 34 | 59 | 82 | 56.5 | I |
| 1.9 (66 kw) | 1994.11-2002.07 | 5MT | F | L | MPV FWD XUD9TE | | GDS10016 | Drive Shaft | 48T | 27 | 37 | 59 | 82 | 641 | |
| | 1994.11-2002.07 | 5MT | F | L | MPV FWD XUD9TE | | GDS10072 | Drive Shaft | | 27 | 37 | 59 | 82 | 641 | |
| | 1994.11-2002.07 | 5MT | F | R | MPV FWD XUD9TE | | GDS10014 | Drive Shaft | 48T | 27 | 37 | 59 | 82 | 947 | |
| | 1994.11-2002.07 | 5MT | F | R | MPV FWD XUD9TE | | GDS10155 | Drive Shaft | | 27 | 37 | 59 | 82 | 947 | |
| | 1994.11-2002.07 | 5MT | F | L/R | MPV FWD XUD9TE | | GCO10014 | Outer Joint | | 27 | 39 | 59 | 82 | 63 | I |
| | 1994.11-2002.07 | 5MT | F | L/R | MPV FWD XUD9TE | | GCO10015 | Outer Joint | 48T | 27 | 39 | 59 | 82 | 63 | I |
| | 1994.11-2002.07 | 5MT | F | L | MPV FWD XUD9TE | | GCI10015 | Inner Joint | | 37 | 39 | 40 | 68.5 | 104 | |
| | 1994.11-2002.07 | 5MT | F | R | MPV FWD XUD9TE | | GCI10034 | Inner Joint | | 37 | 39 | 31.9 | 369.5 | 99 | |
| 2.0 (80 kw) | 1999.09-2003.02 | 5MT | F | L | MPV Van FWD DW10ATED4 | | GDS10264 | Drive Shaft | 48T | 27 | 37 | 59 | 82 | 630 | |
| | 1999.09-2003.02 | 5MT | F | R | MPV Van FWD DW10ATED4 | | GDS10057 | Drive Shaft | | 27 | 37 | 59 | 82 | 960 | |
| | 1999.09-2003.02 | 5MT | F | R | MPV Van FWD DW10ATED4 | | GDS45120 | Drive Shaft | 48T | 27 | 37 | 59 | 82 | 960 | |
| | 1999.09-2003.02 | 5MT | F | L/R | MPV Van FWD DW10ATED4 | | GCO10015 | Outer Joint | 48T | 27 | 39 | 59 | 82 | 63 | I |
| | 1999.09-2003.02 | 5MT | F | R | MPV Van FWD DW10ATED4 | | GCI10034 | Inner Joint | | 37 | 39 | 31.9 | 369.5 | 99 | |
| 2.0 (81 kw) | 2000.10-2001.12 | 5MT | F | L | MPV FWD DW10ATED | | GDS10264 | Drive Shaft | 48T | 27 | 37 | 59 | 82 | 630 | |
| | 2000.10-2001.12 | 5MT | F | L | MPV FWD DW10ATED | | GDS10430 | Drive Shaft | | 27 | 37 | 59 | 82 | 630 | |
| | 2000.10-2001.12 | 5MT | F | R | MPV FWD DW10ATED | | GDS10057 | Drive Shaft | | 27 | 37 | 59 | 82 | 960 | |
| | 2000.10-2001.12 | 5MT | F | R | MPV FWD DW10ATED | | GDS45120 | Drive Shaft | 48T | 27 | 37 | 59 | 82 | 960 | |
| | 2000.10-2001.12 | 5MT | F | L/R | MPV FWD DW10ATED | | GCO10014 | Outer Joint | | 27 | 39 | 59 | 82 | 63 | I |
| | 2000.10-2001.12 | 5MT | F | L/R | MPV FWD DW10ATED | | GCO10015 | Outer Joint | 48T | 27 | 39 | 59 | 82 | 63 | I |
| | 2000.10-2001.12 | 5MT | F | L | MPV FWD DW10ATED | | GCI10015 | Inner Joint | | 37 | 39 | 40 | 68.5 | 104 | |
| | 2000.10-2001.12 | 5MT | F | R | MPV FWD DW10ATED | | GCI10034 | Inner Joint | | 37 | 39 | 31.9 | 369.5 | 99 | |
| 2.0 (97 kw) | 1998.05-2000.04 | 5MT | F | L | MPV Van FWD XU10J4R | | GDS10016 | Drive Shaft | 48T | 27 | 37 | 59 | 82 | 641 | |
| | 1998.05-2000.04 | 5MT | F | L | MPV Van FWD XU10J4R | | GDS10072 | Drive Shaft | | 27 | 37 | 59 | 82 | 641 | |
| | 1998.05-2000.04 | 5MT | F | R | MPV Van FWD XU10J4R | | GDS10014 | Drive Shaft | 48T | 27 | 37 | 59 | 82 | 947 | |
| | 1998.05-2000.04 | 5MT | F | R | MPV Van FWD XU10J4R | | GDS10155 | Drive Shaft | | 27 | 37 | 59 | 82 | 947 | |
| | 1998.05-2000.04 | 5MT | F | L/R | MPV Van FWD XU10J4R | | GCO10015 | Outer Joint | 48T | 27 | 39 | 59 | 82 | 63 | I |
| | 1998.05-2000.04 | | F | R | MPV Van FWD XU10J4R | | GCI10034 | Inner Joint | | 37 | 39 | 31.9 | 369.5 | 99 | |
| **Xantia** | | | | | | | | | | | | | | | |
| 1.6 (65 kw) | 1993.03-2001.03 | AT/MT | F | L/R | Hatchback FWD XU5JP | Date from:1994.01 | GCO10024 | Outer Joint | 48T | 25 | 34 | 55.7 | 79 | 55 | I |
| | 1993.03-2001.03 | AT/MT | F | L/R | Hatchback FWD XU5JP | Date from:1994.01 | GCO10043 | Outer Joint | | 25 | 34 | 54.8 | 78.5 | 56 | I |
| | 1993.03-2001.03 | MT | F | L | Hatchback FWD XU5JP | Date to:1995.07 | GDS10194 | Drive Shaft | 48T | 25 | 24 | 55.7 | 79 | 620 | |
| | 1993.03-2001.03 | MT | F | R | Hatchback FWD XU5JP | | GDS10195 | Drive Shaft | 48T | 25 | 24 | 55.7 | 79 | 893 | |
| | 1993.03-2001.03 | MT | F | R | Hatchback FWD XU5JP | Date from:1995.07 | GDS10202 | Drive Shaft | 48T | 25 | 24 | 55.7 | 79 | 892 | |
| | 1993.03-2001.03 | MT | F | L/R | Hatchback FWD XU5JP | | GCO10002 | Outer Joint | | 25 | 23 | 54.8 | 78.5 | 56 | I |
| | 1993.03-2001.03 | MT | F | L/R | Hatchback FWD XU5JP | Chassis no. to:6443 | GCO10004 | Outer Joint | 48T | 25 | 23 | 54.8 | 78.5 | 56 | I |
| | 1993.03-2001.03 | | F | | Hatchback FWD XU5JP | | GCO10027 | Outer Joint | 48T | 25 | 34 | 55.7 | 79 | 55 | I |
| | 1993.03-2001.03 | | F | | Hatchback FWD XU5JP | | GCO10042 | Outer Joint | | 25 | 34 | 54.8 | 78.5 | 56 | I |
| | 1993.03-2001.03 | | F | | Hatchback FWD XU5JP | | GCO45035 | Outer Joint | 48T | 25 | 34 | 58 | 79 | 55.5 | I |
| 1.8 (66 kw) | 1996.11-2001.12 | 5MT | F | L | Estate FWD XU7JB | | GDS10194 | Drive Shaft | 48T | 25 | 24 | 55.7 | 79 | 620 | |
| | 1996.11-2001.12 | 5MT | F | R | Estate FWD XU7JB | | GDS10202 | Drive Shaft | 48T | 25 | 24 | 55.7 | 79 | 892 | |
| | 1996.11-2001.12 | AT/MT | F | L/R | Estate FWD XU7JB | | GCO10002 | Outer Joint | | 25 | 23 | 54.8 | 78.5 | 56 | I |
| | 1996.11-2001.12 | AT/MT | F | L/R | Estate FWD XU7JB | | GCO10004 | Outer Joint | 48T | 25 | 23 | 54.8 | 78.5 | 56 | I |
| | 1996.11-2001.12 | | F | | Estate FWD XU7JB | | GCO10027 | Outer Joint | 48T | 25 | 34 | 55.7 | 79 | 55 | I |
| | 1996.11-2001.12 | | F | | Estate FWD XU7JB | | GCO10042 | Outer Joint | | 25 | 34 | 54.8 | 78.5 | 56 | I |
| | 1996.11-2001.12 | | F | | Estate FWD XU7JB | | GCO45035 | Outer Joint | 48T | 25 | 34 | 58 | 79 | 55.5 | I |
| | 1996.11-2003.04 | AT/MT | F | L/R | Hatchback FWD XU7JB | | GCO10002 | Outer Joint | | 25 | 23 | 54.8 | 78.5 | 56 | I |

| | YEAR | TRANSM. | F/R | L/R | BODY STYLE & DRIVE TYPE & ENGINE | REMARKS | G-AP Ref. | PRODUCT | ABS | Technical Specifications A | B | C | H | L | P |
|---|---|---|---|---|---|---|---|---|---|---|---|---|---|---|---|
| **CITROËN** | | | | | | | | | | | | | | | |
| **Xantia** | | | | | | | | | | | | | | | |
| 1.8 (66 kw) | 1996.11-2003.04 | AT/MT | F | L/R | Hatchback FWD XU7JB | | GCO10004 | Outer Joint | 48T | 25 | 23 | 54.8 | 78.5 | 56 | I |
| | 1996.11-2003.04 | MT | F | R | Hatchback FWD XU7JB | | GDS10202 | Drive Shaft | 48T | 25 | 24 | 55.7 | 79 | 892 | |
| 1.8 (74 kw) | 1993.03-1998.01 | AT/MT | F | L/R | Hatchback FWD XU7JP | | GCO10004 | Outer Joint | 48T | 25 | 23 | 54.8 | 78.5 | 56 | I |
| | 1993.03-1998.01 | AT/MT | F | L/R | Hatchback FWD XU7JP | | GCO10024 | Outer Joint | 48T | 25 | 34 | 55.7 | 79 | 55 | I |
| | 1993.03-1998.01 | MT | F | L | Hatchback FWD XU7JP | Date to:1995.07 | GDS10194 | Drive Shaft | 48T | 25 | 24 | 55.7 | 79 | 620 | |
| | 1993.03-1998.01 | MT | F | R | Hatchback FWD XU7JP | Date to:1995.07 | GDS10195 | Drive Shaft | 48T | 25 | 24 | 55.7 | 79 | 893 | |
| | 1993.03-1998.01 | MT | F | R | Hatchback FWD XU7JP | Date from:1995.07 | GDS10202 | Drive Shaft | 48T | 25 | 24 | 55.7 | 79 | 892 | |
| | 1993.03-1998.01 | MT | F | L/R | Hatchback FWD XU7JP | | GCO10002 | Outer Joint | | 25 | 23 | 54.8 | 78.5 | 56 | I |
| | 1993.03-1998.01 | | F | | Hatchback FWD XU7JP | | GCO10027 | Outer Joint | 48T | 25 | 34 | 55.7 | 79 | 55 | I |
| | 1993.03-1998.01 | | F | | Hatchback FWD XU7JP | | GCO10042 | Outer Joint | | 25 | 34 | 54.8 | 78.5 | 56 | I |
| | 1993.03-1998.01 | | F | | Hatchback FWD XU7JP | | GCO45035 | Outer Joint | 48T | 25 | 34 | 58 | 79 | 55.5 | I |
| | 1995.06-1998.01 | AT/MT | F | L/R | Estate FWD XU7JP | | GCO10002 | Outer Joint | | 25 | 23 | 54.8 | 78.5 | 56 | I |
| | 1995.06-1998.01 | AT/MT | F | L/R | Estate FWD XU7JP | | GCO10004 | Outer Joint | 48T | 25 | 23 | 54.8 | 78.5 | 56 | I |
| | 1995.06-1998.01 | AT/MT | F | L/R | Estate FWD XU7JP | | GCO10024 | Outer Joint | 48T | 25 | 34 | 55.7 | 79 | 55 | I |
| | 1995.06-1998.01 | MT | F | L | Estate FWD XU7JP | | GDS10194 | Drive Shaft | 48T | 25 | 24 | 55.7 | 79 | 620 | |
| | 1995.06-1998.01 | MT | F | R | Estate FWD XU7JP | | GDS10195 | Drive Shaft | 48T | 25 | 24 | 55.7 | 79 | 893 | |
| | 1995.06-1998.01 | | F | | Estate FWD XU7JP | | GCO10027 | Outer Joint | 48T | 25 | 34 | 55.7 | 79 | 55 | I |
| | 1995.06-1998.01 | | F | | Estate FWD XU7JP | | GCO10042 | Outer Joint | | 25 | 34 | 54.8 | 78.5 | 56 | I |
| | 1995.06-1998.01 | | F | | Estate FWD XU7JP | | GCO45035 | Outer Joint | 48T | 25 | 34 | 58 | 79 | 55.5 | I |
| 1.8 (81 kw) | 1995.06-2001.12 | MT | F | R | Estate FWD XU7JP4 | Date to:2001.12 | GDS10202 | Drive Shaft | 48T | 25 | 24 | 55.7 | 79 | 892 | |
| | 1995.06-2001.12 | MT | F | L/R | Estate FWD XU7JP4 | Date to:2001.12 | GCO10002 | Outer Joint | | 25 | 23 | 54.8 | 78.5 | 56 | I |
| | 1995.06-2001.12 | MT | F | L/R | Estate FWD XU7JP4 | Date to:2001.12 | GCO10024 | Outer Joint | 48T | 25 | 34 | 55.7 | 79 | 55 | I |
| | 1995.06-2001.12 | | F | | Estate FWD XU7JP4 | | GCO10027 | Outer Joint | 48T | 25 | 34 | 55.7 | 79 | 55 | I |
| | 1995.06-2001.12 | | F | | Estate FWD XU7JP4 | | GCO10042 | Outer Joint | | 25 | 34 | 54.8 | 78.5 | 56 | I |
| | 1995.06-2001.12 | | F | | Estate FWD XU7JP4 | | GCO45035 | Outer Joint | 48T | 25 | 34 | 58 | 79 | 55.5 | I |
| | 1995.06-2001.12 | AT/MT | F | L/R | Hatchback FWD XU7JP4 | | GCO10002 | Outer Joint | | 25 | 23 | 54.8 | 78.5 | 56 | I |
| | 1995.06-2001.12 | AT/MT | F | L/R | Hatchback FWD XU7JP4 | | GCO10024 | Outer Joint | 48T | 25 | 34 | 55.7 | 79 | 55 | I |
| | 1995.06-2001.12 | MT | F | R | Hatchback FWD XU7JP4 | | GDS10202 | Drive Shaft | 48T | 25 | 24 | 55.7 | 79 | 892 | |
| | 1995.06-2001.12 | | F | L/R | Hatchback FWD XU7JP4 | | GCO10042 | Outer Joint | | 25 | 34 | 54.8 | 78.5 | 56 | I |
| | 1995.06-2001.12 | | F | L/R | Hatchback FWD XU7JP4 | | GCO45035 | Outer Joint | 48T | 25 | 34 | 58 | 79 | 55.5 | I |
| | 1995.06-2001.12 | | F | | Hatchback FWD XU7JP4 | | GCO10027 | Outer Joint | 48T | 25 | 34 | 55.7 | 79 | 55 | I |
| 1.9 (50 kw) | 1994.06-1998.01 | AT/MT | F | L/R | Hatchback FWD XUD9 | | GCO10002 | Outer Joint | | 25 | 23 | 54.8 | 78.5 | 56 | I |
| | 1994.06-1998.01 | MT | F | L | Hatchback FWD XUD9 | Date to:1995.07 | GDS10194 | Drive Shaft | 48T | 25 | 24 | 55.7 | 79 | 620 | |
| | 1994.06-1998.01 | MT | F | R | Hatchback FWD XUD9 | | GDS10195 | Drive Shaft | 48T | 25 | 24 | 55.7 | 79 | 893 | |
| | 1994.06-1998.01 | MT | F | R | Hatchback FWD XUD9 | Date from:1995.07 | GDS10202 | Drive Shaft | 48T | 25 | 24 | 55.7 | 79 | 892 | |
| | 1994.06-1998.01 | | F | | Hatchback FWD XUD9 | | GCO10027 | Outer Joint | 48T | 25 | 34 | 55.7 | 79 | 55 | I |
| | 1994.06-1998.01 | | F | | Hatchback FWD XUD9 | | GCO10042 | Outer Joint | | 25 | 34 | 54.8 | 78.5 | 56 | I |
| 1.9 (51 kw) | 1993.05-1996.10 | MT | F | L | Hatchback FWD XUD9/XUD9A | Date to:1995.07 | GDS10194 | Drive Shaft | 48T | 25 | 24 | 55.7 | 79 | 620 | |
| | 1993.05-1996.10 | MT | F | R | Hatchback FWD XUD9/XUD9A | | GDS10195 | Drive Shaft | 48T | 25 | 24 | 55.7 | 79 | 893 | |
| | 1993.05-1996.10 | MT | F | R | Hatchback FWD XUD9/XUD9A | Date from:1995.07;Date to:1996.10 | GDS10202 | Drive Shaft | 48T | 25 | 24 | 55.7 | 79 | 892 | |
| | 1993.05-1996.10 | MT | F | L/R | Hatchback FWD XUD9/XUD9A | Date to:1996.10 | GCO10002 | Outer Joint | | 25 | 23 | 54.8 | 78.5 | 56 | I |
| | 1993.05-1996.10 | | F | | Hatchback FWD XUD9/XUD9A | | GCO10027 | Outer Joint | 48T | 25 | 34 | 55.7 | 79 | 55 | I |
| | 1993.05-1996.10 | | F | | Hatchback FWD XUD9/XUD9A | | GCO10042 | Outer Joint | | 25 | 34 | 54.8 | 78.5 | 56 | I |
| 1.9 (55 kw) | 1996.02-2000.12 | 5MT | F | R | Hatchback FWD XUD9SD | | GDS10202 | Drive Shaft | 48T | 25 | 24 | 55.7 | 79 | 892 | |
| | 1996.02-2000.12 | MT | F | L/R | Hatchback FWD XUD9SD | Date to:2000.12 | GCO10002 | Outer Joint | | 25 | 23 | 54.8 | 78.5 | 56 | I |
| | 1996.02-2000.12 | | F | | Hatchback FWD XUD9SD | | GCO10027 | Outer Joint | 48T | 25 | 34 | 55.7 | 79 | 55 | I |
| | 1996.02-2000.12 | | F | | Hatchback FWD XUD9SD | | GCO10042 | Outer Joint | | 25 | 34 | 54.8 | 78.5 | 56 | I |
| | 1996.11-2000.12 | MT | F | R | Estate FWD XUD9SD | Date to:2000.12 | GDS10202 | Drive Shaft | 48T | 25 | 24 | 55.7 | 79 | 892 | |
| | 1996.11-2000.12 | MT | F | L/R | Estate FWD XUD9SD | | GCO10002 | Outer Joint | | 25 | 23 | 54.8 | 78.5 | 56 | I |
| | 1996.11-2000.12 | | F | | Estate FWD XUD9SD | | GCO10027 | Outer Joint | 48T | 25 | 34 | 55.7 | 79 | 55 | I |
| | 1996.11-2000.12 | | F | | Estate FWD XUD9SD | | GCO10042 | Outer Joint | | 25 | 34 | 54.8 | 78.5 | 56 | I |
| 1.9 (66 kw) | 1993.05-2003.04 | 4AT/5MT | F | | Hatchback FWD XUD9BTF/XUD9TE/XUD9TF | | GCO10022 | Outer Joint | 29W | 25 | 34 | 55.7 | 79 | 55 | I |
| | 1993.05-2003.04 | 4AT/5MT | F | | Hatchback FWD XUD9BTF/XUD9TE/XUD9TF | | GCO45003 | Outer Joint | 29T | 25 | 34 | 58 | 79 | 55.5 | I |
| | 1993.05-2003.04 | 4AT/5MT | F | | Hatchback FWD XUD9BTF/XUD9TE/XUD9TF | ABS Ring Ø [mm]:99 | GCO45035 | Outer Joint | 48T | 25 | 34 | 58 | 79 | 55.5 | I |
| | 1993.05-2003.04 | AT/MT | F | L/R | Hatchback FWD XUD9BTF/XUD9TE/XUD9TF | | GCO10002 | Outer Joint | | 25 | 23 | 54.8 | 78.5 | 56 | I |
| | 1993.05-2003.04 | AT/MT | F | L/R | Hatchback FWD XUD9BTF/XUD9TE/XUD9TF | | GCO10004 | Outer Joint | 48T | 25 | 23 | 54.8 | 78.5 | 56 | I |
| | 1993.05-2003.04 | AT/MT | F | L/R | Hatchback FWD XUD9BTF/XUD9TE/XUD9TF | ABS Ring Ø [mm]:99 | GCO10024 | Outer Joint | 48T | 25 | 34 | 55.7 | 79 | 55 | I |
| | 1993.05-2003.04 | AT/MT | F | L/R | Hatchback FWD XUD9BTF/XUD9TE/XUD9TF | ABS Ring Ø [mm]:90 | GCO10027 | Outer Joint | 48T | 25 | 34 | 55.7 | 79 | 55 | I |
| | 1993.05-2003.04 | AT/MT | F | L/R | Hatchback FWD XUD9BTF/XUD9TE/XUD9TF | | GCO10043 | Outer Joint | | 25 | 34 | 54.8 | 78.5 | 56 | I |
| | 1993.05-2003.04 | MT | F | L | Hatchback FWD XUD9BTF/XUD9TE/XUD9TF | Date from:1995.07 | GDS10189 | Drive Shaft | 48T | 25 | 24 | 54.8 | 78.5 | 605 | |
| | 1993.05-2003.04 | MT | F | L | Hatchback FWD XUD9BTF/XUD9TE/XUD9TF | Date to:1999.08 | GDS10196 | Drive Shaft | | 25 | 24 | 54.8 | 78.5 | 608 | |
| | 1993.05-2003.04 | MT | F | R | Hatchback FWD XUD9BTF/XUD9TE/XUD9TF | Date to:1995.07 | GDS10195 | Drive Shaft | 48T | 25 | 24 | 55.7 | 79 | 893 | |
| | 1993.05-2003.04 | MT | F | R | Hatchback FWD XUD9BTF/XUD9TE/XUD9TF | Date from:1995.07 | GDS10202 | Drive Shaft | 48T | 25 | 24 | 55.7 | 79 | 892 | |
| | 1993.05-2003.04 | MT | F | L | Hatchback FWD XUD9BTF/XUD9TE/XUD9TF | Date from:1995.07 | GCI10070 | Inner Joint | | 24 | 34 | 40 | 62 | 88 | |
| | 1995.06-2003.04 | AT/MT | F | L/R | Estate FWD XUD9BTF/XUD9TE | | GCO10002 | Outer Joint | | 25 | 23 | 54.8 | 78.5 | 56 | I |

| | YEAR | TRANSM. | F/R | L/R | BODY STYLE & DRIVE TYPE & ENGINE | REMARKS | G-AP Ref. | PRODUCT | ABS | Technical Specifications A | B | C | H | L | P |
|---|---|---|---|---|---|---|---|---|---|---|---|---|---|---|---|
| **CITROËN** **Xantia** | | | | | | | | | | | | | | | |
| 1.9 (66 kw) | 1995.06-2003.04 | AT/MT | F | L/R | Estate FWD XUD9BTF/XUD9TE | | GCO10027 | Outer Joint | 48T | 25 | 34 | 55.7 | 79 | 55 | I |
| | 1995.06-2003.04 | MT | F | L | Estate FWD XUD9BTF/XUD9TE | | GDS10189 | Drive Shaft | 48T | 25 | 24 | 54.8 | 78.5 | 605 | |
| | 1995.06-2003.04 | MT | F | L | Estate FWD XUD9BTF/XUD9TE | Date to:1999.08 | GDS10196 | Drive Shaft | | 25 | 24 | 54.8 | 78.5 | 608 | |
| | 1995.06-2003.04 | MT | F | R | Estate FWD XUD9BTF/XUD9TE | Date to:1995.07 | GDS10195 | Drive Shaft | 48T | 25 | 24 | 55.7 | 79 | 893 | |
| | 1995.06-2003.04 | MT | F | R | Estate FWD XUD9BTF/XUD9TE | | GDS10202 | Drive Shaft | 48T | 25 | 24 | 55.7 | 79 | 892 | |
| | 1995.06-2003.04 | | F | | Estate FWD XUD9BTF/XUD9TE | | GCO10022 | Outer Joint | 29W | 25 | 34 | 55.7 | 79 | 55 | I |
| | 1995.06-2003.04 | | F | | Estate FWD XUD9BTF/XUD9TE | | GCO10042 | Outer Joint | | 25 | 34 | 54.8 | 78.5 | 56 | I |
| | 1995.06-2003.04 | | F | | Estate FWD XUD9BTF/XUD9TE | | GCO45003 | Outer Joint | 29T | 25 | 34 | 58 | 79 | 55.5 | I |
| | 1995.06-2003.04 | | F | | Estate FWD XUD9BTF/XUD9TE | | GCO45035 | Outer Joint | 48T | 25 | 34 | 58 | 79 | 55.5 | I |
| 2.0 (66 kw) | 1999.06-2003.04 | 5MT | F | L | Estate FWD DW10TD | | GDS10189 | Drive Shaft | 48T | 25 | 24 | 54.8 | 78.5 | 605 | |
| | 1999.06-2003.04 | 5MT | F | R | Estate FWD DW10TD | | GDS10202 | Drive Shaft | 48T | 25 | 24 | 55.7 | 79 | 892 | |
| | 1999.06-2003.04 | 5MT | F | L | Estate FWD DW10TD | | GCI10070 | Inner Joint | | 24 | 34 | 40 | 62 | 88 | |
| | 1999.06-2003.04 | AT/MT | F | L/R | Estate FWD DW10TD | | GCO10024 | Outer Joint | 48T | 25 | 34 | 55.7 | 79 | 55 | I |
| | 1999.06-2003.04 | AT/MT | F | L/R | Estate FWD DW10TD | | GCO45035 | Outer Joint | 48T | 25 | 34 | 58 | 79 | 55.5 | I |
| | 1999.06-2003.04 | | F | | Estate FWD DW10TD | | GCO10042 | Outer Joint | | 25 | 34 | 54.8 | 78.5 | 56 | I |
| | 1999.06-2003.04 | 5MT | F | L | Estate Van FWD DW10TD | | GDS10189 | Drive Shaft | 48T | 25 | 24 | 54.8 | 78.5 | 605 | |
| | 1999.06-2003.04 | 5MT | F | R | Estate Van FWD DW10TD | | GDS10202 | Drive Shaft | 48T | 25 | 24 | 55.7 | 79 | 892 | |
| | 1999.06-2003.04 | 5MT | F | L | Estate Van FWD DW10TD | | GCI10070 | Inner Joint | | 24 | 34 | 40 | 62 | 88 | |
| | 1999.06-2003.04 | 5MT | F | L | Hatchback FWD DW10TD | | GDS10189 | Drive Shaft | 48T | 25 | 24 | 54.8 | 78.5 | 605 | |
| | 1999.06-2003.04 | 5MT | F | R | Hatchback FWD DW10TD | | GDS10202 | Drive Shaft | 48T | 25 | 24 | 55.7 | 79 | 892 | |
| | 1999.06-2003.04 | 5MT | F | L | Hatchback FWD DW10TD | | GCI10070 | Inner Joint | | 24 | 34 | 40 | 62 | 88 | |
| | 1999.06-2003.04 | AT/MT | F | L/R | Hatchback FWD DW10TD | | GCO10024 | Outer Joint | 48T | 25 | 34 | 55.7 | 79 | 55 | I |
| | 1999.06-2003.04 | AT/MT | F | L/R | Hatchback FWD DW10TD | | GCO45035 | Outer Joint | 48T | 25 | 34 | 58 | 79 | 55.5 | I |
| | 1999.06-2003.04 | | F | | Hatchback FWD DW10TD | | GCO10042 | Outer Joint | | 25 | 34 | 54.8 | 78.5 | 56 | I |
| 2.0 (80 kw) | 1998.07-2003.04 | 5MT | F | L | Estate FWD DW10ATED | | GDS45178 | Drive Shaft | 48T | 25 | 37 | 59 | 89 | 621 | |
| | 1998.07-2003.04 | 5MT | F | R | Estate FWD DW10ATED | | GDS45179 | Drive Shaft | 48T | 25 | 37 | 59 | 89 | 918 | |
| | 1998.07-2003.04 | 5MT | F | L | Estate FWD DW10ATED | | GCI45032 | Inner Joint | | 37 | 39 | 40 | 68.5 | 100 | |
| | 1998.07-2003.04 | AT/MT | F | L/R | Estate FWD DW10ATED | | GCO10019 | Outer Joint | 48T | 25 | 39 | 59 | 89 | 63.5 | I |
| | 1998.07-2003.04 | 5MT | F | L | Hatchback FWD DW10ATED | | GDS45178 | Drive Shaft | 48T | 25 | 37 | 59 | 89 | 621 | |
| | 1998.07-2003.04 | 5MT | F | R | Hatchback FWD DW10ATED | | GDS45179 | Drive Shaft | 48T | 25 | 37 | 59 | 89 | 918 | |
| | 1998.07-2003.04 | 5MT | F | L | Hatchback FWD DW10ATED | | GCI45032 | Inner Joint | | 37 | 39 | 40 | 68.5 | 100 | |
| | 1998.07-2003.04 | AT/MT | F | L/R | Hatchback FWD DW10ATED | | GCO10019 | Outer Joint | 48T | 25 | 39 | 59 | 89 | 63.5 | I |
| 2.0 (89 kw) | 1993.03-1999.08 | MT | F | L | Hatchback FWD XU10J2C | Date to:1999.08 | GDS10189 | Drive Shaft | 48T | 25 | 24 | 54.8 | 78.5 | 605 | |
| | 1993.03-1999.08 | MT | F | L | Hatchback FWD XU10J2C | Date to:1999.08 | GDS10196 | Drive Shaft | | 25 | 24 | 54.8 | 78.5 | 608 | |
| | 1993.03-1999.08 | MT | F | R | Hatchback FWD XU10J2C | Date to:1995.07 | GDS10195 | Drive Shaft | 48T | 25 | 24 | 55.7 | 79 | 893 | |
| | 1993.03-1999.08 | MT | F | R | Hatchback FWD XU10J2C | Date from:1995.07;Date to:1999.08 | GDS10202 | Drive Shaft | 48T | 25 | 24 | 55.7 | 79 | 892 | |
| | 1993.03-1999.08 | MT | F | L/R | Hatchback FWD XU10J2C | Date to:1999.08 | GCO10002 | Outer Joint | | 25 | 23 | 54.8 | 78.5 | 56 | I |
| | 1993.03-1999.08 | MT | F | L/R | Hatchback FWD XU10J2C | Date to:1999.08 | GCO10024 | Outer Joint | 48T | 25 | 34 | 55.7 | 79 | 55 | I |
| | 1993.03-1999.08 | | F | | Hatchback FWD XU10J2C | | GCO10027 | Outer Joint | 48T | 25 | 34 | 55.7 | 79 | 55 | I |
| | 1993.03-1999.08 | | F | | Hatchback FWD XU10J2C | | GCO10042 | Outer Joint | | 25 | 34 | 54.8 | 78.5 | 56 | I |
| | 1995.06-2003.04 | MT | F | L | Estate FWD XU10J2C | | GDS10189 | Drive Shaft | 48T | 25 | 24 | 54.8 | 78.5 | 605 | |
| | 1995.06-2003.04 | MT | F | L | Estate FWD XU10J2C | Date to:1999.08 | GDS10196 | Drive Shaft | | 25 | 24 | 54.8 | 78.5 | 608 | |
| | 1995.06-2003.04 | MT | F | R | Estate FWD XU10J2C | Date to:1995.07 | GDS10195 | Drive Shaft | 48T | 25 | 24 | 55.7 | 79 | 893 | |
| | 1995.06-2003.04 | MT | F | R | Estate FWD XU10J2C | | GDS10202 | Drive Shaft | 48T | 25 | 24 | 55.7 | 79 | 892 | |
| | 1995.06-2003.04 | MT | F | L/R | Estate FWD XU10J2C | | GCO10002 | Outer Joint | | 25 | 23 | 54.8 | 78.5 | 56 | I |
| | 1995.06-2003.04 | | F | L/R | Estate FWD XU10J2C | | GCO10042 | Outer Joint | | 25 | 34 | 54.8 | 78.5 | 56 | I |
| | 1995.06-2003.04 | | F | | Estate FWD XU10J2C | | GCO10027 | Outer Joint | 48T | 25 | 34 | 55.7 | 79 | 55 | I |
| 2.0 (97 kw) | 1995.06-2003.04 | AT/MT | F | L/R | Estate FWD XU10J4R | | GCO10002 | Outer Joint | | 25 | 23 | 54.8 | 78.5 | 56 | I |
| | 1995.06-2003.04 | AT/MT | F | L/R | Estate FWD XU10J4R | | GCO10024 | Outer Joint | 48T | 25 | 34 | 55.7 | 79 | 55 | I |
| | 1995.06-2003.04 | MT | F | L | Estate FWD XU10J4R | | GDS10189 | Drive Shaft | 48T | 25 | 24 | 54.8 | 78.5 | 605 | |
| | 1995.06-2003.04 | MT | F | R | Estate FWD XU10J4R | | GDS10202 | Drive Shaft | 48T | 25 | 24 | 55.7 | 79 | 892 | |
| | 1995.06-2003.04 | | F | | Estate FWD XU10J4R | | GCO10022 | Outer Joint | 29W | 25 | 34 | 55.7 | 79 | 55 | I |
| | 1995.06-2003.04 | | F | | Estate FWD XU10J4R | | GCO10042 | Outer Joint | | 25 | 34 | 54.8 | 78.5 | 56 | I |
| | 1995.06-2003.04 | | F | | Estate FWD XU10J4R | | GCO45003 | Outer Joint | 29T | 25 | 34 | 58 | 79 | 55.5 | I |
| | 1995.06-2003.04 | | F | | Estate FWD XU10J4R | | GCO45035 | Outer Joint | 48T | 25 | 34 | 58 | 79 | 55.5 | I |
| | 1995.06-2003.04 | AT/MT | F | L/R | Hatchback FWD XU10J4R | | GCO10002 | Outer Joint | | 25 | 23 | 54.8 | 78.5 | 56 | I |
| | 1995.06-2003.04 | AT/MT | F | L/R | Hatchback FWD XU10J4R | | GCO10024 | Outer Joint | 48T | 25 | 34 | 55.7 | 79 | 55 | I |
| | 1995.06-2003.04 | MT | F | R | Hatchback FWD XU10J4R | Date from:1995.07 | GDS10202 | Drive Shaft | 48T | 25 | 24 | 55.7 | 79 | 892 | |
| | 1995.06-2003.04 | MT | F | L | Hatchback FWD XU10J4R | Date from:1995.07 | GCI10070 | Inner Joint | | 24 | 34 | 40 | 62 | 88 | |
| | 1995.06-2003.04 | | F | | Hatchback FWD XU10J4R | | GCO10022 | Outer Joint | 29W | 25 | 34 | 55.7 | 79 | 55 | I |
| | 1995.06-2003.04 | | F | | Hatchback FWD XU10J4R | | GCO10042 | Outer Joint | | 25 | 34 | 54.8 | 78.5 | 56 | I |
| | 1995.06-2003.04 | | F | | Hatchback FWD XU10J4R | | GCO45003 | Outer Joint | 29T | 25 | 34 | 58 | 79 | 55.5 | I |
| | 1995.06-2003.04 | | F | | Hatchback FWD XU10J4R | | GCO45035 | Outer Joint | 48T | 25 | 34 | 58 | 79 | 55.5 | I |
| 2.0 (108 kw) | 1995.06-1999.08 | AT/MT | F | L/R | Hatchback FWD XU10J2TE | | GCO10019 | Outer Joint | 48T | 25 | 39 | 59 | 89 | 63.5 | I |
| | 1995.06-1999.08 | MT | F | L | Hatchback FWD XU10J2TE | | GDS45178 | Drive Shaft | 48T | 25 | 37 | 59 | 89 | 621 | |

| | YEAR | TRANSM. | F/R | L/R | BODY STYLE & DRIVE TYPE & ENGINE | REMARKS | G-AP Ref. | PRODUCT | ABS | Technical Specifications A | B | C | H | L | P |
|---|---|---|---|---|---|---|---|---|---|---|---|---|---|---|---|
| **CITROËN** | | | | | | | | | | | | | | | |
| **Xantia** | | | | | | | | | | | | | | | |
| 2.0 (108 kw) | 1995.06-1999.08 | MT | F | R | Hatchback FWD XU10J2TE | | GDS45179 | Drive Shaft | 48T | 25 | 37 | 59 | 89 | 918 | |
| | 1995.06-1999.08 | MT | F | L/R | Hatchback FWD XU10J2TE | Date to:1999.08 | GCO10002 | Outer Joint | | 25 | 23 | 54.8 | 78.5 | 56 | I |
| | 1995.06-1999.08 | MT | F | L/R | Hatchback FWD XU10J2TE | Date to:1999.08 | GCO10024 | Outer Joint | 48T | 25 | 34 | 55.7 | 79 | 55 | I |
| | 1995.06-2003.04 | AT/MT | F | L/R | Estate FWD XU10J2TE | | GCO10019 | Outer Joint | 48T | 25 | 39 | 59 | 89 | 63.5 | I |
| | 1995.06-2003.04 | MT | F | L | Estate FWD XU10J2TE | | GDS45178 | Drive Shaft | 48T | 25 | 37 | 59 | 89 | 621 | |
| | 1995.06-2003.04 | MT | F | R | Estate FWD XU10J2TE | | GDS45179 | Drive Shaft | 48T | 25 | 37 | 59 | 89 | 918 | |
| | 1995.06-2003.04 | MT | F | L/R | Estate FWD XU10J2TE | | GCO10002 | Outer Joint | | 25 | 23 | 54.8 | 78.5 | 56 | I |
| | 1995.06-2003.04 | MT | F | L/R | Estate FWD XU10J2TE | | GCO10024 | Outer Joint | 48T | 25 | 34 | 55.7 | 79 | 55 | I |
| 2.0 (110 kw) | 1994.06-1998.01 | MT | F | L | Hatchback FWD XU10J4D | Date from:1995.07;Date to:1995.07 | GDS10189 | Drive Shaft | 48T | 25 | 24 | 54.8 | 78.5 | 605 | |
| | 1994.06-1998.01 | MT | F | R | Hatchback FWD XU10J4D | Date to:1995.07 | GDS10195 | Drive Shaft | 48T | 25 | 24 | 55.7 | 79 | 893 | |
| | 1994.06-1998.01 | MT | F | R | Hatchback FWD XU10J4D | Date from:1995.07 | GDS10202 | Drive Shaft | 48T | 25 | 24 | 55.7 | 79 | 892 | |
| | 1994.06-1998.01 | | F | L/R | Hatchback FWD XU10J4D | | GCO10022 | Outer Joint | 29W | 25 | 34 | 55.7 | 79 | 55 | I |
| | 1994.06-1998.01 | | F | L/R | Hatchback FWD XU10J4D | | GCO10042 | Outer Joint | | 25 | 34 | 54.8 | 78.5 | 56 | I |
| | 1994.06-1998.01 | | F | L/R | Hatchback FWD XU10J4D | | GCO45003 | Outer Joint | 29T | 25 | 34 | 58 | 79 | 55.5 | I |
| | 1994.06-1998.01 | | F | L/R | Hatchback FWD XU10J4D | | GCO45035 | Outer Joint | 48T | 25 | 34 | 58 | 79 | 55.5 | I |
| 2.0 (112 kw) | 1993.03-1998.01 | MT | F | L | Hatchback FWD XU10J4D | | GDS10189 | Drive Shaft | 48T | 25 | 24 | 54.8 | 78.5 | 605 | |
| | 1993.03-1998.01 | MT | F | R | Hatchback FWD XU10J4D | Date to:1995.07 | GDS10195 | Drive Shaft | 48T | 25 | 24 | 55.7 | 79 | 893 | |
| | 1993.03-1998.01 | MT | F | R | Hatchback FWD XU10J4D | Date from:1995.07 | GDS10202 | Drive Shaft | 48T | 25 | 24 | 55.7 | 79 | 892 | |
| | 1993.03-1998.01 | | F | | Hatchback FWD XU10J4D | | GCO10022 | Outer Joint | 29W | 25 | 34 | 55.7 | 79 | 55 | I |
| | 1993.03-1998.01 | | F | | Hatchback FWD XU10J4D | | GCO10042 | Outer Joint | | 25 | 34 | 54.8 | 78.5 | 56 | I |
| | 1993.03-1998.01 | | F | | Hatchback FWD XU10J4D | | GCO45003 | Outer Joint | 29T | 25 | 34 | 58 | 79 | 55.5 | I |
| | 1993.03-1998.01 | | F | | Hatchback FWD XU10J4D | | GCO45035 | Outer Joint | 48T | 25 | 34 | 58 | 79 | 55.5 | I |
| 2.1 (80 kw) | 1995.06-1999.02 | 5MT | F | L | Hatchback FWD XUD11BTE | | GDS45178 | Drive Shaft | 48T | 25 | 37 | 59 | 89 | 621 | |
| | 1995.06-1999.02 | 5MT | F | R | Hatchback FWD XUD11BTE | | GDS45179 | Drive Shaft | 48T | 25 | 37 | 59 | 89 | 918 | |
| | 1995.06-1999.02 | 5MT | F | L/R | Hatchback FWD XUD11BTE | | GCO10019 | Outer Joint | 48T | 25 | 39 | 59 | 89 | 63.5 | I |
| | 1995.06-1999.02 | 5MT | F | L | Hatchback FWD XUD11BTE | | GCI45032 | Inner Joint | | 37 | 39 | 40 | 68.5 | 100 | |
| | 1996.06-1999.02 | AT/MT | F | L/R | Estate FWD XUD11BTE | | GCO10019 | Outer Joint | 48T | 25 | 39 | 59 | 89 | 63.5 | I |
| | 1996.06-1999.02 | MT | F | L | Estate FWD XUD11BTE | | GDS45178 | Drive Shaft | 48T | 25 | 37 | 59 | 89 | 621 | |
| | 1996.06-1999.02 | MT | F | R | Estate FWD XUD11BTE | | GDS45179 | Drive Shaft | 48T | 25 | 37 | 59 | 89 | 918 | |
| 3.0 (140 kw) | 1997.01-2003.04 | AT/MT | F | L | Hatchback FWD ES9J4 | | GDS45178 | Drive Shaft | 48T | 25 | 37 | 59 | 89 | 621 | |
| | 1997.01-2003.04 | AT/MT | F | R | Hatchback FWD ES9J4 | | GDS45179 | Drive Shaft | 48T | 25 | 37 | 59 | 89 | 918 | |
| | 1997.01-2003.04 | | F | | Hatchback FWD ES9J4 | | GCO10019 | Outer Joint | 48T | 25 | 39 | 59 | 89 | 63.5 | I |
| | 1998.01-2003.04 | AT/MT | F | L | Estate FWD ES9J4 | | GDS45178 | Drive Shaft | 48T | 25 | 37 | 59 | 89 | 621 | |
| | 1998.01-2003.04 | AT/MT | F | R | Estate FWD ES9J4 | | GDS45179 | Drive Shaft | 48T | 25 | 37 | 59 | 89 | 918 | |
| | 1998.01-2003.04 | AT/MT | F | L/R | Estate FWD ES9J4 | | GCO10019 | Outer Joint | 48T | 25 | 39 | 59 | 89 | 63.5 | I |
| **XM** | | | | | | | | | | | | | | | |
| 2.0 (97 kw) | 1994.08-2000.04 | AT/MT | F | L | Estate FWD XU10J4R | | GDS10441 | Drive Shaft | 48T | 28 | 37 | 58.5 | 88 | 623 | |
| | 1994.08-2000.04 | AT/MT | F | R | Estate FWD XU10J4R | | GDS10442 | Drive Shaft | 48T | 28 | 37 | 58 | 89 | 920 | |
| | 1994.08-2000.04 | AT/MT | F | L/R | Estate FWD XU10J4R | | GCO10021 | Outer Joint | 29T | 28 | 23 | 58 | 88.5 | 55 | I |
| | 1994.08-2000.04 | MT | F | L | Estate FWD XU10J4R | | GDS10083 | Drive Shaft | 48T | 28 | 24 | 58 | 88.5 | 651 | |
| | 1994.08-2000.04 | MT | F | R | Estate FWD XU10J4R | | GDS10084 | Drive Shaft | 48T | 28 | 24 | 58 | 88.5 | 942.5 | |
| | 1994.08-2000.04 | | F | L | Estate FWD XU10J4R | | GDS10113 | Drive Shaft | | 28 | 24 | 58 | 88.5 | 651 | |
| | 1994.08-2000.04 | | F | R | Estate FWD XU10J4R | | GDS10070 | Drive Shaft | 48T | 28 | 37 | 58 | 89 | 939 | |
| | 1994.08-2000.04 | | F | R | Estate FWD XU10J4R | | GDS10114 | Drive Shaft | | 28 | 24 | 58 | 88.5 | 942.5 | |
| | 1994.08-2000.04 | | F | | Estate FWD XU10J4R | | GCO10008 | Outer Joint | 48T | 28 | 27 | 58 | 89 | 63 | I |
| | 1994.08-2000.04 | AT/MT | F | L | Hatchback FWD XU10J4R | | GDS10441 | Drive Shaft | 48T | 28 | 37 | 58.5 | 88 | 623 | |
| | 1994.08-2000.04 | AT/MT | F | R | Hatchback FWD XU10J4R | | GDS10442 | Drive Shaft | 48T | 28 | 37 | 58 | 89 | 920 | |
| | 1994.08-2000.04 | AT/MT | F | L/R | Hatchback FWD XU10J4R | | GCO10021 | Outer Joint | 29T | 28 | 23 | 58 | 88.5 | 55 | I |
| | 1994.08-2000.04 | MT | F | L | Hatchback FWD XU10J4R | | GDS10083 | Drive Shaft | 48T | 28 | 24 | 58 | 88.5 | 651 | |
| | 1994.08-2000.04 | MT | F | R | Hatchback FWD XU10J4R | | GDS10084 | Drive Shaft | 48T | 28 | 24 | 58 | 88.5 | 942.5 | |
| | 1994.08-2000.04 | | F | L | Hatchback FWD XU10J4R | | GDS10113 | Drive Shaft | | 28 | 24 | 58 | 88.5 | 651 | |
| | 1994.08-2000.04 | | F | R | Hatchback FWD XU10J4R | | GDS10070 | Drive Shaft | 48T | 28 | 37 | 58 | 89 | 939 | |
| | 1994.08-2000.04 | | F | R | Hatchback FWD XU10J4R | | GDS10114 | Drive Shaft | | 28 | 24 | 58 | 88.5 | 942.5 | |
| | 1994.08-2000.04 | | F | | Hatchback FWD XU10J4R | | GCO10008 | Outer Joint | 48T | 28 | 27 | 58 | 89 | 63 | I |
| 2.0 (108 kw) | 1994.08-1999.07 | AT/MT | F | L | Estate FWD XU10J2TE | | GDS10441 | Drive Shaft | 48T | 28 | 37 | 58.5 | 88 | 623 | |
| | 1994.08-1999.07 | AT/MT | F | R | Estate FWD XU10J2TE | | GDS10442 | Drive Shaft | 48T | 28 | 37 | 58 | 89 | 920 | |
| | 1994.08-1999.07 | | F | R | Estate FWD XU10J2TE | | GDS10070 | Drive Shaft | 48T | 28 | 37 | 58 | 89 | 939 | |
| | 1994.08-1999.07 | | F | | Estate FWD XU10J2TE | | GCO10008 | Outer Joint | 48T | 28 | 27 | 58 | 89 | 63 | I |
| | 1994.08-1999.07 | | F | | Estate FWD XU10J2TE | | GCO10021 | Outer Joint | 29T | 28 | 23 | 58 | 88.5 | 55 | I |
| | 1994.08-1999.07 | AT/MT | F | L | Hatchback FWD XU10J2TE | | GDS10441 | Drive Shaft | 48T | 28 | 37 | 58.5 | 88 | 623 | |
| | 1994.08-1999.07 | AT/MT | F | R | Hatchback FWD XU10J2TE | | GDS10442 | Drive Shaft | 48T | 28 | 37 | 58 | 89 | 920 | |
| | 1994.08-1999.07 | | F | R | Hatchback FWD XU10J2TE | | GDS10070 | Drive Shaft | 48T | 28 | 37 | 58 | 89 | 939 | |
| | 1994.08-1999.07 | | F | | Hatchback FWD XU10J2TE | | GCO10008 | Outer Joint | 48T | 28 | 27 | 58 | 89 | 63 | I |
| | 1994.08-1999.07 | | F | | Hatchback FWD XU10J2TE | | GCO10021 | Outer Joint | 29T | 28 | 23 | 58 | 88.5 | 55 | I |
| 2.1 (60 kw) | 1994.08-1996.08 | AT/MT | F | L/R | Estate FWD XUD11A | transm. Type:ME/4HP | GCO10008 | Outer Joint | 48T | 28 | 27 | 58 | 89 | 63 | I |

| | YEAR | TRANSM. | F/R | L/R | BODY STYLE & DRIVE TYPE & ENGINE | REMARKS | G-AP Ref. | PRODUCT | ABS | Technical Specifications A | B | C | H | L | P |
|---|---|---|---|---|---|---|---|---|---|---|---|---|---|---|---|
| **CITROËN** | | | | | | | | | | | | | | | |
| **XM** | | | | | | | | | | | | | | | |
| 2.1 (60 kw) | 1994.08-1996.08 | AT/MT | F | L | Estate FWD XUD11A | | GCI10018 | Inner Joint | | 24 | 29 | 40 | 62.5 | 99 | |
| | 1994.08-1996.08 | MT | F | L | Estate FWD XUD11A | | GDS10083 | Drive Shaft | 48T | 28 | 24 | 58 | 88.5 | 651 | |
| | 1994.08-1996.08 | MT | F | R | Estate FWD XUD11A | | GDS10084 | Drive Shaft | 48T | 28 | 24 | 58 | 88.5 | 942.5 | |
| | 1994.08-1996.08 | | F | L | Estate FWD XUD11A | | GDS10113 | Drive Shaft | | 28 | 24 | 58 | 88.5 | 651 | |
| | 1994.08-1996.08 | | F | R | Estate FWD XUD11A | | GDS10114 | Drive Shaft | | 28 | 24 | 58 | 88.5 | 942.5 | |
| 2.1 (80 kw) | 1994.08-2000.04 | AT/MT | F | L | Estate FWD XUD11ATE/XUD11BTE | | GDS10441 | Drive Shaft | 48T | 28 | 37 | 58.5 | 88 | 623 | |
| | 1994.08-2000.04 | AT/MT | F | R | Estate FWD XUD11ATE/XUD11BTE | | GDS10442 | Drive Shaft | 48T | 28 | 37 | 58 | 89 | 920 | |
| | 1994.08-2000.04 | | F | R | Estate FWD XUD11ATE/XUD11BTE | | GDS10070 | Drive Shaft | 48T | 28 | 37 | 58 | 89 | 939 | |
| | 1994.08-2000.04 | | F | | Estate FWD XUD11ATE/XUD11BTE | | GCO10008 | Outer Joint | 48T | 28 | 27 | 58 | 89 | 63 | I |
| | 1994.08-2000.04 | AT/MT | F | L | Hatchback FWD XUD11ATE/XUD11BTE | | GDS10441 | Drive Shaft | 48T | 28 | 37 | 58.5 | 88 | 623 | |
| | 1994.08-2000.04 | AT/MT | F | R | Hatchback FWD XUD11ATE/XUD11BTE | | GDS10442 | Drive Shaft | 48T | 28 | 37 | 58 | 89 | 920 | |
| | 1994.08-2000.04 | | F | R | Hatchback FWD XUD11ATE/XUD11BTE | | GDS10070 | Drive Shaft | 48T | 28 | 37 | 58 | 89 | 939 | |
| | 1994.08-2000.04 | | F | | Hatchback FWD XUD11ATE/XUD11BTE | | GCO10008 | Outer Joint | 48T | 28 | 27 | 58 | 89 | 63 | I |
| 2.5 (95 kw) | 1994.08-2000.04 | | F | | Estate FWD DK5ATE | | GCO10008 | Outer Joint | 48T | 28 | 27 | 58 | 89 | 63 | I |
| | 1994.08-2000.04 | | F | | Hatchback FWD DK5ATE | | GCO10008 | Outer Joint | 48T | 28 | 27 | 58 | 89 | 63 | I |
| 3.0 (123 kw) | 1994.08-1998.12 | AT/MT | F | L | Estate FWD ZPJ | | GDS10441 | Drive Shaft | 48T | 28 | 37 | 58.5 | 88 | 623 | |
| | 1994.08-1998.12 | AT/MT | F | R | Estate FWD ZPJ | | GDS10442 | Drive Shaft | 48T | 28 | 37 | 58 | 89 | 920 | |
| | 1994.08-1998.12 | | F | | Estate FWD ZPJ | | GCO10008 | Outer Joint | 48T | 28 | 27 | 58 | 89 | 63 | I |
| | 1994.08-1998.12 | AT/MT | F | L | Hatchback FWD ZPJ | | GDS10441 | Drive Shaft | 48T | 28 | 37 | 58.5 | 88 | 623 | |
| | 1994.08-1998.12 | AT/MT | F | R | Hatchback FWD ZPJ | | GDS10442 | Drive Shaft | 48T | 28 | 37 | 58 | 89 | 920 | |
| | 1994.08-1998.12 | | F | | Hatchback FWD ZPJ | | GCO10008 | Outer Joint | 48T | 28 | 27 | 58 | 89 | 63 | I |
| 3.0 (140 kw) | 1997.05-2000.04 | | F | | Estate FWD ES9J4 | | GCO10008 | Outer Joint | 48T | 28 | 27 | 58 | 89 | 63 | I |
| | 1997.05-2000.04 | | F | L/R | Hatchback FWD ES9J4 | | GCO10008 | Outer Joint | 48T | 28 | 27 | 58 | 89 | 63 | I |
| 3.0 (147 kw) | 1994.05-2000.10 | AT/MT | F | L | Hatchback FWD ZPJ4 | | GDS10441 | Drive Shaft | 48T | 28 | 37 | 58.5 | 88 | 623 | |
| | 1994.05-2000.10 | AT/MT | F | R | Hatchback FWD ZPJ4 | | GDS10442 | Drive Shaft | 48T | 28 | 37 | 58 | 89 | 920 | |
| | 1994.05-2000.10 | | F | | Hatchback FWD ZPJ4 | | GCO10008 | Outer Joint | 48T | 28 | 27 | 58 | 89 | 63 | I |
| **Xsara** | | | | | | | | | | | | | | | |
| 1.4 (50 kw) | 2003.01-2005.03 | 5MT | F | R | Hatchback FWD DV4TD | | GDS10193 | Drive Shaft | 29T | 25 | 24 | 54.8 | 78.5 | 868 | |
| | 2003.01-2005.03 | 5MT | F | L/R | Hatchback FWD DV4TD | | GCO10076 | Outer Joint | 29W | 25 | 34 | 58.5 | 79 | 55 | I |
| | 2003.01-2005.03 | | F | L | Hatchback FWD DV4TD | | GDS10025 | Drive Shaft | 29T | 25 | 24 | 54.8 | 78.5 | 593 | |
| | 2003.01-2005.03 | | F | L | Hatchback FWD DV4TD | | GDS10131 | Drive Shaft | 29T | 25 | 24 | 54.8 | 78.5 | 583 | |
| | 2003.01-2005.03 | | F | L | Hatchback FWD DV4TD | | GDS99025 | Drive Shaft | 29W | 25 | 24 | 55.7 | 79 | 597 | |
| | 2003.01-2005.03 | | F | R | Hatchback FWD DV4TD | | GDS10078 | Drive Shaft | 29W | 25 | 24 | 55.7 | 79 | 872 | |
| | 2003.05-2005.03 | 5MT | F | R | Coupe FWD DV4TD | | GDS10193 | Drive Shaft | 29T | 25 | 24 | 54.8 | 78.5 | 868 | |
| | 2003.05-2005.03 | 5MT | F | L/R | Coupe FWD DV4TD | | GCO10076 | Outer Joint | 29W | 25 | 34 | 58.5 | 79 | 55 | I |
| | 2003.05-2005.03 | 5MT | F | L | Coupe FWD DV4TD | | GCI10018 | Inner Joint | | 24 | 29 | 40 | 62.5 | 99 | |
| | 2003.05-2005.03 | MT | F | L | Coupe FWD DV4TD | | GDS10080 | Drive Shaft | 29W | 25 | 24 | 55.7 | 79 | 597 | |
| | 2003.05-2005.03 | MT | F | R | Coupe FWD DV4TD | | GDS10078 | Drive Shaft | 29W | 25 | 24 | 55.7 | 79 | 872 | |
| | 2003.05-2005.03 | | F | L | Coupe FWD DV4TD | | GDS10025 | Drive Shaft | 29T | 25 | 24 | 54.8 | 78.5 | 593 | |
| | 2003.05-2005.03 | | F | L | Coupe FWD DV4TD | | GDS10131 | Drive Shaft | 29T | 25 | 24 | 54.8 | 78.5 | 583 | |
| 1.4 (55 kw) | 1997.07-2000.08 | 5MT | F | L | Hatchback FWD TU3JP | | GDS10018 | Drive Shaft | 29T | 25 | 22 | 60 | 80 | 603 | |
| | 1997.07-2000.08 | 5MT | F | L | Hatchback FWD TU3JP | Date to:1998.12,Org. no. to:08091 | GDS10040 | Drive Shaft | | 21 | 22 | 56.4 | 76 | 595 | |
| | 1997.07-2000.08 | 5MT | F | R | Hatchback FWD TU3JP | Date to:1998.12,Org. no. to:08091 | GDS10017 | Drive Shaft | | 21 | 22 | 56.4 | 76 | 860 | |
| | 1997.07-2000.08 | 5MT | F | R | Hatchback FWD TU3JP | | GDS10019 | Drive Shaft | 29T | 25 | 22 | 60 | 80 | 867 | |
| | 1997.07-2000.08 | 5MT | F | L/R | Hatchback FWD TU3JP | | GCO45036 | Outer Joint | 29T | 25 | 22 | 60 | 80 | 54 | I |
| | 1997.07-2000.08 | 5MT | F | L | Hatchback FWD TU3JP | For vehicles with reinforced differential | GCI10006 | Inner Joint | | 22 | 22 | 40 | 58.5 | 87 | |
| | 1997.07-2000.08 | | F | L | Hatchback FWD TU3JP | Date To:2004.01;To ORG/OPR:09947 | GDS10021 | Drive Shaft | 29T | 25 | 22 | 60 | 80 | 593 | |
| | 1997.07-2000.08 | | F | L | Hatchback FWD TU3JP | Veh Equip:For vehicles with reinforced differential | GDS10026 | Drive Shaft | | 25 | 22 | 56.7 | 79 | 594 | |
| | 1997.07-2000.08 | | F | L | Hatchback FWD TU3JP | Date From:1999.01;From ORG/OPR:08092 | GDS10043 | Drive Shaft | | 21 | 22 | 48 | 86.5 | 610 | |
| | 1997.07-2000.08 | | F | L | Hatchback FWD TU3JP | Veh Equip:For vehicles with reinforced differential | GDS10187 | Drive Shaft | 29T | 25 | 22 | 54.5 | 79.5 | 590.5 | |
| | 1997.07-2000.08 | | F | L | Hatchback FWD TU3JP | Veh Equip:For vehicles with reinforced differential | GDS10204 | Drive Shaft | | 25 | 22 | 58.5 | 79 | 594 | |
| | 1997.07-2000.08 | | F | R | Hatchback FWD TU3JP | | GDS10004 | Drive Shaft | | 21 | 22 | 56.4 | 76 | 855.5 | |
| | 1997.07-2000.08 | | F | R | Hatchback FWD TU3JP | Veh Equip:For vehicles with reinforced differential | GDS10015 | Drive Shaft | | 25 | 22 | 56.7 | 79 | 868 | |
| | 1997.07-2000.08 | | F | R | Hatchback FWD TU3JP | Date From:1999.01;From ORG/OPR:08092 | GDS10205 | Drive Shaft | | 25 | 22 | 58.5 | 79 | 866 | |
| | 1997.07-2000.08 | | F | L | Hatchback FWD TU3JP | Date from:1999.01;From ORG/OPR:08092 | GCO45011 | Outer Joint | | 21 | 22 | 48 | 86.5 | 54 | I |
| | 1997.07-2004.10 | 5MT | F | L | Hatchback FWD TU3JP | Transm.code:68/70 | GDS10018 | Drive Shaft | 29T | 25 | 22 | 60 | 80 | 603 | |
| | 1997.07-2004.10 | 5MT | F | L | Hatchback FWD TU3JP | Transm.code:77;Date to:2000.08;To ORG/OPR:08687;For vehicles with reinforced differential | GDS10021 | Drive Shaft | 29T | 25 | 22 | 60 | 80 | 593 | |
| | 1997.07-2004.10 | 5MT | F | L | Hatchback FWD TU3JP | Transm.code:77,Date to:2000.08;To ORG/OPR:08687 | GDS10026 | Drive Shaft | | 25 | 22 | 56.7 | 79 | 594 | |
| | 1997.07-2004.10 | 5MT | F | L | Hatchback FWD TU3JP | Date to:1998.12,To ORG/OPR:08091;length 2:65.8 | GDS10040 | Drive Shaft | | 21 | 22 | 56.4 | 76 | 595 | |
| | 1997.07-2004.10 | 5MT | F | L | Hatchback FWD TU3JP | Date from:1999.01;Date to:2000.08;From ORG/OPR:08092;To ORG/OPR:08687 | GDS10043 | Drive Shaft | | 21 | 22 | 48 | 86.5 | 610 | |
| | 1997.07-2004.10 | 5MT | F | L | Hatchback FWD TU3JP | Date to:2000.08;To ORG/OPR:08687;For vehicles with reinforced differential | GDS10187 | Drive Shaft | 29T | 25 | 22 | 54.5 | 79.5 | 590.5 | |
| | 1997.07-2004.10 | 5MT | F | L | Hatchback FWD TU3JP | Date to:2000.08;To ORG/OPR:08687;Veh Equip:For vehicles with reinforced differential | GDS10204 | Drive Shaft | | 25 | 22 | 58.5 | 79 | 594 | |
| | 1997.07-2004.10 | 5MT | F | R | Hatchback FWD TU3JP | Date to:2000.08;To ORG/OPR:08687 | GDS10004 | Drive Shaft | | 21 | 22 | 56.4 | 76 | 855.5 | |
| | 1997.07-2004.10 | 5MT | F | R | Hatchback FWD TU3JP | Date to:2000.08;To ORG/OPR:08687;Veh Equip:For vehicles with reinforced differential | GDS10015 | Drive Shaft | | 25 | 22 | 56.7 | 79 | 868 | |
| | 1997.07-2004.10 | 5MT | F | R | Hatchback FWD TU3JP | Date to:1998.12;To ORG/OPR:08091;Date to:2000.08;To ORG/OPR:08687 | GDS10017 | Drive Shaft | | 21 | 22 | 56.4 | 76 | 860 | |

| | YEAR | TRANSM. | F/R | L/R | BODY STYLE & DRIVE TYPE & ENGINE | REMARKS | G-AP Ref. | PRODUCT | ABS | Technical Specifications A | B | C | H | L | P |
|---|---|---|---|---|---|---|---|---|---|---|---|---|---|---|---|
| **CITROËN** | | | | | | | | | | | | | | | |
| **Xsara** | | | | | | | | | | | | | | | |
| 1.4 (55 kw) | 1997.07-2004.10 | 5MT | F | R | Hatchback FWD TU3JP | Transm.code:68/70/77 | GDS10019 | Drive Shaft | 29T | 25 | 22 | 60 | 80 | 867 | |
| | 1997.07-2004.10 | 5MT | F | R | Hatchback FWD TU3JP | | GDS10188 | Drive Shaft | 29T | 25 | 22 | 54.5 | 79.5 | 860 | |
| | 1997.07-2004.10 | 5MT | F | R | Hatchback FWD TU3JP | Date from:1999.01;Date to:2000.08;To ORG/OPR:08687 ;From ORG/OPR:08092 | GDS10205 | Drive Shaft | | 25 | 22 | 58.5 | 79 | 866 | |
| | 1997.07-2004.10 | 5MT | F | L | Hatchback FWD TU3JP | Transm.code:77,Date to:2000.08;To ORG/OPR:08687 | GCI10006 | Inner Joint | | 22 | 22 | 40 | 58.5 | 87 | |
| | 1997.07-2004.10 | MT | F | L/R | Hatchback FWD TU3JP | | GCO99006 | Outer Joint | | 25 | 22 | 60 | 78.7 | 54 | M |
| | 1997.07-2004.10 | MT | F | L/R | Hatchback FWD TU3JP | | GCO99221 | Outer Joint | 29T | 25 | 22 | 60 | 78.7 | 54 | M |
| | 1998.03-2005.03 | 5MT | F | L | Coupe FWD TU3JP | Transm.code:68/70 | GDS10018 | Drive Shaft | 29T | 25 | 22 | 60 | 80 | 603 | |
| | 1998.03-2005.03 | 5MT | F | L | Coupe FWD TU3JP | Date to:1998.12 | GDS10040 | Drive Shaft | | 21 | 22 | 56.4 | 76 | 595 | |
| | 1998.03-2005.03 | MT | F | R | Coupe FWD TU3JP | | GDS10188 | Drive Shaft | 29T | 25 | 22 | 54.5 | 79.5 | 860 | |
| | 1998.03-2005.03 | MT | F | L/R | Coupe FWD TU3JP | | GCO99006 | Outer Joint | | 25 | 22 | 60 | 78.7 | 54 | M |
| | 1998.03-2005.03 | MT | F | L/R | Coupe FWD TU3JP | | GCO99221 | Outer Joint | 29T | 25 | 22 | 60 | 78.7 | 54 | M |
| | 1998.03-2005.03 | | F | L | Coupe FWD TU3JP | Trans. code:77 | GDS10021 | Drive Shaft | 29T | 25 | 22 | 60 | 80 | 593 | |
| | 1998.03-2005.03 | | F | L | Coupe FWD TU3JP | | GDS10026 | Drive Shaft | | 25 | 22 | 56.7 | 79 | 594 | |
| | 1998.03-2005.03 | | F | L | Coupe FWD TU3JP | Date From:1999.01;Date To:2000.08;RPO number from:08092;RPO number to:08687 | GDS10043 | Drive Shaft | | 21 | 22 | 48 | 86.5 | 610 | |
| | 1998.03-2005.03 | | F | L | Coupe FWD TU3JP | Date To:2000.08;To ORG/OPR:08687;Veh Equip:For vehicles with reinforced differential | GDS10187 | Drive Shaft | 29T | 25 | 22 | 54.5 | 79.5 | 590.5 | |
| | 1998.03-2005.03 | | F | L | Coupe FWD TU3JP | Trans. code:77 | GDS10204 | Drive Shaft | | 25 | 22 | 58.5 | 79 | 594 | |
| | 1998.03-2005.03 | | F | R | Coupe FWD TU3JP | Date To:2000.08;To ORG/OPR:08687 | GDS10004 | Drive Shaft | | 21 | 22 | 56.4 | 76 | 855.5 | |
| | 1998.03-2005.03 | | F | R | Coupe FWD TU3JP | Trans. code:77 | GDS10015 | Drive Shaft | | 25 | 22 | 56.7 | 79 | 868 | |
| | 1998.03-2005.03 | | F | R | Coupe FWD TU3JP | Date To:1998.12;RPO number to:08091 | GDS10017 | Drive Shaft | | 21 | 22 | 56.4 | 76 | 860 | |
| | 1998.03-2005.03 | | F | R | Coupe FWD TU3JP | Trans. code:77 | GDS10019 | Drive Shaft | 29T | 25 | 22 | 60 | 80 | 867 | |
| | 1998.03-2005.03 | | F | R | Coupe FWD TU3JP | | GDS10205 | Drive Shaft | | 25 | 22 | 58.5 | 79 | 866 | |
| | 1998.05-2004.10 | 5MT | F | L | Hatchback Van FWD TU3JP | | GDS10018 | Drive Shaft | 29T | 25 | 22 | 60 | 80 | 603 | |
| | 1998.05-2004.10 | 5MT | F | L | Hatchback Van FWD TU3JP | Date to:1998.12,Org. no. to:08091 | GDS10040 | Drive Shaft | | 21 | 22 | 56.4 | 76 | 595 | |
| | 1998.05-2004.10 | 5MT | F | R | Hatchback Van FWD TU3JP | | GDS10017 | Drive Shaft | | 21 | 22 | 56.4 | 76 | 860 | |
| | 1998.05-2004.10 | 5MT | F | R | Hatchback Van FWD TU3JP | | GDS10019 | Drive Shaft | 29T | 25 | 22 | 60 | 80 | 867 | |
| | 1998.05-2004.10 | 5MT | F | L/R | Hatchback Van FWD TU3JP | | GCO45036 | Outer Joint | 29T | 25 | 22 | 60 | 80 | 54 | I |
| | 1998.05-2004.10 | 5MT | F | L | Hatchback Van FWD TU3JP | Date to:2000.08;To ORG/OPR:08687;Veh Equip:For vehicles with reinforced differential | GCI10006 | Inner Joint | | 22 | 22 | 40 | 58.5 | 87 | |
| | 1998.05-2004.10 | | F | L | Hatchback Van FWD TU3JP | Date To:2000.08;To ORG/OPR:08687;Veh Equip:For vehicles with reinforced differential | GDS10021 | Drive Shaft | 29T | 25 | 22 | 60 | 80 | 593 | |
| | 1998.05-2004.10 | | F | L | Hatchback Van FWD TU3JP | Date To:2000.08;To ORG/OPR:08687;Veh Equip:For vehicles with reinforced differential | GDS10026 | Drive Shaft | | 25 | 22 | 56.7 | 79 | 594 | |
| | 1998.05-2004.10 | | F | L | Hatchback Van FWD TU3JP | Date From:1999.01;Date To:2000.08;From ORG/OPR:08092;To ORG/OPR:08687 | GDS10043 | Drive Shaft | | 21 | 22 | 48 | 86.5 | 610 | |
| | 1998.05-2004.10 | | F | L | Hatchback Van FWD TU3JP | Date To:2000.08;To ORG/OPR:08687;Veh Equip:For vehicles with reinforced differential | GDS10187 | Drive Shaft | 29T | 25 | 22 | 54.5 | 79.5 | 590.5 | |
| | 1998.05-2004.10 | | F | L | Hatchback Van FWD TU3JP | Date To:2000.08;To ORG/OPR:08687;Veh Equip:For vehicles with reinforced differential | GDS10204 | Drive Shaft | | 25 | 22 | 58.5 | 79 | 594 | |
| | 1998.05-2004.10 | | F | R | Hatchback Van FWD TU3JP | Date To:2000.08;To ORG/OPR:08687 | GDS10004 | Drive Shaft | | 21 | 22 | 56.4 | 76 | 855.5 | |
| | 1998.05-2004.10 | | F | R | Hatchback Van FWD TU3JP | Date To:2000.08;To ORG/OPR:08687;Veh Equip:For vehicles with reinforced differential | GDS10015 | Drive Shaft | | 25 | 22 | 56.7 | 79 | 868 | |
| | 1998.05-2004.10 | | F | R | Hatchback Van FWD TU3JP | | GDS10205 | Drive Shaft | | 25 | 22 | 58.5 | 79 | 866 | |
| | 1998.05-2004.10 | | F | L | Hatchback Van FWD TU3JP | Date from:1999.01;Date To:2000.08;From ORG/OPR:08092;To ORG/OPR:08687 | GCO45011 | Outer Joint | | 21 | 22 | 48 | 86.5 | 54 | I |
| | 1999.06-2000.08 | 5MT | F | L | Hatchback Van FWD TU3JP | For Vehicles With Abs | GDS10018 | Drive Shaft | 29T | 25 | 22 | 60 | 80 | 603 | |
| | 1999.06-2000.08 | 5MT | F | L | Hatchback Van FWD TU3JP | For Vehicles With Abs,For Vehicles With Reinforced Differential | GDS10021 | Drive Shaft | 29T | 25 | 22 | 60 | 80 | 593 | |
| | 1999.06-2000.08 | 5MT | F | L | Hatchback Van FWD TU3JP | For Vehicles Without Abs | GDS10043 | Drive Shaft | | 21 | 22 | 48 | 86.5 | 610 | |
| | 1999.06-2000.08 | 5MT | F | L | Hatchback Van FWD TU3JP | For Vehicles With Abs,For Vehicles With Reinforced Differential | GDS10187 | Drive Shaft | 29T | 25 | 22 | 54.5 | 79.5 | 590.5 | |
| | 1999.06-2000.08 | 5MT | F | L | Hatchback Van FWD TU3JP | For Vehicles Without Abs,For Vehicles With Reinforced Differential | GDS10204 | Drive Shaft | | 25 | 22 | 58.5 | 79 | 594 | |
| | 1999.06-2000.08 | 5MT | F | R | Hatchback Van FWD TU3JP | For Vehicles With Abs | GDS10019 | Drive Shaft | 29T | 25 | 22 | 60 | 80 | 867 | |
| | 1999.06-2000.08 | 5MT | F | R | Hatchback Van FWD TU3JP | For Vehicles Without Abs,For Vehicles With Reinforced Differential | GDS10205 | Drive Shaft | | 25 | 22 | 58.5 | 79 | 866 | |
| | 1999.06-2000.08 | 5MT | F | L/R | Hatchback Van FWD TU3JP | | GCO45036 | Outer Joint | 29T | 25 | 22 | 60 | 80 | 54 | I |
| | 1999.06-2000.08 | 5MT | F | L | Hatchback Van FWD TU3JP | For vehicles with reinforced differential | GCI10006 | Inner Joint | | 22 | 22 | 40 | 58.5 | 87 | |
| | 1999.06-2000.08 | 5MT | F | L | Hatchback Van FWD TU3JP | | GCI45011 | Inner Joint | | 22 | 22 | 40 | 65 | 88 | |
| | 1999.06-2000.08 | | F | L | Hatchback Van FWD TU3JP | Date from:1999.01;From ORG/OPR:08092 | GCO45011 | Outer Joint | | 21 | 22 | 48 | 86.5 | 54 | I |
| 1.5 (42 kw) | 1998.05-2000.08 | 5MT | F | L | Hatchback FWD TUD5 | | GDS10018 | Drive Shaft | 29T | 25 | 22 | 60 | 80 | 603 | |
| | 1998.05-2000.08 | 5MT | F | L | Hatchback FWD TUD5 | For vehicles with reinforced differential | GDS10021 | Drive Shaft | 29T | 25 | 22 | 60 | 80 | 593 | |
| | 1998.05-2000.08 | 5MT | F | L | Hatchback FWD TUD5 | For vehicles with reinforced differential | GDS10026 | Drive Shaft | | 25 | 22 | 56.7 | 79 | 594 | |
| | 1998.05-2000.08 | 5MT | F | L | Hatchback FWD TUD5 | Date to:1998.12,Org. no. to:08091 | GDS10040 | Drive Shaft | | 21 | 22 | 56.4 | 76 | 595 | |
| | 1998.05-2000.08 | 5MT | F | L | Hatchback FWD TUD5 | Date from:1999.01,From ORG/OPR:08092 | GDS10043 | Drive Shaft | | 21 | 22 | 48 | 86.5 | 610 | |
| | 1998.05-2000.08 | 5MT | F | L | Hatchback FWD TUD5 | For vehicles with reinforced differential | GDS10204 | Drive Shaft | | 25 | 22 | 58.5 | 79 | 594 | |
| | 1998.05-2000.08 | 5MT | F | R | Hatchback FWD TUD5 | Date to:1998.12,Org. no. to:08091 | GDS10017 | Drive Shaft | | 21 | 22 | 56.4 | 76 | 860 | |
| | 1998.05-2000.08 | 5MT | F | R | Hatchback FWD TUD5 | | GDS10019 | Drive Shaft | 29T | 25 | 22 | 60 | 80 | 867 | |
| | 1998.05-2000.08 | 5MT | F | L | Hatchback FWD TUD5 | Date from:1999.01,From ORG/OPR:08092 | GCO45011 | Outer Joint | | 21 | 22 | 48 | 86.5 | 54 | I |
| | 1998.05-2000.08 | 5MT | F | L/R | Hatchback FWD TUD5 | | GCO45036 | Outer Joint | 29T | 25 | 22 | 60 | 80 | 54 | I |
| | 1998.05-2000.08 | 5MT | F | L | Hatchback FWD TUD5 | For vehicles with reinforced differential | GCI10006 | Inner Joint | | 22 | 22 | 40 | 58.5 | 87 | |
| | 1998.05-2000.08 | | F | L | Hatchback FWD TUD5 | Veh Equip:For vehicles with reinforced differential | GDS10187 | Drive Shaft | 29T | 25 | 22 | 54.5 | 79.5 | 590.5 | |
| | 1998.05-2000.08 | | F | R | Hatchback FWD TUD5 | | GDS10004 | Drive Shaft | | 21 | 22 | 56.4 | 76 | 855.5 | |
| | 1998.05-2000.08 | | F | R | Hatchback FWD TUD5 | Veh Equip:For vehicles with reinforced differential | GDS10015 | Drive Shaft | | 25 | 22 | 56.7 | 79 | 868 | |
| | 1998.05-2000.08 | | F | R | Hatchback FWD TUD5 | | GDS10188 | Drive Shaft | 29T | 25 | 22 | 54.5 | 79.5 | 860 | |
| | 1998.05-2000.08 | | F | R | Hatchback FWD TUD5 | Date From:1999.01;From ORG/OPR:08092 | GDS10205 | Drive Shaft | | 25 | 22 | 58.5 | 79 | 866 | |
| 1.6 (65 kw) | 1997.07-2000.08 | AT | F | L | Hatchback FWD TU5JP | | GDS56307 | Drive Shaft | 48W | 25 | 26 | 58.5 | 79 | 575 | |
| | 1997.07-2000.08 | AT | F | R | Hatchback FWD TU5JP | Date from:2000.05,From ORG/OPR:08574 | GDS56308 | Drive Shaft | 48W | 25 | 26 | 58.5 | 79 | 783 | |

| | YEAR | TRANSM. | F/R | L/R | BODY STYLE & DRIVE TYPE & ENGINE | REMARKS | G-AP Ref. | PRODUCT | ABS | Technical Specifications A | B | C | H | L | P |
|---|---|---|---|---|---|---|---|---|---|---|---|---|---|---|---|
| **CITROËN** | | | | | | | | | | | | | | | |
| **Xsara** | | | | | | | | | | | | | | | |
| 1.6 (65 kw) | 1997.07-2000.08 | AT | F | L/R | Hatchback FWD TU5JP | | GCO10042 | Outer Joint | | 25 | 34 | 54.8 | 78.5 | 56 | I |
| | 1997.07-2000.08 | AT | F | | Hatchback FWD TU5JP | | GCO10022 | Outer Joint | 29W | 25 | 34 | 55.7 | 79 | 55 | I |
| | 1997.07-2000.08 | MT | F | L | Hatchback FWD TU5JP | | GDS10018 | Drive Shaft | 29T | 25 | 22 | 60 | 80 | 603 | |
| | 1997.07-2000.08 | MT | F | L | Hatchback FWD TU5JP | For vehicles with reinforced differential | GDS10021 | Drive Shaft | 29T | 25 | 22 | 60 | 80 | 593 | |
| | 1997.07-2000.08 | MT | F | L | Hatchback FWD TU5JP | For vehicles with reinforced differential | GDS10026 | Drive Shaft | | 25 | 22 | 56.7 | 79 | 594 | |
| | 1997.07-2000.08 | MT | F | L | Hatchback FWD TU5JP | Date to:1998.12,Org. no. to:08091 | GDS10040 | Drive Shaft | | 21 | 22 | 56.4 | 76 | 595 | |
| | 1997.07-2000.08 | MT | F | L | Hatchback FWD TU5JP | For vehicles with reinforced differential | GDS10187 | Drive Shaft | 29T | 25 | 22 | 54.5 | 79.5 | 590.5 | |
| | 1997.07-2000.08 | MT | F | L | Hatchback FWD TU5JP | For vehicles with reinforced differential | GDS10204 | Drive Shaft | | 25 | 22 | 58.5 | 79 | 594 | |
| | 1997.07-2000.08 | MT | F | R | Hatchback FWD TU5JP | | GDS10004 | Drive Shaft | | 21 | 22 | 56.4 | 76 | 855.5 | |
| | 1997.07-2000.08 | MT | F | R | Hatchback FWD TU5JP | Date to:1998.12,Org. no. to:08091 | GDS10017 | Drive Shaft | | 21 | 22 | 56.4 | 76 | 860 | |
| | 1997.07-2000.08 | MT | F | R | Hatchback FWD TU5JP | | GDS10019 | Drive Shaft | 29T | 25 | 22 | 60 | 80 | 867 | |
| | 1997.07-2000.08 | MT | F | R | Hatchback FWD TU5JP | | GDS10188 | Drive Shaft | 29T | 25 | 22 | 54.5 | 79.5 | 860 | |
| | 1997.07-2000.08 | MT | F | R | Hatchback FWD TU5JP | Date from:1999.01;From ORG/OPR:08092 | GDS10205 | Drive Shaft | | 25 | 22 | 58.5 | 79 | 866 | |
| | 1997.07-2000.08 | MT | F | L/R | Hatchback FWD TU5JP | | GCO99006 | Outer Joint | | 25 | 22 | 60 | 78.7 | 54 | M |
| | 1997.07-2000.08 | MT | F | L/R | Hatchback FWD TU5JP | | GCO99221 | Outer Joint | 29T | 25 | 22 | 60 | 78.7 | 54 | M |
| | 1997.07-2000.08 | MT | F | L | Hatchback FWD TU5JP | For vehicles with reinforced differential | GCI10006 | Inner Joint | | 22 | 22 | 40 | 58.5 | 87 | |
| | 1998.02-2000.08 | AT | F | L | Coupe FWD TU5JP | | GDS56307 | Drive Shaft | 48W | 25 | 26 | 58.5 | 79 | 575 | |
| | 1998.02-2000.08 | AT | F | R | Coupe FWD TU5JP | Date from:2000.05,From ORG/OPR:08574 | GDS56308 | Drive Shaft | 48W | 25 | 26 | 58.5 | 79 | 783 | |
| | 1998.02-2000.08 | AT | F | L/R | Coupe FWD TU5JP | | GCO10042 | Outer Joint | | 25 | 34 | 54.8 | 78.5 | 56 | I |
| | 1998.02-2000.08 | AT | F | | Coupe FWD TU5JP | | GCO10022 | Outer Joint | 29W | 25 | 34 | 55.7 | 79 | 55 | I |
| | 1998.02-2000.08 | MT | F | L | Coupe FWD TU5JP | Transm.code:68/70 | GDS10018 | Drive Shaft | 29T | 25 | 22 | 60 | 80 | 603 | |
| | 1998.02-2000.08 | MT | F | L | Coupe FWD TU5JP | For vehicles with reinforced differential | GDS10021 | Drive Shaft | 29T | 25 | 22 | 60 | 80 | 593 | |
| | 1998.02-2000.08 | MT | F | L | Coupe FWD TU5JP | For vehicles with reinforced differential | GDS10026 | Drive Shaft | | 25 | 22 | 56.7 | 79 | 594 | |
| | 1998.02-2000.08 | MT | F | L | Coupe FWD TU5JP | Date to:1998.12 | GDS10040 | Drive Shaft | | 21 | 22 | 56.4 | 76 | 595 | |
| | 1998.02-2000.08 | MT | F | L | Coupe FWD TU5JP | For vehicles with reinforced differential | GDS10187 | Drive Shaft | 29T | 25 | 22 | 54.5 | 79.5 | 590.5 | |
| | 1998.02-2000.08 | MT | F | L | Coupe FWD TU5JP | For vehicles with reinforced differential | GDS10204 | Drive Shaft | | 25 | 22 | 58.5 | 79 | 594 | |
| | 1998.02-2000.08 | MT | F | R | Coupe FWD TU5JP | | GDS10004 | Drive Shaft | | 21 | 22 | 56.4 | 76 | 855.5 | |
| | 1998.02-2000.08 | MT | F | R | Coupe FWD TU5JP | Date to:1998.12;To ORG/OPR:08091 | GDS10017 | Drive Shaft | | 21 | 22 | 56.4 | 76 | 860 | |
| | 1998.02-2000.08 | MT | F | R | Coupe FWD TU5JP | Date from:1999.02;From ORG/OPR:08134 | GDS10019 | Drive Shaft | 29T | 25 | 22 | 60 | 80 | 867 | |
| | 1998.02-2000.08 | MT | F | R | Coupe FWD TU5JP | | GDS10188 | Drive Shaft | 29T | 25 | 22 | 54.5 | 79.5 | 860 | |
| | 1998.02-2000.08 | MT | F | R | Coupe FWD TU5JP | Date from:1999.01;From ORG/OPR:08092 | GDS10205 | Drive Shaft | | 25 | 22 | 58.5 | 79 | 866 | |
| | 1998.02-2000.08 | MT | F | L/R | Coupe FWD TU5JP | | GCO99006 | Outer Joint | | 25 | 22 | 60 | 78.7 | 54 | M |
| | 1998.02-2000.08 | MT | F | L/R | Coupe FWD TU5JP | | GCO99221 | Outer Joint | 29T | 25 | 22 | 60 | 78.7 | 54 | M |
| | 1998.02-2000.08 | MT | F | L | Coupe FWD TU5JP | For vehicles with reinforced differential | GCI10006 | Inner Joint | | 22 | 22 | 40 | 58.5 | 87 | |
| 1.6 (80 kw) | 2000.09-2004.10 | 5MT | F | R | Coupe FWD TU5JP4 | For vehicles with ESP | GDS82450 | Drive Shaft | 48T | 25 | 22 | 58.5 | 79.5 | 865 | |
| | 2000.09-2004.10 | AT | F | L | Coupe FWD TU5JP4 | | GDS56307 | Drive Shaft | 48W | 25 | 26 | 58.5 | 79 | 575 | |
| | 2000.09-2004.10 | AT | F | R | Coupe FWD TU5JP4 | | GDS56308 | Drive Shaft | 48W | 25 | 26 | 58.5 | 79 | 783 | |
| | 2000.09-2004.10 | MT | F | L | Coupe FWD TU5JP4 | For vehicles without ESP | GDS10021 | Drive Shaft | 29T | 25 | 22 | 60 | 80 | 593 | |
| | 2000.09-2004.10 | MT | F | L | Coupe FWD TU5JP4 | For vehicles without ESP | GDS10187 | Drive Shaft | 29T | 25 | 22 | 54.5 | 79.5 | 590.5 | |
| | 2000.09-2004.10 | MT | F | L | Coupe FWD TU5JP4 | | GDS10204 | Drive Shaft | | 25 | 22 | 58.5 | 79 | 594 | |
| | 2000.09-2004.10 | MT | F | R | Coupe FWD TU5JP4 | For vehicles without ESP | GDS10019 | Drive Shaft | 29T | 25 | 22 | 60 | 80 | 867 | |
| | 2000.09-2004.10 | MT | F | R | Coupe FWD TU5JP4 | | GDS10205 | Drive Shaft | | 25 | 22 | 58.5 | 79 | 866 | |
| | 2000.09-2004.10 | MT | F | L/R | Coupe FWD TU5JP4 | | GCO99006 | Outer Joint | | 25 | 22 | 60 | 78.7 | 54 | M |
| | 2000.09-2004.10 | MT | F | L/R | Coupe FWD TU5JP4 | | GCO99221 | Outer Joint | 29T | 25 | 22 | 60 | 78.7 | 54 | M |
| | 2000.09-2004.10 | MT | F | L | Coupe FWD TU5JP4 | | GCI10006 | Inner Joint | | 22 | 22 | 40 | 58.5 | 87 | |
| | 2000.09-2005.03 | 5MT | F | R | Hatchback FWD TU5JP4 | For vehicles with ESP | GDS82450 | Drive Shaft | 48T | 25 | 22 | 58.5 | 79.5 | 865 | |
| | 2000.09-2005.03 | AT | F | L | Hatchback FWD TU5JP4 | | GDS56307 | Drive Shaft | 48W | 25 | 26 | 58.5 | 79 | 575 | |
| | 2000.09-2005.03 | AT | F | R | Hatchback FWD TU5JP4 | | GDS56308 | Drive Shaft | 48W | 25 | 26 | 58.5 | 79 | 783 | |
| | 2000.09-2005.03 | MT | F | L | Hatchback FWD TU5JP4 | For vehicles without ESP | GDS10021 | Drive Shaft | 29T | 25 | 22 | 60 | 80 | 593 | |
| | 2000.09-2005.03 | MT | F | L | Hatchback FWD TU5JP4 | For vehicles without ESP | GDS10187 | Drive Shaft | 29T | 25 | 22 | 54.5 | 79.5 | 590.5 | |
| | 2000.09-2005.03 | MT | F | L | Hatchback FWD TU5JP4 | | GDS10204 | Drive Shaft | | 25 | 22 | 58.5 | 79 | 594 | |
| | 2000.09-2005.03 | MT | F | R | Hatchback FWD TU5JP4 | For vehicles without ESP | GDS10019 | Drive Shaft | 29T | 25 | 22 | 60 | 80 | 867 | |
| | 2000.09-2005.03 | MT | F | R | Hatchback FWD TU5JP4 | | GDS10205 | Drive Shaft | | 25 | 22 | 58.5 | 79 | 866 | |
| | 2000.09-2005.03 | MT | F | L/R | Hatchback FWD TU5JP4 | | GCO10002 | Outer Joint | | 25 | 23 | 54.8 | 78.5 | 56 | I |
| | 2000.09-2005.03 | MT | F | L/R | Hatchback FWD TU5JP4 | | GCO10003 | Outer Joint | 29T | 25 | 23 | 54.8 | 78.5 | 56 | I |
| | 2000.09-2005.03 | MT | F | L/R | Hatchback FWD TU5JP4 | | GCO99006 | Outer Joint | | 25 | 22 | 60 | 78.7 | 54 | M |
| | 2000.09-2005.03 | MT | F | L/R | Hatchback FWD TU5JP4 | | GCO99221 | Outer Joint | 29T | 25 | 22 | 60 | 78.7 | 54 | M |
| 1.8 (43 kw) | 1997.04-2000.09 | 5MT | F | R | Hatchback FWD XUD7 | | GDS10077 | Drive Shaft | | 25 | 24 | 55.7 | 79 | 872 | |
| | 1997.04-2000.09 | 5MT | F | R | Hatchback FWD XUD7 | | GDS10078 | Drive Shaft | 29W | 25 | 24 | 55.7 | 79 | 872 | |
| | 1997.04-2000.09 | MT | F | L | Hatchback FWD XUD7 | | GDS10025 | Drive Shaft | 29T | 25 | 24 | 54.8 | 78.5 | 593 | |
| | 1997.04-2000.09 | MT | F | L | Hatchback FWD XUD7 | | GDS10090 | Drive Shaft | | 25 | 24 | 54.8 | 78.5 | 593 | |
| | 1997.04-2000.09 | MT | F | L | Hatchback FWD XUD7 | | GCO10022 | Outer Joint | 29W | 25 | 34 | 55.7 | 79 | 55 | I |
| | 1997.04-2000.09 | MT | F | L/R | Hatchback FWD XUD7 | | GCO10002 | Outer Joint | | 25 | 23 | 54.8 | 78.5 | 56 | I |
| | 1997.04-2000.09 | MT | F | L/R | Hatchback FWD XUD7 | | GCO10003 | Outer Joint | 29T | 25 | 23 | 54.8 | 78.5 | 56 | I |
| | 1997.04-2000.09 | | F | L | Hatchback FWD XUD7 | | GDS10131 | Drive Shaft | 29T | 25 | 24 | 54.8 | 78.5 | 583 | |

| | YEAR | TRANSM. | F/R | L/R | BODY STYLE & DRIVE TYPE & ENGINE | REMARKS | G-AP Ref. | PRODUCT | ABS | Technical Specifications A | B | C | H | L | P |
|---|---|---|---|---|---|---|---|---|---|---|---|---|---|---|---|
| **CITROËN** **Xsara** | | | | | | | | | | | | | | | |
| 1.8 (43 kw) | 1997.04-2000.09 | | F | L | Hatchback FWD XUD7 | | GCO10049 | Outer Joint | | 25 | 34 | 55.7 | 79 | 55 | I |
| | 1997.04-2000.09 | | F | L/R | Hatchback FWD XUD7 | | GCO10076 | Outer Joint | 29W | 25 | 34 | 58.5 | 79 | 55 | I |
| | 1998.05-1999.05 | 5MT | F | R | Hatchback Van FWD XUD7 | | GDS10077 | Drive Shaft | | 25 | 24 | 55.7 | 79 | 872 | |
| | 1998.05-1999.05 | 5MT | F | R | Hatchback Van FWD XUD7 | | GDS10078 | Drive Shaft | 29W | 25 | 24 | 55.7 | 79 | 872 | |
| | 1998.05-1999.05 | 5MT | F | L/R | Hatchback Van FWD XUD7 | | GCO10076 | Outer Joint | 29W | 25 | 34 | 58.5 | 79 | 55 | I |
| | 1998.05-1999.05 | | F | L | Hatchback Van FWD XUD7 | | GDS10025 | Drive Shaft | 29T | 25 | 24 | 54.8 | 78.5 | 593 | |
| | 1998.05-1999.05 | | F | L | Hatchback Van FWD XUD7 | | GDS10090 | Drive Shaft | | 25 | 24 | 54.8 | 78.5 | 593 | |
| | 1998.05-1999.05 | | F | L | Hatchback Van FWD XUD7 | | GDS10131 | Drive Shaft | 29T | 25 | 24 | 54.8 | 78.5 | 583 | |
| | 1998.05-1999.05 | | F | L | Hatchback Van FWD XUD7 | | GCO10022 | Outer Joint | 29W | 25 | 34 | 55.7 | 79 | 55 | I |
| | 1998.05-1999.05 | | F | L | Hatchback Van FWD XUD7 | | GCO10049 | Outer Joint | | 25 | 34 | 55.7 | 79 | 55 | I |
| 1.8 (66 kw) | 1997.07-2000.08 | 5MT | F | R | Coupe FWD XU7JB | | GDS10193 | Drive Shaft | 29T | 25 | 24 | 54.8 | 78.5 | 868 | |
| | 1997.07-2000.08 | MT | F | L | Coupe FWD XU7JB | Trans. code:BE3 | GDS10025 | Drive Shaft | 29T | 25 | 24 | 54.8 | 78.5 | 593 | |
| | 1997.07-2000.08 | MT | F | L | Coupe FWD XU7JB | Trans. code:BE3 | GDS10090 | Drive Shaft | | 25 | 24 | 54.8 | 78.5 | 593 | |
| | 1997.07-2000.08 | MT | F | L | Coupe FWD XU7JB | | GDS99025 | Drive Shaft | 29W | 25 | 24 | 55.7 | 79 | 597 | |
| | 1997.07-2000.08 | MT | F | R | Coupe FWD XU7JB | | GDS10077 | Drive Shaft | | 25 | 24 | 55.7 | 79 | 872 | |
| | 1997.07-2000.08 | MT | F | R | Coupe FWD XU7JB | | GDS10078 | Drive Shaft | 29W | 25 | 24 | 55.7 | 79 | 872 | |
| | 1997.07-2000.08 | MT | F | L | Coupe FWD XU7JB | | GCO10022 | Outer Joint | 29W | 25 | 34 | 55.7 | 79 | 55 | I |
| | 1997.07-2000.08 | MT | F | L/R | Coupe FWD XU7JB | | GCO10002 | Outer Joint | | 25 | 23 | 54.8 | 78.5 | 56 | I |
| | 1997.07-2000.08 | MT | F | L/R | Coupe FWD XU7JB | | GCO10003 | Outer Joint | 29T | 25 | 23 | 54.8 | 78.5 | 56 | I |
| | 1997.07-2000.08 | | F | L | Coupe FWD XU7JB | | GDS10131 | Drive Shaft | 29T | 25 | 24 | 54.8 | 78.5 | 583 | |
| | 1997.07-2000.08 | | F | L | Coupe FWD XU7JB | | GCO10049 | Outer Joint | | 25 | 34 | 55.7 | 79 | 55 | I |
| | 1997.07-2000.08 | | F | L/R | Coupe FWD XU7JB | | GCO10042 | Outer Joint | | 25 | 34 | 54.8 | 78.5 | 56 | I |
| | 1997.07-2000.08 | | F | L/R | Coupe FWD XU7JB | | GCO10076 | Outer Joint | 29W | 25 | 34 | 58.5 | 79 | 55 | I |
| | 1997.07-2000.08 | 5MT | F | R | Hatchback FWD XU7JB | | GDS10193 | Drive Shaft | 29T | 25 | 24 | 54.8 | 78.5 | 868 | |
| | 1997.07-2000.08 | 5MT | F | L | Hatchback FWD XU7JB | | GCI10018 | Inner Joint | | 24 | 29 | 40 | 62.5 | 99 | |
| | 1997.07-2000.08 | MT | F | L | Hatchback FWD XU7JB | Date from:1997.07;Trans. code:BE3 | GDS10025 | Drive Shaft | 29T | 25 | 24 | 54.8 | 78.5 | 593 | |
| | 1997.07-2000.08 | MT | F | L | Hatchback FWD XU7JB | Date from:1997.07;Trans. code:BE3 | GDS10090 | Drive Shaft | | 25 | 24 | 54.8 | 78.5 | 593 | |
| | 1997.07-2000.08 | MT | F | L | Hatchback FWD XU7JB | | GDS99025 | Drive Shaft | 29W | 25 | 24 | 55.7 | 79 | 597 | |
| | 1997.07-2000.08 | MT | F | R | Hatchback FWD XU7JB | Date from:1997.07;Trans. code:BE3 | GDS10077 | Drive Shaft | | 25 | 24 | 55.7 | 79 | 872 | |
| | 1997.07-2000.08 | MT | F | R | Hatchback FWD XU7JB | | GDS10078 | Drive Shaft | 29W | 25 | 24 | 55.7 | 79 | 872 | |
| | 1997.07-2000.08 | MT | F | L | Hatchback FWD XU7JB | | GCO10022 | Outer Joint | 29W | 25 | 34 | 55.7 | 79 | 55 | I |
| | 1997.07-2000.08 | | F | L | Hatchback FWD XU7JB | | GDS10131 | Drive Shaft | 29T | 25 | 24 | 54.8 | 78.5 | 583 | |
| | 1997.07-2000.08 | | F | L | Hatchback FWD XU7JB | | GCO10049 | Outer Joint | | 25 | 34 | 55.7 | 79 | 55 | I |
| | 1997.07-2000.08 | | F | L/R | Hatchback FWD XU7JB | | GCO10076 | Outer Joint | 29W | 25 | 34 | 58.5 | 79 | 55 | I |
| 1.8 (74 kw) | 1997.07-2000.09 | 4AT | F | R | Hatchback FWD XU7JP | Date from:1997.07;Trans. code:BE3 | GDS10077 | Drive Shaft | | 25 | 24 | 55.7 | 79 | 872 | |
| | 1997.07-2000.09 | 4AT | F | R | Hatchback FWD XU7JP | | GDS10078 | Drive Shaft | 29W | 25 | 24 | 55.7 | 79 | 872 | |
| | 1997.07-2000.09 | 4AT | F | R | Hatchback FWD XU7JP | | GDS10193 | Drive Shaft | 29T | 25 | 24 | 54.8 | 78.5 | 868 | |
| | 1997.07-2000.09 | 4AT | F | L | Hatchback FWD XU7JP | | GCI10018 | Inner Joint | | 24 | 29 | 40 | 62.5 | 99 | |
| | 1997.07-2000.09 | AT | F | L | Hatchback FWD XU7JP | Date from:1997.07;Trans. code:BE3 | GDS10025 | Drive Shaft | 29T | 25 | 24 | 54.8 | 78.5 | 593 | |
| | 1997.07-2000.09 | AT | F | L | Hatchback FWD XU7JP | Date from:1997.07;Trans. code:BE3 | GDS10090 | Drive Shaft | | 25 | 24 | 54.8 | 78.5 | 593 | |
| | 1997.07-2000.09 | AT | F | L | Hatchback FWD XU7JP | | GCO10022 | Outer Joint | 29W | 25 | 34 | 55.7 | 79 | 55 | I |
| | 1997.07-2000.09 | AT | F | L/R | Hatchback FWD XU7JP | Trans. code:4HP14 | GCO10002 | Outer Joint | | 25 | 23 | 54.8 | 78.5 | 56 | I |
| | 1997.07-2000.09 | AT | F | L/R | Hatchback FWD XU7JP | Trans. code:4HP14 | GCO10003 | Outer Joint | 29T | 25 | 23 | 54.8 | 78.5 | 56 | I |
| | 1997.07-2000.09 | | F | L | Hatchback FWD XU7JP | | GDS10131 | Drive Shaft | 29T | 25 | 24 | 54.8 | 78.5 | 583 | |
| | 1997.07-2000.09 | | F | L | Hatchback FWD XU7JP | | GCO10049 | Outer Joint | | 25 | 34 | 55.7 | 79 | 55 | I |
| | 1997.07-2000.09 | | F | L/R | Hatchback FWD XU7JP | | GCO10042 | Outer Joint | | 25 | 34 | 54.8 | 78.5 | 56 | I |
| | 1997.07-2000.09 | | F | L/R | Hatchback FWD XU7JP | | GCO10076 | Outer Joint | 29W | 25 | 34 | 58.5 | 79 | 55 | I |
| | 1998.02-2000.09 | 4AT | F | R | Coupe FWD XU7JP | | GDS10077 | Drive Shaft | | 25 | 24 | 55.7 | 79 | 872 | |
| | 1998.02-2000.09 | 4AT | F | R | Coupe FWD XU7JP | | GDS10078 | Drive Shaft | 29W | 25 | 24 | 55.7 | 79 | 872 | |
| | 1998.02-2000.09 | 4AT | F | R | Coupe FWD XU7JP | | GDS10193 | Drive Shaft | 29T | 25 | 24 | 54.8 | 78.5 | 868 | |
| | 1998.02-2000.09 | 4AT | F | L/R | Coupe FWD XU7JP | | GCO10076 | Outer Joint | 29W | 25 | 34 | 58.5 | 79 | 55 | I |
| | 1998.02-2000.09 | | F | L | Coupe FWD XU7JP | | GDS10025 | Drive Shaft | 29T | 25 | 24 | 54.8 | 78.5 | 593 | |
| | 1998.02-2000.09 | | F | L | Coupe FWD XU7JP | | GDS10090 | Drive Shaft | | 25 | 24 | 54.8 | 78.5 | 593 | |
| | 1998.02-2000.09 | | F | L | Coupe FWD XU7JP | | GDS10131 | Drive Shaft | 29T | 25 | 24 | 54.8 | 78.5 | 583 | |
| | 1998.02-2000.09 | | F | L | Coupe FWD XU7JP | | GCO10022 | Outer Joint | 29W | 25 | 34 | 55.7 | 79 | 55 | I |
| | 1998.02-2000.09 | | F | L | Coupe FWD XU7JP | | GCO10049 | Outer Joint | | 25 | 34 | 55.7 | 79 | 55 | I |
| | 1998.02-2000.09 | | F | L/R | Coupe FWD XU7JP | | GCO10042 | Outer Joint | | 25 | 34 | 54.8 | 78.5 | 56 | I |
| 1.8 (81 kw) | 1997.07-2000.08 | 5MT | F | R | Hatchback FWD XU7JP4 | | GDS10193 | Drive Shaft | 29T | 25 | 24 | 54.8 | 78.5 | 868 | |
| | 1997.07-2000.08 | 5MT | F | L | Hatchback FWD XU7JP4 | | GCI10018 | Inner Joint | | 24 | 29 | 40 | 62.5 | 99 | |
| | 1997.07-2000.08 | MT | F | L | Hatchback FWD XU7JP4 | Trans. code:BE3R | GDS10025 | Drive Shaft | 29T | 25 | 24 | 54.8 | 78.5 | 593 | |
| | 1997.07-2000.08 | MT | F | L | Hatchback FWD XU7JP4 | Date from:1997.07;Trans. code:BE3 | GDS10090 | Drive Shaft | | 25 | 24 | 54.8 | 78.5 | 593 | |
| | 1997.07-2000.08 | MT | F | L | Hatchback FWD XU7JP4 | | GDS99025 | Drive Shaft | 29W | 25 | 24 | 55.7 | 79 | 597 | |
| | 1997.07-2000.08 | MT | F | R | Hatchback FWD XU7JP4 | Date from:1997.07;Trans. code:BE3 | GDS10077 | Drive Shaft | | 25 | 24 | 55.7 | 79 | 872 | |
| | 1997.07-2000.08 | MT | F | R | Hatchback FWD XU7JP4 | | GDS10078 | Drive Shaft | 29W | 25 | 24 | 55.7 | 79 | 872 | |
| | 1997.07-2000.08 | MT | F | L | Hatchback FWD XU7JP4 | | GCO10022 | Outer Joint | 29W | 25 | 34 | 55.7 | 79 | 55 | I |

| | YEAR | TRANSM. | F/R | L/R | BODY STYLE & DRIVE TYPE & ENGINE | REMARKS | G-AP Ref. | PRODUCT | ABS | Technical Specifications A | B | C | H | L | P |
|---|---|---|---|---|---|---|---|---|---|---|---|---|---|---|---|
| **CITROËN** | | | | | | | | | | | | | | | |
| **Xsara** | | | | | | | | | | | | | | | |
| 1.8 (81 kw) | 1997.07-2000.08 | MT | F | L/R | Hatchback FWD XU7JP4 | Trans. code:BE3R | GCO10002 | Outer Joint | | 25 | 23 | 54.8 | 78.5 | 56 | I |
| | 1997.07-2000.08 | MT | F | L/R | Hatchback FWD XU7JP4 | Trans. code:BE3R | GCO10003 | Outer Joint | 29T | 25 | 23 | 54.8 | 78.5 | 56 | I |
| | 1997.07-2000.08 | | F | L | Hatchback FWD XU7JP4 | | GDS10131 | Drive Shaft | 29T | 25 | 24 | 54.8 | 78.5 | 583 | |
| | 1997.07-2000.08 | | F | L | Hatchback FWD XU7JP4 | | GCO10049 | Outer Joint | | 25 | 34 | 55.7 | 79 | 55 | I |
| | 1997.07-2000.08 | | F | L/R | Hatchback FWD XU7JP4 | | GCO10042 | Outer Joint | | 25 | 34 | 54.8 | 78.5 | 56 | I |
| | 1997.07-2000.08 | | F | L/R | Hatchback FWD XU7JP4 | | GCO10076 | Outer Joint | 29W | 25 | 34 | 58.5 | 79 | 55 | I |
| | 1998.01-2000.08 | 5MT | F | R | Coupe FWD XU7JP4 | | GDS10193 | Drive Shaft | 29T | 25 | 24 | 54.8 | 78.5 | 868 | |
| | 1998.01-2000.08 | MT | F | L | Coupe FWD XU7JP4 | Trans. code:BE3 | GDS10025 | Drive Shaft | 29T | 25 | 24 | 54.8 | 78.5 | 593 | |
| | 1998.01-2000.08 | MT | F | L | Coupe FWD XU7JP4 | Trans. code:BE3 | GDS10090 | Drive Shaft | | 25 | 24 | 54.8 | 78.5 | 593 | |
| | 1998.01-2000.08 | MT | F | L | Coupe FWD XU7JP4 | | GDS99025 | Drive Shaft | 29W | 25 | 24 | 55.7 | 79 | 597 | |
| | 1998.01-2000.08 | MT | F | R | Coupe FWD XU7JP4 | | GDS10077 | Drive Shaft | | 25 | 24 | 55.7 | 79 | 872 | |
| | 1998.01-2000.08 | MT | F | R | Coupe FWD XU7JP4 | | GDS10078 | Drive Shaft | 29W | 25 | 24 | 55.7 | 79 | 872 | |
| | 1998.01-2000.08 | MT | F | L | Coupe FWD XU7JP4 | | GCO10022 | Outer Joint | 29W | 25 | 34 | 55.7 | 79 | 55 | I |
| | 1998.01-2000.08 | MT | F | L/R | Coupe FWD XU7JP4 | | GCO10002 | Outer Joint | | 25 | 23 | 54.8 | 78.5 | 56 | I |
| | 1998.01-2000.08 | MT | F | L/R | Coupe FWD XU7JP4 | | GCO10003 | Outer Joint | 29T | 25 | 23 | 54.8 | 78.5 | 56 | I |
| | 1998.01-2000.08 | | F | L | Coupe FWD XU7JP4 | | GDS10131 | Drive Shaft | 29T | 25 | 24 | 54.8 | 78.5 | 583 | |
| | 1998.01-2000.08 | | F | L | Coupe FWD XU7JP4 | | GCO10049 | Outer Joint | | 25 | 34 | 55.7 | 79 | 55 | I |
| | 1998.01-2000.08 | | F | L/R | Coupe FWD XU7JP4 | | GCO10042 | Outer Joint | | 25 | 34 | 54.8 | 78.5 | 56 | I |
| | 1998.01-2000.08 | | F | L/R | Coupe FWD XU7JP4 | | GCO10076 | Outer Joint | 29W | 25 | 34 | 58.5 | 79 | 55 | I |
| 1.8 (82 kw) | 1997.07-2000.08 | 5MT | F | L | Hatchback FWD XU7JP4 | | GDS10025 | Drive Shaft | 29T | 25 | 24 | 54.8 | 78.5 | 593 | |
| | 1997.07-2000.08 | 5MT | F | R | Hatchback FWD XU7JP4 | | GDS10077 | Drive Shaft | | 25 | 24 | 55.7 | 79 | 872 | |
| | 1997.07-2000.08 | 5MT | F | R | Hatchback FWD XU7JP4 | | GDS10078 | Drive Shaft | 29W | 25 | 24 | 55.7 | 79 | 872 | |
| | 1997.07-2000.08 | 5MT | F | R | Hatchback FWD XU7JP4 | | GDS10193 | Drive Shaft | 29T | 25 | 24 | 54.8 | 78.5 | 868 | |
| | 1997.07-2000.08 | 5MT | F | L/R | Hatchback FWD XU7JP4 | | GCO10076 | Outer Joint | 29W | 25 | 34 | 58.5 | 79 | 55 | I |
| | 1997.07-2000.08 | | F | L | Hatchback FWD XU7JP4 | | GDS10090 | Drive Shaft | | 25 | 24 | 54.8 | 78.5 | 593 | |
| | 1997.07-2000.08 | | F | L | Hatchback FWD XU7JP4 | | GDS10131 | Drive Shaft | 29T | 25 | 24 | 54.8 | 78.5 | 583 | |
| | 1997.07-2000.08 | | F | L | Hatchback FWD XU7JP4 | | GCO10022 | Outer Joint | 29W | 25 | 34 | 55.7 | 79 | 55 | I |
| | 1997.07-2000.08 | | F | L | Hatchback FWD XU7JP4 | | GCO10049 | Outer Joint | | 25 | 34 | 55.7 | 79 | 55 | I |
| | 1998.01-2000.08 | 5MT | F | L | Coupe FWD XU7JP4 | | GDS10025 | Drive Shaft | 29T | 25 | 24 | 54.8 | 78.5 | 593 | |
| | 1998.01-2000.08 | 5MT | F | R | Coupe FWD XU7JP4 | | GDS10077 | Drive Shaft | | 25 | 24 | 55.7 | 79 | 872 | |
| | 1998.01-2000.08 | 5MT | F | R | Coupe FWD XU7JP4 | | GDS10078 | Drive Shaft | 29W | 25 | 24 | 55.7 | 79 | 872 | |
| | 1998.01-2000.08 | 5MT | F | R | Coupe FWD XU7JP4 | | GDS10193 | Drive Shaft | 29T | 25 | 24 | 54.8 | 78.5 | 868 | |
| | 1998.01-2000.08 | | F | L | Coupe FWD XU7JP4 | | GDS10090 | Drive Shaft | | 25 | 24 | 54.8 | 78.5 | 593 | |
| | 1998.01-2000.08 | | F | L | Coupe FWD XU7JP4 | | GDS10131 | Drive Shaft | 29T | 25 | 24 | 54.8 | 78.5 | 583 | |
| | 1998.01-2000.08 | | F | L | Coupe FWD XU7JP4 | | GCO10022 | Outer Joint | 29W | 25 | 34 | 55.7 | 79 | 55 | I |
| | 1998.01-2000.08 | | F | L | Coupe FWD XU7JP4 | | GCO10049 | Outer Joint | | 25 | 34 | 55.7 | 79 | 55 | I |
| | 1998.01-2000.08 | | F | L/R | Coupe FWD XU7JP4 | | GCO10076 | Outer Joint | 29W | 25 | 34 | 58.5 | 79 | 55 | I |
| | 1998.01-2000.08 | | F | L | Coupe FWD XU7JP4 | | GCI10018 | Inner Joint | | 24 | 29 | 40 | 62.5 | 99 | |
| 1.8 (85 kw) | 1998.08-2004.10 | MT | F | L | Hatchback FWD EW7J4 | | GDS99025 | Drive Shaft | 29W | 25 | 24 | 55.7 | 79 | 597 | |
| | 1998.08-2004.10 | MT | F | R | Hatchback FWD EW7J4 | | GDS10078 | Drive Shaft | 29W | 25 | 24 | 55.7 | 79 | 872 | |
| | 1998.08-2004.10 | | F | | Hatchback FWD EW7J4 | | GCO10022 | Outer Joint | 29W | 25 | 34 | 55.7 | 79 | 55 | I |
| 1.9 (50 kw) | 1997.04-2000.09 | MT | F | L | Hatchback FWD XUD9/XUD9A | | GDS10025 | Drive Shaft | 29T | 25 | 24 | 54.8 | 78.5 | 593 | |
| | 1997.04-2000.09 | MT | F | L | Hatchback FWD XUD9/XUD9A | | GDS10090 | Drive Shaft | | 25 | 24 | 54.8 | 78.5 | 593 | |
| | 1997.04-2000.09 | MT | F | L | Hatchback FWD XUD9/XUD9A | | GDS99025 | Drive Shaft | 29W | 25 | 24 | 55.7 | 79 | 597 | |
| | 1997.04-2000.09 | MT | F | R | Hatchback FWD XUD9/XUD9A | | GDS10077 | Drive Shaft | | 25 | 24 | 55.7 | 79 | 872 | |
| | 1997.04-2000.09 | MT | F | R | Hatchback FWD XUD9/XUD9A | | GDS10078 | Drive Shaft | 29W | 25 | 24 | 55.7 | 79 | 872 | |
| | 1997.04-2000.09 | MT | F | L | Hatchback FWD XUD9/XUD9A | | GCO10022 | Outer Joint | 29W | 25 | 34 | 55.7 | 79 | 55 | I |
| | 1997.04-2000.09 | MT | F | L/R | Hatchback FWD XUD9/XUD9A | | GCO10002 | Outer Joint | | 25 | 23 | 54.8 | 78.5 | 56 | I |
| | 1997.04-2000.09 | MT | F | L/R | Hatchback FWD XUD9/XUD9A | | GCO10003 | Outer Joint | 29T | 25 | 23 | 54.8 | 78.5 | 56 | I |
| | 1997.04-2000.09 | | F | L | Hatchback FWD XUD9/XUD9A | | GDS10131 | Drive Shaft | 29T | 25 | 24 | 54.8 | 78.5 | 583 | |
| | 1997.04-2000.09 | | F | L | Hatchback FWD XUD9/XUD9A | | GCO10049 | Outer Joint | | 25 | 34 | 55.7 | 79 | 55 | I |
| | 1997.04-2000.09 | | F | L/R | Hatchback FWD XUD9/XUD9A | | GCO10042 | Outer Joint | | 25 | 34 | 54.8 | 78.5 | 56 | I |
| | 1997.04-2000.09 | | F | L/R | Hatchback FWD XUD9/XUD9A | | GCO10076 | Outer Joint | 29W | 25 | 34 | 58.5 | 79 | 55 | I |
| | 1998.02-2000.09 | 5MT | F | L/R | Coupe FWD XUD9/XUD9A | | GCO10076 | Outer Joint | 29W | 25 | 34 | 58.5 | 79 | 55 | I |
| | 1998.02-2000.09 | MT | F | L | Coupe FWD XUD9/XUD9A | Trans. code:BE3 | GDS10025 | Drive Shaft | 29T | 25 | 24 | 54.8 | 78.5 | 593 | |
| | 1998.02-2000.09 | MT | F | L | Coupe FWD XUD9/XUD9A | Trans. code:BE3 | GDS10090 | Drive Shaft | | 25 | 24 | 54.8 | 78.5 | 593 | |
| | 1998.02-2000.09 | MT | F | L | Coupe FWD XUD9/XUD9A | | GDS99025 | Drive Shaft | 29W | 25 | 24 | 55.7 | 79 | 597 | |
| | 1998.02-2000.09 | MT | F | R | Coupe FWD XUD9/XUD9A | | GDS10077 | Drive Shaft | | 25 | 24 | 55.7 | 79 | 872 | |
| | 1998.02-2000.09 | MT | F | R | Coupe FWD XUD9/XUD9A | | GDS10078 | Drive Shaft | 29W | 25 | 24 | 55.7 | 79 | 872 | |
| | 1998.02-2000.09 | | F | L | Coupe FWD XUD9/XUD9A | | GDS10131 | Drive Shaft | 29T | 25 | 24 | 54.8 | 78.5 | 583 | |
| | 1998.02-2000.09 | | F | L | Coupe FWD XUD9/XUD9A | | GCO10022 | Outer Joint | 29W | 25 | 34 | 55.7 | 79 | 55 | I |
| | 1998.02-2000.09 | | F | L | Coupe FWD XUD9/XUD9A | | GCO10049 | Outer Joint | | 25 | 34 | 55.7 | 79 | 55 | I |
| | 1998.02-2000.09 | | F | L/R | Coupe FWD XUD9/XUD9A | | GCO10042 | Outer Joint | | 25 | 34 | 54.8 | 78.5 | 56 | I |
| 1.9 (51 kw) | 1998.03-2005.03 | 5MT | F | L/R | Hatchback FWD DW8/DW8B | | GCO10076 | Outer Joint | 29W | 25 | 34 | 58.5 | 79 | 55 | I |
| | 1998.03-2005.03 | MT | F | L | Hatchback FWD DW8/DW8B | | GDS10025 | Drive Shaft | 29T | 25 | 24 | 54.8 | 78.5 | 593 | |

| | YEAR | TRANSM. | F/R | L/R | BODY STYLE & DRIVE TYPE & ENGINE | REMARKS | G-AP Ref. | PRODUCT | ABS | Technical Specifications | | | | | |
|---|---|---|---|---|---|---|---|---|---|---|---|---|---|---|---|
| | | | | | | | | | | A | B | C | H | L | P |
| **CITROËN** | | | | | | | | | | | | | | | |
| **Xsara** | | | | | | | | | | | | | | | |
| 1.9 (51 kw) | 1998.03-2005.03 | MT | F | L | Hatchback FWD DW8/DW8B | | GDS10090 | Drive Shaft | | 25 | 24 | 54.8 | 78.5 | 593 | |
| | 1998.03-2005.03 | MT | F | L | Hatchback FWD DW8/DW8B | | GDS99025 | Drive Shaft | 29W | 25 | 24 | 55.7 | 79 | 597 | |
| | 1998.03-2005.03 | MT | F | R | Hatchback FWD DW8/DW8B | | GDS10077 | Drive Shaft | | 25 | 24 | 55.7 | 79 | 872 | |
| | 1998.03-2005.03 | MT | F | R | Hatchback FWD DW8/DW8B | | GDS10078 | Drive Shaft | 29W | 25 | 24 | 55.7 | 79 | 872 | |
| | 1998.03-2005.03 | MT | F | R | Hatchback FWD DW8/DW8B | | GDS10193 | Drive Shaft | 29T | 25 | 24 | 54.8 | 78.5 | 868 | |
| | 1998.03-2005.03 | MT | F | L/R | Hatchback FWD DW8/DW8B | | GCO10002 | Outer Joint | | 25 | 23 | 54.8 | 78.5 | 56 | I |
| | 1998.03-2005.03 | MT | F | L/R | Hatchback FWD DW8/DW8B | | GCO10003 | Outer Joint | 29T | 25 | 23 | 54.8 | 78.5 | 56 | I |
| | 1998.03-2005.03 | | F | L | Hatchback FWD DW8/DW8B | | GDS10131 | Drive Shaft | 29T | 25 | 24 | 54.8 | 78.5 | 583 | |
| | 1998.03-2005.03 | | F | L | Hatchback FWD DW8/DW8B | | GCO10022 | Outer Joint | 29W | 25 | 34 | 55.7 | 79 | 55 | I |
| | 1998.03-2005.03 | | F | L | Hatchback FWD DW8/DW8B | | GCO10049 | Outer Joint | | 25 | 34 | 55.7 | 79 | 55 | I |
| | 1998.03-2005.03 | | F | L/R | Hatchback FWD DW8/DW8B | | GCO10042 | Outer Joint | | 25 | 34 | 54.8 | 78.5 | 56 | I |
| | 1999.06-2005.03 | 5MT | F | R | Coupe FWD DW8/DW8B | | GDS10193 | Drive Shaft | 29T | 25 | 24 | 54.8 | 78.5 | 868 | |
| | 1999.06-2005.03 | 5MT | F | L/R | Coupe FWD DW8/DW8B | | GCO10076 | Outer Joint | 29W | 25 | 34 | 58.5 | 79 | 55 | I |
| | 1999.06-2005.03 | 5MT | F | L | Coupe FWD DW8/DW8B | | GCI10018 | Inner Joint | | 24 | 29 | 40 | 62.5 | 99 | |
| | 1999.06-2005.03 | MT | F | L | Coupe FWD DW8/DW8B | Date from:1999.06;Trans. code:BE3 | GDS10025 | Drive Shaft | 29T | 25 | 24 | 54.8 | 78.5 | 593 | |
| | 1999.06-2005.03 | MT | F | L | Coupe FWD DW8/DW8B | Date from:1999.06;Trans. code:BE3 | GDS10090 | Drive Shaft | | 25 | 24 | 54.8 | 78.5 | 593 | |
| | 1999.06-2005.03 | MT | F | L | Coupe FWD DW8/DW8B | | GDS99025 | Drive Shaft | 29W | 25 | 24 | 55.7 | 79 | 597 | |
| | 1999.06-2005.03 | MT | F | R | Coupe FWD DW8/DW8B | | GDS10077 | Drive Shaft | | 25 | 24 | 55.7 | 79 | 872 | |
| | 1999.06-2005.03 | MT | F | R | Coupe FWD DW8/DW8B | | GDS10078 | Drive Shaft | 29W | 25 | 24 | 55.7 | 79 | 872 | |
| | 1999.06-2005.03 | MT | F | L/R | Coupe FWD DW8/DW8B | | GCO10002 | Outer Joint | | 25 | 23 | 54.8 | 78.5 | 56 | I |
| | 1999.06-2005.03 | MT | F | L/R | Coupe FWD DW8/DW8B | | GCO10003 | Outer Joint | 29T | 25 | 23 | 54.8 | 78.5 | 56 | I |
| | 1999.06-2005.03 | | F | L | Coupe FWD DW8/DW8B | | GDS10131 | Drive Shaft | 29T | 25 | 24 | 54.8 | 78.5 | 583 | |
| | 1999.06-2005.03 | | F | L | Coupe FWD DW8/DW8B | | GCO10022 | Outer Joint | 29W | 25 | 34 | 55.7 | 79 | 55 | I |
| | 1999.06-2005.03 | | F | L | Coupe FWD DW8/DW8B | | GCO10049 | Outer Joint | | 25 | 34 | 55.7 | 79 | 55 | I |
| | 1999.06-2005.03 | | F | L/R | Coupe FWD DW8/DW8B | | GCO10042 | Outer Joint | | 25 | 34 | 54.8 | 78.5 | 56 | I |
| | 1999.06-2005.03 | 5MT | F | R | Hatchback Van FWD DW8/DW8B | | GDS10077 | Drive Shaft | | 25 | 24 | 55.7 | 79 | 872 | |
| | 1999.06-2005.03 | 5MT | F | R | Hatchback Van FWD DW8/DW8B | | GDS10078 | Drive Shaft | 29W | 25 | 24 | 55.7 | 79 | 872 | |
| | 1999.06-2005.03 | 5MT | F | R | Hatchback Van FWD DW8/DW8B | | GDS10193 | Drive Shaft | 29T | 25 | 24 | 54.8 | 78.5 | 868 | |
| | 1999.06-2005.03 | 5MT | F | L/R | Hatchback Van FWD DW8/DW8B | | GCO10076 | Outer Joint | 29W | 25 | 34 | 58.5 | 79 | 55 | I |
| | 1999.06-2005.03 | | F | L | Hatchback Van FWD DW8/DW8B | | GDS10025 | Drive Shaft | 29T | 25 | 24 | 54.8 | 78.5 | 593 | |
| | 1999.06-2005.03 | | F | L | Hatchback Van FWD DW8/DW8B | | GDS10090 | Drive Shaft | | 25 | 24 | 54.8 | 78.5 | 593 | |
| | 1999.06-2005.03 | | F | L | Hatchback Van FWD DW8/DW8B | | GDS10131 | Drive Shaft | 29T | 25 | 24 | 54.8 | 78.5 | 583 | |
| | 1999.06-2005.03 | | F | L | Hatchback Van FWD DW8/DW8B | | GCO10022 | Outer Joint | 29W | 25 | 34 | 55.7 | 79 | 55 | I |
| | 1999.06-2005.03 | | F | L | Hatchback Van FWD DW8/DW8B | | GCO10049 | Outer Joint | | 25 | 34 | 55.7 | 79 | 55 | I |
| 1.9 (52 kw) | 2000.04-2005.04 | 5MT | F | L | Hatchback FWD DW8B | For vehicles without ABS | GDS10227 | Drive Shaft | | 25 | 24 | 58.5 | 78.5 | 595 | |
| | 2000.04-2005.04 | 5MT | F | L | Hatchback FWD DW8B | For vehicles with ABS | GDS99025 | Drive Shaft | 29W | 25 | 24 | 55.7 | 79 | 597 | |
| | 2000.04-2005.04 | 5MT | F | R | Hatchback FWD DW8B | For vehicles without ABS | GDS10077 | Drive Shaft | | 25 | 24 | 55.7 | 79 | 872 | |
| | 2000.04-2005.04 | 5MT | F | R | Hatchback FWD DW8B | For vehicles with ABS | GDS10078 | Drive Shaft | 29W | 25 | 24 | 55.7 | 79 | 872 | |
| | 2000.04-2005.04 | 5MT | F | R | Hatchback FWD DW8B | For vehicles with ABS | GDS10193 | Drive Shaft | 29T | 25 | 24 | 54.8 | 78.5 | 868 | |
| | 2000.04-2005.04 | | F | L | Hatchback FWD DW8B | | GCO10049 | Outer Joint | | 25 | 34 | 55.7 | 79 | 55 | I |
| | 2000.04-2005.04 | | F | L/R | Hatchback FWD DW8B | | GCO10042 | Outer Joint | | 25 | 34 | 54.8 | 78.5 | 56 | I |
| | 2000.04-2005.04 | | F | | Hatchback FWD DW8B | | GCO10022 | Outer Joint | 29W | 25 | 34 | 55.7 | 79 | 55 | I |
| | 2000.04-2005.04 | | F | | Hatchback FWD DW8B | | GCO10076 | Outer Joint | 29W | 25 | 34 | 58.5 | 79 | 55 | I |
| 1.9 (55 kw) | 1998.01-1999.05 | 5MT | F | L | Coupe FWD XUD9BSD | | GDS10025 | Drive Shaft | 29T | 25 | 24 | 54.8 | 78.5 | 593 | |
| | 1998.01-1999.05 | 5MT | F | L | Coupe FWD XUD9BSD | | GDS10090 | Drive Shaft | | 25 | 24 | 54.8 | 78.5 | 593 | |
| | 1998.01-1999.05 | 5MT | F | R | Coupe FWD XUD9BSD | | GDS10077 | Drive Shaft | | 25 | 24 | 55.7 | 79 | 872 | |
| | 1998.01-1999.05 | 5MT | F | R | Coupe FWD XUD9BSD | | GDS10078 | Drive Shaft | 29W | 25 | 24 | 55.7 | 79 | 872 | |
| | 1998.01-1999.05 | 5MT | F | R | Coupe FWD XUD9BSD | | GDS10193 | Drive Shaft | 29T | 25 | 24 | 54.8 | 78.5 | 868 | |
| | 1998.01-1999.05 | MT | F | L/R | Coupe FWD XUD9BSD | | GCO10022 | Outer Joint | 29W | 25 | 34 | 55.7 | 79 | 55 | I |
| | 1998.01-1999.05 | | F | L | Coupe FWD XUD9BSD | | GCO10049 | Outer Joint | | 25 | 34 | 55.7 | 79 | 55 | I |
| | 1998.01-2000.09 | MT | F | L | Hatchback FWD XUD9BSD | Trans. code:BE3 | GDS10025 | Drive Shaft | 29T | 25 | 24 | 54.8 | 78.5 | 593 | |
| | 1998.01-2000.09 | MT | F | L | Hatchback FWD XUD9BSD | Trans. code:BE3 | GDS10090 | Drive Shaft | | 25 | 24 | 54.8 | 78.5 | 593 | |
| | 1998.01-2000.09 | MT | F | L | Hatchback FWD XUD9BSD | | GDS99025 | Drive Shaft | 29W | 25 | 24 | 55.7 | 79 | 597 | |
| | 1998.01-2000.09 | MT | F | R | Hatchback FWD XUD9BSD | Trans. code:BE3 | GDS10077 | Drive Shaft | | 25 | 24 | 55.7 | 79 | 872 | |
| | 1998.01-2000.09 | MT | F | R | Hatchback FWD XUD9BSD | | GDS10078 | Drive Shaft | 29W | 25 | 24 | 55.7 | 79 | 872 | |
| | 1998.01-2000.09 | MT | F | L | Hatchback FWD XUD9BSD | | GCO10022 | Outer Joint | 29W | 25 | 34 | 55.7 | 79 | 55 | I |
| | 1998.01-2000.09 | MT | F | L/R | Hatchback FWD XUD9BSD | | GCO10002 | Outer Joint | | 25 | 23 | 54.8 | 78.5 | 56 | I |
| | 1998.01-2000.09 | MT | F | L/R | Hatchback FWD XUD9BSD | | GCO10003 | Outer Joint | 29T | 25 | 23 | 54.8 | 78.5 | 56 | I |
| | 1998.01-2000.09 | | F | L | Hatchback FWD XUD9BSD | | GDS10131 | Drive Shaft | 29T | 25 | 24 | 54.8 | 78.5 | 583 | |
| | 1998.01-2000.09 | | F | L | Hatchback FWD XUD9BSD | | GCO10049 | Outer Joint | | 25 | 34 | 55.7 | 79 | 55 | I |
| | 1998.01-2000.09 | | F | L/R | Hatchback FWD XUD9BSD | | GCO10042 | Outer Joint | | 25 | 34 | 54.8 | 78.5 | 56 | I |
| | 1998.01-2000.09 | | F | L/R | Hatchback FWD XUD9BSD | | GCO10076 | Outer Joint | 29W | 25 | 34 | 58.5 | 79 | 55 | I |
| 1.9 (65 kw) | 1998.05-2000.08 | MT | F | L | Hatchback Van FWD XUD9TE | | GDS10025 | Drive Shaft | 29T | 25 | 24 | 54.8 | 78.5 | 593 | |
| | 1998.05-2000.08 | MT | F | L | Hatchback Van FWD XUD9TE | | GDS10131 | Drive Shaft | 29T | 25 | 24 | 54.8 | 78.5 | 583 | |
| | 1998.05-2000.08 | MT | F | L | Hatchback Van FWD XUD9TE | | GDS10163 | Drive Shaft | | 25 | 24 | 54.8 | 78.5 | 583 | |

| | YEAR | TRANSM. | F/R | L/R | BODY STYLE & DRIVE TYPE & ENGINE | REMARKS | G-AP Ref. | PRODUCT | ABS | Technical Specifications A | B | C | H | L | P |
|---|---|---|---|---|---|---|---|---|---|---|---|---|---|---|---|
| **CITROËN** | | | | | | | | | | | | | | | |
| **Xsara** | | | | | | | | | | | | | | | |
| 1.9 (65 kw) | 1998.05-2000.08 | MT | F | L | Hatchback Van FWD XUD9TE | | GDS99025 | Drive Shaft | 29W | 25 | 24 | 55.7 | 79 | 597 | |
| | 1998.05-2000.08 | MT | F | R | Hatchback Van FWD XUD9TE | | GDS10077 | Drive Shaft | | 25 | 24 | 55.7 | 79 | 872 | |
| | 1998.05-2000.08 | MT | F | R | Hatchback Van FWD XUD9TE | | GDS10078 | Drive Shaft | 29W | 25 | 24 | 55.7 | 79 | 872 | |
| | 1998.05-2000.08 | MT | F | R | Hatchback Van FWD XUD9TE | | GDS10193 | Drive Shaft | 29T | 25 | 24 | 54.8 | 78.5 | 868 | |
| | 1998.05-2000.08 | MT | F | L | Hatchback Van FWD XUD9TE | | GCO10022 | Outer Joint | 29W | 25 | 34 | 55.7 | 79 | 55 | I |
| | 1998.05-2000.08 | MT | F | L | Hatchback Van FWD XUD9TE | | GCO10049 | Outer Joint | | 25 | 34 | 55.7 | 79 | 55 | I |
| | 1998.05-2000.08 | MT | F | L/R | Hatchback Van FWD XUD9TE | | GCO10076 | Outer Joint | 29W | 25 | 34 | 58.5 | 79 | 55 | I |
| | 1998.05-2000.08 | MT | F | L | Hatchback Van FWD XUD9TE | | GCI10018 | Inner Joint | | 24 | 29 | 40 | 62.5 | 99 | |
| | 1998.05-2000.08 | | F | L/R | Hatchback Van FWD XUD9TE | | GCO10042 | Outer Joint | | 25 | 34 | 54.8 | 78.5 | 56 | I |
| 1.9 (66 kw) | 1997.07-2000.08 | 5MT | F | L | Hatchback FWD XUD9TE | length2:69mm | GDS10025 | Drive Shaft | 29T | 25 | 24 | 54.8 | 78.5 | 593 | |
| | 1997.07-2000.08 | 5MT | F | R | Hatchback FWD XUD9TE | | GDS10193 | Drive Shaft | 29T | 25 | 24 | 54.8 | 78.5 | 868 | |
| | 1997.07-2000.08 | MT | F | L | Hatchback FWD XUD9TE | | GDS10080 | Drive Shaft | 29W | 25 | 24 | 55.7 | 79 | 597 | |
| | 1997.07-2000.08 | MT | F | L | Hatchback FWD XUD9TE | length2:69mm | GDS10090 | Drive Shaft | | 25 | 24 | 54.8 | 78.5 | 593 | |
| | 1997.07-2000.08 | MT | F | L | Hatchback FWD XUD9TE | length2:62.5mm | GDS10131 | Drive Shaft | 29T | 25 | 24 | 54.8 | 78.5 | 583 | |
| | 1997.07-2000.08 | MT | F | L | Hatchback FWD XUD9TE | Date from:1997.07;length2:62.5mm | GDS10163 | Drive Shaft | | 25 | 24 | 54.8 | 78.5 | 583 | |
| | 1997.07-2000.08 | MT | F | R | Hatchback FWD XUD9TE | | GDS10077 | Drive Shaft | | 25 | 24 | 55.7 | 79 | 872 | |
| | 1997.07-2000.08 | MT | F | R | Hatchback FWD XUD9TE | | GDS10078 | Drive Shaft | 29W | 25 | 24 | 55.7 | 79 | 872 | |
| | 1997.07-2000.08 | MT | F | L | Hatchback FWD XUD9TE | | GCO10022 | Outer Joint | 29W | 25 | 34 | 55.7 | 79 | 55 | I |
| | 1997.07-2000.08 | MT | F | L | Hatchback FWD XUD9TE | | GCO10049 | Outer Joint | | 25 | 34 | 55.7 | 79 | 55 | I |
| | 1997.07-2000.08 | MT | F | L/R | Hatchback FWD XUD9TE | Trans. code:BE3R | GCO10002 | Outer Joint | | 25 | 23 | 54.8 | 78.5 | 56 | I |
| | 1997.07-2000.08 | MT | F | L/R | Hatchback FWD XUD9TE | Trans. code:BE3R | GCO10003 | Outer Joint | 29T | 25 | 23 | 54.8 | 78.5 | 56 | I |
| | 1997.07-2000.08 | MT | F | L/R | Hatchback FWD XUD9TE | | GCO10042 | Outer Joint | | 25 | 34 | 54.8 | 78.5 | 56 | I |
| | 1997.07-2000.08 | MT | F | L/R | Hatchback FWD XUD9TE | | GCO10076 | Outer Joint | 29W | 25 | 34 | 58.5 | 79 | 55 | I |
| | 1997.07-2000.08 | MT | F | L | Hatchback FWD XUD9TE | | GCI10018 | Inner Joint | | 24 | 29 | 40 | 62.5 | 99 | |
| | 1998.02-2000.09 | 5MT | F | R | Coupe FWD XUD9TE | | GDS10193 | Drive Shaft | 29T | 25 | 24 | 54.8 | 78.5 | 868 | |
| | 1998.02-2000.09 | 5MT | F | L/R | Coupe FWD XUD9TE | | GCO10076 | Outer Joint | 29W | 25 | 34 | 58.5 | 79 | 55 | I |
| | 1998.02-2000.09 | MT | F | L | Coupe FWD XUD9TE | | GDS10080 | Drive Shaft | 29W | 25 | 24 | 55.7 | 79 | 597 | |
| | 1998.02-2000.09 | MT | F | L | Coupe FWD XUD9TE | | GDS10131 | Drive Shaft | 29T | 25 | 24 | 54.8 | 78.5 | 583 | |
| | 1998.02-2000.09 | MT | F | L | Coupe FWD XUD9TE | | GDS10163 | Drive Shaft | | 25 | 24 | 54.8 | 78.5 | 583 | |
| | 1998.02-2000.09 | MT | F | R | Coupe FWD XUD9TE | | GDS10077 | Drive Shaft | | 25 | 24 | 55.7 | 79 | 872 | |
| | 1998.02-2000.09 | MT | F | R | Coupe FWD XUD9TE | | GDS10078 | Drive Shaft | 29W | 25 | 24 | 55.7 | 79 | 872 | |
| | 1998.02-2000.09 | MT | F | L | Coupe FWD XUD9TE | | GCO10022 | Outer Joint | 29W | 25 | 34 | 55.7 | 79 | 55 | I |
| | 1998.02-2000.09 | MT | F | L/R | Coupe FWD XUD9TE | Trans. code:BE3R | GCO10002 | Outer Joint | | 25 | 23 | 54.8 | 78.5 | 56 | I |
| | 1998.02-2000.09 | MT | F | L/R | Coupe FWD XUD9TE | Trans. code:BE3R | GCO10003 | Outer Joint | 29T | 25 | 23 | 54.8 | 78.5 | 56 | I |
| | 1998.02-2000.09 | MT | F | L | Coupe FWD XUD9TE | | GCI10018 | Inner Joint | | 24 | 29 | 40 | 62.5 | 99 | |
| | 1998.02-2000.09 | | F | L | Coupe FWD XUD9TE | | GDS10025 | Drive Shaft | 29T | 25 | 24 | 54.8 | 78.5 | 593 | |
| | 1998.02-2000.09 | | F | L | Coupe FWD XUD9TE | | GCO10049 | Outer Joint | | 25 | 34 | 55.7 | 79 | 55 | I |
| | 1998.02-2000.09 | | F | L/R | Coupe FWD XUD9TE | | GCO10042 | Outer Joint | | 25 | 34 | 54.8 | 78.5 | 56 | I |
| 2.0 (66 kw) | 1999.02-2005.03 | 5MT | F | L | Coupe FWD DW10TD | | GDS99195 | Drive Shaft | 48W | 25 | 24 | 58.5 | 79 | 585 | |
| | 1999.02-2005.03 | 5MT | F | R | Coupe FWD DW10TD | | GDS10193 | Drive Shaft | 29T | 25 | 24 | 54.8 | 78.5 | 868 | |
| | 1999.02-2005.03 | 5MT | F | R | Coupe FWD DW10TD | | GDS99196 | Drive Shaft | 48W | 25 | 24 | 58.5 | 79 | 869 | |
| | 1999.02-2005.03 | 5MT | F | L/R | Coupe FWD DW10TD | for ESP,Date from:2000.09 | GCO10067 | Outer Joint | 48W | 25 | 34 | 58.5 | 79 | 55 | I |
| | 1999.02-2005.03 | 5MT | F | L/R | Coupe FWD DW10TD | not for ESP | GCO10076 | Outer Joint | 29W | 25 | 34 | 58.5 | 79 | 55 | I |
| | 1999.02-2005.03 | 5MT | F | L | Coupe FWD DW10TD | | GCI10020 | Inner Joint | | 24 | 34 | 40 | 62.5 | 99 | |
| | 1999.02-2005.03 | MT | F | L | Coupe FWD DW10TD | | GDS10080 | Drive Shaft | 29W | 25 | 24 | 55.7 | 79 | 597 | |
| | 1999.02-2005.03 | MT | F | L | Coupe FWD DW10TD | | GDS10131 | Drive Shaft | 29T | 25 | 24 | 54.8 | 78.5 | 583 | |
| | 1999.02-2005.03 | MT | F | R | Coupe FWD DW10TD | | GDS10078 | Drive Shaft | 29W | 25 | 24 | 55.7 | 79 | 872 | |
| | 1999.02-2005.03 | MT | F | L/R | Coupe FWD DW10TD | Trans. code:BE3R | GCO10002 | Outer Joint | | 25 | 23 | 54.8 | 78.5 | 56 | I |
| | 1999.02-2005.03 | MT | F | L/R | Coupe FWD DW10TD | Trans. code:BE3R | GCO10003 | Outer Joint | 29T | 25 | 23 | 54.8 | 78.5 | 56 | I |
| | 1999.02-2005.03 | | F | L | Coupe FWD DW10TD | Date To:2000.08;To ORG/OPR:08687 | GDS10025 | Drive Shaft | 29T | 25 | 24 | 54.8 | 78.5 | 593 | |
| | 1999.02-2005.03 | 5MT | F | L | Hatchback FWD DW10TD | Date to:2000.08;To ORG/OPR:08687 | GDS10025 | Drive Shaft | 29T | 25 | 24 | 54.8 | 78.5 | 593 | |
| | 1999.02-2005.03 | 5MT | F | L | Hatchback FWD DW10TD | | GDS99195 | Drive Shaft | 48W | 25 | 24 | 58.5 | 79 | 585 | |
| | 1999.02-2005.03 | 5MT | F | R | Hatchback FWD DW10TD | | GDS10188 | Drive Shaft | 29T | 25 | 22 | 54.5 | 79.5 | 860 | |
| | 1999.02-2005.03 | 5MT | F | R | Hatchback FWD DW10TD | | GDS10193 | Drive Shaft | 29T | 25 | 24 | 54.8 | 78.5 | 868 | |
| | 1999.02-2005.03 | 5MT | F | R | Hatchback FWD DW10TD | | GDS99196 | Drive Shaft | 48W | 25 | 24 | 58.5 | 79 | 869 | |
| | 1999.02-2005.03 | 5MT | F | L/R | Hatchback FWD DW10TD | for ESP,Date from:2000.09 | GCO10067 | Outer Joint | 48W | 25 | 34 | 58.5 | 79 | 55 | I |
| | 1999.02-2005.03 | 5MT | F | L/R | Hatchback FWD DW10TD | not for ESP,Without Stability Control System | GCO10076 | Outer Joint | 29W | 25 | 34 | 58.5 | 79 | 55 | I |
| | 1999.02-2005.03 | 5MT | F | L | Hatchback FWD DW10TD | | GCI10020 | Inner Joint | | 24 | 34 | 40 | 62.5 | 99 | |
| | 1999.02-2005.03 | MT | F | R | Hatchback FWD DW10TD | | GDS10078 | Drive Shaft | 29W | 25 | 24 | 55.7 | 79 | 872 | |
| | 1999.02-2005.03 | MT | F | L/R | Hatchback FWD DW10TD | Trans. code:BE3R | GCO10002 | Outer Joint | | 25 | 23 | 54.8 | 78.5 | 56 | I |
| | 1999.02-2005.03 | MT | F | L/R | Hatchback FWD DW10TD | Trans. code:BE3R | GCO10003 | Outer Joint | 29T | 25 | 23 | 54.8 | 78.5 | 56 | I |
| | 2000.09-2005.03 | 5MT | F | L | Hatchback Van FWD DW10TD | | GDS99195 | Drive Shaft | 48W | 25 | 24 | 58.5 | 79 | 585 | |
| | 2000.09-2005.03 | 5MT | F | R | Hatchback Van FWD DW10TD | | GDS10193 | Drive Shaft | 29T | 25 | 24 | 54.8 | 78.5 | 868 | |
| | 2000.09-2005.03 | 5MT | F | R | Hatchback Van FWD DW10TD | | GDS99196 | Drive Shaft | 48W | 25 | 24 | 58.5 | 79 | 869 | |
| | 2000.09-2005.03 | 5MT | F | L/R | Hatchback Van FWD DW10TD | for ESP | GCO10067 | Outer Joint | 48W | 25 | 34 | 58.5 | 79 | 55 | I |

| | YEAR | TRANSM. | F/R | L/R | BODY STYLE & DRIVE TYPE & ENGINE | REMARKS | G-AP Ref. | PRODUCT | ABS | Technical Specifications A | B | C | H | L | P |
|---|---|---|---|---|---|---|---|---|---|---|---|---|---|---|---|
| **CITROËN** **Xsara** | | | | | | | | | | | | | | | |
| 2.0 (66 kw) | 2000.09-2005.03 | 5MT | F | L/R | Hatchback Van FWD DW10TD | not for ESP | GCO10076 | Outer Joint | 29W | 25 | 34 | 58.5 | 79 | 55 | I |
| | 2000.09-2005.03 | 5MT | F | L | Hatchback Van FWD DW10TD | | GCI10020 | Inner Joint | | 24 | 34 | 40 | 62.5 | 99 | |
| | 2000.09-2005.03 | MT | F | L | Hatchback Van FWD DW10TD | | GDS10080 | Drive Shaft | 29W | 25 | 24 | 55.7 | 79 | 597 | |
| | 2000.09-2005.03 | MT | F | L | Hatchback Van FWD DW10TD | Trans. code:BE3 | GDS10131 | Drive Shaft | 29T | 25 | 24 | 54.8 | 78.5 | 583 | |
| | 2000.09-2005.03 | MT | F | L | Hatchback Van FWD DW10TD | | GDS10163 | Drive Shaft | | 25 | 24 | 54.8 | 78.5 | 583 | |
| | 2000.09-2005.03 | MT | F | R | Hatchback Van FWD DW10TD | Trans. code:BE3 | GDS10077 | Drive Shaft | | 25 | 24 | 55.7 | 79 | 872 | |
| | 2000.09-2005.03 | MT | F | R | Hatchback Van FWD DW10TD | | GDS10078 | Drive Shaft | 29W | 25 | 24 | 55.7 | 79 | 872 | |
| | 2000.09-2005.03 | | F | L | Hatchback Van FWD DW10TD | Date To:2000.08;To ORG/OPR:08687 | GDS10025 | Drive Shaft | 29T | 25 | 24 | 54.8 | 78.5 | 593 | |
| | 2000.09-2005.03 | | F | L | Hatchback Van FWD DW10TD | | GDS10090 | Drive Shaft | | 25 | 24 | 54.8 | 78.5 | 593 | |
| 2.0 (80 kw) | 2001.05-2005.03 | AT | F | L | Coupe FWD DW10ATED | | GDS56307 | Drive Shaft | 48W | 25 | 26 | 58.5 | 79 | 575 | |
| | 2001.05-2005.03 | AT | F | R | Coupe FWD DW10ATED | | GDS56308 | Drive Shaft | 48W | 25 | 26 | 58.5 | 79 | 783 | |
| | 2001.05-2005.03 | MT | F | L | Coupe FWD DW10ATED | | GDS10025 | Drive Shaft | 29T | 25 | 24 | 54.8 | 78.5 | 593 | |
| | 2001.05-2005.03 | MT | F | L | Coupe FWD DW10ATED | | GDS10080 | Drive Shaft | 29W | 25 | 24 | 55.7 | 79 | 597 | |
| | 2001.05-2005.03 | MT | F | L | Coupe FWD DW10ATED | | GDS10131 | Drive Shaft | 29T | 25 | 24 | 54.8 | 78.5 | 583 | |
| | 2001.05-2005.03 | MT | F | L | Coupe FWD DW10ATED | | GDS99195 | Drive Shaft | 48W | 25 | 24 | 58.5 | 79 | 585 | |
| | 2001.05-2005.03 | MT | F | R | Coupe FWD DW10ATED | | GDS10078 | Drive Shaft | 29W | 25 | 24 | 55.7 | 79 | 872 | |
| | 2001.05-2005.03 | MT | F | R | Coupe FWD DW10ATED | | GDS10193 | Drive Shaft | 29T | 25 | 24 | 54.8 | 78.5 | 868 | |
| | 2001.05-2005.03 | MT | F | R | Coupe FWD DW10ATED | | GDS99196 | Drive Shaft | 48W | 25 | 24 | 58.5 | 79 | 869 | |
| | 2001.05-2005.03 | MT | F | L/R | Coupe FWD DW10ATED | for ESP | GCO10067 | Outer Joint | 48W | 25 | 34 | 58.5 | 79 | 55 | I |
| | 2001.05-2005.03 | MT | F | L/R | Coupe FWD DW10ATED | not for ESP | GCO10076 | Outer Joint | 29W | 25 | 34 | 58.5 | 79 | 55 | I |
| | 2001.05-2005.03 | MT | F | L | Coupe FWD DW10ATED | | GCI10020 | Inner Joint | | 24 | 34 | 40 | 62.5 | 99 | |
| | 2001.05-2005.03 | AT | F | L | Hatchback FWD DW10ATED | | GDS56307 | Drive Shaft | 48W | 25 | 26 | 58.5 | 79 | 575 | |
| | 2001.05-2005.03 | AT | F | R | Hatchback FWD DW10ATED | | GDS56308 | Drive Shaft | 48W | 25 | 26 | 58.5 | 79 | 783 | |
| | 2001.05-2005.03 | MT | F | L | Hatchback FWD DW10ATED | | GDS10025 | Drive Shaft | 29T | 25 | 24 | 54.8 | 78.5 | 593 | |
| | 2001.05-2005.03 | MT | F | L | Hatchback FWD DW10ATED | | GDS10080 | Drive Shaft | 29W | 25 | 24 | 55.7 | 79 | 597 | |
| | 2001.05-2005.03 | MT | F | L | Hatchback FWD DW10ATED | | GDS10131 | Drive Shaft | 29T | 25 | 24 | 54.8 | 78.5 | 583 | |
| | 2001.05-2005.03 | MT | F | L | Hatchback FWD DW10ATED | | GDS99195 | Drive Shaft | 48W | 25 | 24 | 58.5 | 79 | 585 | |
| | 2001.05-2005.03 | MT | F | R | Hatchback FWD DW10ATED | | GDS10078 | Drive Shaft | 29W | 25 | 24 | 55.7 | 79 | 872 | |
| | 2001.05-2005.03 | MT | F | R | Hatchback FWD DW10ATED | | GDS10193 | Drive Shaft | 29T | 25 | 24 | 54.8 | 78.5 | 868 | |
| | 2001.05-2005.03 | MT | F | R | Hatchback FWD DW10ATED | | GDS99196 | Drive Shaft | 48W | 25 | 24 | 58.5 | 79 | 869 | |
| | 2001.05-2005.03 | MT | F | L/R | Hatchback FWD DW10ATED | for ESP | GCO10067 | Outer Joint | 48W | 25 | 34 | 58.5 | 79 | 55 | I |
| | 2001.05-2005.03 | MT | F | L/R | Hatchback FWD DW10ATED | not for ESP | GCO10076 | Outer Joint | 29W | 25 | 34 | 58.5 | 79 | 55 | I |
| | 2001.05-2005.03 | MT | F | L | Hatchback FWD DW10ATED | | GCI10020 | Inner Joint | | 24 | 34 | 40 | 62.5 | 99 | |
| 2.0 (97 kw) | 1998.07-2000.08 | 4AT/5MT | F | R | Hatchback FWD XU10J4R | | GDS10193 | Drive Shaft | 29T | 25 | 24 | 54.8 | 78.5 | 868 | |
| | 1998.07-2000.08 | 4AT/5MT | F | L/R | Hatchback FWD XU10J4R | | GCO10076 | Outer Joint | 29W | 25 | 34 | 58.5 | 79 | 55 | I |
| | 1998.07-2000.08 | MT | F | L | Hatchback FWD XU10J4R | | GDS10080 | Drive Shaft | 29W | 25 | 24 | 55.7 | 79 | 597 | |
| | 1998.07-2000.08 | MT | F | L | Hatchback FWD XU10J4R | Trans. code:BE3 | GDS10131 | Drive Shaft | 29T | 25 | 24 | 54.8 | 78.5 | 583 | |
| | 1998.07-2000.08 | MT | F | L | Hatchback FWD XU10J4R | | GDS10163 | Drive Shaft | | 25 | 24 | 54.8 | 78.5 | 583 | |
| | 1998.07-2000.08 | MT | F | R | Hatchback FWD XU10J4R | Trans. code:BE3 | GDS10077 | Drive Shaft | | 25 | 24 | 55.7 | 79 | 872 | |
| | 1998.07-2000.08 | MT | F | R | Hatchback FWD XU10J4R | | GDS10078 | Drive Shaft | 29W | 25 | 24 | 55.7 | 79 | 872 | |
| | 1998.07-2000.08 | MT | F | L | Hatchback FWD XU10J4R | | GCI10018 | Inner Joint | | 24 | 29 | 40 | 62.5 | 99 | |
| | 1998.07-2000.08 | | F | L | Hatchback FWD XU10J4R | | GDS10025 | Drive Shaft | 29T | 25 | 24 | 54.8 | 78.5 | 593 | |
| | 1998.07-2000.08 | | F | L | Hatchback FWD XU10J4R | | GDS10090 | Drive Shaft | | 25 | 24 | 54.8 | 78.5 | 593 | |
| | 1998.07-2000.08 | | F | L | Hatchback FWD XU10J4R | | GCO10022 | Outer Joint | 29W | 25 | 34 | 55.7 | 79 | 55 | I |
| | 1998.07-2000.08 | | F | L | Hatchback FWD XU10J4R | | GCO10049 | Outer Joint | | 25 | 34 | 55.7 | 79 | 55 | I |
| 2.0 (100 kw) | 2000.09-2005.03 | AT | F | L | Coupe FWD EW10J4 | | GDS56307 | Drive Shaft | 48W | 25 | 26 | 58.5 | 79 | 575 | |
| | 2000.09-2005.03 | AT | F | R | Coupe FWD EW10J4 | | GDS56308 | Drive Shaft | 48W | 25 | 26 | 58.5 | 79 | 783 | |
| | 2000.09-2005.03 | MT | F | L | Coupe FWD EW10J4 | | GDS10080 | Drive Shaft | 29W | 25 | 24 | 55.7 | 79 | 597 | |
| | 2000.09-2005.03 | MT | F | L | Coupe FWD EW10J4 | | GDS99195 | Drive Shaft | 48W | 25 | 24 | 58.5 | 79 | 585 | |
| | 2000.09-2005.03 | MT | F | R | Coupe FWD EW10J4 | | GDS10078 | Drive Shaft | 29W | 25 | 24 | 55.7 | 79 | 872 | |
| | 2000.09-2005.03 | MT | F | R | Coupe FWD EW10J4 | | GDS99196 | Drive Shaft | 48W | 25 | 24 | 58.5 | 79 | 869 | |
| | 2000.09-2005.03 | MT | F | L | Coupe FWD EW10J4 | | GCO10067 | Outer Joint | 48W | 25 | 34 | 58.5 | 79 | 55 | I |
| | 2000.09-2005.03 | MT | F | L | Coupe FWD EW10J4 | | GCI10020 | Inner Joint | | 24 | 34 | 40 | 62.5 | 99 | |
| | 2000.09-2005.03 | | F | | Coupe FWD EW10J4 | | GCO10022 | Outer Joint | 29W | 25 | 34 | 55.7 | 79 | 55 | I |
| | 2000.09-2005.03 | MT | F | L | Hatchback FWD EW10J4 | | GDS10080 | Drive Shaft | 29W | 25 | 24 | 55.7 | 79 | 597 | |
| | 2000.09-2005.03 | MT | F | L | Hatchback FWD EW10J4 | for vehicles without ESP | GDS10131 | Drive Shaft | 29T | 25 | 24 | 54.8 | 78.5 | 583 | |
| | 2000.09-2005.03 | MT | F | L | Hatchback FWD EW10J4 | | GDS10163 | Drive Shaft | | 25 | 24 | 54.8 | 78.5 | 583 | |
| | 2000.09-2005.03 | MT | F | L | Hatchback FWD EW10J4 | | GDS99195 | Drive Shaft | 48W | 25 | 24 | 58.5 | 79 | 585 | |
| | 2000.09-2005.03 | MT | F | R | Hatchback FWD EW10J4 | for vehicles without ESP | GDS10077 | Drive Shaft | | 25 | 24 | 55.7 | 79 | 872 | |
| | 2000.09-2005.03 | MT | F | R | Hatchback FWD EW10J4 | | GDS10078 | Drive Shaft | 29W | 25 | 24 | 55.7 | 79 | 872 | |
| | 2000.09-2005.03 | MT | F | R | Hatchback FWD EW10J4 | | GDS99196 | Drive Shaft | 48W | 25 | 24 | 58.5 | 79 | 869 | |
| | 2000.09-2005.03 | MT | F | L | Hatchback FWD EW10J4 | | GCO10067 | Outer Joint | 48W | 25 | 34 | 58.5 | 79 | 55 | I |
| | 2000.09-2005.03 | MT | F | L | Hatchback FWD EW10J4 | | GCI10018 | Inner Joint | | 24 | 29 | 40 | 62.5 | 99 | |
| | 2000.09-2005.03 | | F | L/R | Hatchback FWD EW10J4 | | GCO10022 | Outer Joint | 29W | 25 | 34 | 55.7 | 79 | 55 | I |
| 2.0 (120 kw) | 1997.06-2004.10 | 5MT | F | R | Coupe FWD XU10J4RS | | GDS10193 | Drive Shaft | 29T | 25 | 24 | 54.8 | 78.5 | 868 | |

| | YEAR | TRANSM. | F/R | L/R | BODY STYLE & DRIVE TYPE & ENGINE | REMARKS | G-AP Ref. | PRODUCT | ABS | Technical Specifications A | B | C | H | L | P |
|---|---|---|---|---|---|---|---|---|---|---|---|---|---|---|---|
| **CITROËN** | | | | | | | | | | | | | | | |
| **Xsara** | | | | | | | | | | | | | | | |
| 2.0 (120 kw) | 1997.06-2004.10 | MT | F | L | Coupe FWD XU10J4RS | | GDS10080 | Drive Shaft | 29W | 25 | 24 | 55.7 | 79 | 597 | |
| | 1997.06-2004.10 | MT | F | L | Coupe FWD XU10J4RS | Date to:2004.10;Trans. code:BE3 | GDS10131 | Drive Shaft | 29T | 25 | 24 | 54.8 | 78.5 | 583 | |
| | 1997.06-2004.10 | MT | F | L | Coupe FWD XU10J4RS | | GDS10163 | Drive Shaft | | 25 | 24 | 54.8 | 78.5 | 583 | |
| | 1997.06-2004.10 | MT | F | R | Coupe FWD XU10J4RS | Date to:2004.10;Trans. code:BE3 | GDS10077 | Drive Shaft | | 25 | 24 | 55.7 | 79 | 872 | |
| | 1997.06-2004.10 | MT | F | R | Coupe FWD XU10J4RS | | GDS10078 | Drive Shaft | 29W | 25 | 24 | 55.7 | 79 | 872 | |
| | 1997.06-2004.10 | MT | F | L/R | Coupe FWD XU10J4RS | Trans. code:BE3R | GCO10002 | Outer Joint | | 25 | 23 | 54.8 | 78.5 | 56 | I |
| | 1997.06-2004.10 | MT | F | L/R | Coupe FWD XU10J4RS | Trans. code:BE3R | GCO10003 | Outer Joint | 29T | 25 | 23 | 54.8 | 78.5 | 56 | I |
| | 1997.06-2004.10 | MT | F | L | Coupe FWD XU10J4RS | | GCI10018 | Inner Joint | | 24 | 29 | 40 | 62.5 | 99 | |
| | 1997.06-2004.10 | | F | L | Coupe FWD XU10J4RS | | GDS10025 | Drive Shaft | 29T | 25 | 24 | 54.8 | 78.5 | 593 | |
| | 1997.06-2004.10 | | F | L | Coupe FWD XU10J4RS | | GCO10022 | Outer Joint | 29W | 25 | 34 | 55.7 | 79 | 55 | I |
| | 1997.06-2004.10 | | F | L | Coupe FWD XU10J4RS | | GCO10049 | Outer Joint | | 25 | 34 | 55.7 | 79 | 55 | I |
| | 1997.06-2004.10 | | F | L/R | Coupe FWD XU10J4RS | | GCO10076 | Outer Joint | 29W | 25 | 34 | 58.5 | 79 | 55 | I |
| **Xsara Estate/Break** | | | | | | | | | | | | | | | |
| 1.4 (50 kw) | 2003.01-2005.08 | 5MT | F | R | Estate FWD DV4TD | | GDS10193 | Drive Shaft | 29T | 25 | 24 | 54.8 | 78.5 | 868 | |
| | 2003.01-2005.08 | 5MT | F | L/R | Estate FWD DV4TD | | GCO10076 | Outer Joint | 29W | 25 | 34 | 58.5 | 79 | 55 | I |
| | 2003.01-2005.08 | MT | F | L | Estate FWD DV4TD | | GDS10080 | Drive Shaft | 29W | 25 | 24 | 55.7 | 79 | 597 | |
| | 2003.01-2005.08 | MT | F | R | Estate FWD DV4TD | | GDS10078 | Drive Shaft | 29W | 25 | 24 | 55.7 | 79 | 872 | |
| | 2003.01-2005.08 | | F | L | Estate FWD DV4TD | | GDS10025 | Drive Shaft | 29T | 25 | 24 | 54.8 | 78.5 | 593 | |
| | 2003.01-2005.08 | | F | L | Estate FWD DV4TD | | GDS10131 | Drive Shaft | 29T | 25 | 24 | 54.8 | 78.5 | 583 | |
| 1.4 (55 kw) | 1997.10-2005.08 | 5MT | F | L | Estate FWD TU3JP | Transm.code:68/70 | GDS10018 | Drive Shaft | 29T | 25 | 22 | 60 | 80 | 603 | |
| | 1997.10-2005.08 | 5MT | F | R | Estate FWD TU3JP | Transm.code:68/70/77 | GDS10019 | Drive Shaft | 29T | 25 | 22 | 60 | 80 | 867 | |
| | 1997.10-2005.08 | 5MT | F | L | Estate FWD TU3JP | Date from:1999.01;Differential ID:77;From ORG/OPR:08092 | GCI10006 | Inner Joint | | 22 | 22 | 40 | 58.5 | 87 | |
| | 1997.10-2005.08 | 5MT | F | L | Estate FWD TU3JP | Transm.code:68/70 | GCI45011 | Inner Joint | | 22 | 22 | 40 | 65 | 88 | |
| | 1997.10-2005.08 | MT | F | L | Estate FWD TU3JP | Date to:1999.01 | GDS10040 | Drive Shaft | | 21 | 22 | 56.4 | 76 | 595 | |
| | 1997.10-2005.08 | MT | F | R | Estate FWD TU3JP | | GDS10188 | Drive Shaft | 29T | 25 | 22 | 54.5 | 79.5 | 860 | |
| | 1997.10-2005.08 | MT | F | L/R | Estate FWD TU3JP | | GCO99006 | Outer Joint | | 25 | 22 | 60 | 78.7 | 54 | M |
| | 1997.10-2005.08 | MT | F | L/R | Estate FWD TU3JP | | GCO99221 | Outer Joint | 29T | 25 | 22 | 60 | 78.7 | 54 | M |
| | 1997.10-2005.08 | | F | L | Estate FWD TU3JP | Differential ID:77 | GDS10021 | Drive Shaft | 29T | 25 | 22 | 60 | 80 | 593 | |
| | 1997.10-2005.08 | | F | L | Estate FWD TU3JP | Date From:1999.01;Differential ID:77;From ORG/OPR:08092 | GDS10026 | Drive Shaft | | 25 | 22 | 56.7 | 79 | 594 | |
| | 1997.10-2005.08 | | F | L | Estate FWD TU3JP | Differential ID:77 | GDS10187 | Drive Shaft | 29T | 25 | 22 | 54.5 | 79.5 | 590.5 | |
| | 1997.10-2005.08 | | F | L | Estate FWD TU3JP | Differential ID:77 | GDS10204 | Drive Shaft | | 25 | 22 | 58.5 | 79 | 594 | |
| | 1997.10-2005.08 | | F | R | Estate FWD TU3JP | | GDS10004 | Drive Shaft | | 21 | 22 | 56.4 | 76 | 855.5 | |
| | 1997.10-2005.08 | | F | R | Estate FWD TU3JP | Date From:1999.01;Differential ID:77;From ORG/OPR:08092 | GDS10015 | Drive Shaft | | 25 | 22 | 56.7 | 79 | 868 | |
| | 1997.10-2005.08 | | F | R | Estate FWD TU3JP | Differential ID:77 | GDS10205 | Drive Shaft | | 25 | 22 | 58.5 | 79 | 866 | |
| | 1998.05-2000.08 | 5MT | F | L | Estate FWD TU3JP | Date from:1999.01;Differential ID:77;From ORG/OPR:08092 | GCI10006 | Inner Joint | | 22 | 22 | 40 | 58.5 | 87 | |
| | 1998.05-2000.08 | | F | L | Estate FWD TU3JP | Differential ID:77 | GDS10021 | Drive Shaft | 29T | 25 | 22 | 60 | 80 | 593 | |
| | 1998.05-2000.08 | | F | L | Estate FWD TU3JP | Date From:1999.01;Differential ID:77;From ORG/OPR:08092 | GDS10026 | Drive Shaft | | 25 | 22 | 56.7 | 79 | 594 | |
| | 1998.05-2000.08 | | F | L | Estate FWD TU3JP | Differential ID:77 | GDS10187 | Drive Shaft | 29T | 25 | 22 | 54.5 | 79.5 | 590.5 | |
| | 1998.05-2000.08 | | F | L | Estate FWD TU3JP | Date From:1999.01;Differential ID:77;From ORG/OPR:08092 | GDS10204 | Drive Shaft | | 25 | 22 | 58.5 | 79 | 594 | |
| | 1998.05-2000.08 | | F | R | Estate FWD TU3JP | Differential ID:77 | GDS10019 | Drive Shaft | 29T | 25 | 22 | 60 | 80 | 867 | |
| | 1998.05-2000.08 | | F | R | Estate FWD TU3JP | Date From:1999.01;Differential ID:77;From ORG/OPR:08091 | GDS10205 | Drive Shaft | | 25 | 22 | 58.5 | 79 | 866 | |
| | 1998.05-2000.08 | | F | L/R | Estate FWD TU3JP | Differential ID:77 | GCO45036 | Outer Joint | 29T | 25 | 22 | 60 | 80 | 54 | I |
| | 2000.09-2005.03 | 5MT | F | L | Estate Van FWD TU3JP | Transm.code:68/70 | GDS10018 | Drive Shaft | 29T | 25 | 22 | 60 | 80 | 603 | |
| | 2000.09-2005.03 | 5MT | F | R | Estate Van FWD TU3JP | Transm.code:68/70 | GDS10019 | Drive Shaft | 29T | 25 | 22 | 60 | 80 | 867 | |
| | 2000.09-2005.03 | 5MT | F | L/R | Estate Van FWD TU3JP | Transm.code:68/70 | GCO45036 | Outer Joint | 29T | 25 | 22 | 60 | 80 | 54 | I |
| | 2000.09-2005.03 | 5MT | F | L | Estate Van FWD TU3JP | Date from:1999.01;Differential ID:77;From ORG/OPR:08092 | GCI10006 | Inner Joint | | 22 | 22 | 40 | 58.5 | 87 | |
| | 2000.09-2005.03 | 5MT | F | L | Estate Van FWD TU3JP | Transm.code:68/70 | GCI45011 | Inner Joint | | 22 | 22 | 40 | 65 | 88 | |
| | 2000.09-2005.03 | | F | L | Estate Van FWD TU3JP | Differential ID:77 | GDS10021 | Drive Shaft | 29T | 25 | 22 | 60 | 80 | 593 | |
| | 2000.09-2005.03 | | F | L | Estate Van FWD TU3JP | Date From:1999.01;Differential ID:77;From ORG/OPR:08092 | GDS10026 | Drive Shaft | | 25 | 22 | 56.7 | 79 | 594 | |
| | 2000.09-2005.03 | | F | L | Estate Van FWD TU3JP | Differential ID:77 | GDS10187 | Drive Shaft | 29T | 25 | 22 | 54.5 | 79.5 | 590.5 | |
| | 2000.09-2005.03 | | F | L | Estate Van FWD TU3JP | Differential ID:77 | GDS10204 | Drive Shaft | | 25 | 22 | 58.5 | 79 | 594 | |
| | 2000.09-2005.03 | | F | R | Estate Van FWD TU3JP | Date From:1999.01;Differential ID:77;From ORG/OPR:08092 | GDS10015 | Drive Shaft | | 25 | 22 | 56.7 | 79 | 868 | |
| | 2000.09-2005.03 | | F | R | Estate Van FWD TU3JP | Differential ID:77 | GDS10205 | Drive Shaft | | 25 | 22 | 58.5 | 79 | 866 | |
| 1.5 (42 kw) | 1997.10-2000.08 | 5MT | F | L | Estate FWD TUD5 | | GDS10021 | Drive Shaft | 29T | 25 | 22 | 60 | 80 | 593 | |
| | 1997.10-2000.08 | 5MT | F | L | Estate FWD TUD5 | | GDS10204 | Drive Shaft | | 25 | 22 | 58.5 | 79 | 594 | |
| | 1997.10-2000.08 | 5MT | F | R | Estate FWD TUD5 | | GDS10019 | Drive Shaft | 29T | 25 | 22 | 60 | 80 | 867 | |
| | 1997.10-2000.08 | 5MT | F | R | Estate FWD TUD5 | | GDS10205 | Drive Shaft | | 25 | 22 | 58.5 | 79 | 866 | |
| | 1997.10-2000.08 | 5MT | F | L/R | Estate FWD TUD5 | | GCO45036 | Outer Joint | 29T | 25 | 22 | 60 | 80 | 54 | I |
| | 1997.10-2000.08 | MT | F | L | Estate FWD TUD5 | Trans. code:MA | GDS10018 | Drive Shaft | 29T | 25 | 22 | 60 | 80 | 603 | |
| | 1997.10-2000.08 | MT | F | L | Estate FWD TUD5 | Date to:1998.03;Trans. code:MA | GDS10040 | Drive Shaft | | 21 | 22 | 56.4 | 76 | 595 | |
| | 1997.10-2000.08 | MT | F | L | Estate FWD TUD5 | Date from:1998.03;Trans. code:MA | GDS10043 | Drive Shaft | | 21 | 22 | 48 | 86.5 | 610 | |
| | 1997.10-2000.08 | MT | F | R | Estate FWD TUD5 | Date to:1998.03;Trans. code:MA | GDS10017 | Drive Shaft | | 21 | 22 | 56.4 | 76 | 860 | |
| | 1997.10-2000.08 | MT | F | R | Estate FWD TUD5 | | GDS10203 | Drive Shaft | | 21 | 22 | 48 | 86.5 | 877 | |
| | 1997.10-2000.08 | | F | L | Estate FWD TUD5 | | GDS10026 | Drive Shaft | | 25 | 22 | 56.7 | 79 | 594 | |
| | 1997.10-2000.08 | | F | L | Estate FWD TUD5 | | GDS10187 | Drive Shaft | 29T | 25 | 22 | 54.5 | 79.5 | 590.5 | |

| | YEAR | TRANSM. | F/R | L/R | BODY STYLE & DRIVE TYPE & ENGINE | REMARKS | G-AP Ref. | PRODUCT | ABS | Technical Specifications A | B | C | H | L | P |
|---|---|---|---|---|---|---|---|---|---|---|---|---|---|---|---|
| **CITROËN** **Xsara Estate/Break** | | | | | | | | | | | | | | | |
| 1.5 (42 kw) | 1997.10-2000.08 | | F | R | Estate FWD TUD5 | For vehicles without ASB | GDS10015 | Drive Shaft | | 25 | 22 | 56.7 | 79 | 868 | |
| | 1997.10-2000.08 | | F | R | Estate FWD TUD5 | | GDS10188 | Drive Shaft | 29T | 25 | 22 | 54.5 | 79.5 | 860 | |
| 1.6 (65 kw) | 1998.05-2000.08 | 4AT/5MT | F | L | Estate FWD TU5JP | | GDS10204 | Drive Shaft | | 25 | 22 | 58.5 | 79 | 594 | |
| | 1998.05-2000.08 | 4AT/5MT | F | L | Estate FWD TU5JP | | GCI10006 | Inner Joint | | 22 | 22 | 40 | 58.5 | 87 | |
| | 1998.05-2000.08 | 5MT | F | L | Estate FWD TU5JP | | GDS10021 | Drive Shaft | 29T | 25 | 22 | 60 | 80 | 593 | |
| | 1998.05-2000.08 | 5MT | F | R | Estate FWD TU5JP | | GDS10019 | Drive Shaft | 29T | 25 | 22 | 60 | 80 | 867 | |
| | 1998.05-2000.08 | AT | F | L/R | Estate FWD TU5JP | | GCO10042 | Outer Joint | | 25 | 34 | 54.8 | 78.5 | 56 | I |
| | 1998.05-2000.08 | AT | F | | Estate FWD TU5JP | | GCO10022 | Outer Joint | 29W | 25 | 34 | 55.7 | 79 | 55 | I |
| | 1998.05-2000.08 | MT | F | R | Estate FWD TU5JP | | GDS10188 | Drive Shaft | 29T | 25 | 22 | 54.5 | 79.5 | 860 | |
| | 1998.05-2000.08 | MT | F | L/R | Estate FWD TU5JP | | GCO99006 | Outer Joint | | 25 | 22 | 60 | 78.7 | 54 | M |
| | 1998.05-2000.08 | MT | F | L/R | Estate FWD TU5JP | | GCO99221 | Outer Joint | 29T | 25 | 22 | 60 | 78.7 | 54 | M |
| | 1998.05-2000.08 | | F | L | Estate FWD TU5JP | | GDS10026 | Drive Shaft | | 25 | 22 | 56.7 | 79 | 594 | |
| | 1998.05-2000.08 | | F | L | Estate FWD TU5JP | | GDS10187 | Drive Shaft | 29T | 25 | 22 | 54.5 | 79.5 | 590.5 | |
| | 1998.05-2000.08 | | F | R | Estate FWD TU5JP | | GDS10015 | Drive Shaft | | 25 | 22 | 56.7 | 79 | 868 | |
| | 1998.05-2000.08 | | F | R | Estate FWD TU5JP | | GDS10205 | Drive Shaft | | 25 | 22 | 58.5 | 79 | 866 | |
| 1.6 (80 kw) | 2000.09-2005.08 | 5MT | F | R | Estate FWD TU5JP4 | For vehicles with ESP | GDS82450 | Drive Shaft | 48T | 25 | 22 | 58.5 | 79.5 | 865 | |
| | 2000.09-2005.08 | AT | F | L | Estate FWD TU5JP4 | | GDS56307 | Drive Shaft | 48W | 25 | 26 | 58.5 | 79 | 575 | |
| | 2000.09-2005.08 | AT | F | R | Estate FWD TU5JP4 | | GDS56308 | Drive Shaft | 48W | 25 | 26 | 58.5 | 79 | 783 | |
| | 2000.09-2005.08 | MT | F | L | Estate FWD TU5JP4 | For vehicles without ESP | GDS10021 | Drive Shaft | 29T | 25 | 22 | 60 | 80 | 593 | |
| | 2000.09-2005.08 | MT | F | L | Estate FWD TU5JP4 | | GDS10026 | Drive Shaft | | 25 | 22 | 56.7 | 79 | 594 | |
| | 2000.09-2005.08 | MT | F | L | Estate FWD TU5JP4 | For vehicles without ESP | GDS10187 | Drive Shaft | 29T | 25 | 22 | 54.5 | 79.5 | 590.5 | |
| | 2000.09-2005.08 | MT | F | L | Estate FWD TU5JP4 | | GDS10204 | Drive Shaft | | 25 | 22 | 58.5 | 79 | 594 | |
| | 2000.09-2005.08 | MT | F | R | Estate FWD TU5JP4 | For vehicles without ESP | GDS10019 | Drive Shaft | 29T | 25 | 22 | 60 | 80 | 867 | |
| | 2000.09-2005.08 | MT | F | R | Estate FWD TU5JP4 | | GDS10205 | Drive Shaft | | 25 | 22 | 58.5 | 79 | 866 | |
| | 2000.09-2005.08 | MT | F | L/R | Estate FWD TU5JP4 | | GCO10002 | Outer Joint | | 25 | 23 | 54.8 | 78.5 | 56 | I |
| | 2000.09-2005.08 | MT | F | L/R | Estate FWD TU5JP4 | | GCO10003 | Outer Joint | 29T | 25 | 23 | 54.8 | 78.5 | 56 | I |
| | 2000.09-2005.08 | MT | F | L/R | Estate FWD TU5JP4 | | GCO99006 | Outer Joint | | 25 | 22 | 60 | 78.7 | 54 | M |
| | 2000.09-2005.08 | MT | F | L/R | Estate FWD TU5JP4 | | GCO99221 | Outer Joint | 29T | 25 | 22 | 60 | 78.7 | 54 | M |
| 1.8 (43 kw) | 1997.10-2000.08 | 5MT | F | R | Estate FWD XUD7 | Trans. code:BE3 | GDS10077 | Drive Shaft | | 25 | 24 | 55.7 | 79 | 872 | |
| | 1997.10-2000.08 | 5MT | F | R | Estate FWD XUD7 | | GDS10078 | Drive Shaft | 29W | 25 | 24 | 55.7 | 79 | 872 | |
| | 1997.10-2000.08 | MT | F | L | Estate FWD XUD7 | Trans. code:BE3 | GDS10025 | Drive Shaft | 29T | 25 | 24 | 54.8 | 78.5 | 593 | |
| | 1997.10-2000.08 | MT | F | L | Estate FWD XUD7 | | GDS10090 | Drive Shaft | | 25 | 24 | 54.8 | 78.5 | 593 | |
| | 1997.10-2000.08 | MT | F | L | Estate FWD XUD7 | | GCO10022 | Outer Joint | 29W | 25 | 34 | 55.7 | 79 | 55 | I |
| | 1997.10-2000.08 | MT | F | L/R | Estate FWD XUD7 | | GCO10002 | Outer Joint | | 25 | 23 | 54.8 | 78.5 | 56 | I |
| | 1997.10-2000.08 | MT | F | L/R | Estate FWD XUD7 | | GCO10003 | Outer Joint | 29T | 25 | 23 | 54.8 | 78.5 | 56 | I |
| | 1997.10-2000.08 | | F | L | Estate FWD XUD7 | | GDS10131 | Drive Shaft | 29T | 25 | 24 | 54.8 | 78.5 | 583 | |
| | 1997.10-2000.08 | | F | L | Estate FWD XUD7 | | GCO10049 | Outer Joint | | 25 | 34 | 55.7 | 79 | 55 | I |
| | 1997.10-2000.08 | | F | L/R | Estate FWD XUD7 | | GCO10076 | Outer Joint | 29W | 25 | 34 | 58.5 | 79 | 55 | I |
| | 1998.05-1999.05 | 5MT | F | R | Estate Van FWD XUD7 | | GDS10077 | Drive Shaft | | 25 | 24 | 55.7 | 79 | 872 | |
| | 1998.05-1999.05 | 5MT | F | R | Estate Van FWD XUD7 | | GDS10078 | Drive Shaft | 29W | 25 | 24 | 55.7 | 79 | 872 | |
| | 1998.05-1999.05 | 5MT | F | L/R | Estate Van FWD XUD7 | | GCO10076 | Outer Joint | 29W | 25 | 34 | 58.5 | 79 | 55 | I |
| | 1998.05-1999.05 | | F | L | Estate Van FWD XUD7 | | GDS10025 | Drive Shaft | 29T | 25 | 24 | 54.8 | 78.5 | 593 | |
| | 1998.05-1999.05 | | F | L | Estate Van FWD XUD7 | | GDS10090 | Drive Shaft | | 25 | 24 | 54.8 | 78.5 | 593 | |
| | 1998.05-1999.05 | | F | L | Estate Van FWD XUD7 | | GDS10131 | Drive Shaft | 29T | 25 | 24 | 54.8 | 78.5 | 583 | |
| | 1998.05-1999.05 | | F | L | Estate Van FWD XUD7 | | GCO10022 | Outer Joint | 29W | 25 | 34 | 55.7 | 79 | 55 | I |
| | 1998.05-1999.05 | | F | L | Estate Van FWD XUD7 | | GCO10049 | Outer Joint | | 25 | 34 | 55.7 | 79 | 55 | I |
| 1.8 (66 kw) | 1998.05-2000.08 | 5MT | F | R | Estate FWD XU7JB | | GDS10193 | Drive Shaft | 29T | 25 | 24 | 54.8 | 78.5 | 868 | |
| | 1998.05-2000.08 | 5MT | F | L | Estate FWD XU7JB | | GCI10018 | Inner Joint | | 24 | 29 | 40 | 62.5 | 99 | |
| | 1998.05-2000.08 | MT | F | L | Estate FWD XU7JB | | GDS10025 | Drive Shaft | 29T | 25 | 24 | 54.8 | 78.5 | 593 | |
| | 1998.05-2000.08 | MT | F | L | Estate FWD XU7JB | | GDS10090 | Drive Shaft | | 25 | 24 | 54.8 | 78.5 | 593 | |
| | 1998.05-2000.08 | MT | F | L | Estate FWD XU7JB | | GDS99025 | Drive Shaft | 29W | 25 | 24 | 55.7 | 79 | 597 | |
| | 1998.05-2000.08 | MT | F | R | Estate FWD XU7JB | | GDS10077 | Drive Shaft | | 25 | 24 | 55.7 | 79 | 872 | |
| | 1998.05-2000.08 | MT | F | R | Estate FWD XU7JB | | GDS10078 | Drive Shaft | 29W | 25 | 24 | 55.7 | 79 | 872 | |
| | 1998.05-2000.08 | MT | F | L | Estate FWD XU7JB | | GCO10022 | Outer Joint | 29W | 25 | 34 | 55.7 | 79 | 55 | I |
| | 1998.05-2000.08 | MT | F | L/R | Estate FWD XU7JB | | GCO10002 | Outer Joint | | 25 | 23 | 54.8 | 78.5 | 56 | I |
| | 1998.05-2000.08 | MT | F | L/R | Estate FWD XU7JB | inner teeth of wheel side:23 | GCO10003 | Outer Joint | 29T | 25 | 23 | 54.8 | 78.5 | 56 | I |
| | 1998.05-2000.08 | | F | L | Estate FWD XU7JB | | GDS10131 | Drive Shaft | 29T | 25 | 24 | 54.8 | 78.5 | 583 | |
| | 1998.05-2000.08 | | F | L | Estate FWD XU7JB | | GCO10049 | Outer Joint | | 25 | 34 | 55.7 | 79 | 55 | I |
| | 1998.05-2000.08 | | F | L/R | Estate FWD XU7JB | | GCO10042 | Outer Joint | | 25 | 34 | 54.8 | 78.5 | 56 | I |
| | 1998.05-2000.08 | | F | L/R | Estate FWD XU7JB | | GCO10076 | Outer Joint | 29W | 25 | 34 | 58.5 | 79 | 55 | I |
| 1.8 (74 kw) | 1997.10-2000.09 | 4AT | F | R | Estate FWD XU7JP | Trans. code:BE3 | GDS10077 | Drive Shaft | | 25 | 24 | 55.7 | 79 | 872 | |
| | 1997.10-2000.09 | 4AT | F | R | Estate FWD XU7JP | | GDS10078 | Drive Shaft | 29W | 25 | 24 | 55.7 | 79 | 872 | |
| | 1997.10-2000.09 | 4AT | F | R | Estate FWD XU7JP | | GDS10193 | Drive Shaft | 29T | 25 | 24 | 54.8 | 78.5 | 868 | |
| | 1997.10-2000.09 | AT | F | L | Estate FWD XU7JP | Trans. code:BE3 | GDS10025 | Drive Shaft | 29T | 25 | 24 | 54.8 | 78.5 | 593 | |
| | 1997.10-2000.09 | AT | F | L | Estate FWD XU7JP | Trans. code:BE3 | GDS10090 | Drive Shaft | | 25 | 24 | 54.8 | 78.5 | 593 | |

| | YEAR | TRANSM. | F/R | L/R | BODY STYLE & DRIVE TYPE & ENGINE | REMARKS | G-AP Ref. | PRODUCT | ABS | Technical Specifications A | B | C | H | L | P |
|---|---|---|---|---|---|---|---|---|---|---|---|---|---|---|---|
| **CITROËN** **Xsara Estate/Break** | | | | | | | | | | | | | | | |
| 1.8 (74 kw) | 1997.10-2000.09 | AT | F | L | Estate FWD XU7JP | | GCO10022 | Outer Joint | 29W | 25 | 34 | 55.7 | 79 | 55 | I |
| | 1997.10-2000.09 | | F | L | Estate FWD XU7JP | | GDS10131 | Drive Shaft | 29T | 25 | 24 | 54.8 | 78.5 | 583 | |
| | 1997.10-2000.09 | | F | L | Estate FWD XU7JP | | GCO10049 | Outer Joint | | 25 | 34 | 55.7 | 79 | 55 | I |
| | 1997.10-2000.09 | | F | L/R | Estate FWD XU7JP | | GCO10042 | Outer Joint | | 25 | 34 | 54.8 | 78.5 | 56 | I |
| | 1997.10-2000.09 | | F | L/R | Estate FWD XU7JP | | GCO10076 | Outer Joint | 29W | 25 | 34 | 58.5 | 79 | 55 | I |
| 1.8 (81 kw) | 1998.05-2000.08 | 5MT | F | L | Estate FWD XU7JP4 | | GDS10025 | Drive Shaft | 29T | 25 | 24 | 54.8 | 78.5 | 593 | |
| | 1998.05-2000.08 | 5MT | F | R | Estate FWD XU7JP4 | | GDS10077 | Drive Shaft | | 25 | 24 | 55.7 | 79 | 872 | |
| | 1998.05-2000.08 | 5MT | F | R | Estate FWD XU7JP4 | | GDS10078 | Drive Shaft | 29W | 25 | 24 | 55.7 | 79 | 872 | |
| | 1998.05-2000.08 | 5MT | F | R | Estate FWD XU7JP4 | | GDS10193 | Drive Shaft | 29T | 25 | 24 | 54.8 | 78.5 | 868 | |
| | 1998.05-2000.08 | 5MT | F | L | Estate FWD XU7JP4 | | GCI10018 | Inner Joint | | 24 | 29 | 40 | 62.5 | 99 | |
| | 1998.05-2000.08 | MT | F | L | Estate FWD XU7JP4 | | GDS10025 | Drive Shaft | 29T | 25 | 24 | 54.8 | 78.5 | 593 | |
| | 1998.05-2000.08 | MT | F | L | Estate FWD XU7JP4 | | GDS10090 | Drive Shaft | | 25 | 24 | 54.8 | 78.5 | 593 | |
| | 1998.05-2000.08 | MT | F | L | Estate FWD XU7JP4 | | GDS99025 | Drive Shaft | 29W | 25 | 24 | 55.7 | 79 | 597 | |
| | 1998.05-2000.08 | MT | F | R | Estate FWD XU7JP4 | | GDS10077 | Drive Shaft | | 25 | 24 | 55.7 | 79 | 872 | |
| | 1998.05-2000.08 | MT | F | R | Estate FWD XU7JP4 | | GDS10078 | Drive Shaft | 29W | 25 | 24 | 55.7 | 79 | 872 | |
| | 1998.05-2000.08 | MT | F | L | Estate FWD XU7JP4 | | GCO10022 | Outer Joint | 29W | 25 | 34 | 55.7 | 79 | 55 | I |
| | 1998.05-2000.08 | MT | F | L/R | Estate FWD XU7JP4 | | GCO10002 | Outer Joint | | 25 | 23 | 54.8 | 78.5 | 56 | I |
| | 1998.05-2000.08 | MT | F | L/R | Estate FWD XU7JP4 | | GCO10003 | Outer Joint | 29T | 25 | 23 | 54.8 | 78.5 | 56 | I |
| | 1998.05-2000.08 | | F | L | Estate FWD XU7JP4 | | GDS10090 | Drive Shaft | | 25 | 24 | 54.8 | 78.5 | 593 | |
| | 1998.05-2000.08 | | F | L | Estate FWD XU7JP4 | | GDS10131 | Drive Shaft | 29T | 25 | 24 | 54.8 | 78.5 | 583 | |
| | 1998.05-2000.08 | | F | L | Estate FWD XU7JP4 | | GCO10022 | Outer Joint | 29W | 25 | 34 | 55.7 | 79 | 55 | I |
| | 1998.05-2000.08 | | F | L | Estate FWD XU7JP4 | | GCO10049 | Outer Joint | | 25 | 34 | 55.7 | 79 | 55 | I |
| | 1998.05-2000.08 | | F | L/R | Estate FWD XU7JP4 | | GCO10042 | Outer Joint | | 25 | 34 | 54.8 | 78.5 | 56 | I |
| | 1998.05-2000.08 | | F | L/R | Estate FWD XU7JP4 | | GCO10076 | Outer Joint | 29W | 25 | 34 | 58.5 | 79 | 55 | I |
| 1.9 (50 kw) | 1997.10-2000.10 | MT | F | L | Estate FWD XUD9/XUD9A | Trans. code:BE3 | GDS10025 | Drive Shaft | 29T | 25 | 24 | 54.8 | 78.5 | 593 | |
| | 1997.10-2000.10 | MT | F | L | Estate FWD XUD9/XUD9A | Trans. code:BE3 | GDS10090 | Drive Shaft | | 25 | 24 | 54.8 | 78.5 | 593 | |
| | 1997.10-2000.10 | MT | F | L | Estate FWD XUD9/XUD9A | | GDS99025 | Drive Shaft | 29W | 25 | 24 | 55.7 | 79 | 597 | |
| | 1997.10-2000.10 | MT | F | R | Estate FWD XUD9/XUD9A | Trans. code:BE3 | GDS10077 | Drive Shaft | | 25 | 24 | 55.7 | 79 | 872 | |
| | 1997.10-2000.10 | MT | F | R | Estate FWD XUD9/XUD9A | | GDS10078 | Drive Shaft | 29W | 25 | 24 | 55.7 | 79 | 872 | |
| | 1997.10-2000.10 | MT | F | L | Estate FWD XUD9/XUD9A | | GCO10022 | Outer Joint | 29W | 25 | 34 | 55.7 | 79 | 55 | I |
| | 1997.10-2000.10 | MT | F | L/R | Estate FWD XUD9/XUD9A | | GCO10002 | Outer Joint | | 25 | 23 | 54.8 | 78.5 | 56 | I |
| | 1997.10-2000.10 | MT | F | L/R | Estate FWD XUD9/XUD9A | | GCO10003 | Outer Joint | 29T | 25 | 23 | 54.8 | 78.5 | 56 | I |
| | 1997.10-2000.10 | | F | L | Estate FWD XUD9/XUD9A | | GDS10131 | Drive Shaft | 29T | 25 | 24 | 54.8 | 78.5 | 583 | |
| | 1997.10-2000.10 | | F | L | Estate FWD XUD9/XUD9A | | GCO10049 | Outer Joint | | 25 | 34 | 55.7 | 79 | 55 | I |
| | 1997.10-2000.10 | | F | L/R | Estate FWD XUD9/XUD9A | | GCO10042 | Outer Joint | | 25 | 34 | 54.8 | 78.5 | 56 | I |
| | 1997.10-2000.10 | | F | L/R | Estate FWD XUD9/XUD9A | | GCO10076 | Outer Joint | 29W | 25 | 34 | 58.5 | 79 | 55 | I |
| 1.9 (51 kw) | 1998.04-2005.08 | 5MT | F | L/R | Estate FWD DW8/DW8B | | GCO10076 | Outer Joint | 29W | 25 | 34 | 58.5 | 79 | 55 | I |
| | 1998.04-2005.08 | MT | F | L | Estate FWD DW8/DW8B | Trans. code:BE3 | GDS10025 | Drive Shaft | 29T | 25 | 24 | 54.8 | 78.5 | 593 | |
| | 1998.04-2005.08 | MT | F | L | Estate FWD DW8/DW8B | Trans. code:BE3 | GDS10090 | Drive Shaft | | 25 | 24 | 54.8 | 78.5 | 593 | |
| | 1998.04-2005.08 | MT | F | L | Estate FWD DW8/DW8B | | GDS99025 | Drive Shaft | 29W | 25 | 24 | 55.7 | 79 | 597 | |
| | 1998.04-2005.08 | MT | F | R | Estate FWD DW8/DW8B | Trans. code:BE3 | GDS10077 | Drive Shaft | | 25 | 24 | 55.7 | 79 | 872 | |
| | 1998.04-2005.08 | MT | F | R | Estate FWD DW8/DW8B | | GDS10078 | Drive Shaft | 29W | 25 | 24 | 55.7 | 79 | 872 | |
| | 1998.04-2005.08 | MT | F | R | Estate FWD DW8/DW8B | | GDS10193 | Drive Shaft | 29T | 25 | 24 | 54.8 | 78.5 | 868 | |
| | 1998.04-2005.08 | MT | F | L/R | Estate FWD DW8/DW8B | | GCO10002 | Outer Joint | | 25 | 23 | 54.8 | 78.5 | 56 | I |
| | 1998.04-2005.08 | MT | F | L/R | Estate FWD DW8/DW8B | | GCO10003 | Outer Joint | 29T | 25 | 23 | 54.8 | 78.5 | 56 | I |
| | 1998.04-2005.08 | | F | L | Estate FWD DW8/DW8B | | GDS10131 | Drive Shaft | 29T | 25 | 24 | 54.8 | 78.5 | 583 | |
| | 1998.04-2005.08 | | F | L | Estate FWD DW8/DW8B | | GCO10022 | Outer Joint | 29W | 25 | 34 | 55.7 | 79 | 55 | I |
| | 1998.04-2005.08 | | F | L | Estate FWD DW8/DW8B | For Engine Code:DW8 | GCO10049 | Outer Joint | | 25 | 34 | 55.7 | 79 | 55 | I |
| | 1998.04-2005.08 | | F | L/R | Estate FWD DW8/DW8B | | GCO10042 | Outer Joint | | 25 | 34 | 54.8 | 78.5 | 56 | I |
| | 1999.06-2005.08 | 5MT | F | R | Estate Van FWD DW8/DW8B | | GDS10077 | Drive Shaft | | 25 | 24 | 55.7 | 79 | 872 | |
| | 1999.06-2005.08 | 5MT | F | R | Estate Van FWD DW8/DW8B | | GDS10078 | Drive Shaft | 29W | 25 | 24 | 55.7 | 79 | 872 | |
| | 1999.06-2005.08 | 5MT | F | R | Estate Van FWD DW8/DW8B | | GDS10193 | Drive Shaft | 29T | 25 | 24 | 54.8 | 78.5 | 868 | |
| | 1999.06-2005.08 | 5MT | F | L/R | Estate Van FWD DW8/DW8B | | GCO10076 | Outer Joint | 29W | 25 | 34 | 58.5 | 79 | 55 | I |
| | 1999.06-2005.08 | | F | L | Estate Van FWD DW8/DW8B | For Engine code:DW8/DW8B | GDS10025 | Drive Shaft | 29T | 25 | 24 | 54.8 | 78.5 | 593 | |
| | 1999.06-2005.08 | | F | L | Estate Van FWD DW8/DW8B | | GDS10090 | Drive Shaft | | 25 | 24 | 54.8 | 78.5 | 593 | |
| | 1999.06-2005.08 | | F | L | Estate Van FWD DW8/DW8B | | GDS10131 | Drive Shaft | 29T | 25 | 24 | 54.8 | 78.5 | 583 | |
| | 1999.06-2005.08 | | F | L | Estate Van FWD DW8/DW8B | | GCO10022 | Outer Joint | 29W | 25 | 34 | 55.7 | 79 | 55 | I |
| | 1999.06-2005.08 | | F | L | Estate Van FWD DW8/DW8B | | GCO10049 | Outer Joint | | 25 | 34 | 55.7 | 79 | 55 | I |
| 1.9 (55 kw) | 1998.01-2000.09 | MT | F | L | Estate FWD XUD9BSD | Trans. code:BE3 | GDS10025 | Drive Shaft | 29T | 25 | 24 | 54.8 | 78.5 | 593 | |
| | 1998.01-2000.09 | MT | F | L | Estate FWD XUD9BSD | Trans. code:BE3 | GDS10090 | Drive Shaft | | 25 | 24 | 54.8 | 78.5 | 593 | |
| | 1998.01-2000.09 | MT | F | L | Estate FWD XUD9BSD | | GDS99025 | Drive Shaft | 29W | 25 | 24 | 55.7 | 79 | 597 | |
| | 1998.01-2000.09 | MT | F | R | Estate FWD XUD9BSD | Trans. code:BE3 | GDS10077 | Drive Shaft | | 25 | 24 | 55.7 | 79 | 872 | |
| | 1998.01-2000.09 | MT | F | R | Estate FWD XUD9BSD | | GDS10078 | Drive Shaft | 29W | 25 | 24 | 55.7 | 79 | 872 | |
| | 1998.01-2000.09 | MT | F | L | Estate FWD XUD9BSD | | GCO10022 | Outer Joint | 29W | 25 | 34 | 55.7 | 79 | 55 | I |
| | 1998.01-2000.09 | MT | F | L/R | Estate FWD XUD9BSD | | GCO10002 | Outer Joint | | 25 | 23 | 54.8 | 78.5 | 56 | I |

| | YEAR | TRANSM. | F/R | L/R | BODY STYLE & DRIVE TYPE & ENGINE | REMARKS | G-AP Ref. | PRODUCT | ABS | Technical Specifications A | B | C | H | L | P |
|---|---|---|---|---|---|---|---|---|---|---|---|---|---|---|---|
| **CITROËN** **Xsara Estate/Break** | | | | | | | | | | | | | | | |
| 1.9 (55 kw) | 1998.01-2000.09 | MT | F | L/R | Estate FWD XUD9BSD | | GCO10003 | Outer Joint | 29T | 25 | 23 | 54.8 | 78.5 | 56 | I |
| | 1998.01-2000.09 | | F | L | Estate FWD XUD9BSD | | GDS10131 | Drive Shaft | 29T | 25 | 24 | 54.8 | 78.5 | 583 | |
| | 1998.01-2000.09 | | F | L | Estate FWD XUD9BSD | | GCO10049 | Outer Joint | | 25 | 34 | 55.7 | 79 | 55 | I |
| | 1998.01-2000.09 | | F | L/R | Estate FWD XUD9BSD | | GCO10042 | Outer Joint | | 25 | 34 | 54.8 | 78.5 | 56 | I |
| | 1998.01-2000.09 | | F | L/R | Estate FWD XUD9BSD | | GCO10076 | Outer Joint | 29W | 25 | 34 | 58.5 | 79 | 55 | I |
| 1.9 (66 kw) | 1998.05-2000.08 | 5MT | F | R | Estate FWD XUD9TE | | GDS10193 | Drive Shaft | 29T | 25 | 24 | 54.8 | 78.5 | 868 | |
| | 1998.05-2000.08 | MT | F | L | Estate FWD XUD9TE | | GDS10080 | Drive Shaft | 29W | 25 | 24 | 55.7 | 79 | 597 | |
| | 1998.05-2000.08 | MT | F | L | Estate FWD XUD9TE | | GDS10090 | Drive Shaft | | 25 | 24 | 54.8 | 78.5 | 593 | |
| | 1998.05-2000.08 | MT | F | L | Estate FWD XUD9TE | Date from:1998.05;Trans. code:BE3 | GDS10131 | Drive Shaft | 29T | 25 | 24 | 54.8 | 78.5 | 583 | |
| | 1998.05-2000.08 | MT | F | L | Estate FWD XUD9TE | Date from:1998.05 | GDS10163 | Drive Shaft | | 25 | 24 | 54.8 | 78.5 | 583 | |
| | 1998.05-2000.08 | MT | F | R | Estate FWD XUD9TE | Date from:1998.05;Trans. code:BE3 | GDS10077 | Drive Shaft | | 25 | 24 | 55.7 | 79 | 872 | |
| | 1998.05-2000.08 | MT | F | R | Estate FWD XUD9TE | | GDS10078 | Drive Shaft | 29W | 25 | 24 | 55.7 | 79 | 872 | |
| | 1998.05-2000.08 | MT | F | L | Estate FWD XUD9TE | | GCO10022 | Outer Joint | 29W | 25 | 34 | 55.7 | 79 | 55 | I |
| | 1998.05-2000.08 | MT | F | L | Estate FWD XUD9TE | Date from:1998.05 | GCI10018 | Inner Joint | | 24 | 29 | 40 | 62.5 | 99 | |
| | 1998.05-2000.08 | | F | L | Estate FWD XUD9TE | | GDS10025 | Drive Shaft | 29T | 25 | 24 | 54.8 | 78.5 | 593 | |
| | 1998.05-2000.08 | | F | L | Estate FWD XUD9TE | | GCO10049 | Outer Joint | | 25 | 34 | 55.7 | 79 | 55 | I |
| | 1998.05-2000.08 | | F | L/R | Estate FWD XUD9TE | | GCO10042 | Outer Joint | | 25 | 34 | 54.8 | 78.5 | 56 | I |
| | 1998.05-2000.08 | | F | L/R | Estate FWD XUD9TE | | GCO10076 | Outer Joint | 29W | 25 | 34 | 58.5 | 79 | 55 | I |
| 2.0 (66 kw) | 1999.02-2005.03 | 5MT | F | L | Estate FWD DW10TD | | GDS99195 | Drive Shaft | 48W | 25 | 24 | 58.5 | 79 | 585 | |
| | 1999.02-2005.03 | 5MT | F | R | Estate FWD DW10TD | | GDS99196 | Drive Shaft | 48W | 25 | 24 | 58.5 | 79 | 869 | |
| | 1999.02-2005.03 | 5MT | F | L/R | Estate FWD DW10TD | for ESP,Date from:2000.09 | GCO10067 | Outer Joint | 48W | 25 | 34 | 58.5 | 79 | 55 | I |
| | 1999.02-2005.03 | 5MT | F | L/R | Estate FWD DW10TD | not for ESP | GCO10076 | Outer Joint | 29W | 25 | 34 | 58.5 | 79 | 55 | I |
| | 1999.02-2005.03 | 5MT | F | L | Estate FWD DW10TD | | GCI10020 | Inner Joint | | 24 | 34 | 40 | 62.5 | 99 | |
| | 1999.02-2005.03 | MT | F | L | Estate FWD DW10TD | | GDS10080 | Drive Shaft | 29W | 25 | 24 | 55.7 | 79 | 597 | |
| | 1999.02-2005.03 | MT | F | L | Estate FWD DW10TD | Date to:2005.03 | GDS10131 | Drive Shaft | 29T | 25 | 24 | 54.8 | 78.5 | 583 | |
| | 1999.02-2005.03 | MT | F | R | Estate FWD DW10TD | | GDS10078 | Drive Shaft | 29W | 25 | 24 | 55.7 | 79 | 872 | |
| | 1999.02-2005.03 | MT | F | R | Estate FWD DW10TD | Date to:2005.03 | GDS10193 | Drive Shaft | 29T | 25 | 24 | 54.8 | 78.5 | 868 | |
| | 1999.02-2005.03 | | F | L | Estate FWD DW10TD | Date To:2000.08;To ORG/OPR:08687 | GDS10025 | Drive Shaft | 29T | 25 | 24 | 54.8 | 78.5 | 593 | |
| | 2000.09-2005.08 | MT | F | L | Estate Van FWD DW10TD | | GDS10025 | Drive Shaft | 29T | 25 | 24 | 54.8 | 78.5 | 593 | |
| | 2000.09-2005.08 | MT | F | L | Estate Van FWD DW10TD | | GDS10080 | Drive Shaft | 29W | 25 | 24 | 55.7 | 79 | 597 | |
| | 2000.09-2005.08 | MT | F | L | Estate Van FWD DW10TD | | GDS10131 | Drive Shaft | 29T | 25 | 24 | 54.8 | 78.5 | 583 | |
| | 2000.09-2005.08 | MT | F | L | Estate Van FWD DW10TD | | GDS99195 | Drive Shaft | 48W | 25 | 24 | 58.5 | 79 | 585 | |
| | 2000.09-2005.08 | MT | F | R | Estate Van FWD DW10TD | | GDS10078 | Drive Shaft | 29W | 25 | 24 | 55.7 | 79 | 872 | |
| | 2000.09-2005.08 | MT | F | R | Estate Van FWD DW10TD | | GDS10193 | Drive Shaft | 29T | 25 | 24 | 54.8 | 78.5 | 868 | |
| | 2000.09-2005.08 | MT | F | R | Estate Van FWD DW10TD | | GDS99196 | Drive Shaft | 48W | 25 | 24 | 58.5 | 79 | 869 | |
| | 2000.09-2005.08 | MT | F | L/R | Estate Van FWD DW10TD | for ESP | GCO10067 | Outer Joint | 48W | 25 | 34 | 58.5 | 79 | 55 | I |
| | 2000.09-2005.08 | MT | F | L/R | Estate Van FWD DW10TD | | GCO10076 | Outer Joint | 29W | 25 | 34 | 58.5 | 79 | 55 | I |
| | 2000.09-2005.08 | MT | F | L | Estate Van FWD DW10TD | | GCI10020 | Inner Joint | | 24 | 34 | 40 | 62.5 | 99 | |
| 2.0 (80 kw) | 2001.05-2005.08 | AT | F | L | Estate FWD DW10ATED | | GDS56307 | Drive Shaft | 48W | 25 | 26 | 58.5 | 79 | 575 | |
| | 2001.05-2005.08 | AT | F | R | Estate FWD DW10ATED | | GDS56308 | Drive Shaft | 48W | 25 | 26 | 58.5 | 79 | 783 | |
| | 2001.05-2005.08 | MT | F | L | Estate FWD DW10ATED | | GDS10025 | Drive Shaft | 29T | 25 | 24 | 54.8 | 78.5 | 593 | |
| | 2001.05-2005.08 | MT | F | L | Estate FWD DW10ATED | | GDS10080 | Drive Shaft | 29W | 25 | 24 | 55.7 | 79 | 597 | |
| | 2001.05-2005.08 | MT | F | L | Estate FWD DW10ATED | | GDS10131 | Drive Shaft | 29T | 25 | 24 | 54.8 | 78.5 | 583 | |
| | 2001.05-2005.08 | MT | F | L | Estate FWD DW10ATED | | GDS99195 | Drive Shaft | 48W | 25 | 24 | 58.5 | 79 | 585 | |
| | 2001.05-2005.08 | MT | F | R | Estate FWD DW10ATED | | GDS10078 | Drive Shaft | 29W | 25 | 24 | 55.7 | 79 | 872 | |
| | 2001.05-2005.08 | MT | F | R | Estate FWD DW10ATED | | GDS10193 | Drive Shaft | 29T | 25 | 24 | 54.8 | 78.5 | 868 | |
| | 2001.05-2005.08 | MT | F | R | Estate FWD DW10ATED | | GDS99196 | Drive Shaft | 48W | 25 | 24 | 58.5 | 79 | 869 | |
| | 2001.05-2005.08 | MT | F | L/R | Estate FWD DW10ATED | for ESP | GCO10067 | Outer Joint | 48W | 25 | 34 | 58.5 | 79 | 55 | I |
| | 2001.05-2005.08 | MT | F | L/R | Estate FWD DW10ATED | | GCO10076 | Outer Joint | 29W | 25 | 34 | 58.5 | 79 | 55 | I |
| | 2001.05-2005.08 | MT | F | L | Estate FWD DW10ATED | | GCI10020 | Inner Joint | | 24 | 34 | 40 | 62.5 | 99 | |
| 2.0 (97 kw) | 1998.07-2000.08 | 4AT/5MT | F | R | Estate FWD XU10J4R | | GDS10193 | Drive Shaft | 29T | 25 | 24 | 54.8 | 78.5 | 868 | |
| | 1998.07-2000.08 | 4AT/5MT | F | L/R | Estate FWD XU10J4R | | GCO10076 | Outer Joint | 29W | 25 | 34 | 58.5 | 79 | 55 | I |
| | 1998.07-2000.08 | MT | F | L | Estate FWD XU10J4R | | GDS10025 | Drive Shaft | 29T | 25 | 24 | 54.8 | 78.5 | 593 | |
| | 1998.07-2000.08 | MT | F | L | Estate FWD XU10J4R | | GDS10080 | Drive Shaft | 29W | 25 | 24 | 55.7 | 79 | 597 | |
| | 1998.07-2000.08 | MT | F | L | Estate FWD XU10J4R | | GDS10131 | Drive Shaft | 29T | 25 | 24 | 54.8 | 78.5 | 583 | |
| | 1998.07-2000.08 | MT | F | L | Estate FWD XU10J4R | | GDS10163 | Drive Shaft | | 25 | 24 | 54.8 | 78.5 | 583 | |
| | 1998.07-2000.08 | MT | F | R | Estate FWD XU10J4R | Trans. code:BE3 | GDS10077 | Drive Shaft | | 25 | 24 | 55.7 | 79 | 872 | |
| | 1998.07-2000.08 | MT | F | R | Estate FWD XU10J4R | | GDS10078 | Drive Shaft | 29W | 25 | 24 | 55.7 | 79 | 872 | |
| | 1998.07-2000.08 | MT | F | L | Estate FWD XU10J4R | | GCO10022 | Outer Joint | 29W | 25 | 34 | 55.7 | 79 | 55 | I |
| | 1998.07-2000.08 | MT | F | L | Estate FWD XU10J4R | | GCI10018 | Inner Joint | | 24 | 29 | 40 | 62.5 | 99 | |
| | 1998.07-2000.08 | | F | L | Estate FWD XU10J4R | | GDS10090 | Drive Shaft | | 25 | 24 | 54.8 | 78.5 | 593 | |
| | 1998.07-2000.08 | | F | L | Estate FWD XU10J4R | | GCO10049 | Outer Joint | | 25 | 34 | 55.7 | 79 | 55 | I |
| 2.0 (100 kw) | 2000.09-2005.08 | AT | F | L | Estate FWD EW10J4 | | GDS56307 | Drive Shaft | 48W | 25 | 26 | 58.5 | 79 | 575 | |
| | 2000.09-2005.08 | AT | F | R | Estate FWD EW10J4 | | GDS56308 | Drive Shaft | 48W | 25 | 26 | 58.5 | 79 | 783 | |
| | 2000.09-2005.08 | MT | F | L | Estate FWD EW10J4 | | GDS10025 | Drive Shaft | 29T | 25 | 24 | 54.8 | 78.5 | 593 | |

| | YEAR | TRANSM. | F/R | L/R | BODY STYLE & DRIVE TYPE & ENGINE | REMARKS | G-AP Ref. | PRODUCT | ABS | Technical Specifications A | B | C | H | L | P |
|---|---|---|---|---|---|---|---|---|---|---|---|---|---|---|---|
| **CITROËN** | | | | | | | | | | | | | | | |
| **Xsara Estate/Break** | | | | | | | | | | | | | | | |
| 2.0 (100 kw) | 2000.09-2005.08 | MT | F | L | Estate FWD EW10J4 | | GDS10080 | Drive Shaft | 29W | 25 | 24 | 55.7 | 79 | 597 | |
| | 2000.09-2005.08 | MT | F | L | Estate FWD EW10J4 | Without Stability Control System (ESP/DSC) | GDS10131 | Drive Shaft | 29T | 25 | 24 | 54.8 | 78.5 | 583 | |
| | 2000.09-2005.08 | MT | F | L | Estate FWD EW10J4 | | GDS10163 | Drive Shaft | | 25 | 24 | 54.8 | 78.5 | 583 | |
| | 2000.09-2005.08 | MT | F | L | Estate FWD EW10J4 | | GDS99195 | Drive Shaft | 48W | 25 | 24 | 58.5 | 79 | 585 | |
| | 2000.09-2005.08 | MT | F | R | Estate FWD EW10J4 | for vehicles without ESP | GDS10077 | Drive Shaft | | 25 | 24 | 55.7 | 79 | 872 | |
| | 2000.09-2005.08 | MT | F | R | Estate FWD EW10J4 | | GDS10078 | Drive Shaft | 29W | 25 | 24 | 55.7 | 79 | 872 | |
| | 2000.09-2005.08 | MT | F | R | Estate FWD EW10J4 | | GDS99196 | Drive Shaft | 48W | 25 | 24 | 58.5 | 79 | 869 | |
| | 2000.09-2005.08 | MT | F | L/R | Estate FWD EW10J4 | | GCO10002 | Outer Joint | | 25 | 23 | 54.8 | 78.5 | 56 | I |
| | 2000.09-2005.08 | MT | F | L/R | Estate FWD EW10J4 | | GCO10003 | Outer Joint | 29T | 25 | 23 | 54.8 | 78.5 | 56 | I |
| | 2000.09-2005.08 | MT | F | L/R | Estate FWD EW10J4 | for ESP | GCO10067 | Outer Joint | 48W | 25 | 34 | 58.5 | 79 | 55 | I |
| | 2000.09-2005.08 | MT | F | L/R | Estate FWD EW10J4 | not for ESP | GCO10076 | Outer Joint | 29W | 25 | 34 | 58.5 | 79 | 55 | I |
| | 2000.09-2005.08 | MT | F | L | Estate FWD EW10J4 | | GCI10018 | Inner Joint | | 24 | 29 | 40 | 62.5 | 99 | |
| **Xsara Picasso** | | | | | | | | | | | | | | | |
| 1.6 (65 kw) | 1999.12-2001.09 | 5MT | F | L | MPV FWD NFZ (TU5JP) | | GDS10025 | Drive Shaft | 29T | 25 | 24 | 54.8 | 78.5 | 593 | |
| | 1999.12-2001.09 | 5MT | F | L | MPV FWD NFZ (TU5JP) | Inner teeth of wheel side:23 | GDS10090 | Drive Shaft | | 25 | 24 | 54.8 | 78.5 | 593 | |
| | 1999.12-2001.09 | 5MT | F | L | MPV FWD NFZ (TU5JP) | Inner teeth of wheel side:34 | GDS10227 | Drive Shaft | | 25 | 24 | 58.5 | 78.5 | 595 | |
| | 1999.12-2001.09 | 5MT | F | R | MPV FWD NFZ (TU5JP) | | GDS10077 | Drive Shaft | | 25 | 24 | 55.7 | 79 | 872 | |
| | 1999.12-2001.09 | 5MT | F | L/R | MPV FWD NFZ (TU5JP) | | GCO10076 | Outer Joint | 29W | 25 | 34 | 58.5 | 79 | 55 | I |
| | 1999.12-2001.09 | | F | L | MPV FWD NFZ (TU5JP) | | GDS10080 | Drive Shaft | 29W | 25 | 24 | 55.7 | 79 | 597 | |
| | 1999.12-2001.09 | | F | R | MPV FWD NFZ (TU5JP) | | GDS10078 | Drive Shaft | 29W | 25 | 24 | 55.7 | 79 | 872 | |
| | 1999.12-2001.09 | | F | | MPV FWD NFZ (TU5JP) | | GCO10067 | Outer Joint | 48W | 25 | 34 | 58.5 | 79 | 55 | I |
| 1.6 (66 kw) | 2005.09-2011.12 | 5MT | F | L | MPV FWD 9HX (DV6ATED4) | | GDS99195 | Drive Shaft | 48W | 25 | 24 | 58.5 | 79 | 585 | |
| | 2005.09-2011.12 | 5MT | F | R | MPV FWD 9HX (DV6ATED4) | | GDS99196 | Drive Shaft | 48W | 25 | 24 | 58.5 | 79 | 869 | |
| | 2005.09-2011.12 | 5MT | F | L/R | MPV FWD 9HX (DV6ATED4) | | GCO99293 | Outer Joint | 48W | 25 | 34 | 58.5 | 79 | 55 | I |
| | 2005.09-2011.12 | 5MT | F | L | MPV FWD 9HX (DV6ATED4) | | GCI10020 | Inner Joint | | 24 | 34 | 40 | 62.5 | 99 | |
| 1.6 (67 kw) | 2002.06-2005.08 | 5MT | F | L | MPV FWD NFZ (TU5JP) | | GDS10025 | Drive Shaft | 29T | 25 | 24 | 54.8 | 78.5 | 593 | |
| | 2002.06-2005.08 | 5MT | F | L | MPV FWD NFZ (TU5JP) | Inner teeth of wheel side:23 | GDS10090 | Drive Shaft | | 25 | 24 | 54.8 | 78.5 | 593 | |
| | 2002.06-2005.08 | 5MT | F | L | MPV FWD NFZ (TU5JP) | Inner teeth of wheel side:34 | GDS10227 | Drive Shaft | | 25 | 24 | 58.5 | 78.5 | 595 | |
| | 2002.06-2005.08 | 5MT | F | L | MPV FWD NFZ (TU5JP) | Date from:2004.11,From ORG/OPR:10221 | GDS99195 | Drive Shaft | 48W | 25 | 24 | 58.5 | 79 | 585 | |
| | 2002.06-2005.08 | 5MT | F | R | MPV FWD NFZ (TU5JP) | | GDS10077 | Drive Shaft | | 25 | 24 | 55.7 | 79 | 872 | |
| | 2002.06-2005.08 | 5MT | F | R | MPV FWD NFZ (TU5JP) | Date to:2004.10 | GDS10078 | Drive Shaft | 29W | 25 | 24 | 55.7 | 79 | 872 | |
| | 2002.06-2005.08 | 5MT | F | R | MPV FWD NFZ (TU5JP) | Date from:2004.11,From ORG/OPR:10221 | GDS99196 | Drive Shaft | 48W | 25 | 24 | 58.5 | 79 | 869 | |
| | 2002.06-2005.08 | 5MT | F | L/R | MPV FWD NFZ (TU5JP) | Date to:2004.10,To ORG/OPR:10220 | GCO10076 | Outer Joint | 29W | 25 | 34 | 58.5 | 79 | 55 | I |
| 1.6 (70 kw) | 1999.12-2010.12 | 5MT | F | L | MPV FWD NFV (TU5JP) | Date to:2004.10 | GDS10025 | Drive Shaft | 29T | 25 | 24 | 54.8 | 78.5 | 593 | |
| | 1999.12-2010.12 | 5MT | F | L | MPV FWD NFV (TU5JP) | Date to:2004.10;Inner teeth of wheel side:23 | GDS10090 | Drive Shaft | | 25 | 24 | 54.8 | 78.5 | 593 | |
| | 1999.12-2010.12 | 5MT | F | L | MPV FWD NFV (TU5JP) | Date to:2004.12;Inner teeth of wheel side:34 | GDS10227 | Drive Shaft | | 25 | 24 | 58.5 | 78.5 | 595 | |
| | 1999.12-2010.12 | 5MT | F | L | MPV FWD NFV (TU5JP) | Date from:2004.11 | GDS99195 | Drive Shaft | 48W | 25 | 24 | 58.5 | 79 | 585 | |
| | 1999.12-2010.12 | 5MT | F | R | MPV FWD NFV (TU5JP) | Date to:2004.10 | GDS10077 | Drive Shaft | | 25 | 24 | 55.7 | 79 | 872 | |
| | 1999.12-2010.12 | 5MT | F | R | MPV FWD NFV (TU5JP) | Date to:2004.10 | GDS10193 | Drive Shaft | 29T | 25 | 24 | 54.8 | 78.5 | 868 | |
| | 1999.12-2010.12 | 5MT | F | R | MPV FWD NFV (TU5JP) | | GDS10205 | Drive Shaft | | 25 | 22 | 58.5 | 79 | 866 | |
| | 1999.12-2010.12 | 5MT | F | R | MPV FWD NFV (TU5JP) | Date from:2004.11 | GDS99196 | Drive Shaft | 48W | 25 | 24 | 58.5 | 79 | 869 | |
| | 1999.12-2010.12 | 5MT | F | L/R | MPV FWD NFV (TU5JP) | Date to:2004.10,To ORG/OPR:10220 | GCO10076 | Outer Joint | 29W | 25 | 34 | 58.5 | 79 | 55 | I |
| | 1999.12-2010.12 | 5MT | F | L/R | MPV FWD NFV (TU5JP) | Date from:2004.11,From ORG/OPR:10221 | GCO99293 | Outer Joint | 48W | 25 | 34 | 58.5 | 79 | 55 | I |
| | 1999.12-2010.12 | 5MT | F | L | MPV FWD NFV (TU5JP) | Date from:2004.11 | GCI10020 | Inner Joint | | 24 | 34 | 40 | 62.5 | 99 | |
| | 1999.12-2010.12 | MT | F | L | MPV FWD NFV (TU5JP) | | GDS10080 | Drive Shaft | 29W | 25 | 24 | 55.7 | 79 | 597 | |
| | 1999.12-2010.12 | MT | F | R | MPV FWD NFV (TU5JP) | | GDS10078 | Drive Shaft | 29W | 25 | 24 | 55.7 | 79 | 872 | |
| 1.6 (74 kw) | 2001.04-2004.10 | 5MT | F | L | MPV FWD NFV (TU5JP) | | GDS10025 | Drive Shaft | 29T | 25 | 24 | 54.8 | 78.5 | 593 | |
| | 2001.04-2004.10 | 5MT | F | L | MPV FWD NFV (TU5JP) | Inner teeth of wheel side:23 | GDS10090 | Drive Shaft | | 25 | 24 | 54.8 | 78.5 | 593 | |
| | 2001.04-2004.10 | 5MT | F | L | MPV FWD NFV (TU5JP) | Inner teeth of wheel side:34 | GDS10227 | Drive Shaft | | 25 | 24 | 58.5 | 78.5 | 595 | |
| | 2001.04-2004.10 | 5MT | F | R | MPV FWD NFV (TU5JP) | | GDS10077 | Drive Shaft | | 25 | 24 | 55.7 | 79 | 872 | |
| | 2001.04-2004.10 | 5MT | F | R | MPV FWD NFV (TU5JP) | | GDS10078 | Drive Shaft | 29W | 25 | 24 | 55.7 | 79 | 872 | |
| | 2001.04-2004.10 | 5MT | F | L/R | MPV FWD NFV (TU5JP) | | GCO10076 | Outer Joint | 29W | 25 | 34 | 58.5 | 79 | 55 | I |
| 1.6 (80 kw) | 2004.05-2011.12 | 5MT | F | L | MPV FWD 9HZ (DV6TED4);9HY (DV6TED4) | | GDS99195 | Drive Shaft | 48W | 25 | 24 | 58.5 | 79 | 585 | |
| | 2004.05-2011.12 | 5MT | F | R | MPV FWD 9HZ (DV6TED4);9HY (DV6TED4) | | GDS99196 | Drive Shaft | 48W | 25 | 24 | 58.5 | 79 | 869 | |
| | 2004.05-2011.12 | 5MT | F | L/R | MPV FWD 9HZ (DV6TED4);9HY (DV6TED4) | | GCO99293 | Outer Joint | 48W | 25 | 34 | 58.5 | 79 | 55 | I |
| | 2004.05-2011.12 | 5MT | F | L | MPV FWD 9HZ (DV6TED4);9HY (DV6TED4) | | GCI10020 | Inner Joint | | 24 | 34 | 40 | 62.5 | 99 | |
| | 2004.06-2010.12 | 5MT | F | L | MPV FWD | | GDS99195 | Drive Shaft | 48W | 25 | 24 | 58.5 | 79 | 585 | |
| | 2004.06-2010.12 | 5MT | F | R | MPV FWD | | GDS99196 | Drive Shaft | 48W | 25 | 24 | 58.5 | 79 | 869 | |
| | 2004.06-2010.12 | 5MT | F | L | MPV FWD | | GCO99293 | Outer Joint | 48W | 25 | 34 | 58.5 | 79 | 55 | I |
| | 2004.06-2010.12 | 5MT | F | L | MPV FWD | | GCI10020 | Inner Joint | | 24 | 34 | 40 | 62.5 | 99 | |
| | 2005.09-2011.12 | 5MT | F | L | MPV FWD NFU (TU5JP4) | | GDS99195 | Drive Shaft | 48W | 25 | 24 | 58.5 | 79 | 585 | |
| | 2005.09-2011.12 | 5MT | F | R | MPV FWD NFU (TU5JP4) | | GDS99196 | Drive Shaft | 48W | 25 | 24 | 58.5 | 79 | 869 | |
| | 2005.09-2011.12 | 5MT | F | L/R | MPV FWD NFU (TU5JP4) | | GCO99293 | Outer Joint | 48W | 25 | 34 | 58.5 | 79 | 55 | I |
| | 2005.09-2011.12 | 5MT | F | L | MPV FWD NFU (TU5JP4) | | GCI10020 | Inner Joint | | 24 | 34 | 40 | 62.5 | 99 | |
| 1.6 (81 kw) | 2005.06-2006.09 | 5MT | F | L | MPV FWD NFU (TU5JP4) | | GCO99293 | Outer Joint | 48W | 25 | 34 | 58.5 | 79 | 55 | I |

| | YEAR | TRANSM. | F/R | L/R | BODY STYLE & DRIVE TYPE & ENGINE | REMARKS | G-AP Ref. | PRODUCT | ABS | Technical Specifications A | B | C | H | L | P |
|---|---|---|---|---|---|---|---|---|---|---|---|---|---|---|---|
| **CITROËN** | | | | | | | | | | | | | | | |
| **Xsara Picasso** | | | | | | | | | | | | | | | |
| 1.6 (81 kw) | 2005.06-2006.09 | MT | F | L | MPV FWD NFU (TU5JP4) | | GDS99195 | Drive Shaft | 48W | 25 | 24 | 58.5 | 79 | 585 | |
| | 2005.06-2006.09 | MT | F | R | MPV FWD NFU (TU5JP4) | | GDS99196 | Drive Shaft | 48W | 25 | 24 | 58.5 | 79 | 869 | |
| | 2005.06-2006.09 | MT | F | L | MPV FWD NFU (TU5JP4) | | GCI10020 | Inner Joint | | 24 | 34 | 40 | 62.5 | 99 | |
| 1.8 (85 kw) | 2000.02-2005.08 | 5MT | F | L | MPV FWD 6FZ (EW7J4) | | GDS10025 | Drive Shaft | 29T | 25 | 24 | 54.8 | 78.5 | 593 | |
| | 2000.02-2005.08 | 5MT | F | L | MPV FWD 6FZ (EW7J4) | Inner teeth of wheel side:23 | GDS10090 | Drive Shaft | | 25 | 24 | 54.8 | 78.5 | 593 | |
| | 2000.02-2005.08 | 5MT | F | L | MPV FWD 6FZ (EW7J4) | For vehicles without ESP;Inner teeth of wheel side:34 | GDS10227 | Drive Shaft | | 25 | 24 | 58.5 | 78.5 | 595 | |
| | 2000.02-2005.08 | 5MT | F | L | MPV FWD 6FZ (EW7J4) | | GDS99195 | Drive Shaft | 48W | 25 | 24 | 58.5 | 79 | 585 | |
| | 2000.02-2005.08 | 5MT | F | R | MPV FWD 6FZ (EW7J4) | | GDS10077 | Drive Shaft | | 25 | 24 | 55.7 | 79 | 872 | |
| | 2000.02-2005.08 | 5MT | F | R | MPV FWD 6FZ (EW7J4) | | GDS99196 | Drive Shaft | 48W | 25 | 24 | 58.5 | 79 | 869 | |
| | 2000.02-2005.08 | 5MT | F | L/R | MPV FWD 6FZ (EW7J4) | For vehicles without ESP | GCO10076 | Outer Joint | 29W | 25 | 34 | 58.5 | 79 | 55 | I |
| | 2000.02-2005.08 | 5MT | F | L/R | MPV FWD 6FZ (EW7J4) | For vehicles with ESP | GCO99293 | Outer Joint | 48W | 25 | 34 | 58.5 | 79 | 55 | I |
| | 2000.02-2005.08 | 5MT | F | L | MPV FWD 6FZ (EW7J4) | | GCI10020 | Inner Joint | | 24 | 34 | 40 | 62.5 | 99 | |
| | 2000.02-2005.08 | MT | F | L | MPV FWD 6FZ (EW7J4) | | GDS10080 | Drive Shaft | 29W | 25 | 24 | 55.7 | 79 | 597 | |
| | 2000.02-2005.08 | MT | F | R | MPV FWD 6FZ (EW7J4) | | GDS10078 | Drive Shaft | 29W | 25 | 24 | 55.7 | 79 | 872 | |
| 2.0 (66 kw) | 1999.12-2011.12 | 5MT | F | L | MPV FWD RHY (DW10TD) | Date to:2005.03 | GDS10131 | Drive Shaft | 29T | 25 | 24 | 54.8 | 78.5 | 583 | |
| | 1999.12-2011.12 | 5MT | F | L | MPV FWD RHY (DW10TD) | Date to:2005.03,Chassis no. to:1031278 | GDS10163 | Drive Shaft | | 25 | 24 | 54.8 | 78.5 | 583 | |
| | 1999.12-2011.12 | 5MT | F | L | MPV FWD RHY (DW10TD) | Date from:2005.04 | GDS99195 | Drive Shaft | 48W | 25 | 24 | 58.5 | 79 | 585 | |
| | 1999.12-2011.12 | 5MT | F | R | MPV FWD RHY (DW10TD) | Date to:2005.03 | GDS10077 | Drive Shaft | | 25 | 24 | 55.7 | 79 | 872 | |
| | 1999.12-2011.12 | 5MT | F | R | MPV FWD RHY (DW10TD) | Date to:2005.03 | GDS10193 | Drive Shaft | 29T | 25 | 24 | 54.8 | 78.5 | 868 | |
| | 1999.12-2011.12 | 5MT | F | R | MPV FWD RHY (DW10TD) | Date from:2005.04 | GDS99196 | Drive Shaft | 48W | 25 | 24 | 58.5 | 79 | 869 | |
| | 1999.12-2011.12 | 5MT | F | L/R | MPV FWD RHY (DW10TD) | | GCO10076 | Outer Joint | 29W | 25 | 34 | 58.5 | 79 | 55 | I |
| | 1999.12-2011.12 | 5MT | F | L/R | MPV FWD RHY (DW10TD) | | GCO99293 | Outer Joint | 48W | 25 | 34 | 58.5 | 79 | 55 | I |
| | 1999.12-2011.12 | 5MT | F | L | MPV FWD RHY (DW10TD) | Date to:2005.03 | GCI10018 | Inner Joint | | 24 | 29 | 40 | 62.5 | 99 | |
| | 1999.12-2011.12 | 5MT | F | L | MPV FWD RHY (DW10TD) | Date from:2005.04 | GCI10020 | Inner Joint | | 24 | 34 | 40 | 62.5 | 99 | |
| | 1999.12-2011.12 | MT | F | L | MPV FWD RHY (DW10TD) | | GDS10080 | Drive Shaft | 29W | 25 | 24 | 55.7 | 79 | 597 | |
| | 1999.12-2011.12 | MT | F | R | MPV FWD RHY (DW10TD) | | GDS10078 | Drive Shaft | 29W | 25 | 24 | 55.7 | 79 | 872 | |
| 2.0 (88 kw) | 2004.02-2004.10 | 5MT | F | L | MPV FWD RFN (EW10J4) | | GDS10025 | Drive Shaft | 29T | 25 | 24 | 54.8 | 78.5 | 593 | |
| | 2004.02-2004.10 | 5MT | F | L | MPV FWD RFN (EW10J4) | | GDS10131 | Drive Shaft | 29T | 25 | 24 | 54.8 | 78.5 | 583 | |
| | 2004.02-2004.10 | 5MT | F | R | MPV FWD RFN (EW10J4) | | GDS10078 | Drive Shaft | 29W | 25 | 24 | 55.7 | 79 | 872 | |
| | 2004.02-2004.10 | 5MT | F | L/R | MPV FWD RFN (EW10J4) | | GCO10076 | Outer Joint | 29W | 25 | 34 | 58.5 | 79 | 55 | I |
| | 2004.02-2004.10 | 5MT | F | L | MPV FWD RFN (EW10J4) | | GCI10018 | Inner Joint | | 24 | 29 | 40 | 62.5 | 99 | |
| 2.0 (100 kw) | 2003.01-2012.06 | 4AT | F | L | MPV FWD RFN (EW10J4) | | GDS56307 | Drive Shaft | 48W | 25 | 26 | 58.5 | 79 | 575 | |
| | 2003.01-2012.06 | 4AT | F | R | MPV FWD RFN (EW10J4) | | GDS56308 | Drive Shaft | 48W | 25 | 26 | 58.5 | 79 | 783 | |
| | 2003.01-2012.06 | 4AT | F | L | MPV FWD RFN (EW10J4) | with ESP | GCO99293 | Outer Joint | 48W | 25 | 34 | 58.5 | 79 | 55 | I |
| | 2003.01-2012.06 | 5MT | F | L | MPV FWD RFN (EW10J4) | | GDS10131 | Drive Shaft | 29T | 25 | 24 | 54.8 | 78.5 | 583 | |
| | 2003.01-2012.06 | 5MT | F | R | MPV FWD RFN (EW10J4) | | GDS10078 | Drive Shaft | 29W | 25 | 24 | 55.7 | 79 | 872 | |
| | 2003.01-2012.06 | 5MT | F | R | MPV FWD RFN (EW10J4) | | GDS10193 | Drive Shaft | 29T | 25 | 24 | 54.8 | 78.5 | 868 | |
| | 2003.01-2012.06 | 5MT | F | L/R | MPV FWD RFN (EW10J4) | | GCO10076 | Outer Joint | 29W | 25 | 34 | 58.5 | 79 | 55 | I |
| | 2003.01-2012.06 | MT | F | L | MPV FWD RFN (EW10J4) | | GDS10163 | Drive Shaft | | 25 | 24 | 54.8 | 78.5 | 583 | |
| | 2003.01-2012.06 | MT | F | L | MPV FWD RFN (EW10J4) | Date from:2007.03 | GDS99195 | Drive Shaft | 48W | 25 | 24 | 58.5 | 79 | 585 | |
| | 2003.01-2012.06 | MT | F | R | MPV FWD RFN (EW10J4) | Date from:2007.03 | GDS99196 | Drive Shaft | 48W | 25 | 24 | 58.5 | 79 | 869 | |
| | 2003.01-2012.06 | MT | F | L | MPV FWD RFN (EW10J4) | | GCI10018 | Inner Joint | | 24 | 29 | 40 | 62.5 | 99 | |
| | 2003.01-2012.06 | MT/5MT | F | L | MPV FWD RFN (EW10J4) | | GDS10025 | Drive Shaft | 29T | 25 | 24 | 54.8 | 78.5 | 593 | |
| 2.0 (101 kw) | 1999.12-2011.11 | 4AT | F | L | MPV FWD RFN (EW10J4) | | GDS56307 | Drive Shaft | 48W | 25 | 26 | 58.5 | 79 | 575 | |
| | 1999.12-2011.11 | 4AT | F | R | MPV FWD RFN (EW10J4) | | GDS56308 | Drive Shaft | 48W | 25 | 26 | 58.5 | 79 | 783 | |
| | 1999.12-2011.11 | 4AT | F | L | MPV FWD RFN (EW10J4) | with ESP | GCO99293 | Outer Joint | 48W | 25 | 34 | 58.5 | 79 | 55 | I |
| | 1999.12-2011.11 | 5MT | F | L | MPV FWD RFN (EW10J4) | | GDS10025 | Drive Shaft | 29T | 25 | 24 | 54.8 | 78.5 | 593 | |
| | 1999.12-2011.11 | 5MT | F | L | MPV FWD RFN (EW10J4) | | GDS10131 | Drive Shaft | 29T | 25 | 24 | 54.8 | 78.5 | 583 | |
| | 1999.12-2011.11 | 5MT | F | R | MPV FWD RFN (EW10J4) | | GDS10078 | Drive Shaft | 29W | 25 | 24 | 55.7 | 79 | 872 | |
| | 1999.12-2011.11 | 5MT | F | L/R | MPV FWD RFN (EW10J4) | | GCO10076 | Outer Joint | 29W | 25 | 34 | 58.5 | 79 | 55 | I |
| | 1999.12-2011.11 | 5MT | F | L | MPV FWD RFN (EW10J4) | | GCI10018 | Inner Joint | | 24 | 29 | 40 | 62.5 | 99 | |
| **ZX** | | | | | | | | | | | | | | | |
| 1.1 (44 kw) | 1991.03-1997.10 | MT | F | L | Hatchback FWD TU1M/TU1M+ | | GDS10040 | Drive Shaft | | 21 | 22 | 56.4 | 76 | 595 | |
| | 1991.03-1997.10 | MT | F | R | Hatchback FWD TU1M/TU1M+ | | GDS10004 | Drive Shaft | | 21 | 22 | 56.4 | 76 | 855.5 | |
| 1.4 (55 kw) | 1991.03-1997.06 | 5MT | F | L | Hatchback FWD KDX (TU3M/Z) (03.91-.), KDZ (TU3M/Z), KFX (TU3JP) | | GDS10021 | Drive Shaft | 29T | 25 | 22 | 60 | 80 | 593 | |
| | 1991.03-1997.06 | 5MT | F | L | Hatchback FWD KDX (TU3M/Z) (03.91-.), KDZ (TU3M/Z), KFX (TU3JP) | | GDS10040 | Drive Shaft | | 21 | 22 | 56.4 | 76 | 595 | |
| | 1991.03-1997.06 | 5MT | F | R | Hatchback FWD KDX (TU3M/Z) (03.91-.), KDZ (TU3M/Z), KFX (TU3JP) | | GDS10004 | Drive Shaft | | 21 | 22 | 56.4 | 76 | 855.5 | |
| | 1991.03-1997.06 | 5MT | F | R | Hatchback FWD KDX (TU3M/Z) (03.91-.), KDZ (TU3M/Z), KFX (TU3JP) | | GDS10188 | Drive Shaft | 29T | 25 | 22 | 54.5 | 79.5 | 860 | |
| | 1991.03-1997.06 | 5MT | F | L | Hatchback FWD KDZ (TU3M/Z) | | GDS10021 | Drive Shaft | 29T | 25 | 22 | 60 | 80 | 593 | |
| | 1991.03-1997.06 | 5MT | F | L | Hatchback FWD KDZ (TU3M/Z) | | GDS10040 | Drive Shaft | | 21 | 22 | 56.4 | 76 | 595 | |
| | 1991.03-1997.06 | 5MT | F | R | Hatchback FWD KDZ (TU3M/Z) | | GDS10004 | Drive Shaft | | 21 | 22 | 56.4 | 76 | 855.5 | |
| | 1991.03-1997.06 | 5MT | F | R | Hatchback FWD KDZ (TU3M/Z) | | GDS10188 | Drive Shaft | 29T | 25 | 22 | 54.5 | 79.5 | 860 | |
| | 1993.10-1997.10 | MT | F | L | Estate FWD TU3JP/TU3MC | Trans. code:MA | GDS10040 | Drive Shaft | | 21 | 22 | 56.4 | 76 | 595 | |
| | 1993.10-1997.10 | MT | F | R | Estate FWD TU3JP/TU3MC | | GDS10004 | Drive Shaft | | 21 | 22 | 56.4 | 76 | 855.5 | |
| | 1993.10-1997.10 | | F | L | Estate FWD TU3JP/TU3MC | | GDS10097 | Drive Shaft | | 21 | 22 | 56.4 | 76 | 590.7 | |

| | YEAR | TRANSM. | F/R | L/R | BODY STYLE & DRIVE TYPE & ENGINE | REMARKS | G-AP Ref. | PRODUCT | ABS | Technical Specifications | | | | | |
|---|---|---|---|---|---|---|---|---|---|---|---|---|---|---|---|
| | | | | | | | | | | A | B | C | H | L | P |
| **CITROËN** | | | | | | | | | | | | | | | |
| **ZX** | | | | | | | | | | | | | | | |
| 1.6 (65 kw) | 1991.03-1997.06 | MT | F | L | Hatchback FWD XU5JP/XU5M | Trans. code:BE3 | GDS10025 | Drive Shaft | 29T | 25 | 24 | 54.8 | 78.5 | 593 | |
| | 1991.03-1997.06 | MT | F | L | Hatchback FWD XU5JP/XU5M | | GDS10090 | Drive Shaft | | 25 | 24 | 54.8 | 78.5 | 593 | |
| | 1991.03-1997.06 | MT | F | R | Hatchback FWD XU5JP/XU5M | | GDS10077 | Drive Shaft | | 25 | 24 | 55.7 | 79 | 872 | |
| | 1991.03-1997.06 | MT | F | R | Hatchback FWD XU5JP/XU5M | Trans. code:BE3 | GDS10193 | Drive Shaft | 29T | 25 | 24 | 54.8 | 78.5 | 868 | |
| | 1991.03-1997.06 | MT | F | L/R | Hatchback FWD XU5JP/XU5M | | GCO10002 | Outer Joint | | 25 | 23 | 54.8 | 78.5 | 56 | I |
| | 1991.03-1997.06 | MT | F | L/R | Hatchback FWD XU5JP/XU5M | | GCO10003 | Outer Joint | 29T | 25 | 23 | 54.8 | 78.5 | 56 | I |
| | 1993.10-1997.10 | MT | F | L | Estate FWD XU5JP | Trans. code:BE3 | GDS10025 | Drive Shaft | 29T | 25 | 24 | 54.8 | 78.5 | 593 | |
| | 1993.10-1997.10 | MT | F | L | Estate FWD XU5JP | | GDS10090 | Drive Shaft | | 25 | 24 | 54.8 | 78.5 | 593 | |
| | 1993.10-1997.10 | MT | F | R | Estate FWD XU5JP | | GDS10077 | Drive Shaft | | 25 | 24 | 55.7 | 79 | 872 | |
| | 1993.10-1997.10 | MT | F | R | Estate FWD XU5JP | Trans. code:BE3 | GDS10193 | Drive Shaft | 29T | 25 | 24 | 54.8 | 78.5 | 868 | |
| | 1993.10-1997.10 | MT | F | L/R | Estate FWD XU5JP | | GCO10002 | Outer Joint | | 25 | 23 | 54.8 | 78.5 | 56 | I |
| | 1993.10-1997.10 | MT | F | L/R | Estate FWD XU5JP | | GCO10003 | Outer Joint | 29T | 25 | 23 | 54.8 | 78.5 | 56 | I |
| 1.6 (66 kw) | 1994.07-1997.10 | | F | R | Hatchback FWD XU5JP | | GDS10077 | Drive Shaft | | 25 | 24 | 55.7 | 79 | 872 | |
| 1.8 (44 kw) | 1993.06-1997.10 | MT | F | L | Estate FWD XUD7 | | GDS10025 | Drive Shaft | 29T | 25 | 24 | 54.8 | 78.5 | 593 | |
| | 1993.06-1997.10 | MT | F | R | Estate FWD XUD7 | Trans. code:BE3 | GDS10077 | Drive Shaft | | 25 | 24 | 55.7 | 79 | 872 | |
| | 1993.06-1997.10 | MT | F | R | Estate FWD XUD7 | Trans. code:BE3 | GDS10193 | Drive Shaft | 29T | 25 | 24 | 54.8 | 78.5 | 868 | |
| | 1993.06-1997.10 | | F | L | Estate FWD XUD7 | | GDS10090 | Drive Shaft | | 25 | 24 | 54.8 | 78.5 | 593 | |
| | 1993.07-1998.05 | | F | L | Hatchback FWD XUD7 | | GDS10090 | Drive Shaft | | 25 | 24 | 54.8 | 78.5 | 593 | |
| 1.8 (74 kw) | 1992.07-1997.06 | MT | F | L | Hatchback FWD XU7JP | | GDS10025 | Drive Shaft | 29T | 25 | 24 | 54.8 | 78.5 | 593 | |
| | 1992.07-1997.06 | MT | F | L | Hatchback FWD XU7JP | | GDS10090 | Drive Shaft | | 25 | 24 | 54.8 | 78.5 | 593 | |
| | 1992.07-1997.06 | MT | F | R | Hatchback FWD XU7JP | | GDS10077 | Drive Shaft | | 25 | 24 | 55.7 | 79 | 872 | |
| | 1992.07-1997.06 | MT | F | L/R | Hatchback FWD XU7JP | | GCO10002 | Outer Joint | | 25 | 23 | 54.8 | 78.5 | 56 | I |
| | 1992.07-1997.06 | MT | F | L/R | Hatchback FWD XU7JP | | GCO10003 | Outer Joint | 29T | 25 | 23 | 54.8 | 78.5 | 56 | I |
| | 1992.07-1997.06 | | F | | Hatchback FWD XU7JP | | GCO10022 | Outer Joint | 29W | 25 | 34 | 55.7 | 79 | 55 | I |
| | 1993.10-1997.10 | MT | F | L | Estate FWD XU7JP | Trans. code:BE3 | GDS10025 | Drive Shaft | 29T | 25 | 24 | 54.8 | 78.5 | 593 | |
| | 1993.10-1997.10 | MT | F | L | Estate FWD XU7JP | | GDS10090 | Drive Shaft | | 25 | 24 | 54.8 | 78.5 | 593 | |
| | 1993.10-1997.10 | MT | F | R | Estate FWD XU7JP | | GDS10077 | Drive Shaft | | 25 | 24 | 55.7 | 79 | 872 | |
| | 1993.10-1997.10 | MT | F | R | Estate FWD XU7JP | Trans. code:BE3 | GDS10193 | Drive Shaft | 29T | 25 | 24 | 54.8 | 78.5 | 868 | |
| | 1993.10-1997.10 | MT | F | L/R | Estate FWD XU7JP | | GCO10002 | Outer Joint | | 25 | 23 | 54.8 | 78.5 | 56 | I |
| | 1993.10-1997.10 | MT | F | L/R | Estate FWD XU7JP | | GCO10003 | Outer Joint | 29T | 25 | 23 | 54.8 | 78.5 | 56 | I |
| | 1993.10-1997.10 | | F | | Estate FWD XU7JP | | GCO10022 | Outer Joint | 29W | 25 | 34 | 55.7 | 79 | 55 | I |
| 1.8 (76 kw) | 1991.03-1997.10 | MT | F | L | Hatchback FWD XU7JP | | GDS10025 | Drive Shaft | 29T | 25 | 24 | 54.8 | 78.5 | 593 | |
| | 1991.03-1997.10 | MT | F | L | Hatchback FWD XU7JP | | GDS10090 | Drive Shaft | | 25 | 24 | 54.8 | 78.5 | 593 | |
| | 1991.03-1997.10 | MT | F | R | Hatchback FWD XU7JP | Trans. code:BE3 | GDS10077 | Drive Shaft | | 25 | 24 | 55.7 | 79 | 872 | |
| | 1991.03-1997.10 | MT | F | R | Hatchback FWD XU7JP | Trans. code:BE3 | GDS10193 | Drive Shaft | 29T | 25 | 24 | 54.8 | 78.5 | 868 | |
| | 1991.03-1997.10 | MT | F | L/R | Hatchback FWD XU7JP | | GCO10002 | Outer Joint | | 25 | 23 | 54.8 | 78.5 | 56 | I |
| | 1991.03-1997.10 | MT | F | L/R | Hatchback FWD XU7JP | | GCO10003 | Outer Joint | 29T | 25 | 23 | 54.8 | 78.5 | 56 | I |
| | 1991.03-1997.10 | | F | L/R | Hatchback FWD XU7JP | | GCO10022 | Outer Joint | 29W | 25 | 34 | 55.7 | 79 | 55 | I |
| 1.8 (81 kw) | 1996.01-1997.06 | AT/MT | F | L | Hatchback FWD XU7JP4 | | GDS10090 | Drive Shaft | | 25 | 24 | 54.8 | 78.5 | 593 | |
| | 1996.01-1997.06 | | F | R | Hatchback FWD XU7JP4 | | GDS10077 | Drive Shaft | | 25 | 24 | 55.7 | 79 | 872 | |
| | 1996.01-1997.06 | | F | | Hatchback FWD XU7JP4 | | GCO10022 | Outer Joint | 29W | 25 | 34 | 55.7 | 79 | 55 | I |
| | 1996.01-1998.02 | AT/MT | F | L | Estate FWD XU7JP4 | | GDS10090 | Drive Shaft | | 25 | 24 | 54.8 | 78.5 | 593 | |
| | 1996.01-1998.02 | | F | R | Estate FWD XU7JP4 | | GDS10077 | Drive Shaft | | 25 | 24 | 55.7 | 79 | 872 | |
| | 1996.01-1998.02 | | F | | Estate FWD XU7JP4 | | GCO10022 | Outer Joint | 29W | 25 | 34 | 55.7 | 79 | 55 | I |
| 1.9 (47 kw) | 1991.03-1997.06 | MT | F | L | Hatchback FWD XUD9 | | GDS10025 | Drive Shaft | 29T | 25 | 24 | 54.8 | 78.5 | 593 | |
| | 1991.03-1997.06 | MT | F | L | Hatchback FWD XUD9 | | GDS10090 | Drive Shaft | | 25 | 24 | 54.8 | 78.5 | 593 | |
| | 1991.03-1997.06 | MT | F | R | Hatchback FWD XUD9 | | GDS10077 | Drive Shaft | | 25 | 24 | 55.7 | 79 | 872 | |
| | 1991.03-1997.06 | MT | F | R | Hatchback FWD XUD9 | Trans. code:BE3 | GDS10193 | Drive Shaft | 29T | 25 | 24 | 54.8 | 78.5 | 868 | |
| | 1991.03-1997.06 | MT | F | L/R | Hatchback FWD XUD9 | | GCO10002 | Outer Joint | | 25 | 23 | 54.8 | 78.5 | 56 | I |
| | 1991.03-1997.06 | MT | F | L/R | Hatchback FWD XUD9 | | GCO10003 | Outer Joint | 29T | 25 | 23 | 54.8 | 78.5 | 56 | I |
| | 1991.03-1997.06 | | F | | Hatchback FWD XUD9 | | GCO10022 | Outer Joint | 29W | 25 | 34 | 55.7 | 79 | 55 | I |
| | 1993.10-1997.10 | MT | F | L | Estate FWD XUD9 | Trans. code:BE3 | GDS10025 | Drive Shaft | 29T | 25 | 24 | 54.8 | 78.5 | 593 | |
| | 1993.10-1997.10 | MT | F | L | Estate FWD XUD9 | | GDS10090 | Drive Shaft | | 25 | 24 | 54.8 | 78.5 | 593 | |
| | 1993.10-1997.10 | MT | F | R | Estate FWD XUD9 | | GDS10077 | Drive Shaft | | 25 | 24 | 55.7 | 79 | 872 | |
| | 1993.10-1997.10 | MT | F | R | Estate FWD XUD9 | Trans. code:BE3 | GDS10193 | Drive Shaft | 29T | 25 | 24 | 54.8 | 78.5 | 868 | |
| | 1993.10-1997.10 | MT | F | L/R | Estate FWD XUD9 | | GCO10002 | Outer Joint | | 25 | 23 | 54.8 | 78.5 | 56 | I |
| | 1993.10-1997.10 | MT | F | L/R | Estate FWD XUD9 | | GCO10003 | Outer Joint | 29T | 25 | 23 | 54.8 | 78.5 | 56 | I |
| | 1993.10-1997.10 | | F | | Estate FWD XUD9 | | GCO10022 | Outer Joint | 29W | 25 | 34 | 55.7 | 79 | 55 | I |
| 1.9 (50 kw) | 1994.06-1997.06 | MT | F | L | Hatchback FWD XUD9 | Date from:1994.06;Trans. code:BE3 | GDS10025 | Drive Shaft | 29T | 25 | 24 | 54.8 | 78.5 | 593 | |
| | 1994.06-1997.06 | MT | F | L | Hatchback FWD XUD9 | | GDS10090 | Drive Shaft | | 25 | 24 | 54.8 | 78.5 | 593 | |
| | 1994.06-1997.06 | MT | F | R | Hatchback FWD XUD9 | Date from:1994.06;Trans. code:BE3 | GDS10077 | Drive Shaft | | 25 | 24 | 55.7 | 79 | 872 | |
| | 1994.06-1997.06 | MT | F | R | Hatchback FWD XUD9 | Date from:1994.06;Trans. code:BE3 | GDS10193 | Drive Shaft | 29T | 25 | 24 | 54.8 | 78.5 | 868 | |
| | 1994.06-1997.06 | MT | F | L/R | Hatchback FWD XUD9 | Date from:1994.06 | GCO10002 | Outer Joint | | 25 | 23 | 54.8 | 78.5 | 56 | I |
| | 1994.06-1997.06 | MT | F | L/R | Hatchback FWD XUD9 | Date from:1994.06 | GCO10003 | Outer Joint | 29T | 25 | 23 | 54.8 | 78.5 | 56 | I |
| | 1994.06-1997.06 | MT | F | L/R | Hatchback FWD XUD9 | | GCO10022 | Outer Joint | 29W | 25 | 34 | 55.7 | 79 | 55 | I |

| | YEAR | TRANSM. | F/R | L/R | BODY STYLE & DRIVE TYPE & ENGINE | REMARKS | G-AP Ref. | PRODUCT | ABS | Technical Specifications A | B | C | H | L | P |
|---|---|---|---|---|---|---|---|---|---|---|---|---|---|---|---|
| **CITROËN ZX** | | | | | | | | | | | | | | | |
| 1.9 (50 kw) | 1994.07-1998.05 | MT | F | L | Estate FWD XUD9 | Trans. code:BE3 | GDS10025 | Drive Shaft | 29T | 25 | 24 | 54.8 | 78.5 | 593 | |
| | 1994.07-1998.05 | MT | F | L | Estate FWD XUD9 | | GDS10090 | Drive Shaft | | 25 | 24 | 54.8 | 78.5 | 593 | |
| | 1994.07-1998.05 | MT | F | R | Estate FWD XUD9 | Trans. code:BE3 | GDS10077 | Drive Shaft | | 25 | 24 | 55.7 | 79 | 872 | |
| | 1994.07-1998.05 | MT | F | R | Estate FWD XUD9 | Trans. code:BE3 | GDS10193 | Drive Shaft | 29T | 25 | 24 | 54.8 | 78.5 | 868 | |
| | 1994.07-1998.05 | MT | F | L/R | Estate FWD XUD9 | | GCO10002 | Outer Joint | | 25 | 23 | 54.8 | 78.5 | 56 | I |
| | 1994.07-1998.05 | MT | F | L/R | Estate FWD XUD9 | | GCO10003 | Outer Joint | 29T | 25 | 23 | 54.8 | 78.5 | 56 | I |
| | 1994.07-1998.05 | | F | | Estate FWD XUD9 | | GCO10022 | Outer Joint | 29W | 25 | 34 | 55.7 | 79 | 55 | I |
| 1.9 (65 kw) | 1994.07-1997.10 | | F | L | Hatchback FWD XUD9TE | | GDS99025 | Drive Shaft | 29W | 25 | 24 | 55.7 | 79 | 597 | |
| | 1994.07-1997.10 | | F | | Hatchback FWD XUD9TE | | GCO10022 | Outer Joint | 29W | 25 | 34 | 55.7 | 79 | 55 | I |
| 1.9 (66 kw) | 1993.10-1997.10 | MT | F | L | Estate FWD XUD9TE | Trans. code:BE3 | GDS10131 | Drive Shaft | 29T | 25 | 24 | 54.8 | 78.5 | 583 | |
| | 1993.10-1997.10 | MT | F | R | Estate FWD XUD9TE | Trans. code:BE3 | GDS10077 | Drive Shaft | | 25 | 24 | 55.7 | 79 | 872 | |
| | 1993.10-1997.10 | MT | F | R | Estate FWD XUD9TE | | GDS10193 | Drive Shaft | 29T | 25 | 24 | 54.8 | 78.5 | 868 | |
| | 1993.10-1997.10 | MT | F | L/R | Estate FWD XUD9TE | | GCO10002 | Outer Joint | | 25 | 23 | 54.8 | 78.5 | 56 | I |
| | 1993.10-1997.10 | MT | F | L/R | Estate FWD XUD9TE | | GCO10003 | Outer Joint | 29T | 25 | 23 | 54.8 | 78.5 | 56 | I |
| | 1993.10-1997.10 | | F | L | Estate FWD XUD9TE | | GDS10090 | Drive Shaft | | 25 | 24 | 54.8 | 78.5 | 593 | |
| | 1993.10-1997.10 | | F | L | Estate FWD XUD9TE | | GDS99025 | Drive Shaft | 29W | 25 | 24 | 55.7 | 79 | 597 | |
| | 1993.10-1997.10 | | F | | Estate FWD XUD9TE | | GCO10022 | Outer Joint | 29W | 25 | 34 | 55.7 | 79 | 55 | I |
| 1.9 (88 kw) | 1991.03-1997.06 | AT/MT | F | L | Hatchback FWD XU9JAZ | Trans. code:4HP14;Trans. code:BE3R | GDS10090 | Drive Shaft | | 25 | 24 | 54.8 | 78.5 | 593 | |
| | 1991.03-1997.06 | MT | F | L | Hatchback FWD XU9JAZ | Trans. code:BE3 | GDS10025 | Drive Shaft | 29T | 25 | 24 | 54.8 | 78.5 | 593 | |
| | 1991.03-1997.06 | MT | F | R | Hatchback FWD XU9JAZ | Trans. code:BE3 | GDS10077 | Drive Shaft | | 25 | 24 | 55.7 | 79 | 872 | |
| | 1991.03-1997.06 | MT | F | R | Hatchback FWD XU9JAZ | Trans. code:BE3 | GDS10193 | Drive Shaft | 29T | 25 | 24 | 54.8 | 78.5 | 868 | |
| | 1991.03-1997.06 | MT | F | L/R | Hatchback FWD XU9JAZ | | GCO10002 | Outer Joint | | 25 | 23 | 54.8 | 78.5 | 56 | I |
| | 1991.03-1997.06 | MT | F | L/R | Hatchback FWD XU9JAZ | | GCO10003 | Outer Joint | 29T | 25 | 23 | 54.8 | 78.5 | 56 | I |
| | 1991.03-1997.06 | | F | | Hatchback FWD XU9JAZ | | GCO10022 | Outer Joint | 29W | 25 | 34 | 55.7 | 79 | 55 | I |
| | 1991.03-1997.06 | | F | | Hatchback FWD XU9JAZ | | GCO10027 | Outer Joint | 48T | 25 | 34 | 55.7 | 79 | 55 | I |
| | 1991.03-1997.06 | | F | | Hatchback FWD XU9JAZ | | GCO10042 | Outer Joint | | 25 | 34 | 54.8 | 78.5 | 56 | I |
| 1.9 (93 kw) | 1991.03-1997.06 | | F | | Hatchback FWD D6E (XU9JA) | | GCO10022 | Outer Joint | 29W | 25 | 34 | 55.7 | 79 | 55 | I |
| | 1991.03-1997.06 | | F | | Hatchback FWD D6E (XU9JA) | | GCO10027 | Outer Joint | 48T | 25 | 34 | 55.7 | 79 | 55 | I |
| | 1991.03-1997.06 | | F | | Hatchback FWD D6E (XU9JA) | | GCO10042 | Outer Joint | | 25 | 34 | 54.8 | 78.5 | 56 | I |
| 2.0 (89 kw) | 1992.07-1997.06 | AT/MT | F | R | Hatchback FWD XU10J2 | Trans. code:4HP14 | GDS10077 | Drive Shaft | | 25 | 24 | 55.7 | 79 | 872 | |
| | 1992.07-1997.06 | AT/MT | F | L/R | Hatchback FWD XU10J2 | Trans. code:4HP14 | GCO10002 | Outer Joint | | 25 | 23 | 54.8 | 78.5 | 56 | I |
| | 1992.07-1997.06 | AT/MT | F | L/R | Hatchback FWD XU10J2 | Trans. code:4HP14 | GCO10003 | Outer Joint | 29T | 25 | 23 | 54.8 | 78.5 | 56 | I |
| | 1992.07-1997.06 | MT | F | L | Hatchback FWD XU10J2 | Trans. code:4HP14 | GDS10025 | Drive Shaft | 29T | 25 | 24 | 54.8 | 78.5 | 593 | |
| | 1992.07-1997.06 | MT | F | L | Hatchback FWD XU10J2 | Trans. code:4HP14 | GDS10090 | Drive Shaft | | 25 | 24 | 54.8 | 78.5 | 593 | |
| | 1992.07-1997.06 | MT | F | L | Hatchback FWD XU10J2 | Trans. code:BE3 | GDS10131 | Drive Shaft | 29T | 25 | 24 | 54.8 | 78.5 | 583 | |
| | 1992.07-1997.06 | MT | F | R | Hatchback FWD XU10J2 | | GDS10193 | Drive Shaft | 29T | 25 | 24 | 54.8 | 78.5 | 868 | |
| | 1992.07-1997.06 | | F | | Hatchback FWD XU10J2 | | GCO10022 | Outer Joint | 29W | 25 | 34 | 55.7 | 79 | 55 | I |
| | 1992.07-1997.06 | | F | | Hatchback FWD XU10J2 | | GCO10027 | Outer Joint | 48T | 25 | 34 | 55.7 | 79 | 55 | I |
| | 1992.07-1997.06 | | F | | Hatchback FWD XU10J2 | | GCO10042 | Outer Joint | | 25 | 34 | 54.8 | 78.5 | 56 | I |
| 2.0 (110 kw) | 1994.06-1997.06 | MT | F | L | Hatchback FWD XU10J4 | Trans. code:BE3 | GDS10131 | Drive Shaft | 29T | 25 | 24 | 54.8 | 78.5 | 583 | |
| | 1994.06-1997.06 | MT | F | R | Hatchback FWD XU10J4 | | GDS10193 | Drive Shaft | 29T | 25 | 24 | 54.8 | 78.5 | 868 | |
| | 1994.06-1997.06 | MT | F | L/R | Hatchback FWD XU10J4 | | GCO10002 | Outer Joint | | 25 | 23 | 54.8 | 78.5 | 56 | I |
| | 1994.06-1997.06 | MT | F | L/R | Hatchback FWD XU10J4 | | GCO10003 | Outer Joint | 29T | 25 | 23 | 54.8 | 78.5 | 56 | I |
| | 1994.06-1997.06 | | F | L | Hatchback FWD XU10J4 | | GDS10090 | Drive Shaft | | 25 | 24 | 54.8 | 78.5 | 593 | |
| | 1994.06-1997.06 | | F | | Hatchback FWD XU10J4 | | GCO10022 | Outer Joint | 29W | 25 | 34 | 55.7 | 79 | 55 | I |
| | 1994.06-1997.06 | | F | | Hatchback FWD XU10J4 | | GCO10027 | Outer Joint | 48T | 25 | 34 | 55.7 | 79 | 55 | I |
| | 1994.06-1997.06 | | F | | Hatchback FWD XU10J4 | | GCO10042 | Outer Joint | | 25 | 34 | 54.8 | 78.5 | 56 | I |
| 2.0 (114 kw) | 1992.07-1997.10 | MT | F | L/R | Hatchback FWD RFT (XU10J4/Z), RFY (XU10J4/Z) | | GCO10022 | Outer Joint | 29W | 25 | 34 | 55.7 | 79 | 55 | I |
| | 1992.07-1997.10 | | F | L/R | Hatchback FWD RFT (XU10J4/Z), RFY (XU10J4/Z) | | GCO10042 | Outer Joint | | 25 | 34 | 54.8 | 78.5 | 56 | I |
| | 1992.07-1997.10 | | F | | Hatchback FWD RFT (XU10J4/Z), RFY (XU10J4/Z) | | GCO10027 | Outer Joint | 48T | 25 | 34 | 55.7 | 79 | 55 | I |
| 2.0 (120 kw) | 1996.05-1997.06 | MT | F | R | Hatchback FWD XU10J4RS | | GDS10193 | Drive Shaft | 29T | 25 | 24 | 54.8 | 78.5 | 868 | |
| | 1996.05-1997.06 | MT | F | L/R | Hatchback FWD XU10J4RS | | GCO10002 | Outer Joint | | 25 | 23 | 54.8 | 78.5 | 56 | I |
| | 1996.05-1997.06 | MT | F | L/R | Hatchback FWD XU10J4RS | | GCO10003 | Outer Joint | 29T | 25 | 23 | 54.8 | 78.5 | 56 | I |
| | 1996.05-1997.06 | | F | | Hatchback FWD XU10J4RS | | GCO10022 | Outer Joint | 29W | 25 | 34 | 55.7 | 79 | 55 | I |
| | 1996.05-1997.06 | | F | | Hatchback FWD XU10J4RS | | GCO10027 | Outer Joint | 48T | 25 | 34 | 55.7 | 79 | 55 | I |
| | 1996.05-1997.06 | | F | | Hatchback FWD XU10J4RS | | GCO10042 | Outer Joint | | 25 | 34 | 54.8 | 78.5 | 56 | I |
| 2.0 (122 kw) | 1996.09-1997.10 | MT | F | L/R | Hatchback FWD XU10J4RS | | GCO10002 | Outer Joint | | 25 | 23 | 54.8 | 78.5 | 56 | I |
| | 1996.09-1997.10 | MT | F | L/R | Hatchback FWD XU10J4RS | | GCO10003 | Outer Joint | 29T | 25 | 23 | 54.8 | 78.5 | 56 | I |
| | 1996.09-1997.10 | | F | | Hatchback FWD XU10J4RS | | GCO10022 | Outer Joint | 29W | 25 | 34 | 55.7 | 79 | 55 | I |
| | 1996.09-1997.10 | | F | | Hatchback FWD XU10J4RS | | GCO10027 | Outer Joint | 48T | 25 | 34 | 55.7 | 79 | 55 | I |
| | 1996.09-1997.10 | | F | | Hatchback FWD XU10J4RS | | GCO10042 | Outer Joint | | 25 | 34 | 54.8 | 78.5 | 56 | I |

| | YEAR | TRANSM. | F/R | L/R | BODY STYLE & DRIVE TYPE & ENGINE | REMARKS | G-AP Ref. | PRODUCT | ABS | Technical Specifications A | B | C | H | L | P |
|---|---|---|---|---|---|---|---|---|---|---|---|---|---|---|---|
| **CITROËN (DF-PSA)** | | | | | | | | | | | | | | | |
| **Fukang** | | | | | | | | | | | | | | | |
| 1.4 (55 kw) | 2007.12-2008.12 | | F | L | Saloon FWD TU3JPK | | GCO10058 | Outer Joint | 29T | 25 | 30 | 59 | 79 | 61 | I |
| 1.6 (65 kw) | 1998.09-2006.08 | | F | L | Saloon FWD TU5JPK | | GCO10058 | Outer Joint | 29T | 25 | 30 | 59 | 79 | 61 | I |
| **CUPRA** | | | | | | | | | | | | | | | |
| **Ateca** | | | | | | | | | | | | | | | |
| 1.5 (110 kw) | 2023.07-2026.05 | 7DCT | F | L | SUV FWD DXDB | | GDS82387 | Drive Shaft | | 36 | | 59.5 | 40 | 523 | |
| 2.0 (140 kw) | 2023.06-2026.05 | 7DCT | F | L | SUV 4WD DNNA | | GDS82351 | Drive Shaft | | 36 | 37 | 59.5 | 40 | 568 | |
| | 2023.06-2026.05 | 7DCT | F | R | SUV 4WD DNNA | | GDS81889 | Drive Shaft | | 36 | | 59.5 | 40 | 614 | |
| | 2023.06-2026.05 | 7DCT | F | L | SUV 4WD DNNA | | GCI81158 | Inner Joint | | 37 | 34 | 34.5 | 65.5 | 83 | |
| | 2023.06-2026.05 | 7DCT | R | L/R | SUV 4WD DNNA | | GCI61103 | Inner Joint | | | 33 | | | 32 | |
| 2.0 (221 kw) | 2018.09-2026.05 | 7AT | F | R | SUV 4WD DNUE;DNFC | TJ | GCI61048 | Inner Joint | | 40 | 34 | 46.9 | | 127.5 | |
| | 2018.09-2026.05 | 7DCT | F | L | SUV 4WD DNUE;DNFC | | GDS84414 | Drive Shaft | | 36 | 37 | 59.5 | 40 | 570 | |
| | 2018.09-2026.05 | 7DCT | F | R | SUV 4WD DNUE;DNFC | | GDS84412 | Drive Shaft | | 36 | | 59.5 | 40 | 587 | |
| | 2018.09-2026.05 | 7DCT | F | L/R | SUV 4WD DNUE;DNFC | | GCO81352 | Outer Joint | | 36 | 28 | 59.5 | 40 | 65 | I |
| | 2018.09-2026.05 | 7DCT | F | L | SUV 4WD DNUE;DNFC | | GCI81158 | Inner Joint | | 37 | 34 | 34.5 | 65.5 | 83 | |
| | 2018.09-2026.05 | 7DCT | F | R | SUV 4WD DNUE;DNFC | AAR | GCI61057 | Inner Joint | | | 34 | | | 89 | |
| | 2018.09-2026.05 | 7AT | R | L | SUV 4WD DNUE;DNFC | | GDS61331 | Drive Shaft | | 36 | | 59.5 | 40 | 606 | |
| | 2018.09-2026.05 | 7AT | R | R | SUV 4WD DNUE;DNFC | | GDS61332 | Drive Shaft | | 36 | | 59.5 | 40 | 650 | |
| | 2018.09-2026.05 | 7DCT | R | L/R | SUV 4WD DNUE;DNFC | | GCI35026 | Outer Joint | | 36 | 33 | 59.5 | 40 | 61 | |
| | 2018.09-2026.05 | 7DCT | R | L/R | SUV 4WD DNUE;DNFC | | GCI61103 | Inner Joint | | | 33 | | | 32 | |
| | 2018.09-2026.05 | 7DCT | R | L/R | SUV 4WD DNUE;DNFC | | GCI83008 | Inner Joint | | | 33 | | | 32 | |
| **Born** | | | | | | | | | | | | | | | |
| EV (110 kw) | 2021.08- | ET | R | L | Hatchback RWD EBJD | For PR code:5LC | GDS84093 | Drive Shaft | | 36 | 37 | 59.5 | 34 | 611 | |
| | 2021.08- | ET | R | R | Hatchback RWD EBJD | For PR code:5LC | GDS84092 | Drive Shaft | | 36 | 37 | 59.5 | 34 | 840 | |
| | 2021.08- | ET | R | L/R | Hatchback RWD EBJD | For PR code:5LC | GCI82504 | Inner Joint | | 37 | 33 | 40 | 69 | 83.5 | |
| EV (150 kw) | 2021.08- | ET | R | L | Hatchback RWD EBJC | For PR code:5LC | GDS84093 | Drive Shaft | | 36 | 37 | 59.5 | 34 | 611 | |
| | 2021.08- | ET | R | R | Hatchback RWD EBJC | For PR code:5LC | GDS84092 | Drive Shaft | | 36 | 37 | 59.5 | 34 | 840 | |
| | 2021.08- | ET | R | L/R | Hatchback RWD EBJC | | GCI82504 | Inner Joint | | 37 | 33 | 40 | 69 | 83.5 | |
| EV (240 kw) | 2024.06- | ET | R | L | Hatchback RWD EEWA | | GDS58306 | Drive Shaft | | 38 | 42 | 59.5 | 34 | 618 | |
| | 2024.06- | ET | R | R | Hatchback RWD EEWA | | GDS58305 | Drive Shaft | | 38 | 42 | 59.5 | 34 | 834 | |
| | 2024.06- | ET | R | L/R | Hatchback RWD EEWA | | GCO83846 | Outer Joint | | 38 | 27 | 59.5 | 34 | 65 | M |
| | 2024.06- | ET | R | L/R | Hatchback RWD EEWA | | GCI84059 | Inner Joint | | 42 | 28 | 45 | 80.5 | 129.5 | |
| **Formentor** | | | | | | | | | | | | | | | |
| 1.4 (150 kw) | 2021.01- | 6AT | F | L | SUV FWD DGEA;EANA | | GCI81158 | Inner Joint | | 37 | 34 | 34.5 | 65.5 | 83 | |
| | 2021.01- | 7AT | F | L/R | SUV FWD DGEA;EANA | | GCO83101 | Outer Joint | | 36 | 27 | 59.5 | 40 | 65 | M |
| | 2021.01- | 7AT | F | R | SUV FWD DGEA;EANA | | GCI82108 | Inner Joint | | 37 | 34 | 40 | 77.5 | 103.5 | |
| | 2021.01- | 7DCT | F | L | SUV FWD DGEA;EANA | | GDS81265 | Drive Shaft | | 36 | 37 | 59.5 | 40 | 557 | |
| | 2021.01- | 7DCT | F | R | SUV FWD DGEA;EANA | | GDS57844 | Drive Shaft | | 36 | 37 | 59.5 | 40 | 929 | |
| 1.4 (180 kw) | 2021.02- | 6AT | F | L/R | SUV FWD DGEA;EANA | | GCO83101 | Outer Joint | | 36 | 27 | 59.5 | 40 | 65 | M |
| | 2021.02- | 6AT | F | L | SUV FWD DGEA;EANA | | GCI81158 | Inner Joint | | 37 | 34 | 34.5 | 65.5 | 83 | |
| | 2021.02- | 6AT | F | R | SUV FWD DGEA;EANA | | GCI82108 | Inner Joint | | 37 | 34 | 40 | 77.5 | 103.5 | |
| | 2021.02- | 7DCT | F | L | SUV FWD DGEA;EANA | | GDS81265 | Drive Shaft | | 36 | 37 | 59.5 | 40 | 557 | |
| | 2021.02- | 7DCT | F | R | SUV FWD DGEA;EANA | | GDS57844 | Drive Shaft | | 36 | 37 | 59.5 | 40 | 929 | |
| 1.5 (110 kw) | 2020.11- | 6MT | F | L | SUV FWD DPCA | | GDS81896 | Drive Shaft | | 36 | | 59.5 | 40 | 500 | |
| | 2020.11- | 6MT | F | R | SUV FWD DPCA | | GDS83313 | Drive Shaft | | 36 | | 59.5 | 40 | 792 | |
| | 2020.11- | 7DCT | F | L | SUV FWD DPCA | | GDS83323 | Drive Shaft | | 36 | 37 | 59.5 | 40 | 570 | |
| | 2020.11- | 7DCT | F | R | SUV FWD DPCA | | GDS84510 | Drive Shaft | | 36 | 37 | 59.5 | 40 | 925 | |
| | 2020.11- | 7DCT | F | L/R | SUV FWD DPCA | | GCO83101 | Outer Joint | | 36 | 27 | 59.5 | 40 | 65 | M |
| | 2020.11- | 7DCT | F | L | SUV FWD DPCA | | GCI83028 | Inner Joint | | 37 | 28 | | 65.5 | 90.2 | |
| | 2024.05- | 7DCT | F | L | SUV FWD DXDB | | GDS83323 | Drive Shaft | | 36 | 37 | 59.5 | 40 | 570 | |
| | 2024.05- | 7DCT | F | R | SUV FWD DXDB | | GDS84510 | Drive Shaft | | 36 | 37 | 59.5 | 40 | 925 | |
| | 2024.05- | 7DCT | F | L/R | SUV FWD DXDB | | GCO83101 | Outer Joint | | 36 | 27 | 59.5 | 40 | 65 | M |
| | 2024.05- | 7DCT | F | L | SUV FWD DXDB | | GCI83028 | Inner Joint | | 37 | 28 | | 65.5 | 90.2 | |
| 1.5 (150 kw) | 2024.07- | 6DCT | F | L | SUV FWD DUCB | | GDS81265 | Drive Shaft | | 36 | 37 | 59.5 | 40 | 557 | |
| | 2024.07- | 6DCT | F | R | SUV FWD DUCB | | GDS57844 | Drive Shaft | | 36 | 37 | 59.5 | 40 | 929 | |
| | 2024.07- | 6DCT | F | L/R | SUV FWD DUCB | | GCO83101 | Outer Joint | | 36 | 27 | 59.5 | 40 | 65 | M |
| | 2024.07- | 6DCT | F | L | SUV FWD DUCB | | GCI81158 | Inner Joint | | 37 | 34 | 34.5 | 65.5 | 83 | |
| | 2024.07- | 6DCT | F | R | SUV FWD DUCB | | GCI82108 | Inner Joint | | 37 | 34 | 40 | 77.5 | 103.5 | |
| 1.5 (200 kw) | 2024.06- | 6DCT | F | L | SUV FWD DUCA, EANB | | GDS81265 | Drive Shaft | | 36 | 37 | 59.5 | 40 | 557 | |
| | 2024.06- | 6DCT | F | R | SUV FWD DUCA, EANB | | GDS57844 | Drive Shaft | | 36 | 37 | 59.5 | 40 | 929 | |
| | 2024.06- | 6DCT | F | L/R | SUV FWD DUCA, EANB | | GCO83101 | Outer Joint | | 36 | 27 | 59.5 | 40 | 65 | M |
| | 2024.06- | 6DCT | F | L | SUV FWD DUCA, EANB | | GCI81158 | Inner Joint | | 37 | 34 | 34.5 | 65.5 | 83 | |
| | 2024.06- | 6DCT | F | R | SUV FWD DUCA, EANB | | GCI82108 | Inner Joint | | 37 | 34 | 40 | 77.5 | 103.5 | |
| 2.0 (110 kw) | 2021.03- | 7AT | F | L/R | SUV 4WD DTTA;DTTC | | GCO83101 | Outer Joint | | 36 | 27 | 59.5 | 40 | 65 | M |
| | 2021.03- | 7DCT | F | L | SUV 4WD DTTA;DTTC | | GDS82351 | Drive Shaft | | 36 | 37 | 59.5 | 40 | 568 | |
| | 2021.03- | 7DCT | F | R | SUV 4WD DTTA;DTTC | | GDS61346 | Drive Shaft | | 36 | | 59.5 | 40 | 589 | |

| | YEAR | TRANSM. | F/R | L/R | BODY STYLE & DRIVE TYPE & ENGINE | REMARKS | G-AP Ref. | PRODUCT | ABS | Technical Specifications A | B | C | H | L | P |
|---|---|---|---|---|---|---|---|---|---|---|---|---|---|---|---|
| **CUPRA** **Formentor** | | | | | | | | | | | | | | | |
| 2.0 (110 kw) | 2021.03- | 7DCT | F | L | SUV 4WD DTTA;DTTC | | GCI81158 | Inner Joint | | 37 | 34 | 34.5 | 65.5 | 83 | |
| | 2021.03- | 7AT | R | L/R | SUV 4WD DTTA;DTTC | | GCI35026 | Outer Joint | | 36 | 33 | 59.5 | 40 | 61 | |
| | 2021.03- | 7DCT | R | L | SUV 4WD DTTA;DTTC | | GDS61331 | Drive Shaft | | 36 | | 59.5 | 40 | 606 | |
| | 2021.03- | 7DCT | R | R | SUV 4WD DTTA;DTTC | | GDS61332 | Drive Shaft | | 36 | | 59.5 | 40 | 650 | |
| | 2021.03- | 7DCT | R | L/R | SUV 4WD DTTA;DTTC | | GCI61103 | Inner Joint | | | 33 | | | 32 | |
| | 2021.03- | 7DCT | R | L/R | SUV 4WD DTTA;DTTC | | GCI83008 | Inner Joint | | | 33 | | | 32 | |
| | 2021.03- | 6MT | F | L | SUV FWD DTTA;DTTC | | GDS81896 | Drive Shaft | | 36 | | 59.5 | 40 | 500 | |
| | 2021.03- | 6MT | F | R | SUV FWD DTTA;DTTC | | GDS61101 | Drive Shaft | | 36 | | 59.5 | 40 | 803 | |
| 2.0 (140 kw) | 2020.08- | 7AT | F | L/R | SUV 4WD DNNA | | GCO83101 | Outer Joint | | 36 | 27 | 59.5 | 40 | 65 | M |
| | 2020.08- | 7AT | F | L | SUV 4WD DNNA | | GCI81158 | Inner Joint | | 37 | 34 | 34.5 | 65.5 | 83 | |
| | 2020.08- | 7AT | F | R | SUV 4WD DNNA | TJ | GCI61048 | Inner Joint | | 40 | 34 | 46.9 | | 127.5 | |
| | 2020.08- | 7AT | F | R | SUV 4WD DNNA | AAR | GCI61084 | Inner Joint | | 40 | 34 | 46.9 | | 128 | |
| | 2020.08- | 7DCT | F | L | SUV 4WD DNNA | | GDS82351 | Drive Shaft | | 36 | 37 | 59.5 | 40 | 568 | |
| | 2020.08- | 7DCT | F | R | SUV 4WD DNNA | | GDS81889 | Drive Shaft | | 36 | | 59.5 | 40 | 614 | |
| | 2020.08- | 7AT | R | L/R | SUV 4WD DNNA | | GCI35026 | Outer Joint | | 36 | 33 | 59.5 | 40 | 61 | |
| | 2020.08- | 7AT | R | L/R | SUV 4WD DNNA | | GCI61103 | Inner Joint | | | 33 | | | 32 | |
| | 2020.08- | 7AT | R | L/R | SUV 4WD DNNA | | GCI83008 | Inner Joint | | | 33 | | | 32 | |
| | 2020.08- | 7DCT | R | L | SUV 4WD DNNA | | GDS61331 | Drive Shaft | | 36 | | 59.5 | 40 | 606 | |
| | 2020.08- | 7DCT | R | R | SUV 4WD DNNA | | GDS61332 | Drive Shaft | | 36 | | 59.5 | 40 | 650 | |
| | 2021.01- | 7AT | F | L | SUV FWD CZPB | | GDS82351 | Drive Shaft | | 36 | 37 | 59.5 | 40 | 568 | |
| | 2021.01- | 7AT | F | L | SUV FWD CZPB | | GCO83101 | Outer Joint | | 36 | 27 | 59.5 | 40 | 65 | M |
| | 2021.01- | 7AT | F | L | SUV FWD CZPB | | GCI81158 | Inner Joint | | 37 | 34 | 34.5 | 65.5 | 83 | |
| 2.0 (150 kw) | 2025.04- | 7DCT | F | L | SUV 4WD DNNE | | GDS82351 | Drive Shaft | | 36 | 37 | 59.5 | 40 | 568 | |
| | 2025.04- | 7DCT | F | R | SUV 4WD DNNE | | GDS81889 | Drive Shaft | | 36 | | 59.5 | 40 | 614 | |
| | 2025.04- | 7DCT | F | L/R | SUV 4WD DNNE | | GCO83101 | Outer Joint | | 36 | 27 | 59.5 | 40 | 65 | M |
| | 2025.04- | 7DCT | F | L | SUV 4WD DNNE | | GCI81158 | Inner Joint | | 37 | 34 | 34.5 | 65.5 | 83 | |
| | 2025.04- | 7DCT | F | R | SUV 4WD DNNE | | GCI61069 | Inner Joint | | | 28 | | | 32 | |
| | 2025.04- | 7DCT | R | L | SUV 4WD DNNE | | GDS61331 | Drive Shaft | | 36 | | 59.5 | 40 | 606 | |
| | 2025.04- | 7DCT | R | R | SUV 4WD DNNE | | GDS61332 | Drive Shaft | | 36 | | 59.5 | 40 | 650 | |
| | 2025.04- | 7DCT | R | L/R | SUV 4WD DNNE | | GCI35026 | Outer Joint | | 36 | 33 | 59.5 | 40 | 61 | |
| | 2025.04- | 7DCT | R | L/R | SUV 4WD DNNE | | GCI61103 | Inner Joint | | | 33 | | | 32 | |
| 2.0 (180 kw) | 2021.03- | 7AT | F | L | SUV FWD DNPA | | GDS82351 | Drive Shaft | | 36 | 37 | 59.5 | 40 | 568 | |
| | 2021.03- | 7AT | F | L | SUV FWD DNPA | | GCO83101 | Outer Joint | | 36 | 27 | 59.5 | 40 | 65 | M |
| | 2021.03- | 7DCT | F | L | SUV FWD DNPA | | GCI81158 | Inner Joint | | 37 | 34 | 34.5 | 65.5 | 83 | |
| | 2021.03- | 7DCT | F | R | SUV FWD DNPA | | GCI61057 | Inner Joint | | | 34 | | | 89 | |
| 2.0 (195 kw) | 2024.11- | 7DCT | F | L | SUV FWD DNPD | | GDS82351 | Drive Shaft | | 36 | 37 | 59.5 | 40 | 568 | |
| | 2024.11- | 7DCT | F | L/R | SUV FWD DNPD | | GCO83101 | Outer Joint | | 36 | 27 | 59.5 | 40 | 65 | M |
| | 2024.11- | 7DCT | F | L | SUV FWD DNPD | | GCI81158 | Inner Joint | | 37 | 34 | 34.5 | 65.5 | 83 | |
| 2.0 (228 kw) | 2020.07- | 7DCT | F | L | SUV 4WD DNFB | | GDS84414 | Drive Shaft | | 36 | 37 | 59.5 | 40 | 570 | |
| | 2020.07- | 7DCT | F | R | SUV 4WD DNFB | | GDS84412 | Drive Shaft | | 36 | | 59.5 | 40 | 587 | |
| | 2020.07- | 7DCT | F | L/R | SUV 4WD DNFB | | GCO81352 | Outer Joint | | 36 | 28 | 59.5 | 40 | 65 | I |
| | 2020.07- | 7DCT | F | L | SUV 4WD DNFB | | GCI81158 | Inner Joint | | 37 | 34 | 34.5 | 65.5 | 83 | |
| | 2020.07- | 7DCT | F | R | SUV 4WD DNFB | | GCI61057 | Inner Joint | | | 34 | | | 89 | |
| | 2020.07- | 7AT | R | L | SUV 4WD DNFB | | GDS61331 | Drive Shaft | | 36 | | 59.5 | 40 | 606 | |
| | 2020.07- | 7AT | R | R | SUV 4WD DNFB | | GDS61332 | Drive Shaft | | 36 | | 59.5 | 40 | 650 | |
| | 2020.07- | 7DCT | R | L/R | SUV 4WD DNFB | | GCI35026 | Outer Joint | | 36 | 33 | 59.5 | 40 | 61 | |
| | 2020.07- | 7DCT | R | L/R | SUV 4WD DNFB | | GCI61103 | Inner Joint | | | 33 | | | 32 | |
| | 2020.07- | 7DCT | R | L/R | SUV 4WD DNFB | | GCI83008 | Inner Joint | | | 33 | | | 32 | |
| 2.0 (245 kw) | 2024.08- | 7DCT | F | L | SUV 4WD DNFF | | GDS84414 | Drive Shaft | | 36 | 37 | 59.5 | 40 | 570 | |
| | 2024.08- | 7DCT | F | R | SUV 4WD DNFF | | GDS84412 | Drive Shaft | | 36 | | 59.5 | 40 | 587 | |
| | 2024.08- | 7DCT | F | L/R | SUV 4WD DNFF | | GCO81352 | Outer Joint | | 36 | 28 | 59.5 | 40 | 65 | I |
| | 2024.08- | 7DCT | F | L | SUV 4WD DNFF | | GCI81158 | Inner Joint | | 37 | 34 | 34.5 | 65.5 | 83 | |
| | 2024.08- | 7DCT | F | R | SUV 4WD DNFF | | GCI61057 | Inner Joint | | | 34 | | | 89 | |
| | 2024.08- | 7DCT | R | L | SUV 4WD DNFF | | GDS61331 | Drive Shaft | | 36 | | 59.5 | 40 | 606 | |
| | 2024.08- | 7DCT | R | R | SUV 4WD DNFF | | GDS61332 | Drive Shaft | | 36 | | 59.5 | 40 | 650 | |
| | 2024.08- | 7DCT | R | L/R | SUV 4WD DNFF | | GCI35026 | Outer Joint | | 36 | 33 | 59.5 | 40 | 61 | |
| | 2024.08- | 7DCT | R | L/R | SUV 4WD DNFF | | GCI61103 | Inner Joint | | | 33 | | | 32 | |
| 2.5 (287 kw) | 2021.10- | 7DCT | F | L | SUV 4WD DNWB | | GDS84414 | Drive Shaft | | 36 | 37 | 59.5 | 40 | 570 | |
| | 2021.10- | 7DCT | F | R | SUV 4WD DNWB | | GDS84413 | Drive Shaft | | 36 | 40 | 59.5 | 40 | 605 | |
| | 2021.10- | 7DCT | F | L/R | SUV 4WD DNWB | | GCO81352 | Outer Joint | | 36 | 28 | 59.5 | 40 | 65 | I |
| | 2021.10- | 7DCT | F | L | SUV 4WD DNWB | | GCI81158 | Inner Joint | | 37 | 34 | 34.5 | 65.5 | 83 | |
| | 2021.10- | 7DCT | F | R | SUV 4WD DNWB | | GCI61084 | Inner Joint | | 40 | 34 | 46.9 | | 128 | |
| | 2021.10- | 7AT | R | L/R | SUV 4WD DNWB | | GCI35026 | Outer Joint | | 36 | 33 | 59.5 | 40 | 61 | |
| | 2021.10- | 7AT | R | L/R | SUV 4WD DNWB | | GCI61103 | Inner Joint | | | 33 | | | 32 | |
| | 2021.10- | 7AT | R | L/R | SUV 4WD DNWB | | GCI83008 | Inner Joint | | | 33 | | | 32 | |

| | YEAR | TRANSM. | F/R | L/R | BODY STYLE & DRIVE TYPE & ENGINE | REMARKS | G-AP Ref. | PRODUCT | ABS | Technical Specifications A | B | C | H | L | P |
|---|---|---|---|---|---|---|---|---|---|---|---|---|---|---|---|
| **CUPRA** | | | | | | | | | | | | | | | |
| **Formentor** | | | | | | | | | | | | | | | |
| 2.5 (287 kw) | 2021.10- | 7DCT | R | L | SUV 4WD DNWB | | GDS61331 | Drive Shaft | | 36 | | 59.5 | 40 | 606 | |
| | 2021.10- | 7DCT | R | R | SUV 4WD DNWB | | GDS61332 | Drive Shaft | | 36 | | 59.5 | 40 | 650 | |
| **Leon** | | | | | | | | | | | | | | | |
| 1.4 (150 kw) | 2020.09- | 6AT | F | L | Hatchback FWD DGEA;EANA | | GDS81985 | Drive Shaft | | 36 | 37 | 59.5 | 40 | 546 | |
| | 2020.09- | 6AT | F | R | Hatchback FWD DGEA;EANA | | GDS83612 | Drive Shaft | | 36 | 37 | 59.5 | 40 | 907 | |
| | 2020.09- | 6AT | F | L/R | Hatchback FWD DGEA;EANA | | GCO83101 | Outer Joint | | 36 | 27 | 59.5 | 40 | 65 | M |
| | 2020.09- | 6AT | F | L | Hatchback FWD DGEA;EANA | | GCI81158 | Inner Joint | | 37 | 34 | 34.5 | 65.5 | 83 | |
| | 2020.09- | 6AT | F | R | Hatchback FWD DGEA;EANA | | GCI82108 | Inner Joint | | 37 | 34 | 40 | 77.5 | 103.5 | |
| 1.4 (180 kw) | 2020.09- | 6DCT | F | L | Hatchback FWD DGEA | Date to:2021.06 | GDS81985 | Drive Shaft | | 36 | 37 | 59.5 | 40 | 546 | |
| | 2020.09- | 6DCT | F | R | Hatchback FWD DGEA | | GDS83612 | Drive Shaft | | 36 | 37 | 59.5 | 40 | 907 | |
| | 2020.09- | 6DCT | F | L/R | Hatchback FWD DGEA | | GCO83101 | Outer Joint | | 36 | 27 | 59.5 | 40 | 65 | M |
| | 2020.09- | 6DCT | F | L | Hatchback FWD DGEA | | GCI81158 | Inner Joint | | 37 | 34 | 34.5 | 65.5 | 83 | |
| | 2020.09- | 6DCT | F | R | Hatchback FWD DGEA | | GCI82108 | Inner Joint | | 37 | 34 | 40 | 77.5 | 103.5 | |
| 1.5 (110 kw) | 2022.08- | 7DCT | F | R | Hatchback FWD DFYA;DXDB | | GDS84503 | Drive Shaft | | 36 | 40 | 59.5 | 40 | 817 | |
| | 2022.08- | AT | F | L | Hatchback FWD DFYA;DXDB | | GDS61100 | Drive Shaft | | 36 | | 59.5 | 40 | 513 | |
| | 2022.08- | AT | F | L | Hatchback FWD DFYA;DXDB | | GCO83101 | Outer Joint | | 36 | 27 | 59.5 | 40 | 65 | M |
| | 2022.08- | AT | F | R | Hatchback FWD DFYA;DXDB | | GCO61059 | Outer Joint | | 36 | 33 | 59.5 | 40 | 59.5 | I |
| | 2022.08- | AT | F | L | Hatchback FWD DFYA;DXDB | | GCI83016 | Inner Joint | | | 28 | | | 32 | |
| | 2022.08- | AT | F | R | Hatchback FWD DFYA;DXDB | | GCI61090 | Inner Joint | | 40 | 28 | 46.9 | | 133.2 | |
| | 2022.09- | | F | L | Hatchback FWD DPCA;DXDB | | GDS84408 | Drive Shaft | | 36 | | 59.5 | 40 | 499 | |
| | 2022.09- | | F | R | Hatchback FWD DPCA;DXDB | | GDS84417 | Drive Shaft | | 36 | | 59.5 | 40 | 783 | |
| | 2022.09- | | F | L/R | Hatchback FWD DPCA;DXDB | | GCO61059 | Outer Joint | | 36 | 33 | 59.5 | 40 | 59.5 | I |
| | 2022.09- | | F | L/R | Hatchback FWD DPCA;DXDB | | GCI82447 | Inner Joint | | | 33 | | | 34 | |
| 1.5 (150 kw) | 2024.07- | 6DCT | F | L | Hatchback FWD EANB;DUCB | | GCI81158 | Inner Joint | | 37 | 34 | 34.5 | 65.5 | 83 | |
| 1.5 (200 kw) | 2024.05- | 6DCT | F | L | Hatchback FWD DUCA, EANB | | GCI81158 | Inner Joint | | 37 | 34 | 34.5 | 65.5 | 83 | |
| 2.0 (110 kw) | 2022.11- | 6MT | F | L | Hatchback FWD DTTA;DTTC;DXRB | | GDS83295 | Drive Shaft | | 36 | | 59.5 | 40 | 491 | |
| | 2022.11- | 6MT | F | R | Hatchback FWD DTTA;DTTC;DXRB | | GDS81891 | Drive Shaft | | 36 | | 59.5 | 40 | 781 | |
| | 2022.11- | 6MT/7DCT | F | L/R | Hatchback FWD DTTA;DTTC;DXRB | | GCO83101 | Outer Joint | | 36 | 27 | 59.5 | 40 | 65 | M |
| | 2022.11- | 7DCT | F | L | Hatchback FWD DTTA;DTTC;DXRB | | GDS81265 | Drive Shaft | | 36 | 37 | 59.5 | 40 | 557 | |
| | 2022.11- | 7DCT | F | R | Hatchback FWD DTTA;DTTC;DXRB | | GDS83612 | Drive Shaft | | 36 | 37 | 59.5 | 40 | 907 | |
| | 2022.11- | 7DCT | F | L | Hatchback FWD DTTA;DTTC;DXRB | | GCI81158 | Inner Joint | | 37 | 34 | 34.5 | 65.5 | 83 | |
| | 2022.11- | 7DCT | F | R | Hatchback FWD DTTA;DTTC;DXRB | | GCI82108 | Inner Joint | | 37 | 34 | 40 | 77.5 | 103.5 | |
| 2.0 (140 kw) | 2022.09- | 7DCT | F | L | Hatchback FWD DNNA | | GDS84237 | Drive Shaft | | 36 | 37 | 59.5 | 40 | 560 | |
| | 2022.09- | 7DCT | F | L | Hatchback FWD DNNA | | GCO83101 | Outer Joint | | 36 | 27 | 59.5 | 40 | 65 | M |
| | 2022.09- | 7DCT | F | L | Hatchback FWD DNNA | | GCI83028 | Inner Joint | | 37 | 28 | | 65.5 | 90.2 | |
| 2.0 (180 kw) | 2021.06- | 7DCT | F | L | Hatchback FWD DNPA | | GDS84237 | Drive Shaft | | 36 | 37 | 59.5 | 40 | 560 | |
| | 2021.06- | 7DCT | F | R | Hatchback FWD DNPA | Wheel Hub Diam:27 | GDS81892 | Drive Shaft | | 36 | | 59.5 | 40 | 602 | |
| | 2021.06- | 7DCT | F | L | Hatchback FWD DNPA | | GCI83028 | Inner Joint | | 37 | 28 | | 65.5 | 90.2 | |
| | 2021.06- | 7DCT | F | R | Hatchback FWD DNPA | | GCI61069 | Inner Joint | | | 28 | | | 32 | |
| | 2021.06- | AT | F | L/R | Hatchback FWD DNPA | | GCO83101 | Outer Joint | | 36 | 27 | 59.5 | 40 | 65 | M |
| 2.0 (221 kw) | 2021.01- | 7DCT | F | L | Hatchback FWD DNFC | | GDS84237 | Drive Shaft | | 36 | 37 | 59.5 | 40 | 560 | |
| | 2021.01- | 7DCT | F | R | Hatchback FWD DNFC | Wheel Hub Diam:27 | GDS81892 | Drive Shaft | | 36 | | 59.5 | 40 | 602 | |
| | 2021.01- | 7DCT | F | L | Hatchback FWD DNFC | | GCI83028 | Inner Joint | | 37 | 28 | | 65.5 | 90.2 | |
| | 2021.01- | 7DCT | F | R | Hatchback FWD DNFC | | GCI61069 | Inner Joint | | | 28 | | | 32 | |
| | 2021.01- | AT | F | L/R | Hatchback FWD DNFC | | GCO83101 | Outer Joint | | 36 | 27 | 59.5 | 40 | 65 | M |
| **Leon Sportstourer** | | | | | | | | | | | | | | | |
| 1.4 (150 kw) | 2020.09- | 6AT | F | L | Estate FWD DGEA;EANA | | GDS81985 | Drive Shaft | | 36 | 37 | 59.5 | 40 | 546 | |
| | 2020.09- | 6AT | F | R | Estate FWD DGEA;EANA | | GDS83612 | Drive Shaft | | 36 | 37 | 59.5 | 40 | 907 | |
| | 2020.09- | 6AT | F | L/R | Estate FWD DGEA;EANA | | GCO83101 | Outer Joint | | 36 | 27 | 59.5 | 40 | 65 | M |
| | 2020.09- | 6AT | F | L | Estate FWD DGEA;EANA | | GCI81158 | Inner Joint | | 37 | 34 | 34.5 | 65.5 | 83 | |
| | 2020.09- | 6AT | F | R | Estate FWD DGEA;EANA | | GCI82108 | Inner Joint | | 37 | 34 | 40 | 77.5 | 103.5 | |
| 1.4 (180 kw) | 2020.09- | 6DCT | F | L | Estate FWD DGEA | Date to:2021.06 | GDS81985 | Drive Shaft | | 36 | 37 | 59.5 | 40 | 546 | |
| | 2020.09- | 6DCT | F | R | Estate FWD DGEA | | GDS83612 | Drive Shaft | | 36 | 37 | 59.5 | 40 | 907 | |
| | 2020.09- | 6DCT | F | L/R | Estate FWD DGEA | | GCO83101 | Outer Joint | | 36 | 27 | 59.5 | 40 | 65 | M |
| | 2020.09- | 6DCT | F | L | Estate FWD DGEA | | GCI81158 | Inner Joint | | 37 | 34 | 34.5 | 65.5 | 83 | |
| | 2020.09- | 6DCT | F | R | Estate FWD DGEA | | GCI82108 | Inner Joint | | 37 | 34 | 40 | 77.5 | 103.5 | |
| 1.5 (110 kw) | 2022.09- | 7DCT | F | R | Estate FWD DFYA;DXDB | | GDS84503 | Drive Shaft | | 36 | 40 | 59.5 | 40 | 817 | |
| | 2022.09- | AT | F | L | Estate FWD DFYA;DXDB | | GDS61100 | Drive Shaft | | 36 | | 59.5 | 40 | 513 | |
| | 2022.09- | AT | F | L | Estate FWD DFYA;DXDB | | GCO83101 | Outer Joint | | 36 | 27 | 59.5 | 40 | 65 | M |
| | 2022.09- | AT | F | R | Estate FWD DFYA;DXDB | | GCO61059 | Outer Joint | | 36 | 33 | 59.5 | 40 | 59.5 | I |
| | 2022.09- | AT | F | L | Estate FWD DFYA;DXDB | | GCI83016 | Inner Joint | | | 28 | | | 32 | |
| | 2022.09- | AT | F | R | Estate FWD DFYA;DXDB | | GCI61090 | Inner Joint | | 40 | 28 | 46.9 | | 133.2 | |
| | 2022.09- | 6MT | F | L | Estate FWD DPCA;DXDB | | GDS84408 | Drive Shaft | | 36 | | 59.5 | 40 | 499 | |
| | 2022.09- | 6MT | F | R | Estate FWD DPCA;DXDB | | GDS84417 | Drive Shaft | | 36 | | 59.5 | 40 | 783 | |
| | 2022.09- | 6MT | F | L/R | Estate FWD DPCA;DXDB | | GCO61059 | Outer Joint | | 36 | 33 | 59.5 | 40 | 59.5 | I |

| | YEAR | TRANSM. | F/R | L/R | BODY STYLE & DRIVE TYPE & ENGINE | REMARKS | G-AP Ref. | PRODUCT | ABS | Technical Specifications A | B | C | H | L | P |
|---|---|---|---|---|---|---|---|---|---|---|---|---|---|---|---|
| **CUPRA** | | | | | | | | | | | | | | | |
| **Leon Sportstourer** | | | | | | | | | | | | | | | |
| 1.5 (110 kw) | 2022.09- | 6MT | F | L/R | Estate FWD DPCA;DXDB | | GCI82447 | Inner Joint | | | 33 | | | 34 | |
| 1.5 (150 kw) | 2024.07- | 6DCT | F | L | Estate FWD DUCB | | GCI81158 | Inner Joint | | 37 | 34 | 34.5 | 65.5 | 83 | |
| 1.5 (200 kw) | 2024.05- | 6DCT | F | L | Estate FWD DUCA, EANB | | GCI81158 | Inner Joint | | 37 | 34 | 34.5 | 65.5 | 83 | |
| 2.0 (110 kw) | 2022.11- | 7DCT | F | L | Estate 4WD DTTC | | GDS81265 | Drive Shaft | | 36 | 37 | 59.5 | 40 | 557 | |
| | 2022.11- | 7DCT | F | R | Estate 4WD DTTC | | GDS81893 | Drive Shaft | | 36 | | 59.5 | 40 | 575 | |
| | 2022.11- | 7DCT | F | L/R | Estate 4WD DTTC | | GCO83101 | Outer Joint | | 36 | 27 | 59.5 | 40 | 65 | M |
| | 2022.11- | 7DCT | F | L | Estate 4WD DTTC | | GCI81158 | Inner Joint | | 37 | 34 | 34.5 | 65.5 | 83 | |
| | 2022.11- | 7DCT | F | R | Estate 4WD DTTC | | GCI61057 | Inner Joint | | | 34 | | | 89 | |
| | 2022.11- | 7AT | R | L | Estate 4WD DTTC | | GDS61286 | Drive Shaft | | 36 | | 59.5 | 40 | 587 | |
| | 2022.11- | 7AT | R | R | Estate 4WD DTTC | | GDS61287 | Drive Shaft | | 36 | | 59.5 | 40 | 632 | |
| | 2022.11- | 6MT | F | L | Estate FWD DTTA;DTTC;DXRB | | GDS83295 | Drive Shaft | | 36 | | 59.5 | 40 | 491 | |
| | 2022.11- | 6MT | F | R | Estate FWD DTTA;DTTC;DXRB | | GDS81891 | Drive Shaft | | 36 | | 59.5 | 40 | 781 | |
| | 2022.11- | 6MT/7DCT | F | L/R | Estate FWD DTTA;DTTC;DXRB | | GCO83101 | Outer Joint | | 36 | 27 | 59.5 | 40 | 65 | M |
| | 2022.11- | 7DCT | F | L | Estate FWD DTTA;DTTC;DXRB | | GDS81265 | Drive Shaft | | 36 | 37 | 59.5 | 40 | 557 | |
| | 2022.11- | 7DCT | F | R | Estate FWD DTTA;DTTC;DXRB | | GDS83612 | Drive Shaft | | 36 | 37 | 59.5 | 40 | 907 | |
| | 2022.11- | 7DCT | F | L | Estate FWD DTTA;DTTC;DXRB | | GCI81158 | Inner Joint | | 37 | 34 | 34.5 | 65.5 | 83 | |
| | 2022.11- | 7DCT | F | R | Estate FWD DTTA;DTTC;DXRB | | GCI82108 | Inner Joint | | 37 | 34 | 40 | 77.5 | 103.5 | |
| 2.0 (140 kw) | 2022.09- | 7DCT | F | L | Estate FWD DNNA | | GDS84237 | Drive Shaft | | 36 | 37 | 59.5 | 40 | 560 | |
| | 2022.09- | 7DCT | F | L | Estate FWD DNNA | | GCO83101 | Outer Joint | | 36 | 27 | 59.5 | 40 | 65 | M |
| | 2022.09- | 7DCT | F | L | Estate FWD DNNA | | GCI83028 | Inner Joint | | 37 | 28 | | 65.5 | 90.2 | |
| 2.0 (150 kw) | 2025.04- | 7DCT | F | L | Estate 4WD DNNE | | GDS84237 | Drive Shaft | | 36 | 37 | 59.5 | 40 | 560 | |
| | 2025.04- | 7DCT | F | R | Estate 4WD DNNE | | GDS81892 | Drive Shaft | | 36 | | 59.5 | 40 | 602 | |
| | 2025.04- | 7DCT | R | L | Estate 4WD DNNE | | GDS61286 | Drive Shaft | | 36 | | 59.5 | 40 | 587 | |
| | 2025.04- | 7DCT | R | R | Estate 4WD DNNE | | GDS61287 | Drive Shaft | | 36 | | 59.5 | 40 | 632 | |
| 2.0 (180 kw) | 2021.06- | 7DCT | F | L | Estate FWD DNPA | | GDS84237 | Drive Shaft | | 36 | 37 | 59.5 | 40 | 560 | |
| | 2021.06- | 7DCT | F | R | Estate FWD DNPA | Wheel Hub Diam:27 | GDS81892 | Drive Shaft | | 36 | | 59.5 | 40 | 602 | |
| | 2021.06- | 7DCT | F | L/R | Estate FWD DNPA | | GCO83101 | Outer Joint | | 36 | 27 | 59.5 | 40 | 65 | M |
| | 2021.06- | 7DCT | F | L | Estate FWD DNPA | | GCI83028 | Inner Joint | | 37 | 28 | | 65.5 | 90.2 | |
| | 2021.06- | 7DCT | F | R | Estate FWD DNPA | | GCI61069 | Inner Joint | | | 28 | | | 32 | |
| 2.0 (221 kw) | 2021.06- | 7DCT | F | L | Estate FWD DNFC | | GDS84237 | Drive Shaft | | 36 | 37 | 59.5 | 40 | 560 | |
| | 2021.06- | 7DCT | F | R | Estate FWD DNFC | Wheel Hub Diam:27 | GDS81892 | Drive Shaft | | 36 | | 59.5 | 40 | 602 | |
| | 2021.06- | 7DCT | F | L/R | Estate FWD DNFC | | GCO83101 | Outer Joint | | 36 | 27 | 59.5 | 40 | 65 | M |
| | 2021.06- | 7DCT | F | L | Estate FWD DNFC | | GCI83028 | Inner Joint | | 37 | 28 | | 65.5 | 90.2 | |
| | 2021.06- | 7DCT | F | R | Estate FWD DNFC | | GCI61069 | Inner Joint | | | 28 | | | 32 | |
| 2.0 (228 kw) | 2021.06- | 7AT | F | L/R | Estate 4WD DNFB | | GCO83101 | Outer Joint | | 36 | 27 | 59.5 | 40 | 65 | M |
| | 2021.06- | 7DCT | F | L | Estate 4WD DNFB | | GDS84237 | Drive Shaft | | 36 | 37 | 59.5 | 40 | 560 | |
| | 2021.06- | 7DCT | F | R | Estate 4WD DNFB | Wheel Hub Diam:27 | GDS81892 | Drive Shaft | | 36 | | 59.5 | 40 | 602 | |
| | 2021.06- | 7DCT | R | L | Estate 4WD DNFB | | GDS61286 | Drive Shaft | | 36 | | 59.5 | 40 | 587 | |
| | 2021.06- | 7DCT | R | R | Estate 4WD DNFB | | GDS61287 | Drive Shaft | | 36 | | 59.5 | 40 | 632 | |
| | 2021.06- | 7DCT | R | L/R | Estate 4WD DNFB | | GCI35026 | Outer Joint | | 36 | 33 | 59.5 | 40 | 61 | |
| | 2021.06- | 7DCT | R | L/R | Estate 4WD DNFB | | GCI61103 | Inner Joint | | | 33 | | | 32 | |
| 2.0 (245 kw) | 2024.07- | 7DCT | F | L | Estate 4WD DNFF | | GDS84237 | Drive Shaft | | 36 | 37 | 59.5 | 40 | 560 | |
| | 2024.07- | 7DCT | F | R | Estate 4WD DNFF | | GDS81892 | Drive Shaft | | 36 | | 59.5 | 40 | 602 | |
| | 2024.07- | 7DCT | R | L | Estate 4WD DNFF | Date to:2024.07 | GDS61286 | Drive Shaft | | 36 | | 59.5 | 40 | 587 | |
| | 2024.07- | 7DCT | R | R | Estate 4WD DNFF | Date to:2024.07 | GDS61287 | Drive Shaft | | 36 | | 59.5 | 40 | 632 | |
| **Tavascan** | | | | | | | | | | | | | | | |
| EV (210 kw) | 2024.03- | ET | R | L | SUV RWD EDFA | | GDS58102 | Drive Shaft | | 38 | 42 | 59.5 | 34 | 639 | |
| | 2024.03- | ET | R | R | SUV RWD EDFA | | GDS58101 | Drive Shaft | | 38 | 42 | 59.5 | 34 | 853 | |
| | 2024.03- | ET | R | L/R | SUV RWD EDFA | | GCO83846 | Outer Joint | | 38 | 27 | 59.5 | 34 | 65 | M |
| EV (250 kw) | 2024.03- | ET | F | L | SUV 4WD EDDA, EDFA | For right-hand drive vehicles | GDS57677 | Drive Shaft | | 38 | 33 | 59.5 | 40.5 | 565 | |
| | 2024.03- | ET | F | R | SUV 4WD EDDA, EDFA | For right-hand drive vehicles | GDS57678 | Drive Shaft | | 38 | 33 | 59.5 | 40.5 | 721 | |
| | 2024.03- | ET | F | L/R | SUV 4WD EDDA, EDFA | | GCO83674 | Outer Joint | | 38 | 33 | 59.5 | 40.5 | 59 | I |
| | 2024.03- | ET | F | L/R | SUV 4WD EDDA, EDFA | | GCI81546 | Inner Joint | | 33 | 32 | 39.9 | 58.5 | 105 | |
| | 2024.03- | ET | R | L | SUV 4WD EDDA, EDFA | | GDS58102 | Drive Shaft | | 38 | 42 | 59.5 | 34 | 639 | |
| | 2024.03- | ET | R | R | SUV 4WD EDDA, EDFA | | GDS58101 | Drive Shaft | | 38 | 42 | 59.5 | 34 | 853 | |
| | 2024.03- | ET | R | L/R | SUV 4WD EDDA, EDFA | | GCO83846 | Outer Joint | | 38 | 27 | 59.5 | 34 | 65 | M |
| **Terramar** | | | | | | | | | | | | | | | |
| 1.5 (110 kw) | 2024.11- | 7DCT | F | L | SUV FWD DXDB | | GDS82351 | Drive Shaft | | 36 | 37 | 59.5 | 40 | 568 | |
| | 2024.11- | 7DCT | F | R | SUV FWD DXDB | | GDS58238 | Drive Shaft | | 36 | 37 | 59.5 | 40 | 919 | |
| | 2024.11- | 7DCT | F | L/R | SUV FWD DXDB | | GCO83101 | Outer Joint | | 36 | 27 | 59.5 | 40 | 65 | M |
| | 2024.11- | 7DCT | F | L | SUV FWD DXDB | | GCI81158 | Inner Joint | | 37 | 34 | 34.5 | 65.5 | 83 | |
| | 2024.11- | 7DCT | F | R | SUV FWD DXDB | | GCI82108 | Inner Joint | | 37 | 34 | 40 | 77.5 | 103.5 | |
| 1.5 (150 kw) | 2024.06- | 6DCT | F | L | SUV FWD DUCB | | GDS81265 | Drive Shaft | | 36 | 37 | 59.5 | 40 | 557 | |
| | 2024.06- | 6DCT | F | R | SUV FWD DUCB | | GDS57844 | Drive Shaft | | 36 | 37 | 59.5 | 40 | 929 | |
| | 2024.06- | 6DCT | F | L | SUV FWD DUCB | | GCI81158 | Inner Joint | | 37 | 34 | 34.5 | 65.5 | 83 | |

| | YEAR | TRANSM. | F/R | L/R | BODY STYLE & DRIVE TYPE & ENGINE | REMARKS | G-AP Ref. | PRODUCT | ABS | Technical Specifications A | B | C | H | L | P |
|---|---|---|---|---|---|---|---|---|---|---|---|---|---|---|---|
| **CUPRA** | | | | | | | | | | | | | | | |
| **Terramar** | | | | | | | | | | | | | | | |
| 1.5 (200 kw) | 2024.11- | 6DCT | F | L | SUV FWD DUCA | | GDS81265 | Drive Shaft | | 36 | 37 | 59.5 | 40 | 557 | |
| | 2024.11- | 6DCT | F | R | SUV FWD DUCA | | GDS57844 | Drive Shaft | | 36 | 37 | 59.5 | 40 | 929 | |
| | 2024.11- | 6DCT | F | L | SUV FWD DUCA | | GCI81158 | Inner Joint | | 37 | 34 | 34.5 | 65.5 | 83 | |
| 2.0 (150 kw) | 2025.01- | 7DCT | F | R | SUV 4WD DNNE | | GDS81889 | Drive Shaft | | 36 | | 59.5 | 40 | 614 | |
| | 2025.01- | 7DCT | F | L | SUV 4WD DNNE | | GCI81158 | Inner Joint | | 37 | 34 | 34.5 | 65.5 | 83 | |
| 2.0 (195 kw) | 2024.11- | 7DCT | F | L | SUV 4WD DNPB | | GCI81158 | Inner Joint | | 37 | 34 | 34.5 | 65.5 | 83 | |
| **DACIA** | | | | | | | | | | | | | | | |
| **Dokker** | | | | | | | | | | | | | | | |
| 1.2 (84 kw) | 2012.12-2015.12 | 5MT | F | L | Box Body/MPV FWD H5F 402 | | GDS11024 | Drive Shaft | | 25 | 26 | 52.5 | 88.5 | 653 | |
| | 2012.12-2015.12 | 5MT | F | R | Box Body/MPV FWD H5F 402 | | GDS50501 | Drive Shaft | | 25 | 26 | 52.4 | 88.5 | 898 | |
| | 2012.12-2015.12 | 5MT | F | L | Box Body/MPV FWD H5F 402 | | GCI50057 | Inner Joint | | 26 | 22 | 40 | 64 | 104 | |
| | 2012.12-2015.12 | MT | F | L/R | Box Body/MPV FWD H5F 402 | | GCO50162 | Outer Joint | | 25 | 23 | 52.5 | 88.5 | 60.5 | M |
| 1.2 (85 kw) | 2012.11-2021.12 | 5MT | F | L | MPV FWD H5F 402, H5F 408 | | GDS11024 | Drive Shaft | | 25 | 26 | 52.5 | 88.5 | 653 | |
| | 2012.11-2021.12 | 5MT | F | R | MPV FWD H5F 402, H5F 408 | | GDS50501 | Drive Shaft | | 25 | 26 | 52.4 | 88.5 | 898 | |
| | 2012.11-2021.12 | 5MT | F | L | MPV FWD H5F 402, H5F 408 | | GCI50057 | Inner Joint | | 26 | 22 | 40 | 64 | 104 | |
| | 2012.11-2021.12 | MT | F | L/R | MPV FWD H5F 402, H5F 408 | | GCO50162 | Outer Joint | | 25 | 23 | 52.5 | 88.5 | 60.5 | M |
| | 2015.07-2021.12 | 5MT | F | L | Box Body/MPV FWD H5F 408 | | GCI50057 | Inner Joint | | 26 | 22 | 40 | 64 | 104 | |
| | 2015.07-2021.12 | MT | F | L | Box Body/MPV FWD H5F 408 | | GDS11024 | Drive Shaft | | 25 | 26 | 52.5 | 88.5 | 653 | |
| | 2015.07-2021.12 | MT | F | R | Box Body/MPV FWD H5F 408 | | GDS50501 | Drive Shaft | | 25 | 26 | 52.4 | 88.5 | 898 | |
| | 2015.07-2021.12 | MT | F | L/R | Box Body/MPV FWD H5F 408 | Date from:2016.01 | GCO50162 | Outer Joint | | 25 | 23 | 52.5 | 88.5 | 60.5 | M |
| 1.3 (75 kw) | 2019.08-2021.12 | 5MT | F | L | Box Body/MPV FWD H5H 470 | | GDS11024 | Drive Shaft | | 25 | 26 | 52.5 | 88.5 | 653 | |
| | 2019.08-2021.12 | 5MT | F | R | Box Body/MPV FWD H5H 470 | | GDS50501 | Drive Shaft | | 25 | 26 | 52.4 | 88.5 | 898 | |
| | 2019.08-2021.12 | 5MT | F | L/R | Box Body/MPV FWD H5H 470 | | GCI50057 | Inner Joint | | 26 | 22 | 40 | 64 | 104 | |
| | 2019.08-2021.12 | | F | L | Box Body/MPV FWD H5H 470 | | GCO50162 | Outer Joint | | 25 | 23 | 52.5 | 88.5 | 60.5 | M |
| | 2019.08-2021.12 | 5MT | F | L | MPV FWD H5H 470 | | GDS11024 | Drive Shaft | | 25 | 26 | 52.5 | 88.5 | 653 | |
| | 2019.08-2021.12 | 5MT | F | R | MPV FWD H5H 470 | | GDS50501 | Drive Shaft | | 25 | 26 | 52.4 | 88.5 | 898 | |
| | 2019.08-2021.12 | 5MT | F | L/R | MPV FWD H5H 470 | | GCI50057 | Inner Joint | | 26 | 22 | 40 | 64 | 104 | |
| | 2019.08-2021.12 | | F | L | MPV FWD H5H 470 | | GCO50162 | Outer Joint | | 25 | 23 | 52.5 | 88.5 | 60.5 | M |
| 1.3 (96 kw) | 2019.03-2021.12 | 5MT | F | L | MPV FWD H5H 470 | | GDS11024 | Drive Shaft | | 25 | 26 | 52.5 | 88.5 | 653 | |
| | 2019.03-2021.12 | 5MT | F | R | MPV FWD H5H 470 | | GDS50501 | Drive Shaft | | 25 | 26 | 52.4 | 88.5 | 898 | |
| | 2019.03-2021.12 | 5MT | F | L/R | MPV FWD H5H 470 | | GCI50057 | Inner Joint | | 26 | 22 | 40 | 64 | 104 | |
| | 2019.03-2021.12 | | F | L | MPV FWD H5H 470 | | GCO50162 | Outer Joint | | 25 | 23 | 52.5 | 88.5 | 60.5 | M |
| | 2019.08-2021.12 | 5MT | F | L | Box Body/MPV FWD H5H 470 | | GDS11024 | Drive Shaft | | 25 | 26 | 52.5 | 88.5 | 653 | |
| | 2019.08-2021.12 | 5MT | F | R | Box Body/MPV FWD H5H 470 | | GDS50501 | Drive Shaft | | 25 | 26 | 52.4 | 88.5 | 898 | |
| | 2019.08-2021.12 | 5MT | F | L/R | Box Body/MPV FWD H5H 470 | | GCI50057 | Inner Joint | | 26 | 22 | 40 | 64 | 104 | |
| | 2019.08-2021.12 | | F | L | Box Body/MPV FWD H5H 470 | | GCO50162 | Outer Joint | | 25 | 23 | 52.5 | 88.5 | 60.5 | M |
| 1.5 (55 kw) | 2012.11-2021.12 | 5MT | F | L | MPV FWD K9K 626, K9K 612, K9K 872 | | GDS11024 | Drive Shaft | | 25 | 26 | 52.5 | 88.5 | 653 | |
| | 2012.11-2021.12 | 5MT | F | L | MPV FWD K9K 626, K9K 612, K9K 872 | | GCI50057 | Inner Joint | | 26 | 22 | 40 | 64 | 104 | |
| | 2012.11-2021.12 | 5MT/6MT | F | R | MPV FWD K9K 626, K9K 612, K9K 872 | | GDS50501 | Drive Shaft | | 25 | 26 | 52.4 | 88.5 | 898 | |
| | 2012.11-2021.12 | 6MT | F | R | MPV FWD K9K 626, K9K 612, K9K 872 | | GDS83477 | Drive Shaft | | 25 | 26 | 52.4 | 88.5 | 897 | |
| | 2012.11-2021.12 | 6MT | F | R | MPV FWD K9K 626, K9K 612, K9K 872 | | GCI82231 | Inner Joint | | 26 | 23 | 33 | 329 | 98 | |
| | 2012.11-2021.12 | MT | F | L/R | MPV FWD K9K 626, K9K 612, K9K 872 | | GCO50162 | Outer Joint | | 25 | 23 | 52.5 | 88.5 | 60.5 | M |
| | 2012.12-2021.12 | 5MT | F | L | Box Body/MPV FWD K9K 612;K9K 626;K9K 872 | | GDS11024 | Drive Shaft | | 25 | 26 | 52.5 | 88.5 | 653 | |
| | 2012.12-2021.12 | 5MT | F | R | Box Body/MPV FWD K9K 612;K9K 626;K9K 872 | | GDS50501 | Drive Shaft | | 25 | 26 | 52.4 | 88.5 | 898 | |
| | 2012.12-2021.12 | 5MT | F | L | Box Body/MPV FWD K9K 612;K9K 626;K9K 872 | | GCI50057 | Inner Joint | | 26 | 22 | 40 | 64 | 104 | |
| | 2012.12-2021.12 | MT | F | L/R | Box Body/MPV FWD K9K 612;K9K 626;K9K 872 | | GCO50162 | Outer Joint | | 25 | 23 | 52.5 | 88.5 | 60.5 | M |
| 1.5 (62 kw) | 2012.11-2021.12 | 5MT | F | L | Box Body/MPV FWD K9K 838 | | GDS11024 | Drive Shaft | | 25 | 26 | 52.5 | 88.5 | 653 | |
| | 2012.11-2021.12 | 5MT | F | R | Box Body/MPV FWD K9K 838 | | GDS50501 | Drive Shaft | | 25 | 26 | 52.4 | 88.5 | 898 | |
| | 2012.11-2021.12 | 5MT | F | L | Box Body/MPV FWD K9K 838 | | GCI50057 | Inner Joint | | 26 | 22 | 40 | 64 | 104 | |
| | 2012.11-2021.12 | | F | R | Box Body/MPV FWD K9K 838 | | GCO50162 | Outer Joint | | 25 | 23 | 52.5 | 88.5 | 60.5 | M |
| 1.5 (63 kw) | 2012.11-2021.12 | 5MT | F | L | MPV FWD K9K 612;K9K 830 | | GDS11024 | Drive Shaft | | 25 | 26 | 52.5 | 88.5 | 653 | |
| | 2012.11-2021.12 | 5MT | F | R | MPV FWD K9K 612;K9K 830 | | GDS50501 | Drive Shaft | | 25 | 26 | 52.4 | 88.5 | 898 | |
| | 2012.11-2021.12 | 5MT | F | L | MPV FWD K9K 612;K9K 830 | | GCO50162 | Outer Joint | | 25 | 23 | 52.5 | 88.5 | 60.5 | M |
| | 2012.11-2021.12 | 5MT | F | L | MPV FWD K9K 612;K9K 830 | | GCI50057 | Inner Joint | | 26 | 22 | 40 | 64 | 104 | |
| | 2012.12-2021.12 | 5MT | F | L | Box Body/MPV FWD K9K 612;K9K 830 | | GDS11024 | Drive Shaft | | 25 | 26 | 52.5 | 88.5 | 653 | |
| | 2012.12-2021.12 | 5MT | F | R | Box Body/MPV FWD K9K 612;K9K 830 | | GDS50501 | Drive Shaft | | 25 | 26 | 52.4 | 88.5 | 898 | |
| | 2012.12-2021.12 | 5MT | F | L | Box Body/MPV FWD K9K 612;K9K 830 | | GCI50057 | Inner Joint | | 26 | 22 | 40 | 64 | 104 | |
| | 2012.12-2021.12 | | F | R | Box Body/MPV FWD K9K 612;K9K 830 | | GCO50162 | Outer Joint | | 25 | 23 | 52.5 | 88.5 | 60.5 | M |
| 1.5 (66 kw) | 2012.11-2021.12 | 5MT | F | L | MPV FWD K9K 626, K9K 612 | | GDS11024 | Drive Shaft | | 25 | 26 | 52.5 | 88.5 | 653 | |
| | 2012.11-2021.12 | 5MT | F | R | MPV FWD K9K 626, K9K 612 | | GDS50501 | Drive Shaft | | 25 | 26 | 52.4 | 88.5 | 898 | |
| | 2012.11-2021.12 | 5MT | F | L/R | MPV FWD K9K 626, K9K 612 | | GCO50162 | Outer Joint | | 25 | 23 | 52.5 | 88.5 | 60.5 | M |
| | 2012.11-2021.12 | 5MT | F | L | MPV FWD K9K 626, K9K 612 | | GCI50057 | Inner Joint | | 26 | 22 | 40 | 64 | 104 | |
| | 2012.12-2021.12 | 5MT | F | L | Box Body/MPV FWD K9K 612;K9K 626 | | GDS11024 | Drive Shaft | | 25 | 26 | 52.5 | 88.5 | 653 | |
| | 2012.12-2021.12 | 5MT | F | R | Box Body/MPV FWD K9K 612;K9K 626 | | GDS50501 | Drive Shaft | | 25 | 26 | 52.4 | 88.5 | 898 | |
| | 2012.12-2021.12 | 5MT | F | L | Box Body/MPV FWD K9K 612;K9K 626 | | GCI50057 | Inner Joint | | 26 | 22 | 40 | 64 | 104 | |

| | YEAR | TRANSM. | F/R | L/R | BODY STYLE & DRIVE TYPE & ENGINE | REMARKS | G-AP Ref. | PRODUCT | ABS | Technical Specifications A | B | C | H | L | P |
|---|---|---|---|---|---|---|---|---|---|---|---|---|---|---|---|
| **DACIA** | | | | | | | | | | | | | | | |
| **Dokker** | | | | | | | | | | | | | | | |
| 1.5 (66 kw) | 2012.12-2021.12 | MT | F | L/R | Box Body/MPV FWD K9K 612;K9K 626 | | GCO50162 | Outer Joint | | 25 | 23 | 52.5 | 88.5 | 60.5 | M |
| 1.5 (70 kw) | 2018.12-2021.12 | 5MT | F | L | MPV FWD K9K 872 | | GDS11024 | Drive Shaft | | 25 | 26 | 52.5 | 88.5 | 653 | |
| | 2018.12-2021.12 | 6MT | F | R | MPV FWD K9K 872 | | GDS50501 | Drive Shaft | | 25 | 26 | 52.4 | 88.5 | 898 | |
| | 2018.12-2021.12 | 6MT | F | R | MPV FWD K9K 872 | | GDS83477 | Drive Shaft | | 25 | 26 | 52.4 | 88.5 | 897 | |
| | 2018.12-2021.12 | 6MT | F | R | MPV FWD K9K 872 | | GCO50162 | Outer Joint | | 25 | 23 | 52.5 | 88.5 | 60.5 | M |
| | 2018.12-2021.12 | 6MT | F | R | MPV FWD K9K 872 | | GCI82231 | Inner Joint | | 26 | 23 | 33 | 329 | 98 | |
| | 2019.06-2021.12 | 5MT | F | L | Box Body/MPV FWD K9K 872 | | GDS11024 | Drive Shaft | | 25 | 26 | 52.5 | 88.5 | 653 | |
| | 2019.06-2021.12 | 5MT | F | R | Box Body/MPV FWD K9K 872 | | GDS50501 | Drive Shaft | | 25 | 26 | 52.4 | 88.5 | 898 | |
| | 2019.06-2021.12 | 5MT | F | R | Box Body/MPV FWD K9K 872 | | GDS83477 | Drive Shaft | | 25 | 26 | 52.4 | 88.5 | 897 | |
| | 2019.06-2021.12 | 5MT | F | R | Box Body/MPV FWD K9K 872 | | GCO50162 | Outer Joint | | 25 | 23 | 52.5 | 88.5 | 60.5 | M |
| | 2019.06-2021.12 | 5MT | F | R | Box Body/MPV FWD K9K 872 | | GCI82231 | Inner Joint | | 26 | 23 | 33 | 329 | 98 | |
| 1.6 (61 kw) | 2012.11-2015.12 | 5MT | F | R | MPV FWD K7M 812;K7M 828 | | GDS50501 | Drive Shaft | | 25 | 26 | 52.4 | 88.5 | 898 | |
| | 2012.11-2015.12 | 5MT | F | L | MPV FWD K7M 812;K7M 828 | | GCI50057 | Inner Joint | | 26 | 22 | 40 | 64 | 104 | |
| | 2012.11-2015.12 | MT | F | L | MPV FWD K7M 812;K7M 828 | | GDS11024 | Drive Shaft | | 25 | 26 | 52.5 | 88.5 | 653 | |
| | 2012.11-2015.12 | MT | F | L/R | MPV FWD K7M 812;K7M 828 | | GCO50162 | Outer Joint | | 25 | 23 | 52.5 | 88.5 | 60.5 | M |
| | 2012.12-2015.12 | 5MT | F | R | Box Body/MPV FWD K7M 812;K7M 828 | | GDS50501 | Drive Shaft | | 25 | 26 | 52.4 | 88.5 | 898 | |
| | 2012.12-2015.12 | 5MT | F | L | Box Body/MPV FWD K7M 812;K7M 828 | | GCI50057 | Inner Joint | | 26 | 22 | 40 | 64 | 104 | |
| | 2012.12-2015.12 | MT | F | L | Box Body/MPV FWD K7M 812;K7M 828 | | GDS11024 | Drive Shaft | | 25 | 26 | 52.5 | 88.5 | 653 | |
| | 2012.12-2015.12 | MT | F | L/R | Box Body/MPV FWD K7M 812;K7M 828 | | GCO50162 | Outer Joint | | 25 | 23 | 52.5 | 88.5 | 60.5 | M |
| | 2013.11-2015.12 | 5MT | F | L | Box Body/MPV FWD K7M 812;K7M 828 | | GCI50057 | Inner Joint | | 26 | 22 | 40 | 64 | 104 | |
| | 2013.11-2015.12 | MT | F | L | Box Body/MPV FWD K7M 812;K7M 828 | | GDS11024 | Drive Shaft | | 25 | 26 | 52.5 | 88.5 | 653 | |
| | 2013.11-2015.12 | MT | F | R | Box Body/MPV FWD K7M 812;K7M 828 | | GDS50501 | Drive Shaft | | 25 | 26 | 52.4 | 88.5 | 898 | |
| | 2013.11-2015.12 | MT | F | L/R | Box Body/MPV FWD K7M 812;K7M 828 | | GCO50162 | Outer Joint | | 25 | 23 | 52.5 | 88.5 | 60.5 | M |
| | 2013.11-2015.12 | 5MT | F | L | MPV FWD K7M 812;K7M 828 | | GCI50057 | Inner Joint | | 26 | 22 | 40 | 64 | 104 | |
| | 2013.11-2015.12 | MT | F | L | MPV FWD K7M 812;K7M 828 | | GDS11024 | Drive Shaft | | 25 | 26 | 52.5 | 88.5 | 653 | |
| | 2013.11-2015.12 | MT | F | R | MPV FWD K7M 812;K7M 828 | | GDS50501 | Drive Shaft | | 25 | 26 | 52.4 | 88.5 | 898 | |
| | 2013.11-2015.12 | MT | F | L/R | MPV FWD K7M 812;K7M 828 | | GCO50162 | Outer Joint | | 25 | 23 | 52.5 | 88.5 | 60.5 | M |
| 1.6 (75 kw) | 2015.04-2021.12 | 5MT | F | L | Box Body/MPV FWD H4M 738 | | GCI50057 | Inner Joint | | 26 | 22 | 40 | 64 | 104 | |
| | 2015.04-2021.12 | MT | F | L | Box Body/MPV FWD H4M 738 | | GDS11024 | Drive Shaft | | 25 | 26 | 52.5 | 88.5 | 653 | |
| | 2015.04-2021.12 | MT | F | R | Box Body/MPV FWD H4M 738 | | GDS50501 | Drive Shaft | | 25 | 26 | 52.4 | 88.5 | 898 | |
| | 2015.04-2021.12 | MT | F | L/R | Box Body/MPV FWD H4M 738 | | GCO50162 | Outer Joint | | 25 | 23 | 52.5 | 88.5 | 60.5 | M |
| | 2015.04-2021.12 | 5MT | F | L | Box Body/MPV FWD H4M 740 | | GCI50057 | Inner Joint | | 26 | 22 | 40 | 64 | 104 | |
| | 2015.04-2021.12 | MT | F | L | Box Body/MPV FWD H4M 740 | | GDS11024 | Drive Shaft | | 25 | 26 | 52.5 | 88.5 | 653 | |
| | 2015.04-2021.12 | MT | F | R | Box Body/MPV FWD H4M 740 | | GDS50501 | Drive Shaft | | 25 | 26 | 52.4 | 88.5 | 898 | |
| | 2015.04-2021.12 | MT | F | L/R | Box Body/MPV FWD H4M 740 | | GCO50162 | Outer Joint | | 25 | 23 | 52.5 | 88.5 | 60.5 | M |
| | 2015.04-2021.12 | 5MT | F | L | MPV FWD H4M 738 | | GCI50057 | Inner Joint | | 26 | 22 | 40 | 64 | 104 | |
| | 2015.04-2021.12 | MT | F | L | MPV FWD H4M 738 | | GDS11024 | Drive Shaft | | 25 | 26 | 52.5 | 88.5 | 653 | |
| | 2015.04-2021.12 | MT | F | R | MPV FWD H4M 738 | | GDS50501 | Drive Shaft | | 25 | 26 | 52.4 | 88.5 | 898 | |
| | 2015.04-2021.12 | MT | F | L/R | MPV FWD H4M 738 | | GCO50162 | Outer Joint | | 25 | 23 | 52.5 | 88.5 | 60.5 | M |
| | 2015.04-2021.12 | 5MT | F | L | MPV FWD H4M 740 | | GCI50057 | Inner Joint | | 26 | 22 | 40 | 64 | 104 | |
| | 2015.04-2021.12 | MT | F | L | MPV FWD H4M 740 | | GDS11024 | Drive Shaft | | 25 | 26 | 52.5 | 88.5 | 653 | |
| | 2015.04-2021.12 | MT | F | R | MPV FWD H4M 740 | | GDS50501 | Drive Shaft | | 25 | 26 | 52.4 | 88.5 | 898 | |
| | 2015.04-2021.12 | MT | F | L/R | MPV FWD H4M 740 | | GCO50162 | Outer Joint | | 25 | 23 | 52.5 | 88.5 | 60.5 | M |
| 1.6 (80 kw) | 2018.08-2021.12 | 5MT | F | L | Box Body/MPV FWD H4M 740 | | GDS11024 | Drive Shaft | | 25 | 26 | 52.5 | 88.5 | 653 | |
| | 2018.08-2021.12 | 5MT | F | R | Box Body/MPV FWD H4M 740 | | GDS50501 | Drive Shaft | | 25 | 26 | 52.4 | 88.5 | 898 | |
| | 2018.08-2021.12 | 5MT | F | L/R | Box Body/MPV FWD H4M 740 | | GCO50162 | Outer Joint | | 25 | 23 | 52.5 | 88.5 | 60.5 | M |
| | 2018.08-2021.12 | 5MT | F | L | Box Body/MPV FWD H4M 740 | | GCI50057 | Inner Joint | | 26 | 22 | 40 | 64 | 104 | |
| | 2018.08-2021.12 | 5MT | F | L | MPV FWD H4M 740 | | GDS11024 | Drive Shaft | | 25 | 26 | 52.5 | 88.5 | 653 | |
| | 2018.08-2021.12 | 5MT | F | R | MPV FWD H4M 740 | | GDS50501 | Drive Shaft | | 25 | 26 | 52.4 | 88.5 | 898 | |
| | 2018.08-2021.12 | 5MT | F | L | MPV FWD H4M 740 | | GCI50057 | Inner Joint | | 26 | 22 | 40 | 64 | 104 | |
| | 2018.08-2021.12 | | F | | MPV FWD H4M 740 | | GCO50162 | Outer Joint | | 25 | 23 | 52.5 | 88.5 | 60.5 | M |
| **Duster** | | | | | | | | | | | | | | | |
| 1.0 (67 kw) | 2021.05- | 6MT | F | L | SUV FWD H4D 470 | | GDS84195 | Drive Shaft | | 25 | 26 | 52.5 | 88.5 | 696 | |
| | 2021.05- | 6MT | F | R | SUV FWD H4D 470 | | GDS56439 | Drive Shaft | | 25 | 26 | 52.5 | 88.5 | 952 | |
| | 2021.05- | 6MT | F | L/R | SUV FWD H4D 470 | | GCO82446 | Outer Joint | | 25 | 33 | 52.5 | 88.5 | 59 | I |
| | 2021.05- | 6MT | F | L | SUV FWD H4D 470 | | GCI41166 | Inner Joint | | 26 | 33 | 40 | 64 | 123 | |
| | 2021.05- | 6MT | F | R | SUV FWD H4D 470 | | GCI50138 | Inner Joint | | 26 | 33 | 33 | 346 | 100.5 | |
| | 2021.06- | 6MT | F | L | SUV FWD H4D 480;H4D 470 | | GDS84195 | Drive Shaft | | 25 | 26 | 52.5 | 88.5 | 696 | |
| | 2021.06- | 6MT | F | R | SUV FWD H4D 480;H4D 470 | | GDS56439 | Drive Shaft | | 25 | 26 | 52.5 | 88.5 | 952 | |
| | 2021.06- | 6MT | F | L/R | SUV FWD H4D 480;H4D 470 | | GCO82446 | Outer Joint | | 25 | 33 | 52.5 | 88.5 | 59 | I |
| | 2021.06- | 6MT | F | L | SUV FWD H4D 480;H4D 470 | | GCI41166 | Inner Joint | | 26 | 33 | 40 | 64 | 123 | |
| | 2021.06- | 6MT | F | R | SUV FWD H4D 480;H4D 470 | | GCI50138 | Inner Joint | | 26 | 33 | 33 | 346 | 100.5 | |
| 1.0 (74 kw) | 2019.01- | 5MT | F | L | SUV 4WD H4D450/H4D460 | | GCO82446 | Outer Joint | | 25 | 33 | 52.5 | 88.5 | 59 | I |
| | 2019.01- | 5MT | F | L | SUV FWD H4D 450;H4D 460 | | GCO82446 | Outer Joint | | 25 | 33 | 52.5 | 88.5 | 59 | I |
| | 2019.01- | 5MT | F | L | SUV FWD H4D 450;H4D 460 | | GCI41166 | Inner Joint | | 26 | 33 | 40 | 64 | 123 | |

| | YEAR | TRANSM. | F/R | L/R | BODY STYLE & DRIVE TYPE & ENGINE | REMARKS | G-AP Ref. | PRODUCT | ABS | Technical Specifications A | B | C | H | L | P |
|---|---|---|---|---|---|---|---|---|---|---|---|---|---|---|---|
| **DACIA** **Duster** | | | | | | | | | | | | | | | |
| 1.0 (74 kw) | 2019.01- | 5MT/6MT | F | L | SUV FWD H4D 450;H4D 460 | | GDS84195 | Drive Shaft | | 25 | 26 | 52.5 | 88.5 | 696 | |
| | 2019.01- | 5MT | F | L | SUV FWD H4D 450;H4D 460;H4D 480 | | GCI41166 | Inner Joint | | 26 | 33 | 40 | 64 | 123 | |
| | 2019.01- | 5MT/6MT | F | L | SUV FWD H4D 450;H4D 460;H4D 480 | | GDS84195 | Drive Shaft | | 25 | 26 | 52.5 | 88.5 | 696 | |
| | 2019.01- | 5MT/6MT | F | L/R | SUV FWD H4D 450;H4D 460;H4D 480 | | GCO82446 | Outer Joint | | 25 | 33 | 52.5 | 88.5 | 59 | I |
| | 2019.01- | 6MT | F | R | SUV FWD H4D 450;H4D 460;H4D 480 | | GDS56439 | Drive Shaft | | 25 | 26 | 52.5 | 88.5 | 952 | |
| | 2019.01- | 6MT | F | R | SUV FWD H4D 450;H4D 460;H4D 480 | | GCI50138 | Inner Joint | | 26 | 33 | 33 | 346 | 100.5 | |
| 1.2 (92 kw) | 2013.10- | 6MT | F | L | SUV Van 4WD H5F 410 | | GDS50464 | Drive Shaft | | 25 | 27 | 52.6 | 89 | 652 | |
| | 2013.10- | 6MT | F | R | SUV Van 4WD H5F 410 | | GDS50463 | Drive Shaft | | 25 | 31 | 52.6 | 89 | 611 | |
| | 2013.10- | 6MT | F | L/R | SUV Van 4WD H5F 410 | | GCO50148 | Outer Joint | | 25 | 35 | 52.6 | 89 | 60 | I |
| | 2013.10- | 6MT | F | L | SUV Van 4WD H5F 410 | | GCI50105 | Inner Joint | | 27 | 33 | 40 | 70.5 | 111 | |
| | 2013.10- | 6MT | F | R | SUV Van 4WD H5F 410 | | GCI50106 | Inner Joint | | 31 | 33 | 42 | | 133.5 | |
| | 2013.10- | MT | F | L/R | SUV Van 4WD H5F 410 | | GCO99213 | Outer Joint | | 25 | 33 | 53 | 88 | 61.5 | I |
| | 2013.10- | 6MT | R | L/R | SUV Van 4WD H5F 410 | | GDS57265 | Drive Shaft | 48T | 25 | 21 | 52.5 | 88.5 | 824 | |
| | 2013.10- | 6MT | R | L/R | SUV Van 4WD H5F 410 | | GCO57203 | Outer Joint | 48T | 25 | 28 | 52.5 | 88.5 | 60 | I |
| | 2013.10- | 6MT | R | L/R | SUV Van 4WD H5F 410 | | GCI57129 | Inner Joint | | 21 | 28 | 38 | 55 | 96 | |
| | 2013.10-2018.01 | 6MT | F | L | SUV FWD H5F 404;H5F 408 | Inner teeth of wheel side:33 | GDS50415 | Drive Shaft | | 25 | 26 | 52.6 | 89 | 704 | |
| | 2013.10-2018.01 | 6MT | F | L | SUV FWD H5F 404;H5F 408 | Inner teeth of wheel side:35 | GDS50498 | Drive Shaft | | 25 | 26 | 52.6 | 89 | 702 | |
| | 2013.10-2018.01 | MT | F | R | SUV FWD H5F 404;H5F 408 | | GDS11020 | Drive Shaft | | 25 | 26 | 52.6 | 89 | 950 | |
| | 2013.10-2018.01 | MT | F | L/R | SUV FWD H5F 404;H5F 408 | | GCO50148 | Outer Joint | | 25 | 35 | 52.6 | 89 | 60 | I |
| | 2013.10-2018.01 | MT | F | L/R | SUV FWD H5F 404;H5F 408 | | GCO99213 | Outer Joint | | 25 | 33 | 53 | 88 | 61.5 | I |
| | 2013.10-2018.01 | MT | F | R | SUV FWD H5F 404;H5F 408 | PTJ | GCI50138 | Inner Joint | | 26 | 33 | 33 | 346 | 100.5 | |
| | 2013.10-2018.01 | | F | L | SUV FWD H5F 404;H5F 408 | | GCI50105 | Inner Joint | | 27 | 33 | 40 | 70.5 | 111 | |
| | 2013.10-2018.01 | | F | R | SUV FWD H5F 404;H5F 408 | TJ | GCI50106 | Inner Joint | | 31 | 33 | 42 | | 133.5 | |
| | 2015.06-2018.01 | 6MT | F | L | SUV 4WD H5F 410 | | GDS50464 | Drive Shaft | | 25 | 27 | 52.6 | 89 | 652 | |
| | 2015.06-2018.01 | 6MT | F | R | SUV 4WD H5F 410 | | GDS11020 | Drive Shaft | | 25 | 26 | 52.6 | 89 | 950 | |
| | 2015.06-2018.01 | 6MT | F | R | SUV 4WD H5F 410 | | GDS50463 | Drive Shaft | | 25 | 31 | 52.6 | 89 | 611 | |
| | 2015.06-2018.01 | MT | F | L/R | SUV 4WD H5F 410 | | GCO99213 | Outer Joint | | 25 | 33 | 53 | 88 | 61.5 | I |
| | 2015.06-2018.01 | | F | L/R | SUV 4WD H5F 410 | | GCO50148 | Outer Joint | | 25 | 35 | 52.6 | 89 | 60 | I |
| | 2015.06-2018.01 | | F | L | SUV 4WD H5F 410 | | GCI50105 | Inner Joint | | 27 | 33 | 40 | 70.5 | 111 | |
| | 2015.06-2018.01 | | F | R | SUV 4WD H5F 410 | | GCI50106 | Inner Joint | | 31 | 33 | 42 | | 133.5 | |
| | 2015.06-2018.01 | 6MT | R | L/R | SUV 4WD H5F 410 | | GDS57265 | Drive Shaft | 48T | 25 | 21 | 52.5 | 88.5 | 824 | |
| | 2015.06-2018.01 | MT | R | L/R | SUV 4WD H5F 410 | | GCO57203 | Outer Joint | 48T | 25 | 28 | 52.5 | 88.5 | 60 | I |
| | 2015.06-2018.01 | | R | L/R | SUV 4WD H5F 410 | | GCI57129 | Inner Joint | | 21 | 28 | 38 | 55 | 96 | |
| | 2017.10- | 6MT | F | L | SUV 4WD H5F 410 | | GDS11017 | Drive Shaft | | 25 | 27 | 52.6 | 89 | 655 | |
| | 2017.10- | 6MT | F | R | SUV 4WD H5F 410 | Date To:2018.04 | GDS11019 | Drive Shaft | | 25 | 31 | 52.6 | 89 | 614 | |
| | 2017.10- | 6MT | F | R | SUV 4WD H5F 410 | | GDS83783 | Drive Shaft | | 25 | 31 | 52.6 | 89 | 615 | |
| | 2017.10- | 6MT | F | L/R | SUV 4WD H5F 410 | | GCO50157 | Outer Joint | | 25 | 33 | 52.6 | 89 | 60 | I |
| | 2017.10- | 6MT | F | L | SUV 4WD H5F 410 | | GCI50105 | Inner Joint | | 27 | 33 | 40 | 70.5 | 111 | |
| | 2017.10- | 6MT | F | R | SUV 4WD H5F 410 | | GCI81137 | Inner Joint | | 31 | 33 | 42 | | 133 | |
| | 2017.10- | 6MT | R | L/R | SUV 4WD H5F 410 | | GDS57265 | Drive Shaft | 48T | 25 | 21 | 52.5 | 88.5 | 824 | |
| | 2017.10- | 6MT | R | L/R | SUV 4WD H5F 410 | | GCO57203 | Outer Joint | 48T | 25 | 28 | 52.5 | 88.5 | 60 | I |
| | 2017.10- | 6MT | R | L/R | SUV 4WD H5F 410 | | GCI57129 | Inner Joint | | 21 | 28 | 38 | 55 | 96 | |
| | 2017.10- | 6MT | F | L | SUV FWD H5F 408 | Inner teeth of wheel side:33 | GDS50415 | Drive Shaft | | 25 | 26 | 52.6 | 89 | 704 | |
| | 2017.10- | 6MT | F | L | SUV FWD H5F 408 | Inner teeth of wheel side:35 | GDS50498 | Drive Shaft | | 25 | 26 | 52.6 | 89 | 702 | |
| | 2017.10- | 6MT | F | R | SUV FWD H5F 408 | | GDS11020 | Drive Shaft | | 25 | 26 | 52.6 | 89 | 950 | |
| | 2017.10- | 6MT | F | R | SUV FWD H5F 408 | | GCO50148 | Outer Joint | | 25 | 35 | 52.6 | 89 | 60 | I |
| | 2017.10- | 6MT | F | R | SUV FWD H5F 408 | | GCI50138 | Inner Joint | | 26 | 33 | 33 | 346 | 100.5 | |
| 1.3 (96 kw) | 2019.01- | 6MT | F | L | SUV 4WD H5H 470;H5H 480;H5H494 | | GDS11017 | Drive Shaft | | 25 | 27 | 52.6 | 89 | 655 | |
| | 2019.01- | 6MT | F | R | SUV 4WD H5H 470;H5H 480;H5H494 | | GDS83783 | Drive Shaft | | 25 | 31 | 52.6 | 89 | 615 | |
| | 2019.01- | 6MT | F | R | SUV 4WD H5H 470;H5H 480;H5H494 | | GCO50157 | Outer Joint | | 25 | 33 | 52.6 | 89 | 60 | I |
| | 2019.01- | 6MT | F | L | SUV 4WD H5H 470;H5H 480;H5H494 | Date to:2021.02 | GCI50105 | Inner Joint | | 27 | 33 | 40 | 70.5 | 111 | |
| | 2019.01- | 6MT | F | R | SUV 4WD H5H 470;H5H 480;H5H494 | | GCI81137 | Inner Joint | | 31 | 33 | 42 | | 133 | |
| | 2019.01- | 6MT | R | L/R | SUV 4WD H5H 470;H5H 480;H5H494 | | GDS57265 | Drive Shaft | 48T | 25 | 21 | 52.5 | 88.5 | 824 | |
| | 2019.01- | 6MT | R | L/R | SUV 4WD H5H 470;H5H 480;H5H494 | | GCO57203 | Outer Joint | 48T | 25 | 28 | 52.5 | 88.5 | 60 | I |
| | 2019.01- | 6MT | R | L/R | SUV 4WD H5H 470;H5H 480;H5H494 | | GCI57129 | Inner Joint | | 21 | 28 | 38 | 55 | 96 | |
| | 2019.01- | 6MT | F | L | SUV FWD H5H 470;H5H 480 | Inner teeth of wheel side:33 | GDS50415 | Drive Shaft | | 25 | 26 | 52.6 | 89 | 704 | |
| | 2019.01- | 6MT | F | L | SUV FWD H5H 470;H5H 480 | Inner teeth of wheel side:35 | GDS50498 | Drive Shaft | | 25 | 26 | 52.6 | 89 | 702 | |
| | 2019.01- | 6MT | F | R | SUV FWD H5H 470;H5H 480 | | GDS11020 | Drive Shaft | | 25 | 26 | 52.6 | 89 | 950 | |
| | 2019.01- | 6MT | F | L/R | SUV FWD H5H 470;H5H 480 | | GCO50148 | Outer Joint | | 25 | 35 | 52.6 | 89 | 60 | I |
| | 2019.01- | 6MT | F | R | SUV FWD H5H 470;H5H 480 | | GCI50138 | Inner Joint | | 26 | 33 | 33 | 346 | 100.5 | |
| 1.3 (110 kw) | 2019.01- | 6MT | F | L | SUV 4WD H5H 470;H5H 480;H5H 490 | | GDS11017 | Drive Shaft | | 25 | 27 | 52.6 | 89 | 655 | |
| | 2019.01- | 6MT | F | R | SUV 4WD H5H 470;H5H 480;H5H 490 | | GDS83783 | Drive Shaft | | 25 | 31 | 52.6 | 89 | 615 | |
| | 2019.01- | 6MT | F | R | SUV 4WD H5H 470;H5H 480;H5H 490 | | GCO50157 | Outer Joint | | 25 | 33 | 52.6 | 89 | 60 | I |
| | 2019.01- | 6MT | F | L | SUV 4WD H5H 470;H5H 480;H5H 490 | Date to:2021.02 | GCI50105 | Inner Joint | | 27 | 33 | 40 | 70.5 | 111 | |
| | 2019.01- | 6MT | F | R | SUV 4WD H5H 470;H5H 480;H5H 490 | | GCI81137 | Inner Joint | | 31 | 33 | 42 | | 133 | |

| | YEAR | TRANSM. | F/R | L/R | BODY STYLE & DRIVE TYPE & ENGINE | REMARKS | G-AP Ref. | PRODUCT | ABS | Technical Specifications A | B | C | H | L | P |
|---|---|---|---|---|---|---|---|---|---|---|---|---|---|---|---|
| **DACIA** **Duster** | | | | | | | | | | | | | | | |
| 1.3 (110 kw) | 2019.01- | 6MT | R | L/R | SUV 4WD H5H 470;H5H 480;H5H 490 | | GDS57265 | Drive Shaft | 48T | 25 | 21 | 52.5 | 88.5 | 824 | |
| | 2019.01- | 6MT | R | L/R | SUV 4WD H5H 470;H5H 480;H5H 490 | | GCO57203 | Outer Joint | 48T | 25 | 28 | 52.5 | 88.5 | 60 | I |
| | 2019.01- | 6MT | R | L/R | SUV 4WD H5H 470;H5H 480;H5H 490 | | GCI57129 | Inner Joint | | 21 | 28 | 38 | 55 | 96 | |
| | 2019.01- | 6DCT | F | L | SUV FWD H5H 470;H5H 480;H5H 490 | | GDS83561 | Drive Shaft | | 25 | 34 | 52.5 | 88.5 | 643 | |
| | 2019.01- | 6DCT | F | R | SUV FWD H5H 470;H5H 480;H5H 490 | | GDS83764 | Drive Shaft | | 25 | 34 | 52.5 | 88.5 | 1002 | |
| | 2019.01- | 6DCT | F | L | SUV FWD H5H 470;H5H 480;H5H 490 | | GCI82271 | Inner Joint | | 34 | 33 | 40 | 54 | 118 | |
| | 2019.01- | 6MT | F | L | SUV FWD H5H 470;H5H 480;H5H 490 | Inner teeth of wheel side:33 | GDS50415 | Drive Shaft | | 25 | 26 | 52.6 | 89 | 704 | |
| | 2019.01- | 6MT | F | L | SUV FWD H5H 470;H5H 480;H5H 490 | Inner teeth of wheel side:35 | GDS50498 | Drive Shaft | | 25 | 26 | 52.6 | 89 | 702 | |
| | 2019.01- | 6MT | F | R | SUV FWD H5H 470;H5H 480;H5H 490 | | GDS11020 | Drive Shaft | | 25 | 26 | 52.6 | 89 | 950 | |
| | 2019.01- | 6MT | F | L/R | SUV FWD H5H 470;H5H 480;H5H 490 | | GCO50148 | Outer Joint | | 25 | 35 | 52.6 | 89 | 60 | I |
| | 2019.01- | 6MT | F | R | SUV FWD H5H 470;H5H 480;H5H 490 | | GCI50138 | Inner Joint | | 26 | 33 | 33 | 346 | 100.5 | |
| 1.5 (63 kw) | 2010.04-2018.01 | 5MT | F | R | SUV FWD K9K 796;K9K 830 | TJ | GDS50416 | Drive Shaft | | 25 | 26 | 52.6 | 89 | 950 | |
| | 2010.04-2018.01 | 5MT | F | R | SUV FWD K9K 796;K9K 830 | | GDS50586 | Drive Shaft | | 25 | 26 | 52.6 | 89 | 950 | |
| | 2010.04-2018.01 | MT | F | L | SUV FWD K9K 796;K9K 830 | | GDS50415 | Drive Shaft | | 25 | 26 | 52.6 | 89 | 704 | |
| | 2010.04-2018.01 | MT | F | L | SUV FWD K9K 796;K9K 830 | | GDS50498 | Drive Shaft | | 25 | 26 | 52.6 | 89 | 702 | |
| | 2010.04-2018.01 | MT | F | L | SUV FWD K9K 796;K9K 830 | | GDS50587 | Drive Shaft | | 25 | 26 | 52.6 | 89 | 700 | |
| | 2010.04-2018.01 | MT | F | L/R | SUV FWD K9K 796;K9K 830 | | GCO99213 | Outer Joint | | 25 | 33 | 53 | 88 | 61.5 | I |
| | 2010.04-2018.01 | | F | L | SUV FWD K9K 796;K9K 830 | | GCI50105 | Inner Joint | | 27 | 33 | 40 | 70.5 | 111 | |
| | 2010.04-2018.01 | | F | R | SUV FWD K9K 796;K9K 830 | | GCI50106 | Inner Joint | | 31 | 33 | 42 | | 133.5 | |
| 1.5 (66 kw) | 2010.10-2018.01 | 6MT | F | L | SUV 4WD K9K 894;K9K 884 | | GDS50464 | Drive Shaft | | 25 | 27 | 52.6 | 89 | 652 | |
| | 2010.10-2018.01 | 6MT | F | R | SUV 4WD K9K 894;K9K 884 | | GDS50463 | Drive Shaft | | 25 | 31 | 52.6 | 89 | 611 | |
| | 2010.10-2018.01 | AT | F | L | SUV 4WD K9K 894;K9K 884 | | GCI41188 | Inner Joint | | 26 | 33 | 39.6 | 46 | 100.5 | |
| | 2010.10-2018.01 | MT | F | L | SUV 4WD K9K 894;K9K 884 | | GDS11017 | Drive Shaft | | 25 | 27 | 52.6 | 89 | 655 | |
| | 2010.10-2018.01 | MT | F | R | SUV 4WD K9K 894;K9K 884 | | GDS11019 | Drive Shaft | | 25 | 31 | 52.6 | 89 | 614 | |
| | 2010.10-2018.01 | MT | F | L/R | SUV 4WD K9K 894;K9K 884 | | GCO99213 | Outer Joint | | 25 | 33 | 53 | 88 | 61.5 | I |
| | 2010.10-2018.01 | | F | L/R | SUV 4WD K9K 894;K9K 884 | | GCO50148 | Outer Joint | | 25 | 35 | 52.6 | 89 | 60 | I |
| | 2010.10-2018.01 | | F | L | SUV 4WD K9K 894;K9K 884 | | GCI50105 | Inner Joint | | 27 | 33 | 40 | 70.5 | 111 | |
| | 2010.10-2018.01 | | F | R | SUV 4WD K9K 894;K9K 884 | | GCI50106 | Inner Joint | | 31 | 33 | 42 | | 133.5 | |
| | 2010.10-2018.01 | 6MT | R | L/R | SUV 4WD K9K 894;K9K 884 | | GDS57265 | Drive Shaft | 48T | 25 | 21 | 52.5 | 88.5 | 824 | |
| | 2010.10-2018.01 | 6MT | R | L/R | SUV 4WD K9K 894;K9K 884 | Date to:2017.03 | GCO57203 | Outer Joint | 48T | 25 | 28 | 52.5 | 88.5 | 60 | I |
| | 2010.10-2018.01 | | R | L/R | SUV 4WD K9K 894;K9K 884 | | GCI57129 | Inner Joint | | 21 | 28 | 38 | 55 | 96 | |
| | 2010.10-2018.01 | MT | F | L | SUV FWD K9K 892;K9K 612;K9K 626 | Model code:HSMG,For other | GDS50415 | Drive Shaft | | 25 | 26 | 52.6 | 89 | 704 | |
| | 2010.10-2018.01 | MT | F | L | SUV FWD K9K 892;K9K 612;K9K 626 | For Modelcode:HSMV/HSM0 | GDS50464 | Drive Shaft | | 25 | 27 | 52.6 | 89 | 652 | |
| | 2010.10-2018.01 | MT | F | L | SUV FWD K9K 892;K9K 612;K9K 626 | Model code:HSAL | GDS50498 | Drive Shaft | | 25 | 26 | 52.6 | 89 | 702 | |
| | 2010.10-2018.01 | MT | F | L | SUV FWD K9K 892;K9K 612;K9K 626 | Model code:HSMG,For Brazil | GDS50587 | Drive Shaft | | 25 | 26 | 52.6 | 89 | 700 | |
| | 2010.10-2018.01 | MT | F | R | SUV FWD K9K 892;K9K 612;K9K 626 | For Modelcode:HSMG | GDS50416 | Drive Shaft | | 25 | 26 | 52.6 | 89 | 950 | |
| | 2010.10-2018.01 | MT | F | R | SUV FWD K9K 892;K9K 612;K9K 626 | For Modelcode:HSMV/HSM0 | GDS50463 | Drive Shaft | | 25 | 31 | 52.6 | 89 | 611 | |
| | 2010.10-2018.01 | MT | F | R | SUV FWD K9K 892;K9K 612;K9K 626 | For Modelcode:HSAL | GDS50586 | Drive Shaft | | 25 | 26 | 52.6 | 89 | 950 | |
| | 2010.10-2018.01 | MT | F | L/R | SUV FWD K9K 892;K9K 612;K9K 626 | For Modelcode:HSMV/HSM0 | GCO50148 | Outer Joint | | 25 | 35 | 52.6 | 89 | 60 | I |
| | 2010.10-2018.01 | MT | F | L/R | SUV FWD K9K 892;K9K 612;K9K 626 | For Modelcode:HSMG | GCO50157 | Outer Joint | | 25 | 33 | 52.6 | 89 | 60 | I |
| | 2010.10-2018.01 | MT | F | L | SUV FWD K9K 892;K9K 612;K9K 626 | For Modelcode:HSMV/HSM0 | GCI50105 | Inner Joint | | 27 | 33 | 40 | 70.5 | 111 | |
| | 2010.10-2018.01 | MT | F | R | SUV FWD K9K 892;K9K 612;K9K 626 | For Modelcode:HSAL | GCI41190 | Inner Joint | | 26 | 33 | 33 | 329 | 101 | |
| | 2010.10-2018.01 | MT | F | R | SUV FWD K9K 892;K9K 612;K9K 626 | For Modelcode:HSMV/HSM0 | GCI50106 | Inner Joint | | 31 | 33 | 42 | | 133.5 | |
| | 2011.04- | MT | F | L | SUV Van 4WD K9K 894;K9K 884 | | GDS50464 | Drive Shaft | | 25 | 27 | 52.6 | 89 | 652 | |
| | 2011.04- | MT | F | R | SUV Van 4WD K9K 894;K9K 884 | | GDS50463 | Drive Shaft | | 25 | 31 | 52.6 | 89 | 611 | |
| | 2011.04- | MT | F | L/R | SUV Van 4WD K9K 894;K9K 884 | | GCO99213 | Outer Joint | | 25 | 33 | 53 | 88 | 61.5 | I |
| | 2011.04- | MT | F | L | SUV Van 4WD K9K 894;K9K 884 | | GCI50105 | Inner Joint | | 27 | 33 | 40 | 70.5 | 111 | |
| | 2011.04- | | F | R | SUV Van 4WD K9K 894;K9K 884 | | GCI50106 | Inner Joint | | 31 | 33 | 42 | | 133.5 | |
| | 2011.04- | MT | R | L/R | SUV Van 4WD K9K 894;K9K 884 | | GDS57265 | Drive Shaft | 48T | 25 | 21 | 52.5 | 88.5 | 824 | |
| | 2011.04- | MT | R | L/R | SUV Van 4WD K9K 894;K9K 884 | | GCO57203 | Outer Joint | 48T | 25 | 28 | 52.5 | 88.5 | 60 | I |
| | 2011.04- | MT | R | L/R | SUV Van 4WD K9K 894;K9K 884 | | GCI57129 | Inner Joint | | 21 | 28 | 38 | 55 | 96 | |
| | 2011.04- | 6MT | F | L | SUV Van FWD K9K 892 | | GDS50498 | Drive Shaft | | 25 | 26 | 52.6 | 89 | 702 | |
| | 2011.04- | 6MT | F | R | SUV Van FWD K9K 892 | Date to:2018.01,Type:HSMV/HSM0;Outer teeth of tranm.side:31,TJ | GDS50463 | Drive Shaft | | 25 | 31 | 52.6 | 89 | 611 | |
| | 2011.04- | 6MT | F | R | SUV Van FWD K9K 892 | PTJ | GDS50586 | Drive Shaft | | 25 | 26 | 52.6 | 89 | 950 | |
| | 2011.04- | 6MT | F | L | SUV Van FWD K9K 892 | | GCI50105 | Inner Joint | | 27 | 33 | 40 | 70.5 | 111 | |
| | 2011.04- | 6MT | F | R | SUV Van FWD K9K 892 | | GCI50106 | Inner Joint | | 31 | 33 | 42 | | 133.5 | |
| | 2011.04- | MT | F | L | SUV Van FWD K9K 892 | Date to:2018.01,Modelcode:HSMV/HSM0 | GDS50464 | Drive Shaft | | 25 | 27 | 52.6 | 89 | 652 | |
| | 2011.04- | MT | F | L/R | SUV Van FWD K9K 892 | | GCO99213 | Outer Joint | | 25 | 33 | 53 | 88 | 61.5 | I |
| | 2017.10- | 6MT | F | L | SUV FWD K9K 656 | Inner teeth of wheel side:33 | GDS50415 | Drive Shaft | | 25 | 26 | 52.6 | 89 | 704 | |
| | 2017.10- | 6MT | F | L | SUV FWD K9K 656 | Inner teeth of wheel side:35 | GDS50498 | Drive Shaft | | 25 | 26 | 52.6 | 89 | 702 | |
| | 2017.10- | 6MT | F | R | SUV FWD K9K 656 | | GDS50586 | Drive Shaft | | 25 | 26 | 52.6 | 89 | 950 | |
| | 2017.10- | 6MT | F | R | SUV FWD K9K 656 | | GCO50157 | Outer Joint | | 25 | 33 | 52.6 | 89 | 60 | I |
| | 2017.10- | 6MT | F | R | SUV FWD K9K 656 | | GCI41190 | Inner Joint | | 26 | 33 | 33 | 329 | 101 | |
| 1.5 (70 kw) | 2017.10- | 6MT | F | L | SUV FWD K9K 872;K9K 876 | Inner teeth of wheel side:33 | GDS50415 | Drive Shaft | | 25 | 26 | 52.6 | 89 | 704 | |
| | 2017.10- | 6MT | F | L | SUV FWD K9K 872;K9K 876 | Inner teeth of wheel side:35 | GDS50498 | Drive Shaft | | 25 | 26 | 52.6 | 89 | 702 | |

| | YEAR | TRANSM. | F/R | L/R | BODY STYLE & DRIVE TYPE & ENGINE | REMARKS | G-AP Ref. | PRODUCT | ABS | Technical Specifications A | B | C | H | L | P |
|---|---|---|---|---|---|---|---|---|---|---|---|---|---|---|---|
| **DACIA** **Duster** | | | | | | | | | | | | | | | |
| 1.5 (70 kw) | 2017.10- | 6MT | F | R | SUV FWD K9K 872;K9K 876 | | GDS50586 | Drive Shaft | | 25 | 26 | 52.6 | 89 | 950 | |
| | 2017.10- | 6MT | F | R | SUV FWD K9K 872;K9K 876 | | GCO50157 | Outer Joint | | 25 | 33 | 52.6 | 89 | 60 | I |
| | 2017.10- | 6MT | F | R | SUV FWD K9K 872;K9K 876 | | GCI41190 | Inner Joint | | 26 | 33 | 33 | 329 | 101 | |
| 1.5 (79 kw) | 2010.06-2018.01 | 6MT | F | L | SUV FWD K9K 896;K9K 898 | | GDS50498 | Drive Shaft | | 25 | 26 | 52.6 | 89 | 702 | |
| | 2010.06-2018.01 | 6MT | F | R | SUV FWD K9K 896;K9K 898 | Date to:2011.01;TJ | GDS50416 | Drive Shaft | | 25 | 26 | 52.6 | 89 | 950 | |
| | 2010.06-2018.01 | 6MT | F | R | SUV FWD K9K 896;K9K 898 | | GDS50586 | Drive Shaft | | 25 | 26 | 52.6 | 89 | 950 | |
| | 2010.06-2018.01 | MT | F | L/R | SUV FWD K9K 896;K9K 898 | | GCO99213 | Outer Joint | | 25 | 33 | 53 | 88 | 61.5 | I |
| | 2010.06-2018.01 | | F | L/R | SUV FWD K9K 896;K9K 898 | | GCO50148 | Outer Joint | | 25 | 35 | 52.6 | 89 | 60 | I |
| 1.5 (80 kw) | 2013.04- | AT | F | L | SUV Van 4WD K9K 858;K9K 658 | | GCI41188 | Inner Joint | | 26 | 33 | 39.6 | 46 | 100.5 | |
| | 2013.04- | MT | F | L | SUV Van 4WD K9K 858;K9K 658 | Date to:2018.01 | GDS50464 | Drive Shaft | | 25 | 27 | 52.6 | 89 | 652 | |
| | 2013.04- | MT | F | R | SUV Van 4WD K9K 858;K9K 658 | Date to:2018.01 | GDS50463 | Drive Shaft | | 25 | 31 | 52.6 | 89 | 611 | |
| | 2013.04- | MT | F | L/R | SUV Van 4WD K9K 858;K9K 658 | | GCO99213 | Outer Joint | | 25 | 33 | 53 | 88 | 61.5 | I |
| | 2013.04- | MT | F | L | SUV Van 4WD K9K 858;K9K 658 | | GCI50105 | Inner Joint | | 27 | 33 | 40 | 70.5 | 111 | |
| | 2013.04- | | F | R | SUV Van 4WD K9K 858;K9K 658 | | GCI50106 | Inner Joint | | 31 | 33 | 42 | | 133.5 | |
| | 2013.04- | MT | R | L/R | SUV Van 4WD K9K 858;K9K 658 | | GDS57265 | Drive Shaft | 48T | 25 | 21 | 52.5 | 88.5 | 824 | |
| | 2013.04- | MT | R | L/R | SUV Van 4WD K9K 858;K9K 658 | | GCO57203 | Outer Joint | 48T | 25 | 28 | 52.5 | 88.5 | 60 | I |
| | 2013.04- | MT | R | L/R | SUV Van 4WD K9K 858;K9K 658 | | GCI57129 | Inner Joint | | 21 | 28 | 38 | 55 | 96 | |
| | 2013.04- | 6MT | F | L | SUV Van FWD K9K 856;K9K 666 | Inner teeth of wheel side:33 | GDS50415 | Drive Shaft | | 25 | 26 | 52.6 | 89 | 704 | |
| | 2013.04- | 6MT | F | L | SUV Van FWD K9K 856;K9K 666 | Inner teeth of wheel side:35 | GDS50498 | Drive Shaft | | 25 | 26 | 52.6 | 89 | 702 | |
| | 2013.04- | 6MT | F | R | SUV Van FWD K9K 856;K9K 666 | | GDS50586 | Drive Shaft | | 25 | 26 | 52.6 | 89 | 950 | |
| | 2013.04- | 6MT | F | R | SUV Van FWD K9K 856;K9K 666 | | GCI41190 | Inner Joint | | 26 | 33 | 33 | 329 | 101 | |
| | 2013.04- | MT | F | L/R | SUV Van FWD K9K 856;K9K 666 | | GCO99213 | Outer Joint | | 25 | 33 | 53 | 88 | 61.5 | I |
| | 2013.04- | | F | L | SUV Van FWD K9K 856;K9K 666 | | GCI50105 | Inner Joint | | 27 | 33 | 40 | 70.5 | 111 | |
| | 2013.04- | | F | R | SUV Van FWD K9K 856;K9K 666 | | GCI50106 | Inner Joint | | 31 | 33 | 42 | | 133.5 | |
| | 2013.08-2018.01 | 6MT | F | L | SUV 4WD K9K 898;K9K 858;K9K 658 | | GDS50464 | Drive Shaft | | 25 | 27 | 52.6 | 89 | 652 | |
| | 2013.08-2018.01 | 6MT | F | R | SUV 4WD K9K 898;K9K 858;K9K 658 | | GDS50463 | Drive Shaft | | 25 | 31 | 52.6 | 89 | 611 | |
| | 2013.08-2018.01 | AT | F | L | SUV 4WD K9K 898;K9K 858;K9K 658 | | GCI41188 | Inner Joint | | 26 | 33 | 39.6 | 46 | 100.5 | |
| | 2013.08-2018.01 | MT | F | L/R | SUV 4WD K9K 898;K9K 858;K9K 658 | | GCO99213 | Outer Joint | | 25 | 33 | 53 | 88 | 61.5 | I |
| | 2013.08-2018.01 | MT | F | L | SUV 4WD K9K 898;K9K 858;K9K 658 | | GCI50105 | Inner Joint | | 27 | 33 | 40 | 70.5 | 111 | |
| | 2013.08-2018.01 | MT | F | R | SUV 4WD K9K 898;K9K 858;K9K 658 | | GCI50106 | Inner Joint | | 31 | 33 | 42 | | 133.5 | |
| | 2013.08-2018.01 | | F | L/R | SUV 4WD K9K 898;K9K 858;K9K 658 | Date From:2013.10 | GCO50148 | Outer Joint | | 25 | 35 | 52.6 | 89 | 60 | I |
| | 2013.08-2018.01 | 6MT | R | L/R | SUV 4WD K9K 898;K9K 858;K9K 658 | | GDS57265 | Drive Shaft | 48T | 25 | 21 | 52.5 | 88.5 | 824 | |
| | 2013.08-2018.01 | MT | R | L/R | SUV 4WD K9K 898;K9K 858;K9K 658 | | GCO57203 | Outer Joint | 48T | 25 | 28 | 52.5 | 88.5 | 60 | I |
| | 2013.08-2018.01 | MT | R | L/R | SUV 4WD K9K 898;K9K 858;K9K 658 | | GCI57129 | Inner Joint | | 21 | 28 | 38 | 55 | 96 | |
| | 2013.08-2018.01 | 6DCT | F | L | SUV FWD K9K 858;K9K 856;K9K 666;K9K 658;K9K 667 | | GDS83561 | Drive Shaft | | 25 | 34 | 52.5 | 88.5 | 643 | |
| | 2013.08-2018.01 | 6DCT | F | R | SUV FWD K9K 858;K9K 856;K9K 666;K9K 658;K9K 667 | | GDS83764 | Drive Shaft | | 25 | 34 | 52.5 | 88.5 | 1002 | |
| | 2013.08-2018.01 | 6DCT | F | L/R | SUV FWD K9K 858;K9K 856;K9K 666;K9K 658;K9K 667 | | GCO82418 | Outer Joint | | 25 | 35 | 52.5 | 88.5 | 61 | I |
| | 2013.08-2018.01 | 6DCT | F | L | SUV FWD K9K 858;K9K 856;K9K 666;K9K 658;K9K 667 | | GCI82271 | Inner Joint | | 34 | 33 | 40 | 54 | 118 | |
| | 2013.08-2018.01 | 6DCT | F | R | SUV FWD K9K 858;K9K 856;K9K 666;K9K 658;K9K 667 | | GCI82365 | Inner Joint | | 34 | 33 | 40 | 380.5 | 101 | |
| | 2013.08-2018.01 | 6MT | F | L | SUV FWD K9K 858;K9K 856;K9K 666;K9K 658;K9K 667 | Inner teeth of wheel side:33 | GDS50415 | Drive Shaft | | 25 | 26 | 52.6 | 89 | 704 | |
| | 2013.08-2018.01 | 6MT | F | L | SUV FWD K9K 858;K9K 856;K9K 666;K9K 658;K9K 667 | Inner teeth of wheel side:35 | GDS50498 | Drive Shaft | | 25 | 26 | 52.6 | 89 | 702 | |
| | 2013.08-2018.01 | 6MT | F | R | SUV FWD K9K 858;K9K 856;K9K 666;K9K 658;K9K 667 | | GDS50586 | Drive Shaft | | 25 | 26 | 52.6 | 89 | 950 | |
| | 2013.08-2018.01 | 6MT | F | L/R | SUV FWD K9K 858;K9K 856;K9K 666;K9K 658;K9K 667 | | GCO50148 | Outer Joint | | 25 | 35 | 52.6 | 89 | 60 | I |
| | 2013.08-2018.01 | 6MT | F | L/R | SUV FWD K9K 858;K9K 856;K9K 666;K9K 658;K9K 667 | | GCO50157 | Outer Joint | | 25 | 33 | 52.6 | 89 | 60 | I |
| | 2013.08-2018.01 | 6MT | F | R | SUV FWD K9K 858;K9K 856;K9K 666;K9K 658;K9K 667 | | GCI41190 | Inner Joint | | 26 | 33 | 33 | 329 | 101 | |
| | 2013.08-2018.01 | | F | L | SUV FWD K9K 858;K9K 856;K9K 666;K9K 658;K9K 667 | | GCI50105 | Inner Joint | | 27 | 33 | 40 | 70.5 | 111 | |
| | 2013.08-2018.01 | | F | R | SUV FWD K9K 858;K9K 856;K9K 666;K9K 658;K9K 667 | | GCI50106 | Inner Joint | | 31 | 33 | 42 | | 133.5 | |
| | 2017.10- | 6MT | F | L | SUV 4WD K9K 658 | | GDS50464 | Drive Shaft | | 25 | 27 | 52.6 | 89 | 652 | |
| | 2017.10- | 6MT | F | R | SUV 4WD K9K 658 | Date to:2018.08 | GDS50463 | Drive Shaft | | 25 | 31 | 52.6 | 89 | 611 | |
| | 2017.10- | 6MT | F | R | SUV 4WD K9K 658 | Date from:2018.09 | GDS57835 | Drive Shaft | | 25 | 31 | 52.6 | 89 | 634 | |
| | 2017.10- | 6MT | F | L/R | SUV 4WD K9K 658 | Date from:2018.09 | GCO50148 | Outer Joint | | 25 | 35 | 52.6 | 89 | 60 | I |
| | 2017.10- | 6MT | F | R | SUV 4WD K9K 658 | Date from:2018.09 | GCI81137 | Inner Joint | | 31 | 33 | 42 | | 133 | |
| | 2017.10- | MT | F | L | SUV 4WD K9K 658 | | GCI50105 | Inner Joint | | 27 | 33 | 40 | 70.5 | 111 | |
| | 2017.10- | MT | F | R | SUV 4WD K9K 658 | Date to:2018.08 | GCI50106 | Inner Joint | | 31 | 33 | 42 | | 133.5 | |
| | 2017.10- | 6MT | R | L/R | SUV 4WD K9K 658 | | GDS57265 | Drive Shaft | 48T | 25 | 21 | 52.5 | 88.5 | 824 | |
| | 2017.10- | MT | R | L/R | SUV 4WD K9K 658 | | GCO57203 | Outer Joint | 48T | 25 | 28 | 52.5 | 88.5 | 60 | I |
| | 2017.10- | MT | R | L/R | SUV 4WD K9K 658 | | GCI57129 | Inner Joint | | 21 | 28 | 38 | 55 | 96 | |
| | 2017.10- | 6DCT | F | L | SUV FWD K9K 656;K9K 667 | | GDS83561 | Drive Shaft | | 25 | 34 | 52.5 | 88.5 | 643 | |
| | 2017.10- | 6DCT | F | R | SUV FWD K9K 656;K9K 667 | | GDS83764 | Drive Shaft | | 25 | 34 | 52.5 | 88.5 | 1002 | |
| | 2017.10- | 6DCT | F | L/R | SUV FWD K9K 656;K9K 667 | | GCO82418 | Outer Joint | | 25 | 35 | 52.5 | 88.5 | 61 | I |
| | 2017.10- | 6DCT | F | L | SUV FWD K9K 656;K9K 667 | | GCI82271 | Inner Joint | | 34 | 33 | 40 | 54 | 118 | |
| | 2017.10- | 6DCT | F | R | SUV FWD K9K 656;K9K 667 | | GCI82365 | Inner Joint | | 34 | 33 | 40 | 380.5 | 101 | |
| | 2017.10- | 6MT | F | L | SUV FWD K9K 656;K9K 667 | Inner teeth of wheel side:33 | GDS50415 | Drive Shaft | | 25 | 26 | 52.6 | 89 | 704 | |
| | 2017.10- | 6MT | F | L | SUV FWD K9K 656;K9K 667 | Inner teeth of wheel side:35 | GDS50498 | Drive Shaft | | 25 | 26 | 52.6 | 89 | 702 | |
| | 2017.10- | 6MT | F | R | SUV FWD K9K 656;K9K 667 | | GDS50586 | Drive Shaft | | 25 | 26 | 52.6 | 89 | 950 | |

| | YEAR | TRANSM. | F/R | L/R | BODY STYLE & DRIVE TYPE & ENGINE | REMARKS | G-AP Ref. | PRODUCT | ABS | Technical Specifications A | B | C | H | L | P |
|---|---|---|---|---|---|---|---|---|---|---|---|---|---|---|---|
| **DACIA** **Duster** | | | | | | | | | | | | | | | |
| 1.5 (80 kw) | 2017.10- | 6MT | F | R | SUV FWD K9K 656;K9K 667 | | GCO50157 | Outer Joint | | 25 | 33 | 52.6 | 89 | 60 | I |
| | 2017.10- | 6MT | F | R | SUV FWD K9K 656;K9K 667 | | GCI41190 | Inner Joint | | 26 | 33 | 33 | 329 | 101 | |
| 1.5 (81 kw) | 2010.10-2018.01 | MT | F | L | SUV 4WD K9K 898;K9K 858 | | GDS50464 | Drive Shaft | | 25 | 27 | 52.6 | 89 | 652 | |
| | 2010.10-2018.01 | MT | F | R | SUV 4WD K9K 898;K9K 858 | | GDS50463 | Drive Shaft | | 25 | 31 | 52.6 | 89 | 611 | |
| | 2010.10-2018.01 | MT | F | L/R | SUV 4WD K9K 898;K9K 858 | | GCO99213 | Outer Joint | | 25 | 33 | 53 | 88 | 61.5 | I |
| | 2010.10-2018.01 | MT | F | L | SUV 4WD K9K 898;K9K 858 | | GCI50105 | Inner Joint | | 27 | 33 | 40 | 70.5 | 111 | |
| | 2010.10-2018.01 | MT | F | R | SUV 4WD K9K 898;K9K 858 | | GCI50106 | Inner Joint | | 31 | 33 | 42 | | 133.5 | |
| | 2010.10-2018.01 | | F | L/R | SUV 4WD K9K 898;K9K 858 | | GCO50148 | Outer Joint | | 25 | 35 | 52.6 | 89 | 60 | I |
| | 2010.10-2018.01 | MT | R | L/R | SUV 4WD K9K 898;K9K 858 | | GDS57265 | Drive Shaft | 48T | 25 | 21 | 52.5 | 88.5 | 824 | |
| | 2010.10-2018.01 | MT | R | L/R | SUV 4WD K9K 898;K9K 858 | | GCO57203 | Outer Joint | 48T | 25 | 28 | 52.5 | 88.5 | 60 | I |
| | 2010.10-2018.01 | MT | R | L/R | SUV 4WD K9K 898;K9K 858 | | GCI57129 | Inner Joint | | 21 | 28 | 38 | 55 | 96 | |
| | 2013.08-2018.01 | MT | F | L | SUV FWD K9K 898;K9K 858;K9K 856 | Inner teeth of wheel side:33 | GDS50415 | Drive Shaft | | 25 | 26 | 52.6 | 89 | 704 | |
| | 2013.08-2018.01 | MT | F | L | SUV FWD K9K 898;K9K 858;K9K 856 | Inner teeth of wheel side:35 | GDS50498 | Drive Shaft | | 25 | 26 | 52.6 | 89 | 702 | |
| | 2013.08-2018.01 | MT | F | R | SUV FWD K9K 898;K9K 858;K9K 856 | For Modelcode:HSAL | GDS50586 | Drive Shaft | | 25 | 26 | 52.6 | 89 | 950 | |
| | 2013.08-2018.01 | MT | F | R | SUV FWD K9K 898;K9K 858;K9K 856 | For Modelcode:HSAL | GCO50157 | Outer Joint | | 25 | 33 | 52.6 | 89 | 60 | I |
| | 2013.08-2018.01 | MT | F | R | SUV FWD K9K 898;K9K 858;K9K 856 | For Modelcode:HSAL | GCI41190 | Inner Joint | | 26 | 33 | 33 | 329 | 101 | |
| 1.5 (84 kw) | 2022.01- | 6MT | F | L | SUV 4WD K9K 874 | | GDS50464 | Drive Shaft | | 25 | 27 | 52.6 | 89 | 652 | |
| | 2022.01- | 6MT | F | R | SUV 4WD K9K 874 | | GDS57835 | Drive Shaft | | 25 | 31 | 52.6 | 89 | 634 | |
| | 2022.01- | 6MT | F | L | SUV 4WD K9K 874 | | GCO50148 | Outer Joint | | 25 | 35 | 52.6 | 89 | 60 | I |
| | 2022.01- | 6MT | F | L | SUV 4WD K9K 874 | | GCI50105 | Inner Joint | | 27 | 33 | 40 | 70.5 | 111 | |
| | 2022.01- | 6MT | F | R | SUV 4WD K9K 874 | | GCI81137 | Inner Joint | | 31 | 33 | 42 | | 133 | |
| | 2022.01- | 6MT | R | L/R | SUV 4WD K9K 874 | | GDS57265 | Drive Shaft | 48T | 25 | 21 | 52.5 | 88.5 | 824 | |
| | 2022.01- | 6MT | R | L/R | SUV 4WD K9K 874 | | GCO57203 | Outer Joint | 48T | 25 | 28 | 52.5 | 88.5 | 60 | I |
| | 2022.01- | 6MT | R | L/R | SUV 4WD K9K 874 | | GCI57129 | Inner Joint | | 21 | 28 | 38 | 55 | 96 | |
| 1.5 (85 kw) | 2017.10- | 6MT | F | L | SUV 4WD K9K 874;K9K 878 | | GDS50464 | Drive Shaft | | 25 | 27 | 52.6 | 89 | 652 | |
| | 2017.10- | 6MT | F | R | SUV 4WD K9K 874;K9K 878 | Date to:2018.08 | GDS50463 | Drive Shaft | | 25 | 31 | 52.6 | 89 | 611 | |
| | 2017.10- | 6MT | F | R | SUV 4WD K9K 874;K9K 878 | Date from:2018.09 | GDS57835 | Drive Shaft | | 25 | 31 | 52.6 | 89 | 634 | |
| | 2017.10- | 6MT | F | L/R | SUV 4WD K9K 874;K9K 878 | | GCO50148 | Outer Joint | | 25 | 35 | 52.6 | 89 | 60 | I |
| | 2017.10- | 6MT | F | L | SUV 4WD K9K 874;K9K 878 | | GCI50105 | Inner Joint | | 27 | 33 | 40 | 70.5 | 111 | |
| | 2017.10- | 6MT | F | R | SUV 4WD K9K 874;K9K 878 | Date to:2018.08 | GCI50106 | Inner Joint | | 31 | 33 | 42 | | 133.5 | |
| | 2017.10- | 6MT | F | R | SUV 4WD K9K 874;K9K 878 | Date from:2018.09 | GCI81137 | Inner Joint | | 31 | 33 | 42 | | 133 | |
| | 2017.10- | 6MT | R | L/R | SUV 4WD K9K 874;K9K 878 | | GDS57265 | Drive Shaft | 48T | 25 | 21 | 52.5 | 88.5 | 824 | |
| | 2017.10- | 6MT | R | L/R | SUV 4WD K9K 874;K9K 878 | | GCO57203 | Outer Joint | 48T | 25 | 28 | 52.5 | 88.5 | 60 | I |
| | 2017.10- | 6MT | R | L/R | SUV 4WD K9K 874;K9K 878 | | GCI57129 | Inner Joint | | 21 | 28 | 38 | 55 | 96 | |
| | 2017.10- | 6MT | F | L | SUV FWD K9K 872;K9K 876 | Inner teeth of wheel side:33 | GDS50415 | Drive Shaft | | 25 | 26 | 52.6 | 89 | 704 | |
| | 2017.10- | 6MT | F | L | SUV FWD K9K 872;K9K 876 | Inner teeth of wheel side:35 | GDS50498 | Drive Shaft | | 25 | 26 | 52.6 | 89 | 702 | |
| | 2017.10- | 6MT | F | R | SUV FWD K9K 872;K9K 876 | | GDS50586 | Drive Shaft | | 25 | 26 | 52.6 | 89 | 950 | |
| | 2017.10- | 6MT | F | R | SUV FWD K9K 872;K9K 876 | | GCO50157 | Outer Joint | | 25 | 33 | 52.6 | 89 | 60 | I |
| | 2017.10- | 6MT | F | R | SUV FWD K9K 872;K9K 876 | | GCI41190 | Inner Joint | | 26 | 33 | 33 | 329 | 101 | |
| 1.6 (77 kw) | 2010.04-2018.01 | AT | F | L | SUV FWD K4M 690;K4M 696;K4M 694;K4M 842;K4M 896 | | GCI41188 | Inner Joint | | 26 | 33 | 39.6 | 46 | 100.5 | |
| | 2010.04-2018.01 | MT | F | L | SUV FWD K4M 690;K4M 696;K4M 694;K4M 842;K4M 896 | | GDS50415 | Drive Shaft | | 25 | 26 | 52.6 | 89 | 704 | |
| | 2010.04-2018.01 | MT | F | L | SUV FWD K4M 690;K4M 696;K4M 694;K4M 842;K4M 896 | | GDS50498 | Drive Shaft | | 25 | 26 | 52.6 | 89 | 702 | |
| | 2010.04-2018.01 | MT | F | L | SUV FWD K4M 690;K4M 696;K4M 694;K4M 842;K4M 896 | | GDS50587 | Drive Shaft | | 25 | 26 | 52.6 | 89 | 700 | |
| | 2010.04-2018.01 | MT | F | R | SUV FWD K4M 690;K4M 696;K4M 694;K4M 842;K4M 896 | | GDS50586 | Drive Shaft | | 25 | 26 | 52.6 | 89 | 950 | |
| | 2010.04-2018.01 | MT | F | L/R | SUV FWD K4M 690;K4M 696;K4M 694;K4M 842;K4M 896 | | GCO50157 | Outer Joint | | 25 | 33 | 52.6 | 89 | 60 | I |
| | 2010.04-2018.01 | MT | F | L/R | SUV FWD K4M 690;K4M 696;K4M 694;K4M 842;K4M 896 | | GCO99213 | Outer Joint | | 25 | 33 | 53 | 88 | 61.5 | I |
| | 2010.04-2018.01 | MT | F | R | SUV FWD K4M 690;K4M 696;K4M 694;K4M 842;K4M 896 | | GCI41190 | Inner Joint | | 26 | 33 | 33 | 329 | 101 | |
| | 2010.04-2018.01 | | F | R | SUV FWD K4M 690;K4M 696;K4M 694;K4M 842;K4M 896 | Date From:2010.12 | GCO50148 | Outer Joint | | 25 | 35 | 52.6 | 89 | 60 | I |
| | 2010.04-2018.01 | | F | L | SUV FWD K4M 690;K4M 696;K4M 694;K4M 842;K4M 896 | | GCI50105 | Inner Joint | | 27 | 33 | 40 | 70.5 | 111 | |
| | 2010.04-2018.01 | | F | R | SUV FWD K4M 690;K4M 696;K4M 694;K4M 842;K4M 896 | | GCI50106 | Inner Joint | | 31 | 33 | 42 | | 133.5 | |
| | 2010.06-2018.01 | 5MT/6MT | F | R | SUV 4WD K4M 606;K4M 646 | | GCI81137 | Inner Joint | | 31 | 33 | 42 | | 133 | |
| | 2010.06-2018.01 | 6MT | F | R | SUV 4WD K4M 606;K4M 646 | | GDS83783 | Drive Shaft | | 25 | 31 | 52.6 | 89 | 615 | |
| | 2010.06-2018.01 | MT | F | L | SUV 4WD K4M 606;K4M 646 | | GDS11017 | Drive Shaft | | 25 | 27 | 52.6 | 89 | 655 | |
| | 2010.06-2018.01 | MT | F | R | SUV 4WD K4M 606;K4M 646 | | GDS11019 | Drive Shaft | | 25 | 31 | 52.6 | 89 | 614 | |
| | 2010.06-2018.01 | MT | F | L/R | SUV 4WD K4M 606;K4M 646 | | GCO50157 | Outer Joint | | 25 | 33 | 52.6 | 89 | 60 | I |
| | 2010.06-2018.01 | MT | F | L/R | SUV 4WD K4M 606;K4M 646 | | GCO99213 | Outer Joint | | 25 | 33 | 53 | 88 | 61.5 | I |
| | 2010.06-2018.01 | MT | F | L | SUV 4WD K4M 606;K4M 646 | | GCI50105 | Inner Joint | | 27 | 33 | 40 | 70.5 | 111 | |
| | 2010.06-2018.01 | MT | F | R | SUV 4WD K4M 606;K4M 646 | | GCI50106 | Inner Joint | | 31 | 33 | 42 | | 133.5 | |
| | 2010.06-2018.01 | MT | R | L/R | SUV 4WD K4M 606;K4M 646 | | GDS57265 | Drive Shaft | 48T | 25 | 21 | 52.5 | 88.5 | 824 | |
| | 2010.06-2018.01 | MT | R | L/R | SUV 4WD K4M 606;K4M 646 | | GCO57203 | Outer Joint | 48T | 25 | 28 | 52.5 | 88.5 | 60 | I |
| | 2010.06-2018.01 | MT | R | L/R | SUV 4WD K4M 606;K4M 646 | | GCI57129 | Inner Joint | | 21 | 28 | 38 | 55 | 96 | |
| | 2010.08-2018.01 | 5MT | F | L | SUV FWD K4M 696 | | GDS50415 | Drive Shaft | | 25 | 26 | 52.6 | 89 | 704 | |
| | 2010.08-2018.01 | 5MT | F | L | SUV FWD K4M 696 | | GDS50498 | Drive Shaft | | 25 | 26 | 52.6 | 89 | 702 | |
| | 2010.08-2018.01 | 5MT | F | L | SUV FWD K4M 696 | | GDS50587 | Drive Shaft | | 25 | 26 | 52.6 | 89 | 700 | |
| | 2010.08-2018.01 | 5MT | F | R | SUV FWD K4M 696 | TJ | GDS50416 | Drive Shaft | | 25 | 26 | 52.6 | 89 | 950 | |

| | YEAR | TRANSM. | F/R | L/R | BODY STYLE & DRIVE TYPE & ENGINE | REMARKS | G-AP Ref. | PRODUCT | ABS | Technical Specifications A | B | C | H | L | P |
|---|---|---|---|---|---|---|---|---|---|---|---|---|---|---|---|
| **DACIA** **Duster** | | | | | | | | | | | | | | | |
| 1.6 (77 kw) | 2010.08-2018.01 | 5MT | F | R | SUV FWD K4M 696 | | GDS50586 | Drive Shaft | | 25 | 26 | 52.6 | 89 | 950 | |
| | 2010.08-2018.01 | MT | F | R | SUV FWD K4M 696 | | GCO50148 | Outer Joint | | 25 | 35 | 52.6 | 89 | 60 | I |
| | 2010.08-2018.01 | MT | F | L/R | SUV FWD K4M 696 | | GCO99213 | Outer Joint | | 25 | 33 | 53 | 88 | 61.5 | I |
| | 2010.08-2018.01 | | F | L | SUV FWD K4M 696 | | GCI50105 | Inner Joint | | 27 | 33 | 40 | 70.5 | 111 | |
| | 2010.08-2018.01 | | F | R | SUV FWD K4M 696 | | GCI50106 | Inner Joint | | 31 | 33 | 42 | | 133.5 | |
| | 2011.04- | 5MT/6MT | F | L/R | SUV Van 4WD K4M 606 | | GCO50157 | Outer Joint | | 25 | 33 | 52.6 | 89 | 60 | I |
| | 2011.04- | 5MT/6MT | F | R | SUV Van 4WD K4M 606 | | GCI81137 | Inner Joint | | 31 | 33 | 42 | | 133 | |
| | 2011.04- | 6MT | F | L | SUV Van 4WD K4M 606 | | GDS11017 | Drive Shaft | | 25 | 27 | 52.6 | 89 | 655 | |
| | 2011.04- | 6MT | F | R | SUV Van 4WD K4M 606 | | GDS11019 | Drive Shaft | | 25 | 31 | 52.6 | 89 | 614 | |
| | 2011.04- | 6MT | F | R | SUV Van 4WD K4M 606 | | GDS83783 | Drive Shaft | | 25 | 31 | 52.6 | 89 | 615 | |
| | 2011.04- | 6MT | F | L | SUV Van 4WD K4M 606 | | GCI50105 | Inner Joint | | 27 | 33 | 40 | 70.5 | 111 | |
| | 2011.04- | 6MT | F | R | SUV Van 4WD K4M 606 | | GCI50106 | Inner Joint | | 31 | 33 | 42 | | 133.5 | |
| | 2011.04- | MT | F | L/R | SUV Van 4WD K4M 606 | Date from:2013.01 | GCO99213 | Outer Joint | | 25 | 33 | 53 | 88 | 61.5 | I |
| | 2011.04- | 5MT/6MT | R | L/R | SUV Van 4WD K4M 606 | | GDS57265 | Drive Shaft | 48T | 25 | 21 | 52.5 | 88.5 | 824 | |
| | 2011.04- | 5MT/6MT | R | L/R | SUV Van 4WD K4M 606 | | GCO57203 | Outer Joint | 48T | 25 | 28 | 52.5 | 88.5 | 60 | I |
| | 2011.04- | 5MT/6MT | R | L/R | SUV Van 4WD K4M 606 | | GCI57129 | Inner Joint | | 21 | 28 | 38 | 55 | 96 | |
| | 2011.04- | MT | F | L | SUV Van FWD K4M 690;K4M 696;K4M 606;K4M 694;K4M 842 | | GDS50415 | Drive Shaft | | 25 | 26 | 52.6 | 89 | 704 | |
| | 2011.04- | MT | F | L | SUV Van FWD K4M 690;K4M 696;K4M 606;K4M 694;K4M 842 | | GDS50498 | Drive Shaft | | 25 | 26 | 52.6 | 89 | 702 | |
| | 2011.04- | MT | F | L | SUV Van FWD K4M 690;K4M 696;K4M 606;K4M 694;K4M 842 | | GDS50587 | Drive Shaft | | 25 | 26 | 52.6 | 89 | 700 | |
| | 2011.04- | MT | F | R | SUV Van FWD K4M 690;K4M 696;K4M 606;K4M 694;K4M 842 | | GDS50586 | Drive Shaft | | 25 | 26 | 52.6 | 89 | 950 | |
| | 2011.04- | MT | F | R | SUV Van FWD K4M 690;K4M 696;K4M 606;K4M 694;K4M 842 | | GCO50157 | Outer Joint | | 25 | 33 | 52.6 | 89 | 60 | I |
| | 2011.04- | MT | F | R | SUV Van FWD K4M 690;K4M 696;K4M 606;K4M 694;K4M 842 | | GCI41190 | Inner Joint | | 26 | 33 | 33 | 329 | 101 | |
| | 2011.04- | 5MT | F | L | SUV Van FWD K4M 696 | | GDS50415 | Drive Shaft | | 25 | 26 | 52.6 | 89 | 704 | |
| | 2011.04- | 5MT | F | L | SUV Van FWD K4M 696 | | GDS50498 | Drive Shaft | | 25 | 26 | 52.6 | 89 | 702 | |
| | 2011.04- | 5MT | F | L | SUV Van FWD K4M 696 | | GDS50587 | Drive Shaft | | 25 | 26 | 52.6 | 89 | 700 | |
| | 2011.04- | 5MT | F | R | SUV Van FWD K4M 696 | TJ | GDS50416 | Drive Shaft | | 25 | 26 | 52.6 | 89 | 950 | |
| | 2011.04- | 5MT | F | R | SUV Van FWD K4M 696 | PTJ | GDS50586 | Drive Shaft | | 25 | 26 | 52.6 | 89 | 950 | |
| | 2011.04- | MT | F | L/R | SUV Van FWD K4M 696 | | GCO99213 | Outer Joint | | 25 | 33 | 53 | 88 | 61.5 | I |
| | 2011.04- | | F | L | SUV Van FWD K4M 696 | | GCI50105 | Inner Joint | | 27 | 33 | 40 | 70.5 | 111 | |
| | 2011.04- | | F | R | SUV Van FWD K4M 696 | | GCI50106 | Inner Joint | | 31 | 33 | 42 | | 133.5 | |
| | 2011.04-2018.01 | 5MT | F | L | SUV FWD K4M 616;K4M 642 | | GDS50498 | Drive Shaft | | 25 | 26 | 52.6 | 89 | 702 | |
| | 2011.04-2018.01 | MT | F | L | SUV FWD K4M 616;K4M 642 | | GDS50415 | Drive Shaft | | 25 | 26 | 52.6 | 89 | 704 | |
| | 2011.04-2018.01 | MT | F | L | SUV FWD K4M 616;K4M 642 | | GDS50587 | Drive Shaft | | 25 | 26 | 52.6 | 89 | 700 | |
| | 2011.04-2018.01 | MT | F | R | SUV FWD K4M 616;K4M 642 | | GDS50586 | Drive Shaft | | 25 | 26 | 52.6 | 89 | 950 | |
| | 2011.04-2018.01 | MT | F | L/R | SUV FWD K4M 616;K4M 642 | | GCO99213 | Outer Joint | | 25 | 33 | 53 | 88 | 61.5 | I |
| | 2011.04-2018.01 | MT | F | R | SUV FWD K4M 616;K4M 642 | PTJ | GCI41190 | Inner Joint | | 26 | 33 | 33 | 329 | 101 | |
| | 2011.04-2018.01 | MT/5MT | F | R | SUV FWD K4M 616;K4M 642 | | GCO50157 | Outer Joint | | 25 | 33 | 52.6 | 89 | 60 | I |
| | 2011.04-2018.01 | | F | R | SUV FWD K4M 616;K4M 642 | Date from:201012 | GCO50148 | Outer Joint | | 25 | 35 | 52.6 | 89 | 60 | I |
| | 2011.04-2018.01 | | F | L | SUV FWD K4M 616;K4M 642 | TJ | GCI50105 | Inner Joint | | 27 | 33 | 40 | 70.5 | 111 | |
| | 2011.04-2018.01 | | F | R | SUV FWD K4M 616;K4M 642 | TJ | GCI50106 | Inner Joint | | 31 | 33 | 42 | | 133.5 | |
| 1.6 (80 kw) | 2017.10- | 5MT | F | L | SUV FWD H4M 740 | | GDS50415 | Drive Shaft | | 25 | 26 | 52.6 | 89 | 704 | |
| | 2017.10- | 5MT | F | L | SUV FWD H4M 740 | | GDS50498 | Drive Shaft | | 25 | 26 | 52.6 | 89 | 702 | |
| | 2017.10- | 5MT | F | L | SUV FWD H4M 740 | | GDS50587 | Drive Shaft | | 25 | 26 | 52.6 | 89 | 700 | |
| | 2017.10- | 5MT | F | R | SUV FWD H4M 740 | | GCO50157 | Outer Joint | | 25 | 33 | 52.6 | 89 | 60 | I |
| | 2017.10- | 5MT | F | R | SUV FWD H4M 740 | | GCI41190 | Inner Joint | | 26 | 33 | 33 | 329 | 101 | |
| 1.6 (84 kw) | 2015.06- | 5MT | F | L | SUV Van FWD H4M 738 | | GDS50415 | Drive Shaft | | 25 | 26 | 52.6 | 89 | 704 | |
| | 2015.06- | 5MT | F | L | SUV Van FWD H4M 738 | | GDS50498 | Drive Shaft | | 25 | 26 | 52.6 | 89 | 702 | |
| | 2015.06- | 5MT | F | L | SUV Van FWD H4M 738 | | GDS50587 | Drive Shaft | | 25 | 26 | 52.6 | 89 | 700 | |
| | 2015.06- | MT | F | R | SUV Van FWD H4M 738 | | GDS50586 | Drive Shaft | | 25 | 26 | 52.6 | 89 | 950 | |
| | 2015.06- | MT | F | L/R | SUV Van FWD H4M 738 | | GCO99213 | Outer Joint | | 25 | 33 | 53 | 88 | 61.5 | I |
| | 2015.06- | MT | F | R | SUV Van FWD H4M 738 | | GCI41190 | Inner Joint | | 26 | 33 | 33 | 329 | 101 | |
| | 2015.06-2018.01 | 5MT/6MT | F | R | SUV 4WD H4M 430;H4M 730;H4M 738 | | GDS11019 | Drive Shaft | | 25 | 31 | 52.6 | 89 | 614 | |
| | 2015.06-2018.01 | 5MT/6MT | F | L/R | SUV 4WD H4M 430;H4M 730;H4M 738 | | GCO50157 | Outer Joint | | 25 | 33 | 52.6 | 89 | 60 | I |
| | 2015.06-2018.01 | 5MT/6MT | F | L | SUV 4WD H4M 430;H4M 730;H4M 738 | | GCI50105 | Inner Joint | | 27 | 33 | 40 | 70.5 | 111 | |
| | 2015.06-2018.01 | 5MT/6MT | F | R | SUV 4WD H4M 430;H4M 730;H4M 738 | | GCI50106 | Inner Joint | | 31 | 33 | 42 | | 133.5 | |
| | 2015.06-2018.01 | 6MT | F | L | SUV 4WD H4M 430;H4M 730;H4M 738 | | GDS11017 | Drive Shaft | | 25 | 27 | 52.6 | 89 | 655 | |
| | 2015.06-2018.01 | 6MT | F | R | SUV 4WD H4M 430;H4M 730;H4M 738 | | GDS83783 | Drive Shaft | | 25 | 31 | 52.6 | 89 | 615 | |
| | 2015.06-2018.01 | 6MT | F | R | SUV 4WD H4M 430;H4M 730;H4M 738 | | GCI81137 | Inner Joint | | 31 | 33 | 42 | | 133 | |
| | 2015.06-2018.01 | 5MT/6MT | R | L/R | SUV 4WD H4M 430;H4M 730;H4M 738 | | GDS57265 | Drive Shaft | 48T | 25 | 21 | 52.5 | 88.5 | 824 | |
| | 2015.06-2018.01 | 5MT/6MT | R | L/R | SUV 4WD H4M 430;H4M 730;H4M 738 | | GCO57203 | Outer Joint | 48T | 25 | 28 | 52.5 | 88.5 | 60 | I |
| | 2015.06-2018.01 | 5MT/6MT | R | L/R | SUV 4WD H4M 430;H4M 730;H4M 738 | | GCI57129 | Inner Joint | | 21 | 28 | 38 | 55 | 96 | |
| | 2015.06-2018.01 | 5MT | F | L | SUV FWD H4M 438;H4M 738 | | GDS50415 | Drive Shaft | | 25 | 26 | 52.6 | 89 | 704 | |
| | 2015.06-2018.01 | 5MT | F | L | SUV FWD H4M 438;H4M 738 | | GDS50587 | Drive Shaft | | 25 | 26 | 52.6 | 89 | 700 | |
| | 2015.06-2018.01 | 5MT | F | R | SUV FWD H4M 438;H4M 738 | | GDS50586 | Drive Shaft | | 25 | 26 | 52.6 | 89 | 950 | |
| | 2015.06-2018.01 | 5MT | F | R | SUV FWD H4M 438;H4M 738 | | GCO50157 | Outer Joint | | 25 | 33 | 52.6 | 89 | 60 | I |

| | YEAR | TRANSM. | F/R | L/R | BODY STYLE & DRIVE TYPE & ENGINE | REMARKS | G-AP Ref. | PRODUCT | ABS | Technical Specifications A | B | C | H | L | P |
|---|---|---|---|---|---|---|---|---|---|---|---|---|---|---|---|
| **DACIA** | | | | | | | | | | | | | | | |
| **Duster** | | | | | | | | | | | | | | | |
| 1.6 (84 kw) | 2015.06-2018.01 | 5MT | F | R | SUV FWD H4M 438;H4M 738 | PTJ | GCI41190 | Inner Joint | | 26 | 33 | 33 | 329 | 101 | |
| | 2015.06-2018.01 | MT | F | L/R | SUV FWD H4M 438;H4M 738 | | GCO99213 | Outer Joint | | 25 | 33 | 53 | 88 | 61.5 | I |
| | 2015.06-2018.01 | MT/5MT | F | L | SUV FWD H4M 438;H4M 738 | | GDS50498 | Drive Shaft | | 25 | 26 | 52.6 | 89 | 702 | |
| | 2015.06-2018.01 | | F | L | SUV FWD H4M 438;H4M 738 | TJ | GCI50105 | Inner Joint | | 27 | 33 | 40 | 70.5 | 111 | |
| | 2015.06-2018.01 | | F | R | SUV FWD H4M 438;H4M 738 | TJ | GCI50106 | Inner Joint | | 31 | 33 | 42 | | 133.5 | |
| | 2015.06-2018.01 | 5MT | F | L | SUV FWD H4M 740 | | GDS50415 | Drive Shaft | | 25 | 26 | 52.6 | 89 | 704 | |
| | 2015.06-2018.01 | 5MT | F | L | SUV FWD H4M 740 | | GDS50498 | Drive Shaft | | 25 | 26 | 52.6 | 89 | 702 | |
| | 2015.06-2018.01 | 5MT | F | L | SUV FWD H4M 740 | | GDS50587 | Drive Shaft | | 25 | 26 | 52.6 | 89 | 700 | |
| | 2015.06-2018.01 | 5MT | F | R | SUV FWD H4M 740 | | GDS50586 | Drive Shaft | | 25 | 26 | 52.6 | 89 | 950 | |
| | 2015.06-2018.01 | 5MT | F | R | SUV FWD H4M 740 | | GCI41190 | Inner Joint | | 26 | 33 | 33 | 329 | 101 | |
| | 2015.06-2018.01 | MT | F | L/R | SUV FWD H4M 740 | | GCO99213 | Outer Joint | | 25 | 33 | 53 | 88 | 61.5 | I |
| | 2015.06-2018.01 | | F | L | SUV FWD H4M 740 | | GCI50105 | Inner Joint | | 27 | 33 | 40 | 70.5 | 111 | |
| | 2015.06-2018.01 | | F | R | SUV FWD H4M 740 | | GCI50106 | Inner Joint | | 31 | 33 | 42 | | 133.5 | |
| | 2015.06-2018.01 | 5MT | F | R | SUV Van 4WD H4M 730;H4M 738 | | GDS83783 | Drive Shaft | | 25 | 31 | 52.6 | 89 | 615 | |
| | 2015.06-2018.01 | 5MT | F | R | SUV Van 4WD H4M 730;H4M 738 | | GCI81137 | Inner Joint | | 31 | 33 | 42 | | 133 | |
| | 2015.06-2018.01 | MT | F | L | SUV Van 4WD H4M 730;H4M 738 | | GDS11017 | Drive Shaft | | 25 | 27 | 52.6 | 89 | 655 | |
| | 2015.06-2018.01 | MT | F | R | SUV Van 4WD H4M 730;H4M 738 | | GDS11019 | Drive Shaft | | 25 | 31 | 52.6 | 89 | 614 | |
| | 2015.06-2018.01 | MT | F | L/R | SUV Van 4WD H4M 730;H4M 738 | | GCO50157 | Outer Joint | | 25 | 33 | 52.6 | 89 | 60 | I |
| | 2015.06-2018.01 | MT | F | L/R | SUV Van 4WD H4M 730;H4M 738 | | GCO99213 | Outer Joint | | 25 | 33 | 53 | 88 | 61.5 | I |
| | 2015.06-2018.01 | MT | F | L | SUV Van 4WD H4M 730;H4M 738 | | GCI50105 | Inner Joint | | 27 | 33 | 40 | 70.5 | 111 | |
| | 2015.06-2018.01 | MT | F | R | SUV Van 4WD H4M 730;H4M 738 | | GCI50106 | Inner Joint | | 31 | 33 | 42 | | 133.5 | |
| | 2015.06-2018.01 | MT | R | L/R | SUV Van 4WD H4M 730;H4M 738 | | GDS57265 | Drive Shaft | 48T | 25 | 21 | 52.5 | 88.5 | 824 | |
| | 2015.06-2018.01 | MT | R | L/R | SUV Van 4WD H4M 730;H4M 738 | | GCO57203 | Outer Joint | 48T | 25 | 28 | 52.5 | 88.5 | 60 | I |
| | 2015.06-2018.01 | MT | R | L/R | SUV Van 4WD H4M 730;H4M 738 | | GCI57129 | Inner Joint | | 21 | 28 | 38 | 55 | 96 | |
| | 2015.06-2018.01 | 5MT | F | L | SUV Van FWD H4M 738 | TJ | GDS50415 | Drive Shaft | | 25 | 26 | 52.6 | 89 | 704 | |
| | 2015.06-2018.01 | MT | F | R | SUV Van FWD H4M 738 | Date to:2016.03 | GDS50586 | Drive Shaft | | 25 | 26 | 52.6 | 89 | 950 | |
| | 2015.06-2018.01 | | F | R | SUV Van FWD H4M 738 | Date to:2016.03 | GCI41190 | Inner Joint | | 26 | 33 | 33 | 329 | 101 | |
| | 2017.10- | 6MT | F | L | SUV 4WD H4M 730 | | GDS11017 | Drive Shaft | | 25 | 27 | 52.6 | 89 | 655 | |
| | 2017.10- | 6MT | F | R | SUV 4WD H4M 730 | Date To:2018.04 | GDS11019 | Drive Shaft | | 25 | 31 | 52.6 | 89 | 614 | |
| | 2017.10- | 6MT | F | R | SUV 4WD H4M 730 | | GDS83783 | Drive Shaft | | 25 | 31 | 52.6 | 89 | 615 | |
| | 2017.10- | 6MT | F | L/R | SUV 4WD H4M 730 | | GCO50157 | Outer Joint | | 25 | 33 | 52.6 | 89 | 60 | I |
| | 2017.10- | 6MT | F | L | SUV 4WD H4M 730 | Date to:2021.02 | GCI50105 | Inner Joint | | 27 | 33 | 40 | 70.5 | 111 | |
| | 2017.10- | 6MT | F | R | SUV 4WD H4M 730 | | GCI81137 | Inner Joint | | 31 | 33 | 42 | | 133 | |
| | 2017.10- | 6MT | R | L/R | SUV 4WD H4M 730 | | GDS57265 | Drive Shaft | 48T | 25 | 21 | 52.5 | 88.5 | 824 | |
| | 2017.10- | 6MT | R | L/R | SUV 4WD H4M 730 | | GCO57203 | Outer Joint | 48T | 25 | 28 | 52.5 | 88.5 | 60 | I |
| | 2017.10- | 6MT | R | L/R | SUV 4WD H4M 730 | | GCI57129 | Inner Joint | | 21 | 28 | 38 | 55 | 96 | |
| | 2017.10- | 5MT | F | L | SUV FWD H4M 738 | | GDS50415 | Drive Shaft | | 25 | 26 | 52.6 | 89 | 704 | |
| | 2017.10- | 5MT | F | L | SUV FWD H4M 738 | | GDS50587 | Drive Shaft | | 25 | 26 | 52.6 | 89 | 700 | |
| | 2017.10- | 5MT | F | R | SUV FWD H4M 738 | | GCO50157 | Outer Joint | | 25 | 33 | 52.6 | 89 | 60 | I |
| | 2017.10- | 5MT | F | R | SUV FWD H4M 738 | | GCI41190 | Inner Joint | | 26 | 33 | 33 | 329 | 101 | |
| | 2017.10- | MT | F | L | SUV FWD H4M 738 | | GDS50498 | Drive Shaft | | 25 | 26 | 52.6 | 89 | 702 | |
| **Jogger** | | | | | | | | | | | | | | | |
| 1.0 (67 kw) | 2021.09- | 6MT | F | L | MPV FWD H4D 480 | Not For Country Version:Turkey; Not For vehicles with 3rd seating row | GDS57547 | Drive Shaft | | 23 | 26 | 49.5 | 85.5 | 670 | |
| | 2021.09- | 6MT | F | L | MPV FWD H4D 480 | Country Version:Turkey;For vehicles with 3rd seating row | GDS58227 | Drive Shaft | | 25 | 26 | 53 | 88.5 | 671 | |
| | 2021.09- | 6MT | F | R | MPV FWD H4D 480 | Country Version:Turkey;For vehicles with 3rd seating row | GDS58226 | Drive Shaft | | 25 | 26 | 53 | 88.5 | 924 | |
| | 2021.09- | 6MT | F | R | MPV FWD H4D 480 | Not For Country Version:Turkey; Not For vehicles with 3rd seating row | GDS58282 | Drive Shaft | | 23 | 26 | 49.5 | 85.5 | 921 | |
| | 2021.09- | 6MT | F | L/R | MPV FWD H4D 480 | Not For Country Version:Turkey; Not For vehicles with 3rd seating row | GCO82607 | Outer Joint | | 23 | 30 | 49.5 | 85.5 | 53 | I |
| | 2021.09- | 6MT | F | L/R | MPV FWD H4D 480 | Country Version:Turkey;For vehicles with 3rd seating row | GCO83867 | Outer Joint | | 25 | 30 | 53 | 88.5 | 53 | I |
| | 2021.09- | 6MT | F | L | MPV FWD H4D 480 | Not For Country Version:Turkey; Not For vehicles with 3rd seating row | GCI83736 | Inner Joint | | 26 | 30 | 40 | 64 | 96 | |
| | 2021.09- | 6MT | F | R | MPV FWD H4D 480 | | GCI82653 | Inner Joint | | 26 | 30 | 33 | 346.5 | 90 | |
| 1.0 (74 kw) | 2021.09- | 6MT | F | L | MPV FWD H4D 480 | Not For Country Version:Turkey; Not For vehicles with 3rd seating row | GDS57547 | Drive Shaft | | 23 | 26 | 49.5 | 85.5 | 670 | |
| | 2021.09- | 6MT | F | L | MPV FWD H4D 480 | Country Version:Turkey;For vehicles with 3rd seating row | GDS58227 | Drive Shaft | | 25 | 26 | 53 | 88.5 | 671 | |
| | 2021.09- | 6MT | F | R | MPV FWD H4D 480 | Country Version:Turkey;For vehicles with 3rd seating row | GDS58226 | Drive Shaft | | 25 | 26 | 53 | 88.5 | 924 | |
| | 2021.09- | 6MT | F | R | MPV FWD H4D 480 | Not For Country Version:Turkey; Not For vehicles with 3rd seating row | GDS58282 | Drive Shaft | | 23 | 26 | 49.5 | 85.5 | 921 | |
| | 2021.09- | 6MT | F | L/R | MPV FWD H4D 480 | Not For Country Version:Turkey; Not For vehicles with 3rd seating row | GCO82607 | Outer Joint | | 23 | 30 | 49.5 | 85.5 | 53 | I |
| | 2021.09- | 6MT | F | L/R | MPV FWD H4D 480 | Country Version:Turkey;For vehicles with 3rd seating row | GCO83867 | Outer Joint | | 25 | 30 | 53 | 88.5 | 53 | I |
| | 2021.09- | 6MT | F | L | MPV FWD H4D 480 | Not For Country Version:Turkey; Not For vehicles with 3rd seating row | GCI83736 | Inner Joint | | 26 | 30 | 40 | 64 | 96 | |
| | 2021.09- | 6MT | F | R | MPV FWD H4D 480 | | GCI82653 | Inner Joint | | 26 | 30 | 33 | 346.5 | 90 | |
| 1.0 (81 kw) | 2021.09- | 6MT | F | L | MPV FWD H5D 490 | Not For Country Version:Turkey; Not For vehicles with 3rd seating row | GDS57547 | Drive Shaft | | 23 | 26 | 49.5 | 85.5 | 670 | |
| | 2021.09- | 6MT | F | L | MPV FWD H5D 490 | Country Version:Turkey;For vehicles with 3rd seating row | GDS58227 | Drive Shaft | | 25 | 26 | 53 | 88.5 | 671 | |
| | 2021.09- | 6MT | F | R | MPV FWD H5D 490 | Country Version:Turkey;For vehicles with 3rd seating row | GDS58226 | Drive Shaft | | 25 | 26 | 53 | 88.5 | 924 | |
| | 2021.09- | 6MT | F | R | MPV FWD H5D 490 | Not For Country Version:Turkey; Not For vehicles with 3rd seating row | GDS58282 | Drive Shaft | | 23 | 26 | 49.5 | 85.5 | 921 | |
| | 2021.09- | 6MT | F | L/R | MPV FWD H5D 490 | Not For Country Version:Turkey; Not For vehicles with 3rd seating row | GCO82607 | Outer Joint | | 23 | 30 | 49.5 | 85.5 | 53 | I |
| | 2021.09- | 6MT | F | L/R | MPV FWD H5D 490 | Country Version:Turkey;For vehicles with 3rd seating row | GCO83867 | Outer Joint | | 25 | 30 | 53 | 88.5 | 53 | I |
| | 2021.09- | 6MT | F | L | MPV FWD H5D 490 | Not For Country Version:Turkey; Not For vehicles with 3rd seating row | GCI83736 | Inner Joint | | 26 | 30 | 40 | 64 | 96 | |

| | YEAR | TRANSM. | F/R | L/R | BODY STYLE & DRIVE TYPE & ENGINE | REMARKS | G-AP Ref. | PRODUCT | ABS | Technical Specifications A | B | C | H | L | P |
|---|---|---|---|---|---|---|---|---|---|---|---|---|---|---|---|
| **DACIA** | | | | | | | | | | | | | | | |
| **Jogger** | | | | | | | | | | | | | | | |
| 1.0 (81 kw) | 2021.09- | 6MT | F | R | MPV FWD H5D 490 | | GCI82653 | Inner Joint | | 26 | 30 | 33 | 346.5 | 90 | |
| 1.6 (104 kw) | 2023.01- | | F | L | MPV FWD | | GDS58239 | Drive Shaft | | 25 | 26 | 53 | 88.5 | 672 | |
| | 2023.01- | | F | R | MPV FWD | | GDS57996 | Drive Shaft | | 25 | 26 | 53 | 88.5 | 923 | |
| | 2023.01- | | F | L | MPV FWD | | GCI83730 | Inner Joint | | 26 | 24 | 39.95 | 64.5 | 122 | |
| | 2023.01- | | F | R | MPV FWD | | GCI83729 | Inner Joint | | 26 | 24 | 33 | 330 | 112 | |
| | 2023.01- | 4DHT | F | L | MPV FWD H4M632 | | GDS58239 | Drive Shaft | | 25 | 26 | 53 | 88.5 | 672 | |
| | 2023.01- | 4DHT | F | R | MPV FWD H4M632 | | GDS57996 | Drive Shaft | | 25 | 26 | 53 | 88.5 | 923 | |
| | 2023.01- | 4DHT | F | L/R | MPV FWD H4M632 | | GCO83588 | Outer Joint | | 25 | 24 | 53 | 88.5 | 61 | I |
| | 2023.01- | 4DHT | F | L | MPV FWD H4M632 | | GCI83730 | Inner Joint | | 26 | 24 | 39.95 | 64.5 | 122 | |
| | 2023.01- | 4DHT | F | R | MPV FWD H4M632 | | GCI83729 | Inner Joint | | 26 | 24 | 33 | 330 | 112 | |
| **Lodgy** | | | | | | | | | | | | | | | |
| 1.2 (85 kw) | 2012.03- | 5MT | F | L | MPV FWD H5F 402, H5F 408 | | GDS11024 | Drive Shaft | | 25 | 26 | 52.5 | 88.5 | 653 | |
| | 2012.03- | 5MT | F | R | MPV FWD H5F 402, H5F 408 | | GDS50501 | Drive Shaft | | 25 | 26 | 52.4 | 88.5 | 898 | |
| | 2012.03- | 5MT | F | L | MPV FWD H5F 402, H5F 408 | | GCI50057 | Inner Joint | | 26 | 22 | 40 | 64 | 104 | |
| | 2012.03- | MT | F | L/R | MPV FWD H5F 402, H5F 408 | | GCO50162 | Outer Joint | | 25 | 23 | 52.5 | 88.5 | 60.5 | M |
| 1.3 (75 kw) | 2019.01- | 6MT | F | L | MPV FWD H5H 490, H5H 470 | | GDS11024 | Drive Shaft | | 25 | 26 | 52.5 | 88.5 | 653 | |
| | 2019.01- | 6MT | F | L | MPV FWD H5H 490, H5H 470 | | GCI50057 | Inner Joint | | 26 | 22 | 40 | 64 | 104 | |
| | 2019.01- | | F | L | MPV FWD H5H 490, H5H 470 | | GCO50162 | Outer Joint | | 25 | 23 | 52.5 | 88.5 | 60.5 | M |
| 1.3 (96 kw) | 2019.01- | 6MT | F | L | MPV FWD H5H 470 | | GDS11024 | Drive Shaft | | 25 | 26 | 52.5 | 88.5 | 653 | |
| | 2019.01- | 6MT | F | L | MPV FWD H5H 470 | | GCI50057 | Inner Joint | | 26 | 22 | 40 | 64 | 104 | |
| | 2019.01- | | F | L | MPV FWD H5H 470 | | GCO50162 | Outer Joint | | 25 | 23 | 52.5 | 88.5 | 60.5 | M |
| 1.5 (63 kw) | 2012.11- | 5MT | F | L | MPV FWD K9K 612;K9K 830 | | GDS11024 | Drive Shaft | | 25 | 26 | 52.5 | 88.5 | 653 | |
| | 2012.11- | 5MT | F | R | MPV FWD K9K 612;K9K 830 | | GDS50501 | Drive Shaft | | 25 | 26 | 52.4 | 88.5 | 898 | |
| | 2012.11- | 5MT | F | L/R | MPV FWD K9K 612;K9K 830 | | GCO50162 | Outer Joint | | 25 | 23 | 52.5 | 88.5 | 60.5 | M |
| | 2012.11- | 5MT | F | L | MPV FWD K9K 612;K9K 830 | | GCI50057 | Inner Joint | | 26 | 22 | 40 | 64 | 104 | |
| 1.5 (66 kw) | 2012.03- | 5MT | F | R | MPV FWD K9K 626, K9K 612 | | GDS50501 | Drive Shaft | | 25 | 26 | 52.4 | 88.5 | 898 | |
| | 2012.03- | 5MT | F | L/R | MPV FWD K9K 626, K9K 612 | | GCO50162 | Outer Joint | | 25 | 23 | 52.5 | 88.5 | 60.5 | M |
| | 2012.03- | 5MT | F | L/R | MPV FWD K9K 626, K9K 612 | | GCI50057 | Inner Joint | | 26 | 22 | 40 | 64 | 104 | |
| | 2012.03- | MT | F | L | MPV FWD K9K 626, K9K 612 | | GDS11024 | Drive Shaft | | 25 | 26 | 52.5 | 88.5 | 653 | |
| 1.5 (70 kw) | 2018.08- | 6MT | F | L | MPV FWD K9K 872, K9K 876 | | GDS11024 | Drive Shaft | | 25 | 26 | 52.5 | 88.5 | 653 | |
| | 2018.08- | 6MT | F | R | MPV FWD K9K 872, K9K 876 | | GDS83477 | Drive Shaft | | 25 | 26 | 52.4 | 88.5 | 897 | |
| | 2018.08- | 6MT | F | R | MPV FWD K9K 872, K9K 876 | | GCO50162 | Outer Joint | | 25 | 23 | 52.5 | 88.5 | 60.5 | M |
| | 2018.08- | 6MT | F | R | MPV FWD K9K 872, K9K 876 | | GCI82231 | Inner Joint | | 26 | 23 | 33 | 329 | 98 | |
| 1.5 (79 kw) | 2013.01- | 6MT | F | L | MPV FWD K9K 856;K9K 846 | | GDS11024 | Drive Shaft | | 25 | 26 | 52.5 | 88.5 | 653 | |
| | 2013.01- | 6MT | F | R | MPV FWD K9K 856;K9K 846 | | GDS83477 | Drive Shaft | | 25 | 26 | 52.4 | 88.5 | 897 | |
| | 2013.01- | 6MT | F | R | MPV FWD K9K 856;K9K 846 | | GCO50162 | Outer Joint | | 25 | 23 | 52.5 | 88.5 | 60.5 | M |
| | 2013.01- | 6MT | F | R | MPV FWD K9K 856;K9K 846 | | GCI82231 | Inner Joint | | 26 | 23 | 33 | 329 | 98 | |
| 1.5 (80 kw) | 2015.06- | 6MT | F | L | MPV FWD K9K 846, K9K 666 | | GDS11024 | Drive Shaft | | 25 | 26 | 52.5 | 88.5 | 653 | |
| | 2015.06- | 6MT | F | R | MPV FWD K9K 846, K9K 666 | | GDS83477 | Drive Shaft | | 25 | 26 | 52.4 | 88.5 | 897 | |
| | 2015.06- | 6MT | F | L/R | MPV FWD K9K 846, K9K 666 | | GCO50162 | Outer Joint | | 25 | 23 | 52.5 | 88.5 | 60.5 | M |
| | 2015.06- | 6MT | F | R | MPV FWD K9K 846, K9K 666 | | GCI82231 | Inner Joint | | 26 | 23 | 33 | 329 | 98 | |
| 1.5 (81 kw) | 2012.03- | 6MT | F | L | MPV FWD K9K 846, K9K 666 | | GDS11024 | Drive Shaft | | 25 | 26 | 52.5 | 88.5 | 653 | |
| | 2012.03- | 6MT | F | R | MPV FWD K9K 846, K9K 666 | | GDS83477 | Drive Shaft | | 25 | 26 | 52.4 | 88.5 | 897 | |
| | 2012.03- | 6MT | F | R | MPV FWD K9K 846, K9K 666 | | GCI82231 | Inner Joint | | 26 | 23 | 33 | 329 | 98 | |
| | 2012.03- | MT | F | L/R | MPV FWD K9K 846, K9K 666 | | GCO50162 | Outer Joint | | 25 | 23 | 52.5 | 88.5 | 60.5 | M |
| 1.5 (85 kw) | 2018.08- | 6MT | F | L | MPV FWD K9K 872 | | GDS11024 | Drive Shaft | | 25 | 26 | 52.5 | 88.5 | 653 | |
| | 2018.08- | 6MT | F | R | MPV FWD K9K 872 | | GDS83477 | Drive Shaft | | 25 | 26 | 52.4 | 88.5 | 897 | |
| | 2018.08- | 6MT | F | R | MPV FWD K9K 872 | | GCO50162 | Outer Joint | | 25 | 23 | 52.5 | 88.5 | 60.5 | M |
| | 2018.08- | 6MT | F | R | MPV FWD K9K 872 | | GCI82231 | Inner Joint | | 26 | 23 | 33 | 329 | 98 | |
| 1.6 (61 kw) | 2012.03- | 5MT | F | L | MPV FWD K7M 812;K7M 828 | Model code:JSJB | GDS11024 | Drive Shaft | | 25 | 26 | 52.5 | 88.5 | 653 | |
| | 2012.03- | 5MT | F | R | MPV FWD K7M 812;K7M 828 | Model code:JSJB | GDS50501 | Drive Shaft | | 25 | 26 | 52.4 | 88.5 | 898 | |
| | 2012.03- | 5MT | F | R | MPV FWD K7M 812;K7M 828 | Model code:JSM3 | GDS83765 | Drive Shaft | | 25 | 23 | 52.4 | 88.5 | 762 | |
| | 2012.03- | 5MT | F | L/R | MPV FWD K7M 812;K7M 828 | Model code:JSJB | GCO50162 | Outer Joint | | 25 | 23 | 52.5 | 88.5 | 60.5 | M |
| | 2012.03- | 5MT | F | L/R | MPV FWD K7M 812;K7M 828 | Model code:JSM3 | GCO50171 | Outer Joint | | 25 | 22 | 52.4 | 88.5 | 55 | M |
| | 2012.03- | 5MT | F | L | MPV FWD K7M 812;K7M 828 | For Type code:JSJB | GCI50057 | Inner Joint | | 26 | 22 | 40 | 64 | 104 | |
| | 2012.03- | 5MT | F | R | MPV FWD K7M 812;K7M 828 | Model code:JSM3 | GCI50054 | Inner Joint | | 23 | 20 | 36.3 | | 119 | |
| | 2013.11- | 5MT | F | L | MPV FWD K7M 812;K7M 828 | Model code:JSJB | GDS11024 | Drive Shaft | | 25 | 26 | 52.5 | 88.5 | 653 | |
| | 2013.11- | 5MT | F | R | MPV FWD K7M 812;K7M 828 | Model code:JSJB | GDS50501 | Drive Shaft | | 25 | 26 | 52.4 | 88.5 | 898 | |
| | 2013.11- | 5MT | F | R | MPV FWD K7M 812;K7M 828 | Model code:JSM3 | GDS83765 | Drive Shaft | | 25 | 23 | 52.4 | 88.5 | 762 | |
| | 2013.11- | 5MT | F | L/R | MPV FWD K7M 812;K7M 828 | Model code:JSJB | GCO50162 | Outer Joint | | 25 | 23 | 52.5 | 88.5 | 60.5 | M |
| | 2013.11- | 5MT | F | L/R | MPV FWD K7M 812;K7M 828 | Model code:JSM3 | GCO50171 | Outer Joint | | 25 | 22 | 52.4 | 88.5 | 55 | M |
| | 2013.11- | 5MT | F | L | MPV FWD K7M 812;K7M 828 | For Type code:JSJB | GCI50057 | Inner Joint | | 26 | 22 | 40 | 64 | 104 | |
| | 2013.11- | 5MT | F | R | MPV FWD K7M 812;K7M 828 | Model code:JSM3 | GCI50054 | Inner Joint | | 23 | 20 | 36.3 | | 119 | |
| 1.6 (75 kw) | 2015.04- | 5MT | F | L | MPV FWD H4M 738, H4M 740 | | GCI50057 | Inner Joint | | 26 | 22 | 40 | 64 | 104 | |
| | 2015.04- | MT | F | L | MPV FWD H4M 738, H4M 740 | | GDS11024 | Drive Shaft | | 25 | 26 | 52.5 | 88.5 | 653 | |

| | YEAR | TRANSM. | F/R | L/R | BODY STYLE & DRIVE TYPE & ENGINE | REMARKS | G-AP Ref. | PRODUCT | ABS | Technical Specifications A | B | C | H | L | P |
|---|---|---|---|---|---|---|---|---|---|---|---|---|---|---|---|
| **DACIA** | | | | | | | | | | | | | | | |
| **Lodgy** | | | | | | | | | | | | | | | |
| 1.6 (75 kw) | 2015.04- | MT | F | R | MPV FWD H4M 738, H4M 740 | | GDS50501 | Drive Shaft | | 25 | 26 | 52.4 | 88.5 | 898 | |
| | 2015.04- | MT | F | L/R | MPV FWD H4M 738, H4M 740 | | GCO50162 | Outer Joint | | 25 | 23 | 52.5 | 88.5 | 60.5 | M |
| | 2015.06- | 5MT | F | L | MPV FWD H4M 738, H4M 740 | | GDS11024 | Drive Shaft | | 25 | 26 | 52.5 | 88.5 | 653 | |
| | 2015.06- | 5MT | F | R | MPV FWD H4M 738, H4M 740 | | GDS50501 | Drive Shaft | | 25 | 26 | 52.4 | 88.5 | 898 | |
| | 2015.06- | 5MT | F | L | MPV FWD H4M 738, H4M 740 | | GCI50057 | Inner Joint | | 26 | 22 | 40 | 64 | 104 | |
| | 2015.06- | MT | F | L/R | MPV FWD H4M 738, H4M 740 | | GCO50162 | Outer Joint | | 25 | 23 | 52.5 | 88.5 | 60.5 | M |
| 1.6 (80 kw) | 2018.08- | 5MT | F | L | MPV FWD H4M 738, H4M 740 | | GCI50057 | Inner Joint | | 26 | 22 | 40 | 64 | 104 | |
| | 2018.08- | MT | F | L | MPV FWD H4M 738, H4M 740 | | GDS11024 | Drive Shaft | | 25 | 26 | 52.5 | 88.5 | 653 | |
| | 2018.08- | MT | F | R | MPV FWD H4M 738, H4M 740 | | GDS50501 | Drive Shaft | | 25 | 26 | 52.4 | 88.5 | 898 | |
| | 2018.08- | MT | F | L/R | MPV FWD H4M 738, H4M 740 | | GCO50162 | Outer Joint | | 25 | 23 | 52.5 | 88.5 | 60.5 | M |
| **Logan** | | | | | | | | | | | | | | | |
| 0.9 (66 kw) | 2012.10- | 5AT/5MT | F | L | Saloon FWD H4B 400;H4B 408;H4B 412 | TJ | GDS50512 | Drive Shaft | | 23 | 26 | 49 | 86 | 658 | |
| | 2012.10- | 5AT/5MT | F | R | Saloon FWD H4B 400;H4B 408;H4B 412 | | GDS50513 | Drive Shaft | | 23 | 26 | 49 | 86 | 904 | |
| | 2012.10- | 5MT | F | L | Saloon FWD H4B 400;H4B 408;H4B 412 | AAR | GDS50508 | Drive Shaft | | 23 | 26 | 49 | 86 | 660 | |
| | 2012.10- | 5MT | F | L | Saloon FWD H4B 400;H4B 408;H4B 412 | AAR | GCI82311 | Inner Joint | | 26 | 22 | 39.95 | 64 | 109 | |
| | 2012.10- | | F | L | Saloon FWD H4B 400;H4B 408;H4B 412 | | GCO50173 | Outer Joint | | 23 | 22 | 49 | 86 | 57 | M |
| | 2012.10- | | F | R | Saloon FWD H4B 400;H4B 408;H4B 412 | | GCI50118 | Inner Joint | | 26 | 22 | 40 | 64 | 104 | |
| | 2015.09- | 5MT | F | L | Saloon FWD H4B 410;H4B 405 | AAR | GDS50508 | Drive Shaft | | 23 | 26 | 49 | 86 | 660 | |
| | 2015.09- | 5MT | F | L | Saloon FWD H4B 410;H4B 405 | TJ | GDS50512 | Drive Shaft | | 23 | 26 | 49 | 86 | 658 | |
| | 2015.09- | 5MT | F | R | Saloon FWD H4B 410;H4B 405 | | GDS50513 | Drive Shaft | | 23 | 26 | 49 | 86 | 904 | |
| | 2015.09- | 5MT | F | L/R | Saloon FWD H4B 410;H4B 405 | | GCO50173 | Outer Joint | | 23 | 22 | 49 | 86 | 57 | M |
| | 2015.09- | 5MT | F | L | Saloon FWD H4B 410;H4B 405 | AAR | GCI82311 | Inner Joint | | 26 | 22 | 39.95 | 64 | 109 | |
| | 2015.09- | | F | R | Saloon FWD H4B 410;H4B 405 | | GCI50118 | Inner Joint | | 26 | 22 | 40 | 64 | 104 | |
| 1.0 (54 kw) | 2017.01- | 5MT | F | L | Saloon FWD B4D 401;B4D 400 | Manufacturer:GKN | GDS50508 | Drive Shaft | | 23 | 26 | 49 | 86 | 660 | |
| | 2017.01- | 5MT | F | L | Saloon FWD B4D 401;B4D 400 | Manufacturer:NTN | GDS84116 | Drive Shaft | | 23 | 26 | 49 | 86 | 660 | |
| | 2017.01- | 5MT | F | R | Saloon FWD B4D 401;B4D 400 | | GDS84115 | Drive Shaft | | 23 | 26 | 49 | 86 | 903 | |
| | 2017.01- | 5MT | F | L/R | Saloon FWD B4D 401;B4D 400 | | GCO50219 | Outer Joint | | 23 | 28 | 49 | 86 | 52 | I |
| | 2017.01- | 5MT | F | L | Saloon FWD B4D 401;B4D 400 | | GCI50116 | Inner Joint | | 26 | 28 | 40 | 64 | 93 | |
| | 2017.01- | 5MT | F | R | Saloon FWD B4D 401;B4D 400 | | GCI82521 | Inner Joint | | 26 | 28 | 40 | 64 | 93 | |
| 1.0 (56 kw) | 2011.01-2012.10 | 5MT | F | L | Saloon FWD D4D 760 | | GDS11021 | Drive Shaft | | 23 | 30 | 49 | 86 | 683 | |
| | 2011.01-2012.10 | 5MT | F | R | Saloon FWD D4D 760 | | GDS45085 | Drive Shaft | | 21 | 23 | 49 | 84 | 763 | |
| | 2011.01-2012.10 | 5MT | F | L | Saloon FWD D4D 760 | | GCO81158 | Outer Joint | | 23 | 21 | 48.7 | 83.5 | 55 | M |
| | 2011.01-2012.10 | 5MT | F | R | Saloon FWD D4D 760 | | GCI50008 | Inner Joint | | 23 | 30 | 36.3 | | 120.7 | |
| 1.0 (67 kw) | 2021.05- | 6MT | F | L | Saloon FWD H4D 470 | | GDS57999 | Drive Shaft | | 23 | 26 | 49.5 | 85 | 671 | |
| | 2021.05- | 6MT | F | R | Saloon FWD H4D 470 | | GDS57640 | Drive Shaft | | 23 | 26 | 49.5 | 85 | 924 | |
| | 2021.05- | 6MT | F | L | Saloon FWD H4D 470 | | GCI83980 | Inner Joint | | 26 | 29 | 39.95 | 64 | 98 | |
| | 2021.05- | 6MT | F | R | Saloon FWD H4D 470 | | GCI83786 | Inner Joint | | 26 | 29 | 39.95 | 64.5 | 111 | |
| | 2021.05- | 6MT/CVT | F | L/R | Saloon FWD H4D 470 | | GCO83656 | Outer Joint | | 23 | 29 | 49.5 | 85 | 56 | M |
| | 2021.05- | CVT | F | L | Saloon FWD H4D 470 | | GDS57839 | Drive Shaft | | 23 | 25 | 49.5 | 85 | 674 | |
| | 2021.05- | CVT | F | R | Saloon FWD H4D 470 | | GDS57641 | Drive Shaft | | 23 | 25 | 49.5 | 85 | 920 | |
| | 2021.05- | CVT | F | L | Saloon FWD H4D 470 | | GCI83345 | Inner Joint | | 25 | 29 | 40 | 53 | 112 | |
| | 2021.05- | CVT | F | R | Saloon FWD H4D 470 | | GCI83347 | Inner Joint | | 25 | 29 | 33 | 345 | 97 | |
| 1.0 (74 kw) | 2021.05- | 6MT | F | L | Saloon FWD H4D 480 | | GDS57999 | Drive Shaft | | 23 | 26 | 49.5 | 85 | 671 | |
| | 2021.05- | 6MT | F | R | Saloon FWD H4D 480 | | GDS57640 | Drive Shaft | | 23 | 26 | 49.5 | 85 | 924 | |
| | 2021.05- | 6MT | F | L/R | Saloon FWD H4D 480 | | GCO83656 | Outer Joint | | 23 | 29 | 49.5 | 85 | 56 | M |
| | 2021.05- | 6MT | F | L | Saloon FWD H4D 480 | | GCI83980 | Inner Joint | | 26 | 29 | 39.95 | 64 | 98 | |
| | 2021.05- | 6MT | F | R | Saloon FWD H4D 480 | | GCI83786 | Inner Joint | | 26 | 29 | 39.95 | 64.5 | 111 | |
| 1.2 (53 kw) | 2013.02- | 5MT | F | L | Saloon FWD D4F 734 | Manufacturer:NTN | GDS11021 | Drive Shaft | | 23 | 30 | 49 | 86 | 683 | |
| | 2013.02- | 5MT | F | L | Saloon FWD D4F 734 | | GDS84116 | Drive Shaft | | 23 | 26 | 49 | 86 | 660 | |
| | 2013.02- | 5MT | F | R | Saloon FWD D4F 734 | Manufacturer:NTN | GDS11014 | Drive Shaft | | 23 | 23 | 49 | 83.5 | 755 | |
| | 2013.02- | 5MT | F | L | Saloon FWD D4F 734 | | GCO50219 | Outer Joint | | 23 | 28 | 49 | 86 | 52 | I |
| 1.2 (54 kw) | 2015.05- | 5MT | F | L | Saloon FWD | Trans. side without housing | GDS11021 | Drive Shaft | | 23 | 30 | 49 | 86 | 683 | |
| | 2015.05- | 5MT | F | L | Saloon FWD | | GDS84116 | Drive Shaft | | 23 | 26 | 49 | 86 | 660 | |
| | 2015.05- | 5MT | F | R | Saloon FWD | | GDS11014 | Drive Shaft | | 23 | 23 | 49 | 83.5 | 755 | |
| | 2015.05- | 5MT | F | R | Saloon FWD | | GDS84115 | Drive Shaft | | 23 | 26 | 49 | 86 | 903 | |
| | 2015.05- | | F | L/R | Saloon FWD | Date From:2015.07 | GCO50219 | Outer Joint | | 23 | 28 | 49 | 86 | 52 | I |
| 1.2 (55 kw) | 2006.02- | 5MT | F | L | Saloon FWD D4F 732;D4F 734 | Inner teeth of wheel side:24 | GDS45084 | Drive Shaft | | 21 | 30 | 49 | 84 | 681 | |
| | 2006.02- | 5MT | F | R | Saloon FWD D4F 732;D4F 734 | Inner teeth of wheel side:28 | GDS11023 | Drive Shaft | | 21 | 23 | 49 | 84 | 761 | |
| | 2006.02- | 5MT | F | R | Saloon FWD D4F 732;D4F 734 | Inner teeth of wheel side:24 | GDS45085 | Drive Shaft | | 21 | 23 | 49 | 84 | 763 | |
| | 2006.02- | 5MT | F | L/R | Saloon FWD D4F 732;D4F 734 | new | GCO11004 | Outer Joint | | 21 | 28 | 49 | 84 | 53.5 | I |
| | 2006.02- | 5MT | F | R | Saloon FWD D4F 732;D4F 734 | | GCI50008 | Inner Joint | | 23 | 30 | 36.3 | | 120.7 | |
| | 2006.02- | 5MT | F | R | Saloon FWD D4F 732;D4F 734 | new | GCI50124 | Inner Joint | | 23 | 28 | 36.3 | | 115 | |
| | 2006.02- | 5MT | F | L | Saloon FWD D4F 734 | Inner teeth of wheel side:24 | GDS45084 | Drive Shaft | | 21 | 30 | 49 | 84 | 681 | |
| | 2006.02- | 5MT | F | R | Saloon FWD D4F 734 | Inner teeth of wheel side:28 | GDS11023 | Drive Shaft | | 21 | 23 | 49 | 84 | 761 | |
| | 2006.02- | 5MT | F | R | Saloon FWD D4F 734 | Inner teeth of wheel side:24 | GDS45085 | Drive Shaft | | 21 | 23 | 49 | 84 | 763 | |

| | YEAR | TRANSM. | F/R | L/R | BODY STYLE & DRIVE TYPE & ENGINE | REMARKS | G-AP Ref. | PRODUCT | ABS | Technical Specifications A | B | C | H | L | P |
|---|---|---|---|---|---|---|---|---|---|---|---|---|---|---|---|
| **DACIA** | | | | | | | | | | | | | | | |
| **Logan** | | | | | | | | | | | | | | | |
| 1.2 (55 kw) | 2006.02- | 5MT | F | L/R | Saloon FWD D4F 734 | new | GCO11004 | Outer Joint | | 21 | 28 | 49 | 84 | 53.5 | I |
| | 2006.02- | 5MT | F | R | Saloon FWD D4F 734 | | GCI50008 | Inner Joint | | 23 | 30 | 36.3 | | 120.7 | |
| | 2006.02- | 5MT | F | R | Saloon FWD D4F 734 | new | GCI50124 | Inner Joint | | 23 | 28 | 36.3 | | 115 | |
| | 2012.10- | 5MT | F | L | Saloon FWD D4F 732 | | GDS84116 | Drive Shaft | | 23 | 26 | 49 | 86 | 660 | |
| | 2012.10- | 5MT | F | R | Saloon FWD D4F 732 | | GDS11014 | Drive Shaft | | 23 | 23 | 49 | 83.5 | 755 | |
| | 2012.10- | 5MT | F | R | Saloon FWD D4F 732 | | GDS84115 | Drive Shaft | | 23 | 26 | 49 | 86 | 903 | |
| | 2012.10- | MT | F | L | Saloon FWD D4F 732 | Date from:2013.01;Date to:2014.07 | GDS11021 | Drive Shaft | | 23 | 30 | 49 | 86 | 683 | |
| | 2012.10- | MT | F | L | Saloon FWD D4F 732 | Date from:2013.01;Date to:2014.07 | GCO50219 | Outer Joint | | 23 | 28 | 49 | 86 | 52 | I |
| | 2012.10- | 5MT | F | L | Saloon FWD D4F 734 | Manufacturer:NTN | GDS11021 | Drive Shaft | | 23 | 30 | 49 | 86 | 683 | |
| | 2012.10- | 5MT | F | L | Saloon FWD D4F 734 | | GDS84116 | Drive Shaft | | 23 | 26 | 49 | 86 | 660 | |
| | 2012.10- | 5MT | F | R | Saloon FWD D4F 734 | Manufacturer:NTN | GDS11014 | Drive Shaft | | 23 | 23 | 49 | 83.5 | 755 | |
| | 2012.10- | 5MT | F | L | Saloon FWD D4F 734 | | GCO50219 | Outer Joint | | 23 | 28 | 49 | 86 | 52 | I |
| 1.4 (55 kw) | 2004.09- | 5MT | F | L | Saloon FWD K7J 710;K7J 714 | Date to:2014.02 | GDS45084 | Drive Shaft | | 21 | 30 | 49 | 84 | 681 | |
| | 2004.09- | 5MT | F | R | Saloon FWD K7J 710;K7J 714 | Date from:2014.02 | GDS11023 | Drive Shaft | | 21 | 23 | 49 | 84 | 761 | |
| | 2004.09- | 5MT | F | R | Saloon FWD K7J 710;K7J 714 | Date to:2014.02 | GDS45085 | Drive Shaft | | 21 | 23 | 49 | 84 | 763 | |
| | 2004.09- | 5MT | F | L/R | Saloon FWD K7J 710;K7J 714 | Date from:2014.02 | GCO11004 | Outer Joint | | 21 | 28 | 49 | 84 | 53.5 | I |
| | 2004.09- | 5MT | F | R | Saloon FWD K7J 710;K7J 714 | Date to:2014.02 | GCI50008 | Inner Joint | | 23 | 30 | 36.3 | | 120.7 | |
| | 2004.09- | 5MT | F | R | Saloon FWD K7J 710;K7J 714 | Date from:2014.02 | GCI50124 | Inner Joint | | 23 | 28 | 36.3 | | 115 | |
| | 2006.02-2012.12 | 5MT | F | L | Saloon FWD K7J 710;K7J 714 | Inner teeth of wheel side:24 | GDS45084 | Drive Shaft | | 21 | 30 | 49 | 84 | 681 | |
| | 2006.02-2012.12 | 5MT | F | R | Saloon FWD K7J 710;K7J 714 | Inner teeth of wheel side:28 | GDS11023 | Drive Shaft | | 21 | 23 | 49 | 84 | 761 | |
| | 2006.02-2012.12 | 5MT | F | R | Saloon FWD K7J 710;K7J 714 | Inner teeth of wheel side:24 | GDS45085 | Drive Shaft | | 21 | 23 | 49 | 84 | 763 | |
| | 2006.02-2012.12 | 5MT | F | L/R | Saloon FWD K7J 710;K7J 714 | new | GCO11004 | Outer Joint | | 21 | 28 | 49 | 84 | 53.5 | I |
| | 2006.02-2012.12 | 5MT | F | R | Saloon FWD K7J 710;K7J 714 | | GCI50008 | Inner Joint | | 23 | 30 | 36.3 | | 120.7 | |
| | 2006.02-2012.12 | 5MT | F | R | Saloon FWD K7J 710;K7J 714 | new | GCI50124 | Inner Joint | | 23 | 28 | 36.3 | | 115 | |
| | 2009.03- | MT | F | R | Estate Van FWD K7J 710 | Date to:2012.12 | GCI99169 | Inner Joint | | 26 | 30 | 33 | 326 | 95 | |
| | 2009.03- | | F | L | Estate Van FWD K7J 710 | | GDS50353 | Drive Shaft | | 23 | 26 | 49 | 86 | 649 | |
| | 2009.03- | | F | L | Estate Van FWD K7J 710 | Date To:2012.12 | GDS50570 | Drive Shaft | | 23 | 26 | 49 | 83.5 | 647 | |
| | 2009.03- | | F | R | Estate Van FWD K7J 710 | Date to:2010.12 | GDS50354 | Drive Shaft | | 23 | 26 | 49 | 86 | 897 | |
| | 2009.03- | | F | R | Estate Van FWD K7J 710 | | GDS50507 | Drive Shaft | | 23 | 26 | 49 | 86 | 898 | |
| | 2009.03- | | F | L/R | Estate Van FWD K7J 710 | Date To:2010.12 | GCO50092 | Outer Joint | | 23 | 29 | 49 | 86 | 57 | I |
| | 2009.03- | | F | L/R | Estate Van FWD K7J 710 | Date To:2010.12 | GCO99085 | Outer Joint | | 23 | 30 | 49 | 86 | 59 | I |
| 1.5 (48 kw) | 2005.09- | 5MT | F | L | Saloon FWD K9K 790 | | GDS11021 | Drive Shaft | | 23 | 30 | 49 | 86 | 683 | |
| | 2005.09- | 5MT | F | R | Saloon FWD K9K 790 | | GDS11014 | Drive Shaft | | 23 | 23 | 49 | 83.5 | 755 | |
| | 2005.09- | 5MT | F | L | Saloon FWD K9K 790 | | GCO50219 | Outer Joint | | 23 | 28 | 49 | 86 | 52 | I |
| | 2005.09- | 5MT | F | R | Saloon FWD K9K 790 | | GCI50008 | Inner Joint | | 23 | 30 | 36.3 | | 120.7 | |
| | 2005.09- | | F | R | Saloon FWD K9K 790 | | GDS11016 | Drive Shaft | | 23 | 23 | 49 | 86 | 764 | |
| | 2007.10-2012.12 | MT | F | L | Estate Van FWD K9K 794 | Inner teeth of wheel side:30 | GDS50353 | Drive Shaft | | 23 | 26 | 49 | 86 | 649 | |
| | 2007.10-2012.12 | MT | F | L | Estate Van FWD K9K 794 | Inner teeth of wheel side:22 | GDS50570 | Drive Shaft | | 23 | 26 | 49 | 83.5 | 647 | |
| | 2007.10-2012.12 | MT | F | R | Estate Van FWD K9K 794 | Inner teeth of wheel side:22 | GDS11014 | Drive Shaft | | 23 | 23 | 49 | 83.5 | 755 | |
| | 2007.10-2012.12 | MT | F | R | Estate Van FWD K9K 794 | Inner teeth of wheel side:30 | GDS11016 | Drive Shaft | | 23 | 23 | 49 | 86 | 764 | |
| | 2007.10-2012.12 | MT | F | R | Estate Van FWD K9K 794 | | GCO99085 | Outer Joint | | 23 | 30 | 49 | 86 | 59 | I |
| | 2007.10-2012.12 | MT | F | L | Estate Van FWD K9K 794 | | GCI50048 | Inner Joint | | 26 | 30 | 40 | 64 | 121 | |
| | 2007.10-2012.12 | MT | F | L | Estate Van FWD K9K 794 | | GCI50057 | Inner Joint | | 26 | 22 | 40 | 64 | 104 | |
| | 2007.10-2012.12 | MT | F | R | Estate Van FWD K9K 794 | | GCI50008 | Inner Joint | | 23 | 30 | 36.3 | | 120.7 | |
| | 2008.04-2012.12 | 5MT | F | L | Pickup FWD K9K 794 | | GDS50570 | Drive Shaft | | 23 | 26 | 49 | 83.5 | 647 | |
| | 2008.04-2012.12 | 5MT | F | R | Pickup FWD K9K 794 | | GDS50593 | Drive Shaft | | 23 | 26 | 49 | 83.5 | 890 | |
| | 2008.04-2012.12 | 5MT | F | L | Pickup FWD K9K 794 | | GCI50057 | Inner Joint | | 26 | 22 | 40 | 64 | 104 | |
| | 2008.04-2012.12 | 5MT | F | R | Pickup FWD K9K 794 | | GCI50051 | Inner Joint | | 26 | 22 | 33 | 326 | 96 | |
| | 2008.04-2012.12 | 5MT | F | R | Pickup FWD K9K 794 | Date from:2011.01 | GCI50107 | Inner Joint | | 26 | 21 | 40 | 64 | 105.5 | |
| | 2008.04-2012.12 | | F | R | Pickup FWD K9K 794 | Date From:2011.01 | GDS50507 | Drive Shaft | | 23 | 26 | 49 | 86 | 898 | |
| | 2008.04-2012.12 | | F | R | Pickup FWD K9K 794 | Date from:2011.01 | GCO50175 | Outer Joint | | 23 | 22 | 49 | 86 | 58.5 | I |
| 1.5 (50 kw) | 2006.01-2012.12 | 5MT | F | L | Saloon FWD K9K 792 | Date from:2011.01,Date to:2011.10 | GDS11022 | Drive Shaft | | 23 | 26 | 49 | 86 | 662 | |
| | 2006.01-2012.12 | 5MT | F | L | Saloon FWD K9K 792 | Date to:2009.10 | GDS50353 | Drive Shaft | | 23 | 26 | 49 | 86 | 649 | |
| | 2006.01-2012.12 | 5MT | F | L | Saloon FWD K9K 792 | Date from:2009.11,Date to:2010.12;Date from:2011.11 | GDS50570 | Drive Shaft | | 23 | 26 | 49 | 83.5 | 647 | |
| | 2006.01-2012.12 | 5MT | F | R | Saloon FWD K9K 792 | Date from:2011.01,Date to:2011.10 | GDS11018 | Drive Shaft | | 23 | 26 | 49 | 86 | 906 | |
| | 2006.01-2012.12 | 5MT | F | R | Saloon FWD K9K 792 | Date to:2009.10 | GDS50354 | Drive Shaft | | 23 | 26 | 49 | 86 | 897 | |
| | 2006.01-2012.12 | 5MT | F | R | Saloon FWD K9K 792 | Date from:2011.11 | GDS50507 | Drive Shaft | | 23 | 26 | 49 | 86 | 898 | |
| | 2006.01-2012.12 | 5MT | F | R | Saloon FWD K9K 792 | Date from:2009.11,Date to:2010.12 | GDS50593 | Drive Shaft | | 23 | 26 | 49 | 83.5 | 890 | |
| | 2006.01-2012.12 | 5MT | F | L/R | Saloon FWD K9K 792 | Date to:2009.10 | GCO99085 | Outer Joint | | 23 | 30 | 49 | 86 | 59 | I |
| | 2006.01-2012.12 | 5MT | F | L/R | Saloon FWD K9K 792 | Date from:2011.01,Date to:2011.10 | GCI50134 | Inner Joint | | 26 | 30 | 40 | 64 | 96 | |
| | 2008.03- | 5MT | F | R | Pickup FWD K9K 792 | Date to:2010.12 | GCI50051 | Inner Joint | | 26 | 22 | 33 | 326 | 96 | |
| | 2008.03- | 5MT | F | R | Pickup FWD K9K 792 | Date from:2011.01 | GCI50107 | Inner Joint | | 26 | 21 | 40 | 64 | 105.5 | |
| | 2008.03- | MT | F | L | Pickup FWD K9K 792 | Date to:2011.12 | GDS50353 | Drive Shaft | | 23 | 26 | 49 | 86 | 649 | |
| | 2008.03- | MT | F | R | Pickup FWD K9K 792 | Date to:2011.12 | GDS50354 | Drive Shaft | | 23 | 26 | 49 | 86 | 897 | |
| | 2008.03- | | F | L | Pickup FWD K9K 792 | Date To:2012.12;Manufacturer Restriction:GKN | GDS50570 | Drive Shaft | | 23 | 26 | 49 | 83.5 | 647 | |

| | YEAR | TRANSM. | F/R | L/R | BODY STYLE & DRIVE TYPE & ENGINE | REMARKS | G-AP Ref. | PRODUCT | ABS | Technical Specifications A | B | C | H | L | P |
|---|---|---|---|---|---|---|---|---|---|---|---|---|---|---|---|
| **DACIA** | | | | | | | | | | | | | | | |
| **Logan** | | | | | | | | | | | | | | | |
| 1.5 (50 kw) | 2008.03- | | F | R | Pickup FWD K9K 792 | Date From:2011.01 | GDS50507 | Drive Shaft | | 23 | 26 | 49 | 86 | 898 | |
| | 2008.03- | | F | R | Pickup FWD K9K 792 | | GDS50593 | Drive Shaft | | 23 | 26 | 49 | 83.5 | 890 | |
| | 2009.03- | MT | F | L | Estate Van FWD K9K 792 | Date to:2011.12 | GDS50353 | Drive Shaft | | 23 | 26 | 49 | 86 | 649 | |
| | 2009.03- | MT | F | L | Estate Van FWD K9K 792 | Manufacturer:GKN | GDS50570 | Drive Shaft | | 23 | 26 | 49 | 83.5 | 647 | |
| | 2009.03- | MT | F | R | Estate Van FWD K9K 792 | Date to:2011.12 | GDS50354 | Drive Shaft | | 23 | 26 | 49 | 86 | 897 | |
| | 2009.03- | MT | F | R | Estate Van FWD K9K 792 | Date from:2009.11,Date to:2009.10 | GCI99169 | Inner Joint | | 26 | 30 | 33 | 326 | 95 | |
| | 2009.03- | | F | R | Estate Van FWD K9K 792 | Date From:2011.01 | GDS50507 | Drive Shaft | | 23 | 26 | 49 | 86 | 898 | |
| | 2009.03- | | F | R | Estate Van FWD K9K 792 | | GDS50593 | Drive Shaft | | 23 | 26 | 49 | 83.5 | 890 | |
| | 2009.03- | | F | L/R | Estate Van FWD K9K 792 | Date To:2010.12 | GCO50092 | Outer Joint | | 23 | 29 | 49 | 86 | 57 | I |
| | 2009.03- | | F | L/R | Estate Van FWD K9K 792 | Date To:2010.12 | GCO99085 | Outer Joint | | 23 | 30 | 49 | 86 | 59 | I |
| 1.5 (55 kw) | 2010.05- | 5MT | F | L | Estate Van FWD K9K 892 | | GDS50353 | Drive Shaft | | 23 | 26 | 49 | 86 | 649 | |
| | 2010.05- | 5MT | F | L | Estate Van FWD K9K 892 | Date From:2011.01 | GDS50570 | Drive Shaft | | 23 | 26 | 49 | 83.5 | 647 | |
| | 2010.05- | 5MT | F | R | Estate Van FWD K9K 892 | | GDS50354 | Drive Shaft | | 23 | 26 | 49 | 86 | 897 | |
| | 2010.05- | MT | F | R | Estate Van FWD K9K 892 | Date to:2012.12 | GCI99169 | Inner Joint | | 26 | 30 | 33 | 326 | 95 | |
| | 2010.05- | | F | R | Estate Van FWD K9K 892 | Date From:2011.01 | GDS50507 | Drive Shaft | | 23 | 26 | 49 | 86 | 898 | |
| | 2010.05- | | F | R | Estate Van FWD K9K 892 | | GDS50593 | Drive Shaft | | 23 | 26 | 49 | 83.5 | 890 | |
| | 2010.05- | | F | R | Estate Van FWD K9K 892 | | GCO50092 | Outer Joint | | 23 | 29 | 49 | 86 | 57 | I |
| | 2010.05- | | F | L/R | Estate Van FWD K9K 892 | | GCO99085 | Outer Joint | | 23 | 30 | 49 | 86 | 59 | I |
| | 2010.05- | 5MT | F | L | Pickup FWD K9K 892 | | GDS50570 | Drive Shaft | | 23 | 26 | 49 | 83.5 | 647 | |
| | 2010.05- | 5MT | F | R | Pickup FWD K9K 892 | | GDS50593 | Drive Shaft | | 23 | 26 | 49 | 83.5 | 890 | |
| | 2010.05- | MT | F | L | Pickup FWD K9K 892 | Date to:2011.12 | GDS50353 | Drive Shaft | | 23 | 26 | 49 | 86 | 649 | |
| | 2010.05- | MT | F | R | Pickup FWD K9K 892 | Date to:2011.12 | GDS50354 | Drive Shaft | | 23 | 26 | 49 | 86 | 897 | |
| | 2010.05- | | F | R | Pickup FWD K9K 892 | Date From:2011.01 | GDS50507 | Drive Shaft | | 23 | 26 | 49 | 86 | 898 | |
| | 2010.05- | | F | R | Pickup FWD K9K 892 | Date from:2011.01 | GCO50175 | Outer Joint | | 23 | 22 | 49 | 86 | 58.5 | I |
| | 2010.05-2012.12 | MT | F | L | Saloon FWD K9K 892 | Date to:2011.12 | GDS50353 | Drive Shaft | | 23 | 26 | 49 | 86 | 649 | |
| | 2010.05-2012.12 | MT | F | R | Saloon FWD K9K 892 | Date to:2011.12 | GDS50354 | Drive Shaft | | 23 | 26 | 49 | 86 | 897 | |
| | 2010.05-2012.12 | | F | L | Saloon FWD K9K 892 | Date To:2012.12;Manufacturer Restriction:GKN | GDS50570 | Drive Shaft | | 23 | 26 | 49 | 83.5 | 647 | |
| | 2010.05-2012.12 | | F | R | Saloon FWD K9K 892 | Date From:2011.01 | GDS50507 | Drive Shaft | | 23 | 26 | 49 | 86 | 898 | |
| | 2010.05-2012.12 | | F | R | Saloon FWD K9K 892 | Date from:2011.01 | GCO50175 | Outer Joint | | 23 | 22 | 49 | 86 | 58.5 | I |
| | 2012.10- | 5MT | F | L | Saloon FWD K9K 612;K9K 626;K9K 872 | | GDS50512 | Drive Shaft | | 23 | 26 | 49 | 86 | 658 | |
| | 2012.10- | 5MT | F | R | Saloon FWD K9K 612;K9K 626;K9K 872 | | GDS50513 | Drive Shaft | | 23 | 26 | 49 | 86 | 904 | |
| | 2012.10- | MT | F | R | Saloon FWD K9K 612;K9K 626;K9K 872 | | GDS50489 | Drive Shaft | | 23 | 26 | 49 | 86 | 910 | |
| | 2012.10- | | F | L | Saloon FWD K9K 612;K9K 626;K9K 872 | | GCO50173 | Outer Joint | | 23 | 22 | 49 | 86 | 57 | M |
| | 2012.10- | | F | R | Saloon FWD K9K 612;K9K 626;K9K 872 | | GCI50118 | Inner Joint | | 26 | 22 | 40 | 64 | 104 | |
| 1.5 (63 kw) | 2007.09-2011.12 | 5MT | F | L | Saloon FWD K9K 796 | Date from:2011.01 | GDS11022 | Drive Shaft | | 23 | 26 | 49 | 86 | 662 | |
| | 2007.09-2011.12 | 5MT | F | L | Saloon FWD K9K 796 | Date To:2010.12 | GDS50570 | Drive Shaft | | 23 | 26 | 49 | 83.5 | 647 | |
| | 2007.09-2011.12 | 5MT | F | R | Saloon FWD K9K 796 | Date from:2011.01 | GDS11018 | Drive Shaft | | 23 | 26 | 49 | 86 | 906 | |
| | 2007.09-2011.12 | 5MT | F | R | Saloon FWD K9K 796 | Date to:2010.12 | GDS50593 | Drive Shaft | | 23 | 26 | 49 | 83.5 | 890 | |
| | 2007.09-2011.12 | 5MT | F | L/R | Saloon FWD K9K 796 | | GCI50134 | Inner Joint | | 26 | 30 | 40 | 64 | 96 | |
| | 2007.09-2011.12 | MT | F | L | Saloon FWD K9K 796 | Date to:2011.12 | GDS50353 | Drive Shaft | | 23 | 26 | 49 | 86 | 649 | |
| | 2007.09-2011.12 | MT | F | R | Saloon FWD K9K 796 | Date to:2011.12 | GDS50354 | Drive Shaft | | 23 | 26 | 49 | 86 | 897 | |
| | 2007.09-2011.12 | MT | F | L/R | Saloon FWD K9K 796 | | GCO99085 | Outer Joint | | 23 | 30 | 49 | 86 | 59 | I |
| | 2007.09-2011.12 | MT | F | R | Saloon FWD K9K 796 | Date to:2008.03 | GCI99169 | Inner Joint | | 26 | 30 | 33 | 326 | 95 | |
| | 2007.09-2011.12 | | F | R | Saloon FWD K9K 796 | Date From:2011.01 | GDS50507 | Drive Shaft | | 23 | 26 | 49 | 86 | 898 | |
| | 2008.03- | 5MT | F | R | Pickup FWD K9K 796 | Date from:2011.01 | GCO50175 | Outer Joint | | 23 | 22 | 49 | 86 | 58.5 | I |
| | 2008.03- | 5MT | F | R | Pickup FWD K9K 796 | Date to:2010.12 | GCI50051 | Inner Joint | | 26 | 22 | 33 | 326 | 96 | |
| | 2008.03- | 5MT | F | R | Pickup FWD K9K 796 | Date from:2011.01 | GCI50107 | Inner Joint | | 26 | 21 | 40 | 64 | 105.5 | |
| | 2008.03- | MT | F | L | Pickup FWD K9K 796 | Date to:2011.12 | GDS50353 | Drive Shaft | | 23 | 26 | 49 | 86 | 649 | |
| | 2008.03- | MT | F | R | Pickup FWD K9K 796 | Date to:2011.12 | GDS50354 | Drive Shaft | | 23 | 26 | 49 | 86 | 897 | |
| | 2008.03- | | F | L | Pickup FWD K9K 796 | Date To:2012.12;Type:GKN | GDS50570 | Drive Shaft | | 23 | 26 | 49 | 83.5 | 647 | |
| | 2008.03- | | F | R | Pickup FWD K9K 796 | Date From:2011.01 | GDS50507 | Drive Shaft | | 23 | 26 | 49 | 86 | 898 | |
| | 2008.03- | | F | R | Pickup FWD K9K 796 | | GDS50593 | Drive Shaft | | 23 | 26 | 49 | 83.5 | 890 | |
| | 2009.03- | 5MT | F | R | Estate Van FWD K9K 796 | | GCI50051 | Inner Joint | | 26 | 22 | 33 | 326 | 96 | |
| | 2009.03- | MT | F | L | Estate Van FWD K9K 796 | Date to:2011.12 | GDS50353 | Drive Shaft | | 23 | 26 | 49 | 86 | 649 | |
| | 2009.03- | MT | F | R | Estate Van FWD K9K 796 | Date to:2011.12 | GDS50354 | Drive Shaft | | 23 | 26 | 49 | 86 | 897 | |
| | 2009.03- | | F | L | Estate Van FWD K9K 796 | Date to:2012.12 | GDS50570 | Drive Shaft | | 23 | 26 | 49 | 83.5 | 647 | |
| | 2009.03- | | F | R | Estate Van FWD K9K 796 | | GDS50593 | Drive Shaft | | 23 | 26 | 49 | 83.5 | 890 | |
| | 2013.01- | 5MT | F | L | Saloon FWD K9K 830;K9K 838 | | GDS50512 | Drive Shaft | | 23 | 26 | 49 | 86 | 658 | |
| | 2013.01- | 5MT | F | R | Saloon FWD K9K 830;K9K 838 | | GDS50513 | Drive Shaft | | 23 | 26 | 49 | 86 | 904 | |
| | 2013.01- | 5MT | F | L/R | Saloon FWD K9K 830;K9K 838 | | GCO50173 | Outer Joint | | 23 | 22 | 49 | 86 | 57 | M |
| | 2013.01- | MT | F | R | Saloon FWD K9K 830;K9K 838 | | GDS50489 | Drive Shaft | | 23 | 26 | 49 | 86 | 910 | |
| | 2013.01- | | F | R | Saloon FWD K9K 830;K9K 838 | | GCI50118 | Inner Joint | | 26 | 22 | 40 | 64 | 104 | |
| 1.5 (65 kw) | 2010.05- | 5MT | F | L | Estate Van FWD K9K 892 | | GDS50353 | Drive Shaft | | 23 | 26 | 49 | 86 | 649 | |
| | 2010.05- | 5MT | F | L | Estate Van FWD K9K 892 | Date From:2011.01 | GDS50570 | Drive Shaft | | 23 | 26 | 49 | 83.5 | 647 | |
| | 2010.05- | 5MT | F | R | Estate Van FWD K9K 892 | | GDS50354 | Drive Shaft | | 23 | 26 | 49 | 86 | 897 | |

| | YEAR | TRANSM. | F/R | L/R | BODY STYLE & DRIVE TYPE & ENGINE | REMARKS | G-AP Ref. | PRODUCT | ABS | Technical Specifications A | B | C | H | L | P |
|---|---|---|---|---|---|---|---|---|---|---|---|---|---|---|---|
| **DACIA** **Logan** | | | | | | | | | | | | | | | |
| 1.5 (65 kw) | 2010.05- | MT | F | R | Estate Van FWD K9K 892 | Date to:2010.12 | GCI99169 | Inner Joint | | 26 | 30 | 33 | 326 | 95 | |
| | 2010.05- | | F | R | Estate Van FWD K9K 892 | Date From:2011.01 | GDS50507 | Drive Shaft | | 23 | 26 | 49 | 86 | 898 | |
| | 2010.05- | | F | R | Estate Van FWD K9K 892 | | GDS50593 | Drive Shaft | | 23 | 26 | 49 | 83.5 | 890 | |
| | 2010.05- | | F | R | Estate Van FWD K9K 892 | | GCO50092 | Outer Joint | | 23 | 29 | 49 | 86 | 57 | I |
| | 2010.05- | | F | L/R | Estate Van FWD K9K 892 | | GCO99085 | Outer Joint | | 23 | 30 | 49 | 86 | 59 | I |
| | 2010.05- | 5MT | F | L | Pickup FWD K9K 892 | | GDS50570 | Drive Shaft | | 23 | 26 | 49 | 83.5 | 647 | |
| | 2010.05- | 5MT | F | R | Pickup FWD K9K 892 | | GDS50593 | Drive Shaft | | 23 | 26 | 49 | 83.5 | 890 | |
| | 2010.05- | MT | F | L | Pickup FWD K9K 892 | Date to:2011.12 | GDS50353 | Drive Shaft | | 23 | 26 | 49 | 86 | 649 | |
| | 2010.05- | MT | F | R | Pickup FWD K9K 892 | Date to:2011.12 | GDS50354 | Drive Shaft | | 23 | 26 | 49 | 86 | 897 | |
| | 2010.05- | | F | R | Pickup FWD K9K 892 | Date From:2011.01 | GDS50507 | Drive Shaft | | 23 | 26 | 49 | 86 | 898 | |
| | 2010.05- | | F | R | Pickup FWD K9K 892 | Date from:2011.01 | GCO50175 | Outer Joint | | 23 | 22 | 49 | 86 | 58.5 | I |
| | 2010.05- | MT | F | L | Saloon FWD K9K 892 | Date to:2011.12 | GDS50353 | Drive Shaft | | 23 | 26 | 49 | 86 | 649 | |
| | 2010.05- | MT | F | R | Saloon FWD K9K 892 | Date to:2011.12 | GDS50354 | Drive Shaft | | 23 | 26 | 49 | 86 | 897 | |
| | 2010.05- | | F | L | Saloon FWD K9K 892 | Date To:2012.12;Manufacturer Restriction:GKN | GDS50570 | Drive Shaft | | 23 | 26 | 49 | 83.5 | 647 | |
| | 2010.05- | | F | R | Saloon FWD K9K 892 | Date From:2011.01 | GDS50507 | Drive Shaft | | 23 | 26 | 49 | 86 | 898 | |
| | 2010.05- | | F | R | Saloon FWD K9K 892 | Date from:2011.01 | GCO50175 | Outer Joint | | 23 | 22 | 49 | 86 | 58.5 | I |
| 1.5 (66 kw) | 2012.10- | 6AT/5MT | F | L | Saloon FWD K9K 612;K9K 626 | | GDS50512 | Drive Shaft | | 23 | 26 | 49 | 86 | 658 | |
| | 2012.10- | 6AT/5MT | F | R | Saloon FWD K9K 612;K9K 626 | | GDS50513 | Drive Shaft | | 23 | 26 | 49 | 86 | 904 | |
| | 2012.10- | 6MT | F | L | Saloon FWD K9K 612;K9K 626 | | GDS50487 | Drive Shaft | | 23 | 26 | 49 | 86 | 662 | |
| | 2012.10- | 6MT | F | L | Saloon FWD K9K 612;K9K 626 | Manufacturer:NTN | GCI50134 | Inner Joint | | 26 | 30 | 40 | 64 | 96 | |
| | 2012.10- | MT | F | R | Saloon FWD K9K 612;K9K 626 | | GDS50489 | Drive Shaft | | 23 | 26 | 49 | 86 | 910 | |
| | 2012.10- | | F | L | Saloon FWD K9K 612;K9K 626 | | GCO50173 | Outer Joint | | 23 | 22 | 49 | 86 | 57 | M |
| | 2012.10- | | F | R | Saloon FWD K9K 612;K9K 626 | | GCI50118 | Inner Joint | | 26 | 22 | 40 | 64 | 104 | |
| 1.5 (70 kw) | 2018.05- | | F | L | Saloon FWD K9K 872 | | GDS50512 | Drive Shaft | | 23 | 26 | 49 | 86 | 658 | |
| | 2018.05- | | F | R | Saloon FWD K9K 872 | | GDS50513 | Drive Shaft | | 23 | 26 | 49 | 86 | 904 | |
| | 2018.05- | | F | L | Saloon FWD K9K 872 | | GCO50173 | Outer Joint | | 23 | 22 | 49 | 86 | 57 | M |
| | 2018.05- | | F | R | Saloon FWD K9K 872 | | GCI50118 | Inner Joint | | 26 | 22 | 40 | 64 | 104 | |
| 1.6 (62 kw) | 2010.05- | 5MT | F | L | Estate Van FWD K7M 800 | | GDS50353 | Drive Shaft | | 23 | 26 | 49 | 86 | 649 | |
| | 2010.05- | 5MT | F | L | Estate Van FWD K7M 800 | Date From:2011.01 | GDS50570 | Drive Shaft | | 23 | 26 | 49 | 83.5 | 647 | |
| | 2010.05- | 5MT | F | R | Estate Van FWD K7M 800 | | GDS50354 | Drive Shaft | | 23 | 26 | 49 | 86 | 897 | |
| | 2010.05- | MT | F | R | Estate Van FWD K7M 800 | Date to:2010.12 | GCI99169 | Inner Joint | | 26 | 30 | 33 | 326 | 95 | |
| | 2010.05- | | F | R | Estate Van FWD K7M 800 | Date From:2011.01 | GDS50507 | Drive Shaft | | 23 | 26 | 49 | 86 | 898 | |
| | 2010.05- | | F | R | Estate Van FWD K7M 800 | | GDS50593 | Drive Shaft | | 23 | 26 | 49 | 83.5 | 890 | |
| | 2010.05- | | F | R | Estate Van FWD K7M 800 | | GCO50092 | Outer Joint | | 23 | 29 | 49 | 86 | 57 | I |
| | 2010.05- | | F | L/R | Estate Van FWD K7M 800 | | GCO99085 | Outer Joint | | 23 | 30 | 49 | 86 | 59 | I |
| | 2010.05- | 5MT | F | L | Pickup FWD K7M 800 | | GDS50570 | Drive Shaft | | 23 | 26 | 49 | 83.5 | 647 | |
| | 2010.05- | 5MT | F | R | Pickup FWD K7M 800 | | GDS50593 | Drive Shaft | | 23 | 26 | 49 | 83.5 | 890 | |
| | 2010.05- | MT | F | L | Pickup FWD K7M 800 | Date to:2011.12 | GDS50353 | Drive Shaft | | 23 | 26 | 49 | 86 | 649 | |
| | 2010.05- | MT | F | R | Pickup FWD K7M 800 | Date to:2011.12 | GDS50354 | Drive Shaft | | 23 | 26 | 49 | 86 | 897 | |
| | 2010.05- | | F | R | Pickup FWD K7M 800 | Date From:2011.01 | GDS50507 | Drive Shaft | | 23 | 26 | 49 | 86 | 898 | |
| | 2010.05- | | F | R | Pickup FWD K7M 800 | Date from:2011.01 | GCO50175 | Outer Joint | | 23 | 22 | 49 | 86 | 58.5 | I |
| | 2010.05- | 5MT | F | L | Saloon FWD K7M 718 | Inner teeth of wheel side:24 | GDS45084 | Drive Shaft | | 21 | 30 | 49 | 84 | 681 | |
| | 2010.05- | 5MT | F | R | Saloon FWD K7M 718 | Inner teeth of wheel side:28 | GDS11023 | Drive Shaft | | 21 | 23 | 49 | 84 | 761 | |
| | 2010.05- | 5MT | F | R | Saloon FWD K7M 718 | Inner teeth of wheel side:24 | GDS45085 | Drive Shaft | | 21 | 23 | 49 | 84 | 763 | |
| | 2010.05- | 5MT | F | L/R | Saloon FWD K7M 718 | new | GCO11004 | Outer Joint | | 21 | 28 | 49 | 84 | 53.5 | I |
| | 2010.05- | 5MT | F | R | Saloon FWD K7M 718 | | GCI50008 | Inner Joint | | 23 | 30 | 36.3 | | 120.7 | |
| | 2010.05- | 5MT | F | R | Saloon FWD K7M 718 | new | GCI50124 | Inner Joint | | 23 | 28 | 36.3 | | 115 | |
| | 2010.05- | 5MT | F | L | Saloon FWD K7M 800 | Inner teeth of wheel side:24 | GDS45084 | Drive Shaft | | 21 | 30 | 49 | 84 | 681 | |
| | 2010.05- | 5MT | F | R | Saloon FWD K7M 800 | Inner teeth of wheel side:28 | GDS11023 | Drive Shaft | | 21 | 23 | 49 | 84 | 761 | |
| | 2010.05- | 5MT | F | R | Saloon FWD K7M 800 | Inner teeth of wheel side:24 | GDS45085 | Drive Shaft | | 21 | 23 | 49 | 84 | 763 | |
| | 2010.05- | 5MT | F | L/R | Saloon FWD K7M 800 | new | GCO11004 | Outer Joint | | 21 | 28 | 49 | 84 | 53.5 | I |
| | 2010.05- | 5MT | F | R | Saloon FWD K7M 800 | | GCI50008 | Inner Joint | | 23 | 30 | 36.3 | | 120.7 | |
| | 2010.05- | 5MT | F | R | Saloon FWD K7M 800 | new | GCI50124 | Inner Joint | | 23 | 28 | 36.3 | | 115 | |
| | 2010.05-2012.12 | 5MT | F | R | Estate Van FWD K7M 818 | | GDS50354 | Drive Shaft | | 23 | 26 | 49 | 86 | 897 | |
| | 2010.05-2012.12 | 5MT | F | L | Estate Van FWD K7M 818 | | GCI50048 | Inner Joint | | 26 | 30 | 40 | 64 | 121 | |
| | 2010.05-2012.12 | 5MT | F | R | Estate Van FWD K7M 818 | Date from:2011.01 | GCI50107 | Inner Joint | | 26 | 21 | 40 | 64 | 105.5 | |
| | 2010.05-2012.12 | 5MT | F | R | Estate Van FWD K7M 818 | | GCI99169 | Inner Joint | | 26 | 30 | 33 | 326 | 95 | |
| | 2010.05-2012.12 | | F | L | Estate Van FWD K7M 818 | | GDS50353 | Drive Shaft | | 23 | 26 | 49 | 86 | 649 | |
| | 2010.05-2012.12 | | F | L | Estate Van FWD K7M 818 | Date From:2011.01;Manufacturer Restriction:GKN | GDS50570 | Drive Shaft | | 23 | 26 | 49 | 83.5 | 647 | |
| | 2010.05-2012.12 | | F | R | Estate Van FWD K7M 818 | Date From:2011.01 | GDS50507 | Drive Shaft | | 23 | 26 | 49 | 86 | 898 | |
| | 2010.05-2012.12 | | F | R | Estate Van FWD K7M 818 | | GDS50593 | Drive Shaft | | 23 | 26 | 49 | 83.5 | 890 | |
| | 2010.05-2012.12 | | F | L/R | Estate Van FWD K7M 818 | Date To:2010.12 | GCO50092 | Outer Joint | | 23 | 29 | 49 | 86 | 57 | I |
| | 2010.05-2012.12 | | F | L/R | Estate Van FWD K7M 818 | Date To:2010.12 | GCO99085 | Outer Joint | | 23 | 30 | 49 | 86 | 59 | I |
| 1.6 (63 kw) | 2013.06-2016.08 | 5MT | F | L | Saloon FWD K7M 812 | Manufacturer:NTN | GDS11021 | Drive Shaft | | 23 | 30 | 49 | 86 | 683 | |
| | 2013.06-2016.08 | 5MT | F | L | Saloon FWD K7M 812 | Manufacturer:NTN | GDS84116 | Drive Shaft | | 23 | 26 | 49 | 86 | 660 | |

| | YEAR | TRANSM. | F/R | L/R | BODY STYLE & DRIVE TYPE & ENGINE | REMARKS | G-AP Ref. | PRODUCT | ABS | Technical Specifications | | | | | |
|---|---|---|---|---|---|---|---|---|---|---|---|---|---|---|---|
| | | | | | | | | | | A | B | C | H | L | P |
| **DACIA** | | | | | | | | | | | | | | | |
| **Logan** | | | | | | | | | | | | | | | |
| 1.6 (63 kw) | 2013.06-2016.08 | 5MT | F | R | Saloon FWD K7M 812 | Manufacturer:NTN | GDS11014 | Drive Shaft | | 23 | 23 | 49 | 83.5 | 755 | |
| | 2013.06-2016.08 | 5MT | F | R | Saloon FWD K7M 812 | Manufacturer:GKN | GDS50507 | Drive Shaft | | 23 | 26 | 49 | 86 | 898 | |
| | 2013.06-2016.08 | 5MT | F | L | Saloon FWD K7M 812 | | GCO50219 | Outer Joint | | 23 | 28 | 49 | 86 | 52 | I |
| | 2013.06-2016.08 | 5MT | F | L | Saloon FWD K7M 812 | | GCI50116 | Inner Joint | | 26 | 28 | 40 | 64 | 93 | |
| 1.6 (64 kw) | 2004.08-2011.03 | 5MT | F | L | Saloon FWD K7M 718 | Inner teeth of wheel side:24 | GDS45084 | Drive Shaft | | 21 | 30 | 49 | 84 | 681 | |
| | 2004.08-2011.03 | 5MT | F | R | Saloon FWD K7M 718 | Inner teeth of wheel side:28 | GDS11023 | Drive Shaft | | 21 | 23 | 49 | 84 | 761 | |
| | 2004.08-2011.03 | 5MT | F | R | Saloon FWD K7M 718 | Inner teeth of wheel side:24 | GDS45085 | Drive Shaft | | 21 | 23 | 49 | 84 | 763 | |
| | 2004.08-2011.03 | 5MT | F | L/R | Saloon FWD K7M 718 | new | GCO11004 | Outer Joint | | 21 | 28 | 49 | 84 | 53.5 | I |
| | 2004.08-2011.03 | 5MT | F | R | Saloon FWD K7M 718 | | GCI50008 | Inner Joint | | 23 | 30 | 36.3 | | 120.7 | |
| | 2004.08-2011.03 | 5MT | F | R | Saloon FWD K7M 718 | new | GCI50124 | Inner Joint | | 23 | 28 | 36.3 | | 115 | |
| | 2004.09- | 5MT | F | L | Saloon FWD K7M 710;K7M 718 | Date to:2014.02 | GDS45084 | Drive Shaft | | 21 | 30 | 49 | 84 | 681 | |
| | 2004.09- | 5MT | F | R | Saloon FWD K7M 710;K7M 718 | Date from:2014.02 | GDS11023 | Drive Shaft | | 21 | 23 | 49 | 84 | 761 | |
| | 2004.09- | 5MT | F | R | Saloon FWD K7M 710;K7M 718 | Date to:2014.02 | GDS45085 | Drive Shaft | | 21 | 23 | 49 | 84 | 763 | |
| | 2004.09- | 5MT | F | L/R | Saloon FWD K7M 710;K7M 718 | Date from:2014.02 | GCO11004 | Outer Joint | | 21 | 28 | 49 | 84 | 53.5 | I |
| | 2004.09- | 5MT | F | R | Saloon FWD K7M 710;K7M 718 | Date to:2014.02 | GCI50008 | Inner Joint | | 23 | 30 | 36.3 | | 120.7 | |
| | 2004.09- | 5MT | F | R | Saloon FWD K7M 710;K7M 718 | Date from:2014.02 | GCI50124 | Inner Joint | | 23 | 28 | 36.3 | | 115 | |
| | 2008.03- | MT | F | L | Pickup FWD K7M 710 | Date to:2011.12 | GDS50353 | Drive Shaft | | 23 | 26 | 49 | 86 | 649 | |
| | 2008.03- | MT | F | R | Pickup FWD K7M 710 | Date to:2011.12 | GDS50354 | Drive Shaft | | 23 | 26 | 49 | 86 | 897 | |
| | 2008.03- | | F | L | Pickup FWD K7M 710 | Date To:2012.12;Manufacturer Restriction:GKN | GDS50570 | Drive Shaft | | 23 | 26 | 49 | 83.5 | 647 | |
| | 2008.03- | | F | R | Pickup FWD K7M 710 | Date From:2011.01 | GDS50507 | Drive Shaft | | 23 | 26 | 49 | 86 | 898 | |
| | 2008.03- | | F | R | Pickup FWD K7M 710 | | GDS50593 | Drive Shaft | | 23 | 26 | 49 | 83.5 | 890 | |
| | 2009.03- | MT | F | L | Estate Van FWD K7M 710 | Date to:2011.12 | GDS50353 | Drive Shaft | | 23 | 26 | 49 | 86 | 649 | |
| | 2009.03- | MT | F | L | Estate Van FWD K7M 710 | Date From:2011.01;Date To:2013.06;Manufacturer Restriction:GKN | GDS50570 | Drive Shaft | | 23 | 26 | 49 | 83.5 | 647 | |
| | 2009.03- | MT | F | R | Estate Van FWD K7M 710 | Date to:2011.12 | GDS50354 | Drive Shaft | | 23 | 26 | 49 | 86 | 897 | |
| | 2009.03- | MT | F | R | Estate Van FWD K7M 710 | Date from:2009.11,Date to:2009.10 | GCI99169 | Inner Joint | | 26 | 30 | 33 | 326 | 95 | |
| | 2009.03- | | F | R | Estate Van FWD K7M 710 | Date From:2011.01 | GDS50507 | Drive Shaft | | 23 | 26 | 49 | 86 | 898 | |
| | 2009.03- | | F | R | Estate Van FWD K7M 710 | | GDS50593 | Drive Shaft | | 23 | 26 | 49 | 83.5 | 890 | |
| | 2009.03- | | F | L | Estate Van FWD K7M 710 | Date To:2010.12;For Modelcode:FS0D | GCO99085 | Outer Joint | | 23 | 30 | 49 | 86 | 59 | I |
| | 2009.03- | | F | R | Estate Van FWD K7M 710 | Date To:2010.12 | GCO50092 | Outer Joint | | 23 | 29 | 49 | 86 | 57 | I |
| | 2009.03- | | F | R | Estate Van FWD K7M 710 | Date To:2010.12 | GCO99085 | Outer Joint | | 23 | 30 | 49 | 86 | 59 | I |
| 1.6 (77 kw) | 2006.02- | 4AT | F | L | Saloon FWD K4M 690;K4M 696;K4M 694;K4M 697;K4M 698 | | GDS50574 | Drive Shaft | | 23 | 26 | 49 | 86 | 652 | |
| | 2006.02- | 4AT | F | R | Saloon FWD K4M 690;K4M 696;K4M 694;K4M 697;K4M 698 | Date To:2011.07 | GDS50443 | Drive Shaft | | 23 | 23 | 49 | 86 | 789 | |
| | 2006.02- | 4AT | F | R | Saloon FWD K4M 690;K4M 696;K4M 694;K4M 697;K4M 698 | Date From:2011.08 | GDS50575 | Drive Shaft | | 23 | 23 | 49 | 86 | 790 | |
| | 2006.02- | 4AT | F | L/R | Saloon FWD K4M 690;K4M 696;K4M 694;K4M 697;K4M 698 | | GCO99085 | Outer Joint | | 23 | 30 | 49 | 86 | 59 | I |
| | 2006.02- | 4AT | F | L | Saloon FWD K4M 690;K4M 696;K4M 694;K4M 697;K4M 698 | | GCI50040 | Inner Joint | | 26 | 30 | 43 | 42.5 | 83 | |
| | 2006.02- | 4AT | F | R | Saloon FWD K4M 690;K4M 696;K4M 694;K4M 697;K4M 698 | Date From:2011.08 | GCI50008 | Inner Joint | | 23 | 30 | 36.3 | | 120.7 | |
| | 2006.02- | 5MT | F | L | Saloon FWD K4M 690;K4M 696;K4M 694;K4M 697;K4M 698 | Model code:LS09,Date To:2010.06;Model code:LS05,ILS0M;Vehicle Production Country:Romania | GDS11021 | Drive Shaft | | 23 | 30 | 49 | 86 | 683 | |
| | 2006.02- | 5MT | F | L | Saloon FWD K4M 690;K4M 696;K4M 694;K4M 697;K4M 698 | Date To:2009.10,Model code:LS09 | GDS45084 | Drive Shaft | | 21 | 30 | 49 | 84 | 681 | |
| | 2006.02- | 5MT | F | R | Saloon FWD K4M 690;K4M 696;K4M 694;K4M 697;K4M 698 | Model code:LS05,Date To:2010.06;Model code:LS05,ILS0M;Vehicle Production Country:Romania | GDS11016 | Drive Shaft | | 23 | 23 | 49 | 86 | 764 | |
| | 2006.02- | 5MT | F | R | Saloon FWD K4M 690;K4M 696;K4M 694;K4M 697;K4M 698 | Date To:2009.10,Model code:LS09;new | GDS11023 | Drive Shaft | | 21 | 23 | 49 | 84 | 761 | |
| | 2006.02- | 5MT | F | R | Saloon FWD K4M 690;K4M 696;K4M 694;K4M 697;K4M 698 | Date To:2009.10,Model code:LS09 | GDS45085 | Drive Shaft | | 21 | 23 | 49 | 84 | 763 | |
| | 2006.02- | 5MT | F | R | Saloon FWD K4M 690;K4M 696;K4M 694;K4M 697;K4M 698 | Model code:LS0V;Model code:LS0L,Date From:2010.07 | GDS50475 | Drive Shaft | | 23 | 23 | 49 | 84 | 762 | |
| | 2006.02- | 5MT | F | L | Saloon FWD K4M 690;K4M 696;K4M 694;K4M 697;K4M 698 | Model code:LS05,Date To:2010.06;Model code:LS05,ILS0M;Vehicle Production Country:Romania | GCO50219 | Outer Joint | | 23 | 28 | 49 | 86 | 52 | I |
| | 2006.02- | 5MT | F | L | Saloon FWD K4M 690;K4M 696;K4M 694;K4M 697;K4M 698 | Model code:LS0V;Model code:LS0L,Date From:2010.07 | GCO81158 | Outer Joint | | 23 | 21 | 48.7 | 83.5 | 55 | M |
| | 2006.02- | 5MT | F | R | Saloon FWD K4M 690;K4M 696;K4M 694;K4M 697;K4M 698 | Model code:LS05,Date To:2010.06;Model code:LS05,ILS0M;Vehicle Production Country:Romania | GCO99085 | Outer Joint | | 23 | 30 | 49 | 86 | 59 | I |
| | 2006.02- | 5MT | F | L/R | Saloon FWD K4M 690;K4M 696;K4M 694;K4M 697;K4M 698 | Date To:2009.10,Model code:LS09;new | GCO11004 | Outer Joint | | 21 | 28 | 49 | 84 | 53.5 | I |
| | 2006.02- | 5MT | F | R | Saloon FWD K4M 690;K4M 696;K4M 694;K4M 697;K4M 698 | Date To:2009.10;Model code:LS09;Model code:ISS;LS0D;Model code:ISS;LS0D;Vehicle Production Country:RO | GCI50008 | Inner Joint | | 23 | 30 | 36.3 | | 120.7 | |
| | 2006.02- | 5MT | F | R | Saloon FWD K4M 690;K4M 696;K4M 694;K4M 697;K4M 698 | Model code:LS0V;Model code:LS0L,Date From:2010.07 | GCI50015 | Inner Joint | | 23 | 21 | 36.25 | | 118.5 | |
| | 2006.02- | 5MT | F | R | Saloon FWD K4M 690;K4M 696;K4M 694;K4M 697;K4M 698 | Date To:2009.10,Model code:LS09;new | GCI50124 | Inner Joint | | 23 | 28 | 36.3 | | 115 | |
| | 2010.01-2013.08 | 5MT | F | L | Pickup FWD K4M 690 | | GDS50570 | Drive Shaft | | 23 | 26 | 49 | 83.5 | 647 | |
| | 2010.01-2013.08 | 5MT | F | R | Pickup FWD K4M 690 | | GDS50593 | Drive Shaft | | 23 | 26 | 49 | 83.5 | 890 | |
| | 2010.01-2013.08 | 5MT | F | L | Pickup FWD K4M 690 | | GCI50057 | Inner Joint | | 26 | 22 | 40 | 64 | 104 | |
| | 2010.01-2013.08 | 5MT | F | R | Pickup FWD K4M 690 | | GCI50051 | Inner Joint | | 26 | 22 | 33 | 326 | 96 | |
| | 2010.01-2013.08 | 5MT | F | R | Pickup FWD K4M 690 | Date from:2011.01 | GCI50107 | Inner Joint | | 26 | 21 | 40 | 64 | 105.5 | |
| | 2010.01-2013.08 | | F | R | Pickup FWD K4M 690 | Date From:2011.01 | GDS50507 | Drive Shaft | | 23 | 26 | 49 | 86 | 898 | |
| | 2010.01-2013.08 | | F | R | Pickup FWD K4M 690 | Date from:2011.01 | GCO50175 | Outer Joint | | 23 | 22 | 49 | 86 | 58.5 | I |
| | 2010.07- | 5MT | F | L | Saloon FWD K4M 696 | Date from:2011.01 | GDS11022 | Drive Shaft | | 23 | 26 | 49 | 86 | 662 | |
| | 2010.07- | 5MT | F | L | Saloon FWD K4M 696 | Date To:2010.12 | GDS50570 | Drive Shaft | | 23 | 26 | 49 | 83.5 | 647 | |
| | 2010.07- | 5MT | F | R | Saloon FWD K4M 696 | Date from:2011.01 | GDS11018 | Drive Shaft | | 23 | 26 | 49 | 86 | 906 | |
| | 2010.07- | 5MT | F | R | Saloon FWD K4M 696 | Date to:2010.12 | GDS50593 | Drive Shaft | | 23 | 26 | 49 | 83.5 | 890 | |
| | 2010.07- | 5MT | F | L/R | Saloon FWD K4M 696 | Date from:2011.01 | GCO99085 | Outer Joint | | 23 | 30 | 49 | 86 | 59 | I |
| | 2010.07- | 5MT | F | L/R | Saloon FWD K4M 696 | | GCI50134 | Inner Joint | | 26 | 30 | 40 | 64 | 96 | |
| | 2010.07- | | F | R | Saloon FWD K4M 696 | | GDS50507 | Drive Shaft | | 23 | 26 | 49 | 86 | 898 | |
| | 2013.01- | 5MT | F | L | Saloon FWD K4M 842 | | GDS11021 | Drive Shaft | | 23 | 30 | 49 | 86 | 683 | |
| | 2013.01- | 5MT | F | R | Saloon FWD K4M 842 | Manufacturer:NTN | GDS11014 | Drive Shaft | | 23 | 23 | 49 | 83.5 | 755 | |

| | YEAR | TRANSM. | F/R | L/R | BODY STYLE & DRIVE TYPE & ENGINE | REMARKS | G-AP Ref. | PRODUCT | ABS | Technical Specifications A | B | C | H | L | P |
|---|---|---|---|---|---|---|---|---|---|---|---|---|---|---|---|
| **DACIA** | | | | | | | | | | | | | | | |
| **Logan** | | | | | | | | | | | | | | | |
| 1.6 (77 kw) | 2013.01- | 5MT | F | L | Saloon FWD K4M 842 | | GCO50219 | Outer Joint | | 23 | 28 | 49 | 86 | 52 | I |
| **Logan II** | | | | | | | | | | | | | | | |
| 1.0 (74 kw) | 2019.11- | 5MT | F | L | Saloon FWD H4D 450, H4D 460 | Manufacturer:GKN | GDS50508 | Drive Shaft | | 23 | 26 | 49 | 86 | 660 | |
| | 2019.11- | 5MT | F | L | Saloon FWD H4D 450, H4D 460 | | GDS50508 | Drive Shaft | | 23 | 26 | 49 | 86 | 660 | |
| | 2019.11- | 5MT | F | R | Saloon FWD H4D 450, H4D 460 | Manufacturer:GKN | GDS50507 | Drive Shaft | | 23 | 26 | 49 | 86 | 898 | |
| | 2019.11- | 5MT | F | R | Saloon FWD H4D 450, H4D 460 | | GDS50507 | Drive Shaft | | 23 | 26 | 49 | 86 | 898 | |
| **Logan MCV** | | | | | | | | | | | | | | | |
| 0.9 (66 kw) | 2013.02- | 5AT/5MT | F | L | Estate FWD H4B 400, H4B 412, H4B 408 | AAR | GDS50508 | Drive Shaft | | 23 | 26 | 49 | 86 | 660 | |
| | 2013.02- | 5AT/5MT | F | L | Estate FWD H4B 400, H4B 412, H4B 408 | TJ | GDS50512 | Drive Shaft | | 23 | 26 | 49 | 86 | 658 | |
| | 2013.02- | 5AT/5MT | F | R | Estate FWD H4B 400, H4B 412, H4B 408 | Inner teeth of tranm.side:22 | GDS50513 | Drive Shaft | | 23 | 26 | 49 | 86 | 904 | |
| | 2013.02- | 5AT/5MT | F | L | Estate FWD H4B 400, H4B 412, H4B 408 | | GCO50173 | Outer Joint | | 23 | 22 | 49 | 86 | 57 | M |
| | 2013.02- | 5AT/5MT | F | L | Estate FWD H4B 400, H4B 412, H4B 408 | AAR | GCI82311 | Inner Joint | | 26 | 22 | 39.95 | 64 | 109 | |
| | 2013.02- | 5AT/5MT | F | R | Estate FWD H4B 400, H4B 412, H4B 408 | TJ | GCI50118 | Inner Joint | | 26 | 22 | 40 | 64 | 104 | |
| | 2013.02- | | F | R | Estate FWD H4B 400, H4B 412, H4B 408 | | GDS50507 | Drive Shaft | | 23 | 26 | 49 | 86 | 898 | |
| | 2015.09- | 5MT | F | L | Estate FWD H4B 410;H4B 405 | AAR | GDS50508 | Drive Shaft | | 23 | 26 | 49 | 86 | 660 | |
| | 2015.09- | 5MT | F | L | Estate FWD H4B 410;H4B 405 | TJ | GDS50512 | Drive Shaft | | 23 | 26 | 49 | 86 | 658 | |
| | 2015.09- | 5MT | F | R | Estate FWD H4B 410;H4B 405 | | GDS50513 | Drive Shaft | | 23 | 26 | 49 | 86 | 904 | |
| | 2015.09- | 5MT | F | L/R | Estate FWD H4B 410;H4B 405 | | GCO50173 | Outer Joint | | 23 | 22 | 49 | 86 | 57 | M |
| | 2015.09- | 5MT | F | L | Estate FWD H4B 410;H4B 405 | AAR | GCI82311 | Inner Joint | | 26 | 22 | 39.95 | 64 | 109 | |
| | 2015.09- | | F | R | Estate FWD H4B 410;H4B 405 | | GCI50118 | Inner Joint | | 26 | 22 | 40 | 64 | 104 | |
| 1.0 (54 kw) | 2016.12- | 5MT | F | L | Estate FWD B4D 401;B4D 400 | Manufacturer:GKN | GDS50508 | Drive Shaft | | 23 | 26 | 49 | 86 | 660 | |
| | 2016.12- | 5MT | F | L | Estate FWD B4D 401;B4D 400 | Manufacturer:NTN | GDS84116 | Drive Shaft | | 23 | 26 | 49 | 86 | 660 | |
| | 2016.12- | 5MT | F | R | Estate FWD B4D 401;B4D 400 | Inner teeth of wheel side:22 | GDS50507 | Drive Shaft | | 23 | 26 | 49 | 86 | 898 | |
| | 2016.12- | 5MT | F | R | Estate FWD B4D 401;B4D 400 | Inner teeth of wheel side:28 | GDS84115 | Drive Shaft | | 23 | 26 | 49 | 86 | 903 | |
| | 2016.12- | 5MT | F | R | Estate FWD B4D 401;B4D 400 | | GCO50175 | Outer Joint | | 23 | 22 | 49 | 86 | 58.5 | I |
| | 2016.12- | 5MT | F | L/R | Estate FWD B4D 401;B4D 400 | | GCO50219 | Outer Joint | | 23 | 28 | 49 | 86 | 52 | I |
| | 2016.12- | 5MT | F | L | Estate FWD B4D 401;B4D 400 | | GCI50116 | Inner Joint | | 26 | 28 | 40 | 64 | 93 | |
| | 2016.12- | 5MT | F | R | Estate FWD B4D 401;B4D 400 | | GCI50107 | Inner Joint | | 26 | 21 | 40 | 64 | 105.5 | |
| | 2016.12- | 5MT | F | R | Estate FWD B4D 401;B4D 400 | | GCI82521 | Inner Joint | | 26 | 28 | 40 | 64 | 93 | |
| 1.0 (74 kw) | 2019.11- | 5MT | F | L | Estate FWD H4D 450, H4D 460 | | GDS50508 | Drive Shaft | | 23 | 26 | 49 | 86 | 660 | |
| | 2019.11- | 5MT | F | R | Estate FWD H4D 450, H4D 460 | | GDS50507 | Drive Shaft | | 23 | 26 | 49 | 86 | 898 | |
| | 2019.11- | 5MT | F | R | Estate FWD H4D 450, H4D 460 | | GCO50175 | Outer Joint | | 23 | 22 | 49 | 86 | 58.5 | I |
| | 2019.11- | 5MT | F | R | Estate FWD H4D 450, H4D 460 | | GCI50107 | Inner Joint | | 26 | 21 | 40 | 64 | 105.5 | |
| | 2019.11- | 5MT | F | L | Estate FWD H4D 450;H4D 460 | Manufacturer:GKN | GDS50508 | Drive Shaft | | 23 | 26 | 49 | 86 | 660 | |
| | 2019.11- | 5MT | F | R | Estate FWD H4D 450;H4D 460 | Manufacturer:GKN | GDS50507 | Drive Shaft | | 23 | 26 | 49 | 86 | 898 | |
| 1.2 (53 kw) | 2013.02- | 5MT | F | L | Estate FWD D4F 734 | Manufacturer:NTN | GDS11021 | Drive Shaft | | 23 | 30 | 49 | 86 | 683 | |
| | 2013.02- | 5MT | F | L | Estate FWD D4F 734 | | GDS84116 | Drive Shaft | | 23 | 26 | 49 | 86 | 660 | |
| | 2013.02- | 5MT | F | R | Estate FWD D4F 734 | Manufacturer:NTN | GDS11014 | Drive Shaft | | 23 | 23 | 49 | 83.5 | 755 | |
| | 2013.02- | 5MT | F | L | Estate FWD D4F 734 | | GCO50219 | Outer Joint | | 23 | 28 | 49 | 86 | 52 | I |
| 1.2 (54 kw) | 2015.05- | 5MT | F | L | Estate FWD D4F 732 | | GDS84116 | Drive Shaft | | 23 | 26 | 49 | 86 | 660 | |
| | 2015.05- | 5MT | F | R | Estate FWD D4F 732 | | GDS11014 | Drive Shaft | | 23 | 23 | 49 | 83.5 | 755 | |
| | 2015.05- | 5MT | F | R | Estate FWD D4F 732 | | GDS84115 | Drive Shaft | | 23 | 26 | 49 | 86 | 903 | |
| | 2015.05- | 5MT | F | L | Estate FWD D4F 732 | | GCI50116 | Inner Joint | | 26 | 28 | 40 | 64 | 93 | |
| | 2015.05- | | F | L | Estate FWD D4F 732 | Date from:2015.07 | GDS11021 | Drive Shaft | | 23 | 30 | 49 | 86 | 683 | |
| | 2015.05- | | F | L/R | Estate FWD D4F 732 | Date From:2015.07 | GCO50219 | Outer Joint | | 23 | 28 | 49 | 86 | 52 | I |
| 1.2 (55 kw) | 2013.02- | 5MT | F | L | Estate FWD D4F 732 | | GDS84116 | Drive Shaft | | 23 | 26 | 49 | 86 | 660 | |
| | 2013.02- | 5MT | F | R | Estate FWD D4F 732 | | GDS11014 | Drive Shaft | | 23 | 23 | 49 | 83.5 | 755 | |
| | 2013.02- | 5MT | F | R | Estate FWD D4F 732 | | GDS84115 | Drive Shaft | | 23 | 26 | 49 | 86 | 903 | |
| | 2013.02- | 5MT | F | L | Estate FWD D4F 732 | | GCI50116 | Inner Joint | | 26 | 28 | 40 | 64 | 93 | |
| | 2013.02- | MT | F | L | Estate FWD D4F 732 | Date to:2014.07 | GDS11021 | Drive Shaft | | 23 | 30 | 49 | 86 | 683 | |
| | 2013.02- | MT | F | L | Estate FWD D4F 732 | Date to:2014.07 | GCO50219 | Outer Joint | | 23 | 28 | 49 | 86 | 52 | I |
| | 2013.02- | 5MT | F | L | Estate FWD D4F 734 | | GDS84116 | Drive Shaft | | 23 | 26 | 49 | 86 | 660 | |
| | 2013.02- | 5MT | F | R | Estate FWD D4F 734 | Manufacturer:NTN | GDS11014 | Drive Shaft | | 23 | 23 | 49 | 83.5 | 755 | |
| | 2013.02- | 5MT | F | L | Estate FWD D4F 734 | | GCI50116 | Inner Joint | | 26 | 28 | 40 | 64 | 93 | |
| | 2013.02- | MT | F | L | Estate FWD D4F 734 | Date to:2014.07 | GDS11021 | Drive Shaft | | 23 | 30 | 49 | 86 | 683 | |
| | 2013.02- | MT | F | L | Estate FWD D4F 734 | Date to:2014.07 | GCO50219 | Outer Joint | | 23 | 28 | 49 | 86 | 52 | I |
| 1.4 (55 kw) | 2007.02- | 5MT | F | L | Estate FWD K7J 710 | | GDS11021 | Drive Shaft | | 23 | 30 | 49 | 86 | 683 | |
| | 2007.02- | 5MT | F | R | Estate FWD K7J 710 | | GDS11014 | Drive Shaft | | 23 | 23 | 49 | 83.5 | 755 | |
| | 2007.02- | 5MT | F | R | Estate FWD K7J 710 | | GCI50008 | Inner Joint | | 23 | 30 | 36.3 | | 120.7 | |
| | 2007.02- | MT | F | L | Estate FWD K7J 710 | | GDS50353 | Drive Shaft | | 23 | 26 | 49 | 86 | 649 | |
| | 2007.02- | MT | F | R | Estate FWD K7J 710 | | GDS50354 | Drive Shaft | | 23 | 26 | 49 | 86 | 897 | |
| | 2007.02- | MT | F | L/R | Estate FWD K7J 710 | | GCO99085 | Outer Joint | | 23 | 30 | 49 | 86 | 59 | I |
| | 2007.02- | | F | R | Estate FWD K7J 710 | | GDS11016 | Drive Shaft | | 23 | 23 | 49 | 86 | 764 | |
| 1.5 (50 kw) | 2007.02- | 5MT | F | R | Estate FWD K9K 792 | Date to:2010.12 | GDS50354 | Drive Shaft | | 23 | 26 | 49 | 86 | 897 | |
| | 2007.02- | 5MT | F | L/R | Estate FWD K9K 792 | Date to:2010.12 | GCO99085 | Outer Joint | | 23 | 30 | 49 | 86 | 59 | I |

| | YEAR | TRANSM. | F/R | L/R | BODY STYLE & DRIVE TYPE & ENGINE | REMARKS | G-AP Ref. | PRODUCT | ABS | Technical Specifications A | B | C | H | L | P |
|---|---|---|---|---|---|---|---|---|---|---|---|---|---|---|---|
| **DACIA** **Logan MCV** | | | | | | | | | | | | | | | |
| 1.5 (50 kw) | 2007.02- | 5MT | F | R | Estate FWD K9K 792 | Date to:2010.12 | GCI99169 | Inner Joint | | 26 | 30 | 33 | 326 | 95 | |
| | 2007.02- | | F | L | Estate FWD K9K 792 | Inner teeth of wheel side:30 | GDS50353 | Drive Shaft | | 23 | 26 | 49 | 86 | 649 | |
| | 2007.02- | | F | L | Estate FWD K9K 792 | Date from:2011.01;Date to:201306;Inner teeth of wheel side:22 | GDS50570 | Drive Shaft | | 23 | 26 | 49 | 83.5 | 647 | |
| | 2007.02- | | F | R | Estate FWD K9K 792 | Date from:2011.01;Inner teeth of tranm.side:21 | GDS50507 | Drive Shaft | | 23 | 26 | 49 | 86 | 898 | |
| | 2007.02- | | F | R | Estate FWD K9K 792 | Date from:2011.01;Inner teeth of tranm.side:22 | GDS50593 | Drive Shaft | | 23 | 26 | 49 | 83.5 | 890 | |
| | 2007.02- | | F | L/R | Estate FWD K9K 792 | Date To:2010.12 | GCO50092 | Outer Joint | | 23 | 29 | 49 | 86 | 57 | I |
| 1.5 (55 kw) | 2010.05-2013.06 | 5MT | F | L | Estate FWD K9K 892 | | GDS50353 | Drive Shaft | | 23 | 26 | 49 | 86 | 649 | |
| | 2010.05-2013.06 | 5MT | F | L | Estate FWD K9K 892 | Date From:2011.01 | GDS50570 | Drive Shaft | | 23 | 26 | 49 | 83.5 | 647 | |
| | 2010.05-2013.06 | 5MT | F | R | Estate FWD K9K 892 | | GDS50354 | Drive Shaft | | 23 | 26 | 49 | 86 | 897 | |
| | 2010.05-2013.06 | 5MT | F | L | Estate FWD K9K 892 | | GCI50048 | Inner Joint | | 26 | 30 | 40 | 64 | 121 | |
| | 2010.05-2013.06 | 5MT | F | L | Estate FWD K9K 892 | Date from:2011.01 | GCI50057 | Inner Joint | | 26 | 22 | 40 | 64 | 104 | |
| | 2010.05-2013.06 | 5MT | F | R | Estate FWD K9K 892 | Date from:2011.01 | GCI50051 | Inner Joint | | 26 | 22 | 33 | 326 | 96 | |
| | 2010.05-2013.06 | 5MT | F | R | Estate FWD K9K 892 | Date from:2011.01 | GCI50107 | Inner Joint | | 26 | 21 | 40 | 64 | 105.5 | |
| | 2010.05-2013.06 | 5MT | F | R | Estate FWD K9K 892 | | GCI99169 | Inner Joint | | 26 | 30 | 33 | 326 | 95 | |
| | 2010.05-2013.06 | | F | R | Estate FWD K9K 892 | Date From:2011.01 | GDS50507 | Drive Shaft | | 23 | 26 | 49 | 86 | 898 | |
| | 2010.05-2013.06 | | F | R | Estate FWD K9K 892 | Date From:2011.01 | GDS50593 | Drive Shaft | | 23 | 26 | 49 | 83.5 | 890 | |
| | 2010.05-2013.06 | | F | R | Estate FWD K9K 892 | | GCO50092 | Outer Joint | | 23 | 29 | 49 | 86 | 57 | I |
| | 2010.05-2013.06 | | F | L/R | Estate FWD K9K 892 | | GCO99085 | Outer Joint | | 23 | 30 | 49 | 86 | 59 | I |
| | 2013.02- | 5MT | F | L | Estate FWD K9K 612;K9K 626 | Inner teeth of wheel side:30 | GDS50487 | Drive Shaft | | 23 | 26 | 49 | 86 | 662 | |
| | 2013.02- | 5MT | F | L | Estate FWD K9K 612;K9K 626 | Inner teeth of wheel side:22 | GDS50512 | Drive Shaft | | 23 | 26 | 49 | 86 | 658 | |
| | 2013.02- | 5MT | F | R | Estate FWD K9K 612;K9K 626 | | GDS50513 | Drive Shaft | | 23 | 26 | 49 | 86 | 904 | |
| | 2013.02- | 5MT | F | L | Estate FWD K9K 612;K9K 626 | Manufacturer:NTN | GCI50134 | Inner Joint | | 26 | 30 | 40 | 64 | 96 | |
| | 2013.02- | 5MT | F | R | Estate FWD K9K 612;K9K 626 | | GCI50118 | Inner Joint | | 26 | 22 | 40 | 64 | 104 | |
| | 2013.02- | MT | F | R | Estate FWD K9K 612;K9K 626 | | GDS50489 | Drive Shaft | | 23 | 26 | 49 | 86 | 910 | |
| | 2013.02- | MT | F | L | Estate FWD K9K 612;K9K 626 | | GCO50173 | Outer Joint | | 23 | 22 | 49 | 86 | 57 | M |
| 1.5 (63 kw) | 2007.09-2012.12 | 5MT | F | L | Estate FWD K9K 796 | Date to:2010.12 | GDS50353 | Drive Shaft | | 23 | 26 | 49 | 86 | 649 | |
| | 2007.09-2012.12 | 5MT | F | L | Estate FWD K9K 796 | Date From:2011.01 | GDS50570 | Drive Shaft | | 23 | 26 | 49 | 83.5 | 647 | |
| | 2007.09-2012.12 | 5MT | F | R | Estate FWD K9K 796 | Date to:2010.12 | GDS50354 | Drive Shaft | | 23 | 26 | 49 | 86 | 897 | |
| | 2007.09-2012.12 | 5MT | F | L/R | Estate FWD K9K 796 | Date to:2010.12 | GCO99085 | Outer Joint | | 23 | 30 | 49 | 86 | 59 | I |
| | 2007.09-2012.12 | 5MT | F | L | Estate FWD K9K 796 | Date to:2010.12 | GCI50048 | Inner Joint | | 26 | 30 | 40 | 64 | 121 | |
| | 2007.09-2012.12 | 5MT | F | L | Estate FWD K9K 796 | Date from:2011.01 | GCI50057 | Inner Joint | | 26 | 22 | 40 | 64 | 104 | |
| | 2007.09-2012.12 | 5MT | F | R | Estate FWD K9K 796 | Date from:2011.01 | GCI50051 | Inner Joint | | 26 | 22 | 33 | 326 | 96 | |
| | 2007.09-2012.12 | 5MT | F | R | Estate FWD K9K 796 | Date from:2011.01 | GCI50107 | Inner Joint | | 26 | 21 | 40 | 64 | 105.5 | |
| | 2007.09-2012.12 | 5MT | F | R | Estate FWD K9K 796 | Date to:2010.12 | GCI99169 | Inner Joint | | 26 | 30 | 33 | 326 | 95 | |
| | 2007.09-2012.12 | MT | F | R | Estate FWD K9K 796 | Date From:2011.01;Inner teeth of tranm.side:21 | GDS50507 | Drive Shaft | | 23 | 26 | 49 | 86 | 898 | |
| | 2007.09-2012.12 | MT | F | R | Estate FWD K9K 796 | Date From:2011.01;Inner teeth of tranm.side:22 | GDS50593 | Drive Shaft | | 23 | 26 | 49 | 83.5 | 890 | |
| | 2007.09-2012.12 | MT | F | L/R | Estate FWD K9K 796 | Date To:2010.12 | GCO50092 | Outer Joint | | 23 | 29 | 49 | 86 | 57 | I |
| | 2013.02- | 5MT | F | L | Estate FWD K9K 830;K9K 838 | | GDS50512 | Drive Shaft | | 23 | 26 | 49 | 86 | 658 | |
| | 2013.02- | 5MT | F | R | Estate FWD K9K 830;K9K 838 | | GDS50513 | Drive Shaft | | 23 | 26 | 49 | 86 | 904 | |
| | 2013.02- | 5MT | F | L/R | Estate FWD K9K 830;K9K 838 | | GCO50173 | Outer Joint | | 23 | 22 | 49 | 86 | 57 | M |
| | 2013.02- | 5MT | F | R | Estate FWD K9K 830;K9K 838 | | GCI50118 | Inner Joint | | 26 | 22 | 40 | 64 | 104 | |
| | 2013.02- | MT | F | R | Estate FWD K9K 830;K9K 838 | | GDS50489 | Drive Shaft | | 23 | 26 | 49 | 86 | 910 | |
| 1.5 (65 kw) | 2010.05- | 5MT | F | L | Estate FWD K9K 892 | | GDS50353 | Drive Shaft | | 23 | 26 | 49 | 86 | 649 | |
| | 2010.05- | 5MT | F | L | Estate FWD K9K 892 | Date From:2011.01 | GDS50570 | Drive Shaft | | 23 | 26 | 49 | 83.5 | 647 | |
| | 2010.05- | 5MT | F | R | Estate FWD K9K 892 | | GDS50354 | Drive Shaft | | 23 | 26 | 49 | 86 | 897 | |
| | 2010.05- | 5MT | F | L | Estate FWD K9K 892 | | GCI50048 | Inner Joint | | 26 | 30 | 40 | 64 | 121 | |
| | 2010.05- | 5MT | F | L | Estate FWD K9K 892 | Date from:2011.01 | GCI50057 | Inner Joint | | 26 | 22 | 40 | 64 | 104 | |
| | 2010.05- | 5MT | F | R | Estate FWD K9K 892 | Date from:2011.01 | GCI50051 | Inner Joint | | 26 | 22 | 33 | 326 | 96 | |
| | 2010.05- | 5MT | F | R | Estate FWD K9K 892 | Date from:2011.01 | GCI50107 | Inner Joint | | 26 | 21 | 40 | 64 | 105.5 | |
| | 2010.05- | 5MT | F | R | Estate FWD K9K 892 | | GCI99169 | Inner Joint | | 26 | 30 | 33 | 326 | 95 | |
| | 2010.05- | | F | R | Estate FWD K9K 892 | Date From:2011.01 | GDS50507 | Drive Shaft | | 23 | 26 | 49 | 86 | 898 | |
| | 2010.05- | | F | R | Estate FWD K9K 892 | Date From:2011.01 | GDS50593 | Drive Shaft | | 23 | 26 | 49 | 83.5 | 890 | |
| | 2010.05- | | F | R | Estate FWD K9K 892 | | GCO50092 | Outer Joint | | 23 | 29 | 49 | 86 | 57 | I |
| | 2010.05- | | F | L/R | Estate FWD K9K 892 | | GCO99085 | Outer Joint | | 23 | 30 | 49 | 86 | 59 | I |
| 1.5 (66 kw) | 2013.02- | 5MT | F | L | Estate FWD K9K 626, K9K 612 | | GDS50512 | Drive Shaft | | 23 | 26 | 49 | 86 | 658 | |
| | 2013.02- | 5MT | F | R | Estate FWD K9K 626, K9K 612 | Inner teeth of tranm.side:22 | GDS50513 | Drive Shaft | | 23 | 26 | 49 | 86 | 904 | |
| | 2013.02- | 5MT | F | L | Estate FWD K9K 626, K9K 612 | | GCO50173 | Outer Joint | | 23 | 22 | 49 | 86 | 57 | M |
| | 2013.02- | 5MT | F | L | Estate FWD K9K 626, K9K 612 | | GCI82311 | Inner Joint | | 26 | 22 | 39.95 | 64 | 109 | |
| | 2013.02- | 5MT | F | R | Estate FWD K9K 626, K9K 612 | | GCI50118 | Inner Joint | | 26 | 22 | 40 | 64 | 104 | |
| | 2013.02- | 5MT/6MT | F | L | Estate FWD K9K 626, K9K 612 | Manufacturer:NTN | GCI50134 | Inner Joint | | 26 | 30 | 40 | 64 | 96 | |
| | 2013.02- | 6MT | F | L | Estate FWD K9K 626, K9K 612 | | GDS50487 | Drive Shaft | | 23 | 26 | 49 | 86 | 662 | |
| | 2013.02- | 6MT | F | R | Estate FWD K9K 626, K9K 612 | | GDS50489 | Drive Shaft | | 23 | 26 | 49 | 86 | 910 | |
| | 2013.02- | AT | F | R | Estate FWD K9K 626, K9K 612 | | GDS50489 | Drive Shaft | | 23 | 26 | 49 | 86 | 910 | |
| 1.5 (70 kw) | 2018.10- | 5MT | F | L | Estate FWD K9K 872 | | GDS50508 | Drive Shaft | | 23 | 26 | 49 | 86 | 660 | |
| | 2018.10- | 5MT | F | L | Estate FWD K9K 872 | | GCI82311 | Inner Joint | | 26 | 22 | 39.95 | 64 | 109 | |

| | YEAR | TRANSM. | F/R | L/R | BODY STYLE & DRIVE TYPE & ENGINE | REMARKS | G-AP Ref. | PRODUCT | ABS | Technical Specifications A | B | C | H | L | P |
|---|---|---|---|---|---|---|---|---|---|---|---|---|---|---|---|
| **DACIA** **Logan MCV** | | | | | | | | | | | | | | | |
| 1.5 (70 kw) | 2018.10- | | F | R | Estate FWD K9K 872 | | GDS50489 | Drive Shaft | | 23 | 26 | 49 | 86 | 910 | |
| | 2018.10- | | F | R | Estate FWD K9K 872 | | GDS50507 | Drive Shaft | | 23 | 26 | 49 | 86 | 898 | |
| | 2018.10- | | F | | Estate FWD K9K 872 | | GDS50487 | Drive Shaft | | 23 | 26 | 49 | 86 | 662 | |
| | 2018.10- | | F | R | Estate FWD K9K 872 | | GCO50175 | Outer Joint | | 23 | 22 | 49 | 86 | 58.5 | I |
| 1.6 (62 kw) | 2010.05- | 5MT | F | L | Estate FWD K7M 718 | Manufacturer:NTN | GDS11021 | Drive Shaft | | 23 | 30 | 49 | 86 | 683 | |
| | 2010.05- | 5MT | F | L | Estate FWD K7M 718 | For special-purpose vehicles;For vehicles with 3rd seating row | GDS50353 | Drive Shaft | | 23 | 26 | 49 | 86 | 649 | |
| | 2010.05- | 5MT | F | L | Estate FWD K7M 718 | For special-purpose vehicles,Manufacturer:GKN | GDS50570 | Drive Shaft | | 23 | 26 | 49 | 83.5 | 647 | |
| | 2010.05- | 5MT | F | R | Estate FWD K7M 718 | Date From:2010.06 | GDS11014 | Drive Shaft | | 23 | 23 | 49 | 83.5 | 755 | |
| | 2010.05- | 5MT | F | R | Estate FWD K7M 718 | Date to:2010.12;For vehicles with 3rd seating row;Date to:2010.12;For special-purpose vehicles | GDS50354 | Drive Shaft | | 23 | 26 | 49 | 86 | 897 | |
| | 2010.05- | | F | R | Estate FWD K7M 718 | | GDS11016 | Drive Shaft | | 23 | 23 | 49 | 86 | 764 | |
| | 2010.05- | | F | R | Estate FWD K7M 718 | Date From:2011.01;For special-purpose vehicles | GDS50507 | Drive Shaft | | 23 | 26 | 49 | 86 | 898 | |
| | 2010.05- | | F | R | Estate FWD K7M 718 | For vehicles with 3rd seating row | GDS50593 | Drive Shaft | | 23 | 26 | 49 | 83.5 | 890 | |
| | 2010.05- | | F | L/R | Estate FWD K7M 718 | Date To:2010.12;For special-purpose vehicles | GCO50092 | Outer Joint | | 23 | 29 | 49 | 86 | 57 | I |
| | 2010.05- | | F | L/R | Estate FWD K7M 718 | Date To:2010.12;For special-purpose vehicles | GCO99085 | Outer Joint | | 23 | 30 | 49 | 86 | 59 | I |
| | 2010.05- | | F | R | Estate FWD K7M 718 | | GCI50008 | Inner Joint | | 23 | 30 | 36.3 | | 120.7 | |
| | 2010.05- | 5MT | F | L | Estate FWD K7M 800 | Manufacturer:NTN | GDS11021 | Drive Shaft | | 23 | 30 | 49 | 86 | 683 | |
| | 2010.05- | 5MT | F | L | Estate FWD K7M 800 | | GDS50353 | Drive Shaft | | 23 | 26 | 49 | 86 | 649 | |
| | 2010.05- | 5MT | F | L | Estate FWD K7M 800 | Manufacturer:GKN | GDS50570 | Drive Shaft | | 23 | 26 | 49 | 83.5 | 647 | |
| | 2010.05- | 5MT | F | R | Estate FWD K7M 800 | common vehicles | GDS11014 | Drive Shaft | | 23 | 23 | 49 | 83.5 | 755 | |
| | 2010.05- | 5MT | F | R | Estate FWD K7M 800 | For vehicles with 3rd seating row;For special-purpose vehicles | GDS50354 | Drive Shaft | | 23 | 26 | 49 | 86 | 897 | |
| | 2010.05- | 5MT | F | R | Estate FWD K7M 800 | | GCI50008 | Inner Joint | | 23 | 30 | 36.3 | | 120.7 | |
| | 2010.05- | | F | R | Estate FWD K7M 800 | | GDS11016 | Drive Shaft | | 23 | 23 | 49 | 86 | 764 | |
| | 2010.05- | | F | R | Estate FWD K7M 800 | For vehicles with 3rd seating row | GDS50507 | Drive Shaft | | 23 | 26 | 49 | 86 | 898 | |
| | 2010.05- | | F | R | Estate FWD K7M 800 | For vehicles with 3rd seating row | GDS50593 | Drive Shaft | | 23 | 26 | 49 | 83.5 | 890 | |
| | 2010.05- | | F | R | Estate FWD K7M 800 | | GCO50092 | Outer Joint | | 23 | 29 | 49 | 86 | 57 | I |
| | 2010.05- | | F | L/R | Estate FWD K7M 800 | | GCO99085 | Outer Joint | | 23 | 30 | 49 | 86 | 59 | I |
| | 2013.06- | 5MT | F | L | Estate FWD K7M 812 | Manufacturer:NTN | GDS11021 | Drive Shaft | | 23 | 30 | 49 | 86 | 683 | |
| | 2013.06- | 5MT | F | L | Estate FWD K7M 812 | | GDS84116 | Drive Shaft | | 23 | 26 | 49 | 86 | 660 | |
| | 2013.06- | 5MT | F | R | Estate FWD K7M 812 | Manufacturer:NTN | GDS11014 | Drive Shaft | | 23 | 23 | 49 | 83.5 | 755 | |
| | 2013.06- | 5MT | F | L/R | Estate FWD K7M 812 | | GCO50219 | Outer Joint | | 23 | 28 | 49 | 86 | 52 | I |
| 1.6 (64 kw) | 2007.02-2013.06 | 5MT | F | R | Estate FWD K7M 710;K7M 718 | common vehicles | GDS11014 | Drive Shaft | | 23 | 23 | 49 | 83.5 | 755 | |
| | 2007.02-2013.06 | 5MT | F | R | Estate FWD K7M 710;K7M 718 | For vehicles with 3rd seating row;For special-purpose vehicles | GDS50354 | Drive Shaft | | 23 | 26 | 49 | 86 | 897 | |
| | 2007.02-2013.06 | 5MT | F | L/R | Estate FWD K7M 710;K7M 718 | Date to:2010.12;For special-purpose vehicles;Date to:2010.12;For vehicles with 3rd seating row | GCO99085 | Outer Joint | | 23 | 30 | 49 | 86 | 59 | I |
| | 2007.02-2013.06 | 5MT | F | R | Estate FWD K7M 710;K7M 718 | | GCI50008 | Inner Joint | | 23 | 30 | 36.3 | | 120.7 | |
| | 2007.02-2013.06 | MT | F | L | Estate FWD K7M 710;K7M 718 | Manufacturer:NTN | GDS11021 | Drive Shaft | | 23 | 30 | 49 | 86 | 683 | |
| | 2007.02-2013.06 | MT | F | L | Estate FWD K7M 710;K7M 718 | Date to:2011.12 | GDS50353 | Drive Shaft | | 23 | 26 | 49 | 86 | 649 | |
| | 2007.02-2013.06 | MT | F | L | Estate FWD K7M 710;K7M 718 | Manufacturer:GKN | GDS50570 | Drive Shaft | | 23 | 26 | 49 | 83.5 | 647 | |
| | 2007.02-2013.06 | MT | F | L/R | Estate FWD K7M 710;K7M 718 | Trans. code:JH1/3 | GCO11004 | Outer Joint | | 21 | 28 | 49 | 84 | 53.5 | I |
| | 2007.02-2013.06 | MT | F | R | Estate FWD K7M 710;K7M 718 | Date to:2010.12,for vehicles with 3rd seating row | GCI99169 | Inner Joint | | 26 | 30 | 33 | 326 | 95 | |
| | 2007.02-2013.06 | | F | R | Estate FWD K7M 710;K7M 718 | | GDS11016 | Drive Shaft | | 23 | 23 | 49 | 86 | 764 | |
| | 2007.02-2013.06 | | F | R | Estate FWD K7M 710;K7M 718 | Date from:2011.01;For special-purpose vehicles;For vehicles with 3rd seating row | GDS50507 | Drive Shaft | | 23 | 26 | 49 | 86 | 898 | |
| | 2007.02-2013.06 | | F | R | Estate FWD K7M 710;K7M 718 | For vehicles with 3rd seating row | GDS50593 | Drive Shaft | | 23 | 26 | 49 | 83.5 | 890 | |
| | 2007.02-2013.06 | | F | R | Estate FWD K7M 710;K7M 718 | Date To:2010.12;For vehicles with 3rd seating row | GCO50092 | Outer Joint | | 23 | 29 | 49 | 86 | 57 | I |
| | 2008.11- | 5MT | F | L | Estate FWD K7M 710 | Manufacturer:NTN | GDS11021 | Drive Shaft | | 23 | 30 | 49 | 86 | 683 | |
| | 2008.11- | 5MT | F | L | Estate FWD K7M 710 | For special-purpose vehicles;For vehicles with 3rd seating row | GDS50353 | Drive Shaft | | 23 | 26 | 49 | 86 | 649 | |
| | 2008.11- | 5MT | F | L | Estate FWD K7M 710 | For special-purpose vehicles,Manufacturer:GKN | GDS50570 | Drive Shaft | | 23 | 26 | 49 | 83.5 | 647 | |
| | 2008.11- | 5MT | F | R | Estate FWD K7M 710 | Date From:2010.06 | GDS11014 | Drive Shaft | | 23 | 23 | 49 | 83.5 | 755 | |
| | 2008.11- | 5MT | F | R | Estate FWD K7M 710 | Date to:2010.12;For vehicles with 3rd seating row;Date to:2010.12;For special-purpose vehicles | GDS50354 | Drive Shaft | | 23 | 26 | 49 | 86 | 897 | |
| | 2008.11- | | F | R | Estate FWD K7M 710 | | GDS11016 | Drive Shaft | | 23 | 23 | 49 | 86 | 764 | |
| | 2008.11- | | F | R | Estate FWD K7M 710 | Date From:2011.01;For special-purpose vehicles | GDS50507 | Drive Shaft | | 23 | 26 | 49 | 86 | 898 | |
| | 2008.11- | | F | R | Estate FWD K7M 710 | For vehicles with 3rd seating row | GDS50593 | Drive Shaft | | 23 | 26 | 49 | 83.5 | 890 | |
| | 2008.11- | | F | L/R | Estate FWD K7M 710 | Date To:2010.12;For special-purpose vehicles | GCO50092 | Outer Joint | | 23 | 29 | 49 | 86 | 57 | I |
| | 2008.11- | | F | L/R | Estate FWD K7M 710 | Date To:2010.12;For special-purpose vehicles | GCO99085 | Outer Joint | | 23 | 30 | 49 | 86 | 59 | I |
| | 2008.11- | | F | R | Estate FWD K7M 710 | | GCI50008 | Inner Joint | | 23 | 30 | 36.3 | | 120.7 | |
| 1.6 (77 kw) | 2007.02- | 4AT | F | L | Estate FWD K4M 690;K4M 696;K4M 697 | | GDS50574 | Drive Shaft | | 23 | 26 | 49 | 86 | 652 | |
| | 2007.02- | 4AT | F | R | Estate FWD K4M 690;K4M 696;K4M 697 | | GDS50443 | Drive Shaft | | 23 | 23 | 49 | 86 | 789 | |
| | 2007.02- | 5MT | F | L | Estate FWD K4M 690;K4M 696;K4M 697 | Date From:2011.01;Date To:2013.06;Manufacturer Restriction:GKN | GDS50570 | Drive Shaft | | 23 | 26 | 49 | 83.5 | 647 | |
| | 2007.02- | 5MT | F | R | Estate FWD K4M 690;K4M 696;K4M 697 | Date to:2010.12 | GDS50354 | Drive Shaft | | 23 | 26 | 49 | 86 | 897 | |
| | 2007.02- | 5MT | F | R | Estate FWD K4M 690;K4M 696;K4M 697 | Date From:2011.01;Manufacturer:GKN;For special-purpose vehicles | GDS50507 | Drive Shaft | | 23 | 26 | 49 | 86 | 898 | |
| | 2007.02- | 5MT | F | R | Estate FWD K4M 690;K4M 696;K4M 697 | Date from:2011.01 | GDS50593 | Drive Shaft | | 23 | 26 | 49 | 83.5 | 890 | |
| | 2007.02- | 5MT | F | L/R | Estate FWD K4M 690;K4M 696;K4M 697 | Date to:2010.12 | GCO99085 | Outer Joint | | 23 | 30 | 49 | 86 | 59 | I |
| | 2007.02- | MT | F | L | Estate FWD K4M 690;K4M 696;K4M 697 | Date to:2010.12 | GDS50353 | Drive Shaft | | 23 | 26 | 49 | 86 | 649 | |
| | 2007.02- | MT | F | R | Estate FWD K4M 690;K4M 696;K4M 697 | Date to:2010.12 | GCI99169 | Inner Joint | | 26 | 30 | 33 | 326 | 95 | |
| | 2007.02- | | F | R | Estate FWD K4M 690;K4M 696;K4M 697 | Date To:2010.12;For vehicles with 3rd seating row | GCO50092 | Outer Joint | | 23 | 29 | 49 | 86 | 57 | I |
| | 2009.11- | 5MT | F | L | Estate FWD K4M 690 | | GDS50353 | Drive Shaft | | 23 | 26 | 49 | 86 | 649 | |

| | YEAR | TRANSM. | F/R | L/R | BODY STYLE & DRIVE TYPE & ENGINE | REMARKS | G-AP Ref. | PRODUCT | ABS | Technical Specifications A | B | C | H | L | P |
|---|---|---|---|---|---|---|---|---|---|---|---|---|---|---|---|
| **DACIA** | | | | | | | | | | | | | | | |
| **Logan MCV** | | | | | | | | | | | | | | | |
| 1.6 (77 kw) | 2009.11- | 5MT | F | L | Estate FWD K4M 690 | Date From:2011.01 | GDS50570 | Drive Shaft | | 23 | 26 | 49 | 83.5 | 647 | |
| | 2009.11- | 5MT | F | R | Estate FWD K4M 690 | | GDS50354 | Drive Shaft | | 23 | 26 | 49 | 86 | 897 | |
| | 2009.11- | MT | F | R | Estate FWD K4M 690 | Date to:2013.06 | GCI99169 | Inner Joint | | 26 | 30 | 33 | 326 | 95 | |
| | 2009.11- | | F | R | Estate FWD K4M 690 | Date From:2011.01 | GDS50507 | Drive Shaft | | 23 | 26 | 49 | 86 | 898 | |
| | 2009.11- | | F | R | Estate FWD K4M 690 | Date From:2011.01 | GDS50593 | Drive Shaft | | 23 | 26 | 49 | 83.5 | 890 | |
| | 2009.11- | | F | R | Estate FWD K4M 690 | | GCO50092 | Outer Joint | | 23 | 29 | 49 | 86 | 57 | I |
| | 2009.11- | | F | L/R | Estate FWD K4M 690 | | GCO99085 | Outer Joint | | 23 | 30 | 49 | 86 | 59 | I |
| **Sandero** | | | | | | | | | | | | | | | |
| 0.9 (66 kw) | 2012.10- | 5MT | F | L | Hatchback FWD H4B 400, H4B 412, H4B 411, H4B 410, H4B 408 | AAR | GDS50508 | Drive Shaft | | 23 | 26 | 49 | 86 | 660 | |
| | 2012.10- | 5MT | F | R | Hatchback FWD H4B 400, H4B 412, H4B 411, H4B 410, H4B 408 | Inner teeth of tranm.side:21 | GDS50507 | Drive Shaft | | 23 | 26 | 49 | 86 | 898 | |
| | 2012.10- | 5MT | F | L/R | Hatchback FWD H4B 400, H4B 412, H4B 411, H4B 410, H4B 408 | | GCO50175 | Outer Joint | | 23 | 22 | 49 | 86 | 58.5 | I |
| | 2012.10- | 5MT | F | L | Hatchback FWD H4B 400, H4B 412, H4B 411, H4B 410, H4B 408 | AAR | GCI82311 | Inner Joint | | 26 | 22 | 39.95 | 64 | 109 | |
| | 2012.10- | 5MT | F | R | Hatchback FWD H4B 400, H4B 412, H4B 411, H4B 410, H4B 408 | | GCI50107 | Inner Joint | | 26 | 21 | 40 | 64 | 105.5 | |
| | 2012.10- | AT/MT | F | L | Hatchback FWD H4B 400, H4B 412, H4B 411, H4B 410, H4B 408 | TJ | GDS50512 | Drive Shaft | | 23 | 26 | 49 | 86 | 658 | |
| | 2012.10- | AT/MT | F | R | Hatchback FWD H4B 400, H4B 412, H4B 411, H4B 410, H4B 408 | Inner teeth of tranm.side:22 | GDS50513 | Drive Shaft | | 23 | 26 | 49 | 86 | 904 | |
| | 2012.10- | AT/MT | F | L/R | Hatchback FWD H4B 400, H4B 412, H4B 411, H4B 410, H4B 408 | | GCO50173 | Outer Joint | | 23 | 22 | 49 | 86 | 57 | M |
| | 2012.10- | AT/MT | F | L/R | Hatchback FWD H4B 400, H4B 412, H4B 411, H4B 410, H4B 408 | TJ | GCI50118 | Inner Joint | | 26 | 22 | 40 | 64 | 104 | |
| | 2015.09- | 5MT | F | L | Hatchback FWD H4B 410 | AAR | GDS50508 | Drive Shaft | | 23 | 26 | 49 | 86 | 660 | |
| | 2015.09- | 5MT | F | L | Hatchback FWD H4B 410 | TJ | GDS50512 | Drive Shaft | | 23 | 26 | 49 | 86 | 658 | |
| | 2015.09- | 5MT | F | R | Hatchback FWD H4B 410 | | GDS50513 | Drive Shaft | | 23 | 26 | 49 | 86 | 904 | |
| | 2015.09- | 5MT | F | L/R | Hatchback FWD H4B 410 | | GCO50173 | Outer Joint | | 23 | 22 | 49 | 86 | 57 | M |
| | 2015.09- | 5MT | F | L | Hatchback FWD H4B 410 | AAR | GCI82311 | Inner Joint | | 26 | 22 | 39.95 | 64 | 109 | |
| | 2015.09- | | F | R | Hatchback FWD H4B 410 | | GCI50118 | Inner Joint | | 26 | 22 | 40 | 64 | 104 | |
| 1.0 (54 kw) | 2016.12-2020.09 | 5MT | F | L | Hatchback FWD B4D 490, B4D411, B4D 401, B4D 400 | | GDS50508 | Drive Shaft | | 23 | 26 | 49 | 86 | 660 | |
| | 2016.12-2020.09 | 5MT | F | L | Hatchback FWD B4D 490, B4D411, B4D 401, B4D 400 | | GDS84116 | Drive Shaft | | 23 | 26 | 49 | 86 | 660 | |
| | 2016.12-2020.09 | 5MT | F | R | Hatchback FWD B4D 490, B4D411, B4D 401, B4D 400 | | GDS50507 | Drive Shaft | | 23 | 26 | 49 | 86 | 898 | |
| | 2016.12-2020.09 | 5MT | F | R | Hatchback FWD B4D 490, B4D411, B4D 401, B4D 400 | | GDS84115 | Drive Shaft | | 23 | 26 | 49 | 86 | 903 | |
| | 2016.12-2020.09 | 5MT | F | R | Hatchback FWD B4D 490, B4D411, B4D 401, B4D 400 | | GCO50175 | Outer Joint | | 23 | 22 | 49 | 86 | 58.5 | I |
| | 2016.12-2020.09 | 5MT | F | L/R | Hatchback FWD B4D 490, B4D411, B4D 401, B4D 400 | | GCO50219 | Outer Joint | | 23 | 28 | 49 | 86 | 52 | I |
| | 2016.12-2020.09 | 5MT | F | L | Hatchback FWD B4D 490, B4D411, B4D 401, B4D 400 | | GCI50116 | Inner Joint | | 26 | 28 | 40 | 64 | 93 | |
| | 2016.12-2020.09 | 5MT | F | L | Hatchback FWD B4D 490, B4D411, B4D 401, B4D 400 | | GCI82311 | Inner Joint | | 26 | 22 | 39.95 | 64 | 109 | |
| | 2016.12-2020.09 | 5MT | F | R | Hatchback FWD B4D 490, B4D411, B4D 401, B4D 400 | | GCI50107 | Inner Joint | | 26 | 21 | 40 | 64 | 105.5 | |
| | 2016.12-2020.09 | 5MT | F | R | Hatchback FWD B4D 490, B4D411, B4D 401, B4D 400 | | GCI82521 | Inner Joint | | 26 | 28 | 40 | 64 | 93 | |
| 1.0 (56 kw) | 2011.01-2012.12 | 5MT | F | L | Hatchback FWD D4D 760 | | GDS11021 | Drive Shaft | | 23 | 30 | 49 | 86 | 683 | |
| | 2011.01-2012.12 | 5MT | F | R | Hatchback FWD D4D 760 | | GDS11014 | Drive Shaft | | 23 | 23 | 49 | 83.5 | 755 | |
| | 2011.01-2012.12 | 5MT | F | L | Hatchback FWD D4D 760 | | GCO50219 | Outer Joint | | 23 | 28 | 49 | 86 | 52 | I |
| 1.0 (67 kw) | 2021.01- | 6MT | F | L | Hatchback FWD H4D 470 | | GDS57999 | Drive Shaft | | 23 | 26 | 49.5 | 85 | 671 | |
| | 2021.01- | 6MT | F | R | Hatchback FWD H4D 470 | Model:Sandero | GDS57640 | Drive Shaft | | 23 | 26 | 49.5 | 85 | 924 | |
| | 2021.01- | 6MT | F | R | Hatchback FWD H4D 470 | Model:Sandero Stepway | GDS57998 | Drive Shaft | | 23 | 26 | 49.5 | 85 | 923 | |
| | 2021.01- | 6MT | F | L/R | Hatchback FWD H4D 470 | | GCO83656 | Outer Joint | | 23 | 29 | 49.5 | 85 | 56 | M |
| | 2021.01- | 6MT | F | L | Hatchback FWD H4D 470 | | GCI83980 | Inner Joint | | 26 | 29 | 39.95 | 64 | 98 | |
| | 2021.01- | 6MT | F | R | Hatchback FWD H4D 470 | Model:Sandero | GCI83786 | Inner Joint | | 26 | 29 | 39.95 | 64.5 | 111 | |
| | 2021.01- | 6MT | F | R | Hatchback FWD H4D 470 | Model:Sandero Stepway | GCI83979 | Inner Joint | | 26 | 29 | 33 | 347 | 97 | |
| | 2021.01- | 6MT/CVT | F | L/R | Hatchback FWD H4D 470 | | GCO83656 | Outer Joint | | 23 | 29 | 49.5 | 85 | 56 | M |
| | 2021.01- | CVT | F | L | Hatchback FWD H4D 470 | | GDS57839 | Drive Shaft | | 23 | 25 | 49.5 | 85 | 674 | |
| | 2021.01- | CVT | F | R | Hatchback FWD H4D 470 | | GDS57641 | Drive Shaft | | 23 | 25 | 49.5 | 85 | 920 | |
| | 2021.01- | CVT | F | L | Hatchback FWD H4D 470 | | GCI83345 | Inner Joint | | 25 | 29 | 40 | 53 | 112 | |
| | 2021.01- | CVT | F | R | Hatchback FWD H4D 470 | | GCI83347 | Inner Joint | | 25 | 29 | 33 | 345 | 97 | |
| 1.0 (74 kw) | 2019.11- | 5MT | F | L | Hatchback FWD H4D 450, H4D 460 | | GDS50508 | Drive Shaft | | 23 | 26 | 49 | 86 | 660 | |
| | 2019.11- | 5MT | F | R | Hatchback FWD H4D 450, H4D 460 | | GDS50507 | Drive Shaft | | 23 | 26 | 49 | 86 | 898 | |
| | 2019.11- | 5MT | F | L/R | Hatchback FWD H4D 450, H4D 460 | | GCO50175 | Outer Joint | | 23 | 22 | 49 | 86 | 58.5 | I |
| | 2019.11- | 5MT | F | L | Hatchback FWD H4D 450, H4D 460 | | GCI82311 | Inner Joint | | 26 | 22 | 39.95 | 64 | 109 | |
| | 2019.11- | 5MT | F | R | Hatchback FWD H4D 450, H4D 460 | | GCI50107 | Inner Joint | | 26 | 21 | 40 | 64 | 105.5 | |
| | 2019.11- | MT | F | L | Hatchback FWD H4D 450, H4D 460 | | GDS50508 | Drive Shaft | | 23 | 26 | 49 | 86 | 660 | |
| | 2019.11- | MT | F | L | Hatchback FWD H4D 450, H4D 460 | | GCI82311 | Inner Joint | | 26 | 22 | 39.95 | 64 | 109 | |
| | 2019.11- | | F | R | Hatchback FWD H4D 450, H4D 460 | | GDS50507 | Drive Shaft | | 23 | 26 | 49 | 86 | 898 | |
| | 2019.11- | | F | L/R | Hatchback FWD H4D 450, H4D 460 | | GCO50175 | Outer Joint | | 23 | 22 | 49 | 86 | 58.5 | I |
| | 2019.11- | | F | R | Hatchback FWD H4D 450, H4D 460 | | GCI50107 | Inner Joint | | 26 | 21 | 40 | 64 | 105.5 | |
| | 2021.01- | 6MT | F | L | Hatchback FWD H4D 480 | | GDS57999 | Drive Shaft | | 23 | 26 | 49.5 | 85 | 671 | |
| | 2021.01- | 6MT | F | R | Hatchback FWD H4D 480 | Model:Sandero | GDS57640 | Drive Shaft | | 23 | 26 | 49.5 | 85 | 924 | |
| | 2021.01- | 6MT | F | R | Hatchback FWD H4D 480 | Model:Sandero Stepway | GDS57998 | Drive Shaft | | 23 | 26 | 49.5 | 85 | 923 | |
| | 2021.01- | 6MT | F | L/R | Hatchback FWD H4D 480 | | GCO83656 | Outer Joint | | 23 | 29 | 49.5 | 85 | 56 | M |
| | 2021.01- | 6MT | F | L | Hatchback FWD H4D 480 | | GCI83980 | Inner Joint | | 26 | 29 | 39.95 | 64 | 98 | |
| | 2021.01- | 6MT | F | R | Hatchback FWD H4D 480 | Model:Sandero | GCI83786 | Inner Joint | | 26 | 29 | 39.95 | 64.5 | 111 | |
| | 2021.01- | 6MT | F | R | Hatchback FWD H4D 480 | Model:Sandero Stepway | GCI83979 | Inner Joint | | 26 | 29 | 33 | 347 | 97 | |

| | YEAR | TRANSM. | F/R | L/R | BODY STYLE & DRIVE TYPE & ENGINE | REMARKS | G-AP Ref. | PRODUCT | ABS | Technical Specifications A | B | C | H | L | P |
|---|---|---|---|---|---|---|---|---|---|---|---|---|---|---|---|
| **DACIA** **Sandero** | | | | | | | | | | | | | | | |
| 1.2 (54 kw) | 2015.05- | 5MT | F | L | Hatchback FWD D4F 732 | Trans. side without housing | GDS11021 | Drive Shaft | | 23 | 30 | 49 | 86 | 683 | |
| | 2015.05- | 5MT | F | L | Hatchback FWD D4F 732 | | GDS84116 | Drive Shaft | | 23 | 26 | 49 | 86 | 660 | |
| | 2015.05- | 5MT | F | R | Hatchback FWD D4F 732 | Model code:B8MG/B8MP/B8MU/B8MY | GDS11014 | Drive Shaft | | 23 | 23 | 49 | 83.5 | 755 | |
| | 2015.05- | 5MT | F | R | Hatchback FWD D4F 732 | Manufacturer:NTN;Model code:B8J3 | GDS84115 | Drive Shaft | | 23 | 26 | 49 | 86 | 903 | |
| | 2015.05- | 5MT | F | L | Hatchback FWD D4F 732 | | GCI50116 | Inner Joint | | 26 | 28 | 40 | 64 | 93 | |
| | 2015.05- | 5MT | F | R | Hatchback FWD D4F 732 | Manufacturer:NTN | GCI82521 | Inner Joint | | 26 | 28 | 40 | 64 | 93 | |
| | 2015.05- | | F | L/R | Hatchback FWD D4F 732 | Date From:2015.07 | GCO50219 | Outer Joint | | 23 | 28 | 49 | 86 | 52 | I |
| 1.2 (55 kw) | 2008.11-2013.06 | 5MT | F | L | Hatchback FWD D4F 732 | Inner teeth of wheel side:24 | GDS45084 | Drive Shaft | | 21 | 30 | 49 | 84 | 681 | |
| | 2008.11-2013.06 | 5MT | F | R | Hatchback FWD D4F 732 | Inner teeth of wheel side:28 | GDS11023 | Drive Shaft | | 21 | 23 | 49 | 84 | 761 | |
| | 2008.11-2013.06 | 5MT | F | R | Hatchback FWD D4F 732 | Inner teeth of wheel side:24 | GDS45085 | Drive Shaft | | 21 | 23 | 49 | 84 | 763 | |
| | 2008.11-2013.06 | 5MT | F | R | Hatchback FWD D4F 732 | | GCI50008 | Inner Joint | | 23 | 30 | 36.3 | | 120.7 | |
| | 2008.11-2013.06 | 5MT | F | R | Hatchback FWD D4F 732 | new | GCI50124 | Inner Joint | | 23 | 28 | 36.3 | | 115 | |
| | 2008.11-2013.06 | MT | F | L | Hatchback FWD D4F 732 | Inner teeth of wheel side:24 | GDS45084 | Drive Shaft | | 21 | 30 | 49 | 84 | 681 | |
| | 2008.11-2013.06 | MT | F | R | Hatchback FWD D4F 732 | Inner teeth of wheel side:28 | GDS11023 | Drive Shaft | | 21 | 23 | 49 | 84 | 761 | |
| | 2008.11-2013.06 | MT | F | R | Hatchback FWD D4F 732 | Inner teeth of wheel side:24 | GDS45085 | Drive Shaft | | 21 | 23 | 49 | 84 | 763 | |
| | 2008.11-2013.06 | MT | F | L/R | Hatchback FWD D4F 732 | new | GCO11004 | Outer Joint | | 21 | 28 | 49 | 84 | 53.5 | I |
| | 2008.11-2013.06 | MT | F | R | Hatchback FWD D4F 732 | | GCI50008 | Inner Joint | | 23 | 30 | 36.3 | | 120.7 | |
| | 2008.11-2013.06 | MT | F | R | Hatchback FWD D4F 732 | new | GCI50124 | Inner Joint | | 23 | 28 | 36.3 | | 115 | |
| | 2012.10- | 5MT | F | L | Hatchback FWD D4F 732 | Model:Sandero Stepway,Manufacturer:NTN | GDS11021 | Drive Shaft | | 23 | 30 | 49 | 86 | 683 | |
| | 2012.10- | 5MT | F | L | Hatchback FWD D4F 732 | | GDS84116 | Drive Shaft | | 23 | 26 | 49 | 86 | 660 | |
| | 2012.10- | 5MT | F | R | Hatchback FWD D4F 732 | For Modelcode:B8MG/B8MP/B8MU/B8MY,Manufacturer:NTN | GDS11014 | Drive Shaft | | 23 | 23 | 49 | 83.5 | 755 | |
| | 2012.10- | 5MT | F | R | Hatchback FWD D4F 732 | For Modelcode:B8J3 | GDS84115 | Drive Shaft | | 23 | 26 | 49 | 86 | 903 | |
| | 2012.10- | 5MT | F | L | Hatchback FWD D4F 732 | Model:Sandero Stepway,Manufacturer:NTN | GCO50219 | Outer Joint | | 23 | 28 | 49 | 86 | 52 | I |
| | 2012.10- | 5MT | F | L | Hatchback FWD D4F 734 | Manufacturer:NTN | GDS11021 | Drive Shaft | | 23 | 30 | 49 | 86 | 683 | |
| | 2012.10- | 5MT | F | L | Hatchback FWD D4F 734 | | GDS84116 | Drive Shaft | | 23 | 26 | 49 | 86 | 660 | |
| | 2012.10- | 5MT | F | R | Hatchback FWD D4F 734 | Manufacturer:NTN | GDS11014 | Drive Shaft | | 23 | 23 | 49 | 83.5 | 755 | |
| | 2012.10- | 5MT | F | L | Hatchback FWD D4F 734 | Manufacturer:NTN | GCO50219 | Outer Joint | | 23 | 28 | 49 | 86 | 52 | I |
| 1.4 (53 kw) | 2009.01-2012.12 | 5MT | F | L | Hatchback FWD K7J 714 | Inner teeth of wheel side:24 | GDS45084 | Drive Shaft | | 21 | 30 | 49 | 84 | 681 | |
| | 2009.01-2012.12 | 5MT | F | R | Hatchback FWD K7J 714 | Inner teeth of wheel side:28 | GDS11023 | Drive Shaft | | 21 | 23 | 49 | 84 | 761 | |
| | 2009.01-2012.12 | 5MT | F | R | Hatchback FWD K7J 714 | Inner teeth of wheel side:24 | GDS45085 | Drive Shaft | | 21 | 23 | 49 | 84 | 763 | |
| | 2009.01-2012.12 | 5MT | F | L/R | Hatchback FWD K7J 714 | new | GCO11004 | Outer Joint | | 21 | 28 | 49 | 84 | 53.5 | I |
| | 2009.01-2012.12 | 5MT | F | R | Hatchback FWD K7J 714 | | GCI50008 | Inner Joint | | 23 | 30 | 36.3 | | 120.7 | |
| | 2009.01-2012.12 | 5MT | F | R | Hatchback FWD K7J 714 | new | GCI50124 | Inner Joint | | 23 | 28 | 36.3 | | 115 | |
| 1.4 (55 kw) | 2008.06-2012.12 | 5MT | F | L | Hatchback FWD K7J 710;K7J 714 | Inner teeth of wheel side:24 | GDS45084 | Drive Shaft | | 21 | 30 | 49 | 84 | 681 | |
| | 2008.06-2012.12 | 5MT | F | R | Hatchback FWD K7J 710;K7J 714 | Inner teeth of wheel side:28 | GDS11023 | Drive Shaft | | 21 | 23 | 49 | 84 | 761 | |
| | 2008.06-2012.12 | 5MT | F | R | Hatchback FWD K7J 710;K7J 714 | Inner teeth of wheel side:24 | GDS45085 | Drive Shaft | | 21 | 23 | 49 | 84 | 763 | |
| | 2008.06-2012.12 | 5MT | F | L/R | Hatchback FWD K7J 710;K7J 714 | new | GCO11004 | Outer Joint | | 21 | 28 | 49 | 84 | 53.5 | I |
| | 2008.06-2012.12 | 5MT | F | R | Hatchback FWD K7J 710;K7J 714 | | GCI50008 | Inner Joint | | 23 | 30 | 36.3 | | 120.7 | |
| | 2008.06-2012.12 | 5MT | F | R | Hatchback FWD K7J 710;K7J 714 | new | GCI50124 | Inner Joint | | 23 | 28 | 36.3 | | 115 | |
| 1.5 (48 kw) | 2008.11-2012.12 | 5MT | F | L | Hatchback FWD K9K 790 | Model code:BS00/BS0Y | GDS11021 | Drive Shaft | | 23 | 30 | 49 | 86 | 683 | |
| | 2008.11-2012.12 | 5MT | F | R | Hatchback FWD K9K 790 | Model code:BS00/BS0Y | GDS11016 | Drive Shaft | | 23 | 23 | 49 | 86 | 764 | |
| | 2008.11-2012.12 | 5MT | F | R | Hatchback FWD K9K 790 | Model code:BS0J;new | GDS11023 | Drive Shaft | | 21 | 23 | 49 | 84 | 761 | |
| | 2008.11-2012.12 | 5MT | F | R | Hatchback FWD K9K 790 | Model code:BS0J | GDS45085 | Drive Shaft | | 21 | 23 | 49 | 84 | 763 | |
| | 2008.11-2012.12 | 5MT | F | L | Hatchback FWD K9K 790 | Model code:BS00/BS0Y | GCO50219 | Outer Joint | | 23 | 28 | 49 | 86 | 52 | I |
| | 2008.11-2012.12 | 5MT | F | R | Hatchback FWD K9K 790 | Model code:BS00/BS0Y | GCO99085 | Outer Joint | | 23 | 30 | 49 | 86 | 59 | I |
| | 2008.11-2012.12 | 5MT | F | L/R | Hatchback FWD K9K 790 | Model code:BS0J;new | GCO11004 | Outer Joint | | 21 | 28 | 49 | 84 | 53.5 | I |
| | 2008.11-2012.12 | 5MT | F | R | Hatchback FWD K9K 790 | Model code:BS00/BS0Y/BS0J | GCI50008 | Inner Joint | | 23 | 30 | 36.3 | | 120.7 | |
| | 2008.11-2012.12 | 5MT | F | R | Hatchback FWD K9K 790 | Model code:BS0J;new | GCI50124 | Inner Joint | | 23 | 28 | 36.3 | | 115 | |
| 1.5 (50 kw) | 2008.11-2012.12 | MT | F | L | Hatchback FWD K9K 792 | Manufacturer:NTN | GDS11021 | Drive Shaft | | 23 | 30 | 49 | 86 | 683 | |
| | 2008.11-2012.12 | MT | F | L | Hatchback FWD K9K 792 | Manufacturer:GKN | GDS50570 | Drive Shaft | | 23 | 26 | 49 | 83.5 | 647 | |
| | 2008.11-2012.12 | MT | F | R | Hatchback FWD K9K 792 | | GDS50354 | Drive Shaft | | 23 | 26 | 49 | 86 | 897 | |
| | 2008.11-2012.12 | MT | F | R | Hatchback FWD K9K 792 | Date To:2012.12;Type:Sandero Stepway | GDS50593 | Drive Shaft | | 23 | 26 | 49 | 83.5 | 890 | |
| | 2008.11-2012.12 | MT | F | L/R | Hatchback FWD K9K 792 | | GCO99085 | Outer Joint | | 23 | 30 | 49 | 86 | 59 | I |
| | 2008.11-2012.12 | | F | R | Hatchback FWD K9K 792 | Date To:2012.12 | GDS11014 | Drive Shaft | | 23 | 23 | 49 | 83.5 | 755 | |
| 1.5 (55 kw) | 2010.05-2013.06 | 5MT | F | L | Hatchback FWD K9K 892 | | GDS50570 | Drive Shaft | | 23 | 26 | 49 | 83.5 | 647 | |
| | 2010.05-2013.06 | 5MT | F | R | Hatchback FWD K9K 892 | | GDS50593 | Drive Shaft | | 23 | 26 | 49 | 83.5 | 890 | |
| | 2010.05-2013.06 | 5MT | F | L | Hatchback FWD K9K 892 | | GCI50057 | Inner Joint | | 26 | 22 | 40 | 64 | 104 | |
| | 2010.05-2013.06 | 5MT | F | R | Hatchback FWD K9K 892 | | GCI50051 | Inner Joint | | 26 | 22 | 33 | 326 | 96 | |
| | 2012.10- | 5MT | F | L | Hatchback FWD K9K 626, K9K 838, K9K 612, K9K 872 | | GDS50512 | Drive Shaft | | 23 | 26 | 49 | 86 | 658 | |
| | 2012.10- | 5MT | F | R | Hatchback FWD K9K 626, K9K 838, K9K 612, K9K 872 | | GDS50513 | Drive Shaft | | 23 | 26 | 49 | 86 | 904 | |
| | 2012.10- | 5MT | F | L | Hatchback FWD K9K 626, K9K 838, K9K 612, K9K 872 | | GCO50173 | Outer Joint | | 23 | 22 | 49 | 86 | 57 | M |
| | 2012.10- | 5MT | F | L | Hatchback FWD K9K 626, K9K 838, K9K 612, K9K 872 | | GCI82311 | Inner Joint | | 26 | 22 | 39.95 | 64 | 109 | |
| | 2012.10- | MT | F | R | Hatchback FWD K9K 626, K9K 838, K9K 612, K9K 872 | | GDS50489 | Drive Shaft | | 23 | 26 | 49 | 86 | 910 | |
| | 2012.10- | | F | R | Hatchback FWD K9K 626, K9K 838, K9K 612, K9K 872 | | GCI50118 | Inner Joint | | 26 | 22 | 40 | 64 | 104 | |
| 1.5 (63 kw) | 2008.11-2012.12 | MT | F | L | Hatchback FWD K9K 796 | | GDS50353 | Drive Shaft | | 23 | 26 | 49 | 86 | 649 | |

| | YEAR | TRANSM. | F/R | L/R | BODY STYLE & DRIVE TYPE & ENGINE | REMARKS | G-AP Ref. | PRODUCT | ABS | Technical Specifications | | | | | |
|---|---|---|---|---|---|---|---|---|---|---|---|---|---|---|---|
| | | | | | | | | | | A | B | C | H | L | P |
| **DACIA** **Sandero** | | | | | | | | | | | | | | | |
| 1.5 (63 kw) | 2008.11-2012.12 | MT | F | L | Hatchback FWD K9K 796 | Date To:2012.12 | GDS50570 | Drive Shaft | | 23 | 26 | 49 | 83.5 | 647 | |
| | 2008.11-2012.12 | MT | F | R | Hatchback FWD K9K 796 | | GDS50354 | Drive Shaft | | 23 | 26 | 49 | 86 | 897 | |
| | 2008.11-2012.12 | MT | F | R | Hatchback FWD K9K 796 | | GDS50593 | Drive Shaft | | 23 | 26 | 49 | 83.5 | 890 | |
| | 2008.11-2012.12 | MT | F | L/R | Hatchback FWD K9K 796 | | GCO99085 | Outer Joint | | 23 | 30 | 49 | 86 | 59 | I |
| | 2008.11-2012.12 | MT | F | R | Hatchback FWD K9K 796 | | GCI50051 | Inner Joint | | 26 | 22 | 33 | 326 | 96 | |
| | 2013.01- | 5MT | F | L | Hatchback FWD K9K 830 | | GDS50512 | Drive Shaft | | 23 | 26 | 49 | 86 | 658 | |
| | 2013.01- | 5MT | F | R | Hatchback FWD K9K 830 | | GDS50513 | Drive Shaft | | 23 | 26 | 49 | 86 | 904 | |
| | 2013.01- | 5MT | F | L/R | Hatchback FWD K9K 830 | | GCO50173 | Outer Joint | | 23 | 22 | 49 | 86 | 57 | M |
| | 2013.01- | | F | R | Hatchback FWD K9K 830 | | GCI50118 | Inner Joint | | 26 | 22 | 40 | 64 | 104 | |
| 1.5 (65 kw) | 2010.05-2013.06 | 5MT | F | L | Hatchback FWD K9K 892 | | GDS50570 | Drive Shaft | | 23 | 26 | 49 | 83.5 | 647 | |
| | 2010.05-2013.06 | 5MT | F | R | Hatchback FWD K9K 892 | | GDS50593 | Drive Shaft | | 23 | 26 | 49 | 83.5 | 890 | |
| | 2010.05-2013.06 | 5MT | F | L | Hatchback FWD K9K 892 | | GCI50057 | Inner Joint | | 26 | 22 | 40 | 64 | 104 | |
| | 2010.05-2013.06 | 5MT | F | R | Hatchback FWD K9K 892 | | GCI50051 | Inner Joint | | 26 | 22 | 33 | 326 | 96 | |
| 1.5 (66 kw) | 2012.10- | 5MT | F | L | Hatchback FWD K9K 626, K9K 612 | TJ | GDS50512 | Drive Shaft | | 23 | 26 | 49 | 86 | 658 | |
| | 2012.10- | 5MT | F | R | Hatchback FWD K9K 626, K9K 612 | Inner teeth of tranm.side:21 | GDS50507 | Drive Shaft | | 23 | 26 | 49 | 86 | 898 | |
| | 2012.10- | 5MT | F | R | Hatchback FWD K9K 626, K9K 612 | Inner teeth of tranm.side:22 | GDS50513 | Drive Shaft | | 23 | 26 | 49 | 86 | 904 | |
| | 2012.10- | 5MT | F | L | Hatchback FWD K9K 626, K9K 612 | | GCO50173 | Outer Joint | | 23 | 22 | 49 | 86 | 57 | M |
| | 2012.10- | 5MT | F | L | Hatchback FWD K9K 626, K9K 612 | | GCI82311 | Inner Joint | | 26 | 22 | 39.95 | 64 | 109 | |
| | 2012.10- | 5MT | F | R | Hatchback FWD K9K 626, K9K 612 | | GCI50118 | Inner Joint | | 26 | 22 | 40 | 64 | 104 | |
| | 2012.10- | 5MT/6AT | F | L | Hatchback FWD K9K 626, K9K 612 | AAR | GDS50508 | Drive Shaft | | 23 | 26 | 49 | 86 | 660 | |
| | 2012.10- | 6AMT | F | L | Hatchback FWD K9K 626, K9K 612 | | GDS50487 | Drive Shaft | | 23 | 26 | 49 | 86 | 662 | |
| | 2012.10- | 6AMT | F | R | Hatchback FWD K9K 626, K9K 612 | | GDS50489 | Drive Shaft | | 23 | 26 | 49 | 86 | 910 | |
| | 2012.10- | 6MT | F | L | Hatchback FWD K9K 626, K9K 612 | Manufacturer:NTN | GCI50134 | Inner Joint | | 26 | 30 | 40 | 64 | 96 | |
| | 2012.10- | | F | L/R | Hatchback FWD K9K 626, K9K 612 | | GCO99085 | Outer Joint | | 23 | 30 | 49 | 86 | 59 | I |
| 1.5 (70 kw) | 2018.08- | 5MT | F | L | Hatchback FWD K9K 872 | | GDS50512 | Drive Shaft | | 23 | 26 | 49 | 86 | 658 | |
| | 2018.08- | 5MT | F | L | Hatchback FWD K9K 872 | | GCO50173 | Outer Joint | | 23 | 22 | 49 | 86 | 57 | M |
| | 2018.08- | | F | R | Hatchback FWD K9K 872 | | GDS50513 | Drive Shaft | | 23 | 26 | 49 | 86 | 904 | |
| | 2018.08- | | F | R | Hatchback FWD K9K 872 | | GCI50118 | Inner Joint | | 26 | 22 | 40 | 64 | 104 | |
| 1.6 (62 kw) | 2010.05-2012.10 | 5MT | F | L | Hatchback FWD K7M 818 | Model:Sandero Stepway | GDS11021 | Drive Shaft | | 23 | 30 | 49 | 86 | 683 | |
| | 2010.05-2012.10 | 5MT | F | R | Hatchback FWD K7M 818 | Model:Sandero Stepway,Inner teeth of wheel side:22 | GDS11014 | Drive Shaft | | 23 | 23 | 49 | 83.5 | 755 | |
| | 2010.05-2012.10 | 5MT | F | R | Hatchback FWD K7M 818 | Model:Sandero Stepway,Inner teeth of wheel side:30 | GDS11016 | Drive Shaft | | 23 | 23 | 49 | 86 | 764 | |
| | 2010.05-2012.10 | MT | F | L | Hatchback FWD K7M 818 | Model:Sandero;Inner teeth of wheel side:24 | GDS45084 | Drive Shaft | | 21 | 30 | 49 | 84 | 681 | |
| | 2010.05-2012.10 | MT | F | R | Hatchback FWD K7M 818 | Model:Sandero;Inner teeth of wheel side:28 | GDS11023 | Drive Shaft | | 21 | 23 | 49 | 84 | 761 | |
| | 2010.05-2012.10 | MT | F | R | Hatchback FWD K7M 818 | Model:Sandero;Inner teeth of wheel side:24 | GDS45085 | Drive Shaft | | 21 | 23 | 49 | 84 | 763 | |
| | 2010.05-2012.10 | MT | F | L/R | Hatchback FWD K7M 818 | new | GCO11004 | Outer Joint | | 21 | 28 | 49 | 84 | 53.5 | I |
| | 2010.05-2012.10 | MT | F | R | Hatchback FWD K7M 818 | | GCI50008 | Inner Joint | | 23 | 30 | 36.3 | | 120.7 | |
| | 2010.05-2012.10 | MT | F | R | Hatchback FWD K7M 818 | new | GCI50124 | Inner Joint | | 23 | 28 | 36.3 | | 115 | |
| | 2010.05-2013.06 | 5MT | F | L | Hatchback FWD K7M 818, K7M 800 | | GDS11021 | Drive Shaft | | 23 | 30 | 49 | 86 | 683 | |
| | 2010.05-2013.06 | 5MT | F | R | Hatchback FWD K7M 818, K7M 800 | | GDS11014 | Drive Shaft | | 23 | 23 | 49 | 83.5 | 755 | |
| | 2010.05-2013.06 | 5MT | F | R | Hatchback FWD K7M 818, K7M 800 | | GDS11016 | Drive Shaft | | 23 | 23 | 49 | 86 | 764 | |
| | 2010.05-2013.06 | MT | F | L | Hatchback FWD K7M 818, K7M 800 | Inner teeth of wheel side:24 | GDS45084 | Drive Shaft | | 21 | 30 | 49 | 84 | 681 | |
| | 2010.05-2013.06 | MT | F | R | Hatchback FWD K7M 818, K7M 800 | Inner teeth of wheel side:28 | GDS11023 | Drive Shaft | | 21 | 23 | 49 | 84 | 761 | |
| | 2010.05-2013.06 | MT | F | R | Hatchback FWD K7M 818, K7M 800 | Inner teeth of wheel side:24 | GDS45085 | Drive Shaft | | 21 | 23 | 49 | 84 | 763 | |
| | 2010.05-2013.06 | MT | F | L/R | Hatchback FWD K7M 818, K7M 800 | new | GCO11004 | Outer Joint | | 21 | 28 | 49 | 84 | 53.5 | I |
| | 2010.05-2013.06 | MT | F | R | Hatchback FWD K7M 818, K7M 800 | | GCI50008 | Inner Joint | | 23 | 30 | 36.3 | | 120.7 | |
| | 2010.05-2013.06 | MT | F | R | Hatchback FWD K7M 818, K7M 800 | new | GCI50124 | Inner Joint | | 23 | 28 | 36.3 | | 115 | |
| 1.6 (64 kw) | 2008.06-2012.12 | MT | F | L | Hatchback FWD K7M 710, K7M 718 | Inner teeth of wheel side:24 | GDS45084 | Drive Shaft | | 21 | 30 | 49 | 84 | 681 | |
| | 2008.06-2012.12 | MT | F | R | Hatchback FWD K7M 710, K7M 718 | Inner teeth of wheel side:28 | GDS11023 | Drive Shaft | | 21 | 23 | 49 | 84 | 761 | |
| | 2008.06-2012.12 | MT | F | R | Hatchback FWD K7M 710, K7M 718 | Inner teeth of wheel side:24 | GDS45085 | Drive Shaft | | 21 | 23 | 49 | 84 | 763 | |
| | 2008.06-2012.12 | MT | F | L/R | Hatchback FWD K7M 710, K7M 718 | new | GCO11004 | Outer Joint | | 21 | 28 | 49 | 84 | 53.5 | I |
| | 2008.06-2012.12 | MT | F | R | Hatchback FWD K7M 710, K7M 718 | | GCI50008 | Inner Joint | | 23 | 30 | 36.3 | | 120.7 | |
| | 2008.06-2012.12 | MT | F | R | Hatchback FWD K7M 710, K7M 718 | new | GCI50124 | Inner Joint | | 23 | 28 | 36.3 | | 115 | |
| | 2008.06-2012.12 | 5MT | F | L | Hatchback FWD K7M 718 | For SUV | GDS11021 | Drive Shaft | | 23 | 30 | 49 | 86 | 683 | |
| | 2008.06-2012.12 | 5MT | F | L | Hatchback FWD K7M 718 | Not For SUV | GDS45084 | Drive Shaft | | 21 | 30 | 49 | 84 | 681 | |
| | 2008.06-2012.12 | 5MT | F | R | Hatchback FWD K7M 718 | Not For SUV;new | GDS11023 | Drive Shaft | | 21 | 23 | 49 | 84 | 761 | |
| | 2008.06-2012.12 | 5MT | F | R | Hatchback FWD K7M 718 | Not For SUV | GDS45085 | Drive Shaft | | 21 | 23 | 49 | 84 | 763 | |
| | 2008.06-2012.12 | 5MT | F | L | Hatchback FWD K7M 718 | For SUV | GCO50219 | Outer Joint | | 23 | 28 | 49 | 86 | 52 | I |
| | 2008.06-2012.12 | 5MT | F | R | Hatchback FWD K7M 718 | For SUV | GCO99085 | Outer Joint | | 23 | 30 | 49 | 86 | 59 | I |
| | 2008.06-2012.12 | 5MT | F | L/R | Hatchback FWD K7M 718 | Not For SUV;new | GCO11004 | Outer Joint | | 21 | 28 | 49 | 84 | 53.5 | I |
| | 2008.06-2012.12 | 5MT | F | R | Hatchback FWD K7M 718 | | GCI50008 | Inner Joint | | 23 | 30 | 36.3 | | 120.7 | |
| | 2008.06-2012.12 | 5MT | F | R | Hatchback FWD K7M 718 | Not For SUV;new | GCI50124 | Inner Joint | | 23 | 28 | 36.3 | | 115 | |
| | 2008.06-2012.12 | 5MT | F | L | Hatchback FWD K7M 732 | Inner teeth of wheel side:24 | GDS45084 | Drive Shaft | | 21 | 30 | 49 | 84 | 681 | |
| | 2008.06-2012.12 | 5MT | F | R | Hatchback FWD K7M 732 | Inner teeth of wheel side:28 | GDS11023 | Drive Shaft | | 21 | 23 | 49 | 84 | 761 | |
| | 2008.06-2012.12 | 5MT | F | R | Hatchback FWD K7M 732 | Inner teeth of wheel side:24 | GDS45085 | Drive Shaft | | 21 | 23 | 49 | 84 | 763 | |
| | 2008.06-2012.12 | 5MT | F | L/R | Hatchback FWD K7M 732 | new | GCO11004 | Outer Joint | | 21 | 28 | 49 | 84 | 53.5 | I |

| | YEAR | TRANSM. | F/R | L/R | BODY STYLE & DRIVE TYPE & ENGINE | REMARKS | G-AP Ref. | PRODUCT | ABS | Technical Specifications A | B | C | H | L | P |
|---|---|---|---|---|---|---|---|---|---|---|---|---|---|---|---|
| **DACIA** | | | | | | | | | | | | | | | |
| **Sandero** | | | | | | | | | | | | | | | |
| 1.6 (64 kw) | 2008.06-2012.12 | 5MT | F | R | Hatchback FWD K7M 732 | | GCI50008 | Inner Joint | | 23 | 30 | 36.3 | | 120.7 | |
| | 2008.06-2012.12 | 5MT | F | R | Hatchback FWD K7M 732 | new | GCI50124 | Inner Joint | | 23 | 28 | 36.3 | | 115 | |
| 1.6 (77 kw) | 2011.01-2012.12 | 5MT | F | L | Hatchback FWD K4M 690;K4M 696;K4M 694 | | GDS11022 | Drive Shaft | | 23 | 26 | 49 | 86 | 662 | |
| | 2011.01-2012.12 | 5MT | F | R | Hatchback FWD K4M 690;K4M 696;K4M 694 | | GDS11018 | Drive Shaft | | 23 | 26 | 49 | 86 | 906 | |
| | 2011.01-2012.12 | 5MT | F | L/R | Hatchback FWD K4M 690;K4M 696;K4M 694 | | GCO99085 | Outer Joint | | 23 | 30 | 49 | 86 | 59 | I |
| | 2011.01-2012.12 | 5MT | F | L/R | Hatchback FWD K4M 690;K4M 696;K4M 694 | | GCI50134 | Inner Joint | | 26 | 30 | 40 | 64 | 96 | |
| | 2011.07-2012.12 | 5MT | F | L | Hatchback FWD K4M 694, K4M 690 | Model code:BS0L/BS1Y | GDS11021 | Drive Shaft | | 23 | 30 | 49 | 86 | 683 | |
| | 2011.07-2012.12 | 5MT | F | L | Hatchback FWD K4M 694, K4M 690 | | GCO50219 | Outer Joint | | 23 | 28 | 49 | 86 | 52 | I |
| | 2011.07-2012.12 | MT | F | R | Hatchback FWD K4M 694, K4M 690 | | GDS11014 | Drive Shaft | | 23 | 23 | 49 | 83.5 | 755 | |
| | 2011.07-2012.12 | MT | F | R | Hatchback FWD K4M 694, K4M 690 | Model code:BS0V/BS1V/BS0L/BS0P/BS1Y | GDS11016 | Drive Shaft | | 23 | 23 | 49 | 86 | 764 | |
| | 2011.07-2012.12 | MT | F | R | Hatchback FWD K4M 694, K4M 690 | | GDS11018 | Drive Shaft | | 23 | 26 | 49 | 86 | 906 | |
| | 2011.07-2012.12 | MT | F | L/R | Hatchback FWD K4M 694, K4M 690 | | GCO99085 | Outer Joint | | 23 | 30 | 49 | 86 | 59 | I |
| | 2011.07-2012.12 | MT | F | R | Hatchback FWD K4M 694, K4M 690 | Model code:BS0V/BS1V/BS0L/BS0P/BS1Y | GCI50008 | Inner Joint | | 23 | 30 | 36.3 | | 120.7 | |
| | 2011.07-2012.12 | MT | F | L/R | Hatchback FWD K4M 694, K4M 690 | | GCI50134 | Inner Joint | | 26 | 30 | 40 | 64 | 96 | |
| **Sandero II** | | | | | | | | | | | | | | | |
| 1.6 (63 kw) | 2012.11- | | F | L/R | Hatchback FWD K7M 812 | | GCO50219 | Outer Joint | | 23 | 28 | 49 | 86 | 52 | I |
| **Sandero Stepway** | | | | | | | | | | | | | | | |
| 1.6 (60 kw) | 2011.01-2012.12 | 5MT | F | L | Hatchback FWD K7M 818 | | GDS11021 | Drive Shaft | | 23 | 30 | 49 | 86 | 683 | |
| | 2011.01-2012.12 | 5MT | F | R | Hatchback FWD K7M 818 | solid shaft | GDS11014 | Drive Shaft | | 23 | 23 | 49 | 83.5 | 755 | |
| | 2011.01-2012.12 | 5MT | F | R | Hatchback FWD K7M 818 | hollow shaft | GDS11016 | Drive Shaft | | 23 | 23 | 49 | 86 | 764 | |
| | 2011.01-2012.12 | 5MT | F | L | Hatchback FWD K7M 818 | | GCO50219 | Outer Joint | | 23 | 28 | 49 | 86 | 52 | I |
| | 2011.01-2012.12 | 5MT | F | R | Hatchback FWD K7M 818 | | GCO99085 | Outer Joint | | 23 | 30 | 49 | 86 | 59 | I |
| | 2011.01-2012.12 | 5MT | F | R | Hatchback FWD K7M 818 | Inner teeth:30 | GCI50008 | Inner Joint | | 23 | 30 | 36.3 | | 120.7 | |
| **Solenza** | | | | | | | | | | | | | | | |
| 1.4 (55 kw) | 2003.02-2005.10 | 5MT | F | L | Hatchback FWD E7J 262 | | GDS11006 | Drive Shaft | | 20 | 30 | 54 | 86 | 616 | |
| | 2003.02-2005.10 | 5MT | F | R | Hatchback FWD E7J 262 | | GDS11007 | Drive Shaft | | 20 | 23 | 54 | 86 | 744 | |
| | 2003.02-2005.10 | MT | F | R | Hatchback FWD E7J 262 | | GCI50008 | Inner Joint | | 23 | 30 | 36.3 | | 120.7 | |
| 1.9 (46 kw) | 2003.02- | 5MT | F | L | Hatchback FWD F8Q 636 | | GDS11006 | Drive Shaft | | 20 | 30 | 54 | 86 | 616 | |
| | 2003.02- | 5MT | F | R | Hatchback FWD F8Q 636 | | GDS11007 | Drive Shaft | | 20 | 23 | 54 | 86 | 744 | |
| | 2003.02- | 5MT | F | R | Hatchback FWD F8Q 636 | | GCI50008 | Inner Joint | | 23 | 30 | 36.3 | | 120.7 | |
| **Spring** | | | | | | | | | | | | | | | |
| EV (33 kw) | 2020.10- | ET | F | L | Hatchback FWD 4DB 401 | | GDS57593 | Drive Shaft | | 23 | 23 | 46.2 | 77.5 | 670 | |
| | 2020.10- | ET | F | R | Hatchback FWD 4DB 401 | | GDS57589 | Drive Shaft | | 23 | 23 | 46.2 | 77.5 | 772 | |
| | 2020.10- | ET | F | L/R | Hatchback FWD 4DB 401 | | GCO83636 | Outer Joint | | 23 | 21 | 46.2 | 77.5 | 56.5 | M |
| | 2020.10- | ET | F | L/R | Hatchback FWD 4DB 401 | | GCI83762 | Inner Joint | | 23 | 21 | 40 | 61 | 81.5 | |
| EV (48 kw) | 2022.12- | ET | F | L | Hatchback FWD 4DB 403 | | GDS58330 | Drive Shaft | | 23 | 25 | 46.2 | 77.5 | 603 | |
| | 2022.12- | ET | F | R | Hatchback FWD 4DB 403 | | GDS58045 | Drive Shaft | | 23 | 25 | 46.2 | 77.5 | 833 | |
| | 2022.12- | ET | F | L/R | Hatchback FWD 4DB 403 | | GCO83827 | Outer Joint | | 23 | 21 | 46.2 | 77.5 | 56.5 | M |
| | 2022.12- | ET | F | L/R | Hatchback FWD 4DB 403 | | GCI83987 | Inner Joint | | 25 | 21 | 35 | 50.5 | 85.5 | |
| | 2024.12- | ET | F | L | Hatchback FWD 4DB 403 | | GDS58330 | Drive Shaft | | 23 | 25 | 46.2 | 77.5 | 603 | |
| | 2024.12- | ET | F | R | Hatchback FWD 4DB 403 | | GDS58045 | Drive Shaft | | 23 | 25 | 46.2 | 77.5 | 833 | |
| | 2024.12- | ET | F | L/R | Hatchback FWD 4DB 403 | | GCO83827 | Outer Joint | | 23 | 21 | 46.2 | 77.5 | 56.5 | M |
| | 2024.12- | ET | F | L/R | Hatchback FWD 4DB 403 | | GCI83987 | Inner Joint | | 25 | 21 | 35 | 50.5 | 85.5 | |
| EV (52 kw) | 2025.10- | ET | F | L | Hatchback FWD | | GDS57593 | Drive Shaft | | 23 | 23 | 46.2 | 77.5 | 670 | |
| | 2025.10- | ET | F | R | Hatchback FWD | | GDS58045 | Drive Shaft | | 23 | 25 | 46.2 | 77.5 | 833 | |
| | 2025.10- | ET | F | R | Hatchback FWD | | GCO83827 | Outer Joint | | 23 | 21 | 46.2 | 77.5 | 56.5 | M |
| | 2025.10- | ET | F | R | Hatchback FWD | | GCI83987 | Inner Joint | | 25 | 21 | 35 | 50.5 | 85.5 | |
| EV (75 kw) | 2025.10- | ET | F | L | Hatchback FWD | | GDS57593 | Drive Shaft | | 23 | 23 | 46.2 | 77.5 | 670 | |
| | 2025.10- | ET | F | R | Hatchback FWD | | GDS58045 | Drive Shaft | | 23 | 25 | 46.2 | 77.5 | 833 | |
| | 2025.10- | ET | F | R | Hatchback FWD | | GCO83827 | Outer Joint | | 23 | 21 | 46.2 | 77.5 | 56.5 | M |
| | 2025.10- | ET | F | R | Hatchback FWD | | GCI83987 | Inner Joint | | 25 | 21 | 35 | 50.5 | 85.5 | |
| **SuperNova** | | | | | | | | | | | | | | | |
| 1.4 (55 kw) | 2000.03-2003.12 | MT | F | R | Hatchback FWD E7J262 | | GDS11003 | Drive Shaft | | 20 | 23 | 54 | 86 | 734 | |
| **DAEWOO** | | | | | | | | | | | | | | | |
| **Aranos** | | | | | | | | | | | | | | | |
| 1.5 (66 kw) | 1995.01-1997.11 | 4AT/5MT | F | L/R | Saloon FWD V15L | | GCO12001 | Outer Joint | | 33 | 29 | 52 | 95.5 | 63 | O |
| | 1995.01-1997.11 | 4AT/5MT | F | L/R | Saloon FWD V15L | | GCO12008 | Outer Joint | 47T | 33 | 29 | 52 | 108.5 | 63 | O |
| | 1995.01-1997.11 | 4AT/5MT | F | L/R | Saloon FWD V15L | | GCO12027 | Outer Joint | 47T | 33 | 29 | 52 | 95.5 | 63 | O |
| 1.8 (70 kw) | 1995.01-1997.11 | 4AT/5MT | F | L/R | Saloon FWD Y18L | | GCO12001 | Outer Joint | | 33 | 29 | 52 | 95.5 | 63 | O |
| | 1995.01-1997.11 | 4AT/5MT | F | L/R | Saloon FWD Y18L | | GCO12008 | Outer Joint | 47T | 33 | 29 | 52 | 108.5 | 63 | O |
| | 1995.01-1997.11 | 4AT/5MT | F | L/R | Saloon FWD Y18L | | GCO12027 | Outer Joint | 47T | 33 | 29 | 52 | 95.5 | 63 | O |
| 2.0 (77 kw) | 1995.01-1997.11 | 4AT/5MT | F | L/R | Saloon FWD C20LE | | GCO12001 | Outer Joint | | 33 | 29 | 52 | 95.5 | 63 | O |
| | 1995.01-1997.11 | 4AT/5MT | F | L/R | Saloon FWD C20LE | | GCO12008 | Outer Joint | 47T | 33 | 29 | 52 | 108.5 | 63 | O |
| | 1995.01-1997.11 | 4AT/5MT | F | L/R | Saloon FWD C20LE | | GCO12027 | Outer Joint | 47T | 33 | 29 | 52 | 95.5 | 63 | O |

| | YEAR | TRANSM. | F/R | L/R | BODY STYLE & DRIVE TYPE & ENGINE | REMARKS | G-AP Ref. | PRODUCT | ABS | Technical Specifications A | B | C | H | L | P |
|---|---|---|---|---|---|---|---|---|---|---|---|---|---|---|---|
| **DAEWOO** | | | | | | | | | | | | | | | |
| **Cielo** | | | | | | | | | | | | | | | |
| 1.5 (55 kw) | 1995.04-1997.07 | | F | | Saloon FWD Y15L | | GCO12003 | Outer Joint | | 22 | 29 | 52 | 95 | 62.5 | O |
| 1.5 (66 kw) | 1994.06-1998.07 | AT | F | L/R | Saloon FWD V15L | | GCI12002 | Inner Joint | | 34 | 29 | 34.6 | | 127 | |
| | 1994.06-1998.07 | MT | F | L | Saloon FWD V15L | Date from:1996.02,Trim Level:GL/GLE | GDS12003 | Drive Shaft | | 22 | 34 | 52 | 95 | 573 | |
| | 1994.06-1998.07 | MT | F | L/R | Saloon FWD V15L | Type:GLX | GCO12001 | Outer Joint | | 33 | 29 | 52 | 95.5 | 63 | O |
| | 1994.06-1998.07 | MT | F | L/R | Saloon FWD V15L | Type:GLX,Date From:1995.11 | GCO12005 | Outer Joint | 47T | 22 | 22 | 52 | 96 | 56 | I |
| | 1994.06-1998.07 | MT | F | L/R | Saloon FWD V15L | Type:GL/GLE | GCO12019 | Outer Joint | | 22 | 29 | 52 | 95 | 62.5 | O |
| | 1994.06-1998.07 | MT | F | L/R | Saloon FWD V15L | | GCI99025 | Inner Joint | | 34 | 22 | 35 | 56.2 | 111.3 | |
| **Espero** | | | | | | | | | | | | | | | |
| 1.5 (55 kw) | 1997.10-1999.08 | 4AT/5MT | F | L/R | Saloon FWD A15F | | GCO12009 | Outer Joint | | 33 | 29 | 52 | 109 | 63 | O |
| 1.5 (66 kw) | 1993.09-1999.06 | 4AT/5MT | F | L/R | Saloon FWD V15L | | GCO12008 | Outer Joint | 47T | 33 | 29 | 52 | 108.5 | 63 | O |
| | 1993.09-1999.06 | MT | F | | Saloon FWD V15L | | GCI44001 | Inner Joint | | 34 | 22 | 35 | 56.2 | 105.5 | |
| | 1993.09-1999.06 | | F | L/R | Saloon FWD V15L | | GCO12001 | Outer Joint | | 33 | 29 | 52 | 95.5 | 63 | O |
| | 1993.09-1999.06 | | F | L/R | Saloon FWD V15L | | GCO12002 | Outer Joint | 47T | 33 | 29 | 52 | 95.5 | 63 | O |
| | 1993.09-1999.06 | | F | L/R | Saloon FWD V15L | | GCO12009 | Outer Joint | | 33 | 29 | 52 | 109 | 63 | O |
| | 1993.09-1999.06 | | F | L/R | Saloon FWD V15L | | GCO12018 | Outer Joint | | 33 | 29 | 52 | 95.5 | 62.5 | O |
| 1.8 (66 kw) | 1995.02-1999.06 | AT | F | L/R | Saloon FWD C18LE | | GCO12004 | Outer Joint | | 22 | 29 | 52 | 95.5 | 57 | O |
| | 1995.02-1999.06 | MT | F | L/R | Saloon FWD C18LE | M20x1.5 | GCO12001 | Outer Joint | | 33 | 29 | 52 | 95.5 | 63 | O |
| | 1995.02-1999.06 | MT | F | L/R | Saloon FWD C18LE | | GCO12002 | Outer Joint | 47T | 33 | 29 | 52 | 95.5 | 63 | O |
| | 1995.02-1999.06 | MT | F | L/R | Saloon FWD C18LE | | GCO12008 | Outer Joint | 47T | 33 | 29 | 52 | 108.5 | 63 | O |
| | 1995.02-1999.06 | MT | F | L/R | Saloon FWD C18LE | M22x1.5 | GCO12018 | Outer Joint | | 33 | 29 | 52 | 95.5 | 62.5 | O |
| | 1995.02-1999.06 | MT | F | | Saloon FWD C18LE | | GCI44001 | Inner Joint | | 34 | 22 | 35 | 56.2 | 105.5 | |
| 1.8 (70 kw) | 1995.02-1999.06 | AT | F | L/R | Saloon FWD Y18L | | GCO12004 | Outer Joint | | 22 | 29 | 52 | 95.5 | 57 | O |
| | 1995.02-1999.06 | MT | F | L/R | Saloon FWD Y18L | M20x1.5 | GCO12001 | Outer Joint | | 33 | 29 | 52 | 95.5 | 63 | O |
| | 1995.02-1999.06 | MT | F | L/R | Saloon FWD Y18L | | GCO12002 | Outer Joint | 47T | 33 | 29 | 52 | 95.5 | 63 | O |
| | 1995.02-1999.06 | MT | F | L/R | Saloon FWD Y18L | | GCO12008 | Outer Joint | 47T | 33 | 29 | 52 | 108.5 | 63 | O |
| | 1995.02-1999.06 | MT | F | L/R | Saloon FWD Y18L | M20x1.5 | GCO12009 | Outer Joint | | 33 | 29 | 52 | 109 | 63 | O |
| | 1995.02-1999.06 | MT | F | L/R | Saloon FWD Y18L | M22x1.5 | GCO12018 | Outer Joint | | 33 | 29 | 52 | 95.5 | 62.5 | O |
| | 1995.02-1999.06 | MT | F | | Saloon FWD Y18L | | GCI44001 | Inner Joint | | 34 | 22 | 35 | 56.2 | 105.5 | |
| 2.0 (77 kw) | 1995.02-1999.06 | | F | L/R | Saloon FWD C20LE | | GCO12001 | Outer Joint | | 33 | 29 | 52 | 95.5 | 63 | O |
| | 1995.02-1999.06 | | F | L/R | Saloon FWD C20LE | | GCO12002 | Outer Joint | 47T | 33 | 29 | 52 | 95.5 | 63 | O |
| | 1995.02-1999.06 | | F | L/R | Saloon FWD C20LE | | GCO12009 | Outer Joint | | 33 | 29 | 52 | 109 | 63 | O |
| | 1995.02-1999.06 | | F | L/R | Saloon FWD C20LE | | GCO12018 | Outer Joint | | 33 | 29 | 52 | 95.5 | 62.5 | O |
| | 1995.02-1999.06 | | F | L/R | Saloon FWD C20LE | | GCI44001 | Inner Joint | | 34 | 22 | 35 | 56.2 | 105.5 | |
| 2.0 (81 kw) | 1993.10-1997.12 | MT | F | L/R | Saloon FWD C20LE | | GCI44001 | Inner Joint | | 34 | 22 | 35 | 56.2 | 105.5 | |
| | 1993.10-1997.12 | | F | L/R | Saloon FWD C20LE | | GCO12001 | Outer Joint | | 33 | 29 | 52 | 95.5 | 63 | O |
| | 1993.10-1997.12 | | F | L/R | Saloon FWD C20LE | | GCO12002 | Outer Joint | 47T | 33 | 29 | 52 | 95.5 | 63 | O |
| | 1993.10-1997.12 | | F | L/R | Saloon FWD C20LE | | GCO12018 | Outer Joint | | 33 | 29 | 52 | 95.5 | 62.5 | O |
| **Evanda** | | | | | | | | | | | | | | | |
| 2.0 (96 kw) | 2002.08- | AT | F | L/R | Saloon FWD X 20 SED | | GCO24021 | Outer Joint | | 28 | 29 | 55.5 | 99 | 61 | O |
| | 2002.08- | AT | F | L | Saloon FWD X 20 SED | | GCI21005 | Inner Joint | | 34 | 29 | 40 | 64 | 110 | |
| | 2002.08- | MT | F | L | Saloon FWD X 20 SED | | GDS12027 | Drive Shaft | | 28 | 34 | 55.5 | 99 | 643 | |
| | 2002.08- | MT | F | R | Saloon FWD X 20 SED | | GDS12026 | Drive Shaft | | 28 | 26 | 55.5 | 99 | 682 | |
| | 2002.08- | MT | F | L/R | Saloon FWD X 20 SED | | GCO14030 | Outer Joint | | 28 | 32 | 55.5 | 99 | 61 | O |
| | 2002.08- | MT | F | R | Saloon FWD X 20 SED | | GCI88019 | Inner Joint | | 26 | 32 | 43 | | 130 | |
| | 2002.08- | | F | | Saloon FWD X 20 SED | | GCO12009 | Outer Joint | | 33 | 29 | 52 | 109 | 63 | O |
| | 2002.08- | | F | | Saloon FWD X 20 SED | | GCO12018 | Outer Joint | | 33 | 29 | 52 | 95.5 | 62.5 | O |
| **Gentra** | | | | | | | | | | | | | | | |
| 1.5 (79 kw) | 2013.06- | MT | F | L | Saloon FWD B 15 D2 | | GDS12045 | Drive Shaft | | 33 | 34 | 52 | 95.5 | 612.5 | |
| | 2013.06- | MT | F | L | Saloon FWD B 15 D2 | | GDS86058 | Drive Shaft | 47T | 33 | 34 | 52 | 95.5 | 612.5 | |
| | 2013.06- | MT | F | R | Saloon FWD B 15 D2 | | GDS12046 | Drive Shaft | | 33 | 34 | 52 | 95.5 | 934 | |
| | 2013.06- | MT | F | R | Saloon FWD B 15 D2 | | GDS86059 | Drive Shaft | 47T | 33 | 34 | 52 | 95.5 | 934 | |
| | 2013.06- | MT | F | L/R | Saloon FWD B 15 D2 | | GCO12011 | Outer Joint | | 33 | 22 | 52 | 95.5 | 53 | O |
| | 2013.06- | MT | F | L/R | Saloon FWD B 15 D2 | | GCO88019 | Outer Joint | 47T | 33 | 22 | 52 | 95.5 | 53 | O |
| | 2013.06- | MT | F | L/R | Saloon FWD B 15 D2 | | GCI99025 | Inner Joint | | 34 | 22 | 35 | 56.2 | 111.3 | |
| **Kalos** | | | | | | | | | | | | | | | |
| 1.2 (53 kw) | 2003.04- | 5MT | F | L | Hatchback FWD B12S1 | | GDS44071 | Drive Shaft | 47T | 22 | 22 | 52 | 95.5 | 661 | |
| | 2003.04- | 5MT | F | R | Hatchback FWD B12S1 | | GDS44072 | Drive Shaft | 47T | 22 | 22 | 52 | 95.5 | 880 | |
| | 2003.04- | 5MT | F | L/R | Hatchback FWD B12S1 | | GCO88034 | Outer Joint | 47T | 22 | 19 | 52 | 95.5 | 53 | O |
| | 2003.04- | 5MT | F | L/R | Hatchback FWD B12S1 | | GCO88037 | Outer Joint | | 22 | 19 | 52 | 95.5 | 53 | O |
| | 2003.04- | 5MT | F | L/R | Hatchback FWD B12S1 | | GCI99107 | Inner Joint | | 22 | 19 | 35 | 50.5 | 78 | |
| 1.4 (61 kw) | 2002.09- | 5MT | F | L | Hatchback FWD F14S3 | | GDS12058 | Drive Shaft | 47T | 22 | 34 | 52 | 96.5 | 606 | |
| | 2002.09- | 5MT | F | R | Hatchback FWD F14S3 | | GDS12057 | Drive Shaft | 47T | 22 | 34 | 52 | 96.5 | 918 | |
| | 2002.09- | 5MT | F | L/R | Hatchback FWD F14S3 | | GCO12042 | Outer Joint | 47T | 22 | 22 | 52 | 96.5 | 53.5 | O |
| | 2002.09- | 5MT | F | L/R | Hatchback FWD F14S3 | | GCI99025 | Inner Joint | | 34 | 22 | 35 | 56.2 | 111.3 | |
| | 2002.09- | | F | L/R | Hatchback FWD F14S3 | | GCO99013 | Outer Joint | | 22 | 22 | 56 | 95.5 | 53 | O |

| | YEAR | TRANSM. | F/R | L/R | BODY STYLE & DRIVE TYPE & ENGINE | REMARKS | G-AP Ref. | PRODUCT | ABS | Technical Specifications A | B | C | H | L | P |
|---|---|---|---|---|---|---|---|---|---|---|---|---|---|---|---|
| **DAEWOO** | | | | | | | | | | | | | | | |
| **Kalos** | | | | | | | | | | | | | | | |
| 1.4 (61 kw) | 2002.11-2004.12 | 5MT | F | L | Saloon FWD F14S3 | | GDS12058 | Drive Shaft | 47T | 22 | 34 | 52 | 96.5 | 606 | |
| | 2002.11-2004.12 | 5MT | F | R | Saloon FWD F14S3 | | GDS12057 | Drive Shaft | 47T | 22 | 34 | 52 | 96.5 | 918 | |
| | 2002.11-2004.12 | 5MT | F | L/R | Saloon FWD F14S3 | | GCO12042 | Outer Joint | 47T | 22 | 22 | 52 | 96.5 | 53.5 | O |
| | 2002.11-2004.12 | 5MT | F | L/R | Saloon FWD F14S3 | | GCI99025 | Inner Joint | | 34 | 22 | 35 | 56.2 | 111.3 | |
| | 2002.11-2004.12 | | F | L/R | Saloon FWD F14S3 | | GCO99013 | Outer Joint | | 22 | 22 | 56 | 95.5 | 53 | O |
| 1.4 (69 kw) | 2003.04- | AT | F | L | Hatchback FWD F14D3 | For vehicles without ABS | GDS12040 | Drive Shaft | | 22 | 22 | 56 | 95.5 | 602 | |
| | 2003.04- | AT | F | L | Hatchback FWD F14D3 | | GDS88012 | Drive Shaft | 48T | 22 | 22 | 56 | 95.5 | 602 | |
| | 2003.04- | AT | F | R | Hatchback FWD F14D3 | For vehicles without ABS | GDS12042 | Drive Shaft | | 22 | 22 | 56 | 95.5 | 930 | |
| | 2003.04- | AT | F | R | Hatchback FWD F14D3 | For vehicles with ABS,47T | GDS57094 | Drive Shaft | 47T | 22 | 22 | 52 | 96 | 933 | |
| | 2003.04- | AT | F | R | Hatchback FWD F14D3 | For vehicles with ABS,48T | GDS88013 | Drive Shaft | 48T | 22 | 22 | 56 | 95.5 | 930 | |
| | 2003.04- | AT | F | L/R | Hatchback FWD F14D3 | | GCI12004 | Inner Joint | | 22 | 29 | 38 | 59 | 116 | |
| | 2003.04- | MT | F | L | Hatchback FWD F14D3 | | GDS12058 | Drive Shaft | 47T | 22 | 34 | 52 | 96.5 | 606 | |
| | 2003.04- | MT | F | R | Hatchback FWD F14D3 | | GDS12057 | Drive Shaft | 47T | 22 | 34 | 52 | 96.5 | 918 | |
| | 2003.04- | MT | F | L/R | Hatchback FWD F14D3 | | GCO12042 | Outer Joint | 47T | 22 | 22 | 52 | 96.5 | 53.5 | O |
| | 2003.04- | MT | F | L/R | Hatchback FWD F14D3 | | GCI99025 | Inner Joint | | 34 | 22 | 35 | 56.2 | 111.3 | |
| | 2003.04- | | F | L/R | Hatchback FWD F14D3 | | GCO99013 | Outer Joint | | 22 | 22 | 56 | 95.5 | 53 | O |
| | 2003.05-2004.12 | AT | F | L | Saloon FWD F14D3 | For vehicles without ABS | GDS12040 | Drive Shaft | | 22 | 22 | 56 | 95.5 | 602 | |
| | 2003.05-2004.12 | AT | F | L | Saloon FWD F14D3 | | GDS88012 | Drive Shaft | 48T | 22 | 22 | 56 | 95.5 | 602 | |
| | 2003.05-2004.12 | AT | F | R | Saloon FWD F14D3 | For vehicles without ABS | GDS12042 | Drive Shaft | | 22 | 22 | 56 | 95.5 | 930 | |
| | 2003.05-2004.12 | AT | F | R | Saloon FWD F14D3 | For vehicles with ABS,47T | GDS57094 | Drive Shaft | 47T | 22 | 22 | 52 | 96 | 933 | |
| | 2003.05-2004.12 | AT | F | R | Saloon FWD F14D3 | For vehicles with ABS,48T | GDS88013 | Drive Shaft | 48T | 22 | 22 | 56 | 95.5 | 930 | |
| | 2003.05-2004.12 | AT | F | L/R | Saloon FWD F14D3 | | GCI12004 | Inner Joint | | 22 | 29 | 38 | 59 | 116 | |
| | 2003.05-2004.12 | MT | F | L | Saloon FWD F14D3 | | GDS12058 | Drive Shaft | 47T | 22 | 34 | 52 | 96.5 | 606 | |
| | 2003.05-2004.12 | MT | F | R | Saloon FWD F14D3 | | GDS12057 | Drive Shaft | 47T | 22 | 34 | 52 | 96.5 | 918 | |
| | 2003.05-2004.12 | MT | F | L/R | Saloon FWD F14D3 | | GCO12042 | Outer Joint | 47T | 22 | 22 | 52 | 96.5 | 53.5 | O |
| | 2003.05-2004.12 | MT | F | L/R | Saloon FWD F14D3 | | GCI99025 | Inner Joint | | 34 | 22 | 35 | 56.2 | 111.3 | |
| | 2003.05-2004.12 | | F | L/R | Saloon FWD F14D3 | | GCO99013 | Outer Joint | | 22 | 22 | 56 | 95.5 | 53 | O |
| 1.5 (62 kw) | 2002.11-2004.12 | 5MT | F | L | Saloon FWD F15S | | GDS12058 | Drive Shaft | 47T | 22 | 34 | 52 | 96.5 | 606 | |
| | 2002.11-2004.12 | 5MT | F | R | Saloon FWD F15S | | GDS12057 | Drive Shaft | 47T | 22 | 34 | 52 | 96.5 | 918 | |
| | 2002.11-2004.12 | 5MT | F | L/R | Saloon FWD F15S | | GCO12042 | Outer Joint | 47T | 22 | 22 | 52 | 96.5 | 53.5 | O |
| | 2002.11-2004.12 | 5MT | F | L/R | Saloon FWD F15S | | GCI99025 | Inner Joint | | 34 | 22 | 35 | 56.2 | 111.3 | |
| | 2002.11-2004.12 | | F | L/R | Saloon FWD F15S | | GCO99013 | Outer Joint | | 22 | 22 | 56 | 95.5 | 53 | O |
| 1.6 (78 kw) | 2003.02- | MT | F | L | Hatchback FWD F16S4 | | GDS12058 | Drive Shaft | 47T | 22 | 34 | 52 | 96.5 | 606 | |
| | 2003.02- | MT | F | R | Hatchback FWD F16S4 | | GDS12057 | Drive Shaft | 47T | 22 | 34 | 52 | 96.5 | 918 | |
| | 2003.02- | MT | F | L/R | Hatchback FWD F16S4 | | GCO12042 | Outer Joint | 47T | 22 | 22 | 52 | 96.5 | 53.5 | O |
| | 2003.02- | MT | F | L/R | Hatchback FWD F16S4 | | GCI99025 | Inner Joint | | 34 | 22 | 35 | 56.2 | 111.3 | |
| | 2003.02- | | F | L/R | Hatchback FWD F16S4 | | GCO99013 | Outer Joint | | 22 | 22 | 56 | 95.5 | 53 | O |
| **Korando** | | | | | | | | | | | | | | | |
| 2.0 (94 kw) | 1999.02-2001.02 | 5MT | F | L/R | Terrain cab open 4WD E20 | | GCO99059 | Outer Joint | | 28 | 35 | 53 | 154 | 79 | O |
| 2.3 (103 kw) | 1999.01-2001.02 | 5MT | F | L/R | Terrain cab wagon closed 4WD E23 | | GCO99059 | Outer Joint | | 28 | 35 | 53 | 154 | 79 | O |
| | 1999.02-2001.02 | 5MT | F | L/R | Terrain cab open 4WD E23 | | GCO99059 | Outer Joint | | 28 | 35 | 53 | 154 | 79 | O |
| 2.3 (105 kw) | 1998.12-2005.05 | 5MT | F | L/R | Terrain cab open 4WD E23 | | GCO99059 | Outer Joint | | 28 | 35 | 53 | 154 | 79 | O |
| | 1998.12-2005.05 | 5MT | F | L/R | Terrain cab wagon closed 4WD E23 | | GCO99059 | Outer Joint | | 28 | 35 | 53 | 154 | 79 | O |
| 3.2 (156 kw) | 1998.12-2005.05 | 4AT/5MT | F | L/R | Terrain cab wagon closed 4WD E32 | | GCO99059 | Outer Joint | | 28 | 35 | 53 | 154 | 79 | O |
| **Lacetti** | | | | | | | | | | | | | | | |
| 1.4 (69 kw) | 2002.06-2004.12 | 5MT | F | L | Hatchback FWD F14D3 | | GDS86058 | Drive Shaft | 47T | 33 | 34 | 52 | 95.5 | 612.5 | |
| | 2002.06-2004.12 | 5MT | F | R | Hatchback FWD F14D3 | | GDS86059 | Drive Shaft | 47T | 33 | 34 | 52 | 95.5 | 934 | |
| | 2002.06-2004.12 | 5MT | F | L/R | Hatchback FWD F14D3 | | GCO88019 | Outer Joint | 47T | 33 | 22 | 52 | 95.5 | 53 | O |
| | 2002.06-2004.12 | 5MT | F | L/R | Hatchback FWD F14D3 | | GCI99025 | Inner Joint | | 34 | 22 | 35 | 56.2 | 111.3 | |
| 1.4 (70 kw) | 2004.02- | 5MT | F | L | Hatchback FWD F14D3 | | GDS86058 | Drive Shaft | 47T | 33 | 34 | 52 | 95.5 | 612.5 | |
| | 2004.02- | 5MT | F | R | Hatchback FWD F14D3 | | GDS86059 | Drive Shaft | 47T | 33 | 34 | 52 | 95.5 | 934 | |
| | 2004.02- | 5MT | F | L/R | Hatchback FWD F14D3 | | GCO88019 | Outer Joint | 47T | 33 | 22 | 52 | 95.5 | 53 | O |
| | 2004.02- | | F | L/R | Hatchback FWD F14D3 | | GCO12042 | Outer Joint | 47T | 22 | 22 | 52 | 96.5 | 53.5 | O |
| | 2004.02- | | F | L/R | Hatchback FWD F14D3 | | GCI99025 | Inner Joint | | 34 | 22 | 35 | 56.2 | 111.3 | |
| | 2004.02- | | F | | Hatchback FWD F14D3 | | GCI44001 | Inner Joint | | 34 | 22 | 35 | 56.2 | 105.5 | |
| 1.6 (78 kw) | 1999.06-2003.07 | AT | F | R | Saloon FWD A16DMS | | GDS21021 | Drive Shaft | | 33 | 22 | 52 | 95.5 | 945 | |
| | 1999.06-2003.07 | AT | F | L/R | Saloon FWD A16DMS | | GCI12004 | Inner Joint | | 22 | 29 | 38 | 59 | 116 | |
| | 1999.06-2003.07 | AT/MT | F | L/R | Saloon FWD A16DMS | | GCO12011 | Outer Joint | | 33 | 22 | 52 | 95.5 | 53 | O |
| | 1999.06-2003.07 | AT/MT | F | L/R | Saloon FWD A16DMS | | GCO88019 | Outer Joint | 47T | 33 | 22 | 52 | 95.5 | 53 | O |
| | 1999.06-2003.07 | MT | F | L | Saloon FWD A16DMS | | GDS12045 | Drive Shaft | | 33 | 34 | 52 | 95.5 | 612.5 | |
| | 1999.06-2003.07 | MT | F | L | Saloon FWD A16DMS | | GDS86058 | Drive Shaft | 47T | 33 | 34 | 52 | 95.5 | 612.5 | |
| | 1999.06-2003.07 | MT | F | R | Saloon FWD A16DMS | | GDS12046 | Drive Shaft | | 33 | 34 | 52 | 95.5 | 934 | |
| | 1999.06-2003.07 | MT | F | R | Saloon FWD A16DMS | | GDS86059 | Drive Shaft | 47T | 33 | 34 | 52 | 95.5 | 934 | |
| | 1999.06-2003.07 | MT | F | L/R | Saloon FWD A16DMS | | GCI99025 | Inner Joint | | 34 | 22 | 35 | 56.2 | 111.3 | |
| 1.6 (80 kw) | 2004.02- | AT | F | R | Hatchback FWD F16D3 | | GDS21021 | Drive Shaft | | 33 | 22 | 52 | 95.5 | 945 | |

| | YEAR | TRANSM. | F/R | L/R | BODY STYLE & DRIVE TYPE & ENGINE | REMARKS | G-AP Ref. | PRODUCT | ABS | Technical Specifications A | B | C | H | L | P |
|---|---|---|---|---|---|---|---|---|---|---|---|---|---|---|---|
| **DAEWOO** | | | | | | | | | | | | | | | |
| **Lacetti** | | | | | | | | | | | | | | | |
| 1.6 (80 kw) | 2004.02- | AT | F | L/R | Hatchback FWD F16D3 | | GCI12004 | Inner Joint | | 22 | 29 | 38 | 59 | 116 | |
| | 2004.02- | AT/MT | F | L/R | Hatchback FWD F16D3 | | GCO12011 | Outer Joint | | 33 | 22 | 52 | 95.5 | 53 | O |
| | 2004.02- | AT/MT | F | L/R | Hatchback FWD F16D3 | | GCO88019 | Outer Joint | 47T | 33 | 22 | 52 | 95.5 | 53 | O |
| | 2004.02- | MT | F | L | Hatchback FWD F16D3 | | GDS12045 | Drive Shaft | | 33 | 34 | 52 | 95.5 | 612.5 | |
| | 2004.02- | MT | F | L | Hatchback FWD F16D3 | | GDS86058 | Drive Shaft | 47T | 33 | 34 | 52 | 95.5 | 612.5 | |
| | 2004.02- | MT | F | R | Hatchback FWD F16D3 | | GDS12046 | Drive Shaft | | 33 | 34 | 52 | 95.5 | 934 | |
| | 2004.02- | MT | F | R | Hatchback FWD F16D3 | | GDS86059 | Drive Shaft | 47T | 33 | 34 | 52 | 95.5 | 934 | |
| | 2004.02- | MT | F | L/R | Hatchback FWD F16D3 | | GCI99025 | Inner Joint | | 34 | 22 | 35 | 56.2 | 111.3 | |
| 1.8 (90 kw) | 2004.02- | AT | F | L/R | Hatchback FWD T18SED | | GCI21005 | Inner Joint | | 34 | 29 | 40 | 64 | 110 | |
| | 2004.02- | AT/MT | F | L/R | Hatchback FWD T18SED | | GCO12027 | Outer Joint | 47T | 33 | 29 | 52 | 95.5 | 63 | O |
| | 2004.02- | AT/MT | F | L/R | Hatchback FWD T18SED | | GCO88019 | Outer Joint | 47T | 33 | 22 | 52 | 95.5 | 53 | O |
| | 2004.02- | MT | F | L/R | Hatchback FWD T18SED | | GCI12003 | Inner Joint | | 34 | 29 | 35 | 56.5 | 119 | |
| **Lanos** | | | | | | | | | | | | | | | |
| 1.3 (55 kw) | 1997.05- | 5MT | F | L | Hatchback FWD A13SMS | Chassis no. from:069312 | GDS12003 | Drive Shaft | | 22 | 34 | 52 | 95 | 573 | |
| | 1997.05- | 5MT | F | R | Hatchback FWD A13SMS | Chassis no. from:069312 | GDS12004 | Drive Shaft | | 22 | 34 | 52 | 95 | 906 | |
| | 1997.05- | 5MT | F | L/R | Hatchback FWD A13SMS | Chassis no. from:069312 | GCO12020 | Outer Joint | | 22 | 29 | 52 | 95.5 | 63 | O |
| | 1997.05- | 5MT | F | L/R | Hatchback FWD A13SMS | | GCO88002 | Outer Joint | 47T | 22 | 29 | 52 | 95.5 | 63 | O |
| | 1997.05- | 5MT | F | L/R | Hatchback FWD A13SMS | | GCI99025 | Inner Joint | | 34 | 22 | 35 | 56.2 | 111.3 | |
| | 1997.05- | 5MT | F | L | Saloon FWD A13SMS | Chassis no. from:069312 | GDS12003 | Drive Shaft | | 22 | 34 | 52 | 95 | 573 | |
| | 1997.05- | MT | F | R | Saloon FWD A13SMS | Chassis no. from:069312 | GDS12004 | Drive Shaft | | 22 | 34 | 52 | 95 | 906 | |
| | 1997.05- | MT | F | L/R | Saloon FWD A13SMS | | GCO12020 | Outer Joint | | 22 | 29 | 52 | 95.5 | 63 | O |
| | 1997.05- | MT | F | L/R | Saloon FWD A13SMS | | GCO88002 | Outer Joint | 47T | 22 | 29 | 52 | 95.5 | 63 | O |
| | 1997.05- | MT | F | L/R | Saloon FWD A13SMS | | GCI99025 | Inner Joint | | 34 | 22 | 35 | 56.2 | 111.3 | |
| 1.5 (63 kw) | 1997.04-2001.10 | AT | F | R | Saloon FWD LX6(91CUL4) | | GCO12005 | Outer Joint | 47T | 22 | 22 | 52 | 96 | 56 | I |
| | 1997.04-2001.10 | AT | F | L/R | Saloon FWD LX6(91CUL4) | Date to:2003.12 | GCO88021 | Outer Joint | 47T | 22 | 22 | 52 | 96.5 | 53.5 | O |
| | 1997.04-2001.10 | AT | F | L/R | Saloon FWD LX6(91CUL4) | | GCI12002 | Inner Joint | | 34 | 29 | 34.6 | | 127 | |
| | 1997.04-2001.10 | MT | F | L | Saloon FWD LX6(91CUL4) | Chassis no. from:069312 | GDS12003 | Drive Shaft | | 22 | 34 | 52 | 95 | 573 | |
| | 1997.04-2001.10 | MT | F | R | Saloon FWD LX6(91CUL4) | Chassis no. from:069312 | GDS12004 | Drive Shaft | | 22 | 34 | 52 | 95 | 906 | |
| | 1997.04-2001.10 | MT | F | L/R | Saloon FWD LX6(91CUL4) | | GCO12020 | Outer Joint | | 22 | 29 | 52 | 95.5 | 63 | O |
| | 1997.04-2001.10 | MT | F | L/R | Saloon FWD LX6(91CUL4) | | GCO88002 | Outer Joint | 47T | 22 | 29 | 52 | 95.5 | 63 | O |
| | 1997.04-2001.10 | MT | F | L/R | Saloon FWD LX6(91CUL4) | | GCI99025 | Inner Joint | | 34 | 22 | 35 | 56.2 | 111.3 | |
| | 1997.05-2002.12 | AT | F | R | Hatchback FWD LX6(91CUL4) | | GCO12005 | Outer Joint | 47T | 22 | 22 | 52 | 96 | 56 | I |
| | 1997.05-2002.12 | AT | F | L/R | Hatchback FWD LX6(91CUL4) | Date to:2003.12 | GCO88021 | Outer Joint | 47T | 22 | 22 | 52 | 96.5 | 53.5 | O |
| | 1997.05-2002.12 | AT | F | L/R | Hatchback FWD LX6(91CUL4) | | GCI12002 | Inner Joint | | 34 | 29 | 34.6 | | 127 | |
| | 1997.05-2002.12 | MT | F | L | Hatchback FWD LX6(91CUL4) | Chassis no. from:069312 | GDS12003 | Drive Shaft | | 22 | 34 | 52 | 95 | 573 | |
| | 1997.05-2002.12 | MT | F | R | Hatchback FWD LX6(91CUL4) | Chassis no. from:069312 | GDS12004 | Drive Shaft | | 22 | 34 | 52 | 95 | 906 | |
| | 1997.05-2002.12 | MT | F | L/R | Hatchback FWD LX6(91CUL4) | | GCO12020 | Outer Joint | | 22 | 29 | 52 | 95.5 | 63 | O |
| | 1997.05-2002.12 | MT | F | L/R | Hatchback FWD LX6(91CUL4) | | GCO88002 | Outer Joint | 47T | 22 | 29 | 52 | 95.5 | 63 | O |
| | 1997.05-2002.12 | MT | F | L/R | Hatchback FWD LX6(91CUL4) | | GCI99025 | Inner Joint | | 34 | 22 | 35 | 56.2 | 111.3 | |
| 1.5 (73 kw) | 1997.10-1999.06 | 5MT | F | L | Hatchback FWD L43(91CUL4) | Chassis no. from:069312 | GDS12003 | Drive Shaft | | 22 | 34 | 52 | 95 | 573 | |
| | 1997.10-1999.06 | 5MT | F | R | Hatchback FWD L43(91CUL4) | Chassis no. from:069312 | GDS12004 | Drive Shaft | | 22 | 34 | 52 | 95 | 906 | |
| | 1997.10-1999.06 | 5MT | F | L/R | Hatchback FWD L43(91CUL4) | | GCO12020 | Outer Joint | | 22 | 29 | 52 | 95.5 | 63 | O |
| | 1997.10-1999.06 | 5MT | F | L/R | Hatchback FWD L43(91CUL4) | | GCO88002 | Outer Joint | 47T | 22 | 29 | 52 | 95.5 | 63 | O |
| | 1997.10-1999.06 | 5MT | F | L/R | Hatchback FWD L43(91CUL4) | | GCI99025 | Inner Joint | | 34 | 22 | 35 | 56.2 | 111.3 | |
| | 1997.10-1999.06 | MT | F | L | Saloon FWD L43(91CUL4) | Chassis no. from:069312 | GDS12003 | Drive Shaft | | 22 | 34 | 52 | 95 | 573 | |
| | 1997.10-1999.06 | MT | F | R | Saloon FWD L43(91CUL4) | Chassis no. from:069312 | GDS12004 | Drive Shaft | | 22 | 34 | 52 | 95 | 906 | |
| | 1997.10-1999.06 | MT | F | L/R | Saloon FWD L43(91CUL4) | Chassis no. from:069312 | GCO12020 | Outer Joint | | 22 | 29 | 52 | 95.5 | 63 | O |
| | 1997.10-1999.06 | MT | F | L/R | Saloon FWD L43(91CUL4) | | GCO88002 | Outer Joint | 47T | 22 | 29 | 52 | 95.5 | 63 | O |
| | 1997.10-1999.06 | MT | F | L/R | Saloon FWD L43(91CUL4) | | GCI99025 | Inner Joint | | 34 | 22 | 35 | 56.2 | 111.3 | |
| 1.6 (78 kw) | 1997.02- | AT | F | L | Saloon FWD A16DMS | Chassis no. from:702977 | GDS12028 | Drive Shaft | 47T | 33 | 34 | 52 | 95.5 | 490 | |
| | 1997.02- | AT | F | R | Saloon FWD A16DMS | Chassis no. from:702977 | GDS12029 | Drive Shaft | 47T | 33 | 34 | 52 | 95.5 | 473 | |
| | 1997.02- | AT | F | L/R | Saloon FWD A16DMS | | GCI12002 | Inner Joint | | 34 | 29 | 34.6 | | 127 | |
| | 1997.02- | MT | F | L | Saloon FWD A16DMS | chassis no. from:069312,Chassis no. to:702976 | GCO12018 | Outer Joint | | 33 | 29 | 52 | 95.5 | 62.5 | O |
| | 1997.02- | MT | F | L/R | Saloon FWD A16DMS | | GCO12001 | Outer Joint | | 33 | 29 | 52 | 95.5 | 63 | O |
| | 1997.02- | MT | F | L/R | Saloon FWD A16DMS | | GCO12002 | Outer Joint | 47T | 33 | 29 | 52 | 95.5 | 63 | O |
| | 1997.02- | MT | F | L/R | Saloon FWD A16DMS | | GCO12027 | Outer Joint | 47T | 33 | 29 | 52 | 95.5 | 63 | O |
| | 1997.02- | MT | F | L/R | Saloon FWD A16DMS | | GCI99025 | Inner Joint | | 34 | 22 | 35 | 56.2 | 111.3 | |
| | 1997.05- | AT | F | L | Hatchback FWD A16DMS | Chassis no. from:702977 | GDS12028 | Drive Shaft | 47T | 33 | 34 | 52 | 95.5 | 490 | |
| | 1997.05- | AT | F | R | Hatchback FWD A16DMS | Chassis no. from:702977 | GDS12029 | Drive Shaft | 47T | 33 | 34 | 52 | 95.5 | 473 | |
| | 1997.05- | AT | F | L/R | Hatchback FWD A16DMS | Date to:2003.12 | GCO88002 | Outer Joint | 47T | 22 | 29 | 52 | 95.5 | 63 | O |
| | 1997.05- | AT | F | L/R | Hatchback FWD A16DMS | | GCI12002 | Inner Joint | | 34 | 29 | 34.6 | | 127 | |
| | 1997.05- | MT | F | L | Hatchback FWD A16DMS | | GCO12018 | Outer Joint | | 33 | 29 | 52 | 95.5 | 62.5 | O |
| | 1997.05- | MT | F | L/R | Hatchback FWD A16DMS | | GCO12001 | Outer Joint | | 33 | 29 | 52 | 95.5 | 63 | O |
| | 1997.05- | MT | F | L/R | Hatchback FWD A16DMS | | GCO12002 | Outer Joint | 47T | 33 | 29 | 52 | 95.5 | 63 | O |
| | 1997.05- | MT | F | L/R | Hatchback FWD A16DMS | | GCO12009 | Outer Joint | | 33 | 29 | 52 | 109 | 63 | O |

| | YEAR | TRANSM. | F/R | L/R | BODY STYLE & DRIVE TYPE & ENGINE | REMARKS | G-AP Ref. | PRODUCT | ABS | Technical Specifications A | B | C | H | L | P |
|---|---|---|---|---|---|---|---|---|---|---|---|---|---|---|---|
| **DAEWOO** | | | | | | | | | | | | | | | |
| **Lanos** | | | | | | | | | | | | | | | |
| 1.6 (78 kw) | 1997.05- | MT | F | L/R | Hatchback FWD A16DMS | | GCO12027 | Outer Joint | 47T | 33 | 29 | 52 | 95.5 | 63 | O |
| | 1997.05- | MT | F | L/R | Hatchback FWD A16DMS | | GCI99025 | Inner Joint | | 34 | 22 | 35 | 56.2 | 111.3 | |
| **Leganza** | | | | | | | | | | | | | | | |
| 2.0 (85 kw) | 1997.06-2002.12 | AT | F | R | Saloon FWD X20SED | Chassis no. to:328623 | GCI12006 | Inner Joint | | 24 | 29 | 40 | 95.5 | 146 | |
| | 1997.06-2002.12 | AT/MT | F | L/R | Saloon FWD X20SED | Chassis no. to:329773 | GCO12027 | Outer Joint | 47T | 33 | 29 | 52 | 95.5 | 63 | O |
| | 1997.06-2002.12 | MT | F | L/R | Saloon FWD X20SED | | GCI12003 | Inner Joint | | 34 | 29 | 35 | 56.5 | 119 | |
| 2.0 (93 kw) | 2000.03-2002.12 | MT | F | L/R | Saloon FWD T20SED | | GCO12002 | Outer Joint | 47T | 33 | 29 | 52 | 95.5 | 63 | O |
| | 2000.03-2002.12 | MT | F | L/R | Saloon FWD T20SED | | GCO12009 | Outer Joint | | 33 | 29 | 52 | 109 | 63 | O |
| | 2000.03-2002.12 | MT | F | L/R | Saloon FWD T20SED | | GCO12018 | Outer Joint | | 33 | 29 | 52 | 95.5 | 62.5 | O |
| | 2000.03-2002.12 | MT | F | L/R | Saloon FWD T20SED | | GCO12023 | Outer Joint | 47T | 33 | 32 | 52 | 95.5 | 66 | O |
| | 2000.03-2002.12 | MT | F | L/R | Saloon FWD T20SED | | GCO12027 | Outer Joint | 47T | 33 | 29 | 52 | 95.5 | 63 | O |
| | 2000.03-2002.12 | MT | F | L/R | Saloon FWD T20SED | | GCI12003 | Inner Joint | | 34 | 29 | 35 | 56.5 | 119 | |
| 2.0 (98 kw) | 1997.06-2002.12 | AT | F | R | Saloon FWD X 20 SED | Chassis no. to:328623 | GCI12006 | Inner Joint | | 24 | 29 | 40 | 95.5 | 146 | |
| | 1997.06-2002.12 | AT/MT | F | L/R | Saloon FWD X 20 SED | | GCO12002 | Outer Joint | 47T | 33 | 29 | 52 | 95.5 | 63 | O |
| | 1997.06-2002.12 | AT/MT | F | L/R | Saloon FWD X 20 SED | | GCO12009 | Outer Joint | | 33 | 29 | 52 | 109 | 63 | O |
| | 1997.06-2002.12 | AT/MT | F | L/R | Saloon FWD X 20 SED | | GCO12018 | Outer Joint | | 33 | 29 | 52 | 95.5 | 62.5 | O |
| | 1997.06-2002.12 | AT/MT | F | L/R | Saloon FWD X 20 SED | | GCO12023 | Outer Joint | 47T | 33 | 32 | 52 | 95.5 | 66 | O |
| | 1997.06-2002.12 | AT/MT | F | L/R | Saloon FWD X 20 SED | Chassis no. to:329773 | GCO12027 | Outer Joint | 47T | 33 | 29 | 52 | 95.5 | 63 | O |
| | 1997.06-2002.12 | MT | F | L/R | Saloon FWD X 20 SED | | GCI12003 | Inner Joint | | 34 | 29 | 35 | 56.5 | 119 | |
| 2.0 (133 kw) | 2001.01-2002.12 | MT | F | L/R | Saloon FWD T20SED | | GCO12009 | Outer Joint | | 33 | 29 | 52 | 109 | 63 | O |
| | 2001.01-2002.12 | MT | F | L/R | Saloon FWD T20SED | | GCO12027 | Outer Joint | 47T | 33 | 29 | 52 | 95.5 | 63 | O |
| | 2001.01-2002.12 | MT | F | L/R | Saloon FWD T20SED | | GCI12003 | Inner Joint | | 34 | 29 | 35 | 56.5 | 119 | |
| 2.2 (100 kw) | 1999.01-2002.12 | 4AT/5MT | F | L/R | Saloon FWD T22SED | | GCO12023 | Outer Joint | 47T | 33 | 32 | 52 | 95.5 | 66 | O |
| | 1999.01-2002.12 | AT/MT | F | L | Saloon FWD T22SED | | GDS12014 | Drive Shaft | 47T | 33 | 34 | 52 | 96 | 620 | |
| | 1999.01-2002.12 | MT | F | L | Saloon FWD T22SED | Chassis no. from:281378 | GCO12024 | Outer Joint | 47T | 33 | 23 | 52 | 96 | 64 | I |
| | 1999.01-2002.12 | | F | | Saloon FWD T22SED | | GCO12009 | Outer Joint | | 33 | 29 | 52 | 109 | 63 | O |
| | 1999.01-2002.12 | | F | | Saloon FWD T22SED | | GCO12018 | Outer Joint | | 33 | 29 | 52 | 95.5 | 62.5 | O |
| **Magnus** | | | | | | | | | | | | | | | |
| 2.0 (96 kw) | 1999.07-2006.01 | AT | F | L/R | Saloon FWD X 20 SED | | GCO24021 | Outer Joint | | 28 | 29 | 55.5 | 99 | 61 | O |
| | 1999.07-2006.01 | AT | F | L | Saloon FWD X 20 SED | | GCI21005 | Inner Joint | | 34 | 29 | 40 | 64 | 110 | |
| | 1999.07-2006.01 | MT | F | L | Saloon FWD X 20 SED | | GDS12027 | Drive Shaft | | 28 | 34 | 55.5 | 99 | 643 | |
| | 1999.07-2006.01 | MT | F | R | Saloon FWD X 20 SED | | GDS12026 | Drive Shaft | | 28 | 26 | 55.5 | 99 | 682 | |
| | 1999.07-2006.01 | MT | F | L/R | Saloon FWD X 20 SED | | GCO14030 | Outer Joint | | 28 | 32 | 55.5 | 99 | 61 | O |
| | 1999.07-2006.01 | MT | F | R | Saloon FWD X 20 SED | | GCI88019 | Inner Joint | | 26 | 32 | 43 | | 130 | |
| **Matiz** | | | | | | | | | | | | | | | |
| 0.8 (38 kw) | 1998.09-2004.12 | AT/MT | F | L | Hatchback FWD F8CV | | GDS12011 | Drive Shaft | | 23 | 22 | 46 | 92 | 616 | |
| | 1998.09-2004.12 | AT/MT | F | L | Hatchback FWD F8CV | | GDS12025 | Drive Shaft | 40T | 23 | 22 | 46 | 92 | 616 | |
| | 1998.09-2004.12 | AT/MT | F | R | Hatchback FWD F8CV | | GDS88059 | Drive Shaft | | 23 | 22 | 46 | 92 | 785 | |
| | 1998.09-2004.12 | AT/MT | F | L/R | Hatchback FWD F8CV | | GCO12007 | Outer Joint | | 23 | 19 | 46 | 92 | 56.5 | O |
| | 1998.09-2004.12 | MT | F | L/R | Hatchback FWD F8CV | Date to:2004.12 | GCO12021 | Outer Joint | 40T | 23 | 19 | 46 | 92 | 56.5 | O |
| | 1998.09-2004.12 | | F | R | Hatchback FWD F8CV | | GDS12044 | Drive Shaft | 40T | 23 | 22 | 46 | 92 | 786 | |
| | 1998.09-2004.12 | | F | L/R | Hatchback FWD F8CV | | GCO12028 | Outer Joint | | 23 | 19 | 46 | 92 | 56.5 | O |
| | 1998.09-2004.12 | | F | L/R | Hatchback FWD F8CV | | GCO12046 | Outer Joint | 40T | 23 | 19 | 46 | 92 | 56.5 | O |
| | 1998.09-2004.12 | | F | L/R | Hatchback FWD F8CV | | GCI12001 | Inner Joint | | 22 | 19 | 35 | 54.5 | 79 | |
| | 2000.09-2004.12 | MT | F | L/R | Hatchback Van FWD F8CV | | GCO12021 | Outer Joint | 40T | 23 | 19 | 46 | 92 | 56.5 | O |
| | 2000.09-2004.12 | MT | F | L/R | Hatchback Van FWD F8CV | | GCI12001 | Inner Joint | | 22 | 19 | 35 | 54.5 | 79 | |
| | 2005.01-2010.06 | MT | F | L | Hatchback FWD F8CV | For vehicles with ABS | GDS12025 | Drive Shaft | 40T | 23 | 22 | 46 | 92 | 616 | |
| | 2005.01-2010.06 | MT | F | R | Hatchback FWD F8CV | | GDS12012 | Drive Shaft | 40T | 23 | 22 | 46 | 92 | 785 | |
| | 2005.01-2010.06 | MT | F | L/R | Hatchback FWD F8CV | | GCO12021 | Outer Joint | 40T | 23 | 19 | 46 | 92 | 56.5 | O |
| | 2005.01-2010.06 | MT | F | L/R | Hatchback FWD F8CV | | GCI12001 | Inner Joint | | 22 | 19 | 35 | 54.5 | 79 | |
| 1.0 (46 kw) | 2003.04-2004.12 | MT | F | R | Hatchback FWD B10S | | GDS12044 | Drive Shaft | 40T | 23 | 22 | 46 | 92 | 786 | |
| | 2003.04-2004.12 | MT | F | L/R | Hatchback FWD B10S | | GCO12021 | Outer Joint | 40T | 23 | 19 | 46 | 92 | 56.5 | O |
| | 2003.04-2004.12 | MT | F | L/R | Hatchback FWD B10S | | GCI12001 | Inner Joint | | 22 | 19 | 35 | 54.5 | 79 | |
| 1.0 (47 kw) | 2002.11-2004.12 | MT | F | L | Hatchback FWD B10S | | GDS57177 | Drive Shaft | 40T | 23 | 22 | 46 | 92 | 562 | |
| | 2002.11-2004.12 | MT | F | R | Hatchback FWD B10S | | GDS57176 | Drive Shaft | 40T | 23 | 22 | 46 | 92 | 831 | |
| | 2002.11-2004.12 | MT | F | L/R | Hatchback FWD B10S | | GCO12021 | Outer Joint | 40T | 23 | 19 | 46 | 92 | 56.5 | O |
| | 2002.11-2004.12 | MT | F | L/R | Hatchback FWD B10S | | GCI12001 | Inner Joint | | 22 | 19 | 35 | 54.5 | 79 | |
| | 2002.11-2004.12 | | F | | Hatchback FWD B10S | | GCO12046 | Outer Joint | 40T | 23 | 19 | 46 | 92 | 56.5 | O |
| 1.0 (49 kw) | 2005.03-2008.12 | 5MT | F | L/R | Hatchback FWD LA2(61CUL4);LQ4(61CUL4) | | GCI99107 | Inner Joint | | 22 | 19 | 35 | 50.5 | 78 | |
| | 2005.03-2008.12 | | F | L | Hatchback FWD LA2(61CUL4);LQ4(61CUL4) | | GDS57177 | Drive Shaft | 40T | 23 | 22 | 46 | 92 | 562 | |
| | 2005.03-2008.12 | | F | R | Hatchback FWD LA2(61CUL4);LQ4(61CUL4) | | GDS57176 | Drive Shaft | 40T | 23 | 22 | 46 | 92 | 831 | |
| | 2005.03-2008.12 | | F | L/R | Hatchback FWD LA2(61CUL4);LQ4(61CUL4) | | GCO12021 | Outer Joint | 40T | 23 | 19 | 46 | 92 | 56.5 | O |
| **Musso** | | | | | | | | | | | | | | | |
| 2.3 (103 kw) | 1999.01-2005.05 | 4AT/5MT | F | L/R | Terrain cab wagon closed 4WD M111970 | | GCO99059 | Outer Joint | | 28 | 35 | 53 | 154 | 79 | O |
| 3.2 (162 kw) | 1998.07-2000.02 | 4AT | F | L/R | Terrain cab wagon closed 4WD M162E32 | | GCO99059 | Outer Joint | | 28 | 35 | 53 | 154 | 79 | O |

| | YEAR | TRANSM. | F/R | L/R | BODY STYLE & DRIVE TYPE & ENGINE | REMARKS | G-AP Ref. | PRODUCT | ABS | Technical Specifications A | B | C | H | L | P |
|---|---|---|---|---|---|---|---|---|---|---|---|---|---|---|---|
| **DAEWOO** **Nexia** | | | | | | | | | | | | | | | |
| 1.5 (44 kw) | 1995.01-1997.08 | MT | F | L | Hatchback FWD G15MF | Date from:1996.02 | GDS12003 | Drive Shaft | | 22 | 34 | 52 | 95 | 573 | |
| | 1995.01-1997.08 | MT | F | L/R | Hatchback FWD G15MF | M18x1.5 | GCO12004 | Outer Joint | | 22 | 29 | 52 | 95.5 | 57 | O |
| | 1995.01-1997.08 | MT | F | L/R | Hatchback FWD G15MF | M20x1 | GCO12019 | Outer Joint | | 22 | 29 | 52 | 95 | 62.5 | O |
| | 1995.01-1997.08 | MT | F | L/R | Hatchback FWD G15MF | M20x1.5 | GCO12020 | Outer Joint | | 22 | 29 | 52 | 95.5 | 63 | O |
| | 1995.01-1997.08 | MT | F | L/R | Hatchback FWD G15MF | | GCO88002 | Outer Joint | 47T | 22 | 29 | 52 | 95.5 | 63 | O |
| | 1995.01-1997.08 | MT | F | L/R | Hatchback FWD G15MF | | GCI99025 | Inner Joint | | 34 | 22 | 35 | 56.2 | 111.3 | |
| | 1996.08-1997.08 | MT | F | L | Saloon FWD G15MF | Date from:1996.02 | GDS12003 | Drive Shaft | | 22 | 34 | 52 | 95 | 573 | |
| | 1996.08-1997.08 | MT | F | L/R | Saloon FWD G15MF | | GCO12004 | Outer Joint | | 22 | 29 | 52 | 95.5 | 57 | O |
| | 1996.08-1997.08 | MT | F | L/R | Saloon FWD G15MF | Model:Nexia | GCO12019 | Outer Joint | | 22 | 29 | 52 | 95 | 62.5 | O |
| | 1996.08-1997.08 | MT | F | L/R | Saloon FWD G15MF | | GCO12020 | Outer Joint | | 22 | 29 | 52 | 95.5 | 63 | O |
| | 1996.08-1997.08 | MT | F | L/R | Saloon FWD G15MF | | GCO88002 | Outer Joint | 47T | 22 | 29 | 52 | 95.5 | 63 | O |
| | 1996.08-1997.08 | MT | F | L/R | Saloon FWD G15MF | | GCI99025 | Inner Joint | | 34 | 22 | 35 | 56.2 | 111.3 | |
| 1.5 (52 kw) | 1995.02-1997.08 | AT | F | L/R | Hatchback FWD G15MF | | GCO12002 | Outer Joint | 47T | 33 | 29 | 52 | 95.5 | 63 | O |
| | 1995.02-1997.08 | AT | F | L/R | Hatchback FWD G15MF | | GCI12002 | Inner Joint | | 34 | 29 | 34.6 | | 127 | |
| | 1995.02-1997.08 | MT | F | L | Hatchback FWD G15MF | Date from:1996.02,For vehicles without ABS | GDS12003 | Drive Shaft | | 22 | 34 | 52 | 95 | 573 | |
| | 1995.02-1997.08 | MT | F | L/R | Hatchback FWD G15MF | M18x1.5 | GCO12004 | Outer Joint | | 22 | 29 | 52 | 95.5 | 57 | O |
| | 1995.02-1997.08 | MT | F | L/R | Hatchback FWD G15MF | Date to:1995.11;M20x1 | GCO12008 | Outer Joint | 47T | 33 | 29 | 52 | 108.5 | 63 | O |
| | 1995.02-1997.08 | MT | F | L/R | Hatchback FWD G15MF | Date to:1996.01;M20x1 | GCO12019 | Outer Joint | | 22 | 29 | 52 | 95 | 62.5 | O |
| | 1995.02-1997.08 | MT | F | L/R | Hatchback FWD G15MF | M20x1.5 | GCO12020 | Outer Joint | | 22 | 29 | 52 | 95.5 | 63 | O |
| | 1995.02-1997.08 | MT | F | L/R | Hatchback FWD G15MF | M20x1.5 | GCO88002 | Outer Joint | 47T | 22 | 29 | 52 | 95.5 | 63 | O |
| | 1995.02-1997.08 | MT | F | L/R | Hatchback FWD G15MF | | GCI99025 | Inner Joint | | 34 | 22 | 35 | 56.2 | 111.3 | |
| | 1995.02-1997.08 | AT | F | L/R | Saloon FWD G15MF | | GCO12002 | Outer Joint | 47T | 33 | 29 | 52 | 95.5 | 63 | O |
| | 1995.02-1997.08 | AT | F | L/R | Saloon FWD G15MF | | GCI12002 | Inner Joint | | 34 | 29 | 34.6 | | 127 | |
| | 1995.02-1997.08 | MT | F | L | Saloon FWD G15MF | Date from:1996.02,For vehicles without ABS | GDS12003 | Drive Shaft | | 22 | 34 | 52 | 95 | 573 | |
| | 1995.02-1997.08 | MT | F | L/R | Saloon FWD G15MF | M18x1.5 | GCO12004 | Outer Joint | | 22 | 29 | 52 | 95.5 | 57 | O |
| | 1995.02-1997.08 | MT | F | L/R | Saloon FWD G15MF | Date to:1995.11;M20x1 | GCO12008 | Outer Joint | 47T | 33 | 29 | 52 | 108.5 | 63 | O |
| | 1995.02-1997.08 | MT | F | L/R | Saloon FWD G15MF | Date to:1996.01;M20x1 | GCO12019 | Outer Joint | | 22 | 29 | 52 | 95 | 62.5 | O |
| | 1995.02-1997.08 | MT | F | L/R | Saloon FWD G15MF | M20x1.5 | GCO12020 | Outer Joint | | 22 | 29 | 52 | 95.5 | 63 | O |
| | 1995.02-1997.08 | MT | F | L/R | Saloon FWD G15MF | M20x1.5 | GCO88002 | Outer Joint | 47T | 22 | 29 | 52 | 95.5 | 63 | O |
| | 1995.02-1997.08 | MT | F | L/R | Saloon FWD G15MF | | GCI99025 | Inner Joint | | 34 | 22 | 35 | 56.2 | 111.3 | |
| 1.5 (55 kw) | 1995.01-1997.08 | AT | F | L/R | Hatchback FWD G15MF | | GCO12002 | Outer Joint | 47T | 33 | 29 | 52 | 95.5 | 63 | O |
| | 1995.01-1997.08 | AT | F | L/R | Hatchback FWD G15MF | | GCI12002 | Inner Joint | | 34 | 29 | 34.6 | | 127 | |
| | 1995.01-1997.08 | MT | F | L | Hatchback FWD G15MF | Date from:1996.02,For vehicles without ABS | GDS12003 | Drive Shaft | | 22 | 34 | 52 | 95 | 573 | |
| | 1995.01-1997.08 | MT | F | L/R | Hatchback FWD G15MF | M18x1.5 | GCO12004 | Outer Joint | | 22 | 29 | 52 | 95.5 | 57 | O |
| | 1995.01-1997.08 | MT | F | L/R | Hatchback FWD G15MF | Date to:1995.11;M20x1 | GCO12008 | Outer Joint | 47T | 33 | 29 | 52 | 108.5 | 63 | O |
| | 1995.01-1997.08 | MT | F | L/R | Hatchback FWD G15MF | Date to:1996.01;M20x1 | GCO12019 | Outer Joint | | 22 | 29 | 52 | 95 | 62.5 | O |
| | 1995.01-1997.08 | MT | F | L/R | Hatchback FWD G15MF | M20x1.5 | GCO12020 | Outer Joint | | 22 | 29 | 52 | 95.5 | 63 | O |
| | 1995.01-1997.08 | MT | F | L/R | Hatchback FWD G15MF | M20x1.5 | GCO88002 | Outer Joint | 47T | 22 | 29 | 52 | 95.5 | 63 | O |
| | 1995.01-1997.08 | MT | F | L/R | Hatchback FWD G15MF | | GCI99025 | Inner Joint | | 34 | 22 | 35 | 56.2 | 111.3 | |
| | 1995.02-2008.06 | AT | F | L/R | Saloon FWD G15MF | | GCI12002 | Inner Joint | | 34 | 29 | 34.6 | | 127 | |
| | 1995.02-2008.06 | MT | F | L | Saloon FWD G15MF | Date from:1996.02,For vehicles without ABS | GDS12003 | Drive Shaft | | 22 | 34 | 52 | 95 | 573 | |
| | 1995.02-2008.06 | MT | F | L/R | Saloon FWD G15MF | | GCO12004 | Outer Joint | | 22 | 29 | 52 | 95.5 | 57 | O |
| | 1995.02-2008.06 | MT | F | L/R | Saloon FWD G15MF | Date to:1995.11 | GCO12008 | Outer Joint | 47T | 33 | 29 | 52 | 108.5 | 63 | O |
| | 1995.02-2008.06 | MT | F | L/R | Saloon FWD G15MF | | GCO12019 | Outer Joint | | 22 | 29 | 52 | 95 | 62.5 | O |
| | 1995.02-2008.06 | MT | F | L/R | Saloon FWD G15MF | | GCO12020 | Outer Joint | | 22 | 29 | 52 | 95.5 | 63 | O |
| | 1995.02-2008.06 | MT | F | L/R | Saloon FWD G15MF | Date from:1995.12 | GCO12027 | Outer Joint | 47T | 33 | 29 | 52 | 95.5 | 63 | O |
| | 1995.02-2008.06 | MT | F | L/R | Saloon FWD G15MF | | GCO88002 | Outer Joint | 47T | 22 | 29 | 52 | 95.5 | 63 | O |
| | 1995.02-2008.06 | MT | F | L/R | Saloon FWD G15MF | | GCI99025 | Inner Joint | | 34 | 22 | 35 | 56.2 | 111.3 | |
| 1.5 (59 kw) | 1997.08-2008.06 | MT | F | L | Saloon FWD G15MF | For vehicles without ABS | GDS12003 | Drive Shaft | | 22 | 34 | 52 | 95 | 573 | |
| | 1997.08-2008.06 | MT | F | L/R | Saloon FWD G15MF | | GCO12027 | Outer Joint | 47T | 33 | 29 | 52 | 95.5 | 63 | O |
| | 1997.08-2008.06 | MT | F | L/R | Saloon FWD G15MF | | GCI99025 | Inner Joint | | 34 | 22 | 35 | 56.2 | 111.3 | |
| | 2008.07- | 5MT | F | L | Saloon FWD A15SMS | | GDS12003 | Drive Shaft | | 22 | 34 | 52 | 95 | 573 | |
| | 2008.07- | 5MT | F | R | Saloon FWD A15SMS | | GDS12004 | Drive Shaft | | 22 | 34 | 52 | 95 | 906 | |
| | 2008.07- | 5MT | F | L/R | Saloon FWD A15SMS | | GCO12003 | Outer Joint | | 22 | 29 | 52 | 95 | 62.5 | O |
| | 2008.07- | MT | F | | Saloon FWD A15SMS | | GCI99025 | Inner Joint | | 34 | 22 | 35 | 56.2 | 111.3 | |
| 1.5 (66 kw) | 1995.01-1997.08 | AT | F | L/R | Hatchback FWD A15MF | | GCO12004 | Outer Joint | | 22 | 29 | 52 | 95.5 | 57 | O |
| | 1995.01-1997.08 | AT | F | L/R | Hatchback FWD A15MF | | GCO12019 | Outer Joint | | 22 | 29 | 52 | 95 | 62.5 | O |
| | 1995.01-1997.08 | AT | F | L/R | Hatchback FWD A15MF | | GCO88002 | Outer Joint | 47T | 22 | 29 | 52 | 95.5 | 63 | O |
| | 1995.01-1997.08 | AT | F | L/R | Hatchback FWD A15MF | | GCI12002 | Inner Joint | | 34 | 29 | 34.6 | | 127 | |
| | 1995.01-1997.08 | MT | F | L/R | Hatchback FWD A15MF | | GCO12001 | Outer Joint | | 33 | 29 | 52 | 95.5 | 63 | O |
| | 1995.01-1997.08 | MT | F | L/R | Hatchback FWD A15MF | | GCO12002 | Outer Joint | 47T | 33 | 29 | 52 | 95.5 | 63 | O |
| | 1995.01-1997.08 | MT | F | L/R | Hatchback FWD A15MF | | GCO12008 | Outer Joint | 47T | 33 | 29 | 52 | 108.5 | 63 | O |
| | 1995.01-1997.08 | MT | F | L/R | Hatchback FWD A15MF | | GCO12027 | Outer Joint | 47T | 33 | 29 | 52 | 95.5 | 63 | O |
| | 1995.01-1997.08 | MT | F | L/R | Hatchback FWD A15MF | | GCI99025 | Inner Joint | | 34 | 22 | 35 | 56.2 | 111.3 | |
| | 1995.01-2008.06 | AT | F | L/R | Saloon FWD A15MF | | GCO12004 | Outer Joint | | 22 | 29 | 52 | 95.5 | 57 | O |

| | YEAR | TRANSM. | F/R | L/R | BODY STYLE & DRIVE TYPE & ENGINE | REMARKS | G-AP Ref. | PRODUCT | ABS | Technical Specifications A | B | C | H | L | P |
|---|---|---|---|---|---|---|---|---|---|---|---|---|---|---|---|
| **DAEWOO** | | | | | | | | | | | | | | | |
| **Nexia** | | | | | | | | | | | | | | | |
| 1.5 (66 kw) | 1995.01-2008.06 | AT | F | L/R | Saloon FWD A15MF | | GCO12019 | Outer Joint | | 22 | 29 | 52 | 95 | 62.5 | O |
| | 1995.01-2008.06 | AT | F | L/R | Saloon FWD A15MF | | GCO88002 | Outer Joint | 47T | 22 | 29 | 52 | 95.5 | 63 | O |
| | 1995.01-2008.06 | AT | F | L/R | Saloon FWD A15MF | | GCI12002 | Inner Joint | | 34 | 29 | 34.6 | | 127 | |
| | 1995.01-2008.06 | MT | F | L | Saloon FWD A15MF | Date from:1996.02,Trim Level:GL/GLE | GDS12003 | Drive Shaft | | 22 | 34 | 52 | 95 | 573 | |
| | 1995.01-2008.06 | MT | F | R | Saloon FWD A15MF | Date to:1995.11 | GCO12009 | Outer Joint | | 33 | 29 | 52 | 109 | 63 | O |
| | 1995.01-2008.06 | MT | F | L/R | Saloon FWD A15MF | | GCO12001 | Outer Joint | | 33 | 29 | 52 | 95.5 | 63 | O |
| | 1995.01-2008.06 | MT | F | L/R | Saloon FWD A15MF | | GCO12002 | Outer Joint | 47T | 33 | 29 | 52 | 95.5 | 63 | O |
| | 1995.01-2008.06 | MT | F | L/R | Saloon FWD A15MF | | GCO12008 | Outer Joint | 47T | 33 | 29 | 52 | 108.5 | 63 | O |
| | 1995.01-2008.06 | MT | F | L/R | Saloon FWD A15MF | | GCO12027 | Outer Joint | 47T | 33 | 29 | 52 | 95.5 | 63 | O |
| | 1995.01-2008.06 | MT | F | L/R | Saloon FWD A15MF | | GCI99025 | Inner Joint | | 34 | 22 | 35 | 56.2 | 111.3 | |
| 1.6 (80 kw) | 2008.07- | MT | F | | Saloon FWD F16D3 | | GCI99025 | Inner Joint | | 34 | 22 | 35 | 56.2 | 111.3 | |
| **Nubira** | | | | | | | | | | | | | | | |
| 1.6 (66 kw) | 1997.06-1999.12 | 5MT | F | L/R | Estate FWD A16DMS | | GCO12001 | Outer Joint | | 33 | 29 | 52 | 95.5 | 63 | O |
| | 1997.06-1999.12 | 5MT | F | L/R | Estate FWD A16DMS | | GCO12002 | Outer Joint | 47T | 33 | 29 | 52 | 95.5 | 63 | O |
| | 1997.06-1999.12 | 5MT | F | L/R | Estate FWD A16DMS | | GCO12009 | Outer Joint | | 33 | 29 | 52 | 109 | 63 | O |
| | 1997.06-1999.12 | 5MT | F | L/R | Estate FWD A16DMS | | GCO12018 | Outer Joint | | 33 | 29 | 52 | 95.5 | 62.5 | O |
| | 1997.06-1999.12 | 5MT | F | L/R | Estate FWD A16DMS | | GCO12027 | Outer Joint | 47T | 33 | 29 | 52 | 95.5 | 63 | O |
| | 1997.06-1999.12 | 5MT | F | L/R | Estate FWD A16DMS | Type:HALF SHAFT | GCO88002 | Outer Joint | 47T | 22 | 29 | 52 | 95.5 | 63 | O |
| | 1997.06-1999.12 | 5MT | F | L/R | Estate FWD A16DMS | | GCI12002 | Inner Joint | | 34 | 29 | 34.6 | | 127 | |
| 1.6 (76 kw) | 2000.07- | AT | F | R | Saloon FWD A16DMS | Trans. code:ZF14 | GCI12006 | Inner Joint | | 24 | 29 | 40 | 95.5 | 146 | |
| | 2000.07- | AT | F | L/R | Saloon FWD A16DMS | Trans. code:ZF16 | GCI21005 | Inner Joint | | 34 | 29 | 40 | 64 | 110 | |
| | 2000.07- | AT/MT | F | L/R | Saloon FWD A16DMS | | GCO12001 | Outer Joint | | 33 | 29 | 52 | 95.5 | 63 | O |
| | 2000.07- | AT/MT | F | L/R | Saloon FWD A16DMS | | GCO12002 | Outer Joint | 47T | 33 | 29 | 52 | 95.5 | 63 | O |
| | 2000.07- | AT/MT | F | L/R | Saloon FWD A16DMS | | GCO12009 | Outer Joint | | 33 | 29 | 52 | 109 | 63 | O |
| | 2000.07- | AT/MT | F | L/R | Saloon FWD A16DMS | | GCO12018 | Outer Joint | | 33 | 29 | 52 | 95.5 | 62.5 | O |
| | 2000.07- | AT/MT | F | L/R | Saloon FWD A16DMS | | GCO12027 | Outer Joint | 47T | 33 | 29 | 52 | 95.5 | 63 | O |
| | 2000.07- | MT | F | L/R | Saloon FWD A16DMS | | GCI99025 | Inner Joint | | 34 | 22 | 35 | 56.2 | 111.3 | |
| | 2000.12- | AT | F | R | Estate FWD A16DMS | Trans. code:ZF14 | GCI12006 | Inner Joint | | 24 | 29 | 40 | 95.5 | 146 | |
| | 2000.12- | AT | F | L/R | Estate FWD A16DMS | Trans. code:ZF16 | GCI21005 | Inner Joint | | 34 | 29 | 40 | 64 | 110 | |
| | 2000.12- | AT/MT | F | L/R | Estate FWD A16DMS | | GCO12001 | Outer Joint | | 33 | 29 | 52 | 95.5 | 63 | O |
| | 2000.12- | AT/MT | F | L/R | Estate FWD A16DMS | | GCO12002 | Outer Joint | 47T | 33 | 29 | 52 | 95.5 | 63 | O |
| | 2000.12- | AT/MT | F | L/R | Estate FWD A16DMS | | GCO12009 | Outer Joint | | 33 | 29 | 52 | 109 | 63 | O |
| | 2000.12- | AT/MT | F | L/R | Estate FWD A16DMS | | GCO12018 | Outer Joint | | 33 | 29 | 52 | 95.5 | 62.5 | O |
| | 2000.12- | AT/MT | F | L/R | Estate FWD A16DMS | | GCO12027 | Outer Joint | 47T | 33 | 29 | 52 | 95.5 | 63 | O |
| | 2000.12- | MT | F | L/R | Estate FWD A16DMS | | GCI99025 | Inner Joint | | 34 | 22 | 35 | 56.2 | 111.3 | |
| | 2002.08-2003.07 | AT | F | R | Hatchback FWD A16DMS | Trans. code:ZF14 | GCI12006 | Inner Joint | | 24 | 29 | 40 | 95.5 | 146 | |
| | 2002.08-2003.07 | AT | F | L/R | Hatchback FWD A16DMS | Trans. code:ZF16 | GCI21005 | Inner Joint | | 34 | 29 | 40 | 64 | 110 | |
| | 2002.08-2003.07 | AT/MT | F | L/R | Hatchback FWD A16DMS | | GCO12001 | Outer Joint | | 33 | 29 | 52 | 95.5 | 63 | O |
| | 2002.08-2003.07 | AT/MT | F | L/R | Hatchback FWD A16DMS | | GCO12027 | Outer Joint | 47T | 33 | 29 | 52 | 95.5 | 63 | O |
| | 2002.08-2003.07 | MT | F | L/R | Hatchback FWD A16DMS | | GCI99025 | Inner Joint | | 34 | 22 | 35 | 56.2 | 111.3 | |
| 1.6 (78 kw) | 1997.05-1999.05 | 4AT/5MT | F | L/R | Estate FWD A16DMS | | GCO12001 | Outer Joint | | 33 | 29 | 52 | 95.5 | 63 | O |
| | 1997.05-1999.05 | 4AT/5MT | F | L/R | Estate FWD A16DMS | | GCO12002 | Outer Joint | 47T | 33 | 29 | 52 | 95.5 | 63 | O |
| | 1997.05-1999.05 | 4AT/5MT | F | L/R | Estate FWD A16DMS | | GCO12009 | Outer Joint | | 33 | 29 | 52 | 109 | 63 | O |
| | 1997.05-1999.05 | 4AT/5MT | F | L/R | Estate FWD A16DMS | | GCO12018 | Outer Joint | | 33 | 29 | 52 | 95.5 | 62.5 | O |
| | 1997.05-1999.05 | 4AT/5MT | F | L/R | Estate FWD A16DMS | | GCO12027 | Outer Joint | 47T | 33 | 29 | 52 | 95.5 | 63 | O |
| | 1997.05-1999.05 | 4AT/5MT | F | L/R | Estate FWD A16DMS | Type:HALF SHAFT | GCO88002 | Outer Joint | 47T | 22 | 29 | 52 | 95.5 | 63 | O |
| | 1997.05-1999.05 | 4AT/5MT | F | L/R | Estate FWD A16DMS | | GCI12002 | Inner Joint | | 34 | 29 | 34.6 | | 127 | |
| | 1997.05-1999.05 | 4AT/5MT | F | L/R | Hatchback FWD A16DMS | | GCO12001 | Outer Joint | | 33 | 29 | 52 | 95.5 | 63 | O |
| | 1997.05-1999.05 | 4AT/5MT | F | L/R | Hatchback FWD A16DMS | | GCO12002 | Outer Joint | 47T | 33 | 29 | 52 | 95.5 | 63 | O |
| | 1997.05-1999.05 | 4AT/5MT | F | L/R | Hatchback FWD A16DMS | | GCO12009 | Outer Joint | | 33 | 29 | 52 | 109 | 63 | O |
| | 1997.05-1999.05 | 4AT/5MT | F | L/R | Hatchback FWD A16DMS | | GCO12018 | Outer Joint | | 33 | 29 | 52 | 95.5 | 62.5 | O |
| | 1997.05-1999.05 | 4AT/5MT | F | L/R | Hatchback FWD A16DMS | | GCO12027 | Outer Joint | 47T | 33 | 29 | 52 | 95.5 | 63 | O |
| | 1997.05-1999.05 | 4AT/5MT | F | L/R | Hatchback FWD A16DMS | Type:HALF SHAFT | GCO88002 | Outer Joint | 47T | 22 | 29 | 52 | 95.5 | 63 | O |
| | 1997.05-1999.05 | 4AT/5MT | F | L/R | Hatchback FWD A16DMS | | GCI12002 | Inner Joint | | 34 | 29 | 34.6 | | 127 | |
| | 1997.05-1999.05 | 4AT/5MT | F | L/R | Saloon FWD A16DMS | | GCO12001 | Outer Joint | | 33 | 29 | 52 | 95.5 | 63 | O |
| | 1997.05-1999.05 | 4AT/5MT | F | L/R | Saloon FWD A16DMS | | GCO12002 | Outer Joint | 47T | 33 | 29 | 52 | 95.5 | 63 | O |
| | 1997.05-1999.05 | 4AT/5MT | F | L/R | Saloon FWD A16DMS | | GCO12018 | Outer Joint | | 33 | 29 | 52 | 95.5 | 62.5 | O |
| | 1997.05-1999.05 | 4AT/5MT | F | L/R | Saloon FWD A16DMS | | GCO12027 | Outer Joint | 47T | 33 | 29 | 52 | 95.5 | 63 | O |
| | 1997.05-1999.05 | 4AT/5MT | F | L/R | Saloon FWD A16DMS | Type:HALF SHAFT | GCO88002 | Outer Joint | 47T | 22 | 29 | 52 | 95.5 | 63 | O |
| | 1997.05-1999.05 | 4AT/5MT | F | L/R | Saloon FWD A16DMS | | GCI12002 | Inner Joint | | 34 | 29 | 34.6 | | 127 | |
| | 1999.06-2002.07 | AT | F | R | Hatchback FWD A16DMS | Trans. code:ZF14 | GCI12006 | Inner Joint | | 24 | 29 | 40 | 95.5 | 146 | |
| | 1999.06-2002.07 | AT | F | L/R | Hatchback FWD A16DMS | Trans. code:ZF16 | GCI21005 | Inner Joint | | 34 | 29 | 40 | 64 | 110 | |
| | 1999.06-2002.07 | AT/MT | F | L/R | Hatchback FWD A16DMS | | GCO12001 | Outer Joint | | 33 | 29 | 52 | 95.5 | 63 | O |
| | 1999.06-2002.07 | AT/MT | F | L/R | Hatchback FWD A16DMS | | GCO12027 | Outer Joint | 47T | 33 | 29 | 52 | 95.5 | 63 | O |
| | 1999.06-2002.07 | MT | F | L/R | Hatchback FWD A16DMS | | GCI99025 | Inner Joint | | 34 | 22 | 35 | 56.2 | 111.3 | |

| | YEAR | TRANSM. | F/R | L/R | BODY STYLE & DRIVE TYPE & ENGINE | REMARKS | G-AP Ref. | PRODUCT | ABS | Technical Specifications | | | | | |
|---|---|---|---|---|---|---|---|---|---|---|---|---|---|---|---|
| | | | | | | | | | | A | B | C | H | L | P |
| **DAEWOO** | | | | | | | | | | | | | | | |
| **Nubira** | | | | | | | | | | | | | | | |
| 1.6 (78 kw) | 1999.06-2002.07 | AT | F | R | Saloon FWD A16DMS | Trans. code:ZF14 | GCI12006 | Inner Joint | | 24 | 29 | 40 | 95.5 | 146 | |
| | 1999.06-2002.07 | AT | F | L/R | Saloon FWD A16DMS | Trans. code:ZF16 | GCI21005 | Inner Joint | | 34 | 29 | 40 | 64 | 110 | |
| | 1999.06-2002.07 | AT/MT | F | L/R | Saloon FWD A16DMS | | GCO12001 | Outer Joint | | 33 | 29 | 52 | 95.5 | 63 | O |
| | 1999.06-2002.07 | AT/MT | F | L/R | Saloon FWD A16DMS | | GCO12027 | Outer Joint | 47T | 33 | 29 | 52 | 95.5 | 63 | O |
| | 1999.06-2002.07 | MT | F | L/R | Saloon FWD A16DMS | | GCI99025 | Inner Joint | | 34 | 22 | 35 | 56.2 | 111.3 | |
| | 1999.06-2002.12 | AT | F | R | Estate FWD A16DMS | Trans. code:ZF14 | GCI12006 | Inner Joint | | 24 | 29 | 40 | 95.5 | 146 | |
| | 1999.06-2002.12 | AT | F | L/R | Estate FWD A16DMS | Trans. code:ZF16 | GCI21005 | Inner Joint | | 34 | 29 | 40 | 64 | 110 | |
| | 1999.06-2002.12 | AT/MT | F | L/R | Estate FWD A16DMS | | GCO12001 | Outer Joint | | 33 | 29 | 52 | 95.5 | 63 | O |
| | 1999.06-2002.12 | AT/MT | F | L/R | Estate FWD A16DMS | | GCO12027 | Outer Joint | 47T | 33 | 29 | 52 | 95.5 | 63 | O |
| | 1999.06-2002.12 | MT | F | L/R | Estate FWD A16DMS | | GCI99025 | Inner Joint | | 34 | 22 | 35 | 56.2 | 111.3 | |
| 1.6 (80 kw) | 2003.07- | 4AT/5MT | F | L/R | Estate FWD F16D3 | | GCO88019 | Outer Joint | 47T | 33 | 22 | 52 | 95.5 | 53 | O |
| | 2003.07- | AT | F | L/R | Estate FWD F16D3 | | GCI12004 | Inner Joint | | 22 | 29 | 38 | 59 | 116 | |
| | 2003.07- | MT | F | L | Estate FWD F16D3 | | GDS86058 | Drive Shaft | 47T | 33 | 34 | 52 | 95.5 | 612.5 | |
| | 2003.07- | MT | F | R | Estate FWD F16D3 | | GDS86059 | Drive Shaft | 47T | 33 | 34 | 52 | 95.5 | 934 | |
| | 2003.07- | MT | F | L/R | Estate FWD F16D3 | | GCI99025 | Inner Joint | | 34 | 22 | 35 | 56.2 | 111.3 | |
| | 2003.07- | 4AT/5MT | F | L/R | Saloon FWD F16D3 | | GCO88019 | Outer Joint | 47T | 33 | 22 | 52 | 95.5 | 53 | O |
| | 2003.07- | AT | F | L/R | Saloon FWD F16D3 | | GCI12004 | Inner Joint | | 22 | 29 | 38 | 59 | 116 | |
| | 2003.07- | MT | F | L | Saloon FWD F16D3 | | GDS86058 | Drive Shaft | 47T | 33 | 34 | 52 | 95.5 | 612.5 | |
| | 2003.07- | MT | F | R | Saloon FWD F16D3 | | GDS86059 | Drive Shaft | 47T | 33 | 34 | 52 | 95.5 | 934 | |
| | 2003.07- | MT | F | L/R | Saloon FWD F16D3 | | GCI99025 | Inner Joint | | 34 | 22 | 35 | 56.2 | 111.3 | |
| 1.8 (90 kw) | 2003.07- | AT | F | L/R | Estate FWD T18SED | | GCI21005 | Inner Joint | | 34 | 29 | 40 | 64 | 110 | |
| | 2003.07- | AT/MT | F | L/R | Estate FWD T18SED | | GCO12002 | Outer Joint | 47T | 33 | 29 | 52 | 95.5 | 63 | O |
| | 2003.07- | AT/MT | F | L/R | Estate FWD T18SED | | GCO12027 | Outer Joint | 47T | 33 | 29 | 52 | 95.5 | 63 | O |
| | 2003.07- | AT/MT | F | L/R | Estate FWD T18SED | | GCO88019 | Outer Joint | 47T | 33 | 22 | 52 | 95.5 | 53 | O |
| | 2003.07- | MT | F | L/R | Estate FWD T18SED | | GCI12003 | Inner Joint | | 34 | 29 | 35 | 56.5 | 119 | |
| | 2003.07- | AT | F | L/R | Saloon FWD T18SED | | GCI21005 | Inner Joint | | 34 | 29 | 40 | 64 | 110 | |
| | 2003.07- | AT/MT | F | L/R | Saloon FWD T18SED | | GCO12002 | Outer Joint | 47T | 33 | 29 | 52 | 95.5 | 63 | O |
| | 2003.07- | AT/MT | F | L/R | Saloon FWD T18SED | | GCO12027 | Outer Joint | 47T | 33 | 29 | 52 | 95.5 | 63 | O |
| | 2003.07- | AT/MT | F | L/R | Saloon FWD T18SED | | GCO88019 | Outer Joint | 47T | 33 | 22 | 52 | 95.5 | 53 | O |
| | 2003.07- | MT | F | L/R | Saloon FWD T18SED | | GCI12003 | Inner Joint | | 34 | 29 | 35 | 56.5 | 119 | |
| 1.8 (100 kw) | 1997.04-1999.05 | 4AT/5MT | F | L/R | Saloon FWD L84(110CUL4) | | GCO12023 | Outer Joint | 47T | 33 | 32 | 52 | 95.5 | 66 | O |
| | 1997.04-1999.05 | 4AT/5MT | F | L/R | Saloon FWD L84(110CUL4) | | GCO12027 | Outer Joint | 47T | 33 | 29 | 52 | 95.5 | 63 | O |
| | 1997.04-1999.05 | 4AT/5MT | F | L/R | Saloon FWD L84(110CUL4) | | GCI12003 | Inner Joint | | 34 | 29 | 35 | 56.5 | 119 | |
| 2.0 (81 kw) | 1999.06-2003.07 | AT | F | R | Saloon FWD C20SED | Trans. code:ZF14 | GCI12006 | Inner Joint | | 24 | 29 | 40 | 95.5 | 146 | |
| | 1999.06-2003.07 | AT | F | L/R | Saloon FWD C20SED | Trans. code:ZF16 | GCI21005 | Inner Joint | | 34 | 29 | 40 | 64 | 110 | |
| | 1999.06-2003.07 | AT/MT | F | L/R | Saloon FWD C20SED | | GCO12001 | Outer Joint | | 33 | 29 | 52 | 95.5 | 63 | O |
| | 1999.06-2003.07 | AT/MT | F | L/R | Saloon FWD C20SED | | GCO12002 | Outer Joint | 47T | 33 | 29 | 52 | 95.5 | 63 | O |
| | 1999.06-2003.07 | AT/MT | F | L/R | Saloon FWD C20SED | | GCO12027 | Outer Joint | 47T | 33 | 29 | 52 | 95.5 | 63 | O |
| | 1999.06-2003.07 | AT/MT | F | L/R | Saloon FWD C20SED | | GCO88002 | Outer Joint | 47T | 22 | 29 | 52 | 95.5 | 63 | O |
| | 1999.06-2003.07 | MT | F | L/R | Saloon FWD C20SED | | GCI12003 | Inner Joint | | 34 | 29 | 35 | 56.5 | 119 | |
| 2.0 (93 kw) | 2000.12- | AT | F | L/R | Estate FWD T20SED | Chassis no. to:746726 | GCO12001 | Outer Joint | | 33 | 29 | 52 | 95.5 | 63 | O |
| | 2000.12- | AT | F | L/R | Estate FWD T20SED | Chassis no. to:746726 | GCO12027 | Outer Joint | 47T | 33 | 29 | 52 | 95.5 | 63 | O |
| | 2000.12- | AT | F | R | Estate FWD T20SED | Trans. code:ZF14 | GCI12006 | Inner Joint | | 24 | 29 | 40 | 95.5 | 146 | |
| | 2000.12- | AT | F | L/R | Estate FWD T20SED | Trans. code:ZF16 | GCI21005 | Inner Joint | | 34 | 29 | 40 | 64 | 110 | |
| | 2000.12- | AT/MT | F | L/R | Estate FWD T20SED | Chassis no. from:746727 | GCO12001 | Outer Joint | | 33 | 29 | 52 | 95.5 | 63 | O |
| | 2000.12- | AT/MT | F | L/R | Estate FWD T20SED | Chassis no. from:746727 | GCO12027 | Outer Joint | 47T | 33 | 29 | 52 | 95.5 | 63 | O |
| | 2000.12- | MT | F | L/R | Estate FWD T20SED | Chassis no. to:746726 | GCO12023 | Outer Joint | 47T | 33 | 32 | 52 | 95.5 | 66 | O |
| | 2000.12- | MT | F | L/R | Estate FWD T20SED | Chassis no. from:746727 | GCI12003 | Inner Joint | | 34 | 29 | 35 | 56.5 | 119 | |
| | 2000.12- | | F | L/R | Estate FWD T20SED | | GCO12009 | Outer Joint | | 33 | 29 | 52 | 109 | 63 | O |
| | 2000.12- | | F | L/R | Estate FWD T20SED | | GCO12018 | Outer Joint | | 33 | 29 | 52 | 95.5 | 62.5 | O |
| | 2000.12- | AT | F | L/R | Saloon FWD T20SED | Chassis no. to:746726 | GCO12001 | Outer Joint | | 33 | 29 | 52 | 95.5 | 63 | O |
| | 2000.12- | AT | F | L/R | Saloon FWD T20SED | Chassis no. to:746726 | GCO12027 | Outer Joint | 47T | 33 | 29 | 52 | 95.5 | 63 | O |
| | 2000.12- | AT | F | R | Saloon FWD T20SED | Trans. code:ZF14 | GCI12006 | Inner Joint | | 24 | 29 | 40 | 95.5 | 146 | |
| | 2000.12- | AT | F | L/R | Saloon FWD T20SED | Trans. code:ZF16 | GCI21005 | Inner Joint | | 34 | 29 | 40 | 64 | 110 | |
| | 2000.12- | AT/MT | F | L/R | Saloon FWD T20SED | Chassis no. from:746727 | GCO12001 | Outer Joint | | 33 | 29 | 52 | 95.5 | 63 | O |
| | 2000.12- | AT/MT | F | L/R | Saloon FWD T20SED | Chassis no. from:746727 | GCO12027 | Outer Joint | 47T | 33 | 29 | 52 | 95.5 | 63 | O |
| | 2000.12- | MT | F | L/R | Saloon FWD T20SED | Chassis no. to:746726 | GCO12023 | Outer Joint | 47T | 33 | 32 | 52 | 95.5 | 66 | O |
| | 2000.12- | MT | F | L/R | Saloon FWD T20SED | Chassis no. from:746727 | GCI12003 | Inner Joint | | 34 | 29 | 35 | 56.5 | 119 | |
| | 2000.12- | | F | L/R | Saloon FWD T20SED | | GCO12002 | Outer Joint | 47T | 33 | 29 | 52 | 95.5 | 63 | O |
| | 2000.12- | | F | L/R | Saloon FWD T20SED | | GCO12009 | Outer Joint | | 33 | 29 | 52 | 109 | 63 | O |
| | 2000.12- | | F | L/R | Saloon FWD T20SED | | GCO12018 | Outer Joint | | 33 | 29 | 52 | 95.5 | 62.5 | O |
| | 2002.08-2003.07 | AT | F | L/R | Hatchback FWD T20SED | Chassis no. to:746726 | GCO12001 | Outer Joint | | 33 | 29 | 52 | 95.5 | 63 | O |
| | 2002.08-2003.07 | AT | F | L/R | Hatchback FWD T20SED | Chassis no. to:746726 | GCO12027 | Outer Joint | 47T | 33 | 29 | 52 | 95.5 | 63 | O |
| | 2002.08-2003.07 | AT | F | R | Hatchback FWD T20SED | Trans. code:ZF14 | GCI12006 | Inner Joint | | 24 | 29 | 40 | 95.5 | 146 | |
| | 2002.08-2003.07 | AT | F | L/R | Hatchback FWD T20SED | Trans. code:ZF16 | GCI21005 | Inner Joint | | 34 | 29 | 40 | 64 | 110 | |

| | YEAR | TRANSM. | F/R | L/R | BODY STYLE & DRIVE TYPE & ENGINE | REMARKS | G-AP Ref. | PRODUCT | ABS | Technical Specifications A | B | C | H | L | P |
|---|---|---|---|---|---|---|---|---|---|---|---|---|---|---|---|
| **DAEWOO** | | | | | | | | | | | | | | | |
| **Nubira** | | | | | | | | | | | | | | | |
| 2.0 (93 kw) | 2002.08-2003.07 | AT/MT | F | L/R | Hatchback FWD T20SED | Chassis no. from:746727 | GCO12001 | Outer Joint | | 33 | 29 | 52 | 95.5 | 63 | O |
| | 2002.08-2003.07 | AT/MT | F | L/R | Hatchback FWD T20SED | Chassis no. from:746727 | GCO12027 | Outer Joint | 47T | 33 | 29 | 52 | 95.5 | 63 | O |
| | 2002.08-2003.07 | MT | F | L/R | Hatchback FWD T20SED | Chassis no. to:746726 | GCO12023 | Outer Joint | 47T | 33 | 32 | 52 | 95.5 | 66 | O |
| | 2002.08-2003.07 | MT | F | L/R | Hatchback FWD T20SED | Chassis no. from:746727 | GCI12003 | Inner Joint | | 34 | 29 | 35 | 56.5 | 119 | |
| 2.0 (98 kw) | 1997.05- | AT | F | L/R | Estate FWD X 20 SED | | GCO12023 | Outer Joint | 47T | 33 | 32 | 52 | 95.5 | 66 | O |
| | 1997.05- | MT | F | L/R | Estate FWD X 20 SED | | GCO12001 | Outer Joint | | 33 | 29 | 52 | 95.5 | 63 | O |
| | 1997.05- | MT | F | L/R | Estate FWD X 20 SED | | GCO12002 | Outer Joint | 47T | 33 | 29 | 52 | 95.5 | 63 | O |
| | 1997.05- | MT | F | L/R | Estate FWD X 20 SED | | GCO12027 | Outer Joint | 47T | 33 | 29 | 52 | 95.5 | 63 | O |
| | 1997.05- | MT | F | L/R | Estate FWD X 20 SED | | GCI12003 | Inner Joint | | 34 | 29 | 35 | 56.5 | 119 | |
| | 1997.05-1999.12 | AT | F | L/R | Hatchback FWD X20SED | | GCO12023 | Outer Joint | 47T | 33 | 32 | 52 | 95.5 | 66 | O |
| | 1997.05-1999.12 | MT | F | L/R | Hatchback FWD X20SED | | GCO12001 | Outer Joint | | 33 | 29 | 52 | 95.5 | 63 | O |
| | 1997.05-1999.12 | MT | F | L/R | Hatchback FWD X20SED | | GCO12002 | Outer Joint | 47T | 33 | 29 | 52 | 95.5 | 63 | O |
| | 1997.05-1999.12 | MT | F | L/R | Hatchback FWD X20SED | | GCO12027 | Outer Joint | 47T | 33 | 29 | 52 | 95.5 | 63 | O |
| | 1997.05-1999.12 | MT | F | L/R | Hatchback FWD X20SED | | GCI12003 | Inner Joint | | 34 | 29 | 35 | 56.5 | 119 | |
| | 1997.05-2003.07 | AT | F | L/R | Saloon FWD X20SED | | GCO12023 | Outer Joint | 47T | 33 | 32 | 52 | 95.5 | 66 | O |
| | 1997.05-2003.07 | MT | F | L/R | Saloon FWD X20SED | | GCO12001 | Outer Joint | | 33 | 29 | 52 | 95.5 | 63 | O |
| | 1997.05-2003.07 | MT | F | L/R | Saloon FWD X20SED | | GCO12002 | Outer Joint | 47T | 33 | 29 | 52 | 95.5 | 63 | O |
| | 1997.05-2003.07 | MT | F | L/R | Saloon FWD X20SED | | GCO12027 | Outer Joint | 47T | 33 | 29 | 52 | 95.5 | 63 | O |
| | 1997.05-2003.07 | MT | F | L/R | Saloon FWD X20SED | | GCI12003 | Inner Joint | | 34 | 29 | 35 | 56.5 | 119 | |
| | 1999.06-2002.07 | AT | F | L/R | Estate FWD X 20 SED | Chassis no. to:746726 | GCO12001 | Outer Joint | | 33 | 29 | 52 | 95.5 | 63 | O |
| | 1999.06-2002.07 | AT | F | L/R | Estate FWD X 20 SED | Chassis no. to:746726 | GCO12027 | Outer Joint | 47T | 33 | 29 | 52 | 95.5 | 63 | O |
| | 1999.06-2002.07 | AT | F | R | Estate FWD X 20 SED | Trans. code:ZF14 | GCI12006 | Inner Joint | | 24 | 29 | 40 | 95.5 | 146 | |
| | 1999.06-2002.07 | AT | F | L/R | Estate FWD X 20 SED | Trans. code:ZF16 | GCI21005 | Inner Joint | | 34 | 29 | 40 | 64 | 110 | |
| | 1999.06-2002.07 | AT/MT | F | L/R | Estate FWD X 20 SED | Chassis no. from:746727 | GCO12001 | Outer Joint | | 33 | 29 | 52 | 95.5 | 63 | O |
| | 1999.06-2002.07 | AT/MT | F | L/R | Estate FWD X 20 SED | Chassis no. from:746727 | GCO12027 | Outer Joint | 47T | 33 | 29 | 52 | 95.5 | 63 | O |
| | 1999.06-2002.07 | MT | F | L/R | Estate FWD X 20 SED | Chassis no. to:746726 | GCO12023 | Outer Joint | 47T | 33 | 32 | 52 | 95.5 | 66 | O |
| | 1999.06-2002.07 | MT | F | L/R | Estate FWD X 20 SED | Chassis no. from:746727 | GCI12003 | Inner Joint | | 34 | 29 | 35 | 56.5 | 119 | |
| | 1999.06-2002.07 | AT | F | L/R | Hatchback FWD X 20 SED | Chassis no. to:746726 | GCO12001 | Outer Joint | | 33 | 29 | 52 | 95.5 | 63 | O |
| | 1999.06-2002.07 | AT | F | L/R | Hatchback FWD X 20 SED | Chassis no. to:746726 | GCO12027 | Outer Joint | 47T | 33 | 29 | 52 | 95.5 | 63 | O |
| | 1999.06-2002.07 | AT | F | R | Hatchback FWD X 20 SED | Trans. code:ZF14 | GCI12006 | Inner Joint | | 24 | 29 | 40 | 95.5 | 146 | |
| | 1999.06-2002.07 | AT | F | L/R | Hatchback FWD X 20 SED | Trans. code:ZF16 | GCI21005 | Inner Joint | | 34 | 29 | 40 | 64 | 110 | |
| | 1999.06-2002.07 | AT/MT | F | L/R | Hatchback FWD X 20 SED | Chassis no. from:746727 | GCO12001 | Outer Joint | | 33 | 29 | 52 | 95.5 | 63 | O |
| | 1999.06-2002.07 | AT/MT | F | L/R | Hatchback FWD X 20 SED | Chassis no. from:746727 | GCO12027 | Outer Joint | 47T | 33 | 29 | 52 | 95.5 | 63 | O |
| | 1999.06-2002.07 | MT | F | L/R | Hatchback FWD X 20 SED | Chassis no. to:746726 | GCO12023 | Outer Joint | 47T | 33 | 32 | 52 | 95.5 | 66 | O |
| | 1999.06-2002.07 | MT | F | L/R | Hatchback FWD X 20 SED | Chassis no. from:746727 | GCI12003 | Inner Joint | | 34 | 29 | 35 | 56.5 | 119 | |
| | 1999.06-2002.07 | AT | F | L/R | Saloon FWD X 20 SED | Chassis no. to:746726 | GCO12001 | Outer Joint | | 33 | 29 | 52 | 95.5 | 63 | O |
| | 1999.06-2002.07 | AT | F | L/R | Saloon FWD X 20 SED | Chassis no. to:746726 | GCO12027 | Outer Joint | 47T | 33 | 29 | 52 | 95.5 | 63 | O |
| | 1999.06-2002.07 | AT | F | R | Saloon FWD X 20 SED | Trans. code:ZF14 | GCI12006 | Inner Joint | | 24 | 29 | 40 | 95.5 | 146 | |
| | 1999.06-2002.07 | AT | F | L/R | Saloon FWD X 20 SED | Trans. code:ZF16 | GCI21005 | Inner Joint | | 34 | 29 | 40 | 64 | 110 | |
| | 1999.06-2002.07 | AT/MT | F | L/R | Saloon FWD X 20 SED | Chassis no. from:746727 | GCO12001 | Outer Joint | | 33 | 29 | 52 | 95.5 | 63 | O |
| | 1999.06-2002.07 | AT/MT | F | L/R | Saloon FWD X 20 SED | Chassis no. from:746727 | GCO12027 | Outer Joint | 47T | 33 | 29 | 52 | 95.5 | 63 | O |
| | 1999.06-2002.07 | MT | F | L/R | Saloon FWD X 20 SED | Chassis no. to:746726 | GCO12023 | Outer Joint | 47T | 33 | 32 | 52 | 95.5 | 66 | O |
| | 1999.06-2002.07 | MT | F | L/R | Saloon FWD X 20 SED | Chassis no. from:746727 | GCI12003 | Inner Joint | | 34 | 29 | 35 | 56.5 | 119 | |
| **Racer** | | | | | | | | | | | | | | | |
| 1.5 (52 kw) | 1995.03-1997.12 | 5MT | F | L/R | Hatchback FWD G15MF | | GCO12001 | Outer Joint | | 33 | 29 | 52 | 95.5 | 63 | O |
| | 1995.03-1997.12 | 5MT | F | L/R | Hatchback FWD G15MF | Date To:1995.11 | GCO12008 | Outer Joint | 47T | 33 | 29 | 52 | 108.5 | 63 | O |
| | 1995.03-1997.12 | 5MT | F | L/R | Hatchback FWD G15MF | | GCO12019 | Outer Joint | | 22 | 29 | 52 | 95 | 62.5 | O |
| | 1995.03-1997.12 | 5MT | F | L/R | Hatchback FWD G15MF | Date from:1995.12 | GCO12027 | Outer Joint | 47T | 33 | 29 | 52 | 95.5 | 63 | O |
| | 1995.03-1997.12 | 5MT | F | L/R | Hatchback FWD G15MF | | GCO88002 | Outer Joint | 47T | 22 | 29 | 52 | 95.5 | 63 | O |
| | 1995.03-1997.12 | 5MT | F | L/R | Hatchback FWD G15MF | | GCI99025 | Inner Joint | | 34 | 22 | 35 | 56.2 | 111.3 | |
| | 1995.03-1997.12 | MT | F | L | Hatchback FWD G15MF | Date from:1996.02,For vehicles without ABS | GDS12003 | Drive Shaft | | 22 | 34 | 52 | 95 | 573 | |
| **Rezzo** | | | | | | | | | | | | | | | |
| 1.6 (66 kw) | 2001.08-2004.12 | 5MT | F | L/R | MPV FWD L44(96CUL4) | Chassis no. to:750473 | GCO12001 | Outer Joint | | 33 | 29 | 52 | 95.5 | 63 | O |
| | 2001.08-2004.12 | 5MT | F | L/R | MPV FWD L44(96CUL4) | Chassis no. from:750474 | GCO12027 | Outer Joint | 47T | 33 | 29 | 52 | 95.5 | 63 | O |
| | 2001.08-2004.12 | 5MT | F | L/R | MPV FWD L44(96CUL4) | | GCI12003 | Inner Joint | | 34 | 29 | 35 | 56.5 | 119 | |
| | 2001.08-2004.12 | MT | F | L/R | MPV FWD L44(96CUL4) | | GCO12002 | Outer Joint | 47T | 33 | 29 | 52 | 95.5 | 63 | O |
| 1.6 (77 kw) | 2000.09- | 5MT | F | L/R | MPV FWD A16DMS | Chassis no. to:750473 | GCO12001 | Outer Joint | | 33 | 29 | 52 | 95.5 | 63 | O |
| | 2000.09- | 5MT | F | L/R | MPV FWD A16DMS | Chassis no. from:750474 | GCO12027 | Outer Joint | 47T | 33 | 29 | 52 | 95.5 | 63 | O |
| | 2000.09- | 5MT | F | L/R | MPV FWD A16DMS | | GCI12003 | Inner Joint | | 34 | 29 | 35 | 56.5 | 119 | |
| | 2000.09- | MT | F | L/R | MPV FWD A16DMS | | GCO12002 | Outer Joint | 47T | 33 | 29 | 52 | 95.5 | 63 | O |
| 1.8 (67 kw) | 2000.09- | 4AT/5MT | F | L/R | MPV FWD F18S2 | | GCO12001 | Outer Joint | | 33 | 29 | 52 | 95.5 | 63 | O |
| | 2000.09- | AT | F | L/R | MPV FWD F18S2 | | GCI21005 | Inner Joint | | 34 | 29 | 40 | 64 | 110 | |
| | 2000.09- | MT | F | L/R | MPV FWD F18S2 | | GCO12009 | Outer Joint | | 33 | 29 | 52 | 109 | 63 | O |
| | 2000.09- | MT | F | L/R | MPV FWD F18S2 | Model:Tacuma | GCO12027 | Outer Joint | 47T | 33 | 29 | 52 | 95.5 | 63 | O |
| | 2000.09- | MT | F | L/R | MPV FWD F18S2 | Date To:2001.12,Type:Tacuma | GCO88002 | Outer Joint | 47T | 22 | 29 | 52 | 95.5 | 63 | O |

| | YEAR | TRANSM. | F/R | L/R | BODY STYLE & DRIVE TYPE & ENGINE | REMARKS | G-AP Ref. | PRODUCT | ABS | Technical Specifications A | B | C | H | L | P |
|---|---|---|---|---|---|---|---|---|---|---|---|---|---|---|---|
| **DAEWOO** | | | | | | | | | | | | | | | |
| **Rezzo** | | | | | | | | | | | | | | | |
| 1.8 (67 kw) | 2000.09- | MT | F | L/R | MPV FWD F18S2 | | GCI12003 | Inner Joint | | 34 | 29 | 35 | 56.5 | 119 | |
| 1.8 (72 kw) | 2000.09- | 5MT | F | R | MPV FWD F18S2 | | GCO12001 | Outer Joint | | 33 | 29 | 52 | 95.5 | 63 | O |
| | 2000.09- | 5MT | F | L/R | MPV FWD F18S2 | | GCO12002 | Outer Joint | 47T | 33 | 29 | 52 | 95.5 | 63 | O |
| | 2000.09- | 5MT | F | L/R | MPV FWD F18S2 | Date To:2001.12,Type:Tacuma,Chassis no. from:750474 | GCO12027 | Outer Joint | 47T | 33 | 29 | 52 | 95.5 | 63 | O |
| | 2000.09- | 5MT | F | L/R | MPV FWD F18S2 | | GCI12003 | Inner Joint | | 34 | 29 | 35 | 56.5 | 119 | |
| 1.8 (74 kw) | 2000.09- | MT | F | L/R | MPV FWD F18S2 | | GCO12001 | Outer Joint | | 33 | 29 | 52 | 95.5 | 63 | O |
| | 2000.09- | MT | F | L/R | MPV FWD F18S2 | | GCO12009 | Outer Joint | | 33 | 29 | 52 | 109 | 63 | O |
| | 2000.09- | MT | F | L/R | MPV FWD F18S2 | | GCO12027 | Outer Joint | 47T | 33 | 29 | 52 | 95.5 | 63 | O |
| | 2000.09- | MT | F | L/R | MPV FWD F18S2 | | GCI12003 | Inner Joint | | 34 | 29 | 35 | 56.5 | 119 | |
| 2.0 (89 kw) | 2001.09-2004.12 | 4AT | F | L/R | MPV FWD T20SED | Chassis no. from:750474 | GCO12027 | Outer Joint | 47T | 33 | 29 | 52 | 95.5 | 63 | O |
| | 2001.09-2004.12 | 4AT | F | L/R | MPV FWD T20SED | | GCI21005 | Inner Joint | | 34 | 29 | 40 | 64 | 110 | |
| | 2001.09-2004.12 | AT | F | L/R | MPV FWD T20SED | | GCO12002 | Outer Joint | 47T | 33 | 29 | 52 | 95.5 | 63 | O |
| | 2001.09-2004.12 | MT | F | L/R | MPV FWD T20SED | Chassis no. from:750474 | GCO12023 | Outer Joint | 47T | 33 | 32 | 52 | 95.5 | 66 | O |
| 2.0 (94 kw) | 2000.09- | MT | F | L/R | MPV FWD T20SED, C20SED | Date To:2004.12,Type:Rezzo/Tacuma,Chassis no. from:750474 | GCO12023 | Outer Joint | 47T | 33 | 32 | 52 | 95.5 | 66 | O |
| | 2000.09- | | F | L/R | MPV FWD T20SED, C20SED | | GCO12002 | Outer Joint | 47T | 33 | 29 | 52 | 95.5 | 63 | O |
| **Tacuma** | | | | | | | | | | | | | | | |
| 1.6 (78 kw) | 2002.02-2004.12 | 5MT | F | L/R | MPV FWD A16DMS | | GCO12001 | Outer Joint | | 33 | 29 | 52 | 95.5 | 63 | O |
| | 2002.02-2004.12 | 5MT | F | L/R | MPV FWD A16DMS | | GCO12027 | Outer Joint | 47T | 33 | 29 | 52 | 95.5 | 63 | O |
| | 2002.02-2004.12 | 5MT | F | L/R | MPV FWD A16DMS | | GCI12003 | Inner Joint | | 34 | 29 | 35 | 56.5 | 119 | |
| **Tico** | | | | | | | | | | | | | | | |
| 0.8 (35 kw) | 1995.02-2000.12 | 4MT | F | L/R | Hatchback FWD F8B | Thread Size:M20×1.5 | GCO12006 | Outer Joint | | 23 | 19 | 44 | 92 | 56.5 | O |
| | 1995.02-2000.12 | AT/MT | F | L/R | Hatchback FWD F8B | Thread Size:M20×1.5 | GCO12007 | Outer Joint | | 23 | 19 | 46 | 92 | 56.5 | O |
| | 1995.02-2000.12 | AT/MT | F | L/R | Hatchback FWD F8B | GrooveType:Middle | GCO88004 | Outer Joint | | 23 | 19 | 44 | 89 | 54 | M |
| 0.8 (38 kw) | 1996.01-2000.12 | 4MT | F | L/R | Hatchback FWD F8C | Thread Size:M20×1.5 | GCO12006 | Outer Joint | | 23 | 19 | 44 | 92 | 56.5 | O |
| **Tosca** | | | | | | | | | | | | | | | |
| 2.0 (105 kw) | 2006.02- | AT | F | L/R | Saloon FWD X 20 D1 | | GCO24021 | Outer Joint | | 28 | 29 | 55.5 | 99 | 61 | O |
| | 2006.02- | AT | F | R | Saloon FWD X 20 D1 | | GCI21050 | Inner Joint | | 26 | 23 | 43 | | 140.5 | |
| | 2006.02- | MT | F | L | Saloon FWD X 20 D1 | | GDS88072 | Drive Shaft | | 28 | 34 | 55.5 | 99 | 622 | |
| | 2006.02- | MT | F | R | Saloon FWD X 20 D1 | | GDS88071 | Drive Shaft | | 28 | 26 | 55.5 | 99 | 554 | |
| | 2006.02- | MT | F | L/R | Saloon FWD X 20 D1 | | GCO14030 | Outer Joint | | 28 | 32 | 55.5 | 99 | 61 | O |
| | 2006.02- | MT | F | R | Saloon FWD X 20 D1 | | GCI88019 | Inner Joint | | 26 | 32 | 43 | | 130 | |
| 2.0 (110 kw) | 2006.02- | MT | F | L | Saloon FWD Z 20 DMH | | GDS39183 | Drive Shaft | | 28 | 27 | 55.5 | 99 | 622 | |
| | 2006.02- | MT | F | R | Saloon FWD Z 20 DMH | | GDS39182 | Drive Shaft | | 28 | 27 | 55.5 | 99 | 529 | |
| | 2006.02- | | F | L/R | Saloon FWD Z 20 DMH | | GCO68008 | Outer Joint | | 28 | 34 | 55.5 | 99 | 66 | O |
| 2.5 (115 kw) | 2006.02- | AT | F | L | Saloon FWD X 25 D1 | | GDS22012 | Drive Shaft | | 28 | 27 | 55.5 | 99 | 599 | |
| | 2006.02- | AT | F | R | Saloon FWD X 25 D1 | | GDS22013 | Drive Shaft | | 28 | 26 | 55.5 | 99 | 551 | |
| | 2006.02- | AT | F | L/R | Saloon FWD X 25 D1 | | GCO14030 | Outer Joint | | 28 | 32 | 55.5 | 99 | 61 | O |
| | 2006.02- | AT | F | L | Saloon FWD X 25 D1 | | GCI21051 | Inner Joint | | 27 | 23 | 34.95 | 104 | 91 | |
| | 2006.02- | AT | F | R | Saloon FWD X 25 D1 | | GCI21050 | Inner Joint | | 26 | 23 | 43 | | 140.5 | |
| **DAIHATSU** | | | | | | | | | | | | | | | |
| **Applause** | | | | | | | | | | | | | | | |
| 1.6 (77 kw) | 1989.06-1997.08 | AT/MT | F | L/R | Hatchback FWD HDE | | GCO14006 | Outer Joint | | 24 | 22 | 54 | 92 | 53 | M |
| **Charade** | | | | | | | | | | | | | | | |
| 1.3 (44 kw) | 1997.07-1999.10 | AT/MT | F | L/R | Hatchback FWD HCU | | GCO14046 | Outer Joint | | 24 | 22 | 52 | 93 | 53 | I |
| | 1997.07-1999.10 | MT | F | L/R | Hatchback FWD HCU | | GCO14073 | Outer Joint | 48T | 24 | 21 | 52 | 93 | 53 | M |
| | 1997.07-1999.10 | | F | | Hatchback FWD HCU | | GCO14001 | Outer Joint | 48T | 24 | 22 | 52 | 93 | 54 | I |
| | 1997.07-1999.10 | | F | | Hatchback FWD HCU | | GCO14096 | Outer Joint | | 24 | 19 | 52 | 93 | 53 | M |
| | 1997.07-1999.10 | | F | | Hatchback FWD HCU | | GCO41323 | Outer Joint | | 24 | 22 | 52 | 92 | 53 | M |
| 1.3 (55 kw) | 1996.04-1999.11 | AT/MT | F | L/R | Hatchback FWD HCU | | GCO14046 | Outer Joint | | 24 | 22 | 52 | 93 | 53 | I |
| | 1996.04-1999.11 | MT | F | L/R | Hatchback FWD HCU | | GCO14073 | Outer Joint | 48T | 24 | 21 | 52 | 93 | 53 | M |
| | 1996.04-1999.11 | | F | | Hatchback FWD HCU | | GCO14001 | Outer Joint | 48T | 24 | 22 | 52 | 93 | 54 | I |
| | 1996.04-1999.11 | | F | | Hatchback FWD HCU | | GCO14019 | Outer Joint | | 24 | 20 | 52 | 92 | 47.5 | M |
| | 1996.04-1999.11 | | F | | Hatchback FWD HCU | | GCO14096 | Outer Joint | | 24 | 19 | 52 | 93 | 53 | M |
| | 1996.04-1999.11 | | F | | Hatchback FWD HCU | | GCO41323 | Outer Joint | | 24 | 22 | 52 | 92 | 53 | M |
| 1.3 (62 kw) | 1993.03-2000.12 | AT/MT | F | L/R | Hatchback FWD HCE | | GCO14046 | Outer Joint | | 24 | 22 | 52 | 93 | 53 | I |
| | 1993.03-2000.12 | MT | F | L/R | Hatchback FWD HCE | | GCO14073 | Outer Joint | 48T | 24 | 21 | 52 | 93 | 53 | M |
| | 1993.03-2000.12 | | F | L/R | Hatchback FWD HCE | | GCO14019 | Outer Joint | | 24 | 20 | 52 | 92 | 47.5 | M |
| | 1993.03-2000.12 | | F | | Hatchback FWD HCE | | GCO14001 | Outer Joint | 48T | 24 | 22 | 52 | 93 | 54 | I |
| | 1993.03-2000.12 | | F | | Hatchback FWD HCE | | GCO14096 | Outer Joint | | 24 | 19 | 52 | 93 | 53 | M |
| 1.3 (73 kw) | 2011.05- | 6AT/6MT | F | L | Hatchback FWD 1NR-FE | | GDS59206 | Drive Shaft | | 26 | 23 | 55.6 | 95 | 670 | |
| | 2011.05- | 6AT/6MT | F | R | Hatchback FWD 1NR-FE | | GCO59270 | Outer Joint | | 26 | 24 | 55.6 | 95 | 56 | M |
| | 2011.05- | 6AT/6MT | F | L/R | Hatchback FWD 1NR-FE | | GCI59092 | Inner Joint | | 23 | 20 | 34 | 60 | 101 | |
| 1.5 (55 kw) | 1994.06-1996.03 | | F | | Hatchback FWD HEE | | GCO14001 | Outer Joint | 48T | 24 | 22 | 52 | 93 | 54 | I |
| | 1994.10-2001.01 | AT/MT | F | L/R | Saloon FWD HEE | | GCO14046 | Outer Joint | | 24 | 22 | 52 | 93 | 53 | I |
| | 1994.10-2001.01 | | F | | Saloon FWD HEE | | GCO14001 | Outer Joint | 48T | 24 | 22 | 52 | 93 | 54 | I |

| | YEAR | TRANSM. | F/R | L/R | BODY STYLE & DRIVE TYPE & ENGINE | REMARKS | G-AP Ref. | PRODUCT | ABS | Technical Specifications A | B | C | H | L | P |
|---|---|---|---|---|---|---|---|---|---|---|---|---|---|---|---|
| **DAIHATSU** | | | | | | | | | | | | | | | |
| **Charade** | | | | | | | | | | | | | | | |
| 1.5 (55 kw) | 1994.10-2001.01 | | F | | Saloon FWD HEE | | GCO14096 | Outer Joint | | 24 | 19 | 52 | 93 | 53 | M |
| | 1994.10-2001.01 | | F | | Saloon FWD HEE | | GCO41323 | Outer Joint | | 24 | 22 | 52 | 92 | 53 | M |
| 1.5 (66 kw) | 1994.06-1999.11 | AT/MT | F | L/R | Saloon FWD HEE | | GCO14046 | Outer Joint | | 24 | 22 | 52 | 93 | 53 | I |
| | 1994.06-1999.11 | | F | | Saloon FWD HEE | | GCO14001 | Outer Joint | 48T | 24 | 22 | 52 | 93 | 54 | I |
| | 1994.06-1999.11 | | F | | Saloon FWD HEE | | GCO14096 | Outer Joint | | 24 | 19 | 52 | 93 | 53 | M |
| | 1997.01-2000.07 | AT/MT | F | L/R | Hatchback FWD HEE | | GCO14046 | Outer Joint | | 24 | 22 | 52 | 93 | 53 | I |
| | 1997.01-2000.07 | | F | | Hatchback FWD HEE | | GCO14001 | Outer Joint | 48T | 24 | 22 | 52 | 93 | 54 | I |
| | 1997.01-2000.07 | | F | | Hatchback FWD HEE | | GCO14096 | Outer Joint | | 24 | 19 | 52 | 93 | 53 | M |
| | 1997.01-2000.07 | | F | | Hatchback FWD HEE | | GCO41323 | Outer Joint | | 24 | 22 | 52 | 92 | 53 | M |
| 1.6 (77 kw) | 1993.03-1996.03 | AT/MT | F | L/R | Hatchback FWD HDE | Date to:1996.03 | GCO14046 | Outer Joint | | 24 | 22 | 52 | 93 | 53 | I |
| | 1993.03-1996.03 | | F | | Hatchback FWD HDE | | GCO14001 | Outer Joint | 48T | 24 | 22 | 52 | 93 | 54 | I |
| | 1993.03-1996.03 | | F | | Hatchback FWD HDE | | GCO14006 | Outer Joint | | 24 | 22 | 54 | 92 | 53 | M |
| | 1993.03-1996.03 | | F | | Hatchback FWD HDE | | GCO14096 | Outer Joint | | 24 | 19 | 52 | 93 | 53 | M |
| | 1993.03-1996.03 | | F | | Hatchback FWD HDE | | GCO41323 | Outer Joint | | 24 | 22 | 52 | 92 | 53 | M |
| **Copen** | | | | | | | | | | | | | | | |
| 1.3 (64 kw) | 2006.03-2012.09 | 5MT | F | R | Convertible FWD K3-VE | | GCO14098 | Outer Joint | | 24 | 29 | 47 | 85.5 | 47.5 | M |
| **Cuore** | | | | | | | | | | | | | | | |
| 0.8 (31 kw) | 1994.08-1999.12 | AT/MT | F | L/R | Hatchback FWD ED20 | | GCO14020 | Outer Joint | | 24 | 19 | 44 | 113.5 | 48.5 | M |
| | 1994.08-1999.12 | | F | L/R | Hatchback FWD ED20 | | GCO14018 | Outer Joint | | 24 | 19 | 44 | 111.5 | 48.5 | M |
| | 1994.08-1999.12 | | F | | Hatchback FWD ED20 | | GCO14009 | Outer Joint | | 24 | 20 | 44 | 113.5 | 48.5 | M |
| 0.8 (32 kw) | 1995.01-1998.08 | AT/MT | F | L/R | Hatchback FWD ED20 | | GCO12034 | Outer Joint | | 24 | 20 | 44 | 113.5 | 48.5 | I |
| | 1995.01-1998.08 | MT | F | L/R | Hatchback FWD ED20 | Date to:1997.12 | GCO14020 | Outer Joint | | 24 | 19 | 44 | 113.5 | 48.5 | M |
| | 1995.01-1998.08 | | F | L/R | Hatchback FWD ED20 | | GCO14018 | Outer Joint | | 24 | 19 | 44 | 111.5 | 48.5 | M |
| | 1995.01-1998.08 | | F | | Hatchback FWD ED20 | | GCO14009 | Outer Joint | | 24 | 20 | 44 | 113.5 | 48.5 | M |
| 1.0 (40 kw) | 1998.11-2000.09 | AT/MT | F | L | Hatchback FWD EJ-DE | | GDS14035 | Drive Shaft | | 24 | 23 | 47 | 84.5 | 581 | |
| | 1998.11-2000.09 | AT/MT | F | R | Hatchback FWD EJ-DE | | GDS14036 | Drive Shaft | | 24 | 23 | 47 | 84.5 | 794 | |
| | 1998.11-2000.09 | AT/MT | F | L/R | Hatchback FWD EJ-DE | | GCO14040 | Outer Joint | | 24 | 18 | 47 | 85.5 | 45.5 | I |
| 1.0 (43 kw) | 2003.05- | AT | F | L/R | Hatchback FWD EJ-VE | Date to:2004.07 | GCO59268 | Outer Joint | | 24 | 26 | 47 | 85.5 | 47.5 | I |
| | 2003.05- | MT | F | L | Hatchback FWD EJ-VE | Date to:2003.12,Manufacturer:TK | GDS14035 | Drive Shaft | | 24 | 23 | 47 | 84.5 | 581 | |
| | 2003.05- | MT | F | R | Hatchback FWD EJ-VE | Date to:2004.06 | GDS14036 | Drive Shaft | | 24 | 23 | 47 | 84.5 | 794 | |
| | 2003.05- | MT | F | R | Hatchback FWD EJ-VE | Date to:2004.06;Date from:2004.07;Date to:2004.11 | GCO14078 | Outer Joint | | 24 | 19 | 47 | 85.5 | 47.5 | M |
| | 2003.05- | MT | F | L/R | Hatchback FWD EJ-VE | Date to:2003.12 | GCO14028 | Outer Joint | | 24 | 19 | 47 | 84.5 | 47.5 | I |
| | 2003.05- | MT | F | L/R | Hatchback FWD EJ-VE | Date from:2004.07;Date to:2004.11;Date from:2005.03;Date to:2007.03 | GCO14061 | Outer Joint | | 24 | 19 | 47 | 85.5 | 47.5 | M |
| | 2003.05- | MT | F | L/R | Hatchback FWD EJ-VE | Date from:2007.04 | GCI14017 | Inner Joint | | 23 | 26 | 45 | 52 | 83 | |
| | 2003.05- | MT | F | L/R | Hatchback FWD EJ-VE | Date to:2004.11;Date from:2005.03;Date to:2005.07 | GCI81329 | Inner Joint | | 23 | 19 | 45 | 52 | 88.5 | |
| 1.0 (51 kw) | 2007.04- | MT | F | L/R | Hatchback FWD 1KR-FE | Date from:2004.12;Date to:2005.02 | GCO59268 | Outer Joint | | 24 | 26 | 47 | 85.5 | 47.5 | I |
| | 2007.04- | MT | F | L/R | Hatchback FWD 1KR-FE | Date from:2007.04 | GCI14017 | Inner Joint | | 23 | 26 | 45 | 52 | 83 | |
| | 2011.09-2012.12 | | F | L/R | Hatchback FWD 1KR-FE | | GCI14017 | Inner Joint | | 23 | 26 | 45 | 52 | 83 | |
| **Extol** | | | | | | | | | | | | | | | |
| 1.3 (66 kw) | 2000.07-2003.09 | AT | F | L/R | Bus 4WD K3-VE | | GCO59268 | Outer Joint | | 24 | 26 | 47 | 85.5 | 47.5 | I |
| 1.3 (68 kw) | 2003.10-2005.12 | AT | F | L/R | Bus 4WD K3-VE | | GCO59268 | Outer Joint | | 24 | 26 | 47 | 85.5 | 47.5 | I |
| **Feroza** | | | | | | | | | | | | | | | |
| 1.6 (63 kw) | 1988.10-1999.12 | 5MT | F | L/R | Closed Off-Road Vehicle 4WD HD-C | | GCO14001 | Outer Joint | 48T | 24 | 22 | 52 | 93 | 54 | I |
| | 1988.10-1999.12 | AT | F | L/R | Open Off-Road Vehicle 4WD HD-C | | GCO14001 | Outer Joint | 48T | 24 | 22 | 52 | 93 | 54 | I |
| 1.6 (70 kw) | 1988.10-1999.12 | 5MT | F | L/R | Closed Off-Road Vehicle 4WD HD-E | | GCO14001 | Outer Joint | 48T | 24 | 22 | 52 | 93 | 54 | I |
| | 1988.10-1999.12 | 5MT | F | L/R | Closed Off-Road Vehicle 4WD HD-E | | GCO14017 | Outer Joint | | 24 | 22 | 42 | 155 | 63 | I |
| | 1988.10-1999.12 | 5MT | F | L/R | Open Off-Road Vehicle 4WD HD-E | | GCO14001 | Outer Joint | 48T | 24 | 22 | 52 | 93 | 54 | I |
| | 1988.10-1999.12 | 5MT | F | L/R | Open Off-Road Vehicle 4WD HD-E | | GCO14017 | Outer Joint | | 24 | 22 | 42 | 155 | 63 | I |
| **Fourtrak** | | | | | | | | | | | | | | | |
| 2.8 (54 kw) | 1985.02-1998.12 | MT | F | L/R | Terrain cab wagon closed 4WD DL | | GCO14004 | Outer Joint | | 26 | 23 | 42 | 165.5 | 56 | I |
| 2.8 (75 kw) | 1991.09-1996.06 | AT/MT | F | L/R | Terrain cab wagon closed 4WD DL | | GCO14010 | Outer Joint | | 26 | 26 | 61.95 | 161 | 65 | M |
| **Gran Move** | | | | | | | | | | | | | | | |
| 1.5 (55 kw) | 1996.08-1998.06 | MT | F | L/R | MPV FWD HEEG | | GCO14001 | Outer Joint | 48T | 24 | 22 | 52 | 93 | 54 | I |
| 1.5 (66 kw) | 1996.10-1998.07 | AT/MT | F | L/R | MPV FWD HEEG | | GCO14001 | Outer Joint | 48T | 24 | 22 | 52 | 93 | 54 | I |
| | 1996.10-1998.07 | AT/MT | F | L/R | MPV FWD HEEG | with Rim protector | GCO14006 | Outer Joint | | 24 | 22 | 54 | 92 | 53 | M |
| | 1996.10-1998.07 | AT/MT | F | L/R | MPV FWD HEEG | without Rim protector | GCO14046 | Outer Joint | | 24 | 22 | 52 | 93 | 53 | I |
| | 1996.10-1998.07 | AT/MT | F | L/R | MPV FWD HEEG | | GCO14072 | Outer Joint | 48T | 24 | 22 | 52 | 92 | 53 | M |
| | 1996.10-1998.07 | AT/MT | F | L/R | MPV FWD HEEG | without Rim protector | GCO41323 | Outer Joint | | 24 | 22 | 52 | 92 | 53 | M |
| 1.5 (71 kw) | 1996.08-1998.06 | 5MT | F | L/R | MPV FWD HEEG | | GCO14001 | Outer Joint | 48T | 24 | 22 | 52 | 93 | 54 | I |
| 1.6 (67 kw) | 1998.05-2003.09 | AT/MT | F | L/R | MPV FWD HDEP | | GCO14001 | Outer Joint | 48T | 24 | 22 | 52 | 93 | 54 | I |
| | 1998.05-2003.09 | AT/MT | F | L/R | MPV FWD HDEP | | GCO14006 | Outer Joint | | 24 | 22 | 54 | 92 | 53 | M |
| **Move** | | | | | | | | | | | | | | | |
| 0.8 (31 kw) | 1997.01-1999.11 | AT/MT | F | L/R | MPV FWD ED20 | | GCO12034 | Outer Joint | | 24 | 20 | 44 | 113.5 | 48.5 | I |
| | 1997.01-1999.11 | AT/MT | F | L/R | MPV FWD ED20 | | GCO14020 | Outer Joint | | 24 | 19 | 44 | 113.5 | 48.5 | M |
| | 1997.01-1999.11 | | F | R | MPV FWD ED20 | | GCO14008 | Outer Joint | | 24 | 20 | 44 | 111.5 | 48.5 | M |

| | YEAR | TRANSM. | F/R | L/R | BODY STYLE & DRIVE TYPE & ENGINE | REMARKS | G-AP Ref. | PRODUCT | ABS | Technical Specifications A | B | C | H | L | P |
|---|---|---|---|---|---|---|---|---|---|---|---|---|---|---|---|
| **DAIHATSU** | | | | | | | | | | | | | | | |
| **Move** | | | | | | | | | | | | | | | |
| 0.8 (31 kw) | 1997.01-1999.11 | | F | L/R | MPV FWD ED20 | | GCO14018 | Outer Joint | | 24 | 19 | 44 | 111.5 | 48.5 | M |
| | 1997.01-1999.11 | | F | | MPV FWD ED20 | | GCO14009 | Outer Joint | | 24 | 20 | 44 | 113.5 | 48.5 | M |
| 1.0 (40 kw) | 1998.10-2000.12 | MT | F | L | MPV FWD EJVE | | GCO14061 | Outer Joint | | 24 | 19 | 47 | 85.5 | 47.5 | M |
| 1.0 (41 kw) | 1998.10-2002.09 | AT/MT | F | L/R | MPV FWD EJDE | Date to:1994.09;GrooveType:Inner,Inner teeth:20 | GCO12034 | Outer Joint | | 24 | 20 | 44 | 113.5 | 48.5 | I |
| | 1998.10-2002.09 | AT/MT | F | L/R | MPV FWD EJDE | | GCO14009 | Outer Joint | | 24 | 20 | 44 | 113.5 | 48.5 | M |
| | 1998.10-2002.09 | AT/MT | F | L/R | MPV FWD EJDE | | GCO14018 | Outer Joint | | 24 | 19 | 44 | 111.5 | 48.5 | M |
| | 1998.10-2002.09 | AT/MT | F | L/R | MPV FWD EJDE | Date to:2001.12 | GCO14020 | Outer Joint | | 24 | 19 | 44 | 113.5 | 48.5 | M |
| | 1998.10-2002.09 | MT | F | L/R | MPV FWD EJDE | Date to:2002.01 | GCO14061 | Outer Joint | | 24 | 19 | 47 | 85.5 | 47.5 | M |
| **Pyzar** | | | | | | | | | | | | | | | |
| 1.6 (67 kw) | 1998.06-2002.07 | 4AT/5MT | F | L/R | MPV FWD HDEP | | GCO14001 | Outer Joint | 48T | 24 | 22 | 52 | 93 | 54 | I |
| **Rocky** | | | | | | | | | | | | | | | |
| 2.8 (54 kw) | 1985.02-1998.12 | AT/MT | F | L/R | Terrain cab open 4WD DL | | GCO14010 | Outer Joint | | 26 | 26 | 61.95 | 161 | 65 | M |
| | 1985.02-1998.12 | MT | F | L/R | Terrain cab open 4WD DL | | GCO14004 | Outer Joint | | 26 | 23 | 42 | 165.5 | 56 | I |
| 2.8 (75 kw) | 1991.09-1996.06 | AT/MT | F | L/R | Terrain cab open 4WD DL | | GCO14010 | Outer Joint | | 26 | 26 | 61.95 | 161 | 65 | M |
| **Rocky/Fourtrak** | | | | | | | | | | | | | | | |
| 2.8 (72 kw) | 1993.05-1998.12 | AT/MT | F | L/R | SUV 4WD DL 52/DLT-C | | GCO14010 | Outer Joint | | 26 | 26 | 61.95 | 161 | 65 | M |
| **Rugger** | | | | | | | | | | | | | | | |
| 2.8 (72 kw) | 1996.07-1999.12 | 5MT | F | L/R | Closed Off-Road Vehicle 4WD DL-T | | GCO14010 | Outer Joint | | 26 | 26 | 61.95 | 161 | 65 | M |
| 2.8 (75 kw) | 1993.05-1996.06 | MT | F | L/R | Closed Off-Road Vehicle 4WD DL-T | | GCO14010 | Outer Joint | | 26 | 26 | 61.95 | 161 | 65 | M |
| **Sigra** | | | | | | | | | | | | | | | |
| 1.2 (65 kw) | 2016.06- | 4AT/5MT | F | L | MPV FWD 3NR-VE | | GDS81469 | Drive Shaft | | 26 | 23 | 55.6 | 88 | 640 | |
| | 2016.06- | 4AT/5MT | F | R | MPV FWD 3NR-VE | | GDS81468 | Drive Shaft | | 26 | 23 | 55.6 | 88 | 892 | |
| **Sirion** | | | | | | | | | | | | | | | |
| 1.0 (41 kw) | 1998.04-2000.09 | AT/MT | F | L/R | Hatchback FWD EJDE | | GCO14020 | Outer Joint | | 24 | 19 | 44 | 113.5 | 48.5 | M |
| | 1998.04-2000.09 | | F | | Hatchback FWD EJDE | | GCO14040 | Outer Joint | | 24 | 18 | 47 | 85.5 | 45.5 | I |
| | 1998.04-2000.09 | | F | | Hatchback FWD EJDE | | GCO14061 | Outer Joint | | 24 | 19 | 47 | 85.5 | 47.5 | M |
| | 1999.04-2000.09 | AT/MT | F | L/R | Hatchback 4WD EJDE | | GCO14020 | Outer Joint | | 24 | 19 | 44 | 113.5 | 48.5 | M |
| | 1999.04-2000.09 | | F | | Hatchback 4WD EJDE | | GCO14040 | Outer Joint | | 24 | 18 | 47 | 85.5 | 45.5 | I |
| 1.0 (43 kw) | 2000.09-2005.01 | AT | F | L/R | Hatchback 4WD EJ-VE | | GCO14061 | Outer Joint | | 24 | 19 | 47 | 85.5 | 47.5 | M |
| | 2000.09-2005.01 | AT/MT | F | L/R | Hatchback 4WD EJ-VE | | GCO14020 | Outer Joint | | 24 | 19 | 44 | 113.5 | 48.5 | M |
| | 2000.09-2005.01 | | F | | Hatchback 4WD EJ-VE | | GCO14040 | Outer Joint | | 24 | 18 | 47 | 85.5 | 45.5 | I |
| | 2000.09-2005.01 | AT | F | L/R | Hatchback FWD EJ-VE | | GCO14061 | Outer Joint | | 24 | 19 | 47 | 85.5 | 47.5 | M |
| | 2000.09-2005.01 | AT/MT | F | L/R | Hatchback FWD EJ-VE | | GCO14020 | Outer Joint | | 24 | 19 | 44 | 113.5 | 48.5 | M |
| | 2000.09-2005.01 | | F | | Hatchback FWD EJ-VE | | GCO14040 | Outer Joint | | 24 | 18 | 47 | 85.5 | 45.5 | I |
| 1.0 (51 kw) | 2005.01-2013.06 | | F | L | Hatchback FWD 1KR-FE | | GCO59268 | Outer Joint | | 24 | 26 | 47 | 85.5 | 47.5 | I |
| | 2005.01-2013.06 | | F | L/R | Hatchback FWD 1KR-FE | Date From:2007.01 | GCI14017 | Inner Joint | | 23 | 26 | 45 | 52 | 83 | |
| 1.3 (64 kw) | 2005.01- | 4AT/5MT | F | L | Hatchback FWD K3-VE | | GDS99294 | Drive Shaft | | 24 | 23 | 47 | 85.5 | 648 | |
| | 2005.01- | AT | F | L/R | Hatchback FWD K3-VE | | GCO59266 | Outer Joint | | 24 | 29 | 47 | 85.5 | 51 | I |
| | 2005.01- | | F | | Hatchback FWD K3-VE | | GCO59268 | Outer Joint | | 24 | 26 | 47 | 85.5 | 47.5 | I |
| | 2005.04- | 4AT/5MT | F | L | Hatchback 4WD K3-VE | | GDS99294 | Drive Shaft | | 24 | 23 | 47 | 85.5 | 648 | |
| | 2005.04- | | F | L | Hatchback 4WD K3-VE | | GCO59266 | Outer Joint | | 24 | 29 | 47 | 85.5 | 51 | I |
| | 2005.04- | | F | | Hatchback 4WD K3-VE | | GCO59268 | Outer Joint | | 24 | 26 | 47 | 85.5 | 47.5 | I |
| 1.3 (67 kw) | 2008.03- | 4AT/5MT | F | L/R | Hatchback 4WD K3-VE | | GDS99294 | Drive Shaft | | 24 | 23 | 47 | 85.5 | 648 | |
| | 2008.03- | AT | F | L | Hatchback 4WD K3-VE | | GCO59266 | Outer Joint | | 24 | 29 | 47 | 85.5 | 51 | I |
| | 2008.03- | AT | F | L/R | Hatchback 4WD K3-VE | | GCO14025 | Outer Joint | | 24 | 29 | 47 | 91.5 | 51 | I |
| | 2008.03- | 4AT/5MT | F | L/R | Hatchback FWD K3-VE | | GDS99294 | Drive Shaft | | 24 | 23 | 47 | 85.5 | 648 | |
| | 2008.03- | AT | F | L | Hatchback FWD K3-VE | | GCO59266 | Outer Joint | | 24 | 29 | 47 | 85.5 | 51 | I |
| | 2008.03- | AT | F | L/R | Hatchback FWD K3-VE | | GCO14025 | Outer Joint | | 24 | 29 | 47 | 91.5 | 51 | I |
| 1.3 (75 kw) | 2000.08-2005.01 | AT/MT | F | L/R | Hatchback FWD K3-VE2 | | GCO14034 | Outer Joint | | 24 | 21 | 46 | 86 | 53 | M |
| | 2000.08-2005.01 | | F | L | Hatchback FWD K3-VE2 | | GCO14077 | Outer Joint | | 24 | 20 | 47 | 85.5 | 47 | M |
| | 2000.08-2005.01 | | F | R | Hatchback FWD K3-VE2 | | GCO14038 | Outer Joint | | 24 | 21 | 47 | 85 | 47 | M |
| | 2000.08-2005.01 | | F | L/R | Hatchback FWD K3-VE2 | | GCO59423 | Outer Joint | | 24 | 21 | 47 | 85.5 | 47.5 | M |
| | 2000.08-2005.01 | | F | | Hatchback FWD K3-VE2 | | GCO59268 | Outer Joint | | 24 | 26 | 47 | 85.5 | 47.5 | I |
| | 2002.11-2005.03 | AT/MT | F | L/R | Hatchback 4WD K3VE2 | | GCO14034 | Outer Joint | | 24 | 21 | 46 | 86 | 53 | M |
| | 2002.11-2005.03 | | F | L | Hatchback 4WD K3VE2 | | GCO14077 | Outer Joint | | 24 | 20 | 47 | 85.5 | 47 | M |
| | 2002.11-2005.03 | | F | L/R | Hatchback 4WD K3VE2 | | GCO14038 | Outer Joint | | 24 | 21 | 47 | 85 | 47 | M |
| | 2002.11-2005.03 | | F | L/R | Hatchback 4WD K3VE2 | | GCO59423 | Outer Joint | | 24 | 21 | 47 | 85.5 | 47.5 | M |
| | 2002.11-2005.03 | | F | | Hatchback 4WD K3VE2 | | GCO59268 | Outer Joint | | 24 | 26 | 47 | 85.5 | 47.5 | I |
| 1.5 (76 kw) | 2008.03- | 4AT/5MT | F | L | Hatchback FWD 3SZ-VE | | GDS99294 | Drive Shaft | | 24 | 23 | 47 | 85.5 | 648 | |
| | 2008.03- | AT | F | L/R | Hatchback FWD 3SZ-VE | | GCO59266 | Outer Joint | | 24 | 29 | 47 | 85.5 | 51 | I |
| **Terios** | | | | | | | | | | | | | | | |
| 1.3 (61 kw) | 1997.03-2000.09 | 4AT/5MT | F | L | Terrain cab wagon closed 4WD HCEJ | Date from:1998.10 | GDS14029 | Drive Shaft | 48T | 24 | 23 | 52 | 94 | 539 | |
| | 1997.03-2000.09 | 4AT/5MT | F | R | Terrain cab wagon closed 4WD HCEJ | Date from:1998.10 | GDS14022 | Drive Shaft | | 24 | 23 | 52 | 94 | 849.5 | |
| | 1997.03-2000.09 | AT/MT | F | L/R | Terrain cab wagon closed 4WD HCEJ | | GCO14002 | Outer Joint | 48T | 24 | 19 | 52 | 94 | 81.5 | I |
| | 1997.03-2000.09 | AT/MT | F | L/R | Terrain cab wagon closed 4WD HCEJ | | GCO14027 | Outer Joint | | 24 | 19 | 52 | 94 | 81.5 | I |

| | YEAR | TRANSM. | F/R | L/R | BODY STYLE & DRIVE TYPE & ENGINE | REMARKS | G-AP Ref. | PRODUCT | ABS | Technical Specifications A | B | C | H | L | P |
|---|---|---|---|---|---|---|---|---|---|---|---|---|---|---|---|
| **DAIHATSU** | | | | | | | | | | | | | | | |
| **Terios** | | | | | | | | | | | | | | | |
| 1.3 (61 kw) | 1997.03-2000.09 | AT/MT | F | L/R | Terrain cab wagon closed 4WD HCEJ | Date to:1998.09 | GCO14037 | Outer Joint | 48T | 24 | 19 | 52 | 94 | 81.5 | M |
| 1.3 (62 kw) | 1997.05-1999.12 | | F | L | Terrain cab wagon closed 4WD HCEJ | | GDS14029 | Drive Shaft | 48T | 24 | 23 | 52 | 94 | 539 | |
| | 1997.05-1999.12 | | F | R | Terrain cab wagon closed 4WD HCEJ | Date from:1998.10 | GDS14022 | Drive Shaft | | 24 | 23 | 52 | 94 | 849.5 | |
| | 1997.05-1999.12 | | F | | Terrain cab wagon closed 4WD HCEJ | | GCO14037 | Outer Joint | 48T | 24 | 19 | 52 | 94 | 81.5 | M |
| 1.3 (63 kw) | 2000.07-2005.10 | AT/MT | R | | Terrain cab wagon closed RWD K3VE | | GCO14011 | Outer Joint | | 24 | 19 | 52 | 94 | 81.5 | M |
| | 2000.10-2002.09 | 4AT/5MT | F | L | Terrain cab wagon closed 4WD K3VE | | GDS14029 | Drive Shaft | 48T | 24 | 23 | 52 | 94 | 539 | |
| | 2000.10-2002.09 | 4AT/5MT | F | R | Terrain cab wagon closed 4WD K3VE | | GDS14022 | Drive Shaft | | 24 | 23 | 52 | 94 | 849.5 | |
| | 2000.10-2002.09 | 4AT/5MT | F | L | Terrain cab wagon closed 4WD K3VE | | GCO14002 | Outer Joint | 48T | 24 | 19 | 52 | 94 | 81.5 | I |
| | 2000.10-2002.09 | | F | | Terrain cab wagon closed 4WD K3VE | | GCO14037 | Outer Joint | 48T | 24 | 19 | 52 | 94 | 81.5 | M |
| | 2005.11- | | F | R | Closed Off-Road Vehicle 4WD K3-VE | | GCO99290 | Outer Joint | | 24 | 22 | 52 | 89.8 | 81 | M |
| | 2009.01-2009.12 | | F | R | Closed Off-Road Vehicle 4WD K3-VE | | GCO99290 | Outer Joint | | 24 | 22 | 52 | 89.8 | 81 | M |
| 1.3 (103 kw) | 2002.10-2005.10 | 4AT/5MT | F | R | Terrain cab wagon closed 4WD K3VE | | GDS14022 | Drive Shaft | | 24 | 23 | 52 | 94 | 849.5 | |
| 1.5 (75 kw) | 2010.09- | | F | R | Closed Off-Road Vehicle 4WD 3SZ-VE | | GCO99290 | Outer Joint | | 24 | 22 | 52 | 89.8 | 81 | M |
| 1.5 (77 kw) | 2006.05- | 4AT/5MT | F | L/R | Closed Off-Road Vehicle 4WD 3SZ-VE | | GCO99290 | Outer Joint | | 24 | 22 | 52 | 89.8 | 81 | M |
| | 2009.06- | | F | R | Closed Off-Road Vehicle 4WD 3SZ-VE | | GCO99290 | Outer Joint | | 24 | 22 | 52 | 89.8 | 81 | M |
| **Trevis** | | | | | | | | | | | | | | | |
| 1.0 (43 kw) | 2006.06- | 4AT/5MT | F | L/R | Hatchback FWD EJ-VE | Date to:2007.03 | GCO14028 | Outer Joint | | 24 | 19 | 47 | 84.5 | 47.5 | I |
| | 2006.06- | MT | F | L/R | Hatchback FWD EJ-VE | Date to:2007.03,Manufacturer:TK | GCO14061 | Outer Joint | | 24 | 19 | 47 | 85.5 | 47.5 | M |
| | 2006.06- | MT | F | L/R | Hatchback FWD EJ-VE | Date from:2007.04 | GCO59268 | Outer Joint | | 24 | 26 | 47 | 85.5 | 47.5 | I |
| | 2006.06- | | F | L/R | Hatchback FWD EJ-VE | Date From:2007.04 | GCI14017 | Inner Joint | | 23 | 26 | 45 | 52 | 83 | |
| **YRV** | | | | | | | | | | | | | | | |
| 1.0 (43 kw) | 2001.02- | 5MT | F | L/R | MPV FWD EJ-VE | | GCO14061 | Outer Joint | | 24 | 19 | 47 | 85.5 | 47.5 | M |
| 1.3 (64 kw) | 2001.02- | | F | L | MPV 4WD K3-VE | Date To:2003.01 | GCO14077 | Outer Joint | | 24 | 20 | 47 | 85.5 | 47 | M |
| | 2001.02- | | F | L/R | MPV 4WD K3-VE | | GCO14038 | Outer Joint | | 24 | 21 | 47 | 85 | 47 | M |
| | 2001.02- | | F | L/R | MPV 4WD K3-VE | Date From:2003.02 | GCO59423 | Outer Joint | | 24 | 21 | 47 | 85.5 | 47.5 | M |
| | 2001.02- | | F | | MPV 4WD K3-VE | | GCO59268 | Outer Joint | | 24 | 26 | 47 | 85.5 | 47.5 | I |
| | 2001.02- | | F | R | MPV FWD K3-VE | Date To:2003.01 | GCO14077 | Outer Joint | | 24 | 20 | 47 | 85.5 | 47 | M |
| | 2001.02- | | F | R | MPV FWD K3-VE | Date From:2003.02 | GCO59423 | Outer Joint | | 24 | 21 | 47 | 85.5 | 47.5 | M |
| | 2001.02- | | F | | MPV FWD K3-VE | | GCO14038 | Outer Joint | | 24 | 21 | 47 | 85 | 47 | M |
| | 2001.02- | | F | | MPV FWD K3-VE | | GCO14062 | Outer Joint | | 24 | 20 | 47 | 86.5 | 48 | M |
| | 2001.02- | | F | | MPV FWD K3-VE | | GCO59268 | Outer Joint | | 24 | 26 | 47 | 85.5 | 47.5 | I |
| 1.3 (95 kw) | 2002.07- | AT | F | L/R | MPV FWD K3-VET | | GCO14038 | Outer Joint | | 24 | 21 | 47 | 85 | 47 | M |
| | 2002.07- | | F | | MPV FWD K3-VET | | GCO14028 | Outer Joint | | 24 | 19 | 47 | 84.5 | 47.5 | I |
| **DAIMLER** | | | | | | | | | | | | | | | |
| **Super Eight** | | | | | | | | | | | | | | | |
| 4.2 (291 kw) | 2005.09-2009.12 | 6AT | R | L | Saloon RWD AJ8FT | Chassis no. from:G41512,Chassis no. to:H31470 | GDS82181 | Drive Shaft | 46T | 28 | 28 | 54.9 | 105.5 | 775 | |
| | 2005.09-2009.12 | 6AT | R | R | Saloon RWD AJ8FT | Chassis no. from:G41512,Chassis no. to:H31470 | GDS82180 | Drive Shaft | 46T | 28 | 28 | 54.9 | 105.5 | 830 | |
| | 2005.09-2009.12 | 6AT | R | L/R | Saloon RWD AJ8FT | Chassis no. from:G41512,Chassis no. to:H31470 | GCO18246 | Outer Joint | 46T | 28 | 26 | 54.9 | 105.5 | 61 | M |
| | 2005.09-2009.12 | 6AT | R | L/R | Saloon RWD AJ8FT | Chassis no. from:G41512,Chassis no. to:H31470 | GCI18179 | Inner Joint | | 28 | 28 | 46 | 101 | 78.5 | |
| **DATSUN** | | | | | | | | | | | | | | | |
| **Cross** | | | | | | | | | | | | | | | |
| 1.2 (50 kw) | 2018.01-2020.01 | 5MT | F | L/R | Estate FWD HR12DE | | GCO41297 | Outer Joint | | 25 | 21 | 49.1 | 94 | 56.5 | M |
| 1.2 (57 kw) | 2018.01-2020.01 | 5MT | F | L/R | Estate FWD HR12DE | | GCO41297 | Outer Joint | | 25 | 21 | 49.1 | 94 | 56.5 | M |
| **DEEPAL** | | | | | | | | | | | | | | | |
| **S05** | | | | | | | | | | | | | | | |
| EV (175 kw) | 2024.10- | ET | F | L | SUV RWD XTDM40 | | GDS57989 | Drive Shaft | | 30 | 31 | 65.5 | 91.5 | 961 | |
| | 2024.10- | ET | F | R | SUV RWD XTDM40 | | GDS57988 | Drive Shaft | | 30 | 31 | 65.5 | 91.5 | 702 | |
| | 2024.10- | ET | F | L/R | SUV RWD XTDM40 | | GCO83822 | Outer Joint | | 30 | 26 | 65.5 | 91.5 | 63.5 | M |
| | 2024.10- | ET | F | L/R | SUV RWD XTDM40 | | GCI83977 | Inner Joint | | 31 | 26 | 40 | 63.5 | 108.5 | |
| **DODGE** | | | | | | | | | | | | | | | |
| **Caliber** | | | | | | | | | | | | | | | |
| 1.8 (110 kw) | 2006.06-2009.12 | 5MT | F | L/R | Hatchback FWD EBA | Model year from:2007,Model year to:2012 | GCO39113 | Outer Joint | | 28 | 33 | 59.5 | 95 | 61.5 | I |
| | 2006.06-2009.12 | MT | F | L | Hatchback FWD EBA | | GDS15053 | Drive Shaft | | 28 | 27 | 59.5 | 95 | 638 | |
| | 2006.06-2009.12 | MT | F | L | Hatchback FWD EBA | | GDS15054 | Drive Shaft | | 28 | 24 | 59.5 | 95 | 622 | |
| | 2006.06-2009.12 | MT | F | R | Hatchback FWD EBA | | GDS15051 | Drive Shaft | | 28 | 28 | 59.5 | 95 | 586 | |
| | 2006.06-2009.12 | MT | F | L | Hatchback FWD EBA | | GCI59140 | Inner Joint | | 24 | 36 | 50 | 67 | 116 | |
| 2.0 (88 kw) | 2006.06-2011.11 | MT | F | L | Hatchback FWD ECD | | GDS15054 | Drive Shaft | | 28 | 24 | 59.5 | 95 | 622 | |
| | 2006.06-2011.11 | MT | F | R | Hatchback FWD ECD | | GDS15052 | Drive Shaft | | 28 | 28 | 59.5 | 95 | 613 | |
| | 2006.06-2011.11 | MT | F | L/R | Hatchback FWD ECD | | GCO15010 | Outer Joint | | 28 | 36 | 59.5 | 95 | 68 | I |
| | 2006.06-2011.11 | MT | F | L | Hatchback FWD ECD | | GCI59140 | Inner Joint | | 24 | 36 | 50 | 67 | 116 | |
| | 2006.06-2011.11 | MT | F | R | Hatchback FWD ECD | | GCI15012 | Inner Joint | | 28 | 36 | 42 | | 122 | |
| 2.0 (100 kw) | 2006.06-2011.11 | 5MT | F | | Hatchback FWD ECD | Model year from:2007 | GCO39113 | Outer Joint | | 28 | 33 | 59.5 | 95 | 61.5 | I |
| | 2006.06-2011.11 | MT | F | L | Hatchback FWD ECD | | GDS15054 | Drive Shaft | | 28 | 24 | 59.5 | 95 | 622 | |
| | 2006.06-2011.11 | MT | F | R | Hatchback FWD ECD | | GDS15052 | Drive Shaft | | 28 | 28 | 59.5 | 95 | 613 | |
| | 2006.06-2011.11 | MT | F | R | Hatchback FWD ECD | | GCI15012 | Inner Joint | | 28 | 36 | 42 | | 122 | |

| | YEAR | TRANSM. | F/R | L/R | BODY STYLE & DRIVE TYPE & ENGINE | REMARKS | G-AP Ref. | PRODUCT | ABS | Technical Specifications A | B | C | H | L | P |
|---|---|---|---|---|---|---|---|---|---|---|---|---|---|---|---|
| **DODGE** | | | | | | | | | | | | | | | |
| **Caliber** | | | | | | | | | | | | | | | |
| 2.0 (100 kw) | 2006.06-2011.11 | | F | | Hatchback FWD ECD | | GCO15010 | Outer Joint | | 28 | 36 | 59.5 | 95 | 68 | I |
| 2.0 (103 kw) | 2006.06- | 5MT | F | L/R | Hatchback FWD ECD;ECE | | GCO39113 | Outer Joint | | 28 | 33 | 59.5 | 95 | 61.5 | I |
| | 2006.06- | 6MT | F | L | Hatchback FWD ECD;ECE | | GDS15054 | Drive Shaft | | 28 | 24 | 59.5 | 95 | 622 | |
| | 2006.06- | 6MT | F | R | Hatchback FWD ECD;ECE | | GDS15052 | Drive Shaft | | 28 | 28 | 59.5 | 95 | 613 | |
| | 2006.06- | 6MT | F | L/R | Hatchback FWD ECD;ECE | | GCO15010 | Outer Joint | | 28 | 36 | 59.5 | 95 | 68 | I |
| | 2006.06- | 6MT | F | L | Hatchback FWD ECD;ECE | | GCI59140 | Inner Joint | | 24 | 36 | 50 | 67 | 116 | |
| | 2006.06- | 6MT | F | R | Hatchback FWD ECD;ECE | | GCI15012 | Inner Joint | | 28 | 36 | 42 | | 122 | |
| 2.0 (115 kw) | 2006.06- | AT/MT | F | L | Hatchback FWD ECN | Date to:2007.12 | GDS15054 | Drive Shaft | | 28 | 24 | 59.5 | 95 | 622 | |
| | 2006.06- | AT/MT | F | R | Hatchback FWD ECN | Date from:2008.01 | GDS15051 | Drive Shaft | | 28 | 28 | 59.5 | 95 | 586 | |
| | 2006.06- | AT/MT | F | R | Hatchback FWD ECN | Date To:2007.12 | GDS51067 | Drive Shaft | | 28 | 27 | 59.5 | 95 | 958 | |
| | 2006.06- | AT/MT | F | L | Hatchback FWD ECN | Date from:2008.01 | GCO39113 | Outer Joint | | 28 | 33 | 59.5 | 95 | 61.5 | I |
| | 2006.06- | AT/MT | F | L | Hatchback FWD ECN | Date to:2007.12 | GCI59140 | Inner Joint | | 24 | 36 | 50 | 67 | 116 | |
| | 2006.06- | AT/MT | F | R | Hatchback FWD ECN | Date to:2007.12 | GCI41056 | Inner Joint | | 27 | 33 | 40 | 62 | 112 | |
| | 2006.06- | CVT | F | L | Hatchback FWD ECN | | GDS15053 | Drive Shaft | | 28 | 27 | 59.5 | 95 | 638 | |
| | 2006.06- | CVT | F | R | Hatchback FWD ECN | | GDS51041 | Drive Shaft | | 28 | 24 | 59.5 | 95 | 977 | |
| 2.2 (120 kw) | 2010.07-2011.11 | MT | F | L | Hatchback FWD ENE | | GDS15053 | Drive Shaft | | 28 | 27 | 59.5 | 95 | 638 | |
| | 2010.07-2011.11 | MT | F | L | Hatchback FWD ENE | | GDS15054 | Drive Shaft | | 28 | 24 | 59.5 | 95 | 622 | |
| | 2010.07-2011.11 | MT | F | R | Hatchback FWD ENE | | GDS15051 | Drive Shaft | | 28 | 28 | 59.5 | 95 | 586 | |
| | 2010.07-2011.11 | MT | F | R | Hatchback FWD ENE | | GDS15052 | Drive Shaft | | 28 | 28 | 59.5 | 95 | 613 | |
| | 2010.07-2011.11 | MT | F | L | Hatchback FWD ENE | | GCO39113 | Outer Joint | | 28 | 33 | 59.5 | 95 | 61.5 | I |
| | 2010.07-2011.11 | MT | F | L | Hatchback FWD ENE | | GCI41056 | Inner Joint | | 27 | 33 | 40 | 62 | 112 | |
| | 2010.07-2011.11 | | F | | Hatchback FWD ENE | | GCO15010 | Outer Joint | | 28 | 36 | 59.5 | 95 | 68 | I |
| 2.4 (125 kw) | 2006.10- | CVT | F | L | Hatchback 4WD ED3 | | GDS15054 | Drive Shaft | | 28 | 24 | 59.5 | 95 | 622 | |
| | 2006.10- | CVT | F | R | Hatchback 4WD ED3 | | GDS51067 | Drive Shaft | | 28 | 27 | 59.5 | 95 | 958 | |
| | 2006.10- | CVT | F | L | Hatchback 4WD ED3 | | GCO15010 | Outer Joint | | 28 | 36 | 59.5 | 95 | 68 | I |
| | 2006.10- | CVT | F | R | Hatchback 4WD ED3 | | GCO39113 | Outer Joint | | 28 | 33 | 59.5 | 95 | 61.5 | I |
| | 2006.10- | CVT | F | L | Hatchback 4WD ED3 | | GCI59140 | Inner Joint | | 24 | 36 | 50 | 67 | 116 | |
| | 2006.10- | CVT | F | R | Hatchback 4WD ED3 | | GCI41056 | Inner Joint | | 27 | 33 | 40 | 62 | 112 | |
| | 2006.10- | MT | F | L | Hatchback 4WD ED3 | | GDS15053 | Drive Shaft | | 28 | 27 | 59.5 | 95 | 638 | |
| | 2006.10- | MT | F | R | Hatchback 4WD ED3 | | GDS51045 | Drive Shaft | | 28 | 27 | 59.5 | 95 | 962 | |
| | 2006.10- | CVT | R | L | Hatchback 4WD ED3 | | GDS51055 | Drive Shaft | | 25 | 23 | 48 | 106.5 | 743 | |
| | 2006.10- | CVT | R | R | Hatchback 4WD ED3 | | GDS51056 | Drive Shaft | | 25 | 23 | 48 | 106.5 | 822 | |
| | 2006.10- | CVT | R | L/R | Hatchback 4WD ED3 | | GCO51033 | Outer Joint | | 25 | 26 | 48 | 106.5 | 49 | I |
| | 2006.10- | CVT | R | L/R | Hatchback 4WD ED3 | | GCI39050 | Inner Joint | | 23 | 26 | 35 | 64 | 96 | |
| | 2006.10- | CVT | F | L | Hatchback FWD ED3 | | GDS15054 | Drive Shaft | | 28 | 24 | 59.5 | 95 | 622 | |
| | 2006.10- | CVT | F | R | Hatchback FWD ED3 | Date to:2007.12 | GDS51045 | Drive Shaft | | 28 | 27 | 59.5 | 95 | 962 | |
| | 2006.10- | CVT | F | L | Hatchback FWD ED3 | | GCI59140 | Inner Joint | | 24 | 36 | 50 | 67 | 116 | |
| | 2006.10- | MT | F | R | Hatchback FWD ED3 | Date from:2008.01 | GDS15051 | Drive Shaft | | 28 | 28 | 59.5 | 95 | 586 | |
| | 2006.10- | MT/CVT | F | L | Hatchback FWD ED3 | Date from:2008.01 | GDS15053 | Drive Shaft | | 28 | 27 | 59.5 | 95 | 638 | |
| | 2006.10- | MT/CVT | F | L | Hatchback FWD ED3 | Date from:2008.01 | GCO39113 | Outer Joint | | 28 | 33 | 59.5 | 95 | 61.5 | I |
| | 2006.10- | MT/CVT | F | L | Hatchback FWD ED3 | Date from:2008.01 | GCI41056 | Inner Joint | | 27 | 33 | 40 | 62 | 112 | |
| 2.4 (126 kw) | 2006.10- | MT | F | L | Hatchback FWD ED3 | | GDS15053 | Drive Shaft | | 28 | 27 | 59.5 | 95 | 638 | |
| | 2006.10- | MT | F | R | Hatchback FWD ED3 | | GDS15051 | Drive Shaft | | 28 | 28 | 59.5 | 95 | 586 | |
| 2.4 (217 kw) | 2007.12- | 5MT | F | | Hatchback FWD ED4 | Model year to:2012 | GCO39113 | Outer Joint | | 28 | 33 | 59.5 | 95 | 61.5 | I |
| | 2007.12- | MT | F | L | Hatchback FWD ED4 | | GDS15053 | Drive Shaft | | 28 | 27 | 59.5 | 95 | 638 | |
| | 2007.12- | MT | F | R | Hatchback FWD ED4 | | GDS15051 | Drive Shaft | | 28 | 28 | 59.5 | 95 | 586 | |
| 2.4 (223 kw) | 2006.10- | MT | F | L | Hatchback 4WD ED4 | | GDS15053 | Drive Shaft | | 28 | 27 | 59.5 | 95 | 638 | |
| | 2006.10- | MT | F | R | Hatchback 4WD ED4 | | GDS51045 | Drive Shaft | | 28 | 27 | 59.5 | 95 | 962 | |
| **Caravan** | | | | | | | | | | | | | | | |
| 2.4 (112 kw) | 2001.01-2007.12 | 4AT | F | | MPV FWD EDZ | Date from:2001 | GCO89029 | Outer Joint | 47T | 26 | 32 | 54 | 98.5 | 61.5 | I |
| 3.3 (128 kw) | 2001.04-2006.09 | 4AT | F | | MPV 4WD EGA | Date from:2001 | GCO89029 | Outer Joint | 47T | 26 | 32 | 54 | 98.5 | 61.5 | I |
| | 2001.04-2006.09 | 4AT | F | | MPV FWD EGA | Date from:2001 | GCO89029 | Outer Joint | 47T | 26 | 32 | 54 | 98.5 | 61.5 | I |
| 3.8 (153 kw) | 2001.04-2007.12 | 4AT | F | | MPV 4WD EGH | | GCO89029 | Outer Joint | 47T | 26 | 32 | 54 | 98.5 | 61.5 | I |
| 3.8 (160 kw) | 2001.04-2006.09 | 4AT | F | | MPV 4WD EGH | Date from:2001 | GCO89029 | Outer Joint | 47T | 26 | 32 | 54 | 98.5 | 61.5 | I |
| | 2001.04-2006.09 | 4AT | F | | MPV FWD EGH | Date from:2001 | GCO89029 | Outer Joint | 47T | 26 | 32 | 54 | 98.5 | 61.5 | I |
| **Charger** | | | | | | | | | | | | | | | |
| 6.4 (351 kw) | 2012.01-2014.12 | AT | R | L | Saloon RWD ESG | | GDS35131 | Drive Shaft | 48NS | 32 | 31 | 63 | 105.5 | 797 | |
| | 2012.01-2014.12 | AT | R | R | Saloon RWD ESG | | GDS35130 | Drive Shaft | 48NS | 32 | 31 | 63 | 105.5 | 822 | |
| | 2012.01-2014.12 | AT | R | L/R | Saloon RWD ESG | | GCI35072 | Inner Joint | 48NS | 32 | 37 | 63 | 105.5 | 96 | |
| | 2012.01-2014.12 | AT | R | L/R | Saloon RWD ESG | | GCI35074 | Inner Joint | | 31 | 37 | 40 | 97.5 | 91.2 | |
| **Journey** | | | | | | | | | | | | | | | |
| 2.0 (100 kw) | 2008.06-2011.12 | 6MT | F | R | MPV FWD ECE | | GDS89084 | Drive Shaft | | 32 | 28 | 56.7 | 105 | 620 | |
| 2.0 (103 kw) | 2008.06- | 6MT | F | R | MPV FWD ECE;BWD | | GDS89084 | Drive Shaft | | 32 | 28 | 56.7 | 105 | 620 | |
| | 2008.06- | AT | F | L | MPV FWD ECE;BWD | | GDS89079 | Drive Shaft | | 32 | 29 | 56.7 | 104.5 | 643 | |
| | 2008.06- | AT | F | R | MPV FWD ECE;BWD | | GDS89080 | Drive Shaft | | 32 | 28 | 56.7 | 104.5 | 521 | |

| | YEAR | TRANSM. | F/R | L/R | BODY STYLE & DRIVE TYPE & ENGINE | REMARKS | G-AP Ref. | PRODUCT | ABS | Technical Specifications A | B | C | H | L | P |
|---|---|---|---|---|---|---|---|---|---|---|---|---|---|---|---|
| **DODGE** | | | | | | | | | | | | | | | |
| **Journey** | | | | | | | | | | | | | | | |
| 2.0 (103 kw) | 2008.06-2011.12 | 6MT | F | R | Box Body/MPV FWD ECE | | GDS89084 | Drive Shaft | | 32 | 28 | 56.7 | 105 | 620 | |
| 2.4 (125 kw) | 2008.06- | 4AT | F | L | MPV FWD EDG | | GDS82646 | Drive Shaft | | 32 | 25 | 56.7 | 104.5 | 646 | |
| | 2008.06- | 4AT | F | R | MPV FWD EDG | | GDS82639 | Drive Shaft | | 32 | 25 | 56.7 | 104.5 | 994 | |
| | 2008.06- | 4AT | F | L | MPV FWD EDG | | GCI81929 | Inner Joint | | 25 | 24 | 40 | 73.5 | 111.5 | |
| | 2008.06- | 5MT | F | R | MPV FWD EDG | | GDS83857 | Drive Shaft | | 32 | 28 | 57 | 104.5 | 583 | |
| | 2008.06- | 5MT | F | R | MPV FWD EDG | | GCO82522 | Outer Joint | | 32 | 32 | 57 | 104.5 | 62 | I |
| | 2008.06- | 5MT | F | R | MPV FWD EDG | | GCI82400 | Inner Joint | | 28 | 24 | 42.5 | | 123 | |
| | 2009.01- | 4AT | F | L | MPV FWD ED3;EDG | | GDS82646 | Drive Shaft | | 32 | 25 | 56.7 | 104.5 | 646 | |
| | 2009.01- | 4AT | F | R | MPV FWD ED3;EDG | | GDS82639 | Drive Shaft | | 32 | 25 | 56.7 | 104.5 | 994 | |
| | 2009.01- | 4AT | F | L/R | MPV FWD ED3;EDG | | GCO82522 | Outer Joint | | 32 | 32 | 57 | 104.5 | 62 | I |
| | 2009.01- | 4AT | F | L/R | MPV FWD ED3;EDG | | GCI81929 | Inner Joint | | 25 | 24 | 40 | 73.5 | 111.5 | |
| | 2009.01-2012.12 | 4AT | F | L | Box Body/MPV FWD ED3 | | GDS82646 | Drive Shaft | | 32 | 25 | 56.7 | 104.5 | 646 | |
| | 2009.01-2012.12 | 4AT | F | R | Box Body/MPV FWD ED3 | | GDS82639 | Drive Shaft | | 32 | 25 | 56.7 | 104.5 | 994 | |
| | 2009.01-2012.12 | 4AT | F | L/R | Box Body/MPV FWD ED3 | | GCO82522 | Outer Joint | | 32 | 32 | 57 | 104.5 | 62 | I |
| | 2009.01-2012.12 | 4AT | F | L/R | Box Body/MPV FWD ED3 | | GCI81929 | Inner Joint | | 25 | 24 | 40 | 73.5 | 111.5 | |
| 2.4 (127 kw) | 2012.06- | 4AT | F | L | MPV FWD ED3 | | GDS82646 | Drive Shaft | | 32 | 25 | 56.7 | 104.5 | 646 | |
| | 2012.06- | 4AT | F | R | MPV FWD ED3 | | GDS83857 | Drive Shaft | | 32 | 28 | 57 | 104.5 | 583 | |
| | 2012.06- | 4AT | F | R | MPV FWD ED3 | | GCO82522 | Outer Joint | | 32 | 32 | 57 | 104.5 | 62 | I |
| | 2012.06- | 4AT | F | L | MPV FWD ED3 | | GCI81929 | Inner Joint | | 25 | 24 | 40 | 73.5 | 111.5 | |
| | 2012.06- | 4AT | F | R | MPV FWD ED3 | | GCI82400 | Inner Joint | | 28 | 24 | 42.5 | | 123 | |
| 2.7 (136 kw) | 2009.01- | 6AT | F | L | MPV FWD EER | | GDS89079 | Drive Shaft | | 32 | 29 | 56.7 | 104.5 | 643 | |
| | 2009.01- | 6AT | F | R | MPV FWD EER | | GDS89080 | Drive Shaft | | 32 | 28 | 56.7 | 104.5 | 521 | |
| | 2009.01-2011.12 | 6AT | F | L | Box Body/MPV FWD EER | | GDS89079 | Drive Shaft | | 32 | 29 | 56.7 | 104.5 | 643 | |
| | 2009.01-2011.12 | 6AT | F | R | Box Body/MPV FWD EER | | GDS89080 | Drive Shaft | | 32 | 28 | 56.7 | 104.5 | 521 | |
| | 2009.01-2011.12 | 4AT | F | L | MPV FWD EER | | GDS82646 | Drive Shaft | | 32 | 25 | 56.7 | 104.5 | 646 | |
| | 2009.01-2011.12 | 4AT | F | L/R | MPV FWD EER | | GCO82522 | Outer Joint | | 32 | 32 | 57 | 104.5 | 62 | I |
| | 2009.01-2011.12 | 4AT | F | L | MPV FWD EER | | GCI81929 | Inner Joint | | 25 | 24 | 40 | 73.5 | 111.5 | |
| | 2009.01-2011.12 | 6AT | F | L | MPV FWD EER | | GDS89079 | Drive Shaft | | 32 | 29 | 56.7 | 104.5 | 643 | |
| | 2009.01-2011.12 | 6AT | F | R | MPV FWD EER | | GDS89080 | Drive Shaft | | 32 | 28 | 56.7 | 104.5 | 521 | |
| 3.5 (173 kw) | 2008.06-2010.12 | AT | F | L | MPV 4WD EGF | | GDS89079 | Drive Shaft | | 32 | 29 | 56.7 | 104.5 | 643 | |
| | 2008.06-2010.12 | AT | F | R | MPV 4WD EGF | | GDS89080 | Drive Shaft | | 32 | 28 | 56.7 | 104.5 | 521 | |
| | 2008.06-2010.12 | AT | F | L | MPV FWD EGF | | GDS89079 | Drive Shaft | | 32 | 29 | 56.7 | 104.5 | 643 | |
| | 2008.06-2010.12 | AT | F | R | MPV FWD EGF | | GDS89080 | Drive Shaft | | 32 | 28 | 56.7 | 104.5 | 521 | |
| 3.6 (206 kw) | 2012.06-2015.12 | 6AT | F | L | MPV FWD ERB | | GDS89079 | Drive Shaft | | 32 | 29 | 56.7 | 104.5 | 643 | |
| | 2012.06-2015.12 | 6AT | F | R | MPV FWD ERB | | GDS89080 | Drive Shaft | | 32 | 28 | 56.7 | 104.5 | 521 | |
| | 2013.05- | 6AT | F | L | MPV 4WD ERB | | GDS17229 | Drive Shaft | | 32 | 29 | 56.7 | 105 | 640 | |
| | 2013.05- | 6AT | F | L/R | MPV 4WD ERB | | GCO89054 | Outer Joint | | 32 | 26 | 56.7 | 105 | 62 | M |
| | 2013.05- | AT | F | R | MPV 4WD ERB | | GDS89080 | Drive Shaft | | 32 | 28 | 56.7 | 104.5 | 521 | |
| 3.6 (211 kw) | 2010.09- | 6AT | F | L | MPV 4WD ERB | | GDS17229 | Drive Shaft | | 32 | 29 | 56.7 | 105 | 640 | |
| | 2010.09- | 6AT | F | R | MPV 4WD ERB | | GDS17228 | Drive Shaft | | 32 | 28 | 56.7 | 105 | 524 | |
| | 2010.09- | 6AT | F | L/R | MPV 4WD ERB | | GCO89054 | Outer Joint | | 32 | 26 | 56.7 | 105 | 62 | M |
| | 2011.01- | 6AT | F | L | Box Body/MPV 4WD ERB | | GDS17229 | Drive Shaft | | 32 | 29 | 56.7 | 105 | 640 | |
| | 2011.01- | 6AT | F | R | Box Body/MPV 4WD ERB | AAR | GDS17228 | Drive Shaft | | 32 | 28 | 56.7 | 105 | 524 | |
| | 2011.01- | 6AT | F | R | Box Body/MPV 4WD ERB | TJ | GDS89080 | Drive Shaft | | 32 | 28 | 56.7 | 104.5 | 521 | |
| | 2011.01- | 6AT | F | R | Box Body/MPV 4WD ERB | | GCO89054 | Outer Joint | | 32 | 26 | 56.7 | 105 | 62 | M |
| | 2011.01- | 6AT | F | R | Box Body/MPV 4WD ERB | AAR | GCI88093 | Inner Joint | | 28 | 26 | 42.5 | | 125 | |
| | 2012.01- | AT | F | L | MPV FWD ERB | | GDS89079 | Drive Shaft | | 32 | 29 | 56.7 | 104.5 | 643 | |
| | 2012.01- | AT | F | R | MPV FWD ERB | | GDS89080 | Drive Shaft | | 32 | 28 | 56.7 | 104.5 | 521 | |
| **Neon** | | | | | | | | | | | | | | | |
| 2.0 (98 kw) | 1994.06-1999.09 | AT/MT | F | L/R | Saloon FWD ECB | | GCO89011 | Outer Joint | | 23 | 28 | 57.7 | 91.8 | 58 | I |
| | 1994.06-1999.09 | AT/MT | F | L/R | Saloon FWD ECB | | GCO89036 | Outer Joint | 56T | 23 | 28 | 57.7 | 91.8 | 58 | I |
| | 1999.08- | | F | | Saloon FWD ECB | | GCO89011 | Outer Joint | | 23 | 28 | 57.7 | 91.8 | 58 | I |
| 2.0 (107 kw) | 1994.06-1999.09 | AT/MT | F | L/R | Saloon FWD ECC | | GCO89011 | Outer Joint | | 23 | 28 | 57.7 | 91.8 | 58 | I |
| | 1994.06-1999.09 | AT/MT | F | L/R | Saloon FWD ECC | | GCO89036 | Outer Joint | 56T | 23 | 28 | 57.7 | 91.8 | 58 | I |
| 2.0 (109 kw) | 1996.04-1999.08 | AT/MT | F | L/R | Saloon FWD ECC | | GCO89011 | Outer Joint | | 23 | 28 | 57.7 | 91.8 | 58 | I |
| | 1996.04-1999.08 | AT/MT | F | L/R | Saloon FWD ECC | | GCO89036 | Outer Joint | 56T | 23 | 28 | 57.7 | 91.8 | 58 | I |
| 2.0 (112 kw) | 1996.04-1999.09 | | F | | Saloon FWD ECC | | GCO89011 | Outer Joint | | 23 | 28 | 57.7 | 91.8 | 58 | I |
| | 1999.08-2002.12 | AT/MT | F | L/R | Saloon FWD ECH | Date to:2006.12 | GCO89040 | Outer Joint | 46T | 26 | 23 | 57.7 | 92.5 | 58 | M |
| | 1999.08-2002.12 | | F | | Saloon FWD ECH | | GCO89011 | Outer Joint | | 23 | 28 | 57.7 | 91.8 | 58 | I |
| **Nitro** | | | | | | | | | | | | | | | |
| 2.8 (120 kw) | 2007.10-2011.12 | 5AT/6MT | F | L | SUV 4WD ENR | | GDS83214 | Drive Shaft | | 32 | 27 | 57 | 105 | 613 | |
| | 2007.10-2011.12 | 5AT/6MT | F | R | SUV 4WD ENR | | GDS83215 | Drive Shaft | | 32 | 29 | 57 | 105 | 545 | |
| | 2007.10-2011.12 | 5AT/6MT | F | L/R | SUV 4WD ENR | | GCO82260 | Outer Joint | | 32 | 35 | 57 | 105 | 74 | O |
| | 2007.10-2011.12 | 5AT/6MT | F | L | SUV 4WD ENR | | GCI16004 | Inner Joint | | 27 | 35 | 34.9 | 114 | 113 | |
| | 2007.10-2011.12 | 5AT/6MT | F | R | SUV 4WD ENR | | GCI16003 | Inner Joint | | 29 | 35 | 45 | | 156.5 | |

| | YEAR | TRANSM. | F/R | L/R | BODY STYLE & DRIVE TYPE & ENGINE | REMARKS | G-AP Ref. | PRODUCT | ABS | Technical Specifications A | B | C | H | L | P |
|---|---|---|---|---|---|---|---|---|---|---|---|---|---|---|---|
| **DODGE** | | | | | | | | | | | | | | | |
| **Nitro** | | | | | | | | | | | | | | | |
| 2.8 (130 kw) | 2006.10-2010.12 | 5AT/6MT | F | L | SUV Van 4WD ENR;ENS | | GDS83214 | Drive Shaft | | 32 | 27 | 57 | 105 | 613 | |
| | 2006.10-2010.12 | 5AT/6MT | F | R | SUV Van 4WD ENR;ENS | | GDS83215 | Drive Shaft | | 32 | 29 | 57 | 105 | 545 | |
| | 2007.06-2012.12 | 5AT/6MT | F | L | SUV 4WD ENR;ENS | | GDS83214 | Drive Shaft | | 32 | 27 | 57 | 105 | 613 | |
| | 2007.06-2012.12 | 5AT/6MT | F | R | SUV 4WD ENR;ENS | | GDS83215 | Drive Shaft | | 32 | 29 | 57 | 105 | 545 | |
| | 2007.06-2012.12 | 5AT/6MT | F | L/R | SUV 4WD ENR;ENS | | GCO82260 | Outer Joint | | 32 | 35 | 57 | 105 | 74 | O |
| | 2007.06-2012.12 | 5AT/6MT | F | L | SUV 4WD ENR;ENS | | GCI16004 | Inner Joint | | 27 | 35 | 34.9 | 114 | 113 | |
| | 2007.06-2012.12 | 5AT/6MT | F | R | SUV 4WD ENR;ENS | | GCI16003 | Inner Joint | | 29 | 35 | 45 | | 156.5 | |
| 3.7 (151 kw) | 2006.10-2010.12 | 4AT | F | R | SUV Van 4WD EKG | | GDS83215 | Drive Shaft | | 32 | 29 | 57 | 105 | 545 | |
| | 2006.10-2010.12 | 4AT/6MT | F | L | SUV Van 4WD EKG | | GDS83214 | Drive Shaft | | 32 | 27 | 57 | 105 | 613 | |
| | 2007.06-2012.12 | 4AT | F | L | SUV 4WD EKG | | GDS83214 | Drive Shaft | | 32 | 27 | 57 | 105 | 613 | |
| | 2007.06-2012.12 | 4AT | F | R | SUV 4WD EKG | | GDS83215 | Drive Shaft | | 32 | 29 | 57 | 105 | 545 | |
| | 2007.06-2012.12 | 4AT | F | L/R | SUV 4WD EKG | | GCO82260 | Outer Joint | | 32 | 35 | 57 | 105 | 74 | O |
| | 2007.06-2012.12 | 4AT | F | L | SUV 4WD EKG | | GCI16004 | Inner Joint | | 27 | 35 | 34.9 | 114 | 113 | |
| | 2007.06-2012.12 | 4AT | F | R | SUV 4WD EKG | | GCI16003 | Inner Joint | | 29 | 35 | 45 | | 156.5 | |
| 3.7 (157 kw) | 2006.09-2012.12 | 4AT/6MT | F | L | SUV 4WD EKG | | GDS83214 | Drive Shaft | | 32 | 27 | 57 | 105 | 613 | |
| | 2006.09-2012.12 | 4AT/6MT | F | R | SUV 4WD EKG | | GDS83215 | Drive Shaft | | 32 | 29 | 57 | 105 | 545 | |
| | 2006.09-2012.12 | 4AT/6MT | F | L/R | SUV 4WD EKG | | GCO82260 | Outer Joint | | 32 | 35 | 57 | 105 | 74 | O |
| | 2006.09-2012.12 | 4AT/6MT | F | L | SUV 4WD EKG | | GCI16004 | Inner Joint | | 27 | 35 | 34.9 | 114 | 113 | |
| | 2006.09-2012.12 | 4AT/6MT | F | R | SUV 4WD EKG | | GCI16003 | Inner Joint | | 29 | 35 | 45 | | 156.5 | |
| 4.0 (191 kw) | 2006.09-2007.12 | 5AT | F | L | SUV 4WD EGS | | GDS83214 | Drive Shaft | | 32 | 27 | 57 | 105 | 613 | |
| | 2006.09-2007.12 | 5AT | F | R | SUV 4WD EGS | | GDS83215 | Drive Shaft | | 32 | 29 | 57 | 105 | 545 | |
| | 2006.09-2007.12 | 5AT | F | L/R | SUV 4WD EGS | | GCO82260 | Outer Joint | | 32 | 35 | 57 | 105 | 74 | O |
| | 2006.09-2007.12 | 5AT | F | L | SUV 4WD EGS | | GCI16004 | Inner Joint | | 27 | 35 | 34.9 | 114 | 113 | |
| | 2006.09-2007.12 | 5AT | F | R | SUV 4WD EGS | | GCI16003 | Inner Joint | | 29 | 35 | 45 | | 156.5 | |
| | 2006.09-2011.12 | 5AT | F | L | SUV Van 4WD EGS | | GDS83214 | Drive Shaft | | 32 | 27 | 57 | 105 | 613 | |
| | 2006.09-2011.12 | 5AT | F | R | SUV Van 4WD EGS | | GDS83215 | Drive Shaft | | 32 | 29 | 57 | 105 | 545 | |
| 4.0 (194 kw) | 2007.09-2011.12 | 4AT/5AT | F | L | SUV 4WD EGS | | GDS83214 | Drive Shaft | | 32 | 27 | 57 | 105 | 613 | |
| | 2007.09-2011.12 | 4AT/5AT | F | R | SUV 4WD EGS | | GDS83215 | Drive Shaft | | 32 | 29 | 57 | 105 | 545 | |
| | 2007.09-2011.12 | 4AT/5AT | F | L/R | SUV 4WD EGS | | GCO82260 | Outer Joint | | 32 | 35 | 57 | 105 | 74 | O |
| | 2007.09-2011.12 | 4AT/5AT | F | L | SUV 4WD EGS | | GCI16004 | Inner Joint | | 27 | 35 | 34.9 | 114 | 113 | |
| | 2007.09-2011.12 | 4AT/5AT | F | R | SUV 4WD EGS | | GCI16003 | Inner Joint | | 29 | 35 | 45 | | 156.5 | |
| **Ram Van** | | | | | | | | | | | | | | | |
| 2.5 (105 kw) | 2002.03-2005.12 | MT | F | L | MPV Van FWD ENJ | | GDS89067 | Drive Shaft | 47T | 26 | 27 | 54.1 | 98 | 639 | |
| | 2002.03-2005.12 | MT | F | R | MPV Van FWD ENJ | | GDS89082 | Drive Shaft | 47T | 26 | 27 | 54 | 98.5 | 1031 | |
| 2.8 (110 kw) | 2004.06-2005.12 | AT | F | R | MPV Van FWD ENR | | GDS89005 | Drive Shaft | 47T | 26 | 25 | 54 | 98.5 | 1030 | |
| **Stratus** | | | | | | | | | | | | | | | |
| 2.4 (108 kw) | 2000.10-2002.09 | AT | F | | Saloon FWD EY7 | | GCI81580 | Inner Joint | | 27 | 30 | 41 | 62.5 | 83 | |
| **DS** | | | | | | | | | | | | | | | |
| **DS3** | | | | | | | | | | | | | | | |
| 1.2 (60 kw) | 2015.04-2019.07 | 5AT/5MT | F | L | Hatchback FWD HMZ (EB2F);HMZ (EB2) | | GDS10340 | Drive Shaft | | 21 | 22 | 49 | 86 | 655 | |
| | 2015.04-2019.07 | 5AT/5MT | F | R | Hatchback FWD HMZ (EB2F);HMZ (EB2) | | GDS10339 | Drive Shaft | | 21 | 22 | 49 | 86 | 868 | |
| | 2015.04-2019.07 | 5AT/5MT | F | L | Hatchback FWD HMZ (EB2F);HMZ (EB2) | | GCO10151 | Outer Joint | | 21 | 28 | 49 | 86 | 49 | I |
| | 2015.07-2019.07 | 5MT | F | L | Convertible FWD HMZ (EB2F) | | GDS10340 | Drive Shaft | | 21 | 22 | 49 | 86 | 655 | |
| | 2015.07-2019.07 | 5MT | F | R | Convertible FWD HMZ (EB2F) | | GDS10339 | Drive Shaft | | 21 | 22 | 49 | 86 | 868 | |
| | 2015.07-2019.07 | 5MT | F | L | Convertible FWD HMZ (EB2F) | | GCO10151 | Outer Joint | | 21 | 28 | 49 | 86 | 49 | I |
| | 2015.07-2019.07 | MT | F | | Convertible FWD HMZ (EB2F) | | GCO10130 | Outer Joint | | 21 | 34 | 48.3 | 86.5 | 55.5 | I |
| 1.2 (81 kw) | 2015.04-2019.07 | AT | F | L | Hatchback FWD HNZ (EB2DT);HNP (EB2ADT) | | GDS83216 | Drive Shaft | | 25 | 37 | 58.5 | 79 | 598 | |
| | 2015.04-2019.07 | AT | F | R | Hatchback FWD HNZ (EB2DT);HNP (EB2ADT) | | GDS83217 | Drive Shaft | | 25 | 37 | 58.5 | 79 | 862 | |
| | 2015.04-2019.07 | AT | F | L | Hatchback FWD HNZ (EB2DT);HNP (EB2ADT) | | GCO82355 | Outer Joint | | 25 | 34 | 58.5 | 79 | 55.5 | I |
| | 2015.04-2019.07 | AT | F | R | Hatchback FWD HNZ (EB2DT);HNP (EB2ADT) | | GCO82351 | Outer Joint | | 25 | 34 | 58.5 | 79 | 55.5 | I |
| | 2015.04-2019.07 | AT | F | L | Hatchback FWD HNZ (EB2DT);HNP (EB2ADT) | | GCI82119 | Inner Joint | | 37 | 34 | 41.5 | 58.5 | 94 | |
| | 2015.04-2019.07 | AT | F | R | Hatchback FWD HNZ (EB2DT);HNP (EB2ADT) | | GCI82182 | Inner Joint | | 37 | 34 | | 290 | 88 | |
| | 2015.04-2019.07 | MT | F | L | Hatchback FWD HNZ (EB2DT);HNP (EB2ADT) | Wheel Hub Diam:82mm | GDS10250 | Drive Shaft | | 25 | 24 | 58.5 | 79 | 630 | |
| | 2015.04-2019.07 | MT | F | L | Hatchback FWD HNZ (EB2DT);HNP (EB2ADT) | Wheel Hub Diam:72mm | GDS10309 | Drive Shaft | | 21 | 24 | 48.3 | 86.5 | 641 | |
| | 2015.04-2019.07 | MT | F | R | Hatchback FWD HNZ (EB2DT);HNP (EB2ADT) | Wheel Hub Diam:82mm | GDS10249 | Drive Shaft | | 25 | 24 | 58.5 | 79 | 864 | |
| | 2015.04-2019.07 | MT | F | R | Hatchback FWD HNZ (EB2DT);HNP (EB2ADT) | Wheel Hub Diam:72mm | GDS10301 | Drive Shaft | | 21 | 24 | 48.3 | 86.5 | 871 | |
| | 2015.04-2019.07 | MT | F | L/R | Hatchback FWD HNZ (EB2DT);HNP (EB2ADT) | Wheel Hub Diam:72mm | GCO82278 | Outer Joint | | 21 | 34 | 48.2 | 85.5 | 56.5 | I |
| | 2015.07-2019.07 | 5MT | F | L | Convertible FWD HNZ (EB2DT);HNP (EB2ADT) | Wheel Hub Diam:82 mm | GDS10250 | Drive Shaft | | 25 | 24 | 58.5 | 79 | 630 | |
| | 2015.07-2019.07 | 5MT | F | L | Convertible FWD HNZ (EB2DT);HNP (EB2ADT) | Wheel Hub Diam:72 mm | GDS10309 | Drive Shaft | | 21 | 24 | 48.3 | 86.5 | 641 | |
| | 2015.07-2019.07 | 5MT | F | R | Convertible FWD HNZ (EB2DT);HNP (EB2ADT) | Wheel Hub Diam:82 mm | GDS10249 | Drive Shaft | | 25 | 24 | 58.5 | 79 | 864 | |
| | 2015.07-2019.07 | 5MT | F | R | Convertible FWD HNZ (EB2DT);HNP (EB2ADT) | Wheel Hub Diam:72 mm | GDS10301 | Drive Shaft | | 21 | 24 | 48.3 | 86.5 | 871 | |
| | 2015.07-2019.07 | AT | F | L | Convertible FWD HNZ (EB2DT);HNP (EB2ADT) | | GDS83216 | Drive Shaft | | 25 | 37 | 58.5 | 79 | 598 | |
| | 2015.07-2019.07 | AT | F | R | Convertible FWD HNZ (EB2DT);HNP (EB2ADT) | | GDS83217 | Drive Shaft | | 25 | 37 | 58.5 | 79 | 862 | |
| | 2015.07-2019.07 | AT | F | L | Convertible FWD HNZ (EB2DT);HNP (EB2ADT) | | GCO82355 | Outer Joint | | 25 | 34 | 58.5 | 79 | 55.5 | I |
| | 2015.07-2019.07 | AT | F | R | Convertible FWD HNZ (EB2DT);HNP (EB2ADT) | | GCO82351 | Outer Joint | | 25 | 34 | 58.5 | 79 | 55.5 | I |

| | YEAR | TRANSM. | F/R | L/R | BODY STYLE & DRIVE TYPE & ENGINE | REMARKS | G-AP Ref. | PRODUCT | ABS | Technical Specifications A | B | C | H | L | P |
|---|---|---|---|---|---|---|---|---|---|---|---|---|---|---|---|
| **DS** | | | | | | | | | | | | | | | |
| **DS3** | | | | | | | | | | | | | | | |
| 1.2 (81 kw) | 2015.07-2019.07 | AT | F | R | Convertible FWD HNZ (EB2DT);HNP (EB2ADT) | | GCI82182 | Inner Joint | | 37 | 34 | | 290 | 88 | |
| | 2015.07-2019.07 | MT | F | L | Convertible FWD HNZ (EB2DT);HNP (EB2ADT) | Wheel Hub Diam:72mm | GCO82278 | Outer Joint | | 21 | 34 | 48.2 | 85.5 | 56.5 | I |
| | 2015.07-2019.07 | MT | F | L/R | Convertible FWD HNZ (EB2DT);HNP (EB2ADT) | | GCO45012 | Outer Joint | | 21 | 34 | 48.5 | 86 | 55.5 | I |
| | 2015.07-2019.07 | | F | L/R | Convertible FWD HNZ (EB2DT);HNP (EB2ADT) | | GCO10042 | Outer Joint | | 25 | 34 | 54.8 | 78.5 | 56 | I |
| 1.2 (96 kw) | 2015.09-2019.07 | 6MT | F | L | Convertible FWD HNY (EB2DTS) | | GDS10253 | Drive Shaft | | 25 | 24 | 58.5 | 79 | 626 | |
| | 2015.09-2019.07 | 6MT | F | R | Convertible FWD HNY (EB2DTS) | | GDS45221 | Drive Shaft | | 25 | 24 | 58.5 | 79 | 881 | |
| | 2015.09-2019.07 | 6MT | F | L | Convertible FWD HNY (EB2DTS) | | GCO10148 | Outer Joint | | 25 | 34 | 58.5 | 79 | 55.5 | I |
| | 2015.09-2019.07 | 6MT | F | L | Convertible FWD HNY (EB2DTS) | | GCO99366 | Outer Joint | | 25 | 34 | 58.5 | 79 | 55 | I |
| | 2015.09-2019.07 | 6MT | F | L | Convertible FWD HNY (EB2DTS) | | GCI10057 | Inner Joint | | 24 | 34 | 40 | 52.5 | 90 | |
| | 2015.09-2019.07 | 6MT | F | R | Convertible FWD HNY (EB2DTS) | | GCI10165 | Inner Joint | | 24 | 34 | 29.8 | 305.5 | 87.5 | |
| | 2015.09-2019.07 | | F | L/R | Convertible FWD HNY (EB2DTS) | | GCO10042 | Outer Joint | | 25 | 34 | 54.8 | 78.5 | 56 | I |
| | 2015.09-2019.07 | 6MT | F | L | Hatchback FWD HNY (EB2DTS) | | GDS10253 | Drive Shaft | | 25 | 24 | 58.5 | 79 | 626 | |
| | 2015.09-2019.07 | 6MT | F | R | Hatchback FWD HNY (EB2DTS) | | GDS45221 | Drive Shaft | | 25 | 24 | 58.5 | 79 | 881 | |
| | 2015.09-2019.07 | 6MT | F | L | Hatchback FWD HNY (EB2DTS) | | GCO10148 | Outer Joint | | 25 | 34 | 58.5 | 79 | 55.5 | I |
| | 2015.09-2019.07 | 6MT | F | L | Hatchback FWD HNY (EB2DTS) | | GCO99366 | Outer Joint | | 25 | 34 | 58.5 | 79 | 55 | I |
| | 2015.09-2019.07 | 6MT | F | L | Hatchback FWD HNY (EB2DTS) | | GCI10057 | Inner Joint | | 24 | 34 | 40 | 52.5 | 90 | |
| | 2015.09-2019.07 | 6MT | F | R | Hatchback FWD HNY (EB2DTS) | | GCI10165 | Inner Joint | | 24 | 34 | 29.8 | 305.5 | 87.5 | |
| | 2015.09-2019.07 | | F | L/R | Hatchback FWD HNY (EB2DTS) | | GCO10042 | Outer Joint | | 25 | 34 | 54.8 | 78.5 | 56 | I |
| 1.2 (100 kw) | 2024.04- | 8AT | F | R | Hatchback FWD HPY (EB2LTDH2) | | GDS56753 | Drive Shaft | | 25 | 37 | 55.7 | 84 | 911 | |
| | 2024.04- | 8AT | F | R | Hatchback FWD HPY (EB2LTDH2) | | GCO82279 | Outer Joint | | 25 | 34 | 55.7 | 84 | 55.5 | I |
| | 2024.04- | 8AT | F | R | Hatchback FWD HPY (EB2LTDH2) | | GCI83474 | Inner Joint | | 37 | 34 | 29.8 | 290 | 99 | |
| 1.4 (50 kw) | 2015.07-2016.12 | 5AT/5MT | F | L | Hatchback FWD 8HR (DV4C);8HP (DV4C) | | GDS10340 | Drive Shaft | | 21 | 22 | 49 | 86 | 655 | |
| | 2015.07-2016.12 | 5AT/5MT | F | R | Hatchback FWD 8HR (DV4C);8HP (DV4C) | | GDS10339 | Drive Shaft | | 21 | 22 | 49 | 86 | 868 | |
| | 2015.07-2016.12 | 5AT/5MT | F | L | Hatchback FWD 8HR (DV4C);8HP (DV4C) | | GCO10151 | Outer Joint | | 21 | 28 | 49 | 86 | 49 | I |
| 1.6 (55 kw) | 2015.07-2019.07 | 5MT | F | L | Hatchback FWD BHW (DV6FE) | Wheel Hub Diam:82 mm | GDS10250 | Drive Shaft | | 25 | 24 | 58.5 | 79 | 630 | |
| | 2015.07-2019.07 | 5MT | F | L | Hatchback FWD BHW (DV6FE) | Wheel Hub Diam:72 mm | GDS10309 | Drive Shaft | | 21 | 24 | 48.3 | 86.5 | 641 | |
| | 2015.07-2019.07 | 5MT | F | R | Hatchback FWD BHW (DV6FE) | Wheel Hub Diam:82 mm | GDS10249 | Drive Shaft | | 25 | 24 | 58.5 | 79 | 864 | |
| | 2015.07-2019.07 | 5MT | F | R | Hatchback FWD BHW (DV6FE) | Wheel Hub Diam:72 mm | GDS10301 | Drive Shaft | | 21 | 24 | 48.3 | 86.5 | 871 | |
| | 2015.07-2019.07 | MT | F | L | Hatchback FWD BHW (DV6FE) | Wheel Hub Diam:72mm | GCO82278 | Outer Joint | | 21 | 34 | 48.2 | 85.5 | 56.5 | I |
| | 2015.07-2019.07 | MT | F | L | Hatchback FWD BHW (DV6FE) | | GCI10070 | Inner Joint | | 24 | 34 | 40 | 62 | 88 | |
| | 2015.07-2019.07 | MT | F | L | Hatchback FWD BHW (DV6FE) | | GCI10129 | Inner Joint | | 24 | 34 | 40 | 62 | 89 | |
| | 2015.07-2019.07 | MT | F | R | Hatchback FWD BHW (DV6FE) | | GCI10082 | Inner Joint | | 24 | 34 | 29.8 | 291 | 88 | |
| | 2015.07-2019.07 | | F | L/R | Hatchback FWD BHW (DV6FE) | | GCO10042 | Outer Joint | | 25 | 34 | 54.8 | 78.5 | 56 | I |
| 1.6 (73 kw) | 2015.04-2019.07 | 5MT | F | L | Hatchback FWD BHY (DV6FD) | Wheel Hub Diam:82mm | GDS10250 | Drive Shaft | | 25 | 24 | 58.5 | 79 | 630 | |
| | 2015.04-2019.07 | 5MT | F | L | Hatchback FWD BHY (DV6FD) | Wheel Hub Diam:72 mm | GDS10309 | Drive Shaft | | 21 | 24 | 48.3 | 86.5 | 641 | |
| | 2015.04-2019.07 | 5MT | F | R | Hatchback FWD BHY (DV6FD) | Wheel Hub Diam:82mm | GDS10249 | Drive Shaft | | 25 | 24 | 58.5 | 79 | 864 | |
| | 2015.04-2019.07 | 5MT | F | R | Hatchback FWD BHY (DV6FD) | Wheel Hub Diam:72 mm | GDS10301 | Drive Shaft | | 21 | 24 | 48.3 | 86.5 | 871 | |
| | 2015.04-2019.07 | MT | F | L | Hatchback FWD BHY (DV6FD) | Wheel Hub Diam:72mm | GCO82278 | Outer Joint | | 21 | 34 | 48.2 | 85.5 | 56.5 | I |
| | 2015.04-2019.07 | MT | F | L | Hatchback FWD BHY (DV6FD) | | GCI10070 | Inner Joint | | 24 | 34 | 40 | 62 | 88 | |
| | 2015.04-2019.07 | MT | F | L | Hatchback FWD BHY (DV6FD) | | GCI10129 | Inner Joint | | 24 | 34 | 40 | 62 | 89 | |
| | 2015.04-2019.07 | MT | F | R | Hatchback FWD BHY (DV6FD) | | GCI10082 | Inner Joint | | 24 | 34 | 29.8 | 291 | 88 | |
| | 2015.04-2019.07 | | F | L/R | Hatchback FWD BHY (DV6FD) | | GCO10042 | Outer Joint | | 25 | 34 | 54.8 | 78.5 | 56 | I |
| | 2015.07-2019.07 | 5MT | F | L | Convertible FWD BHY (DV6FD) | Wheel Hub Diam:82 mm | GDS10250 | Drive Shaft | | 25 | 24 | 58.5 | 79 | 630 | |
| | 2015.07-2019.07 | 5MT | F | L | Convertible FWD BHY (DV6FD) | Wheel Hub Diam:72 mm | GDS10309 | Drive Shaft | | 21 | 24 | 48.3 | 86.5 | 641 | |
| | 2015.07-2019.07 | 5MT | F | R | Convertible FWD BHY (DV6FD) | Wheel Hub Diam:82 mm | GDS10249 | Drive Shaft | | 25 | 24 | 58.5 | 79 | 864 | |
| | 2015.07-2019.07 | 5MT | F | R | Convertible FWD BHY (DV6FD) | Wheel Hub Diam:72 mm | GDS10301 | Drive Shaft | | 21 | 24 | 48.3 | 86.5 | 871 | |
| | 2015.07-2019.07 | MT | F | L | Convertible FWD BHY (DV6FD) | Wheel Hub Diam:72mm | GCO82278 | Outer Joint | | 21 | 34 | 48.2 | 85.5 | 56.5 | I |
| | 2015.07-2019.07 | MT | F | L | Convertible FWD BHY (DV6FD) | | GCI10070 | Inner Joint | | 24 | 34 | 40 | 62 | 88 | |
| | 2015.07-2019.07 | MT | F | L | Convertible FWD BHY (DV6FD) | | GCI10129 | Inner Joint | | 24 | 34 | 40 | 62 | 89 | |
| | 2015.07-2019.07 | MT | F | R | Convertible FWD BHY (DV6FD) | | GCI10082 | Inner Joint | | 24 | 34 | 29.8 | 291 | 88 | |
| | 2015.07-2019.07 | | F | L/R | Convertible FWD BHY (DV6FD) | | GCO10042 | Outer Joint | | 25 | 34 | 54.8 | 78.5 | 56 | I |
| 1.6 (85 kw) | 2015.07-2019.07 | MT | F | L | Convertible FWD BHX (DV6FC) | | GDS10253 | Drive Shaft | | 25 | 24 | 58.5 | 79 | 626 | |
| | 2015.07-2019.07 | MT | F | R | Convertible FWD BHX (DV6FC) | | GDS45221 | Drive Shaft | | 25 | 24 | 58.5 | 79 | 881 | |
| | 2015.07-2019.07 | MT | F | L | Convertible FWD BHX (DV6FC) | | GCO99366 | Outer Joint | | 25 | 34 | 58.5 | 79 | 55 | I |
| | 2015.07-2019.07 | MT | F | R | Convertible FWD BHX (DV6FC) | | GCI10165 | Inner Joint | | 24 | 34 | 29.8 | 305.5 | 87.5 | |
| | 2015.07-2019.07 | MT | F | L | Hatchback FWD BHX (DV6FC) | | GDS10253 | Drive Shaft | | 25 | 24 | 58.5 | 79 | 626 | |
| | 2015.07-2019.07 | MT | F | R | Hatchback FWD BHX (DV6FC) | | GDS45221 | Drive Shaft | | 25 | 24 | 58.5 | 79 | 881 | |
| | 2015.07-2019.07 | MT | F | L | Hatchback FWD BHX (DV6FC) | | GCO99366 | Outer Joint | | 25 | 34 | 58.5 | 79 | 55 | I |
| | 2015.07-2019.07 | MT | F | R | Hatchback FWD BHX (DV6FC) | | GCI10165 | Inner Joint | | 24 | 34 | 29.8 | 305.5 | 87.5 | |
| 1.6 (88 kw) | 2015.07-2019.07 | MT | F | L | Convertible FWD BHZ (DV6FC) | | GDS10253 | Drive Shaft | | 25 | 24 | 58.5 | 79 | 626 | |
| | 2015.07-2019.07 | MT | F | R | Convertible FWD BHZ (DV6FC) | | GDS45221 | Drive Shaft | | 25 | 24 | 58.5 | 79 | 881 | |
| | 2015.07-2019.07 | MT | F | L | Convertible FWD BHZ (DV6FC) | | GCO10148 | Outer Joint | | 25 | 34 | 58.5 | 79 | 55.5 | I |
| | 2015.07-2019.07 | MT | F | L | Convertible FWD BHZ (DV6FC) | | GCO99366 | Outer Joint | | 25 | 34 | 58.5 | 79 | 55 | I |
| | 2015.07-2019.07 | MT | F | L | Convertible FWD BHZ (DV6FC) | | GCI10057 | Inner Joint | | 24 | 34 | 40 | 52.5 | 90 | |
| | 2015.07-2019.07 | MT | F | R | Convertible FWD BHZ (DV6FC) | | GCI10165 | Inner Joint | | 24 | 34 | 29.8 | 305.5 | 87.5 | |

| | YEAR | TRANSM. | F/R | L/R | BODY STYLE & DRIVE TYPE & ENGINE | REMARKS | G-AP Ref. | PRODUCT | ABS | Technical Specifications A | B | C | H | L | P |
|---|---|---|---|---|---|---|---|---|---|---|---|---|---|---|---|
| **DS** | | | | | | | | | | | | | | | |
| **DS3** | | | | | | | | | | | | | | | |
| 1.6 (88 kw) | 2015.07-2019.07 | | F | L/R | Convertible FWD BHZ (DV6FC) | | GCO10042 | Outer Joint | | 25 | 34 | 54.8 | 78.5 | 56 | I |
| | 2015.07-2019.07 | MT | F | L | Hatchback FWD BHZ (DV6FC) | | GDS10253 | Drive Shaft | | 25 | 24 | 58.5 | 79 | 626 | |
| | 2015.07-2019.07 | MT | F | R | Hatchback FWD BHZ (DV6FC) | | GDS45221 | Drive Shaft | | 25 | 24 | 58.5 | 79 | 881 | |
| | 2015.07-2019.07 | MT | F | L | Hatchback FWD BHZ (DV6FC) | | GCO10148 | Outer Joint | | 25 | 34 | 58.5 | 79 | 55.5 | I |
| | 2015.07-2019.07 | MT | F | L | Hatchback FWD BHZ (DV6FC) | | GCO99366 | Outer Joint | | 25 | 34 | 58.5 | 79 | 55 | I |
| | 2015.07-2019.07 | MT | F | L | Hatchback FWD BHZ (DV6FC) | | GCI10057 | Inner Joint | | 24 | 34 | 40 | 52.5 | 90 | |
| | 2015.07-2019.07 | MT | F | R | Hatchback FWD BHZ (DV6FC) | | GCI10165 | Inner Joint | | 24 | 34 | 29.8 | 305.5 | 87.5 | |
| | 2015.07-2019.07 | | F | L/R | Hatchback FWD BHZ (DV6FC) | | GCO10042 | Outer Joint | | 25 | 34 | 54.8 | 78.5 | 56 | I |
| 1.6 (110 kw) | 2015.07-2019.07 | 6MT | F | L | Convertible FWD 5GW (EP6FDT) | | GCO99366 | Outer Joint | | 25 | 34 | 58.5 | 79 | 55 | I |
| | 2015.07-2019.07 | 6MT | F | R | Convertible FWD 5GW (EP6FDT) | | GCI10165 | Inner Joint | | 24 | 34 | 29.8 | 305.5 | 87.5 | |
| | 2015.07-2019.07 | MT | F | L | Convertible FWD 5GW (EP6FDT) | | GDS10253 | Drive Shaft | | 25 | 24 | 58.5 | 79 | 626 | |
| | 2015.07-2019.07 | MT | F | R | Convertible FWD 5GW (EP6FDT) | | GDS45221 | Drive Shaft | | 25 | 24 | 58.5 | 79 | 881 | |
| | 2015.07-2019.07 | 6MT | F | L | Hatchback FWD 5GW (EP6FDT) | | GCO99366 | Outer Joint | | 25 | 34 | 58.5 | 79 | 55 | I |
| | 2015.07-2019.07 | 6MT | F | R | Hatchback FWD 5GW (EP6FDT) | | GCI10165 | Inner Joint | | 24 | 34 | 29.8 | 305.5 | 87.5 | |
| | 2015.07-2019.07 | MT | F | L | Hatchback FWD 5GW (EP6FDT) | | GDS10253 | Drive Shaft | | 25 | 24 | 58.5 | 79 | 626 | |
| | 2015.07-2019.07 | MT | F | R | Hatchback FWD 5GW (EP6FDT) | | GDS45221 | Drive Shaft | | 25 | 24 | 58.5 | 79 | 881 | |
| 1.6 (120 kw) | 2015.07-2019.07 | 6MT | F | L | Convertible FWD 5GZ (EP6FDT) | | GCO99366 | Outer Joint | | 25 | 34 | 58.5 | 79 | 55 | I |
| | 2015.07-2019.07 | 6MT | F | L | Convertible FWD 5GZ (EP6FDT) | | GCI10057 | Inner Joint | | 24 | 34 | 40 | 52.5 | 90 | |
| | 2015.07-2019.07 | 6MT | F | R | Convertible FWD 5GZ (EP6FDT) | | GCI10165 | Inner Joint | | 24 | 34 | 29.8 | 305.5 | 87.5 | |
| | 2015.07-2019.07 | MT | F | L | Convertible FWD 5GZ (EP6FDT) | | GDS10253 | Drive Shaft | | 25 | 24 | 58.5 | 79 | 626 | |
| | 2015.07-2019.07 | MT | F | R | Convertible FWD 5GZ (EP6FDT) | | GDS45221 | Drive Shaft | | 25 | 24 | 58.5 | 79 | 881 | |
| | 2015.07-2019.07 | MT | F | L | Convertible FWD 5GZ (EP6FDT) | | GCO10148 | Outer Joint | | 25 | 34 | 58.5 | 79 | 55.5 | I |
| | 2015.07-2019.07 | 6MT | F | L | Hatchback FWD 5GZ (EP6FDT) | | GCO99366 | Outer Joint | | 25 | 34 | 58.5 | 79 | 55 | I |
| | 2015.07-2019.07 | 6MT | F | L | Hatchback FWD 5GZ (EP6FDT) | | GCI10057 | Inner Joint | | 24 | 34 | 40 | 52.5 | 90 | |
| | 2015.07-2019.07 | 6MT | F | R | Hatchback FWD 5GZ (EP6FDT) | | GCI10165 | Inner Joint | | 24 | 34 | 29.8 | 305.5 | 87.5 | |
| | 2015.07-2019.07 | MT | F | L | Hatchback FWD 5GZ (EP6FDT) | | GDS10253 | Drive Shaft | | 25 | 24 | 58.5 | 79 | 626 | |
| | 2015.07-2019.07 | MT | F | R | Hatchback FWD 5GZ (EP6FDT) | | GDS45221 | Drive Shaft | | 25 | 24 | 58.5 | 79 | 881 | |
| | 2015.07-2019.07 | MT | F | L | Hatchback FWD 5GZ (EP6FDT) | | GCO10148 | Outer Joint | | 25 | 34 | 58.5 | 79 | 55.5 | I |
| 1.6 (121 kw) | 2015.07-2019.07 | 6MT | F | L | Convertible FWD 5GZ (EP6FDT) | | GDS10253 | Drive Shaft | | 25 | 24 | 58.5 | 79 | 626 | |
| | 2015.07-2019.07 | 6MT | F | R | Convertible FWD 5GZ (EP6FDT) | | GDS45221 | Drive Shaft | | 25 | 24 | 58.5 | 79 | 881 | |
| | 2015.07-2019.07 | 6MT | F | L | Convertible FWD 5GZ (EP6FDT) | | GCO10148 | Outer Joint | | 25 | 34 | 58.5 | 79 | 55.5 | I |
| | 2015.07-2019.07 | 6MT | F | L | Convertible FWD 5GZ (EP6FDT) | | GCO99366 | Outer Joint | | 25 | 34 | 58.5 | 79 | 55 | I |
| | 2015.07-2019.07 | 6MT | F | L | Convertible FWD 5GZ (EP6FDT) | | GCI10057 | Inner Joint | | 24 | 34 | 40 | 52.5 | 90 | |
| | 2015.07-2019.07 | 6MT | F | R | Convertible FWD 5GZ (EP6FDT) | | GCI10165 | Inner Joint | | 24 | 34 | 29.8 | 305.5 | 87.5 | |
| | 2015.07-2019.07 | | F | L/R | Convertible FWD 5GZ (EP6FDT) | | GCO10042 | Outer Joint | | 25 | 34 | 54.8 | 78.5 | 56 | I |
| | 2015.07-2019.07 | 6MT | F | L | Hatchback FWD 5GZ (EP6FDT) | | GDS10253 | Drive Shaft | | 25 | 24 | 58.5 | 79 | 626 | |
| | 2015.07-2019.07 | 6MT | F | R | Hatchback FWD 5GZ (EP6FDT) | | GDS45221 | Drive Shaft | | 25 | 24 | 58.5 | 79 | 881 | |
| | 2015.07-2019.07 | 6MT | F | L | Hatchback FWD 5GZ (EP6FDT) | | GCO10148 | Outer Joint | | 25 | 34 | 58.5 | 79 | 55.5 | I |
| | 2015.07-2019.07 | 6MT | F | L | Hatchback FWD 5GZ (EP6FDT) | | GCO99366 | Outer Joint | | 25 | 34 | 58.5 | 79 | 55 | I |
| | 2015.07-2019.07 | 6MT | F | L | Hatchback FWD 5GZ (EP6FDT) | | GCI10057 | Inner Joint | | 24 | 34 | 40 | 52.5 | 90 | |
| | 2015.07-2019.07 | 6MT | F | R | Hatchback FWD 5GZ (EP6FDT) | | GCI10165 | Inner Joint | | 24 | 34 | 29.8 | 305.5 | 87.5 | |
| | 2015.07-2019.07 | | F | L/R | Hatchback FWD 5GZ (EP6FDT) | | GCO10042 | Outer Joint | | 25 | 34 | 54.8 | 78.5 | 56 | I |
| 1.6 (153 kw) | 2015.09-2019.07 | 6MT | F | L | Convertible FWD 5GR (EP6FDTX) | | GDS10253 | Drive Shaft | | 25 | 24 | 58.5 | 79 | 626 | |
| | 2015.09-2019.07 | 6MT | F | R | Convertible FWD 5GR (EP6FDTX) | | GDS45221 | Drive Shaft | | 25 | 24 | 58.5 | 79 | 881 | |
| | 2015.09-2019.07 | 6MT | F | L | Convertible FWD 5GR (EP6FDTX) | | GCO10148 | Outer Joint | | 25 | 34 | 58.5 | 79 | 55.5 | I |
| | 2015.09-2019.07 | 6MT | F | L | Convertible FWD 5GR (EP6FDTX) | | GCO99366 | Outer Joint | | 25 | 34 | 58.5 | 79 | 55 | I |
| | 2015.09-2019.07 | 6MT | F | L | Convertible FWD 5GR (EP6FDTX) | | GCI10057 | Inner Joint | | 24 | 34 | 40 | 52.5 | 90 | |
| | 2015.09-2019.07 | 6MT | F | R | Convertible FWD 5GR (EP6FDTX) | | GCI10165 | Inner Joint | | 24 | 34 | 29.8 | 305.5 | 87.5 | |
| | 2015.09-2019.07 | | F | L/R | Convertible FWD 5GR (EP6FDTX) | | GCO10042 | Outer Joint | | 25 | 34 | 54.8 | 78.5 | 56 | I |
| | 2015.09-2019.07 | 6MT | F | L | Hatchback FWD 5GR (EP6FDTX) | | GDS10253 | Drive Shaft | | 25 | 24 | 58.5 | 79 | 626 | |
| | 2015.09-2019.07 | 6MT | F | R | Hatchback FWD 5GR (EP6FDTX) | | GDS45221 | Drive Shaft | | 25 | 24 | 58.5 | 79 | 881 | |
| | 2015.09-2019.07 | 6MT | F | L | Hatchback FWD 5GR (EP6FDTX) | | GCO10148 | Outer Joint | | 25 | 34 | 58.5 | 79 | 55.5 | I |
| | 2015.09-2019.07 | 6MT | F | L | Hatchback FWD 5GR (EP6FDTX) | | GCO99366 | Outer Joint | | 25 | 34 | 58.5 | 79 | 55 | I |
| | 2015.09-2019.07 | 6MT | F | L | Hatchback FWD 5GR (EP6FDTX) | | GCI10057 | Inner Joint | | 24 | 34 | 40 | 52.5 | 90 | |
| | 2015.09-2019.07 | 6MT | F | R | Hatchback FWD 5GR (EP6FDTX) | | GCI10165 | Inner Joint | | 24 | 34 | 29.8 | 305.5 | 87.5 | |
| | 2015.09-2019.07 | | F | L/R | Hatchback FWD 5GR (EP6FDTX) | | GCO10042 | Outer Joint | | 25 | 34 | 54.8 | 78.5 | 56 | I |
| EV (115 kw) | 2023.01- | ET | F | L | Hatchback FWD ZKX (ZK02) | Date to:2023.04,To ORG/OPR:16981 | GDS56582 | Drive Shaft | | 25 | 24 | 56 | 83.5 | 675 | |
| | 2023.01- | ET | F | R | Hatchback FWD ZKX (ZK02) | Date to:2023.04,To ORG/OPR:16981 | GDS56581 | Drive Shaft | | 25 | 24 | 56 | 83.5 | 902 | |
| | 2023.01- | ET | F | L/R | Hatchback FWD ZKX (ZK02) | Date to:2023.04,To ORG/OPR:16981 | GCO82749 | Outer Joint | | 25 | 23 | 56 | 83.5 | 50 | I |
| | 2023.01- | ET | F | L | Hatchback FWD ZKX (ZK02) | Date to:2023.04,To ORG/OPR:16981 | GCI83389 | Inner Joint | | 24 | 23 | 40 | 61.5 | 110.5 | |
| | 2023.01- | ET | F | R | Hatchback FWD ZKX (ZK02) | Date to:2023.04,To ORG/OPR:16981 | GCI83388 | Inner Joint | | 24 | 23 | 29.8 | 290.5 | 110.5 | |
| **DS3 Crossback** | | | | | | | | | | | | | | | |
| 1.2 (107 kw) | 2025.04- | 6DCT | F | R | Hatchback FWD HPY(EB2LTDH2) | | GDS56753 | Drive Shaft | | 25 | 37 | 55.7 | 84 | 911 | |
| | 2025.04- | | F | R | Hatchback FWD HPY(EB2LTDH2) | | GCI83474 | Inner Joint | | 37 | 34 | 29.8 | 290 | 99 | |
| 1.2 (115 kw) | 2018.10-2022.12 | 8AT | F | L | Hatchback FWD HNN (EB2ADTX) | Date from:2021.07,From ORG/OPR:16310 | GDS56754 | Drive Shaft | | 25 | 37 | 55.7 | 84 | 644 | |

| | YEAR | TRANSM. | F/R | L/R | BODY STYLE & DRIVE TYPE & ENGINE | REMARKS | G-AP Ref. | PRODUCT | ABS | Technical Specifications | | | | | |
|---|---|---|---|---|---|---|---|---|---|---|---|---|---|---|---|
| | | | | | | | | | | A | B | C | H | L | P |
| **DS** | | | | | | | | | | | | | | | |
| **DS3 Crossback** | | | | | | | | | | | | | | | |
| 1.2 (115 kw) | 2018.10-2022.12 | 8AT | F | L | Hatchback FWD HNN (EB2ADTX) | Date to:2021.06,To ORG/OPR:16309 | GDS84557 | Drive Shaft | | 25 | 37 | 56 | 83.5 | 641 | |
| | 2018.10-2022.12 | 8AT | F | R | Hatchback FWD HNN (EB2ADTX) | Date from:2021.07,From ORG/OPR:16310 | GDS56753 | Drive Shaft | | 25 | 37 | 55.7 | 84 | 911 | |
| | 2018.10-2022.12 | 8AT | F | R | Hatchback FWD HNN (EB2ADTX) | Date to:2021.06,To ORG/OPR:16309 | GDS84559 | Drive Shaft | | 25 | 37 | 56 | 83.5 | 903 | |
| | 2018.10-2022.12 | 8AT | F | L/R | Hatchback FWD HNN (EB2ADTX) | Date from:2021.07,From ORG/OPR:16310 | GCO82279 | Outer Joint | | 25 | 34 | 55.7 | 84 | 55.5 | I |
| | 2018.10-2022.12 | 8AT | F | L/R | Hatchback FWD HNN (EB2ADTX) | Date to:2021.06,To ORG/OPR:16309 | GCO82749 | Outer Joint | | 25 | 23 | 56 | 83.5 | 50 | I |
| | 2018.10-2022.12 | 8AT | F | L | Hatchback FWD HNN (EB2ADTX) | Date to:2021.06,To ORG/OPR:16309 | GCI82859 | Inner Joint | | 37 | 24 | 42 | 58.5 | 101.5 | |
| | 2018.10-2022.12 | 8AT | F | L | Hatchback FWD HNN (EB2ADTX) | Date from:2021.07,From ORG/OPR:16310 | GCI83475 | Inner Joint | | 37 | 34 | 42.5 | 59 | 99.5 | |
| | 2018.10-2022.12 | 8AT | F | R | Hatchback FWD HNN (EB2ADTX) | Date to:2021.06,To ORG/OPR:16309 | GCI82860 | Inner Joint | | 37 | 24 | 29.85 | 285 | 101 | |
| | 2018.10-2022.12 | 8AT | F | R | Hatchback FWD HNN (EB2ADTX) | Date from:2021.07,From ORG/OPR:16310 | GCI83474 | Inner Joint | | 37 | 34 | 29.8 | 290 | 99 | |
| 1.5 (75 kw) | 2018.10-2022.12 | 6MT | F | L | Hatchback FWD YHY (DV5RD) | | GDS84174 | Drive Shaft | | 25 | 24 | 55.7 | 84 | 685 | |
| | 2018.10-2022.12 | 6MT | F | R | Hatchback FWD YHY (DV5RD) | | GDS84335 | Drive Shaft | | 25 | 24 | 55.7 | 84 | 910 | |
| | 2018.10-2022.12 | 6MT | F | L/R | Hatchback FWD YHY (DV5RD) | | GCO82279 | Outer Joint | | 25 | 34 | 55.7 | 84 | 55.5 | I |
| | 2018.10-2022.12 | 6MT | F | L | Hatchback FWD YHY (DV5RD) | | GCI82131 | Inner Joint | | 24 | 34 | 40 | 62 | 89 | |
| | 2018.10-2022.12 | 6MT | F | R | Hatchback FWD YHY (DV5RD) | | GCI82130 | Inner Joint | | 24 | 34 | 29.8 | 291 | 88 | |
| 1.5 (81 kw) | 2021.01-2022.12 | 6MT | F | L | Hatchback FWD YHS (DV5RCE) | | GDS84174 | Drive Shaft | | 25 | 24 | 55.7 | 84 | 685 | |
| | 2021.01-2022.12 | 6MT | F | R | Hatchback FWD YHS (DV5RCE) | | GDS84335 | Drive Shaft | | 25 | 24 | 55.7 | 84 | 910 | |
| | 2021.01-2022.12 | 6MT | F | L/R | Hatchback FWD YHS (DV5RCE) | | GCO82279 | Outer Joint | | 25 | 34 | 55.7 | 84 | 55.5 | I |
| | 2021.01-2022.12 | 6MT | F | L | Hatchback FWD YHS (DV5RCE) | | GCI82131 | Inner Joint | | 24 | 34 | 40 | 62 | 89 | |
| | 2021.01-2022.12 | 6MT | F | R | Hatchback FWD YHS (DV5RCE) | | GCI82130 | Inner Joint | | 24 | 34 | 29.8 | 291 | 88 | |
| EV (100 kw) | 2019.05-2022.12 | ET | F | L | Hatchback FWD ZKX (ZK01) | | GDS56582 | Drive Shaft | | 25 | 24 | 56 | 83.5 | 675 | |
| | 2019.05-2022.12 | ET | F | R | Hatchback FWD ZKX (ZK01) | | GDS56581 | Drive Shaft | | 25 | 24 | 56 | 83.5 | 902 | |
| | 2019.05-2022.12 | ET | F | L/R | Hatchback FWD ZKX (ZK01) | | GCO82749 | Outer Joint | | 25 | 23 | 56 | 83.5 | 50 | I |
| | 2019.05-2022.12 | ET | F | L | Hatchback FWD ZKX (ZK01) | | GCI83389 | Inner Joint | | 24 | 23 | 40 | 61.5 | 110.5 | |
| | 2019.05-2022.12 | ET | F | R | Hatchback FWD ZKX (ZK01) | | GCI83388 | Inner Joint | | 24 | 23 | 29.8 | 290.5 | 110.5 | |
| **DS3/DS3 Crossback** | | | | | | | | | | | | | | | |
| 1.2 (74 kw) | 2018.10- | 6MT | F | L | Hatchback FWD HNK (EB2ADTD) | | GDS84174 | Drive Shaft | | 25 | 24 | 55.7 | 84 | 685 | |
| | 2018.10- | 6MT | F | R | Hatchback FWD HNK (EB2ADTD) | | GDS84335 | Drive Shaft | | 25 | 24 | 55.7 | 84 | 910 | |
| | 2018.10- | 6MT | F | L/R | Hatchback FWD HNK (EB2ADTD) | | GCO82279 | Outer Joint | | 25 | 34 | 55.7 | 84 | 55.5 | I |
| | 2018.10- | 6MT | F | L | Hatchback FWD HNK (EB2ADTD) | | GCI82131 | Inner Joint | | 24 | 34 | 40 | 62 | 89 | |
| | 2018.10- | 6MT | F | R | Hatchback FWD HNK (EB2ADTD) | | GCI82130 | Inner Joint | | 24 | 34 | 29.8 | 291 | 88 | |
| 1.2 (96 kw) | 2018.10- | 8AT | F | L | Hatchback FWD HNS (EB2ADTS) | Date from:2021.07,From ORG/OPR:16310 | GDS56754 | Drive Shaft | | 25 | 37 | 55.7 | 84 | 644 | |
| | 2018.10- | 8AT | F | L | Hatchback FWD HNS (EB2ADTS) | Date to:2021.06,To ORG/OPR:16309 | GDS84557 | Drive Shaft | | 25 | 37 | 56 | 83.5 | 641 | |
| | 2018.10- | 8AT | F | R | Hatchback FWD HNS (EB2ADTS) | Date from:2021.07,From ORG/OPR:16310 | GDS56753 | Drive Shaft | | 25 | 37 | 55.7 | 84 | 911 | |
| | 2018.10- | 8AT | F | R | Hatchback FWD HNS (EB2ADTS) | Date to:2021.06,To ORG/OPR:16309 | GDS84559 | Drive Shaft | | 25 | 37 | 56 | 83.5 | 903 | |
| | 2018.10- | 8AT | F | L/R | Hatchback FWD HNS (EB2ADTS) | Date from:2021.07,From ORG/OPR:16310 | GCO82279 | Outer Joint | | 25 | 34 | 55.7 | 84 | 55.5 | I |
| | 2018.10- | 8AT | F | L/R | Hatchback FWD HNS (EB2ADTS) | Date to:2021.06,To ORG/OPR:16309 | GCO82749 | Outer Joint | | 25 | 23 | 56 | 83.5 | 50 | I |
| | 2018.10- | 8AT | F | L | Hatchback FWD HNS (EB2ADTS) | Date to:2021.06,To ORG/OPR:16309 | GCI82859 | Inner Joint | | 37 | 24 | 42 | 58.5 | 101.5 | |
| | 2018.10- | 8AT | F | L | Hatchback FWD HNS (EB2ADTS) | Date from:2021.07,From ORG/OPR:16310 | GCI83475 | Inner Joint | | 37 | 34 | 42.5 | 59 | 99.5 | |
| | 2018.10- | 8AT | F | R | Hatchback FWD HNS (EB2ADTS) | Date to:2021.06,To ORG/OPR:16309 | GCI82860 | Inner Joint | | 37 | 24 | 29.85 | 285 | 101 | |
| | 2018.10- | 8AT | F | R | Hatchback FWD HNS (EB2ADTS) | Date from:2021.07,From ORG/OPR:16310 | GCI83474 | Inner Joint | | 37 | 34 | 29.8 | 290 | 99 | |
| 1.5 (96 kw) | 2018.10- | 8AT | F | L | Hatchback FWD YHZ (DV5RC) | Model:DS3 Crossback,Date to:2021.06,To ORG/OPR:16309 | GDS56654 | Drive Shaft | | 25 | 37 | 56 | 83.5 | 642 | |
| | 2018.10- | 8AT | F | L | Hatchback FWD YHZ (DV5RC) | Model:DS3;Model:DS3 Crossback,Date from:2021.07,From ORG/OPR:16310 | GDS56754 | Drive Shaft | | 25 | 37 | 55.7 | 84 | 644 | |
| | 2018.10- | 8AT | F | R | Hatchback FWD YHZ (DV5RC) | Model:DS3;Model:DS3 Crossback,Date from:2021.07,From ORG/OPR:16310 | GDS56753 | Drive Shaft | | 25 | 37 | 55.7 | 84 | 911 | |
| | 2018.10- | 8AT | F | R | Hatchback FWD YHZ (DV5RC) | Model:DS3 Crossback,Date to:2021.06,To ORG/OPR:16309 | GDS84423 | Drive Shaft | | 25 | 37 | 56 | 83.5 | 903 | |
| | 2018.10- | 8AT | F | L/R | Hatchback FWD YHZ (DV5RC) | Model:DS3;Model:DS3 Crossback,Date from:2021.07,From ORG/OPR:16310 | GCO82279 | Outer Joint | | 25 | 34 | 55.7 | 84 | 55.5 | I |
| | 2018.10- | 8AT | F | L/R | Hatchback FWD YHZ (DV5RC) | Model:DS3 Crossback,Date to:2021.06,To ORG/OPR:16309 | GCO82810 | Outer Joint | | 25 | 25 | 56 | 83.5 | 56 | I |
| | 2018.10- | 8AT | F | L | Hatchback FWD YHZ (DV5RC) | Model:DS3 Crossback,Date to:2021.06,To ORG/OPR:16309 | GCI83423 | Inner Joint | | 37 | 26 | 42 | 59 | 103 | |
| | 2018.10- | 8AT | F | L | Hatchback FWD YHZ (DV5RC) | Model:DS3;Model:DS3 Crossback,Date from:2021.07,From ORG/OPR:16310 | GCI83475 | Inner Joint | | 37 | 34 | 42.5 | 59 | 99.5 | |
| | 2018.10- | 8AT | F | R | Hatchback FWD YHZ (DV5RC) | Model:DS3 Crossback,Date to:2021.06,To ORG/OPR:16309 | GCI82748 | Inner Joint | | 37 | 26 | 29.85 | 285 | 104 | |
| | 2018.10- | 8AT | F | R | Hatchback FWD YHZ (DV5RC) | Model:DS3;Model:DS3 Crossback,Date from:2021.07,From ORG/OPR:16310 | GCI83474 | Inner Joint | | 37 | 34 | 29.8 | 290 | 99 | |
| **DS4** | | | | | | | | | | | | | | | |
| 1.2 (96 kw) | 2021.10-2024.12 | 8AT | F | L | Hatchback FWD HNS (EB2ADTS) | | GDS83110 | Drive Shaft | | 28 | 37 | 58.5 | 92.5 | 662 | |
| | 2021.10-2024.12 | 8AT | F | R | Hatchback FWD HNS (EB2ADTS) | | GDS83109 | Drive Shaft | | 28 | 37 | 58.5 | 92.5 | 933 | |
| 1.2 (100 kw) | 2024.06-2025.04 | 6DCT | F | R | Hatchback FWD HPY (EB2LTDH2) | | GDS83109 | Drive Shaft | | 28 | 37 | 58.5 | 92.5 | 933 | |
| | 2024.06-2025.04 | 6DCT | F | R | Hatchback FWD HPY (EB2LTDH2) | | GCI82118 | Inner Joint | | 37 | 34 | | 290 | 88 | |
| 1.2 (107 kw) | 2025.03-2025.08 | 6DCT | F | R | Hatchback FWD HPY(EB2LTDH2) | | GDS83109 | Drive Shaft | | 28 | 37 | 58.5 | 92.5 | 933 | |
| | 2025.03-2025.08 | 6DCT | F | R | Hatchback FWD HPY(EB2LTDH2) | | GCI82118 | Inner Joint | | 37 | 34 | | 290 | 88 | |
| 1.5 (96 kw) | 2021.10-2025.08 | 8AT | F | L | Hatchback FWD YHZ (DV5RC) | | GDS83110 | Drive Shaft | | 28 | 37 | 58.5 | 92.5 | 662 | |
| | 2021.10-2025.08 | 8AT | F | R | Hatchback FWD YHZ (DV5RC) | | GDS83109 | Drive Shaft | | 28 | 37 | 58.5 | 92.5 | 933 | |
| 1.6 (73 kw) | 2016.04-2018.12 | 5MT | F | L | Hatchback FWD BHY (DV6FD) | | GDS10250 | Drive Shaft | | 25 | 24 | 58.5 | 79 | 630 | |
| | 2016.04-2018.12 | 5MT | F | R | Hatchback FWD BHY (DV6FD) | | GDS10251 | Drive Shaft | | 25 | 24 | 58.5 | 79 | 935 | |
| | 2016.04-2018.12 | 5MT | F | L/R | Hatchback FWD BHY (DV6FD) | | GCO99366 | Outer Joint | | 25 | 34 | 58.5 | 79 | 55 | I |
| | 2016.04-2018.12 | 5MT | F | L | Hatchback FWD BHY (DV6FD) | | GCI10070 | Inner Joint | | 24 | 34 | 40 | 62 | 88 | |
| | 2016.04-2018.12 | 5MT | F | R | Hatchback FWD BHY (DV6FD) | | GCI99159 | Inner Joint | | 24 | 34 | 29.8 | 350 | 87.5 | |
| 1.6 (132 kw) | 2021.10-2022.10 | 8AT | F | L | Hatchback FWD 5GF (EP6FADTXD) | | GDS83110 | Drive Shaft | | 28 | 37 | 58.5 | 92.5 | 662 | |

| | YEAR | TRANSM. | F/R | L/R | BODY STYLE & DRIVE TYPE & ENGINE | REMARKS | G-AP Ref. | PRODUCT | ABS | Technical Specifications A | B | C | H | L | P |
|---|---|---|---|---|---|---|---|---|---|---|---|---|---|---|---|
| **DS** | | | | | | | | | | | | | | | |
| **DS4** | | | | | | | | | | | | | | | |
| 1.6 (132 kw) | 2021.10-2022.10 | 8AT | F | R | Hatchback FWD 5GF (EP6FADTXD) | | GDS83109 | Drive Shaft | | 28 | 37 | 58.5 | 92.5 | 933 | |
| 1.6 (165 kw) | 2021.10-2022.08 | 8AT | F | L | Hatchback FWD 5GG (EP6FADTX) | | GDS83110 | Drive Shaft | | 28 | 37 | 58.5 | 92.5 | 662 | |
| | 2021.10-2022.08 | 8AT | F | R | Hatchback FWD 5GG (EP6FADTX) | | GDS83109 | Drive Shaft | | 28 | 37 | 58.5 | 92.5 | 933 | |
| 2.0 (110 kw) | 2015.07-2018.12 | MT | F | L | Hatchback FWD AHR (DW10FD);AHX (DW10FD) | | GDS10427 | Drive Shaft | | 25 | 37 | 58.5 | 89 | 638 | |
| | 2015.07-2018.12 | MT | F | R | Hatchback FWD AHR (DW10FD);AHX (DW10FD) | | GDS10421 | Drive Shaft | | 25 | 37 | 58.5 | 89 | 972 | |
| | 2015.07-2018.12 | MT | F | L/R | Hatchback FWD AHR (DW10FD);AHX (DW10FD) | | GCO10155 | Outer Joint | | 25 | 39 | 58.5 | 89 | 63.5 | I |
| | 2015.07-2018.12 | MT | F | L/R | Hatchback FWD AHR (DW10FD);AHX (DW10FD) | | GCO10158 | Outer Joint | | 25 | 26 | 58.5 | 89 | 61.5 | M |
| | 2015.07-2018.12 | MT | F | L | Hatchback FWD AHR (DW10FD);AHX (DW10FD) | | GCI10095 | Inner Joint | | 37 | 26 | 40 | 68 | 100 | |
| **DS4/DS4 Crossback** | | | | | | | | | | | | | | | |
| 1.2 (96 kw) | 2015.07-2018.12 | 6MT | F | L | Hatchback FWD HNY (EB2DTS) | Model:DS4;Model:DS4 Crossback,Wheel Hub Diam:83 mm | GDS10253 | Drive Shaft | | 25 | 24 | 58.5 | 79 | 626 | |
| | 2015.07-2018.12 | 6MT | F | L | Hatchback FWD HNY (EB2DTS) | Model:DS4 Crossback,Wheel Hub Diam:82 mm,Technical Information no.:8NN275 | GDS10427 | Drive Shaft | | 25 | 37 | 58.5 | 89 | 638 | |
| | 2015.07-2018.12 | 6MT | F | R | Hatchback FWD HNY (EB2DTS) | Model:DS4 Crossback,Wheel Hub Diam:82 mm,Technical Information no.:8NN274/8NN23 | GDS10421 | Drive Shaft | | 25 | 37 | 58.5 | 89 | 972 | |
| | 2015.07-2018.12 | MT | F | L | Hatchback FWD HNY (EB2DTS) | | GCO10158 | Outer Joint | | 25 | 26 | 58.5 | 89 | 61.5 | M |
| | 2015.07-2018.12 | MT | F | L/R | Hatchback FWD HNY (EB2DTS) | Wheel Hub Diam:82mm | GCO10155 | Outer Joint | | 25 | 39 | 58.5 | 89 | 63.5 | I |
| | 2015.07-2018.12 | MT | F | L | Hatchback FWD HNY (EB2DTS) | | GCI10095 | Inner Joint | | 37 | 26 | 40 | 68 | 100 | |
| 1.6 (85 kw) | 2015.07-2018.12 | AT | F | R | Hatchback FWD BHX (DV6FC) | Technical Information no.:8PN06 | GDS84640 | Drive Shaft | | 25 | 37 | 58.5 | 79 | 931 | |
| | 2015.07-2018.12 | AT | F | L | Hatchback FWD BHX (DV6FC) | Technical Information no.:8PN05 | GCO99366 | Outer Joint | | 25 | 34 | 58.5 | 79 | 55 | I |
| | 2015.07-2018.12 | AT | F | R | Hatchback FWD BHX (DV6FC) | Technical Information no.:8PN06 | GCO82351 | Outer Joint | | 25 | 34 | 58.5 | 79 | 55.5 | I |
| | 2015.07-2018.12 | AT | F | L | Hatchback FWD BHX (DV6FC) | | GCI82119 | Inner Joint | | 37 | 34 | 41.5 | 58.5 | 94 | |
| | 2015.07-2018.12 | MT | F | L | Hatchback FWD BHX (DV6FC) | | GDS10253 | Drive Shaft | | 25 | 24 | 58.5 | 79 | 626 | |
| | 2015.07-2018.12 | MT | F | R | Hatchback FWD BHX (DV6FC) | | GDS10325 | Drive Shaft | | 25 | 24 | 58.5 | 79 | 940 | |
| | 2015.07-2018.12 | MT | F | L/R | Hatchback FWD BHX (DV6FC) | | GCO99366 | Outer Joint | | 25 | 34 | 58.5 | 79 | 55 | I |
| 1.6 (88 kw) | 2015.07-2018.12 | AT | F | L | Hatchback FWD BHZ (DV6FC) | Technical Information no.:8PN05 | GDS58072 | Drive Shaft | | 25 | 37 | 58.5 | 79 | 598 | |
| | 2015.07-2018.12 | AT | F | R | Hatchback FWD BHZ (DV6FC) | Technical Information no.:8PN06 | GDS84640 | Drive Shaft | | 25 | 37 | 58.5 | 79 | 931 | |
| | 2015.07-2018.12 | AT | F | L | Hatchback FWD BHZ (DV6FC) | Technical Information no.:8PN05 | GCO99366 | Outer Joint | | 25 | 34 | 58.5 | 79 | 55 | I |
| | 2015.07-2018.12 | AT | F | R | Hatchback FWD BHZ (DV6FC) | Technical Information no.:8PN06 | GCO82351 | Outer Joint | | 25 | 34 | 58.5 | 79 | 55.5 | I |
| | 2015.07-2018.12 | AT | F | L | Hatchback FWD BHZ (DV6FC) | | GCI82119 | Inner Joint | | 37 | 34 | 41.5 | 58.5 | 94 | |
| | 2015.07-2018.12 | MT | F | L | Hatchback FWD BHZ (DV6FC) | | GDS10253 | Drive Shaft | | 25 | 24 | 58.5 | 79 | 626 | |
| | 2015.07-2018.12 | MT | F | R | Hatchback FWD BHZ (DV6FC) | | GDS10325 | Drive Shaft | | 25 | 24 | 58.5 | 79 | 940 | |
| | 2015.07-2018.12 | MT | F | L/R | Hatchback FWD BHZ (DV6FC) | | GCO10148 | Outer Joint | | 25 | 34 | 58.5 | 79 | 55.5 | I |
| | 2015.07-2018.12 | MT | F | L | Hatchback FWD BHZ (DV6FC) | | GCI10057 | Inner Joint | | 24 | 34 | 40 | 52.5 | 90 | |
| | 2015.07-2018.12 | MT | F | R | Hatchback FWD BHZ (DV6FC) | | GCI10058 | Inner Joint | | 24 | 34 | 29.8 | 365 | 88 | |
| 1.6 (110 kw) | 2016.10-2018.12 | 6AT | F | R | Hatchback FWD 5FE (EP6CDTMD) | Technical Information no.:8PN06 | GDS84640 | Drive Shaft | | 25 | 37 | 58.5 | 79 | 931 | |
| | 2016.10-2018.12 | 6AT | F | L/R | Hatchback FWD 5FE (EP6CDTMD) | Technical Information no.:8PN06 | GCO82351 | Outer Joint | | 25 | 34 | 58.5 | 79 | 55.5 | I |
| | 2016.10-2018.12 | 6AT | F | L | Hatchback FWD 5FE (EP6CDTMD) | | GCI82119 | Inner Joint | | 37 | 34 | 41.5 | 58.5 | 94 | |
| | 2016.10-2018.12 | AT | F | L | Hatchback FWD 5FE (EP6CDTMD) | | GCO99366 | Outer Joint | | 25 | 34 | 58.5 | 79 | 55 | I |
| 1.6 (120 kw) | 2015.07-2018.12 | 6AT | F | R | Hatchback FWD 5FM (EP6CDTM) | | GDS84640 | Drive Shaft | | 25 | 37 | 58.5 | 79 | 931 | |
| 1.6 (121 kw) | 2015.07-2018.12 | AT | F | L | Hatchback FWD 5GZ (EP6FDT) | Technical Information no.:8PN05 | GDS58072 | Drive Shaft | | 25 | 37 | 58.5 | 79 | 598 | |
| | 2015.07-2018.12 | AT | F | R | Hatchback FWD 5GZ (EP6FDT) | Technical Information no.:8PN06 | GDS84640 | Drive Shaft | | 25 | 37 | 58.5 | 79 | 931 | |
| | 2015.07-2018.12 | AT | F | L | Hatchback FWD 5GZ (EP6FDT) | Technical Information no.:8PN05 | GCO99366 | Outer Joint | | 25 | 34 | 58.5 | 79 | 55 | I |
| | 2015.07-2018.12 | AT | F | R | Hatchback FWD 5GZ (EP6FDT) | Technical Information no.:8PN06 | GCO82351 | Outer Joint | | 25 | 34 | 58.5 | 79 | 55.5 | I |
| | 2015.07-2018.12 | AT | F | L | Hatchback FWD 5GZ (EP6FDT) | | GCI82119 | Inner Joint | | 37 | 34 | 41.5 | 58.5 | 94 | |
| **DS5** | | | | | | | | | | | | | | | |
| 1.6 (85 kw) | 2015.06-2018.12 | 6AT | F | R | Hatchback FWD BHX (DV6FC) | Wheel Hub Diameter [mm]:83 | GDS84332 | Drive Shaft | | 28 | 24 | 58.6 | 93 | 978 | |
| | 2015.06-2018.12 | 6AT | F | L/R | Hatchback FWD BHX (DV6FC) | Wheel Hub Diameter [mm]:83 | GCO10098 | Outer Joint | | 28 | 39 | 58.6 | 93 | 63 | I |
| | 2015.06-2018.12 | MT | F | L/R | Hatchback FWD BHX (DV6FC) | Climate Zones:Not for cold climate zones;Wheel Hub Diam:82mm | GCO99366 | Outer Joint | | 25 | 34 | 58.5 | 79 | 55 | I |
| 1.6 (88 kw) | 2015.06-2018.12 | 6MT | F | R | Hatchback FWD BHZ (DV6FC) | Wheel Hub Diameter [mm]:83 | GDS84332 | Drive Shaft | | 28 | 24 | 58.6 | 93 | 978 | |
| | 2015.06-2018.12 | 6MT | F | L/R | Hatchback FWD BHZ (DV6FC) | Wheel Hub Diameter [mm]:83 | GCO10098 | Outer Joint | | 28 | 39 | 58.6 | 93 | 63 | I |
| | 2015.06-2018.12 | MT | F | L/R | Hatchback FWD BHZ (DV6FC) | Climate Zones:Not for cold climate zones;Wheel Hub Diam:82mm | GCO99366 | Outer Joint | | 25 | 34 | 58.5 | 79 | 55 | I |
| 1.6 (155 kw) | 2015.04-2018.12 | 6MT | F | R | Hatchback FWD 5GM (EP6FDTX) | Wheel Hub Diameter [mm]:83 | GDS84332 | Drive Shaft | | 28 | 24 | 58.6 | 93 | 978 | |
| | 2015.04-2018.12 | 6MT | F | L/R | Hatchback FWD 5GM (EP6FDTX) | Wheel Hub Diameter [mm]:83 | GCO10098 | Outer Joint | | 28 | 39 | 58.6 | 93 | 63 | I |
| | 2015.04-2018.12 | 6MT | F | L/R | Hatchback FWD 5GM (EP6FDTX) | Wheel Hub Diameter [mm]:82 | GCO99366 | Outer Joint | | 25 | 34 | 58.5 | 79 | 55 | I |
| 2.0 (100 kw) | 2015.06-2018.12 | 6MT | F | L | Hatchback FWD AHV (DW10FDD) | Wheel Hub Diam:83 mm | GDS45133 | Drive Shaft | | 28 | 37 | 58.6 | 94 | 653 | |
| | 2015.06-2018.12 | 6MT | F | R | Hatchback FWD AHV (DW10FDD) | Wheel Hub Diam:83 mm | GDS10302 | Drive Shaft | | 28 | 37 | 58.6 | 94 | 969 | |
| | 2015.06-2018.12 | MT | F | R | Hatchback FWD AHV (DW10FDD) | Wheel Hub Diam:83mm | GCO10051 | Outer Joint | | 28 | 39 | 58.6 | 94 | 63 | I |
| | 2015.06-2018.12 | MT | F | R | Hatchback FWD AHV (DW10FDD) | Wheel Hub Diam:83mm | GCO10098 | Outer Joint | | 28 | 39 | 58.6 | 93 | 63 | I |
| | 2015.06-2018.12 | MT | F | L/R | Hatchback FWD AHV (DW10FDD) | Wheel Hub Diam:82mm | GCO10155 | Outer Joint | | 25 | 39 | 58.5 | 89 | 63.5 | I |
| | 2015.06-2018.12 | MT | F | R | Hatchback FWD AHV (DW10FDD) | Wheel Hub Diam:83mm | GCI10041 | Inner Joint | | 37 | 39 | 32 | 399 | 95.5 | |
| 2.0 (110 kw) | 2015.04-2018.12 | 6MT | F | L | Hatchback FWD AHR (DW10FD) | Wheel Hub Diam:83 mm | GDS45133 | Drive Shaft | | 28 | 37 | 58.6 | 94 | 653 | |
| | 2015.04-2018.12 | 6MT | F | R | Hatchback FWD AHR (DW10FD) | Wheel Hub Diam:83 mm | GDS10302 | Drive Shaft | | 28 | 37 | 58.6 | 94 | 969 | |
| | 2015.04-2018.12 | MT | F | R | Hatchback FWD AHR (DW10FD) | Wheel Hub Diam:83mm | GCO10051 | Outer Joint | | 28 | 39 | 58.6 | 94 | 63 | I |
| | 2015.04-2018.12 | MT | F | R | Hatchback FWD AHR (DW10FD) | Wheel Hub Diam:83mm | GCO10098 | Outer Joint | | 28 | 39 | 58.6 | 93 | 63 | I |
| | 2015.04-2018.12 | MT | F | L/R | Hatchback FWD AHR (DW10FD) | Wheel Hub Diam:82mm | GCO10155 | Outer Joint | | 25 | 39 | 58.5 | 89 | 63.5 | I |
| | 2015.04-2018.12 | MT | F | R | Hatchback FWD AHR (DW10FD) | Wheel Hub Diam:83mm | GCI10041 | Inner Joint | | 37 | 39 | 32 | 399 | 95.5 | |
| 2.0 (133 kw) | 2015.04-2018.12 | 6AT | F | R | Hatchback FWD AHW (DW10FC) | Trans. code:AM6/3 | GDS56859 | Drive Shaft | | 28 | 37 | 58.6 | 93 | 961 | |

| | YEAR | TRANSM. | F/R | L/R | BODY STYLE & DRIVE TYPE & ENGINE | REMARKS | G-AP Ref. | PRODUCT | ABS | Technical Specifications A | B | C | H | L | P |
|---|---|---|---|---|---|---|---|---|---|---|---|---|---|---|---|
| **DS** | | | | | | | | | | | | | | | |
| **DS5** | | | | | | | | | | | | | | | |
| 2.0 (133 kw) | 2015.04-2018.12 | 6AT | F | R | Hatchback FWD AHW (DW10FC) | Trans. code:AM6/3 | GCO10098 | Outer Joint | | 28 | 39 | 58.6 | 93 | 63 | I |
| | 2015.04-2018.12 | 6AT | F | R | Hatchback FWD AHW (DW10FC) | Trans. code:AM6/3 | GCI45033 | Inner Joint | | 37 | 39 | | 379 | 96 | |
| **N°8 74** | | | | | | | | | | | | | | | |
| EV (191 kw) | 2025.02- | ET | F | L | Coupe FWD ZKV(ZLC) | | GDS58077 | Drive Shaft | | 28 | 37 | 60 | 96 | 724 | |
| | 2025.02- | ET | F | R | Coupe FWD ZKV(ZLC) | | GDS58329 | Drive Shaft | | 28 | 37 | 60 | 96 | 974 | |
| | 2025.02- | ET | F | L/R | Coupe FWD ZKV(ZLC) | | GCO83838 | Outer Joint | | 28 | 39 | 60 | 96 | 63 | I |
| | 2025.02- | ET | F | L | Coupe FWD ZKV(ZLC) | | GCI10040 | Inner Joint | | 37 | 39 | 40 | 69 | 95.5 | |
| **N°8 97 Long Range** | | | | | | | | | | | | | | | |
| EV (207 kw) | 2025.02- | ET | F | L | Coupe FWD ZKT(ZLX) | | GDS58077 | Drive Shaft | | 28 | 37 | 60 | 96 | 724 | |
| | 2025.02- | ET | F | R | Coupe FWD ZKT(ZLX) | | GDS58329 | Drive Shaft | | 28 | 37 | 60 | 96 | 974 | |
| | 2025.02- | ET | F | L/R | Coupe FWD ZKT(ZLX) | | GCO83838 | Outer Joint | | 28 | 39 | 60 | 96 | 63 | I |
| | 2025.02- | ET | F | L | Coupe FWD ZKT(ZLX) | | GCI10040 | Inner Joint | | 37 | 39 | 40 | 69 | 95.5 | |
| EV (276 kw) | 2025.02- | ET | F | L | Coupe 4WD ZKT(ZLC) | | GDS58077 | Drive Shaft | | 28 | 37 | 60 | 96 | 724 | |
| | 2025.02- | ET | F | R | Coupe 4WD ZKT(ZLC) | | GDS58329 | Drive Shaft | | 28 | 37 | 60 | 96 | 974 | |
| | 2025.02- | ET | F | L/R | Coupe 4WD ZKT(ZLC) | | GCO83838 | Outer Joint | | 28 | 39 | 60 | 96 | 63 | I |
| | 2025.02- | ET | F | L | Coupe 4WD ZKT(ZLC) | | GCI10040 | Inner Joint | | 37 | 39 | 40 | 69 | 95.5 | |
| **EMC** | | | | | | | | | | | | | | | |
| **7** | | | | | | | | | | | | | | | |
| 1.5 (128 kw) | 2024.11- | AT | F | L | SUV FWD BHE15-EFZ | | GDS57919 | Drive Shaft | 48T | 26 | 28 | 58 | 86 | 629 | |
| | 2024.11- | AT | F | R | SUV FWD BHE15-EFZ | | GDS57918 | Drive Shaft | 48T | 26 | 28 | 58 | 86 | 977 | |
| | 2024.11- | AT | F | L/R | SUV FWD BHE15-EFZ | | GCO83786 | Outer Joint | 48T | 26 | 25 | 58 | 86 | 63 | I |
| | 2024.11- | AT | F | L | SUV FWD BHE15-EFZ | | GCI83922 | Inner Joint | | 28 | 33 | 33 | 64 | 101 | |
| | 2024.11- | AT | F | R | SUV FWD BHE15-EFZ | | GCI83921 | Inner Joint | | 28 | 33 | 33 | 421.5 | 100.5 | |
| **EMGRAND** | | | | | | | | | | | | | | | |
| **EC7** | | | | | | | | | | | | | | | |
| 1.8 (98 kw) | 2009.07-2015.12 | 5MT | F | L/R | Saloon FWD JLY4G18 | Model year from:2011,Model year to:2014 | GCO14100 | Outer Joint | 48T | 26 | 23 | 58 | 91 | 54.5 | I |
| 1.8 (102 kw) | 2009.07-2014.12 | 5MT | F | L | Saloon FWD JL4G18 | Model year to:2013 | GCI14038 | Inner Joint | | 25 | 23 | 45 | 57.5 | 110.5 | |
| | 2009.07-2014.12 | 5MT/CVT | F | L/R | Saloon FWD JL4G18 | Model year to:2013 | GCO14100 | Outer Joint | 48T | 26 | 23 | 58 | 91 | 54.5 | I |
| **EC8** | | | | | | | | | | | | | | | |
| 2.0 (100 kw) | 2010.08-2012.12 | 4AT/5MT | F | L/R | Saloon FWD 4G63S4N | Model year from:2011 | GCO81028 | Outer Joint | 48T | 26 | 25 | 61 | 88.5 | 60 | O |
| **X7** | | | | | | | | | | | | | | | |
| 2.0 (104 kw) | 2012.04- | 5MT | F | L | SUV FWD JLD4G20 | Model year to:2016 | GDS81102 | Drive Shaft | 48T | 26 | 27 | 61 | 88.5 | 638 | |
| | 2012.04- | 5MT | F | R | SUV FWD JLD4G20 | Model year to:2016 | GDS81256 | Drive Shaft | 48T | 26 | 27 | 60 | 88 | 970 | |
| | 2012.04- | 5MT | F | L | SUV FWD JLD4G20 | Model year to:2016 | GCO81028 | Outer Joint | 48T | 26 | 25 | 61 | 88.5 | 60 | O |
| | 2012.04- | 5MT | F | R | SUV FWD JLD4G20 | Model year to:2016 | GCO81097 | Outer Joint | 48T | 26 | 25 | 60 | 88 | 60 | O |
| | 2012.04- | 6MT | F | L | SUV FWD JLD4G20 | Model year from:2016 | GDS56515 | Drive Shaft | 48T | 28 | 26 | 61.9 | 89 | 626 | |
| | 2012.04- | 6MT | F | R | SUV FWD JLD4G20 | Model year from:2016 | GDS56182 | Drive Shaft | 48T | 28 | 26 | 61.9 | 89 | 988 | |
| | 2012.04- | 6MT | F | L/R | SUV FWD JLD4G20 | Model year from:2016 | GCO82049 | Outer Joint | 48T | 28 | 26 | 61.9 | 89 | 70 | M |
| | 2012.04- | 6MT | F | L | SUV FWD JLD4G20 | Model year from:2016 | GCI83343 | Inner Joint | | 26 | 34 | 40 | 60 | 101 | |
| | 2012.04- | 6MT | F | R | SUV FWD JLD4G20 | Model year from:2016 | GCI83183 | Inner Joint | | 26 | 26 | 40 | 428.5 | 114.5 | |
| 2.4 (119 kw) | 2012.04- | 6AT | F | L | SUV FWD JLD4G24 | Model year to:2014 | GDS81260 | Drive Shaft | 48T | 26 | 27 | 61 | 88.5 | 615 | |
| | 2012.04- | 6AT | F | R | SUV FWD JLD4G24 | Model year to:2014 | GDS81259 | Drive Shaft | 48T | 26 | 27 | 60 | 88 | 979 | |
| | 2012.04- | 6AT | F | L/R | SUV FWD JLD4G24 | Model year to:2014 | GCO81028 | Outer Joint | 48T | 26 | 25 | 61 | 88.5 | 60 | O |
| **ENGLON** | | | | | | | | | | | | | | | |
| **SC7** | | | | | | | | | | | | | | | |
| 1.5 (80 kw) | 2010.11-2017.12 | 5MT | F | L | Saloon FWD JLY-4G15 | Model year to:2016 | GDS14087 | Drive Shaft | 48T | 26 | 25 | 58 | 91 | 614 | |
| | 2010.11-2017.12 | 5MT | F | R | Saloon FWD JLY-4G15 | Model year to:2016 | GDS81103 | Drive Shaft | 48T | 26 | 25 | 58 | 91 | 914 | |
| | 2010.11-2017.12 | 5MT | F | L/R | Saloon FWD JLY-4G15 | Model year to:2016 | GCO14100 | Outer Joint | 48T | 26 | 23 | 58 | 91 | 54.5 | I |
| | 2010.11-2017.12 | 5MT | F | L | Saloon FWD JLY-4G15 | Model year to:2016 | GCI14038 | Inner Joint | | 25 | 23 | 45 | 57.5 | 110.5 | |
| | 2010.11-2017.12 | 5MT | F | R | Saloon FWD JLY-4G15 | Model year to:2016 | GCI81042 | Inner Joint | | 25 | 23 | 45 | 53.5 | 140 | |
| **SX7** | | | | | | | | | | | | | | | |
| 1.8 (102 kw) | 2012.12-2015.01 | 5MT | F | L | SUV FWD JL4G18 | | GDS81258 | Drive Shaft | 48T | 26 | 25 | 61 | 88.5 | 639 | |
| | 2012.12-2015.01 | 5MT | F | R | SUV FWD JL4G18 | | GDS81257 | Drive Shaft | 48T | 26 | 25 | 61 | 88.5 | 981 | |
| **EVUM Motors** | | | | | | | | | | | | | | | |
| **Acar** | | | | | | | | | | | | | | | |
| EV (26 kw) | 2020.06- | ET | F | L | Platform/Chassis 4WD AMV7172 | power:20KW | GDS56717 | Drive Shaft | | 29 | | 62 | 102.5 | 498 | |
| | 2020.06- | ET | F | R | Platform/Chassis 4WD AMV7172 | power:42KW | GDS56716 | Drive Shaft | | 29 | | 62 | 102.5 | 698 | |
| | 2020.06- | ET | F | | Platform/Chassis 4WD AMV7172 | power:40KW | GDS56676 | Drive Shaft | | 25 | | 50 | 94.5 | 591 | |
| | 2020.06- | ET | F | L/R | Platform/Chassis 4WD AMV7172 | power:20KW/42KW | GCO83406 | Outer Joint | | 29 | 26 | 62 | 102.5 | 60 | I |
| | 2020.06- | ET | F | | Platform/Chassis 4WD AMV7172 | power:40KW | GCO83390 | Outer Joint | | 25 | 23 | 50 | 94.5 | 62.5 | M |
| | 2020.06- | ET | F | L/R | Platform/Chassis 4WD AMV7172 | power:20KW/40KW/42KW | GCI83439 | Inner Joint | | | 26 | | | 30 | |

| | YEAR | TRANSM. | F/R | L/R | BODY STYLE & DRIVE TYPE & ENGINE | REMARKS | G-AP Ref. | PRODUCT | ABS | Technical Specifications A | B | C | H | L | P |
|---|---|---|---|---|---|---|---|---|---|---|---|---|---|---|---|
| **EXEED (CHERY)** | | | | | | | | | | | | | | | |
| **LX** | | | | | | | | | | | | | | | |
| 1.6 (145 kw) | 2019.10- | 7DCT | F | L | SUV FWD SQRF4J16, SQRF4J16D | | GDS57718 | Drive Shaft | 48T | 28 | 27 | 58 | 100 | 595 | |
| | 2019.10- | 7DCT | F | L/R | SUV FWD SQRF4J16, SQRF4J16D | | GCO83164 | Outer Joint | 48T | 28 | 26 | 58 | 100 | 64.5 | M |
| | 2019.10- | 7DCT | F | L | SUV FWD SQRF4J16, SQRF4J16D | | GCI83820 | Inner Joint | | 27 | 34 | 40 | 56 | 115 | |
| **TXL** | | | | | | | | | | | | | | | |
| 1.6 (137 kw) | 2021.11- | 7DCT | F | L | SUV 4WD SQRF4J16 | | GDS56153 | Drive Shaft | | 28 | 27 | 60.5 | 95.5 | 621 | |
| | 2021.11- | 7DCT | F | L | SUV 4WD SQRF4J16 | | GCO83172 | Outer Joint | | 28 | 34 | 60.5 | 95.5 | 63 | M |
| | 2021.11- | 7DCT | F | L | SUV 4WD SQRF4J16 | | GCI83110 | Inner Joint | | 27 | 34 | 40 | 56 | 127.5 | |
| 1.6 (145 kw) | 2020.10-2022.08 | 7DCT | F | L | SUV 4WD SQRF4J16 | | GDS56153 | Drive Shaft | | 28 | 27 | 60.5 | 95.5 | 621 | |
| | 2020.10-2022.08 | 7DCT | F | L | SUV 4WD SQRF4J16 | | GCO83172 | Outer Joint | | 28 | 34 | 60.5 | 95.5 | 63 | M |
| | 2020.10-2022.08 | 7DCT | F | L | SUV 4WD SQRF4J16 | | GCI83110 | Inner Joint | | 27 | 34 | 40 | 56 | 127.5 | |
| | 2020.10-2022.08 | 7DCT | F | L | SUV FWD SQRF4J16 | | GDS56153 | Drive Shaft | | 28 | 27 | 60.5 | 95.5 | 621 | |
| | 2020.10-2022.08 | 7DCT | F | L | SUV FWD SQRF4J16 | | GCO83172 | Outer Joint | | 28 | 34 | 60.5 | 95.5 | 63 | M |
| | 2020.10-2022.08 | 7DCT | F | L | SUV FWD SQRF4J16 | | GCI83110 | Inner Joint | | 27 | 34 | 40 | 56 | 127.5 | |
| | 2022.09- | 7DCT | F | L | SUV 4WD SQRF4J16 | | GDS56153 | Drive Shaft | | 28 | 27 | 60.5 | 95.5 | 621 | |
| | 2022.09- | 7DCT | F | L | SUV 4WD SQRF4J16 | | GCO83172 | Outer Joint | | 28 | 34 | 60.5 | 95.5 | 63 | M |
| | 2022.09- | 7DCT | F | L | SUV 4WD SQRF4J16 | | GCI83110 | Inner Joint | | 27 | 34 | 40 | 56 | 127.5 | |
| | 2022.09- | 7DCT | F | L | SUV FWD SQRF4J16 | | GDS56153 | Drive Shaft | | 28 | 27 | 60.5 | 95.5 | 621 | |
| | 2022.09- | 7DCT | F | L | SUV FWD SQRF4J16 | | GCO83172 | Outer Joint | | 28 | 34 | 60.5 | 95.5 | 63 | M |
| | 2022.09- | 7DCT | F | L | SUV FWD SQRF4J16 | | GCI83110 | Inner Joint | | 27 | 34 | 40 | 56 | 127.5 | |
| **VX** | | | | | | | | | | | | | | | |
| 2.0 (192 kw) | 2021.09- | 8AT | F | L | SUV 4WD SQRF4J20C | | GDS56158 | Drive Shaft | | 28 | 27 | 60.5 | 95.5 | 643 | |
| | 2021.09- | 8AT | F | R | SUV 4WD SQRF4J20C | | GDS56157 | Drive Shaft | | 28 | 27 | 60.5 | 95.5 | 1007 | |
| | 2021.09- | 8AT | F | L/R | SUV 4WD SQRF4J20C | | GCO83172 | Outer Joint | | 28 | 34 | 60.5 | 95.5 | 63 | M |
| | 2021.09- | 8AT | F | L | SUV 4WD SQRF4J20C | | GCI83112 | Inner Joint | | 27 | 34 | 34.7 | 58 | 128 | |
| | 2021.09- | 8AT | F | R | SUV 4WD SQRF4J20C | | GCI83111 | Inner Joint | | 27 | 34 | 34.5 | 425.5 | 112.5 | |
| | 2021.09- | 8AT | F | L | SUV FWD SQRF4J20C | | GDS56158 | Drive Shaft | | 28 | 27 | 60.5 | 95.5 | 643 | |
| | 2021.09- | 8AT | F | R | SUV FWD SQRF4J20C | | GDS56157 | Drive Shaft | | 28 | 27 | 60.5 | 95.5 | 1007 | |
| | 2021.09- | 8AT | F | L/R | SUV FWD SQRF4J20C | | GCO83172 | Outer Joint | | 28 | 34 | 60.5 | 95.5 | 63 | M |
| | 2021.09- | 8AT | F | L | SUV FWD SQRF4J20C | | GCI83112 | Inner Joint | | 27 | 34 | 34.7 | 58 | 128 | |
| | 2021.09- | 8AT | F | R | SUV FWD SQRF4J20C | | GCI83111 | Inner Joint | | 27 | 34 | 34.5 | 425.5 | 112.5 | |
| **FAW (TIANJIN)** | | | | | | | | | | | | | | | |
| **N3** | | | | | | | | | | | | | | | |
| 1.0 (39 kw) | 2004.08-2008.12 | 5MT | F | L/R | Hatchback FWD TJ376QE | GrooveType:Middle | GCO14014 | Outer Joint | | 24 | 21 | 54 | 92 | 47.5 | M |
| | 2004.08-2011.12 | 5MT | F | L/R | Saloon FWD TJ376QE | GrooveType:Middle | GCO14014 | Outer Joint | | 24 | 21 | 54 | 92 | 47.5 | M |
| 1.0 (48 kw) | 2008.03-2012.12 | 5MT | F | L/R | Hatchback FWD CA3GA2 | | GCO14014 | Outer Joint | | 24 | 21 | 54 | 92 | 47.5 | M |
| | 2008.03-2012.12 | 5MT | F | L/R | Saloon FWD CA3GA2 | | GCO14014 | Outer Joint | | 24 | 21 | 54 | 92 | 47.5 | M |
| | 2012.05-2015.12 | 5MT | F | L/R | Saloon FWD CA3GA2 | GrooveType:Middle | GCO14014 | Outer Joint | | 24 | 21 | 54 | 92 | 47.5 | M |
| 1.1 (42 kw) | 2004.08-2010.12 | 5MT | F | L/R | Hatchback FWD TJ378QE | Model year from:2005,Model year to:2008 | GCO14013 | Outer Joint | | 24 | 21 | 54 | 92 | 50 | M |
| | 2004.08-2010.12 | 5MT | F | L/R | Saloon FWD TJ378QE | Model year from:2005,Model year to:2008 | GCO14013 | Outer Joint | | 24 | 21 | 54 | 92 | 50 | M |
| **Xiali** | | | | | | | | | | | | | | | |
| 1.0 (39 kw) | 1997.01-2003.01 | 4MT | F | L/R | Saloon FWD TJ376QE | Model year to:2003 | GCO14014 | Outer Joint | | 24 | 21 | 54 | 92 | 47.5 | M |
| **FENGON** | | | | | | | | | | | | | | | |
| **Glory 360** | | | | | | | | | | | | | | | |
| 1.5 (85 kw) | 2015.05-2018.12 | | F | L | MPV FWD SFG15-01 | | GCI34052 | Inner Joint | | 23 | 29 | 40 | 61 | 91 | |
| **Glory 370** | | | | | | | | | | | | | | | |
| 1.5 (85 kw) | 2015.11-2018.12 | | F | L | MPV FWD SFG15-02 | | GCI34052 | Inner Joint | | 23 | 29 | 40 | 61 | 91 | |
| **Glory S370** | | | | | | | | | | | | | | | |
| 1.5 (85 kw) | 2018.03- | MT | F | L | MPV FWD SFG15-02 | | GCI34052 | Inner Joint | | 23 | 29 | 40 | 61 | 91 | |
| **FIAT** | | | | | | | | | | | | | | | |
| **500** | | | | | | | | | | | | | | | |
| 0.9 (59 kw) | 2013.12- | 5AT/5MT | F | L | Hatchback FWD 312 A5.000 | | GDS17119 | Drive Shaft | | 25 | 22 | 51 | 84 | 615 | |
| | 2013.12- | 5AT/5MT | F | R | Hatchback FWD 312 A5.000 | | GDS17120 | Drive Shaft | | 25 | 22 | 51 | 84 | 846 | |
| | 2013.12- | 5AT/5MT | F | L/R | Hatchback FWD 312 A5.000 | | GCO17026 | Outer Joint | | 25 | 22 | 51 | 84 | 57 | M |
| | 2013.12- | 5AT/5MT | F | L/R | Hatchback FWD 312 A5.000 | | GCI17004 | Inner Joint | | 22 | 21 | 36 | 61 | 93.5 | |
| 0.9 (63 kw) | 2010.07- | 5AT/5MT | F | L | Hatchback FWD 312 A2.000 | | GDS17119 | Drive Shaft | | 25 | 22 | 51 | 84 | 615 | |
| | 2010.07- | 5AT/5MT | F | R | Hatchback FWD 312 A2.000 | | GDS17120 | Drive Shaft | | 25 | 22 | 51 | 84 | 846 | |
| | 2010.07- | 5AT/5MT | F | L/R | Hatchback FWD 312 A2.000 | Date from:2013.06 | GCO17026 | Outer Joint | | 25 | 22 | 51 | 84 | 57 | M |
| | 2010.07- | 5AT/5MT | F | L/R | Hatchback FWD 312 A2.000 | | GCI17004 | Inner Joint | | 22 | 21 | 36 | 61 | 93.5 | |
| 0.9 (77 kw) | 2013.10- | 5MT/6MT | F | L | Hatchback FWD 199 B6.000 | | GDS17119 | Drive Shaft | | 25 | 22 | 51 | 84 | 615 | |
| | 2013.10- | 5MT/6MT | F | R | Hatchback FWD 199 B6.000 | | GDS17120 | Drive Shaft | | 25 | 22 | 51 | 84 | 846 | |
| | 2013.10- | 5MT/6MT | F | L/R | Hatchback FWD 199 B6.000 | | GCO17026 | Outer Joint | | 25 | 22 | 51 | 84 | 57 | M |
| | 2013.10- | 5MT/6MT | F | L/R | Hatchback FWD 199 B6.000 | | GCI17004 | Inner Joint | | 22 | 21 | 36 | 61 | 93.5 | |
| 1.0 (44 kw) | 2013.12- | 5MT | F | L | Hatchback FWD 312 A4.000;312 A6.000 | | GDS17119 | Drive Shaft | | 25 | 22 | 51 | 84 | 615 | |
| | 2013.12- | 5MT | F | R | Hatchback FWD 312 A4.000;312 A6.000 | | GDS17120 | Drive Shaft | | 25 | 22 | 51 | 84 | 846 | |
| | 2013.12- | 5MT | F | L/R | Hatchback FWD 312 A4.000;312 A6.000 | | GCO17026 | Outer Joint | | 25 | 22 | 51 | 84 | 57 | M |

| | YEAR | TRANSM. | F/R | L/R | BODY STYLE & DRIVE TYPE & ENGINE | REMARKS | G-AP Ref. | PRODUCT | ABS | Technical Specifications A | B | C | H | L | P |
|---|---|---|---|---|---|---|---|---|---|---|---|---|---|---|---|
| **FIAT** | | | | | | | | | | | | | | | |
| **500** | | | | | | | | | | | | | | | |
| 1.0 (44 kw) | 2013.12- | 5MT | F | L/R | Hatchback FWD 312 A4.000;312 A6.000 | | GCI17004 | Inner Joint | | 22 | 21 | 36 | 61 | 93.5 | |
| 1.0 (48 kw) | 2012.09- | 5MT | F | L | Hatchback FWD 312 A4.000 | | GDS17119 | Drive Shaft | | 25 | 22 | 51 | 84 | 615 | |
| | 2012.09- | 5MT | F | L/R | Hatchback FWD 312 A4.000 | | GCO17026 | Outer Joint | | 25 | 22 | 51 | 84 | 57 | M |
| | 2012.09- | 5MT | F | L | Hatchback FWD 312 A4.000 | | GCI17004 | Inner Joint | | 22 | 21 | 36 | 61 | 93.5 | |
| | 2012.09- | MT | F | R | Hatchback FWD 312 A4.000 | | GDS17120 | Drive Shaft | | 25 | 22 | 51 | 84 | 846 | |
| | 2025.09- | 6MT | F | L | Hatchback FWD 46341162 | | GDS57904 | Drive Shaft | | 22 | 22 | 47 | 79 | 614 | |
| | 2025.09- | 6MT | F | R | Hatchback FWD 46341162 | | GDS57905 | Drive Shaft | | 22 | 22 | 47 | 79 | 851 | |
| | 2025.09- | 6MT | F | L/R | Hatchback FWD 46341162 | | GCO17075 | Outer Joint | | 22 | 21 | 47 | 79 | 54 | M |
| | 2025.09- | 6MT | F | L/R | Hatchback FWD 46341162 | | GCI17001 | Inner Joint | | 22 | 19 | 36 | 61.5 | 88.5 | |
| | 2025.09- | MT | F | L/R | Hatchback FWD 46341162 | | GCI17046 | Inner Joint | | 22 | 20 | 36 | 61.5 | 88.5 | |
| 1.0 (51 kw) | 2020.01- | 6MT | F | L | Hatchback FWD 463 41 162 | | GDS57904 | Drive Shaft | | 22 | 22 | 47 | 79 | 614 | |
| | 2020.01- | 6MT | F | R | Hatchback FWD 463 41 162 | | GDS57905 | Drive Shaft | | 22 | 22 | 47 | 79 | 851 | |
| | 2020.01- | 6MT | F | L/R | Hatchback FWD 463 41 162 | | GCO17075 | Outer Joint | | 22 | 21 | 47 | 79 | 54 | M |
| | 2020.01- | 6MT | F | L/R | Hatchback FWD 463 41 162 | | GCI17001 | Inner Joint | | 22 | 19 | 36 | 61.5 | 88.5 | |
| | 2020.01- | 6MT | F | L/R | Hatchback FWD 463 41 162 | | GCI17046 | Inner Joint | | 22 | 20 | 36 | 61.5 | 88.5 | |
| 1.2 (51 kw) | 2007.07- | 5AT/5MT | F | L/R | Hatchback FWD 169 A4.000 | | GCI17001 | Inner Joint | | 22 | 19 | 36 | 61.5 | 88.5 | |
| | 2007.07- | 5MT | F | L | Hatchback FWD 169 A4.000 | Trans. side with housing | GDS17101 | Drive Shaft | | 22 | 22 | 47 | 75.5 | 613 | |
| | 2007.07- | 5MT | F | L | Hatchback FWD 169 A4.000 | Trans. side without housing | GDS17170 | Drive Shaft | | 22 | 29 | 47 | 75.5 | 524 | |
| | 2007.07- | 5MT | F | R | Hatchback FWD 169 A4.000 | Trans. side with housing | GDS17112 | Drive Shaft | | 22 | 22 | 47 | 75.5 | 846 | |
| | 2007.07- | 5MT | F | R | Hatchback FWD 169 A4.000 | Trans. side without housing | GDS17171 | Drive Shaft | | 22 | 29 | 47 | 75.5 | 758 | |
| | 2007.07- | 5MT | F | L/R | Hatchback FWD 169 A4.000 | | GCO17043 | Outer Joint | | 22 | 20 | 47 | 75.5 | 54.5 | M |
| | 2007.07- | 5MT | F | L/R | Hatchback FWD 169 A4.000 | | GCI17046 | Inner Joint | | 22 | 20 | 36 | 61.5 | 88.5 | |
| | 2010.12- | 5MT | F | L | Hatchback FWD 169 A4.000 | Trans. side with housing | GDS17101 | Drive Shaft | | 22 | 22 | 47 | 75.5 | 613 | |
| | 2010.12- | 5MT | F | L | Hatchback FWD 169 A4.000 | Trans. side without housing | GDS17170 | Drive Shaft | | 22 | 29 | 47 | 75.5 | 524 | |
| | 2010.12- | 5MT | F | R | Hatchback FWD 169 A4.000 | Trans. side with housing | GDS17112 | Drive Shaft | | 22 | 22 | 47 | 75.5 | 846 | |
| | 2010.12- | 5MT | F | R | Hatchback FWD 169 A4.000 | Trans. side without housing | GDS17171 | Drive Shaft | | 22 | 29 | 47 | 75.5 | 758 | |
| | 2010.12- | 5MT | F | L/R | Hatchback FWD 169 A4.000 | | GCO17043 | Outer Joint | | 22 | 20 | 47 | 75.5 | 54.5 | M |
| | 2010.12- | 5MT | F | L/R | Hatchback FWD 169 A4.000 | | GCI17001 | Inner Joint | | 22 | 19 | 36 | 61.5 | 88.5 | |
| | 2010.12- | 5MT | F | L/R | Hatchback FWD 169 A4.000 | | GCI17046 | Inner Joint | | 22 | 20 | 36 | 61.5 | 88.5 | |
| 1.3 (55 kw) | 2007.10- | 5MT | F | L | Hatchback FWD 169 A1.000 | | GDS17119 | Drive Shaft | | 25 | 22 | 51 | 84 | 615 | |
| | 2007.10- | 5MT | F | R | Hatchback FWD 169 A1.000 | | GDS17120 | Drive Shaft | | 25 | 22 | 51 | 84 | 846 | |
| | 2007.10- | 5MT | F | L/R | Hatchback FWD 169 A1.000 | | GCO17026 | Outer Joint | | 25 | 22 | 51 | 84 | 57 | M |
| | 2007.10- | 5MT | F | L/R | Hatchback FWD 169 A1.000 | | GCI17004 | Inner Joint | | 22 | 21 | 36 | 61 | 93.5 | |
| 1.3 (57 kw) | 2016.06- | 5MT | F | L | Hatchback FWD 312 B5.000 | | GDS17193 | Drive Shaft | | 25 | 34 | 51 | 84.5 | 469 | |
| | 2016.06- | 5MT | F | R | Hatchback FWD 312 B5.000 | | GDS17066 | Drive Shaft | | 25 | 34 | 51 | 84.5 | 497 | |
| | 2016.06- | 5MT | F | L/R | Hatchback FWD 312 B5.000 | | GCO17053 | Outer Joint | | 25 | 23 | 51 | 84.5 | 60 | M |
| 1.3 (70 kw) | 2009.12- | 5MT | F | L | Hatchback FWD 199 B1.000;312 B1.000 | | GDS17193 | Drive Shaft | | 25 | 34 | 51 | 84.5 | 469 | |
| | 2009.12- | 5MT | F | R | Hatchback FWD 199 B1.000;312 B1.000 | | GDS17066 | Drive Shaft | | 25 | 34 | 51 | 84.5 | 497 | |
| | 2009.12- | 5MT | F | L/R | Hatchback FWD 199 B1.000;312 B1.000 | | GCO17053 | Outer Joint | | 25 | 23 | 51 | 84.5 | 60 | M |
| | 2009.12- | 5MT | F | L | Hatchback FWD 199 B1.000;312 B1.000 | | GCI17011 | Inner Joint | | 24 | 23 | 29.7 | 86.5 | 93 | |
| 1.4 (74 kw) | 2007.10- | 5AT/5MT | F | L | Hatchback FWD 169 A3.000 | | GDS17119 | Drive Shaft | | 25 | 22 | 51 | 84 | 615 | |
| | 2007.10- | 5AT/5MT | F | R | Hatchback FWD 169 A3.000 | | GDS17120 | Drive Shaft | | 25 | 22 | 51 | 84 | 846 | |
| | 2007.10- | 5AT/5MT | F | L/R | Hatchback FWD 169 A3.000 | | GCI17004 | Inner Joint | | 22 | 21 | 36 | 61 | 93.5 | |
| | 2007.10- | 5AT/5MT/6MT | F | L/R | Hatchback FWD 169 A3.000 | | GCO17026 | Outer Joint | | 25 | 22 | 51 | 84 | 57 | M |
| 1.4 (75 kw) | 2008.09- | 6MT | F | L | Hatchback FWD 169 A3.000 | | GDS17119 | Drive Shaft | | 25 | 22 | 51 | 84 | 615 | |
| | 2008.09- | 6MT | F | R | Hatchback FWD 169 A3.000 | | GDS17120 | Drive Shaft | | 25 | 22 | 51 | 84 | 846 | |
| | 2008.09- | 6MT | F | L/R | Hatchback FWD 169 A3.000 | | GCO17026 | Outer Joint | | 25 | 22 | 51 | 84 | 57 | M |
| | 2008.09- | 6MT | F | L/R | Hatchback FWD 169 A3.000 | | GCI17004 | Inner Joint | | 22 | 21 | 36 | 61 | 93.5 | |
| **500 (312_)** | | | | | | | | | | | | | | | |
| 1.0 (52 kw) | 2021.06- | 6MT | F | L | Hatchback FWD 463 41 162 | | GDS57904 | Drive Shaft | | 22 | 22 | 47 | 79 | 614 | |
| | 2021.06- | 6MT | F | R | Hatchback FWD 463 41 162 | | GDS57905 | Drive Shaft | | 22 | 22 | 47 | 79 | 851 | |
| | 2021.06- | 6MT | F | L/R | Hatchback FWD 463 41 162 | | GCO17075 | Outer Joint | | 22 | 21 | 47 | 79 | 54 | M |
| | 2021.06- | 6MT | F | L/R | Hatchback FWD 463 41 162 | | GCI17001 | Inner Joint | | 22 | 19 | 36 | 61.5 | 88.5 | |
| | 2021.06- | 6MT | F | L/R | Hatchback FWD 463 41 162 | | GCI17046 | Inner Joint | | 22 | 20 | 36 | 61.5 | 88.5 | |
| **500C** | | | | | | | | | | | | | | | |
| 0.9 (59 kw) | 2013.12- | 5AT/5MT | F | L | Convertible FWD 312 A5.000 | | GDS17119 | Drive Shaft | | 25 | 22 | 51 | 84 | 615 | |
| | 2013.12- | 5AT/5MT | F | R | Convertible FWD 312 A5.000 | | GDS17120 | Drive Shaft | | 25 | 22 | 51 | 84 | 846 | |
| | 2013.12- | 5AT/5MT | F | L/R | Convertible FWD 312 A5.000 | | GCO17026 | Outer Joint | | 25 | 22 | 51 | 84 | 57 | M |
| | 2013.12- | 5AT/5MT | F | L/R | Convertible FWD 312 A5.000 | | GCI17004 | Inner Joint | | 22 | 21 | 36 | 61 | 93.5 | |
| 0.9 (63 kw) | 2009.09- | 5AT/5MT | F | L | Convertible FWD 312 A2.000 | | GDS17119 | Drive Shaft | | 25 | 22 | 51 | 84 | 615 | |
| | 2009.09- | 5AT/5MT | F | R | Convertible FWD 312 A2.000 | | GDS17120 | Drive Shaft | | 25 | 22 | 51 | 84 | 846 | |
| | 2009.09- | 5AT/5MT | F | L/R | Convertible FWD 312 A2.000 | | GCO17026 | Outer Joint | | 25 | 22 | 51 | 84 | 57 | M |
| | 2009.09- | 5AT/5MT | F | L/R | Convertible FWD 312 A2.000 | | GCI17004 | Inner Joint | | 22 | 21 | 36 | 61 | 93.5 | |
| 0.9 (77 kw) | 2013.12- | 5MT/6MT | F | L/R | Convertible FWD 199 B6.000 | | GCO17026 | Outer Joint | | 25 | 22 | 51 | 84 | 57 | M |
| | 2013.12- | 6MT | F | L | Convertible FWD 199 B6.000 | | GDS17119 | Drive Shaft | | 25 | 22 | 51 | 84 | 615 | |

| | YEAR | TRANSM. | F/R | L/R | BODY STYLE & DRIVE TYPE & ENGINE | REMARKS | G-AP Ref. | PRODUCT | ABS | Technical Specifications A | B | C | H | L | P |
|---|---|---|---|---|---|---|---|---|---|---|---|---|---|---|---|
| **FIAT** | | | | | | | | | | | | | | | |
| **500C** | | | | | | | | | | | | | | | |
| 0.9 (77 kw) | 2013.12- | 6MT | F | R | Convertible FWD 199 B6.000 | | GDS17120 | Drive Shaft | | 25 | 22 | 51 | 84 | 846 | |
| | 2013.12- | 6MT | F | L/R | Convertible FWD 199 B6.000 | | GCI17004 | Inner Joint | | 22 | 21 | 36 | 61 | 93.5 | |
| 1.0 (44 kw) | 2013.12- | 5MT | F | L | Convertible FWD 312 A6.000 | | GDS17119 | Drive Shaft | | 25 | 22 | 51 | 84 | 615 | |
| | 2013.12- | 5MT | F | R | Convertible FWD 312 A6.000 | | GDS17120 | Drive Shaft | | 25 | 22 | 51 | 84 | 846 | |
| | 2013.12- | 5MT | F | L/R | Convertible FWD 312 A6.000 | | GCO17026 | Outer Joint | | 25 | 22 | 51 | 84 | 57 | M |
| | 2013.12- | 5MT | F | L/R | Convertible FWD 312 A6.000 | | GCI17004 | Inner Joint | | 22 | 21 | 36 | 61 | 93.5 | |
| 1.0 (48 kw) | 2012.09- | 5MT | F | L | Convertible FWD 312 A4.000 | | GDS17119 | Drive Shaft | | 25 | 22 | 51 | 84 | 615 | |
| | 2012.09- | 5MT | F | R | Convertible FWD 312 A4.000 | | GDS17120 | Drive Shaft | | 25 | 22 | 51 | 84 | 846 | |
| | 2012.09- | 5MT | F | L/R | Convertible FWD 312 A4.000 | | GCO17026 | Outer Joint | | 25 | 22 | 51 | 84 | 57 | M |
| | 2012.09- | | F | R | Convertible FWD 312 A4.000 | | GCI17004 | Inner Joint | | 22 | 21 | 36 | 61 | 93.5 | |
| 1.0 (51 kw) | 2020.01- | 6MT | F | L | Convertible FWD 463 41 162 | | GDS57904 | Drive Shaft | | 22 | 22 | 47 | 79 | 614 | |
| | 2020.01- | 6MT | F | R | Convertible FWD 463 41 162 | | GDS57905 | Drive Shaft | | 22 | 22 | 47 | 79 | 851 | |
| | 2020.01- | 6MT | F | L/R | Convertible FWD 463 41 162 | | GCO17075 | Outer Joint | | 22 | 21 | 47 | 79 | 54 | M |
| | 2020.01- | 6MT | F | L/R | Convertible FWD 463 41 162 | | GCI17001 | Inner Joint | | 22 | 19 | 36 | 61.5 | 88.5 | |
| | 2020.01- | 6MT | F | L/R | Convertible FWD 463 41 162 | | GCI17046 | Inner Joint | | 22 | 20 | 36 | 61.5 | 88.5 | |
| 1.2 (51 kw) | 2009.09- | 5AT/5MT | F | L/R | Convertible FWD 169 A4.000 | Date to:2015.06 | GCO17026 | Outer Joint | | 25 | 22 | 51 | 84 | 57 | M |
| | 2009.09- | 5AT/5MT | F | L/R | Convertible FWD 169 A4.000 | Date from:2015.07 | GCO17043 | Outer Joint | | 22 | 20 | 47 | 75.5 | 54.5 | M |
| | 2009.09- | 5AT/5MT | F | L/R | Convertible FWD 169 A4.000 | Model year from:2015 | GCI17001 | Inner Joint | | 22 | 19 | 36 | 61.5 | 88.5 | |
| | 2009.09- | 5MT | F | L | Convertible FWD 169 A4.000 | Date from:2015.07;Trans. side with housing | GDS17101 | Drive Shaft | | 22 | 22 | 47 | 75.5 | 613 | |
| | 2009.09- | 5MT | F | L | Convertible FWD 169 A4.000 | Date to:2015.06 | GDS17119 | Drive Shaft | | 25 | 22 | 51 | 84 | 615 | |
| | 2009.09- | 5MT | F | L | Convertible FWD 169 A4.000 | Date from:2015.07;Trans. side without housing | GDS17170 | Drive Shaft | | 22 | 29 | 47 | 75.5 | 524 | |
| | 2009.09- | 5MT | F | R | Convertible FWD 169 A4.000 | Date from:2015.07;Trans. side with housing | GDS17112 | Drive Shaft | | 22 | 22 | 47 | 75.5 | 846 | |
| | 2009.09- | 5MT | F | R | Convertible FWD 169 A4.000 | Date to:2015.06 | GDS17120 | Drive Shaft | | 25 | 22 | 51 | 84 | 846 | |
| | 2009.09- | 5MT | F | R | Convertible FWD 169 A4.000 | Date from:2015.07;Trans. side without housing | GDS17171 | Drive Shaft | | 22 | 29 | 47 | 75.5 | 758 | |
| | 2009.09- | 5MT | F | R | Convertible FWD 169 A4.000 | Date to:2015.06 | GCI17004 | Inner Joint | | 22 | 21 | 36 | 61 | 93.5 | |
| | 2009.09- | 5MT | F | R | Convertible FWD 169 A4.000 | Date from:2015.07 | GCI17046 | Inner Joint | | 22 | 20 | 36 | 61.5 | 88.5 | |
| 1.3 (55 kw) | 2009.09- | 5MT | F | L | Convertible FWD 169 A1.000 | | GDS17119 | Drive Shaft | | 25 | 22 | 51 | 84 | 615 | |
| | 2009.09- | 5MT | F | R | Convertible FWD 169 A1.000 | | GDS17120 | Drive Shaft | | 25 | 22 | 51 | 84 | 846 | |
| | 2009.09- | 5MT | F | L/R | Convertible FWD 169 A1.000 | | GCO17026 | Outer Joint | | 25 | 22 | 51 | 84 | 57 | M |
| | 2009.09- | | F | R | Convertible FWD 169 A1.000 | | GCI17004 | Inner Joint | | 22 | 21 | 36 | 61 | 93.5 | |
| 1.3 (70 kw) | 2009.09- | 5MT | F | L | Convertible FWD 199 B1.000;312 B1.000 | | GDS17193 | Drive Shaft | | 25 | 34 | 51 | 84.5 | 469 | |
| | 2009.09- | 5MT | F | R | Convertible FWD 199 B1.000;312 B1.000 | | GDS17066 | Drive Shaft | | 25 | 34 | 51 | 84.5 | 497 | |
| | 2009.09- | 5MT | F | L/R | Convertible FWD 199 B1.000;312 B1.000 | | GCO17053 | Outer Joint | | 25 | 23 | 51 | 84.5 | 60 | M |
| | 2009.09- | 5MT | F | L | Convertible FWD 199 B1.000;312 B1.000 | | GCI17011 | Inner Joint | | 24 | 23 | 29.7 | 86.5 | 93 | |
| 1.4 (74 kw) | 2009.06- | 5AT/5MT/6MT | F | L | Convertible FWD 169 A3.000 | | GDS17119 | Drive Shaft | | 25 | 22 | 51 | 84 | 615 | |
| | 2009.06- | 5AT/5MT/6MT | F | R | Convertible FWD 169 A3.000 | | GDS17120 | Drive Shaft | | 25 | 22 | 51 | 84 | 846 | |
| | 2009.06- | 5AT/5MT/6MT | F | L/R | Convertible FWD 169 A3.000 | | GCI17004 | Inner Joint | | 22 | 21 | 36 | 61 | 93.5 | |
| | 2009.06- | 5AT/6AT/5MT/6MT | F | L/R | Convertible FWD 169 A3.000 | | GCO17026 | Outer Joint | | 25 | 22 | 51 | 84 | 57 | M |
| 1.4 (75 kw) | 2011.09- | 6MT | F | L | Convertible FWD 169 A3.000;EAB | | GDS17119 | Drive Shaft | | 25 | 22 | 51 | 84 | 615 | |
| | 2011.09- | 6MT | F | R | Convertible FWD 169 A3.000;EAB | | GDS17120 | Drive Shaft | | 25 | 22 | 51 | 84 | 846 | |
| | 2011.09- | 6MT | F | L/R | Convertible FWD 169 A3.000;EAB | | GCO17026 | Outer Joint | | 25 | 22 | 51 | 84 | 57 | M |
| | 2011.09- | | F | L | Convertible FWD 169 A3.000;EAB | | GCI17004 | Inner Joint | | 22 | 21 | 36 | 61 | 93.5 | |
| **500E** | | | | | | | | | | | | | | | |
| EV (70 kw) | 2020.10- | ET | F | L/R | Convertible FWD 46348460 | | GDS57726 | Drive Shaft | | 25 | 25 | 51 | 84 | 760 | |
| | 2020.10- | ET | F | L/R | Convertible FWD 46348460 | | GCO83686 | Outer Joint | | 25 | 29 | 51 | 84 | 56 | M |
| | 2020.10- | ET | F | L/R | Convertible FWD 46348460 | | GCI83253 | Inner Joint | | 25 | 29 | 32 | 59 | 106 | |
| | 2020.10- | ET | F | L/R | Hatchback FWD 46348460 | | GDS57726 | Drive Shaft | | 25 | 25 | 51 | 84 | 760 | |
| | 2020.10- | ET | F | L/R | Hatchback FWD 46348460 | | GCO83686 | Outer Joint | | 25 | 29 | 51 | 84 | 56 | M |
| | 2020.10- | ET | F | L/R | Hatchback FWD 46348460 | | GCI83253 | Inner Joint | | 25 | 29 | 32 | 59 | 106 | |
| EV (87 kw) | 2020.10- | ET | F | L/R | Convertible FWD 46348460 | | GDS57726 | Drive Shaft | | 25 | 25 | 51 | 84 | 760 | |
| | 2020.10- | ET | F | L/R | Convertible FWD 46348460 | | GCO83686 | Outer Joint | | 25 | 29 | 51 | 84 | 56 | M |
| | 2020.10- | ET | F | L/R | Convertible FWD 46348460 | | GCI83253 | Inner Joint | | 25 | 29 | 32 | 59 | 106 | |
| | 2020.10- | ET | F | L/R | Hatchback FWD 46348460 | | GDS57726 | Drive Shaft | | 25 | 25 | 51 | 84 | 760 | |
| | 2020.10- | ET | F | L/R | Hatchback FWD 46348460 | | GCO83686 | Outer Joint | | 25 | 29 | 51 | 84 | 56 | M |
| | 2020.10- | ET | F | L/R | Hatchback FWD 46348460 | | GCI83253 | Inner Joint | | 25 | 29 | 32 | 59 | 106 | |
| | 2022.12- | ET | F | L/R | Hatchback FWD 46348460 | | GDS57726 | Drive Shaft | | 25 | 25 | 51 | 84 | 760 | |
| | 2022.12- | ET | F | L/R | Hatchback FWD 46348460 | | GCO83686 | Outer Joint | | 25 | 29 | 51 | 84 | 56 | M |
| | 2022.12- | ET | F | L/R | Hatchback FWD 46348460 | | GCI83253 | Inner Joint | | 25 | 29 | 32 | 59 | 106 | |
| **500L** | | | | | | | | | | | | | | | |
| 0.9 (59 kw) | 2017.04- | 6MT | F | L/R | Hatchback FWD 312 A2.000 | | GCO17026 | Outer Joint | | 25 | 22 | 51 | 84 | 57 | M |
| 0.9 (63 kw) | 2013.03- | 6MT | F | L/R | Hatchback FWD 312 A2.000 | | GCO17026 | Outer Joint | | 25 | 22 | 51 | 84 | 57 | M |
| 0.9 (77 kw) | 2012.09- | 6MT | F | L/R | Hatchback FWD 199 B6.000 | Date from:2013.01 | GCO17026 | Outer Joint | | 25 | 22 | 51 | 84 | 57 | M |
| 1.3 (62 kw) | 2012.09- | 5AT/5MT | F | L | Hatchback FWD 199 B4.000 | | GDS82848 | Drive Shaft | | 25 | 24 | 51 | 84.5 | 637 | |
| | 2012.09- | 5AT/5MT | F | L | Hatchback FWD 199 B4.000 | | GCI99008 | Inner Joint | | 24 | 24 | 29.7 | 86.5 | 93 | |
| | 2012.09- | 5MT | F | R | Hatchback FWD 199 B4.000 | | GDS58196 | Drive Shaft | | 25 | 24 | 51 | 84.5 | 921 | |

| | YEAR | TRANSM. | F/R | L/R | BODY STYLE & DRIVE TYPE & ENGINE | REMARKS | G-AP Ref. | PRODUCT | ABS | Technical Specifications A | B | C | H | L | P |
|---|---|---|---|---|---|---|---|---|---|---|---|---|---|---|---|
| **FIAT** | | | | | | | | | | | | | | | |
| **500L** | | | | | | | | | | | | | | | |
| 1.3 (62 kw) | 2012.09- | 5MT | F | L/R | Hatchback FWD 199 B4.000 | | GCO17057 | Outer Joint | | 25 | 24 | 51 | 84.5 | 62 | M |
| | 2012.09- | 5MT | F | R | Hatchback FWD 199 B4.000 | | GCI17015 | Inner Joint | | 24 | 24 | 29.7 | 379 | 100.5 | |
| | 2012.09- | MT | F | L/R | Hatchback FWD 199 B4.000 | Exhaust Emis Nm:Euro 5 | GCO17028 | Outer Joint | | 25 | 24 | 51 | 84.5 | 62 | M |
| 1.3 (70 kw) | 2014.06- | 5AT/5MT | F | L | Hatchback FWD 330 A1.000;552 83 775;463 45 266 | | GDS82848 | Drive Shaft | | 25 | 24 | 51 | 84.5 | 637 | |
| | 2014.06- | 5AT/5MT | F | L | Hatchback FWD 330 A1.000;552 83 775;463 45 266 | | GCI99008 | Inner Joint | | 24 | 24 | 29.7 | 86.5 | 93 | |
| | 2014.06- | 5AT/5MT/6MT | F | L/R | Hatchback FWD 330 A1.000;552 83 775;463 45 266 | | GCO17028 | Outer Joint | | 25 | 24 | 51 | 84.5 | 62 | M |
| | 2014.06- | 5MT | F | R | Hatchback FWD 330 A1.000;552 83 775;463 45 266 | | GDS58196 | Drive Shaft | | 25 | 24 | 51 | 84.5 | 921 | |
| | 2014.06- | 5MT | F | L/R | Hatchback FWD 330 A1.000;552 83 775;463 45 266 | | GCO17057 | Outer Joint | | 25 | 24 | 51 | 84.5 | 62 | M |
| | 2014.06- | 5MT | F | R | Hatchback FWD 330 A1.000;552 83 775;463 45 266 | | GCI17015 | Inner Joint | | 24 | 24 | 29.7 | 379 | 100.5 | |
| 1.4 (70 kw) | 2012.09- | 6MT | F | L | Hatchback FWD 843 A1.000 | | GDS17140 | Drive Shaft | | 25 | 22 | 51 | 84 | 660 | |
| | 2012.09- | 6MT | F | R | Hatchback FWD 843 A1.000 | | GDS84382 | Drive Shaft | | 25 | 32 | 51 | 84 | 813 | |
| | 2012.09- | 6MT | F | L/R | Hatchback FWD 843 A1.000 | | GCO17026 | Outer Joint | | 25 | 22 | 51 | 84 | 57 | M |
| | 2012.09- | 6MT | F | L | Hatchback FWD 843 A1.000 | | GCI17004 | Inner Joint | | 22 | 21 | 36 | 61 | 93.5 | |
| 1.4 (88 kw) | 2013.10- | 6MT | F | L | Hatchback FWD 940 B7.000 | | GDS17212 | Drive Shaft | | 25 | 25 | 51.1 | 84.5 | 616 | |
| | 2013.10- | 6MT | F | R | Hatchback FWD 940 B7.000 | | GDS82636 | Drive Shaft | | 25 | 25 | 51.1 | 84.5 | 954 | |
| | 2013.10- | 6MT | F | L/R | Hatchback FWD 940 B7.000 | Date from:2019.03,Equipment code:LL0/LL1 | GCO17063 | Outer Joint | | 25 | 25 | 51.1 | 84.5 | 61 | M |
| | 2013.10- | 6MT | F | L | Hatchback FWD 940 B7.000 | | GCI17096 | Inner Joint | | 25 | 24 | 32 | 75 | 82.5 | |
| | 2013.10- | 6MT | F | R | Hatchback FWD 940 B7.000 | | GCI17098 | Inner Joint | | 25 | 24 | 29.75 | 443 | 94.5 | |
| | 2014.02- | 6MT | F | L | Hatchback FWD 940 B7.000 | | GDS17212 | Drive Shaft | | 25 | 25 | 51.1 | 84.5 | 616 | |
| | 2014.02- | 6MT | F | R | Hatchback FWD 940 B7.000 | | GDS82636 | Drive Shaft | | 25 | 25 | 51.1 | 84.5 | 954 | |
| | 2014.02- | 6MT | F | L/R | Hatchback FWD 940 B7.000 | Date from:2019.03,Equipment code:LL0/LL1 | GCO17063 | Outer Joint | | 25 | 25 | 51.1 | 84.5 | 61 | M |
| | 2014.02- | 6MT | F | L | Hatchback FWD 940 B7.000 | | GCI17096 | Inner Joint | | 25 | 24 | 32 | 75 | 82.5 | |
| | 2014.02- | 6MT | F | R | Hatchback FWD 940 B7.000 | | GCI17098 | Inner Joint | | 25 | 24 | 29.75 | 443 | 94.5 | |
| 1.6 (77 kw) | 2012.09-2018.05 | 6MT | F | L/R | Hatchback FWD 199 B5.000 | Position:Front axle right,Exhaust Emis:Euro 5 | GCO17063 | Outer Joint | | 25 | 25 | 51.1 | 84.5 | 61 | M |
| | 2012.09-2018.05 | 6MT | F | L | Hatchback FWD 199 B5.000 | | GCI17096 | Inner Joint | | 25 | 24 | 32 | 75 | 82.5 | |
| | 2012.09-2018.05 | 6MT | F | R | Hatchback FWD 199 B5.000 | | GCI17093 | Inner Joint | | 25 | 24 | 29.75 | 433 | 94.5 | |
| 1.6 (88 kw) | 2013.09- | 6MT | F | L/R | Hatchback FWD 955 A3.000;940 C1.000;552 80 444 | Date from:2019.03 | GCO17063 | Outer Joint | | 25 | 25 | 51.1 | 84.5 | 61 | M |
| | 2013.09- | 6MT | F | L | Hatchback FWD 955 A3.000;940 C1.000;552 80 444 | | GCI17096 | Inner Joint | | 25 | 24 | 32 | 75 | 82.5 | |
| | 2013.09- | 6MT | F | R | Hatchback FWD 955 A3.000;940 C1.000;552 80 444 | Exhaust Emis:Euro 5 | GCI17093 | Inner Joint | | 25 | 24 | 29.75 | 433 | 94.5 | |
| **500X** | | | | | | | | | | | | | | | |
| 1.0 (84 kw) | 2018.06- | 6MT | F | L | SUV FWD 552 82 151 | | GDS58315 | Drive Shaft | | 27 | 25 | 59 | 84 | 634 | |
| | 2018.06- | 6MT | F | R | SUV FWD 552 82 151 | | GDS58246 | Drive Shaft | | 27 | 25 | 59 | 84 | 970 | |
| | 2018.06- | 6MT | F | L/R | SUV FWD 552 82 151 | | GCO99348 | Outer Joint | | 27 | 25 | 59 | 84 | 61.5 | M |
| | 2018.06- | 6MT | F | L | SUV FWD 552 82 151 | | GCI17126 | Inner Joint | | 25 | 26 | 32 | 59 | 110.5 | |
| | 2018.06- | 6MT | F | R | SUV FWD 552 82 151 | | GCI84043 | Inner Joint | | 25 | 26 | 29.75 | 397 | 108.5 | |
| 1.0 (88 kw) | 2018.09- | 6MT | F | L | SUV FWD 552 82 151 | | GDS58315 | Drive Shaft | | 27 | 25 | 59 | 84 | 634 | |
| | 2018.09- | 6MT | F | R | SUV FWD 552 82 151 | | GDS58246 | Drive Shaft | | 27 | 25 | 59 | 84 | 970 | |
| | 2018.09- | 6MT | F | L/R | SUV FWD 552 82 151 | | GCO99348 | Outer Joint | | 27 | 25 | 59 | 84 | 61.5 | M |
| | 2018.09- | 6MT | F | L | SUV FWD 552 82 151 | | GCI17126 | Inner Joint | | 25 | 26 | 32 | 59 | 110.5 | |
| | 2018.09- | 6MT | F | R | SUV FWD 552 82 151 | | GCI84043 | Inner Joint | | 25 | 26 | 29.75 | 397 | 108.5 | |
| 1.3 (70 kw) | 2014.11- | 5MT | F | L | SUV FWD 552 66 963;552 83 775 | Model year from:2022 | GDS58335 | Drive Shaft | | 27 | 24 | 59 | 84.5 | 651 | |
| | 2014.11- | 5MT | F | R | SUV FWD 552 66 963;552 83 775 | Model year from:2022 | GDS58334 | Drive Shaft | | 27 | 24 | 59 | 84.5 | 949 | |
| | 2014.11- | 5MT | F | L | SUV FWD 552 66 963;552 83 775 | Model year from:2022 | GCI83548 | Inner Joint | | 24 | 24 | 29.75 | 86.5 | 99.5 | |
| | 2014.11- | 5MT | F | R | SUV FWD 552 66 963;552 83 775 | Model year from:2022 | GCI84077 | Inner Joint | | 24 | 24 | 29.75 | 379 | 105 | |
| 1.3 (110 kw) | 2018.09- | 6AT | F | L/R | SUV FWD 552 82 328;463 51 268 | | GCO82930 | Outer Joint | | 27 | 26 | 59 | 84.5 | 62.5 | I |
| | 2018.09- | 6AT | F | L | SUV FWD 552 82 328;463 51 268 | | GCI82440 | Inner Joint | | 25 | 27 | 32 | 59 | 112.5 | |
| 1.4 (88 kw) | 2017.03-2018.09 | 6MT | F | L | SUV FWD 552 77 701 | | GDS83864 | Drive Shaft | | 27 | 25 | 59 | 84.5 | 630 | |
| | 2017.03-2018.09 | 6MT | F | L/R | SUV FWD 552 77 701 | | GCO99298 | Outer Joint | | 27 | 26 | 59 | 84.5 | 63 | M |
| | 2017.03-2018.09 | 6MT | F | L | SUV FWD 552 77 701 | | GCI17118 | Inner Joint | | 25 | 35 | 32 | 75 | 96 | |
| 1.4 (100 kw) | 2014.09- | 6MT | F | L | SUV FWD 552 63 624 | | GDS83864 | Drive Shaft | | 27 | 25 | 59 | 84.5 | 630 | |
| | 2014.09- | 6MT | F | L/R | SUV FWD 552 63 624 | | GCO99298 | Outer Joint | | 27 | 26 | 59 | 84.5 | 63 | M |
| | 2014.09- | 6MT | F | L | SUV FWD 552 63 624 | | GCI17118 | Inner Joint | | 25 | 35 | 32 | 75 | 96 | |
| | 2014.09- | 6MT | F | R | SUV FWD 552 63 624 | | GCI17113 | Inner Joint | | 25 | 35 | 29.7 | 432.5 | 108.5 | |
| 1.4 (103 kw) | 2014.09- | 6DCT | F | R | SUV FWD 552 63 624 | | GDS83863 | Drive Shaft | | 27 | 25 | 59 | 84.5 | 975 | |
| | 2014.09- | 6DCT | F | L/R | SUV FWD 552 63 624 | | GCO82524 | Outer Joint | | 27 | 35 | 59 | 84.5 | 61 | I |
| | 2014.09- | 6DCT | F | R | SUV FWD 552 63 624 | | GCI17113 | Inner Joint | | 25 | 35 | 29.7 | 432.5 | 108.5 | |
| | 2014.09- | 6MT | F | L/R | SUV FWD 552 63 624 | | GCO99298 | Outer Joint | | 27 | 26 | 59 | 84.5 | 63 | M |
| | 2014.09- | 6MT/6DCT | F | L | SUV FWD 552 63 624 | | GDS83864 | Drive Shaft | | 27 | 25 | 59 | 84.5 | 630 | |
| | 2014.09- | 6MT/6DCT | F | L | SUV FWD 552 63 624 | | GCI17118 | Inner Joint | | 25 | 35 | 32 | 75 | 96 | |
| 1.4 (120 kw) | 2015.02-2018.09 | 9AT | F | L/R | SUV 4WD 552 63 623 | | GDS56984 | Drive Shaft | | 27 | 30 | 59 | 84.5 | 600 | |
| | 2015.02-2018.09 | 9AT | F | L/R | SUV 4WD 552 63 623 | | GCO82930 | Outer Joint | | 27 | 26 | 59 | 84.5 | 62.5 | I |
| | 2015.02-2018.09 | 9AT | F | L/R | SUV 4WD 552 63 623 | | GCI83584 | Inner Joint | | 30 | 27 | | 68.5 | 98 | |
| | 2015.02-2018.09 | 9AT | R | L/R | SUV 4WD 552 63 623 | | GDS84019 | Drive Shaft | | 27 | 22 | 59 | 84.5 | 679 | |
| | 2015.02-2018.09 | 9AT | R | L/R | SUV 4WD 552 63 623 | | GCO82554 | Outer Joint | | 27 | 21 | 59 | 84.5 | 54 | M |
| | 2015.02-2018.09 | 9AT | R | L/R | SUV 4WD 552 63 623 | | GCI83205 | Inner Joint | | 22 | 21 | 38.5 | | 134 | |

| | YEAR | TRANSM. | F/R | L/R | BODY STYLE & DRIVE TYPE & ENGINE | REMARKS | G-AP Ref. | PRODUCT | ABS | Technical Specifications A | B | C | H | L | P |
|---|---|---|---|---|---|---|---|---|---|---|---|---|---|---|---|
| **FIAT** | | | | | | | | | | | | | | | |
| **500X** | | | | | | | | | | | | | | | |
| 1.4 (125 kw) | 2015.02- | 9AT | F | L/R | SUV 4WD 552 63 623 | | GDS56984 | Drive Shaft | | 27 | 30 | 59 | 84.5 | 600 | |
| | 2015.02- | 9AT | F | L/R | SUV 4WD 552 63 623 | | GCO82930 | Outer Joint | | 27 | 26 | 59 | 84.5 | 62.5 | I |
| | 2015.02- | 9AT | F | L/R | SUV 4WD 552 63 623 | | GCI83584 | Inner Joint | | 30 | 27 | | 68.5 | 98 | |
| | 2015.02- | 9AT | R | L/R | SUV 4WD 552 63 623 | | GDS84019 | Drive Shaft | | 27 | 22 | 59 | 84.5 | 679 | |
| | 2015.02- | 9AT | R | L/R | SUV 4WD 552 63 623 | | GCO82554 | Outer Joint | | 27 | 21 | 59 | 84.5 | 54 | M |
| | 2015.02- | 9AT | R | L/R | SUV 4WD 552 63 623 | | GCI83205 | Inner Joint | | 22 | 21 | 38.5 | | 134 | |
| 1.6 (84 kw) | 2014.09- | 6MT | F | L | SUV FWD 552 60 384;552 80 444 | Model year to:2018;Model year from:2019;Equipment code:1YH | GDS82613 | Drive Shaft | | 27 | 25 | 59 | 84.5 | 602 | |
| | 2014.09- | 6MT | F | L/R | SUV FWD 552 60 384;552 80 444 | Model year to:2018;Model year from:2019;Equipment code:1YH | GCO99298 | Outer Joint | | 27 | 26 | 59 | 84.5 | 63 | M |
| | 2014.09- | 6MT | F | L | SUV FWD 552 60 384;552 80 444 | Model year to:2018;Model year from:2019;Equipment code:1YH | GCI17126 | Inner Joint | | 25 | 26 | 32 | 59 | 110.5 | |
| | 2014.09- | MT | F | R | SUV FWD 552 60 384;552 80 444 | | GDS84198 | Drive Shaft | | 27 | 25 | 59 | 84.5 | 996 | |
| | 2014.09- | MT | F | R | SUV FWD 552 60 384;552 80 444 | Date from:2015.01 | GDS84202 | Drive Shaft | | 27 | 25 | 59 | 84.5 | 1000 | |
| | 2014.09- | MT | F | R | SUV FWD 552 60 384;552 80 444 | | GCI82637 | Inner Joint | | 25 | 26 | 29.75 | 423 | 107.5 | |
| 1.6 (88 kw) | 2014.09- | 6DCT | F | R | SUV FWD 552 60 384;552 80 444 | | GDS84202 | Drive Shaft | | 27 | 25 | 59 | 84.5 | 1000 | |
| | 2014.09- | 6DCT | F | R | SUV FWD 552 60 384;552 80 444 | | GCI82150 | Inner Joint | | 25 | 26 | 29.75 | 432 | 108 | |
| | 2014.09- | 6MT | F | L | SUV FWD 552 60 384;552 80 444 | Model year to:2018;Model year from:2019;Equipment code:1YH | GDS82613 | Drive Shaft | | 27 | 25 | 59 | 84.5 | 602 | |
| | 2014.09- | 6MT | F | R | SUV FWD 552 60 384;552 80 444 | | GDS84198 | Drive Shaft | | 27 | 25 | 59 | 84.5 | 996 | |
| | 2014.09- | 6MT | F | L | SUV FWD 552 60 384;552 80 444 | Model year to:2018;Model year from:2019;Equipment code:1YH | GCI17126 | Inner Joint | | 25 | 26 | 32 | 59 | 110.5 | |
| | 2014.09- | 6MT | F | R | SUV FWD 552 60 384;552 80 444 | | GCI82637 | Inner Joint | | 25 | 26 | 29.75 | 423 | 107.5 | |
| | 2014.09- | 6MT/6DCT | F | L/R | SUV FWD 552 60 384;552 80 444 | Model year to:2018;Model year from:2019;Equipment code:1YH | GCO99298 | Outer Joint | | 27 | 26 | 59 | 84.5 | 63 | M |
| 1.6 (96 kw) | 2021.05- | 6MT | F | L | SUV FWD 463 46 020 | Equipment code:1YH | GDS82613 | Drive Shaft | | 27 | 25 | 59 | 84.5 | 602 | |
| | 2021.05- | 6MT | F | R | SUV FWD 463 46 020 | Equipment code:1YH | GDS84198 | Drive Shaft | | 27 | 25 | 59 | 84.5 | 996 | |
| | 2021.05- | 6MT | F | L/R | SUV FWD 463 46 020 | Equipment code:1YH | GCO99298 | Outer Joint | | 27 | 26 | 59 | 84.5 | 63 | M |
| | 2021.05- | 6MT | F | L | SUV FWD 463 46 020 | Equipment code:1YH | GCI17126 | Inner Joint | | 25 | 26 | 32 | 59 | 110.5 | |
| 2.0 (100 kw) | 2014.09-2018.09 | 6MT | F | L | SUV 4WD 552 63 087;552 63 088;552 83 099 | | GDS56094 | Drive Shaft | | 27 | 25 | 59 | 84.5 | 606 | |
| | 2014.09-2018.09 | 6MT | F | R | SUV 4WD 552 63 087;552 63 088;552 83 099 | | GDS56984 | Drive Shaft | | 27 | 30 | 59 | 84.5 | 600 | |
| | 2014.09-2018.09 | 6MT | F | L/R | SUV 4WD 552 63 087;552 63 088;552 83 099 | | GCO82930 | Outer Joint | | 27 | 26 | 59 | 84.5 | 62.5 | I |
| | 2014.09-2018.09 | 6MT | F | L | SUV 4WD 552 63 087;552 63 088;552 83 099 | | GCI82440 | Inner Joint | | 25 | 27 | 32 | 59 | 112.5 | |
| | 2014.09-2018.09 | 6MT | F | R | SUV 4WD 552 63 087;552 63 088;552 83 099 | | GCI83584 | Inner Joint | | 30 | 27 | | 68.5 | 98 | |
| | 2014.09-2018.09 | 9AT | F | L/R | SUV 4WD 552 63 087;552 63 088;552 83 099 | | GDS56985 | Drive Shaft | | 27 | 30 | 59 | 84.5 | 600 | |
| | 2014.09-2018.09 | 9AT | F | L/R | SUV 4WD 552 63 087;552 63 088;552 83 099 | | GCO83422 | Outer Joint | | 27 | 27 | 59 | 84.5 | 64 | I |
| | 2014.09-2018.09 | 9AT | F | L/R | SUV 4WD 552 63 087;552 63 088;552 83 099 | | GCI83585 | Inner Joint | | 30 | 29 | | 68.5 | 98 | |
| | 2014.09-2018.09 | 9AT | R | L/R | SUV 4WD 552 63 087;552 63 088;552 83 099 | | GDS84019 | Drive Shaft | | 27 | 22 | 59 | 84.5 | 679 | |
| | 2014.09-2018.09 | 9AT | R | L/R | SUV 4WD 552 63 087;552 63 088;552 83 099 | | GCO82554 | Outer Joint | | 27 | 21 | 59 | 84.5 | 54 | M |
| | 2014.09-2018.09 | 9AT | R | L/R | SUV 4WD 552 63 087;552 63 088;552 83 099 | | GCI83205 | Inner Joint | | 22 | 21 | 38.5 | | 134 | |
| 2.0 (103 kw) | 2014.09-2018.09 | 6MT | F | L | SUV 4WD 552 63 087;552 63 088 | | GDS56094 | Drive Shaft | | 27 | 25 | 59 | 84.5 | 606 | |
| | 2014.09-2018.09 | 6MT | F | R | SUV 4WD 552 63 087;552 63 088 | | GDS56984 | Drive Shaft | | 27 | 30 | 59 | 84.5 | 600 | |
| | 2014.09-2018.09 | 6MT | F | L/R | SUV 4WD 552 63 087;552 63 088 | | GCO82930 | Outer Joint | | 27 | 26 | 59 | 84.5 | 62.5 | I |
| | 2014.09-2018.09 | 6MT | F | L | SUV 4WD 552 63 087;552 63 088 | | GCI82440 | Inner Joint | | 25 | 27 | 32 | 59 | 112.5 | |
| | 2014.09-2018.09 | 6MT | F | R | SUV 4WD 552 63 087;552 63 088 | | GCI83584 | Inner Joint | | 30 | 27 | | 68.5 | 98 | |
| | 2014.09-2018.09 | 9AT | F | L/R | SUV 4WD 552 63 087;552 63 088 | | GDS56985 | Drive Shaft | | 27 | 30 | 59 | 84.5 | 600 | |
| | 2014.09-2018.09 | 9AT | F | L/R | SUV 4WD 552 63 087;552 63 088 | | GCO83422 | Outer Joint | | 27 | 27 | 59 | 84.5 | 64 | I |
| | 2014.09-2018.09 | 9AT | F | L/R | SUV 4WD 552 63 087;552 63 088 | | GCI83585 | Inner Joint | | 30 | 29 | | 68.5 | 98 | |
| | 2014.09-2018.09 | 9AT | R | L/R | SUV 4WD 552 63 087;552 63 088 | | GDS84019 | Drive Shaft | | 27 | 22 | 59 | 84.5 | 679 | |
| | 2014.09-2018.09 | 9AT | R | L/R | SUV 4WD 552 63 087;552 63 088 | | GCO82554 | Outer Joint | | 27 | 21 | 59 | 84.5 | 54 | M |
| | 2014.09-2018.09 | 9AT | R | L/R | SUV 4WD 552 63 087;552 63 088 | | GCI83205 | Inner Joint | | 22 | 21 | 38.5 | | 134 | |
| 2.0 (110 kw) | 2018.09-2020.09 | 9AT | F | L/R | SUV 4WD 552 83 099 | | GDS56985 | Drive Shaft | | 27 | 30 | 59 | 84.5 | 600 | |
| | 2018.09-2020.09 | 9AT | F | L/R | SUV 4WD 552 83 099 | | GCO83422 | Outer Joint | | 27 | 27 | 59 | 84.5 | 64 | I |
| | 2018.09-2020.09 | 9AT | F | L/R | SUV 4WD 552 83 099 | | GCI83585 | Inner Joint | | 30 | 29 | | 68.5 | 98 | |
| | 2018.09-2020.09 | 9AT | R | L/R | SUV 4WD 552 83 099 | | GDS84019 | Drive Shaft | | 27 | 22 | 59 | 84.5 | 679 | |
| | 2018.09-2020.09 | 9AT | R | L/R | SUV 4WD 552 83 099 | | GCO82554 | Outer Joint | | 27 | 21 | 59 | 84.5 | 54 | M |
| | 2018.09-2020.09 | 9AT | R | L/R | SUV 4WD 552 83 099 | | GCI83205 | Inner Joint | | 22 | 21 | 38.5 | | 134 | |
| 2.4 (135 kw) | 2015.05- | 9AT | F | L | SUV 4WD ED6 | | GDS84182 | Drive Shaft | | 27 | 30 | 59 | 84 | 600 | |
| | 2015.05- | 9AT | F | L/R | SUV 4WD ED6 | | GCO99348 | Outer Joint | | 27 | 25 | 59 | 84 | 61.5 | M |
| | 2015.05- | 9AT | F | L | SUV 4WD ED6 | | GCI17111 | Inner Joint | | 30 | 26 | 34.85 | 68.5 | 91 | |
| 2.4 (138 kw) | 2016.01- | 9AT | F | L | SUV FWD ED6 | | GDS84182 | Drive Shaft | | 27 | 30 | 59 | 84 | 600 | |
| | 2016.01- | 9AT | F | L/R | SUV FWD ED6 | | GCO99348 | Outer Joint | | 27 | 25 | 59 | 84 | 61.5 | M |
| | 2016.01- | 9AT | F | L | SUV FWD ED6 | | GCI17111 | Inner Joint | | 30 | 26 | 34.85 | 68.5 | 91 | |
| **Barchetta** | | | | | | | | | | | | | | | |
| 1.8 (96 kw) | 1995.01-2005.06 | 5MT | F | R | Cabriolet FWD 183A1000/188A6000 | | GDS99049 | Drive Shaft | | 25 | | 52 | 85 | 493 | |
| | 1995.01-2005.06 | 5MT | F | L/R | Cabriolet FWD 183A1000/188A6000 | | GCI82005 | Inner Joint | | | 25 | | | 32 | |
| | 1995.01-2005.06 | MT | F | L/R | Cabriolet FWD 183A1000/188A6000 | Date to:1999.06,VET no. to:0020897 | GCO17004 | Outer Joint | | 25 | 25 | 52 | 85 | 58 | I |
| | 1995.01-2005.06 | MT | F | L/R | Cabriolet FWD 183A1000/188A6000 | Date from:1999.06,VET no. from:0043320 | GCO17042 | Outer Joint | | 25 | 25 | 51 | 85 | 58 | O |
| | 1995.01-2005.06 | MT | F | L/R | Cabriolet FWD 183A1000/188A6000 | Date to:1999.06,VET no. to:0020897 | GCO82004 | Outer Joint | 44T | 25 | 25 | 52 | 85 | 58 | I |
| | 1995.01-2005.06 | MT | F | L/R | Cabriolet FWD 183A1000/188A6000 | Date from:1996.07,Date to:1999.05,VET no. from:0020898,VET no. to:0043319 | GCO82006 | Outer Joint | 44T | 25 | 25 | 52 | 85 | 58 | O |

| | YEAR | TRANSM. | F/R | L/R | BODY STYLE & DRIVE TYPE & ENGINE | REMARKS | G-AP Ref. | PRODUCT | ABS | Technical Specifications A | B | C | H | L | P |
|---|---|---|---|---|---|---|---|---|---|---|---|---|---|---|---|
| **FIAT** **Brava** | | | | | | | | | | | | | | | |
| 1.2 (59 kw) | 2000.09-2002.05 | 5MT | F | L | Hatchback FWD 188A5000 | | GDS17197 | Drive Shaft | | 22 | 22 | 46.8 | 75.5 | 591 | |
| | 2000.09-2002.05 | 5MT | F | R | Hatchback FWD 188A5000 | | GDS17025 | Drive Shaft | | 22 | 22 | 46.8 | 75.5 | 913 | |
| | 2000.09-2002.05 | 5MT | F | L/R | Hatchback FWD 188A5000 | | GCO17001 | Outer Joint | | 22 | 20 | 46.8 | 75.5 | 52 | O |
| 1.2 (60 kw) | 1998.09-2000.08 | 5MT | F | R | Hatchback FWD 182B2000 | | GDS17025 | Drive Shaft | | 22 | 22 | 46.8 | 75.5 | 913 | |
| | 1998.09-2000.08 | AT/MT | F | L/R | Hatchback FWD 182B2000 | | GCO17008 | Outer Joint | | 22 | 20 | 51 | 79.5 | 51.5 | O |
| | 1998.09-2000.08 | MT | F | L | Hatchback FWD 182B2000 | | GDS17010 | Drive Shaft | | 22 | 32 | 46.8 | 75.5 | 569 | |
| | 1998.09-2000.08 | MT | F | R | Hatchback FWD 182B2000 | | GDS17011 | Drive Shaft | | 22 | 32 | 46.8 | 75.5 | 928.5 | |
| | 1998.09-2000.08 | | F | L | Hatchback FWD 182B2000 | | GDS17197 | Drive Shaft | | 22 | 22 | 46.8 | 75.5 | 591 | |
| 1.4 (55 kw) | 1995.10-1997.02 | 5MT | F | L | Hatchback FWD 182A5000 | | GDS17197 | Drive Shaft | | 22 | 22 | 46.8 | 75.5 | 591 | |
| | 1995.10-1997.02 | 5MT | F | R | Hatchback FWD 182A5000 | | GDS17025 | Drive Shaft | | 22 | 22 | 46.8 | 75.5 | 913 | |
| | 1995.10-1997.02 | AT | F | L/R | Hatchback FWD 182A5000 | | GCO17021 | Outer Joint | | 22 | 22 | 46.8 | 75.5 | 52 | O |
| | 1995.10-1997.02 | AT | F | L/R | Hatchback FWD 182A5000 | | GCO17022 | Outer Joint | 44T | 22 | 22 | 46.8 | 75.5 | 52 | O |
| | 1995.10-1997.02 | AT/MT | F | L/R | Hatchback FWD 182A5000 | Date to:1997.02 | GCO17001 | Outer Joint | | 22 | 20 | 46.8 | 75.5 | 52 | O |
| | 1995.10-1997.02 | AT/MT | F | L/R | Hatchback FWD 182A5000 | Date to:1997.02 | GCO17039 | Outer Joint | 44T | 22 | 20 | 46.8 | 75.5 | 52 | O |
| | 1995.10-1997.02 | MT | F | L | Hatchback FWD 182A5000 | | GDS17010 | Drive Shaft | | 22 | 32 | 46.8 | 75.5 | 569 | |
| | 1995.10-1997.02 | MT | F | R | Hatchback FWD 182A5000 | | GDS17011 | Drive Shaft | | 22 | 32 | 46.8 | 75.5 | 928.5 | |
| 1.4 (59 kw) | 1995.10-1998.08 | 5MT | F | L | Hatchback FWD 182A3000 | | GDS17197 | Drive Shaft | | 22 | 22 | 46.8 | 75.5 | 591 | |
| | 1995.10-1998.08 | 5MT | F | R | Hatchback FWD 182A3000 | | GDS17025 | Drive Shaft | | 22 | 22 | 46.8 | 75.5 | 913 | |
| | 1995.10-1998.08 | AT | F | L/R | Hatchback FWD 182A3000 | | GCO17021 | Outer Joint | | 22 | 22 | 46.8 | 75.5 | 52 | O |
| | 1995.10-1998.08 | AT | F | L/R | Hatchback FWD 182A3000 | | GCO17022 | Outer Joint | 44T | 22 | 22 | 46.8 | 75.5 | 52 | O |
| | 1995.10-1998.08 | AT/MT | F | L/R | Hatchback FWD 182A3000 | | GCO17001 | Outer Joint | | 22 | 20 | 46.8 | 75.5 | 52 | O |
| | 1995.10-1998.08 | AT/MT | F | L/R | Hatchback FWD 182A3000 | | GCO17039 | Outer Joint | 44T | 22 | 20 | 46.8 | 75.5 | 52 | O |
| | 1995.10-1998.08 | MT | F | L | Hatchback FWD 182A3000 | | GDS17010 | Drive Shaft | | 22 | 32 | 46.8 | 75.5 | 569 | |
| | 1995.10-1998.08 | MT | F | R | Hatchback FWD 182A3000 | | GDS17011 | Drive Shaft | | 22 | 32 | 46.8 | 75.5 | 928.5 | |
| 1.6 (66 kw) | 1995.10-2001.10 | AT/MT | F | L/R | Hatchback FWD 182A6000 | | GCO17021 | Outer Joint | | 22 | 22 | 46.8 | 75.5 | 52 | O |
| | 1995.10-2001.10 | AT/MT | F | L/R | Hatchback FWD 182A6000 | | GCO17022 | Outer Joint | 44T | 22 | 22 | 46.8 | 75.5 | 52 | O |
| | 1995.10-2001.10 | MT | F | L | Hatchback FWD 182A6000 | | GDS17010 | Drive Shaft | | 22 | 32 | 46.8 | 75.5 | 569 | |
| | 1995.10-2001.10 | MT | F | R | Hatchback FWD 182A6000 | | GDS17011 | Drive Shaft | | 22 | 32 | 46.8 | 75.5 | 928.5 | |
| | 1995.10-2001.10 | MT | F | L/R | Hatchback FWD 182A6000 | | GCO17015 | Outer Joint | | 22 | 22 | 51 | 79.5 | 54 | O |
| | 1995.10-2001.10 | | F | L/R | Hatchback FWD 182A6000 | Country Version:Turkey | GCO17011 | Outer Joint | | 25 | 22 | 51 | 84.5 | 57 | O |
| 1.6 (76 kw) | 1996.02-2001.10 | AT/MT | F | L | Hatchback FWD 182A4000 | | GCO17015 | Outer Joint | | 22 | 22 | 51 | 79.5 | 54 | O |
| | 1996.02-2001.10 | AT/MT | F | L/R | Hatchback FWD 182A4000 | | GCO17021 | Outer Joint | | 22 | 22 | 46.8 | 75.5 | 52 | O |
| | 1996.02-2001.10 | AT/MT | F | L/R | Hatchback FWD 182A4000 | | GCO17022 | Outer Joint | 44T | 22 | 22 | 46.8 | 75.5 | 52 | O |
| | 1996.02-2001.10 | MT | F | L/R | Hatchback FWD 182A4000 | Country Version:Turkey | GCO17011 | Outer Joint | | 25 | 22 | 51 | 84.5 | 57 | O |
| | 2000.09-2002.05 | | F | L/R | Hatchback FWD 182B6000 | Country Version:Turkey | GCO17011 | Outer Joint | | 25 | 22 | 51 | 84.5 | 57 | O |
| | 2000.09-2002.05 | | F | L/R | Hatchback FWD 182B6000 | Date From:1998.11 | GCO17015 | Outer Joint | | 22 | 22 | 51 | 79.5 | 54 | O |
| 1.8 (83 kw) | 1995.10-2001.08 | 5MT | F | L | Hatchback FWD 182A2000 | | GDS99048 | Drive Shaft | | 25 | | 52 | 85 | 467 | |
| | 1995.10-2001.08 | AT/MT | F | L/R | Hatchback FWD 182A2000 | | GCO17004 | Outer Joint | | 25 | 25 | 52 | 85 | 58 | I |
| | 1995.10-2001.08 | AT/MT | F | L/R | Hatchback FWD 182A2000 | | GCO82004 | Outer Joint | 44T | 25 | 25 | 52 | 85 | 58 | I |
| | 1995.10-2001.08 | AT/MT | F | L/R | Hatchback FWD 182A2000 | | GCI18070 | Inner Joint | | | 25 | | | 32 | |
| | 1995.10-2001.08 | MT | F | L/R | Hatchback FWD 182A2000 | | GCI82011 | Inner Joint | | | 25 | | | 32 | |
| | 1995.10-2001.08 | | F | L/R | Hatchback FWD 182A2000 | Date From:1998.11 | GCO17042 | Outer Joint | | 25 | 25 | 51 | 85 | 58 | O |
| | 1995.10-2001.08 | | F | L/R | Hatchback FWD 182A2000 | Date To:1998.10 | GCI82005 | Inner Joint | | | 25 | | | 32 | |
| | 1995.10-2001.08 | | F | | Hatchback FWD 182A2000 | | GCI82006 | Inner Joint | | | 25 | | | 32 | |
| 1.9 (48 kw) | 1995.10-1997.05 | AT/MT | F | L/R | Hatchback FWD 160A7000 | | GCO17001 | Outer Joint | | 22 | 20 | 46.8 | 75.5 | 52 | O |
| | 1995.10-1997.05 | AT/MT | F | L/R | Hatchback FWD 160A7000 | | GCO17039 | Outer Joint | 44T | 22 | 20 | 46.8 | 75.5 | 52 | O |
| | 1995.10-1997.05 | MT | F | L | Hatchback FWD 160A7000 | | GDS17010 | Drive Shaft | | 22 | 32 | 46.8 | 75.5 | 569 | |
| | 1995.10-1997.05 | MT | F | R | Hatchback FWD 160A7000 | | GDS17011 | Drive Shaft | | 22 | 32 | 46.8 | 75.5 | 928.5 | |
| 1.9 (55 kw) | 1996.09-2001.08 | 5MT | F | L/R | Hatchback FWD 182A8000 | | GDS17001 | Drive Shaft | 44T | 25 | | 52 | 85 | 452 | |
| | 1996.09-2001.08 | 5MT | F | L/R | Hatchback FWD 182A8000 | | GDS17038 | Drive Shaft | | 25 | | 52 | 85 | 452 | |
| | 1996.09-2001.08 | AT/MT | F | L/R | Hatchback FWD 182A8000 | Date from:1998.01 | GCO17042 | Outer Joint | | 25 | 25 | 51 | 85 | 58 | O |
| | 1996.09-2001.08 | AT/MT | F | L/R | Hatchback FWD 182A8000 | Date from:1996.09 | GCO82006 | Outer Joint | 44T | 25 | 25 | 52 | 85 | 58 | O |
| | 1996.09-2001.08 | AT/MT | F | L/R | Hatchback FWD 182A8000 | | GCI18070 | Inner Joint | | | 25 | | | 32 | |
| | 1996.09-2001.08 | | F | | Hatchback FWD 182A8000 | | GCI82005 | Inner Joint | | | 25 | | | 32 | |
| 1.9 (74 kw) | 1996.09-2002.05 | 5MT | F | L/R | Hatchback FWD 182A7000/182B9000 | | GDS17038 | Drive Shaft | | 25 | | 52 | 85 | 452 | |
| | 1996.09-2002.05 | AT/MT | F | L/R | Hatchback FWD 182A7000/182B9000 | | GCO82006 | Outer Joint | 44T | 25 | 25 | 52 | 85 | 58 | O |
| | 1996.09-2002.05 | AT/MT | F | L/R | Hatchback FWD 182A7000/182B9000 | Date from:1998.01 | GCI18070 | Inner Joint | | | 25 | | | 32 | |
| | 1996.09-2002.05 | MT | F | L/R | Hatchback FWD 182A7000/182B9000 | | GCO17042 | Outer Joint | | 25 | 25 | 51 | 85 | 58 | O |
| | 1996.09-2002.05 | | F | L/R | Hatchback FWD 182A7000/182B9000 | Date to:1998.10 | GDS17001 | Drive Shaft | 44T | 25 | | 52 | 85 | 452 | |
| 1.9 (77 kw) | 1998.09-2000.08 | 5MT | F | L/R | Hatchback FWD 182B4000 | | GDS17038 | Drive Shaft | | 25 | | 52 | 85 | 452 | |
| | 1998.09-2000.08 | AT/MT | F | L/R | Hatchback FWD 182B4000 | | GCI18070 | Inner Joint | | | 25 | | | 32 | |
| | 1998.09-2000.08 | MT | F | L/R | Hatchback FWD 182B4000 | Date to:2000.08 | GCO17042 | Outer Joint | | 25 | 25 | 51 | 85 | 58 | O |
| | 1998.09-2000.08 | MT | F | L/R | Hatchback FWD 182B4000 | Date to:2000.08 | GCI82011 | Inner Joint | | | 25 | | | 32 | |
| | 1998.09-2000.08 | | F | | Hatchback FWD 182B4000 | | GCI82005 | Inner Joint | | | 25 | | | 32 | |

| | YEAR | TRANSM. | F/R | L/R | BODY STYLE & DRIVE TYPE & ENGINE | REMARKS | G-AP Ref. | PRODUCT | ABS | Technical Specifications A | B | C | H | L | P |
|---|---|---|---|---|---|---|---|---|---|---|---|---|---|---|---|
| **FIAT** **Bravo** | | | | | | | | | | | | | | | |
| 1.2 (59 kw) | 1998.06-2002.05 | 5MT | F | R | Hatchback FWD 188A5000 | | GDS17025 | Drive Shaft | | 22 | 22 | 46.8 | 75.5 | 913 | |
| | 1998.06-2002.05 | MT | F | L | Hatchback FWD 188A5000 | | GDS17010 | Drive Shaft | | 22 | 32 | 46.8 | 75.5 | 569 | |
| | 1998.06-2002.05 | MT | F | R | Hatchback FWD 188A5000 | | GDS17011 | Drive Shaft | | 22 | 32 | 46.8 | 75.5 | 928.5 | |
| | 1998.06-2002.05 | | F | L | Hatchback FWD 188A5000 | | GDS17197 | Drive Shaft | | 22 | 22 | 46.8 | 75.5 | 591 | |
| | 1998.06-2002.05 | | F | L/R | Hatchback FWD 188A5000 | | GCO17008 | Outer Joint | | 22 | 20 | 51 | 79.5 | 51.5 | O |
| 1.2 (60 kw) | 1998.09-2000.08 | 5MT | F | R | Hatchback FWD 182B2000 | | GDS17025 | Drive Shaft | | 22 | 22 | 46.8 | 75.5 | 913 | |
| | 1998.09-2000.08 | AT/MT | F | L/R | Hatchback FWD 182B2000 | | GCO17008 | Outer Joint | | 22 | 20 | 51 | 79.5 | 51.5 | O |
| | 1998.09-2000.08 | MT | F | L | Hatchback FWD 182B2000 | | GDS17010 | Drive Shaft | | 22 | 32 | 46.8 | 75.5 | 569 | |
| | 1998.09-2000.08 | MT | F | R | Hatchback FWD 182B2000 | | GDS17011 | Drive Shaft | | 22 | 32 | 46.8 | 75.5 | 928.5 | |
| | 1998.09-2000.08 | | F | L | Hatchback FWD 182B2000 | | GDS17197 | Drive Shaft | | 22 | 22 | 46.8 | 75.5 | 591 | |
| 1.4 (55 kw) | 1995.10-1997.02 | 5MT | F | L | Hatchback FWD 182A5000 | | GDS17197 | Drive Shaft | | 22 | 22 | 46.8 | 75.5 | 591 | |
| | 1995.10-1997.02 | 5MT | F | R | Hatchback FWD 182A5000 | | GDS17025 | Drive Shaft | | 22 | 22 | 46.8 | 75.5 | 913 | |
| | 1995.10-1997.02 | 5MT | F | L/R | Hatchback FWD 182A5000 | | GCO17001 | Outer Joint | | 22 | 20 | 46.8 | 75.5 | 52 | O |
| | 1995.10-1997.02 | 5MT | F | L/R | Hatchback FWD 182A5000 | | GCO17039 | Outer Joint | 44T | 22 | 20 | 46.8 | 75.5 | 52 | O |
| | 1995.10-1997.02 | AT | F | L/R | Hatchback FWD 182A5000 | | GCO17021 | Outer Joint | | 22 | 22 | 46.8 | 75.5 | 52 | O |
| | 1995.10-1997.02 | AT | F | L/R | Hatchback FWD 182A5000 | | GCO17022 | Outer Joint | 44T | 22 | 22 | 46.8 | 75.5 | 52 | O |
| 1.4 (59 kw) | 1995.10-1998.08 | 5MT | F | L | Hatchback FWD 182A3000 | | GDS17197 | Drive Shaft | | 22 | 22 | 46.8 | 75.5 | 591 | |
| | 1995.10-1998.08 | 5MT | F | R | Hatchback FWD 182A3000 | | GDS17025 | Drive Shaft | | 22 | 22 | 46.8 | 75.5 | 913 | |
| | 1995.10-1998.08 | 5MT | F | L/R | Hatchback FWD 182A3000 | Trans. code:M38,Date From:1995.12 | GCO17021 | Outer Joint | | 22 | 22 | 46.8 | 75.5 | 52 | O |
| | 1995.10-1998.08 | 5MT | F | L/R | Hatchback FWD 182A3000 | Trans. code:M38,Date From:1995.12 | GCO17022 | Outer Joint | 44T | 22 | 22 | 46.8 | 75.5 | 52 | O |
| 1.4 (66 kw) | 2007.04-2014.12 | 6MT | F | R | Hatchback FWD 192 B2.000 | | GDS17214 | Drive Shaft | | 25 | 22 | 51 | 84 | 918 | |
| | 2007.04-2014.12 | 6MT | F | L/R | Hatchback FWD 192 B2.000 | | GCO17026 | Outer Joint | | 25 | 22 | 51 | 84 | 57 | M |
| | 2007.04-2014.12 | 6MT | F | L/R | Hatchback FWD 192 B2.000 | | GCI17027 | Inner Joint | | 22 | 22 | 36 | 61.5 | 93.5 | |
| | 2008.12-2014.12 | 6MT | F | R | Hatchback FWD 192 B2.000 | | GDS17214 | Drive Shaft | | 25 | 22 | 51 | 84 | 918 | |
| | 2008.12-2014.12 | 6MT | F | L/R | Hatchback FWD 192 B2.000 | | GCO17026 | Outer Joint | | 25 | 22 | 51 | 84 | 57 | M |
| | 2008.12-2014.12 | 6MT | F | L/R | Hatchback FWD 192 B2.000 | | GCI17027 | Inner Joint | | 22 | 22 | 36 | 61.5 | 93.5 | |
| 1.4 (88 kw) | 2007.10-2014.12 | 6MT | F | R | Hatchback FWD 198 A4.000 | Date to:2012.06;Inner teeth of wheel side:25 | GDS17226 | Drive Shaft | | 25 | 25 | 51.1 | 84.5 | 955 | |
| | 2007.10-2014.12 | 6MT | F | R | Hatchback FWD 198 A4.000 | Inner teeth of wheel side:26 | GDS81768 | Drive Shaft | | 25 | 25 | 51 | 84.5 | 930 | |
| | 2007.10-2014.12 | 6MT | F | L/R | Hatchback FWD 198 A4.000 | Equipment code:PCC635 | GCO17063 | Outer Joint | | 25 | 25 | 51.1 | 84.5 | 61 | M |
| | 2007.10-2014.12 | 6MT | F | L | Hatchback FWD 198 A4.000 | Equipment code:PCC544;VET no. from:4269790 | GCI17083 | Inner Joint | | 25 | 24 | 34.9 | 57 | 107.5 | |
| | 2007.10-2014.12 | MT | F | R | Hatchback FWD 198 A4.000 | | GCI17058 | Inner Joint | | 25 | 26 | 34.9 | 367 | 108.5 | |
| | 2007.10-2014.12 | SAT/6MT | F | L | Hatchback FWD 198 A4.000 | | GDS17180 | Drive Shaft | | 25 | 25 | 51 | 84.5 | 628 | |
| | 2007.10-2014.12 | SAT/6MT | F | L | Hatchback FWD 198 A4.000 | | GCI17035 | Inner Joint | | 25 | 26 | 34.9 | 57.5 | 114.5 | |
| 1.4 (103 kw) | 2010.04-2014.12 | 6MT | F | R | Hatchback FWD 198 A7.000 | | GDS17226 | Drive Shaft | | 25 | 25 | 51.1 | 84.5 | 955 | |
| | 2010.04-2014.12 | 6MT | F | R | Hatchback FWD 198 A7.000 | | GCO17063 | Outer Joint | | 25 | 25 | 51.1 | 84.5 | 61 | M |
| | 2010.04-2014.12 | 6MT | F | L/R | Hatchback FWD 198 A7.000 | | GCI17123 | Inner Joint | | 25 | 26 | 29.75 | 409 | 108.5 | |
| 1.4 (110 kw) | 2007.09-2014.12 | 6MT | F | L | Hatchback FWD 198 A1.000 | | GDS17180 | Drive Shaft | | 25 | 25 | 51 | 84.5 | 628 | |
| | 2007.09-2014.12 | 6MT | F | R | Hatchback FWD 198 A1.000 | | GDS81768 | Drive Shaft | | 25 | 25 | 51 | 84.5 | 930 | |
| | 2007.09-2014.12 | 6MT | F | L | Hatchback FWD 198 A1.000 | | GCI17035 | Inner Joint | | 25 | 26 | 34.9 | 57.5 | 114.5 | |
| | 2007.09-2014.12 | 6MT | F | L | Hatchback FWD 198 A1.000 | | GCI17083 | Inner Joint | | 25 | 24 | 34.9 | 57 | 107.5 | |
| | 2007.09-2014.12 | AT/MT | F | L/R | Hatchback FWD 198 A1.000 | | GCO82025 | Outer Joint | | 25 | 26 | 51 | 84.5 | 64.5 | M |
| | 2007.09-2014.12 | MT | F | R | Hatchback FWD 198 A1.000 | | GCI17058 | Inner Joint | | 25 | 26 | 34.9 | 367 | 108.5 | |
| | 2007.09-2014.12 | | F | L/R | Hatchback FWD 198 A1.000 | | GCO17030 | Outer Joint | | 25 | 26 | 51 | 84.5 | 64.5 | M |
| 1.6 (66 kw) | 1995.10-2001.10 | AT/MT | F | L/R | Hatchback FWD 182A6000 | | GCO17021 | Outer Joint | | 22 | 22 | 46.8 | 75.5 | 52 | O |
| | 1995.10-2001.10 | AT/MT | F | L/R | Hatchback FWD 182A6000 | | GCO17022 | Outer Joint | 44T | 22 | 22 | 46.8 | 75.5 | 52 | O |
| | 1995.10-2001.10 | MT | F | L | Hatchback FWD 182A6000 | | GDS17010 | Drive Shaft | | 22 | 32 | 46.8 | 75.5 | 569 | |
| | 1995.10-2001.10 | MT | F | R | Hatchback FWD 182A6000 | | GDS17011 | Drive Shaft | | 22 | 32 | 46.8 | 75.5 | 928.5 | |
| | 1995.10-2001.10 | MT | F | L/R | Hatchback FWD 182A6000 | | GCO17015 | Outer Joint | | 22 | 22 | 51 | 79.5 | 54 | O |
| | 1995.10-2001.10 | | F | L/R | Hatchback FWD 182A6000 | Date To:1995.12,VET To:4064492/6000001 | GCO17001 | Outer Joint | | 22 | 20 | 46.8 | 75.5 | 52 | O |
| | 1995.10-2001.10 | | F | L/R | Hatchback FWD 182A6000 | Date From:1998.11 | GCO17011 | Outer Joint | | 25 | 22 | 51 | 84.5 | 57 | O |
| | 1995.10-2001.10 | | F | L/R | Hatchback FWD 182A6000 | Date To:1995.12;VET To:4064492/6000001 | GCO17039 | Outer Joint | 44T | 22 | 20 | 46.8 | 75.5 | 52 | O |
| | 2008.03-2014.12 | 6MT | F | L/R | Hatchback FWD 198 A6.000 | Equipment code:PCC635 | GCO17063 | Outer Joint | | 25 | 25 | 51.1 | 84.5 | 61 | M |
| | 2008.03-2014.12 | 6MT | F | L | Hatchback FWD 198 A6.000 | Equipment code:PCC530 | GCI17084 | Inner Joint | | 25 | 24 | 31.95 | 91 | 87 | |
| | 2008.03-2014.12 | 6MT | F | R | Hatchback FWD 198 A6.000 | Date from:2009.07 | GCI17123 | Inner Joint | | 25 | 26 | 29.75 | 409 | 108.5 | |
| | 2008.03-2014.12 | | F | R | Hatchback FWD 198 A6.000 | Date From:2009.07 | GDS17226 | Drive Shaft | | 25 | 25 | 51.1 | 84.5 | 955 | |
| | 2008.03-2014.12 | | F | L/R | Hatchback FWD 198 A6.000 | Date From:2008.08;Date To:2009.06;VET From:4183048 | GDS17194 | Drive Shaft | | 25 | 39 | 51 | 84.5 | 523 | |
| 1.6 (76 kw) | 1996.03-2001.10 | AT/MT | F | L | Hatchback FWD 182A4000 | | GCO17015 | Outer Joint | | 22 | 22 | 51 | 79.5 | 54 | O |
| | 1996.03-2001.10 | AT/MT | F | L/R | Hatchback FWD 182A4000 | | GCO17021 | Outer Joint | | 22 | 22 | 46.8 | 75.5 | 52 | O |
| | 1996.03-2001.10 | AT/MT | F | L/R | Hatchback FWD 182A4000 | | GCO17022 | Outer Joint | 44T | 22 | 22 | 46.8 | 75.5 | 52 | O |
| | 2000.09-2003.08 | | F | L/R | Hatchback FWD 182B6000 | | GCO17015 | Outer Joint | | 22 | 22 | 51 | 79.5 | 54 | O |
| 1.6 (77 kw) | 2007.09-2014.12 | 6MT | F | L | Hatchback FWD 198 A3.000;844 A3.000 | | GDS17179 | Drive Shaft | | 25 | 25 | 51 | 84.5 | 632 | |
| | 2007.09-2014.12 | 6MT | F | R | Hatchback FWD 198 A3.000;844 A3.000 | Date from:2009.07 | GDS17226 | Drive Shaft | | 25 | 25 | 51.1 | 84.5 | 955 | |
| | 2007.09-2014.12 | 6MT | F | L/R | Hatchback FWD 198 A3.000;844 A3.000 | Date from:2008.08,Date to:2009.06 | GDS17194 | Drive Shaft | | 25 | 39 | 51 | 84.5 | 523 | |
| | 2007.09-2014.12 | 6MT | F | L/R | Hatchback FWD 198 A3.000;844 A3.000 | Equipment code:PCC635 | GCO17063 | Outer Joint | | 25 | 25 | 51.1 | 84.5 | 61 | M |
| | 2007.09-2014.12 | 6MT | F | L | Hatchback FWD 198 A3.000;844 A3.000 | Equipment code:PCC530 | GCI17084 | Inner Joint | | 25 | 24 | 31.95 | 91 | 87 | |

| | YEAR | TRANSM. | F/R | L/R | BODY STYLE & DRIVE TYPE & ENGINE | REMARKS | G-AP Ref. | PRODUCT | ABS | Technical Specifications A | B | C | H | L | P |
|---|---|---|---|---|---|---|---|---|---|---|---|---|---|---|---|
| **FIAT Bravo** | | | | | | | | | | | | | | | |
| 1.6 (77 kw) | 2007.09-2014.12 | 6MT | F | R | Hatchback FWD 198 A3.000;844 A3.000 | Date to:2012.06,Chassis no. from:4335323,Equipment code:PCC635 | GCI17123 | Inner Joint | | 25 | 26 | 29.75 | 409 | 108.5 | |
| 1.6 (88 kw) | 2008.03-2014.12 | 6AT/6MT | F | L | Hatchback FWD 198 A2.000 | Date from:2008.08;Equipment code:PCC530 | GDS17179 | Drive Shaft | | 25 | 25 | 51 | 84.5 | 632 | |
| | 2008.03-2014.12 | 6MT | F | L/R | Hatchback FWD 198 A2.000 | Date to:2012.06;Equipment code:PCC635 | GDS17226 | Drive Shaft | | 25 | 25 | 51.1 | 84.5 | 955 | |
| | 2008.03-2014.12 | 6MT | F | L/R | Hatchback FWD 198 A2.000 | Equipment code:PCC635 | GCO17063 | Outer Joint | | 25 | 25 | 51.1 | 84.5 | 61 | M |
| | 2008.03-2014.12 | 6MT | F | L | Hatchback FWD 198 A2.000 | Date from:2008.08;VET no. from:4183048;Equipment code:PCC530 | GCI17084 | Inner Joint | | 25 | 24 | 31.95 | 91 | 87 | |
| | 2008.03-2014.12 | 6MT | F | R | Hatchback FWD 198 A2.000 | Date to:2012.06,Chassis no. from:4335323,Equipment code:PCC635 | GCI17123 | Inner Joint | | 25 | 26 | 29.75 | 409 | 108.5 | |
| | 2008.03-2014.12 | MT | F | L/R | Hatchback FWD 198 A2.000 | Date from:2008.08;Equipment code:PCC530 | GDS17194 | Drive Shaft | | 25 | 39 | 51 | 84.5 | 523 | |
| 1.8 (83 kw) | 1995.10-2001.10 | 5MT | F | L | Hatchback FWD 182A2000 | | GDS99048 | Drive Shaft | | 25 | | 52 | 85 | 467 | |
| | 1995.10-2001.10 | AT/MT | F | L/R | Hatchback FWD 182A2000 | | GCO17004 | Outer Joint | | 25 | 25 | 52 | 85 | 58 | I |
| | 1995.10-2001.10 | AT/MT | F | L/R | Hatchback FWD 182A2000 | | GCO82004 | Outer Joint | 44T | 25 | 25 | 52 | 85 | 58 | I |
| | 1995.10-2001.10 | MT | F | L/R | Hatchback FWD 182A2000 | | GCI82011 | Inner Joint | | | 25 | | | 32 | |
| | 1995.10-2001.10 | | F | L/R | Hatchback FWD 182A2000 | Date From:1998.11 | GCO17042 | Outer Joint | | 25 | 25 | 51 | 85 | 58 | O |
| | 1995.10-2001.10 | | F | L/R | Hatchback FWD 182A2000 | | GCI82005 | Inner Joint | | | 25 | | | 32 | |
| | 1995.10-2001.10 | | F | | Hatchback FWD 182A2000 | | GCI82006 | Inner Joint | | | 25 | | | 32 | |
| 1.9 (48 kw) | 1995.10-1997.05 | 5MT | F | L | Hatchback FWD 160A7000 | | GDS17010 | Drive Shaft | | 22 | 32 | 46.8 | 75.5 | 569 | |
| | 1995.10-1997.05 | AT/MT | F | L/R | Hatchback FWD 160A7000 | Date to:1997.05 | GCO17001 | Outer Joint | | 22 | 20 | 46.8 | 75.5 | 52 | O |
| | 1995.10-1997.05 | AT/MT | F | L/R | Hatchback FWD 160A7000 | Date to:1997.05 | GCO17039 | Outer Joint | 44T | 22 | 20 | 46.8 | 75.5 | 52 | O |
| | 1995.10-1997.05 | MT | F | R | Hatchback FWD 160A7000 | | GDS17011 | Drive Shaft | | 22 | 32 | 46.8 | 75.5 | 928.5 | |
| 1.9 (55 kw) | 1996.09-2001.08 | 5MT | F | L/R | Hatchback FWD 182A8000 | | GDS17001 | Drive Shaft | 44T | 25 | | 52 | 85 | 452 | |
| | 1996.09-2001.08 | 5MT | F | L/R | Hatchback FWD 182A8000 | | GDS17038 | Drive Shaft | | 25 | | 52 | 85 | 452 | |
| | 1996.09-2001.08 | AT/MT | F | L/R | Hatchback FWD 182A8000 | Date from:1996.09 | GCO17042 | Outer Joint | | 25 | 25 | 51 | 85 | 58 | O |
| | 1996.09-2001.08 | AT/MT | F | L/R | Hatchback FWD 182A8000 | Date from:1996.09 | GCO82006 | Outer Joint | 44T | 25 | 25 | 52 | 85 | 58 | O |
| | 1996.09-2001.08 | AT/MT | F | L/R | Hatchback FWD 182A8000 | | GCI18070 | Inner Joint | | | 25 | | | 32 | |
| | 1996.09-2001.08 | | F | | Hatchback FWD 182A8000 | | GCI82005 | Inner Joint | | | 25 | | | 32 | |
| 1.9 (66 kw) | 2007.04-2008.12 | 5MT | F | L | Hatchback FWD 192 B5.000 | Date to:2007.04 | GCO82025 | Outer Joint | | 25 | 26 | 51 | 84.5 | 64.5 | M |
| | 2007.04-2008.12 | 5MT | F | L | Hatchback FWD 192 B5.000 | Date from:2007.05 | GCI17084 | Inner Joint | | 25 | 24 | 31.95 | 91 | 87 | |
| | 2007.04-2008.12 | | F | L/R | Hatchback FWD 192 B5.000 | Date From:2008.08;VET From:4183048 | GDS17194 | Drive Shaft | | 25 | 39 | 51 | 84.5 | 523 | |
| | 2007.04-2008.12 | | F | L/R | Hatchback FWD 192 B5.000 | | GCO17030 | Outer Joint | | 25 | 26 | 51 | 84.5 | 64.5 | M |
| 1.9 (74 kw) | 1996.09-2002.05 | 5MT | F | L/R | Hatchback FWD 182A7000/182B9000 | | GDS17038 | Drive Shaft | | 25 | | 52 | 85 | 452 | |
| | 1996.09-2002.05 | AT/MT | F | L/R | Hatchback FWD 182A7000/182B9000 | | GCO82006 | Outer Joint | 44T | 25 | 25 | 52 | 85 | 58 | O |
| | 1996.09-2002.05 | AT/MT | F | L/R | Hatchback FWD 182A7000/182B9000 | Date from:1998.01 | GCI18070 | Inner Joint | | | 25 | | | 32 | |
| | 1996.09-2002.05 | MT | F | L/R | Hatchback FWD 182A7000/182B9000 | | GCO17042 | Outer Joint | | 25 | 25 | 51 | 85 | 58 | O |
| | 1996.09-2002.05 | | F | L/R | Hatchback FWD 182A7000/182B9000 | Date To:1998.10 | GDS17001 | Drive Shaft | 44T | 25 | | 52 | 85 | 452 | |
| | 1996.09-2002.05 | | F | | Hatchback FWD 182A7000/182B9000 | | GCI82005 | Inner Joint | | | 25 | | | 32 | |
| 1.9 (77 kw) | 1998.09-2000.08 | 5MT | F | L | Hatchback FWD 182B4000 | | GDS99048 | Drive Shaft | | 25 | | 52 | 85 | 467 | |
| | 1998.09-2000.08 | AT/MT | F | L/R | Hatchback FWD 182B4000 | | GCI18070 | Inner Joint | | | 25 | | | 32 | |
| | 1998.09-2000.08 | MT | F | L/R | Hatchback FWD 182B4000 | Date to:2000.08 | GCO17042 | Outer Joint | | 25 | 25 | 51 | 85 | 58 | O |
| | 1998.09-2000.08 | | F | L/R | Hatchback FWD 182B4000 | Date From:1998.11 | GDS17038 | Drive Shaft | | 25 | | 52 | 85 | 452 | |
| | 1998.09-2000.08 | | F | L/R | Hatchback FWD 182B4000 | | GCI82005 | Inner Joint | | | 25 | | | 32 | |
| | 1998.09-2000.08 | | F | | Hatchback FWD 182B4000 | | GCI82006 | Inner Joint | | | 25 | | | 32 | |
| 1.9 (85 kw) | 2006.11-2009.12 | 5MT | F | L | Hatchback FWD 192 A1.000;192 B4.000 | Date from:2007.05 | GCI17084 | Inner Joint | | 25 | 24 | 31.95 | 91 | 87 | |
| | 2006.11-2009.12 | AT/MT | F | L/R | Hatchback FWD 192 A1.000;192 B4.000 | | GCO82025 | Outer Joint | | 25 | 26 | 51 | 84.5 | 64.5 | M |
| | 2006.11-2009.12 | MT | F | L | Hatchback FWD 192 A1.000;192 B4.000 | Trans. code:not for sequential manual transmission | GDS17180 | Drive Shaft | | 25 | 25 | 51 | 84.5 | 628 | |
| | 2006.11-2009.12 | | F | L/R | Hatchback FWD 192 A1.000;192 B4.000 | Date From:2007.05 | GDS17194 | Drive Shaft | | 25 | 39 | 51 | 84.5 | 523 | |
| | 2006.11-2009.12 | | F | L/R | Hatchback FWD 192 A1.000;192 B4.000 | | GCO17030 | Outer Joint | | 25 | 26 | 51 | 84.5 | 64.5 | M |
| 1.9 (88 kw) | 2007.04-2014.12 | 5MT | F | L | Hatchback FWD 192 A8.000 | | GDS17179 | Drive Shaft | | 25 | 25 | 51 | 84.5 | 632 | |
| | 2007.04-2014.12 | 5MT | F | L/R | Hatchback FWD 192 A8.000 | Date from:2008.08,Date to:2009.06 | GDS17194 | Drive Shaft | | 25 | 39 | 51 | 84.5 | 523 | |
| | 2007.04-2014.12 | 5MT | F | L | Hatchback FWD 192 A8.000 | | GCI17005 | Inner Joint | | 25 | 26 | 32 | 91 | 95 | |
| | 2007.04-2014.12 | 5MT | F | L | Hatchback FWD 192 A8.000 | Date from:2007.05 | GCI17084 | Inner Joint | | 25 | 24 | 31.95 | 91 | 87 | |
| | 2007.04-2014.12 | 5MT | F | R | Hatchback FWD 192 A8.000 | | GCI17006 | Inner Joint | | 25 | 26 | 29.8 | 377 | 108 | |
| | 2007.04-2014.12 | AT/MT | F | L/R | Hatchback FWD 192 A8.000 | | GCO82025 | Outer Joint | | 25 | 26 | 51 | 84.5 | 64.5 | M |
| | 2007.04-2014.12 | | F | L/R | Hatchback FWD 192 A8.000 | | GCO17030 | Outer Joint | | 25 | 26 | 51 | 84.5 | 64.5 | M |
| 1.9 (110 kw) | 2007.04-2014.12 | 6MT | F | R | Hatchback FWD 937 A5.000 | | GDS17136 | Drive Shaft | | 25 | 25 | 51 | 84.5 | 931 | |
| | 2007.04-2014.12 | 6MT | F | L | Hatchback FWD 937 A5.000 | | GCI17005 | Inner Joint | | 25 | 26 | 32 | 91 | 95 | |
| | 2007.04-2014.12 | 6MT | F | R | Hatchback FWD 937 A5.000 | | GCI17073 | Inner Joint | | 25 | 24 | 29.7 | 377.5 | 94.5 | |
| | 2007.04-2014.12 | AT/MT | F | L/R | Hatchback FWD 937 A5.000 | | GCO17009 | Outer Joint | | 25 | 26 | 59 | 84 | 63 | M |
| | 2007.04-2014.12 | | F | L | Hatchback FWD 937 A5.000 | | GDS17121 | Drive Shaft | | 25 | 25 | 59 | 84 | 630 | |
| 2.0 (108 kw) | 1995.10-1998.07 | AT/MT | F | L/R | Hatchback FWD 182A1000 | | GCO17032 | Outer Joint | 44T | 25 | 25 | 59 | 85 | 58 | O |
| | 1995.10-1998.07 | AT/MT | F | L/R | Hatchback FWD 182A1000 | | GCI18070 | Inner Joint | | | 25 | | | 32 | |
| | 1995.10-1998.07 | AT/MT | F | L/R | Hatchback FWD 182A1000 | | GCI82011 | Inner Joint | | | 25 | | | 32 | |
| | 1995.10-1998.07 | | F | | Hatchback FWD 182A1000 | | GCI82005 | Inner Joint | | | 25 | | | 32 | |
| | 1995.10-1998.07 | | F | | Hatchback FWD 182A1000 | | GCI82006 | Inner Joint | | | 25 | | | 32 | |
| 2.0 (113 kw) | 1998.09-2000.08 | MT | F | L/R | Hatchback FWD 182B7000 | Date to:2000.08 | GCO17004 | Outer Joint | | 25 | 25 | 52 | 85 | 58 | I |
| | 1998.09-2000.08 | MT | F | L/R | Hatchback FWD 182B7000 | Date to:2000.08 | GCO82004 | Outer Joint | 44T | 25 | 25 | 52 | 85 | 58 | I |
| | 1998.09-2000.08 | MT | F | L/R | Hatchback FWD 182B7000 | | GCI82011 | Inner Joint | | | 25 | | | 32 | |

| | YEAR | TRANSM. | F/R | L/R | BODY STYLE & DRIVE TYPE & ENGINE | REMARKS | G-AP Ref. | PRODUCT | ABS | Technical Specifications A | B | C | H | L | P |
|---|---|---|---|---|---|---|---|---|---|---|---|---|---|---|---|
| **FIAT** | | | | | | | | | | | | | | | |
| **Bravo** | | | | | | | | | | | | | | | |
| 2.0 (113 kw) | 1998.09-2000.08 | | F | L/R | Hatchback FWD 182B7000 | | GCO17042 | Outer Joint | | 25 | 25 | 51 | 85 | 58 | O |
| | 1998.09-2000.08 | | F | L/R | Hatchback FWD 182B7000 | | GCO82017 | Outer Joint | | 25 | 25 | 58.8 | 85 | 58 | O |
| | 1998.09-2000.08 | | F | | Hatchback FWD 182B7000 | | GCI82005 | Inner Joint | | | 25 | | | 32 | |
| | 1998.09-2000.08 | | F | | Hatchback FWD 182B7000 | | GCI82006 | Inner Joint | | | 25 | | | 32 | |
| 2.0 (120 kw) | 2008.09-2014.12 | 6MT | F | L | Hatchback FWD 844 A2.000;198 A8.000 | | GDS17121 | Drive Shaft | | 25 | 25 | 59 | 84 | 630 | |
| | 2008.09-2014.12 | 6MT | F | L | Hatchback FWD 844 A2.000;198 A8.000 | | GCI17005 | Inner Joint | | 25 | 26 | 32 | 91 | 95 | |
| | 2008.09-2014.12 | 6MT | F | R | Hatchback FWD 844 A2.000;198 A8.000 | Date to:2012.06,Chassis no. from:4335323,Equipment code:PCC635 | GCI17123 | Inner Joint | | 25 | 26 | 29.75 | 409 | 108.5 | |
| | 2008.09-2014.12 | | F | L/R | Hatchback FWD 844 A2.000;198 A8.000 | | GCO17064 | Outer Joint | | 27 | 27 | 59 | 84.5 | 64 | M |
| 2.0 (121 kw) | 2008.09-2014.12 | 6MT/SAT | F | L | Hatchback FWD 198 A5.000 | | GCI17005 | Inner Joint | | 25 | 26 | 32 | 91 | 95 | |
| | 2008.09-2014.12 | 6MT/SAT | F | R | Hatchback FWD 198 A5.000 | Date to:2012.06,Chassis no. from:4335323,Equipment code:PCC635 | GCI17123 | Inner Joint | | 25 | 26 | 29.75 | 409 | 108.5 | |
| | 2008.09-2014.12 | | F | L | Hatchback FWD 198 A5.000 | | GDS17121 | Drive Shaft | | 25 | 25 | 59 | 84 | 630 | |
| | 2008.09-2014.12 | | F | L/R | Hatchback FWD 198 A5.000 | | GCO17064 | Outer Joint | | 27 | 27 | 59 | 84.5 | 64 | M |
| **Bravo Van** | | | | | | | | | | | | | | | |
| 1.6 (77 kw) | 2008.03-2014.12 | 6MT | F | R | Hatchback Van FWD 198 A3.000 | Equipment code:PCC635 | GDS17226 | Drive Shaft | | 25 | 25 | 51.1 | 84.5 | 955 | |
| | 2008.03-2014.12 | 6MT | F | L/R | Hatchback Van FWD 198 A3.000 | Equipment code:PCC530 | GDS17194 | Drive Shaft | | 25 | 39 | 51 | 84.5 | 523 | |
| | 2008.03-2014.12 | 6MT | F | L/R | Hatchback Van FWD 198 A3.000 | Equipment code:PCC635 | GCO17063 | Outer Joint | | 25 | 25 | 51.1 | 84.5 | 61 | M |
| | 2008.03-2014.12 | 6MT | F | L | Hatchback Van FWD 198 A3.000 | Equipment code:PCC635 | GCI17031 | Inner Joint | | 25 | 26 | 32 | 59 | 110.5 | |
| | 2008.03-2014.12 | 6MT | F | L | Hatchback Van FWD 198 A3.000 | Equipment code:PCC530 | GCI17084 | Inner Joint | | 25 | 24 | 31.95 | 91 | 87 | |
| | 2008.03-2014.12 | 6MT | F | R | Hatchback Van FWD 198 A3.000 | Date to:2012.06,Chassis no. from:4335323,Equipment code:PCC635 | GCI17123 | Inner Joint | | 25 | 26 | 29.75 | 409 | 108.5 | |
| **Cinquecento** | | | | | | | | | | | | | | | |
| 0.7 (22 kw) | 1991.07-1998.01 | 5MT | F | L/R | Hatchback FWD 170A046 | | GCO17010 | Outer Joint | | 22 | 20 | 46.8 | 75.5 | 48 | O |
| 0.7 (23 kw) | 1991.12-1996.01 | 4MT | F | L/R | Hatchback FWD 170A000/171A000 | | GCO17010 | Outer Joint | | 22 | 20 | 46.8 | 75.5 | 48 | O |
| 0.9 (29 kw) | 1991.07-1998.02 | MT | F | L | Hatchback Van FWD 1170A1046 | | GDS17187 | Drive Shaft | | 22 | 29 | 46.8 | 75.5 | 534 | |
| | 1991.07-1998.02 | MT | F | R | Hatchback Van FWD 1170A1046 | | GDS17048 | Drive Shaft | | 22 | 29 | 46.8 | 75.5 | 795 | |
| | 1991.07-1998.02 | MT | F | L/R | Hatchback Van FWD 1170A1046 | | GCO17010 | Outer Joint | | 22 | 20 | 46.8 | 75.5 | 48 | O |
| | 1991.07-1998.07 | MT | F | L | Hatchback FWD 1170A1000/1170A1046 | | GDS17187 | Drive Shaft | | 22 | 29 | 46.8 | 75.5 | 534 | |
| | 1991.07-1998.07 | MT | F | R | Hatchback FWD 1170A1000/1170A1046 | | GDS17048 | Drive Shaft | | 22 | 29 | 46.8 | 75.5 | 795 | |
| | 1991.07-1998.07 | MT | F | L/R | Hatchback FWD 1170A1000/1170A1046 | | GCO17010 | Outer Joint | | 22 | 20 | 46.8 | 75.5 | 48 | O |
| 1.1 (40 kw) | 1994.10-1998.01 | 5MT | F | L | Hatchback FWD 176B2000 | | GDS17188 | Drive Shaft | | 22 | 22 | 46.8 | 75.5 | 552 | |
| | 1994.10-1998.01 | 5MT | F | R | Hatchback FWD 176B2000 | | GDS17189 | Drive Shaft | | 22 | 22 | 46.8 | 75.5 | 774 | |
| | 1994.10-1998.01 | 5MT | F | L/R | Hatchback FWD 176B2000 | | GCO17010 | Outer Joint | | 22 | 20 | 46.8 | 75.5 | 48 | O |
| | 1994.10-1998.01 | 5MT | F | L/R | Hatchback FWD 176B2000 | | GCI17001 | Inner Joint | | 22 | 19 | 36 | 61.5 | 88.5 | |
| | 1994.10-1998.02 | 5MT | F | L | Hatchback Van FWD 176B2000 | | GDS17188 | Drive Shaft | | 22 | 22 | 46.8 | 75.5 | 552 | |
| | 1994.10-1998.02 | 5MT | F | R | Hatchback Van FWD 176B2000 | | GDS17189 | Drive Shaft | | 22 | 22 | 46.8 | 75.5 | 774 | |
| | 1994.10-1998.02 | 5MT | F | L/R | Hatchback Van FWD 176B2000 | | GCO17010 | Outer Joint | | 22 | 20 | 46.8 | 75.5 | 48 | O |
| | 1994.10-1998.02 | 5MT | F | L/R | Hatchback Van FWD 176B2000 | | GCI17001 | Inner Joint | | 22 | 19 | 36 | 61.5 | 88.5 | |
| **Coupe** | | | | | | | | | | | | | | | |
| 1.8 (96 kw) | 1996.03-2000.08 | AT/MT | F | L/R | Coupe FWD 183A1000 | | GCI48004 | Inner Joint | | | 25 | | | 32 | |
| | 1996.03-2000.08 | MT | F | L/R | Coupe FWD 183A1000 | Date to:1998.03 | GCO17042 | Outer Joint | | 25 | 25 | 51 | 85 | 58 | O |
| | 1996.03-2000.08 | MT | F | L/R | Coupe FWD 183A1000 | Date to:1998.03 | GCO82006 | Outer Joint | 44T | 25 | 25 | 52 | 85 | 58 | O |
| | 1996.03-2000.08 | MT | F | | Coupe FWD 183A1000 | | GCI82005 | Inner Joint | | | 25 | | | 32 | |
| 2.0 (102 kw) | 1994.02-1996.08 | AT/MT | F | L/R | Coupe FWD 836A3000/836A3011 | Date from:1994.01 | GCI48004 | Inner Joint | | | 25 | | | 32 | |
| | 1994.02-1996.08 | MT | F | L/R | Coupe FWD 836A3000/836A3011 | Date from:1994.02 | GCO17004 | Outer Joint | | 25 | 25 | 52 | 85 | 58 | I |
| | 1994.02-1996.08 | MT | F | L/R | Coupe FWD 836A3000/836A3011 | Date from:1994.02 | GCO82004 | Outer Joint | 44T | 25 | 25 | 52 | 85 | 58 | I |
| | 1994.02-1996.08 | | F | L/R | Coupe FWD 836A3000/836A3011 | | GCO82006 | Outer Joint | 44T | 25 | 25 | 52 | 85 | 58 | O |
| | 1994.02-1996.08 | | F | | Coupe FWD 836A3000/836A3011 | | GCI82005 | Inner Joint | | | 25 | | | 32 | |
| | 1994.02-1996.08 | | F | | Coupe FWD 836A3000/836A3011 | | GCI82006 | Inner Joint | | | 25 | | | 32 | |
| 2.0 (108 kw) | 1996.09-1998.09 | AT/MT | F | L/R | Coupe FWD 182A1000 | | GCI18070 | Inner Joint | | | 25 | | | 32 | |
| | 1996.09-1998.09 | MT | F | L/R | Coupe FWD 182A1000 | | GCO17042 | Outer Joint | | 25 | 25 | 51 | 85 | 58 | O |
| | 1996.09-1998.09 | MT | F | L/R | Coupe FWD 182A1000 | | GCO82006 | Outer Joint | 44T | 25 | 25 | 52 | 85 | 58 | O |
| | 1996.09-1998.09 | | F | | Coupe FWD 182A1000 | | GCI82005 | Inner Joint | | | 25 | | | 32 | |
| | 1996.09-1998.09 | | F | | Coupe FWD 182A1000 | | GCI82006 | Inner Joint | | | 25 | | | 32 | |
| 2.0 (113 kw) | 1998.04-2000.08 | AT/MT | F | L/R | Coupe FWD 182B3000 | | GCO17042 | Outer Joint | | 25 | 25 | 51 | 85 | 58 | O |
| | 1998.04-2000.08 | AT/MT | F | L/R | Coupe FWD 182B3000 | | GCI18070 | Inner Joint | | | 25 | | | 32 | |
| | 1998.04-2000.08 | MT | F | L/R | Coupe FWD 182B3000 | | GCO82006 | Outer Joint | 44T | 25 | 25 | 52 | 85 | 58 | O |
| | 1998.04-2000.08 | | F | | Coupe FWD 182B3000 | | GCI82005 | Inner Joint | | | 25 | | | 32 | |
| 2.0 (140 kw) | 1993.11-1996.08 | AT/MT | F | L/R | Coupe FWD 175A1000 | | GCI48004 | Inner Joint | | | 25 | | | 32 | |
| | 1993.11-1996.08 | MT | F | L/R | Coupe FWD 175A1000 | | GCO82009 | Outer Joint | 44T | 25 | 28 | 56 | 85 | 63.5 | O |
| | 1993.11-1996.08 | MT | F | L/R | Coupe FWD 175A1000 | | GCO82019 | Outer Joint | | 25 | 28 | 56 | 85 | 63.5 | O |
| | 1993.11-1996.08 | | F | | Coupe FWD 175A1000 | | GCI82005 | Inner Joint | | | 25 | | | 32 | |
| | 1993.11-1996.08 | | F | | Coupe FWD 175A1000 | | GCI82006 | Inner Joint | | | 25 | | | 32 | |
| 2.0 (162 kw) | 1996.09-2000.08 | MT | F | L/R | Coupe FWD 175A3000 | for vehicles without ASB | GCO82009 | Outer Joint | 44T | 25 | 28 | 56 | 85 | 63.5 | O |
| **Croma** | | | | | | | | | | | | | | | |
| 1.8 (103 kw) | 2005.12-2011.12 | 5MT | F | R | Estate FWD 939 A4.000 | | GDS17040 | Drive Shaft | | 30 | 22 | 52.5 | 105 | 987 | |
| | 2005.12-2011.12 | MT | F | L | Estate FWD 939 A4.000 | Date to:2011.12 | GDS44020 | Drive Shaft | | 30 | 22 | 52.5 | 105 | 617.5 | |

| | YEAR | TRANSM. | F/R | L/R | BODY STYLE & DRIVE TYPE & ENGINE | REMARKS | G-AP Ref. | PRODUCT | ABS | Technical Specifications A | B | C | H | L | P |
|---|---|---|---|---|---|---|---|---|---|---|---|---|---|---|---|
| **FIAT** | | | | | | | | | | | | | | | |
| **Croma** | | | | | | | | | | | | | | | |
| 1.8 (103 kw) | 2005.12-2011.12 | MT | F | L | Estate FWD 939 A4.000 | Date to:2011.12 | GCI99026 | Inner Joint | | 22 | 25 | 35 | 57 | 111.7 | |
| | 2005.12-2011.12 | MT | F | L/R | Estate FWD 939 A4.000 | | GCI48004 | Inner Joint | | | 25 | | | 32 | |
| | 2005.12-2011.12 | | F | L | Estate FWD 939 A4.000 | | GDS17223 | Drive Shaft | | 30 | 22 | 52 | 94 | 609 | |
| | 2005.12-2011.12 | | F | R | Estate FWD 939 A4.000 | | GDS81124 | Drive Shaft | | 30 | 34 | 52.5 | 105 | 971 | |
| | 2005.12-2011.12 | | F | L/R | Estate FWD 939 A4.000 | | GCO17007 | Outer Joint | | 30 | 25 | 52.5 | 105 | 62 | O |
| 1.9 (69 kw) | 1991.03-1996.12 | MT | F | L/R | Hatchback FWD 154D1000 | | GCO17013 | Outer Joint | 44T | 27 | 25 | 56 | 85 | 58 | I |
| | 1991.03-1996.12 | MT | F | L/R | Hatchback FWD 154D1000 | | GCO17033 | Outer Joint | | 27 | 25 | 56 | 85 | 58 | I |
| | 1991.03-1996.12 | MT | F | L/R | Hatchback FWD 154D1000 | | GCI48004 | Inner Joint | | | 25 | | | 32 | |
| | 1991.03-1996.12 | | F | | Hatchback FWD 154D1000 | | GCI82006 | Inner Joint | | | 25 | | | 32 | |
| 1.9 (85 kw) | 2005.06-2011.12 | MT | F | L | Estate FWD 939 A7.000 | | GDS21102 | Drive Shaft | | 30 | 25 | 53.8 | 94.5 | 602 | |
| | 2005.06-2011.12 | MT | F | R | Estate FWD 939 A7.000 | | GDS21103 | Drive Shaft | | 30 | 25 | 53.8 | 94.5 | 972 | |
| | 2005.06-2011.12 | MT | F | L | Estate FWD 939 A7.000 | | GCI17035 | Inner Joint | | 25 | 26 | 34.9 | 57.5 | 114.5 | |
| | 2005.06-2011.12 | MT | F | R | Estate FWD 939 A7.000 | | GCI17036 | Inner Joint | | 25 | 26 | 34.9 | 434.5 | 108.5 | |
| | 2005.06-2011.12 | | F | R | Estate FWD 939 A7.000 | | GDS81124 | Drive Shaft | | 30 | 34 | 52.5 | 105 | 971 | |
| | 2005.06-2011.12 | | F | L/R | Estate FWD 939 A7.000 | | GCO17051 | Outer Joint | | 30 | 26 | 53.8 | 94.5 | 65.5 | M |
| 1.9 (88 kw) | 2005.06-2011.12 | MT | F | L | Estate FWD 939 A1.000 | | GDS21102 | Drive Shaft | | 30 | 25 | 53.8 | 94.5 | 602 | |
| | 2005.06-2011.12 | MT | F | R | Estate FWD 939 A1.000 | | GDS21103 | Drive Shaft | | 30 | 25 | 53.8 | 94.5 | 972 | |
| | 2005.06-2011.12 | MT | F | L/R | Estate FWD 939 A1.000 | | GCO17051 | Outer Joint | | 30 | 26 | 53.8 | 94.5 | 65.5 | M |
| | 2005.06-2011.12 | MT | F | L | Estate FWD 939 A1.000 | | GCI17035 | Inner Joint | | 25 | 26 | 34.9 | 57.5 | 114.5 | |
| | 2005.06-2011.12 | MT | F | R | Estate FWD 939 A1.000 | | GCI17036 | Inner Joint | | 25 | 26 | 34.9 | 434.5 | 108.5 | |
| | 2005.06-2011.12 | | F | R | Estate FWD 939 A1.000 | | GDS81124 | Drive Shaft | | 30 | 34 | 52.5 | 105 | 971 | |
| | 2006.04-2011.12 | 6MT | F | R | Estate Van FWD 939 A1.000 | | GCI17035 | Inner Joint | | 25 | 26 | 34.9 | 57.5 | 114.5 | |
| | 2006.04-2011.12 | | F | R | Estate Van FWD 939 A1.000 | | GDS21102 | Drive Shaft | | 30 | 25 | 53.8 | 94.5 | 602 | |
| | 2006.04-2011.12 | | F | L/R | Estate Van FWD 939 A1.000 | | GCO17051 | Outer Joint | | 30 | 26 | 53.8 | 94.5 | 65.5 | M |
| 1.9 (100 kw) | 2005.12-2007.10 | 6AT | F | R | Estate FWD 939 A8.000 | | GCI17043 | Inner Joint | | 27 | 26 | 35 | 448.5 | 107 | |
| | 2005.12-2007.10 | AT/MT | F | R | Estate FWD 939 A8.000 | | GDS21103 | Drive Shaft | | 30 | 25 | 53.8 | 94.5 | 972 | |
| | 2005.12-2007.10 | AT/MT | F | R | Estate FWD 939 A8.000 | | GCI17036 | Inner Joint | | 25 | 26 | 34.9 | 434.5 | 108.5 | |
| | 2005.12-2007.10 | MT | F | L | Estate FWD 939 A8.000 | | GDS21102 | Drive Shaft | | 30 | 25 | 53.8 | 94.5 | 602 | |
| | 2005.12-2007.10 | MT | F | L | Estate FWD 939 A8.000 | | GCI17035 | Inner Joint | | 25 | 26 | 34.9 | 57.5 | 114.5 | |
| | 2005.12-2007.10 | | F | R | Estate FWD 939 A8.000 | | GDS81124 | Drive Shaft | | 30 | 34 | 52.5 | 105 | 971 | |
| | 2005.12-2007.10 | | F | L/R | Estate FWD 939 A8.000 | | GCO17051 | Outer Joint | | 30 | 26 | 53.8 | 94.5 | 65.5 | M |
| 1.9 (110 kw) | 2005.06-2011.12 | 6AT | F | R | Estate FWD 939 A2.000 | | GCI17043 | Inner Joint | | 27 | 26 | 35 | 448.5 | 107 | |
| | 2005.06-2011.12 | AT | F | R | Estate FWD 939 A2.000 | | GCO17051 | Outer Joint | | 30 | 26 | 53.8 | 94.5 | 65.5 | M |
| | 2005.06-2011.12 | MT | F | L | Estate FWD 939 A2.000 | | GDS21102 | Drive Shaft | | 30 | 25 | 53.8 | 94.5 | 602 | |
| | 2005.06-2011.12 | MT | F | R | Estate FWD 939 A2.000 | | GDS21103 | Drive Shaft | | 30 | 25 | 53.8 | 94.5 | 972 | |
| | 2005.06-2011.12 | MT | F | L/R | Estate FWD 939 A2.000 | | GCO17051 | Outer Joint | | 30 | 26 | 53.8 | 94.5 | 65.5 | M |
| | 2005.06-2011.12 | MT | F | L | Estate FWD 939 A2.000 | | GCI17035 | Inner Joint | | 25 | 26 | 34.9 | 57.5 | 114.5 | |
| | 2005.06-2011.12 | MT | F | R | Estate FWD 939 A2.000 | | GCI17036 | Inner Joint | | 25 | 26 | 34.9 | 434.5 | 108.5 | |
| | 2005.06-2011.12 | | F | R | Estate FWD 939 A2.000 | | GDS81124 | Drive Shaft | | 30 | 34 | 52.5 | 105 | 971 | |
| 2.0 (85 kw) | 1987.10-1996.08 | MT | F | L/R | Hatchback FWD 154C3046/834B146 | Chassis no. to:0189806 | GCO17002 | Outer Joint | | 25 | 25 | 54.5 | 77 | 58 | I |
| | 1987.10-1996.08 | MT | F | L/R | Hatchback FWD 154C3046/834B146 | Chassis no. to:0189806 | GCO17003 | Outer Joint | 90T | 25 | 25 | 54.5 | 77 | 58 | I |
| | 1987.10-1996.08 | MT | F | L/R | Hatchback FWD 154C3046/834B146 | Date to:1993.01;Chassis no. from:0189807 | GCO17004 | Outer Joint | | 25 | 25 | 52 | 85 | 58 | I |
| | 1987.10-1996.08 | MT | F | L/R | Hatchback FWD 154C3046/834B146 | Date from:1993.01 | GCO17013 | Outer Joint | 44T | 27 | 25 | 56 | 85 | 58 | I |
| | 1987.10-1996.08 | MT | F | L/R | Hatchback FWD 154C3046/834B146 | Date from:1992.12 | GCO17033 | Outer Joint | | 27 | 25 | 56 | 85 | 58 | I |
| | 1987.10-1996.08 | MT | F | L/R | Hatchback FWD 154C3046/834B146 | Date to:1993.01;Chassis no. from:0189807 | GCO82004 | Outer Joint | 44T | 25 | 25 | 52 | 85 | 58 | I |
| | 1987.10-1996.08 | MT | F | L/R | Hatchback FWD 154C3046/834B146 | | GCI48004 | Inner Joint | | | 25 | | | 32 | |
| | 1987.10-1996.08 | | F | | Hatchback FWD 154C3046/834B146 | | GCI82006 | Inner Joint | | | 25 | | | 32 | |
| 2.0 (101 kw) | 1992.08-1996.08 | MT | F | L/R | Hatchback FWD 154E1000 | | GCO17004 | Outer Joint | | 25 | 25 | 52 | 85 | 58 | I |
| | 1992.08-1996.08 | MT | F | L/R | Hatchback FWD 154E1000 | Date from:1992.11 | GCO17013 | Outer Joint | 44T | 27 | 25 | 56 | 85 | 58 | I |
| | 1992.08-1996.08 | MT | F | L/R | Hatchback FWD 154E1000 | Date to:1992.11 | GCO82004 | Outer Joint | 44T | 25 | 25 | 52 | 85 | 58 | I |
| | 1992.08-1996.08 | | F | | Hatchback FWD 154E1000 | Date From:1993.02 | GCO17033 | Outer Joint | | 27 | 25 | 56 | 85 | 58 | I |
| | 1992.08-1996.08 | | F | | Hatchback FWD 154E1000 | | GCI82006 | Inner Joint | | | 25 | | | 32 | |
| 2.0 (110 kw) | 1987.04-1996.12 | MT | F | L/R | Hatchback FWD 154C4046 | Chassis no. to:0189806 | GCO17002 | Outer Joint | | 25 | 25 | 54.5 | 77 | 58 | I |
| | 1987.04-1996.12 | MT | F | L/R | Hatchback FWD 154C4046 | Chassis no. to:0189806 | GCO17003 | Outer Joint | 90T | 25 | 25 | 54.5 | 77 | 58 | I |
| | 1987.04-1996.12 | MT | F | L/R | Hatchback FWD 154C4046 | Date to:1993.01;Chassis no. from:0189807 | GCO17004 | Outer Joint | | 25 | 25 | 52 | 85 | 58 | I |
| | 1987.04-1996.12 | MT | F | L/R | Hatchback FWD 154C4046 | Date from:1993.01 | GCO17013 | Outer Joint | 44T | 27 | 25 | 56 | 85 | 58 | I |
| | 1987.04-1996.12 | MT | F | L/R | Hatchback FWD 154C4046 | Date to:1993.01;Chassis no. from:0189807 | GCO82004 | Outer Joint | 44T | 25 | 25 | 52 | 85 | 58 | I |
| | 1987.04-1996.12 | MT | F | L/R | Hatchback FWD 154C4046 | | GCI48004 | Inner Joint | | | 25 | | | 32 | |
| | 1987.04-1996.12 | | F | | Hatchback FWD 154C4046 | Date From:1993.02 | GCO17033 | Outer Joint | | 27 | 25 | 56 | 85 | 58 | I |
| | 1987.04-1996.12 | | F | | Hatchback FWD 154C4046 | | GCI82006 | Inner Joint | | | 25 | | | 32 | |
| 2.2 (108 kw) | 2005.06-2010.12 | 5AT/5MT | F | L | Estate FWD 194 A1.000 | | GDS60015 | Drive Shaft | | 30 | 34 | 52.5 | 105 | 628 | |
| | 2005.06-2010.12 | 5AT/5MT | F | R | Estate FWD 194 A1.000 | | GDS81124 | Drive Shaft | | 30 | 34 | 52.5 | 105 | 971 | |
| | 2005.06-2010.12 | MT | F | L/R | Estate FWD 194 A1.000 | Date to:2013.12 | GCO17007 | Outer Joint | | 30 | 25 | 52.5 | 105 | 62 | O |
| | 2005.06-2010.12 | MT | F | L | Estate FWD 194 A1.000 | Date from:2006.01 | GCI44002 | Inner Joint | | 34 | 25 | 35 | 56.2 | 114.8 | |
| 2.4 (147 kw) | 2005.06-2011.12 | MT | F | L/R | Estate FWD 939 A3.000 | Date to:2011.12 | GCO17051 | Outer Joint | | 30 | 26 | 53.8 | 94.5 | 65.5 | M |

| | YEAR | TRANSM. | F/R | L/R | BODY STYLE & DRIVE TYPE & ENGINE | REMARKS | G-AP Ref. | PRODUCT | ABS | Technical Specifications A | B | C | H | L | P |
|---|---|---|---|---|---|---|---|---|---|---|---|---|---|---|---|
| **FIAT** | | | | | | | | | | | | | | | |
| **Croma** | | | | | | | | | | | | | | | |
| 2.4 (147 kw) | 2005.06-2011.12 | | F | R | Estate FWD 939 A3.000 | | GDS81124 | Drive Shaft | | 30 | 34 | 52.5 | 105 | 971 | |
| 2.5 (77 kw) | 1991.03-1996.12 | MT | F | L/R | Hatchback FWD 814497S | Chassis no. to:0189806 | GCO17002 | Outer Joint | | 25 | 25 | 54.5 | 77 | 58 | I |
| | 1991.03-1996.12 | MT | F | L/R | Hatchback FWD 814497S | Chassis no. to:0189806 | GCO17003 | Outer Joint | 90T | 25 | 25 | 54.5 | 77 | 58 | I |
| | 1991.03-1996.12 | MT | F | L/R | Hatchback FWD 814497S | Date to:1993.01;Chassis no. from:0189807 | GCO17004 | Outer Joint | | 25 | 25 | 52 | 85 | 58 | I |
| | 1991.03-1996.12 | MT | F | L/R | Hatchback FWD 814497S | Date from:1993.01 | GCO17013 | Outer Joint | 44T | 27 | 25 | 56 | 85 | 58 | I |
| | 1991.03-1996.12 | MT | F | L/R | Hatchback FWD 814497S | Date to:1993.01;Chassis no. from:0189807 | GCO82004 | Outer Joint | 44T | 25 | 25 | 52 | 85 | 58 | I |
| | 1991.03-1996.12 | MT | F | L/R | Hatchback FWD 814497S | | GCI48004 | Inner Joint | | | 25 | | | 32 | |
| | 1991.03-1996.12 | | F | | Hatchback FWD 814497S | Date From:1993.02 | GCO17033 | Outer Joint | | 27 | 25 | 56 | 85 | 58 | I |
| | 1991.03-1996.12 | | F | | Hatchback FWD 814497S | | GCI82006 | Inner Joint | | | 25 | | | 32 | |
| 2.5 (85 kw) | 1987.09-1996.12 | MT | F | L/R | Hatchback FWD 814497/814497S/814497Y | Chassis no. to:0189806 | GCO17002 | Outer Joint | | 25 | 25 | 54.5 | 77 | 58 | I |
| | 1987.09-1996.12 | MT | F | L/R | Hatchback FWD 814497/814497S/814497Y | Chassis no. to:0189806 | GCO17003 | Outer Joint | 90T | 25 | 25 | 54.5 | 77 | 58 | I |
| | 1987.09-1996.12 | MT | F | L/R | Hatchback FWD 814497/814497S/814497Y | Date to:1993.01;Chassis no. from:0189807 | GCO17004 | Outer Joint | | 25 | 25 | 52 | 85 | 58 | I |
| | 1987.09-1996.12 | MT | F | L/R | Hatchback FWD 814497/814497S/814497Y | Date from:1993.01 | GCO17013 | Outer Joint | 44T | 27 | 25 | 56 | 85 | 58 | I |
| | 1987.09-1996.12 | MT | F | L/R | Hatchback FWD 814497/814497S/814497Y | | GCO17018 | Outer Joint | 90T | 25 | 25 | 52 | 85 | 58 | I |
| | 1987.09-1996.12 | MT | F | L/R | Hatchback FWD 814497/814497S/814497Y | Date to:1993.01;Chassis no. from:0189807 | GCO82004 | Outer Joint | 44T | 25 | 25 | 52 | 85 | 58 | I |
| | 1987.09-1996.12 | MT | F | L/R | Hatchback FWD 814497/814497S/814497Y | | GCI48004 | Inner Joint | | | 25 | | | 32 | |
| | 1987.09-1996.12 | | F | | Hatchback FWD 814497/814497S/814497Y | Date From:1993.02 | GCO17033 | Outer Joint | | 27 | 25 | 56 | 85 | 58 | I |
| | 1987.09-1996.12 | | F | | Hatchback FWD 814497/814497S/814497Y | | GCI82006 | Inner Joint | | | 25 | | | 32 | |
| 2.5 (119 kw) | 1993.03-1996.12 | MT | F | L/R | Hatchback FWD 834G000 | | GCO17013 | Outer Joint | 44T | 27 | 25 | 56 | 85 | 58 | I |
| | 1993.03-1996.12 | MT | F | L/R | Hatchback FWD 834G000 | | GCI48004 | Inner Joint | | | 25 | | | 32 | |
| | 1993.03-1996.12 | | F | | Hatchback FWD 834G000 | | GCI82006 | Inner Joint | | | 25 | | | 32 | |
| **Doblo** | | | | | | | | | | | | | | | |
| 1.2 (48 kw) | 2001.03- | 5MT | F | L | MPV FWD 223 A5.000 | | GDS41006 | Drive Shaft | | 22 | | 51 | 89.5 | 618 | |
| | 2001.03- | MT | F | R | MPV FWD 223 A5.000 | | GDS41007 | Drive Shaft | | 22 | | 51 | 89.5 | 932 | |
| | 2001.03- | MT | F | L/R | MPV FWD 223 A5.000 | | GCO82018 | Outer Joint | | 22 | 22 | 51 | 89.5 | 57 | M |
| 1.2 (81 kw) | 2022.06- | 6MT | F | L | Box Body/MPV FWD EB2ADT | | GDS84336 | Drive Shaft | | 28 | 37 | 58.5 | 92.5 | 930 | |
| | 2022.06- | 6MT | F | R | Box Body/MPV FWD EB2ADT | | GDS84170 | Drive Shaft | | 28 | 37 | 58.5 | 92.5 | 670 | |
| | 2022.06- | 6MT | F | L | MPV FWD EB2ADT | | GDS84336 | Drive Shaft | | 28 | 37 | 58.5 | 92.5 | 930 | |
| | 2022.06- | 6MT | F | R | MPV FWD EB2ADT | | GDS84170 | Drive Shaft | | 28 | 37 | 58.5 | 92.5 | 670 | |
| 1.3 (51 kw) | 2004.12-2005.05 | 5MT | F | L | MPV FWD 188 A9.000 | | GDS17017 | Drive Shaft | | 25 | 24 | 51 | 90 | 611 | |
| | 2004.12-2005.05 | 5MT | F | R | MPV FWD 188 A9.000 | | GDS17019 | Drive Shaft | | 25 | 24 | 51 | 90 | 928 | |
| | 2004.12-2005.05 | 5MT | F | L/R | MPV FWD 188 A9.000 | | GCO17031 | Outer Joint | | 25 | 24 | 51 | 90 | 62 | M |
| | 2004.12-2005.05 | 5MT | F | L | MPV FWD 188 A9.000 | | GCI99008 | Inner Joint | | 24 | 24 | 29.7 | 86.5 | 93 | |
| | 2004.12-2005.05 | 5MT | F | R | MPV FWD 188 A9.000 | | GCI17015 | Inner Joint | | 24 | 24 | 29.7 | 379 | 100.5 | |
| 1.3 (55 kw) | 2005.05- | 5MT | F | L | MPV FWD 199 A2.000 | Trans. side without housing | GDS17013 | Drive Shaft | | 25 | 36 | 51 | 90 | 501 | |
| | 2005.05- | 5MT | F | L | MPV FWD 199 A2.000 | Trans. side with housing | GDS17017 | Drive Shaft | | 25 | 24 | 51 | 90 | 611 | |
| | 2005.05- | 5MT | F | R | MPV FWD 199 A2.000 | Trans. side without housing | GDS17014 | Drive Shaft | | 25 | 36 | 51 | 90 | 524 | |
| | 2005.05- | 5MT | F | R | MPV FWD 199 A2.000 | Trans. side with housing | GDS17019 | Drive Shaft | | 25 | 24 | 51 | 90 | 928 | |
| | 2005.05- | 5MT | F | L/R | MPV FWD 199 A2.000 | | GCO17031 | Outer Joint | | 25 | 24 | 51 | 90 | 62 | M |
| | 2005.05- | 5MT | F | L | MPV FWD 199 A2.000 | | GCI99008 | Inner Joint | | 24 | 24 | 29.7 | 86.5 | 93 | |
| | 2005.05- | 5MT | F | R | MPV FWD 199 A2.000 | | GCI17015 | Inner Joint | | 24 | 24 | 29.7 | 379 | 100.5 | |
| 1.3 (62 kw) | 2005.10- | 5MT | F | L | MPV FWD 223 A9.000 | Trans. side without housing | GDS17013 | Drive Shaft | | 25 | 36 | 51 | 90 | 501 | |
| | 2005.10- | 5MT | F | L | MPV FWD 223 A9.000 | Trans. side with housing | GDS17017 | Drive Shaft | | 25 | 24 | 51 | 90 | 611 | |
| | 2005.10- | 5MT | F | R | MPV FWD 223 A9.000 | Trans. side without housing | GDS17014 | Drive Shaft | | 25 | 36 | 51 | 90 | 524 | |
| | 2005.10- | 5MT | F | R | MPV FWD 223 A9.000 | Trans. side with housing | GDS17019 | Drive Shaft | | 25 | 24 | 51 | 90 | 928 | |
| | 2005.10- | 5MT | F | L/R | MPV FWD 223 A9.000 | | GCO17031 | Outer Joint | | 25 | 24 | 51 | 90 | 62 | M |
| | 2005.10- | 5MT | F | L | MPV FWD 223 A9.000 | | GCI99008 | Inner Joint | | 24 | 24 | 29.7 | 86.5 | 93 | |
| | 2005.10- | 5MT | F | R | MPV FWD 223 A9.000 | | GCI17015 | Inner Joint | | 24 | 24 | 29.7 | 379 | 100.5 | |
| 1.3 (66 kw) | 2010.02-2023.12 | 5MT | F | L | Bus FWD 199 A3.000;263 A2.000 | | GDS17078 | Drive Shaft | | 25 | 24 | 51 | 84.5 | 602 | |
| | 2010.02-2023.12 | 5MT | F | L | Bus FWD 199 A3.000;263 A2.000 | For dusty conditions | GDS56172 | Drive Shaft | | 25 | 39 | 51.1 | 84.5 | 491 | |
| | 2010.02-2023.12 | 5MT | F | R | Bus FWD 199 A3.000;263 A2.000 | Date to:2018.10,Exhaust Emis:Euro4/Euro5 | GDS17069 | Drive Shaft | | 25 | 39 | 51 | 84.5 | 559 | |
| | 2010.02-2023.12 | 5MT | F | R | Bus FWD 199 A3.000;263 A2.000 | Date to:2018.10,Exhaust Emis:Euro4/Euro5 | GDS17079 | Drive Shaft | | 25 | 24 | 51 | 84.5 | 970 | |
| | 2010.02-2023.12 | 5MT | F | R | Bus FWD 199 A3.000;263 A2.000 | Date to:2018.10,Exhaust Emis:Euro4/Euro5;For dusty conditions;Date from:2018.11,Country Version:Europe;For dusty conditions | GDS56173 | Drive Shaft | | 25 | 39 | 51.1 | 84.5 | 558 | |
| | 2010.02-2023.12 | 5MT | F | L/R | Bus FWD 199 A3.000;263 A2.000 | | GCO17063 | Outer Joint | | 25 | 25 | 51.1 | 84.5 | 61 | M |
| | 2010.02-2023.12 | MT | F | L | Bus FWD 199 A3.000;263 A2.000 | | GCI17025 | Inner Joint | | 24 | 24 | 29.7 | 86.5 | 93 | |
| | 2010.02-2023.12 | MT | F | R | Bus FWD 199 A3.000;263 A2.000 | | GCI17026 | Inner Joint | | 24 | 24 | 29.7 | 379 | 100.5 | |
| | 2010.02-2023.12 | 5MT | F | L | Platform/Chassis FWD 199 A3.000, 263 A2.000 | | GDS17078 | Drive Shaft | | 25 | 24 | 51 | 84.5 | 602 | |
| | 2010.02-2023.12 | 5MT | F | L | Platform/Chassis FWD 199 A3.000, 263 A2.000 | For dusty conditions | GDS56172 | Drive Shaft | | 25 | 39 | 51.1 | 84.5 | 491 | |
| | 2010.02-2023.12 | 5MT | F | R | Platform/Chassis FWD 199 A3.000, 263 A2.000 | Date to:2018.10,Exhaust Emis:Euro4/Euro5 | GDS17069 | Drive Shaft | | 25 | 39 | 51 | 84.5 | 559 | |
| | 2010.02-2023.12 | 5MT | F | R | Platform/Chassis FWD 199 A3.000, 263 A2.000 | Date to:2018.10,Exhaust Emis:Euro4/Euro5 | GDS17079 | Drive Shaft | | 25 | 24 | 51 | 84.5 | 970 | |
| | 2010.02-2023.12 | 5MT | F | R | Platform/Chassis FWD 199 A3.000, 263 A2.000 | Date to:2018.10,Exhaust Emis:Euro4/Euro5;For dusty conditions;Date from:2018.11,Country Version:Europe;For dusty conditions | GDS56173 | Drive Shaft | | 25 | 39 | 51.1 | 84.5 | 558 | |
| | 2010.02-2023.12 | 5MT | F | L/R | Platform/Chassis FWD 199 A3.000, 263 A2.000 | | GCO17063 | Outer Joint | | 25 | 25 | 51.1 | 84.5 | 61 | M |
| | 2010.02-2023.12 | MT | F | L | Platform/Chassis FWD 199 A3.000, 263 A2.000 | | GCI17025 | Inner Joint | | 24 | 24 | 29.7 | 86.5 | 93 | |
| | 2010.02-2023.12 | MT | F | R | Platform/Chassis FWD 199 A3.000, 263 A2.000 | | GCI17026 | Inner Joint | | 24 | 24 | 29.7 | 379 | 100.5 | |
| 1.3 (70 kw) | 2016.03-2023.12 | 5MT | F | L | Bus FWD 330 A1.000;552 83 775 | | GDS17078 | Drive Shaft | | 25 | 24 | 51 | 84.5 | 602 | |

| | YEAR | TRANSM. | F/R | L/R | BODY STYLE & DRIVE TYPE & ENGINE | REMARKS | G-AP Ref. | PRODUCT | ABS | Technical Specifications A | B | C | H | L | P |
|---|---|---|---|---|---|---|---|---|---|---|---|---|---|---|---|
| **FIAT** **Doblo** | | | | | | | | | | | | | | | |
| 1.3 (70 kw) | 2016.03-2023.12 | 5MT | F | L | Bus FWD 330 A1.000;552 83 775 | For dusty conditions | GDS56172 | Drive Shaft | | 25 | 39 | 51.1 | 84.5 | 491 | |
| | 2016.03-2023.12 | 5MT | F | R | Bus FWD 330 A1.000;552 83 775 | Date to:2018.10,Exhaust Emis:Euro4/Euro5 | GDS17069 | Drive Shaft | | 25 | 39 | 51 | 84.5 | 559 | |
| | 2016.03-2023.12 | 5MT | F | R | Bus FWD 330 A1.000;552 83 775 | Date to:2018.10,Exhaust Emis:Euro4/Euro5 | GDS17079 | Drive Shaft | | 25 | 24 | 51 | 84.5 | 970 | |
| | 2016.03-2023.12 | 5MT | F | R | Bus FWD 330 A1.000;552 83 775 | Date to:2018.10,Exhaust Emis:Euro4/Euro5,For dusty conditions,Date from:2018.11,Country Version:Europe,For dusty conditions | GDS56173 | Drive Shaft | | 25 | 39 | 51.1 | 84.5 | 558 | |
| | 2016.03-2023.12 | 5MT | F | L/R | Bus FWD 330 A1.000;552 83 775 | | GCO17063 | Outer Joint | | 25 | 25 | 51.1 | 84.5 | 61 | M |
| | 2016.03-2023.12 | 5MT | F | L | Bus FWD 330 A1.000;552 83 775 | | GCI17025 | Inner Joint | | 24 | 24 | 29.7 | 86.5 | 93 | |
| | 2016.03-2023.12 | 5MT | F | R | Bus FWD 330 A1.000;552 83 775 | | GCI17026 | Inner Joint | | 24 | 24 | 29.7 | 379 | 100.5 | |
| | 2016.03-2023.12 | 5MT | F | L | Platform/Chassis FWD 330 A1.000, 552 83 775 | | GDS17078 | Drive Shaft | | 25 | 24 | 51 | 84.5 | 602 | |
| | 2016.03-2023.12 | 5MT | F | L | Platform/Chassis FWD 330 A1.000, 552 83 775 | For dusty conditions | GDS56172 | Drive Shaft | | 25 | 39 | 51.1 | 84.5 | 491 | |
| | 2016.03-2023.12 | 5MT | F | R | Platform/Chassis FWD 330 A1.000, 552 83 775 | Date to:2018.10,Exhaust Emis:Euro4/Euro5 | GDS17069 | Drive Shaft | | 25 | 39 | 51 | 84.5 | 559 | |
| | 2016.03-2023.12 | 5MT | F | R | Platform/Chassis FWD 330 A1.000, 552 83 775 | Date to:2018.10,Exhaust Emis:Euro4/Euro5 | GDS17079 | Drive Shaft | | 25 | 24 | 51 | 84.5 | 970 | |
| | 2016.03-2023.12 | 5MT | F | R | Platform/Chassis FWD 330 A1.000, 552 83 775 | Date to:2018.10,Exhaust Emis:Euro4/Euro5,For dusty conditions,Date from:2018.11,Country Version:Europe,For dusty conditions | GDS56173 | Drive Shaft | | 25 | 39 | 51.1 | 84.5 | 558 | |
| | 2016.03-2023.12 | 5MT | F | L/R | Platform/Chassis FWD 330 A1.000, 552 83 775 | | GCO17063 | Outer Joint | | 25 | 25 | 51.1 | 84.5 | 61 | M |
| | 2016.03-2023.12 | 5MT | F | L | Platform/Chassis FWD 330 A1.000, 552 83 775 | | GCI17025 | Inner Joint | | 24 | 24 | 29.7 | 86.5 | 93 | |
| | 2016.03-2023.12 | 5MT | F | R | Platform/Chassis FWD 330 A1.000, 552 83 775 | | GCI17026 | Inner Joint | | 24 | 24 | 29.7 | 379 | 100.5 | |
| 1.4 (57 kw) | 2005.10- | 5MT | F | L | MPV FWD 350 A1.000 | | GDS17102 | Drive Shaft | | 22 | 22 | 51 | 89.5 | 636 | |
| | 2005.10- | 5MT | F | R | MPV FWD 350 A1.000 | | GDS17113 | Drive Shaft | | 22 | 22 | 51 | 89.5 | 930.5 | |
| | 2005.10- | MT | F | L/R | MPV FWD 350 A1.000 | Date to:2013.08 | GCO82018 | Outer Joint | | 22 | 22 | 51 | 89.5 | 57 | M |
| 1.4 (70 kw) | 2010.02-2023.12 | 5MT | F | L | Bus FWD 843 A1.000 | | GDS83974 | Drive Shaft | | 25 | 22 | 51 | 84 | 668 | |
| | 2010.02-2023.12 | 5MT | F | L/R | Bus FWD 843 A1.000 | Date from:2011.01 | GCO17026 | Outer Joint | | 25 | 22 | 51 | 84 | 57 | M |
| | 2010.02-2023.12 | 5MT | F | L | Bus FWD 843 A1.000 | | GCI17124 | Inner Joint | | 22 | 21 | 36 | 61.5 | 93.5 | |
| | 2010.02-2023.12 | 5MT | F | L/R | Bus FWD 843 A1.000 | | GCI17027 | Inner Joint | | 22 | 22 | 36 | 61.5 | 93.5 | |
| 1.4 (88 kw) | 2010.02-2023.12 | 6MT | F | L | Bus FWD 198 A4.000 | | GDS17152 | Drive Shaft | | 27 | 25 | 59 | 84.5 | 596 | |
| | 2010.02-2023.12 | 6MT | F | R | Bus FWD 198 A4.000 | | GDS17153 | Drive Shaft | | 27 | 25 | 59 | 84.5 | 967 | |
| | 2010.02-2023.12 | 6MT | F | L/R | Bus FWD 198 A4.000 | | GDS17106 | Drive Shaft | | 27 | 43 | 59 | 84.5 | 499.5 | |
| | 2010.02-2023.12 | 6MT | F | L/R | Bus FWD 198 A4.000 | Date to:2018.12 | GCO99298 | Outer Joint | | 27 | 26 | 59 | 84.5 | 63 | M |
| | 2010.02-2023.12 | MT | F | L | Bus FWD 198 A4.000 | Shock Absorber System:Normal Suspension | GDS17076 | Drive Shaft | | 25 | 25 | 51 | 84.5 | 596 | |
| | 2010.02-2023.12 | MT | F | R | Bus FWD 198 A4.000 | Shock Absorber System:Normal Suspension | GDS17081 | Drive Shaft | | 25 | 25 | 51 | 84.5 | 966.5 | |
| | 2010.02-2023.12 | MT | F | R | Bus FWD 198 A4.000 | Shock Absorber System:Normal Suspension | GCI18100 | Inner Joint | | 25 | 26 | 29.7 | 434 | 108 | |
| | 2011.10-2023.12 | 5MT/6MT | F | L | Bus FWD 198 A4.000 | | GDS17152 | Drive Shaft | | 27 | 25 | 59 | 84.5 | 596 | |
| | 2011.10-2023.12 | 5MT/6MT | F | R | Bus FWD 198 A4.000 | | GDS17153 | Drive Shaft | | 27 | 25 | 59 | 84.5 | 967 | |
| | 2011.10-2023.12 | 5MT/6MT | F | L/R | Bus FWD 198 A4.000 | | GDS17106 | Drive Shaft | | 27 | 43 | 59 | 84.5 | 499.5 | |
| | 2011.10-2023.12 | 6MT | F | L/R | Bus FWD 198 A4.000 | Date to:2018.12 | GCO99298 | Outer Joint | | 27 | 26 | 59 | 84.5 | 63 | M |
| | 2011.10-2023.12 | MT | F | L | Bus FWD 198 A4.000 | Shock Absorber System:Normal Suspension | GDS17076 | Drive Shaft | | 25 | 25 | 51 | 84.5 | 596 | |
| | 2011.10-2023.12 | MT | F | R | Bus FWD 198 A4.000 | Shock Absorber System:Normal Suspension | GDS17081 | Drive Shaft | | 25 | 25 | 51 | 84.5 | 966.5 | |
| | 2011.10-2023.12 | MT | F | R | Bus FWD 198 A4.000 | Shock Absorber System:Normal Suspension | GCI18100 | Inner Joint | | 25 | 26 | 29.7 | 434 | 108 | |
| 1.5 (75 kw) | 2022.06- | 6MT | F | L | Box Body/MPV FWD DV5RCF | | GDS84336 | Drive Shaft | | 28 | 37 | 58.5 | 92.5 | 930 | |
| | 2022.06- | 6MT | F | R | Box Body/MPV FWD DV5RCF | | GDS84170 | Drive Shaft | | 28 | 37 | 58.5 | 92.5 | 670 | |
| | 2022.06- | 6MT | F | L | MPV FWD DV5RCF | | GDS84336 | Drive Shaft | | 28 | 37 | 58.5 | 92.5 | 930 | |
| | 2022.06- | 6MT | F | R | MPV FWD DV5RCF | | GDS84170 | Drive Shaft | | 28 | 37 | 58.5 | 92.5 | 670 | |
| 1.5 (96 kw) | 2022.06- | 6MT | F | L | Box Body/MPV FWD DV5RC | | GDS84336 | Drive Shaft | | 28 | 37 | 58.5 | 92.5 | 930 | |
| | 2022.06- | 6MT | F | R | Box Body/MPV FWD DV5RC | | GDS84170 | Drive Shaft | | 28 | 37 | 58.5 | 92.5 | 670 | |
| | 2022.06- | 8AT | F | L | Box Body/MPV FWD DV5RC | | GDS84579 | Drive Shaft | | 28 | 37 | 58.5 | 92.5 | 641 | |
| | 2022.06- | 8AT | F | R | Box Body/MPV FWD DV5RC | | GDS84582 | Drive Shaft | | 28 | 37 | 58.5 | 92.5 | 918 | |
| | 2022.06- | 8AT | F | L | Box Body/MPV FWD DV5RC | | GCI82119 | Inner Joint | | 37 | 34 | 41.5 | 58.5 | 94 | |
| | 2022.06- | 6MT | F | L | MPV FWD DV5RC | | GDS84336 | Drive Shaft | | 28 | 37 | 58.5 | 92.5 | 930 | |
| | 2022.06- | 6MT | F | R | MPV FWD DV5RC | | GDS84170 | Drive Shaft | | 28 | 37 | 58.5 | 92.5 | 670 | |
| | 2022.06- | 8AT | F | L | MPV FWD DV5RC | | GDS84579 | Drive Shaft | | 28 | 37 | 58.5 | 92.5 | 641 | |
| | 2022.06- | 8AT | F | R | MPV FWD DV5RC | | GDS84582 | Drive Shaft | | 28 | 37 | 58.5 | 92.5 | 918 | |
| | 2022.06- | 8AT | F | L | MPV FWD DV5RC | | GCI82119 | Inner Joint | | 37 | 34 | 41.5 | 58.5 | 94 | |
| 1.6 (66 kw) | 2010.02-2023.12 | 5AT | F | L | Bus FWD 263 A4.000;263 A5.000 | For vehicles with heavy duty suspension | GDS56898 | Drive Shaft | | 27 | 24 | 59 | 84.5 | 596 | |
| | 2010.02-2023.12 | 5AT | F | R | Bus FWD 263 A4.000;263 A5.000 | For vehicles with heavy duty suspension | GDS56897 | Drive Shaft | | 27 | 24 | 59 | 84.5 | 975 | |
| | 2010.02-2023.12 | 5AT | F | L | Bus FWD 263 A4.000;263 A5.000 | For vehicles with heavy duty suspension | GCI83548 | Inner Joint | | 24 | 24 | 29.75 | 86.5 | 99.5 | |
| | 2010.02-2023.12 | 5AT | F | R | Bus FWD 263 A4.000;263 A5.000 | For vehicles with heavy duty suspension | GCI83547 | Inner Joint | | 24 | 24 | 29.75 | 460 | 105 | |
| | 2010.02-2023.12 | 5MT/6MT | F | L | Bus FWD 263 A4.000;263 A5.000 | Heavy Duty Version | GDS17152 | Drive Shaft | | 27 | 25 | 59 | 84.5 | 596 | |
| | 2010.02-2023.12 | 5MT/6MT | F | R | Bus FWD 263 A4.000;263 A5.000 | Heavy Duty Version | GDS17153 | Drive Shaft | | 27 | 25 | 59 | 84.5 | 967 | |
| | 2010.02-2023.12 | 5MT/6MT | F | L/R | Bus FWD 263 A4.000;263 A5.000 | Heavy Duty Version | GDS17106 | Drive Shaft | | 27 | 43 | 59 | 84.5 | 499.5 | |
| | 2010.02-2023.12 | 5MT/6MT | F | L/R | Bus FWD 263 A4.000;263 A5.000 | Date to:2012.03 | GCO17030 | Outer Joint | | 25 | 26 | 51 | 84.5 | 64.5 | M |
| | 2010.02-2023.12 | 5MT/6MT | F | L/R | Bus FWD 263 A4.000;263 A5.000 | Date from:2012.04,Date to:2018.12,Not For vehicles with heavy duty suspension,Equipped | GCO82025 | Outer Joint | | 25 | 26 | 51 | 84.5 | 64.5 | M |
| | 2010.02-2023.12 | 6MT | F | L | Bus FWD 263 A4.000;263 A5.000 | Exhaust Emis:Euro 6 | GDS56167 | Drive Shaft | | 27 | 43 | 59 | 84.5 | 495 | |
| | 2010.02-2023.12 | 6MT | F | L | Bus FWD 263 A4.000;263 A5.000 | Exhaust Emis:Euro 6,For vehicles with standard suspension,Not for increased payload | GDS57453 | Drive Shaft | | 25 | 43 | 51 | 84.5 | 496 | |
| | 2010.02-2023.12 | 6MT | F | R | Bus FWD 263 A4.000;263 A5.000 | Exhaust Emis:Euro 6 | GDS56166 | Drive Shaft | | 27 | 43 | 59 | 84.5 | 517 | |
| | 2010.02-2023.12 | 6MT | F | R | Bus FWD 263 A4.000;263 A5.000 | Exhaust Emis:Euro 6,For vehicles with standard suspension,Not for increased payload | GDS57454 | Drive Shaft | | 25 | 25 | 51 | 84.5 | 964 | |
| | 2010.02-2023.12 | MT | F | L | Bus FWD 263 A4.000;263 A5.000 | not for reinforced version | GDS17076 | Drive Shaft | | 25 | 25 | 51 | 84.5 | 596 | |
| | 2010.02-2023.12 | MT | F | R | Bus FWD 263 A4.000;263 A5.000 | not for reinforced version | GDS17081 | Drive Shaft | | 25 | 25 | 51 | 84.5 | 966.5 | |

| | YEAR | TRANSM. | F/R | L/R | BODY STYLE & DRIVE TYPE & ENGINE | REMARKS | G-AP Ref. | PRODUCT | ABS | Technical Specifications A | B | C | H | L | P |
|---|---|---|---|---|---|---|---|---|---|---|---|---|---|---|---|
| **FIAT** **Doblo** | | | | | | | | | | | | | | | |
| 1.6 (66 kw) | 2010.02-2023.12 | MT | F | R | Bus FWD 263 A4.000;263 A5.000 | not for reinforced version | GCI18100 | Inner Joint | | 25 | 26 | 29.7 | 434 | 108 | |
| | 2010.02-2023.12 | Semi-5AT | F | L/R | Bus FWD 263 A4.000;263 A5.000 | For vehicles with heavy duty suspension | GDS83673 | Drive Shaft | | 27 | 42 | 59 | 84.5 | 485 | |
| | 2010.02-2023.12 | Semi-AT/MT | F | L/R | Bus FWD 263 A4.000;263 A5.000 | Date from:2012.04,Date to:2018.12,For vehicles with heavy duty suspension,Equipment code:943 | GCO99298 | Outer Joint | | 27 | 26 | 59 | 84.5 | 63 | M |
| 1.6 (68 kw) | 2005.11-2009.07 | | F | L | MPV FWD 182 B6.000 | | GDS17102 | Drive Shaft | | 22 | 22 | 51 | 89.5 | 636 | |
| | 2005.11-2009.07 | | F | R | MPV FWD 182 B6.000 | | GDS17113 | Drive Shaft | | 22 | 22 | 51 | 89.5 | 930.5 | |
| | 2005.11-2009.07 | | F | L/R | MPV FWD 182 B6.000 | | GCO82018 | Outer Joint | | 22 | 22 | 51 | 89.5 | 57 | M |
| 1.6 (70 kw) | 2015.03-2023.12 | 6MT | F | L | Bus FWD 263 A7.000;552 80 444 | Exhaust Emis:Euro4/Euro5,For vehicles with standard suspension,Not for increased payload;Trans. side with housing | GDS17076 | Drive Shaft | | 25 | 25 | 51 | 84.5 | 596 | |
| | 2015.03-2023.12 | 6MT | F | L | Bus FWD 263 A7.000;552 80 444 | Exhaust Emis:Euro4/Euro5,Equipment code:057,Axle:Reinforced wheel suspension,Equipment code:943,For increased payload;Trans. side with housing | GDS17152 | Drive Shaft | | 27 | 25 | 59 | 84.5 | 596 | |
| | 2015.03-2023.12 | 6MT | F | L | Bus FWD 263 A7.000;552 80 444 | Exhaust Emis:Euro 6;For vehicles with heavy duty suspension,Equipment code:943;Trans. side without housing | GDS56167 | Drive Shaft | | 27 | 43 | 59 | 84.5 | 495 | |
| | 2015.03-2023.12 | 6MT | F | L | Bus FWD 263 A7.000;552 80 444 | Exhaust Emis:Euro 6;For vehicles without heavy duty suspension;Trans. side without housing | GDS57453 | Drive Shaft | | 25 | 43 | 51 | 84.5 | 496 | |
| | 2015.03-2023.12 | 6MT | F | L | Bus FWD 263 A7.000;552 80 444 | Exhaust Emis:Euro 6;For vehicles with heavy duty suspension,Equipment code:943;Trans. side with housing | GDS81182 | Drive Shaft | | 27 | 25 | 59 | 84.5 | 595 | |
| | 2015.03-2023.12 | 6MT | F | R | Bus FWD 263 A7.000;552 80 444 | Exhaust Emis:Euro4/Euro5,For vehicles with standard suspension,Not for increased payload;Trans. side with housing | GDS17081 | Drive Shaft | | 25 | 25 | 51 | 84.5 | 966.5 | |
| | 2015.03-2023.12 | 6MT | F | R | Bus FWD 263 A7.000;552 80 444 | Exhaust Emis:Euro4/Euro5,Equipment code:057,Axle:Reinforced wheel suspension,Equipment code:943,For increased payload;Trans. side with housing | GDS17153 | Drive Shaft | | 27 | 25 | 59 | 84.5 | 967 | |
| | 2015.03-2023.12 | 6MT | F | R | Bus FWD 263 A7.000;552 80 444 | Exhaust Emis:Euro 6;For vehicles with heavy duty suspension,Equipment code:943;Trans. side without housing | GDS56166 | Drive Shaft | | 27 | 43 | 59 | 84.5 | 517 | |
| | 2015.03-2023.12 | 6MT | F | R | Bus FWD 263 A7.000;552 80 444 | Exhaust Emis:Euro 6;For vehicles with heavy duty suspension,Equipment code:943;Trans. side with housing | GDS56269 | Drive Shaft | | 27 | 25 | 59 | 84.5 | 958 | |
| | 2015.03-2023.12 | 6MT | F | R | Bus FWD 263 A7.000;552 80 444 | Exhaust Emis:Euro 6;For vehicles without heavy duty suspension | GDS57454 | Drive Shaft | | 25 | 25 | 51 | 84.5 | 964 | |
| | 2015.03-2023.12 | 6MT | F | L/R | Bus FWD 263 A7.000;552 80 444 | Exhaust Emis:Euro4/Euro5,Equipment code:057,Axle:Reinforced wheel suspension,Equipment code:943,For increased payload;Trans. side without housing | GDS17106 | Drive Shaft | | 27 | 43 | 59 | 84.5 | 499.5 | |
| | 2015.03-2023.12 | 6MT | F | L/R | Bus FWD 263 A7.000;552 80 444 | For vehicles with heavy duty suspension,Equipment code:943 | GCO99298 | Outer Joint | | 27 | 26 | 59 | 84.5 | 63 | M |
| | 2015.03-2023.12 | 6MT | F | L | Bus FWD 263 A7.000;552 80 444 | For vehicles with heavy duty suspension,Equipment code:943 | GCI17126 | Inner Joint | | 25 | 26 | 32 | 59 | 110.5 | |
| | 2015.03-2023.12 | 6MT | F | R | Bus FWD 263 A7.000;552 80 444 | For vehicles with heavy duty suspension,Equipment code:943 | GCI83221 | Inner Joint | | 25 | 26 | 29.75 | 409 | 108 | |
| 1.6 (74 kw) | 2016.03-2023.12 | 6MT | F | L | Bus FWD 263 A3.000;263 A9.000;552 80 444 | not for reinforced version | GDS17076 | Drive Shaft | | 25 | 25 | 51 | 84.5 | 596 | |
| | 2016.03-2023.12 | 6MT | F | L | Bus FWD 263 A3.000;263 A9.000;552 80 444 | Heavy Duty Version | GDS17152 | Drive Shaft | | 27 | 25 | 59 | 84.5 | 596 | |
| | 2016.03-2023.12 | 6MT | F | L | Bus FWD 263 A3.000;263 A9.000;552 80 444 | For vehicles with standard suspension,Exhaust Emis:Euro 6,Not for increased payload | GDS57453 | Drive Shaft | | 25 | 43 | 51 | 84.5 | 496 | |
| | 2016.03-2023.12 | 6MT | F | R | Bus FWD 263 A3.000;263 A9.000;552 80 444 | not for reinforced version | GDS17081 | Drive Shaft | | 25 | 25 | 51 | 84.5 | 966.5 | |
| | 2016.03-2023.12 | 6MT | F | R | Bus FWD 263 A3.000;263 A9.000;552 80 444 | Heavy Duty Version | GDS17153 | Drive Shaft | | 27 | 25 | 59 | 84.5 | 967 | |
| | 2016.03-2023.12 | 6MT | F | L/R | Bus FWD 263 A3.000;263 A9.000;552 80 444 | Heavy Duty Version | GDS17106 | Drive Shaft | | 27 | 43 | 59 | 84.5 | 499.5 | |
| | 2016.03-2023.12 | 6MT | F | L/R | Bus FWD 263 A3.000;263 A9.000;552 80 444 | not for reinforced version | GCO17030 | Outer Joint | | 25 | 26 | 51 | 84.5 | 64.5 | M |
| | 2016.03-2023.12 | 6MT | F | L/R | Bus FWD 263 A3.000;263 A9.000;552 80 444 | Heavy Duty Version | GCO99298 | Outer Joint | | 27 | 26 | 59 | 84.5 | 63 | M |
| | 2016.03-2023.12 | 6MT | F | R | Bus FWD 263 A3.000;263 A9.000;552 80 444 | not for reinforced version | GCI18100 | Inner Joint | | 25 | 26 | 29.7 | 434 | 108 | |
| 1.6 (76 kw) | 2001.10- | 5MT | F | L | MPV FWD 182 B6.000 | | GDS17102 | Drive Shaft | | 22 | 22 | 51 | 89.5 | 636 | |
| | 2001.10- | 5MT | F | R | MPV FWD 182 B6.000 | | GDS17113 | Drive Shaft | | 22 | 22 | 51 | 89.5 | 930.5 | |
| | 2001.10- | MT | F | L/R | MPV FWD 182 B6.000 | Date to:2009.07 | GCO82018 | Outer Joint | | 22 | 22 | 51 | 89.5 | 57 | M |
| | 2002.09- | 5MT | F | L | MPV FWD 182 B6.000 | | GDS17102 | Drive Shaft | | 22 | 22 | 51 | 89.5 | 636 | |
| | 2002.09- | 5MT | F | R | MPV FWD 182 B6.000 | | GDS17113 | Drive Shaft | | 22 | 22 | 51 | 89.5 | 930.5 | |
| | 2002.09- | MT | F | L/R | MPV FWD 182 B6.000 | Date to:2009.07 | GCO82018 | Outer Joint | | 22 | 22 | 51 | 89.5 | 57 | M |
| 1.6 (77 kw) | 2010.01-2023.12 | 6MT | F | L | Bus FWD 198 A3.000;263 A8.000;552 80 444 | No Facelift,For vehicles without heavy duty suspension | GDS17076 | Drive Shaft | | 25 | 25 | 51 | 84.5 | 596 | |
| | 2010.01-2023.12 | 6MT | F | L | Bus FWD 198 A3.000;263 A8.000;552 80 444 | No Facelift,For vehicles with heavy duty suspension,Equipment code:943 | GDS17152 | Drive Shaft | | 27 | 25 | 59 | 84.5 | 596 | |
| | 2010.01-2023.12 | 6MT | F | L | Bus FWD 198 A3.000;263 A8.000;552 80 444 | Facelift,For vehicles with heavy duty suspension,Equipment code:943 | GDS56167 | Drive Shaft | | 27 | 43 | 59 | 84.5 | 495 | |
| | 2010.01-2023.12 | 6MT | F | L | Bus FWD 198 A3.000;263 A8.000;552 80 444 | Facelift,For vehicles without heavy duty suspension | GDS57453 | Drive Shaft | | 25 | 43 | 51 | 84.5 | 496 | |
| | 2010.01-2023.12 | 6MT | F | L | Bus FWD 198 A3.000;263 A8.000;552 80 444 | Facelift,For vehicles with heavy duty suspension,Equipment code:943 | GDS81182 | Drive Shaft | | 27 | 25 | 59 | 84.5 | 595 | |
| | 2010.01-2023.12 | 6MT | F | R | Bus FWD 198 A3.000;263 A8.000;552 80 444 | No Facelift,For vehicles without heavy duty suspension | GDS17081 | Drive Shaft | | 25 | 25 | 51 | 84.5 | 966.5 | |
| | 2010.01-2023.12 | 6MT | F | R | Bus FWD 198 A3.000;263 A8.000;552 80 444 | No Facelift,For vehicles with heavy duty suspension,Equipment code:943 | GDS17153 | Drive Shaft | | 27 | 25 | 59 | 84.5 | 967 | |
| | 2010.01-2023.12 | 6MT | F | R | Bus FWD 198 A3.000;263 A8.000;552 80 444 | Facelift,For vehicles with heavy duty suspension,Equipment code:943 | GDS56166 | Drive Shaft | | 27 | 43 | 59 | 84.5 | 517 | |
| | 2010.01-2023.12 | 6MT | F | R | Bus FWD 198 A3.000;263 A8.000;552 80 444 | Facelift,For vehicles with heavy duty suspension,Equipment code:943 | GDS56269 | Drive Shaft | | 27 | 25 | 59 | 84.5 | 958 | |
| | 2010.01-2023.12 | 6MT | F | R | Bus FWD 198 A3.000;263 A8.000;552 80 444 | Facelift,For vehicles without heavy duty suspension | GDS57454 | Drive Shaft | | 25 | 25 | 51 | 84.5 | 964 | |
| | 2010.01-2023.12 | 6MT | F | L/R | Bus FWD 198 A3.000;263 A8.000;552 80 444 | No Facelift,For vehicles with heavy duty suspension,Equipment code:943 | GDS17106 | Drive Shaft | | 27 | 43 | 59 | 84.5 | 499.5 | |
| | 2010.01-2023.12 | 6MT | F | L/R | Bus FWD 198 A3.000;263 A8.000;552 80 444 | No Facelift | GCO82025 | Outer Joint | | 25 | 26 | 51 | 84.5 | 64.5 | M |
| | 2010.01-2023.12 | 6MT | F | L/R | Bus FWD 198 A3.000;263 A8.000;552 80 444 | Facelift,For vehicles with heavy duty suspension,Equipment code:943 | GCO99298 | Outer Joint | | 27 | 26 | 59 | 84.5 | 63 | M |
| | 2010.01-2023.12 | 6MT | F | L | Bus FWD 198 A3.000;263 A8.000;552 80 444 | For facelift,For vehicles with heavy duty suspension,Equipment code:943 | GCI17126 | Inner Joint | | 25 | 26 | 32 | 59 | 110.5 | |
| | 2010.01-2023.12 | 6MT | F | R | Bus FWD 198 A3.000;263 A8.000;552 80 444 | | GCI18100 | Inner Joint | | 25 | 26 | 29.7 | 434 | 108 | |
| | 2010.01-2023.12 | 6MT | F | R | Bus FWD 198 A3.000;263 A8.000;552 80 444 | For facelift,For vehicles with heavy duty suspension,Equipment code:943 | GCI83221 | Inner Joint | | 25 | 26 | 29.75 | 409 | 108 | |
| | 2010.02-2023.12 | 6MT | F | L | Platform/Chassis FWD 263 A8.000, 198 A3.000, 552 80 444 | No Facelift,For vehicles without heavy duty suspension | GDS17076 | Drive Shaft | | 25 | 25 | 51 | 84.5 | 596 | |
| | 2010.02-2023.12 | 6MT | F | L | Platform/Chassis FWD 263 A8.000, 198 A3.000, 552 80 444 | No Facelift,For vehicles with heavy duty suspension,Equipment code:943 | GDS17152 | Drive Shaft | | 27 | 25 | 59 | 84.5 | 596 | |
| | 2010.02-2023.12 | 6MT | F | L | Platform/Chassis FWD 263 A8.000, 198 A3.000, 552 80 444 | Facelift,For vehicles with heavy duty suspension,Equipment code:943 | GDS56167 | Drive Shaft | | 27 | 43 | 59 | 84.5 | 495 | |
| | 2010.02-2023.12 | 6MT | F | L | Platform/Chassis FWD 263 A8.000, 198 A3.000, 552 80 444 | Facelift,For vehicles without heavy duty suspension | GDS57453 | Drive Shaft | | 25 | 43 | 51 | 84.5 | 496 | |
| | 2010.02-2023.12 | 6MT | F | L | Platform/Chassis FWD 263 A8.000, 198 A3.000, 552 80 444 | Facelift,For vehicles with heavy duty suspension,Equipment code:943 | GDS81182 | Drive Shaft | | 27 | 25 | 59 | 84.5 | 595 | |
| | 2010.02-2023.12 | 6MT | F | R | Platform/Chassis FWD 263 A8.000, 198 A3.000, 552 80 444 | No Facelift,For vehicles without heavy duty suspension | GDS17081 | Drive Shaft | | 25 | 25 | 51 | 84.5 | 966.5 | |
| | 2010.02-2023.12 | 6MT | F | R | Platform/Chassis FWD 263 A8.000, 198 A3.000, 552 80 444 | No Facelift,For vehicles with heavy duty suspension,Equipment code:943 | GDS17153 | Drive Shaft | | 27 | 25 | 59 | 84.5 | 967 | |
| | 2010.02-2023.12 | 6MT | F | R | Platform/Chassis FWD 263 A8.000, 198 A3.000, 552 80 444 | Facelift,For vehicles with heavy duty suspension,Equipment code:943 | GDS56166 | Drive Shaft | | 27 | 43 | 59 | 84.5 | 517 | |
| | 2010.02-2023.12 | 6MT | F | R | Platform/Chassis FWD 263 A8.000, 198 A3.000, 552 80 444 | Facelift,For vehicles with heavy duty suspension,Equipment code:943 | GDS56269 | Drive Shaft | | 27 | 25 | 59 | 84.5 | 958 | |
| | 2010.02-2023.12 | 6MT | F | R | Platform/Chassis FWD 263 A8.000, 198 A3.000, 552 80 444 | Facelift,For vehicles without heavy duty suspension | GDS57454 | Drive Shaft | | 25 | 25 | 51 | 84.5 | 964 | |
| | 2010.02-2023.12 | 6MT | F | L/R | Platform/Chassis FWD 263 A8.000, 198 A3.000, 552 80 444 | No Facelift,For vehicles with heavy duty suspension,Equipment code:943 | GDS17106 | Drive Shaft | | 27 | 43 | 59 | 84.5 | 499.5 | |
| | 2010.02-2023.12 | 6MT | F | L/R | Platform/Chassis FWD 263 A8.000, 198 A3.000, 552 80 444 | No Facelift | GCO82025 | Outer Joint | | 25 | 26 | 51 | 84.5 | 64.5 | M |
| | 2010.02-2023.12 | 6MT | F | L/R | Platform/Chassis FWD 263 A8.000, 198 A3.000, 552 80 444 | Model:Doblo Cargo,Facelift,For vehicles with heavy duty suspension,Equipment code:943 | GCO99298 | Outer Joint | | 27 | 26 | 59 | 84.5 | 63 | M |
| | 2010.02-2023.12 | 6MT | F | L | Platform/Chassis FWD 263 A8.000, 198 A3.000, 552 80 444 | For facelift,For vehicles with heavy duty suspension,Equipment code:943 | GCI17126 | Inner Joint | | 25 | 26 | 32 | 59 | 110.5 | |

| | YEAR | TRANSM. | F/R | L/R | BODY STYLE & DRIVE TYPE & ENGINE | REMARKS | G-AP Ref. | PRODUCT | ABS | Technical Specifications A | B | C | H | L | P |
|---|---|---|---|---|---|---|---|---|---|---|---|---|---|---|---|
| **FIAT** | | | | | | | | | | | | | | | |
| **Doblo** | | | | | | | | | | | | | | | |
| 1.6 (77 kw) | 2010.02-2023.12 | 6MT | F | R | Platform/Chassis FWD 263 A8.000, 198 A3.000, 552 80 444 | For facelift,For vehicles with heavy duty suspension,Equipment code:943 | GCI83221 | Inner Joint | | 25 | 26 | 29.75 | 409 | 108 | |
| | 2010.02-2023.12 | MT | F | R | Platform/Chassis FWD 263 A8.000, 198 A3.000, 552 80 444 | not for reinforced version | GCI18100 | Inner Joint | | 25 | 26 | 29.7 | 434 | 108 | |
| | 2010.02-2023.12 | | F | L/R | Platform/Chassis FWD 263 A8.000, 198 A3.000, 552 80 444 | | GCO17030 | Outer Joint | | 25 | 26 | 51 | 84.5 | 64.5 | M |
| 1.6 (88 kw) | 2015.03-2023.12 | 6MT | F | L | Bus FWD 940 C1.000;552 80 444 | Date to:2017.09 | GDS17152 | Drive Shaft | | 27 | 25 | 59 | 84.5 | 596 | |
| | 2015.03-2023.12 | 6MT | F | L | Bus FWD 940 C1.000;552 80 444 | Date from:2017.10 | GDS56167 | Drive Shaft | | 27 | 43 | 59 | 84.5 | 495 | |
| | 2015.03-2023.12 | 6MT | F | L | Bus FWD 940 C1.000;552 80 444 | Date from:2017.10 | GDS81182 | Drive Shaft | | 27 | 25 | 59 | 84.5 | 595 | |
| | 2015.03-2023.12 | 6MT | F | R | Bus FWD 940 C1.000;552 80 444 | Date from:2017.02 | GDS56166 | Drive Shaft | | 27 | 43 | 59 | 84.5 | 517 | |
| | 2015.03-2023.12 | 6MT | F | R | Bus FWD 940 C1.000;552 80 444 | Date from:2017.02 | GDS56269 | Drive Shaft | | 27 | 25 | 59 | 84.5 | 958 | |
| | 2015.03-2023.12 | 6MT | F | L/R | Bus FWD 940 C1.000;552 80 444 | Date to:2017.01 | GCO17064 | Outer Joint | | 27 | 27 | 59 | 84.5 | 64 | M |
| | 2015.03-2023.12 | 6MT | F | L/R | Bus FWD 940 C1.000;552 80 444 | Date from:2017.02 | GCO99298 | Outer Joint | | 27 | 26 | 59 | 84.5 | 63 | M |
| | 2015.03-2023.12 | 6MT | F | L | Bus FWD 940 C1.000;552 80 444 | Date from:2017.02 | GCI17126 | Inner Joint | | 25 | 26 | 32 | 59 | 110.5 | |
| | 2015.03-2023.12 | 6MT | F | R | Bus FWD 940 C1.000;552 80 444 | Date from:2017.02 | GCI83221 | Inner Joint | | 25 | 26 | 29.75 | 409 | 108 | |
| | 2016.02-2023.12 | 6MT | F | L | Platform/Chassis FWD 940 C1.000, 552 80 444 | Equipment code:PASCRT | GDS57453 | Drive Shaft | | 25 | 43 | 51 | 84.5 | 496 | |
| | 2016.02-2023.12 | 6MT | F | L | Platform/Chassis FWD 940 C1.000, 552 80 444 | Date from:2017.02 | GDS81182 | Drive Shaft | | 27 | 25 | 59 | 84.5 | 595 | |
| | 2016.02-2023.12 | 6MT | F | R | Platform/Chassis FWD 940 C1.000, 552 80 444 | Model:Doblo Cargo,Date from:2017.02 | GDS56166 | Drive Shaft | | 27 | 43 | 59 | 84.5 | 517 | |
| | 2016.02-2023.12 | 6MT | F | R | Platform/Chassis FWD 940 C1.000, 552 80 444 | Date from:2017.02 | GDS56269 | Drive Shaft | | 27 | 25 | 59 | 84.5 | 958 | |
| | 2016.02-2023.12 | 6MT | F | L/R | Platform/Chassis FWD 940 C1.000, 552 80 444 | Date to:2017.01 | GCO17064 | Outer Joint | | 27 | 27 | 59 | 84.5 | 64 | M |
| | 2016.02-2023.12 | 6MT | F | L/R | Platform/Chassis FWD 940 C1.000, 552 80 444 | Model:Doblo Cargo,Date from:2017.02 | GCO99298 | Outer Joint | | 27 | 26 | 59 | 84.5 | 63 | M |
| | 2016.02-2023.12 | 6MT | F | L | Platform/Chassis FWD 940 C1.000, 552 80 444 | Date from:2017.02 | GCI17126 | Inner Joint | | 25 | 26 | 32 | 59 | 110.5 | |
| | 2016.02-2023.12 | 6MT | F | R | Platform/Chassis FWD 940 C1.000, 552 80 444 | Date from:2017.02 | GCI83221 | Inner Joint | | 25 | 26 | 29.75 | 409 | 108 | |
| | 2016.02-2023.12 | MT | F | L | Platform/Chassis FWD 940 C1.000, 552 80 444 | Model:Doblo Cargo,Date from:2017.02 | GDS56167 | Drive Shaft | | 27 | 43 | 59 | 84.5 | 495 | |
| 1.9 (46 kw) | 2001.03- | 5MT | F | L | MPV FWD 223 A6.000 | | GDS41006 | Drive Shaft | | 22 | | 51 | 89.5 | 618 | |
| | 2001.03- | 5MT | F | R | MPV FWD 223 A6.000 | | GDS41007 | Drive Shaft | | 22 | | 51 | 89.5 | 932 | |
| | 2001.03- | MT | F | L/R | MPV FWD 223 A6.000 | | GCO82018 | Outer Joint | | 22 | 22 | 51 | 89.5 | 57 | M |
| 1.9 (74 kw) | 2001.10- | 5MT | F | L | MPV FWD 182 B9.000;223 B2.000 | | GDS17017 | Drive Shaft | | 25 | 24 | 51 | 90 | 611 | |
| | 2001.10- | 5MT | F | R | MPV FWD 182 B9.000;223 B2.000 | | GDS17014 | Drive Shaft | | 25 | 36 | 51 | 90 | 524 | |
| | 2001.10- | 5MT | F | R | MPV FWD 182 B9.000;223 B2.000 | | GDS17019 | Drive Shaft | | 25 | 24 | 51 | 90 | 928 | |
| | 2001.10- | 5MT | F | L/R | MPV FWD 182 B9.000;223 B2.000 | | GCO17031 | Outer Joint | | 25 | 24 | 51 | 90 | 62 | M |
| | 2001.10- | 5MT | F | L | MPV FWD 182 B9.000;223 B2.000 | | GCI99008 | Inner Joint | | 24 | 24 | 29.7 | 86.5 | 93 | |
| | 2001.10- | 5MT | F | R | MPV FWD 182 B9.000;223 B2.000 | | GCI17015 | Inner Joint | | 24 | 24 | 29.7 | 379 | 100.5 | |
| 1.9 (77 kw) | 2003.07- | 5MT | F | L | MPV FWD 223 A7.000;223 B1.000 | Trans. side without housing | GDS17013 | Drive Shaft | | 25 | 36 | 51 | 90 | 501 | |
| | 2003.07- | 5MT | F | L | MPV FWD 223 A7.000;223 B1.000 | Trans. side with housing | GDS17017 | Drive Shaft | | 25 | 24 | 51 | 90 | 611 | |
| | 2003.07- | 5MT | F | R | MPV FWD 223 A7.000;223 B1.000 | Trans. side without housing | GDS17014 | Drive Shaft | | 25 | 36 | 51 | 90 | 524 | |
| | 2003.07- | 5MT | F | R | MPV FWD 223 A7.000;223 B1.000 | Trans. side with housing | GDS17019 | Drive Shaft | | 25 | 24 | 51 | 90 | 928 | |
| | 2003.07- | 5MT | F | L/R | MPV FWD 223 A7.000;223 B1.000 | | GCO17031 | Outer Joint | | 25 | 24 | 51 | 90 | 62 | M |
| | 2003.07- | 5MT | F | L | MPV FWD 223 A7.000;223 B1.000 | | GCI99008 | Inner Joint | | 24 | 24 | 29.7 | 86.5 | 93 | |
| | 2003.07- | 5MT | F | R | MPV FWD 223 A7.000;223 B1.000 | | GCI17015 | Inner Joint | | 24 | 24 | 29.7 | 379 | 100.5 | |
| 1.9 (88 kw) | 2005.10- | 5MT | F | L | MPV FWD 186 A9.000 | Trans. side without housing | GDS17013 | Drive Shaft | | 25 | 36 | 51 | 90 | 501 | |
| | 2005.10- | 5MT | F | L | MPV FWD 186 A9.000 | Trans. side with housing | GDS17017 | Drive Shaft | | 25 | 24 | 51 | 90 | 611 | |
| | 2005.10- | 5MT | F | R | MPV FWD 186 A9.000 | Trans. side without housing | GDS17014 | Drive Shaft | | 25 | 36 | 51 | 90 | 524 | |
| | 2005.10- | 5MT | F | R | MPV FWD 186 A9.000 | Trans. side with housing | GDS17019 | Drive Shaft | | 25 | 24 | 51 | 90 | 928 | |
| | 2005.10- | 5MT | F | L/R | MPV FWD 186 A9.000 | | GCO17031 | Outer Joint | | 25 | 24 | 51 | 90 | 62 | M |
| | 2005.10- | 5MT | F | L | MPV FWD 186 A9.000 | | GCI99008 | Inner Joint | | 24 | 24 | 29.7 | 86.5 | 93 | |
| | 2005.10- | 5MT | F | R | MPV FWD 186 A9.000 | | GCI17015 | Inner Joint | | 24 | 24 | 29.7 | 379 | 100.5 | |
| 2.0 (99 kw) | 2010.01-2023.12 | MT | F | L/R | Bus FWD 263 A1.000 | | GCI17114 | Inner Joint | | 25 | 27 | 29.7 | 433 | 110 | |
| | 2010.02-2023.12 | MT | F | L/R | Platform/Chassis FWD 263 A1.000 | | GCI17114 | Inner Joint | | 25 | 27 | 29.7 | 433 | 110 | |
| **Doblo Cargo** | | | | | | | | | | | | | | | |
| 1.2 (48 kw) | 2001.03-2004.01 | 5MT | F | L | Box Body/MPV FWD 223 A5.000 | | GDS41006 | Drive Shaft | | 22 | | 51 | 89.5 | 618 | |
| | 2001.03-2004.01 | MT | F | R | Box Body/MPV FWD 223 A5.000 | | GDS41007 | Drive Shaft | | 22 | | 51 | 89.5 | 932 | |
| | 2001.03-2004.01 | MT | F | L/R | Box Body/MPV FWD 223 A5.000 | | GCO82018 | Outer Joint | | 22 | 22 | 51 | 89.5 | 57 | M |
| 1.3 (51 kw) | 2004.05-2006.12 | 5MT | F | L | Box Body/MPV FWD 188 A9.000;188 A8.000 | | GDS17017 | Drive Shaft | | 25 | 24 | 51 | 90 | 611 | |
| | 2004.05-2006.12 | 5MT | F | R | Box Body/MPV FWD 188 A9.000;188 A8.000 | | GDS17019 | Drive Shaft | | 25 | 24 | 51 | 90 | 928 | |
| | 2004.05-2006.12 | 5MT | F | L/R | Box Body/MPV FWD 188 A9.000;188 A8.000 | | GCO17031 | Outer Joint | | 25 | 24 | 51 | 90 | 62 | M |
| | 2004.05-2006.12 | 5MT | F | L | Box Body/MPV FWD 188 A9.000;188 A8.000 | | GCI99008 | Inner Joint | | 24 | 24 | 29.7 | 86.5 | 93 | |
| | 2004.05-2006.12 | 5MT | F | R | Box Body/MPV FWD 188 A9.000;188 A8.000 | | GCI17015 | Inner Joint | | 24 | 24 | 29.7 | 379 | 100.5 | |
| 1.3 (55 kw) | 2005.10-2010.01 | 5MT | F | L | Box Body/MPV FWD 199 A2.000 | Trans. side without housing | GDS17013 | Drive Shaft | | 25 | 36 | 51 | 90 | 501 | |
| | 2005.10-2010.01 | 5MT | F | L | Box Body/MPV FWD 199 A2.000 | Trans. side with housing | GDS17017 | Drive Shaft | | 25 | 24 | 51 | 90 | 611 | |
| | 2005.10-2010.01 | 5MT | F | R | Box Body/MPV FWD 199 A2.000 | Trans. side without housing | GDS17014 | Drive Shaft | | 25 | 36 | 51 | 90 | 524 | |
| | 2005.10-2010.01 | 5MT | F | R | Box Body/MPV FWD 199 A2.000 | Trans. side with housing | GDS17019 | Drive Shaft | | 25 | 24 | 51 | 90 | 928 | |
| | 2005.10-2010.01 | 5MT | F | L/R | Box Body/MPV FWD 199 A2.000 | | GCO17031 | Outer Joint | | 25 | 24 | 51 | 90 | 62 | M |
| | 2005.10-2010.01 | 5MT | F | L | Box Body/MPV FWD 199 A2.000 | | GCI99008 | Inner Joint | | 24 | 24 | 29.7 | 86.5 | 93 | |
| | 2005.10-2010.01 | 5MT | F | R | Box Body/MPV FWD 199 A2.000 | | GCI17015 | Inner Joint | | 24 | 24 | 29.7 | 379 | 100.5 | |
| | 2013.11-2023.12 | 5MT | F | L | Box Body/MPV FWD 263 A6.000 | | GDS17078 | Drive Shaft | | 25 | 24 | 51 | 84.5 | 602 | |
| | 2013.11-2023.12 | 5MT | F | L | Box Body/MPV FWD 263 A6.000 | For dusty conditions | GDS56172 | Drive Shaft | | 25 | 39 | 51.1 | 84.5 | 491 | |
| | 2013.11-2023.12 | 5MT | F | R | Box Body/MPV FWD 263 A6.000 | Date to:2018.10,Exhaust Emis:Euro4/Euro5 | GDS17069 | Drive Shaft | | 25 | 39 | 51 | 84.5 | 559 | |

| | YEAR | TRANSM. | F/R | L/R | BODY STYLE & DRIVE TYPE & ENGINE | REMARKS | G-AP Ref. | PRODUCT | ABS | Technical Specifications A | B | C | H | L | P |
|---|---|---|---|---|---|---|---|---|---|---|---|---|---|---|---|
| **FIAT** **Doblo Cargo** | | | | | | | | | | | | | | | |
| 1.3 (55 kw) | 2013.11-2023.12 | 5MT | F | R | Box Body/MPV FWD 263 A6.000 | Date to:2018.10,Exhaust Emis:Euro4/Euro5 | GDS17079 | Drive Shaft | | 25 | 24 | 51 | 84.5 | 970 | |
| | 2013.11-2023.12 | 5MT | F | R | Box Body/MPV FWD 263 A6.000 | Date to:2018.10,Exhaust Emis:Euro4/Euro5;Country Version:Europe;For dusty conditions | GDS56173 | Drive Shaft | | 25 | 39 | 51.1 | 84.5 | 558 | |
| | 2013.11-2023.12 | 5MT | F | L/R | Box Body/MPV FWD 263 A6.000 | | GCO17063 | Outer Joint | | 25 | 25 | 51.1 | 84.5 | 61 | M |
| | 2013.11-2023.12 | MT | F | L | Box Body/MPV FWD 263 A6.000 | | GCI17025 | Inner Joint | | 24 | 24 | 29.7 | 86.5 | 93 | |
| | 2013.11-2023.12 | MT | F | R | Box Body/MPV FWD 263 A6.000 | | GCI17026 | Inner Joint | | 24 | 24 | 29.7 | 379 | 100.5 | |
| | 2013.11-2023.12 | 5MT | F | L | Platform/Chassis FWD 263 A6.000 | | GDS17078 | Drive Shaft | | 25 | 24 | 51 | 84.5 | 602 | |
| | 2013.11-2023.12 | 5MT | F | L | Platform/Chassis FWD 263 A6.000 | For dusty conditions | GDS56172 | Drive Shaft | | 25 | 39 | 51.1 | 84.5 | 491 | |
| | 2013.11-2023.12 | 5MT | F | R | Platform/Chassis FWD 263 A6.000 | Date to:2018.10,Exhaust Emis:Euro4/Euro5 | GDS17069 | Drive Shaft | | 25 | 39 | 51 | 84.5 | 559 | |
| | 2013.11-2023.12 | 5MT | F | R | Platform/Chassis FWD 263 A6.000 | Date to:2018.10,Exhaust Emis:Euro4/Euro5 | GDS17079 | Drive Shaft | | 25 | 24 | 51 | 84.5 | 970 | |
| | 2013.11-2023.12 | 5MT | F | R | Platform/Chassis FWD 263 A6.000 | Date to:2018.10,Exhaust Emis:Euro4/Euro5;Country Version:Europe;For dusty conditions | GDS56173 | Drive Shaft | | 25 | 39 | 51.1 | 84.5 | 558 | |
| | 2013.11-2023.12 | 5MT | F | L/R | Platform/Chassis FWD 263 A6.000 | | GCO17063 | Outer Joint | | 25 | 25 | 51.1 | 84.5 | 61 | M |
| | 2013.11-2023.12 | 5MT | F | L | Platform/Chassis FWD 263 A6.000 | | GCI17025 | Inner Joint | | 24 | 24 | 29.7 | 86.5 | 93 | |
| | 2013.11-2023.12 | 5MT | F | R | Platform/Chassis FWD 263 A6.000 | | GCI17026 | Inner Joint | | 24 | 24 | 29.7 | 379 | 100.5 | |
| 1.3 (59 kw) | 2016.03-2023.12 | 5MT | F | L | Box Body/MPV FWD 225 A2.000;552 83 775 | | GDS17078 | Drive Shaft | | 25 | 24 | 51 | 84.5 | 602 | |
| | 2016.03-2023.12 | 5MT | F | L | Box Body/MPV FWD 225 A2.000;552 83 775 | For dusty conditions | GDS56172 | Drive Shaft | | 25 | 39 | 51.1 | 84.5 | 491 | |
| | 2016.03-2023.12 | 5MT | F | R | Box Body/MPV FWD 225 A2.000;552 83 775 | Date to:2018.10,Exhaust Emis:Euro4/Euro5 | GDS17069 | Drive Shaft | | 25 | 39 | 51 | 84.5 | 559 | |
| | 2016.03-2023.12 | 5MT | F | R | Box Body/MPV FWD 225 A2.000;552 83 775 | Date to:2018.10,Exhaust Emis:Euro4/Euro5 | GDS17079 | Drive Shaft | | 25 | 24 | 51 | 84.5 | 970 | |
| | 2016.03-2023.12 | 5MT | F | R | Box Body/MPV FWD 225 A2.000;552 83 775 | Date to:2018.10,Exhaust Emis:Euro4/Euro5;Country Version:Europe;For dusty conditions | GDS56173 | Drive Shaft | | 25 | 39 | 51.1 | 84.5 | 558 | |
| | 2016.03-2023.12 | 5MT | F | L/R | Box Body/MPV FWD 225 A2.000;552 83 775 | | GCO17063 | Outer Joint | | 25 | 25 | 51.1 | 84.5 | 61 | M |
| | 2016.03-2023.12 | 5MT | F | L | Box Body/MPV FWD 225 A2.000;552 83 775 | | GCI17025 | Inner Joint | | 24 | 24 | 29.7 | 86.5 | 93 | |
| | 2016.03-2023.12 | 5MT | F | R | Box Body/MPV FWD 225 A2.000;552 83 775 | | GCI17026 | Inner Joint | | 24 | 24 | 29.7 | 379 | 100.5 | |
| | 2016.03-2023.12 | 5MT | F | L | Platform/Chassis FWD 225 A2.000;552 83 775 | | GDS17078 | Drive Shaft | | 25 | 24 | 51 | 84.5 | 602 | |
| | 2016.03-2023.12 | 5MT | F | L | Platform/Chassis FWD 225 A2.000;552 83 775 | For dusty conditions | GDS56172 | Drive Shaft | | 25 | 39 | 51.1 | 84.5 | 491 | |
| | 2016.03-2023.12 | 5MT | F | R | Platform/Chassis FWD 225 A2.000;552 83 775 | Date to:2018.10,Exhaust Emis:Euro4/Euro5 | GDS17069 | Drive Shaft | | 25 | 39 | 51 | 84.5 | 559 | |
| | 2016.03-2023.12 | 5MT | F | R | Platform/Chassis FWD 225 A2.000;552 83 775 | Date to:2018.10,Exhaust Emis:Euro4/Euro5 | GDS17079 | Drive Shaft | | 25 | 24 | 51 | 84.5 | 970 | |
| | 2016.03-2023.12 | 5MT | F | R | Platform/Chassis FWD 225 A2.000;552 83 775 | Date to:2018.10,Exhaust Emis:Euro4/Euro5;Country Version:Europe;For dusty conditions | GDS56173 | Drive Shaft | | 25 | 39 | 51.1 | 84.5 | 558 | |
| | 2016.03-2023.12 | 5MT | F | L/R | Platform/Chassis FWD 225 A2.000;552 83 775 | | GCO17063 | Outer Joint | | 25 | 25 | 51.1 | 84.5 | 61 | M |
| | 2016.03-2023.12 | 5MT | F | L | Platform/Chassis FWD 225 A2.000;552 83 775 | | GCI17025 | Inner Joint | | 24 | 24 | 29.7 | 86.5 | 93 | |
| | 2016.03-2023.12 | 5MT | F | R | Platform/Chassis FWD 225 A2.000;552 83 775 | | GCI17026 | Inner Joint | | 24 | 24 | 29.7 | 379 | 100.5 | |
| 1.3 (62 kw) | 2006.08- | 5MT | F | L | Box Body/MPV FWD 223 A9.000 | | GDS17013 | Drive Shaft | | 25 | 36 | 51 | 90 | 501 | |
| | 2006.08- | 5MT | F | L | Box Body/MPV FWD 223 A9.000 | Date to:2009.12 | GDS17017 | Drive Shaft | | 25 | 24 | 51 | 90 | 611 | |
| | 2006.08- | 5MT | F | R | Box Body/MPV FWD 223 A9.000 | | GDS17014 | Drive Shaft | | 25 | 36 | 51 | 90 | 524 | |
| | 2006.08- | 5MT | F | R | Box Body/MPV FWD 223 A9.000 | Date to:2009.12 | GDS17019 | Drive Shaft | | 25 | 24 | 51 | 90 | 928 | |
| | 2006.08- | 5MT | F | L/R | Box Body/MPV FWD 223 A9.000 | Date to:2009.12 | GCO17031 | Outer Joint | | 25 | 24 | 51 | 90 | 62 | M |
| | 2006.08- | 5MT | F | L | Box Body/MPV FWD 223 A9.000 | | GCI99008 | Inner Joint | | 24 | 24 | 29.7 | 86.5 | 93 | |
| | 2006.08- | 5MT | F | R | Box Body/MPV FWD 223 A9.000 | | GCI17015 | Inner Joint | | 24 | 24 | 29.7 | 379 | 100.5 | |
| 1.3 (66 kw) | 2010.02-2023.12 | 5MT | F | L | Box Body/MPV FWD 199 A3.000;263 A2.000 | | GDS17078 | Drive Shaft | | 25 | 24 | 51 | 84.5 | 602 | |
| | 2010.02-2023.12 | 5MT | F | L | Box Body/MPV FWD 199 A3.000;263 A2.000 | For dusty conditions | GDS56172 | Drive Shaft | | 25 | 39 | 51.1 | 84.5 | 491 | |
| | 2010.02-2023.12 | 5MT | F | R | Box Body/MPV FWD 199 A3.000;263 A2.000 | Date to:2018.10,Exhaust Emis:Euro4/Euro5 | GDS17069 | Drive Shaft | | 25 | 39 | 51 | 84.5 | 559 | |
| | 2010.02-2023.12 | 5MT | F | R | Box Body/MPV FWD 199 A3.000;263 A2.000 | Date to:2018.10,Exhaust Emis:Euro4/Euro5 | GDS17079 | Drive Shaft | | 25 | 24 | 51 | 84.5 | 970 | |
| | 2010.02-2023.12 | 5MT | F | R | Box Body/MPV FWD 199 A3.000;263 A2.000 | Date to:2018.10,Exhaust Emis:Euro4/Euro5;Country Version:Europe;For dusty conditions | GDS56173 | Drive Shaft | | 25 | 39 | 51.1 | 84.5 | 558 | |
| | 2010.02-2023.12 | 5MT | F | L/R | Box Body/MPV FWD 199 A3.000;263 A2.000 | | GCO17063 | Outer Joint | | 25 | 25 | 51.1 | 84.5 | 61 | M |
| | 2010.02-2023.12 | MT | F | L | Box Body/MPV FWD 199 A3.000;263 A2.000 | | GCI17025 | Inner Joint | | 24 | 24 | 29.7 | 86.5 | 93 | |
| | 2010.02-2023.12 | MT | F | R | Box Body/MPV FWD 199 A3.000;263 A2.000 | | GCI17026 | Inner Joint | | 24 | 24 | 29.7 | 379 | 100.5 | |
| 1.3 (70 kw) | 2016.03-2023.12 | 5MT | F | L | Box Body/MPV FWD 330 A1.000;552 83 775 | | GDS17078 | Drive Shaft | | 25 | 24 | 51 | 84.5 | 602 | |
| | 2016.03-2023.12 | 5MT | F | L | Box Body/MPV FWD 330 A1.000;552 83 775 | For dusty conditions | GDS56172 | Drive Shaft | | 25 | 39 | 51.1 | 84.5 | 491 | |
| | 2016.03-2023.12 | 5MT | F | R | Box Body/MPV FWD 330 A1.000;552 83 775 | Date to:2018.10,Exhaust Emis:Euro4/Euro5 | GDS17069 | Drive Shaft | | 25 | 39 | 51 | 84.5 | 559 | |
| | 2016.03-2023.12 | 5MT | F | R | Box Body/MPV FWD 330 A1.000;552 83 775 | Date to:2018.10,Exhaust Emis:Euro4/Euro5 | GDS17079 | Drive Shaft | | 25 | 24 | 51 | 84.5 | 970 | |
| | 2016.03-2023.12 | 5MT | F | R | Box Body/MPV FWD 330 A1.000;552 83 775 | Date to:2018.10,Exhaust Emis:Euro4/Euro5;Country Version:Europe;For dusty conditions | GDS56173 | Drive Shaft | | 25 | 39 | 51.1 | 84.5 | 558 | |
| | 2016.03-2023.12 | 5MT | F | L/R | Box Body/MPV FWD 330 A1.000;552 83 775 | | GCO17063 | Outer Joint | | 25 | 25 | 51.1 | 84.5 | 61 | M |
| | 2016.03-2023.12 | 5MT | F | L | Box Body/MPV FWD 330 A1.000;552 83 775 | | GCI17025 | Inner Joint | | 24 | 24 | 29.7 | 86.5 | 93 | |
| | 2016.03-2023.12 | 5MT | F | R | Box Body/MPV FWD 330 A1.000;552 83 775 | | GCI17026 | Inner Joint | | 24 | 24 | 29.7 | 379 | 100.5 | |
| 1.4 (57 kw) | 2005.10- | 5MT | F | L | Box Body/MPV FWD 350 A1.000 | | GDS17102 | Drive Shaft | | 22 | 22 | 51 | 89.5 | 636 | |
| | 2005.10- | 5MT | F | R | Box Body/MPV FWD 350 A1.000 | | GDS17113 | Drive Shaft | | 22 | 22 | 51 | 89.5 | 930.5 | |
| | 2005.10- | MT | F | L/R | Box Body/MPV FWD 350 A1.000 | Date to:2013.08 | GCO82018 | Outer Joint | | 22 | 22 | 51 | 89.5 | 57 | M |
| 1.4 (70 kw) | 2010.02-2023.12 | 5MT | F | L | Box Body/MPV FWD 843 A1.000 | | GDS83974 | Drive Shaft | | 25 | 22 | 51 | 84 | 668 | |
| | 2010.02-2023.12 | 5MT | F | L/R | Box Body/MPV FWD 843 A1.000 | Date from:2011.01 | GCO17026 | Outer Joint | | 25 | 22 | 51 | 84 | 57 | M |
| | 2010.02-2023.12 | 5MT | F | L | Box Body/MPV FWD 843 A1.000 | | GCI17124 | Inner Joint | | 22 | 21 | 36 | 61.5 | 93.5 | |
| | 2010.02-2023.12 | 5MT | F | L/R | Box Body/MPV FWD 843 A1.000 | | GCI17027 | Inner Joint | | 22 | 22 | 36 | 61.5 | 93.5 | |
| | 2010.04-2023.12 | 5MT | F | L | Platform/Chassis FWD 843 A1.000 | | GDS83974 | Drive Shaft | | 25 | 22 | 51 | 84 | 668 | |
| | 2010.04-2023.12 | 5MT | F | L/R | Platform/Chassis FWD 843 A1.000 | | GCO17026 | Outer Joint | | 25 | 22 | 51 | 84 | 57 | M |
| | 2010.04-2023.12 | 5MT | F | L | Platform/Chassis FWD 843 A1.000 | | GCI17124 | Inner Joint | | 22 | 21 | 36 | 61.5 | 93.5 | |
| | 2010.04-2023.12 | 5MT | F | L/R | Platform/Chassis FWD 843 A1.000 | | GCI17027 | Inner Joint | | 22 | 22 | 36 | 61.5 | 93.5 | |
| 1.4 (88 kw) | 2010.06-2023.12 | 6MT | F | L | Box Body/MPV FWD 198 A4.000 | | GDS17152 | Drive Shaft | | 27 | 25 | 59 | 84.5 | 596 | |
| | 2010.06-2023.12 | 6MT | F | R | Box Body/MPV FWD 198 A4.000 | | GDS17153 | Drive Shaft | | 27 | 25 | 59 | 84.5 | 967 | |

## FIAT
### Doblo Cargo

| Model | YEAR | TRANSM. | F/R | L/R | BODY STYLE & DRIVE TYPE & ENGINE | REMARKS | G-AP Ref. | PRODUCT | ABS | A | B | C | H | L | P |
|---|---|---|---|---|---|---|---|---|---|---|---|---|---|---|---|
| 1.4 (88 kw) | 2010.06-2023.12 | 6MT | F | L/R | Box Body/MPV FWD 198 A4.000 | | GDS17106 | Drive Shaft | | 27 | 43 | 59 | 84.5 | 499.5 | |
| | 2010.06-2023.12 | 6MT | F | L/R | Box Body/MPV FWD 198 A4.000 | Date to:2018.12 | GCO99298 | Outer Joint | | 27 | 26 | 59 | 84.5 | 63 | M |
| | 2010.06-2023.12 | MT | F | L | Box Body/MPV FWD 198 A4.000 | Shock Absorber System:Normal Suspension | GDS17076 | Drive Shaft | | 25 | 25 | 51 | 84.5 | 596 | |
| | 2010.06-2023.12 | MT | F | R | Box Body/MPV FWD 198 A4.000 | Shock Absorber System:Normal Suspension | GDS17081 | Drive Shaft | | 25 | 25 | 51 | 84.5 | 966.5 | |
| | 2010.06-2023.12 | MT | F | R | Box Body/MPV FWD 198 A4.000 | Shock Absorber System:Normal Suspension | GCI18100 | Inner Joint | | 25 | 26 | 29.7 | 434 | 108 | |
| | 2010.06-2023.12 | 6MT | F | L | Platform/Chassis FWD 198 A4.000 | | GDS17152 | Drive Shaft | | 27 | 25 | 59 | 84.5 | 596 | |
| | 2010.06-2023.12 | 6MT | F | R | Platform/Chassis FWD 198 A4.000 | | GDS17153 | Drive Shaft | | 27 | 25 | 59 | 84.5 | 967 | |
| | 2010.06-2023.12 | 6MT | F | L/R | Platform/Chassis FWD 198 A4.000 | | GDS17106 | Drive Shaft | | 27 | 43 | 59 | 84.5 | 499.5 | |
| | 2010.06-2023.12 | 6MT | F | L/R | Platform/Chassis FWD 198 A4.000 | Date to:2018.12 | GCO99298 | Outer Joint | | 27 | 26 | 59 | 84.5 | 63 | M |
| | 2010.06-2023.12 | MT | F | L | Platform/Chassis FWD 198 A4.000 | Shock Absorber System:Normal Suspension | GDS17076 | Drive Shaft | | 25 | 25 | 51 | 84.5 | 596 | |
| | 2010.06-2023.12 | MT | F | R | Platform/Chassis FWD 198 A4.000 | Shock Absorber System:Normal Suspension | GDS17081 | Drive Shaft | | 25 | 25 | 51 | 84.5 | 966.5 | |
| | 2010.06-2023.12 | MT | F | R | Platform/Chassis FWD 198 A4.000 | Shock Absorber System:Normal Suspension | GCI18100 | Inner Joint | | 25 | 26 | 29.7 | 434 | 108 | |
| | 2011.10-2023.12 | 6MT | F | L | Box Body/MPV FWD 198 A4.000 | | GDS17152 | Drive Shaft | | 27 | 25 | 59 | 84.5 | 596 | |
| | 2011.10-2023.12 | 6MT | F | R | Box Body/MPV FWD 198 A4.000 | | GDS17153 | Drive Shaft | | 27 | 25 | 59 | 84.5 | 967 | |
| | 2011.10-2023.12 | 6MT | F | L/R | Box Body/MPV FWD 198 A4.000 | | GDS17106 | Drive Shaft | | 27 | 43 | 59 | 84.5 | 499.5 | |
| | 2011.10-2023.12 | 6MT | F | L/R | Box Body/MPV FWD 198 A4.000 | Date to:2018.12 | GCO99298 | Outer Joint | | 27 | 26 | 59 | 84.5 | 63 | M |
| | 2011.10-2023.12 | MT | F | L | Box Body/MPV FWD 198 A4.000 | Shock Absorber System:Normal Suspension | GDS17076 | Drive Shaft | | 25 | 25 | 51 | 84.5 | 596 | |
| | 2011.10-2023.12 | MT | F | R | Box Body/MPV FWD 198 A4.000 | Shock Absorber System:Normal Suspension | GDS17081 | Drive Shaft | | 25 | 25 | 51 | 84.5 | 966.5 | |
| | 2011.10-2023.12 | MT | F | R | Box Body/MPV FWD 198 A4.000 | Shock Absorber System:Normal Suspension | GCI18100 | Inner Joint | | 25 | 26 | 29.7 | 434 | 108 | |
| | 2011.10-2023.12 | 6MT | F | L | Platform/Chassis FWD 198 A4.000 | | GDS17152 | Drive Shaft | | 27 | 25 | 59 | 84.5 | 596 | |
| | 2011.10-2023.12 | 6MT | F | R | Platform/Chassis FWD 198 A4.000 | | GDS17153 | Drive Shaft | | 27 | 25 | 59 | 84.5 | 967 | |
| | 2011.10-2023.12 | 6MT | F | L/R | Platform/Chassis FWD 198 A4.000 | | GDS17106 | Drive Shaft | | 27 | 43 | 59 | 84.5 | 499.5 | |
| | 2011.10-2023.12 | 6MT | F | L/R | Platform/Chassis FWD 198 A4.000 | Date to:2018.12 | GCO99298 | Outer Joint | | 27 | 26 | 59 | 84.5 | 63 | M |
| | 2011.10-2023.12 | MT | F | L | Platform/Chassis FWD 198 A4.000 | Shock Absorber System:Normal Suspension | GDS17076 | Drive Shaft | | 25 | 25 | 51 | 84.5 | 596 | |
| | 2011.10-2023.12 | MT | F | R | Platform/Chassis FWD 198 A4.000 | Shock Absorber System:Normal Suspension | GDS17081 | Drive Shaft | | 25 | 25 | 51 | 84.5 | 966.5 | |
| | 2011.10-2023.12 | MT | F | R | Platform/Chassis FWD 198 A4.000 | Shock Absorber System:Normal Suspension | GCI18100 | Inner Joint | | 25 | 26 | 29.7 | 434 | 108 | |
| 1.6 (66 kw) | 2010.02-2023.12 | 5AT | F | L | Box Body/MPV FWD 263 A4.000;263 A5.000;463 46 020 | For vehicles with heavy duty suspension | GDS56898 | Drive Shaft | | 27 | 24 | 59 | 84.5 | 596 | |
| | 2010.02-2023.12 | 5AT | F | R | Box Body/MPV FWD 263 A4.000;263 A5.000;463 46 020 | For vehicles with heavy duty suspension | GDS56897 | Drive Shaft | | 27 | 24 | 59 | 84.5 | 975 | |
| | 2010.02-2023.12 | 5AT | F | L | Box Body/MPV FWD 263 A4.000;263 A5.000;463 46 020 | For vehicles with heavy duty suspension | GCI83548 | Inner Joint | | 24 | 24 | 29.75 | 86.5 | 99.5 | |
| | 2010.02-2023.12 | 5AT | F | R | Box Body/MPV FWD 263 A4.000;263 A5.000;463 46 020 | For vehicles with heavy duty suspension | GCI83547 | Inner Joint | | 24 | 24 | 29.75 | 460 | 105 | |
| | 2010.02-2023.12 | 6MT | F | L | Box Body/MPV FWD 263 A4.000;263 A5.000;463 46 020 | Heavy Duty Version | GDS17152 | Drive Shaft | | 27 | 25 | 59 | 84.5 | 596 | |
| | 2010.02-2023.12 | 6MT | F | L | Box Body/MPV FWD 263 A4.000;263 A5.000;463 46 020 | For vehicles with standard suspension,Exhaust Emis:Euro 6,Not for increased payload | GDS57453 | Drive Shaft | | 25 | 43 | 51 | 84.5 | 496 | |
| | 2010.02-2023.12 | 6MT | F | R | Box Body/MPV FWD 263 A4.000;263 A5.000;463 46 020 | Heavy Duty Version | GDS17153 | Drive Shaft | | 27 | 25 | 59 | 84.5 | 967 | |
| | 2010.02-2023.12 | 6MT | F | L/R | Box Body/MPV FWD 263 A4.000;263 A5.000;463 46 020 | Heavy Duty Version | GDS17106 | Drive Shaft | | 27 | 43 | 59 | 84.5 | 499.5 | |
| | 2010.02-2023.12 | 6MT | F | L/R | Box Body/MPV FWD 263 A4.000;263 A5.000;463 46 020 | Date to:2018.12,Not For vehicles with heavy duty suspension | GCO82025 | Outer Joint | | 25 | 26 | 51 | 84.5 | 64.5 | M |
| | 2010.02-2023.12 | MT | F | L | Box Body/MPV FWD 263 A4.000;263 A5.000;463 46 020 | not for reinforced version | GDS17076 | Drive Shaft | | 25 | 25 | 51 | 84.5 | 596 | |
| | 2010.02-2023.12 | MT | F | R | Box Body/MPV FWD 263 A4.000;263 A5.000;463 46 020 | not for reinforced version | GDS17081 | Drive Shaft | | 25 | 25 | 51 | 84.5 | 966.5 | |
| | 2010.02-2023.12 | MT | F | R | Box Body/MPV FWD 263 A4.000;263 A5.000;463 46 020 | not for reinforced version | GCI18100 | Inner Joint | | 25 | 26 | 29.7 | 434 | 108 | |
| | 2010.02-2023.12 | Semi-5AT | F | L/R | Box Body/MPV FWD 263 A4.000;263 A5.000;463 46 020 | For vehicles with heavy duty suspension | GDS83673 | Drive Shaft | | 27 | 42 | 59 | 84.5 | 485 | |
| | 2010.02-2023.12 | Semi-AT/MT | F | L/R | Box Body/MPV FWD 263 A4.000;263 A5.000;463 46 020 | Date from:2012.04,Date to:2018.12,For vehicles with heavy duty suspension,Equipment code:943 | GCO99298 | Outer Joint | | 27 | 26 | 59 | 84.5 | 63 | M |
| | 2010.02-2023.12 | 5AT | F | L | Platform/Chassis FWD 263 A4.000;263 A5.000 | For vehicles with heavy duty suspension | GDS56898 | Drive Shaft | | 27 | 24 | 59 | 84.5 | 596 | |
| | 2010.02-2023.12 | 5AT | F | R | Platform/Chassis FWD 263 A4.000;263 A5.000 | For vehicles with heavy duty suspension | GDS56897 | Drive Shaft | | 27 | 24 | 59 | 84.5 | 975 | |
| | 2010.02-2023.12 | 5AT | F | L | Platform/Chassis FWD 263 A4.000;263 A5.000 | For vehicles with heavy duty suspension | GCI83548 | Inner Joint | | 24 | 24 | 29.75 | 86.5 | 99.5 | |
| | 2010.02-2023.12 | 5AT | F | R | Platform/Chassis FWD 263 A4.000;263 A5.000 | For vehicles with heavy duty suspension | GCI83547 | Inner Joint | | 24 | 24 | 29.75 | 460 | 105 | |
| | 2010.02-2023.12 | 6MT | F | L | Platform/Chassis FWD 263 A4.000;263 A5.000 | not for reinforced version | GDS17076 | Drive Shaft | | 25 | 25 | 51 | 84.5 | 596 | |
| | 2010.02-2023.12 | 6MT | F | L | Platform/Chassis FWD 263 A4.000;263 A5.000 | Heavy Duty Version | GDS17152 | Drive Shaft | | 27 | 25 | 59 | 84.5 | 596 | |
| | 2010.02-2023.12 | 6MT | F | L | Platform/Chassis FWD 263 A4.000;263 A5.000 | For vehicles with standard suspension,Exhaust Emis:Euro 6,Not for increased payload | GDS57453 | Drive Shaft | | 25 | 43 | 51 | 84.5 | 496 | |
| | 2010.02-2023.12 | 6MT | F | R | Platform/Chassis FWD 263 A4.000;263 A5.000 | not for reinforced version | GDS17081 | Drive Shaft | | 25 | 25 | 51 | 84.5 | 966.5 | |
| | 2010.02-2023.12 | 6MT | F | R | Platform/Chassis FWD 263 A4.000;263 A5.000 | Heavy Duty Version | GDS17153 | Drive Shaft | | 27 | 25 | 59 | 84.5 | 967 | |
| | 2010.02-2023.12 | 6MT | F | L/R | Platform/Chassis FWD 263 A4.000;263 A5.000 | Heavy Duty Version | GDS17106 | Drive Shaft | | 27 | 43 | 59 | 84.5 | 499.5 | |
| | 2010.02-2023.12 | 6MT | F | L/R | Platform/Chassis FWD 263 A4.000;263 A5.000 | Date to:2018.12,Not For vehicles with heavy duty suspension | GCO82025 | Outer Joint | | 25 | 26 | 51 | 84.5 | 64.5 | M |
| | 2010.02-2023.12 | 6MT | F | R | Platform/Chassis FWD 263 A4.000;263 A5.000 | not for reinforced version | GCI18100 | Inner Joint | | 25 | 26 | 29.7 | 434 | 108 | |
| | 2010.02-2023.12 | Semi-5AT | F | L/R | Platform/Chassis FWD 263 A4.000;263 A5.000 | For vehicles with heavy duty suspension | GDS83673 | Drive Shaft | | 27 | 42 | 59 | 84.5 | 485 | |
| | 2010.02-2023.12 | Semi-AT/MT | F | L/R | Platform/Chassis FWD 263 A4.000;263 A5.000 | Date from:2012.04,Date to:2018.12,For vehicles with heavy duty suspension,Equipment code:943 | GCO99298 | Outer Joint | | 27 | 26 | 59 | 84.5 | 63 | M |
| 1.6 (68 kw) | 2004.02-2009.07 | 5MT | F | L | Box Body/MPV FWD 182 B6.000 | | GDS17102 | Drive Shaft | | 22 | 22 | 51 | 89.5 | 636 | |
| | 2004.02-2009.07 | 5MT | F | R | Box Body/MPV FWD 182 B6.000 | | GDS17113 | Drive Shaft | | 22 | 22 | 51 | 89.5 | 930.5 | |
| | 2004.02-2009.07 | | F | L/R | Box Body/MPV FWD 182 B6.000 | | GCO82018 | Outer Joint | | 22 | 22 | 51 | 89.5 | 57 | M |
| 1.6 (70 kw) | 2015.03-2023.12 | 6MT | F | L | Box Body/MPV FWD 263 A7.000 | Exhaust Emis:Euro4/Euro5,For vehicles with standard suspension,Not for increased payload;Trans. side with housing | GDS17076 | Drive Shaft | | 25 | 25 | 51 | 84.5 | 596 | |
| | 2015.03-2023.12 | 6MT | F | L | Box Body/MPV FWD 263 A7.000 | Exhaust Emis:Euro4/Euro5;Equipment code:057,Axle:Reinforced wheel suspension;Equipment code:943,For increased payload;Trans. side with housing | GDS17152 | Drive Shaft | | 27 | 25 | 59 | 84.5 | 596 | |
| | 2015.03-2023.12 | 6MT | F | L | Box Body/MPV FWD 263 A7.000 | Exhaust Emis:Euro 6;For vehicles with heavy duty suspension,Equipment code:943;Trans. side without housing | GDS56167 | Drive Shaft | | 27 | 43 | 59 | 84.5 | 495 | |
| | 2015.03-2023.12 | 6MT | F | L | Box Body/MPV FWD 263 A7.000 | Exhaust Emis:Euro 6;For vehicles without heavy duty suspension;Trans. side without housing | GDS57453 | Drive Shaft | | 25 | 43 | 51 | 84.5 | 496 | |
| | 2015.03-2023.12 | 6MT | F | L | Box Body/MPV FWD 263 A7.000 | Exhaust Emis:Euro 6;For vehicles with heavy duty suspension,Equipment code:943;Trans. side with housing | GDS81182 | Drive Shaft | | 27 | 25 | 59 | 84.5 | 595 | |
| | 2015.03-2023.12 | 6MT | F | R | Box Body/MPV FWD 263 A7.000 | Exhaust Emis:Euro4/Euro5,For vehicles with standard suspension,Not for increased payload;Trans. side with housing | GDS17081 | Drive Shaft | | 25 | 25 | 51 | 84.5 | 966.5 | |
| | 2015.03-2023.12 | 6MT | F | R | Box Body/MPV FWD 263 A7.000 | Exhaust Emis:Euro4/Euro5;Equipment code:057,Axle:Reinforced wheel suspension;Equipment code:943,For increased payload;Trans. side with housing | GDS17153 | Drive Shaft | | 27 | 25 | 59 | 84.5 | 967 | |
| | 2015.03-2023.12 | 6MT | F | R | Box Body/MPV FWD 263 A7.000 | Exhaust Emis:Euro 6;For vehicles with heavy duty suspension,Equipment code:943;Trans. side without housing | GDS56166 | Drive Shaft | | 27 | 43 | 59 | 84.5 | 517 | |

| FIAT Doblo Cargo | YEAR | TRANSM. | F/R | L/R | BODY STYLE & DRIVE TYPE & ENGINE | REMARKS | G-AP Ref. | PRODUCT | ABS | A | B | C | H | L | P |
|---|---|---|---|---|---|---|---|---|---|---|---|---|---|---|---|
| 1.6 (70 kw) | 2015.03-2023.12 | 6MT | F | R | Box Body/MPV FWD 263 A7.000 | Exhaust Emis:Euro 6;For vehicles with heavy duty suspension,Equipment code:943;Trans. side with housing | GDS56269 | Drive Shaft | | 27 | 25 | 59 | 84.5 | 958 | |
| | 2015.03-2023.12 | 6MT | F | R | Box Body/MPV FWD 263 A7.000 | Exhaust Emis:Euro 6;For vehicles without heavy duty suspension | GDS57454 | Drive Shaft | | 25 | 25 | 51 | 84.5 | 964 | |
| | 2015.03-2023.12 | 6MT | F | L/R | Box Body/MPV FWD 263 A7.000 | Exhaust Emis:Euro4/Euro5;Equipment code:057,Axle:Reinforced wheel suspension;Equipment code:943,For increased payload;Trans. side without housing | GDS17106 | Drive Shaft | | 27 | 43 | 59 | 84.5 | 499.5 | |
| | 2015.03-2023.12 | 6MT | F | L/R | Box Body/MPV FWD 263 A7.000 | For vehicles with heavy duty suspension,Equipment code:943 | GCO99298 | Outer Joint | | 27 | 26 | 59 | 84.5 | 63 | M |
| | 2015.03-2023.12 | 6MT | F | L | Box Body/MPV FWD 263 A7.000 | For vehicles with heavy duty suspension,Equipment code:943 | GCI17126 | Inner Joint | | 25 | 26 | 32 | 59 | 110.5 | |
| | 2015.03-2023.12 | 6MT | F | R | Box Body/MPV FWD 263 A7.000 | For vehicles with heavy duty suspension,Equipment code:943 | GCI83221 | Inner Joint | | 25 | 26 | 29.75 | 409 | 108 | |
| 1.6 (74 kw) | 2010.02-2023.12 | 6AT | F | L | Box Body/MPV FWD 263 A3.000;263 A9.000;552 80 444;463 46 020 | For vehicles with heavy duty suspension | GDS56898 | Drive Shaft | | 27 | 24 | 59 | 84.5 | 596 | |
| | 2010.02-2023.12 | 6AT | F | R | Box Body/MPV FWD 263 A3.000;263 A9.000;552 80 444;463 46 020 | For vehicles with heavy duty suspension | GDS56897 | Drive Shaft | | 27 | 24 | 59 | 84.5 | 975 | |
| | 2010.02-2023.12 | 6AT | F | L | Box Body/MPV FWD 263 A3.000;263 A9.000;552 80 444;463 46 020 | For vehicles with heavy duty suspension | GCI83548 | Inner Joint | | 24 | 24 | 29.75 | 86.5 | 99.5 | |
| | 2010.02-2023.12 | 6AT | F | R | Box Body/MPV FWD 263 A3.000;263 A9.000;552 80 444;463 46 020 | For vehicles with heavy duty suspension | GCI83547 | Inner Joint | | 24 | 24 | 29.75 | 460 | 105 | |
| | 2010.02-2023.12 | 6MT | F | L | Box Body/MPV FWD 263 A3.000;263 A9.000;552 80 444;463 46 020 | Heavy Duty Version | GDS17152 | Drive Shaft | | 27 | 25 | 59 | 84.5 | 596 | |
| | 2010.02-2023.12 | 6MT | F | L | Box Body/MPV FWD 263 A3.000;263 A9.000;552 80 444;463 46 020 | For vehicles with standard suspension,Exhaust Emis:Euro 6,Not for increased payload | GDS57453 | Drive Shaft | | 25 | 43 | 51 | 84.5 | 496 | |
| | 2010.02-2023.12 | 6MT | F | R | Box Body/MPV FWD 263 A3.000;263 A9.000;552 80 444;463 46 020 | Heavy Duty Version | GDS17153 | Drive Shaft | | 27 | 25 | 59 | 84.5 | 967 | |
| | 2010.02-2023.12 | 6MT | F | L/R | Box Body/MPV FWD 263 A3.000;263 A9.000;552 80 444;463 46 020 | Heavy Duty Version | GDS17106 | Drive Shaft | | 27 | 43 | 59 | 84.5 | 499.5 | |
| | 2010.02-2023.12 | 6MT | F | L/R | Box Body/MPV FWD 263 A3.000;263 A9.000;552 80 444;463 46 020 | Date to:2018.12,Not For vehicles with heavy duty suspension | GCO82025 | Outer Joint | | 25 | 26 | 51 | 84.5 | 64.5 | M |
| | 2010.02-2023.12 | 6MT | F | L/R | Box Body/MPV FWD 263 A3.000;263 A9.000;552 80 444;463 46 020 | Date from:2012.04,Date to:2018.12,For vehicles with heavy duty suspension,Equipment code:943 | GCO99298 | Outer Joint | | 27 | 26 | 59 | 84.5 | 63 | M |
| | 2010.02-2023.12 | MT | F | L | Box Body/MPV FWD 263 A3.000;263 A9.000;552 80 444;463 46 020 | not for reinforced version | GDS17076 | Drive Shaft | | 25 | 25 | 51 | 84.5 | 596 | |
| | 2010.02-2023.12 | MT | F | R | Box Body/MPV FWD 263 A3.000;263 A9.000;552 80 444;463 46 020 | not for reinforced version | GDS17081 | Drive Shaft | | 25 | 25 | 51 | 84.5 | 966.5 | |
| | 2010.02-2023.12 | MT | F | R | Box Body/MPV FWD 263 A3.000;263 A9.000;552 80 444;463 46 020 | not for reinforced version | GCI18100 | Inner Joint | | 25 | 26 | 29.7 | 434 | 108 | |
| | 2010.02-2023.12 | Semi-6AT | F | L/R | Box Body/MPV FWD 263 A3.000;263 A9.000;552 80 444;463 46 020 | For vehicles with heavy duty suspension | GDS83673 | Drive Shaft | | 27 | 42 | 59 | 84.5 | 485 | |
| | 2011.02-2023.12 | 6AT | F | L | Platform/Chassis FWD 263 A3.000;263 A9.000;552 80 444 | For vehicles with heavy duty suspension | GDS56898 | Drive Shaft | | 27 | 24 | 59 | 84.5 | 596 | |
| | 2011.02-2023.12 | 6AT | F | R | Platform/Chassis FWD 263 A3.000;263 A9.000;552 80 444 | For vehicles with heavy duty suspension | GDS56897 | Drive Shaft | | 27 | 24 | 59 | 84.5 | 975 | |
| | 2011.02-2023.12 | 6AT | F | L | Platform/Chassis FWD 263 A3.000;263 A9.000;552 80 444 | For vehicles with heavy duty suspension | GCI83548 | Inner Joint | | 24 | 24 | 29.75 | 86.5 | 99.5 | |
| | 2011.02-2023.12 | 6AT | F | R | Platform/Chassis FWD 263 A3.000;263 A9.000;552 80 444 | For vehicles with heavy duty suspension | GCI83547 | Inner Joint | | 24 | 24 | 29.75 | 460 | 105 | |
| | 2011.02-2023.12 | 6MT | F | L | Platform/Chassis FWD 263 A3.000;263 A9.000;552 80 444 | Heavy Duty Version;Modelcode:263YXE11/263YXE1B | GDS17152 | Drive Shaft | | 27 | 25 | 59 | 84.5 | 596 | |
| | 2011.02-2023.12 | 6MT | F | L | Platform/Chassis FWD 263 A3.000;263 A9.000;552 80 444 | For vehicles with standard suspension,Exhaust Emis:Euro 6,Not for increased payload | GDS57453 | Drive Shaft | | 25 | 43 | 51 | 84.5 | 496 | |
| | 2011.02-2023.12 | 6MT | F | R | Platform/Chassis FWD 263 A3.000;263 A9.000;552 80 444 | Heavy Duty Version;Modelcode:263YXE11/263YXE1B | GDS17153 | Drive Shaft | | 27 | 25 | 59 | 84.5 | 967 | |
| | 2011.02-2023.12 | 6MT | F | L/R | Platform/Chassis FWD 263 A3.000;263 A9.000;552 80 444 | Heavy Duty Version;Modelcode:263YXE11/263YXE1B | GDS17106 | Drive Shaft | | 27 | 43 | 59 | 84.5 | 499.5 | |
| | 2011.02-2023.12 | 6MT | F | L/R | Platform/Chassis FWD 263 A3.000;263 A9.000;552 80 444 | Date to:2018.12,Not For vehicles with heavy duty suspension | GCO82025 | Outer Joint | | 25 | 26 | 51 | 84.5 | 64.5 | M |
| | 2011.02-2023.12 | MT | F | L | Platform/Chassis FWD 263 A3.000;263 A9.000;552 80 444 | not for reinforced version | GDS17076 | Drive Shaft | | 25 | 25 | 51 | 84.5 | 596 | |
| | 2011.02-2023.12 | MT | F | R | Platform/Chassis FWD 263 A3.000;263 A9.000;552 80 444 | not for reinforced version | GDS17081 | Drive Shaft | | 25 | 25 | 51 | 84.5 | 966.5 | |
| | 2011.02-2023.12 | MT | F | R | Platform/Chassis FWD 263 A3.000;263 A9.000;552 80 444 | not for reinforced version | GCI18100 | Inner Joint | | 25 | 26 | 29.7 | 434 | 108 | |
| | 2011.02-2023.12 | Semi-6AT | F | L/R | Platform/Chassis FWD 263 A3.000;263 A9.000;552 80 444 | For vehicles with heavy duty suspension | GDS83673 | Drive Shaft | | 27 | 42 | 59 | 84.5 | 485 | |
| | 2011.02-2023.12 | Semi-AT/MT | F | L/R | Platform/Chassis FWD 263 A3.000;263 A9.000;552 80 444 | Date from:2012.04,Date to:2018.12,For vehicles with heavy duty suspension,Equipment code:943 | GCO99298 | Outer Joint | | 27 | 26 | 59 | 84.5 | 63 | M |
| 1.6 (76 kw) | 2001.10- | 5MT | F | L | Box Body/MPV FWD 182 B6.000 | | GDS17102 | Drive Shaft | | 22 | 22 | 51 | 89.5 | 636 | |
| | 2001.10- | 5MT | F | R | Box Body/MPV FWD 182 B6.000 | | GDS17113 | Drive Shaft | | 22 | 22 | 51 | 89.5 | 930.5 | |
| | 2001.10- | MT | F | L/R | Box Body/MPV FWD 182 B6.000 | Date to:2006.10 | GCO82018 | Outer Joint | | 22 | 22 | 51 | 89.5 | 57 | M |
| | 2002.09- | 5MT | F | L | Box Body/MPV FWD 182 B6.000 | | GDS17102 | Drive Shaft | | 22 | 22 | 51 | 89.5 | 636 | |
| | 2002.09- | 5MT | F | R | Box Body/MPV FWD 182 B6.000 | | GDS17113 | Drive Shaft | | 22 | 22 | 51 | 89.5 | 930.5 | |
| | 2002.09- | MT | F | L/R | Box Body/MPV FWD 182 B6.000 | Date to:2009.07 | GCO82018 | Outer Joint | | 22 | 22 | 51 | 89.5 | 57 | M |
| 1.6 (77 kw) | 2010.02- | 6MT | F | L | Box Body/MPV FWD 198 A3.000;263 A8.000;552 80 444;463 46 020 | No Facelift,For vehicles without heavy duty suspension | GDS17076 | Drive Shaft | | 25 | 25 | 51 | 84.5 | 596 | |
| | 2010.02- | 6MT | F | L | Box Body/MPV FWD 198 A3.000;263 A8.000;552 80 444;463 46 020 | NO Facelift,For vehicles with heavy duty suspension,Equipment code:943 | GDS17152 | Drive Shaft | | 27 | 25 | 59 | 84.5 | 596 | |
| | 2010.02- | 6MT | F | L | Box Body/MPV FWD 198 A3.000;263 A8.000;552 80 444;463 46 020 | Facelift,For vehicles with heavy duty suspension,Equipment code:943 | GDS56167 | Drive Shaft | | 27 | 43 | 59 | 84.5 | 495 | |
| | 2010.02- | 6MT | F | L | Box Body/MPV FWD 198 A3.000;263 A8.000;552 80 444;463 46 020 | Facelift,For vehicles without heavy duty suspension | GDS57453 | Drive Shaft | | 25 | 43 | 51 | 84.5 | 496 | |
| | 2010.02- | 6MT | F | L | Box Body/MPV FWD 198 A3.000;263 A8.000;552 80 444;463 46 020 | Facelift,For vehicles with heavy duty suspension,Equipment code:943 | GDS81182 | Drive Shaft | | 27 | 25 | 59 | 84.5 | 595 | |
| | 2010.02- | 6MT | F | R | Box Body/MPV FWD 198 A3.000;263 A8.000;552 80 444;463 46 020 | No Facelift,For vehicles without heavy duty suspension | GDS17081 | Drive Shaft | | 25 | 25 | 51 | 84.5 | 966.5 | |
| | 2010.02- | 6MT | F | R | Box Body/MPV FWD 198 A3.000;263 A8.000;552 80 444;463 46 020 | No Facelift,For vehicles with heavy duty suspension,Equipment code:943 | GDS17153 | Drive Shaft | | 27 | 25 | 59 | 84.5 | 967 | |
| | 2010.02- | 6MT | F | R | Box Body/MPV FWD 198 A3.000;263 A8.000;552 80 444;463 46 020 | Facelift,For vehicles with heavy duty suspension,Equipment code:943 | GDS56166 | Drive Shaft | | 27 | 43 | 59 | 84.5 | 517 | |
| | 2010.02- | 6MT | F | R | Box Body/MPV FWD 198 A3.000;263 A8.000;552 80 444;463 46 020 | Facelift,For vehicles with heavy duty suspension,Equipment code:943 | GDS56269 | Drive Shaft | | 27 | 25 | 59 | 84.5 | 958 | |
| | 2010.02- | 6MT | F | R | Box Body/MPV FWD 198 A3.000;263 A8.000;552 80 444;463 46 020 | Facelift,For vehicles without heavy duty suspension | GDS57454 | Drive Shaft | | 25 | 25 | 51 | 84.5 | 964 | |
| | 2010.02- | 6MT | F | L/R | Box Body/MPV FWD 198 A3.000;263 A8.000;552 80 444;463 46 020 | No Facelift,For vehicles with heavy duty suspension,Equipment code:943 | GDS17106 | Drive Shaft | | 27 | 43 | 59 | 84.5 | 499.5 | |
| | 2010.02- | 6MT | F | L/R | Box Body/MPV FWD 198 A3.000;263 A8.000;552 80 444;463 46 020 | No Facelift | GCO82025 | Outer Joint | | 25 | 26 | 51 | 84.5 | 64.5 | M |
| | 2010.02- | 6MT | F | L/R | Box Body/MPV FWD 198 A3.000;263 A8.000;552 80 444;463 46 020 | Facelift,For vehicles with heavy duty suspension,Equipment code:943 | GCO99298 | Outer Joint | | 27 | 26 | 59 | 84.5 | 63 | M |
| | 2010.02- | 6MT | F | L | Box Body/MPV FWD 198 A3.000;263 A8.000;552 80 444;463 46 020 | For facelift,For vehicles with heavy duty suspension,Equipment code:943 | GCI17126 | Inner Joint | | 25 | 26 | 32 | 59 | 110.5 | |
| | 2010.02- | 6MT | F | R | Box Body/MPV FWD 198 A3.000;263 A8.000;552 80 444;463 46 020 | For facelift,For vehicles with heavy duty suspension,Equipment code:943 | GCI83221 | Inner Joint | | 25 | 26 | 29.75 | 409 | 108 | |
| | 2010.02- | MT | F | R | Box Body/MPV FWD 198 A3.000;263 A8.000;552 80 444;463 46 020 | not for reinforced version | GCI18100 | Inner Joint | | 25 | 26 | 29.7 | 434 | 108 | |
| 1.6 (88 kw) | 2016.02-2023.12 | 6MT | F | L | Box Body/MPV FWD 940 C1.000;552 80 444;463 46 020 | Date from:2017.02 | GDS56167 | Drive Shaft | | 27 | 43 | 59 | 84.5 | 495 | |
| | 2016.02-2023.12 | 6MT | F | L | Box Body/MPV FWD 940 C1.000;552 80 444;463 46 020 | Equipment code:PASCRT | GDS57453 | Drive Shaft | | 25 | 43 | 51 | 84.5 | 496 | |
| | 2016.02-2023.12 | 6MT | F | L | Box Body/MPV FWD 940 C1.000;552 80 444;463 46 020 | Date from:2017.02 | GDS81182 | Drive Shaft | | 27 | 25 | 59 | 84.5 | 595 | |
| | 2016.02-2023.12 | 6MT | F | R | Box Body/MPV FWD 940 C1.000;552 80 444;463 46 020 | Date from:2017.02 | GDS56166 | Drive Shaft | | 27 | 43 | 59 | 84.5 | 517 | |
| | 2016.02-2023.12 | 6MT | F | R | Box Body/MPV FWD 940 C1.000;552 80 444;463 46 020 | Date from:2017.02 | GDS56269 | Drive Shaft | | 27 | 25 | 59 | 84.5 | 958 | |
| | 2016.02-2023.12 | 6MT | F | L/R | Box Body/MPV FWD 940 C1.000;552 80 444;463 46 020 | Date to:2017.01 | GCO17064 | Outer Joint | | 27 | 27 | 59 | 84.5 | 64 | M |
| | 2016.02-2023.12 | 6MT | F | L/R | Box Body/MPV FWD 940 C1.000;552 80 444;463 46 020 | Date from:2017.02 | GCO99298 | Outer Joint | | 27 | 26 | 59 | 84.5 | 63 | M |
| | 2016.02-2023.12 | 6MT | F | L | Box Body/MPV FWD 940 C1.000;552 80 444;463 46 020 | Date from:2017.02 | GCI17126 | Inner Joint | | 25 | 26 | 32 | 59 | 110.5 | |
| | 2016.02-2023.12 | 6MT | F | R | Box Body/MPV FWD 940 C1.000;552 80 444;463 46 020 | Date from:2017.02 | GCI83221 | Inner Joint | | 25 | 26 | 29.75 | 409 | 108 | |

Technical Specifications: A, B, C, H, L, P

| | YEAR | TRANSM. | F/R | L/R | BODY STYLE & DRIVE TYPE & ENGINE | REMARKS | G-AP Ref. | PRODUCT | ABS | Technical Specifications A | B | C | H | L | P |
|---|---|---|---|---|---|---|---|---|---|---|---|---|---|---|---|
| **FIAT** | | | | | | | | | | | | | | | |
| **Doblo Cargo** | | | | | | | | | | | | | | | |
| 1.9 (46 kw) | 2001.03- | 5MT | F | L | Box Body/MPV FWD 223 A6.000 | | GDS41006 | Drive Shaft | | 22 | | 51 | 89.5 | 618 | |
| | 2001.03- | 5MT | F | R | Box Body/MPV FWD 223 A6.000 | | GDS41007 | Drive Shaft | | 22 | | 51 | 89.5 | 932 | |
| | 2001.03- | MT | F | L/R | Box Body/MPV FWD 223 A6.000 | | GCO82018 | Outer Joint | | 22 | 22 | 51 | 89.5 | 57 | M |
| 1.9 (74 kw) | 2001.10- | 5MT | F | L | Box Body/MPV FWD 182 B9.000;223 B2.000 | Trans. side without housing | GDS17013 | Drive Shaft | | 25 | 36 | 51 | 90 | 501 | |
| | 2001.10- | 5MT | F | L | Box Body/MPV FWD 182 B9.000;223 B2.000 | Trans. side with housing | GDS17017 | Drive Shaft | | 25 | 24 | 51 | 90 | 611 | |
| | 2001.10- | 5MT | F | R | Box Body/MPV FWD 182 B9.000;223 B2.000 | Trans. side without housing | GDS17014 | Drive Shaft | | 25 | 36 | 51 | 90 | 524 | |
| | 2001.10- | 5MT | F | R | Box Body/MPV FWD 182 B9.000;223 B2.000 | Trans. side with housing | GDS17019 | Drive Shaft | | 25 | 24 | 51 | 90 | 928 | |
| | 2001.10- | 5MT | F | L/R | Box Body/MPV FWD 182 B9.000;223 B2.000 | | GCO17031 | Outer Joint | | 25 | 24 | 51 | 90 | 62 | M |
| | 2001.10- | 5MT | F | L | Box Body/MPV FWD 182 B9.000;223 B2.000 | | GCI99008 | Inner Joint | | 24 | 24 | 29.7 | 86.5 | 93 | |
| | 2001.10- | 5MT | F | R | Box Body/MPV FWD 182 B9.000;223 B2.000 | | GCI17015 | Inner Joint | | 24 | 24 | 29.7 | 379 | 100.5 | |
| 1.9 (77 kw) | 2003.07- | 5MT | F | L | Box Body/MPV FWD 223 A7.000;223 B1.000 | Trans. side without housing | GDS17013 | Drive Shaft | | 25 | 36 | 51 | 90 | 501 | |
| | 2003.07- | 5MT | F | L | Box Body/MPV FWD 223 A7.000;223 B1.000 | Trans. side with housing | GDS17017 | Drive Shaft | | 25 | 24 | 51 | 90 | 611 | |
| | 2003.07- | 5MT | F | R | Box Body/MPV FWD 223 A7.000;223 B1.000 | Trans. side without housing | GDS17014 | Drive Shaft | | 25 | 36 | 51 | 90 | 524 | |
| | 2003.07- | 5MT | F | R | Box Body/MPV FWD 223 A7.000;223 B1.000 | Trans. side with housing | GDS17019 | Drive Shaft | | 25 | 24 | 51 | 90 | 928 | |
| | 2003.07- | 5MT | F | L/R | Box Body/MPV FWD 223 A7.000;223 B1.000 | | GCO17031 | Outer Joint | | 25 | 24 | 51 | 90 | 62 | M |
| | 2003.07- | 5MT | F | L | Box Body/MPV FWD 223 A7.000;223 B1.000 | | GCI99008 | Inner Joint | | 24 | 24 | 29.7 | 86.5 | 93 | |
| | 2003.07- | 5MT | F | R | Box Body/MPV FWD 223 A7.000;223 B1.000 | | GCI17015 | Inner Joint | | 24 | 24 | 29.7 | 379 | 100.5 | |
| 1.9 (88 kw) | 2006.12- | 5MT | F | L | Box Body/MPV FWD 186 A9.000 | | GDS17013 | Drive Shaft | | 25 | 36 | 51 | 90 | 501 | |
| | 2006.12- | 5MT | F | L | Box Body/MPV FWD 186 A9.000 | | GDS17017 | Drive Shaft | | 25 | 24 | 51 | 90 | 611 | |
| | 2006.12- | 5MT | F | R | Box Body/MPV FWD 186 A9.000 | | GDS17014 | Drive Shaft | | 25 | 36 | 51 | 90 | 524 | |
| | 2006.12- | 5MT | F | R | Box Body/MPV FWD 186 A9.000 | | GDS17019 | Drive Shaft | | 25 | 24 | 51 | 90 | 928 | |
| | 2006.12- | 5MT | F | L/R | Box Body/MPV FWD 186 A9.000 | | GCO17031 | Outer Joint | | 25 | 24 | 51 | 90 | 62 | M |
| | 2006.12- | 5MT | F | L | Box Body/MPV FWD 186 A9.000 | | GCI99008 | Inner Joint | | 24 | 24 | 29.7 | 86.5 | 93 | |
| | 2006.12- | 5MT | F | R | Box Body/MPV FWD 186 A9.000 | | GCI17015 | Inner Joint | | 24 | 24 | 29.7 | 379 | 100.5 | |
| 2.0 (99 kw) | 2010.02-2023.12 | MT | F | L/R | Box Body/MPV FWD 263 A1.000 | | GCI17114 | Inner Joint | | 25 | 27 | 29.7 | 433 | 110 | |
| **Ducato** | | | | | | | | | | | | | | | |
| 2.0 (62 kw) | 2001.12-2006.07 | 5MT | F | L | Bus FWD RHV | | GDS10037 | Drive Shaft | 54T | 28 | 37 | 63 | 112.5 | 771 | |
| | 2001.12-2006.07 | 5MT | F | L | Bus FWD RHV | | GDS10105 | Drive Shaft | | 28 | 37 | 63 | 112.5 | 771 | |
| | 2001.12-2006.07 | 5MT | F | R | Bus FWD RHV | | GDS10069 | Drive Shaft | | 28 | 37 | 63 | 112.5 | 1072 | |
| | 2001.12-2006.07 | 5MT | F | L/R | Bus FWD RHV | | GCO10012 | Outer Joint | | 28 | 39 | 63 | 112.5 | 63 | I |
| | 2001.12-2006.07 | 5MT | F | L/R | Bus FWD RHV | | GCO10013 | Outer Joint | 54T | 28 | 39 | 63 | 112.5 | 63 | I |
| | 2001.12-2006.07 | 5MT | F | L | Bus FWD RHV | | GCI10015 | Inner Joint | | 37 | 39 | 40 | 68.5 | 104 | |
| | 2001.12-2006.07 | 5MT | F | L | Bus FWD RHV | | GCI45013 | Inner Joint | | 37 | 39 | 40 | 68.5 | 100 | |
| | 2001.12-2006.07 | 5MT | F | R | Bus FWD RHV | | GCI10034 | Inner Joint | | 37 | 39 | 31.9 | 369.5 | 99 | |
| | 2001.12-2006.07 | MT | F | R | Bus FWD RHV | | GDS10104 | Drive Shaft | 54T | 28 | 37 | 63 | 112.5 | 1072 | |
| | 2001.12-2006.07 | 5MT | F | L | Van FWD RHV | | GDS10037 | Drive Shaft | 54T | 28 | 37 | 63 | 112.5 | 771 | |
| | 2001.12-2006.07 | 5MT | F | L | Van FWD RHV | | GDS10105 | Drive Shaft | | 28 | 37 | 63 | 112.5 | 771 | |
| | 2001.12-2006.07 | 5MT | F | R | Van FWD RHV | | GDS10069 | Drive Shaft | | 28 | 37 | 63 | 112.5 | 1072 | |
| | 2001.12-2006.07 | 5MT | F | R | Van FWD RHV | | GDS10104 | Drive Shaft | 54T | 28 | 37 | 63 | 112.5 | 1072 | |
| | 2001.12-2006.07 | 5MT | F | L/R | Van FWD RHV | | GCO10012 | Outer Joint | | 28 | 39 | 63 | 112.5 | 63 | I |
| | 2001.12-2006.07 | 5MT | F | L/R | Van FWD RHV | | GCO10013 | Outer Joint | 54T | 28 | 39 | 63 | 112.5 | 63 | I |
| | 2001.12-2006.07 | 5MT | F | L | Van FWD RHV | | GCI10015 | Inner Joint | | 37 | 39 | 40 | 68.5 | 104 | |
| | 2001.12-2006.07 | 5MT | F | L | Van FWD RHV | | GCI45013 | Inner Joint | | 37 | 39 | 40 | 68.5 | 100 | |
| | 2001.12-2006.07 | 5MT | F | R | Van FWD RHV | | GCI10034 | Inner Joint | | 37 | 39 | 31.9 | 369.5 | 99 | |
| 2.0 (81 kw) | 2001.12-2006.07 | 5MT | F | L | Bus FWD RFL | Model:Ducato 18 | GDS10033 | Drive Shaft | 54T | 35 | 41 | 70 | 117 | 762 | |
| | 2001.12-2006.07 | 5MT | F | L | Bus FWD RFL | Model:Ducato 11/Ducato 15,Date to:2003.05,For vehicles with ABS | GDS10035 | Drive Shaft | 54T | 28 | 41 | 63 | 112.5 | 757.5 | |
| | 2001.12-2006.07 | 5MT | F | L | Bus FWD RFL | Model:Ducato 18 | GDS10067 | Drive Shaft | | 35 | 41 | 70 | 117 | 762 | |
| | 2001.12-2006.07 | 5MT | F | L | Bus FWD RFL | Date from:2003.06,For vehicles without ABS,Model:Ducato 11/Ducato 15 | GDS10102 | Drive Shaft | | 28 | 41 | 63 | 112.5 | 757.5 | |
| | 2001.12-2006.07 | 5MT | F | R | Bus FWD RFL | Model:Ducato 18,Date to:2003.05 | GDS10032 | Drive Shaft | 54T | 35 | 41 | 70 | 117 | 1085 | |
| | 2001.12-2006.07 | 5MT | F | R | Bus FWD RFL | Model:Ducato 11/Ducato 15,For vehicles with ABS | GDS10036 | Drive Shaft | 54T | 28 | 41 | 63 | 112.5 | 1079 | |
| | 2001.12-2006.07 | 5MT | F | R | Bus FWD RFL | Model:Ducato 18,Date to:2003.05 | GDS10066 | Drive Shaft | | 35 | 41 | 70 | 117 | 1085 | |
| | 2001.12-2006.07 | 5MT | F | R | Bus FWD RFL | Date from:2003.06,For vehicles without ABS,Model:Ducato 11/Ducato 15 | GDS10103 | Drive Shaft | | 28 | 41 | 63 | 112.5 | 1079 | |
| | 2001.12-2006.07 | 5MT | F | L/R | Bus FWD RFL | Model:Ducato 18,Date To:2003.04 | GCO10011 | Outer Joint | 54T | 35 | 45 | 70 | 117 | 73 | I |
| | 2001.12-2006.07 | 5MT | F | L/R | Bus FWD RFL | Date To:2003.05 | GCO10013 | Outer Joint | 54T | 28 | 39 | 63 | 112.5 | 63 | I |
| | 2001.12-2006.07 | 5MT | F | L/R | Bus FWD RFL | Model:Ducato 18,Date To:2003.04 | GCO10050 | Outer Joint | | 35 | 45 | 70 | 117 | 73 | I |
| | 2001.12-2006.07 | 5MT | F | L | Bus FWD RFL | Model:Ducato 18,Date to:2003.04 | GCI10010 | Inner Joint | | 41 | 45 | 43 | 70 | 115.5 | |
| | 2001.12-2006.07 | 5MT | F | L | Bus FWD RFL | Model:Ducato 11/15,Date to:2003.05 | GCI10013 | Inner Joint | | 41 | 39 | 43 | 70 | 104 | |
| | 2001.12-2006.07 | 5MT | F | L | Bus FWD RFL | Model:Ducato 18,Equipment code:E52Q | GCI17028 | Inner Joint | | 41 | 29 | 43 | 69.5 | 109.5 | |
| | 2001.12-2006.07 | 5MT | F | R | Bus FWD RFL | Equipment code:E52Q | GCI17020 | Inner Joint | | 41 | 29 | 34.85 | 403 | 109 | |
| | 2001.12-2006.07 | 5MT | F | L | Van FWD RFL | Model:Ducato 18 | GDS10033 | Drive Shaft | 54T | 35 | 41 | 70 | 117 | 762 | |
| | 2001.12-2006.07 | 5MT | F | L | Van FWD RFL | Model:Ducato 11/Ducato 15,Date to:2003.05,For vehicles with ABS | GDS10035 | Drive Shaft | 54T | 28 | 41 | 63 | 112.5 | 757.5 | |
| | 2001.12-2006.07 | 5MT | F | L | Van FWD RFL | Model:Ducato 18 | GDS10067 | Drive Shaft | | 35 | 41 | 70 | 117 | 762 | |
| | 2001.12-2006.07 | 5MT | F | L | Van FWD RFL | Date from:2003.06,For vehicles without ABS,Model:Ducato 11/Ducato 15 | GDS10102 | Drive Shaft | | 28 | 41 | 63 | 112.5 | 757.5 | |
| | 2001.12-2006.07 | 5MT | F | R | Van FWD RFL | Model:Ducato 18,Date to:2003.05 | GDS10032 | Drive Shaft | 54T | 35 | 41 | 70 | 117 | 1085 | |
| | 2001.12-2006.07 | 5MT | F | R | Van FWD RFL | Model:Ducato 11/Ducato 15,For vehicles with ABS | GDS10036 | Drive Shaft | 54T | 28 | 41 | 63 | 112.5 | 1079 | |

| | YEAR | TRANSM. | F/R | L/R | BODY STYLE & DRIVE TYPE & ENGINE | REMARKS | G-AP Ref. | PRODUCT | ABS | Technical Specifications A | B | C | H | L | P |
|---|---|---|---|---|---|---|---|---|---|---|---|---|---|---|---|
| **FIAT** **Ducato** | | | | | | | | | | | | | | | |
| 2.0 (81 kw) | 2001.12-2006.07 | 5MT | F | R | Van FWD RFL | Model:Ducato 18,Date to:2003.05 | GDS10066 | Drive Shaft | | 35 | 41 | 70 | 117 | 1085 | |
| | 2001.12-2006.07 | 5MT | F | R | Van FWD RFL | Date from:2003.06,For vehicles without ABS,Model:Ducato 11/Ducato 15 | GDS10103 | Drive Shaft | | 28 | 41 | 63 | 112.5 | 1079 | |
| | 2001.12-2006.07 | 5MT | F | L/R | Van FWD RFL | Model:Ducato 18,Date To:2003.04 | GCO10011 | Outer Joint | 54T | 35 | 45 | 70 | 117 | 73 | I |
| | 2001.12-2006.07 | 5MT | F | L/R | Van FWD RFL | Date To:2003.05 | GCO10013 | Outer Joint | 54T | 28 | 39 | 63 | 112.5 | 63 | I |
| | 2001.12-2006.07 | 5MT | F | L/R | Van FWD RFL | Model:Ducato 18,Date To:2003.04 | GCO10050 | Outer Joint | | 35 | 45 | 70 | 117 | 73 | I |
| | 2001.12-2006.07 | 5MT | F | L | Van FWD RFL | Model:Ducato 18,Date to:2003.04 | GCI10010 | Inner Joint | | 41 | 45 | 43 | 70 | 115.5 | |
| | 2001.12-2006.07 | 5MT | F | L | Van FWD RFL | Model:Ducato 11/15,Date to:2003.05 | GCI10013 | Inner Joint | | 41 | 39 | 43 | 70 | 104 | |
| | 2001.12-2006.07 | 5MT | F | L | Van FWD RFL | Model:Ducato 18,Equipment code:E52Q | GCI17028 | Inner Joint | | 41 | 29 | 43 | 69.5 | 109.5 | |
| | 2001.12-2006.07 | 5MT | F | R | Van FWD RFL | Equipment code:E52Q | GCI17020 | Inner Joint | | 41 | 29 | 34.85 | 403 | 109 | |
| | 2002.05-2006.07 | 5MT | F | L | Bus 4WD RFL | Model:Ducato 18 | GDS10033 | Drive Shaft | 54T | 35 | 41 | 70 | 117 | 762 | |
| | 2002.05-2006.07 | 5MT | F | L | Bus 4WD RFL | Model:Ducato 11/Ducato 15,Date to:2003.05,For vehicles with ABS | GDS10035 | Drive Shaft | 54T | 28 | 41 | 63 | 112.5 | 757.5 | |
| | 2002.05-2006.07 | 5MT | F | L | Bus 4WD RFL | Model:Ducato 18 | GDS10067 | Drive Shaft | | 35 | 41 | 70 | 117 | 762 | |
| | 2002.05-2006.07 | 5MT | F | L | Bus 4WD RFL | Date from:2003.06,For vehicles without ABS,Model:Ducato 11/Ducato 15 | GDS10102 | Drive Shaft | | 28 | 41 | 63 | 112.5 | 757.5 | |
| | 2002.05-2006.07 | 5MT | F | R | Bus 4WD RFL | Model:Ducato 18,Date to:2003.05 | GDS10032 | Drive Shaft | 54T | 35 | 41 | 70 | 117 | 1085 | |
| | 2002.05-2006.07 | 5MT | F | R | Bus 4WD RFL | Model:Ducato 11/Ducato 15,For vehicles with ABS | GDS10036 | Drive Shaft | 54T | 28 | 41 | 63 | 112.5 | 1079 | |
| | 2002.05-2006.07 | 5MT | F | R | Bus 4WD RFL | Model:Ducato 18,Date to:2003.05 | GDS10066 | Drive Shaft | | 35 | 41 | 70 | 117 | 1085 | |
| | 2002.05-2006.07 | 5MT | F | R | Bus 4WD RFL | Date from:2003.06,For vehicles without ABS,Model:Ducato 11/Ducato 15 | GDS10103 | Drive Shaft | | 28 | 41 | 63 | 112.5 | 1079 | |
| | 2002.05-2006.07 | 5MT | F | L/R | Bus 4WD RFL | Model:Ducato 18,Date To:2003.04 | GCO10011 | Outer Joint | 54T | 35 | 45 | 70 | 117 | 73 | I |
| | 2002.05-2006.07 | 5MT | F | L/R | Bus 4WD RFL | Date To:2003.05 | GCO10013 | Outer Joint | 54T | 28 | 39 | 63 | 112.5 | 63 | I |
| | 2002.05-2006.07 | 5MT | F | L/R | Bus 4WD RFL | Model:Ducato 18,Date To:2003.04 | GCO10050 | Outer Joint | | 35 | 45 | 70 | 117 | 73 | I |
| | 2002.05-2006.07 | 5MT | F | L/R | Bus 4WD RFL | Model:Ducato 18,EXTENDED SEMISHAFT | GCO17061 | Outer Joint | 54T | 35 | 29 | 71.5 | 127 | 71 | I |
| | 2002.05-2006.07 | 5MT | F | L | Bus 4WD RFL | Model:Ducato 18,Date to:2003.04 | GCI10010 | Inner Joint | | 41 | 45 | 43 | 70 | 115.5 | |
| | 2002.05-2006.07 | 5MT | F | L | Bus 4WD RFL | Model:Ducato 11/15,Date to:2003.05 | GCI10013 | Inner Joint | | 41 | 39 | 43 | 70 | 104 | |
| | 2002.05-2006.07 | 5MT | F | L | Bus 4WD RFL | Model:Ducato 18,Equipment code:E52Q | GCI17028 | Inner Joint | | 41 | 29 | 43 | 69.5 | 109.5 | |
| | 2002.05-2006.07 | 5MT | F | R | Bus 4WD RFL | Equipment code:E52Q | GCI17020 | Inner Joint | | 41 | 29 | 34.85 | 403 | 109 | |
| | 2002.05-2006.07 | 5MT | F | L | Van 4WD RFL | Model:Ducato 18 | GDS10033 | Drive Shaft | 54T | 35 | 41 | 70 | 117 | 762 | |
| | 2002.05-2006.07 | 5MT | F | L | Van 4WD RFL | Date to:2003.04 | GDS10035 | Drive Shaft | 54T | 28 | 41 | 63 | 112.5 | 757.5 | |
| | 2002.05-2006.07 | 5MT | F | L | Van 4WD RFL | Model:Ducato 18 | GDS10067 | Drive Shaft | | 35 | 41 | 70 | 117 | 762 | |
| | 2002.05-2006.07 | 5MT | F | L | Van 4WD RFL | | GDS10102 | Drive Shaft | | 28 | 41 | 63 | 112.5 | 757.5 | |
| | 2002.05-2006.07 | 5MT | F | R | Van 4WD RFL | Model:Ducato 18 | GDS10032 | Drive Shaft | 54T | 35 | 41 | 70 | 117 | 1085 | |
| | 2002.05-2006.07 | 5MT | F | R | Van 4WD RFL | Date to:2003.04 | GDS10036 | Drive Shaft | 54T | 28 | 41 | 63 | 112.5 | 1079 | |
| | 2002.05-2006.07 | 5MT | F | R | Van 4WD RFL | Model:Ducato 18 | GDS10066 | Drive Shaft | | 35 | 41 | 70 | 117 | 1085 | |
| | 2002.05-2006.07 | 5MT | F | R | Van 4WD RFL | | GDS10103 | Drive Shaft | | 28 | 41 | 63 | 112.5 | 1079 | |
| | 2002.05-2006.07 | 5MT | F | L/R | Van 4WD RFL | Model:Ducato 18 | GCO10011 | Outer Joint | 54T | 35 | 45 | 70 | 117 | 73 | I |
| | 2002.05-2006.07 | 5MT | F | L/R | Van 4WD RFL | Date To:2003.04 | GCO10012 | Outer Joint | | 28 | 39 | 63 | 112.5 | 63 | I |
| | 2002.05-2006.07 | 5MT | F | L/R | Van 4WD RFL | Date To:2003.04 | GCO10013 | Outer Joint | 54T | 28 | 39 | 63 | 112.5 | 63 | I |
| | 2002.05-2006.07 | 5MT | F | L/R | Van 4WD RFL | Model:Ducato 18 | GCO10050 | Outer Joint | | 35 | 45 | 70 | 117 | 73 | I |
| | 2002.05-2006.07 | 5MT | F | L | Van 4WD RFL | Model:Ducato 18 | GCI10010 | Inner Joint | | 41 | 45 | 43 | 70 | 115.5 | |
| | 2002.05-2006.07 | 5MT | F | L | Van 4WD RFL | Model:Ducato 15,Date to:2003.04 | GCI10013 | Inner Joint | | 41 | 39 | 43 | 70 | 104 | |
| | 2002.05-2006.07 | 5MT | F | L | Van 4WD RFL | Model:Ducato 18,Equipment code:E52Q | GCI17028 | Inner Joint | | 41 | 29 | 43 | 69.5 | 109.5 | |
| | 2002.05-2006.07 | 5MT | F | R | Van 4WD RFL | Equipment code:E52Q | GCI17020 | Inner Joint | | 41 | 29 | 34.85 | 403 | 109 | |
| | 2002.11-2006.07 | 5MT | F | L | Van FWD RFL | Model:Ducato 18 | GDS10033 | Drive Shaft | 54T | 35 | 41 | 70 | 117 | 762 | |
| | 2002.11-2006.07 | 5MT | F | L | Van FWD RFL | Model:Ducato 15,Date to:2003.05,For vehicles with ABS | GDS10035 | Drive Shaft | 54T | 28 | 41 | 63 | 112.5 | 757.5 | |
| | 2002.11-2006.07 | 5MT | F | L | Van FWD RFL | Date from:2003.06,For vehicles without ABS,Model:Ducato 15 | GDS10102 | Drive Shaft | | 28 | 41 | 63 | 112.5 | 757.5 | |
| | 2002.11-2006.07 | 5MT | F | R | Van FWD RFL | Model:Ducato 18,Date to:2003.05 | GDS10032 | Drive Shaft | 54T | 35 | 41 | 70 | 117 | 1085 | |
| | 2002.11-2006.07 | 5MT | F | R | Van FWD RFL | Model:Ducato 15,For vehicles with ABS | GDS10036 | Drive Shaft | 54T | 28 | 41 | 63 | 112.5 | 1079 | |
| | 2002.11-2006.07 | 5MT | F | R | Van FWD RFL | Date from:2003.06,For vehicles without ABS,Model:Ducato 15 | GDS10103 | Drive Shaft | | 28 | 41 | 63 | 112.5 | 1079 | |
| | 2002.11-2006.07 | 5MT | F | L/R | Van FWD RFL | Model:Ducato 18 | GCO10011 | Outer Joint | 54T | 35 | 45 | 70 | 117 | 73 | I |
| | 2002.11-2006.07 | 5MT | F | L/R | Van FWD RFL | Date to:2003.05 | GCO10013 | Outer Joint | 54T | 28 | 39 | 63 | 112.5 | 63 | I |
| | 2002.11-2006.07 | 5MT | F | L/R | Van FWD RFL | Model:Ducato 18,Date to:2003.05 | GCO10050 | Outer Joint | | 35 | 45 | 70 | 117 | 73 | I |
| | 2002.11-2006.07 | 5MT | F | L | Van FWD RFL | Model:Ducato 18 | GCI10010 | Inner Joint | | 41 | 45 | 43 | 70 | 115.5 | |
| | 2002.11-2006.07 | 5MT | F | L | Van FWD RFL | Model:Ducato 15,Date to:2003.05 | GCI10013 | Inner Joint | | 41 | 39 | 43 | 70 | 104 | |
| | 2002.11-2006.07 | 5MT | F | L | Van FWD RFL | Model:Ducato 18,Equipment code:E52Q | GCI17028 | Inner Joint | | 41 | 29 | 43 | 69.5 | 109.5 | |
| | 2002.11-2006.07 | 5MT | F | R | Van FWD RFL | Equipment code:E52Q | GCI17020 | Inner Joint | | 41 | 29 | 34.85 | 403 | 109 | |
| 2.0 (85 kw) | 2011.06- | 5MT | F | L | Bus FWD 250 A2.000, 250 A1.000 | Exhaust Emis:Euro 5 | GDS17231 | Drive Shaft | | 35 | 31 | 71.5 | 127 | 785 | |
| | 2011.06- | 5MT | F | R | Bus FWD 250 A2.000, 250 A1.000 | Exhaust Emis:Euro 5 | GDS17232 | Drive Shaft | | 35 | 31 | 71.5 | 127 | 1161 | |
| | 2011.06- | 5MT | F | L/R | Bus FWD 250 A2.000, 250 A1.000 | Exhaust Emis Nm:Euro 5/6 | GCO17060 | Outer Joint | | 35 | 29 | 71.5 | 127 | 71 | I |
| | 2011.06- | 5MT | F | L | Bus FWD 250 A2.000, 250 A1.000 | Exhaust Emis Nm:Euro 5 | GCI17022 | Inner Joint | | 31 | 29 | 44.95 | 77 | 109.5 | |
| | 2011.06- | 5MT | F | L | Bus FWD 250 A2.000, 250 A1.000 | Model:Ducato 30/33,Exhaust Emis:Euro 6 | GCI17028 | Inner Joint | | 41 | 29 | 43 | 69.5 | 109.5 | |
| | 2011.06- | 5MT | F | R | Bus FWD 250 A2.000, 250 A1.000 | Exhaust Emis:Euro 5 | GCI17091 | Inner Joint | | 31 | 29 | 34.85 | 454.5 | 109 | |
| | 2011.06- | 5MT | F | R | Bus FWD 250 A2.000, 250 A1.000 | Exhaust Emis:Euro 6,Equipment code:CML | GCI82445 | Inner Joint | | 41 | 29 | 34.85 | 372 | 110 | |
| | 2011.06- | AT | F | L | Bus FWD 250 A2.000, 250 A1.000 | | GDS17053 | Drive Shaft | | 35 | 41 | 71.5 | 127 | 806 | |
| | 2011.06- | AT | F | R | Bus FWD 250 A2.000, 250 A1.000 | | GDS17050 | Drive Shaft | | 35 | 41 | 71.5 | 127 | 1140 | |
| | 2011.06- | AT | F | L/R | Bus FWD 250 A2.000, 250 A1.000 | | GCO17045 | Outer Joint | | 35 | 29 | 71.5 | 127 | 71 | M |
| | 2011.06- | AT | F | R | Bus FWD 250 A2.000, 250 A1.000 | | GCI17020 | Inner Joint | | 41 | 29 | 34.85 | 403 | 109 | |

| | YEAR | TRANSM. | F/R | L/R | BODY STYLE & DRIVE TYPE & ENGINE | REMARKS | G-AP Ref. | PRODUCT | ABS | Technical Specifications A | B | C | H | L | P |
|---|---|---|---|---|---|---|---|---|---|---|---|---|---|---|---|
| **FIAT** **Ducato** | | | | | | | | | | | | | | | |
| 2.0 (85 kw) | 2011.06- | 5MT | F | L | Platform/Chassis FWD 250 A2.000, 250 A1.000 | Exhaust Emis:Euro 5 | GDS17231 | Drive Shaft | | 35 | 31 | 71.5 | 127 | 785 | |
| | 2011.06- | 5MT | F | R | Platform/Chassis FWD 250 A2.000, 250 A1.000 | Exhaust Emis:Euro 5 | GDS17232 | Drive Shaft | | 35 | 31 | 71.5 | 127 | 1161 | |
| | 2011.06- | 5MT | F | L | Platform/Chassis FWD 250 A2.000, 250 A1.000 | Exhaust Emis:Euro 5 | GCI17022 | Inner Joint | | 31 | 29 | 44.95 | 77 | 109.5 | |
| | 2011.06- | 5MT | F | L | Platform/Chassis FWD 250 A2.000, 250 A1.000 | Model:Ducato 30/33,Exhaust Emis:Euro 6 | GCI17028 | Inner Joint | | 41 | 29 | 43 | 69.5 | 109.5 | |
| | 2011.06- | 5MT | F | R | Platform/Chassis FWD 250 A2.000, 250 A1.000 | Exhaust Emis:Euro 5 | GCI17091 | Inner Joint | | 31 | 29 | 34.85 | 454.5 | 109 | |
| | 2011.06- | 5MT | F | R | Platform/Chassis FWD 250 A2.000, 250 A1.000 | Exhaust Emis:Euro 6,Equipment code:CML | GCI82445 | Inner Joint | | 41 | 29 | 34.85 | 372 | 110 | |
| | 2011.06- | AT | F | L | Platform/Chassis FWD 250 A2.000, 250 A1.000 | | GDS17053 | Drive Shaft | | 35 | 41 | 71.5 | 127 | 806 | |
| | 2011.06- | AT | F | R | Platform/Chassis FWD 250 A2.000, 250 A1.000 | | GDS17050 | Drive Shaft | | 35 | 41 | 71.5 | 127 | 1140 | |
| | 2011.06- | AT | F | L/R | Platform/Chassis FWD 250 A2.000, 250 A1.000 | | GCO17045 | Outer Joint | | 35 | 29 | 71.5 | 127 | 71 | M |
| | 2011.06- | AT | F | L/R | Platform/Chassis FWD 250 A2.000, 250 A1.000 | Model:Ducato 30/33 | GCO17054 | Outer Joint | | 35 | 29 | 71.5 | 127 | 71 | M |
| | 2011.06- | AT | F | R | Platform/Chassis FWD 250 A2.000, 250 A1.000 | | GCI17020 | Inner Joint | | 41 | 29 | 34.85 | 403 | 109 | |
| | 2011.06- | AT/MT | F | L/R | Platform/Chassis FWD 250 A2.000, 250 A1.000 | Model:Ducato 35 | GCO17060 | Outer Joint | | 35 | 29 | 71.5 | 127 | 71 | I |
| | 2011.06- | 5MT | F | L | Van FWD 250 A2.000, 250 A1.000 | Exhaust Emis:Euro 5 | GDS17231 | Drive Shaft | | 35 | 31 | 71.5 | 127 | 785 | |
| | 2011.06- | 5MT | F | R | Van FWD 250 A2.000, 250 A1.000 | Exhaust Emis:Euro 5 | GDS17232 | Drive Shaft | | 35 | 31 | 71.5 | 127 | 1161 | |
| | 2011.06- | 5MT | F | L/R | Van FWD 250 A2.000, 250 A1.000 | Exhaust Emis:Euro 6 | GCO17045 | Outer Joint | | 35 | 29 | 71.5 | 127 | 71 | M |
| | 2011.06- | 5MT | F | L/R | Van FWD 250 A2.000, 250 A1.000 | Exhaust Emis:Euro 5 | GCO17060 | Outer Joint | | 35 | 29 | 71.5 | 127 | 71 | I |
| | 2011.06- | 5MT | F | L | Van FWD 250 A2.000, 250 A1.000 | Exhaust Emis:Euro 5 | GCI17022 | Inner Joint | | 31 | 29 | 44.95 | 77 | 109.5 | |
| | 2011.06- | 5MT | F | L | Van FWD 250 A2.000, 250 A1.000 | Model:Ducato 28/30/33,Exhaust Emis:Euro 6 | GCI17028 | Inner Joint | | 41 | 29 | 43 | 69.5 | 109.5 | |
| | 2011.06- | 5MT | F | R | Van FWD 250 A2.000, 250 A1.000 | Exhaust Emis:Euro 5 | GCI17091 | Inner Joint | | 31 | 29 | 34.85 | 454.5 | 109 | |
| | 2011.06- | 5MT | F | R | Van FWD 250 A2.000, 250 A1.000 | Exhaust Emis:Euro 6,Equipment code:CML | GCI82445 | Inner Joint | | 41 | 29 | 34.85 | 372 | 110 | |
| | 2011.06- | AT | F | L | Van FWD 250 A2.000, 250 A1.000 | | GDS17053 | Drive Shaft | | 35 | 41 | 71.5 | 127 | 806 | |
| | 2011.06- | AT | F | R | Van FWD 250 A2.000, 250 A1.000 | | GDS17050 | Drive Shaft | | 35 | 41 | 71.5 | 127 | 1140 | |
| | 2011.06- | AT | F | L/R | Van FWD 250 A2.000, 250 A1.000 | | GCO17045 | Outer Joint | | 35 | 29 | 71.5 | 127 | 71 | M |
| | 2011.06- | AT | F | R | Van FWD 250 A2.000, 250 A1.000 | | GCI17020 | Inner Joint | | 41 | 29 | 34.85 | 403 | 109 | |
| 2.2 (74 kw) | 2006.07-2011.05 | 5MT | F | L | Bus FWD 4HV | Model:Ducato 35 | GDS45175 | Drive Shaft | | 35 | 31 | 71.5 | 127 | 749.5 | |
| | 2006.07-2011.05 | 5MT | F | L | Bus FWD 4HV | | GDS45176 | Drive Shaft | | 35 | 41 | 71.5 | 127 | 808 | |
| | 2006.07-2011.05 | 5MT | F | R | Bus FWD 4HV | Model:Ducato 35 | GDS45174 | Drive Shaft | | 35 | 31 | 71.5 | 127 | 1199 | |
| | 2006.07-2011.05 | 5MT | F | L/R | Bus FWD 4HV | | GCO17055 | Outer Joint | | 35 | 27 | 71.5 | 127 | 66.5 | I |
| | 2006.07-2011.05 | 5MT | F | L/R | Bus FWD 4HV | Model:Ducato 35 | GCO17060 | Outer Joint | | 35 | 29 | 71.5 | 127 | 71 | I |
| | 2006.07-2011.05 | 5MT | F | L | Bus FWD 4HV | Model:Ducato 35 | GCI17022 | Inner Joint | | 31 | 29 | 44.95 | 77 | 109.5 | |
| | 2006.07-2011.05 | 5MT | F | L | Bus FWD 4HV | | GCI17042 | Inner Joint | | 41 | 27 | 43 | 70 | 102 | |
| | 2006.07-2011.05 | 5MT | F | R | Bus FWD 4HV | | GCI10038 | Inner Joint | | 41 | 27 | 34.85 | 403 | 102 | |
| | 2006.07-2011.05 | 5MT | F | R | Bus FWD 4HV | Model:Ducato 35 | GCI17021 | Inner Joint | | 31 | 29 | 34.85 | 530 | 109 | |
| | 2006.07-2011.05 | 6MT | F | L | Bus FWD 4HV | Model:Ducato 40 | GDS17053 | Drive Shaft | | 35 | 41 | 71.5 | 127 | 806 | |
| | 2006.07-2011.05 | 6MT | F | R | Bus FWD 4HV | Model:Ducato 40 | GDS17050 | Drive Shaft | | 35 | 41 | 71.5 | 127 | 1140 | |
| | 2006.07-2011.05 | 6MT | F | L/R | Bus FWD 4HV | Model:Ducato 40 | GCO17045 | Outer Joint | | 35 | 29 | 71.5 | 127 | 71 | M |
| | 2006.07-2011.05 | 6MT | F | L/R | Bus FWD 4HV | Model:Ducato 40 | GCO17054 | Outer Joint | | 35 | 29 | 71.5 | 127 | 71 | M |
| | 2006.07-2011.05 | 6MT | F | L | Bus FWD 4HV | Model:Ducato 40 | GCI17028 | Inner Joint | | 41 | 29 | 43 | 69.5 | 109.5 | |
| | 2006.07-2011.05 | 6MT | F | R | Bus FWD 4HV | Model:Ducato 40 | GCI17020 | Inner Joint | | 41 | 29 | 34.85 | 403 | 109 | |
| | 2006.07-2011.05 | 5MT | F | L | Platform/Chassis FWD 4HV | Model:Ducato 35 | GDS45175 | Drive Shaft | | 35 | 31 | 71.5 | 127 | 749.5 | |
| | 2006.07-2011.05 | 5MT | F | L | Platform/Chassis FWD 4HV | | GDS45176 | Drive Shaft | | 35 | 41 | 71.5 | 127 | 808 | |
| | 2006.07-2011.05 | 5MT | F | R | Platform/Chassis FWD 4HV | Model:Ducato 35 | GDS45174 | Drive Shaft | | 35 | 31 | 71.5 | 127 | 1199 | |
| | 2006.07-2011.05 | 5MT | F | L/R | Platform/Chassis FWD 4HV | | GCO17055 | Outer Joint | | 35 | 27 | 71.5 | 127 | 66.5 | I |
| | 2006.07-2011.05 | 5MT | F | L/R | Platform/Chassis FWD 4HV | Model:Ducato 35 | GCO17060 | Outer Joint | | 35 | 29 | 71.5 | 127 | 71 | I |
| | 2006.07-2011.05 | 5MT | F | L | Platform/Chassis FWD 4HV | Model:Ducato 35 | GCI17022 | Inner Joint | | 31 | 29 | 44.95 | 77 | 109.5 | |
| | 2006.07-2011.05 | 5MT | F | L | Platform/Chassis FWD 4HV | | GCI17042 | Inner Joint | | 41 | 27 | 43 | 70 | 102 | |
| | 2006.07-2011.05 | 5MT | F | R | Platform/Chassis FWD 4HV | | GCI10038 | Inner Joint | | 41 | 27 | 34.85 | 403 | 102 | |
| | 2006.07-2011.05 | 5MT | F | R | Platform/Chassis FWD 4HV | Model:Ducato 35 | GCI17021 | Inner Joint | | 31 | 29 | 34.85 | 530 | 109 | |
| | 2006.07-2011.05 | 6MT | F | L | Platform/Chassis FWD 4HV | Model:Ducato 40 | GDS17053 | Drive Shaft | | 35 | 41 | 71.5 | 127 | 806 | |
| | 2006.07-2011.05 | 6MT | F | R | Platform/Chassis FWD 4HV | Model:Ducato 40 | GDS17050 | Drive Shaft | | 35 | 41 | 71.5 | 127 | 1140 | |
| | 2006.07-2011.05 | 6MT | F | L/R | Platform/Chassis FWD 4HV | Model:Ducato 40 | GCO17045 | Outer Joint | | 35 | 29 | 71.5 | 127 | 71 | M |
| | 2006.07-2011.05 | 6MT | F | L/R | Platform/Chassis FWD 4HV | Model:Ducato 40 | GCO17054 | Outer Joint | | 35 | 29 | 71.5 | 127 | 71 | M |
| | 2006.07-2011.05 | 6MT | F | L | Platform/Chassis FWD 4HV | Model:Ducato 40 | GCI17028 | Inner Joint | | 41 | 29 | 43 | 69.5 | 109.5 | |
| | 2006.07-2011.05 | 6MT | F | R | Platform/Chassis FWD 4HV | Model:Ducato 40 | GCI17020 | Inner Joint | | 41 | 29 | 34.85 | 403 | 109 | |
| | 2006.07-2011.05 | 5MT | F | L | Van FWD 4HV | | GDS45176 | Drive Shaft | | 35 | 41 | 71.5 | 127 | 808 | |
| | 2006.07-2011.05 | 5MT | F | L/R | Van FWD 4HV | | GCO17055 | Outer Joint | | 35 | 27 | 71.5 | 127 | 66.5 | I |
| | 2006.07-2011.05 | 5MT | F | L | Van FWD 4HV | | GCI17042 | Inner Joint | | 41 | 27 | 43 | 70 | 102 | |
| | 2006.07-2011.05 | 5MT | F | R | Van FWD 4HV | | GCI10038 | Inner Joint | | 41 | 27 | 34.85 | 403 | 102 | |
| | 2006.07-2011.05 | 6MT | F | L | Van FWD 4HV | Model:Ducato 40 | GDS17053 | Drive Shaft | | 35 | 41 | 71.5 | 127 | 806 | |
| | 2006.07-2011.05 | 6MT | F | L | Van FWD 4HV | Model:Ducato 35 | GDS45175 | Drive Shaft | | 35 | 31 | 71.5 | 127 | 749.5 | |
| | 2006.07-2011.05 | 6MT | F | R | Van FWD 4HV | Model:Ducato 40 | GDS17050 | Drive Shaft | | 35 | 41 | 71.5 | 127 | 1140 | |
| | 2006.07-2011.05 | 6MT | F | R | Van FWD 4HV | Model:Ducato 35 | GDS45174 | Drive Shaft | | 35 | 31 | 71.5 | 127 | 1199 | |
| | 2006.07-2011.05 | 6MT | F | L/R | Van FWD 4HV | Model:Ducato 40 | GCO17045 | Outer Joint | | 35 | 29 | 71.5 | 127 | 71 | M |
| | 2006.07-2011.05 | 6MT | F | L/R | Van FWD 4HV | Model:Ducato 40 | GCO17054 | Outer Joint | | 35 | 29 | 71.5 | 127 | 71 | M |
| | 2006.07-2011.05 | 6MT | F | L/R | Van FWD 4HV | Model:Ducato 35 | GCO17060 | Outer Joint | | 35 | 29 | 71.5 | 127 | 71 | I |

| | YEAR | TRANSM. | F/R | L/R | BODY STYLE & DRIVE TYPE & ENGINE | REMARKS | G-AP Ref. | PRODUCT | ABS | Technical Specifications A | B | C | H | L | P |
|---|---|---|---|---|---|---|---|---|---|---|---|---|---|---|---|
| **FIAT** **Ducato** | | | | | | | | | | | | | | | |
| 2.2 (74 kw) | 2006.07-2011.05 | 6MT | F | L | Van FWD 4HV | Model:Ducato 35 | GCI17022 | Inner Joint | | 31 | 29 | 44.95 | 77 | 109.5 | |
| | 2006.07-2011.05 | 6MT | F | L | Van FWD 4HV | Model:Ducato 40 | GCI17028 | Inner Joint | | 41 | 29 | 43 | 69.5 | 109.5 | |
| | 2006.07-2011.05 | 6MT | F | R | Van FWD 4HV | Model:Ducato 40 | GCI17020 | Inner Joint | | 41 | 29 | 34.85 | 403 | 109 | |
| | 2006.07-2011.05 | 6MT | F | R | Van FWD 4HV | Model:Ducato 35 | GCI17021 | Inner Joint | | 31 | 29 | 34.85 | 530 | 109 | |
| 2.2 (88 kw) | 2021.07- | 6MT | F | L | Platform/Chassis FWD 46349131, 46356294 | Equipment code:CMFU/PCC637 | GDS57878 | Drive Shaft | | 35 | 31 | 71.5 | 127 | 756 | |
| | 2021.07- | 6MT | F | R | Platform/Chassis FWD 46349131, 46356294 | | GDS57656 | Drive Shaft | | 35 | 31 | 71.5 | 127 | 1187 | |
| | 2021.07- | 6MT | F | L/R | Platform/Chassis FWD 46349131, 46356294 | | GCO17060 | Outer Joint | | 35 | 29 | 71.5 | 127 | 71 | I |
| | 2021.07- | 6MT | F | L | Platform/Chassis FWD 46349131, 46356294 | | GCI17028 | Inner Joint | | 41 | 29 | 43 | 69.5 | 109.5 | |
| | 2021.07- | 6MT | F | L | Platform/Chassis FWD 46349131, 46356294 | Equipment code:CMFU/PCC637 | GCI83906 | Inner Joint | | 31 | 29 | 44.95 | 79.5 | 117.5 | |
| | 2021.07- | 6MT | F | R | Platform/Chassis FWD 46349131, 46356294 | Not for Equipment code:PCC637 | GCI82445 | Inner Joint | | 41 | 29 | 34.85 | 372 | 110 | |
| | 2021.07- | 6MT | F | R | Platform/Chassis FWD 46349131, 46356294 | Equipment code:PCC637 | GCI83797 | Inner Joint | | 31 | 29 | 44.8 | 517 | 113 | |
| | 2021.07- | 6MT | F | L | Van FWD 46349131, 46356294 | Equipment code:CMFU/PCC637 | GDS57878 | Drive Shaft | | 35 | 31 | 71.5 | 127 | 756 | |
| | 2021.07- | 6MT | F | R | Van FWD 46349131, 46356294 | | GDS57656 | Drive Shaft | | 35 | 31 | 71.5 | 127 | 1187 | |
| | 2021.07- | 6MT | F | L/R | Van FWD 46349131, 46356294 | | GCO17060 | Outer Joint | | 35 | 29 | 71.5 | 127 | 71 | I |
| | 2021.07- | 6MT | F | L | Van FWD 46349131, 46356294 | | GCI17028 | Inner Joint | | 41 | 29 | 43 | 69.5 | 109.5 | |
| | 2021.07- | 6MT | F | L | Van FWD 46349131, 46356294 | Equipment code:CMFU/PCC637 | GCI83906 | Inner Joint | | 31 | 29 | 44.95 | 79.5 | 117.5 | |
| | 2021.07- | 6MT | F | R | Van FWD 46349131, 46356294 | Not for Equipment code:PCC637 | GCI82445 | Inner Joint | | 41 | 29 | 34.85 | 372 | 110 | |
| | 2021.07- | 6MT | F | R | Van FWD 46349131, 46356294 | Equipment code:PCC637 | GCI83797 | Inner Joint | | 31 | 29 | 44.8 | 517 | 113 | |
| 2.2 (103 kw) | 2021.07- | 6MT | F | L | Platform/Chassis FWD 46349131, 46356294 | Not for Equipment code:CMFU/PCC637 | GDS56467 | Drive Shaft | | 35 | 41 | 71.5 | 127 | 824 | |
| | 2021.07- | 6MT | F | L | Platform/Chassis FWD 46349131, 46356294 | Equipment code:CMFU/PCC637 | GDS57878 | Drive Shaft | | 35 | 31 | 71.5 | 127 | 756 | |
| | 2021.07- | 6MT | F | R | Platform/Chassis FWD 46349131, 46356294 | Not for Equipment code:CMFU/PCC637 | GDS57538 | Drive Shaft | | 35 | 41 | 71.5 | 127 | 1127 | |
| | 2021.07- | 6MT | F | R | Platform/Chassis FWD 46349131, 46356294 | Equipment code:CMFU/PCC637 | GDS57656 | Drive Shaft | | 35 | 31 | 71.5 | 127 | 1187 | |
| | 2021.07- | 6MT | F | L | Platform/Chassis FWD 46349131, 46356294 | | GCI17028 | Inner Joint | | 41 | 29 | 43 | 69.5 | 109.5 | |
| | 2021.07- | 6MT | F | L | Platform/Chassis FWD 46349131, 46356294 | Equipment code:CMFU/PCC637 | GCI83906 | Inner Joint | | 31 | 29 | 44.95 | 79.5 | 117.5 | |
| | 2021.07- | 6MT | F | R | Platform/Chassis FWD 46349131, 46356294 | Not for Equipment code:PCC637 | GCI82445 | Inner Joint | | 41 | 29 | 34.85 | 372 | 110 | |
| | 2021.07- | 6MT | F | R | Platform/Chassis FWD 46349131, 46356294 | Equipment code:PCC637 | GCI83797 | Inner Joint | | 31 | 29 | 44.8 | 517 | 113 | |
| | 2021.07- | 9AT/6MT | F | L/R | Platform/Chassis FWD 46349131, 46356294 | | GCO17060 | Outer Joint | | 35 | 29 | 71.5 | 127 | 71 | I |
| | 2021.07- | 6MT | F | L | Van FWD 46349131, 46356294 | Not for Equipment code:CMFU/PCC637 | GDS56467 | Drive Shaft | | 35 | 41 | 71.5 | 127 | 824 | |
| | 2021.07- | 6MT | F | L | Van FWD 46349131, 46356294 | Equipment code:CMFU/PCC637 | GDS57878 | Drive Shaft | | 35 | 31 | 71.5 | 127 | 756 | |
| | 2021.07- | 6MT | F | R | Van FWD 46349131, 46356294 | Not for Equipment code:CMFU/PCC637 | GDS57538 | Drive Shaft | | 35 | 41 | 71.5 | 127 | 1127 | |
| | 2021.07- | 6MT | F | R | Van FWD 46349131, 46356294 | Equipment code:CMFU/PCC637 | GDS57656 | Drive Shaft | | 35 | 31 | 71.5 | 127 | 1187 | |
| | 2021.07- | 6MT | F | L | Van FWD 46349131, 46356294 | | GCI17028 | Inner Joint | | 41 | 29 | 43 | 69.5 | 109.5 | |
| | 2021.07- | 6MT | F | L | Van FWD 46349131, 46356294 | Equipment code:CMFU/PCC637 | GCI83906 | Inner Joint | | 31 | 29 | 44.95 | 79.5 | 117.5 | |
| | 2021.07- | 6MT | F | R | Van FWD 46349131, 46356294 | Not for Equipment code:PCC637 | GCI82445 | Inner Joint | | 41 | 29 | 34.85 | 372 | 110 | |
| | 2021.07- | 6MT | F | R | Van FWD 46349131, 46356294 | Equipment code:PCC637 | GCI83797 | Inner Joint | | 31 | 29 | 44.8 | 517 | 113 | |
| | 2021.07- | 9AT/6MT | F | L/R | Van FWD 46349131, 46356294 | | GCO17060 | Outer Joint | | 35 | 29 | 71.5 | 127 | 71 | I |
| | 2021.07-2023.10 | 6MT | F | L | Bus FWD 46349131 | Not for Equipment code:PCC637 | GDS56467 | Drive Shaft | | 35 | 41 | 71.5 | 127 | 824 | |
| | 2021.07-2023.10 | 6MT | F | L | Bus FWD 46349131 | Equipment code:PCC637 | GDS57878 | Drive Shaft | | 35 | 31 | 71.5 | 127 | 756 | |
| | 2021.07-2023.10 | 6MT | F | R | Bus FWD 46349131 | Not for Equipment code:PCC637 | GDS57538 | Drive Shaft | | 35 | 41 | 71.5 | 127 | 1127 | |
| | 2021.07-2023.10 | 6MT | F | R | Bus FWD 46349131 | Equipment code:PCC637 | GDS57656 | Drive Shaft | | 35 | 31 | 71.5 | 127 | 1187 | |
| | 2021.07-2023.10 | 6MT | F | L | Bus FWD 46349131 | | GCI17028 | Inner Joint | | 41 | 29 | 43 | 69.5 | 109.5 | |
| | 2021.07-2023.10 | 6MT | F | L | Bus FWD 46349131 | Equipment code:PCC637 | GCI83906 | Inner Joint | | 31 | 29 | 44.95 | 79.5 | 117.5 | |
| | 2021.07-2023.10 | 6MT | F | R | Bus FWD 46349131 | Not for Equipment code:PCC637 | GCI82445 | Inner Joint | | 41 | 29 | 34.85 | 372 | 110 | |
| | 2021.07-2023.10 | 6MT | F | R | Bus FWD 46349131 | Equipment code:PCC637 | GCI83797 | Inner Joint | | 31 | 29 | 44.8 | 517 | 113 | |
| | 2021.07-2023.10 | 9AT/6MT | F | L/R | Bus FWD 46349131 | | GCO17060 | Outer Joint | | 35 | 29 | 71.5 | 127 | 71 | I |
| | 2023.04- | 6MT | F | L | Van FWD DW12RUD | Not for Equipment code:PCC637 | GDS56467 | Drive Shaft | | 35 | 41 | 71.5 | 127 | 824 | |
| | 2023.04- | 6MT | F | R | Van FWD DW12RUD | Not for Equipment code:PCC637 | GDS57538 | Drive Shaft | | 35 | 41 | 71.5 | 127 | 1127 | |
| | 2023.04- | 6MT | F | L | Van FWD DW12RUD | | GCI17028 | Inner Joint | | 41 | 29 | 43 | 69.5 | 109.5 | |
| | 2023.04- | 6MT | F | R | Van FWD DW12RUD | Not for Equipment code:PCC637 | GCI82445 | Inner Joint | | 41 | 29 | 34.85 | 372 | 110 | |
| | 2023.04- | | F | L/R | Van FWD DW12RUD | | GCO17060 | Outer Joint | | 35 | 29 | 71.5 | 127 | 71 | I |
| 2.2 (118 kw) | 2021.07-2023.10 | 6MT | F | L | Platform/Chassis FWD 46348913 | Not for Equipment code:PCC637 | GDS56467 | Drive Shaft | | 35 | 41 | 71.5 | 127 | 824 | |
| | 2021.07-2023.10 | 6MT | F | L | Platform/Chassis FWD 46348913 | Equipment code:PCC637 | GDS57878 | Drive Shaft | | 35 | 31 | 71.5 | 127 | 756 | |
| | 2021.07-2023.10 | 6MT | F | R | Platform/Chassis FWD 46348913 | Not for Equipment code:PCC637 | GDS57538 | Drive Shaft | | 35 | 41 | 71.5 | 127 | 1127 | |
| | 2021.07-2023.10 | 6MT | F | R | Platform/Chassis FWD 46348913 | Equipment code:PCC637 | GDS57656 | Drive Shaft | | 35 | 31 | 71.5 | 127 | 1187 | |
| | 2021.07-2023.10 | 6MT | F | L | Platform/Chassis FWD 46348913 | | GCI17028 | Inner Joint | | 41 | 29 | 43 | 69.5 | 109.5 | |
| | 2021.07-2023.10 | 6MT | F | L | Platform/Chassis FWD 46348913 | Equipment code:PCC637 | GCI83906 | Inner Joint | | 31 | 29 | 44.95 | 79.5 | 117.5 | |
| | 2021.07-2023.10 | 6MT | F | R | Platform/Chassis FWD 46348913 | Not for Equipment code:PCC637 | GCI82445 | Inner Joint | | 41 | 29 | 34.85 | 372 | 110 | |
| | 2021.07-2023.10 | 6MT | F | R | Platform/Chassis FWD 46348913 | Equipment code:PCC637 | GCI83797 | Inner Joint | | 31 | 29 | 44.8 | 517 | 113 | |
| | 2021.07-2023.10 | 9AT/6MT | F | L/R | Platform/Chassis FWD 46348913 | | GCO17060 | Outer Joint | | 35 | 29 | 71.5 | 127 | 71 | I |
| | 2021.07-2023.10 | 6MT | F | L | Van FWD 46348913 | Not for Equipment code:PCC637 | GDS56467 | Drive Shaft | | 35 | 41 | 71.5 | 127 | 824 | |
| | 2021.07-2023.10 | 6MT | F | L | Van FWD 46348913 | Equipment code:PCC637 | GDS57878 | Drive Shaft | | 35 | 31 | 71.5 | 127 | 756 | |
| | 2021.07-2023.10 | 6MT | F | R | Van FWD 46348913 | Not for Equipment code:PCC637 | GDS57538 | Drive Shaft | | 35 | 41 | 71.5 | 127 | 1127 | |
| | 2021.07-2023.10 | 6MT | F | R | Van FWD 46348913 | Equipment code:PCC637 | GDS57656 | Drive Shaft | | 35 | 31 | 71.5 | 127 | 1187 | |
| | 2021.07-2023.10 | 6MT | F | L | Van FWD 46348913 | | GCI17028 | Inner Joint | | 41 | 29 | 43 | 69.5 | 109.5 | |
| | 2021.07-2023.10 | 6MT | F | L | Van FWD 46348913 | Equipment code:PCC637 | GCI83906 | Inner Joint | | 31 | 29 | 44.95 | 79.5 | 117.5 | |

| | YEAR | TRANSM. | F/R | L/R | BODY STYLE & DRIVE TYPE & ENGINE | REMARKS | G-AP Ref. | PRODUCT | ABS | Technical Specifications A | B | C | H | L | P |
|---|---|---|---|---|---|---|---|---|---|---|---|---|---|---|---|
| **FIAT** **Ducato** | | | | | | | | | | | | | | | |
| 2.2 (118 kw) | 2021.07-2023.10 | 6MT | F | R | Van FWD 46348913 | Not for Equipment code:PCC637 | GCI82445 | Inner Joint | | 41 | 29 | 34.85 | 372 | 110 | |
| | 2021.07-2023.10 | 6MT | F | R | Van FWD 46348913 | Equipment code:PCC637 | GCI83797 | Inner Joint | | 31 | 29 | 44.8 | 517 | 113 | |
| | 2021.07-2023.10 | 9AT/6MT | F | L/R | Van FWD 46348913 | | GCO17060 | Outer Joint | | 35 | 29 | 71.5 | 127 | 71 | I |
| 2.2 (132 kw) | 2021.07- | 6MT | F | L | Platform/Chassis FWD 46348913, 46356723 | | GDS57878 | Drive Shaft | | 35 | 31 | 71.5 | 127 | 756 | |
| | 2021.07- | 6MT | F | R | Platform/Chassis FWD 46348913, 46356723 | | GDS57656 | Drive Shaft | | 35 | 31 | 71.5 | 127 | 1187 | |
| | 2021.07- | 6MT | F | L | Platform/Chassis FWD 46348913, 46356723 | | GCI83906 | Inner Joint | | 31 | 29 | 44.95 | 79.5 | 117.5 | |
| | 2021.07- | 6MT | F | R | Platform/Chassis FWD 46348913, 46356723 | | GCI83797 | Inner Joint | | 31 | 29 | 44.8 | 517 | 113 | |
| | 2021.07- | 9AT/6MT | F | L/R | Platform/Chassis FWD 46348913, 46356723 | | GCO17060 | Outer Joint | | 35 | 29 | 71.5 | 127 | 71 | I |
| | 2021.07- | 6MT | F | L | Van FWD 46348913, 46356723 | | GDS57878 | Drive Shaft | | 35 | 31 | 71.5 | 127 | 756 | |
| | 2021.07- | 6MT | F | R | Van FWD 46348913, 46356723 | | GDS57656 | Drive Shaft | | 35 | 31 | 71.5 | 127 | 1187 | |
| | 2021.07- | 6MT | F | L | Van FWD 46348913, 46356723 | | GCI83906 | Inner Joint | | 31 | 29 | 44.95 | 79.5 | 117.5 | |
| | 2021.07- | 6MT | F | R | Van FWD 46348913, 46356723 | | GCI83797 | Inner Joint | | 31 | 29 | 44.8 | 517 | 113 | |
| | 2021.07- | 9AT/6MT | F | L/R | Van FWD 46348913, 46356723 | | GCO17060 | Outer Joint | | 35 | 29 | 71.5 | 127 | 71 | I |
| 2.3 (81 kw) | 2001.12-2006.07 | 5MT | F | L | Bus FWD F1AE0481C | Model:Ducato 18 | GDS10033 | Drive Shaft | 54T | 35 | 41 | 70 | 117 | 762 | |
| | 2001.12-2006.07 | 5MT | F | L | Bus FWD F1AE0481C | Model:Ducato 11/Ducato 15,Date to:2003.05,For vehicles with ABS | GDS10035 | Drive Shaft | 54T | 28 | 41 | 63 | 112.5 | 757.5 | |
| | 2001.12-2006.07 | 5MT | F | L | Bus FWD F1AE0481C | Model:Ducato 18 | GDS10067 | Drive Shaft | | 35 | 41 | 70 | 117 | 762 | |
| | 2001.12-2006.07 | 5MT | F | L | Bus FWD F1AE0481C | Date from:2003.06,For vehicles without ABS,Model:Ducato 11/Ducato 15 | GDS10102 | Drive Shaft | | 28 | 41 | 63 | 112.5 | 757.5 | |
| | 2001.12-2006.07 | 5MT | F | R | Bus FWD F1AE0481C | Model:Ducato 18,Date to:2003.05 | GDS10032 | Drive Shaft | 54T | 35 | 41 | 70 | 117 | 1085 | |
| | 2001.12-2006.07 | 5MT | F | R | Bus FWD F1AE0481C | Model:Ducato 11/Ducato 15,For vehicles with ABS | GDS10036 | Drive Shaft | 54T | 28 | 41 | 63 | 112.5 | 1079 | |
| | 2001.12-2006.07 | 5MT | F | R | Bus FWD F1AE0481C | Model:Ducato 18,Date to:2003.05 | GDS10066 | Drive Shaft | | 35 | 41 | 70 | 117 | 1085 | |
| | 2001.12-2006.07 | 5MT | F | R | Bus FWD F1AE0481C | Date from:2003.06,For vehicles without ABS,Model:Ducato 11/Ducato 15 | GDS10103 | Drive Shaft | | 28 | 41 | 63 | 112.5 | 1079 | |
| | 2001.12-2006.07 | 5MT | F | L/R | Bus FWD F1AE0481C | Model:Ducato 18,Date To:2003.04 | GCO10011 | Outer Joint | 54T | 35 | 45 | 70 | 117 | 73 | I |
| | 2001.12-2006.07 | 5MT | F | L/R | Bus FWD F1AE0481C | Date To:2003.05 | GCO10013 | Outer Joint | 54T | 28 | 39 | 63 | 112.5 | 63 | I |
| | 2001.12-2006.07 | 5MT | F | L/R | Bus FWD F1AE0481C | Model:Ducato 18,Date To:2003.04 | GCO10050 | Outer Joint | | 35 | 45 | 70 | 117 | 73 | I |
| | 2001.12-2006.07 | 5MT | F | L | Bus FWD F1AE0481C | Model:Ducato 18,Date to:2003.04 | GCI10010 | Inner Joint | | 41 | 45 | 43 | 70 | 115.5 | |
| | 2001.12-2006.07 | 5MT | F | L | Bus FWD F1AE0481C | Model:Ducato 11/15,Date to:2003.05 | GCI10013 | Inner Joint | | 41 | 39 | 43 | 70 | 104 | |
| | 2001.12-2006.07 | 5MT | F | L | Bus FWD F1AE0481C | Model:Ducato 18,Equipment code:E52Q | GCI17028 | Inner Joint | | 41 | 29 | 43 | 69.5 | 109.5 | |
| | 2001.12-2006.07 | 5MT | F | R | Bus FWD F1AE0481C | Equipment code:E52Q | GCI17020 | Inner Joint | | 41 | 29 | 34.85 | 403 | 109 | |
| | 2001.12-2006.07 | 5MT | F | L | Platform/Chassis FWD F1AE0481C | Model:Ducato 18,Not for motor home | GDS10033 | Drive Shaft | 54T | 35 | 41 | 70 | 117 | 762 | |
| | 2001.12-2006.07 | 5MT | F | L | Platform/Chassis FWD F1AE0481C | Model:Ducato 11/Ducato 15,Date to:2003.05,For vehicles with ABS,Model:Ducato 18,Date to:2003.05,For motor home | GDS10035 | Drive Shaft | 54T | 28 | 41 | 63 | 112.5 | 757.5 | |
| | 2001.12-2006.07 | 5MT | F | L | Platform/Chassis FWD F1AE0481C | Model:Ducato 18,Not for motor home | GDS10067 | Drive Shaft | | 35 | 41 | 70 | 117 | 762 | |
| | 2001.12-2006.07 | 5MT | F | L | Platform/Chassis FWD F1AE0481C | Date from:2003.06,For vehicles without ABS,Model:Ducato 15 | GDS10102 | Drive Shaft | | 28 | 41 | 63 | 112.5 | 757.5 | |
| | 2001.12-2006.07 | 5MT | F | R | Platform/Chassis FWD F1AE0481C | Model:Ducato 18,Date to:2003.05,Not for motor home | GDS10032 | Drive Shaft | 54T | 35 | 41 | 70 | 117 | 1085 | |
| | 2001.12-2006.07 | 5MT | F | R | Platform/Chassis FWD F1AE0481C | Model:Ducato 15,For vehicles with ABS,Model:Ducato 18,For motor home | GDS10036 | Drive Shaft | 54T | 28 | 41 | 63 | 112.5 | 1079 | |
| | 2001.12-2006.07 | 5MT | F | R | Platform/Chassis FWD F1AE0481C | Model:Ducato 18,Date to:2003.05,Not for motor home | GDS10066 | Drive Shaft | | 35 | 41 | 70 | 117 | 1085 | |
| | 2001.12-2006.07 | 5MT | F | R | Platform/Chassis FWD F1AE0481C | Date from:2003.06,For vehicles without ABS,Model:Ducato 15 | GDS10103 | Drive Shaft | | 28 | 41 | 63 | 112.5 | 1079 | |
| | 2001.12-2006.07 | 5MT | F | L/R | Platform/Chassis FWD F1AE0481C | Model:Ducato 18,Date To:2003.04 | GCO10011 | Outer Joint | 54T | 35 | 45 | 70 | 117 | 73 | I |
| | 2001.12-2006.07 | 5MT | F | L/R | Platform/Chassis FWD F1AE0481C | Date To:2003.05 | GCO10013 | Outer Joint | 54T | 28 | 39 | 63 | 112.5 | 63 | I |
| | 2001.12-2006.07 | 5MT | F | L/R | Platform/Chassis FWD F1AE0481C | Model:Ducato 18,Date To:2003.04 | GCO10050 | Outer Joint | | 35 | 45 | 70 | 117 | 73 | I |
| | 2001.12-2006.07 | 5MT | F | L | Platform/Chassis FWD F1AE0481C | Model:Ducato 18,Date to:2003.04 | GCI10010 | Inner Joint | | 41 | 45 | 43 | 70 | 115.5 | |
| | 2001.12-2006.07 | 5MT | F | L | Platform/Chassis FWD F1AE0481C | Model:Ducato 15,Date to:2003.05 | GCI10013 | Inner Joint | | 41 | 39 | 43 | 70 | 104 | |
| | 2001.12-2006.07 | 5MT | F | L | Platform/Chassis FWD F1AE0481C | Model:Ducato 18,Equipment code:E52Q | GCI17028 | Inner Joint | | 41 | 29 | 43 | 69.5 | 109.5 | |
| | 2001.12-2006.07 | 5MT | F | R | Platform/Chassis FWD F1AE0481C | Equipment code:E52Q | GCI17020 | Inner Joint | | 41 | 29 | 34.85 | 403 | 109 | |
| | 2001.12-2006.07 | 5MT | F | L | Van FWD F1AE0481C | Model:Ducato 18 | GDS10033 | Drive Shaft | 54T | 35 | 41 | 70 | 117 | 762 | |
| | 2001.12-2006.07 | 5MT | F | L | Van FWD F1AE0481C | Model:Ducato 11/Ducato 15,Date to:2003.05,For vehicles with ABS | GDS10035 | Drive Shaft | 54T | 28 | 41 | 63 | 112.5 | 757.5 | |
| | 2001.12-2006.07 | 5MT | F | L | Van FWD F1AE0481C | Model:Ducato 18 | GDS10067 | Drive Shaft | | 35 | 41 | 70 | 117 | 762 | |
| | 2001.12-2006.07 | 5MT | F | L | Van FWD F1AE0481C | Date from:2003.06,For vehicles without ABS,Model:Ducato 11/Ducato 15 | GDS10102 | Drive Shaft | | 28 | 41 | 63 | 112.5 | 757.5 | |
| | 2001.12-2006.07 | 5MT | F | R | Van FWD F1AE0481C | Model:Ducato 18,Date to:2003.05 | GDS10032 | Drive Shaft | 54T | 35 | 41 | 70 | 117 | 1085 | |
| | 2001.12-2006.07 | 5MT | F | R | Van FWD F1AE0481C | Model:Ducato 11/Ducato 15,For vehicles with ABS | GDS10036 | Drive Shaft | 54T | 28 | 41 | 63 | 112.5 | 1079 | |
| | 2001.12-2006.07 | 5MT | F | R | Van FWD F1AE0481C | Model:Ducato 18,Date to:2003.05 | GDS10066 | Drive Shaft | | 35 | 41 | 70 | 117 | 1085 | |
| | 2001.12-2006.07 | 5MT | F | R | Van FWD F1AE0481C | Date from:2003.06,For vehicles without ABS,Model:Ducato 11/Ducato 15 | GDS10103 | Drive Shaft | | 28 | 41 | 63 | 112.5 | 1079 | |
| | 2001.12-2006.07 | 5MT | F | L/R | Van FWD F1AE0481C | Model:Ducato 18,Date To:2003.04 | GCO10011 | Outer Joint | 54T | 35 | 45 | 70 | 117 | 73 | I |
| | 2001.12-2006.07 | 5MT | F | L/R | Van FWD F1AE0481C | Date To:2003.05 | GCO10013 | Outer Joint | 54T | 28 | 39 | 63 | 112.5 | 63 | I |
| | 2001.12-2006.07 | 5MT | F | L/R | Van FWD F1AE0481C | Model:Ducato 18,Date To:2003.04 | GCO10050 | Outer Joint | | 35 | 45 | 70 | 117 | 73 | I |
| | 2001.12-2006.07 | 5MT | F | L | Van FWD F1AE0481C | Model:Ducato 18,Date to:2003.04 | GCI10010 | Inner Joint | | 41 | 45 | 43 | 70 | 115.5 | |
| | 2001.12-2006.07 | 5MT | F | L | Van FWD F1AE0481C | Model:Ducato 11/15,Date to:2003.05 | GCI10013 | Inner Joint | | 41 | 39 | 43 | 70 | 104 | |
| | 2001.12-2006.07 | 5MT | F | L | Van FWD F1AE0481C | Model:Ducato 18,Equipment code:E52Q | GCI17028 | Inner Joint | | 41 | 29 | 43 | 69.5 | 109.5 | |
| | 2001.12-2006.07 | 5MT | F | R | Van FWD F1AE0481C | Equipment code:E52Q | GCI17020 | Inner Joint | | 41 | 29 | 34.85 | 403 | 109 | |
| 2.3 (82 kw) | 2006.08- | 5MT | F | L/R | Platform/Chassis FWD F1AE3481G | | GCO10094 | Outer Joint | 54T | 28 | 27 | 63.3 | 116 | 66.5 | I |
| | 2006.08- | 5MT/6MT | F | L | Platform/Chassis FWD F1AE3481G | | GDS17053 | Drive Shaft | | 35 | 41 | 71.5 | 127 | 806 | |
| | 2006.08- | 5MT/6MT | F | R | Platform/Chassis FWD F1AE3481G | | GDS17050 | Drive Shaft | | 35 | 41 | 71.5 | 127 | 1140 | |
| | 2006.08- | 6MT | F | L | Platform/Chassis FWD F1AE3481G | | GDS45176 | Drive Shaft | | 35 | 41 | 71.5 | 127 | 808 | |
| | 2006.08- | 6MT | F | L/R | Platform/Chassis FWD F1AE3481G | | GCO17045 | Outer Joint | | 35 | 29 | 71.5 | 127 | 71 | M |
| | 2006.08- | 6MT | F | L/R | Platform/Chassis FWD F1AE3481G | | GCO17054 | Outer Joint | | 35 | 29 | 71.5 | 127 | 71 | M |
| | 2006.08- | 6MT | F | L | Platform/Chassis FWD F1AE3481G | | GCI17028 | Inner Joint | | 41 | 29 | 43 | 69.5 | 109.5 | |

| | YEAR | TRANSM. | F/R | L/R | BODY STYLE & DRIVE TYPE & ENGINE | REMARKS | G-AP Ref. | PRODUCT | ABS | Technical Specifications | | | | | |
|---|---|---|---|---|---|---|---|---|---|---|---|---|---|---|---|
| | | | | | | | | | | A | B | C | H | L | P |
| **FIAT** **Ducato** | | | | | | | | | | | | | | | |
| 2.3 (82 kw) | 2006.08- | 6MT | F | R | Platform/Chassis FWD F1AE3481G | | GCI17020 | Inner Joint | | 41 | 29 | 34.85 | 403 | 109 | |
| | 2014.05- | 6MT | F | L | Bus FWD F1AE3481G | | GDS17053 | Drive Shaft | | 35 | 41 | 71.5 | 127 | 806 | |
| | 2014.05- | 6MT | F | R | Bus FWD F1AE3481G | | GDS17050 | Drive Shaft | | 35 | 41 | 71.5 | 127 | 1140 | |
| | 2014.05- | 6MT | F | L/R | Bus FWD F1AE3481G | | GCO17054 | Outer Joint | | 35 | 29 | 71.5 | 127 | 71 | M |
| | 2014.05- | 6MT | F | L | Bus FWD F1AE3481G | | GCI17028 | Inner Joint | | 41 | 29 | 43 | 69.5 | 109.5 | |
| | 2014.05- | 6MT | F | R | Bus FWD F1AE3481G | | GCI17020 | Inner Joint | | 41 | 29 | 34.85 | 403 | 109 | |
| | 2014.05- | MT | F | L/R | Bus FWD F1AE3481G | | GCO17055 | Outer Joint | | 35 | 27 | 71.5 | 127 | 66.5 | I |
| | 2014.05- | | F | L/R | Bus FWD F1AE3481G | | GCO17054 | Outer Joint | | 35 | 29 | 71.5 | 127 | 71 | M |
| | 2014.05- | 6MT | F | L | Van FWD F1AE3481G | | GDS17053 | Drive Shaft | | 35 | 41 | 71.5 | 127 | 806 | |
| | 2014.05- | 6MT | F | L | Van FWD F1AE3481G | | GDS45176 | Drive Shaft | | 35 | 41 | 71.5 | 127 | 808 | |
| | 2014.05- | 6MT | F | R | Van FWD F1AE3481G | | GDS17050 | Drive Shaft | | 35 | 41 | 71.5 | 127 | 1140 | |
| | 2014.05- | 6MT | F | L/R | Van FWD F1AE3481G | | GCO17054 | Outer Joint | | 35 | 29 | 71.5 | 127 | 71 | M |
| | 2014.05- | 6MT | F | L | Van FWD F1AE3481G | | GCI17028 | Inner Joint | | 41 | 29 | 43 | 69.5 | 109.5 | |
| | 2014.05- | 6MT | F | R | Van FWD F1AE3481G | | GCI17020 | Inner Joint | | 41 | 29 | 34.85 | 403 | 109 | |
| | 2014.05- | MT | F | L/R | Van FWD F1AE3481G | | GCO17055 | Outer Joint | | 35 | 27 | 71.5 | 127 | 66.5 | I |
| | 2014.05- | | F | L/R | Van FWD F1AE3481G | | GCO17054 | Outer Joint | | 35 | 29 | 71.5 | 127 | 71 | M |
| 2.3 (88 kw) | 2006.07- | 6MT | F | L | Platform/Chassis FWD F1AGL4114, F1AE0481D | | GDS17053 | Drive Shaft | | 35 | 41 | 71.5 | 127 | 806 | |
| | 2006.07- | 6MT | F | L | Platform/Chassis FWD F1AGL4114, F1AE0481D | | GDS45176 | Drive Shaft | | 35 | 41 | 71.5 | 127 | 808 | |
| | 2006.07- | 6MT | F | R | Platform/Chassis FWD F1AGL4114, F1AE0481D | | GDS17050 | Drive Shaft | | 35 | 41 | 71.5 | 127 | 1140 | |
| | 2006.07- | 6MT | F | L/R | Platform/Chassis FWD F1AGL4114, F1AE0481D | Country Version:RU | GCO10094 | Outer Joint | 54T | 28 | 27 | 63.3 | 116 | 66.5 | I |
| | 2006.07- | 6MT | F | L/R | Platform/Chassis FWD F1AGL4114, F1AE0481D | Model:Ducato 33/35/40 | GCO17045 | Outer Joint | | 35 | 29 | 71.5 | 127 | 71 | M |
| | 2006.07- | 6MT | F | L/R | Platform/Chassis FWD F1AGL4114, F1AE0481D | | GCO17055 | Outer Joint | | 35 | 27 | 71.5 | 127 | 66.5 | I |
| | 2006.07- | 6MT | F | L | Platform/Chassis FWD F1AGL4114, F1AE0481D | Vehicle Production Country:Russia | GCI17028 | Inner Joint | | 41 | 29 | 43 | 69.5 | 109.5 | |
| | 2006.07- | 6MT | F | L | Platform/Chassis FWD F1AGL4114, F1AE0481D | | GCI17042 | Inner Joint | | 41 | 27 | 43 | 70 | 102 | |
| | 2006.07- | 6MT | F | R | Platform/Chassis FWD F1AGL4114, F1AE0481D | | GCI10038 | Inner Joint | | 41 | 27 | 34.85 | 403 | 102 | |
| | 2006.07- | 6MT | F | R | Platform/Chassis FWD F1AGL4114, F1AE0481D | Model:Ducato 33/35/40 | GCI17020 | Inner Joint | | 41 | 29 | 34.85 | 403 | 109 | |
| | 2006.07- | | F | L/R | Platform/Chassis FWD F1AGL4114, F1AE0481D | | GCO17054 | Outer Joint | | 35 | 29 | 71.5 | 127 | 71 | M |
| | 2006.07- | 5MT/6MT | F | R | Van FWD F1AGL4114, F1AE0481D | Type:Ducato 30/33/35;Trans. code:MLGU | GCI17020 | Inner Joint | | 41 | 29 | 34.85 | 403 | 109 | |
| | 2006.07- | 6MT | F | L | Van FWD F1AGL4114, F1AE0481D | | GDS17053 | Drive Shaft | | 35 | 41 | 71.5 | 127 | 806 | |
| | 2006.07- | 6MT | F | L | Van FWD F1AGL4114, F1AE0481D | Inner teeth of wheel side:27 | GDS45176 | Drive Shaft | | 35 | 41 | 71.5 | 127 | 808 | |
| | 2006.07- | 6MT | F | R | Van FWD F1AGL4114, F1AE0481D | | GDS17050 | Drive Shaft | | 35 | 41 | 71.5 | 127 | 1140 | |
| | 2006.07- | 6MT | F | L/R | Van FWD F1AGL4114, F1AE0481D | Model:Ducato 33,Country Version:RU | GCO10094 | Outer Joint | 54T | 28 | 27 | 63.3 | 116 | 66.5 | I |
| | 2006.07- | 6MT | F | L/R | Van FWD F1AGL4114, F1AE0481D | Model:Ducato 33/35/40 | GCO17045 | Outer Joint | | 35 | 29 | 71.5 | 127 | 71 | M |
| | 2006.07- | 6MT | F | L/R | Van FWD F1AGL4114, F1AE0481D | Model:Ducato 30 | GCO17055 | Outer Joint | | 35 | 27 | 71.5 | 127 | 66.5 | I |
| | 2006.07- | 6MT | F | L | Van FWD F1AGL4114, F1AE0481D | Model:Ducato 33/35/40 | GCI17028 | Inner Joint | | 41 | 29 | 43 | 69.5 | 109.5 | |
| | 2006.07- | 6MT | F | L | Van FWD F1AGL4114, F1AE0481D | Model:Ducato 30 | GCI17042 | Inner Joint | | 41 | 27 | 43 | 70 | 102 | |
| | 2006.07- | 6MT | F | R | Van FWD F1AGL4114, F1AE0481D | Model:Ducato 30 | GCI10038 | Inner Joint | | 41 | 27 | 34.85 | 403 | 102 | |
| | 2006.07- | | F | L/R | Van FWD F1AGL4114, F1AE0481D | | GCO17054 | Outer Joint | | 35 | 29 | 71.5 | 127 | 71 | M |
| | 2006.07-2013.10 | 6MT | F | L | Bus FWD F1AE0481D | | GDS17053 | Drive Shaft | | 35 | 41 | 71.5 | 127 | 806 | |
| | 2006.07-2013.10 | 6MT | F | R | Bus FWD F1AE0481D | | GDS17050 | Drive Shaft | | 35 | 41 | 71.5 | 127 | 1140 | |
| | 2006.07-2013.10 | 6MT | F | L/R | Bus FWD F1AE0481D | Model:Ducato 33/35,Country Version:RU | GCO10094 | Outer Joint | 54T | 28 | 27 | 63.3 | 116 | 66.5 | I |
| | 2006.07-2013.10 | 6MT | F | L/R | Bus FWD F1AE0481D | Model:Ducato 33/35/40 | GCO17045 | Outer Joint | | 35 | 29 | 71.5 | 127 | 71 | M |
| | 2006.07-2013.10 | 6MT | F | L/R | Bus FWD F1AE0481D | | GCO17055 | Outer Joint | | 35 | 27 | 71.5 | 127 | 66.5 | I |
| | 2006.07-2013.10 | 6MT | F | L | Bus FWD F1AE0481D | Model:Ducato 33/35/40 | GCI17028 | Inner Joint | | 41 | 29 | 43 | 69.5 | 109.5 | |
| | 2006.07-2013.10 | 6MT | F | L | Bus FWD F1AE0481D | | GCI17042 | Inner Joint | | 41 | 27 | 43 | 70 | 102 | |
| | 2006.07-2013.10 | 6MT | F | R | Bus FWD F1AE0481D | | GCI10038 | Inner Joint | | 41 | 27 | 34.85 | 403 | 102 | |
| | 2006.07-2013.10 | 6MT | F | R | Bus FWD F1AE0481D | Model:Ducato 33/35/40 | GCI17020 | Inner Joint | | 41 | 29 | 34.85 | 403 | 109 | |
| | 2006.07-2013.10 | MT | F | L | Bus FWD F1AE0481D | Inner teeth of wheel side:27 | GDS45176 | Drive Shaft | | 35 | 41 | 71.5 | 127 | 808 | |
| | 2006.07-2013.10 | | F | L/R | Bus FWD F1AE0481D | | GCO17054 | Outer Joint | | 35 | 29 | 71.5 | 127 | 71 | M |
| 2.3 (96 kw) | 2006.08- | 6AMT/6MT | F | L | Platform/Chassis FWD F1AE3481D, F1AGL411D, F1AE0481N | Transmission:6AMT | GDS17231 | Drive Shaft | | 35 | 31 | 71.5 | 127 | 785 | |
| | 2006.08- | 6AMT/6MT | F | R | Platform/Chassis FWD F1AE3481D, F1AGL411D, F1AE0481N | Transmission:6AMT | GDS17232 | Drive Shaft | | 35 | 31 | 71.5 | 127 | 1161 | |
| | 2006.08- | 6AMT/6MT | F | L | Platform/Chassis FWD F1AE3481D, F1AGL411D, F1AE0481N | [illegible] | GCI17022 | Inner Joint | | 31 | 29 | 44.95 | 77 | 109.5 | |
| | 2006.08- | 6AMT/6MT | F | R | Platform/Chassis FWD F1AE3481D, F1AGL411D, F1AE0481N | Transmission:6AMT | GCI17091 | Inner Joint | | 31 | 29 | 34.85 | 454.5 | 109 | |
| | 2006.08- | 6MT | F | L | Platform/Chassis FWD F1AE3481D, F1AGL411D, F1AE0481N | Model:Ducato 35;Model:Ducato 40;Exhaust Emis Nm:Euro 5;Date to:2014.02 | GDS17053 | Drive Shaft | | 35 | 41 | 71.5 | 127 | 806 | |
| | 2006.08- | 6MT | F | L | Platform/Chassis FWD F1AE3481D, F1AGL411D, F1AE0481N | Model:Ducato 35;Exhaust Emis Nm:Euro 5;Model:Ducato 40;Exhaust Emis Nm:Euro 5;Date From:2014.03 | GDS45176 | Drive Shaft | | 35 | 41 | 71.5 | 127 | 808 | |
| | 2006.08- | 6MT | F | L | Platform/Chassis FWD F1AE3481D, F1AGL411D, F1AE0481N | Model:Ducato 33 | GDS56983 | Drive Shaft | | 35 | 41 | 71.5 | 127 | 808 | |
| | 2006.08- | 6MT | F | R | Platform/Chassis FWD F1AE3481D, F1AGL411D, F1AE0481N | Model:Ducato 35;Model:Ducato 40;Exhaust Emis Nm:Euro 5;Date to:2014.02 | GDS17050 | Drive Shaft | | 35 | 41 | 71.5 | 127 | 1140 | |
| | 2006.08- | 6MT | F | R | Platform/Chassis FWD F1AE3481D, F1AGL411D, F1AE0481N | Model:Ducato 33 | GDS56982 | Drive Shaft | | 35 | 41 | 71.5 | 127 | 1140 | |
| | 2006.08- | 6MT | F | L/R | Platform/Chassis FWD F1AE3481D, F1AGL411D, F1AE0481N | Model:Ducato 35;Model:Ducato 40;Exhaust Emis Nm:Euro 5;Date To:2014.02 | GCO17045 | Outer Joint | | 35 | 29 | 71.5 | 127 | 71 | M |
| | 2006.08- | 6MT | F | L/R | Platform/Chassis FWD F1AE3481D, F1AGL411D, F1AE0481N | Model:Ducato 35;Model:Ducato 40;Exhaust Emis Nm:Euro 5;Date To:2014.02 | GCO17054 | Outer Joint | | 35 | 29 | 71.5 | 127 | 71 | M |
| | 2006.08- | 6MT | F | L/R | Platform/Chassis FWD F1AE3481D, F1AGL411D, F1AE0481N | Exhaust Emis Nm:Euro 5 | GCO17055 | Outer Joint | | 35 | 27 | 71.5 | 127 | 66.5 | I |
| | 2006.08- | 6MT | F | L | Platform/Chassis FWD F1AE3481D, F1AGL411D, F1AE0481N | Model:Ducato 33/35;Model:Ducato 40;Date to:2014.02;Exhaust Emis:Euro 5 | GCI17028 | Inner Joint | | 41 | 29 | 43 | 69.5 | 109.5 | |
| | 2006.08- | 6MT | F | L | Platform/Chassis FWD F1AE3481D, F1AGL411D, F1AE0481N | Model:Ducato 35;Exhaust Emis Nm:Euro 5;Model:Ducato 40;Exhaust Emis Nm:Euro 5;Date from:2014.03 | GCI17042 | Inner Joint | | 41 | 27 | 43 | 70 | 102 | |
| | 2006.08- | 6MT | F | R | Platform/Chassis FWD F1AE3481D, F1AGL411D, F1AE0481N | Model:Ducato 35;Exhaust Emis Nm:Euro 5;Model:Ducato 40;Exhaust Emis Nm:Euro 5;Date from:2014.03 | GCI10038 | Inner Joint | | 41 | 27 | 34.85 | 403 | 102 | |
| | 2006.08- | 6MT | F | R | Platform/Chassis FWD F1AE3481D, F1AGL411D, F1AE0481N | Model:Ducato 33;Model:Ducato 35;Date ro:2014.02 | GCI17020 | Inner Joint | | 41 | 29 | 34.85 | 403 | 109 | |

| | YEAR | TRANSM. | F/R | L/R | BODY STYLE & DRIVE TYPE & ENGINE | REMARKS | G-AP Ref. | PRODUCT | ABS | Technical Specifications A | B | C | H | L | P |
|---|---|---|---|---|---|---|---|---|---|---|---|---|---|---|---|
| **FIAT** **Ducato** | | | | | | | | | | | | | | | |
| 2.3 (96 kw) | 2006.08- | Semi-6AT | F | L/R | Platform/Chassis FWD F1AE3481D, F1AGL411D, F1AE0481N | | GCO17060 | Outer Joint | | 35 | 29 | 71.5 | 127 | 71 | I |
| | 2006.08- | 6MT | F | L | Van FWD F1AE3481D, F1AGL411D, F1AE0481N | Model:Ducato 35;Model:Ducato 40;Exhaust Emis Nm:Euro 5;Date to:2014.02 | GDS17053 | Drive Shaft | | 35 | 41 | 71.5 | 127 | 806 | |
| | 2006.08- | 6MT | F | L | Van FWD F1AE3481D, F1AGL411D, F1AE0481N | Model:Ducato 30;Exhaust Emis Nm:Euro 5;Model:Ducato 40;Exhaust Emis Nm:Euro 5;Date from:2014.03 | GDS45176 | Drive Shaft | | 35 | 41 | 71.5 | 127 | 808 | |
| | 2006.08- | 6MT | F | L | Van FWD F1AE3481D, F1AGL411D, F1AE0481N | Model:Ducato 33 | GDS56983 | Drive Shaft | | 35 | 41 | 71.5 | 127 | 808 | |
| | 2006.08- | 6MT | F | R | Van FWD F1AE3481D, F1AGL411D, F1AE0481N | Model:Ducato 35;Model:Ducato 40;Exhaust Emis Nm:Euro 5;Date to:2014.02 | GDS17050 | Drive Shaft | | 35 | 41 | 71.5 | 127 | 1140 | |
| | 2006.08- | 6MT | F | R | Van FWD F1AE3481D, F1AGL411D, F1AE0481N | Model:Ducato 33 | GDS56982 | Drive Shaft | | 35 | 41 | 71.5 | 127 | 1140 | |
| | 2006.08- | 6MT | F | L/R | Van FWD F1AE3481D, F1AGL411D, F1AE0481N | Model:Ducato 35;Model:Ducato 40;Exhaust Emis Nm:Euro 5;Date to:2014.02 | GCO17045 | Outer Joint | | 35 | 29 | 71.5 | 127 | 71 | M |
| | 2006.08- | 6MT | F | L/R | Van FWD F1AE3481D, F1AGL411D, F1AE0481N | Model:Ducato 35;Model:Ducato 40;Exhaust Emis Nm:Euro 5;Date to:2014.02 | GCO17054 | Outer Joint | | 35 | 29 | 71.5 | 127 | 71 | M |
| | 2006.08- | 6MT | F | L/R | Van FWD F1AE3481D, F1AGL411D, F1AE0481N | Model:Ducato 30;Exhaust Emis Nm:Euro 5;Model:Ducato 40;Exhaust Emis Nm:Euro 5;Date from:2014.03 | GCO17055 | Outer Joint | | 35 | 27 | 71.5 | 127 | 66.5 | I |
| | 2006.08- | 6MT | F | L/R | Van FWD F1AE3481D, F1AGL411D, F1AE0481N | Model:Ducato 28;Exhaust Emis Nm:Euro 5;Model:Ducato 40;Exhaust Emis Nm:Euro 4 | GCO17060 | Outer Joint | | 35 | 29 | 71.5 | 127 | 71 | I |
| | 2006.08- | 6MT | F | L | Van FWD F1AE3481D, F1AGL411D, F1AE0481N | Model:Ducato 28;Exhaust Emis Nm:Euro 5;Model:Ducato 40;Exhaust Emis Nm:Euro 4 | GCI17022 | Inner Joint | | 31 | 29 | 44.95 | 77 | 109.5 | |
| | 2006.08- | 6MT | F | L | Van FWD F1AE3481D, F1AGL411D, F1AE0481N | Model:Ducato 28;Exhaust Emis Nm:Euro 5;Model:Ducato 35;Model:Ducato 40;Date to:2014.02;Exhaust Emis Nm:E | GCI17028 | Inner Joint | | 41 | 29 | 43 | 69.5 | 109.5 | |
| | 2006.08- | 6MT | F | L | Van FWD F1AE3481D, F1AGL411D, F1AE0481N | Model:Ducato 30;Exhaust Emis Nm:Euro 5;Model:Ducato 40;Exhaust Emis Nm:Euro 5;Date from:2014.03 | GCI17042 | Inner Joint | | 41 | 27 | 43 | 70 | 102 | |
| | 2006.08- | 6MT | F | R | Van FWD F1AE3481D, F1AGL411D, F1AE0481N | Model:Ducato 30;Exhaust Emis Nm:Euro 5;Model:Ducato 40;Exhaust Emis Nm:Euro 5;Date from:2014.03 | GCI10038 | Inner Joint | | 41 | 27 | 34.85 | 403 | 102 | |
| | 2006.08- | 6MT | F | R | Van FWD F1AE3481D, F1AGL411D, F1AE0481N | Model:Ducato 33;Model:Ducato 35;Date to:2014.02 | GCI17020 | Inner Joint | | 41 | 29 | 34.85 | 403 | 109 | |
| | 2006.08- | 6MT/6AMT/9AT | F | L | Van FWD F1AE3481D, F1AGL411D, F1AE0481N | ---------- | GDS17231 | Drive Shaft | | 35 | 31 | 71.5 | 127 | 785 | |
| | 2006.08- | 6MT/6AMT/9AT | F | R | Van FWD F1AE3481D, F1AGL411D, F1AE0481N | ---------- | GDS17232 | Drive Shaft | | 35 | 31 | 71.5 | 127 | 1161 | |
| | 2006.08- | 6MT/6AMT/9AT | F | R | Van FWD F1AE3481D, F1AGL411D, F1AE0481N | ---------- | GCI17091 | Inner Joint | | 31 | 29 | 34.85 | 454.5 | 109 | |
| | 2007.01- | 6AMT | F | L | Bus FWD F1AGL411M, F1AE3481D, F1AGL411D, F1AE0481N | | GDS17231 | Drive Shaft | | 35 | 31 | 71.5 | 127 | 785 | |
| | 2007.01- | 6AMT | F | R | Bus FWD F1AGL411M, F1AE3481D, F1AGL411D, F1AE0481N | | GDS17232 | Drive Shaft | | 35 | 31 | 71.5 | 127 | 1161 | |
| | 2007.01- | 6AMT | F | R | Bus FWD F1AGL411M, F1AE3481D, F1AGL411D, F1AE0481N | | GCI17091 | Inner Joint | | 31 | 29 | 34.85 | 454.5 | 109 | |
| | 2007.01- | 6AT | F | L/R | Bus FWD F1AGL411M, F1AE3481D, F1AGL411D, F1AE0481N | | GCO17060 | Outer Joint | | 35 | 29 | 71.5 | 127 | 71 | I |
| | 2007.01- | 6AT | F | L | Bus FWD F1AGL411M, F1AE3481D, F1AGL411D, F1AE0481N | Model:Ducato 35 | GCI17022 | Inner Joint | | 31 | 29 | 44.95 | 77 | 109.5 | |
| | 2007.01- | 6MT | F | L | Bus FWD F1AGL411M, F1AE3481D, F1AGL411D, F1AE0481N | Model:Ducato 33/35 | GDS17053 | Drive Shaft | | 35 | 41 | 71.5 | 127 | 806 | |
| | 2007.01- | 6MT | F | L | Bus FWD F1AGL411M, F1AE3481D, F1AGL411D, F1AE0481N | | GDS45176 | Drive Shaft | | 35 | 41 | 71.5 | 127 | 808 | |
| | 2007.01- | 6MT | F | R | Bus FWD F1AGL411M, F1AE3481D, F1AGL411D, F1AE0481N | | GDS17050 | Drive Shaft | | 35 | 41 | 71.5 | 127 | 1140 | |
| | 2007.01- | 6MT | F | L/R | Bus FWD F1AGL411M, F1AE3481D, F1AGL411D, F1AE0481N | | GCO10094 | Outer Joint | 54T | 28 | 27 | 63.3 | 116 | 66.5 | I |
| | 2007.01- | 6MT | F | L/R | Bus FWD F1AGL411M, F1AE3481D, F1AGL411D, F1AE0481N | Model:Ducato 33/35 | GCO17045 | Outer Joint | | 35 | 29 | 71.5 | 127 | 71 | M |
| | 2007.01- | 6MT | F | L/R | Bus FWD F1AGL411M, F1AE3481D, F1AGL411D, F1AE0481N | Model:Ducato 33/35 | GCO17054 | Outer Joint | | 35 | 29 | 71.5 | 127 | 71 | M |
| | 2007.01- | 6MT | F | L/R | Bus FWD F1AGL411M, F1AE3481D, F1AGL411D, F1AE0481N | | GCO17055 | Outer Joint | | 35 | 27 | 71.5 | 127 | 66.5 | I |
| | 2007.01- | 6MT | F | L | Bus FWD F1AGL411M, F1AE3481D, F1AGL411D, F1AE0481N | Model:Ducato 33/35 | GCI17028 | Inner Joint | | 41 | 29 | 43 | 69.5 | 109.5 | |
| | 2007.01- | 6MT | F | L | Bus FWD F1AGL411M, F1AE3481D, F1AGL411D, F1AE0481N | | GCI17042 | Inner Joint | | 41 | 27 | 43 | 70 | 102 | |
| | 2007.01- | 6MT | F | R | Bus FWD F1AGL411M, F1AE3481D, F1AGL411D, F1AE0481N | | GCI10038 | Inner Joint | | 41 | 27 | 34.85 | 403 | 102 | |
| | 2007.01- | 6MT | F | R | Bus FWD F1AGL411M, F1AE3481D, F1AGL411D, F1AE0481N | Model:Ducato 33/35 | GCI17020 | Inner Joint | | 41 | 29 | 34.85 | 403 | 109 | |
| 2.3 (103 kw) | 2019.05- | 6MT | F | L | Bus FWD F1AGL4113 | | GDS17053 | Drive Shaft | | 35 | 41 | 71.5 | 127 | 806 | |
| | 2019.05- | 6MT | F | R | Bus FWD F1AGL4113 | | GDS17050 | Drive Shaft | | 35 | 41 | 71.5 | 127 | 1140 | |
| | 2019.05- | 6MT | F | L/R | Bus FWD F1AGL4113 | | GCO17045 | Outer Joint | | 35 | 29 | 71.5 | 127 | 71 | M |
| | 2019.05- | 6MT | F | L/R | Bus FWD F1AGL4113 | | GCO17054 | Outer Joint | | 35 | 29 | 71.5 | 127 | 71 | M |
| | 2019.05- | 6MT | F | L | Bus FWD F1AGL4113 | | GCI17028 | Inner Joint | | 41 | 29 | 43 | 69.5 | 109.5 | |
| | 2019.05- | 6MT | F | R | Bus FWD F1AGL4113 | | GCI17020 | Inner Joint | | 41 | 29 | 34.85 | 403 | 109 | |
| | 2019.05- | 9AT | F | L | Bus FWD F1AGL4113 | | GDS17231 | Drive Shaft | | 35 | 31 | 71.5 | 127 | 785 | |
| | 2019.05- | 9AT | F | L/R | Bus FWD F1AGL4113 | | GCO17060 | Outer Joint | | 35 | 29 | 71.5 | 127 | 71 | I |
| | 2019.05- | 6MT | F | L | Platform/Chassis FWD F1AGL4113 | | GDS17053 | Drive Shaft | | 35 | 41 | 71.5 | 127 | 806 | |
| | 2019.05- | 6MT | F | R | Platform/Chassis FWD F1AGL4113 | | GDS17050 | Drive Shaft | | 35 | 41 | 71.5 | 127 | 1140 | |
| | 2019.05- | 6MT | F | L/R | Platform/Chassis FWD F1AGL4113 | | GCO17045 | Outer Joint | | 35 | 29 | 71.5 | 127 | 71 | M |
| | 2019.05- | 6MT | F | L/R | Platform/Chassis FWD F1AGL4113 | | GCO17054 | Outer Joint | | 35 | 29 | 71.5 | 127 | 71 | M |
| | 2019.05- | 6MT | F | L | Platform/Chassis FWD F1AGL4113 | | GCI17028 | Inner Joint | | 41 | 29 | 43 | 69.5 | 109.5 | |
| | 2019.05- | 6MT | F | R | Platform/Chassis FWD F1AGL4113 | | GCI17020 | Inner Joint | | 41 | 29 | 34.85 | 403 | 109 | |
| | 2019.05- | 9AT | F | L | Platform/Chassis FWD F1AGL4113 | | GDS17231 | Drive Shaft | | 35 | 31 | 71.5 | 127 | 785 | |
| | 2019.05- | 9AT | F | L/R | Platform/Chassis FWD F1AGL4113 | | GCO17060 | Outer Joint | | 35 | 29 | 71.5 | 127 | 71 | I |
| | 2019.05- | 6MT | F | L | Van FWD F1AGL4113 | | GDS17053 | Drive Shaft | | 35 | 41 | 71.5 | 127 | 806 | |
| | 2019.05- | 6MT | F | R | Van FWD F1AGL4113 | | GDS17050 | Drive Shaft | | 35 | 41 | 71.5 | 127 | 1140 | |
| | 2019.05- | 6MT | F | L/R | Van FWD F1AGL4113 | | GCO17045 | Outer Joint | | 35 | 29 | 71.5 | 127 | 71 | M |
| | 2019.05- | 6MT | F | L/R | Van FWD F1AGL4113 | | GCO17054 | Outer Joint | | 35 | 29 | 71.5 | 127 | 71 | M |
| | 2019.05- | 6MT | F | L | Van FWD F1AGL4113 | | GCI17028 | Inner Joint | | 41 | 29 | 43 | 69.5 | 109.5 | |
| | 2019.05- | 6MT | F | R | Van FWD F1AGL4113 | | GCI17020 | Inner Joint | | 41 | 29 | 34.85 | 403 | 109 | |
| | 2019.05- | 9AT | F | L | Van FWD F1AGL4113 | | GDS17231 | Drive Shaft | | 35 | 31 | 71.5 | 127 | 785 | |
| | 2019.05- | 9AT | F | L/R | Van FWD F1AGL4113 | | GCO17060 | Outer Joint | | 35 | 29 | 71.5 | 127 | 71 | I |
| 2.3 (109 kw) | 2011.06- | 6AMT/6MT | F | L | Bus FWD F1AE3481E | Transmission:6AMT | GDS17231 | Drive Shaft | | 35 | 31 | 71.5 | 127 | 785 | |
| | 2011.06- | 6AMT/6MT | F | R | Bus FWD F1AE3481E | Transmission:6AMT | GDS17232 | Drive Shaft | | 35 | 31 | 71.5 | 127 | 1161 | |
| | 2011.06- | 6AMT/6MT | F | R | Bus FWD F1AE3481E | Transmission:6AMT | GCI17091 | Inner Joint | | 31 | 29 | 34.85 | 454.5 | 109 | |
| | 2011.06- | 6MT | F | L | Bus FWD F1AE3481E | Model:Ducato 30 | GDS56983 | Drive Shaft | | 35 | 41 | 71.5 | 127 | 808 | |
| | 2011.06- | 6MT | F | R | Bus FWD F1AE3481E | Model:Ducato 30 | GDS56982 | Drive Shaft | | 35 | 41 | 71.5 | 127 | 1140 | |
| | 2011.06- | 6MT | F | L | Bus FWD F1AE3481E | Model:Ducato 30/33 | GCI17028 | Inner Joint | | 41 | 29 | 43 | 69.5 | 109.5 | |
| | 2011.06- | 6MT | F | R | Bus FWD F1AE3481E | Model:Ducato 30/33 | GCI17020 | Inner Joint | | 41 | 29 | 34.85 | 403 | 109 | |

| | YEAR | TRANSM. | F/R | L/R | BODY STYLE & DRIVE TYPE & ENGINE | REMARKS | G-AP Ref. | PRODUCT | ABS | Technical Specifications A | B | C | H | L | P |
|---|---|---|---|---|---|---|---|---|---|---|---|---|---|---|---|
| **FIAT** **Ducato** | | | | | | | | | | | | | | | |
| 2.3 (109 kw) | 2011.06- | Semi-6AT | F | L | Bus FWD F1AE3481E | Model:Ducato 30/33,Model:Ducato 35,Exhaust Emis Nm:Euro 5 | GCI17022 | Inner Joint | | 31 | 29 | 44.95 | 77 | 109.5 | |
| | 2011.06- | 6AMT/6MT | F | L | Platform/Chassis FWD F1AE3481E | Transmission:6AMT | GDS17231 | Drive Shaft | | 35 | 31 | 71.5 | 127 | 785 | |
| | 2011.06- | 6AMT/6MT | F | R | Platform/Chassis FWD F1AE3481E | Transmission:6AMT | GDS17232 | Drive Shaft | | 35 | 31 | 71.5 | 127 | 1161 | |
| | 2011.06- | 6AMT/6MT | F | R | Platform/Chassis FWD F1AE3481E | Transmission:6AMT | GCI17091 | Inner Joint | | 31 | 29 | 34.85 | 454.5 | 109 | |
| | 2011.06- | 6MT | F | L | Platform/Chassis FWD F1AE3481E | Model:Ducato 30 | GDS56983 | Drive Shaft | | 35 | 41 | 71.5 | 127 | 808 | |
| | 2011.06- | 6MT | F | R | Platform/Chassis FWD F1AE3481E | Model:Ducato 30 | GDS56982 | Drive Shaft | | 35 | 41 | 71.5 | 127 | 1140 | |
| | 2011.06- | 6MT | F | L | Platform/Chassis FWD F1AE3481E | Model:Ducato 30/33,Model:Ducato 35/40,Exhaust Emis Nm:Euro 5 | GCI17028 | Inner Joint | | 41 | 29 | 43 | 69.5 | 109.5 | |
| | 2011.06- | 6MT | F | R | Platform/Chassis FWD F1AE3481E | Model:Ducato 30/33,Model:Ducato 35/40,Exhaust Emis Nm:Euro 5 | GCI17020 | Inner Joint | | 41 | 29 | 34.85 | 403 | 109 | |
| | 2011.06- | Semi-6AT | F | L/R | Platform/Chassis FWD F1AE3481E | Model:Ducato 30/33,Model:Ducato 35/40,Exhaust Emis Nm:Euro 5 | GCO17060 | Outer Joint | | 35 | 29 | 71.5 | 127 | 71 | I |
| | 2011.06- | Semi-6AT | F | L | Platform/Chassis FWD F1AE3481E | Model:Ducato 30/33,Model:Ducato 35/40,Exhaust Emis Nm:Euro 5 | GCI17022 | Inner Joint | | 31 | 29 | 44.95 | 77 | 109.5 | |
| | 2011.06- | 6AMT/6MT | F | L | Van FWD F1AE3481E | Transmission:6AMT | GDS17231 | Drive Shaft | | 35 | 31 | 71.5 | 127 | 785 | |
| | 2011.06- | 6AMT/6MT | F | R | Van FWD F1AE3481E | Transmission:6AMT | GDS17232 | Drive Shaft | | 35 | 31 | 71.5 | 127 | 1161 | |
| | 2011.06- | 6AMT/6MT | F | L | Van FWD F1AE3481E | ---------- | GCI17022 | Inner Joint | | 31 | 29 | 44.95 | 77 | 109.5 | |
| | 2011.06- | 6AMT/6MT | F | R | Van FWD F1AE3481E | Transmission:6AMT | GCI17091 | Inner Joint | | 31 | 29 | 34.85 | 454.5 | 109 | |
| | 2011.06- | 6MT | F | L | Van FWD F1AE3481E | Model:Ducato 30 | GDS56983 | Drive Shaft | | 35 | 41 | 71.5 | 127 | 808 | |
| | 2011.06- | 6MT | F | R | Van FWD F1AE3481E | Model:Ducato 30 | GDS56982 | Drive Shaft | | 35 | 41 | 71.5 | 127 | 1140 | |
| | 2011.06- | 6MT | F | L | Van FWD F1AE3481E | Model:Ducato 30 | GCI17028 | Inner Joint | | 41 | 29 | 43 | 69.5 | 109.5 | |
| | 2011.06- | 6MT | F | R | Van FWD F1AE3481E | Model:Ducato 30 | GCI17020 | Inner Joint | | 41 | 29 | 34.85 | 403 | 109 | |
| | 2011.06- | Semi-6AT | F | L/R | Van FWD F1AE3481E | | GCO17060 | Outer Joint | | 35 | 29 | 71.5 | 127 | 71 | I |
| 2.3 (110 kw) | 2015.04- | 6MT | F | L | Bus FWD F1AGL411A, F1AGL411C | Exhaust Emis:Euro 6 | GDS17231 | Drive Shaft | | 35 | 31 | 71.5 | 127 | 785 | |
| | 2015.04- | 6MT | F | L | Bus FWD F1AGL411A, F1AGL411C | Model:Ducato 30,Exhaust Emis:Euro 5 | GDS56983 | Drive Shaft | | 35 | 41 | 71.5 | 127 | 808 | |
| | 2015.04- | 6MT | F | R | Bus FWD F1AGL411A, F1AGL411C | Exhaust Emis:Euro 6 | GDS17232 | Drive Shaft | | 35 | 31 | 71.5 | 127 | 1161 | |
| | 2015.04- | 6MT | F | R | Bus FWD F1AGL411A, F1AGL411C | Model:Ducato 30,Exhaust Emis:Euro 5 | GDS56982 | Drive Shaft | | 35 | 41 | 71.5 | 127 | 1140 | |
| | 2015.04- | 6MT | F | L/R | Bus FWD F1AGL411A, F1AGL411C | | GCO17054 | Outer Joint | | 35 | 29 | 71.5 | 127 | 71 | M |
| | 2015.04- | 6MT | F | L/R | Bus FWD F1AGL411A, F1AGL411C | | GCO17060 | Outer Joint | | 35 | 29 | 71.5 | 127 | 71 | I |
| | 2015.04- | 6MT | F | L | Bus FWD F1AGL411A, F1AGL411C | Model:Ducato 30/33,Exhaust Emis:Euro 6,Model:Ducato 35 | GCI17022 | Inner Joint | | 31 | 29 | 44.95 | 77 | 109.5 | |
| | 2015.04- | 6MT | F | L | Bus FWD F1AGL411A, F1AGL411C | Model:Ducato 30/33,Exhaust Emis:Euro 5 | GCI17028 | Inner Joint | | 41 | 29 | 43 | 69.5 | 109.5 | |
| | 2015.04- | 6MT | F | R | Bus FWD F1AGL411A, F1AGL411C | Model:Ducato 30/33,Exhaust Emis Nm:Euro 5 | GCI17020 | Inner Joint | | 41 | 29 | 34.85 | 403 | 109 | |
| | 2015.04- | 6MT | F | R | Bus FWD F1AGL411A, F1AGL411C | Exhaust Emis:Euro 6 | GCI17091 | Inner Joint | | 31 | 29 | 34.85 | 454.5 | 109 | |
| | 2015.12- | 6AMT | F | L | Platform/Chassis FWD F1AGL411C | | GDS17231 | Drive Shaft | | 35 | 31 | 71.5 | 127 | 785 | |
| | 2015.12- | 6AMT | F | R | Platform/Chassis FWD F1AGL411C | | GDS17232 | Drive Shaft | | 35 | 31 | 71.5 | 127 | 1161 | |
| | 2015.12- | 6AMT | F | L | Platform/Chassis FWD F1AGL411C | Model:Ducato 30/33/35/40 | GCI17022 | Inner Joint | | 31 | 29 | 44.95 | 77 | 109.5 | |
| | 2015.12- | 6AMT | F | R | Platform/Chassis FWD F1AGL411C | | GCI17091 | Inner Joint | | 31 | 29 | 34.85 | 454.5 | 109 | |
| | 2015.12- | 6AT/6MT | F | L/R | Platform/Chassis FWD F1AGL411C | | GCO17060 | Outer Joint | | 35 | 29 | 71.5 | 127 | 71 | I |
| | 2015.12- | 6MT | F | L | Platform/Chassis FWD F1AGL411C | Model:Ducato 30,Exhaust Emis:Euro 5 | GDS56983 | Drive Shaft | | 35 | 41 | 71.5 | 127 | 808 | |
| | 2015.12- | 6MT | F | R | Platform/Chassis FWD F1AGL411C | Model:Ducato 30,Exhaust Emis:Euro 5 | GDS56982 | Drive Shaft | | 35 | 41 | 71.5 | 127 | 1140 | |
| | 2015.12- | 6MT | F | L | Platform/Chassis FWD F1AGL411C | Model:Ducato 30/33,Exhaust Emis:Euro 5 | GCI17028 | Inner Joint | | 41 | 29 | 43 | 69.5 | 109.5 | |
| | 2015.12- | 6MT | F | R | Platform/Chassis FWD F1AGL411C | Model:Ducato 30/33,Exhaust Emis Nm:Euro 5 | GCI17020 | Inner Joint | | 41 | 29 | 34.85 | 403 | 109 | |
| | 2015.12- | 6AMT/6MT | F | L | Van FWD F1AGL411A, F1AGL411C | Transmission:6AMT | GDS17231 | Drive Shaft | | 35 | 31 | 71.5 | 127 | 785 | |
| | 2015.12- | 6AMT/6MT | F | R | Van FWD F1AGL411A, F1AGL411C | Transmission:6AMT | GDS17232 | Drive Shaft | | 35 | 31 | 71.5 | 127 | 1161 | |
| | 2015.12- | 6AMT/6MT | F | L | Van FWD F1AGL411A, F1AGL411C | Model:Ducato 30,Transmission:6AMT,Model:Ducato 30/35/40,Transmission:6AMT,6MT | GCI17022 | Inner Joint | | 31 | 29 | 44.95 | 77 | 109.5 | |
| | 2015.12- | 6AMT/6MT | F | R | Van FWD F1AGL411A, F1AGL411C | Transmission:6AMT | GCI17091 | Inner Joint | | 31 | 29 | 34.85 | 454.5 | 109 | |
| | 2015.12- | 6AT/6MT | F | L/R | Van FWD F1AGL411A, F1AGL411C | | GCO17060 | Outer Joint | | 35 | 29 | 71.5 | 127 | 71 | I |
| | 2015.12- | 6MT | F | L | Van FWD F1AGL411A, F1AGL411C | Model:Ducato 30,Exhaust Emis:Euro 5 | GDS56983 | Drive Shaft | | 35 | 41 | 71.5 | 127 | 808 | |
| | 2015.12- | 6MT | F | R | Van FWD F1AGL411A, F1AGL411C | Model:Ducato 30,Exhaust Emis:Euro 5 | GDS56982 | Drive Shaft | | 35 | 41 | 71.5 | 127 | 1140 | |
| | 2015.12- | 6MT | F | L | Van FWD F1AGL411A, F1AGL411C | Model:Ducato 30/33,Exhaust Emis:Euro 5 | GCI17028 | Inner Joint | | 41 | 29 | 43 | 69.5 | 109.5 | |
| | 2015.12- | 6MT | F | R | Van FWD F1AGL411A, F1AGL411C | Model:Ducato 30/33,Exhaust Emis Nm:Euro 5 | GCI17020 | Inner Joint | | 41 | 29 | 34.85 | 403 | 109 | |
| 2.3 (118 kw) | 2019.05- | 6MT | F | R | Bus FWD F1AGL4112 | | GDS17232 | Drive Shaft | | 35 | 31 | 71.5 | 127 | 1161 | |
| | 2019.05- | 6MT | F | L/R | Bus FWD F1AGL4112 | | GCO17060 | Outer Joint | | 35 | 29 | 71.5 | 127 | 71 | I |
| | 2019.05- | 6MT | F | R | Bus FWD F1AGL4112 | | GCI17091 | Inner Joint | | 31 | 29 | 34.85 | 454.5 | 109 | |
| | 2019.05- | 6MT/9AT | F | L | Bus FWD F1AGL4112 | | GDS17231 | Drive Shaft | | 35 | 31 | 71.5 | 127 | 785 | |
| | 2019.05- | 6MT/9AT | F | L | Bus FWD F1AGL4112 | Model:Ducato 30/33/35 | GCI17022 | Inner Joint | | 31 | 29 | 44.95 | 77 | 109.5 | |
| | 2019.05- | 6MT | F | R | Platform/Chassis FWD F1AGL4112 | | GDS17232 | Drive Shaft | | 35 | 31 | 71.5 | 127 | 1161 | |
| | 2019.05- | 6MT | F | L/R | Platform/Chassis FWD F1AGL4112 | | GCO17060 | Outer Joint | | 35 | 29 | 71.5 | 127 | 71 | I |
| | 2019.05- | 6MT | F | R | Platform/Chassis FWD F1AGL4112 | | GCI17091 | Inner Joint | | 31 | 29 | 34.85 | 454.5 | 109 | |
| | 2019.05- | 6MT/9AT | F | L | Platform/Chassis FWD F1AGL4112 | | GDS17231 | Drive Shaft | | 35 | 31 | 71.5 | 127 | 785 | |
| | 2019.05- | 6MT/9AT | F | L | Platform/Chassis FWD F1AGL4112 | Ducato 33/35/40 | GCI17022 | Inner Joint | | 31 | 29 | 44.95 | 77 | 109.5 | |
| | 2019.05- | 6MT | F | R | Van FWD F1AGL4112 | | GDS17232 | Drive Shaft | | 35 | 31 | 71.5 | 127 | 1161 | |
| | 2019.05- | 6MT | F | R | Van FWD F1AGL4112 | | GCI17091 | Inner Joint | | 31 | 29 | 34.85 | 454.5 | 109 | |
| | 2019.05- | 9AT/6MT | F | L | Van FWD F1AGL4112 | | GDS17231 | Drive Shaft | | 35 | 31 | 71.5 | 127 | 785 | |
| | 2019.05- | 9AT/6MT | F | L/R | Van FWD F1AGL4112 | | GCO17060 | Outer Joint | | 35 | 29 | 71.5 | 127 | 71 | I |
| | 2019.05- | 9AT/6MT | F | L | Van FWD F1AGL4112 | Model:Ducato 30/33/35/40 | GCI17022 | Inner Joint | | 31 | 29 | 44.95 | 77 | 109.5 | |
| 2.3 (130 kw) | 2015.12- | 6AMT/6MT | F | L | Platform/Chassis FWD F1AGL4111, F1AGL411B | | GDS17231 | Drive Shaft | | 35 | 31 | 71.5 | 127 | 785 | |
| | 2015.12- | 6AMT/6MT | F | R | Platform/Chassis FWD F1AGL4111, F1AGL411B | | GDS17232 | Drive Shaft | | 35 | 31 | 71.5 | 127 | 1161 | |
| | 2015.12- | 6AMT/6MT | F | L | Platform/Chassis FWD F1AGL4111, F1AGL411B | Model:Ducato 30/33/35/40 | GCI17022 | Inner Joint | | 31 | 29 | 44.95 | 77 | 109.5 | |

| | YEAR | TRANSM. | F/R | L/R | BODY STYLE & DRIVE TYPE & ENGINE | REMARKS | G-AP Ref. | PRODUCT | ABS | Technical Specifications A | B | C | H | L | P |
|---|---|---|---|---|---|---|---|---|---|---|---|---|---|---|---|
| **FIAT** **Ducato** | | | | | | | | | | | | | | | |
| 2.3 (130 kw) | 2015.12- | 6AMT/6MT | F | R | Platform/Chassis FWD F1AGL4111, F1AGL411B | | GCI17091 | Inner Joint | | 31 | 29 | 34.85 | 454.5 | 109 | |
| | 2015.12- | 6MT/Semi-6AT | F | L/R | Platform/Chassis FWD F1AGL4111, F1AGL411B | | GCO17060 | Outer Joint | | 35 | 29 | 71.5 | 127 | 71 | I |
| | 2015.12- | 6MT/6AMT | F | R | Van FWD F1AGL4111, F1AGL4115, F1AGL411B | | GDS17232 | Drive Shaft | | 35 | 31 | 71.5 | 127 | 1161 | |
| | 2015.12- | 6MT/6AMT | F | R | Van FWD F1AGL4111, F1AGL4115, F1AGL411B | | GCI17091 | Inner Joint | | 31 | 29 | 34.85 | 454.5 | 109 | |
| | 2015.12- | 6MT/6AMT/9AT | F | L | Van FWD F1AGL4111, F1AGL4115, F1AGL411B | | GDS17231 | Drive Shaft | | 35 | 31 | 71.5 | 127 | 785 | |
| | 2015.12- | 6MT/6AMT/9AT | F | L | Van FWD F1AGL4111, F1AGL4115, F1AGL411B | Model:Ducato 30/33/35/40 | GCI17022 | Inner Joint | | 31 | 29 | 44.95 | 77 | 109.5 | |
| | 2015.12- | 6MT/Semi-6AT | F | L/R | Van FWD F1AGL4111, F1AGL4115, F1AGL411B | | GCO17060 | Outer Joint | | 35 | 29 | 71.5 | 127 | 71 | I |
| | 2019.05- | 6MT | F | R | Bus FWD F1AGL4111 | | GDS17232 | Drive Shaft | | 35 | 31 | 71.5 | 127 | 1161 | |
| | 2019.05- | 6MT | F | R | Bus FWD F1AGL4111 | | GCI17091 | Inner Joint | | 31 | 29 | 34.85 | 454.5 | 109 | |
| | 2019.05- | 6MT/9AT | F | L | Bus FWD F1AGL4111 | | GDS17231 | Drive Shaft | | 35 | 31 | 71.5 | 127 | 785 | |
| | 2019.05- | 9AT/6MT | F | L/R | Bus FWD F1AGL4111 | | GCO17060 | Outer Joint | | 35 | 29 | 71.5 | 127 | 71 | I |
| | 2019.05- | 9AT/6MT | F | L | Bus FWD F1AGL4111 | Model:Ducato 30/33/35/40 | GCI17022 | Inner Joint | | 31 | 29 | 44.95 | 77 | 109.5 | |
| 2.5 (80 kw) | 1994.03-2002.04 | MT | F | L | Platform/Chassis FWD 8140.47R | Payload:1800kg,Trans. code:MG | GDS10033 | Drive Shaft | 54T | 35 | 41 | 70 | 117 | 762 | |
| | 1994.03-2002.04 | MT | F | L | Platform/Chassis FWD 8140.47R | Payload:1000/1400kg,Trans. code:MG | GDS10035 | Drive Shaft | 54T | 28 | 41 | 63 | 112.5 | 757.5 | |
| | 1994.03-2002.04 | MT | F | L | Platform/Chassis FWD 8140.47R | Payload:1000/1400kg,Trans. code:ME/ML | GDS10037 | Drive Shaft | 54T | 28 | 37 | 63 | 112.5 | 771 | |
| | 1994.03-2002.04 | MT | F | L | Platform/Chassis FWD 8140.47R | Payload:1800kg,Trans. code:MG | GDS10067 | Drive Shaft | | 35 | 41 | 70 | 117 | 762 | |
| | 1994.03-2002.04 | MT | F | L | Platform/Chassis FWD 8140.47R | Payload:1000/1400kg,Trans. code:MG | GDS10102 | Drive Shaft | | 28 | 41 | 63 | 112.5 | 757.5 | |
| | 1994.03-2002.04 | MT | F | L | Platform/Chassis FWD 8140.47R | Payload:1000/1400kg,Trans. code:ME/ML | GDS10105 | Drive Shaft | | 28 | 37 | 63 | 112.5 | 771 | |
| | 1994.03-2002.04 | MT | F | R | Platform/Chassis FWD 8140.47R | Payload:1800kg,Trans. code:MG | GDS10032 | Drive Shaft | 54T | 35 | 41 | 70 | 117 | 1085 | |
| | 1994.03-2002.04 | MT | F | R | Platform/Chassis FWD 8140.47R | Payload:1000/1400kg,Trans. code:MG | GDS10036 | Drive Shaft | 54T | 28 | 41 | 63 | 112.5 | 1079 | |
| | 1994.03-2002.04 | MT | F | R | Platform/Chassis FWD 8140.47R | Payload:1800kg,Trans. code:MG | GDS10066 | Drive Shaft | | 35 | 41 | 70 | 117 | 1085 | |
| | 1994.03-2002.04 | MT | F | R | Platform/Chassis FWD 8140.47R | Payload:1000/1400kg,Trans. code:ME/ML | GDS10069 | Drive Shaft | | 28 | 37 | 63 | 112.5 | 1072 | |
| | 1994.03-2002.04 | MT | F | R | Platform/Chassis FWD 8140.47R | Payload:1000/1400kg,Trans. code:MG | GDS10103 | Drive Shaft | | 28 | 41 | 63 | 112.5 | 1079 | |
| | 1994.03-2002.04 | MT | F | R | Platform/Chassis FWD 8140.47R | Payload:1000/1400kg,Trans. code:ME/ML | GDS10104 | Drive Shaft | 54T | 28 | 37 | 63 | 112.5 | 1072 | |
| | 1994.03-2002.04 | MT | F | L/R | Platform/Chassis FWD 8140.47R | Payload:1800kg,Trans. code:MG | GCO10011 | Outer Joint | 54T | 35 | 45 | 70 | 117 | 73 | I |
| | 1994.03-2002.04 | MT | F | L/R | Platform/Chassis FWD 8140.47R | Payload:1000/1400kg,Trans. code:ME/ML/MG | GCO10012 | Outer Joint | | 28 | 39 | 63 | 112.5 | 63 | I |
| | 1994.03-2002.04 | MT | F | L/R | Platform/Chassis FWD 8140.47R | Payload:1000/1400kg,Trans. code:ME/ML/MG | GCO10013 | Outer Joint | 54T | 28 | 39 | 63 | 112.5 | 63 | I |
| | 1994.03-2002.04 | MT | F | L/R | Platform/Chassis FWD 8140.47R | Payload:1800kg,Trans. code:MG | GCO10050 | Outer Joint | | 35 | 45 | 70 | 117 | 73 | I |
| | 1994.03-2002.04 | MT | F | L | Platform/Chassis FWD 8140.47R | Payload:1800kg,Trans. code:MG | GCI10010 | Inner Joint | | 41 | 45 | 43 | 70 | 115.5 | |
| | 1994.03-2002.04 | MT | F | L | Platform/Chassis FWD 8140.47R | Payload:1000/1400kg,Trans. code:MG | GCI10013 | Inner Joint | | 41 | 39 | 43 | 70 | 104 | |
| | 1994.03-2002.04 | MT | F | L | Platform/Chassis FWD 8140.47R | Payload:1000/1400kg,Trans. code:ME/ML | GCI10015 | Inner Joint | | 37 | 39 | 40 | 68.5 | 104 | |
| | 1994.03-2002.04 | MT | F | L | Platform/Chassis FWD 8140.47R | Payload:1000/1400kg,Trans. code:ME/ML | GCI45013 | Inner Joint | | 37 | 39 | 40 | 68.5 | 100 | |
| | 1994.03-2002.04 | MT | F | R | Platform/Chassis FWD 8140.47R | Payload:1800kg,Trans. code:MG | GCI10009 | Inner Joint | | 41 | 45 | 34.9 | 393 | 115.6 | |
| | 1994.03-2002.04 | MT | F | R | Platform/Chassis FWD 8140.47R | Payload:1000/1400kg,Trans. code:ME/ML | GCI10034 | Inner Joint | | 37 | 39 | 31.9 | 369.5 | 99 | |
| | 1994.03-2002.04 | MT | F | L | Van FWD 8140.47R | Payload:1800kg,Trans. code:MG | GDS10033 | Drive Shaft | 54T | 35 | 41 | 70 | 117 | 762 | |
| | 1994.03-2002.04 | MT | F | L | Van FWD 8140.47R | Payload:1000/1400kg,Trans. code:MG | GDS10035 | Drive Shaft | 54T | 28 | 41 | 63 | 112.5 | 757.5 | |
| | 1994.03-2002.04 | MT | F | L | Van FWD 8140.47R | Payload:1000/1400kg,Trans. code:ME/ML | GDS10037 | Drive Shaft | 54T | 28 | 37 | 63 | 112.5 | 771 | |
| | 1994.03-2002.04 | MT | F | L | Van FWD 8140.47R | Payload:1800kg,Trans. code:MG | GDS10067 | Drive Shaft | | 35 | 41 | 70 | 117 | 762 | |
| | 1994.03-2002.04 | MT | F | L | Van FWD 8140.47R | Payload:1000/1400kg,Trans. code:MG | GDS10102 | Drive Shaft | | 28 | 41 | 63 | 112.5 | 757.5 | |
| | 1994.03-2002.04 | MT | F | L | Van FWD 8140.47R | Payload:1000/1400kg,Trans. code:ME/ML | GDS10105 | Drive Shaft | | 28 | 37 | 63 | 112.5 | 771 | |
| | 1994.03-2002.04 | MT | F | R | Van FWD 8140.47R | Payload:1800kg,Trans. code:MG | GDS10032 | Drive Shaft | 54T | 35 | 41 | 70 | 117 | 1085 | |
| | 1994.03-2002.04 | MT | F | R | Van FWD 8140.47R | Payload:1000/1400kg,Trans. code:MG | GDS10036 | Drive Shaft | 54T | 28 | 41 | 63 | 112.5 | 1079 | |
| | 1994.03-2002.04 | MT | F | R | Van FWD 8140.47R | Payload:1800kg,Trans. code:MG | GDS10066 | Drive Shaft | | 35 | 41 | 70 | 117 | 1085 | |
| | 1994.03-2002.04 | MT | F | R | Van FWD 8140.47R | Payload:1000/1400kg,Trans. code:ME/ML | GDS10069 | Drive Shaft | | 28 | 37 | 63 | 112.5 | 1072 | |
| | 1994.03-2002.04 | MT | F | R | Van FWD 8140.47R | Payload:1000/1400kg,Trans. code:MG | GDS10103 | Drive Shaft | | 28 | 41 | 63 | 112.5 | 1079 | |
| | 1994.03-2002.04 | MT | F | R | Van FWD 8140.47R | Payload:1000/1400kg,Trans. code:ME/ML | GDS10104 | Drive Shaft | 54T | 28 | 37 | 63 | 112.5 | 1072 | |
| | 1994.03-2002.04 | MT | F | L/R | Van FWD 8140.47R | Payload:1800kg,Trans. code:MG | GCO10011 | Outer Joint | 54T | 35 | 45 | 70 | 117 | 73 | I |
| | 1994.03-2002.04 | MT | F | L/R | Van FWD 8140.47R | Payload:1000/1400kg,Trans. code:ME/ML/MG | GCO10012 | Outer Joint | | 28 | 39 | 63 | 112.5 | 63 | I |
| | 1994.03-2002.04 | MT | F | L/R | Van FWD 8140.47R | Payload:1000/1400kg,Trans. code:ME/ML/MG | GCO10013 | Outer Joint | 54T | 28 | 39 | 63 | 112.5 | 63 | I |
| | 1994.03-2002.04 | MT | F | L/R | Van FWD 8140.47R | Payload:1800kg,Trans. code:MG | GCO10050 | Outer Joint | | 35 | 45 | 70 | 117 | 73 | I |
| | 1994.03-2002.04 | MT | F | L | Van FWD 8140.47R | Payload:1800kg,Trans. code:MG | GCI10010 | Inner Joint | | 41 | 45 | 43 | 70 | 115.5 | |
| | 1994.03-2002.04 | MT | F | L | Van FWD 8140.47R | Payload:1000/1400kg,Trans. code:MG | GCI10013 | Inner Joint | | 41 | 39 | 43 | 70 | 104 | |
| | 1994.03-2002.04 | MT | F | L | Van FWD 8140.47R | Payload:1000/1400kg,Trans. code:ME/ML | GCI10015 | Inner Joint | | 37 | 39 | 40 | 68.5 | 104 | |
| | 1994.03-2002.04 | MT | F | L | Van FWD 8140.47R | Payload:1000/1400kg,Trans. code:ME/ML | GCI45013 | Inner Joint | | 37 | 39 | 40 | 68.5 | 100 | |
| | 1994.03-2002.04 | MT | F | R | Van FWD 8140.47R | Payload:1800kg,Trans. code:MG | GCI10009 | Inner Joint | | 41 | 45 | 34.9 | 393 | 115.6 | |
| | 1994.03-2002.04 | MT | F | R | Van FWD 8140.47R | Payload:1000/1400kg,Trans. code:ME/ML | GCI10034 | Inner Joint | | 37 | 39 | 31.9 | 369.5 | 99 | |
| | 1994.06-1998.08 | MT | F | L | Platform/Chassis FWD 8140.47 | Payload:1800kg,Trans. code:MG | GDS10033 | Drive Shaft | 54T | 35 | 41 | 70 | 117 | 762 | |
| | 1994.06-1998.08 | MT | F | L | Platform/Chassis FWD 8140.47 | Payload:1000/1400kg,Trans. code:MG | GDS10035 | Drive Shaft | 54T | 28 | 41 | 63 | 112.5 | 757.5 | |
| | 1994.06-1998.08 | MT | F | L | Platform/Chassis FWD 8140.47 | Payload:1000/1400kg,Trans. code:ME/ML | GDS10037 | Drive Shaft | 54T | 28 | 37 | 63 | 112.5 | 771 | |
| | 1994.06-1998.08 | MT | F | L | Platform/Chassis FWD 8140.47 | Payload:1800kg,Trans. code:MG | GDS10067 | Drive Shaft | | 35 | 41 | 70 | 117 | 762 | |
| | 1994.06-1998.08 | MT | F | L | Platform/Chassis FWD 8140.47 | Payload:1000/1400kg,Trans. code:MG | GDS10102 | Drive Shaft | | 28 | 41 | 63 | 112.5 | 757.5 | |
| | 1994.06-1998.08 | MT | F | L | Platform/Chassis FWD 8140.47 | Payload:1000/1400kg,Trans. code:ME/ML | GDS10105 | Drive Shaft | | 28 | 37 | 63 | 112.5 | 771 | |
| | 1994.06-1998.08 | MT | F | R | Platform/Chassis FWD 8140.47 | Payload:1800kg,Trans. code:MG | GDS10032 | Drive Shaft | 54T | 35 | 41 | 70 | 117 | 1085 | |
| | 1994.06-1998.08 | MT | F | R | Platform/Chassis FWD 8140.47 | Payload:1000/1400kg,Trans. code:MG | GDS10036 | Drive Shaft | 54T | 28 | 41 | 63 | 112.5 | 1079 | |
| | 1994.06-1998.08 | MT | F | R | Platform/Chassis FWD 8140.47 | Payload:1800kg,Trans. code:MG | GDS10066 | Drive Shaft | | 35 | 41 | 70 | 117 | 1085 | |

| | YEAR | TRANSM. | F/R | L/R | BODY STYLE & DRIVE TYPE & ENGINE | REMARKS | G-AP Ref. | PRODUCT | ABS | Technical Specifications A | B | C | H | L | P |
|---|---|---|---|---|---|---|---|---|---|---|---|---|---|---|---|
| **FIAT** **Ducato** | | | | | | | | | | | | | | | |
| 2.5 (80 kw) | 1994.06-1998.08 | MT | F | R | Platform/Chassis FWD 8140.47 | Payload:1000/1400kg,Trans. code:ME/ML | GDS10069 | Drive Shaft | | 28 | 37 | 63 | 112.5 | 1072 | |
| | 1994.06-1998.08 | MT | F | R | Platform/Chassis FWD 8140.47 | Payload:1000/1400kg,Trans. code:MG | GDS10103 | Drive Shaft | | 28 | 41 | 63 | 112.5 | 1079 | |
| | 1994.06-1998.08 | MT | F | R | Platform/Chassis FWD 8140.47 | Payload:1000/1400kg,Trans. code:ME/ML | GDS10104 | Drive Shaft | 54T | 28 | 37 | 63 | 112.5 | 1072 | |
| | 1994.06-1998.08 | MT | F | L/R | Platform/Chassis FWD 8140.47 | Payload:1800kg,Trans. code:MG | GCO10011 | Outer Joint | 54T | 35 | 45 | 70 | 117 | 73 | I |
| | 1994.06-1998.08 | MT | F | L/R | Platform/Chassis FWD 8140.47 | Payload:1000/1400kg,Trans. code:ME/ML/MG | GCO10012 | Outer Joint | | 28 | 39 | 63 | 112.5 | 63 | I |
| | 1994.06-1998.08 | MT | F | L/R | Platform/Chassis FWD 8140.47 | Payload:1000/1400kg,Trans. code:ME/ML/MG | GCO10013 | Outer Joint | 54T | 28 | 39 | 63 | 112.5 | 63 | I |
| | 1994.06-1998.08 | MT | F | L/R | Platform/Chassis FWD 8140.47 | Payload:1800kg,Trans. code:MG | GCO10050 | Outer Joint | | 35 | 45 | 70 | 117 | 73 | I |
| | 1994.06-1998.08 | MT | F | L | Platform/Chassis FWD 8140.47 | Payload:1800kg,Trans. code:MG | GCI10010 | Inner Joint | | 41 | 45 | 43 | 70 | 115.5 | |
| | 1994.06-1998.08 | MT | F | L | Platform/Chassis FWD 8140.47 | Payload:1000/1400kg,Trans. code:MG | GCI10013 | Inner Joint | | 41 | 39 | 43 | 70 | 104 | |
| | 1994.06-1998.08 | MT | F | L | Platform/Chassis FWD 8140.47 | Payload:1000/1400kg,Trans. code:ME/ML | GCI10015 | Inner Joint | | 37 | 39 | 40 | 68.5 | 104 | |
| | 1994.06-1998.08 | MT | F | R | Platform/Chassis FWD 8140.47 | Payload:1800kg,Trans. code:MG | GCI10009 | Inner Joint | | 41 | 45 | 34.9 | 393 | 115.6 | |
| | 1994.06-1998.08 | MT | F | R | Platform/Chassis FWD 8140.47 | Payload:1000/1400kg,Trans. code:ME/ML | GCI10034 | Inner Joint | | 37 | 39 | 31.9 | 369.5 | 99 | |
| | 1994.06-1998.08 | MT | F | L | Van FWD 8140.47 | Payload:1800kg,Trans. code:MG | GDS10033 | Drive Shaft | 54T | 35 | 41 | 70 | 117 | 762 | |
| | 1994.06-1998.08 | MT | F | L | Van FWD 8140.47 | Payload:1000/1400kg,Trans. code:MG | GDS10035 | Drive Shaft | 54T | 28 | 41 | 63 | 112.5 | 757.5 | |
| | 1994.06-1998.08 | MT | F | L | Van FWD 8140.47 | Payload:1000/1400kg,Trans. code:ME/ML | GDS10037 | Drive Shaft | 54T | 28 | 37 | 63 | 112.5 | 771 | |
| | 1994.06-1998.08 | MT | F | L | Van FWD 8140.47 | Payload:1800kg,Trans. code:MG | GDS10067 | Drive Shaft | | 35 | 41 | 70 | 117 | 762 | |
| | 1994.06-1998.08 | MT | F | L | Van FWD 8140.47 | Payload:1000/1400kg,Trans. code:MG | GDS10102 | Drive Shaft | | 28 | 41 | 63 | 112.5 | 757.5 | |
| | 1994.06-1998.08 | MT | F | L | Van FWD 8140.47 | Payload:1000/1400kg,Trans. code:ME/ML | GDS10105 | Drive Shaft | | 28 | 37 | 63 | 112.5 | 771 | |
| | 1994.06-1998.08 | MT | F | R | Van FWD 8140.47 | Payload:1800kg,Trans. code:MG | GDS10032 | Drive Shaft | 54T | 35 | 41 | 70 | 117 | 1085 | |
| | 1994.06-1998.08 | MT | F | R | Van FWD 8140.47 | Payload:1000/1400kg,Trans. code:MG | GDS10036 | Drive Shaft | 54T | 28 | 41 | 63 | 112.5 | 1079 | |
| | 1994.06-1998.08 | MT | F | R | Van FWD 8140.47 | Payload:1800kg,Trans. code:MG | GDS10066 | Drive Shaft | | 35 | 41 | 70 | 117 | 1085 | |
| | 1994.06-1998.08 | MT | F | R | Van FWD 8140.47 | Payload:1000/1400kg,Trans. code:ME/ML | GDS10069 | Drive Shaft | | 28 | 37 | 63 | 112.5 | 1072 | |
| | 1994.06-1998.08 | MT | F | R | Van FWD 8140.47 | Payload:1000/1400kg,Trans. code:MG | GDS10103 | Drive Shaft | | 28 | 41 | 63 | 112.5 | 1079 | |
| | 1994.06-1998.08 | MT | F | R | Van FWD 8140.47 | Payload:1000/1400kg,Trans. code:ME/ML | GDS10104 | Drive Shaft | 54T | 28 | 37 | 63 | 112.5 | 1072 | |
| | 1994.06-1998.08 | MT | F | L/R | Van FWD 8140.47 | Payload:1800kg,Trans. code:MG | GCO10011 | Outer Joint | 54T | 35 | 45 | 70 | 117 | 73 | I |
| | 1994.06-1998.08 | MT | F | L/R | Van FWD 8140.47 | Payload:1000/1400kg,Trans. code:ME/ML/MG | GCO10012 | Outer Joint | | 28 | 39 | 63 | 112.5 | 63 | I |
| | 1994.06-1998.08 | MT | F | L/R | Van FWD 8140.47 | Payload:1000/1400kg,Trans. code:ME/ML/MG | GCO10013 | Outer Joint | 54T | 28 | 39 | 63 | 112.5 | 63 | I |
| | 1994.06-1998.08 | MT | F | L/R | Van FWD 8140.47 | Payload:1800kg,Trans. code:MG | GCO10050 | Outer Joint | | 35 | 45 | 70 | 117 | 73 | I |
| | 1994.06-1998.08 | MT | F | L | Van FWD 8140.47 | Payload:1800kg,Trans. code:MG | GCI10010 | Inner Joint | | 41 | 45 | 43 | 70 | 115.5 | |
| | 1994.06-1998.08 | MT | F | L | Van FWD 8140.47 | Payload:1000/1400kg,Trans. code:MG | GCI10013 | Inner Joint | | 41 | 39 | 43 | 70 | 104 | |
| | 1994.06-1998.08 | MT | F | L | Van FWD 8140.47 | Payload:1000/1400kg,Trans. code:ME/ML | GCI10015 | Inner Joint | | 37 | 39 | 40 | 68.5 | 104 | |
| | 1994.06-1998.08 | MT | F | R | Van FWD 8140.47 | Payload:1800kg,Trans. code:MG | GCI10009 | Inner Joint | | 41 | 45 | 34.9 | 393 | 115.6 | |
| | 1994.06-1998.08 | MT | F | R | Van FWD 8140.47 | Payload:1000/1400kg,Trans. code:ME/ML | GCI10034 | Inner Joint | | 37 | 39 | 31.9 | 369.5 | 99 | |
| 2.5 (85 kw) | 1994.11-1998.04 | MT | F | L/R | Van 4WD 814047 | Payload:1000/1400kg,Trans. code:ME/ML/MG | GCO10012 | Outer Joint | | 28 | 39 | 63 | 112.5 | 63 | I |
| | 1994.11-1998.04 | MT | F | L/R | Van 4WD 814047 | Payload:1000/1400kg,Trans. code:ME/ML/MG | GCO10013 | Outer Joint | 54T | 28 | 39 | 63 | 112.5 | 63 | I |
| | 1994.11-1998.04 | MT | F | L | Van 4WD 814047 | Payload:1800kg,Trans. code:MG | GCI10010 | Inner Joint | | 41 | 45 | 43 | 70 | 115.5 | |
| | 1994.11-1998.04 | MT | F | L | Van 4WD 814047 | Payload:1000/1400kg,Trans. code:MG | GCI10013 | Inner Joint | | 41 | 39 | 43 | 70 | 104 | |
| | 1994.11-1998.04 | MT | F | L | Van 4WD 814047 | Payload:1000/1400kg,Trans. code:ME/ML | GCI10015 | Inner Joint | | 37 | 39 | 40 | 68.5 | 104 | |
| | 1994.11-1998.04 | MT | F | R | Van 4WD 814047 | Payload:1800kg,Trans. code:MG | GCI10009 | Inner Joint | | 41 | 45 | 34.9 | 393 | 115.6 | |
| | 1994.11-1998.04 | MT | F | R | Van 4WD 814047 | Payload:1000/1400kg,Trans. code:ME/ML | GCI10034 | Inner Joint | | 37 | 39 | 31.9 | 369.5 | 99 | |
| | 1997.04-2002.04 | MT | F | L | Bus 4WD 8140.47 | Payload:1800kg,Trans. code:MG | GDS10033 | Drive Shaft | 54T | 35 | 41 | 70 | 117 | 762 | |
| | 1997.04-2002.04 | MT | F | L | Bus 4WD 8140.47 | Payload:1000/1400kg,Trans. code:MG | GDS10035 | Drive Shaft | 54T | 28 | 41 | 63 | 112.5 | 757.5 | |
| | 1997.04-2002.04 | MT | F | L | Bus 4WD 8140.47 | Payload:1000/1400kg,Trans. code:ME/ML | GDS10037 | Drive Shaft | 54T | 28 | 37 | 63 | 112.5 | 771 | |
| | 1997.04-2002.04 | MT | F | L | Bus 4WD 8140.47 | Payload:1800kg,Trans. code:MG | GDS10067 | Drive Shaft | | 35 | 41 | 70 | 117 | 762 | |
| | 1997.04-2002.04 | MT | F | L | Bus 4WD 8140.47 | Payload:1000/1400kg,Trans. code:MG | GDS10102 | Drive Shaft | | 28 | 41 | 63 | 112.5 | 757.5 | |
| | 1997.04-2002.04 | MT | F | L | Bus 4WD 8140.47 | Payload:1000/1400kg,Trans. code:ME/ML | GDS10105 | Drive Shaft | | 28 | 37 | 63 | 112.5 | 771 | |
| | 1997.04-2002.04 | MT | F | R | Bus 4WD 8140.47 | Payload:1800kg,Trans. code:MG | GDS10032 | Drive Shaft | 54T | 35 | 41 | 70 | 117 | 1085 | |
| | 1997.04-2002.04 | MT | F | R | Bus 4WD 8140.47 | Payload:1000/1400kg,Trans. code:MG | GDS10036 | Drive Shaft | 54T | 28 | 41 | 63 | 112.5 | 1079 | |
| | 1997.04-2002.04 | MT | F | R | Bus 4WD 8140.47 | Payload:1800kg,Trans. code:MG | GDS10066 | Drive Shaft | | 35 | 41 | 70 | 117 | 1085 | |
| | 1997.04-2002.04 | MT | F | R | Bus 4WD 8140.47 | Payload:1000/1400kg,Trans. code:ME/ML | GDS10069 | Drive Shaft | | 28 | 37 | 63 | 112.5 | 1072 | |
| | 1997.04-2002.04 | MT | F | R | Bus 4WD 8140.47 | Payload:1000/1400kg,Trans. code:MG | GDS10103 | Drive Shaft | | 28 | 41 | 63 | 112.5 | 1079 | |
| | 1997.04-2002.04 | MT | F | R | Bus 4WD 8140.47 | Payload:1000/1400kg,Trans. code:ME/ML | GDS10104 | Drive Shaft | 54T | 28 | 37 | 63 | 112.5 | 1072 | |
| | 1997.04-2002.04 | MT | F | L/R | Bus 4WD 8140.47 | Payload:1800kg,Trans. code:MG | GCO10011 | Outer Joint | 54T | 35 | 45 | 70 | 117 | 73 | I |
| | 1997.04-2002.04 | MT | F | L/R | Bus 4WD 8140.47 | Payload:1000/1400kg,Trans. code:ME/ML/MG | GCO10012 | Outer Joint | | 28 | 39 | 63 | 112.5 | 63 | I |
| | 1997.04-2002.04 | MT | F | L/R | Bus 4WD 8140.47 | Payload:1000/1400kg,Trans. code:ME/ML/MG | GCO10013 | Outer Joint | 54T | 28 | 39 | 63 | 112.5 | 63 | I |
| | 1997.04-2002.04 | MT | F | L/R | Bus 4WD 8140.47 | Payload:1800kg,Trans. code:MG | GCO10050 | Outer Joint | | 35 | 45 | 70 | 117 | 73 | I |
| | 1997.04-2002.04 | MT | F | L | Bus 4WD 8140.47 | Payload:1800kg,Trans. code:MG | GCI10010 | Inner Joint | | 41 | 45 | 43 | 70 | 115.5 | |
| | 1997.04-2002.04 | MT | F | L | Bus 4WD 8140.47 | Payload:1000/1400kg,Trans. code:MG | GCI10013 | Inner Joint | | 41 | 39 | 43 | 70 | 104 | |
| | 1997.04-2002.04 | MT | F | L | Bus 4WD 8140.47 | Payload:1000/1400kg,Trans. code:ME/ML | GCI10015 | Inner Joint | | 37 | 39 | 40 | 68.5 | 104 | |
| | 1997.04-2002.04 | MT | F | L | Bus 4WD 8140.47 | Payload:1000/1400kg,Trans. code:ME/ML | GCI45013 | Inner Joint | | 37 | 39 | 40 | 68.5 | 100 | |
| | 1997.04-2002.04 | MT | F | R | Bus 4WD 8140.47 | Payload:1800kg,Trans. code:MG | GCI10009 | Inner Joint | | 41 | 45 | 34.9 | 393 | 115.6 | |
| | 1997.04-2002.04 | MT | F | R | Bus 4WD 8140.47 | Payload:1000/1400kg,Trans. code:ME/ML | GCI10034 | Inner Joint | | 37 | 39 | 31.9 | 369.5 | 99 | |
| | 1998.05-2002.04 | MT | F | L | Van 4WD 814047 | Payload:1800kg,Trans. code:MG | GDS10033 | Drive Shaft | 54T | 35 | 41 | 70 | 117 | 762 | |
| | 1998.05-2002.04 | MT | F | L | Van 4WD 814047 | Payload:1000/1400kg,Trans. code:MG | GDS10035 | Drive Shaft | 54T | 28 | 41 | 63 | 112.5 | 757.5 | |
| | 1998.05-2002.04 | MT | F | L | Van 4WD 814047 | Payload:1000/1400kg,Trans. code:ME/ML | GDS10037 | Drive Shaft | 54T | 28 | 37 | 63 | 112.5 | 771 | |

| | YEAR | TRANSM. | F/R | L/R | BODY STYLE & DRIVE TYPE & ENGINE | REMARKS | G-AP Ref. | PRODUCT | ABS | Technical Specifications A | B | C | H | L | P |
|---|---|---|---|---|---|---|---|---|---|---|---|---|---|---|---|
| **FIAT** **Ducato** | | | | | | | | | | | | | | | |
| 2.5 (85 kw) | 1998.05-2002.04 | MT | F | L | Van 4WD 814047 | Payload:1000/1400kg,Trans. code:MG | GDS10102 | Drive Shaft | | 28 | 41 | 63 | 112.5 | 757.5 | |
| | 1998.05-2002.04 | MT | F | L | Van 4WD 814047 | Payload:1000/1400kg,Trans. code:ME/ML | GDS10105 | Drive Shaft | | 28 | 37 | 63 | 112.5 | 771 | |
| | 1998.05-2002.04 | MT | F | R | Van 4WD 814047 | Payload:1800kg,Trans. code:MG | GDS10032 | Drive Shaft | 54T | 35 | 41 | 70 | 117 | 1085 | |
| | 1998.05-2002.04 | MT | F | R | Van 4WD 814047 | Payload:1000/1400kg,Trans. code:MG | GDS10036 | Drive Shaft | 54T | 28 | 41 | 63 | 112.5 | 1079 | |
| | 1998.05-2002.04 | MT | F | R | Van 4WD 814047 | Payload:1000/1400kg,Trans. code:ME/ML | GDS10069 | Drive Shaft | | 28 | 37 | 63 | 112.5 | 1072 | |
| | 1998.05-2002.04 | MT | F | R | Van 4WD 814047 | Payload:1000/1400kg,Trans. code:MG | GDS10103 | Drive Shaft | | 28 | 41 | 63 | 112.5 | 1079 | |
| | 1998.05-2002.04 | MT | F | R | Van 4WD 814047 | Payload:1000/1400kg,Trans. code:ME/ML | GDS10104 | Drive Shaft | 54T | 28 | 37 | 63 | 112.5 | 1072 | |
| | 1998.05-2002.04 | MT | F | L/R | Van 4WD 814047 | Payload:1800kg,Trans. code:MG | GCO10011 | Outer Joint | 54T | 35 | 45 | 70 | 117 | 73 | I |
| | 1998.05-2002.04 | MT | F | L/R | Van 4WD 814047 | Payload:1000/1400kg,Trans. code:ME/ML/MG | GCO10012 | Outer Joint | | 28 | 39 | 63 | 112.5 | 63 | I |
| | 1998.05-2002.04 | MT | F | L/R | Van 4WD 814047 | Payload:1000/1400kg,Trans. code:ME/ML/MG | GCO10013 | Outer Joint | 54T | 28 | 39 | 63 | 112.5 | 63 | I |
| | 1998.05-2002.04 | MT | F | L/R | Van 4WD 814047 | Payload:1800kg,Trans. code:MG | GCO10050 | Outer Joint | | 35 | 45 | 70 | 117 | 73 | I |
| | 1998.05-2002.04 | MT | F | L | Van 4WD 814047 | Payload:1800kg,Trans. code:MG | GCI10010 | Inner Joint | | 41 | 45 | 43 | 70 | 115.5 | |
| | 1998.05-2002.04 | MT | F | L | Van 4WD 814047 | Payload:1000/1400kg,Trans. code:MG | GCI10013 | Inner Joint | | 41 | 39 | 43 | 70 | 104 | |
| | 1998.05-2002.04 | MT | F | L | Van 4WD 814047 | Payload:1000/1400kg,Trans. code:ME/ML | GCI10015 | Inner Joint | | 37 | 39 | 40 | 68.5 | 104 | |
| | 1998.05-2002.04 | MT | F | L | Van 4WD 814047 | Payload:1000/1400kg,Trans. code:ME/ML | GCI45013 | Inner Joint | | 37 | 39 | 40 | 68.5 | 100 | |
| | 1998.05-2002.04 | MT | F | R | Van 4WD 814047 | Payload:1800kg,Trans. code:MG | GCI10009 | Inner Joint | | 41 | 45 | 34.9 | 393 | 115.6 | |
| | 1998.05-2002.04 | MT | F | R | Van 4WD 814047 | Payload:1000/1400kg,Trans. code:ME/ML | GCI10034 | Inner Joint | | 37 | 39 | 31.9 | 369.5 | 99 | |
| | 1998.06-2002.04 | MT | F | L | Platform/Chassis 4WD 8140.47 | Payload:1800kg,Trans. code:MG | GDS10033 | Drive Shaft | 54T | 35 | 41 | 70 | 117 | 762 | |
| | 1998.06-2002.04 | MT | F | L | Platform/Chassis 4WD 8140.47 | Payload:1000/1400kg,Trans. code:MG | GDS10035 | Drive Shaft | 54T | 28 | 41 | 63 | 112.5 | 757.5 | |
| | 1998.06-2002.04 | MT | F | L | Platform/Chassis 4WD 8140.47 | Payload:1000/1400kg,Trans. code:ME/ML | GDS10037 | Drive Shaft | 54T | 28 | 37 | 63 | 112.5 | 771 | |
| | 1998.06-2002.04 | MT | F | L | Platform/Chassis 4WD 8140.47 | Payload:1800kg,Trans. code:MG | GDS10067 | Drive Shaft | | 35 | 41 | 70 | 117 | 762 | |
| | 1998.06-2002.04 | MT | F | L | Platform/Chassis 4WD 8140.47 | Payload:1000/1400kg,Trans. code:MG | GDS10102 | Drive Shaft | | 28 | 41 | 63 | 112.5 | 757.5 | |
| | 1998.06-2002.04 | MT | F | L | Platform/Chassis 4WD 8140.47 | Payload:1000/1400kg,Trans. code:ME/ML | GDS10105 | Drive Shaft | | 28 | 37 | 63 | 112.5 | 771 | |
| | 1998.06-2002.04 | MT | F | R | Platform/Chassis 4WD 8140.47 | Payload:1800kg,Trans. code:MG | GDS10032 | Drive Shaft | 54T | 35 | 41 | 70 | 117 | 1085 | |
| | 1998.06-2002.04 | MT | F | R | Platform/Chassis 4WD 8140.47 | Payload:1000/1400kg,Trans. code:MG | GDS10036 | Drive Shaft | 54T | 28 | 41 | 63 | 112.5 | 1079 | |
| | 1998.06-2002.04 | MT | F | R | Platform/Chassis 4WD 8140.47 | Payload:1800kg,Trans. code:MG | GDS10066 | Drive Shaft | | 35 | 41 | 70 | 117 | 1085 | |
| | 1998.06-2002.04 | MT | F | R | Platform/Chassis 4WD 8140.47 | Payload:1000/1400kg,Trans. code:ME/ML | GDS10069 | Drive Shaft | | 28 | 37 | 63 | 112.5 | 1072 | |
| | 1998.06-2002.04 | MT | F | R | Platform/Chassis 4WD 8140.47 | Payload:1000/1400kg,Trans. code:MG | GDS10103 | Drive Shaft | | 28 | 41 | 63 | 112.5 | 1079 | |
| | 1998.06-2002.04 | MT | F | R | Platform/Chassis 4WD 8140.47 | Payload:1000/1400kg,Trans. code:ME/ML | GDS10104 | Drive Shaft | 54T | 28 | 37 | 63 | 112.5 | 1072 | |
| | 1998.06-2002.04 | MT | F | L/R | Platform/Chassis 4WD 8140.47 | Payload:1800kg,Trans. code:MG | GCO10011 | Outer Joint | 54T | 35 | 45 | 70 | 117 | 73 | I |
| | 1998.06-2002.04 | MT | F | L/R | Platform/Chassis 4WD 8140.47 | Payload:1000/1400kg,Trans. code:ME/ML/MG | GCO10012 | Outer Joint | | 28 | 39 | 63 | 112.5 | 63 | I |
| | 1998.06-2002.04 | MT | F | L/R | Platform/Chassis 4WD 8140.47 | Payload:1000/1400kg,Trans. code:ME/ML/MG | GCO10013 | Outer Joint | 54T | 28 | 39 | 63 | 112.5 | 63 | I |
| | 1998.06-2002.04 | MT | F | L/R | Platform/Chassis 4WD 8140.47 | Payload:1800kg,Trans. code:MG | GCO10050 | Outer Joint | | 35 | 45 | 70 | 117 | 73 | I |
| | 1998.06-2002.04 | MT | F | L | Platform/Chassis 4WD 8140.47 | Payload:1800kg,Trans. code:MG | GCI10010 | Inner Joint | | 41 | 45 | 43 | 70 | 115.5 | |
| | 1998.06-2002.04 | MT | F | L | Platform/Chassis 4WD 8140.47 | Payload:1000/1400kg,Trans. code:MG | GCI10013 | Inner Joint | | 41 | 39 | 43 | 70 | 104 | |
| | 1998.06-2002.04 | MT | F | L | Platform/Chassis 4WD 8140.47 | Payload:1000/1400kg,Trans. code:ME/ML | GCI10015 | Inner Joint | | 37 | 39 | 40 | 68.5 | 104 | |
| | 1998.06-2002.04 | MT | F | L | Platform/Chassis 4WD 8140.47 | Payload:1000/1400kg,Trans. code:ME/ML | GCI45013 | Inner Joint | | 37 | 39 | 40 | 68.5 | 100 | |
| | 1998.06-2002.04 | MT | F | R | Platform/Chassis 4WD 8140.47 | Payload:1800kg,Trans. code:MG | GCI10009 | Inner Joint | | 41 | 45 | 34.9 | 393 | 115.6 | |
| | 1998.06-2002.04 | MT | F | R | Platform/Chassis 4WD 8140.47 | Payload:1000/1400kg,Trans. code:ME/ML | GCI10034 | Inner Joint | | 37 | 39 | 31.9 | 369.5 | 99 | |
| 2.8 (90 kw) | 1998.05-2001.09 | MT | F | L/R | Van 4WD 814043 | Payload:1800kg,Trans. code:MG | GCO10011 | Outer Joint | 54T | 35 | 45 | 70 | 117 | 73 | I |
| | 1998.05-2001.09 | MT | F | L/R | Van 4WD 814043 | Payload:1000/1400kg,Trans. code:ME/ML/MG | GCO10012 | Outer Joint | | 28 | 39 | 63 | 112.5 | 63 | I |
| | 1998.05-2001.09 | MT | F | L/R | Van 4WD 814043 | Payload:1000/1400kg,Trans. code:ME/ML/MG | GCO10013 | Outer Joint | 54T | 28 | 39 | 63 | 112.5 | 63 | I |
| | 1998.05-2001.09 | MT | F | L/R | Van 4WD 814043 | Payload:1800kg,Trans. code:MG | GCO10050 | Outer Joint | | 35 | 45 | 70 | 117 | 73 | I |
| | 1998.05-2001.09 | MT | F | L | Van 4WD 814043 | Payload:1800kg,Trans. code:MG | GCI10010 | Inner Joint | | 41 | 45 | 43 | 70 | 115.5 | |
| | 1998.05-2001.09 | MT | F | L | Van 4WD 814043 | Payload:1000/1400kg,Trans. code:MG | GCI10013 | Inner Joint | | 41 | 39 | 43 | 70 | 104 | |
| | 1998.05-2001.09 | MT | F | L | Van 4WD 814043 | Payload:1000/1400kg,Trans. code:ME/ML | GCI10015 | Inner Joint | | 37 | 39 | 40 | 68.5 | 104 | |
| | 1998.05-2001.09 | MT | F | R | Van 4WD 814043 | Payload:1800kg,Trans. code:MG | GCI10009 | Inner Joint | | 41 | 45 | 34.9 | 393 | 115.6 | |
| | 1998.05-2001.09 | MT | F | R | Van 4WD 814043 | Payload:1000/1400kg,Trans. code:ME/ML | GCI10034 | Inner Joint | | 37 | 39 | 31.9 | 369.5 | 99 | |
| | 1999.06-2002.04 | MT | F | L | Van 4WD 814043 | Payload:1000/1400kg,Trans. code:MG | GDS10035 | Drive Shaft | 54T | 28 | 41 | 63 | 112.5 | 757.5 | |
| | 1999.06-2002.04 | MT | F | L | Van 4WD 814043 | Payload:1000/1400kg,Trans. code:ME/ML | GDS10037 | Drive Shaft | 54T | 28 | 37 | 63 | 112.5 | 771 | |
| | 1999.06-2002.04 | MT | F | L | Van 4WD 814043 | Payload:1000/1400kg,Trans. code:MG | GDS10102 | Drive Shaft | | 28 | 41 | 63 | 112.5 | 757.5 | |
| | 1999.06-2002.04 | MT | F | L | Van 4WD 814043 | Payload:1000/1400kg,Trans. code:ME/ML | GDS10105 | Drive Shaft | | 28 | 37 | 63 | 112.5 | 771 | |
| | 1999.06-2002.04 | MT | F | R | Van 4WD 814043 | Payload:1800kg,Trans. code:MG | GDS10032 | Drive Shaft | 54T | 35 | 41 | 70 | 117 | 1085 | |
| | 1999.06-2002.04 | MT | F | R | Van 4WD 814043 | Payload:1000/1400kg,Trans. code:MG | GDS10036 | Drive Shaft | 54T | 28 | 41 | 63 | 112.5 | 1079 | |
| | 1999.06-2002.04 | MT | F | R | Van 4WD 814043 | Payload:1000/1400kg,Trans. code:ME/ML | GDS10069 | Drive Shaft | | 28 | 37 | 63 | 112.5 | 1072 | |
| | 1999.06-2002.04 | MT | F | R | Van 4WD 814043 | Payload:1000/1400kg,Trans. code:MG | GDS10103 | Drive Shaft | | 28 | 41 | 63 | 112.5 | 1079 | |
| | 1999.06-2002.04 | MT | F | R | Van 4WD 814043 | Payload:1000/1400kg,Trans. code:ME/ML | GDS10104 | Drive Shaft | 54T | 28 | 37 | 63 | 112.5 | 1072 | |
| | 1999.06-2002.04 | MT | F | L/R | Van 4WD 814043 | Payload:1800kg,Trans. code:MG | GCO10011 | Outer Joint | 54T | 35 | 45 | 70 | 117 | 73 | I |
| | 1999.06-2002.04 | MT | F | L/R | Van 4WD 814043 | Payload:1000/1400kg,Trans. code:ME/ML/MG | GCO10012 | Outer Joint | | 28 | 39 | 63 | 112.5 | 63 | I |
| | 1999.06-2002.04 | MT | F | L/R | Van 4WD 814043 | Payload:1000/1400kg,Trans. code:ME/ML/MG | GCO10013 | Outer Joint | 54T | 28 | 39 | 63 | 112.5 | 63 | I |
| | 1999.06-2002.04 | MT | F | L/R | Van 4WD 814043 | Payload:1800kg,Trans. code:MG | GCO10050 | Outer Joint | | 35 | 45 | 70 | 117 | 73 | I |
| | 1999.06-2002.04 | MT | F | L | Van 4WD 814043 | Payload:1800kg,Trans. code:MG | GCI10010 | Inner Joint | | 41 | 45 | 43 | 70 | 115.5 | |
| | 1999.06-2002.04 | MT | F | L | Van 4WD 814043 | Payload:1000/1400kg,Trans. code:MG | GCI10013 | Inner Joint | | 41 | 39 | 43 | 70 | 104 | |
| | 1999.06-2002.04 | MT | F | L | Van 4WD 814043 | Payload:1000/1400kg,Trans. code:ME/ML | GCI10015 | Inner Joint | | 37 | 39 | 40 | 68.5 | 104 | |
| | 1999.06-2002.04 | MT | F | L | Van 4WD 814043 | Payload:1000/1400kg,Trans. code:ME/ML | GCI45013 | Inner Joint | | 37 | 39 | 40 | 68.5 | 100 | |

| Model | YEAR | TRANSM. | F/R | L/R | BODY STYLE & DRIVE TYPE & ENGINE | REMARKS | G-AP Ref. | PRODUCT | ABS | A | B | C | H | L | P |
|---|---|---|---|---|---|---|---|---|---|---|---|---|---|---|---|
| **FIAT** **Ducato** | | | | | | | | | | | | | | | |
| 2.8 (90 kw) | 1999.06-2002.04 | MT | F | R | Van 4WD 814043 | Payload:1800kg,Trans. code:MG | GCI10009 | Inner Joint | | 41 | 45 | 34.9 | 393 | 115.6 | |
| | 1999.06-2002.04 | MT | F | R | Van 4WD 814043 | Payload:1000/1400kg,Trans. code:ME/ML | GCI10034 | Inner Joint | | 37 | 39 | 31.9 | 369.5 | 99 | |
| | 2001.12-2006.07 | 5MT | F | L | Van FWD 8140.43 | Model:Ducato 18 | GDS10033 | Drive Shaft | 54T | 35 | 41 | 70 | 117 | 762 | |
| | 2001.12-2006.07 | 5MT | F | L | Van FWD 8140.43 | Model:Ducato 11/Ducato 15,Date to:2003.05,For vehicles with ABS | GDS10035 | Drive Shaft | 54T | 28 | 41 | 63 | 112.5 | 757.5 | |
| | 2001.12-2006.07 | 5MT | F | L | Van FWD 8140.43 | Date from:2003.06,For vehicles without ABS,Model:Ducato 11/Ducato 15 | GDS10102 | Drive Shaft | | 28 | 41 | 63 | 112.5 | 757.5 | |
| | 2001.12-2006.07 | 5MT | F | R | Van FWD 8140.43 | Model:Ducato 11/Ducato 15,For vehicles with ABS | GDS10036 | Drive Shaft | 54T | 28 | 41 | 63 | 112.5 | 1079 | |
| | 2001.12-2006.07 | 5MT | F | R | Van FWD 8140.43 | Date from:2003.06,For vehicles without ABS,Model:Ducato 11/Ducato 15 | GDS10103 | Drive Shaft | | 28 | 41 | 63 | 112.5 | 1079 | |
| | 2001.12-2006.07 | 5MT | F | L/R | Van FWD 8140.43 | Model:Ducato 18 | GCO10011 | Outer Joint | 54T | 35 | 45 | 70 | 117 | 73 | I |
| | 2001.12-2006.07 | 5MT | F | L/R | Van FWD 8140.43 | Date to:2003.05 | GCO10013 | Outer Joint | 54T | 28 | 39 | 63 | 112.5 | 63 | I |
| | 2001.12-2006.07 | 5MT | F | L/R | Van FWD 8140.43 | Model:Ducato 18,EXTENDED SEMISHAFT | GCO17061 | Outer Joint | 54T | 35 | 29 | 71.5 | 127 | 71 | I |
| | 2001.12-2006.07 | 5MT | F | L | Van FWD 8140.43 | Model:Ducato 11/15,Date to:2003.05 | GCI10013 | Inner Joint | | 41 | 39 | 43 | 70 | 104 | |
| | 2001.12-2006.07 | 5MT | F | L | Van FWD 8140.43 | Model:Ducato 18,Equipment code:E52Q | GCI17028 | Inner Joint | | 41 | 29 | 43 | 69.5 | 109.5 | |
| | 2001.12-2006.07 | 5MT | F | R | Van FWD 8140.43 | Equipment code:E52Q | GCI17020 | Inner Joint | | 41 | 29 | 34.85 | 403 | 109 | |
| 2.8 (94 kw) | 2001.12- | 4AT/5MT | F | L | Bus FWD 8140.43S | Transmission:4AT,Model:Ducato 11,Equipment code:LV59;Transmission:4AT/5MT,Model:Ducato 18 | GDS10033 | Drive Shaft | 54T | 35 | 41 | 70 | 117 | 762 | |
| | 2001.12- | 4AT/5MT | F | L | Bus FWD 8140.43S | Transmission:4AT,Model:Ducato 11,Equipment code:LV59;Transmission:4AT/5MT,Model:Ducato 18 | GDS10067 | Drive Shaft | | 35 | 41 | 70 | 117 | 762 | |
| | 2001.12- | 4AT/5MT | F | R | Bus FWD 8140.43S | Transmission:4AT,Model:Ducato 11,Equipment code:LV59;Transmission:4AT,Model:Ducato 18;Transmission:5MT,Model:Ducato 18,Date to:2003.05 | GDS10032 | Drive Shaft | 54T | 35 | 41 | 70 | 117 | 1085 | |
| | 2001.12- | 4AT/5MT | F | R | Bus FWD 8140.43S | Transmission:4AT,Model:Ducato 11,Equipment code:LV59;Transmission:4AT,Model:Ducato 18;Transmission:5MT,Model:Ducato 18,Date to:2003.05 | GDS10066 | Drive Shaft | | 35 | 41 | 70 | 117 | 1085 | |
| | 2001.12- | 5MT | F | L | Bus FWD 8140.43S | Model:Ducato 11,Date to:2003.05,For vehicles with ABS | GDS10035 | Drive Shaft | 54T | 28 | 41 | 63 | 112.5 | 757.5 | |
| | 2001.12- | 5MT | F | L | Bus FWD 8140.43S | Date from:2003.06,For vehicles without ABS,Model:Ducato 11 | GDS10102 | Drive Shaft | | 28 | 41 | 63 | 112.5 | 757.5 | |
| | 2001.12- | 5MT | F | R | Bus FWD 8140.43S | Model:Ducato 11,For vehicles with ABS | GDS10036 | Drive Shaft | 54T | 28 | 41 | 63 | 112.5 | 1079 | |
| | 2001.12- | 5MT | F | R | Bus FWD 8140.43S | Date from:2003.06,For vehicles without ABS,Model:Ducato 11 | GDS10103 | Drive Shaft | | 28 | 41 | 63 | 112.5 | 1079 | |
| | 2001.12- | 5MT | F | L | Bus FWD 8140.43S | Model:Ducato 18,Equipment code:E52Q | GCI17028 | Inner Joint | | 41 | 29 | 43 | 69.5 | 109.5 | |
| | 2001.12- | 5MT | F | R | Bus FWD 8140.43S | Model:Ducato 18,Equipment code:E52Q | GCI17020 | Inner Joint | | 41 | 29 | 34.85 | 403 | 109 | |
| | 2001.12- | AT | F | L/R | Bus FWD 8140.43S | Model:Ducato 18 | GCO10011 | Outer Joint | 54T | 35 | 45 | 70 | 117 | 73 | I |
| | 2001.12- | AT | F | L | Bus FWD 8140.43S | Model:Ducato 18 | GCI10010 | Inner Joint | | 41 | 45 | 43 | 70 | 115.5 | |
| | 2001.12- | AT | F | R | Bus FWD 8140.43S | Model:Ducato 18 | GCI10009 | Inner Joint | | 41 | 45 | 34.9 | 393 | 115.6 | |
| | 2001.12- | MT | F | L/R | Bus FWD 8140.43S | Model:Ducato 18,Date To:2003.04 | GCO10011 | Outer Joint | 54T | 35 | 45 | 70 | 117 | 73 | I |
| | 2001.12- | MT | F | L/R | Bus FWD 8140.43S | Model:Ducato 11,Date to:2003.05 | GCO10013 | Outer Joint | 54T | 28 | 39 | 63 | 112.5 | 63 | I |
| | 2001.12- | MT | F | L/R | Bus FWD 8140.43S | Model:Ducato 18,Date To:2003.04 | GCO10050 | Outer Joint | | 35 | 45 | 70 | 117 | 73 | I |
| | 2001.12- | MT | F | L | Bus FWD 8140.43S | Model:Ducato 18,Date To:2003.04 | GCI10010 | Inner Joint | | 41 | 45 | 43 | 70 | 115.5 | |
| | 2001.12- | MT | F | L | Bus FWD 8140.43S | Model:Ducato 11,Date to:2003.05 | GCI10013 | Inner Joint | | 41 | 39 | 43 | 70 | 104 | |
| | 2001.12- | MT | F | R | Bus FWD 8140.43S | Model:Ducato 18,Date To:2003.04 | GCI10009 | Inner Joint | | 41 | 45 | 34.9 | 393 | 115.6 | |
| | 2001.12-2006.07 | 5MT | F | L | Bus 4WD 8140.43S | Model:Ducato 18 | GDS10033 | Drive Shaft | 54T | 35 | 41 | 70 | 117 | 762 | |
| | 2001.12-2006.07 | 5MT | F | L | Bus 4WD 8140.43S | Model:Ducato 11,Date to:2003.05,For vehicles with ABS | GDS10035 | Drive Shaft | 54T | 28 | 41 | 63 | 112.5 | 757.5 | |
| | 2001.12-2006.07 | 5MT | F | L | Bus 4WD 8140.43S | Model:Ducato 18 | GDS10067 | Drive Shaft | | 35 | 41 | 70 | 117 | 762 | |
| | 2001.12-2006.07 | 5MT | F | L | Bus 4WD 8140.43S | Date from:2003.06,For vehicles without ABS,Model:Ducato 11 | GDS10102 | Drive Shaft | | 28 | 41 | 63 | 112.5 | 757.5 | |
| | 2001.12-2006.07 | 5MT | F | R | Bus 4WD 8140.43S | Model:Ducato 18,Date to:2003.05 | GDS10032 | Drive Shaft | 54T | 35 | 41 | 70 | 117 | 1085 | |
| | 2001.12-2006.07 | 5MT | F | R | Bus 4WD 8140.43S | Model:Ducato 11,For vehicles with ABS | GDS10036 | Drive Shaft | 54T | 28 | 41 | 63 | 112.5 | 1079 | |
| | 2001.12-2006.07 | 5MT | F | R | Bus 4WD 8140.43S | Model:Ducato 18,Date to:2003.05 | GDS10066 | Drive Shaft | | 35 | 41 | 70 | 117 | 1085 | |
| | 2001.12-2006.07 | 5MT | F | R | Bus 4WD 8140.43S | Date from:2003.06,For vehicles without ABS,Model:Ducato 11 | GDS10103 | Drive Shaft | | 28 | 41 | 63 | 112.5 | 1079 | |
| | 2001.12-2006.07 | 5MT | F | L/R | Bus 4WD 8140.43S | Model:Ducato 18,Date To:2003.04 | GCO10011 | Outer Joint | 54T | 35 | 45 | 70 | 117 | 73 | I |
| | 2001.12-2006.07 | 5MT | F | L/R | Bus 4WD 8140.43S | Model:Ducato 18,Date To:2003.04 | GCO10050 | Outer Joint | | 35 | 45 | 70 | 117 | 73 | I |
| | 2001.12-2006.07 | 5MT | F | L | Bus 4WD 8140.43S | Model:Ducato 18,Date to:2003.04 | GCI10010 | Inner Joint | | 41 | 45 | 43 | 70 | 115.5 | |
| | 2001.12-2006.07 | 5MT | F | L | Bus 4WD 8140.43S | Model:Ducato 18,Equipment code:E52Q | GCI17028 | Inner Joint | | 41 | 29 | 43 | 69.5 | 109.5 | |
| | 2001.12-2006.07 | 5MT | F | R | Bus 4WD 8140.43S | Equipment code:E52Q | GCI17020 | Inner Joint | | 41 | 29 | 34.85 | 403 | 109 | |
| | 2001.12-2006.07 | MT | F | L/R | Bus 4WD 8140.43S | Date To:2003.05 | GCO10013 | Outer Joint | 54T | 28 | 39 | 63 | 112.5 | 63 | I |
| | 2001.12-2006.07 | MT | F | L | Bus 4WD 8140.43S | Model:Ducato 11,Date to:2003.05 | GCI10013 | Inner Joint | | 41 | 39 | 43 | 70 | 104 | |
| | 2001.12-2006.07 | 5MT | F | L | Platform/Chassis 4WD 8140.43S | Model:Ducato 18,Not for motor home | GDS10033 | Drive Shaft | 54T | 35 | 41 | 70 | 117 | 762 | |
| | 2001.12-2006.07 | 5MT | F | L | Platform/Chassis 4WD 8140.43S | Model:Ducato 15,Date to:2003.05,For vehicles with ABS;Model:Ducato 18,Date to:2003.05,For motor home | GDS10035 | Drive Shaft | 54T | 28 | 41 | 63 | 112.5 | 757.5 | |
| | 2001.12-2006.07 | 5MT | F | L | Platform/Chassis 4WD 8140.43S | Model:Ducato 18,Not for motor home | GDS10067 | Drive Shaft | | 35 | 41 | 70 | 117 | 762 | |
| | 2001.12-2006.07 | 5MT | F | L | Platform/Chassis 4WD 8140.43S | Date from:2003.06,For vehicles without ABS,Model:Ducato 15 | GDS10102 | Drive Shaft | | 28 | 41 | 63 | 112.5 | 757.5 | |
| | 2001.12-2006.07 | 5MT | F | R | Platform/Chassis 4WD 8140.43S | Model:Ducato 18,Date to:2003.05,Not for motor home | GDS10032 | Drive Shaft | 54T | 35 | 41 | 70 | 117 | 1085 | |
| | 2001.12-2006.07 | 5MT | F | R | Platform/Chassis 4WD 8140.43S | Model:Ducato 15,For vehicles with ABS;Model:Ducato 18,For motor home | GDS10036 | Drive Shaft | 54T | 28 | 41 | 63 | 112.5 | 1079 | |
| | 2001.12-2006.07 | 5MT | F | R | Platform/Chassis 4WD 8140.43S | Model:Ducato 18,Date to:2003.05,Not for motor home | GDS10066 | Drive Shaft | | 35 | 41 | 70 | 117 | 1085 | |
| | 2001.12-2006.07 | 5MT | F | R | Platform/Chassis 4WD 8140.43S | Date from:2003.06,For vehicles without ABS,Model:Ducato 15 | GDS10103 | Drive Shaft | | 28 | 41 | 63 | 112.5 | 1079 | |
| | 2001.12-2006.07 | 5MT | F | L/R | Platform/Chassis 4WD 8140.43S | Model:Ducato 18,Date To:2003.04 | GCO10011 | Outer Joint | 54T | 35 | 45 | 70 | 117 | 73 | I |
| | 2001.12-2006.07 | 5MT | F | L/R | Platform/Chassis 4WD 8140.43S | Date To:2003.05 | GCO10013 | Outer Joint | 54T | 28 | 39 | 63 | 112.5 | 63 | I |
| | 2001.12-2006.07 | 5MT | F | L/R | Platform/Chassis 4WD 8140.43S | Model:Ducato 18,Date To:2003.04 | GCO10050 | Outer Joint | | 35 | 45 | 70 | 117 | 73 | I |
| | 2001.12-2006.07 | 5MT | F | L | Platform/Chassis 4WD 8140.43S | Model:Ducato 18,Date to:2003.04 | GCI10010 | Inner Joint | | 41 | 45 | 43 | 70 | 115.5 | |
| | 2001.12-2006.07 | 5MT | F | L | Platform/Chassis 4WD 8140.43S | Model:Ducato 15,Date to:2003.05 | GCI10013 | Inner Joint | | 41 | 39 | 43 | 70 | 104 | |
| | 2001.12-2006.07 | 5MT | F | L | Platform/Chassis 4WD 8140.43S | Model:Ducato 18,Equipment code:E52Q | GCI17028 | Inner Joint | | 41 | 29 | 43 | 69.5 | 109.5 | |
| | 2001.12-2006.07 | 5MT | F | R | Platform/Chassis 4WD 8140.43S | Equipment code:E52Q | GCI17020 | Inner Joint | | 41 | 29 | 34.85 | 403 | 109 | |
| | 2001.12-2006.07 | 4AT/5MT | F | L | Platform/Chassis FWD 8140.43S | Model:Ducato 18,Not for motor home | GDS10033 | Drive Shaft | 54T | 35 | 41 | 70 | 117 | 762 | |
| | 2001.12-2006.07 | 4AT/5MT | F | R | Platform/Chassis FWD 8140.43S | Transmission:4AT,Model:Ducato 18;Transmission:5MT,Model:Ducato 18,Date to:2003.05,Not for motor home | GDS10032 | Drive Shaft | 54T | 35 | 41 | 70 | 117 | 1085 | |
| | 2001.12-2006.07 | 5MT | F | L | Platform/Chassis FWD 8140.43S | Model:Ducato 15,Date to:2003.05,For vehicles with ABS;Model:Ducato 18,Date to:2003.05,For motor home | GDS10035 | Drive Shaft | 54T | 28 | 41 | 63 | 112.5 | 757.5 | |

## FIAT
### Ducato

| | YEAR | TRANSM. | F/R | L/R | BODY STYLE & DRIVE TYPE & ENGINE | REMARKS | G-AP Ref. | PRODUCT | ABS | A | B | C | H | L | P |
|---|---|---|---|---|---|---|---|---|---|---|---|---|---|---|---|
| 2.8 (94 kw) | 2001.12-2006.07 | 5MT | F | L | Platform/Chassis FWD 8140.43S | Date from:2003.06,For vehicles without ABS,Model:Ducato 15 | GDS10102 | Drive Shaft | | 28 | 41 | 63 | 112.5 | 757.5 | |
| | 2001.12-2006.07 | 5MT | F | R | Platform/Chassis FWD 8140.43S | Model:Ducato 15,For vehicles with ABS;Model:Ducato 18,For motor home | GDS10036 | Drive Shaft | 54T | 28 | 41 | 63 | 112.5 | 1079 | |
| | 2001.12-2006.07 | 5MT | F | R | Platform/Chassis FWD 8140.43S | Date from:2003.06,For vehicles without ABS,Model:Ducato 15 | GDS10103 | Drive Shaft | | 28 | 41 | 63 | 112.5 | 1079 | |
| | 2001.12-2006.07 | 5MT | F | L | Platform/Chassis FWD 8140.43S | Model:Ducato 18,Equipment code:E52Q | GCI17028 | Inner Joint | | 41 | 29 | 43 | 69.5 | 109.5 | |
| | 2001.12-2006.07 | 5MT | F | R | Platform/Chassis FWD 8140.43S | Model:Ducato 18,Equipment code:E52Q | GCI17020 | Inner Joint | | 41 | 29 | 34.85 | 403 | 109 | |
| | 2001.12-2006.07 | AT | F | L | Platform/Chassis FWD 8140.43S | Model:Ducato 18,Not for motor home | GDS10067 | Drive Shaft | | 35 | 41 | 70 | 117 | 762 | |
| | 2001.12-2006.07 | AT | F | L/R | Platform/Chassis FWD 8140.43S | Model:Ducato 18 | GCO10011 | Outer Joint | 54T | 35 | 45 | 70 | 117 | 73 | I |
| | 2001.12-2006.07 | AT | F | L | Platform/Chassis FWD 8140.43S | Model:Ducato 18 | GCI10010 | Inner Joint | | 41 | 45 | 43 | 70 | 115.5 | |
| | 2001.12-2006.07 | AT | F | R | Platform/Chassis FWD 8140.43S | Model:Ducato 18 | GCI10009 | Inner Joint | | 41 | 45 | 34.9 | 393 | 115.6 | |
| | 2001.12-2006.07 | MT | F | R | Platform/Chassis FWD 8140.43S | Model:Ducato 18,Date to:2003.05 | GDS10066 | Drive Shaft | | 35 | 41 | 70 | 117 | 1085 | |
| | 2001.12-2006.07 | MT | F | L/R | Platform/Chassis FWD 8140.43S | Model:Ducato 18,Date To:2003.04 | GCO10011 | Outer Joint | 54T | 35 | 45 | 70 | 117 | 73 | I |
| | 2001.12-2006.07 | MT | F | L/R | Platform/Chassis FWD 8140.43S | Model:Ducato 11,Date To:2003.05 | GCO10013 | Outer Joint | 54T | 28 | 39 | 63 | 112.5 | 63 | I |
| | 2001.12-2006.07 | MT | F | L/R | Platform/Chassis FWD 8140.43S | Model:Ducato 18,Date To:2003.04 | GCO10050 | Outer Joint | | 35 | 45 | 70 | 117 | 73 | I |
| | 2001.12-2006.07 | MT | F | L | Platform/Chassis FWD 8140.43S | Model:Ducato 18,Date To:2003.04 | GCI10010 | Inner Joint | | 41 | 45 | 43 | 70 | 115.5 | |
| | 2001.12-2006.07 | MT | F | L | Platform/Chassis FWD 8140.43S | Model:Ducato 11,Date To:2003.05 | GCI10013 | Inner Joint | | 41 | 39 | 43 | 70 | 104 | |
| | 2001.12-2006.07 | MT | F | R | Platform/Chassis FWD 8140.43S | Model:Ducato 18,Date To:2003.04 | GCI10009 | Inner Joint | | 41 | 45 | 34.9 | 393 | 115.6 | |
| | 2001.12-2006.07 | 5MT | F | L | Van 4WD 8140.43S | Model:Ducato 18 | GDS10033 | Drive Shaft | 54T | 35 | 41 | 70 | 117 | 762 | |
| | 2001.12-2006.07 | 5MT | F | L | Van 4WD 8140.43S | Model:Ducato 15,Date to:2003.05,For vehicles with ABS | GDS10035 | Drive Shaft | 54T | 28 | 41 | 63 | 112.5 | 757.5 | |
| | 2001.12-2006.07 | 5MT | F | L | Van 4WD 8140.43S | Model:Ducato 18 | GDS10067 | Drive Shaft | | 35 | 41 | 70 | 117 | 762 | |
| | 2001.12-2006.07 | 5MT | F | L | Van 4WD 8140.43S | Date from:2003.06,For vehicles without ABS,Model:Ducato 15 | GDS10102 | Drive Shaft | | 28 | 41 | 63 | 112.5 | 757.5 | |
| | 2001.12-2006.07 | 5MT | F | R | Van 4WD 8140.43S | Model:Ducato 18,Date to:2003.05 | GDS10032 | Drive Shaft | 54T | 35 | 41 | 70 | 117 | 1085 | |
| | 2001.12-2006.07 | 5MT | F | R | Van 4WD 8140.43S | Model:Ducato 15,For vehicles with ABS | GDS10036 | Drive Shaft | 54T | 28 | 41 | 63 | 112.5 | 1079 | |
| | 2001.12-2006.07 | 5MT | F | R | Van 4WD 8140.43S | Model:Ducato 18,Date to:2003.05 | GDS10066 | Drive Shaft | | 35 | 41 | 70 | 117 | 1085 | |
| | 2001.12-2006.07 | 5MT | F | R | Van 4WD 8140.43S | Date from:2003.06,For vehicles without ABS,Model:Ducato 15 | GDS10103 | Drive Shaft | | 28 | 41 | 63 | 112.5 | 1079 | |
| | 2001.12-2006.07 | 5MT | F | L/R | Van 4WD 8140.43S | Model:Ducato 18,Date To:2003.04 | GCO10011 | Outer Joint | 54T | 35 | 45 | 70 | 117 | 73 | I |
| | 2001.12-2006.07 | 5MT | F | L/R | Van 4WD 8140.43S | Date To:2003.05 | GCO10013 | Outer Joint | 54T | 28 | 39 | 63 | 112.5 | 63 | I |
| | 2001.12-2006.07 | 5MT | F | L/R | Van 4WD 8140.43S | Model:Ducato 18,Date To:2003.04 | GCO10050 | Outer Joint | | 35 | 45 | 70 | 117 | 73 | I |
| | 2001.12-2006.07 | 5MT | F | L | Van 4WD 8140.43S | Model:Ducato 18,Date to:2003.04 | GCI10010 | Inner Joint | | 41 | 45 | 43 | 70 | 115.5 | |
| | 2001.12-2006.07 | 5MT | F | L | Van 4WD 8140.43S | Model:Ducato 15,Date to:2003.05 | GCI10013 | Inner Joint | | 41 | 39 | 43 | 70 | 104 | |
| | 2001.12-2006.07 | 5MT | F | L | Van 4WD 8140.43S | Model:Ducato 18,Equipment code:E52Q | GCI17028 | Inner Joint | | 41 | 29 | 43 | 69.5 | 109.5 | |
| | 2001.12-2006.07 | 5MT | F | R | Van 4WD 8140.43S | Equipment code:E52Q | GCI17020 | Inner Joint | | 41 | 29 | 34.85 | 403 | 109 | |
| | 2001.12-2011.12 | 4AT/5MT | F | L | Van FWD 8140.43S | Transmission:4AT,Model:Ducato 11,Equipment code:LV59;Transmission:4AT/5MT,Model:Ducato 18 | GDS10033 | Drive Shaft | 54T | 35 | 41 | 70 | 117 | 762 | |
| | 2001.12-2011.12 | 4AT/5MT | F | L | Van FWD 8140.43S | [illegible] | GDS10035 | Drive Shaft | 54T | 28 | 41 | 63 | 112.5 | 757.5 | |
| | 2001.12-2011.12 | 4AT/5MT | F | L | Van FWD 8140.43S | Transmission:4AT,Model:Ducato 11,Equipment code:LV59;Transmission:4AT/5MT,Model:Ducato 18 | GDS10067 | Drive Shaft | | 35 | 41 | 70 | 117 | 762 | |
| | 2001.12-2011.12 | 4AT/5MT | F | R | Van FWD 8140.43S | Transmission:4AT,Model:Ducato 11,Equipment code:LV59;Transmission:4AT,Model:Ducato 18;Transmission:5MT,Date to:2003.05 | GDS10032 | Drive Shaft | 54T | 35 | 41 | 70 | 117 | 1085 | |
| | 2001.12-2011.12 | 4AT/5MT | F | R | Van FWD 8140.43S | [illegible] | GDS10036 | Drive Shaft | 54T | 28 | 41 | 63 | 112.5 | 1079 | |
| | 2001.12-2011.12 | 4AT/5MT | F | R | Van FWD 8140.43S | Transmission:4AT,Model:Ducato 11,Equipment code:LV59;Transmission:4AT,Model:Ducato 18;Transmission:5MT,Date to:2003.05 | GDS10066 | Drive Shaft | | 35 | 41 | 70 | 117 | 1085 | |
| | 2001.12-2011.12 | 4AT/5MT | F | L/R | Van FWD 8140.43S | Date To:2003.05 | GCO10013 | Outer Joint | 54T | 28 | 39 | 63 | 112.5 | 63 | I |
| | 2001.12-2011.12 | 4AT/5MT | F | L | Van FWD 8140.43S | Date To:2003.05 | GCI10013 | Inner Joint | | 41 | 39 | 43 | 70 | 104 | |
| | 2001.12-2011.12 | 5MT | F | L | Van FWD 8140.43S | Date from:2003.06,For vehicles without ABS,Model:Ducato 11/Ducato 15 | GDS10102 | Drive Shaft | | 28 | 41 | 63 | 112.5 | 757.5 | |
| | 2001.12-2011.12 | 5MT | F | R | Van FWD 8140.43S | Date from:2003.06,For vehicles without ABS,Model:Ducato 11/Ducato 15 | GDS10103 | Drive Shaft | | 28 | 41 | 63 | 112.5 | 1079 | |
| | 2001.12-2011.12 | 5MT | F | L | Van FWD 8140.43S | Model:Ducato 18,Equipment code:E52Q | GCI17028 | Inner Joint | | 41 | 29 | 43 | 69.5 | 109.5 | |
| | 2001.12-2011.12 | 5MT | F | R | Van FWD 8140.43S | Model:Ducato 18,Equipment code:E52Q | GCI17020 | Inner Joint | | 41 | 29 | 34.85 | 403 | 109 | |
| | 2001.12-2011.12 | AT/MT | F | L/R | Van FWD 8140.43S | Model:Ducato 18 | GCO10011 | Outer Joint | 54T | 35 | 45 | 70 | 117 | 73 | I |
| | 2001.12-2011.12 | AT/MT | F | L/R | Van FWD 8140.43S | Model:Ducato 18 | GCO10050 | Outer Joint | | 35 | 45 | 70 | 117 | 73 | I |
| | 2001.12-2011.12 | AT/MT | F | L | Van FWD 8140.43S | Model:Ducato 18 | GCI10010 | Inner Joint | | 41 | 45 | 43 | 70 | 115.5 | |
| | 2001.12-2011.12 | AT/MT | F | R | Van FWD 8140.43S | Model:Ducato 18 | GCI10009 | Inner Joint | | 41 | 45 | 34.9 | 393 | 115.6 | |
| 2.8 (107 kw) | 2004.04-2006.07 | 5MT | F | L | Bus FWD 8140.43N | Model:Ducato 18 | GDS10033 | Drive Shaft | 54T | 35 | 41 | 70 | 117 | 762 | |
| | 2004.04-2006.07 | 5MT | F | L | Bus FWD 8140.43N | For vehicles without ABS,Model:Ducato 15 | GDS10102 | Drive Shaft | | 28 | 41 | 63 | 112.5 | 757.5 | |
| | 2004.04-2006.07 | 5MT | F | R | Bus FWD 8140.43N | For vehicles without ABS,Model:Ducato 15 | GDS10103 | Drive Shaft | | 28 | 41 | 63 | 112.5 | 1079 | |
| | 2004.04-2006.07 | 5MT | F | L/R | Bus FWD 8140.43N | Model:Ducato 18 | GCO10011 | Outer Joint | 54T | 35 | 45 | 70 | 117 | 73 | I |
| | 2004.04-2006.07 | 5MT | F | L/R | Bus FWD 8140.43N | Model:Ducato 18,EXTENDED SEMISHAFT | GCO17061 | Outer Joint | 54T | 35 | 29 | 71.5 | 127 | 71 | I |
| | 2004.04-2006.07 | 5MT | F | L | Bus FWD 8140.43N | Model:Ducato 18,Equipment code:E52Q | GCI17028 | Inner Joint | | 41 | 29 | 43 | 69.5 | 109.5 | |
| | 2004.04-2006.07 | 5MT | F | R | Bus FWD 8140.43N | Model:Ducato 18,Equipment code:E52Q | GCI17020 | Inner Joint | | 41 | 29 | 34.85 | 403 | 109 | |
| | 2004.04-2006.07 | 5MT | F | L | Van FWD 8140.43N | Model:Ducato 18 | GDS10033 | Drive Shaft | 54T | 35 | 41 | 70 | 117 | 762 | |
| | 2004.04-2006.07 | 5MT | F | L | Van FWD 8140.43N | For vehicles without ABS,Model:Ducato 15 | GDS10102 | Drive Shaft | | 28 | 41 | 63 | 112.5 | 757.5 | |
| | 2004.04-2006.07 | 5MT | F | R | Van FWD 8140.43N | Model:Ducato 15,For vehicles with ABS | GDS10036 | Drive Shaft | 54T | 28 | 41 | 63 | 112.5 | 1079 | |
| | 2004.04-2006.07 | 5MT | F | R | Van FWD 8140.43N | For vehicles without ABS,Model:Ducato 15 | GDS10103 | Drive Shaft | | 28 | 41 | 63 | 112.5 | 1079 | |
| | 2004.04-2006.07 | 5MT | F | L | Van FWD 8140.43N | Model:Ducato 18,Equipment code:E52Q | GCI17028 | Inner Joint | | 41 | 29 | 43 | 69.5 | 109.5 | |
| | 2004.04-2006.07 | 5MT | F | R | Van FWD 8140.43N | Model:Ducato 18,Equipment code:E52Q | GCI17020 | Inner Joint | | 41 | 29 | 34.85 | 403 | 109 | |
| | 2004.04-2006.07 | MT | F | L/R | Van FWD 8140.43N | for vehicles with tolerated total weight above [kg]:1800 | GCO10011 | Outer Joint | 54T | 35 | 45 | 70 | 117 | 73 | I |
| | 2004.04-2006.07 | MT | F | L/R | Van FWD 8140.43N | for vehicles with tolerated total weight to [kg]:1800 | GCO10013 | Outer Joint | 54T | 28 | 39 | 63 | 112.5 | 63 | I |
| | 2004.04-2006.07 | MT | F | L/R | Van FWD 8140.43N | for vehicles with tolerated total weight above [kg]:1800 | GCO10050 | Outer Joint | | 35 | 45 | 70 | 117 | 73 | I |
| 3.0 (100 kw) | 2009.04- | 6MT | F | L | Bus FWD F1CFA401C, F1CE0441A, F1CFA401A | | GDS45175 | Drive Shaft | | 35 | 31 | 71.5 | 127 | 749.5 | |
| | 2009.04- | 6MT | F | R | Bus FWD F1CFA401C, F1CE0441A, F1CFA401A | | GDS45174 | Drive Shaft | | 35 | 31 | 71.5 | 127 | 1199 | |

| | YEAR | TRANSM. | F/R | L/R | BODY STYLE & DRIVE TYPE & ENGINE | REMARKS | G-AP Ref. | PRODUCT | ABS | Technical Specifications A | B | C | H | L | P |
|---|---|---|---|---|---|---|---|---|---|---|---|---|---|---|---|
| **FIAT** **Ducato** | | | | | | | | | | | | | | | |
| 3.0 (100 kw) | 2009.04- | 6MT | F | L/R | Bus FWD F1CFA401C, F1CE0441A, F1CFA401A | | GCO17060 | Outer Joint | | 35 | 29 | 71.5 | 127 | 71 | I |
| | 2009.04- | 6MT | F | L | Bus FWD F1CFA401C, F1CE0441A, F1CFA401A | | GCI17022 | Inner Joint | | 31 | 29 | 44.95 | 77 | 109.5 | |
| | 2009.04- | 6MT | F | R | Bus FWD F1CFA401C, F1CE0441A, F1CFA401A | | GCI17021 | Inner Joint | | 31 | 29 | 34.85 | 530 | 109 | |
| | 2009.04- | 6MT | F | L | Platform/Chassis FWD F1CFA401C, F1CE0441A, F1CFA401A | | GDS45175 | Drive Shaft | | 35 | 31 | 71.5 | 127 | 749.5 | |
| | 2009.04- | 6MT | F | R | Platform/Chassis FWD F1CFA401C, F1CE0441A, F1CFA401A | | GDS45174 | Drive Shaft | | 35 | 31 | 71.5 | 127 | 1199 | |
| | 2009.04- | 6MT | F | L/R | Platform/Chassis FWD F1CFA401C, F1CE0441A, F1CFA401A | | GCO17060 | Outer Joint | | 35 | 29 | 71.5 | 127 | 71 | I |
| | 2009.04- | 6MT | F | L | Platform/Chassis FWD F1CFA401C, F1CE0441A, F1CFA401A | | GCI17022 | Inner Joint | | 31 | 29 | 44.95 | 77 | 109.5 | |
| | 2009.04- | 6MT | F | R | Platform/Chassis FWD F1CFA401C, F1CE0441A, F1CFA401A | | GCI17021 | Inner Joint | | 31 | 29 | 34.85 | 530 | 109 | |
| | 2009.04- | 6MT | F | L | Van FWD F1CFA401C, F1CE0441A, F1CFA401A | | GDS45175 | Drive Shaft | | 35 | 31 | 71.5 | 127 | 749.5 | |
| | 2009.04- | 6MT | F | R | Van FWD F1CFA401C, F1CE0441A, F1CFA401A | | GDS45174 | Drive Shaft | | 35 | 31 | 71.5 | 127 | 1199 | |
| | 2009.04- | 6MT | F | L/R | Van FWD F1CFA401C, F1CE0441A, F1CFA401A | | GCO17060 | Outer Joint | | 35 | 29 | 71.5 | 127 | 71 | I |
| | 2009.04- | 6MT | F | L | Van FWD F1CFA401C, F1CE0441A, F1CFA401A | | GCI17022 | Inner Joint | | 31 | 29 | 44.95 | 77 | 109.5 | |
| | 2009.04- | 6MT | F | R | Van FWD F1CFA401C, F1CE0441A, F1CFA401A | | GCI17021 | Inner Joint | | 31 | 29 | 34.85 | 530 | 109 | |
| 3.0 (107 kw) | 2010.04-2014.07 | 6MT | F | L | Bus FWD F1CE3481N | | GDS45175 | Drive Shaft | | 35 | 31 | 71.5 | 127 | 749.5 | |
| | 2010.04-2014.07 | 6MT | F | R | Bus FWD F1CE3481N | | GDS45174 | Drive Shaft | | 35 | 31 | 71.5 | 127 | 1199 | |
| | 2010.04-2014.07 | 6MT | F | L/R | Bus FWD F1CE3481N | | GCO17060 | Outer Joint | | 35 | 29 | 71.5 | 127 | 71 | I |
| | 2010.04-2014.07 | 6MT | F | L | Bus FWD F1CE3481N | | GCI17022 | Inner Joint | | 31 | 29 | 44.95 | 77 | 109.5 | |
| | 2010.04-2014.07 | 6MT | F | R | Bus FWD F1CE3481N | | GCI17021 | Inner Joint | | 31 | 29 | 34.85 | 530 | 109 | |
| | 2010.04-2014.07 | 6MT | F | L | Platform/Chassis FWD F1CE3481N | | GDS45175 | Drive Shaft | | 35 | 31 | 71.5 | 127 | 749.5 | |
| | 2010.04-2014.07 | 6MT | F | R | Platform/Chassis FWD F1CE3481N | | GDS45174 | Drive Shaft | | 35 | 31 | 71.5 | 127 | 1199 | |
| | 2010.04-2014.07 | 6MT | F | L/R | Platform/Chassis FWD F1CE3481N | | GCO17060 | Outer Joint | | 35 | 29 | 71.5 | 127 | 71 | I |
| | 2010.04-2014.07 | 6MT | F | L | Platform/Chassis FWD F1CE3481N | | GCI17022 | Inner Joint | | 31 | 29 | 44.95 | 77 | 109.5 | |
| | 2010.04-2014.07 | 6MT | F | R | Platform/Chassis FWD F1CE3481N | | GCI17021 | Inner Joint | | 31 | 29 | 34.85 | 530 | 109 | |
| | 2010.04-2014.07 | 6MT | F | L | Van FWD F1CE3481N | | GDS45175 | Drive Shaft | | 35 | 31 | 71.5 | 127 | 749.5 | |
| | 2010.04-2014.07 | 6MT | F | R | Van FWD F1CE3481N | | GDS45174 | Drive Shaft | | 35 | 31 | 71.5 | 127 | 1199 | |
| | 2010.04-2014.07 | 6MT | F | L/R | Van FWD F1CE3481N | | GCO17060 | Outer Joint | | 35 | 29 | 71.5 | 127 | 71 | I |
| | 2010.04-2014.07 | 6MT | F | L | Van FWD F1CE3481N | | GCI17022 | Inner Joint | | 31 | 29 | 44.95 | 77 | 109.5 | |
| | 2010.04-2014.07 | 6MT | F | R | Van FWD F1CE3481N | | GCI17021 | Inner Joint | | 31 | 29 | 34.85 | 530 | 109 | |
| 3.0 (115 kw) | 2006.07-2011.05 | 5MT/6MT | F | L | Platform/Chassis FWD F1CE3481M | | GDS45175 | Drive Shaft | | 35 | 31 | 71.5 | 127 | 749.5 | |
| | 2006.07-2011.05 | 5MT/6MT | F | R | Platform/Chassis FWD F1CE3481M | | GDS45174 | Drive Shaft | | 35 | 31 | 71.5 | 127 | 1199 | |
| | 2006.07-2011.05 | 5MT/6MT | F | L/R | Platform/Chassis FWD F1CE3481M | | GCO17060 | Outer Joint | | 35 | 29 | 71.5 | 127 | 71 | I |
| | 2006.07-2011.05 | 5MT/6MT | F | L | Platform/Chassis FWD F1CE3481M | | GCI17022 | Inner Joint | | 31 | 29 | 44.95 | 77 | 109.5 | |
| | 2006.07-2011.05 | 5MT/6MT | F | R | Platform/Chassis FWD F1CE3481M | | GCI17021 | Inner Joint | | 31 | 29 | 34.85 | 530 | 109 | |
| | 2006.07-2011.12 | 6MT | F | L | Van FWD F1CE3481M | | GDS45175 | Drive Shaft | | 35 | 31 | 71.5 | 127 | 749.5 | |
| | 2006.07-2011.12 | 6MT | F | R | Van FWD F1CE3481M | | GDS45174 | Drive Shaft | | 35 | 31 | 71.5 | 127 | 1199 | |
| | 2006.07-2011.12 | 6MT | F | L/R | Van FWD F1CE3481M | | GCO17060 | Outer Joint | | 35 | 29 | 71.5 | 127 | 71 | I |
| | 2006.07-2011.12 | 6MT | F | L | Van FWD F1CE3481M | | GCI17022 | Inner Joint | | 31 | 29 | 44.95 | 77 | 109.5 | |
| | 2006.07-2011.12 | 6MT | F | R | Van FWD F1CE3481M | | GCI17021 | Inner Joint | | 31 | 29 | 34.85 | 530 | 109 | |
| | 2006.10-2011.05 | 6MT | F | L | Bus FWD F1CE0481D | | GDS45175 | Drive Shaft | | 35 | 31 | 71.5 | 127 | 749.5 | |
| | 2006.10-2011.05 | 6MT | F | R | Bus FWD F1CE0481D | | GDS45174 | Drive Shaft | | 35 | 31 | 71.5 | 127 | 1199 | |
| | 2006.10-2011.05 | 6MT | F | L/R | Bus FWD F1CE0481D | | GCO17060 | Outer Joint | | 35 | 29 | 71.5 | 127 | 71 | I |
| | 2006.10-2011.05 | 6MT | F | L | Bus FWD F1CE0481D | | GCI17022 | Inner Joint | | 31 | 29 | 44.95 | 77 | 109.5 | |
| | 2006.10-2011.05 | 6MT | F | R | Bus FWD F1CE0481D | | GCI17021 | Inner Joint | | 31 | 29 | 34.85 | 530 | 109 | |
| 3.0 (116 kw) | 2006.07-2011.05 | MT | F | L | Van FWD F1CE0481D | | GDS45175 | Drive Shaft | | 35 | 31 | 71.5 | 127 | 749.5 | |
| | 2006.07-2011.05 | MT | F | R | Van FWD F1CE0481D | | GDS45174 | Drive Shaft | | 35 | 31 | 71.5 | 127 | 1199 | |
| | 2006.07-2011.05 | MT | F | L/R | Van FWD F1CE0481D | | GCO17060 | Outer Joint | | 35 | 29 | 71.5 | 127 | 71 | I |
| | 2006.07-2011.05 | MT | F | L | Van FWD F1CE0481D | | GCI17022 | Inner Joint | | 31 | 29 | 44.95 | 77 | 109.5 | |
| | 2006.07-2011.05 | MT | F | R | Van FWD F1CE0481D | | GCI17021 | Inner Joint | | 31 | 29 | 34.85 | 530 | 109 | |
| | 2006.07-2014.05 | MT | F | L | Platform/Chassis FWD F1CE0481D | | GDS45175 | Drive Shaft | | 35 | 31 | 71.5 | 127 | 749.5 | |
| | 2006.07-2014.05 | MT | F | R | Platform/Chassis FWD F1CE0481D | | GDS45174 | Drive Shaft | | 35 | 31 | 71.5 | 127 | 1199 | |
| | 2006.07-2014.05 | MT | F | L/R | Platform/Chassis FWD F1CE0481D | | GCO17060 | Outer Joint | | 35 | 29 | 71.5 | 127 | 71 | I |
| | 2006.07-2014.05 | MT | F | L | Platform/Chassis FWD F1CE0481D | | GCI17022 | Inner Joint | | 31 | 29 | 44.95 | 77 | 109.5 | |
| | 2006.07-2014.05 | MT | F | R | Platform/Chassis FWD F1CE0481D | | GCI17021 | Inner Joint | | 31 | 29 | 34.85 | 530 | 109 | |
| 3.0 (130 kw) | 2011.06- | 6AT/6MT | F | L | Bus FWD F1CE3481E | | GDS45175 | Drive Shaft | | 35 | 31 | 71.5 | 127 | 749.5 | |
| | 2011.06- | 6AT/6MT | F | R | Bus FWD F1CE3481E | | GDS45174 | Drive Shaft | | 35 | 31 | 71.5 | 127 | 1199 | |
| | 2011.06- | 6AT/6MT | F | L/R | Bus FWD F1CE3481E | Model:Ducato 30/33/35 | GCO17060 | Outer Joint | | 35 | 29 | 71.5 | 127 | 71 | I |
| | 2011.06- | 6AT/6MT | F | L | Bus FWD F1CE3481E | | GCI17022 | Inner Joint | | 31 | 29 | 44.95 | 77 | 109.5 | |
| | 2011.06- | 6AT/6MT | F | R | Bus FWD F1CE3481E | | GCI17021 | Inner Joint | | 31 | 29 | 34.85 | 530 | 109 | |
| | 2011.06- | 6AT/6MT | F | L | Platform/Chassis FWD F1CE3481E | | GDS45175 | Drive Shaft | | 35 | 31 | 71.5 | 127 | 749.5 | |
| | 2011.06- | 6AT/6MT | F | R | Platform/Chassis FWD F1CE3481E | | GDS45174 | Drive Shaft | | 35 | 31 | 71.5 | 127 | 1199 | |
| | 2011.06- | 6AT/6MT | F | L/R | Platform/Chassis FWD F1CE3481E | | GCO17060 | Outer Joint | | 35 | 29 | 71.5 | 127 | 71 | I |
| | 2011.06- | 6AT/6MT | F | L | Platform/Chassis FWD F1CE3481E | | GCI17022 | Inner Joint | | 31 | 29 | 44.95 | 77 | 109.5 | |
| | 2011.06- | 6AT/6MT | F | R | Platform/Chassis FWD F1CE3481E | | GCI17021 | Inner Joint | | 31 | 29 | 34.85 | 530 | 109 | |
| | 2011.06- | 6AT/6MT | F | L | Van FWD F1CE3481E | | GDS45175 | Drive Shaft | | 35 | 31 | 71.5 | 127 | 749.5 | |
| | 2011.06- | 6AT/6MT | F | R | Van FWD F1CE3481E | | GDS45174 | Drive Shaft | | 35 | 31 | 71.5 | 127 | 1199 | |

| | YEAR | TRANSM. | F/R | L/R | BODY STYLE & DRIVE TYPE & ENGINE | REMARKS | G-AP Ref. | PRODUCT | ABS | Technical Specifications A | B | C | H | L | P |
|---|---|---|---|---|---|---|---|---|---|---|---|---|---|---|---|
| **FIAT** | | | | | | | | | | | | | | | |
| **Ducato** | | | | | | | | | | | | | | | |
| 3.0 (130 kw) | 2011.06- | 6AT/6MT | F | L/R | Van FWD F1CE3481E | | GCO17060 | Outer Joint | | 35 | 29 | 71.5 | 127 | 71 | I |
| | 2011.06- | 6AT/6MT | F | L | Van FWD F1CE3481E | | GCI17022 | Inner Joint | | 31 | 29 | 44.95 | 77 | 109.5 | |
| | 2011.06- | 6AT/6MT | F | R | Van FWD F1CE3481E | | GCI17021 | Inner Joint | | 31 | 29 | 34.85 | 530 | 109 | |
| **Ducato 10** | | | | | | | | | | | | | | | |
| 1.9 (50 kw) | 1998.04-2002.04 | MT | F | L | Bus FWD DJY (04.98-.) | Payload:1800kg,Trans. code:MG | GDS10033 | Drive Shaft | 54T | 35 | 41 | 70 | 117 | 762 | |
| | 1998.04-2002.04 | MT | F | L | Bus FWD DJY (04.98-.) | Payload:1000/1400kg,Trans. code:MG | GDS10035 | Drive Shaft | 54T | 28 | 41 | 63 | 112.5 | 757.5 | |
| | 1998.04-2002.04 | MT | F | L | Bus FWD DJY (04.98-.) | Payload:1000/1400kg,Trans. code:ME/ML | GDS10037 | Drive Shaft | 54T | 28 | 37 | 63 | 112.5 | 771 | |
| | 1998.04-2002.04 | MT | F | L | Bus FWD DJY (04.98-.) | Payload:1800kg,Trans. code:MG | GDS10067 | Drive Shaft | | 35 | 41 | 70 | 117 | 762 | |
| | 1998.04-2002.04 | MT | F | L | Bus FWD DJY (04.98-.) | Payload:1000/1400kg,Trans. code:MG | GDS10102 | Drive Shaft | | 28 | 41 | 63 | 112.5 | 757.5 | |
| | 1998.04-2002.04 | MT | F | L | Bus FWD DJY (04.98-.) | Payload:1000/1400kg,Trans. code:ME/ML | GDS10105 | Drive Shaft | | 28 | 37 | 63 | 112.5 | 771 | |
| | 1998.04-2002.04 | MT | F | R | Bus FWD DJY (04.98-.) | Payload:1800kg,Trans. code:MG | GDS10032 | Drive Shaft | 54T | 35 | 41 | 70 | 117 | 1085 | |
| | 1998.04-2002.04 | MT | F | R | Bus FWD DJY (04.98-.) | Payload:1000/1400kg,Trans. code:MG | GDS10036 | Drive Shaft | 54T | 28 | 41 | 63 | 112.5 | 1079 | |
| | 1998.04-2002.04 | MT | F | R | Bus FWD DJY (04.98-.) | Payload:1800kg,Trans. code:MG | GDS10066 | Drive Shaft | | 35 | 41 | 70 | 117 | 1085 | |
| | 1998.04-2002.04 | MT | F | R | Bus FWD DJY (04.98-.) | Payload:1000/1400kg,Trans. code:ME/ML | GDS10069 | Drive Shaft | | 28 | 37 | 63 | 112.5 | 1072 | |
| | 1998.04-2002.04 | MT | F | R | Bus FWD DJY (04.98-.) | Payload:1000/1400kg,Trans. code:MG | GDS10103 | Drive Shaft | | 28 | 41 | 63 | 112.5 | 1079 | |
| | 1998.04-2002.04 | MT | F | R | Bus FWD DJY (04.98-.) | Payload:1000/1400kg,Trans. code:ME/ML | GDS10104 | Drive Shaft | 54T | 28 | 37 | 63 | 112.5 | 1072 | |
| | 1998.04-2002.04 | MT | F | L/R | Bus FWD DJY (04.98-.) | Payload:1800kg,Trans. code:MG | GCO10011 | Outer Joint | 54T | 35 | 45 | 70 | 117 | 73 | I |
| | 1998.04-2002.04 | MT | F | L/R | Bus FWD DJY (04.98-.) | Payload:1000/1400kg,Trans. code:ME/ML/MG | GCO10012 | Outer Joint | | 28 | 39 | 63 | 112.5 | 63 | I |
| | 1998.04-2002.04 | MT | F | L/R | Bus FWD DJY (04.98-.) | Payload:1000/1400kg,Trans. code:ME/ML/MG | GCO10013 | Outer Joint | 54T | 28 | 39 | 63 | 112.5 | 63 | I |
| | 1998.04-2002.04 | MT | F | L/R | Bus FWD DJY (04.98-.) | Payload:1800kg,Trans. code:MG | GCO10050 | Outer Joint | | 35 | 45 | 70 | 117 | 73 | I |
| | 1998.04-2002.04 | MT | F | L | Bus FWD DJY (04.98-.) | Payload:1800kg,Trans. code:MG | GCI10010 | Inner Joint | | 41 | 45 | 43 | 70 | 115.5 | |
| | 1998.04-2002.04 | MT | F | L | Bus FWD DJY (04.98-.) | Payload:1000/1400kg,Trans. code:MG | GCI10013 | Inner Joint | | 41 | 39 | 43 | 70 | 104 | |
| | 1998.04-2002.04 | MT | F | L | Bus FWD DJY (04.98-.) | Payload:1000/1400kg,Trans. code:ME/ML | GCI10015 | Inner Joint | | 37 | 39 | 40 | 68.5 | 104 | |
| | 1998.04-2002.04 | MT | F | L | Bus FWD DJY (04.98-.) | Payload:1000/1400kg,Trans. code:ME/ML | GCI45013 | Inner Joint | | 37 | 39 | 40 | 68.5 | 100 | |
| | 1998.04-2002.04 | MT | F | R | Bus FWD DJY (04.98-.) | Payload:1800kg,Trans. code:MG | GCI10009 | Inner Joint | | 41 | 45 | 34.9 | 393 | 115.6 | |
| | 1998.04-2002.04 | MT | F | R | Bus FWD DJY (04.98-.) | Payload:1000/1400kg,Trans. code:ME/ML | GCI10034 | Inner Joint | | 37 | 39 | 31.9 | 369.5 | 99 | |
| | 1998.04-2002.04 | MT | F | L | Platform/Chassis FWD DJY (04.98-.) | Payload:1800kg,Trans. code:MG | GDS10033 | Drive Shaft | 54T | 35 | 41 | 70 | 117 | 762 | |
| | 1998.04-2002.04 | MT | F | L | Platform/Chassis FWD DJY (04.98-.) | Payload:1000/1400kg,Trans. code:MG | GDS10035 | Drive Shaft | 54T | 28 | 41 | 63 | 112.5 | 757.5 | |
| | 1998.04-2002.04 | MT | F | L | Platform/Chassis FWD DJY (04.98-.) | Payload:1000/1400kg,Trans. code:ME/ML | GDS10037 | Drive Shaft | 54T | 28 | 37 | 63 | 112.5 | 771 | |
| | 1998.04-2002.04 | MT | F | L | Platform/Chassis FWD DJY (04.98-.) | Payload:1800kg,Trans. code:MG | GDS10067 | Drive Shaft | | 35 | 41 | 70 | 117 | 762 | |
| | 1998.04-2002.04 | MT | F | L | Platform/Chassis FWD DJY (04.98-.) | Payload:1000/1400kg,Trans. code:MG | GDS10102 | Drive Shaft | | 28 | 41 | 63 | 112.5 | 757.5 | |
| | 1998.04-2002.04 | MT | F | L | Platform/Chassis FWD DJY (04.98-.) | Payload:1000/1400kg,Trans. code:ME/ML | GDS10105 | Drive Shaft | | 28 | 37 | 63 | 112.5 | 771 | |
| | 1998.04-2002.04 | MT | F | R | Platform/Chassis FWD DJY (04.98-.) | Payload:1800kg,Trans. code:MG | GDS10032 | Drive Shaft | 54T | 35 | 41 | 70 | 117 | 1085 | |
| | 1998.04-2002.04 | MT | F | R | Platform/Chassis FWD DJY (04.98-.) | Payload:1000/1400kg,Trans. code:MG | GDS10036 | Drive Shaft | 54T | 28 | 41 | 63 | 112.5 | 1079 | |
| | 1998.04-2002.04 | MT | F | R | Platform/Chassis FWD DJY (04.98-.) | Payload:1800kg,Trans. code:MG | GDS10066 | Drive Shaft | | 35 | 41 | 70 | 117 | 1085 | |
| | 1998.04-2002.04 | MT | F | R | Platform/Chassis FWD DJY (04.98-.) | Payload:1000/1400kg,Trans. code:ME/ML | GDS10069 | Drive Shaft | | 28 | 37 | 63 | 112.5 | 1072 | |
| | 1998.04-2002.04 | MT | F | R | Platform/Chassis FWD DJY (04.98-.) | Payload:1000/1400kg,Trans. code:MG | GDS10103 | Drive Shaft | | 28 | 41 | 63 | 112.5 | 1079 | |
| | 1998.04-2002.04 | MT | F | R | Platform/Chassis FWD DJY (04.98-.) | Payload:1000/1400kg,Trans. code:ME/ML | GDS10104 | Drive Shaft | 54T | 28 | 37 | 63 | 112.5 | 1072 | |
| | 1998.04-2002.04 | MT | F | L/R | Platform/Chassis FWD DJY (04.98-.) | Payload:1800kg,Trans. code:MG | GCO10011 | Outer Joint | 54T | 35 | 45 | 70 | 117 | 73 | I |
| | 1998.04-2002.04 | MT | F | L/R | Platform/Chassis FWD DJY (04.98-.) | Payload:1000/1400kg,Trans. code:ME/ML/MG | GCO10012 | Outer Joint | | 28 | 39 | 63 | 112.5 | 63 | I |
| | 1998.04-2002.04 | MT | F | L/R | Platform/Chassis FWD DJY (04.98-.) | Payload:1000/1400kg,Trans. code:ME/ML/MG | GCO10013 | Outer Joint | 54T | 28 | 39 | 63 | 112.5 | 63 | I |
| | 1998.04-2002.04 | MT | F | L/R | Platform/Chassis FWD DJY (04.98-.) | Payload:1800kg,Trans. code:MG | GCO10050 | Outer Joint | | 35 | 45 | 70 | 117 | 73 | I |
| | 1998.04-2002.04 | MT | F | L | Platform/Chassis FWD DJY (04.98-.) | Payload:1800kg,Trans. code:MG | GCI10010 | Inner Joint | | 41 | 45 | 43 | 70 | 115.5 | |
| | 1998.04-2002.04 | MT | F | L | Platform/Chassis FWD DJY (04.98-.) | Payload:1000/1400kg,Trans. code:MG | GCI10013 | Inner Joint | | 41 | 39 | 43 | 70 | 104 | |
| | 1998.04-2002.04 | MT | F | L | Platform/Chassis FWD DJY (04.98-.) | Payload:1000/1400kg,Trans. code:ME/ML | GCI10015 | Inner Joint | | 37 | 39 | 40 | 68.5 | 104 | |
| | 1998.04-2002.04 | MT | F | L | Platform/Chassis FWD DJY (04.98-.) | Payload:1000/1400kg,Trans. code:ME/ML | GCI45013 | Inner Joint | | 37 | 39 | 40 | 68.5 | 100 | |
| | 1998.04-2002.04 | MT | F | R | Platform/Chassis FWD DJY (04.98-.) | Payload:1800kg,Trans. code:MG | GCI10009 | Inner Joint | | 41 | 45 | 34.9 | 393 | 115.6 | |
| | 1998.04-2002.04 | MT | F | R | Platform/Chassis FWD DJY (04.98-.) | Payload:1000/1400kg,Trans. code:ME/ML | GCI10034 | Inner Joint | | 37 | 39 | 31.9 | 369.5 | 99 | |
| | 1998.04-2002.04 | MT | F | L | Van FWD DJY (04.98-.) | Payload:1800kg,Trans. code:MG | GDS10033 | Drive Shaft | 54T | 35 | 41 | 70 | 117 | 762 | |
| | 1998.04-2002.04 | MT | F | L | Van FWD DJY (04.98-.) | Payload:1000/1400kg,Trans. code:MG | GDS10035 | Drive Shaft | 54T | 28 | 41 | 63 | 112.5 | 757.5 | |
| | 1998.04-2002.04 | MT | F | L | Van FWD DJY (04.98-.) | Payload:1000/1400kg,Trans. code:ME/ML | GDS10037 | Drive Shaft | 54T | 28 | 37 | 63 | 112.5 | 771 | |
| | 1998.04-2002.04 | MT | F | L | Van FWD DJY (04.98-.) | Payload:1800kg,Trans. code:MG | GDS10067 | Drive Shaft | | 35 | 41 | 70 | 117 | 762 | |
| | 1998.04-2002.04 | MT | F | L | Van FWD DJY (04.98-.) | Payload:1000/1400kg,Trans. code:MG | GDS10102 | Drive Shaft | | 28 | 41 | 63 | 112.5 | 757.5 | |
| | 1998.04-2002.04 | MT | F | L | Van FWD DJY (04.98-.) | Payload:1000/1400kg,Trans. code:ME/ML | GDS10105 | Drive Shaft | | 28 | 37 | 63 | 112.5 | 771 | |
| | 1998.04-2002.04 | MT | F | R | Van FWD DJY (04.98-.) | Payload:1800kg,Trans. code:MG | GDS10032 | Drive Shaft | 54T | 35 | 41 | 70 | 117 | 1085 | |
| | 1998.04-2002.04 | MT | F | R | Van FWD DJY (04.98-.) | Payload:1000/1400kg,Trans. code:MG | GDS10036 | Drive Shaft | 54T | 28 | 41 | 63 | 112.5 | 1079 | |
| | 1998.04-2002.04 | MT | F | R | Van FWD DJY (04.98-.) | Payload:1800kg,Trans. code:MG | GDS10066 | Drive Shaft | | 35 | 41 | 70 | 117 | 1085 | |
| | 1998.04-2002.04 | MT | F | R | Van FWD DJY (04.98-.) | Payload:1000/1400kg,Trans. code:ME/ML | GDS10069 | Drive Shaft | | 28 | 37 | 63 | 112.5 | 1072 | |
| | 1998.04-2002.04 | MT | F | R | Van FWD DJY (04.98-.) | Payload:1000/1400kg,Trans. code:MG | GDS10103 | Drive Shaft | | 28 | 41 | 63 | 112.5 | 1079 | |
| | 1998.04-2002.04 | MT | F | R | Van FWD DJY (04.98-.) | Payload:1000/1400kg,Trans. code:ME/ML | GDS10104 | Drive Shaft | 54T | 28 | 37 | 63 | 112.5 | 1072 | |
| | 1998.04-2002.04 | MT | F | L/R | Van FWD DJY (04.98-.) | Payload:1800kg,Trans. code:MG | GCO10011 | Outer Joint | 54T | 35 | 45 | 70 | 117 | 73 | I |
| | 1998.04-2002.04 | MT | F | L/R | Van FWD DJY (04.98-.) | Payload:1000/1400kg,Trans. code:ME/ML/MG | GCO10012 | Outer Joint | | 28 | 39 | 63 | 112.5 | 63 | I |
| | 1998.04-2002.04 | MT | F | L/R | Van FWD DJY (04.98-.) | Payload:1000/1400kg,Trans. code:ME/ML/MG | GCO10013 | Outer Joint | 54T | 28 | 39 | 63 | 112.5 | 63 | I |
| | 1998.04-2002.04 | MT | F | L/R | Van FWD DJY (04.98-.) | Payload:1800kg,Trans. code:MG | GCO10050 | Outer Joint | | 35 | 45 | 70 | 117 | 73 | I |
| | 1998.04-2002.04 | MT | F | L | Van FWD DJY (04.98-.) | Payload:1800kg,Trans. code:MG | GCI10010 | Inner Joint | | 41 | 45 | 43 | 70 | 115.5 | |

| | YEAR | TRANSM. | F/R | L/R | BODY STYLE & DRIVE TYPE & ENGINE | REMARKS | G-AP Ref. | PRODUCT | ABS | Technical Specifications A | B | C | H | L | P |
|---|---|---|---|---|---|---|---|---|---|---|---|---|---|---|---|
| **FIAT** **Ducato 10** | | | | | | | | | | | | | | | |
| 1.9 (50 kw) | 1998.04-2002.04 | MT | F | L | Van FWD DJY (04.98-.) | Payload:1000/1400kg,Trans. code:MG | GCI10013 | Inner Joint | | 41 | 39 | 43 | 70 | 104 | |
| | 1998.04-2002.04 | MT | F | L | Van FWD DJY (04.98-.) | Payload:1000/1400kg,Trans. code:ME/ML | GCI10015 | Inner Joint | | 37 | 39 | 40 | 68.5 | 104 | |
| | 1998.04-2002.04 | MT | F | L | Van FWD DJY (04.98-.) | Payload:1000/1400kg,Trans. code:ME/ML | GCI45013 | Inner Joint | | 37 | 39 | 40 | 68.5 | 100 | |
| | 1998.04-2002.04 | MT | F | R | Van FWD DJY (04.98-.) | Payload:1800kg,Trans. code:MG | GCI10009 | Inner Joint | | 41 | 45 | 34.9 | 393 | 115.6 | |
| | 1998.04-2002.04 | MT | F | R | Van FWD DJY (04.98-.) | Payload:1000/1400kg,Trans. code:ME/ML | GCI10034 | Inner Joint | | 37 | 39 | 31.9 | 369.5 | 99 | |
| 1.9 (51 kw) | 1994.03-2002.04 | MT | F | L | Platform/Chassis FWD 230 A2.000 | Payload:1800kg,Trans. code:MG | GDS10033 | Drive Shaft | 54T | 35 | 41 | 70 | 117 | 762 | |
| | 1994.03-2002.04 | MT | F | L | Platform/Chassis FWD 230 A2.000 | Payload:1000/1400kg,Trans. code:MG | GDS10035 | Drive Shaft | 54T | 28 | 41 | 63 | 112.5 | 757.5 | |
| | 1994.03-2002.04 | MT | F | L | Platform/Chassis FWD 230 A2.000 | Payload:1000/1400kg,Trans. code:ME/ML | GDS10037 | Drive Shaft | 54T | 28 | 37 | 63 | 112.5 | 771 | |
| | 1994.03-2002.04 | MT | F | L | Platform/Chassis FWD 230 A2.000 | Payload:1800kg,Trans. code:MG | GDS10067 | Drive Shaft | | 35 | 41 | 70 | 117 | 762 | |
| | 1994.03-2002.04 | MT | F | L | Platform/Chassis FWD 230 A2.000 | Payload:1000/1400kg,Trans. code:MG | GDS10102 | Drive Shaft | | 28 | 41 | 63 | 112.5 | 757.5 | |
| | 1994.03-2002.04 | MT | F | L | Platform/Chassis FWD 230 A2.000 | Payload:1000/1400kg,Trans. code:ME/ML | GDS10105 | Drive Shaft | | 28 | 37 | 63 | 112.5 | 771 | |
| | 1994.03-2002.04 | MT | F | R | Platform/Chassis FWD 230 A2.000 | Payload:1800kg,Trans. code:MG | GDS10032 | Drive Shaft | 54T | 35 | 41 | 70 | 117 | 1085 | |
| | 1994.03-2002.04 | MT | F | R | Platform/Chassis FWD 230 A2.000 | Payload:1000/1400kg,Trans. code:MG | GDS10036 | Drive Shaft | 54T | 28 | 41 | 63 | 112.5 | 1079 | |
| | 1994.03-2002.04 | MT | F | R | Platform/Chassis FWD 230 A2.000 | Payload:1800kg,Trans. code:MG | GDS10066 | Drive Shaft | | 35 | 41 | 70 | 117 | 1085 | |
| | 1994.03-2002.04 | MT | F | R | Platform/Chassis FWD 230 A2.000 | Payload:1000/1400kg,Trans. code:ME/ML | GDS10069 | Drive Shaft | | 28 | 37 | 63 | 112.5 | 1072 | |
| | 1994.03-2002.04 | MT | F | R | Platform/Chassis FWD 230 A2.000 | Payload:1000/1400kg,Trans. code:MG | GDS10103 | Drive Shaft | | 28 | 41 | 63 | 112.5 | 1079 | |
| | 1994.03-2002.04 | MT | F | R | Platform/Chassis FWD 230 A2.000 | Payload:1000/1400kg,Trans. code:ME/ML | GDS10104 | Drive Shaft | 54T | 28 | 37 | 63 | 112.5 | 1072 | |
| | 1994.03-2002.04 | MT | F | L/R | Platform/Chassis FWD 230 A2.000 | Payload:1800kg,Trans. code:MG | GCO10011 | Outer Joint | 54T | 35 | 45 | 70 | 117 | 73 | I |
| | 1994.03-2002.04 | MT | F | L/R | Platform/Chassis FWD 230 A2.000 | Payload:1000/1400kg,Trans. code:ME/ML/MG | GCO10012 | Outer Joint | | 28 | 39 | 63 | 112.5 | 63 | I |
| | 1994.03-2002.04 | MT | F | L/R | Platform/Chassis FWD 230 A2.000 | Payload:1000/1400kg,Trans. code:ME/ML/MG | GCO10013 | Outer Joint | 54T | 28 | 39 | 63 | 112.5 | 63 | I |
| | 1994.03-2002.04 | MT | F | L/R | Platform/Chassis FWD 230 A2.000 | Payload:1800kg,Trans. code:MG | GCO10050 | Outer Joint | | 35 | 45 | 70 | 117 | 73 | I |
| | 1994.03-2002.04 | MT | F | L | Platform/Chassis FWD 230 A2.000 | Payload:1800kg,Trans. code:MG | GCI10010 | Inner Joint | | 41 | 45 | 43 | 70 | 115.5 | |
| | 1994.03-2002.04 | MT | F | L | Platform/Chassis FWD 230 A2.000 | Payload:1000/1400kg,Trans. code:MG | GCI10013 | Inner Joint | | 41 | 39 | 43 | 70 | 104 | |
| | 1994.03-2002.04 | MT | F | L | Platform/Chassis FWD 230 A2.000 | Payload:1000/1400kg,Trans. code:ME/ML | GCI10015 | Inner Joint | | 37 | 39 | 40 | 68.5 | 104 | |
| | 1994.03-2002.04 | MT | F | L | Platform/Chassis FWD 230 A2.000 | Payload:1000/1400kg,Trans. code:ME/ML | GCI45013 | Inner Joint | | 37 | 39 | 40 | 68.5 | 100 | |
| | 1994.03-2002.04 | MT | F | R | Platform/Chassis FWD 230 A2.000 | Payload:1800kg,Trans. code:MG | GCI10009 | Inner Joint | | 41 | 45 | 34.9 | 393 | 115.6 | |
| | 1994.03-2002.04 | MT | F | R | Platform/Chassis FWD 230 A2.000 | Payload:1000/1400kg,Trans. code:ME/ML | GCI10034 | Inner Joint | | 37 | 39 | 31.9 | 369.5 | 99 | |
| | 1994.03-2002.04 | MT | F | L | Van FWD 230 A2.000 | Payload:1800kg,Trans. code:MG | GDS10033 | Drive Shaft | 54T | 35 | 41 | 70 | 117 | 762 | |
| | 1994.03-2002.04 | MT | F | L | Van FWD 230 A2.000 | Payload:1000/1400kg,Trans. code:MG | GDS10035 | Drive Shaft | 54T | 28 | 41 | 63 | 112.5 | 757.5 | |
| | 1994.03-2002.04 | MT | F | L | Van FWD 230 A2.000 | Payload:1000/1400kg,Trans. code:ME/ML | GDS10037 | Drive Shaft | 54T | 28 | 37 | 63 | 112.5 | 771 | |
| | 1994.03-2002.04 | MT | F | L | Van FWD 230 A2.000 | Payload:1800kg,Trans. code:MG | GDS10067 | Drive Shaft | | 35 | 41 | 70 | 117 | 762 | |
| | 1994.03-2002.04 | MT | F | L | Van FWD 230 A2.000 | Payload:1000/1400kg,Trans. code:MG | GDS10102 | Drive Shaft | | 28 | 41 | 63 | 112.5 | 757.5 | |
| | 1994.03-2002.04 | MT | F | L | Van FWD 230 A2.000 | Payload:1000/1400kg,Trans. code:ME/ML | GDS10105 | Drive Shaft | | 28 | 37 | 63 | 112.5 | 771 | |
| | 1994.03-2002.04 | MT | F | R | Van FWD 230 A2.000 | Payload:1800kg,Trans. code:MG | GDS10032 | Drive Shaft | 54T | 35 | 41 | 70 | 117 | 1085 | |
| | 1994.03-2002.04 | MT | F | R | Van FWD 230 A2.000 | Payload:1000/1400kg,Trans. code:MG | GDS10036 | Drive Shaft | 54T | 28 | 41 | 63 | 112.5 | 1079 | |
| | 1994.03-2002.04 | MT | F | R | Van FWD 230 A2.000 | Payload:1800kg,Trans. code:MG | GDS10066 | Drive Shaft | | 35 | 41 | 70 | 117 | 1085 | |
| | 1994.03-2002.04 | MT | F | R | Van FWD 230 A2.000 | Payload:1000/1400kg,Trans. code:ME/ML | GDS10069 | Drive Shaft | | 28 | 37 | 63 | 112.5 | 1072 | |
| | 1994.03-2002.04 | MT | F | R | Van FWD 230 A2.000 | Payload:1000/1400kg,Trans. code:MG | GDS10103 | Drive Shaft | | 28 | 41 | 63 | 112.5 | 1079 | |
| | 1994.03-2002.04 | MT | F | R | Van FWD 230 A2.000 | Payload:1000/1400kg,Trans. code:ME/ML | GDS10104 | Drive Shaft | 54T | 28 | 37 | 63 | 112.5 | 1072 | |
| | 1994.03-2002.04 | MT | F | L/R | Van FWD 230 A2.000 | Payload:1800kg,Trans. code:MG | GCO10011 | Outer Joint | 54T | 35 | 45 | 70 | 117 | 73 | I |
| | 1994.03-2002.04 | MT | F | L/R | Van FWD 230 A2.000 | Payload:1000/1400kg,Trans. code:ME/ML/MG | GCO10012 | Outer Joint | | 28 | 39 | 63 | 112.5 | 63 | I |
| | 1994.03-2002.04 | MT | F | L/R | Van FWD 230 A2.000 | Payload:1000/1400kg,Trans. code:ME/ML/MG | GCO10013 | Outer Joint | 54T | 28 | 39 | 63 | 112.5 | 63 | I |
| | 1994.03-2002.04 | MT | F | L/R | Van FWD 230 A2.000 | Payload:1800kg,Trans. code:MG | GCO10050 | Outer Joint | | 35 | 45 | 70 | 117 | 73 | I |
| | 1994.03-2002.04 | MT | F | L | Van FWD 230 A2.000 | Payload:1800kg,Trans. code:MG | GCI10010 | Inner Joint | | 41 | 45 | 43 | 70 | 115.5 | |
| | 1994.03-2002.04 | MT | F | L | Van FWD 230 A2.000 | Payload:1000/1400kg,Trans. code:MG | GCI10013 | Inner Joint | | 41 | 39 | 43 | 70 | 104 | |
| | 1994.03-2002.04 | MT | F | L | Van FWD 230 A2.000 | Payload:1000/1400kg,Trans. code:ME/ML | GCI10015 | Inner Joint | | 37 | 39 | 40 | 68.5 | 104 | |
| | 1994.03-2002.04 | MT | F | L | Van FWD 230 A2.000 | Payload:1000/1400kg,Trans. code:ME/ML | GCI45013 | Inner Joint | | 37 | 39 | 40 | 68.5 | 100 | |
| | 1994.03-2002.04 | MT | F | R | Van FWD 230 A2.000 | Payload:1800kg,Trans. code:MG | GCI10009 | Inner Joint | | 41 | 45 | 34.9 | 393 | 115.6 | |
| | 1994.03-2002.04 | MT | F | R | Van FWD 230 A2.000 | Payload:1000/1400kg,Trans. code:ME/ML | GCI10034 | Inner Joint | | 37 | 39 | 31.9 | 369.5 | 99 | |
| | 1995.06-2002.04 | MT | F | L | Bus FWD 230 A2.000 | Payload:1800kg,Trans. code:MG | GDS10033 | Drive Shaft | 54T | 35 | 41 | 70 | 117 | 762 | |
| | 1995.06-2002.04 | MT | F | L | Bus FWD 230 A2.000 | Payload:1000/1400kg,Trans. code:MG | GDS10035 | Drive Shaft | 54T | 28 | 41 | 63 | 112.5 | 757.5 | |
| | 1995.06-2002.04 | MT | F | L | Bus FWD 230 A2.000 | Payload:1000/1400kg,Trans. code:ME/ML | GDS10037 | Drive Shaft | 54T | 28 | 37 | 63 | 112.5 | 771 | |
| | 1995.06-2002.04 | MT | F | L | Bus FWD 230 A2.000 | Payload:1800kg,Trans. code:MG | GDS10067 | Drive Shaft | | 35 | 41 | 70 | 117 | 762 | |
| | 1995.06-2002.04 | MT | F | L | Bus FWD 230 A2.000 | Payload:1000/1400kg,Trans. code:MG | GDS10102 | Drive Shaft | | 28 | 41 | 63 | 112.5 | 757.5 | |
| | 1995.06-2002.04 | MT | F | L | Bus FWD 230 A2.000 | Payload:1000/1400kg,Trans. code:ME/ML | GDS10105 | Drive Shaft | | 28 | 37 | 63 | 112.5 | 771 | |
| | 1995.06-2002.04 | MT | F | R | Bus FWD 230 A2.000 | Payload:1800kg,Trans. code:MG | GDS10032 | Drive Shaft | 54T | 35 | 41 | 70 | 117 | 1085 | |
| | 1995.06-2002.04 | MT | F | R | Bus FWD 230 A2.000 | Payload:1000/1400kg,Trans. code:MG | GDS10036 | Drive Shaft | 54T | 28 | 41 | 63 | 112.5 | 1079 | |
| | 1995.06-2002.04 | MT | F | R | Bus FWD 230 A2.000 | Payload:1800kg,Trans. code:MG | GDS10066 | Drive Shaft | | 35 | 41 | 70 | 117 | 1085 | |
| | 1995.06-2002.04 | MT | F | R | Bus FWD 230 A2.000 | Payload:1000/1400kg,Trans. code:ME/ML | GDS10069 | Drive Shaft | | 28 | 37 | 63 | 112.5 | 1072 | |
| | 1995.06-2002.04 | MT | F | R | Bus FWD 230 A2.000 | Payload:1000/1400kg,Trans. code:MG | GDS10103 | Drive Shaft | | 28 | 41 | 63 | 112.5 | 1079 | |
| | 1995.06-2002.04 | MT | F | R | Bus FWD 230 A2.000 | Payload:1000/1400kg,Trans. code:ME/ML | GDS10104 | Drive Shaft | 54T | 28 | 37 | 63 | 112.5 | 1072 | |
| | 1995.06-2002.04 | MT | F | L/R | Bus FWD 230 A2.000 | Payload:1800kg,Trans. code:MG | GCO10011 | Outer Joint | 54T | 35 | 45 | 70 | 117 | 73 | I |
| | 1995.06-2002.04 | MT | F | L/R | Bus FWD 230 A2.000 | Payload:1000/1400kg,Trans. code:ME/ML/MG | GCO10012 | Outer Joint | | 28 | 39 | 63 | 112.5 | 63 | I |
| | 1995.06-2002.04 | MT | F | L/R | Bus FWD 230 A2.000 | Payload:1000/1400kg,Trans. code:ME/ML/MG | GCO10013 | Outer Joint | 54T | 28 | 39 | 63 | 112.5 | 63 | I |
| | 1995.06-2002.04 | MT | F | L/R | Bus FWD 230 A2.000 | Payload:1800kg,Trans. code:MG | GCO10050 | Outer Joint | | 35 | 45 | 70 | 117 | 73 | I |

| | YEAR | TRANSM. | F/R | L/R | BODY STYLE & DRIVE TYPE & ENGINE | REMARKS | G-AP Ref. | PRODUCT | ABS | Technical Specifications A | B | C | H | L | P |
|---|---|---|---|---|---|---|---|---|---|---|---|---|---|---|---|
| **FIAT** **Ducato 10** | | | | | | | | | | | | | | | |
| 1.9 (51 kw) | 1995.06-2002.04 | MT | F | L | Bus FWD 230 A2.000 | Payload:1800kg,Trans. code:MG | GCI10010 | Inner Joint | | 41 | 45 | 43 | 70 | 115.5 | |
| | 1995.06-2002.04 | MT | F | L | Bus FWD 230 A2.000 | Payload:1000/1400kg,Trans. code:MG | GCI10013 | Inner Joint | | 41 | 39 | 43 | 70 | 104 | |
| | 1995.06-2002.04 | MT | F | L | Bus FWD 230 A2.000 | Payload:1000/1400kg,Trans. code:ME/ML | GCI10015 | Inner Joint | | 37 | 39 | 40 | 68.5 | 104 | |
| | 1995.06-2002.04 | MT | F | L | Bus FWD 230 A2.000 | Payload:1000/1400kg,Trans. code:ME/ML | GCI45013 | Inner Joint | | 37 | 39 | 40 | 68.5 | 100 | |
| | 1995.06-2002.04 | MT | F | R | Bus FWD 230 A2.000 | Payload:1800kg,Trans. code:MG | GCI10009 | Inner Joint | | 41 | 45 | 34.9 | 393 | 115.6 | |
| | 1995.06-2002.04 | MT | F | R | Bus FWD 230 A2.000 | Payload:1000/1400kg,Trans. code:ME/ML | GCI10034 | Inner Joint | | 37 | 39 | 31.9 | 369.5 | 99 | |
| 1.9 (59 kw) | 1994.08-2002.04 | MT | F | L | Bus FWD 230 A4.000 | Payload:1800kg,Trans. code:MG | GDS10033 | Drive Shaft | 54T | 35 | 41 | 70 | 117 | 762 | |
| | 1994.08-2002.04 | MT | F | L | Bus FWD 230 A4.000 | Payload:1000/1400kg,Trans. code:MG | GDS10035 | Drive Shaft | 54T | 28 | 41 | 63 | 112.5 | 757.5 | |
| | 1994.08-2002.04 | MT | F | L | Bus FWD 230 A4.000 | Payload:1000/1400kg,Trans. code:ME/ML | GDS10037 | Drive Shaft | 54T | 28 | 37 | 63 | 112.5 | 771 | |
| | 1994.08-2002.04 | MT | F | L | Bus FWD 230 A4.000 | Payload:1800kg,Trans. code:MG | GDS10067 | Drive Shaft | | 35 | 41 | 70 | 117 | 762 | |
| | 1994.08-2002.04 | MT | F | L | Bus FWD 230 A4.000 | Payload:1000/1400kg,Trans. code:MG | GDS10102 | Drive Shaft | | 28 | 41 | 63 | 112.5 | 757.5 | |
| | 1994.08-2002.04 | MT | F | L | Bus FWD 230 A4.000 | Payload:1000/1400kg,Trans. code:ME/ML | GDS10105 | Drive Shaft | | 28 | 37 | 63 | 112.5 | 771 | |
| | 1994.08-2002.04 | MT | F | R | Bus FWD 230 A4.000 | Payload:1800kg,Trans. code:MG | GDS10032 | Drive Shaft | 54T | 35 | 41 | 70 | 117 | 1085 | |
| | 1994.08-2002.04 | MT | F | R | Bus FWD 230 A4.000 | Payload:1000/1400kg,Trans. code:MG | GDS10036 | Drive Shaft | 54T | 28 | 41 | 63 | 112.5 | 1079 | |
| | 1994.08-2002.04 | MT | F | R | Bus FWD 230 A4.000 | Payload:1800kg,Trans. code:MG | GDS10066 | Drive Shaft | | 35 | 41 | 70 | 117 | 1085 | |
| | 1994.08-2002.04 | MT | F | R | Bus FWD 230 A4.000 | Payload:1000/1400kg,Trans. code:ME/ML | GDS10069 | Drive Shaft | | 28 | 37 | 63 | 112.5 | 1072 | |
| | 1994.08-2002.04 | MT | F | R | Bus FWD 230 A4.000 | Payload:1000/1400kg,Trans. code:MG | GDS10103 | Drive Shaft | | 28 | 41 | 63 | 112.5 | 1079 | |
| | 1994.08-2002.04 | MT | F | R | Bus FWD 230 A4.000 | Payload:1000/1400kg,Trans. code:ME/ML | GDS10104 | Drive Shaft | 54T | 28 | 37 | 63 | 112.5 | 1072 | |
| | 1994.08-2002.04 | MT | F | L/R | Bus FWD 230 A4.000 | Payload:1800kg,Trans. code:MG | GCO10011 | Outer Joint | 54T | 35 | 45 | 70 | 117 | 73 | I |
| | 1994.08-2002.04 | MT | F | L/R | Bus FWD 230 A4.000 | Payload:1000/1400kg,Trans. code:ME/ML/MG | GCO10012 | Outer Joint | | 28 | 39 | 63 | 112.5 | 63 | I |
| | 1994.08-2002.04 | MT | F | L/R | Bus FWD 230 A4.000 | Payload:1000/1400kg,Trans. code:ME/ML/MG | GCO10013 | Outer Joint | 54T | 28 | 39 | 63 | 112.5 | 63 | I |
| | 1994.08-2002.04 | MT | F | L/R | Bus FWD 230 A4.000 | Payload:1800kg,Trans. code:MG | GCO10050 | Outer Joint | | 35 | 45 | 70 | 117 | 73 | I |
| | 1994.08-2002.04 | MT | F | L | Bus FWD 230 A4.000 | Payload:1800kg,Trans. code:MG | GCI10010 | Inner Joint | | 41 | 45 | 43 | 70 | 115.5 | |
| | 1994.08-2002.04 | MT | F | L | Bus FWD 230 A4.000 | Payload:1000/1400kg,Trans. code:MG | GCI10013 | Inner Joint | | 41 | 39 | 43 | 70 | 104 | |
| | 1994.08-2002.04 | MT | F | L | Bus FWD 230 A4.000 | Payload:1000/1400kg,Trans. code:ME/ML | GCI10015 | Inner Joint | | 37 | 39 | 40 | 68.5 | 104 | |
| | 1994.08-2002.04 | MT | F | L | Bus FWD 230 A4.000 | Payload:1000/1400kg,Trans. code:ME/ML | GCI45013 | Inner Joint | | 37 | 39 | 40 | 68.5 | 100 | |
| | 1994.08-2002.04 | MT | F | R | Bus FWD 230 A4.000 | Payload:1800kg,Trans. code:MG | GCI10009 | Inner Joint | | 41 | 45 | 34.9 | 393 | 115.6 | |
| | 1994.08-2002.04 | MT | F | R | Bus FWD 230 A4.000 | Payload:1000/1400kg,Trans. code:ME/ML | GCI10034 | Inner Joint | | 37 | 39 | 31.9 | 369.5 | 99 | |
| | 1994.08-2002.04 | MT | F | L | Platform/Chassis FWD 230 A4.000 | Payload:1800kg,Trans. code:MG | GDS10033 | Drive Shaft | 54T | 35 | 41 | 70 | 117 | 762 | |
| | 1994.08-2002.04 | MT | F | L | Platform/Chassis FWD 230 A4.000 | Payload:1000/1400kg,Trans. code:MG | GDS10035 | Drive Shaft | 54T | 28 | 41 | 63 | 112.5 | 757.5 | |
| | 1994.08-2002.04 | MT | F | L | Platform/Chassis FWD 230 A4.000 | Payload:1000/1400kg,Trans. code:ME/ML | GDS10037 | Drive Shaft | 54T | 28 | 37 | 63 | 112.5 | 771 | |
| | 1994.08-2002.04 | MT | F | L | Platform/Chassis FWD 230 A4.000 | Payload:1800kg,Trans. code:MG | GDS10067 | Drive Shaft | | 35 | 41 | 70 | 117 | 762 | |
| | 1994.08-2002.04 | MT | F | L | Platform/Chassis FWD 230 A4.000 | Payload:1000/1400kg,Trans. code:MG | GDS10102 | Drive Shaft | | 28 | 41 | 63 | 112.5 | 757.5 | |
| | 1994.08-2002.04 | MT | F | L | Platform/Chassis FWD 230 A4.000 | Payload:1000/1400kg,Trans. code:ME/ML | GDS10105 | Drive Shaft | | 28 | 37 | 63 | 112.5 | 771 | |
| | 1994.08-2002.04 | MT | F | R | Platform/Chassis FWD 230 A4.000 | Payload:1800kg,Trans. code:MG | GDS10032 | Drive Shaft | 54T | 35 | 41 | 70 | 117 | 1085 | |
| | 1994.08-2002.04 | MT | F | R | Platform/Chassis FWD 230 A4.000 | Payload:1000/1400kg,Trans. code:MG | GDS10036 | Drive Shaft | 54T | 28 | 41 | 63 | 112.5 | 1079 | |
| | 1994.08-2002.04 | MT | F | R | Platform/Chassis FWD 230 A4.000 | Payload:1800kg,Trans. code:MG | GDS10066 | Drive Shaft | | 35 | 41 | 70 | 117 | 1085 | |
| | 1994.08-2002.04 | MT | F | R | Platform/Chassis FWD 230 A4.000 | Payload:1000/1400kg,Trans. code:ME/ML | GDS10069 | Drive Shaft | | 28 | 37 | 63 | 112.5 | 1072 | |
| | 1994.08-2002.04 | MT | F | R | Platform/Chassis FWD 230 A4.000 | Payload:1000/1400kg,Trans. code:MG | GDS10103 | Drive Shaft | | 28 | 41 | 63 | 112.5 | 1079 | |
| | 1994.08-2002.04 | MT | F | R | Platform/Chassis FWD 230 A4.000 | Payload:1000/1400kg,Trans. code:ME/ML | GDS10104 | Drive Shaft | 54T | 28 | 37 | 63 | 112.5 | 1072 | |
| | 1994.08-2002.04 | MT | F | L/R | Platform/Chassis FWD 230 A4.000 | Payload:1800kg,Trans. code:MG | GCO10011 | Outer Joint | 54T | 35 | 45 | 70 | 117 | 73 | I |
| | 1994.08-2002.04 | MT | F | L/R | Platform/Chassis FWD 230 A4.000 | Payload:1000/1400kg,Trans. code:ME/ML/MG | GCO10012 | Outer Joint | | 28 | 39 | 63 | 112.5 | 63 | I |
| | 1994.08-2002.04 | MT | F | L/R | Platform/Chassis FWD 230 A4.000 | Payload:1000/1400kg,Trans. code:ME/ML/MG | GCO10013 | Outer Joint | 54T | 28 | 39 | 63 | 112.5 | 63 | I |
| | 1994.08-2002.04 | MT | F | L/R | Platform/Chassis FWD 230 A4.000 | Payload:1800kg,Trans. code:MG | GCO10050 | Outer Joint | | 35 | 45 | 70 | 117 | 73 | I |
| | 1994.08-2002.04 | MT | F | L | Platform/Chassis FWD 230 A4.000 | Payload:1800kg,Trans. code:MG | GCI10010 | Inner Joint | | 41 | 45 | 43 | 70 | 115.5 | |
| | 1994.08-2002.04 | MT | F | L | Platform/Chassis FWD 230 A4.000 | Payload:1000/1400kg,Trans. code:MG | GCI10013 | Inner Joint | | 41 | 39 | 43 | 70 | 104 | |
| | 1994.08-2002.04 | MT | F | L | Platform/Chassis FWD 230 A4.000 | Payload:1000/1400kg,Trans. code:ME/ML | GCI10015 | Inner Joint | | 37 | 39 | 40 | 68.5 | 104 | |
| | 1994.08-2002.04 | MT | F | L | Platform/Chassis FWD 230 A4.000 | Payload:1000/1400kg,Trans. code:ME/ML | GCI45013 | Inner Joint | | 37 | 39 | 40 | 68.5 | 100 | |
| | 1994.08-2002.04 | MT | F | R | Platform/Chassis FWD 230 A4.000 | Payload:1800kg,Trans. code:MG | GCI10009 | Inner Joint | | 41 | 45 | 34.9 | 393 | 115.6 | |
| | 1994.08-2002.04 | MT | F | R | Platform/Chassis FWD 230 A4.000 | Payload:1000/1400kg,Trans. code:ME/ML | GCI10034 | Inner Joint | | 37 | 39 | 31.9 | 369.5 | 99 | |
| | 1994.08-2002.04 | MT | F | L | Van FWD 230 A4.000 | Payload:1800kg,Trans. code:MG | GDS10033 | Drive Shaft | 54T | 35 | 41 | 70 | 117 | 762 | |
| | 1994.08-2002.04 | MT | F | L | Van FWD 230 A4.000 | Payload:1000/1400kg,Trans. code:MG | GDS10035 | Drive Shaft | 54T | 28 | 41 | 63 | 112.5 | 757.5 | |
| | 1994.08-2002.04 | MT | F | L | Van FWD 230 A4.000 | Payload:1000/1400kg,Trans. code:ME/ML | GDS10037 | Drive Shaft | 54T | 28 | 37 | 63 | 112.5 | 771 | |
| | 1994.08-2002.04 | MT | F | L | Van FWD 230 A4.000 | Payload:1800kg,Trans. code:MG | GDS10067 | Drive Shaft | | 35 | 41 | 70 | 117 | 762 | |
| | 1994.08-2002.04 | MT | F | L | Van FWD 230 A4.000 | Payload:1000/1400kg,Trans. code:MG | GDS10102 | Drive Shaft | | 28 | 41 | 63 | 112.5 | 757.5 | |
| | 1994.08-2002.04 | MT | F | L | Van FWD 230 A4.000 | Payload:1000/1400kg,Trans. code:ME/ML | GDS10105 | Drive Shaft | | 28 | 37 | 63 | 112.5 | 771 | |
| | 1994.08-2002.04 | MT | F | R | Van FWD 230 A4.000 | Payload:1800kg,Trans. code:MG | GDS10032 | Drive Shaft | 54T | 35 | 41 | 70 | 117 | 1085 | |
| | 1994.08-2002.04 | MT | F | R | Van FWD 230 A4.000 | Payload:1000/1400kg,Trans. code:MG | GDS10036 | Drive Shaft | 54T | 28 | 41 | 63 | 112.5 | 1079 | |
| | 1994.08-2002.04 | MT | F | R | Van FWD 230 A4.000 | Payload:1800kg,Trans. code:MG | GDS10066 | Drive Shaft | | 35 | 41 | 70 | 117 | 1085 | |
| | 1994.08-2002.04 | MT | F | R | Van FWD 230 A4.000 | Payload:1000/1400kg,Trans. code:ME/ML | GDS10069 | Drive Shaft | | 28 | 37 | 63 | 112.5 | 1072 | |
| | 1994.08-2002.04 | MT | F | R | Van FWD 230 A4.000 | Payload:1000/1400kg,Trans. code:MG | GDS10103 | Drive Shaft | | 28 | 41 | 63 | 112.5 | 1079 | |
| | 1994.08-2002.04 | MT | F | R | Van FWD 230 A4.000 | Payload:1000/1400kg,Trans. code:ME/ML | GDS10104 | Drive Shaft | 54T | 28 | 37 | 63 | 112.5 | 1072 | |
| | 1994.08-2002.04 | MT | F | L/R | Van FWD 230 A4.000 | Payload:1800kg,Trans. code:MG | GCO10011 | Outer Joint | 54T | 35 | 45 | 70 | 117 | 73 | I |
| | 1994.08-2002.04 | MT | F | L/R | Van FWD 230 A4.000 | Payload:1000/1400kg,Trans. code:ME/ML/MG | GCO10012 | Outer Joint | | 28 | 39 | 63 | 112.5 | 63 | I |
| | 1994.08-2002.04 | MT | F | L/R | Van FWD 230 A4.000 | Payload:1000/1400kg,Trans. code:ME/ML/MG | GCO10013 | Outer Joint | 54T | 28 | 39 | 63 | 112.5 | 63 | I |

| | YEAR | TRANSM. | F/R | L/R | BODY STYLE & DRIVE TYPE & ENGINE | REMARKS | G-AP Ref. | PRODUCT | ABS | Technical Specifications A | B | C | H | L | P |
|---|---|---|---|---|---|---|---|---|---|---|---|---|---|---|---|
| **FIAT** **Ducato 10** | | | | | | | | | | | | | | | |
| 1.9 (59 kw) | 1994.08-2002.04 | MT | F | L/R | Van FWD 230 A4.000 | Payload:1800kg,Trans. code:MG | GCO10050 | Outer Joint | | 35 | 45 | 70 | 117 | 73 | I |
| | 1994.08-2002.04 | MT | F | L | Van FWD 230 A4.000 | Payload:1800kg,Trans. code:MG | GCI10010 | Inner Joint | | 41 | 45 | 43 | 70 | 115.5 | |
| | 1994.08-2002.04 | MT | F | L | Van FWD 230 A4.000 | Payload:1000/1400kg,Trans. code:MG | GCI10013 | Inner Joint | | 41 | 39 | 43 | 70 | 104 | |
| | 1994.08-2002.04 | MT | F | L | Van FWD 230 A4.000 | Payload:1000/1400kg,Trans. code:ME/ML | GCI10015 | Inner Joint | | 37 | 39 | 40 | 68.5 | 104 | |
| | 1994.08-2002.04 | MT | F | L | Van FWD 230 A4.000 | Payload:1000/1400kg,Trans. code:ME/ML | GCI45013 | Inner Joint | | 37 | 39 | 40 | 68.5 | 100 | |
| | 1994.08-2002.04 | MT | F | R | Van FWD 230 A4.000 | Payload:1800kg,Trans. code:MG | GCI10009 | Inner Joint | | 41 | 45 | 34.9 | 393 | 115.6 | |
| | 1994.08-2002.04 | MT | F | R | Van FWD 230 A4.000 | Payload:1000/1400kg,Trans. code:ME/ML | GCI10034 | Inner Joint | | 37 | 39 | 31.9 | 369.5 | 99 | |
| 1.9 (60 kw) | 1994.03-2002.04 | MT | F | L | Bus FWD 230 A3.000 | Payload:1800kg,Trans. code:MG | GDS10033 | Drive Shaft | 54T | 35 | 41 | 70 | 117 | 762 | |
| | 1994.03-2002.04 | MT | F | L | Bus FWD 230 A3.000 | Payload:1000/1400kg,Trans. code:MG | GDS10035 | Drive Shaft | 54T | 28 | 41 | 63 | 112.5 | 757.5 | |
| | 1994.03-2002.04 | MT | F | L | Bus FWD 230 A3.000 | Payload:1000/1400kg,Trans. code:ME/ML | GDS10037 | Drive Shaft | 54T | 28 | 37 | 63 | 112.5 | 771 | |
| | 1994.03-2002.04 | MT | F | L | Bus FWD 230 A3.000 | Payload:1800kg,Trans. code:MG | GDS10067 | Drive Shaft | | 35 | 41 | 70 | 117 | 762 | |
| | 1994.03-2002.04 | MT | F | L | Bus FWD 230 A3.000 | Payload:1000/1400kg,Trans. code:MG | GDS10102 | Drive Shaft | | 28 | 41 | 63 | 112.5 | 757.5 | |
| | 1994.03-2002.04 | MT | F | L | Bus FWD 230 A3.000 | Payload:1000/1400kg,Trans. code:ME/ML | GDS10105 | Drive Shaft | | 28 | 37 | 63 | 112.5 | 771 | |
| | 1994.03-2002.04 | MT | F | R | Bus FWD 230 A3.000 | Payload:1800kg,Trans. code:MG | GDS10032 | Drive Shaft | 54T | 35 | 41 | 70 | 117 | 1085 | |
| | 1994.03-2002.04 | MT | F | R | Bus FWD 230 A3.000 | Payload:1000/1400kg,Trans. code:MG | GDS10036 | Drive Shaft | 54T | 28 | 41 | 63 | 112.5 | 1079 | |
| | 1994.03-2002.04 | MT | F | R | Bus FWD 230 A3.000 | Payload:1800kg,Trans. code:MG | GDS10066 | Drive Shaft | | 35 | 41 | 70 | 117 | 1085 | |
| | 1994.03-2002.04 | MT | F | R | Bus FWD 230 A3.000 | Payload:1000/1400kg,Trans. code:ME/ML | GDS10069 | Drive Shaft | | 28 | 37 | 63 | 112.5 | 1072 | |
| | 1994.03-2002.04 | MT | F | R | Bus FWD 230 A3.000 | Payload:1000/1400kg,Trans. code:MG | GDS10103 | Drive Shaft | | 28 | 41 | 63 | 112.5 | 1079 | |
| | 1994.03-2002.04 | MT | F | R | Bus FWD 230 A3.000 | Payload:1000/1400kg,Trans. code:ME/ML | GDS10104 | Drive Shaft | 54T | 28 | 37 | 63 | 112.5 | 1072 | |
| | 1994.03-2002.04 | MT | F | L/R | Bus FWD 230 A3.000 | Payload:1800kg,Trans. code:MG | GCO10011 | Outer Joint | 54T | 35 | 45 | 70 | 117 | 73 | I |
| | 1994.03-2002.04 | MT | F | L/R | Bus FWD 230 A3.000 | Payload:1000/1400kg,Trans. code:ME/ML/MG | GCO10012 | Outer Joint | | 28 | 39 | 63 | 112.5 | 63 | I |
| | 1994.03-2002.04 | MT | F | L/R | Bus FWD 230 A3.000 | Payload:1000/1400kg,Trans. code:ME/ML/MG | GCO10013 | Outer Joint | 54T | 28 | 39 | 63 | 112.5 | 63 | I |
| | 1994.03-2002.04 | MT | F | L/R | Bus FWD 230 A3.000 | Payload:1800kg,Trans. code:MG | GCO10050 | Outer Joint | | 35 | 45 | 70 | 117 | 73 | I |
| | 1994.03-2002.04 | MT | F | L | Bus FWD 230 A3.000 | Payload:1800kg,Trans. code:MG | GCI10010 | Inner Joint | | 41 | 45 | 43 | 70 | 115.5 | |
| | 1994.03-2002.04 | MT | F | L | Bus FWD 230 A3.000 | Payload:1000/1400kg,Trans. code:MG | GCI10013 | Inner Joint | | 41 | 39 | 43 | 70 | 104 | |
| | 1994.03-2002.04 | MT | F | L | Bus FWD 230 A3.000 | Payload:1000/1400kg,Trans. code:ME/ML | GCI10015 | Inner Joint | | 37 | 39 | 40 | 68.5 | 104 | |
| | 1994.03-2002.04 | MT | F | R | Bus FWD 230 A3.000 | Payload:1800kg,Trans. code:MG | GCI10009 | Inner Joint | | 41 | 45 | 34.9 | 393 | 115.6 | |
| | 1994.03-2002.04 | MT | F | R | Bus FWD 230 A3.000 | Payload:1000/1400kg,Trans. code:ME/ML | GCI10034 | Inner Joint | | 37 | 39 | 31.9 | 369.5 | 99 | |
| | 1994.03-2002.04 | MT | F | L | Platform/Chassis FWD 230 A3.000 | Payload:1800kg,Trans. code:MG | GDS10033 | Drive Shaft | 54T | 35 | 41 | 70 | 117 | 762 | |
| | 1994.03-2002.04 | MT | F | L | Platform/Chassis FWD 230 A3.000 | Payload:1000/1400kg,Trans. code:MG | GDS10035 | Drive Shaft | 54T | 28 | 41 | 63 | 112.5 | 757.5 | |
| | 1994.03-2002.04 | MT | F | L | Platform/Chassis FWD 230 A3.000 | Payload:1000/1400kg,Trans. code:ME/ML | GDS10037 | Drive Shaft | 54T | 28 | 37 | 63 | 112.5 | 771 | |
| | 1994.03-2002.04 | MT | F | L | Platform/Chassis FWD 230 A3.000 | Payload:1800kg,Trans. code:MG | GDS10067 | Drive Shaft | | 35 | 41 | 70 | 117 | 762 | |
| | 1994.03-2002.04 | MT | F | L | Platform/Chassis FWD 230 A3.000 | Payload:1000/1400kg,Trans. code:MG | GDS10102 | Drive Shaft | | 28 | 41 | 63 | 112.5 | 757.5 | |
| | 1994.03-2002.04 | MT | F | L | Platform/Chassis FWD 230 A3.000 | Payload:1000/1400kg,Trans. code:ME/ML | GDS10105 | Drive Shaft | | 28 | 37 | 63 | 112.5 | 771 | |
| | 1994.03-2002.04 | MT | F | R | Platform/Chassis FWD 230 A3.000 | Payload:1800kg,Trans. code:MG | GDS10032 | Drive Shaft | 54T | 35 | 41 | 70 | 117 | 1085 | |
| | 1994.03-2002.04 | MT | F | R | Platform/Chassis FWD 230 A3.000 | Payload:1000/1400kg,Trans. code:MG | GDS10036 | Drive Shaft | 54T | 28 | 41 | 63 | 112.5 | 1079 | |
| | 1994.03-2002.04 | MT | F | R | Platform/Chassis FWD 230 A3.000 | Payload:1800kg,Trans. code:MG | GDS10066 | Drive Shaft | | 35 | 41 | 70 | 117 | 1085 | |
| | 1994.03-2002.04 | MT | F | R | Platform/Chassis FWD 230 A3.000 | Payload:1000/1400kg,Trans. code:ME/ML | GDS10069 | Drive Shaft | | 28 | 37 | 63 | 112.5 | 1072 | |
| | 1994.03-2002.04 | MT | F | R | Platform/Chassis FWD 230 A3.000 | Payload:1000/1400kg,Trans. code:MG | GDS10103 | Drive Shaft | | 28 | 41 | 63 | 112.5 | 1079 | |
| | 1994.03-2002.04 | MT | F | R | Platform/Chassis FWD 230 A3.000 | Payload:1000/1400kg,Trans. code:ME/ML | GDS10104 | Drive Shaft | 54T | 28 | 37 | 63 | 112.5 | 1072 | |
| | 1994.03-2002.04 | MT | F | L/R | Platform/Chassis FWD 230 A3.000 | Payload:1800kg,Trans. code:MG | GCO10011 | Outer Joint | 54T | 35 | 45 | 70 | 117 | 73 | I |
| | 1994.03-2002.04 | MT | F | L/R | Platform/Chassis FWD 230 A3.000 | Payload:1000/1400kg,Trans. code:ME/ML/MG | GCO10012 | Outer Joint | | 28 | 39 | 63 | 112.5 | 63 | I |
| | 1994.03-2002.04 | MT | F | L/R | Platform/Chassis FWD 230 A3.000 | Payload:1000/1400kg,Trans. code:ME/ML/MG | GCO10013 | Outer Joint | 54T | 28 | 39 | 63 | 112.5 | 63 | I |
| | 1994.03-2002.04 | MT | F | L/R | Platform/Chassis FWD 230 A3.000 | Payload:1800kg,Trans. code:MG | GCO10050 | Outer Joint | | 35 | 45 | 70 | 117 | 73 | I |
| | 1994.03-2002.04 | MT | F | L | Platform/Chassis FWD 230 A3.000 | Payload:1800kg,Trans. code:MG | GCI10010 | Inner Joint | | 41 | 45 | 43 | 70 | 115.5 | |
| | 1994.03-2002.04 | MT | F | L | Platform/Chassis FWD 230 A3.000 | Payload:1000/1400kg,Trans. code:MG | GCI10013 | Inner Joint | | 41 | 39 | 43 | 70 | 104 | |
| | 1994.03-2002.04 | MT | F | L | Platform/Chassis FWD 230 A3.000 | Payload:1000/1400kg,Trans. code:ME/ML | GCI10015 | Inner Joint | | 37 | 39 | 40 | 68.5 | 104 | |
| | 1994.03-2002.04 | MT | F | L | Platform/Chassis FWD 230 A3.000 | Payload:1000/1400kg,Trans. code:ME/ML | GCI45013 | Inner Joint | | 37 | 39 | 40 | 68.5 | 100 | |
| | 1994.03-2002.04 | MT | F | R | Platform/Chassis FWD 230 A3.000 | Payload:1800kg,Trans. code:MG | GCI10009 | Inner Joint | | 41 | 45 | 34.9 | 393 | 115.6 | |
| | 1994.03-2002.04 | MT | F | R | Platform/Chassis FWD 230 A3.000 | Payload:1000/1400kg,Trans. code:ME/ML | GCI10034 | Inner Joint | | 37 | 39 | 31.9 | 369.5 | 99 | |
| | 1994.03-2002.04 | MT | F | L | Van FWD 230 A3.000 | Payload:1800kg,Trans. code:MG | GDS10033 | Drive Shaft | 54T | 35 | 41 | 70 | 117 | 762 | |
| | 1994.03-2002.04 | MT | F | L | Van FWD 230 A3.000 | Payload:1000/1400kg,Trans. code:MG | GDS10035 | Drive Shaft | 54T | 28 | 41 | 63 | 112.5 | 757.5 | |
| | 1994.03-2002.04 | MT | F | L | Van FWD 230 A3.000 | Payload:1000/1400kg,Trans. code:ME/ML | GDS10037 | Drive Shaft | 54T | 28 | 37 | 63 | 112.5 | 771 | |
| | 1994.03-2002.04 | MT | F | L | Van FWD 230 A3.000 | Payload:1800kg,Trans. code:MG | GDS10067 | Drive Shaft | | 35 | 41 | 70 | 117 | 762 | |
| | 1994.03-2002.04 | MT | F | L | Van FWD 230 A3.000 | Payload:1000/1400kg,Trans. code:MG | GDS10102 | Drive Shaft | | 28 | 41 | 63 | 112.5 | 757.5 | |
| | 1994.03-2002.04 | MT | F | L | Van FWD 230 A3.000 | Payload:1000/1400kg,Trans. code:ME/ML | GDS10105 | Drive Shaft | | 28 | 37 | 63 | 112.5 | 771 | |
| | 1994.03-2002.04 | MT | F | R | Van FWD 230 A3.000 | Payload:1800kg,Trans. code:MG | GDS10032 | Drive Shaft | 54T | 35 | 41 | 70 | 117 | 1085 | |
| | 1994.03-2002.04 | MT | F | R | Van FWD 230 A3.000 | Payload:1000/1400kg,Trans. code:MG | GDS10036 | Drive Shaft | 54T | 28 | 41 | 63 | 112.5 | 1079 | |
| | 1994.03-2002.04 | MT | F | R | Van FWD 230 A3.000 | Payload:1800kg,Trans. code:MG | GDS10066 | Drive Shaft | | 35 | 41 | 70 | 117 | 1085 | |
| | 1994.03-2002.04 | MT | F | R | Van FWD 230 A3.000 | Payload:1000/1400kg,Trans. code:ME/ML | GDS10069 | Drive Shaft | | 28 | 37 | 63 | 112.5 | 1072 | |
| | 1994.03-2002.04 | MT | F | R | Van FWD 230 A3.000 | Payload:1000/1400kg,Trans. code:MG | GDS10103 | Drive Shaft | | 28 | 41 | 63 | 112.5 | 1079 | |
| | 1994.03-2002.04 | MT | F | R | Van FWD 230 A3.000 | Payload:1000/1400kg,Trans. code:ME/ML | GDS10104 | Drive Shaft | 54T | 28 | 37 | 63 | 112.5 | 1072 | |
| | 1994.03-2002.04 | MT | F | L/R | Van FWD 230 A3.000 | Payload:1800kg,Trans. code:MG | GCO10011 | Outer Joint | 54T | 35 | 45 | 70 | 117 | 73 | I |
| | 1994.03-2002.04 | MT | F | L/R | Van FWD 230 A3.000 | Payload:1000/1400kg,Trans. code:ME/ML/MG | GCO10012 | Outer Joint | | 28 | 39 | 63 | 112.5 | 63 | I |
| | 1994.03-2002.04 | MT | F | L/R | Van FWD 230 A3.000 | Payload:1000/1400kg,Trans. code:ME/ML/MG | GCO10013 | Outer Joint | 54T | 28 | 39 | 63 | 112.5 | 63 | I |

| | YEAR | TRANSM. | F/R | L/R | BODY STYLE & DRIVE TYPE & ENGINE | REMARKS | G-AP Ref. | PRODUCT | ABS | Technical Specifications A | B | C | H | L | P |
|---|---|---|---|---|---|---|---|---|---|---|---|---|---|---|---|
| **FIAT** **Ducato 10** | | | | | | | | | | | | | | | |
| 1.9 (60 kw) | 1994.03-2002.04 | MT | F | L/R | Van FWD 230 A3.000 | Payload:1800kg,Trans. code:MG | GCO10050 | Outer Joint | | 35 | 45 | 70 | 117 | 73 | I |
| | 1994.03-2002.04 | MT | F | L | Van FWD 230 A3.000 | Payload:1800kg,Trans. code:MG | GCI10010 | Inner Joint | | 41 | 45 | 43 | 70 | 115.5 | |
| | 1994.03-2002.04 | MT | F | L | Van FWD 230 A3.000 | Payload:1000/1400kg,Trans. code:MG | GCI10013 | Inner Joint | | 41 | 39 | 43 | 70 | 104 | |
| | 1994.03-2002.04 | MT | F | L | Van FWD 230 A3.000 | Payload:1000/1400kg,Trans. code:ME/ML | GCI10015 | Inner Joint | | 37 | 39 | 40 | 68.5 | 104 | |
| | 1994.03-2002.04 | MT | F | L | Van FWD 230 A3.000 | Payload:1000/1400kg,Trans. code:ME/ML | GCI45013 | Inner Joint | | 37 | 39 | 40 | 68.5 | 100 | |
| | 1994.03-2002.04 | MT | F | R | Van FWD 230 A3.000 | Payload:1800kg,Trans. code:MG | GCI10009 | Inner Joint | | 41 | 45 | 34.9 | 393 | 115.6 | |
| | 1994.03-2002.04 | MT | F | R | Van FWD 230 A3.000 | Payload:1000/1400kg,Trans. code:ME/ML | GCI10034 | Inner Joint | | 37 | 39 | 31.9 | 369.5 | 99 | |
| 2.0 (62 kw) | 2001.10-2002.04 | MT | F | L | Bus FWD RHV | Payload:1000kg/1400kg | GDS10037 | Drive Shaft | 54T | 28 | 37 | 63 | 112.5 | 771 | |
| | 2001.10-2002.04 | MT | F | R | Bus FWD RHV | Payload:1000kg/1400kg | GDS10104 | Drive Shaft | 54T | 28 | 37 | 63 | 112.5 | 1072 | |
| | 2001.10-2002.04 | MT | F | L/R | Bus FWD RHV | Payload [kg]:1000/1400 | GCO10013 | Outer Joint | 54T | 28 | 39 | 63 | 112.5 | 63 | I |
| | 2001.10-2002.04 | MT | F | L | Van FWD RHV | Payload:1000kg/1400kg | GDS10037 | Drive Shaft | 54T | 28 | 37 | 63 | 112.5 | 771 | |
| | 2001.10-2002.04 | MT | F | R | Van FWD RHV | Payload:1000kg/1400kg | GDS10104 | Drive Shaft | 54T | 28 | 37 | 63 | 112.5 | 1072 | |
| | 2001.10-2002.04 | MT | F | L/R | Van FWD RHV | Payload [kg]:1000/1400 | GCO10013 | Outer Joint | 54T | 28 | 39 | 63 | 112.5 | 63 | I |
| 2.0 (80 kw) | 1994.03-2002.04 | MT | F | L | Bus FWD RFW | Payload:1800kg,Trans. code:MG | GDS10033 | Drive Shaft | 54T | 35 | 41 | 70 | 117 | 762 | |
| | 1994.03-2002.04 | MT | F | L | Bus FWD RFW | Payload:1000/1400kg,Trans. code:MG | GDS10035 | Drive Shaft | 54T | 28 | 41 | 63 | 112.5 | 757.5 | |
| | 1994.03-2002.04 | MT | F | L | Bus FWD RFW | Payload:1000/1400kg,Trans. code:ME/ML | GDS10037 | Drive Shaft | 54T | 28 | 37 | 63 | 112.5 | 771 | |
| | 1994.03-2002.04 | MT | F | L | Bus FWD RFW | Payload:1800kg,Trans. code:MG | GDS10067 | Drive Shaft | | 35 | 41 | 70 | 117 | 762 | |
| | 1994.03-2002.04 | MT | F | L | Bus FWD RFW | Payload:1000/1400kg,Trans. code:MG | GDS10102 | Drive Shaft | | 28 | 41 | 63 | 112.5 | 757.5 | |
| | 1994.03-2002.04 | MT | F | L | Bus FWD RFW | Payload:1000/1400kg,Trans. code:ME/ML | GDS10105 | Drive Shaft | | 28 | 37 | 63 | 112.5 | 771 | |
| | 1994.03-2002.04 | MT | F | R | Bus FWD RFW | Payload:1800kg,Trans. code:MG | GDS10032 | Drive Shaft | 54T | 35 | 41 | 70 | 117 | 1085 | |
| | 1994.03-2002.04 | MT | F | R | Bus FWD RFW | Payload:1000/1400kg,Trans. code:MG | GDS10036 | Drive Shaft | 54T | 28 | 41 | 63 | 112.5 | 1079 | |
| | 1994.03-2002.04 | MT | F | R | Bus FWD RFW | Payload:1800kg,Trans. code:MG | GDS10066 | Drive Shaft | | 35 | 41 | 70 | 117 | 1085 | |
| | 1994.03-2002.04 | MT | F | R | Bus FWD RFW | Payload:1000/1400kg,Trans. code:ME/ML | GDS10069 | Drive Shaft | | 28 | 37 | 63 | 112.5 | 1072 | |
| | 1994.03-2002.04 | MT | F | R | Bus FWD RFW | Payload:1000/1400kg,Trans. code:MG | GDS10103 | Drive Shaft | | 28 | 41 | 63 | 112.5 | 1079 | |
| | 1994.03-2002.04 | MT | F | R | Bus FWD RFW | Payload:1000/1400kg,Trans. code:ME/ML | GDS10104 | Drive Shaft | 54T | 28 | 37 | 63 | 112.5 | 1072 | |
| | 1994.03-2002.04 | MT | F | L/R | Bus FWD RFW | Payload:1800kg,Trans. code:MG | GCO10011 | Outer Joint | 54T | 35 | 45 | 70 | 117 | 73 | I |
| | 1994.03-2002.04 | MT | F | L/R | Bus FWD RFW | Payload:1000/1400kg,Trans. code:ME/ML/MG | GCO10012 | Outer Joint | | 28 | 39 | 63 | 112.5 | 63 | I |
| | 1994.03-2002.04 | MT | F | L/R | Bus FWD RFW | Payload:1000/1400kg,Trans. code:ME/ML/MG | GCO10013 | Outer Joint | 54T | 28 | 39 | 63 | 112.5 | 63 | I |
| | 1994.03-2002.04 | MT | F | L/R | Bus FWD RFW | Payload:1800kg,Trans. code:MG | GCO10050 | Outer Joint | | 35 | 45 | 70 | 117 | 73 | I |
| | 1994.03-2002.04 | MT | F | L | Bus FWD RFW | Payload:1800kg,Trans. code:MG | GCI10010 | Inner Joint | | 41 | 45 | 43 | 70 | 115.5 | |
| | 1994.03-2002.04 | MT | F | L | Bus FWD RFW | Payload:1000/1400kg,Trans. code:MG | GCI10013 | Inner Joint | | 41 | 39 | 43 | 70 | 104 | |
| | 1994.03-2002.04 | MT | F | L | Bus FWD RFW | Payload:1000/1400kg,Trans. code:ME/ML | GCI10015 | Inner Joint | | 37 | 39 | 40 | 68.5 | 104 | |
| | 1994.03-2002.04 | MT | F | L | Bus FWD RFW | Payload:1000/1400kg,Trans. code:ME/ML | GCI45013 | Inner Joint | | 37 | 39 | 40 | 68.5 | 100 | |
| | 1994.03-2002.04 | MT | F | R | Bus FWD RFW | Payload:1800kg,Trans. code:MG | GCI10009 | Inner Joint | | 41 | 45 | 34.9 | 393 | 115.6 | |
| | 1994.03-2002.04 | MT | F | R | Bus FWD RFW | Payload:1000/1400kg,Trans. code:ME/ML | GCI10034 | Inner Joint | | 37 | 39 | 31.9 | 369.5 | 99 | |
| | 1994.03-2002.04 | MT | F | L | Van FWD RFW | Payload:1800kg,Trans. code:MG | GDS10033 | Drive Shaft | 54T | 35 | 41 | 70 | 117 | 762 | |
| | 1994.03-2002.04 | MT | F | L | Van FWD RFW | Payload:1000/1400kg,Trans. code:MG | GDS10035 | Drive Shaft | 54T | 28 | 41 | 63 | 112.5 | 757.5 | |
| | 1994.03-2002.04 | MT | F | L | Van FWD RFW | Payload:1000/1400kg,Trans. code:ME/ML | GDS10037 | Drive Shaft | 54T | 28 | 37 | 63 | 112.5 | 771 | |
| | 1994.03-2002.04 | MT | F | L | Van FWD RFW | Payload:1800kg,Trans. code:MG | GDS10067 | Drive Shaft | | 35 | 41 | 70 | 117 | 762 | |
| | 1994.03-2002.04 | MT | F | L | Van FWD RFW | Payload:1000/1400kg,Trans. code:MG | GDS10102 | Drive Shaft | | 28 | 41 | 63 | 112.5 | 757.5 | |
| | 1994.03-2002.04 | MT | F | L | Van FWD RFW | Payload:1000/1400kg,Trans. code:ME/ML | GDS10105 | Drive Shaft | | 28 | 37 | 63 | 112.5 | 771 | |
| | 1994.03-2002.04 | MT | F | R | Van FWD RFW | Payload:1800kg,Trans. code:MG | GDS10032 | Drive Shaft | 54T | 35 | 41 | 70 | 117 | 1085 | |
| | 1994.03-2002.04 | MT | F | R | Van FWD RFW | Payload:1000/1400kg,Trans. code:MG | GDS10036 | Drive Shaft | 54T | 28 | 41 | 63 | 112.5 | 1079 | |
| | 1994.03-2002.04 | MT | F | R | Van FWD RFW | Payload:1800kg,Trans. code:MG | GDS10066 | Drive Shaft | | 35 | 41 | 70 | 117 | 1085 | |
| | 1994.03-2002.04 | MT | F | R | Van FWD RFW | Payload:1000/1400kg,Trans. code:ME/ML | GDS10069 | Drive Shaft | | 28 | 37 | 63 | 112.5 | 1072 | |
| | 1994.03-2002.04 | MT | F | R | Van FWD RFW | Payload:1000/1400kg,Trans. code:MG | GDS10103 | Drive Shaft | | 28 | 41 | 63 | 112.5 | 1079 | |
| | 1994.03-2002.04 | MT | F | R | Van FWD RFW | Payload:1000/1400kg,Trans. code:ME/ML | GDS10104 | Drive Shaft | 54T | 28 | 37 | 63 | 112.5 | 1072 | |
| | 1994.03-2002.04 | MT | F | L/R | Van FWD RFW | Payload:1800kg,Trans. code:MG | GCO10011 | Outer Joint | 54T | 35 | 45 | 70 | 117 | 73 | I |
| | 1994.03-2002.04 | MT | F | L/R | Van FWD RFW | Payload:1000/1400kg,Trans. code:ME/ML/MG | GCO10012 | Outer Joint | | 28 | 39 | 63 | 112.5 | 63 | I |
| | 1994.03-2002.04 | MT | F | L/R | Van FWD RFW | Payload:1000/1400kg,Trans. code:ME/ML/MG | GCO10013 | Outer Joint | 54T | 28 | 39 | 63 | 112.5 | 63 | I |
| | 1994.03-2002.04 | MT | F | L/R | Van FWD RFW | Payload:1800kg,Trans. code:MG | GCO10050 | Outer Joint | | 35 | 45 | 70 | 117 | 73 | I |
| | 1994.03-2002.04 | MT | F | L | Van FWD RFW | Payload:1800kg,Trans. code:MG | GCI10010 | Inner Joint | | 41 | 45 | 43 | 70 | 115.5 | |
| | 1994.03-2002.04 | MT | F | L | Van FWD RFW | Payload:1000/1400kg,Trans. code:MG | GCI10013 | Inner Joint | | 41 | 39 | 43 | 70 | 104 | |
| | 1994.03-2002.04 | MT | F | L | Van FWD RFW | Payload:1000/1400kg,Trans. code:ME/ML | GCI10015 | Inner Joint | | 37 | 39 | 40 | 68.5 | 104 | |
| | 1994.03-2002.04 | MT | F | L | Van FWD RFW | Payload:1000/1400kg,Trans. code:ME/ML | GCI45013 | Inner Joint | | 37 | 39 | 40 | 68.5 | 100 | |
| | 1994.03-2002.04 | MT | F | R | Van FWD RFW | Payload:1800kg,Trans. code:MG | GCI10009 | Inner Joint | | 41 | 45 | 34.9 | 393 | 115.6 | |
| | 1994.03-2002.04 | MT | F | R | Van FWD RFW | Payload:1000/1400kg,Trans. code:ME/ML | GCI10034 | Inner Joint | | 37 | 39 | 31.9 | 369.5 | 99 | |
| | 1994.11-2001.11 | MT | F | L | Bus 4WD RFW | Payload:1800kg | GDS10033 | Drive Shaft | 54T | 35 | 41 | 70 | 117 | 762 | |
| | 1994.11-2001.11 | MT | F | L | Bus 4WD RFW | Date From:2001.06,Payload:1000kg/1400kg | GDS10035 | Drive Shaft | 54T | 28 | 41 | 63 | 112.5 | 757.5 | |
| | 1994.11-2001.11 | MT | F | L | Bus 4WD RFW | Date To:2001.05,Payload:1000kg/1400kg | GDS10037 | Drive Shaft | 54T | 28 | 37 | 63 | 112.5 | 771 | |
| | 1994.11-2001.11 | MT | F | R | Bus 4WD RFW | Chassis no. from:5235559,Payload:1800kg | GDS10032 | Drive Shaft | 54T | 35 | 41 | 70 | 117 | 1085 | |
| | 1994.11-2001.11 | MT | F | R | Bus 4WD RFW | Date From:2001.06,Payload:1000kg/1400kg | GDS10036 | Drive Shaft | 54T | 28 | 41 | 63 | 112.5 | 1079 | |
| | 1994.11-2001.11 | MT | F | R | Bus 4WD RFW | Date To:2001.05,Payload:1000kg/1400kg | GDS10104 | Drive Shaft | 54T | 28 | 37 | 63 | 112.5 | 1072 | |
| | 1994.11-2001.11 | MT | F | L/R | Bus 4WD RFW | Payload [kg]:1800 | GCO10011 | Outer Joint | 54T | 35 | 45 | 70 | 117 | 73 | I |
| | 1994.11-2001.11 | MT | F | L/R | Bus 4WD RFW | Payload [kg]:1000/1400 | GCO10013 | Outer Joint | 54T | 28 | 39 | 63 | 112.5 | 63 | I |

| | YEAR | TRANSM. | F/R | L/R | BODY STYLE & DRIVE TYPE & ENGINE | REMARKS | G-AP Ref. | PRODUCT | ABS | Technical Specifications A | B | C | H | L | P |
|---|---|---|---|---|---|---|---|---|---|---|---|---|---|---|---|
| **FIAT** **Ducato 10** | | | | | | | | | | | | | | | |
| 2.5 (62 kw) | 1994.03-2002.04 | MT | F | L | Van FWD 8140.67 | Payload:1800kg,Trans. code:MG | GDS10033 | Drive Shaft | 54T | 35 | 41 | 70 | 117 | 762 | |
| | 1994.03-2002.04 | MT | F | L | Van FWD 8140.67 | Payload:1000/1400kg,Trans. code:MG | GDS10035 | Drive Shaft | 54T | 28 | 41 | 63 | 112.5 | 757.5 | |
| | 1994.03-2002.04 | MT | F | L | Van FWD 8140.67 | Payload:1000/1400kg,Trans. code:ME/ML | GDS10037 | Drive Shaft | 54T | 28 | 37 | 63 | 112.5 | 771 | |
| | 1994.03-2002.04 | MT | F | L | Van FWD 8140.67 | Payload:1800kg,Trans. code:MG | GDS10067 | Drive Shaft | | 35 | 41 | 70 | 117 | 762 | |
| | 1994.03-2002.04 | MT | F | L | Van FWD 8140.67 | Payload:1000/1400kg,Trans. code:MG | GDS10102 | Drive Shaft | | 28 | 41 | 63 | 112.5 | 757.5 | |
| | 1994.03-2002.04 | MT | F | L | Van FWD 8140.67 | Payload:1000/1400kg,Trans. code:ME/ML | GDS10105 | Drive Shaft | | 28 | 37 | 63 | 112.5 | 771 | |
| | 1994.03-2002.04 | MT | F | R | Van FWD 8140.67 | Payload:1800kg,Trans. code:MG | GDS10032 | Drive Shaft | 54T | 35 | 41 | 70 | 117 | 1085 | |
| | 1994.03-2002.04 | MT | F | R | Van FWD 8140.67 | Payload:1000/1400kg,Trans. code:MG | GDS10036 | Drive Shaft | 54T | 28 | 41 | 63 | 112.5 | 1079 | |
| | 1994.03-2002.04 | MT | F | R | Van FWD 8140.67 | Payload:1800kg,Trans. code:MG | GDS10066 | Drive Shaft | | 35 | 41 | 70 | 117 | 1085 | |
| | 1994.03-2002.04 | MT | F | R | Van FWD 8140.67 | Payload:1000/1400kg,Trans. code:ME/ML | GDS10069 | Drive Shaft | | 28 | 37 | 63 | 112.5 | 1072 | |
| | 1994.03-2002.04 | MT | F | R | Van FWD 8140.67 | Payload:1000/1400kg,Trans. code:MG | GDS10103 | Drive Shaft | | 28 | 41 | 63 | 112.5 | 1079 | |
| | 1994.03-2002.04 | MT | F | R | Van FWD 8140.67 | Payload:1000/1400kg,Trans. code:ME/ML | GDS10104 | Drive Shaft | 54T | 28 | 37 | 63 | 112.5 | 1072 | |
| | 1994.03-2002.04 | MT | F | L/R | Van FWD 8140.67 | Payload:1800kg,Trans. code:MG | GCO10011 | Outer Joint | 54T | 35 | 45 | 70 | 117 | 73 | I |
| | 1994.03-2002.04 | MT | F | L/R | Van FWD 8140.67 | Payload:1000/1400kg,Trans. code:ME/ML/MG | GCO10012 | Outer Joint | | 28 | 39 | 63 | 112.5 | 63 | I |
| | 1994.03-2002.04 | MT | F | L/R | Van FWD 8140.67 | Payload:1000/1400kg,Trans. code:ME/ML/MG | GCO10013 | Outer Joint | 54T | 28 | 39 | 63 | 112.5 | 63 | I |
| | 1994.03-2002.04 | MT | F | L/R | Van FWD 8140.67 | Payload:1800kg,Trans. code:MG | GCO10050 | Outer Joint | | 35 | 45 | 70 | 117 | 73 | I |
| | 1994.03-2002.04 | MT | F | L | Van FWD 8140.67 | Payload:1800kg,Trans. code:MG | GCI10010 | Inner Joint | | 41 | 45 | 43 | 70 | 115.5 | |
| | 1994.03-2002.04 | MT | F | L | Van FWD 8140.67 | Payload:1000/1400kg,Trans. code:MG | GCI10013 | Inner Joint | | 41 | 39 | 43 | 70 | 104 | |
| | 1994.03-2002.04 | MT | F | L | Van FWD 8140.67 | Payload:1000/1400kg,Trans. code:ME/ML | GCI10015 | Inner Joint | | 37 | 39 | 40 | 68.5 | 104 | |
| | 1994.03-2002.04 | MT | F | L | Van FWD 8140.67 | Payload:1000/1400kg,Trans. code:ME/ML | GCI45013 | Inner Joint | | 37 | 39 | 40 | 68.5 | 100 | |
| | 1994.03-2002.04 | MT | F | R | Van FWD 8140.67 | Payload:1800kg,Trans. code:MG | GCI10009 | Inner Joint | | 41 | 45 | 34.9 | 393 | 115.6 | |
| | 1994.03-2002.04 | MT | F | R | Van FWD 8140.67 | Payload:1000/1400kg,Trans. code:ME/ML | GCI10034 | Inner Joint | | 37 | 39 | 31.9 | 369.5 | 99 | |
| | 1994.08-2002.04 | MT | F | L | Bus FWD 8140.67 | Payload:1800kg,Trans. code:MG | GDS10033 | Drive Shaft | 54T | 35 | 41 | 70 | 117 | 762 | |
| | 1994.08-2002.04 | MT | F | L | Bus FWD 8140.67 | Payload:1000/1400kg,Trans. code:MG | GDS10035 | Drive Shaft | 54T | 28 | 41 | 63 | 112.5 | 757.5 | |
| | 1994.08-2002.04 | MT | F | L | Bus FWD 8140.67 | Payload:1000/1400kg,Trans. code:ME/ML | GDS10037 | Drive Shaft | 54T | 28 | 37 | 63 | 112.5 | 771 | |
| | 1994.08-2002.04 | MT | F | L | Bus FWD 8140.67 | Payload:1800kg,Trans. code:MG | GDS10067 | Drive Shaft | | 35 | 41 | 70 | 117 | 762 | |
| | 1994.08-2002.04 | MT | F | L | Bus FWD 8140.67 | Payload:1000/1400kg,Trans. code:MG | GDS10102 | Drive Shaft | | 28 | 41 | 63 | 112.5 | 757.5 | |
| | 1994.08-2002.04 | MT | F | L | Bus FWD 8140.67 | Payload:1000/1400kg,Trans. code:ME/ML | GDS10105 | Drive Shaft | | 28 | 37 | 63 | 112.5 | 771 | |
| | 1994.08-2002.04 | MT | F | R | Bus FWD 8140.67 | Payload:1800kg,Trans. code:MG | GDS10032 | Drive Shaft | 54T | 35 | 41 | 70 | 117 | 1085 | |
| | 1994.08-2002.04 | MT | F | R | Bus FWD 8140.67 | Payload:1000/1400kg,Trans. code:MG | GDS10036 | Drive Shaft | 54T | 28 | 41 | 63 | 112.5 | 1079 | |
| | 1994.08-2002.04 | MT | F | R | Bus FWD 8140.67 | Payload:1800kg,Trans. code:MG | GDS10066 | Drive Shaft | | 35 | 41 | 70 | 117 | 1085 | |
| | 1994.08-2002.04 | MT | F | R | Bus FWD 8140.67 | Payload:1000/1400kg,Trans. code:ME/ML | GDS10069 | Drive Shaft | | 28 | 37 | 63 | 112.5 | 1072 | |
| | 1994.08-2002.04 | MT | F | R | Bus FWD 8140.67 | Payload:1000/1400kg,Trans. code:MG | GDS10103 | Drive Shaft | | 28 | 41 | 63 | 112.5 | 1079 | |
| | 1994.08-2002.04 | MT | F | R | Bus FWD 8140.67 | Payload:1000/1400kg,Trans. code:ME/ML | GDS10104 | Drive Shaft | 54T | 28 | 37 | 63 | 112.5 | 1072 | |
| | 1994.08-2002.04 | MT | F | L/R | Bus FWD 8140.67 | Payload:1800kg,Trans. code:MG | GCO10011 | Outer Joint | 54T | 35 | 45 | 70 | 117 | 73 | I |
| | 1994.08-2002.04 | MT | F | L/R | Bus FWD 8140.67 | Payload:1000/1400kg,Trans. code:ME/ML/MG | GCO10012 | Outer Joint | | 28 | 39 | 63 | 112.5 | 63 | I |
| | 1994.08-2002.04 | MT | F | L/R | Bus FWD 8140.67 | Payload:1000/1400kg,Trans. code:ME/ML/MG | GCO10013 | Outer Joint | 54T | 28 | 39 | 63 | 112.5 | 63 | I |
| | 1994.08-2002.04 | MT | F | L/R | Bus FWD 8140.67 | Payload:1800kg,Trans. code:MG | GCO10050 | Outer Joint | | 35 | 45 | 70 | 117 | 73 | I |
| | 1994.08-2002.04 | MT | F | L | Bus FWD 8140.67 | Payload:1800kg,Trans. code:MG | GCI10010 | Inner Joint | | 41 | 45 | 43 | 70 | 115.5 | |
| | 1994.08-2002.04 | MT | F | L | Bus FWD 8140.67 | Payload:1000/1400kg,Trans. code:MG | GCI10013 | Inner Joint | | 41 | 39 | 43 | 70 | 104 | |
| | 1994.08-2002.04 | MT | F | L | Bus FWD 8140.67 | Payload:1000/1400kg,Trans. code:ME/ML | GCI10015 | Inner Joint | | 37 | 39 | 40 | 68.5 | 104 | |
| | 1994.08-2002.04 | MT | F | L | Bus FWD 8140.67 | Payload:1000/1400kg,Trans. code:ME/ML | GCI45013 | Inner Joint | | 37 | 39 | 40 | 68.5 | 100 | |
| | 1994.08-2002.04 | MT | F | R | Bus FWD 8140.67 | Payload:1800kg,Trans. code:MG | GCI10009 | Inner Joint | | 41 | 45 | 34.9 | 393 | 115.6 | |
| | 1994.08-2002.04 | MT | F | R | Bus FWD 8140.67 | Payload:1000/1400kg,Trans. code:ME/ML | GCI10034 | Inner Joint | | 37 | 39 | 31.9 | 369.5 | 99 | |
| 2.5 (80 kw) | 1994.11-1998.04 | MT | F | L | Bus 4WD 8140.47 | Payload:1000kg/1400kg | GDS10035 | Drive Shaft | 54T | 28 | 41 | 63 | 112.5 | 757.5 | |
| | 1994.11-1998.04 | MT | F | R | Bus 4WD 8140.47 | Payload:1000kg/1400kg | GDS10036 | Drive Shaft | 54T | 28 | 41 | 63 | 112.5 | 1079 | |
| | 1994.11-1998.04 | MT | F | L/R | Bus 4WD 8140.47 | Payload [kg]:1000/1400 | GCO10013 | Outer Joint | 54T | 28 | 39 | 63 | 112.5 | 63 | I |
| 2.5 (85 kw) | 1994.03-2002.04 | MT | F | L | Bus FWD 8140.47 | Payload:1800kg,Trans. code:MG | GDS10033 | Drive Shaft | 54T | 35 | 41 | 70 | 117 | 762 | |
| | 1994.03-2002.04 | MT | F | L | Bus FWD 8140.47 | Payload:1000/1400kg,Trans. code:MG | GDS10035 | Drive Shaft | 54T | 28 | 41 | 63 | 112.5 | 757.5 | |
| | 1994.03-2002.04 | MT | F | L | Bus FWD 8140.47 | Payload:1000/1400kg,Trans. code:ME/ML | GDS10037 | Drive Shaft | 54T | 28 | 37 | 63 | 112.5 | 771 | |
| | 1994.03-2002.04 | MT | F | L | Bus FWD 8140.47 | Payload:1800kg,Trans. code:MG | GDS10067 | Drive Shaft | | 35 | 41 | 70 | 117 | 762 | |
| | 1994.03-2002.04 | MT | F | L | Bus FWD 8140.47 | Payload:1000/1400kg,Trans. code:MG | GDS10102 | Drive Shaft | | 28 | 41 | 63 | 112.5 | 757.5 | |
| | 1994.03-2002.04 | MT | F | L | Bus FWD 8140.47 | Payload:1000/1400kg,Trans. code:ME/ML | GDS10105 | Drive Shaft | | 28 | 37 | 63 | 112.5 | 771 | |
| | 1994.03-2002.04 | MT | F | R | Bus FWD 8140.47 | Payload:1800kg,Trans. code:MG | GDS10032 | Drive Shaft | 54T | 35 | 41 | 70 | 117 | 1085 | |
| | 1994.03-2002.04 | MT | F | R | Bus FWD 8140.47 | Payload:1000/1400kg,Trans. code:MG | GDS10036 | Drive Shaft | 54T | 28 | 41 | 63 | 112.5 | 1079 | |
| | 1994.03-2002.04 | MT | F | R | Bus FWD 8140.47 | Payload:1800kg,Trans. code:MG | GDS10066 | Drive Shaft | | 35 | 41 | 70 | 117 | 1085 | |
| | 1994.03-2002.04 | MT | F | R | Bus FWD 8140.47 | Payload:1000/1400kg,Trans. code:ME/ML | GDS10069 | Drive Shaft | | 28 | 37 | 63 | 112.5 | 1072 | |
| | 1994.03-2002.04 | MT | F | R | Bus FWD 8140.47 | Payload:1000/1400kg,Trans. code:MG | GDS10103 | Drive Shaft | | 28 | 41 | 63 | 112.5 | 1079 | |
| | 1994.03-2002.04 | MT | F | R | Bus FWD 8140.47 | Payload:1000/1400kg,Trans. code:ME/ML | GDS10104 | Drive Shaft | 54T | 28 | 37 | 63 | 112.5 | 1072 | |
| | 1994.03-2002.04 | MT | F | L/R | Bus FWD 8140.47 | Payload:1800kg,Trans. code:MG | GCO10011 | Outer Joint | 54T | 35 | 45 | 70 | 117 | 73 | I |
| | 1994.03-2002.04 | MT | F | L/R | Bus FWD 8140.47 | Payload:1000/1400kg,Trans. code:ME/ML/MG | GCO10012 | Outer Joint | | 28 | 39 | 63 | 112.5 | 63 | I |
| | 1994.03-2002.04 | MT | F | L/R | Bus FWD 8140.47 | Payload:1000/1400kg,Trans. code:ME/ML/MG | GCO10013 | Outer Joint | 54T | 28 | 39 | 63 | 112.5 | 63 | I |
| | 1994.03-2002.04 | MT | F | L/R | Bus FWD 8140.47 | Payload:1800kg,Trans. code:MG | GCO10050 | Outer Joint | | 35 | 45 | 70 | 117 | 73 | I |
| | 1994.03-2002.04 | MT | F | L | Bus FWD 8140.47 | Payload:1800kg,Trans. code:MG | GCI10010 | Inner Joint | | 41 | 45 | 43 | 70 | 115.5 | |
| | 1994.03-2002.04 | MT | F | L | Bus FWD 8140.47 | Payload:1000/1400kg,Trans. code:MG | GCI10013 | Inner Joint | | 41 | 39 | 43 | 70 | 104 | |

| | YEAR | TRANSM. | F/R | L/R | BODY STYLE & DRIVE TYPE & ENGINE | REMARKS | G-AP Ref. | PRODUCT | ABS | Technical Specifications A | B | C | H | L | P |
|---|---|---|---|---|---|---|---|---|---|---|---|---|---|---|---|
| **FIAT** **Ducato 10** | | | | | | | | | | | | | | | |
| 2.5 (85 kw) | 1994.03-2002.04 | MT | F | L | Bus FWD 8140.47 | Payload:1000/1400kg,Trans. code:ME/ML | GCI10015 | Inner Joint | | 37 | 39 | 40 | 68.5 | 104 | |
| | 1994.03-2002.04 | MT | F | L | Bus FWD 8140.47 | Payload:1000/1400kg,Trans. code:ME/ML | GCI45013 | Inner Joint | | 37 | 39 | 40 | 68.5 | 100 | |
| | 1994.03-2002.04 | MT | F | R | Bus FWD 8140.47 | Payload:1800kg,Trans. code:MG | GCI10009 | Inner Joint | | 41 | 45 | 34.9 | 393 | 115.6 | |
| | 1994.03-2002.04 | MT | F | R | Bus FWD 8140.47 | Payload:1000/1400kg,Trans. code:ME/ML | GCI10034 | Inner Joint | | 37 | 39 | 31.9 | 369.5 | 99 | |
| 2.8 (64 kw) | 1998.02-2002.04 | MT | F | L | Bus FWD 8140.63 | Payload:1800kg,Trans. code:MG | GDS10033 | Drive Shaft | 54T | 35 | 41 | 70 | 117 | 762 | |
| | 1998.02-2002.04 | MT | F | L | Bus FWD 8140.63 | Payload:1000/1400kg,Trans. code:MG | GDS10035 | Drive Shaft | 54T | 28 | 41 | 63 | 112.5 | 757.5 | |
| | 1998.02-2002.04 | MT | F | L | Bus FWD 8140.63 | Payload:1000/1400kg,Trans. code:ME/ML | GDS10037 | Drive Shaft | 54T | 28 | 37 | 63 | 112.5 | 771 | |
| | 1998.02-2002.04 | MT | F | L | Bus FWD 8140.63 | Payload:1800kg,Trans. code:MG | GDS10067 | Drive Shaft | | 35 | 41 | 70 | 117 | 762 | |
| | 1998.02-2002.04 | MT | F | L | Bus FWD 8140.63 | Payload:1000/1400kg,Trans. code:MG | GDS10102 | Drive Shaft | | 28 | 41 | 63 | 112.5 | 757.5 | |
| | 1998.02-2002.04 | MT | F | L | Bus FWD 8140.63 | Payload:1000/1400kg,Trans. code:ME/ML | GDS10105 | Drive Shaft | | 28 | 37 | 63 | 112.5 | 771 | |
| | 1998.02-2002.04 | MT | F | R | Bus FWD 8140.63 | Payload:1800kg,Trans. code:MG | GDS10032 | Drive Shaft | 54T | 35 | 41 | 70 | 117 | 1085 | |
| | 1998.02-2002.04 | MT | F | R | Bus FWD 8140.63 | Payload:1000/1400kg,Trans. code:MG | GDS10036 | Drive Shaft | 54T | 28 | 41 | 63 | 112.5 | 1079 | |
| | 1998.02-2002.04 | MT | F | R | Bus FWD 8140.63 | Payload:1800kg,Trans. code:MG | GDS10066 | Drive Shaft | | 35 | 41 | 70 | 117 | 1085 | |
| | 1998.02-2002.04 | MT | F | R | Bus FWD 8140.63 | Payload:1000/1400kg,Trans. code:ME/ML | GDS10069 | Drive Shaft | | 28 | 37 | 63 | 112.5 | 1072 | |
| | 1998.02-2002.04 | MT | F | R | Bus FWD 8140.63 | Payload:1000/1400kg,Trans. code:MG | GDS10103 | Drive Shaft | | 28 | 41 | 63 | 112.5 | 1079 | |
| | 1998.02-2002.04 | MT | F | R | Bus FWD 8140.63 | Payload:1000/1400kg,Trans. code:ME/ML | GDS10104 | Drive Shaft | 54T | 28 | 37 | 63 | 112.5 | 1072 | |
| | 1998.02-2002.04 | MT | F | L/R | Bus FWD 8140.63 | Payload:1800kg,Trans. code:MG | GCO10011 | Outer Joint | 54T | 35 | 45 | 70 | 117 | 73 | I |
| | 1998.02-2002.04 | MT | F | L/R | Bus FWD 8140.63 | Payload:1000/1400kg,Trans. code:ME/ML/MG | GCO10012 | Outer Joint | | 28 | 39 | 63 | 112.5 | 63 | I |
| | 1998.02-2002.04 | MT | F | L/R | Bus FWD 8140.63 | Payload:1000/1400kg,Trans. code:ME/ML/MG | GCO10013 | Outer Joint | 54T | 28 | 39 | 63 | 112.5 | 63 | I |
| | 1998.02-2002.04 | MT | F | L/R | Bus FWD 8140.63 | Payload:1800kg,Trans. code:MG | GCO10050 | Outer Joint | | 35 | 45 | 70 | 117 | 73 | I |
| | 1998.02-2002.04 | MT | F | L | Bus FWD 8140.63 | Payload:1800kg,Trans. code:MG | GCI10010 | Inner Joint | | 41 | 45 | 43 | 70 | 115.5 | |
| | 1998.02-2002.04 | MT | F | L | Bus FWD 8140.63 | Payload:1000/1400kg,Trans. code:MG | GCI10013 | Inner Joint | | 41 | 39 | 43 | 70 | 104 | |
| | 1998.02-2002.04 | MT | F | L | Bus FWD 8140.63 | Payload:1000/1400kg,Trans. code:ME/ML | GCI10015 | Inner Joint | | 37 | 39 | 40 | 68.5 | 104 | |
| | 1998.02-2002.04 | MT | F | L | Bus FWD 8140.63 | Payload:1000/1400kg,Trans. code:ME/ML | GCI45013 | Inner Joint | | 37 | 39 | 40 | 68.5 | 100 | |
| | 1998.02-2002.04 | MT | F | R | Bus FWD 8140.63 | Payload:1800kg,Trans. code:MG | GCI10009 | Inner Joint | | 41 | 45 | 34.9 | 393 | 115.6 | |
| | 1998.02-2002.04 | MT | F | R | Bus FWD 8140.63 | Payload:1000/1400kg,Trans. code:ME/ML | GCI10034 | Inner Joint | | 37 | 39 | 31.9 | 369.5 | 99 | |
| | 1998.05-2002.04 | MT | F | L | Van FWD 8140.63 | Payload:1800kg,Trans. code:MG | GDS10033 | Drive Shaft | 54T | 35 | 41 | 70 | 117 | 762 | |
| | 1998.05-2002.04 | MT | F | L | Van FWD 8140.63 | Payload:1000/1400kg,Trans. code:MG | GDS10035 | Drive Shaft | 54T | 28 | 41 | 63 | 112.5 | 757.5 | |
| | 1998.05-2002.04 | MT | F | L | Van FWD 8140.63 | Payload:1000/1400kg,Trans. code:ME/ML | GDS10037 | Drive Shaft | 54T | 28 | 37 | 63 | 112.5 | 771 | |
| | 1998.05-2002.04 | MT | F | L | Van FWD 8140.63 | Payload:1800kg,Trans. code:MG | GDS10067 | Drive Shaft | | 35 | 41 | 70 | 117 | 762 | |
| | 1998.05-2002.04 | MT | F | L | Van FWD 8140.63 | Payload:1000/1400kg,Trans. code:MG | GDS10102 | Drive Shaft | | 28 | 41 | 63 | 112.5 | 757.5 | |
| | 1998.05-2002.04 | MT | F | L | Van FWD 8140.63 | Payload:1000/1400kg,Trans. code:ME/ML | GDS10105 | Drive Shaft | | 28 | 37 | 63 | 112.5 | 771 | |
| | 1998.05-2002.04 | MT | F | R | Van FWD 8140.63 | Payload:1800kg,Trans. code:MG | GDS10032 | Drive Shaft | 54T | 35 | 41 | 70 | 117 | 1085 | |
| | 1998.05-2002.04 | MT | F | R | Van FWD 8140.63 | Payload:1000/1400kg,Trans. code:MG | GDS10036 | Drive Shaft | 54T | 28 | 41 | 63 | 112.5 | 1079 | |
| | 1998.05-2002.04 | MT | F | R | Van FWD 8140.63 | Payload:1800kg,Trans. code:MG | GDS10066 | Drive Shaft | | 35 | 41 | 70 | 117 | 1085 | |
| | 1998.05-2002.04 | MT | F | R | Van FWD 8140.63 | Payload:1000/1400kg,Trans. code:ME/ML | GDS10069 | Drive Shaft | | 28 | 37 | 63 | 112.5 | 1072 | |
| | 1998.05-2002.04 | MT | F | R | Van FWD 8140.63 | Payload:1000/1400kg,Trans. code:MG | GDS10103 | Drive Shaft | | 28 | 41 | 63 | 112.5 | 1079 | |
| | 1998.05-2002.04 | MT | F | R | Van FWD 8140.63 | Payload:1000/1400kg,Trans. code:ME/ML | GDS10104 | Drive Shaft | 54T | 28 | 37 | 63 | 112.5 | 1072 | |
| | 1998.05-2002.04 | MT | F | L/R | Van FWD 8140.63 | Payload:1800kg,Trans. code:MG | GCO10011 | Outer Joint | 54T | 35 | 45 | 70 | 117 | 73 | I |
| | 1998.05-2002.04 | MT | F | L/R | Van FWD 8140.63 | Payload:1000/1400kg,Trans. code:ME/ML/MG | GCO10012 | Outer Joint | | 28 | 39 | 63 | 112.5 | 63 | I |
| | 1998.05-2002.04 | MT | F | L/R | Van FWD 8140.63 | Payload:1000/1400kg,Trans. code:ME/ML/MG | GCO10013 | Outer Joint | 54T | 28 | 39 | 63 | 112.5 | 63 | I |
| | 1998.05-2002.04 | MT | F | L/R | Van FWD 8140.63 | Payload:1800kg,Trans. code:MG | GCO10050 | Outer Joint | | 35 | 45 | 70 | 117 | 73 | I |
| | 1998.05-2002.04 | MT | F | L | Van FWD 8140.63 | Payload:1800kg,Trans. code:MG | GCI10010 | Inner Joint | | 41 | 45 | 43 | 70 | 115.5 | |
| | 1998.05-2002.04 | MT | F | L | Van FWD 8140.63 | Payload:1000/1400kg,Trans. code:MG | GCI10013 | Inner Joint | | 41 | 39 | 43 | 70 | 104 | |
| | 1998.05-2002.04 | MT | F | L | Van FWD 8140.63 | Payload:1000/1400kg,Trans. code:ME/ML | GCI10015 | Inner Joint | | 37 | 39 | 40 | 68.5 | 104 | |
| | 1998.05-2002.04 | MT | F | L | Van FWD 8140.63 | Payload:1000/1400kg,Trans. code:ME/ML | GCI45013 | Inner Joint | | 37 | 39 | 40 | 68.5 | 100 | |
| | 1998.05-2002.04 | MT | F | R | Van FWD 8140.63 | Payload:1800kg,Trans. code:MG | GCI10009 | Inner Joint | | 41 | 45 | 34.9 | 393 | 115.6 | |
| | 1998.05-2002.04 | MT | F | R | Van FWD 8140.63 | Payload:1000/1400kg,Trans. code:ME/ML | GCI10034 | Inner Joint | | 37 | 39 | 31.9 | 369.5 | 99 | |
| 2.8 (90 kw) | 1997.10-2002.04 | MT | F | L | Bus FWD 8140.43 | Payload:1800kg,Trans. code:MG | GDS10033 | Drive Shaft | 54T | 35 | 41 | 70 | 117 | 762 | |
| | 1997.10-2002.04 | MT | F | L | Bus FWD 8140.43 | Payload:1000/1400kg,Trans. code:MG | GDS10035 | Drive Shaft | 54T | 28 | 41 | 63 | 112.5 | 757.5 | |
| | 1997.10-2002.04 | MT | F | L | Bus FWD 8140.43 | Payload:1000/1400kg,Trans. code:ME/ML | GDS10037 | Drive Shaft | 54T | 28 | 37 | 63 | 112.5 | 771 | |
| | 1997.10-2002.04 | MT | F | L | Bus FWD 8140.43 | Payload:1800kg,Trans. code:MG | GDS10067 | Drive Shaft | | 35 | 41 | 70 | 117 | 762 | |
| | 1997.10-2002.04 | MT | F | L | Bus FWD 8140.43 | Payload:1000/1400kg,Trans. code:MG | GDS10102 | Drive Shaft | | 28 | 41 | 63 | 112.5 | 757.5 | |
| | 1997.10-2002.04 | MT | F | L | Bus FWD 8140.43 | Payload:1000/1400kg,Trans. code:ME/ML | GDS10105 | Drive Shaft | | 28 | 37 | 63 | 112.5 | 771 | |
| | 1997.10-2002.04 | MT | F | R | Bus FWD 8140.43 | Payload:1800kg,Trans. code:MG | GDS10032 | Drive Shaft | 54T | 35 | 41 | 70 | 117 | 1085 | |
| | 1997.10-2002.04 | MT | F | R | Bus FWD 8140.43 | Payload:1000/1400kg,Trans. code:MG | GDS10036 | Drive Shaft | 54T | 28 | 41 | 63 | 112.5 | 1079 | |
| | 1997.10-2002.04 | MT | F | R | Bus FWD 8140.43 | Payload:1800kg,Trans. code:MG | GDS10066 | Drive Shaft | | 35 | 41 | 70 | 117 | 1085 | |
| | 1997.10-2002.04 | MT | F | R | Bus FWD 8140.43 | Payload:1000/1400kg,Trans. code:ME/ML | GDS10069 | Drive Shaft | | 28 | 37 | 63 | 112.5 | 1072 | |
| | 1997.10-2002.04 | MT | F | R | Bus FWD 8140.43 | Payload:1000/1400kg,Trans. code:MG | GDS10103 | Drive Shaft | | 28 | 41 | 63 | 112.5 | 1079 | |
| | 1997.10-2002.04 | MT | F | R | Bus FWD 8140.43 | Payload:1000/1400kg,Trans. code:ME/ML | GDS10104 | Drive Shaft | 54T | 28 | 37 | 63 | 112.5 | 1072 | |
| | 1997.10-2002.04 | MT | F | L/R | Bus FWD 8140.43 | Payload:1800kg,Trans. code:MG | GCO10011 | Outer Joint | 54T | 35 | 45 | 70 | 117 | 73 | I |
| | 1997.10-2002.04 | MT | F | L/R | Bus FWD 8140.43 | Payload:1000/1400kg,Trans. code:ME/ML/MG | GCO10012 | Outer Joint | | 28 | 39 | 63 | 112.5 | 63 | I |
| | 1997.10-2002.04 | MT | F | L/R | Bus FWD 8140.43 | Payload:1000/1400kg,Trans. code:ME/ML/MG | GCO10013 | Outer Joint | 54T | 28 | 39 | 63 | 112.5 | 63 | I |
| | 1997.10-2002.04 | MT | F | L/R | Bus FWD 8140.43 | Payload:1800kg,Trans. code:MG | GCO10050 | Outer Joint | | 35 | 45 | 70 | 117 | 73 | I |
| | 1997.10-2002.04 | MT | F | L | Bus FWD 8140.43 | Payload:1800kg,Trans. code:MG | GCI10010 | Inner Joint | | 41 | 45 | 43 | 70 | 115.5 | |

| | YEAR | TRANSM. | F/R | L/R | BODY STYLE & DRIVE TYPE & ENGINE | REMARKS | G-AP Ref. | PRODUCT | ABS | Technical Specifications A | B | C | H | L | P |
|---|---|---|---|---|---|---|---|---|---|---|---|---|---|---|---|
| **FIAT** **Ducato 10** | | | | | | | | | | | | | | | |
| 2.8 (90 kw) | 1997.10-2002.04 | MT | F | L | Bus FWD 8140.43 | Payload:1000/1400kg,Trans. code:MG | GCI10013 | Inner Joint | | 41 | 39 | 43 | 70 | 104 | |
| | 1997.10-2002.04 | MT | F | L | Bus FWD 8140.43 | Payload:1000/1400kg,Trans. code:ME/ML | GCI10015 | Inner Joint | | 37 | 39 | 40 | 68.5 | 104 | |
| | 1997.10-2002.04 | MT | F | L | Bus FWD 8140.43 | Payload:1000/1400kg,Trans. code:ME/ML | GCI45013 | Inner Joint | | 37 | 39 | 40 | 68.5 | 100 | |
| | 1997.10-2002.04 | MT | F | R | Bus FWD 8140.43 | Payload:1800kg,Trans. code:MG | GCI10009 | Inner Joint | | 41 | 45 | 34.9 | 393 | 115.6 | |
| | 1997.10-2002.04 | MT | F | R | Bus FWD 8140.43 | Payload:1000/1400kg,Trans. code:ME/ML | GCI10034 | Inner Joint | | 37 | 39 | 31.9 | 369.5 | 99 | |
| | 1997.10-2002.04 | MT | F | L | Van FWD 8140.43 | Payload:1800kg,Trans. code:MG | GDS10033 | Drive Shaft | 54T | 35 | 41 | 70 | 117 | 762 | |
| | 1997.10-2002.04 | MT | F | L | Van FWD 8140.43 | Payload:1000/1400kg,Trans. code:MG | GDS10035 | Drive Shaft | 54T | 28 | 41 | 63 | 112.5 | 757.5 | |
| | 1997.10-2002.04 | MT | F | L | Van FWD 8140.43 | Payload:1000/1400kg,Trans. code:ME/ML | GDS10037 | Drive Shaft | 54T | 28 | 37 | 63 | 112.5 | 771 | |
| | 1997.10-2002.04 | MT | F | L | Van FWD 8140.43 | Payload:1800kg,Trans. code:MG | GDS10067 | Drive Shaft | | 35 | 41 | 70 | 117 | 762 | |
| | 1997.10-2002.04 | MT | F | L | Van FWD 8140.43 | Payload:1000/1400kg,Trans. code:MG | GDS10102 | Drive Shaft | | 28 | 41 | 63 | 112.5 | 757.5 | |
| | 1997.10-2002.04 | MT | F | L | Van FWD 8140.43 | Payload:1000/1400kg,Trans. code:ME/ML | GDS10105 | Drive Shaft | | 28 | 37 | 63 | 112.5 | 771 | |
| | 1997.10-2002.04 | MT | F | R | Van FWD 8140.43 | Payload:1800kg,Trans. code:MG | GDS10032 | Drive Shaft | 54T | 35 | 41 | 70 | 117 | 1085 | |
| | 1997.10-2002.04 | MT | F | R | Van FWD 8140.43 | Payload:1000/1400kg,Trans. code:MG | GDS10036 | Drive Shaft | 54T | 28 | 41 | 63 | 112.5 | 1079 | |
| | 1997.10-2002.04 | MT | F | R | Van FWD 8140.43 | Payload:1800kg,Trans. code:MG | GDS10066 | Drive Shaft | | 35 | 41 | 70 | 117 | 1085 | |
| | 1997.10-2002.04 | MT | F | R | Van FWD 8140.43 | Payload:1000/1400kg,Trans. code:ME/ML | GDS10069 | Drive Shaft | | 28 | 37 | 63 | 112.5 | 1072 | |
| | 1997.10-2002.04 | MT | F | R | Van FWD 8140.43 | Payload:1000/1400kg,Trans. code:MG | GDS10103 | Drive Shaft | | 28 | 41 | 63 | 112.5 | 1079 | |
| | 1997.10-2002.04 | MT | F | R | Van FWD 8140.43 | Payload:1000/1400kg,Trans. code:ME/ML | GDS10104 | Drive Shaft | 54T | 28 | 37 | 63 | 112.5 | 1072 | |
| | 1997.10-2002.04 | MT | F | L/R | Van FWD 8140.43 | Payload:1800kg,Trans. code:MG | GCO10011 | Outer Joint | 54T | 35 | 45 | 70 | 117 | 73 | I |
| | 1997.10-2002.04 | MT | F | L/R | Van FWD 8140.43 | Payload:1000/1400kg,Trans. code:ME/ML/MG | GCO10012 | Outer Joint | | 28 | 39 | 63 | 112.5 | 63 | I |
| | 1997.10-2002.04 | MT | F | L/R | Van FWD 8140.43 | Payload:1000/1400kg,Trans. code:ME/ML/MG | GCO10013 | Outer Joint | 54T | 28 | 39 | 63 | 112.5 | 63 | I |
| | 1997.10-2002.04 | MT | F | L/R | Van FWD 8140.43 | Payload:1800kg,Trans. code:MG | GCO10050 | Outer Joint | | 35 | 45 | 70 | 117 | 73 | I |
| | 1997.10-2002.04 | MT | F | L | Van FWD 8140.43 | Payload:1800kg,Trans. code:MG | GCI10010 | Inner Joint | | 41 | 45 | 43 | 70 | 115.5 | |
| | 1997.10-2002.04 | MT | F | L | Van FWD 8140.43 | Payload:1000/1400kg,Trans. code:MG | GCI10013 | Inner Joint | | 41 | 39 | 43 | 70 | 104 | |
| | 1997.10-2002.04 | MT | F | L | Van FWD 8140.43 | Payload:1000/1400kg,Trans. code:ME/ML | GCI10015 | Inner Joint | | 37 | 39 | 40 | 68.5 | 104 | |
| | 1997.10-2002.04 | MT | F | L | Van FWD 8140.43 | Payload:1000/1400kg,Trans. code:ME/ML | GCI45013 | Inner Joint | | 37 | 39 | 40 | 68.5 | 100 | |
| | 1997.10-2002.04 | MT | F | R | Van FWD 8140.43 | Payload:1800kg,Trans. code:MG | GCI10009 | Inner Joint | | 41 | 45 | 34.9 | 393 | 115.6 | |
| | 1997.10-2002.04 | MT | F | R | Van FWD 8140.43 | Payload:1000/1400kg,Trans. code:ME/ML | GCI10034 | Inner Joint | | 37 | 39 | 31.9 | 369.5 | 99 | |
| | 1999.07-2002.04 | MT | F | L | Bus 4WD 8140.43 | Payload:1800kg,Trans. code:MG | GDS10033 | Drive Shaft | 54T | 35 | 41 | 70 | 117 | 762 | |
| | 1999.07-2002.04 | MT | F | L | Bus 4WD 8140.43 | Payload:1000/1400kg,Trans. code:MG | GDS10035 | Drive Shaft | 54T | 28 | 41 | 63 | 112.5 | 757.5 | |
| | 1999.07-2002.04 | MT | F | L | Bus 4WD 8140.43 | Payload:1000/1400kg,Trans. code:ME/ML | GDS10037 | Drive Shaft | 54T | 28 | 37 | 63 | 112.5 | 771 | |
| | 1999.07-2002.04 | MT | F | L | Bus 4WD 8140.43 | Payload:1800kg,Trans. code:MG | GDS10067 | Drive Shaft | | 35 | 41 | 70 | 117 | 762 | |
| | 1999.07-2002.04 | MT | F | L | Bus 4WD 8140.43 | Payload:1000/1400kg,Trans. code:MG | GDS10102 | Drive Shaft | | 28 | 41 | 63 | 112.5 | 757.5 | |
| | 1999.07-2002.04 | MT | F | L | Bus 4WD 8140.43 | Payload:1000/1400kg,Trans. code:ME/ML | GDS10105 | Drive Shaft | | 28 | 37 | 63 | 112.5 | 771 | |
| | 1999.07-2002.04 | MT | F | R | Bus 4WD 8140.43 | Payload:1800kg,Trans. code:MG | GDS10032 | Drive Shaft | 54T | 35 | 41 | 70 | 117 | 1085 | |
| | 1999.07-2002.04 | MT | F | R | Bus 4WD 8140.43 | Payload:1000/1400kg,Trans. code:MG | GDS10036 | Drive Shaft | 54T | 28 | 41 | 63 | 112.5 | 1079 | |
| | 1999.07-2002.04 | MT | F | R | Bus 4WD 8140.43 | Payload:1800kg,Trans. code:MG | GDS10066 | Drive Shaft | | 35 | 41 | 70 | 117 | 1085 | |
| | 1999.07-2002.04 | MT | F | R | Bus 4WD 8140.43 | Payload:1000/1400kg,Trans. code:ME/ML | GDS10069 | Drive Shaft | | 28 | 37 | 63 | 112.5 | 1072 | |
| | 1999.07-2002.04 | MT | F | R | Bus 4WD 8140.43 | Payload:1000/1400kg,Trans. code:MG | GDS10103 | Drive Shaft | | 28 | 41 | 63 | 112.5 | 1079 | |
| | 1999.07-2002.04 | MT | F | R | Bus 4WD 8140.43 | Payload:1000/1400kg,Trans. code:ME/ML | GDS10104 | Drive Shaft | 54T | 28 | 37 | 63 | 112.5 | 1072 | |
| | 1999.07-2002.04 | MT | F | L/R | Bus 4WD 8140.43 | Payload:1800kg,Trans. code:MG | GCO10011 | Outer Joint | 54T | 35 | 45 | 70 | 117 | 73 | I |
| | 1999.07-2002.04 | MT | F | L/R | Bus 4WD 8140.43 | Payload:1000/1400kg,Trans. code:ME/ML/MG | GCO10012 | Outer Joint | | 28 | 39 | 63 | 112.5 | 63 | I |
| | 1999.07-2002.04 | MT | F | L/R | Bus 4WD 8140.43 | Payload:1000/1400kg,Trans. code:ME/ML/MG | GCO10013 | Outer Joint | 54T | 28 | 39 | 63 | 112.5 | 63 | I |
| | 1999.07-2002.04 | MT | F | L/R | Bus 4WD 8140.43 | Payload:1800kg,Trans. code:MG | GCO10050 | Outer Joint | | 35 | 45 | 70 | 117 | 73 | I |
| | 1999.07-2002.04 | MT | F | L | Bus 4WD 8140.43 | Payload:1800kg,Trans. code:MG | GCI10010 | Inner Joint | | 41 | 45 | 43 | 70 | 115.5 | |
| | 1999.07-2002.04 | MT | F | L | Bus 4WD 8140.43 | Payload:1000/1400kg,Trans. code:MG | GCI10013 | Inner Joint | | 41 | 39 | 43 | 70 | 104 | |
| | 1999.07-2002.04 | MT | F | L | Bus 4WD 8140.43 | Payload:1000/1400kg,Trans. code:ME/ML | GCI10015 | Inner Joint | | 37 | 39 | 40 | 68.5 | 104 | |
| | 1999.07-2002.04 | MT | F | L | Bus 4WD 8140.43 | Payload:1000/1400kg,Trans. code:ME/ML | GCI45013 | Inner Joint | | 37 | 39 | 40 | 68.5 | 100 | |
| | 1999.07-2002.04 | MT | F | R | Bus 4WD 8140.43 | Payload:1800kg,Trans. code:MG | GCI10009 | Inner Joint | | 41 | 45 | 34.9 | 393 | 115.6 | |
| | 1999.07-2002.04 | MT | F | R | Bus 4WD 8140.43 | Payload:1000/1400kg,Trans. code:ME/ML | GCI10034 | Inner Joint | | 37 | 39 | 31.9 | 369.5 | 99 | |
| 2.8 (94 kw) | 2000.11-2002.04 | MT | F | L | Bus 4WD 8140.43S | Payload:1800kg | GDS10033 | Drive Shaft | 54T | 35 | 41 | 70 | 117 | 762 | |
| | 2000.11-2002.04 | MT | F | L | Bus 4WD 8140.43S | Payload:1000kg/1400kg | GDS10035 | Drive Shaft | 54T | 28 | 41 | 63 | 112.5 | 757.5 | |
| | 2000.11-2002.04 | MT | F | R | Bus 4WD 8140.43S | Payload:1800kg | GDS10032 | Drive Shaft | 54T | 35 | 41 | 70 | 117 | 1085 | |
| | 2000.11-2002.04 | MT | F | R | Bus 4WD 8140.43S | Payload:1000kg/1400kg | GDS10036 | Drive Shaft | 54T | 28 | 41 | 63 | 112.5 | 1079 | |
| | 2000.11-2002.04 | MT | F | L/R | Bus 4WD 8140.43S | Payload [kg]:1800 | GCO10011 | Outer Joint | 54T | 35 | 45 | 70 | 117 | 73 | I |
| | 2000.11-2002.04 | MT | F | L/R | Bus 4WD 8140.43S | Payload [kg]:1000/1400 | GCO10013 | Outer Joint | 54T | 28 | 39 | 63 | 112.5 | 63 | I |
| | 2000.11-2002.04 | MT | F | L | Van FWD 8140.43S | Payload:1800kg,Trans. code:MG | GDS10033 | Drive Shaft | 54T | 35 | 41 | 70 | 117 | 762 | |
| | 2000.11-2002.04 | MT | F | L | Van FWD 8140.43S | Payload:1000/1400kg,Trans. code:MG | GDS10035 | Drive Shaft | 54T | 28 | 41 | 63 | 112.5 | 757.5 | |
| | 2000.11-2002.04 | MT | F | L | Van FWD 8140.43S | Payload:1000/1400kg,Trans. code:ME/ML | GDS10037 | Drive Shaft | 54T | 28 | 37 | 63 | 112.5 | 771 | |
| | 2000.11-2002.04 | MT | F | L | Van FWD 8140.43S | Payload:1800kg,Trans. code:MG | GDS10067 | Drive Shaft | | 35 | 41 | 70 | 117 | 762 | |
| | 2000.11-2002.04 | MT | F | L | Van FWD 8140.43S | Payload:1000/1400kg,Trans. code:MG | GDS10102 | Drive Shaft | | 28 | 41 | 63 | 112.5 | 757.5 | |
| | 2000.11-2002.04 | MT | F | L | Van FWD 8140.43S | Payload:1000/1400kg,Trans. code:ME/ML | GDS10105 | Drive Shaft | | 28 | 37 | 63 | 112.5 | 771 | |
| | 2000.11-2002.04 | MT | F | R | Van FWD 8140.43S | Payload:1800kg,Trans. code:MG | GDS10032 | Drive Shaft | 54T | 35 | 41 | 70 | 117 | 1085 | |
| | 2000.11-2002.04 | MT | F | R | Van FWD 8140.43S | Payload:1000/1400kg,Trans. code:MG | GDS10036 | Drive Shaft | 54T | 28 | 41 | 63 | 112.5 | 1079 | |
| | 2000.11-2002.04 | MT | F | R | Van FWD 8140.43S | Payload:1800kg,Trans. code:MG | GDS10066 | Drive Shaft | | 35 | 41 | 70 | 117 | 1085 | |
| | 2000.11-2002.04 | MT | F | R | Van FWD 8140.43S | Payload:1000/1400kg,Trans. code:ME/ML | GDS10069 | Drive Shaft | | 28 | 37 | 63 | 112.5 | 1072 | |

| | YEAR | TRANSM. | F/R | L/R | BODY STYLE & DRIVE TYPE & ENGINE | REMARKS | G-AP Ref. | PRODUCT | ABS | Technical Specifications A | B | C | H | L | P |
|---|---|---|---|---|---|---|---|---|---|---|---|---|---|---|---|
| **FIAT** | | | | | | | | | | | | | | | |
| **Ducato 10** | | | | | | | | | | | | | | | |
| 2.8 (94 kw) | 2000.11-2002.04 | MT | F | R | Van FWD 8140.43S | Payload:1000/1400kg,Trans. code:MG | GDS10103 | Drive Shaft | | 28 | 41 | 63 | 112.5 | 1079 | |
| | 2000.11-2002.04 | MT | F | R | Van FWD 8140.43S | Payload:1000/1400kg,Trans. code:ME/ML | GDS10104 | Drive Shaft | 54T | 28 | 37 | 63 | 112.5 | 1072 | |
| | 2000.11-2002.04 | MT | F | L/R | Van FWD 8140.43S | Payload:1800kg,Trans. code:MG | GCO10011 | Outer Joint | 54T | 35 | 45 | 70 | 117 | 73 | I |
| | 2000.11-2002.04 | MT | F | L/R | Van FWD 8140.43S | Payload:1000/1400kg,Trans. code:ME/ML/MG | GCO10012 | Outer Joint | | 28 | 39 | 63 | 112.5 | 63 | I |
| | 2000.11-2002.04 | MT | F | L/R | Van FWD 8140.43S | Payload:1000/1400kg,Trans. code:ME/ML/MG | GCO10013 | Outer Joint | 54T | 28 | 39 | 63 | 112.5 | 63 | I |
| | 2000.11-2002.04 | MT | F | L/R | Van FWD 8140.43S | Payload:1800kg,Trans. code:MG | GCO10050 | Outer Joint | | 35 | 45 | 70 | 117 | 73 | I |
| | 2000.11-2002.04 | MT | F | L | Van FWD 8140.43S | Payload:1800kg,Trans. code:MG | GCI10010 | Inner Joint | | 41 | 45 | 43 | 70 | 115.5 | |
| | 2000.11-2002.04 | MT | F | L | Van FWD 8140.43S | Payload:1000/1400kg,Trans. code:MG | GCI10013 | Inner Joint | | 41 | 39 | 43 | 70 | 104 | |
| | 2000.11-2002.04 | MT | F | L | Van FWD 8140.43S | Payload:1000/1400kg,Trans. code:ME/ML | GCI10015 | Inner Joint | | 37 | 39 | 40 | 68.5 | 104 | |
| | 2000.11-2002.04 | MT | F | R | Van FWD 8140.43S | Payload:1800kg,Trans. code:MG | GCI10009 | Inner Joint | | 41 | 45 | 34.9 | 393 | 115.6 | |
| | 2000.11-2002.04 | MT | F | R | Van FWD 8140.43S | Payload:1000/1400kg,Trans. code:ME/ML | GCI10034 | Inner Joint | | 37 | 39 | 31.9 | 369.5 | 99 | |
| **Ducato 11** | | | | | | | | | | | | | | | |
| 2.8 (90 kw) | 2003.11-2006.07 | 5MT | F | L | Bus 4WD 8140.43 | For vehicles without ABS | GDS10102 | Drive Shaft | | 28 | 41 | 63 | 112.5 | 757.5 | |
| | 2003.11-2006.07 | 5MT | F | R | Bus 4WD 8140.43 | For vehicles with ABS | GDS10036 | Drive Shaft | 54T | 28 | 41 | 63 | 112.5 | 1079 | |
| | 2003.11-2006.07 | 5MT | F | R | Bus 4WD 8140.43 | For vehicles without ABS | GDS10103 | Drive Shaft | | 28 | 41 | 63 | 112.5 | 1079 | |
| | 2003.11-2006.07 | 5MT | F | R | Bus 4WD 8140.43 | | GCO10013 | Outer Joint | 54T | 28 | 39 | 63 | 112.5 | 63 | I |
| **Ducato 14** | | | | | | | | | | | | | | | |
| 1.9 (66 kw) | 1998.04-2002.04 | MT | F | L | Bus FWD DHX, DHX (XUD9TF/L) | Payload:1800kg,Trans. code:MG | GDS10033 | Drive Shaft | 54T | 35 | 41 | 70 | 117 | 762 | |
| | 1998.04-2002.04 | MT | F | L | Bus FWD DHX, DHX (XUD9TF/L) | Payload:1000/1400kg,Trans. code:MG | GDS10035 | Drive Shaft | 54T | 28 | 41 | 63 | 112.5 | 757.5 | |
| | 1998.04-2002.04 | MT | F | L | Bus FWD DHX, DHX (XUD9TF/L) | Payload:1000/1400kg,Trans. code:ME/ML | GDS10037 | Drive Shaft | 54T | 28 | 37 | 63 | 112.5 | 771 | |
| | 1998.04-2002.04 | MT | F | L | Bus FWD DHX, DHX (XUD9TF/L) | Payload:1800kg,Trans. code:MG | GDS10067 | Drive Shaft | | 35 | 41 | 70 | 117 | 762 | |
| | 1998.04-2002.04 | MT | F | L | Bus FWD DHX, DHX (XUD9TF/L) | Payload:1000/1400kg,Trans. code:MG | GDS10102 | Drive Shaft | | 28 | 41 | 63 | 112.5 | 757.5 | |
| | 1998.04-2002.04 | MT | F | L | Bus FWD DHX, DHX (XUD9TF/L) | Payload:1000/1400kg,Trans. code:ME/ML | GDS10105 | Drive Shaft | | 28 | 37 | 63 | 112.5 | 771 | |
| | 1998.04-2002.04 | MT | F | R | Bus FWD DHX, DHX (XUD9TF/L) | Payload:1800kg,Trans. code:MG | GDS10032 | Drive Shaft | 54T | 35 | 41 | 70 | 117 | 1085 | |
| | 1998.04-2002.04 | MT | F | R | Bus FWD DHX, DHX (XUD9TF/L) | Payload:1000/1400kg,Trans. code:MG | GDS10036 | Drive Shaft | 54T | 28 | 41 | 63 | 112.5 | 1079 | |
| | 1998.04-2002.04 | MT | F | R | Bus FWD DHX, DHX (XUD9TF/L) | Payload:1800kg,Trans. code:MG | GDS10066 | Drive Shaft | | 35 | 41 | 70 | 117 | 1085 | |
| | 1998.04-2002.04 | MT | F | R | Bus FWD DHX, DHX (XUD9TF/L) | Payload:1000/1400kg,Trans. code:ME/ML | GDS10069 | Drive Shaft | | 28 | 37 | 63 | 112.5 | 1072 | |
| | 1998.04-2002.04 | MT | F | R | Bus FWD DHX, DHX (XUD9TF/L) | Payload:1000/1400kg,Trans. code:MG | GDS10103 | Drive Shaft | | 28 | 41 | 63 | 112.5 | 1079 | |
| | 1998.04-2002.04 | MT | F | R | Bus FWD DHX, DHX (XUD9TF/L) | Payload:1000/1400kg,Trans. code:ME/ML | GDS10104 | Drive Shaft | 54T | 28 | 37 | 63 | 112.5 | 1072 | |
| | 1998.04-2002.04 | MT | F | L/R | Bus FWD DHX, DHX (XUD9TF/L) | Payload:1800kg,Trans. code:MG | GCO10011 | Outer Joint | 54T | 35 | 45 | 70 | 117 | 73 | I |
| | 1998.04-2002.04 | MT | F | L/R | Bus FWD DHX, DHX (XUD9TF/L) | Payload:1000/1400kg,Trans. code:ME/ML/MG | GCO10012 | Outer Joint | | 28 | 39 | 63 | 112.5 | 63 | I |
| | 1998.04-2002.04 | MT | F | L/R | Bus FWD DHX, DHX (XUD9TF/L) | Payload:1000/1400kg,Trans. code:ME/ML/MG | GCO10013 | Outer Joint | 54T | 28 | 39 | 63 | 112.5 | 63 | I |
| | 1998.04-2002.04 | MT | F | L/R | Bus FWD DHX, DHX (XUD9TF/L) | Payload:1800kg,Trans. code:MG | GCO10050 | Outer Joint | | 35 | 45 | 70 | 117 | 73 | I |
| | 1998.04-2002.04 | MT | F | L | Bus FWD DHX, DHX (XUD9TF/L) | Payload:1800kg,Trans. code:MG | GCI10010 | Inner Joint | | 41 | 45 | 43 | 70 | 115.5 | |
| | 1998.04-2002.04 | MT | F | L | Bus FWD DHX, DHX (XUD9TF/L) | Payload:1000/1400kg,Trans. code:MG | GCI10013 | Inner Joint | | 41 | 39 | 43 | 70 | 104 | |
| | 1998.04-2002.04 | MT | F | L | Bus FWD DHX, DHX (XUD9TF/L) | Payload:1000/1400kg,Trans. code:ME/ML | GCI10015 | Inner Joint | | 37 | 39 | 40 | 68.5 | 104 | |
| | 1998.04-2002.04 | MT | F | L | Bus FWD DHX, DHX (XUD9TF/L) | Payload:1000/1400kg,Trans. code:ME/ML | GCI45013 | Inner Joint | | 37 | 39 | 40 | 68.5 | 100 | |
| | 1998.04-2002.04 | MT | F | R | Bus FWD DHX, DHX (XUD9TF/L) | Payload:1800kg,Trans. code:MG | GCI10009 | Inner Joint | | 41 | 45 | 34.9 | 393 | 115.6 | |
| | 1998.04-2002.04 | MT | F | R | Bus FWD DHX, DHX (XUD9TF/L) | Payload:1000/1400kg,Trans. code:ME/ML | GCI10034 | Inner Joint | | 37 | 39 | 31.9 | 369.5 | 99 | |
| | 1998.04-2002.04 | MT | F | L | Platform/Chassis FWD DHX, DHX (XUD9TF/L) | Payload:1800kg,Trans. code:MG | GDS10033 | Drive Shaft | 54T | 35 | 41 | 70 | 117 | 762 | |
| | 1998.04-2002.04 | MT | F | L | Platform/Chassis FWD DHX, DHX (XUD9TF/L) | Payload:1000/1400kg,Trans. code:MG | GDS10035 | Drive Shaft | 54T | 28 | 41 | 63 | 112.5 | 757.5 | |
| | 1998.04-2002.04 | MT | F | L | Platform/Chassis FWD DHX, DHX (XUD9TF/L) | Payload:1000/1400kg,Trans. code:ME/ML | GDS10037 | Drive Shaft | 54T | 28 | 37 | 63 | 112.5 | 771 | |
| | 1998.04-2002.04 | MT | F | L | Platform/Chassis FWD DHX, DHX (XUD9TF/L) | Payload:1800kg,Trans. code:MG | GDS10067 | Drive Shaft | | 35 | 41 | 70 | 117 | 762 | |
| | 1998.04-2002.04 | MT | F | L | Platform/Chassis FWD DHX, DHX (XUD9TF/L) | Payload:1000/1400kg,Trans. code:MG | GDS10102 | Drive Shaft | | 28 | 41 | 63 | 112.5 | 757.5 | |
| | 1998.04-2002.04 | MT | F | L | Platform/Chassis FWD DHX, DHX (XUD9TF/L) | Payload:1000/1400kg,Trans. code:ME/ML | GDS10105 | Drive Shaft | | 28 | 37 | 63 | 112.5 | 771 | |
| | 1998.04-2002.04 | MT | F | R | Platform/Chassis FWD DHX, DHX (XUD9TF/L) | Payload:1800kg,Trans. code:MG | GDS10032 | Drive Shaft | 54T | 35 | 41 | 70 | 117 | 1085 | |
| | 1998.04-2002.04 | MT | F | R | Platform/Chassis FWD DHX, DHX (XUD9TF/L) | Payload:1000/1400kg,Trans. code:MG | GDS10036 | Drive Shaft | 54T | 28 | 41 | 63 | 112.5 | 1079 | |
| | 1998.04-2002.04 | MT | F | R | Platform/Chassis FWD DHX, DHX (XUD9TF/L) | Payload:1800kg,Trans. code:MG | GDS10066 | Drive Shaft | | 35 | 41 | 70 | 117 | 1085 | |
| | 1998.04-2002.04 | MT | F | R | Platform/Chassis FWD DHX, DHX (XUD9TF/L) | Payload:1000/1400kg,Trans. code:ME/ML | GDS10069 | Drive Shaft | | 28 | 37 | 63 | 112.5 | 1072 | |
| | 1998.04-2002.04 | MT | F | R | Platform/Chassis FWD DHX, DHX (XUD9TF/L) | Payload:1000/1400kg,Trans. code:MG | GDS10103 | Drive Shaft | | 28 | 41 | 63 | 112.5 | 1079 | |
| | 1998.04-2002.04 | MT | F | R | Platform/Chassis FWD DHX, DHX (XUD9TF/L) | Payload:1000/1400kg,Trans. code:ME/ML | GDS10104 | Drive Shaft | 54T | 28 | 37 | 63 | 112.5 | 1072 | |
| | 1998.04-2002.04 | MT | F | L/R | Platform/Chassis FWD DHX, DHX (XUD9TF/L) | Payload:1800kg,Trans. code:MG | GCO10011 | Outer Joint | 54T | 35 | 45 | 70 | 117 | 73 | I |
| | 1998.04-2002.04 | MT | F | L/R | Platform/Chassis FWD DHX, DHX (XUD9TF/L) | Payload:1000/1400kg,Trans. code:ME/ML/MG | GCO10012 | Outer Joint | | 28 | 39 | 63 | 112.5 | 63 | I |
| | 1998.04-2002.04 | MT | F | L/R | Platform/Chassis FWD DHX, DHX (XUD9TF/L) | Payload:1000/1400kg,Trans. code:ME/ML/MG | GCO10013 | Outer Joint | 54T | 28 | 39 | 63 | 112.5 | 63 | I |
| | 1998.04-2002.04 | MT | F | L/R | Platform/Chassis FWD DHX, DHX (XUD9TF/L) | Payload:1800kg,Trans. code:MG | GCO10050 | Outer Joint | | 35 | 45 | 70 | 117 | 73 | I |
| | 1998.04-2002.04 | MT | F | L | Platform/Chassis FWD DHX, DHX (XUD9TF/L) | Payload:1800kg,Trans. code:MG | GCI10010 | Inner Joint | | 41 | 45 | 43 | 70 | 115.5 | |
| | 1998.04-2002.04 | MT | F | L | Platform/Chassis FWD DHX, DHX (XUD9TF/L) | Payload:1000/1400kg,Trans. code:MG | GCI10013 | Inner Joint | | 41 | 39 | 43 | 70 | 104 | |
| | 1998.04-2002.04 | MT | F | L | Platform/Chassis FWD DHX, DHX (XUD9TF/L) | Payload:1000/1400kg,Trans. code:ME/ML | GCI10015 | Inner Joint | | 37 | 39 | 40 | 68.5 | 104 | |
| | 1998.04-2002.04 | MT | F | L | Platform/Chassis FWD DHX, DHX (XUD9TF/L) | Payload:1000/1400kg,Trans. code:ME/ML | GCI45013 | Inner Joint | | 37 | 39 | 40 | 68.5 | 100 | |
| | 1998.04-2002.04 | MT | F | R | Platform/Chassis FWD DHX, DHX (XUD9TF/L) | Payload:1800kg,Trans. code:MG | GCI10009 | Inner Joint | | 41 | 45 | 34.9 | 393 | 115.6 | |
| | 1998.04-2002.04 | MT | F | R | Platform/Chassis FWD DHX, DHX (XUD9TF/L) | Payload:1000/1400kg,Trans. code:ME/ML | GCI10034 | Inner Joint | | 37 | 39 | 31.9 | 369.5 | 99 | |
| | 1998.04-2002.04 | MT | F | L | Van FWD DHX, DHX (XUD9TF/L) | Payload:1800kg,Trans. code:MG | GDS10033 | Drive Shaft | 54T | 35 | 41 | 70 | 117 | 762 | |
| | 1998.04-2002.04 | MT | F | L | Van FWD DHX, DHX (XUD9TF/L) | Payload:1000/1400kg,Trans. code:MG | GDS10035 | Drive Shaft | 54T | 28 | 41 | 63 | 112.5 | 757.5 | |
| | 1998.04-2002.04 | MT | F | L | Van FWD DHX, DHX (XUD9TF/L) | Payload:1000/1400kg,Trans. code:ME/ML | GDS10037 | Drive Shaft | 54T | 28 | 37 | 63 | 112.5 | 771 | |
| | 1998.04-2002.04 | MT | F | L | Van FWD DHX, DHX (XUD9TF/L) | Payload:1800kg,Trans. code:MG | GDS10067 | Drive Shaft | | 35 | 41 | 70 | 117 | 762 | |

| | YEAR | TRANSM. | F/R | L/R | BODY STYLE & DRIVE TYPE & ENGINE | REMARKS | G-AP Ref. | PRODUCT | ABS | Technical Specifications A | B | C | H | L | P |
|---|---|---|---|---|---|---|---|---|---|---|---|---|---|---|---|
| **FIAT** **Ducato 14** | | | | | | | | | | | | | | | |
| 1.9 (66 kw) | 1998.04-2002.04 | MT | F | L | Van FWD DHX, DHX (XUD9TF/L) | Payload:1000/1400kg,Trans. code:MG | GDS10102 | Drive Shaft | | 28 | 41 | 63 | 112.5 | 757.5 | |
| | 1998.04-2002.04 | MT | F | L | Van FWD DHX, DHX (XUD9TF/L) | Payload:1000/1400kg,Trans. code:ME/ML | GDS10105 | Drive Shaft | | 28 | 37 | 63 | 112.5 | 771 | |
| | 1998.04-2002.04 | MT | F | R | Van FWD DHX, DHX (XUD9TF/L) | Payload:1800kg,Trans. code:MG | GDS10032 | Drive Shaft | 54T | 35 | 41 | 70 | 117 | 1085 | |
| | 1998.04-2002.04 | MT | F | R | Van FWD DHX, DHX (XUD9TF/L) | Payload:1000/1400kg,Trans. code:MG | GDS10036 | Drive Shaft | 54T | 28 | 41 | 63 | 112.5 | 1079 | |
| | 1998.04-2002.04 | MT | F | R | Van FWD DHX, DHX (XUD9TF/L) | Payload:1800kg,Trans. code:MG | GDS10066 | Drive Shaft | | 35 | 41 | 70 | 117 | 1085 | |
| | 1998.04-2002.04 | MT | F | R | Van FWD DHX, DHX (XUD9TF/L) | Payload:1000/1400kg,Trans. code:ME/ML | GDS10069 | Drive Shaft | | 28 | 37 | 63 | 112.5 | 1072 | |
| | 1998.04-2002.04 | MT | F | R | Van FWD DHX, DHX (XUD9TF/L) | Payload:1000/1400kg,Trans. code:MG | GDS10103 | Drive Shaft | | 28 | 41 | 63 | 112.5 | 1079 | |
| | 1998.04-2002.04 | MT | F | R | Van FWD DHX, DHX (XUD9TF/L) | Payload:1000/1400kg,Trans. code:ME/ML | GDS10104 | Drive Shaft | 54T | 28 | 37 | 63 | 112.5 | 1072 | |
| | 1998.04-2002.04 | MT | F | L/R | Van FWD DHX, DHX (XUD9TF/L) | Payload:1800kg,Trans. code:MG | GCO10011 | Outer Joint | 54T | 35 | 45 | 70 | 117 | 73 | I |
| | 1998.04-2002.04 | MT | F | L/R | Van FWD DHX, DHX (XUD9TF/L) | Payload:1000/1400kg,Trans. code:ME/ML/MG | GCO10012 | Outer Joint | | 28 | 39 | 63 | 112.5 | 63 | I |
| | 1998.04-2002.04 | MT | F | L/R | Van FWD DHX, DHX (XUD9TF/L) | Payload:1000/1400kg,Trans. code:ME/ML/MG | GCO10013 | Outer Joint | 54T | 28 | 39 | 63 | 112.5 | 63 | I |
| | 1998.04-2002.04 | MT | F | L/R | Van FWD DHX, DHX (XUD9TF/L) | Payload:1800kg,Trans. code:MG | GCO10050 | Outer Joint | | 35 | 45 | 70 | 117 | 73 | I |
| | 1998.04-2002.04 | MT | F | L | Van FWD DHX, DHX (XUD9TF/L) | Payload:1800kg,Trans. code:MG | GCI10010 | Inner Joint | | 41 | 45 | 43 | 70 | 115.5 | |
| | 1998.04-2002.04 | MT | F | L | Van FWD DHX, DHX (XUD9TF/L) | Payload:1000/1400kg,Trans. code:MG | GCI10013 | Inner Joint | | 41 | 39 | 43 | 70 | 104 | |
| | 1998.04-2002.04 | MT | F | L | Van FWD DHX, DHX (XUD9TF/L) | Payload:1000/1400kg,Trans. code:ME/ML | GCI10015 | Inner Joint | | 37 | 39 | 40 | 68.5 | 104 | |
| | 1998.04-2002.04 | MT | F | L | Van FWD DHX, DHX (XUD9TF/L) | Payload:1000/1400kg,Trans. code:ME/ML | GCI45013 | Inner Joint | | 37 | 39 | 40 | 68.5 | 100 | |
| | 1998.04-2002.04 | MT | F | R | Van FWD DHX, DHX (XUD9TF/L) | Payload:1800kg,Trans. code:MG | GCI10009 | Inner Joint | | 41 | 45 | 34.9 | 393 | 115.6 | |
| | 1998.04-2002.04 | MT | F | R | Van FWD DHX, DHX (XUD9TF/L) | Payload:1000/1400kg,Trans. code:ME/ML | GCI10034 | Inner Joint | | 37 | 39 | 31.9 | 369.5 | 99 | |
| 2.0 (80 kw) | 1994.03-2002.04 | MT | F | L | Platform/Chassis FWD RFW | Payload:1800kg,Trans. code:MG | GDS10033 | Drive Shaft | 54T | 35 | 41 | 70 | 117 | 762 | |
| | 1994.03-2002.04 | MT | F | L | Platform/Chassis FWD RFW | Payload:1000/1400kg,Trans. code:MG | GDS10035 | Drive Shaft | 54T | 28 | 41 | 63 | 112.5 | 757.5 | |
| | 1994.03-2002.04 | MT | F | L | Platform/Chassis FWD RFW | Payload:1000/1400kg,Trans. code:ME/ML | GDS10037 | Drive Shaft | 54T | 28 | 37 | 63 | 112.5 | 771 | |
| | 1994.03-2002.04 | MT | F | L | Platform/Chassis FWD RFW | Payload:1800kg,Trans. code:MG | GDS10067 | Drive Shaft | | 35 | 41 | 70 | 117 | 762 | |
| | 1994.03-2002.04 | MT | F | L | Platform/Chassis FWD RFW | Payload:1000/1400kg,Trans. code:MG | GDS10102 | Drive Shaft | | 28 | 41 | 63 | 112.5 | 757.5 | |
| | 1994.03-2002.04 | MT | F | L | Platform/Chassis FWD RFW | Payload:1000/1400kg,Trans. code:ME/ML | GDS10105 | Drive Shaft | | 28 | 37 | 63 | 112.5 | 771 | |
| | 1994.03-2002.04 | MT | F | R | Platform/Chassis FWD RFW | Payload:1800kg,Trans. code:MG | GDS10032 | Drive Shaft | 54T | 35 | 41 | 70 | 117 | 1085 | |
| | 1994.03-2002.04 | MT | F | R | Platform/Chassis FWD RFW | Payload:1000/1400kg,Trans. code:MG | GDS10036 | Drive Shaft | 54T | 28 | 41 | 63 | 112.5 | 1079 | |
| | 1994.03-2002.04 | MT | F | R | Platform/Chassis FWD RFW | Payload:1800kg,Trans. code:MG | GDS10066 | Drive Shaft | | 35 | 41 | 70 | 117 | 1085 | |
| | 1994.03-2002.04 | MT | F | R | Platform/Chassis FWD RFW | Payload:1000/1400kg,Trans. code:ME/ML | GDS10069 | Drive Shaft | | 28 | 37 | 63 | 112.5 | 1072 | |
| | 1994.03-2002.04 | MT | F | R | Platform/Chassis FWD RFW | Payload:1000/1400kg,Trans. code:MG | GDS10103 | Drive Shaft | | 28 | 41 | 63 | 112.5 | 1079 | |
| | 1994.03-2002.04 | MT | F | R | Platform/Chassis FWD RFW | Payload:1000/1400kg,Trans. code:ME/ML | GDS10104 | Drive Shaft | 54T | 28 | 37 | 63 | 112.5 | 1072 | |
| | 1994.03-2002.04 | MT | F | L/R | Platform/Chassis FWD RFW | Payload:1800kg,Trans. code:MG | GCO10011 | Outer Joint | 54T | 35 | 45 | 70 | 117 | 73 | I |
| | 1994.03-2002.04 | MT | F | L/R | Platform/Chassis FWD RFW | Payload:1000/1400kg,Trans. code:ME/ML/MG | GCO10012 | Outer Joint | | 28 | 39 | 63 | 112.5 | 63 | I |
| | 1994.03-2002.04 | MT | F | L/R | Platform/Chassis FWD RFW | Payload:1000/1400kg,Trans. code:ME/ML/MG | GCO10013 | Outer Joint | 54T | 28 | 39 | 63 | 112.5 | 63 | I |
| | 1994.03-2002.04 | MT | F | L/R | Platform/Chassis FWD RFW | Payload:1800kg,Trans. code:MG | GCO10050 | Outer Joint | | 35 | 45 | 70 | 117 | 73 | I |
| | 1994.03-2002.04 | MT | F | L | Platform/Chassis FWD RFW | Payload:1800kg,Trans. code:MG | GCI10010 | Inner Joint | | 41 | 45 | 43 | 70 | 115.5 | |
| | 1994.03-2002.04 | MT | F | L | Platform/Chassis FWD RFW | Payload:1000/1400kg,Trans. code:MG | GCI10013 | Inner Joint | | 41 | 39 | 43 | 70 | 104 | |
| | 1994.03-2002.04 | MT | F | L | Platform/Chassis FWD RFW | Payload:1000/1400kg,Trans. code:ME/ML | GCI10015 | Inner Joint | | 37 | 39 | 40 | 68.5 | 104 | |
| | 1994.03-2002.04 | MT | F | L | Platform/Chassis FWD RFW | Payload:1000/1400kg,Trans. code:ME/ML | GCI45013 | Inner Joint | | 37 | 39 | 40 | 68.5 | 100 | |
| | 1994.03-2002.04 | MT | F | R | Platform/Chassis FWD RFW | Payload:1800kg,Trans. code:MG | GCI10009 | Inner Joint | | 41 | 45 | 34.9 | 393 | 115.6 | |
| | 1994.03-2002.04 | MT | F | R | Platform/Chassis FWD RFW | Payload:1000/1400kg,Trans. code:ME/ML | GCI10034 | Inner Joint | | 37 | 39 | 31.9 | 369.5 | 99 | |
| | 1994.11-2002.04 | MT | F | L | Van 4WD RFW | Payload:1800kg | GDS10033 | Drive Shaft | 54T | 35 | 41 | 70 | 117 | 762 | |
| | 1994.11-2002.04 | MT | F | L | Van 4WD RFW | Date From:2001.06,Payload:1000kg/1400kg | GDS10035 | Drive Shaft | 54T | 28 | 41 | 63 | 112.5 | 757.5 | |
| | 1994.11-2002.04 | MT | F | L | Van 4WD RFW | Date To:2001.05,Payload:1000kg/1400kg | GDS10037 | Drive Shaft | 54T | 28 | 37 | 63 | 112.5 | 771 | |
| | 1994.11-2002.04 | MT | F | R | Van 4WD RFW | Chassis no. from:5235559,Payload:1800kg | GDS10032 | Drive Shaft | 54T | 35 | 41 | 70 | 117 | 1085 | |
| | 1994.11-2002.04 | MT | F | R | Van 4WD RFW | Date From:2001.06,Payload:1000kg/1400kg | GDS10036 | Drive Shaft | 54T | 28 | 41 | 63 | 112.5 | 1079 | |
| | 1994.11-2002.04 | MT | F | R | Van 4WD RFW | Date To:2001.05,Payload:1000kg/1400kg | GDS10104 | Drive Shaft | 54T | 28 | 37 | 63 | 112.5 | 1072 | |
| | 1994.11-2002.04 | MT | F | L/R | Van 4WD RFW | Payload [kg]:1800 | GCO10011 | Outer Joint | 54T | 35 | 45 | 70 | 117 | 73 | I |
| | 1994.11-2002.04 | MT | F | L/R | Van 4WD RFW | Payload [kg]:1000/1400 | GCO10013 | Outer Joint | 54T | 28 | 39 | 63 | 112.5 | 63 | I |
| 2.5 (62 kw) | 1994.03-2002.04 | MT | F | L | Platform/Chassis 4WD 8140.67 | Payload:1800kg,Trans. code:MG | GDS10033 | Drive Shaft | 54T | 35 | 41 | 70 | 117 | 762 | |
| | 1994.03-2002.04 | MT | F | L | Platform/Chassis 4WD 8140.67 | Payload:1000/1400kg,Trans. code:MG | GDS10035 | Drive Shaft | 54T | 28 | 41 | 63 | 112.5 | 757.5 | |
| | 1994.03-2002.04 | MT | F | L | Platform/Chassis 4WD 8140.67 | Payload:1000/1400kg,Trans. code:ME/ML | GDS10037 | Drive Shaft | 54T | 28 | 37 | 63 | 112.5 | 771 | |
| | 1994.03-2002.04 | MT | F | L | Platform/Chassis 4WD 8140.67 | Payload:1800kg,Trans. code:MG | GDS10067 | Drive Shaft | | 35 | 41 | 70 | 117 | 762 | |
| | 1994.03-2002.04 | MT | F | L | Platform/Chassis 4WD 8140.67 | Payload:1000/1400kg,Trans. code:MG | GDS10102 | Drive Shaft | | 28 | 41 | 63 | 112.5 | 757.5 | |
| | 1994.03-2002.04 | MT | F | L | Platform/Chassis 4WD 8140.67 | Payload:1000/1400kg,Trans. code:ME/ML | GDS10105 | Drive Shaft | | 28 | 37 | 63 | 112.5 | 771 | |
| | 1994.03-2002.04 | MT | F | R | Platform/Chassis 4WD 8140.67 | Payload:1800kg,Trans. code:MG | GDS10032 | Drive Shaft | 54T | 35 | 41 | 70 | 117 | 1085 | |
| | 1994.03-2002.04 | MT | F | R | Platform/Chassis 4WD 8140.67 | Payload:1000/1400kg,Trans. code:MG | GDS10036 | Drive Shaft | 54T | 28 | 41 | 63 | 112.5 | 1079 | |
| | 1994.03-2002.04 | MT | F | R | Platform/Chassis 4WD 8140.67 | Payload:1800kg,Trans. code:MG | GDS10066 | Drive Shaft | | 35 | 41 | 70 | 117 | 1085 | |
| | 1994.03-2002.04 | MT | F | R | Platform/Chassis 4WD 8140.67 | Payload:1000/1400kg,Trans. code:ME/ML | GDS10069 | Drive Shaft | | 28 | 37 | 63 | 112.5 | 1072 | |
| | 1994.03-2002.04 | MT | F | R | Platform/Chassis 4WD 8140.67 | Payload:1000/1400kg,Trans. code:MG | GDS10103 | Drive Shaft | | 28 | 41 | 63 | 112.5 | 1079 | |
| | 1994.03-2002.04 | MT | F | R | Platform/Chassis 4WD 8140.67 | Payload:1000/1400kg,Trans. code:ME/ML | GDS10104 | Drive Shaft | 54T | 28 | 37 | 63 | 112.5 | 1072 | |
| | 1994.03-2002.04 | MT | F | L/R | Platform/Chassis 4WD 8140.67 | Payload:1800kg,Trans. code:MG | GCO10011 | Outer Joint | 54T | 35 | 45 | 70 | 117 | 73 | I |
| | 1994.03-2002.04 | MT | F | L/R | Platform/Chassis 4WD 8140.67 | Payload:1000/1400kg,Trans. code:ME/ML/MG | GCO10012 | Outer Joint | | 28 | 39 | 63 | 112.5 | 63 | I |
| | 1994.03-2002.04 | MT | F | L/R | Platform/Chassis 4WD 8140.67 | Payload:1000/1400kg,Trans. code:ME/ML/MG | GCO10013 | Outer Joint | 54T | 28 | 39 | 63 | 112.5 | 63 | I |
| | 1994.03-2002.04 | MT | F | L/R | Platform/Chassis 4WD 8140.67 | Payload:1800kg,Trans. code:MG | GCO10050 | Outer Joint | | 35 | 45 | 70 | 117 | 73 | I |
| | 1994.03-2002.04 | MT | F | L | Platform/Chassis 4WD 8140.67 | Payload:1800kg,Trans. code:MG | GCI10010 | Inner Joint | | 41 | 45 | 43 | 70 | 115.5 | |

| | YEAR | TRANSM. | F/R | L/R | BODY STYLE & DRIVE TYPE & ENGINE | REMARKS | G-AP Ref. | PRODUCT | ABS | Technical Specifications A | B | C | H | L | P |
|---|---|---|---|---|---|---|---|---|---|---|---|---|---|---|---|
| **FIAT** **Ducato 14** | | | | | | | | | | | | | | | |
| 2.5 (62 kw) | 1994.03-2002.04 | MT | F | L | Platform/Chassis 4WD 8140.67 | Payload:1000/1400kg,Trans. code:MG | GCI10013 | Inner Joint | | 41 | 39 | 43 | 70 | 104 | |
| | 1994.03-2002.04 | MT | F | L | Platform/Chassis 4WD 8140.67 | Payload:1000/1400kg,Trans. code:ME/ML | GCI10015 | Inner Joint | | 37 | 39 | 40 | 68.5 | 104 | |
| | 1994.03-2002.04 | MT | F | L | Platform/Chassis 4WD 8140.67 | Payload:1000/1400kg,Trans. code:ME/ML | GCI45013 | Inner Joint | | 37 | 39 | 40 | 68.5 | 100 | |
| | 1994.03-2002.04 | MT | F | R | Platform/Chassis 4WD 8140.67 | Payload:1800kg,Trans. code:MG | GCI10009 | Inner Joint | | 41 | 45 | 34.9 | 393 | 115.6 | |
| | 1994.03-2002.04 | MT | F | R | Platform/Chassis 4WD 8140.67 | Payload:1000/1400kg,Trans. code:ME/ML | GCI10034 | Inner Joint | | 37 | 39 | 31.9 | 369.5 | 99 | |
| 2.5 (80 kw) | 1994.07-2002.04 | MT | F | L | Bus FWD 8140.47R | Payload:1800kg,Trans. code:MG | GDS10033 | Drive Shaft | 54T | 35 | 41 | 70 | 117 | 762 | |
| | 1994.07-2002.04 | MT | F | L | Bus FWD 8140.47R | Payload:1000/1400kg,Trans. code:MG | GDS10035 | Drive Shaft | 54T | 28 | 41 | 63 | 112.5 | 757.5 | |
| | 1994.07-2002.04 | MT | F | L | Bus FWD 8140.47R | Payload:1000/1400kg,Trans. code:ME/ML | GDS10037 | Drive Shaft | 54T | 28 | 37 | 63 | 112.5 | 771 | |
| | 1994.07-2002.04 | MT | F | L | Bus FWD 8140.47R | Payload:1800kg,Trans. code:MG | GDS10067 | Drive Shaft | | 35 | 41 | 70 | 117 | 762 | |
| | 1994.07-2002.04 | MT | F | L | Bus FWD 8140.47R | Payload:1000/1400kg,Trans. code:MG | GDS10102 | Drive Shaft | | 28 | 41 | 63 | 112.5 | 757.5 | |
| | 1994.07-2002.04 | MT | F | L | Bus FWD 8140.47R | Payload:1000/1400kg,Trans. code:ME/ML | GDS10105 | Drive Shaft | | 28 | 37 | 63 | 112.5 | 771 | |
| | 1994.07-2002.04 | MT | F | R | Bus FWD 8140.47R | Payload:1800kg,Trans. code:MG | GDS10032 | Drive Shaft | 54T | 35 | 41 | 70 | 117 | 1085 | |
| | 1994.07-2002.04 | MT | F | R | Bus FWD 8140.47R | Payload:1000/1400kg,Trans. code:MG | GDS10036 | Drive Shaft | 54T | 28 | 41 | 63 | 112.5 | 1079 | |
| | 1994.07-2002.04 | MT | F | R | Bus FWD 8140.47R | Payload:1800kg,Trans. code:MG | GDS10066 | Drive Shaft | | 35 | 41 | 70 | 117 | 1085 | |
| | 1994.07-2002.04 | MT | F | R | Bus FWD 8140.47R | Payload:1000/1400kg,Trans. code:ME/ML | GDS10069 | Drive Shaft | | 28 | 37 | 63 | 112.5 | 1072 | |
| | 1994.07-2002.04 | MT | F | R | Bus FWD 8140.47R | Payload:1000/1400kg,Trans. code:MG | GDS10103 | Drive Shaft | | 28 | 41 | 63 | 112.5 | 1079 | |
| | 1994.07-2002.04 | MT | F | R | Bus FWD 8140.47R | Payload:1000/1400kg,Trans. code:ME/ML | GDS10104 | Drive Shaft | 54T | 28 | 37 | 63 | 112.5 | 1072 | |
| | 1994.07-2002.04 | MT | F | L/R | Bus FWD 8140.47R | Payload:1800kg,Trans. code:MG | GCO10011 | Outer Joint | 54T | 35 | 45 | 70 | 117 | 73 | I |
| | 1994.07-2002.04 | MT | F | L/R | Bus FWD 8140.47R | Payload:1000/1400kg,Trans. code:ME/ML/MG | GCO10012 | Outer Joint | | 28 | 39 | 63 | 112.5 | 63 | I |
| | 1994.07-2002.04 | MT | F | L/R | Bus FWD 8140.47R | Payload:1000/1400kg,Trans. code:ME/ML/MG | GCO10013 | Outer Joint | 54T | 28 | 39 | 63 | 112.5 | 63 | I |
| | 1994.07-2002.04 | MT | F | L/R | Bus FWD 8140.47R | Payload:1800kg,Trans. code:MG | GCO10050 | Outer Joint | | 35 | 45 | 70 | 117 | 73 | I |
| | 1994.07-2002.04 | MT | F | L | Bus FWD 8140.47R | Payload:1800kg,Trans. code:MG | GCI10010 | Inner Joint | | 41 | 45 | 43 | 70 | 115.5 | |
| | 1994.07-2002.04 | MT | F | L | Bus FWD 8140.47R | Payload:1000/1400kg,Trans. code:MG | GCI10013 | Inner Joint | | 41 | 39 | 43 | 70 | 104 | |
| | 1994.07-2002.04 | MT | F | L | Bus FWD 8140.47R | Payload:1000/1400kg,Trans. code:ME/ML | GCI10015 | Inner Joint | | 37 | 39 | 40 | 68.5 | 104 | |
| | 1994.07-2002.04 | MT | F | L | Bus FWD 8140.47R | Payload:1000/1400kg,Trans. code:ME/ML | GCI45013 | Inner Joint | | 37 | 39 | 40 | 68.5 | 100 | |
| | 1994.07-2002.04 | MT | F | R | Bus FWD 8140.47R | Payload:1800kg,Trans. code:MG | GCI10009 | Inner Joint | | 41 | 45 | 34.9 | 393 | 115.6 | |
| | 1994.07-2002.04 | MT | F | R | Bus FWD 8140.47R | Payload:1000/1400kg,Trans. code:ME/ML | GCI10034 | Inner Joint | | 37 | 39 | 31.9 | 369.5 | 99 | |
| | 1994.11-1998.04 | MT | F | L | Van 4WD 8140.47 | Payload:1000kg/1400kg | GDS10035 | Drive Shaft | 54T | 28 | 41 | 63 | 112.5 | 757.5 | |
| | 1994.11-1998.04 | MT | F | R | Van 4WD 8140.47 | Payload:1000kg/1400kg | GDS10036 | Drive Shaft | 54T | 28 | 41 | 63 | 112.5 | 1079 | |
| | 1994.11-1998.04 | MT | F | L/R | Van 4WD 8140.47 | Payload [kg]:1000/1400 | GCO10013 | Outer Joint | 54T | 28 | 39 | 63 | 112.5 | 63 | I |
| 2.5 (85 kw) | 1994.03-2002.04 | MT | F | L | Van FWD 8140.47 | Payload:1800kg,Trans. code:MG | GDS10033 | Drive Shaft | 54T | 35 | 41 | 70 | 117 | 762 | |
| | 1994.03-2002.04 | MT | F | L | Van FWD 8140.47 | Payload:1000/1400kg,Trans. code:MG | GDS10035 | Drive Shaft | 54T | 28 | 41 | 63 | 112.5 | 757.5 | |
| | 1994.03-2002.04 | MT | F | L | Van FWD 8140.47 | Payload:1000/1400kg,Trans. code:ME/ML | GDS10037 | Drive Shaft | 54T | 28 | 37 | 63 | 112.5 | 771 | |
| | 1994.03-2002.04 | MT | F | L | Van FWD 8140.47 | Payload:1800kg,Trans. code:MG | GDS10067 | Drive Shaft | | 35 | 41 | 70 | 117 | 762 | |
| | 1994.03-2002.04 | MT | F | L | Van FWD 8140.47 | Payload:1000/1400kg,Trans. code:MG | GDS10102 | Drive Shaft | | 28 | 41 | 63 | 112.5 | 757.5 | |
| | 1994.03-2002.04 | MT | F | L | Van FWD 8140.47 | Payload:1000/1400kg,Trans. code:ME/ML | GDS10105 | Drive Shaft | | 28 | 37 | 63 | 112.5 | 771 | |
| | 1994.03-2002.04 | MT | F | R | Van FWD 8140.47 | Payload:1800kg,Trans. code:MG | GDS10032 | Drive Shaft | 54T | 35 | 41 | 70 | 117 | 1085 | |
| | 1994.03-2002.04 | MT | F | R | Van FWD 8140.47 | Payload:1000/1400kg,Trans. code:MG | GDS10036 | Drive Shaft | 54T | 28 | 41 | 63 | 112.5 | 1079 | |
| | 1994.03-2002.04 | MT | F | R | Van FWD 8140.47 | Payload:1800kg,Trans. code:MG | GDS10066 | Drive Shaft | | 35 | 41 | 70 | 117 | 1085 | |
| | 1994.03-2002.04 | MT | F | R | Van FWD 8140.47 | Payload:1000/1400kg,Trans. code:ME/ML | GDS10069 | Drive Shaft | | 28 | 37 | 63 | 112.5 | 1072 | |
| | 1994.03-2002.04 | MT | F | R | Van FWD 8140.47 | Payload:1000/1400kg,Trans. code:MG | GDS10103 | Drive Shaft | | 28 | 41 | 63 | 112.5 | 1079 | |
| | 1994.03-2002.04 | MT | F | R | Van FWD 8140.47 | Payload:1000/1400kg,Trans. code:ME/ML | GDS10104 | Drive Shaft | 54T | 28 | 37 | 63 | 112.5 | 1072 | |
| | 1994.03-2002.04 | MT | F | L/R | Van FWD 8140.47 | Payload:1800kg,Trans. code:MG | GCO10011 | Outer Joint | 54T | 35 | 45 | 70 | 117 | 73 | I |
| | 1994.03-2002.04 | MT | F | L/R | Van FWD 8140.47 | Payload:1000/1400kg,Trans. code:ME/ML/MG | GCO10012 | Outer Joint | | 28 | 39 | 63 | 112.5 | 63 | I |
| | 1994.03-2002.04 | MT | F | L/R | Van FWD 8140.47 | Payload:1000/1400kg,Trans. code:ME/ML/MG | GCO10013 | Outer Joint | 54T | 28 | 39 | 63 | 112.5 | 63 | I |
| | 1994.03-2002.04 | MT | F | L/R | Van FWD 8140.47 | Payload:1800kg,Trans. code:MG | GCO10050 | Outer Joint | | 35 | 45 | 70 | 117 | 73 | I |
| | 1994.03-2002.04 | MT | F | L | Van FWD 8140.47 | Payload:1800kg,Trans. code:MG | GCI10010 | Inner Joint | | 41 | 45 | 43 | 70 | 115.5 | |
| | 1994.03-2002.04 | MT | F | L | Van FWD 8140.47 | Payload:1000/1400kg,Trans. code:MG | GCI10013 | Inner Joint | | 41 | 39 | 43 | 70 | 104 | |
| | 1994.03-2002.04 | MT | F | L | Van FWD 8140.47 | Payload:1000/1400kg,Trans. code:ME/ML | GCI10015 | Inner Joint | | 37 | 39 | 40 | 68.5 | 104 | |
| | 1994.03-2002.04 | MT | F | L | Van FWD 8140.47 | Payload:1000/1400kg,Trans. code:ME/ML | GCI45013 | Inner Joint | | 37 | 39 | 40 | 68.5 | 100 | |
| | 1994.03-2002.04 | MT | F | R | Van FWD 8140.47 | Payload:1800kg,Trans. code:MG | GCI10009 | Inner Joint | | 41 | 45 | 34.9 | 393 | 115.6 | |
| | 1994.03-2002.04 | MT | F | R | Van FWD 8140.47 | Payload:1000/1400kg,Trans. code:ME/ML | GCI10034 | Inner Joint | | 37 | 39 | 31.9 | 369.5 | 99 | |
| | 1994.06-1998.04 | MT | F | L | Platform/Chassis FWD 8140.47 | Payload:1800kg,Trans. code:MG | GDS10033 | Drive Shaft | 54T | 35 | 41 | 70 | 117 | 762 | |
| | 1994.06-1998.04 | MT | F | L | Platform/Chassis FWD 8140.47 | Payload:1000/1400kg,Trans. code:MG | GDS10035 | Drive Shaft | 54T | 28 | 41 | 63 | 112.5 | 757.5 | |
| | 1994.06-1998.04 | MT | F | L | Platform/Chassis FWD 8140.47 | Payload:1000/1400kg,Trans. code:ME/ML | GDS10037 | Drive Shaft | 54T | 28 | 37 | 63 | 112.5 | 771 | |
| | 1994.06-1998.04 | MT | F | L | Platform/Chassis FWD 8140.47 | Payload:1800kg,Trans. code:MG | GDS10067 | Drive Shaft | | 35 | 41 | 70 | 117 | 762 | |
| | 1994.06-1998.04 | MT | F | L | Platform/Chassis FWD 8140.47 | Payload:1000/1400kg,Trans. code:MG | GDS10102 | Drive Shaft | | 28 | 41 | 63 | 112.5 | 757.5 | |
| | 1994.06-1998.04 | MT | F | L | Platform/Chassis FWD 8140.47 | Payload:1000/1400kg,Trans. code:ME/ML | GDS10105 | Drive Shaft | | 28 | 37 | 63 | 112.5 | 771 | |
| | 1994.06-1998.04 | MT | F | R | Platform/Chassis FWD 8140.47 | Payload:1800kg,Trans. code:MG | GDS10032 | Drive Shaft | 54T | 35 | 41 | 70 | 117 | 1085 | |
| | 1994.06-1998.04 | MT | F | R | Platform/Chassis FWD 8140.47 | Payload:1000/1400kg,Trans. code:MG | GDS10036 | Drive Shaft | 54T | 28 | 41 | 63 | 112.5 | 1079 | |
| | 1994.06-1998.04 | MT | F | R | Platform/Chassis FWD 8140.47 | Payload:1800kg,Trans. code:MG | GDS10066 | Drive Shaft | | 35 | 41 | 70 | 117 | 1085 | |
| | 1994.06-1998.04 | MT | F | R | Platform/Chassis FWD 8140.47 | Payload:1000/1400kg,Trans. code:ME/ML | GDS10069 | Drive Shaft | | 28 | 37 | 63 | 112.5 | 1072 | |
| | 1994.06-1998.04 | MT | F | R | Platform/Chassis FWD 8140.47 | Payload:1000/1400kg,Trans. code:MG | GDS10103 | Drive Shaft | | 28 | 41 | 63 | 112.5 | 1079 | |
| | 1994.06-1998.04 | MT | F | R | Platform/Chassis FWD 8140.47 | Payload:1000/1400kg,Trans. code:ME/ML | GDS10104 | Drive Shaft | 54T | 28 | 37 | 63 | 112.5 | 1072 | |
| | 1994.06-1998.04 | MT | F | L/R | Platform/Chassis FWD 8140.47 | Payload:1800kg,Trans. code:MG | GCO10011 | Outer Joint | 54T | 35 | 45 | 70 | 117 | 73 | I |

| | YEAR | TRANSM. | F/R | L/R | BODY STYLE & DRIVE TYPE & ENGINE | REMARKS | G-AP Ref. | PRODUCT | ABS | Technical Specifications A | B | C | H | L | P |
|---|---|---|---|---|---|---|---|---|---|---|---|---|---|---|---|
| **FIAT** **Ducato 14** | | | | | | | | | | | | | | | |
| 2.5 (85 kw) | 1994.06-1998.04 | MT | F | L/R | Platform/Chassis FWD 8140.47 | Payload:1000/1400kg,Trans. code:ME/ML/MG | GCO10012 | Outer Joint | | 28 | 39 | 63 | 112.5 | 63 | I |
| | 1994.06-1998.04 | MT | F | L/R | Platform/Chassis FWD 8140.47 | Payload:1000/1400kg,Trans. code:ME/ML/MG | GCO10013 | Outer Joint | 54T | 28 | 39 | 63 | 112.5 | 63 | I |
| | 1994.06-1998.04 | MT | F | L/R | Platform/Chassis FWD 8140.47 | Payload:1800kg,Trans. code:MG | GCO10050 | Outer Joint | | 35 | 45 | 70 | 117 | 73 | I |
| | 1994.06-1998.04 | MT | F | L | Platform/Chassis FWD 8140.47 | Payload:1800kg,Trans. code:MG | GCI10010 | Inner Joint | | 41 | 45 | 43 | 70 | 115.5 | |
| | 1994.06-1998.04 | MT | F | L | Platform/Chassis FWD 8140.47 | Payload:1000/1400kg,Trans. code:MG | GCI10013 | Inner Joint | | 41 | 39 | 43 | 70 | 104 | |
| | 1994.06-1998.04 | MT | F | L | Platform/Chassis FWD 8140.47 | Payload:1000/1400kg,Trans. code:ME/ML | GCI10015 | Inner Joint | | 37 | 39 | 40 | 68.5 | 104 | |
| | 1994.06-1998.04 | MT | F | R | Platform/Chassis FWD 8140.47 | Payload:1800kg,Trans. code:MG | GCI10009 | Inner Joint | | 41 | 45 | 34.9 | 393 | 115.6 | |
| | 1994.06-1998.04 | MT | F | R | Platform/Chassis FWD 8140.47 | Payload:1000/1400kg,Trans. code:ME/ML | GCI10034 | Inner Joint | | 37 | 39 | 31.9 | 369.5 | 99 | |
| 2.8 (64 kw) | 1998.02-2002.04 | MT | F | L | Platform/Chassis FWD 8140.63 | Payload:1800kg,Trans. code:MG | GDS10033 | Drive Shaft | 54T | 35 | 41 | 70 | 117 | 762 | |
| | 1998.02-2002.04 | MT | F | L | Platform/Chassis FWD 8140.63 | Payload:1000/1400kg,Trans. code:MG | GDS10035 | Drive Shaft | 54T | 28 | 41 | 63 | 112.5 | 757.5 | |
| | 1998.02-2002.04 | MT | F | L | Platform/Chassis FWD 8140.63 | Payload:1000/1400kg,Trans. code:ME/ML | GDS10037 | Drive Shaft | 54T | 28 | 37 | 63 | 112.5 | 771 | |
| | 1998.02-2002.04 | MT | F | L | Platform/Chassis FWD 8140.63 | Payload:1800kg,Trans. code:MG | GDS10067 | Drive Shaft | | 35 | 41 | 70 | 117 | 762 | |
| | 1998.02-2002.04 | MT | F | L | Platform/Chassis FWD 8140.63 | Payload:1000/1400kg,Trans. code:MG | GDS10102 | Drive Shaft | | 28 | 41 | 63 | 112.5 | 757.5 | |
| | 1998.02-2002.04 | MT | F | L | Platform/Chassis FWD 8140.63 | Payload:1000/1400kg,Trans. code:ME/ML | GDS10105 | Drive Shaft | | 28 | 37 | 63 | 112.5 | 771 | |
| | 1998.02-2002.04 | MT | F | R | Platform/Chassis FWD 8140.63 | Payload:1800kg,Trans. code:MG | GDS10032 | Drive Shaft | 54T | 35 | 41 | 70 | 117 | 1085 | |
| | 1998.02-2002.04 | MT | F | R | Platform/Chassis FWD 8140.63 | Payload:1000/1400kg,Trans. code:MG | GDS10036 | Drive Shaft | 54T | 28 | 41 | 63 | 112.5 | 1079 | |
| | 1998.02-2002.04 | MT | F | R | Platform/Chassis FWD 8140.63 | Payload:1800kg,Trans. code:MG | GDS10066 | Drive Shaft | | 35 | 41 | 70 | 117 | 1085 | |
| | 1998.02-2002.04 | MT | F | R | Platform/Chassis FWD 8140.63 | Payload:1000/1400kg,Trans. code:ME/ML | GDS10069 | Drive Shaft | | 28 | 37 | 63 | 112.5 | 1072 | |
| | 1998.02-2002.04 | MT | F | R | Platform/Chassis FWD 8140.63 | Payload:1000/1400kg,Trans. code:MG | GDS10103 | Drive Shaft | | 28 | 41 | 63 | 112.5 | 1079 | |
| | 1998.02-2002.04 | MT | F | R | Platform/Chassis FWD 8140.63 | Payload:1000/1400kg,Trans. code:ME/ML | GDS10104 | Drive Shaft | 54T | 28 | 37 | 63 | 112.5 | 1072 | |
| | 1998.02-2002.04 | MT | F | L/R | Platform/Chassis FWD 8140.63 | Payload:1800kg,Trans. code:MG | GCO10011 | Outer Joint | 54T | 35 | 45 | 70 | 117 | 73 | I |
| | 1998.02-2002.04 | MT | F | L/R | Platform/Chassis FWD 8140.63 | Payload:1000/1400kg,Trans. code:ME/ML/MG | GCO10012 | Outer Joint | | 28 | 39 | 63 | 112.5 | 63 | I |
| | 1998.02-2002.04 | MT | F | L/R | Platform/Chassis FWD 8140.63 | Payload:1000/1400kg,Trans. code:ME/ML/MG | GCO10013 | Outer Joint | 54T | 28 | 39 | 63 | 112.5 | 63 | I |
| | 1998.02-2002.04 | MT | F | L/R | Platform/Chassis FWD 8140.63 | Payload:1800kg,Trans. code:MG | GCO10050 | Outer Joint | | 35 | 45 | 70 | 117 | 73 | I |
| | 1998.02-2002.04 | MT | F | L | Platform/Chassis FWD 8140.63 | Payload:1800kg,Trans. code:MG | GCI10010 | Inner Joint | | 41 | 45 | 43 | 70 | 115.5 | |
| | 1998.02-2002.04 | MT | F | L | Platform/Chassis FWD 8140.63 | Payload:1000/1400kg,Trans. code:MG | GCI10013 | Inner Joint | | 41 | 39 | 43 | 70 | 104 | |
| | 1998.02-2002.04 | MT | F | L | Platform/Chassis FWD 8140.63 | Payload:1000/1400kg,Trans. code:ME/ML | GCI10015 | Inner Joint | | 37 | 39 | 40 | 68.5 | 104 | |
| | 1998.02-2002.04 | MT | F | L | Platform/Chassis FWD 8140.63 | Payload:1000/1400kg,Trans. code:ME/ML | GCI45013 | Inner Joint | | 37 | 39 | 40 | 68.5 | 100 | |
| | 1998.02-2002.04 | MT | F | R | Platform/Chassis FWD 8140.63 | Payload:1800kg,Trans. code:MG | GCI10009 | Inner Joint | | 41 | 45 | 34.9 | 393 | 115.6 | |
| | 1998.02-2002.04 | MT | F | R | Platform/Chassis FWD 8140.63 | Payload:1000/1400kg,Trans. code:ME/ML | GCI10034 | Inner Joint | | 37 | 39 | 31.9 | 369.5 | 99 | |
| | 1998.08-2002.04 | MT | F | L | Van 4WD 8140.63 | Payload:1800kg,Trans. code:MG | GDS10033 | Drive Shaft | 54T | 35 | 41 | 70 | 117 | 762 | |
| | 1998.08-2002.04 | MT | F | L | Van 4WD 8140.63 | Payload:1000/1400kg,Trans. code:MG | GDS10035 | Drive Shaft | 54T | 28 | 41 | 63 | 112.5 | 757.5 | |
| | 1998.08-2002.04 | MT | F | L | Van 4WD 8140.63 | Payload:1000/1400kg,Trans. code:ME/ML | GDS10037 | Drive Shaft | 54T | 28 | 37 | 63 | 112.5 | 771 | |
| | 1998.08-2002.04 | MT | F | L | Van 4WD 8140.63 | Payload:1800kg,Trans. code:MG | GDS10067 | Drive Shaft | | 35 | 41 | 70 | 117 | 762 | |
| | 1998.08-2002.04 | MT | F | L | Van 4WD 8140.63 | Payload:1000/1400kg,Trans. code:MG | GDS10102 | Drive Shaft | | 28 | 41 | 63 | 112.5 | 757.5 | |
| | 1998.08-2002.04 | MT | F | L | Van 4WD 8140.63 | Payload:1000/1400kg,Trans. code:ME/ML | GDS10105 | Drive Shaft | | 28 | 37 | 63 | 112.5 | 771 | |
| | 1998.08-2002.04 | MT | F | R | Van 4WD 8140.63 | Payload:1800kg,Trans. code:MG | GDS10032 | Drive Shaft | 54T | 35 | 41 | 70 | 117 | 1085 | |
| | 1998.08-2002.04 | MT | F | R | Van 4WD 8140.63 | Payload:1000/1400kg,Trans. code:MG | GDS10036 | Drive Shaft | 54T | 28 | 41 | 63 | 112.5 | 1079 | |
| | 1998.08-2002.04 | MT | F | R | Van 4WD 8140.63 | Payload:1800kg,Trans. code:MG | GDS10066 | Drive Shaft | | 35 | 41 | 70 | 117 | 1085 | |
| | 1998.08-2002.04 | MT | F | R | Van 4WD 8140.63 | Payload:1000/1400kg,Trans. code:ME/ML | GDS10069 | Drive Shaft | | 28 | 37 | 63 | 112.5 | 1072 | |
| | 1998.08-2002.04 | MT | F | R | Van 4WD 8140.63 | Payload:1000/1400kg,Trans. code:MG | GDS10103 | Drive Shaft | | 28 | 41 | 63 | 112.5 | 1079 | |
| | 1998.08-2002.04 | MT | F | R | Van 4WD 8140.63 | Payload:1000/1400kg,Trans. code:ME/ML | GDS10104 | Drive Shaft | 54T | 28 | 37 | 63 | 112.5 | 1072 | |
| | 1998.08-2002.04 | MT | F | L/R | Van 4WD 8140.63 | Payload:1800kg,Trans. code:MG | GCO10011 | Outer Joint | 54T | 35 | 45 | 70 | 117 | 73 | I |
| | 1998.08-2002.04 | MT | F | L/R | Van 4WD 8140.63 | Payload:1000/1400kg,Trans. code:ME/ML/MG | GCO10012 | Outer Joint | | 28 | 39 | 63 | 112.5 | 63 | I |
| | 1998.08-2002.04 | MT | F | L/R | Van 4WD 8140.63 | Payload:1000/1400kg,Trans. code:ME/ML/MG | GCO10013 | Outer Joint | 54T | 28 | 39 | 63 | 112.5 | 63 | I |
| | 1998.08-2002.04 | MT | F | L/R | Van 4WD 8140.63 | Payload:1800kg,Trans. code:MG | GCO10050 | Outer Joint | | 35 | 45 | 70 | 117 | 73 | I |
| | 1998.08-2002.04 | MT | F | L | Van 4WD 8140.63 | Payload:1800kg,Trans. code:MG | GCI10010 | Inner Joint | | 41 | 45 | 43 | 70 | 115.5 | |
| | 1998.08-2002.04 | MT | F | L | Van 4WD 8140.63 | Payload:1000/1400kg,Trans. code:MG | GCI10013 | Inner Joint | | 41 | 39 | 43 | 70 | 104 | |
| | 1998.08-2002.04 | MT | F | L | Van 4WD 8140.63 | Payload:1000/1400kg,Trans. code:ME/ML | GCI10015 | Inner Joint | | 37 | 39 | 40 | 68.5 | 104 | |
| | 1998.08-2002.04 | MT | F | L | Van 4WD 8140.63 | Payload:1000/1400kg,Trans. code:ME/ML | GCI45013 | Inner Joint | | 37 | 39 | 40 | 68.5 | 100 | |
| | 1998.08-2002.04 | MT | F | R | Van 4WD 8140.63 | Payload:1800kg,Trans. code:MG | GCI10009 | Inner Joint | | 41 | 45 | 34.9 | 393 | 115.6 | |
| | 1998.08-2002.04 | MT | F | R | Van 4WD 8140.63 | Payload:1000/1400kg,Trans. code:ME/ML | GCI10034 | Inner Joint | | 37 | 39 | 31.9 | 369.5 | 99 | |
| 2.8 (90 kw) | 1998.05-2001.09 | MT | F | L | Platform/Chassis 4WD 8140.43 | Payload:1800kg | GDS10033 | Drive Shaft | 54T | 35 | 41 | 70 | 117 | 762 | |
| | 1998.05-2001.09 | MT | F | R | Platform/Chassis 4WD 8140.43 | Payload:1800kg | GDS10032 | Drive Shaft | 54T | 35 | 41 | 70 | 117 | 1085 | |
| | 1998.05-2001.09 | MT | F | L/R | Platform/Chassis 4WD 8140.43 | Payload [kg]:1800 | GCO10011 | Outer Joint | 54T | 35 | 45 | 70 | 117 | 73 | I |
| | 1998.12-2002.04 | MT | F | L | Platform/Chassis FWD 8140.43 | Model:Ducato 18,Date to:2001.09,Trans. code:MG,Payload:1800kg | GDS10033 | Drive Shaft | 54T | 35 | 41 | 70 | 117 | 762 | |
| | 1998.12-2002.04 | MT | F | L | Platform/Chassis FWD 8140.43 | | GDS10035 | Drive Shaft | 54T | 28 | 41 | 63 | 112.5 | 757.5 | |
| | 1998.12-2002.04 | MT | F | L | Platform/Chassis FWD 8140.43 | Model:Ducato 18,Date to:2001.09,Trans. code:ME/ML,Payload:1000/1400kg | GDS10037 | Drive Shaft | 54T | 28 | 37 | 63 | 112.5 | 771 | |
| | 1998.12-2002.04 | MT | F | L | Platform/Chassis FWD 8140.43 | Model:Ducato 18,Date to:2001.09,Trans. code:MG,Payload:1800kg | GDS10067 | Drive Shaft | | 35 | 41 | 70 | 117 | 762 | |
| | 1998.12-2002.04 | MT | F | L | Platform/Chassis FWD 8140.43 | Model:Ducato 18,Date to:2001.09,Trans. code:MG,Payload:1000/1400kg | GDS10102 | Drive Shaft | | 28 | 41 | 63 | 112.5 | 757.5 | |
| | 1998.12-2002.04 | MT | F | L | Platform/Chassis FWD 8140.43 | Model:Ducato 18,Date to:2001.09,Trans. code:ME/ML,Payload:1000/1400kg | GDS10105 | Drive Shaft | | 28 | 37 | 63 | 112.5 | 771 | |
| | 1998.12-2002.04 | MT | F | R | Platform/Chassis FWD 8140.43 | Model:Ducato 18,Date to:2001.09,Trans. code:MG,Payload:1800kg | GDS10032 | Drive Shaft | 54T | 35 | 41 | 70 | 117 | 1085 | |
| | 1998.12-2002.04 | MT | F | R | Platform/Chassis FWD 8140.43 | | GDS10036 | Drive Shaft | 54T | 28 | 41 | 63 | 112.5 | 1079 | |
| | 1998.12-2002.04 | MT | F | R | Platform/Chassis FWD 8140.43 | Model:Ducato 18,Date to:2001.09,Trans. code:MG,Payload:1800kg | GDS10066 | Drive Shaft | | 35 | 41 | 70 | 117 | 1085 | |
| | 1998.12-2002.04 | MT | F | R | Platform/Chassis FWD 8140.43 | Model:Ducato 18,Date to:2001.09,Trans. code:ME/ML,Payload:1000/1400kg | GDS10069 | Drive Shaft | | 28 | 37 | 63 | 112.5 | 1072 | |

| | YEAR | TRANSM. | F/R | L/R | BODY STYLE & DRIVE TYPE & ENGINE | REMARKS | G-AP Ref. | PRODUCT | ABS | Technical Specifications A | B | C | H | L | P |
|---|---|---|---|---|---|---|---|---|---|---|---|---|---|---|---|
| **FIAT** | | | | | | | | | | | | | | | |
| **Ducato 14** | | | | | | | | | | | | | | | |
| 2.8 (90 kw) | 1998.12-2002.04 | MT | F | R | Platform/Chassis FWD 8140.43 | Model:Ducato 18,Date to:2001.09,Trans. code:MG,Payload:1000/1400kg | GDS10103 | Drive Shaft | | 28 | 41 | 63 | 112.5 | 1079 | |
| | 1998.12-2002.04 | MT | F | R | Platform/Chassis FWD 8140.43 | Model:Ducato 18,Date to:2001.09,Trans. code:ME/ML,Payload:1000/1400kg | GDS10104 | Drive Shaft | 54T | 28 | 37 | 63 | 112.5 | 1072 | |
| | 1998.12-2002.04 | MT | F | L/R | Platform/Chassis FWD 8140.43 | Model:Ducato 18,Date To:2001.09,Trans. code:MG,Payload:1800kg | GCO10011 | Outer Joint | 54T | 35 | 45 | 70 | 117 | 73 | I |
| | 1998.12-2002.04 | MT | F | L/R | Platform/Chassis FWD 8140.43 | | GCO10012 | Outer Joint | | 28 | 39 | 63 | 112.5 | 63 | I |
| | 1998.12-2002.04 | MT | F | L/R | Platform/Chassis FWD 8140.43 | | GCO10013 | Outer Joint | 54T | 28 | 39 | 63 | 112.5 | 63 | I |
| | 1998.12-2002.04 | MT | F | L/R | Platform/Chassis FWD 8140.43 | Model:Ducato 18,Date To:2001.09,Trans. code:MG,Payload:1800kg | GCO10050 | Outer Joint | | 35 | 45 | 70 | 117 | 73 | I |
| | 1998.12-2002.04 | MT | F | L | Platform/Chassis FWD 8140.43 | Model:Ducato 18,Date To:2001.09,Trans. code:MG,Payload:1800kg | GCI10010 | Inner Joint | | 41 | 45 | 43 | 70 | 115.5 | |
| | 1998.12-2002.04 | MT | F | L | Platform/Chassis FWD 8140.43 | | GCI10013 | Inner Joint | | 41 | 39 | 43 | 70 | 104 | |
| | 1998.12-2002.04 | MT | F | L | Platform/Chassis FWD 8140.43 | Model:Ducato 18,Date To:2001.09,Trans. code:ME/ML,Payload:1000/1400kg | GCI10015 | Inner Joint | | 37 | 39 | 40 | 68.5 | 104 | |
| | 1998.12-2002.04 | MT | F | L | Platform/Chassis FWD 8140.43 | Model:Ducato 18,Date To:2001.09,Trans. code:ME/ML,Payload:1000/1400kg | GCI45013 | Inner Joint | | 37 | 39 | 40 | 68.5 | 100 | |
| | 1998.12-2002.04 | MT | F | R | Platform/Chassis FWD 8140.43 | Model:Ducato 18,Date To:2001.09,Trans. code:MG,Payload:1800kg | GCI10009 | Inner Joint | | 41 | 45 | 34.9 | 393 | 115.6 | |
| | 1998.12-2002.04 | MT | F | R | Platform/Chassis FWD 8140.43 | Model:Ducato 18,Date To:2001.09,Trans. code:ME/ML,Payload:1000/1400kg | GCI10034 | Inner Joint | | 37 | 39 | 31.9 | 369.5 | 99 | |
| 2.8 (94 kw) | 2000.11-2002.04 | MT | F | L | Bus FWD 8140.43S | Payload:1800kg | GDS10033 | Drive Shaft | 54T | 35 | 41 | 70 | 117 | 762 | |
| | 2000.11-2002.04 | MT | F | L | Bus FWD 8140.43S | Payload:1000kg/1400kg | GDS10035 | Drive Shaft | 54T | 28 | 41 | 63 | 112.5 | 757.5 | |
| | 2000.11-2002.04 | MT | F | R | Bus FWD 8140.43S | Payload:1800kg | GDS10032 | Drive Shaft | 54T | 35 | 41 | 70 | 117 | 1085 | |
| | 2000.11-2002.04 | MT | F | R | Bus FWD 8140.43S | Payload:1000kg/1400kg | GDS10036 | Drive Shaft | 54T | 28 | 41 | 63 | 112.5 | 1079 | |
| | 2000.11-2002.04 | MT | F | L/R | Bus FWD 8140.43S | Payload [kg]:1800 | GCO10011 | Outer Joint | 54T | 35 | 45 | 70 | 117 | 73 | I |
| | 2000.11-2002.04 | MT | F | L/R | Bus FWD 8140.43S | Payload [kg]:1000/1400 | GCO10013 | Outer Joint | 54T | 28 | 39 | 63 | 112.5 | 63 | I |
| | 2000.11-2002.04 | MT | F | L/R | Platform/Chassis FWD 8140.43S | Payload:1800kg,Trans. code:MG | GCO10011 | Outer Joint | 54T | 35 | 45 | 70 | 117 | 73 | I |
| | 2000.11-2002.04 | MT | F | L/R | Platform/Chassis FWD 8140.43S | Payload:1000/1400kg,Trans. code:ME/ML/MG | GCO10012 | Outer Joint | | 28 | 39 | 63 | 112.5 | 63 | I |
| | 2000.11-2002.04 | MT | F | L/R | Platform/Chassis FWD 8140.43S | Payload:1000/1400kg,Trans. code:ME/ML/MG | GCO10013 | Outer Joint | 54T | 28 | 39 | 63 | 112.5 | 63 | I |
| | 2000.11-2002.04 | MT | F | L/R | Platform/Chassis FWD 8140.43S | Payload:1800kg,Trans. code:MG | GCO10050 | Outer Joint | | 35 | 45 | 70 | 117 | 73 | I |
| | 2000.11-2002.04 | MT | F | L | Platform/Chassis FWD 8140.43S | Payload:1800kg,Trans. code:MG | GCI10010 | Inner Joint | | 41 | 45 | 43 | 70 | 115.5 | |
| | 2000.11-2002.04 | MT | F | L | Platform/Chassis FWD 8140.43S | Payload:1000/1400kg,Trans. code:MG | GCI10013 | Inner Joint | | 41 | 39 | 43 | 70 | 104 | |
| | 2000.11-2002.04 | MT | F | L | Platform/Chassis FWD 8140.43S | Payload:1000/1400kg,Trans. code:ME/ML | GCI10015 | Inner Joint | | 37 | 39 | 40 | 68.5 | 104 | |
| | 2000.11-2002.04 | MT | F | R | Platform/Chassis FWD 8140.43S | Payload:1800kg,Trans. code:MG | GCI10009 | Inner Joint | | 41 | 45 | 34.9 | 393 | 115.6 | |
| | 2000.11-2002.04 | MT | F | R | Platform/Chassis FWD 8140.43S | Payload:1000/1400kg,Trans. code:ME/ML | GCI10034 | Inner Joint | | 37 | 39 | 31.9 | 369.5 | 99 | |
| | 2000.11-2002.04 | MT | F | L | Van 4WD 8140.43S | Payload:1800kg | GDS10033 | Drive Shaft | 54T | 35 | 41 | 70 | 117 | 762 | |
| | 2000.11-2002.04 | MT | F | L | Van 4WD 8140.43S | Payload:1000kg/1400kg | GDS10035 | Drive Shaft | 54T | 28 | 41 | 63 | 112.5 | 757.5 | |
| | 2000.11-2002.04 | MT | F | R | Van 4WD 8140.43S | Payload:1800kg | GDS10032 | Drive Shaft | 54T | 35 | 41 | 70 | 117 | 1085 | |
| | 2000.11-2002.04 | MT | F | R | Van 4WD 8140.43S | Payload:1000kg/1400kg | GDS10036 | Drive Shaft | 54T | 28 | 41 | 63 | 112.5 | 1079 | |
| | 2000.11-2002.04 | MT | F | L/R | Van 4WD 8140.43S | Payload [kg]:1800 | GCO10011 | Outer Joint | 54T | 35 | 45 | 70 | 117 | 73 | I |
| | 2000.11-2002.04 | MT | F | L/R | Van 4WD 8140.43S | Payload [kg]:1000/1400 | GCO10013 | Outer Joint | 54T | 28 | 39 | 63 | 112.5 | 63 | I |
| **Ducato 15** | | | | | | | | | | | | | | | |
| 2.0 (62 kw) | 2001.12-2006.07 | 5MT | F | L | Platform/Chassis FWD RHV | | GDS10037 | Drive Shaft | 54T | 28 | 37 | 63 | 112.5 | 771 | |
| | 2001.12-2006.07 | 5MT | F | L | Platform/Chassis FWD RHV | | GDS10105 | Drive Shaft | | 28 | 37 | 63 | 112.5 | 771 | |
| | 2001.12-2006.07 | 5MT | F | R | Platform/Chassis FWD RHV | | GDS10069 | Drive Shaft | | 28 | 37 | 63 | 112.5 | 1072 | |
| | 2001.12-2006.07 | 5MT | F | R | Platform/Chassis FWD RHV | | GDS10104 | Drive Shaft | 54T | 28 | 37 | 63 | 112.5 | 1072 | |
| | 2001.12-2006.07 | 5MT | F | L/R | Platform/Chassis FWD RHV | | GCO10012 | Outer Joint | | 28 | 39 | 63 | 112.5 | 63 | I |
| | 2001.12-2006.07 | 5MT | F | L/R | Platform/Chassis FWD RHV | | GCO10013 | Outer Joint | 54T | 28 | 39 | 63 | 112.5 | 63 | I |
| | 2001.12-2006.07 | 5MT | F | L | Platform/Chassis FWD RHV | | GCI10015 | Inner Joint | | 37 | 39 | 40 | 68.5 | 104 | |
| | 2001.12-2006.07 | 5MT | F | L | Platform/Chassis FWD RHV | | GCI45013 | Inner Joint | | 37 | 39 | 40 | 68.5 | 100 | |
| | 2001.12-2006.07 | 5MT | F | R | Platform/Chassis FWD RHV | | GCI10034 | Inner Joint | | 37 | 39 | 31.9 | 369.5 | 99 | |
| 2.0 (71 kw) | 2002.11-2006.07 | 5MT | F | L | Bus FWD RFL | Date to:2003.05 | GDS10035 | Drive Shaft | 54T | 28 | 41 | 63 | 112.5 | 757.5 | |
| | 2002.11-2006.07 | 5MT | F | L | Bus FWD RFL | Date from:2003.06,For vehicles without ABS | GDS10102 | Drive Shaft | | 28 | 41 | 63 | 112.5 | 757.5 | |
| | 2002.11-2006.07 | 5MT | F | R | Bus FWD RFL | Date to:2003.05 | GDS10036 | Drive Shaft | 54T | 28 | 41 | 63 | 112.5 | 1079 | |
| | 2002.11-2006.07 | 5MT | F | R | Bus FWD RFL | Date from:2003.06,For vehicles without ABS | GDS10103 | Drive Shaft | | 28 | 41 | 63 | 112.5 | 1079 | |
| | 2002.11-2006.07 | | F | L/R | Bus FWD RFL | Date to:2003.05 | GCO10013 | Outer Joint | 54T | 28 | 39 | 63 | 112.5 | 63 | I |
| | 2002.11-2006.07 | | F | L | Bus FWD RFL | Date to:2003.05 | GCI10013 | Inner Joint | | 41 | 39 | 43 | 70 | 104 | |
| | 2002.11-2006.07 | 5MT | F | L | Van FWD RFL | Date to:2003.05 | GDS10035 | Drive Shaft | 54T | 28 | 41 | 63 | 112.5 | 757.5 | |
| | 2002.11-2006.07 | 5MT | F | L | Van FWD RFL | Date from:2003.06,For vehicles without ABS | GDS10102 | Drive Shaft | | 28 | 41 | 63 | 112.5 | 757.5 | |
| | 2002.11-2006.07 | 5MT | F | R | Van FWD RFL | Date to:2003.05 | GDS10036 | Drive Shaft | 54T | 28 | 41 | 63 | 112.5 | 1079 | |
| | 2002.11-2006.07 | 5MT | F | R | Van FWD RFL | Date from:2003.06,For vehicles without ABS | GDS10103 | Drive Shaft | | 28 | 41 | 63 | 112.5 | 1079 | |
| | 2002.11-2006.07 | | F | L/R | Van FWD RFL | Date to:2003.05 | GCO10013 | Outer Joint | 54T | 28 | 39 | 63 | 112.5 | 63 | I |
| | 2002.11-2006.07 | | F | L | Van FWD RFL | Date to:2003.05 | GCI10013 | Inner Joint | | 41 | 39 | 43 | 70 | 104 | |
| 2.0 (81 kw) | 2002.04-2006.07 | MT | F | L | Platform/Chassis FWD RFL | Date to:2003.05 | GDS10035 | Drive Shaft | 54T | 28 | 41 | 63 | 112.5 | 757.5 | |
| | 2002.04-2006.07 | MT | F | L | Platform/Chassis FWD RFL | | GDS10102 | Drive Shaft | | 28 | 41 | 63 | 112.5 | 757.5 | |
| | 2002.04-2006.07 | MT | F | R | Platform/Chassis FWD RFL | | GDS10036 | Drive Shaft | 54T | 28 | 41 | 63 | 112.5 | 1079 | |
| | 2002.04-2006.07 | MT | F | R | Platform/Chassis FWD RFL | | GDS10103 | Drive Shaft | | 28 | 41 | 63 | 112.5 | 1079 | |
| | 2002.04-2006.07 | MT | F | L/R | Platform/Chassis FWD RFL | | GCO10012 | Outer Joint | | 28 | 39 | 63 | 112.5 | 63 | I |
| | 2002.04-2006.07 | MT | F | L/R | Platform/Chassis FWD RFL | Date to:2003.05 | GCO10013 | Outer Joint | 54T | 28 | 39 | 63 | 112.5 | 63 | I |
| | 2002.04-2006.07 | MT | F | L | Platform/Chassis FWD RFL | | GCI10013 | Inner Joint | | 41 | 39 | 43 | 70 | 104 | |
| | 2002.11-2006.07 | 5MT | F | L | Bus FWD RFL | Date to:2003.05,For vehicles with ABS | GDS10035 | Drive Shaft | 54T | 28 | 41 | 63 | 112.5 | 757.5 | |
| | 2002.11-2006.07 | 5MT | F | L | Bus FWD RFL | Date from:2003.06,For vehicles without ABS | GDS10102 | Drive Shaft | | 28 | 41 | 63 | 112.5 | 757.5 | |
| | 2002.11-2006.07 | 5MT | F | R | Bus FWD RFL | For vehicles with ABS | GDS10036 | Drive Shaft | 54T | 28 | 41 | 63 | 112.5 | 1079 | |

| | YEAR | TRANSM. | F/R | L/R | BODY STYLE & DRIVE TYPE & ENGINE | REMARKS | G-AP Ref. | PRODUCT | ABS | Technical Specifications A | B | C | H | L | P |
|---|---|---|---|---|---|---|---|---|---|---|---|---|---|---|---|
| **FIAT** | | | | | | | | | | | | | | | |
| **Ducato 15** | | | | | | | | | | | | | | | |
| 2.0 (81 kw) | 2002.11-2006.07 | 5MT | F | R | Bus FWD RFL | Date from:2003.06,For vehicles without ABS | GDS10103 | Drive Shaft | | 28 | 41 | 63 | 112.5 | 1079 | |
| | 2002.11-2006.07 | 5MT | F | L/R | Bus FWD RFL | Date To:2003.05 | GCO10013 | Outer Joint | 54T | 28 | 39 | 63 | 112.5 | 63 | I |
| | 2002.11-2006.07 | 5MT | F | L | Bus FWD RFL | Date To:2003.05 | GCI10013 | Inner Joint | | 41 | 39 | 43 | 70 | 104 | |
| 2.8 (107 kw) | 2004.04-2006.07 | 5MT | F | L | Platform/Chassis FWD 8140.43N | For vehicles without ABS | GDS10102 | Drive Shaft | | 28 | 41 | 63 | 112.5 | 757.5 | |
| | 2004.04-2006.07 | 5MT | F | R | Platform/Chassis FWD 8140.43N | For vehicles with ABS | GDS10036 | Drive Shaft | 54T | 28 | 41 | 63 | 112.5 | 1079 | |
| | 2004.04-2006.07 | 5MT | F | R | Platform/Chassis FWD 8140.43N | For vehicles without ABS | GDS10103 | Drive Shaft | | 28 | 41 | 63 | 112.5 | 1079 | |
| | 2004.04-2006.07 | MT | F | L/R | Platform/Chassis FWD 8140.43N | for vehicles with tolerated total weight above [kg]:1800 | GCO10011 | Outer Joint | 54T | 35 | 45 | 70 | 117 | 73 | I |
| | 2004.04-2006.07 | MT | F | L/R | Platform/Chassis FWD 8140.43N | for vehicles with tolerated total weight to [kg]:1800 | GCO10013 | Outer Joint | 54T | 28 | 39 | 63 | 112.5 | 63 | I |
| | 2004.04-2006.07 | MT | F | L/R | Platform/Chassis FWD 8140.43N | for vehicles with tolerated total weight above [kg]:1800 | GCO10050 | Outer Joint | | 35 | 45 | 70 | 117 | 73 | I |
| | 2004.04-2006.07 | MT | F | L | Platform/Chassis FWD 8140.43N | for vehicles with tolerated total weight above [kg]:1800 | GCI10010 | Inner Joint | | 41 | 45 | 43 | 70 | 115.5 | |
| | 2004.04-2006.07 | MT | F | L | Platform/Chassis FWD 8140.43N | for vehicles with tolerated total weight to [kg]:1800 | GCI10013 | Inner Joint | | 41 | 39 | 43 | 70 | 104 | |
| | 2004.04-2006.07 | MT | F | R | Platform/Chassis FWD 8140.43N | for vehicles with tolerated total weight above [kg]:1800 | GCI10009 | Inner Joint | | 41 | 45 | 34.9 | 393 | 115.6 | |
| **Ducato 18** | | | | | | | | | | | | | | | |
| 2.5 (62 kw) | 1994.03-2002.04 | MT | F | L | Platform/Chassis FWD 8140.67 | Payload:1800kg,Trans. code:MG | GDS10033 | Drive Shaft | 54T | 35 | 41 | 70 | 117 | 762 | |
| | 1994.03-2002.04 | MT | F | L | Platform/Chassis FWD 8140.67 | Payload:1000/1400kg,Trans. code:MG | GDS10035 | Drive Shaft | 54T | 28 | 41 | 63 | 112.5 | 757.5 | |
| | 1994.03-2002.04 | MT | F | L | Platform/Chassis FWD 8140.67 | Payload:1000/1400kg,Trans. code:ME/ML | GDS10037 | Drive Shaft | 54T | 28 | 37 | 63 | 112.5 | 771 | |
| | 1994.03-2002.04 | MT | F | L | Platform/Chassis FWD 8140.67 | Payload:1800kg,Trans. code:MG | GDS10067 | Drive Shaft | | 35 | 41 | 70 | 117 | 762 | |
| | 1994.03-2002.04 | MT | F | L | Platform/Chassis FWD 8140.67 | Payload:1000/1400kg,Trans. code:MG | GDS10102 | Drive Shaft | | 28 | 41 | 63 | 112.5 | 757.5 | |
| | 1994.03-2002.04 | MT | F | L | Platform/Chassis FWD 8140.67 | Payload:1000/1400kg,Trans. code:ME/ML | GDS10105 | Drive Shaft | | 28 | 37 | 63 | 112.5 | 771 | |
| | 1994.03-2002.04 | MT | F | R | Platform/Chassis FWD 8140.67 | Payload:1800kg,Trans. code:MG | GDS10032 | Drive Shaft | 54T | 35 | 41 | 70 | 117 | 1085 | |
| | 1994.03-2002.04 | MT | F | R | Platform/Chassis FWD 8140.67 | Payload:1000/1400kg,Trans. code:MG | GDS10036 | Drive Shaft | 54T | 28 | 41 | 63 | 112.5 | 1079 | |
| | 1994.03-2002.04 | MT | F | R | Platform/Chassis FWD 8140.67 | Payload:1800kg,Trans. code:MG | GDS10066 | Drive Shaft | | 35 | 41 | 70 | 117 | 1085 | |
| | 1994.03-2002.04 | MT | F | R | Platform/Chassis FWD 8140.67 | Payload:1000/1400kg,Trans. code:ME/ML | GDS10069 | Drive Shaft | | 28 | 37 | 63 | 112.5 | 1072 | |
| | 1994.03-2002.04 | MT | F | R | Platform/Chassis FWD 8140.67 | Payload:1000/1400kg,Trans. code:MG | GDS10103 | Drive Shaft | | 28 | 41 | 63 | 112.5 | 1079 | |
| | 1994.03-2002.04 | MT | F | R | Platform/Chassis FWD 8140.67 | Payload:1000/1400kg,Trans. code:ME/ML | GDS10104 | Drive Shaft | 54T | 28 | 37 | 63 | 112.5 | 1072 | |
| | 1994.03-2002.04 | MT | F | L/R | Platform/Chassis FWD 8140.67 | Payload:1800kg,Trans. code:MG | GCO10011 | Outer Joint | 54T | 35 | 45 | 70 | 117 | 73 | I |
| | 1994.03-2002.04 | MT | F | L/R | Platform/Chassis FWD 8140.67 | Payload:1000/1400kg,Trans. code:ME/ML/MG | GCO10012 | Outer Joint | | 28 | 39 | 63 | 112.5 | 63 | I |
| | 1994.03-2002.04 | MT | F | L/R | Platform/Chassis FWD 8140.67 | Payload:1000/1400kg,Trans. code:ME/ML/MG | GCO10013 | Outer Joint | 54T | 28 | 39 | 63 | 112.5 | 63 | I |
| | 1994.03-2002.04 | MT | F | L/R | Platform/Chassis FWD 8140.67 | Payload:1800kg,Trans. code:MG | GCO10050 | Outer Joint | | 35 | 45 | 70 | 117 | 73 | I |
| | 1994.03-2002.04 | MT | F | L | Platform/Chassis FWD 8140.67 | Payload:1800kg,Trans. code:MG | GCI10010 | Inner Joint | | 41 | 45 | 43 | 70 | 115.5 | |
| | 1994.03-2002.04 | MT | F | L | Platform/Chassis FWD 8140.67 | Payload:1000/1400kg,Trans. code:MG | GCI10013 | Inner Joint | | 41 | 39 | 43 | 70 | 104 | |
| | 1994.03-2002.04 | MT | F | L | Platform/Chassis FWD 8140.67 | Payload:1000/1400kg,Trans. code:ME/ML | GCI10015 | Inner Joint | | 37 | 39 | 40 | 68.5 | 104 | |
| | 1994.03-2002.04 | MT | F | L | Platform/Chassis FWD 8140.67 | Payload:1000/1400kg,Trans. code:ME/ML | GCI45013 | Inner Joint | | 37 | 39 | 40 | 68.5 | 100 | |
| | 1994.03-2002.04 | MT | F | R | Platform/Chassis FWD 8140.67 | Payload:1800kg,Trans. code:MG | GCI10009 | Inner Joint | | 41 | 45 | 34.9 | 393 | 115.6 | |
| | 1994.03-2002.04 | MT | F | R | Platform/Chassis FWD 8140.67 | Payload:1000/1400kg,Trans. code:ME/ML | GCI10034 | Inner Joint | | 37 | 39 | 31.9 | 369.5 | 99 | |
| 2.8 (64 kw) | 1998.05-2001.11 | MT | F | L | Platform/Chassis 4WD 8140.63 | Payload:1800kg | GDS10033 | Drive Shaft | 54T | 35 | 41 | 70 | 117 | 762 | |
| | 1998.05-2001.11 | MT | F | L | Platform/Chassis 4WD 8140.63 | Payload:1000kg/1400kg | GDS10035 | Drive Shaft | 54T | 28 | 41 | 63 | 112.5 | 757.5 | |
| | 1998.05-2001.11 | MT | F | R | Platform/Chassis 4WD 8140.63 | Payload:1800kg | GDS10032 | Drive Shaft | 54T | 35 | 41 | 70 | 117 | 1085 | |
| | 1998.05-2001.11 | MT | F | R | Platform/Chassis 4WD 8140.63 | Payload:1000kg/1400kg | GDS10036 | Drive Shaft | 54T | 28 | 41 | 63 | 112.5 | 1079 | |
| | 1998.05-2001.11 | MT | F | L/R | Platform/Chassis 4WD 8140.63 | Payload [kg]:1800 | GCO10011 | Outer Joint | 54T | 35 | 45 | 70 | 117 | 73 | I |
| | 1998.05-2001.11 | MT | F | L/R | Platform/Chassis 4WD 8140.63 | Payload [kg]:1000/1400 | GCO10013 | Outer Joint | 54T | 28 | 39 | 63 | 112.5 | 63 | I |
| 2.8 (90 kw) | 2003.11-2006.07 | 5MT | F | L | Bus FWD 8140.43 | Model:Ducato 18 | GDS10033 | Drive Shaft | 54T | 35 | 41 | 70 | 117 | 762 | |
| | 2003.11-2006.07 | 5MT | F | L/R | Bus FWD 8140.43 | Model:Ducato 18 | GCO10011 | Outer Joint | 54T | 35 | 45 | 70 | 117 | 73 | I |
| | 2003.11-2006.07 | 5MT | F | L/R | Bus FWD 8140.43 | Model:Ducato 18,EXTENDED SEMISHAFT | GCO17061 | Outer Joint | 54T | 35 | 29 | 71.5 | 127 | 71 | I |
| | 2003.11-2006.07 | 5MT | F | L | Bus FWD 8140.43 | Model:Ducato 18,Equipment code:E52Q | GCI17028 | Inner Joint | | 41 | 29 | 43 | 69.5 | 109.5 | |
| | 2003.11-2006.07 | 5MT | F | R | Bus FWD 8140.43 | Model:Ducato 18,Equipment code:E52Q | GCI17020 | Inner Joint | | 41 | 29 | 34.85 | 403 | 109 | |
| | 2003.11-2006.07 | 5MT | F | L | Platform/Chassis FWD 8140.43 | Model:Ducato 18 | GDS10033 | Drive Shaft | 54T | 35 | 41 | 70 | 117 | 762 | |
| | 2003.11-2006.07 | 5MT | F | L/R | Platform/Chassis FWD 8140.43 | Model:Ducato 18 | GCO10011 | Outer Joint | 54T | 35 | 45 | 70 | 117 | 73 | I |
| | 2003.11-2006.07 | 5MT | F | L/R | Platform/Chassis FWD 8140.43 | Model:Ducato 18,EXTENDED SEMISHAFT | GCO17061 | Outer Joint | 54T | 35 | 29 | 71.5 | 127 | 71 | I |
| | 2003.11-2006.07 | 5MT | F | L | Platform/Chassis FWD 8140.43 | Model:Ducato 18,Equipment code:E52Q | GCI17028 | Inner Joint | | 41 | 29 | 43 | 69.5 | 109.5 | |
| | 2003.11-2006.07 | 5MT | F | R | Platform/Chassis FWD 8140.43 | Model:Ducato 18,Equipment code:E52Q | GCI17020 | Inner Joint | | 41 | 29 | 34.85 | 403 | 109 | |
| **Ducato 25** | | | | | | | | | | | | | | | |
| 2.3 (88 kw) | 2010.03- | MT | F | L | Platform/Chassis 4WD F1AE0481D | | GDS17053 | Drive Shaft | | 35 | 41 | 71.5 | 127 | 806 | |
| | 2010.03- | MT | F | L | Platform/Chassis 4WD F1AE0481D | | GDS45176 | Drive Shaft | | 35 | 41 | 71.5 | 127 | 808 | |
| | 2010.03- | MT | F | R | Platform/Chassis 4WD F1AE0481D | | GDS17050 | Drive Shaft | | 35 | 41 | 71.5 | 127 | 1140 | |
| | 2010.03- | MT | F | L/R | Platform/Chassis 4WD F1AE0481D | | GCO17045 | Outer Joint | | 35 | 29 | 71.5 | 127 | 71 | M |
| | 2010.03- | MT | F | L | Van 4WD F1AE0481D | | GDS17053 | Drive Shaft | | 35 | 41 | 71.5 | 127 | 806 | |
| | 2010.03- | MT | F | R | Van 4WD F1AE0481D | | GDS17050 | Drive Shaft | | 35 | 41 | 71.5 | 127 | 1140 | |
| | 2010.03- | MT | F | L/R | Van 4WD F1AE0481D | | GCO17045 | Outer Joint | | 35 | 29 | 71.5 | 127 | 71 | M |
| **Ducato 30** | | | | | | | | | | | | | | | |
| 2.3 (83 kw) | 2011.10-2014.07 | 5MT | F | L | Bus FWD F1AE3481G | | GDS45176 | Drive Shaft | | 35 | 41 | 71.5 | 127 | 808 | |
| | 2011.10-2014.07 | 5MT | F | R | Bus FWD F1AE3481G | | GDS17050 | Drive Shaft | | 35 | 41 | 71.5 | 127 | 1140 | |
| | 2011.10-2014.07 | 6MT | F | L/R | Bus FWD F1AE3481G | | GCO17055 | Outer Joint | | 35 | 27 | 71.5 | 127 | 66.5 | I |
| | 2011.10-2014.07 | MT | F | L | Bus FWD F1AE3481G | | GDS17053 | Drive Shaft | | 35 | 41 | 71.5 | 127 | 806 | |
| | 2011.10-2014.07 | | F | L | Bus FWD F1AE3481G | | GCI17042 | Inner Joint | | 41 | 27 | 43 | 70 | 102 | |

| | YEAR | TRANSM. | F/R | L/R | BODY STYLE & DRIVE TYPE & ENGINE | REMARKS | G-AP Ref. | PRODUCT | ABS | Technical Specifications A | B | C | H | L | P |
|---|---|---|---|---|---|---|---|---|---|---|---|---|---|---|---|
| **FIAT** | | | | | | | | | | | | | | | |
| **Ducato 30** | | | | | | | | | | | | | | | |
| 2.3 (83 kw) | 2011.10-2014.07 | | F | R | Bus FWD F1AE3481G | | GCI10038 | Inner Joint | | 41 | 27 | 34.85 | 403 | 102 | |
| | 2011.10-2014.07 | 5MT | F | L | Platform/Chassis FWD F1AE3481G | | GDS45176 | Drive Shaft | | 35 | 41 | 71.5 | 127 | 808 | |
| | 2011.10-2014.07 | 5MT | F | R | Platform/Chassis FWD F1AE3481G | | GDS17050 | Drive Shaft | | 35 | 41 | 71.5 | 127 | 1140 | |
| | 2011.10-2014.07 | 6MT | F | L/R | Platform/Chassis FWD F1AE3481G | | GCO17055 | Outer Joint | | 35 | 27 | 71.5 | 127 | 66.5 | I |
| | 2011.10-2014.07 | MT | F | L | Platform/Chassis FWD F1AE3481G | | GDS17053 | Drive Shaft | | 35 | 41 | 71.5 | 127 | 806 | |
| | 2011.10-2014.07 | | F | L | Platform/Chassis FWD F1AE3481G | | GCI17042 | Inner Joint | | 41 | 27 | 43 | 70 | 102 | |
| | 2011.10-2014.07 | | F | R | Platform/Chassis FWD F1AE3481G | | GCI10038 | Inner Joint | | 41 | 27 | 34.85 | 403 | 102 | |
| | 2011.10-2014.07 | 5MT | F | L | Van FWD F1AE3481G | | GDS45176 | Drive Shaft | | 35 | 41 | 71.5 | 127 | 808 | |
| | 2011.10-2014.07 | 5MT | F | R | Van FWD F1AE3481G | | GDS17050 | Drive Shaft | | 35 | 41 | 71.5 | 127 | 1140 | |
| | 2011.10-2014.07 | 6MT | F | L/R | Van FWD F1AE3481G | | GCO17055 | Outer Joint | | 35 | 27 | 71.5 | 127 | 66.5 | I |
| | 2011.10-2014.07 | MT | F | L | Van FWD F1AE3481G | | GDS17053 | Drive Shaft | | 35 | 41 | 71.5 | 127 | 806 | |
| | 2011.10-2014.07 | | F | L | Van FWD F1AE3481G | | GCI17042 | Inner Joint | | 41 | 27 | 43 | 70 | 102 | |
| | 2011.10-2014.07 | | F | R | Van FWD F1AE3481G | | GCI10038 | Inner Joint | | 41 | 27 | 34.85 | 403 | 102 | |
| **Ducato 40** | | | | | | | | | | | | | | | |
| 2.3 (96 kw) | 2011.06- | MT | F | L | Van 4WD F1AE0481N, F1AE3481D, F1AGL411D | Date From:2014.03 | GDS17053 | Drive Shaft | | 35 | 41 | 71.5 | 127 | 806 | |
| | 2011.06- | MT | F | R | Van 4WD F1AE0481N, F1AE3481D, F1AGL411D | Date From:2014.03 | GDS17050 | Drive Shaft | | 35 | 41 | 71.5 | 127 | 1140 | |
| | 2011.06- | MT | F | L/R | Van 4WD F1AE0481N, F1AE3481D, F1AGL411D | Date From:2014.03 | GCO17054 | Outer Joint | | 35 | 29 | 71.5 | 127 | 71 | M |
| | 2011.06- | MT | F | L | Van 4WD F1AE0481N, F1AE3481D, F1AGL411D | Date From:2014.03;Type:Ducato 30 | GCI17042 | Inner Joint | | 41 | 27 | 43 | 70 | 102 | |
| | 2011.06- | MT | F | R | Van 4WD F1AE0481N, F1AE3481D, F1AGL411D | Date From:2014.03;Type:Ducato 30 | GCI10038 | Inner Joint | | 41 | 27 | 34.85 | 403 | 102 | |
| 3.0 (116 kw) | 2006.07-2011.05 | 6MT | F | L | Bus FWD F1CE0481D;F1CE3481M | | GDS45175 | Drive Shaft | | 35 | 31 | 71.5 | 127 | 749.5 | |
| | 2006.07-2011.05 | 6MT | F | R | Bus FWD F1CE0481D;F1CE3481M | | GDS45174 | Drive Shaft | | 35 | 31 | 71.5 | 127 | 1199 | |
| | 2006.07-2011.05 | 6MT | F | L/R | Bus FWD F1CE0481D;F1CE3481M | | GCO17060 | Outer Joint | | 35 | 29 | 71.5 | 127 | 71 | I |
| | 2006.07-2011.05 | 6MT | F | L | Bus FWD F1CE0481D;F1CE3481M | | GCI17022 | Inner Joint | | 31 | 29 | 44.95 | 77 | 109.5 | |
| | 2006.07-2011.05 | 6MT | F | R | Bus FWD F1CE0481D;F1CE3481M | | GCI17021 | Inner Joint | | 31 | 29 | 34.85 | 530 | 109 | |
| **E-Doblo** | | | | | | | | | | | | | | | |
| EV (100 kw) | 2022.06-2023.10 | ET | F | L | Box Body/MPV FWD ZKX (ZK01) | | GDS57969 | Drive Shaft | | 28 | 37 | 58.5 | 92.5 | 675 | |
| | 2022.06-2023.10 | ET | F | R | Box Body/MPV FWD ZKX (ZK01) | | GDS58244 | Drive Shaft | | 28 | 37 | 58.5 | 92.5 | 927 | |
| | 2022.06-2023.10 | ET | F | L | Box Body/MPV FWD ZKX (ZK01) | | GCO83814 | Outer Joint | | 28 | 34 | 58.5 | 92.5 | 56 | I |
| | 2022.06-2023.10 | ET | F | L | Box Body/MPV FWD ZKX (ZK01) | | GCI82301 | Inner Joint | | 37 | 34 | 40 | 65.5 | 89.5 | |
| | 2022.06-2023.10 | ET | F | L | MPV FWD ZKX (ZK01) | | GDS57969 | Drive Shaft | | 28 | 37 | 58.5 | 92.5 | 675 | |
| | 2022.06-2023.10 | ET | F | R | MPV FWD ZKX (ZK01) | | GDS58244 | Drive Shaft | | 28 | 37 | 58.5 | 92.5 | 927 | |
| | 2022.06-2023.10 | ET | F | L | MPV FWD ZKX (ZK01) | | GCO83814 | Outer Joint | | 28 | 34 | 58.5 | 92.5 | 56 | I |
| | 2022.06-2023.10 | ET | F | L | MPV FWD ZKX (ZK01) | | GCI82301 | Inner Joint | | 37 | 34 | 40 | 65.5 | 89.5 | |
| | 2023.11- | ET | F | L | Box Body/MPV FWD ZKU (ZK02) | | GDS57969 | Drive Shaft | | 28 | 37 | 58.5 | 92.5 | 675 | |
| | 2023.11- | ET | F | R | Box Body/MPV FWD ZKU (ZK02) | | GDS58244 | Drive Shaft | | 28 | 37 | 58.5 | 92.5 | 927 | |
| | 2023.11- | ET | F | L | Box Body/MPV FWD ZKU (ZK02) | | GCO83814 | Outer Joint | | 28 | 34 | 58.5 | 92.5 | 56 | I |
| | 2023.11- | ET | F | L | Box Body/MPV FWD ZKU (ZK02) | | GCI82301 | Inner Joint | | 37 | 34 | 40 | 65.5 | 89.5 | |
| | 2023.11- | ET | F | L | MPV FWD ZKU (ZK02) | | GDS57969 | Drive Shaft | | 28 | 37 | 58.5 | 92.5 | 675 | |
| | 2023.11- | ET | F | R | MPV FWD ZKU (ZK02) | | GDS58244 | Drive Shaft | | 28 | 37 | 58.5 | 92.5 | 927 | |
| | 2023.11- | ET | F | L | MPV FWD ZKU (ZK02) | | GCO83814 | Outer Joint | | 28 | 34 | 58.5 | 92.5 | 56 | I |
| | 2023.11- | ET | F | L | MPV FWD ZKU (ZK02) | | GCI82301 | Inner Joint | | 37 | 34 | 40 | 65.5 | 89.5 | |
| **E-Ducato** | | | | | | | | | | | | | | | |
| EV (90 kw) | 2020.12-2023.10 | ET | F | L | Van FWD 46350679 | | GDS58235 | Drive Shaft | | 35 | 31 | 71.5 | 127 | 1153 | |
| | 2020.12-2023.10 | ET | F | R | Van FWD 46350679 | | GDS17231 | Drive Shaft | | 35 | 31 | 71.5 | 127 | 785 | |
| | 2020.12-2023.10 | ET | F | L | Van FWD 46350679 | | GCO17060 | Outer Joint | | 35 | 29 | 71.5 | 127 | 71 | I |
| | 2020.12-2023.10 | ET | F | L | Van FWD 46350679 | | GCI84040 | Inner Joint | | 31 | 29 | 34.85 | 443 | 109 | |
| | 2020.12-2023.10 | ET | F | R | Van FWD 46350679 | | GCI17022 | Inner Joint | | 31 | 29 | 44.95 | 77 | 109.5 | |
| | 2021.02-2023.10 | ET | F | L | Platform/Chassis FWD 46350679 | | GDS58235 | Drive Shaft | | 35 | 31 | 71.5 | 127 | 1153 | |
| | 2021.02-2023.10 | ET | F | R | Platform/Chassis FWD 46350679 | | GDS17231 | Drive Shaft | | 35 | 31 | 71.5 | 127 | 785 | |
| | 2021.02-2023.10 | ET | F | L/R | Platform/Chassis FWD 46350679 | | GCO17060 | Outer Joint | | 35 | 29 | 71.5 | 127 | 71 | I |
| | 2021.02-2023.10 | ET | F | L | Platform/Chassis FWD 46350679 | | GCI84040 | Inner Joint | | 31 | 29 | 34.85 | 443 | 109 | |
| | 2021.02-2023.10 | ET | F | R | Platform/Chassis FWD 46350679 | | GCI17022 | Inner Joint | | 31 | 29 | 44.95 | 77 | 109.5 | |
| **E-Ducato 35** | | | | | | | | | | | | | | | |
| EV (90 kw) | 2021.02-2023.10 | ET | F | L | Bus FWD 46350679 | | GDS58235 | Drive Shaft | | 35 | 31 | 71.5 | 127 | 1153 | |
| | 2021.02-2023.10 | ET | F | R | Bus FWD 46350679 | | GDS17231 | Drive Shaft | | 35 | 31 | 71.5 | 127 | 785 | |
| | 2021.02-2023.10 | ET | F | L | Bus FWD 46350679 | | GCO17060 | Outer Joint | | 35 | 29 | 71.5 | 127 | 71 | I |
| | 2021.02-2023.10 | ET | F | L | Bus FWD 46350679 | | GCI84040 | Inner Joint | | 31 | 29 | 34.85 | 443 | 109 | |
| | 2021.02-2023.10 | ET | F | R | Bus FWD 46350679 | | GCI17022 | Inner Joint | | 31 | 29 | 44.95 | 77 | 109.5 | |
| **E-Scudo** | | | | | | | | | | | | | | | |
| EV (100 kw) | 2022.01-2023.10 | ET | F | L | Bus FWD ZKX (ZK01) | | GDS57725 | Drive Shaft | | 28 | 37 | 58.5 | 96 | 724 | |
| | 2022.01-2023.10 | ET | F | R | Bus FWD ZKX (ZK01) | | GDS82316 | Drive Shaft | | 28 | 37 | 58.6 | 93 | 974 | |
| | 2022.01-2023.10 | ET | F | L/R | Bus FWD ZKX (ZK01) | | GCO10098 | Outer Joint | | 28 | 39 | 58.6 | 93 | 63 | I |
| | 2022.01-2023.10 | ET | F | R | Bus FWD ZKX (ZK01) | | GCI81759 | Inner Joint | | 37 | 34 | 31.9 | 302 | 88 | |
| | 2022.01-2023.10 | ET | F | L | Platform/Chassis FWD ZKX (ZK01) | | GDS57725 | Drive Shaft | | 28 | 37 | 58.5 | 96 | 724 | |
| | 2022.01-2023.10 | ET | F | R | Platform/Chassis FWD ZKX (ZK01) | | GDS82316 | Drive Shaft | | 28 | 37 | 58.6 | 93 | 974 | |

| | YEAR | TRANSM. | F/R | L/R | BODY STYLE & DRIVE TYPE & ENGINE | REMARKS | G-AP Ref. | PRODUCT | ABS | Technical Specifications A | B | C | H | L | P |
|---|---|---|---|---|---|---|---|---|---|---|---|---|---|---|---|
| **FIAT** | | | | | | | | | | | | | | | |
| **E-Scudo** | | | | | | | | | | | | | | | |
| EV (100 kw) | 2022.01-2023.10 | ET | F | L/R | Platform/Chassis FWD ZKX (ZK01) | | GCO10098 | Outer Joint | | 28 | 39 | 58.6 | 93 | 63 | I |
| | 2022.01-2023.10 | ET | F | R | Platform/Chassis FWD ZKX (ZK01) | | GCI81759 | Inner Joint | | 37 | 34 | 31.9 | 302 | 88 | |
| | 2022.01-2023.10 | ET | F | L | Van FWD ZKX (ZK01) | | GDS57725 | Drive Shaft | | 28 | 37 | 58.5 | 96 | 724 | |
| | 2022.01-2023.10 | ET | F | R | Van FWD ZKX (ZK01) | | GDS82316 | Drive Shaft | | 28 | 37 | 58.6 | 93 | 974 | |
| | 2022.01-2023.10 | ET | F | L/R | Van FWD ZKX (ZK01) | | GCO10098 | Outer Joint | | 28 | 39 | 58.6 | 93 | 63 | I |
| | 2022.01-2023.10 | ET | F | R | Van FWD ZKX (ZK01) | | GCI81759 | Inner Joint | | 37 | 34 | 31.9 | 302 | 88 | |
| | 2023.11- | ET | F | L | Bus FWD ZKU (ZK02) | | GDS57725 | Drive Shaft | | 28 | 37 | 58.5 | 96 | 724 | |
| | 2023.11- | ET | F | R | Bus FWD ZKU (ZK02) | | GDS82316 | Drive Shaft | | 28 | 37 | 58.6 | 93 | 974 | |
| | 2023.11- | ET | F | L/R | Bus FWD ZKU (ZK02) | | GCO10098 | Outer Joint | | 28 | 39 | 58.6 | 93 | 63 | I |
| | 2023.11- | ET | F | L | Platform/Chassis FWD ZKU (ZK02) | | GDS57725 | Drive Shaft | | 28 | 37 | 58.5 | 96 | 724 | |
| | 2023.11- | ET | F | R | Platform/Chassis FWD ZKU (ZK02) | | GDS82316 | Drive Shaft | | 28 | 37 | 58.6 | 93 | 974 | |
| | 2023.11- | ET | F | L/R | Platform/Chassis FWD ZKU (ZK02) | | GCO10098 | Outer Joint | | 28 | 39 | 58.6 | 93 | 63 | I |
| | 2023.11- | ET | F | L | Van FWD ZKU (ZK02) | | GDS57725 | Drive Shaft | | 28 | 37 | 58.5 | 96 | 724 | |
| | 2023.11- | ET | F | R | Van FWD ZKU (ZK02) | | GDS82316 | Drive Shaft | | 28 | 37 | 58.6 | 93 | 974 | |
| | 2023.11- | ET | F | L/R | Van FWD ZKU (ZK02) | | GCO10098 | Outer Joint | | 28 | 39 | 58.6 | 93 | 63 | I |
| **E-Ulysse** | | | | | | | | | | | | | | | |
| EV (100 kw) | 2022.01-2023.10 | ET | F | L | Bus FWD ZKX (ZK01) | | GDS57725 | Drive Shaft | | 28 | 37 | 58.5 | 96 | 724 | |
| | 2022.01-2023.10 | ET | F | R | Bus FWD ZKX (ZK01) | | GDS82316 | Drive Shaft | | 28 | 37 | 58.6 | 93 | 974 | |
| | 2022.01-2023.10 | ET | F | L/R | Bus FWD ZKX (ZK01) | | GCO10098 | Outer Joint | | 28 | 39 | 58.6 | 93 | 63 | I |
| | 2022.01-2023.10 | ET | F | R | Bus FWD ZKX (ZK01) | | GCI81759 | Inner Joint | | 37 | 34 | 31.9 | 302 | 88 | |
| | 2023.11- | ET | F | L | Bus FWD ZKU (ZK02) | | GDS57725 | Drive Shaft | | 28 | 37 | 58.5 | 96 | 724 | |
| | 2023.11- | ET | F | R | Bus FWD ZKU (ZK02) | | GDS82316 | Drive Shaft | | 28 | 37 | 58.6 | 93 | 974 | |
| | 2023.11- | ET | F | L/R | Bus FWD ZKU (ZK02) | | GCO10098 | Outer Joint | | 28 | 39 | 58.6 | 93 | 63 | I |
| **Egea** | | | | | | | | | | | | | | | |
| 1.6 (96 kw) | 2020.11- | 6MT | F | L/R | Saloon FWD 463 46 020 | | GCO17063 | Outer Joint | | 25 | 25 | 51.1 | 84.5 | 61 | M |
| | 2020.11- | 6MT | F | L | Saloon FWD 463 46 020 | | GCI17096 | Inner Joint | | 25 | 24 | 32 | 75 | 82.5 | |
| **Elba** | | | | | | | | | | | | | | | |
| 1.5 (49 kw) | 1992.01-1996.12 | MT | F | L/R | Estate FWD 149 C1.000 | | GCO17005 | Outer Joint | | 22 | 20 | 48.1 | 90.5 | 59.5 | O |
| 1.7 (43 kw) | 1989.04-1996.12 | MT | F | L/R | Estate FWD 146 B2.000 | | GCO17005 | Outer Joint | | 22 | 20 | 48.1 | 90.5 | 59.5 | O |
| **Fiorino** | | | | | | | | | | | | | | | |
| 1.3 (55 kw) | 2007.11- | 5AT | F | L | Box Body/MPV FWD 199 A2.000;199 A9.000 | | GDS17147 | Drive Shaft | | 25 | 34 | 51 | 84.5 | 480 | |
| | 2007.11- | 5AT | F | R | Box Body/MPV FWD 199 A2.000;199 A9.000 | | GDS17146 | Drive Shaft | | 25 | 34 | 51 | 84.5 | 522 | |
| | 2007.11- | 5AT | F | L/R | Box Body/MPV FWD 199 A2.000;199 A9.000 | | GCO17053 | Outer Joint | | 25 | 23 | 51 | 84.5 | 60 | M |
| | 2007.11- | 5AT | F | L | Box Body/MPV FWD 199 A2.000;199 A9.000 | Exhaust Emis:Euro 4 | GCI44014 | Inner Joint | | 25 | 23 | 34.9 | 57.5 | 102 | |
| | 2007.11- | 5AT | F | R | Box Body/MPV FWD 199 A2.000;199 A9.000 | | GCI17056 | Inner Joint | | 25 | 23 | 34.9 | 400 | 97 | |
| | 2007.11- | 5AT/5MT | F | R | Box Body/MPV FWD 199 A2.000;199 A9.000 | | GCI17107 | Inner Joint | | 24 | 24 | 29.7 | 394 | 99 | |
| | 2007.11- | 5MT | F | L | Box Body/MPV FWD 199 A2.000;199 A9.000 | for OE No.:51934091 | GDS17062 | Drive Shaft | | 25 | 24 | 51 | 84.5 | 582 | |
| | 2007.11- | 5MT | F | L | Box Body/MPV FWD 199 A2.000;199 A9.000 | for OE No.:51896520 | GDS17165 | Drive Shaft | | 25 | 24 | 51 | 84.5 | 603 | |
| | 2007.11- | 5MT | F | R | Box Body/MPV FWD 199 A2.000;199 A9.000 | Trans. side without housing | GDS17055 | Drive Shaft | | 25 | 35 | 51 | 84.5 | 543 | |
| | 2007.11- | 5MT | F | R | Box Body/MPV FWD 199 A2.000;199 A9.000 | Trans. side with housing,length 2:379 | GDS17061 | Drive Shaft | | 25 | 24 | 51 | 84.5 | 953 | |
| | 2007.11- | 5MT | F | R | Box Body/MPV FWD 199 A2.000;199 A9.000 | Trans. side with housing,length 2:394 | GDS17157 | Drive Shaft | | 25 | 24 | 51 | 84.5 | 919 | |
| | 2007.11- | 5MT | F | L/R | Box Body/MPV FWD 199 A2.000;199 A9.000 | | GCO17028 | Outer Joint | | 25 | 24 | 51 | 84.5 | 62 | M |
| | 2007.11- | 5MT/5AMT | F | L | Box Body/MPV FWD 199 A2.000;199 A9.000 | Transmission:5AMT,Exhaust Emis:Euro 6 | GCI99008 | Inner Joint | | 24 | 24 | 29.7 | 86.5 | 93 | |
| | 2007.11- | 5AT | F | L | MPV FWD 199 A2.000;199 A9.000 | | GDS17147 | Drive Shaft | | 25 | 34 | 51 | 84.5 | 480 | |
| | 2007.11- | 5AT | F | R | MPV FWD 199 A2.000;199 A9.000 | | GDS17146 | Drive Shaft | | 25 | 34 | 51 | 84.5 | 522 | |
| | 2007.11- | 5AT | F | L/R | MPV FWD 199 A2.000;199 A9.000 | | GCO17053 | Outer Joint | | 25 | 23 | 51 | 84.5 | 60 | M |
| | 2007.11- | 5AT | F | L | MPV FWD 199 A2.000;199 A9.000 | Exhaust Emis Nm:Euro 4 | GCI44014 | Inner Joint | | 25 | 23 | 34.9 | 57.5 | 102 | |
| | 2007.11- | 5AT | F | R | MPV FWD 199 A2.000;199 A9.000 | | GCI17056 | Inner Joint | | 25 | 23 | 34.9 | 400 | 97 | |
| | 2007.11- | 5MT | F | L | MPV FWD 199 A2.000;199 A9.000 | for OE No.:51934091 | GDS17062 | Drive Shaft | | 25 | 24 | 51 | 84.5 | 582 | |
| | 2007.11- | 5MT | F | L | MPV FWD 199 A2.000;199 A9.000 | for OE No.:51896520 | GDS17165 | Drive Shaft | | 25 | 24 | 51 | 84.5 | 603 | |
| | 2007.11- | 5MT | F | R | MPV FWD 199 A2.000;199 A9.000 | Trans. side without housing | GDS17055 | Drive Shaft | | 25 | 35 | 51 | 84.5 | 543 | |
| | 2007.11- | 5MT | F | R | MPV FWD 199 A2.000;199 A9.000 | Trans. side with housing;for OE No.:51934087 | GDS17061 | Drive Shaft | | 25 | 24 | 51 | 84.5 | 953 | |
| | 2007.11- | 5MT | F | R | MPV FWD 199 A2.000;199 A9.000 | Trans. side with housing;for OE No.:51975576 | GDS17157 | Drive Shaft | | 25 | 24 | 51 | 84.5 | 919 | |
| | 2007.11- | 5MT | F | L/R | MPV FWD 199 A2.000;199 A9.000 | | GCO17028 | Outer Joint | | 25 | 24 | 51 | 84.5 | 62 | M |
| | 2007.11- | 5MT | F | R | MPV FWD 199 A2.000;199 A9.000 | | GCI17107 | Inner Joint | | 24 | 24 | 29.7 | 394 | 99 | |
| | 2007.11- | 5MT/5AMT | F | L | MPV FWD 199 A2.000;199 A9.000 | Transmission:5AMT,Exhaust Emis:Euro 6 | GCI99008 | Inner Joint | | 24 | 24 | 29.7 | 86.5 | 93 | |
| 1.3 (59 kw) | 2015.03- | 5MT | F | L | Box Body/MPV FWD 225 A2.000;552 83 775;463 45 266 | | GDS17165 | Drive Shaft | | 25 | 24 | 51 | 84.5 | 603 | |
| | 2015.03- | 5MT | F | L/R | Box Body/MPV FWD 225 A2.000;552 83 775;463 45 266 | | GCO17028 | Outer Joint | | 25 | 24 | 51 | 84.5 | 62 | M |
| | 2015.03- | 5MT | F | L | Box Body/MPV FWD 225 A2.000;552 83 775;463 45 266 | | GCI99008 | Inner Joint | | 24 | 24 | 29.7 | 86.5 | 93 | |
| | 2015.03- | | F | R | Box Body/MPV FWD 225 A2.000;552 83 775;463 45 266 | Exhaust Emis Nm:Euro 6 | GCI17107 | Inner Joint | | 24 | 24 | 29.7 | 394 | 99 | |
| | 2016.03- | 5MT | F | L/R | MPV FWD 225 A2.000;463 45 266 | Exhaust Emis:Euro 6 | GCO17028 | Outer Joint | | 25 | 24 | 51 | 84.5 | 62 | M |
| | 2016.03- | 5MT | F | L | MPV FWD 225 A2.000;463 45 266 | | GCI99008 | Inner Joint | | 24 | 24 | 29.7 | 86.5 | 93 | |
| 1.3 (70 kw) | 2009.07- | 5MT | F | L | Box Body/MPV FWD 199 B1.000;330 A1.000;463 45 266 | Facelift,Exhaust Emis:Euro 5 | GDS17062 | Drive Shaft | | 25 | 24 | 51 | 84.5 | 582 | |
| | 2009.07- | 5MT | F | L | Box Body/MPV FWD 199 B1.000;330 A1.000;463 45 266 | not Facelift,Exhaust Emis:Euro 5 | GDS17165 | Drive Shaft | | 25 | 24 | 51 | 84.5 | 603 | |
| | 2009.07- | 5MT | F | R | Box Body/MPV FWD 199 B1.000;330 A1.000;463 45 266 | For facelift;Exhaust Emis:Euro 5 | GDS17055 | Drive Shaft | | 25 | 35 | 51 | 84.5 | 543 | |

| | YEAR | TRANSM. | F/R | L/R | BODY STYLE & DRIVE TYPE & ENGINE | REMARKS | G-AP Ref. | PRODUCT | ABS | Technical Specifications A | B | C | H | L | P |
|---|---|---|---|---|---|---|---|---|---|---|---|---|---|---|---|
| **FIAT** | | | | | | | | | | | | | | | |
| **Fiorino** | | | | | | | | | | | | | | | |
| 1.3 (70 kw) | 2009.07- | 5MT | F | R | Box Body/MPV FWD 199 B1.000;330 A1.000;463 45 266 | For facelift;Exhaust Emis:Euro 5 | GDS17061 | Drive Shaft | | 25 | 24 | 51 | 84.5 | 953 | |
| | 2009.07- | 5MT | F | R | Box Body/MPV FWD 199 B1.000;330 A1.000;463 45 266 | [illegible] | GDS17157 | Drive Shaft | | 25 | 24 | 51 | 84.5 | 919 | |
| | 2009.07- | 5MT | F | L/R | Box Body/MPV FWD 199 B1.000;330 A1.000;463 45 266 | | GCO17028 | Outer Joint | | 25 | 24 | 51 | 84.5 | 62 | M |
| | 2009.07- | 5MT | F | L | Box Body/MPV FWD 199 B1.000;330 A1.000;463 45 266 | | GCI99008 | Inner Joint | | 24 | 24 | 29.7 | 86.5 | 93 | |
| | 2009.07- | 5MT | F | R | Box Body/MPV FWD 199 B1.000;330 A1.000;463 45 266 | Exhaust Emis:Euro 5/Euro 6 | GCI17107 | Inner Joint | | 24 | 24 | 29.7 | 394 | 99 | |
| | 2011.01- | 5MT | F | L | MPV FWD 199 B1.000;330 A1.000;463 45 266 | Exhaust Emis:Euro 5;Without Facelift | GDS17062 | Drive Shaft | | 25 | 24 | 51 | 84.5 | 582 | |
| | 2011.01- | 5MT | F | R | MPV FWD 199 B1.000;330 A1.000;463 45 266 | For facelift;Exhaust Emis:Euro 5 | GDS17055 | Drive Shaft | | 25 | 35 | 51 | 84.5 | 543 | |
| | 2011.01- | 5MT | F | R | MPV FWD 199 B1.000;330 A1.000;463 45 266 | For facelift;Exhaust Emis:Euro 5 | GDS17061 | Drive Shaft | | 25 | 24 | 51 | 84.5 | 953 | |
| | 2011.01- | 5MT | F | R | MPV FWD 199 B1.000;330 A1.000;463 45 266 | [illegible] | GDS17157 | Drive Shaft | | 25 | 24 | 51 | 84.5 | 919 | |
| | 2011.01- | 5MT | F | L | MPV FWD 199 B1.000;330 A1.000;463 45 266 | | GCI99008 | Inner Joint | | 24 | 24 | 29.7 | 86.5 | 93 | |
| | 2011.01- | 5MT | F | R | MPV FWD 199 B1.000;330 A1.000;463 45 266 | Exhaust Emis Nm:Euro 5/Euro 6,Option Code+:5SE | GCI17107 | Inner Joint | | 24 | 24 | 29.7 | 394 | 99 | |
| | 2011.01- | MT | F | L | MPV FWD 199 B1.000;330 A1.000;463 45 266 | With Facelift | GDS17165 | Drive Shaft | | 25 | 24 | 51 | 84.5 | 603 | |
| | 2011.01- | MT | F | L/R | MPV FWD 199 B1.000;330 A1.000;463 45 266 | | GCO17028 | Outer Joint | | 25 | 24 | 51 | 84.5 | 62 | M |
| 1.4 (49 kw) | 1994.05-2001.05 | AT/MT | F | L/R | MPV Van FWD 146D5000 | | GCO17017 | Outer Joint | | 22 | 20 | 52 | 91 | 60.5 | O |
| | 1994.05-2001.05 | MT | F | L/R | MPV Van FWD 146D5000 | | GCO84001 | Outer Joint | | 20 | 20 | 43.1 | 90.5 | 60.5 | O |
| 1.4 (51 kw) | 2008.06- | 5MT | F | L | Box Body/MPV FWD 350 A1.000 | | GDS17088 | Drive Shaft | | 22 | | 51 | 79 | 552 | |
| | 2008.06- | 5MT | F | R | Box Body/MPV FWD 350 A1.000 | | GDS17111 | Drive Shaft | | 22 | 22 | 51.2 | 79.5 | 887 | |
| | 2008.06- | 5MT | F | R | Box Body/MPV FWD 350 A1.000 | | GCI17004 | Inner Joint | | 22 | 21 | 36 | 61 | 93.5 | |
| | 2008.06- | 5MT | F | L/R | Box Body/MPV FWD 350 A1.000 | | GCI17027 | Inner Joint | | 22 | 22 | 36 | 61.5 | 93.5 | |
| | 2008.06- | MT | F | L/R | Box Body/MPV FWD 350 A1.000 | | GCO17070 | Outer Joint | | 22 | 22 | 51 | 79 | 57.5 | M |
| | 2014.07- | 5MT | F | L | MPV FWD 350 A1.000 | | GDS17088 | Drive Shaft | | 22 | | 51 | 79 | 552 | |
| | 2014.07- | 5MT | F | R | MPV FWD 350 A1.000 | | GDS17111 | Drive Shaft | | 22 | 22 | 51.2 | 79.5 | 887 | |
| | 2014.07- | 5MT | F | L | MPV FWD 350 A1.000 | | GCO17070 | Outer Joint | | 22 | 22 | 51 | 79 | 57.5 | M |
| | 2014.07- | 5MT | F | R | MPV FWD 350 A1.000 | | GCO17052 | Outer Joint | | 22 | 21 | 51.2 | 79.5 | 54 | M |
| | 2014.07- | 5MT | F | R | MPV FWD 350 A1.000 | | GCI17004 | Inner Joint | | 22 | 21 | 36 | 61 | 93.5 | |
| | 2014.07- | 5MT | F | L/R | MPV FWD 350 A1.000 | | GCI17027 | Inner Joint | | 22 | 22 | 36 | 61.5 | 93.5 | |
| 1.4 (54 kw) | 2007.11- | MT | F | R | Box Body/MPV FWD KFV;KFT | | GDS83558 | Drive Shaft | | 22 | 22 | 51 | 79 | 880 | |
| | 2007.11- | MT | F | R | Box Body/MPV FWD KFV;KFT | | GCO82416 | Outer Joint | | 22 | 22 | 51 | 79 | 57.5 | M |
| | 2007.11- | MT | F | L/R | Box Body/MPV FWD KFV;KFT | | GCO17070 | Outer Joint | | 22 | 22 | 51 | 79 | 57.5 | M |
| | 2007.11- | MT | F | R | Box Body/MPV FWD KFV;KFT | | GCI17030 | Inner Joint | | 22 | 22 | 30 | 96.5 | 99 | |
| | 2007.11- | 5MT | F | R | MPV FWD KFV;KFT | Exhaust Emis:Euro 4/Euro 5 | GCO17070 | Outer Joint | | 22 | 22 | 51 | 79 | 57.5 | M |
| 1.4 (57 kw) | 2008.06- | 5MT | F | L/R | Box Body/MPV FWD 350 A1.000 | | GCI17027 | Inner Joint | | 22 | 22 | 36 | 61.5 | 93.5 | |
| | 2008.06- | MT | F | L | Box Body/MPV FWD 350 A1.000 | | GDS17088 | Drive Shaft | | 22 | | 51 | 79 | 552 | |
| | 2008.06- | MT | F | R | Box Body/MPV FWD 350 A1.000 | | GDS17111 | Drive Shaft | | 22 | 22 | 51.2 | 79.5 | 887 | |
| | 2008.06- | MT | F | L/R | Box Body/MPV FWD 350 A1.000 | | GCO17070 | Outer Joint | | 22 | 22 | 51 | 79 | 57.5 | M |
| | 2008.06- | MT | F | R | Box Body/MPV FWD 350 A1.000 | | GCI17004 | Inner Joint | | 22 | 21 | 36 | 61 | 93.5 | |
| | 2008.06- | 5MT | F | L/R | MPV FWD 350 A1.000 | | GCI17027 | Inner Joint | | 22 | 22 | 36 | 61.5 | 93.5 | |
| | 2008.06- | MT | F | L | MPV FWD 350 A1.000 | | GDS17088 | Drive Shaft | | 22 | | 51 | 79 | 552 | |
| | 2008.06- | MT | F | R | MPV FWD 350 A1.000 | | GDS17111 | Drive Shaft | | 22 | 22 | 51.2 | 79.5 | 887 | |
| | 2008.06- | MT | F | L/R | MPV FWD 350 A1.000 | | GCO17070 | Outer Joint | | 22 | 22 | 51 | 79 | 57.5 | M |
| | 2008.06- | MT | F | R | MPV FWD 350 A1.000 | | GCI17004 | Inner Joint | | 22 | 21 | 36 | 61 | 93.5 | |
| | 2009.10- | 5MT | F | L | Box Body/MPV FWD 350 A1.000 | | GDS17088 | Drive Shaft | | 22 | | 51 | 79 | 552 | |
| | 2009.10- | 5MT | F | R | Box Body/MPV FWD 350 A1.000 | | GDS17111 | Drive Shaft | | 22 | 22 | 51.2 | 79.5 | 887 | |
| | 2009.10- | 5MT | F | L | Box Body/MPV FWD 350 A1.000 | | GCO17070 | Outer Joint | | 22 | 22 | 51 | 79 | 57.5 | M |
| | 2009.10- | 5MT | F | R | Box Body/MPV FWD 350 A1.000 | | GCO17052 | Outer Joint | | 22 | 21 | 51.2 | 79.5 | 54 | M |
| | 2009.10- | 5MT | F | L | Box Body/MPV FWD 350 A1.000 | | GCI17027 | Inner Joint | | 22 | 22 | 36 | 61.5 | 93.5 | |
| | 2009.10- | 5MT | F | R | Box Body/MPV FWD 350 A1.000 | | GCI17004 | Inner Joint | | 22 | 21 | 36 | 61 | 93.5 | |
| | 2014.07- | 5MT | F | L | MPV FWD 350 A1.000 | | GDS17088 | Drive Shaft | | 22 | | 51 | 79 | 552 | |
| | 2014.07- | 5MT | F | R | MPV FWD 350 A1.000 | | GDS17111 | Drive Shaft | | 22 | 22 | 51.2 | 79.5 | 887 | |
| | 2014.07- | 5MT | F | L | MPV FWD 350 A1.000 | | GCO17070 | Outer Joint | | 22 | 22 | 51 | 79 | 57.5 | M |
| | 2014.07- | 5MT | F | R | MPV FWD 350 A1.000 | | GCO17052 | Outer Joint | | 22 | 21 | 51.2 | 79.5 | 54 | M |
| | 2014.07- | 5MT | F | L | MPV FWD 350 A1.000 | | GCI17027 | Inner Joint | | 22 | 22 | 36 | 61.5 | 93.5 | |
| | 2014.07- | 5MT | F | R | MPV FWD 350 A1.000 | | GCI17004 | Inner Joint | | 22 | 21 | 36 | 61 | 93.5 | |
| 1.6 (55 kw) | 1993.10-2001.05 | MT | F | L/R | MPV Van FWD 146C6000/146D6000 | | GCO17017 | Outer Joint | | 22 | 20 | 52 | 91 | 60.5 | O |
| 1.7 (42 kw) | 1988.05-2000.05 | AT/MT | F | L/R | MPV Van FWD 149B2000 | | GCO17017 | Outer Joint | | 22 | 20 | 52 | 91 | 60.5 | O |
| | 1988.05-2000.05 | AT/MT | F | L/R | MPV Van FWD 149B2000 | | GCI48004 | Inner Joint | | | 25 | | | 32 | |
| 1.7 (44 kw) | 1988.01-2000.05 | | F | | MPV Van FWD 146B2000/149B3000 | Date From:1993.01 | GCO17017 | Outer Joint | | 22 | 20 | 52 | 91 | 60.5 | O |
| 1.7 (46 kw) | 1996.11-2000.05 | AT/MT | F | L/R | Box Body/MPV FWD 146 D7.000 (01.97-.) | | GCO17020 | Outer Joint | 44T | 22 | 22 | 52 | 91 | 60.5 | O |
| | 1996.11-2000.05 | MT | F | L/R | Box Body/MPV FWD 146 D7.000 (01.97-.) | | GCO17019 | Outer Joint | | 22 | 22 | 52 | 91 | 60.5 | O |
| | 1997.01-2001.05 | AT/MT | F | L/R | Box Body/MPV FWD 146 D7.000 (01.97-.) | | GCO17020 | Outer Joint | 44T | 22 | 22 | 52 | 91 | 60.5 | O |
| | 1997.01-2001.05 | MT | F | L/R | Box Body/MPV FWD 146 D7.000 (01.97-.) | | GCO17019 | Outer Joint | | 22 | 22 | 52 | 91 | 60.5 | O |
| **Fiorino Pick Up** | | | | | | | | | | | | | | | |
| 1.4 (49 kw) | 1994.05-2001.05 | MT | F | L/R | Pickup FWD 146D5000 | | GCO84001 | Outer Joint | | 20 | 20 | 43.1 | 90.5 | 60.5 | O |
| 1.6 (55 kw) | 1994.01-2001.05 | AT/MT | F | L/R | Pickup FWD 146C6000/146D6000 | | GCO17017 | Outer Joint | | 22 | 20 | 52 | 91 | 60.5 | O |
| 1.7 (42 kw) | 1993.10-1999.12 | MT | F | L/R | Pickup FWD 146B2000 | | GCO17017 | Outer Joint | | 22 | 20 | 52 | 91 | 60.5 | O |

| | YEAR | TRANSM. | F/R | L/R | BODY STYLE & DRIVE TYPE & ENGINE | REMARKS | G-AP Ref. | PRODUCT | ABS | Technical Specifications A | B | C | H | L | P |
|---|---|---|---|---|---|---|---|---|---|---|---|---|---|---|---|
| **FIAT** | | | | | | | | | | | | | | | |
| **Fiorino Pick Up** | | | | | | | | | | | | | | | |
| 1.7 (44 kw) | 1988.05-1999.10 | MT | F | L/R | Pickup FWD 149B3000 | | GCO17005 | Outer Joint | | 22 | 20 | 48.1 | 90.5 | 59.5 | O |
| | 1988.05-1999.10 | | F | | Pickup FWD 149B3000 | Date From:1993.01 | GCO17017 | Outer Joint | | 22 | 20 | 52 | 91 | 60.5 | O |
| 1.7 (46 kw) | 1997.01-2001.05 | MT | F | L/R | Pickup FWD 146D7000 | | GCO17019 | Outer Joint | | 22 | 22 | 52 | 91 | 60.5 | O |
| | 1997.01-2001.05 | MT | F | L/R | Pickup FWD 146D7000 | | GCO17020 | Outer Joint | 44T | 22 | 22 | 52 | 91 | 60.5 | O |
| **Freemont** | | | | | | | | | | | | | | | |
| 2.0 (100 kw) | 2011.08-2015.12 | | F | R | MPV FWD 939 B5.000 | | GDS89080 | Drive Shaft | | 32 | 28 | 56.7 | 104.5 | 521 | |
| | 2011.08-2015.12 | | F | L | MPV FWD 939 B5.000 | | GCO89054 | Outer Joint | | 32 | 26 | 56.7 | 105 | 62 | M |
| 2.0 (103 kw) | 2011.08-2015.12 | 6MT | F | R | MPV FWD 939 B5.000;940 A5.000 | | GDS89080 | Drive Shaft | | 32 | 28 | 56.7 | 104.5 | 521 | |
| | 2011.08-2015.12 | MT | F | L/R | MPV FWD 939 B5.000;940 A5.000 | | GCO89054 | Outer Joint | | 32 | 26 | 56.7 | 105 | 62 | M |
| 2.0 (120 kw) | 2011.08-2015.12 | 6AT | F | L | MPV 4WD 939 B5.000 | | GDS17229 | Drive Shaft | | 32 | 29 | 56.7 | 105 | 640 | |
| | 2011.08-2015.12 | 6AT | F | L | MPV 4WD 939 B5.000 | | GCO89054 | Outer Joint | | 32 | 26 | 56.7 | 105 | 62 | M |
| | 2011.08-2015.12 | 6AT | F | L | MPV 4WD 939 B5.000 | | GCI88094 | Inner Joint | | 29 | 26 | 40 | 81.5 | 106.5 | |
| | 2011.08-2015.12 | MT | F | L/R | MPV FWD 939 B5.000 | | GCO89054 | Outer Joint | | 32 | 26 | 56.7 | 105 | 62 | M |
| | 2011.08-2015.12 | | F | R | MPV FWD 939 B5.000 | | GDS89080 | Drive Shaft | | 32 | 28 | 56.7 | 104.5 | 521 | |
| 2.0 (125 kw) | 2011.08-2015.12 | AT | F | L | MPV 4WD 939 B5.000;940 A5.000 | | GDS17229 | Drive Shaft | | 32 | 29 | 56.7 | 105 | 640 | |
| | 2011.08-2015.12 | AT | F | R | MPV 4WD 939 B5.000;940 A5.000 | | GDS17228 | Drive Shaft | | 32 | 28 | 56.7 | 105 | 524 | |
| | 2011.08-2015.12 | AT | F | R | MPV 4WD 939 B5.000;940 A5.000 | | GCO89054 | Outer Joint | | 32 | 26 | 56.7 | 105 | 62 | M |
| | 2011.08-2015.12 | AT | F | R | MPV 4WD 939 B5.000;940 A5.000 | | GCI88093 | Inner Joint | | 28 | 26 | 42.5 | | 125 | |
| | 2011.08-2015.12 | 6MT | F | R | MPV FWD 939 B5.000;940 A5.000 | | GDS89080 | Drive Shaft | | 32 | 28 | 56.7 | 104.5 | 521 | |
| | 2011.08-2015.12 | MT | F | L/R | MPV FWD 939 B5.000;940 A5.000 | | GCO89054 | Outer Joint | | 32 | 26 | 56.7 | 105 | 62 | M |
| 3.6 (206 kw) | 2011.08-2015.12 | 6AT | F | L | MPV 4WD ERB | | GDS17229 | Drive Shaft | | 32 | 29 | 56.7 | 105 | 640 | |
| | 2011.08-2015.12 | 6AT | F | L | MPV 4WD ERB | | GCO89054 | Outer Joint | | 32 | 26 | 56.7 | 105 | 62 | M |
| | 2011.08-2015.12 | 6AT | F | L | MPV 4WD ERB | | GCI88094 | Inner Joint | | 29 | 26 | 40 | 81.5 | 106.5 | |
| | 2011.08-2016.12 | 6AT | F | L | MPV FWD ERB | | GDS17229 | Drive Shaft | | 32 | 29 | 56.7 | 105 | 640 | |
| | 2011.08-2016.12 | 6AT | F | R | MPV FWD ERB | Model year from:2014 | GDS17228 | Drive Shaft | | 32 | 28 | 56.7 | 105 | 524 | |
| | 2011.08-2016.12 | 6AT | F | L/R | MPV FWD ERB | Model year from:2014 | GCO89054 | Outer Joint | | 32 | 26 | 56.7 | 105 | 62 | M |
| **Fullback** | | | | | | | | | | | | | | | |
| 2.4 (110 kw) | 2016.04- | 5AT/6MT | F | R | Pickup 4WD 4N15 | For vehicles without ABS | GDS39104 | Drive Shaft | | 30 | | 69 | 98 | 492 | |
| | 2016.04- | 5AT/6MT | F | R | Pickup 4WD 4N15 | For vehicles with ABS | GDS39164 | Drive Shaft | 47T | 30 | | 69 | 98 | 492 | |
| | 2016.04- | AT/MT | F | L | Pickup 4WD 4N15 | | GDS39163 | Drive Shaft | 47T | 30 | 28 | 69 | 98 | 594 | |
| | 2016.04- | AT/MT | F | L/R | Pickup 4WD 4N15 | | GCO39294 | Outer Joint | | 30 | 33 | 69 | 98 | 66.5 | I |
| 2.4 (113 kw) | 2016.04- | 6MT | F | R | Pickup 4WD 4N15 | For vehicles without ABS | GDS39104 | Drive Shaft | | 30 | | 69 | 98 | 492 | |
| | 2016.04- | 6MT | F | R | Pickup 4WD 4N15 | For vehicles with ABS | GDS39164 | Drive Shaft | 47T | 30 | | 69 | 98 | 492 | |
| | 2016.04- | AT/MT | F | L | Pickup 4WD 4N15 | | GDS39163 | Drive Shaft | 47T | 30 | 28 | 69 | 98 | 594 | |
| | 2016.04- | AT/MT | F | L/R | Pickup 4WD 4N15 | | GCO39294 | Outer Joint | | 30 | 33 | 69 | 98 | 66.5 | I |
| 2.4 (133 kw) | 2016.04- | 5AT/6MT | F | R | Pickup 4WD 4N15 | For vehicles without ABS | GDS39104 | Drive Shaft | | 30 | | 69 | 98 | 492 | |
| | 2016.04- | 5AT/6MT | F | R | Pickup 4WD 4N15 | For vehicles with ABS | GDS39164 | Drive Shaft | 47T | 30 | | 69 | 98 | 492 | |
| | 2016.04- | AT/MT | F | L | Pickup 4WD 4N15 | | GDS39163 | Drive Shaft | 47T | 30 | 28 | 69 | 98 | 594 | |
| | 2016.04- | AT/MT | F | L/R | Pickup 4WD 4N15 | | GCO39294 | Outer Joint | | 30 | 33 | 69 | 98 | 66.5 | I |
| **Grande Punto** | | | | | | | | | | | | | | | |
| 1.2 (48 kw) | 2005.10- | 5MT | F | L | Hatchback FWD 199 A4.000 | | GDS17045 | Drive Shaft | | 22 | 22 | 51 | 79.5 | 649 | |
| | 2005.10- | 5MT | F | L | Hatchback FWD 199 A4.000 | | GDS17222 | Drive Shaft | | 22 | 22 | 51 | 79.5 | 646 | |
| | 2005.10- | 5MT | F | R | Hatchback FWD 199 A4.000 | | GDS17111 | Drive Shaft | | 22 | 22 | 51.2 | 79.5 | 887 | |
| | 2005.10- | 5MT | F | L/R | Hatchback FWD 199 A4.000 | | GCO17052 | Outer Joint | | 22 | 21 | 51.2 | 79.5 | 54 | M |
| | 2005.10- | 5MT | F | L/R | Hatchback FWD 199 A4.000 | | GCO99018 | Outer Joint | | 22 | 27 | 51 | 79.5 | 54 | O |
| | 2005.10- | 5MT | F | L | Hatchback FWD 199 A4.000 | | GCI17004 | Inner Joint | | 22 | 21 | 36 | 61 | 93.5 | |
| | 2005.10- | MT | F | L | Hatchback FWD 199 A4.000 | | GCO99325 | Outer Joint | | 22 | 27 | 51 | 79.5 | 54 | O |
| | 2005.10- | | F | L/R | Hatchback FWD 199 A4.000 | | GCO17014 | Outer Joint | | 22 | 21 | 51 | 79.5 | 54 | M |
| | 2005.10- | | F | | Hatchback FWD 199 A4.000 | | GCO17034 | Outer Joint | | 22 | 21 | 51 | 79.5 | 54 | M |
| 1.2 (51 kw) | 2008.06-2012.12 | 5MT | F | R | Hatchback FWD 199 A4.000 | | GDS17111 | Drive Shaft | | 22 | 22 | 51.2 | 79.5 | 887 | |
| | 2008.06-2012.12 | MT | F | L/R | Hatchback FWD 199 A4.000 | Date to:2011.12 | GCO17014 | Outer Joint | | 22 | 21 | 51 | 79.5 | 54 | M |
| | 2008.06-2012.12 | | F | L | Hatchback FWD 199 A4.000 | | GDS17222 | Drive Shaft | | 22 | 22 | 51 | 79.5 | 646 | |
| | 2008.06-2012.12 | | F | L/R | Hatchback FWD 199 A4.000 | | GCO17052 | Outer Joint | | 22 | 21 | 51.2 | 79.5 | 54 | M |
| | 2010.09- | 5MT | F | L | Hatchback FWD 169 A4.000 | | GDS17045 | Drive Shaft | | 22 | 22 | 51 | 79.5 | 649 | |
| | 2010.09- | 5MT | F | L | Hatchback FWD 169 A4.000 | | GDS17222 | Drive Shaft | | 22 | 22 | 51 | 79.5 | 646 | |
| | 2010.09- | 5MT | F | R | Hatchback FWD 169 A4.000 | | GDS17111 | Drive Shaft | | 22 | 22 | 51.2 | 79.5 | 887 | |
| | 2010.09- | 5MT | F | L/R | Hatchback FWD 169 A4.000 | | GCO17052 | Outer Joint | | 22 | 21 | 51.2 | 79.5 | 54 | M |
| | 2010.09- | 5MT | F | L/R | Hatchback FWD 169 A4.000 | | GCO99018 | Outer Joint | | 22 | 27 | 51 | 79.5 | 54 | O |
| | 2010.09- | 5MT | F | L | Hatchback FWD 169 A4.000 | | GCI17004 | Inner Joint | | 22 | 21 | 36 | 61 | 93.5 | |
| | 2010.09- | MT | F | L | Hatchback FWD 169 A4.000 | | GCO99325 | Outer Joint | | 22 | 27 | 51 | 79.5 | 54 | O |
| | 2010.09- | MT | F | L/R | Hatchback FWD 169 A4.000 | Date to:2011.12 | GCO17014 | Outer Joint | | 22 | 21 | 51 | 79.5 | 54 | M |
| 1.3 (51 kw) | 2008.07- | 5AT | F | L | Hatchback FWD 199 B2.000 | | GDS17082 | Drive Shaft | | 25 | 34 | 51 | 84.5 | 514 | |
| | 2008.07- | 5AT | F | L | Hatchback FWD 199 B2.000 | | GDS17182 | Drive Shaft | | 25 | 24 | 51 | 84.5 | 624 | |
| | 2008.07- | 5AT | F | R | Hatchback FWD 199 B2.000 | | GDS17066 | Drive Shaft | | 25 | 34 | 51 | 84.5 | 497 | |
| | 2008.07- | 5AT | F | L/R | Hatchback FWD 199 B2.000 | | GCO17053 | Outer Joint | | 25 | 23 | 51 | 84.5 | 60 | M |

| | YEAR | TRANSM. | F/R | L/R | BODY STYLE & DRIVE TYPE & ENGINE | REMARKS | G-AP Ref. | PRODUCT | ABS | Technical Specifications A | B | C | H | L | P |
|---|---|---|---|---|---|---|---|---|---|---|---|---|---|---|---|
| **FIAT** **Grande Punto** | | | | | | | | | | | | | | | |
| 1.3 (51 kw) | 2008.07- | 5AT | F | L | Hatchback FWD 199 B2.000 | | GCI17011 | Inner Joint | | 24 | 23 | 29.7 | 86.5 | 93 | |
| | 2008.07- | 5AT | F | L | Hatchback FWD 199 B2.000 | | GCI99008 | Inner Joint | | 24 | 24 | 29.7 | 86.5 | 93 | |
| | 2008.07- | MT | F | R | Hatchback FWD 199 B2.000 | Date to:2011.12 | GDS17109 | Drive Shaft | | 25 | 24 | 51 | 84.5 | 908 | |
| | 2008.07- | | F | L | Hatchback FWD 199 B2.000 | | GDS17060 | Drive Shaft | | 25 | 24 | 51 | 84.5 | 608 | |
| 1.3 (55 kw) | 2005.10-2013.06 | 5MT | F | L | Hatchback FWD 199 A2.000;199 A9.000 | Trans. side without housing | GDS17082 | Drive Shaft | | 25 | 34 | 51 | 84.5 | 514 | |
| | 2005.10-2013.06 | 5MT | F | L | Hatchback FWD 199 A2.000;199 A9.000 | Trans. side with housing | GDS17182 | Drive Shaft | | 25 | 24 | 51 | 84.5 | 624 | |
| | 2005.10-2013.06 | 5MT | F | R | Hatchback FWD 199 A2.000;199 A9.000 | Trans. side without housing | GDS17066 | Drive Shaft | | 25 | 34 | 51 | 84.5 | 497 | |
| | 2005.10-2013.06 | 5MT | F | R | Hatchback FWD 199 A2.000;199 A9.000 | Trans. side with housing | GDS17109 | Drive Shaft | | 25 | 24 | 51 | 84.5 | 908 | |
| | 2005.10-2013.06 | 5MT | F | L/R | Hatchback FWD 199 A2.000;199 A9.000 | | GCO17053 | Outer Joint | | 25 | 23 | 51 | 84.5 | 60 | M |
| | 2005.10-2013.06 | 5MT | F | L | Hatchback FWD 199 A2.000;199 A9.000 | | GCI17011 | Inner Joint | | 24 | 23 | 29.7 | 86.5 | 93 | |
| | 2005.10-2013.06 | MT | F | R | Hatchback FWD 199 A2.000;199 A9.000 | | GCI17012 | Inner Joint | | 24 | 23 | 29.7 | 379 | 100.5 | |
| | 2005.10-2013.06 | | F | L | Hatchback FWD 199 A2.000;199 A9.000 | | GDS17060 | Drive Shaft | | 25 | 24 | 51 | 84.5 | 608 | |
| 1.3 (56 kw) | 2009.06-2014.07 | 5MT | F | L | Hatchback FWD 199 A2.000 | | GDS17082 | Drive Shaft | | 25 | 34 | 51 | 84.5 | 514 | |
| | 2009.06-2014.07 | 5MT | F | L | Hatchback FWD 199 A2.000 | Trans. side with housing | GDS17182 | Drive Shaft | | 25 | 24 | 51 | 84.5 | 624 | |
| | 2009.06-2014.07 | 5MT | F | R | Hatchback FWD 199 A2.000 | Manufacturer:Gkn | GDS17066 | Drive Shaft | | 25 | 34 | 51 | 84.5 | 497 | |
| | 2009.06-2014.07 | 5MT | F | R | Hatchback FWD 199 A2.000 | Manufacturer:Gkn | GDS17109 | Drive Shaft | | 25 | 24 | 51 | 84.5 | 908 | |
| | 2009.06-2014.07 | 5MT | F | L | Hatchback FWD 199 A2.000 | | GCI17011 | Inner Joint | | 24 | 23 | 29.7 | 86.5 | 93 | |
| | 2009.06-2014.07 | AT/MT | F | L/R | Hatchback FWD 199 A2.000 | Manufacturer:GKN | GCO17053 | Outer Joint | | 25 | 23 | 51 | 84.5 | 60 | M |
| | 2009.06-2014.07 | MT | F | R | Hatchback FWD 199 A2.000 | | GCI17012 | Inner Joint | | 24 | 23 | 29.7 | 379 | 100.5 | |
| 1.3 (62 kw) | 2010.04- | 5MT | F | L | Hatchback FWD 223 A9.000;199 B4.000 | | GDS82635 | Drive Shaft | | 25 | 24 | 51.1 | 84.5 | 626 | |
| | 2010.04- | 5MT | F | R | Hatchback FWD 223 A9.000;199 B4.000 | | GDS17109 | Drive Shaft | | 25 | 24 | 51 | 84.5 | 908 | |
| | 2010.04- | 5MT | F | L/R | Hatchback FWD 223 A9.000;199 B4.000 | | GCO17063 | Outer Joint | | 25 | 25 | 51.1 | 84.5 | 61 | M |
| | 2010.04- | 5MT | F | L | Hatchback FWD 223 A9.000;199 B4.000 | | GCI81925 | Inner Joint | | 24 | 24 | 29.8 | 86.5 | 87 | |
| | 2010.04- | MT | F | L | Hatchback FWD 223 A9.000;199 B4.000 | | GDS17182 | Drive Shaft | | 25 | 24 | 51 | 84.5 | 624 | |
| | 2010.04- | MT | F | R | Hatchback FWD 223 A9.000;199 B4.000 | | GCI17012 | Inner Joint | | 24 | 23 | 29.7 | 379 | 100.5 | |
| 1.3 (66 kw) | 2005.10-2010.12 | 5MT | F | L | Hatchback FWD 199 A3.000 | | GDS17148 | Drive Shaft | | 25 | 24 | 51.1 | 84.5 | 614 | |
| | 2005.10-2010.12 | 5MT | F | R | Hatchback FWD 199 A3.000 | | GDS17144 | Drive Shaft | | 25 | 24 | 51.1 | 84.5 | 908 | |
| | 2005.10-2010.12 | 5MT | F | L/R | Hatchback FWD 199 A3.000 | | GCO17028 | Outer Joint | | 25 | 24 | 51 | 84.5 | 62 | M |
| | 2005.10-2010.12 | 5MT | F | L | Hatchback FWD 199 A3.000 | | GCI99008 | Inner Joint | | 24 | 24 | 29.7 | 86.5 | 93 | |
| | 2005.10-2010.12 | 5MT | F | R | Hatchback FWD 199 A3.000 | | GCI17015 | Inner Joint | | 24 | 24 | 29.7 | 379 | 100.5 | |
| | 2005.10-2010.12 | 6MT | F | L | Hatchback FWD 199 A3.000 | | GDS17172 | Drive Shaft | | 25 | 34 | 51 | 84.5 | 486 | |
| | 2005.10-2010.12 | 6MT | F | R | Hatchback FWD 199 A3.000 | | GDS17146 | Drive Shaft | | 25 | 34 | 51 | 84.5 | 522 | |
| | 2005.10-2010.12 | 6MT | F | L/R | Hatchback FWD 199 A3.000 | | GCO17053 | Outer Joint | | 25 | 23 | 51 | 84.5 | 60 | M |
| | 2005.10-2010.12 | 6MT | F | L | Hatchback FWD 199 A3.000 | | GCI44014 | Inner Joint | | 25 | 23 | 34.9 | 57.5 | 102 | |
| | 2005.10-2010.12 | 6MT | F | R | Hatchback FWD 199 A3.000 | | GCI17056 | Inner Joint | | 25 | 23 | 34.9 | 400 | 97 | |
| 1.4 (55 kw) | 2005.10-2007.07 | 5MT | F | R | Hatchback FWD 199 A7.000 | | GDS17111 | Drive Shaft | | 22 | 22 | 51.2 | 79.5 | 887 | |
| | 2005.10-2007.07 | MT | F | L | Hatchback FWD 199 A7.000 | | GCO99325 | Outer Joint | | 22 | 27 | 51 | 79.5 | 54 | O |
| | 2005.10-2007.07 | MT | F | L/R | Hatchback FWD 199 A7.000 | Date from:2006.01 | GCO17014 | Outer Joint | | 22 | 21 | 51 | 79.5 | 54 | M |
| | 2005.10-2007.07 | | F | L | Hatchback FWD 199 A7.000 | | GDS17222 | Drive Shaft | | 22 | 22 | 51 | 79.5 | 646 | |
| | 2005.10-2007.07 | | F | L/R | Hatchback FWD 199 A7.000 | | GCO17052 | Outer Joint | | 22 | 21 | 51.2 | 79.5 | 54 | M |
| | 2005.10-2007.07 | | F | L | Hatchback FWD 199 A7.000 | | GCI17004 | Inner Joint | | 22 | 21 | 36 | 61 | 93.5 | |
| 1.4 (57 kw) | 2005.06-2015.12 | 5MT | F | L | Hatchback FWD 350 A1.000 | | GDS17222 | Drive Shaft | | 22 | 22 | 51 | 79.5 | 646 | |
| | 2005.06-2015.12 | 5MT | F | R | Hatchback FWD 350 A1.000 | | GDS17111 | Drive Shaft | | 22 | 22 | 51.2 | 79.5 | 887 | |
| | 2005.06-2015.12 | 5MT | F | L/R | Hatchback FWD 350 A1.000 | | GCO17014 | Outer Joint | | 22 | 21 | 51 | 79.5 | 54 | M |
| | 2005.06-2015.12 | 5MT | F | L/R | Hatchback FWD 350 A1.000 | | GCO17052 | Outer Joint | | 22 | 21 | 51.2 | 79.5 | 54 | M |
| | 2005.06-2015.12 | 5MT | F | L | Hatchback FWD 350 A1.000 | | GCI17004 | Inner Joint | | 22 | 21 | 36 | 61 | 93.5 | |
| | 2008.07- | 5MT | F | L | Hatchback FWD 350 A1.000 | | GDS17222 | Drive Shaft | | 22 | 22 | 51 | 79.5 | 646 | |
| | 2008.07- | 5MT | F | R | Hatchback FWD 350 A1.000 | | GDS17111 | Drive Shaft | | 22 | 22 | 51.2 | 79.5 | 887 | |
| | 2008.07- | 5MT | F | L/R | Hatchback FWD 350 A1.000 | | GCO17014 | Outer Joint | | 22 | 21 | 51 | 79.5 | 54 | M |
| | 2008.07- | 5MT | F | L/R | Hatchback FWD 350 A1.000 | | GCO17052 | Outer Joint | | 22 | 21 | 51.2 | 79.5 | 54 | M |
| | 2008.07- | 5MT | F | L | Hatchback FWD 350 A1.000 | | GCI17004 | Inner Joint | | 22 | 21 | 36 | 61 | 93.5 | |
| | 2008.12- | SAT/5MT | F | L | Hatchback FWD 350 A1.000 | | GDS17222 | Drive Shaft | | 22 | 22 | 51 | 79.5 | 646 | |
| | 2008.12- | SAT/5MT | F | R | Hatchback FWD 350 A1.000 | | GDS17111 | Drive Shaft | | 22 | 22 | 51.2 | 79.5 | 887 | |
| | 2008.12- | SAT/5MT | F | L/R | Hatchback FWD 350 A1.000 | Date to:2011.12 | GCO17014 | Outer Joint | | 22 | 21 | 51 | 79.5 | 54 | M |
| | 2008.12- | SAT/5MT | F | L/R | Hatchback FWD 350 A1.000 | | GCO17052 | Outer Joint | | 22 | 21 | 51.2 | 79.5 | 54 | M |
| | 2008.12- | SAT/5MT | F | L | Hatchback FWD 350 A1.000 | | GCI17004 | Inner Joint | | 22 | 21 | 36 | 61 | 93.5 | |
| 1.4 (70 kw) | 2005.10-2011.08 | 5MT | F | L | Hatchback FWD 199 A6.000 | | GDS17222 | Drive Shaft | | 22 | 22 | 51 | 79.5 | 646 | |
| | 2005.10-2011.08 | 5MT | F | R | Hatchback FWD 199 A6.000 | | GDS17111 | Drive Shaft | | 22 | 22 | 51.2 | 79.5 | 887 | |
| | 2005.10-2011.08 | 5MT | F | L/R | Hatchback FWD 199 A6.000 | | GCO17014 | Outer Joint | | 22 | 21 | 51 | 79.5 | 54 | M |
| | 2005.10-2011.08 | 5MT | F | L/R | Hatchback FWD 199 A6.000 | | GCO17052 | Outer Joint | | 22 | 21 | 51.2 | 79.5 | 54 | M |
| | 2005.10-2011.08 | 5MT | F | L | Hatchback FWD 199 A6.000 | | GCI17004 | Inner Joint | | 22 | 21 | 36 | 61 | 93.5 | |
| 1.4 (88 kw) | 2007.09- | 5MT | F | L | Hatchback FWD 198 A4.000 | | GDS17148 | Drive Shaft | | 25 | 24 | 51.1 | 84.5 | 614 | |
| | 2007.09- | 5MT | F | R | Hatchback FWD 198 A4.000 | | GDS82634 | Drive Shaft | | 25 | 24 | 51.1 | 84.5 | 919 | |
| | 2007.09- | 5MT | F | L/R | Hatchback FWD 198 A4.000 | | GCO17063 | Outer Joint | | 25 | 25 | 51.1 | 84.5 | 61 | M |
| | 2007.09- | 5MT | F | L | Hatchback FWD 198 A4.000 | | GCI17025 | Inner Joint | | 24 | 24 | 29.7 | 86.5 | 93 | |

| | YEAR | TRANSM. | F/R | L/R | BODY STYLE & DRIVE TYPE & ENGINE | REMARKS | G-AP Ref. | PRODUCT | ABS | Technical Specifications A | B | C | H | L | P |
|---|---|---|---|---|---|---|---|---|---|---|---|---|---|---|---|
| **FIAT** | | | | | | | | | | | | | | | |
| **Grande Punto** | | | | | | | | | | | | | | | |
| 1.4 (88 kw) | 2007.09- | 5MT | F | R | Hatchback FWD 198 A4.000 | | GCI17057 | Inner Joint | | 24 | 24 | 29.75 | 388 | 96.5 | |
| 1.6 (88 kw) | 2008.07- | 6MT | F | R | Hatchback FWD 955 A3.000 | | GDS17143 | Drive Shaft | | 25 | 25 | 51.1 | 84.5 | 953 | |
| | 2008.07- | MT | F | L | Hatchback FWD 955 A3.000 | | GCI17085 | Inner Joint | | 25 | 33 | 34.9 | 57.5 | 97.5 | |
| | 2008.07- | MT | F | R | Hatchback FWD 955 A3.000 | | GCI17072 | Inner Joint | | 25 | 33 | 34.9 | 431.5 | 93 | |
| | 2008.07- | | F | L | Hatchback FWD 955 A3.000 | | GDS17142 | Drive Shaft | | 25 | 25 | 51.1 | 84.5 | 588 | |
| | 2008.07- | | F | L/R | Hatchback FWD 955 A3.000 | | GCO17065 | Outer Joint | | 25 | 33 | 51.1 | 84.5 | 61 | I |
| 1.9 (85 kw) | 2006.06-2009.12 | 6MT | F | R | Hatchback FWD 939 A7.000 | | GDS17143 | Drive Shaft | | 25 | 25 | 51.1 | 84.5 | 953 | |
| | 2006.06-2009.12 | MT | F | L | Hatchback FWD 939 A7.000 | | GCI17085 | Inner Joint | | 25 | 33 | 34.9 | 57.5 | 97.5 | |
| | 2006.06-2009.12 | MT | F | R | Hatchback FWD 939 A7.000 | | GCI17072 | Inner Joint | | 25 | 33 | 34.9 | 431.5 | 93 | |
| | 2006.06-2009.12 | | F | L | Hatchback FWD 939 A7.000 | | GDS17142 | Drive Shaft | | 25 | 25 | 51.1 | 84.5 | 588 | |
| | 2006.06-2009.12 | | F | L/R | Hatchback FWD 939 A7.000 | | GCO17065 | Outer Joint | | 25 | 33 | 51.1 | 84.5 | 61 | I |
| 1.9 (88 kw) | 2005.10- | 6MT | F | R | Hatchback FWD 939 A1.000 | | GDS17143 | Drive Shaft | | 25 | 25 | 51.1 | 84.5 | 953 | |
| | 2005.10- | MT | F | L | Hatchback FWD 939 A1.000 | | GCI17085 | Inner Joint | | 25 | 33 | 34.9 | 57.5 | 97.5 | |
| | 2005.10- | MT | F | R | Hatchback FWD 939 A1.000 | | GCI17072 | Inner Joint | | 25 | 33 | 34.9 | 431.5 | 93 | |
| | 2005.10- | | F | L | Hatchback FWD 939 A1.000 | | GDS17142 | Drive Shaft | | 25 | 25 | 51.1 | 84.5 | 588 | |
| | 2005.10- | | F | L/R | Hatchback FWD 939 A1.000 | | GCO17065 | Outer Joint | | 25 | 33 | 51.1 | 84.5 | 61 | I |
| 1.9 (96 kw) | 2005.10- | MT | F | L | Hatchback FWD 199 A5.000 | | GDS17142 | Drive Shaft | | 25 | 25 | 51.1 | 84.5 | 588 | |
| | 2005.10- | MT | F | R | Hatchback FWD 199 A5.000 | | GDS17143 | Drive Shaft | | 25 | 25 | 51.1 | 84.5 | 953 | |
| | 2005.10- | MT | F | L/R | Hatchback FWD 199 A5.000 | | GCO17065 | Outer Joint | | 25 | 33 | 51.1 | 84.5 | 61 | I |
| | 2005.10- | MT | F | L | Hatchback FWD 199 A5.000 | | GCI17085 | Inner Joint | | 25 | 33 | 34.9 | 57.5 | 97.5 | |
| | 2005.10- | MT | F | R | Hatchback FWD 199 A5.000 | | GCI17072 | Inner Joint | | 25 | 33 | 34.9 | 431.5 | 93 | |
| **Grande Punto Van** | | | | | | | | | | | | | | | |
| 1.3 (55 kw) | 2006.02-2013.06 | 5MT | F | L | Hatchback Van FWD 199 A2.000 | | GDS17082 | Drive Shaft | | 25 | 34 | 51 | 84.5 | 514 | |
| | 2006.02-2013.06 | 5MT | F | L | Hatchback Van FWD 199 A2.000 | | GDS17182 | Drive Shaft | | 25 | 24 | 51 | 84.5 | 624 | |
| | 2006.02-2013.06 | 5MT | F | R | Hatchback Van FWD 199 A2.000 | | GDS17066 | Drive Shaft | | 25 | 34 | 51 | 84.5 | 497 | |
| | 2006.02-2013.06 | 5MT | F | R | Hatchback Van FWD 199 A2.000 | | GDS17109 | Drive Shaft | | 25 | 24 | 51 | 84.5 | 908 | |
| | 2006.02-2013.06 | 5MT | F | L/R | Hatchback Van FWD 199 A2.000 | | GCO17053 | Outer Joint | | 25 | 23 | 51 | 84.5 | 60 | M |
| | 2006.02-2013.06 | 5MT | F | L | Hatchback Van FWD 199 A2.000 | | GCI17011 | Inner Joint | | 24 | 23 | 29.7 | 86.5 | 93 | |
| | 2006.02-2013.06 | 5MT | F | L | Hatchback Van FWD 199 A2.000 | | GCI99008 | Inner Joint | | 24 | 24 | 29.7 | 86.5 | 93 | |
| | 2006.02-2013.06 | 5MT | F | R | Hatchback Van FWD 199 A2.000 | | GCI17012 | Inner Joint | | 24 | 23 | 29.7 | 379 | 100.5 | |
| | 2006.02-2013.06 | | F | L | Hatchback Van FWD 199 A2.000 | | GDS17060 | Drive Shaft | | 25 | 24 | 51 | 84.5 | 608 | |
| 1.3 (66 kw) | 2006.02-2010.08 | 5MT | F | R | Hatchback Van FWD 199 A3.000 | | GDS17144 | Drive Shaft | | 25 | 24 | 51.1 | 84.5 | 908 | |
| | 2006.02-2010.08 | 5MT | F | L/R | Hatchback Van FWD 199 A3.000 | | GCO17028 | Outer Joint | | 25 | 24 | 51 | 84.5 | 62 | M |
| | 2006.02-2010.08 | 5MT | F | L | Hatchback Van FWD 199 A3.000 | | GCI99008 | Inner Joint | | 24 | 24 | 29.7 | 86.5 | 93 | |
| | 2006.02-2010.08 | 5MT | F | R | Hatchback Van FWD 199 A3.000 | | GCI17015 | Inner Joint | | 24 | 24 | 29.7 | 379 | 100.5 | |
| | 2006.02-2010.08 | 6MT | F | L | Hatchback Van FWD 199 A3.000 | Trans. side with housing | GDS17070 | Drive Shaft | | 25 | 25 | 51 | 84.5 | 576 | |
| | 2006.02-2010.08 | 6MT | F | L | Hatchback Van FWD 199 A3.000 | Trans. side without housing | GDS17172 | Drive Shaft | | 25 | 34 | 51 | 84.5 | 486 | |
| | 2006.02-2010.08 | 6MT | F | R | Hatchback Van FWD 199 A3.000 | | GDS17146 | Drive Shaft | | 25 | 34 | 51 | 84.5 | 522 | |
| | 2006.02-2010.08 | 6MT | F | L/R | Hatchback Van FWD 199 A3.000 | | GCO17053 | Outer Joint | | 25 | 23 | 51 | 84.5 | 60 | M |
| | 2006.02-2010.08 | 6MT | F | L | Hatchback Van FWD 199 A3.000 | | GCI44014 | Inner Joint | | 25 | 23 | 34.9 | 57.5 | 102 | |
| | 2006.02-2010.08 | 6MT | F | R | Hatchback Van FWD 199 A3.000 | | GCI17056 | Inner Joint | | 25 | 23 | 34.9 | 400 | 97 | |
| 1.4 (57 kw) | 2006.02-2013.06 | 5MT | F | R | Hatchback Van FWD 350 A1.000 | | GDS17111 | Drive Shaft | | 22 | 22 | 51.2 | 79.5 | 887 | |
| | 2006.02-2013.06 | | F | L | Hatchback Van FWD 350 A1.000 | | GDS17222 | Drive Shaft | | 22 | 22 | 51 | 79.5 | 646 | |
| | 2006.02-2013.06 | | F | L/R | Hatchback Van FWD 350 A1.000 | | GCO17014 | Outer Joint | | 22 | 21 | 51 | 79.5 | 54 | M |
| | 2006.02-2013.06 | | F | L/R | Hatchback Van FWD 350 A1.000 | | GCO17052 | Outer Joint | | 22 | 21 | 51.2 | 79.5 | 54 | M |
| | 2009.03-2012.12 | 5MT | F | R | Hatchback Van FWD 350 A1.000 | | GDS17111 | Drive Shaft | | 22 | 22 | 51.2 | 79.5 | 887 | |
| | 2009.03-2012.12 | | F | L | Hatchback Van FWD 350 A1.000 | | GDS17222 | Drive Shaft | | 22 | 22 | 51 | 79.5 | 646 | |
| | 2009.03-2012.12 | | F | L/R | Hatchback Van FWD 350 A1.000 | | GCO17014 | Outer Joint | | 22 | 21 | 51 | 79.5 | 54 | M |
| | 2009.03-2012.12 | | F | L/R | Hatchback Van FWD 350 A1.000 | | GCO17052 | Outer Joint | | 22 | 21 | 51.2 | 79.5 | 54 | M |
| **Idea** | | | | | | | | | | | | | | | |
| 1.2 (59 kw) | 2004.01- | 5MT | F | L | MPV FWD 188 A5.000 | | GDS17230 | Drive Shaft | | 22 | 22 | 51 | 79.5 | 636 | |
| | 2004.01- | 5MT | F | R | MPV FWD 188 A5.000 | | GDS17227 | Drive Shaft | | 22 | 22 | 51 | 79.5 | 863 | |
| | 2004.01- | 5MT | F | L | MPV FWD 188 A5.000 | | GCO17014 | Outer Joint | | 22 | 21 | 51 | 79.5 | 54 | M |
| | 2004.01- | 5MT | F | R | MPV FWD 188 A5.000 | | GCO44081 | Outer Joint | | 22 | 21 | 51 | 79.5 | 54 | M |
| | 2004.01- | 5MT | F | L/R | MPV FWD 188 A5.000 | | GCI17027 | Inner Joint | | 22 | 22 | 36 | 61.5 | 93.5 | |
| | 2004.01- | MT | F | R | MPV FWD 188 A5.000 | | GCI17004 | Inner Joint | | 22 | 21 | 36 | 61 | 93.5 | |
| | 2004.01- | | F | L/R | MPV FWD 188 A5.000 | | GCO17052 | Outer Joint | | 22 | 21 | 51.2 | 79.5 | 54 | M |
| | 2004.01- | | F | | MPV FWD 188 A5.000 | | GCO17034 | Outer Joint | | 22 | 21 | 51 | 79.5 | 54 | M |
| 1.3 (51 kw) | 2004.01- | 5AT/5MT | F | L | MPV FWD 188 A9.000 | TJ | GCI17011 | Inner Joint | | 24 | 23 | 29.7 | 86.5 | 93 | |
| | 2004.01- | 5MT | F | L | MPV FWD 188 A9.000 | Date from:2005.10 | GDS17147 | Drive Shaft | | 25 | 34 | 51 | 84.5 | 480 | |
| | 2004.01- | 5MT | F | R | MPV FWD 188 A9.000 | Date from:2005.10;Trans. side without housing | GDS17066 | Drive Shaft | | 25 | 34 | 51 | 84.5 | 497 | |
| | 2004.01- | 5MT | F | R | MPV FWD 188 A9.000 | Date from:2005.10;Trans. side with housing | GDS17109 | Drive Shaft | | 25 | 24 | 51 | 84.5 | 908 | |
| | 2004.01- | 5MT | F | L/R | MPV FWD 188 A9.000 | Date to:2005.09 | GCO17027 | Outer Joint | | 25 | 23 | 51 | 84.5 | 60 | M |
| | 2004.01- | 5MT | F | L/R | MPV FWD 188 A9.000 | Date from:2005.10 | GCO17053 | Outer Joint | | 25 | 23 | 51 | 84.5 | 60 | M |
| | 2004.01- | 5MT | F | L/R | MPV FWD 188 A9.000 | VL | GCI82011 | Inner Joint | | | 25 | | | 32 | |

| | YEAR | TRANSM. | F/R | L/R | BODY STYLE & DRIVE TYPE & ENGINE | REMARKS | G-AP Ref. | PRODUCT | ABS | Technical Specifications A | B | C | H | L | P |
|---|---|---|---|---|---|---|---|---|---|---|---|---|---|---|---|
| **FIAT** | | | | | | | | | | | | | | | |
| **Idea** | | | | | | | | | | | | | | | |
| 1.3 (51 kw) | 2004.10-2011.12 | 5MT | F | L/R | Box Body/MPV FWD 188 A9.000 | Date from:2005.10,Manufacturer:GKN | GCO17053 | Outer Joint | | 25 | 23 | 51 | 84.5 | 60 | M |
| | 2004.10-2011.12 | 5MT | F | L | Box Body/MPV FWD 188 A9.000 | TJ | GCI17011 | Inner Joint | | 24 | 23 | 29.7 | 86.5 | 93 | |
| | 2004.10-2011.12 | 5MT | F | L/R | Box Body/MPV FWD 188 A9.000 | VL | GCI82005 | Inner Joint | | | 25 | | | 32 | |
| | 2004.10-2011.12 | 5MT | F | L/R | Box Body/MPV FWD 188 A9.000 | VL | GCI82011 | Inner Joint | | | 25 | | | 32 | |
| | 2004.10-2011.12 | 7AT | F | R | Box Body/MPV FWD 188 A9.000 | | GDS17066 | Drive Shaft | | 25 | 34 | 51 | 84.5 | 497 | |
| | 2004.10-2011.12 | 7AT | F | R | Box Body/MPV FWD 188 A9.000 | | GDS17109 | Drive Shaft | | 25 | 24 | 51 | 84.5 | 908 | |
| | 2004.10-2011.12 | 7AT | F | R | Box Body/MPV FWD 188 A9.000 | | GCI17012 | Inner Joint | | 24 | 23 | 29.7 | 379 | 100.5 | |
| 1.3 (66 kw) | 2005.04-2010.12 | 5MT | F | L | Box Body/MPV FWD 199 A3.000 | Trans. side without housing | GDS17054 | Drive Shaft | | 25 | 35 | 51 | 84.5 | 472 | |
| | 2005.04-2010.12 | 5MT | F | L | Box Body/MPV FWD 199 A3.000 | Trans. side with housing | GDS17062 | Drive Shaft | | 25 | 24 | 51 | 84.5 | 582 | |
| | 2005.04-2010.12 | 5MT | F | R | Box Body/MPV FWD 199 A3.000 | | GDS17144 | Drive Shaft | | 25 | 24 | 51.1 | 84.5 | 908 | |
| | 2005.04-2010.12 | 5MT | F | L/R | Box Body/MPV FWD 199 A3.000 | | GCO17028 | Outer Joint | | 25 | 24 | 51 | 84.5 | 62 | M |
| | 2005.04-2010.12 | 5MT | F | L | Box Body/MPV FWD 199 A3.000 | | GCI99008 | Inner Joint | | 24 | 24 | 29.7 | 86.5 | 93 | |
| | 2005.04-2010.12 | 5MT | F | R | Box Body/MPV FWD 199 A3.000 | | GCI17015 | Inner Joint | | 24 | 24 | 29.7 | 379 | 100.5 | |
| | 2005.10- | 5MT | F | R | MPV FWD 199 A3.000 | | GDS17144 | Drive Shaft | | 25 | 24 | 51.1 | 84.5 | 908 | |
| | 2005.10- | 5MT | F | R | MPV FWD 199 A3.000 | | GCI17015 | Inner Joint | | 24 | 24 | 29.7 | 379 | 100.5 | |
| | 2005.10- | 5MT/SAT | F | L | MPV FWD 199 A3.000 | | GDS17062 | Drive Shaft | | 25 | 24 | 51 | 84.5 | 582 | |
| | 2005.10- | 5MT/SAT | F | L | MPV FWD 199 A3.000 | | GCI99008 | Inner Joint | | 24 | 24 | 29.7 | 86.5 | 93 | |
| | 2005.10- | SAT/5MT | F | L | MPV FWD 199 A3.000 | | GDS17054 | Drive Shaft | | 25 | 35 | 51 | 84.5 | 472 | |
| | 2005.10- | SAT/5MT | F | L | MPV FWD 199 A3.000 | | GCO17028 | Outer Joint | | 25 | 24 | 51 | 84.5 | 62 | M |
| 1.3 (70 kw) | 2008.05-2012.12 | 5AT/5MT | F | L | MPV FWD 199 B1.000 | | GDS17054 | Drive Shaft | | 25 | 35 | 51 | 84.5 | 472 | |
| | 2008.05-2012.12 | 5AT/5MT | F | L | MPV FWD 199 B1.000 | | GDS17062 | Drive Shaft | | 25 | 24 | 51 | 84.5 | 582 | |
| | 2008.05-2012.12 | 5AT/5MT | F | L | MPV FWD 199 B1.000 | | GCI99008 | Inner Joint | | 24 | 24 | 29.7 | 86.5 | 93 | |
| | 2008.05-2012.12 | 5AT/5MT | F | R | MPV FWD 199 B1.000 | | GCI17015 | Inner Joint | | 24 | 24 | 29.7 | 379 | 100.5 | |
| | 2008.05-2012.12 | 5MT | F | R | MPV FWD 199 B1.000 | | GDS17144 | Drive Shaft | | 25 | 24 | 51.1 | 84.5 | 908 | |
| | 2008.05-2012.12 | SAT/5MT | F | L/R | MPV FWD 199 B1.000 | | GCO17028 | Outer Joint | | 25 | 24 | 51 | 84.5 | 62 | M |
| 1.4 (57 kw) | 2005.10- | SAT/5MT | F | L | MPV FWD 350 A1.000 | | GDS17230 | Drive Shaft | | 22 | 22 | 51 | 79.5 | 636 | |
| | 2005.10- | SAT/5MT | F | R | MPV FWD 350 A1.000 | | GDS17227 | Drive Shaft | | 22 | 22 | 51 | 79.5 | 863 | |
| | 2005.10- | SAT/5MT | F | L | MPV FWD 350 A1.000 | | GCO17014 | Outer Joint | | 22 | 21 | 51 | 79.5 | 54 | M |
| | 2005.10- | SAT/5MT | F | R | MPV FWD 350 A1.000 | | GCO44081 | Outer Joint | | 22 | 21 | 51 | 79.5 | 54 | M |
| | 2005.10- | SAT/5MT | F | L/R | MPV FWD 350 A1.000 | | GCI17004 | Inner Joint | | 22 | 21 | 36 | 61 | 93.5 | |
| | 2005.10- | | F | L/R | MPV FWD 350 A1.000 | | GCO17052 | Outer Joint | | 22 | 21 | 51.2 | 79.5 | 54 | M |
| | 2009.03- | SAT/5MT | F | L | MPV FWD 350 A1.000 | | GDS17230 | Drive Shaft | | 22 | 22 | 51 | 79.5 | 636 | |
| | 2009.03- | SAT/5MT | F | R | MPV FWD 350 A1.000 | | GDS17227 | Drive Shaft | | 22 | 22 | 51 | 79.5 | 863 | |
| | 2009.03- | SAT/5MT | F | L | MPV FWD 350 A1.000 | | GCO17014 | Outer Joint | | 22 | 21 | 51 | 79.5 | 54 | M |
| | 2009.03- | SAT/5MT | F | R | MPV FWD 350 A1.000 | | GCO44081 | Outer Joint | | 22 | 21 | 51 | 79.5 | 54 | M |
| | 2009.03- | SAT/5MT | F | L/R | MPV FWD 350 A1.000 | | GCI17004 | Inner Joint | | 22 | 21 | 36 | 61 | 93.5 | |
| | 2009.03- | | F | L/R | MPV FWD 350 A1.000 | | GCO17052 | Outer Joint | | 22 | 21 | 51.2 | 79.5 | 54 | M |
| 1.4 (66 kw) | 2003.12- | SAT/5MT | F | L | MPV FWD 192 B2.000 | | GDS17230 | Drive Shaft | | 22 | 22 | 51 | 79.5 | 636 | |
| | 2003.12- | SAT/5MT | F | R | MPV FWD 192 B2.000 | | GDS17227 | Drive Shaft | | 22 | 22 | 51 | 79.5 | 863 | |
| | 2003.12- | SAT/5MT | F | L | MPV FWD 192 B2.000 | | GCO17014 | Outer Joint | | 22 | 21 | 51 | 79.5 | 54 | M |
| | 2003.12- | SAT/5MT | F | R | MPV FWD 192 B2.000 | | GCO44081 | Outer Joint | | 22 | 21 | 51 | 79.5 | 54 | M |
| | 2003.12- | SAT/5MT | F | L/R | MPV FWD 192 B2.000 | | GCI17004 | Inner Joint | | 22 | 21 | 36 | 61 | 93.5 | |
| | 2003.12- | | F | L/R | MPV FWD 192 B2.000 | | GCO17052 | Outer Joint | | 22 | 21 | 51.2 | 79.5 | 54 | M |
| 1.4 (70 kw) | 2004.01- | 5MT/6MT | F | L/R | MPV FWD 843 A1.000 | | GCI17027 | Inner Joint | | 22 | 22 | 36 | 61.5 | 93.5 | |
| | 2004.01- | MT | F | L/R | MPV FWD 843 A1.000 | | GCO17014 | Outer Joint | | 22 | 21 | 51 | 79.5 | 54 | M |
| | 2004.01- | MT | F | R | MPV FWD 843 A1.000 | | GCI17004 | Inner Joint | | 22 | 21 | 36 | 61 | 93.5 | |
| | 2004.01- | SAT/5MT/6MT | F | L | MPV FWD 843 A1.000 | | GDS17230 | Drive Shaft | | 22 | 22 | 51 | 79.5 | 636 | |
| | 2004.01- | SAT/5MT/6MT | F | R | MPV FWD 843 A1.000 | | GDS17227 | Drive Shaft | | 22 | 22 | 51 | 79.5 | 863 | |
| | 2004.01- | SAT/5MT/6MT | F | R | MPV FWD 843 A1.000 | | GCO44081 | Outer Joint | | 22 | 21 | 51 | 79.5 | 54 | M |
| | 2004.01- | | F | L/R | MPV FWD 843 A1.000 | | GCO17052 | Outer Joint | | 22 | 21 | 51.2 | 79.5 | 54 | M |
| | 2004.01- | | F | | MPV FWD 843 A1.000 | | GCO17034 | Outer Joint | | 22 | 21 | 51 | 79.5 | 54 | M |
| | 2004.10-2012.12 | 5AT/5MT | F | L | Box Body/MPV FWD 843 A1.000 | | GDS17230 | Drive Shaft | | 22 | 22 | 51 | 79.5 | 636 | |
| | 2004.10-2012.12 | 5AT/5MT | F | R | Box Body/MPV FWD 843 A1.000 | | GDS17227 | Drive Shaft | | 22 | 22 | 51 | 79.5 | 863 | |
| | 2004.10-2012.12 | 5AT/5MT | F | L/R | Box Body/MPV FWD 843 A1.000 | | GCI17027 | Inner Joint | | 22 | 22 | 36 | 61.5 | 93.5 | |
| 1.6 (88 kw) | 2008.05- | 5MT | F | L | MPV FWD 350 A2.000 | | GCI17005 | Inner Joint | | 25 | 26 | 32 | 91 | 95 | |
| | 2008.05- | 5MT | F | R | MPV FWD 350 A2.000 | | GCI17006 | Inner Joint | | 25 | 26 | 29.8 | 377 | 108 | |
| | 2008.05- | MT | F | L/R | MPV FWD 350 A2.000 | | GCO82025 | Outer Joint | | 25 | 26 | 51 | 84.5 | 64.5 | M |
| 1.9 (74 kw) | 2004.01- | MT | F | L/R | MPV FWD 188 B2.000 | Date to:2010.12 | GCO17028 | Outer Joint | | 25 | 24 | 51 | 84.5 | 62 | M |
| **Linea** | | | | | | | | | | | | | | | |
| 1.3 (63 kw) | 2006.10- | 5MT | F | L | Saloon FWD 199 A3.000 | | GDS17064 | Drive Shaft | | 25 | 39 | 51.1 | 84.5 | 471 | |
| | 2006.10- | 5MT | F | R | Saloon FWD 199 A3.000 | | GDS17057 | Drive Shaft | | 25 | 24 | 51.1 | 84.5 | 949 | |
| | 2006.10- | 5MT | F | L/R | Saloon FWD 199 A3.000 | | GCO17063 | Outer Joint | | 25 | 25 | 51.1 | 84.5 | 61 | M |
| | 2006.10- | 5MT | F | R | Saloon FWD 199 A3.000 | | GCI17026 | Inner Joint | | 24 | 24 | 29.7 | 379 | 100.5 | |
| 1.3 (66 kw) | 2007.06- | 5MT | F | L/R | Saloon FWD 199 A3.000 | | GCO17063 | Outer Joint | | 25 | 25 | 51.1 | 84.5 | 61 | M |
| | 2007.06- | 5MT | F | L | Saloon FWD 199 A3.000 | | GCI17025 | Inner Joint | | 24 | 24 | 29.7 | 86.5 | 93 | |

| | YEAR | TRANSM. | F/R | L/R | BODY STYLE & DRIVE TYPE & ENGINE | REMARKS | G-AP Ref. | PRODUCT | ABS | Technical Specifications A | B | C | H | L | P |
|---|---|---|---|---|---|---|---|---|---|---|---|---|---|---|---|
| **FIAT** | | | | | | | | | | | | | | | |
| **Linea** | | | | | | | | | | | | | | | |
| 1.3 (66 kw) | 2007.06- | 5MT | F | R | Saloon FWD 199 A3.000 | | GCI17026 | Inner Joint | | 24 | 24 | 29.7 | 379 | 100.5 | |
| | 2007.06- | AT/Semi-AT | F | L/R | Saloon FWD 199 A3.000 | | GCO17028 | Outer Joint | | 25 | 24 | 51 | 84.5 | 62 | M |
| | 2007.06- | MT | F | L | Saloon FWD 199 A3.000 | | GDS17064 | Drive Shaft | | 25 | 39 | 51.1 | 84.5 | 471 | |
| | 2007.06- | MT | F | R | Saloon FWD 199 A3.000 | | GDS17057 | Drive Shaft | | 25 | 24 | 51.1 | 84.5 | 949 | |
| 1.3 (70 kw) | 2009.09- | 5MT | F | L | Saloon FWD 199 A3.000;199 B1.000 | | GDS17064 | Drive Shaft | | 25 | 39 | 51.1 | 84.5 | 471 | |
| | 2009.09- | 5MT | F | R | Saloon FWD 199 A3.000;199 B1.000 | | GDS17057 | Drive Shaft | | 25 | 24 | 51.1 | 84.5 | 949 | |
| | 2009.09- | 5MT | F | L/R | Saloon FWD 199 A3.000;199 B1.000 | | GCO17063 | Outer Joint | | 25 | 25 | 51.1 | 84.5 | 61 | M |
| | 2009.09- | 5MT | F | L | Saloon FWD 199 A3.000;199 B1.000 | | GCI17025 | Inner Joint | | 24 | 24 | 29.7 | 86.5 | 93 | |
| | 2009.09- | 5MT | F | R | Saloon FWD 199 A3.000;199 B1.000 | | GCI17026 | Inner Joint | | 24 | 24 | 29.7 | 379 | 100.5 | |
| 1.4 (57 kw) | 2007.06- | 5MT | F | L | Saloon FWD 350 A1.000 | | GDS17088 | Drive Shaft | | 22 | | 51 | 79 | 552 | |
| | 2007.06- | 5MT | F | R | Saloon FWD 350 A1.000 | | GDS17111 | Drive Shaft | | 22 | 22 | 51.2 | 79.5 | 887 | |
| | 2007.06- | 5MT | F | L/R | Saloon FWD 350 A1.000 | | GCO17070 | Outer Joint | | 22 | 22 | 51 | 79 | 57.5 | M |
| | 2007.06- | 5MT | F | L/R | Saloon FWD 350 A1.000 | | GCI17027 | Inner Joint | | 22 | 22 | 36 | 61.5 | 93.5 | |
| 1.4 (88 kw) | 2007.05- | 5MT | F | L | Saloon FWD 198 A4.000 | | GDS17148 | Drive Shaft | | 25 | 24 | 51.1 | 84.5 | 614 | |
| | 2007.05- | 5MT | F | R | Saloon FWD 198 A4.000 | | GDS82634 | Drive Shaft | | 25 | 24 | 51.1 | 84.5 | 919 | |
| | 2007.05- | 5MT | F | L/R | Saloon FWD 198 A4.000 | | GCO17063 | Outer Joint | | 25 | 25 | 51.1 | 84.5 | 61 | M |
| | 2007.05- | 5MT | F | L | Saloon FWD 198 A4.000 | | GCI17025 | Inner Joint | | 24 | 24 | 29.7 | 86.5 | 93 | |
| | 2007.05- | 5MT | F | R | Saloon FWD 198 A4.000 | | GCI17057 | Inner Joint | | 24 | 24 | 29.75 | 388 | 96.5 | |
| 1.6 (77 kw) | 2009.06- | 6MT | F | L/R | Saloon FWD 198 A3.000 | Exhaust Emis:Euro 4/5 | GCO17063 | Outer Joint | | 25 | 25 | 51.1 | 84.5 | 61 | M |
| | 2009.06- | 6MT | F | L | Saloon FWD 198 A3.000 | Equipment code:PCC544 | GCI17083 | Inner Joint | | 25 | 24 | 34.9 | 57 | 107.5 | |
| | 2009.06- | 6MT | F | R | Saloon FWD 198 A3.000 | Exhaust Emis:Euro 4(D4) | GCI17063 | Inner Joint | | 25 | 24 | 34.9 | 435 | 95 | |
| 1.6 (81 kw) | 2011.10- | 5AT | F | R | Saloon FWD 310 A5.011 | | GCO17028 | Outer Joint | | 25 | 24 | 51 | 84.5 | 62 | M |
| | 2011.10- | 5AT | F | L | Saloon FWD 310 A5.011 | | GCI81925 | Inner Joint | | 24 | 24 | 29.8 | 86.5 | 87 | |
| **Marea** | | | | | | | | | | | | | | | |
| 1.2 (60 kw) | 1998.10-2002.05 | MT | F | L/R | Saloon FWD 182B2000 | | GCO17015 | Outer Joint | | 22 | 22 | 51 | 79.5 | 54 | O |
| 1.4 (59 kw) | 1996.08-1999.02 | AT/MT | F | L/R | Saloon FWD 182A3000 | | GCO17001 | Outer Joint | | 22 | 20 | 46.8 | 75.5 | 52 | O |
| | 1996.08-1999.02 | AT/MT | F | L/R | Saloon FWD 182A3000 | | GCO17039 | Outer Joint | 44T | 22 | 20 | 46.8 | 75.5 | 52 | O |
| | 1996.08-1999.02 | MT | F | L | Saloon FWD 182A3000 | | GDS17010 | Drive Shaft | | 22 | 32 | 46.8 | 75.5 | 569 | |
| | 1996.08-1999.02 | MT | F | R | Saloon FWD 182A3000 | | GDS17011 | Drive Shaft | | 22 | 32 | 46.8 | 75.5 | 928.5 | |
| | 1996.08-1999.02 | | F | L/R | Saloon FWD 182A3000 | VET From:0176273;VET From:0180748;VET From:5054835 | GCO17015 | Outer Joint | | 22 | 22 | 51 | 79.5 | 54 | O |
| 1.6 (68 kw) | 1999.03-2000.08 | | F | L/R | Saloon FWD 185A3000 | | GCO17011 | Outer Joint | | 25 | 22 | 51 | 84.5 | 57 | O |
| 1.6 (72 kw) | 2000.09-2002.08 | | F | L/R | Saloon FWD 182B5098 | | GCO17011 | Outer Joint | | 25 | 22 | 51 | 84.5 | 57 | O |
| 1.6 (75 kw) | 1997.04-1999.02 | 5MT | F | L/R | Saloon FWD 185A3000 | VET no. from:0176273/0180748/5054835 | GCO17011 | Outer Joint | | 25 | 22 | 51 | 84.5 | 57 | O |
| | 1997.04-1999.02 | 5MT | F | L/R | Saloon FWD 185A3000 | VET no. to:0176272/0180747/5054834 | GCO17023 | Outer Joint | | 25 | 22 | 52 | 84 | 57 | O |
| | 1997.04-1999.02 | 5MT | F | L/R | Saloon FWD 185A3000 | VET no. to:0176272/0180747/5054834 | GCO82005 | Outer Joint | 44T | 25 | 22 | 52 | 84 | 57 | O |
| 1.6 (76 kw) | 1996.08-2000.08 | AT/MT | F | L | Saloon FWD 182A4000 | | GCO17015 | Outer Joint | | 22 | 22 | 51 | 79.5 | 54 | O |
| | 1996.08-2000.08 | AT/MT | F | L/R | Saloon FWD 182A4000 | | GCO17023 | Outer Joint | | 25 | 22 | 52 | 84 | 57 | O |
| | 1996.08-2000.08 | AT/MT | F | L/R | Saloon FWD 182A4000 | Date to:2000.08 | GCO82005 | Outer Joint | 44T | 25 | 22 | 52 | 84 | 57 | O |
| | 1996.08-2000.08 | | F | L/R | Saloon FWD 182A4000 | | GCO17011 | Outer Joint | | 25 | 22 | 51 | 84.5 | 57 | O |
| | 1999.03-2002.05 | AT/MT | F | L/R | Saloon FWD 182A4000 | | GCO17011 | Outer Joint | | 25 | 22 | 51 | 84.5 | 57 | O |
| | 1999.03-2002.05 | MT | F | | Saloon FWD 182A4000 | | GCO17015 | Outer Joint | | 22 | 22 | 51 | 79.5 | 54 | O |
| | 2000.09-2002.08 | | F | L/R | Saloon FWD 182B6000 | | GCO17011 | Outer Joint | | 25 | 22 | 51 | 84.5 | 57 | O |
| 1.8 (83 kw) | 1996.08-2000.08 | AT/MT | F | L/R | Saloon FWD 182A2000 | | GCO17042 | Outer Joint | | 25 | 25 | 51 | 85 | 58 | O |
| | 1996.08-2000.08 | AT/MT | F | R | Saloon FWD 182A2000 | | GCI82011 | Inner Joint | | | 25 | | | 32 | |
| | 1996.08-2000.08 | AT/MT | F | L/R | Saloon FWD 182A2000 | | GCI18070 | Inner Joint | | | 25 | | | 32 | |
| | 1996.08-2000.08 | MT | F | L/R | Saloon FWD 182A2000 | | GCO82006 | Outer Joint | 44T | 25 | 25 | 52 | 85 | 58 | O |
| | 1996.08-2000.08 | | F | R | Saloon FWD 182A2000 | VET From:0176273;VET From:0180748;VET From:5054835 | GCI82005 | Inner Joint | | | 25 | | | 32 | |
| 1.9 (55 kw) | 1996.08-2000.08 | MT | F | L/R | Saloon FWD 182A8000 | | GCO17042 | Outer Joint | | 25 | 25 | 51 | 85 | 58 | O |
| | 1996.08-2000.08 | MT | F | L/R | Saloon FWD 182A8000 | | GCO82006 | Outer Joint | 44T | 25 | 25 | 52 | 85 | 58 | O |
| 1.9 (74 kw) | 1996.08-1999.02 | MT | F | L/R | Saloon FWD 182A7000 | | GCO82006 | Outer Joint | 44T | 25 | 25 | 52 | 85 | 58 | O |
| | 1996.08-1999.02 | | F | L/R | Saloon FWD 182A7000 | VET From:0176273;VET From:0180748;VET From:5054835 | GCO17042 | Outer Joint | | 25 | 25 | 51 | 85 | 58 | O |
| 1.9 (77 kw) | 1999.03-2000.08 | MT | F | L/R | Saloon FWD 182B4000 | Date from:1999.03;Date to:2000.08 | GCO17042 | Outer Joint | | 25 | 25 | 51 | 85 | 58 | O |
| 1.9 (81 kw) | 2000.09-2002.08 | MT | F | L/R | Saloon FWD 186A6000 | | GCO17042 | Outer Joint | | 25 | 25 | 51 | 85 | 58 | O |
| | 2000.09-2002.08 | MT | F | R | Saloon FWD 186A6000 | | GCI82005 | Inner Joint | | | 25 | | | 32 | |
| | 2000.09-2002.08 | MT | F | R | Saloon FWD 186A6000 | | GCI82011 | Inner Joint | | | 25 | | | 32 | |
| 2.0 (108 kw) | 1996.10-1999.02 | 5MT | F | L/R | Saloon FWD 182A1000 | | GCI82005 | Inner Joint | | | 25 | | | 32 | |
| | 1996.10-1999.02 | AT/MT | F | L/R | Saloon FWD 182A1000 | | GCO17032 | Outer Joint | 44T | 25 | 25 | 59 | 85 | 58 | O |
| | 1996.10-1999.02 | AT/MT | F | L/R | Saloon FWD 182A1000 | | GCI18070 | Inner Joint | | | 25 | | | 32 | |
| | 1996.10-1999.02 | AT/MT | F | L/R | Saloon FWD 182A1000 | | GCI82011 | Inner Joint | | | 25 | | | 32 | |
| | 1996.10-1999.02 | | F | L/R | Saloon FWD 182A1000 | VET From:0176273;VET From:0180748;VET From:5054835 | GCO17042 | Outer Joint | | 25 | 25 | 51 | 85 | 58 | O |
| | 1996.10-1999.02 | | F | L/R | Saloon FWD 182A1000 | VET From:0176273;VET From:0180748;VET From:5054835 | GCO82017 | Outer Joint | | 25 | 25 | 58.8 | 85 | 58 | O |
| | 1996.10-1999.02 | | F | | Saloon FWD 182A1000 | | GCI82006 | Inner Joint | | | 25 | | | 32 | |
| 2.0 (110 kw) | 2000.09-2006.06 | MT | F | L/R | Saloon FWD 185A8000 | | GCI82005 | Inner Joint | | | 25 | | | 32 | |
| | 2000.09-2006.06 | MT | F | L/R | Saloon FWD 185A8000 | | GCI82011 | Inner Joint | | | 25 | | | 32 | |
| | 2000.09-2006.06 | | F | L/R | Saloon FWD 185A8000 | VET From:0176273;VET From:0180748;VET From:5054835 | GCO17042 | Outer Joint | | 25 | 25 | 51 | 85 | 58 | O |

| | YEAR | TRANSM. | F/R | L/R | BODY STYLE & DRIVE TYPE & ENGINE | REMARKS | G-AP Ref. | PRODUCT | ABS | Technical Specifications A | B | C | H | L | P |
|---|---|---|---|---|---|---|---|---|---|---|---|---|---|---|---|
| **FIAT** | | | | | | | | | | | | | | | |
| **Marea** | | | | | | | | | | | | | | | |
| 2.0 (110 kw) | 2000.09-2006.06 | | F | L/R | Saloon FWD 185A8000 | VET From:0176273;VET From:0180748;VET From:5054835 | GCO82017 | Outer Joint | | 25 | 25 | 58.8 | 85 | 58 | O |
| 2.0 (113 kw) | 1999.03-2000.08 | MT | F | L/R | Saloon FWD 182B7000 | Date to:2000.08 | GCO82006 | Outer Joint | 44T | 25 | 25 | 52 | 85 | 58 | O |
| | 1999.03-2000.08 | MT | F | L/R | Saloon FWD 182B7000 | | GCI18070 | Inner Joint | | | 25 | | | 32 | |
| | 1999.03-2000.08 | MT | F | L/R | Saloon FWD 182B7000 | Date to:2000.08 | GCI82011 | Inner Joint | | | 25 | | | 32 | |
| | 1999.03-2000.08 | | F | L/R | Saloon FWD 182B7000 | VET To:0176272;VET To:0180747;VET To:5054834 | GCO17032 | Outer Joint | 44T | 25 | 25 | 59 | 85 | 58 | O |
| | 1999.03-2000.08 | | F | L/R | Saloon FWD 182B7000 | VET From:0176273;VET From:0180748;VET From:5054835 | GCO17042 | Outer Joint | | 25 | 25 | 51 | 85 | 58 | O |
| | 1999.03-2000.08 | | F | L/R | Saloon FWD 182B7000 | VET From:0176273;VET From:0180748;VET From:5054835 | GCO82017 | Outer Joint | | 25 | 25 | 58.8 | 85 | 58 | O |
| | 1999.03-2000.08 | | F | L/R | Saloon FWD 182B7000 | | GCI82005 | Inner Joint | | | 25 | | | 32 | |
| 2.4 (91 kw) | 1996.11-1999.02 | 5MT | F | L/R | Saloon FWD 185A2000 | VET To:0176272/0180747/5054834 | GCO82009 | Outer Joint | 44T | 25 | 28 | 56 | 85 | 63.5 | O |
| | 1996.11-1999.02 | 5MT | F | L/R | Saloon FWD 185A2000 | VET From:0176273/0180748/5054835 | GCO82012 | Outer Joint | | 25 | 28 | 59 | 85 | 63 | O |
| | 1996.11-1999.02 | 5MT | F | L/R | Saloon FWD 185A2000 | VET To:0176272/0180747/5054834 | GCO82019 | Outer Joint | | 25 | 28 | 56 | 85 | 63.5 | O |
| 2.4 (96 kw) | 1999.03-2000.08 | MT | F | L/R | Saloon FWD 185A6000 | Date to:2000.08 | GCO82012 | Outer Joint | | 25 | 28 | 59 | 85 | 63 | O |
| **Marea S.W./Weekend** | | | | | | | | | | | | | | | |
| 1.2 (60 kw) | 1998.10-2000.08 | MT | F | L/R | Estate FWD 182B2000 | | GCO17015 | Outer Joint | | 22 | 22 | 51 | 79.5 | 54 | O |
| 1.4 (59 kw) | 1996.08-1999.02 | AT/MT | F | L/R | Estate FWD 182A3000 | | GCO17001 | Outer Joint | | 22 | 20 | 46.8 | 75.5 | 52 | O |
| | 1996.08-1999.02 | AT/MT | F | L/R | Estate FWD 182A3000 | | GCO17039 | Outer Joint | 44T | 22 | 20 | 46.8 | 75.5 | 52 | O |
| | 1996.08-1999.02 | MT | F | L | Estate FWD 182A3000 | | GDS17010 | Drive Shaft | | 22 | 32 | 46.8 | 75.5 | 569 | |
| | 1996.08-1999.02 | MT | F | R | Estate FWD 182A3000 | | GDS17011 | Drive Shaft | | 22 | 32 | 46.8 | 75.5 | 928.5 | |
| | 1996.08-1999.02 | MT | F | L/R | Estate FWD 182A3000 | | GCI18070 | Inner Joint | | | 25 | | | 32 | |
| | 1996.08-1999.02 | MT | F | | Estate FWD 182A3000 | | GCI82005 | Inner Joint | | | 25 | | | 32 | |
| | 1996.08-1999.02 | | F | L/R | Estate FWD 182A3000 | VET From:0176273;VET From:0180748;VET From:5054835 | GCO17015 | Outer Joint | | 22 | 22 | 51 | 79.5 | 54 | O |
| 1.6 (76 kw) | 1996.08-2000.08 | AT/MT | F | L | Estate FWD 182A4000 | | GCO17015 | Outer Joint | | 22 | 22 | 51 | 79.5 | 54 | O |
| | 1996.08-2000.08 | AT/MT | F | L/R | Estate FWD 182A4000 | | GCO17023 | Outer Joint | | 25 | 22 | 52 | 84 | 57 | O |
| | 1996.08-2000.08 | AT/MT | F | L/R | Estate FWD 182A4000 | Date to:2000.08 | GCO82005 | Outer Joint | 44T | 25 | 22 | 52 | 84 | 57 | O |
| | 2000.09-2002.08 | | F | L/R | Estate FWD 182B6000 | | GCO17011 | Outer Joint | | 25 | 22 | 51 | 84.5 | 57 | O |
| 1.8 (83 kw) | 1996.08-2000.08 | AT/MT | F | L/R | Estate FWD 182A2000 | | GCO17042 | Outer Joint | | 25 | 25 | 51 | 85 | 58 | O |
| | 1996.08-2000.08 | AT/MT | F | L/R | Estate FWD 182A2000 | Date to:2000.08 | GCO82006 | Outer Joint | 44T | 25 | 25 | 52 | 85 | 58 | O |
| | 1996.08-2000.08 | AT/MT | F | R | Estate FWD 182A2000 | | GCI82011 | Inner Joint | | | 25 | | | 32 | |
| | 1996.08-2000.08 | AT/MT | F | L/R | Estate FWD 182A2000 | | GCI18070 | Inner Joint | | | 25 | | | 32 | |
| | 1996.08-2000.08 | | F | R | Estate FWD 182A2000 | VET From:0176273;VET From:0180748;VET From:5054835 | GCI82005 | Inner Joint | | | 25 | | | 32 | |
| 1.9 (55 kw) | 1996.08-2000.08 | AT/MT | F | L/R | Estate FWD 182A8000 | VET From:0176273;VET From:0180748;VET From:5054835 | GCO17042 | Outer Joint | | 25 | 25 | 51 | 85 | 58 | O |
| | 1996.08-2000.08 | MT | F | L/R | Estate FWD 182A8000 | | GCO82006 | Outer Joint | 44T | 25 | 25 | 52 | 85 | 58 | O |
| 1.9 (74 kw) | 1996.08-2003.06 | AT/MT | F | L/R | Estate FWD 182A7000/182B9000 | VET From:0176273;VET From:0180748;VET From:5054835 | GCO17042 | Outer Joint | | 25 | 25 | 51 | 85 | 58 | O |
| | 1996.08-2003.06 | MT | F | L/R | Estate FWD 182A7000/182B9000 | | GCO82006 | Outer Joint | 44T | 25 | 25 | 52 | 85 | 58 | O |
| 1.9 (77 kw) | 1999.03-2000.08 | MT | F | L/R | Estate FWD 182B4000 | Date from:1999.03;Date to:2000.08 | GCO17042 | Outer Joint | | 25 | 25 | 51 | 85 | 58 | O |
| 1.9 (81 kw) | 2000.09-2002.08 | MT | F | L/R | Estate FWD 186A6000 | | GCO17042 | Outer Joint | | 25 | 25 | 51 | 85 | 58 | O |
| | 2000.09-2002.08 | MT | F | R | Estate FWD 186A6000 | | GCI82011 | Inner Joint | | | 25 | | | 32 | |
| | 2000.09-2002.08 | MT | F | | Estate FWD 186A6000 | | GCI82005 | Inner Joint | | | 25 | | | 32 | |
| 2.0 (108 kw) | 1996.10-1999.02 | AT/MT | F | L/R | Estate FWD 182A1000 | | GCO17032 | Outer Joint | 44T | 25 | 25 | 59 | 85 | 58 | O |
| | 1996.10-1999.02 | AT/MT | F | L/R | Estate FWD 182A1000 | | GCI18070 | Inner Joint | | | 25 | | | 32 | |
| | 1996.10-1999.02 | AT/MT | F | L/R | Estate FWD 182A1000 | | GCI82011 | Inner Joint | | | 25 | | | 32 | |
| | 1996.10-1999.02 | | F | L/R | Estate FWD 182A1000 | VET To:0176272;VET To:0180747;VET To:5054834 | GCO17042 | Outer Joint | | 25 | 25 | 51 | 85 | 58 | O |
| | 1996.10-1999.02 | | F | L/R | Estate FWD 182A1000 | VET To:0176272;VET To:0180747;VET To:5054834 | GCO82017 | Outer Joint | | 25 | 25 | 58.8 | 85 | 58 | O |
| | 1996.10-1999.02 | | F | | Estate FWD 182A1000 | | GCI82005 | Inner Joint | | | 25 | | | 32 | |
| | 1996.10-1999.02 | | F | | Estate FWD 182A1000 | | GCI82006 | Inner Joint | | | 25 | | | 32 | |
| 2.0 (110 kw) | 2000.09-2002.08 | MT | F | L/R | Estate FWD 185A8000 | | GCI82011 | Inner Joint | | | 25 | | | 32 | |
| | 2000.09-2002.08 | MT | F | | Estate FWD 185A8000 | | GCI82005 | Inner Joint | | | 25 | | | 32 | |
| | 2000.09-2002.08 | | F | L/R | Estate FWD 185A8000 | VET To:0176272;VET To:0180747;VET To:5054834 | GCO17042 | Outer Joint | | 25 | 25 | 51 | 85 | 58 | O |
| | 2000.09-2002.08 | | F | L/R | Estate FWD 185A8000 | VET To:0176272;VET To:0180747;VET To:5054834 | GCO82017 | Outer Joint | | 25 | 25 | 58.8 | 85 | 58 | O |
| 2.0 (113 kw) | 1997.03-2003.02 | MT | F | L/R | Estate FWD 182B7000 | VET To:0176272;VET To:0180747;VET To:5054834 | GCO17042 | Outer Joint | | 25 | 25 | 51 | 85 | 58 | O |
| | 1997.03-2003.02 | MT | F | L/R | Estate FWD 182B7000 | | GCO82006 | Outer Joint | 44T | 25 | 25 | 52 | 85 | 58 | O |
| | 1997.03-2003.02 | MT | F | L/R | Estate FWD 182B7000 | | GCI18070 | Inner Joint | | | 25 | | | 32 | |
| | 1997.03-2003.02 | MT | F | L/R | Estate FWD 182B7000 | | GCI82011 | Inner Joint | | | 25 | | | 32 | |
| | 1997.03-2003.02 | | F | L/R | Estate FWD 182B7000 | VET To:0176272;VET To:0180747;VET To:5054834 | GCO82017 | Outer Joint | | 25 | 25 | 58.8 | 85 | 58 | O |
| | 1997.03-2003.02 | | F | L/R | Estate FWD 182B7000 | | GCI82005 | Inner Joint | | | 25 | | | 32 | |
| 2.4 (91 kw) | 1996.11-1999.02 | 5MT | F | L/R | Estate FWD 185A2000 | VET To:0176272/0180747/5054834 | GCO82009 | Outer Joint | 44T | 25 | 28 | 56 | 85 | 63.5 | O |
| | 1996.11-1999.02 | 5MT | F | L/R | Estate FWD 185A2000 | VET From:0176273/0180748/5054835 | GCO82012 | Outer Joint | | 25 | 28 | 59 | 85 | 63 | O |
| | 1996.11-1999.02 | 5MT | F | L/R | Estate FWD 185A2000 | VET To:0176272/0180747/5054834 | GCO82019 | Outer Joint | | 25 | 28 | 56 | 85 | 63.5 | O |
| 2.4 (96 kw) | 1999.03-2000.08 | MT | F | L/R | Estate FWD 185A6000 | Date to:2000.08 | GCO82012 | Outer Joint | | 25 | 28 | 59 | 85 | 63 | O |
| **Multipla** | | | | | | | | | | | | | | | |
| 1.6 (68 kw) | 2004.05-2005.08 | | F | L/R | MPV FWD 182B6000 | | GCO17011 | Outer Joint | | 25 | 22 | 51 | 84.5 | 57 | O |
| 1.6 (70 kw) | 1999.04-2001.02 | MT | F | L/R | MPV FWD 186A3000CNG | Date to:2001.02 | GCO17011 | Outer Joint | | 25 | 22 | 51 | 84.5 | 57 | O |
| | 1999.04-2001.02 | MT | F | L/R | MPV FWD 186A3000CNG | | GCI18070 | Inner Joint | | | 25 | | | 32 | |
| | 1999.04-2001.02 | | F | | MPV FWD 186A3000CNG | | GCI82005 | Inner Joint | | | 25 | | | 32 | |
| | 2002.04-2010.06 | | F | L/R | MPV FWD 182B6000 | | GCO17011 | Outer Joint | | 25 | 22 | 51 | 84.5 | 57 | O |

| | YEAR | TRANSM. | F/R | L/R | BODY STYLE & DRIVE TYPE & ENGINE | REMARKS | G-AP Ref. | PRODUCT | ABS | Technical Specifications A | B | C | H | L | P |
|---|---|---|---|---|---|---|---|---|---|---|---|---|---|---|---|
| **FIAT** | | | | | | | | | | | | | | | |
| **Multipla** | | | | | | | | | | | | | | | |
| 1.6 (76 kw) | 1999.04-2000.08 | MT | F | L/R | MPV FWD 182A4000 | Date to:2000.08 | GCO17011 | Outer Joint | | 25 | 22 | 51 | 84.5 | 57 | O |
| | 1999.04-2003.09 | MT | F | L/R | MPV FWD 186A4000 | Date to:2003.09 | GCO17011 | Outer Joint | | 25 | 22 | 51 | 84.5 | 57 | O |
| | 1999.04-2003.09 | MT | F | L/R | MPV FWD 186A4000 | | GCI18070 | Inner Joint | | | 25 | | | 32 | |
| | 2000.09-2010.06 | | F | L/R | MPV FWD 182B6000 | | GCO17011 | Outer Joint | | 25 | 22 | 51 | 84.5 | 57 | O |
| | 2001.10-2005.08 | | F | L/R | MPV FWD 182B6000 | | GCO17011 | Outer Joint | | 25 | 22 | 51 | 84.5 | 57 | O |
| | 2001.10-2010.06 | MT | F | L/R | MPV FWD 182B6000 | | GCO17011 | Outer Joint | | 25 | 22 | 51 | 84.5 | 57 | O |
| 1.6 (77 kw) | 2008.11-2010.06 | MT | F | L/R | MPV FWD 182B6000CNG | | GCO17011 | Outer Joint | | 25 | 22 | 51 | 84.5 | 57 | O |
| 1.9 (77 kw) | 1998.08-2000.08 | AT/MT | F | L/R | MPV FWD 182B4000 | | GCI18070 | Inner Joint | | | 25 | | | 32 | |
| | 1998.08-2000.08 | MT | F | L/R | MPV FWD 182B4000 | Date to:2000.08 | GCO17042 | Outer Joint | | 25 | 25 | 51 | 85 | 58 | O |
| | 1998.08-2000.08 | MT | F | R | MPV FWD 182B4000 | | GCI82011 | Inner Joint | | | 25 | | | 32 | |
| | 1998.08-2000.08 | | F | | MPV FWD 182B4000 | | GCI82005 | Inner Joint | | | 25 | | | 32 | |
| | 1998.08-2000.08 | | F | | MPV FWD 182B4000 | | GCI82006 | Inner Joint | | | 25 | | | 32 | |
| | 1999.04-2000.08 | 5MT | F | L/R | MPV Van FWD 182B4000 | | GCI82005 | Inner Joint | | | 25 | | | 32 | |
| | 1999.04-2000.08 | 5MT | F | L/R | MPV Van FWD 182B4000 | | GCI82011 | Inner Joint | | | 25 | | | 32 | |
| 1.9 (81 kw) | 2000.09-2002.03 | AT/MT | F | L/R | MPV FWD 186A6000 | | GCO17042 | Outer Joint | | 25 | 25 | 51 | 85 | 58 | O |
| | 2000.09-2002.03 | AT/MT | F | L/R | MPV FWD 186A6000 | | GCI18070 | Inner Joint | | | 25 | | | 32 | |
| | 2000.09-2002.03 | MT | F | R | MPV FWD 186A6000 | | GCI82011 | Inner Joint | | | 25 | | | 32 | |
| | 2000.09-2002.03 | MT | F | | MPV FWD 186A6000 | | GCI82005 | Inner Joint | | | 25 | | | 32 | |
| | 2000.09-2002.03 | | F | | MPV FWD 186A6000 | | GCI82006 | Inner Joint | | | 25 | | | 32 | |
| | 2000.09-2002.03 | 5MT | F | L/R | MPV Van FWD 186A6000 | | GCI82005 | Inner Joint | | | 25 | | | 32 | |
| | 2000.09-2002.03 | 5MT | F | L/R | MPV Van FWD 186A6000 | | GCI82011 | Inner Joint | | | 25 | | | 32 | |
| 1.9 (85 kw) | 2000.12-2010.06 | AT/MT | F | L/R | MPV FWD 186A8000 | | GCO17042 | Outer Joint | | 25 | 25 | 51 | 85 | 58 | O |
| | 2000.12-2010.06 | AT/MT | F | L/R | MPV FWD 186A8000 | | GCI18070 | Inner Joint | | | 25 | | | 32 | |
| | 2000.12-2010.06 | MT | F | R | MPV FWD 186A8000 | | GCI82011 | Inner Joint | | | 25 | | | 32 | |
| | 2000.12-2010.06 | | F | | MPV FWD 186A8000 | | GCI82006 | Inner Joint | | | 25 | | | 32 | |
| 1.9 (88 kw) | 2002.04-2010.06 | 5MT | F | L/R | MPV FWD 186A9000 | | GCO17042 | Outer Joint | | 25 | 25 | 51 | 85 | 58 | O |
| | 2002.04-2010.06 | | F | | MPV FWD 186A9000 | | GCI82006 | Inner Joint | | | 25 | | | 32 | |
| **Multipla Van** | | | | | | | | | | | | | | | |
| 1.9 (85 kw) | 2004.05-2010.06 | 5MT | F | L/R | MPV Van FWD 186A8000 | | GCI82005 | Inner Joint | | | 25 | | | 32 | |
| | 2004.05-2010.06 | 5MT | F | L/R | MPV Van FWD 186A8000 | | GCI82011 | Inner Joint | | | 25 | | | 32 | |
| 1.9 (88 kw) | 2002.04-2010.06 | 5MT | F | L/R | Box Body/MPV FWD 186 A9.000 | | GCI82005 | Inner Joint | | | 25 | | | 32 | |
| | 2002.04-2010.06 | 5MT | F | L/R | Box Body/MPV FWD 186 A9.000 | | GCI82011 | Inner Joint | | | 25 | | | 32 | |
| **Palio** | | | | | | | | | | | | | | | |
| 1.0 (45 kw) | 1996.06-2003.10 | AT/MT | F | L/R | Hatchback FWD 178A1000 | | GCO17029 | Outer Joint | | 22 | 20 | 47 | 89 | 61 | O |
| | 1996.06-2003.10 | MT | F | L/R | Hatchback FWD 178A1000 | | GCO17017 | Outer Joint | | 22 | 20 | 52 | 91 | 60.5 | O |
| | 1996.06-2003.10 | MT | F | L/R | Hatchback FWD 178A1000 | | GCO17020 | Outer Joint | 44T | 22 | 22 | 52 | 91 | 60.5 | O |
| | 1996.06-2003.10 | | F | L | Hatchback FWD 178A1000 | Date to:2000.07,Chassis no. to:6238336 | GDS17005 | Drive Shaft | | 22 | | 52 | 91 | 554 | |
| 1.0 (56 kw) | 1996.06-2003.10 | MT | F | L/R | Hatchback FWD 178A1000 | | GCO17017 | Outer Joint | | 22 | 20 | 52 | 91 | 60.5 | O |
| | 1996.06-2003.10 | MT | F | L/R | Hatchback FWD 178A1000 | | GCO17020 | Outer Joint | 44T | 22 | 22 | 52 | 91 | 60.5 | O |
| | 1996.06-2003.10 | | F | L/R | Hatchback FWD 178A1000 | Date From:2002.07 | GCO17029 | Outer Joint | | 22 | 20 | 47 | 89 | 61 | O |
| 1.1 (40 kw) | 1996.06-2003.10 | 5MT | F | L | Hatchback FWD 178B9033 | | GDS17005 | Drive Shaft | | 22 | | 52 | 91 | 554 | |
| | 1996.06-2003.10 | 5MT | F | R | Hatchback FWD 178B9033 | | GDS17007 | Drive Shaft | | 22 | | 52 | 91 | 904.5 | |
| | 1996.06-2003.10 | | F | L/R | Hatchback FWD 178B9033 | Date To:2000.07 | GCO17017 | Outer Joint | | 22 | 20 | 52 | 91 | 60.5 | O |
| | 1996.06-2003.10 | | F | L/R | Hatchback FWD 178B9033 | Date From:2000.08 | GCO17019 | Outer Joint | | 22 | 22 | 52 | 91 | 60.5 | O |
| | 1996.06-2003.10 | | F | L/R | Hatchback FWD 178B9033 | Date From:2000.08 | GCO17020 | Outer Joint | 44T | 22 | 22 | 52 | 91 | 60.5 | O |
| 1.2 (44 kw) | 1997.07-2002.08 | 5MT | F | L | Hatchback FWD 178B7045/188A4000 | | GDS17005 | Drive Shaft | | 22 | | 52 | 91 | 554 | |
| | 1997.07-2002.08 | 5MT | F | R | Hatchback FWD 178B7045/188A4000 | | GDS17007 | Drive Shaft | | 22 | | 52 | 91 | 904.5 | |
| | 1997.07-2002.08 | AT/MT | F | L/R | Hatchback FWD 178B7045/188A4000 | | GCO17029 | Outer Joint | | 22 | 20 | 47 | 89 | 61 | O |
| | 1997.07-2002.08 | | F | L/R | Hatchback FWD 178B7045/188A4000 | | GCO17017 | Outer Joint | | 22 | 20 | 52 | 91 | 60.5 | O |
| 1.2 (50 kw) | 1999.06-2000.10 | 5MT | F | L | Hatchback FWD 178E2000 | | GDS17005 | Drive Shaft | | 22 | | 52 | 91 | 554 | |
| | 1999.06-2000.10 | 5MT | F | R | Hatchback FWD 178E2000 | | GDS17007 | Drive Shaft | | 22 | | 52 | 91 | 904.5 | |
| | 1999.06-2000.10 | | F | L/R | Hatchback FWD 178E2000 | | GCO17017 | Outer Joint | | 22 | 20 | 52 | 91 | 60.5 | O |
| | 1999.06-2000.10 | | F | L/R | Hatchback FWD 178E2000 | | GCO17020 | Outer Joint | 44T | 22 | 22 | 52 | 91 | 60.5 | O |
| 1.2 (54 kw) | 1996.06-2002.10 | MT | F | L/R | Hatchback FWD 178B5000 | Date to:2002.10 | GCO17017 | Outer Joint | | 22 | 20 | 52 | 91 | 60.5 | O |
| | 1996.06-2002.10 | MT | F | L/R | Hatchback FWD 178B5000 | Date to:2002.10 | GCO17020 | Outer Joint | 44T | 22 | 22 | 52 | 91 | 60.5 | O |
| | 1996.06-2002.10 | | F | L | Hatchback FWD 178B5000 | | GDS17005 | Drive Shaft | | 22 | | 52 | 91 | 554 | |
| | 1996.06-2002.10 | | F | R | Hatchback FWD 178B5000 | | GDS17007 | Drive Shaft | | 22 | | 52 | 91 | 904.5 | |
| | 1996.06-2002.10 | | F | L/R | Hatchback FWD 178B5000 | Vehicle Production Country:Turkey | GCO17019 | Outer Joint | | 22 | 22 | 52 | 91 | 60.5 | O |
| 1.2 (59 kw) | 2000.03-2012.01 | 5MT | F | L | Hatchback FWD 178 D6.011 | | GDS17029 | Drive Shaft | | 22 | 32 | 47 | 89 | 504 | |
| | 2000.03-2012.01 | 5MT | F | R | Hatchback FWD 178 D6.011 | | GDS17030 | Drive Shaft | | 22 | 32 | 47 | 89 | 809 | |
| 1.3 (51 kw) | 2003.06-2012.01 | 5MT | F | L | Hatchback FWD 188A9000 | Engine To:9967853 | GDS17003 | Drive Shaft | | 25 | | 51 | 90 | 455 | |
| | 2003.06-2012.01 | 5MT | F | L | Hatchback FWD 188A9000 | Engine From:9967854 | GDS17034 | Drive Shaft | | 25 | 36 | 51 | 90 | 447 | |
| | 2003.06-2012.01 | 5MT | F | R | Hatchback FWD 188A9000 | Engine To:9967853 | GDS17002 | Drive Shaft | | 25 | | 51 | 90 | 533 | |
| | 2003.06-2012.01 | 5MT | F | R | Hatchback FWD 188A9000 | Engine From:9967854 | GDS17013 | Drive Shaft | | 25 | 36 | 51 | 90 | 501 | |
| | 2003.06-2012.01 | 5MT | F | L/R | Hatchback FWD 188A9000 | | GCO17031 | Outer Joint | | 25 | 24 | 51 | 90 | 62 | M |

| | YEAR | TRANSM. | F/R | L/R | BODY STYLE & DRIVE TYPE & ENGINE | REMARKS | G-AP Ref. | PRODUCT | ABS | Technical Specifications A | B | C | H | L | P |
|---|---|---|---|---|---|---|---|---|---|---|---|---|---|---|---|
| **FIAT** | | | | | | | | | | | | | | | |
| **Palio** | | | | | | | | | | | | | | | |
| 1.3 (51 kw) | 2003.06-2012.01 | 5MT | F | R | Hatchback FWD 188A9000 | Engine To:9967853 | GCI82005 | Inner Joint | | | 25 | | | 32 | |
| | 2003.06-2012.01 | MT | F | R | Hatchback FWD 188A9000 | Engine no. to:9967853 | GCI82011 | Inner Joint | | | 25 | | | 32 | |
| 1.3 (59 kw) | 2000.03-2012.01 | 5MT | F | L | Hatchback FWD 178D6011 | | GDS17029 | Drive Shaft | | 22 | 32 | 47 | 89 | 504 | |
| | 2000.03-2012.01 | 5MT | F | R | Hatchback FWD 178D6011 | | GDS17030 | Drive Shaft | | 22 | 32 | 47 | 89 | 809 | |
| 1.4 (51 kw) | 1996.06-2001.08 | 5MT | F | L | Hatchback FWD 178B2000/178B2016 | | GDS17005 | Drive Shaft | | 22 | | 52 | 91 | 554 | |
| | 1996.06-2001.08 | 5MT | F | R | Hatchback FWD 178B2000/178B2016 | | GDS17007 | Drive Shaft | | 22 | | 52 | 91 | 904.5 | |
| | 1996.06-2001.08 | 5MT | F | L/R | Hatchback FWD 178B2000/178B2016 | | GCO17017 | Outer Joint | | 22 | 20 | 52 | 91 | 60.5 | O |
| | 1996.06-2001.08 | AT/MT | F | L/R | Hatchback FWD 178B2000/178B2016 | | GCO17017 | Outer Joint | | 22 | 20 | 52 | 91 | 60.5 | O |
| 1.4 (57 kw) | 2005.04-2012.01 | 5MT | F | L/R | Hatchback FWD 178F3011/350A1000 | | GCO17093 | Outer Joint | | 22 | 28 | 47 | 89 | 57 | O |
| | 2005.04-2012.01 | | F | L/R | Hatchback FWD 178F3011/350A1000 | | GCO17029 | Outer Joint | | 22 | 20 | 47 | 89 | 61 | O |
| 1.4 (63 kw) | 2002.10-2004.10 | 5MT | F | L | Hatchback FWD 350A1000 | | GDS17029 | Drive Shaft | | 22 | 32 | 47 | 89 | 504 | |
| | 2002.10-2004.10 | 5MT | F | R | Hatchback FWD 350A1000 | | GDS17030 | Drive Shaft | | 22 | 32 | 47 | 89 | 809 | |
| | 2002.10-2004.10 | 5MT | F | L/R | Hatchback FWD 350A1000 | | GCO17016 | Outer Joint | | 22 | 22 | 47 | 89 | 61 | O |
| 1.5 (62 kw) | 2002.02-2012.01 | MT | F | L | Hatchback FWD 178E5022 | | GCO17037 | Outer Joint | | 22 | 22 | 51 | 89 | 61 | O |
| | 2002.02-2012.01 | MT | F | R | Hatchback FWD 178E5022 | | GCO17016 | Outer Joint | | 22 | 22 | 47 | 89 | 61 | O |
| 1.6 (74 kw) | 1996.06-2002.10 | AT/MT | F | L/R | Hatchback FWD 178B3000 | | GCO17020 | Outer Joint | 44T | 22 | 22 | 52 | 91 | 60.5 | O |
| | 1996.06-2002.10 | MT | F | L/R | Hatchback FWD 178B3000 | | GCO17019 | Outer Joint | | 22 | 22 | 52 | 91 | 60.5 | O |
| | 1996.06-2002.10 | | F | L | Hatchback FWD 178B3000 | | GDS17005 | Drive Shaft | | 22 | | 52 | 91 | 554 | |
| | 1996.06-2002.10 | | F | R | Hatchback FWD 178B3000 | | GDS17007 | Drive Shaft | | 22 | | 52 | 91 | 904.5 | |
| 1.7 (42 kw) | 1996.06-2002.09 | | F | L/R | Hatchback FWD 176B3000 | Date To:2000.07 | GCO17019 | Outer Joint | | 22 | 22 | 52 | 91 | 60.5 | O |
| | 1996.06-2002.09 | | F | L/R | Hatchback FWD 176B3000 | | GCO17020 | Outer Joint | 44T | 22 | 22 | 52 | 91 | 60.5 | O |
| 1.7 (51 kw) | 2002.10-2012.01 | 5MT | F | L | Hatchback FWD 176A3000 | Vehicle Production Country:Saudi Arabia | GDS17029 | Drive Shaft | | 22 | 32 | 47 | 89 | 504 | |
| | 2002.10-2012.01 | 5MT | F | R | Hatchback FWD 176A3000 | Vehicle Production Country:Saudi Arabia | GDS17030 | Drive Shaft | | 22 | 32 | 47 | 89 | 809 | |
| | 2002.10-2012.01 | 5MT | F | L | Hatchback FWD 176A3000 | Vehicle Production Country:Morocco | GCO17037 | Outer Joint | | 22 | 22 | 51 | 89 | 61 | O |
| | 2002.10-2012.01 | 5MT | F | L/R | Hatchback FWD 176A3000 | Vehicle Production Country:Saudi Arabia | GCO17016 | Outer Joint | | 22 | 22 | 47 | 89 | 61 | O |
| 1.7 (53 kw) | 2001.09-2012.01 | 5MT | F | L | Hatchback FWD 176A5000 | Vehicle Production Country:Saudi Arabia | GCO17037 | Outer Joint | | 22 | 22 | 51 | 89 | 61 | O |
| | 2001.09-2012.01 | 5MT | F | R | Hatchback FWD 176A5000 | Vehicle Production Country:Saudi Arabia | GCO17016 | Outer Joint | | 22 | 22 | 47 | 89 | 61 | O |
| | 2001.09-2012.01 | 5MT | F | L/R | Hatchback FWD 176A5000 | Vehicle Production Country:Morocco | GCO17019 | Outer Joint | | 22 | 22 | 52 | 91 | 60.5 | O |
| | 2001.09-2012.01 | 5MT | F | L/R | Hatchback FWD 176A5000 | Vehicle Production Country:Morocco | GCO17020 | Outer Joint | 44T | 22 | 22 | 52 | 91 | 60.5 | O |
| **Palio Weekend** | | | | | | | | | | | | | | | |
| 1.2 (44 kw) | 1997.07-2004.10 | 5MT | F | L | Estate FWD 178C4066/188A4000 | Date To:2001.12 | GDS17005 | Drive Shaft | | 22 | | 52 | 91 | 554 | |
| | 1997.07-2004.10 | 5MT | F | R | Estate FWD 178C4066/188A4000 | Date To:2001.12 | GDS17007 | Drive Shaft | | 22 | | 52 | 91 | 904.5 | |
| | 1997.07-2004.10 | 5MT | F | L/R | Estate FWD 178C4066/188A4000 | Date To:2001.12 | GCO17017 | Outer Joint | | 22 | 20 | 52 | 91 | 60.5 | O |
| | 1997.07-2004.10 | 5MT | F | L/R | Estate FWD 178C4066/188A4000 | Date To:2001.12 | GCO17019 | Outer Joint | | 22 | 22 | 52 | 91 | 60.5 | O |
| | 1997.07-2004.10 | 5MT | F | L/R | Estate FWD 178C4066/188A4000 | Date From:2002.01 | GCO17029 | Outer Joint | | 22 | 20 | 47 | 89 | 61 | O |
| | 1997.07-2004.10 | AT/MT | F | L/R | Estate FWD 178C4066/188A4000 | Date From:2002.01 | GCO17016 | Outer Joint | | 22 | 22 | 47 | 89 | 61 | O |
| 1.2 (50 kw) | 1999.06-2002.10 | 5MT | F | L | Estate FWD 178E2000 | | GDS17005 | Drive Shaft | | 22 | | 52 | 91 | 554 | |
| | 1999.06-2002.10 | 5MT | F | R | Estate FWD 178E2000 | | GDS17007 | Drive Shaft | | 22 | | 52 | 91 | 904.5 | |
| | 1999.06-2002.10 | | F | L/R | Estate FWD 178E2000 | Date To:2001.12 | GCO17017 | Outer Joint | | 22 | 20 | 52 | 91 | 60.5 | O |
| 1.2 (54 kw) | 1996.06-2001.02 | 5MT | F | L | Estate FWD 178B5000 | | GDS17005 | Drive Shaft | | 22 | | 52 | 91 | 554 | |
| | 1996.06-2001.02 | 5MT | F | R | Estate FWD 178B5000 | | GDS17007 | Drive Shaft | | 22 | | 52 | 91 | 904.5 | |
| | 1996.06-2001.02 | MT | F | L/R | Estate FWD 178B5000 | | GCO17017 | Outer Joint | | 22 | 20 | 52 | 91 | 60.5 | O |
| | 1996.06-2001.02 | MT | F | L/R | Estate FWD 178B5000 | | GCO17020 | Outer Joint | 44T | 22 | 22 | 52 | 91 | 60.5 | O |
| | 1996.06-2001.02 | | F | | Estate FWD 178B5000 | | GCO17019 | Outer Joint | | 22 | 22 | 52 | 91 | 60.5 | O |
| 1.2 (59 kw) | 2001.09-2004.10 | 5MT | F | L | Estate FWD 178D6011/188A5000 | Not For Modelcode:178DYE1A | GDS17029 | Drive Shaft | | 22 | 32 | 47 | 89 | 504 | |
| | 2001.09-2004.10 | 5MT | F | R | Estate FWD 178D6011/188A5000 | Not For Modelcode:178DYE1A | GDS17030 | Drive Shaft | | 22 | 32 | 47 | 89 | 809 | |
| | 2001.09-2004.10 | 5MT | F | L/R | Estate FWD 178D6011/188A5000 | Not For Modelcode:178DYE1A | GCO17016 | Outer Joint | | 22 | 22 | 47 | 89 | 61 | O |
| 1.3 (59 kw) | 2000.03-2003.02 | 5MT | F | L | Estate FWD 178 D6.011, 188 A5.000 | Modelcode:178DYE1AAP/178DYE1AAT | GDS17029 | Drive Shaft | | 22 | 32 | 47 | 89 | 504 | |
| | 2000.03-2003.02 | 5MT | F | R | Estate FWD 178 D6.011, 188 A5.000 | Modelcode:178DYE1AAP/178DYE1AAT | GDS17030 | Drive Shaft | | 22 | 32 | 47 | 89 | 809 | |
| 1.4 (51 kw) | 1997.07-2001.08 | | F | L/R | Estate FWD 178B2000 | | GCO17019 | Outer Joint | | 22 | 22 | 52 | 91 | 60.5 | O |
| 1.5 (62 kw) | 2002.02-2008.12 | MT | F | L | Estate FWD 178E5022 | | GCO17037 | Outer Joint | | 22 | 22 | 51 | 89 | 61 | O |
| | 2002.02-2008.12 | MT | F | R | Estate FWD 178E5022 | | GCO17016 | Outer Joint | | 22 | 22 | 47 | 89 | 61 | O |
| 1.6 (74 kw) | 1996.06-2001.02 | AT/MT | F | L/R | Estate FWD 178B3000 | | GCO17020 | Outer Joint | 44T | 22 | 22 | 52 | 91 | 60.5 | O |
| | 1996.06-2001.02 | MT | F | L/R | Estate FWD 178B3000 | | GCO17019 | Outer Joint | | 22 | 22 | 52 | 91 | 60.5 | O |
| 1.6 (76 kw) | 2001.02-2004.10 | 5MT | F | L | Estate FWD 182B6000 | Date From:2002.01,Model code:178DYC1AAP/178DYC1AAT | GDS17029 | Drive Shaft | | 22 | 32 | 47 | 89 | 504 | |
| | 2001.02-2004.10 | 5MT | F | R | Estate FWD 182B6000 | Date From:2002.01,Model code:178DYC1AAP/178DYC1AAT | GDS17030 | Drive Shaft | | 22 | 32 | 47 | 89 | 809 | |
| | 2001.02-2004.10 | 5MT | F | L/R | Estate FWD 182B6000 | Date From:2002.01,Model code:178DYC1AAP/178DYC1AAT | GCO17016 | Outer Joint | | 22 | 22 | 47 | 89 | 61 | O |
| | 2001.02-2004.10 | 5MT | F | L/R | Estate FWD 182B6000 | Date To:2001.12 | GCO17019 | Outer Joint | | 22 | 22 | 52 | 91 | 60.5 | O |
| 1.7 (51 kw) | 1996.07-2009.12 | AT/MT | F | L/R | Estate FWD 176A3000 | | GCO17020 | Outer Joint | 44T | 22 | 22 | 52 | 91 | 60.5 | O |
| | 1996.07-2009.12 | MT | F | L/R | Estate FWD 176A3000 | | GCO17019 | Outer Joint | | 22 | 22 | 52 | 91 | 60.5 | O |
| 1.9 (46 kw) | 1998.03-2002.08 | 5MT | F | L | Estate FWD 223A6000 | Modelcode:178DYD1A07 | GDS17005 | Drive Shaft | | 22 | | 52 | 91 | 554 | |
| | 1998.03-2002.08 | 5MT | F | L | Estate FWD 223A6000 | Not For Modelcode:178DYD1A07 | GDS17029 | Drive Shaft | | 22 | 32 | 47 | 89 | 504 | |
| | 1998.03-2002.08 | 5MT | F | R | Estate FWD 223A6000 | Not For Modelcode:178DYD1A07 | GDS17030 | Drive Shaft | | 22 | 32 | 47 | 89 | 809 | |
| | 1998.03-2002.08 | 5MT | F | L/R | Estate FWD 223A6000 | Not For Modelcode:178DYD1A07 | GCO17016 | Outer Joint | | 22 | 22 | 47 | 89 | 61 | O |
| | 1998.03-2002.08 | AT/MT | F | L/R | Estate FWD 223A6000 | Modelcode:178DYD1A07 | GCO17019 | Outer Joint | | 22 | 22 | 52 | 91 | 60.5 | O |

| | YEAR | TRANSM. | F/R | L/R | BODY STYLE & DRIVE TYPE & ENGINE | REMARKS | G-AP Ref. | PRODUCT | ABS | Technical Specifications A | B | C | H | L | P |
|---|---|---|---|---|---|---|---|---|---|---|---|---|---|---|---|
| **FIAT** | | | | | | | | | | | | | | | |
| **Palio Weekend** | | | | | | | | | | | | | | | |
| 1.9 (46 kw) | 1998.03-2002.08 | AT/MT | F | L/R | Estate FWD 223A6000 | Modelcode:178DYD1A07 | GCO17020 | Outer Joint | 44T | 22 | 22 | 52 | 91 | 60.5 | O |
| 1.9 (59 kw) | 2001.09-2004.10 | 5MT | F | L | Estate FWD 188A2000 | Model code:178DYD1A | GDS16001 | Drive Shaft | | 22 | 32 | 47 | 89 | 918.5 | |
| | 2001.09-2004.10 | 5MT | F | L | Estate FWD 188A2000 | Model code:178DYF1A/178DYF1A11 | GDS17003 | Drive Shaft | | 25 | | 51 | 90 | 455 | |
| | 2001.09-2004.10 | 5MT | F | R | Estate FWD 188A2000 | Model code:178DYF1A/178DYF1A11 | GDS17002 | Drive Shaft | | 25 | | 51 | 90 | 533 | |
| | 2001.09-2004.10 | 5MT | F | L/R | Estate FWD 188A2000 | | GCO17031 | Outer Joint | | 25 | 24 | 51 | 90 | 62 | M |
| | 2001.09-2004.10 | 5MT | F | L | Estate FWD 188A2000 | Model code:178DYF1A/178DYF1A11 | GCI61005 | Inner Joint | | | 30 | | | 57.6 | |
| | 2001.09-2004.10 | 5MT | F | R | Estate FWD 188A2000 | Model code:178DYF1A/178DYF1A11 | GCI82005 | Inner Joint | | | 25 | | | 32 | |
| **Panda** | | | | | | | | | | | | | | | |
| 0.7 (22 kw) | 1982.01-2004.02 | MT | F | L/R | Hatchback FWD 141A000 | Date to:2004.02 | GCO84001 | Outer Joint | | 20 | 20 | 43.1 | 90.5 | 60.5 | O |
| 0.8 (25 kw) | 1986.01-1997.12 | MT | F | L/R | Hatchback FWD 141B000/156A4000/156A4048 | Date to:1997.12 | GCO84001 | Outer Joint | | 20 | 20 | 43.1 | 90.5 | 60.5 | O |
| 0.9 (29 kw) | 1992.04-2000.08 | MT | F | L/R | Hatchback FWD 1170A1046 | | GCO84001 | Outer Joint | | 20 | 20 | 43.1 | 90.5 | 60.5 | O |
| 0.9 (51 kw) | 2019.03- | 5MT | F | L | Hatchback FWD 463 37 566 | | GDS56089 | Drive Shaft | | 25 | 32 | 51 | 84 | 525 | |
| | 2019.03- | 5MT | F | R | Hatchback FWD 463 37 566 | | GDS56090 | Drive Shaft | | 25 | 32 | 51 | 84 | 758 | |
| | 2019.03- | 5MT | F | L/R | Hatchback FWD 463 37 566 | GKN | GCO17026 | Outer Joint | | 25 | 22 | 51 | 84 | 57 | M |
| | 2019.03- | 5MT | F | L/R | Hatchback FWD 463 37 566 | NTN | GCO82919 | Outer Joint | | 25 | 29 | 51 | 84 | 51 | I |
| 0.9 (57 kw) | 2012.02- | | F | L | Hatchback FWD 312 A2.000/312 A7.000 | | GDS17101 | Drive Shaft | | 22 | 22 | 47 | 75.5 | 613 | |
| | 2012.02- | | F | R | Hatchback FWD 312 A2.000/312 A7.000 | | GDS17112 | Drive Shaft | | 22 | 22 | 47 | 75.5 | 846 | |
| | 2012.02- | | F | L/R | Hatchback FWD 312 A2.000/312 A7.000 | | GCO17043 | Outer Joint | | 22 | 20 | 47 | 75.5 | 54.5 | M |
| | 2012.02- | | F | L/R | Hatchback FWD 312 A2.000/312 A7.000 | | GCI17046 | Inner Joint | | 22 | 20 | 36 | 61.5 | 88.5 | |
| 0.9 (59 kw) | 2013.12- | 5AT/5MT | F | L/R | Hatchback FWD 312 A5.000 | GKN | GCO17026 | Outer Joint | | 25 | 22 | 51 | 84 | 57 | M |
| | 2013.12- | 5AT/5MT | F | L/R | Hatchback FWD 312 A5.000 | | GCI17027 | Inner Joint | | 22 | 22 | 36 | 61.5 | 93.5 | |
| | 2013.12- | 5MT | F | L | Hatchback FWD 312 A5.000 | Manufacturer:NTN | GDS56089 | Drive Shaft | | 25 | 32 | 51 | 84 | 525 | |
| | 2013.12- | 5MT | F | R | Hatchback FWD 312 A5.000 | Manufacturer:GKN | GDS17120 | Drive Shaft | | 25 | 22 | 51 | 84 | 846 | |
| | 2013.12- | 5MT | F | R | Hatchback FWD 312 A5.000 | Manufacturer:NTN | GDS56090 | Drive Shaft | | 25 | 32 | 51 | 84 | 758 | |
| | 2013.12- | 5MT | F | L/R | Hatchback FWD 312 A5.000 | NTN | GCO82919 | Outer Joint | | 25 | 29 | 51 | 84 | 51 | I |
| | 2015.01- | 5MT | F | L | Hatchback FWD 312 A2.000 | Manufacturer:NTN | GDS56089 | Drive Shaft | | 25 | 32 | 51 | 84 | 525 | |
| | 2015.01- | 5MT | F | R | Hatchback FWD 312 A2.000 | Manufacturer:GKN | GDS17120 | Drive Shaft | | 25 | 22 | 51 | 84 | 846 | |
| | 2015.01- | 5MT | F | R | Hatchback FWD 312 A2.000 | Manufacturer:NTN | GDS56090 | Drive Shaft | | 25 | 32 | 51 | 84 | 758 | |
| | 2015.01- | 5MT | F | L/R | Hatchback FWD 312 A2.000 | GKN | GCO17026 | Outer Joint | | 25 | 22 | 51 | 84 | 57 | M |
| | 2015.01- | 5MT | F | L/R | Hatchback FWD 312 A2.000 | NTN | GCO82919 | Outer Joint | | 25 | 29 | 51 | 84 | 51 | I |
| | 2015.01- | 5MT | F | L/R | Hatchback FWD 312 A2.000 | | GCI17027 | Inner Joint | | 22 | 22 | 36 | 61.5 | 93.5 | |
| 0.9 (63 kw) | 2012.02- | 5AT/5MT | F | L | Hatchback FWD 312 A2.000 | Date from:2012.05,Manufacturer:NTN | GDS56089 | Drive Shaft | | 25 | 32 | 51 | 84 | 525 | |
| | 2012.02- | 5AT/5MT | F | R | Hatchback FWD 312 A2.000 | Manufacturer:NTN | GDS56090 | Drive Shaft | | 25 | 32 | 51 | 84 | 758 | |
| | 2012.02- | 5AT/5MT | F | L/R | Hatchback FWD 312 A2.000 | NTN | GCO82919 | Outer Joint | | 25 | 29 | 51 | 84 | 51 | I |
| | 2012.02- | 5AT/5MT | F | L | Hatchback FWD 312 A2.000 | Date to:2012.04 | GCI17004 | Inner Joint | | 22 | 21 | 36 | 61 | 93.5 | |
| | 2012.02- | 5AT/5MT | F | L/R | Hatchback FWD 312 A2.000 | | GCI17027 | Inner Joint | | 22 | 22 | 36 | 61.5 | 93.5 | |
| | 2012.02- | 5AT/5MT/6MT | F | L/R | Hatchback FWD 312 A2.000 | GKN | GCO17026 | Outer Joint | | 25 | 22 | 51 | 84 | 57 | M |
| | 2012.02- | 5MT | F | R | Hatchback FWD 312 A2.000 | Manufacturer:GKN | GDS17120 | Drive Shaft | | 25 | 22 | 51 | 84 | 846 | |
| | 2012.07- | 5MT | F | L | Hatchback FWD 312 A2.000;463 37 566 | Manufacturer:NTN | GDS17119 | Drive Shaft | | 25 | 22 | 51 | 84 | 615 | |
| | 2012.07- | 5MT | F | L | Hatchback FWD 312 A2.000;463 37 566 | Manufacturer:NTN | GDS56089 | Drive Shaft | | 25 | 32 | 51 | 84 | 525 | |
| | 2012.07- | 5MT | F | R | Hatchback FWD 312 A2.000;463 37 566 | Manufacturer:GKN | GDS17120 | Drive Shaft | | 25 | 22 | 51 | 84 | 846 | |
| | 2012.07- | 5MT | F | R | Hatchback FWD 312 A2.000;463 37 566 | Manufacturer:NTN | GDS56090 | Drive Shaft | | 25 | 32 | 51 | 84 | 758 | |
| | 2012.07- | 5MT | F | L/R | Hatchback FWD 312 A2.000;463 37 566 | GKN | GCO17026 | Outer Joint | | 25 | 22 | 51 | 84 | 57 | M |
| | 2012.07- | 5MT | F | L/R | Hatchback FWD 312 A2.000;463 37 566 | NTN | GCO82919 | Outer Joint | | 25 | 29 | 51 | 84 | 51 | I |
| | 2012.07- | 5MT | F | L | Hatchback FWD 312 A2.000;463 37 566 | | GCI17004 | Inner Joint | | 22 | 21 | 36 | 61 | 93.5 | |
| | 2012.07- | 5MT | F | L/R | Hatchback FWD 312 A2.000;463 37 566 | | GCI17027 | Inner Joint | | 22 | 22 | 36 | 61.5 | 93.5 | |
| | 2012.09- | 6MT | F | R | Hatchback 4WD 312 A2.000 | Date to: 2016.08 | GDS84458 | Drive Shaft | | 25 | 22 | 51 | 85 | 843 | |
| | 2012.09- | 6MT | F | L/R | Hatchback 4WD 312 A2.000 | Date to:2016.08 | GCO17079 | Outer Joint | | 25 | 22 | 51 | 85 | 53.5 | I |
| | 2012.09- | 6MT | F | R | Hatchback 4WD 312 A2.000 | Date to: 2016.08 | GCI17088 | Inner Joint | | 22 | 22 | 35.95 | 66 | 98 | |
| | 2012.09- | 6MT | R | L | Hatchback 4WD 312 A2.000 | | GDS84511 | Drive Shaft | | 22 | | 47 | 79 | 610 | |
| | 2012.09- | 6MT | R | R | Hatchback 4WD 312 A2.000 | | GDS84385 | Drive Shaft | | 22 | | 47 | 79 | 627 | |
| | 2012.09- | 6MT | R | L | Hatchback 4WD 312 A2.000 | | GCO82855 | Outer Joint | | 22 | 20 | 47 | 79 | 51 | M |
| | 2012.09- | 6MT | R | R | Hatchback 4WD 312 A2.000 | | GCO82797 | Outer Joint | | 22 | 20 | 47 | 79 | 51 | M |
| | 2012.09- | 6MT | R | L/R | Hatchback 4WD 312 A2.000 | | GCI82732 | Inner Joint | | | 21 | | | 88 | |
| 0.9 (66 kw) | 2014.06- | 6MT | F | R | Hatchback 4WD 312 A2.000;312 A7.000 | Date to: 2016.08 | GDS84458 | Drive Shaft | | 25 | 22 | 51 | 85 | 843 | |
| | 2014.06- | 6MT | F | L/R | Hatchback 4WD 312 A2.000;312 A7.000 | | GCO17079 | Outer Joint | | 25 | 22 | 51 | 85 | 53.5 | I |
| | 2014.06- | 6MT | F | R | Hatchback 4WD 312 A2.000;312 A7.000 | Date to: 2016.08 | GCI17088 | Inner Joint | | 22 | 22 | 35.95 | 66 | 98 | |
| | 2014.06- | 6MT | R | L | Hatchback 4WD 312 A2.000;312 A7.000 | | GDS84511 | Drive Shaft | | 22 | | 47 | 79 | 610 | |
| | 2014.06- | 6MT | R | R | Hatchback 4WD 312 A2.000;312 A7.000 | | GDS84385 | Drive Shaft | | 22 | | 47 | 79 | 627 | |
| | 2014.06- | 6MT | R | L | Hatchback 4WD 312 A2.000;312 A7.000 | | GCO82855 | Outer Joint | | 22 | 20 | 47 | 79 | 51 | M |
| | 2014.06- | 6MT | R | R | Hatchback 4WD 312 A2.000;312 A7.000 | | GCO82797 | Outer Joint | | 22 | 20 | 47 | 79 | 51 | M |
| | 2014.06- | 6MT | R | L/R | Hatchback 4WD 312 A2.000;312 A7.000 | | GCI82732 | Inner Joint | | | 21 | | | 88 | |
| 1.0 (33 kw) | 1987.10-1998.08 | MT | F | L/R | Hatchback FWD 141C2000/156A2000/156A2246 | | GCO84001 | Outer Joint | | 20 | 20 | 43.1 | 90.5 | 60.5 | O |
| 1.0 (44 kw) | 2013.12- | 5MT | F | L | Hatchback FWD 312 A4.000;312 A6.000 | Manufacturer:GKN | GDS17119 | Drive Shaft | | 25 | 22 | 51 | 84 | 615 | |
| | 2013.12- | 5MT | F | L | Hatchback FWD 312 A4.000;312 A6.000 | Manufacturer:NTN | GDS56089 | Drive Shaft | | 25 | 32 | 51 | 84 | 525 | |

| | YEAR | TRANSM. | F/R | L/R | BODY STYLE & DRIVE TYPE & ENGINE | REMARKS | G-AP Ref. | PRODUCT | ABS | Technical Specifications | | | | | |
|---|---|---|---|---|---|---|---|---|---|---|---|---|---|---|---|
| | | | | | | | | | | A | B | C | H | L | P |
| **FIAT** **Panda** | | | | | | | | | | | | | | | |
| 1.0 (44 kw) | 2013.12- | 5MT | F | R | Hatchback FWD 312 A4.000;312 A6.000 | Manufacturer:GKN | GDS17120 | Drive Shaft | | 25 | 22 | 51 | 84 | 846 | |
| | 2013.12- | 5MT | F | R | Hatchback FWD 312 A4.000;312 A6.000 | Manufacturer:NTN | GDS56090 | Drive Shaft | | 25 | 32 | 51 | 84 | 758 | |
| | 2013.12- | 5MT | F | L/R | Hatchback FWD 312 A4.000;312 A6.000 | GKN | GCO17026 | Outer Joint | | 25 | 22 | 51 | 84 | 57 | M |
| | 2013.12- | 5MT | F | L/R | Hatchback FWD 312 A4.000;312 A6.000 | NTN | GCO82919 | Outer Joint | | 25 | 29 | 51 | 84 | 51 | I |
| | 2013.12- | 5MT | F | L/R | Hatchback FWD 312 A4.000;312 A6.000 | | GCI17046 | Inner Joint | | 22 | 20 | 36 | 61.5 | 88.5 | |
| 1.0 (48 kw) | 2012.02- | 5MT | F | L | Hatchback FWD 312 A4.000 | Date to:2013.10 | GDS17101 | Drive Shaft | | 22 | 22 | 47 | 75.5 | 613 | |
| | 2012.02- | 5MT | F | L | Hatchback FWD 312 A4.000 | Date from:2013.11,Manufacturer:GKN | GDS17119 | Drive Shaft | | 25 | 22 | 51 | 84 | 615 | |
| | 2012.02- | 5MT | F | L | Hatchback FWD 312 A4.000 | Date from:2013.11,Manufacturer:NTN | GDS56089 | Drive Shaft | | 25 | 32 | 51 | 84 | 525 | |
| | 2012.02- | 5MT | F | R | Hatchback FWD 312 A4.000 | Date to:2013.10 | GDS17112 | Drive Shaft | | 22 | 22 | 47 | 75.5 | 846 | |
| | 2012.02- | 5MT | F | R | Hatchback FWD 312 A4.000 | Date from:2013.11,Manufacturer:GKN | GDS17120 | Drive Shaft | | 25 | 22 | 51 | 84 | 846 | |
| | 2012.02- | 5MT | F | R | Hatchback FWD 312 A4.000 | Date from:2013.11,Manufacturer:NTN | GDS56090 | Drive Shaft | | 25 | 32 | 51 | 84 | 758 | |
| | 2012.02- | 5MT | F | L/R | Hatchback FWD 312 A4.000 | Date from:2013.11,GKN | GCO17026 | Outer Joint | | 25 | 22 | 51 | 84 | 57 | M |
| | 2012.02- | 5MT | F | L/R | Hatchback FWD 312 A4.000 | Date from:2013.11,NTN | GCO82919 | Outer Joint | | 25 | 29 | 51 | 84 | 51 | I |
| | 2012.02- | 5MT | F | L/R | Hatchback FWD 312 A4.000 | | GCI17001 | Inner Joint | | 22 | 19 | 36 | 61.5 | 88.5 | |
| | 2012.02- | 5MT | F | L/R | Hatchback FWD 312 A4.000 | Date to:2013.10 | GCI17046 | Inner Joint | | 22 | 20 | 36 | 61.5 | 88.5 | |
| 1.0 (51 kw) | 2020.01- | 6MT | F | L/R | Hatchback FWD 463 41 162 | | GCO17075 | Outer Joint | | 22 | 21 | 47 | 79 | 54 | M |
| | 2020.01- | 6MT | F | L | Hatchback FWD 463 41 162 | | GCI17046 | Inner Joint | | 22 | 20 | 36 | 61.5 | 88.5 | |
| 1.0 (52 kw) | 2022.03- | 6MT | F | L/R | Hatchback FWD 463 41 162 | | GCO17075 | Outer Joint | | 22 | 21 | 47 | 79 | 54 | M |
| | 2022.03- | 6MT | F | L | Hatchback FWD 463 41 162 | | GCI17046 | Inner Joint | | 22 | 20 | 36 | 61.5 | 88.5 | |
| | 2022.03- | 6MT | F | L/R | Hatchback FWD 463 41 162 | | GCI17001 | Inner Joint | | 22 | 19 | 36 | 61.5 | 88.5 | |
| 1.1 (40 kw) | 1995.04-2004.07 | MT | F | L/R | Hatchback 4WD 176B2000/187A1000 | | GCO84001 | Outer Joint | | 20 | 20 | 43.1 | 90.5 | 60.5 | O |
| | 1995.04-2004.07 | MT | F | L/R | Hatchback FWD 176B2000/187A1000 | | GCO84001 | Outer Joint | | 20 | 20 | 43.1 | 90.5 | 60.5 | O |
| | 2003.09- | 5MT | F | L | Hatchback FWD 187 A1.000 | | GDS17181 | Drive Shaft | | 22 | 22 | 47 | 75.5 | 595 | |
| | 2003.09- | 5MT | F | R | Hatchback FWD 187 A1.000 | | GDS17137 | Drive Shaft | | 22 | 22 | 47 | 75.5 | 827 | |
| | 2003.09- | 5MT | F | L/R | Hatchback FWD 187 A1.000 | | GCO17043 | Outer Joint | | 22 | 20 | 47 | 75.5 | 54.5 | M |
| | 2003.09- | 5MT | F | L/R | Hatchback FWD 187 A1.000 | Exhaust Emis:Euro 4 (D4) | GCI17001 | Inner Joint | | 22 | 19 | 36 | 61.5 | 88.5 | |
| | 2003.09- | 5MT | F | L/R | Hatchback FWD 187 A1.000 | Exhaust Emis:Euro 4 (D4) | GCI17046 | Inner Joint | | 22 | 20 | 36 | 61.5 | 88.5 | |
| | 2003.09- | 5MT | F | L/R | Hatchback FWD 187 A1.000 | Exhaust Emis:Euro 5 | GCI17086 | Inner Joint | | 22 | 22 | 35.9 | 66 | 106.5 | |
| 1.2 (44 kw) | 2003.09- | 5AT/5MT | F | L | Hatchback FWD 188 A4.000 | | GDS17181 | Drive Shaft | | 22 | 22 | 47 | 75.5 | 595 | |
| | 2003.09- | 5AT/5MT | F | R | Hatchback FWD 188 A4.000 | | GDS17137 | Drive Shaft | | 22 | 22 | 47 | 75.5 | 827 | |
| | 2003.09- | 5AT/5MT | F | L/R | Hatchback FWD 188 A4.000 | | GCO17043 | Outer Joint | | 22 | 20 | 47 | 75.5 | 54.5 | M |
| | 2003.09- | 5AT/5MT | F | L/R | Hatchback FWD 188 A4.000 | Exhaust Emis:Euro 4 (D4) | GCI17001 | Inner Joint | | 22 | 19 | 36 | 61.5 | 88.5 | |
| | 2003.09- | 5AT/5MT | F | L/R | Hatchback FWD 188 A4.000 | Exhaust Emis:Euro 4 (D4) | GCI17046 | Inner Joint | | 22 | 20 | 36 | 61.5 | 88.5 | |
| | 2003.09- | 5AT/5MT | F | L/R | Hatchback FWD 188 A4.000 | Exhaust Emis:Euro 5 | GCI17086 | Inner Joint | | 22 | 22 | 35.9 | 66 | 106.5 | |
| | 2004.10- | 5AT/5MT | F | L | Hatchback 4WD 188 A4.000 | | GDS57622 | Drive Shaft | | 25 | 22 | 51 | 84 | 588 | |
| | 2004.10- | 5AT/5MT | F | R | Hatchback 4WD 188 A4.000 | | GDS83224 | Drive Shaft | | 25 | 22 | 51 | 84 | 820 | |
| | 2004.10- | 5AT/5MT | F | L/R | Hatchback 4WD 188 A4.000 | | GCO17026 | Outer Joint | | 25 | 22 | 51 | 84 | 57 | M |
| | 2004.10- | 5AT/5MT | F | R | Hatchback 4WD 188 A4.000 | | GCI17086 | Inner Joint | | 22 | 22 | 35.9 | 66 | 106.5 | |
| | 2004.10- | 5AT/5MT | R | L/R | Hatchback 4WD 188 A4.000 | | GCO17043 | Outer Joint | | 22 | 20 | 47 | 75.5 | 54.5 | M |
| | 2007.01-2011.12 | 5MT | F | L | Hatchback FWD 188 A4.000 | | GDS17141 | Drive Shaft | | 25 | 22 | 51 | 84 | 593 | |
| | 2007.01-2011.12 | 5MT | F | R | Hatchback FWD 188 A4.000 | | GDS17149 | Drive Shaft | | 25 | 22 | 51 | 84 | 828 | |
| | 2007.01-2011.12 | 5MT | F | L/R | Hatchback FWD 188 A4.000 | | GCO17026 | Outer Joint | | 25 | 22 | 51 | 84 | 57 | M |
| | 2007.01-2011.12 | 5MT | F | L/R | Hatchback FWD 188 A4.000 | | GCI17004 | Inner Joint | | 22 | 21 | 36 | 61 | 93.5 | |
| | 2009.04- | 5MT | F | L | Hatchback FWD 188 A4.000 | | GDS17181 | Drive Shaft | | 22 | 22 | 47 | 75.5 | 595 | |
| | 2009.04- | 5MT | F | R | Hatchback FWD 188 A4.000 | | GDS17137 | Drive Shaft | | 22 | 22 | 47 | 75.5 | 827 | |
| | 2009.04- | 5MT | F | L | Hatchback FWD 188 A4.000 | | GCO17043 | Outer Joint | | 22 | 20 | 47 | 75.5 | 54.5 | M |
| | 2009.04- | 5MT | F | L/R | Hatchback FWD 188 A4.000 | Exhaust Emis:Euro 4 (D4) | GCI17001 | Inner Joint | | 22 | 19 | 36 | 61.5 | 88.5 | |
| | 2009.04- | 5MT | F | L/R | Hatchback FWD 188 A4.000 | Exhaust Emis:Euro 4 (D4) | GCI17046 | Inner Joint | | 22 | 20 | 36 | 61.5 | 88.5 | |
| | 2009.04- | 5MT | F | L/R | Hatchback FWD 188 A4.000 | Exhaust Emis:Euro 5 | GCI17086 | Inner Joint | | 22 | 22 | 35.9 | 66 | 106.5 | |
| 1.2 (51 kw) | 2010.03-2013.08 | 5MT | F | L | Hatchback FWD 169 A4.000 | | GDS17181 | Drive Shaft | | 22 | 22 | 47 | 75.5 | 595 | |
| | 2010.03-2013.08 | 5MT | F | R | Hatchback FWD 169 A4.000 | | GDS17137 | Drive Shaft | | 22 | 22 | 47 | 75.5 | 827 | |
| | 2010.03-2013.08 | 5MT | F | L/R | Hatchback FWD 169 A4.000 | | GCO17043 | Outer Joint | | 22 | 20 | 47 | 75.5 | 54.5 | M |
| | 2010.03-2013.08 | 5MT | F | L/R | Hatchback FWD 169 A4.000 | | GCI17001 | Inner Joint | | 22 | 19 | 36 | 61.5 | 88.5 | |
| | 2010.03-2013.08 | 5MT | F | L/R | Hatchback FWD 169 A4.000 | Exhaust Emis:Euro 4 (D4) | GCI17046 | Inner Joint | | 22 | 20 | 36 | 61.5 | 88.5 | |
| | 2010.03-2013.08 | 5MT | F | L/R | Hatchback FWD 169 A4.000 | Exhaust Emis:Euro 5 | GCI17086 | Inner Joint | | 22 | 22 | 35.9 | 66 | 106.5 | |
| | 2010.04-2013.08 | 5MT | F | L | Hatchback 4WD 169 A4.000 | | GDS57622 | Drive Shaft | | 25 | 22 | 51 | 84 | 588 | |
| | 2010.04-2013.08 | 5MT | F | R | Hatchback 4WD 169 A4.000 | | GDS83224 | Drive Shaft | | 25 | 22 | 51 | 84 | 820 | |
| | 2010.04-2013.08 | 5MT | F | L/R | Hatchback 4WD 169 A4.000 | | GCO17026 | Outer Joint | | 25 | 22 | 51 | 84 | 57 | M |
| | 2010.04-2013.08 | 5MT | F | R | Hatchback 4WD 169 A4.000 | | GCI17086 | Inner Joint | | 22 | 22 | 35.9 | 66 | 106.5 | |
| | 2010.04-2013.08 | 5MT | R | L/R | Hatchback 4WD 169 A4.000 | | GCO17043 | Outer Joint | | 22 | 20 | 47 | 75.5 | 54.5 | M |
| | 2010.11-2013.08 | 5MT | F | L | Hatchback FWD 169 A4.000 | | GDS17181 | Drive Shaft | | 22 | 22 | 47 | 75.5 | 595 | |
| | 2010.11-2013.08 | 5MT | F | R | Hatchback FWD 169 A4.000 | | GDS17137 | Drive Shaft | | 22 | 22 | 47 | 75.5 | 827 | |
| | 2010.11-2013.08 | 5MT | F | L/R | Hatchback FWD 169 A4.000 | | GCO17043 | Outer Joint | | 22 | 20 | 47 | 75.5 | 54.5 | M |
| | 2010.11-2013.08 | 5MT | F | L/R | Hatchback FWD 169 A4.000 | Exhaust Emis:Euro 4 (D4) | GCI17046 | Inner Joint | | 22 | 20 | 36 | 61.5 | 88.5 | |
| | 2010.11-2013.08 | 5MT | F | L/R | Hatchback FWD 169 A4.000 | Exhaust Emis:Euro 5 | GCI17086 | Inner Joint | | 22 | 22 | 35.9 | 66 | 106.5 | |

| | YEAR | TRANSM. | F/R | L/R | BODY STYLE & DRIVE TYPE & ENGINE | REMARKS | G-AP Ref. | PRODUCT | ABS | Technical Specifications A | B | C | H | L | P |
|---|---|---|---|---|---|---|---|---|---|---|---|---|---|---|---|
| **FIAT** **Panda** | | | | | | | | | | | | | | | |
| 1.2 (51 kw) | 2012.02- | 5MT | F | L | Hatchback FWD 169 A4.000 | Model year to:2016;Model year from:2016;Equipment code:LL0/LL1/LL2/LL4 | GDS17101 | Drive Shaft | | 22 | 22 | 47 | 75.5 | 613 | |
| | 2012.02- | 5MT | F | L | Hatchback FWD 169 A4.000 | Model year from:2016,Equipment code:LL6/LL7 | GDS56089 | Drive Shaft | | 25 | 32 | 51 | 84 | 525 | |
| | 2012.02- | 5MT | F | R | Hatchback FWD 169 A4.000 | Model year to:2016;Model year from:2016;Equipment code:LL0/LL1/LL2/LL4 | GDS17112 | Drive Shaft | | 22 | 22 | 47 | 75.5 | 846 | |
| | 2012.02- | 5MT | F | R | Hatchback FWD 169 A4.000 | Model year from:2016,Equipment code:LL6/LL7 | GDS56090 | Drive Shaft | | 25 | 32 | 51 | 84 | 758 | |
| | 2012.02- | 5MT | F | L/R | Hatchback FWD 169 A4.000 | Model year to:2016;Model year from:2016;Equipment code:LL0/LL1/LL2/LL4 | GCO17043 | Outer Joint | | 22 | 20 | 47 | 75.5 | 54.5 | M |
| | 2012.02- | 5MT | F | L/R | Hatchback FWD 169 A4.000 | Model year from:2016,Equipment code:LL6/LL7 | GCO82919 | Outer Joint | | 25 | 29 | 51 | 84 | 51 | I |
| | 2012.02- | 5MT | F | L/R | Hatchback FWD 169 A4.000 | | GCI17027 | Inner Joint | | 22 | 22 | 36 | 61.5 | 93.5 | |
| | 2012.02- | 5MT | F | L/R | Hatchback FWD 169 A4.000 | Model year to:2016;Model year from:2016;Equipment code:LL0/LL1/LL2/LL4 | GCI17046 | Inner Joint | | 22 | 20 | 36 | 61.5 | 88.5 | |
| | 2012.06- | 5MT | F | L | Hatchback FWD 169 A4.000 | Model year to:2016;Model year from:2016;Equipment code:LL0/LL1/LL2/LL4 | GDS17101 | Drive Shaft | | 22 | 22 | 47 | 75.5 | 613 | |
| | 2012.06- | 5MT | F | L | Hatchback FWD 169 A4.000 | Model year from:2016,Equipment code:LL6/LL7 | GDS56089 | Drive Shaft | | 25 | 32 | 51 | 84 | 525 | |
| | 2012.06- | 5MT | F | R | Hatchback FWD 169 A4.000 | Model year to:2016;Model year from:2016;Equipment code:LL0/LL1/LL2/LL4 | GDS17112 | Drive Shaft | | 22 | 22 | 47 | 75.5 | 846 | |
| | 2012.06- | 5MT | F | R | Hatchback FWD 169 A4.000 | Model year from:2016,Equipment code:LL6/LL7 | GDS56090 | Drive Shaft | | 25 | 32 | 51 | 84 | 758 | |
| | 2012.06- | 5MT | F | L/R | Hatchback FWD 169 A4.000 | Model year from:2016,Equipment code:LL6/LL7 | GCO82919 | Outer Joint | | 25 | 29 | 51 | 84 | 51 | I |
| | 2012.06- | 5MT | F | L/R | Hatchback FWD 169 A4.000 | | GCI17027 | Inner Joint | | 22 | 22 | 36 | 61.5 | 93.5 | |
| | 2012.06- | 5MT | F | L/R | Hatchback FWD 169 A4.000 | | GCI17046 | Inner Joint | | 22 | 20 | 36 | 61.5 | 88.5 | |
| 1.3 (51 kw) | 2003.09- | 5MT | F | L | Hatchback FWD 188 A8.000 | | GDS17141 | Drive Shaft | | 25 | 22 | 51 | 84 | 593 | |
| | 2003.09- | 5MT | F | R | Hatchback FWD 188 A8.000 | | GDS17149 | Drive Shaft | | 25 | 22 | 51 | 84 | 828 | |
| | 2003.09- | 5MT | F | L/R | Hatchback FWD 188 A8.000 | | GCO17026 | Outer Joint | | 25 | 22 | 51 | 84 | 57 | M |
| | 2003.09- | 5MT | F | L/R | Hatchback FWD 188 A8.000 | | GCI17027 | Inner Joint | | 22 | 22 | 36 | 61.5 | 93.5 | |
| | 2004.10- | 5MT | F | L | Hatchback 4WD 188 A8.000 | | GDS57622 | Drive Shaft | | 25 | 22 | 51 | 84 | 588 | |
| | 2004.10- | 5MT | F | R | Hatchback 4WD 188 A8.000 | | GDS83224 | Drive Shaft | | 25 | 22 | 51 | 84 | 820 | |
| | 2004.10- | 5MT | F | L/R | Hatchback 4WD 188 A8.000 | | GCO17026 | Outer Joint | | 25 | 22 | 51 | 84 | 57 | M |
| | 2004.10- | 5MT | F | R | Hatchback 4WD 188 A8.000 | | GCI17086 | Inner Joint | | 22 | 22 | 35.9 | 66 | 106.5 | |
| | 2004.10- | 5MT | R | L/R | Hatchback 4WD 188 A8.000 | | GCO17043 | Outer Joint | | 22 | 20 | 47 | 75.5 | 54.5 | M |
| 1.3 (55 kw) | 2006.06-2013.08 | 5MT | F | L | Hatchback FWD 169 A5.000, 169 A1.000 | | GDS17141 | Drive Shaft | | 25 | 22 | 51 | 84 | 593 | |
| | 2006.06-2013.08 | 5MT | F | R | Hatchback FWD 169 A5.000, 169 A1.000 | | GDS17149 | Drive Shaft | | 25 | 22 | 51 | 84 | 828 | |
| | 2006.06-2013.08 | 5MT | F | L/R | Hatchback FWD 169 A5.000, 169 A1.000 | | GCO17026 | Outer Joint | | 25 | 22 | 51 | 84 | 57 | M |
| | 2006.06-2013.08 | 5MT | F | L/R | Hatchback FWD 169 A5.000, 169 A1.000 | | GCI17004 | Inner Joint | | 22 | 21 | 36 | 61 | 93.5 | |
| | 2006.06-2013.08 | 5MT | F | L/R | Hatchback FWD 169 A5.000, 169 A1.000 | | GCI17027 | Inner Joint | | 22 | 22 | 36 | 61.5 | 93.5 | |
| | 2010.09-2013.08 | 5MT | F | L | Hatchback 4WD 169 A5.000, 169 A1.000 | | GDS57622 | Drive Shaft | | 25 | 22 | 51 | 84 | 588 | |
| | 2010.09-2013.08 | 5MT | F | R | Hatchback 4WD 169 A5.000, 169 A1.000 | | GDS83224 | Drive Shaft | | 25 | 22 | 51 | 84 | 820 | |
| | 2010.09-2013.08 | 5MT | F | L/R | Hatchback 4WD 169 A5.000, 169 A1.000 | | GCO17026 | Outer Joint | | 25 | 22 | 51 | 84 | 57 | M |
| | 2010.09-2013.08 | 5MT | F | R | Hatchback 4WD 169 A5.000, 169 A1.000 | | GCI17086 | Inner Joint | | 22 | 22 | 35.9 | 66 | 106.5 | |
| | 2010.09-2013.08 | 5MT | R | L/R | Hatchback 4WD 169 A5.000, 169 A1.000 | | GCO17043 | Outer Joint | | 22 | 20 | 47 | 75.5 | 54.5 | M |
| | 2012.02- | 5MT | F | L/R | Hatchback FWD 199 A9.000;199 A1.000 | Date from:2012.11;Model year to:2016;Equipment code:LL2;Model year from:2016;Equipment code:LL6 | GCO17028 | Outer Joint | | 25 | 24 | 51 | 84.5 | 62 | M |
| | 2012.02- | 5MT | F | L/R | Hatchback FWD 199 A9.000;199 A1.000 | Date to:2014.06;Equipment code:LL1/LL2;Model year from:2016;Equipment code:LL1/LL2;Date to:2014.06;Equipment code:LL2 | GCO17079 | Outer Joint | | 25 | 22 | 51 | 85 | 53.5 | I |
| | 2012.02- | 5MT | F | L | Hatchback FWD 199 A9.000;199 A1.000 | Exhaust Emis:Euro 5/6,Equipment code:LL1/LL2 | GCI17011 | Inner Joint | | 24 | 23 | 29.7 | 86.5 | 93 | |
| | 2012.02- | 5MT | F | L | Hatchback FWD 199 A9.000;199 A1.000 | Exhaust Emis:Euro 6 | GCI83548 | Inner Joint | | 24 | 24 | 29.75 | 86.5 | 99.5 | |
| | 2012.06- | 5MT | F | L | Hatchback 4WD 199 A9.000;199 A1.000 | Date from:2012.09 | GCI83548 | Inner Joint | | 24 | 24 | 29.75 | 86.5 | 99.5 | |
| | 2012.06- | 5MT | F | L | Hatchback 4WD 199 A9.000;199 A1.000 | Date to:2012.08 | GCI99008 | Inner Joint | | 24 | 24 | 29.7 | 86.5 | 93 | |
| | 2012.06- | 5MT | F | R | Hatchback 4WD 199 A9.000;199 A1.000 | Date to:2017.04 | GCI83548 | Inner Joint | | 24 | 24 | 29.75 | 86.5 | 99.5 | |
| | 2012.06- | MT | F | L/R | Hatchback 4WD 199 A9.000;199 A1.000 | Date from:2012.11 | GCO17028 | Outer Joint | | 25 | 24 | 51 | 84.5 | 62 | M |
| | 2012.06- | 5MT | R | L | Hatchback 4WD 199 A9.000;199 A1.000 | | GDS84511 | Drive Shaft | | 22 | | 47 | 79 | 610 | |
| | 2012.06- | 5MT | R | R | Hatchback 4WD 199 A9.000;199 A1.000 | | GDS84385 | Drive Shaft | | 22 | | 47 | 79 | 627 | |
| | 2012.06- | 5MT | R | L | Hatchback 4WD 199 A9.000;199 A1.000 | | GCO82855 | Outer Joint | | 22 | 20 | 47 | 79 | 51 | M |
| | 2012.06- | 5MT | R | R | Hatchback 4WD 199 A9.000;199 A1.000 | | GCO82797 | Outer Joint | | 22 | 20 | 47 | 79 | 51 | M |
| | 2012.06- | 5MT | R | L/R | Hatchback 4WD 199 A9.000;199 A1.000 | | GCI82732 | Inner Joint | | | 21 | | | 88 | |
| 1.3 (59 kw) | 2014.06- | 5MT | F | L | Hatchback 4WD 199 A9.000;312 A8.000;225 A2.000;312 B2.000 | | GCI83548 | Inner Joint | | 24 | 24 | 29.75 | 86.5 | 99.5 | |
| | 2014.06- | 5MT | F | R | Hatchback 4WD 199 A9.000;312 A8.000;225 A2.000;312 B2.000 | Date to:2017.04 | GCI83548 | Inner Joint | | 24 | 24 | 29.75 | 86.5 | 99.5 | |
| | 2014.06- | MT | F | L/R | Hatchback 4WD 199 A9.000;312 A8.000;225 A2.000;312 B2.000 | | GCO17028 | Outer Joint | | 25 | 24 | 51 | 84.5 | 62 | M |
| | 2014.06- | 5MT | R | L | Hatchback 4WD 199 A9.000;312 A8.000;225 A2.000;312 B2.000 | | GDS84511 | Drive Shaft | | 22 | | 47 | 79 | 610 | |
| | 2014.06- | 5MT | R | R | Hatchback 4WD 199 A9.000;312 A8.000;225 A2.000;312 B2.000 | | GDS84385 | Drive Shaft | | 22 | | 47 | 79 | 627 | |
| | 2014.06- | 5MT | R | L | Hatchback 4WD 199 A9.000;312 A8.000;225 A2.000;312 B2.000 | | GCO82855 | Outer Joint | | 22 | 20 | 47 | 79 | 51 | M |
| | 2014.06- | 5MT | R | R | Hatchback 4WD 199 A9.000;312 A8.000;225 A2.000;312 B2.000 | | GCO82797 | Outer Joint | | 22 | 20 | 47 | 79 | 51 | M |
| | 2014.06- | 5MT | R | L/R | Hatchback 4WD 199 A9.000;312 A8.000;225 A2.000;312 B2.000 | | GCI82732 | Inner Joint | | | 21 | | | 88 | |
| 1.3 (70 kw) | 2015.04- | 5MT | F | L | Hatchback 4WD 199 B1.000;330 A1.000;312 B1.000 | | GCI83548 | Inner Joint | | 24 | 24 | 29.75 | 86.5 | 99.5 | |
| | 2015.04- | 5MT | F | R | Hatchback 4WD 199 B1.000;330 A1.000;312 B1.000 | Date to:2017.04 | GCI83548 | Inner Joint | | 24 | 24 | 29.75 | 86.5 | 99.5 | |
| | 2015.04- | MT | F | L/R | Hatchback 4WD 199 B1.000;330 A1.000;312 B1.000 | | GCO17028 | Outer Joint | | 25 | 24 | 51 | 84.5 | 62 | M |
| | 2015.04- | 5MT | R | L | Hatchback 4WD 199 B1.000;330 A1.000;312 B1.000 | | GDS84511 | Drive Shaft | | 22 | | 47 | 79 | 610 | |
| | 2015.04- | 5MT | R | R | Hatchback 4WD 199 B1.000;330 A1.000;312 B1.000 | | GDS84385 | Drive Shaft | | 22 | | 47 | 79 | 627 | |
| | 2015.04- | 5MT | R | L | Hatchback 4WD 199 B1.000;330 A1.000;312 B1.000 | | GCO82855 | Outer Joint | | 22 | 20 | 47 | 79 | 51 | M |
| | 2015.04- | 5MT | R | R | Hatchback 4WD 199 B1.000;330 A1.000;312 B1.000 | | GCO82797 | Outer Joint | | 22 | 20 | 47 | 79 | 51 | M |
| | 2015.04- | 5MT | R | L/R | Hatchback 4WD 199 B1.000;330 A1.000;312 B1.000 | | GCI82732 | Inner Joint | | | 21 | | | 88 | |
| | 2015.04- | 5MT | F | L/R | Hatchback FWD 199 B1.000;330 A1.000;312 B1.000 | Model year to:2016;Equipment code:LL4;Model year from:2016;Equipment code:LL6 | GCO17028 | Outer Joint | | 25 | 24 | 51 | 84.5 | 62 | M |
| | 2015.04- | 5MT | F | L/R | Hatchback FWD 199 B1.000;330 A1.000;312 B1.000 | Date to:2014.06;Equipment code:LL1/LL2;Model year from:2016;Equipment code:LL1/LL2 | GCO17079 | Outer Joint | | 25 | 22 | 51 | 85 | 53.5 | I |

| | YEAR | TRANSM. | F/R | L/R | BODY STYLE & DRIVE TYPE & ENGINE | REMARKS | G-AP Ref. | PRODUCT | ABS | Technical Specifications A | B | C | H | L | P |
|---|---|---|---|---|---|---|---|---|---|---|---|---|---|---|---|
| **FIAT** | | | | | | | | | | | | | | | |
| **Panda** | | | | | | | | | | | | | | | |
| 1.3 (70 kw) | 2015.04- | 5MT | F | L | Hatchback FWD 199 B1.000;330 A1.000;312 B1.000 | Exhaust Emis:Euro 5,Equipment code:LL1;TL1;2LL4;Exhaust Emis:Euro 6,Equipment code:LL1;TL1;2 | GCI17011 | Inner Joint | | 24 | 23 | 29.7 | 86.5 | 93 | |
| | 2015.04- | 5MT | F | L | Hatchback FWD 199 B1.000;330 A1.000;312 B1.000 | Exhaust Emis:Euro 6,Equipment code:LL4 | GCI83548 | Inner Joint | | 24 | 24 | 29.75 | 86.5 | 99.5 | |
| 1.4 (57 kw) | 2010.09-2013.08 | 5MT | F | L | Hatchback FWD 350 A1.000 | | GDS17141 | Drive Shaft | | 25 | 22 | 51 | 84 | 593 | |
| | 2010.09-2013.08 | 5MT | F | R | Hatchback FWD 350 A1.000 | | GDS17149 | Drive Shaft | | 25 | 22 | 51 | 84 | 828 | |
| | 2010.09-2013.08 | 5MT | F | L/R | Hatchback FWD 350 A1.000 | | GCO17026 | Outer Joint | | 25 | 22 | 51 | 84 | 57 | M |
| | 2010.09-2013.08 | 5MT | F | L/R | Hatchback FWD 350 A1.000 | Inner teeth of tranm.side:21 | GCI17004 | Inner Joint | | 22 | 21 | 36 | 61 | 93.5 | |
| | 2010.09-2013.08 | 5MT | F | L/R | Hatchback FWD 350 A1.000 | Inner teeth of tranm.side:22 | GCI17027 | Inner Joint | | 22 | 22 | 36 | 61.5 | 93.5 | |
| 1.4 (74 kw) | 2006.10- | 6MT | F | L | Hatchback FWD 169 A3.000 | | GDS17141 | Drive Shaft | | 25 | 22 | 51 | 84 | 593 | |
| | 2006.10- | 6MT | F | L/R | Hatchback FWD 169 A3.000 | | GCO17026 | Outer Joint | | 25 | 22 | 51 | 84 | 57 | M |
| | 2006.10- | 6MT | F | L | Hatchback FWD 169 A3.000 | | GCI17004 | Inner Joint | | 22 | 21 | 36 | 61 | 93.5 | |
| | 2006.10- | 6MT | F | L/R | Hatchback FWD 169 A3.000 | | GCI17027 | Inner Joint | | 22 | 22 | 36 | 61.5 | 93.5 | |
| **Panda Van** | | | | | | | | | | | | | | | |
| 0.9 (59 kw) | 2013.11- | 5MT | F | L | Hatchback Van FWD 312 A2.000 | Manufacturer:NTN | GDS56089 | Drive Shaft | | 25 | 32 | 51 | 84 | 525 | |
| | 2013.11- | 5MT | F | R | Hatchback Van FWD 312 A2.000 | Manufacturer:GKN | GDS17120 | Drive Shaft | | 25 | 22 | 51 | 84 | 846 | |
| | 2013.11- | 5MT | F | R | Hatchback Van FWD 312 A2.000 | Manufacturer:NTN | GDS56090 | Drive Shaft | | 25 | 32 | 51 | 84 | 758 | |
| | 2013.11- | 5MT | F | L/R | Hatchback Van FWD 312 A2.000 | GKN | GCO17026 | Outer Joint | | 25 | 22 | 51 | 84 | 57 | M |
| | 2013.11- | 5MT | F | L/R | Hatchback Van FWD 312 A2.000 | NTN | GCO82919 | Outer Joint | | 25 | 29 | 51 | 84 | 51 | I |
| | 2013.11- | 5MT | F | L/R | Hatchback Van FWD 312 A2.000 | | GCI17027 | Inner Joint | | 22 | 22 | 36 | 61.5 | 93.5 | |
| | 2015.01- | 5MT | F | L | Hatchback Van FWD 312 A2.000 | Manufacturer:NTN | GDS56089 | Drive Shaft | | 25 | 32 | 51 | 84 | 525 | |
| | 2015.01- | 5MT | F | R | Hatchback Van FWD 312 A2.000 | Manufacturer:GKN | GDS17120 | Drive Shaft | | 25 | 22 | 51 | 84 | 846 | |
| | 2015.01- | 5MT | F | R | Hatchback Van FWD 312 A2.000 | Manufacturer:NTN | GDS56090 | Drive Shaft | | 25 | 32 | 51 | 84 | 758 | |
| | 2015.01- | 5MT | F | L/R | Hatchback Van FWD 312 A2.000 | NTN | GCO82919 | Outer Joint | | 25 | 29 | 51 | 84 | 51 | I |
| | 2015.01- | MT | F | L/R | Hatchback Van FWD 312 A2.000 | GKN | GCO17026 | Outer Joint | | 25 | 22 | 51 | 84 | 57 | M |
| 0.9 (63 kw) | 2012.02- | 5MT | F | L | Hatchback Van FWD 312 A2.000 | Manufacturer:NTN | GDS56089 | Drive Shaft | | 25 | 32 | 51 | 84 | 525 | |
| | 2012.02- | 5MT | F | R | Hatchback Van FWD 312 A2.000 | Manufacturer:GKN | GDS17120 | Drive Shaft | | 25 | 22 | 51 | 84 | 846 | |
| | 2012.02- | 5MT | F | R | Hatchback Van FWD 312 A2.000 | Manufacturer:NTN | GDS56090 | Drive Shaft | | 25 | 32 | 51 | 84 | 758 | |
| | 2012.02- | 5MT | F | L/R | Hatchback Van FWD 312 A2.000 | GKN | GCO17026 | Outer Joint | | 25 | 22 | 51 | 84 | 57 | M |
| | 2012.02- | 5MT | F | L/R | Hatchback Van FWD 312 A2.000 | NTN | GCO82919 | Outer Joint | | 25 | 29 | 51 | 84 | 51 | I |
| | 2012.02- | 5MT | F | L/R | Hatchback Van FWD 312 A2.000 | | GCI17027 | Inner Joint | | 22 | 22 | 36 | 61.5 | 93.5 | |
| | 2012.07- | 5MT | F | L | Hatchback Van FWD 312 A2.000 | Manufacturer:NTN | GDS56089 | Drive Shaft | | 25 | 32 | 51 | 84 | 525 | |
| | 2012.07- | 5MT | F | R | Hatchback Van FWD 312 A2.000 | Manufacturer:GKN | GDS17120 | Drive Shaft | | 25 | 22 | 51 | 84 | 846 | |
| | 2012.07- | 5MT | F | R | Hatchback Van FWD 312 A2.000 | Manufacturer:NTN | GDS56090 | Drive Shaft | | 25 | 32 | 51 | 84 | 758 | |
| | 2012.07- | 5MT | F | L/R | Hatchback Van FWD 312 A2.000 | GKN | GCO17026 | Outer Joint | | 25 | 22 | 51 | 84 | 57 | M |
| | 2012.07- | 5MT | F | L/R | Hatchback Van FWD 312 A2.000 | NTN | GCO82919 | Outer Joint | | 25 | 29 | 51 | 84 | 51 | I |
| | 2012.07- | 5MT | F | L/R | Hatchback Van FWD 312 A2.000 | | GCI17027 | Inner Joint | | 22 | 22 | 36 | 61.5 | 93.5 | |
| | 2012.09- | 6MT | F | R | Hatchback Van 4WD 312 A2.000 | Date to: 2016.08 | GDS84458 | Drive Shaft | | 25 | 22 | 51 | 85 | 843 | |
| | 2012.09- | 6MT | F | L/R | Hatchback Van 4WD 312 A2.000 | Date to:2016.08 | GCO17079 | Outer Joint | | 25 | 22 | 51 | 85 | 53.5 | I |
| | 2012.09- | 6MT | F | R | Hatchback Van 4WD 312 A2.000 | Date to: 2016.08 | GCI17088 | Inner Joint | | 22 | 22 | 35.95 | 66 | 98 | |
| | 2012.09- | 6MT | R | L | Hatchback Van 4WD 312 A2.000 | | GDS84511 | Drive Shaft | | 22 | | 47 | 79 | 610 | |
| | 2012.09- | 6MT | R | R | Hatchback Van 4WD 312 A2.000 | | GDS84385 | Drive Shaft | | 22 | | 47 | 79 | 627 | |
| | 2012.09- | 6MT | R | L | Hatchback Van 4WD 312 A2.000 | | GCO82855 | Outer Joint | | 22 | 20 | 47 | 79 | 51 | M |
| | 2012.09- | 6MT | R | R | Hatchback Van 4WD 312 A2.000 | | GCO82797 | Outer Joint | | 22 | 20 | 47 | 79 | 51 | M |
| | 2012.09- | 6MT | R | L/R | Hatchback Van 4WD 312 A2.000 | | GCI82732 | Inner Joint | | | 21 | | | 88 | |
| 1.0 (33 kw) | 1991.05-2000.08 | MT | F | L/R | Hatchback Van FWD 141C2000/156A2246 | Date to:2000.08 | GCO84001 | Outer Joint | | 20 | 20 | 43.1 | 90.5 | 60.5 | O |
| 1.0 (48 kw) | 2012.02- | 5MT | F | L | Hatchback Van FWD 312 A4.000 | Date to:2013.10 | GDS17101 | Drive Shaft | | 22 | 22 | 47 | 75.5 | 613 | |
| | 2012.02- | 5MT | F | L | Hatchback Van FWD 312 A4.000 | Date from:2013.11,Manufacturer:GKN | GDS17119 | Drive Shaft | | 25 | 22 | 51 | 84 | 615 | |
| | 2012.02- | 5MT | F | L | Hatchback Van FWD 312 A4.000 | Date from:2013.11,Manufacturer:NTN | GDS56089 | Drive Shaft | | 25 | 32 | 51 | 84 | 525 | |
| | 2012.02- | 5MT | F | R | Hatchback Van FWD 312 A4.000 | Date to:2013.10 | GDS17112 | Drive Shaft | | 22 | 22 | 47 | 75.5 | 846 | |
| | 2012.02- | 5MT | F | R | Hatchback Van FWD 312 A4.000 | Date from:2013.11,Manufacturer:GKN | GDS17120 | Drive Shaft | | 25 | 22 | 51 | 84 | 846 | |
| | 2012.02- | 5MT | F | R | Hatchback Van FWD 312 A4.000 | Date from:2013.11,Manufacturer:NTN | GDS56090 | Drive Shaft | | 25 | 32 | 51 | 84 | 758 | |
| | 2012.02- | 5MT | F | L/R | Hatchback Van FWD 312 A4.000 | Date from:2013.11,GKN | GCO17026 | Outer Joint | | 25 | 22 | 51 | 84 | 57 | M |
| | 2012.02- | 5MT | F | L/R | Hatchback Van FWD 312 A4.000 | Date from:2013.11,NTN | GCO82919 | Outer Joint | | 25 | 29 | 51 | 84 | 51 | I |
| | 2012.02- | 5MT | F | L/R | Hatchback Van FWD 312 A4.000 | | GCI17001 | Inner Joint | | 22 | 19 | 36 | 61.5 | 88.5 | |
| | 2012.02- | 5MT | F | L/R | Hatchback Van FWD 312 A4.000 | Date to:2013.10 | GCI17046 | Inner Joint | | 22 | 20 | 36 | 61.5 | 88.5 | |
| 1.0 (51 kw) | 2020.01- | 6MT | F | L/R | Hatchback Van FWD 463 41 162 | | GCO17075 | Outer Joint | | 22 | 21 | 47 | 79 | 54 | M |
| | 2020.01- | 6MT | F | L | Hatchback Van FWD 463 41 162 | | GCI17046 | Inner Joint | | 22 | 20 | 36 | 61.5 | 88.5 | |
| 1.1 (40 kw) | 2004.09- | 5MT | F | L | Hatchback Van FWD 187 A1.000 | | GDS17181 | Drive Shaft | | 22 | 22 | 47 | 75.5 | 595 | |
| | 2004.09- | 5MT | F | R | Hatchback Van FWD 187 A1.000 | | GDS17137 | Drive Shaft | | 22 | 22 | 47 | 75.5 | 827 | |
| | 2004.09- | 5MT | F | L | Hatchback Van FWD 187 A1.000 | | GCO17043 | Outer Joint | | 22 | 20 | 47 | 75.5 | 54.5 | M |
| | 2004.09- | 5MT | F | L/R | Hatchback Van FWD 187 A1.000 | Exhaust Emis:Euro 4 (D4) | GCI17001 | Inner Joint | | 22 | 19 | 36 | 61.5 | 88.5 | |
| | 2004.09- | 5MT | F | L/R | Hatchback Van FWD 187 A1.000 | Exhaust Emis:Euro 4 (D4) | GCI17046 | Inner Joint | | 22 | 20 | 36 | 61.5 | 88.5 | |
| | 2004.09- | 5MT | F | L/R | Hatchback Van FWD 187 A1.000 | Exhaust Emis:Euro 5 | GCI17086 | Inner Joint | | 22 | 22 | 35.9 | 66 | 106.5 | |
| 1.2 (44 kw) | 2004.09- | 5MT | F | L | Hatchback Van 4WD 188 A4.000 | | GDS57622 | Drive Shaft | | 25 | 22 | 51 | 84 | 588 | |
| | 2004.09- | 5MT | F | R | Hatchback Van 4WD 188 A4.000 | Inner teeth of tranm.side:22 | GDS83224 | Drive Shaft | | 25 | 22 | 51 | 84 | 820 | |
| | 2004.09- | 5MT | F | L/R | Hatchback Van 4WD 188 A4.000 | | GCO17026 | Outer Joint | | 25 | 22 | 51 | 84 | 57 | M |

| | YEAR | TRANSM. | F/R | L/R | BODY STYLE & DRIVE TYPE & ENGINE | REMARKS | G-AP Ref. | PRODUCT | ABS | Technical Specifications | | | | | |
|---|---|---|---|---|---|---|---|---|---|---|---|---|---|---|---|
| | | | | | | | | | | A | B | C | H | L | P |
| **FIAT**<br>**Panda Van** | | | | | | | | | | | | | | | |
| 1.2 (44 kw) | 2004.09- | 5MT | F | R | Hatchback Van 4WD 188 A4.000 | | GCI17086 | Inner Joint | | 22 | 22 | 35.9 | 66 | 106.5 | |
| | 2004.09- | 5MT | R | L/R | Hatchback Van 4WD 188 A4.000 | | GCO17043 | Outer Joint | | 22 | 20 | 47 | 75.5 | 54.5 | M |
| | 2004.09- | 5MT | F | L | Hatchback Van FWD 188 A4.000 | | GDS17181 | Drive Shaft | | 22 | 22 | 47 | 75.5 | 595 | |
| | 2004.09- | 5MT | F | R | Hatchback Van FWD 188 A4.000 | | GDS17137 | Drive Shaft | | 22 | 22 | 47 | 75.5 | 827 | |
| | 2004.09- | 5MT | F | L/R | Hatchback Van FWD 188 A4.000 | Exhaust Emis:Euro 4 (D4) | GCI17001 | Inner Joint | | 22 | 19 | 36 | 61.5 | 88.5 | |
| | 2004.09- | 5MT | F | L/R | Hatchback Van FWD 188 A4.000 | Exhaust Emis:Euro 4 (D4) | GCI17046 | Inner Joint | | 22 | 20 | 36 | 61.5 | 88.5 | |
| | 2004.09- | 5MT | F | L/R | Hatchback Van FWD 188 A4.000 | Exhaust Emis:Euro 5 | GCI17086 | Inner Joint | | 22 | 22 | 35.9 | 66 | 106.5 | |
| | 2004.09- | AT/MT | F | L/R | Hatchback Van FWD 188 A4.000 | | GCO17043 | Outer Joint | | 22 | 20 | 47 | 75.5 | 54.5 | M |
| | 2004.09-2011.12 | 5MT | F | L | Hatchback Van FWD 188 A4.000 | | GDS17181 | Drive Shaft | | 22 | 22 | 47 | 75.5 | 595 | |
| | 2004.09-2011.12 | 5MT | F | R | Hatchback Van FWD 188 A4.000 | | GDS17137 | Drive Shaft | | 22 | 22 | 47 | 75.5 | 827 | |
| | 2004.09-2011.12 | 5MT | F | L | Hatchback Van FWD 188 A4.000 | | GCO17043 | Outer Joint | | 22 | 20 | 47 | 75.5 | 54.5 | M |
| | 2004.09-2011.12 | 5MT | F | L/R | Hatchback Van FWD 188 A4.000 | Exhaust Emis:Euro 4 (D4) | GCI17001 | Inner Joint | | 22 | 19 | 36 | 61.5 | 88.5 | |
| | 2004.09-2011.12 | 5MT | F | L/R | Hatchback Van FWD 188 A4.000 | Exhaust Emis:Euro 4 (D4) | GCI17046 | Inner Joint | | 22 | 20 | 36 | 61.5 | 88.5 | |
| | 2004.09-2011.12 | 5MT | F | L/R | Hatchback Van FWD 188 A4.000 | Exhaust Emis:Euro 5 | GCI17086 | Inner Joint | | 22 | 22 | 35.9 | 66 | 106.5 | |
| | 2007.01-2009.11 | 5MT | F | L | Hatchback Van FWD 188 A4.000 | | GDS17141 | Drive Shaft | | 25 | 22 | 51 | 84 | 593 | |
| | 2007.01-2009.11 | 5MT | F | R | Hatchback Van FWD 188 A4.000 | | GDS17149 | Drive Shaft | | 25 | 22 | 51 | 84 | 828 | |
| | 2007.01-2009.11 | 5MT | F | L/R | Hatchback Van FWD 188 A4.000 | | GCO17026 | Outer Joint | | 25 | 22 | 51 | 84 | 57 | M |
| | 2007.01-2009.11 | | F | L/R | Hatchback Van FWD 188 A4.000 | | GCI17027 | Inner Joint | | 22 | 22 | 36 | 61.5 | 93.5 | |
| | 2009.04- | 5MT | F | L | Hatchback Van FWD 188 A4.000 | | GDS17181 | Drive Shaft | | 22 | 22 | 47 | 75.5 | 595 | |
| | 2009.04- | 5MT | F | R | Hatchback Van FWD 188 A4.000 | | GDS17137 | Drive Shaft | | 22 | 22 | 47 | 75.5 | 827 | |
| | 2009.04- | 5MT | F | L | Hatchback Van FWD 188 A4.000 | | GCO17043 | Outer Joint | | 22 | 20 | 47 | 75.5 | 54.5 | M |
| | 2009.04- | 5MT | F | L/R | Hatchback Van FWD 188 A4.000 | Exhaust Emis:Euro 4 (D4) | GCI17001 | Inner Joint | | 22 | 19 | 36 | 61.5 | 88.5 | |
| | 2009.04- | 5MT | F | L/R | Hatchback Van FWD 188 A4.000 | Exhaust Emis:Euro 4 (D4) | GCI17046 | Inner Joint | | 22 | 20 | 36 | 61.5 | 88.5 | |
| | 2009.04- | 5MT | F | L/R | Hatchback Van FWD 188 A4.000 | Exhaust Emis:Euro 5 | GCI17086 | Inner Joint | | 22 | 22 | 35.9 | 66 | 106.5 | |
| 1.2 (51 kw) | 2010.09- | 5MT | F | L | Hatchback Van 4WD 169 A4.000 | | GDS57622 | Drive Shaft | | 25 | 22 | 51 | 84 | 588 | |
| | 2010.09- | 5MT | F | R | Hatchback Van 4WD 169 A4.000 | Inner teeth of tranm.side:22 | GDS83224 | Drive Shaft | | 25 | 22 | 51 | 84 | 820 | |
| | 2010.09- | 5MT | F | L/R | Hatchback Van 4WD 169 A4.000 | | GCO17026 | Outer Joint | | 25 | 22 | 51 | 84 | 57 | M |
| | 2010.09- | 5MT | F | R | Hatchback Van 4WD 169 A4.000 | | GCI17086 | Inner Joint | | 22 | 22 | 35.9 | 66 | 106.5 | |
| | 2010.09- | 5MT | R | L/R | Hatchback Van 4WD 169 A4.000 | | GCO17043 | Outer Joint | | 22 | 20 | 47 | 75.5 | 54.5 | M |
| | 2010.09- | 5MT | F | L | Hatchback Van FWD 169 A4.000 | | GDS17181 | Drive Shaft | | 22 | 22 | 47 | 75.5 | 595 | |
| | 2010.09- | 5MT | F | R | Hatchback Van FWD 169 A4.000 | | GDS17137 | Drive Shaft | | 22 | 22 | 47 | 75.5 | 827 | |
| | 2010.09- | 5MT | F | L | Hatchback Van FWD 169 A4.000 | | GCO17043 | Outer Joint | | 22 | 20 | 47 | 75.5 | 54.5 | M |
| | 2010.09- | 5MT | F | L/R | Hatchback Van FWD 169 A4.000 | Exhaust Emis:Euro 4 (D4) | GCI17046 | Inner Joint | | 22 | 20 | 36 | 61.5 | 88.5 | |
| | 2010.09- | 5MT | F | L/R | Hatchback Van FWD 169 A4.000 | Exhaust Emis:Euro 5 | GCI17086 | Inner Joint | | 22 | 22 | 35.9 | 66 | 106.5 | |
| | 2012.02- | 5MT | F | L | Hatchback Van FWD 169 A4.000 | Model year to:2016;Model year from:2016;Equipment code:LL0/LL1/LL2/LL4 | GDS17101 | Drive Shaft | | 22 | 22 | 47 | 75.5 | 613 | |
| | 2012.02- | 5MT | F | L | Hatchback Van FWD 169 A4.000 | Model year from:2016,Equipment code:LL6/LL7 | GDS56089 | Drive Shaft | | 25 | 32 | 51 | 84 | 525 | |
| | 2012.02- | 5MT | F | R | Hatchback Van FWD 169 A4.000 | Model year to:2016;Model year from:2016;Equipment code:LL0/LL1/LL2/LL4 | GDS17112 | Drive Shaft | | 22 | 22 | 47 | 75.5 | 846 | |
| | 2012.02- | 5MT | F | R | Hatchback Van FWD 169 A4.000 | Model year from:2016,Equipment code:LL6/LL7 | GDS56090 | Drive Shaft | | 25 | 32 | 51 | 84 | 758 | |
| | 2012.02- | 5MT | F | L/R | Hatchback Van FWD 169 A4.000 | Model year from:2016,Equipment code:LL6/LL7 | GCO82919 | Outer Joint | | 25 | 29 | 51 | 84 | 51 | I |
| | 2012.02- | 5MT | F | L/R | Hatchback Van FWD 169 A4.000 | | GCI17027 | Inner Joint | | 22 | 22 | 36 | 61.5 | 93.5 | |
| | 2012.02- | 5MT | F | L/R | Hatchback Van FWD 169 A4.000 | | GCI17046 | Inner Joint | | 22 | 20 | 36 | 61.5 | 88.5 | |
| | 2012.06- | 5MT | F | L | Hatchback Van FWD 169 A4.000 | Model year to:2016;Model year from:2016;Equipment code:LL0/LL1/LL2/LL4 | GDS17101 | Drive Shaft | | 22 | 22 | 47 | 75.5 | 613 | |
| | 2012.06- | 5MT | F | L | Hatchback Van FWD 169 A4.000 | Model year from:2016,Equipment code:LL6/LL7 | GDS56089 | Drive Shaft | | 25 | 32 | 51 | 84 | 525 | |
| | 2012.06- | 5MT | F | R | Hatchback Van FWD 169 A4.000 | Model year to:2016;Model year from:2016;Equipment code:LL0/LL1/LL2/LL4 | GDS17112 | Drive Shaft | | 22 | 22 | 47 | 75.5 | 846 | |
| | 2012.06- | 5MT | F | R | Hatchback Van FWD 169 A4.000 | Model year from:2016,Equipment code:LL6/LL7 | GDS56090 | Drive Shaft | | 25 | 32 | 51 | 84 | 758 | |
| | 2012.06- | 5MT | F | L/R | Hatchback Van FWD 169 A4.000 | Model year to:2016;Model year from:2016;Equipment code:LL0/LL1/LL2/LL4 | GCO17043 | Outer Joint | | 22 | 20 | 47 | 75.5 | 54.5 | M |
| | 2012.06- | 5MT | F | L/R | Hatchback Van FWD 169 A4.000 | Model year from:2016,Equipment code:LL6/LL7 | GCO82919 | Outer Joint | | 25 | 29 | 51 | 84 | 51 | I |
| | 2012.06- | 5MT | F | L/R | Hatchback Van FWD 169 A4.000 | | GCI17001 | Inner Joint | | 22 | 19 | 36 | 61.5 | 88.5 | |
| | 2012.06- | 5MT | F | L/R | Hatchback Van FWD 169 A4.000 | Model year to:2016;Model year from:2016;Equipment code:LL0/LL1/LL2/LL4 | GCI17046 | Inner Joint | | 22 | 20 | 36 | 61.5 | 88.5 | |
| 1.3 (51 kw) | 2004.03- | 5MT | F | L | Hatchback Van FWD 188 A8.000 | | GDS17141 | Drive Shaft | | 25 | 22 | 51 | 84 | 593 | |
| | 2004.03- | 5MT | F | R | Hatchback Van FWD 188 A8.000 | | GDS17149 | Drive Shaft | | 25 | 22 | 51 | 84 | 828 | |
| | 2004.03- | 5MT | F | L/R | Hatchback Van FWD 188 A8.000 | | GCO17026 | Outer Joint | | 25 | 22 | 51 | 84 | 57 | M |
| | 2004.03- | 5MT | F | L/R | Hatchback Van FWD 188 A8.000 | | GCI17027 | Inner Joint | | 22 | 22 | 36 | 61.5 | 93.5 | |
| | 2004.03- | MT | F | L | Hatchback Van FWD 188 A8.000 | | GCI17004 | Inner Joint | | 22 | 21 | 36 | 61 | 93.5 | |
| | 2004.10-2006.12 | 5MT | F | L | Hatchback Van 4WD 188 A8.000 | | GDS57622 | Drive Shaft | | 25 | 22 | 51 | 84 | 588 | |
| | 2004.10-2006.12 | 5MT | F | R | Hatchback Van 4WD 188 A8.000 | Inner teeth of tranm.side:22 | GDS83224 | Drive Shaft | | 25 | 22 | 51 | 84 | 820 | |
| | 2004.10-2006.12 | 5MT | F | L/R | Hatchback Van 4WD 188 A8.000 | | GCO17026 | Outer Joint | | 25 | 22 | 51 | 84 | 57 | M |
| | 2004.10-2006.12 | 5MT | F | R | Hatchback Van 4WD 188 A8.000 | | GCI17086 | Inner Joint | | 22 | 22 | 35.9 | 66 | 106.5 | |
| | 2004.10-2006.12 | 5MT | R | L/R | Hatchback Van 4WD 188 A8.000 | | GCO17043 | Outer Joint | | 22 | 20 | 47 | 75.5 | 54.5 | M |
| 1.3 (55 kw) | 2006.01- | 5MT | F | L | Hatchback Van 4WD 169 A1.000 | | GDS57622 | Drive Shaft | | 25 | 22 | 51 | 84 | 588 | |
| | 2006.01- | 5MT | F | R | Hatchback Van 4WD 169 A1.000 | Inner teeth of tranm.side:22 | GDS83224 | Drive Shaft | | 25 | 22 | 51 | 84 | 820 | |
| | 2006.01- | 5MT | F | L/R | Hatchback Van 4WD 169 A1.000 | | GCO17026 | Outer Joint | | 25 | 22 | 51 | 84 | 57 | M |
| | 2006.01- | 5MT | F | R | Hatchback Van 4WD 169 A1.000 | | GCI17086 | Inner Joint | | 22 | 22 | 35.9 | 66 | 106.5 | |
| | 2006.01- | 5MT | R | L/R | Hatchback Van 4WD 169 A1.000 | | GCO17043 | Outer Joint | | 22 | 20 | 47 | 75.5 | 54.5 | M |
| | 2006.01- | 5MT | F | L | Hatchback Van FWD 169 A1.000 | | GDS17141 | Drive Shaft | | 25 | 22 | 51 | 84 | 593 | |

| | YEAR | TRANSM. | F/R | L/R | BODY STYLE & DRIVE TYPE & ENGINE | REMARKS | G-AP Ref. | PRODUCT | ABS | Technical Specifications A | B | C | H | L | P |
|---|---|---|---|---|---|---|---|---|---|---|---|---|---|---|---|
| **FIAT** | | | | | | | | | | | | | | | |
| **Panda Van** | | | | | | | | | | | | | | | |
| 1.3 (55 kw) | 2006.01- | 5MT | F | R | Hatchback Van FWD 169 A1.000 | | GDS17149 | Drive Shaft | | 25 | 22 | 51 | 84 | 828 | |
| | 2006.01- | 5MT | F | L/R | Hatchback Van FWD 169 A1.000 | | GCO17026 | Outer Joint | | 25 | 22 | 51 | 84 | 57 | M |
| | 2006.01- | 5MT | F | L/R | Hatchback Van FWD 169 A1.000 | | GCI17027 | Inner Joint | | 22 | 22 | 36 | 61.5 | 93.5 | |
| | 2006.01- | MT | F | L | Hatchback Van FWD 169 A1.000 | | GCI17004 | Inner Joint | | 22 | 21 | 36 | 61 | 93.5 | |
| | 2012.02- | 5MT | F | L/R | Hatchback Van FWD 199 A9.000 | Model year to:2016,Equipment code:LL4,Model year from:2016,Equipment code:LL6 | GCO17028 | Outer Joint | | 25 | 24 | 51 | 84.5 | 62 | M |
| | 2012.02- | 5MT | F | L/R | Hatchback Van FWD 199 A9.000 | Date to:2016.06,Equipment code:LL1/LL2,Model year from:2016,Equipment code:LL1/LL2 | GCO17079 | Outer Joint | | 25 | 22 | 51 | 85 | 53.5 | I |
| | 2012.02- | 5MT | F | L | Hatchback Van FWD 199 A9.000 | Exhaust Emis:Euro 5,Equipment code:LL1/LL2/LL4,Exhaust Emis:Euro 6,Equipment code:LL1/LL2 | GCI17011 | Inner Joint | | 24 | 23 | 29.7 | 86.5 | 93 | |
| | 2012.02- | 5MT | F | L | Hatchback Van FWD 199 A9.000 | Exhaust Emis:Euro 6,Equipment code:LL4 | GCI83548 | Inner Joint | | 24 | 24 | 29.75 | 86.5 | 99.5 | |
| | 2012.06- | 5MT | F | L | Hatchback Van 4WD 199 A9.000 | | GCI83548 | Inner Joint | | 24 | 24 | 29.75 | 86.5 | 99.5 | |
| | 2012.06- | 5MT | F | R | Hatchback Van 4WD 199 A9.000 | Date to:2017.04 | GCI83548 | Inner Joint | | 24 | 24 | 29.75 | 86.5 | 99.5 | |
| | 2012.06- | MT | F | L/R | Hatchback Van 4WD 199 A9.000 | | GCO17028 | Outer Joint | | 25 | 24 | 51 | 84.5 | 62 | M |
| | 2012.06- | 5MT | R | L | Hatchback Van 4WD 199 A9.000 | | GDS84511 | Drive Shaft | | 22 | | 47 | 79 | 610 | |
| | 2012.06- | 5MT | R | R | Hatchback Van 4WD 199 A9.000 | | GDS84385 | Drive Shaft | | 22 | | 47 | 79 | 627 | |
| | 2012.06- | 5MT | R | L | Hatchback Van 4WD 199 A9.000 | | GCO82855 | Outer Joint | | 22 | 20 | 47 | 79 | 51 | M |
| | 2012.06- | 5MT | R | R | Hatchback Van 4WD 199 A9.000 | | GCO82797 | Outer Joint | | 22 | 20 | 47 | 79 | 51 | M |
| | 2012.06- | 5MT | R | L/R | Hatchback Van 4WD 199 A9.000 | | GCI82732 | Inner Joint | | | 21 | | | 88 | |
| 1.3 (59 kw) | 2014.06- | 5MT | F | L | Hatchback Van 4WD 225 A2.000 | | GCI83548 | Inner Joint | | 24 | 24 | 29.75 | 86.5 | 99.5 | |
| | 2014.06- | 5MT | F | R | Hatchback Van 4WD 225 A2.000 | Date to:2017.04 | GCI83548 | Inner Joint | | 24 | 24 | 29.75 | 86.5 | 99.5 | |
| | 2014.06- | MT | F | L/R | Hatchback Van 4WD 225 A2.000 | | GCO17028 | Outer Joint | | 25 | 24 | 51 | 84.5 | 62 | M |
| | 2014.06- | 5MT | R | L | Hatchback Van 4WD 225 A2.000 | | GDS84511 | Drive Shaft | | 22 | | 47 | 79 | 610 | |
| | 2014.06- | 5MT | R | R | Hatchback Van 4WD 225 A2.000 | | GDS84385 | Drive Shaft | | 22 | | 47 | 79 | 627 | |
| | 2014.06- | 5MT | R | L | Hatchback Van 4WD 225 A2.000 | | GCO82855 | Outer Joint | | 22 | 20 | 47 | 79 | 51 | M |
| | 2014.06- | 5MT | R | R | Hatchback Van 4WD 225 A2.000 | | GCO82797 | Outer Joint | | 22 | 20 | 47 | 79 | 51 | M |
| | 2014.06- | 5MT | R | L/R | Hatchback Van 4WD 225 A2.000 | | GCI82732 | Inner Joint | | | 21 | | | 88 | |
| | 2015.12- | 5MT | F | L/R | Hatchback Van FWD 312 A8.000;225 A2.000;312 B2.000 | Model year to:2016,Equipment code:LL4,Model year from:2016,Equipment code:LL6 | GCO17028 | Outer Joint | | 25 | 24 | 51 | 84.5 | 62 | M |
| | 2015.12- | 5MT | F | L/R | Hatchback Van FWD 312 A8.000;225 A2.000;312 B2.000 | Date to:2016.06,Equipment code:LL1/LL2,Model year from:2016,Equipment code:LL1/LL2 | GCO17079 | Outer Joint | | 25 | 22 | 51 | 85 | 53.5 | I |
| | 2015.12- | 5MT | F | L | Hatchback Van FWD 312 A8.000;225 A2.000;312 B2.000 | Exhaust Emis:Euro 5,Equipment code:LL1/LL2/LL4,Exhaust Emis:Euro 6,Equipment code:LL1/LL2 | GCI17011 | Inner Joint | | 24 | 23 | 29.7 | 86.5 | 93 | |
| | 2015.12- | 5MT | F | L | Hatchback Van FWD 312 A8.000;225 A2.000;312 B2.000 | Exhaust Emis:Euro 6,Equipment code:LL4 | GCI83548 | Inner Joint | | 24 | 24 | 29.75 | 86.5 | 99.5 | |
| 1.4 (57 kw) | 2009.10- | 5MT | F | L | Hatchback Van FWD 350 A1.000 | | GDS17141 | Drive Shaft | | 25 | 22 | 51 | 84 | 593 | |
| | 2009.10- | 5MT | F | R | Hatchback Van FWD 350 A1.000 | | GDS17149 | Drive Shaft | | 25 | 22 | 51 | 84 | 828 | |
| | 2009.10- | MT | F | L/R | Hatchback Van FWD 350 A1.000 | | GCO17026 | Outer Joint | | 25 | 22 | 51 | 84 | 57 | M |
| | 2009.10- | | F | L/R | Hatchback Van FWD 350 A1.000 | | GCI17027 | Inner Joint | | 22 | 22 | 36 | 61.5 | 93.5 | |
| **Punto** | | | | | | | | | | | | | | | |
| 0.9 (63 kw) | 2012.03- | 6MT | F | L | Hatchback FWD 312 A2.000 | | GDS17224 | Drive Shaft | | 22 | 22 | 51 | 79 | 670 | |
| | 2012.03- | 6MT | F | R | Hatchback FWD 312 A2.000 | | GDS17225 | Drive Shaft | | 22 | 22 | 51 | 79 | 860 | |
| | 2012.03- | 6MT | F | L/R | Hatchback FWD 312 A2.000 | | GCO17070 | Outer Joint | | 22 | 22 | 51 | 79 | 57.5 | M |
| | 2012.03- | 6MT | F | L/R | Hatchback FWD 312 A2.000 | | GCI17004 | Inner Joint | | 22 | 21 | 36 | 61 | 93.5 | |
| 0.9 (74 kw) | 2013.12- | 6MT | F | L | Hatchback FWD 199 B6.000;199 B7.000 | | GDS17224 | Drive Shaft | | 22 | 22 | 51 | 79 | 670 | |
| | 2013.12- | 6MT | F | R | Hatchback FWD 199 B6.000;199 B7.000 | | GDS17225 | Drive Shaft | | 22 | 22 | 51 | 79 | 860 | |
| | 2013.12- | 6MT | F | L/R | Hatchback FWD 199 B6.000;199 B7.000 | | GCO17070 | Outer Joint | | 22 | 22 | 51 | 79 | 57.5 | M |
| | 2013.12- | 6MT | F | L/R | Hatchback FWD 199 B6.000;199 B7.000 | | GCI17004 | Inner Joint | | 22 | 21 | 36 | 61 | 93.5 | |
| 0.9 (77 kw) | 2013.07- | 6MT | F | L | Hatchback FWD 199 B6.000 | | GDS17224 | Drive Shaft | | 22 | 22 | 51 | 79 | 670 | |
| | 2013.07- | 6MT | F | R | Hatchback FWD 199 B6.000 | | GDS17225 | Drive Shaft | | 22 | 22 | 51 | 79 | 860 | |
| | 2013.07- | 6MT | F | L/R | Hatchback FWD 199 B6.000 | | GCO17070 | Outer Joint | | 22 | 22 | 51 | 79 | 57.5 | M |
| | 2013.07- | 6MT | F | L/R | Hatchback FWD 199 B6.000 | | GCI17004 | Inner Joint | | 22 | 21 | 36 | 61 | 93.5 | |
| 1.1 (40 kw) | 1993.09-1999.09 | 5MT | F | L | Hatchback FWD 176A6000/176B2000 | | GDS17018 | Drive Shaft | | 22 | 22 | 46.8 | 75.5 | 581 | |
| | 1993.09-1999.09 | 5MT | F | R | Hatchback FWD 176A6000/176B2000 | | GDS17022 | Drive Shaft | | 22 | 22 | 46.8 | 75.5 | 874 | |
| | 1993.09-1999.09 | MT | F | L | Hatchback FWD 176A6000/176B2000 | | GDS17037 | Drive Shaft | 44T | 22 | 22 | 46.8 | 75.5 | 581 | |
| | 1993.09-1999.09 | MT | F | R | Hatchback FWD 176A6000/176B2000 | | GDS17039 | Drive Shaft | 44T | 22 | 22 | 46.8 | 75.5 | 874 | |
| | 1993.09-1999.09 | MT | F | L/R | Hatchback FWD 176A6000/176B2000 | | GCO17001 | Outer Joint | | 22 | 20 | 46.8 | 75.5 | 52 | O |
| | 1993.09-1999.09 | MT | F | L/R | Hatchback FWD 176A6000/176B2000 | | GCO17039 | Outer Joint | 44T | 22 | 20 | 46.8 | 75.5 | 52 | O |
| | 1993.09-1999.09 | MT | F | L/R | Hatchback FWD 176A6000/176B2000 | | GCI17001 | Inner Joint | | 22 | 19 | 36 | 61.5 | 88.5 | |
| 1.2 (38 kw) | 2004.04-2006.04 | 5MT | F | L | Hatchback FWD 188 A4.000 | | GDS17032 | Drive Shaft | | 22 | 22 | 51 | 79.5 | 612 | |
| | 2004.04-2006.04 | 5MT | F | R | Hatchback FWD 188 A4.000 | | GDS17033 | Drive Shaft | | 22 | 22 | 51 | 79.5 | 841 | |
| | 2004.04-2006.04 | 5MT | F | L/R | Hatchback FWD 188 A4.000 | | GCI17004 | Inner Joint | | 22 | 21 | 36 | 61 | 93.5 | |
| | 2004.04-2006.04 | | F | L/R | Hatchback FWD 188 A4.000 | | GCO17014 | Outer Joint | | 22 | 21 | 51 | 79.5 | 54 | M |
| | 2004.04-2006.04 | | F | L/R | Hatchback FWD 188 A4.000 | | GCO17052 | Outer Joint | | 22 | 21 | 51.2 | 79.5 | 54 | M |
| | 2004.04-2006.04 | | F | L/R | Hatchback FWD 188 A4.000 | | GCO99018 | Outer Joint | | 22 | 27 | 51 | 79.5 | 54 | O |
| 1.2 (43 kw) | 1993.10-1997.03 | MT | F | L | Hatchback FWD 176A7000 | Model year to:1997.03 | GDS17018 | Drive Shaft | | 22 | 22 | 46.8 | 75.5 | 581 | |
| | 1993.10-1997.03 | MT | F | L | Hatchback FWD 176A7000 | Model year to:1997.03 | GDS17037 | Drive Shaft | 44T | 22 | 22 | 46.8 | 75.5 | 581 | |
| | 1993.10-1997.03 | MT | F | R | Hatchback FWD 176A7000 | Model year to:1997.03 | GDS17022 | Drive Shaft | | 22 | 22 | 46.8 | 75.5 | 874 | |
| | 1993.10-1997.03 | MT | F | L/R | Hatchback FWD 176A7000 | Model year to:1997.03 | GCO17001 | Outer Joint | | 22 | 20 | 46.8 | 75.5 | 52 | O |
| | 1993.10-1997.03 | MT | F | L/R | Hatchback FWD 176A7000 | Model year to:1997.03 | GCO17039 | Outer Joint | 44T | 22 | 20 | 46.8 | 75.5 | 52 | O |
| 1.2 (44 kw) | 1993.10-1999.07 | MT | F | L | Hatchback FWD 176B1000/176B4000 | | GDS17018 | Drive Shaft | | 22 | 22 | 46.8 | 75.5 | 581 | |
| | 1993.10-1999.07 | MT | F | L | Hatchback FWD 176B1000/176B4000 | | GDS17037 | Drive Shaft | 44T | 22 | 22 | 46.8 | 75.5 | 581 | |

| | YEAR | TRANSM. | F/R | L/R | BODY STYLE & DRIVE TYPE & ENGINE | REMARKS | G-AP Ref. | PRODUCT | ABS | Technical Specifications A | B | C | H | L | P |
|---|---|---|---|---|---|---|---|---|---|---|---|---|---|---|---|
| **FIAT** **Punto** | | | | | | | | | | | | | | | |
| 1.2 (44 kw) | 1993.10-1999.07 | MT | F | R | Hatchback FWD 176B1000/176B4000 | | GDS17022 | Drive Shaft | | 22 | 22 | 46.8 | 75.5 | 874 | |
| | 1999.09-2010.12 | 5MT | F | L | Hatchback FWD 188 A4.000 | Inner teeth of wheel side:21;For vehicles with air conditioning;Manufacturer:GKN | GDS17032 | Drive Shaft | | 22 | 22 | 51 | 79.5 | 612 | |
| | 1999.09-2010.12 | 5MT | F | R | Hatchback FWD 188 A4.000 | Inner teeth of wheel side:21;For vehicles with air conditioning;Manufacturer:GKN | GDS17033 | Drive Shaft | | 22 | 22 | 51 | 79.5 | 841 | |
| | 1999.09-2010.12 | 5MT | F | L/R | Hatchback FWD 188 A4.000 | Inner teeth of tranm.side:21;For vehicles with air conditioning;Manufacturer:GKN | GCI17004 | Inner Joint | | 22 | 21 | 36 | 61 | 93.5 | |
| | 1999.09-2010.12 | MT | F | L | Hatchback FWD 188 A4.000 | Inner teeth of wheel side:20 | GDS17023 | Drive Shaft | | 22 | 22 | 46.8 | 75.5 | 606 | |
| | 1999.09-2010.12 | MT | F | L | Hatchback FWD 188 A4.000 | Inner teeth of wheel side:20 | GCO17001 | Outer Joint | | 22 | 20 | 46.8 | 75.5 | 52 | O |
| | 1999.09-2010.12 | MT | F | R | Hatchback FWD 188 A4.000 | Inner teeth of wheel side:27 | GCO99325 | Outer Joint | | 22 | 27 | 51 | 79.5 | 54 | O |
| | 1999.09-2010.12 | MT | F | L/R | Hatchback FWD 188 A4.000 | Inner teeth of wheel side:21;For vehicles with air conditioning;Manufacturer:GKN | GCO17014 | Outer Joint | | 22 | 21 | 51 | 79.5 | 54 | M |
| | 1999.09-2010.12 | MT | F | L | Hatchback FWD 188 A4.000 | Inner teeth of tranm.side:19 | GCI17001 | Inner Joint | | 22 | 19 | 36 | 61.5 | 88.5 | |
| | 2001.08-2003.05 | 5MT | F | L | Hatchback FWD 188 A4.000 | | GDS17032 | Drive Shaft | | 22 | 22 | 51 | 79.5 | 612 | |
| | 2001.08-2003.05 | 5MT | F | R | Hatchback FWD 188 A4.000 | | GDS17033 | Drive Shaft | | 22 | 22 | 51 | 79.5 | 841 | |
| | 2001.08-2003.05 | 5MT | F | L/R | Hatchback FWD 188 A4.000 | | GCI17004 | Inner Joint | | 22 | 21 | 36 | 61 | 93.5 | |
| | 2001.08-2003.05 | | F | L/R | Hatchback FWD 188 A4.000 | | GCO17014 | Outer Joint | | 22 | 21 | 51 | 79.5 | 54 | M |
| | 2001.08-2003.05 | | F | L/R | Hatchback FWD 188 A4.000 | | GCO17052 | Outer Joint | | 22 | 21 | 51.2 | 79.5 | 54 | M |
| | 2003.09-2012.03 | 5MT | F | L | Hatchback FWD 188 A4.000 | Inner teeth of wheel side:21;For vehicles with air conditioning | GDS17032 | Drive Shaft | | 22 | 22 | 51 | 79.5 | 612 | |
| | 2003.09-2012.03 | 5MT | F | R | Hatchback FWD 188 A4.000 | Inner teeth of wheel side:21;For vehicles with air conditioning | GDS17033 | Drive Shaft | | 22 | 22 | 51 | 79.5 | 841 | |
| | 2003.09-2012.03 | 5MT | F | L/R | Hatchback FWD 188 A4.000 | | GCO17014 | Outer Joint | | 22 | 21 | 51 | 79.5 | 54 | M |
| | 2003.09-2012.03 | 5MT | F | L/R | Hatchback FWD 188 A4.000 | | GCO17052 | Outer Joint | | 22 | 21 | 51.2 | 79.5 | 54 | M |
| | 2003.09-2012.03 | 5MT | F | L/R | Hatchback FWD 188 A4.000 | | GCO99018 | Outer Joint | | 22 | 27 | 51 | 79.5 | 54 | O |
| | 2003.09-2012.03 | 5MT | F | L | Hatchback FWD 188 A4.000 | | GCI17004 | Inner Joint | | 22 | 21 | 36 | 61 | 93.5 | |
| | 2003.09-2012.03 | AT | F | L | Hatchback FWD 188 A4.000 | | GDS17158 | Drive Shaft | | 22 | 23 | 51 | 79.5 | 512 | |
| | 2007.08-2012.03 | 5MT | F | L | Hatchback FWD 188 A4.000 | | GDS17032 | Drive Shaft | | 22 | 22 | 51 | 79.5 | 612 | |
| | 2007.08-2012.03 | 5MT | F | R | Hatchback FWD 188 A4.000 | | GDS17033 | Drive Shaft | | 22 | 22 | 51 | 79.5 | 841 | |
| | 2007.08-2012.03 | 5MT | F | L/R | Hatchback FWD 188 A4.000 | | GCO17014 | Outer Joint | | 22 | 21 | 51 | 79.5 | 54 | M |
| | 2007.08-2012.03 | 5MT | F | L/R | Hatchback FWD 188 A4.000 | | GCO17052 | Outer Joint | | 22 | 21 | 51.2 | 79.5 | 54 | M |
| | 2007.08-2012.03 | 5MT | F | L/R | Hatchback FWD 188 A4.000 | | GCO99018 | Outer Joint | | 22 | 27 | 51 | 79.5 | 54 | O |
| | 2007.08-2012.03 | 5MT | F | L/R | Hatchback FWD 188 A4.000 | | GCI17004 | Inner Joint | | 22 | 21 | 36 | 61 | 93.5 | |
| 1.2 (49 kw) | 2014.02- | 5MT | F | R | Hatchback FWD 199 B9.000 | | GDS17111 | Drive Shaft | | 22 | 22 | 51.2 | 79.5 | 887 | |
| | 2014.02- | MT | F | L | Hatchback FWD 199 B9.000 | | GCO99325 | Outer Joint | | 22 | 27 | 51 | 79.5 | 54 | O |
| | 2014.02- | | F | L | Hatchback FWD 199 B9.000 | | GDS17222 | Drive Shaft | | 22 | 22 | 51 | 79.5 | 646 | |
| | 2014.02- | | F | L/R | Hatchback FWD 199 B9.000 | | GCO17014 | Outer Joint | | 22 | 21 | 51 | 79.5 | 54 | M |
| | 2014.02- | | F | L | Hatchback FWD 199 B9.000 | | GCI17004 | Inner Joint | | 22 | 21 | 36 | 61 | 93.5 | |
| 1.2 (51 kw) | 2012.03- | 5MT | F | L | Hatchback FWD 169 A4.000 | | GDS17222 | Drive Shaft | | 22 | 22 | 51 | 79.5 | 646 | |
| | 2012.03- | 5MT | F | R | Hatchback FWD 169 A4.000 | | GDS17111 | Drive Shaft | | 22 | 22 | 51.2 | 79.5 | 887 | |
| | 2012.03- | 5MT | F | L/R | Hatchback FWD 169 A4.000 | | GCO17014 | Outer Joint | | 22 | 21 | 51 | 79.5 | 54 | M |
| | 2012.03- | 5MT | F | L/R | Hatchback FWD 169 A4.000 | VET no. to:1014503 | GCO17052 | Outer Joint | | 22 | 21 | 51.2 | 79.5 | 54 | M |
| | 2012.03- | 5MT | F | L/R | Hatchback FWD 169 A4.000 | | GCO44081 | Outer Joint | | 22 | 21 | 51 | 79.5 | 54 | M |
| | 2012.03- | 5MT | F | L/R | Hatchback FWD 169 A4.000 | | GCI17004 | Inner Joint | | 22 | 21 | 36 | 61 | 93.5 | |
| 1.2 (54 kw) | 1993.10-1998.10 | MT | F | L | Hatchback FWD 176A8000 | Model year to:1998.10 | GDS17018 | Drive Shaft | | 22 | 22 | 46.8 | 75.5 | 581 | |
| | 1993.10-1998.10 | MT | F | L | Hatchback FWD 176A8000 | | GDS17037 | Drive Shaft | 44T | 22 | 22 | 46.8 | 75.5 | 581 | |
| | 1993.10-1998.10 | MT | F | R | Hatchback FWD 176A8000 | Model year to:1998.10 | GDS17022 | Drive Shaft | | 22 | 22 | 46.8 | 75.5 | 874 | |
| | 1993.10-1998.10 | MT | F | L/R | Hatchback FWD 176A8000 | Model year to:1998.10 | GCO17001 | Outer Joint | | 22 | 20 | 46.8 | 75.5 | 52 | O |
| | 1993.10-1998.10 | MT | F | L/R | Hatchback FWD 176A8000 | Model year to:1998.10 | GCO17039 | Outer Joint | 44T | 22 | 20 | 46.8 | 75.5 | 52 | O |
| | 1993.10-1998.10 | MT | F | L | Hatchback FWD 176A8000 | Model year to:1998.10 | GCI17001 | Inner Joint | | 22 | 19 | 36 | 61.5 | 88.5 | |
| 1.2 (59 kw) | 1999.09-2006.04 | 5AT/5MT/6MT | F | L/R | Hatchback FWD 188 A5.000 | | GCO17014 | Outer Joint | | 22 | 21 | 51 | 79.5 | 54 | M |
| | 1999.09-2006.04 | 5AT/5MT/6MT | F | L/R | Hatchback FWD 188 A5.000 | | GCO17052 | Outer Joint | | 22 | 21 | 51.2 | 79.5 | 54 | M |
| | 1999.09-2006.04 | 5MT/6MT | F | L | Hatchback FWD 188 A5.000 | Facelift | GDS17032 | Drive Shaft | | 22 | 22 | 51 | 79.5 | 612 | |
| | 1999.09-2006.04 | 5MT/6MT | F | L | Hatchback FWD 188 A5.000 | No Facelift | GDS82005 | Drive Shaft | | 25 | | 51 | 85 | 450 | |
| | 1999.09-2006.04 | 5MT/6MT | F | R | Hatchback FWD 188 A5.000 | Facelift | GDS17033 | Drive Shaft | | 22 | 22 | 51 | 79.5 | 841 | |
| | 1999.09-2006.04 | 5MT/6MT | F | R | Hatchback FWD 188 A5.000 | No Facelift | GDS82009 | Drive Shaft | | 25 | | 51 | 85 | 494 | |
| | 1999.09-2006.04 | 5MT/6MT | F | R | Hatchback FWD 188 A5.000 | Not for Facelift | GCI82005 | Inner Joint | | | 25 | | | 32 | |
| | 1999.09-2006.04 | 5MT/6MT | F | R | Hatchback FWD 188 A5.000 | Not for Facelift | GCI82011 | Inner Joint | | | 25 | | | 32 | |
| | 1999.09-2006.04 | MT | F | L/R | Hatchback FWD 188 A5.000 | Facelift | GCI17004 | Inner Joint | | 22 | 21 | 36 | 61 | 93.5 | |
| | 1999.09-2006.04 | Semi-AT | F | L | Hatchback FWD 188 A5.000 | No Facelift | GDS17158 | Drive Shaft | | 22 | 23 | 51 | 79.5 | 512 | |
| 1.2 (63 kw) | 1997.04-1999.09 | MT | F | L | Hatchback FWD 176B9000 | | GDS17037 | Drive Shaft | 44T | 22 | 22 | 46.8 | 75.5 | 581 | |
| | 1997.04-1999.09 | MT | F | L/R | Hatchback FWD 176B9000 | | GCO17001 | Outer Joint | | 22 | 20 | 46.8 | 75.5 | 52 | O |
| | 1997.04-1999.09 | MT | F | L/R | Hatchback FWD 176B9000 | | GCO17039 | Outer Joint | 44T | 22 | 20 | 46.8 | 75.5 | 52 | O |
| | 1997.04-1999.09 | | F | R | Hatchback FWD 176B9000 | | GDS17039 | Drive Shaft | 44T | 22 | 22 | 46.8 | 75.5 | 874 | |
| 1.3 (51 kw) | 2003.06-2012.03 | 5MT | F | L | Hatchback FWD 188 A9.000 | Trans. side with housing | GDS82005 | Drive Shaft | | 25 | | 51 | 85 | 450 | |
| | 2003.06-2012.03 | 5MT | F | R | Hatchback FWD 188 A9.000 | Trans. side with housing | GDS82009 | Drive Shaft | | 25 | | 51 | 85 | 494 | |
| | 2003.06-2012.03 | 5MT | F | L/R | Hatchback FWD 188 A9.000 | | GCO17042 | Outer Joint | | 25 | 25 | 51 | 85 | 58 | O |
| | 2003.06-2012.03 | 5MT | F | L/R | Hatchback FWD 188 A9.000 | | GCI82005 | Inner Joint | | | 25 | | | 32 | |
| | 2003.06-2012.03 | MT | F | L | Hatchback FWD 188 A9.000 | Trans. side without housing | GDS17192 | Drive Shaft | | 25 | 34 | 51 | 84.5 | 452 | |
| | 2003.06-2012.03 | MT | F | R | Hatchback FWD 188 A9.000 | Trans. side without housing | GDS17193 | Drive Shaft | | 25 | 34 | 51 | 84.5 | 469 | |
| | 2003.06-2012.03 | MT | F | R | Hatchback FWD 188 A9.000 | Chassis no. from:0822488 | GCI17012 | Inner Joint | | 24 | 23 | 29.7 | 379 | 100.5 | |

| | YEAR | TRANSM. | F/R | L/R | BODY STYLE & DRIVE TYPE & ENGINE | REMARKS | G-AP Ref. | PRODUCT | ABS | Technical Specifications | | | | | |
|---|---|---|---|---|---|---|---|---|---|---|---|---|---|---|---|
| | | | | | | | | | | A | B | C | H | L | P |
| **FIAT** **Punto** | | | | | | | | | | | | | | | |
| 1.3 (55 kw) | 2012.03- | 5MT | F | L | Hatchback FWD 199 A2.000;199 A9.000 | Trans. side without housing | GDS17082 | Drive Shaft | | 25 | 34 | 51 | 84.5 | 514 | |
| | 2012.03- | 5MT | F | L | Hatchback FWD 199 A2.000;199 A9.000 | Trans. side with housing | GDS17182 | Drive Shaft | | 25 | 24 | 51 | 84.5 | 624 | |
| | 2012.03- | 5MT | F | R | Hatchback FWD 199 A2.000;199 A9.000 | Trans. side without housing | GDS17066 | Drive Shaft | | 25 | 34 | 51 | 84.5 | 497 | |
| | 2012.03- | 5MT | F | R | Hatchback FWD 199 A2.000;199 A9.000 | Trans. side with housing | GDS17109 | Drive Shaft | | 25 | 24 | 51 | 84.5 | 908 | |
| | 2012.03- | 5MT | F | L/R | Hatchback FWD 199 A2.000;199 A9.000 | VET no. to:1014503 | GCO17053 | Outer Joint | | 25 | 23 | 51 | 84.5 | 60 | M |
| | 2012.03- | MT | F | R | Hatchback FWD 199 A2.000;199 A9.000 | | GCI17012 | Inner Joint | | 24 | 23 | 29.7 | 379 | 100.5 | |
| 1.3 (59 kw) | 2013.12- | 5MT | F | L | Hatchback FWD 199 B8.000 | | GDS82635 | Drive Shaft | | 25 | 24 | 51.1 | 84.5 | 626 | |
| | 2013.12- | 5MT | F | R | Hatchback FWD 199 B8.000 | | GDS17109 | Drive Shaft | | 25 | 24 | 51 | 84.5 | 908 | |
| | 2013.12- | 5MT | F | L/R | Hatchback FWD 199 B8.000 | | GCO17063 | Outer Joint | | 25 | 25 | 51.1 | 84.5 | 61 | M |
| | 2013.12- | 5MT | F | L | Hatchback FWD 199 B8.000 | | GCI81925 | Inner Joint | | 24 | 24 | 29.8 | 86.5 | 87 | |
| 1.3 (62 kw) | 2012.03- | 5MT | F | L | Hatchback FWD 199 B4.000 | | GDS82635 | Drive Shaft | | 25 | 24 | 51.1 | 84.5 | 626 | |
| | 2012.03- | 5MT | F | R | Hatchback FWD 199 B4.000 | | GDS17109 | Drive Shaft | | 25 | 24 | 51 | 84.5 | 908 | |
| | 2012.03- | 5MT | F | L/R | Hatchback FWD 199 B4.000 | | GCO17063 | Outer Joint | | 25 | 25 | 51.1 | 84.5 | 61 | M |
| | 2012.03- | 5MT | F | L | Hatchback FWD 199 B4.000 | | GCI81925 | Inner Joint | | 24 | 24 | 29.8 | 86.5 | 87 | |
| 1.3 (66 kw) | 2018.05- | 5MT | F | L | Hatchback FWD 955 B2.000 | | GDS82635 | Drive Shaft | | 25 | 24 | 51.1 | 84.5 | 626 | |
| | 2018.05- | 5MT | F | R | Hatchback FWD 955 B2.000 | | GDS17109 | Drive Shaft | | 25 | 24 | 51 | 84.5 | 908 | |
| 1.3 (70 kw) | 2012.03- | 5AMT | F | L | Hatchback FWD 199 B1.000;330 A1.000 | Trans. side with housing | GDS17070 | Drive Shaft | | 25 | 25 | 51 | 84.5 | 576 | |
| | 2012.03- | 5AMT | F | L | Hatchback FWD 199 B1.000;330 A1.000 | Trans. side without housing | GDS17172 | Drive Shaft | | 25 | 34 | 51 | 84.5 | 486 | |
| | 2012.03- | 5AMT | F | R | Hatchback FWD 199 B1.000;330 A1.000 | | GDS17146 | Drive Shaft | | 25 | 34 | 51 | 84.5 | 522 | |
| | 2012.03- | 5AMT | F | L/R | Hatchback FWD 199 B1.000;330 A1.000 | | GCO17053 | Outer Joint | | 25 | 23 | 51 | 84.5 | 60 | M |
| | 2012.03- | 5MT | F | L | Hatchback FWD 199 B1.000;330 A1.000 | | GDS82635 | Drive Shaft | | 25 | 24 | 51.1 | 84.5 | 626 | |
| | 2012.03- | 5MT | F | R | Hatchback FWD 199 B1.000;330 A1.000 | | GDS17109 | Drive Shaft | | 25 | 24 | 51 | 84.5 | 908 | |
| | 2012.03- | 5MT | F | L/R | Hatchback FWD 199 B1.000;330 A1.000 | | GCO17063 | Outer Joint | | 25 | 25 | 51.1 | 84.5 | 61 | M |
| | 2012.03- | 5MT | F | L | Hatchback FWD 199 B1.000;330 A1.000 | | GCI81925 | Inner Joint | | 24 | 24 | 29.8 | 86.5 | 87 | |
| 1.4 (55 kw) | 2012.03- | 5AT/5MT | F | R | Hatchback FWD 199 A7.000 | | GDS17111 | Drive Shaft | | 22 | 22 | 51.2 | 79.5 | 887 | |
| | 2012.03- | 5MT | F | L/R | Hatchback FWD 199 A7.000 | VET To:1014503 | GCO17052 | Outer Joint | | 22 | 21 | 51.2 | 79.5 | 54 | M |
| | 2012.03- | 5MT | F | L/R | Hatchback FWD 199 A7.000 | To VET:1014503 | GCO44081 | Outer Joint | | 22 | 21 | 51 | 79.5 | 54 | M |
| | 2012.03- | MT | F | L/R | Hatchback FWD 199 A7.000 | | GCO17014 | Outer Joint | | 22 | 21 | 51 | 79.5 | 54 | M |
| | 2012.03- | | F | L | Hatchback FWD 199 A7.000 | | GDS17060 | Drive Shaft | | 25 | 24 | 51 | 84.5 | 608 | |
| | 2012.03- | | F | L | Hatchback FWD 199 A7.000 | | GDS17082 | Drive Shaft | | 25 | 34 | 51 | 84.5 | 514 | |
| | 2012.03- | | F | L | Hatchback FWD 199 A7.000 | | GDS17222 | Drive Shaft | | 22 | 22 | 51 | 79.5 | 646 | |
| | 2012.03- | | F | R | Hatchback FWD 199 A7.000 | | GDS17066 | Drive Shaft | | 25 | 34 | 51 | 84.5 | 497 | |
| 1.4 (57 kw) | 2012.03- | 5AT/5MT | F | L | Hatchback FWD 350 A1.000 | | GDS17222 | Drive Shaft | | 22 | 22 | 51 | 79.5 | 646 | |
| | 2012.03- | 5AT/5MT | F | R | Hatchback FWD 350 A1.000 | | GDS17111 | Drive Shaft | | 22 | 22 | 51.2 | 79.5 | 887 | |
| | 2012.03- | 5AT/5MT | F | L/R | Hatchback FWD 350 A1.000 | | GCO17014 | Outer Joint | | 22 | 21 | 51 | 79.5 | 54 | M |
| | 2012.03- | 5AT/5MT | F | L/R | Hatchback FWD 350 A1.000 | | GCO17052 | Outer Joint | | 22 | 21 | 51.2 | 79.5 | 54 | M |
| | 2012.03- | 5AT/5MT | F | L/R | Hatchback FWD 350 A1.000 | | GCO44081 | Outer Joint | | 22 | 21 | 51 | 79.5 | 54 | M |
| | 2012.03- | 5AT/5MT | F | L | Hatchback FWD 350 A1.000 | | GCI17004 | Inner Joint | | 22 | 21 | 36 | 61 | 93.5 | |
| | 2012.03- | 5MT | F | L | Hatchback FWD 350 A1.000 | | GDS17222 | Drive Shaft | | 22 | 22 | 51 | 79.5 | 646 | |
| | 2012.03- | 5MT | F | R | Hatchback FWD 350 A1.000 | | GDS17111 | Drive Shaft | | 22 | 22 | 51.2 | 79.5 | 887 | |
| | 2012.03- | 5MT | F | L/R | Hatchback FWD 350 A1.000 | | GCO17014 | Outer Joint | | 22 | 21 | 51 | 79.5 | 54 | M |
| | 2012.03- | 5MT | F | L/R | Hatchback FWD 350 A1.000 | | GCO17052 | Outer Joint | | 22 | 21 | 51.2 | 79.5 | 54 | M |
| | 2012.03- | 5MT | F | L/R | Hatchback FWD 350 A1.000 | | GCO44081 | Outer Joint | | 22 | 21 | 51 | 79.5 | 54 | M |
| | 2012.03- | 5MT | F | L | Hatchback FWD 350 A1.000 | | GCI17004 | Inner Joint | | 22 | 21 | 36 | 61 | 93.5 | |
| 1.4 (70 kw) | 2003.09-2012.03 | 5MT/6MT | F | L | Hatchback FWD 843 A1.000 | | GDS17032 | Drive Shaft | | 22 | 22 | 51 | 79.5 | 612 | |
| | 2003.09-2012.03 | 5MT/6MT | F | L/R | Hatchback FWD 843 A1.000 | | GCO17014 | Outer Joint | | 22 | 21 | 51 | 79.5 | 54 | M |
| | 2003.09-2012.03 | 5MT/6MT | F | L/R | Hatchback FWD 843 A1.000 | | GCO17052 | Outer Joint | | 22 | 21 | 51.2 | 79.5 | 54 | M |
| | 2003.09-2012.03 | 5MT/6MT | F | L | Hatchback FWD 843 A1.000 | | GCI17004 | Inner Joint | | 22 | 21 | 36 | 61 | 93.5 | |
| 1.4 (71 kw) | 2005.11-2010.12 | MT | F | L | Hatchback FWD 843A1000 | | GDS17023 | Drive Shaft | | 22 | 22 | 46.8 | 75.5 | 606 | |
| | 2005.11-2010.12 | MT | F | R | Hatchback FWD 843A1000 | | GDS17033 | Drive Shaft | | 22 | 22 | 51 | 79.5 | 841 | |
| | 2005.11-2010.12 | | F | L/R | Hatchback FWD 843A1000 | Date To:2010.12 | GCO17052 | Outer Joint | | 22 | 21 | 51.2 | 79.5 | 54 | M |
| 1.4 (77 kw) | 2012.03- | 6MT | F | L | Hatchback FWD 955 A6.000 | | GDS17088 | Drive Shaft | | 22 | | 51 | 79 | 552 | |
| | 2012.03- | 6MT | F | R | Hatchback FWD 955 A6.000 | | GDS17111 | Drive Shaft | | 22 | 22 | 51.2 | 79.5 | 887 | |
| | 2012.03- | 6MT | F | R | Hatchback FWD 955 A6.000 | | GCI17004 | Inner Joint | | 22 | 21 | 36 | 61 | 93.5 | |
| | 2012.03- | | F | L/R | Hatchback FWD 955 A6.000 | VET To:1014503 | GCO17070 | Outer Joint | | 22 | 22 | 51 | 79 | 57.5 | M |
| 1.4 (96 kw) | 1996.09-1999.07 | AT/MT | F | L/R | Hatchback FWD 176B6000 | | GCO17042 | Outer Joint | | 25 | 25 | 51 | 85 | 58 | O |
| | 1996.09-1999.07 | AT/MT | F | L/R | Hatchback FWD 176B6000 | | GCO82006 | Outer Joint | 44T | 25 | 25 | 52 | 85 | 58 | O |
| | 1996.09-1999.07 | AT/MT | F | L/R | Hatchback FWD 176B6000 | | GCI18070 | Inner Joint | | | 25 | | | 32 | |
| | 1996.09-1999.07 | AT/MT | F | L/R | Hatchback FWD 176B6000 | | GCI82011 | Inner Joint | | | 25 | | | 32 | |
| | 1996.09-1999.07 | MT | F | R | Hatchback FWD 176B6000 | | GDS99049 | Drive Shaft | | 25 | | 52 | 85 | 493 | |
| | 1996.09-1999.07 | MT | F | L/R | Hatchback FWD 176B6000 | | GCO82004 | Outer Joint | 44T | 25 | 25 | 52 | 85 | 58 | I |
| | 1996.09-1999.07 | | F | | Hatchback FWD 176B6000 | | GCI82005 | Inner Joint | | | 25 | | | 32 | |
| | 1996.09-1999.07 | | F | | Hatchback FWD 176B6000 | | GCI82006 | Inner Joint | | | 25 | | | 32 | |
| 1.4 (98 kw) | 1993.10-1997.03 | AT/MT | F | L/R | Hatchback FWD 176A4000 | | GCI18070 | Inner Joint | | | 25 | | | 32 | |
| | 1993.10-1997.03 | MT | F | R | Hatchback FWD 176A4000 | | GDS99049 | Drive Shaft | | 25 | | 52 | 85 | 493 | |

| | YEAR | TRANSM. | F/R | L/R | BODY STYLE & DRIVE TYPE & ENGINE | REMARKS | G-AP Ref. | PRODUCT | ABS | Technical Specifications A | B | C | H | L | P |
|---|---|---|---|---|---|---|---|---|---|---|---|---|---|---|---|
| **FIAT** **Punto** | | | | | | | | | | | | | | | |
| 1.4 (98 kw) | 1993.10-1997.03 | MT | F | L/R | Hatchback FWD 176A4000 | | GCO17004 | Outer Joint | | 25 | 25 | 52 | 85 | 58 | I |
| | 1993.10-1997.03 | MT | F | L/R | Hatchback FWD 176A4000 | Date To:1996.06;VET To:0305275 | GCO82004 | Outer Joint | 44T | 25 | 25 | 52 | 85 | 58 | I |
| | 1993.10-1997.03 | MT | F | L/R | Hatchback FWD 176A4000 | Date From:1996.06;VET From:0305275 | GCO82006 | Outer Joint | 44T | 25 | 25 | 52 | 85 | 58 | O |
| | 1993.10-1997.03 | MT | F | L/R | Hatchback FWD 176A4000 | | GCI82011 | Inner Joint | | | 25 | | | 32 | |
| | 1993.10-1997.03 | | F | | Hatchback FWD 176A4000 | | GCI82005 | Inner Joint | | | 25 | | | 32 | |
| | 1993.10-1997.03 | | F | | Hatchback FWD 176A4000 | | GCI82006 | Inner Joint | | | 25 | | | 32 | |
| 1.4 (99 kw) | 2012.03- | 5MT/6MT | F | R | Hatchback FWD 955 A2.000 | | GDS17111 | Drive Shaft | | 22 | 22 | 51.2 | 79.5 | 887 | |
| | 2012.03- | 5MT/6MT | F | R | Hatchback FWD 955 A2.000 | Model year to:2012 | GCI17004 | Inner Joint | | 22 | 21 | 36 | 61 | 93.5 | |
| | 2012.03- | 6MT | F | L/R | Hatchback FWD 955 A2.000 | Model year from:2013 | GCO17063 | Outer Joint | | 25 | 25 | 51.1 | 84.5 | 61 | M |
| | 2012.03- | 6MT | F | L/R | Hatchback FWD 955 A2.000 | Model year to:2012 | GCO17070 | Outer Joint | | 22 | 22 | 51 | 79 | 57.5 | M |
| | 2012.03- | 6MT | F | L | Hatchback FWD 955 A2.000 | Model year from:2013 | GCI17025 | Inner Joint | | 24 | 24 | 29.7 | 86.5 | 93 | |
| | 2012.03- | 6MT | F | R | Hatchback FWD 955 A2.000 | Model year from:2013 | GCI17057 | Inner Joint | | 24 | 24 | 29.75 | 388 | 96.5 | |
| | 2012.03- | | F | L | Hatchback FWD 955 A2.000 | | GDS17088 | Drive Shaft | | 22 | | 51 | 79 | 552 | |
| | 2012.03- | | F | L | Hatchback FWD 955 A2.000 | Model year from:2013 | GDS17148 | Drive Shaft | | 25 | 24 | 51.1 | 84.5 | 614 | |
| | 2012.03- | | F | R | Hatchback FWD 955 A2.000 | | GDS82634 | Drive Shaft | | 25 | 24 | 51.1 | 84.5 | 919 | |
| 1.6 (65 kw) | 1994.04-1997.03 | MT | F | L | Hatchback FWD 176A9000 | | GDS17010 | Drive Shaft | | 22 | 32 | 46.8 | 75.5 | 569 | |
| | 1994.04-1997.03 | MT | F | L | Hatchback FWD 176A9000 | Date from:1994.04 | GDS17018 | Drive Shaft | | 22 | 22 | 46.8 | 75.5 | 581 | |
| | 1994.04-1997.03 | MT | F | L | Hatchback FWD 176A9000 | | GDS17037 | Drive Shaft | 44T | 22 | 22 | 46.8 | 75.5 | 581 | |
| | 1994.04-1997.03 | MT | F | R | Hatchback FWD 176A9000 | | GDS17011 | Drive Shaft | | 22 | 32 | 46.8 | 75.5 | 928.5 | |
| | 1994.04-1997.03 | MT | F | R | Hatchback FWD 176A9000 | Date from:1994.04 | GDS17022 | Drive Shaft | | 22 | 22 | 46.8 | 75.5 | 874 | |
| | 1994.04-1997.03 | MT | F | L/R | Hatchback FWD 176A9000 | Date from:1994.04 | GCO17001 | Outer Joint | | 22 | 20 | 46.8 | 75.5 | 52 | O |
| | 1994.04-1997.03 | MT | F | L/R | Hatchback FWD 176A9000 | Date from:1994.04 | GCO17039 | Outer Joint | 44T | 22 | 20 | 46.8 | 75.5 | 52 | O |
| 1.7 (42 kw) | 1994.04-1997.09 | AT/MT | F | L/R | Hatchback FWD 176B3000 | | GCO17001 | Outer Joint | | 22 | 20 | 46.8 | 75.5 | 52 | O |
| | 1994.04-1997.09 | AT/MT | F | L/R | Hatchback FWD 176B3000 | | GCO17039 | Outer Joint | 44T | 22 | 20 | 46.8 | 75.5 | 52 | O |
| | 1994.04-1997.09 | MT | F | L | Hatchback FWD 176B3000 | | GDS17010 | Drive Shaft | | 22 | 32 | 46.8 | 75.5 | 569 | |
| | 1994.04-1997.09 | MT | F | L | Hatchback FWD 176B3000 | | GDS17018 | Drive Shaft | | 22 | 22 | 46.8 | 75.5 | 581 | |
| | 1994.04-1997.09 | MT | F | L | Hatchback FWD 176B3000 | | GDS17037 | Drive Shaft | 44T | 22 | 22 | 46.8 | 75.5 | 581 | |
| | 1994.04-1997.09 | MT | F | R | Hatchback FWD 176B3000 | | GDS17011 | Drive Shaft | | 22 | 32 | 46.8 | 75.5 | 928.5 | |
| | 1994.04-1997.09 | MT | F | R | Hatchback FWD 176B3000 | | GDS17022 | Drive Shaft | | 22 | 22 | 46.8 | 75.5 | 874 | |
| 1.7 (46 kw) | 1996.12-1999.07 | AT/MT | F | L/R | Hatchback FWD 176B7000 | | GCO17021 | Outer Joint | | 22 | 22 | 46.8 | 75.5 | 52 | O |
| | 1996.12-1999.07 | AT/MT | F | L/R | Hatchback FWD 176B7000 | | GCO17022 | Outer Joint | 44T | 22 | 22 | 46.8 | 75.5 | 52 | O |
| | 1996.12-1999.07 | AT/MT | F | L/R | Hatchback FWD 176B7000 | | GCO17023 | Outer Joint | | 25 | 22 | 52 | 84 | 57 | O |
| | 1996.12-1999.07 | AT/MT | F | L/R | Hatchback FWD 176B7000 | | GCO82005 | Outer Joint | 44T | 25 | 22 | 52 | 84 | 57 | O |
| | 1996.12-1999.07 | AT/MT | F | L/R | Hatchback FWD 176B7000 | | GCI18070 | Inner Joint | | | 25 | | | 32 | |
| 1.7 (51 kw) | 1994.01-1999.07 | MT | F | R | Hatchback FWD 176A3000 | | GDS99049 | Drive Shaft | | 25 | | 52 | 85 | 493 | |
| | 1994.01-1999.07 | MT | F | L/R | Hatchback FWD 176A3000 | | GCO17004 | Outer Joint | | 25 | 25 | 52 | 85 | 58 | I |
| | 1994.01-1999.07 | MT | F | L/R | Hatchback FWD 176A3000 | | GCO82004 | Outer Joint | 44T | 25 | 25 | 52 | 85 | 58 | I |
| | 1994.01-1999.07 | MT | F | L/R | Hatchback FWD 176A3000 | | GCI82011 | Inner Joint | | | 25 | | | 32 | |
| | 1994.01-1999.07 | | F | | Hatchback FWD 176A3000 | | GCO82005 | Outer Joint | 44T | 25 | 22 | 52 | 84 | 57 | O |
| | 1994.01-1999.07 | | F | | Hatchback FWD 176A3000 | | GCI82005 | Inner Joint | | | 25 | | | 32 | |
| | 1994.01-1999.07 | | F | | Hatchback FWD 176A3000 | | GCI82006 | Inner Joint | | | 25 | | | 32 | |
| 1.7 (52 kw) | 1994.01-1997.03 | AT/MT | F | L/R | Hatchback FWD 176A5000 | Date from:1997.01;Date to:1997.12;Groove Type:Outer | GCO82006 | Outer Joint | 44T | 25 | 25 | 52 | 85 | 58 | O |
| | 1994.01-1997.03 | AT/MT | F | L/R | Hatchback FWD 176A5000 | | GCI18070 | Inner Joint | | | 25 | | | 32 | |
| | 1994.01-1997.03 | MT | F | R | Hatchback FWD 176A5000 | Date to:1997.03 | GDS99049 | Drive Shaft | | 25 | | 52 | 85 | 493 | |
| | 1994.01-1997.03 | MT | F | L/R | Hatchback FWD 176A5000 | Date to:1997.03 | GCO17004 | Outer Joint | | 25 | 25 | 52 | 85 | 58 | I |
| | 1994.01-1997.03 | MT | F | L/R | Hatchback FWD 176A5000 | Date to:1997.03;Groove Type:Inner | GCO82004 | Outer Joint | 44T | 25 | 25 | 52 | 85 | 58 | I |
| | 1994.01-1997.03 | MT | F | L/R | Hatchback FWD 176A5000 | | GCI82011 | Inner Joint | | | 25 | | | 32 | |
| | 1994.01-1997.03 | | F | | Hatchback FWD 176A5000 | Groove Type:Outer | GCO82005 | Outer Joint | 44T | 25 | 22 | 52 | 84 | 57 | O |
| | 1994.01-1997.03 | | F | | Hatchback FWD 176A5000 | | GCI82006 | Inner Joint | | | 25 | | | 32 | |
| 1.8 (96 kw) | 1999.09-2012.03 | MT | F | L | Hatchback FWD 183 A1.000;188 A6.000 | Date to:2005.10 | GDS82005 | Drive Shaft | | 25 | | 51 | 85 | 450 | |
| | 1999.09-2012.03 | MT | F | L/R | Hatchback FWD 183 A1.000;188 A6.000 | Date to:2005.10 | GCO17042 | Outer Joint | | 25 | 25 | 51 | 85 | 58 | O |
| | 1999.09-2012.03 | MT | F | L/R | Hatchback FWD 183 A1.000;188 A6.000 | | GCI18070 | Inner Joint | | | 25 | | | 32 | |
| | 1999.09-2012.03 | MT | F | L/R | Hatchback FWD 183 A1.000;188 A6.000 | | GCI82011 | Inner Joint | | | 25 | | | 32 | |
| | 1999.09-2012.03 | MT | F | | Hatchback FWD 183 A1.000;188 A6.000 | | GCI82005 | Inner Joint | | | 25 | | | 32 | |
| | 1999.09-2012.03 | | F | R | Hatchback FWD 183 A1.000;188 A6.000 | | GDS82009 | Drive Shaft | | 25 | | 51 | 85 | 494 | |
| 1.9 (44 kw) | 1999.09-2012.03 | MT | F | L/R | Hatchback FWD 188 A3.000 | Date to:2003.10 | GCO17014 | Outer Joint | | 22 | 21 | 51 | 79.5 | 54 | M |
| | 1999.09-2012.03 | | F | L/R | Hatchback FWD 188 A3.000 | | GCO17052 | Outer Joint | | 22 | 21 | 51.2 | 79.5 | 54 | M |
| | 1999.09-2012.03 | | F | | Hatchback FWD 188 A3.000 | | GCO17034 | Outer Joint | | 22 | 21 | 51 | 79.5 | 54 | M |
| 1.9 (59 kw) | 1999.09-2012.03 | 5MT | F | L | Hatchback FWD 188 A2.000 | | GDS82005 | Drive Shaft | | 25 | | 51 | 85 | 450 | |
| | 1999.09-2012.03 | 5MT | F | R | Hatchback FWD 188 A2.000 | | GDS82009 | Drive Shaft | | 25 | | 51 | 85 | 494 | |
| | 1999.09-2012.03 | 5MT | F | L/R | Hatchback FWD 188 A2.000 | | GCI82005 | Inner Joint | | | 25 | | | 32 | |
| | 1999.09-2012.03 | 5MT | F | R | Hatchback FWD 188 A2.000 | | GDS17238 | Stub Axle-Flange | | 24 | | | 379 | 415 | |
| | 1999.09-2012.03 | MT | F | L/R | Hatchback FWD 188 A2.000 | | GCO17042 | Outer Joint | | 25 | 25 | 51 | 85 | 58 | O |
| 1.9 (63 kw) | 2001.10-2012.03 | 5MT | F | L | Hatchback FWD 188 A7.000 | | GDS82005 | Drive Shaft | | 25 | | 51 | 85 | 450 | |
| | 2001.10-2012.03 | 5MT | F | R | Hatchback FWD 188 A7.000 | | GDS82009 | Drive Shaft | | 25 | | 51 | 85 | 494 | |

| | YEAR | TRANSM. | F/R | L/R | BODY STYLE & DRIVE TYPE & ENGINE | REMARKS | G-AP Ref. | PRODUCT | ABS | Technical Specifications A | B | C | H | L | P |
|---|---|---|---|---|---|---|---|---|---|---|---|---|---|---|---|
| **FIAT** | | | | | | | | | | | | | | | |
| **Punto** | | | | | | | | | | | | | | | |
| 1.9 (63 kw) | 2001.10-2012.03 | 5MT | F | L/R | Hatchback FWD 188 A7.000 | | GCO17042 | Outer Joint | | 25 | 25 | 51 | 85 | 58 | O |
| | 2001.10-2012.03 | 5MT | F | L/R | Hatchback FWD 188 A7.000 | | GCI82005 | Inner Joint | | | 25 | | | 32 | |
| | 2001.10-2012.03 | 5MT | F | R | Hatchback FWD 188 A7.000 | | GDS17238 | Stub Axle-Flange | | 24 | | | 379 | 415 | |
| 1.9 (74 kw) | 2003.06-2012.03 | MT | F | L/R | Hatchback FWD 188 B2.000 | Date to:2005.10 | GCO17028 | Outer Joint | | 25 | 24 | 51 | 84.5 | 62 | M |
| **Punto Cabrio** | | | | | | | | | | | | | | | |
| 1.2 (43 kw) | 1994.05-1997.03 | MT | F | L | Cabriolet FWD 176A7000 | Date to:1997.03 | GDS17018 | Drive Shaft | | 22 | 22 | 46.8 | 75.5 | 581 | |
| | 1994.05-1997.03 | MT | F | L | Cabriolet FWD 176A7000 | Date to:1997.03 | GDS17037 | Drive Shaft | 44T | 22 | 22 | 46.8 | 75.5 | 581 | |
| | 1994.05-1997.03 | MT | F | R | Cabriolet FWD 176A7000 | Date to:1997.03 | GDS17022 | Drive Shaft | | 22 | 22 | 46.8 | 75.5 | 874 | |
| | 1994.05-1997.03 | MT | F | L/R | Cabriolet FWD 176A7000 | Date to:1997.03 | GCO17001 | Outer Joint | | 22 | 20 | 46.8 | 75.5 | 52 | O |
| | 1994.05-1997.03 | MT | F | L/R | Cabriolet FWD 176A7000 | Date to:1997.03 | GCO17039 | Outer Joint | 44T | 22 | 20 | 46.8 | 75.5 | 52 | O |
| 1.2 (44 kw) | 1995.05-2000.06 | MT | F | L | Cabriolet FWD 176B4000 | | GDS17018 | Drive Shaft | | 22 | 22 | 46.8 | 75.5 | 581 | |
| | 1995.05-2000.06 | MT | F | L | Cabriolet FWD 176B4000 | | GDS17037 | Drive Shaft | 44T | 22 | 22 | 46.8 | 75.5 | 581 | |
| | 1995.05-2000.06 | MT | F | R | Cabriolet FWD 176B4000 | | GDS17022 | Drive Shaft | | 22 | 22 | 46.8 | 75.5 | 874 | |
| | 1995.05-2000.06 | MT | F | L/R | Cabriolet FWD 176B4000 | | GCO17001 | Outer Joint | | 22 | 20 | 46.8 | 75.5 | 52 | O |
| | 1995.05-2000.06 | MT | F | L/R | Cabriolet FWD 176B4000 | | GCO17039 | Outer Joint | 44T | 22 | 20 | 46.8 | 75.5 | 52 | O |
| 1.2 (63 kw) | 1997.04-2000.06 | MT | F | L/R | Cabriolet FWD 176B9000 | | GCO17001 | Outer Joint | | 22 | 20 | 46.8 | 75.5 | 52 | O |
| | 1997.04-2000.06 | MT | F | L/R | Cabriolet FWD 176B9000 | | GCO17039 | Outer Joint | 44T | 22 | 20 | 46.8 | 75.5 | 52 | O |
| | 1997.04-2000.06 | | F | R | Cabriolet FWD 176B9000 | | GDS17039 | Drive Shaft | 44T | 22 | 22 | 46.8 | 75.5 | 874 | |
| 1.6 (65 kw) | 1994.05-1997.03 | AT/MT | F | L/R | Cabriolet FWD 176A9000 | | GCO17001 | Outer Joint | | 22 | 20 | 46.8 | 75.5 | 52 | O |
| | 1994.05-1997.03 | AT/MT | F | L/R | Cabriolet FWD 176A9000 | | GCO17039 | Outer Joint | 44T | 22 | 20 | 46.8 | 75.5 | 52 | O |
| | 1994.05-1997.03 | MT | F | L | Cabriolet FWD 176A9000 | | GDS17018 | Drive Shaft | | 22 | 22 | 46.8 | 75.5 | 581 | |
| | 1994.05-1997.03 | MT | F | L | Cabriolet FWD 176A9000 | | GDS17037 | Drive Shaft | 44T | 22 | 22 | 46.8 | 75.5 | 581 | |
| | 1994.05-1997.03 | MT | F | R | Cabriolet FWD 176A9000 | | GDS17022 | Drive Shaft | | 22 | 22 | 46.8 | 75.5 | 874 | |
| **Punto Evo** | | | | | | | | | | | | | | | |
| 1.2 (48 kw) | 2009.10-2012.02 | 5MT | F | L | Hatchback FWD 199 A4.000 | | GDS17222 | Drive Shaft | | 22 | 22 | 51 | 79.5 | 646 | |
| | 2009.10-2012.02 | 5MT | F | R | Hatchback FWD 199 A4.000 | | GDS17111 | Drive Shaft | | 22 | 22 | 51.2 | 79.5 | 887 | |
| | 2009.10-2012.02 | 5MT | F | L/R | Hatchback FWD 199 A4.000 | | GCO17014 | Outer Joint | | 22 | 21 | 51 | 79.5 | 54 | M |
| | 2009.10-2012.02 | 5MT | F | L/R | Hatchback FWD 199 A4.000 | | GCO17052 | Outer Joint | | 22 | 21 | 51.2 | 79.5 | 54 | M |
| | 2009.10-2012.02 | 5MT | F | L | Hatchback FWD 199 A4.000 | | GCI17004 | Inner Joint | | 22 | 21 | 36 | 61 | 93.5 | |
| | 2009.10-2012.02 | 5MT | F | L/R | Hatchback FWD 199 A4.000 | | GCI17027 | Inner Joint | | 22 | 22 | 36 | 61.5 | 93.5 | |
| 1.2 (51 kw) | 2009.10-2012.02 | 5MT | F | L/R | Hatchback FWD 169 A4.000 | | GCI17027 | Inner Joint | | 22 | 22 | 36 | 61.5 | 93.5 | |
| | 2009.10-2012.02 | MT | F | L | Hatchback FWD 169 A4.000 | Inner teeth of wheel side:21 | GDS17222 | Drive Shaft | | 22 | 22 | 51 | 79.5 | 646 | |
| | 2009.10-2012.02 | MT | F | R | Hatchback FWD 169 A4.000 | | GDS17111 | Drive Shaft | | 22 | 22 | 51.2 | 79.5 | 887 | |
| | 2009.10-2012.02 | MT | F | L/R | Hatchback FWD 169 A4.000 | | GCO17014 | Outer Joint | | 22 | 21 | 51 | 79.5 | 54 | M |
| | 2009.10-2012.02 | MT | F | L/R | Hatchback FWD 169 A4.000 | | GCO17052 | Outer Joint | | 22 | 21 | 51.2 | 79.5 | 54 | M |
| | 2009.10-2012.02 | MT | F | L/R | Hatchback FWD 169 A4.000 | | GCO44081 | Outer Joint | | 22 | 21 | 51 | 79.5 | 54 | M |
| | 2009.10-2012.02 | MT | F | L | Hatchback FWD 169 A4.000 | | GCI17004 | Inner Joint | | 22 | 21 | 36 | 61 | 93.5 | |
| 1.3 (51 kw) | 2008.07-2012.02 | 5MT | F | L | Hatchback FWD 199 B2.000 | Trans. side without housing | GDS17082 | Drive Shaft | | 25 | 34 | 51 | 84.5 | 514 | |
| | 2008.07-2012.02 | 5MT | F | L | Hatchback FWD 199 B2.000 | Trans. side with housing | GDS17182 | Drive Shaft | | 25 | 24 | 51 | 84.5 | 624 | |
| | 2008.07-2012.02 | 5MT | F | R | Hatchback FWD 199 B2.000 | Trans. side without housing | GDS17066 | Drive Shaft | | 25 | 34 | 51 | 84.5 | 497 | |
| | 2008.07-2012.02 | 5MT | F | R | Hatchback FWD 199 B2.000 | Trans. side with housing | GDS17109 | Drive Shaft | | 25 | 24 | 51 | 84.5 | 908 | |
| | 2008.07-2012.02 | 5MT | F | L/R | Hatchback FWD 199 B2.000 | | GCO17053 | Outer Joint | | 25 | 23 | 51 | 84.5 | 60 | M |
| | 2008.07-2012.02 | 5MT | F | L | Hatchback FWD 199 B2.000 | | GCI17011 | Inner Joint | | 24 | 23 | 29.7 | 86.5 | 93 | |
| | 2008.07-2012.02 | 5MT | F | L | Hatchback FWD 199 B2.000 | | GCI99008 | Inner Joint | | 24 | 24 | 29.7 | 86.5 | 93 | |
| | 2008.07-2012.02 | 5MT | F | R | Hatchback FWD 199 B2.000 | | GCI17012 | Inner Joint | | 24 | 23 | 29.7 | 379 | 100.5 | |
| | 2008.07-2012.02 | | F | L | Hatchback FWD 199 B2.000 | | GDS17060 | Drive Shaft | | 25 | 24 | 51 | 84.5 | 608 | |
| 1.3 (55 kw) | 2009.10-2012.02 | 5MT | F | L | Hatchback FWD 199 A2.000;199 A9.000 | Trans. side without housing | GDS17082 | Drive Shaft | | 25 | 34 | 51 | 84.5 | 514 | |
| | 2009.10-2012.02 | 5MT | F | L | Hatchback FWD 199 A2.000;199 A9.000 | Trans. side with housing | GDS17182 | Drive Shaft | | 25 | 24 | 51 | 84.5 | 624 | |
| | 2009.10-2012.02 | 5MT | F | R | Hatchback FWD 199 A2.000;199 A9.000 | Trans. side without housing | GDS17066 | Drive Shaft | | 25 | 34 | 51 | 84.5 | 497 | |
| | 2009.10-2012.02 | 5MT | F | R | Hatchback FWD 199 A2.000;199 A9.000 | Trans. side with housing | GDS17109 | Drive Shaft | | 25 | 24 | 51 | 84.5 | 908 | |
| | 2009.10-2012.02 | 5MT | F | L/R | Hatchback FWD 199 A2.000;199 A9.000 | | GCO17053 | Outer Joint | | 25 | 23 | 51 | 84.5 | 60 | M |
| | 2009.10-2012.02 | 5MT | F | L | Hatchback FWD 199 A2.000;199 A9.000 | | GCI17011 | Inner Joint | | 24 | 23 | 29.7 | 86.5 | 93 | |
| | 2009.10-2012.02 | MT | F | R | Hatchback FWD 199 A2.000;199 A9.000 | Date to:2011.12 | GCI17012 | Inner Joint | | 24 | 23 | 29.7 | 379 | 100.5 | |
| | 2009.10-2012.02 | | F | L | Hatchback FWD 199 A2.000;199 A9.000 | | GDS17060 | Drive Shaft | | 25 | 24 | 51 | 84.5 | 608 | |
| 1.3 (56 kw) | 2010.09- | 5MT | F | L | Hatchback FWD 199 A2.000;199 A9.000 | | GDS17082 | Drive Shaft | | 25 | 34 | 51 | 84.5 | 514 | |
| | 2010.09- | 5MT | F | L | Hatchback FWD 199 A2.000;199 A9.000 | | GDS17182 | Drive Shaft | | 25 | 24 | 51 | 84.5 | 624 | |
| | 2010.09- | 5MT | F | R | Hatchback FWD 199 A2.000;199 A9.000 | Manufacturer:GKN | GDS17066 | Drive Shaft | | 25 | 34 | 51 | 84.5 | 497 | |
| | 2010.09- | 5MT | F | R | Hatchback FWD 199 A2.000;199 A9.000 | Manufacturer:GKN | GDS17109 | Drive Shaft | | 25 | 24 | 51 | 84.5 | 908 | |
| | 2010.09- | 5MT | F | L | Hatchback FWD 199 A2.000;199 A9.000 | | GCI17011 | Inner Joint | | 24 | 23 | 29.7 | 86.5 | 93 | |
| 1.3 (62 kw) | 2009.10-2012.02 | 5MT | F | L | Hatchback FWD 223 A9.000;199 B4.000 | | GDS82635 | Drive Shaft | | 25 | 24 | 51.1 | 84.5 | 626 | |
| | 2009.10-2012.02 | 5MT | F | L/R | Hatchback FWD 223 A9.000;199 B4.000 | | GCO17063 | Outer Joint | | 25 | 25 | 51.1 | 84.5 | 61 | M |
| | 2009.10-2012.02 | 5MT | F | L | Hatchback FWD 223 A9.000;199 B4.000 | | GCI81925 | Inner Joint | | 24 | 24 | 29.8 | 86.5 | 87 | |
| | 2009.10-2012.02 | 5MT/6MT | F | R | Hatchback FWD 223 A9.000;199 B4.000 | | GCI17026 | Inner Joint | | 24 | 24 | 29.7 | 379 | 100.5 | |
| | 2009.10-2012.02 | MT | F | L | Hatchback FWD 223 A9.000;199 B4.000 | Date to:2011.12 | GDS17182 | Drive Shaft | | 25 | 24 | 51 | 84.5 | 624 | |
| | 2009.10-2012.02 | MT | F | R | Hatchback FWD 223 A9.000;199 B4.000 | Date to:2011.12 | GDS17109 | Drive Shaft | | 25 | 24 | 51 | 84.5 | 908 | |

| | YEAR | TRANSM. | F/R | L/R | BODY STYLE & DRIVE TYPE & ENGINE | REMARKS | G-AP Ref. | PRODUCT | ABS | Technical Specifications A | B | C | H | L | P |
|---|---|---|---|---|---|---|---|---|---|---|---|---|---|---|---|
| **FIAT** | | | | | | | | | | | | | | | |
| **Punto Evo** | | | | | | | | | | | | | | | |
| 1.3 (66 kw) | 2009.10-2012.02 | 5MT | F | R | Hatchback FWD 199 A3.000 | | GDS17144 | Drive Shaft | | 25 | 24 | 51.1 | 84.5 | 908 | |
| | 2009.10-2012.02 | 5MT | F | L | Hatchback FWD 199 A3.000 | | GCI99008 | Inner Joint | | 24 | 24 | 29.7 | 86.5 | 93 | |
| | 2009.10-2012.02 | 5MT | F | R | Hatchback FWD 199 A3.000 | | GCI17015 | Inner Joint | | 24 | 24 | 29.7 | 379 | 100.5 | |
| | 2009.10-2012.02 | 6MT/5AMT | F | R | Hatchback FWD 199 A3.000 | | GCI17056 | Inner Joint | | 25 | 23 | 34.9 | 400 | 97 | |
| | 2009.10-2012.02 | 6MT/6AMT | F | L | Hatchback FWD 199 A3.000 | | GDS17070 | Drive Shaft | | 25 | 25 | 51 | 84.5 | 576 | |
| | 2009.10-2012.02 | 6MT/6AMT | F | L | Hatchback FWD 199 A3.000 | | GDS17172 | Drive Shaft | | 25 | 34 | 51 | 84.5 | 486 | |
| | 2009.10-2012.02 | 6MT/6AMT | F | R | Hatchback FWD 199 A3.000 | Trans. side without housing | GDS17146 | Drive Shaft | | 25 | 34 | 51 | 84.5 | 522 | |
| | 2009.10-2012.02 | 6MT/6AMT | F | L | Hatchback FWD 199 A3.000 | | GCI44014 | Inner Joint | | 25 | 23 | 34.9 | 57.5 | 102 | |
| | 2009.10-2012.02 | SAT/5AT/5MT | F | L/R | Hatchback FWD 199 A3.000 | | GCO17053 | Outer Joint | | 25 | 23 | 51 | 84.5 | 60 | M |
| 1.3 (70 kw) | 2009.10-2012.02 | 5AMT | F | L | Hatchback FWD 199 B1.000 | Trans. side with housing | GDS17070 | Drive Shaft | | 25 | 25 | 51 | 84.5 | 576 | |
| | 2009.10-2012.02 | 5AMT | F | L | Hatchback FWD 199 B1.000 | Trans. side without housing | GDS17172 | Drive Shaft | | 25 | 34 | 51 | 84.5 | 486 | |
| | 2009.10-2012.02 | 5AMT | F | L/R | Hatchback FWD 199 B1.000 | | GCO17053 | Outer Joint | | 25 | 23 | 51 | 84.5 | 60 | M |
| | 2009.10-2012.02 | 5AMT | F | L | Hatchback FWD 199 B1.000 | | GCI44014 | Inner Joint | | 25 | 23 | 34.9 | 57.5 | 102 | |
| | 2009.10-2012.02 | 5AMT | F | R | Hatchback FWD 199 B1.000 | | GCI17056 | Inner Joint | | 25 | 23 | 34.9 | 400 | 97 | |
| | 2009.10-2012.02 | 5MT | F | L | Hatchback FWD 199 B1.000 | Trans. side with housing | GDS82635 | Drive Shaft | | 25 | 24 | 51.1 | 84.5 | 626 | |
| | 2009.10-2012.02 | 5MT | F | L/R | Hatchback FWD 199 B1.000 | | GCO17063 | Outer Joint | | 25 | 25 | 51.1 | 84.5 | 61 | M |
| | 2009.10-2012.02 | 5MT | F | L | Hatchback FWD 199 B1.000 | | GCI17025 | Inner Joint | | 24 | 24 | 29.7 | 86.5 | 93 | |
| | 2009.10-2012.02 | 5MT | F | R | Hatchback FWD 199 B1.000 | Date to:2011.12 | GCI17012 | Inner Joint | | 24 | 23 | 29.7 | 379 | 100.5 | |
| | 2009.10-2012.02 | MT/5MT | F | R | Hatchback FWD 199 B1.000 | Trans. side with housing | GDS17109 | Drive Shaft | | 25 | 24 | 51 | 84.5 | 908 | |
| | 2009.10-2012.02 | SAT/5AT/5MT | F | R | Hatchback FWD 199 B1.000 | Trans. side without housing | GDS17146 | Drive Shaft | | 25 | 34 | 51 | 84.5 | 522 | |
| 1.4 (55 kw) | 2009.07-2012.02 | 5MT | F | L/R | Hatchback FWD 199 A7.000 | | GCI17027 | Inner Joint | | 22 | 22 | 36 | 61.5 | 93.5 | |
| | 2009.07-2012.02 | AT/MT | F | L | Hatchback FWD 199 A7.000 | | GDS17222 | Drive Shaft | | 22 | 22 | 51 | 79.5 | 646 | |
| | 2009.07-2012.02 | AT/MT | F | L/R | Hatchback FWD 199 A7.000 | | GCO17014 | Outer Joint | | 22 | 21 | 51 | 79.5 | 54 | M |
| | 2009.07-2012.02 | AT/MT | F | L/R | Hatchback FWD 199 A7.000 | | GCO17052 | Outer Joint | | 22 | 21 | 51.2 | 79.5 | 54 | M |
| | 2009.07-2012.02 | MT | F | L | Hatchback FWD 199 A7.000 | | GCO99325 | Outer Joint | | 22 | 27 | 51 | 79.5 | 54 | O |
| | 2009.07-2012.02 | SAT/5MT | F | R | Hatchback FWD 199 A7.000 | | GDS17111 | Drive Shaft | | 22 | 22 | 51.2 | 79.5 | 887 | |
| 1.4 (57 kw) | 2009.06-2012.02 | 5AT/5MT | F | L/R | Hatchback FWD 350 A1.000 | | GCI17027 | Inner Joint | | 22 | 22 | 36 | 61.5 | 93.5 | |
| | 2009.06-2012.02 | AT/MT | F | L | Hatchback FWD 350 A1.000 | | GDS17222 | Drive Shaft | | 22 | 22 | 51 | 79.5 | 646 | |
| | 2009.06-2012.02 | AT/MT | F | R | Hatchback FWD 350 A1.000 | | GDS17111 | Drive Shaft | | 22 | 22 | 51.2 | 79.5 | 887 | |
| | 2009.06-2012.02 | AT/MT | F | L/R | Hatchback FWD 350 A1.000 | | GCO17014 | Outer Joint | | 22 | 21 | 51 | 79.5 | 54 | M |
| | 2009.06-2012.02 | AT/MT | F | L/R | Hatchback FWD 350 A1.000 | | GCO17052 | Outer Joint | | 22 | 21 | 51.2 | 79.5 | 54 | M |
| | 2009.06-2012.02 | AT/MT | F | L | Hatchback FWD 350 A1.000 | | GCI17004 | Inner Joint | | 22 | 21 | 36 | 61 | 93.5 | |
| | 2009.10-2012.02 | 5AT/5MT | F | L/R | Hatchback FWD 350 A1.000 | | GCI17027 | Inner Joint | | 22 | 22 | 36 | 61.5 | 93.5 | |
| | 2009.10-2012.02 | 5MT | F | L | Hatchback FWD 350 A1.000 | | GDS17222 | Drive Shaft | | 22 | 22 | 51 | 79.5 | 646 | |
| | 2009.10-2012.02 | 5MT | F | R | Hatchback FWD 350 A1.000 | | GDS17111 | Drive Shaft | | 22 | 22 | 51.2 | 79.5 | 887 | |
| | 2009.10-2012.02 | 5MT | F | L/R | Hatchback FWD 350 A1.000 | | GCO17014 | Outer Joint | | 22 | 21 | 51 | 79.5 | 54 | M |
| | 2009.10-2012.02 | 5MT | F | L/R | Hatchback FWD 350 A1.000 | | GCO17052 | Outer Joint | | 22 | 21 | 51.2 | 79.5 | 54 | M |
| | 2009.10-2012.02 | 5MT | F | L | Hatchback FWD 350 A1.000 | | GCI17004 | Inner Joint | | 22 | 21 | 36 | 61 | 93.5 | |
| | 2009.10-2012.02 | 5MT | F | L/R | Hatchback FWD 350 A1.000 | | GCI17027 | Inner Joint | | 22 | 22 | 36 | 61.5 | 93.5 | |
| | 2009.10-2012.02 | AT/MT | F | L | Hatchback FWD 350 A1.000 | | GDS17222 | Drive Shaft | | 22 | 22 | 51 | 79.5 | 646 | |
| | 2009.10-2012.02 | AT/MT | F | R | Hatchback FWD 350 A1.000 | | GDS17111 | Drive Shaft | | 22 | 22 | 51.2 | 79.5 | 887 | |
| | 2009.10-2012.02 | AT/MT | F | L/R | Hatchback FWD 350 A1.000 | | GCO17014 | Outer Joint | | 22 | 21 | 51 | 79.5 | 54 | M |
| | 2009.10-2012.02 | AT/MT | F | L/R | Hatchback FWD 350 A1.000 | | GCO17052 | Outer Joint | | 22 | 21 | 51.2 | 79.5 | 54 | M |
| | 2009.10-2012.02 | AT/MT | F | L | Hatchback FWD 350 A1.000 | | GCI17004 | Inner Joint | | 22 | 21 | 36 | 61 | 93.5 | |
| 1.4 (77 kw) | 2009.10-2012.02 | 5AT/6MT | F | L | Hatchback FWD 955 A6.000 | | GDS17088 | Drive Shaft | | 22 | | 51 | 79 | 552 | |
| | 2009.10-2012.02 | 5AT/6MT | F | R | Hatchback FWD 955 A6.000 | | GDS17111 | Drive Shaft | | 22 | 22 | 51.2 | 79.5 | 887 | |
| | 2009.10-2012.02 | 5AT/6MT | F | L/R | Hatchback FWD 955 A6.000 | | GCO17070 | Outer Joint | | 22 | 22 | 51 | 79 | 57.5 | M |
| | 2009.10-2012.02 | 5AT/6MT | F | R | Hatchback FWD 955 A6.000 | | GCI17004 | Inner Joint | | 22 | 21 | 36 | 61 | 93.5 | |
| | 2009.10-2012.02 | 5AT/6MT | F | L/R | Hatchback FWD 955 A6.000 | | GCI17027 | Inner Joint | | 22 | 22 | 36 | 61.5 | 93.5 | |
| 1.4 (99 kw) | 2009.10-2012.02 | 5MT | F | L | Hatchback FWD 955 A2.000 | | GDS17148 | Drive Shaft | | 25 | 24 | 51.1 | 84.5 | 614 | |
| | 2009.10-2012.02 | 5MT | F | L/R | Hatchback FWD 955 A2.000 | | GCO17063 | Outer Joint | | 25 | 25 | 51.1 | 84.5 | 61 | M |
| | 2009.10-2012.02 | 5MT | F | L | Hatchback FWD 955 A2.000 | | GCI17025 | Inner Joint | | 24 | 24 | 29.7 | 86.5 | 93 | |
| | 2009.10-2012.02 | 5MT | F | R | Hatchback FWD 955 A2.000 | | GCI17057 | Inner Joint | | 24 | 24 | 29.75 | 388 | 96.5 | |
| | 2009.10-2012.02 | | F | R | Hatchback FWD 955 A2.000 | | GDS82634 | Drive Shaft | | 25 | 24 | 51.1 | 84.5 | 919 | |
| 1.6 (88 kw) | 2009.10-2012.02 | 6MT | F | L/R | Hatchback FWD 955 A3.000 | Equipment code:PCC635 | GCO17063 | Outer Joint | | 25 | 25 | 51.1 | 84.5 | 61 | M |
| | 2009.10-2012.02 | 6MT | F | L/R | Hatchback FWD 955 A3.000 | Equipment code:PCC544 | GCO17065 | Outer Joint | | 25 | 33 | 51.1 | 84.5 | 61 | I |
| | 2009.10-2012.02 | MT | F | L | Hatchback FWD 955 A3.000 | | GDS17142 | Drive Shaft | | 25 | 25 | 51.1 | 84.5 | 588 | |
| | 2009.10-2012.02 | MT | F | R | Hatchback FWD 955 A3.000 | Date to:2011.12 | GDS17143 | Drive Shaft | | 25 | 25 | 51.1 | 84.5 | 953 | |
| | 2009.10-2012.02 | MT | F | L | Hatchback FWD 955 A3.000 | | GCI17085 | Inner Joint | | 25 | 33 | 34.9 | 57.5 | 97.5 | |
| | 2009.10-2012.02 | MT | F | R | Hatchback FWD 955 A3.000 | | GCI17072 | Inner Joint | | 25 | 33 | 34.9 | 431.5 | 93 | |
| **Punto Evo Van** | | | | | | | | | | | | | | | |
| 1.3 (55 kw) | 2009.03-2012.02 | 5MT | F | L | Hatchback Van FWD 199 A2.000;199 A9.000 | | GDS17082 | Drive Shaft | | 25 | 34 | 51 | 84.5 | 514 | |
| | 2009.03-2012.02 | 5MT | F | L | Hatchback Van FWD 199 A2.000;199 A9.000 | | GDS17182 | Drive Shaft | | 25 | 24 | 51 | 84.5 | 624 | |
| | 2009.03-2012.02 | 5MT | F | R | Hatchback Van FWD 199 A2.000;199 A9.000 | | GDS17066 | Drive Shaft | | 25 | 34 | 51 | 84.5 | 497 | |
| | 2009.03-2012.02 | 5MT | F | L/R | Hatchback Van FWD 199 A2.000;199 A9.000 | | GCO17053 | Outer Joint | | 25 | 23 | 51 | 84.5 | 60 | M |

| | YEAR | TRANSM. | F/R | L/R | BODY STYLE & DRIVE TYPE & ENGINE | REMARKS | G-AP Ref. | PRODUCT | ABS | Technical Specifications A | B | C | H | L | P |
|---|---|---|---|---|---|---|---|---|---|---|---|---|---|---|---|
| **FIAT** | | | | | | | | | | | | | | | |
| **Punto Evo Van** | | | | | | | | | | | | | | | |
| 1.3 (55 kw) | 2009.03-2012.02 | 5MT | F | L | Hatchback Van FWD 199 A2.000;199 A9.000 | | GCI17011 | Inner Joint | | 24 | 23 | 29.7 | 86.5 | 93 | |
| | 2009.03-2012.02 | MT | F | R | Hatchback Van FWD 199 A2.000;199 A9.000 | Date to:2011.12 | GCI17012 | Inner Joint | | 24 | 23 | 29.7 | 379 | 100.5 | |
| | 2009.03-2012.02 | | F | L | Hatchback Van FWD 199 A2.000;199 A9.000 | | GDS17060 | Drive Shaft | | 25 | 24 | 51 | 84.5 | 608 | |
| | 2009.03-2012.02 | | F | R | Hatchback Van FWD 199 A2.000;199 A9.000 | | GDS17109 | Drive Shaft | | 25 | 24 | 51 | 84.5 | 908 | |
| 1.3 (66 kw) | 2009.03-2012.02 | 5AMT | F | R | Hatchback Van FWD 199 A3.000 | | GDS17146 | Drive Shaft | | 25 | 34 | 51 | 84.5 | 522 | |
| | 2009.03-2012.02 | 5AMT | F | L | Hatchback Van FWD 199 A3.000 | | GCI44014 | Inner Joint | | 25 | 23 | 34.9 | 57.5 | 102 | |
| | 2009.03-2012.02 | 5AMT | F | R | Hatchback Van FWD 199 A3.000 | | GCI17056 | Inner Joint | | 25 | 23 | 34.9 | 400 | 97 | |
| | 2009.03-2012.02 | 5AT/5MT | F | L | Hatchback Van FWD 199 A3.000 | | GDS17172 | Drive Shaft | | 25 | 34 | 51 | 84.5 | 486 | |
| | 2009.03-2012.02 | 5AT/5MT | F | L/R | Hatchback Van FWD 199 A3.000 | | GCO17053 | Outer Joint | | 25 | 23 | 51 | 84.5 | 60 | M |
| | 2009.03-2012.02 | 5MT | F | R | Hatchback Van FWD 199 A3.000 | | GDS17144 | Drive Shaft | | 25 | 24 | 51.1 | 84.5 | 908 | |
| | 2009.03-2012.02 | 5MT | F | L | Hatchback Van FWD 199 A3.000 | | GCI99008 | Inner Joint | | 24 | 24 | 29.7 | 86.5 | 93 | |
| | 2009.03-2012.02 | 5MT | F | R | Hatchback Van FWD 199 A3.000 | | GCI17015 | Inner Joint | | 24 | 24 | 29.7 | 379 | 100.5 | |
| | 2009.03-2012.02 | | F | L/R | Hatchback Van FWD 199 A3.000 | Option Code(+):PCC510 | GCO17028 | Outer Joint | | 25 | 24 | 51 | 84.5 | 62 | M |
| 1.3 (70 kw) | 2009.03-2012.02 | 5MT | F | L | Hatchback Van FWD 199 B1.000 | | GDS82635 | Drive Shaft | | 25 | 24 | 51.1 | 84.5 | 626 | |
| | 2009.03-2012.02 | 5MT | F | R | Hatchback Van FWD 199 B1.000 | | GDS17109 | Drive Shaft | | 25 | 24 | 51 | 84.5 | 908 | |
| | 2009.03-2012.02 | 5MT | F | L/R | Hatchback Van FWD 199 B1.000 | | GCO17063 | Outer Joint | | 25 | 25 | 51.1 | 84.5 | 61 | M |
| | 2009.03-2012.02 | 5MT | F | L | Hatchback Van FWD 199 B1.000 | | GCI81925 | Inner Joint | | 24 | 24 | 29.8 | 86.5 | 87 | |
| | 2009.03-2012.02 | 5MT | F | R | Hatchback Van FWD 199 B1.000 | | GCI17026 | Inner Joint | | 24 | 24 | 29.7 | 379 | 100.5 | |
| 1.4 (57 kw) | 2009.03-2012.02 | 5MT | F | R | Hatchback Van FWD 350 A1.000 | | GDS17111 | Drive Shaft | | 22 | 22 | 51.2 | 79.5 | 887 | |
| | 2009.03-2012.02 | 5MT | F | L/R | Hatchback Van FWD 350 A1.000 | | GCI17027 | Inner Joint | | 22 | 22 | 36 | 61.5 | 93.5 | |
| | 2009.03-2012.02 | MT | F | L/R | Hatchback Van FWD 350 A1.000 | Date to:2011.12 | GCO17014 | Outer Joint | | 22 | 21 | 51 | 79.5 | 54 | M |
| | 2009.03-2012.02 | | F | L | Hatchback Van FWD 350 A1.000 | | GDS17222 | Drive Shaft | | 22 | 22 | 51 | 79.5 | 646 | |
| **Punto Van** | | | | | | | | | | | | | | | |
| 0.9 (63 kw) | 2012.03- | 6MT | F | L | Hatchback Van FWD 312 A2.000 | | GDS17224 | Drive Shaft | | 22 | 22 | 51 | 79 | 670 | |
| | 2012.03- | 6MT | F | R | Hatchback Van FWD 312 A2.000 | | GDS17225 | Drive Shaft | | 22 | 22 | 51 | 79 | 860 | |
| | 2012.03- | 6MT | F | L/R | Hatchback Van FWD 312 A2.000 | | GCO17070 | Outer Joint | | 22 | 22 | 51 | 79 | 57.5 | M |
| | 2012.03- | 6MT | F | L/R | Hatchback Van FWD 312 A2.000 | | GCI17004 | Inner Joint | | 22 | 21 | 36 | 61 | 93.5 | |
| 1.1 (40 kw) | 1996.04-2000.02 | MT | F | L | Hatchback Van FWD 176B2000 | | GDS17037 | Drive Shaft | 44T | 22 | 22 | 46.8 | 75.5 | 581 | |
| | 1996.04-2000.02 | MT | F | L/R | Hatchback Van FWD 176B2000 | | GCO17001 | Outer Joint | | 22 | 20 | 46.8 | 75.5 | 52 | O |
| | 1996.04-2000.02 | MT | F | L/R | Hatchback Van FWD 176B2000 | | GCO17039 | Outer Joint | 44T | 22 | 20 | 46.8 | 75.5 | 52 | O |
| 1.2 (44 kw) | 2000.02-2009.10 | 5MT | F | L | Hatchback Van FWD 188 A4.000 | For vehicles with air conditioning | GDS17032 | Drive Shaft | | 22 | 22 | 51 | 79.5 | 612 | |
| | 2000.02-2009.10 | 5MT | F | R | Hatchback Van FWD 188 A4.000 | For vehicles with air conditioning | GDS17033 | Drive Shaft | | 22 | 22 | 51 | 79.5 | 841 | |
| | 2000.02-2009.10 | 5MT | F | L/R | Hatchback Van FWD 188 A4.000 | | GCO17014 | Outer Joint | | 22 | 21 | 51 | 79.5 | 54 | M |
| | 2000.02-2009.10 | 5MT | F | L/R | Hatchback Van FWD 188 A4.000 | | GCO17052 | Outer Joint | | 22 | 21 | 51.2 | 79.5 | 54 | M |
| | 2000.02-2009.10 | 5MT | F | L/R | Hatchback Van FWD 188 A4.000 | | GCO99018 | Outer Joint | | 22 | 27 | 51 | 79.5 | 54 | O |
| | 2000.02-2009.10 | MT | F | L | Hatchback Van FWD 188 A4.000 | | GCI17004 | Inner Joint | | 22 | 21 | 36 | 61 | 93.5 | |
| | 2003.01-2010.12 | 5MT | F | L | Hatchback Van FWD 188 A4.000 | | GDS17032 | Drive Shaft | | 22 | 22 | 51 | 79.5 | 612 | |
| | 2003.01-2010.12 | 5MT | F | R | Hatchback Van FWD 188 A4.000 | | GDS17033 | Drive Shaft | | 22 | 22 | 51 | 79.5 | 841 | |
| | 2003.01-2010.12 | 5MT | F | L/R | Hatchback Van FWD 188 A4.000 | | GCI17004 | Inner Joint | | 22 | 21 | 36 | 61 | 93.5 | |
| | 2003.01-2010.12 | | F | L/R | Hatchback Van FWD 188 A4.000 | | GCO17014 | Outer Joint | | 22 | 21 | 51 | 79.5 | 54 | M |
| | 2003.01-2010.12 | | F | L/R | Hatchback Van FWD 188 A4.000 | | GCO17052 | Outer Joint | | 22 | 21 | 51.2 | 79.5 | 54 | M |
| | 2003.01-2010.12 | | F | L/R | Hatchback Van FWD 188 A4.000 | | GCO99018 | Outer Joint | | 22 | 27 | 51 | 79.5 | 54 | O |
| 1.3 (51 kw) | 2003.06-2005.10 | 5AT/5MT | F | L | Hatchback Van FWD 188 A9.000 | | GDS82005 | Drive Shaft | | 25 | | 51 | 85 | 450 | |
| | 2003.06-2005.10 | 5AT/5MT | F | R | Hatchback Van FWD 188 A9.000 | | GDS82009 | Drive Shaft | | 25 | | 51 | 85 | 494 | |
| | 2003.06-2005.10 | MT | F | R | Hatchback Van FWD 188 A9.000 | Chassis no. from:0822488 | GCI17012 | Inner Joint | | 24 | 23 | 29.7 | 379 | 100.5 | |
| | 2003.06-2005.10 | | F | L/R | Hatchback Van FWD 188 A9.000 | | GCO17042 | Outer Joint | | 25 | 25 | 51 | 85 | 58 | O |
| | 2003.06-2005.10 | | F | R | Hatchback Van FWD 188 A9.000 | | GCI82005 | Inner Joint | | | 25 | | | 32 | |
| 1.3 (55 kw) | 2008.04- | 5MT | F | L | Hatchback Van FWD 199 A2.000;199 A9.000 | | GDS17082 | Drive Shaft | | 25 | 34 | 51 | 84.5 | 514 | |
| | 2008.04- | 5MT | F | L | Hatchback Van FWD 199 A2.000;199 A9.000 | | GDS17182 | Drive Shaft | | 25 | 24 | 51 | 84.5 | 624 | |
| | 2008.04- | 5MT | F | R | Hatchback Van FWD 199 A2.000;199 A9.000 | | GDS17066 | Drive Shaft | | 25 | 34 | 51 | 84.5 | 497 | |
| | 2008.04- | 5MT | F | L/R | Hatchback Van FWD 199 A2.000;199 A9.000 | VET To:1014503 | GCO17053 | Outer Joint | | 25 | 23 | 51 | 84.5 | 60 | M |
| | 2008.04- | MT | F | R | Hatchback Van FWD 199 A2.000;199 A9.000 | | GDS17109 | Drive Shaft | | 25 | 24 | 51 | 84.5 | 908 | |
| | 2008.04- | MT | F | R | Hatchback Van FWD 199 A2.000;199 A9.000 | | GCI17012 | Inner Joint | | 24 | 23 | 29.7 | 379 | 100.5 | |
| | 2008.04- | | F | L | Hatchback Van FWD 199 A2.000;199 A9.000 | | GDS17060 | Drive Shaft | | 25 | 24 | 51 | 84.5 | 608 | |
| 1.3 (62 kw) | 2012.03- | 5MT | F | L | Hatchback Van FWD 199 B4.000 | | GDS82635 | Drive Shaft | | 25 | 24 | 51.1 | 84.5 | 626 | |
| | 2012.03- | 5MT | F | L/R | Hatchback Van FWD 199 B4.000 | | GCO17063 | Outer Joint | | 25 | 25 | 51.1 | 84.5 | 61 | M |
| | 2012.03- | 5MT | F | L | Hatchback Van FWD 199 B4.000 | | GCI81925 | Inner Joint | | 24 | 24 | 29.8 | 86.5 | 87 | |
| | 2012.03- | MT | F | L | Hatchback Van FWD 199 B4.000 | | GDS17182 | Drive Shaft | | 25 | 24 | 51 | 84.5 | 624 | |
| | 2012.03- | MT | F | R | Hatchback Van FWD 199 B4.000 | | GDS17109 | Drive Shaft | | 25 | 24 | 51 | 84.5 | 908 | |
| 1.3 (70 kw) | 2009.03- | 5MT | F | L | Hatchback Van FWD 199 B1.000 | | GDS82635 | Drive Shaft | | 25 | 24 | 51.1 | 84.5 | 626 | |
| | 2009.03- | 5MT | F | R | Hatchback Van FWD 199 B1.000 | | GDS17109 | Drive Shaft | | 25 | 24 | 51 | 84.5 | 908 | |
| | 2009.03- | 5MT | F | L/R | Hatchback Van FWD 199 B1.000 | | GCO17063 | Outer Joint | | 25 | 25 | 51.1 | 84.5 | 61 | M |
| | 2009.03- | 5MT | F | L | Hatchback Van FWD 199 B1.000 | | GCI81925 | Inner Joint | | 24 | 24 | 29.8 | 86.5 | 87 | |
| | 2009.03- | 6AMT | F | L | Hatchback Van FWD 199 B1.000 | Trans. side with housing | GDS17070 | Drive Shaft | | 25 | 25 | 51 | 84.5 | 576 | |
| | 2009.03- | 6AMT | F | L | Hatchback Van FWD 199 B1.000 | Trans. side without housing | GDS17172 | Drive Shaft | | 25 | 34 | 51 | 84.5 | 486 | |

| | YEAR | TRANSM. | F/R | L/R | BODY STYLE & DRIVE TYPE & ENGINE | REMARKS | G-AP Ref. | PRODUCT | ABS | Technical Specifications A | B | C | H | L | P |
|---|---|---|---|---|---|---|---|---|---|---|---|---|---|---|---|
| **FIAT** | | | | | | | | | | | | | | | |
| **Punto Van** | | | | | | | | | | | | | | | |
| 1.3 (70 kw) | 2009.03- | 6MT | F | R | Hatchback Van FWD 199 B1.000 | | GDS17146 | Drive Shaft | | 25 | 34 | 51 | 84.5 | 522 | |
| | 2009.03- | Semi-6AT | F | L/R | Hatchback Van FWD 199 B1.000 | | GCO17053 | Outer Joint | | 25 | 23 | 51 | 84.5 | 60 | M |
| 1.4 (57 kw) | 2009.03- | 5MT | F | R | Hatchback Van FWD 350 A1.000 | | GDS17111 | Drive Shaft | | 22 | 22 | 51.2 | 79.5 | 887 | |
| | 2009.03- | MT | F | L | Hatchback Van FWD 350 A1.000 | | GCO99325 | Outer Joint | | 22 | 27 | 51 | 79.5 | 54 | O |
| | 2009.03- | MT | F | L/R | Hatchback Van FWD 350 A1.000 | Date to:2011.12 | GCO17014 | Outer Joint | | 22 | 21 | 51 | 79.5 | 54 | M |
| | 2009.03- | | F | L | Hatchback Van FWD 350 A1.000 | | GDS17222 | Drive Shaft | | 22 | 22 | 51 | 79.5 | 646 | |
| | 2009.03- | | F | R | Hatchback Van FWD 350 A1.000 | | GCI17004 | Inner Joint | | 22 | 21 | 36 | 61 | 93.5 | |
| | 2012.03- | 5MT | F | R | Hatchback Van FWD 350 A1.000 | | GDS17111 | Drive Shaft | | 22 | 22 | 51.2 | 79.5 | 887 | |
| | 2012.03- | 5MT | F | L/R | Hatchback Van FWD 350 A1.000 | | GCO17052 | Outer Joint | | 22 | 21 | 51.2 | 79.5 | 54 | M |
| | 2012.03- | 5MT | F | L/R | Hatchback Van FWD 350 A1.000 | To VET:1014503 | GCO44081 | Outer Joint | | 22 | 21 | 51 | 79.5 | 54 | M |
| | 2012.03- | MT | F | R | Hatchback Van FWD 350 A1.000 | | GDS17111 | Drive Shaft | | 22 | 22 | 51.2 | 79.5 | 887 | |
| | 2012.03- | MT | F | L/R | Hatchback Van FWD 350 A1.000 | Date to:2013.12 | GCO17014 | Outer Joint | | 22 | 21 | 51 | 79.5 | 54 | M |
| | 2012.03- | MT | F | L/R | Hatchback Van FWD 350 A1.000 | | GCO17014 | Outer Joint | | 22 | 21 | 51 | 79.5 | 54 | M |
| | 2012.03- | | F | L | Hatchback Van FWD 350 A1.000 | | GDS17222 | Drive Shaft | | 22 | 22 | 51 | 79.5 | 646 | |
| | 2012.03- | | F | L/R | Hatchback Van FWD 350 A1.000 | | GCO17052 | Outer Joint | | 22 | 21 | 51.2 | 79.5 | 54 | M |
| | 2012.03- | | F | R | Hatchback Van FWD 350 A1.000 | | GCI17004 | Inner Joint | | 22 | 21 | 36 | 61 | 93.5 | |
| 1.7 (42 kw) | 1996.04-2000.02 | AT/MT | F | L/R | Hatchback Van FWD 176B3000 | | GCO17001 | Outer Joint | | 22 | 20 | 46.8 | 75.5 | 52 | O |
| | 1996.04-2000.02 | AT/MT | F | L/R | Hatchback Van FWD 176B3000 | | GCO17039 | Outer Joint | 44T | 22 | 20 | 46.8 | 75.5 | 52 | O |
| | 1996.04-2000.02 | MT | F | L | Hatchback Van FWD 176B3000 | | GDS17037 | Drive Shaft | 44T | 22 | 22 | 46.8 | 75.5 | 581 | |
| 1.7 (46 kw) | 1997.08-2000.08 | AT/MT | F | L/R | Hatchback Van FWD 176B7000 | | GCO17021 | Outer Joint | | 22 | 22 | 46.8 | 75.5 | 52 | O |
| | 1997.08-2000.08 | AT/MT | F | L/R | Hatchback Van FWD 176B7000 | | GCO17022 | Outer Joint | 44T | 22 | 22 | 46.8 | 75.5 | 52 | O |
| 1.7 (52 kw) | 1996.04-2000.02 | MT | F | L/R | Hatchback Van FWD 176A5000 | | GCO17023 | Outer Joint | | 25 | 22 | 52 | 84 | 57 | O |
| | 1996.04-2000.02 | MT | F | L/R | Hatchback Van FWD 176A5000 | | GCO82004 | Outer Joint | 44T | 25 | 25 | 52 | 85 | 58 | I |
| | 1996.04-2000.02 | MT | F | L/R | Hatchback Van FWD 176A5000 | | GCO82005 | Outer Joint | 44T | 25 | 22 | 52 | 84 | 57 | O |
| | 1996.04-2000.02 | | F | | Hatchback Van FWD 176A5000 | | GCI82005 | Inner Joint | | | 25 | | | 32 | |
| 1.9 (44 kw) | 2000.02-2009.10 | | F | L/R | Hatchback Van FWD 188 A3.000 | | GCO17014 | Outer Joint | | 22 | 21 | 51 | 79.5 | 54 | M |
| | 2000.02-2009.10 | | F | L/R | Hatchback Van FWD 188 A3.000 | | GCO17052 | Outer Joint | | 22 | 21 | 51.2 | 79.5 | 54 | M |
| | 2000.02-2009.10 | | F | | Hatchback Van FWD 188 A3.000 | | GCI82005 | Inner Joint | | | 25 | | | 32 | |
| 1.9 (63 kw) | 2000.02-2009.10 | 5MT | F | L | Hatchback Van FWD 188 A7.000 | | GDS82005 | Drive Shaft | | 25 | | 51 | 85 | 450 | |
| | 2000.02-2009.10 | 5MT | F | R | Hatchback Van FWD 188 A7.000 | | GDS82009 | Drive Shaft | | 25 | | 51 | 85 | 494 | |
| | 2000.02-2009.10 | 5MT | F | R | Hatchback Van FWD 188 A7.000 | | GDS17238 | Stub Axle-Flange | | 24 | | | 379 | 415 | |
| | 2000.02-2009.10 | MT | F | L/R | Hatchback Van FWD 188 A7.000 | | GCO17042 | Outer Joint | | 25 | 25 | 51 | 85 | 58 | O |
| | 2000.02-2009.10 | MT | F | R | Hatchback Van FWD 188 A7.000 | Date from:2001.09;Date to:2005.10 | GCI82011 | Inner Joint | | | 25 | | | 32 | |
| | 2000.02-2009.10 | MT | F | L/R | Hatchback Van FWD 188 A7.000 | | GCI18070 | Inner Joint | | | 25 | | | 32 | |
| | 2000.02-2009.10 | | F | R | Hatchback Van FWD 188 A7.000 | | GCI82005 | Inner Joint | | | 25 | | | 32 | |
| **Qubo** | | | | | | | | | | | | | | | |
| 1.3 (55 kw) | 2008.02- | 5AMT | F | L | MPV FWD 199 A2.000;199 A9.000 | Not For facelift | GDS17147 | Drive Shaft | | 25 | 34 | 51 | 84.5 | 480 | |
| | 2008.02- | 5AMT | F | R | MPV FWD 199 A2.000;199 A9.000 | Not For facelift | GDS17146 | Drive Shaft | | 25 | 34 | 51 | 84.5 | 522 | |
| | 2008.02- | 5AMT | F | L/R | MPV FWD 199 A2.000;199 A9.000 | Date to:2013.03 | GCO17053 | Outer Joint | | 25 | 23 | 51 | 84.5 | 60 | M |
| | 2008.02- | 5AMT | F | L | MPV FWD 199 A2.000;199 A9.000 | Exhaust Emis:Euro 4 | GCI44014 | Inner Joint | | 25 | 23 | 34.9 | 57.5 | 102 | |
| | 2008.02- | 5AMT | F | R | MPV FWD 199 A2.000;199 A9.000 | | GCI17056 | Inner Joint | | 25 | 23 | 34.9 | 400 | 97 | |
| | 2008.02- | 5AT/5MT | F | R | MPV FWD 199 A2.000;199 A9.000 | Exhaust Emis Nm:Euro 5/Euro 6 | GCI17107 | Inner Joint | | 24 | 24 | 29.7 | 394 | 99 | |
| | 2008.02- | 5MT | F | L | MPV FWD 199 A2.000;199 A9.000 | For facelift,Exhaust Emis:Euro 4/Euro 5;Not For facelift | GDS17062 | Drive Shaft | | 25 | 24 | 51 | 84.5 | 582 | |
| | 2008.02- | 5MT | F | R | MPV FWD 199 A2.000;199 A9.000 | For facelift,Exhaust Emis:Euro 4/Euro 5;Not For facelift;Trans. side with housing | GDS17055 | Drive Shaft | | 25 | 35 | 51 | 84.5 | 543 | |
| | 2008.02- | 5MT | F | R | MPV FWD 199 A2.000;199 A9.000 | For facelift,Exhaust Emis:Euro 4/Euro 5;Not For facelift;Trans. side without housing | GDS17061 | Drive Shaft | | 25 | 24 | 51 | 84.5 | 953 | |
| | 2008.02- | 5MT | F | L/R | MPV FWD 199 A2.000;199 A9.000 | Exhaust Emis Nm:Euro 4 | GCO17028 | Outer Joint | | 25 | 24 | 51 | 84.5 | 62 | M |
| | 2008.02- | 5MT/5AMT | F | L | MPV FWD 199 A2.000;199 A9.000 | Transmission:5AMT,Exhaust Emis:Euro 6 | GCI99008 | Inner Joint | | 24 | 24 | 29.7 | 86.5 | 93 | |
| 1.3 (59 kw) | 2015.03- | 5AMT | F | R | MPV FWD 225 A2.000 | | GDS17146 | Drive Shaft | | 25 | 34 | 51 | 84.5 | 522 | |
| | 2015.03- | 5AMT | F | L/R | MPV FWD 225 A2.000 | Manufacturer:GKN | GCO17053 | Outer Joint | | 25 | 23 | 51 | 84.5 | 60 | M |
| | 2015.03- | 5MT | F | L | MPV FWD 225 A2.000 | | GDS17165 | Drive Shaft | | 25 | 24 | 51 | 84.5 | 603 | |
| | 2015.03- | 5MT | F | L/R | MPV FWD 225 A2.000 | Date from:2014.04;Exhaust Emis Nm:Euro 5 | GCO17028 | Outer Joint | | 25 | 24 | 51 | 84.5 | 62 | M |
| | 2015.03- | 5MT/5AMT | F | L | MPV FWD 225 A2.000 | Transmission:5AMT,Exhaust Emis:Euro 6 | GCI99008 | Inner Joint | | 24 | 24 | 29.7 | 86.5 | 93 | |
| | 2015.03- | AT/5MT | F | R | MPV FWD 225 A2.000 | | GCI17056 | Inner Joint | | 25 | 23 | 34.9 | 400 | 97 | |
| | 2015.03- | | F | R | MPV FWD 225 A2.000 | Exhaust Emis Nm:Euro 6 | GCI17107 | Inner Joint | | 24 | 24 | 29.7 | 394 | 99 | |
| 1.3 (70 kw) | 2010.07- | 5MT | F | L | MPV FWD 199 B1.000;330 A1.000;552 83 775 | For facelift;Exhaust Emis:Euro 5 | GDS17062 | Drive Shaft | | 25 | 24 | 51 | 84.5 | 582 | |
| | 2010.07- | 5MT | F | L | MPV FWD 199 B1.000;330 A1.000;552 83 775 | For right-hand drive vehicles;Engine:Fiat 199 B1;Exhaust Emis:Euro5;Not For facelift;Not For right-hand drive vehicles;Not For Israel | GDS17165 | Drive Shaft | | 25 | 24 | 51 | 84.5 | 603 | |
| | 2010.07- | 5MT | F | R | MPV FWD 199 B1.000;330 A1.000;552 83 775 | For facelift;Exhaust Emis:Euro 5 | GDS17055 | Drive Shaft | | 25 | 35 | 51 | 84.5 | 543 | |
| | 2010.07- | 5MT | F | R | MPV FWD 199 B1.000;330 A1.000;552 83 775 | For facelift;Exhaust Emis:Euro 5 | GDS17061 | Drive Shaft | | 25 | 24 | 51 | 84.5 | 953 | |
| | 2010.07- | 5MT | F | R | MPV FWD 199 B1.000;330 A1.000;552 83 775 | For right-hand drive vehicles;Engine:Fiat 199 B1;Exhaust Emis:Euro5;Not For facelift;Not For right-hand drive vehicles;Not For Israel | GDS17157 | Drive Shaft | | 25 | 24 | 51 | 84.5 | 919 | |
| | 2010.07- | 5MT | F | L/R | MPV FWD 199 B1.000;330 A1.000;552 83 775 | | GCO17028 | Outer Joint | | 25 | 24 | 51 | 84.5 | 62 | M |
| | 2010.07- | 5MT | F | L | MPV FWD 199 B1.000;330 A1.000;552 83 775 | | GCI99008 | Inner Joint | | 24 | 24 | 29.7 | 86.5 | 93 | |
| | 2010.07- | 5MT | F | R | MPV FWD 199 B1.000;330 A1.000;552 83 775 | Exhaust Emis:Euro 5/Euro 6 | GCI17107 | Inner Joint | | 24 | 24 | 29.7 | 394 | 99 | |
| 1.4 (54 kw) | 2008.02- | 5MT | F | L | MPV FWD KFV;KFT | Date To:2016.01,Exhaust Emission no.:Euro 6 | GDS17088 | Drive Shaft | | 22 | | 51 | 79 | 552 | |
| | 2008.02- | 5MT | F | R | MPV FWD KFV;KFT | Date To:2016.01,Exhaust Emission no.:Euro 6 | GDS17111 | Drive Shaft | | 22 | 22 | 51.2 | 79.5 | 887 | |
| | 2008.02- | 5MT | F | R | MPV FWD KFV;KFT | Exhaust Emission no.:Euro 4/Euro 5 | GDS83558 | Drive Shaft | | 22 | 22 | 51 | 79 | 880 | |

| | YEAR | TRANSM. | F/R | L/R | BODY STYLE & DRIVE TYPE & ENGINE | REMARKS | G-AP Ref. | PRODUCT | ABS | Technical Specifications A | B | C | H | L | P |
|---|---|---|---|---|---|---|---|---|---|---|---|---|---|---|---|
| **FIAT** | | | | | | | | | | | | | | | |
| **Qubo** | | | | | | | | | | | | | | | |
| 1.4 (54 kw) | 2008.02- | 5MT | F | L | MPV FWD KFV;KFT | Exhaust Emis Nm:Euro 4 /Euro 5 | GCO17070 | Outer Joint | | 22 | 22 | 51 | 79 | 57.5 | M |
| | 2008.02- | 5MT | F | R | MPV FWD KFV;KFT | Exhaust Emission no.:Euro 4/Euro 5 | GCO82416 | Outer Joint | | 22 | 22 | 51 | 79 | 57.5 | M |
| | 2008.02- | 5MT | F | R | MPV FWD KFV;KFT | Exhaust Emission no.:Euro 4/Euro 5 | GCI17030 | Inner Joint | | 22 | 22 | 30 | 96.5 | 99 | |
| 1.4 (57 kw) | 2009.10- | 5MT | F | L | MPV FWD 350 A1.000 | Date To:2016.01,Exhaust Emission no.:Euro 6 | GDS17088 | Drive Shaft | | 22 | | 51 | 79 | 552 | |
| | 2009.10- | 5MT | F | L | MPV FWD 350 A1.000 | | GDS17088 | Drive Shaft | | 22 | | 51 | 79 | 552 | |
| | 2009.10- | 5MT | F | R | MPV FWD 350 A1.000 | Date To:2016.01,Exhaust Emission no.:Euro 6 | GDS17111 | Drive Shaft | | 22 | 22 | 51.2 | 79.5 | 887 | |
| | 2009.10- | 5MT | F | R | MPV FWD 350 A1.000 | | GDS17111 | Drive Shaft | | 22 | 22 | 51.2 | 79.5 | 887 | |
| | 2009.10- | 5MT | F | R | MPV FWD 350 A1.000 | Exhaust Emission no.:Euro 5 | GCO82416 | Outer Joint | | 22 | 22 | 51 | 79 | 57.5 | M |
| | 2009.10- | 5MT | F | L/R | MPV FWD 350 A1.000 | Date To:2016.01,Exhaust Emission no.:Euro 6 | GCO17070 | Outer Joint | | 22 | 22 | 51 | 79 | 57.5 | M |
| | 2009.10- | 5MT | F | L/R | MPV FWD 350 A1.000 | Date to:2013.03 | GCO17070 | Outer Joint | | 22 | 22 | 51 | 79 | 57.5 | M |
| | 2009.10- | 5MT | F | L | MPV FWD 350 A1.000 | | GCI17027 | Inner Joint | | 22 | 22 | 36 | 61.5 | 93.5 | |
| | 2009.10- | 5MT | F | R | MPV FWD 350 A1.000 | | GCI17004 | Inner Joint | | 22 | 21 | 36 | 61 | 93.5 | |
| | 2009.10- | 5MT | F | R | MPV FWD 350 A1.000 | Exhaust Emission no.:Euro 5 | GCI17030 | Inner Joint | | 22 | 22 | 30 | 96.5 | 99 | |
| | 2009.10- | 5MT | F | L/R | MPV FWD 350 A1.000 | | GCI17027 | Inner Joint | | 22 | 22 | 36 | 61.5 | 93.5 | |
| **Scudo** | | | | | | | | | | | | | | | |
| 1.5 (75 kw) | 2022.01- | 6MT | F | L | Van FWD DV5RUCD | | GDS82315 | Drive Shaft | | 28 | 37 | 58.6 | 93 | 719 | |
| | 2022.01- | 6MT | F | R | Van FWD DV5RUCD | | GDS82316 | Drive Shaft | | 28 | 37 | 58.6 | 93 | 974 | |
| | 2022.01- | 6MT | F | L/R | Van FWD DV5RUCD | | GCO10098 | Outer Joint | | 28 | 39 | 58.6 | 93 | 63 | I |
| | 2022.01- | 6MT | F | R | Van FWD DV5RUCD | | GCI81759 | Inner Joint | | 37 | 34 | 31.9 | 302 | 88 | |
| 1.5 (88 kw) | 2022.01- | 6MT | F | L | Van FWD DV5RUC | | GDS82315 | Drive Shaft | | 28 | 37 | 58.6 | 93 | 719 | |
| | 2022.01- | 6MT | F | R | Van FWD DV5RUC | | GDS82316 | Drive Shaft | | 28 | 37 | 58.6 | 93 | 974 | |
| | 2022.01- | 6MT | F | L/R | Van FWD DV5RUC | | GCO10098 | Outer Joint | | 28 | 39 | 58.6 | 93 | 63 | I |
| | 2022.01- | 6MT | F | R | Van FWD DV5RUC | | GCI81759 | Inner Joint | | 37 | 34 | 31.9 | 302 | 88 | |
| 1.6 (58 kw) | 1996.02-2006.12 | 5MT | F | L | Bus FWD 220 A 2.000 | | GDS10112 | Drive Shaft | | 27 | 24 | 59 | 82 | 648 | |
| | 1996.02-2006.12 | 5MT | F | R | Bus FWD 220 A 2.000 | | GDS10081 | Drive Shaft | 48T | 27 | 24 | 59 | 82 | 935 | |
| | 1996.02-2006.12 | 5MT | F | R | Bus FWD 220 A 2.000 | | GCI10004 | Inner Joint | | 24 | 34 | 29.8 | 348 | 99.5 | |
| | 1996.02-2006.12 | MT | F | L | Bus FWD 220 A 2.000 | Date to:2000.08;Trans. code:BE3 | GDS10082 | Drive Shaft | 48T | 27 | 24 | 59 | 82 | 648 | |
| | 1996.02-2006.12 | MT | F | R | Bus FWD 220 A 2.000 | Date to:2000.08 | GDS10012 | Drive Shaft | 48T | 27 | 24 | 64 | 80.5 | 928 | |
| | 1996.02-2006.12 | MT | F | R | Bus FWD 220 A 2.000 | Date to:2000.08 | GDS10120 | Drive Shaft | | 27 | 24 | 59 | 82 | 928 | |
| | 1996.02-2006.12 | MT | F | L/R | Bus FWD 220 A 2.000 | | GCO10018 | Outer Joint | 48T | 27 | 34 | 61 | 82 | 56.5 | I |
| | 1996.02-2006.12 | MT | F | L/R | Bus FWD 220 A 2.000 | | GCO10059 | Outer Joint | 48T | 27 | 34 | 59 | 82 | 56.5 | I |
| | 1996.02-2006.12 | 5MT | F | L | Van FWD 220 A 2.000 | | GDS10112 | Drive Shaft | | 27 | 24 | 59 | 82 | 648 | |
| | 1996.02-2006.12 | 5MT | F | R | Van FWD 220 A 2.000 | | GDS10081 | Drive Shaft | 48T | 27 | 24 | 59 | 82 | 935 | |
| | 1996.02-2006.12 | 5MT | F | L/R | Van FWD 220 A 2.000 | | GCO10018 | Outer Joint | 48T | 27 | 34 | 61 | 82 | 56.5 | I |
| | 1996.02-2006.12 | 5MT | F | L/R | Van FWD 220 A 2.000 | | GCO10059 | Outer Joint | 48T | 27 | 34 | 59 | 82 | 56.5 | I |
| | 1996.02-2006.12 | 5MT | F | R | Van FWD 220 A 2.000 | | GCI10004 | Inner Joint | | 24 | 34 | 29.8 | 348 | 99.5 | |
| | 1996.02-2006.12 | MT | F | L | Van FWD 220 A 2.000 | Date to:2000.08;Trans. code:BE3 | GDS10082 | Drive Shaft | 48T | 27 | 24 | 59 | 82 | 648 | |
| | 1996.02-2006.12 | MT | F | R | Van FWD 220 A 2.000 | Date to:2000.08 | GDS10012 | Drive Shaft | 48T | 27 | 24 | 64 | 80.5 | 928 | |
| | 1996.02-2006.12 | MT | F | R | Van FWD 220 A 2.000 | Date to:2000.08 | GDS10120 | Drive Shaft | | 27 | 24 | 59 | 82 | 928 | |
| | 1996.09-2006.12 | 5MT | F | L | Platform/Chassis FWD 220 A 2.000 | | GDS10082 | Drive Shaft | 48T | 27 | 24 | 59 | 82 | 648 | |
| | 1996.09-2006.12 | 5MT | F | L | Platform/Chassis FWD 220 A 2.000 | | GDS10112 | Drive Shaft | | 27 | 24 | 59 | 82 | 648 | |
| | 1996.09-2006.12 | 5MT | F | R | Platform/Chassis FWD 220 A 2.000 | | GDS10081 | Drive Shaft | 48T | 27 | 24 | 59 | 82 | 935 | |
| | 1996.09-2006.12 | 5MT | F | R | Platform/Chassis FWD 220 A 2.000 | | GDS10120 | Drive Shaft | | 27 | 24 | 59 | 82 | 928 | |
| | 1996.09-2006.12 | 5MT | F | L/R | Platform/Chassis FWD 220 A 2.000 | | GCO10018 | Outer Joint | 48T | 27 | 34 | 61 | 82 | 56.5 | I |
| | 1996.09-2006.12 | 5MT | F | L/R | Platform/Chassis FWD 220 A 2.000 | | GCO10059 | Outer Joint | 48T | 27 | 34 | 59 | 82 | 56.5 | I |
| | 1996.09-2006.12 | 5MT | F | R | Platform/Chassis FWD 220 A 2.000 | | GCI10004 | Inner Joint | | 24 | 34 | 29.8 | 348 | 99.5 | |
| 1.6 (66 kw) | 2007.01-2016.03 | 5MT | F | L | Bus FWD 9HU | | GDS10238 | Drive Shaft | | 28 | 24 | 58.5 | 92 | 669 | |
| | 2007.01-2016.03 | 5MT | F | R | Bus FWD 9HU | | GDS10239 | Drive Shaft | | 28 | 24 | 58.5 | 92 | 955 | |
| | 2007.01-2016.03 | 5MT | F | R | Bus FWD 9HU | | GCI99159 | Inner Joint | | 24 | 34 | 29.8 | 350 | 87.5 | |
| | 2007.01-2016.03 | MT | F | L/R | Bus FWD 9HU | | GCO10124 | Outer Joint | | 28 | 34 | 58.5 | 92 | 55 | I |
| | 2007.01-2016.03 | 5MT | F | L | Platform/Chassis FWD 9HU | | GDS10238 | Drive Shaft | | 28 | 24 | 58.5 | 92 | 669 | |
| | 2007.01-2016.03 | 5MT | F | R | Platform/Chassis FWD 9HU | | GDS10239 | Drive Shaft | | 28 | 24 | 58.5 | 92 | 955 | |
| | 2007.01-2016.03 | 5MT | F | R | Platform/Chassis FWD 9HU | | GCI99159 | Inner Joint | | 24 | 34 | 29.8 | 350 | 87.5 | |
| | 2007.01-2016.03 | MT | F | L/R | Platform/Chassis FWD 9HU | | GCO10124 | Outer Joint | | 28 | 34 | 58.5 | 92 | 55 | I |
| | 2007.01-2016.03 | 5MT | F | L | Van FWD 9HU | | GDS10238 | Drive Shaft | | 28 | 24 | 58.5 | 92 | 669 | |
| | 2007.01-2016.03 | 5MT | F | R | Van FWD 9HU | | GDS10239 | Drive Shaft | | 28 | 24 | 58.5 | 92 | 955 | |
| | 2007.01-2016.03 | 5MT | F | R | Van FWD 9HU | | GCI99159 | Inner Joint | | 24 | 34 | 29.8 | 350 | 87.5 | |
| | 2007.01-2016.03 | MT | F | L/R | Van FWD 9HU | | GCO10124 | Outer Joint | | 28 | 34 | 58.5 | 92 | 55 | I |
| | 2011.02-2016.03 | 5MT | F | L | Bus FWD 9HM (DV6UC);9H07 (DV6UC) | | GDS10238 | Drive Shaft | | 28 | 24 | 58.5 | 92 | 669 | |
| | 2011.02-2016.03 | 5MT | F | R | Bus FWD 9HM (DV6UC);9H07 (DV6UC) | | GDS10239 | Drive Shaft | | 28 | 24 | 58.5 | 92 | 955 | |
| | 2011.02-2016.03 | 5MT | F | R | Bus FWD 9HM (DV6UC);9H07 (DV6UC) | | GCI99159 | Inner Joint | | 24 | 34 | 29.8 | 350 | 87.5 | |
| | 2011.02-2016.03 | MT | F | L/R | Bus FWD 9HM (DV6UC);9H07 (DV6UC) | | GCO10124 | Outer Joint | | 28 | 34 | 58.5 | 92 | 55 | I |
| | 2011.02-2016.03 | MT | F | L | Van FWD 9HM (DV6UC);9H07 (DV6UC) | | GDS10238 | Drive Shaft | | 28 | 24 | 58.5 | 92 | 669 | |
| | 2011.02-2016.03 | MT | F | R | Van FWD 9HM (DV6UC);9H07 (DV6UC) | | GDS10239 | Drive Shaft | | 28 | 24 | 58.5 | 92 | 955 | |
| | 2011.02-2016.03 | MT | F | L/R | Van FWD 9HM (DV6UC);9H07 (DV6UC) | | GCO10124 | Outer Joint | | 28 | 34 | 58.5 | 92 | 55 | I |

| | YEAR | TRANSM. | F/R | L/R | BODY STYLE & DRIVE TYPE & ENGINE | REMARKS | G-AP Ref. | PRODUCT | ABS | Technical Specifications A | B | C | H | L | P |
|---|---|---|---|---|---|---|---|---|---|---|---|---|---|---|---|
| **FIAT** **Scudo** | | | | | | | | | | | | | | | |
| 1.6 (66 kw) | 2011.02-2016.03 | MT | F | R | Van FWD 9HM (DV6UC);9H07 (DV6UC) | | GCI99159 | Inner Joint | | 24 | 34 | 29.8 | 350 | 87.5 | |
| 1.9 (51 kw) | 1996.02-1998.04 | 5MT | F | L | Bus FWD D9B (XUD9A) | | GDS10112 | Drive Shaft | | 27 | 24 | 59 | 82 | 648 | |
| | 1996.02-1998.04 | 5MT | F | R | Bus FWD D9B (XUD9A) | | GDS10081 | Drive Shaft | 48T | 27 | 24 | 59 | 82 | 935 | |
| | 1996.02-1998.04 | 5MT | F | R | Bus FWD D9B (XUD9A) | | GCI10004 | Inner Joint | | 24 | 34 | 29.8 | 348 | 99.5 | |
| | 1996.02-1998.04 | MT | F | L | Bus FWD D9B (XUD9A) | Trans. code:BE3 | GDS10082 | Drive Shaft | 48T | 27 | 24 | 59 | 82 | 648 | |
| | 1996.02-1998.04 | MT | F | R | Bus FWD D9B (XUD9A) | | GDS10012 | Drive Shaft | 48T | 27 | 24 | 64 | 80.5 | 928 | |
| | 1996.02-1998.04 | MT | F | R | Bus FWD D9B (XUD9A) | | GDS10120 | Drive Shaft | | 27 | 24 | 59 | 82 | 928 | |
| | 1996.02-1998.04 | MT | F | L/R | Bus FWD D9B (XUD9A) | | GCO10018 | Outer Joint | 48T | 27 | 34 | 61 | 82 | 56.5 | I |
| | 1996.02-1998.04 | MT | F | L/R | Bus FWD D9B (XUD9A) | | GCO10059 | Outer Joint | 48T | 27 | 34 | 59 | 82 | 56.5 | I |
| | 1996.02-1998.04 | | F | R | Bus FWD D9B (XUD9A) | | GDS10111 | Drive Shaft | | 27 | 24 | 59 | 82 | 935 | |
| | 1996.02-1998.04 | | F | | Bus FWD D9B (XUD9A) | | GCO10016 | Outer Joint | | 27 | 34 | 59 | 82 | 56.5 | I |
| | 1996.02-2006.12 | 5MT | F | L | Van FWD D9B (XUD9A) | Date to:1998.07 | GDS10082 | Drive Shaft | 48T | 27 | 24 | 59 | 82 | 648 | |
| | 1996.02-2006.12 | 5MT | F | L | Van FWD D9B (XUD9A) | | GDS10112 | Drive Shaft | | 27 | 24 | 59 | 82 | 648 | |
| | 1996.02-2006.12 | 5MT | F | R | Van FWD D9B (XUD9A) | | GDS10081 | Drive Shaft | 48T | 27 | 24 | 59 | 82 | 935 | |
| | 1996.02-2006.12 | 5MT | F | L | Van FWD D9B (XUD9A) | | GCO10059 | Outer Joint | 48T | 27 | 34 | 59 | 82 | 56.5 | I |
| | 1996.02-2006.12 | 5MT | F | R | Van FWD D9B (XUD9A) | | GCO10018 | Outer Joint | 48T | 27 | 34 | 61 | 82 | 56.5 | I |
| | 1998.04-2006.12 | 5MT | F | L | Bus FWD WJZ (DW8) | | GDS10112 | Drive Shaft | | 27 | 24 | 59 | 82 | 648 | |
| | 1998.04-2006.12 | 5MT | F | R | Bus FWD WJZ (DW8) | | GDS10081 | Drive Shaft | 48T | 27 | 24 | 59 | 82 | 935 | |
| | 1998.04-2006.12 | 5MT | F | L/R | Bus FWD WJZ (DW8) | | GCO10018 | Outer Joint | 48T | 27 | 34 | 61 | 82 | 56.5 | I |
| | 1998.04-2006.12 | 5MT | F | R | Bus FWD WJZ (DW8) | | GCI10004 | Inner Joint | | 24 | 34 | 29.8 | 348 | 99.5 | |
| | 1998.04-2006.12 | MT | F | L | Bus FWD WJZ (DW8) | Date from:1998.08;Trans. code:BE3 | GDS10082 | Drive Shaft | 48T | 27 | 24 | 59 | 82 | 648 | |
| | 1998.04-2006.12 | MT | F | R | Bus FWD WJZ (DW8) | Date from:1998.08 | GDS10012 | Drive Shaft | 48T | 27 | 24 | 64 | 80.5 | 928 | |
| | 1998.04-2006.12 | MT | F | R | Bus FWD WJZ (DW8) | Date from:1998.08 | GDS10120 | Drive Shaft | | 27 | 24 | 59 | 82 | 928 | |
| | 1998.04-2006.12 | MT | F | L/R | Bus FWD WJZ (DW8) | | GCO10016 | Outer Joint | | 27 | 34 | 59 | 82 | 56.5 | I |
| | 1998.04-2006.12 | MT | F | L/R | Bus FWD WJZ (DW8) | Date to:2002.12 | GCO10059 | Outer Joint | 48T | 27 | 34 | 59 | 82 | 56.5 | I |
| | 1998.04-2006.12 | | F | R | Bus FWD WJZ (DW8) | | GDS10111 | Drive Shaft | | 27 | 24 | 59 | 82 | 935 | |
| | 1998.04-2006.12 | 5MT | F | L | Platform/Chassis FWD WJY (DW8) | | GDS10082 | Drive Shaft | 48T | 27 | 24 | 59 | 82 | 648 | |
| | 1998.04-2006.12 | 5MT | F | L | Platform/Chassis FWD WJY (DW8) | | GDS10112 | Drive Shaft | | 27 | 24 | 59 | 82 | 648 | |
| | 1998.04-2006.12 | 5MT | F | R | Platform/Chassis FWD WJY (DW8) | | GDS10012 | Drive Shaft | 48T | 27 | 24 | 64 | 80.5 | 928 | |
| | 1998.04-2006.12 | 5MT | F | R | Platform/Chassis FWD WJY (DW8) | | GDS10081 | Drive Shaft | 48T | 27 | 24 | 59 | 82 | 935 | |
| | 1998.04-2006.12 | 5MT | F | R | Platform/Chassis FWD WJY (DW8) | | GDS10120 | Drive Shaft | | 27 | 24 | 59 | 82 | 928 | |
| | 1998.04-2006.12 | 5MT | F | L/R | Platform/Chassis FWD WJY (DW8) | | GCO10018 | Outer Joint | 48T | 27 | 34 | 61 | 82 | 56.5 | I |
| | 1998.04-2006.12 | 5MT | F | L/R | Platform/Chassis FWD WJY (DW8) | | GCO10059 | Outer Joint | 48T | 27 | 34 | 59 | 82 | 56.5 | I |
| | 1998.04-2006.12 | 5MT | F | R | Platform/Chassis FWD WJY (DW8) | | GCI10004 | Inner Joint | | 24 | 34 | 29.8 | 348 | 99.5 | |
| | 1998.04-2006.12 | 5MT | F | L | Van FWD WJY (DW8B), WJZ (DW8) | | GDS10112 | Drive Shaft | | 27 | 24 | 59 | 82 | 648 | |
| | 1998.04-2006.12 | 5MT | F | R | Van FWD WJY (DW8B), WJZ (DW8) | | GDS10081 | Drive Shaft | 48T | 27 | 24 | 59 | 82 | 935 | |
| | 1998.04-2006.12 | 5MT | F | L/R | Van FWD WJY (DW8B), WJZ (DW8) | | GCO10018 | Outer Joint | 48T | 27 | 34 | 61 | 82 | 56.5 | I |
| | 1998.04-2006.12 | 5MT | F | L/R | Van FWD WJY (DW8B), WJZ (DW8) | | GCO10059 | Outer Joint | 48T | 27 | 34 | 59 | 82 | 56.5 | I |
| | 1998.04-2006.12 | 5MT | F | R | Van FWD WJY (DW8B), WJZ (DW8) | | GCI10004 | Inner Joint | | 24 | 34 | 29.8 | 348 | 99.5 | |
| | 1998.04-2006.12 | MT | F | L | Van FWD WJY (DW8B), WJZ (DW8) | Trans. code:BE3 | GDS10082 | Drive Shaft | 48T | 27 | 24 | 59 | 82 | 648 | |
| | 1998.04-2006.12 | MT | F | R | Van FWD WJY (DW8B), WJZ (DW8) | | GDS10012 | Drive Shaft | 48T | 27 | 24 | 64 | 80.5 | 928 | |
| | 1998.04-2006.12 | MT | F | R | Van FWD WJY (DW8B), WJZ (DW8) | | GDS10120 | Drive Shaft | | 27 | 24 | 59 | 82 | 928 | |
| | 1998.04-2006.12 | MT | F | L/R | Van FWD WJY (DW8B), WJZ (DW8) | | GCO10016 | Outer Joint | | 27 | 34 | 59 | 82 | 56.5 | I |
| | 1998.04-2006.12 | | F | R | Van FWD WJY (DW8B), WJZ (DW8) | | GDS10111 | Drive Shaft | | 27 | 24 | 59 | 82 | 935 | |
| 1.9 (66 kw) | 1996.02-2006.12 | 5MT | F | L | Bus FWD DHX (XUD9TF/L) | | GDS10016 | Drive Shaft | 48T | 27 | 37 | 59 | 82 | 641 | |
| | 1996.02-2006.12 | 5MT | F | R | Bus FWD DHX (XUD9TF/L) | | GDS10014 | Drive Shaft | 48T | 27 | 37 | 59 | 82 | 947 | |
| | 1996.02-2006.12 | 5MT | F | R | Bus FWD DHX (XUD9TF/L) | | GDS10155 | Drive Shaft | | 27 | 37 | 59 | 82 | 947 | |
| | 1996.02-2006.12 | 5MT | F | L/R | Bus FWD DHX (XUD9TF/L) | | GCO10014 | Outer Joint | | 27 | 39 | 59 | 82 | 63 | I |
| | 1996.02-2006.12 | 5MT | F | L/R | Bus FWD DHX (XUD9TF/L) | | GCO10015 | Outer Joint | 48T | 27 | 39 | 59 | 82 | 63 | I |
| | 1996.02-2006.12 | 5MT | F | L | Bus FWD DHX (XUD9TF/L) | | GCI10015 | Inner Joint | | 37 | 39 | 40 | 68.5 | 104 | |
| | 1996.02-2006.12 | 5MT | F | R | Bus FWD DHX (XUD9TF/L) | | GCI10034 | Inner Joint | | 37 | 39 | 31.9 | 369.5 | 99 | |
| | 1996.02-2006.12 | 5MT | F | L | Van FWD DHX (XUD9TF/L) | | GDS10016 | Drive Shaft | 48T | 27 | 37 | 59 | 82 | 641 | |
| | 1996.02-2006.12 | 5MT | F | R | Van FWD DHX (XUD9TF/L) | | GDS10014 | Drive Shaft | 48T | 27 | 37 | 59 | 82 | 947 | |
| | 1996.02-2006.12 | 5MT | F | R | Van FWD DHX (XUD9TF/L) | | GDS10155 | Drive Shaft | | 27 | 37 | 59 | 82 | 947 | |
| | 1996.02-2006.12 | 5MT | F | L/R | Van FWD DHX (XUD9TF/L) | | GCO10014 | Outer Joint | | 27 | 39 | 59 | 82 | 63 | I |
| | 1996.02-2006.12 | 5MT | F | L/R | Van FWD DHX (XUD9TF/L) | | GCO10015 | Outer Joint | 48T | 27 | 39 | 59 | 82 | 63 | I |
| | 1996.02-2006.12 | 5MT | F | L | Van FWD DHX (XUD9TF/L) | | GCI10015 | Inner Joint | | 37 | 39 | 40 | 68.5 | 104 | |
| | 1996.02-2006.12 | 5MT | F | R | Van FWD DHX (XUD9TF/L) | | GCI10034 | Inner Joint | | 37 | 39 | 31.9 | 369.5 | 99 | |
| 1.9 (68 kw) | 1996.02-2006.12 | 5MT | F | L | Bus FWD D8B | | GDS10016 | Drive Shaft | 48T | 27 | 37 | 59 | 82 | 641 | |
| | 1996.02-2006.12 | 5MT | F | R | Bus FWD D8B | | GDS10014 | Drive Shaft | 48T | 27 | 37 | 59 | 82 | 947 | |
| | 1996.02-2006.12 | 5MT | F | R | Bus FWD D8B | | GDS10155 | Drive Shaft | | 27 | 37 | 59 | 82 | 947 | |
| | 1996.02-2006.12 | 5MT | F | L/R | Bus FWD D8B | | GCO10014 | Outer Joint | | 27 | 39 | 59 | 82 | 63 | I |
| | 1996.02-2006.12 | 5MT | F | L/R | Bus FWD D8B | | GCO10015 | Outer Joint | 48T | 27 | 39 | 59 | 82 | 63 | I |
| | 1996.02-2006.12 | 5MT | F | L | Bus FWD D8B | | GCI10015 | Inner Joint | | 37 | 39 | 40 | 68.5 | 104 | |
| | 1996.02-2006.12 | 5MT | F | R | Bus FWD D8B | | GCI10034 | Inner Joint | | 37 | 39 | 31.9 | 369.5 | 99 | |

| | YEAR | TRANSM. | F/R | L/R | BODY STYLE & DRIVE TYPE & ENGINE | REMARKS | G-AP Ref. | PRODUCT | ABS | Technical Specifications A | B | C | H | L | P |
|---|---|---|---|---|---|---|---|---|---|---|---|---|---|---|---|
| **FIAT** **Scudo** | | | | | | | | | | | | | | | |
| 1.9 (68 kw) | 1996.09-2006.12 | 5MT | F | L | Platform/Chassis FWD DHX (XUD9TF/L) | | GDS10016 | Drive Shaft | 48T | 27 | 37 | 59 | 82 | 641 | |
| | 1996.09-2006.12 | 5MT | F | L | Platform/Chassis FWD DHX (XUD9TF/L) | | GDS10072 | Drive Shaft | | 27 | 37 | 59 | 82 | 641 | |
| | 1996.09-2006.12 | 5MT | F | R | Platform/Chassis FWD DHX (XUD9TF/L) | | GDS10014 | Drive Shaft | 48T | 27 | 37 | 59 | 82 | 947 | |
| | 1996.09-2006.12 | 5MT | F | R | Platform/Chassis FWD DHX (XUD9TF/L) | | GDS10155 | Drive Shaft | | 27 | 37 | 59 | 82 | 947 | |
| | 1996.09-2006.12 | 5MT | F | L/R | Platform/Chassis FWD DHX (XUD9TF/L) | | GCO10014 | Outer Joint | | 27 | 39 | 59 | 82 | 63 | I |
| | 1996.09-2006.12 | 5MT | F | L/R | Platform/Chassis FWD DHX (XUD9TF/L) | | GCO10015 | Outer Joint | 48T | 27 | 39 | 59 | 82 | 63 | I |
| | 1996.09-2006.12 | 5MT | F | L | Platform/Chassis FWD DHX (XUD9TF/L) | | GCI10015 | Inner Joint | | 37 | 39 | 40 | 68.5 | 104 | |
| | 1996.09-2006.12 | 5MT | F | R | Platform/Chassis FWD DHX (XUD9TF/L) | | GCI10034 | Inner Joint | | 37 | 39 | 31.9 | 369.5 | 99 | |
| | 1998.02-2006.12 | 5MT | F | L | Van FWD D8B | | GDS10016 | Drive Shaft | 48T | 27 | 37 | 59 | 82 | 641 | |
| | 1998.02-2006.12 | 5MT | F | R | Van FWD D8B | | GDS10014 | Drive Shaft | 48T | 27 | 37 | 59 | 82 | 947 | |
| | 1998.02-2006.12 | 5MT | F | R | Van FWD D8B | | GDS10155 | Drive Shaft | | 27 | 37 | 59 | 82 | 947 | |
| | 1998.02-2006.12 | 5MT | F | L/R | Van FWD D8B | | GCO10014 | Outer Joint | | 27 | 39 | 59 | 82 | 63 | I |
| | 1998.02-2006.12 | 5MT | F | L/R | Van FWD D8B | | GCO10015 | Outer Joint | 48T | 27 | 39 | 59 | 82 | 63 | I |
| | 1998.02-2006.12 | 5MT | F | L | Van FWD D8B | | GCI10015 | Inner Joint | | 37 | 39 | 40 | 68.5 | 104 | |
| | 1998.02-2006.12 | 5MT | F | R | Van FWD D8B | | GCI10034 | Inner Joint | | 37 | 39 | 31.9 | 369.5 | 99 | |
| 2.0 (69 kw) | 1999.10-2006.12 | 5MT | F | L | Platform/Chassis FWD RHX | | GDS10264 | Drive Shaft | 48T | 27 | 37 | 59 | 82 | 630 | |
| | 1999.10-2006.12 | 5MT | F | L | Platform/Chassis FWD RHX | | GDS10430 | Drive Shaft | | 27 | 37 | 59 | 82 | 630 | |
| | 1999.10-2006.12 | 5MT | F | R | Platform/Chassis FWD RHX | | GDS10057 | Drive Shaft | | 27 | 37 | 59 | 82 | 960 | |
| | 1999.10-2006.12 | 5MT | F | R | Platform/Chassis FWD RHX | | GDS45120 | Drive Shaft | 48T | 27 | 37 | 59 | 82 | 960 | |
| | 1999.10-2006.12 | 5MT | F | L/R | Platform/Chassis FWD RHX | | GCO10014 | Outer Joint | | 27 | 39 | 59 | 82 | 63 | I |
| | 1999.10-2006.12 | 5MT | F | L/R | Platform/Chassis FWD RHX | | GCO10015 | Outer Joint | 48T | 27 | 39 | 59 | 82 | 63 | I |
| | 1999.10-2006.12 | 5MT | F | L | Platform/Chassis FWD RHX | | GCI10015 | Inner Joint | | 37 | 39 | 40 | 68.5 | 104 | |
| | 1999.10-2006.12 | 5MT | F | R | Platform/Chassis FWD RHX | | GCI10034 | Inner Joint | | 37 | 39 | 31.9 | 369.5 | 99 | |
| | 1999.10-2006.12 | 5MT | F | L | Van FWD RHX | | GDS10264 | Drive Shaft | 48T | 27 | 37 | 59 | 82 | 630 | |
| | 1999.10-2006.12 | 5MT | F | L | Van FWD RHX | | GDS10430 | Drive Shaft | | 27 | 37 | 59 | 82 | 630 | |
| | 1999.10-2006.12 | 5MT | F | R | Van FWD RHX | | GDS10057 | Drive Shaft | | 27 | 37 | 59 | 82 | 960 | |
| | 1999.10-2006.12 | 5MT | F | R | Van FWD RHX | | GDS45120 | Drive Shaft | 48T | 27 | 37 | 59 | 82 | 960 | |
| | 1999.10-2006.12 | 5MT | F | L/R | Van FWD RHX | | GCO10014 | Outer Joint | | 27 | 39 | 59 | 82 | 63 | I |
| | 1999.10-2006.12 | 5MT | F | L/R | Van FWD RHX | | GCO10015 | Outer Joint | 48T | 27 | 39 | 59 | 82 | 63 | I |
| | 1999.10-2006.12 | 5MT | F | L | Van FWD RHX | | GCI10015 | Inner Joint | | 37 | 39 | 40 | 68.5 | 104 | |
| | 1999.10-2006.12 | 5MT | F | R | Van FWD RHX | | GCI10034 | Inner Joint | | 37 | 39 | 31.9 | 369.5 | 99 | |
| | 2004.01-2006.12 | 5MT | F | L | Bus FWD RHX | | GDS10264 | Drive Shaft | 48T | 27 | 37 | 59 | 82 | 630 | |
| | 2004.01-2006.12 | 5MT | F | L | Bus FWD RHX | | GDS10430 | Drive Shaft | | 27 | 37 | 59 | 82 | 630 | |
| | 2004.01-2006.12 | 5MT | F | R | Bus FWD RHX | | GDS10057 | Drive Shaft | | 27 | 37 | 59 | 82 | 960 | |
| | 2004.01-2006.12 | 5MT | F | R | Bus FWD RHX | | GDS45120 | Drive Shaft | 48T | 27 | 37 | 59 | 82 | 960 | |
| | 2004.01-2006.12 | 5MT | F | L/R | Bus FWD RHX | | GCO10014 | Outer Joint | | 27 | 39 | 59 | 82 | 63 | I |
| | 2004.01-2006.12 | 5MT | F | L/R | Bus FWD RHX | | GCO10015 | Outer Joint | 48T | 27 | 39 | 59 | 82 | 63 | I |
| | 2004.01-2006.12 | 5MT | F | L | Bus FWD RHX | | GCI10015 | Inner Joint | | 37 | 39 | 40 | 68.5 | 104 | |
| | 2004.01-2006.12 | 5MT | F | R | Bus FWD RHX | | GCI10034 | Inner Joint | | 37 | 39 | 31.9 | 369.5 | 99 | |
| 2.0 (80 kw) | 1999.05-2006.12 | 5MT | F | L | Bus FWD RHW (DW10ATED4) | | GDS10264 | Drive Shaft | 48T | 27 | 37 | 59 | 82 | 630 | |
| | 1999.05-2006.12 | 5MT | F | L | Bus FWD RHW (DW10ATED4) | | GDS10430 | Drive Shaft | | 27 | 37 | 59 | 82 | 630 | |
| | 1999.05-2006.12 | 5MT | F | R | Bus FWD RHW (DW10ATED4) | | GDS10057 | Drive Shaft | | 27 | 37 | 59 | 82 | 960 | |
| | 1999.05-2006.12 | 5MT | F | R | Bus FWD RHW (DW10ATED4) | | GDS45120 | Drive Shaft | 48T | 27 | 37 | 59 | 82 | 960 | |
| | 1999.05-2006.12 | 5MT | F | L/R | Bus FWD RHW (DW10ATED4) | | GCO10014 | Outer Joint | | 27 | 39 | 59 | 82 | 63 | I |
| | 1999.05-2006.12 | 5MT | F | L/R | Bus FWD RHW (DW10ATED4) | | GCO10015 | Outer Joint | 48T | 27 | 39 | 59 | 82 | 63 | I |
| | 1999.05-2006.12 | 5MT | F | L | Bus FWD RHW (DW10ATED4) | | GCI10015 | Inner Joint | | 37 | 39 | 40 | 68.5 | 104 | |
| | 1999.05-2006.12 | 5MT | F | R | Bus FWD RHW (DW10ATED4) | | GCI10034 | Inner Joint | | 37 | 39 | 31.9 | 369.5 | 99 | |
| | 1999.05-2006.12 | 5MT | F | L | Platform/Chassis FWD RHK (DW10UTED4), RHW (DW10ATED4) | | GDS10264 | Drive Shaft | 48T | 27 | 37 | 59 | 82 | 630 | |
| | 1999.05-2006.12 | 5MT | F | L | Platform/Chassis FWD RHK (DW10UTED4), RHW (DW10ATED4) | | GDS10430 | Drive Shaft | | 27 | 37 | 59 | 82 | 630 | |
| | 1999.05-2006.12 | 5MT | F | R | Platform/Chassis FWD RHK (DW10UTED4), RHW (DW10ATED4) | | GDS10057 | Drive Shaft | | 27 | 37 | 59 | 82 | 960 | |
| | 1999.05-2006.12 | 5MT | F | R | Platform/Chassis FWD RHK (DW10UTED4), RHW (DW10ATED4) | | GDS45120 | Drive Shaft | 48T | 27 | 37 | 59 | 82 | 960 | |
| | 1999.05-2006.12 | 5MT | F | L/R | Platform/Chassis FWD RHK (DW10UTED4), RHW (DW10ATED4) | | GCO10014 | Outer Joint | | 27 | 39 | 59 | 82 | 63 | I |
| | 1999.05-2006.12 | 5MT | F | L/R | Platform/Chassis FWD RHK (DW10UTED4), RHW (DW10ATED4) | | GCO10015 | Outer Joint | 48T | 27 | 39 | 59 | 82 | 63 | I |
| | 1999.05-2006.12 | 5MT | F | L | Platform/Chassis FWD RHK (DW10UTED4), RHW (DW10ATED4) | | GCI10015 | Inner Joint | | 37 | 39 | 40 | 68.5 | 104 | |
| | 1999.05-2006.12 | 5MT | F | R | Platform/Chassis FWD RHK (DW10UTED4), RHW (DW10ATED4) | | GCI10034 | Inner Joint | | 37 | 39 | 31.9 | 369.5 | 99 | |
| | 1999.05-2006.12 | 5MT | F | L | Van FWD RHK (DW10UTED4), RHM (DW10ATED4), RHW (DW10ATED4) | | GDS10264 | Drive Shaft | 48T | 27 | 37 | 59 | 82 | 630 | |
| | 1999.05-2006.12 | 5MT | F | L | Van FWD RHK (DW10UTED4), RHM (DW10ATED4), RHW (DW10ATED4) | | GDS10430 | Drive Shaft | | 27 | 37 | 59 | 82 | 630 | |
| | 1999.05-2006.12 | 5MT | F | R | Van FWD RHK (DW10UTED4), RHM (DW10ATED4), RHW (DW10ATED4) | | GDS10057 | Drive Shaft | | 27 | 37 | 59 | 82 | 960 | |
| | 1999.05-2006.12 | 5MT | F | R | Van FWD RHK (DW10UTED4), RHM (DW10ATED4), RHW (DW10ATED4) | | GDS45120 | Drive Shaft | 48T | 27 | 37 | 59 | 82 | 960 | |
| | 1999.05-2006.12 | 5MT | F | L/R | Van FWD RHK (DW10UTED4), RHM (DW10ATED4), RHW (DW10ATED4) | | GCO10014 | Outer Joint | | 27 | 39 | 59 | 82 | 63 | I |
| | 1999.05-2006.12 | 5MT | F | L/R | Van FWD RHK (DW10UTED4), RHM (DW10ATED4), RHW (DW10ATED4) | | GCO10015 | Outer Joint | 48T | 27 | 39 | 59 | 82 | 63 | I |
| | 1999.05-2006.12 | 5MT | F | L | Van FWD RHK (DW10UTED4), RHM (DW10ATED4), RHW (DW10ATED4) | | GCI10015 | Inner Joint | | 37 | 39 | 40 | 68.5 | 104 | |
| | 1999.05-2006.12 | 5MT | F | R | Van FWD RHK (DW10UTED4), RHM (DW10ATED4), RHW (DW10ATED4) | | GCI10034 | Inner Joint | | 37 | 39 | 31.9 | 369.5 | 99 | |
| | 1999.12-2006.12 | 5MT | F | L | Bus FWD RHZ | | GDS10264 | Drive Shaft | 48T | 27 | 37 | 59 | 82 | 630 | |
| | 1999.12-2006.12 | 5MT | F | L | Bus FWD RHZ | | GDS10430 | Drive Shaft | | 27 | 37 | 59 | 82 | 630 | |

| | YEAR | TRANSM. | F/R | L/R | BODY STYLE & DRIVE TYPE & ENGINE | REMARKS | G-AP Ref. | PRODUCT | ABS | Technical Specifications A | B | C | H | L | P |
|---|---|---|---|---|---|---|---|---|---|---|---|---|---|---|---|
| **FIAT** **Scudo** | | | | | | | | | | | | | | | |
| 2.0 (80 kw) | 1999.12-2006.12 | 5MT | F | R | Bus FWD RHZ | | GDS10057 | Drive Shaft | | 27 | 37 | 59 | 82 | 960 | |
| | 1999.12-2006.12 | 5MT | F | R | Bus FWD RHZ | | GDS45120 | Drive Shaft | 48T | 27 | 37 | 59 | 82 | 960 | |
| | 1999.12-2006.12 | 5MT | F | L/R | Bus FWD RHZ | | GCO10014 | Outer Joint | | 27 | 39 | 59 | 82 | 63 | I |
| | 1999.12-2006.12 | 5MT | F | L/R | Bus FWD RHZ | | GCO10015 | Outer Joint | 48T | 27 | 39 | 59 | 82 | 63 | I |
| | 1999.12-2006.12 | 5MT | F | L | Bus FWD RHZ | | GCI10015 | Inner Joint | | 37 | 39 | 40 | 68.5 | 104 | |
| | 1999.12-2006.12 | 5MT | F | R | Bus FWD RHZ | | GCI10034 | Inner Joint | | 37 | 39 | 31.9 | 369.5 | 99 | |
| | 2002.12-2006.12 | 5MT | F | L | Platform/Chassis FWD RHZ | | GDS10264 | Drive Shaft | 48T | 27 | 37 | 59 | 82 | 630 | |
| | 2002.12-2006.12 | 5MT | F | L | Platform/Chassis FWD RHZ | | GDS10430 | Drive Shaft | | 27 | 37 | 59 | 82 | 630 | |
| | 2002.12-2006.12 | 5MT | F | R | Platform/Chassis FWD RHZ | | GDS10057 | Drive Shaft | | 27 | 37 | 59 | 82 | 960 | |
| | 2002.12-2006.12 | 5MT | F | R | Platform/Chassis FWD RHZ | | GDS45120 | Drive Shaft | 48T | 27 | 37 | 59 | 82 | 960 | |
| | 2002.12-2006.12 | 5MT | F | L/R | Platform/Chassis FWD RHZ | | GCO10014 | Outer Joint | | 27 | 39 | 59 | 82 | 63 | I |
| | 2002.12-2006.12 | 5MT | F | L/R | Platform/Chassis FWD RHZ | | GCO10015 | Outer Joint | 48T | 27 | 39 | 59 | 82 | 63 | I |
| | 2002.12-2006.12 | 5MT | F | L | Platform/Chassis FWD RHZ | | GCI10015 | Inner Joint | | 37 | 39 | 40 | 68.5 | 104 | |
| | 2002.12-2006.12 | 5MT | F | R | Platform/Chassis FWD RHZ | | GCI10034 | Inner Joint | | 37 | 39 | 31.9 | 369.5 | 99 | |
| | 2002.12-2006.12 | 5MT | F | L | Van FWD RHZ | | GDS10264 | Drive Shaft | 48T | 27 | 37 | 59 | 82 | 630 | |
| | 2002.12-2006.12 | 5MT | F | L | Van FWD RHZ | | GDS10430 | Drive Shaft | | 27 | 37 | 59 | 82 | 630 | |
| | 2002.12-2006.12 | 5MT | F | R | Van FWD RHZ | | GDS10057 | Drive Shaft | | 27 | 37 | 59 | 82 | 960 | |
| | 2002.12-2006.12 | 5MT | F | R | Van FWD RHZ | | GDS45120 | Drive Shaft | 48T | 27 | 37 | 59 | 82 | 960 | |
| | 2002.12-2006.12 | 5MT | F | L/R | Van FWD RHZ | | GCO10014 | Outer Joint | | 27 | 39 | 59 | 82 | 63 | I |
| | 2002.12-2006.12 | 5MT | F | L/R | Van FWD RHZ | | GCO10015 | Outer Joint | 48T | 27 | 39 | 59 | 82 | 63 | I |
| | 2002.12-2006.12 | 5MT | F | L | Van FWD RHZ | | GCI10015 | Inner Joint | | 37 | 39 | 40 | 68.5 | 104 | |
| | 2002.12-2006.12 | 5MT | F | R | Van FWD RHZ | | GCI10034 | Inner Joint | | 37 | 39 | 31.9 | 369.5 | 99 | |
| 2.0 (88 kw) | 2007.01-2016.03 | MT | F | L | Bus 4WD RHK | Date to:2016.03 | GDS45133 | Drive Shaft | | 28 | 37 | 58.6 | 94 | 653 | |
| | 2007.01-2016.03 | MT | F | R | Bus 4WD RHK | Date to:2016.03 | GDS99214 | Drive Shaft | | 28 | 37 | 58.6 | 94 | 978 | |
| | 2007.01-2016.03 | MT | F | L | Bus 4WD RHK | Date to:2016.03 | GCO10051 | Outer Joint | | 28 | 39 | 58.6 | 94 | 63 | I |
| | 2007.01-2016.03 | MT | F | R | Bus 4WD RHK | Date to:2016.03 | GCO10098 | Outer Joint | | 28 | 39 | 58.6 | 93 | 63 | I |
| | 2007.01-2016.03 | MT | F | L | Bus 4WD RHK | Date to:2016.03 | GCI45032 | Inner Joint | | 37 | 39 | 40 | 68.5 | 100 | |
| | 2007.01-2016.03 | MT | F | R | Bus 4WD RHK | Date to:2016.03 | GCI10041 | Inner Joint | | 37 | 39 | 32 | 399 | 95.5 | |
| | 2007.01-2016.03 | 6MT | F | L | Bus FWD RHK;RHG | | GDS45133 | Drive Shaft | | 28 | 37 | 58.6 | 94 | 653 | |
| | 2007.01-2016.03 | 6MT | F | R | Bus FWD RHK;RHG | | GDS99214 | Drive Shaft | | 28 | 37 | 58.6 | 94 | 978 | |
| | 2007.01-2016.03 | 6MT | F | L | Bus FWD RHK;RHG | | GCO10051 | Outer Joint | | 28 | 39 | 58.6 | 94 | 63 | I |
| | 2007.01-2016.03 | 6MT | F | R | Bus FWD RHK;RHG | | GCO10098 | Outer Joint | | 28 | 39 | 58.6 | 93 | 63 | I |
| | 2007.01-2016.03 | 6MT | F | L | Bus FWD RHK;RHG | | GCI45032 | Inner Joint | | 37 | 39 | 40 | 68.5 | 100 | |
| | 2007.01-2016.03 | 6MT | F | R | Bus FWD RHK;RHG | | GCI10041 | Inner Joint | | 37 | 39 | 32 | 399 | 95.5 | |
| | 2007.01-2016.03 | 6MT | F | L | Platform/Chassis FWD RHK;RHG | | GDS45133 | Drive Shaft | | 28 | 37 | 58.6 | 94 | 653 | |
| | 2007.01-2016.03 | 6MT | F | R | Platform/Chassis FWD RHK;RHG | | GDS99214 | Drive Shaft | | 28 | 37 | 58.6 | 94 | 978 | |
| | 2007.01-2016.03 | 6MT | F | L | Platform/Chassis FWD RHK;RHG | | GCO10051 | Outer Joint | | 28 | 39 | 58.6 | 94 | 63 | I |
| | 2007.01-2016.03 | 6MT | F | R | Platform/Chassis FWD RHK;RHG | | GCO10098 | Outer Joint | | 28 | 39 | 58.6 | 93 | 63 | I |
| | 2007.01-2016.03 | 6MT | F | L | Platform/Chassis FWD RHK;RHG | | GCI45032 | Inner Joint | | 37 | 39 | 40 | 68.5 | 100 | |
| | 2007.01-2016.03 | 6MT | F | R | Platform/Chassis FWD RHK;RHG | | GCI10041 | Inner Joint | | 37 | 39 | 32 | 399 | 95.5 | |
| | 2007.01-2016.03 | MT | F | L | Van 4WD RHG, RHK | Date to:2016.03 | GDS45133 | Drive Shaft | | 28 | 37 | 58.6 | 94 | 653 | |
| | 2007.01-2016.03 | MT | F | R | Van 4WD RHG, RHK | Date to:2016.03 | GDS99214 | Drive Shaft | | 28 | 37 | 58.6 | 94 | 978 | |
| | 2007.01-2016.03 | MT | F | L | Van 4WD RHG, RHK | Date to:2016.03 | GCO10051 | Outer Joint | | 28 | 39 | 58.6 | 94 | 63 | I |
| | 2007.01-2016.03 | MT | F | R | Van 4WD RHG, RHK | Date to:2016.03 | GCO10098 | Outer Joint | | 28 | 39 | 58.6 | 93 | 63 | I |
| | 2007.01-2016.03 | MT | F | L | Van 4WD RHG, RHK | Date to:2016.03 | GCI45032 | Inner Joint | | 37 | 39 | 40 | 68.5 | 100 | |
| | 2007.01-2016.03 | MT | F | R | Van 4WD RHG, RHK | Date to:2016.03 | GCI10041 | Inner Joint | | 37 | 39 | 32 | 399 | 95.5 | |
| | 2007.01-2016.03 | 6MT | F | L | Van FWD RHK;RHG | | GDS45133 | Drive Shaft | | 28 | 37 | 58.6 | 94 | 653 | |
| | 2007.01-2016.03 | 6MT | F | R | Van FWD RHK;RHG | | GDS99214 | Drive Shaft | | 28 | 37 | 58.6 | 94 | 978 | |
| | 2007.01-2016.03 | 6MT | F | L | Van FWD RHK;RHG | | GCO10051 | Outer Joint | | 28 | 39 | 58.6 | 94 | 63 | I |
| | 2007.01-2016.03 | 6MT | F | R | Van FWD RHK;RHG | | GCO10098 | Outer Joint | | 28 | 39 | 58.6 | 93 | 63 | I |
| | 2007.01-2016.03 | 6MT | F | L | Van FWD RHK;RHG | | GCI45032 | Inner Joint | | 37 | 39 | 40 | 68.5 | 100 | |
| | 2007.01-2016.03 | 6MT | F | R | Van FWD RHK;RHG | | GCI10041 | Inner Joint | | 37 | 39 | 32 | 399 | 95.5 | |
| 2.0 (94 kw) | 2011.04-2016.03 | 6MT | F | L | Bus FWD RH02 | | GDS45133 | Drive Shaft | | 28 | 37 | 58.6 | 94 | 653 | |
| | 2011.04-2016.03 | 6MT | F | R | Bus FWD RH02 | | GDS99214 | Drive Shaft | | 28 | 37 | 58.6 | 94 | 978 | |
| | 2011.04-2016.03 | 6MT | F | L | Bus FWD RH02 | | GCO10051 | Outer Joint | | 28 | 39 | 58.6 | 94 | 63 | I |
| | 2011.04-2016.03 | 6MT | F | R | Bus FWD RH02 | | GCO10098 | Outer Joint | | 28 | 39 | 58.6 | 93 | 63 | I |
| | 2011.04-2016.03 | 6MT | F | L | Bus FWD RH02 | | GCI45032 | Inner Joint | | 37 | 39 | 40 | 68.5 | 100 | |
| | 2011.04-2016.03 | 6MT | F | R | Bus FWD RH02 | | GCI10041 | Inner Joint | | 37 | 39 | 32 | 399 | 95.5 | |
| | 2011.05-2016.03 | 6MT | F | L | Platform/Chassis FWD RH02 | | GDS45133 | Drive Shaft | | 28 | 37 | 58.6 | 94 | 653 | |
| | 2011.05-2016.03 | 6MT | F | R | Platform/Chassis FWD RH02 | | GDS99214 | Drive Shaft | | 28 | 37 | 58.6 | 94 | 978 | |
| | 2011.05-2016.03 | 6MT | F | L | Platform/Chassis FWD RH02 | | GCO10051 | Outer Joint | | 28 | 39 | 58.6 | 94 | 63 | I |
| | 2011.05-2016.03 | 6MT | F | R | Platform/Chassis FWD RH02 | | GCO10098 | Outer Joint | | 28 | 39 | 58.6 | 93 | 63 | I |
| | 2011.05-2016.03 | 6MT | F | L | Platform/Chassis FWD RH02 | | GCI45032 | Inner Joint | | 37 | 39 | 40 | 68.5 | 100 | |
| | 2011.05-2016.03 | 6MT | F | R | Platform/Chassis FWD RH02 | | GCI10041 | Inner Joint | | 37 | 39 | 32 | 399 | 95.5 | |
| | 2011.05-2016.03 | MT | F | L | Van 4WD RH02 | Date to:2016.03 | GDS45133 | Drive Shaft | | 28 | 37 | 58.6 | 94 | 653 | |

| | YEAR | TRANSM. | F/R | L/R | BODY STYLE & DRIVE TYPE & ENGINE | REMARKS | G-AP Ref. | PRODUCT | ABS | Technical Specifications | | | | | |
|---|---|---|---|---|---|---|---|---|---|---|---|---|---|---|---|
| | | | | | | | | | | A | B | C | H | L | P |
| **FIAT** **Scudo** | | | | | | | | | | | | | | | |
| 2.0 (94 kw) | 2011.05-2016.03 | MT | F | R | Van 4WD RH02 | Date to:2016.03 | GDS99214 | Drive Shaft | | 28 | 37 | 58.6 | 94 | 978 | |
| | 2011.05-2016.03 | MT | F | L | Van 4WD RH02 | Date to:2016.03 | GCO10051 | Outer Joint | | 28 | 39 | 58.6 | 94 | 63 | I |
| | 2011.05-2016.03 | MT | F | R | Van 4WD RH02 | Date to:2016.03 | GCO10098 | Outer Joint | | 28 | 39 | 58.6 | 93 | 63 | I |
| | 2011.05-2016.03 | MT | F | L | Van 4WD RH02 | Date to:2016.03 | GCI45032 | Inner Joint | | 37 | 39 | 40 | 68.5 | 100 | |
| | 2011.05-2016.03 | MT | F | R | Van 4WD RH02 | Date to:2016.03 | GCI10041 | Inner Joint | | 37 | 39 | 32 | 399 | 95.5 | |
| | 2011.05-2016.03 | 6MT | F | L | Van FWD RH02 | | GDS45133 | Drive Shaft | | 28 | 37 | 58.6 | 94 | 653 | |
| | 2011.05-2016.03 | 6MT | F | R | Van FWD RH02 | | GDS99214 | Drive Shaft | | 28 | 37 | 58.6 | 94 | 978 | |
| | 2011.05-2016.03 | 6MT | F | L | Van FWD RH02 | | GCO10051 | Outer Joint | | 28 | 39 | 58.6 | 94 | 63 | I |
| | 2011.05-2016.03 | 6MT | F | R | Van FWD RH02 | | GCO10098 | Outer Joint | | 28 | 39 | 58.6 | 93 | 63 | I |
| | 2011.05-2016.03 | 6MT | F | L | Van FWD RH02 | | GCI45032 | Inner Joint | | 37 | 39 | 40 | 68.5 | 100 | |
| | 2011.05-2016.03 | 6MT | F | R | Van FWD RH02 | | GCI10041 | Inner Joint | | 37 | 39 | 32 | 399 | 95.5 | |
| 2.0 (100 kw) | 2000.05-2006.12 | 5MT | F | L | Van FWD RFN (EW10J4) | | GDS10082 | Drive Shaft | 48T | 27 | 24 | 59 | 82 | 648 | |
| | 2000.05-2006.12 | 5MT | F | L | Van FWD RFN (EW10J4) | | GDS10112 | Drive Shaft | | 27 | 24 | 59 | 82 | 648 | |
| | 2000.05-2006.12 | 5MT | F | R | Van FWD RFN (EW10J4) | Inner teeth of wheel side:25 | GDS10012 | Drive Shaft | 48T | 27 | 24 | 64 | 80.5 | 928 | |
| | 2000.05-2006.12 | 5MT | F | R | Van FWD RFN (EW10J4) | Inner teeth of wheel side:34 | GDS10081 | Drive Shaft | 48T | 27 | 24 | 59 | 82 | 935 | |
| | 2000.05-2006.12 | 5MT | F | R | Van FWD RFN (EW10J4) | | GDS10120 | Drive Shaft | | 27 | 24 | 59 | 82 | 928 | |
| | 2000.05-2006.12 | 5MT | F | L/R | Van FWD RFN (EW10J4) | Date from:2002.01 | GCO10018 | Outer Joint | 48T | 27 | 34 | 61 | 82 | 56.5 | I |
| | 2000.05-2006.12 | 5MT | F | L/R | Van FWD RFN (EW10J4) | | GCO10059 | Outer Joint | 48T | 27 | 34 | 59 | 82 | 56.5 | I |
| | 2000.05-2006.12 | 5MT | F | R | Van FWD RFN (EW10J4) | | GCI10004 | Inner Joint | | 24 | 34 | 29.8 | 348 | 99.5 | |
| | 2000.06-2006.12 | 4AT/5MT | F | L | Bus FWD RFN (EW10J4) | | GDS10112 | Drive Shaft | | 27 | 24 | 59 | 82 | 648 | |
| | 2000.06-2006.12 | 4AT/5MT | F | L/R | Bus FWD RFN (EW10J4) | Date from:2002.01 | GCO10018 | Outer Joint | 48T | 27 | 34 | 61 | 82 | 56.5 | I |
| | 2000.06-2006.12 | 4AT/5MT | F | L/R | Bus FWD RFN (EW10J4) | | GCO10059 | Outer Joint | 48T | 27 | 34 | 59 | 82 | 56.5 | I |
| | 2000.06-2006.12 | 5MT | F | R | Bus FWD RFN (EW10J4) | | GDS10081 | Drive Shaft | 48T | 27 | 24 | 59 | 82 | 935 | |
| | 2000.06-2006.12 | 5MT | F | R | Bus FWD RFN (EW10J4) | | GCI10004 | Inner Joint | | 24 | 34 | 29.8 | 348 | 99.5 | |
| | 2000.06-2006.12 | | F | L | Bus FWD RFN (EW10J4) | | GDS10082 | Drive Shaft | 48T | 27 | 24 | 59 | 82 | 648 | |
| | 2000.06-2006.12 | | F | R | Bus FWD RFN (EW10J4) | Date from:2000.09 | GDS10012 | Drive Shaft | 48T | 27 | 24 | 64 | 80.5 | 928 | |
| | 2000.06-2006.12 | | F | R | Bus FWD RFN (EW10J4) | Date from:2000.09 | GDS10120 | Drive Shaft | | 27 | 24 | 59 | 82 | 928 | |
| | 2007.01-2016.03 | 6MT | F | L | Bus FWD RHR | | GDS45133 | Drive Shaft | | 28 | 37 | 58.6 | 94 | 653 | |
| | 2007.01-2016.03 | 6MT | F | R | Bus FWD RHR | | GDS99214 | Drive Shaft | | 28 | 37 | 58.6 | 94 | 978 | |
| | 2007.01-2016.03 | 6MT | F | L | Bus FWD RHR | | GCO10051 | Outer Joint | | 28 | 39 | 58.6 | 94 | 63 | I |
| | 2007.01-2016.03 | 6MT | F | R | Bus FWD RHR | | GCO10098 | Outer Joint | | 28 | 39 | 58.6 | 93 | 63 | I |
| | 2007.01-2016.03 | 6MT | F | L | Bus FWD RHR | | GCI45032 | Inner Joint | | 37 | 39 | 40 | 68.5 | 100 | |
| | 2007.01-2016.03 | 6MT | F | R | Bus FWD RHR | | GCI10041 | Inner Joint | | 37 | 39 | 32 | 399 | 95.5 | |
| | 2007.01-2016.03 | 6MT | F | L | Platform/Chassis FWD RHR;DW10BTED4 | | GDS45133 | Drive Shaft | | 28 | 37 | 58.6 | 94 | 653 | |
| | 2007.01-2016.03 | 6MT | F | R | Platform/Chassis FWD RHR;DW10BTED4 | | GDS99214 | Drive Shaft | | 28 | 37 | 58.6 | 94 | 978 | |
| | 2007.01-2016.03 | 6MT | F | L | Platform/Chassis FWD RHR;DW10BTED4 | | GCO10051 | Outer Joint | | 28 | 39 | 58.6 | 94 | 63 | I |
| | 2007.01-2016.03 | 6MT | F | R | Platform/Chassis FWD RHR;DW10BTED4 | | GCO10098 | Outer Joint | | 28 | 39 | 58.6 | 93 | 63 | I |
| | 2007.01-2016.03 | 6MT | F | L | Platform/Chassis FWD RHR;DW10BTED4 | | GCI45032 | Inner Joint | | 37 | 39 | 40 | 68.5 | 100 | |
| | 2007.01-2016.03 | 6MT | F | R | Platform/Chassis FWD RHR;DW10BTED4 | | GCI10041 | Inner Joint | | 37 | 39 | 32 | 399 | 95.5 | |
| | 2007.01-2016.03 | 6MT | F | L | Van FWD RHR | | GDS45133 | Drive Shaft | | 28 | 37 | 58.6 | 94 | 653 | |
| | 2007.01-2016.03 | 6MT | F | R | Van FWD RHR | | GDS99214 | Drive Shaft | | 28 | 37 | 58.6 | 94 | 978 | |
| | 2007.01-2016.03 | 6MT | F | L | Van FWD RHR | | GCO10051 | Outer Joint | | 28 | 39 | 58.6 | 94 | 63 | I |
| | 2007.01-2016.03 | 6MT | F | R | Van FWD RHR | | GCO10098 | Outer Joint | | 28 | 39 | 58.6 | 93 | 63 | I |
| | 2007.01-2016.03 | 6MT | F | L | Van FWD RHR | | GCI45032 | Inner Joint | | 37 | 39 | 40 | 68.5 | 100 | |
| | 2007.01-2016.03 | 6MT | F | R | Van FWD RHR | | GCI10041 | Inner Joint | | 37 | 39 | 32 | 399 | 95.5 | |
| 2.0 (106 kw) | 2022.01-2025.04 | 6MT | F | L | Platform/Chassis FWD DW10FDDU | | GDS83778 | Drive Shaft | | 28 | 37 | 58.5 | 92.5 | 699 | |
| | 2022.01-2025.04 | 6MT | F | R | Platform/Chassis FWD DW10FDDU | | GDS83775 | Drive Shaft | | 28 | 37 | 58.5 | 92.5 | 1002 | |
| | 2022.01-2025.04 | 6MT | F | L | Van FWD DW10FDDU | | GDS83778 | Drive Shaft | | 28 | 37 | 58.5 | 92.5 | 699 | |
| | 2022.01-2025.04 | 6MT | F | R | Van FWD DW10FDDU | | GDS83775 | Drive Shaft | | 28 | 37 | 58.5 | 92.5 | 1002 | |
| | 2022.01-2025.04 | 8AT | F | L | Van FWD DW10FDDU | | GDS56191 | Drive Shaft | | 28 | 37 | 58.6 | 93 | 649 | |
| | 2022.01-2025.04 | 8AT | F | R | Van FWD DW10FDDU | | GDS56190 | Drive Shaft | | 28 | 37 | 58.6 | 93 | 989 | |
| 2.0 (120 kw) | 2010.07-2016.03 | 6MT | F | L | Bus FWD RHH;RH02 | | GDS45133 | Drive Shaft | | 28 | 37 | 58.6 | 94 | 653 | |
| | 2010.07-2016.03 | 6MT | F | R | Bus FWD RHH;RH02 | | GDS99214 | Drive Shaft | | 28 | 37 | 58.6 | 94 | 978 | |
| | 2010.07-2016.03 | 6MT | F | L | Bus FWD RHH;RH02 | | GCO10051 | Outer Joint | | 28 | 39 | 58.6 | 94 | 63 | I |
| | 2010.07-2016.03 | 6MT | F | R | Bus FWD RHH;RH02 | | GCO10098 | Outer Joint | | 28 | 39 | 58.6 | 93 | 63 | I |
| | 2010.07-2016.03 | 6MT | F | L | Bus FWD RHH;RH02 | | GCI45032 | Inner Joint | | 37 | 39 | 40 | 68.5 | 100 | |
| | 2010.07-2016.03 | 6MT | F | R | Bus FWD RHH;RH02 | | GCI10041 | Inner Joint | | 37 | 39 | 32 | 399 | 95.5 | |
| | 2010.07-2016.03 | MT | F | L | Platform/Chassis FWD RHH;RH02 | | GDS45133 | Drive Shaft | | 28 | 37 | 58.6 | 94 | 653 | |
| | 2010.07-2016.03 | MT | F | R | Platform/Chassis FWD RHH;RH02 | | GDS99214 | Drive Shaft | | 28 | 37 | 58.6 | 94 | 978 | |
| | 2010.07-2016.03 | MT | F | L | Platform/Chassis FWD RHH;RH02 | | GCO10051 | Outer Joint | | 28 | 39 | 58.6 | 94 | 63 | I |
| | 2010.07-2016.03 | MT | F | R | Platform/Chassis FWD RHH;RH02 | | GCO10098 | Outer Joint | | 28 | 39 | 58.6 | 93 | 63 | I |
| | 2010.07-2016.03 | MT | F | L | Platform/Chassis FWD RHH;RH02 | | GCI45032 | Inner Joint | | 37 | 39 | 40 | 68.5 | 100 | |
| | 2010.07-2016.03 | MT | F | R | Platform/Chassis FWD RHH;RH02 | | GCI10041 | Inner Joint | | 37 | 39 | 32 | 399 | 95.5 | |
| | 2010.07-2016.03 | 6MT | F | L | Van FWD RHH;RH02 | | GDS45133 | Drive Shaft | | 28 | 37 | 58.6 | 94 | 653 | |
| | 2010.07-2016.03 | 6MT | F | R | Van FWD RHH;RH02 | | GDS99214 | Drive Shaft | | 28 | 37 | 58.6 | 94 | 978 | |

| | YEAR | TRANSM. | F/R | L/R | BODY STYLE & DRIVE TYPE & ENGINE | REMARKS | G-AP Ref. | PRODUCT | ABS | Technical Specifications | | | | | |
|---|---|---|---|---|---|---|---|---|---|---|---|---|---|---|---|
| | | | | | | | | | | A | B | C | H | L | P |
| **FIAT** | | | | | | | | | | | | | | | |
| **Scudo** | | | | | | | | | | | | | | | |
| 2.0 (120 kw) | 2010.07-2016.03 | 6MT | F | L | Van FWD RHH;RH02 | | GCO10051 | Outer Joint | | 28 | 39 | 58.6 | 94 | 63 | I |
| | 2010.07-2016.03 | 6MT | F | R | Van FWD RHH;RH02 | | GCO10098 | Outer Joint | | 28 | 39 | 58.6 | 93 | 63 | I |
| | 2010.07-2016.03 | 6MT | F | L | Van FWD RHH;RH02 | | GCI45032 | Inner Joint | | 37 | 39 | 40 | 68.5 | 100 | |
| | 2010.07-2016.03 | 6MT | F | R | Van FWD RHH;RH02 | | GCI10041 | Inner Joint | | 37 | 39 | 32 | 399 | 95.5 | |
| 2.0 (130 kw) | 2022.01-2025.04 | 8AT | F | L | Van FWD DW10FDCU | | GDS56191 | Drive Shaft | | 28 | 37 | 58.6 | 93 | 649 | |
| | 2022.01-2025.04 | 8AT | F | R | Van FWD DW10FDCU | | GDS56190 | Drive Shaft | | 28 | 37 | 58.6 | 93 | 989 | |
| | 2024.02-2025.04 | 8AT | F | L | Bus FWD DW10FDCU | | GDS56191 | Drive Shaft | | 28 | 37 | 58.6 | 93 | 649 | |
| | 2024.02-2025.04 | 8AT | F | R | Bus FWD DW10FDCU | | GDS56190 | Drive Shaft | | 28 | 37 | 58.6 | 93 | 989 | |
| 2.2 (110 kw) | 2025.05- | 8AT | F | L | Van FWD B22LD | | GDS56191 | Drive Shaft | | 28 | 37 | 58.6 | 93 | 649 | |
| 2.2 (132 kw) | 2025.05- | 8AT | F | L | Bus FWD B22LC | | GDS56191 | Drive Shaft | | 28 | 37 | 58.6 | 93 | 649 | |
| | 2025.05- | 8AT | F | L | Van FWD B22LC | | GDS56191 | Drive Shaft | | 28 | 37 | 58.6 | 93 | 649 | |
| **Sedici** | | | | | | | | | | | | | | | |
| 1.6 (79 kw) | 2006.06-2014.10 | AT | F | R | SUV 4WD M16A | | GDS57290 | Drive Shaft | | 28 | 26 | 58 | 85 | 698 | |
| | 2006.06-2014.10 | AT | F | L | SUV 4WD M16A | | GCO57140 | Outer Joint | | 28 | 29 | 58 | 85 | 62.5 | I |
| | 2006.06-2014.10 | AT | F | R | SUV 4WD M16A | | GCO57210 | Outer Joint | | 28 | 29 | 58 | 85 | 61.5 | I |
| | 2006.06-2014.10 | AT | F | L/R | SUV 4WD M16A | | GCO57092 | Outer Joint | | 28 | 29 | 58 | 86.5 | 63 | I |
| | 2006.06-2014.10 | MT | F | L | SUV 4WD M16A | Date to:2009.06 | GDS57247 | Drive Shaft | | 28 | 26 | 58 | 85 | 612 | |
| | 2006.06-2014.10 | MT | F | R | SUV 4WD M16A | Date to:2009.06 | GCO57140 | Outer Joint | | 28 | 29 | 58 | 85 | 62.5 | I |
| | 2006.06-2014.10 | MT | F | R | SUV 4WD M16A | | GCI57137 | Inner Joint | | 26 | 29 | 40 | | 116.5 | |
| | 2006.06-2014.10 | 4AT/5MT | R | L/R | SUV 4WD M16A | | GCI57142 | Inner Joint | | | 26 | | | 75.5 | |
| | 2006.06-2014.10 | | R | L | SUV 4WD M16A | | GDS14074 | Drive Shaft | | 24 | | 45 | 89 | 637 | |
| | 2006.06-2014.10 | | R | R | SUV 4WD M16A | | GDS14073 | Drive Shaft | | 24 | | 45 | 89 | 731 | |
| | 2006.06-2014.10 | AT | F | R | SUV FWD M16A | | GDS57290 | Drive Shaft | | 28 | 26 | 58 | 85 | 698 | |
| | 2006.06-2014.10 | AT | F | L | SUV FWD M16A | | GCO57140 | Outer Joint | | 28 | 29 | 58 | 85 | 62.5 | I |
| | 2006.06-2014.10 | AT | F | R | SUV FWD M16A | | GCO57092 | Outer Joint | | 28 | 29 | 58 | 86.5 | 63 | I |
| | 2006.06-2014.10 | AT | F | R | SUV FWD M16A | | GCO57210 | Outer Joint | | 28 | 29 | 58 | 85 | 61.5 | I |
| | 2006.06-2014.10 | AT | F | R | SUV FWD M16A | | GCI57137 | Inner Joint | | 26 | 29 | 40 | | 116.5 | |
| | 2006.06-2014.10 | MT | F | L | SUV FWD M16A | Date to:2009.06 | GDS57247 | Drive Shaft | | 28 | 26 | 58 | 85 | 612 | |
| | 2006.06-2014.10 | MT | F | L | SUV FWD M16A | Date to:2009.06 | GCO57092 | Outer Joint | | 28 | 29 | 58 | 86.5 | 63 | I |
| | 2006.06-2014.10 | MT | F | R | SUV FWD M16A | Date to:2009.06 | GCO57140 | Outer Joint | | 28 | 29 | 58 | 85 | 62.5 | I |
| | 2006.06-2014.10 | MT | F | L | SUV FWD M16A | Date to:2009.06 | GCI57049 | Inner Joint | | 26 | 29 | 38 | 58 | 98 | |
| 1.6 (88 kw) | 2006.06-2014.10 | AT/MT | F | L/R | SUV 4WD M16A | | GCO57092 | Outer Joint | | 28 | 29 | 58 | 86.5 | 63 | I |
| | 2006.06-2014.10 | MT | F | L | SUV 4WD M16A | | GDS57247 | Drive Shaft | | 28 | 26 | 58 | 85 | 612 | |
| | 2006.06-2014.10 | MT | F | R | SUV 4WD M16A | | GDS57290 | Drive Shaft | | 28 | 26 | 58 | 85 | 698 | |
| | 2006.06-2014.10 | 5MT | R | L | SUV 4WD M16A | | GDS14074 | Drive Shaft | | 24 | | 45 | 89 | 637 | |
| | 2006.06-2014.10 | 5MT | R | R | SUV 4WD M16A | | GDS14073 | Drive Shaft | | 24 | | 45 | 89 | 731 | |
| | 2006.06-2014.10 | 5MT | R | L/R | SUV 4WD M16A | | GCI57142 | Inner Joint | | | 26 | | | 75.5 | |
| | 2006.06-2014.10 | AT | F | R | SUV FWD M16A | | GDS57290 | Drive Shaft | | 28 | 26 | 58 | 85 | 698 | |
| | 2006.06-2014.10 | AT | F | L | SUV FWD M16A | | GCO57140 | Outer Joint | | 28 | 29 | 58 | 85 | 62.5 | I |
| | 2006.06-2014.10 | AT | F | R | SUV FWD M16A | | GCO57092 | Outer Joint | | 28 | 29 | 58 | 86.5 | 63 | I |
| | 2006.06-2014.10 | AT | F | R | SUV FWD M16A | | GCO57210 | Outer Joint | | 28 | 29 | 58 | 85 | 61.5 | I |
| | 2006.06-2014.10 | AT | F | R | SUV FWD M16A | | GCI57137 | Inner Joint | | 26 | 29 | 40 | | 116.5 | |
| | 2006.06-2014.10 | | F | L | SUV FWD M16A | | GDS57247 | Drive Shaft | | 28 | 26 | 58 | 85 | 612 | |
| 1.9 (88 kw) | 2006.06-2011.10 | 6MT | F | L | SUV 4WD D19AA | | GDS83780 | Drive Shaft | | 28 | 28 | 58 | 85.5 | 597 | |
| | 2006.06-2011.10 | 6MT | F | R | SUV 4WD D19AA | | GDS57281 | Drive Shaft | | 28 | 26 | 58 | 85 | 567 | |
| | 2006.06-2011.10 | 6MT | F | L/R | SUV 4WD D19AA | 8 balls | GCO82486 | Outer Joint | | 28 | 35 | 58 | 85.5 | 65 | I |
| | 2006.06-2011.10 | 6MT | F | L | SUV 4WD D19AA | | GCI82369 | Inner Joint | | 28 | 33 | 42 | 70.5 | 101.5 | |
| | 2006.06-2011.10 | | F | | SUV 4WD D19AA | 6 balls | GCO99310 | Outer Joint | | 28 | 35 | 58 | 85 | 65 | I |
| | 2006.06-2011.10 | 6MT | R | L | SUV 4WD D19AA | | GDS14074 | Drive Shaft | | 24 | | 45 | 89 | 637 | |
| | 2006.06-2011.10 | 6MT | R | R | SUV 4WD D19AA | | GDS14073 | Drive Shaft | | 24 | | 45 | 89 | 731 | |
| | 2006.06-2011.10 | 6MT | R | L/R | SUV 4WD D19AA | | GCI57142 | Inner Joint | | | 26 | | | 75.5 | |
| | 2006.06-2011.10 | 6MT | F | L | SUV FWD D19AA | | GDS83780 | Drive Shaft | | 28 | 28 | 58 | 85.5 | 597 | |
| | 2006.06-2011.10 | 6MT | F | R | SUV FWD D19AA | | GDS84111 | Drive Shaft | | 28 | 26 | 58 | 85.5 | 567 | |
| | 2006.06-2011.10 | 6MT | F | L/R | SUV FWD D19AA | | GCO82486 | Outer Joint | | 28 | 35 | 58 | 85.5 | 65 | I |
| | 2006.06-2011.10 | 6MT | F | L | SUV FWD D19AA | | GCI82369 | Inner Joint | | 28 | 33 | 42 | 70.5 | 101.5 | |
| | 2006.06-2011.10 | 6MT | F | R | SUV FWD D19AA | | GCI82388 | Inner Joint | | 26 | 33 | 40 | | 120.5 | |
| 2.0 (99 kw) | 2006.06-2014.10 | 6MT | F | L | SUV 4WD D20AA | | GDS57299 | Drive Shaft | | 28 | 28 | 58 | 85 | 598 | |
| | 2006.06-2014.10 | 6MT | F | L | SUV 4WD D20AA | | GCI57164 | Inner Joint | | 28 | 33 | 42 | 70.5 | 102.5 | |
| | 2006.06-2014.10 | MT | F | L | SUV 4WD D20AA | Date from:2009.07;Date to:2012.01 | GCO57205 | Outer Joint | | 28 | 33 | 58 | 85 | 64.5 | I |
| | 2006.06-2014.10 | | F | R | SUV 4WD D20AA | Date From:2009.07;Date To:2012.01 | GDS57300 | Drive Shaft | | 28 | 28 | 58 | 85 | 710 | |
| | 2006.06-2014.10 | 6MT | R | L | SUV 4WD D20AA | | GDS14074 | Drive Shaft | | 24 | | 45 | 89 | 637 | |
| | 2006.06-2014.10 | 6MT | R | R | SUV 4WD D20AA | | GDS14073 | Drive Shaft | | 24 | | 45 | 89 | 731 | |
| | 2006.06-2014.10 | 6MT | R | L/R | SUV 4WD D20AA | | GCI57142 | Inner Joint | | | 26 | | | 75.5 | |
| | 2006.06-2014.10 | MT | F | L | SUV FWD D20AA | Date from:2009.07;Date to:2012.01 | GCO57205 | Outer Joint | | 28 | 33 | 58 | 85 | 64.5 | I |
| | 2006.06-2014.10 | | F | L | SUV FWD D20AA | | GCI57163 | Inner Joint | | 28 | 33 | 42 | | 122.5 | |

| | YEAR | TRANSM. | F/R | L/R | BODY STYLE & DRIVE TYPE & ENGINE | REMARKS | G-AP Ref. | PRODUCT | ABS | Technical Specifications A | B | C | H | L | P |
|---|---|---|---|---|---|---|---|---|---|---|---|---|---|---|---|
| **FIAT** | | | | | | | | | | | | | | | |
| **Sedici** | | | | | | | | | | | | | | | |
| 2.0 (99 kw) | 2006.06-2014.10 | | F | L | SUV FWD D20AA | | GCI57164 | Inner Joint | | 28 | 33 | 42 | 70.5 | 102.5 | |
| **Seicento** | | | | | | | | | | | | | | | |
| 0.9 (29 kw) | 1998.01-2002.12 | 5MT | F | L | Hatchback Van FWD 1170A1046 | Chassis no. from:0047304 | GDS17201 | Drive Shaft | | 22 | | 47 | 75.5 | 533 | |
| | 1998.01-2002.12 | 5MT | F | R | Hatchback Van FWD 1170A1046 | Chassis no. from:0047304 | GDS17206 | Drive Shaft | | 22 | 29 | 47 | 75.5 | 795 | |
| | 1998.01-2002.12 | MT | F | L | Hatchback Van FWD 1170A1046 | Chassis no. to:0047303 | GDS17187 | Drive Shaft | | 22 | 29 | 46.8 | 75.5 | 534 | |
| | 1998.01-2002.12 | MT | F | R | Hatchback Van FWD 1170A1046 | Chassis no. to:0047303 | GDS17048 | Drive Shaft | | 22 | 29 | 46.8 | 75.5 | 795 | |
| | 1998.01-2002.12 | MT | F | L/R | Hatchback Van FWD 1170A1046 | Chassis no. to:0047303 | GCO17010 | Outer Joint | | 22 | 20 | 46.8 | 75.5 | 48 | O |
| | 1998.01-2002.12 | MT | F | L/R | Hatchback Van FWD 1170A1046 | Chassis no. from:0047304 | GCO17024 | Outer Joint | | 22 | 20 | 47 | 75.5 | 51.5 | O |
| | 1998.01-2008.12 | 5MT | F | L | Hatchback FWD 1170A1046 | Chassis no. to:0047303 | GDS17187 | Drive Shaft | | 22 | 29 | 46.8 | 75.5 | 534 | |
| | 1998.01-2008.12 | 5MT | F | L | Hatchback FWD 1170A1046 | Chassis no. from:0047304 | GDS17201 | Drive Shaft | | 22 | | 47 | 75.5 | 533 | |
| | 1998.01-2008.12 | 5MT | F | R | Hatchback FWD 1170A1046 | Chassis no. to:0047303 | GDS17048 | Drive Shaft | | 22 | 29 | 46.8 | 75.5 | 795 | |
| | 1998.01-2008.12 | 5MT | F | R | Hatchback FWD 1170A1046 | Chassis no. from:0047304 | GDS17206 | Drive Shaft | | 22 | 29 | 47 | 75.5 | 795 | |
| | 1998.01-2008.12 | 5MT | F | L/R | Hatchback FWD 1170A1046 | Chassis no. to:0047303 | GCO17010 | Outer Joint | | 22 | 20 | 46.8 | 75.5 | 48 | O |
| | 1998.01-2008.12 | 5MT | F | L/R | Hatchback FWD 1170A1046 | Chassis no. from:0047304 | GCO17024 | Outer Joint | | 22 | 20 | 47 | 75.5 | 51.5 | O |
| 1.1 (40 kw) | 2000.03-2004.04 | MT | F | L | Hatchback Van FWD 176B2000/187A1000 | Chassis no. to:0047303 | GDS17188 | Drive Shaft | | 22 | 22 | 46.8 | 75.5 | 552 | |
| | 2000.03-2004.04 | MT | F | L | Hatchback Van FWD 176B2000/187A1000 | Chassis no. from:0047304 | GDS17190 | Drive Shaft | | 22 | 22 | 47 | 75.5 | 553 | |
| | 2000.03-2004.04 | MT | F | R | Hatchback Van FWD 176B2000/187A1000 | Chassis no. to:0047303 | GDS17189 | Drive Shaft | | 22 | 22 | 46.8 | 75.5 | 774 | |
| | 2000.03-2004.04 | MT | F | R | Hatchback Van FWD 176B2000/187A1000 | Chassis no. from:0047304 | GDS17191 | Drive Shaft | | 22 | 22 | 47 | 75.5 | 776 | |
| | 2000.03-2004.04 | MT | F | L/R | Hatchback Van FWD 176B2000/187A1000 | Chassis no. to:0047303 | GCO17010 | Outer Joint | | 22 | 20 | 46.8 | 75.5 | 48 | O |
| | 2000.03-2004.04 | MT | F | L/R | Hatchback Van FWD 176B2000/187A1000 | Chassis no. from:0047304 | GCO17024 | Outer Joint | | 22 | 20 | 47 | 75.5 | 51.5 | O |
| | 2000.03-2004.04 | MT | F | L/R | Hatchback Van FWD 176B2000/187A1000 | | GCI17001 | Inner Joint | | 22 | 19 | 36 | 61.5 | 88.5 | |
| **Seicento/600** | | | | | | | | | | | | | | | |
| 1.1 (40 kw) | 1998.01-2010.01 | 5MT | F | L | Hatchback FWD 187 A1.000, 176 B2.000 | Chassis no. to:0047303 | GDS17188 | Drive Shaft | | 22 | 22 | 46.8 | 75.5 | 552 | |
| | 1998.01-2010.01 | 5MT | F | L | Hatchback FWD 187 A1.000, 176 B2.000 | Chassis no. from:0047304 | GDS17190 | Drive Shaft | | 22 | 22 | 47 | 75.5 | 553 | |
| | 1998.01-2010.01 | 5MT | F | R | Hatchback FWD 187 A1.000, 176 B2.000 | Chassis no. to:0047303 | GDS17189 | Drive Shaft | | 22 | 22 | 46.8 | 75.5 | 774 | |
| | 1998.01-2010.01 | 5MT | F | R | Hatchback FWD 187 A1.000, 176 B2.000 | Chassis no. from:0047304 | GDS17191 | Drive Shaft | | 22 | 22 | 47 | 75.5 | 776 | |
| | 1998.01-2010.01 | 5MT | F | L/R | Hatchback FWD 187 A1.000, 176 B2.000 | Chassis no. to:0047303 | GCO17010 | Outer Joint | | 22 | 20 | 46.8 | 75.5 | 48 | O |
| | 1998.01-2010.01 | 5MT | F | L/R | Hatchback FWD 187 A1.000, 176 B2.000 | Chassis no. from:0047304 | GCO17024 | Outer Joint | | 22 | 20 | 47 | 75.5 | 51.5 | O |
| | 1998.01-2010.01 | 5MT | F | L/R | Hatchback FWD 187 A1.000, 176 B2.000 | | GCI17001 | Inner Joint | | 22 | 19 | 36 | 61.5 | 88.5 | |
| | 1998.01-2010.01 | MT | F | L | Hatchback FWD 187 A1.000, 176 B2.000 | Trans. code:SA157 | GDS17201 | Drive Shaft | | 22 | | 47 | 75.5 | 533 | |
| | 1998.01-2010.01 | MT | F | R | Hatchback FWD 187 A1.000, 176 B2.000 | Trans. code:SA157 | GDS17206 | Drive Shaft | | 22 | 29 | 47 | 75.5 | 795 | |
| **Siena** | | | | | | | | | | | | | | | |
| 1.3 (44 kw) | 2001.09-2012.12 | 5MT | F | L | Saloon FWD 188 A4.000, 178 C4.066 | Date From:2002.12,Date To:2003.12 | GDS17029 | Drive Shaft | | 22 | 32 | 47 | 89 | 504 | |
| | 2001.09-2012.12 | 5MT | F | R | Saloon FWD 188 A4.000, 178 C4.066 | Date From:2002.12,Date To:2003.12 | GDS17030 | Drive Shaft | | 22 | 32 | 47 | 89 | 809 | |
| | 2001.09-2012.12 | 5MT | F | L/R | Saloon FWD 188 A4.000, 178 C4.066 | Date From:2002.12 | GCO17016 | Outer Joint | | 22 | 22 | 47 | 89 | 61 | O |
| | 2001.09-2012.12 | 5MT | F | L/R | Saloon FWD 188 A4.000, 178 C4.066 | Date To:2002.11 | GCO17029 | Outer Joint | | 22 | 20 | 47 | 89 | 61 | O |
| 1.3 (51 kw) | 2003.09-2009.12 | 5MT | F | L | Saloon FWD 188 A9.000 | Chassis no. to:6410204 | GDS17003 | Drive Shaft | | 25 | | 51 | 90 | 455 | |
| | 2003.09-2009.12 | 5MT | F | L | Saloon FWD 188 A9.000 | Chassis no. from:6410205 | GDS17034 | Drive Shaft | | 25 | 36 | 51 | 90 | 447 | |
| | 2003.09-2009.12 | 5MT | F | R | Saloon FWD 188 A9.000 | Chassis no. to:6410204 | GDS17002 | Drive Shaft | | 25 | | 51 | 90 | 533 | |
| | 2003.09-2009.12 | 5MT | F | R | Saloon FWD 188 A9.000 | Chassis no. from:6410205 | GDS17013 | Drive Shaft | | 25 | 36 | 51 | 90 | 501 | |
| | 2003.09-2009.12 | 5MT | F | R | Saloon FWD 188 A9.000 | Engine To:9967853 | GCI82005 | Inner Joint | | | 25 | | | 32 | |
| | 2003.09-2009.12 | MT | F | L/R | Saloon FWD 188 A9.000 | | GCO17031 | Outer Joint | | 25 | 24 | 51 | 90 | 62 | M |
| | 2003.09-2009.12 | MT | F | R | Saloon FWD 188 A9.000 | Engine no. to:9967853 | GCI82011 | Inner Joint | | | 25 | | | 32 | |
| 1.3 (54 kw) | 1998.09-2002.12 | 5MT | F | L | Saloon FWD 178B5000 | | GDS17005 | Drive Shaft | | 22 | | 52 | 91 | 554 | |
| | 1998.09-2002.12 | 5MT | F | R | Saloon FWD 178B5000 | | GDS17007 | Drive Shaft | | 22 | | 52 | 91 | 904.5 | |
| | 1998.09-2002.12 | 5MT | F | L/R | Saloon FWD 178B5000 | Date To:2000.06;For Modelcode:178CXG1AAM | GCO17017 | Outer Joint | | 22 | 20 | 52 | 91 | 60.5 | O |
| | 1998.09-2002.12 | MT | F | L/R | Saloon FWD 178B5000 | Date to:2002.12 | GCO17019 | Outer Joint | | 22 | 22 | 52 | 91 | 60.5 | O |
| | 1998.09-2002.12 | MT | F | L/R | Saloon FWD 178B5000 | | GCO17020 | Outer Joint | 44T | 22 | 22 | 52 | 91 | 60.5 | O |
| | 1998.09-2002.12 | | F | | Saloon FWD 178B5000 | | GCO17029 | Outer Joint | | 22 | 20 | 47 | 89 | 61 | O |
| 1.3 (59 kw) | 2001.09-2009.12 | 5MT | F | L | Saloon FWD 188 A5.000 | Date To:2006.02 | GDS17029 | Drive Shaft | | 22 | 32 | 47 | 89 | 504 | |
| | 2001.09-2009.12 | 5MT | F | R | Saloon FWD 188 A5.000 | Date To:2006.02 | GDS17030 | Drive Shaft | | 22 | 32 | 47 | 89 | 809 | |
| | 2001.09-2009.12 | 5MT | F | L/R | Saloon FWD 188 A5.000 | Date To:2006.02 | GCO17016 | Outer Joint | | 22 | 22 | 47 | 89 | 61 | O |
| | 2001.09-2009.12 | 5MT | F | L/R | Saloon FWD 188 A5.000 | Date From:2006.03 | GCO17029 | Outer Joint | | 22 | 20 | 47 | 89 | 61 | O |
| 1.4 (51 kw) | 1996.06-2002.12 | 5MT | F | L | Saloon FWD 178B2000/178B2016 | For Modelcode:178CXC1AAP | GDS17005 | Drive Shaft | | 22 | | 52 | 91 | 554 | |
| | 1996.06-2002.12 | 5MT | F | L | Saloon FWD 178B2000/178B2016 | Modelcode:178CXC1AAP | GDS17005 | Drive Shaft | | 22 | | 52 | 91 | 554 | |
| | 1996.06-2002.12 | 5MT | F | R | Saloon FWD 178B2000/178B2016 | For Modelcode:178CXC1AAP | GDS17007 | Drive Shaft | | 22 | | 52 | 91 | 904.5 | |
| | 1996.06-2002.12 | 5MT | F | R | Saloon FWD 178B2000/178B2016 | Modelcode:178CXC1AAP | GDS17007 | Drive Shaft | | 22 | | 52 | 91 | 904.5 | |
| | 1996.06-2002.12 | 5MT | F | L/R | Saloon FWD 178B2000/178B2016 | For Modelcode:178CXC1AAP | GCO17017 | Outer Joint | | 22 | 20 | 52 | 91 | 60.5 | O |
| | 1996.06-2002.12 | 5MT | F | L/R | Saloon FWD 178B2000/178B2016 | For Modelcod:178CXC1AAP | GCO17017 | Outer Joint | | 22 | 20 | 52 | 91 | 60.5 | O |
| | 1996.06-2002.12 | 5MT | F | L/R | Saloon FWD 178B2000/178B2016 | For Modelcod:178CXC1AAE/178CXC1AAT | GCO17019 | Outer Joint | | 22 | 22 | 52 | 91 | 60.5 | O |
| | 1996.06-2002.12 | 5MT | F | L/R | Saloon FWD 178B2000/178B2016 | For Modelcod:178CXC1AAE/178CXC1AAT | GCO17020 | Outer Joint | 44T | 22 | 22 | 52 | 91 | 60.5 | O |
| | 1996.06-2002.12 | MT | F | L/R | Saloon FWD 178B2000/178B2016 | Date to:2002.12 | GCO17019 | Outer Joint | | 22 | 22 | 52 | 91 | 60.5 | O |
| | 1996.06-2002.12 | MT | F | L/R | Saloon FWD 178B2000/178B2016 | Date to:2002.12 | GCO17020 | Outer Joint | 44T | 22 | 22 | 52 | 91 | 60.5 | O |
| 1.4 (57 kw) | 2007.01-2009.12 | 5MT | F | L | Saloon FWD 350 A1.000, 178 F3.011 | | GDS17029 | Drive Shaft | | 22 | 32 | 47 | 89 | 504 | |
| | 2007.01-2009.12 | 5MT | F | R | Saloon FWD 350 A1.000, 178 F3.011 | | GDS17030 | Drive Shaft | | 22 | 32 | 47 | 89 | 809 | |

| | YEAR | TRANSM. | F/R | L/R | BODY STYLE & DRIVE TYPE & ENGINE | REMARKS | G-AP Ref. | PRODUCT | ABS | Technical Specifications A | B | C | H | L | P |
|---|---|---|---|---|---|---|---|---|---|---|---|---|---|---|---|
| **FIAT** | | | | | | | | | | | | | | | |
| **Siena** | | | | | | | | | | | | | | | |
| 1.4 (57 kw) | 2007.01-2009.12 | 5MT | F | L/R | Saloon FWD 350 A1.000, 178 F3.011 | | GCO17016 | Outer Joint | | 22 | 22 | 47 | 89 | 61 | O |
| | 2007.01-2009.12 | 5MT | F | L/R | Saloon FWD 350 A1.000, 178 F3.011 | Model:Siena,Manufacturer:GKN | GCO17029 | Outer Joint | | 22 | 20 | 47 | 89 | 61 | O |
| | 2007.01-2009.12 | 5MT | F | L/R | Saloon FWD 350 A1.000, 178 F3.011 | Model:Siena,Manufacturer:Delphi | GCO17093 | Outer Joint | | 22 | 28 | 47 | 89 | 57 | O |
| 1.5 (62 kw) | 2004.06-2011.12 | MT | F | L | Saloon FWD 178E5022 | | GCO17037 | Outer Joint | | 22 | 22 | 51 | 89 | 61 | O |
| | 2004.06-2011.12 | MT | F | R | Saloon FWD 178E5022 | | GCO17016 | Outer Joint | | 22 | 22 | 47 | 89 | 61 | O |
| 1.6 (74 kw) | 1997.07-2004.12 | MT | F | L/R | Saloon FWD 178B3000 | Date to:2004.12 | GCO17019 | Outer Joint | | 22 | 22 | 52 | 91 | 60.5 | O |
| | 1997.07-2004.12 | MT | F | L/R | Saloon FWD 178B3000 | Date to:2004.12 | GCO17020 | Outer Joint | 44T | 22 | 22 | 52 | 91 | 60.5 | O |
| 1.6 (76 kw) | 2000.11-2012.12 | 5MT | F | L | Saloon FWD 182 B6.000 | | GDS17029 | Drive Shaft | | 22 | 32 | 47 | 89 | 504 | |
| | 2000.11-2012.12 | 5MT | F | R | Saloon FWD 182 B6.000 | | GDS17030 | Drive Shaft | | 22 | 32 | 47 | 89 | 809 | |
| | 2000.11-2012.12 | 5MT | F | L/R | Saloon FWD 182 B6.000 | | GCO17016 | Outer Joint | | 22 | 22 | 47 | 89 | 61 | O |
| | 2000.11-2012.12 | 5MT | F | L/R | Saloon FWD 182 B6.000 | Model:Siena | GCO17019 | Outer Joint | | 22 | 22 | 52 | 91 | 60.5 | O |
| | 2000.11-2012.12 | 5MT | F | L/R | Saloon FWD 182 B6.000 | Model:Siena | GCO17020 | Outer Joint | 44T | 22 | 22 | 52 | 91 | 60.5 | O |
| 1.7 (51 kw) | 2006.02-2012.12 | AT/MT | F | L/R | Saloon FWD 176A3000 | | GCO17019 | Outer Joint | | 22 | 22 | 52 | 91 | 60.5 | O |
| | 2006.02-2012.12 | AT/MT | F | L/R | Saloon FWD 176A3000 | | GCO17020 | Outer Joint | 44T | 22 | 22 | 52 | 91 | 60.5 | O |
| **Stilo** | | | | | | | | | | | | | | | |
| 1.2 (59 kw) | 2001.11-2003.12 | 5MT/6MT | F | L/R | Hatchback FWD 188 A5.000 | Date to:2003.10 | GCO17014 | Outer Joint | | 22 | 21 | 51 | 79.5 | 54 | M |
| | 2001.11-2003.12 | 5MT/6MT | F | L/R | Hatchback FWD 188 A5.000 | | GCO17052 | Outer Joint | | 22 | 21 | 51.2 | 79.5 | 54 | M |
| | 2001.11-2003.12 | 5MT/6MT | F | L/R | Hatchback FWD 188 A5.000 | | GCI17027 | Inner Joint | | 22 | 22 | 36 | 61.5 | 93.5 | |
| 1.4 (66 kw) | 2005.03-2006.11 | 5MT | F | R | Hatchback FWD 192 B2.000 | | GDS17214 | Drive Shaft | | 25 | 22 | 51 | 84 | 918 | |
| | 2005.03-2006.11 | 5MT | F | L/R | Hatchback FWD 192 B2.000 | | GCO17026 | Outer Joint | | 25 | 22 | 51 | 84 | 57 | M |
| | 2005.03-2006.11 | 5MT | F | L/R | Hatchback FWD 192 B2.000 | | GCI17027 | Inner Joint | | 22 | 22 | 36 | 61.5 | 93.5 | |
| | 2005.03-2008.08 | 5MT | F | R | Estate FWD 192 B2.000 | | GDS17214 | Drive Shaft | | 25 | 22 | 51 | 84 | 918 | |
| | 2005.03-2008.08 | 5MT | F | L/R | Estate FWD 192 B2.000 | | GCO17026 | Outer Joint | | 25 | 22 | 51 | 84 | 57 | M |
| | 2005.03-2008.08 | 5MT | F | L/R | Estate FWD 192 B2.000 | | GCI17027 | Inner Joint | | 22 | 22 | 36 | 61.5 | 93.5 | |
| 1.4 (70 kw) | 2003.10-2006.12 | 5AT/6MT | F | L/R | Hatchback FWD 843 A1.000 | | GCI17027 | Inner Joint | | 22 | 22 | 36 | 61.5 | 93.5 | |
| | 2003.10-2006.12 | 5MT/6MT | F | R | Hatchback FWD 843 A1.000 | | GDS17214 | Drive Shaft | | 25 | 22 | 51 | 84 | 918 | |
| | 2003.10-2006.12 | 5MT/6MT | F | L/R | Hatchback FWD 843 A1.000 | | GCO17026 | Outer Joint | | 25 | 22 | 51 | 84 | 57 | M |
| | 2004.01-2008.08 | 5MT | F | R | Estate FWD 843 A1.000 | | GDS17214 | Drive Shaft | | 25 | 22 | 51 | 84 | 918 | |
| | 2004.01-2008.08 | 5MT | F | L/R | Estate FWD 843 A1.000 | | GCO17026 | Outer Joint | | 25 | 22 | 51 | 84 | 57 | M |
| | 2004.01-2008.08 | 5MT | F | L/R | Estate FWD 843 A1.000 | | GCI17027 | Inner Joint | | 22 | 22 | 36 | 61.5 | 93.5 | |
| 1.6 (76 kw) | 2001.10-2006.11 | 5MT | F | L | Hatchback FWD 182 B6.000 | | GDS17099 | Drive Shaft | | 25 | 22 | 51 | 84 | 638 | |
| | 2001.10-2006.11 | 5MT | F | R | Hatchback FWD 182 B6.000 | | GDS17080 | Drive Shaft | | 25 | 22 | 51 | 84 | 938 | |
| | 2001.10-2006.11 | 5MT | F | L/R | Hatchback FWD 182 B6.000 | | GCO17026 | Outer Joint | | 25 | 22 | 51 | 84 | 57 | M |
| | 2001.10-2006.11 | | F | L | Hatchback FWD 182 B6.000 | | GCI17004 | Inner Joint | | 22 | 21 | 36 | 61 | 93.5 | |
| 1.6 (77 kw) | 2005.03-2007.12 | 5MT | F | L | Estate FWD 192 B3.000 | | GDS17099 | Drive Shaft | | 25 | 22 | 51 | 84 | 638 | |
| | 2005.03-2007.12 | 5MT | F | R | Estate FWD 192 B3.000 | | GDS17080 | Drive Shaft | | 25 | 22 | 51 | 84 | 938 | |
| | 2005.03-2007.12 | 5MT | F | L/R | Estate FWD 192 B3.000 | | GCO17026 | Outer Joint | | 25 | 22 | 51 | 84 | 57 | M |
| | 2005.03-2007.12 | 5MT | F | L/R | Estate FWD 192 B3.000 | | GCI17004 | Inner Joint | | 22 | 21 | 36 | 61 | 93.5 | |
| | 2005.05-2006.11 | 5MT | F | L | Hatchback FWD 192 B3.000 | | GDS17099 | Drive Shaft | | 25 | 22 | 51 | 84 | 638 | |
| | 2005.05-2006.11 | 5MT | F | R | Hatchback FWD 192 B3.000 | | GDS17080 | Drive Shaft | | 25 | 22 | 51 | 84 | 938 | |
| | 2005.05-2006.11 | 5MT | F | L/R | Hatchback FWD 192 B3.000 | | GCO17026 | Outer Joint | | 25 | 22 | 51 | 84 | 57 | M |
| | 2005.05-2006.11 | 5MT | F | L/R | Hatchback FWD 192 B3.000 | | GCI17004 | Inner Joint | | 22 | 21 | 36 | 61 | 93.5 | |
| 1.8 (98 kw) | 2001.10-2007.04 | MT | F | L/R | Hatchback FWD 192 A4.000 | | GCO17042 | Outer Joint | | 25 | 25 | 51 | 85 | 58 | O |
| | 2001.10-2007.04 | MT | F | L/R | Hatchback FWD 192 A4.000 | | GCI18070 | Inner Joint | | | 25 | | | 32 | |
| | 2001.10-2007.04 | | F | L/R | Hatchback FWD 192 A4.000 | Date From:2002.04;Chassis no. from:0276611 | GCO17028 | Outer Joint | | 25 | 24 | 51 | 84.5 | 62 | M |
| | 2001.10-2007.04 | | F | L/R | Hatchback FWD 192 A4.000 | To TEL:0276610 | GCO82017 | Outer Joint | | 25 | 25 | 58.8 | 85 | 58 | O |
| | 2001.10-2007.04 | | F | | Hatchback FWD 192 A4.000 | | GCI82005 | Inner Joint | | | 25 | | | 32 | |
| | 2001.10-2007.04 | | F | | Hatchback FWD 192 A4.000 | | GCI82006 | Inner Joint | | | 25 | | | 32 | |
| | 2003.01-2008.08 | MT | F | L/R | Estate FWD 192 A4.000 | | GCO17042 | Outer Joint | | 25 | 25 | 51 | 85 | 58 | O |
| | 2003.01-2008.08 | MT | F | L/R | Estate FWD 192 A4.000 | | GCI18070 | Inner Joint | | | 25 | | | 32 | |
| | 2003.01-2008.08 | MT | F | L/R | Estate FWD 192 A4.000 | | GCI82011 | Inner Joint | | | 25 | | | 32 | |
| | 2003.01-2008.08 | MT | F | | Estate FWD 192 A4.000 | | GCI82005 | Inner Joint | | | 25 | | | 32 | |
| | 2003.01-2008.08 | | F | L | Estate FWD 192 A4.000 | | GCO17028 | Outer Joint | | 25 | 24 | 51 | 84.5 | 62 | M |
| | 2003.01-2008.08 | | F | | Estate FWD 192 A4.000 | | GCI82006 | Inner Joint | | | 25 | | | 32 | |
| 1.9 (59 kw) | 2002.02-2005.09 | MT | F | | Hatchback FWD 192 A3.000 | | GCI82005 | Inner Joint | | | 25 | | | 32 | |
| | 2002.02-2005.09 | | F | L/R | Hatchback FWD 192 A3.000 | Date From:2004.01;Date To:2005.08 | GCO17028 | Outer Joint | | 25 | 24 | 51 | 84.5 | 62 | M |
| | 2002.02-2005.09 | | F | L/R | Hatchback FWD 192 A3.000 | Date To:2003.12 | GCO82017 | Outer Joint | | 25 | 25 | 58.8 | 85 | 58 | O |
| | 2002.02-2005.09 | | F | | Hatchback FWD 192 A3.000 | | GCI82006 | Inner Joint | | | 25 | | | 32 | |
| | 2003.01-2005.08 | MT | F | L/R | Estate FWD 192 A3.000 | | GCI82011 | Inner Joint | | | 25 | | | 32 | |
| | 2003.01-2005.08 | MT | F | | Estate FWD 192 A3.000 | | GCI82005 | Inner Joint | | | 25 | | | 32 | |
| | 2003.01-2005.08 | | F | L/R | Estate FWD 192 A3.000 | Date To:2005.08 | GCO17028 | Outer Joint | | 25 | 24 | 51 | 84.5 | 62 | M |
| | 2003.01-2005.08 | | F | | Estate FWD 192 A3.000 | | GCI82006 | Inner Joint | | | 25 | | | 32 | |
| 1.9 (66 kw) | 2004.09-2006.11 | 5MT | F | L | Hatchback FWD 192 B5.000 | | GDS17108 | Drive Shaft | | 25 | 34 | 51 | 84.5 | 631 | |
| | 2004.09-2006.11 | 5MT | F | R | Hatchback FWD 192 B5.000 | | GDS17077 | Drive Shaft | | 25 | 34 | 51 | 84.5 | 928 | |
| | 2004.09-2006.11 | | F | L/R | Hatchback FWD 192 B5.000 | | GCO17028 | Outer Joint | | 25 | 24 | 51 | 84.5 | 62 | M |

| | YEAR | TRANSM. | F/R | L/R | BODY STYLE & DRIVE TYPE & ENGINE | REMARKS | G-AP Ref. | PRODUCT | ABS | Technical Specifications A | B | C | H | L | P |
|---|---|---|---|---|---|---|---|---|---|---|---|---|---|---|---|
| **FIAT** **Stilo** | | | | | | | | | | | | | | | |
| 1.9 (66 kw) | 2004.09-2006.11 | | F | | Hatchback FWD 192 B5.000 | | GCI82006 | Inner Joint | | | 25 | | | 32 | |
| | 2004.09-2008.08 | 5MT | F | L | Estate FWD 192 B5.000 | | GDS17108 | Drive Shaft | | 25 | 34 | 51 | 84.5 | 631 | |
| | 2004.09-2008.08 | 5MT | F | R | Estate FWD 192 B5.000 | | GDS17077 | Drive Shaft | | 25 | 34 | 51 | 84.5 | 928 | |
| | 2004.09-2008.08 | 5MT | F | L | Estate FWD 192 B5.000 | | GCI17013 | Inner Joint | | 34 | 24 | 35 | 56.5 | 115 | |
| | 2004.09-2008.08 | 5MT | F | R | Estate FWD 192 B5.000 | | GCI17014 | Inner Joint | | 34 | 24 | 34.9 | 411 | 102.5 | |
| | 2004.09-2008.08 | | F | L/R | Estate FWD 192 B5.000 | | GCO17028 | Outer Joint | | 25 | 24 | 51 | 84.5 | 62 | M |
| 1.9 (74 kw) | 2005.09-2006.11 | AT/MT | F | L/R | Hatchback FWD 192 A9.000 | | GCI18070 | Inner Joint | | | 25 | | | 32 | |
| | 2005.09-2006.11 | MT | F | L/R | Hatchback FWD 192 A9.000 | | GCI82011 | Inner Joint | | | 25 | | | 32 | |
| | 2005.09-2006.11 | MT | F | | Hatchback FWD 192 A9.000 | | GCI82005 | Inner Joint | | | 25 | | | 32 | |
| | 2005.09-2006.11 | | F | L/R | Hatchback FWD 192 A9.000 | | GCO17028 | Outer Joint | | 25 | 24 | 51 | 84.5 | 62 | M |
| | 2005.09-2006.11 | | F | | Hatchback FWD 192 A9.000 | | GCI82006 | Inner Joint | | | 25 | | | 32 | |
| | 2005.09-2008.08 | AT/MT | F | L/R | Estate FWD 192 A9.000 | | GCI18070 | Inner Joint | | | 25 | | | 32 | |
| | 2005.09-2008.08 | | F | L | Estate FWD 192 A9.000 | | GCO17028 | Outer Joint | | 25 | 24 | 51 | 84.5 | 62 | M |
| | 2005.09-2008.08 | | F | | Estate FWD 192 A9.000 | | GCI82005 | Inner Joint | | | 25 | | | 32 | |
| | 2005.09-2008.08 | | F | | Estate FWD 192 A9.000 | | GCI82006 | Inner Joint | | | 25 | | | 32 | |
| 1.9 (85 kw) | 2001.10-2006.11 | 5MT | F | L | Hatchback FWD 192 A1.000;937 A7.000;192 B4.000 | | GDS17108 | Drive Shaft | | 25 | 34 | 51 | 84.5 | 631 | |
| | 2001.10-2006.11 | 5MT | F | R | Hatchback FWD 192 A1.000;937 A7.000;192 B4.000 | | GDS17077 | Drive Shaft | | 25 | 34 | 51 | 84.5 | 928 | |
| | 2001.10-2006.11 | 5MT | F | L/R | Hatchback FWD 192 A1.000;937 A7.000;192 B4.000 | Chassis no. from:0279622 | GCO17028 | Outer Joint | | 25 | 24 | 51 | 84.5 | 62 | M |
| | 2001.10-2006.11 | 5MT | F | L/R | Hatchback FWD 192 A1.000;937 A7.000;192 B4.000 | Chassis no. to:0279621 | GCO82025 | Outer Joint | | 25 | 26 | 51 | 84.5 | 64.5 | M |
| | 2001.10-2006.11 | 5MT | F | R | Hatchback FWD 192 A1.000;937 A7.000;192 B4.000 | Chassis no. from:0279622 | GCI17014 | Inner Joint | | 34 | 24 | 34.9 | 411 | 102.5 | |
| | 2003.01-2008.08 | 5MT | F | L | Estate FWD 192 A1.000;937 A7.000;192 B4.000 | Equipment code:V3/V8/V14/V32/V35/V38 | GDS17108 | Drive Shaft | | 25 | 34 | 51 | 84.5 | 631 | |
| | 2003.01-2008.08 | 5MT | F | R | Estate FWD 192 A1.000;937 A7.000;192 B4.000 | Equipment code:V3/V8/V14/V32/V35/V38 | GDS17077 | Drive Shaft | | 25 | 34 | 51 | 84.5 | 928 | |
| | 2003.01-2008.08 | 5MT | F | L/R | Estate FWD 192 A1.000;937 A7.000;192 B4.000 | VET no. from:451684 | GCO17028 | Outer Joint | | 25 | 24 | 51 | 84.5 | 62 | M |
| | 2003.01-2008.08 | 5MT | F | L/R | Estate FWD 192 A1.000;937 A7.000;192 B4.000 | VET no. to:451684 | GCO82025 | Outer Joint | | 25 | 26 | 51 | 84.5 | 64.5 | M |
| | 2003.01-2008.08 | 5MT | F | R | Estate FWD 192 A1.000;937 A7.000;192 B4.000 | VET no. from:451684,Equipment code:V3/V8/V14/V32/V35/V38 | GCI17014 | Inner Joint | | 34 | 24 | 34.9 | 411 | 102.5 | |
| 1.9 (88 kw) | 2005.09-2006.11 | 6MT | F | L | Hatchback FWD 192 A8.000 | Trans. side with housing,Date to:2006.11 | GDS17108 | Drive Shaft | | 25 | 34 | 51 | 84.5 | 631 | |
| | 2005.09-2006.11 | 6MT | F | R | Hatchback FWD 192 A8.000 | Trans. side with housing,Date to:2006.11 | GDS17077 | Drive Shaft | | 25 | 34 | 51 | 84.5 | 928 | |
| | 2005.09-2006.11 | 6MT | F | L/R | Hatchback FWD 192 A8.000 | Trans. side without housing,VET no. from:657008 | GDS17194 | Drive Shaft | | 25 | 39 | 51 | 84.5 | 523 | |
| | 2005.09-2006.11 | 6MT | F | L/R | Hatchback FWD 192 A8.000 | Date to:2006.11 | GCO17028 | Outer Joint | | 25 | 24 | 51 | 84.5 | 62 | M |
| | 2005.09-2006.11 | 6MT | F | L/R | Hatchback FWD 192 A8.000 | Date from:2006.11,VET no. to:657007 | GCO17030 | Outer Joint | | 25 | 26 | 51 | 84.5 | 64.5 | M |
| | 2005.09-2006.11 | 6MT | F | L | Hatchback FWD 192 A8.000 | TJ,Date from:2006.11,VET no. to:657007 | GCI17005 | Inner Joint | | 25 | 26 | 32 | 91 | 95 | |
| | 2005.09-2006.11 | 6MT | F | L | Hatchback FWD 192 A8.000 | TJ,VET no. to:657008,Date to:2006.11 | GCI17013 | Inner Joint | | 34 | 24 | 35 | 56.5 | 115 | |
| | 2005.09-2006.11 | 6MT | F | L | Hatchback FWD 192 A8.000 | VET no. from:657008 | GCI17084 | Inner Joint | | 25 | 24 | 31.95 | 91 | 87 | |
| | 2005.09-2006.11 | 6MT | F | R | Hatchback FWD 192 A8.000 | TJ,Date from:2006.11,VET no. to:657007 | GCI17006 | Inner Joint | | 25 | 26 | 29.8 | 377 | 108 | |
| | 2005.09-2006.11 | 6MT | F | R | Hatchback FWD 192 A8.000 | TJ,Date to:2006.11 | GCI17014 | Inner Joint | | 34 | 24 | 34.9 | 411 | 102.5 | |
| | 2005.09-2008.08 | 6MT | F | L | Estate FWD 192 A8.000 | Trans. side with housing,Date to:2006.11 | GDS17108 | Drive Shaft | | 25 | 34 | 51 | 84.5 | 631 | |
| | 2005.09-2008.08 | 6MT | F | R | Estate FWD 192 A8.000 | Trans. side with housing,Date to:2006.11 | GDS17077 | Drive Shaft | | 25 | 34 | 51 | 84.5 | 928 | |
| | 2005.09-2008.08 | 6MT | F | R | Estate FWD 192 A8.000 | Trans. side with housing,Date from:2006.11,VET no. to:657007 | GDS82008 | Drive Shaft | | 25 | 25 | 51 | 84.5 | 931.5 | |
| | 2005.09-2008.08 | 6MT | F | L/R | Estate FWD 192 A8.000 | Trans. side without housing,VET no. from:657008 | GDS17194 | Drive Shaft | | 25 | 39 | 51 | 84.5 | 523 | |
| | 2005.09-2008.08 | 6MT | F | L/R | Estate FWD 192 A8.000 | Date to:2006.11 | GCO17028 | Outer Joint | | 25 | 24 | 51 | 84.5 | 62 | M |
| | 2005.09-2008.08 | 6MT | F | L/R | Estate FWD 192 A8.000 | Date from:2006.11,VET no. to:657007 | GCO17030 | Outer Joint | | 25 | 26 | 51 | 84.5 | 64.5 | M |
| | 2005.09-2008.08 | 6MT | F | L | Estate FWD 192 A8.000 | TJ,Date from:2006.11,VET no. to:657007 | GCI17005 | Inner Joint | | 25 | 26 | 32 | 91 | 95 | |
| | 2005.09-2008.08 | 6MT | F | L | Estate FWD 192 A8.000 | TJ,VET no. to:657008,Date to:2006.11 | GCI17013 | Inner Joint | | 34 | 24 | 35 | 56.5 | 115 | |
| | 2005.09-2008.08 | 6MT | F | L | Estate FWD 192 A8.000 | VET no. from:657008 | GCI17084 | Inner Joint | | 25 | 24 | 31.95 | 91 | 87 | |
| | 2005.09-2008.08 | 6MT | F | R | Estate FWD 192 A8.000 | TJ,Date from:2006.11,VET no. to:657007 | GCI17006 | Inner Joint | | 25 | 26 | 29.8 | 377 | 108 | |
| | 2005.09-2008.08 | 6MT | F | R | Estate FWD 192 A8.000 | TJ,Date to:2006.11 | GCI17014 | Inner Joint | | 34 | 24 | 34.9 | 411 | 102.5 | |
| | 2005.09-2008.08 | AT/MT | F | L/R | Estate FWD 192 A8.000 | VL | GCI18070 | Inner Joint | | | 25 | | | 32 | |
| 1.9 (93 kw) | 2003.09-2006.11 | AT/MT | F | L/R | Hatchback FWD 937 A4.000 | | GCO17009 | Outer Joint | | 25 | 26 | 59 | 84 | 63 | M |
| | 2003.09-2006.11 | | F | L/R | Hatchback FWD 937 A4.000 | | GCI82007 | Inner Joint | | | 34 | | | 47.5 | |
| | 2003.09-2008.08 | | F | L/R | Estate FWD 937 A4.000 | | GCO17009 | Outer Joint | | 25 | 26 | 59 | 84 | 63 | M |
| | 2003.09-2008.08 | | F | R | Estate FWD 937 A4.000 | | GCI82007 | Inner Joint | | | 34 | | | 47.5 | |
| 1.9 (100 kw) | 2004.04-2006.11 | | F | L/R | Hatchback FWD 192 B1.000 | | GCO17009 | Outer Joint | | 25 | 26 | 59 | 84 | 63 | M |
| | 2004.04-2006.11 | | F | R | Hatchback FWD 192 B1.000 | | GCI82007 | Inner Joint | | | 34 | | | 47.5 | |
| | 2004.04-2008.08 | | F | L/R | Estate FWD 192 B1.000 | | GCO17009 | Outer Joint | | 25 | 26 | 59 | 84 | 63 | M |
| | 2004.04-2008.08 | | F | R | Estate FWD 192 B1.000 | | GCI82007 | Inner Joint | | | 34 | | | 47.5 | |
| 1.9 (103 kw) | 2004.01-2005.08 | AT/MT | F | L/R | Hatchback FWD 192 A5.000 | | GCO17009 | Outer Joint | | 25 | 26 | 59 | 84 | 63 | M |
| | 2004.01-2005.08 | | F | L/R | Hatchback FWD 192 A5.000 | | GCI82007 | Inner Joint | | | 34 | | | 47.5 | |
| | 2004.01-2008.08 | AT/MT | F | L/R | Estate FWD 192 A5.000 | | GCO17009 | Outer Joint | | 25 | 26 | 59 | 84 | 63 | M |
| | 2004.01-2008.08 | | F | L/R | Estate FWD 192 A5.000 | | GCI82007 | Inner Joint | | | 34 | | | 47.5 | |
| 1.9 (110 kw) | 2005.09-2006.11 | 6MT | F | R | Hatchback FWD 937 A5.000 | | GDS17136 | Drive Shaft | | 25 | 25 | 51 | 84.5 | 931 | |
| | 2005.09-2006.11 | 6MT | F | L | Hatchback FWD 937 A5.000 | | GCI17005 | Inner Joint | | 25 | 26 | 32 | 91 | 95 | |
| | 2005.09-2006.11 | 6MT | F | R | Hatchback FWD 937 A5.000 | | GCI17073 | Inner Joint | | 25 | 24 | 29.7 | 377.5 | 94.5 | |
| | 2005.09-2006.11 | AT/MT | F | L/R | Hatchback FWD 937 A5.000 | | GCO17009 | Outer Joint | | 25 | 26 | 59 | 84 | 63 | M |
| | 2005.09-2008.08 | 6MT | F | R | Estate FWD 937 A5.000 | | GDS17136 | Drive Shaft | | 25 | 25 | 51 | 84.5 | 931 | |
| | 2005.09-2008.08 | 6MT | F | L | Estate FWD 937 A5.000 | | GCI17005 | Inner Joint | | 25 | 26 | 32 | 91 | 95 | |

| | YEAR | TRANSM. | F/R | L/R | BODY STYLE & DRIVE TYPE & ENGINE | REMARKS | G-AP Ref. | PRODUCT | ABS | Technical Specifications A | B | C | H | L | P |
|---|---|---|---|---|---|---|---|---|---|---|---|---|---|---|---|
| **FIAT** | | | | | | | | | | | | | | | |
| **Stilo** | | | | | | | | | | | | | | | |
| 1.9 (110 kw) | 2005.09-2008.08 | 6MT | F | R | Estate FWD 937 A5.000 | | GCI17073 | Inner Joint | | 25 | 24 | 29.7 | 377.5 | 94.5 | |
| | 2005.09-2008.08 | AT/MT | F | L/R | Estate FWD 937 A5.000 | | GCO17009 | Outer Joint | | 25 | 26 | 59 | 84 | 63 | M |
| 2.4 (123 kw) | 2004.01-2008.08 | 5MT/5AMT | F | R | Estate FWD 192 A7.011 | | GDS17118 | Drive Shaft | | 25 | 25 | 59 | 84 | 985 | |
| | 2004.01-2008.08 | | F | L/R | Estate FWD 192 A7.011 | | GCO17009 | Outer Joint | | 25 | 26 | 59 | 84 | 63 | M |
| | 2004.01-2008.08 | | F | L | Estate FWD 192 A7.011 | | GCI17005 | Inner Joint | | 25 | 26 | 32 | 91 | 95 | |
| 2.4 (125 kw) | 2001.10-2007.04 | 5MT/SAT | F | L | Hatchback FWD 192 A2.000 | | GCI17005 | Inner Joint | | 25 | 26 | 32 | 91 | 95 | |
| | 2001.10-2007.04 | AT/MT | F | L/R | Hatchback FWD 192 A2.000 | | GCO17009 | Outer Joint | | 25 | 26 | 59 | 84 | 63 | M |
| | 2001.10-2007.04 | SAT/5MT | F | R | Hatchback FWD 192 A2.000 | | GDS17118 | Drive Shaft | | 25 | 25 | 59 | 84 | 985 | |
| **Stilo Multi Wagon** | | | | | | | | | | | | | | | |
| 1.6 (76 kw) | 2003.01-2008.08 | 5MT | F | L | Estate FWD 182 B6.000 | | GDS17099 | Drive Shaft | | 25 | 22 | 51 | 84 | 638 | |
| | 2003.01-2008.08 | 5MT | F | R | Estate FWD 182 B6.000 | | GDS17080 | Drive Shaft | | 25 | 22 | 51 | 84 | 938 | |
| | 2003.01-2008.08 | 5MT | F | L/R | Estate FWD 182 B6.000 | | GCO17026 | Outer Joint | | 25 | 22 | 51 | 84 | 57 | M |
| | 2003.01-2008.08 | | F | L | Estate FWD 182 B6.000 | | GCI17004 | Inner Joint | | 22 | 21 | 36 | 61 | 93.5 | |
| **Stilo Van** | | | | | | | | | | | | | | | |
| 1.4 (70 kw) | 2004.01-2008.08 | 6MT | F | R | Estate Van FWD 843 A1.000 | | GDS17214 | Drive Shaft | | 25 | 22 | 51 | 84 | 918 | |
| | 2004.01-2008.08 | 6MT | F | L/R | Estate Van FWD 843 A1.000 | | GCO17026 | Outer Joint | | 25 | 22 | 51 | 84 | 57 | M |
| | 2004.01-2008.08 | 6MT | F | L/R | Estate Van FWD 843 A1.000 | | GCI17027 | Inner Joint | | 22 | 22 | 36 | 61.5 | 93.5 | |
| 1.6 (77 kw) | 2005.04-2008.08 | 5MT | F | L | Estate Van FWD 192 B3.000 | | GDS17099 | Drive Shaft | | 25 | 22 | 51 | 84 | 638 | |
| | 2005.04-2008.08 | 5MT | F | R | Estate Van FWD 192 B3.000 | | GDS17080 | Drive Shaft | | 25 | 22 | 51 | 84 | 938 | |
| | 2005.04-2008.08 | 5MT | F | L/R | Estate Van FWD 192 B3.000 | | GCO17026 | Outer Joint | | 25 | 22 | 51 | 84 | 57 | M |
| | 2005.04-2008.08 | 5MT | F | L/R | Estate Van FWD 192 B3.000 | | GCI17004 | Inner Joint | | 22 | 21 | 36 | 61 | 93.5 | |
| 1.9 (59 kw) | 2001.10-2005.08 | | F | L/R | Estate Van FWD 192 A3.000 | From TEL:0276611 | GCO17028 | Outer Joint | | 25 | 24 | 51 | 84.5 | 62 | M |
| | 2001.10-2005.08 | | F | L/R | Estate Van FWD 192 A3.000 | To TEL:0276610 | GCO82017 | Outer Joint | | 25 | 25 | 58.8 | 85 | 58 | O |
| | 2001.10-2005.08 | | F | L/R | Estate Van FWD 192 A3.000 | | GCI82005 | Inner Joint | | | 25 | | | 32 | |
| 1.9 (85 kw) | 2001.10-2005.08 | 5MT | F | L | Estate Van FWD 192 A1.000 | Equipment code:V3/V8/V14/V32/V35/V38 | GDS17108 | Drive Shaft | | 25 | 34 | 51 | 84.5 | 631 | |
| | 2001.10-2005.08 | 5MT | F | R | Estate Van FWD 192 A1.000 | Equipment code:V3/V8/V14/V32/V35/V38 | GDS17077 | Drive Shaft | | 25 | 34 | 51 | 84.5 | 928 | |
| | 2001.10-2005.08 | 5MT | F | L/R | Estate Van FWD 192 A1.000 | VET no. from:451684,Equipment code:V3/V8/V14/V32/V35/V38 | GCO17028 | Outer Joint | | 25 | 24 | 51 | 84.5 | 62 | M |
| | 2001.10-2005.08 | 5MT | F | L/R | Estate Van FWD 192 A1.000 | VET no. to:451683 | GCO17030 | Outer Joint | | 25 | 26 | 51 | 84.5 | 64.5 | M |
| | 2001.10-2005.08 | 5MT | F | R | Estate Van FWD 192 A1.000 | VET no. from:451684,Equipment code:V3/V8/V14/V32/V35/V38 | GCI17014 | Inner Joint | | 34 | 24 | 34.9 | 411 | 102.5 | |
| 1.9 (88 kw) | 2005.09-2008.08 | 5MT | F | L | Estate Van FWD 192 A8.000 | Date to:2006.11 | GDS17108 | Drive Shaft | | 25 | 34 | 51 | 84.5 | 631 | |
| | 2005.09-2008.08 | 5MT | F | R | Estate Van FWD 192 A8.000 | Date to:2006.11 | GDS17077 | Drive Shaft | | 25 | 34 | 51 | 84.5 | 928 | |
| | 2005.09-2008.08 | 5MT | F | L/R | Estate Van FWD 192 A8.000 | Date from:2008.08,Date to:2009.06 | GDS17194 | Drive Shaft | | 25 | 39 | 51 | 84.5 | 523 | |
| | 2005.09-2008.08 | 5MT | F | L | Estate Van FWD 192 A8.000 | Date to:2006.11 | GCI17013 | Inner Joint | | 34 | 24 | 35 | 56.5 | 115 | |
| | 2005.09-2008.08 | 5MT | F | L | Estate Van FWD 192 A8.000 | VET no. from:657008 | GCI17084 | Inner Joint | | 25 | 24 | 31.95 | 91 | 87 | |
| | 2005.09-2008.08 | 5MT | F | R | Estate Van FWD 192 A8.000 | Date to:2006.11 | GCI17014 | Inner Joint | | 34 | 24 | 34.9 | 411 | 102.5 | |
| | 2005.09-2008.08 | | F | L/R | Estate Van FWD 192 A8.000 | From TEL:0276611 | GCO17028 | Outer Joint | | 25 | 24 | 51 | 84.5 | 62 | M |
| | 2005.09-2008.08 | | F | L/R | Estate Van FWD 192 A8.000 | VET To:451684 | GCO17030 | Outer Joint | | 25 | 26 | 51 | 84.5 | 64.5 | M |
| 1.9 (93 kw) | 2003.09-2005.08 | | F | L/R | Estate Van FWD 937 A4.000 | | GCO17009 | Outer Joint | | 25 | 26 | 59 | 84 | 63 | M |
| | 2003.09-2005.08 | | F | R | Estate Van FWD 937 A4.000 | | GCI82007 | Inner Joint | | | 34 | | | 47.5 | |
| 1.9 (100 kw) | 2004.02-2008.08 | | F | L/R | Estate Van FWD 192 B1.000 | | GCO17009 | Outer Joint | | 25 | 26 | 59 | 84 | 63 | M |
| | 2004.02-2008.08 | | F | R | Estate Van FWD 192 B1.000 | | GCI82007 | Inner Joint | | | 34 | | | 47.5 | |
| 1.9 (103 kw) | 2003.09-2005.08 | | F | L/R | Estate Van FWD 192 A5.000 | | GCO17009 | Outer Joint | | 25 | 26 | 59 | 84 | 63 | M |
| | 2003.09-2005.08 | | F | R | Estate Van FWD 192 A5.000 | | GCI82007 | Inner Joint | | | 34 | | | 47.5 | |
| 1.9 (110 kw) | 2005.09-2008.08 | 6MT | F | R | Estate Van FWD 937 A5.000 | | GDS17136 | Drive Shaft | | 25 | 25 | 51 | 84.5 | 931 | |
| | 2005.09-2008.08 | 6MT | F | L | Estate Van FWD 937 A5.000 | | GCI17005 | Inner Joint | | 25 | 26 | 32 | 91 | 95 | |
| | 2005.09-2008.08 | 6MT | F | R | Estate Van FWD 937 A5.000 | | GCI17073 | Inner Joint | | 25 | 24 | 29.7 | 377.5 | 94.5 | |
| | 2005.09-2008.08 | | F | L/R | Estate Van FWD 937 A5.000 | | GCO17009 | Outer Joint | | 25 | 26 | 59 | 84 | 63 | M |
| **Strada Pick Up** | | | | | | | | | | | | | | | |
| 1.2 (44 kw) | 2001.06-2005.10 | AT/MT | F | L/R | Pickup FWD 188A4000 | | GCO17037 | Outer Joint | | 22 | 22 | 51 | 89 | 61 | O |
| 1.2 (54 kw) | 1999.06-2001.05 | AT/MT | F | L/R | Pickup FWD 178B5000 | | GCO17037 | Outer Joint | | 22 | 22 | 51 | 89 | 61 | O |
| 1.2 (60 kw) | 2005.08- | 5MT | F | L | Pickup FWD 178B7045 | Date To:2010.12 | GDS17029 | Drive Shaft | | 22 | 32 | 47 | 89 | 504 | |
| | 2005.08- | 5MT | F | R | Pickup FWD 178B7045 | Date To:2010.12 | GDS17030 | Drive Shaft | | 22 | 32 | 47 | 89 | 809 | |
| | 2005.08- | 5MT | F | L/R | Pickup FWD 178B7045 | Date To:2010.12 | GCO17016 | Outer Joint | | 22 | 22 | 47 | 89 | 61 | O |
| | 2005.08- | 5MT | F | L/R | Pickup FWD 178B7045 | Long Wheelbase | GCO17074 | Outer Joint | | 27 | 25 | 51 | 90 | 61.5 | M |
| 1.3 (62 kw) | 2005.08- | 5MT | F | L | Pickup FWD 223A9000 | | GDS17003 | Drive Shaft | | 25 | | 51 | 90 | 455 | |
| | 2005.08- | 5MT | F | R | Pickup FWD 223A9000 | | GDS17002 | Drive Shaft | | 25 | | 51 | 90 | 533 | |
| | 2005.08- | 5MT | F | L/R | Pickup FWD 223A9000 | | GCO17031 | Outer Joint | | 25 | 24 | 51 | 90 | 62 | M |
| | 2005.08- | 5MT | F | L/R | Pickup FWD 223A9000 | | GCI82005 | Inner Joint | | | 25 | | | 32 | |
| | 2005.08- | 5MT | F | L/R | Pickup FWD 223A9000 | | GCI82011 | Inner Joint | | | 25 | | | 32 | |
| 1.3 (70 kw) | 2011.07- | MT | F | L/R | Pickup FWD 199B1000 | Date from:2011.01 | GCO17031 | Outer Joint | | 25 | 24 | 51 | 90 | 62 | M |
| | 2011.07- | | F | L/R | Pickup FWD 199B1000 | Type:ADVENTURE | GCO17074 | Outer Joint | | 27 | 25 | 51 | 90 | 61.5 | M |
| 1.7 (51 kw) | 2000.02-2004.08 | AT/MT | F | L/R | Pickup FWD 176A3000 | | GCO17037 | Outer Joint | | 22 | 22 | 51 | 89 | 61 | O |
| 1.9 (46 kw) | 2001.06-2005.10 | AT/MT | F | L/R | Pickup FWD 223A6000 | | GCO17037 | Outer Joint | | 22 | 22 | 51 | 89 | 61 | O |
| 1.9 (59 kw) | 2002.06-2005.08 | 5MT | F | L | Pickup FWD 188A2000 | | GDS17003 | Drive Shaft | | 25 | | 51 | 90 | 455 | |
| | 2002.06-2005.08 | 5MT | F | R | Pickup FWD 188A2000 | | GDS17002 | Drive Shaft | | 25 | | 51 | 90 | 533 | |

| | YEAR | TRANSM. | F/R | L/R | BODY STYLE & DRIVE TYPE & ENGINE | REMARKS | G-AP Ref. | PRODUCT | ABS | Technical Specifications A | B | C | H | L | P |
|---|---|---|---|---|---|---|---|---|---|---|---|---|---|---|---|
| **FIAT** | | | | | | | | | | | | | | | |
| **Strada Pick Up** | | | | | | | | | | | | | | | |
| 1.9 (59 kw) | 2002.06-2005.08 | 5MT | F | L/R | Pickup FWD 188A2000 | | GCO17031 | Outer Joint | | 25 | 24 | 51 | 90 | 62 | M |
| | 2002.06-2005.08 | 5MT | F | L/R | Pickup FWD 188A2000 | | GCI82005 | Inner Joint | | | 25 | | | 32 | |
| | 2002.06-2005.08 | 5MT | F | L/R | Pickup FWD 188A2000 | | GCI82011 | Inner Joint | | | 25 | | | 32 | |
| **Talento** | | | | | | | | | | | | | | | |
| 1.6 (70 kw) | 2016.06- | 6MT | F | L | Bus FWD R9M 413 | | GDS82548 | Drive Shaft | | 29 | 39 | 60 | 95.5 | 694 | |
| | 2016.06- | 6MT | F | R | Bus FWD R9M 413 | | GDS18445 | Drive Shaft | | 29 | 39 | 60 | 96 | 1020 | |
| | 2016.06- | MT | F | L | Bus FWD R9M 413 | | GCO81973 | Outer Joint | | 29 | 28 | 60 | 95.5 | 68.5 | I |
| | 2016.06- | MT | F | R | Bus FWD R9M 413 | Date from:2017.01 | GCO18327 | Outer Joint | | 29 | 28 | 60 | 96 | 69 | I |
| | 2016.06- | MT | F | L | Bus FWD R9M 413 | | GCI18247 | Inner Joint | | 39 | 27 | 39 | 74 | 108.5 | |
| | 2016.06- | MT | F | R | Bus FWD R9M 413 | Date from:2017.01 | GCI81567 | Inner Joint | | 39 | 27 | 30 | 367.5 | 92 | |
| | 2016.06- | 6MT | F | L | Van FWD R9M 413 | | GDS82548 | Drive Shaft | | 29 | 39 | 60 | 95.5 | 694 | |
| | 2016.06- | 6MT | F | R | Van FWD R9M 413 | | GDS18445 | Drive Shaft | | 29 | 39 | 60 | 96 | 1020 | |
| | 2016.06- | MT | F | L | Van FWD R9M 413 | | GCO81973 | Outer Joint | | 29 | 28 | 60 | 95.5 | 68.5 | I |
| | 2016.06- | MT | F | R | Van FWD R9M 413 | Date from:2017.01 | GCO18327 | Outer Joint | | 29 | 28 | 60 | 96 | 69 | I |
| | 2016.06- | MT | F | L | Van FWD R9M 413 | | GCI18247 | Inner Joint | | 39 | 27 | 39 | 74 | 108.5 | |
| | 2016.06- | MT | F | R | Van FWD R9M 413 | Date from:2017.01 | GCI81567 | Inner Joint | | 39 | 27 | 30 | 367.5 | 92 | |
| 1.6 (85 kw) | 2016.06- | 6MT | F | L | Van FWD R9M 408 | | GDS82548 | Drive Shaft | | 29 | 39 | 60 | 95.5 | 694 | |
| | 2016.06- | 6MT | F | R | Van FWD R9M 408 | | GDS18445 | Drive Shaft | | 29 | 39 | 60 | 96 | 1020 | |
| | 2016.06- | MT | F | L | Van FWD R9M 408 | | GCO81973 | Outer Joint | | 29 | 28 | 60 | 95.5 | 68.5 | I |
| | 2016.06- | MT | F | R | Van FWD R9M 408 | Date from:2017.01 | GCO18327 | Outer Joint | | 29 | 28 | 60 | 96 | 69 | I |
| | 2016.06- | MT | F | L | Van FWD R9M 408 | | GCI18247 | Inner Joint | | 39 | 27 | 39 | 74 | 108.5 | |
| | 2016.06- | MT | F | R | Van FWD R9M 408 | Date from:2017.01 | GCI81567 | Inner Joint | | 39 | 27 | 30 | 367.5 | 92 | |
| 1.6 (89 kw) | 2016.06- | 6MT | F | L | Platform/Chassis FWD R9M 413 | | GDS82548 | Drive Shaft | | 29 | 39 | 60 | 95.5 | 694 | |
| | 2016.06- | 6MT | F | R | Platform/Chassis FWD R9M 413 | | GDS18445 | Drive Shaft | | 29 | 39 | 60 | 96 | 1020 | |
| | 2016.06- | 6MT | F | L | Platform/Chassis FWD R9M 413 | | GCO81973 | Outer Joint | | 29 | 28 | 60 | 95.5 | 68.5 | I |
| | 2016.06- | 6MT | F | R | Platform/Chassis FWD R9M 413 | | GCO18327 | Outer Joint | | 29 | 28 | 60 | 96 | 69 | I |
| | 2016.06- | 6MT | F | L | Platform/Chassis FWD R9M 413 | | GCI18247 | Inner Joint | | 39 | 27 | 39 | 74 | 108.5 | |
| | 2016.06- | 6MT | F | R | Platform/Chassis FWD R9M 413 | | GCI81567 | Inner Joint | | 39 | 27 | 30 | 367.5 | 92 | |
| | 2016.06- | 6MT | F | L | Van FWD R9M 413 | | GDS82548 | Drive Shaft | | 29 | 39 | 60 | 95.5 | 694 | |
| | 2016.06- | 6MT | F | R | Van FWD R9M 413 | | GDS18445 | Drive Shaft | | 29 | 39 | 60 | 96 | 1020 | |
| | 2016.06- | MT | F | L | Van FWD R9M 413 | | GCO81973 | Outer Joint | | 29 | 28 | 60 | 95.5 | 68.5 | I |
| | 2016.06- | MT | F | R | Van FWD R9M 413 | Date from:2017.01 | GCO18327 | Outer Joint | | 29 | 28 | 60 | 96 | 69 | I |
| | 2016.06- | MT | F | L | Van FWD R9M 413 | | GCI18247 | Inner Joint | | 39 | 27 | 39 | 74 | 108.5 | |
| | 2016.06- | MT | F | R | Van FWD R9M 413 | Date from:2017.01 | GCI81567 | Inner Joint | | 39 | 27 | 30 | 367.5 | 92 | |
| | 2018.05- | 6MT | F | L | Bus FWD R9M 413 | | GDS82548 | Drive Shaft | | 29 | 39 | 60 | 95.5 | 694 | |
| | 2018.05- | 6MT | F | R | Bus FWD R9M 413 | Exhaust Emis:Euro 6C | GDS18445 | Drive Shaft | | 29 | 39 | 60 | 96 | 1020 | |
| 1.6 (92 kw) | 2016.06- | 6MT | F | L | Bus FWD R9M 452 | | GDS82548 | Drive Shaft | | 29 | 39 | 60 | 95.5 | 694 | |
| | 2016.06- | 6MT | F | R | Bus FWD R9M 452 | | GDS18445 | Drive Shaft | | 29 | 39 | 60 | 96 | 1020 | |
| | 2016.06- | MT | F | L | Bus FWD R9M 452 | | GCO81973 | Outer Joint | | 29 | 28 | 60 | 95.5 | 68.5 | I |
| | 2016.06- | MT | F | R | Bus FWD R9M 452 | Date from:2017.01 | GCO18327 | Outer Joint | | 29 | 28 | 60 | 96 | 69 | I |
| | 2016.06- | MT | F | L | Bus FWD R9M 452 | | GCI18247 | Inner Joint | | 39 | 27 | 39 | 74 | 108.5 | |
| | 2016.06- | MT | F | R | Bus FWD R9M 452 | Date from:2017.01 | GCI81567 | Inner Joint | | 39 | 27 | 30 | 367.5 | 92 | |
| | 2016.06- | 6MT | F | L | Platform/Chassis FWD R9M 452 | | GDS82548 | Drive Shaft | | 29 | 39 | 60 | 95.5 | 694 | |
| | 2016.06- | 6MT | F | R | Platform/Chassis FWD R9M 452 | | GDS18445 | Drive Shaft | | 29 | 39 | 60 | 96 | 1020 | |
| | 2016.06- | MT | F | L | Platform/Chassis FWD R9M 452 | | GCO81973 | Outer Joint | | 29 | 28 | 60 | 95.5 | 68.5 | I |
| | 2016.06- | MT | F | R | Platform/Chassis FWD R9M 452 | Date from:2017.01 | GCO18327 | Outer Joint | | 29 | 28 | 60 | 96 | 69 | I |
| | 2016.06- | MT | F | L | Platform/Chassis FWD R9M 452 | | GCI18247 | Inner Joint | | 39 | 27 | 39 | 74 | 108.5 | |
| | 2016.06- | MT | F | R | Platform/Chassis FWD R9M 452 | Date from:2017.01 | GCI81567 | Inner Joint | | 39 | 27 | 30 | 367.5 | 92 | |
| | 2016.06- | 6MT | F | L | Van FWD R9M 452 | | GDS82548 | Drive Shaft | | 29 | 39 | 60 | 95.5 | 694 | |
| | 2016.06- | 6MT | F | R | Van FWD R9M 452 | | GDS18445 | Drive Shaft | | 29 | 39 | 60 | 96 | 1020 | |
| | 2016.06- | MT | F | L | Van FWD R9M 452 | | GCO81973 | Outer Joint | | 29 | 28 | 60 | 95.5 | 68.5 | I |
| | 2016.06- | MT | F | R | Van FWD R9M 452 | Date from:2017.01 | GCO18327 | Outer Joint | | 29 | 28 | 60 | 96 | 69 | I |
| | 2016.06- | MT | F | L | Van FWD R9M 452 | | GCI18247 | Inner Joint | | 39 | 27 | 39 | 74 | 108.5 | |
| | 2016.06- | MT | F | R | Van FWD R9M 452 | Date from:2017.01 | GCI81567 | Inner Joint | | 39 | 27 | 30 | 367.5 | 92 | |
| 1.6 (107 kw) | 2016.06- | 6MT | F | L | Bus FWD R9M 452 | | GDS82548 | Drive Shaft | | 29 | 39 | 60 | 95.5 | 694 | |
| | 2016.06- | 6MT | F | R | Bus FWD R9M 452 | | GDS18445 | Drive Shaft | | 29 | 39 | 60 | 96 | 1020 | |
| | 2016.06- | MT | F | L | Bus FWD R9M 452 | | GCO81973 | Outer Joint | | 29 | 28 | 60 | 95.5 | 68.5 | I |
| | 2016.06- | MT | F | R | Bus FWD R9M 452 | Date from:2017.01 | GCO18327 | Outer Joint | | 29 | 28 | 60 | 96 | 69 | I |
| | 2016.06- | MT | F | L | Bus FWD R9M 452 | | GCI18247 | Inner Joint | | 39 | 27 | 39 | 74 | 108.5 | |
| | 2016.06- | MT | F | R | Bus FWD R9M 452 | Date from:2017.01 | GCI81567 | Inner Joint | | 39 | 27 | 30 | 367.5 | 92 | |
| | 2016.06- | 6MT | F | L | Platform/Chassis FWD R9M 452 | | GDS82548 | Drive Shaft | | 29 | 39 | 60 | 95.5 | 694 | |
| | 2016.06- | 6MT | F | R | Platform/Chassis FWD R9M 452 | | GDS18445 | Drive Shaft | | 29 | 39 | 60 | 96 | 1020 | |
| | 2016.06- | MT | F | L | Platform/Chassis FWD R9M 452 | | GCO81973 | Outer Joint | | 29 | 28 | 60 | 95.5 | 68.5 | I |
| | 2016.06- | MT | F | R | Platform/Chassis FWD R9M 452 | Date from:2017.01 | GCO18327 | Outer Joint | | 29 | 28 | 60 | 96 | 69 | I |
| | 2016.06- | MT | F | L | Platform/Chassis FWD R9M 452 | | GCI18247 | Inner Joint | | 39 | 27 | 39 | 74 | 108.5 | |

| | YEAR | TRANSM. | F/R | L/R | BODY STYLE & DRIVE TYPE & ENGINE | REMARKS | G-AP Ref. | PRODUCT | ABS | Technical Specifications A | B | C | H | L | P |
|---|---|---|---|---|---|---|---|---|---|---|---|---|---|---|---|
| **FIAT** | | | | | | | | | | | | | | | |
| **Talento** | | | | | | | | | | | | | | | |
| 1.6 (107 kw) | 2016.06- | MT | F | R | Platform/Chassis FWD R9M 452 | Date from:2017.01 | GCI81567 | Inner Joint | | 39 | 27 | 30 | 367.5 | 92 | |
| | 2016.06- | 6MT | F | L | Van FWD R9M 452 | | GDS82548 | Drive Shaft | | 29 | 39 | 60 | 95.5 | 694 | |
| | 2016.06- | 6MT | F | R | Van FWD R9M 452 | | GDS18445 | Drive Shaft | | 29 | 39 | 60 | 96 | 1020 | |
| | 2016.06- | MT | F | L | Van FWD R9M 452 | | GCO81973 | Outer Joint | | 29 | 28 | 60 | 95.5 | 68.5 | I |
| | 2016.06- | MT | F | R | Van FWD R9M 452 | Date from:2017.01 | GCO18327 | Outer Joint | | 29 | 28 | 60 | 96 | 69 | I |
| | 2016.06- | MT | F | L | Van FWD R9M 452 | | GCI18247 | Inner Joint | | 39 | 27 | 39 | 74 | 108.5 | |
| | 2016.06- | MT | F | R | Van FWD R9M 452 | Date from:2017.01 | GCI81567 | Inner Joint | | 39 | 27 | 30 | 367.5 | 92 | |
| 2.0 (88 kw) | 2019.07- | 6MT | F | L | Bus FWD M9R 710 | | GDS82548 | Drive Shaft | | 29 | 39 | 60 | 95.5 | 694 | |
| | 2019.07- | 6MT | F | L | Bus FWD M9R 710 | | GCO81973 | Outer Joint | | 29 | 28 | 60 | 95.5 | 68.5 | I |
| | 2019.07- | 6MT | F | L | Bus FWD M9R 710 | | GCI18247 | Inner Joint | | 39 | 27 | 39 | 74 | 108.5 | |
| | 2019.07- | 6MT | F | L | Van FWD M9R 710 | | GDS82548 | Drive Shaft | | 29 | 39 | 60 | 95.5 | 694 | |
| | 2019.07- | 6MT | F | L | Van FWD M9R 710 | | GCO81973 | Outer Joint | | 29 | 28 | 60 | 95.5 | 68.5 | I |
| | 2019.07- | 6MT | F | L | Van FWD M9R 710 | | GCI18247 | Inner Joint | | 39 | 27 | 39 | 74 | 108.5 | |
| 2.0 (107 kw) | 2019.07- | 6MT | F | L | Bus FWD M9R 710 | | GDS82548 | Drive Shaft | | 29 | 39 | 60 | 95.5 | 694 | |
| | 2019.07- | 6MT | F | L | Bus FWD M9R 710 | | GCO81973 | Outer Joint | | 29 | 28 | 60 | 95.5 | 68.5 | I |
| | 2019.07- | 6MT | F | L | Bus FWD M9R 710 | | GCI18247 | Inner Joint | | 39 | 27 | 39 | 74 | 108.5 | |
| | 2019.07- | 6MT | F | L | Platform/Chassis FWD M9R 710 | | GDS82548 | Drive Shaft | | 29 | 39 | 60 | 95.5 | 694 | |
| | 2019.07- | 6MT | F | L | Platform/Chassis FWD M9R 710 | | GCO81973 | Outer Joint | | 29 | 28 | 60 | 95.5 | 68.5 | I |
| | 2019.07- | 6MT | F | L | Platform/Chassis FWD M9R 710 | | GCI18247 | Inner Joint | | 39 | 27 | 39 | 74 | 108.5 | |
| | 2019.07- | 6MT | F | L | Van FWD M9R 710 | | GDS82548 | Drive Shaft | | 29 | 39 | 60 | 95.5 | 694 | |
| | 2019.07- | 6MT | F | L | Van FWD M9R 710 | | GCO81973 | Outer Joint | | 29 | 28 | 60 | 95.5 | 68.5 | I |
| | 2019.07- | 6MT | F | L | Van FWD M9R 710 | | GCI18247 | Inner Joint | | 39 | 27 | 39 | 74 | 108.5 | |
| 2.0 (125 kw) | 2019.07- | 6MT | F | L | Platform/Chassis FWD M9R 710 | | GDS82548 | Drive Shaft | | 29 | 39 | 60 | 95.5 | 694 | |
| | 2019.07- | 6MT | F | L | Platform/Chassis FWD M9R 710 | | GCO81973 | Outer Joint | | 29 | 28 | 60 | 95.5 | 68.5 | I |
| | 2019.07- | 6MT | F | L | Platform/Chassis FWD M9R 710 | | GCI18247 | Inner Joint | | 39 | 27 | 39 | 74 | 108.5 | |
| | 2019.07- | 6MT | F | L | Van FWD M9R 710 | | GDS82548 | Drive Shaft | | 29 | 39 | 60 | 95.5 | 694 | |
| | 2019.07- | 6MT | F | L | Van FWD M9R 710 | | GCO81973 | Outer Joint | | 29 | 28 | 60 | 95.5 | 68.5 | I |
| | 2019.07- | 6MT | F | L | Van FWD M9R 710 | | GCI18247 | Inner Joint | | 39 | 27 | 39 | 74 | 108.5 | |
| **Tempra** | | | | | | | | | | | | | | | |
| 1.4 (51 kw) | 1992.03-1996.08 | AT | F | L/R | Saloon FWD 160A1046/836A4000 | Date from:1992.03 | GCI48004 | Inner Joint | | | 25 | | | 32 | |
| | 1992.03-1996.08 | AT/MT | F | L/R | Saloon FWD 160A1046/836A4000 | Date from:1992.03 | GCO17001 | Outer Joint | | 22 | 20 | 46.8 | 75.5 | 52 | O |
| | 1992.03-1996.08 | AT/MT | F | L/R | Saloon FWD 160A1046/836A4000 | Date from:1992.03 | GCO17039 | Outer Joint | 44T | 22 | 20 | 46.8 | 75.5 | 52 | O |
| | 1992.03-1996.08 | MT | F | L | Saloon FWD 160A1046/836A4000 | | GDS17010 | Drive Shaft | | 22 | 32 | 46.8 | 75.5 | 569 | |
| | 1992.03-1996.08 | MT | F | R | Saloon FWD 160A1046/836A4000 | | GDS17011 | Drive Shaft | | 22 | 32 | 46.8 | 75.5 | 928.5 | |
| | 1992.03-1996.08 | MT | F | L/R | Saloon FWD 160A1046/836A4000 | | GCI48004 | Inner Joint | | | 25 | | | 32 | |
| 1.4 (55 kw) | 1991.03-1996.08 | AT | F | L/R | Saloon FWD 159A2000 | | GCI48004 | Inner Joint | | | 25 | | | 32 | |
| | 1991.03-1996.08 | AT/MT | F | L/R | Saloon FWD 159A2000 | | GCO17001 | Outer Joint | | 22 | 20 | 46.8 | 75.5 | 52 | O |
| | 1991.03-1996.08 | AT/MT | F | L/R | Saloon FWD 159A2000 | | GCO17039 | Outer Joint | 44T | 22 | 20 | 46.8 | 75.5 | 52 | O |
| | 1991.03-1996.08 | | F | R | Saloon FWD 159A2000 | | GDS17011 | Drive Shaft | | 22 | 32 | 46.8 | 75.5 | 928.5 | |
| 1.6 (51 kw) | 1990.04-1996.07 | 5MT | F | L | Saloon FWD 159A3048 | | GDS17010 | Drive Shaft | | 22 | 32 | 46.8 | 75.5 | 569 | |
| 1.6 (55 kw) | 1992.06-1996.08 | AT | F | L/R | Saloon FWD 835C1000 | | GCI48004 | Inner Joint | | | 25 | | | 32 | |
| | 1992.06-1996.08 | AT/MT | F | L/R | Saloon FWD 835C1000 | | GCO17001 | Outer Joint | | 22 | 20 | 46.8 | 75.5 | 52 | O |
| | 1992.06-1996.08 | AT/MT | F | L/R | Saloon FWD 835C1000 | | GCO17039 | Outer Joint | 44T | 22 | 20 | 46.8 | 75.5 | 52 | O |
| | 1992.06-1996.08 | MT | F | L | Saloon FWD 835C1000 | | GDS17010 | Drive Shaft | | 22 | 32 | 46.8 | 75.5 | 569 | |
| | 1992.06-1996.08 | MT | F | R | Saloon FWD 835C1000 | | GDS17011 | Drive Shaft | | 22 | 32 | 46.8 | 75.5 | 928.5 | |
| | 1992.06-1996.08 | | F | | Saloon FWD 835C1000 | | GCI82006 | Inner Joint | | | 25 | | | 32 | |
| 1.6 (63 kw) | 1994.06-1996.08 | AT/MT | F | L/R | Saloon FWD 159 B9.000 | | GCO17001 | Outer Joint | | 22 | 20 | 46.8 | 75.5 | 52 | O |
| | 1994.06-1996.08 | AT/MT | F | L/R | Saloon FWD 159 B9.000 | | GCO17039 | Outer Joint | 44T | 22 | 20 | 46.8 | 75.5 | 52 | O |
| | 1994.06-1996.08 | AT/MT | F | L/R | Saloon FWD 159 B9.000 | | GCI48004 | Inner Joint | | | 25 | | | 32 | |
| | 1994.06-1996.08 | MT | F | R | Saloon FWD 159 B9.000 | | GDS17011 | Drive Shaft | | 22 | 32 | 46.8 | 75.5 | 928.5 | |
| 1.6 (66 kw) | 1994.06-1996.07 | AT | F | L/R | Saloon FWD 159B9000 | | GCI48004 | Inner Joint | | | 25 | | | 32 | |
| | 1994.06-1996.07 | AT/MT | F | L/R | Saloon FWD 159B9000 | | GCO17001 | Outer Joint | | 22 | 20 | 46.8 | 75.5 | 52 | O |
| | 1994.06-1996.07 | AT/MT | F | L/R | Saloon FWD 159B9000 | | GCO17039 | Outer Joint | 44T | 22 | 20 | 46.8 | 75.5 | 52 | O |
| | 1994.06-1996.07 | MT | F | L | Saloon FWD 159B9000 | | GDS17010 | Drive Shaft | | 22 | 32 | 46.8 | 75.5 | 569 | |
| | 1994.06-1996.07 | MT | F | R | Saloon FWD 159B9000 | | GDS17011 | Drive Shaft | | 22 | 32 | 46.8 | 75.5 | 928.5 | |
| 1.8 (66 kw) | 1993.07-1996.07 | AT/MT | F | L/R | Saloon FWD 835C4000 | | GCO17018 | Outer Joint | 90T | 25 | 25 | 52 | 85 | 58 | I |
| | 1993.07-1996.07 | AT/MT | F | L/R | Saloon FWD 835C4000 | | GCO82004 | Outer Joint | 44T | 25 | 25 | 52 | 85 | 58 | I |
| | 1993.07-1996.07 | MT | F | L/R | Saloon FWD 835C4000 | | GCO17012 | Outer Joint | | 25 | 25 | 52 | 84.5 | 56 | I |
| | 1993.07-1996.07 | MT | F | L/R | Saloon FWD 835C4000 | | GCI48004 | Inner Joint | | | 25 | | | 32 | |
| | 1993.07-1996.07 | | F | | Saloon FWD 835C4000 | | GCI82006 | Inner Joint | | | 25 | | | 32 | |
| 1.8 (74 kw) | 1994.10-1996.08 | MT | F | L/R | Saloon FWD 836A5000 | | GCO17012 | Outer Joint | | 25 | 25 | 52 | 84.5 | 56 | I |
| | 1994.10-1996.08 | MT | F | L/R | Saloon FWD 836A5000 | | GCO82004 | Outer Joint | 44T | 25 | 25 | 52 | 85 | 58 | I |
| | 1994.10-1996.08 | MT | F | L/R | Saloon FWD 836A5000 | | GCI48004 | Inner Joint | | | 25 | | | 32 | |
| | 1994.10-1996.08 | | F | | Saloon FWD 836A5000 | | GCI82006 | Inner Joint | | | 25 | | | 32 | |
| 1.8 (76 kw) | 1993.09-1996.08 | MT | F | L/R | Saloon FWD 835C2000 | | GCO17012 | Outer Joint | | 25 | 25 | 52 | 84.5 | 56 | I |

| | YEAR | TRANSM. | F/R | L/R | BODY STYLE & DRIVE TYPE & ENGINE | REMARKS | G-AP Ref. | PRODUCT | ABS | Technical Specifications A | B | C | H | L | P |
|---|---|---|---|---|---|---|---|---|---|---|---|---|---|---|---|
| **FIAT** | | | | | | | | | | | | | | | |
| **Tempra** | | | | | | | | | | | | | | | |
| 1.8 (76 kw) | 1993.09-1996.08 | MT | F | L/R | Saloon FWD 835C2000 | | GCO82004 | Outer Joint | 44T | 25 | 25 | 52 | 85 | 58 | I |
| | 1993.09-1996.08 | MT | F | L/R | Saloon FWD 835C2000 | | GCI48004 | Inner Joint | | | 25 | | | 32 | |
| | 1993.09-1996.08 | | F | | Saloon FWD 835C2000 | | GCI82006 | Inner Joint | | | 25 | | | 32 | |
| 1.8 (77 kw) | 1992.03-1996.08 | AT/MT | F | L/R | Saloon FWD 159A4046/835C2000 | | GCO17018 | Outer Joint | 90T | 25 | 25 | 52 | 85 | 58 | I |
| | 1992.03-1996.08 | AT/MT | F | L/R | Saloon FWD 159A4046/835C2000 | | GCO82004 | Outer Joint | 44T | 25 | 25 | 52 | 85 | 58 | I |
| | 1992.03-1996.08 | MT | F | L/R | Saloon FWD 159A4046/835C2000 | | GCO17012 | Outer Joint | | 25 | 25 | 52 | 84.5 | 56 | I |
| | 1992.03-1996.08 | MT | F | L/R | Saloon FWD 159A4046/835C2000 | | GCI48004 | Inner Joint | | | 25 | | | 32 | |
| | 1992.03-1996.08 | | F | | Saloon FWD 159A4046/835C2000 | | GCI82006 | Inner Joint | | | 25 | | | 32 | |
| 1.8 (81 kw) | 1990.03-1996.08 | MT | F | L/R | Saloon FWD 159A4000 | | GCO17012 | Outer Joint | | 25 | 25 | 52 | 84.5 | 56 | I |
| | 1990.03-1996.08 | MT | F | L/R | Saloon FWD 159A4000 | | GCO82004 | Outer Joint | 44T | 25 | 25 | 52 | 85 | 58 | I |
| | 1990.03-1996.08 | MT | F | L/R | Saloon FWD 159A4000 | | GCI48004 | Inner Joint | | | 25 | | | 32 | |
| | 1990.03-1996.08 | | F | | Saloon FWD 159A4000 | | GCI82006 | Inner Joint | | | 25 | | | 32 | |
| 1.9 (48 kw) | 1990.06-1996.07 | AT/MT | F | L/R | Saloon FWD 160A7000 | | GCO17018 | Outer Joint | 90T | 25 | 25 | 52 | 85 | 58 | I |
| | 1990.06-1996.07 | AT/MT | F | L/R | Saloon FWD 160A7000 | | GCO17039 | Outer Joint | 44T | 22 | 20 | 46.8 | 75.5 | 52 | O |
| | 1990.06-1996.07 | AT/MT | F | L/R | Saloon FWD 160A7000 | | GCI48004 | Inner Joint | | | 25 | | | 32 | |
| | 1990.06-1996.07 | MT | F | L | Saloon FWD 160A7000 | | GDS17010 | Drive Shaft | | 22 | 32 | 46.8 | 75.5 | 569 | |
| | 1990.06-1996.07 | MT | F | R | Saloon FWD 160A7000 | | GDS17011 | Drive Shaft | | 22 | 32 | 46.8 | 75.5 | 928.5 | |
| | 1990.06-1996.07 | MT | F | L/R | Saloon FWD 160A7000 | | GCO17001 | Outer Joint | | 22 | 20 | 46.8 | 75.5 | 52 | O |
| 1.9 (59 kw) | 1992.05-1996.07 | MT | F | L/R | Saloon FWD 160B6046 | | GCO17012 | Outer Joint | | 25 | 25 | 52 | 84.5 | 56 | I |
| | 1992.05-1996.07 | MT | F | L/R | Saloon FWD 160B6046 | | GCI48004 | Inner Joint | | | 25 | | | 32 | |
| | 1992.05-1996.07 | | F | L/R | Saloon FWD 160B6046 | | GCO82004 | Outer Joint | 44T | 25 | 25 | 52 | 85 | 58 | I |
| | 1992.05-1996.07 | | F | | Saloon FWD 160B6046 | | GCI82005 | Inner Joint | | | 25 | | | 32 | |
| | 1992.05-1996.07 | | F | | Saloon FWD 160B6046 | | GCI82006 | Inner Joint | | | 25 | | | 32 | |
| 1.9 (66 kw) | 1990.06-1996.07 | AT/MT | F | L/R | Saloon FWD 160A6000/160D1000 | | GCO17018 | Outer Joint | 90T | 25 | 25 | 52 | 85 | 58 | I |
| | 1990.06-1996.07 | AT/MT | F | L/R | Saloon FWD 160A6000/160D1000 | | GCO82004 | Outer Joint | 44T | 25 | 25 | 52 | 85 | 58 | I |
| | 1990.06-1996.07 | MT | F | L/R | Saloon FWD 160A6000/160D1000 | | GCO17012 | Outer Joint | | 25 | 25 | 52 | 84.5 | 56 | I |
| | 1990.06-1996.07 | MT | F | L/R | Saloon FWD 160A6000/160D1000 | | GCI48004 | Inner Joint | | | 25 | | | 32 | |
| | 1990.06-1996.07 | | F | | Saloon FWD 160A6000/160D1000 | | GCI82005 | Inner Joint | | | 25 | | | 32 | |
| | 1990.06-1996.07 | | F | | Saloon FWD 160A6000/160D1000 | | GCI82006 | Inner Joint | | | 25 | | | 32 | |
| 2.0 (83 kw) | 1990.10-1996.09 | AT/MT | F | L/R | Saloon FWD 159A6046 | | GCO17018 | Outer Joint | 90T | 25 | 25 | 52 | 85 | 58 | I |
| | 1990.10-1996.09 | AT/MT | F | L/R | Saloon FWD 159A6046 | | GCO82004 | Outer Joint | 44T | 25 | 25 | 52 | 85 | 58 | I |
| | 1990.10-1996.09 | MT | F | L/R | Saloon FWD 159A6046 | | GCO17004 | Outer Joint | | 25 | 25 | 52 | 85 | 58 | I |
| | 1990.10-1996.09 | MT | F | L/R | Saloon FWD 159A6046 | | GCI48004 | Inner Joint | | | 25 | | | 32 | |
| | 1990.10-1996.09 | | F | | Saloon FWD 159A6046 | | GCI82006 | Inner Joint | | | 25 | | | 32 | |
| **Tempra S.W./Weekend** | | | | | | | | | | | | | | | |
| 1.4 (51 kw) | 1993.07-1996.07 | AT | F | L/R | Estate FWD 160A1046/836A4000 | Date from:1993.07 | GCI48004 | Inner Joint | | | 25 | | | 32 | |
| | 1993.07-1996.07 | AT/MT | F | L/R | Estate FWD 160A1046/836A4000 | Date from:1993.07 | GCO17001 | Outer Joint | | 22 | 20 | 46.8 | 75.5 | 52 | O |
| | 1993.07-1996.07 | AT/MT | F | L/R | Estate FWD 160A1046/836A4000 | Date from:1993.07 | GCO17039 | Outer Joint | 44T | 22 | 20 | 46.8 | 75.5 | 52 | O |
| | 1993.07-1996.07 | MT | F | L | Estate FWD 160A1046/836A4000 | | GDS17010 | Drive Shaft | | 22 | 32 | 46.8 | 75.5 | 569 | |
| | 1993.07-1996.07 | MT | F | R | Estate FWD 160A1046/836A4000 | | GDS17011 | Drive Shaft | | 22 | 32 | 46.8 | 75.5 | 928.5 | |
| | 1993.07-1996.07 | MT | F | L/R | Estate FWD 160A1046/836A4000 | | GCI48004 | Inner Joint | | | 25 | | | 32 | |
| 1.4 (57 kw) | 1991.03-1996.08 | AT | F | L/R | Estate FWD 159A2000 | | GCI48004 | Inner Joint | | | 25 | | | 32 | |
| | 1991.03-1996.08 | AT/MT | F | L/R | Estate FWD 159A2000 | | GCO17001 | Outer Joint | | 22 | 20 | 46.8 | 75.5 | 52 | O |
| | 1991.03-1996.08 | AT/MT | F | L/R | Estate FWD 159A2000 | | GCO17039 | Outer Joint | 44T | 22 | 20 | 46.8 | 75.5 | 52 | O |
| | 1991.03-1996.08 | MT | F | R | Estate FWD 159A2000 | | GDS17011 | Drive Shaft | | 22 | 32 | 46.8 | 75.5 | 928.5 | |
| 1.6 (55 kw) | 1992.10-1996.10 | AT | F | L/R | Estate FWD 835C1000 | | GCI48004 | Inner Joint | | | 25 | | | 32 | |
| | 1992.10-1996.10 | AT/MT | F | L/R | Estate FWD 835C1000 | | GCO17001 | Outer Joint | | 22 | 20 | 46.8 | 75.5 | 52 | O |
| | 1992.10-1996.10 | AT/MT | F | L/R | Estate FWD 835C1000 | | GCO17039 | Outer Joint | 44T | 22 | 20 | 46.8 | 75.5 | 52 | O |
| | 1992.10-1996.10 | MT | F | L | Estate FWD 835C1000 | | GDS17010 | Drive Shaft | | 22 | 32 | 46.8 | 75.5 | 569 | |
| | 1992.10-1996.10 | MT | F | R | Estate FWD 835C1000 | | GDS17011 | Drive Shaft | | 22 | 32 | 46.8 | 75.5 | 928.5 | |
| | 1992.10-1996.10 | | F | | Estate FWD 835C1000 | | GCI82006 | Inner Joint | | | 25 | | | 32 | |
| 1.6 (57 kw) | 1991.04-1996.07 | AT | F | L/R | Estate FWD 159A3046/835C1000 | Date from:1991.04 | GCI48004 | Inner Joint | | | 25 | | | 32 | |
| | 1991.04-1996.07 | AT/MT | F | L/R | Estate FWD 159A3046/835C1000 | Date from:1991.04 | GCO17001 | Outer Joint | | 22 | 20 | 46.8 | 75.5 | 52 | O |
| | 1991.04-1996.07 | AT/MT | F | L/R | Estate FWD 159A3046/835C1000 | Date from:1991.04 | GCO17039 | Outer Joint | 44T | 22 | 20 | 46.8 | 75.5 | 52 | O |
| | 1991.04-1996.07 | MT | F | R | Estate FWD 159A3046/835C1000 | | GDS17011 | Drive Shaft | | 22 | 32 | 46.8 | 75.5 | 928.5 | |
| | 1991.04-1996.07 | MT | F | | Estate FWD 159A3046/835C1000 | | GCI82006 | Inner Joint | | | 25 | | | 32 | |
| 1.6 (66 kw) | 1993.07-1996.07 | AT/MT | F | L/R | Estate FWD 159B9000 | | GCO17001 | Outer Joint | | 22 | 20 | 46.8 | 75.5 | 52 | O |
| | 1993.07-1996.07 | AT/MT | F | L/R | Estate FWD 159B9000 | | GCO17039 | Outer Joint | 44T | 22 | 20 | 46.8 | 75.5 | 52 | O |
| | 1993.07-1996.07 | AT/MT | F | L/R | Estate FWD 159B9000 | | GCI48004 | Inner Joint | | | 25 | | | 32 | |
| | 1993.07-1996.07 | MT | F | L | Estate FWD 159B9000 | | GDS17010 | Drive Shaft | | 22 | 32 | 46.8 | 75.5 | 569 | |
| | 1993.07-1996.07 | MT | F | R | Estate FWD 159B9000 | | GDS17011 | Drive Shaft | | 22 | 32 | 46.8 | 75.5 | 928.5 | |
| 1.8 (66 kw) | 1993.07-1996.07 | AT/MT | F | L/R | Estate FWD 835C4000 | | GCO17018 | Outer Joint | 90T | 25 | 25 | 52 | 85 | 58 | I |
| | 1993.07-1996.07 | AT/MT | F | L/R | Estate FWD 835C4000 | | GCO82004 | Outer Joint | 44T | 25 | 25 | 52 | 85 | 58 | I |
| | 1993.07-1996.07 | MT | F | L/R | Estate FWD 835C4000 | | GCO17012 | Outer Joint | | 25 | 25 | 52 | 84.5 | 56 | I |
| | 1993.07-1996.07 | MT | F | L/R | Estate FWD 835C4000 | | GCI48004 | Inner Joint | | | 25 | | | 32 | |

| FIAT | YEAR | TRANSM. | F/R | L/R | BODY STYLE & DRIVE TYPE & ENGINE | REMARKS | G-AP Ref. | PRODUCT | ABS | A | B | C | H | L | P |
|---|---|---|---|---|---|---|---|---|---|---|---|---|---|---|---|
| **Tempra S.W./Weekend** | | | | | | | | | | | | | | | |
| 1.8 (66 kw) | 1993.07-1996.07 | | F | | Estate FWD 835C4000 | | GCI82006 | Inner Joint | | | 25 | | | 32 | |
| 1.8 (74 kw) | 1994.10-1996.08 | MT | F | L/R | Estate FWD 836A5000 | | GCO17012 | Outer Joint | | 25 | 25 | 52 | 84.5 | 56 | I |
| | 1994.10-1996.08 | MT | F | L/R | Estate FWD 836A5000 | | GCO82004 | Outer Joint | 44T | 25 | 25 | 52 | 85 | 58 | I |
| | 1994.10-1996.08 | MT | F | L/R | Estate FWD 836A5000 | | GCI48004 | Inner Joint | | | 25 | | | 32 | |
| | 1994.10-1996.08 | | F | | Estate FWD 836A5000 | | GCI82006 | Inner Joint | | | 25 | | | 32 | |
| 1.8 (76 kw) | 1993.09-1996.08 | MT | F | L/R | Estate FWD 835C2000 | | GCO17012 | Outer Joint | | 25 | 25 | 52 | 84.5 | 56 | I |
| | 1993.09-1996.08 | MT | F | L/R | Estate FWD 835C2000 | | GCO82004 | Outer Joint | 44T | 25 | 25 | 52 | 85 | 58 | I |
| | 1993.09-1996.08 | MT | F | L/R | Estate FWD 835C2000 | | GCI48004 | Inner Joint | | | 25 | | | 32 | |
| | 1993.09-1996.08 | | F | | Estate FWD 835C2000 | | GCI82006 | Inner Joint | | | 25 | | | 32 | |
| 1.8 (81 kw) | 1990.03-1996.08 | MT | F | L/R | Estate FWD 159A4000 | | GCO17012 | Outer Joint | | 25 | 25 | 52 | 84.5 | 56 | I |
| | 1990.03-1996.08 | MT | F | L/R | Estate FWD 159A4000 | | GCO82004 | Outer Joint | 44T | 25 | 25 | 52 | 85 | 58 | I |
| | 1990.03-1996.08 | MT | F | L/R | Estate FWD 159A4000 | | GCI48004 | Inner Joint | | | 25 | | | 32 | |
| | 1990.03-1996.08 | | F | | Estate FWD 159A4000 | | GCI82006 | Inner Joint | | | 25 | | | 32 | |
| 1.9 (48 kw) | 1990.10-1996.07 | MT | F | L | Estate FWD 160A7000 | | GDS17010 | Drive Shaft | | 22 | 32 | 46.8 | 75.5 | 569 | |
| | 1990.10-1996.07 | MT | F | R | Estate FWD 160A7000 | | GDS17011 | Drive Shaft | | 22 | 32 | 46.8 | 75.5 | 928.5 | |
| | 1990.10-1996.07 | MT | F | L/R | Estate FWD 160A7000 | | GCO17001 | Outer Joint | | 22 | 20 | 46.8 | 75.5 | 52 | O |
| | 1990.10-1996.07 | MT | F | L/R | Estate FWD 160A7000 | | GCO17039 | Outer Joint | 44T | 22 | 20 | 46.8 | 75.5 | 52 | O |
| 1.9 (66 kw) | 1990.10-1996.07 | AT/MT | F | L/R | Estate FWD 160A6000/160D1000 | | GCO17018 | Outer Joint | 90T | 25 | 25 | 52 | 85 | 58 | I |
| | 1990.10-1996.07 | AT/MT | F | L/R | Estate FWD 160A6000/160D1000 | | GCO82004 | Outer Joint | 44T | 25 | 25 | 52 | 85 | 58 | I |
| | 1990.10-1996.07 | MT | F | L/R | Estate FWD 160A6000/160D1000 | | GCO17012 | Outer Joint | | 25 | 25 | 52 | 84.5 | 56 | I |
| | 1990.10-1996.07 | MT | F | L/R | Estate FWD 160A6000/160D1000 | | GCI48004 | Inner Joint | | | 25 | | | 32 | |
| | 1990.10-1996.07 | | F | | Estate FWD 160A6000/160D1000 | | GCI82005 | Inner Joint | | | 25 | | | 32 | |
| | 1990.10-1996.07 | | F | | Estate FWD 160A6000/160D1000 | | GCI82006 | Inner Joint | | | 25 | | | 32 | |
| 2.0 (83 kw) | 1991.01-1996.09 | AT/MT | F | L/R | Estate FWD 159A6046 | | GCO17018 | Outer Joint | 90T | 25 | 25 | 52 | 85 | 58 | I |
| | 1991.01-1996.09 | AT/MT | F | L/R | Estate FWD 159A6046 | | GCO82004 | Outer Joint | 44T | 25 | 25 | 52 | 85 | 58 | I |
| | 1991.01-1996.09 | MT | F | L/R | Estate FWD 159A6046 | | GCO17004 | Outer Joint | | 25 | 25 | 52 | 85 | 58 | I |
| | 1991.01-1996.09 | MT | F | L/R | Estate FWD 159A6046 | | GCI48004 | Inner Joint | | | 25 | | | 32 | |
| | 1991.01-1996.09 | | F | | Estate FWD 159A6046 | | GCI82006 | Inner Joint | | | 25 | | | 32 | |
| **Tipo** | | | | | | | | | | | | | | | |
| 1.3 (70 kw) | 2015.10-2020.10 | 5MT | F | L | Saloon FWD 199 B1.000, 552 83 775, 463 45 266, 552 66 963 | Date to:2018.10;Date from:2018.11,Equipment code:6SC/AM32/AM87 | GDS17207 | Drive Shaft | | 25 | 24 | 51 | 84.5 | 650 | |
| | 2015.10-2020.10 | 5MT | F | R | Saloon FWD 199 B1.000, 552 83 775, 463 45 266, 552 66 963 | Date to:2018.10;Date from:2018.11,Equipment code:6SC/AM32/AM87 | GDS17208 | Drive Shaft | | 25 | 24 | 51 | 84.5 | 940 | |
| | 2015.10-2020.10 | 5MT | F | L/R | Saloon FWD 199 B1.000, 552 83 775, 463 45 266, 552 66 963 | Date to:2018.10;Date from:2018.11,Equipment code:6SC/AM32/AM87 | GCO17057 | Outer Joint | | 25 | 24 | 51 | 84.5 | 62 | M |
| | 2015.10-2020.10 | 5MT | F | L | Saloon FWD 199 B1.000, 552 83 775, 463 45 266, 552 66 963 | | GCI99008 | Inner Joint | | 24 | 24 | 29.7 | 86.5 | 93 | |
| | 2015.10-2020.10 | 5MT | F | R | Saloon FWD 199 B1.000, 552 83 775, 463 45 266, 552 66 963 | | GCI17015 | Inner Joint | | 24 | 24 | 29.7 | 379 | 100.5 | |
| | 2016.03- | 5MT | F | L | Estate FWD 552 83 775, 463 45 266, 552 66 963 | Date to:2018.10;Date from:2018.11,Equipment code:6SC/AM32/AM87 | GDS17207 | Drive Shaft | | 25 | 24 | 51 | 84.5 | 650 | |
| | 2016.03- | 5MT | F | R | Estate FWD 552 83 775, 463 45 266, 552 66 963 | Date to:2018.10;Date from:2018.11,Equipment code:6SC/AM32/AM87 | GDS17208 | Drive Shaft | | 25 | 24 | 51 | 84.5 | 940 | |
| | 2016.03- | 5MT | F | L/R | Estate FWD 552 83 775, 463 45 266, 552 66 963 | Date to:2018.10;Date from:2018.11,Equipment code:6SC/AM32/AM87 | GCO17057 | Outer Joint | | 25 | 24 | 51 | 84.5 | 62 | M |
| | 2016.03- | 5MT | F | L | Estate FWD 552 83 775, 463 45 266, 552 66 963 | | GCI99008 | Inner Joint | | 24 | 24 | 29.7 | 86.5 | 93 | |
| | 2016.03- | 5MT | F | R | Estate FWD 552 83 775, 463 45 266, 552 66 963 | | GCI17015 | Inner Joint | | 24 | 24 | 29.7 | 379 | 100.5 | |
| | 2016.03- | 5MT | F | L | Hatchback FWD 552 83 775, 463 45 266, 552 66 963 | Date to:2018.10;Date from:2018.11,Equipment code:6SC/AM32/AM87;Facelift,Equipment code:LL0/LL1/LL2/LL3/LL4/LL5/LL6/AM87 | GDS17207 | Drive Shaft | | 25 | 24 | 51 | 84.5 | 650 | |
| | 2016.03- | 5MT | F | R | Hatchback FWD 552 83 775, 463 45 266, 552 66 963 | Date to:2018.10;Date from:2018.11,Equipment code:6SC/AM32/AM87;Facelift,Equipment code:LL0/LL1/LL2/LL3/LL4/LL5/LL6/AM87 | GDS17208 | Drive Shaft | | 25 | 24 | 51 | 84.5 | 940 | |
| | 2016.03- | 5MT | F | L/R | Hatchback FWD 552 83 775, 463 45 266, 552 66 963 | Date to:2018.10;Date from:2018.11,Equipment code:6SC/AM32/AM87;Facelift,Equipment code:LL0/LL1/LL2/LL3/LL4/LL5/LL6/AM87 | GCO17057 | Outer Joint | | 25 | 24 | 51 | 84.5 | 62 | M |
| | 2016.03- | 5MT | F | L | Hatchback FWD 552 83 775, 463 45 266, 552 66 963 | | GCI99008 | Inner Joint | | 24 | 24 | 29.7 | 86.5 | 93 | |
| | 2016.03- | 5MT | F | R | Hatchback FWD 552 83 775, 463 45 266, 552 66 963 | | GCI17015 | Inner Joint | | 24 | 24 | 29.7 | 379 | 100.5 | |
| 1.4 (70 kw) | 2015.10- | 6MT | F | L | Saloon FWD 843 A1.000 | Date from:2018.11,Equipment code:6SC/AM32 | GDS17213 | Drive Shaft | | 25 | 22 | 51 | 84 | 675 | |
| | 2015.10- | 6MT | F | R | Saloon FWD 843 A1.000 | Date from:2018.11,Equipment code:6SC/AM32 | GDS17214 | Drive Shaft | | 25 | 22 | 51 | 84 | 918 | |
| | 2015.10- | 6MT | F | L/R | Saloon FWD 843 A1.000 | Date from:2018.11,Equipment code:6SC/AM32 | GCO17026 | Outer Joint | | 25 | 22 | 51 | 84 | 57 | M |
| | 2015.10- | 6MT | F | L/R | Saloon FWD 843 A1.000 | | GCI17027 | Inner Joint | | 22 | 22 | 36 | 61.5 | 93.5 | |
| | 2015.10- | 6MT | F | L/R | Saloon FWD 843 A1.000 | Date from:2018.11,Equipment code:6SC/AM32 | GCI17124 | Inner Joint | | 22 | 21 | 36 | 61.5 | 93.5 | |
| | 2016.03- | 6MT | F | L | Hatchback FWD 843 A1.000 | Date to:2018.10 | GDS17213 | Drive Shaft | | 25 | 22 | 51 | 84 | 675 | |
| | 2016.03- | 6MT | F | R | Hatchback FWD 843 A1.000 | Date to:2018.10 | GDS17214 | Drive Shaft | | 25 | 22 | 51 | 84 | 918 | |
| | 2016.03- | 6MT | F | L/R | Hatchback FWD 843 A1.000 | | GCO17026 | Outer Joint | | 25 | 22 | 51 | 84 | 57 | M |
| | 2016.03- | 6MT | F | L/R | Hatchback FWD 843 A1.000 | | GCI17027 | Inner Joint | | 22 | 22 | 36 | 61.5 | 93.5 | |
| | 2016.03- | 6MT | F | L/R | Hatchback FWD 843 A1.000 | Date to:2018.10 | GCI17124 | Inner Joint | | 22 | 21 | 36 | 61.5 | 93.5 | |
| | 2016.03-2020.10 | 6MT | F | L | Estate FWD 843 A1.000 | Date from:2018.11,Equipment code:6SC/AM32 | GDS17213 | Drive Shaft | | 25 | 22 | 51 | 84 | 675 | |
| | 2016.03-2020.10 | 6MT | F | R | Estate FWD 843 A1.000 | Date from:2018.11,Equipment code:6SC/AM32 | GDS17214 | Drive Shaft | | 25 | 22 | 51 | 84 | 918 | |
| | 2016.03-2020.10 | 6MT | F | L/R | Estate FWD 843 A1.000 | Date from:2018.11,Equipment code:6SC/AM32 | GCO17026 | Outer Joint | | 25 | 22 | 51 | 84 | 57 | M |
| | 2016.03-2020.10 | 6MT | F | L/R | Estate FWD 843 A1.000 | | GCI17027 | Inner Joint | | 22 | 22 | 36 | 61.5 | 93.5 | |
| | 2016.03-2020.10 | 6MT | F | L/R | Estate FWD 843 A1.000 | Date from:2018.11,Equipment code:6SC/AM32 | GCI17124 | Inner Joint | | 22 | 21 | 36 | 61.5 | 93.5 | |
| 1.4 (88 kw) | 2016.03-2020.10 | 6MT | F | L/R | Estate FWD 940 B7.000 | | GCO17063 | Outer Joint | | 25 | 25 | 51.1 | 84.5 | 61 | M |
| | 2016.03-2020.10 | 6MT | F | L | Estate FWD 940 B7.000 | | GCI17096 | Inner Joint | | 25 | 24 | 32 | 75 | 82.5 | |
| | 2016.03-2020.10 | 6MT | F | R | Estate FWD 940 B7.000 | | GCI17098 | Inner Joint | | 25 | 24 | 29.75 | 443 | 94.5 | |
| | 2016.03-2020.10 | 6MT | F | L/R | Hatchback FWD 940 B7.000 | | GCO17063 | Outer Joint | | 25 | 25 | 51.1 | 84.5 | 61 | M |
| | 2016.03-2020.10 | 6MT | F | L | Hatchback FWD 940 B7.000 | | GCI17096 | Inner Joint | | 25 | 24 | 32 | 75 | 82.5 | |
| | 2016.03-2020.10 | 6MT | F | R | Hatchback FWD 940 B7.000 | | GCI17098 | Inner Joint | | 25 | 24 | 29.75 | 443 | 94.5 | |

| | YEAR | TRANSM. | F/R | L/R | BODY STYLE & DRIVE TYPE & ENGINE | REMARKS | G-AP Ref. | PRODUCT | ABS | Technical Specifications | | | | | |
|---|---|---|---|---|---|---|---|---|---|---|---|---|---|---|---|
| | | | | | | | | | | A | B | C | H | L | P |
| **FIAT** | | | | | | | | | | | | | | | |
| **Tipo** | | | | | | | | | | | | | | | |
| 1.4 (88 kw) | 2016.05-2020.10 | 6MT | F | L/R | Estate FWD 940 B7.000 | | GCO17063 | Outer Joint | | 25 | 25 | 51.1 | 84.5 | 61 | M |
| | 2016.05-2020.10 | 6MT | F | L | Estate FWD 940 B7.000 | | GCI17096 | Inner Joint | | 25 | 24 | 32 | 75 | 82.5 | |
| | 2016.05-2020.10 | 6MT | F | R | Estate FWD 940 B7.000 | | GCI17098 | Inner Joint | | 25 | 24 | 29.75 | 443 | 94.5 | |
| | 2016.05-2020.10 | 6MT | F | L/R | Hatchback FWD 940 B7.000 | | GCO17063 | Outer Joint | | 25 | 25 | 51.1 | 84.5 | 61 | M |
| | 2016.05-2020.10 | 6MT | F | L | Hatchback FWD 940 B7.000 | | GCI17096 | Inner Joint | | 25 | 24 | 32 | 75 | 82.5 | |
| | 2016.05-2020.10 | 6MT | F | R | Hatchback FWD 940 B7.000 | | GCI17098 | Inner Joint | | 25 | 24 | 29.75 | 443 | 94.5 | |
| | 2016.05-2020.10 | 6MT | F | L/R | Saloon FWD 940 B7.000 | | GCO17063 | Outer Joint | | 25 | 25 | 51.1 | 84.5 | 61 | M |
| | 2016.05-2020.10 | 6MT | F | L | Saloon FWD 940 B7.000 | | GCI17096 | Inner Joint | | 25 | 24 | 32 | 75 | 82.5 | |
| | 2016.05-2020.10 | 6MT | F | R | Saloon FWD 940 B7.000 | | GCI17098 | Inner Joint | | 25 | 24 | 29.75 | 443 | 94.5 | |
| 1.6 (81 kw) | 2015.10-2020.10 | 6AT | F | L | Saloon FWD 552 68 036 | | GDS83523 | Drive Shaft | | 25 | 26 | 51 | 84.5 | 622 | |
| | 2015.10-2020.10 | 6AT | F | R | Saloon FWD 552 68 036 | | GDS83524 | Drive Shaft | | 25 | 26 | 51 | 84.5 | 937 | |
| | 2015.10-2020.10 | 6AT | F | L/R | Saloon FWD 552 68 036 | | GCO17028 | Outer Joint | | 25 | 24 | 51 | 84.5 | 62 | M |
| | 2015.10-2020.10 | 6AT | F | L/R | Saloon FWD 552 68 036 | | GCO17057 | Outer Joint | | 25 | 24 | 51 | 84.5 | 62 | M |
| | 2015.10-2020.10 | 6AT | F | L | Saloon FWD 552 68 036 | | GCI17116 | Inner Joint | | 26 | 23 | 31 | 68 | 91 | |
| | 2015.10-2020.10 | 6AT | F | R | Saloon FWD 552 68 036 | | GCI17119 | Inner Joint | | 26 | 23 | 31 | 411 | 107.5 | |
| | 2016.07-2020.10 | 6AT | F | L | Estate FWD 552 68 036 | | GDS83523 | Drive Shaft | | 25 | 26 | 51 | 84.5 | 622 | |
| | 2016.07-2020.10 | 6AT | F | R | Estate FWD 552 68 036 | | GDS83524 | Drive Shaft | | 25 | 26 | 51 | 84.5 | 937 | |
| | 2016.07-2020.10 | 6AT | F | L/R | Estate FWD 552 68 036 | | GCO17028 | Outer Joint | | 25 | 24 | 51 | 84.5 | 62 | M |
| | 2016.07-2020.10 | 6AT | F | L/R | Estate FWD 552 68 036 | | GCO17057 | Outer Joint | | 25 | 24 | 51 | 84.5 | 62 | M |
| | 2016.07-2020.10 | 6AT | F | L | Estate FWD 552 68 036 | | GCI17116 | Inner Joint | | 26 | 23 | 31 | 68 | 91 | |
| | 2016.07-2020.10 | 6AT | F | R | Estate FWD 552 68 036 | | GCI17119 | Inner Joint | | 26 | 23 | 31 | 411 | 107.5 | |
| | 2016.07-2020.10 | 6AT | F | L | Hatchback FWD 552 68 036 | | GDS83523 | Drive Shaft | | 25 | 26 | 51 | 84.5 | 622 | |
| | 2016.07-2020.10 | 6AT | F | R | Hatchback FWD 552 68 036 | | GDS83524 | Drive Shaft | | 25 | 26 | 51 | 84.5 | 937 | |
| | 2016.07-2020.10 | 6AT | F | L/R | Hatchback FWD 552 68 036 | | GCO17028 | Outer Joint | | 25 | 24 | 51 | 84.5 | 62 | M |
| | 2016.07-2020.10 | 6AT | F | L/R | Hatchback FWD 552 68 036 | | GCO17057 | Outer Joint | | 25 | 24 | 51 | 84.5 | 62 | M |
| | 2016.07-2020.10 | 6AT | F | L | Hatchback FWD 552 68 036 | | GCI17116 | Inner Joint | | 26 | 23 | 31 | 68 | 91 | |
| | 2016.07-2020.10 | 6AT | F | R | Hatchback FWD 552 68 036 | | GCI17119 | Inner Joint | | 26 | 23 | 31 | 411 | 107.5 | |
| 1.6 (84 kw) | 2016.09-2020.10 | 6DCT | F | L | Estate FWD 552 60 384;552 80 444 | Date to:2018.10,Equipment code:6SC/AM32 | GDS17076 | Drive Shaft | | 25 | 25 | 51 | 84.5 | 596 | |
| | 2016.09-2020.10 | 6DCT | F | R | Estate FWD 552 60 384;552 80 444 | Date to:2018.10,Equipment code:6SC/AM32 | GDS82783 | Drive Shaft | | 25 | 25 | 51 | 84.5 | 987 | |
| | 2016.09-2020.10 | 6DCT | F | L/R | Estate FWD 552 60 384;552 80 444 | | GCO17030 | Outer Joint | | 25 | 26 | 51 | 84.5 | 64.5 | M |
| | 2016.09-2020.10 | 6DCT | F | L | Estate FWD 552 60 384;552 80 444 | TJ | GCI17031 | Inner Joint | | 25 | 26 | 32 | 59 | 110.5 | |
| | 2016.09-2020.10 | 6DCT | F | L | Estate FWD 552 60 384;552 80 444 | Date to:2018.10,Equipment code:6SC/AM32 | GCI17126 | Inner Joint | | 25 | 26 | 32 | 59 | 110.5 | |
| | 2016.09-2020.10 | 6DCT | F | R | Estate FWD 552 60 384;552 80 444 | Date to:2018.10,Equipment code:6SC/AM32 | GCI82150 | Inner Joint | | 25 | 26 | 29.75 | 432 | 108 | |
| | 2016.09-2020.10 | 6MT | F | L/R | Estate FWD 552 60 384;552 80 444 | | GCO17063 | Outer Joint | | 25 | 25 | 51.1 | 84.5 | 61 | M |
| | 2016.09-2020.10 | 6MT | F | L | Estate FWD 552 60 384;552 80 444 | | GCI17096 | Inner Joint | | 25 | 24 | 32 | 75 | 82.5 | |
| | 2016.09-2020.10 | AT | F | L/R | Estate FWD 552 60 384;552 80 444 | Date from:2017.01 | GCO82025 | Outer Joint | | 25 | 26 | 51 | 84.5 | 64.5 | M |
| | 2016.09-2020.10 | 6DCT | F | L | Hatchback FWD 552 60 384;552 80 444 | Date to:2018.10,Equipment code:6SC/AM32 | GDS17076 | Drive Shaft | | 25 | 25 | 51 | 84.5 | 596 | |
| | 2016.09-2020.10 | 6DCT | F | R | Hatchback FWD 552 60 384;552 80 444 | Date to:2018.10,Equipment code:6SC/AM32 | GDS82783 | Drive Shaft | | 25 | 25 | 51 | 84.5 | 987 | |
| | 2016.09-2020.10 | 6DCT | F | L/R | Hatchback FWD 552 60 384;552 80 444 | | GCO17030 | Outer Joint | | 25 | 26 | 51 | 84.5 | 64.5 | M |
| | 2016.09-2020.10 | 6DCT | F | L | Hatchback FWD 552 60 384;552 80 444 | TJ | GCI17031 | Inner Joint | | 25 | 26 | 32 | 59 | 110.5 | |
| | 2016.09-2020.10 | 6DCT | F | L | Hatchback FWD 552 60 384;552 80 444 | Date to:2018.10,Equipment code:6SC/AM32;AAR | GCI17126 | Inner Joint | | 25 | 26 | 32 | 59 | 110.5 | |
| | 2016.09-2020.10 | 6DCT | F | R | Hatchback FWD 552 60 384;552 80 444 | Date to:2018.10,Equipment code:6SC/AM32 | GCI82150 | Inner Joint | | 25 | 26 | 29.75 | 432 | 108 | |
| | 2016.09-2020.10 | 6MT | F | L/R | Hatchback FWD 552 60 384;552 80 444 | | GCO17063 | Outer Joint | | 25 | 25 | 51.1 | 84.5 | 61 | M |
| | 2016.09-2020.10 | 6MT | F | L | Hatchback FWD 552 60 384;552 80 444 | | GCI17096 | Inner Joint | | 25 | 24 | 32 | 75 | 82.5 | |
| | 2016.09-2020.10 | AT | F | L/R | Hatchback FWD 552 60 384;552 80 444 | Date from:2017.01 | GCO82025 | Outer Joint | | 25 | 26 | 51 | 84.5 | 64.5 | M |
| | 2016.09-2020.10 | 6MT | F | L/R | Saloon FWD 552 60 384 | | GCO17063 | Outer Joint | | 25 | 25 | 51.1 | 84.5 | 61 | M |
| | 2016.09-2020.10 | 6MT | F | L | Saloon FWD 552 60 384 | | GCI17096 | Inner Joint | | 25 | 24 | 32 | 75 | 82.5 | |
| | 2016.09-2020.10 | AT | F | L/R | Saloon FWD 552 60 384 | Date from:2017.01 | GCO82025 | Outer Joint | | 25 | 26 | 51 | 84.5 | 64.5 | M |
| 1.6 (88 kw) | 2015.10-2020.10 | 6DCT | F | L | Saloon FWD 940 C1.000, 552 60 384 | Date to:2018.10,Equipment code:6SC/AM32 | GDS17076 | Drive Shaft | | 25 | 25 | 51 | 84.5 | 596 | |
| | 2015.10-2020.10 | 6DCT | F | R | Saloon FWD 940 C1.000, 552 60 384 | Date to:2018.10,Equipment code:6SC/AM32 | GDS82783 | Drive Shaft | | 25 | 25 | 51 | 84.5 | 987 | |
| | 2015.10-2020.10 | 6DCT | F | L/R | Saloon FWD 940 C1.000, 552 60 384 | | GCO17030 | Outer Joint | | 25 | 26 | 51 | 84.5 | 64.5 | M |
| | 2015.10-2020.10 | 6DCT | F | L | Saloon FWD 940 C1.000, 552 60 384 | Date to:2018.10,Equipment code:6SC/AM32 | GCI17126 | Inner Joint | | 25 | 26 | 32 | 59 | 110.5 | |
| | 2015.10-2020.10 | 6DCT | F | R | Saloon FWD 940 C1.000, 552 60 384 | Date to:2018.10,Equipment code:6SC/AM32 | GCI82150 | Inner Joint | | 25 | 26 | 29.75 | 432 | 108 | |
| | 2015.10-2020.10 | 6MT | F | L/R | Saloon FWD 940 C1.000, 552 60 384 | | GCO17063 | Outer Joint | | 25 | 25 | 51.1 | 84.5 | 61 | M |
| | 2015.10-2020.10 | 6MT | F | L | Saloon FWD 940 C1.000, 552 60 384 | | GCI17096 | Inner Joint | | 25 | 24 | 32 | 75 | 82.5 | |
| | 2015.10-2020.10 | AT | F | L/R | Saloon FWD 940 C1.000, 552 60 384 | Date from:2016.01 | GCO82025 | Outer Joint | | 25 | 26 | 51 | 84.5 | 64.5 | M |
| | 2016.03-2020.10 | 6DCT | F | L | Estate FWD 552 80 444, 552 60 384 | Date to:2018.10,Equipment code:6SC/AM32 | GDS17076 | Drive Shaft | | 25 | 25 | 51 | 84.5 | 596 | |
| | 2016.03-2020.10 | 6DCT | F | R | Estate FWD 552 80 444, 552 60 384 | Date to:2018.10,Equipment code:6SC/AM32 | GDS82783 | Drive Shaft | | 25 | 25 | 51 | 84.5 | 987 | |
| | 2016.03-2020.10 | 6DCT | F | L/R | Estate FWD 552 80 444, 552 60 384 | | GCO17030 | Outer Joint | | 25 | 26 | 51 | 84.5 | 64.5 | M |
| | 2016.03-2020.10 | 6DCT | F | L | Estate FWD 552 80 444, 552 60 384 | TJ | GCI17031 | Inner Joint | | 25 | 26 | 32 | 59 | 110.5 | |
| | 2016.03-2020.10 | 6DCT | F | L | Estate FWD 552 80 444, 552 60 384 | Date to:2018.10,Equipment code:6SC/AM32;AAR | GCI17126 | Inner Joint | | 25 | 26 | 32 | 59 | 110.5 | |
| | 2016.03-2020.10 | 6DCT | F | R | Estate FWD 552 80 444, 552 60 384 | Date to:2018.10,Equipment code:6SC/AM32 | GCI82150 | Inner Joint | | 25 | 26 | 29.75 | 432 | 108 | |
| | 2016.03-2020.10 | 6MT | F | L/R | Estate FWD 552 80 444, 552 60 384 | | GCO17063 | Outer Joint | | 25 | 25 | 51.1 | 84.5 | 61 | M |
| | 2016.03-2020.10 | 6MT | F | L | Estate FWD 552 80 444, 552 60 384 | | GCI17096 | Inner Joint | | 25 | 24 | 32 | 75 | 82.5 | |
| | 2016.03-2020.10 | AT | F | L/R | Estate FWD 552 80 444, 552 60 384 | | GCO82025 | Outer Joint | | 25 | 26 | 51 | 84.5 | 64.5 | M |

| | YEAR | TRANSM. | F/R | L/R | BODY STYLE & DRIVE TYPE & ENGINE | REMARKS | G-AP Ref. | PRODUCT | ABS | Technical Specifications A | B | C | H | L | P |
|---|---|---|---|---|---|---|---|---|---|---|---|---|---|---|---|
| **FIAT** | | | | | | | | | | | | | | | |
| **Tipo** | | | | | | | | | | | | | | | |
| 1.6 (88 kw) | 2016.03-2020.10 | 6DCT | F | L | Hatchback FWD 552 80 444, 552 60 384 | Date to:2018.10,Equipment code:6SC/AM32 | GDS17076 | Drive Shaft | | 25 | 25 | 51 | 84.5 | 596 | |
| | 2016.03-2020.10 | 6DCT | F | R | Hatchback FWD 552 80 444, 552 60 384 | Date to:2018.10,Equipment code:6SC/AM32 | GDS82783 | Drive Shaft | | 25 | 25 | 51 | 84.5 | 987 | |
| | 2016.03-2020.10 | 6DCT | F | L/R | Hatchback FWD 552 80 444, 552 60 384 | | GCO17030 | Outer Joint | | 25 | 26 | 51 | 84.5 | 64.5 | M |
| | 2016.03-2020.10 | 6DCT | F | L | Hatchback FWD 552 80 444, 552 60 384 | TJ | GCI17031 | Inner Joint | | 25 | 26 | 32 | 59 | 110.5 | |
| | 2016.03-2020.10 | 6DCT | F | L | Hatchback FWD 552 80 444, 552 60 384 | Date to:2018.10,Equipment code:6SC/AM32;AAR | GCI17126 | Inner Joint | | 25 | 26 | 32 | 59 | 110.5 | |
| | 2016.03-2020.10 | 6DCT | F | R | Hatchback FWD 552 80 444, 552 60 384 | Date to:2018.10,Equipment code:6SC/AM32 | GCI82150 | Inner Joint | | 25 | 26 | 29.75 | 432 | 108 | |
| | 2016.03-2020.10 | 6MT | F | L/R | Hatchback FWD 552 80 444, 552 60 384 | | GCO17063 | Outer Joint | | 25 | 25 | 51.1 | 84.5 | 61 | M |
| | 2016.03-2020.10 | 6MT | F | L | Hatchback FWD 552 80 444, 552 60 384 | | GCI17096 | Inner Joint | | 25 | 24 | 32 | 75 | 82.5 | |
| | 2016.03-2020.10 | AT | F | L/R | Hatchback FWD 552 80 444, 552 60 384 | | GCO82025 | Outer Joint | | 25 | 26 | 51 | 84.5 | 64.5 | M |
| 1.6 (96 kw) | 2020.11- | 6DCT | F | L | Estate FWD 463 46 020 | Equipment code:6SC | GDS17076 | Drive Shaft | | 25 | 25 | 51 | 84.5 | 596 | |
| | 2020.11- | 6DCT | F | R | Estate FWD 463 46 020 | Equipment code:6SC | GDS82783 | Drive Shaft | | 25 | 25 | 51 | 84.5 | 987 | |
| | 2020.11- | 6DCT | F | L/R | Estate FWD 463 46 020 | | GCO17030 | Outer Joint | | 25 | 26 | 51 | 84.5 | 64.5 | M |
| | 2020.11- | 6DCT | F | L/R | Estate FWD 463 46 020 | | GCO82025 | Outer Joint | | 25 | 26 | 51 | 84.5 | 64.5 | M |
| | 2020.11- | 6DCT | F | L | Estate FWD 463 46 020 | Equipment code:6SC | GCI17126 | Inner Joint | | 25 | 26 | 32 | 59 | 110.5 | |
| | 2020.11- | 6DCT | F | R | Estate FWD 463 46 020 | Equipment code:6SC | GCI82150 | Inner Joint | | 25 | 26 | 29.75 | 432 | 108 | |
| | 2020.11- | 6MT | F | L/R | Estate FWD 463 46 020 | | GCO17063 | Outer Joint | | 25 | 25 | 51.1 | 84.5 | 61 | M |
| | 2020.11- | 6MT | F | L | Estate FWD 463 46 020 | | GCI17096 | Inner Joint | | 25 | 24 | 32 | 75 | 82.5 | |
| | 2020.11- | 6DCT | F | L | Hatchback FWD 463 46 020 | Equipment code:6SC | GDS17076 | Drive Shaft | | 25 | 25 | 51 | 84.5 | 596 | |
| | 2020.11- | 6DCT | F | R | Hatchback FWD 463 46 020 | Equipment code:6SC | GDS82783 | Drive Shaft | | 25 | 25 | 51 | 84.5 | 987 | |
| | 2020.11- | 6DCT | F | L/R | Hatchback FWD 463 46 020 | | GCO17030 | Outer Joint | | 25 | 26 | 51 | 84.5 | 64.5 | M |
| | 2020.11- | 6DCT | F | L/R | Hatchback FWD 463 46 020 | | GCO82025 | Outer Joint | | 25 | 26 | 51 | 84.5 | 64.5 | M |
| | 2020.11- | 6DCT | F | L | Hatchback FWD 463 46 020 | Equipment code:6SC | GCI17126 | Inner Joint | | 25 | 26 | 32 | 59 | 110.5 | |
| | 2020.11- | 6DCT | F | R | Hatchback FWD 463 46 020 | Equipment code:6SC | GCI82150 | Inner Joint | | 25 | 26 | 29.75 | 432 | 108 | |
| | 2020.11- | 6MT | F | L/R | Hatchback FWD 463 46 020 | | GCO17063 | Outer Joint | | 25 | 25 | 51.1 | 84.5 | 61 | M |
| | 2020.11- | 6MT | F | L | Hatchback FWD 463 46 020 | | GCI17096 | Inner Joint | | 25 | 24 | 32 | 75 | 82.5 | |
| 1.9 (48 kw) | 1991.07-1996.08 | MT | F | L | Hatchback FWD 160A7000 | | GDS17010 | Drive Shaft | | 22 | 32 | 46.8 | 75.5 | 569 | |
| | 1991.07-1996.08 | MT | F | R | Hatchback FWD 160A7000 | | GDS17011 | Drive Shaft | | 22 | 32 | 46.8 | 75.5 | 928.5 | |
| | 1991.07-1996.08 | MT | F | L/R | Hatchback FWD 160A7000 | | GCO17001 | Outer Joint | | 22 | 20 | 46.8 | 75.5 | 52 | O |
| | 1991.07-1996.08 | MT | F | L/R | Hatchback FWD 160A7000 | | GCO17039 | Outer Joint | 44T | 22 | 20 | 46.8 | 75.5 | 52 | O |
| **Ulysse** | | | | | | | | | | | | | | | |
| 1.8 (73 kw) | 1996.04-2000.08 | MT | F | L | MPV FWD LFW | Date to:2000.08;Trans. code:BE3 | GDS10082 | Drive Shaft | 48T | 27 | 24 | 59 | 82 | 648 | |
| | 1996.04-2000.08 | MT | F | L | MPV FWD LFW | Date to:2000.08;Trans. code:BE3 | GDS10112 | Drive Shaft | | 27 | 24 | 59 | 82 | 648 | |
| | 1996.04-2000.08 | MT | F | R | MPV FWD LFW | Date to:2000.08 | GDS10012 | Drive Shaft | 48T | 27 | 24 | 64 | 80.5 | 928 | |
| | 1996.04-2000.08 | MT | F | R | MPV FWD LFW | Date to:2000.08 | GDS10120 | Drive Shaft | | 27 | 24 | 59 | 82 | 928 | |
| | 1996.04-2000.08 | MT | F | L/R | MPV FWD LFW | | GCO10018 | Outer Joint | 48T | 27 | 34 | 61 | 82 | 56.5 | I |
| | 1996.04-2000.08 | MT | F | L/R | MPV FWD LFW | Trans. code:BE3R | GCO10059 | Outer Joint | 48T | 27 | 34 | 59 | 82 | 56.5 | I |
| 1.9 (66 kw) | 1995.05-2000.08 | MT | F | L | MPV FWD DHX | Date from:1995.05,Date to:2000.08 | GDS10016 | Drive Shaft | 48T | 27 | 37 | 59 | 82 | 641 | |
| | 1995.05-2000.08 | MT | F | L | MPV FWD DHX | Date from:1995.05,Date to:2000.08 | GDS10072 | Drive Shaft | | 27 | 37 | 59 | 82 | 641 | |
| | 1995.05-2000.08 | MT | F | R | MPV FWD DHX | Date from:1995.05,Date to:2000.08 | GDS10014 | Drive Shaft | 48T | 27 | 37 | 59 | 82 | 947 | |
| | 1995.05-2000.08 | MT | F | R | MPV FWD DHX | Date from:1995.05,Date to:2000.08 | GDS10155 | Drive Shaft | | 27 | 37 | 59 | 82 | 947 | |
| | 1995.05-2000.08 | MT | F | L/R | MPV FWD DHX | Date from:1995.05,Date to:2000.08 | GCO10014 | Outer Joint | | 27 | 39 | 59 | 82 | 63 | I |
| | 1995.05-2000.08 | MT | F | L/R | MPV FWD DHX | Date from:1995.05,Date to:2000.08 | GCO10015 | Outer Joint | 48T | 27 | 39 | 59 | 82 | 63 | I |
| | 1995.05-2000.08 | MT | F | L | MPV FWD DHX | Date from:1995.05,Date to:2000.08 | GCI10015 | Inner Joint | | 37 | 39 | 40 | 68.5 | 104 | |
| | 1995.05-2000.08 | MT | F | R | MPV FWD DHX | Date from:1995.05,Date to:2000.08 | GCI10034 | Inner Joint | | 37 | 39 | 31.9 | 369.5 | 99 | |
| 2.0 (79 kw) | 2003.05-2006.08 | 4AT | F | R | MPV FWD RHM (DW10ATED4) | | GDS17218 | Drive Shaft | | 27 | 26 | 58 | 81.5 | 855 | |
| | 2003.05-2006.08 | 4AT | F | R | MPV FWD RHM (DW10ATED4) | | GCI10105 | Inner Joint | | 26 | 34 | | 259 | 87 | |
| | 2003.05-2006.08 | AT | F | L/R | MPV FWD RHM (DW10ATED4) | | GCO10016 | Outer Joint | | 27 | 34 | 59 | 82 | 56.5 | I |
| | 2003.05-2006.08 | AT/MT | F | L/R | MPV FWD RHM (DW10ATED4) | | GCO17044 | Outer Joint | | 27 | 28 | 58 | 81.5 | 62 | M |
| | 2003.05-2006.08 | | F | R | MPV FWD RHM (DW10ATED4) | | GCO45059 | Outer Joint | | 27 | 34 | 58 | 81.5 | 56.5 | I |
| 2.0 (80 kw) | 1999.05-2002.08 | AT/MT | F | L/R | MPV FWD RHW | Date from:2000.01;Date to:2001.12 | GCO17044 | Outer Joint | | 27 | 28 | 58 | 81.5 | 62 | M |
| | 1999.06-2002.08 | MT | F | L | MPV FWD RHZ | | GDS10264 | Drive Shaft | 48T | 27 | 37 | 59 | 82 | 630 | |
| | 1999.06-2002.08 | MT | F | L | MPV FWD RHZ | | GDS10430 | Drive Shaft | | 27 | 37 | 59 | 82 | 630 | |
| | 1999.06-2002.08 | MT | F | R | MPV FWD RHZ | | GDS10057 | Drive Shaft | | 27 | 37 | 59 | 82 | 960 | |
| | 1999.06-2002.08 | MT | F | R | MPV FWD RHZ | | GDS45120 | Drive Shaft | 48T | 27 | 37 | 59 | 82 | 960 | |
| | 1999.06-2002.08 | MT | F | L/R | MPV FWD RHZ | | GCO10014 | Outer Joint | | 27 | 39 | 59 | 82 | 63 | I |
| | 1999.06-2002.08 | MT | F | L/R | MPV FWD RHZ | | GCO10015 | Outer Joint | 48T | 27 | 39 | 59 | 82 | 63 | I |
| | 1999.06-2002.08 | MT | F | L | MPV FWD RHZ | | GCI10015 | Inner Joint | | 37 | 39 | 40 | 68.5 | 104 | |
| | 1999.06-2002.08 | MT | F | R | MPV FWD RHZ | | GCI10034 | Inner Joint | | 37 | 39 | 31.9 | 369.5 | 99 | |
| | 2002.08-2006.08 | 5MT | F | L | MPV FWD RHW (DW10ATED4) | | GDS10072 | Drive Shaft | | 27 | 37 | 59 | 82 | 641 | |
| | 2002.08-2006.08 | AT | F | R | MPV FWD RHW (DW10ATED4) | | GDS17218 | Drive Shaft | | 27 | 26 | 58 | 81.5 | 855 | |
| | 2002.08-2006.08 | AT | F | L/R | MPV FWD RHW (DW10ATED4) | | GCO10016 | Outer Joint | | 27 | 34 | 59 | 82 | 56.5 | I |
| | 2002.08-2006.08 | AT | F | R | MPV FWD RHW (DW10ATED4) | | GCI10105 | Inner Joint | | 26 | 34 | | 259 | 87 | |
| | 2002.08-2006.08 | AT/MT | F | L/R | MPV FWD RHW (DW10ATED4) | | GCO17044 | Outer Joint | | 27 | 28 | 58 | 81.5 | 62 | M |
| | 2002.08-2006.08 | MT | F | R | MPV FWD RHW (DW10ATED4) | | GDS18291 | Drive Shaft | | 27 | 37 | 58 | 81 | 977 | |
| | 2002.08-2006.08 | | F | R | MPV FWD RHW (DW10ATED4) | | GCO45059 | Outer Joint | | 27 | 34 | 58 | 81.5 | 56.5 | I |

| | YEAR | TRANSM. | F/R | L/R | BODY STYLE & DRIVE TYPE & ENGINE | REMARKS | G-AP Ref. | PRODUCT | ABS | Technical Specifications A | B | C | H | L | P |
|---|---|---|---|---|---|---|---|---|---|---|---|---|---|---|---|
| **FIAT** | | | | | | | | | | | | | | | |
| **Ulysse** | | | | | | | | | | | | | | | |
| 2.0 (88 kw) | 2006.05-2011.06 | 6MT | F | L | MPV FWD RHK | | GDS10072 | Drive Shaft | | 27 | 37 | 59 | 82 | 641 | |
| | 2006.05-2011.06 | AT/MT | F | L/R | MPV FWD RHK | Date to:2010.12 | GCO17044 | Outer Joint | | 27 | 28 | 58 | 81.5 | 62 | M |
| 2.0 (89 kw) | 1994.04-2000.08 | MT | F | L | MPV FWD RFU | Date to:2000.08;Trans. code:BE3 | GDS10082 | Drive Shaft | 48T | 27 | 24 | 59 | 82 | 648 | |
| | 1994.04-2000.08 | MT | F | L | MPV FWD RFU | | GDS10112 | Drive Shaft | | 27 | 24 | 59 | 82 | 648 | |
| | 1994.04-2000.08 | MT | F | R | MPV FWD RFU | Date to:2000.08 | GDS10012 | Drive Shaft | 48T | 27 | 24 | 64 | 80.5 | 928 | |
| | 1994.04-2000.08 | MT | F | R | MPV FWD RFU | | GDS10111 | Drive Shaft | | 27 | 24 | 59 | 82 | 935 | |
| | 1994.04-2000.08 | MT | F | R | MPV FWD RFU | Date to:2000.08 | GDS10120 | Drive Shaft | | 27 | 24 | 59 | 82 | 928 | |
| | 1994.04-2000.08 | MT | F | L/R | MPV FWD RFU | | GCO10016 | Outer Joint | | 27 | 34 | 59 | 82 | 56.5 | I |
| | 1994.04-2000.08 | MT | F | L/R | MPV FWD RFU | | GCO10018 | Outer Joint | 48T | 27 | 34 | 61 | 82 | 56.5 | I |
| | 1994.04-2000.08 | MT | F | L/R | MPV FWD RFU | Trans. code:BE3R | GCO10059 | Outer Joint | 48T | 27 | 34 | 59 | 82 | 56.5 | I |
| 2.0 (97 kw) | 1998.05-2000.08 | MT | F | L | MPV FWD RFV | | GDS10082 | Drive Shaft | 48T | 27 | 24 | 59 | 82 | 648 | |
| | 1998.05-2000.08 | MT | F | L/R | MPV FWD RFV | | GCO10018 | Outer Joint | 48T | 27 | 34 | 61 | 82 | 56.5 | I |
| 2.0 (100 kw) | 2000.09-2002.08 | AT/MT | F | L/R | MPV FWD RFN | Date to:2001.12 | GCO10059 | Outer Joint | 48T | 27 | 34 | 59 | 82 | 56.5 | I |
| | 2000.09-2002.08 | MT | F | L | MPV FWD RFN | | GDS10112 | Drive Shaft | | 27 | 24 | 59 | 82 | 648 | |
| | 2000.09-2002.08 | MT | F | R | MPV FWD RFN | | GDS10111 | Drive Shaft | | 27 | 24 | 59 | 82 | 935 | |
| | 2000.09-2002.08 | MT | F | L/R | MPV FWD RFN | | GCO10016 | Outer Joint | | 27 | 34 | 59 | 82 | 56.5 | I |
| | 2000.09-2002.08 | MT | F | L/R | MPV FWD RFN | | GCO10018 | Outer Joint | 48T | 27 | 34 | 61 | 82 | 56.5 | I |
| | 2002.08-2011.06 | AT | F | L | MPV FWD RFN (EW10J4) | | GDS17220 | Drive Shaft | | 27 | 26 | 58 | 81.5 | 648 | |
| | 2002.08-2011.06 | AT | F | R | MPV FWD RFN (EW10J4) | | GDS17218 | Drive Shaft | | 27 | 26 | 58 | 81.5 | 855 | |
| | 2002.08-2011.06 | AT | F | R | MPV FWD RFN (EW10J4) | | GCO45059 | Outer Joint | | 27 | 34 | 58 | 81.5 | 56.5 | I |
| | 2002.08-2011.06 | AT | F | | MPV FWD RFN (EW10J4) | | GCO17044 | Outer Joint | | 27 | 28 | 58 | 81.5 | 62 | M |
| | 2002.08-2011.06 | AT | F | L | MPV FWD RFN (EW10J4) | | GCI81321 | Inner Joint | | 26 | 34 | 30.2 | 46.5 | 103.5 | |
| | 2002.08-2011.06 | AT | F | R | MPV FWD RFN (EW10J4) | | GCI10105 | Inner Joint | | 26 | 34 | | 259 | 87 | |
| | 2002.08-2011.06 | AT/MT | F | L/R | MPV FWD RFN (EW10J4) | | GCO10016 | Outer Joint | | 27 | 34 | 59 | 82 | 56.5 | I |
| | 2002.08-2011.06 | AT/MT | F | L/R | MPV FWD RFN (EW10J4) | Date to:2006.12 | GCO10059 | Outer Joint | 48T | 27 | 34 | 59 | 82 | 56.5 | I |
| | 2002.08-2011.06 | MT | F | L | MPV FWD RFN (EW10J4) | | GDS10422 | Drive Shaft | | 27 | 24 | 58 | 81.5 | 659 | |
| | 2006.05-2011.06 | 6MT | F | L | MPV FWD RHR | | GDS10072 | Drive Shaft | | 27 | 37 | 59 | 82 | 641 | |
| | 2006.05-2011.06 | | F | L/R | MPV FWD RHR | Date To:2010.12 | GCO17044 | Outer Joint | | 27 | 28 | 58 | 81.5 | 62 | M |
| 2.0 (108 kw) | 1994.06-2002.08 | MT | F | L | MPV FWD RGX | | GDS10016 | Drive Shaft | 48T | 27 | 37 | 59 | 82 | 641 | |
| | 1994.06-2002.08 | MT | F | L | MPV FWD RGX | | GDS10072 | Drive Shaft | | 27 | 37 | 59 | 82 | 641 | |
| | 1994.06-2002.08 | MT | F | R | MPV FWD RGX | | GDS10014 | Drive Shaft | 48T | 27 | 37 | 59 | 82 | 947 | |
| | 1994.06-2002.08 | MT | F | R | MPV FWD RGX | | GDS10155 | Drive Shaft | | 27 | 37 | 59 | 82 | 947 | |
| | 1994.06-2002.08 | MT | F | L/R | MPV FWD RGX | | GCO10014 | Outer Joint | | 27 | 39 | 59 | 82 | 63 | I |
| | 1994.06-2002.08 | MT | F | L/R | MPV FWD RGX | | GCO10015 | Outer Joint | 48T | 27 | 39 | 59 | 82 | 63 | I |
| | 1994.06-2002.08 | MT | F | L | MPV FWD RGX | | GCI10015 | Inner Joint | | 37 | 39 | 40 | 68.5 | 104 | |
| | 1994.06-2002.08 | MT | F | R | MPV FWD RGX | | GCI10034 | Inner Joint | | 37 | 39 | 31.9 | 369.5 | 99 | |
| 2.0 (130 kw) | 2022.01-2025.04 | 8AT | F | L | Bus FWD DW10FDCU | | GDS56191 | Drive Shaft | | 28 | 37 | 58.6 | 93 | 649 | |
| | 2022.01-2025.04 | 8AT | F | R | Bus FWD DW10FDCU | | GDS56190 | Drive Shaft | | 28 | 37 | 58.6 | 93 | 989 | |
| 2.1 (80 kw) | 1996.04-2000.08 | MT | F | L | MPV FWD P8C | | GDS10016 | Drive Shaft | 48T | 27 | 37 | 59 | 82 | 641 | |
| | 1996.04-2000.08 | MT | F | R | MPV FWD P8C | | GDS10014 | Drive Shaft | 48T | 27 | 37 | 59 | 82 | 947 | |
| | 1996.04-2000.08 | MT | F | L/R | MPV FWD P8C | | GCO10015 | Outer Joint | 48T | 27 | 39 | 59 | 82 | 63 | I |
| | 1996.04-2000.08 | MT | F | L | MPV FWD P8C | | GCI10015 | Inner Joint | | 37 | 39 | 40 | 68.5 | 104 | |
| | 1996.04-2000.08 | MT | F | R | MPV FWD P8C | | GCI10034 | Inner Joint | | 37 | 39 | 31.9 | 369.5 | 99 | |
| 2.2 (94 kw) | 2002.08-2006.08 | 4AT/5MT | F | L | MPV FWD 4HW (DW12ATED4) | | GDS10430 | Drive Shaft | | 27 | 37 | 59 | 82 | 630 | |
| | 2002.08-2006.08 | 4AT/5MT | F | R | MPV FWD 4HW (DW12ATED4) | | GDS18291 | Drive Shaft | | 27 | 37 | 58 | 81 | 977 | |
| | 2002.08-2006.08 | AT/MT | F | L/R | MPV FWD 4HW (DW12ATED4) | | GCO18098 | Outer Joint | | 27 | 29 | 58 | 81 | 71 | M |
| | 2002.08-2006.08 | | F | | MPV FWD 4HW (DW12ATED4) | | GCO17044 | Outer Joint | | 27 | 28 | 58 | 81.5 | 62 | M |
| 2.2 (120 kw) | 2008.03-2011.06 | AT/MT | F | L/R | MPV FWD 4HP;4HR | Date to:2010.12 | GCO18098 | Outer Joint | | 27 | 29 | 58 | 81 | 71 | M |
| 2.2 (125 kw) | 2008.03-2011.06 | AT/MT | F | L/R | MPV FWD 4HS;4HT (DW12BTED4) | Date to:2010.12 | GCO18098 | Outer Joint | | 27 | 29 | 58 | 81 | 71 | M |
| 3.0 (150 kw) | 2002.08-2011.06 | 4AT | F | L | MPV FWD XFW | | GCI10168 | Inner Joint | | 37 | 28 | 40.3 | 60 | 94 | |
| | 2002.08-2011.06 | 4AT | F | R | MPV FWD XFW | Date from:2003.07;VET From:9739 | GCI10167 | Inner Joint | | 37 | 28 | | 340 | 93 | |
| | 2002.08-2011.06 | | F | L | MPV FWD XFW | | GDS17221 | Drive Shaft | | 27 | 37 | 58 | 81.5 | 624 | |
| | 2002.08-2011.06 | | F | R | MPV FWD XFW | Date From:2003.07;VET From:9739 | GDS17217 | Drive Shaft | | 27 | 37 | 58 | 81.5 | 924 | |
| | 2002.08-2011.06 | | F | L/R | MPV FWD XFW | | GCO17044 | Outer Joint | | 27 | 28 | 58 | 81.5 | 62 | M |
| **Uno** | | | | | | | | | | | | | | | |
| 1.0 (41 kw) | 1993.05-2000.08 | MT | F | L | Hatchback FWD 146C8000 | | GDS17015 | Drive Shaft | | 20 | | 43.1 | 90.5 | 552 | |
| | 1993.05-2000.08 | MT | F | R | Hatchback FWD 146C8000 | | GDS17016 | Drive Shaft | | 20 | | 43.1 | 90.5 | 861.5 | |
| 1.4 (52 kw) | 1988.10-2006.06 | AT/MT | F | L/R | Hatchback FWD 160A1046/160A1048 | Date from:1989.01;Date to:1993.12 | GCO84001 | Outer Joint | | 20 | 20 | 43.1 | 90.5 | 60.5 | O |
| | 1988.10-2006.06 | AT/MT | F | L/R | Hatchback FWD 160A1046/160A1048 | Date from:1989.01;Date to:1993.12 | GCI48004 | Inner Joint | | | 25 | | | 32 | |
| 1.4 (87 kw) | 1989.12-1996.12 | MT | F | L/R | Hatchback FWD 146A8000 | | GCO17006 | Outer Joint | | 22 | 25 | 48.1 | 93.5 | 60.5 | I |
| **FORD** | | | | | | | | | | | | | | | |
| **B-Max** | | | | | | | | | | | | | | | |
| 1.0 (74 kw) | 2012.10-2017.12 | 5MT | F | L | Box Body/MPV FWD SFJA;SFJB;SFJC;SFJD | | GDS18405 | Drive Shaft | | 25 | 23 | 53.2 | 88.5 | 622 | |
| | 2012.10-2017.12 | 5MT | F | R | Box Body/MPV FWD SFJA;SFJB;SFJC;SFJD | | GDS18380 | Drive Shaft | | 25 | 23 | 53.2 | 88.5 | 920 | |
| | 2012.10-2017.12 | 5MT | F | L/R | Box Body/MPV FWD SFJA;SFJB;SFJC;SFJD | | GCO18258 | Outer Joint | | 25 | 24 | 53.2 | 88.5 | 58.5 | M |

| | YEAR | TRANSM. | F/R | L/R | BODY STYLE & DRIVE TYPE & ENGINE | REMARKS | G-AP Ref. | PRODUCT | ABS | Technical Specifications | | | | | |
|---|---|---|---|---|---|---|---|---|---|---|---|---|---|---|---|
| | | | | | | | | | | A | B | C | H | L | P |
| **FORD**<br>**B-Max** | | | | | | | | | | | | | | | |
| 1.0 (74 kw) | 2012.10-2017.12 | 5MT | F | L | Box Body/MPV FWD SFJA;SFJB;SFJC;SFJD | | GCI18086 | Inner Joint | | 23 | 22 | 40 | 61 | 90 | |
| | 2012.10-2017.12 | 5MT | F | R | Box Body/MPV FWD SFJA;SFJB;SFJC;SFJD | | GCI18087 | Inner Joint | | 23 | 22 | 40 | 371 | 78.5 | |
| | 2012.10-2017.12 | AT | F | R | Box Body/MPV FWD SFJA;SFJB;SFJC;SFJD | Date from:2013.01 | GDS18406 | Drive Shaft | | 25 | 34 | 53.3 | 87 | 974 | |
| | 2012.10-2017.12 | 5MT | F | L | MPV FWD SFJA;SFJB;SFJC;SFJD | | GDS18405 | Drive Shaft | | 25 | 23 | 53.2 | 88.5 | 622 | |
| | 2012.10-2017.12 | 5MT | F | R | MPV FWD SFJA;SFJB;SFJC;SFJD | | GDS18380 | Drive Shaft | | 25 | 23 | 53.2 | 88.5 | 920 | |
| | 2012.10-2017.12 | 5MT | F | L/R | MPV FWD SFJA;SFJB;SFJC;SFJD | | GCO18258 | Outer Joint | | 25 | 24 | 53.2 | 88.5 | 58.5 | M |
| | 2012.10-2017.12 | 5MT | F | L | MPV FWD SFJA;SFJB;SFJC;SFJD | | GCI18086 | Inner Joint | | 23 | 22 | 40 | 61 | 90 | |
| | 2012.10-2017.12 | 5MT | F | R | MPV FWD SFJA;SFJB;SFJC;SFJD | | GCI18087 | Inner Joint | | 23 | 22 | 40 | 371 | 78.5 | |
| | 2012.10-2017.12 | AT | F | R | MPV FWD SFJA;SFJB;SFJC;SFJD | Date from:2013.01 | GDS18406 | Drive Shaft | | 25 | 34 | 53.3 | 87 | 974 | |
| 1.0 (88 kw) | 2012.08-2017.12 | 5MT | F | L | Box Body/MPV FWD M1JA | | GDS18405 | Drive Shaft | | 25 | 23 | 53.2 | 88.5 | 622 | |
| | 2012.08-2017.12 | 5MT | F | R | Box Body/MPV FWD M1JA | | GDS18380 | Drive Shaft | | 25 | 23 | 53.2 | 88.5 | 920 | |
| | 2012.08-2017.12 | 5MT | F | L/R | Box Body/MPV FWD M1JA | Date to:2013.02 | GCO18258 | Outer Joint | | 25 | 24 | 53.2 | 88.5 | 58.5 | M |
| | 2012.08-2017.12 | 5MT | F | L | Box Body/MPV FWD M1JA | | GCI18086 | Inner Joint | | 23 | 22 | 40 | 61 | 90 | |
| | 2012.10-2017.12 | 5MT | F | L | MPV FWD M1JA | | GDS18405 | Drive Shaft | | 25 | 23 | 53.2 | 88.5 | 622 | |
| | 2012.10-2017.12 | 5MT | F | R | MPV FWD M1JA | | GDS18380 | Drive Shaft | | 25 | 23 | 53.2 | 88.5 | 920 | |
| | 2012.10-2017.12 | 5MT | F | L/R | MPV FWD M1JA | | GCO18258 | Outer Joint | | 25 | 24 | 53.2 | 88.5 | 58.5 | M |
| | 2012.10-2017.12 | 5MT | F | L | MPV FWD M1JA | | GCI18086 | Inner Joint | | 23 | 22 | 40 | 61 | 90 | |
| | 2012.10-2017.12 | 5MT | F | R | MPV FWD M1JA | | GCI18087 | Inner Joint | | 23 | 22 | 40 | 371 | 78.5 | |
| 1.0 (92 kw) | 2012.10-2017.12 | 5MT | F | L | Box Body/MPV FWD M1JE;M1JH | | GDS18405 | Drive Shaft | | 25 | 23 | 53.2 | 88.5 | 622 | |
| | 2012.10-2017.12 | 5MT | F | R | Box Body/MPV FWD M1JE;M1JH | | GDS18380 | Drive Shaft | | 25 | 23 | 53.2 | 88.5 | 920 | |
| | 2012.10-2017.12 | 5MT | F | L/R | Box Body/MPV FWD M1JE;M1JH | | GCO18258 | Outer Joint | | 25 | 24 | 53.2 | 88.5 | 58.5 | M |
| | 2012.10-2017.12 | 5MT | F | L | Box Body/MPV FWD M1JE;M1JH | | GCI18086 | Inner Joint | | 23 | 22 | 40 | 61 | 90 | |
| | 2012.10-2017.12 | 5MT | F | R | Box Body/MPV FWD M1JE;M1JH | | GCI18087 | Inner Joint | | 23 | 22 | 40 | 371 | 78.5 | |
| | 2012.10-2017.12 | 5MT | F | L | MPV FWD M1JE;M1JH | | GDS18405 | Drive Shaft | | 25 | 23 | 53.2 | 88.5 | 622 | |
| | 2012.10-2017.12 | 5MT | F | R | MPV FWD M1JE;M1JH | | GDS18380 | Drive Shaft | | 25 | 23 | 53.2 | 88.5 | 920 | |
| | 2012.10-2017.12 | 5MT | F | L/R | MPV FWD M1JE;M1JH | | GCO18258 | Outer Joint | | 25 | 24 | 53.2 | 88.5 | 58.5 | M |
| | 2012.10-2017.12 | 5MT | F | L | MPV FWD M1JE;M1JH | | GCI18086 | Inner Joint | | 23 | 22 | 40 | 61 | 90 | |
| | 2012.10-2017.12 | 5MT | F | R | MPV FWD M1JE;M1JH | | GCI18087 | Inner Joint | | 23 | 22 | 40 | 371 | 78.5 | |
| 1.0 (103 kw) | 2016.02-2017.12 | 5MT | F | L | MPV FWD YYJC | | GDS18405 | Drive Shaft | | 25 | 23 | 53.2 | 88.5 | 622 | |
| | 2016.02-2017.12 | 5MT | F | R | MPV FWD YYJC | | GDS18380 | Drive Shaft | | 25 | 23 | 53.2 | 88.5 | 920 | |
| | 2016.02-2017.12 | | F | L/R | MPV FWD YYJC | | GCO18258 | Outer Joint | | 25 | 24 | 53.2 | 88.5 | 58.5 | M |
| | 2016.02-2017.12 | | F | L | MPV FWD YYJC | | GCI18086 | Inner Joint | | 23 | 22 | 40 | 61 | 90 | |
| 1.4 (64 kw) | 2013.08-2017.12 | 5MT | F | L | MPV FWD RTJC | | GDS18216 | Drive Shaft | | 25 | 23 | 53.3 | 90 | 621 | |
| | 2013.08-2017.12 | 5MT | F | R | MPV FWD RTJC | | GDS18201 | Drive Shaft | | 25 | 23 | 53.3 | 90 | 919 | |
| | 2013.08-2017.12 | 5MT | F | L/R | MPV FWD RTJC | Date from:2014.01 | GCO18222 | Outer Joint | | 25 | 23 | 53.3 | 87 | 56 | M |
| | 2013.08-2017.12 | 5MT | F | L | MPV FWD RTJC | | GCI18085 | Inner Joint | | 23 | 22 | 40 | 61 | 90 | |
| 1.4 (66 kw) | 2012.10-2017.12 | 5MT | F | L | Box Body/MPV FWD RTJC | | GDS18216 | Drive Shaft | | 25 | 23 | 53.3 | 90 | 621 | |
| | 2012.10-2017.12 | 5MT | F | R | Box Body/MPV FWD RTJC | | GDS18201 | Drive Shaft | | 25 | 23 | 53.3 | 90 | 919 | |
| | 2012.10-2017.12 | 5MT | F | L/R | Box Body/MPV FWD RTJC | | GCO18222 | Outer Joint | | 25 | 23 | 53.3 | 87 | 56 | M |
| | 2012.10-2017.12 | MT | F | L | Box Body/MPV FWD SPJD;SPJE | Date from:2013.01 | GDS18216 | Drive Shaft | | 25 | 23 | 53.3 | 90 | 621 | |
| | 2012.10-2017.12 | MT | F | L/R | Box Body/MPV FWD SPJD;SPJE | Date from:2013.01 | GCO18222 | Outer Joint | | 25 | 23 | 53.3 | 87 | 56 | M |
| | 2012.10-2017.12 | | F | R | Box Body/MPV FWD SPJD;SPJE | | GDS18201 | Drive Shaft | | 25 | 23 | 53.3 | 90 | 919 | |
| | 2012.10-2017.12 | 5MT | F | L | MPV FWD SPJD;SPJE | Date to:2015.08 | GDS18216 | Drive Shaft | | 25 | 23 | 53.3 | 90 | 621 | |
| | 2012.10-2017.12 | 5MT | F | R | MPV FWD SPJD;SPJE | | GDS18201 | Drive Shaft | | 25 | 23 | 53.3 | 90 | 919 | |
| | 2012.10-2017.12 | 5MT | F | L/R | MPV FWD SPJD;SPJE | | GCO18009 | Outer Joint | | 25 | 22 | 53.3 | 90 | 51 | M |
| | 2012.10-2017.12 | 5MT | F | L/R | MPV FWD SPJD;SPJE | | GCO18222 | Outer Joint | | 25 | 23 | 53.3 | 87 | 56 | M |
| | 2012.10-2017.12 | 5MT | F | L | MPV FWD SPJD;SPJE | | GCI18085 | Inner Joint | | 23 | 22 | 40 | 61 | 90 | |
| | 2013.08-2017.12 | 5MT | F | L | MPV FWD RTJC | | GDS18216 | Drive Shaft | | 25 | 23 | 53.3 | 90 | 621 | |
| | 2013.08-2017.12 | 5MT | F | R | MPV FWD RTJC | | GDS18201 | Drive Shaft | | 25 | 23 | 53.3 | 90 | 919 | |
| | 2013.08-2017.12 | MT | F | L/R | MPV FWD RTJC | Date from:2014.01 | GCO18222 | Outer Joint | | 25 | 23 | 53.3 | 87 | 56 | M |
| 1.5 (55 kw) | 2012.10-2017.12 | 5MT | F | L | Box Body/MPV FWD UGJC;XUJA;XUJB;UGJG | | GDS18405 | Drive Shaft | | 25 | 23 | 53.2 | 88.5 | 622 | |
| | 2012.10-2017.12 | 5MT | F | R | Box Body/MPV FWD UGJC;XUJA;XUJB;UGJG | | GDS18380 | Drive Shaft | | 25 | 23 | 53.2 | 88.5 | 920 | |
| | 2012.10-2017.12 | 5MT | F | L/R | Box Body/MPV FWD UGJC;XUJA;XUJB;UGJG | | GCO18258 | Outer Joint | | 25 | 24 | 53.2 | 88.5 | 58.5 | M |
| | 2012.10-2017.12 | MT | F | L | Box Body/MPV FWD UGJC;XUJA;XUJB;UGJG | | GCI18086 | Inner Joint | | 23 | 22 | 40 | 61 | 90 | |
| | 2012.10-2017.12 | 5MT | F | L | MPV FWD UGJC;XUJA;XUJB;UGJG | | GDS18405 | Drive Shaft | | 25 | 23 | 53.2 | 88.5 | 622 | |
| | 2012.10-2017.12 | 5MT | F | R | MPV FWD UGJC;XUJA;XUJB;UGJG | | GDS18380 | Drive Shaft | | 25 | 23 | 53.2 | 88.5 | 920 | |
| | 2012.10-2017.12 | 5MT | F | R | MPV FWD UGJC;XUJA;XUJB;UGJG | | GCO18258 | Outer Joint | | 25 | 24 | 53.2 | 88.5 | 58.5 | M |
| | 2012.10-2017.12 | 5MT | F | L | MPV FWD UGJC;XUJA;XUJB;UGJG | | GCI18086 | Inner Joint | | 23 | 22 | 40 | 61 | 90 | |
| 1.5 (70 kw) | 2015.04-2017.12 | 5MT | F | L | Box Body/MPV FWD XVJA;XVJC | | GDS18405 | Drive Shaft | | 25 | 23 | 53.2 | 88.5 | 622 | |
| | 2015.04-2017.12 | 5MT | F | R | Box Body/MPV FWD XVJA;XVJC | | GDS18380 | Drive Shaft | | 25 | 23 | 53.2 | 88.5 | 920 | |
| | 2015.04-2017.12 | 5MT | F | L/R | Box Body/MPV FWD XVJA;XVJC | | GCO18258 | Outer Joint | | 25 | 24 | 53.2 | 88.5 | 58.5 | M |
| | 2015.04-2017.12 | MT | F | L | Box Body/MPV FWD XVJA;XVJC | | GCI18086 | Inner Joint | | 23 | 22 | 40 | 61 | 90 | |
| | 2015.04-2017.12 | 5MT | F | L | MPV FWD XVJA;XVJC | | GDS18405 | Drive Shaft | | 25 | 23 | 53.2 | 88.5 | 622 | |
| | 2015.04-2017.12 | 5MT | F | R | MPV FWD XVJA;XVJC | | GDS18380 | Drive Shaft | | 25 | 23 | 53.2 | 88.5 | 920 | |
| | 2015.04-2017.12 | 5MT | F | L/R | MPV FWD XVJA;XVJC | | GCO18258 | Outer Joint | | 25 | 24 | 53.2 | 88.5 | 58.5 | M |

| | YEAR | TRANSM. | F/R | L/R | BODY STYLE & DRIVE TYPE & ENGINE | REMARKS | G-AP Ref. | PRODUCT | ABS | Technical Specifications | | | | | |
|---|---|---|---|---|---|---|---|---|---|---|---|---|---|---|---|
| | | | | | | | | | | A | B | C | H | L | P |
| **FORD** | | | | | | | | | | | | | | | |
| **B-Max** | | | | | | | | | | | | | | | |
| 1.5 (70 kw) | 2015.04-2017.12 | 5MT | F | L | MPV FWD XVJA;XVJC | | GCI18086 | Inner Joint | | 23 | 22 | 40 | 61 | 90 | |
| 1.6 (70 kw) | 2012.10-2017.12 | 5MT | F | L | Box Body/MPV FWD T3JB | | GDS18405 | Drive Shaft | | 25 | 23 | 53.2 | 88.5 | 622 | |
| | 2012.10-2017.12 | 5MT | F | R | Box Body/MPV FWD T3JB | | GDS18380 | Drive Shaft | | 25 | 23 | 53.2 | 88.5 | 920 | |
| | 2012.10-2017.12 | 5MT | F | L/R | Box Body/MPV FWD T3JB | | GCO18258 | Outer Joint | | 25 | 24 | 53.2 | 88.5 | 58.5 | M |
| | 2012.10-2017.12 | | F | L | Box Body/MPV FWD T3JB | | GCI18086 | Inner Joint | | 23 | 22 | 40 | 61 | 90 | |
| | 2012.10-2017.12 | 5MT | F | L | MPV FWD T3JB | | GDS18405 | Drive Shaft | | 25 | 23 | 53.2 | 88.5 | 622 | |
| | 2012.10-2017.12 | 5MT | F | R | MPV FWD T3JB | | GDS18380 | Drive Shaft | | 25 | 23 | 53.2 | 88.5 | 920 | |
| | 2012.10-2017.12 | 5MT | F | L/R | MPV FWD T3JB | | GCO18258 | Outer Joint | | 25 | 24 | 53.2 | 88.5 | 58.5 | M |
| | 2012.10-2017.12 | 5MT | F | L | MPV FWD T3JB | | GCI18086 | Inner Joint | | 23 | 22 | 40 | 61 | 90 | |
| 1.6 (77 kw) | 2012.10-2017.12 | 6AT | F | L | Box Body/MPV FWD IQJA;IQJC | | GDS18389 | Drive Shaft | | 25 | 34 | 53.3 | 87 | 566 | |
| | 2012.10-2017.12 | AT | F | R | Box Body/MPV FWD IQJA;IQJC | Date from:2013.01 | GDS18406 | Drive Shaft | | 25 | 34 | 53.3 | 87 | 974 | |
| | 2012.10-2017.12 | AT/MT | F | L/R | Box Body/MPV FWD IQJA;IQJC | Date from:2013.01 | GCO18222 | Outer Joint | | 25 | 23 | 53.3 | 87 | 56 | M |
| | 2012.10-2017.12 | MT | F | L | Box Body/MPV FWD IQJA;IQJC | Date from:2013.01 | GDS18216 | Drive Shaft | | 25 | 23 | 53.3 | 90 | 621 | |
| | 2012.10-2017.12 | MT | F | R | Box Body/MPV FWD IQJA;IQJC | Date from:2013.01 | GDS18201 | Drive Shaft | | 25 | 23 | 53.3 | 90 | 919 | |
| | 2012.10-2017.12 | 6AT | F | L | MPV FWD IQJA;IQJC | Date to:2015.08 | GDS18389 | Drive Shaft | | 25 | 34 | 53.3 | 87 | 566 | |
| | 2012.10-2017.12 | 6AT | F | R | MPV FWD IQJA;IQJC | | GDS18406 | Drive Shaft | | 25 | 34 | 53.3 | 87 | 974 | |
| | 2012.10-2017.12 | 6AT | F | L/R | MPV FWD IQJA;IQJC | | GCO18222 | Outer Joint | | 25 | 23 | 53.3 | 87 | 56 | M |
| | 2012.10-2017.12 | MT | F | L | MPV FWD IQJA;IQJC | Date from:2013.01 | GDS18216 | Drive Shaft | | 25 | 23 | 53.3 | 90 | 621 | |
| | 2012.10-2017.12 | MT | F | R | MPV FWD IQJA;IQJC | Date from:2013.01 | GDS18201 | Drive Shaft | | 25 | 23 | 53.3 | 90 | 919 | |
| **C-Max** | | | | | | | | | | | | | | | |
| 1.0 (74 kw) | 2012.10-2019.06 | 6MT | F | L | Box Body/MPV FWD M2DA;M2DC | Date to:2018.02 | GDS18295 | Drive Shaft | | 27 | 26 | 62.7 | 96 | 637 | |
| | 2012.10-2019.06 | 6MT | F | R | Box Body/MPV FWD M2DA;M2DC | Date to:2018.02 | GDS18294 | Drive Shaft | | 27 | 26 | 62.7 | 96 | 972 | |
| | 2012.10-2019.06 | 6MT | F | L/R | Box Body/MPV FWD M2DA;M2DC | Date to:2018.02 | GCO18277 | Outer Joint | | 27 | 33 | 62.8 | 95.5 | 59 | M |
| | 2012.10-2019.06 | 6MT | F | R | Box Body/MPV FWD M2DA;M2DC | Date to:2018.02 | GCI81295 | Inner Joint | | 26 | 33 | 40 | 381.5 | 83.5 | |
| | 2012.10-2019.06 | 6MT | F | L | MPV FWD M2DA;M2DC | Date to:2018.02 | GDS18295 | Drive Shaft | | 27 | 26 | 62.7 | 96 | 637 | |
| | 2012.10-2019.06 | 6MT | F | R | MPV FWD M2DA;M2DC | Date to:2018.02 | GDS18294 | Drive Shaft | | 27 | 26 | 62.7 | 96 | 972 | |
| | 2012.10-2019.06 | 6MT | F | L/R | MPV FWD M2DA;M2DC | Date to:2018.02 | GCO18277 | Outer Joint | | 27 | 33 | 62.8 | 95.5 | 59 | M |
| | 2012.10-2019.06 | 6MT | F | R | MPV FWD M2DA;M2DC | Date to:2018.02 | GCI81295 | Inner Joint | | 26 | 33 | 40 | 381.5 | 83.5 | |
| 1.0 (92 kw) | 2012.10-2019.06 | 6MT | F | L | Box Body/MPV FWD M1DA;M1DD;B7DA | Date to:2018.02 | GDS18295 | Drive Shaft | | 27 | 26 | 62.7 | 96 | 637 | |
| | 2012.10-2019.06 | 6MT | F | R | Box Body/MPV FWD M1DA;M1DD;B7DA | Date to:2018.02 | GDS18294 | Drive Shaft | | 27 | 26 | 62.7 | 96 | 972 | |
| | 2012.10-2019.06 | 6MT | F | L/R | Box Body/MPV FWD M1DA;M1DD;B7DA | Date to:2018.02 | GCO18277 | Outer Joint | | 27 | 33 | 62.8 | 95.5 | 59 | M |
| | 2012.10-2019.06 | 6MT | F | R | Box Body/MPV FWD M1DA;M1DD;B7DA | Date to:2018.02 | GCI81295 | Inner Joint | | 26 | 33 | 40 | 381.5 | 83.5 | |
| | 2012.10-2019.06 | 6MT | F | L | MPV FWD M1DA;M1DD | Date to:2018.02 | GDS18295 | Drive Shaft | | 27 | 26 | 62.7 | 96 | 637 | |
| | 2012.10-2019.06 | 6MT | F | R | MPV FWD M1DA;M1DD | Date to:2018.02 | GDS18294 | Drive Shaft | | 27 | 26 | 62.7 | 96 | 972 | |
| | 2012.10-2019.06 | 6MT | F | L/R | MPV FWD M1DA;M1DD | Date to:2018.02 | GCO18277 | Outer Joint | | 27 | 33 | 62.8 | 95.5 | 59 | M |
| | 2012.10-2019.06 | 6MT | F | R | MPV FWD M1DA;M1DD | Date to:2018.02 | GCI81295 | Inner Joint | | 26 | 33 | 40 | 381.5 | 83.5 | |
| 1.5 (70 kw) | 2015.03-2019.06 | 6MT | F | R | MPV FWD XXDA;XXDC;XXDD | | GCI81338 | Inner Joint | | 26 | 32 | 40 | 383 | 99 | |
| | 2015.03-2019.06 | MT | F | L | MPV FWD XXDA;XXDC;XXDD | | GDS18295 | Drive Shaft | | 27 | 26 | 62.7 | 96 | 637 | |
| | 2015.03-2019.06 | MT | F | R | MPV FWD XXDA;XXDC;XXDD | | GDS18294 | Drive Shaft | | 27 | 26 | 62.7 | 96 | 972 | |
| | 2015.03-2019.06 | MT | F | L/R | MPV FWD XXDA;XXDC;XXDD | | GCO18240 | Outer Joint | | 27 | 26 | 62.7 | 96 | 62.5 | M |
| 1.5 (77 kw) | 2015.03-2019.06 | 6MT | F | R | Box Body/MPV FWD AEDA | | GCI81338 | Inner Joint | | 26 | 32 | 40 | 383 | 99 | |
| | 2015.03-2019.06 | MT | F | L | Box Body/MPV FWD AEDA | | GDS18295 | Drive Shaft | | 27 | 26 | 62.7 | 96 | 637 | |
| | 2015.03-2019.06 | MT | F | R | Box Body/MPV FWD AEDA | Wheels:Alloy Wheels | GDS18294 | Drive Shaft | | 27 | 26 | 62.7 | 96 | 972 | |
| | 2015.03-2019.06 | MT | F | L/R | Box Body/MPV FWD AEDA | | GCO18240 | Outer Joint | | 27 | 26 | 62.7 | 96 | 62.5 | M |
| | 2015.03-2019.06 | 6MT | F | R | MPV FWD AEDA | | GCI81338 | Inner Joint | | 26 | 32 | 40 | 383 | 99 | |
| | 2015.03-2019.06 | MT | F | L | MPV FWD AEDA | | GDS18295 | Drive Shaft | | 27 | 26 | 62.7 | 96 | 637 | |
| | 2015.03-2019.06 | MT | F | R | MPV FWD AEDA | | GDS18294 | Drive Shaft | | 27 | 26 | 62.7 | 96 | 972 | |
| | 2015.03-2019.06 | MT | F | L/R | MPV FWD AEDA | | GCO18240 | Outer Joint | | 27 | 26 | 62.7 | 96 | 62.5 | M |
| 1.5 (88 kw) | 2015.03-2019.06 | 6DCT | F | L | Box Body/MPV FWD XWDA;XWDB;XWDC;XWDD;XWDE | | GDS81479 | Drive Shaft | | 27 | 28 | 63.1 | 96 | 623 | |
| | 2015.03-2019.06 | 6DCT | F | R | Box Body/MPV FWD XWDA;XWDB;XWDC;XWDD;XWDE | With vibration damper | GDS81480 | Drive Shaft | | 27 | 28 | 63.1 | 96 | 967 | |
| | 2015.03-2019.06 | 6DCT | F | L/R | Box Body/MPV FWD XWDA;XWDB;XWDC;XWDD;XWDE | With vibration damper | GCO18252 | Outer Joint | | 27 | 26 | 63.1 | 96 | 64 | I |
| | 2015.03-2019.06 | 6DCT | F | L | Box Body/MPV FWD XWDA;XWDB;XWDC;XWDD;XWDE | | GCI62053 | Inner Joint | | 28 | 26 | 34 | 79.5 | 91 | |
| | 2015.03-2019.06 | 6MT | F | L/R | Box Body/MPV FWD XWDA;XWDB;XWDC;XWDD;XWDE | | GCO18240 | Outer Joint | | 27 | 26 | 62.7 | 96 | 62.5 | M |
| | 2015.03-2019.06 | 6MT | F | R | Box Body/MPV FWD XWDA;XWDB;XWDC;XWDD;XWDE | | GCI81338 | Inner Joint | | 26 | 32 | 40 | 383 | 99 | |
| | 2015.03-2019.06 | MT | F | L | Box Body/MPV FWD XWDA;XWDB;XWDC;XWDD;XWDE | | GDS18295 | Drive Shaft | | 27 | 26 | 62.7 | 96 | 637 | |
| | 2015.03-2019.06 | MT | F | R | Box Body/MPV FWD XWDA;XWDB;XWDC;XWDD;XWDE | Wheels:Alloy Wheels | GDS18294 | Drive Shaft | | 27 | 26 | 62.7 | 96 | 972 | |
| | 2015.03-2019.06 | 6DCT | F | L | MPV FWD XWDA;XWDB;XWDC;XWDD;XWDE | | GDS81479 | Drive Shaft | | 27 | 28 | 63.1 | 96 | 623 | |
| | 2015.03-2019.06 | 6DCT | F | R | MPV FWD XWDA;XWDB;XWDC;XWDD;XWDE | With vibration damper | GDS81480 | Drive Shaft | | 27 | 28 | 63.1 | 96 | 967 | |
| | 2015.03-2019.06 | 6DCT | F | L/R | MPV FWD XWDA;XWDB;XWDC;XWDD;XWDE | With vibration damper | GCO18252 | Outer Joint | | 27 | 26 | 63.1 | 96 | 64 | I |
| | 2015.03-2019.06 | 6DCT | F | L | MPV FWD XWDA;XWDB;XWDC;XWDD;XWDE | | GCI62053 | Inner Joint | | 28 | 26 | 34 | 79.5 | 91 | |
| | 2015.03-2019.06 | 6MT | F | L/R | MPV FWD XWDA;XWDB;XWDC;XWDD;XWDE | | GCO18240 | Outer Joint | | 27 | 26 | 62.7 | 96 | 62.5 | M |
| | 2015.03-2019.06 | 6MT | F | R | MPV FWD XWDA;XWDB;XWDC;XWDD;XWDE | | GCI81338 | Inner Joint | | 26 | 32 | 40 | 383 | 99 | |
| | 2015.03-2019.06 | MT | F | L | MPV FWD XWDA;XWDB;XWDC;XWDD;XWDE | | GDS18295 | Drive Shaft | | 27 | 26 | 62.7 | 96 | 637 | |
| | 2015.03-2019.06 | MT | F | R | MPV FWD XWDA;XWDB;XWDC;XWDD;XWDE | | GDS18294 | Drive Shaft | | 27 | 26 | 62.7 | 96 | 972 | |
| 1.5 (110 kw) | 2015.03-2019.06 | 6AT | F | L/R | Box Body/MPV FWD M8DB;M8DF | | GCO82320 | Outer Joint | | 27 | 26 | 62.5 | 96 | 62 | M |

| | YEAR | TRANSM. | F/R | L/R | BODY STYLE & DRIVE TYPE & ENGINE | REMARKS | G-AP Ref. | PRODUCT | ABS | Technical Specifications | | | | | |
|---|---|---|---|---|---|---|---|---|---|---|---|---|---|---|---|
| | | | | | | | | | | A | B | C | H | L | P |
| **FORD** **C-Max** | | | | | | | | | | | | | | | |
| 1.5 (110 kw) | 2015.03-2019.06 | 6MT | F | R | Box Body/MPV FWD M8DB;M8DF | | GDS18299 | Drive Shaft | | 27 | 26 | 60.8 | 96 | 975 | |
| | 2015.03-2019.06 | 6MT | F | L | Box Body/MPV FWD M8DB;M8DF | | GCI81392 | Inner Joint | | 26 | 24 | 40 | 60 | 112 | |
| | 2015.03-2019.06 | 6MT | F | R | Box Body/MPV FWD M8DB;M8DF | | GCI81338 | Inner Joint | | 26 | 32 | 40 | 383 | 99 | |
| | 2015.03-2019.06 | MT | F | L | Box Body/MPV FWD M8DB;M8DF | | GDS18295 | Drive Shaft | | 27 | 26 | 62.7 | 96 | 637 | |
| | 2015.03-2019.06 | MT | F | L/R | Box Body/MPV FWD M8DB;M8DF | | GCO18244 | Outer Joint | | 27 | 24 | 62.8 | 95.5 | 59 | M |
| | 2015.03-2019.06 | 6AT | F | L/R | MPV FWD M8DB;M8DF | | GCO82320 | Outer Joint | | 27 | 26 | 62.5 | 96 | 62 | M |
| | 2015.03-2019.06 | 6MT | F | L | MPV FWD M8DB;M8DF | | GCI81392 | Inner Joint | | 26 | 24 | 40 | 60 | 112 | |
| | 2015.03-2019.06 | 6MT | F | R | MPV FWD M8DB;M8DF | | GCI81338 | Inner Joint | | 26 | 32 | 40 | 383 | 99 | |
| | 2015.03-2019.06 | MT | F | L | MPV FWD M8DB;M8DF | | GDS18295 | Drive Shaft | | 27 | 26 | 62.7 | 96 | 637 | |
| | 2015.03-2019.06 | MT | F | R | MPV FWD M8DB;M8DF | | GDS18299 | Drive Shaft | | 27 | 26 | 60.8 | 96 | 975 | |
| | 2015.03-2019.06 | MT | F | L/R | MPV FWD M8DB;M8DF | | GCO18244 | Outer Joint | | 27 | 24 | 62.8 | 95.5 | 59 | M |
| 1.5 (134 kw) | 2015.03-2019.06 | 6AT | F | L/R | Box Body/MPV FWD M9DB | | GCO82320 | Outer Joint | | 27 | 26 | 62.5 | 96 | 62 | M |
| | 2015.03-2019.06 | MT | F | L/R | Box Body/MPV FWD M9DB | | GCO18244 | Outer Joint | | 27 | 24 | 62.8 | 95.5 | 59 | M |
| | 2015.03-2019.06 | 6AT | F | L/R | MPV FWD M9DB | | GCO82320 | Outer Joint | | 27 | 26 | 62.5 | 96 | 62 | M |
| | 2015.03-2019.06 | MT | F | L/R | MPV FWD M9DB | | GCO18244 | Outer Joint | | 27 | 24 | 62.8 | 95.5 | 59 | M |
| 1.6 (63 kw) | 2010.12-2019.06 | 5MT | F | L | MPV FWD XTDA;XTDB | | GDS18322 | Drive Shaft | | 27 | 23 | 62.8 | 95.5 | 657 | |
| | 2010.12-2019.06 | 5MT | F | R | MPV FWD XTDA;XTDB | | GDS18323 | Drive Shaft | | 27 | 23 | 62.8 | 95.5 | 961 | |
| | 2010.12-2019.06 | 5MT | F | L | MPV FWD XTDA;XTDB | For Modelcode:BJ | GCI18086 | Inner Joint | | 23 | 22 | 40 | 61 | 90 | |
| | 2010.12-2019.06 | 5MT | F | R | MPV FWD XTDA;XTDB | For Modelcode:BJ | GCI18263 | Inner Joint | | 23 | 22 | 40 | 375 | 76 | |
| | 2010.12-2019.06 | AT | F | L/R | MPV FWD XTDA;XTDB | Date from:2011.01 | GCO18238 | Outer Joint | | 27 | 23 | 63 | 96 | 57 | M |
| | 2010.12-2019.06 | MT | F | L/R | MPV FWD XTDA;XTDB | Date from:2011.01 | GCO18244 | Outer Joint | | 27 | 24 | 62.8 | 95.5 | 59 | M |
| 1.6 (66 kw) | 2007.02-2010.09 | 5MT | F | L | MPV FWD HHDA;HHDB;GPDA | | GDS18218 | Drive Shaft | | 36 | 26 | 56 | 48 | 582 | |
| | 2007.02-2010.09 | 5MT | F | R | MPV FWD HHDA;HHDB;GPDA | | GDS18219 | Drive Shaft | | 36 | 26 | 56.3 | 48 | 921 | |
| | 2007.02-2010.09 | 5MT | F | L | MPV FWD HHDA;HHDB;GPDA | | GCO99288 | Outer Joint | | 36 | 26 | 56.3 | 48 | 61 | M |
| | 2007.02-2010.09 | 5MT | F | R | MPV FWD HHDA;HHDB;GPDA | | GCO18230 | Outer Joint | | 36 | 26 | 56.3 | 48 | 61 | M |
| 1.6 (70 kw) | 2010.12-2019.06 | 6MT | F | L | Box Body/MPV FWD T3DA;T3DB | | GCI21028 | Inner Joint | | 26 | 32 | 40 | 61 | 112.5 | |
| | 2010.12-2019.06 | 6MT | F | R | Box Body/MPV FWD T3DA;T3DB | | GCI81338 | Inner Joint | | 26 | 32 | 40 | 383 | 99 | |
| | 2010.12-2019.06 | MT | F | L | Box Body/MPV FWD T3DA;T3DB | Date from:2011.01 | GDS18295 | Drive Shaft | | 27 | 26 | 62.7 | 96 | 637 | |
| | 2010.12-2019.06 | MT | F | R | Box Body/MPV FWD T3DA;T3DB | Date from:2011.01 | GDS18294 | Drive Shaft | | 27 | 26 | 62.7 | 96 | 972 | |
| | 2010.12-2019.06 | MT | F | L/R | Box Body/MPV FWD T3DA;T3DB | Date from:2011.01 | GCO18240 | Outer Joint | | 27 | 26 | 62.7 | 96 | 62.5 | M |
| | 2010.12-2019.06 | 6MT | F | L | MPV FWD T3DA;T3DB | | GDS18295 | Drive Shaft | | 27 | 26 | 62.7 | 96 | 637 | |
| | 2010.12-2019.06 | 6MT | F | R | MPV FWD T3DA;T3DB | | GDS18294 | Drive Shaft | | 27 | 26 | 62.7 | 96 | 972 | |
| | 2010.12-2019.06 | 6MT | F | L | MPV FWD T3DA;T3DB | | GCI21028 | Inner Joint | | 26 | 32 | 40 | 61 | 112.5 | |
| | 2010.12-2019.06 | 6MT | F | R | MPV FWD T3DA;T3DB | | GCI81338 | Inner Joint | | 26 | 32 | 40 | 383 | 99 | |
| | 2010.12-2019.06 | MT | F | L | MPV FWD T3DA;T3DB | | GCO18240 | Outer Joint | | 27 | 26 | 62.7 | 96 | 62.5 | M |
| 1.6 (74 kw) | 2007.02-2010.09 | 5MT | F | L | MPV FWD G8DC;MTDA | | GDS18218 | Drive Shaft | | 36 | 26 | 56 | 48 | 582 | |
| | 2007.02-2010.09 | 5MT | F | R | MPV FWD G8DC;MTDA | | GDS18219 | Drive Shaft | | 36 | 26 | 56.3 | 48 | 921 | |
| | 2007.02-2010.09 | 5MT | F | L | MPV FWD G8DC;MTDA | | GCO99288 | Outer Joint | | 36 | 26 | 56.3 | 48 | 61 | M |
| | 2007.02-2010.09 | 5MT | F | R | MPV FWD G8DC;MTDA | | GCO18230 | Outer Joint | | 36 | 26 | 56.3 | 48 | 61 | M |
| | 2007.02-2010.09 | 5MT | F | L | MPV FWD HWDA;HWDB;SHDA;SHDB;SHDC | Inner teeth of wheel side:24 | GDS18261 | Drive Shaft | | 36 | 23 | 55.8 | 48 | 600 | |
| | 2007.02-2010.09 | 5MT | F | L | MPV FWD HWDA;HWDB;SHDA;SHDB;SHDC | Inner teeth of wheel side:23 | GDS18359 | Drive Shaft | | 36 | 23 | 56 | 48 | 594 | |
| | 2007.02-2010.09 | 5MT | F | R | MPV FWD HWDA;HWDB;SHDA;SHDB;SHDC | Inner teeth of wheel side:24 | GDS18262 | Drive Shaft | | 36 | 23 | 55.8 | 48 | 905 | |
| | 2007.02-2010.09 | 5MT | F | R | MPV FWD HWDA;HWDB;SHDA;SHDB;SHDC | Inner teeth of wheel side:23 | GDS18358 | Drive Shaft | | 36 | 23 | 56 | 48 | 899 | |
| | 2007.02-2010.09 | 5MT | F | L/R | MPV FWD HWDA;HWDB;SHDA;SHDB;SHDC | | GCO99129 | Outer Joint | | 36 | 24 | 56 | 48 | 57 | M |
| | 2007.02-2010.09 | 5MT | F | L | MPV FWD HWDA;HWDB;SHDA;SHDB;SHDC | | GCI18086 | Inner Joint | | 23 | 22 | 40 | 61 | 90 | |
| | 2007.02-2010.09 | 5MT | F | R | MPV FWD HWDA;HWDB;SHDA;SHDB;SHDC | | GCI18087 | Inner Joint | | 23 | 22 | 40 | 371 | 78.5 | |
| | 2007.02-2010.09 | AT | F | L | MPV FWD HWDA;HWDB;SHDA;SHDB;SHDC | | GDS18218 | Drive Shaft | | 36 | 26 | 56 | 48 | 582 | |
| | 2007.02-2010.09 | AT | F | R | MPV FWD HWDA;HWDB;SHDA;SHDB;SHDC | | GDS18219 | Drive Shaft | | 36 | 26 | 56.3 | 48 | 921 | |
| | 2007.02-2010.09 | MT | F | L | MPV FWD HWDA;HWDB;SHDA;SHDB;SHDC | Inner teeth of wheel side:24 | GDS18189 | Drive Shaft | | 36 | 23 | 56 | 48 | 601 | |
| | 2007.02-2010.09 | MT | F | L | MPV FWD HWDA;HWDB;SHDA;SHDB;SHDC | Inner teeth of wheel side:25 | GDS18336 | Drive Shaft | | 36 | 23 | 51.6 | 48 | 600 | |
| | 2007.02-2010.09 | MT | F | R | MPV FWD HWDA;HWDB;SHDA;SHDB;SHDC | Inner teeth of wheel side:24 | GDS18206 | Drive Shaft | | 36 | 23 | 56 | 48 | 906 | |
| | 2007.02-2010.09 | MT | F | R | MPV FWD HWDA;HWDB;SHDA;SHDB;SHDC | Inner teeth of wheel side:25 | GDS18337 | Drive Shaft | | 36 | 23 | 51.6 | 48 | 908 | |
| | 2007.02-2010.09 | MT | F | L | MPV FWD HWDA;HWDB;SHDA;SHDB;SHDC | | GCO18264 | Outer Joint | | 36 | 25 | 51.6 | 48 | 58 | O |
| | 2007.02-2010.09 | | F | L/R | MPV FWD HWDA;HWDB;SHDA;SHDB;SHDC | | GCO62039 | Outer Joint | | 36 | 24 | 55.8 | 48 | 57 | M |
| 1.6 (77 kw) | 2010.10-2019.06 | 5MT | F | L | Box Body/MPV FWD IQDA;IQDB | For steel and light alloy rims | GDS18322 | Drive Shaft | | 27 | 23 | 62.8 | 95.5 | 657 | |
| | 2010.10-2019.06 | 5MT | F | R | Box Body/MPV FWD IQDA;IQDB | | GDS18323 | Drive Shaft | | 27 | 23 | 62.8 | 95.5 | 961 | |
| | 2010.10-2019.06 | 5MT | F | R | Box Body/MPV FWD IQDA;IQDB | | GCO18244 | Outer Joint | | 27 | 24 | 62.8 | 95.5 | 59 | M |
| | 2010.10-2019.06 | 5MT | F | L | Box Body/MPV FWD IQDA;IQDB | | GCI18086 | Inner Joint | | 23 | 22 | 40 | 61 | 90 | |
| | 2010.10-2019.06 | 5MT | F | R | Box Body/MPV FWD IQDA;IQDB | | GCI18263 | Inner Joint | | 23 | 22 | 40 | 375 | 76 | |
| | 2010.10-2019.06 | MT | F | R | Box Body/MPV FWD IQDA;IQDB | | GCI18087 | Inner Joint | | 23 | 22 | 40 | 371 | 78.5 | |
| | 2010.12-2019.06 | 5MT | F | L | MPV FWD IQDA;IQDB | | GDS18322 | Drive Shaft | | 27 | 23 | 62.8 | 95.5 | 657 | |
| | 2010.12-2019.06 | 5MT | F | R | MPV FWD IQDA;IQDB | | GDS18323 | Drive Shaft | | 27 | 23 | 62.8 | 95.5 | 961 | |
| | 2010.12-2019.06 | 5MT | F | L | MPV FWD IQDA;IQDB | | GCI18086 | Inner Joint | | 23 | 22 | 40 | 61 | 90 | |
| | 2010.12-2019.06 | 5MT | F | R | MPV FWD IQDA;IQDB | | GCI18263 | Inner Joint | | 23 | 22 | 40 | 375 | 76 | |
| | 2010.12-2019.06 | AT | F | L/R | MPV FWD IQDA;IQDB | | GCO18238 | Outer Joint | | 27 | 23 | 63 | 96 | 57 | M |

| | YEAR | TRANSM. | F/R | L/R | BODY STYLE & DRIVE TYPE & ENGINE | REMARKS | G-AP Ref. | PRODUCT | ABS | Technical Specifications | | | | | |
|---|---|---|---|---|---|---|---|---|---|---|---|---|---|---|---|
| | | | | | | | | | | A | B | C | H | L | P |
| **FORD** **C-Max** | | | | | | | | | | | | | | | |
| 1.6 (77 kw) | 2010.12-2019.06 | MT | F | L/R | MPV FWD IQDA;IQDB | | GCO18244 | Outer Joint | | 27 | 24 | 62.8 | 95.5 | 59 | M |
| 1.6 (80 kw) | 2007.02-2010.09 | 5MT | F | L | MPV FWD G8DA;G8DB;G8DD | | GDS18218 | Drive Shaft | | 36 | 26 | 56 | 48 | 582 | |
| | 2007.02-2010.09 | 5MT | F | R | MPV FWD G8DA;G8DB;G8DD | | GDS18219 | Drive Shaft | | 36 | 26 | 56.3 | 48 | 921 | |
| | 2007.02-2010.09 | 5MT | F | L | MPV FWD G8DA;G8DB;G8DD | | GCO99288 | Outer Joint | | 36 | 26 | 56.3 | 48 | 61 | M |
| | 2007.02-2010.09 | 5MT | F | R | MPV FWD G8DA;G8DB;G8DD | | GCO18230 | Outer Joint | | 36 | 26 | 56.3 | 48 | 61 | M |
| 1.6 (85 kw) | 2007.04-2010.09 | 5MT | F | L | MPV FWD HXDA;HXDB;SIDA | Inner teeth of wheel side:24 | GDS18261 | Drive Shaft | | 36 | 23 | 55.8 | 48 | 600 | |
| | 2007.04-2010.09 | 5MT | F | L | MPV FWD HXDA;HXDB;SIDA | Inner teeth of wheel side:23 | GDS18359 | Drive Shaft | | 36 | 23 | 56 | 48 | 594 | |
| | 2007.04-2010.09 | 5MT | F | R | MPV FWD HXDA;HXDB;SIDA | Inner teeth of wheel side:24 | GDS18262 | Drive Shaft | | 36 | 23 | 55.8 | 48 | 905 | |
| | 2007.04-2010.09 | 5MT | F | R | MPV FWD HXDA;HXDB;SIDA | Inner teeth of wheel side:23 | GDS18358 | Drive Shaft | | 36 | 23 | 56 | 48 | 899 | |
| | 2007.04-2010.09 | 5MT | F | L/R | MPV FWD HXDA;HXDB;SIDA | | GCO99129 | Outer Joint | | 36 | 24 | 56 | 48 | 57 | M |
| | 2007.04-2010.09 | 5MT | F | L | MPV FWD HXDA;HXDB;SIDA | | GCI18086 | Inner Joint | | 23 | 22 | 40 | 61 | 90 | |
| | 2007.04-2010.09 | 5MT | F | R | MPV FWD HXDA;HXDB;SIDA | | GCI18087 | Inner Joint | | 23 | 22 | 40 | 371 | 78.5 | |
| | 2007.04-2010.09 | MT | F | L | MPV FWD HXDA;HXDB;SIDA | | GDS18189 | Drive Shaft | | 36 | 23 | 56 | 48 | 601 | |
| | 2007.04-2010.09 | MT | F | L | MPV FWD HXDA;HXDB;SIDA | | GDS18336 | Drive Shaft | | 36 | 23 | 51.6 | 48 | 600 | |
| | 2007.04-2010.09 | MT | F | R | MPV FWD HXDA;HXDB;SIDA | | GDS18206 | Drive Shaft | | 36 | 23 | 56 | 48 | 906 | |
| | 2007.04-2010.09 | MT | F | R | MPV FWD HXDA;HXDB;SIDA | | GDS18337 | Drive Shaft | | 36 | 23 | 51.6 | 48 | 908 | |
| | 2007.04-2010.09 | MT | F | L | MPV FWD HXDA;HXDB;SIDA | | GCO18264 | Outer Joint | | 36 | 25 | 51.6 | 48 | 58 | O |
| | 2007.04-2010.09 | MT | F | L | MPV FWD HXDA;HXDB;SIDA | | GCI18168 | Inner Joint | | 23 | 22 | 40 | 61 | 90 | |
| | 2007.04-2010.09 | | F | L/R | MPV FWD HXDA;HXDB;SIDA | | GCO62039 | Outer Joint | | 36 | 24 | 55.8 | 48 | 57 | M |
| | 2010.12-2019.06 | 6MT | F | L | Box Body/MPV FWD T1DA;T1DB | | GDS18295 | Drive Shaft | | 27 | 26 | 62.7 | 96 | 637 | |
| | 2010.12-2019.06 | 6MT | F | R | Box Body/MPV FWD T1DA;T1DB | | GDS18294 | Drive Shaft | | 27 | 26 | 62.7 | 96 | 972 | |
| | 2010.12-2019.06 | 6MT | F | L | Box Body/MPV FWD T1DA;T1DB | For Modelcode:BJ | GCI21028 | Inner Joint | | 26 | 32 | 40 | 61 | 112.5 | |
| | 2010.12-2019.06 | 6MT | F | R | Box Body/MPV FWD T1DA;T1DB | | GCI81338 | Inner Joint | | 26 | 32 | 40 | 383 | 99 | |
| | 2010.12-2019.06 | MT | F | L/R | Box Body/MPV FWD T1DA;T1DB | Date from:2011.01 | GCO18240 | Outer Joint | | 27 | 26 | 62.7 | 96 | 62.5 | M |
| | 2010.12-2019.06 | 6AT/6MT | F | L | MPV FWD T1DA;T1DB | | GDS18295 | Drive Shaft | | 27 | 26 | 62.7 | 96 | 637 | |
| | 2010.12-2019.06 | 6AT/6MT | F | R | MPV FWD T1DA;T1DB | | GDS18294 | Drive Shaft | | 27 | 26 | 62.7 | 96 | 972 | |
| | 2010.12-2019.06 | 6MT | F | L | MPV FWD T1DA;T1DB | For Modelcode:BJ | GCI21028 | Inner Joint | | 26 | 32 | 40 | 61 | 112.5 | |
| | 2010.12-2019.06 | 6MT | F | R | MPV FWD T1DA;T1DB | | GCI81338 | Inner Joint | | 26 | 32 | 40 | 383 | 99 | |
| | 2010.12-2019.06 | MT | F | L/R | MPV FWD T1DA;T1DB | | GCO18240 | Outer Joint | | 27 | 26 | 62.7 | 96 | 62.5 | M |
| 1.6 (86 kw) | 2012.02-2019.06 | 5MT | F | L | MPV FWD MUDA;MUDD | | GDS18322 | Drive Shaft | | 27 | 23 | 62.8 | 95.5 | 657 | |
| | 2012.02-2019.06 | 5MT | F | R | MPV FWD MUDA;MUDD | | GDS18323 | Drive Shaft | | 27 | 23 | 62.8 | 95.5 | 961 | |
| | 2012.02-2019.06 | 5MT | F | L | MPV FWD MUDA;MUDD | For Modelcode:BJ | GCI18086 | Inner Joint | | 23 | 22 | 40 | 61 | 90 | |
| | 2012.02-2019.06 | 5MT | F | R | MPV FWD MUDA;MUDD | For Modelcode:BJ | GCI18263 | Inner Joint | | 23 | 22 | 40 | 375 | 76 | |
| | 2012.02-2019.06 | AT | F | L/R | MPV FWD MUDA;MUDD | | GCO18238 | Outer Joint | | 27 | 23 | 63 | 96 | 57 | M |
| | 2012.02-2019.06 | MT | F | L/R | MPV FWD MUDA;MUDD | | GCO18244 | Outer Joint | | 27 | 24 | 62.8 | 95.5 | 59 | M |
| | 2013.01-2014.12 | 5MT | F | L | MPV FWD MUDA | | GDS18322 | Drive Shaft | | 27 | 23 | 62.8 | 95.5 | 657 | |
| | 2013.01-2014.12 | 5MT | F | R | MPV FWD MUDA | | GDS18323 | Drive Shaft | | 27 | 23 | 62.8 | 95.5 | 961 | |
| | 2013.01-2014.12 | 5MT | F | R | MPV FWD MUDA | | GCI18263 | Inner Joint | | 23 | 22 | 40 | 375 | 76 | |
| | 2013.01-2014.12 | AT | F | L/R | MPV FWD MUDA | | GCO18238 | Outer Joint | | 27 | 23 | 63 | 96 | 57 | M |
| | 2013.01-2014.12 | MT | F | L/R | MPV FWD MUDA | | GCO18244 | Outer Joint | | 27 | 24 | 62.8 | 95.5 | 59 | M |
| | 2013.01-2014.12 | MT | F | R | MPV FWD MUDA | | GCI18087 | Inner Joint | | 23 | 22 | 40 | 371 | 78.5 | |
| 1.6 (88 kw) | 2011.02-2019.06 | 5MT | F | L | MPV FWD MUDA;MUDD | | GDS18322 | Drive Shaft | | 27 | 23 | 62.8 | 95.5 | 657 | |
| | 2011.02-2019.06 | 5MT | F | R | MPV FWD MUDA;MUDD | | GDS18323 | Drive Shaft | | 27 | 23 | 62.8 | 95.5 | 961 | |
| | 2011.02-2019.06 | 5MT | F | L | MPV FWD MUDA;MUDD | For Modelcode:BJ | GCI18086 | Inner Joint | | 23 | 22 | 40 | 61 | 90 | |
| | 2011.02-2019.06 | 5MT | F | R | MPV FWD MUDA;MUDD | For Modelcode:BJ | GCI18263 | Inner Joint | | 23 | 22 | 40 | 375 | 76 | |
| | 2011.02-2019.06 | AT | F | L/R | MPV FWD MUDA;MUDD | | GCO18238 | Outer Joint | | 27 | 23 | 63 | 96 | 57 | M |
| | 2011.02-2019.06 | MT | F | L/R | MPV FWD MUDA;MUDD | | GCO18244 | Outer Joint | | 27 | 24 | 62.8 | 95.5 | 59 | M |
| | 2012.02-2019.06 | 5MT | F | L | MPV FWD MUDA;MUDD | | GDS18322 | Drive Shaft | | 27 | 23 | 62.8 | 95.5 | 657 | |
| | 2012.02-2019.06 | 5MT | F | R | MPV FWD MUDA;MUDD | | GDS18323 | Drive Shaft | | 27 | 23 | 62.8 | 95.5 | 961 | |
| | 2012.02-2019.06 | 5MT | F | L | MPV FWD MUDA;MUDD | For Modelcode:BJ | GCI18086 | Inner Joint | | 23 | 22 | 40 | 61 | 90 | |
| | 2012.02-2019.06 | 5MT | F | R | MPV FWD MUDA;MUDD | For Modelcode:BJ | GCI18263 | Inner Joint | | 23 | 22 | 40 | 375 | 76 | |
| | 2012.02-2019.06 | AT | F | L/R | MPV FWD MUDA;MUDD | | GCO18238 | Outer Joint | | 27 | 23 | 63 | 96 | 57 | M |
| | 2012.02-2019.06 | MT | F | L/R | MPV FWD MUDA;MUDD | | GCO18244 | Outer Joint | | 27 | 24 | 62.8 | 95.5 | 59 | M |
| 1.6 (92 kw) | 2010.12-2019.06 | 5MT | F | L | MPV FWD PNDA;PNDD | | GDS18322 | Drive Shaft | | 27 | 23 | 62.8 | 95.5 | 657 | |
| | 2010.12-2019.06 | 5MT | F | R | MPV FWD PNDA;PNDD | | GDS18323 | Drive Shaft | | 27 | 23 | 62.8 | 95.5 | 961 | |
| | 2010.12-2019.06 | 5MT | F | L | MPV FWD PNDA;PNDD | For Modelcode:BJ | GCI18086 | Inner Joint | | 23 | 22 | 40 | 61 | 90 | |
| | 2010.12-2019.06 | 5MT | F | R | MPV FWD PNDA;PNDD | For Modelcode:BJ | GCI18263 | Inner Joint | | 23 | 22 | 40 | 375 | 76 | |
| | 2010.12-2019.06 | AT | F | L | MPV FWD PNDA;PNDD | | GDS18296 | Drive Shaft | | 27 | 34 | 63 | 96 | 606 | |
| | 2010.12-2019.06 | AT | F | R | MPV FWD PNDA;PNDD | | GDS18477 | Drive Shaft | | 27 | 34 | 63 | 96 | 1014 | |
| | 2010.12-2019.06 | AT | F | L/R | MPV FWD PNDA;PNDD | | GCO18238 | Outer Joint | | 27 | 23 | 63 | 96 | 57 | M |
| | 2010.12-2019.06 | MT | F | L/R | MPV FWD PNDA;PNDD | | GCO18244 | Outer Joint | | 27 | 24 | 62.8 | 95.5 | 59 | M |
| 1.6 (110 kw) | 2010.12-2019.06 | 6MT | F | L | Box Body/MPV FWD JQDA;JQDB | | GDS18295 | Drive Shaft | | 27 | 26 | 62.7 | 96 | 637 | |
| | 2010.12-2019.06 | 6MT | F | R | Box Body/MPV FWD JQDA;JQDB | | GDS18299 | Drive Shaft | | 27 | 26 | 60.8 | 96 | 975 | |
| | 2010.12-2019.06 | 6MT | F | L | Box Body/MPV FWD JQDA;JQDB | | GCI81392 | Inner Joint | | 26 | 24 | 40 | 60 | 112 | |
| | 2010.12-2019.06 | MT | F | L/R | Box Body/MPV FWD JQDA;JQDB | Date from:2011.01 | GCO18244 | Outer Joint | | 27 | 24 | 62.8 | 95.5 | 59 | M |

| | YEAR | TRANSM. | F/R | L/R | BODY STYLE & DRIVE TYPE & ENGINE | REMARKS | G-AP Ref. | PRODUCT | ABS | Technical Specifications | | | | | |
|---|---|---|---|---|---|---|---|---|---|---|---|---|---|---|---|
| | | | | | | | | | | A | B | C | H | L | P |
| **FORD** **C-Max** | | | | | | | | | | | | | | | |
| 1.6 (110 kw) | 2010.12-2019.06 | | F | R | Box Body/MPV FWD JQDA;JQDB | | GCI18263 | Inner Joint | | 23 | 22 | 40 | 375 | 76 | |
| | 2010.12-2019.06 | 6MT | F | L | MPV FWD JQDA;JQDB | | GDS18295 | Drive Shaft | | 27 | 26 | 62.7 | 96 | 637 | |
| | 2010.12-2019.06 | 6MT | F | R | MPV FWD JQDA;JQDB | | GDS18299 | Drive Shaft | | 27 | 26 | 60.8 | 96 | 975 | |
| | 2010.12-2019.06 | 6MT | F | L | MPV FWD JQDA;JQDB | | GCI81392 | Inner Joint | | 26 | 24 | 40 | 60 | 112 | |
| | 2010.12-2019.06 | MT | F | R | MPV FWD JQDA;JQDB | | GCO18239 | Outer Joint | | 27 | 26 | 62.7 | 96 | 62.5 | M |
| | 2010.12-2019.06 | MT | F | L/R | MPV FWD JQDA;JQDB | | GCO18244 | Outer Joint | | 27 | 24 | 62.8 | 95.5 | 59 | M |
| | 2010.12-2019.06 | | F | R | MPV FWD JQDA;JQDB | | GCI18263 | Inner Joint | | 23 | 22 | 40 | 375 | 76 | |
| 1.6 (134 kw) | 2010.12-2019.06 | 6MT | F | L | Box Body/MPV FWD JTDA;JTDB | | GDS18295 | Drive Shaft | | 27 | 26 | 62.7 | 96 | 637 | |
| | 2010.12-2019.06 | 6MT | F | R | Box Body/MPV FWD JTDA;JTDB | | GDS18299 | Drive Shaft | | 27 | 26 | 60.8 | 96 | 975 | |
| | 2010.12-2019.06 | 6MT | F | R | Box Body/MPV FWD JTDA;JTDB | | GCO18241 | Outer Joint | | 27 | 24 | 60.8 | 96 | 59 | I |
| | 2010.12-2019.06 | 6MT | F | L | Box Body/MPV FWD JTDA;JTDB | | GCI81392 | Inner Joint | | 26 | 24 | 40 | 60 | 112 | |
| | 2010.12-2019.06 | | F | R | Box Body/MPV FWD JTDA;JTDB | | GCI18263 | Inner Joint | | 23 | 22 | 40 | 375 | 76 | |
| | 2010.12-2019.06 | 6MT | F | L | MPV FWD JTDA;JTDB | | GDS18295 | Drive Shaft | | 27 | 26 | 62.7 | 96 | 637 | |
| | 2010.12-2019.06 | 6MT | F | R | MPV FWD JTDA;JTDB | | GDS18299 | Drive Shaft | | 27 | 26 | 60.8 | 96 | 975 | |
| | 2010.12-2019.06 | 6MT | F | L | MPV FWD JTDA;JTDB | | GCI81392 | Inner Joint | | 26 | 24 | 40 | 60 | 112 | |
| | 2010.12-2019.06 | MT | F | R | MPV FWD JTDA;JTDB | | GCO18239 | Outer Joint | | 27 | 26 | 62.7 | 96 | 62.5 | M |
| | 2010.12-2019.06 | MT | F | L/R | MPV FWD JTDA;JTDB | | GCO18244 | Outer Joint | | 27 | 24 | 62.8 | 95.5 | 59 | M |
| | 2010.12-2019.06 | | F | R | MPV FWD JTDA;JTDB | | GCI18263 | Inner Joint | | 23 | 22 | 40 | 375 | 76 | |
| 1.8 (85 kw) | 2007.02-2010.09 | 5MT | F | L | MPV FWD KKDA;KKDB | | GDS18218 | Drive Shaft | | 36 | 26 | 56 | 48 | 582 | |
| | 2007.02-2010.09 | 5MT | F | R | MPV FWD KKDA;KKDB | | GDS18219 | Drive Shaft | | 36 | 26 | 56.3 | 48 | 921 | |
| | 2007.02-2010.09 | | F | L | MPV FWD KKDA;KKDB | | GCO99288 | Outer Joint | | 36 | 26 | 56.3 | 48 | 61 | M |
| | 2007.02-2010.09 | | F | R | MPV FWD KKDA;KKDB | | GCO18230 | Outer Joint | | 36 | 26 | 56.3 | 48 | 61 | M |
| 1.8 (90 kw) | 2007.02-2010.09 | 5MT | F | L | MPV FWD QQDC | Inner teeth of wheel side:24 | GDS18189 | Drive Shaft | | 36 | 23 | 56 | 48 | 601 | |
| | 2007.02-2010.09 | 5MT | F | L | MPV FWD QQDC | Inner teeth of wheel side:24 | GDS18261 | Drive Shaft | | 36 | 23 | 55.8 | 48 | 600 | |
| | 2007.02-2010.09 | 5MT | F | L | MPV FWD QQDC | Inner teeth of wheel side:23 | GDS18359 | Drive Shaft | | 36 | 23 | 56 | 48 | 594 | |
| | 2007.02-2010.09 | 5MT | F | R | MPV FWD QQDC | Inner teeth of wheel side:24 | GDS18206 | Drive Shaft | | 36 | 23 | 56 | 48 | 906 | |
| | 2007.02-2010.09 | 5MT | F | R | MPV FWD QQDC | Inner teeth of wheel side:24 | GDS18262 | Drive Shaft | | 36 | 23 | 55.8 | 48 | 905 | |
| | 2007.02-2010.09 | 5MT | F | R | MPV FWD QQDC | Inner teeth of wheel side:23 | GDS18358 | Drive Shaft | | 36 | 23 | 56 | 48 | 899 | |
| | 2007.02-2010.09 | 5MT | F | L/R | MPV FWD QQDC | | GCO18203 | Outer Joint | | 36 | 23 | 56 | 48 | 57 | I |
| | 2007.02-2010.09 | 5MT | F | L/R | MPV FWD QQDC | | GCO62039 | Outer Joint | | 36 | 24 | 55.8 | 48 | 57 | M |
| | 2007.02-2010.09 | 5MT | F | L/R | MPV FWD QQDC | | GCO99129 | Outer Joint | | 36 | 24 | 56 | 48 | 57 | M |
| | 2007.02-2010.09 | 5MT | F | L | MPV FWD QQDC | | GCI18086 | Inner Joint | | 23 | 22 | 40 | 61 | 90 | |
| | 2007.02-2010.09 | 5MT | F | L | MPV FWD QQDC | | GCI82479 | Inner Joint | | 23 | 23 | 40 | 61 | 110 | |
| | 2007.02-2010.09 | 5MT | F | R | MPV FWD QQDC | | GCI18087 | Inner Joint | | 23 | 22 | 40 | 371 | 78.5 | |
| 1.8 (92 kw) | 2007.02-2010.09 | 5MT | F | L | MPV FWD Q7DA | Inner teeth of wheel side:24 | GDS18189 | Drive Shaft | | 36 | 23 | 56 | 48 | 601 | |
| | 2007.02-2010.09 | 5MT | F | L | MPV FWD Q7DA | Inner teeth of wheel side:24 | GDS18261 | Drive Shaft | | 36 | 23 | 55.8 | 48 | 600 | |
| | 2007.02-2010.09 | 5MT | F | L | MPV FWD Q7DA | Inner teeth of wheel side:23 | GDS18359 | Drive Shaft | | 36 | 23 | 56 | 48 | 594 | |
| | 2007.02-2010.09 | 5MT | F | R | MPV FWD Q7DA | Inner teeth of wheel side:24 | GDS18206 | Drive Shaft | | 36 | 23 | 56 | 48 | 906 | |
| | 2007.02-2010.09 | 5MT | F | R | MPV FWD Q7DA | Inner teeth of wheel side:24 | GDS18262 | Drive Shaft | | 36 | 23 | 55.8 | 48 | 905 | |
| | 2007.02-2010.09 | 5MT | F | R | MPV FWD Q7DA | Inner teeth of wheel side:23 | GDS18358 | Drive Shaft | | 36 | 23 | 56 | 48 | 899 | |
| | 2007.02-2010.09 | 5MT | F | L/R | MPV FWD Q7DA | | GCO18203 | Outer Joint | | 36 | 23 | 56 | 48 | 57 | I |
| | 2007.02-2010.09 | 5MT | F | L/R | MPV FWD Q7DA | | GCO62039 | Outer Joint | | 36 | 24 | 55.8 | 48 | 57 | M |
| | 2007.02-2010.09 | 5MT | F | L/R | MPV FWD Q7DA | | GCO99129 | Outer Joint | | 36 | 24 | 56 | 48 | 57 | M |
| | 2007.02-2010.09 | 5MT | F | L | MPV FWD Q7DA | | GCI18086 | Inner Joint | | 23 | 22 | 40 | 61 | 90 | |
| | 2007.02-2010.09 | 5MT | F | L | MPV FWD Q7DA | | GCI82479 | Inner Joint | | 23 | 23 | 40 | 61 | 110 | |
| | 2007.02-2010.09 | 5MT | F | R | MPV FWD Q7DA | | GCI18087 | Inner Joint | | 23 | 22 | 40 | 371 | 78.5 | |
| | 2007.02-2010.09 | 4AT/5MT | F | L | MPV FWD QQDB;QQDA | Inner teeth of wheel side:24 | GDS18189 | Drive Shaft | | 36 | 23 | 56 | 48 | 601 | |
| | 2007.02-2010.09 | 4AT/5MT | F | L | MPV FWD QQDB;QQDA | Inner teeth of wheel side:24 | GDS18261 | Drive Shaft | | 36 | 23 | 55.8 | 48 | 600 | |
| | 2007.02-2010.09 | 4AT/5MT | F | L | MPV FWD QQDB;QQDA | Inner teeth of wheel side:23 | GDS18359 | Drive Shaft | | 36 | 23 | 56 | 48 | 594 | |
| | 2007.02-2010.09 | 4AT/5MT | F | R | MPV FWD QQDB;QQDA | Inner teeth of wheel side:24 | GDS18206 | Drive Shaft | | 36 | 23 | 56 | 48 | 906 | |
| | 2007.02-2010.09 | 4AT/5MT | F | R | MPV FWD QQDB;QQDA | Inner teeth of wheel side:24 | GDS18262 | Drive Shaft | | 36 | 23 | 55.8 | 48 | 905 | |
| | 2007.02-2010.09 | 4AT/5MT | F | R | MPV FWD QQDB;QQDA | Inner teeth of wheel side:23 | GDS18358 | Drive Shaft | | 36 | 23 | 56 | 48 | 899 | |
| | 2007.02-2010.09 | 4AT/5MT | F | L | MPV FWD QQDB;QQDA | | GCI82479 | Inner Joint | | 23 | 23 | 40 | 61 | 110 | |
| 2.0 (81 kw) | 2008.02-2010.09 | 6MT | F | R | MPV FWD IXDA | Inner teeth of tranm.side:32 | GDS18219 | Drive Shaft | | 36 | 26 | 56.3 | 48 | 921 | |
| | 2008.02-2010.09 | 6MT | F | R | MPV FWD IXDA | Inner teeth of tranm.side:26 | GDS56093 | Drive Shaft | | 36 | 26 | 56 | 48 | 916 | |
| | 2008.02-2010.09 | 6MT | F | L/R | MPV FWD IXDA | | GCO99155 | Outer Joint | | 36 | 26 | 56 | 48 | 64 | I |
| | 2008.02-2010.09 | 6MT | F | R | MPV FWD IXDA | | GCI83312 | Inner Joint | | 26 | 26 | 40 | 389 | 92 | |
| | 2008.02-2010.09 | MT | F | L | MPV FWD IXDA | | GDS18218 | Drive Shaft | | 36 | 26 | 56 | 48 | 582 | |
| | 2008.02-2010.09 | MT | F | L/R | MPV FWD IXDA | | GCO18203 | Outer Joint | | 36 | 23 | 56 | 48 | 57 | I |
| 2.0 (85 kw) | 2011.02-2019.06 | 6AT | F | L | Box Body/MPV FWD TYDA | | GCO18326 | Outer Joint | | 27 | 26 | 63.1 | 96 | 64 | I |
| | 2011.02-2019.06 | 6AT | F | L | Box Body/MPV FWD TYDA | | GCI62053 | Inner Joint | | 28 | 26 | 34 | 79.5 | 91 | |
| | 2011.02-2019.06 | AT | F | R | Box Body/MPV FWD TYDA | | GDS18343 | Drive Shaft | | 27 | 28 | 63.1 | 96 | 967 | |
| | 2011.02-2019.06 | | F | L | Box Body/MPV FWD TYDA | | GDS18410 | Drive Shaft | | 27 | 28 | 63.1 | 96 | 631 | |
| | 2011.02-2019.06 | 6AT | F | R | MPV FWD TYDA | | GDS18343 | Drive Shaft | | 27 | 28 | 63.1 | 96 | 967 | |
| | 2011.02-2019.06 | 6AT | F | L | MPV FWD TYDA | | GCO18326 | Outer Joint | | 27 | 26 | 63.1 | 96 | 64 | I |

| | YEAR | TRANSM. | F/R | L/R | BODY STYLE & DRIVE TYPE & ENGINE | REMARKS | G-AP Ref. | PRODUCT | ABS | Technical Specifications A | B | C | H | L | P |
|---|---|---|---|---|---|---|---|---|---|---|---|---|---|---|---|
| **FORD** **C-Max** | | | | | | | | | | | | | | | |
| 2.0 (85 kw) | 2011.02-2019.06 | 6AT | F | L | MPV FWD TYDA | | GCI62053 | Inner Joint | | 28 | 26 | 34 | 79.5 | 91 | |
| | 2011.02-2019.06 | | F | L | MPV FWD TYDA | | GDS18410 | Drive Shaft | | 27 | 28 | 63.1 | 96 | 631 | |
| 2.0 (98 kw) | 2007.02-2010.09 | 6AT/6MT | F | L/R | MPV FWD G6DC;G6DE;G6DF | | GCO99155 | Outer Joint | | 36 | 26 | 56 | 48 | 64 | I |
| | 2007.02-2010.09 | 6MT | F | R | MPV FWD G6DC;G6DE;G6DF | Inner teeth of tranm.side:32 | GDS18219 | Drive Shaft | | 36 | 26 | 56.3 | 48 | 921 | |
| | 2007.02-2010.09 | 6MT | F | R | MPV FWD G6DC;G6DE;G6DF | Inner teeth of tranm.side:26 | GDS56093 | Drive Shaft | | 36 | 26 | 56 | 48 | 916 | |
| | 2007.02-2010.09 | 6MT | F | R | MPV FWD G6DC;G6DE;G6DF | | GCI83312 | Inner Joint | | 26 | 26 | 40 | 389 | 92 | |
| | 2007.02-2010.09 | AT | F | L | MPV FWD G6DC;G6DE;G6DF | | GDS18367 | Drive Shaft | | 36 | 28 | 56 | 48 | 570 | |
| | 2007.02-2010.09 | AT | F | R | MPV FWD G6DC;G6DE;G6DF | | GDS62024 | Drive Shaft | | 36 | 28 | 56 | 48 | 908 | |
| | 2007.02-2010.09 | AT | F | R | MPV FWD G6DC;G6DE;G6DF | | GCI62017 | Inner Joint | | 28 | 26 | 33.95 | 371.5 | 92 | |
| | 2007.02-2010.09 | MT | F | L | MPV FWD G6DC;G6DE;G6DF | | GDS18218 | Drive Shaft | | 36 | 26 | 56 | 48 | 582 | |
| | 2007.02-2010.09 | MT | F | L/R | MPV FWD G6DC;G6DE;G6DF | | GCO18203 | Outer Joint | | 36 | 23 | 56 | 48 | 57 | I |
| 2.0 (100 kw) | 2007.02-2010.09 | 6DCT | F | L | MPV FWD G6DA;G6DB;G6DD;G6DG | | GDS18367 | Drive Shaft | | 36 | 28 | 56 | 48 | 570 | |
| | 2007.02-2010.09 | 6MT | F | R | MPV FWD G6DA;G6DB;G6DD;G6DG | Inner teeth of tranm.side:32 | GDS18219 | Drive Shaft | | 36 | 26 | 56.3 | 48 | 921 | |
| | 2007.02-2010.09 | 6MT | F | R | MPV FWD G6DA;G6DB;G6DD;G6DG | Inner teeth of tranm.side:26 | GDS56093 | Drive Shaft | | 36 | 26 | 56 | 48 | 916 | |
| | 2007.02-2010.09 | 6MT | F | L/R | MPV FWD G6DA;G6DB;G6DD;G6DG | | GCO18203 | Outer Joint | | 36 | 23 | 56 | 48 | 57 | I |
| | 2007.02-2010.09 | 6MT | F | L/R | MPV FWD G6DA;G6DB;G6DD;G6DG | | GCO99155 | Outer Joint | | 36 | 26 | 56 | 48 | 64 | I |
| | 2007.02-2010.09 | 6MT | F | R | MPV FWD G6DA;G6DB;G6DD;G6DG | | GCI83312 | Inner Joint | | 26 | 26 | 40 | 389 | 92 | |
| | 2007.02-2010.09 | AT | F | R | MPV FWD G6DA;G6DB;G6DD;G6DG | Trans. code:MPS6 Powershift | GDS62024 | Drive Shaft | | 36 | 28 | 56 | 48 | 908 | |
| | 2007.02-2010.09 | MT | F | L | MPV FWD G6DA;G6DB;G6DD;G6DG | | GDS18218 | Drive Shaft | | 36 | 26 | 56 | 48 | 582 | |
| | 2011.02-2019.06 | 6DCT | F | L | MPV FWD UKDB | | GDS18410 | Drive Shaft | | 27 | 28 | 63.1 | 96 | 631 | |
| | 2011.02-2019.06 | 6DCT | F | L | MPV FWD UKDB | | GCI62053 | Inner Joint | | 28 | 26 | 34 | 79.5 | 91 | |
| | 2011.02-2019.06 | 6MT | F | R | MPV FWD UKDB | | GDS18315 | Drive Shaft | | 27 | 26 | 63 | 96 | 984 | |
| | 2011.02-2019.06 | 6MT/6DCT | F | L/R | MPV FWD UKDB | | GCO18252 | Outer Joint | | 27 | 26 | 63.1 | 96 | 64 | I |
| | 2011.02-2019.06 | 6MT/6DCT | F | L/R | MPV FWD UKDB | | GCO18326 | Outer Joint | | 27 | 26 | 63.1 | 96 | 64 | I |
| | 2011.02-2019.06 | AT | F | R | MPV FWD UKDB | | GDS18343 | Drive Shaft | | 27 | 28 | 63.1 | 96 | 967 | |
| | 2011.02-2019.06 | MT | F | L | MPV FWD UKDB | | GDS18382 | Drive Shaft | | 27 | 26 | 63.1 | 96 | 638 | |
| 2.0 (103 kw) | 2010.04-2019.06 | 6DCT | F | L | MPV FWD UFDB | | GDS18410 | Drive Shaft | | 27 | 28 | 63.1 | 96 | 631 | |
| | 2010.04-2019.06 | 6DCT | F | R | MPV FWD UFDB | | GDS18343 | Drive Shaft | | 27 | 28 | 63.1 | 96 | 967 | |
| | 2010.04-2019.06 | 6DCT | F | L | MPV FWD UFDB | | GCI62053 | Inner Joint | | 28 | 26 | 34 | 79.5 | 91 | |
| | 2010.04-2019.06 | 6MT | F | L | MPV FWD UFDB | | GDS18382 | Drive Shaft | | 27 | 26 | 63.1 | 96 | 638 | |
| | 2010.04-2019.06 | 6MT | F | R | MPV FWD UFDB | | GDS18315 | Drive Shaft | | 27 | 26 | 63 | 96 | 984 | |
| | 2010.04-2019.06 | 6MT/6DCT | F | L/R | MPV FWD UFDB | | GCO18252 | Outer Joint | | 27 | 26 | 63.1 | 96 | 64 | I |
| | 2010.04-2019.06 | 6MT/6DCT | F | L/R | MPV FWD UFDB | | GCO18326 | Outer Joint | | 27 | 26 | 63.1 | 96 | 64 | I |
| | 2011.02-2019.06 | 6DCT | F | L | Box Body/MPV FWD UFDB | | GCI62053 | Inner Joint | | 28 | 26 | 34 | 79.5 | 91 | |
| | 2011.02-2019.06 | 6MT | F | R | Box Body/MPV FWD UFDB | | GDS18315 | Drive Shaft | | 27 | 26 | 63 | 96 | 984 | |
| | 2011.02-2019.06 | 6MT/6DCT | F | L/R | Box Body/MPV FWD UFDB | | GCO18252 | Outer Joint | | 27 | 26 | 63.1 | 96 | 64 | I |
| | 2011.02-2019.06 | 6MT/6DCT | F | L/R | Box Body/MPV FWD UFDB | | GCO18326 | Outer Joint | | 27 | 26 | 63.1 | 96 | 64 | I |
| | 2011.02-2019.06 | AT | F | R | Box Body/MPV FWD UFDB | | GDS18343 | Drive Shaft | | 27 | 28 | 63.1 | 96 | 967 | |
| | 2011.02-2019.06 | MT | F | L | Box Body/MPV FWD UFDB | | GDS18382 | Drive Shaft | | 27 | 26 | 63.1 | 96 | 638 | |
| | 2011.02-2019.06 | | F | L | Box Body/MPV FWD UFDB | | GDS18410 | Drive Shaft | | 27 | 28 | 63.1 | 96 | 631 | |
| 2.0 (107 kw) | 2007.02-2010.09 | 4AT/5MT | F | L | MPV FWD AODA;AODB;SYDA;AODE | | GCI18044 | Inner Joint | | 26 | 23 | 40 | 68.5 | 99.5 | |
| | 2007.02-2010.09 | AT | F | L/R | MPV FWD AODA;AODB;SYDA;AODE | Date to:2008.01 | GCO18203 | Outer Joint | | 36 | 23 | 56 | 48 | 57 | I |
| | 2007.02-2010.09 | AT | F | L | MPV FWD AODA;AODB;SYDA;AODE | Date to:2008.01 | GCI18219 | Inner Joint | | 26 | 23 | 40 | 69 | 105 | |
| | 2007.02-2010.09 | AT/MT | F | L | MPV FWD AODA;AODB;SYDA;AODE | | GDS18218 | Drive Shaft | | 36 | 26 | 56 | 48 | 582 | |
| | 2007.02-2010.09 | AT/MT | F | R | MPV FWD AODA;AODB;SYDA;AODE | | GDS18219 | Drive Shaft | | 36 | 26 | 56.3 | 48 | 921 | |
| | 2007.02-2010.09 | MT | F | L/R | MPV FWD AODA;AODB;SYDA;AODE | | GCO18203 | Outer Joint | | 36 | 23 | 56 | 48 | 57 | I |
| | 2007.02-2010.09 | | F | R | MPV FWD AODA;AODB;SYDA;AODE | Date from:2007.03,Date to:2010.07;TJ | GCI18161 | Inner Joint | | 26 | 23 | 40 | 389 | 86 | |
| | 2008.06-2010.09 | 5MT | F | L | MPV FWD SYDA | | GDS18218 | Drive Shaft | | 36 | 26 | 56 | 48 | 582 | |
| | 2008.06-2010.09 | 5MT | F | R | MPV FWD SYDA | | GDS18219 | Drive Shaft | | 36 | 26 | 56.3 | 48 | 921 | |
| | 2008.06-2010.09 | 5MT | F | L | MPV FWD SYDA | | GCI18044 | Inner Joint | | 26 | 23 | 40 | 68.5 | 99.5 | |
| | 2008.06-2010.09 | 5MT | F | R | MPV FWD SYDA | TJ | GCI18161 | Inner Joint | | 26 | 23 | 40 | 389 | 86 | |
| | 2008.06-2010.09 | | F | L/R | MPV FWD SYDA | | GCO18203 | Outer Joint | | 36 | 23 | 56 | 48 | 57 | I |
| | 2008.06-2010.09 | | F | L | MPV FWD SYDA | | GCI18219 | Inner Joint | | 26 | 23 | 40 | 69 | 105 | |
| | 2009.04-2010.09 | 4AT/5MT | F | L | MPV FWD SYDA | | GCI18044 | Inner Joint | | 26 | 23 | 40 | 68.5 | 99.5 | |
| | 2009.04-2010.09 | AT | F | L | MPV FWD SYDA | | GCI18219 | Inner Joint | | 26 | 23 | 40 | 69 | 105 | |
| | 2009.04-2010.09 | AT/MT | F | L | MPV FWD SYDA | | GDS18218 | Drive Shaft | | 36 | 26 | 56 | 48 | 582 | |
| | 2009.04-2010.09 | AT/MT | F | R | MPV FWD SYDA | | GDS18219 | Drive Shaft | | 36 | 26 | 56.3 | 48 | 921 | |
| | 2009.04-2010.09 | MT | F | L | MPV FWD SYDA | | GCO18203 | Outer Joint | | 36 | 23 | 56 | 48 | 57 | I |
| | 2009.04-2010.09 | | F | R | MPV FWD SYDA | Date to:2010.07;TJ | GCI18161 | Inner Joint | | 26 | 23 | 40 | 389 | 86 | |
| 2.0 (110 kw) | 2015.03-2019.06 | 6DCT | F | L | Box Body/MPV FWD T7DB;T7DC | | GDS81479 | Drive Shaft | | 27 | 28 | 63.1 | 96 | 623 | |
| | 2015.03-2019.06 | 6DCT | F | R | Box Body/MPV FWD T7DB;T7DC | | GDS56408 | Drive Shaft | | 27 | 28 | 63.2 | 96 | 970 | |
| | 2015.03-2019.06 | 6DCT | F | L/R | Box Body/MPV FWD T7DB;T7DC | | GCO18252 | Outer Joint | | 27 | 26 | 63.1 | 96 | 64 | I |
| | 2015.03-2019.06 | 6DCT | F | L | Box Body/MPV FWD T7DB;T7DC | | GCI62053 | Inner Joint | | 28 | 26 | 34 | 79.5 | 91 | |
| | 2015.03-2019.06 | 6DCT | F | R | Box Body/MPV FWD T7DB;T7DC | | GCI83292 | Inner Joint | | 28 | 26 | 33.8 | 394 | 92.5 | |
| | 2015.03-2019.06 | 6MT | F | L | Box Body/MPV FWD T7DB;T7DC | | GDS18382 | Drive Shaft | | 27 | 26 | 63.1 | 96 | 638 | |

| | YEAR | TRANSM. | F/R | L/R | BODY STYLE & DRIVE TYPE & ENGINE | REMARKS | G-AP Ref. | PRODUCT | ABS | Technical Specifications A | B | C | H | L | P |
|---|---|---|---|---|---|---|---|---|---|---|---|---|---|---|---|
| **FORD** | | | | | | | | | | | | | | | |
| **C-Max** | | | | | | | | | | | | | | | |
| 2.0 (110 kw) | 2015.03-2019.06 | 6MT | F | R | Box Body/MPV FWD T7DB;T7DC | | GDS18315 | Drive Shaft | | 27 | 26 | 63 | 96 | 984 | |
| | 2015.03-2019.06 | 6MT | F | L/R | Box Body/MPV FWD T7DB;T7DC | | GCO18326 | Outer Joint | | 27 | 26 | 63.1 | 96 | 64 | I |
| | 2015.03-2019.06 | 6DCT | F | L | MPV FWD T7DB;T7DC;T7DD | | GDS81479 | Drive Shaft | | 27 | 28 | 63.1 | 96 | 623 | |
| | 2015.03-2019.06 | 6DCT | F | R | MPV FWD T7DB;T7DC;T7DD | | GDS56408 | Drive Shaft | | 27 | 28 | 63.2 | 96 | 970 | |
| | 2015.03-2019.06 | 6DCT | F | L/R | MPV FWD T7DB;T7DC;T7DD | | GCO18252 | Outer Joint | | 27 | 26 | 63.1 | 96 | 64 | I |
| | 2015.03-2019.06 | 6DCT | F | L | MPV FWD T7DB;T7DC;T7DD | | GCI62053 | Inner Joint | | 28 | 26 | 34 | 79.5 | 91 | |
| | 2015.03-2019.06 | 6DCT | F | R | MPV FWD T7DB;T7DC;T7DD | | GCI83292 | Inner Joint | | 28 | 26 | 33.8 | 394 | 92.5 | |
| | 2015.03-2019.06 | 6MT | F | L | MPV FWD T7DB;T7DC;T7DD | | GDS18382 | Drive Shaft | | 27 | 26 | 63.1 | 96 | 638 | |
| | 2015.03-2019.06 | 6MT | F | R | MPV FWD T7DB;T7DC;T7DD | | GDS18315 | Drive Shaft | | 27 | 26 | 63 | 96 | 984 | |
| | 2015.03-2019.06 | 6MT | F | L/R | MPV FWD T7DB;T7DC;T7DD | | GCO18326 | Outer Joint | | 27 | 26 | 63.1 | 96 | 64 | I |
| 2.0 (120 kw) | 2010.12-2019.06 | 6DCT | F | L | Box Body/MPV FWD TXDB | | GCO18326 | Outer Joint | | 27 | 26 | 63.1 | 96 | 64 | I |
| | 2010.12-2019.06 | 6DCT | F | L | Box Body/MPV FWD TXDB | | GCI62053 | Inner Joint | | 28 | 26 | 34 | 79.5 | 91 | |
| | 2010.12-2019.06 | AT | F | R | Box Body/MPV FWD TXDB | | GDS18343 | Drive Shaft | | 27 | 28 | 63.1 | 96 | 967 | |
| | 2010.12-2019.06 | | F | L | Box Body/MPV FWD TXDB | | GDS18410 | Drive Shaft | | 27 | 28 | 63.1 | 96 | 631 | |
| | 2010.12-2019.06 | 6DCT | F | L | MPV FWD TXDB | | GDS18410 | Drive Shaft | | 27 | 28 | 63.1 | 96 | 631 | |
| | 2010.12-2019.06 | 6DCT | F | L | MPV FWD TXDB | | GCI62053 | Inner Joint | | 28 | 26 | 34 | 79.5 | 91 | |
| | 2010.12-2019.06 | 6MT | F | R | MPV FWD TXDB | | GDS18315 | Drive Shaft | | 27 | 26 | 63 | 96 | 984 | |
| | 2010.12-2019.06 | 6MT/6DCT | F | L/R | MPV FWD TXDB | | GCO18326 | Outer Joint | | 27 | 26 | 63.1 | 96 | 64 | I |
| | 2010.12-2019.06 | AT | F | R | MPV FWD TXDB | | GDS18343 | Drive Shaft | | 27 | 28 | 63.1 | 96 | 967 | |
| | 2010.12-2019.06 | MT | F | L | MPV FWD TXDB | | GDS18382 | Drive Shaft | | 27 | 26 | 63.1 | 96 | 638 | |
| 2.0 (125 kw) | 2015.03-2019.06 | 6AT/6DCT | F | L | Box Body/MPV FWD T8DE | | GDS81479 | Drive Shaft | | 27 | 28 | 63.1 | 96 | 623 | |
| | 2015.03-2019.06 | 6DCT | F | R | Box Body/MPV FWD T8DE | | GDS56408 | Drive Shaft | | 27 | 28 | 63.2 | 96 | 970 | |
| | 2015.03-2019.06 | 6DCT | F | L/R | Box Body/MPV FWD T8DE | | GCO18252 | Outer Joint | | 27 | 26 | 63.1 | 96 | 64 | I |
| | 2015.03-2019.06 | 6DCT | F | L | Box Body/MPV FWD T8DE | | GCI62053 | Inner Joint | | 28 | 26 | 34 | 79.5 | 91 | |
| | 2015.03-2019.06 | 6DCT | F | R | Box Body/MPV FWD T8DE | | GCI83292 | Inner Joint | | 28 | 26 | 33.8 | 394 | 92.5 | |
| | 2015.03-2019.06 | MT | F | L/R | Box Body/MPV FWD T8DE | | GCO18270 | Outer Joint | | 27 | 26 | 62.8 | 91 | 64 | M |
| | 2015.03-2019.06 | 6AT/6DCT | F | L | MPV FWD T8DE;T8DF | | GDS81479 | Drive Shaft | | 27 | 28 | 63.1 | 96 | 623 | |
| | 2015.03-2019.06 | 6DCT | F | R | MPV FWD T8DE;T8DF | | GDS56408 | Drive Shaft | | 27 | 28 | 63.2 | 96 | 970 | |
| | 2015.03-2019.06 | 6DCT | F | L/R | MPV FWD T8DE;T8DF | | GCO18252 | Outer Joint | | 27 | 26 | 63.1 | 96 | 64 | I |
| | 2015.03-2019.06 | 6DCT | F | L | MPV FWD T8DE;T8DF | | GCI62053 | Inner Joint | | 28 | 26 | 34 | 79.5 | 91 | |
| | 2015.03-2019.06 | 6DCT | F | R | MPV FWD T8DE;T8DF | | GCI83292 | Inner Joint | | 28 | 26 | 33.8 | 394 | 92.5 | |
| | 2015.03-2019.06 | MT | F | L/R | MPV FWD T8DE;T8DF | | GCO18270 | Outer Joint | | 27 | 26 | 62.8 | 91 | 64 | M |
| 2.0 (136 kw) | 2015.01-2019.06 | CVT | F | L | MPV FWD UADA | | GDS83951 | Drive Shaft | | 27 | 35 | 60.8 | 96 | 645 | |
| | 2015.01-2019.06 | CVT | F | R | MPV FWD UADA | | GDS83929 | Drive Shaft | | 27 | 35 | 60.8 | 96 | 960 | |
| | 2015.01-2019.06 | CVT | F | R | MPV FWD UADA | | GCO82539 | Outer Joint | | 27 | 24 | 60.8 | 96 | 59 | M |
| | 2015.01-2019.06 | CVT | F | L | MPV FWD UADA | | GCI82432 | Inner Joint | | 35 | 24 | 35 | 87 | 108 | |
| | 2015.01-2019.06 | CVT | F | R | MPV FWD UADA | | GCI82424 | Inner Joint | | 35 | 24 | 42 | 370 | 96 | |
| **Cougar** | | | | | | | | | | | | | | | |
| 2.0 (96 kw) | 1998.08-2001.12 | MT | F | L | Coupe FWD EDBA/EDBB/EDBC/EDBD | | GDS18001 | Drive Shaft | | 27 | 26 | 54.3 | 91 | 615 | |
| | 1998.08-2001.12 | MT | F | L | Coupe FWD EDBA/EDBB/EDBC/EDBD | | GDS18002 | Drive Shaft | 44T | 27 | 26 | 54.3 | 91 | 615 | |
| | 1998.08-2001.12 | MT | F | R | Coupe FWD EDBA/EDBB/EDBC/EDBD | | GDS18006 | Drive Shaft | 44T | 27 | 35 | 57 | 91 | 566 | |
| | 1998.08-2001.12 | MT | F | L/R | Coupe FWD EDBA/EDBB/EDBC/EDBD | | GCO18023 | Outer Joint | 44T | 27 | 30 | 57 | 91 | 56 | I |
| | 1998.08-2001.12 | MT | F | L/R | Coupe FWD EDBA/EDBB/EDBC/EDBD | | GCO18024 | Outer Joint | 44T | 27 | 30 | 57 | 91 | 56 | M |
| | 1998.08-2001.12 | MT | F | L | Coupe FWD EDBA/EDBB/EDBC/EDBD | | GCI36001 | Inner Joint | | 26 | 33 | 40 | 68.5 | 100 | |
| 2.5 (125 kw) | 1998.08-2001.12 | AT/MT | F | R | Coupe FWD LCBA/LCBB/LCBC/LCBE | | GDS18006 | Drive Shaft | 44T | 27 | 35 | 57 | 91 | 566 | |
| | 1998.08-2001.12 | MT | F | L | Coupe FWD LCBA/LCBB/LCBC/LCBE | | GDS18002 | Drive Shaft | 44T | 27 | 26 | 54.3 | 91 | 615 | |
| | 1998.08-2001.12 | MT | F | L | Coupe FWD LCBA/LCBB/LCBC/LCBE | | GCI36001 | Inner Joint | | 26 | 33 | 40 | 68.5 | 100 | |
| | 1999.02-2001.12 | AT/MT | F | R | Coupe FWD JP25LCBD | | GDS18006 | Drive Shaft | 44T | 27 | 35 | 57 | 91 | 566 | |
| | 1999.02-2001.12 | MT | F | L | Coupe FWD JP25LCBD | | GDS18002 | Drive Shaft | 44T | 27 | 26 | 54.3 | 91 | 615 | |
| | 1999.02-2001.12 | MT | F | L | Coupe FWD JP25LCBD | | GCI36001 | Inner Joint | | 26 | 33 | 40 | 68.5 | 100 | |
| 2.5 (151 kw) | 1999.02-2001.12 | AT/MT | F | R | Coupe FWD SGA | | GDS18006 | Drive Shaft | 44T | 27 | 35 | 57 | 91 | 566 | |
| | 1999.02-2001.12 | MT | F | L | Coupe FWD SGA | | GDS18002 | Drive Shaft | 44T | 27 | 26 | 54.3 | 91 | 615 | |
| | 1999.02-2001.12 | MT | F | L | Coupe FWD SGA | | GCI36001 | Inner Joint | | 26 | 33 | 40 | 68.5 | 100 | |
| **Courier (Fiesta)** | | | | | | | | | | | | | | | |
| 1.3 (44 kw) | 1991.09-1996.02 | 3AT/5MT | F | L/R | Box Body/MPV FWD J6B | | GCO18004 | Outer Joint | | 25 | 22 | 56.5 | 88.5 | 53.5 | O |
| | 1991.09-1996.02 | 3AT/5MT | F | L/R | Box Body/MPV FWD J6B | | GCO18015 | Outer Joint | | 23 | 22 | 60 | 80 | 52.5 | O |
| | 1991.09-1996.02 | 5MT | F | L | Box Body/MPV FWD J6B | Date to:1994.01 | GDS18118 | Drive Shaft | | 23 | 23 | 60 | 80 | 583.5 | |
| | 1991.09-1996.02 | 5MT | F | R | Box Body/MPV FWD J6B | Date to:1994.01 | GDS18289 | Drive Shaft | | 23 | 23 | 60 | 80 | 857 | |
| | 1991.09-1996.02 | 5MT | F | L/R | Box Body/MPV FWD J6B | TJ | GCI18053 | Inner Joint | | 23 | 22 | 40 | 61 | 91.5 | |
| | 1991.09-1996.02 | 5MT | F | L/R | Box Body/MPV FWD J6B | DOJ | GCI99075 | Inner Joint | | 23 | 22 | 40 | 61 | 93 | |
| | 1995.09-2003.08 | AT/MT | F | L/R | MPV Van FWD J4C/J4J/J4L/J4Q/J4R/J4T | | GCO18004 | Outer Joint | | 25 | 22 | 56.5 | 88.5 | 53.5 | O |
| | 1995.09-2003.08 | MT | F | L | MPV Van FWD J4C/J4J/J4L/J4Q/J4R/J4T | | GDS18141 | Drive Shaft | | 25 | 23 | 55.5 | 88.5 | 606 | |
| | 1995.09-2003.08 | MT | F | L/R | MPV Van FWD J4C/J4J/J4L/J4Q/J4R/J4T | | GCO18012 | Outer Joint | | 25 | 20 | 56.5 | 88.5 | 49 | O |
| | 1995.09-2003.08 | | F | L | MPV Van FWD J4C/J4J/J4L/J4Q/J4R/J4T | Date From:1997.02 | GDS18040 | Drive Shaft | | 25 | 23 | 56.5 | 88.5 | 608 | |
| | 1995.09-2003.08 | | F | R | MPV Van FWD J4C/J4J/J4L/J4Q/J4R/J4T | Date From:1997.02 | GDS18011 | Drive Shaft | | 25 | 25 | 55.5 | 88.5 | 813.5 | |

| | YEAR | TRANSM. | F/R | L/R | BODY STYLE & DRIVE TYPE & ENGINE | REMARKS | G-AP Ref. | PRODUCT | ABS | Technical Specifications A | B | C | H | L | P |
|---|---|---|---|---|---|---|---|---|---|---|---|---|---|---|---|
| **FORD** | | | | | | | | | | | | | | | |
| **Courier (Fiesta)** | | | | | | | | | | | | | | | |
| 1.3 (44 kw) | 1995.09-2003.08 | | F | R | MPV Van FWD J4C/J4J/J4L/J4Q/J4R/J4T | | GDS18032 | Drive Shaft | | 25 | 23 | 56.5 | 88.5 | 900 | |
| | 1995.09-2003.08 | | F | L/R | MPV Van FWD J4C/J4J/J4L/J4Q/J4R/J4T | Date To:1997.01 | GCI18072 | Inner Joint | | 23 | 22 | 40 | 61 | 86 | |
| 1.4 (66 kw) | 1996.04-1999.10 | MT | F | L | MPV Van FWD FHA | Date from:1997.01 | GDS18141 | Drive Shaft | | 25 | 23 | 55.5 | 88.5 | 606 | |
| | 1996.04-1999.10 | MT | F | L | MPV Van FWD FHA | Date to:1997.01 | GDS18284 | Drive Shaft | | 25 | 23 | 56.5 | 88.5 | 585 | |
| | 1996.04-1999.10 | MT | F | R | MPV Van FWD FHA | Date to:1996.12 | GDS18011 | Drive Shaft | | 25 | 25 | 55.5 | 88.5 | 813.5 | |
| | 1996.04-1999.10 | MT | F | R | MPV Van FWD FHA | Date from:1997.01 | GDS18032 | Drive Shaft | | 25 | 23 | 56.5 | 88.5 | 900 | |
| | 1996.04-1999.10 | MT | F | L/R | MPV Van FWD FHA | | GCO18004 | Outer Joint | | 25 | 22 | 56.5 | 88.5 | 53.5 | O |
| | 1996.04-1999.10 | | F | L | MPV Van FWD FHA | | GDS18040 | Drive Shaft | | 25 | 23 | 56.5 | 88.5 | 608 | |
| | 1996.04-1999.10 | | F | L | MPV Van FWD FHA | Date To:1997.01 | GCI18072 | Inner Joint | | 23 | 22 | 40 | 61 | 86 | |
| 1.8 (44 kw) | 1995.09-2001.12 | 5MT | F | L | MPV Van FWD RTJ/RTK | Date from:1997.02 | GDS18141 | Drive Shaft | | 25 | 23 | 55.5 | 88.5 | 606 | |
| | 1995.09-2001.12 | 5MT | F | L | MPV Van FWD RTJ/RTK | Date to:1997.01 | GDS18284 | Drive Shaft | | 25 | 23 | 56.5 | 88.5 | 585 | |
| 1.8 (55 kw) | 2000.09-2003.08 | MT | F | L | MPV Van FWD RTN/RTP | | GDS18141 | Drive Shaft | | 25 | 23 | 55.5 | 88.5 | 606 | |
| | 2000.09-2003.08 | MT | F | L/R | MPV Van FWD RTN/RTP | | GCO18004 | Outer Joint | | 25 | 22 | 56.5 | 88.5 | 53.5 | O |
| | 2000.09-2003.08 | MT | F | L | MPV Van FWD RTN/RTP | | GCI18053 | Inner Joint | | 23 | 22 | 40 | 61 | 91.5 | |
| | 2000.09-2003.08 | | F | L | MPV Van FWD RTN/RTP | | GDS18040 | Drive Shaft | | 25 | 23 | 56.5 | 88.5 | 608 | |
| | 2000.09-2003.08 | | F | R | MPV Van FWD RTN/RTP | | GDS18032 | Drive Shaft | | 25 | 23 | 56.5 | 88.5 | 900 | |
| **E-Transit** | | | | | | | | | | | | | | | |
| EV (135 kw) | 2022.03-2025.06 | ET | R | L | Platform/Chassis RWD C2RA | | GDS56337 | Drive Shaft | | 31 | 27 | 65 | 136.5 | 716 | |
| | 2022.03-2025.06 | ET | R | R | Platform/Chassis RWD C2RA | | GDS56336 | Drive Shaft | | 31 | 27 | 65 | 136.5 | 659 | |
| | 2022.03-2025.06 | ET | R | L/R | Platform/Chassis RWD C2RA | | GCO83258 | Outer Joint | | 31 | 40 | 65 | 136.5 | 70 | I |
| | 2022.03-2025.06 | ET | R | L | Platform/Chassis RWD C2RA | | GCI83250 | Inner Joint | | 27 | 40 | 38 | 105.5 | 85 | |
| | 2022.03-2025.06 | ET | R | R | Platform/Chassis RWD C2RA | | GCI83249 | Inner Joint | | 27 | 40 | | 48 | 85 | |
| | 2022.03-2025.06 | ET | R | L | Van RWD C2RA | | GDS56337 | Drive Shaft | | 31 | 27 | 65 | 136.5 | 716 | |
| | 2022.03-2025.06 | ET | R | R | Van RWD C2RA | | GDS56336 | Drive Shaft | | 31 | 27 | 65 | 136.5 | 659 | |
| | 2022.03-2025.06 | ET | R | L/R | Van RWD C2RA | | GCO83258 | Outer Joint | | 31 | 40 | 65 | 136.5 | 70 | I |
| | 2022.03-2025.06 | ET | R | L | Van RWD C2RA | | GCI83250 | Inner Joint | | 27 | 40 | 38 | 105.5 | 85 | |
| | 2022.03-2025.06 | ET | R | R | Van RWD C2RA | | GCI83249 | Inner Joint | | 27 | 40 | | 48 | 85 | |
| | 2025.07- | ET | R | L | Platform/Chassis RWD EHRA | Date to:2024.04 | GDS56337 | Drive Shaft | | 31 | 27 | 65 | 136.5 | 716 | |
| | 2025.07- | ET | R | R | Platform/Chassis RWD EHRA | Date to:2024.04 | GDS56336 | Drive Shaft | | 31 | 27 | 65 | 136.5 | 659 | |
| | 2025.07- | ET | R | L | Van RWD EHRA | Date to:2024.04 | GDS56337 | Drive Shaft | | 31 | 27 | 65 | 136.5 | 716 | |
| | 2025.07- | ET | R | R | Van RWD EHRA | Date to:2024.04 | GDS56336 | Drive Shaft | | 31 | 27 | 65 | 136.5 | 659 | |
| EV (198 kw) | 2022.03-2025.06 | ET | R | L | Platform/Chassis RWD C0RA | | GDS56337 | Drive Shaft | | 31 | 27 | 65 | 136.5 | 716 | |
| | 2022.03-2025.06 | ET | R | R | Platform/Chassis RWD C0RA | | GDS56336 | Drive Shaft | | 31 | 27 | 65 | 136.5 | 659 | |
| | 2022.03-2025.06 | ET | R | L/R | Platform/Chassis RWD C0RA | | GCO83258 | Outer Joint | | 31 | 40 | 65 | 136.5 | 70 | I |
| | 2022.03-2025.06 | ET | R | L | Platform/Chassis RWD C0RA | | GCI83250 | Inner Joint | | 27 | 40 | 38 | 105.5 | 85 | |
| | 2022.03-2025.06 | ET | R | R | Platform/Chassis RWD C0RA | | GCI83249 | Inner Joint | | 27 | 40 | | 48 | 85 | |
| | 2022.03-2025.06 | ET | R | L | Van RWD C0RA | | GDS56337 | Drive Shaft | | 31 | 27 | 65 | 136.5 | 716 | |
| | 2022.03-2025.06 | ET | R | R | Van RWD C0RA | | GDS56336 | Drive Shaft | | 31 | 27 | 65 | 136.5 | 659 | |
| | 2022.03-2025.06 | ET | R | L/R | Van RWD C0RA | | GCO83258 | Outer Joint | | 31 | 40 | 65 | 136.5 | 70 | I |
| | 2022.03-2025.06 | ET | R | L | Van RWD C0RA | | GCI83250 | Inner Joint | | 27 | 40 | 38 | 105.5 | 85 | |
| | 2022.03-2025.06 | ET | R | R | Van RWD C0RA | | GCI83249 | Inner Joint | | 27 | 40 | | 48 | 85 | |
| | 2025.07- | | R | L | Platform/Chassis RWD C1RA | Date to:2024.04 | GDS56337 | Drive Shaft | | 31 | 27 | 65 | 136.5 | 716 | |
| | 2025.07- | | R | R | Platform/Chassis RWD C1RA | Date to:2024.04 | GDS56336 | Drive Shaft | | 31 | 27 | 65 | 136.5 | 659 | |
| | 2025.07- | | R | L | Van RWD C1RA | Date to:2024.04 | GDS56337 | Drive Shaft | | 31 | 27 | 65 | 136.5 | 716 | |
| | 2025.07- | | R | R | Van RWD C1RA | Date to:2024.04 | GDS56336 | Drive Shaft | | 31 | 27 | 65 | 136.5 | 659 | |
| **Ecosport** | | | | | | | | | | | | | | | |
| 1.0 (74 kw) | 2018.04-2022.12 | 6MT | F | L | SUV FWD SFJL | | GDS58124 | Drive Shaft | | 25 | 23 | 53.2 | 88.5 | 637 | |
| | 2018.04-2022.12 | 6MT | F | R | SUV FWD SFJL | | GDS58109 | Drive Shaft | | 25 | 23 | 53.2 | 88.5 | 932 | |
| | 2018.04-2022.12 | 6MT | F | L | SUV FWD SFJL | | GCO83682 | Outer Joint | | 25 | 23 | 53.2 | 88.5 | 58.5 | M |
| | 2018.04-2022.12 | 6MT | F | R | SUV FWD SFJL | | GCO83848 | Outer Joint | | 25 | 22 | 53.2 | 88.5 | 58.5 | M |
| | 2018.04-2022.12 | 6MT | F | L | SUV FWD SFJL | | GCI84016 | Inner Joint | | 23 | 22 | 40 | 60.5 | 104 | |
| | 2018.04-2022.12 | 6MT | F | R | SUV FWD SFJL | | GCI84010 | Inner Joint | | 23 | 22 | 40 | 60.5 | 110 | |
| 1.0 (92 kw) | 2013.10-2022.12 | 5MT/6DCT | F | L | SUV FWD M1JC;M1JJ;M1JU | Transmission:5MT;Transmission:6DCT,Date to:2017.10 | GDS18483 | Drive Shaft | | 25 | 23 | 53.3 | 89 | 634 | |
| | 2013.10-2022.12 | 5MT/6DCT | F | R | SUV FWD M1JC;M1JJ;M1JU | Transmission:5MT;Transmission:6DCT,Date to:2017.10 | GDS18485 | Drive Shaft | | 25 | 23 | 53.3 | 89 | 931 | |
| | 2013.10-2022.12 | 5MT/6DCT | F | L/R | SUV FWD M1JC;M1JJ;M1JU | Transmission:5MT;Transmission:6DCT,Date to:2017.10 | GCO18262 | Outer Joint | | 25 | 21 | 53.3 | 89 | 54.5 | M |
| | 2013.10-2022.12 | 5MT/6DCT | F | L | SUV FWD M1JC;M1JJ;M1JU | Transmission:5MT;Transmission:6DCT,Date to:2017.10 | GCI18113 | Inner Joint | | 23 | 21 | 40 | 61.5 | 96.5 | |
| | 2013.10-2022.12 | 5MT/6DCT | F | R | SUV FWD M1JC;M1JJ;M1JU | Transmission:5MT;Transmission:6DCT,Date to:2017.10 | GCI18190 | Inner Joint | | 23 | 21 | 40 | 371 | 84.5 | |
| | 2013.10-2022.12 | 6AT | F | L | SUV FWD M1JC;M1JJ;M1JU | | GDS58242 | Drive Shaft | | 25 | 22 | 53.2 | 89 | 662 | |
| | 2013.10-2022.12 | 6AT | F | R | SUV FWD M1JC;M1JJ;M1JU | | GDS57721 | Drive Shaft | | 25 | 22 | 53.2 | 88.5 | 908 | |
| | 2013.10-2022.12 | 6AT | F | L | SUV FWD M1JC;M1JJ;M1JU | | GCO83869 | Outer Joint | | 25 | 25 | 53.2 | 89 | 66.5 | M |
| | 2013.10-2022.12 | 6AT | F | R | SUV FWD M1JC;M1JJ;M1JU | | GCO83682 | Outer Joint | | 25 | 23 | 53.2 | 88.5 | 58.5 | M |
| | 2013.10-2022.12 | 6AT | F | L | SUV FWD M1JC;M1JJ;M1JU | | GCI84042 | Inner Joint | | 22 | 23 | 35 | 141.5 | 76.5 | |
| | 2013.10-2022.12 | 6AT | F | R | SUV FWD M1JC;M1JJ;M1JU | | GCI83823 | Inner Joint | | 22 | 22 | 35 | 62 | 118 | |
| | 2013.10-2022.12 | 6MT | F | L | SUV FWD M1JC;M1JJ;M1JU | | GDS58124 | Drive Shaft | | 25 | 23 | 53.2 | 88.5 | 637 | |
| | 2013.10-2022.12 | 6MT | F | R | SUV FWD M1JC;M1JJ;M1JU | | GDS58109 | Drive Shaft | | 25 | 23 | 53.2 | 88.5 | 932 | |

| | YEAR | TRANSM. | F/R | L/R | BODY STYLE & DRIVE TYPE & ENGINE | REMARKS | G-AP Ref. | PRODUCT | ABS | Technical Specifications A | B | C | H | L | P |
|---|---|---|---|---|---|---|---|---|---|---|---|---|---|---|---|
| **FORD** | | | | | | | | | | | | | | | |
| **Ecosport** | | | | | | | | | | | | | | | |
| 1.0 (92 kw) | 2013.10-2022.12 | 6MT | F | R | SUV FWD M1JC;M1JJ;M1JU | | GCO83848 | Outer Joint | | 25 | 22 | 53.2 | 88.5 | 58.5 | M |
| | 2013.10-2022.12 | 6MT | F | L | SUV FWD M1JC;M1JJ;M1JU | | GCI84016 | Inner Joint | | 23 | 22 | 40 | 60.5 | 104 | |
| | 2013.10-2022.12 | 6MT | F | R | SUV FWD M1JC;M1JJ;M1JU | | GCI84010 | Inner Joint | | 23 | 22 | 40 | 60.5 | 110 | |
| 1.0 (103 kw) | 2016.03-2022.12 | 5MT | F | L | SUV FWD YYJD;YYJF | | GDS18483 | Drive Shaft | | 25 | 23 | 53.3 | 89 | 634 | |
| | 2016.03-2022.12 | 5MT | F | R | SUV FWD YYJD;YYJF | | GDS18485 | Drive Shaft | | 25 | 23 | 53.3 | 89 | 931 | |
| | 2016.03-2022.12 | 5MT | F | L/R | SUV FWD YYJD;YYJF | | GCO18262 | Outer Joint | | 25 | 21 | 53.3 | 89 | 54.5 | M |
| | 2016.03-2022.12 | 5MT | F | L | SUV FWD YYJD;YYJF | | GCI18113 | Inner Joint | | 23 | 21 | 40 | 61.5 | 96.5 | |
| | 2016.03-2022.12 | 5MT | F | R | SUV FWD YYJD;YYJF | | GCI18190 | Inner Joint | | 23 | 21 | 40 | 371 | 84.5 | |
| | 2016.03-2022.12 | 6MT | F | L | SUV FWD YYJD;YYJF | | GDS58124 | Drive Shaft | | 25 | 23 | 53.2 | 88.5 | 637 | |
| | 2016.03-2022.12 | 6MT | F | R | SUV FWD YYJD;YYJF | | GDS58109 | Drive Shaft | | 25 | 23 | 53.2 | 88.5 | 932 | |
| | 2016.03-2022.12 | 6MT | F | L | SUV FWD YYJD;YYJF | | GCO83682 | Outer Joint | | 25 | 23 | 53.2 | 88.5 | 58.5 | M |
| | 2016.03-2022.12 | 6MT | F | R | SUV FWD YYJD;YYJF | | GCO83848 | Outer Joint | | 25 | 22 | 53.2 | 88.5 | 58.5 | M |
| | 2016.03-2022.12 | 6MT | F | L | SUV FWD YYJD;YYJF | | GCI84016 | Inner Joint | | 23 | 22 | 40 | 60.5 | 104 | |
| | 2016.03-2022.12 | 6MT | F | R | SUV FWD YYJD;YYJF | | GCI84010 | Inner Joint | | 23 | 22 | 40 | 60.5 | 110 | |
| 1.5 (74 kw) | 2015.05-2022.12 | 6MT | F | R | SUV FWD UGJM;XUJH | | GCI84010 | Inner Joint | | 23 | 22 | 40 | 60.5 | 110 | |
| 1.5 (81 kw) | 2013.10-2022.06 | 5MT | F | L | SUV FWD UEJB;UEJE | | GDS81306 | Drive Shaft | | 25 | 23 | 53.3 | 88.5 | 633 | |
| | 2013.10-2022.06 | 5MT | F | R | SUV FWD UEJB;UEJE | | GDS81305 | Drive Shaft | | 25 | 23 | 53.3 | 88.5 | 933 | |
| | 2013.10-2022.06 | 5MT | F | L/R | SUV FWD UEJB;UEJE | | GCO18226 | Outer Joint | | 25 | 22 | 53.3 | 88.5 | 59 | M |
| | 2013.10-2022.06 | 5MT | F | L | SUV FWD UEJB;UEJE | | GCI18113 | Inner Joint | | 23 | 21 | 40 | 61.5 | 96.5 | |
| | 2013.10-2022.06 | 5MT | F | R | SUV FWD UEJB;UEJE | | GCI81181 | Inner Joint | | 23 | 22 | 40 | 372 | 95 | |
| | 2013.10-2022.06 | 6DCT | F | L | SUV FWD UEJB;UEJE | | GDS18392 | Drive Shaft | | 25 | 34 | 53.3 | 89 | 584 | |
| | 2013.10-2022.06 | 6DCT | F | R | SUV FWD UEJB;UEJE | | GDS18393 | Drive Shaft | | 25 | 34 | 53.3 | 89 | 987 | |
| | 2013.10-2022.06 | 6DCT | F | L/R | SUV FWD UEJB;UEJE | | GCO18261 | Outer Joint | | 25 | 25 | 53.3 | 89 | 61.5 | M |
| 1.5 (82 kw) | 2013.10-2017.10 | 5MT | F | L | SUV FWD UEJB;UEJE | | GDS81306 | Drive Shaft | | 25 | 23 | 53.3 | 88.5 | 633 | |
| | 2013.10-2017.10 | 5MT | F | R | SUV FWD UEJB;UEJE | | GDS81305 | Drive Shaft | | 25 | 23 | 53.3 | 88.5 | 933 | |
| | 2013.10-2017.10 | 5MT | F | L/R | SUV FWD UEJB;UEJE | | GCO18226 | Outer Joint | | 25 | 22 | 53.3 | 88.5 | 59 | M |
| | 2013.10-2017.10 | 5MT | F | L | SUV FWD UEJB;UEJE | | GCI18113 | Inner Joint | | 23 | 21 | 40 | 61.5 | 96.5 | |
| | 2013.10-2017.10 | 5MT | F | R | SUV FWD UEJB;UEJE | | GCI81181 | Inner Joint | | 23 | 22 | 40 | 372 | 95 | |
| | 2013.10-2017.10 | 6DCT | F | L | SUV FWD UEJB;UEJE | | GDS18392 | Drive Shaft | | 25 | 34 | 53.3 | 89 | 584 | |
| | 2013.10-2017.10 | 6DCT | F | R | SUV FWD UEJB;UEJE | | GDS18393 | Drive Shaft | | 25 | 34 | 53.3 | 89 | 987 | |
| | 2013.10-2017.10 | 6DCT | F | L/R | SUV FWD UEJB;UEJE | | GCO18261 | Outer Joint | | 25 | 25 | 53.3 | 89 | 61.5 | M |
| **Escort** | | | | | | | | | | | | | | | |
| 1.3 (44 kw) | 1995.01-1997.08 | 5MT | F | R | Estate Van FWD J6A | | GDS18039 | Drive Shaft | | 25 | 23 | 56.5 | 88.5 | 903 | |
| | 1995.01-1997.08 | 5MT | F | L/R | Estate Van FWD J6A | Trans. code:B5/IB5 | GCO18004 | Outer Joint | | 25 | 22 | 56.5 | 88.5 | 53.5 | O |
| | 1995.01-1997.08 | 5MT | F | L/R | Estate Van FWD J6A | Trans. code:MTX75 | GCO18021 | Outer Joint | | 25 | 25 | 56.5 | 89 | 56.5 | O |
| | 1995.01-1997.09 | 5MT | F | R | Hatchback FWD J4B/J6A | | GDS18039 | Drive Shaft | | 25 | 23 | 56.5 | 88.5 | 903 | |
| | 1995.01-1997.09 | MT | F | L/R | Hatchback FWD J4B/J6A | Date to:1997.09 | GCO18017 | Outer Joint | | 23 | 20 | 48 | 80.5 | 49 | O |
| | 1995.01-1997.09 | MT | F | L/R | Hatchback FWD J4B/J6A | | GCI99075 | Inner Joint | | 23 | 22 | 40 | 61 | 93 | |
| | 1995.01-1997.09 | | F | L/R | Hatchback FWD J4B/J6A | Trans. code:B5/IB5 | GCO18004 | Outer Joint | | 25 | 22 | 56.5 | 88.5 | 53.5 | O |
| | 1995.01-1997.09 | | F | L/R | Hatchback FWD J4B/J6A | Trans. code:MTX75 | GCO18021 | Outer Joint | | 25 | 25 | 56.5 | 89 | 56.5 | O |
| | 1995.01-1997.09 | | F | | Hatchback FWD J4B/J6A | | GCI18053 | Inner Joint | | 23 | 22 | 40 | 61 | 91.5 | |
| | 1995.01-1997.09 | 5MT | F | R | Saloon FWD J4B | | GDS18039 | Drive Shaft | | 25 | 23 | 56.5 | 88.5 | 903 | |
| | 1995.01-1997.09 | MT | F | L/R | Saloon FWD J4B | Date to:1997.09 | GCO18017 | Outer Joint | | 23 | 20 | 48 | 80.5 | 49 | O |
| | 1995.01-1997.09 | MT | F | L/R | Saloon FWD J4B | | GCI99075 | Inner Joint | | 23 | 22 | 40 | 61 | 93 | |
| | 1995.01-1997.09 | | F | L/R | Saloon FWD J4B | Trans. code:B5/IB5 | GCO18004 | Outer Joint | | 25 | 22 | 56.5 | 88.5 | 53.5 | O |
| | 1995.01-1997.09 | | F | L/R | Saloon FWD J4B | Trans. code:MTX75 | GCO18021 | Outer Joint | | 25 | 25 | 56.5 | 89 | 56.5 | O |
| | 1995.01-1997.09 | | F | | Saloon FWD J4B | | GCI18053 | Inner Joint | | 23 | 22 | 40 | 61 | 91.5 | |
| | 1995.01-1999.01 | 5MT | F | R | Estate FWD J4B/J6A | | GDS18039 | Drive Shaft | | 25 | 23 | 56.5 | 88.5 | 903 | |
| | 1995.01-1999.01 | MT | F | L/R | Estate FWD J4B/J6A | | GCO18017 | Outer Joint | | 23 | 20 | 48 | 80.5 | 49 | O |
| | 1995.01-1999.01 | MT | F | L/R | Estate FWD J4B/J6A | | GCI99075 | Inner Joint | | 23 | 22 | 40 | 61 | 93 | |
| | 1995.01-1999.01 | | F | L/R | Estate FWD J4B/J6A | Trans. code:B5/IB5 | GCO18004 | Outer Joint | | 25 | 22 | 56.5 | 88.5 | 53.5 | O |
| | 1995.01-1999.01 | | F | L/R | Estate FWD J4B/J6A | Trans. code:MTX75 | GCO18021 | Outer Joint | | 25 | 25 | 56.5 | 89 | 56.5 | O |
| | 1995.01-1999.01 | | F | | Estate FWD J4B/J6A | | GCI18053 | Inner Joint | | 23 | 22 | 40 | 61 | 91.5 | |
| 1.4 (54 kw) | 1995.01-1996.12 | 5MT | F | L | Estate FWD F4B | | GDS18040 | Drive Shaft | | 25 | 23 | 56.5 | 88.5 | 608 | |
| | 1995.01-1996.12 | 5MT | F | R | Estate FWD F4B | | GDS18039 | Drive Shaft | | 25 | 23 | 56.5 | 88.5 | 903 | |
| | 1995.01-1996.12 | 5MT | F | L/R | Estate FWD F4B | | GCI18053 | Inner Joint | | 23 | 22 | 40 | 61 | 91.5 | |
| | 1995.01-1996.12 | | F | L/R | Estate FWD F4B | Trans. code:B5/IB5 | GCO18004 | Outer Joint | | 25 | 22 | 56.5 | 88.5 | 53.5 | O |
| | 1995.01-1996.12 | | F | L/R | Estate FWD F4B | Trans. code:MTX75 | GCO18021 | Outer Joint | | 25 | 25 | 56.5 | 89 | 56.5 | O |
| | 1995.01-1996.12 | 5MT | F | L | Saloon FWD F4B | | GDS18040 | Drive Shaft | | 25 | 23 | 56.5 | 88.5 | 608 | |
| | 1995.01-1996.12 | 5MT | F | R | Saloon FWD F4B | | GDS18039 | Drive Shaft | | 25 | 23 | 56.5 | 88.5 | 903 | |
| | 1995.01-1996.12 | 5MT | F | L/R | Saloon FWD F4B | | GCI18053 | Inner Joint | | 23 | 22 | 40 | 61 | 91.5 | |
| | 1995.01-1996.12 | MT | F | L/R | Saloon FWD F4B | Trans. code:B5/IB5 | GCO18004 | Outer Joint | | 25 | 22 | 56.5 | 88.5 | 53.5 | O |
| | 1995.01-1996.12 | | F | L/R | Saloon FWD F4B | Trans. code:MTX75 | GCO18021 | Outer Joint | | 25 | 25 | 56.5 | 89 | 56.5 | O |
| | 1995.01-1999.12 | 5MT | F | L | Hatchback FWD F4B | | GDS18040 | Drive Shaft | | 25 | 23 | 56.5 | 88.5 | 608 | |
| | 1995.01-1999.12 | 5MT | F | R | Hatchback FWD F4B | | GDS18039 | Drive Shaft | | 25 | 23 | 56.5 | 88.5 | 903 | |

| | YEAR | TRANSM. | F/R | L/R | BODY STYLE & DRIVE TYPE & ENGINE | REMARKS | G-AP Ref. | PRODUCT | ABS | Technical Specifications A | B | C | H | L | P |
|---|---|---|---|---|---|---|---|---|---|---|---|---|---|---|---|
| **FORD** **Escort** | | | | | | | | | | | | | | | |
| 1.4 (54 kw) | 1995.01-1999.12 | 5MT | F | L/R | Hatchback FWD F4B | | GCI18053 | Inner Joint | | 23 | 22 | 40 | 61 | 91.5 | |
| | 1995.01-1999.12 | | F | L/R | Hatchback FWD F4B | Trans. code:B5/IB5 | GCO18004 | Outer Joint | | 25 | 22 | 56.5 | 88.5 | 53.5 | O |
| | 1995.01-1999.12 | | F | L/R | Hatchback FWD F4B | Trans. code:MTX75 | GCO18021 | Outer Joint | | 25 | 25 | 56.5 | 89 | 56.5 | O |
| | 1995.01-2000.08 | 5MT | F | L | Estate Van FWD F4B | | GDS18040 | Drive Shaft | | 25 | 23 | 56.5 | 88.5 | 608 | |
| | 1995.01-2000.08 | 5MT | F | R | Estate Van FWD F4B | For vehicles without air conditioning | GDS18039 | Drive Shaft | | 25 | 23 | 56.5 | 88.5 | 903 | |
| | 1995.01-2000.08 | MT | F | L/R | Estate Van FWD F4B | Trans. code:B5/IB5 | GCO18004 | Outer Joint | | 25 | 22 | 56.5 | 88.5 | 53.5 | O |
| | 1995.01-2000.08 | | F | L/R | Estate Van FWD F4B | Trans. code:MTX75 | GCO18021 | Outer Joint | | 25 | 25 | 56.5 | 89 | 56.5 | O |
| | 1995.01-2000.08 | | F | | Estate Van FWD F4B | | GCI18053 | Inner Joint | | 23 | 22 | 40 | 61 | 91.5 | |
| 1.4 (55 kw) | 1995.01-1996.09 | 5MT | F | L | Saloon FWD F6B/F6D/FUH | | GDS18040 | Drive Shaft | | 25 | 23 | 56.5 | 88.5 | 608 | |
| | 1995.01-1996.09 | 5MT | F | R | Saloon FWD F6B/F6D/FUH | | GDS18039 | Drive Shaft | | 25 | 23 | 56.5 | 88.5 | 903 | |
| | 1995.01-1996.09 | MT | F | L/R | Saloon FWD F6B/F6D/FUH | Trans. code:B5/IB5 | GCO18004 | Outer Joint | | 25 | 22 | 56.5 | 88.5 | 53.5 | O |
| | 1995.01-1996.09 | MT | F | L/R | Saloon FWD F6B/F6D/FUH | | GCI99075 | Inner Joint | | 23 | 22 | 40 | 61 | 93 | |
| | 1995.01-1996.09 | | F | L/R | Saloon FWD F6B/F6D/FUH | Trans. code:MTX75 | GCO18021 | Outer Joint | | 25 | 25 | 56.5 | 89 | 56.5 | O |
| | 1995.01-1996.09 | | F | | Saloon FWD F6B/F6D/FUH | | GCI18053 | Inner Joint | | 23 | 22 | 40 | 61 | 91.5 | |
| | 1995.01-1998.10 | 5MT | F | L | Hatchback FWD F4B/FUH | | GDS18040 | Drive Shaft | | 25 | 23 | 56.5 | 88.5 | 608 | |
| | 1995.01-1998.10 | 5MT | F | R | Hatchback FWD F4B/FUH | | GDS18039 | Drive Shaft | | 25 | 23 | 56.5 | 88.5 | 903 | |
| | 1995.01-1998.10 | MT | F | L/R | Hatchback FWD F4B/FUH | Trans. code:B5/IB5 | GCO18004 | Outer Joint | | 25 | 22 | 56.5 | 88.5 | 53.5 | O |
| | 1995.01-1998.10 | MT | F | L/R | Hatchback FWD F4B/FUH | | GCI99075 | Inner Joint | | 23 | 22 | 40 | 61 | 93 | |
| | 1995.01-1998.10 | | F | L/R | Hatchback FWD F4B/FUH | Trans. code:MTX75 | GCO18021 | Outer Joint | | 25 | 25 | 56.5 | 89 | 56.5 | O |
| | 1995.01-1998.10 | | F | | Hatchback FWD F4B/FUH | | GCI18053 | Inner Joint | | 23 | 22 | 40 | 61 | 91.5 | |
| | 1995.01-1999.02 | 5MT | F | L | Estate FWD FUH | | GDS18040 | Drive Shaft | | 25 | 23 | 56.5 | 88.5 | 608 | |
| | 1995.01-1999.02 | 5MT | F | R | Estate FWD FUH | | GDS18039 | Drive Shaft | | 25 | 23 | 56.5 | 88.5 | 903 | |
| | 1995.01-1999.02 | MT | F | L/R | Estate FWD FUH | Trans. code:B5/IB5 | GCO18004 | Outer Joint | | 25 | 22 | 56.5 | 88.5 | 53.5 | O |
| | 1995.01-1999.02 | MT | F | L/R | Estate FWD FUH | | GCI99075 | Inner Joint | | 23 | 22 | 40 | 61 | 93 | |
| | 1995.01-1999.02 | | F | L/R | Estate FWD FUH | Trans. code:MTX75 | GCO18021 | Outer Joint | | 25 | 25 | 56.5 | 89 | 56.5 | O |
| | 1995.01-1999.02 | | F | | Estate FWD FUH | | GCI18053 | Inner Joint | | 23 | 22 | 40 | 61 | 91.5 | |
| | 1995.02-1998.08 | MT | F | L | Cabriolet FWD F4B/F6B/F6D | | GDS18040 | Drive Shaft | | 25 | 23 | 56.5 | 88.5 | 608 | |
| | 1995.02-1998.08 | MT | F | R | Cabriolet FWD F4B/F6B/F6D | | GDS18039 | Drive Shaft | | 25 | 23 | 56.5 | 88.5 | 903 | |
| | 1995.02-1998.08 | MT | F | L/R | Cabriolet FWD F4B/F6B/F6D | Trans. code:B5/IB5 | GCO18004 | Outer Joint | | 25 | 22 | 56.5 | 88.5 | 53.5 | O |
| | 1995.02-1998.08 | MT | F | L/R | Cabriolet FWD F4B/F6B/F6D | | GCI99075 | Inner Joint | | 23 | 22 | 40 | 61 | 93 | |
| | 1995.02-1998.08 | | F | L/R | Cabriolet FWD F4B/F6B/F6D | Trans. code:MTX75 | GCO18021 | Outer Joint | | 25 | 25 | 56.5 | 89 | 56.5 | O |
| | 1995.02-1998.08 | | F | | Cabriolet FWD F4B/F6B/F6D | | GCI18053 | Inner Joint | | 23 | 22 | 40 | 61 | 91.5 | |
| 1.6 (65 kw) | 1995.02-1996.12 | MT | F | L | Cabriolet FWD L1H | | GDS18040 | Drive Shaft | | 25 | 23 | 56.5 | 88.5 | 608 | |
| | 1995.02-1996.12 | MT | F | R | Cabriolet FWD L1H | | GDS18039 | Drive Shaft | | 25 | 23 | 56.5 | 88.5 | 903 | |
| | 1995.02-1996.12 | MT | F | L/R | Cabriolet FWD L1H | Trans. code:B5/IB5 | GCO18004 | Outer Joint | | 25 | 22 | 56.5 | 88.5 | 53.5 | O |
| | 1995.02-1996.12 | MT | F | L/R | Cabriolet FWD L1H | | GCI99075 | Inner Joint | | 23 | 22 | 40 | 61 | 93 | |
| | 1995.02-1996.12 | | F | L/R | Cabriolet FWD L1H | Trans. code:MTX75 | GCO18021 | Outer Joint | | 25 | 25 | 56.5 | 89 | 56.5 | O |
| | 1995.02-1996.12 | | F | | Cabriolet FWD L1H | | GCI18053 | Inner Joint | | 23 | 22 | 40 | 61 | 91.5 | |
| 1.6 (66 kw) | 1995.01-1997.08 | | F | L | Hatchback 4WD L1E | | GDS18040 | Drive Shaft | | 25 | 23 | 56.5 | 88.5 | 608 | |
| | 1995.01-1997.08 | | F | L/R | Hatchback 4WD L1E | Trans. code:B5/IB5 | GCO18004 | Outer Joint | | 25 | 22 | 56.5 | 88.5 | 53.5 | O |
| | 1995.01-1997.08 | | F | | Hatchback 4WD L1E | | GCI18053 | Inner Joint | | 23 | 22 | 40 | 61 | 91.5 | |
| | 1995.01-1998.10 | CVT/5MT | F | L | Hatchback FWD L1E | Trans. code:MTX75;Date from:1995.05 | GDS18019 | Drive Shaft | | 25 | 26 | 56.5 | 89 | 591.5 | |
| | 1995.01-1998.10 | CVT/5MT | F | L | Hatchback FWD L1E | Trans. code:CVH | GDS18040 | Drive Shaft | | 25 | 23 | 56.5 | 88.5 | 608 | |
| | 1995.01-1998.10 | MT | F | R | Hatchback FWD L1E | | GDS18039 | Drive Shaft | | 25 | 23 | 56.5 | 88.5 | 903 | |
| | 1995.01-1998.10 | MT | F | L/R | Hatchback FWD L1E | Trans. code:B5/IB5 | GCO18004 | Outer Joint | | 25 | 22 | 56.5 | 88.5 | 53.5 | O |
| | 1995.01-1998.10 | MT | F | L/R | Hatchback FWD L1E | | GCI99075 | Inner Joint | | 23 | 22 | 40 | 61 | 93 | |
| | 1995.01-1998.10 | | F | L/R | Hatchback FWD L1E | Trans. code:MTX75 | GCO18021 | Outer Joint | | 25 | 25 | 56.5 | 89 | 56.5 | O |
| | 1995.01-1998.10 | | F | | Hatchback FWD L1E | | GCI18053 | Inner Joint | | 23 | 22 | 40 | 61 | 91.5 | |
| | 1995.01-1999.02 | CVT/5MT | F | L | Estate FWD L1E/L1K | Trans. code:MTX75;Date from:1995.05 | GDS18019 | Drive Shaft | | 25 | 26 | 56.5 | 89 | 591.5 | |
| | 1995.01-1999.02 | CVT/5MT | F | L | Estate FWD L1E/L1K | Trans. code:CVH | GDS18040 | Drive Shaft | | 25 | 23 | 56.5 | 88.5 | 608 | |
| | 1995.01-1999.02 | CVT/5MT | F | R | Estate FWD L1E/L1K | | GDS18039 | Drive Shaft | | 25 | 23 | 56.5 | 88.5 | 903 | |
| | 1995.01-1999.02 | MT | F | L/R | Estate FWD L1E/L1K | Trans. code:B5/IB5 | GCO18004 | Outer Joint | | 25 | 22 | 56.5 | 88.5 | 53.5 | O |
| | 1995.01-1999.02 | MT | F | L/R | Estate FWD L1E/L1K | | GCI99075 | Inner Joint | | 23 | 22 | 40 | 61 | 93 | |
| | 1995.01-1999.02 | | F | L/R | Estate FWD L1E/L1K | Trans. code:MTX75 | GCO18021 | Outer Joint | | 25 | 25 | 56.5 | 89 | 56.5 | O |
| | 1995.01-1999.02 | | F | | Estate FWD L1E/L1K | | GCI18053 | Inner Joint | | 23 | 22 | 40 | 61 | 91.5 | |
| | 1995.01-1999.09 | MT | F | L | Cabriolet FWD L1E/L1K | | GDS18040 | Drive Shaft | | 25 | 23 | 56.5 | 88.5 | 608 | |
| | 1995.01-1999.09 | MT | F | R | Cabriolet FWD L1E/L1K | | GDS18039 | Drive Shaft | | 25 | 23 | 56.5 | 88.5 | 903 | |
| | 1995.01-1999.09 | MT | F | L/R | Cabriolet FWD L1E/L1K | Trans. code:B5/IB5 | GCO18004 | Outer Joint | | 25 | 22 | 56.5 | 88.5 | 53.5 | O |
| | 1995.01-1999.09 | MT | F | L/R | Cabriolet FWD L1E/L1K | Trans. code:MTX75 | GCO18021 | Outer Joint | | 25 | 25 | 56.5 | 89 | 56.5 | O |
| | 1995.01-1999.09 | MT | F | L/R | Cabriolet FWD L1E/L1K | | GCI99075 | Inner Joint | | 23 | 22 | 40 | 61 | 93 | |
| | 1995.01-1999.09 | | F | | Cabriolet FWD L1E/L1K | | GCI18053 | Inner Joint | | 23 | 22 | 40 | 61 | 91.5 | |
| | 1995.01-2000.08 | 5MT | F | L | Saloon FWD L1E/L1K | Date from:1995.05,Trans. code:MTX75 | GDS18019 | Drive Shaft | | 25 | 26 | 56.5 | 89 | 591.5 | |
| | 1995.01-2000.08 | 5MT | F | L | Saloon FWD L1E/L1K | Trans. code:CVH | GDS18040 | Drive Shaft | | 25 | 23 | 56.5 | 88.5 | 608 | |
| | 1995.01-2000.08 | 5MT | F | L/R | Saloon FWD L1E/L1K | Trans. code:B5/IB5 | GCO18004 | Outer Joint | | 25 | 22 | 56.5 | 88.5 | 53.5 | O |
| | 1995.01-2000.08 | 5MT | F | L/R | Saloon FWD L1E/L1K | Trans. code:MTX75 | GCO18021 | Outer Joint | | 25 | 25 | 56.5 | 89 | 56.5 | O |

| | YEAR | TRANSM. | F/R | L/R | BODY STYLE & DRIVE TYPE & ENGINE | REMARKS | G-AP Ref. | PRODUCT | ABS | Technical Specifications A | B | C | H | L | P |
|---|---|---|---|---|---|---|---|---|---|---|---|---|---|---|---|
| **FORD** **Escort** | | | | | | | | | | | | | | | |
| 1.6 (66 kw) | 1995.01-2000.08 | MT | F | R | Saloon FWD L1E/L1K | | GDS18039 | Drive Shaft | | 25 | 23 | 56.5 | 88.5 | 903 | |
| | 1995.01-2000.08 | MT | F | L/R | Saloon FWD L1E/L1K | TJ | GCI18053 | Inner Joint | | 23 | 22 | 40 | 61 | 91.5 | |
| | 1995.01-2000.08 | MT | F | L/R | Saloon FWD L1E/L1K | DOJ | GCI99075 | Inner Joint | | 23 | 22 | 40 | 61 | 93 | |
| 1.8 (44 kw) | 1995.01-1997.01 | MT | F | L | Hatchback FWD RTE/RTH | | GDS18040 | Drive Shaft | | 25 | 23 | 56.5 | 88.5 | 608 | |
| | 1995.01-1997.01 | MT | F | R | Hatchback FWD RTE/RTH | | GDS18039 | Drive Shaft | | 25 | 23 | 56.5 | 88.5 | 903 | |
| | 1995.01-1997.01 | MT | F | L/R | Hatchback FWD RTE/RTH | Trans. code:B5/IB5 | GCO18004 | Outer Joint | | 25 | 22 | 56.5 | 88.5 | 53.5 | O |
| | 1995.01-1997.01 | MT | F | L/R | Hatchback FWD RTE/RTH | | GCI99075 | Inner Joint | | 23 | 22 | 40 | 61 | 93 | |
| | 1995.01-1997.01 | | F | L/R | Hatchback FWD RTE/RTH | Trans. code:MTX75 | GCO18021 | Outer Joint | | 25 | 25 | 56.5 | 89 | 56.5 | O |
| | 1995.01-1997.01 | | F | | Hatchback FWD RTE/RTH | | GCI18053 | Inner Joint | | 23 | 22 | 40 | 61 | 91.5 | |
| | 1995.01-1997.01 | MT | F | L | Saloon FWD RTE/RTH | | GDS18040 | Drive Shaft | | 25 | 23 | 56.5 | 88.5 | 608 | |
| | 1995.01-1997.01 | MT | F | R | Saloon FWD RTE/RTH | | GDS18039 | Drive Shaft | | 25 | 23 | 56.5 | 88.5 | 903 | |
| | 1995.01-1997.01 | MT | F | L/R | Saloon FWD RTE/RTH | Trans. code:B5/IB5 | GCO18004 | Outer Joint | | 25 | 22 | 56.5 | 88.5 | 53.5 | O |
| | 1995.01-1997.01 | MT | F | L/R | Saloon FWD RTE/RTH | | GCI99075 | Inner Joint | | 23 | 22 | 40 | 61 | 93 | |
| | 1995.01-1997.01 | | F | L/R | Saloon FWD RTE/RTH | Trans. code:MTX75 | GCO18021 | Outer Joint | | 25 | 25 | 56.5 | 89 | 56.5 | O |
| | 1995.01-1997.01 | | F | | Saloon FWD RTE/RTH | | GCI18053 | Inner Joint | | 23 | 22 | 40 | 61 | 91.5 | |
| | 1995.01-2000.08 | MT | F | L | Estate FWD RTE/RTH | | GDS18040 | Drive Shaft | | 25 | 23 | 56.5 | 88.5 | 608 | |
| | 1995.01-2000.08 | MT | F | R | Estate FWD RTE/RTH | | GDS18039 | Drive Shaft | | 25 | 23 | 56.5 | 88.5 | 903 | |
| | 1995.01-2000.08 | MT | F | L/R | Estate FWD RTE/RTH | Trans. code:B5/IB5 | GCO18004 | Outer Joint | | 25 | 22 | 56.5 | 88.5 | 53.5 | O |
| | 1995.01-2000.08 | MT | F | L/R | Estate FWD RTE/RTH | | GCI99075 | Inner Joint | | 23 | 22 | 40 | 61 | 93 | |
| | 1995.01-2000.08 | | F | L/R | Estate FWD RTE/RTH | Date From:1998.05;Trans. code:MTX75 | GCO18016 | Outer Joint | | 25 | 30 | 56.5 | 89 | 56.5 | I |
| | 1995.01-2000.08 | | F | L/R | Estate FWD RTE/RTH | Date to:1998.04,Trans. code:MTX75 | GCO18021 | Outer Joint | | 25 | 25 | 56.5 | 89 | 56.5 | O |
| | 1995.01-2000.08 | | F | | Estate FWD RTE/RTH | | GCI18053 | Inner Joint | | 23 | 22 | 40 | 61 | 91.5 | |
| | 1995.01-2000.08 | 5MT | F | R | Estate Van FWD RTH, RTE, RTF | | GDS18039 | Drive Shaft | | 25 | 23 | 56.5 | 88.5 | 903 | |
| | 1995.01-2000.08 | MT | F | L | Estate Van FWD RTH, RTE, RTF | | GDS18040 | Drive Shaft | | 25 | 23 | 56.5 | 88.5 | 608 | |
| | 1995.01-2000.08 | MT | F | L/R | Estate Van FWD RTH, RTE, RTF | Trans. code:B5/IB5 | GCO18004 | Outer Joint | | 25 | 22 | 56.5 | 88.5 | 53.5 | O |
| | 1995.01-2000.08 | | F | L/R | Estate Van FWD RTH, RTE, RTF | Date From:1998.05;Trans. code:MTX75 | GCO18016 | Outer Joint | | 25 | 30 | 56.5 | 89 | 56.5 | I |
| | 1995.01-2000.08 | | F | L/R | Estate Van FWD RTH, RTE, RTF | Date to:1998.04,Trans. code:MTX75 | GCO18021 | Outer Joint | | 25 | 25 | 56.5 | 89 | 56.5 | O |
| | 1995.01-2000.08 | | F | | Estate Van FWD RTH, RTE, RTF | | GCI18053 | Inner Joint | | 23 | 22 | 40 | 61 | 91.5 | |
| 1.8 (51 kw) | 1995.12-1998.10 | MT | F | R | Hatchback FWD RVA | | GDS18179 | Drive Shaft | | 25 | 26 | 56.5 | 89 | 908 | |
| | 1995.12-1998.10 | MT | F | L/R | Hatchback FWD RVA | Date to:1996.09 | GCO18004 | Outer Joint | | 25 | 22 | 56.5 | 88.5 | 53.5 | O |
| | 1995.12-1998.10 | MT | F | L/R | Hatchback FWD RVA | Date from:1996.10 | GCO18021 | Outer Joint | | 25 | 25 | 56.5 | 89 | 56.5 | O |
| | 1995.12-1998.10 | | F | L | Hatchback FWD RVA | | GDS18038 | Drive Shaft | | 25 | 26 | 56.5 | 89 | 596 | |
| | 1995.12-1998.10 | | F | R | Hatchback FWD RVA | Date From:1997.02 | GDS18015 | Drive Shaft | | 25 | 26 | 56.5 | 89 | 906 | |
| | 1995.12-1998.10 | | F | R | Hatchback FWD RVA | | GDS18103 | Drive Shaft | | 25 | 25 | 56.5 | 89 | 816.5 | |
| | 1995.12-1998.10 | | F | L/R | Hatchback FWD RVA | | GCO18016 | Outer Joint | | 25 | 30 | 56.5 | 89 | 56.5 | I |
| | 1995.12-2001.06 | 5MT | F | L | Estate Van FWD RVA | Trans. code:MTX75;Date to:1997.01 | GDS18019 | Drive Shaft | | 25 | 26 | 56.5 | 89 | 591.5 | |
| | 1995.12-2001.06 | 5MT | F | R | Estate Van FWD RVA | Date from:1997.02,Trans. code:MTX75 | GDS18015 | Drive Shaft | | 25 | 26 | 56.5 | 89 | 906 | |
| | 1995.12-2001.06 | 5MT | F | R | Estate Van FWD RVA | Trans. code:B5/IB5 | GDS18039 | Drive Shaft | | 25 | 23 | 56.5 | 88.5 | 903 | |
| | 1995.12-2001.06 | MT | F | L/R | Estate Van FWD RVA | | GCO18021 | Outer Joint | | 25 | 25 | 56.5 | 89 | 56.5 | O |
| | 1995.12-2001.06 | | F | R | Estate Van FWD RVA | | GDS18103 | Drive Shaft | | 25 | 25 | 56.5 | 89 | 816.5 | |
| | 1995.12-2001.06 | | F | L/R | Estate Van FWD RVA | | GCO18016 | Outer Joint | | 25 | 30 | 56.5 | 89 | 56.5 | I |
| | 1996.04-2000.08 | MT | F | R | Estate FWD RVA | | GDS18103 | Drive Shaft | | 25 | 25 | 56.5 | 89 | 816.5 | |
| | 1996.04-2000.08 | MT | F | R | Estate FWD RVA | | GDS18179 | Drive Shaft | | 25 | 26 | 56.5 | 89 | 908 | |
| | 1996.04-2000.08 | MT | F | L/R | Estate FWD RVA | Date from:1996.04 | GCO18004 | Outer Joint | | 25 | 22 | 56.5 | 88.5 | 53.5 | O |
| | 1996.04-2000.08 | MT | F | L/R | Estate FWD RVA | | GCO18021 | Outer Joint | | 25 | 25 | 56.5 | 89 | 56.5 | O |
| | 1996.04-2000.08 | | F | L | Estate FWD RVA | | GDS18038 | Drive Shaft | | 25 | 26 | 56.5 | 89 | 596 | |
| | 1996.04-2000.08 | | F | R | Estate FWD RVA | Date From:1997.02 | GDS18015 | Drive Shaft | | 25 | 26 | 56.5 | 89 | 906 | |
| | 1996.04-2000.08 | | F | L/R | Estate FWD RVA | | GCO18016 | Outer Joint | | 25 | 30 | 56.5 | 89 | 56.5 | I |
| | 1996.04-2000.08 | MT | F | L/R | Saloon FWD RVA | Date from:1996.04 | GCO18004 | Outer Joint | | 25 | 22 | 56.5 | 88.5 | 53.5 | O |
| | 1996.04-2000.08 | MT | F | L/R | Saloon FWD RVA | Date from:1996.10 | GCO18021 | Outer Joint | | 25 | 25 | 56.5 | 89 | 56.5 | O |
| | 1996.04-2000.08 | | F | L | Saloon FWD RVA | | GDS18038 | Drive Shaft | | 25 | 26 | 56.5 | 89 | 596 | |
| | 1996.04-2000.08 | | F | R | Saloon FWD RVA | Date From:1997.02 | GDS18015 | Drive Shaft | | 25 | 26 | 56.5 | 89 | 906 | |
| | 1996.04-2000.08 | | F | R | Saloon FWD RVA | | GDS18103 | Drive Shaft | | 25 | 25 | 56.5 | 89 | 816.5 | |
| | 1996.04-2000.08 | | F | L/R | Saloon FWD RVA | | GCO18016 | Outer Joint | | 25 | 30 | 56.5 | 89 | 56.5 | I |
| | 1996.10-1999.08 | 5MT | F | R | Cabriolet FWD RVA | Trans. code:B5/IB5 | GDS18039 | Drive Shaft | | 25 | 23 | 56.5 | 88.5 | 903 | |
| | 1996.10-1999.08 | MT | F | L | Cabriolet FWD RVA | | GDS18044 | Drive Shaft | | 25 | 26 | 56.5 | 89 | 594 | |
| | 1996.10-1999.08 | MT | F | L/R | Cabriolet FWD RVA | | GCO18021 | Outer Joint | | 25 | 25 | 56.5 | 89 | 56.5 | O |
| | 1996.10-1999.08 | | F | L | Cabriolet FWD RVA | | GDS18038 | Drive Shaft | | 25 | 26 | 56.5 | 89 | 596 | |
| | 1996.10-1999.08 | | F | R | Cabriolet FWD RVA | | GDS18015 | Drive Shaft | | 25 | 26 | 56.5 | 89 | 906 | |
| | 1996.10-1999.08 | | F | R | Cabriolet FWD RVA | | GDS18103 | Drive Shaft | | 25 | 25 | 56.5 | 89 | 816.5 | |
| | 1996.10-1999.08 | | F | L/R | Cabriolet FWD RVA | | GCO18016 | Outer Joint | | 25 | 30 | 56.5 | 89 | 56.5 | I |
| 1.8 (66 kw) | 1995.01-1996.09 | 5MT | F | R | Cabriolet FWD RFK/RFS/RKD | Date from:1995.05,Trans. code:B5/IB5 | GDS18039 | Drive Shaft | | 25 | 23 | 56.5 | 88.5 | 903 | |
| | 1995.01-1996.09 | MT | F | L | Cabriolet FWD RFK/RFS/RKD | | GDS18019 | Drive Shaft | | 25 | 26 | 56.5 | 89 | 591.5 | |
| | 1995.01-1996.09 | MT | F | L | Cabriolet FWD RFK/RFS/RKD | | GDS18044 | Drive Shaft | | 25 | 26 | 56.5 | 89 | 594 | |
| | 1995.01-1996.09 | MT | F | R | Cabriolet FWD RFK/RFS/RKD | | GDS18103 | Drive Shaft | | 25 | 25 | 56.5 | 89 | 816.5 | |

| | YEAR | TRANSM. | F/R | L/R | BODY STYLE & DRIVE TYPE & ENGINE | REMARKS | G-AP Ref. | PRODUCT | ABS | Technical Specifications A | B | C | H | L | P |
|---|---|---|---|---|---|---|---|---|---|---|---|---|---|---|---|
| **FORD** **Escort** | | | | | | | | | | | | | | | |
| 1.8 (66 kw) | 1995.01-1996.09 | MT | F | L/R | Cabriolet FWD RFK/RFS/RKD | transm. type:MTX75,Date from:1997.01 | GCO18016 | Outer Joint | | 25 | 30 | 56.5 | 89 | 56.5 | I |
| | 1995.01-1996.09 | MT | F | L/R | Cabriolet FWD RFK/RFS/RKD | Date to:1996.09 | GCO18021 | Outer Joint | | 25 | 25 | 56.5 | 89 | 56.5 | O |
| | 1995.01-1996.09 | | F | R | Cabriolet FWD RFK/RFS/RKD | | GDS18015 | Drive Shaft | | 25 | 26 | 56.5 | 89 | 906 | |
| | 1995.01-1996.09 | | F | L/R | Cabriolet FWD RFK/RFS/RKD | Trans. code:B5/IB5 | GCO18004 | Outer Joint | | 25 | 22 | 56.5 | 88.5 | 53.5 | O |
| | 1995.01-1998.10 | 5MT | F | R | Hatchback FWD RFK/RFS/RKD | Trans. code:B5/IB5 | GDS18039 | Drive Shaft | | 25 | 23 | 56.5 | 88.5 | 903 | |
| | 1995.01-1998.10 | MT | F | L | Hatchback FWD RFK/RFS/RKD | | GDS18019 | Drive Shaft | | 25 | 26 | 56.5 | 89 | 591.5 | |
| | 1995.01-1998.10 | MT | F | L | Hatchback FWD RFK/RFS/RKD | | GDS18044 | Drive Shaft | | 25 | 26 | 56.5 | 89 | 594 | |
| | 1995.01-1998.10 | MT | F | L/R | Hatchback FWD RFK/RFS/RKD | | GCO18021 | Outer Joint | | 25 | 25 | 56.5 | 89 | 56.5 | O |
| | 1995.01-1998.10 | | F | R | Hatchback FWD RFK/RFS/RKD | | GDS18015 | Drive Shaft | | 25 | 26 | 56.5 | 89 | 906 | |
| | 1995.01-1998.10 | | F | R | Hatchback FWD RFK/RFS/RKD | | GDS18103 | Drive Shaft | | 25 | 25 | 56.5 | 89 | 816.5 | |
| | 1995.01-1998.10 | | F | L/R | Hatchback FWD RFK/RFS/RKD | Trans. code:B5/IB5 | GCO18004 | Outer Joint | | 25 | 22 | 56.5 | 88.5 | 53.5 | O |
| | 1995.01-1998.10 | | F | L/R | Hatchback FWD RFK/RFS/RKD | Date From:1998.05;Trans. code:MTX75 | GCO18016 | Outer Joint | | 25 | 30 | 56.5 | 89 | 56.5 | I |
| | 1995.01-2000.08 | 5MT | F | R | Estate FWD RFK/RFS/RKD | Trans. code:B5/IB5 | GDS18039 | Drive Shaft | | 25 | 23 | 56.5 | 88.5 | 903 | |
| | 1995.01-2000.08 | MT | F | L | Estate FWD RFK/RFS/RKD | | GDS18019 | Drive Shaft | | 25 | 26 | 56.5 | 89 | 591.5 | |
| | 1995.01-2000.08 | MT | F | L/R | Estate FWD RFK/RFS/RKD | | GCO18021 | Outer Joint | | 25 | 25 | 56.5 | 89 | 56.5 | O |
| | 1995.01-2000.08 | | F | R | Estate FWD RFK/RFS/RKD | | GDS18015 | Drive Shaft | | 25 | 26 | 56.5 | 89 | 906 | |
| | 1995.01-2000.08 | | F | R | Estate FWD RFK/RFS/RKD | | GDS18103 | Drive Shaft | | 25 | 25 | 56.5 | 89 | 816.5 | |
| | 1995.01-2000.08 | | F | L/R | Estate FWD RFK/RFS/RKD | Trans. code:B5/IB5 | GCO18004 | Outer Joint | | 25 | 22 | 56.5 | 88.5 | 53.5 | O |
| | 1995.01-2000.08 | | F | L/R | Estate FWD RFK/RFS/RKD | Date From:1998.05;Trans. code:MTX75 | GCO18016 | Outer Joint | | 25 | 30 | 56.5 | 89 | 56.5 | I |
| | 1995.01-2000.08 | 5MT | F | L | Estate Van FWD RFD, RFK, RFS | Trans. code:MTX75;Date to:1997.01 | GDS18019 | Drive Shaft | | 25 | 26 | 56.5 | 89 | 591.5 | |
| | 1995.01-2000.08 | 5MT | F | R | Estate Van FWD RFD, RFK, RFS | Trans. code:B5/IB5 | GDS18039 | Drive Shaft | | 25 | 23 | 56.5 | 88.5 | 903 | |
| | 1995.01-2000.08 | MT | F | R | Estate Van FWD RFD, RFK, RFS | | GDS18015 | Drive Shaft | | 25 | 26 | 56.5 | 89 | 906 | |
| | 1995.01-2000.08 | | F | R | Estate Van FWD RFD, RFK, RFS | | GDS18103 | Drive Shaft | | 25 | 25 | 56.5 | 89 | 816.5 | |
| | 1995.01-2000.08 | | F | L/R | Estate Van FWD RFD, RFK, RFS | Trans. code:B5/IB5 | GCO18004 | Outer Joint | | 25 | 22 | 56.5 | 88.5 | 53.5 | O |
| | 1995.01-2000.08 | | F | L/R | Estate Van FWD RFD, RFK, RFS | Date From:1998.05;Trans. code:MTX75 | GCO18016 | Outer Joint | | 25 | 30 | 56.5 | 89 | 56.5 | I |
| | 1995.01-2000.08 | | F | L/R | Estate Van FWD RFD, RFK, RFS | Date to:1998.04,Trans. code:MTX75 | GCO18021 | Outer Joint | | 25 | 25 | 56.5 | 89 | 56.5 | O |
| | 1995.01-2000.08 | 5MT | F | R | Saloon FWD RFK/RFS/RKD | Trans. code:B5/IB5 | GDS18039 | Drive Shaft | | 25 | 23 | 56.5 | 88.5 | 903 | |
| | 1995.01-2000.08 | MT | F | L | Saloon FWD RFK/RFS/RKD | | GDS18019 | Drive Shaft | | 25 | 26 | 56.5 | 89 | 591.5 | |
| | 1995.01-2000.08 | MT | F | R | Saloon FWD RFK/RFS/RKD | | GDS18015 | Drive Shaft | | 25 | 26 | 56.5 | 89 | 906 | |
| | 1995.01-2000.08 | MT | F | R | Saloon FWD RFK/RFS/RKD | | GDS18103 | Drive Shaft | | 25 | 25 | 56.5 | 89 | 816.5 | |
| | 1995.01-2000.08 | MT | F | L/R | Saloon FWD RFK/RFS/RKD | transm. type:MTX75;Date from:1998.05 | GCO18016 | Outer Joint | | 25 | 30 | 56.5 | 89 | 56.5 | I |
| | 1995.01-2000.08 | MT | F | L/R | Saloon FWD RFK/RFS/RKD | | GCO18021 | Outer Joint | | 25 | 25 | 56.5 | 89 | 56.5 | O |
| | 1995.01-2000.08 | | F | L/R | Saloon FWD RFK/RFS/RKD | Trans. code:B5/IB5 | GCO18004 | Outer Joint | | 25 | 22 | 56.5 | 88.5 | 53.5 | O |
| 1.8 (77 kw) | 1995.01-1996.10 | 5MT | F | L | Estate FWD RDA | Trans. code:MTX75;Date from:1995.05 | GDS18019 | Drive Shaft | | 25 | 26 | 56.5 | 89 | 591.5 | |
| | 1995.01-1996.10 | 5MT | F | R | Estate FWD RDA | Date to:1995.04,Trans. code:B5/IB5 | GDS18039 | Drive Shaft | | 25 | 23 | 56.5 | 88.5 | 903 | |
| | 1995.01-1996.10 | MT | F | R | Estate FWD RDA | | GDS18179 | Drive Shaft | | 25 | 26 | 56.5 | 89 | 908 | |
| | 1995.01-1996.10 | MT | F | L/R | Estate FWD RDA | Trans. code:B5/IB5 | GCO18004 | Outer Joint | | 25 | 22 | 56.5 | 88.5 | 53.5 | O |
| | 1995.01-1996.10 | MT | F | L/R | Estate FWD RDA | | GCO18021 | Outer Joint | | 25 | 25 | 56.5 | 89 | 56.5 | O |
| | 1995.01-1996.10 | | F | | Estate FWD RDA | | GCI18053 | Inner Joint | | 23 | 22 | 40 | 61 | 91.5 | |
| | 1995.01-1996.10 | 5MT | F | L | Hatchback FWD RDA | Trans. code:MTX75;Date from:1995.05 | GDS18019 | Drive Shaft | | 25 | 26 | 56.5 | 89 | 591.5 | |
| | 1995.01-1996.10 | 5MT | F | R | Hatchback FWD RDA | Trans. code:B5/IB5 | GDS18039 | Drive Shaft | | 25 | 23 | 56.5 | 88.5 | 903 | |
| | 1995.01-1996.10 | MT | F | R | Hatchback FWD RDA | | GDS18179 | Drive Shaft | | 25 | 26 | 56.5 | 89 | 908 | |
| | 1995.01-1996.10 | MT | F | L/R | Hatchback FWD RDA | Trans. code:B5/IB5 | GCO18004 | Outer Joint | | 25 | 22 | 56.5 | 88.5 | 53.5 | O |
| | 1995.01-1996.10 | MT | F | L/R | Hatchback FWD RDA | | GCO18021 | Outer Joint | | 25 | 25 | 56.5 | 89 | 56.5 | O |
| | 1995.01-1996.10 | | F | | Hatchback FWD RDA | | GCI18053 | Inner Joint | | 23 | 22 | 40 | 61 | 91.5 | |
| | 1995.01-1996.10 | 5MT | F | L | Saloon FWD RDA | Trans. code:MTX75;Date from:1995.05 | GDS18019 | Drive Shaft | | 25 | 26 | 56.5 | 89 | 591.5 | |
| | 1995.01-1996.10 | 5MT | F | R | Saloon FWD RDA | Trans. code:B5/IB5 | GDS18039 | Drive Shaft | | 25 | 23 | 56.5 | 88.5 | 903 | |
| | 1995.01-1996.10 | MT | F | R | Saloon FWD RDA | | GDS18179 | Drive Shaft | | 25 | 26 | 56.5 | 89 | 908 | |
| | 1995.01-1996.10 | MT | F | L/R | Saloon FWD RDA | Trans. code:B5/IB5 | GCO18004 | Outer Joint | | 25 | 22 | 56.5 | 88.5 | 53.5 | O |
| | 1995.01-1996.10 | MT | F | L/R | Saloon FWD RDA | | GCO18021 | Outer Joint | | 25 | 25 | 56.5 | 89 | 56.5 | O |
| | 1995.01-1996.10 | | F | | Saloon FWD RDA | | GCI18053 | Inner Joint | | 23 | 22 | 40 | 61 | 91.5 | |
| | 1995.01-1998.08 | 5MT | F | R | Cabriolet FWD RDA | Date to:1995.04 | GDS18039 | Drive Shaft | | 25 | 23 | 56.5 | 88.5 | 903 | |
| | 1995.01-1998.08 | MT | F | L | Cabriolet FWD RDA | | GDS18044 | Drive Shaft | | 25 | 26 | 56.5 | 89 | 594 | |
| | 1995.01-1998.08 | MT | F | R | Cabriolet FWD RDA | | GDS18179 | Drive Shaft | | 25 | 26 | 56.5 | 89 | 908 | |
| | 1995.01-1998.08 | MT | F | L/R | Cabriolet FWD RDA | | GCO18021 | Outer Joint | | 25 | 25 | 56.5 | 89 | 56.5 | O |
| | 1995.01-1998.08 | | F | L | Cabriolet FWD RDA | | GDS18040 | Drive Shaft | | 25 | 23 | 56.5 | 88.5 | 608 | |
| | 1995.01-1998.08 | | F | L/R | Cabriolet FWD RDA | Trans. code:B5/IB5 | GCO18004 | Outer Joint | | 25 | 22 | 56.5 | 88.5 | 53.5 | O |
| | 1995.01-1998.08 | | F | | Cabriolet FWD RDA | | GCI18053 | Inner Joint | | 23 | 22 | 40 | 61 | 91.5 | |
| 1.8 (85 kw) | 1995.01-1996.12 | 5MT | F | R | Cabriolet FWD RKC | Date to:1995.04 | GDS18039 | Drive Shaft | | 25 | 23 | 56.5 | 88.5 | 903 | |
| | 1995.01-1996.12 | MT | F | L | Cabriolet FWD RKC | | GDS18019 | Drive Shaft | | 25 | 26 | 56.5 | 89 | 591.5 | |
| | 1995.01-1996.12 | MT | F | L | Cabriolet FWD RKC | | GDS18044 | Drive Shaft | | 25 | 26 | 56.5 | 89 | 594 | |
| | 1995.01-1996.12 | MT | F | R | Cabriolet FWD RKC | | GDS18179 | Drive Shaft | | 25 | 26 | 56.5 | 89 | 908 | |
| | 1995.01-1996.12 | MT | F | L/R | Cabriolet FWD RKC | Trans. code:B5/IB5 | GCO18004 | Outer Joint | | 25 | 22 | 56.5 | 88.5 | 53.5 | O |
| | 1995.01-1996.12 | MT | F | L/R | Cabriolet FWD RKC | | GCO18021 | Outer Joint | | 25 | 25 | 56.5 | 89 | 56.5 | O |
| | 1995.01-1996.12 | | F | L | Cabriolet FWD RKC | | GDS18040 | Drive Shaft | | 25 | 23 | 56.5 | 88.5 | 608 | |

| | YEAR | TRANSM. | F/R | L/R | BODY STYLE & DRIVE TYPE & ENGINE | REMARKS | G-AP Ref. | PRODUCT | ABS | Technical Specifications A | B | C | H | L | P |
|---|---|---|---|---|---|---|---|---|---|---|---|---|---|---|---|
| **FORD** | | | | | | | | | | | | | | | |
| **Escort** | | | | | | | | | | | | | | | |
| 1.8 (85 kw) | 1995.01-1996.12 | | F | | Cabriolet FWD RKC | | GCI18053 | Inner Joint | | 23 | 22 | 40 | 61 | 91.5 | |
| | 1995.01-1999.02 | 5MT | F | R | Saloon FWD RKC | Trans. code:B5/IB5 | GDS18039 | Drive Shaft | | 25 | 23 | 56.5 | 88.5 | 903 | |
| | 1995.01-1999.02 | MT | F | L | Saloon FWD RKC | | GDS18019 | Drive Shaft | | 25 | 26 | 56.5 | 89 | 591.5 | |
| | 1995.01-1999.02 | MT | F | L | Saloon FWD RKC | | GDS18044 | Drive Shaft | | 25 | 26 | 56.5 | 89 | 594 | |
| | 1995.01-1999.02 | MT | F | L/R | Saloon FWD RKC | Trans. code:B5/IB5 | GCO18004 | Outer Joint | | 25 | 22 | 56.5 | 88.5 | 53.5 | O |
| | 1995.01-1999.02 | MT | F | L/R | Saloon FWD RKC | | GCO18021 | Outer Joint | | 25 | 25 | 56.5 | 89 | 56.5 | O |
| | 1995.01-1999.02 | | F | L | Saloon FWD RKC | | GDS18040 | Drive Shaft | | 25 | 23 | 56.5 | 88.5 | 608 | |
| | 1995.01-1999.02 | | F | | Saloon FWD RKC | | GCI18053 | Inner Joint | | 23 | 22 | 40 | 61 | 91.5 | |
| | 1995.01-2000.04 | 5MT | F | R | Estate FWD RKC | Date to:1995.04,Trans. code:B5/IB5 | GDS18039 | Drive Shaft | | 25 | 23 | 56.5 | 88.5 | 903 | |
| | 1995.01-2000.04 | MT | F | L | Estate FWD RKC | | GDS18019 | Drive Shaft | | 25 | 26 | 56.5 | 89 | 591.5 | |
| | 1995.01-2000.04 | MT | F | L | Estate FWD RKC | | GDS18044 | Drive Shaft | | 25 | 26 | 56.5 | 89 | 594 | |
| | 1995.01-2000.04 | MT | F | L/R | Estate FWD RKC | Trans. code:B5/IB5 | GCO18004 | Outer Joint | | 25 | 22 | 56.5 | 88.5 | 53.5 | O |
| | 1995.01-2000.04 | MT | F | L/R | Estate FWD RKC | | GCO18021 | Outer Joint | | 25 | 25 | 56.5 | 89 | 56.5 | O |
| | 1995.01-2000.04 | | F | L | Estate FWD RKC | | GDS18040 | Drive Shaft | | 25 | 23 | 56.5 | 88.5 | 608 | |
| | 1995.01-2000.04 | | F | | Estate FWD RKC | | GCI18053 | Inner Joint | | 23 | 22 | 40 | 61 | 91.5 | |
| | 1995.01-2002.10 | 5MT | F | R | Hatchback FWD RKC | Trans. code:B5/IB5 | GDS18039 | Drive Shaft | | 25 | 23 | 56.5 | 88.5 | 903 | |
| | 1995.01-2002.10 | MT | F | L | Hatchback FWD RKC | | GDS18019 | Drive Shaft | | 25 | 26 | 56.5 | 89 | 591.5 | |
| | 1995.01-2002.10 | MT | F | L | Hatchback FWD RKC | | GDS18044 | Drive Shaft | | 25 | 26 | 56.5 | 89 | 594 | |
| | 1995.01-2002.10 | MT | F | L/R | Hatchback FWD RKC | Trans. code:B5/IB5 | GCO18004 | Outer Joint | | 25 | 22 | 56.5 | 88.5 | 53.5 | O |
| | 1995.01-2002.10 | MT | F | L/R | Hatchback FWD RKC | | GCO18021 | Outer Joint | | 25 | 25 | 56.5 | 89 | 56.5 | O |
| | 1995.01-2002.10 | | F | L | Hatchback FWD RKC | | GDS18040 | Drive Shaft | | 25 | 23 | 56.5 | 88.5 | 608 | |
| | 1995.01-2002.10 | | F | | Hatchback FWD RKC | | GCI18053 | Inner Joint | | 23 | 22 | 40 | 61 | 91.5 | |
| 1.8 (96 kw) | 1995.01-2000.08 | 5MT | F | L | Cabriolet FWD RQB | Trans. code:MTX75;Date from:1995.05,Date to:1997.01 | GDS18019 | Drive Shaft | | 25 | 26 | 56.5 | 89 | 591.5 | |
| | 1995.01-2000.08 | 5MT | F | R | Cabriolet FWD RQB | Date from:1995.05,Trans. code:B5/IB5 | GDS18039 | Drive Shaft | | 25 | 23 | 56.5 | 88.5 | 903 | |
| | 1995.01-2000.08 | | F | L/R | Cabriolet FWD RQB | Trans. code:B5/IB5 | GCO18004 | Outer Joint | | 25 | 22 | 56.5 | 88.5 | 53.5 | O |
| | 1995.01-2000.08 | | F | L/R | Cabriolet FWD RQB | Trans. code:MTX75 | GCO18021 | Outer Joint | | 25 | 25 | 56.5 | 89 | 56.5 | O |
| 2.0 (110 kw) | 1995.01-1997.12 | 5MT | F | L/R | Hatchback 4WD N7A | | GCO18004 | Outer Joint | | 25 | 22 | 56.5 | 88.5 | 53.5 | O |
| | 1995.01-1997.12 | MT | F | L | Hatchback 4WD N7A | | GDS18019 | Drive Shaft | | 25 | 26 | 56.5 | 89 | 591.5 | |
| | 1995.01-1997.12 | MT | F | L | Hatchback 4WD N7A | | GDS18044 | Drive Shaft | | 25 | 26 | 56.5 | 89 | 594 | |
| | 1995.01-1997.12 | MT | F | L/R | Hatchback 4WD N7A | | GCO18021 | Outer Joint | | 25 | 25 | 56.5 | 89 | 56.5 | O |
| | 1995.01-1997.12 | MT | F | L | Hatchback FWD N7A | | GDS18019 | Drive Shaft | | 25 | 26 | 56.5 | 89 | 591.5 | |
| | 1995.01-1997.12 | MT | F | L | Hatchback FWD N7A | | GDS18044 | Drive Shaft | | 25 | 26 | 56.5 | 89 | 594 | |
| | 1995.01-1997.12 | MT | F | R | Hatchback FWD N7A | | GDS18179 | Drive Shaft | | 25 | 26 | 56.5 | 89 | 908 | |
| | 1995.01-1997.12 | MT | F | L/R | Hatchback FWD N7A | Trans. code:MTX75 | GCO18021 | Outer Joint | | 25 | 25 | 56.5 | 89 | 56.5 | O |
| | 1995.01-1997.12 | MT | F | R | Hatchback FWD N7A | | GCI36001 | Inner Joint | | 26 | 33 | 40 | 68.5 | 100 | |
| | 1995.01-1997.12 | | F | L/R | Hatchback FWD N7A | | GCO18004 | Outer Joint | | 25 | 22 | 56.5 | 88.5 | 53.5 | O |
| 2.0 (162 kw) | 1995.01-1996.10 | MT | F | L/R | Hatchback 4WD N5F | | GCO18004 | Outer Joint | | 25 | 22 | 56.5 | 88.5 | 53.5 | O |
| | 1995.01-1996.10 | | F | | Hatchback 4WD N5F | | GDS18033 | Drive Shaft | 94T | 23 | 23 | 55 | 91 | 583 | |
| | 1995.01-1996.10 | | F | L/R | Hatchback 4WD N5F | | GCO18077 | Outer Joint | 94T | 23 | 22 | 55 | 91 | 64 | O |
| | 1995.01-1996.10 | 5MT | R | L | Hatchback 4WD N5F | | GDS18129 | Drive Shaft | | | | | | 478 | |
| | 1995.01-1996.10 | 5MT | R | R | Hatchback 4WD N5F | | GDS18128 | Drive Shaft | | | | | | 519 | |
| | 1995.01-1996.10 | 5MT | R | L | Hatchback 4WD N5F | | GCI18070 | Inner Joint | | | 25 | | | 32 | |
| **Escort Classic** | | | | | | | | | | | | | | | |
| 1.6 (66 kw) | 1998.10-2000.07 | AT | F | L/R | Hatchback FWD L1E/L1K | | GCO18004 | Outer Joint | | 25 | 22 | 56.5 | 88.5 | 53.5 | O |
| | 1998.10-2000.07 | AT/MT | F | L | Hatchback FWD L1E/L1K | | GDS18040 | Drive Shaft | | 25 | 23 | 56.5 | 88.5 | 608 | |
| | 1998.10-2000.07 | AT/MT | F | L | Hatchback FWD L1E/L1K | | GCI18053 | Inner Joint | | 23 | 22 | 40 | 61 | 91.5 | |
| | 1998.10-2000.07 | CVT | F | R | Hatchback FWD L1E/L1K | | GDS18039 | Drive Shaft | | 25 | 23 | 56.5 | 88.5 | 903 | |
| | 1998.10-2000.07 | MT | F | L/R | Hatchback FWD L1E/L1K | | GCO18021 | Outer Joint | | 25 | 25 | 56.5 | 89 | 56.5 | O |
| | 1999.02-2000.07 | AT | F | L/R | Estate FWD L1E | | GCO18004 | Outer Joint | | 25 | 22 | 56.5 | 88.5 | 53.5 | O |
| | 1999.02-2000.07 | AT/MT | F | L | Estate FWD L1E | | GDS18040 | Drive Shaft | | 25 | 23 | 56.5 | 88.5 | 608 | |
| | 1999.02-2000.07 | AT/MT | F | L | Estate FWD L1E | | GCI18053 | Inner Joint | | 23 | 22 | 40 | 61 | 91.5 | |
| | 1999.02-2000.07 | CVT | F | R | Estate FWD L1E | | GDS18039 | Drive Shaft | | 25 | 23 | 56.5 | 88.5 | 903 | |
| | 1999.02-2000.07 | MT | F | L/R | Estate FWD L1E | | GCO18021 | Outer Joint | | 25 | 25 | 56.5 | 89 | 56.5 | O |
| 1.8 (66 kw) | 1998.10-2000.07 | MT | F | L | Hatchback FWD RFK/RFS/RKD | | GDS18019 | Drive Shaft | | 25 | 26 | 56.5 | 89 | 591.5 | |
| | 1998.10-2000.07 | MT | F | R | Hatchback FWD RFK/RFS/RKD | Trans. code:MTX75 | GDS18015 | Drive Shaft | | 25 | 26 | 56.5 | 89 | 906 | |
| | 1998.10-2000.07 | MT | F | L/R | Hatchback FWD RFK/RFS/RKD | | GCO18016 | Outer Joint | | 25 | 30 | 56.5 | 89 | 56.5 | I |
| | 1998.10-2000.07 | | F | L/R | Hatchback FWD RFK/RFS/RKD | Trans. code:IB5 | GCO18004 | Outer Joint | | 25 | 22 | 56.5 | 88.5 | 53.5 | O |
| | 1998.10-2000.07 | | F | L/R | Hatchback FWD RFK/RFS/RKD | Trans. code:MTX;Type:ECONOMY | GCO18018 | Outer Joint | | 23 | 20 | 50 | 91.5 | 52 | O |
| | 1999.02-2000.07 | MT | F | L | Estate FWD RFK/RFS/RKD | | GDS18019 | Drive Shaft | | 25 | 26 | 56.5 | 89 | 591.5 | |
| | 1999.02-2000.07 | MT | F | R | Estate FWD RFK/RFS/RKD | Trans. code:MTX75 | GDS18015 | Drive Shaft | | 25 | 26 | 56.5 | 89 | 906 | |
| | 1999.02-2000.07 | MT | F | L/R | Estate FWD RFK/RFS/RKD | | GCO18016 | Outer Joint | | 25 | 30 | 56.5 | 89 | 56.5 | I |
| | 1999.02-2000.07 | | F | L/R | Estate FWD RFK/RFS/RKD | Trans. code:IB5 | GCO18004 | Outer Joint | | 25 | 22 | 56.5 | 88.5 | 53.5 | O |
| | 1999.02-2000.07 | | F | L/R | Estate FWD RFK/RFS/RKD | Trans. code:MTX;Type:ECONOMY | GCO18018 | Outer Joint | | 23 | 20 | 50 | 91.5 | 52 | O |

| | YEAR | TRANSM. | F/R | L/R | BODY STYLE & DRIVE TYPE & ENGINE | REMARKS | G-AP Ref. | PRODUCT | ABS | Technical Specifications | | | | | |
|---|---|---|---|---|---|---|---|---|---|---|---|---|---|---|---|
| | | | | | | | | | | A | B | C | H | L | P |
| **FORD** | | | | | | | | | | | | | | | |
| **Fiesta** | | | | | | | | | | | | | | | |
| 1.0 (33 kw) | 1989.03-1996.10 | MT | F | L/R | Hatchback FWD TLB | | GCI18002 | Inner Joint | | 23 | 20 | 40 | 61.5 | 78.5 | |
| | 1989.03-1996.10 | | F | | Hatchback FWD TLB | | GCI18053 | Inner Joint | | 23 | 22 | 40 | 61 | 91.5 | |
| 1.0 (38 kw) | 1996.04-1999.08 | MT | F | L/R | Hatchback FWD ZH10JRB | | GCO18004 | Outer Joint | | 25 | 22 | 56.5 | 88.5 | 53.5 | O |
| 1.0 (48 kw) | 1999.09-2006.06 | MT | F | L | Hatchback FWD C4E | | GDS18040 | Drive Shaft | | 25 | 23 | 56.5 | 88.5 | 608 | |
| | 1999.09-2006.06 | MT | F | L | Hatchback FWD C4E | | GDS18141 | Drive Shaft | | 25 | 23 | 55.5 | 88.5 | 606 | |
| | 1999.09-2006.06 | MT | F | R | Hatchback FWD C4E | | GDS18032 | Drive Shaft | | 25 | 23 | 56.5 | 88.5 | 900 | |
| | 1999.09-2006.06 | MT | F | L/R | Hatchback FWD C4E | | GCO18004 | Outer Joint | | 25 | 22 | 56.5 | 88.5 | 53.5 | O |
| | 2013.01-2017.04 | 5MT | F | L | Hatchback FWD XMJA;XMJB;XMJC;XMJD | | GDS18216 | Drive Shaft | | 25 | 23 | 53.3 | 90 | 621 | |
| | 2013.01-2017.04 | 5MT | F | R | Hatchback FWD XMJA;XMJB;XMJC;XMJD | | GDS18201 | Drive Shaft | | 25 | 23 | 53.3 | 90 | 919 | |
| | 2013.01-2017.04 | 5MT | F | L/R | Hatchback FWD XMJA;XMJB;XMJC;XMJD | | GCO18009 | Outer Joint | | 25 | 22 | 53.3 | 90 | 51 | M |
| | 2013.01-2017.04 | 5MT | F | L | Hatchback FWD XMJA;XMJB;XMJC;XMJD | | GCI18085 | Inner Joint | | 23 | 22 | 40 | 61 | 90 | |
| | 2013.01-2017.04 | MT | F | L/R | Hatchback FWD XMJA;XMJB;XMJC;XMJD | | GCO18222 | Outer Joint | | 25 | 23 | 53.3 | 87 | 56 | M |
| 1.0 (59 kw) | 2012.10-2017.04 | 5MT | F | L | Hatchback FWD P4JA;P4JB;P4JC;P4JD | | GDS18216 | Drive Shaft | | 25 | 23 | 53.3 | 90 | 621 | |
| | 2012.10-2017.04 | 5MT | F | R | Hatchback FWD P4JA;P4JB;P4JC;P4JD | | GDS18201 | Drive Shaft | | 25 | 23 | 53.3 | 90 | 919 | |
| | 2012.10-2017.04 | 5MT | F | L/R | Hatchback FWD P4JA;P4JB;P4JC;P4JD | | GCO18009 | Outer Joint | | 25 | 22 | 53.3 | 90 | 51 | M |
| | 2012.10-2017.04 | 5MT | F | L | Hatchback FWD P4JA;P4JB;P4JC;P4JD | | GCI18085 | Inner Joint | | 23 | 22 | 40 | 61 | 90 | |
| | 2012.10-2017.04 | MT | F | L/R | Hatchback FWD P4JA;P4JB;P4JC;P4JD | | GCO18222 | Outer Joint | | 25 | 23 | 53.3 | 87 | 56 | M |
| 1.0 (63 kw) | 2018.04- | 6MT | F | L | Hatchback FWD Q0JA;Q0JB;Q0JC;Q0JD | | GDS83619 | Drive Shaft | | 25 | 23 | 53.2 | 88.5 | 629 | |
| | 2018.04- | 6MT | F | R | Hatchback FWD Q0JA;Q0JB;Q0JC;Q0JD | Date To:2019.03 | GDS82576 | Drive Shaft | | 25 | 23 | 53.2 | 88.5 | 935 | |
| | 2018.04- | 6MT | F | L | Hatchback FWD Q0JA;Q0JB;Q0JC;Q0JD | | GCO18258 | Outer Joint | | 25 | 24 | 53.2 | 88.5 | 58.5 | M |
| | 2018.04- | 6MT | F | R | Hatchback FWD Q0JA;Q0JB;Q0JC;Q0JD | Date to:2019.03 | GCO18258 | Outer Joint | | 25 | 24 | 53.2 | 88.5 | 58.5 | M |
| | 2018.04- | 6MT | F | L | Hatchback FWD Q0JA;Q0JB;Q0JC;Q0JD | | GCI81896 | Inner Joint | | 23 | 22 | 40 | 61 | 96.5 | |
| | 2018.04- | 6MT | F | R | Hatchback FWD Q0JA;Q0JB;Q0JC;Q0JD | Date to:2019.03 | GCI81896 | Inner Joint | | 23 | 22 | 40 | 61 | 96.5 | |
| 1.0 (70 kw) | 2019.12- | 6MT | F | L | Hatchback FWD M0JA;M0JB | | GDS83619 | Drive Shaft | | 25 | 23 | 53.2 | 88.5 | 629 | |
| | 2019.12- | 6MT | F | R | Hatchback FWD M0JA;M0JB | | GDS82576 | Drive Shaft | | 25 | 23 | 53.2 | 88.5 | 935 | |
| | 2019.12- | 6MT | F | L/R | Hatchback FWD M0JA;M0JB | | GCO18258 | Outer Joint | | 25 | 24 | 53.2 | 88.5 | 58.5 | M |
| | 2019.12- | 6MT | F | L/R | Hatchback FWD M0JA;M0JB | | GCI81896 | Inner Joint | | 23 | 22 | 40 | 61 | 96.5 | |
| | 2020.03-2022.12 | 6MT | F | L | Hatchback FWD M0JA;M0JD | | GDS83619 | Drive Shaft | | 25 | 23 | 53.2 | 88.5 | 629 | |
| | 2020.03-2022.12 | 6MT | F | R | Hatchback FWD M0JA;M0JD | | GDS82576 | Drive Shaft | | 25 | 23 | 53.2 | 88.5 | 935 | |
| | 2020.03-2022.12 | 6MT | F | R | Hatchback FWD M0JA;M0JD | | GCO18258 | Outer Joint | | 25 | 24 | 53.2 | 88.5 | 58.5 | M |
| | 2020.03-2022.12 | 6MT | F | R | Hatchback FWD M0JA;M0JD | | GCI81896 | Inner Joint | | 23 | 22 | 40 | 61 | 96.5 | |
| 1.0 (74 kw) | 2013.01-2017.04 | AT | F | L | Hatchback FWD SFJA;SFJB;SFJC;SFJD | | GDS18389 | Drive Shaft | | 25 | 34 | 53.3 | 87 | 566 | |
| | 2013.01-2017.04 | AT | F | R | Hatchback FWD SFJA;SFJB;SFJC;SFJD | | GDS18406 | Drive Shaft | | 25 | 34 | 53.3 | 87 | 974 | |
| | 2013.01-2017.04 | AT | F | L/R | Hatchback FWD SFJA;SFJB;SFJC;SFJD | | GCO18222 | Outer Joint | | 25 | 23 | 53.3 | 87 | 56 | M |
| | 2013.01-2017.04 | MT | F | L | Hatchback FWD SFJA;SFJB;SFJC;SFJD | | GDS18405 | Drive Shaft | | 25 | 23 | 53.2 | 88.5 | 622 | |
| | 2013.01-2017.04 | MT | F | R | Hatchback FWD SFJA;SFJB;SFJC;SFJD | | GDS18380 | Drive Shaft | | 25 | 23 | 53.2 | 88.5 | 920 | |
| | 2013.01-2017.04 | MT | F | L/R | Hatchback FWD SFJA;SFJB;SFJC;SFJD | | GCO18258 | Outer Joint | | 25 | 24 | 53.2 | 88.5 | 58.5 | M |
| | 2013.01-2017.04 | MT | F | L | Hatchback FWD SFJA;SFJB;SFJC;SFJD | | GCI18086 | Inner Joint | | 23 | 22 | 40 | 61 | 90 | |
| | 2013.01-2017.04 | MT | F | R | Hatchback FWD SFJA;SFJB;SFJC;SFJD | | GCI18087 | Inner Joint | | 23 | 22 | 40 | 371 | 78.5 | |
| | 2017.05- | 6AT | F | L | Hatchback FWD SFJE;SFJF;SFJH;SFJJ;SFJK;SFJN;SFJP;Y7JA | | GDS83708 | Drive Shaft | | 25 | 22 | 53.2 | 88.5 | 658 | |
| | 2017.05- | 6AT | F | R | Hatchback FWD SFJE;SFJF;SFJH;SFJJ;SFJK;SFJN;SFJP;Y7JA | | GDS83709 | Drive Shaft | | 25 | 22 | 53.2 | 88.5 | 909 | |
| | 2017.05- | 6AT | F | L | Hatchback FWD SFJE;SFJF;SFJH;SFJJ;SFJK;SFJN;SFJP;Y7JA | | GCI82340 | Inner Joint | | 22 | 22 | 35 | 144 | 71 | |
| | 2017.05- | 6AT | F | R | Hatchback FWD SFJE;SFJF;SFJH;SFJJ;SFJK;SFJN;SFJP;Y7JA | | GCI82339 | Inner Joint | | 22 | 22 | 35 | 62 | 101.5 | |
| | 2017.05- | 6MT | F | L | Hatchback FWD SFJE;SFJF;SFJH;SFJJ;SFJK;SFJN;SFJP;Y7JA | | GDS83619 | Drive Shaft | | 25 | 23 | 53.2 | 88.5 | 629 | |
| | 2017.05- | 6MT | F | R | Hatchback FWD SFJE;SFJF;SFJH;SFJJ;SFJK;SFJN;SFJP;Y7JA | Date To:2019.03 | GDS82576 | Drive Shaft | | 25 | 23 | 53.2 | 88.5 | 935 | |
| | 2017.05- | 6MT | F | L | Hatchback FWD SFJE;SFJF;SFJH;SFJJ;SFJK;SFJN;SFJP;Y7JA | | GCO18258 | Outer Joint | | 25 | 24 | 53.2 | 88.5 | 58.5 | M |
| | 2017.05- | 6MT | F | R | Hatchback FWD SFJE;SFJF;SFJH;SFJJ;SFJK;SFJN;SFJP;Y7JA | Date to:2019.03 | GCO18258 | Outer Joint | | 25 | 24 | 53.2 | 88.5 | 58.5 | M |
| | 2017.05- | 6MT | F | L | Hatchback FWD SFJE;SFJF;SFJH;SFJJ;SFJK;SFJN;SFJP;Y7JA | | GCI81896 | Inner Joint | | 23 | 22 | 40 | 61 | 96.5 | |
| | 2017.05- | 6MT | F | R | Hatchback FWD SFJE;SFJF;SFJH;SFJJ;SFJK;SFJN;SFJP;Y7JA | Date To:2019.03 | GCI81896 | Inner Joint | | 23 | 22 | 40 | 61 | 96.5 | |
| | 2018.04- | 6AT | F | L | Hatchback FWD SFJE;SFJF;SFJH;SFJJ;SFJK;SFJN;SFJP;Y7JA | | GDS83708 | Drive Shaft | | 25 | 22 | 53.2 | 88.5 | 658 | |
| | 2018.04- | 6AT | F | R | Hatchback FWD SFJE;SFJF;SFJH;SFJJ;SFJK;SFJN;SFJP;Y7JA | | GDS83709 | Drive Shaft | | 25 | 22 | 53.2 | 88.5 | 909 | |
| | 2018.04- | 6MT | F | L | Hatchback FWD SFJE;SFJF;SFJH;SFJJ;SFJK;SFJN;SFJP;Y7JA | | GDS83619 | Drive Shaft | | 25 | 23 | 53.2 | 88.5 | 629 | |
| | 2018.04- | 6MT | F | R | Hatchback FWD SFJE;SFJF;SFJH;SFJJ;SFJK;SFJN;SFJP;Y7JA | | GDS82576 | Drive Shaft | | 25 | 23 | 53.2 | 88.5 | 935 | |
| | 2018.04- | 6MT | F | R | Hatchback FWD SFJE;SFJF;SFJH;SFJJ;SFJK;SFJN;SFJP;Y7JA | | GCO18258 | Outer Joint | | 25 | 24 | 53.2 | 88.5 | 58.5 | M |
| | 2018.04- | 6MT | F | R | Hatchback FWD SFJE;SFJF;SFJH;SFJJ;SFJK;SFJN;SFJP;Y7JA | | GCI81896 | Inner Joint | | 23 | 22 | 40 | 61 | 96.5 | |
| 1.0 (92 kw) | 2012.09-2017.04 | 5MT | F | L | Hatchback FWD M1JE;M1JH | | GDS18405 | Drive Shaft | | 25 | 23 | 53.2 | 88.5 | 622 | |
| | 2012.09-2017.04 | 5MT | F | R | Hatchback FWD M1JE;M1JH | | GDS18380 | Drive Shaft | | 25 | 23 | 53.2 | 88.5 | 920 | |
| | 2012.09-2017.04 | 5MT | F | L/R | Hatchback FWD M1JE;M1JH | | GCO18258 | Outer Joint | | 25 | 24 | 53.2 | 88.5 | 58.5 | M |
| | 2012.09-2017.04 | 5MT | F | L | Hatchback FWD M1JE;M1JH | | GCI18086 | Inner Joint | | 23 | 22 | 40 | 61 | 90 | |
| | 2012.09-2017.04 | 5MT | F | R | Hatchback FWD M1JE;M1JH | | GCI18087 | Inner Joint | | 23 | 22 | 40 | 371 | 78.5 | |
| | 2017.05- | 6MT | F | L | Hatchback FWD M1JL;M1JM;M1JP | | GDS83619 | Drive Shaft | | 25 | 23 | 53.2 | 88.5 | 629 | |
| | 2017.05- | 6MT | F | R | Hatchback FWD M1JL;M1JM;M1JP | Date To:2019.03 | GDS82576 | Drive Shaft | | 25 | 23 | 53.2 | 88.5 | 935 | |
| | 2017.05- | 6MT | F | L | Hatchback FWD M1JL;M1JM;M1JP | | GCO18258 | Outer Joint | | 25 | 24 | 53.2 | 88.5 | 58.5 | M |
| | 2017.05- | 6MT | F | R | Hatchback FWD M1JL;M1JM;M1JP | Date to:2019.03 | GCO18258 | Outer Joint | | 25 | 24 | 53.2 | 88.5 | 58.5 | M |
| | 2017.05- | 6MT | F | L | Hatchback FWD M1JL;M1JM;M1JP | | GCI81896 | Inner Joint | | 23 | 22 | 40 | 61 | 96.5 | |

| | YEAR | TRANSM. | F/R | L/R | BODY STYLE & DRIVE TYPE & ENGINE | REMARKS | G-AP Ref. | PRODUCT | ABS | Technical Specifications A | B | C | H | L | P |
|---|---|---|---|---|---|---|---|---|---|---|---|---|---|---|---|
| **FORD** **Fiesta** | | | | | | | | | | | | | | | |
| 1.0 (92 kw) | 2017.05- | 6MT | F | R | Hatchback FWD M1JL;M1JM;M1JP | Date To:2019.03 | GCI81896 | Inner Joint | | 23 | 22 | 40 | 61 | 96.5 | |
| | 2017.05- | 7DCT | F | R | Hatchback FWD M1JL;M1JM;M1JP | | GCI83740 | Inner Joint | | 27 | 24 | 40 | 418 | 88.5 | |
| | 2018.04- | 6MT | F | L | Hatchback FWD M1JL;M1JM;M1JP | | GDS83619 | Drive Shaft | | 25 | 23 | 53.2 | 88.5 | 629 | |
| | 2018.04- | 6MT | F | R | Hatchback FWD M1JL;M1JM;M1JP | | GDS82576 | Drive Shaft | | 25 | 23 | 53.2 | 88.5 | 935 | |
| | 2018.04- | 6MT | F | R | Hatchback FWD M1JL;M1JM;M1JP | | GCO18258 | Outer Joint | | 25 | 24 | 53.2 | 88.5 | 58.5 | M |
| | 2018.04- | 6MT | F | R | Hatchback FWD M1JL;M1JM;M1JP | | GCI81896 | Inner Joint | | 23 | 22 | 40 | 61 | 96.5 | |
| | 2018.04- | 7DCT | F | R | Hatchback FWD M1JL;M1JM;M1JP | | GCI83740 | Inner Joint | | 27 | 24 | 40 | 418 | 88.5 | |
| | 2019.11- | 6MT | F | L | Hatchback FWD B7JA;B7JB;B7JC | | GDS83619 | Drive Shaft | | 25 | 23 | 53.2 | 88.5 | 629 | |
| | 2019.11- | 6MT | F | R | Hatchback FWD B7JA;B7JB;B7JC | Date To:2021.04 | GDS82576 | Drive Shaft | | 25 | 23 | 53.2 | 88.5 | 935 | |
| | 2019.11- | 6MT | F | L/R | Hatchback FWD B7JA;B7JB;B7JC | | GCO18258 | Outer Joint | | 25 | 24 | 53.2 | 88.5 | 58.5 | M |
| | 2019.11- | 6MT | F | L/R | Hatchback FWD B7JA;B7JB;B7JC | | GCI81896 | Inner Joint | | 23 | 22 | 40 | 61 | 96.5 | |
| | 2019.11- | 7DCT | F | L | Hatchback FWD B7JA;B7JB;B7JC | | GCI83509 | Inner Joint | | 27 | 24 | 40 | 56.5 | 104.5 | |
| | 2019.11- | 7DCT | F | R | Hatchback FWD B7JA;B7JB;B7JC | | GCI83740 | Inner Joint | | 27 | 24 | 40 | 418 | 88.5 | |
| | 2020.07- | 6MT | F | L | Hatchback FWD B7JA;B7JB;B7JC | | GDS83619 | Drive Shaft | | 25 | 23 | 53.2 | 88.5 | 629 | |
| | 2020.07- | 6MT | F | R | Hatchback FWD B7JA;B7JB;B7JC | | GDS82576 | Drive Shaft | | 25 | 23 | 53.2 | 88.5 | 935 | |
| | 2020.07- | 6MT | F | L/R | Hatchback FWD B7JA;B7JB;B7JC | | GCI81896 | Inner Joint | | 23 | 22 | 40 | 61 | 96.5 | |
| | 2020.07- | 7DCT | F | L | Hatchback FWD B7JA;B7JB;B7JC | | GCI83509 | Inner Joint | | 27 | 24 | 40 | 56.5 | 104.5 | |
| | 2020.07- | 7DCT | F | R | Hatchback FWD B7JA;B7JB;B7JC | | GCI83740 | Inner Joint | | 27 | 24 | 40 | 418 | 88.5 | |
| | 2021.01- | 6MT | F | L | Hatchback FWD B7JA;B7JB;B7JC | | GDS83619 | Drive Shaft | | 25 | 23 | 53.2 | 88.5 | 629 | |
| | 2021.01- | 6MT | F | R | Hatchback FWD B7JA;B7JB;B7JC | | GDS82576 | Drive Shaft | | 25 | 23 | 53.2 | 88.5 | 935 | |
| | 2021.01- | 6MT | F | L/R | Hatchback FWD B7JA;B7JB;B7JC | | GCO18258 | Outer Joint | | 25 | 24 | 53.2 | 88.5 | 58.5 | M |
| | 2021.01- | 6MT | F | L/R | Hatchback FWD B7JA;B7JB;B7JC | | GCI81896 | Inner Joint | | 23 | 22 | 40 | 61 | 96.5 | |
| | 2021.01- | 7DCT | F | L | Hatchback FWD B7JA;B7JB;B7JC | | GCI83509 | Inner Joint | | 27 | 24 | 40 | 56.5 | 104.5 | |
| | 2021.01- | 7DCT | F | R | Hatchback FWD B7JA;B7JB;B7JC | | GCI83740 | Inner Joint | | 27 | 24 | 40 | 418 | 88.5 | |
| 1.0 (103 kw) | 2014.05-2017.04 | 5MT | F | L | Hatchback FWD YYJA;YYJB | | GDS18405 | Drive Shaft | | 25 | 23 | 53.2 | 88.5 | 622 | |
| | 2014.05-2017.04 | 5MT | F | R | Hatchback FWD YYJA;YYJB | | GDS18380 | Drive Shaft | | 25 | 23 | 53.2 | 88.5 | 920 | |
| | 2014.05-2017.04 | 5MT | F | L/R | Hatchback FWD YYJA;YYJB | | GCO18258 | Outer Joint | | 25 | 24 | 53.2 | 88.5 | 58.5 | M |
| | 2014.05-2017.04 | 5MT | F | L | Hatchback FWD YYJA;YYJB | | GCI18086 | Inner Joint | | 23 | 22 | 40 | 61 | 90 | |
| | 2014.05-2017.04 | 5MT | F | R | Hatchback FWD YYJA;YYJB | | GCI18087 | Inner Joint | | 23 | 22 | 40 | 371 | 78.5 | |
| | 2014.05-2017.04 | MT | F | L/R | Hatchback FWD YYJA;YYJB | | GCO18222 | Outer Joint | | 25 | 23 | 53.3 | 87 | 56 | M |
| | 2017.06- | 6MT | F | L | Hatchback FWD YYJE;YYJG | | GDS83619 | Drive Shaft | | 25 | 23 | 53.2 | 88.5 | 629 | |
| | 2017.06- | 6MT | F | R | Hatchback FWD YYJE;YYJG | Date To:2019.03 | GDS82576 | Drive Shaft | | 25 | 23 | 53.2 | 88.5 | 935 | |
| | 2017.06- | 6MT | F | L | Hatchback FWD YYJE;YYJG | | GCO18258 | Outer Joint | | 25 | 24 | 53.2 | 88.5 | 58.5 | M |
| | 2017.06- | 6MT | F | R | Hatchback FWD YYJE;YYJG | Date to:2019.03 | GCO18258 | Outer Joint | | 25 | 24 | 53.2 | 88.5 | 58.5 | M |
| | 2017.06- | 6MT | F | L | Hatchback FWD YYJE;YYJG | | GCI81896 | Inner Joint | | 23 | 22 | 40 | 61 | 96.5 | |
| | 2017.06- | 6MT | F | R | Hatchback FWD YYJE;YYJG | Date to:2019.03 | GCI81896 | Inner Joint | | 23 | 22 | 40 | 61 | 96.5 | |
| | 2018.04- | 6MT | F | L | Hatchback FWD YYJE | | GDS83619 | Drive Shaft | | 25 | 23 | 53.2 | 88.5 | 629 | |
| | 2018.04- | 6MT | F | R | Hatchback FWD YYJE | | GDS82576 | Drive Shaft | | 25 | 23 | 53.2 | 88.5 | 935 | |
| | 2018.04- | 6MT | F | R | Hatchback FWD YYJE | | GCO18258 | Outer Joint | | 25 | 24 | 53.2 | 88.5 | 58.5 | M |
| | 2018.04- | 6MT | F | R | Hatchback FWD YYJE | | GCI81896 | Inner Joint | | 23 | 22 | 40 | 61 | 96.5 | |
| 1.0 (114 kw) | 2020.07- | 6MT | F | L | Hatchback FWD BZJA | | GDS83619 | Drive Shaft | | 25 | 23 | 53.2 | 88.5 | 629 | |
| | 2020.07- | 6MT | F | R | Hatchback FWD BZJA | Date To:2021.04 | GDS82576 | Drive Shaft | | 25 | 23 | 53.2 | 88.5 | 935 | |
| | 2020.07- | 6MT | F | L/R | Hatchback FWD BZJA | | GCO18258 | Outer Joint | | 25 | 24 | 53.2 | 88.5 | 58.5 | M |
| | 2020.07- | 6MT | F | L/R | Hatchback FWD BZJA | | GCI81896 | Inner Joint | | 23 | 22 | 40 | 61 | 96.5 | |
| | 2021.01- | 6MT | F | L | Hatchback FWD BZJA | | GDS83619 | Drive Shaft | | 25 | 23 | 53.2 | 88.5 | 629 | |
| | 2021.01- | 6MT | F | R | Hatchback FWD BZJA | | GDS82576 | Drive Shaft | | 25 | 23 | 53.2 | 88.5 | 935 | |
| | 2021.01- | 6MT | F | R | Hatchback FWD BZJA | | GCO18258 | Outer Joint | | 25 | 24 | 53.2 | 88.5 | 58.5 | M |
| | 2021.01- | 6MT | F | R | Hatchback FWD BZJA | | GCI81896 | Inner Joint | | 23 | 22 | 40 | 61 | 96.5 | |
| 1.1 (37 kw) | 1995.09-1996.12 | 5MT | F | R | Hatchback FWD GB11G5N | | GDS18011 | Drive Shaft | | 25 | 25 | 55.5 | 88.5 | 813.5 | |
| 1.1 (52 kw) | 2017.05- | 5MT | F | L | Hatchback FWD XPJA;XPJB;XPJC;XPJD | | GDS82977 | Drive Shaft | | 25 | 23 | 53.2 | 88.5 | 630 | |
| | 2017.05- | 5MT | F | R | Hatchback FWD XPJA;XPJB;XPJC;XPJD | | GDS82978 | Drive Shaft | | 25 | 23 | 53.2 | 88.5 | 934 | |
| | 2017.05- | 5MT | F | L/R | Hatchback FWD XPJA;XPJB;XPJC;XPJD | | GCO82251 | Outer Joint | | 25 | 23 | 53.2 | 88.5 | 56.5 | M |
| | 2017.05- | 5MT | F | L/R | Hatchback FWD XPJA;XPJB;XPJC;XPJD | | GCI82094 | Inner Joint | | 23 | 22 | 40 | 61 | 98.5 | |
| 1.1 (55 kw) | 2019.10- | 5MT | F | L | Hatchback FWD FSJB | | GDS82977 | Drive Shaft | | 25 | 23 | 53.2 | 88.5 | 630 | |
| | 2019.10- | 5MT | F | R | Hatchback FWD FSJB | | GDS82978 | Drive Shaft | | 25 | 23 | 53.2 | 88.5 | 934 | |
| | 2019.10- | 5MT | F | L | Hatchback FWD FSJB;FSJA | | GDS82977 | Drive Shaft | | 25 | 23 | 53.2 | 88.5 | 630 | |
| | 2019.10- | 5MT | F | R | Hatchback FWD FSJB;FSJA | | GDS82978 | Drive Shaft | | 25 | 23 | 53.2 | 88.5 | 934 | |
| | 2019.10- | 5MT | F | L/R | Hatchback FWD FSJB;FSJA | | GCO82251 | Outer Joint | | 25 | 23 | 53.2 | 88.5 | 56.5 | M |
| | 2019.10- | 5MT | F | L/R | Hatchback FWD FSJB;FSJA | | GCI82094 | Inner Joint | | 23 | 22 | 40 | 61 | 98.5 | |
| 1.1 (63 kw) | 2017.05- | 5MT | F | L | Hatchback FWD XYJB;XYJC;XYJA;XYJD;XYJE;XYJF | | GDS82977 | Drive Shaft | | 25 | 23 | 53.2 | 88.5 | 630 | |
| | 2017.05- | 5MT | F | R | Hatchback FWD XYJB;XYJC;XYJA;XYJD;XYJE;XYJF | | GDS82978 | Drive Shaft | | 25 | 23 | 53.2 | 88.5 | 934 | |
| | 2017.05- | 5MT | F | L/R | Hatchback FWD XYJB;XYJC;XYJA;XYJD;XYJE;XYJF | | GCO82251 | Outer Joint | | 25 | 23 | 53.2 | 88.5 | 56.5 | M |
| | 2017.05- | 5MT | F | L/R | Hatchback FWD XYJB;XYJC;XYJA;XYJD;XYJE;XYJF | | GCI82094 | Inner Joint | | 23 | 22 | 40 | 61 | 98.5 | |
| 1.2 (44 kw) | 2008.06-2017.04 | 5MT | F | L | Hatchback FWD STJA;STJB;STJC;STJD | | GDS18216 | Drive Shaft | | 25 | 23 | 53.3 | 90 | 621 | |
| | 2008.06-2017.04 | 5MT | F | R | Hatchback FWD STJA;STJB;STJC;STJD | | GDS18201 | Drive Shaft | | 25 | 23 | 53.3 | 90 | 919 | |

| | YEAR | TRANSM. | F/R | L/R | BODY STYLE & DRIVE TYPE & ENGINE | REMARKS | G-AP Ref. | PRODUCT | ABS | Technical Specifications A | B | C | H | L | P |
|---|---|---|---|---|---|---|---|---|---|---|---|---|---|---|---|
| **FORD** **Fiesta** | | | | | | | | | | | | | | | |
| 1.2 (44 kw) | 2008.06-2017.04 | 5MT | F | L/R | Hatchback FWD STJA;STJB;STJC;STJD | | GCO18009 | Outer Joint | | 25 | 22 | 53.3 | 90 | 51 | M |
| | 2008.06-2017.04 | 5MT | F | L/R | Hatchback FWD STJA;STJB;STJC;STJD | | GCO18222 | Outer Joint | | 25 | 23 | 53.3 | 87 | 56 | M |
| | 2008.06-2017.04 | 5MT | F | L | Hatchback FWD STJA;STJB;STJC;STJD | | GCI18085 | Inner Joint | | 23 | 22 | 40 | 61 | 90 | |
| 1.2 (51 kw) | 2003.03-2008.06 | 5MT | F | L | Hatchback FWD M7JA;M7JB | | GDS18216 | Drive Shaft | | 25 | 23 | 53.3 | 90 | 621 | |
| | 2003.03-2008.06 | 5MT | F | R | Hatchback FWD M7JA;M7JB | | GDS18201 | Drive Shaft | | 25 | 23 | 53.3 | 90 | 919 | |
| | 2003.03-2008.06 | 5MT | F | L/R | Hatchback FWD M7JA;M7JB | | GCO18009 | Outer Joint | | 25 | 22 | 53.3 | 90 | 51 | M |
| | 2003.03-2008.06 | 5MT | F | L | Hatchback FWD M7JA;M7JB | | GCI18085 | Inner Joint | | 23 | 22 | 40 | 61 | 90 | |
| 1.2 (55 kw) | 1995.08-2002.04 | MT | F | L | Hatchback FWD DHA/DHB/DHC/DHD/DHE/DHF/DHG | Date from:1997.02 | GDS18141 | Drive Shaft | | 25 | 23 | 55.5 | 88.5 | 606 | |
| | 1995.08-2002.04 | MT | F | L | Hatchback FWD DHA/DHB/DHC/DHD/DHE/DHF/DHG | Date to:1997.01 | GDS18284 | Drive Shaft | | 25 | 23 | 56.5 | 88.5 | 585 | |
| | 1995.08-2002.04 | MT | F | R | Hatchback FWD DHA/DHB/DHC/DHD/DHE/DHF/DHG | Date to:1996.12 | GDS18011 | Drive Shaft | | 25 | 25 | 55.5 | 88.5 | 813.5 | |
| | 1995.08-2002.04 | MT | F | R | Hatchback FWD DHA/DHB/DHC/DHD/DHE/DHF/DHG | Date from:1997.02,Date to:2000.05 | GDS18032 | Drive Shaft | | 25 | 23 | 56.5 | 88.5 | 900 | |
| | 1995.08-2002.04 | MT | F | L/R | Hatchback FWD DHA/DHB/DHC/DHD/DHE/DHF/DHG | | GCO18004 | Outer Joint | | 25 | 22 | 56.5 | 88.5 | 53.5 | O |
| | 1995.08-2002.04 | MT | F | L | Hatchback FWD DHA/DHB/DHC/DHD/DHE/DHF/DHG | Date to:1997.01;TJ | GCI18072 | Inner Joint | | 23 | 22 | 40 | 61 | 86 | |
| | 1995.08-2002.04 | MT | F | L | Hatchback FWD DHA/DHB/DHC/DHD/DHE/DHF/DHG | DOJ | GCI99075 | Inner Joint | | 23 | 22 | 40 | 61 | 93 | |
| | 2001.11-2008.06 | 5MT | F | L | Hatchback FWD FUJA;FUJB | | GDS18216 | Drive Shaft | | 25 | 23 | 53.3 | 90 | 621 | |
| | 2001.11-2008.06 | 5MT | F | R | Hatchback FWD FUJA;FUJB | | GDS18201 | Drive Shaft | | 25 | 23 | 53.3 | 90 | 919 | |
| | 2001.11-2008.06 | 5MT | F | L/R | Hatchback FWD FUJA;FUJB | | GCO18009 | Outer Joint | | 25 | 22 | 53.3 | 90 | 51 | M |
| | 2001.11-2008.06 | 5MT | F | L | Hatchback FWD FUJA;FUJB | | GCI18085 | Inner Joint | | 23 | 22 | 40 | 61 | 90 | |
| 1.2 (60 kw) | 2008.06-2017.04 | 5MT | F | L | Hatchback FWD SNJA;SNJB;SNJC;SNJD | | GDS18216 | Drive Shaft | | 25 | 23 | 53.3 | 90 | 621 | |
| | 2008.06-2017.04 | 5MT | F | R | Hatchback FWD SNJA;SNJB;SNJC;SNJD | | GDS18201 | Drive Shaft | | 25 | 23 | 53.3 | 90 | 919 | |
| | 2008.06-2017.04 | 5MT | F | L/R | Hatchback FWD SNJA;SNJB;SNJC;SNJD | | GCO18009 | Outer Joint | | 25 | 22 | 53.3 | 90 | 51 | M |
| | 2008.06-2017.04 | 5MT | F | L/R | Hatchback FWD SNJA;SNJB;SNJC;SNJD | | GCO18222 | Outer Joint | | 25 | 23 | 53.3 | 87 | 56 | M |
| | 2008.06-2017.04 | 5MT | F | L | Hatchback FWD SNJA;SNJB;SNJC;SNJD | | GCI18085 | Inner Joint | | 23 | 22 | 40 | 61 | 90 | |
| 1.3 (37 kw) | 1996.01-2002.04 | MT | F | L | Hatchback FWD JJA/JJC/JJE/JJJ/JJK/JJM | Date from:1997.02 | GDS18040 | Drive Shaft | | 25 | 23 | 56.5 | 88.5 | 608 | |
| | 1996.01-2002.04 | MT | F | L | Hatchback FWD JJA/JJC/JJE/JJJ/JJK/JJM | | GDS18141 | Drive Shaft | | 25 | 23 | 55.5 | 88.5 | 606 | |
| | 1996.01-2002.04 | MT | F | R | Hatchback FWD JJA/JJC/JJE/JJJ/JJK/JJM | Date to:1996.12 | GDS18011 | Drive Shaft | | 25 | 25 | 55.5 | 88.5 | 813.5 | |
| | 1996.01-2002.04 | MT | F | R | Hatchback FWD JJA/JJC/JJE/JJJ/JJK/JJM | | GDS18032 | Drive Shaft | | 25 | 23 | 56.5 | 88.5 | 900 | |
| | 1996.01-2002.04 | MT | F | L/R | Hatchback FWD JJA/JJC/JJE/JJJ/JJK/JJM | | GCO18004 | Outer Joint | | 25 | 22 | 56.5 | 88.5 | 53.5 | O |
| | 1996.01-2002.04 | MT | F | L/R | Hatchback FWD JJA/JJC/JJE/JJJ/JJK/JJM | Date from:1996.01 | GCO18012 | Outer Joint | | 25 | 20 | 56.5 | 88.5 | 49 | O |
| | 1996.01-2002.04 | MT | F | L | Hatchback FWD JJA/JJC/JJE/JJJ/JJK/JJM | | GCI99075 | Inner Joint | | 23 | 22 | 40 | 61 | 93 | |
| | 1996.01-2002.04 | | F | L | Hatchback FWD JJA/JJC/JJE/JJJ/JJK/JJM | Date To:1997.01 | GCI18072 | Inner Joint | | 23 | 22 | 40 | 61 | 86 | |
| 1.3 (44 kw) | 1991.05-1997.01 | MT | F | L | Hatchback FWD J6B | Date from:1994.02 | GDS18284 | Drive Shaft | | 25 | 23 | 56.5 | 88.5 | 585 | |
| | 1991.05-1997.01 | MT | F | L/R | Hatchback FWD J6B | Date from:1994.01 | GCO18004 | Outer Joint | | 25 | 22 | 56.5 | 88.5 | 53.5 | O |
| | 1991.05-1997.01 | MT | F | L/R | Hatchback FWD J6B | Date to:1994.01 | GCO18015 | Outer Joint | | 23 | 22 | 60 | 80 | 52.5 | O |
| | 1991.05-1997.01 | MT/5MT | F | L | Hatchback FWD J6B | Date to:1994.01 | GDS18118 | Drive Shaft | | 23 | 23 | 60 | 80 | 583.5 | |
| | 1991.05-1997.01 | MT/5MT | F | R | Hatchback FWD J6B | | GDS18289 | Drive Shaft | | 23 | 23 | 60 | 80 | 857 | |
| | 1991.05-1997.01 | | F | | Hatchback FWD J6B | TJ | GCI18053 | Inner Joint | | 23 | 22 | 40 | 61 | 91.5 | |
| | 1991.05-1997.01 | | F | | Hatchback FWD J6B | DOJ | GCI99075 | Inner Joint | | 23 | 22 | 40 | 61 | 93 | |
| | 1995.06-2002.04 | AT | F | L | Hatchback FWD J4C/J4J/J4L/J4Q/J4R/J4T | Date to:1997.01 | GCI18072 | Inner Joint | | 23 | 22 | 40 | 61 | 86 | |
| | 1995.06-2002.04 | MT | F | L | Hatchback FWD J4C/J4J/J4L/J4Q/J4R/J4T | Date From:1997.02 | GDS18040 | Drive Shaft | | 25 | 23 | 56.5 | 88.5 | 608 | |
| | 1995.06-2002.04 | MT | F | L | Hatchback FWD J4C/J4J/J4L/J4Q/J4R/J4T | Date From:1997.01 | GDS18141 | Drive Shaft | | 25 | 23 | 55.5 | 88.5 | 606 | |
| | 1995.06-2002.04 | MT | F | L | Hatchback FWD J4C/J4J/J4L/J4Q/J4R/J4T | Date to:1995.12 | GDS18284 | Drive Shaft | | 25 | 23 | 56.5 | 88.5 | 585 | |
| | 1995.06-2002.04 | MT | F | R | Hatchback FWD J4C/J4J/J4L/J4Q/J4R/J4T | Date to:1996.12 | GDS18011 | Drive Shaft | | 25 | 25 | 55.5 | 88.5 | 813.5 | |
| | 1995.06-2002.04 | MT | F | R | Hatchback FWD J4C/J4J/J4L/J4Q/J4R/J4T | Date from:1997.01 | GDS18032 | Drive Shaft | | 25 | 23 | 56.5 | 88.5 | 900 | |
| | 1995.06-2002.04 | MT | F | L/R | Hatchback FWD J4C/J4J/J4L/J4Q/J4R/J4T | Date from:1997.01 | GCO18004 | Outer Joint | | 25 | 22 | 56.5 | 88.5 | 53.5 | O |
| | 1995.06-2002.04 | MT | F | L/R | Hatchback FWD J4C/J4J/J4L/J4Q/J4R/J4T | | GCO18012 | Outer Joint | | 25 | 20 | 56.5 | 88.5 | 49 | O |
| | 1995.06-2002.04 | MT | F | L | Hatchback FWD J4C/J4J/J4L/J4Q/J4R/J4T | | GCI99075 | Inner Joint | | 23 | 22 | 40 | 61 | 93 | |
| | 2001.11-2008.06 | 5MT | F | L | Hatchback FWD BAJA | | GDS18216 | Drive Shaft | | 25 | 23 | 53.3 | 90 | 621 | |
| | 2001.11-2008.06 | 5MT | F | R | Hatchback FWD BAJA | | GDS18201 | Drive Shaft | | 25 | 23 | 53.3 | 90 | 919 | |
| | 2001.11-2008.06 | 5MT | F | L/R | Hatchback FWD BAJA | | GCO18009 | Outer Joint | | 25 | 22 | 53.3 | 90 | 51 | M |
| | 2001.11-2008.06 | 5MT | F | L | Hatchback FWD BAJA | | GCI18085 | Inner Joint | | 23 | 22 | 40 | 61 | 90 | |
| 1.3 (51 kw) | 2001.11-2008.06 | 5MT | F | L | Hatchback FWD A9JA;A9JB | | GDS18216 | Drive Shaft | | 25 | 23 | 53.3 | 90 | 621 | |
| | 2001.11-2008.06 | 5MT | F | R | Hatchback FWD A9JA;A9JB | | GDS18201 | Drive Shaft | | 25 | 23 | 53.3 | 90 | 919 | |
| | 2001.11-2008.06 | 5MT | F | L/R | Hatchback FWD A9JA;A9JB | | GCO18009 | Outer Joint | | 25 | 22 | 53.3 | 90 | 51 | M |
| | 2001.11-2008.06 | 5MT | F | L | Hatchback FWD A9JA;A9JB | | GCI18085 | Inner Joint | | 23 | 22 | 40 | 61 | 90 | |
| 1.4 (50 kw) | 2001.11-2008.06 | 4AT/5MT | F | R | Hatchback FWD F6JA;F6JB | | GDS18201 | Drive Shaft | | 25 | 23 | 53.3 | 90 | 919 | |
| | 2001.11-2008.06 | 4AT/5MT | F | L/R | Hatchback FWD F6JA;F6JB | | GCO18001 | Outer Joint | | 25 | 20 | 52.9 | 89 | 52 | M |
| | 2001.11-2008.06 | 4AT/5MT | F | L/R | Hatchback FWD F6JA;F6JB | | GCO18009 | Outer Joint | | 25 | 22 | 53.3 | 90 | 51 | M |
| | 2001.11-2008.06 | 5MT | F | L | Hatchback FWD F6JA;F6JB | | GDS18216 | Drive Shaft | | 25 | 23 | 53.3 | 90 | 621 | |
| | 2001.11-2008.06 | 5MT | F | L | Hatchback FWD F6JA;F6JB | | GCI18085 | Inner Joint | | 23 | 22 | 40 | 61 | 90 | |
| | 2008.08-2012.09 | 5MT | F | L | Hatchback FWD F6JB;F6JD | | GDS18216 | Drive Shaft | | 25 | 23 | 53.3 | 90 | 621 | |
| | 2008.08-2012.09 | 5MT | F | R | Hatchback FWD F6JB;F6JD | | GDS18201 | Drive Shaft | | 25 | 23 | 53.3 | 90 | 919 | |
| | 2008.08-2012.09 | 5MT | F | L/R | Hatchback FWD F6JB;F6JD | | GCO18009 | Outer Joint | | 25 | 22 | 53.3 | 90 | 51 | M |
| | 2008.08-2012.09 | 5MT | F | L | Hatchback FWD F6JB;F6JD | | GCI18085 | Inner Joint | | 23 | 22 | 40 | 61 | 90 | |
| 1.4 (51 kw) | 2010.07-2012.09 | 5MT | F | L | Hatchback FWD F6JD;KVJA | | GDS18216 | Drive Shaft | | 25 | 23 | 53.3 | 90 | 621 | |

| | YEAR | TRANSM. | F/R | L/R | BODY STYLE & DRIVE TYPE & ENGINE | REMARKS | G-AP Ref. | PRODUCT | ABS | Technical Specifications A | B | C | H | L | P |
|---|---|---|---|---|---|---|---|---|---|---|---|---|---|---|---|
| **FORD** **Fiesta** | | | | | | | | | | | | | | | |
| 1.4 (51 kw) | 2010.07-2012.09 | 5MT | F | R | Hatchback FWD F6JD;KVJA | | GDS18201 | Drive Shaft | | 25 | 23 | 53.3 | 90 | 919 | |
| | 2010.07-2012.09 | 5MT | F | L/R | Hatchback FWD F6JD;KVJA | | GCO18009 | Outer Joint | | 25 | 22 | 53.3 | 90 | 51 | M |
| | 2010.07-2012.09 | 5MT | F | L | Hatchback FWD F6JD;KVJA | | GCI18085 | Inner Joint | | 23 | 22 | 40 | 61 | 90 | |
| 1.4 (54 kw) | 1989.03-1996.10 | CVT/5MT | F | L | Hatchback FWD F4A/FUG/FUJ | Date from:1989.04,Date to:1994.01 | GDS18118 | Drive Shaft | | 23 | 23 | 60 | 80 | 583.5 | |
| | 1989.03-1996.10 | CVT/5MT | F | R | Hatchback FWD F4A/FUG/FUJ | Date from:1989.04,Date to:1994.01 | GDS18289 | Drive Shaft | | 23 | 23 | 60 | 80 | 857 | |
| | 1989.03-1996.10 | CVT/5MT | F | L/R | Hatchback FWD F4A/FUG/FUJ | TJ | GCI18053 | Inner Joint | | 23 | 22 | 40 | 61 | 91.5 | |
| | 1989.03-1996.10 | CVT/5MT | F | L/R | Hatchback FWD F4A/FUG/FUJ | DOJ | GCI99075 | Inner Joint | | 23 | 22 | 40 | 61 | 93 | |
| | 1989.03-1996.10 | MT | F | L/R | Hatchback FWD F4A/FUG/FUJ | Date from:1994.01 | GCO18004 | Outer Joint | | 25 | 22 | 56.5 | 88.5 | 53.5 | O |
| | 1989.03-1996.10 | MT | F | L/R | Hatchback FWD F4A/FUG/FUJ | Date to:1994.01 | GCO18015 | Outer Joint | | 23 | 22 | 60 | 80 | 52.5 | O |
| 1.4 (55 kw) | 1992.11-1996.12 | | F | | Hatchback FWD FUF | | GCO18004 | Outer Joint | | 25 | 22 | 56.5 | 88.5 | 53.5 | O |
| | 1992.11-1996.12 | | F | | Hatchback FWD FUF | | GCI18053 | Inner Joint | | 23 | 22 | 40 | 61 | 91.5 | |
| | 1992.11-1996.12 | | F | | Hatchback FWD FUF | | GCI99075 | Inner Joint | | 23 | 22 | 40 | 61 | 93 | |
| 1.4 (59 kw) | 2001.11-2008.06 | 5AMT | F | L/R | Hatchback FWD FXJA;FXJB | | GCO18014 | Outer Joint | | 25 | 21 | 53.2 | 89 | 54 | M |
| | 2001.11-2008.06 | 5AMT | F | L | Hatchback FWD FXJA;FXJB | | GCI18113 | Inner Joint | | 23 | 21 | 40 | 61.5 | 96.5 | |
| | 2001.11-2008.06 | 5MT | F | L | Hatchback FWD FXJA;FXJB | | GDS18216 | Drive Shaft | | 25 | 23 | 53.3 | 90 | 621 | |
| | 2001.11-2008.06 | 5MT | F | L | Hatchback FWD FXJA;FXJB | | GCI18085 | Inner Joint | | 23 | 22 | 40 | 61 | 90 | |
| | 2001.11-2008.06 | 5MT/5AMT/Semi-AT | F | R | Hatchback FWD FXJA;FXJB | | GDS18201 | Drive Shaft | | 25 | 23 | 53.3 | 90 | 919 | |
| | 2001.11-2008.06 | 5MT/5AMT/Semi-AT | F | L/R | Hatchback FWD FXJA;FXJB | | GCO18009 | Outer Joint | | 25 | 22 | 53.3 | 90 | 51 | M |
| 1.4 (66 kw) | 1996.01-2002.04 | MT | F | L | Hatchback FWD FHA/FHE | | GDS18040 | Drive Shaft | | 25 | 23 | 56.5 | 88.5 | 608 | |
| | 1996.01-2002.04 | MT | F | L | Hatchback FWD FHA/FHE | Date from:1997.01 | GDS18141 | Drive Shaft | | 25 | 23 | 55.5 | 88.5 | 606 | |
| | 1996.01-2002.04 | MT | F | L | Hatchback FWD FHA/FHE | Date to:1997.01 | GDS18284 | Drive Shaft | | 25 | 23 | 56.5 | 88.5 | 585 | |
| | 1996.01-2002.04 | MT | F | R | Hatchback FWD FHA/FHE | Date to:1997.12 | GDS18011 | Drive Shaft | | 25 | 25 | 55.5 | 88.5 | 813.5 | |
| | 1996.01-2002.04 | MT | F | R | Hatchback FWD FHA/FHE | Date from:1997.01 | GDS18032 | Drive Shaft | | 25 | 23 | 56.5 | 88.5 | 900 | |
| | 1996.01-2002.04 | MT | F | L/R | Hatchback FWD FHA/FHE | | GCO18004 | Outer Joint | | 25 | 22 | 56.5 | 88.5 | 53.5 | O |
| | 1996.01-2002.04 | MT | F | L | Hatchback FWD FHA/FHE | Date to:1997.12 | GCI99075 | Inner Joint | | 23 | 22 | 40 | 61 | 93 | |
| | 1996.01-2002.04 | | F | L | Hatchback FWD FHA/FHE | Date To:1997.01 | GCI18072 | Inner Joint | | 23 | 22 | 40 | 61 | 86 | |
| 1.4 (68 kw) | 2009.01-2017.04 | AT | F | L | Hatchback FWD RTJA;RTJB;RTJD | | GDS81717 | Drive Shaft | | 25 | 26 | 53.3 | 87 | 604 | |
| | 2009.01-2017.04 | AT | F | R | Hatchback FWD RTJA;RTJB;RTJD | | GDS81718 | Drive Shaft | | 25 | 26 | 53.3 | 87 | 938 | |
| | 2009.01-2017.04 | AT | F | L | Hatchback FWD RTJA;RTJB;RTJD | | GCO18222 | Outer Joint | | 25 | 23 | 53.3 | 87 | 56 | M |
| | 2009.01-2017.04 | AT | F | L | Hatchback FWD RTJA;RTJB;RTJD | | GCI81482 | Inner Joint | | 26 | 22 | 40 | 69 | 93.5 | |
| | 2009.01-2017.04 | MT | F | L | Hatchback FWD RTJA;RTJB;RTJD | | GDS18216 | Drive Shaft | | 25 | 23 | 53.3 | 90 | 621 | |
| | 2009.01-2017.04 | MT | F | R | Hatchback FWD RTJA;RTJB;RTJD | | GDS18201 | Drive Shaft | | 25 | 23 | 53.3 | 90 | 919 | |
| 1.4 (71 kw) | 2008.10-2017.04 | 4AT | F | L | Hatchback FWD SPJA;SPJC;RTJA;RTJB;SPJE | | GDS81717 | Drive Shaft | | 25 | 26 | 53.3 | 87 | 604 | |
| | 2008.10-2017.04 | 4AT | F | R | Hatchback FWD SPJA;SPJC;RTJA;RTJB;SPJE | | GDS81718 | Drive Shaft | | 25 | 26 | 53.3 | 87 | 938 | |
| | 2008.10-2017.04 | 4AT | F | L | Hatchback FWD SPJA;SPJC;RTJA;RTJB;SPJE | | GCI81482 | Inner Joint | | 26 | 22 | 40 | 69 | 93.5 | |
| | 2008.10-2017.04 | 4AT/5MT | F | L/R | Hatchback FWD SPJA;SPJC;RTJA;RTJB;SPJE | | GCO18222 | Outer Joint | | 25 | 23 | 53.3 | 87 | 56 | M |
| | 2008.10-2017.04 | 5MT | F | L | Hatchback FWD SPJA;SPJC;RTJA;RTJB;SPJE | | GDS18216 | Drive Shaft | | 25 | 23 | 53.3 | 90 | 621 | |
| | 2008.10-2017.04 | 5MT | F | R | Hatchback FWD SPJA;SPJC;RTJA;RTJB;SPJE | | GDS18201 | Drive Shaft | | 25 | 23 | 53.3 | 90 | 919 | |
| | 2008.10-2017.04 | 5MT | F | L/R | Hatchback FWD SPJA;SPJC;RTJA;RTJB;SPJE | | GCO18009 | Outer Joint | | 25 | 22 | 53.3 | 90 | 51 | M |
| | 2008.10-2017.04 | 5MT | F | L | Hatchback FWD SPJA;SPJC;RTJA;RTJB;SPJE | | GCI18085 | Inner Joint | | 23 | 22 | 40 | 61 | 90 | |
| | 2009.01-2017.04 | MT | F | L | Hatchback FWD SPJA;SPJC;RTJA;RTJB;SPJE;RTJD | | GDS18216 | Drive Shaft | | 25 | 23 | 53.3 | 90 | 621 | |
| | 2009.01-2017.04 | MT | F | R | Hatchback FWD SPJA;SPJC;RTJA;RTJB;SPJE;RTJD | | GDS18201 | Drive Shaft | | 25 | 23 | 53.3 | 90 | 919 | |
| | 2009.01-2017.04 | MT | F | L/R | Hatchback FWD SPJA;SPJC;RTJA;RTJB;SPJE;RTJD | | GCO18222 | Outer Joint | | 25 | 23 | 53.3 | 87 | 56 | M |
| 1.5 (55 kw) | 2012.09-2017.04 | MT | F | L | Hatchback FWD UGJC;XUJA;XUJB | Date from:2013.11,Date to:2015.08 | GDS18216 | Drive Shaft | | 25 | 23 | 53.3 | 90 | 621 | |
| | 2012.09-2017.04 | MT | F | L | Hatchback FWD UGJC;XUJA;XUJB | Date to:2013.10 | GDS82344 | Drive Shaft | | 25 | 23 | 53.3 | 87 | 624 | |
| | 2012.09-2017.04 | MT | F | R | Hatchback FWD UGJC;XUJA;XUJB | Date from:2013.11,Date to:2015.08 | GDS18201 | Drive Shaft | | 25 | 23 | 53.3 | 90 | 919 | |
| | 2012.09-2017.04 | MT | F | L/R | Hatchback FWD UGJC;XUJA;XUJB | Date from:2013.11,Date to:2015.08 | GCO18009 | Outer Joint | | 25 | 22 | 53.3 | 90 | 51 | M |
| | 2012.09-2017.04 | MT | F | L/R | Hatchback FWD UGJC;XUJA;XUJB | Date to:2016.02 | GCO18222 | Outer Joint | | 25 | 23 | 53.3 | 87 | 56 | M |
| | 2012.09-2017.04 | MT | F | L | Hatchback FWD UGJC;XUJA;XUJB | Date from:2013.11,Date to:2015.08 | GCI18085 | Inner Joint | | 23 | 22 | 40 | 61 | 90 | |
| | 2012.09-2017.04 | MT | F | L | Hatchback FWD UGJC;XUJA;XUJB | Date to:2013.10 | GCI18086 | Inner Joint | | 23 | 22 | 40 | 61 | 90 | |
| 1.5 (63 kw) | 2017.05- | 6MT | F | L | Hatchback FWD XUJC;XUJD;XUJF;XUJG;XUJE;XUJL;XUJK;XUJM;XUJN | | GDS82977 | Drive Shaft | | 25 | 23 | 53.2 | 88.5 | 630 | |
| | 2017.05- | 6MT | F | L | Hatchback FWD XUJC;XUJD;XUJF;XUJG;XUJE;XUJL;XUJK;XUJM;XUJN | | GCO82251 | Outer Joint | | 25 | 23 | 53.2 | 88.5 | 56.5 | M |
| | 2017.05- | 6MT | F | L/R | Hatchback FWD XUJC;XUJD;XUJF;XUJG;XUJE;XUJL;XUJK;XUJM;XUJN | | GCI82094 | Inner Joint | | 23 | 22 | 40 | 61 | 98.5 | |
| | 2018.04- | 6MT | F | L | Hatchback FWD XUJC;XUJD;XUJF;XUJG;XUJE;XUJL;XUJK;XUJM;XUJN | | GDS82977 | Drive Shaft | | 25 | 23 | 53.2 | 88.5 | 630 | |
| 1.5 (70 kw) | 2015.05-2017.04 | MT | F | L | Hatchback FWD XVJC;XVJB | | GDS18216 | Drive Shaft | | 25 | 23 | 53.3 | 90 | 621 | |
| | 2015.05-2017.04 | MT | F | R | Hatchback FWD XVJC;XVJB | | GDS18201 | Drive Shaft | | 25 | 23 | 53.3 | 90 | 919 | |
| | 2015.05-2017.04 | MT | F | L/R | Hatchback FWD XVJC;XVJB | | GCO18222 | Outer Joint | | 25 | 23 | 53.3 | 87 | 56 | M |
| 1.5 (88 kw) | 2017.05- | 6MT | F | L | Hatchback FWD XWJA;XWJB;XWJC | | GDS83810 | Drive Shaft | | 25 | 26 | 53.2 | 88.5 | 628 | |
| | 2017.05- | 6MT | F | R | Hatchback FWD XWJA;XWJB;XWJC | Date from:2018.07 | GDS83805 | Drive Shaft | | 25 | 26 | 53.2 | 88.5 | 940 | |
| | 2017.05- | 6MT | F | L/R | Hatchback FWD XWJA;XWJB;XWJC | | GCO18258 | Outer Joint | | 25 | 24 | 53.2 | 88.5 | 58.5 | M |
| | 2017.05- | 6MT | F | L | Hatchback FWD XWJA;XWJB;XWJC | | GCI82375 | Inner Joint | | 26 | 22 | 40 | 61 | 89 | |
| | 2017.05- | 6MT | F | R | Hatchback FWD XWJA;XWJB;XWJC | | GCI82376 | Inner Joint | | 26 | 22 | 40 | 383 | 76 | |
| | 2018.04- | 6MT | F | L | Hatchback FWD XWJA;XWJB;XWJC | | GDS83810 | Drive Shaft | | 25 | 26 | 53.2 | 88.5 | 628 | |
| | 2018.04- | 6MT | F | R | Hatchback FWD XWJA;XWJB;XWJC | | GDS83805 | Drive Shaft | | 25 | 26 | 53.2 | 88.5 | 940 | |
| 1.5 (147 kw) | 2018.04- | 6MT | F | L | Hatchback FWD YZJA | | GDS83811 | Drive Shaft | | 25 | 28 | 53.2 | 88.5 | 616 | |

| | YEAR | TRANSM. | F/R | L/R | BODY STYLE & DRIVE TYPE & ENGINE | REMARKS | G-AP Ref. | PRODUCT | ABS | Technical Specifications A | B | C | H | L | P |
|---|---|---|---|---|---|---|---|---|---|---|---|---|---|---|---|
| **FORD** **Fiesta** | | | | | | | | | | | | | | | |
| 1.5 (147 kw) | 2018.04- | 6MT | F | L | Hatchback FWD YZJA | | GCO82490 | Outer Joint | | 25 | 33 | 53.2 | 88.5 | 58 | M |
| | 2018.04- | 6MT | F | L | Hatchback FWD YZJA | | GCI82372 | Inner Joint | | 28 | 33 | 40 | 64 | 100 | |
| 1.6 (55 kw) | 2008.06-2012.12 | 5MT | F | R | Hatchback FWD HHJF;UBJA | | GDS18201 | Drive Shaft | | 25 | 23 | 53.3 | 90 | 919 | |
| | 2008.06-2012.12 | MT | F | L | Hatchback FWD HHJF;UBJA | Date from:2009.01 | GDS18216 | Drive Shaft | | 25 | 23 | 53.3 | 90 | 621 | |
| | 2008.06-2012.12 | MT | F | L/R | Hatchback FWD HHJF;UBJA | Date from:2009.01 | GCO18222 | Outer Joint | | 25 | 23 | 53.3 | 87 | 56 | M |
| 1.6 (62 kw) | 2015.03-2017.04 | 5MT | F | L | Hatchback FWD XTJA | | GDS18216 | Drive Shaft | | 25 | 23 | 53.3 | 90 | 621 | |
| | 2015.03-2017.04 | 5MT | F | R | Hatchback FWD XTJA | | GDS18201 | Drive Shaft | | 25 | 23 | 53.3 | 90 | 919 | |
| | 2015.03-2017.04 | 5MT | F | R | Hatchback FWD XTJA | | GCO18009 | Outer Joint | | 25 | 22 | 53.3 | 90 | 51 | M |
| | 2015.03-2017.04 | 5MT | F | L | Saloon FWD XTJA | | GDS18216 | Drive Shaft | | 25 | 23 | 53.3 | 90 | 621 | |
| | 2015.03-2017.04 | 5MT | F | R | Saloon FWD XTJA | | GDS18201 | Drive Shaft | | 25 | 23 | 53.3 | 90 | 919 | |
| 1.6 (65 kw) | 1994.01-1997.12 | MT | F | L | Hatchback FWD L1G | | GDS18040 | Drive Shaft | | 25 | 23 | 56.5 | 88.5 | 608 | |
| | 1994.01-1997.12 | MT | F | L | Hatchback FWD L1G | | GDS18284 | Drive Shaft | | 25 | 23 | 56.5 | 88.5 | 585 | |
| | 1994.01-1997.12 | MT | F | L/R | Hatchback FWD L1G | | GCO18004 | Outer Joint | | 25 | 22 | 56.5 | 88.5 | 53.5 | O |
| | 1994.01-1997.12 | MT | F | L | Hatchback FWD L1G | | GCI99075 | Inner Joint | | 23 | 22 | 40 | 61 | 93 | |
| | 1994.01-1997.12 | | F | | Hatchback FWD L1G | | GCI18053 | Inner Joint | | 23 | 22 | 40 | 61 | 91.5 | |
| 1.6 (66 kw) | 2004.11-2008.06 | 5MT | F | L | Hatchback FWD HHJA;HHJB | | GDS18216 | Drive Shaft | | 25 | 23 | 53.3 | 90 | 621 | |
| | 2004.11-2008.06 | 5MT | F | R | Hatchback FWD HHJA;HHJB | | GDS18326 | Drive Shaft | | 25 | 23 | 53.4 | 88.5 | 915 | |
| | 2004.11-2008.06 | 5MT | F | L/R | Hatchback FWD HHJA;HHJB | | GCO18009 | Outer Joint | | 25 | 22 | 53.3 | 90 | 51 | M |
| | 2004.11-2008.06 | 5MT | F | L/R | Hatchback FWD HHJA;HHJB | | GCO18013 | Outer Joint | | 25 | 23 | 53.4 | 88.5 | 57 | M |
| | 2004.11-2008.06 | 5MT | F | L | Hatchback FWD HHJA;HHJB | | GCI18085 | Inner Joint | | 23 | 22 | 40 | 61 | 90 | |
| | 2008.06-2012.12 | 5MT | F | R | Hatchback FWD HHJD;HHJC;HHJE | | GDS18201 | Drive Shaft | | 25 | 23 | 53.3 | 90 | 919 | |
| | 2008.06-2012.12 | MT | F | L | Hatchback FWD HHJD;HHJC;HHJE | | GDS18216 | Drive Shaft | | 25 | 23 | 53.3 | 90 | 621 | |
| | 2008.06-2012.12 | MT | F | L/R | Hatchback FWD HHJD;HHJC;HHJE | Date from:2009.01 | GCO18222 | Outer Joint | | 25 | 23 | 53.3 | 87 | 56 | M |
| 1.6 (70 kw) | 2010.02-2015.12 | 5MT | F | R | Hatchback FWD TZJA;TZJB;T3JA | | GDS18201 | Drive Shaft | | 25 | 23 | 53.3 | 90 | 919 | |
| | 2010.02-2015.12 | MT | F | L | Hatchback FWD TZJA;TZJB;T3JA | | GDS18216 | Drive Shaft | | 25 | 23 | 53.3 | 90 | 621 | |
| | 2010.02-2015.12 | MT | F | L/R | Hatchback FWD TZJA;TZJB;T3JA | | GCO18222 | Outer Joint | | 25 | 23 | 53.3 | 87 | 56 | M |
| 1.6 (74 kw) | 2001.11-2008.06 | 4AT | F | L | Hatchback FWD FYJA;FYJB | | GDS18351 | Drive Shaft | | 25 | 22 | 53.3 | 89 | 606 | |
| | 2001.11-2008.06 | 4AT | F | R | Hatchback FWD FYJA;FYJB | | GDS18333 | Drive Shaft | | 25 | 22 | 53.3 | 89 | 930 | |
| | 2001.11-2008.06 | 4AT | F | L | Hatchback FWD FYJA;FYJB | | GCI57115 | Inner Joint | | 22 | 21 | 38 | 59.5 | 97.5 | |
| | 2001.11-2008.06 | 4AT | F | R | Hatchback FWD FYJA;FYJB | | GCI18103 | Inner Joint | | 22 | 21 | 38 | 403.5 | 84.5 | |
| | 2001.11-2008.06 | 4AT/5MT | F | L/R | Hatchback FWD FYJA;FYJB | | GCO18222 | Outer Joint | | 25 | 23 | 53.3 | 87 | 56 | M |
| | 2001.11-2008.06 | 5MT | F | L | Hatchback FWD FYJA;FYJB | | GDS18216 | Drive Shaft | | 25 | 23 | 53.3 | 90 | 621 | |
| | 2001.11-2008.06 | 5MT | F | R | Hatchback FWD FYJA;FYJB | | GDS18201 | Drive Shaft | | 25 | 23 | 53.3 | 90 | 919 | |
| | 2001.11-2008.06 | 5MT | F | L/R | Hatchback FWD FYJA;FYJB | | GCO18009 | Outer Joint | | 25 | 22 | 53.3 | 90 | 51 | M |
| | 2001.11-2008.06 | 5MT | F | L/R | Hatchback FWD FYJA;FYJB | | GCO18014 | Outer Joint | | 25 | 21 | 53.2 | 89 | 54 | M |
| | 2001.11-2008.06 | 5MT | F | L | Hatchback FWD FYJA;FYJB | | GCI18085 | Inner Joint | | 23 | 22 | 40 | 61 | 90 | |
| 1.6 (76 kw) | 1999.09-2002.04 | MT | F | L | Hatchback FWD L1T/L1V | | GDS18040 | Drive Shaft | | 25 | 23 | 56.5 | 88.5 | 608 | |
| | 1999.09-2002.04 | MT | F | L | Hatchback FWD L1T/L1V | | GDS18141 | Drive Shaft | | 25 | 23 | 55.5 | 88.5 | 606 | |
| | 1999.09-2002.04 | MT | F | R | Hatchback FWD L1T/L1V | | GDS18175 | Drive Shaft | | 25 | 23 | 56.5 | 88.5 | 898 | |
| | 1999.09-2002.04 | MT | F | L/R | Hatchback FWD L1T/L1V | | GCO18004 | Outer Joint | | 25 | 22 | 56.5 | 88.5 | 53.5 | O |
| | 1999.09-2002.04 | MT | F | L | Hatchback FWD L1T/L1V | | GCI99075 | Inner Joint | | 23 | 22 | 40 | 61 | 93 | |
| 1.6 (77 kw) | 2012.09-2017.04 | 5MT | F | L | Hatchback FWD IQJA;IQJC;IQJE | | GDS18216 | Drive Shaft | | 25 | 23 | 53.3 | 90 | 621 | |
| | 2012.09-2017.04 | 5MT | F | R | Hatchback FWD IQJA;IQJC;IQJE | | GDS18201 | Drive Shaft | | 25 | 23 | 53.3 | 90 | 919 | |
| | 2012.09-2017.04 | 5MT | F | L/R | Hatchback FWD IQJA;IQJC;IQJE | | GCO18009 | Outer Joint | | 25 | 22 | 53.3 | 90 | 51 | M |
| | 2012.09-2017.04 | 6DCT | F | L | Hatchback FWD IQJA;IQJC;IQJE | Date to:2015.08 | GDS18389 | Drive Shaft | | 25 | 34 | 53.3 | 87 | 566 | |
| | 2012.09-2017.04 | 6DCT | F | R | Hatchback FWD IQJA;IQJC;IQJE | | GDS18406 | Drive Shaft | | 25 | 34 | 53.3 | 87 | 974 | |
| | 2012.09-2017.04 | 6DCT | F | L/R | Hatchback FWD IQJA;IQJC;IQJE | | GCO18222 | Outer Joint | | 25 | 23 | 53.3 | 87 | 56 | M |
| | 2015.03-2017.04 | 5MT | F | L | Saloon FWD IQJA;IQJC;IQJE | | GDS18216 | Drive Shaft | | 25 | 23 | 53.3 | 90 | 621 | |
| | 2015.03-2017.04 | 5MT | F | R | Saloon FWD IQJA;IQJC;IQJE | | GDS18201 | Drive Shaft | | 25 | 23 | 53.3 | 90 | 919 | |
| | 2015.03-2017.04 | AT | F | L | Saloon FWD IQJA;IQJC;IQJE | Date To:2015.08 | GDS18389 | Drive Shaft | | 25 | 34 | 53.3 | 87 | 566 | |
| | 2015.03-2017.04 | AT | F | R | Saloon FWD IQJA;IQJC;IQJE | | GDS18406 | Drive Shaft | | 25 | 34 | 53.3 | 87 | 974 | |
| | 2015.03-2017.04 | AT | F | R | Saloon FWD IQJA;IQJC;IQJE | | GCO18222 | Outer Joint | | 25 | 23 | 53.3 | 87 | 56 | M |
| 1.6 (88 kw) | 2008.06-2018.01 | 5MT | F | L | Hatchback FWD HXJA;HXJB;HXJE;RVJA | | GDS18216 | Drive Shaft | | 25 | 23 | 53.3 | 90 | 621 | |
| | 2008.06-2018.01 | 5MT | F | R | Hatchback FWD HXJA;HXJB;HXJE;RVJA | | GDS18201 | Drive Shaft | | 25 | 23 | 53.3 | 90 | 919 | |
| | 2008.06-2018.01 | 6DCT | F | L | Hatchback FWD HXJA;HXJB;HXJE;RVJA | | GDS18389 | Drive Shaft | | 25 | 34 | 53.3 | 87 | 566 | |
| | 2008.06-2018.01 | 6DCT | F | R | Hatchback FWD HXJA;HXJB;HXJE;RVJA | | GDS18406 | Drive Shaft | | 25 | 34 | 53.3 | 87 | 974 | |
| | 2008.06-2018.01 | AT | F | R | Hatchback FWD HXJA;HXJB;HXJE;RVJA | | GCO18222 | Outer Joint | | 25 | 23 | 53.3 | 87 | 56 | M |
| | 2010.04-2017.04 | 6DCT | F | L | Saloon FWD HXJA;HXJB;HXJE | | GDS18389 | Drive Shaft | | 25 | 34 | 53.3 | 87 | 566 | |
| | 2010.04-2017.04 | 6DCT | F | R | Saloon FWD HXJA;HXJB;HXJE | | GDS18406 | Drive Shaft | | 25 | 34 | 53.3 | 87 | 974 | |
| | 2010.04-2017.04 | AT | F | R | Saloon FWD HXJA;HXJB;HXJE | | GCO18222 | Outer Joint | | 25 | 23 | 53.3 | 87 | 56 | M |
| 1.6 (99 kw) | 2010.12-2017.04 | 4AT/5MT | F | L | Hatchback FWD U5JA | | GDS18216 | Drive Shaft | | 25 | 23 | 53.3 | 90 | 621 | |
| | 2010.12-2017.04 | 4AT/5MT | F | R | Hatchback FWD U5JA | | GDS18201 | Drive Shaft | | 25 | 23 | 53.3 | 90 | 919 | |
| | 2010.12-2017.04 | 4AT/5MT | F | L/R | Hatchback FWD U5JA | | GCO18222 | Outer Joint | | 25 | 23 | 53.3 | 87 | 56 | M |
| 1.6 (134 kw) | 2013.03-2017.04 | 6MT | F | L | Hatchback FWD JTJA;JTJB | | GDS81622 | Drive Shaft | | 25 | 26 | 53.2 | 89 | 607 | |
| | 2013.03-2017.04 | 6MT | F | R | Hatchback FWD JTJA;JTJB | | GDS81770 | Drive Shaft | | 25 | 26 | 53.2 | 89 | 923 | |

| | YEAR | TRANSM. | F/R | L/R | BODY STYLE & DRIVE TYPE & ENGINE | REMARKS | G-AP Ref. | PRODUCT | ABS | Technical Specifications A | B | C | H | L | P |
|---|---|---|---|---|---|---|---|---|---|---|---|---|---|---|---|
| **FORD** | | | | | | | | | | | | | | | |
| **Fiesta** | | | | | | | | | | | | | | | |
| 1.6 (134 kw) | 2013.03-2017.04 | 6MT | F | L | Hatchback FWD JTJA;JTJB | | GCO81441 | Outer Joint | | 25 | 26 | 53.2 | 89 | 61.5 | M |
| 1.6 (147 kw) | 2016.04-2017.04 | 6MT | F | L | Hatchback FWD JTJC | | GDS81622 | Drive Shaft | | 25 | 26 | 53.2 | 89 | 607 | |
| | 2016.04-2017.04 | 6MT | F | R | Hatchback FWD JTJC | | GDS81770 | Drive Shaft | | 25 | 26 | 53.2 | 89 | 923 | |
| | 2016.04-2017.04 | 6MT | F | L | Hatchback FWD JTJC | | GCO81441 | Outer Joint | | 25 | 26 | 53.2 | 89 | 61.5 | M |
| 1.8 (44 kw) | 1989.03-1996.04 | MT | F | L | Hatchback FWD RTC/RTG | Date From:1994.01 | GDS18040 | Drive Shaft | | 25 | 23 | 56.5 | 88.5 | 608 | |
| | 1989.03-1996.04 | MT | F | L | Hatchback FWD RTC/RTG | | GDS18118 | Drive Shaft | | 23 | 23 | 60 | 80 | 583.5 | |
| | 1989.03-1996.04 | MT | F | L | Hatchback FWD RTC/RTG | Date from:1994.02 | GDS18284 | Drive Shaft | | 25 | 23 | 56.5 | 88.5 | 585 | |
| | 1989.03-1996.04 | MT | F | R | Hatchback FWD RTC/RTG | Date From:1994.01 | GDS18032 | Drive Shaft | | 25 | 23 | 56.5 | 88.5 | 900 | |
| | 1989.03-1996.04 | MT | F | R | Hatchback FWD RTC/RTG | | GDS18289 | Drive Shaft | | 23 | 23 | 60 | 80 | 857 | |
| | 1989.03-1996.04 | MT | F | L/R | Hatchback FWD RTC/RTG | Date from:1994.02 | GCO18004 | Outer Joint | | 25 | 22 | 56.5 | 88.5 | 53.5 | O |
| | 1989.03-1996.04 | MT | F | L/R | Hatchback FWD RTC/RTG | Date to:1994.01 | GCO18015 | Outer Joint | | 23 | 22 | 60 | 80 | 52.5 | O |
| | 1989.03-1996.04 | | F | | Hatchback FWD RTC/RTG | | GCI18053 | Inner Joint | | 23 | 22 | 40 | 61 | 91.5 | |
| | 1989.03-1996.04 | | F | | Hatchback FWD RTC/RTG | | GCI99075 | Inner Joint | | 23 | 22 | 40 | 61 | 93 | |
| | 1995.08-2000.08 | AT | F | L | Hatchback FWD RTJ/RTK | Date to:1997.01 | GCI18072 | Inner Joint | | 23 | 22 | 40 | 61 | 86 | |
| | 1995.08-2000.08 | MT | F | L | Hatchback FWD RTJ/RTK | | GDS18040 | Drive Shaft | | 25 | 23 | 56.5 | 88.5 | 608 | |
| | 1995.08-2000.08 | MT | F | L | Hatchback FWD RTJ/RTK | Date from:1997.01 | GDS18141 | Drive Shaft | | 25 | 23 | 55.5 | 88.5 | 606 | |
| | 1995.08-2000.08 | MT | F | L | Hatchback FWD RTJ/RTK | Date to:1997.01 | GDS18284 | Drive Shaft | | 25 | 23 | 56.5 | 88.5 | 585 | |
| | 1995.08-2000.08 | MT | F | R | Hatchback FWD RTJ/RTK | Date to:1997.12 | GDS18011 | Drive Shaft | | 25 | 25 | 55.5 | 88.5 | 813.5 | |
| | 1995.08-2000.08 | MT | F | R | Hatchback FWD RTJ/RTK | Date from:1997.01 | GDS18032 | Drive Shaft | | 25 | 23 | 56.5 | 88.5 | 900 | |
| | 1995.08-2000.08 | MT | F | L/R | Hatchback FWD RTJ/RTK | | GCO18004 | Outer Joint | | 25 | 22 | 56.5 | 88.5 | 53.5 | O |
| | 1995.08-2000.08 | MT | F | L | Hatchback FWD RTJ/RTK | | GCI99075 | Inner Joint | | 23 | 22 | 40 | 61 | 93 | |
| 1.8 (55 kw) | 2000.04-2002.01 | MT | F | L | Hatchback FWD RTN/RTP/RTQ | | GDS18040 | Drive Shaft | | 25 | 23 | 56.5 | 88.5 | 608 | |
| | 2000.04-2002.01 | MT | F | L | Hatchback FWD RTN/RTP/RTQ | | GDS18141 | Drive Shaft | | 25 | 23 | 55.5 | 88.5 | 606 | |
| | 2000.04-2002.01 | MT | F | R | Hatchback FWD RTN/RTP/RTQ | | GDS18032 | Drive Shaft | | 25 | 23 | 56.5 | 88.5 | 900 | |
| | 2000.04-2002.01 | MT | F | L/R | Hatchback FWD RTN/RTP/RTQ | | GCO18004 | Outer Joint | | 25 | 22 | 56.5 | 88.5 | 53.5 | O |
| | 2000.04-2002.01 | MT | F | L | Hatchback FWD RTN/RTP/RTQ | | GCI99075 | Inner Joint | | 23 | 22 | 40 | 61 | 93 | |
| 2.0 (110 kw) | 2005.03-2008.06 | 5MT | F | L | Hatchback FWD N4JB | | GDS18216 | Drive Shaft | | 25 | 23 | 53.3 | 90 | 621 | |
| | 2005.03-2008.06 | 5MT | F | R | Hatchback FWD N4JB | | GDS18326 | Drive Shaft | | 25 | 23 | 53.4 | 88.5 | 915 | |
| | 2005.03-2008.06 | 5MT | F | L/R | Hatchback FWD N4JB | | GCO18009 | Outer Joint | | 25 | 22 | 53.3 | 90 | 51 | M |
| | 2005.03-2008.06 | 5MT | F | L/R | Hatchback FWD N4JB | | GCO18013 | Outer Joint | | 25 | 23 | 53.4 | 88.5 | 57 | M |
| | 2005.03-2008.06 | 5MT | F | L | Hatchback FWD N4JB | | GCI18085 | Inner Joint | | 23 | 22 | 40 | 61 | 90 | |
| **Fiesta Van** | | | | | | | | | | | | | | | |
| 1.0 (48 kw) | 2013.01-2017.04 | 5MT | F | L/R | Hatchback Van FWD XMJA;XMJB;XMJC;XMJD | | GCO18009 | Outer Joint | | 25 | 22 | 53.3 | 90 | 51 | M |
| | 2013.01-2017.04 | MT | F | L | Hatchback Van FWD XMJA;XMJB;XMJC;XMJD | | GDS18216 | Drive Shaft | | 25 | 23 | 53.3 | 90 | 621 | |
| | 2013.01-2017.04 | MT | F | R | Hatchback Van FWD XMJA;XMJB;XMJC;XMJD | | GDS18201 | Drive Shaft | | 25 | 23 | 53.3 | 90 | 919 | |
| 1.0 (59 kw) | 2012.10-2017.04 | MT | F | L | Hatchback Van FWD P4JA;P4JB;P4JC;P4JD | | GDS18216 | Drive Shaft | | 25 | 23 | 53.3 | 90 | 621 | |
| | 2012.10-2017.04 | MT | F | R | Hatchback Van FWD P4JA;P4JB;P4JC;P4JD | | GDS18201 | Drive Shaft | | 25 | 23 | 53.3 | 90 | 919 | |
| | 2012.10-2017.04 | MT | F | L/R | Hatchback Van FWD P4JA;P4JB;P4JC;P4JD | | GCO18009 | Outer Joint | | 25 | 22 | 53.3 | 90 | 51 | M |
| | 2012.10-2017.04 | MT | F | | Hatchback Van FWD P4JA;P4JB;P4JC;P4JD | | GCO18222 | Outer Joint | | 25 | 23 | 53.3 | 87 | 56 | M |
| 1.0 (70 kw) | 2019.12- | 6MT | F | L | Hatchback Van FWD M0JA | | GDS83619 | Drive Shaft | | 25 | 23 | 53.2 | 88.5 | 629 | |
| | 2019.12- | 6MT | F | R | Hatchback Van FWD M0JA | | GDS82576 | Drive Shaft | | 25 | 23 | 53.2 | 88.5 | 935 | |
| | 2019.12- | 6MT | F | L/R | Hatchback Van FWD M0JA | | GCO18258 | Outer Joint | | 25 | 24 | 53.2 | 88.5 | 58.5 | M |
| | 2019.12- | 6MT | F | L/R | Hatchback Van FWD M0JA | | GCI81896 | Inner Joint | | 23 | 22 | 40 | 61 | 96.5 | |
| 1.0 (74 kw) | 2013.01-2017.04 | 5MT | F | L | Hatchback Van FWD SFJA;SFJB;SFJC;SFJD | | GDS18405 | Drive Shaft | | 25 | 23 | 53.2 | 88.5 | 622 | |
| | 2013.01-2017.04 | 5MT | F | R | Hatchback Van FWD SFJA;SFJB;SFJC;SFJD | | GDS18380 | Drive Shaft | | 25 | 23 | 53.2 | 88.5 | 920 | |
| | 2013.01-2017.04 | AT | F | L | Hatchback Van FWD SFJA;SFJB;SFJC;SFJD | | GDS18389 | Drive Shaft | | 25 | 34 | 53.3 | 87 | 566 | |
| | 2013.01-2017.04 | AT | F | R | Hatchback Van FWD SFJA;SFJB;SFJC;SFJD | | GDS18406 | Drive Shaft | | 25 | 34 | 53.3 | 87 | 974 | |
| | 2013.01-2017.04 | AT | F | R | Hatchback Van FWD SFJA;SFJB;SFJC;SFJD | | GCO18222 | Outer Joint | | 25 | 23 | 53.3 | 87 | 56 | M |
| | 2013.01-2017.04 | MT | F | L | Hatchback Van FWD SFJA;SFJB;SFJC;SFJD | | GCI18086 | Inner Joint | | 23 | 22 | 40 | 61 | 90 | |
| | 2019.04- | 6AT | F | L | Hatchback Van FWD SFJE;SFJF;SFJH;SFJJ;SFJK;SFJN;SFJP | | GDS83708 | Drive Shaft | | 25 | 22 | 53.2 | 88.5 | 658 | |
| | 2019.04- | 6AT | F | R | Hatchback Van FWD SFJE;SFJF;SFJH;SFJJ;SFJK;SFJN;SFJP | | GDS83709 | Drive Shaft | | 25 | 22 | 53.2 | 88.5 | 909 | |
| | 2019.04- | 6AT | F | L | Hatchback Van FWD SFJE;SFJF;SFJH;SFJJ;SFJK;SFJN;SFJP | | GCI82340 | Inner Joint | | 22 | 22 | 35 | 144 | 71 | |
| | 2019.04- | 6AT | F | R | Hatchback Van FWD SFJE;SFJF;SFJH;SFJJ;SFJK;SFJN;SFJP | | GCI82339 | Inner Joint | | 22 | 22 | 35 | 62 | 101.5 | |
| | 2019.04- | 6MT | F | L | Hatchback Van FWD SFJE;SFJF;SFJH;SFJJ;SFJK;SFJN;SFJP | | GDS83619 | Drive Shaft | | 25 | 23 | 53.2 | 88.5 | 629 | |
| | 2019.04- | 6MT | F | R | Hatchback Van FWD SFJE;SFJF;SFJH;SFJJ;SFJK;SFJN;SFJP | | GDS82576 | Drive Shaft | | 25 | 23 | 53.2 | 88.5 | 935 | |
| | 2019.04- | 6MT | F | L | Hatchback Van FWD SFJE;SFJF;SFJH;SFJJ;SFJK;SFJN;SFJP | | GCO18258 | Outer Joint | | 25 | 24 | 53.2 | 88.5 | 58.5 | M |
| | 2019.04- | 6MT | F | L | Hatchback Van FWD SFJE;SFJF;SFJH;SFJJ;SFJK;SFJN;SFJP | | GCI81896 | Inner Joint | | 23 | 22 | 40 | 61 | 96.5 | |
| 1.0 (92 kw) | 2012.09-2017.04 | 5MT | F | L | Hatchback Van FWD M1JE;M1JH | | GDS18405 | Drive Shaft | | 25 | 23 | 53.2 | 88.5 | 622 | |
| | 2012.09-2017.04 | 5MT | F | R | Hatchback Van FWD M1JE;M1JH | | GDS18380 | Drive Shaft | | 25 | 23 | 53.2 | 88.5 | 920 | |
| | 2012.09-2017.04 | 5MT | F | L/R | Hatchback Van FWD M1JE;M1JH | | GCO18258 | Outer Joint | | 25 | 24 | 53.2 | 88.5 | 58.5 | M |
| | 2012.09-2017.04 | MT | F | L | Hatchback Van FWD M1JE;M1JH | | GCI18086 | Inner Joint | | 23 | 22 | 40 | 61 | 90 | |
| | 2018.09- | 6MT | F | L | Hatchback Van FWD M1JL;M1JM;M1JP | | GDS83619 | Drive Shaft | | 25 | 23 | 53.2 | 88.5 | 629 | |
| | 2018.09- | 6MT | F | R | Hatchback Van FWD M1JL;M1JM;M1JP | Date To:2019.03 | GDS82576 | Drive Shaft | | 25 | 23 | 53.2 | 88.5 | 935 | |
| | 2018.09- | 6MT | F | L | Hatchback Van FWD M1JL;M1JM;M1JP | | GCO18258 | Outer Joint | | 25 | 24 | 53.2 | 88.5 | 58.5 | M |
| | 2018.09- | 6MT | F | R | Hatchback Van FWD M1JL;M1JM;M1JP | Date to:2019.03 | GCO18258 | Outer Joint | | 25 | 24 | 53.2 | 88.5 | 58.5 | M |

| | YEAR | TRANSM. | F/R | L/R | BODY STYLE & DRIVE TYPE & ENGINE | REMARKS | G-AP Ref. | PRODUCT | ABS | Technical Specifications A | B | C | H | L | P |
|---|---|---|---|---|---|---|---|---|---|---|---|---|---|---|---|
| **FORD** **Fiesta Van** | | | | | | | | | | | | | | | |
| 1.0 (92 kw) | 2018.09- | 6MT | F | L | Hatchback Van FWD M1JL;M1JM;M1JP | | GCI81896 | Inner Joint | | 23 | 22 | 40 | 61 | 96.5 | |
| | 2018.09- | 6MT | F | R | Hatchback Van FWD M1JL;M1JM;M1JP | Date to:2019.03 | GCI81896 | Inner Joint | | 23 | 22 | 40 | 61 | 96.5 | |
| | 2020.06- | 6MT | F | L | Hatchback Van FWD B7JA;B7JB;B7JC | | GDS83619 | Drive Shaft | | 25 | 23 | 53.2 | 88.5 | 629 | |
| | 2020.06- | 6MT | F | R | Hatchback Van FWD B7JA;B7JB;B7JC | | GDS82576 | Drive Shaft | | 25 | 23 | 53.2 | 88.5 | 935 | |
| | 2020.06- | 6MT | F | R | Hatchback Van FWD B7JA;B7JB;B7JC | | GCO18258 | Outer Joint | | 25 | 24 | 53.2 | 88.5 | 58.5 | M |
| | 2020.06- | 6MT | F | R | Hatchback Van FWD B7JA;B7JB;B7JC | | GCI81896 | Inner Joint | | 23 | 22 | 40 | 61 | 96.5 | |
| 1.0 (103 kw) | 2014.05-2017.04 | 5MT | F | L | Hatchback Van FWD YYJA;YYJB | | GDS18405 | Drive Shaft | | 25 | 23 | 53.2 | 88.5 | 622 | |
| | 2014.05-2017.04 | 5MT | F | R | Hatchback Van FWD YYJA;YYJB | | GDS18380 | Drive Shaft | | 25 | 23 | 53.2 | 88.5 | 920 | |
| | 2014.05-2017.04 | 5MT | F | L | Hatchback Van FWD YYJA;YYJB | | GCI18086 | Inner Joint | | 23 | 22 | 40 | 61 | 90 | |
| | 2014.05-2017.04 | MT | F | L/R | Hatchback Van FWD YYJA;YYJB | | GCO18222 | Outer Joint | | 25 | 23 | 53.3 | 87 | 56 | M |
| | 2019.04- | 6MT | F | L | Hatchback Van FWD YYJE | | GDS83619 | Drive Shaft | | 25 | 23 | 53.2 | 88.5 | 629 | |
| | 2019.04- | 6MT | F | R | Hatchback Van FWD YYJE | | GDS82576 | Drive Shaft | | 25 | 23 | 53.2 | 88.5 | 935 | |
| | 2019.04- | 6MT | F | L | Hatchback Van FWD YYJE | | GCO18258 | Outer Joint | | 25 | 24 | 53.2 | 88.5 | 58.5 | M |
| | 2019.04- | 6MT | F | L | Hatchback Van FWD YYJE | | GCI81896 | Inner Joint | | 23 | 22 | 40 | 61 | 96.5 | |
| 1.1 (52 kw) | 2019.04- | 5MT | F | L | Hatchback Van FWD XPJA;XPJB;XPJC;XPJD | | GDS82977 | Drive Shaft | | 25 | 23 | 53.2 | 88.5 | 630 | |
| | 2019.04- | 5MT | F | R | Hatchback Van FWD XPJA;XPJB;XPJC;XPJD | | GDS82978 | Drive Shaft | | 25 | 23 | 53.2 | 88.5 | 934 | |
| | 2019.04- | 5MT | F | L/R | Hatchback Van FWD XPJA;XPJB;XPJC;XPJD | | GCO82251 | Outer Joint | | 25 | 23 | 53.2 | 88.5 | 56.5 | M |
| | 2019.04- | 5MT | F | L/R | Hatchback Van FWD XPJA;XPJB;XPJC;XPJD | | GCI82094 | Inner Joint | | 23 | 22 | 40 | 61 | 98.5 | |
| 1.1 (55 kw) | 2019.04- | 5MT | F | L/R | Hatchback Van FWD FSJB | | GCI82094 | Inner Joint | | 23 | 22 | 40 | 61 | 98.5 | |
| | 2019.04- | MT | F | L | Hatchback Van FWD FSJB | | GDS82977 | Drive Shaft | | 25 | 23 | 53.2 | 88.5 | 630 | |
| | 2019.04- | MT | F | R | Hatchback Van FWD FSJB | | GDS82978 | Drive Shaft | | 25 | 23 | 53.2 | 88.5 | 934 | |
| | 2019.04- | MT | F | L/R | Hatchback Van FWD FSJB | | GCO82251 | Outer Joint | | 25 | 23 | 53.2 | 88.5 | 56.5 | M |
| 1.1 (63 kw) | 2019.04- | 5MT | F | L | Hatchback Van FWD XYJB;XYJC;XYJA;XYJD;XYJE;XYJF | | GDS82977 | Drive Shaft | | 25 | 23 | 53.2 | 88.5 | 630 | |
| | 2019.04- | 5MT | F | R | Hatchback Van FWD XYJB;XYJC;XYJA;XYJD;XYJE;XYJF | | GDS82978 | Drive Shaft | | 25 | 23 | 53.2 | 88.5 | 934 | |
| | 2019.04- | 5MT | F | L/R | Hatchback Van FWD XYJB;XYJC;XYJA;XYJD;XYJE;XYJF | | GCO82251 | Outer Joint | | 25 | 23 | 53.2 | 88.5 | 56.5 | M |
| | 2019.04- | 5MT | F | L/R | Hatchback Van FWD XYJB;XYJC;XYJA;XYJD;XYJE;XYJF | | GCI82094 | Inner Joint | | 23 | 22 | 40 | 61 | 98.5 | |
| 1.2 (44 kw) | 2008.08-2012.12 | 5MT | F | L | Hatchback Van FWD STJA;STJB | | GDS18216 | Drive Shaft | | 25 | 23 | 53.3 | 90 | 621 | |
| | 2008.08-2012.12 | 5MT | F | R | Hatchback Van FWD STJA;STJB | | GDS18201 | Drive Shaft | | 25 | 23 | 53.3 | 90 | 919 | |
| | 2008.08-2012.12 | 5MT | F | L/R | Hatchback Van FWD STJA;STJB | | GCO18009 | Outer Joint | | 25 | 22 | 53.3 | 90 | 51 | M |
| | 2008.08-2012.12 | 5MT | F | L | Hatchback Van FWD STJA;STJB | | GCI18085 | Inner Joint | | 23 | 22 | 40 | 61 | 90 | |
| 1.2 (60 kw) | 2009.01-2017.04 | 5MT | F | L | Hatchback Van FWD SNJA;SNJB;SNJC;SNJD | | GDS18216 | Drive Shaft | | 25 | 23 | 53.3 | 90 | 621 | |
| | 2009.01-2017.04 | 5MT | F | R | Hatchback Van FWD SNJA;SNJB;SNJC;SNJD | | GDS18201 | Drive Shaft | | 25 | 23 | 53.3 | 90 | 919 | |
| | 2009.01-2017.04 | 5MT | F | L | Hatchback Van FWD SNJA;SNJB;SNJC;SNJD | | GCI18085 | Inner Joint | | 23 | 22 | 40 | 61 | 90 | |
| | 2009.01-2017.04 | MT | F | L/R | Hatchback Van FWD SNJA;SNJB;SNJC;SNJD | | GCO18009 | Outer Joint | | 25 | 22 | 53.3 | 90 | 51 | M |
| 1.3 (44 kw) | 2002.05-2008.08 | 5MT | F | R | Hatchback Van FWD BAJA | | GDS18201 | Drive Shaft | | 25 | 23 | 53.3 | 90 | 919 | |
| | 2002.05-2008.08 | 5MT | F | L/R | Hatchback Van FWD BAJA | | GCO18009 | Outer Joint | | 25 | 22 | 53.3 | 90 | 51 | M |
| | 2002.05-2008.08 | 5MT | F | L | Hatchback Van FWD BAJA | | GCI18085 | Inner Joint | | 23 | 22 | 40 | 61 | 90 | |
| | 2002.05-2008.08 | | F | L | Hatchback Van FWD BAJA | | GDS18216 | Drive Shaft | | 25 | 23 | 53.3 | 90 | 621 | |
| 1.3 (51 kw) | 2003.10-2005.07 | 5MT | F | L | Hatchback Van FWD A9JA;A9JB | | GDS18216 | Drive Shaft | | 25 | 23 | 53.3 | 90 | 621 | |
| | 2003.10-2005.07 | 5MT | F | R | Hatchback Van FWD A9JA;A9JB | | GDS18201 | Drive Shaft | | 25 | 23 | 53.3 | 90 | 919 | |
| | 2003.10-2005.07 | 5MT | F | L/R | Hatchback Van FWD A9JA;A9JB | | GCO18009 | Outer Joint | | 25 | 22 | 53.3 | 90 | 51 | M |
| | 2003.10-2005.07 | 5MT | F | L | Hatchback Van FWD A9JA;A9JB | | GCI18085 | Inner Joint | | 23 | 22 | 40 | 61 | 90 | |
| 1.4 (50 kw) | 2003.10-2010.12 | 5MT | F | L | Hatchback Van FWD F6JA;F6JB | | GDS18216 | Drive Shaft | | 25 | 23 | 53.3 | 90 | 621 | |
| | 2003.10-2010.12 | 5MT | F | R | Hatchback Van FWD F6JA;F6JB | | GDS18201 | Drive Shaft | | 25 | 23 | 53.3 | 90 | 919 | |
| | 2003.10-2010.12 | 5MT | F | L/R | Hatchback Van FWD F6JA;F6JB | | GCO18001 | Outer Joint | | 25 | 20 | 52.9 | 89 | 52 | M |
| | 2003.10-2010.12 | 5MT | F | L/R | Hatchback Van FWD F6JA;F6JB | | GCO18009 | Outer Joint | | 25 | 22 | 53.3 | 90 | 51 | M |
| | 2003.10-2010.12 | 5MT | F | L | Hatchback Van FWD F6JA;F6JB | | GCI18085 | Inner Joint | | 23 | 22 | 40 | 61 | 90 | |
| | 2009.01-2017.04 | 5MT | F | L | Hatchback Van FWD F6JB;F6JD | | GDS18216 | Drive Shaft | | 25 | 23 | 53.3 | 90 | 621 | |
| | 2009.01-2017.04 | 5MT | F | R | Hatchback Van FWD F6JB;F6JD | | GDS18201 | Drive Shaft | | 25 | 23 | 53.3 | 90 | 919 | |
| | 2009.01-2017.04 | 5MT | F | L | Hatchback Van FWD F6JB;F6JD | | GCI18085 | Inner Joint | | 23 | 22 | 40 | 61 | 90 | |
| | 2009.01-2017.04 | AT/MT | F | L/R | Hatchback Van FWD F6JB;F6JD | | GCO18009 | Outer Joint | | 25 | 22 | 53.3 | 90 | 51 | M |
| 1.4 (51 kw) | 2010.07-2017.04 | 5MT | F | L | Hatchback Van FWD F6JD;KVJA | | GDS18216 | Drive Shaft | | 25 | 23 | 53.3 | 90 | 621 | |
| | 2010.07-2017.04 | 5MT | F | R | Hatchback Van FWD F6JD;KVJA | | GDS18201 | Drive Shaft | | 25 | 23 | 53.3 | 90 | 919 | |
| | 2010.07-2017.04 | 5MT | F | L/R | Hatchback Van FWD F6JD;KVJA | | GCO18009 | Outer Joint | | 25 | 22 | 53.3 | 90 | 51 | M |
| | 2010.07-2017.04 | 5MT | F | L | Hatchback Van FWD F6JD;KVJA | | GCI18085 | Inner Joint | | 23 | 22 | 40 | 61 | 90 | |
| 1.4 (59 kw) | 2002.05-2005.09 | 5MT | F | L/R | Hatchback Van FWD FXJA | | GCO18009 | Outer Joint | | 25 | 22 | 53.3 | 90 | 51 | M |
| | 2002.05-2005.09 | 5MT | F | L | Hatchback Van FWD FXJA | | GCI18085 | Inner Joint | | 23 | 22 | 40 | 61 | 90 | |
| | 2002.05-2005.09 | | F | L | Hatchback Van FWD FXJA | | GDS18216 | Drive Shaft | | 25 | 23 | 53.3 | 90 | 621 | |
| | 2002.05-2005.09 | | F | R | Hatchback Van FWD FXJA | | GDS18201 | Drive Shaft | | 25 | 23 | 53.3 | 90 | 919 | |
| 1.4 (66 kw) | 1998.08-2002.04 | MT | F | L | Hatchback Van FWD FHA | | GDS18141 | Drive Shaft | | 25 | 23 | 55.5 | 88.5 | 606 | |
| | 1998.08-2002.04 | MT | F | R | Hatchback Van FWD FHA | | GDS18032 | Drive Shaft | | 25 | 23 | 56.5 | 88.5 | 900 | |
| | 1998.08-2002.04 | MT | F | L/R | Hatchback Van FWD FHA | | GCO18004 | Outer Joint | | 25 | 22 | 56.5 | 88.5 | 53.5 | O |
| | 1998.08-2002.04 | MT | F | L | Hatchback Van FWD FHA | | GCI18053 | Inner Joint | | 23 | 22 | 40 | 61 | 91.5 | |
| 1.4 (71 kw) | 2008.10-2012.12 | 4AT/5MT | F | L/R | Hatchback Van FWD SPJA;SPJC | | GCO18222 | Outer Joint | | 25 | 23 | 53.3 | 87 | 56 | M |
| | 2008.10-2012.12 | AT | F | L | Hatchback Van FWD SPJA;SPJC | | GDS81717 | Drive Shaft | | 25 | 26 | 53.3 | 87 | 604 | |

| | YEAR | TRANSM. | F/R | L/R | BODY STYLE & DRIVE TYPE & ENGINE | REMARKS | G-AP Ref. | PRODUCT | ABS | Technical Specifications A | B | C | H | L | P |
|---|---|---|---|---|---|---|---|---|---|---|---|---|---|---|---|
| **FORD** | | | | | | | | | | | | | | | |
| **Fiesta Van** | | | | | | | | | | | | | | | |
| 1.4 (71 kw) | 2008.10-2012.12 | AT | F | R | Hatchback Van FWD SPJA;SPJC | | GDS81718 | Drive Shaft | | 25 | 26 | 53.3 | 87 | 938 | |
| | 2008.10-2012.12 | AT | F | L | Hatchback Van FWD SPJA;SPJC | | GCI81482 | Inner Joint | | 26 | 22 | 40 | 69 | 93.5 | |
| | 2008.10-2012.12 | MT | F | L | Hatchback Van FWD SPJA;SPJC | | GDS18216 | Drive Shaft | | 25 | 23 | 53.3 | 90 | 621 | |
| | 2008.10-2012.12 | MT | F | R | Hatchback Van FWD SPJA;SPJC | | GDS18201 | Drive Shaft | | 25 | 23 | 53.3 | 90 | 919 | |
| 1.5 (55 kw) | 2012.10-2017.04 | 5MT | F | L | Hatchback Van FWD UGJC;XUJA;XUJB | Date from:2013.11 | GDS18216 | Drive Shaft | | 25 | 23 | 53.3 | 90 | 621 | |
| | 2012.10-2017.04 | 5MT | F | L | Hatchback Van FWD UGJC;XUJA;XUJB | Date to:2013.10 | GDS82344 | Drive Shaft | | 25 | 23 | 53.3 | 87 | 624 | |
| | 2012.10-2017.04 | 5MT | F | R | Hatchback Van FWD UGJC;XUJA;XUJB | | GDS18201 | Drive Shaft | | 25 | 23 | 53.3 | 90 | 919 | |
| | 2012.10-2017.04 | MT | F | L/R | Hatchback Van FWD UGJC;XUJA;XUJB | | GCO18222 | Outer Joint | | 25 | 23 | 53.3 | 87 | 56 | M |
| 1.5 (63 kw) | 2019.04- | 6MT | F | L | Hatchback Van FWD XUJC;XUJD;XUJF;XUJG;XUJE;XUJL;XUJK;XUJM;XUJN | | GDS82977 | Drive Shaft | | 25 | 23 | 53.2 | 88.5 | 630 | |
| | 2019.04- | 6MT | F | L | Hatchback Van FWD XUJC;XUJD;XUJF;XUJG;XUJE;XUJL;XUJK;XUJM;XUJN | | GCO82251 | Outer Joint | | 25 | 23 | 53.2 | 88.5 | 56.5 | M |
| | 2019.04- | 6MT | F | L/R | Hatchback Van FWD XUJC;XUJD;XUJF;XUJG;XUJE;XUJL;XUJK;XUJM;XUJN | | GCI82094 | Inner Joint | | 23 | 22 | 40 | 61 | 98.5 | |
| 1.5 (70 kw) | 2015.05-2017.04 | MT | F | L | Hatchback Van FWD XVJC;XVJB | | GDS18216 | Drive Shaft | | 25 | 23 | 53.3 | 90 | 621 | |
| | 2015.05-2017.04 | MT | F | R | Hatchback Van FWD XVJC;XVJB | | GDS18201 | Drive Shaft | | 25 | 23 | 53.3 | 90 | 919 | |
| | 2015.05-2017.04 | MT | F | L/R | Hatchback Van FWD XVJC;XVJB | | GCO18222 | Outer Joint | | 25 | 23 | 53.3 | 87 | 56 | M |
| | 2015.05-2017.04 | MT | F | L | Hatchback Van FWD XVJC;XVJB | | GCI18085 | Inner Joint | | 23 | 22 | 40 | 61 | 90 | |
| 1.5 (88 kw) | 2018.09- | 6MT | F | L | Hatchback Van FWD XWJA;XWJB;XWJC | | GDS83810 | Drive Shaft | | 25 | 26 | 53.2 | 88.5 | 628 | |
| | 2018.09- | 6MT | F | R | Hatchback Van FWD XWJA;XWJB;XWJC | | GDS83805 | Drive Shaft | | 25 | 26 | 53.2 | 88.5 | 940 | |
| | 2018.09- | 6MT | F | L/R | Hatchback Van FWD XWJA;XWJB;XWJC | | GCO18258 | Outer Joint | | 25 | 24 | 53.2 | 88.5 | 58.5 | M |
| | 2018.09- | 6MT | F | L | Hatchback Van FWD XWJA;XWJB;XWJC | | GCI82375 | Inner Joint | | 26 | 22 | 40 | 61 | 89 | |
| | 2018.09- | 6MT | F | R | Hatchback Van FWD XWJA;XWJB;XWJC | | GCI82376 | Inner Joint | | 26 | 22 | 40 | 383 | 76 | |
| 1.6 (66 kw) | 2007.04-2009.09 | MT | F | L | Hatchback Van FWD HHJA;HHJB;HHJD | | GDS18216 | Drive Shaft | | 25 | 23 | 53.3 | 90 | 621 | |
| | 2007.04-2009.09 | MT | F | R | Hatchback Van FWD HHJA;HHJB;HHJD | | GDS18326 | Drive Shaft | | 25 | 23 | 53.4 | 88.5 | 915 | |
| | 2007.04-2009.09 | MT | F | L/R | Hatchback Van FWD HHJA;HHJB;HHJD | | GCO18013 | Outer Joint | | 25 | 23 | 53.4 | 88.5 | 57 | M |
| | 2009.01-2017.04 | 5MT | F | R | Hatchback Van FWD HHJD;HHJC;HHJE | | GDS18201 | Drive Shaft | | 25 | 23 | 53.3 | 90 | 919 | |
| | 2009.01-2017.04 | MT | F | L | Hatchback Van FWD HHJD;HHJC;HHJE | | GDS18216 | Drive Shaft | | 25 | 23 | 53.3 | 90 | 621 | |
| | 2009.01-2017.04 | MT | F | L/R | Hatchback Van FWD HHJD;HHJC;HHJE | | GCO18222 | Outer Joint | | 25 | 23 | 53.3 | 87 | 56 | M |
| 1.6 (70 kw) | 2010.02-2015.05 | 5MT | F | R | Hatchback Van FWD TZJA;TZJB;T3JA | | GDS18201 | Drive Shaft | | 25 | 23 | 53.3 | 90 | 919 | |
| | 2010.02-2015.05 | MT | F | L | Hatchback Van FWD TZJA;TZJB;T3JA | | GDS18216 | Drive Shaft | | 25 | 23 | 53.3 | 90 | 621 | |
| | 2010.02-2015.05 | MT | F | L/R | Hatchback Van FWD TZJA;TZJB;T3JA | | GCO18222 | Outer Joint | | 25 | 23 | 53.3 | 87 | 56 | M |
| 1.6 (88 kw) | 2008.10-2012.12 | 5MT | F | L | Hatchback Van FWD HXJA;HXJB | | GDS18216 | Drive Shaft | | 25 | 23 | 53.3 | 90 | 621 | |
| | 2008.10-2012.12 | 5MT | F | R | Hatchback Van FWD HXJA;HXJB | | GDS18201 | Drive Shaft | | 25 | 23 | 53.3 | 90 | 919 | |
| | 2008.10-2012.12 | 5MT | F | L/R | Hatchback Van FWD HXJA;HXJB | | GCO18222 | Outer Joint | | 25 | 23 | 53.3 | 87 | 56 | M |
| | 2008.10-2012.12 | 5MT | F | L | Hatchback Van FWD HXJA;HXJB | | GCI18085 | Inner Joint | | 23 | 22 | 40 | 61 | 90 | |
| 1.6 (134 kw) | 2013.03-2017.04 | 6MT | F | L | Hatchback Van FWD JTJA;JTJB | | GDS81622 | Drive Shaft | | 25 | 26 | 53.2 | 89 | 607 | |
| | 2013.03-2017.04 | 6MT | F | R | Hatchback Van FWD JTJA;JTJB | | GDS81770 | Drive Shaft | | 25 | 26 | 53.2 | 89 | 923 | |
| | 2013.03-2017.04 | 6MT | F | L | Hatchback Van FWD JTJA;JTJB | | GCO81441 | Outer Joint | | 25 | 26 | 53.2 | 89 | 61.5 | M |
| | 2013.03-2017.04 | 6MT | F | L | Hatchback Van FWD JTJA;JTJB | | GCI21028 | Inner Joint | | 26 | 32 | 40 | 61 | 112.5 | |
| 1.8 (44 kw) | 1991.09-1996.02 | AT/MT | F | L/R | Box Body/MPV FWD RTC, RTD, RTG | | GCI99075 | Inner Joint | | 23 | 22 | 40 | 61 | 93 | |
| | 1991.09-1996.02 | MT | F | L | Box Body/MPV FWD RTC, RTD, RTG | | GDS18118 | Drive Shaft | | 23 | 23 | 60 | 80 | 583.5 | |
| | 1991.09-1996.02 | MT | F | R | Box Body/MPV FWD RTC, RTD, RTG | | GDS18289 | Drive Shaft | | 23 | 23 | 60 | 80 | 857 | |
| | 1991.09-1996.02 | MT | F | L/R | Box Body/MPV FWD RTC, RTD, RTG | Date from:1994.01 | GCO18004 | Outer Joint | | 25 | 22 | 56.5 | 88.5 | 53.5 | O |
| | 1991.09-1996.02 | MT | F | L/R | Box Body/MPV FWD RTC, RTD, RTG | Date to:1994.01 | GCO18015 | Outer Joint | | 23 | 22 | 60 | 80 | 52.5 | O |
| | 1991.09-1996.02 | | F | | Box Body/MPV FWD RTC, RTD, RTG | | GCI18053 | Inner Joint | | 23 | 22 | 40 | 61 | 91.5 | |
| | 1995.09-2002.04 | AT/MT | F | L | Hatchback Van FWD RTJ/RTK | | GDS18040 | Drive Shaft | | 25 | 23 | 56.5 | 88.5 | 608 | |
| | 1995.09-2002.04 | AT/MT | F | L/R | Hatchback Van FWD RTJ/RTK | | GCO18004 | Outer Joint | | 25 | 22 | 56.5 | 88.5 | 53.5 | O |
| | 1995.09-2002.04 | MT | F | L | Hatchback Van FWD RTJ/RTK | | GDS18141 | Drive Shaft | | 25 | 23 | 55.5 | 88.5 | 606 | |
| | 1995.09-2002.04 | MT | F | R | Hatchback Van FWD RTJ/RTK | | GDS18032 | Drive Shaft | | 25 | 23 | 56.5 | 88.5 | 900 | |
| | 1995.09-2002.04 | MT | F | L | Hatchback Van FWD RTJ/RTK | Date to:1997.01 | GCI18072 | Inner Joint | | 23 | 22 | 40 | 61 | 86 | |
| | 1995.09-2002.04 | | F | L | Hatchback Van FWD RTJ/RTK | Date To:1997.01 | GDS18284 | Drive Shaft | | 25 | 23 | 56.5 | 88.5 | 585 | |
| | 1995.09-2002.04 | | F | L/R | Hatchback Van FWD RTJ/RTK | | GCO18012 | Outer Joint | | 25 | 20 | 56.5 | 88.5 | 49 | O |
| 1.8 (55 kw) | 2000.03-2003.08 | 5MT | F | R | Hatchback Van FWD RTN/RTP/RTQ | | GDS18175 | Drive Shaft | | 25 | 23 | 56.5 | 88.5 | 898 | |
| | 2000.03-2003.08 | 5MT | F | L/R | Hatchback Van FWD RTN/RTP/RTQ | | GCO18004 | Outer Joint | | 25 | 22 | 56.5 | 88.5 | 53.5 | O |
| | 2000.03-2003.08 | MT | F | L | Hatchback Van FWD RTN/RTP/RTQ | | GDS18040 | Drive Shaft | | 25 | 23 | 56.5 | 88.5 | 608 | |
| | 2000.03-2003.08 | MT | F | L | Hatchback Van FWD RTN/RTP/RTQ | | GDS18141 | Drive Shaft | | 25 | 23 | 55.5 | 88.5 | 606 | |
| | 2000.03-2003.08 | MT | F | L | Hatchback Van FWD RTN/RTP/RTQ | | GCI18053 | Inner Joint | | 23 | 22 | 40 | 61 | 91.5 | |
| **Focus** | | | | | | | | | | | | | | | |
| 1.0 (63 kw) | 2018.05-2025.11 | 6MT | F | L | Hatchback FWD SFDC | | GDS84499 | Drive Shaft | | 27 | 23 | 56 | 96.5 | 658 | |
| | 2018.05-2025.11 | 6MT | F | R | Hatchback FWD SFDC | | GDS83647 | Drive Shaft | | 27 | 23 | 56 | 96.5 | 966 | |
| | 2018.05-2025.11 | 6MT | F | L/R | Hatchback FWD SFDC | | GCO82450 | Outer Joint | | 27 | 33 | 56 | 96.5 | 58 | M |
| | 2018.05-2025.11 | 6MT | F | L/R | Hatchback FWD SFDC | | GCI82325 | Inner Joint | | 23 | 33 | 40 | 61 | 115.5 | |
| 1.0 (74 kw) | 2012.02-2017.12 | 5MT | F | L | Hatchback FWD M2DA;SFDA;SFDB;M2DB;M2DC | For light alloy rims | GDS18484 | Drive Shaft | | 27 | 23 | 62.8 | 95.5 | 651 | |
| | 2012.02-2017.12 | 5MT | F | R | Hatchback FWD M2DA;SFDA;SFDB;M2DB;M2DC | | GDS82082 | Drive Shaft | | 27 | 23 | 62.8 | 95.5 | 973 | |
| | 2012.02-2017.12 | 5MT | F | L | Hatchback FWD M2DA;SFDA;SFDB;M2DB;M2DC | | GCI18086 | Inner Joint | | 23 | 22 | 40 | 61 | 90 | |
| | 2012.02-2017.12 | MT | F | L/R | Hatchback FWD M2DA;SFDA;SFDB;M2DB;M2DC | | GCO18244 | Outer Joint | | 27 | 24 | 62.8 | 95.5 | 59 | M |
| | 2012.02-2017.12 | 5MT | F | L | Hatchback Van FWD M2DA;SFDA;SFDB;M2DB;M2DC | For light alloy rims | GDS18484 | Drive Shaft | | 27 | 23 | 62.8 | 95.5 | 651 | |

| | YEAR | TRANSM. | F/R | L/R | BODY STYLE & DRIVE TYPE & ENGINE | REMARKS | G-AP Ref. | PRODUCT | ABS | Technical Specifications A | B | C | H | L | P |
|---|---|---|---|---|---|---|---|---|---|---|---|---|---|---|---|
| **FORD** **Focus** | | | | | | | | | | | | | | | |
| 1.0 (74 kw) | 2012.02-2017.12 | 5MT | F | R | Hatchback Van FWD M2DA;SFDA;SFDB;M2DB;M2DC | | GDS82082 | Drive Shaft | | 27 | 23 | 62.8 | 95.5 | 973 | |
| | 2012.02-2017.12 | 5MT | F | L | Hatchback Van FWD M2DA;SFDA;SFDB;M2DB;M2DC | Date to:2015.07,Trans. code:B5/IB5 | GCI18086 | Inner Joint | | 23 | 22 | 40 | 61 | 90 | |
| | 2012.02-2017.12 | 5MT | F | R | Hatchback Van FWD M2DA;SFDA;SFDB;M2DB;M2DC | Date to:2015.07,Trans. code:B5/IB5 | GCI18263 | Inner Joint | | 23 | 22 | 40 | 375 | 76 | |
| | 2012.02-2017.12 | MT | F | L/R | Hatchback Van FWD M2DA;SFDA;SFDB;M2DB;M2DC | | GCO18244 | Outer Joint | | 27 | 24 | 62.8 | 95.5 | 59 | M |
| | 2012.02-2020.02 | 5MT | F | L | Saloon FWD M2DA;SFDA;SFDB;M2DB;M2DC | For light alloy rims | GDS18484 | Drive Shaft | | 27 | 23 | 62.8 | 95.5 | 651 | |
| | 2012.02-2020.02 | 5MT | F | R | Saloon FWD M2DA;SFDA;SFDB;M2DB;M2DC | | GDS82082 | Drive Shaft | | 27 | 23 | 62.8 | 95.5 | 973 | |
| | 2012.02-2020.02 | 5MT | F | L | Saloon FWD M2DA;SFDA;SFDB;M2DB;M2DC | | GCI18086 | Inner Joint | | 23 | 22 | 40 | 61 | 90 | |
| | 2012.02-2020.02 | MT | F | L/R | Saloon FWD M2DA;SFDA;SFDB;M2DB;M2DC | | GCO18244 | Outer Joint | | 27 | 24 | 62.8 | 95.5 | 59 | M |
| | 2018.01-2025.11 | 6MT | F | L | Hatchback FWD B3DA | | GDS84499 | Drive Shaft | | 27 | 23 | 56 | 96.5 | 658 | |
| | 2018.01-2025.11 | 6MT | F | R | Hatchback FWD B3DA | | GDS83647 | Drive Shaft | | 27 | 23 | 56 | 96.5 | 966 | |
| | 2018.01-2025.11 | 6MT | F | L/R | Hatchback FWD B3DA | | GCO82450 | Outer Joint | | 27 | 33 | 56 | 96.5 | 58 | M |
| | 2018.01-2025.11 | 6MT | F | L/R | Hatchback FWD B3DA | | GCI82325 | Inner Joint | | 23 | 33 | 40 | 61 | 115.5 | |
| | 2018.11-2025.11 | 6MT | F | L | Saloon FWD B3DA | | GDS84499 | Drive Shaft | | 27 | 23 | 56 | 96.5 | 658 | |
| | 2018.11-2025.11 | 6MT | F | R | Saloon FWD B3DA | | GDS83647 | Drive Shaft | | 27 | 23 | 56 | 96.5 | 966 | |
| | 2018.11-2025.11 | 6MT | F | L/R | Saloon FWD B3DA | | GCO82450 | Outer Joint | | 27 | 33 | 56 | 96.5 | 58 | M |
| | 2018.11-2025.11 | 6MT | F | L/R | Saloon FWD B3DA | | GCI82325 | Inner Joint | | 23 | 33 | 40 | 61 | 115.5 | |
| 1.0 (92 kw) | 2012.02-2017.12 | 5MT | F | L | Hatchback FWD M1DA;M1DC;M1DD | For light alloy rims | GDS18484 | Drive Shaft | | 27 | 23 | 62.8 | 95.5 | 651 | |
| | 2012.02-2017.12 | 5MT | F | R | Hatchback FWD M1DA;M1DC;M1DD | | GDS82082 | Drive Shaft | | 27 | 23 | 62.8 | 95.5 | 973 | |
| | 2012.02-2017.12 | 5MT | F | L | Hatchback FWD M1DA;M1DC;M1DD | | GCI18086 | Inner Joint | | 23 | 22 | 40 | 61 | 90 | |
| | 2012.02-2017.12 | 6AT | F | L | Hatchback FWD M1DA;M1DC;M1DD | | GDS84006 | Drive Shaft | | 27 | 22 | 62.7 | 96 | 662 | |
| | 2012.02-2017.12 | 6AT | F | R | Hatchback FWD M1DA;M1DC;M1DD | | GDS84005 | Drive Shaft | | 27 | 22 | 62.7 | 96 | 940 | |
| | 2012.02-2017.12 | 6MT | F | L | Hatchback FWD M1DA;M1DC;M1DD | | GDS18295 | Drive Shaft | | 27 | 26 | 62.7 | 96 | 637 | |
| | 2012.02-2017.12 | 6MT | F | R | Hatchback FWD M1DA;M1DC;M1DD | | GDS18294 | Drive Shaft | | 27 | 26 | 62.7 | 96 | 972 | |
| | 2012.02-2017.12 | 6MT | F | L/R | Hatchback FWD M1DA;M1DC;M1DD | | GCO18277 | Outer Joint | | 27 | 33 | 62.8 | 95.5 | 59 | M |
| | 2012.02-2017.12 | 6MT | F | R | Hatchback FWD M1DA;M1DC;M1DD | | GCI81295 | Inner Joint | | 26 | 33 | 40 | 381.5 | 83.5 | |
| | 2012.02-2017.12 | AT | F | L/R | Hatchback FWD M1DA;M1DC;M1DD | | GCO18240 | Outer Joint | | 27 | 26 | 62.7 | 96 | 62.5 | M |
| | 2012.02-2017.12 | 6AT | F | L | Hatchback Van FWD M1DA;M1DC;M1DD | | GDS84006 | Drive Shaft | | 27 | 22 | 62.7 | 96 | 662 | |
| | 2012.02-2017.12 | 6AT | F | R | Hatchback Van FWD M1DA;M1DC;M1DD | | GDS84005 | Drive Shaft | | 27 | 22 | 62.7 | 96 | 940 | |
| | 2012.02-2017.12 | 6MT | F | L | Hatchback Van FWD M1DA;M1DC;M1DD | | GDS18295 | Drive Shaft | | 27 | 26 | 62.7 | 96 | 637 | |
| | 2012.02-2017.12 | 6MT | F | R | Hatchback Van FWD M1DA;M1DC;M1DD | | GDS18294 | Drive Shaft | | 27 | 26 | 62.7 | 96 | 972 | |
| | 2012.02-2017.12 | 6MT | F | L/R | Hatchback Van FWD M1DA;M1DC;M1DD | | GCO18277 | Outer Joint | | 27 | 33 | 62.8 | 95.5 | 59 | M |
| | 2012.02-2017.12 | 6MT | F | R | Hatchback Van FWD M1DA;M1DC;M1DD | | GCI81295 | Inner Joint | | 26 | 33 | 40 | 381.5 | 83.5 | |
| | 2012.02-2017.12 | AT | F | L/R | Hatchback Van FWD M1DA;M1DC;M1DD | | GCO18240 | Outer Joint | | 27 | 26 | 62.7 | 96 | 62.5 | M |
| | 2012.02-2020.02 | 5MT | F | L | Saloon FWD M1DA;M1DC;M1DD | For light alloy rims | GDS18484 | Drive Shaft | | 27 | 23 | 62.8 | 95.5 | 651 | |
| | 2012.02-2020.02 | 5MT | F | R | Saloon FWD M1DA;M1DC;M1DD | | GDS82082 | Drive Shaft | | 27 | 23 | 62.8 | 95.5 | 973 | |
| | 2012.02-2020.02 | 5MT | F | L | Saloon FWD M1DA;M1DC;M1DD | | GCI18086 | Inner Joint | | 23 | 22 | 40 | 61 | 90 | |
| | 2012.02-2020.02 | 6AT | F | L | Saloon FWD M1DA;M1DC;M1DD | | GDS84006 | Drive Shaft | | 27 | 22 | 62.7 | 96 | 662 | |
| | 2012.02-2020.02 | 6AT | F | R | Saloon FWD M1DA;M1DC;M1DD | | GDS84005 | Drive Shaft | | 27 | 22 | 62.7 | 96 | 940 | |
| | 2012.02-2020.02 | 6MT | F | L | Saloon FWD M1DA;M1DC;M1DD | | GDS18295 | Drive Shaft | | 27 | 26 | 62.7 | 96 | 637 | |
| | 2012.02-2020.02 | 6MT | F | R | Saloon FWD M1DA;M1DC;M1DD | | GDS18294 | Drive Shaft | | 27 | 26 | 62.7 | 96 | 972 | |
| | 2012.02-2020.02 | 6MT | F | L/R | Saloon FWD M1DA;M1DC;M1DD | | GCO18277 | Outer Joint | | 27 | 33 | 62.8 | 95.5 | 59 | M |
| | 2012.02-2020.02 | 6MT | F | R | Saloon FWD M1DA;M1DC;M1DD | | GCI81295 | Inner Joint | | 26 | 33 | 40 | 381.5 | 83.5 | |
| | 2012.02-2020.02 | AT | F | L/R | Saloon FWD M1DA;M1DC;M1DD | | GCO18240 | Outer Joint | | 27 | 26 | 62.7 | 96 | 62.5 | M |
| | 2018.01-2025.11 | 6MT | F | L | Hatchback FWD B7DA | | GDS84499 | Drive Shaft | | 27 | 23 | 56 | 96.5 | 658 | |
| | 2018.01-2025.11 | 6MT | F | R | Hatchback FWD B7DA | | GDS83647 | Drive Shaft | | 27 | 23 | 56 | 96.5 | 966 | |
| | 2018.01-2025.11 | 6MT | F | L/R | Hatchback FWD B7DA | | GCO82450 | Outer Joint | | 27 | 33 | 56 | 96.5 | 58 | M |
| | 2018.01-2025.11 | 6MT | F | L/R | Hatchback FWD B7DA | | GCI82325 | Inner Joint | | 23 | 33 | 40 | 61 | 115.5 | |
| | 2018.01-2025.11 | 8AT | F | L | Hatchback FWD B7DA | | GDS83739 | Drive Shaft | | 27 | 22 | 56 | 96.5 | 686 | |
| | 2018.01-2025.11 | 8AT | F | R | Hatchback FWD B7DA | | GDS83740 | Drive Shaft | | 27 | 22 | 56 | 96.5 | 944 | |
| | 2018.01-2025.11 | 8AT | F | L/R | Hatchback FWD B7DA | | GCO82249 | Outer Joint | | 27 | 24 | 55.9 | 96.5 | 58.5 | M |
| | 2018.01-2025.11 | 8AT | F | L | Hatchback FWD B7DA | Date to:2020.07 | GCI82344 | Inner Joint | | 22 | 22 | | 152 | 86.5 | |
| | 2018.01-2025.11 | 8AT | F | L | Hatchback FWD B7DA | Date from:2020.08 | GCI83756 | Inner Joint | | 22 | 22 | | 152 | 86.5 | |
| | 2018.01-2025.11 | 8AT | F | R | Hatchback FWD B7DA | | GCI82343 | Inner Joint | | 22 | 22 | 35 | 63 | 100.5 | |
| | 2018.11-2025.11 | 6MT | F | L | Saloon FWD B7DA | | GDS84499 | Drive Shaft | | 27 | 23 | 56 | 96.5 | 658 | |
| | 2018.11-2025.11 | 6MT | F | R | Saloon FWD B7DA | | GDS83647 | Drive Shaft | | 27 | 23 | 56 | 96.5 | 966 | |
| | 2018.11-2025.11 | 6MT | F | L/R | Saloon FWD B7DA | | GCO82450 | Outer Joint | | 27 | 33 | 56 | 96.5 | 58 | M |
| | 2018.11-2025.11 | 6MT | F | L/R | Saloon FWD B7DA | | GCI82325 | Inner Joint | | 23 | 33 | 40 | 61 | 115.5 | |
| | 2018.11-2025.11 | 8AT | F | L | Saloon FWD B7DA | | GDS83739 | Drive Shaft | | 27 | 22 | 56 | 96.5 | 686 | |
| | 2018.11-2025.11 | 8AT | F | R | Saloon FWD B7DA | | GDS83740 | Drive Shaft | | 27 | 22 | 56 | 96.5 | 944 | |
| | 2018.11-2025.11 | 8AT | F | L/R | Saloon FWD B7DA | | GCO82249 | Outer Joint | | 27 | 24 | 55.9 | 96.5 | 58.5 | M |
| | 2018.11-2025.11 | 8AT | F | L | Saloon FWD B7DA | Date to:2020.07 | GCI82344 | Inner Joint | | 22 | 22 | | 152 | 86.5 | |
| | 2018.11-2025.11 | 8AT | F | L | Saloon FWD B7DA | Date from:2020.08 | GCI83756 | Inner Joint | | 22 | 22 | | 152 | 86.5 | |
| | 2018.11-2025.11 | 8AT | F | R | Saloon FWD B7DA | | GCI82343 | Inner Joint | | 22 | 22 | 35 | 63 | 100.5 | |
| | 2020.06-2025.11 | 6MT | F | L | Hatchback FWD B7DA;R0DB;B7DC | | GDS84499 | Drive Shaft | | 27 | 23 | 56 | 96.5 | 658 | |
| | 2020.06-2025.11 | 6MT | F | R | Hatchback FWD B7DA;R0DB;B7DC | | GDS83647 | Drive Shaft | | 27 | 23 | 56 | 96.5 | 966 | |

| | YEAR | TRANSM. | F/R | L/R | BODY STYLE & DRIVE TYPE & ENGINE | REMARKS | G-AP Ref. | PRODUCT | ABS | Technical Specifications | | | | | |
|---|---|---|---|---|---|---|---|---|---|---|---|---|---|---|---|
| | | | | | | | | | | A | B | C | H | L | P |
| **FORD** **Focus** | | | | | | | | | | | | | | | |
| 1.0 (92 kw) | 2020.06-2025.11 | 6MT | F | L/R | Hatchback FWD B7DA;R0DB;B7DC | | GCO82450 | Outer Joint | | 27 | 33 | 56 | 96.5 | 58 | M |
| | 2020.06-2025.11 | 6MT | F | L/R | Hatchback FWD B7DA;R0DB;B7DC | | GCI82325 | Inner Joint | | 23 | 33 | 40 | 61 | 115.5 | |
| | 2020.06-2025.11 | 7DCT | F | R | Hatchback FWD B7DA;R0DB;B7DC | | GCO82450 | Outer Joint | | 27 | 33 | 56 | 96.5 | 58 | M |
| | 2020.06-2025.11 | 8AT | F | L | Hatchback FWD B7DA;R0DB;B7DC | Date to:2022.09 | GDS83739 | Drive Shaft | | 27 | 22 | 56 | 96.5 | 686 | |
| | 2020.06-2025.11 | 8AT | F | R | Hatchback FWD B7DA;R0DB;B7DC | | GDS83740 | Drive Shaft | | 27 | 22 | 56 | 96.5 | 944 | |
| | 2020.06-2025.11 | 8AT | F | L/R | Hatchback FWD B7DA;R0DB;B7DC | | GCO82249 | Outer Joint | | 27 | 24 | 55.9 | 96.5 | 58.5 | M |
| | 2020.06-2025.11 | 8AT | F | L | Hatchback FWD B7DA;R0DB;B7DC | Date to:2020.07 | GCI82344 | Inner Joint | | 22 | 22 | | 152 | 86.5 | |
| | 2020.06-2025.11 | 8AT | F | L | Hatchback FWD B7DA;R0DB;B7DC | Date from:2020.08 | GCI83756 | Inner Joint | | 22 | 22 | | 152 | 86.5 | |
| | 2020.06-2025.11 | 8AT | F | R | Hatchback FWD B7DA;R0DB;B7DC | | GCI82343 | Inner Joint | | 22 | 22 | 35 | 63 | 100.5 | |
| | 2021.01-2025.11 | 6MT | F | L | Hatchback FWD B7DA;R0DB | | GDS84499 | Drive Shaft | | 27 | 23 | 56 | 96.5 | 658 | |
| | 2021.01-2025.11 | 6MT | F | R | Hatchback FWD B7DA;R0DB | | GDS83647 | Drive Shaft | | 27 | 23 | 56 | 96.5 | 966 | |
| | 2021.01-2025.11 | 6MT | F | L/R | Hatchback FWD B7DA;R0DB | | GCO82450 | Outer Joint | | 27 | 33 | 56 | 96.5 | 58 | M |
| | 2021.01-2025.11 | 6MT | F | L/R | Hatchback FWD B7DA;R0DB | | GCI82325 | Inner Joint | | 23 | 33 | 40 | 61 | 115.5 | |
| | 2021.01-2025.11 | 8AT | F | L | Hatchback FWD B7DA;R0DB | Date to:2022.09 | GDS83739 | Drive Shaft | | 27 | 22 | 56 | 96.5 | 686 | |
| | 2021.01-2025.11 | 8AT | F | R | Hatchback FWD B7DA;R0DB | | GDS83740 | Drive Shaft | | 27 | 22 | 56 | 96.5 | 944 | |
| | 2021.01-2025.11 | 8AT | F | R | Hatchback FWD B7DA;R0DB | | GCI82343 | Inner Joint | | 22 | 22 | 35 | 63 | 100.5 | |
| | 2022.01-2025.11 | 6MT | F | L | Hatchback FWD B7DA;R0DA | | GDS84499 | Drive Shaft | | 27 | 23 | 56 | 96.5 | 658 | |
| | 2022.01-2025.11 | 6MT | F | R | Hatchback FWD B7DA;R0DA | | GDS83647 | Drive Shaft | | 27 | 23 | 56 | 96.5 | 966 | |
| | 2022.01-2025.11 | 6MT | F | L/R | Hatchback FWD B7DA;R0DA | | GCO82450 | Outer Joint | | 27 | 33 | 56 | 96.5 | 58 | M |
| | 2022.01-2025.11 | 6MT | F | L/R | Hatchback FWD B7DA;R0DA | | GCI82325 | Inner Joint | | 23 | 33 | 40 | 61 | 115.5 | |
| | 2022.01-2025.11 | 8AT | F | L | Hatchback FWD B7DA;R0DA | | GDS83739 | Drive Shaft | | 27 | 22 | 56 | 96.5 | 686 | |
| | 2022.01-2025.11 | 8AT | F | R | Hatchback FWD B7DA;R0DA | | GDS83740 | Drive Shaft | | 27 | 22 | 56 | 96.5 | 944 | |
| | 2022.01-2025.11 | 8AT | F | L/R | Hatchback FWD B7DA;R0DA | | GCO82249 | Outer Joint | | 27 | 24 | 55.9 | 96.5 | 58.5 | M |
| | 2022.01-2025.11 | 8AT | F | L | Hatchback FWD B7DA;R0DA | Date to:2022.09 | GCI82344 | Inner Joint | | 22 | 22 | | 152 | 86.5 | |
| | 2022.01-2025.11 | 8AT | F | L | Hatchback FWD B7DA;R0DA | Date from:2020.08 | GCI83756 | Inner Joint | | 22 | 22 | | 152 | 86.5 | |
| | 2022.01-2025.11 | 8AT | F | R | Hatchback FWD B7DA;R0DA | | GCI82343 | Inner Joint | | 22 | 22 | 35 | 63 | 100.5 | |
| 1.0 (103 kw) | 2017.10-2020.02 | 6MT | F | L | Hatchback FWD M1DH | | GDS18295 | Drive Shaft | | 27 | 26 | 62.7 | 96 | 637 | |
| | 2017.10-2020.02 | 6MT | F | R | Hatchback FWD M1DH | | GDS18294 | Drive Shaft | | 27 | 26 | 62.7 | 96 | 972 | |
| | 2017.10-2020.02 | 6MT | F | L/R | Hatchback FWD M1DH | | GCO18277 | Outer Joint | | 27 | 33 | 62.8 | 95.5 | 59 | M |
| | 2017.10-2020.02 | 6MT | F | R | Hatchback FWD M1DH | | GCI81295 | Inner Joint | | 26 | 33 | 40 | 381.5 | 83.5 | |
| | 2017.10-2020.02 | 6MT | F | L | Saloon FWD M1DH | | GDS18295 | Drive Shaft | | 27 | 26 | 62.7 | 96 | 637 | |
| | 2017.10-2020.02 | 6MT | F | R | Saloon FWD M1DH | | GDS18294 | Drive Shaft | | 27 | 26 | 62.7 | 96 | 972 | |
| | 2017.10-2020.02 | 6MT | F | L/R | Saloon FWD M1DH | | GCO18277 | Outer Joint | | 27 | 33 | 62.8 | 95.5 | 59 | M |
| 1.0 (114 kw) | 2020.06-2025.11 | 6MT | F | L | Hatchback FWD M0DC | | GDS84499 | Drive Shaft | | 27 | 23 | 56 | 96.5 | 658 | |
| | 2020.06-2025.11 | 6MT | F | R | Hatchback FWD M0DC | | GDS83647 | Drive Shaft | | 27 | 23 | 56 | 96.5 | 966 | |
| | 2020.06-2025.11 | 6MT | F | L/R | Hatchback FWD M0DC | | GCO82450 | Outer Joint | | 27 | 33 | 56 | 96.5 | 58 | M |
| | 2020.06-2025.11 | 6MT | F | L/R | Hatchback FWD M0DC | | GCI82325 | Inner Joint | | 23 | 33 | 40 | 61 | 115.5 | |
| | 2020.06-2025.11 | 7DCT | F | R | Hatchback FWD M0DC | | GCO82450 | Outer Joint | | 27 | 33 | 56 | 96.5 | 58 | M |
| 1.4 (55 kw) | 1998.08-2004.07 | AT/MT | F | L/R | Hatchback FWD FXDA/FXDB/FXDC/FXDD | Date to:2004.07 | GCO18003 | Outer Joint | | 25 | 21 | 53.3 | 89 | 53 | M |
| | 1998.08-2004.07 | AT/MT | F | L/R | Hatchback FWD FXDA/FXDB/FXDC/FXDD | Date to:2004.07 | GCO18013 | Outer Joint | | 25 | 23 | 53.4 | 88.5 | 57 | M |
| | 1998.08-2004.07 | MT | F | L | Hatchback FWD FXDA/FXDB/FXDC/FXDD | | GDS18042 | Drive Shaft | | 25 | 23 | 53.4 | 88.5 | 633 | |
| | 1998.08-2004.07 | MT | F | R | Hatchback FWD FXDA/FXDB/FXDC/FXDD | | GDS18046 | Drive Shaft | | 25 | 23 | 53.4 | 88.5 | 934 | |
| | 1998.08-2005.03 | AT/MT | F | L/R | Saloon FWD FXDA/FXDB/FXDC/FXDD | | GCO18003 | Outer Joint | | 25 | 21 | 53.3 | 89 | 53 | M |
| | 1998.08-2005.03 | AT/MT | F | L/R | Saloon FWD FXDA/FXDB/FXDC/FXDD | | GCO18013 | Outer Joint | | 25 | 23 | 53.4 | 88.5 | 57 | M |
| | 1998.08-2005.03 | MT | F | L | Saloon FWD FXDA/FXDB/FXDC/FXDD | | GDS18042 | Drive Shaft | | 25 | 23 | 53.4 | 88.5 | 633 | |
| | 1998.08-2005.03 | MT | F | R | Saloon FWD FXDA/FXDB/FXDC/FXDD | | GDS18046 | Drive Shaft | | 25 | 23 | 53.4 | 88.5 | 934 | |
| | 1998.08-2005.03 | MT | F | L | Saloon FWD FXDA/FXDB/FXDC/FXDD | | GCI18022 | Inner Joint | | 23 | 21 | 40 | 61 | 88 | |
| | 1998.10-1999.09 | | F | L | Hatchback RWD FXDA | | GDS18042 | Drive Shaft | | 25 | 23 | 53.4 | 88.5 | 633 | |
| | 1998.10-1999.09 | | F | R | Hatchback RWD FXDA | | GDS18046 | Drive Shaft | | 25 | 23 | 53.4 | 88.5 | 934 | |
| 1.4 (59 kw) | 2004.07-2012.09 | 5MT | F | L | Hatchback FWD ASDA;ASDB | Inner teeth of wheel side:24 | GDS18261 | Drive Shaft | | 36 | 23 | 55.8 | 48 | 600 | |
| | 2004.07-2012.09 | 5MT | F | L | Hatchback FWD ASDA;ASDB | Inner teeth of wheel side:23 | GDS18359 | Drive Shaft | | 36 | 23 | 56 | 48 | 594 | |
| | 2004.07-2012.09 | 5MT | F | R | Hatchback FWD ASDA;ASDB | Inner teeth of wheel side:24 | GDS18262 | Drive Shaft | | 36 | 23 | 55.8 | 48 | 905 | |
| | 2004.07-2012.09 | 5MT | F | R | Hatchback FWD ASDA;ASDB | Inner teeth of wheel side:23 | GDS18358 | Drive Shaft | | 36 | 23 | 56 | 48 | 899 | |
| | 2004.07-2012.09 | 5MT | F | L/R | Hatchback FWD ASDA;ASDB | | GCO99129 | Outer Joint | | 36 | 24 | 56 | 48 | 57 | M |
| | 2004.07-2012.09 | 5MT | F | R | Hatchback FWD ASDA;ASDB | | GCI18087 | Inner Joint | | 23 | 22 | 40 | 371 | 78.5 | |
| | 2004.07-2012.09 | MT | F | L | Hatchback FWD ASDA;ASDB | | GDS18189 | Drive Shaft | | 36 | 23 | 56 | 48 | 601 | |
| | 2004.07-2012.09 | MT | F | R | Hatchback FWD ASDA;ASDB | | GDS18206 | Drive Shaft | | 36 | 23 | 56 | 48 | 906 | |
| | 2004.07-2012.09 | MT | F | R | Hatchback FWD ASDA;ASDB | | GDS18337 | Drive Shaft | | 36 | 23 | 51.6 | 48 | 908 | |
| | 2004.07-2012.09 | MT | F | L | Hatchback FWD ASDA;ASDB | | GCO18264 | Outer Joint | | 36 | 25 | 51.6 | 48 | 58 | O |
| | 2004.07-2012.09 | MT | F | L | Hatchback FWD ASDA;ASDB | | GCI18168 | Inner Joint | | 23 | 22 | 40 | 61 | 90 | |
| | 2004.07-2012.09 | | F | L | Hatchback FWD ASDA;ASDB | | GDS18336 | Drive Shaft | | 36 | 23 | 51.6 | 48 | 600 | |
| | 2004.07-2012.09 | | F | L/R | Hatchback FWD ASDA;ASDB | | GCO62039 | Outer Joint | | 36 | 24 | 55.8 | 48 | 57 | M |
| | 2004.07-2012.09 | | F | L | Hatchback FWD ASDA;ASDB | | GCI18086 | Inner Joint | | 23 | 22 | 40 | 61 | 90 | |
| | 2005.04-2012.09 | 5MT | F | L | Saloon FWD ASDA;ASDB | Inner teeth of wheel side:24 | GDS18261 | Drive Shaft | | 36 | 23 | 55.8 | 48 | 600 | |
| | 2005.04-2012.09 | 5MT | F | L | Saloon FWD ASDA;ASDB | Inner teeth of wheel side:23 | GDS18359 | Drive Shaft | | 36 | 23 | 56 | 48 | 594 | |

| | YEAR | TRANSM. | F/R | L/R | BODY STYLE & DRIVE TYPE & ENGINE | REMARKS | G-AP Ref. | PRODUCT | ABS | Technical Specifications | | | | | |
|---|---|---|---|---|---|---|---|---|---|---|---|---|---|---|---|
| | | | | | | | | | | A | B | C | H | L | P |
| **FORD** | | | | | | | | | | | | | | | |
| **Focus** | | | | | | | | | | | | | | | |
| 1.4 (59 kw) | 2005.04-2012.09 | 5MT | F | R | Saloon FWD ASDA;ASDB | Inner teeth of wheel side:24 | GDS18262 | Drive Shaft | | 36 | 23 | 55.8 | 48 | 905 | |
| | 2005.04-2012.09 | 5MT | F | R | Saloon FWD ASDA;ASDB | Inner teeth of wheel side:23 | GDS18358 | Drive Shaft | | 36 | 23 | 56 | 48 | 899 | |
| | 2005.04-2012.09 | 5MT | F | L/R | Saloon FWD ASDA;ASDB | | GCO99129 | Outer Joint | | 36 | 24 | 56 | 48 | 57 | M |
| | 2005.04-2012.09 | 5MT | F | R | Saloon FWD ASDA;ASDB | | GCI18087 | Inner Joint | | 23 | 22 | 40 | 371 | 78.5 | |
| | 2005.04-2012.09 | MT | F | L | Saloon FWD ASDA;ASDB | | GDS18189 | Drive Shaft | | 36 | 23 | 56 | 48 | 601 | |
| | 2005.04-2012.09 | MT | F | R | Saloon FWD ASDA;ASDB | | GDS18206 | Drive Shaft | | 36 | 23 | 56 | 48 | 906 | |
| | 2005.04-2012.09 | MT | F | R | Saloon FWD ASDA;ASDB | | GDS18337 | Drive Shaft | | 36 | 23 | 51.6 | 48 | 908 | |
| | 2005.04-2012.09 | MT | F | L | Saloon FWD ASDA;ASDB | | GCO18264 | Outer Joint | | 36 | 25 | 51.6 | 48 | 58 | O |
| | 2005.04-2012.09 | MT | F | L | Saloon FWD ASDA;ASDB | | GCI18168 | Inner Joint | | 23 | 22 | 40 | 61 | 90 | |
| | 2005.04-2012.09 | | F | L | Saloon FWD ASDA;ASDB | | GDS18336 | Drive Shaft | | 36 | 23 | 51.6 | 48 | 600 | |
| | 2005.04-2012.09 | | F | L/R | Saloon FWD ASDA;ASDB | | GCO62039 | Outer Joint | | 36 | 24 | 55.8 | 48 | 57 | M |
| | 2005.04-2012.09 | | F | L | Saloon FWD ASDA;ASDB | | GCI18086 | Inner Joint | | 23 | 22 | 40 | 61 | 90 | |
| 1.5 (70 kw) | 2014.09-2017.12 | 6MT | F | L | Hatchback Van FWD XXDA;XXDC;XXDD | | GDS18295 | Drive Shaft | | 27 | 26 | 62.7 | 96 | 637 | |
| | 2014.09-2017.12 | 6MT | F | R | Hatchback Van FWD XXDA;XXDC;XXDD | | GDS18294 | Drive Shaft | | 27 | 26 | 62.7 | 96 | 972 | |
| | 2014.09-2017.12 | 6MT | F | L | Hatchback Van FWD XXDA;XXDC;XXDD | Date From:2014.10,Trans. code:B6 | GCI21028 | Inner Joint | | 26 | 32 | 40 | 61 | 112.5 | |
| | 2014.09-2017.12 | 6MT | F | R | Hatchback Van FWD XXDA;XXDC;XXDD | | GCI81338 | Inner Joint | | 26 | 32 | 40 | 383 | 99 | |
| | 2014.09-2017.12 | MT | F | L/R | Hatchback Van FWD XXDA;XXDC;XXDD | Date from:2015.01 | GCO18240 | Outer Joint | | 27 | 26 | 62.7 | 96 | 62.5 | M |
| | 2014.09-2018.04 | 6MT | F | L | Hatchback FWD XXDA;XXDC;XXDD | | GDS18295 | Drive Shaft | | 27 | 26 | 62.7 | 96 | 637 | |
| | 2014.09-2018.04 | 6MT | F | R | Hatchback FWD XXDA;XXDC;XXDD | | GDS18294 | Drive Shaft | | 27 | 26 | 62.7 | 96 | 972 | |
| | 2014.09-2018.04 | 6MT | F | L | Hatchback FWD XXDA;XXDC;XXDD | Date From:2014.10,Trans. code:B6 | GCI21028 | Inner Joint | | 26 | 32 | 40 | 61 | 112.5 | |
| | 2014.09-2018.04 | 6MT | F | R | Hatchback FWD XXDA;XXDC;XXDD | | GCI81338 | Inner Joint | | 26 | 32 | 40 | 383 | 99 | |
| | 2014.09-2018.04 | MT | F | L/R | Hatchback FWD XXDA;XXDC;XXDD | | GCO18240 | Outer Joint | | 27 | 26 | 62.7 | 96 | 62.5 | M |
| | 2014.11-2020.02 | 6MT | F | L | Saloon FWD XXDA;XXDC;XXDD | | GDS18295 | Drive Shaft | | 27 | 26 | 62.7 | 96 | 637 | |
| | 2014.11-2020.02 | 6MT | F | R | Saloon FWD XXDA;XXDC;XXDD | | GDS18294 | Drive Shaft | | 27 | 26 | 62.7 | 96 | 972 | |
| | 2014.11-2020.02 | 6MT | F | L | Saloon FWD XXDA;XXDC;XXDD | | GCI21028 | Inner Joint | | 26 | 32 | 40 | 61 | 112.5 | |
| | 2014.11-2020.02 | 6MT | F | R | Saloon FWD XXDA;XXDC;XXDD | | GCI81338 | Inner Joint | | 26 | 32 | 40 | 383 | 99 | |
| | 2014.11-2020.02 | MT | F | L/R | Saloon FWD XXDA;XXDC;XXDD | | GCO18240 | Outer Joint | | 27 | 26 | 62.7 | 96 | 62.5 | M |
| | 2018.01-2025.11 | 6MT | F | L | Hatchback FWD Z2DA | | GDS84581 | Drive Shaft | | 27 | 28 | 56 | 96.5 | 638 | |
| | 2018.01-2025.11 | 6MT | F | R | Hatchback FWD Z2DA | | GDS84578 | Drive Shaft | | 27 | 28 | 56 | 96.5 | 990 | |
| | 2018.01-2025.11 | 6MT | F | L/R | Hatchback FWD Z2DA | | GCO82450 | Outer Joint | | 27 | 33 | 56 | 96.5 | 58 | M |
| | 2018.01-2025.11 | 6MT | F | L | Hatchback FWD Z2DA | For OE no.:JX673B437GAC/JX673B437GAD | GCI82870 | Inner Joint | | 28 | 33 | 40 | 64.5 | 111 | |
| | 2018.01-2025.11 | 6MT | F | R | Hatchback FWD Z2DA | For OE no.:JX673B436GAC/JX673B436GAD | GCI82869 | Inner Joint | | 28 | 33 | 40 | 64 | 138 | |
| | 2018.11-2025.11 | 6MT | F | L | Saloon FWD Z2DA | | GDS84581 | Drive Shaft | | 27 | 28 | 56 | 96.5 | 638 | |
| | 2018.11-2025.11 | 6MT | F | R | Saloon FWD Z2DA | | GDS84578 | Drive Shaft | | 27 | 28 | 56 | 96.5 | 990 | |
| | 2018.11-2025.11 | 6MT | F | L/R | Saloon FWD Z2DA | | GCO82450 | Outer Joint | | 27 | 33 | 56 | 96.5 | 58 | M |
| | 2018.11-2025.11 | 6MT | F | L | Saloon FWD Z2DA | For OE no.:JX673B437GAC/JX673B437GAD | GCI82870 | Inner Joint | | 28 | 33 | 40 | 64.5 | 111 | |
| | 2018.11-2025.11 | 6MT | F | R | Saloon FWD Z2DA | For OE no.:JX673B436GAC/JX673B436GAD | GCI82869 | Inner Joint | | 28 | 33 | 40 | 64 | 138 | |
| 1.5 (77 kw) | 2014.09-2017.12 | 6MT | F | L | Hatchback FWD XXDB;AEDA | | GDS18295 | Drive Shaft | | 27 | 26 | 62.7 | 96 | 637 | |
| | 2014.09-2017.12 | 6MT | F | R | Hatchback FWD XXDB;AEDA | | GDS18294 | Drive Shaft | | 27 | 26 | 62.7 | 96 | 972 | |
| | 2014.09-2017.12 | 6MT | F | L | Hatchback FWD XXDB;AEDA | Date From:2014.10,Trans. code:B6 | GCI21028 | Inner Joint | | 26 | 32 | 40 | 61 | 112.5 | |
| | 2014.09-2017.12 | 6MT | F | R | Hatchback FWD XXDB;AEDA | | GCI81338 | Inner Joint | | 26 | 32 | 40 | 383 | 99 | |
| | 2014.09-2017.12 | MT | F | L/R | Hatchback FWD XXDB;AEDA | | GCO18240 | Outer Joint | | 27 | 26 | 62.7 | 96 | 62.5 | M |
| | 2014.09-2017.12 | 6MT | F | L | Hatchback Van FWD XXDB;AEDA | | GDS18295 | Drive Shaft | | 27 | 26 | 62.7 | 96 | 637 | |
| | 2014.09-2017.12 | 6MT | F | R | Hatchback Van FWD XXDB;AEDA | | GDS18294 | Drive Shaft | | 27 | 26 | 62.7 | 96 | 972 | |
| | 2014.09-2017.12 | 6MT | F | L | Hatchback Van FWD XXDB;AEDA | Date From:2014.10,Trans. code:B6 | GCI21028 | Inner Joint | | 26 | 32 | 40 | 61 | 112.5 | |
| | 2014.09-2017.12 | 6MT | F | R | Hatchback Van FWD XXDB;AEDA | | GCI81338 | Inner Joint | | 26 | 32 | 40 | 383 | 99 | |
| | 2014.09-2017.12 | MT | F | L/R | Hatchback Van FWD XXDB;AEDA | Date from:2015.01 | GCO18240 | Outer Joint | | 27 | 26 | 62.7 | 96 | 62.5 | M |
| | 2014.11-2020.02 | 6MT | F | L | Saloon FWD XXDB;AEDA | | GDS18295 | Drive Shaft | | 27 | 26 | 62.7 | 96 | 637 | |
| | 2014.11-2020.02 | 6MT | F | R | Saloon FWD XXDB;AEDA | | GDS18294 | Drive Shaft | | 27 | 26 | 62.7 | 96 | 972 | |
| | 2014.11-2020.02 | 6MT | F | L | Saloon FWD XXDB;AEDA | | GCI21028 | Inner Joint | | 26 | 32 | 40 | 61 | 112.5 | |
| | 2014.11-2020.02 | 6MT | F | R | Saloon FWD XXDB;AEDA | | GCI81338 | Inner Joint | | 26 | 32 | 40 | 383 | 99 | |
| | 2014.11-2020.02 | MT | F | L/R | Saloon FWD XXDB;AEDA | | GCO18240 | Outer Joint | | 27 | 26 | 62.7 | 96 | 62.5 | M |
| 1.5 (85 kw) | 2022.08-2025.11 | 8AT | F | L | Hatchback FWD Y9DA | | GDS82855 | Drive Shaft | | 27 | 35 | 55.9 | 96.5 | 686 | |
| | 2022.08-2025.11 | 8AT | F | R | Hatchback FWD Y9DA | | GDS82856 | Drive Shaft | | 27 | 35 | 55.9 | 96.5 | 943 | |
| | 2022.08-2025.11 | 8AT | F | L/R | Hatchback FWD Y9DA | | GCO82249 | Outer Joint | | 27 | 24 | 55.9 | 96.5 | 58.5 | M |
| | 2022.08-2025.11 | 8AT | F | L | Hatchback FWD Y9DA | | GCI82087 | Inner Joint | | 35 | 22 | 38 | 153 | 85.5 | |
| | 2022.08-2025.11 | 8AT | F | R | Hatchback FWD Y9DA | | GCI82086 | Inner Joint | | 35 | 22 | 38 | 57.5 | 113 | |
| | 2024.05-2025.11 | 8AT | F | L | Saloon FWD Y9DA | | GDS82855 | Drive Shaft | | 27 | 35 | 55.9 | 96.5 | 686 | |
| | 2024.05-2025.11 | 8AT | F | R | Saloon FWD Y9DA | | GDS82856 | Drive Shaft | | 27 | 35 | 55.9 | 96.5 | 943 | |
| | 2024.05-2025.11 | 8AT | F | L/R | Saloon FWD Y9DA | | GCO82249 | Outer Joint | | 27 | 24 | 55.9 | 96.5 | 58.5 | M |
| | 2024.05-2025.11 | 8AT | F | L | Saloon FWD Y9DA | | GCI82087 | Inner Joint | | 35 | 22 | 38 | 153 | 85.5 | |
| | 2024.05-2025.11 | 8AT | F | R | Saloon FWD Y9DA | | GCI82086 | Inner Joint | | 35 | 22 | 38 | 57.5 | 113 | |
| 1.5 (88 kw) | 2014.09-2017.12 | 6DCT | F | L | Hatchback Van FWD XWDA;XWDB;XWDC;XWDD;XWDE | | GDS81479 | Drive Shaft | | 27 | 28 | 63.1 | 96 | 623 | |
| | 2014.09-2017.12 | 6DCT | F | R | Hatchback Van FWD XWDA;XWDB;XWDC;XWDD;XWDE | With vibration damper | GDS81480 | Drive Shaft | | 27 | 28 | 63.1 | 96 | 967 | |
| | 2014.09-2017.12 | 6DCT | F | L/R | Hatchback Van FWD XWDA;XWDB;XWDC;XWDD;XWDE | | GCO18252 | Outer Joint | | 27 | 26 | 63.1 | 96 | 64 | I |

| | YEAR | TRANSM. | F/R | L/R | BODY STYLE & DRIVE TYPE & ENGINE | REMARKS | G-AP Ref. | PRODUCT | ABS | Technical Specifications A | B | C | H | L | P |
|---|---|---|---|---|---|---|---|---|---|---|---|---|---|---|---|
| **FORD** **Focus** | | | | | | | | | | | | | | | |
| 1.5 (88 kw) | 2014.09-2017.12 | 6DCT | F | L | Hatchback Van FWD XWDA;XWDB;XWDC;XWDD;XWDE | | GCI62053 | Inner Joint | | 28 | 26 | 34 | 79.5 | 91 | |
| | 2014.09-2017.12 | 6MT | F | L | Hatchback Van FWD XWDA;XWDB;XWDC;XWDD;XWDE | | GDS18295 | Drive Shaft | | 27 | 26 | 62.7 | 96 | 637 | |
| | 2014.09-2017.12 | 6MT | F | R | Hatchback Van FWD XWDA;XWDB;XWDC;XWDD;XWDE | | GDS18294 | Drive Shaft | | 27 | 26 | 62.7 | 96 | 972 | |
| | 2014.09-2017.12 | 6MT | F | L | Hatchback Van FWD XWDA;XWDB;XWDC;XWDD;XWDE | | GCO18240 | Outer Joint | | 27 | 26 | 62.7 | 96 | 62.5 | M |
| | 2014.09-2017.12 | 6MT | F | L | Hatchback Van FWD XWDA;XWDB;XWDC;XWDD;XWDE | Date from:2014.10,Trans. code:B6 | GCI21028 | Inner Joint | | 26 | 32 | 40 | 61 | 112.5 | |
| | 2014.09-2017.12 | 6MT | F | R | Hatchback Van FWD XWDA;XWDB;XWDC;XWDD;XWDE | | GCI81338 | Inner Joint | | 26 | 32 | 40 | 383 | 99 | |
| | 2014.09-2018.04 | 6DCT | F | L | Hatchback FWD XWDA;XWDB;XWDC;XWDD;XWDE | | GDS81479 | Drive Shaft | | 27 | 28 | 63.1 | 96 | 623 | |
| | 2014.09-2018.04 | 6DCT | F | R | Hatchback FWD XWDA;XWDB;XWDC;XWDD;XWDE | With vibration damper | GDS81480 | Drive Shaft | | 27 | 28 | 63.1 | 96 | 967 | |
| | 2014.09-2018.04 | 6DCT | F | L/R | Hatchback FWD XWDA;XWDB;XWDC;XWDD;XWDE | | GCO18252 | Outer Joint | | 27 | 26 | 63.1 | 96 | 64 | I |
| | 2014.09-2018.04 | 6DCT | F | L | Hatchback FWD XWDA;XWDB;XWDC;XWDD;XWDE | | GCI62053 | Inner Joint | | 28 | 26 | 34 | 79.5 | 91 | |
| | 2014.09-2018.04 | 6MT | F | L | Hatchback FWD XWDA;XWDB;XWDC;XWDD;XWDE | | GDS18295 | Drive Shaft | | 27 | 26 | 62.7 | 96 | 637 | |
| | 2014.09-2018.04 | 6MT | F | R | Hatchback FWD XWDA;XWDB;XWDC;XWDD;XWDE | | GDS18294 | Drive Shaft | | 27 | 26 | 62.7 | 96 | 972 | |
| | 2014.09-2018.04 | 6MT | F | L | Hatchback FWD XWDA;XWDB;XWDC;XWDD;XWDE | | GCO18240 | Outer Joint | | 27 | 26 | 62.7 | 96 | 62.5 | M |
| | 2014.09-2018.04 | 6MT | F | L | Hatchback FWD XWDA;XWDB;XWDC;XWDD;XWDE | Date from:2014.10,Trans. code:B6 | GCI21028 | Inner Joint | | 26 | 32 | 40 | 61 | 112.5 | |
| | 2014.09-2018.04 | 6MT | F | R | Hatchback FWD XWDA;XWDB;XWDC;XWDD;XWDE | | GCI81338 | Inner Joint | | 26 | 32 | 40 | 383 | 99 | |
| | 2014.11-2020.02 | 6DCT | F | L | Saloon FWD XWDA;XWDB;XWDC;XWDD;XWDE | | GDS81479 | Drive Shaft | | 27 | 28 | 63.1 | 96 | 623 | |
| | 2014.11-2020.02 | 6DCT | F | R | Saloon FWD XWDA;XWDB;XWDC;XWDD;XWDE | With vibration damper | GDS81480 | Drive Shaft | | 27 | 28 | 63.1 | 96 | 967 | |
| | 2014.11-2020.02 | 6DCT | F | L/R | Saloon FWD XWDA;XWDB;XWDC;XWDD;XWDE | | GCO18252 | Outer Joint | | 27 | 26 | 63.1 | 96 | 64 | I |
| | 2014.11-2020.02 | 6DCT | F | L | Saloon FWD XWDA;XWDB;XWDC;XWDD;XWDE | | GCI62053 | Inner Joint | | 28 | 26 | 34 | 79.5 | 91 | |
| | 2014.11-2020.02 | 6MT | F | L | Saloon FWD XWDA;XWDB;XWDC;XWDD;XWDE | | GDS18295 | Drive Shaft | | 27 | 26 | 62.7 | 96 | 637 | |
| | 2014.11-2020.02 | 6MT | F | R | Saloon FWD XWDA;XWDB;XWDC;XWDD;XWDE | | GDS18294 | Drive Shaft | | 27 | 26 | 62.7 | 96 | 972 | |
| | 2014.11-2020.02 | 6MT | F | L | Saloon FWD XWDA;XWDB;XWDC;XWDD;XWDE | | GCO18240 | Outer Joint | | 27 | 26 | 62.7 | 96 | 62.5 | M |
| | 2014.11-2020.02 | 6MT | F | L | Saloon FWD XWDA;XWDB;XWDC;XWDD;XWDE | Trans. code:B6 | GCI21028 | Inner Joint | | 26 | 32 | 40 | 61 | 112.5 | |
| | 2014.11-2020.02 | 6MT | F | R | Saloon FWD XWDA;XWDB;XWDC;XWDD;XWDE | | GCI81338 | Inner Joint | | 26 | 32 | 40 | 383 | 99 | |
| | 2018.01-2025.11 | 6MT | F | L | Hatchback FWD ZTDB;ZTDA | | GDS84581 | Drive Shaft | | 27 | 28 | 56 | 96.5 | 638 | |
| | 2018.01-2025.11 | 6MT | F | R | Hatchback FWD ZTDB;ZTDA | | GDS84578 | Drive Shaft | | 27 | 28 | 56 | 96.5 | 990 | |
| | 2018.01-2025.11 | 6MT | F | L/R | Hatchback FWD ZTDB;ZTDA | | GCO82450 | Outer Joint | | 27 | 33 | 56 | 96.5 | 58 | M |
| | 2018.01-2025.11 | 6MT | F | L | Hatchback FWD ZTDB;ZTDA | For OE no.:JX673B437GAC/JX673B437GAD | GCI82870 | Inner Joint | | 28 | 33 | 40 | 64.5 | 111 | |
| | 2018.01-2025.11 | 6MT | F | R | Hatchback FWD ZTDB;ZTDA | For OE no.:JX673B436GAC/JX673B436GAD | GCI82869 | Inner Joint | | 28 | 33 | 40 | 64 | 138 | |
| | 2018.01-2025.11 | 8AT | F | L | Hatchback FWD ZTDB;ZTDA | | GDS82855 | Drive Shaft | | 27 | 35 | 55.9 | 96.5 | 686 | |
| | 2018.01-2025.11 | 8AT | F | R | Hatchback FWD ZTDB;ZTDA | | GDS82856 | Drive Shaft | | 27 | 35 | 55.9 | 96.5 | 943 | |
| | 2018.01-2025.11 | 8AT | F | L/R | Hatchback FWD ZTDB;ZTDA | | GCO82249 | Outer Joint | | 27 | 24 | 55.9 | 96.5 | 58.5 | M |
| | 2018.01-2025.11 | 8AT | F | L | Hatchback FWD ZTDB;ZTDA | | GCI82087 | Inner Joint | | 35 | 22 | 38 | 153 | 85.5 | |
| | 2018.01-2025.11 | 8AT | F | R | Hatchback FWD ZTDB;ZTDA | | GCI82086 | Inner Joint | | 35 | 22 | 38 | 57.5 | 113 | |
| | 2018.11-2025.11 | 6MT | F | L | Saloon FWD ZTDB;ZTDA | | GDS84581 | Drive Shaft | | 27 | 28 | 56 | 96.5 | 638 | |
| | 2018.11-2025.11 | 6MT | F | R | Saloon FWD ZTDB;ZTDA | | GDS84578 | Drive Shaft | | 27 | 28 | 56 | 96.5 | 990 | |
| | 2018.11-2025.11 | 6MT | F | L/R | Saloon FWD ZTDB;ZTDA | | GCO82450 | Outer Joint | | 27 | 33 | 56 | 96.5 | 58 | M |
| | 2018.11-2025.11 | 6MT | F | L | Saloon FWD ZTDB;ZTDA | For OE no.:JX673B437GAC/JX673B437GAD | GCI82870 | Inner Joint | | 28 | 33 | 40 | 64.5 | 111 | |
| | 2018.11-2025.11 | 6MT | F | R | Saloon FWD ZTDB;ZTDA | For OE no.:JX673B436GAC/JX673B436GAD | GCI82869 | Inner Joint | | 28 | 33 | 40 | 64 | 138 | |
| | 2018.11-2025.11 | 8AT | F | L | Saloon FWD ZTDB;ZTDA | | GDS82855 | Drive Shaft | | 27 | 35 | 55.9 | 96.5 | 686 | |
| | 2018.11-2025.11 | 8AT | F | R | Saloon FWD ZTDB;ZTDA | | GDS82856 | Drive Shaft | | 27 | 35 | 55.9 | 96.5 | 943 | |
| | 2018.11-2025.11 | 8AT | F | L/R | Saloon FWD ZTDB;ZTDA | | GCO82249 | Outer Joint | | 27 | 24 | 55.9 | 96.5 | 58.5 | M |
| | 2018.11-2025.11 | 8AT | F | L | Saloon FWD ZTDB;ZTDA | | GCI82087 | Inner Joint | | 35 | 22 | 38 | 153 | 85.5 | |
| | 2018.11-2025.11 | 8AT | F | R | Saloon FWD ZTDB;ZTDA | | GCI82086 | Inner Joint | | 35 | 22 | 38 | 57.5 | 113 | |
| 1.5 (90 kw) | 2018.11-2025.11 | 6MT | F | L | Hatchback FWD Y2DA | Trans. code:6MX65 | GCO82450 | Outer Joint | | 27 | 33 | 56 | 96.5 | 58 | M |
| | 2018.11-2025.11 | 6MT | F | L/R | Hatchback FWD Y2DA | Trans. code:6MX65 | GCI82325 | Inner Joint | | 23 | 33 | 40 | 61 | 115.5 | |
| | 2018.11-2025.11 | 6MT | F | L | Saloon FWD Y2DA | Trans. code:6MX65 | GCO82450 | Outer Joint | | 27 | 33 | 56 | 96.5 | 58 | M |
| | 2018.11-2025.11 | 6MT | F | L/R | Saloon FWD Y2DA | Trans. code:6MX65 | GCI82325 | Inner Joint | | 23 | 33 | 40 | 61 | 115.5 | |
| 1.5 (110 kw) | 2014.09-2017.12 | 6AT | F | L | Hatchback FWD M8DA;M8DB;M8DD | | GCO17043 | Outer Joint | | 22 | 20 | 47 | 75.5 | 54.5 | M |
| | 2014.09-2017.12 | 6AT/6MT | F | L/R | Hatchback FWD M8DA;M8DB;M8DD | | GCO18240 | Outer Joint | | 27 | 26 | 62.7 | 96 | 62.5 | M |
| | 2014.09-2017.12 | 6MT | F | L | Hatchback FWD M8DA;M8DB;M8DD | | GDS18295 | Drive Shaft | | 27 | 26 | 62.7 | 96 | 637 | |
| | 2014.09-2017.12 | 6MT | F | R | Hatchback FWD M8DA;M8DB;M8DD | | GDS18299 | Drive Shaft | | 27 | 26 | 60.8 | 96 | 975 | |
| | 2014.09-2017.12 | 6MT | F | L/R | Hatchback FWD M8DA;M8DB;M8DD | | GCO18241 | Outer Joint | | 27 | 24 | 60.8 | 96 | 59 | I |
| | 2014.09-2017.12 | 6MT | F | L/R | Hatchback FWD M8DA;M8DB;M8DD | | GCO18244 | Outer Joint | | 27 | 24 | 62.8 | 95.5 | 59 | M |
| | 2014.09-2017.12 | 6MT | F | L | Hatchback FWD M8DA;M8DB;M8DD | | GCI81392 | Inner Joint | | 26 | 24 | 40 | 60 | 112 | |
| | 2014.09-2017.12 | 6MT | F | R | Hatchback FWD M8DA;M8DB;M8DD | | GCI62055 | Inner Joint | | 26 | 24 | 40 | 447.5 | 98.5 | |
| | 2014.09-2017.12 | 6AT | F | L/R | Hatchback Van FWD M8DA;M8DB | | GCO82320 | Outer Joint | | 27 | 26 | 62.5 | 96 | 62 | M |
| | 2014.09-2017.12 | 6MT | F | L | Hatchback Van FWD M8DA;M8DB | | GDS18295 | Drive Shaft | | 27 | 26 | 62.7 | 96 | 637 | |
| | 2014.09-2017.12 | 6MT | F | R | Hatchback Van FWD M8DA;M8DB | | GDS18299 | Drive Shaft | | 27 | 26 | 60.8 | 96 | 975 | |
| | 2014.09-2017.12 | 6MT | F | L | Hatchback Van FWD M8DA;M8DB | | GCI81392 | Inner Joint | | 26 | 24 | 40 | 60 | 112 | |
| | 2014.09-2017.12 | MT | F | L/R | Hatchback Van FWD M8DA;M8DB | Date from:2015.01 | GCO18244 | Outer Joint | | 27 | 24 | 62.8 | 95.5 | 59 | M |
| | 2014.11-2020.02 | 6AT | F | L/R | Saloon FWD M8DA;M8DB;M8DD | | GCO82320 | Outer Joint | | 27 | 26 | 62.5 | 96 | 62 | M |
| | 2014.11-2020.02 | 6MT | F | L | Saloon FWD M8DA;M8DB;M8DD | | GDS18295 | Drive Shaft | | 27 | 26 | 62.7 | 96 | 637 | |
| | 2014.11-2020.02 | 6MT | F | R | Saloon FWD M8DA;M8DB;M8DD | | GDS18299 | Drive Shaft | | 27 | 26 | 60.8 | 96 | 975 | |
| | 2014.11-2020.02 | 6MT | F | L | Saloon FWD M8DA;M8DB;M8DD | | GCI81392 | Inner Joint | | 26 | 24 | 40 | 60 | 112 | |

| | YEAR | TRANSM. | F/R | L/R | BODY STYLE & DRIVE TYPE & ENGINE | REMARKS | G-AP Ref. | PRODUCT | ABS | Technical Specifications | | | | | |
|---|---|---|---|---|---|---|---|---|---|---|---|---|---|---|---|
| | | | | | | | | | | A | B | C | H | L | P |
| **FORD** **Focus** | | | | | | | | | | | | | | | |
| 1.5 (110 kw) | 2014.11-2020.02 | MT | F | L/R | Saloon FWD M8DA;M8DB;M8DD | | GCO18240 | Outer Joint | | 27 | 26 | 62.7 | 96 | 62.5 | M |
| | 2014.11-2020.02 | MT | F | L/R | Saloon FWD M8DA;M8DB;M8DD | | GCO18244 | Outer Joint | | 27 | 24 | 62.8 | 95.5 | 59 | M |
| | 2018.09-2025.11 | 6MT | F | L | Hatchback FWD YZDA | | GDS84581 | Drive Shaft | | 27 | 28 | 56 | 96.5 | 638 | |
| | 2018.09-2025.11 | 6MT | F | R | Hatchback FWD YZDA | | GDS84580 | Drive Shaft | | 27 | 28 | 56 | 96.5 | 988 | |
| | 2018.09-2025.11 | 6MT | F | L/R | Hatchback FWD YZDA | | GCO82450 | Outer Joint | | 27 | 33 | 56 | 96.5 | 58 | M |
| | 2018.09-2025.11 | 6MT | F | L | Hatchback FWD YZDA | | GCI82870 | Inner Joint | | 28 | 33 | 40 | 64.5 | 111 | |
| | 2018.09-2025.11 | 6MT | F | R | Hatchback FWD YZDA | | GCI82869 | Inner Joint | | 28 | 33 | 40 | 64 | 138 | |
| | 2018.09-2025.11 | 8AT | F | L | Hatchback FWD YZDA | | GDS83739 | Drive Shaft | | 27 | 22 | 56 | 96.5 | 686 | |
| | 2018.09-2025.11 | 8AT | F | R | Hatchback FWD YZDA | | GDS83740 | Drive Shaft | | 27 | 22 | 56 | 96.5 | 944 | |
| | 2018.09-2025.11 | 8AT | F | L/R | Hatchback FWD YZDA | | GCO82249 | Outer Joint | | 27 | 24 | 55.9 | 96.5 | 58.5 | M |
| | 2018.09-2025.11 | 8AT | F | L | Hatchback FWD YZDA | Date from:2020.08 | GCI83756 | Inner Joint | | 22 | 22 | | 152 | 86.5 | |
| | 2018.09-2025.11 | 8AT | F | R | Hatchback FWD YZDA | | GCI82343 | Inner Joint | | 22 | 22 | 35 | 63 | 100.5 | |
| | 2018.11-2025.11 | 6MT | F | L | Saloon FWD YZDA | | GDS84581 | Drive Shaft | | 27 | 28 | 56 | 96.5 | 638 | |
| | 2018.11-2025.11 | 6MT | F | R | Saloon FWD YZDA | | GDS84580 | Drive Shaft | | 27 | 28 | 56 | 96.5 | 988 | |
| | 2018.11-2025.11 | 6MT | F | L/R | Saloon FWD YZDA | | GCO82450 | Outer Joint | | 27 | 33 | 56 | 96.5 | 58 | M |
| | 2018.11-2025.11 | 6MT | F | L | Saloon FWD YZDA | | GCI82870 | Inner Joint | | 28 | 33 | 40 | 64.5 | 111 | |
| | 2018.11-2025.11 | 6MT | F | R | Saloon FWD YZDA | | GCI82869 | Inner Joint | | 28 | 33 | 40 | 64 | 138 | |
| | 2018.11-2025.11 | 8AT | F | L | Saloon FWD YZDA | | GDS83739 | Drive Shaft | | 27 | 22 | 56 | 96.5 | 686 | |
| | 2018.11-2025.11 | 8AT | F | R | Saloon FWD YZDA | | GDS83740 | Drive Shaft | | 27 | 22 | 56 | 96.5 | 944 | |
| | 2018.11-2025.11 | 8AT | F | L/R | Saloon FWD YZDA | | GCO82249 | Outer Joint | | 27 | 24 | 55.9 | 96.5 | 58.5 | M |
| | 2018.11-2025.11 | 8AT | F | L | Saloon FWD YZDA | Date from:2020.08 | GCI83756 | Inner Joint | | 22 | 22 | | 152 | 86.5 | |
| | 2018.11-2025.11 | 8AT | F | R | Saloon FWD YZDA | | GCI82343 | Inner Joint | | 22 | 22 | 35 | 63 | 100.5 | |
| 1.5 (134 kw) | 2014.09-2017.12 | 6AT | F | L | Hatchback FWD M9DA;M9DB | | GCO17043 | Outer Joint | | 22 | 20 | 47 | 75.5 | 54.5 | M |
| | 2014.09-2017.12 | 6AT/6MT | F | L/R | Hatchback FWD M9DA;M9DB | | GCO18240 | Outer Joint | | 27 | 26 | 62.7 | 96 | 62.5 | M |
| | 2014.09-2017.12 | 6MT | F | L | Hatchback FWD M9DA;M9DB | | GDS18295 | Drive Shaft | | 27 | 26 | 62.7 | 96 | 637 | |
| | 2014.09-2017.12 | 6MT | F | R | Hatchback FWD M9DA;M9DB | | GDS18299 | Drive Shaft | | 27 | 26 | 60.8 | 96 | 975 | |
| | 2014.09-2017.12 | 6MT | F | L/R | Hatchback FWD M9DA;M9DB | | GCO18241 | Outer Joint | | 27 | 24 | 60.8 | 96 | 59 | I |
| | 2014.09-2017.12 | 6MT | F | L/R | Hatchback FWD M9DA;M9DB | | GCO18244 | Outer Joint | | 27 | 24 | 62.8 | 95.5 | 59 | M |
| | 2014.09-2017.12 | 6MT | F | L | Hatchback FWD M9DA;M9DB | | GCI81392 | Inner Joint | | 26 | 24 | 40 | 60 | 112 | |
| | 2014.09-2017.12 | 6MT | F | R | Hatchback FWD M9DA;M9DB | AAR | GCI62055 | Inner Joint | | 26 | 24 | 40 | 447.5 | 98.5 | |
| | 2014.09-2017.12 | 6AT | F | L/R | Hatchback Van FWD M9DA;M9DB | | GCO82320 | Outer Joint | | 27 | 26 | 62.5 | 96 | 62 | M |
| | 2014.09-2017.12 | 6MT | F | L | Hatchback Van FWD M9DA;M9DB | | GDS18295 | Drive Shaft | | 27 | 26 | 62.7 | 96 | 637 | |
| | 2014.09-2017.12 | 6MT | F | R | Hatchback Van FWD M9DA;M9DB | | GDS18299 | Drive Shaft | | 27 | 26 | 60.8 | 96 | 975 | |
| | 2014.09-2017.12 | 6MT | F | L | Hatchback Van FWD M9DA;M9DB | | GCI81392 | Inner Joint | | 26 | 24 | 40 | 60 | 112 | |
| | 2014.09-2017.12 | MT | F | L/R | Hatchback Van FWD M9DA;M9DB | Date from:2015.01 | GCO18244 | Outer Joint | | 27 | 24 | 62.8 | 95.5 | 59 | M |
| | 2014.11-2020.02 | 6AT | F | L/R | Saloon FWD M9DA;M9DB | | GCO82320 | Outer Joint | | 27 | 26 | 62.5 | 96 | 62 | M |
| | 2014.11-2020.02 | 6MT | F | L | Saloon FWD M9DA;M9DB | | GDS18295 | Drive Shaft | | 27 | 26 | 62.7 | 96 | 637 | |
| | 2014.11-2020.02 | 6MT | F | R | Saloon FWD M9DA;M9DB | | GDS18299 | Drive Shaft | | 27 | 26 | 60.8 | 96 | 975 | |
| | 2014.11-2020.02 | 6MT | F | L | Saloon FWD M9DA;M9DB | | GCI81392 | Inner Joint | | 26 | 24 | 40 | 60 | 112 | |
| | 2014.11-2020.02 | MT | F | L/R | Saloon FWD M9DA;M9DB | | GCO18240 | Outer Joint | | 27 | 26 | 62.7 | 96 | 62.5 | M |
| | 2014.11-2020.02 | MT | F | L/R | Saloon FWD M9DA;M9DB | | GCO18244 | Outer Joint | | 27 | 24 | 62.8 | 95.5 | 59 | M |
| | 2018.09-2025.11 | 6MT | F | L | Hatchback FWD Y1DA | | GDS84581 | Drive Shaft | | 27 | 28 | 56 | 96.5 | 638 | |
| | 2018.09-2025.11 | 6MT | F | R | Hatchback FWD Y1DA | | GDS84580 | Drive Shaft | | 27 | 28 | 56 | 96.5 | 988 | |
| | 2018.09-2025.11 | 6MT | F | L/R | Hatchback FWD Y1DA | | GCO82450 | Outer Joint | | 27 | 33 | 56 | 96.5 | 58 | M |
| | 2018.09-2025.11 | 6MT | F | L | Hatchback FWD Y1DA | | GCI82870 | Inner Joint | | 28 | 33 | 40 | 64.5 | 111 | |
| | 2018.09-2025.11 | 6MT | F | R | Hatchback FWD Y1DA | | GCI82869 | Inner Joint | | 28 | 33 | 40 | 64 | 138 | |
| | 2018.09-2025.11 | 8AT | F | L | Hatchback FWD Y1DA | | GDS83739 | Drive Shaft | | 27 | 22 | 56 | 96.5 | 686 | |
| | 2018.09-2025.11 | 8AT | F | R | Hatchback FWD Y1DA | | GDS83740 | Drive Shaft | | 27 | 22 | 56 | 96.5 | 944 | |
| | 2018.09-2025.11 | 8AT | F | L/R | Hatchback FWD Y1DA | | GCO82249 | Outer Joint | | 27 | 24 | 55.9 | 96.5 | 58.5 | M |
| | 2018.09-2025.11 | 8AT | F | L | Hatchback FWD Y1DA | Date from:2020.08 | GCI83756 | Inner Joint | | 22 | 22 | | 152 | 86.5 | |
| | 2018.09-2025.11 | 8AT | F | R | Hatchback FWD Y1DA | | GCI82343 | Inner Joint | | 22 | 22 | 35 | 63 | 100.5 | |
| 1.6 (63 kw) | 2011.08-2017.12 | 5MT | F | L | Hatchback FWD XTDA;XTDB | | GDS18322 | Drive Shaft | | 27 | 23 | 62.8 | 95.5 | 657 | |
| | 2011.08-2017.12 | 5MT | F | R | Hatchback FWD XTDA;XTDB | | GDS18323 | Drive Shaft | | 27 | 23 | 62.8 | 95.5 | 961 | |
| | 2011.08-2017.12 | 5MT | F | L | Hatchback FWD XTDA;XTDB | | GCI18086 | Inner Joint | | 23 | 22 | 40 | 61 | 90 | |
| | 2011.08-2017.12 | 5MT | F | R | Hatchback FWD XTDA;XTDB | | GCI18263 | Inner Joint | | 23 | 22 | 40 | 375 | 76 | |
| | 2011.08-2017.12 | AT | F | L/R | Hatchback FWD XTDA;XTDB | Date from:2012.01 | GCO18238 | Outer Joint | | 27 | 23 | 63 | 96 | 57 | M |
| | 2011.08-2017.12 | MT | F | L/R | Hatchback FWD XTDA;XTDB | Date from:2012.01 | GCO18244 | Outer Joint | | 27 | 24 | 62.8 | 95.5 | 59 | M |
| | 2011.08-2020.02 | 5MT | F | L | Saloon FWD XTDA;XTDB | | GCI18086 | Inner Joint | | 23 | 22 | 40 | 61 | 90 | |
| | 2011.08-2020.02 | 5MT | F | R | Saloon FWD XTDA;XTDB | | GCI18263 | Inner Joint | | 23 | 22 | 40 | 375 | 76 | |
| | 2011.08-2020.02 | AT | F | L/R | Saloon FWD XTDA;XTDB | Date from:2012.01 | GCO18238 | Outer Joint | | 27 | 23 | 63 | 96 | 57 | M |
| | 2011.08-2020.02 | MT | F | L | Saloon FWD XTDA;XTDB | Date from:2012.01 | GDS18322 | Drive Shaft | | 27 | 23 | 62.8 | 95.5 | 657 | |
| | 2011.08-2020.02 | MT | F | R | Saloon FWD XTDA;XTDB | Date from:2012.01 | GDS18323 | Drive Shaft | | 27 | 23 | 62.8 | 95.5 | 961 | |
| | 2011.08-2020.02 | MT | F | L/R | Saloon FWD XTDA;XTDB | Date from:2012.01 | GCO18244 | Outer Joint | | 27 | 24 | 62.8 | 95.5 | 59 | M |
| 1.6 (66 kw) | 2005.01-2012.09 | 5MT | F | L | Hatchback FWD HHDA;HHDB;GPDA;GPDC;GPDB | | GDS18218 | Drive Shaft | | 36 | 26 | 56 | 48 | 582 | |
| | 2005.01-2012.09 | 5MT | F | R | Hatchback FWD HHDA;HHDB;GPDA;GPDC;GPDB | | GDS18219 | Drive Shaft | | 36 | 26 | 56.3 | 48 | 921 | |

| | YEAR | TRANSM. | F/R | L/R | BODY STYLE & DRIVE TYPE & ENGINE | REMARKS | G-AP Ref. | PRODUCT | ABS | Technical Specifications A | B | C | H | L | P |
|---|---|---|---|---|---|---|---|---|---|---|---|---|---|---|---|
| **FORD** **Focus** | | | | | | | | | | | | | | | |
| 1.6 (66 kw) | 2005.01-2012.09 | 5MT | F | L | Hatchback FWD HHDA;HHDB;GPDA;GPDC;GPDB | | GCO99288 | Outer Joint | | 36 | 26 | 56.3 | 48 | 61 | M |
| | 2005.01-2012.09 | 5MT | F | R | Hatchback FWD HHDA;HHDB;GPDA;GPDC;GPDB | | GCO18230 | Outer Joint | | 36 | 26 | 56.3 | 48 | 61 | M |
| | 2005.04-2012.09 | 5MT | F | L | Saloon FWD HHDA;HHDB;GPDA;GPDC;GPDB | | GDS18218 | Drive Shaft | | 36 | 26 | 56 | 48 | 582 | |
| | 2005.04-2012.09 | 5MT | F | R | Saloon FWD HHDA;HHDB;GPDA;GPDC;GPDB | | GDS18219 | Drive Shaft | | 36 | 26 | 56.3 | 48 | 921 | |
| | 2005.04-2012.09 | MT | F | R | Saloon FWD HHDA;HHDB;GPDA;GPDC;GPDB | | GCO99130 | Outer Joint | | 36 | 26 | 56.3 | 48 | 61 | M |
| | 2005.04-2012.09 | | F | L | Saloon FWD HHDA;HHDB;GPDA;GPDC;GPDB | | GCO99288 | Outer Joint | | 36 | 26 | 56.3 | 48 | 61 | M |
| | 2005.04-2012.09 | | F | R | Saloon FWD HHDA;HHDB;GPDA;GPDC;GPDB | | GCO18230 | Outer Joint | | 36 | 26 | 56.3 | 48 | 61 | M |
| 1.6 (70 kw) | 2010.07-2017.12 | 6MT | F | L | Hatchback FWD T3DA;T3DB | | GDS18295 | Drive Shaft | | 27 | 26 | 62.7 | 96 | 637 | |
| | 2010.07-2017.12 | 6MT | F | R | Hatchback FWD T3DA;T3DB | | GDS18294 | Drive Shaft | | 27 | 26 | 62.7 | 96 | 972 | |
| | 2010.07-2017.12 | 6MT | F | L/R | Hatchback FWD T3DA;T3DB | | GCO18240 | Outer Joint | | 27 | 26 | 62.7 | 96 | 62.5 | M |
| | 2010.07-2017.12 | 6MT | F | L | Hatchback FWD T3DA;T3DB | | GCI21028 | Inner Joint | | 26 | 32 | 40 | 61 | 112.5 | |
| | 2010.07-2017.12 | 6MT | F | R | Hatchback FWD T3DA;T3DB | | GCI81338 | Inner Joint | | 26 | 32 | 40 | 383 | 99 | |
| | 2010.07-2020.02 | 6MT | F | L | Saloon FWD T3DA;T3DB | | GDS18295 | Drive Shaft | | 27 | 26 | 62.7 | 96 | 637 | |
| | 2010.07-2020.02 | 6MT | F | R | Saloon FWD T3DA;T3DB | | GDS18294 | Drive Shaft | | 27 | 26 | 62.7 | 96 | 972 | |
| | 2010.07-2020.02 | 6MT | F | L | Saloon FWD T3DA;T3DB | | GCI21028 | Inner Joint | | 26 | 32 | 40 | 61 | 112.5 | |
| | 2010.07-2020.02 | 6MT | F | R | Saloon FWD T3DA;T3DB | | GCI81338 | Inner Joint | | 26 | 32 | 40 | 383 | 99 | |
| | 2010.07-2020.02 | MT | F | L/R | Saloon FWD T3DA;T3DB | | GCO18240 | Outer Joint | | 27 | 26 | 62.7 | 96 | 62.5 | M |
| | 2011.01-2017.12 | 6MT | F | L | Hatchback Van FWD T3DA;T3DB | | GDS18295 | Drive Shaft | | 27 | 26 | 62.7 | 96 | 637 | |
| | 2011.01-2017.12 | 6MT | F | R | Hatchback Van FWD T3DA;T3DB | | GDS18294 | Drive Shaft | | 27 | 26 | 62.7 | 96 | 972 | |
| | 2011.01-2017.12 | 6MT | F | L | Hatchback Van FWD T3DA;T3DB | | GCO18240 | Outer Joint | | 27 | 26 | 62.7 | 96 | 62.5 | M |
| | 2011.01-2017.12 | 6MT | F | L | Hatchback Van FWD T3DA;T3DB | | GCI21028 | Inner Joint | | 26 | 32 | 40 | 61 | 112.5 | |
| | 2011.01-2017.12 | 6MT | F | R | Hatchback Van FWD T3DA;T3DB | | GCI81338 | Inner Joint | | 26 | 32 | 40 | 383 | 99 | |
| 1.6 (72 kw) | 2004.10-2009.11 | | F | R | Hatchback FWD ZH16DEAR | | GCI18161 | Inner Joint | | 26 | 23 | 40 | 389 | 86 | |
| 1.6 (74 kw) | 1998.08-2004.07 | AT | F | L | Hatchback FWD FYDA/FYDB/FYDC/FYDD/FYDH | | GDS18101 | Drive Shaft | | 25 | 26 | 53.4 | 88.5 | 613 | |
| | 1998.08-2004.07 | AT | F | R | Hatchback FWD FYDA/FYDB/FYDC/FYDD/FYDH | Date to:1999.11 | GDS18042 | Drive Shaft | | 25 | 23 | 53.4 | 88.5 | 633 | |
| | 1998.08-2004.07 | AT | F | R | Hatchback FWD FYDA/FYDB/FYDC/FYDD/FYDH | | GDS18102 | Drive Shaft | | 25 | 26 | 53.4 | 88.5 | 944.5 | |
| | 1998.08-2004.07 | AT | F | R | Hatchback FWD FYDA/FYDB/FYDC/FYDD/FYDH | Date from:2004.07 | GCI18161 | Inner Joint | | 26 | 23 | 40 | 389 | 86 | |
| | 1998.08-2004.07 | AT/MT | F | L/R | Hatchback FWD FYDA/FYDB/FYDC/FYDD/FYDH | Date to:2004.07 | GCO18003 | Outer Joint | | 25 | 21 | 53.3 | 89 | 53 | M |
| | 1998.08-2004.07 | AT/MT | F | L/R | Hatchback FWD FYDA/FYDB/FYDC/FYDD/FYDH | | GCO18013 | Outer Joint | | 25 | 23 | 53.4 | 88.5 | 57 | M |
| | 1998.08-2004.07 | MT | F | L | Hatchback FWD FYDA/FYDB/FYDC/FYDD/FYDH | | GDS18042 | Drive Shaft | | 25 | 23 | 53.4 | 88.5 | 633 | |
| | 1998.08-2004.07 | MT | F | R | Hatchback FWD FYDA/FYDB/FYDC/FYDD/FYDH | | GDS18046 | Drive Shaft | | 25 | 23 | 53.4 | 88.5 | 934 | |
| | 1998.08-2005.03 | AT | F | L | Saloon FWD FYDA/FYDB/FYDC/FYDD/FYDH | | GDS18101 | Drive Shaft | | 25 | 26 | 53.4 | 88.5 | 613 | |
| | 1998.08-2005.03 | AT | F | R | Saloon FWD FYDA/FYDB/FYDC/FYDD/FYDH | | GDS18102 | Drive Shaft | | 25 | 26 | 53.4 | 88.5 | 944.5 | |
| | 1998.08-2005.03 | AT/MT | F | L/R | Saloon FWD FYDA/FYDB/FYDC/FYDD/FYDH | | GCO18003 | Outer Joint | | 25 | 21 | 53.3 | 89 | 53 | M |
| | 1998.08-2005.03 | AT/MT | F | L/R | Saloon FWD FYDA/FYDB/FYDC/FYDD/FYDH | | GCO18013 | Outer Joint | | 25 | 23 | 53.4 | 88.5 | 57 | M |
| | 1998.08-2005.03 | MT | F | L | Saloon FWD FYDA/FYDB/FYDC/FYDD/FYDH | | GDS18042 | Drive Shaft | | 25 | 23 | 53.4 | 88.5 | 633 | |
| | 1998.08-2005.03 | MT | F | R | Saloon FWD FYDA/FYDB/FYDC/FYDD/FYDH | | GDS18046 | Drive Shaft | | 25 | 23 | 53.4 | 88.5 | 934 | |
| | 1998.08-2005.03 | MT | F | L | Saloon FWD FYDA/FYDB/FYDC/FYDD/FYDH | | GCI18022 | Inner Joint | | 23 | 21 | 40 | 61 | 88 | |
| | 2004.07-2012.09 | 5MT | F | L | Hatchback FWD G8DC;MTDA | | GDS18218 | Drive Shaft | | 36 | 26 | 56 | 48 | 582 | |
| | 2004.07-2012.09 | 5MT | F | R | Hatchback FWD G8DC;MTDA | | GDS18219 | Drive Shaft | | 36 | 26 | 56.3 | 48 | 921 | |
| | 2004.07-2012.09 | 5MT | F | L | Hatchback FWD G8DC;MTDA | | GCO18203 | Outer Joint | | 36 | 23 | 56 | 48 | 57 | I |
| | 2004.07-2012.09 | 5MT | F | R | Hatchback FWD G8DC;MTDA | | GCO18230 | Outer Joint | | 36 | 26 | 56.3 | 48 | 61 | M |
| | 2004.07-2012.09 | 5MT | F | L | Hatchback FWD G8DC;MTDA | | GCI18044 | Inner Joint | | 26 | 23 | 40 | 68.5 | 99.5 | |
| | 2004.07-2012.09 | 4AT | F | L | Hatchback FWD HWDA;HWDB;SHDA;SHDB;SHDC | | GDS34252 | Drive Shaft | | 36 | 26 | 55.3 | 48 | 581 | |
| | 2004.07-2012.09 | 4AT | F | R | Hatchback FWD HWDA;HWDB;SHDA;SHDB;SHDC | Inner teeth of wheel side:26;TJ | GDS18219 | Drive Shaft | | 36 | 26 | 56.3 | 48 | 921 | |
| | 2004.07-2012.09 | 4AT | F | L | Hatchback FWD HWDA;HWDB;SHDA;SHDB;SHDC | Date from:2008.05 | GCI18044 | Inner Joint | | 26 | 23 | 40 | 68.5 | 99.5 | |
| | 2004.07-2012.09 | 4AT | F | R | Hatchback FWD HWDA;HWDB;SHDA;SHDB;SHDC | | GCI18161 | Inner Joint | | 26 | 23 | 40 | 389 | 86 | |
| | 2004.07-2012.09 | 5MT | F | L | Hatchback FWD HWDA;HWDB;SHDA;SHDB;SHDC | Inner teeth of wheel side:24 | GDS18189 | Drive Shaft | | 36 | 23 | 56 | 48 | 601 | |
| | 2004.07-2012.09 | 5MT | F | L | Hatchback FWD HWDA;HWDB;SHDA;SHDB;SHDC | Inner teeth of wheel side:24 | GDS18261 | Drive Shaft | | 36 | 23 | 55.8 | 48 | 600 | |
| | 2004.07-2012.09 | 5MT | F | L | Hatchback FWD HWDA;HWDB;SHDA;SHDB;SHDC | Inner teeth of wheel side:25 | GDS18336 | Drive Shaft | | 36 | 23 | 51.6 | 48 | 600 | |
| | 2004.07-2012.09 | 5MT | F | L | Hatchback FWD HWDA;HWDB;SHDA;SHDB;SHDC | Inner teeth of wheel side:23 | GDS18359 | Drive Shaft | | 36 | 23 | 56 | 48 | 594 | |
| | 2004.07-2012.09 | 5MT | F | R | Hatchback FWD HWDA;HWDB;SHDA;SHDB;SHDC | Inner teeth of wheel side:24 | GDS18206 | Drive Shaft | | 36 | 23 | 56 | 48 | 906 | |
| | 2004.07-2012.09 | 5MT | F | R | Hatchback FWD HWDA;HWDB;SHDA;SHDB;SHDC | Inner teeth of wheel side:24 | GDS18262 | Drive Shaft | | 36 | 23 | 55.8 | 48 | 905 | |
| | 2004.07-2012.09 | 5MT | F | R | Hatchback FWD HWDA;HWDB;SHDA;SHDB;SHDC | Inner teeth of wheel side:25 | GDS18337 | Drive Shaft | | 36 | 23 | 51.6 | 48 | 908 | |
| | 2004.07-2012.09 | 5MT | F | R | Hatchback FWD HWDA;HWDB;SHDA;SHDB;SHDC | Inner teeth of wheel side:23 | GDS18358 | Drive Shaft | | 36 | 23 | 56 | 48 | 899 | |
| | 2004.07-2012.09 | 5MT | F | L/R | Hatchback FWD HWDA;HWDB;SHDA;SHDB;SHDC | | GCO99129 | Outer Joint | | 36 | 24 | 56 | 48 | 57 | M |
| | 2004.07-2012.09 | 5MT | F | L | Hatchback FWD HWDA;HWDB;SHDA;SHDB;SHDC | | GCI18086 | Inner Joint | | 23 | 22 | 40 | 61 | 90 | |
| | 2004.07-2012.09 | 5MT | F | R | Hatchback FWD HWDA;HWDB;SHDA;SHDB;SHDC | | GCI18087 | Inner Joint | | 23 | 22 | 40 | 371 | 78.5 | |
| | 2004.07-2012.09 | 5MT/4AT | F | L/R | Hatchback FWD HWDA;HWDB;SHDA;SHDB;SHDC | | GCO18203 | Outer Joint | | 36 | 23 | 56 | 48 | 57 | I |
| | 2004.07-2012.09 | AT | F | L | Hatchback FWD HWDA;HWDB;SHDA;SHDB;SHDC | | GDS18218 | Drive Shaft | | 36 | 26 | 56 | 48 | 582 | |
| | 2005.04-2012.09 | 5MT | F | L | Saloon FWD G8DC;MTDA | | GDS18218 | Drive Shaft | | 36 | 26 | 56 | 48 | 582 | |
| | 2005.04-2012.09 | 5MT | F | R | Saloon FWD G8DC;MTDA | | GDS18219 | Drive Shaft | | 36 | 26 | 56.3 | 48 | 921 | |
| | 2005.04-2012.09 | 5MT | F | L | Saloon FWD G8DC;MTDA | | GCO99288 | Outer Joint | | 36 | 26 | 56.3 | 48 | 61 | M |
| | 2005.04-2012.09 | 5MT | F | R | Saloon FWD G8DC;MTDA | | GCO18230 | Outer Joint | | 36 | 26 | 56.3 | 48 | 61 | M |
| | 2005.04-2012.09 | 5MT | F | R | Saloon FWD HWDA;HWDB;SHDA;SHDB;SHDC | | GCI18087 | Inner Joint | | 23 | 22 | 40 | 371 | 78.5 | |

| | YEAR | TRANSM. | F/R | L/R | BODY STYLE & DRIVE TYPE & ENGINE | REMARKS | G-AP Ref. | PRODUCT | ABS | Technical Specifications A | B | C | H | L | P |
|---|---|---|---|---|---|---|---|---|---|---|---|---|---|---|---|
| **FORD** **Focus** | | | | | | | | | | | | | | | |
| 1.6 (74 kw) | 2005.04-2012.09 | AT | F | L | Saloon FWD HWDA;HWDB;SHDA;SHDB;SHDC | | GDS18218 | Drive Shaft | | 36 | 26 | 56 | 48 | 582 | |
| | 2005.04-2012.09 | AT | F | L | Saloon FWD HWDA;HWDB;SHDA;SHDB;SHDC | | GDS34252 | Drive Shaft | | 36 | 26 | 55.3 | 48 | 581 | |
| | 2005.04-2012.09 | AT | F | R | Saloon FWD HWDA;HWDB;SHDA;SHDB;SHDC | TJ | GDS18219 | Drive Shaft | | 36 | 26 | 56.3 | 48 | 921 | |
| | 2005.04-2012.09 | AT | F | L/R | Saloon FWD HWDA;HWDB;SHDA;SHDB;SHDC | | GCO18203 | Outer Joint | | 36 | 23 | 56 | 48 | 57 | I |
| | 2005.04-2012.09 | MT | F | L | Saloon FWD HWDA;HWDB;SHDA;SHDB;SHDC | Inner teeth of wheel side:24 | GDS18189 | Drive Shaft | | 36 | 23 | 56 | 48 | 601 | |
| | 2005.04-2012.09 | MT | F | L | Saloon FWD HWDA;HWDB;SHDA;SHDB;SHDC | Inner teeth of wheel side:24 | GDS18261 | Drive Shaft | | 36 | 23 | 55.8 | 48 | 600 | |
| | 2005.04-2012.09 | MT | F | L | Saloon FWD HWDA;HWDB;SHDA;SHDB;SHDC | Inner teeth of wheel side:23 | GDS18359 | Drive Shaft | | 36 | 23 | 56 | 48 | 594 | |
| | 2005.04-2012.09 | MT | F | R | Saloon FWD HWDA;HWDB;SHDA;SHDB;SHDC | Inner teeth of wheel side:24 | GDS18206 | Drive Shaft | | 36 | 23 | 56 | 48 | 906 | |
| | 2005.04-2012.09 | MT | F | R | Saloon FWD HWDA;HWDB;SHDA;SHDB;SHDC | Inner teeth of wheel side:24 | GDS18262 | Drive Shaft | | 36 | 23 | 55.8 | 48 | 905 | |
| | 2005.04-2012.09 | MT | F | R | Saloon FWD HWDA;HWDB;SHDA;SHDB;SHDC | Inner teeth of wheel side:25 | GDS18337 | Drive Shaft | | 36 | 23 | 51.6 | 48 | 908 | |
| | 2005.04-2012.09 | MT | F | R | Saloon FWD HWDA;HWDB;SHDA;SHDB;SHDC | Inner teeth of wheel side:23 | GDS18358 | Drive Shaft | | 36 | 23 | 56 | 48 | 899 | |
| | 2005.04-2012.09 | MT | F | L | Saloon FWD HWDA;HWDB;SHDA;SHDB;SHDC | | GCO62039 | Outer Joint | | 36 | 24 | 55.8 | 48 | 57 | M |
| | 2005.04-2012.09 | MT | F | L/R | Saloon FWD HWDA;HWDB;SHDA;SHDB;SHDC | | GCO99129 | Outer Joint | | 36 | 24 | 56 | 48 | 57 | M |
| | 2005.04-2012.09 | MT | F | L | Saloon FWD HWDA;HWDB;SHDA;SHDB;SHDC | Date to:2005.09 | GCI18086 | Inner Joint | | 23 | 22 | 40 | 61 | 90 | |
| | 2005.04-2012.09 | | F | L | Saloon FWD HWDA;HWDB;SHDA;SHDB;SHDC | Date To:2011.07 | GCI18044 | Inner Joint | | 26 | 23 | 40 | 68.5 | 99.5 | |
| | 2005.04-2012.09 | | F | R | Saloon FWD HWDA;HWDB;SHDA;SHDB;SHDC | Date To:2011.07 | GCI18161 | Inner Joint | | 26 | 23 | 40 | 389 | 86 | |
| 1.6 (75 kw) | 2002.01-2004.11 | MT | F | L | Hatchback FWD FYDH | | GDS18042 | Drive Shaft | | 25 | 23 | 53.4 | 88.5 | 633 | |
| | 2002.01-2004.11 | MT | F | R | Hatchback FWD FYDH | | GDS18046 | Drive Shaft | | 25 | 23 | 53.4 | 88.5 | 934 | |
| | 2002.01-2004.11 | MT | F | L/R | Hatchback FWD FYDH | | GCO18013 | Outer Joint | | 25 | 23 | 53.4 | 88.5 | 57 | M |
| | 2002.01-2004.11 | | F | R | Hatchback FWD FYDH | | GCI18161 | Inner Joint | | 26 | 23 | 40 | 389 | 86 | |
| 1.6 (76 kw) | 2003.07-2007.06 | | F | R | Hatchback FWD FYDA | | GCI18161 | Inner Joint | | 26 | 23 | 40 | 389 | 86 | |
| 1.6 (77 kw) | 2010.07-2020.02 | 5MT | F | L | Hatchback FWD IQDA;IQDB;IQDC | | GDS18322 | Drive Shaft | | 27 | 23 | 62.8 | 95.5 | 657 | |
| | 2010.07-2020.02 | 5MT | F | R | Hatchback FWD IQDA;IQDB;IQDC | | GDS18323 | Drive Shaft | | 27 | 23 | 62.8 | 95.5 | 961 | |
| | 2010.07-2020.02 | 5MT | F | L | Hatchback FWD IQDA;IQDB;IQDC | | GCI18086 | Inner Joint | | 23 | 22 | 40 | 61 | 90 | |
| | 2010.07-2020.02 | 5MT | F | R | Hatchback FWD IQDA;IQDB;IQDC | | GCI18263 | Inner Joint | | 23 | 22 | 40 | 375 | 76 | |
| | 2010.07-2020.02 | 6AT/5MT | F | L | Hatchback FWD IQDA;IQDB;IQDC | | GCO18244 | Outer Joint | | 27 | 24 | 62.8 | 95.5 | 59 | M |
| | 2010.07-2020.02 | 6AT/5MT | F | L/R | Hatchback FWD IQDA;IQDB;IQDC | | GCO18238 | Outer Joint | | 27 | 23 | 63 | 96 | 57 | M |
| | 2010.07-2020.02 | 6DCT | F | L | Hatchback FWD IQDA;IQDB;IQDC | | GDS18296 | Drive Shaft | | 27 | 34 | 63 | 96 | 606 | |
| | 2010.07-2020.02 | 6DCT | F | R | Hatchback FWD IQDA;IQDB;IQDC | | GDS18477 | Drive Shaft | | 27 | 34 | 63 | 96 | 1014 | |
| | 2010.07-2020.02 | 6DCT | F | R | Hatchback FWD IQDA;IQDB;IQDC | | GCI18140 | Inner Joint | | 34 | 22 | 40 | 424 | 83.5 | |
| | 2010.07-2020.02 | | F | R | Hatchback FWD IQDA;IQDB;IQDC | Date to:2011.07 | GCI18161 | Inner Joint | | 26 | 23 | 40 | 389 | 86 | |
| | 2010.07-2020.02 | 5MT | F | L | Saloon FWD IQDA;IQDB;IQDC | | GDS18322 | Drive Shaft | | 27 | 23 | 62.8 | 95.5 | 657 | |
| | 2010.07-2020.02 | 5MT | F | R | Saloon FWD IQDA;IQDB;IQDC | | GDS18323 | Drive Shaft | | 27 | 23 | 62.8 | 95.5 | 961 | |
| | 2010.07-2020.02 | 5MT | F | L | Saloon FWD IQDA;IQDB;IQDC | | GCI18086 | Inner Joint | | 23 | 22 | 40 | 61 | 90 | |
| | 2010.07-2020.02 | 5MT | F | R | Saloon FWD IQDA;IQDB;IQDC | | GCI18263 | Inner Joint | | 23 | 22 | 40 | 375 | 76 | |
| | 2010.07-2020.02 | 6AT/5MT | F | L | Saloon FWD IQDA;IQDB;IQDC | | GCO18244 | Outer Joint | | 27 | 24 | 62.8 | 95.5 | 59 | M |
| | 2010.07-2020.02 | 6AT/5MT | F | L/R | Saloon FWD IQDA;IQDB;IQDC | | GCO18238 | Outer Joint | | 27 | 23 | 63 | 96 | 57 | M |
| | 2010.07-2020.02 | 6DCT | F | L | Saloon FWD IQDA;IQDB;IQDC | | GDS18296 | Drive Shaft | | 27 | 34 | 63 | 96 | 606 | |
| | 2010.07-2020.02 | 6DCT | F | R | Saloon FWD IQDA;IQDB;IQDC | Date To:2016.09 | GDS18477 | Drive Shaft | | 27 | 34 | 63 | 96 | 1014 | |
| | 2010.07-2020.02 | 6DCT | F | R | Saloon FWD IQDA;IQDB;IQDC | | GCI18140 | Inner Joint | | 34 | 22 | 40 | 424 | 83.5 | |
| | 2010.07-2020.02 | | F | R | Saloon FWD IQDA;IQDB;IQDC | | GCI18161 | Inner Joint | | 26 | 23 | 40 | 389 | 86 | |
| | 2011.01-2020.02 | 5MT | F | L | Hatchback Van FWD IQDA;IQDB | | GDS18322 | Drive Shaft | | 27 | 23 | 62.8 | 95.5 | 657 | |
| | 2011.01-2020.02 | 5MT | F | R | Hatchback Van FWD IQDA;IQDB | | GDS18323 | Drive Shaft | | 27 | 23 | 62.8 | 95.5 | 961 | |
| | 2011.01-2020.02 | 5MT | F | L | Hatchback Van FWD IQDA;IQDB | | GCI18086 | Inner Joint | | 23 | 22 | 40 | 61 | 90 | |
| | 2011.01-2020.02 | 5MT | F | R | Hatchback Van FWD IQDA;IQDB | | GCI18263 | Inner Joint | | 23 | 22 | 40 | 375 | 76 | |
| | 2011.01-2020.02 | AT | F | L/R | Hatchback Van FWD IQDA;IQDB | | GCO18238 | Outer Joint | | 27 | 23 | 63 | 96 | 57 | M |
| | 2011.01-2020.02 | MT | F | L/R | Hatchback Van FWD IQDA;IQDB | | GCO18244 | Outer Joint | | 27 | 24 | 62.8 | 95.5 | 59 | M |
| | 2012.05-2015.07 | 6MT | F | L | Hatchback FWD NGDA;NGDB | | GDS18295 | Drive Shaft | | 27 | 26 | 62.7 | 96 | 637 | |
| | 2012.05-2015.07 | 6MT | F | R | Hatchback FWD NGDA;NGDB | | GDS18294 | Drive Shaft | | 27 | 26 | 62.7 | 96 | 972 | |
| | 2012.05-2015.07 | 6MT | F | L | Hatchback FWD NGDA;NGDB | | GCI21028 | Inner Joint | | 26 | 32 | 40 | 61 | 112.5 | |
| | 2012.05-2015.07 | 6MT | F | R | Hatchback FWD NGDA;NGDB | | GCI81338 | Inner Joint | | 26 | 32 | 40 | 383 | 99 | |
| | 2012.05-2015.07 | MT | F | L/R | Hatchback FWD NGDA;NGDB | | GCO18240 | Outer Joint | | 27 | 26 | 62.7 | 96 | 62.5 | M |
| | 2012.05-2015.07 | 6MT | F | L | Saloon FWD NGDA;NGDB | | GDS18295 | Drive Shaft | | 27 | 26 | 62.7 | 96 | 637 | |
| | 2012.05-2015.07 | 6MT | F | R | Saloon FWD NGDA;NGDB | | GDS18294 | Drive Shaft | | 27 | 26 | 62.7 | 96 | 972 | |
| | 2012.05-2015.07 | 6MT | F | L | Saloon FWD NGDA;NGDB | | GCO18240 | Outer Joint | | 27 | 26 | 62.7 | 96 | 62.5 | M |
| | 2012.05-2015.07 | 6MT | F | L | Saloon FWD NGDA;NGDB | | GCI21028 | Inner Joint | | 26 | 32 | 40 | 61 | 112.5 | |
| | 2012.05-2015.07 | 6MT | F | R | Saloon FWD NGDA;NGDB | | GCI81338 | Inner Joint | | 26 | 32 | 40 | 383 | 99 | |
| 1.6 (80 kw) | 2004.07-2012.09 | 5MT | F | L | Hatchback FWD G8DA;G8DB;G8DD;G8DE;G8DF | | GDS18218 | Drive Shaft | | 36 | 26 | 56 | 48 | 582 | |
| | 2004.07-2012.09 | 5MT | F | R | Hatchback FWD G8DA;G8DB;G8DD;G8DE;G8DF | | GDS18219 | Drive Shaft | | 36 | 26 | 56.3 | 48 | 921 | |
| | 2004.07-2012.09 | 5MT | F | L | Hatchback FWD G8DA;G8DB;G8DD;G8DE;G8DF | | GCO99288 | Outer Joint | | 36 | 26 | 56.3 | 48 | 61 | M |
| | 2004.07-2012.09 | 5MT | F | R | Hatchback FWD G8DA;G8DB;G8DD;G8DE;G8DF | | GCO18230 | Outer Joint | | 36 | 26 | 56.3 | 48 | 61 | M |
| | 2004.07-2012.09 | CVT | F | L | Hatchback FWD G8DA;G8DB;G8DD;G8DE;G8DF | | GDS18193 | Drive Shaft | | 36 | 34 | 56 | 48 | 568 | |
| | 2004.07-2012.09 | CVT | F | R | Hatchback FWD G8DA;G8DB;G8DD;G8DE;G8DF | | GDS18191 | Drive Shaft | | 36 | 34 | 56 | 48 | 890 | |
| | 2004.07-2012.09 | CVT | F | L/R | Hatchback FWD G8DA;G8DB;G8DD;G8DE;G8DF | with Rim protector | GCO34093 | Outer Joint | | 36 | 24 | 55.3 | 48 | 59 | I |
| | 2004.07-2012.09 | CVT | F | L/R | Hatchback FWD G8DA;G8DB;G8DD;G8DE;G8DF | without Rim protector | GCO99132 | Outer Joint | | 36 | 24 | 56 | 48 | 57 | I |

| | YEAR | TRANSM. | F/R | L/R | BODY STYLE & DRIVE TYPE & ENGINE | REMARKS | G-AP Ref. | PRODUCT | ABS | Technical Specifications A | B | C | H | L | P |
|---|---|---|---|---|---|---|---|---|---|---|---|---|---|---|---|
| **FORD** **Focus** | | | | | | | | | | | | | | | |
| 1.6 (80 kw) | 2004.07-2012.09 | CVT | F | L | Hatchback FWD G8DA;G8DB;G8DD;G8DE;G8DF | | GCI18172 | Inner Joint | | 34 | 24 | 30.8 | 61 | 89.5 | |
| | 2005.04-2012.09 | 5MT | F | L | Saloon FWD G8DA;G8DB;G8DD;G8DE;G8DF | | GDS18218 | Drive Shaft | | 36 | 26 | 56 | 48 | 582 | |
| | 2005.04-2012.09 | 5MT | F | R | Saloon FWD G8DA;G8DB;G8DD;G8DE;G8DF | | GDS18219 | Drive Shaft | | 36 | 26 | 56.3 | 48 | 921 | |
| | 2005.04-2012.09 | 5MT | F | L | Saloon FWD G8DA;G8DB;G8DD;G8DE;G8DF | | GCO99288 | Outer Joint | | 36 | 26 | 56.3 | 48 | 61 | M |
| | 2005.04-2012.09 | 5MT | F | R | Saloon FWD G8DA;G8DB;G8DD;G8DE;G8DF | | GCO18230 | Outer Joint | | 36 | 26 | 56.3 | 48 | 61 | M |
| | 2005.04-2012.09 | AT/CVT | F | L | Saloon FWD G8DA;G8DB;G8DD;G8DE;G8DF | | GDS18193 | Drive Shaft | | 36 | 34 | 56 | 48 | 568 | |
| | 2005.04-2012.09 | AT/CVT | F | R | Saloon FWD G8DA;G8DB;G8DD;G8DE;G8DF | | GDS18191 | Drive Shaft | | 36 | 34 | 56 | 48 | 890 | |
| | 2005.04-2012.09 | CVT | F | L/R | Saloon FWD G8DA;G8DB;G8DD;G8DE;G8DF | | GCO34093 | Outer Joint | | 36 | 24 | 55.3 | 48 | 59 | I |
| | 2005.04-2012.09 | MT | F | R | Saloon FWD G8DA;G8DB;G8DD;G8DE;G8DF | | GCO99130 | Outer Joint | | 36 | 26 | 56.3 | 48 | 61 | M |
| 1.6 (81 kw) | 2010.01-2012.09 | | F | R | Hatchback FWD C16HDEZ | | GCI18161 | Inner Joint | | 26 | 23 | 40 | 389 | 86 | |
| | 2010.03- | | F | R | Saloon FWD C16HDEZ | | GCI18161 | Inner Joint | | 26 | 23 | 40 | 389 | 86 | |
| 1.6 (85 kw) | 2004.07-2012.09 | 5MT | F | R | Hatchback FWD HXDA;HXDB;SIDA | | GCI18087 | Inner Joint | | 23 | 22 | 40 | 371 | 78.5 | |
| | 2004.07-2012.09 | AT | F | L | Hatchback FWD HXDA;HXDB;SIDA | | GDS18218 | Drive Shaft | | 36 | 26 | 56 | 48 | 582 | |
| | 2004.07-2012.09 | AT | F | L | Hatchback FWD HXDA;HXDB;SIDA | | GDS34252 | Drive Shaft | | 36 | 26 | 55.3 | 48 | 581 | |
| | 2004.07-2012.09 | AT | F | R | Hatchback FWD HXDA;HXDB;SIDA | | GDS18219 | Drive Shaft | | 36 | 26 | 56.3 | 48 | 921 | |
| | 2004.07-2012.09 | AT | F | L/R | Hatchback FWD HXDA;HXDB;SIDA | For Engine code:C16HDEZ | GCO18203 | Outer Joint | | 36 | 23 | 56 | 48 | 57 | I |
| | 2004.07-2012.09 | MT | F | L | Hatchback FWD HXDA;HXDB;SIDA | Inner teeth of wheel side:24 | GDS18189 | Drive Shaft | | 36 | 23 | 56 | 48 | 601 | |
| | 2004.07-2012.09 | MT | F | L | Hatchback FWD HXDA;HXDB;SIDA | Inner teeth of wheel side:24 | GDS18261 | Drive Shaft | | 36 | 23 | 55.8 | 48 | 600 | |
| | 2004.07-2012.09 | MT | F | L | Hatchback FWD HXDA;HXDB;SIDA | Inner teeth of wheel side:23 | GDS18359 | Drive Shaft | | 36 | 23 | 56 | 48 | 594 | |
| | 2004.07-2012.09 | MT | F | R | Hatchback FWD HXDA;HXDB;SIDA | Inner teeth of wheel side:24 | GDS18206 | Drive Shaft | | 36 | 23 | 56 | 48 | 906 | |
| | 2004.07-2012.09 | MT | F | R | Hatchback FWD HXDA;HXDB;SIDA | Inner teeth of wheel side:24 | GDS18262 | Drive Shaft | | 36 | 23 | 55.8 | 48 | 905 | |
| | 2004.07-2012.09 | MT | F | R | Hatchback FWD HXDA;HXDB;SIDA | Inner teeth of wheel side:25 | GDS18337 | Drive Shaft | | 36 | 23 | 51.6 | 48 | 908 | |
| | 2004.07-2012.09 | MT | F | R | Hatchback FWD HXDA;HXDB;SIDA | Inner teeth of wheel side:23 | GDS18358 | Drive Shaft | | 36 | 23 | 56 | 48 | 899 | |
| | 2004.07-2012.09 | MT | F | L | Hatchback FWD HXDA;HXDB;SIDA | | GCO62039 | Outer Joint | | 36 | 24 | 55.8 | 48 | 57 | M |
| | 2004.07-2012.09 | MT | F | L/R | Hatchback FWD HXDA;HXDB;SIDA | | GCO99129 | Outer Joint | | 36 | 24 | 56 | 48 | 57 | M |
| | 2004.07-2012.09 | MT | F | L | Hatchback FWD HXDA;HXDB;SIDA | Date to:2005.09 | GCI18086 | Inner Joint | | 23 | 22 | 40 | 61 | 90 | |
| | 2004.07-2012.09 | | F | L | Hatchback FWD HXDA;HXDB;SIDA | Date To:2011.07 | GCI18044 | Inner Joint | | 26 | 23 | 40 | 68.5 | 99.5 | |
| | 2004.07-2012.09 | | F | R | Hatchback FWD HXDA;HXDB;SIDA | Date To:2011.07 | GCI18161 | Inner Joint | | 26 | 23 | 40 | 389 | 86 | |
| | 2005.04-2012.09 | 5MT | F | R | Saloon FWD HXDA;HXDB;SIDA | | GCI18087 | Inner Joint | | 23 | 22 | 40 | 371 | 78.5 | |
| | 2005.04-2012.09 | AT | F | L | Saloon FWD HXDA;HXDB;SIDA | | GDS34252 | Drive Shaft | | 36 | 26 | 55.3 | 48 | 581 | |
| | 2005.04-2012.09 | AT | F | L/R | Saloon FWD HXDA;HXDB;SIDA | For Engine code:C16HDEZ | GCO18203 | Outer Joint | | 36 | 23 | 56 | 48 | 57 | I |
| | 2005.04-2012.09 | MT | F | L | Saloon FWD HXDA;HXDB;SIDA | | GDS18189 | Drive Shaft | | 36 | 23 | 56 | 48 | 601 | |
| | 2005.04-2012.09 | MT | F | L | Saloon FWD HXDA;HXDB;SIDA | Inner teeth of wheel side:24 | GDS18261 | Drive Shaft | | 36 | 23 | 55.8 | 48 | 600 | |
| | 2005.04-2012.09 | MT | F | L | Saloon FWD HXDA;HXDB;SIDA | Inner teeth of wheel side:23 | GDS18359 | Drive Shaft | | 36 | 23 | 56 | 48 | 594 | |
| | 2005.04-2012.09 | MT | F | R | Saloon FWD HXDA;HXDB;SIDA | | GDS18206 | Drive Shaft | | 36 | 23 | 56 | 48 | 906 | |
| | 2005.04-2012.09 | MT | F | R | Saloon FWD HXDA;HXDB;SIDA | Inner teeth of wheel side:24 | GDS18262 | Drive Shaft | | 36 | 23 | 55.8 | 48 | 905 | |
| | 2005.04-2012.09 | MT | F | R | Saloon FWD HXDA;HXDB;SIDA | | GDS18337 | Drive Shaft | | 36 | 23 | 51.6 | 48 | 908 | |
| | 2005.04-2012.09 | MT | F | R | Saloon FWD HXDA;HXDB;SIDA | Inner teeth of wheel side:23 | GDS18358 | Drive Shaft | | 36 | 23 | 56 | 48 | 899 | |
| | 2005.04-2012.09 | MT | F | L | Saloon FWD HXDA;HXDB;SIDA | | GCO18264 | Outer Joint | | 36 | 25 | 51.6 | 48 | 58 | O |
| | 2005.04-2012.09 | MT | F | L | Saloon FWD HXDA;HXDB;SIDA | | GCO62039 | Outer Joint | | 36 | 24 | 55.8 | 48 | 57 | M |
| | 2005.04-2012.09 | MT | F | L/R | Saloon FWD HXDA;HXDB;SIDA | | GCO99129 | Outer Joint | | 36 | 24 | 56 | 48 | 57 | M |
| | 2005.04-2012.09 | MT | F | L | Saloon FWD HXDA;HXDB;SIDA | Date to:2005.09 | GCI18086 | Inner Joint | | 23 | 22 | 40 | 61 | 90 | |
| | 2005.04-2012.09 | MT | F | L | Saloon FWD HXDA;HXDB;SIDA | | GCI18168 | Inner Joint | | 23 | 22 | 40 | 61 | 90 | |
| | 2005.04-2012.09 | | F | L | Saloon FWD HXDA;HXDB;SIDA | Date to:2011.07 | GCI18044 | Inner Joint | | 26 | 23 | 40 | 68.5 | 99.5 | |
| | 2005.04-2012.09 | | F | R | Saloon FWD HXDA;HXDB;SIDA | Date to:2011.07 | GCI18161 | Inner Joint | | 26 | 23 | 40 | 389 | 86 | |
| | 2009.10-2011.07 | 5MT | F | L | Hatchback FWD SIDA | Inner teeth of wheel side:24 | GDS18261 | Drive Shaft | | 36 | 23 | 55.8 | 48 | 600 | |
| | 2009.10-2011.07 | 5MT | F | L | Hatchback FWD SIDA | Inner teeth of wheel side:23 | GDS18359 | Drive Shaft | | 36 | 23 | 56 | 48 | 594 | |
| | 2009.10-2011.07 | 5MT | F | R | Hatchback FWD SIDA | Inner teeth of wheel side:24 | GDS18262 | Drive Shaft | | 36 | 23 | 55.8 | 48 | 905 | |
| | 2009.10-2011.07 | 5MT | F | R | Hatchback FWD SIDA | Inner teeth of wheel side:23 | GDS18358 | Drive Shaft | | 36 | 23 | 56 | 48 | 899 | |
| | 2009.10-2011.07 | 5MT | F | R | Hatchback FWD SIDA | | GCI18087 | Inner Joint | | 23 | 22 | 40 | 371 | 78.5 | |
| | 2009.10-2011.07 | MT | F | L | Hatchback FWD SIDA | | GDS18189 | Drive Shaft | | 36 | 23 | 56 | 48 | 601 | |
| | 2009.10-2011.07 | MT | F | R | Hatchback FWD SIDA | | GDS18206 | Drive Shaft | | 36 | 23 | 56 | 48 | 906 | |
| | 2009.10-2011.07 | MT | F | R | Hatchback FWD SIDA | | GDS18337 | Drive Shaft | | 36 | 23 | 51.6 | 48 | 908 | |
| | 2009.10-2011.07 | MT | F | L | Hatchback FWD SIDA | | GCO18264 | Outer Joint | | 36 | 25 | 51.6 | 48 | 58 | O |
| | 2009.10-2011.07 | MT | F | L/R | Hatchback FWD SIDA | | GCO99129 | Outer Joint | | 36 | 24 | 56 | 48 | 57 | M |
| | 2009.10-2011.07 | MT | F | L | Hatchback FWD SIDA | | GCI18168 | Inner Joint | | 23 | 22 | 40 | 61 | 90 | |
| | 2009.10-2011.07 | | F | L/R | Hatchback FWD SIDA | | GCO62039 | Outer Joint | | 36 | 24 | 55.8 | 48 | 57 | M |
| | 2009.10-2011.07 | | F | L | Hatchback FWD SIDA | | GCI18086 | Inner Joint | | 23 | 22 | 40 | 61 | 90 | |
| | 2009.10-2011.07 | | F | R | Hatchback FWD SIDA | | GCI18161 | Inner Joint | | 26 | 23 | 40 | 389 | 86 | |
| | 2010.01-2013.09 | | F | R | Hatchback FWD | | GCI18161 | Inner Joint | | 26 | 23 | 40 | 389 | 86 | |
| | 2010.01-2013.09 | | F | R | Saloon FWD C16HDEX | | GCI18161 | Inner Joint | | 26 | 23 | 40 | 389 | 86 | |
| | 2010.07-2017.12 | 6MT | F | L | Hatchback FWD T1DA;T1DB | | GDS18295 | Drive Shaft | | 27 | 26 | 62.7 | 96 | 637 | |
| | 2010.07-2017.12 | 6MT | F | R | Hatchback FWD T1DA;T1DB | | GDS18294 | Drive Shaft | | 27 | 26 | 62.7 | 96 | 972 | |
| | 2010.07-2017.12 | 6MT | F | L/R | Hatchback FWD T1DA;T1DB | | GCO18240 | Outer Joint | | 27 | 26 | 62.7 | 96 | 62.5 | M |
| | 2010.07-2017.12 | 6MT | F | L | Hatchback FWD T1DA;T1DB | | GCI21028 | Inner Joint | | 26 | 32 | 40 | 61 | 112.5 | |

| | YEAR | TRANSM. | F/R | L/R | BODY STYLE & DRIVE TYPE & ENGINE | REMARKS | G-AP Ref. | PRODUCT | ABS | Technical Specifications | | | | | |
|---|---|---|---|---|---|---|---|---|---|---|---|---|---|---|---|
| | | | | | | | | | | A | B | C | H | L | P |
| **FORD** **Focus** | | | | | | | | | | | | | | | |
| 1.6 (85 kw) | 2010.07-2017.12 | 6MT | F | R | Hatchback FWD T1DA;T1DB | | GCI81338 | Inner Joint | | 26 | 32 | 40 | 383 | 99 | |
| | 2010.07-2020.02 | 6MT | F | L | Saloon FWD T1DA;T1DB | | GCI21028 | Inner Joint | | 26 | 32 | 40 | 61 | 112.5 | |
| | 2010.07-2020.02 | 6MT | F | R | Saloon FWD T1DA;T1DB | | GCI81338 | Inner Joint | | 26 | 32 | 40 | 383 | 99 | |
| | 2010.07-2020.02 | MT | F | L | Saloon FWD T1DA;T1DB | | GDS18295 | Drive Shaft | | 27 | 26 | 62.7 | 96 | 637 | |
| | 2010.07-2020.02 | MT | F | R | Saloon FWD T1DA;T1DB | | GDS18294 | Drive Shaft | | 27 | 26 | 62.7 | 96 | 972 | |
| | 2010.07-2020.02 | MT | F | L/R | Saloon FWD T1DA;T1DB | | GCO18240 | Outer Joint | | 27 | 26 | 62.7 | 96 | 62.5 | M |
| | 2012.02-2017.12 | 6MT | F | L | Hatchback Van FWD T1DA;T1DB | | GDS18295 | Drive Shaft | | 27 | 26 | 62.7 | 96 | 637 | |
| | 2012.02-2017.12 | 6MT | F | R | Hatchback Van FWD T1DA;T1DB | | GDS18294 | Drive Shaft | | 27 | 26 | 62.7 | 96 | 972 | |
| | 2012.02-2017.12 | 6MT | F | L | Hatchback Van FWD T1DA;T1DB | | GCO18240 | Outer Joint | | 27 | 26 | 62.7 | 96 | 62.5 | M |
| | 2012.02-2017.12 | 6MT | F | L | Hatchback Van FWD T1DA;T1DB | Date to:2012.08 | GCI21028 | Inner Joint | | 26 | 32 | 40 | 61 | 112.5 | |
| | 2012.02-2017.12 | 6MT | F | R | Hatchback Van FWD T1DA;T1DB | | GCI81338 | Inner Joint | | 26 | 32 | 40 | 383 | 99 | |
| 1.6 (86 kw) | 2012.02-2020.02 | 5MT | F | L | Hatchback FWD MUDA | | GDS18322 | Drive Shaft | | 27 | 23 | 62.8 | 95.5 | 657 | |
| | 2012.02-2020.02 | 5MT | F | R | Hatchback FWD MUDA | | GDS18323 | Drive Shaft | | 27 | 23 | 62.8 | 95.5 | 961 | |
| | 2012.02-2020.02 | 5MT | F | L | Hatchback FWD MUDA | | GCI18086 | Inner Joint | | 23 | 22 | 40 | 61 | 90 | |
| | 2012.02-2020.02 | 5MT | F | R | Hatchback FWD MUDA | | GCI18263 | Inner Joint | | 23 | 22 | 40 | 375 | 76 | |
| | 2012.02-2020.02 | AT | F | L | Hatchback FWD MUDA | | GDS18296 | Drive Shaft | | 27 | 34 | 63 | 96 | 606 | |
| | 2012.02-2020.02 | AT | F | L/R | Hatchback FWD MUDA | | GCO18238 | Outer Joint | | 27 | 23 | 63 | 96 | 57 | M |
| | 2012.02-2020.02 | MT | F | L/R | Hatchback FWD MUDA | | GCO18244 | Outer Joint | | 27 | 24 | 62.8 | 95.5 | 59 | M |
| 1.6 (88 kw) | 2010.07-2020.02 | 5MT | F | L | Hatchback FWD MUDA;MUDD | | GDS18322 | Drive Shaft | | 27 | 23 | 62.8 | 95.5 | 657 | |
| | 2010.07-2020.02 | 5MT | F | R | Hatchback FWD MUDA;MUDD | | GDS18323 | Drive Shaft | | 27 | 23 | 62.8 | 95.5 | 961 | |
| | 2010.07-2020.02 | 5MT | F | L | Hatchback FWD MUDA;MUDD | | GCI18086 | Inner Joint | | 23 | 22 | 40 | 61 | 90 | |
| | 2010.07-2020.02 | 5MT | F | R | Hatchback FWD MUDA;MUDD | | GCI18263 | Inner Joint | | 23 | 22 | 40 | 375 | 76 | |
| | 2010.07-2020.02 | AT | F | L | Hatchback FWD MUDA;MUDD | | GDS18296 | Drive Shaft | | 27 | 34 | 63 | 96 | 606 | |
| | 2010.07-2020.02 | AT | F | L/R | Hatchback FWD MUDA;MUDD | | GCO18238 | Outer Joint | | 27 | 23 | 63 | 96 | 57 | M |
| | 2010.07-2020.02 | MT | F | L/R | Hatchback FWD MUDA;MUDD | | GCO18244 | Outer Joint | | 27 | 24 | 62.8 | 95.5 | 59 | M |
| | 2010.07-2020.02 | | F | R | Hatchback FWD MUDA;MUDD | | GCI18161 | Inner Joint | | 26 | 23 | 40 | 389 | 86 | |
| | 2010.07-2020.02 | 5MT | F | L | Saloon FWD MUDA;MUDD | | GDS18322 | Drive Shaft | | 27 | 23 | 62.8 | 95.5 | 657 | |
| | 2010.07-2020.02 | 5MT | F | R | Saloon FWD MUDA;MUDD | | GDS18323 | Drive Shaft | | 27 | 23 | 62.8 | 95.5 | 961 | |
| | 2010.07-2020.02 | 5MT | F | L | Saloon FWD MUDA;MUDD | | GCI18086 | Inner Joint | | 23 | 22 | 40 | 61 | 90 | |
| | 2010.07-2020.02 | 5MT | F | R | Saloon FWD MUDA;MUDD | | GCI18263 | Inner Joint | | 23 | 22 | 40 | 375 | 76 | |
| | 2010.07-2020.02 | AT | F | L | Saloon FWD MUDA;MUDD | | GDS18296 | Drive Shaft | | 27 | 34 | 63 | 96 | 606 | |
| | 2010.07-2020.02 | AT | F | L/R | Saloon FWD MUDA;MUDD | | GCO18238 | Outer Joint | | 27 | 23 | 63 | 96 | 57 | M |
| | 2010.07-2020.02 | MT | F | L/R | Saloon FWD MUDA;MUDD | | GCO18244 | Outer Joint | | 27 | 24 | 62.8 | 95.5 | 59 | M |
| | 2010.07-2020.02 | | F | R | Saloon FWD MUDA;MUDD | | GCI18161 | Inner Joint | | 26 | 23 | 40 | 389 | 86 | |
| | 2012.02-2017.12 | 5MT | F | L | Hatchback FWD MUDA;MUDD | | GDS18322 | Drive Shaft | | 27 | 23 | 62.8 | 95.5 | 657 | |
| | 2012.02-2017.12 | 5MT | F | R | Hatchback FWD MUDA;MUDD | | GDS18323 | Drive Shaft | | 27 | 23 | 62.8 | 95.5 | 961 | |
| | 2012.02-2017.12 | 5MT | F | L | Hatchback FWD MUDA;MUDD | | GCI18086 | Inner Joint | | 23 | 22 | 40 | 61 | 90 | |
| | 2012.02-2017.12 | 5MT | F | R | Hatchback FWD MUDA;MUDD | | GCI18263 | Inner Joint | | 23 | 22 | 40 | 375 | 76 | |
| | 2012.02-2017.12 | AT | F | L/R | Hatchback FWD MUDA;MUDD | | GCO18238 | Outer Joint | | 27 | 23 | 63 | 96 | 57 | M |
| | 2012.02-2017.12 | MT | F | L/R | Hatchback FWD MUDA;MUDD | | GCO18244 | Outer Joint | | 27 | 24 | 62.8 | 95.5 | 59 | M |
| | 2012.02-2020.02 | 5MT | F | L | Hatchback FWD MUDA;MUDD | | GDS18322 | Drive Shaft | | 27 | 23 | 62.8 | 95.5 | 657 | |
| | 2012.02-2020.02 | 5MT | F | R | Hatchback FWD MUDA;MUDD | | GDS18323 | Drive Shaft | | 27 | 23 | 62.8 | 95.5 | 961 | |
| | 2012.02-2020.02 | 5MT | F | L | Hatchback FWD MUDA;MUDD | | GCI18086 | Inner Joint | | 23 | 22 | 40 | 61 | 90 | |
| | 2012.02-2020.02 | 5MT | F | R | Hatchback FWD MUDA;MUDD | | GCI18263 | Inner Joint | | 23 | 22 | 40 | 375 | 76 | |
| | 2012.02-2020.02 | AT | F | L | Hatchback FWD MUDA;MUDD | | GDS18296 | Drive Shaft | | 27 | 34 | 63 | 96 | 606 | |
| | 2012.02-2020.02 | AT | F | L/R | Hatchback FWD MUDA;MUDD | | GCO18238 | Outer Joint | | 27 | 23 | 63 | 96 | 57 | M |
| | 2012.02-2020.02 | MT | F | L/R | Hatchback FWD MUDA;MUDD | | GCO18244 | Outer Joint | | 27 | 24 | 62.8 | 95.5 | 59 | M |
| 1.6 (92 kw) | 2010.07-2017.12 | 5MT | F | L | Hatchback FWD PNDA;PNDD | | GDS18322 | Drive Shaft | | 27 | 23 | 62.8 | 95.5 | 657 | |
| | 2010.07-2017.12 | 5MT | F | R | Hatchback FWD PNDA;PNDD | | GDS18323 | Drive Shaft | | 27 | 23 | 62.8 | 95.5 | 961 | |
| | 2010.07-2017.12 | 5MT | F | L | Hatchback FWD PNDA;PNDD | | GCI18086 | Inner Joint | | 23 | 22 | 40 | 61 | 90 | |
| | 2010.07-2017.12 | 5MT | F | R | Hatchback FWD PNDA;PNDD | | GCI18161 | Inner Joint | | 26 | 23 | 40 | 389 | 86 | |
| | 2010.07-2017.12 | 5MT | F | R | Hatchback FWD PNDA;PNDD | | GCI18263 | Inner Joint | | 23 | 22 | 40 | 375 | 76 | |
| | 2010.07-2017.12 | 6AT/5MT | F | L | Hatchback FWD PNDA;PNDD | | GCO18244 | Outer Joint | | 27 | 24 | 62.8 | 95.5 | 59 | M |
| | 2010.07-2017.12 | 6AT/5MT | F | L/R | Hatchback FWD PNDA;PNDD | | GCO18238 | Outer Joint | | 27 | 23 | 63 | 96 | 57 | M |
| | 2010.07-2017.12 | 6DCT | F | L | Hatchback FWD PNDA;PNDD | | GDS18296 | Drive Shaft | | 27 | 34 | 63 | 96 | 606 | |
| | 2010.07-2017.12 | 6DCT | F | R | Hatchback FWD PNDA;PNDD | | GDS18477 | Drive Shaft | | 27 | 34 | 63 | 96 | 1014 | |
| | 2010.07-2017.12 | 6DCT | F | R | Hatchback FWD PNDA;PNDD | | GCI18140 | Inner Joint | | 34 | 22 | 40 | 424 | 83.5 | |
| | 2010.07-2017.12 | | F | | Hatchback FWD PNDA;PNDD | | GCO18222 | Outer Joint | | 25 | 23 | 53.3 | 87 | 56 | M |
| | 2010.07-2020.02 | 5MT | F | L | Saloon FWD PNDA;PNDD | | GDS18322 | Drive Shaft | | 27 | 23 | 62.8 | 95.5 | 657 | |
| | 2010.07-2020.02 | 5MT | F | R | Saloon FWD PNDA;PNDD | | GDS18323 | Drive Shaft | | 27 | 23 | 62.8 | 95.5 | 961 | |
| | 2010.07-2020.02 | 5MT | F | L | Saloon FWD PNDA;PNDD | | GCI18086 | Inner Joint | | 23 | 22 | 40 | 61 | 90 | |
| | 2010.07-2020.02 | 5MT | F | R | Saloon FWD PNDA;PNDD | | GCI18263 | Inner Joint | | 23 | 22 | 40 | 375 | 76 | |
| | 2010.07-2020.02 | 6AT/5MT | F | L | Saloon FWD PNDA;PNDD | | GCO18244 | Outer Joint | | 27 | 24 | 62.8 | 95.5 | 59 | M |
| | 2010.07-2020.02 | 6AT/5MT | F | L/R | Saloon FWD PNDA;PNDD | | GCO18238 | Outer Joint | | 27 | 23 | 63 | 96 | 57 | M |
| | 2010.07-2020.02 | 6DCT | F | L | Saloon FWD PNDA;PNDD | | GDS18296 | Drive Shaft | | 27 | 34 | 63 | 96 | 606 | |

| | YEAR | TRANSM. | F/R | L/R | BODY STYLE & DRIVE TYPE & ENGINE | REMARKS | G-AP Ref. | PRODUCT | ABS | Technical Specifications | | | | | |
|---|---|---|---|---|---|---|---|---|---|---|---|---|---|---|---|
| | | | | | | | | | | A | B | C | H | L | P |
| **FORD** **Focus** | | | | | | | | | | | | | | | |
| 1.6 (92 kw) | 2010.07-2020.02 | 6DCT | F | R | Saloon FWD PNDA;PNDD | Date To:2016.09 | GDS18477 | Drive Shaft | | 27 | 34 | 63 | 96 | 1014 | |
| | 2010.07-2020.02 | 6DCT | F | R | Saloon FWD PNDA;PNDD | | GCI18140 | Inner Joint | | 34 | 22 | 40 | 424 | 83.5 | |
| | 2010.07-2020.02 | AT | F | R | Saloon FWD PNDA;PNDD | | GDS18477 | Drive Shaft | | 27 | 34 | 63 | 96 | 1014 | |
| | 2010.07-2020.02 | AT | F | | Saloon FWD PNDA;PNDD | | GCO18222 | Outer Joint | | 25 | 23 | 53.3 | 87 | 56 | M |
| | 2010.07-2020.02 | | F | R | Saloon FWD PNDA;PNDD | | GCI18161 | Inner Joint | | 26 | 23 | 40 | 389 | 86 | |
| 1.6 (99 kw) | 2013.10-2019.06 | | F | R | Hatchback FWD C16HDEX | | GCI18263 | Inner Joint | | 23 | 22 | 40 | 375 | 76 | |
| | 2015.06- | | F | R | Saloon FWD | | GCI18263 | Inner Joint | | 23 | 22 | 40 | 375 | 76 | |
| 1.6 (110 kw) | 2010.07-2014.06 | 6MT | F | L | Hatchback FWD JQDA;JQDB;YUDA | | GDS18295 | Drive Shaft | | 27 | 26 | 62.7 | 96 | 637 | |
| | 2010.07-2014.06 | 6MT | F | R | Hatchback FWD JQDA;JQDB;YUDA | | GDS18299 | Drive Shaft | | 27 | 26 | 60.8 | 96 | 975 | |
| | 2010.07-2014.06 | 6MT | F | L | Hatchback FWD JQDA;JQDB;YUDA | | GCI81392 | Inner Joint | | 26 | 24 | 40 | 60 | 112 | |
| | 2010.07-2014.06 | MT | F | R | Hatchback FWD JQDA;JQDB;YUDA | | GCO18239 | Outer Joint | | 27 | 26 | 62.7 | 96 | 62.5 | M |
| | 2010.07-2014.06 | MT | F | L/R | Hatchback FWD JQDA;JQDB;YUDA | | GCO18244 | Outer Joint | | 27 | 24 | 62.8 | 95.5 | 59 | M |
| | 2010.07-2014.06 | | F | | Hatchback FWD JQDA;JQDB;YUDA | Date From:2011.03 | GCO18238 | Outer Joint | | 27 | 23 | 63 | 96 | 57 | M |
| | 2010.07-2014.06 | | F | | Hatchback FWD JQDA;JQDB;YUDA | | GCO18240 | Outer Joint | | 27 | 26 | 62.7 | 96 | 62.5 | M |
| | 2010.07-2014.06 | | F | R | Hatchback FWD JQDA;JQDB;YUDA | | GCI18161 | Inner Joint | | 26 | 23 | 40 | 389 | 86 | |
| | 2010.07-2014.06 | | F | R | Hatchback FWD JQDA;JQDB;YUDA | | GCI18263 | Inner Joint | | 23 | 22 | 40 | 375 | 76 | |
| | 2010.07-2014.06 | 6MT | F | L | Saloon FWD JQDA;JQDB;YUDA | | GDS18295 | Drive Shaft | | 27 | 26 | 62.7 | 96 | 637 | |
| | 2010.07-2014.06 | 6MT | F | R | Saloon FWD JQDA;JQDB;YUDA | | GDS18299 | Drive Shaft | | 27 | 26 | 60.8 | 96 | 975 | |
| | 2010.07-2014.06 | 6MT | F | L | Saloon FWD JQDA;JQDB;YUDA | | GCI81392 | Inner Joint | | 26 | 24 | 40 | 60 | 112 | |
| | 2010.07-2014.06 | MT | F | R | Saloon FWD JQDA;JQDB;YUDA | | GCO18239 | Outer Joint | | 27 | 26 | 62.7 | 96 | 62.5 | M |
| | 2010.07-2014.06 | MT | F | L/R | Saloon FWD JQDA;JQDB;YUDA | | GCO18244 | Outer Joint | | 27 | 24 | 62.8 | 95.5 | 59 | M |
| | 2010.07-2014.06 | | F | | Saloon FWD JQDA;JQDB;YUDA | Date From:2011.03 | GCO18238 | Outer Joint | | 27 | 23 | 63 | 96 | 57 | M |
| | 2010.07-2014.06 | | F | | Saloon FWD JQDA;JQDB;YUDA | | GCO18240 | Outer Joint | | 27 | 26 | 62.7 | 96 | 62.5 | M |
| | 2010.07-2014.06 | | F | R | Saloon FWD JQDA;JQDB;YUDA | | GCI18161 | Inner Joint | | 26 | 23 | 40 | 389 | 86 | |
| | 2010.07-2014.06 | | F | R | Saloon FWD JQDA;JQDB;YUDA | | GCI18263 | Inner Joint | | 23 | 22 | 40 | 375 | 76 | |
| | 2011.11-2014.06 | 6MT | F | L | Hatchback Van FWD JQDA;JQDB;YUDA | | GDS18295 | Drive Shaft | | 27 | 26 | 62.7 | 96 | 637 | |
| | 2011.11-2014.06 | 6MT | F | R | Hatchback Van FWD JQDA;JQDB;YUDA | | GDS18299 | Drive Shaft | | 27 | 26 | 60.8 | 96 | 975 | |
| | 2011.11-2014.06 | 6MT | F | L | Hatchback Van FWD JQDA;JQDB;YUDA | | GCI81392 | Inner Joint | | 26 | 24 | 40 | 60 | 112 | |
| | 2011.11-2014.06 | MT | F | L/R | Hatchback Van FWD JQDA;JQDB;YUDA | Date from:2012.01 | GCO18244 | Outer Joint | | 27 | 24 | 62.8 | 95.5 | 59 | M |
| | 2011.11-2014.06 | | F | R | Hatchback Van FWD JQDA;JQDB;YUDA | | GCI18263 | Inner Joint | | 23 | 22 | 40 | 375 | 76 | |
| | 2013.07-2020.02 | 6MT | F | L | Hatchback FWD YUDA | | GDS18295 | Drive Shaft | | 27 | 26 | 62.7 | 96 | 637 | |
| | 2013.07-2020.02 | 6MT | F | R | Hatchback FWD YUDA | | GDS18299 | Drive Shaft | | 27 | 26 | 60.8 | 96 | 975 | |
| | 2013.07-2020.02 | 6MT | F | L | Hatchback FWD YUDA | | GCI81392 | Inner Joint | | 26 | 24 | 40 | 60 | 112 | |
| | 2013.07-2020.02 | MT | F | L/R | Hatchback FWD YUDA | Date from:2014.01 | GCO18244 | Outer Joint | | 27 | 24 | 62.8 | 95.5 | 59 | M |
| | 2013.07-2020.02 | | F | | Hatchback FWD YUDA | | GCO18240 | Outer Joint | | 27 | 26 | 62.7 | 96 | 62.5 | M |
| | 2013.07-2020.02 | | F | R | Hatchback FWD YUDA | | GCI18263 | Inner Joint | | 23 | 22 | 40 | 375 | 76 | |
| | 2013.07-2020.02 | 6MT | F | L | Saloon FWD YUDA | | GDS18295 | Drive Shaft | | 27 | 26 | 62.7 | 96 | 637 | |
| | 2013.07-2020.02 | 6MT | F | R | Saloon FWD YUDA | | GDS18299 | Drive Shaft | | 27 | 26 | 60.8 | 96 | 975 | |
| | 2013.07-2020.02 | 6MT | F | L | Saloon FWD YUDA | | GCI81392 | Inner Joint | | 26 | 24 | 40 | 60 | 112 | |
| | 2013.07-2020.02 | MT | F | R | Saloon FWD YUDA | | GCO18239 | Outer Joint | | 27 | 26 | 62.7 | 96 | 62.5 | M |
| | 2013.07-2020.02 | MT | F | L/R | Saloon FWD YUDA | | GCO18244 | Outer Joint | | 27 | 24 | 62.8 | 95.5 | 59 | M |
| | 2013.07-2020.02 | | F | | Saloon FWD YUDA | | GCO18240 | Outer Joint | | 27 | 26 | 62.7 | 96 | 62.5 | M |
| | 2013.07-2020.02 | | F | R | Saloon FWD YUDA | | GCI18263 | Inner Joint | | 23 | 22 | 40 | 375 | 76 | |
| 1.6 (134 kw) | 2010.07-2014.06 | 6MT | F | L | Hatchback FWD JTDA;JTDB | | GDS18295 | Drive Shaft | | 27 | 26 | 62.7 | 96 | 637 | |
| | 2010.07-2014.06 | 6MT | F | R | Hatchback FWD JTDA;JTDB | | GDS18299 | Drive Shaft | | 27 | 26 | 60.8 | 96 | 975 | |
| | 2010.07-2014.06 | 6MT | F | L | Hatchback FWD JTDA;JTDB | | GCI81392 | Inner Joint | | 26 | 24 | 40 | 60 | 112 | |
| | 2010.07-2014.06 | MT | F | R | Hatchback FWD JTDA;JTDB | | GCO18239 | Outer Joint | | 27 | 26 | 62.7 | 96 | 62.5 | M |
| | 2010.07-2014.06 | MT | F | L/R | Hatchback FWD JTDA;JTDB | | GCO18244 | Outer Joint | | 27 | 24 | 62.8 | 95.5 | 59 | M |
| | 2010.07-2014.06 | | F | | Hatchback FWD JTDA;JTDB | Date From:2011.03 | GCO18238 | Outer Joint | | 27 | 23 | 63 | 96 | 57 | M |
| | 2010.07-2014.06 | | F | | Hatchback FWD JTDA;JTDB | | GCO18240 | Outer Joint | | 27 | 26 | 62.7 | 96 | 62.5 | M |
| | 2010.07-2014.06 | | F | R | Hatchback FWD JTDA;JTDB | | GCI18161 | Inner Joint | | 26 | 23 | 40 | 389 | 86 | |
| | 2010.07-2014.06 | | F | R | Hatchback FWD JTDA;JTDB | | GCI18263 | Inner Joint | | 23 | 22 | 40 | 375 | 76 | |
| | 2010.07-2014.06 | 6MT | F | L | Saloon FWD JTDA;JTDB | | GDS18295 | Drive Shaft | | 27 | 26 | 62.7 | 96 | 637 | |
| | 2010.07-2014.06 | 6MT | F | R | Saloon FWD JTDA;JTDB | | GDS18299 | Drive Shaft | | 27 | 26 | 60.8 | 96 | 975 | |
| | 2010.07-2014.06 | 6MT | F | L | Saloon FWD JTDA;JTDB | | GCI81392 | Inner Joint | | 26 | 24 | 40 | 60 | 112 | |
| | 2010.07-2014.06 | MT | F | R | Saloon FWD JTDA;JTDB | | GCO18239 | Outer Joint | | 27 | 26 | 62.7 | 96 | 62.5 | M |
| | 2010.07-2014.06 | MT | F | L/R | Saloon FWD JTDA;JTDB | | GCO18244 | Outer Joint | | 27 | 24 | 62.8 | 95.5 | 59 | M |
| | 2010.07-2014.06 | | F | | Saloon FWD JTDA;JTDB | Date From:2011.03 | GCO18238 | Outer Joint | | 27 | 23 | 63 | 96 | 57 | M |
| | 2010.07-2014.06 | | F | | Saloon FWD JTDA;JTDB | | GCO18240 | Outer Joint | | 27 | 26 | 62.7 | 96 | 62.5 | M |
| | 2010.07-2014.06 | | F | R | Saloon FWD JTDA;JTDB | | GCI18161 | Inner Joint | | 26 | 23 | 40 | 389 | 86 | |
| | 2010.07-2014.06 | | F | R | Saloon FWD JTDA;JTDB | | GCI18263 | Inner Joint | | 23 | 22 | 40 | 375 | 76 | |
| | 2011.11-2014.06 | 6MT | F | L | Hatchback Van FWD JTDA;JTDB | | GDS18295 | Drive Shaft | | 27 | 26 | 62.7 | 96 | 637 | |
| | 2011.11-2014.06 | 6MT | F | R | Hatchback Van FWD JTDA;JTDB | | GDS18299 | Drive Shaft | | 27 | 26 | 60.8 | 96 | 975 | |
| | 2011.11-2014.06 | 6MT | F | L | Hatchback Van FWD JTDA;JTDB | | GCI81392 | Inner Joint | | 26 | 24 | 40 | 60 | 112 | |
| | 2011.11-2014.06 | MT | F | L/R | Hatchback Van FWD JTDA;JTDB | Date from:2012.01 | GCO18244 | Outer Joint | | 27 | 24 | 62.8 | 95.5 | 59 | M |

| | YEAR | TRANSM. | F/R | L/R | BODY STYLE & DRIVE TYPE & ENGINE | REMARKS | G-AP Ref. | PRODUCT | ABS | Technical Specifications A | B | C | H | L | P |
|---|---|---|---|---|---|---|---|---|---|---|---|---|---|---|---|
| **FORD** **Focus** | | | | | | | | | | | | | | | |
| 1.6 (134 kw) | 2011.11-2014.06 | | F | R | Hatchback Van FWD JTDA;JTDB | | GCI18263 | Inner Joint | | 23 | 22 | 40 | 375 | 76 | |
| 1.8 (55 kw) | 1999.08-2004.11 | 5MT | F | L | Hatchback FWD BHDA/BHDB | | GDS18101 | Drive Shaft | | 25 | 26 | 53.4 | 88.5 | 613 | |
| | 1999.08-2004.11 | 5MT | F | R | Hatchback FWD BHDA/BHDB | | GDS18102 | Drive Shaft | | 25 | 26 | 53.4 | 88.5 | 944.5 | |
| | 1999.08-2004.11 | 5MT | F | R | Hatchback FWD BHDA/BHDB | | GCI18045 | Inner Joint | | 26 | 23 | 40 | 389 | 92 | |
| | 1999.08-2004.11 | AT/MT | F | L/R | Hatchback FWD BHDA/BHDB | | GCO18003 | Outer Joint | | 25 | 21 | 53.3 | 89 | 53 | M |
| | 1999.08-2004.11 | AT/MT | F | L/R | Hatchback FWD BHDA/BHDB | | GCO18013 | Outer Joint | | 25 | 23 | 53.4 | 88.5 | 57 | M |
| | 1999.08-2004.11 | MT | F | L | Hatchback FWD BHDA/BHDB | | GCI18162 | Inner Joint | | 23 | 21 | 40 | 61 | 87.5 | |
| | 2001.08-2005.03 | 5MT | F | L | Saloon FWD BHDA/BHDB | | GDS18101 | Drive Shaft | | 25 | 26 | 53.4 | 88.5 | 613 | |
| | 2001.08-2005.03 | 5MT | F | R | Saloon FWD BHDA/BHDB | | GDS18102 | Drive Shaft | | 25 | 26 | 53.4 | 88.5 | 944.5 | |
| | 2001.08-2005.03 | 5MT | F | R | Saloon FWD BHDA/BHDB | | GCI18045 | Inner Joint | | 26 | 23 | 40 | 389 | 92 | |
| | 2001.08-2005.03 | | F | L/R | Saloon FWD BHDA/BHDB | | GCO18013 | Outer Joint | | 25 | 23 | 53.4 | 88.5 | 57 | M |
| 1.8 (66 kw) | 1998.10-2004.11 | AT/MT | F | L/R | Hatchback FWD C9DA/C9DB/C9DC | | GCO18013 | Outer Joint | | 25 | 23 | 53.4 | 88.5 | 57 | M |
| | 1998.10-2004.11 | MT | F | L | Hatchback FWD C9DA/C9DB/C9DC | | GDS18101 | Drive Shaft | | 25 | 26 | 53.4 | 88.5 | 613 | |
| | 1998.10-2004.11 | MT | F | R | Hatchback FWD C9DA/C9DB/C9DC | | GDS18102 | Drive Shaft | | 25 | 26 | 53.4 | 88.5 | 944.5 | |
| | 1998.10-2004.11 | MT | F | L | Hatchback FWD C9DA/C9DB/C9DC | | GCI18162 | Inner Joint | | 23 | 21 | 40 | 61 | 87.5 | |
| | 1998.10-2004.11 | MT | F | R | Hatchback FWD C9DA/C9DB/C9DC | | GCI18045 | Inner Joint | | 26 | 23 | 40 | 389 | 92 | |
| | 1999.02-2004.11 | MT | F | L | Saloon FWD C9DA/C9DB/C9DC | | GDS18101 | Drive Shaft | | 25 | 26 | 53.4 | 88.5 | 613 | |
| | 1999.02-2004.11 | MT | F | R | Saloon FWD C9DA/C9DB/C9DC | | GDS18102 | Drive Shaft | | 25 | 26 | 53.4 | 88.5 | 944.5 | |
| | 1999.02-2004.11 | MT | F | L/R | Saloon FWD C9DA/C9DB/C9DC | Trans. code:IB5/B5 | GCO18013 | Outer Joint | | 25 | 23 | 53.4 | 88.5 | 57 | M |
| | 1999.02-2004.11 | MT | F | R | Saloon FWD C9DA/C9DB/C9DC | | GCI18045 | Inner Joint | | 26 | 23 | 40 | 389 | 92 | |
| 1.8 (74 kw) | 2002.08-2004.07 | 5MT | F | L | Hatchback FWD FFDA | | GDS18101 | Drive Shaft | | 25 | 26 | 53.4 | 88.5 | 613 | |
| | 2002.08-2004.07 | 5MT | F | R | Hatchback FWD FFDA | | GDS18102 | Drive Shaft | | 25 | 26 | 53.4 | 88.5 | 944.5 | |
| | 2002.08-2004.07 | 5MT | F | L/R | Hatchback FWD FFDA | Inner Teeth:24 | GCO18069 | Outer Joint | | 25 | 24 | 52.6 | 88 | 59 | M |
| | 2002.08-2004.07 | MT | F | L | Hatchback FWD FFDA | | GDS18042 | Drive Shaft | | 25 | 23 | 53.4 | 88.5 | 633 | |
| | 2002.08-2004.07 | MT | F | R | Hatchback FWD FFDA | | GDS18046 | Drive Shaft | | 25 | 23 | 53.4 | 88.5 | 934 | |
| | 2002.08-2004.07 | MT | F | L | Hatchback FWD FFDA | | GCI18162 | Inner Joint | | 23 | 21 | 40 | 61 | 87.5 | |
| | 2002.08-2005.03 | 5MT | F | L | Saloon FWD FFDA | | GDS18101 | Drive Shaft | | 25 | 26 | 53.4 | 88.5 | 613 | |
| | 2002.08-2005.03 | 5MT | F | R | Saloon FWD FFDA | | GDS18102 | Drive Shaft | | 25 | 26 | 53.4 | 88.5 | 944.5 | |
| | 2002.08-2005.03 | 5MT | F | L | Saloon FWD FFDA | | GCI18044 | Inner Joint | | 26 | 23 | 40 | 68.5 | 99.5 | |
| | 2002.08-2005.03 | 5MT | F | R | Saloon FWD FFDA | | GCI18045 | Inner Joint | | 26 | 23 | 40 | 389 | 92 | |
| | 2002.08-2005.03 | MT | F | L | Saloon FWD FFDA | | GDS18042 | Drive Shaft | | 25 | 23 | 53.4 | 88.5 | 633 | |
| | 2002.08-2005.03 | MT | F | R | Saloon FWD FFDA | | GDS18046 | Drive Shaft | | 25 | 23 | 53.4 | 88.5 | 934 | |
| | 2002.08-2005.03 | | F | L/R | Saloon FWD FFDA | | GCO18069 | Outer Joint | | 25 | 24 | 52.6 | 88 | 59 | M |
| 1.8 (85 kw) | 1998.08-2004.11 | AT/MT | F | L/R | Hatchback FWD EYDB/EYDC/EYDD/EYDE/EYDF/EYDG/EYDI/EYDJ/EYDL | | GCO18003 | Outer Joint | | 25 | 21 | 53.3 | 89 | 53 | M |
| | 1998.08-2004.11 | AT/MT | F | L/R | Hatchback FWD EYDB/EYDC/EYDD/EYDE/EYDF/EYDG/EYDI/EYDJ/EYDL | | GCO18013 | Outer Joint | | 25 | 23 | 53.4 | 88.5 | 57 | M |
| | 1998.08-2004.11 | MT | F | L | Hatchback FWD EYDB/EYDC/EYDD/EYDE/EYDF/EYDG/EYDI/EYDJ/EYDL | | GDS18042 | Drive Shaft | | 25 | 23 | 53.4 | 88.5 | 633 | |
| | 1998.08-2004.11 | MT | F | R | Hatchback FWD EYDB/EYDC/EYDD/EYDE/EYDF/EYDG/EYDI/EYDJ/EYDL | | GDS18046 | Drive Shaft | | 25 | 23 | 53.4 | 88.5 | 934 | |
| | 1998.08-2004.11 | | F | R | Hatchback FWD EYDB/EYDC/EYDD/EYDE/EYDF/EYDG/EYDI/EYDJ/EYDL | | GCI18161 | Inner Joint | | 26 | 23 | 40 | 389 | 86 | |
| | 1998.08-2005.03 | 5MT | F | L | Saloon FWD EYDB/EYDC/EYDD/EYDE/EYDF/EYDG/EYDI/EYDJ/EYDL | | GDS18042 | Drive Shaft | | 25 | 23 | 53.4 | 88.5 | 633 | |
| | 1998.08-2005.03 | 5MT | F | R | Saloon FWD EYDB/EYDC/EYDD/EYDE/EYDF/EYDG/EYDI/EYDJ/EYDL | | GDS18046 | Drive Shaft | | 25 | 23 | 53.4 | 88.5 | 934 | |
| | 1998.08-2005.03 | 5MT | F | L | Saloon FWD EYDB/EYDC/EYDD/EYDE/EYDF/EYDG/EYDI/EYDJ/EYDL | | GCI18022 | Inner Joint | | 23 | 21 | 40 | 61 | 88 | |
| | 1998.08-2005.03 | AT | F | L | Saloon FWD EYDB/EYDC/EYDD/EYDE/EYDF/EYDG/EYDI/EYDJ/EYDL | | GDS18101 | Drive Shaft | | 25 | 26 | 53.4 | 88.5 | 613 | |
| | 1998.08-2005.03 | AT/MT | F | L/R | Saloon FWD EYDB/EYDC/EYDD/EYDE/EYDF/EYDG/EYDI/EYDJ/EYDL | | GCO18003 | Outer Joint | | 25 | 21 | 53.3 | 89 | 53 | M |
| | 1998.08-2005.03 | AT/MT | F | L/R | Saloon FWD EYDB/EYDC/EYDD/EYDE/EYDF/EYDG/EYDI/EYDJ/EYDL | | GCO18013 | Outer Joint | | 25 | 23 | 53.4 | 88.5 | 57 | M |
| | 2000.06-2005.03 | 5MT | F | L | Saloon FWD F9DA/F9DB | | GDS18101 | Drive Shaft | | 25 | 26 | 53.4 | 88.5 | 613 | |
| | 2000.06-2005.03 | 5MT | F | R | Saloon FWD F9DA/F9DB | | GDS18102 | Drive Shaft | | 25 | 26 | 53.4 | 88.5 | 944.5 | |
| | 2000.06-2005.03 | 5MT | F | L | Saloon FWD F9DA/F9DB | | GCI18044 | Inner Joint | | 26 | 23 | 40 | 68.5 | 99.5 | |
| | 2000.06-2005.03 | 5MT | F | R | Saloon FWD F9DA/F9DB | | GCI18045 | Inner Joint | | 26 | 23 | 40 | 389 | 92 | |
| | 2000.06-2005.03 | | F | L/R | Saloon FWD F9DA/F9DB | | GCO18069 | Outer Joint | | 25 | 24 | 52.6 | 88 | 59 | M |
| | 2000.06-2007.09 | 5MT | F | L | Hatchback FWD F9DA/F9DB | | GDS18101 | Drive Shaft | | 25 | 26 | 53.4 | 88.5 | 613 | |
| | 2000.06-2007.09 | 5MT | F | R | Hatchback FWD F9DA/F9DB | | GDS18102 | Drive Shaft | | 25 | 26 | 53.4 | 88.5 | 944.5 | |
| | 2000.06-2007.09 | 5MT | F | L/R | Hatchback FWD F9DA/F9DB | | GCO18069 | Outer Joint | | 25 | 24 | 52.6 | 88 | 59 | M |
| | 2000.06-2007.09 | 5MT | F | L | Hatchback FWD F9DA/F9DB | | GCI18162 | Inner Joint | | 23 | 21 | 40 | 61 | 87.5 | |
| | 2002.09-2004.07 | 5MT | F | L | Hatchback FWD EYDD/EYDG/EYDI | | GDS18042 | Drive Shaft | | 25 | 23 | 53.4 | 88.5 | 633 | |
| | 2002.09-2004.07 | 5MT | F | R | Hatchback FWD EYDD/EYDG/EYDI | | GDS18046 | Drive Shaft | | 25 | 23 | 53.4 | 88.5 | 934 | |
| | 2002.09-2004.07 | | F | L/R | Hatchback FWD EYDD/EYDG/EYDI | | GCO18013 | Outer Joint | | 25 | 23 | 53.4 | 88.5 | 57 | M |
| | 2002.09-2004.07 | | F | R | Hatchback FWD EYDD/EYDG/EYDI | | GCI18161 | Inner Joint | | 26 | 23 | 40 | 389 | 86 | |
| | 2005.01-2012.09 | 5MT | F | L | Hatchback FWD KKDA | | GDS18218 | Drive Shaft | | 36 | 26 | 56 | 48 | 582 | |
| | 2005.01-2012.09 | 5MT | F | R | Hatchback FWD KKDA | | GDS18219 | Drive Shaft | | 36 | 26 | 56.3 | 48 | 921 | |
| | 2005.01-2012.09 | 5MT | F | L | Hatchback FWD KKDA | | GCO99288 | Outer Joint | | 36 | 26 | 56.3 | 48 | 61 | M |
| | 2005.01-2012.09 | 5MT | F | R | Hatchback FWD KKDA | | GCO18230 | Outer Joint | | 36 | 26 | 56.3 | 48 | 61 | M |
| | 2005.04-2012.09 | 5MT | F | L | Saloon FWD KKDA | | GDS18218 | Drive Shaft | | 36 | 26 | 56 | 48 | 582 | |
| | 2005.04-2012.09 | 5MT | F | R | Saloon FWD KKDA | | GDS18219 | Drive Shaft | | 36 | 26 | 56.3 | 48 | 921 | |
| | 2005.04-2012.09 | MT | F | R | Saloon FWD KKDA | | GCO99130 | Outer Joint | | 36 | 26 | 56.3 | 48 | 61 | M |
| | 2005.04-2012.09 | | F | L | Saloon FWD KKDA | | GCO99288 | Outer Joint | | 36 | 26 | 56.3 | 48 | 61 | M |

| | YEAR | TRANSM. | F/R | L/R | BODY STYLE & DRIVE TYPE & ENGINE | REMARKS | G-AP Ref. | PRODUCT | ABS | Technical Specifications A | B | C | H | L | P |
|---|---|---|---|---|---|---|---|---|---|---|---|---|---|---|---|
| **FORD** **Focus** | | | | | | | | | | | | | | | |
| 1.8 (85 kw) | 2005.04-2012.09 | | F | R | Saloon FWD KKDA | | GCO18230 | Outer Joint | | 36 | 26 | 56.3 | 48 | 61 | M |
| 1.8 (92 kw) | 2006.01-2012.09 | 5MT | F | L | Hatchback FWD QQDB;QQDA;Q7DA | Inner teeth of wheel side:24 | GDS18189 | Drive Shaft | | 36 | 23 | 56 | 48 | 601 | |
| | 2006.01-2012.09 | 5MT | F | L | Hatchback FWD QQDB;QQDA;Q7DA | Inner teeth of wheel side:24 | GDS18261 | Drive Shaft | | 36 | 23 | 55.8 | 48 | 600 | |
| | 2006.01-2012.09 | 5MT | F | L | Hatchback FWD QQDB;QQDA;Q7DA | Inner teeth of wheel side:23 | GDS18359 | Drive Shaft | | 36 | 23 | 56 | 48 | 594 | |
| | 2006.01-2012.09 | 5MT | F | R | Hatchback FWD QQDB;QQDA;Q7DA | Inner teeth of wheel side:24 | GDS18206 | Drive Shaft | | 36 | 23 | 56 | 48 | 906 | |
| | 2006.01-2012.09 | 5MT | F | R | Hatchback FWD QQDB;QQDA;Q7DA | Inner teeth of wheel side:24 | GDS18262 | Drive Shaft | | 36 | 23 | 55.8 | 48 | 905 | |
| | 2006.01-2012.09 | 5MT | F | R | Hatchback FWD QQDB;QQDA;Q7DA | Inner teeth of wheel side:23 | GDS18358 | Drive Shaft | | 36 | 23 | 56 | 48 | 899 | |
| | 2006.01-2012.09 | 5MT | F | L/R | Hatchback FWD QQDB;QQDA;Q7DA | | GCO18203 | Outer Joint | | 36 | 23 | 56 | 48 | 57 | I |
| | 2006.01-2012.09 | 5MT | F | L/R | Hatchback FWD QQDB;QQDA;Q7DA | | GCO62039 | Outer Joint | | 36 | 24 | 55.8 | 48 | 57 | M |
| | 2006.01-2012.09 | 5MT | F | L/R | Hatchback FWD QQDB;QQDA;Q7DA | | GCO99129 | Outer Joint | | 36 | 24 | 56 | 48 | 57 | M |
| | 2006.01-2012.09 | 5MT | F | L | Hatchback FWD QQDB;QQDA;Q7DA | | GCI18086 | Inner Joint | | 23 | 22 | 40 | 61 | 90 | |
| | 2006.01-2012.09 | 5MT | F | L | Hatchback FWD QQDB;QQDA;Q7DA | | GCI82479 | Inner Joint | | 23 | 23 | 40 | 61 | 110 | |
| | 2006.01-2012.09 | 5MT | F | R | Hatchback FWD QQDB;QQDA;Q7DA | | GCI18087 | Inner Joint | | 23 | 22 | 40 | 371 | 78.5 | |
| | 2006.03-2012.09 | 5MT | F | L | Hatchback FWD QQDB;QQDA;Q7DA | Inner teeth of wheel side:24 | GDS18189 | Drive Shaft | | 36 | 23 | 56 | 48 | 601 | |
| | 2006.03-2012.09 | 5MT | F | L | Hatchback FWD QQDB;QQDA;Q7DA | Inner teeth of wheel side:24 | GDS18261 | Drive Shaft | | 36 | 23 | 55.8 | 48 | 600 | |
| | 2006.03-2012.09 | 5MT | F | L | Hatchback FWD QQDB;QQDA;Q7DA | Inner teeth of wheel side:23 | GDS18359 | Drive Shaft | | 36 | 23 | 56 | 48 | 594 | |
| | 2006.03-2012.09 | 5MT | F | R | Hatchback FWD QQDB;QQDA;Q7DA | Inner teeth of wheel side:24 | GDS18206 | Drive Shaft | | 36 | 23 | 56 | 48 | 906 | |
| | 2006.03-2012.09 | 5MT | F | R | Hatchback FWD QQDB;QQDA;Q7DA | Inner teeth of wheel side:24 | GDS18262 | Drive Shaft | | 36 | 23 | 55.8 | 48 | 905 | |
| | 2006.03-2012.09 | 5MT | F | R | Hatchback FWD QQDB;QQDA;Q7DA | Inner teeth of wheel side:23 | GDS18358 | Drive Shaft | | 36 | 23 | 56 | 48 | 899 | |
| | 2006.03-2012.09 | 5MT | F | L/R | Hatchback FWD QQDB;QQDA;Q7DA | | GCO18203 | Outer Joint | | 36 | 23 | 56 | 48 | 57 | I |
| | 2006.03-2012.09 | 5MT | F | L/R | Hatchback FWD QQDB;QQDA;Q7DA | | GCO62039 | Outer Joint | | 36 | 24 | 55.8 | 48 | 57 | M |
| | 2006.03-2012.09 | 5MT | F | L/R | Hatchback FWD QQDB;QQDA;Q7DA | | GCO99129 | Outer Joint | | 36 | 24 | 56 | 48 | 57 | M |
| | 2006.03-2012.09 | 5MT | F | L | Hatchback FWD QQDB;QQDA;Q7DA | | GCI18086 | Inner Joint | | 23 | 22 | 40 | 61 | 90 | |
| | 2006.03-2012.09 | 5MT | F | L | Hatchback FWD QQDB;QQDA;Q7DA | | GCI82479 | Inner Joint | | 23 | 23 | 40 | 61 | 110 | |
| | 2006.03-2012.09 | 5MT | F | R | Hatchback FWD QQDB;QQDA;Q7DA | | GCI18087 | Inner Joint | | 23 | 22 | 40 | 371 | 78.5 | |
| | 2006.03-2012.09 | 5MT | F | L | Saloon FWD QQDB;QQDA;Q7DA | Inner teeth of wheel side:24 | GDS18189 | Drive Shaft | | 36 | 23 | 56 | 48 | 601 | |
| | 2006.03-2012.09 | 5MT | F | L | Saloon FWD QQDB;QQDA;Q7DA | Inner teeth of wheel side:24 | GDS18261 | Drive Shaft | | 36 | 23 | 55.8 | 48 | 600 | |
| | 2006.03-2012.09 | 5MT | F | L | Saloon FWD QQDB;QQDA;Q7DA | Inner teeth of wheel side:23 | GDS18359 | Drive Shaft | | 36 | 23 | 56 | 48 | 594 | |
| | 2006.03-2012.09 | 5MT | F | R | Saloon FWD QQDB;QQDA;Q7DA | Inner teeth of wheel side:24 | GDS18206 | Drive Shaft | | 36 | 23 | 56 | 48 | 906 | |
| | 2006.03-2012.09 | 5MT | F | R | Saloon FWD QQDB;QQDA;Q7DA | Inner teeth of wheel side:24 | GDS18262 | Drive Shaft | | 36 | 23 | 55.8 | 48 | 905 | |
| | 2006.03-2012.09 | 5MT | F | R | Saloon FWD QQDB;QQDA;Q7DA | Inner teeth of wheel side:23 | GDS18358 | Drive Shaft | | 36 | 23 | 56 | 48 | 899 | |
| | 2006.03-2012.09 | 5MT | F | L/R | Saloon FWD QQDB;QQDA;Q7DA | | GCO18203 | Outer Joint | | 36 | 23 | 56 | 48 | 57 | I |
| | 2006.03-2012.09 | 5MT | F | L/R | Saloon FWD QQDB;QQDA;Q7DA | | GCO62039 | Outer Joint | | 36 | 24 | 55.8 | 48 | 57 | M |
| | 2006.03-2012.09 | 5MT | F | L/R | Saloon FWD QQDB;QQDA;Q7DA | | GCO99129 | Outer Joint | | 36 | 24 | 56 | 48 | 57 | M |
| | 2006.03-2012.09 | 5MT | F | L | Saloon FWD QQDB;QQDA;Q7DA | | GCI18086 | Inner Joint | | 23 | 22 | 40 | 61 | 90 | |
| | 2006.03-2012.09 | 5MT | F | L | Saloon FWD QQDB;QQDA;Q7DA | | GCI82479 | Inner Joint | | 23 | 23 | 40 | 61 | 110 | |
| | 2006.03-2012.09 | 5MT | F | R | Saloon FWD QQDB;QQDA;Q7DA | | GCI18087 | Inner Joint | | 23 | 22 | 40 | 371 | 78.5 | |
| | 2006.06-2011.07 | 5MT | F | L | Saloon FWD QQDB;QQDA;Q7DA | Inner teeth of wheel side:24 | GDS18189 | Drive Shaft | | 36 | 23 | 56 | 48 | 601 | |
| | 2006.06-2011.07 | 5MT | F | L | Saloon FWD QQDB;QQDA;Q7DA | Inner teeth of wheel side:24 | GDS18261 | Drive Shaft | | 36 | 23 | 55.8 | 48 | 600 | |
| | 2006.06-2011.07 | 5MT | F | L | Saloon FWD QQDB;QQDA;Q7DA | Inner teeth of wheel side:23 | GDS18359 | Drive Shaft | | 36 | 23 | 56 | 48 | 594 | |
| | 2006.06-2011.07 | 5MT | F | R | Saloon FWD QQDB;QQDA;Q7DA | Inner teeth of wheel side:24 | GDS18206 | Drive Shaft | | 36 | 23 | 56 | 48 | 906 | |
| | 2006.06-2011.07 | 5MT | F | R | Saloon FWD QQDB;QQDA;Q7DA | Inner teeth of wheel side:24 | GDS18262 | Drive Shaft | | 36 | 23 | 55.8 | 48 | 905 | |
| | 2006.06-2011.07 | 5MT | F | R | Saloon FWD QQDB;QQDA;Q7DA | Inner teeth of wheel side:23 | GDS18358 | Drive Shaft | | 36 | 23 | 56 | 48 | 899 | |
| | 2006.06-2011.07 | 5MT | F | L/R | Saloon FWD QQDB;QQDA;Q7DA | | GCO18203 | Outer Joint | | 36 | 23 | 56 | 48 | 57 | I |
| | 2006.06-2011.07 | 5MT | F | L/R | Saloon FWD QQDB;QQDA;Q7DA | | GCO62039 | Outer Joint | | 36 | 24 | 55.8 | 48 | 57 | M |
| | 2006.06-2011.07 | 5MT | F | L/R | Saloon FWD QQDB;QQDA;Q7DA | | GCO99129 | Outer Joint | | 36 | 24 | 56 | 48 | 57 | M |
| | 2006.06-2011.07 | 5MT | F | L | Saloon FWD QQDB;QQDA;Q7DA | | GCI18086 | Inner Joint | | 23 | 22 | 40 | 61 | 90 | |
| | 2006.06-2011.07 | 5MT | F | L | Saloon FWD QQDB;QQDA;Q7DA | | GCI82479 | Inner Joint | | 23 | 23 | 40 | 61 | 110 | |
| | 2006.06-2011.07 | 5MT | F | R | Saloon FWD QQDB;QQDA;Q7DA | | GCI18087 | Inner Joint | | 23 | 22 | 40 | 371 | 78.5 | |
| 1.8 (96 kw) | 2005.12-2008.01 | MT | F | L | Hatchback FWD QQDD | Inner teeth of wheel side:24 | GDS18261 | Drive Shaft | | 36 | 23 | 55.8 | 48 | 600 | |
| | 2005.12-2008.01 | MT | F | L | Hatchback FWD QQDD | Inner teeth of wheel side:23 | GDS18359 | Drive Shaft | | 36 | 23 | 56 | 48 | 594 | |
| | 2005.12-2008.01 | MT | F | R | Hatchback FWD QQDD | Inner teeth of wheel side:24 | GDS18262 | Drive Shaft | | 36 | 23 | 55.8 | 48 | 905 | |
| | 2005.12-2008.01 | MT | F | R | Hatchback FWD QQDD | Inner teeth of wheel side:23 | GDS18358 | Drive Shaft | | 36 | 23 | 56 | 48 | 899 | |
| 2.0 (81 kw) | 2008.02-2011.07 | 6MT | F | R | Hatchback FWD IXDA | Inner teeth of tranm.side:32 | GDS18219 | Drive Shaft | | 36 | 26 | 56.3 | 48 | 921 | |
| | 2008.02-2011.07 | 6MT | F | R | Hatchback FWD IXDA | Inner teeth of tranm.side:26 | GDS56093 | Drive Shaft | | 36 | 26 | 56 | 48 | 916 | |
| | 2008.02-2011.07 | 6MT | F | R | Hatchback FWD IXDA | | GCI83312 | Inner Joint | | 26 | 26 | 40 | 389 | 92 | |
| | 2008.02-2011.07 | MT | F | L | Hatchback FWD IXDA | | GDS18218 | Drive Shaft | | 36 | 26 | 56 | 48 | 582 | |
| | 2008.02-2011.07 | MT | F | L/R | Hatchback FWD IXDA | | GCO99155 | Outer Joint | | 36 | 26 | 56 | 48 | 64 | I |
| | 2008.02-2011.07 | 6MT | F | L | Saloon FWD IXDA | | GDS18218 | Drive Shaft | | 36 | 26 | 56 | 48 | 582 | |
| | 2008.02-2011.07 | 6MT | F | R | Saloon FWD IXDA | Inner teeth of tranm.side:32 | GDS18219 | Drive Shaft | | 36 | 26 | 56.3 | 48 | 921 | |
| | 2008.02-2011.07 | 6MT | F | R | Saloon FWD IXDA | Inner teeth of tranm.side:26 | GDS56093 | Drive Shaft | | 36 | 26 | 56 | 48 | 916 | |
| | 2008.02-2011.07 | 6MT | F | L/R | Saloon FWD IXDA | | GCO99155 | Outer Joint | | 36 | 26 | 56 | 48 | 64 | I |
| | 2008.02-2011.07 | 6MT | F | L | Saloon FWD IXDA | | GCI18044 | Inner Joint | | 26 | 23 | 40 | 68.5 | 99.5 | |
| | 2008.02-2011.07 | 6MT | F | R | Saloon FWD IXDA | | GCI83312 | Inner Joint | | 26 | 26 | 40 | 389 | 92 | |
| 2.0 (85 kw) | 2010.07-2014.06 | 6DCT | F | L | Hatchback FWD TYDA | | GDS18410 | Drive Shaft | | 27 | 28 | 63.1 | 96 | 631 | |

| | YEAR | TRANSM. | F/R | L/R | BODY STYLE & DRIVE TYPE & ENGINE | REMARKS | G-AP Ref. | PRODUCT | ABS | Technical Specifications A | B | C | H | L | P |
|---|---|---|---|---|---|---|---|---|---|---|---|---|---|---|---|
| **FORD** **Focus** | | | | | | | | | | | | | | | |
| 2.0 (85 kw) | 2010.07-2014.06 | 6DCT | F | R | Hatchback FWD TYDA | | GDS18343 | Drive Shaft | | 27 | 28 | 63.1 | 96 | 967 | |
| | 2010.07-2014.06 | 6DCT | F | L | Hatchback FWD TYDA | | GCI62053 | Inner Joint | | 28 | 26 | 34 | 79.5 | 91 | |
| | 2010.07-2014.06 | 6MT | F | L | Hatchback FWD TYDA | | GDS18382 | Drive Shaft | | 27 | 26 | 63.1 | 96 | 638 | |
| | 2010.07-2014.06 | 6MT | F | R | Hatchback FWD TYDA | | GDS18315 | Drive Shaft | | 27 | 26 | 63 | 96 | 984 | |
| | 2010.07-2014.06 | 6MT/6DCT | F | L/R | Hatchback FWD TYDA | | GCO18252 | Outer Joint | | 27 | 26 | 63.1 | 96 | 64 | I |
| | 2010.07-2014.06 | 6MT/6DCT | F | L/R | Hatchback FWD TYDA | | GCO18326 | Outer Joint | | 27 | 26 | 63.1 | 96 | 64 | I |
| | 2010.07-2014.06 | 6DCT | F | L | Saloon FWD TYDA | | GDS18410 | Drive Shaft | | 27 | 28 | 63.1 | 96 | 631 | |
| | 2010.07-2014.06 | 6DCT | F | R | Saloon FWD TYDA | | GDS18343 | Drive Shaft | | 27 | 28 | 63.1 | 96 | 967 | |
| | 2010.07-2014.06 | 6DCT | F | L | Saloon FWD TYDA | | GCI62053 | Inner Joint | | 28 | 26 | 34 | 79.5 | 91 | |
| | 2010.07-2014.06 | 6MT | F | L | Saloon FWD TYDA | | GDS18382 | Drive Shaft | | 27 | 26 | 63.1 | 96 | 638 | |
| | 2010.07-2014.06 | 6MT | F | R | Saloon FWD TYDA | | GDS18315 | Drive Shaft | | 27 | 26 | 63 | 96 | 984 | |
| | 2010.07-2014.06 | 6MT/6DCT | F | L/R | Saloon FWD TYDA | | GCO18252 | Outer Joint | | 27 | 26 | 63.1 | 96 | 64 | I |
| | 2010.07-2014.06 | 6MT/6DCT | F | L/R | Saloon FWD TYDA | | GCO18326 | Outer Joint | | 27 | 26 | 63.1 | 96 | 64 | I |
| | 2011.01-2014.06 | 6AT | F | R | Hatchback Van FWD TYDA | | GDS18343 | Drive Shaft | | 27 | 28 | 63.1 | 96 | 967 | |
| | 2011.01-2014.06 | 6AT | F | L | Hatchback Van FWD TYDA | | GCO18326 | Outer Joint | | 27 | 26 | 63.1 | 96 | 64 | I |
| | 2011.01-2014.06 | 6AT | F | L | Hatchback Van FWD TYDA | | GCI62053 | Inner Joint | | 28 | 26 | 34 | 79.5 | 91 | |
| | 2011.01-2014.06 | 6DCT | F | L | Hatchback Van FWD TYDA | | GDS18410 | Drive Shaft | | 27 | 28 | 63.1 | 96 | 631 | |
| 2.0 (92 kw) | 2000.07-2005.05 | | F | R | Hatchback FWD EDDB | | GCI18161 | Inner Joint | | 26 | 23 | 40 | 389 | 86 | |
| 2.0 (96 kw) | 1998.08-2004.07 | AT | F | R | Hatchback FWD EDDB/EDDC/EDDD/EDDF | | GDS18042 | Drive Shaft | | 25 | 23 | 53.4 | 88.5 | 633 | |
| | 1998.08-2004.07 | AT/MT | F | L/R | Hatchback FWD EDDB/EDDC/EDDD/EDDF | | GCO18013 | Outer Joint | | 25 | 23 | 53.4 | 88.5 | 57 | M |
| | 1998.08-2004.07 | MT | F | L | Hatchback FWD EDDB/EDDC/EDDD/EDDF | Trans. code:MTX75 | GDS18101 | Drive Shaft | | 25 | 26 | 53.4 | 88.5 | 613 | |
| | 1998.08-2004.07 | MT | F | R | Hatchback FWD EDDB/EDDC/EDDD/EDDF | Trans. code:MTX75 | GDS18102 | Drive Shaft | | 25 | 26 | 53.4 | 88.5 | 944.5 | |
| | 1998.08-2004.07 | MT | F | R | Hatchback FWD EDDB/EDDC/EDDD/EDDF | Trans. code:MTX75 | GCI18045 | Inner Joint | | 26 | 23 | 40 | 389 | 92 | |
| | 1998.08-2004.07 | | F | R | Hatchback FWD EDDB/EDDC/EDDD/EDDF | Trans. code:B5/IB5 | GDS18046 | Drive Shaft | | 25 | 23 | 53.4 | 88.5 | 934 | |
| | 1998.08-2004.07 | | F | R | Hatchback FWD EDDB/EDDC/EDDD/EDDF | | GCI18161 | Inner Joint | | 26 | 23 | 40 | 389 | 86 | |
| | 1999.02-2006.07 | 5MT | F | L | Saloon FWD EDDB/EDDC/EDDD/EDDF | | GDS18101 | Drive Shaft | | 25 | 26 | 53.4 | 88.5 | 613 | |
| | 1999.02-2006.07 | 5MT | F | R | Saloon FWD EDDB/EDDC/EDDD/EDDF | | GDS18102 | Drive Shaft | | 25 | 26 | 53.4 | 88.5 | 944.5 | |
| | 1999.02-2006.07 | 5MT | F | R | Saloon FWD EDDB/EDDC/EDDD/EDDF | | GCI18045 | Inner Joint | | 26 | 23 | 40 | 389 | 92 | |
| | 1999.02-2006.07 | MT | F | L | Saloon FWD EDDB/EDDC/EDDD/EDDF | Trans. code:BI5/B5 | GDS18042 | Drive Shaft | | 25 | 23 | 53.4 | 88.5 | 633 | |
| | 1999.02-2006.07 | MT | F | R | Saloon FWD EDDB/EDDC/EDDD/EDDF | Trans. code:BI5/B5 | GDS18046 | Drive Shaft | | 25 | 23 | 53.4 | 88.5 | 934 | |
| | 1999.02-2006.07 | MT | F | R | Saloon FWD EDDB/EDDC/EDDD/EDDF | | GCO18013 | Outer Joint | | 25 | 23 | 53.4 | 88.5 | 57 | M |
| 2.0 (98 kw) | 2004.07-2008.01 | 5MT | F | L | Hatchback FWD G6DE;G6DF | Date to:2004.12 | GDS18218 | Drive Shaft | | 36 | 26 | 56 | 48 | 582 | |
| | 2004.07-2008.01 | 5MT | F | L | Hatchback FWD G6DE;G6DF | Date to:2004.12 | GCI18044 | Inner Joint | | 26 | 23 | 40 | 68.5 | 99.5 | |
| | 2004.07-2008.01 | 6MT | F | R | Hatchback FWD G6DE;G6DF | Date to:2006.07 | GDS18219 | Drive Shaft | | 36 | 26 | 56.3 | 48 | 921 | |
| | 2004.07-2008.01 | 6MT | F | R | Hatchback FWD G6DE;G6DF | Date from:2006.08 | GDS56093 | Drive Shaft | | 36 | 26 | 56 | 48 | 916 | |
| | 2004.07-2008.01 | 6MT | F | L/R | Hatchback FWD G6DE;G6DF | | GCO99155 | Outer Joint | | 36 | 26 | 56 | 48 | 64 | I |
| | 2004.07-2008.01 | 6MT | F | R | Hatchback FWD G6DE;G6DF | Date from:2006.08 | GCI83312 | Inner Joint | | 26 | 26 | 40 | 389 | 92 | |
| 2.0 (100 kw) | 2004.07-2012.09 | 6DCT | F | L | Hatchback FWD G6DA;G6DB;G6DD;G6DG | | GDS18367 | Drive Shaft | | 36 | 28 | 56 | 48 | 570 | |
| | 2004.07-2012.09 | 6MT | F | R | Hatchback FWD G6DA;G6DB;G6DD;G6DG | Date to:2006.07 | GDS18219 | Drive Shaft | | 36 | 26 | 56.3 | 48 | 921 | |
| | 2004.07-2012.09 | 6MT | F | R | Hatchback FWD G6DA;G6DB;G6DD;G6DG | Date from:2006.08 | GDS56093 | Drive Shaft | | 36 | 26 | 56 | 48 | 916 | |
| | 2004.07-2012.09 | 6MT | F | R | Hatchback FWD G6DA;G6DB;G6DD;G6DG | Date from:2006.08 | GCI83312 | Inner Joint | | 26 | 26 | 40 | 389 | 92 | |
| | 2004.07-2012.09 | AT | F | R | Hatchback FWD G6DA;G6DB;G6DD;G6DG | Trans. code:MPS6 Powershift | GDS62024 | Drive Shaft | | 36 | 28 | 56 | 48 | 908 | |
| | 2004.07-2012.09 | MT | F | L | Hatchback FWD G6DA;G6DB;G6DD;G6DG | | GDS18218 | Drive Shaft | | 36 | 26 | 56 | 48 | 582 | |
| | 2004.07-2012.09 | MT | F | L/R | Hatchback FWD G6DA;G6DB;G6DD;G6DG | | GCO99155 | Outer Joint | | 36 | 26 | 56 | 48 | 64 | I |
| | 2005.04-2012.09 | 6DCT | F | L | Saloon FWD G6DA;G6DB;G6DD;G6DG | | GDS18367 | Drive Shaft | | 36 | 28 | 56 | 48 | 570 | |
| | 2005.04-2012.09 | 6DCT | F | R | Saloon FWD G6DA;G6DB;G6DD;G6DG | | GDS62024 | Drive Shaft | | 36 | 28 | 56 | 48 | 908 | |
| | 2005.04-2012.09 | 6DCT | F | R | Saloon FWD G6DA;G6DB;G6DD;G6DG | | GCI62017 | Inner Joint | | 28 | 26 | 33.95 | 371.5 | 92 | |
| | 2005.04-2012.09 | 6DCT/6MT | F | L/R | Saloon FWD G6DA;G6DB;G6DD;G6DG | | GCO99155 | Outer Joint | | 36 | 26 | 56 | 48 | 64 | I |
| | 2005.04-2012.09 | 6MT | F | R | Saloon FWD G6DA;G6DB;G6DD;G6DG | Date to:2006.07 | GDS18219 | Drive Shaft | | 36 | 26 | 56.3 | 48 | 921 | |
| | 2005.04-2012.09 | 6MT | F | R | Saloon FWD G6DA;G6DB;G6DD;G6DG | Date from:2006.08 | GDS56093 | Drive Shaft | | 36 | 26 | 56 | 48 | 916 | |
| | 2005.04-2012.09 | 6MT | F | R | Saloon FWD G6DA;G6DB;G6DD;G6DG | Date from:2006.08 | GCI83312 | Inner Joint | | 26 | 26 | 40 | 389 | 92 | |
| | 2005.04-2012.09 | MT | F | L | Saloon FWD G6DA;G6DB;G6DD;G6DG | Date from:2006.01 | GDS18218 | Drive Shaft | | 36 | 26 | 56 | 48 | 582 | |
| | 2010.07-2014.06 | 6DCT | F | L | Hatchback FWD UKDB | | GDS18410 | Drive Shaft | | 27 | 28 | 63.1 | 96 | 631 | |
| | 2010.07-2014.06 | 6DCT | F | R | Hatchback FWD UKDB | | GDS18343 | Drive Shaft | | 27 | 28 | 63.1 | 96 | 967 | |
| | 2010.07-2014.06 | 6DCT | F | L | Hatchback FWD UKDB | | GCI62053 | Inner Joint | | 28 | 26 | 34 | 79.5 | 91 | |
| | 2010.07-2014.06 | 6MT | F | L | Hatchback FWD UKDB | | GDS18382 | Drive Shaft | | 27 | 26 | 63.1 | 96 | 638 | |
| | 2010.07-2014.06 | 6MT | F | R | Hatchback FWD UKDB | | GDS18315 | Drive Shaft | | 27 | 26 | 63 | 96 | 984 | |
| | 2010.07-2014.06 | 6MT/6DCT | F | L/R | Hatchback FWD UKDB | | GCO18252 | Outer Joint | | 27 | 26 | 63.1 | 96 | 64 | I |
| | 2010.07-2014.06 | 6MT/6DCT | F | L/R | Hatchback FWD UKDB | | GCO18326 | Outer Joint | | 27 | 26 | 63.1 | 96 | 64 | I |
| | 2010.07-2014.06 | 6DCT | F | L | Saloon FWD UKDB | | GDS18410 | Drive Shaft | | 27 | 28 | 63.1 | 96 | 631 | |
| | 2010.07-2014.06 | 6DCT | F | L | Saloon FWD UKDB | | GCI62053 | Inner Joint | | 28 | 26 | 34 | 79.5 | 91 | |
| | 2010.07-2014.06 | 6MT | F | L | Saloon FWD UKDB | | GDS18382 | Drive Shaft | | 27 | 26 | 63.1 | 96 | 638 | |
| | 2010.07-2014.06 | 6MT | F | R | Saloon FWD UKDB | | GDS18315 | Drive Shaft | | 27 | 26 | 63 | 96 | 984 | |
| | 2010.07-2014.06 | 6MT/6DCT | F | L/R | Saloon FWD UKDB | | GCO18252 | Outer Joint | | 27 | 26 | 63.1 | 96 | 64 | I |
| | 2010.07-2014.06 | 6MT/6DCT | F | L/R | Saloon FWD UKDB | | GCO18326 | Outer Joint | | 27 | 26 | 63.1 | 96 | 64 | I |

| | YEAR | TRANSM. | F/R | L/R | BODY STYLE & DRIVE TYPE & ENGINE | REMARKS | G-AP Ref. | PRODUCT | ABS | Technical Specifications A | B | C | H | L | P |
|---|---|---|---|---|---|---|---|---|---|---|---|---|---|---|---|
| **FORD** **Focus** | | | | | | | | | | | | | | | |
| 2.0 (100 kw) | 2010.07-2014.06 | AT | F | R | Saloon FWD UKDB | Date from:2011.04;Date to:2014.06 | GDS18343 | Drive Shaft | | 27 | 28 | 63.1 | 96 | 967 | |
| 2.0 (103 kw) | 2010.07-2014.06 | 6DCT | F | L | Hatchback FWD UFDB | | GDS18410 | Drive Shaft | | 27 | 28 | 63.1 | 96 | 631 | |
| | 2010.07-2014.06 | 6DCT | F | R | Hatchback FWD UFDB | | GDS18343 | Drive Shaft | | 27 | 28 | 63.1 | 96 | 967 | |
| | 2010.07-2014.06 | 6DCT | F | L | Hatchback FWD UFDB | | GCI62053 | Inner Joint | | 28 | 26 | 34 | 79.5 | 91 | |
| | 2010.07-2014.06 | 6MT | F | L | Hatchback FWD UFDB | | GDS18382 | Drive Shaft | | 27 | 26 | 63.1 | 96 | 638 | |
| | 2010.07-2014.06 | 6MT | F | R | Hatchback FWD UFDB | | GDS18315 | Drive Shaft | | 27 | 26 | 63 | 96 | 984 | |
| | 2010.07-2014.06 | 6MT/6DCT | F | L/R | Hatchback FWD UFDB | | GCO18252 | Outer Joint | | 27 | 26 | 63.1 | 96 | 64 | I |
| | 2010.07-2014.06 | 6MT/6DCT | F | L/R | Hatchback FWD UFDB | | GCO18326 | Outer Joint | | 27 | 26 | 63.1 | 96 | 64 | I |
| | 2010.07-2014.06 | 6DCT | F | L | Saloon FWD UFDB | | GDS18410 | Drive Shaft | | 27 | 28 | 63.1 | 96 | 631 | |
| | 2010.07-2014.06 | 6DCT | F | R | Saloon FWD UFDB | | GDS18343 | Drive Shaft | | 27 | 28 | 63.1 | 96 | 967 | |
| | 2010.07-2014.06 | 6DCT | F | L | Saloon FWD UFDB | | GCI62053 | Inner Joint | | 28 | 26 | 34 | 79.5 | 91 | |
| | 2010.07-2014.06 | 6MT | F | L | Saloon FWD UFDB | | GDS18382 | Drive Shaft | | 27 | 26 | 63.1 | 96 | 638 | |
| | 2010.07-2014.06 | 6MT | F | R | Saloon FWD UFDB | | GDS18315 | Drive Shaft | | 27 | 26 | 63 | 96 | 984 | |
| | 2010.07-2014.06 | 6MT/6DCT | F | L/R | Saloon FWD UFDB | With vibration damper | GCO18252 | Outer Joint | | 27 | 26 | 63.1 | 96 | 64 | I |
| | 2010.07-2014.06 | 6MT/6DCT | F | L/R | Saloon FWD UFDB | | GCO18326 | Outer Joint | | 27 | 26 | 63.1 | 96 | 64 | I |
| | 2011.01-2014.06 | 6DCT | F | L | Hatchback Van FWD UFDB | | GDS18410 | Drive Shaft | | 27 | 28 | 63.1 | 96 | 631 | |
| | 2011.01-2014.06 | 6DCT | F | R | Hatchback Van FWD UFDB | | GDS18343 | Drive Shaft | | 27 | 28 | 63.1 | 96 | 967 | |
| | 2011.01-2014.06 | 6DCT | F | L | Hatchback Van FWD UFDB | | GCI62053 | Inner Joint | | 28 | 26 | 34 | 79.5 | 91 | |
| | 2011.01-2014.06 | 6MT | F | L | Hatchback Van FWD UFDB | | GDS18382 | Drive Shaft | | 27 | 26 | 63.1 | 96 | 638 | |
| | 2011.01-2014.06 | 6MT | F | R | Hatchback Van FWD UFDB | | GDS18315 | Drive Shaft | | 27 | 26 | 63 | 96 | 984 | |
| | 2011.01-2014.06 | 6MT/6DCT | F | L/R | Hatchback Van FWD UFDB | With vibration damper | GCO18252 | Outer Joint | | 27 | 26 | 63.1 | 96 | 64 | I |
| | 2011.01-2014.06 | 6MT/6DCT | F | L/R | Hatchback Van FWD UFDB | | GCO18326 | Outer Joint | | 27 | 26 | 63.1 | 96 | 64 | I |
| 2.0 (104 kw) | 2005.06-2008.09 | | F | R | Hatchback FWD AODE | | GCI18161 | Inner Joint | | 26 | 23 | 40 | 389 | 86 | |
| | 2005.06-2008.09 | 5MT | F | L | Hatchback FWD SYDA | | GDS18218 | Drive Shaft | | 36 | 26 | 56 | 48 | 582 | |
| | 2005.06-2008.09 | 5MT | F | R | Hatchback FWD SYDA | | GDS18219 | Drive Shaft | | 36 | 26 | 56.3 | 48 | 921 | |
| | 2005.06-2008.09 | 5MT | F | L/R | Hatchback FWD SYDA | | GCO18203 | Outer Joint | | 36 | 23 | 56 | 48 | 57 | I |
| | 2005.06-2008.09 | 5MT | F | L | Hatchback FWD SYDA | | GCI18044 | Inner Joint | | 26 | 23 | 40 | 68.5 | 99.5 | |
| | 2005.06-2008.09 | 5MT | F | R | Hatchback FWD SYDA | | GCI18161 | Inner Joint | | 26 | 23 | 40 | 389 | 86 | |
| | 2005.06-2012.09 | AT | F | R | Saloon FWD SYDA | | GCI18161 | Inner Joint | | 26 | 23 | 40 | 389 | 86 | |
| 2.0 (107 kw) | 2004.07-2012.09 | 5MT | F | L | Hatchback FWD AODA;AODB;SYDA;AODE | Date to:2008.10 | GDS34252 | Drive Shaft | | 36 | 26 | 55.3 | 48 | 581 | |
| | 2004.07-2012.09 | AT | F | L | Hatchback FWD AODA;AODB;SYDA;AODE | | GCI18219 | Inner Joint | | 26 | 23 | 40 | 69 | 105 | |
| | 2004.07-2012.09 | AT/MT | F | L | Hatchback FWD AODA;AODB;SYDA;AODE | | GDS18218 | Drive Shaft | | 36 | 26 | 56 | 48 | 582 | |
| | 2004.07-2012.09 | AT/MT | F | R | Hatchback FWD AODA;AODB;SYDA;AODE | | GDS18219 | Drive Shaft | | 36 | 26 | 56.3 | 48 | 921 | |
| | 2004.07-2012.09 | MT | F | L | Hatchback FWD AODA;AODB;SYDA;AODE | | GCO18203 | Outer Joint | | 36 | 23 | 56 | 48 | 57 | I |
| | 2004.07-2012.09 | MT | F | L | Hatchback FWD AODA;AODB;SYDA;AODE | | GCI18044 | Inner Joint | | 26 | 23 | 40 | 68.5 | 99.5 | |
| | 2004.07-2012.09 | | F | R | Hatchback FWD AODA;AODB;SYDA;AODE | Date from:2007.12,Date to:2011.07;TJ | GCI18161 | Inner Joint | | 26 | 23 | 40 | 389 | 86 | |
| | 2005.04-2011.07 | 5MT | F | L | Saloon FWD AODA;AODB;SYDA;AODE | | GDS34252 | Drive Shaft | | 36 | 26 | 55.3 | 48 | 581 | |
| | 2005.04-2011.07 | AT | F | L | Saloon FWD AODA;AODB;SYDA;AODE | | GCI18219 | Inner Joint | | 26 | 23 | 40 | 69 | 105 | |
| | 2005.04-2011.07 | AT/MT | F | L | Saloon FWD AODA;AODB;SYDA;AODE | | GDS18218 | Drive Shaft | | 36 | 26 | 56 | 48 | 582 | |
| | 2005.04-2011.07 | AT/MT | F | R | Saloon FWD AODA;AODB;SYDA;AODE | | GDS18219 | Drive Shaft | | 36 | 26 | 56.3 | 48 | 921 | |
| | 2005.04-2011.07 | MT | F | L/R | Saloon FWD AODA;AODB;SYDA;AODE | | GCO18203 | Outer Joint | | 36 | 23 | 56 | 48 | 57 | I |
| | 2005.04-2011.07 | MT | F | L | Saloon FWD AODA;AODB;SYDA;AODE | | GCI18044 | Inner Joint | | 26 | 23 | 40 | 68.5 | 99.5 | |
| | 2005.04-2011.07 | | F | R | Saloon FWD AODA;AODB;SYDA;AODE | | GCI18161 | Inner Joint | | 26 | 23 | 40 | 389 | 86 | |
| | 2005.06-2008.09 | | F | R | Hatchback FWD AODA | | GCI18161 | Inner Joint | | 26 | 23 | 40 | 389 | 86 | |
| | 2008.06-2011.07 | 5MT | F | L | Hatchback FWD SYDA | | GDS18218 | Drive Shaft | | 36 | 26 | 56 | 48 | 582 | |
| | 2008.06-2011.07 | 5MT | F | R | Hatchback FWD SYDA | | GDS18219 | Drive Shaft | | 36 | 26 | 56.3 | 48 | 921 | |
| | 2008.06-2011.07 | 5MT | F | L | Hatchback FWD SYDA | | GCI18044 | Inner Joint | | 26 | 23 | 40 | 68.5 | 99.5 | |
| | 2008.06-2011.07 | | F | L | Hatchback FWD SYDA | | GCO18203 | Outer Joint | | 36 | 23 | 56 | 48 | 57 | I |
| | 2008.06-2011.07 | | F | L | Hatchback FWD SYDA | | GCI18219 | Inner Joint | | 26 | 23 | 40 | 69 | 105 | |
| | 2008.06-2011.07 | | F | R | Hatchback FWD SYDA | | GCI18161 | Inner Joint | | 26 | 23 | 40 | 389 | 86 | |
| | 2008.10-2010.03 | 5MT | F | L | Hatchback FWD SYDA | | GDS18218 | Drive Shaft | | 36 | 26 | 56 | 48 | 582 | |
| | 2008.10-2010.03 | 5MT | F | R | Hatchback FWD SYDA | | GDS18219 | Drive Shaft | | 36 | 26 | 56.3 | 48 | 921 | |
| | 2008.10-2010.03 | 5MT | F | L | Hatchback FWD SYDA | | GCI18044 | Inner Joint | | 26 | 23 | 40 | 68.5 | 99.5 | |
| | 2008.10-2010.03 | | F | L | Hatchback FWD SYDA | | GCO18203 | Outer Joint | | 36 | 23 | 56 | 48 | 57 | I |
| | 2008.10-2010.03 | | F | L | Hatchback FWD SYDA | | GCI18219 | Inner Joint | | 26 | 23 | 40 | 69 | 105 | |
| | 2008.10-2010.03 | | F | R | Hatchback FWD SYDA | | GCI18161 | Inner Joint | | 26 | 23 | 40 | 389 | 86 | |
| | 2009.04-2011.07 | AT | F | L | Hatchback FWD SYDA | | GCI18219 | Inner Joint | | 26 | 23 | 40 | 69 | 105 | |
| | 2009.04-2011.07 | AT/MT | F | L | Hatchback FWD SYDA | | GDS18218 | Drive Shaft | | 36 | 26 | 56 | 48 | 582 | |
| | 2009.04-2011.07 | AT/MT | F | R | Hatchback FWD SYDA | | GDS18219 | Drive Shaft | | 36 | 26 | 56.3 | 48 | 921 | |
| | 2009.04-2011.07 | MT | F | L | Hatchback FWD SYDA | | GCO18203 | Outer Joint | | 36 | 23 | 56 | 48 | 57 | I |
| | 2009.04-2011.07 | MT | F | L | Hatchback FWD SYDA | | GCI18044 | Inner Joint | | 26 | 23 | 40 | 68.5 | 99.5 | |
| | 2009.04-2011.07 | | F | R | Hatchback FWD SYDA | | GCI18161 | Inner Joint | | 26 | 23 | 40 | 389 | 86 | |
| 2.0 (109 kw) | 2010.04-2013.09 | | F | R | Hatchback FWD C20HDEA | | GCI18161 | Inner Joint | | 26 | 23 | 40 | 389 | 86 | |
| | 2010.04-2013.09 | | F | R | Saloon FWD SYDA | | GCI18161 | Inner Joint | | 26 | 23 | 40 | 389 | 86 | |
| 2.0 (110 kw) | 2013.10-2017.12 | 5MT | F | L | Hatchback FWD XQDA | No Facelift;Facelift,Date to:2016.02 | GDS18319 | Drive Shaft | | 27 | 26 | 63 | 96 | 645 | |

| | YEAR | TRANSM. | F/R | L/R | BODY STYLE & DRIVE TYPE & ENGINE | REMARKS | G-AP Ref. | PRODUCT | ABS | Technical Specifications | | | | | |
|---|---|---|---|---|---|---|---|---|---|---|---|---|---|---|---|
| | | | | | | | | | | A | B | C | H | L | P |
| **FORD** **Focus** | | | | | | | | | | | | | | | |
| 2.0 (110 kw) | 2013.10-2017.12 | 5MT | F | R | Hatchback FWD XQDA | No Facelift;Facelift,Date to:2016.02 | GDS18315 | Drive Shaft | | 27 | 26 | 63 | 96 | 984 | |
| | 2013.10-2017.12 | 5MT | F | L/R | Hatchback FWD XQDA | No Facelift;Facelift,Date to:2016.02 | GCO18242 | Outer Joint | | 27 | 23 | 63 | 96 | 57 | M |
| | 2013.10-2017.12 | 5MT | F | L | Hatchback FWD XQDA | No Facelift;Facelift,Date to:2016.02 | GCI18139 | Inner Joint | | 26 | 22 | 40 | 69 | 93.5 | |
| | 2013.10-2017.12 | 5MT | F | R | Hatchback FWD XQDA | No Facelift;Facelift,Date to:2016.02 | GCI18135 | Inner Joint | | 26 | 22 | 40 | 390 | 83.5 | |
| | 2013.10-2017.12 | 6DCT | F | L | Hatchback FWD XQDA | Date to:2013.02 | GDS18296 | Drive Shaft | | 27 | 34 | 63 | 96 | 606 | |
| | 2013.10-2020.02 | 5MT | F | L | Saloon FWD XQDA | No Facelift;Facelift,Date to:2016.02 | GDS18319 | Drive Shaft | | 27 | 26 | 63 | 96 | 645 | |
| | 2013.10-2020.02 | 5MT | F | R | Saloon FWD XQDA | No Facelift;Facelift,Date to:2016.02 | GDS18315 | Drive Shaft | | 27 | 26 | 63 | 96 | 984 | |
| | 2013.10-2020.02 | 5MT | F | L/R | Saloon FWD XQDA | No Facelift;Facelift,Date to:2016.02 | GCO18242 | Outer Joint | | 27 | 23 | 63 | 96 | 57 | M |
| | 2013.10-2020.02 | 5MT | F | L | Saloon FWD XQDA | No Facelift;Facelift,Date to:2016.02 | GCI18139 | Inner Joint | | 26 | 22 | 40 | 69 | 93.5 | |
| | 2013.10-2020.02 | 5MT | F | R | Saloon FWD XQDA | No Facelift;Facelift,Date to:2016.02 | GCI18135 | Inner Joint | | 26 | 22 | 40 | 390 | 83.5 | |
| | 2013.10-2020.02 | 6DCT | F | L | Saloon FWD XQDA | Date to:2013.02 | GDS18296 | Drive Shaft | | 27 | 34 | 63 | 96 | 606 | |
| | 2014.11-2017.12 | 6DCT | F | L | Hatchback FWD T7DB;T7DA | | GDS81479 | Drive Shaft | | 27 | 28 | 63.1 | 96 | 623 | |
| | 2014.11-2017.12 | 6DCT | F | R | Hatchback FWD T7DB;T7DA | | GDS56408 | Drive Shaft | | 27 | 28 | 63.2 | 96 | 970 | |
| | 2014.11-2017.12 | 6DCT | F | L/R | Hatchback FWD T7DB;T7DA | | GCO18252 | Outer Joint | | 27 | 26 | 63.1 | 96 | 64 | I |
| | 2014.11-2017.12 | 6DCT | F | L | Hatchback FWD T7DB;T7DA | | GCI62053 | Inner Joint | | 28 | 26 | 34 | 79.5 | 91 | |
| | 2014.11-2017.12 | 6DCT | F | R | Hatchback FWD T7DB;T7DA | | GCI83292 | Inner Joint | | 28 | 26 | 33.8 | 394 | 92.5 | |
| | 2014.11-2017.12 | 6MT | F | L | Hatchback FWD T7DB;T7DA | | GDS18382 | Drive Shaft | | 27 | 26 | 63.1 | 96 | 638 | |
| | 2014.11-2017.12 | 6MT | F | R | Hatchback FWD T7DB;T7DA | | GDS18315 | Drive Shaft | | 27 | 26 | 63 | 96 | 984 | |
| | 2014.11-2017.12 | 6MT | F | L/R | Hatchback FWD T7DB;T7DA | | GCO18326 | Outer Joint | | 27 | 26 | 63.1 | 96 | 64 | I |
| | 2014.11-2017.12 | AT | F | R | Hatchback FWD T7DB;T7DA | | GDS18343 | Drive Shaft | | 27 | 28 | 63.1 | 96 | 967 | |
| | 2014.11-2017.12 | 6DCT | F | L | Hatchback Van FWD T7DB;T7DA | | GDS81479 | Drive Shaft | | 27 | 28 | 63.1 | 96 | 623 | |
| | 2014.11-2017.12 | 6DCT | F | R | Hatchback Van FWD T7DB;T7DA | | GDS56408 | Drive Shaft | | 27 | 28 | 63.2 | 96 | 970 | |
| | 2014.11-2017.12 | 6DCT | F | L/R | Hatchback Van FWD T7DB;T7DA | | GCO18252 | Outer Joint | | 27 | 26 | 63.1 | 96 | 64 | I |
| | 2014.11-2017.12 | 6DCT | F | L | Hatchback Van FWD T7DB;T7DA | | GCI62053 | Inner Joint | | 28 | 26 | 34 | 79.5 | 91 | |
| | 2014.11-2017.12 | 6DCT | F | R | Hatchback Van FWD T7DB;T7DA | | GCI83292 | Inner Joint | | 28 | 26 | 33.8 | 394 | 92.5 | |
| | 2014.11-2017.12 | 6MT | F | L | Hatchback Van FWD T7DB;T7DA | | GDS18382 | Drive Shaft | | 27 | 26 | 63.1 | 96 | 638 | |
| | 2014.11-2017.12 | 6MT | F | R | Hatchback Van FWD T7DB;T7DA | | GDS18315 | Drive Shaft | | 27 | 26 | 63 | 96 | 984 | |
| | 2014.11-2017.12 | 6MT | F | L/R | Hatchback Van FWD T7DB;T7DA | | GCO18326 | Outer Joint | | 27 | 26 | 63.1 | 96 | 64 | I |
| | 2014.11-2020.02 | 6DCT | F | L | Saloon FWD T7DB;T7DA | | GDS81479 | Drive Shaft | | 27 | 28 | 63.1 | 96 | 623 | |
| | 2014.11-2020.02 | 6DCT | F | R | Saloon FWD T7DB;T7DA | | GDS56408 | Drive Shaft | | 27 | 28 | 63.2 | 96 | 970 | |
| | 2014.11-2020.02 | 6DCT | F | L/R | Saloon FWD T7DB;T7DA | | GCO18252 | Outer Joint | | 27 | 26 | 63.1 | 96 | 64 | I |
| | 2014.11-2020.02 | 6DCT | F | L | Saloon FWD T7DB;T7DA | | GCI62053 | Inner Joint | | 28 | 26 | 34 | 79.5 | 91 | |
| | 2014.11-2020.02 | 6DCT | F | R | Saloon FWD T7DB;T7DA | | GCI83292 | Inner Joint | | 28 | 26 | 33.8 | 394 | 92.5 | |
| | 2014.11-2020.02 | 6MT | F | L | Saloon FWD T7DB;T7DA | | GDS18382 | Drive Shaft | | 27 | 26 | 63.1 | 96 | 638 | |
| | 2014.11-2020.02 | 6MT | F | R | Saloon FWD T7DB;T7DA | | GDS18315 | Drive Shaft | | 27 | 26 | 63 | 96 | 984 | |
| | 2014.11-2020.02 | 6MT | F | L/R | Saloon FWD T7DB;T7DA | | GCO18326 | Outer Joint | | 27 | 26 | 63.1 | 96 | 64 | I |
| | 2014.11-2020.02 | AT | F | R | Saloon FWD T7DB;T7DA | | GDS18343 | Drive Shaft | | 27 | 28 | 63.1 | 96 | 967 | |
| | 2018.01-2025.11 | 6MT | F | L | Hatchback FWD YLDA | | GDS56593 | Drive Shaft | | 27 | 26 | 55.8 | 96.5 | 641 | |
| | 2018.01-2025.11 | 6MT | F | R | Hatchback FWD YLDA | | GDS56592 | Drive Shaft | | 27 | 26 | 55.8 | 96.5 | 985 | |
| | 2018.01-2025.11 | 6MT | F | L | Hatchback FWD YLDA | | GCI83395 | Inner Joint | | 26 | 35 | 40 | 69 | 112 | |
| | 2018.01-2025.11 | 6MT | F | R | Hatchback FWD YLDA | | GCI83394 | Inner Joint | | 26 | 35 | 40 | 427 | 98.5 | |
| | 2018.01-2025.11 | 6MT/8AT | F | L/R | Hatchback FWD YLDA | | GCO83353 | Outer Joint | | 27 | 26 | 55.8 | 96.5 | 62 | M |
| | 2018.01-2025.11 | 8AT | F | L | Hatchback FWD YLDA | | GDS56628 | Drive Shaft | | 27 | 35 | 55.8 | 96.5 | 686 | |
| | 2018.01-2025.11 | 8AT | F | R | Hatchback FWD YLDA | | GDS56627 | Drive Shaft | | 27 | 35 | 55.8 | 96.5 | 936 | |
| | 2018.01-2025.11 | 8AT | F | L | Hatchback FWD YLDA | | GCI83411 | Inner Joint | | 35 | 35 | 38 | 153 | 85.5 | |
| | 2018.01-2025.11 | 8AT | F | R | Hatchback FWD YLDA | | GCI83410 | Inner Joint | | 35 | 35 | 38 | 376 | 98.5 | |
| 2.0 (120 kw) | 2010.07-2014.06 | 6DCT | F | L | Hatchback FWD TXDB | | GDS18410 | Drive Shaft | | 27 | 28 | 63.1 | 96 | 631 | |
| | 2010.07-2014.06 | 6DCT | F | R | Hatchback FWD TXDB | | GDS18343 | Drive Shaft | | 27 | 28 | 63.1 | 96 | 967 | |
| | 2010.07-2014.06 | 6DCT | F | L | Hatchback FWD TXDB | | GCI62053 | Inner Joint | | 28 | 26 | 34 | 79.5 | 91 | |
| | 2010.07-2014.06 | 6MT | F | L | Hatchback FWD TXDB | | GDS18382 | Drive Shaft | | 27 | 26 | 63.1 | 96 | 638 | |
| | 2010.07-2014.06 | 6MT | F | R | Hatchback FWD TXDB | | GDS18315 | Drive Shaft | | 27 | 26 | 63 | 96 | 984 | |
| | 2010.07-2014.06 | 6MT/6DCT | F | L/R | Hatchback FWD TXDB | | GCO18252 | Outer Joint | | 27 | 26 | 63.1 | 96 | 64 | I |
| | 2010.07-2014.06 | 6MT/6DCT | F | L/R | Hatchback FWD TXDB | | GCO18326 | Outer Joint | | 27 | 26 | 63.1 | 96 | 64 | I |
| | 2010.07-2014.06 | 6DCT | F | L | Saloon FWD TXDB | | GDS18410 | Drive Shaft | | 27 | 28 | 63.1 | 96 | 631 | |
| | 2010.07-2014.06 | 6DCT | F | R | Saloon FWD TXDB | | GDS18343 | Drive Shaft | | 27 | 28 | 63.1 | 96 | 967 | |
| | 2010.07-2014.06 | 6DCT | F | L | Saloon FWD TXDB | | GCI62053 | Inner Joint | | 28 | 26 | 34 | 79.5 | 91 | |
| | 2010.07-2014.06 | 6MT | F | L | Saloon FWD TXDB | | GDS18382 | Drive Shaft | | 27 | 26 | 63.1 | 96 | 638 | |
| | 2010.07-2014.06 | 6MT | F | R | Saloon FWD TXDB | | GDS18315 | Drive Shaft | | 27 | 26 | 63 | 96 | 984 | |
| | 2010.07-2014.06 | 6MT/6DCT | F | L/R | Saloon FWD TXDB | With vibration damper | GCO18252 | Outer Joint | | 27 | 26 | 63.1 | 96 | 64 | I |
| | 2010.07-2014.06 | 6MT/6DCT | F | L/R | Saloon FWD TXDB | | GCO18326 | Outer Joint | | 27 | 26 | 63.1 | 96 | 64 | I |
| | 2011.01-2014.06 | 6AT | F | R | Hatchback Van FWD TXDB | | GDS18343 | Drive Shaft | | 27 | 28 | 63.1 | 96 | 967 | |
| | 2011.01-2014.06 | 6AT | F | L | Hatchback Van FWD TXDB | | GCO18326 | Outer Joint | | 27 | 26 | 63.1 | 96 | 64 | I |
| | 2011.01-2014.06 | 6AT | F | L | Hatchback Van FWD TXDB | | GCI62053 | Inner Joint | | 28 | 26 | 34 | 79.5 | 91 | |
| | 2011.01-2014.06 | 6DCT | F | L | Hatchback Van FWD TXDB | | GDS18410 | Drive Shaft | | 27 | 28 | 63.1 | 96 | 631 | |
| 2.0 (125 kw) | 2011.08-2020.02 | 5MT | F | L | Hatchback FWD MGDA | No Facelift;Facelift,Date to:2016.02 | GDS18319 | Drive Shaft | | 27 | 26 | 63 | 96 | 645 | |

| | YEAR | TRANSM. | F/R | L/R | BODY STYLE & DRIVE TYPE & ENGINE | REMARKS | G-AP Ref. | PRODUCT | ABS | Technical Specifications | | | | | |
|---|---|---|---|---|---|---|---|---|---|---|---|---|---|---|---|
| | | | | | | | | | | A | B | C | H | L | P |
| **FORD** | | | | | | | | | | | | | | | |
| **Focus** | | | | | | | | | | | | | | | |
| 2.0 (125 kw) | 2011.08-2020.02 | 5MT | F | R | Hatchback FWD MGDA | No Facelift;Facelift,Date to:2016.02 | GDS18315 | Drive Shaft | | 27 | 26 | 63 | 96 | 984 | |
| | 2011.08-2020.02 | 5MT | F | L/R | Hatchback FWD MGDA | No Facelift;Facelift,Date to:2016.02 | GCO18242 | Outer Joint | | 27 | 23 | 63 | 96 | 57 | M |
| | 2011.08-2020.02 | 5MT | F | L | Hatchback FWD MGDA | No Facelift;Facelift,Date to:2016.02 | GCI18139 | Inner Joint | | 26 | 22 | 40 | 69 | 93.5 | |
| | 2011.08-2020.02 | 5MT | F | R | Hatchback FWD MGDA | No Facelift;Facelift,Date to:2016.02 | GCI18135 | Inner Joint | | 26 | 22 | 40 | 390 | 83.5 | |
| 2.0 (127 kw) | 2002.02-2005.05 | MT | F | L | Hatchback FWD ALDA | | GDS18195 | Drive Shaft | | 25 | 34 | 52.6 | 88 | 603 | |
| | 2002.02-2005.05 | MT | F | R | Hatchback FWD ALDA | | GDS99175 | Drive Shaft | | 25 | 34 | 52.6 | 88 | 948 | |
| | 2002.02-2005.05 | MT | F | L/R | Hatchback FWD ALDA | | GCO18069 | Outer Joint | | 25 | 24 | 52.6 | 88 | 59 | M |
| | 2002.02-2005.05 | | F | R | Hatchback FWD ALDA | | GCI18161 | Inner Joint | | 26 | 23 | 40 | 389 | 86 | |
| 2.0 (136 kw) | 2014.11-2017.12 | 6DCT | F | L | Hatchback FWD T8DA | | GDS81479 | Drive Shaft | | 27 | 28 | 63.1 | 96 | 623 | |
| | 2014.11-2017.12 | 6DCT | F | R | Hatchback FWD T8DA | | GDS56408 | Drive Shaft | | 27 | 28 | 63.2 | 96 | 970 | |
| | 2014.11-2017.12 | 6DCT | F | L | Hatchback FWD T8DA | | GCI62053 | Inner Joint | | 28 | 26 | 34 | 79.5 | 91 | |
| | 2014.11-2017.12 | 6DCT | F | R | Hatchback FWD T8DA | | GCI83292 | Inner Joint | | 28 | 26 | 33.8 | 394 | 92.5 | |
| | 2014.11-2017.12 | 6MT | F | L | Hatchback FWD T8DA | | GDS18382 | Drive Shaft | | 27 | 26 | 63.1 | 96 | 638 | |
| | 2014.11-2017.12 | 6MT | F | R | Hatchback FWD T8DA | | GDS18315 | Drive Shaft | | 27 | 26 | 63 | 96 | 984 | |
| | 2014.11-2017.12 | 6MT | F | L/R | Hatchback FWD T8DA | | GCO18252 | Outer Joint | | 27 | 26 | 63.1 | 96 | 64 | I |
| | 2014.11-2017.12 | 6MT | F | L/R | Hatchback FWD T8DA | | GCO18326 | Outer Joint | | 27 | 26 | 63.1 | 96 | 64 | I |
| 2.0 (158 kw) | 2002.02-2004.07 | MT | F | L | Hatchback FWD HMDA | | GDS18027 | Drive Shaft | | 27 | 26 | 57 | 91 | 627.5 | |
| | 2002.02-2004.07 | MT | F | R | Hatchback FWD HMDA | | GDS18028 | Drive Shaft | | 27 | 35 | 57 | 91 | 576.5 | |
| | 2002.02-2004.07 | MT | F | R | Hatchback FWD HMDA | | GDS18043 | Drive Shaft | | 27 | 35 | 56.5 | 92 | 579 | |
| | 2002.02-2004.07 | MT | F | L/R | Hatchback FWD HMDA | | GCO18002 | Outer Joint | | 27 | 26 | 56 | 91 | 64 | M |
| | 2002.02-2004.07 | MT | F | R | Hatchback FWD HMDA | | GCI18061 | Inner Joint | | 35 | 34 | 42 | | 117.5 | |
| | 2002.02-2004.07 | | F | L | Hatchback FWD HMDA | Type:2 | GDS18195 | Drive Shaft | | 25 | 34 | 52.6 | 88 | 603 | |
| | 2002.02-2004.07 | | F | R | Hatchback FWD HMDA | | GDS99175 | Drive Shaft | | 25 | 34 | 52.6 | 88 | 948 | |
| | 2002.02-2004.07 | | F | R | Hatchback FWD HMDA | | GCI18161 | Inner Joint | | 26 | 23 | 40 | 389 | 86 | |
| 2.0 (184 kw) | 2012.07-2017.12 | 6MT | F | L | Hatchback FWD R9DA;R9DB;R9DC;R9DD | Date to:2016.08 | GDS18382 | Drive Shaft | | 27 | 26 | 63.1 | 96 | 638 | |
| | 2012.07-2017.12 | 6MT | F | L | Hatchback FWD R9DA;R9DB;R9DC;R9DD | Date From:2016.09 | GDS82577 | Drive Shaft | | 27 | 26 | 63.1 | 96 | 637 | |
| | 2012.07-2017.12 | 6MT | F | R | Hatchback FWD R9DA;R9DB;R9DC;R9DD | Date to:2016.09 | GDS18381 | Drive Shaft | | 27 | 26 | 63.1 | 96 | 977 | |
| | 2012.07-2017.12 | 6MT | F | L | Hatchback FWD R9DA;R9DB;R9DC;R9DD | Date From:2016.09 | GCO82052 | Outer Joint | | 27 | 26 | 63.1 | 96 | 64 | I |
| | 2012.07-2017.12 | 6MT | F | L | Hatchback FWD R9DA;R9DB;R9DC;R9DD | Date From:2016.09 | GCI18157 | Inner Joint | | 26 | 26 | 40 | 69 | 109 | |
| 2.3 (257 kw) | 2015.07-2018.02 | 6MT | F | L | Hatchback 4WD YVDA | Date to:2016.08 | GDS18382 | Drive Shaft | | 27 | 26 | 63.1 | 96 | 638 | |
| | 2015.07-2018.02 | 6MT | F | L | Hatchback 4WD YVDA | Date From:2016.09 | GDS82577 | Drive Shaft | | 27 | 26 | 63.1 | 96 | 637 | |
| | 2015.07-2018.02 | 6MT | F | R | Hatchback 4WD YVDA | | GDS84303 | Drive Shaft | | 27 | 26 | 63.1 | 96 | 977 | |
| | 2015.07-2018.02 | 6MT | F | L | Hatchback 4WD YVDA | Date From:2016.09 | GCO82052 | Outer Joint | | 27 | 26 | 63.1 | 96 | 64 | I |
| | 2015.07-2018.02 | 6MT | F | R | Hatchback 4WD YVDA | | GCO82770 | Outer Joint | | 27 | 26 | 63.1 | 96 | 64 | I |
| | 2015.07-2018.02 | 6MT | F | L | Hatchback 4WD YVDA | Date From:2016.09 | GCI18157 | Inner Joint | | 26 | 26 | 40 | 69 | 109 | |
| | 2015.07-2018.02 | 6MT | F | R | Hatchback 4WD YVDA | | GCI82695 | Inner Joint | | 26 | 26 | 35 | 448 | 92 | |
| 2.5 (166 kw) | 2005.10-2012.09 | 6MT | F | L | Hatchback FWD HYDA | | GDS18290 | Drive Shaft | | 36 | 26 | 56 | 48 | 530 | |
| | 2005.10-2012.09 | 6MT | F | R | Hatchback FWD HYDA | | GDS62062 | Drive Shaft | | 36 | 26 | 56 | 48 | 959 | |
| | 2005.10-2012.09 | 6MT | F | L/R | Hatchback FWD HYDA | | GCO99155 | Outer Joint | | 36 | 26 | 56 | 48 | 64 | I |
| **Focus C-Max** | | | | | | | | | | | | | | | |
| 1.6 (66 kw) | 2005.02-2007.03 | 5MT | F | L | MPV FWD HHDA;HHDB | | GDS18218 | Drive Shaft | | 36 | 26 | 56 | 48 | 582 | |
| | 2005.02-2007.03 | 5MT | F | R | MPV FWD HHDA;HHDB | | GDS18219 | Drive Shaft | | 36 | 26 | 56.3 | 48 | 921 | |
| | 2005.02-2007.03 | 5MT | F | R | MPV FWD HHDA;HHDB | | GCO18230 | Outer Joint | | 36 | 26 | 56.3 | 48 | 61 | M |
| | 2005.02-2007.03 | | F | L/R | MPV FWD HHDA;HHDB | Date To:2005.12 | GCO99288 | Outer Joint | | 36 | 26 | 56.3 | 48 | 61 | M |
| 1.6 (74 kw) | 2003.10-2007.03 | 5MT | F | L | MPV FWD HWDA;HWDB;SHDA;SHDB;SHDC | Inner teeth of wheel side:24 | GDS18261 | Drive Shaft | | 36 | 23 | 55.8 | 48 | 600 | |
| | 2003.10-2007.03 | 5MT | F | L | MPV FWD HWDA;HWDB;SHDA;SHDB;SHDC | Inner teeth of wheel side:23 | GDS18359 | Drive Shaft | | 36 | 23 | 56 | 48 | 594 | |
| | 2003.10-2007.03 | 5MT | F | R | MPV FWD HWDA;HWDB;SHDA;SHDB;SHDC | Inner teeth of wheel side:24 | GDS18262 | Drive Shaft | | 36 | 23 | 55.8 | 48 | 905 | |
| | 2003.10-2007.03 | 5MT | F | R | MPV FWD HWDA;HWDB;SHDA;SHDB;SHDC | Inner teeth of wheel side:23 | GDS18358 | Drive Shaft | | 36 | 23 | 56 | 48 | 899 | |
| | 2003.10-2007.03 | 5MT | F | L/R | MPV FWD HWDA;HWDB;SHDA;SHDB;SHDC | | GCO99129 | Outer Joint | | 36 | 24 | 56 | 48 | 57 | M |
| | 2003.10-2007.03 | AT | F | L | MPV FWD HWDA;HWDB;SHDA;SHDB;SHDC | | GDS18218 | Drive Shaft | | 36 | 26 | 56 | 48 | 582 | |
| | 2003.10-2007.03 | AT | F | R | MPV FWD HWDA;HWDB;SHDA;SHDB;SHDC | | GDS18219 | Drive Shaft | | 36 | 26 | 56.3 | 48 | 921 | |
| | 2003.10-2007.03 | MT | F | L | MPV FWD HWDA;HWDB;SHDA;SHDB;SHDC | Inner teeth of wheel side:24 | GDS18189 | Drive Shaft | | 36 | 23 | 56 | 48 | 601 | |
| | 2003.10-2007.03 | MT | F | L | MPV FWD HWDA;HWDB;SHDA;SHDB;SHDC | Inner teeth of wheel side:25 | GDS18336 | Drive Shaft | | 36 | 23 | 51.6 | 48 | 600 | |
| | 2003.10-2007.03 | MT | F | R | MPV FWD HWDA;HWDB;SHDA;SHDB;SHDC | Inner teeth of wheel side:24 | GDS18206 | Drive Shaft | | 36 | 23 | 56 | 48 | 906 | |
| | 2003.10-2007.03 | MT | F | R | MPV FWD HWDA;HWDB;SHDA;SHDB;SHDC | Inner teeth of wheel side:25 | GDS18337 | Drive Shaft | | 36 | 23 | 51.6 | 48 | 908 | |
| | 2003.10-2007.03 | | F | L/R | MPV FWD HWDA;HWDB;SHDA;SHDB;SHDC | | GCO62039 | Outer Joint | | 36 | 24 | 55.8 | 48 | 57 | M |
| | 2003.10-2007.03 | | F | L | MPV FWD HWDA;HWDB;SHDA;SHDB;SHDC | | GCI18086 | Inner Joint | | 23 | 22 | 40 | 61 | 90 | |
| | 2003.10-2007.03 | | F | R | MPV FWD HWDA;HWDB;SHDA;SHDB;SHDC | | GCI18161 | Inner Joint | | 26 | 23 | 40 | 389 | 86 | |
| 1.6 (80 kw) | 2003.10-2007.03 | 5MT | F | L | MPV FWD G8DA;G8DB;G8DD;G8DE;G8DF | | GDS18218 | Drive Shaft | | 36 | 26 | 56 | 48 | 582 | |
| | 2003.10-2007.03 | 5MT | F | R | MPV FWD G8DA;G8DB;G8DD;G8DE;G8DF | | GDS18219 | Drive Shaft | | 36 | 26 | 56.3 | 48 | 921 | |
| | 2003.10-2007.03 | CVT | F | L | MPV FWD G8DA;G8DB;G8DD;G8DE;G8DF | | GDS18193 | Drive Shaft | | 36 | 34 | 56 | 48 | 568 | |
| | 2003.10-2007.03 | CVT | F | R | MPV FWD G8DA;G8DB;G8DD;G8DE;G8DF | | GDS18191 | Drive Shaft | | 36 | 34 | 56 | 48 | 890 | |
| | 2003.10-2007.03 | CVT | F | L/R | MPV FWD G8DA;G8DB;G8DD;G8DE;G8DF | | GCO99132 | Outer Joint | | 36 | 24 | 56 | 48 | 57 | I |
| | 2003.10-2007.03 | CVT | F | L | MPV FWD G8DA;G8DB;G8DD;G8DE;G8DF | | GCI18172 | Inner Joint | | 34 | 24 | 30.8 | 61 | 89.5 | |
| | 2003.10-2007.03 | | F | L | MPV FWD G8DA;G8DB;G8DD;G8DE;G8DF | | GCO99288 | Outer Joint | | 36 | 26 | 56.3 | 48 | 61 | M |

| | YEAR | TRANSM. | F/R | L/R | BODY STYLE & DRIVE TYPE & ENGINE | REMARKS | G-AP Ref. | PRODUCT | ABS | Technical Specifications | | | | | |
|---|---|---|---|---|---|---|---|---|---|---|---|---|---|---|---|
| | | | | | | | | | | A | B | C | H | L | P |
| **FORD**<br>**Focus C-Max** | | | | | | | | | | | | | | | |
| 1.6 (80 kw) | 2003.10-2007.03 | | F | R | MPV FWD G8DA;G8DB;G8DD;G8DE;G8DF | | GCO18230 | Outer Joint | | 36 | 26 | 56.3 | 48 | 61 | M |
| 1.6 (85 kw) | 2004.08-2007.03 | 5MT | F | L | MPV FWD HXDA;SIDA | Inner teeth of wheel side:24 | GDS18261 | Drive Shaft | | 36 | 23 | 55.8 | 48 | 600 | |
| | 2004.08-2007.03 | 5MT | F | L | MPV FWD HXDA;SIDA | Inner teeth of wheel side:23 | GDS18359 | Drive Shaft | | 36 | 23 | 56 | 48 | 594 | |
| | 2004.08-2007.03 | 5MT | F | R | MPV FWD HXDA;SIDA | Inner teeth of wheel side:24 | GDS18262 | Drive Shaft | | 36 | 23 | 55.8 | 48 | 905 | |
| | 2004.08-2007.03 | 5MT | F | R | MPV FWD HXDA;SIDA | Inner teeth of wheel side:23 | GDS18358 | Drive Shaft | | 36 | 23 | 56 | 48 | 899 | |
| | 2004.08-2007.03 | 5MT | F | L/R | MPV FWD HXDA;SIDA | | GCO99129 | Outer Joint | | 36 | 24 | 56 | 48 | 57 | M |
| | 2004.08-2007.03 | MT | F | L | MPV FWD HXDA;SIDA | | GDS18189 | Drive Shaft | | 36 | 23 | 56 | 48 | 601 | |
| | 2004.08-2007.03 | MT | F | L | MPV FWD HXDA;SIDA | | GDS18336 | Drive Shaft | | 36 | 23 | 51.6 | 48 | 600 | |
| | 2004.08-2007.03 | MT | F | R | MPV FWD HXDA;SIDA | | GDS18206 | Drive Shaft | | 36 | 23 | 56 | 48 | 906 | |
| | 2004.08-2007.03 | MT | F | R | MPV FWD HXDA;SIDA | | GDS18337 | Drive Shaft | | 36 | 23 | 51.6 | 48 | 908 | |
| | 2004.08-2007.03 | MT | F | L | MPV FWD HXDA;SIDA | | GCO18264 | Outer Joint | | 36 | 25 | 51.6 | 48 | 58 | O |
| | 2004.08-2007.03 | MT | F | L | MPV FWD HXDA;SIDA | | GCI18168 | Inner Joint | | 23 | 22 | 40 | 61 | 90 | |
| | 2004.08-2007.03 | | F | L/R | MPV FWD HXDA;SIDA | | GCO62039 | Outer Joint | | 36 | 24 | 55.8 | 48 | 57 | M |
| | 2004.08-2007.03 | | F | L | MPV FWD HXDA;SIDA | | GCI18086 | Inner Joint | | 23 | 22 | 40 | 61 | 90 | |
| | 2004.08-2007.03 | | F | R | MPV FWD HXDA;SIDA | | GCI18161 | Inner Joint | | 26 | 23 | 40 | 389 | 86 | |
| 1.8 (85 kw) | 2005.01-2007.03 | 5MT | F | L | MPV FWD KKDA;KKDB | | GDS18218 | Drive Shaft | | 36 | 26 | 56 | 48 | 582 | |
| | 2005.01-2007.03 | 5MT | F | R | MPV FWD KKDA;KKDB | | GDS18219 | Drive Shaft | | 36 | 26 | 56.3 | 48 | 921 | |
| | 2005.01-2007.03 | | F | L | MPV FWD KKDA;KKDB | | GCO99288 | Outer Joint | | 36 | 26 | 56.3 | 48 | 61 | M |
| | 2005.01-2007.03 | | F | R | MPV FWD KKDA;KKDB | | GCO18230 | Outer Joint | | 36 | 26 | 56.3 | 48 | 61 | M |
| 1.8 (88 kw) | 2003.10-2007.03 | 5MT | F | L | MPV FWD CSDA;CSDB | | GDS18218 | Drive Shaft | | 36 | 26 | 56 | 48 | 582 | |
| | 2003.10-2007.03 | 5MT | F | R | MPV FWD CSDA;CSDB | | GDS18219 | Drive Shaft | | 36 | 26 | 56.3 | 48 | 921 | |
| | 2003.10-2007.03 | 5MT | F | L | MPV FWD CSDA;CSDB | | GCI18044 | Inner Joint | | 26 | 23 | 40 | 68.5 | 99.5 | |
| | 2003.10-2007.03 | MT | F | L | MPV FWD CSDA;CSDB | | GDS18189 | Drive Shaft | | 36 | 23 | 56 | 48 | 601 | |
| | 2003.10-2007.03 | MT | F | R | MPV FWD CSDA;CSDB | | GDS18206 | Drive Shaft | | 36 | 23 | 56 | 48 | 906 | |
| | 2003.10-2007.03 | MT | F | R | MPV FWD CSDA;CSDB | | GCO99130 | Outer Joint | | 36 | 26 | 56.3 | 48 | 61 | M |
| | 2003.10-2007.03 | MT | F | L/R | MPV FWD CSDA;CSDB | | GCO99129 | Outer Joint | | 36 | 24 | 56 | 48 | 57 | M |
| | 2003.10-2007.03 | | F | L/R | MPV FWD CSDA;CSDB | Date To:2004.10 | GCO18203 | Outer Joint | | 36 | 23 | 56 | 48 | 57 | I |
| | 2003.10-2007.03 | | F | R | MPV FWD CSDA;CSDB | | GCI18161 | Inner Joint | | 26 | 23 | 40 | 389 | 86 | |
| 1.8 (90 kw) | 2005.09-2007.03 | 5MT | F | L | MPV FWD QQDC | | GDS18218 | Drive Shaft | | 36 | 26 | 56 | 48 | 582 | |
| | 2005.09-2007.03 | 5MT | F | L | MPV FWD QQDC | | GCI18044 | Inner Joint | | 26 | 23 | 40 | 68.5 | 99.5 | |
| | 2005.09-2007.03 | AT/5MT | F | R | MPV FWD QQDC | | GDS18219 | Drive Shaft | | 36 | 26 | 56.3 | 48 | 921 | |
| | 2005.09-2007.03 | AT/5MT | F | L/R | MPV FWD QQDC | | GCO18230 | Outer Joint | | 36 | 26 | 56.3 | 48 | 61 | M |
| | 2005.09-2007.03 | MT | F | L | MPV FWD QQDC | Inner teeth of wheel side:24 | GDS18189 | Drive Shaft | | 36 | 23 | 56 | 48 | 601 | |
| | 2005.09-2007.03 | MT | F | L | MPV FWD QQDC | Inner teeth of wheel side:24 | GDS18261 | Drive Shaft | | 36 | 23 | 55.8 | 48 | 600 | |
| | 2005.09-2007.03 | MT | F | L | MPV FWD QQDC | Inner teeth of wheel side:23 | GDS18359 | Drive Shaft | | 36 | 23 | 56 | 48 | 594 | |
| | 2005.09-2007.03 | MT | F | R | MPV FWD QQDC | Inner teeth of wheel side:24 | GDS18206 | Drive Shaft | | 36 | 23 | 56 | 48 | 906 | |
| | 2005.09-2007.03 | MT | F | R | MPV FWD QQDC | Inner teeth of wheel side:24 | GDS18262 | Drive Shaft | | 36 | 23 | 55.8 | 48 | 905 | |
| | 2005.09-2007.03 | MT | F | R | MPV FWD QQDC | Inner teeth of wheel side:23 | GDS18358 | Drive Shaft | | 36 | 23 | 56 | 48 | 899 | |
| | 2005.09-2007.03 | MT | F | L/R | MPV FWD QQDC | | GCO18203 | Outer Joint | | 36 | 23 | 56 | 48 | 57 | I |
| | 2005.09-2007.03 | MT | F | L/R | MPV FWD QQDC | | GCO62039 | Outer Joint | | 36 | 24 | 55.8 | 48 | 57 | M |
| | 2005.09-2007.03 | MT | F | L/R | MPV FWD QQDC | | GCO99129 | Outer Joint | | 36 | 24 | 56 | 48 | 57 | M |
| | 2005.09-2007.03 | MT | F | L | MPV FWD QQDC | | GCI82479 | Inner Joint | | 23 | 23 | 40 | 61 | 110 | |
| | 2005.09-2007.03 | MT | F | R | MPV FWD QQDC | | GCI18087 | Inner Joint | | 23 | 22 | 40 | 371 | 78.5 | |
| | 2005.09-2007.03 | | F | R | MPV FWD QQDC | | GCI18161 | Inner Joint | | 26 | 23 | 40 | 389 | 86 | |
| 1.8 (92 kw) | 2004.04-2007.03 | 4AT/5MT | F | R | MPV FWD QQDB;QQDA;Q7DA | | GCI18161 | Inner Joint | | 26 | 23 | 40 | 389 | 86 | |
| | 2004.04-2007.03 | 5MT | F | L | MPV FWD QQDB;QQDA;Q7DA | | GDS18218 | Drive Shaft | | 36 | 26 | 56 | 48 | 582 | |
| | 2004.04-2007.03 | AT | F | L/R | MPV FWD QQDB;QQDA;Q7DA | | GCO18203 | Outer Joint | | 36 | 23 | 56 | 48 | 57 | I |
| | 2004.04-2007.03 | AT/5MT | F | R | MPV FWD QQDB;QQDA;Q7DA | | GDS18219 | Drive Shaft | | 36 | 26 | 56.3 | 48 | 921 | |
| | 2004.04-2007.03 | MT | F | L | MPV FWD QQDB;QQDA;Q7DA | TJ | GDS18189 | Drive Shaft | | 36 | 23 | 56 | 48 | 601 | |
| | 2004.04-2007.03 | MT | F | L | MPV FWD QQDB;QQDA;Q7DA | TJ | GDS18261 | Drive Shaft | | 36 | 23 | 55.8 | 48 | 600 | |
| | 2004.04-2007.03 | MT | F | L | MPV FWD QQDB;QQDA;Q7DA | TJ | GDS18359 | Drive Shaft | | 36 | 23 | 56 | 48 | 594 | |
| | 2004.04-2007.03 | MT | F | R | MPV FWD QQDB;QQDA;Q7DA | | GDS18206 | Drive Shaft | | 36 | 23 | 56 | 48 | 906 | |
| | 2004.04-2007.03 | MT | F | R | MPV FWD QQDB;QQDA;Q7DA | | GDS18262 | Drive Shaft | | 36 | 23 | 55.8 | 48 | 905 | |
| | 2004.04-2007.03 | MT | F | R | MPV FWD QQDB;QQDA;Q7DA | TJ | GDS18358 | Drive Shaft | | 36 | 23 | 56 | 48 | 899 | |
| | 2004.04-2007.03 | MT | F | L | MPV FWD QQDB;QQDA;Q7DA | AAR | GCI82479 | Inner Joint | | 23 | 23 | 40 | 61 | 110 | |
| | 2006.01-2007.03 | AT | F | L | MPV FWD Q7DA | | GDS18218 | Drive Shaft | | 36 | 26 | 56 | 48 | 582 | |
| | 2006.01-2007.03 | AT | F | R | MPV FWD Q7DA | | GDS18219 | Drive Shaft | | 36 | 26 | 56.3 | 48 | 921 | |
| | 2006.01-2007.03 | AT | F | L/R | MPV FWD Q7DA | | GCO18230 | Outer Joint | | 36 | 26 | 56.3 | 48 | 61 | M |
| | 2006.01-2007.03 | AT | F | L | MPV FWD Q7DA | | GCI18044 | Inner Joint | | 26 | 23 | 40 | 68.5 | 99.5 | |
| | 2006.01-2007.03 | MT | F | L | MPV FWD Q7DA | Inner teeth of wheel side:24 | GDS18189 | Drive Shaft | | 36 | 23 | 56 | 48 | 601 | |
| | 2006.01-2007.03 | MT | F | L | MPV FWD Q7DA | Inner teeth of wheel side:24 | GDS18261 | Drive Shaft | | 36 | 23 | 55.8 | 48 | 600 | |
| | 2006.01-2007.03 | MT | F | L | MPV FWD Q7DA | Inner teeth of wheel side:23 | GDS18359 | Drive Shaft | | 36 | 23 | 56 | 48 | 594 | |
| | 2006.01-2007.03 | MT | F | R | MPV FWD Q7DA | Inner teeth of wheel side:24 | GDS18206 | Drive Shaft | | 36 | 23 | 56 | 48 | 906 | |
| | 2006.01-2007.03 | MT | F | R | MPV FWD Q7DA | Inner teeth of wheel side:24 | GDS18262 | Drive Shaft | | 36 | 23 | 55.8 | 48 | 905 | |
| | 2006.01-2007.03 | MT | F | R | MPV FWD Q7DA | Inner teeth of wheel side:23 | GDS18358 | Drive Shaft | | 36 | 23 | 56 | 48 | 899 | |

| | YEAR | TRANSM. | F/R | L/R | BODY STYLE & DRIVE TYPE & ENGINE | REMARKS | G-AP Ref. | PRODUCT | ABS | Technical Specifications A | B | C | H | L | P |
|---|---|---|---|---|---|---|---|---|---|---|---|---|---|---|---|
| **FORD** | | | | | | | | | | | | | | | |
| **Focus C-Max** | | | | | | | | | | | | | | | |
| 1.8 (92 kw) | 2006.01-2007.03 | MT | F | L/R | MPV FWD Q7DA | | GCO62039 | Outer Joint | | 36 | 24 | 55.8 | 48 | 57 | M |
| | 2006.01-2007.03 | MT | F | L/R | MPV FWD Q7DA | | GCO99129 | Outer Joint | | 36 | 24 | 56 | 48 | 57 | M |
| | 2006.01-2007.03 | MT | F | L | MPV FWD Q7DA | | GCI82479 | Inner Joint | | 23 | 23 | 40 | 61 | 110 | |
| | 2006.01-2007.03 | MT | F | R | MPV FWD Q7DA | | GCI18087 | Inner Joint | | 23 | 22 | 40 | 371 | 78.5 | |
| | 2006.01-2007.03 | MT/AT | F | L/R | MPV FWD Q7DA | | GCO18203 | Outer Joint | | 36 | 23 | 56 | 48 | 57 | I |
| | 2006.01-2007.03 | | F | R | MPV FWD Q7DA | | GCI18161 | Inner Joint | | 26 | 23 | 40 | 389 | 86 | |
| 2.0 (98 kw) | 2003.10-2007.03 | 6MT | F | L | MPV FWD G6DC;G6DE;G6DF | | GDS18218 | Drive Shaft | | 36 | 26 | 56 | 48 | 582 | |
| | 2003.10-2007.03 | 6MT | F | R | MPV FWD G6DC;G6DE;G6DF | Inner teeth of tranm.side:32 | GDS18219 | Drive Shaft | | 36 | 26 | 56.3 | 48 | 921 | |
| | 2003.10-2007.03 | 6MT | F | R | MPV FWD G6DC;G6DE;G6DF | Inner teeth of tranm.side:26 | GDS56093 | Drive Shaft | | 36 | 26 | 56 | 48 | 916 | |
| | 2003.10-2007.03 | 6MT | F | L/R | MPV FWD G6DC;G6DE;G6DF | | GCO18203 | Outer Joint | | 36 | 23 | 56 | 48 | 57 | I |
| | 2003.10-2007.03 | 6MT | F | L/R | MPV FWD G6DC;G6DE;G6DF | | GCO99155 | Outer Joint | | 36 | 26 | 56 | 48 | 64 | I |
| | 2003.10-2007.03 | 6MT | F | L | MPV FWD G6DC;G6DE;G6DF | | GCI18044 | Inner Joint | | 26 | 23 | 40 | 68.5 | 99.5 | |
| | 2003.10-2007.03 | 6MT | F | R | MPV FWD G6DC;G6DE;G6DF | | GCI83312 | Inner Joint | | 26 | 26 | 40 | 389 | 92 | |
| 2.0 (100 kw) | 2003.10-2007.03 | 6MT | F | L | MPV FWD G6DA;G6DB;G6DD;G6DG | Date to:2004.10 | GDS18218 | Drive Shaft | | 36 | 26 | 56 | 48 | 582 | |
| | 2003.10-2007.03 | 6MT | F | R | MPV FWD G6DA;G6DB;G6DD;G6DG | Inner teeth of tranm.side:32 | GDS18219 | Drive Shaft | | 36 | 26 | 56.3 | 48 | 921 | |
| | 2003.10-2007.03 | 6MT | F | R | MPV FWD G6DA;G6DB;G6DD;G6DG | Inner teeth of tranm.side:26 | GDS56093 | Drive Shaft | | 36 | 26 | 56 | 48 | 916 | |
| | 2003.10-2007.03 | 6MT | F | L | MPV FWD G6DA;G6DB;G6DD;G6DG | Date to:2004.10 | GCI18044 | Inner Joint | | 26 | 23 | 40 | 68.5 | 99.5 | |
| | 2003.10-2007.03 | 6MT | F | R | MPV FWD G6DA;G6DB;G6DD;G6DG | | GCI83312 | Inner Joint | | 26 | 26 | 40 | 389 | 92 | |
| | 2003.10-2007.03 | AT | F | R | MPV FWD G6DA;G6DB;G6DD;G6DG | Trans. code:MPS6 Powershift | GDS62024 | Drive Shaft | | 36 | 28 | 56 | 48 | 908 | |
| | 2003.10-2007.03 | | F | L/R | MPV FWD G6DA;G6DB;G6DD;G6DG | | GCO18203 | Outer Joint | | 36 | 23 | 56 | 48 | 57 | I |
| 2.0 (107 kw) | 2004.03-2007.03 | AT | F | L | MPV FWD AODA;AODB;SYDA;AODE | | GCI18219 | Inner Joint | | 26 | 23 | 40 | 69 | 105 | |
| | 2004.03-2007.03 | AT/MT | F | L | MPV FWD AODA;AODB;SYDA;AODE | | GDS18218 | Drive Shaft | | 36 | 26 | 56 | 48 | 582 | |
| | 2004.03-2007.03 | AT/MT | F | R | MPV FWD AODA;AODB;SYDA;AODE | | GDS18219 | Drive Shaft | | 36 | 26 | 56.3 | 48 | 921 | |
| | 2004.03-2007.03 | AT/MT | F | L/R | MPV FWD AODA;AODB;SYDA;AODE | | GCO18203 | Outer Joint | | 36 | 23 | 56 | 48 | 57 | I |
| | 2004.03-2007.03 | MT | F | L | MPV FWD AODA;AODB;SYDA;AODE | | GCI18044 | Inner Joint | | 26 | 23 | 40 | 68.5 | 99.5 | |
| | 2004.03-2007.03 | | F | R | MPV FWD AODA;AODB;SYDA;AODE | | GCI18161 | Inner Joint | | 26 | 23 | 40 | 389 | 86 | |
| **Focus CC** | | | | | | | | | | | | | | | |
| 1.6 (74 kw) | 2006.10-2010.09 | 5MT | F | R | Convertible FWD HWDA;HWDB;SHDA;SHDB;SHDC | | GCI18087 | Inner Joint | | 23 | 22 | 40 | 371 | 78.5 | |
| | 2006.10-2010.09 | AT | F | L | Convertible FWD HWDA;HWDB;SHDA;SHDB;SHDC | | GDS18218 | Drive Shaft | | 36 | 26 | 56 | 48 | 582 | |
| | 2006.10-2010.09 | AT | F | L | Convertible FWD HWDA;HWDB;SHDA;SHDB;SHDC | | GDS34252 | Drive Shaft | | 36 | 26 | 55.3 | 48 | 581 | |
| | 2006.10-2010.09 | AT | F | R | Convertible FWD HWDA;HWDB;SHDA;SHDB;SHDC | | GDS18219 | Drive Shaft | | 36 | 26 | 56.3 | 48 | 921 | |
| | 2006.10-2010.09 | AT | F | L/R | Convertible FWD HWDA;HWDB;SHDA;SHDB;SHDC | | GCO18203 | Outer Joint | | 36 | 23 | 56 | 48 | 57 | I |
| | 2006.10-2010.09 | AT | F | R | Convertible FWD HWDA;HWDB;SHDA;SHDB;SHDC | | GCI18161 | Inner Joint | | 26 | 23 | 40 | 389 | 86 | |
| | 2006.10-2010.09 | MT | F | L | Convertible FWD HWDA;HWDB;SHDA;SHDB;SHDC | | GDS18189 | Drive Shaft | | 36 | 23 | 56 | 48 | 601 | |
| | 2006.10-2010.09 | MT | F | L | Convertible FWD HWDA;HWDB;SHDA;SHDB;SHDC | Inner teeth of wheel side:24 | GDS18261 | Drive Shaft | | 36 | 23 | 55.8 | 48 | 600 | |
| | 2006.10-2010.09 | MT | F | L | Convertible FWD HWDA;HWDB;SHDA;SHDB;SHDC | | GDS18336 | Drive Shaft | | 36 | 23 | 51.6 | 48 | 600 | |
| | 2006.10-2010.09 | MT | F | L | Convertible FWD HWDA;HWDB;SHDA;SHDB;SHDC | Inner teeth of wheel side:23 | GDS18359 | Drive Shaft | | 36 | 23 | 56 | 48 | 594 | |
| | 2006.10-2010.09 | MT | F | R | Convertible FWD HWDA;HWDB;SHDA;SHDB;SHDC | | GDS18206 | Drive Shaft | | 36 | 23 | 56 | 48 | 906 | |
| | 2006.10-2010.09 | MT | F | R | Convertible FWD HWDA;HWDB;SHDA;SHDB;SHDC | Inner teeth of wheel side:24 | GDS18262 | Drive Shaft | | 36 | 23 | 55.8 | 48 | 905 | |
| | 2006.10-2010.09 | MT | F | R | Convertible FWD HWDA;HWDB;SHDA;SHDB;SHDC | | GDS18337 | Drive Shaft | | 36 | 23 | 51.6 | 48 | 908 | |
| | 2006.10-2010.09 | MT | F | R | Convertible FWD HWDA;HWDB;SHDA;SHDB;SHDC | Inner teeth of wheel side:23 | GDS18358 | Drive Shaft | | 36 | 23 | 56 | 48 | 899 | |
| | 2006.10-2010.09 | MT | F | L | Convertible FWD HWDA;HWDB;SHDA;SHDB;SHDC | | GCO18264 | Outer Joint | | 36 | 25 | 51.6 | 48 | 58 | O |
| | 2006.10-2010.09 | MT | F | L | Convertible FWD HWDA;HWDB;SHDA;SHDB;SHDC | | GCO62039 | Outer Joint | | 36 | 24 | 55.8 | 48 | 57 | M |
| | 2006.10-2010.09 | MT | F | L/R | Convertible FWD HWDA;HWDB;SHDA;SHDB;SHDC | | GCO99129 | Outer Joint | | 36 | 24 | 56 | 48 | 57 | M |
| | 2006.10-2010.09 | MT | F | L | Convertible FWD HWDA;HWDB;SHDA;SHDB;SHDC | | GCI18086 | Inner Joint | | 23 | 22 | 40 | 61 | 90 | |
| | 2006.10-2010.09 | MT | F | L | Convertible FWD HWDA;HWDB;SHDA;SHDB;SHDC | | GCI18168 | Inner Joint | | 23 | 22 | 40 | 61 | 90 | |
| 2.0 (100 kw) | 2006.10-2010.09 | 6MT | F | R | Convertible FWD G6DA;G6DB;G6DD;G6DG | | GDS56093 | Drive Shaft | | 36 | 26 | 56 | 48 | 916 | |
| | 2006.10-2010.09 | 6MT | F | L/R | Convertible FWD G6DA;G6DB;G6DD;G6DG | | GCO99155 | Outer Joint | | 36 | 26 | 56 | 48 | 64 | I |
| | 2006.10-2010.09 | 6MT | F | R | Convertible FWD G6DA;G6DB;G6DD;G6DG | | GCI83312 | Inner Joint | | 26 | 26 | 40 | 389 | 92 | |
| | 2006.10-2010.09 | AT | F | R | Convertible FWD G6DA;G6DB;G6DD;G6DG | Trans. code:MPS6 Powershift | GDS62024 | Drive Shaft | | 36 | 28 | 56 | 48 | 908 | |
| | 2006.10-2010.09 | MT | F | L | Convertible FWD G6DA;G6DB;G6DD;G6DG | | GDS18218 | Drive Shaft | | 36 | 26 | 56 | 48 | 582 | |
| 2.0 (107 kw) | 2006.10-2010.09 | 4AT/5MT | F | R | Convertible FWD AODA;AODB;SYDA;AODE | | GDS18219 | Drive Shaft | | 36 | 26 | 56.3 | 48 | 921 | |
| | 2006.10-2010.09 | 4AT/5MT | F | L | Convertible FWD AODA;AODB;SYDA;AODE | | GCI18044 | Inner Joint | | 26 | 23 | 40 | 68.5 | 99.5 | |
| | 2006.10-2010.09 | 5MT | F | L | Convertible FWD AODA;AODB;SYDA;AODE | | GDS18218 | Drive Shaft | | 36 | 26 | 56 | 48 | 582 | |
| | 2006.10-2010.09 | | F | L/R | Convertible FWD AODA;AODB;SYDA;AODE | | GCO18203 | Outer Joint | | 36 | 23 | 56 | 48 | 57 | I |
| | 2006.10-2010.09 | | F | L | Convertible FWD AODA;AODB;SYDA;AODE | | GCI18219 | Inner Joint | | 26 | 23 | 40 | 69 | 105 | |
| | 2006.10-2010.09 | | F | R | Convertible FWD AODA;AODB;SYDA;AODE | | GCI18161 | Inner Joint | | 26 | 23 | 40 | 389 | 86 | |
| **Focus Estate/Wagon** | | | | | | | | | | | | | | | |
| 1.0 (63 kw) | 2018.09-2025.11 | 6MT | F | L | Estate FWD SFDC | | GDS84499 | Drive Shaft | | 27 | 23 | 56 | 96.5 | 658 | |
| | 2018.09-2025.11 | 6MT | F | R | Estate FWD SFDC | | GDS83647 | Drive Shaft | | 27 | 23 | 56 | 96.5 | 966 | |
| | 2018.09-2025.11 | 6MT | F | L/R | Estate FWD SFDC | | GCO82450 | Outer Joint | | 27 | 33 | 56 | 96.5 | 58 | M |
| | 2018.09-2025.11 | 6MT | F | L/R | Estate FWD SFDC | | GCI82325 | Inner Joint | | 23 | 33 | 40 | 61 | 115.5 | |
| 1.0 (74 kw) | 2012.02-2020.02 | 5MT | F | L | Estate FWD M2DA;SFDA;SFDB;M2DB;M2DC | For light alloy rims | GDS18484 | Drive Shaft | | 27 | 23 | 62.8 | 95.5 | 651 | |
| | 2012.02-2020.02 | 5MT | F | R | Estate FWD M2DA;SFDA;SFDB;M2DB;M2DC | | GDS82082 | Drive Shaft | | 27 | 23 | 62.8 | 95.5 | 973 | |
| | 2012.02-2020.02 | 5MT | F | L | Estate FWD M2DA;SFDA;SFDB;M2DB;M2DC | | GCI18086 | Inner Joint | | 23 | 22 | 40 | 61 | 90 | |

| | YEAR | TRANSM. | F/R | L/R | BODY STYLE & DRIVE TYPE & ENGINE | REMARKS | G-AP Ref. | PRODUCT | ABS | Technical Specifications A | B | C | H | L | P |
|---|---|---|---|---|---|---|---|---|---|---|---|---|---|---|---|
| **FORD** **Focus Estate/Wagon** | | | | | | | | | | | | | | | |
| 1.0 (74 kw) | 2012.02-2020.02 | MT | F | L/R | Estate FWD M2DA;SFDA;SFDB;M2DB;M2DC | | GCO18244 | Outer Joint | | 27 | 24 | 62.8 | 95.5 | 59 | M |
| | 2012.02-2020.02 | 5MT | F | L | Estate Van FWD M2DA;SFDA;SFDB;M2DB;M2DC | For light alloy rims | GDS18484 | Drive Shaft | | 27 | 23 | 62.8 | 95.5 | 651 | |
| | 2012.02-2020.02 | 5MT | F | R | Estate Van FWD M2DA;SFDA;SFDB;M2DB;M2DC | | GDS82082 | Drive Shaft | | 27 | 23 | 62.8 | 95.5 | 973 | |
| | 2012.02-2020.02 | 5MT | F | L | Estate Van FWD M2DA;SFDA;SFDB;M2DB;M2DC | Date to:2015.07,Trans. code:B5/IB5 | GCI18086 | Inner Joint | | 23 | 22 | 40 | 61 | 90 | |
| | 2012.02-2020.02 | 5MT | F | R | Estate Van FWD M2DA;SFDA;SFDB;M2DB;M2DC | Date to:2015.07,Trans. code:B5/IB5 | GCI18263 | Inner Joint | | 23 | 22 | 40 | 375 | 76 | |
| | 2012.02-2020.02 | MT | F | L/R | Estate Van FWD M2DA;SFDA;SFDB;M2DB;M2DC | | GCO18244 | Outer Joint | | 27 | 24 | 62.8 | 95.5 | 59 | M |
| | 2018.09-2025.11 | 6MT | F | L | Estate FWD B3DA | | GDS84499 | Drive Shaft | | 27 | 23 | 56 | 96.5 | 658 | |
| | 2018.09-2025.11 | 6MT | F | R | Estate FWD B3DA | | GDS83647 | Drive Shaft | | 27 | 23 | 56 | 96.5 | 966 | |
| | 2018.09-2025.11 | 6MT | F | L/R | Estate FWD B3DA | | GCO82450 | Outer Joint | | 27 | 33 | 56 | 96.5 | 58 | M |
| | 2018.09-2025.11 | 6MT | F | L/R | Estate FWD B3DA | | GCI82325 | Inner Joint | | 23 | 33 | 40 | 61 | 115.5 | |
| 1.0 (92 kw) | 2012.02-2020.02 | 5MT | F | L | Estate FWD M1DA;M1DC;M1DD | For light alloy rims | GDS18484 | Drive Shaft | | 27 | 23 | 62.8 | 95.5 | 651 | |
| | 2012.02-2020.02 | 5MT | F | R | Estate FWD M1DA;M1DC;M1DD | | GDS82082 | Drive Shaft | | 27 | 23 | 62.8 | 95.5 | 973 | |
| | 2012.02-2020.02 | 5MT | F | L | Estate FWD M1DA;M1DC;M1DD | | GCI18086 | Inner Joint | | 23 | 22 | 40 | 61 | 90 | |
| | 2012.02-2020.02 | 6AT | F | L | Estate FWD M1DA;M1DC;M1DD | | GDS84006 | Drive Shaft | | 27 | 22 | 62.7 | 96 | 662 | |
| | 2012.02-2020.02 | 6AT | F | R | Estate FWD M1DA;M1DC;M1DD | | GDS84005 | Drive Shaft | | 27 | 22 | 62.7 | 96 | 940 | |
| | 2012.02-2020.02 | 6MT | F | L | Estate FWD M1DA;M1DC;M1DD | | GDS18295 | Drive Shaft | | 27 | 26 | 62.7 | 96 | 637 | |
| | 2012.02-2020.02 | 6MT | F | R | Estate FWD M1DA;M1DC;M1DD | | GDS18294 | Drive Shaft | | 27 | 26 | 62.7 | 96 | 972 | |
| | 2012.02-2020.02 | 6MT | F | L/R | Estate FWD M1DA;M1DC;M1DD | | GCO18277 | Outer Joint | | 27 | 33 | 62.8 | 95.5 | 59 | M |
| | 2012.02-2020.02 | 6MT | F | R | Estate FWD M1DA;M1DC;M1DD | | GCI81295 | Inner Joint | | 26 | 33 | 40 | 381.5 | 83.5 | |
| | 2012.02-2020.02 | AT | F | L/R | Estate FWD M1DA;M1DC;M1DD | | GCO18240 | Outer Joint | | 27 | 26 | 62.7 | 96 | 62.5 | M |
| | 2012.02-2020.02 | 6AT | F | L | Estate Van FWD M1DA;M1DC;M1DD | | GDS84006 | Drive Shaft | | 27 | 22 | 62.7 | 96 | 662 | |
| | 2012.02-2020.02 | 6AT | F | R | Estate Van FWD M1DA;M1DC;M1DD | | GDS84005 | Drive Shaft | | 27 | 22 | 62.7 | 96 | 940 | |
| | 2012.02-2020.02 | 6MT | F | L | Estate Van FWD M1DA;M1DC;M1DD | | GDS18295 | Drive Shaft | | 27 | 26 | 62.7 | 96 | 637 | |
| | 2012.02-2020.02 | 6MT | F | R | Estate Van FWD M1DA;M1DC;M1DD | | GDS18294 | Drive Shaft | | 27 | 26 | 62.7 | 96 | 972 | |
| | 2012.02-2020.02 | 6MT | F | L/R | Estate Van FWD M1DA;M1DC;M1DD | | GCO18277 | Outer Joint | | 27 | 33 | 62.8 | 95.5 | 59 | M |
| | 2012.02-2020.02 | 6MT | F | R | Estate Van FWD M1DA;M1DC;M1DD | | GCI81295 | Inner Joint | | 26 | 33 | 40 | 381.5 | 83.5 | |
| | 2012.02-2020.02 | AT | F | L/R | Estate Van FWD M1DA;M1DC;M1DD | | GCO18240 | Outer Joint | | 27 | 26 | 62.7 | 96 | 62.5 | M |
| | 2018.09-2025.11 | 6MT | F | L | Estate FWD B7DA | | GDS84499 | Drive Shaft | | 27 | 23 | 56 | 96.5 | 658 | |
| | 2018.09-2025.11 | 6MT | F | R | Estate FWD B7DA | | GDS83647 | Drive Shaft | | 27 | 23 | 56 | 96.5 | 966 | |
| | 2018.09-2025.11 | 6MT | F | L/R | Estate FWD B7DA | | GCO82450 | Outer Joint | | 27 | 33 | 56 | 96.5 | 58 | M |
| | 2018.09-2025.11 | 6MT | F | L/R | Estate FWD B7DA | | GCI82325 | Inner Joint | | 23 | 33 | 40 | 61 | 115.5 | |
| | 2018.09-2025.11 | 8AT | F | L | Estate FWD B7DA | | GDS83739 | Drive Shaft | | 27 | 22 | 56 | 96.5 | 686 | |
| | 2018.09-2025.11 | 8AT | F | R | Estate FWD B7DA | | GDS83740 | Drive Shaft | | 27 | 22 | 56 | 96.5 | 944 | |
| | 2018.09-2025.11 | 8AT | F | L/R | Estate FWD B7DA | | GCO82249 | Outer Joint | | 27 | 24 | 55.9 | 96.5 | 58.5 | M |
| | 2018.09-2025.11 | 8AT | F | L | Estate FWD B7DA | Date to:2020.07 | GCI82344 | Inner Joint | | 22 | 22 | | 152 | 86.5 | |
| | 2018.09-2025.11 | 8AT | F | L | Estate FWD B7DA | Date from:2020.08 | GCI83756 | Inner Joint | | 22 | 22 | | 152 | 86.5 | |
| | 2018.09-2025.11 | 8AT | F | R | Estate FWD B7DA | | GCI82343 | Inner Joint | | 22 | 22 | 35 | 63 | 100.5 | |
| | 2020.07-2025.11 | 6MT | F | L | Estate FWD B7DA;R0DB;B7DC | | GDS84499 | Drive Shaft | | 27 | 23 | 56 | 96.5 | 658 | |
| | 2020.07-2025.11 | 6MT | F | R | Estate FWD B7DA;R0DB;B7DC | | GDS83647 | Drive Shaft | | 27 | 23 | 56 | 96.5 | 966 | |
| | 2020.07-2025.11 | 6MT | F | L/R | Estate FWD B7DA;R0DB;B7DC | | GCO82450 | Outer Joint | | 27 | 33 | 56 | 96.5 | 58 | M |
| | 2020.07-2025.11 | 6MT | F | L/R | Estate FWD B7DA;R0DB;B7DC | | GCI82325 | Inner Joint | | 23 | 33 | 40 | 61 | 115.5 | |
| | 2020.07-2025.11 | 7DCT | F | R | Estate FWD B7DA;R0DB;B7DC | | GCO82450 | Outer Joint | | 27 | 33 | 56 | 96.5 | 58 | M |
| | 2022.12-2025.11 | 6MT | F | L | Estate FWD B7DA | | GDS84499 | Drive Shaft | | 27 | 23 | 56 | 96.5 | 658 | |
| | 2022.12-2025.11 | 6MT | F | R | Estate FWD B7DA | | GDS83647 | Drive Shaft | | 27 | 23 | 56 | 96.5 | 966 | |
| | 2022.12-2025.11 | 6MT | F | L/R | Estate FWD B7DA | | GCO82450 | Outer Joint | | 27 | 33 | 56 | 96.5 | 58 | M |
| | 2022.12-2025.11 | 6MT | F | L/R | Estate FWD B7DA | | GCI82325 | Inner Joint | | 23 | 33 | 40 | 61 | 115.5 | |
| | 2022.12-2025.11 | 8AT | F | R | Estate FWD B7DA | | GDS83740 | Drive Shaft | | 27 | 22 | 56 | 96.5 | 944 | |
| | 2022.12-2025.11 | 8AT | F | L/R | Estate FWD B7DA | | GCO82249 | Outer Joint | | 27 | 24 | 55.9 | 96.5 | 58.5 | M |
| | 2022.12-2025.11 | 8AT | F | L | Estate FWD B7DA | Date to:2022.09 | GCI82344 | Inner Joint | | 22 | 22 | | 152 | 86.5 | |
| | 2022.12-2025.11 | 8AT | F | L | Estate FWD B7DA | Date from:2020.08 | GCI83756 | Inner Joint | | 22 | 22 | | 152 | 86.5 | |
| | 2022.12-2025.11 | 8AT | F | R | Estate FWD B7DA | | GCI82343 | Inner Joint | | 22 | 22 | 35 | 63 | 100.5 | |
| 1.0 (103 kw) | 2017.10-2020.02 | 6MT | F | L | Estate FWD M1DH | | GDS18295 | Drive Shaft | | 27 | 26 | 62.7 | 96 | 637 | |
| | 2017.10-2020.02 | 6MT | F | R | Estate FWD M1DH | | GDS18294 | Drive Shaft | | 27 | 26 | 62.7 | 96 | 972 | |
| | 2017.10-2020.02 | 6MT | F | L/R | Estate FWD M1DH | | GCO18277 | Outer Joint | | 27 | 33 | 62.8 | 95.5 | 59 | M |
| 1.0 (114 kw) | 2020.07-2025.11 | 6MT | F | L | Estate FWD M0DC | | GDS84499 | Drive Shaft | | 27 | 23 | 56 | 96.5 | 658 | |
| | 2020.07-2025.11 | 6MT | F | R | Estate FWD M0DC | | GDS83647 | Drive Shaft | | 27 | 23 | 56 | 96.5 | 966 | |
| | 2020.07-2025.11 | 6MT | F | L/R | Estate FWD M0DC | | GCO82450 | Outer Joint | | 27 | 33 | 56 | 96.5 | 58 | M |
| | 2020.07-2025.11 | 6MT | F | L/R | Estate FWD M0DC | | GCI82325 | Inner Joint | | 23 | 33 | 40 | 61 | 115.5 | |
| | 2020.07-2025.11 | 7DCT | F | R | Estate FWD M0DC | | GCO82450 | Outer Joint | | 27 | 33 | 56 | 96.5 | 58 | M |
| 1.4 (55 kw) | 1999.02-2004.11 | AT/MT | F | L/R | Estate FWD FXDA/FXDB/FXDC/FXDD | | GCO18003 | Outer Joint | | 25 | 21 | 53.3 | 89 | 53 | M |
| | 1999.02-2004.11 | AT/MT | F | L/R | Estate FWD FXDA/FXDB/FXDC/FXDD | | GCO18013 | Outer Joint | | 25 | 23 | 53.4 | 88.5 | 57 | M |
| | 1999.02-2004.11 | MT | F | L | Estate FWD FXDA/FXDB/FXDC/FXDD | | GDS18042 | Drive Shaft | | 25 | 23 | 53.4 | 88.5 | 633 | |
| | 1999.02-2004.11 | MT | F | R | Estate FWD FXDA/FXDB/FXDC/FXDD | | GDS18046 | Drive Shaft | | 25 | 23 | 53.4 | 88.5 | 934 | |
| | 1999.02-2004.11 | MT | F | L | Estate FWD FXDA/FXDB/FXDC/FXDD | | GCI18022 | Inner Joint | | 23 | 21 | 40 | 61 | 88 | |
| 1.4 (59 kw) | 2004.07-2012.09 | 5MT | F | L | Estate FWD ASDA;ASDB | Inner teeth of wheel side:24 | GDS18261 | Drive Shaft | | 36 | 23 | 55.8 | 48 | 600 | |

| | YEAR | TRANSM. | F/R | L/R | BODY STYLE & DRIVE TYPE & ENGINE | REMARKS | G-AP Ref. | PRODUCT | ABS | Technical Specifications | | | | | |
|---|---|---|---|---|---|---|---|---|---|---|---|---|---|---|---|
| | | | | | | | | | | A | B | C | H | L | P |
| **FORD**<br>**Focus Estate/Wagon** | | | | | | | | | | | | | | | |
| 1.4 (59 kw) | 2004.07-2012.09 | 5MT | F | L | Estate FWD ASDA;ASDB | Inner teeth of wheel side:23 | GDS18359 | Drive Shaft | | 36 | 23 | 56 | 48 | 594 | |
| | 2004.07-2012.09 | 5MT | F | R | Estate FWD ASDA;ASDB | Inner teeth of wheel side:24 | GDS18262 | Drive Shaft | | 36 | 23 | 55.8 | 48 | 905 | |
| | 2004.07-2012.09 | 5MT | F | R | Estate FWD ASDA;ASDB | Inner teeth of wheel side:23 | GDS18358 | Drive Shaft | | 36 | 23 | 56 | 48 | 899 | |
| | 2004.07-2012.09 | 5MT | F | L/R | Estate FWD ASDA;ASDB | | GCO99129 | Outer Joint | | 36 | 24 | 56 | 48 | 57 | M |
| | 2004.07-2012.09 | 5MT | F | R | Estate FWD ASDA;ASDB | | GCI18087 | Inner Joint | | 23 | 22 | 40 | 371 | 78.5 | |
| | 2004.07-2012.09 | MT | F | L | Estate FWD ASDA;ASDB | | GDS18189 | Drive Shaft | | 36 | 23 | 56 | 48 | 601 | |
| | 2004.07-2012.09 | MT | F | R | Estate FWD ASDA;ASDB | | GDS18206 | Drive Shaft | | 36 | 23 | 56 | 48 | 906 | |
| | 2004.07-2012.09 | MT | F | R | Estate FWD ASDA;ASDB | | GDS18337 | Drive Shaft | | 36 | 23 | 51.6 | 48 | 908 | |
| | 2004.07-2012.09 | MT | F | L | Estate FWD ASDA;ASDB | | GCO18264 | Outer Joint | | 36 | 25 | 51.6 | 48 | 58 | O |
| | 2004.07-2012.09 | MT | F | L | Estate FWD ASDA;ASDB | | GCI18168 | Inner Joint | | 23 | 22 | 40 | 61 | 90 | |
| | 2004.07-2012.09 | | F | L | Estate FWD ASDA;ASDB | | GDS18336 | Drive Shaft | | 36 | 23 | 51.6 | 48 | 600 | |
| | 2004.07-2012.09 | | F | | Estate FWD ASDA;ASDB | | GCO62039 | Outer Joint | | 36 | 24 | 55.8 | 48 | 57 | M |
| | 2004.07-2012.09 | | F | L | Estate FWD ASDA;ASDB | Date To:2005.09 | GCI18086 | Inner Joint | | 23 | 22 | 40 | 61 | 90 | |
| 1.5 (70 kw) | 2014.09-2020.02 | 6MT | F | L | Estate FWD XXDA;XXDC;XXDD | | GDS18295 | Drive Shaft | | 27 | 26 | 62.7 | 96 | 637 | |
| | 2014.09-2020.02 | 6MT | F | R | Estate FWD XXDA;XXDC;XXDD | | GDS18294 | Drive Shaft | | 27 | 26 | 62.7 | 96 | 972 | |
| | 2014.09-2020.02 | 6MT | F | L | Estate FWD XXDA;XXDC;XXDD | | GCI21028 | Inner Joint | | 26 | 32 | 40 | 61 | 112.5 | |
| | 2014.09-2020.02 | 6MT | F | R | Estate FWD XXDA;XXDC;XXDD | | GCI81338 | Inner Joint | | 26 | 32 | 40 | 383 | 99 | |
| | 2014.09-2020.02 | MT | F | L/R | Estate FWD XXDA;XXDC;XXDD | | GCO18240 | Outer Joint | | 27 | 26 | 62.7 | 96 | 62.5 | M |
| | 2014.09-2020.02 | 6MT | F | L | Estate Van FWD XXDA;XXDC | | GDS18295 | Drive Shaft | | 27 | 26 | 62.7 | 96 | 637 | |
| | 2014.09-2020.02 | 6MT | F | R | Estate Van FWD XXDA;XXDC | | GDS18294 | Drive Shaft | | 27 | 26 | 62.7 | 96 | 972 | |
| | 2014.09-2020.02 | 6MT | F | L | Estate Van FWD XXDA;XXDC | Date From:2014.10,Trans. code:B6 | GCI21028 | Inner Joint | | 26 | 32 | 40 | 61 | 112.5 | |
| | 2014.09-2020.02 | 6MT | F | R | Estate Van FWD XXDA;XXDC | | GCI81338 | Inner Joint | | 26 | 32 | 40 | 383 | 99 | |
| | 2014.09-2020.02 | MT | F | L/R | Estate Van FWD XXDA;XXDC | Date from:2015.01 | GCO18240 | Outer Joint | | 27 | 26 | 62.7 | 96 | 62.5 | M |
| | 2018.09-2025.11 | 6MT | F | L | Estate FWD Z2DA | | GDS84581 | Drive Shaft | | 27 | 28 | 56 | 96.5 | 638 | |
| | 2018.09-2025.11 | 6MT | F | R | Estate FWD Z2DA | | GDS84578 | Drive Shaft | | 27 | 28 | 56 | 96.5 | 990 | |
| | 2018.09-2025.11 | 6MT | F | L/R | Estate FWD Z2DA | | GCO82450 | Outer Joint | | 27 | 33 | 56 | 96.5 | 58 | M |
| | 2018.09-2025.11 | 6MT | F | L | Estate FWD Z2DA | For OE no.:JX673B437GAC/JX673B437GAD | GCI82870 | Inner Joint | | 28 | 33 | 40 | 64.5 | 111 | |
| | 2018.09-2025.11 | 6MT | F | R | Estate FWD Z2DA | For OE no.:JX673B436GAC/JX673B436GAD | GCI82869 | Inner Joint | | 28 | 33 | 40 | 64 | 138 | |
| 1.5 (77 kw) | 2014.09-2020.02 | 6MT | F | L | Estate FWD XXDB;AEDA | | GDS18295 | Drive Shaft | | 27 | 26 | 62.7 | 96 | 637 | |
| | 2014.09-2020.02 | 6MT | F | R | Estate FWD XXDB;AEDA | | GDS18294 | Drive Shaft | | 27 | 26 | 62.7 | 96 | 972 | |
| | 2014.09-2020.02 | 6MT | F | L | Estate FWD XXDB;AEDA | Date From:2014.10,Trans. code:B6 | GCI21028 | Inner Joint | | 26 | 32 | 40 | 61 | 112.5 | |
| | 2014.09-2020.02 | 6MT | F | R | Estate FWD XXDB;AEDA | | GCI81338 | Inner Joint | | 26 | 32 | 40 | 383 | 99 | |
| | 2014.09-2020.02 | MT | F | L/R | Estate FWD XXDB;AEDA | | GCO18240 | Outer Joint | | 27 | 26 | 62.7 | 96 | 62.5 | M |
| | 2014.09-2020.02 | 6MT | F | L | Estate Van FWD XXDB | | GDS18295 | Drive Shaft | | 27 | 26 | 62.7 | 96 | 637 | |
| | 2014.09-2020.02 | 6MT | F | R | Estate Van FWD XXDB | | GDS18294 | Drive Shaft | | 27 | 26 | 62.7 | 96 | 972 | |
| | 2014.09-2020.02 | 6MT | F | L | Estate Van FWD XXDB | Date From:2014.10,Trans. code:B6 | GCI21028 | Inner Joint | | 26 | 32 | 40 | 61 | 112.5 | |
| | 2014.09-2020.02 | 6MT | F | R | Estate Van FWD XXDB | | GCI81338 | Inner Joint | | 26 | 32 | 40 | 383 | 99 | |
| | 2014.09-2020.02 | MT | F | L/R | Estate Van FWD XXDB | Date from:2015.01 | GCO18240 | Outer Joint | | 27 | 26 | 62.7 | 96 | 62.5 | M |
| 1.5 (85 kw) | 2022.08-2025.11 | 8AT | F | L | Estate FWD Y9DA | | GDS82855 | Drive Shaft | | 27 | 35 | 55.9 | 96.5 | 686 | |
| | 2022.08-2025.11 | 8AT | F | R | Estate FWD Y9DA | | GDS82856 | Drive Shaft | | 27 | 35 | 55.9 | 96.5 | 943 | |
| | 2022.08-2025.11 | 8AT | F | L/R | Estate FWD Y9DA | | GCO82249 | Outer Joint | | 27 | 24 | 55.9 | 96.5 | 58.5 | M |
| | 2022.08-2025.11 | 8AT | F | L | Estate FWD Y9DA | | GCI82087 | Inner Joint | | 35 | 22 | 38 | 153 | 85.5 | |
| | 2022.08-2025.11 | 8AT | F | R | Estate FWD Y9DA | | GCI82086 | Inner Joint | | 35 | 22 | 38 | 57.5 | 113 | |
| 1.5 (88 kw) | 2014.09-2020.02 | 6DCT | F | L | Estate FWD XWDA;XWDB;XWDC;XWDD;XWDE | | GDS81479 | Drive Shaft | | 27 | 28 | 63.1 | 96 | 623 | |
| | 2014.09-2020.02 | 6DCT | F | R | Estate FWD XWDA;XWDB;XWDC;XWDD;XWDE | With vibration damper | GDS81480 | Drive Shaft | | 27 | 28 | 63.1 | 96 | 967 | |
| | 2014.09-2020.02 | 6DCT | F | L/R | Estate FWD XWDA;XWDB;XWDC;XWDD;XWDE | | GCO18252 | Outer Joint | | 27 | 26 | 63.1 | 96 | 64 | I |
| | 2014.09-2020.02 | 6DCT | F | L | Estate FWD XWDA;XWDB;XWDC;XWDD;XWDE | | GCI62053 | Inner Joint | | 28 | 26 | 34 | 79.5 | 91 | |
| | 2014.09-2020.02 | 6MT | F | L | Estate FWD XWDA;XWDB;XWDC;XWDD;XWDE | | GDS18295 | Drive Shaft | | 27 | 26 | 62.7 | 96 | 637 | |
| | 2014.09-2020.02 | 6MT | F | R | Estate FWD XWDA;XWDB;XWDC;XWDD;XWDE | | GDS18294 | Drive Shaft | | 27 | 26 | 62.7 | 96 | 972 | |
| | 2014.09-2020.02 | 6MT | F | L | Estate FWD XWDA;XWDB;XWDC;XWDD;XWDE | | GCO18240 | Outer Joint | | 27 | 26 | 62.7 | 96 | 62.5 | M |
| | 2014.09-2020.02 | 6MT | F | L | Estate FWD XWDA;XWDB;XWDC;XWDD;XWDE | Date from:2014.10,Trans. code:B6 | GCI21028 | Inner Joint | | 26 | 32 | 40 | 61 | 112.5 | |
| | 2014.09-2020.02 | 6MT | F | R | Estate FWD XWDA;XWDB;XWDC;XWDD;XWDE | | GCI81338 | Inner Joint | | 26 | 32 | 40 | 383 | 99 | |
| | 2014.09-2020.02 | 6DCT | F | L | Estate Van FWD XWDA;XWDB;XWDC;XWDD | | GDS81479 | Drive Shaft | | 27 | 28 | 63.1 | 96 | 623 | |
| | 2014.09-2020.02 | 6DCT | F | R | Estate Van FWD XWDA;XWDB;XWDC;XWDD | With vibration damper | GDS81480 | Drive Shaft | | 27 | 28 | 63.1 | 96 | 967 | |
| | 2014.09-2020.02 | 6DCT | F | L/R | Estate Van FWD XWDA;XWDB;XWDC;XWDD | | GCO18252 | Outer Joint | | 27 | 26 | 63.1 | 96 | 64 | I |
| | 2014.09-2020.02 | 6DCT | F | L | Estate Van FWD XWDA;XWDB;XWDC;XWDD | | GCI62053 | Inner Joint | | 28 | 26 | 34 | 79.5 | 91 | |
| | 2014.09-2020.02 | 6MT | F | L | Estate Van FWD XWDA;XWDB;XWDC;XWDD | | GDS18295 | Drive Shaft | | 27 | 26 | 62.7 | 96 | 637 | |
| | 2014.09-2020.02 | 6MT | F | R | Estate Van FWD XWDA;XWDB;XWDC;XWDD | | GDS18294 | Drive Shaft | | 27 | 26 | 62.7 | 96 | 972 | |
| | 2014.09-2020.02 | 6MT | F | L | Estate Van FWD XWDA;XWDB;XWDC;XWDD | | GCO18240 | Outer Joint | | 27 | 26 | 62.7 | 96 | 62.5 | M |
| | 2014.09-2020.02 | 6MT | F | L | Estate Van FWD XWDA;XWDB;XWDC;XWDD | Date from:2014.10,Trans. code:B6 | GCI21028 | Inner Joint | | 26 | 32 | 40 | 61 | 112.5 | |
| | 2014.09-2020.02 | 6MT | F | R | Estate Van FWD XWDA;XWDB;XWDC;XWDD | | GCI81338 | Inner Joint | | 26 | 32 | 40 | 383 | 99 | |
| | 2018.09-2025.11 | 6MT | F | L | Estate FWD ZTDB;ZTDA | | GDS84581 | Drive Shaft | | 27 | 28 | 56 | 96.5 | 638 | |
| | 2018.09-2025.11 | 6MT | F | R | Estate FWD ZTDB;ZTDA | | GDS84578 | Drive Shaft | | 27 | 28 | 56 | 96.5 | 990 | |
| | 2018.09-2025.11 | 6MT | F | L/R | Estate FWD ZTDB;ZTDA | | GCO82450 | Outer Joint | | 27 | 33 | 56 | 96.5 | 58 | M |
| | 2018.09-2025.11 | 6MT | F | L | Estate FWD ZTDB;ZTDA | For OE no.:JX673B437GAC/JX673B437GAD | GCI82870 | Inner Joint | | 28 | 33 | 40 | 64.5 | 111 | |

| | YEAR | TRANSM. | F/R | L/R | BODY STYLE & DRIVE TYPE & ENGINE | REMARKS | G-AP Ref. | PRODUCT | ABS | Technical Specifications A | B | C | H | L | P |
|---|---|---|---|---|---|---|---|---|---|---|---|---|---|---|---|
| **FORD** **Focus Estate/Wagon** | | | | | | | | | | | | | | | |
| 1.5 (88 kw) | 2018.09-2025.11 | 6MT | F | R | Estate FWD ZTDB;ZTDA | For OE no.:JX673B436GAC/JX673B436GAD | GCI82869 | Inner Joint | | 28 | 33 | 40 | 64 | 138 | |
| | 2018.09-2025.11 | 8AT | F | L | Estate FWD ZTDB;ZTDA | | GDS82855 | Drive Shaft | | 27 | 35 | 55.9 | 96.5 | 686 | |
| | 2018.09-2025.11 | 8AT | F | R | Estate FWD ZTDB;ZTDA | | GDS82856 | Drive Shaft | | 27 | 35 | 55.9 | 96.5 | 943 | |
| | 2018.09-2025.11 | 8AT | F | L/R | Estate FWD ZTDB;ZTDA | | GCO82249 | Outer Joint | | 27 | 24 | 55.9 | 96.5 | 58.5 | M |
| | 2018.09-2025.11 | 8AT | F | L | Estate FWD ZTDB;ZTDA | | GCI82087 | Inner Joint | | 35 | 22 | 38 | 153 | 85.5 | |
| | 2018.09-2025.11 | 8AT | F | R | Estate FWD ZTDB;ZTDA | | GCI82086 | Inner Joint | | 35 | 22 | 38 | 57.5 | 113 | |
| 1.5 (90 kw) | 2018.09-2025.11 | 6MT | F | L | Estate FWD Y2DA | Trans. code:6MX65 | GCO82450 | Outer Joint | | 27 | 33 | 56 | 96.5 | 58 | M |
| | 2018.09-2025.11 | 6MT | F | L/R | Estate FWD Y2DA | Trans. code:6MX65 | GCI82325 | Inner Joint | | 23 | 33 | 40 | 61 | 115.5 | |
| 1.5 (110 kw) | 2014.09-2020.02 | 6AT | F | L/R | Estate FWD M8DA;M8DB;M8DD | | GCO82320 | Outer Joint | | 27 | 26 | 62.5 | 96 | 62 | M |
| | 2014.09-2020.02 | 6MT | F | L | Estate FWD M8DA;M8DB;M8DD | | GDS18295 | Drive Shaft | | 27 | 26 | 62.7 | 96 | 637 | |
| | 2014.09-2020.02 | 6MT | F | R | Estate FWD M8DA;M8DB;M8DD | | GDS18299 | Drive Shaft | | 27 | 26 | 60.8 | 96 | 975 | |
| | 2014.09-2020.02 | 6MT | F | L | Estate FWD M8DA;M8DB;M8DD | | GCI81392 | Inner Joint | | 26 | 24 | 40 | 60 | 112 | |
| | 2014.09-2020.02 | MT | F | L/R | Estate FWD M8DA;M8DB;M8DD | | GCO18240 | Outer Joint | | 27 | 26 | 62.7 | 96 | 62.5 | M |
| | 2014.09-2020.02 | MT | F | L/R | Estate FWD M8DA;M8DB;M8DD | | GCO18244 | Outer Joint | | 27 | 24 | 62.8 | 95.5 | 59 | M |
| | 2014.09-2020.02 | 6AT | F | L/R | Estate Van FWD M8DA;M8DB;M8DD;M8DE | | GCO82320 | Outer Joint | | 27 | 26 | 62.5 | 96 | 62 | M |
| | 2014.09-2020.02 | 6MT | F | L | Estate Van FWD M8DA;M8DB;M8DD;M8DE | | GDS18295 | Drive Shaft | | 27 | 26 | 62.7 | 96 | 637 | |
| | 2014.09-2020.02 | 6MT | F | R | Estate Van FWD M8DA;M8DB;M8DD;M8DE | | GDS18299 | Drive Shaft | | 27 | 26 | 60.8 | 96 | 975 | |
| | 2014.09-2020.02 | 6MT | F | L | Estate Van FWD M8DA;M8DB;M8DD;M8DE | | GCI81392 | Inner Joint | | 26 | 24 | 40 | 60 | 112 | |
| | 2014.09-2020.02 | MT | F | L/R | Estate Van FWD M8DA;M8DB;M8DD;M8DE | Date from:2015.01 | GCO18244 | Outer Joint | | 27 | 24 | 62.8 | 95.5 | 59 | M |
| | 2018.09-2025.11 | 6MT | F | L | Estate FWD YZDA | | GDS84581 | Drive Shaft | | 27 | 28 | 56 | 96.5 | 638 | |
| | 2018.09-2025.11 | 6MT | F | R | Estate FWD YZDA | | GDS84580 | Drive Shaft | | 27 | 28 | 56 | 96.5 | 988 | |
| | 2018.09-2025.11 | 6MT | F | L/R | Estate FWD YZDA | | GCO82450 | Outer Joint | | 27 | 33 | 56 | 96.5 | 58 | M |
| | 2018.09-2025.11 | 6MT | F | L | Estate FWD YZDA | | GCI82870 | Inner Joint | | 28 | 33 | 40 | 64.5 | 111 | |
| | 2018.09-2025.11 | 6MT | F | R | Estate FWD YZDA | | GCI82869 | Inner Joint | | 28 | 33 | 40 | 64 | 138 | |
| | 2018.09-2025.11 | 8AT | F | L | Estate FWD YZDA | | GDS83739 | Drive Shaft | | 27 | 22 | 56 | 96.5 | 686 | |
| | 2018.09-2025.11 | 8AT | F | R | Estate FWD YZDA | | GDS83740 | Drive Shaft | | 27 | 22 | 56 | 96.5 | 944 | |
| | 2018.09-2025.11 | 8AT | F | L/R | Estate FWD YZDA | | GCO82249 | Outer Joint | | 27 | 24 | 55.9 | 96.5 | 58.5 | M |
| | 2018.09-2025.11 | 8AT | F | L | Estate FWD YZDA | Date from:2020.08 | GCI83756 | Inner Joint | | 22 | 22 | | 152 | 86.5 | |
| | 2018.09-2025.11 | 8AT | F | R | Estate FWD YZDA | | GCI82343 | Inner Joint | | 22 | 22 | 35 | 63 | 100.5 | |
| 1.5 (134 kw) | 2014.09-2020.02 | 6AT | F | L/R | Estate FWD M9DA;M9DB | | GCO82320 | Outer Joint | | 27 | 26 | 62.5 | 96 | 62 | M |
| | 2014.09-2020.02 | 6MT | F | L | Estate FWD M9DA;M9DB | | GDS18295 | Drive Shaft | | 27 | 26 | 62.7 | 96 | 637 | |
| | 2014.09-2020.02 | 6MT | F | R | Estate FWD M9DA;M9DB | | GDS18299 | Drive Shaft | | 27 | 26 | 60.8 | 96 | 975 | |
| | 2014.09-2020.02 | 6MT | F | L/R | Estate FWD M9DA;M9DB | | GCO18240 | Outer Joint | | 27 | 26 | 62.7 | 96 | 62.5 | M |
| | 2014.09-2020.02 | 6MT | F | L/R | Estate FWD M9DA;M9DB | | GCO18241 | Outer Joint | | 27 | 24 | 60.8 | 96 | 59 | I |
| | 2014.09-2020.02 | 6MT | F | L/R | Estate FWD M9DA;M9DB | | GCO18244 | Outer Joint | | 27 | 24 | 62.8 | 95.5 | 59 | M |
| | 2014.09-2020.02 | 6MT | F | L | Estate FWD M9DA;M9DB | | GCI81392 | Inner Joint | | 26 | 24 | 40 | 60 | 112 | |
| | 2014.09-2020.02 | 6MT | F | R | Estate FWD M9DA;M9DB | AAR | GCI62055 | Inner Joint | | 26 | 24 | 40 | 447.5 | 98.5 | |
| | 2014.09-2020.02 | 6AT | F | L/R | Estate Van FWD M9DA;M9DB | | GCO82320 | Outer Joint | | 27 | 26 | 62.5 | 96 | 62 | M |
| | 2014.09-2020.02 | 6MT | F | L | Estate Van FWD M9DA;M9DB | | GDS18295 | Drive Shaft | | 27 | 26 | 62.7 | 96 | 637 | |
| | 2014.09-2020.02 | 6MT | F | R | Estate Van FWD M9DA;M9DB | | GDS18299 | Drive Shaft | | 27 | 26 | 60.8 | 96 | 975 | |
| | 2014.09-2020.02 | 6MT | F | L | Estate Van FWD M9DA;M9DB | | GCI81392 | Inner Joint | | 26 | 24 | 40 | 60 | 112 | |
| | 2014.09-2020.02 | MT | F | L/R | Estate Van FWD M9DA;M9DB | Date from:2015.01 | GCO18244 | Outer Joint | | 27 | 24 | 62.8 | 95.5 | 59 | M |
| | 2018.09-2025.11 | 6MT | F | L | Estate FWD Y1DA | | GDS84581 | Drive Shaft | | 27 | 28 | 56 | 96.5 | 638 | |
| | 2018.09-2025.11 | 6MT | F | R | Estate FWD Y1DA | | GDS84580 | Drive Shaft | | 27 | 28 | 56 | 96.5 | 988 | |
| | 2018.09-2025.11 | 6MT | F | L/R | Estate FWD Y1DA | | GCO82450 | Outer Joint | | 27 | 33 | 56 | 96.5 | 58 | M |
| | 2018.09-2025.11 | 6MT | F | L | Estate FWD Y1DA | | GCI82870 | Inner Joint | | 28 | 33 | 40 | 64.5 | 111 | |
| | 2018.09-2025.11 | 6MT | F | R | Estate FWD Y1DA | | GCI82869 | Inner Joint | | 28 | 33 | 40 | 64 | 138 | |
| | 2018.09-2025.11 | 8AT | F | L | Estate FWD Y1DA | | GDS83739 | Drive Shaft | | 27 | 22 | 56 | 96.5 | 686 | |
| | 2018.09-2025.11 | 8AT | F | R | Estate FWD Y1DA | | GDS83740 | Drive Shaft | | 27 | 22 | 56 | 96.5 | 944 | |
| | 2018.09-2025.11 | 8AT | F | L/R | Estate FWD Y1DA | | GCO82249 | Outer Joint | | 27 | 24 | 55.9 | 96.5 | 58.5 | M |
| | 2018.09-2025.11 | 8AT | F | L | Estate FWD Y1DA | Date from:2020.08 | GCI83756 | Inner Joint | | 22 | 22 | | 152 | 86.5 | |
| | 2018.09-2025.11 | 8AT | F | R | Estate FWD Y1DA | | GCI82343 | Inner Joint | | 22 | 22 | 35 | 63 | 100.5 | |
| 1.6 (63 kw) | 2011.08-2020.02 | 5MT | F | L | Estate FWD XTDA;XTDB | | GDS18322 | Drive Shaft | | 27 | 23 | 62.8 | 95.5 | 657 | |
| | 2011.08-2020.02 | 5MT | F | R | Estate FWD XTDA;XTDB | | GDS18323 | Drive Shaft | | 27 | 23 | 62.8 | 95.5 | 961 | |
| | 2011.08-2020.02 | 5MT | F | L | Estate FWD XTDA;XTDB | | GCI18086 | Inner Joint | | 23 | 22 | 40 | 61 | 90 | |
| | 2011.08-2020.02 | 5MT | F | R | Estate FWD XTDA;XTDB | | GCI18263 | Inner Joint | | 23 | 22 | 40 | 375 | 76 | |
| | 2011.08-2020.02 | AT | F | L/R | Estate FWD XTDA;XTDB | Date from:2012.01 | GCO18238 | Outer Joint | | 27 | 23 | 63 | 96 | 57 | M |
| | 2011.08-2020.02 | MT | F | L/R | Estate FWD XTDA;XTDB | Date from:2012.01 | GCO18244 | Outer Joint | | 27 | 24 | 62.8 | 95.5 | 59 | M |
| 1.6 (66 kw) | 2004.07-2012.09 | 5MT | F | L | Estate FWD HHDA;HHDB;GPDA;GPDC;GPDB | | GDS18218 | Drive Shaft | | 36 | 26 | 56 | 48 | 582 | |
| | 2004.07-2012.09 | 5MT | F | R | Estate FWD HHDA;HHDB;GPDA;GPDC;GPDB | | GDS18219 | Drive Shaft | | 36 | 26 | 56.3 | 48 | 921 | |
| | 2004.07-2012.09 | | F | L | Estate FWD HHDA;HHDB;GPDA;GPDC;GPDB | | GCO99288 | Outer Joint | | 36 | 26 | 56.3 | 48 | 61 | M |
| | 2004.07-2012.09 | | F | R | Estate FWD HHDA;HHDB;GPDA;GPDC;GPDB | | GCO18230 | Outer Joint | | 36 | 26 | 56.3 | 48 | 61 | M |
| 1.6 (70 kw) | 2010.07-2020.02 | 6MT | F | L | Estate FWD T3DA;T3DB | | GDS18295 | Drive Shaft | | 27 | 26 | 62.7 | 96 | 637 | |
| | 2010.07-2020.02 | 6MT | F | R | Estate FWD T3DA;T3DB | | GDS18294 | Drive Shaft | | 27 | 26 | 62.7 | 96 | 972 | |
| | 2010.07-2020.02 | 6MT | F | L | Estate FWD T3DA;T3DB | | GCI21028 | Inner Joint | | 26 | 32 | 40 | 61 | 112.5 | |

| | YEAR | TRANSM. | F/R | L/R | BODY STYLE & DRIVE TYPE & ENGINE | REMARKS | G-AP Ref. | PRODUCT | ABS | Technical Specifications A | B | C | H | L | P |
|---|---|---|---|---|---|---|---|---|---|---|---|---|---|---|---|
| **FORD** **Focus Estate/Wagon** | | | | | | | | | | | | | | | |
| 1.6 (70 kw) | 2010.07-2020.02 | 6MT | F | R | Estate FWD T3DA;T3DB | | GCI81338 | Inner Joint | | 26 | 32 | 40 | 383 | 99 | |
| | 2010.07-2020.02 | MT | F | L/R | Estate FWD T3DA;T3DB | | GCO18240 | Outer Joint | | 27 | 26 | 62.7 | 96 | 62.5 | M |
| 1.6 (74 kw) | 1998.08-2005.04 | AT | F | L | Estate FWD FYDA/FYDB/FYDC/FYDD/FYDH | | GDS18101 | Drive Shaft | | 25 | 26 | 53.4 | 88.5 | 613 | |
| | 1998.08-2005.04 | AT | F | R | Estate FWD FYDA/FYDB/FYDC/FYDD/FYDH | | GDS18102 | Drive Shaft | | 25 | 26 | 53.4 | 88.5 | 944.5 | |
| | 1998.08-2005.04 | AT/MT | F | L/R | Estate FWD FYDA/FYDB/FYDC/FYDD/FYDH | | GCO18003 | Outer Joint | | 25 | 21 | 53.3 | 89 | 53 | M |
| | 1998.08-2005.04 | AT/MT | F | L/R | Estate FWD FYDA/FYDB/FYDC/FYDD/FYDH | | GCO18013 | Outer Joint | | 25 | 23 | 53.4 | 88.5 | 57 | M |
| | 1998.08-2005.04 | MT | F | L | Estate FWD FYDA/FYDB/FYDC/FYDD/FYDH | | GDS18042 | Drive Shaft | | 25 | 23 | 53.4 | 88.5 | 633 | |
| | 1998.08-2005.04 | MT | F | R | Estate FWD FYDA/FYDB/FYDC/FYDD/FYDH | | GDS18046 | Drive Shaft | | 25 | 23 | 53.4 | 88.5 | 934 | |
| | 1998.08-2005.04 | MT | F | L | Estate FWD FYDA/FYDB/FYDC/FYDD/FYDH | | GCI18022 | Inner Joint | | 23 | 21 | 40 | 61 | 88 | |
| | 2004.07-2011.07 | 4AT | F | L | Estate FWD HWDA;HWDB;SHDA;SHDB;SHDC | | GDS34252 | Drive Shaft | | 36 | 26 | 55.3 | 48 | 581 | |
| | 2004.07-2011.07 | 4AT | F | R | Estate FWD HWDA;HWDB;SHDA;SHDB;SHDC | Inner teeth of wheel side:26 | GDS18219 | Drive Shaft | | 36 | 26 | 56.3 | 48 | 921 | |
| | 2004.07-2011.07 | 4AT | F | L/R | Estate FWD HWDA;HWDB;SHDA;SHDB;SHDC | | GCO18203 | Outer Joint | | 36 | 23 | 56 | 48 | 57 | I |
| | 2004.07-2011.07 | 4AT | F | L | Estate FWD HWDA;HWDB;SHDA;SHDB;SHDC | Date from:2008.05 | GCI18044 | Inner Joint | | 26 | 23 | 40 | 68.5 | 99.5 | |
| | 2004.07-2011.07 | 4AT | F | R | Estate FWD HWDA;HWDB;SHDA;SHDB;SHDC | | GCI18161 | Inner Joint | | 26 | 23 | 40 | 389 | 86 | |
| | 2004.07-2011.07 | 5MT | F | L | Estate FWD HWDA;HWDB;SHDA;SHDB;SHDC | | GDS18189 | Drive Shaft | | 36 | 23 | 56 | 48 | 601 | |
| | 2004.07-2011.07 | 5MT | F | L | Estate FWD HWDA;HWDB;SHDA;SHDB;SHDC | | GDS18261 | Drive Shaft | | 36 | 23 | 55.8 | 48 | 600 | |
| | 2004.07-2011.07 | 5MT | F | L | Estate FWD HWDA;HWDB;SHDA;SHDB;SHDC | | GDS18359 | Drive Shaft | | 36 | 23 | 56 | 48 | 594 | |
| | 2004.07-2011.07 | 5MT | F | R | Estate FWD HWDA;HWDB;SHDA;SHDB;SHDC | | GDS18206 | Drive Shaft | | 36 | 23 | 56 | 48 | 906 | |
| | 2004.07-2011.07 | 5MT | F | R | Estate FWD HWDA;HWDB;SHDA;SHDB;SHDC | | GDS18262 | Drive Shaft | | 36 | 23 | 55.8 | 48 | 905 | |
| | 2004.07-2011.07 | 5MT | F | R | Estate FWD HWDA;HWDB;SHDA;SHDB;SHDC | | GDS18358 | Drive Shaft | | 36 | 23 | 56 | 48 | 899 | |
| | 2004.07-2011.07 | 5MT | F | L/R | Estate FWD HWDA;HWDB;SHDA;SHDB;SHDC | | GCO99129 | Outer Joint | | 36 | 24 | 56 | 48 | 57 | M |
| | 2004.07-2011.07 | 5MT | F | L | Estate FWD HWDA;HWDB;SHDA;SHDB;SHDC | | GCI18086 | Inner Joint | | 23 | 22 | 40 | 61 | 90 | |
| | 2004.07-2011.07 | 5MT | F | R | Estate FWD HWDA;HWDB;SHDA;SHDB;SHDC | | GCI18087 | Inner Joint | | 23 | 22 | 40 | 371 | 78.5 | |
| | 2004.07-2011.07 | AT | F | L | Estate FWD HWDA;HWDB;SHDA;SHDB;SHDC | | GDS18218 | Drive Shaft | | 36 | 26 | 56 | 48 | 582 | |
| | 2004.07-2011.07 | MT | F | R | Estate FWD HWDA;HWDB;SHDA;SHDB;SHDC | Inner teeth of wheel side:25 | GDS18337 | Drive Shaft | | 36 | 23 | 51.6 | 48 | 908 | |
| | 2004.07-2012.09 | 5MT | F | L | Estate FWD G8DC;MTDA | | GDS18218 | Drive Shaft | | 36 | 26 | 56 | 48 | 582 | |
| | 2004.07-2012.09 | 5MT | F | R | Estate FWD G8DC;MTDA | | GDS18219 | Drive Shaft | | 36 | 26 | 56.3 | 48 | 921 | |
| | 2004.07-2012.09 | 5MT | F | L | Estate FWD G8DC;MTDA | | GCO99288 | Outer Joint | | 36 | 26 | 56.3 | 48 | 61 | M |
| | 2004.07-2012.09 | 5MT | F | R | Estate FWD G8DC;MTDA | | GCO18230 | Outer Joint | | 36 | 26 | 56.3 | 48 | 61 | M |
| | 2004.07-2012.09 | MT | F | R | Estate FWD G8DC;MTDA | | GCO99130 | Outer Joint | | 36 | 26 | 56.3 | 48 | 61 | M |
| 1.6 (75 kw) | 2002.01-2004.11 | 5MT | F | L | Estate FWD FYDH | | GDS18042 | Drive Shaft | | 25 | 23 | 53.4 | 88.5 | 633 | |
| | 2002.01-2004.11 | 5MT | F | R | Estate FWD FYDH | | GDS18046 | Drive Shaft | | 25 | 23 | 53.4 | 88.5 | 934 | |
| | 2002.01-2004.11 | 5MT | F | L | Estate FWD FYDH | | GCI18022 | Inner Joint | | 23 | 21 | 40 | 61 | 88 | |
| | 2002.01-2004.11 | | F | L/R | Estate FWD FYDH | | GCO18013 | Outer Joint | | 25 | 23 | 53.4 | 88.5 | 57 | M |
| 1.6 (77 kw) | 2010.07-2020.02 | 5MT | F | L | Estate FWD IQDB;IQDC | | GDS18322 | Drive Shaft | | 27 | 23 | 62.8 | 95.5 | 657 | |
| | 2010.07-2020.02 | 5MT | F | R | Estate FWD IQDB;IQDC | | GDS18323 | Drive Shaft | | 27 | 23 | 62.8 | 95.5 | 961 | |
| | 2010.07-2020.02 | 5MT | F | L | Estate FWD IQDB;IQDC | | GCI18086 | Inner Joint | | 23 | 22 | 40 | 61 | 90 | |
| | 2010.07-2020.02 | 5MT | F | R | Estate FWD IQDB;IQDC | | GCI18263 | Inner Joint | | 23 | 22 | 40 | 375 | 76 | |
| | 2010.07-2020.02 | 6AT/5MT | F | L | Estate FWD IQDB;IQDC | | GCO18244 | Outer Joint | | 27 | 24 | 62.8 | 95.5 | 59 | M |
| | 2010.07-2020.02 | 6DCT | F | L | Estate FWD IQDB;IQDC | | GDS18296 | Drive Shaft | | 27 | 34 | 63 | 96 | 606 | |
| | 2010.07-2020.02 | 6DCT | F | R | Estate FWD IQDB;IQDC | Date To:2016.09 | GDS18477 | Drive Shaft | | 27 | 34 | 63 | 96 | 1014 | |
| | 2010.07-2020.02 | 6DCT | F | L | Estate FWD IQDB;IQDC | | GCO18238 | Outer Joint | | 27 | 23 | 63 | 96 | 57 | M |
| | 2010.07-2020.02 | 6DCT | F | R | Estate FWD IQDB;IQDC | Date To:2016.09 | GCO18238 | Outer Joint | | 27 | 23 | 63 | 96 | 57 | M |
| | 2010.07-2020.02 | 6DCT | F | R | Estate FWD IQDB;IQDC | | GCI18140 | Inner Joint | | 34 | 22 | 40 | 424 | 83.5 | |
| | 2010.07-2020.02 | | F | R | Estate FWD IQDB;IQDC | | GCI18161 | Inner Joint | | 26 | 23 | 40 | 389 | 86 | |
| | 2012.05-2015.07 | 6MT | F | L | Estate FWD NGDA;NGDB | | GDS18295 | Drive Shaft | | 27 | 26 | 62.7 | 96 | 637 | |
| | 2012.05-2015.07 | 6MT | F | R | Estate FWD NGDA;NGDB | | GDS18294 | Drive Shaft | | 27 | 26 | 62.7 | 96 | 972 | |
| | 2012.05-2015.07 | 6MT | F | L | Estate FWD NGDA;NGDB | | GCI21028 | Inner Joint | | 26 | 32 | 40 | 61 | 112.5 | |
| | 2012.05-2015.07 | 6MT | F | R | Estate FWD NGDA;NGDB | | GCI81338 | Inner Joint | | 26 | 32 | 40 | 383 | 99 | |
| | 2012.05-2015.07 | MT | F | L/R | Estate FWD NGDA;NGDB | | GCO18240 | Outer Joint | | 27 | 26 | 62.7 | 96 | 62.5 | M |
| 1.6 (80 kw) | 2004.07-2012.09 | 5MT | F | L | Estate FWD G8DA;G8DB;G8DD;G8DE;G8DF | | GDS18218 | Drive Shaft | | 36 | 26 | 56 | 48 | 582 | |
| | 2004.07-2012.09 | 5MT | F | R | Estate FWD G8DA;G8DB;G8DD;G8DE;G8DF | | GDS18219 | Drive Shaft | | 36 | 26 | 56.3 | 48 | 921 | |
| | 2004.07-2012.09 | 5MT | F | L | Estate FWD G8DA;G8DB;G8DD;G8DE;G8DF | | GCO99288 | Outer Joint | | 36 | 26 | 56.3 | 48 | 61 | M |
| | 2004.07-2012.09 | 5MT | F | R | Estate FWD G8DA;G8DB;G8DD;G8DE;G8DF | | GCO18230 | Outer Joint | | 36 | 26 | 56.3 | 48 | 61 | M |
| | 2004.07-2012.09 | CVT | F | L | Estate FWD G8DA;G8DB;G8DD;G8DE;G8DF | | GDS18193 | Drive Shaft | | 36 | 34 | 56 | 48 | 568 | |
| | 2004.07-2012.09 | CVT | F | R | Estate FWD G8DA;G8DB;G8DD;G8DE;G8DF | | GDS18191 | Drive Shaft | | 36 | 34 | 56 | 48 | 890 | |
| | 2004.07-2012.09 | CVT | F | L/R | Estate FWD G8DA;G8DB;G8DD;G8DE;G8DF | | GCO34093 | Outer Joint | | 36 | 24 | 55.3 | 48 | 59 | I |
| 1.6 (81 kw) | 2007.12-2012.09 | 5MT | F | L | Estate FWD G8DA | | GDS18218 | Drive Shaft | | 36 | 26 | 56 | 48 | 582 | |
| | 2007.12-2012.09 | 5MT | F | R | Estate FWD G8DA | | GDS18219 | Drive Shaft | | 36 | 26 | 56.3 | 48 | 921 | |
| | 2007.12-2012.09 | 5MT | F | L | Estate FWD G8DA | | GCO99288 | Outer Joint | | 36 | 26 | 56.3 | 48 | 61 | M |
| | 2007.12-2012.09 | 5MT | F | R | Estate FWD G8DA | | GCO18230 | Outer Joint | | 36 | 26 | 56.3 | 48 | 61 | M |
| | 2007.12-2012.09 | CVT | F | L | Estate FWD G8DA | | GDS18193 | Drive Shaft | | 36 | 34 | 56 | 48 | 568 | |
| | 2007.12-2012.09 | CVT | F | R | Estate FWD G8DA | | GDS18191 | Drive Shaft | | 36 | 34 | 56 | 48 | 890 | |
| | 2007.12-2012.09 | CVT | F | L/R | Estate FWD G8DA | with Rim protector | GCO34093 | Outer Joint | | 36 | 24 | 55.3 | 48 | 59 | I |
| | 2007.12-2012.09 | CVT | F | L/R | Estate FWD G8DA | without Rim protector | GCO99132 | Outer Joint | | 36 | 24 | 56 | 48 | 57 | I |

| | YEAR | TRANSM. | F/R | L/R | BODY STYLE & DRIVE TYPE & ENGINE | REMARKS | G-AP Ref. | PRODUCT | ABS | Technical Specifications | | | | | |
|---|---|---|---|---|---|---|---|---|---|---|---|---|---|---|---|
| | | | | | | | | | | A | B | C | H | L | P |
| **FORD**<br>**Focus Estate/Wagon** | | | | | | | | | | | | | | | |
| 1.6 (81 kw) | 2007.12-2012.09 | CVT | F | L | Estate FWD G8DA | | GCI18172 | Inner Joint | | 34 | 24 | 30.8 | 61 | 89.5 | |
| 1.6 (85 kw) | 2004.07-2012.09 | 5MT | F | R | Estate FWD HXDA;HXDB;SIDA | | GCI18087 | Inner Joint | | 23 | 22 | 40 | 371 | 78.5 | |
| | 2004.07-2012.09 | AT | F | L | Estate FWD HXDA;HXDB;SIDA | | GDS18218 | Drive Shaft | | 36 | 26 | 56 | 48 | 582 | |
| | 2004.07-2012.09 | AT | F | L | Estate FWD HXDA;HXDB;SIDA | | GDS34252 | Drive Shaft | | 36 | 26 | 55.3 | 48 | 581 | |
| | 2004.07-2012.09 | AT | F | R | Estate FWD HXDA;HXDB;SIDA | | GDS18219 | Drive Shaft | | 36 | 26 | 56.3 | 48 | 921 | |
| | 2004.07-2012.09 | AT | F | L/R | Estate FWD HXDA;HXDB;SIDA | For Engine code:C16HDEZ | GCO18203 | Outer Joint | | 36 | 23 | 56 | 48 | 57 | I |
| | 2004.07-2012.09 | MT | F | L | Estate FWD HXDA;HXDB;SIDA | Inner teeth of wheel side:24 | GDS18189 | Drive Shaft | | 36 | 23 | 56 | 48 | 601 | |
| | 2004.07-2012.09 | MT | F | L | Estate FWD HXDA;HXDB;SIDA | Inner teeth of wheel side:24 | GDS18261 | Drive Shaft | | 36 | 23 | 55.8 | 48 | 600 | |
| | 2004.07-2012.09 | MT | F | L | Estate FWD HXDA;HXDB;SIDA | Inner teeth of wheel side:23 | GDS18359 | Drive Shaft | | 36 | 23 | 56 | 48 | 594 | |
| | 2004.07-2012.09 | MT | F | R | Estate FWD HXDA;HXDB;SIDA | Inner teeth of wheel side:24 | GDS18206 | Drive Shaft | | 36 | 23 | 56 | 48 | 906 | |
| | 2004.07-2012.09 | MT | F | R | Estate FWD HXDA;HXDB;SIDA | Inner teeth of wheel side:24 | GDS18262 | Drive Shaft | | 36 | 23 | 55.8 | 48 | 905 | |
| | 2004.07-2012.09 | MT | F | R | Estate FWD HXDA;HXDB;SIDA | Inner teeth of wheel side:25 | GDS18337 | Drive Shaft | | 36 | 23 | 51.6 | 48 | 908 | |
| | 2004.07-2012.09 | MT | F | R | Estate FWD HXDA;HXDB;SIDA | Inner teeth of wheel side:23 | GDS18358 | Drive Shaft | | 36 | 23 | 56 | 48 | 899 | |
| | 2004.07-2012.09 | MT | F | L/R | Estate FWD HXDA;HXDB;SIDA | | GCO62039 | Outer Joint | | 36 | 24 | 55.8 | 48 | 57 | M |
| | 2004.07-2012.09 | MT | F | L/R | Estate FWD HXDA;HXDB;SIDA | | GCO99129 | Outer Joint | | 36 | 24 | 56 | 48 | 57 | M |
| | 2004.07-2012.09 | MT | F | L | Estate FWD HXDA;HXDB;SIDA | Date to:2005.09 | GCI18086 | Inner Joint | | 23 | 22 | 40 | 61 | 90 | |
| | 2004.07-2012.09 | | F | L | Estate FWD HXDA;HXDB;SIDA | Date from:2007.12,Date to:2011.07 | GCI18044 | Inner Joint | | 26 | 23 | 40 | 68.5 | 99.5 | |
| | 2004.07-2012.09 | | F | R | Estate FWD HXDA;HXDB;SIDA | Date from:2007.12,Date to:2011.07 | GCI18161 | Inner Joint | | 26 | 23 | 40 | 389 | 86 | |
| | 2009.10-2012.09 | 5MT | F | L | Estate FWD SIDA | Inner teeth of wheel side:24 | GDS18261 | Drive Shaft | | 36 | 23 | 55.8 | 48 | 600 | |
| | 2009.10-2012.09 | 5MT | F | L | Estate FWD SIDA | Inner teeth of wheel side:23 | GDS18359 | Drive Shaft | | 36 | 23 | 56 | 48 | 594 | |
| | 2009.10-2012.09 | 5MT | F | R | Estate FWD SIDA | Inner teeth of wheel side:24 | GDS18262 | Drive Shaft | | 36 | 23 | 55.8 | 48 | 905 | |
| | 2009.10-2012.09 | 5MT | F | R | Estate FWD SIDA | Inner teeth of wheel side:23 | GDS18358 | Drive Shaft | | 36 | 23 | 56 | 48 | 899 | |
| | 2009.10-2012.09 | 5MT | F | R | Estate FWD SIDA | | GCI18087 | Inner Joint | | 23 | 22 | 40 | 371 | 78.5 | |
| | 2009.10-2012.09 | MT | F | L | Estate FWD SIDA | | GDS18189 | Drive Shaft | | 36 | 23 | 56 | 48 | 601 | |
| | 2009.10-2012.09 | MT | F | L | Estate FWD SIDA | | GDS18336 | Drive Shaft | | 36 | 23 | 51.6 | 48 | 600 | |
| | 2009.10-2012.09 | MT | F | R | Estate FWD SIDA | | GDS18206 | Drive Shaft | | 36 | 23 | 56 | 48 | 906 | |
| | 2009.10-2012.09 | MT | F | L | Estate FWD SIDA | | GCO18264 | Outer Joint | | 36 | 25 | 51.6 | 48 | 58 | O |
| | 2009.10-2012.09 | MT | F | L | Estate FWD SIDA | | GCI18168 | Inner Joint | | 23 | 22 | 40 | 61 | 90 | |
| | 2009.10-2012.09 | | F | L/R | Estate FWD SIDA | | GCO62039 | Outer Joint | | 36 | 24 | 55.8 | 48 | 57 | M |
| | 2009.10-2012.09 | | F | L/R | Estate FWD SIDA | | GCO99129 | Outer Joint | | 36 | 24 | 56 | 48 | 57 | M |
| | 2009.10-2012.09 | | F | L | Estate FWD SIDA | Date To:2011.07 | GCI18044 | Inner Joint | | 26 | 23 | 40 | 68.5 | 99.5 | |
| | 2009.10-2012.09 | | F | L | Estate FWD SIDA | | GCI18086 | Inner Joint | | 23 | 22 | 40 | 61 | 90 | |
| | 2009.10-2012.09 | | F | R | Estate FWD SIDA | Date To:2011.07 | GCI18161 | Inner Joint | | 26 | 23 | 40 | 389 | 86 | |
| | 2010.07-2020.02 | 6MT | F | L | Estate FWD T1DA;T1DB | | GDS18295 | Drive Shaft | | 27 | 26 | 62.7 | 96 | 637 | |
| | 2010.07-2020.02 | 6MT | F | R | Estate FWD T1DA;T1DB | | GDS18294 | Drive Shaft | | 27 | 26 | 62.7 | 96 | 972 | |
| | 2010.07-2020.02 | 6MT | F | L | Estate FWD T1DA;T1DB | | GCI21028 | Inner Joint | | 26 | 32 | 40 | 61 | 112.5 | |
| | 2010.07-2020.02 | 6MT | F | R | Estate FWD T1DA;T1DB | | GCI81338 | Inner Joint | | 26 | 32 | 40 | 383 | 99 | |
| | 2010.07-2020.02 | MT | F | L/R | Estate FWD T1DA;T1DB | | GCO18240 | Outer Joint | | 27 | 26 | 62.7 | 96 | 62.5 | M |
| 1.6 (86 kw) | 2012.02-2020.02 | 5MT | F | L | Estate FWD MUDA | | GDS18322 | Drive Shaft | | 27 | 23 | 62.8 | 95.5 | 657 | |
| | 2012.02-2020.02 | 5MT | F | R | Estate FWD MUDA | | GDS18323 | Drive Shaft | | 27 | 23 | 62.8 | 95.5 | 961 | |
| | 2012.02-2020.02 | 5MT | F | R | Estate FWD MUDA | | GCI18263 | Inner Joint | | 23 | 22 | 40 | 375 | 76 | |
| | 2012.02-2020.02 | AT | F | L | Estate FWD MUDA | | GDS18296 | Drive Shaft | | 27 | 34 | 63 | 96 | 606 | |
| | 2012.02-2020.02 | AT | F | L/R | Estate FWD MUDA | | GCO18238 | Outer Joint | | 27 | 23 | 63 | 96 | 57 | M |
| | 2012.02-2020.02 | MT | F | L/R | Estate FWD MUDA | | GCO18244 | Outer Joint | | 27 | 24 | 62.8 | 95.5 | 59 | M |
| 1.6 (88 kw) | 2010.07-2020.02 | 5MT | F | L | Estate FWD MUDA;MUDD | | GDS18322 | Drive Shaft | | 27 | 23 | 62.8 | 95.5 | 657 | |
| | 2010.07-2020.02 | 5MT | F | R | Estate FWD MUDA;MUDD | | GDS18323 | Drive Shaft | | 27 | 23 | 62.8 | 95.5 | 961 | |
| | 2010.07-2020.02 | 5MT | F | L | Estate FWD MUDA;MUDD | | GCI18086 | Inner Joint | | 23 | 22 | 40 | 61 | 90 | |
| | 2010.07-2020.02 | 5MT | F | R | Estate FWD MUDA;MUDD | | GCI18263 | Inner Joint | | 23 | 22 | 40 | 375 | 76 | |
| | 2010.07-2020.02 | AT | F | L | Estate FWD MUDA;MUDD | | GDS18296 | Drive Shaft | | 27 | 34 | 63 | 96 | 606 | |
| | 2010.07-2020.02 | AT | F | L/R | Estate FWD MUDA;MUDD | | GCO18238 | Outer Joint | | 27 | 23 | 63 | 96 | 57 | M |
| | 2010.07-2020.02 | MT | F | L/R | Estate FWD MUDA;MUDD | | GCO18244 | Outer Joint | | 27 | 24 | 62.8 | 95.5 | 59 | M |
| | 2010.07-2020.02 | | F | R | Estate FWD MUDA;MUDD | | GCI18161 | Inner Joint | | 26 | 23 | 40 | 389 | 86 | |
| | 2012.02-2020.02 | 5MT | F | L | Estate FWD MUDA;MUDD | | GDS18322 | Drive Shaft | | 27 | 23 | 62.8 | 95.5 | 657 | |
| | 2012.02-2020.02 | 5MT | F | R | Estate FWD MUDA;MUDD | | GDS18323 | Drive Shaft | | 27 | 23 | 62.8 | 95.5 | 961 | |
| | 2012.02-2020.02 | 5MT | F | L | Estate FWD MUDA;MUDD | | GCI18086 | Inner Joint | | 23 | 22 | 40 | 61 | 90 | |
| | 2012.02-2020.02 | 5MT | F | R | Estate FWD MUDA;MUDD | | GCI18263 | Inner Joint | | 23 | 22 | 40 | 375 | 76 | |
| | 2012.02-2020.02 | AT | F | L | Estate FWD MUDA;MUDD | | GDS18296 | Drive Shaft | | 27 | 34 | 63 | 96 | 606 | |
| | 2012.02-2020.02 | AT | F | L/R | Estate FWD MUDA;MUDD | | GCO18238 | Outer Joint | | 27 | 23 | 63 | 96 | 57 | M |
| | 2012.02-2020.02 | MT | F | L/R | Estate FWD MUDA;MUDD | | GCO18244 | Outer Joint | | 27 | 24 | 62.8 | 95.5 | 59 | M |
| 1.6 (92 kw) | 2010.07-2020.02 | 5MT | F | L | Estate FWD PNDA;PNDD | | GDS18322 | Drive Shaft | | 27 | 23 | 62.8 | 95.5 | 657 | |
| | 2010.07-2020.02 | 5MT | F | R | Estate FWD PNDA;PNDD | | GDS18323 | Drive Shaft | | 27 | 23 | 62.8 | 95.5 | 961 | |
| | 2010.07-2020.02 | 5MT | F | L | Estate FWD PNDA;PNDD | | GCI18086 | Inner Joint | | 23 | 22 | 40 | 61 | 90 | |
| | 2010.07-2020.02 | 5MT | F | R | Estate FWD PNDA;PNDD | | GCI18263 | Inner Joint | | 23 | 22 | 40 | 375 | 76 | |
| | 2010.07-2020.02 | 6AT/5MT | F | L | Estate FWD PNDA;PNDD | | GCO18244 | Outer Joint | | 27 | 24 | 62.8 | 95.5 | 59 | M |
| | 2010.07-2020.02 | 6AT/5MT | F | L/R | Estate FWD PNDA;PNDD | | GCO18238 | Outer Joint | | 27 | 23 | 63 | 96 | 57 | M |

| | YEAR | TRANSM. | F/R | L/R | BODY STYLE & DRIVE TYPE & ENGINE | REMARKS | G-AP Ref. | PRODUCT | ABS | Technical Specifications A | B | C | H | L | P |
|---|---|---|---|---|---|---|---|---|---|---|---|---|---|---|---|
| **FORD** **Focus Estate/Wagon** | | | | | | | | | | | | | | | |
| 1.6 (92 kw) | 2010.07-2020.02 | 6DCT | F | L | Estate FWD PNDA;PNDD | | GDS18296 | Drive Shaft | | 27 | 34 | 63 | 96 | 606 | |
| | 2010.07-2020.02 | 6DCT | F | R | Estate FWD PNDA;PNDD | | GDS18477 | Drive Shaft | | 27 | 34 | 63 | 96 | 1014 | |
| | 2010.07-2020.02 | 6DCT | F | R | Estate FWD PNDA;PNDD | | GCI18140 | Inner Joint | | 34 | 22 | 40 | 424 | 83.5 | |
| | 2010.07-2020.02 | | F | R | Estate FWD PNDA;PNDD | | GCI18161 | Inner Joint | | 26 | 23 | 40 | 389 | 86 | |
| 1.6 (110 kw) | 2010.07-2014.06 | 6MT | F | L | Estate FWD JQDA;JQDB;YUDA | | GDS18295 | Drive Shaft | | 27 | 26 | 62.7 | 96 | 637 | |
| | 2010.07-2014.06 | 6MT | F | R | Estate FWD JQDA;JQDB;YUDA | | GDS18299 | Drive Shaft | | 27 | 26 | 60.8 | 96 | 975 | |
| | 2010.07-2014.06 | 6MT | F | L | Estate FWD JQDA;JQDB;YUDA | | GCI81392 | Inner Joint | | 26 | 24 | 40 | 60 | 112 | |
| | 2010.07-2014.06 | MT | F | R | Estate FWD JQDA;JQDB;YUDA | | GCO18239 | Outer Joint | | 27 | 26 | 62.7 | 96 | 62.5 | M |
| | 2010.07-2014.06 | MT | F | L/R | Estate FWD JQDA;JQDB;YUDA | | GCO18244 | Outer Joint | | 27 | 24 | 62.8 | 95.5 | 59 | M |
| | 2010.07-2014.06 | | F | | Estate FWD JQDA;JQDB;YUDA | Date From:2011.03 | GCO18238 | Outer Joint | | 27 | 23 | 63 | 96 | 57 | M |
| | 2010.07-2014.06 | | F | | Estate FWD JQDA;JQDB;YUDA | | GCO18240 | Outer Joint | | 27 | 26 | 62.7 | 96 | 62.5 | M |
| | 2010.07-2014.06 | | F | R | Estate FWD JQDA;JQDB;YUDA | | GCI18161 | Inner Joint | | 26 | 23 | 40 | 389 | 86 | |
| | 2010.07-2014.06 | | F | R | Estate FWD JQDA;JQDB;YUDA | | GCI18263 | Inner Joint | | 23 | 22 | 40 | 375 | 76 | |
| | 2013.07-2020.02 | 6MT | F | L | Estate FWD YUDA | | GDS18295 | Drive Shaft | | 27 | 26 | 62.7 | 96 | 637 | |
| | 2013.07-2020.02 | 6MT | F | R | Estate FWD YUDA | | GDS18299 | Drive Shaft | | 27 | 26 | 60.8 | 96 | 975 | |
| | 2013.07-2020.02 | 6MT | F | L | Estate FWD YUDA | | GCI81392 | Inner Joint | | 26 | 24 | 40 | 60 | 112 | |
| | 2013.07-2020.02 | MT | F | R | Estate FWD YUDA | | GCO18239 | Outer Joint | | 27 | 26 | 62.7 | 96 | 62.5 | M |
| | 2013.07-2020.02 | MT | F | L/R | Estate FWD YUDA | | GCO18244 | Outer Joint | | 27 | 24 | 62.8 | 95.5 | 59 | M |
| | 2013.07-2020.02 | | F | | Estate FWD YUDA | | GCO18240 | Outer Joint | | 27 | 26 | 62.7 | 96 | 62.5 | M |
| | 2013.07-2020.02 | | F | R | Estate FWD YUDA | | GCI18263 | Inner Joint | | 23 | 22 | 40 | 375 | 76 | |
| 1.6 (134 kw) | 2010.07-2014.06 | 6MT | F | L | Estate FWD JTDA;JTDB | | GDS18295 | Drive Shaft | | 27 | 26 | 62.7 | 96 | 637 | |
| | 2010.07-2014.06 | 6MT | F | R | Estate FWD JTDA;JTDB | | GDS18299 | Drive Shaft | | 27 | 26 | 60.8 | 96 | 975 | |
| | 2010.07-2014.06 | 6MT | F | L | Estate FWD JTDA;JTDB | | GCI81392 | Inner Joint | | 26 | 24 | 40 | 60 | 112 | |
| | 2010.07-2014.06 | MT | F | R | Estate FWD JTDA;JTDB | | GCO18239 | Outer Joint | | 27 | 26 | 62.7 | 96 | 62.5 | M |
| | 2010.07-2014.06 | MT | F | L/R | Estate FWD JTDA;JTDB | | GCO18244 | Outer Joint | | 27 | 24 | 62.8 | 95.5 | 59 | M |
| | 2010.07-2014.06 | | F | | Estate FWD JTDA;JTDB | Date From:2011.03 | GCO18238 | Outer Joint | | 27 | 23 | 63 | 96 | 57 | M |
| | 2010.07-2014.06 | | F | | Estate FWD JTDA;JTDB | | GCO18240 | Outer Joint | | 27 | 26 | 62.7 | 96 | 62.5 | M |
| | 2010.07-2014.06 | | F | R | Estate FWD JTDA;JTDB | | GCI18161 | Inner Joint | | 26 | 23 | 40 | 389 | 86 | |
| | 2010.07-2014.06 | | F | R | Estate FWD JTDA;JTDB | | GCI18263 | Inner Joint | | 23 | 22 | 40 | 375 | 76 | |
| 1.8 (55 kw) | 1999.08-2004.11 | 5MT | F | L | Estate FWD BHDA/BHDB | | GDS18101 | Drive Shaft | | 25 | 26 | 53.4 | 88.5 | 613 | |
| | 1999.08-2004.11 | 5MT | F | R | Estate FWD BHDA/BHDB | | GDS18102 | Drive Shaft | | 25 | 26 | 53.4 | 88.5 | 944.5 | |
| | 1999.08-2004.11 | 5MT | F | R | Estate FWD BHDA/BHDB | | GCI18045 | Inner Joint | | 26 | 23 | 40 | 389 | 92 | |
| | 1999.08-2004.11 | AT/MT | F | L/R | Estate FWD BHDA/BHDB | | GCO18003 | Outer Joint | | 25 | 21 | 53.3 | 89 | 53 | M |
| | 1999.08-2004.11 | AT/MT | F | L/R | Estate FWD BHDA/BHDB | | GCO18013 | Outer Joint | | 25 | 23 | 53.4 | 88.5 | 57 | M |
| 1.8 (66 kw) | 1999.02-2004.11 | AT/MT | F | L/R | Estate FWD C9DA/C9DB/C9DC | | GCO18013 | Outer Joint | | 25 | 23 | 53.4 | 88.5 | 57 | M |
| | 1999.02-2004.11 | MT | F | L | Estate FWD C9DA/C9DB/C9DC | Trans. code:B5/MTX75 | GDS18042 | Drive Shaft | | 25 | 23 | 53.4 | 88.5 | 633 | |
| | 1999.02-2004.11 | MT | F | L | Estate FWD C9DA/C9DB/C9DC | Trans. code:MTX75 | GDS18101 | Drive Shaft | | 25 | 26 | 53.4 | 88.5 | 613 | |
| | 1999.02-2004.11 | MT | F | R | Estate FWD C9DA/C9DB/C9DC | Trans. code:B5 | GDS18046 | Drive Shaft | | 25 | 23 | 53.4 | 88.5 | 934 | |
| | 1999.02-2004.11 | MT | F | R | Estate FWD C9DA/C9DB/C9DC | Trans. code:MTX75 | GDS18102 | Drive Shaft | | 25 | 26 | 53.4 | 88.5 | 944.5 | |
| | 1999.02-2004.11 | MT | F | R | Estate FWD C9DA/C9DB/C9DC | Trans. code:MTX75 | GCI18045 | Inner Joint | | 26 | 23 | 40 | 389 | 92 | |
| 1.8 (74 kw) | 2002.08-2005.01 | 5MT | F | L | Estate FWD FFDA | | GDS18101 | Drive Shaft | | 25 | 26 | 53.4 | 88.5 | 613 | |
| | 2002.08-2005.01 | 5MT | F | R | Estate FWD FFDA | | GDS18102 | Drive Shaft | | 25 | 26 | 53.4 | 88.5 | 944.5 | |
| | 2002.08-2005.01 | 5MT | F | L/R | Estate FWD FFDA | Inner Teeth:24 | GCO18069 | Outer Joint | | 25 | 24 | 52.6 | 88 | 59 | M |
| | 2002.08-2005.01 | 5MT | F | L | Estate FWD FFDA | | GCI18044 | Inner Joint | | 26 | 23 | 40 | 68.5 | 99.5 | |
| | 2002.08-2005.01 | 5MT | F | R | Estate FWD FFDA | | GCI18045 | Inner Joint | | 26 | 23 | 40 | 389 | 92 | |
| | 2002.08-2005.01 | MT | F | L | Estate FWD FFDA | | GDS18042 | Drive Shaft | | 25 | 23 | 53.4 | 88.5 | 633 | |
| | 2002.08-2005.01 | MT | F | R | Estate FWD FFDA | | GDS18046 | Drive Shaft | | 25 | 23 | 53.4 | 88.5 | 934 | |
| 1.8 (82 kw) | 2003.02-2005.01 | 5MT | F | L | Estate FWD EYDL | | GDS18042 | Drive Shaft | | 25 | 23 | 53.4 | 88.5 | 633 | |
| | 2003.02-2005.01 | 5MT | F | R | Estate FWD EYDL | | GDS18046 | Drive Shaft | | 25 | 23 | 53.4 | 88.5 | 934 | |
| | 2003.02-2005.01 | 5MT | F | L | Estate FWD EYDL | | GCI18022 | Inner Joint | | 23 | 21 | 40 | 61 | 88 | |
| | 2003.02-2005.01 | | F | L/R | Estate FWD EYDL | | GCO18013 | Outer Joint | | 25 | 23 | 53.4 | 88.5 | 57 | M |
| 1.8 (85 kw) | 1998.08-2005.04 | AT | F | L | Estate FWD EYDB/EYDC/EYDD/EYDE/EYDF/EYDG/EYDI/EYDJ/EYDL | | GDS18101 | Drive Shaft | | 25 | 26 | 53.4 | 88.5 | 613 | |
| | 1998.08-2005.04 | AT/MT | F | L/R | Estate FWD EYDB/EYDC/EYDD/EYDE/EYDF/EYDG/EYDI/EYDJ/EYDL | | GCO18003 | Outer Joint | | 25 | 21 | 53.3 | 89 | 53 | M |
| | 1998.08-2005.04 | MT | F | L | Estate FWD EYDB/EYDC/EYDD/EYDE/EYDF/EYDG/EYDI/EYDJ/EYDL | | GDS18042 | Drive Shaft | | 25 | 23 | 53.4 | 88.5 | 633 | |
| | 1998.08-2005.04 | MT | F | R | Estate FWD EYDB/EYDC/EYDD/EYDE/EYDF/EYDG/EYDI/EYDJ/EYDL | | GDS18046 | Drive Shaft | | 25 | 23 | 53.4 | 88.5 | 934 | |
| | 1998.08-2005.04 | MT | F | L/R | Estate FWD EYDB/EYDC/EYDD/EYDE/EYDF/EYDG/EYDI/EYDJ/EYDL | | GCO18013 | Outer Joint | | 25 | 23 | 53.4 | 88.5 | 57 | M |
| | 1998.08-2005.04 | MT | F | L | Estate FWD EYDB/EYDC/EYDD/EYDE/EYDF/EYDG/EYDI/EYDJ/EYDL | | GCI18022 | Inner Joint | | 23 | 21 | 40 | 61 | 88 | |
| | 2000.06-2005.01 | 5MT | F | L | Estate FWD F9DA/F9DB | | GDS18101 | Drive Shaft | | 25 | 26 | 53.4 | 88.5 | 613 | |
| | 2000.06-2005.01 | 5MT | F | R | Estate FWD F9DA/F9DB | | GDS18102 | Drive Shaft | | 25 | 26 | 53.4 | 88.5 | 944.5 | |
| | 2000.06-2005.01 | 5MT | F | L/R | Estate FWD F9DA/F9DB | | GCO18069 | Outer Joint | | 25 | 24 | 52.6 | 88 | 59 | M |
| | 2000.06-2005.01 | 5MT | F | L | Estate FWD F9DA/F9DB | | GCI18044 | Inner Joint | | 26 | 23 | 40 | 68.5 | 99.5 | |
| | 2000.06-2005.01 | 5MT | F | R | Estate FWD F9DA/F9DB | | GCI18045 | Inner Joint | | 26 | 23 | 40 | 389 | 92 | |
| | 2004.07-2012.09 | 5MT | F | L | Estate FWD KKDA | | GDS18218 | Drive Shaft | | 36 | 26 | 56 | 48 | 582 | |
| | 2004.07-2012.09 | 5MT | F | R | Estate FWD KKDA | | GDS18219 | Drive Shaft | | 36 | 26 | 56.3 | 48 | 921 | |
| | 2004.07-2012.09 | 5MT | F | L | Estate FWD KKDA | | GCO99288 | Outer Joint | | 36 | 26 | 56.3 | 48 | 61 | M |

| | YEAR | TRANSM. | F/R | L/R | BODY STYLE & DRIVE TYPE & ENGINE | REMARKS | G-AP Ref. | PRODUCT | ABS | Technical Specifications A | B | C | H | L | P |
|---|---|---|---|---|---|---|---|---|---|---|---|---|---|---|---|
| **FORD**<br>**Focus Estate/Wagon** | | | | | | | | | | | | | | | |
| 1.8 (85 kw) | 2004.07-2012.09 | 5MT | F | R | Estate FWD KKDA | | GCO18230 | Outer Joint | | 36 | 26 | 56.3 | 48 | 61 | M |
| 1.8 (92 kw) | 2006.01-2012.09 | 5MT | F | L | Estate FWD QQDB;QQDA;Q7DA | Inner teeth of wheel side:24 | GDS18189 | Drive Shaft | | 36 | 23 | 56 | 48 | 601 | |
| | 2006.01-2012.09 | 5MT | F | L | Estate FWD QQDB;QQDA;Q7DA | Inner teeth of wheel side:24 | GDS18261 | Drive Shaft | | 36 | 23 | 55.8 | 48 | 600 | |
| | 2006.01-2012.09 | 5MT | F | L | Estate FWD QQDB;QQDA;Q7DA | Inner teeth of wheel side:23 | GDS18359 | Drive Shaft | | 36 | 23 | 56 | 48 | 594 | |
| | 2006.01-2012.09 | 5MT | F | R | Estate FWD QQDB;QQDA;Q7DA | Inner teeth of wheel side:24 | GDS18206 | Drive Shaft | | 36 | 23 | 56 | 48 | 906 | |
| | 2006.01-2012.09 | 5MT | F | R | Estate FWD QQDB;QQDA;Q7DA | Inner teeth of wheel side:24 | GDS18262 | Drive Shaft | | 36 | 23 | 55.8 | 48 | 905 | |
| | 2006.01-2012.09 | 5MT | F | R | Estate FWD QQDB;QQDA;Q7DA | Inner teeth of wheel side:23 | GDS18358 | Drive Shaft | | 36 | 23 | 56 | 48 | 899 | |
| | 2006.01-2012.09 | 5MT | F | L/R | Estate FWD QQDB;QQDA;Q7DA | | GCO18203 | Outer Joint | | 36 | 23 | 56 | 48 | 57 | I |
| | 2006.01-2012.09 | 5MT | F | L/R | Estate FWD QQDB;QQDA;Q7DA | | GCO62039 | Outer Joint | | 36 | 24 | 55.8 | 48 | 57 | M |
| | 2006.01-2012.09 | 5MT | F | L/R | Estate FWD QQDB;QQDA;Q7DA | | GCO99129 | Outer Joint | | 36 | 24 | 56 | 48 | 57 | M |
| | 2006.01-2012.09 | 5MT | F | L | Estate FWD QQDB;QQDA;Q7DA | | GCI18086 | Inner Joint | | 23 | 22 | 40 | 61 | 90 | |
| | 2006.01-2012.09 | 5MT | F | L | Estate FWD QQDB;QQDA;Q7DA | | GCI82479 | Inner Joint | | 23 | 23 | 40 | 61 | 110 | |
| | 2006.01-2012.09 | 5MT | F | R | Estate FWD QQDB;QQDA;Q7DA | | GCI18087 | Inner Joint | | 23 | 22 | 40 | 371 | 78.5 | |
| | 2006.03-2012.09 | 5MT | F | L | Estate FWD QQDB;QQDA;Q7DA | Inner teeth of wheel side:24 | GDS18189 | Drive Shaft | | 36 | 23 | 56 | 48 | 601 | |
| | 2006.03-2012.09 | 5MT | F | L | Estate FWD QQDB;QQDA;Q7DA | Inner teeth of wheel side:24 | GDS18261 | Drive Shaft | | 36 | 23 | 55.8 | 48 | 600 | |
| | 2006.03-2012.09 | 5MT | F | L | Estate FWD QQDB;QQDA;Q7DA | Inner teeth of wheel side:23 | GDS18359 | Drive Shaft | | 36 | 23 | 56 | 48 | 594 | |
| | 2006.03-2012.09 | 5MT | F | R | Estate FWD QQDB;QQDA;Q7DA | Inner teeth of wheel side:24 | GDS18206 | Drive Shaft | | 36 | 23 | 56 | 48 | 906 | |
| | 2006.03-2012.09 | 5MT | F | R | Estate FWD QQDB;QQDA;Q7DA | Inner teeth of wheel side:24 | GDS18262 | Drive Shaft | | 36 | 23 | 55.8 | 48 | 905 | |
| | 2006.03-2012.09 | 5MT | F | R | Estate FWD QQDB;QQDA;Q7DA | Inner teeth of wheel side:23 | GDS18358 | Drive Shaft | | 36 | 23 | 56 | 48 | 899 | |
| | 2006.03-2012.09 | 5MT | F | L/R | Estate FWD QQDB;QQDA;Q7DA | | GCO18203 | Outer Joint | | 36 | 23 | 56 | 48 | 57 | I |
| | 2006.03-2012.09 | 5MT | F | L/R | Estate FWD QQDB;QQDA;Q7DA | | GCO62039 | Outer Joint | | 36 | 24 | 55.8 | 48 | 57 | M |
| | 2006.03-2012.09 | 5MT | F | L/R | Estate FWD QQDB;QQDA;Q7DA | | GCO99129 | Outer Joint | | 36 | 24 | 56 | 48 | 57 | M |
| | 2006.03-2012.09 | 5MT | F | L | Estate FWD QQDB;QQDA;Q7DA | | GCI18086 | Inner Joint | | 23 | 22 | 40 | 61 | 90 | |
| | 2006.03-2012.09 | 5MT | F | L | Estate FWD QQDB;QQDA;Q7DA | | GCI82479 | Inner Joint | | 23 | 23 | 40 | 61 | 110 | |
| | 2006.03-2012.09 | 5MT | F | R | Estate FWD QQDB;QQDA;Q7DA | | GCI18087 | Inner Joint | | 23 | 22 | 40 | 371 | 78.5 | |
| 2.0 (81 kw) | 2008.02-2011.07 | 6MT | F | R | Estate FWD IXDA | Inner teeth of tranm.side:32 | GDS18219 | Drive Shaft | | 36 | 26 | 56.3 | 48 | 921 | |
| | 2008.02-2011.07 | 6MT | F | R | Estate FWD IXDA | Inner teeth of tranm.side:26 | GDS56093 | Drive Shaft | | 36 | 26 | 56 | 48 | 916 | |
| | 2008.02-2011.07 | 6MT | F | R | Estate FWD IXDA | | GCI83312 | Inner Joint | | 26 | 26 | 40 | 389 | 92 | |
| | 2008.02-2011.07 | MT | F | L | Estate FWD IXDA | | GDS18218 | Drive Shaft | | 36 | 26 | 56 | 48 | 582 | |
| | 2008.02-2011.07 | MT | F | L/R | Estate FWD IXDA | | GCO99155 | Outer Joint | | 36 | 26 | 56 | 48 | 64 | I |
| 2.0 (85 kw) | 2010.07-2014.06 | 6DCT | F | L | Estate FWD TYDA | | GDS18410 | Drive Shaft | | 27 | 28 | 63.1 | 96 | 631 | |
| | 2010.07-2014.06 | 6DCT | F | R | Estate FWD TYDA | | GDS18343 | Drive Shaft | | 27 | 28 | 63.1 | 96 | 967 | |
| | 2010.07-2014.06 | 6DCT | F | L | Estate FWD TYDA | | GCI62053 | Inner Joint | | 28 | 26 | 34 | 79.5 | 91 | |
| | 2010.07-2014.06 | 6MT | F | L | Estate FWD TYDA | | GDS18382 | Drive Shaft | | 27 | 26 | 63.1 | 96 | 638 | |
| | 2010.07-2014.06 | 6MT | F | R | Estate FWD TYDA | | GDS18315 | Drive Shaft | | 27 | 26 | 63 | 96 | 984 | |
| | 2010.07-2014.06 | 6MT/6DCT | F | L/R | Estate FWD TYDA | | GCO18252 | Outer Joint | | 27 | 26 | 63.1 | 96 | 64 | I |
| | 2010.07-2014.06 | 6MT/6DCT | F | L/R | Estate FWD TYDA | | GCO18326 | Outer Joint | | 27 | 26 | 63.1 | 96 | 64 | I |
| 2.0 (96 kw) | 1998.08-2005.04 | AT | F | R | Estate FWD EDDB/EDDC/EDDD/EDDF | | GDS18042 | Drive Shaft | | 25 | 23 | 53.4 | 88.5 | 633 | |
| | 1998.08-2005.04 | AT/MT | F | L/R | Estate FWD EDDB/EDDC/EDDD/EDDF | | GCO18013 | Outer Joint | | 25 | 23 | 53.4 | 88.5 | 57 | M |
| | 1998.08-2005.04 | MT | F | L | Estate FWD EDDB/EDDC/EDDD/EDDF | | GDS18101 | Drive Shaft | | 25 | 26 | 53.4 | 88.5 | 613 | |
| | 1998.08-2005.04 | MT | F | R | Estate FWD EDDB/EDDC/EDDD/EDDF | Trans. code:BI5/B5 | GDS18046 | Drive Shaft | | 25 | 23 | 53.4 | 88.5 | 934 | |
| | 1998.08-2005.04 | MT | F | R | Estate FWD EDDB/EDDC/EDDD/EDDF | Trans. code:MTX75 | GDS18102 | Drive Shaft | | 25 | 26 | 53.4 | 88.5 | 944.5 | |
| | 1998.08-2005.04 | MT | F | R | Estate FWD EDDB/EDDC/EDDD/EDDF | Trans. code:MTX75 | GCI18045 | Inner Joint | | 26 | 23 | 40 | 389 | 92 | |
| 2.0 (98 kw) | 2004.07-2008.01 | 6MT | F | L | Estate FWD G6DE;G6DF | Date to:2004.12 | GDS18218 | Drive Shaft | | 36 | 26 | 56 | 48 | 582 | |
| | 2004.07-2008.01 | 6MT | F | R | Estate FWD G6DE;G6DF | Date to:2006.07 | GDS18219 | Drive Shaft | | 36 | 26 | 56.3 | 48 | 921 | |
| | 2004.07-2008.01 | 6MT | F | R | Estate FWD G6DE;G6DF | Date from:2006.08 | GDS56093 | Drive Shaft | | 36 | 26 | 56 | 48 | 916 | |
| | 2004.07-2008.01 | 6MT | F | L/R | Estate FWD G6DE;G6DF | | GCO99155 | Outer Joint | | 36 | 26 | 56 | 48 | 64 | I |
| | 2004.07-2008.01 | 6MT | F | L | Estate FWD G6DE;G6DF | Date to:2004.12 | GCI18044 | Inner Joint | | 26 | 23 | 40 | 68.5 | 99.5 | |
| | 2004.07-2008.01 | 6MT | F | R | Estate FWD G6DE;G6DF | Date from:2006.08 | GCI83312 | Inner Joint | | 26 | 26 | 40 | 389 | 92 | |
| 2.0 (100 kw) | 2004.07-2012.09 | 6DCT | F | L | Estate FWD G6DA;G6DB;G6DD;G6DG | | GDS18367 | Drive Shaft | | 36 | 28 | 56 | 48 | 570 | |
| | 2004.07-2012.09 | 6MT | F | R | Estate FWD G6DA;G6DB;G6DD;G6DG | Date to:2006.07 | GDS18219 | Drive Shaft | | 36 | 26 | 56.3 | 48 | 921 | |
| | 2004.07-2012.09 | 6MT | F | R | Estate FWD G6DA;G6DB;G6DD;G6DG | Date from:2006.08 | GDS56093 | Drive Shaft | | 36 | 26 | 56 | 48 | 916 | |
| | 2004.07-2012.09 | 6MT | F | R | Estate FWD G6DA;G6DB;G6DD;G6DG | Date from:2006.08 | GCI83312 | Inner Joint | | 26 | 26 | 40 | 389 | 92 | |
| | 2004.07-2012.09 | AT | F | R | Estate FWD G6DA;G6DB;G6DD;G6DG | Trans. code:MPS6 Powershift | GDS62024 | Drive Shaft | | 36 | 28 | 56 | 48 | 908 | |
| | 2004.07-2012.09 | MT | F | L | Estate FWD G6DA;G6DB;G6DD;G6DG | | GDS18218 | Drive Shaft | | 36 | 26 | 56 | 48 | 582 | |
| | 2004.07-2012.09 | MT | F | L/R | Estate FWD G6DA;G6DB;G6DD;G6DG | | GCO99155 | Outer Joint | | 36 | 26 | 56 | 48 | 64 | I |
| | 2010.07-2014.06 | 6DCT | F | L | Estate FWD UKDB | | GDS18410 | Drive Shaft | | 27 | 28 | 63.1 | 96 | 631 | |
| | 2010.07-2014.06 | 6DCT | F | R | Estate FWD UKDB | | GDS18343 | Drive Shaft | | 27 | 28 | 63.1 | 96 | 967 | |
| | 2010.07-2014.06 | 6DCT | F | L | Estate FWD UKDB | | GCI62053 | Inner Joint | | 28 | 26 | 34 | 79.5 | 91 | |
| | 2010.07-2014.06 | 6MT | F | L | Estate FWD UKDB | | GDS18382 | Drive Shaft | | 27 | 26 | 63.1 | 96 | 638 | |
| | 2010.07-2014.06 | 6MT | F | R | Estate FWD UKDB | | GDS18315 | Drive Shaft | | 27 | 26 | 63 | 96 | 984 | |
| | 2010.07-2014.06 | 6MT/6DCT | F | L/R | Estate FWD UKDB | | GCO18252 | Outer Joint | | 27 | 26 | 63.1 | 96 | 64 | I |
| | 2010.07-2014.06 | 6MT/6DCT | F | L/R | Estate FWD UKDB | | GCO18326 | Outer Joint | | 27 | 26 | 63.1 | 96 | 64 | I |
| | 2010.07-2014.06 | AT | F | R | Estate FWD UKDB | Date from:2011.05,Date to:2014.06 | GDS18343 | Drive Shaft | | 27 | 28 | 63.1 | 96 | 967 | |
| 2.0 (103 kw) | 2010.07-2014.06 | 6DCT | F | L | Estate FWD UFDB | | GDS18410 | Drive Shaft | | 27 | 28 | 63.1 | 96 | 631 | |

| | YEAR | TRANSM. | F/R | L/R | BODY STYLE & DRIVE TYPE & ENGINE | REMARKS | G-AP Ref. | PRODUCT | ABS | Technical Specifications A | B | C | H | L | P |
|---|---|---|---|---|---|---|---|---|---|---|---|---|---|---|---|
| **FORD** **Focus Estate/Wagon** | | | | | | | | | | | | | | | |
| 2.0 (103 kw) | 2010.07-2014.06 | 6DCT | F | R | Estate FWD UFDB | | GDS18343 | Drive Shaft | | 27 | 28 | 63.1 | 96 | 967 | |
| | 2010.07-2014.06 | 6DCT | F | L | Estate FWD UFDB | | GCI62053 | Inner Joint | | 28 | 26 | 34 | 79.5 | 91 | |
| | 2010.07-2014.06 | 6MT | F | L | Estate FWD UFDB | | GDS18382 | Drive Shaft | | 27 | 26 | 63.1 | 96 | 638 | |
| | 2010.07-2014.06 | 6MT | F | R | Estate FWD UFDB | | GDS18315 | Drive Shaft | | 27 | 26 | 63 | 96 | 984 | |
| | 2010.07-2014.06 | 6MT/6DCT | F | L/R | Estate FWD UFDB | | GCO18252 | Outer Joint | | 27 | 26 | 63.1 | 96 | 64 | I |
| | 2010.07-2014.06 | 6MT/6DCT | F | L/R | Estate FWD UFDB | | GCO18326 | Outer Joint | | 27 | 26 | 63.1 | 96 | 64 | I |
| 2.0 (107 kw) | 2004.07-2012.09 | AT | F | L/R | Estate FWD AODA;AODB;SYDA;AODE | For Engine code:C20HDEA | GCO18203 | Outer Joint | | 36 | 23 | 56 | 48 | 57 | I |
| | 2004.07-2012.09 | AT | F | L | Estate FWD AODA;AODB;SYDA;AODE | | GCI18219 | Inner Joint | | 26 | 23 | 40 | 69 | 105 | |
| | 2004.07-2012.09 | AT/MT | F | L | Estate FWD AODA;AODB;SYDA;AODE | | GDS18218 | Drive Shaft | | 36 | 26 | 56 | 48 | 582 | |
| | 2004.07-2012.09 | AT/MT | F | R | Estate FWD AODA;AODB;SYDA;AODE | | GDS18219 | Drive Shaft | | 36 | 26 | 56.3 | 48 | 921 | |
| | 2004.07-2012.09 | MT | F | L/R | Estate FWD AODA;AODB;SYDA;AODE | | GCO18203 | Outer Joint | | 36 | 23 | 56 | 48 | 57 | I |
| | 2004.07-2012.09 | MT | F | L | Estate FWD AODA;AODB;SYDA;AODE | | GCI18044 | Inner Joint | | 26 | 23 | 40 | 68.5 | 99.5 | |
| | 2004.07-2012.09 | | F | R | Estate FWD AODA;AODB;SYDA;AODE | Date from:2007.12,Date to:2011.07;TJ | GCI18161 | Inner Joint | | 26 | 23 | 40 | 389 | 86 | |
| | 2008.06-2011.07 | 5MT | F | L | Estate FWD SYDA | | GDS18218 | Drive Shaft | | 36 | 26 | 56 | 48 | 582 | |
| | 2008.06-2011.07 | 5MT | F | R | Estate FWD SYDA | | GDS18219 | Drive Shaft | | 36 | 26 | 56.3 | 48 | 921 | |
| | 2008.06-2011.07 | 5MT | F | L | Estate FWD SYDA | | GCI18044 | Inner Joint | | 26 | 23 | 40 | 68.5 | 99.5 | |
| | 2008.06-2011.07 | | F | L | Estate FWD SYDA | | GCO18203 | Outer Joint | | 36 | 23 | 56 | 48 | 57 | I |
| | 2008.06-2011.07 | | F | L | Estate FWD SYDA | | GCI18219 | Inner Joint | | 26 | 23 | 40 | 69 | 105 | |
| | 2008.06-2011.07 | | F | R | Estate FWD SYDA | | GCI18161 | Inner Joint | | 26 | 23 | 40 | 389 | 86 | |
| 2.0 (110 kw) | 2013.10-2020.02 | 5MT | F | L | Estate FWD XQDA | No Facelift;Facelift,Date to:2016.02 | GDS18319 | Drive Shaft | | 27 | 26 | 63 | 96 | 645 | |
| | 2013.10-2020.02 | 5MT | F | R | Estate FWD XQDA | No Facelift;Facelift,Date to:2016.02 | GDS18315 | Drive Shaft | | 27 | 26 | 63 | 96 | 984 | |
| | 2013.10-2020.02 | 5MT | F | L/R | Estate FWD XQDA | No Facelift;Facelift,Date to:2016.02 | GCO18242 | Outer Joint | | 27 | 23 | 63 | 96 | 57 | M |
| | 2013.10-2020.02 | 5MT | F | L | Estate FWD XQDA | No Facelift;Facelift,Date to:2016.02 | GCI18139 | Inner Joint | | 26 | 22 | 40 | 69 | 93.5 | |
| | 2013.10-2020.02 | 5MT | F | R | Estate FWD XQDA | No Facelift;Facelift,Date to:2016.02 | GCI18135 | Inner Joint | | 26 | 22 | 40 | 390 | 83.5 | |
| | 2013.10-2020.02 | 6DCT | F | L | Estate FWD XQDA | Date to:2013.02 | GDS18296 | Drive Shaft | | 27 | 34 | 63 | 96 | 606 | |
| | 2014.11-2020.02 | 6DCT | F | L | Estate FWD T7DB;T7DA | | GDS81479 | Drive Shaft | | 27 | 28 | 63.1 | 96 | 623 | |
| | 2014.11-2020.02 | 6DCT | F | R | Estate FWD T7DB;T7DA | | GDS56408 | Drive Shaft | | 27 | 28 | 63.2 | 96 | 970 | |
| | 2014.11-2020.02 | 6DCT | F | L/R | Estate FWD T7DB;T7DA | | GCO18252 | Outer Joint | | 27 | 26 | 63.1 | 96 | 64 | I |
| | 2014.11-2020.02 | 6DCT | F | L | Estate FWD T7DB;T7DA | | GCI62053 | Inner Joint | | 28 | 26 | 34 | 79.5 | 91 | |
| | 2014.11-2020.02 | 6DCT | F | R | Estate FWD T7DB;T7DA | | GCI83292 | Inner Joint | | 28 | 26 | 33.8 | 394 | 92.5 | |
| | 2014.11-2020.02 | 6MT | F | L | Estate FWD T7DB;T7DA | | GDS18382 | Drive Shaft | | 27 | 26 | 63.1 | 96 | 638 | |
| | 2014.11-2020.02 | 6MT | F | R | Estate FWD T7DB;T7DA | | GDS18315 | Drive Shaft | | 27 | 26 | 63 | 96 | 984 | |
| | 2014.11-2020.02 | 6MT | F | L/R | Estate FWD T7DB;T7DA | | GCO18326 | Outer Joint | | 27 | 26 | 63.1 | 96 | 64 | I |
| | 2014.11-2020.02 | AT | F | R | Estate FWD T7DB;T7DA | | GDS18343 | Drive Shaft | | 27 | 28 | 63.1 | 96 | 967 | |
| | 2014.11-2020.02 | 6DCT | F | L | Estate Van FWD T7DB;T7DA | | GDS81479 | Drive Shaft | | 27 | 28 | 63.1 | 96 | 623 | |
| | 2014.11-2020.02 | 6DCT | F | R | Estate Van FWD T7DB;T7DA | | GDS56408 | Drive Shaft | | 27 | 28 | 63.2 | 96 | 970 | |
| | 2014.11-2020.02 | 6DCT | F | L/R | Estate Van FWD T7DB;T7DA | | GCO18252 | Outer Joint | | 27 | 26 | 63.1 | 96 | 64 | I |
| | 2014.11-2020.02 | 6DCT | F | L | Estate Van FWD T7DB;T7DA | | GCI62053 | Inner Joint | | 28 | 26 | 34 | 79.5 | 91 | |
| | 2014.11-2020.02 | 6DCT | F | R | Estate Van FWD T7DB;T7DA | | GCI83292 | Inner Joint | | 28 | 26 | 33.8 | 394 | 92.5 | |
| | 2014.11-2020.02 | 6MT | F | L | Estate Van FWD T7DB;T7DA | | GDS18382 | Drive Shaft | | 27 | 26 | 63.1 | 96 | 638 | |
| | 2014.11-2020.02 | 6MT | F | R | Estate Van FWD T7DB;T7DA | | GDS18315 | Drive Shaft | | 27 | 26 | 63 | 96 | 984 | |
| | 2014.11-2020.02 | 6MT | F | L/R | Estate Van FWD T7DB;T7DA | | GCO18326 | Outer Joint | | 27 | 26 | 63.1 | 96 | 64 | I |
| | 2018.09-2025.11 | 6MT | F | L | Estate FWD YLDA | | GDS56593 | Drive Shaft | | 27 | 26 | 55.8 | 96.5 | 641 | |
| | 2018.09-2025.11 | 6MT | F | R | Estate FWD YLDA | | GDS56592 | Drive Shaft | | 27 | 26 | 55.8 | 96.5 | 985 | |
| | 2018.09-2025.11 | 6MT | F | L | Estate FWD YLDA | | GCI83395 | Inner Joint | | 26 | 35 | 40 | 69 | 112 | |
| | 2018.09-2025.11 | 6MT | F | R | Estate FWD YLDA | | GCI83394 | Inner Joint | | 26 | 35 | 40 | 427 | 98.5 | |
| | 2018.09-2025.11 | 6MT/8AT | F | L/R | Estate FWD YLDA | | GCO83353 | Outer Joint | | 27 | 26 | 55.8 | 96.5 | 62 | M |
| | 2018.09-2025.11 | 8AT | F | L | Estate FWD YLDA | | GDS56628 | Drive Shaft | | 27 | 35 | 55.8 | 96.5 | 686 | |
| | 2018.09-2025.11 | 8AT | F | R | Estate FWD YLDA | | GDS56627 | Drive Shaft | | 27 | 35 | 55.8 | 96.5 | 936 | |
| | 2018.09-2025.11 | 8AT | F | L | Estate FWD YLDA | | GCI83411 | Inner Joint | | 35 | 35 | 38 | 153 | 85.5 | |
| | 2018.09-2025.11 | 8AT | F | R | Estate FWD YLDA | | GCI83410 | Inner Joint | | 35 | 35 | 38 | 376 | 98.5 | |
| 2.0 (120 kw) | 2010.07-2014.06 | 6DCT | F | L | Estate FWD TXDB | | GDS18410 | Drive Shaft | | 27 | 28 | 63.1 | 96 | 631 | |
| | 2010.07-2014.06 | 6DCT | F | R | Estate FWD TXDB | | GDS18343 | Drive Shaft | | 27 | 28 | 63.1 | 96 | 967 | |
| | 2010.07-2014.06 | 6DCT | F | L | Estate FWD TXDB | | GCI62053 | Inner Joint | | 28 | 26 | 34 | 79.5 | 91 | |
| | 2010.07-2014.06 | 6MT | F | L | Estate FWD TXDB | | GDS18382 | Drive Shaft | | 27 | 26 | 63.1 | 96 | 638 | |
| | 2010.07-2014.06 | 6MT | F | R | Estate FWD TXDB | | GDS18315 | Drive Shaft | | 27 | 26 | 63 | 96 | 984 | |
| | 2010.07-2014.06 | 6MT/6DCT | F | L/R | Estate FWD TXDB | | GCO18252 | Outer Joint | | 27 | 26 | 63.1 | 96 | 64 | I |
| | 2010.07-2014.06 | 6MT/6DCT | F | L/R | Estate FWD TXDB | | GCO18326 | Outer Joint | | 27 | 26 | 63.1 | 96 | 64 | I |
| 2.0 (125 kw) | 2010.07-2020.02 | 6DCT | F | L | Estate FWD MGDA | Date to:2013.02 | GDS18296 | Drive Shaft | | 27 | 34 | 63 | 96 | 606 | |
| | 2010.07-2020.02 | | F | | Estate FWD MGDA | Date From:2011.03 | GCO18238 | Outer Joint | | 27 | 23 | 63 | 96 | 57 | M |
| | 2010.07-2020.02 | | F | R | Estate FWD MGDA | | GCI18161 | Inner Joint | | 26 | 23 | 40 | 389 | 86 | |
| 2.0 (127 kw) | 2002.08-2005.01 | MT | F | L | Estate FWD ALDA | | GDS18195 | Drive Shaft | | 25 | 34 | 52.6 | 88 | 603 | |
| | 2002.08-2005.01 | MT | F | R | Estate FWD ALDA | | GDS99175 | Drive Shaft | | 25 | 34 | 52.6 | 88 | 948 | |
| 2.0 (136 kw) | 2014.11-2020.02 | 6DCT | F | L | Estate FWD T8DA | | GDS81479 | Drive Shaft | | 27 | 28 | 63.1 | 96 | 623 | |
| | 2014.11-2020.02 | 6DCT | F | R | Estate FWD T8DA | | GDS56408 | Drive Shaft | | 27 | 28 | 63.2 | 96 | 970 | |

| | YEAR | TRANSM. | F/R | L/R | BODY STYLE & DRIVE TYPE & ENGINE | REMARKS | G-AP Ref. | PRODUCT | ABS | Technical Specifications A | B | C | H | L | P |
|---|---|---|---|---|---|---|---|---|---|---|---|---|---|---|---|
| **FORD** | | | | | | | | | | | | | | | |
| **Focus Estate/Wagon** | | | | | | | | | | | | | | | |
| 2.0 (136 kw) | 2014.11-2020.02 | 6DCT | F | L/R | Estate FWD T8DA | | GCO18252 | Outer Joint | | 27 | 26 | 63.1 | 96 | 64 | I |
| | 2014.11-2020.02 | 6DCT | F | L | Estate FWD T8DA | | GCI62053 | Inner Joint | | 28 | 26 | 34 | 79.5 | 91 | |
| | 2014.11-2020.02 | 6DCT | F | R | Estate FWD T8DA | | GCI83292 | Inner Joint | | 28 | 26 | 33.8 | 394 | 92.5 | |
| | 2014.11-2020.02 | 6MT | F | L | Estate FWD T8DA | | GDS18382 | Drive Shaft | | 27 | 26 | 63.1 | 96 | 638 | |
| | 2014.11-2020.02 | 6MT | F | R | Estate FWD T8DA | | GDS18315 | Drive Shaft | | 27 | 26 | 63 | 96 | 984 | |
| | 2014.11-2020.02 | 6MT | F | L/R | Estate FWD T8DA | | GCO18326 | Outer Joint | | 27 | 26 | 63.1 | 96 | 64 | I |
| | 2014.11-2020.02 | AT | F | R | Estate FWD T8DA | | GDS18343 | Drive Shaft | | 27 | 28 | 63.1 | 96 | 967 | |
| 2.0 (184 kw) | 2012.07-2020.02 | 6MT | F | L | Estate FWD R9DA;R9DB;R9DC;R9DD | Date to:2016.08 | GDS18382 | Drive Shaft | | 27 | 26 | 63.1 | 96 | 638 | |
| | 2012.07-2020.02 | 6MT | F | L | Estate FWD R9DA;R9DB;R9DC;R9DD | Date From:2016.09 | GDS82577 | Drive Shaft | | 27 | 26 | 63.1 | 96 | 637 | |
| | 2012.07-2020.02 | 6MT | F | R | Estate FWD R9DA;R9DB;R9DC;R9DD | Date to:2016.09 | GDS18381 | Drive Shaft | | 27 | 26 | 63.1 | 96 | 977 | |
| | 2012.07-2020.02 | 6MT | F | L | Estate FWD R9DA;R9DB;R9DC;R9DD | Date From:2016.09 | GCO82052 | Outer Joint | | 27 | 26 | 63.1 | 96 | 64 | I |
| | 2012.07-2020.02 | 6MT | F | L | Estate FWD R9DA;R9DB;R9DC;R9DD | Date From:2016.09 | GCI18157 | Inner Joint | | 26 | 26 | 40 | 69 | 109 | |
| **Focus Van** | | | | | | | | | | | | | | | |
| 1.4 (55 kw) | 1999.04-2005.03 | MT | F | L | Estate Van FWD FXDA/FXDB/FXDC/FXDD | | GDS18042 | Drive Shaft | | 25 | 23 | 53.4 | 88.5 | 633 | |
| | 1999.04-2005.03 | MT | F | R | Estate Van FWD FXDA/FXDB/FXDC/FXDD | | GDS18046 | Drive Shaft | | 25 | 23 | 53.4 | 88.5 | 934 | |
| | 1999.04-2005.03 | MT | F | L/R | Estate Van FWD FXDA/FXDB/FXDC/FXDD | | GCO18013 | Outer Joint | | 25 | 23 | 53.4 | 88.5 | 57 | M |
| | 1999.04-2005.03 | MT | F | L | Estate Van FWD FXDA/FXDB/FXDC/FXDD | | GCI18022 | Inner Joint | | 23 | 21 | 40 | 61 | 88 | |
| 1.4 (59 kw) | 2005.09-2011.07 | 5MT | F | L | Estate Van FWD ASDA;ASDB | Inner teeth of wheel side:24 | GDS18189 | Drive Shaft | | 36 | 23 | 56 | 48 | 601 | |
| | 2005.09-2011.07 | 5MT | F | L | Estate Van FWD ASDA;ASDB | Inner teeth of wheel side:24 | GDS18261 | Drive Shaft | | 36 | 23 | 55.8 | 48 | 600 | |
| | 2005.09-2011.07 | 5MT | F | L | Estate Van FWD ASDA;ASDB | Inner teeth of wheel side:25 | GDS18336 | Drive Shaft | | 36 | 23 | 51.6 | 48 | 600 | |
| | 2005.09-2011.07 | 5MT | F | L | Estate Van FWD ASDA;ASDB | Inner teeth of wheel side:23 | GDS18359 | Drive Shaft | | 36 | 23 | 56 | 48 | 594 | |
| | 2005.09-2011.07 | 5MT | F | R | Estate Van FWD ASDA;ASDB | Inner teeth of wheel side:24;solid shaft | GDS18206 | Drive Shaft | | 36 | 23 | 56 | 48 | 906 | |
| | 2005.09-2011.07 | 5MT | F | R | Estate Van FWD ASDA;ASDB | Inner teeth of wheel side:24;solid shaft | GDS18262 | Drive Shaft | | 36 | 23 | 55.8 | 48 | 905 | |
| | 2005.09-2011.07 | 5MT | F | R | Estate Van FWD ASDA;ASDB | Inner teeth of wheel side:23;hollow shaft | GDS18358 | Drive Shaft | | 36 | 23 | 56 | 48 | 899 | |
| | 2005.09-2011.07 | 5MT | F | R | Estate Van FWD ASDA;ASDB | | GCI18087 | Inner Joint | | 23 | 22 | 40 | 371 | 78.5 | |
| | 2005.09-2011.07 | | F | L | Estate Van FWD ASDA;ASDB | | GCO62039 | Outer Joint | | 36 | 24 | 55.8 | 48 | 57 | M |
| | 2005.09-2011.07 | | F | L/R | Estate Van FWD ASDA;ASDB | | GCO99129 | Outer Joint | | 36 | 24 | 56 | 48 | 57 | M |
| | 2005.09-2011.07 | | F | L | Estate Van FWD ASDA;ASDB | Date To:2006.07 | GCI18086 | Inner Joint | | 23 | 22 | 40 | 61 | 90 | |
| 1.6 (66 kw) | 2005.09-2011.07 | 5MT | F | L | Estate Van FWD HHDA | | GDS18218 | Drive Shaft | | 36 | 26 | 56 | 48 | 582 | |
| | 2005.09-2011.07 | 5MT | F | R | Estate Van FWD HHDA | | GDS18219 | Drive Shaft | | 36 | 26 | 56.3 | 48 | 921 | |
| | 2005.09-2011.07 | | F | L | Estate Van FWD HHDA | | GCO99288 | Outer Joint | | 36 | 26 | 56.3 | 48 | 61 | M |
| | 2005.09-2011.07 | | F | R | Estate Van FWD HHDA | | GCO18230 | Outer Joint | | 36 | 26 | 56.3 | 48 | 61 | M |
| 1.6 (74 kw) | 1999.04-2005.03 | AT | F | L/R | Estate Van FWD FYDA/FYDB/FYDC/FYDD | Date to:1999.11 | GCO18013 | Outer Joint | | 25 | 23 | 53.4 | 88.5 | 57 | M |
| | 1999.04-2005.03 | MT | F | L | Estate Van FWD FYDA/FYDB/FYDC/FYDD | | GDS18042 | Drive Shaft | | 25 | 23 | 53.4 | 88.5 | 633 | |
| | 1999.04-2005.03 | MT | F | R | Estate Van FWD FYDA/FYDB/FYDC/FYDD | | GDS18046 | Drive Shaft | | 25 | 23 | 53.4 | 88.5 | 934 | |
| | 1999.04-2005.03 | MT | F | L/R | Estate Van FWD FYDA/FYDB/FYDC/FYDD | | GCO18013 | Outer Joint | | 25 | 23 | 53.4 | 88.5 | 57 | M |
| | 1999.04-2005.03 | MT | F | L | Estate Van FWD FYDA/FYDB/FYDC/FYDD | | GCI18022 | Inner Joint | | 23 | 21 | 40 | 61 | 88 | |
| | 2004.11-2011.07 | 5MT | F | L | Estate Van FWD G8DC;MTDA | | GDS18218 | Drive Shaft | | 36 | 26 | 56 | 48 | 582 | |
| | 2004.11-2011.07 | 5MT | F | R | Estate Van FWD G8DC;MTDA | | GDS18219 | Drive Shaft | | 36 | 26 | 56.3 | 48 | 921 | |
| | 2004.11-2011.07 | 5MT | F | L | Estate Van FWD G8DC;MTDA | | GCO99288 | Outer Joint | | 36 | 26 | 56.3 | 48 | 61 | M |
| | 2004.11-2011.07 | 5MT | F | R | Estate Van FWD G8DC;MTDA | | GCO18230 | Outer Joint | | 36 | 26 | 56.3 | 48 | 61 | M |
| | 2005.09-2011.07 | 5MT | F | L | Estate Van FWD HWDA | Inner teeth of wheel side:24 | GDS18189 | Drive Shaft | | 36 | 23 | 56 | 48 | 601 | |
| | 2005.09-2011.07 | 5MT | F | R | Estate Van FWD HWDA | | GDS18206 | Drive Shaft | | 36 | 23 | 56 | 48 | 906 | |
| | 2005.09-2011.07 | 5MT | F | R | Estate Van FWD HWDA | | GCI18087 | Inner Joint | | 23 | 22 | 40 | 371 | 78.5 | |
| | 2005.09-2011.07 | AT | F | L | Estate Van FWD HWDA | | GDS34252 | Drive Shaft | | 36 | 26 | 55.3 | 48 | 581 | |
| | 2005.09-2011.07 | MT | F | L | Estate Van FWD HWDA | Inner teeth of wheel side:24 | GDS18261 | Drive Shaft | | 36 | 23 | 55.8 | 48 | 600 | |
| | 2005.09-2011.07 | MT | F | L | Estate Van FWD HWDA | Inner teeth of wheel side:23 | GDS18359 | Drive Shaft | | 36 | 23 | 56 | 48 | 594 | |
| | 2005.09-2011.07 | MT | F | R | Estate Van FWD HWDA | Inner teeth of wheel side:24 | GDS18262 | Drive Shaft | | 36 | 23 | 55.8 | 48 | 905 | |
| | 2005.09-2011.07 | MT | F | R | Estate Van FWD HWDA | Inner teeth of wheel side:23 | GDS18358 | Drive Shaft | | 36 | 23 | 56 | 48 | 899 | |
| | 2005.09-2011.07 | MT | F | L/R | Estate Van FWD HWDA | | GCO62039 | Outer Joint | | 36 | 24 | 55.8 | 48 | 57 | M |
| | 2005.09-2011.07 | MT | F | L/R | Estate Van FWD HWDA | | GCO99129 | Outer Joint | | 36 | 24 | 56 | 48 | 57 | M |
| | 2005.09-2011.07 | MT | F | L | Estate Van FWD HWDA | | GCI18086 | Inner Joint | | 23 | 22 | 40 | 61 | 90 | |
| | 2005.09-2011.07 | | F | R | Estate Van FWD HWDA | | GCI18161 | Inner Joint | | 26 | 23 | 40 | 389 | 86 | |
| 1.6 (80 kw) | 2004.07-2011.07 | 5MT | F | L | Estate Van FWD G8DA | | GDS18218 | Drive Shaft | | 36 | 26 | 56 | 48 | 582 | |
| | 2004.07-2011.07 | 5MT | F | L | Estate Van FWD G8DA | | GCO99288 | Outer Joint | | 36 | 26 | 56.3 | 48 | 61 | M |
| | 2004.07-2011.07 | 5MT | F | R | Estate Van FWD G8DA | | GCO18230 | Outer Joint | | 36 | 26 | 56.3 | 48 | 61 | M |
| | 2004.07-2011.07 | CVT | F | L | Estate Van FWD G8DA | | GDS18193 | Drive Shaft | | 36 | 34 | 56 | 48 | 568 | |
| | 2004.07-2011.07 | CVT | F | R | Estate Van FWD G8DA | | GDS18191 | Drive Shaft | | 36 | 34 | 56 | 48 | 890 | |
| | 2004.07-2011.07 | CVT | F | L/R | Estate Van FWD G8DA | | GCO34093 | Outer Joint | | 36 | 24 | 55.3 | 48 | 59 | I |
| | 2004.07-2011.07 | CVT/5MT | F | R | Estate Van FWD G8DA | | GDS18219 | Drive Shaft | | 36 | 26 | 56.3 | 48 | 921 | |
| 1.6 (85 kw) | 2005.09-2011.07 | 5MT | F | L | Estate Van FWD HXDA;HXDB;SIDA | Inner teeth of wheel side:24 | GDS18189 | Drive Shaft | | 36 | 23 | 56 | 48 | 601 | |
| | 2005.09-2011.07 | 5MT | F | L | Estate Van FWD HXDA;HXDB;SIDA | Inner teeth of wheel side:24 | GDS18261 | Drive Shaft | | 36 | 23 | 55.8 | 48 | 600 | |
| | 2005.09-2011.07 | 5MT | F | L | Estate Van FWD HXDA;HXDB;SIDA | Inner teeth of wheel side:23 | GDS18359 | Drive Shaft | | 36 | 23 | 56 | 48 | 594 | |
| | 2005.09-2011.07 | 5MT | F | R | Estate Van FWD HXDA;HXDB;SIDA | Inner teeth of wheel side:24;solid shaft | GDS18206 | Drive Shaft | | 36 | 23 | 56 | 48 | 906 | |
| | 2005.09-2011.07 | 5MT | F | R | Estate Van FWD HXDA;HXDB;SIDA | Inner teeth of wheel side:24;solid shaft | GDS18262 | Drive Shaft | | 36 | 23 | 55.8 | 48 | 905 | |

| | YEAR | TRANSM. | F/R | L/R | BODY STYLE & DRIVE TYPE & ENGINE | REMARKS | G-AP Ref. | PRODUCT | ABS | Technical Specifications A | B | C | H | L | P |
|---|---|---|---|---|---|---|---|---|---|---|---|---|---|---|---|
| **FORD** | | | | | | | | | | | | | | | |
| **Focus Van** | | | | | | | | | | | | | | | |
| 1.6 (85 kw) | 2005.09-2011.07 | 5MT | F | R | Estate Van FWD HXDA;HXDB;SIDA | Inner teeth of wheel side:23;hollow shaft | GDS18358 | Drive Shaft | | 36 | 23 | 56 | 48 | 899 | |
| | 2005.09-2011.07 | 5MT | F | R | Estate Van FWD HXDA;HXDB;SIDA | | GCI18087 | Inner Joint | | 23 | 22 | 40 | 371 | 78.5 | |
| | 2005.09-2011.07 | MT | F | L/R | Estate Van FWD HXDA;HXDB;SIDA | | GCO62039 | Outer Joint | | 36 | 24 | 55.8 | 48 | 57 | M |
| | 2005.09-2011.07 | MT | F | L/R | Estate Van FWD HXDA;HXDB;SIDA | | GCO99129 | Outer Joint | | 36 | 24 | 56 | 48 | 57 | M |
| | 2005.09-2011.07 | MT | F | L | Estate Van FWD HXDA;HXDB;SIDA | | GCI18086 | Inner Joint | | 23 | 22 | 40 | 61 | 90 | |
| | 2005.09-2011.07 | | F | R | Estate Van FWD HXDA;HXDB;SIDA | | GCI18161 | Inner Joint | | 26 | 23 | 40 | 389 | 86 | |
| 1.8 (55 kw) | 1999.08-2005.03 | 4AT/5MT | F | L | Estate Van FWD BHDA/BHDB | | GDS18101 | Drive Shaft | | 25 | 26 | 53.4 | 88.5 | 613 | |
| | 1999.08-2005.03 | 4AT/5MT | F | R | Estate Van FWD BHDA/BHDB | | GDS18102 | Drive Shaft | | 25 | 26 | 53.4 | 88.5 | 944.5 | |
| | 1999.08-2005.03 | 5MT | F | R | Estate Van FWD BHDA/BHDB | | GCI18045 | Inner Joint | | 26 | 23 | 40 | 389 | 92 | |
| | 1999.08-2005.03 | | F | L/R | Estate Van FWD BHDA/BHDB | | GCO18013 | Outer Joint | | 25 | 23 | 53.4 | 88.5 | 57 | M |
| 1.8 (66 kw) | 1998.08-2005.03 | MT | F | L | Estate Van FWD C9DA/C9DB/C9DC | | GDS18101 | Drive Shaft | | 25 | 26 | 53.4 | 88.5 | 613 | |
| | 1998.08-2005.03 | MT | F | R | Estate Van FWD C9DA/C9DB/C9DC | | GDS18102 | Drive Shaft | | 25 | 26 | 53.4 | 88.5 | 944.5 | |
| | 1998.08-2005.03 | MT | F | L/R | Estate Van FWD C9DA/C9DB/C9DC | | GCO18013 | Outer Joint | | 25 | 23 | 53.4 | 88.5 | 57 | M |
| | 1998.08-2005.03 | MT | F | R | Estate Van FWD C9DA/C9DB/C9DC | | GCI18045 | Inner Joint | | 26 | 23 | 40 | 389 | 92 | |
| 1.8 (74 kw) | 2002.08-2005.03 | 5MT | F | L | Estate Van FWD FFDA | | GDS18101 | Drive Shaft | | 25 | 26 | 53.4 | 88.5 | 613 | |
| | 2002.08-2005.03 | 5MT | F | R | Estate Van FWD FFDA | | GDS18102 | Drive Shaft | | 25 | 26 | 53.4 | 88.5 | 944.5 | |
| | 2002.08-2005.03 | 5MT | F | L | Estate Van FWD FFDA | | GCI18044 | Inner Joint | | 26 | 23 | 40 | 68.5 | 99.5 | |
| | 2002.08-2005.03 | 5MT | F | R | Estate Van FWD FFDA | | GCI18045 | Inner Joint | | 26 | 23 | 40 | 389 | 92 | |
| | 2002.08-2005.03 | | F | L/R | Estate Van FWD FFDA | | GCO18069 | Outer Joint | | 25 | 24 | 52.6 | 88 | 59 | M |
| 1.8 (85 kw) | 1999.04-2005.03 | MT | F | L | Estate Van FWD EYDB/EYDC/EYDD/EYDE/EYDF/EYDG | | GDS18042 | Drive Shaft | | 25 | 23 | 53.4 | 88.5 | 633 | |
| | 1999.04-2005.03 | MT | F | R | Estate Van FWD EYDB/EYDC/EYDD/EYDE/EYDF/EYDG | | GDS18046 | Drive Shaft | | 25 | 23 | 53.4 | 88.5 | 934 | |
| | 1999.04-2005.03 | MT | F | L/R | Estate Van FWD EYDB/EYDC/EYDD/EYDE/EYDF/EYDG | | GCO18013 | Outer Joint | | 25 | 23 | 53.4 | 88.5 | 57 | M |
| | 1999.04-2005.03 | MT | F | L | Estate Van FWD EYDB/EYDC/EYDD/EYDE/EYDF/EYDG | | GCI18022 | Inner Joint | | 23 | 21 | 40 | 61 | 88 | |
| | 2001.08-2005.03 | 5MT | F | L | Estate Van FWD F9DA/F9DB | | GDS18101 | Drive Shaft | | 25 | 26 | 53.4 | 88.5 | 613 | |
| | 2001.08-2005.03 | 5MT | F | R | Estate Van FWD F9DA/F9DB | | GDS18102 | Drive Shaft | | 25 | 26 | 53.4 | 88.5 | 944.5 | |
| | 2001.08-2005.03 | 5MT | F | L | Estate Van FWD F9DA/F9DB | | GCI18044 | Inner Joint | | 26 | 23 | 40 | 68.5 | 99.5 | |
| | 2001.08-2005.03 | 5MT | F | R | Estate Van FWD F9DA/F9DB | | GCI18045 | Inner Joint | | 26 | 23 | 40 | 389 | 92 | |
| | 2001.08-2005.03 | | F | L/R | Estate Van FWD F9DA/F9DB | | GCO18069 | Outer Joint | | 25 | 24 | 52.6 | 88 | 59 | M |
| 1.8 (92 kw) | 2009.06-2011.07 | 4AT/5MT | F | L | Estate Van FWD QQDA;Q7DA | Inner teeth of wheel side:24 | GDS18189 | Drive Shaft | | 36 | 23 | 56 | 48 | 601 | |
| | 2009.06-2011.07 | 5MT | F | L | Estate Van FWD QQDA;Q7DA | Inner teeth of wheel side:24 | GDS18261 | Drive Shaft | | 36 | 23 | 55.8 | 48 | 600 | |
| | 2009.06-2011.07 | 5MT | F | L | Estate Van FWD QQDA;Q7DA | Inner teeth of wheel side:23 | GDS18359 | Drive Shaft | | 36 | 23 | 56 | 48 | 594 | |
| | 2009.06-2011.07 | 5MT | F | R | Estate Van FWD QQDA;Q7DA | Inner teeth of wheel side:24;Not For Facelift;solid shaft | GDS18206 | Drive Shaft | | 36 | 23 | 56 | 48 | 906 | |
| | 2009.06-2011.07 | 5MT | F | R | Estate Van FWD QQDA;Q7DA | Inner teeth of wheel side:24;For Facelift;solid shaft | GDS18262 | Drive Shaft | | 36 | 23 | 55.8 | 48 | 905 | |
| | 2009.06-2011.07 | 5MT | F | R | Estate Van FWD QQDA;Q7DA | Inner teeth of wheel side:23;For Facelift;hollow shaft | GDS18358 | Drive Shaft | | 36 | 23 | 56 | 48 | 899 | |
| | 2009.06-2011.07 | 5MT | F | L/R | Estate Van FWD QQDA;Q7DA | | GCO18203 | Outer Joint | | 36 | 23 | 56 | 48 | 57 | I |
| | 2009.06-2011.07 | 5MT | F | L/R | Estate Van FWD QQDA;Q7DA | | GCO62039 | Outer Joint | | 36 | 24 | 55.8 | 48 | 57 | M |
| | 2009.06-2011.07 | 5MT | F | L | Estate Van FWD QQDA;Q7DA | | GCI18086 | Inner Joint | | 23 | 22 | 40 | 61 | 90 | |
| | 2009.06-2011.07 | 5MT | F | L | Estate Van FWD QQDA;Q7DA | | GCI82479 | Inner Joint | | 23 | 23 | 40 | 61 | 110 | |
| | 2009.06-2011.07 | 5MT | F | R | Estate Van FWD QQDA;Q7DA | | GCI18087 | Inner Joint | | 23 | 22 | 40 | 371 | 78.5 | |
| 2.0 (81 kw) | 2009.06-2011.07 | 6MT | F | L | Estate Van FWD IXDA | | GDS18367 | Drive Shaft | | 36 | 28 | 56 | 48 | 570 | |
| | 2009.06-2011.07 | 6MT | F | R | Estate Van FWD IXDA | | GDS62024 | Drive Shaft | | 36 | 28 | 56 | 48 | 908 | |
| | 2009.06-2011.07 | 6MT | F | L/R | Estate Van FWD IXDA | | GCO99155 | Outer Joint | | 36 | 26 | 56 | 48 | 64 | I |
| | 2009.06-2011.07 | 6MT | F | R | Estate Van FWD IXDA | | GCI62017 | Inner Joint | | 28 | 26 | 33.95 | 371.5 | 92 | |
| 2.0 (100 kw) | 2005.09-2011.07 | 5MT | F | L | Estate Van FWD G6DB | | GDS18218 | Drive Shaft | | 36 | 26 | 56 | 48 | 582 | |
| | 2005.09-2011.07 | 5MT | F | L | Estate Van FWD G6DB | | GCI18044 | Inner Joint | | 26 | 23 | 40 | 68.5 | 99.5 | |
| | 2005.09-2011.07 | 6MT | F | R | Estate Van FWD G6DB | Date to:2006.07 | GDS18219 | Drive Shaft | | 36 | 26 | 56.3 | 48 | 921 | |
| | 2005.09-2011.07 | 6MT | F | R | Estate Van FWD G6DB | Date from:2006.08 | GDS56093 | Drive Shaft | | 36 | 26 | 56 | 48 | 916 | |
| | 2005.09-2011.07 | 6MT | F | L/R | Estate Van FWD G6DB | | GCO99155 | Outer Joint | | 36 | 26 | 56 | 48 | 64 | I |
| | 2005.09-2011.07 | 6MT | F | R | Estate Van FWD G6DB | Date from:2006.08 | GCI83312 | Inner Joint | | 26 | 26 | 40 | 389 | 92 | |
| **Fusion** | | | | | | | | | | | | | | | |
| 1.2 (55 kw) | 2004.08-2012.12 | 5MT | F | L | Estate FWD FUJA;FUJB | | GDS18216 | Drive Shaft | | 25 | 23 | 53.3 | 90 | 621 | |
| | 2004.08-2012.12 | 5MT | F | R | Estate FWD FUJA;FUJB | | GDS18201 | Drive Shaft | | 25 | 23 | 53.3 | 90 | 919 | |
| | 2004.08-2012.12 | 5MT | F | L/R | Estate FWD FUJA;FUJB | | GCO18009 | Outer Joint | | 25 | 22 | 53.3 | 90 | 51 | M |
| | 2004.08-2012.12 | 5MT | F | L/R | Estate FWD FUJA;FUJB | | GCO18014 | Outer Joint | | 25 | 21 | 53.2 | 89 | 54 | M |
| | 2004.08-2012.12 | 5MT | F | L | Estate FWD FUJA;FUJB | | GCI18085 | Inner Joint | | 23 | 22 | 40 | 61 | 90 | |
| 1.3 (44 kw) | 2002.11-2005.07 | 5MT | F | L | Estate FWD BAJA | | GDS18216 | Drive Shaft | | 25 | 23 | 53.3 | 90 | 621 | |
| | 2002.11-2005.07 | 5MT | F | R | Estate FWD BAJA | | GDS18201 | Drive Shaft | | 25 | 23 | 53.3 | 90 | 919 | |
| | 2002.11-2005.07 | 5MT | F | L | Estate FWD BAJA | | GCO18009 | Outer Joint | | 25 | 22 | 53.3 | 90 | 51 | M |
| | 2002.11-2005.07 | 5MT | F | L | Estate FWD BAJA | | GCI18085 | Inner Joint | | 23 | 22 | 40 | 61 | 90 | |
| 1.4 (50 kw) | 2002.08-2012.12 | 5AMT | F | R | Estate FWD F6JA;F6JB | | GDS18201 | Drive Shaft | | 25 | 23 | 53.3 | 90 | 919 | |
| | 2002.08-2012.12 | 5AT/5MT | F | L | Estate FWD F6JA;F6JB | Date to:2005.04 | GDS18216 | Drive Shaft | | 25 | 23 | 53.3 | 90 | 621 | |
| | 2002.08-2012.12 | 5AT/5MT | F | L/R | Estate FWD F6JA;F6JB | | GCO18001 | Outer Joint | | 25 | 20 | 52.9 | 89 | 52 | M |
| | 2002.08-2012.12 | 5AT/5MT | F | L | Estate FWD F6JA;F6JB | | GCI18085 | Inner Joint | | 23 | 22 | 40 | 61 | 90 | |
| | 2002.08-2012.12 | 5AT/5MT/5AMT | F | L/R | Estate FWD F6JA;F6JB | | GCO18009 | Outer Joint | | 25 | 22 | 53.3 | 90 | 51 | M |
| 1.4 (59 kw) | 2002.08-2012.12 | 5AMT | F | L | Estate FWD FXJA;FXJB;FXJC | | GDS18516 | Drive Shaft | | 25 | 23 | 53.3 | 89 | 614 | |

| | YEAR | TRANSM. | F/R | L/R | BODY STYLE & DRIVE TYPE & ENGINE | REMARKS | G-AP Ref. | PRODUCT | ABS | Technical Specifications A | B | C | H | L | P |
|---|---|---|---|---|---|---|---|---|---|---|---|---|---|---|---|
| **FORD** | | | | | | | | | | | | | | | |
| **Fusion** | | | | | | | | | | | | | | | |
| 1.4 (59 kw) | 2002.08-2012.12 | 5AMT | F | L/R | Estate FWD FXJA;FXJB;FXJC | | GCO18014 | Outer Joint | | 25 | 21 | 53.2 | 89 | 54 | M |
| | 2002.08-2012.12 | 5AMT | F | L | Estate FWD FXJA;FXJB;FXJC | | GCI18113 | Inner Joint | | 23 | 21 | 40 | 61.5 | 96.5 | |
| | 2002.08-2012.12 | 5MT | F | L | Estate FWD FXJA;FXJB;FXJC | | GDS18216 | Drive Shaft | | 25 | 23 | 53.3 | 90 | 621 | |
| | 2002.08-2012.12 | 5MT | F | L/R | Estate FWD FXJA;FXJB;FXJC | | GCO18009 | Outer Joint | | 25 | 22 | 53.3 | 90 | 51 | M |
| | 2002.08-2012.12 | 5MT | F | L | Estate FWD FXJA;FXJB;FXJC | | GCI18085 | Inner Joint | | 23 | 22 | 40 | 61 | 90 | |
| | 2002.08-2012.12 | 5MT/5AMT | F | R | Estate FWD FXJA;FXJB;FXJC | | GDS18201 | Drive Shaft | | 25 | 23 | 53.3 | 90 | 919 | |
| | 2010.01-2012.12 | 5MT | F | L | Estate FWD UTJA | | GDS18216 | Drive Shaft | | 25 | 23 | 53.3 | 90 | 621 | |
| | 2010.01-2012.12 | 5MT | F | L/R | Estate FWD UTJA | | GCO18014 | Outer Joint | | 25 | 21 | 53.2 | 89 | 54 | M |
| | 2010.01-2012.12 | 5MT | F | L | Estate FWD UTJA | | GCI18085 | Inner Joint | | 23 | 22 | 40 | 61 | 90 | |
| | 2010.01-2012.12 | | F | R | Estate FWD UTJA | | GDS18201 | Drive Shaft | | 25 | 23 | 53.3 | 90 | 919 | |
| 1.6 (66 kw) | 2004.11-2012.12 | 5MT | F | L | Estate FWD HHJA;HHJB | | GDS18216 | Drive Shaft | | 25 | 23 | 53.3 | 90 | 621 | |
| | 2004.11-2012.12 | 5MT | F | R | Estate FWD HHJA;HHJB | | GDS18326 | Drive Shaft | | 25 | 23 | 53.4 | 88.5 | 915 | |
| | 2004.11-2012.12 | 5MT | F | L/R | Estate FWD HHJA;HHJB | | GCO18009 | Outer Joint | | 25 | 22 | 53.3 | 90 | 51 | M |
| | 2004.11-2012.12 | 5MT | F | L/R | Estate FWD HHJA;HHJB | | GCO18013 | Outer Joint | | 25 | 23 | 53.4 | 88.5 | 57 | M |
| | 2004.11-2012.12 | 5MT | F | L | Estate FWD HHJA;HHJB | | GCI18085 | Inner Joint | | 23 | 22 | 40 | 61 | 90 | |
| 1.6 (74 kw) | 2002.08-2009.11 | 5MT | F | L | Estate FWD FYJA;FYJB;FYJC | | GDS18516 | Drive Shaft | | 25 | 23 | 53.3 | 89 | 614 | |
| | 2002.08-2009.11 | 5MT | F | L | Estate FWD FYJA;FYJB;FYJC | | GCI18113 | Inner Joint | | 23 | 21 | 40 | 61.5 | 96.5 | |
| | 2002.08-2009.11 | AT | F | L | Estate FWD FYJA;FYJB;FYJC | | GDS18351 | Drive Shaft | | 25 | 22 | 53.3 | 89 | 606 | |
| | 2002.08-2009.11 | AT | F | R | Estate FWD FYJA;FYJB;FYJC | | GDS18333 | Drive Shaft | | 25 | 22 | 53.3 | 89 | 930 | |
| | 2002.08-2009.11 | AT | F | L | Estate FWD FYJA;FYJB;FYJC | | GCI57115 | Inner Joint | | 22 | 21 | 38 | 59.5 | 97.5 | |
| | 2002.08-2009.11 | AT | F | R | Estate FWD FYJA;FYJB;FYJC | | GCI18103 | Inner Joint | | 22 | 21 | 38 | 403.5 | 84.5 | |
| | 2002.08-2009.11 | MT | F | L | Estate FWD FYJA;FYJB;FYJC | | GDS18216 | Drive Shaft | | 25 | 23 | 53.3 | 90 | 621 | |
| | 2002.08-2009.11 | MT | F | R | Estate FWD FYJA;FYJB;FYJC | | GDS18201 | Drive Shaft | | 25 | 23 | 53.3 | 90 | 919 | |
| | 2002.08-2009.11 | MT | F | L/R | Estate FWD FYJA;FYJB;FYJC | | GCO18014 | Outer Joint | | 25 | 21 | 53.2 | 89 | 54 | M |
| **Galaxy** | | | | | | | | | | | | | | | |
| 1.5 (118 kw) | 2015.01-2018.06 | 6MT | F | L | MPV FWD UNCJ;UNCK | | GDS81874 | Drive Shaft | | 27 | 26 | 55 | 105 | 664 | |
| | 2015.01-2018.06 | 6MT | F | L/R | MPV FWD UNCJ;UNCK | | GCO81552 | Outer Joint | | 27 | 28 | 55 | 105 | 66.5 | M |
| | 2015.01-2018.06 | 6MT | F | L | MPV FWD UNCJ;UNCK | | GCI81533 | Inner Joint | | 26 | 28 | 40 | 68.5 | 108 | |
| 1.5 (121 kw) | 2018.07-2023.04 | 6MT | F | L | MPV FWD C15HDTX | | GDS81874 | Drive Shaft | | 27 | 26 | 55 | 105 | 664 | |
| | 2018.07-2023.04 | 6MT | F | L/R | MPV FWD C15HDTX | | GCO81552 | Outer Joint | | 27 | 28 | 55 | 105 | 66.5 | M |
| | 2018.07-2023.04 | 6MT | F | L | MPV FWD C15HDTX | | GCI81533 | Inner Joint | | 26 | 28 | 40 | 68.5 | 108 | |
| 1.6 (85 kw) | 2011.02-2015.06 | 6MT | F | L | MPV FWD T1WA;T1WB | | GDS83397 | Drive Shaft | | 40 | 26 | 57.7 | 51 | 611 | |
| | 2011.02-2015.06 | 6MT | F | R | MPV FWD T1WA;T1WB | | GDS99212 | Drive Shaft | | 40 | 26 | 57.7 | 51 | 945 | |
| | 2011.02-2015.06 | 6MT | F | L | MPV FWD T1WA;T1WB | TJ | GCI18128 | Inner Joint | | 26 | 28 | 40 | 68.5 | 111 | |
| | 2011.02-2015.06 | 6MT | F | L | MPV FWD T1WA;T1WB | AAR | GCI81533 | Inner Joint | | 26 | 28 | 40 | 68.5 | 108 | |
| | 2011.02-2015.06 | MT | F | L/R | MPV FWD T1WA;T1WB | | GCO99271 | Outer Joint | | 40 | 28 | 57.7 | 51 | 63 | M |
| | 2011.02-2015.06 | MT | F | R | MPV FWD T1WA;T1WB | | GCI18129 | Inner Joint | | 26 | 28 | 40 | 389 | 96.5 | |
| 1.6 (118 kw) | 2010.11-2015.06 | MT | F | L/R | MPV FWD JTWA;JTWB | | GCO99271 | Outer Joint | | 40 | 28 | 57.7 | 51 | 63 | M |
| | 2010.11-2015.06 | MT | F | L | MPV FWD JTWA;JTWB | | GCI18128 | Inner Joint | | 26 | 28 | 40 | 68.5 | 111 | |
| 1.8 (74 kw) | 2006.05-2015.06 | 5MT | F | L | MPV FWD FFWA | | GDS83397 | Drive Shaft | | 40 | 26 | 57.7 | 51 | 611 | |
| | 2006.05-2015.06 | 5MT | F | R | MPV FWD FFWA | | GDS99212 | Drive Shaft | | 40 | 26 | 57.7 | 51 | 945 | |
| | 2006.05-2015.06 | 5MT | F | L | MPV FWD FFWA | TJ | GCI18128 | Inner Joint | | 26 | 28 | 40 | 68.5 | 111 | |
| | 2006.05-2015.06 | 5MT | F | L | MPV FWD FFWA | AAR | GCI81533 | Inner Joint | | 26 | 28 | 40 | 68.5 | 108 | |
| | 2006.05-2015.06 | 5MT | F | R | MPV FWD FFWA | | GCI18129 | Inner Joint | | 26 | 28 | 40 | 389 | 96.5 | |
| | 2006.05-2015.06 | MT | F | L/R | MPV FWD FFWA | | GCO99271 | Outer Joint | | 40 | 28 | 57.7 | 51 | 63 | M |
| 1.8 (92 kw) | 2006.05-2015.06 | 5MT | F | L | MPV FWD QYWA | | GDS83397 | Drive Shaft | | 40 | 26 | 57.7 | 51 | 611 | |
| | 2006.05-2015.06 | 5MT | F | L | MPV FWD QYWA | AAR | GCI81533 | Inner Joint | | 26 | 28 | 40 | 68.5 | 108 | |
| | 2006.05-2015.06 | 5MT/6MT | F | R | MPV FWD QYWA | | GDS99212 | Drive Shaft | | 40 | 26 | 57.7 | 51 | 945 | |
| | 2006.05-2015.06 | 5MT/6MT | F | L | MPV FWD QYWA | TJ | GCI18128 | Inner Joint | | 26 | 28 | 40 | 68.5 | 111 | |
| | 2006.05-2015.06 | 5MT/6MT | F | R | MPV FWD QYWA | | GCI18129 | Inner Joint | | 26 | 28 | 40 | 389 | 96.5 | |
| | 2006.05-2015.06 | MT | F | L/R | MPV FWD QYWA | | GCO99271 | Outer Joint | | 40 | 28 | 57.7 | 51 | 63 | M |
| 1.9 (66 kw) | 1995.02-2006.05 | MT | F | L | MPV FWD 1Z/AHU/ANU | For Engine Code:1Z/AHU | GDS18009 | Drive Shaft | 48W | 38 | 26 | 60 | 34.5 | 620 | |
| | 1995.02-2006.05 | MT | F | R | MPV FWD 1Z/AHU/ANU | For Engine Code:1Z/AHU | GDS18008 | Drive Shaft | 48W | 38 | 35 | 60 | 34.5 | 559 | |
| | 1995.02-2006.05 | MT | F | L/R | MPV FWD 1Z/AHU/ANU | For Engine Code:ANU,Date From:2001.06 | GDS61087 | Drive Shaft | 48W | 38 | | 60 | 34.5 | 506 | |
| | 1995.02-2006.05 | MT | F | L/R | MPV FWD 1Z/AHU/ANU | For Engine Code:ANU,Date To:2001.05 | GDS83023 | Drive Shaft | 48W | 38 | | 60 | 34 | 507 | |
| | 1995.02-2006.05 | MT | F | L/R | MPV FWD 1Z/AHU/ANU | For Engine Code:ANU,Date To:2001.05 | GCO18025 | Outer Joint | 48W | 38 | 36 | 60 | 34 | 72.5 | I |
| | 1995.02-2006.05 | MT | F | L/R | MPV FWD 1Z/AHU/ANU | For Engine Code:1Z/AHU | GCO18026 | Outer Joint | 48W | 38 | 27 | 60 | 34.5 | 65 | I |
| | 1995.02-2006.05 | MT | F | L | MPV FWD 1Z/AHU/ANU | For Engine Code:1Z/AHU | GCI99053 | Inner Joint | | 26 | 28 | 40 | 77.5 | 111.7 | |
| | 1995.02-2006.05 | MT | F | R | MPV FWD 1Z/AHU/ANU | For Engine Code:1Z/AHU | GCI61028 | Inner Joint | | 35 | 28 | 42 | | 129.2 | |
| | 1995.02-2006.05 | MT | F | L/R | MPV FWD 1Z/AHU/ANU | For Engine Code:ANU,Date From:2001.06 | GCI61032 | Inner Joint | | | 27 | | | 34 | |
| | 1995.02-2006.05 | MT | F | L/R | MPV FWD 1Z/AHU/ANU | For Engine Code:ANU,Date To:2001.05 | GCI83007 | Inner Joint | | | 34 | | | 85 | |
| | 1995.02-2006.05 | MT | F | R | MPV FWD 1Z/AHU/ANU | Date from:2000.01 | GDS61192 | Stub Axle,differential | | 26 | 37 | | | 129.5 | |
| | 1995.02-2006.05 | MT | F | R | MPV FWD 1Z/AHU/ANU | | GDS61193 | Stub Axle-Flange | | 37 | | | 322 | 356 | |
| 1.9 (81 kw) | 1997.10-2000.04 | AT | F | L | MPV FWD AFN/AVG | | GDS61085 | Drive Shaft | 48W | 38 | | 60 | 34.5 | 513 | |
| | 1997.10-2000.04 | AT | F | R | MPV FWD AFN/AVG | | GDS61065 | Drive Shaft | 48W | 38 | | 60 | 34.5 | 544 | |

| | YEAR | TRANSM. | F/R | L/R | BODY STYLE & DRIVE TYPE & ENGINE | REMARKS | G-AP Ref. | PRODUCT | ABS | Technical Specifications A | B | C | H | L | P |
|---|---|---|---|---|---|---|---|---|---|---|---|---|---|---|---|
| **FORD** **Galaxy** | | | | | | | | | | | | | | | |
| 1.9 (81 kw) | 1997.10-2000.04 | AT | F | L/R | MPV FWD AFN/AVG | | GCI50019 | Inner Joint | | | 34 | | | 59.5 | |
| | 1997.10-2000.04 | AT/MT | F | L/R | MPV FWD AFN/AVG | Date from:1999.06 | GCO18025 | Outer Joint | 48W | 38 | 36 | 60 | 34 | 72.5 | I |
| | 1997.10-2000.04 | AT/MT | F | L/R | MPV FWD AFN/AVG | | GCO18026 | Outer Joint | 48W | 38 | 27 | 60 | 34.5 | 65 | I |
| | 1997.10-2000.04 | MT | F | L | MPV FWD AFN/AVG | | GDS18009 | Drive Shaft | 48W | 38 | 26 | 60 | 34.5 | 620 | |
| | 1997.10-2000.04 | MT | F | R | MPV FWD AFN/AVG | | GDS18008 | Drive Shaft | 48W | 38 | 35 | 60 | 34.5 | 559 | |
| | 1997.10-2000.04 | MT | F | L | MPV FWD AFN/AVG | | GCI99053 | Inner Joint | | 26 | 28 | 40 | 77.5 | 111.7 | |
| | 1997.10-2000.04 | MT | F | R | MPV FWD AFN/AVG | | GCI61028 | Inner Joint | | 35 | 28 | 42 | | 129.2 | |
| 1.9 (85 kw) | 2000.05-2006.03 | 5AT/6MT | F | L/R | MPV FWD AUY | Date from:2003.06 | GCI61044 | Inner Joint | | | 34 | | | 85 | |
| | 2000.05-2006.03 | AT | F | R | MPV FWD AUY | Transmission End | GDS81789 | Stub Axle-Flange | | 30 | | | 263.5 | 320.5 | |
| | 2000.05-2006.03 | AT | F | R | MPV FWD AUY | Transmission End | GDS83383 | Stub Axle-Flange | | 30 | | | 355.5 | 412.5 | |
| | 2000.05-2006.03 | MT | F | L/R | MPV FWD AUY | | GDS83023 | Drive Shaft | 48W | 38 | | 60 | 34 | 507 | |
| | 2000.05-2006.03 | MT | F | R | MPV FWD AUY | | GDS61192 | Stub Axle,differential | | 26 | 37 | | | 129.5 | |
| | 2000.05-2006.03 | MT | F | R | MPV FWD AUY | | GDS61193 | Stub Axle-Flange | | 37 | | | 322 | 356 | |
| | 2000.05-2006.03 | MT/Semi-AT | F | L/R | MPV FWD AUY | | GCO18025 | Outer Joint | 48W | 38 | 36 | 60 | 34 | 72.5 | I |
| | 2000.05-2006.03 | Semi-AT | F | L/R | MPV FWD AUY | | GDS83022 | Drive Shaft | 48W | 38 | | 60 | 34 | 486 | |
| 1.9 (96 kw) | 2002.11-2006.03 | AT | F | R | MPV FWD ASZ/AVF | Transmission End | GDS81789 | Stub Axle-Flange | | 30 | | | 263.5 | 320.5 | |
| | 2002.11-2006.03 | AT | F | R | MPV FWD ASZ/AVF | Transmission End | GDS83383 | Stub Axle-Flange | | 30 | | | 355.5 | 412.5 | |
| | 2002.11-2006.03 | MT | F | R | MPV FWD ASZ/AVF | | GDS61192 | Stub Axle,differential | | 26 | 37 | | | 129.5 | |
| | 2002.11-2006.03 | MT | F | R | MPV FWD ASZ/AVF | | GDS61193 | Stub Axle-Flange | | 37 | | | 322 | 356 | |
| | 2002.11-2006.03 | SAT/6MT | F | L/R | MPV FWD ASZ/AVF | | GDS83023 | Drive Shaft | 48W | 38 | | 60 | 34 | 507 | |
| | 2002.11-2006.03 | SAT/6MT | F | L/R | MPV FWD ASZ/AVF | | GCO18025 | Outer Joint | 48W | 38 | 36 | 60 | 34 | 72.5 | I |
| | 2002.11-2006.03 | SAT/6MT | F | L/R | MPV FWD ASZ/AVF | | GCI61044 | Inner Joint | | | 34 | | | 85 | |
| | 2002.11-2006.03 | SAT/6MT | F | L/R | MPV FWD ASZ/AVF | | GCI83007 | Inner Joint | | | 34 | | | 85 | |
| 1.9 (110 kw) | 2005.01-2006.05 | AT | F | R | MPV FWD BTB | Transmission End | GDS81789 | Stub Axle-Flange | | 30 | | | 263.5 | 320.5 | |
| | 2005.01-2006.05 | AT | F | R | MPV FWD BTB | Transmission End | GDS83383 | Stub Axle-Flange | | 30 | | | 355.5 | 412.5 | |
| | 2005.01-2006.05 | MT | F | R | MPV FWD BTB | | GDS61192 | Stub Axle,differential | | 26 | 37 | | | 129.5 | |
| | 2005.01-2006.05 | MT | F | R | MPV FWD BTB | | GDS61193 | Stub Axle-Flange | | 37 | | | 322 | 356 | |
| | 2005.01-2006.05 | SAT/6MT | F | L/R | MPV FWD BTB | | GDS83023 | Drive Shaft | 48W | 38 | | 60 | 34 | 507 | |
| | 2005.01-2006.05 | SAT/6MT | F | L/R | MPV FWD BTB | | GCO18025 | Outer Joint | 48W | 38 | 36 | 60 | 34 | 72.5 | I |
| | 2005.01-2006.05 | SAT/6MT | F | L/R | MPV FWD BTB | | GCI61044 | Inner Joint | | | 34 | | | 85 | |
| | 2005.01-2006.05 | SAT/6MT | F | L/R | MPV FWD BTB | | GCI83007 | Inner Joint | | | 34 | | | 85 | |
| 2.0 (85 kw) | 1995.02-2006.03 | AT | F | L | MPV FWD NSE/ZVSA | | GDS61085 | Drive Shaft | 48W | 38 | | 60 | 34.5 | 513 | |
| | 1995.02-2006.03 | AT | F | R | MPV FWD NSE/ZVSA | | GDS61065 | Drive Shaft | 48W | 38 | | 60 | 34.5 | 544 | |
| | 1995.02-2006.03 | AT | F | L/R | MPV FWD NSE/ZVSA | | GCI50019 | Inner Joint | | | 34 | | | 59.5 | |
| | 1995.02-2006.03 | AT/MT | F | L/R | MPV FWD NSE/ZVSA | | GCO18026 | Outer Joint | 48W | 38 | 27 | 60 | 34.5 | 65 | I |
| | 1995.02-2006.03 | MT | F | L | MPV FWD NSE/ZVSA | | GDS18009 | Drive Shaft | 48W | 38 | 26 | 60 | 34.5 | 620 | |
| | 1995.02-2006.03 | MT | F | R | MPV FWD NSE/ZVSA | | GDS18008 | Drive Shaft | 48W | 38 | 35 | 60 | 34.5 | 559 | |
| | 1995.02-2006.03 | MT | F | L | MPV FWD NSE/ZVSA | | GCI99053 | Inner Joint | | 26 | 28 | 40 | 77.5 | 111.7 | |
| | 1995.02-2006.03 | MT | F | R | MPV FWD NSE/ZVSA | | GCI61028 | Inner Joint | | 35 | 28 | 42 | | 129.2 | |
| | 1995.02-2006.03 | MT | F | R | MPV FWD NSE/ZVSA | | GDS61192 | Stub Axle,differential | | 26 | 37 | | | 129.5 | |
| | 2007.11-2015.06 | 6AT | F | L | MPV FWD TYWA;KLWA | | GDS83288 | Drive Shaft | | 40 | 31 | 57.7 | 51 | 582 | |
| | 2007.11-2015.06 | 6AT | F | L | MPV FWD TYWA;KLWA | | GCI83032 | Inner Joint | | 31 | 28 | 36.2 | 66 | 90 | |
| | 2007.11-2015.06 | 6AT | F | R | MPV FWD TYWA;KLWA | | GCI83031 | Inner Joint | | 28 | 28 | 33 | 391.5 | 95.5 | |
| | 2007.11-2015.06 | 6AT/6MT | F | R | MPV FWD TYWA;KLWA | | GDS83289 | Drive Shaft | | 40 | 28 | 57.7 | 51 | 932 | |
| | 2007.11-2015.06 | 6MT | F | L | MPV FWD TYWA;KLWA | | GDS83397 | Drive Shaft | | 40 | 26 | 57.7 | 51 | 611 | |
| | 2007.11-2015.06 | 6MT | F | L | MPV FWD TYWA;KLWA | AAR | GCI81533 | Inner Joint | | 26 | 28 | 40 | 68.5 | 108 | |
| | 2007.11-2015.06 | AT | F | L/R | MPV FWD TYWA;KLWA | | GCO59344 | Outer Joint | | 40 | 26 | 57.7 | 52 | 63.5 | M |
| | 2007.11-2015.06 | AT/MT | F | L/R | MPV FWD TYWA;KLWA | | GCO99271 | Outer Joint | | 40 | 28 | 57.7 | 51 | 63 | M |
| | 2007.11-2015.06 | MT/6MT | F | R | MPV FWD TYWA;KLWA | | GDS99212 | Drive Shaft | | 40 | 26 | 57.7 | 51 | 945 | |
| 2.0 (88 kw) | 2015.01-2018.06 | 6MT | F | L | MPV FWD UFCA;UFCB | | GDS81874 | Drive Shaft | | 27 | 26 | 55 | 105 | 664 | |
| | 2015.01-2018.06 | 6MT | F | R | MPV FWD UFCA;UFCB | | GDS83141 | Drive Shaft | | 27 | 26 | 55 | 105 | 1025 | |
| | 2015.01-2018.06 | 6MT | F | L/R | MPV FWD UFCA;UFCB | | GCO81552 | Outer Joint | | 27 | 28 | 55 | 105 | 66.5 | M |
| | 2015.01-2018.06 | 6MT | F | L | MPV FWD UFCA;UFCB | | GCI81533 | Inner Joint | | 26 | 28 | 40 | 68.5 | 108 | |
| | 2015.01-2018.06 | 6MT | F | R | MPV FWD UFCA;UFCB | | GCI82393 | Inner Joint | | 26 | 28 | 40 | 403 | 96 | |
| | 2018.07-2023.04 | 6MT | F | R | MPV FWD YNCA | | GDS83141 | Drive Shaft | | 27 | 26 | 55 | 105 | 1025 | |
| | 2018.07-2023.04 | 6MT | F | L/R | MPV FWD YNCA | | GCO81552 | Outer Joint | | 27 | 28 | 55 | 105 | 66.5 | M |
| | 2018.07-2023.04 | 6MT | F | L | MPV FWD YNCA | | GCI81533 | Inner Joint | | 26 | 28 | 40 | 68.5 | 108 | |
| | 2018.07-2023.04 | 6MT | F | R | MPV FWD YNCA | | GCI82393 | Inner Joint | | 26 | 28 | 40 | 403 | 96 | |
| 2.0 (96 kw) | 2006.05-2015.06 | 6AT | F | L | MPV FWD AZWA | | GCI83032 | Inner Joint | | 31 | 28 | 36.2 | 66 | 90 | |
| | 2006.05-2015.06 | 6AT | F | R | MPV FWD AZWA | | GCI83031 | Inner Joint | | 28 | 28 | 33 | 391.5 | 95.5 | |
| | 2006.05-2015.06 | 6MT | F | L | MPV FWD AZWA | | GDS83397 | Drive Shaft | | 40 | 26 | 57.7 | 51 | 611 | |
| | 2006.05-2015.06 | 6MT | F | L | MPV FWD AZWA | AAR | GCI81533 | Inner Joint | | 26 | 28 | 40 | 68.5 | 108 | |
| | 2006.05-2015.06 | 6MT | F | R | MPV FWD AZWA | | GCI18129 | Inner Joint | | 26 | 28 | 40 | 389 | 96.5 | |
| | 2006.05-2015.06 | AT | F | L | MPV FWD AZWA | Date to:2010.12;Trans. code:MPS6 Powershift | GDS18340 | Drive Shaft | | 40 | 28 | 57.7 | 52 | 592 | |
| | 2006.05-2015.06 | AT | F | L | MPV FWD AZWA | | GDS83288 | Drive Shaft | | 40 | 31 | 57.7 | 51 | 582 | |

| | YEAR | TRANSM. | F/R | L/R | BODY STYLE & DRIVE TYPE & ENGINE | REMARKS | G-AP Ref. | PRODUCT | ABS | Technical Specifications A | B | C | H | L | P |
|---|---|---|---|---|---|---|---|---|---|---|---|---|---|---|---|
| **FORD** **Galaxy** | | | | | | | | | | | | | | | |
| 2.0 (96 kw) | 2006.05-2015.06 | AT | F | R | MPV FWD AZWA | Date from:2010.12;Trans. code:MPS6 Powershift | GDS18347 | Drive Shaft | | 40 | 28 | 57.7 | 52 | 939 | |
| | 2006.05-2015.06 | AT | F | R | MPV FWD AZWA | | GDS83289 | Drive Shaft | | 40 | 28 | 57.7 | 51 | 932 | |
| | 2006.05-2015.06 | AT | F | L/R | MPV FWD AZWA | Trans. code:MPS6 Powershift | GCO59344 | Outer Joint | | 40 | 26 | 57.7 | 52 | 63.5 | M |
| | 2006.05-2015.06 | AT/MT | F | L/R | MPV FWD AZWA | | GCO99271 | Outer Joint | | 40 | 28 | 57.7 | 51 | 63 | M |
| | 2006.05-2015.06 | MT | F | R | MPV FWD AZWA | | GDS99212 | Drive Shaft | | 40 | 26 | 57.7 | 51 | 945 | |
| | 2006.05-2015.06 | MT | F | L | MPV FWD AZWA | TJ | GCI18128 | Inner Joint | | 26 | 28 | 40 | 68.5 | 111 | |
| 2.0 (100 kw) | 2006.05-2015.06 | 6DCT | F | R | MPV FWD UKWA;AZWC | Date from:2010.12 | GDS18347 | Drive Shaft | | 40 | 28 | 57.7 | 52 | 939 | |
| | 2006.05-2015.06 | 6DCT | F | R | MPV FWD UKWA;AZWC | Date to:2010.11 | GDS83391 | Drive Shaft | | 40 | 28 | 57.7 | 52 | 940 | |
| | 2006.05-2015.06 | 6DCT | F | L/R | MPV FWD UKWA;AZWC | Date to:2010.11 | GCO18269 | Outer Joint | | 40 | 26 | 57.7 | 52 | 63.5 | I |
| | 2006.05-2015.06 | 6DCT | F | R | MPV FWD UKWA;AZWC | Date to:2010.11 | GCI82178 | Inner Joint | | 28 | 26 | 34 | 371 | 103 | |
| | 2006.05-2015.06 | 6MT | F | L | MPV FWD UKWA;AZWC | | GDS83397 | Drive Shaft | | 40 | 26 | 57.7 | 51 | 611 | |
| | 2006.05-2015.06 | 6MT | F | L | MPV FWD UKWA;AZWC | AAR | GCI81533 | Inner Joint | | 26 | 28 | 40 | 68.5 | 108 | |
| | 2006.05-2015.06 | AT | F | L | MPV FWD UKWA;AZWC | Date to:2010.12;Trans. code:MPS6 Powershift | GDS18340 | Drive Shaft | | 40 | 28 | 57.7 | 52 | 592 | |
| | 2006.05-2015.06 | AT | F | L/R | MPV FWD UKWA;AZWC | Trans. code:MPS6 Powershift | GCO59344 | Outer Joint | | 40 | 26 | 57.7 | 52 | 63.5 | M |
| | 2006.05-2015.06 | AT/MT | F | L/R | MPV FWD UKWA;AZWC | | GCO99271 | Outer Joint | | 40 | 28 | 57.7 | 51 | 63 | M |
| | 2006.05-2015.06 | MT | F | R | MPV FWD UKWA;AZWC | | GDS99212 | Drive Shaft | | 40 | 26 | 57.7 | 51 | 945 | |
| | 2006.05-2015.06 | MT | F | L | MPV FWD UKWA;AZWC | TJ | GCI18128 | Inner Joint | | 26 | 28 | 40 | 68.5 | 111 | |
| | 2006.05-2015.06 | MT | F | R | MPV FWD UKWA;AZWC | | GCI18129 | Inner Joint | | 26 | 28 | 40 | 389 | 96.5 | |
| 2.0 (103 kw) | 2006.05-2015.06 | 6AT | F | R | MPV FWD QXWA;QXWB;QXWC;UFWA | | GDS83289 | Drive Shaft | | 40 | 28 | 57.7 | 51 | 932 | |
| | 2006.05-2015.06 | 6AT | F | L | MPV FWD QXWA;QXWB;QXWC;UFWA | | GCI83032 | Inner Joint | | 31 | 28 | 36.2 | 66 | 90 | |
| | 2006.05-2015.06 | 6AT | F | R | MPV FWD QXWA;QXWB;QXWC;UFWA | | GCI83031 | Inner Joint | | 28 | 28 | 33 | 391.5 | 95.5 | |
| | 2006.05-2015.06 | 6MT | F | L | MPV FWD QXWA;QXWB;QXWC;UFWA | | GDS83397 | Drive Shaft | | 40 | 26 | 57.7 | 51 | 611 | |
| | 2006.05-2015.06 | 6MT | F | R | MPV FWD QXWA;QXWB;QXWC;UFWA | Date from:2006.11 | GDS99212 | Drive Shaft | | 40 | 26 | 57.7 | 51 | 945 | |
| | 2006.05-2015.06 | 6MT | F | L | MPV FWD QXWA;QXWB;QXWC;UFWA | Date to:2008.02;TJ | GCI18128 | Inner Joint | | 26 | 28 | 40 | 68.5 | 111 | |
| | 2006.05-2015.06 | 6MT | F | L | MPV FWD QXWA;QXWB;QXWC;UFWA | AAR | GCI81533 | Inner Joint | | 26 | 28 | 40 | 68.5 | 108 | |
| | 2006.05-2015.06 | 6MT | F | R | MPV FWD QXWA;QXWB;QXWC;UFWA | | GCI18129 | Inner Joint | | 26 | 28 | 40 | 389 | 96.5 | |
| | 2006.05-2015.06 | AT | F | L | MPV FWD QXWA;QXWB;QXWC;UFWA | Date to:2010.12;Trans. code:MPS6 Powershift | GDS18340 | Drive Shaft | | 40 | 28 | 57.7 | 52 | 592 | |
| | 2006.05-2015.06 | AT | F | L | MPV FWD QXWA;QXWB;QXWC;UFWA | Trans. code:AWF21 | GDS83288 | Drive Shaft | | 40 | 31 | 57.7 | 51 | 582 | |
| | 2006.05-2015.06 | AT | F | R | MPV FWD QXWA;QXWB;QXWC;UFWA | Date from:2010.12,Trans. code:MPS6 Powershift | GDS18347 | Drive Shaft | | 40 | 28 | 57.7 | 52 | 939 | |
| | 2006.05-2015.06 | AT | F | | MPV FWD QXWA;QXWB;QXWC;UFWA | | GCO59344 | Outer Joint | | 40 | 26 | 57.7 | 52 | 63.5 | M |
| | 2006.05-2015.06 | AT/MT | F | L/R | MPV FWD QXWA;QXWB;QXWC;UFWA | Trans. code:AWF21 | GCO99271 | Outer Joint | | 40 | 28 | 57.7 | 51 | 63 | M |
| 2.0 (107 kw) | 2006.05-2015.06 | 5MT | F | L | MPV FWD AOWA;AOWB;TBWA;TBWB | | GDS83397 | Drive Shaft | | 40 | 26 | 57.7 | 51 | 611 | |
| | 2006.05-2015.06 | 5MT | F | L | MPV FWD AOWA;AOWB;TBWA;TBWB | AAR | GCI81533 | Inner Joint | | 26 | 28 | 40 | 68.5 | 108 | |
| | 2006.05-2015.06 | AT | F | L/R | MPV FWD AOWA;AOWB;TBWA;TBWB | | GCO59344 | Outer Joint | | 40 | 26 | 57.7 | 52 | 63.5 | M |
| | 2006.05-2015.06 | AT/MT | F | R | MPV FWD AOWA;AOWB;TBWA;TBWB | | GDS99212 | Drive Shaft | | 40 | 26 | 57.7 | 51 | 945 | |
| | 2006.05-2015.06 | AT/MT | F | L/R | MPV FWD AOWA;AOWB;TBWA;TBWB | | GCO99271 | Outer Joint | | 40 | 28 | 57.7 | 51 | 63 | M |
| | 2006.05-2015.06 | AT/MT | F | L | MPV FWD AOWA;AOWB;TBWA;TBWB | TJ | GCI18128 | Inner Joint | | 26 | 28 | 40 | 68.5 | 111 | |
| | 2006.05-2015.06 | AT/MT | F | R | MPV FWD AOWA;AOWB;TBWA;TBWB | Date to:2012.10 | GCI18129 | Inner Joint | | 26 | 28 | 40 | 389 | 96.5 | |
| | 2006.05-2015.06 | 5MT | F | L | MPV FWD TBWA;TBWB | | GDS83397 | Drive Shaft | | 40 | 26 | 57.7 | 51 | 611 | |
| | 2006.05-2015.06 | 5MT | F | L | MPV FWD TBWA;TBWB | AAR | GCI81533 | Inner Joint | | 26 | 28 | 40 | 68.5 | 108 | |
| | 2006.05-2015.06 | 5MT/6MT | F | L | MPV FWD TBWA;TBWB | TJ | GCI18128 | Inner Joint | | 26 | 28 | 40 | 68.5 | 111 | |
| | 2006.05-2015.06 | 6AT/5MT/6MT | F | R | MPV FWD TBWA;TBWB | | GDS99212 | Drive Shaft | | 40 | 26 | 57.7 | 51 | 945 | |
| | 2006.05-2015.06 | | F | L/R | MPV FWD TBWA;TBWB | | GCO99271 | Outer Joint | | 40 | 28 | 57.7 | 51 | 63 | M |
| 2.0 (110 kw) | 2015.01-2018.06 | 6DCT | F | L | MPV FWD T7CI;T7CJ;T7CL;T7CK | | GCI81762 | Inner Joint | | 28 | 28 | 33.8 | 80 | 95.5 | |
| | 2015.01-2018.06 | 6MT | F | L | MPV FWD T7CI;T7CJ;T7CL;T7CK | | GDS81874 | Drive Shaft | | 27 | 26 | 55 | 105 | 664 | |
| | 2015.01-2018.06 | 6MT | F | R | MPV FWD T7CI;T7CJ;T7CL;T7CK | | GDS83141 | Drive Shaft | | 27 | 26 | 55 | 105 | 1025 | |
| | 2015.01-2018.06 | 6MT | F | L/R | MPV FWD T7CI;T7CJ;T7CL;T7CK | | GCO81552 | Outer Joint | | 27 | 28 | 55 | 105 | 66.5 | M |
| | 2015.01-2018.06 | 6MT | F | L | MPV FWD T7CI;T7CJ;T7CL;T7CK | | GCI81533 | Inner Joint | | 26 | 28 | 40 | 68.5 | 108 | |
| | 2015.01-2018.06 | 6MT | F | R | MPV FWD T7CI;T7CJ;T7CL;T7CK | | GCI82393 | Inner Joint | | 26 | 28 | 40 | 403 | 96 | |
| | 2015.05-2018.06 | 6DCT | F | L | MPV 4WD T7CI;T7CJ;T7CL | | GCI81765 | Inner Joint | | 31 | 28 | 42.5 | 78.5 | 95.5 | |
| | 2015.05-2018.06 | 6DCT | F | R | MPV 4WD T7CI;T7CJ;T7CL | | GCI81761 | Inner Joint | | 28 | 28 | 33.8 | 396.5 | 98.5 | |
| | 2015.05-2018.06 | 6MT | F | L | MPV 4WD T7CI;T7CJ;T7CL | | GDS81874 | Drive Shaft | | 27 | 26 | 55 | 105 | 664 | |
| | 2015.05-2018.06 | 6MT | F | L/R | MPV 4WD T7CI;T7CJ;T7CL | | GCO81552 | Outer Joint | | 27 | 28 | 55 | 105 | 66.5 | M |
| | 2015.05-2018.06 | 6MT | F | L | MPV 4WD T7CI;T7CJ;T7CL | | GCI81533 | Inner Joint | | 26 | 28 | 40 | 68.5 | 108 | |
| | 2018.07-2023.04 | 6MT | F | R | MPV FWD YMCB | | GDS83141 | Drive Shaft | | 27 | 26 | 55 | 105 | 1025 | |
| | 2018.07-2023.04 | 6MT | F | L/R | MPV FWD YMCB | | GCO81552 | Outer Joint | | 27 | 28 | 55 | 105 | 66.5 | M |
| | 2018.07-2023.04 | 6MT | F | L | MPV FWD YMCB | | GCI81533 | Inner Joint | | 26 | 28 | 40 | 68.5 | 108 | |
| | 2018.07-2023.04 | 6MT | F | R | MPV FWD YMCB | | GCI82393 | Inner Joint | | 26 | 28 | 40 | 403 | 96 | |
| 2.0 (120 kw) | 2010.03-2015.06 | 6DCT | F | R | MPV FWD TXWA | Date from:2010.12 | GDS18347 | Drive Shaft | | 40 | 28 | 57.7 | 52 | 939 | |
| | 2010.03-2015.06 | 6DCT | F | R | MPV FWD TXWA | Date to:2010.11 | GDS83391 | Drive Shaft | | 40 | 28 | 57.7 | 52 | 940 | |
| | 2010.03-2015.06 | 6DCT | F | L/R | MPV FWD TXWA | Date to:2010.11 | GCO18269 | Outer Joint | | 40 | 26 | 57.7 | 52 | 63.5 | I |
| | 2010.03-2015.06 | 6DCT | F | R | MPV FWD TXWA | Date to:2010.11 | GCI82178 | Inner Joint | | 28 | 26 | 34 | 371 | 103 | |
| | 2010.03-2015.06 | 6MT | F | L | MPV FWD TXWA | | GDS83397 | Drive Shaft | | 40 | 26 | 57.7 | 51 | 611 | |
| | 2010.03-2015.06 | 6MT | F | L/R | MPV FWD TXWA | | GCO99271 | Outer Joint | | 40 | 28 | 57.7 | 51 | 63 | M |
| | 2010.03-2015.06 | 6MT | F | L | MPV FWD TXWA | AAR | GCI81533 | Inner Joint | | 26 | 28 | 40 | 68.5 | 108 | |

| | YEAR | TRANSM. | F/R | L/R | BODY STYLE & DRIVE TYPE & ENGINE | REMARKS | G-AP Ref. | PRODUCT | ABS | Technical Specifications A | B | C | H | L | P |
|---|---|---|---|---|---|---|---|---|---|---|---|---|---|---|---|
| **FORD** **Galaxy** | | | | | | | | | | | | | | | |
| 2.0 (120 kw) | 2010.03-2015.06 | AT | F | L | MPV FWD TXWA | Date to:2010.12;Trans. code:MPS6 Powershift | GDS18340 | Drive Shaft | | 40 | 28 | 57.7 | 52 | 592 | |
| | 2010.03-2015.06 | AT | F | | MPV FWD TXWA | | GCO59344 | Outer Joint | | 40 | 26 | 57.7 | 52 | 63.5 | M |
| | 2010.03-2015.06 | MT | F | R | MPV FWD TXWA | | GDS99212 | Drive Shaft | | 40 | 26 | 57.7 | 51 | 945 | |
| | 2010.03-2015.06 | | F | R | MPV FWD TXWA | | GCI18129 | Inner Joint | | 26 | 28 | 40 | 389 | 96.5 | |
| 2.0 (132 kw) | 2015.01-2018.06 | 6DCT | F | L | MPV FWD T8CH;T8CJ;T8CI;T8CG | | GCI81762 | Inner Joint | | 28 | 28 | 33.8 | 80 | 95.5 | |
| | 2015.01-2018.06 | 6MT | F | L | MPV FWD T8CH;T8CJ;T8CI;T8CG | | GDS81874 | Drive Shaft | | 27 | 26 | 55 | 105 | 664 | |
| | 2015.01-2018.06 | 6MT | F | R | MPV FWD T8CH;T8CJ;T8CI;T8CG | | GDS83141 | Drive Shaft | | 27 | 26 | 55 | 105 | 1025 | |
| | 2015.01-2018.06 | 6MT | F | L/R | MPV FWD T8CH;T8CJ;T8CI;T8CG | | GCO81552 | Outer Joint | | 27 | 28 | 55 | 105 | 66.5 | M |
| | 2015.01-2018.06 | 6MT | F | L | MPV FWD T8CH;T8CJ;T8CI;T8CG | | GCI81533 | Inner Joint | | 26 | 28 | 40 | 68.5 | 108 | |
| | 2015.01-2018.06 | 6MT | F | R | MPV FWD T8CH;T8CJ;T8CI;T8CG | | GCI82393 | Inner Joint | | 26 | 28 | 40 | 403 | 96 | |
| | 2015.05-2018.06 | 6AT | F | L/R | MPV 4WD T8CH;T8CJ;T8CI;T8CG | | GCO81552 | Outer Joint | | 27 | 28 | 55 | 105 | 66.5 | M |
| | 2015.05-2018.06 | 6DCT | F | L | MPV 4WD T8CH;T8CJ;T8CI;T8CG | | GCI81765 | Inner Joint | | 31 | 28 | 42.5 | 78.5 | 95.5 | |
| | 2015.05-2018.06 | 6DCT | F | R | MPV 4WD T8CH;T8CJ;T8CI;T8CG | | GCI81761 | Inner Joint | | 28 | 28 | 33.8 | 396.5 | 98.5 | |
| 2.0 (140 kw) | 2018.07-2023.04 | 6MT | F | L | MPV FWD BCCC | | GCI81533 | Inner Joint | | 26 | 28 | 40 | 68.5 | 108 | |
| | 2018.07-2023.04 | 6MT | F | R | MPV FWD BCCC | | GCI82393 | Inner Joint | | 26 | 28 | 40 | 403 | 96 | |
| 2.0 (149 kw) | 2010.03-2015.06 | AT | F | L | MPV FWD TNWA | | GDS18340 | Drive Shaft | | 40 | 28 | 57.7 | 52 | 592 | |
| | 2010.03-2015.06 | AT | F | R | MPV FWD TNWA | | GDS18341 | Drive Shaft | | 40 | 28 | 57.7 | 52 | 952 | |
| | 2010.03-2015.06 | AT | F | L/R | MPV FWD TNWA | | GCO59344 | Outer Joint | | 40 | 26 | 57.7 | 52 | 63.5 | M |
| | 2010.03-2015.06 | MT | F | L/R | MPV FWD TNWA | | GCO99271 | Outer Joint | | 40 | 28 | 57.7 | 51 | 63 | M |
| 2.0 (154 kw) | 2015.01-2018.06 | 6AT | F | L/R | MPV FWD T9CB;T9CC;T9CD | | GCO81552 | Outer Joint | | 27 | 28 | 55 | 105 | 66.5 | M |
| | 2015.01-2018.06 | 6DCT | F | L | MPV FWD T9CB;T9CC;T9CD | | GCI81762 | Inner Joint | | 28 | 28 | 33.8 | 80 | 95.5 | |
| 2.2 (129 kw) | 2008.03-2012.12 | 6AT | F | L | MPV FWD Q4WA | | GCI83032 | Inner Joint | | 31 | 28 | 36.2 | 66 | 90 | |
| | 2008.03-2012.12 | 6AT | F | R | MPV FWD Q4WA | | GCI83031 | Inner Joint | | 28 | 28 | 33 | 391.5 | 95.5 | |
| | 2008.03-2012.12 | 6AT/6MT | F | L/R | MPV FWD Q4WA | | GCO99271 | Outer Joint | | 40 | 28 | 57.7 | 51 | 63 | M |
| | 2008.03-2012.12 | AT | F | L | MPV FWD Q4WA | | GDS83288 | Drive Shaft | | 40 | 31 | 57.7 | 51 | 582 | |
| | 2008.03-2012.12 | AT | F | R | MPV FWD Q4WA | | GDS83289 | Drive Shaft | | 40 | 28 | 57.7 | 51 | 932 | |
| | 2008.03-2012.12 | MT | F | L | MPV FWD Q4WA | | GDS18363 | Drive Shaft | | 40 | 31 | 57.7 | 52 | 588.5 | |
| | 2008.03-2012.12 | MT | F | R | MPV FWD Q4WA | | GDS18350 | Drive Shaft | | 40 | 28 | 57.7 | 52 | 963 | |
| | 2008.03-2012.12 | MT | F | R | MPV FWD Q4WA | | GDS99212 | Drive Shaft | | 40 | 26 | 57.7 | 51 | 945 | |
| 2.2 (147 kw) | 2010.11-2015.06 | AT/MT | F | L/R | MPV FWD KNWA | Trans. code:AWF21;Trans. code:MMT6 | GCO99271 | Outer Joint | | 40 | 28 | 57.7 | 51 | 63 | M |
| | 2010.11-2015.06 | MT | F | L | MPV FWD KNWA | | GDS18363 | Drive Shaft | | 40 | 31 | 57.7 | 52 | 588.5 | |
| | 2010.11-2015.06 | MT | F | R | MPV FWD KNWA | | GDS18350 | Drive Shaft | | 40 | 28 | 57.7 | 52 | 963 | |
| | 2010.11-2015.06 | MT | F | R | MPV FWD KNWA | Trans. code:MMT6 | GDS99212 | Drive Shaft | | 40 | 26 | 57.7 | 51 | 945 | |
| 2.3 (103 kw) | 2002.11-2006.03 | 4AT/5MT | F | R | MPV FWD E5SB | | GCI61028 | Inner Joint | | 35 | 28 | 42 | | 129.2 | |
| | 2002.11-2006.03 | Semi-AT | F | L | MPV FWD E5SB | | GDS61085 | Drive Shaft | 48W | 38 | | 60 | 34.5 | 513 | |
| | 2002.11-2006.03 | Semi-AT | F | R | MPV FWD E5SB | | GDS61065 | Drive Shaft | 48W | 38 | | 60 | 34.5 | 544 | |
| | 2002.11-2006.03 | Semi-AT | F | L/R | MPV FWD E5SB | | GCO18025 | Outer Joint | 48W | 38 | 36 | 60 | 34 | 72.5 | I |
| | 2002.11-2006.03 | Semi-AT | F | L/R | MPV FWD E5SB | | GCO18026 | Outer Joint | 48W | 38 | 27 | 60 | 34.5 | 65 | I |
| | 2002.11-2006.03 | Semi-AT | F | L/R | MPV FWD E5SB | | GCI50019 | Inner Joint | | | 34 | | | 59.5 | |
| 2.3 (107 kw) | 1996.09-2002.10 | AT | F | L | MPV FWD E5SA/Y5B | | GDS61085 | Drive Shaft | 48W | 38 | | 60 | 34.5 | 513 | |
| | 1996.09-2002.10 | AT | F | R | MPV FWD E5SA/Y5B | | GDS61065 | Drive Shaft | 48W | 38 | | 60 | 34.5 | 544 | |
| | 1996.09-2002.10 | AT | F | L/R | MPV FWD E5SA/Y5B | | GCI50019 | Inner Joint | | | 34 | | | 59.5 | |
| | 1996.09-2002.10 | AT/MT | F | L/R | MPV FWD E5SA/Y5B | | GCO18025 | Outer Joint | 48W | 38 | 36 | 60 | 34 | 72.5 | I |
| | 1996.09-2002.10 | AT/MT | F | L/R | MPV FWD E5SA/Y5B | | GCO18026 | Outer Joint | 48W | 38 | 27 | 60 | 34.5 | 65 | I |
| | 1996.09-2002.10 | MT | F | L | MPV FWD E5SA/Y5B | | GDS18009 | Drive Shaft | 48W | 38 | 26 | 60 | 34.5 | 620 | |
| | 1996.09-2002.10 | MT | F | R | MPV FWD E5SA/Y5B | | GDS18008 | Drive Shaft | 48W | 38 | 35 | 60 | 34.5 | 559 | |
| | 1996.09-2002.10 | MT | F | L | MPV FWD E5SA/Y5B | | GCI99053 | Inner Joint | | 26 | 28 | 40 | 77.5 | 111.7 | |
| | 1996.09-2002.10 | MT | F | R | MPV FWD E5SA/Y5B | | GCI61028 | Inner Joint | | 35 | 28 | 42 | | 129.2 | |
| 2.3 (118 kw) | 2007.09-2015.06 | 6AT | F | R | MPV FWD SEWA | | GCO62045 | Outer Joint | | 40 | 26 | 57.7 | 52 | 62.5 | M |
| | 2007.09-2015.06 | AT | F | L | MPV FWD SEWA | Date To:2010.12 | GDS18346 | Drive Shaft | | 40 | 31 | 57.7 | 52 | 559 | |
| | 2007.09-2015.06 | AT | F | R | MPV FWD SEWA | Date to:2010.12 | GDS61106 | Drive Shaft | | 40 | 31 | 57.7 | 51 | 945 | |
| | 2007.09-2015.06 | | F | L | MPV FWD SEWA | | GDS18346 | Drive Shaft | | 40 | 31 | 57.7 | 52 | 559 | |
| | 2007.09-2015.06 | | F | L | MPV FWD SEWA | | GCI18267 | Inner Joint | | 31 | 26 | 36.2 | 68 | 93 | |
| 2.8 (128 kw) | 1995.11-2000.07 | AT | F | L/R | MPV FWD AAA/AMY | | GDS18010 | Drive Shaft | 48W | 38 | | 60 | 34.5 | 550 | |
| | 1995.11-2000.07 | AT | F | L/R | MPV FWD AAA/AMY | | GCI59006 | Inner Joint | | | 34 | | | 33.2 | |
| | 1995.11-2000.07 | AT/MT | F | L/R | MPV FWD AAA/AMY | Date From:1999.06 | GCO18025 | Outer Joint | 48W | 38 | 36 | 60 | 34 | 72.5 | I |
| | 1995.11-2000.07 | AT/MT | F | L/R | MPV FWD AAA/AMY | | GCO18026 | Outer Joint | 48W | 38 | 27 | 60 | 34.5 | 65 | I |
| | 1995.11-2000.07 | MT | F | L | MPV FWD AAA/AMY | | GDS18009 | Drive Shaft | 48W | 38 | 26 | 60 | 34.5 | 620 | |
| | 1995.11-2000.07 | MT | F | R | MPV FWD AAA/AMY | | GDS18106 | Drive Shaft | 48W | 38 | 35 | 60 | 34.5 | 634 | |
| | 1995.11-2000.07 | MT | F | L | MPV FWD AAA/AMY | | GCI99053 | Inner Joint | | 26 | 28 | 40 | 77.5 | 111.7 | |
| | 1995.11-2000.07 | MT | F | R | MPV FWD AAA/AMY | | GCI61028 | Inner Joint | | 35 | 28 | 42 | | 129.2 | |
| | 1996.09-2000.04 | AT | F | L/R | MPV 4WD AAA/AMY | | GDS18010 | Drive Shaft | 48W | 38 | | 60 | 34.5 | 550 | |
| | 1996.09-2000.04 | AT | F | L/R | MPV 4WD AAA/AMY | | GCI59006 | Inner Joint | | | 34 | | | 33.2 | |
| | 1996.09-2000.04 | AT/MT | F | L/R | MPV 4WD AAA/AMY | Date From:1999.06 | GCO18025 | Outer Joint | 48W | 38 | 36 | 60 | 34 | 72.5 | I |
| | 1996.09-2000.04 | AT/MT | F | L/R | MPV 4WD AAA/AMY | | GCO18026 | Outer Joint | 48W | 38 | 27 | 60 | 34.5 | 65 | I |

| | YEAR | TRANSM. | F/R | L/R | BODY STYLE & DRIVE TYPE & ENGINE | REMARKS | G-AP Ref. | PRODUCT | ABS | Technical Specifications A | B | C | H | L | P |
|---|---|---|---|---|---|---|---|---|---|---|---|---|---|---|---|
| **FORD** | | | | | | | | | | | | | | | |
| **Galaxy** | | | | | | | | | | | | | | | |
| 2.8 (128 kw) | 1996.09-2000.04 | MT | F | L | MPV 4WD AAA/AMY | | GDS18009 | Drive Shaft | 48W | 38 | 26 | 60 | 34.5 | 620 | |
| | 1996.09-2000.04 | MT | F | R | MPV 4WD AAA/AMY | | GDS18106 | Drive Shaft | 48W | 38 | 35 | 60 | 34.5 | 634 | |
| | 1996.09-2000.04 | MT | F | R | MPV 4WD AAA/AMY | Trans. code:VXT75 | GCI61028 | Inner Joint | | 35 | 28 | 42 | | 129.2 | |
| 2.8 (150 kw) | 2000.05-2006.03 | MT | F | L/R | MPV FWD AYL | | GDS83023 | Drive Shaft | 48W | 38 | | 60 | 34 | 507 | |
| | 2000.05-2006.03 | MT | F | R | MPV FWD AYL | | GDS61192 | Stub Axle,differential | | 26 | 37 | | | 129.5 | |
| | 2000.05-2006.03 | MT | F | R | MPV FWD AYL | | GDS61193 | Stub Axle-Flange | | 37 | | | 322 | 356 | |
| | 2000.05-2006.03 | MT/Semi-AT | F | L/R | MPV FWD AYL | | GCO18025 | Outer Joint | 48W | 38 | 36 | 60 | 34 | 72.5 | I |
| | 2000.05-2006.03 | MT/Semi-AT | F | L/R | MPV FWD AYL | | GCI83007 | Inner Joint | | | 34 | | | 85 | |
| | 2000.05-2006.03 | Semi-AT | F | L | MPV FWD AYL | | GDS83022 | Drive Shaft | 48W | 38 | | 60 | 34 | 486 | |
| | 2000.05-2006.03 | Semi-AT | F | R | MPV FWD AYL | | GDS99120 | Drive Shaft | 48W | 38 | 30 | 60 | 34 | 561 | |
| **Galaxy Van** | | | | | | | | | | | | | | | |
| 1.6 (85 kw) | 2013.03-2015.06 | 6MT | F | L | Box Body/MPV FWD T1WA;T1WB | | GDS83397 | Drive Shaft | | 40 | 26 | 57.7 | 51 | 611 | |
| | 2013.03-2015.06 | 6MT | F | L | Box Body/MPV FWD T1WA;T1WB | | GCO99271 | Outer Joint | | 40 | 28 | 57.7 | 51 | 63 | M |
| | 2013.03-2015.06 | 6MT | F | L | Box Body/MPV FWD T1WA;T1WB | | GCI18128 | Inner Joint | | 26 | 28 | 40 | 68.5 | 111 | |
| | 2013.03-2015.06 | 6MT | F | L | Box Body/MPV FWD T1WA;T1WB | | GCI81533 | Inner Joint | | 26 | 28 | 40 | 68.5 | 108 | |
| | 2013.03-2015.06 | MT | F | R | Box Body/MPV FWD T1WA;T1WB | | GDS99212 | Drive Shaft | | 40 | 26 | 57.7 | 51 | 945 | |
| | 2013.03-2015.06 | MT | F | R | Box Body/MPV FWD T1WA;T1WB | | GCI18129 | Inner Joint | | 26 | 28 | 40 | 389 | 96.5 | |
| 1.6 (118 kw) | 2011.02-2015.06 | 6MT | F | L | Box Body/MPV FWD JTWA;JTWB | | GCO99271 | Outer Joint | | 40 | 28 | 57.7 | 51 | 63 | M |
| | 2011.02-2015.06 | 6MT | F | L | Box Body/MPV FWD JTWA;JTWB | | GCI18128 | Inner Joint | | 26 | 28 | 40 | 68.5 | 111 | |
| 1.9 (66 kw) | 1996.09-2006.03 | 5MT | F | L/R | MPV Van FWD AHU/ANU | Date from:1999.06 | GCO18025 | Outer Joint | 48W | 38 | 36 | 60 | 34 | 72.5 | I |
| | 1996.09-2006.03 | 5MT | F | L/R | MPV Van FWD AHU/ANU | Date to:1999.05 | GCO18026 | Outer Joint | 48W | 38 | 27 | 60 | 34.5 | 65 | I |
| | 1996.09-2006.03 | 5MT | F | R | MPV Van FWD AHU/ANU | Trans. code:VXT75 | GCI61028 | Inner Joint | | 35 | 28 | 42 | | 129.2 | |
| 1.9 (85 kw) | 2000.05-2006.03 | 6MT | F | L/R | MPV Van FWD AUY | | GDS83023 | Drive Shaft | 48W | 38 | | 60 | 34 | 507 | |
| | 2000.05-2006.03 | 6MT | F | L/R | MPV Van FWD AUY | | GCO18025 | Outer Joint | 48W | 38 | 36 | 60 | 34 | 72.5 | I |
| | 2000.05-2006.03 | 6MT | F | L/R | MPV Van FWD AUY | Date from:2003.06 | GCI61044 | Inner Joint | | | 34 | | | 85 | |
| 2.0 (85 kw) | 1996.03-2006.03 | 5MT | F | L/R | MPV Van FWD NSE/ZVSA | Date from:1999.06 | GCO18025 | Outer Joint | 48W | 38 | 36 | 60 | 34 | 72.5 | I |
| | 1996.03-2006.03 | 5MT | F | L/R | MPV Van FWD NSE/ZVSA | Date to:1999.05 | GCO18026 | Outer Joint | 48W | 38 | 27 | 60 | 34.5 | 65 | I |
| | 1996.03-2006.03 | 5MT | F | R | MPV Van FWD NSE/ZVSA | Trans. code:VXT75 | GCI61028 | Inner Joint | | 35 | 28 | 42 | | 129.2 | |
| | 2007.01-2015.06 | 6AT | F | L | Box Body/MPV FWD TYWA;KLWA | | GDS83288 | Drive Shaft | | 40 | 31 | 57.7 | 51 | 582 | |
| | 2007.01-2015.06 | 6AT | F | R | Box Body/MPV FWD TYWA;KLWA | | GDS83289 | Drive Shaft | | 40 | 28 | 57.7 | 51 | 932 | |
| | 2007.01-2015.06 | 6AT | F | L | Box Body/MPV FWD TYWA;KLWA | | GCO99271 | Outer Joint | | 40 | 28 | 57.7 | 51 | 63 | M |
| | 2007.01-2015.06 | 6AT | F | L | Box Body/MPV FWD TYWA;KLWA | | GCI83032 | Inner Joint | | 31 | 28 | 36.2 | 66 | 90 | |
| | 2007.01-2015.06 | 6AT | F | R | Box Body/MPV FWD TYWA;KLWA | | GCI83031 | Inner Joint | | 28 | 28 | 33 | 391.5 | 95.5 | |
| 2.0 (96 kw) | 2006.11-2015.06 | 6MT | F | L | Box Body/MPV FWD AZWA | | GDS83397 | Drive Shaft | | 40 | 26 | 57.7 | 51 | 611 | |
| | 2006.11-2015.06 | 6MT | F | R | Box Body/MPV FWD AZWA | | GDS99212 | Drive Shaft | | 40 | 26 | 57.7 | 51 | 945 | |
| | 2006.11-2015.06 | 6MT | F | L | Box Body/MPV FWD AZWA | | GCO99271 | Outer Joint | | 40 | 28 | 57.7 | 51 | 63 | M |
| | 2006.11-2015.06 | 6MT | F | L | Box Body/MPV FWD AZWA | TJ | GCI18128 | Inner Joint | | 26 | 28 | 40 | 68.5 | 111 | |
| | 2006.11-2015.06 | 6MT | F | L | Box Body/MPV FWD AZWA | AAR | GCI81533 | Inner Joint | | 26 | 28 | 40 | 68.5 | 108 | |
| | 2006.11-2015.06 | 6MT | F | R | Box Body/MPV FWD AZWA | | GCI18129 | Inner Joint | | 26 | 28 | 40 | 389 | 96.5 | |
| 2.0 (103 kw) | 2006.05-2015.06 | 6AT | F | L | Box Body/MPV FWD QXWA;QXWB;QXWC;UFWA | | GDS83288 | Drive Shaft | | 40 | 31 | 57.7 | 51 | 582 | |
| | 2006.05-2015.06 | 6AT | F | R | Box Body/MPV FWD QXWA;QXWB;QXWC;UFWA | | GDS83289 | Drive Shaft | | 40 | 28 | 57.7 | 51 | 932 | |
| | 2006.05-2015.06 | 6AT | F | L | Box Body/MPV FWD QXWA;QXWB;QXWC;UFWA | | GCI83032 | Inner Joint | | 31 | 28 | 36.2 | 66 | 90 | |
| | 2006.05-2015.06 | 6AT | F | R | Box Body/MPV FWD QXWA;QXWB;QXWC;UFWA | | GCI83031 | Inner Joint | | 28 | 28 | 33 | 391.5 | 95.5 | |
| | 2006.05-2015.06 | 6AT/6MT | F | L | Box Body/MPV FWD QXWA;QXWB;QXWC;UFWA | | GCO99271 | Outer Joint | | 40 | 28 | 57.7 | 51 | 63 | M |
| | 2006.05-2015.06 | 6MT | F | L | Box Body/MPV FWD QXWA;QXWB;QXWC;UFWA | | GDS83397 | Drive Shaft | | 40 | 26 | 57.7 | 51 | 611 | |
| | 2006.05-2015.06 | 6MT | F | R | Box Body/MPV FWD QXWA;QXWB;QXWC;UFWA | | GDS99212 | Drive Shaft | | 40 | 26 | 57.7 | 51 | 945 | |
| | 2006.05-2015.06 | 6MT | F | L | Box Body/MPV FWD QXWA;QXWB;QXWC;UFWA | TJ | GCI18128 | Inner Joint | | 26 | 28 | 40 | 68.5 | 111 | |
| | 2006.05-2015.06 | 6MT | F | L | Box Body/MPV FWD QXWA;QXWB;QXWC;UFWA | AAR | GCI81533 | Inner Joint | | 26 | 28 | 40 | 68.5 | 108 | |
| | 2006.05-2015.06 | 6MT | F | R | Box Body/MPV FWD QXWA;QXWB;QXWC;UFWA | | GCI18129 | Inner Joint | | 26 | 28 | 40 | 389 | 96.5 | |
| 2.0 (107 kw) | 2006.05-2015.06 | 5MT | F | L | Box Body/MPV FWD AOWA | | GDS83397 | Drive Shaft | | 40 | 26 | 57.7 | 51 | 611 | |
| | 2006.05-2015.06 | 5MT | F | R | Box Body/MPV FWD AOWA | | GDS99212 | Drive Shaft | | 40 | 26 | 57.7 | 51 | 945 | |
| | 2006.05-2015.06 | 5MT | F | L | Box Body/MPV FWD AOWA | TJ | GCI18128 | Inner Joint | | 26 | 28 | 40 | 68.5 | 111 | |
| | 2006.05-2015.06 | 5MT | F | L | Box Body/MPV FWD AOWA | AAR | GCI81533 | Inner Joint | | 26 | 28 | 40 | 68.5 | 108 | |
| | 2006.05-2015.06 | 6MT | F | L/R | Box Body/MPV FWD AOWA | | GCO99271 | Outer Joint | | 40 | 28 | 57.7 | 51 | 63 | M |
| 2.0 (120 kw) | 2010.03-2015.06 | 6DCT | F | L | Box Body/MPV FWD TXWA | | GDS18340 | Drive Shaft | | 40 | 28 | 57.7 | 52 | 592 | |
| | 2010.03-2015.06 | 6DCT | F | R | Box Body/MPV FWD TXWA | Date from:2010.12 | GDS18347 | Drive Shaft | | 40 | 28 | 57.7 | 52 | 939 | |
| | 2010.03-2015.06 | 6DCT | F | R | Box Body/MPV FWD TXWA | Date to:2010.11 | GDS83391 | Drive Shaft | | 40 | 28 | 57.7 | 52 | 940 | |
| | 2010.03-2015.06 | 6DCT | F | L/R | Box Body/MPV FWD TXWA | Date to:2010.11 | GCO18269 | Outer Joint | | 40 | 26 | 57.7 | 52 | 63.5 | I |
| | 2010.03-2015.06 | 6DCT | F | R | Box Body/MPV FWD TXWA | Date to:2010.11 | GCI82178 | Inner Joint | | 28 | 26 | 34 | 371 | 103 | |
| | 2010.03-2015.06 | 6MT | F | L | Box Body/MPV FWD TXWA | | GDS83397 | Drive Shaft | | 40 | 26 | 57.7 | 51 | 611 | |
| | 2010.03-2015.06 | 6MT | F | L | Box Body/MPV FWD TXWA | | GCO99271 | Outer Joint | | 40 | 28 | 57.7 | 51 | 63 | M |
| | 2010.03-2015.06 | 6MT | F | L | Box Body/MPV FWD TXWA | AAR | GCI81533 | Inner Joint | | 26 | 28 | 40 | 68.5 | 108 | |
| | 2010.03-2015.06 | 6MT | F | R | Box Body/MPV FWD TXWA | | GCI18129 | Inner Joint | | 26 | 28 | 40 | 389 | 96.5 | |
| | 2010.03-2015.06 | MT | F | R | Box Body/MPV FWD TXWA | | GDS99212 | Drive Shaft | | 40 | 26 | 57.7 | 51 | 945 | |
| 2.0 (149 kw) | 2010.03-2015.06 | 6DCT | F | L | Box Body/MPV FWD TNWA | | GDS18340 | Drive Shaft | | 40 | 28 | 57.7 | 52 | 592 | |

| | YEAR | TRANSM. | F/R | L/R | BODY STYLE & DRIVE TYPE & ENGINE | REMARKS | G-AP Ref. | PRODUCT | ABS | Technical Specifications A | B | C | H | L | P |
|---|---|---|---|---|---|---|---|---|---|---|---|---|---|---|---|
| **FORD** | | | | | | | | | | | | | | | |
| **Galaxy Van** | | | | | | | | | | | | | | | |
| 2.0 (149 kw) | 2010.03-2015.06 | 6DCT | F | R | Box Body/MPV FWD TNWA | | GDS18341 | Drive Shaft | | 40 | 28 | 57.7 | 52 | 952 | |
| | 2010.03-2015.06 | 6DCT | F | L/R | Box Body/MPV FWD TNWA | | GCO18269 | Outer Joint | | 40 | 26 | 57.7 | 52 | 63.5 | I |
| 2.3 (103 kw) | 2002.11-2006.03 | 4AT/5MT | F | R | MPV Van FWD E5SB | | GCI61028 | Inner Joint | | 35 | 28 | 42 | | 129.2 | |
| | 2002.11-2006.03 | Semi-AT | F | L | MPV Van FWD E5SB | | GDS61085 | Drive Shaft | 48W | 38 | | 60 | 34.5 | 513 | |
| | 2002.11-2006.03 | Semi-AT | F | R | MPV Van FWD E5SB | | GDS61065 | Drive Shaft | 48W | 38 | | 60 | 34.5 | 544 | |
| | 2002.11-2006.03 | Semi-AT | F | L | MPV Van FWD E5SB | | GCO18026 | Outer Joint | 48W | 38 | 27 | 60 | 34.5 | 65 | I |
| | 2002.11-2006.03 | Semi-AT | F | R | MPV Van FWD E5SB | | GCO18025 | Outer Joint | 48W | 38 | 36 | 60 | 34 | 72.5 | I |
| | 2002.11-2006.03 | Semi-AT | F | L/R | MPV Van FWD E5SB | | GCI50019 | Inner Joint | | | 34 | | | 59.5 | |
| 2.3 (107 kw) | 2000.05-2002.10 | AT | F | L | MPV Van FWD E5SA | | GDS61085 | Drive Shaft | 48W | 38 | | 60 | 34.5 | 513 | |
| | 2000.05-2002.10 | AT | F | R | MPV Van FWD E5SA | | GDS61065 | Drive Shaft | 48W | 38 | | 60 | 34.5 | 544 | |
| | 2000.05-2002.10 | AT | F | L/R | MPV Van FWD E5SA | | GCO18026 | Outer Joint | 48W | 38 | 27 | 60 | 34.5 | 65 | I |
| | 2000.05-2002.10 | AT | F | L/R | MPV Van FWD E5SA | | GCI59006 | Inner Joint | | | 34 | | | 33.2 | |
| | 2000.05-2002.10 | MT | F | R | MPV Van FWD E5SA | Transmission Tp:VXT75 | GCI61028 | Inner Joint | | 35 | 28 | 42 | | 129.2 | |
| 2.8 (128 kw) | 1995.11-2000.07 | AT | F | L/R | MPV Van FWD AAA | | GDS18010 | Drive Shaft | 48W | 38 | | 60 | 34.5 | 550 | |
| | 1995.11-2000.07 | AT | F | L/R | MPV Van FWD AAA | | GCI59006 | Inner Joint | | | 34 | | | 33.2 | |
| | 1995.11-2000.07 | AT/MT | F | L/R | MPV Van FWD AAA | | GCO18026 | Outer Joint | 48W | 38 | 27 | 60 | 34.5 | 65 | I |
| | 1995.11-2000.07 | MT | F | L | MPV Van FWD AAA | | GDS18009 | Drive Shaft | 48W | 38 | 26 | 60 | 34.5 | 620 | |
| | 1995.11-2000.07 | MT | F | R | MPV Van FWD AAA | | GDS18106 | Drive Shaft | 48W | 38 | 35 | 60 | 34.5 | 634 | |
| | 1995.11-2000.07 | MT | F | R | MPV Van FWD AAA | Transmission Tp:VXT75 | GCI61028 | Inner Joint | | 35 | 28 | 42 | | 129.2 | |
| 2.8 (150 kw) | 2000.05-2006.03 | MT | F | L/R | MPV Van FWD AYL | | GDS83023 | Drive Shaft | 48W | 38 | | 60 | 34 | 507 | |
| | 2000.05-2006.03 | MT | F | L/R | MPV Van FWD AYL | TJ | GCI61044 | Inner Joint | | | 34 | | | 85 | |
| | 2000.05-2006.03 | MT | F | L/R | MPV Van FWD AYL | | GCI83007 | Inner Joint | | | 34 | | | 85 | |
| | 2000.05-2006.03 | MT/Semi-AT | F | L/R | MPV Van FWD AYL | | GCO18025 | Outer Joint | 48W | 38 | 36 | 60 | 34 | 72.5 | I |
| | 2000.05-2006.03 | Semi-AT | F | L | MPV Van FWD AYL | | GDS83022 | Drive Shaft | 48W | 38 | | 60 | 34 | 486 | |
| | 2000.05-2006.03 | Semi-AT | F | R | MPV Van FWD AYL | | GDS99120 | Drive Shaft | 48W | 38 | 30 | 60 | 34 | 561 | |
| | 2000.05-2006.03 | Semi-AT | F | L | MPV Van FWD AYL | TJ | GCI61044 | Inner Joint | | | 34 | | | 85 | |
| | 2000.05-2006.03 | Semi-AT | F | L | MPV Van FWD AYL | | GCI83007 | Inner Joint | | | 34 | | | 85 | |
| **Grand C-Max** | | | | | | | | | | | | | | | |
| 1.0 (74 kw) | 2012.10-2018.06 | 6MT | F | L | Box Body/MPV FWD M2DA;M2DC | | GDS18295 | Drive Shaft | | 27 | 26 | 62.7 | 96 | 637 | |
| | 2012.10-2018.06 | 6MT | F | R | Box Body/MPV FWD M2DA;M2DC | | GDS18294 | Drive Shaft | | 27 | 26 | 62.7 | 96 | 972 | |
| | 2012.10-2018.06 | 6MT | F | L/R | Box Body/MPV FWD M2DA;M2DC | | GCO18277 | Outer Joint | | 27 | 33 | 62.8 | 95.5 | 59 | M |
| | 2012.10-2018.06 | 6MT | F | R | Box Body/MPV FWD M2DA;M2DC | | GCI81295 | Inner Joint | | 26 | 33 | 40 | 381.5 | 83.5 | |
| | 2012.10-2019.06 | 6MT | F | L | MPV FWD M2DA;M2DC | Date to:2018.02 | GDS18295 | Drive Shaft | | 27 | 26 | 62.7 | 96 | 637 | |
| | 2012.10-2019.06 | 6MT | F | R | MPV FWD M2DA;M2DC | Date to:2018.02 | GDS18294 | Drive Shaft | | 27 | 26 | 62.7 | 96 | 972 | |
| | 2012.10-2019.06 | 6MT | F | L/R | MPV FWD M2DA;M2DC | Date to:2018.02 | GCO18277 | Outer Joint | | 27 | 33 | 62.8 | 95.5 | 59 | M |
| | 2012.10-2019.06 | 6MT | F | R | MPV FWD M2DA;M2DC | Date to:2018.02 | GCI81295 | Inner Joint | | 26 | 33 | 40 | 381.5 | 83.5 | |
| 1.0 (92 kw) | 2012.10-2019.06 | 6MT | F | L | Box Body/MPV FWD M1DA;M1DD;B7DA | | GDS18295 | Drive Shaft | | 27 | 26 | 62.7 | 96 | 637 | |
| | 2012.10-2019.06 | 6MT | F | R | Box Body/MPV FWD M1DA;M1DD;B7DA | | GDS18294 | Drive Shaft | | 27 | 26 | 62.7 | 96 | 972 | |
| | 2012.10-2019.06 | 6MT | F | L/R | Box Body/MPV FWD M1DA;M1DD;B7DA | | GCO18277 | Outer Joint | | 27 | 33 | 62.8 | 95.5 | 59 | M |
| | 2012.10-2019.06 | 6MT | F | R | Box Body/MPV FWD M1DA;M1DD;B7DA | | GCI81295 | Inner Joint | | 26 | 33 | 40 | 381.5 | 83.5 | |
| | 2012.10-2019.06 | 6MT | F | L | MPV FWD M1DA;M1DD | Date to:2018.02 | GDS18295 | Drive Shaft | | 27 | 26 | 62.7 | 96 | 637 | |
| | 2012.10-2019.06 | 6MT | F | R | MPV FWD M1DA;M1DD | Date to:2018.02 | GDS18294 | Drive Shaft | | 27 | 26 | 62.7 | 96 | 972 | |
| | 2012.10-2019.06 | 6MT | F | L/R | MPV FWD M1DA;M1DD | Date to:2018.02 | GCO18277 | Outer Joint | | 27 | 33 | 62.8 | 95.5 | 59 | M |
| | 2012.10-2019.06 | 6MT | F | R | MPV FWD M1DA;M1DD | Date to:2018.02 | GCI81295 | Inner Joint | | 26 | 33 | 40 | 381.5 | 83.5 | |
| 1.5 (70 kw) | 2015.03-2019.06 | 6MT | F | R | MPV FWD XXDA;XXDC | | GCI81338 | Inner Joint | | 26 | 32 | 40 | 383 | 99 | |
| | 2015.03-2019.06 | MT | F | L | MPV FWD XXDA;XXDC | | GDS18295 | Drive Shaft | | 27 | 26 | 62.7 | 96 | 637 | |
| | 2015.03-2019.06 | MT | F | R | MPV FWD XXDA;XXDC | | GDS18294 | Drive Shaft | | 27 | 26 | 62.7 | 96 | 972 | |
| | 2015.03-2019.06 | MT | F | L/R | MPV FWD XXDA;XXDC | | GCO18240 | Outer Joint | | 27 | 26 | 62.7 | 96 | 62.5 | M |
| 1.5 (88 kw) | 2015.03-2019.06 | 6DCT | F | L | Box Body/MPV FWD XWDA;XWDB;XWDC;XWDD;XWDE | | GDS81479 | Drive Shaft | | 27 | 28 | 63.1 | 96 | 623 | |
| | 2015.03-2019.06 | 6DCT | F | R | Box Body/MPV FWD XWDA;XWDB;XWDC;XWDD;XWDE | With vibration damper | GDS81480 | Drive Shaft | | 27 | 28 | 63.1 | 96 | 967 | |
| | 2015.03-2019.06 | 6DCT | F | L/R | Box Body/MPV FWD XWDA;XWDB;XWDC;XWDD;XWDE | | GCO18252 | Outer Joint | | 27 | 26 | 63.1 | 96 | 64 | I |
| | 2015.03-2019.06 | 6DCT | F | L | Box Body/MPV FWD XWDA;XWDB;XWDC;XWDD;XWDE | | GCI62053 | Inner Joint | | 28 | 26 | 34 | 79.5 | 91 | |
| | 2015.03-2019.06 | 6MT | F | R | Box Body/MPV FWD XWDA;XWDB;XWDC;XWDD;XWDE | | GCI81338 | Inner Joint | | 26 | 32 | 40 | 383 | 99 | |
| | 2015.03-2019.06 | MT | F | L | Box Body/MPV FWD XWDA;XWDB;XWDC;XWDD;XWDE | | GDS18295 | Drive Shaft | | 27 | 26 | 62.7 | 96 | 637 | |
| | 2015.03-2019.06 | MT | F | R | Box Body/MPV FWD XWDA;XWDB;XWDC;XWDD;XWDE | | GDS18294 | Drive Shaft | | 27 | 26 | 62.7 | 96 | 972 | |
| | 2015.03-2019.06 | MT | F | L/R | Box Body/MPV FWD XWDA;XWDB;XWDC;XWDD;XWDE | | GCO18240 | Outer Joint | | 27 | 26 | 62.7 | 96 | 62.5 | M |
| | 2015.03-2019.06 | 6DCT | F | L | MPV FWD XWDA;XWDB;XWDC;XWDD;XWDE | | GDS81479 | Drive Shaft | | 27 | 28 | 63.1 | 96 | 623 | |
| | 2015.03-2019.06 | 6DCT | F | R | MPV FWD XWDA;XWDB;XWDC;XWDD;XWDE | With vibration damper | GDS81480 | Drive Shaft | | 27 | 28 | 63.1 | 96 | 967 | |
| | 2015.03-2019.06 | 6DCT | F | L/R | MPV FWD XWDA;XWDB;XWDC;XWDD;XWDE | With vibration damper | GCO18252 | Outer Joint | | 27 | 26 | 63.1 | 96 | 64 | I |
| | 2015.03-2019.06 | 6DCT | F | L | MPV FWD XWDA;XWDB;XWDC;XWDD;XWDE | | GCI62053 | Inner Joint | | 28 | 26 | 34 | 79.5 | 91 | |
| | 2015.03-2019.06 | 6MT | F | L/R | MPV FWD XWDA;XWDB;XWDC;XWDD;XWDE | | GCO18240 | Outer Joint | | 27 | 26 | 62.7 | 96 | 62.5 | M |
| | 2015.03-2019.06 | 6MT | F | R | MPV FWD XWDA;XWDB;XWDC;XWDD;XWDE | | GCI81338 | Inner Joint | | 26 | 32 | 40 | 383 | 99 | |
| | 2015.03-2019.06 | MT | F | L | MPV FWD XWDA;XWDB;XWDC;XWDD;XWDE | | GDS18295 | Drive Shaft | | 27 | 26 | 62.7 | 96 | 637 | |
| | 2015.03-2019.06 | MT | F | R | MPV FWD XWDA;XWDB;XWDC;XWDD;XWDE | | GDS18294 | Drive Shaft | | 27 | 26 | 62.7 | 96 | 972 | |
| 1.5 (110 kw) | 2015.03-2019.06 | 6AT | F | L/R | Box Body/MPV FWD M8DB | | GCO82320 | Outer Joint | | 27 | 26 | 62.5 | 96 | 62 | M |

| | YEAR | TRANSM. | F/R | L/R | BODY STYLE & DRIVE TYPE & ENGINE | REMARKS | G-AP Ref. | PRODUCT | ABS | Technical Specifications | | | | | |
|---|---|---|---|---|---|---|---|---|---|---|---|---|---|---|---|
| | | | | | | | | | | A | B | C | H | L | P |
| **FORD**<br>**Grand C-Max** | | | | | | | | | | | | | | | |
| 1.5 (110 kw) | 2015.03-2019.06 | 6MT | F | L | Box Body/MPV FWD M8DB | | GCI81392 | Inner Joint | | 26 | 24 | 40 | 60 | 112 | |
| | 2015.03-2019.06 | 6MT | F | R | Box Body/MPV FWD M8DB | | GCI81338 | Inner Joint | | 26 | 32 | 40 | 383 | 99 | |
| | 2015.03-2019.06 | MT | F | L | Box Body/MPV FWD M8DB | | GDS18295 | Drive Shaft | | 27 | 26 | 62.7 | 96 | 637 | |
| | 2015.03-2019.06 | MT | F | L/R | Box Body/MPV FWD M8DB | | GCO18244 | Outer Joint | | 27 | 24 | 62.8 | 95.5 | 59 | M |
| | 2015.03-2019.06 | 6AT | F | L/R | MPV FWD M8DB;M8DF | | GCO82320 | Outer Joint | | 27 | 26 | 62.5 | 96 | 62 | M |
| | 2015.03-2019.06 | 6MT | F | L | MPV FWD M8DB;M8DF | | GCI81392 | Inner Joint | | 26 | 24 | 40 | 60 | 112 | |
| | 2015.03-2019.06 | 6MT | F | R | MPV FWD M8DB;M8DF | | GCI81338 | Inner Joint | | 26 | 32 | 40 | 383 | 99 | |
| | 2015.03-2019.06 | MT | F | L | MPV FWD M8DB;M8DF | | GDS18295 | Drive Shaft | | 27 | 26 | 62.7 | 96 | 637 | |
| | 2015.03-2019.06 | MT | F | R | MPV FWD M8DB;M8DF | | GDS18299 | Drive Shaft | | 27 | 26 | 60.8 | 96 | 975 | |
| | 2015.03-2019.06 | MT | F | L/R | MPV FWD M8DB;M8DF | | GCO18244 | Outer Joint | | 27 | 24 | 62.8 | 95.5 | 59 | M |
| 1.5 (134 kw) | 2015.03-2019.06 | 6AT | F | L/R | MPV FWD M9DB | | GCO82320 | Outer Joint | | 27 | 26 | 62.5 | 96 | 62 | M |
| | 2015.03-2019.06 | MT | F | L/R | MPV FWD M9DB | | GCO18244 | Outer Joint | | 27 | 24 | 62.8 | 95.5 | 59 | M |
| 1.6 (63 kw) | 2010.12-2019.06 | 5MT | F | L | MPV FWD XTDA | For steel and light alloy rims | GDS18322 | Drive Shaft | | 27 | 23 | 62.8 | 95.5 | 657 | |
| | 2010.12-2019.06 | 5MT | F | R | MPV FWD XTDA | | GDS18323 | Drive Shaft | | 27 | 23 | 62.8 | 95.5 | 961 | |
| | 2010.12-2019.06 | 5MT | F | R | MPV FWD XTDA | For Modelcode:BH | GCI18263 | Inner Joint | | 23 | 22 | 40 | 375 | 76 | |
| 1.6 (70 kw) | 2010.12-2019.06 | 6MT | F | R | Box Body/MPV FWD T3DA;T3DB | | GCI81338 | Inner Joint | | 26 | 32 | 40 | 383 | 99 | |
| | 2010.12-2019.06 | MT | F | L | Box Body/MPV FWD T3DA;T3DB | Date from:2011.01 | GDS18295 | Drive Shaft | | 27 | 26 | 62.7 | 96 | 637 | |
| | 2010.12-2019.06 | MT | F | R | Box Body/MPV FWD T3DA;T3DB | Date from:2011.01 | GDS18294 | Drive Shaft | | 27 | 26 | 62.7 | 96 | 972 | |
| | 2010.12-2019.06 | MT | F | L/R | Box Body/MPV FWD T3DA;T3DB | Date from:2011.01 | GCO18240 | Outer Joint | | 27 | 26 | 62.7 | 96 | 62.5 | M |
| | 2010.12-2019.06 | MT | F | L | Box Body/MPV FWD T3DA;T3DB | | GCI21028 | Inner Joint | | 26 | 32 | 40 | 61 | 112.5 | |
| | 2010.12-2019.06 | 6MT | F | L | MPV FWD T3DA;T3DB | | GDS18295 | Drive Shaft | | 27 | 26 | 62.7 | 96 | 637 | |
| | 2010.12-2019.06 | 6MT | F | R | MPV FWD T3DA;T3DB | | GDS18294 | Drive Shaft | | 27 | 26 | 62.7 | 96 | 972 | |
| | 2010.12-2019.06 | 6MT | F | L | MPV FWD T3DA;T3DB | | GCI21028 | Inner Joint | | 26 | 32 | 40 | 61 | 112.5 | |
| | 2010.12-2019.06 | 6MT | F | R | MPV FWD T3DA;T3DB | | GCI81338 | Inner Joint | | 26 | 32 | 40 | 383 | 99 | |
| | 2010.12-2019.06 | MT | F | L/R | MPV FWD T3DA;T3DB | | GCO18240 | Outer Joint | | 27 | 26 | 62.7 | 96 | 62.5 | M |
| 1.6 (77 kw) | 2010.12-2019.06 | 5MT | F | L | MPV FWD IQDA;IQDB | | GDS18322 | Drive Shaft | | 27 | 23 | 62.8 | 95.5 | 657 | |
| | 2010.12-2019.06 | 5MT | F | R | MPV FWD IQDA;IQDB | | GDS18323 | Drive Shaft | | 27 | 23 | 62.8 | 95.5 | 961 | |
| | 2010.12-2019.06 | 5MT | F | L | MPV FWD IQDA;IQDB | | GCI18086 | Inner Joint | | 23 | 22 | 40 | 61 | 90 | |
| | 2010.12-2019.06 | 5MT | F | R | MPV FWD IQDA;IQDB | | GCI18263 | Inner Joint | | 23 | 22 | 40 | 375 | 76 | |
| | 2010.12-2019.06 | AT | F | L/R | MPV FWD IQDA;IQDB | | GCO18238 | Outer Joint | | 27 | 23 | 63 | 96 | 57 | M |
| | 2010.12-2019.06 | MT | F | L/R | MPV FWD IQDA;IQDB | | GCO18244 | Outer Joint | | 27 | 24 | 62.8 | 95.5 | 59 | M |
| 1.6 (85 kw) | 2010.12-2019.06 | 6MT | F | R | Box Body/MPV FWD T1DA;T1DB | | GCI81338 | Inner Joint | | 26 | 32 | 40 | 383 | 99 | |
| | 2010.12-2019.06 | MT | F | L | Box Body/MPV FWD T1DA;T1DB | Date from:2011.01 | GDS18295 | Drive Shaft | | 27 | 26 | 62.7 | 96 | 637 | |
| | 2010.12-2019.06 | MT | F | R | Box Body/MPV FWD T1DA;T1DB | Date from:2011.01 | GDS18294 | Drive Shaft | | 27 | 26 | 62.7 | 96 | 972 | |
| | 2010.12-2019.06 | MT | F | L/R | Box Body/MPV FWD T1DA;T1DB | Date from:2011.01 | GCO18240 | Outer Joint | | 27 | 26 | 62.7 | 96 | 62.5 | M |
| | 2010.12-2019.06 | MT | F | L | Box Body/MPV FWD T1DA;T1DB | For Modelcode:BH | GCI21028 | Inner Joint | | 26 | 32 | 40 | 61 | 112.5 | |
| | 2010.12-2019.06 | 6AT/6MT | F | L | MPV FWD T1DA;T1DB | | GDS18295 | Drive Shaft | | 27 | 26 | 62.7 | 96 | 637 | |
| | 2010.12-2019.06 | 6AT/6MT | F | R | MPV FWD T1DA;T1DB | | GDS18294 | Drive Shaft | | 27 | 26 | 62.7 | 96 | 972 | |
| | 2010.12-2019.06 | 6MT | F | L | MPV FWD T1DA;T1DB | For Modelcode:BH | GCI21028 | Inner Joint | | 26 | 32 | 40 | 61 | 112.5 | |
| | 2010.12-2019.06 | 6MT | F | R | MPV FWD T1DA;T1DB | | GCI81338 | Inner Joint | | 26 | 32 | 40 | 383 | 99 | |
| | 2010.12-2019.06 | MT | F | L/R | MPV FWD T1DA;T1DB | | GCO18240 | Outer Joint | | 27 | 26 | 62.7 | 96 | 62.5 | M |
| 1.6 (92 kw) | 2010.12-2014.12 | 5MT | F | L | Box Body/MPV FWD PNDA | For steel and light alloy rims | GDS18322 | Drive Shaft | | 27 | 23 | 62.8 | 95.5 | 657 | |
| | 2010.12-2014.12 | 5MT | F | R | Box Body/MPV FWD PNDA | | GDS18323 | Drive Shaft | | 27 | 23 | 62.8 | 95.5 | 961 | |
| | 2010.12-2014.12 | 5MT | F | R | Box Body/MPV FWD PNDA | | GCI18263 | Inner Joint | | 23 | 22 | 40 | 375 | 76 | |
| | 2010.12-2014.12 | MT | F | R | Box Body/MPV FWD PNDA | | GCI18087 | Inner Joint | | 23 | 22 | 40 | 371 | 78.5 | |
| | 2010.12-2019.06 | 5MT | F | L | MPV FWD PNDA;PNDD | | GDS18322 | Drive Shaft | | 27 | 23 | 62.8 | 95.5 | 657 | |
| | 2010.12-2019.06 | 5MT | F | R | MPV FWD PNDA;PNDD | | GDS18323 | Drive Shaft | | 27 | 23 | 62.8 | 95.5 | 961 | |
| | 2010.12-2019.06 | 5MT | F | L | MPV FWD PNDA;PNDD | For Modelcode:BH | GCI18086 | Inner Joint | | 23 | 22 | 40 | 61 | 90 | |
| | 2010.12-2019.06 | 5MT | F | R | MPV FWD PNDA;PNDD | For Modelcode:BH | GCI18263 | Inner Joint | | 23 | 22 | 40 | 375 | 76 | |
| | 2010.12-2019.06 | AT | F | L | MPV FWD PNDA;PNDD | | GDS18296 | Drive Shaft | | 27 | 34 | 63 | 96 | 606 | |
| | 2010.12-2019.06 | AT | F | R | MPV FWD PNDA;PNDD | | GDS18477 | Drive Shaft | | 27 | 34 | 63 | 96 | 1014 | |
| | 2010.12-2019.06 | AT | F | L/R | MPV FWD PNDA;PNDD | | GCO18238 | Outer Joint | | 27 | 23 | 63 | 96 | 57 | M |
| | 2010.12-2019.06 | MT | F | L/R | MPV FWD PNDA;PNDD | | GCO18244 | Outer Joint | | 27 | 24 | 62.8 | 95.5 | 59 | M |
| 1.6 (110 kw) | 2010.12-2019.06 | 6MT | F | L | Box Body/MPV FWD JQDA;JQDB | | GDS18295 | Drive Shaft | | 27 | 26 | 62.7 | 96 | 637 | |
| | 2010.12-2019.06 | 6MT | F | L | Box Body/MPV FWD JQDA;JQDB | | GCI81392 | Inner Joint | | 26 | 24 | 40 | 60 | 112 | |
| | 2010.12-2019.06 | MT | F | L/R | Box Body/MPV FWD JQDA;JQDB | Date from:2011.01 | GCO18244 | Outer Joint | | 27 | 24 | 62.8 | 95.5 | 59 | M |
| | 2010.12-2019.06 | 6MT | F | L | MPV FWD JQDA;JQDB | | GDS18295 | Drive Shaft | | 27 | 26 | 62.7 | 96 | 637 | |
| | 2010.12-2019.06 | 6MT | F | R | MPV FWD JQDA;JQDB | | GDS18299 | Drive Shaft | | 27 | 26 | 60.8 | 96 | 975 | |
| | 2010.12-2019.06 | 6MT | F | L | MPV FWD JQDA;JQDB | | GCI81392 | Inner Joint | | 26 | 24 | 40 | 60 | 112 | |
| | 2010.12-2019.06 | MT | F | R | MPV FWD JQDA;JQDB | | GCO18239 | Outer Joint | | 27 | 26 | 62.7 | 96 | 62.5 | M |
| | 2010.12-2019.06 | MT | F | L/R | MPV FWD JQDA;JQDB | | GCO18244 | Outer Joint | | 27 | 24 | 62.8 | 95.5 | 59 | M |
| 1.6 (134 kw) | 2010.12-2019.06 | 6MT | F | L | Box Body/MPV FWD JTDA;JTDB | | GDS18295 | Drive Shaft | | 27 | 26 | 62.7 | 96 | 637 | |
| | 2010.12-2019.06 | 6MT | F | R | Box Body/MPV FWD JTDA;JTDB | | GDS18299 | Drive Shaft | | 27 | 26 | 60.8 | 96 | 975 | |
| | 2010.12-2019.06 | 6MT | F | L | Box Body/MPV FWD JTDA;JTDB | | GCI81392 | Inner Joint | | 26 | 24 | 40 | 60 | 112 | |
| | 2010.12-2019.06 | 6MT | F | L | MPV FWD JTDA;JTDB | | GDS18295 | Drive Shaft | | 27 | 26 | 62.7 | 96 | 637 | |

| | YEAR | TRANSM. | F/R | L/R | BODY STYLE & DRIVE TYPE & ENGINE | REMARKS | G-AP Ref. | PRODUCT | ABS | Technical Specifications | | | | | |
|---|---|---|---|---|---|---|---|---|---|---|---|---|---|---|---|
| | | | | | | | | | | A | B | C | H | L | P |
| **FORD**<br>**Grand C-Max** | | | | | | | | | | | | | | | |
| 1.6 (134 kw) | 2010.12-2019.06 | 6MT | F | R | MPV FWD JTDA;JTDB | | GDS18299 | Drive Shaft | | 27 | 26 | 60.8 | 96 | 975 | |
| | 2010.12-2019.06 | 6MT | F | L | MPV FWD JTDA;JTDB | | GCI81392 | Inner Joint | | 26 | 24 | 40 | 60 | 112 | |
| | 2010.12-2019.06 | MT | F | R | MPV FWD JTDA;JTDB | | GCO18239 | Outer Joint | | 27 | 26 | 62.7 | 96 | 62.5 | M |
| | 2010.12-2019.06 | MT | F | L/R | MPV FWD JTDA;JTDB | | GCO18244 | Outer Joint | | 27 | 24 | 62.8 | 95.5 | 59 | M |
| 2.0 (85 kw) | 2011.02-2019.06 | AT | F | L | Box Body/MPV FWD TYDA | | GDS18410 | Drive Shaft | | 27 | 28 | 63.1 | 96 | 631 | |
| | 2011.02-2019.06 | AT | F | R | Box Body/MPV FWD TYDA | | GDS18343 | Drive Shaft | | 27 | 28 | 63.1 | 96 | 967 | |
| | 2011.02-2019.06 | AT | F | L/R | Box Body/MPV FWD TYDA | | GCO18252 | Outer Joint | | 27 | 26 | 63.1 | 96 | 64 | I |
| | 2011.02-2019.06 | AT | F | R | Box Body/MPV FWD TYDA | | GCI62017 | Inner Joint | | 28 | 26 | 33.95 | 371.5 | 92 | |
| | 2011.02-2019.06 | 6AT | F | R | MPV FWD TYDA | | GDS18343 | Drive Shaft | | 27 | 28 | 63.1 | 96 | 967 | |
| | 2011.02-2019.06 | 6AT | F | L | MPV FWD TYDA | | GCO18326 | Outer Joint | | 27 | 26 | 63.1 | 96 | 64 | I |
| | 2011.02-2019.06 | 6AT | F | L | MPV FWD TYDA | | GCI62053 | Inner Joint | | 28 | 26 | 34 | 79.5 | 91 | |
| | 2011.02-2019.06 | | F | L | MPV FWD TYDA | | GDS18410 | Drive Shaft | | 27 | 28 | 63.1 | 96 | 631 | |
| 2.0 (100 kw) | 2011.02-2019.06 | 6DCT | F | L | MPV FWD UKDB | | GCI62053 | Inner Joint | | 28 | 26 | 34 | 79.5 | 91 | |
| | 2011.02-2019.06 | 6MT | F | R | MPV FWD UKDB | | GDS18315 | Drive Shaft | | 27 | 26 | 63 | 96 | 984 | |
| | 2011.02-2019.06 | 6MT/6DCT | F | L/R | MPV FWD UKDB | | GCO18252 | Outer Joint | | 27 | 26 | 63.1 | 96 | 64 | I |
| | 2011.02-2019.06 | 6MT/6DCT | F | L/R | MPV FWD UKDB | | GCO18326 | Outer Joint | | 27 | 26 | 63.1 | 96 | 64 | I |
| | 2011.02-2019.06 | AT | F | R | MPV FWD UKDB | | GDS18343 | Drive Shaft | | 27 | 28 | 63.1 | 96 | 967 | |
| | 2011.02-2019.06 | MT | F | L | MPV FWD UKDB | | GDS18382 | Drive Shaft | | 27 | 26 | 63.1 | 96 | 638 | |
| | 2011.02-2019.06 | | F | L | MPV FWD UKDB | | GDS18410 | Drive Shaft | | 27 | 28 | 63.1 | 96 | 631 | |
| 2.0 (103 kw) | 2010.12-2019.06 | 6MT | F | R | Box Body/MPV FWD UFDB | | GDS18315 | Drive Shaft | | 27 | 26 | 63 | 96 | 984 | |
| | 2010.12-2019.06 | 6MT | F | R | Box Body/MPV FWD UFDB | | GCO18242 | Outer Joint | | 27 | 23 | 63 | 96 | 57 | M |
| | 2010.12-2019.06 | 6MT | F | R | Box Body/MPV FWD UFDB | | GCI18135 | Inner Joint | | 26 | 22 | 40 | 390 | 83.5 | |
| | 2010.12-2019.06 | AT | F | L | Box Body/MPV FWD UFDB | | GDS18410 | Drive Shaft | | 27 | 28 | 63.1 | 96 | 631 | |
| | 2010.12-2019.06 | AT | F | R | Box Body/MPV FWD UFDB | | GDS18343 | Drive Shaft | | 27 | 28 | 63.1 | 96 | 967 | |
| | 2010.12-2019.06 | AT | F | R | Box Body/MPV FWD UFDB | | GCI62017 | Inner Joint | | 28 | 26 | 33.95 | 371.5 | 92 | |
| | 2010.12-2019.06 | AT/MT | F | L/R | Box Body/MPV FWD UFDB | | GCO18252 | Outer Joint | | 27 | 26 | 63.1 | 96 | 64 | I |
| | 2010.12-2019.06 | MT | F | L | Box Body/MPV FWD UFDB | | GDS18382 | Drive Shaft | | 27 | 26 | 63.1 | 96 | 638 | |
| | 2010.12-2019.06 | MT | F | L | Box Body/MPV FWD UFDB | | GCI18157 | Inner Joint | | 26 | 26 | 40 | 69 | 109 | |
| | 2011.02-2019.06 | 6DCT | F | L | MPV FWD UFDB | | GCI62053 | Inner Joint | | 28 | 26 | 34 | 79.5 | 91 | |
| | 2011.02-2019.06 | 6MT | F | R | MPV FWD UFDB | | GDS18315 | Drive Shaft | | 27 | 26 | 63 | 96 | 984 | |
| | 2011.02-2019.06 | 6MT/6DCT | F | L/R | MPV FWD UFDB | With vibration damper | GCO18252 | Outer Joint | | 27 | 26 | 63.1 | 96 | 64 | I |
| | 2011.02-2019.06 | 6MT/6DCT | F | L/R | MPV FWD UFDB | | GCO18326 | Outer Joint | | 27 | 26 | 63.1 | 96 | 64 | I |
| | 2011.02-2019.06 | AT | F | R | MPV FWD UFDB | | GDS18343 | Drive Shaft | | 27 | 28 | 63.1 | 96 | 967 | |
| | 2011.02-2019.06 | MT | F | L | MPV FWD UFDB | | GDS18382 | Drive Shaft | | 27 | 26 | 63.1 | 96 | 638 | |
| | 2011.02-2019.06 | | F | L | MPV FWD UFDB | | GDS18410 | Drive Shaft | | 27 | 28 | 63.1 | 96 | 631 | |
| 2.0 (110 kw) | 2015.03-2019.06 | 6DCT | F | L | Box Body/MPV FWD T7DB;T7DC | | GDS81479 | Drive Shaft | | 27 | 28 | 63.1 | 96 | 623 | |
| | 2015.03-2019.06 | 6DCT | F | R | Box Body/MPV FWD T7DB;T7DC | | GDS56408 | Drive Shaft | | 27 | 28 | 63.2 | 96 | 970 | |
| | 2015.03-2019.06 | 6DCT | F | L/R | Box Body/MPV FWD T7DB;T7DC | | GCO18252 | Outer Joint | | 27 | 26 | 63.1 | 96 | 64 | I |
| | 2015.03-2019.06 | 6DCT | F | L | Box Body/MPV FWD T7DB;T7DC | | GCI62053 | Inner Joint | | 28 | 26 | 34 | 79.5 | 91 | |
| | 2015.03-2019.06 | 6DCT | F | R | Box Body/MPV FWD T7DB;T7DC | | GCI83292 | Inner Joint | | 28 | 26 | 33.8 | 394 | 92.5 | |
| | 2015.03-2019.06 | 6MT | F | R | Box Body/MPV FWD T7DB;T7DC | | GDS18315 | Drive Shaft | | 27 | 26 | 63 | 96 | 984 | |
| | 2015.03-2019.06 | MT | F | L | Box Body/MPV FWD T7DB;T7DC | | GDS18382 | Drive Shaft | | 27 | 26 | 63.1 | 96 | 638 | |
| | 2015.03-2019.06 | 6DCT | F | L | MPV FWD T7DB;T7DC;T7DD | | GDS81479 | Drive Shaft | | 27 | 28 | 63.1 | 96 | 623 | |
| | 2015.03-2019.06 | 6DCT | F | R | MPV FWD T7DB;T7DC;T7DD | | GDS56408 | Drive Shaft | | 27 | 28 | 63.2 | 96 | 970 | |
| | 2015.03-2019.06 | 6DCT | F | L/R | MPV FWD T7DB;T7DC;T7DD | | GCO18252 | Outer Joint | | 27 | 26 | 63.1 | 96 | 64 | I |
| | 2015.03-2019.06 | 6DCT | F | L | MPV FWD T7DB;T7DC;T7DD | | GCI62053 | Inner Joint | | 28 | 26 | 34 | 79.5 | 91 | |
| | 2015.03-2019.06 | 6DCT | F | R | MPV FWD T7DB;T7DC;T7DD | | GCI83292 | Inner Joint | | 28 | 26 | 33.8 | 394 | 92.5 | |
| | 2015.03-2019.06 | 6MT | F | L | MPV FWD T7DB;T7DC;T7DD | | GDS18382 | Drive Shaft | | 27 | 26 | 63.1 | 96 | 638 | |
| | 2015.03-2019.06 | 6MT | F | R | MPV FWD T7DB;T7DC;T7DD | | GDS18315 | Drive Shaft | | 27 | 26 | 63 | 96 | 984 | |
| | 2015.03-2019.06 | 6MT | F | L/R | MPV FWD T7DB;T7DC;T7DD | | GCO18326 | Outer Joint | | 27 | 26 | 63.1 | 96 | 64 | I |
| 2.0 (120 kw) | 2010.12-2019.06 | AT | F | R | Box Body/MPV FWD TXDB | | GDS18343 | Drive Shaft | | 27 | 28 | 63.1 | 96 | 967 | |
| | 2010.12-2019.06 | AT | F | R | Box Body/MPV FWD TXDB | | GCI62017 | Inner Joint | | 28 | 26 | 33.95 | 371.5 | 92 | |
| | 2010.12-2019.06 | AT/MT | F | L/R | Box Body/MPV FWD TXDB | | GCO18252 | Outer Joint | | 27 | 26 | 63.1 | 96 | 64 | I |
| | 2010.12-2019.06 | MT | F | L | Box Body/MPV FWD TXDB | | GCI18157 | Inner Joint | | 26 | 26 | 40 | 69 | 109 | |
| | 2010.12-2019.06 | | F | L | Box Body/MPV FWD TXDB | | GDS18410 | Drive Shaft | | 27 | 28 | 63.1 | 96 | 631 | |
| | 2010.12-2019.06 | 6DCT | F | L | MPV FWD TXDB | | GCI62053 | Inner Joint | | 28 | 26 | 34 | 79.5 | 91 | |
| | 2010.12-2019.06 | 6MT | F | R | MPV FWD TXDB | | GDS18315 | Drive Shaft | | 27 | 26 | 63 | 96 | 984 | |
| | 2010.12-2019.06 | 6MT/6DCT | F | L/R | MPV FWD TXDB | | GCO18252 | Outer Joint | | 27 | 26 | 63.1 | 96 | 64 | I |
| | 2010.12-2019.06 | 6MT/6DCT | F | L/R | MPV FWD TXDB | | GCO18326 | Outer Joint | | 27 | 26 | 63.1 | 96 | 64 | I |
| | 2010.12-2019.06 | AT | F | R | MPV FWD TXDB | | GDS18343 | Drive Shaft | | 27 | 28 | 63.1 | 96 | 967 | |
| | 2010.12-2019.06 | MT | F | L | MPV FWD TXDB | | GDS18382 | Drive Shaft | | 27 | 26 | 63.1 | 96 | 638 | |
| | 2010.12-2019.06 | | F | L | MPV FWD TXDB | | GDS18410 | Drive Shaft | | 27 | 28 | 63.1 | 96 | 631 | |
| 2.0 (125 kw) | 2015.03-2019.06 | 6DCT | F | L | Box Body/MPV FWD T8DE | | GDS81479 | Drive Shaft | | 27 | 28 | 63.1 | 96 | 623 | |
| | 2015.03-2019.06 | 6DCT | F | R | Box Body/MPV FWD T8DE | | GDS56408 | Drive Shaft | | 27 | 28 | 63.2 | 96 | 970 | |
| | 2015.03-2019.06 | 6DCT | F | L/R | Box Body/MPV FWD T8DE | | GCO18252 | Outer Joint | | 27 | 26 | 63.1 | 96 | 64 | I |

| | YEAR | TRANSM. | F/R | L/R | BODY STYLE & DRIVE TYPE & ENGINE | REMARKS | G-AP Ref. | PRODUCT | ABS | Technical Specifications A | B | C | H | L | P |
|---|---|---|---|---|---|---|---|---|---|---|---|---|---|---|---|
| **FORD** | | | | | | | | | | | | | | | |
| **Grand C-Max** | | | | | | | | | | | | | | | |
| 2.0 (125 kw) | 2015.03-2019.06 | 6DCT | F | L | Box Body/MPV FWD T8DE | | GCI62053 | Inner Joint | | 28 | 26 | 34 | 79.5 | 91 | |
| | 2015.03-2019.06 | 6DCT | F | R | Box Body/MPV FWD T8DE | | GCI83292 | Inner Joint | | 28 | 26 | 33.8 | 394 | 92.5 | |
| | 2015.03-2019.06 | MT | F | L/R | Box Body/MPV FWD T8DE | | GCO18270 | Outer Joint | | 27 | 26 | 62.8 | 91 | 64 | M |
| | 2015.03-2019.06 | 6DCT | F | L | MPV FWD T8DE;T8DF | | GDS81479 | Drive Shaft | | 27 | 28 | 63.1 | 96 | 623 | |
| | 2015.03-2019.06 | 6DCT | F | R | MPV FWD T8DE;T8DF | | GDS56408 | Drive Shaft | | 27 | 28 | 63.2 | 96 | 970 | |
| | 2015.03-2019.06 | 6DCT | F | L/R | MPV FWD T8DE;T8DF | | GCO18252 | Outer Joint | | 27 | 26 | 63.1 | 96 | 64 | I |
| | 2015.03-2019.06 | 6DCT | F | L | MPV FWD T8DE;T8DF | | GCI62053 | Inner Joint | | 28 | 26 | 34 | 79.5 | 91 | |
| | 2015.03-2019.06 | 6DCT | F | R | MPV FWD T8DE;T8DF | | GCI83292 | Inner Joint | | 28 | 26 | 33.8 | 394 | 92.5 | |
| | 2015.03-2019.06 | MT | F | L | MPV FWD T8DE;T8DF | | GDS18295 | Drive Shaft | | 27 | 26 | 62.7 | 96 | 637 | |
| | 2015.03-2019.06 | MT | F | R | MPV FWD T8DE;T8DF | | GDS18294 | Drive Shaft | | 27 | 26 | 62.7 | 96 | 972 | |
| **KA** | | | | | | | | | | | | | | | |
| 1.2 (51 kw) | 2008.10-2016.05 | MT | F | L | Hatchback FWD FP4;169A4000 | Inner joint with housing | GDS17101 | Drive Shaft | | 22 | 22 | 47 | 75.5 | 613 | |
| | 2008.10-2016.05 | MT | F | L | Hatchback FWD FP4;169A4000 | Inner joint without housing | GDS17170 | Drive Shaft | | 22 | 29 | 47 | 75.5 | 524 | |
| | 2008.10-2016.05 | MT | F | R | Hatchback FWD FP4;169A4000 | Inner joint with housing | GDS17112 | Drive Shaft | | 22 | 22 | 47 | 75.5 | 846 | |
| | 2008.10-2016.05 | MT | F | R | Hatchback FWD FP4;169A4000 | Inner joint without housing | GDS17171 | Drive Shaft | | 22 | 29 | 47 | 75.5 | 758 | |
| | 2008.10-2016.05 | MT | F | L/R | Hatchback FWD FP4;169A4000 | | GCO17043 | Outer Joint | | 22 | 20 | 47 | 75.5 | 54.5 | M |
| | 2008.10-2016.05 | MT | F | L/R | Hatchback FWD FP4;169A4000 | | GCI17046 | Inner Joint | | 22 | 20 | 36 | 61.5 | 88.5 | |
| 1.3 (36 kw) | 1998.06-2008.11 | 5MT | F | L | Hatchback FWD JJD/JJF/JJG/JJH/JJL | | GDS18007 | Drive Shaft | | 25 | 23 | 56.5 | 88.5 | 590 | |
| | 1998.06-2008.11 | 5MT | F | L/R | Hatchback FWD JJD/JJF/JJG/JJH/JJL | | GCO18012 | Outer Joint | | 25 | 20 | 56.5 | 88.5 | 49 | O |
| | 1998.06-2008.11 | MT | F | R | Hatchback FWD JJD/JJF/JJG/JJH/JJL | | GDS18140 | Drive Shaft | | 25 | 23 | 56.5 | 88.5 | 868 | |
| | 1998.06-2008.11 | MT | F | R | Hatchback FWD JJD/JJF/JJG/JJH/JJL | | GDS99044 | Drive Shaft | | 25 | 23 | 56.5 | 88.5 | 866 | |
| | 1998.06-2008.11 | | F | | Hatchback FWD JJD/JJF/JJG/JJH/JJL | | GCI18053 | Inner Joint | | 23 | 22 | 40 | 61 | 91.5 | |
| 1.3 (37 kw) | 1996.09-2002.10 | 5MT | F | L | Hatchback FWD JJB | | GDS18007 | Drive Shaft | | 25 | 23 | 56.5 | 88.5 | 590 | |
| | 1996.09-2002.10 | 5MT | F | L/R | Hatchback FWD JJB | | GCO18012 | Outer Joint | | 25 | 20 | 56.5 | 88.5 | 49 | O |
| | 1996.09-2002.10 | MT | F | R | Hatchback FWD JJB | | GDS18140 | Drive Shaft | | 25 | 23 | 56.5 | 88.5 | 868 | |
| | 1996.09-2002.10 | MT | F | R | Hatchback FWD JJB | | GDS99044 | Drive Shaft | | 25 | 23 | 56.5 | 88.5 | 866 | |
| | 1996.09-2002.10 | | F | | Hatchback FWD JJB | | GCI18053 | Inner Joint | | 23 | 22 | 40 | 61 | 91.5 | |
| 1.3 (44 kw) | 1996.09-2008.11 | 5MT | F | L | Hatchback FWD BAA/J4D/J4K/J4M/J4N/J4P/J4S | Date to:2002.09 | GDS18007 | Drive Shaft | | 25 | 23 | 56.5 | 88.5 | 590 | |
| | 1996.09-2008.11 | 5MT | F | L/R | Hatchback FWD BAA/J4D/J4K/J4M/J4N/J4P/J4S | Date to:2002.09 | GCO18012 | Outer Joint | | 25 | 20 | 56.5 | 88.5 | 49 | O |
| | 1996.09-2008.11 | 5MT | F | L | Hatchback FWD BAA/J4D/J4K/J4M/J4N/J4P/J4S | Date to:2002.09 | GCI18053 | Inner Joint | | 23 | 22 | 40 | 61 | 91.5 | |
| | 1996.09-2008.11 | MT | F | R | Hatchback FWD BAA/J4D/J4K/J4M/J4N/J4P/J4S | Date from:2002.10 | GDS82178 | Drive Shaft | | 25 | 23 | 53.3 | 87 | 868 | |
| | 1996.09-2008.11 | MT | F | R | Hatchback FWD BAA/J4D/J4K/J4M/J4N/J4P/J4S | Date to:2002.09 | GDS99044 | Drive Shaft | | 25 | 23 | 56.5 | 88.5 | 866 | |
| | 1996.09-2008.11 | MT | F | R | Hatchback FWD BAA/J4D/J4K/J4M/J4N/J4P/J4S | Date from:2002.10 | GCO18222 | Outer Joint | | 25 | 23 | 53.3 | 87 | 56 | M |
| | 1996.09-2008.11 | MT | F | R | Hatchback FWD BAA/J4D/J4K/J4M/J4N/J4P/J4S | | GCI18086 | Inner Joint | | 23 | 22 | 40 | 61 | 90 | |
| 1.3 (51 kw) | 2002.08-2008.09 | 5MT | F | R | Hatchback FWD A9A/A9B | Date from:2002.11 | GDS82178 | Drive Shaft | | 25 | 23 | 53.3 | 87 | 868 | |
| | 2002.08-2008.09 | AT/MT | F | L | Hatchback FWD A9A/A9B | | GDS18007 | Drive Shaft | | 25 | 23 | 56.5 | 88.5 | 590 | |
| | 2002.08-2008.09 | AT/MT | F | L/R | Hatchback FWD A9A/A9B | | GCO18009 | Outer Joint | | 25 | 22 | 53.3 | 90 | 51 | M |
| | 2002.08-2008.09 | MT | F | R | Hatchback FWD A9A/A9B | Date to:2002.10 | GDS99044 | Drive Shaft | | 25 | 23 | 56.5 | 88.5 | 866 | |
| | 2002.08-2008.09 | | F | | Hatchback FWD A9A/A9B | | GCI18053 | Inner Joint | | 23 | 22 | 40 | 61 | 91.5 | |
| 1.3 (55 kw) | 2008.10-2016.05 | 5MT | F | L/R | Hatchback FWD FD4;169A1000 | | GCO17026 | Outer Joint | | 25 | 22 | 51 | 84 | 57 | M |
| | 2008.10-2016.05 | MT | F | L | Hatchback FWD FD4;169A1000 | | GDS17119 | Drive Shaft | | 25 | 22 | 51 | 84 | 615 | |
| | 2008.10-2016.05 | MT | F | R | Hatchback FWD FD4;169A1000 | | GDS17120 | Drive Shaft | | 25 | 22 | 51 | 84 | 846 | |
| 1.6 (70 kw) | 2000.09-2008.11 | 5MT | F | L | Hatchback FWD CDB/CDC | Date from:2003.04 | GDS82179 | Drive Shaft | | 25 | 23 | 53.3 | 87 | 588 | |
| | 2000.09-2008.11 | 5MT | F | R | Hatchback FWD CDB/CDC | Date from:2003.04 | GDS82178 | Drive Shaft | | 25 | 23 | 53.3 | 87 | 868 | |
| | 2000.09-2008.11 | AT/MT | F | L/R | Hatchback FWD CDB/CDC | | GCO18009 | Outer Joint | | 25 | 22 | 53.3 | 90 | 51 | M |
| | 2000.09-2008.11 | MT | F | R | Hatchback FWD CDB/CDC | Date to:2002.10 | GDS99044 | Drive Shaft | | 25 | 23 | 56.5 | 88.5 | 866 | |
| | 2000.09-2008.11 | | F | | Hatchback FWD CDB/CDC | | GCO18222 | Outer Joint | | 25 | 23 | 53.3 | 87 | 56 | M |
| 1.6 (71 kw) | 2005.11-2008.09 | 5MT | F | L | Hatchback FWD HL16SL9B | | GDS82179 | Drive Shaft | | 25 | 23 | 53.3 | 87 | 588 | |
| | 2005.11-2008.09 | 5MT | F | R | Hatchback FWD HL16SL9B | | GDS82178 | Drive Shaft | | 25 | 23 | 53.3 | 87 | 868 | |
| **KA Van** | | | | | | | | | | | | | | | |
| 1.3 (44 kw) | 2002.05-2005.05 | 5MT | F | L | Hatchback Van FWD BAA/J4D/J4K/J4M/J4N/J4P/J4S | Date to:2002.09 | GDS18007 | Drive Shaft | | 25 | 23 | 56.5 | 88.5 | 590 | |
| | 2002.05-2005.05 | 5MT | F | R | Hatchback Van FWD BAA/J4D/J4K/J4M/J4N/J4P/J4S | Date from:2002.10 | GDS82178 | Drive Shaft | | 25 | 23 | 53.3 | 87 | 868 | |
| | 2002.05-2005.05 | 5MT | F | R | Hatchback Van FWD BAA/J4D/J4K/J4M/J4N/J4P/J4S | Date to:2002.09 | GDS99044 | Drive Shaft | | 25 | 23 | 56.5 | 88.5 | 866 | |
| | 2002.05-2005.05 | 5MT | F | L/R | Hatchback Van FWD BAA/J4D/J4K/J4M/J4N/J4P/J4S | Date to:2002.09 | GCO18012 | Outer Joint | | 25 | 20 | 56.5 | 88.5 | 49 | O |
| | 2002.05-2005.05 | 5MT | F | L/R | Hatchback Van FWD BAA/J4D/J4K/J4M/J4N/J4P/J4S | Date from:2002.10 | GCO18222 | Outer Joint | | 25 | 23 | 53.3 | 87 | 56 | M |
| | 2002.05-2005.05 | 5MT | F | R | Hatchback Van FWD BAA/J4D/J4K/J4M/J4N/J4P/J4S | Date from:2002.10 | GCI18086 | Inner Joint | | 23 | 22 | 40 | 61 | 90 | |
| 1.3 (51 kw) | 2002.09-2004.03 | 5MT | F | R | Hatchback Van FWD A9A/A9B | | GDS82178 | Drive Shaft | | 25 | 23 | 53.3 | 87 | 868 | |
| **KA+** | | | | | | | | | | | | | | | |
| 1.2 (51 kw) | 2016.06-2020.12 | 5MT | F | L | Hatchback FWD B2KA | | GDS81341 | Drive Shaft | | 25 | 23 | 52.9 | 89 | 626 | |
| | 2016.06-2020.12 | 5MT | F | R | Hatchback FWD B2KA | | GDS81342 | Drive Shaft | | 25 | 23 | 52.9 | 89 | 920 | |
| | 2016.06-2020.12 | 5MT | F | L/R | Hatchback FWD B2KA | | GCO18001 | Outer Joint | | 25 | 20 | 52.9 | 89 | 52 | M |
| | 2016.06-2020.12 | 5MT | F | L/R | Hatchback FWD B2KA | | GCI81193 | Inner Joint | | 23 | 19 | 40 | 61 | 87 | |
| 1.2 (63 kw) | 2016.06-2020.12 | 5MT | F | L | Hatchback FWD YSKD;YSKE | | GDS81341 | Drive Shaft | | 25 | 23 | 52.9 | 89 | 626 | |
| | 2016.06-2020.12 | 5MT | F | R | Hatchback FWD YSKD;YSKE | | GDS81342 | Drive Shaft | | 25 | 23 | 52.9 | 89 | 920 | |
| | 2016.06-2020.12 | 5MT | F | L/R | Hatchback FWD YSKD;YSKE | | GCO18001 | Outer Joint | | 25 | 20 | 52.9 | 89 | 52 | M |

| | YEAR | TRANSM. | F/R | L/R | BODY STYLE & DRIVE TYPE & ENGINE | REMARKS | G-AP Ref. | PRODUCT | ABS | Technical Specifications | | | | | |
|---|---|---|---|---|---|---|---|---|---|---|---|---|---|---|---|
| | | | | | | | | | | A | B | C | H | L | P |
| **FORD** | | | | | | | | | | | | | | | |
| **KA+** | | | | | | | | | | | | | | | |
| 1.2 (63 kw) | 2016.06-2020.12 | 5MT | F | L/R | Hatchback FWD YSKD;YSKE | | GCI81193 | Inner Joint | | 23 | 19 | 40 | 61 | 87 | |
| | 2016.06-2020.12 | 5MT | F | L | Saloon FWD YSKD;YSKE | | GDS81341 | Drive Shaft | | 25 | 23 | 52.9 | 89 | 626 | |
| | 2016.06-2020.12 | 5MT | F | R | Saloon FWD YSKD;YSKE | | GDS81342 | Drive Shaft | | 25 | 23 | 52.9 | 89 | 920 | |
| | 2016.06-2020.12 | 5MT | F | L/R | Saloon FWD YSKD;YSKE | | GCO18001 | Outer Joint | | 25 | 20 | 52.9 | 89 | 52 | M |
| | 2016.06-2020.12 | 5MT | F | L/R | Saloon FWD YSKD;YSKE | | GCI81193 | Inner Joint | | 23 | 19 | 40 | 61 | 87 | |
| **Kuga** | | | | | | | | | | | | | | | |
| 1.5 (88 kw) | 2016.01-2019.06 | 6MT | F | L | SUV FWD BNMA;BNMB;BNMC | Date to:2016.09,Trans. code:B6 | GDS57402 | Drive Shaft | | 27 | 26 | 63.1 | 96 | 662 | |
| | 2016.01-2019.06 | 6MT | F | L | SUV FWD BNMA;BNMB;BNMC | Date from:2017.01,Trans. code:B6 | GDS84523 | Drive Shaft | | 27 | 26 | 60.8 | 96 | 659 | |
| | 2016.01-2019.06 | 6MT | F | L | SUV FWD BNMA;BNMB;BNMC | Trans. code:MMT6 | GDS84623 | Drive Shaft | | 27 | 26 | 63.1 | 96 | 653 | |
| | 2016.01-2019.06 | 6MT | F | R | SUV FWD BNMA;BNMB;BNMC | Date to:2016.09,Trans. code:B6 | GDS57403 | Drive Shaft | | 27 | 26 | 63.1 | 96 | 1001 | |
| | 2016.01-2019.06 | 6MT | F | R | SUV FWD BNMA;BNMB;BNMC | Date from:2017.01,Trans. code:B6 | GDS84353 | Drive Shaft | | 27 | 26 | 60.8 | 96 | 994 | |
| | 2016.01-2019.06 | 6MT | F | R | SUV FWD BNMA;BNMB;BNMC | Trans. code:MMT6 | GDS84621 | Drive Shaft | | 27 | 26 | 63.1 | 96 | 996 | |
| | 2016.01-2019.06 | 6MT | F | R | SUV FWD BNMA;BNMB;BNMC | Date from:2017.01,Trans. code:B6 | GCO18241 | Outer Joint | | 27 | 24 | 60.8 | 96 | 59 | I |
| | 2016.01-2019.06 | 6MT | F | L/R | SUV FWD BNMA;BNMB;BNMC | Trans. code:MMT6 | GCO18252 | Outer Joint | | 27 | 26 | 63.1 | 96 | 64 | I |
| | 2016.01-2019.06 | 6MT | F | L | SUV FWD BNMA;BNMB;BNMC | Date from:2017.01,Trans. code:B6 | GCI81392 | Inner Joint | | 26 | 24 | 40 | 60 | 112 | |
| | 2016.01-2019.06 | 6MT | F | L | SUV FWD BNMA;BNMB;BNMC | Date to:2016.09,Trans. code:B6 | GCI83648 | Inner Joint | | 26 | 26 | 40 | 60 | 116 | |
| | 2016.01-2019.06 | 6MT | F | R | SUV FWD BNMA;BNMB;BNMC | Date from:2017.01,Trans. code:B6 | GCI62055 | Inner Joint | | 26 | 24 | 40 | 447.5 | 98.5 | |
| | 2016.01-2019.06 | 6MT | F | R | SUV FWD BNMA;BNMB;BNMC | Date to:2016.09,Trans. code:B6 | GCI83649 | Inner Joint | | 26 | 26 | 40 | 383 | 107 | |
| | 2016.07-2019.06 | 6DCT | F | L/R | SUV FWD XWMB;XWMC | Position:Front axle right,Date form:2017.01 | GCO18326 | Outer Joint | | 27 | 26 | 63.1 | 96 | 64 | I |
| | 2016.07-2019.06 | 6MT | F | L | SUV FWD XWMB;XWMC | | GDS57402 | Drive Shaft | | 27 | 26 | 63.1 | 96 | 662 | |
| | 2016.07-2019.06 | 6MT | F | L/R | SUV FWD XWMB;XWMC | | GCO18252 | Outer Joint | | 27 | 26 | 63.1 | 96 | 64 | I |
| | 2016.07-2019.06 | 6MT | F | L | SUV FWD XWMB;XWMC | | GCI83648 | Inner Joint | | 26 | 26 | 40 | 60 | 116 | |
| | 2016.07-2019.06 | 6MT | F | R | SUV FWD XWMB;XWMC | | GCI83649 | Inner Joint | | 26 | 26 | 40 | 383 | 107 | |
| | 2016.07-2019.06 | 6MT/6DCT | F | R | SUV FWD XWMB;XWMC | Transmission:6DCT,Date to:2016.12 | GDS57403 | Drive Shaft | | 27 | 26 | 63.1 | 96 | 1001 | |
| | 2019.07- | 6MT | F | L | SUV FWD UNDA | Date to:2022.10 | GDS58338 | Drive Shaft | | 27 | 28 | 60 | 96 | 654 | |
| | 2019.07- | 6MT | F | R | SUV FWD UNDA | Date to:2022.10 | GDS58248 | Drive Shaft | | 27 | 28 | 60 | 96 | 1008 | |
| | 2019.07- | 6MT | F | L/R | SUV FWD UNDA | Date to:2022.10 | GCO83505 | Outer Joint | | 27 | 24 | 60 | 96 | 62 | M |
| | 2019.07- | 6MT | F | L | SUV FWD UNDA | Date to:2022.10 | GCI84069 | Inner Joint | | 28 | 23 | 40 | 64.5 | 96.5 | |
| | 2019.07- | 6MT | F | R | SUV FWD UNDA | Date to:2022.10 | GCI84044 | Inner Joint | | 28 | 23 | 40 | 393 | 77 | |
| | 2019.07- | 6MT | F | L | SUV FWD ZTDA | Date to:2022.10 | GDS58338 | Drive Shaft | | 27 | 28 | 60 | 96 | 654 | |
| | 2019.07- | 6MT | F | R | SUV FWD ZTDA | Date to:2022.10 | GDS58248 | Drive Shaft | | 27 | 28 | 60 | 96 | 1008 | |
| | 2019.07- | 6MT | F | L/R | SUV FWD ZTDA | Date to:2022.10 | GCO83505 | Outer Joint | | 27 | 24 | 60 | 96 | 62 | M |
| | 2019.07- | 6MT | F | L | SUV FWD ZTDA | Date to:2022.10 | GCI84069 | Inner Joint | | 28 | 23 | 40 | 64.5 | 96.5 | |
| | 2019.07- | 6MT | F | R | SUV FWD ZTDA | Date to:2022.10 | GCI84044 | Inner Joint | | 28 | 23 | 40 | 393 | 77 | |
| | 2019.07- | 8AT | F | L | SUV FWD ZTDA | | GDS57336 | Drive Shaft | | 27 | 35 | 60 | 96 | 706 | |
| | 2019.07- | 8AT | F | L/R | SUV FWD ZTDA | | GCO83505 | Outer Joint | | 27 | 24 | 60 | 96 | 62 | M |
| | 2019.07- | 8AT | F | L | SUV FWD ZTDA | | GCI83604 | Inner Joint | | 35 | 24 | 38 | 154 | 86 | |
| 1.5 (110 kw) | 2014.09-2019.06 | 6AT | F | L | SUV FWD M8MA;M8MB;M8ME;M8MC;M8MD | | GDS18373 | Drive Shaft | | 27 | 35 | 63.1 | 96 | 695 | |
| | 2014.09-2019.06 | 6AT | F | R | SUV FWD M8MA;M8MB;M8ME;M8MC;M8MD | Date to:2014.09 | GDS18374 | Drive Shaft | | 27 | 35 | 63.1 | 96 | 956 | |
| | 2014.09-2019.06 | 6AT | F | R | SUV FWD M8MA;M8MB;M8ME;M8MC;M8MD | Date from:2014.10 | GDS83992 | Drive Shaft | | 27 | 35 | 63.1 | 96 | 956 | |
| | 2014.09-2019.06 | 6AT | F | L/R | SUV FWD M8MA;M8MB;M8ME;M8MC;M8MD | | GCO18326 | Outer Joint | | 27 | 26 | 63.1 | 96 | 64 | I |
| | 2014.09-2019.06 | 6AT | F | L/R | SUV FWD M8MA;M8MB;M8ME;M8MC;M8MD | Date from:2014.10 | GCO82562 | Outer Joint | | 27 | 26 | 63.1 | 96 | 64 | M |
| | 2014.09-2019.06 | 6AT | F | R | SUV FWD M8MA;M8MB;M8ME;M8MC;M8MD | Date from:2014.10 | GCI18155 | Inner Joint | | 35 | 27 | 42 | 407.5 | 100.5 | |
| | 2014.09-2019.06 | 6MT | F | L | SUV FWD M8MA;M8MB;M8ME;M8MC;M8MD | Date to:2016.09,Trans. code:B6 | GDS57402 | Drive Shaft | | 27 | 26 | 63.1 | 96 | 662 | |
| | 2014.09-2019.06 | 6MT | F | L | SUV FWD M8MA;M8MB;M8ME;M8MC;M8MD | Date from:2017.09,Trans. code:B6 | GDS84523 | Drive Shaft | | 27 | 26 | 60.8 | 96 | 659 | |
| | 2014.09-2019.06 | 6MT | F | L | SUV FWD M8MA;M8MB;M8ME;M8MC;M8MD | Trans. code:MMT6 | GDS84623 | Drive Shaft | | 27 | 26 | 63.1 | 96 | 653 | |
| | 2014.09-2019.06 | 6MT | F | R | SUV FWD M8MA;M8MB;M8ME;M8MC;M8MD | Date to:2016.09,Trans. code:B6 | GDS57403 | Drive Shaft | | 27 | 26 | 63.1 | 96 | 1001 | |
| | 2014.09-2019.06 | 6MT | F | R | SUV FWD M8MA;M8MB;M8ME;M8MC;M8MD | Date from:2017.09,Trans. code:B6 | GDS84353 | Drive Shaft | | 27 | 26 | 60.8 | 96 | 994 | |
| | 2014.09-2019.06 | 6MT | F | R | SUV FWD M8MA;M8MB;M8ME;M8MC;M8MD | Trans. code:MMT6 | GDS84621 | Drive Shaft | | 27 | 26 | 63.1 | 96 | 996 | |
| | 2014.09-2019.06 | 6MT | F | L | SUV FWD M8MA;M8MB;M8ME;M8MC;M8MD | Trans. code:B6 | GCO18241 | Outer Joint | | 27 | 24 | 60.8 | 96 | 59 | I |
| | 2014.09-2019.06 | 6MT | F | L/R | SUV FWD M8MA;M8MB;M8ME;M8MC;M8MD | Trans. code:MMT6 | GCO18252 | Outer Joint | | 27 | 26 | 63.1 | 96 | 64 | I |
| | 2014.09-2019.06 | 6MT | F | L | SUV FWD M8MA;M8MB;M8ME;M8MC;M8MD | Date from:2017.09,Trans. code:B6 | GCI81392 | Inner Joint | | 26 | 24 | 40 | 60 | 112 | |
| | 2014.09-2019.06 | 6MT | F | L | SUV FWD M8MA;M8MB;M8ME;M8MC;M8MD | Date to:2016.09,Trans. code:B6 | GCI83648 | Inner Joint | | 26 | 26 | 40 | 60 | 116 | |
| | 2014.09-2019.06 | 6MT | F | R | SUV FWD M8MA;M8MB;M8ME;M8MC;M8MD | Date to:2016.09,Trans. code:B6 | GCI83649 | Inner Joint | | 26 | 26 | 40 | 383 | 107 | |
| | 2016.07-2019.12 | 6AT | F | L | SUV 4WD M8MA;M8MB;M8ME;M8MC;M8MD | | GDS18373 | Drive Shaft | | 27 | 35 | 63.1 | 96 | 695 | |
| | 2016.07-2019.12 | 6AT | F | R | SUV 4WD M8MA;M8MB;M8ME;M8MC;M8MD | | GDS18374 | Drive Shaft | | 27 | 35 | 63.1 | 96 | 956 | |
| | 2016.07-2019.12 | 6AT | F | L/R | SUV 4WD M8MA;M8MB;M8ME;M8MC;M8MD | | GCO18326 | Outer Joint | | 27 | 26 | 63.1 | 96 | 64 | I |
| | 2016.07-2019.12 | 6AT | R | L/R | SUV 4WD M8MA;M8MB;M8ME;M8MC;M8MD | | GDS82182 | Drive Shaft | 44NS | 27 | 25 | 56.2 | 107 | 811 | |
| | 2016.07-2019.12 | 6AT | R | L/R | SUV 4WD M8MA;M8MB;M8ME;M8MC;M8MD | | GCO81687 | Outer Joint | 44NS | 27 | 26 | 56.2 | 107 | 61 | I |
| | 2016.07-2019.12 | 6AT | R | L/R | SUV 4WD M8MA;M8MB;M8ME;M8MC;M8MD | | GCI81660 | Inner Joint | | 25 | 26 | 35 | 113.5 | 72 | |
| | 2019.02-2019.11 | 6MT | F | L | SUV FWD M8ME | Trans. code:B6 | GDS84523 | Drive Shaft | | 27 | 26 | 60.8 | 96 | 659 | |
| | 2019.02-2019.11 | 6MT | F | L | SUV FWD M8ME | Trans. code:MMT6 | GDS84623 | Drive Shaft | | 27 | 26 | 63.1 | 96 | 653 | |
| | 2019.02-2019.11 | 6MT | F | R | SUV FWD M8ME | Trans. code:B6 | GDS84353 | Drive Shaft | | 27 | 26 | 60.8 | 96 | 994 | |
| | 2019.02-2019.11 | 6MT | F | R | SUV FWD M8ME | Trans. code:MMT6 | GDS84621 | Drive Shaft | | 27 | 26 | 63.1 | 96 | 996 | |
| | 2019.02-2019.11 | 6MT | F | L/R | SUV FWD M8ME | Trans. code:B6 | GCO18241 | Outer Joint | | 27 | 24 | 60.8 | 96 | 59 | I |

| | YEAR | TRANSM. | F/R | L/R | BODY STYLE & DRIVE TYPE & ENGINE | REMARKS | G-AP Ref. | PRODUCT | ABS | Technical Specifications A | B | C | H | L | P |
|---|---|---|---|---|---|---|---|---|---|---|---|---|---|---|---|
| **FORD** **Kuga** | | | | | | | | | | | | | | | |
| 1.5 (110 kw) | 2019.02-2019.11 | 6MT | F | L/R | SUV FWD M8ME | Trans. code:MMT6 | GCO18252 | Outer Joint | | 27 | 26 | 63.1 | 96 | 64 | I |
| | 2019.02-2019.11 | 6MT | F | L | SUV FWD M8ME | Trans. code:B6 | GCI81392 | Inner Joint | | 26 | 24 | 40 | 60 | 112 | |
| | 2019.07- | 6MT | F | L | SUV FWD YZDA;YZDB | Date to:2022.10 | GDS58338 | Drive Shaft | | 27 | 28 | 60 | 96 | 654 | |
| | 2019.07- | 6MT | F | R | SUV FWD YZDA;YZDB | Date to:2022.10 | GDS58248 | Drive Shaft | | 27 | 28 | 60 | 96 | 1008 | |
| | 2019.07- | 6MT | F | L/R | SUV FWD YZDA;YZDB | Date to:2022.10 | GCO83505 | Outer Joint | | 27 | 24 | 60 | 96 | 62 | M |
| | 2019.07- | 6MT | F | L | SUV FWD YZDA;YZDB | Date to:2022.10 | GCI84069 | Inner Joint | | 28 | 23 | 40 | 64.5 | 96.5 | |
| | 2019.07- | 6MT | F | R | SUV FWD YZDA;YZDB | Date to:2022.10 | GCI84044 | Inner Joint | | 28 | 23 | 40 | 393 | 77 | |
| 1.5 (129 kw) | 2018.08-2019.06 | 6AT | F | L | SUV 4WD M9ME | | GDS18373 | Drive Shaft | | 27 | 35 | 63.1 | 96 | 695 | |
| | 2018.08-2019.06 | 6AT | F | R | SUV 4WD M9ME | | GDS18374 | Drive Shaft | | 27 | 35 | 63.1 | 96 | 956 | |
| | 2018.08-2019.06 | 6AT | F | L/R | SUV 4WD M9ME | | GCO18326 | Outer Joint | | 27 | 26 | 63.1 | 96 | 64 | I |
| | 2018.08-2019.06 | 6AT | R | L/R | SUV 4WD M9ME | | GDS82182 | Drive Shaft | 44NS | 27 | 25 | 56.2 | 107 | 811 | |
| | 2018.08-2019.06 | 6AT | R | L/R | SUV 4WD M9ME | | GCO81687 | Outer Joint | 44NS | 27 | 26 | 56.2 | 107 | 61 | I |
| | 2018.08-2019.06 | 6AT | R | L/R | SUV 4WD M9ME | | GCI81660 | Inner Joint | | 25 | 26 | 35 | 113.5 | 72 | |
| 1.5 (132 kw) | 2015.10-2019.12 | 6AT | F | L | SUV 4WD M9MA | | GDS18373 | Drive Shaft | | 27 | 35 | 63.1 | 96 | 695 | |
| | 2015.10-2019.12 | 6AT | F | R | SUV 4WD M9MA | | GDS18374 | Drive Shaft | | 27 | 35 | 63.1 | 96 | 956 | |
| | 2015.10-2019.12 | 6AT | R | L/R | SUV 4WD M9MA | | GDS82182 | Drive Shaft | 44NS | 27 | 25 | 56.2 | 107 | 811 | |
| | 2015.10-2019.12 | 6AT | R | L/R | SUV 4WD M9MA | | GCO81687 | Outer Joint | 44NS | 27 | 26 | 56.2 | 107 | 61 | I |
| | 2015.10-2019.12 | 6AT | R | L/R | SUV 4WD M9MA | | GCI81660 | Inner Joint | | 25 | 26 | 35 | 113.5 | 72 | |
| 1.5 (134 kw) | 2014.09-2018.06 | 6AT | F | L | SUV 4WD M9MA;M9MC;M9MD;M9MB | | GDS18373 | Drive Shaft | | 27 | 35 | 63.1 | 96 | 695 | |
| | 2014.09-2018.06 | 6AT | F | R | SUV 4WD M9MA;M9MC;M9MD;M9MB | | GDS18374 | Drive Shaft | | 27 | 35 | 63.1 | 96 | 956 | |
| | 2014.09-2018.06 | 6AT | F | L/R | SUV 4WD M9MA;M9MC;M9MD;M9MB | | GCO18326 | Outer Joint | | 27 | 26 | 63.1 | 96 | 64 | I |
| | 2014.09-2018.06 | 6AT | R | L/R | SUV 4WD M9MA;M9MC;M9MD;M9MB | | GDS82182 | Drive Shaft | 44NS | 27 | 25 | 56.2 | 107 | 811 | |
| | 2014.09-2018.06 | 6AT | R | L/R | SUV 4WD M9MA;M9MC;M9MD;M9MB | | GCO81687 | Outer Joint | 44NS | 27 | 26 | 56.2 | 107 | 61 | I |
| | 2014.09-2018.06 | 6AT | R | L/R | SUV 4WD M9MA;M9MC;M9MD;M9MB | | GCI81660 | Inner Joint | | 25 | 26 | 35 | 113.5 | 72 | |
| | 2019.09- | 8AT | F | L/R | SUV FWD Y1DA;996 | | GCO83505 | Outer Joint | | 27 | 24 | 60 | 96 | 62 | M |
| 1.5 (137 kw) | 2025.10- | 8AT | F | L/R | SUV FWD | | GCO83505 | Outer Joint | | 27 | 24 | 60 | 96 | 62 | M |
| | 2025.10- | 8AT | F | L | SUV FWD | | GCI83604 | Inner Joint | | 35 | 24 | 38 | 154 | 86 | |
| 1.6 (110 kw) | 2013.03-2014.09 | 6AT | F | L | SUV 4WD JQMA;JQMB | | GDS18373 | Drive Shaft | | 27 | 35 | 63.1 | 96 | 695 | |
| | 2013.03-2014.09 | 6AT | F | R | SUV 4WD JQMA;JQMB | | GDS18374 | Drive Shaft | | 27 | 35 | 63.1 | 96 | 956 | |
| | 2013.03-2014.09 | 6AT | F | L/R | SUV 4WD JQMA;JQMB | | GCO18326 | Outer Joint | | 27 | 26 | 63.1 | 96 | 64 | I |
| | 2013.03-2014.09 | 6AT | R | L/R | SUV 4WD JQMA;JQMB | | GDS82182 | Drive Shaft | 44NS | 27 | 25 | 56.2 | 107 | 811 | |
| | 2013.03-2014.09 | 6AT | R | L/R | SUV 4WD JQMA;JQMB | | GCO81687 | Outer Joint | 44NS | 27 | 26 | 56.2 | 107 | 61 | I |
| | 2013.03-2014.09 | 6AT | R | L/R | SUV 4WD JQMA;JQMB | | GCI81660 | Inner Joint | | 25 | 26 | 35 | 113.5 | 72 | |
| | 2013.03-2014.09 | 6MT | F | L | SUV FWD JQMA;JQMB | Trans. code:MMT6 | GDS84623 | Drive Shaft | | 27 | 26 | 63.1 | 96 | 653 | |
| | 2013.03-2014.09 | 6MT | F | R | SUV FWD JQMA;JQMB | Trans. code:MMT6 | GDS84621 | Drive Shaft | | 27 | 26 | 63.1 | 96 | 996 | |
| | 2013.03-2014.09 | 6MT | F | L/R | SUV FWD JQMA;JQMB | Trans. code:MMT6 | GCO18252 | Outer Joint | | 27 | 26 | 63.1 | 96 | 64 | I |
| 1.6 (132 kw) | 2012.10-2019.12 | 6AT | F | L | SUV 4WD JTMA | | GDS18373 | Drive Shaft | | 27 | 35 | 63.1 | 96 | 695 | |
| | 2012.10-2019.12 | 6AT | F | R | SUV 4WD JTMA | | GDS18374 | Drive Shaft | | 27 | 35 | 63.1 | 96 | 956 | |
| | 2012.10-2019.12 | 6AT | F | L/R | SUV 4WD JTMA | | GCO18326 | Outer Joint | | 27 | 26 | 63.1 | 96 | 64 | I |
| | 2012.10-2019.12 | 6AT | R | L/R | SUV 4WD JTMA | | GDS82182 | Drive Shaft | 44NS | 27 | 25 | 56.2 | 107 | 811 | |
| | 2012.10-2019.12 | 6AT | R | L/R | SUV 4WD JTMA | | GCO81687 | Outer Joint | 44NS | 27 | 26 | 56.2 | 107 | 61 | I |
| | 2012.10-2019.12 | 6AT | R | L/R | SUV 4WD JTMA | | GCI81660 | Inner Joint | | 25 | 26 | 35 | 113.5 | 72 | |
| 1.6 (134 kw) | 2013.03-2014.09 | 6AT | F | L | SUV 4WD JTMA | | GDS18373 | Drive Shaft | | 27 | 35 | 63.1 | 96 | 695 | |
| | 2013.03-2014.09 | 6AT | F | R | SUV 4WD JTMA | | GDS18374 | Drive Shaft | | 27 | 35 | 63.1 | 96 | 956 | |
| | 2013.03-2014.09 | 6AT | F | L/R | SUV 4WD JTMA | | GCO18326 | Outer Joint | | 27 | 26 | 63.1 | 96 | 64 | I |
| | 2013.03-2014.09 | 6AT | R | L/R | SUV 4WD JTMA | | GDS82182 | Drive Shaft | 44NS | 27 | 25 | 56.2 | 107 | 811 | |
| | 2013.03-2014.09 | 6AT | R | L/R | SUV 4WD JTMA | | GCO81687 | Outer Joint | 44NS | 27 | 26 | 56.2 | 107 | 61 | I |
| | 2013.03-2014.09 | 6AT | R | L/R | SUV 4WD JTMA | | GCI81660 | Inner Joint | | 25 | 26 | 35 | 113.5 | 72 | |
| 2.0 (85 kw) | 2013.03-2019.12 | 6MT | F | L | SUV FWD TYMA | | GDS82851 | Drive Shaft | | 27 | 26 | 63.1 | 96 | 660 | |
| | 2013.03-2019.12 | 6MT | F | R | SUV FWD TYMA | | GDS56894 | Drive Shaft | | 27 | 26 | 63.1 | 96 | 1000 | |
| | 2013.03-2019.12 | 6MT | F | L/R | SUV FWD TYMA | | GCO18326 | Outer Joint | | 27 | 26 | 63.1 | 96 | 64 | I |
| | 2013.03-2019.12 | 6MT | F | R | SUV FWD TYMA | | GCI83546 | Inner Joint | | 26 | 27 | 40 | 391 | 101 | |
| 2.0 (88 kw) | 2014.09-2019.06 | 6DCT | F | L | SUV FWD XRMB;XRMA;XRMC | Date from:2014.10 | GDS82183 | Drive Shaft | | 27 | 31 | 63.1 | 96 | 645 | |
| | 2014.09-2019.06 | 6DCT | F | R | SUV FWD XRMB;XRMA;XRMC | Date to:2014.09 | GDS18509 | Drive Shaft | | 27 | 28 | 63.1 | 96 | 990 | |
| | 2014.09-2019.06 | 6DCT | F | R | SUV FWD XRMB;XRMA;XRMC | Date from:2014.10,Date to:2016.09 | GDS56302 | Drive Shaft | | 27 | 28 | 63.1 | 96 | 997 | |
| | 2014.09-2019.06 | 6DCT | F | L | SUV FWD XRMB;XRMA;XRMC | Date from:2014.10 | GCI81661 | Inner Joint | | 31 | 27 | 35.85 | 78.5 | 100.5 | |
| | 2014.09-2019.06 | 6DCT | F | R | SUV FWD XRMB;XRMA;XRMC | Date to:2014.09 | GCI18280 | Inner Joint | | 28 | 27 | 32.2 | 371.5 | 100 | |
| | 2014.09-2019.06 | 6DCT | F | R | SUV FWD XRMB;XRMA;XRMC | Date from:2014.10,Date to:2016.09 | GCI83233 | Inner Joint | | 28 | 27 | 30 | 397 | 100.5 | |
| | 2014.09-2019.06 | 6MT | F | L | SUV FWD XRMB;XRMA;XRMC | | GDS82851 | Drive Shaft | | 27 | 26 | 63.1 | 96 | 660 | |
| | 2014.09-2019.06 | 6MT | F | R | SUV FWD XRMB;XRMA;XRMC | | GDS56894 | Drive Shaft | | 27 | 26 | 63.1 | 96 | 1000 | |
| | 2014.09-2019.06 | 6MT | F | R | SUV FWD XRMB;XRMA;XRMC | Date from:2014.10 | GCI83546 | Inner Joint | | 26 | 27 | 40 | 391 | 101 | |
| | 2014.09-2019.06 | 6MT/6DCT | F | L/R | SUV FWD XRMB;XRMA;XRMC | | GCO18326 | Outer Joint | | 27 | 26 | 63.1 | 96 | 64 | I |
| | 2022.11- | 8AT | F | L | SUV 4WD BJDA | | GDS57336 | Drive Shaft | | 27 | 35 | 60 | 96 | 706 | |
| | 2022.11- | 8AT | F | L/R | SUV 4WD BJDA | | GCO83505 | Outer Joint | | 27 | 24 | 60 | 96 | 62 | M |
| | 2022.11- | 8AT | F | L | SUV 4WD BJDA | | GCI83604 | Inner Joint | | 35 | 24 | 38 | 154 | 86 | |

| | YEAR | TRANSM. | F/R | L/R | BODY STYLE & DRIVE TYPE & ENGINE | REMARKS | G-AP Ref. | PRODUCT | ABS | Technical Specifications | | | | | |
|---|---|---|---|---|---|---|---|---|---|---|---|---|---|---|---|
| | | | | | | | | | | A | B | C | H | L | P |
| **FORD** | | | | | | | | | | | | | | | |
| **Kuga** | | | | | | | | | | | | | | | |
| 2.0 (88 kw) | 2022.11- | 8AT | F | L | SUV FWD BJDA | | GDS57336 | Drive Shaft | | 27 | 35 | 60 | 96 | 706 | |
| | 2022.11- | 8AT | F | L/R | SUV FWD BJDA | | GCO83505 | Outer Joint | | 27 | 24 | 60 | 96 | 62 | M |
| | 2022.11- | 8AT | F | L | SUV FWD BJDA | | GCI83604 | Inner Joint | | 35 | 24 | 38 | 154 | 86 | |
| 2.0 (100 kw) | 2008.03-2012.11 | 6DCT | F | L | SUV 4WD G6DG;UKDA | | GDS57877 | Drive Shaft | | 27 | 31 | 63 | 91 | 648 | |
| | 2008.03-2012.11 | 6DCT | F | R | SUV 4WD G6DG;UKDA | | GDS56234 | Drive Shaft | | 27 | 28 | 63 | 91 | 986 | |
| | 2008.03-2012.11 | 6DCT | F | L | SUV 4WD G6DG;UKDA | | GCI81661 | Inner Joint | | 31 | 27 | 35.85 | 78.5 | 100.5 | |
| | 2008.03-2012.11 | 6DCT | F | R | SUV 4WD G6DG;UKDA | | GCI83206 | Inner Joint | | 28 | 27 | 30 | 370 | 96 | |
| | 2008.03-2012.11 | 6MT | F | L | SUV 4WD G6DG;UKDA | | GDS50466 | Drive Shaft | | 27 | 26 | 63 | 91 | 657 | |
| | 2008.03-2012.11 | 6MT | F | R | SUV 4WD G6DG;UKDA | | GDS50465 | Drive Shaft | | 27 | 26 | 63 | 91 | 994 | |
| | 2008.03-2012.11 | 6MT | F | L | SUV 4WD G6DG;UKDA | | GCI50061 | Inner Joint | | 26 | 27 | 40 | 69 | 111 | |
| | 2008.03-2012.11 | 6MT | F | R | SUV 4WD G6DG;UKDA | | GCI50083 | Inner Joint | | 26 | 27 | 30 | 388.5 | 96 | |
| | 2008.03-2012.11 | 6MT/6DCT | F | L/R | SUV 4WD G6DG;UKDA | | GCO99318 | Outer Joint | | 27 | 36 | 63 | 91 | 68 | I |
| | 2008.03-2012.11 | 6MT | R | L/R | SUV 4WD G6DG;UKDA | 8 balls | GDS83926 | Drive Shaft | 44NS | 36 | 26 | 56.5 | 49.5 | 751 | |
| | 2008.03-2012.11 | 6MT | F | L | SUV FWD G6DG;UKDA | | GDS50466 | Drive Shaft | | 27 | 26 | 63 | 91 | 657 | |
| | 2008.03-2012.11 | 6MT | F | L/R | SUV FWD G6DG;UKDA | | GCO99318 | Outer Joint | | 27 | 36 | 63 | 91 | 68 | I |
| | 2008.03-2012.11 | 6MT | F | L | SUV FWD G6DG;UKDA | | GCI50061 | Inner Joint | | 26 | 27 | 40 | 69 | 111 | |
| | 2013.03-2019.12 | 6DCT | F | L | SUV 4WD UKMA | Date from:2014.10 | GDS82183 | Drive Shaft | | 27 | 31 | 63.1 | 96 | 645 | |
| | 2013.03-2019.12 | 6DCT | F | R | SUV 4WD UKMA | Date to:2014.09 | GDS18509 | Drive Shaft | | 27 | 28 | 63.1 | 96 | 990 | |
| | 2013.03-2019.12 | 6DCT | F | R | SUV 4WD UKMA | Date from:2014.10 | GDS56302 | Drive Shaft | | 27 | 28 | 63.1 | 96 | 997 | |
| | 2013.03-2019.12 | 6DCT | F | L | SUV 4WD UKMA | | GCI81661 | Inner Joint | | 31 | 27 | 35.85 | 78.5 | 100.5 | |
| | 2013.03-2019.12 | 6DCT | F | R | SUV 4WD UKMA | Date to:2014.09 | GCI18280 | Inner Joint | | 28 | 27 | 32.2 | 371.5 | 100 | |
| | 2013.03-2019.12 | 6DCT | F | R | SUV 4WD UKMA | Date to:2016.09 | GCI83233 | Inner Joint | | 28 | 27 | 30 | 397 | 100.5 | |
| | 2013.03-2019.12 | 6MT | F | L | SUV 4WD UKMA | | GDS82851 | Drive Shaft | | 27 | 26 | 63.1 | 96 | 660 | |
| | 2013.03-2019.12 | 6MT | F | R | SUV 4WD UKMA | Date to:2014.09 | GDS82850 | Drive Shaft | | 27 | 26 | 63.1 | 96 | 1000 | |
| | 2013.03-2019.12 | 6MT | F | R | SUV 4WD UKMA | Date to:2014.09 | GCI82124 | Inner Joint | | 26 | 27 | 35 | 391 | 101 | |
| | 2013.03-2019.12 | 6MT/6DCT | F | L/R | SUV 4WD UKMA | Transmission:6MT,Date from:2014.10 | GCO18326 | Outer Joint | | 27 | 26 | 63.1 | 96 | 64 | I |
| | 2013.03-2019.12 | 6AT/6MT | R | L/R | SUV 4WD UKMA | | GDS82182 | Drive Shaft | 44NS | 27 | 25 | 56.2 | 107 | 811 | |
| | 2013.03-2019.12 | 6AT/6MT | R | L/R | SUV 4WD UKMA | | GCO81687 | Outer Joint | 44NS | 27 | 26 | 56.2 | 107 | 61 | I |
| | 2013.03-2019.12 | 6AT/6MT | R | L/R | SUV 4WD UKMA | | GCI81660 | Inner Joint | | 25 | 26 | 35 | 113.5 | 72 | |
| | 2013.03-2019.12 | 6MT | F | L | SUV FWD UKMA | | GDS82851 | Drive Shaft | | 27 | 26 | 63.1 | 96 | 660 | |
| | 2013.03-2019.12 | 6MT | F | R | SUV FWD UKMA | | GDS56894 | Drive Shaft | | 27 | 26 | 63.1 | 96 | 1000 | |
| | 2013.03-2019.12 | 6MT | F | L/R | SUV FWD UKMA | | GCO18326 | Outer Joint | | 27 | 26 | 63.1 | 96 | 64 | I |
| | 2013.03-2019.12 | 6MT | F | R | SUV FWD UKMA | | GCI83546 | Inner Joint | | 26 | 27 | 40 | 391 | 101 | |
| 2.0 (103 kw) | 2010.03-2012.11 | 6DCT | F | L | SUV 4WD UFDA | | GDS57877 | Drive Shaft | | 27 | 31 | 63 | 91 | 648 | |
| | 2010.03-2012.11 | 6DCT | F | R | SUV 4WD UFDA | | GDS56234 | Drive Shaft | | 27 | 28 | 63 | 91 | 986 | |
| | 2010.03-2012.11 | 6DCT | F | L | SUV 4WD UFDA | | GCI81661 | Inner Joint | | 31 | 27 | 35.85 | 78.5 | 100.5 | |
| | 2010.03-2012.11 | 6DCT | F | R | SUV 4WD UFDA | | GCI83206 | Inner Joint | | 28 | 27 | 30 | 370 | 96 | |
| | 2010.03-2012.11 | 6MT | F | L | SUV 4WD UFDA | | GDS50466 | Drive Shaft | | 27 | 26 | 63 | 91 | 657 | |
| | 2010.03-2012.11 | 6MT | F | R | SUV 4WD UFDA | | GDS50465 | Drive Shaft | | 27 | 26 | 63 | 91 | 994 | |
| | 2010.03-2012.11 | 6MT | F | L | SUV 4WD UFDA | | GCI50061 | Inner Joint | | 26 | 27 | 40 | 69 | 111 | |
| | 2010.03-2012.11 | 6MT | F | R | SUV 4WD UFDA | | GCI50083 | Inner Joint | | 26 | 27 | 30 | 388.5 | 96 | |
| | 2010.03-2012.11 | 6MT/6DCT | F | L/R | SUV 4WD UFDA | | GCO99318 | Outer Joint | | 27 | 36 | 63 | 91 | 68 | I |
| | 2010.03-2012.11 | 6AT/6MT | R | L/R | SUV 4WD UFDA | 8 balls | GDS83926 | Drive Shaft | 44NS | 36 | 26 | 56.5 | 49.5 | 751 | |
| | 2010.03-2012.11 | 6MT | F | L | SUV FWD UFDA | | GDS50466 | Drive Shaft | | 27 | 26 | 63 | 91 | 657 | |
| | 2010.03-2012.11 | 6MT | F | L/R | SUV FWD UFDA | | GCO99318 | Outer Joint | | 27 | 36 | 63 | 91 | 68 | I |
| | 2010.03-2012.11 | 6MT | F | L | SUV FWD UFDA | | GCI50061 | Inner Joint | | 26 | 27 | 40 | 69 | 111 | |
| | 2010.03-2012.11 | 6DCT | F | L | SUV Van 4WD UFDA | | GDS57877 | Drive Shaft | | 27 | 31 | 63 | 91 | 648 | |
| | 2010.03-2012.11 | 6DCT | F | R | SUV Van 4WD UFDA | | GDS56234 | Drive Shaft | | 27 | 28 | 63 | 91 | 986 | |
| | 2010.03-2012.11 | 6DCT | F | L | SUV Van 4WD UFDA | | GCI81661 | Inner Joint | | 31 | 27 | 35.85 | 78.5 | 100.5 | |
| | 2010.03-2012.11 | 6DCT | F | R | SUV Van 4WD UFDA | | GCI83206 | Inner Joint | | 28 | 27 | 30 | 370 | 96 | |
| | 2010.03-2012.11 | 6MT | F | L | SUV Van 4WD UFDA | | GDS50466 | Drive Shaft | | 27 | 26 | 63 | 91 | 657 | |
| | 2010.03-2012.11 | 6MT | F | R | SUV Van 4WD UFDA | | GDS50465 | Drive Shaft | | 27 | 26 | 63 | 91 | 994 | |
| | 2010.03-2012.11 | 6MT | F | L | SUV Van 4WD UFDA | | GCI50061 | Inner Joint | | 26 | 27 | 40 | 69 | 111 | |
| | 2010.03-2012.11 | 6MT | F | R | SUV Van 4WD UFDA | | GCI50083 | Inner Joint | | 26 | 27 | 30 | 388.5 | 96 | |
| | 2010.03-2012.11 | 6MT/6DCT | F | L/R | SUV Van 4WD UFDA | | GCO99318 | Outer Joint | | 27 | 36 | 63 | 91 | 68 | I |
| | 2010.03-2012.11 | 6AT | R | L/R | SUV Van 4WD UFDA | | GDS83926 | Drive Shaft | 44NS | 36 | 26 | 56.5 | 49.5 | 751 | |
| | 2010.03-2012.11 | 6AT/6MT | R | L/R | SUV Van 4WD UFDA | | GCI18187 | Inner Joint | | 26 | 29 | 35 | 69.5 | 107.5 | |
| | 2010.03-2012.11 | 6MT | F | L | SUV Van FWD UFDA | | GDS50466 | Drive Shaft | | 27 | 26 | 63 | 91 | 657 | |
| | 2010.03-2012.11 | 6MT | F | L/R | SUV Van FWD UFDA | | GCO99318 | Outer Joint | | 27 | 36 | 63 | 91 | 68 | I |
| | 2010.03-2012.11 | 6MT | F | L | SUV Van FWD UFDA | | GCI50061 | Inner Joint | | 26 | 27 | 40 | 69 | 111 | |
| | 2013.03-2014.09 | 6DCT | F | R | SUV 4WD UFMA | | GDS18509 | Drive Shaft | | 27 | 28 | 63.1 | 96 | 990 | |
| | 2013.03-2014.09 | 6DCT | F | L/R | SUV 4WD UFMA | | GCO18326 | Outer Joint | | 27 | 26 | 63.1 | 96 | 64 | I |
| | 2013.03-2014.09 | 6DCT | F | L | SUV 4WD UFMA | | GCI81661 | Inner Joint | | 31 | 27 | 35.85 | 78.5 | 100.5 | |
| | 2013.03-2014.09 | 6DCT | F | R | SUV 4WD UFMA | | GCI18280 | Inner Joint | | 28 | 27 | 32.2 | 371.5 | 100 | |
| | 2013.03-2014.09 | 6MT | F | L | SUV 4WD UFMA | | GDS82851 | Drive Shaft | | 27 | 26 | 63.1 | 96 | 660 | |

| | YEAR | TRANSM. | F/R | L/R | BODY STYLE & DRIVE TYPE & ENGINE | REMARKS | G-AP Ref. | PRODUCT | ABS | Technical Specifications A | B | C | H | L | P |
|---|---|---|---|---|---|---|---|---|---|---|---|---|---|---|---|
| **FORD** **Kuga** | | | | | | | | | | | | | | | |
| 2.0 (103 kw) | 2013.03-2014.09 | 6MT | F | R | SUV 4WD UFMA | | GDS82850 | Drive Shaft | | 27 | 26 | 63.1 | 96 | 1000 | |
| | 2013.03-2014.09 | 6AT/6MT | R | L/R | SUV 4WD UFMA | | GDS82182 | Drive Shaft | 44NS | 27 | 25 | 56.2 | 107 | 811 | |
| | 2013.03-2014.09 | 6AT/6MT | R | L/R | SUV 4WD UFMA | | GCO81687 | Outer Joint | 44NS | 27 | 26 | 56.2 | 107 | 61 | I |
| | 2013.03-2014.09 | 6AT/6MT | R | L/R | SUV 4WD UFMA | | GCI81660 | Inner Joint | | 25 | 26 | 35 | 113.5 | 72 | |
| | 2013.03-2014.09 | 6MT | F | L | SUV FWD UFMA | | GDS82851 | Drive Shaft | | 27 | 26 | 63.1 | 96 | 660 | |
| | 2013.03-2014.09 | 6MT | F | R | SUV FWD UFMA | | GDS56894 | Drive Shaft | | 27 | 26 | 63.1 | 96 | 1000 | |
| | 2013.03-2014.09 | 6MT | F | L/R | SUV FWD UFMA | | GCO18326 | Outer Joint | | 27 | 26 | 63.1 | 96 | 64 | I |
| 2.0 (110 kw) | 2014.09-2019.06 | 6DCT | F | L | SUV 4WD T7MB;T7MA;T7MD | Date from:2014.10 | GDS82183 | Drive Shaft | | 27 | 31 | 63.1 | 96 | 645 | |
| | 2014.09-2019.06 | 6DCT | F | R | SUV 4WD T7MB;T7MA;T7MD | Date from:2014.10 | GDS56302 | Drive Shaft | | 27 | 28 | 63.1 | 96 | 997 | |
| | 2014.09-2019.06 | 6DCT | F | L | SUV 4WD T7MB;T7MA;T7MD | Date to:2016.09 | GCI81661 | Inner Joint | | 31 | 27 | 35.85 | 78.5 | 100.5 | |
| | 2014.09-2019.06 | 6DCT | F | R | SUV 4WD T7MB;T7MA;T7MD | Date to:2016.09 | GCI83233 | Inner Joint | | 28 | 27 | 30 | 397 | 100.5 | |
| | 2014.09-2019.06 | 6MT | F | L | SUV 4WD T7MB;T7MA;T7MD | | GDS82851 | Drive Shaft | | 27 | 26 | 63.1 | 96 | 660 | |
| | 2014.09-2019.06 | 6MT | F | R | SUV 4WD T7MB;T7MA;T7MD | | GDS82850 | Drive Shaft | | 27 | 26 | 63.1 | 96 | 1000 | |
| | 2014.09-2019.06 | 6MT | F | R | SUV 4WD T7MB;T7MA;T7MD | | GCI82124 | Inner Joint | | 26 | 27 | 35 | 391 | 101 | |
| | 2014.09-2019.06 | 6MT/6DCT | F | L/R | SUV 4WD T7MB;T7MA;T7MD | | GCO18326 | Outer Joint | | 27 | 26 | 63.1 | 96 | 64 | I |
| | 2014.09-2019.06 | 6AT/6MT | R | L/R | SUV 4WD T7MB;T7MA;T7MD | | GDS82182 | Drive Shaft | 44NS | 27 | 25 | 56.2 | 107 | 811 | |
| | 2014.09-2019.06 | 6AT/6MT | R | L/R | SUV 4WD T7MB;T7MA;T7MD | | GCO81687 | Outer Joint | 44NS | 27 | 26 | 56.2 | 107 | 61 | I |
| | 2014.09-2019.06 | 6AT/6MT | R | L/R | SUV 4WD T7MB;T7MA;T7MD | | GCI81660 | Inner Joint | | 25 | 26 | 35 | 113.5 | 72 | |
| | 2014.09-2019.06 | 6MT | F | L | SUV FWD T7MB;T7MA;T7MC;T7MD | | GDS82851 | Drive Shaft | | 27 | 26 | 63.1 | 96 | 660 | |
| | 2014.09-2019.06 | 6MT | F | R | SUV FWD T7MB;T7MA;T7MC;T7MD | | GDS56894 | Drive Shaft | | 27 | 26 | 63.1 | 96 | 1000 | |
| | 2014.09-2019.06 | 6MT | F | L/R | SUV FWD T7MB;T7MA;T7MC;T7MD | | GCO18326 | Outer Joint | | 27 | 26 | 63.1 | 96 | 64 | I |
| | 2014.09-2019.06 | 6MT | F | R | SUV FWD T7MB;T7MA;T7MC;T7MD | | GCI83546 | Inner Joint | | 26 | 27 | 40 | 391 | 101 | |
| | 2021.02- | 8AT | F | L | SUV 4WD YLDC | | GDS57336 | Drive Shaft | | 27 | 35 | 60 | 96 | 706 | |
| | 2021.02- | 8AT | F | R | SUV 4WD YLDC | Date to:2022.09 | GDS58299 | Drive Shaft | | 27 | 27 | 60 | 96 | 575 | |
| | 2021.02- | 8AT | F | L/R | SUV 4WD YLDC | Date to:2022.09 | GCO83505 | Outer Joint | | 27 | 24 | 60 | 96 | 62 | M |
| | 2021.02- | 8AT | F | L | SUV 4WD YLDC | | GCI83604 | Inner Joint | | 35 | 24 | 38 | 154 | 86 | |
| | 2021.02- | 8AT | F | R | SUV 4WD YLDC | Date to:2022.09 | GCI84056 | Inner Joint | | 27 | 24 | 47 | | 130.5 | |
| 2.0 (120 kw) | 2010.03-2012.11 | 6DCT | F | L | SUV 4WD TXDA | | GDS57877 | Drive Shaft | | 27 | 31 | 63 | 91 | 648 | |
| | 2010.03-2012.11 | 6DCT | F | R | SUV 4WD TXDA | | GDS56234 | Drive Shaft | | 27 | 28 | 63 | 91 | 986 | |
| | 2010.03-2012.11 | 6DCT | F | L | SUV 4WD TXDA | | GCI81661 | Inner Joint | | 31 | 27 | 35.85 | 78.5 | 100.5 | |
| | 2010.03-2012.11 | 6DCT | F | R | SUV 4WD TXDA | | GCI83206 | Inner Joint | | 28 | 27 | 30 | 370 | 96 | |
| | 2010.03-2012.11 | 6MT | F | L | SUV 4WD TXDA | | GDS50466 | Drive Shaft | | 27 | 26 | 63 | 91 | 657 | |
| | 2010.03-2012.11 | 6MT | F | R | SUV 4WD TXDA | | GDS50465 | Drive Shaft | | 27 | 26 | 63 | 91 | 994 | |
| | 2010.03-2012.11 | 6MT | F | L | SUV 4WD TXDA | | GCI50061 | Inner Joint | | 26 | 27 | 40 | 69 | 111 | |
| | 2010.03-2012.11 | 6MT | F | R | SUV 4WD TXDA | | GCI50083 | Inner Joint | | 26 | 27 | 30 | 388.5 | 96 | |
| | 2010.03-2012.11 | 6MT/6DCT | F | L/R | SUV 4WD TXDA | | GCO99318 | Outer Joint | | 27 | 36 | 63 | 91 | 68 | I |
| | 2010.03-2012.11 | 6AT/6MT | R | L/R | SUV 4WD TXDA | 8 balls | GDS83926 | Drive Shaft | 44NS | 36 | 26 | 56.5 | 49.5 | 751 | |
| | 2010.03-2012.11 | 6DCT | F | L | SUV Van 4WD TXDA | | GDS57877 | Drive Shaft | | 27 | 31 | 63 | 91 | 648 | |
| | 2010.03-2012.11 | 6DCT | F | R | SUV Van 4WD TXDA | | GDS56234 | Drive Shaft | | 27 | 28 | 63 | 91 | 986 | |
| | 2010.03-2012.11 | 6DCT | F | L | SUV Van 4WD TXDA | | GCI81661 | Inner Joint | | 31 | 27 | 35.85 | 78.5 | 100.5 | |
| | 2010.03-2012.11 | 6DCT | F | R | SUV Van 4WD TXDA | | GCI83206 | Inner Joint | | 28 | 27 | 30 | 370 | 96 | |
| | 2010.03-2012.11 | 6MT | F | L | SUV Van 4WD TXDA | | GDS50466 | Drive Shaft | | 27 | 26 | 63 | 91 | 657 | |
| | 2010.03-2012.11 | 6MT | F | R | SUV Van 4WD TXDA | | GDS50465 | Drive Shaft | | 27 | 26 | 63 | 91 | 994 | |
| | 2010.03-2012.11 | 6MT | F | L | SUV Van 4WD TXDA | | GCI50061 | Inner Joint | | 26 | 27 | 40 | 69 | 111 | |
| | 2010.03-2012.11 | 6MT | F | R | SUV Van 4WD TXDA | | GCI50083 | Inner Joint | | 26 | 27 | 30 | 388.5 | 96 | |
| | 2010.03-2012.11 | 6MT/6DCT | F | L/R | SUV Van 4WD TXDA | | GCO99318 | Outer Joint | | 27 | 36 | 63 | 91 | 68 | I |
| | 2010.03-2012.11 | 6AT | R | L/R | SUV Van 4WD TXDA | | GDS83926 | Drive Shaft | 44NS | 36 | 26 | 56.5 | 49.5 | 751 | |
| | 2010.03-2012.11 | 6AT/6MT | R | L/R | SUV Van 4WD TXDA | | GCI18187 | Inner Joint | | 26 | 29 | 35 | 69.5 | 107.5 | |
| | 2013.03-2014.09 | 6DCT | F | R | SUV 4WD TXDA;TXMA | | GDS18509 | Drive Shaft | | 27 | 28 | 63.1 | 96 | 990 | |
| | 2013.03-2014.09 | 6DCT | F | L/R | SUV 4WD TXDA;TXMA | | GCO18326 | Outer Joint | | 27 | 26 | 63.1 | 96 | 64 | I |
| | 2013.03-2014.09 | 6DCT | F | L | SUV 4WD TXDA;TXMA | | GCI81661 | Inner Joint | | 31 | 27 | 35.85 | 78.5 | 100.5 | |
| | 2013.03-2014.09 | 6DCT | F | R | SUV 4WD TXDA;TXMA | | GCI18280 | Inner Joint | | 28 | 27 | 32.2 | 371.5 | 100 | |
| | 2013.03-2014.09 | 6MT | F | L | SUV 4WD TXDA;TXMA | | GDS82851 | Drive Shaft | | 27 | 26 | 63.1 | 96 | 660 | |
| | 2013.03-2014.09 | 6MT | F | R | SUV 4WD TXDA;TXMA | | GDS82850 | Drive Shaft | | 27 | 26 | 63.1 | 96 | 1000 | |
| | 2013.03-2014.09 | 6AT/6MT | R | L/R | SUV 4WD TXDA;TXMA | | GDS82182 | Drive Shaft | 44NS | 27 | 25 | 56.2 | 107 | 811 | |
| | 2013.03-2014.09 | 6AT/6MT | R | L/R | SUV 4WD TXDA;TXMA | | GCO81687 | Outer Joint | 44NS | 27 | 26 | 56.2 | 107 | 61 | I |
| | 2013.03-2014.09 | 6AT/6MT | R | L/R | SUV 4WD TXDA;TXMA | | GCI81660 | Inner Joint | | 25 | 26 | 35 | 113.5 | 72 | |
| 2.0 (132 kw) | 2014.09-2019.06 | 6DCT | F | L | SUV 4WD T8MB;T8MA;T8MC | Date from:2014.10 | GDS82183 | Drive Shaft | | 27 | 31 | 63.1 | 96 | 645 | |
| | 2014.09-2019.06 | 6DCT | F | R | SUV 4WD T8MB;T8MA;T8MC | Date to:2014.09 | GDS18509 | Drive Shaft | | 27 | 28 | 63.1 | 96 | 990 | |
| | 2014.09-2019.06 | 6DCT | F | R | SUV 4WD T8MB;T8MA;T8MC | Date from:2014.10 | GDS56302 | Drive Shaft | | 27 | 28 | 63.1 | 96 | 997 | |
| | 2014.09-2019.06 | 6DCT | F | L/R | SUV 4WD T8MB;T8MA;T8MC | Date from:2016.10 | GCO18326 | Outer Joint | | 27 | 26 | 63.1 | 96 | 64 | I |
| | 2014.09-2019.06 | 6DCT | F | L | SUV 4WD T8MB;T8MA;T8MC | Date to:2016.09 | GCI81661 | Inner Joint | | 31 | 27 | 35.85 | 78.5 | 100.5 | |
| | 2014.09-2019.06 | 6DCT | F | R | SUV 4WD T8MB;T8MA;T8MC | Date to:2014.09 | GCI18280 | Inner Joint | | 28 | 27 | 32.2 | 371.5 | 100 | |
| | 2014.09-2019.06 | 6DCT | F | R | SUV 4WD T8MB;T8MA;T8MC | Date from:2014.10,Date to:2016.09 | GCI83233 | Inner Joint | | 28 | 27 | 30 | 397 | 100.5 | |
| | 2014.09-2019.06 | 6MT | F | L | SUV 4WD T8MB;T8MA;T8MC | | GDS82851 | Drive Shaft | | 27 | 26 | 63.1 | 96 | 660 | |

| | YEAR | TRANSM. | F/R | L/R | BODY STYLE & DRIVE TYPE & ENGINE | REMARKS | G-AP Ref. | PRODUCT | ABS | Technical Specifications | | | | | |
|---|---|---|---|---|---|---|---|---|---|---|---|---|---|---|---|
| | | | | | | | | | | A | B | C | H | L | P |
| **FORD** **Kuga** | | | | | | | | | | | | | | | |
| 2.0 (132 kw) | 2014.09-2019.06 | 6MT | F | R | SUV 4WD T8MB;T8MA;T8MC | Date to:2014.09 | GDS82850 | Drive Shaft | | 27 | 26 | 63.1 | 96 | 1000 | |
| | 2014.09-2019.06 | 6MT | F | R | SUV 4WD T8MB;T8MA;T8MC | Date to:2014.09 | GCI82124 | Inner Joint | | 26 | 27 | 35 | 391 | 101 | |
| | 2014.09-2019.06 | 6AT/6MT | R | L/R | SUV 4WD T8MB;T8MA;T8MC | | GDS82182 | Drive Shaft | 44NS | 27 | 25 | 56.2 | 107 | 811 | |
| | 2014.09-2019.06 | 6AT/6MT | R | L/R | SUV 4WD T8MB;T8MA;T8MC | | GCO81687 | Outer Joint | 44NS | 27 | 26 | 56.2 | 107 | 61 | I |
| | 2014.09-2019.06 | 6AT/6MT | R | L/R | SUV 4WD T8MB;T8MA;T8MC | | GCI81660 | Inner Joint | | 25 | 26 | 35 | 113.5 | 72 | |
| 2.0 (140 kw) | 2019.07- | 8AT | F | L | SUV 4WD YMDA | | GDS57336 | Drive Shaft | | 27 | 35 | 60 | 96 | 706 | |
| | 2019.07- | 8AT | F | R | SUV 4WD YMDA | Date to:2022.09 | GDS58299 | Drive Shaft | | 27 | 27 | 60 | 96 | 575 | |
| | 2019.07- | 8AT | F | L/R | SUV 4WD YMDA | Date to:2022.09 | GCO83505 | Outer Joint | | 27 | 24 | 60 | 96 | 62 | M |
| | 2019.07- | 8AT | F | L | SUV 4WD YMDA | | GCI83604 | Inner Joint | | 35 | 24 | 38 | 154 | 86 | |
| | 2019.07- | 8AT | F | R | SUV 4WD YMDA | Date to:2022.09 | GCI84056 | Inner Joint | | 27 | 24 | 47 | | 130.5 | |
| 2.0 (169 kw) | 2019.03-2019.12 | 6AT | F | L/R | SUV 4WD R9MC | | GCO18326 | Outer Joint | | 27 | 26 | 63.1 | 96 | 64 | I |
| | 2019.03-2019.12 | 6AT | R | L/R | SUV 4WD R9MC | | GDS82182 | Drive Shaft | 44NS | 27 | 25 | 56.2 | 107 | 811 | |
| | 2019.03-2019.12 | 6AT | R | L/R | SUV 4WD R9MC | | GCO81687 | Outer Joint | 44NS | 27 | 26 | 56.2 | 107 | 61 | I |
| | 2019.03-2019.12 | 6AT | R | L/R | SUV 4WD R9MC | | GCI81660 | Inner Joint | | 25 | 26 | 35 | 113.5 | 72 | |
| 2.0 (178 kw) | 2017.08-2018.06 | 6AT | F | L/R | SUV 4WD R9MA | | GCO18326 | Outer Joint | | 27 | 26 | 63.1 | 96 | 64 | I |
| | 2017.08-2018.06 | 6AT | R | L/R | SUV 4WD R9MA | | GDS82182 | Drive Shaft | 44NS | 27 | 25 | 56.2 | 107 | 811 | |
| | 2017.08-2018.06 | 6AT | R | L/R | SUV 4WD R9MA | | GCO81687 | Outer Joint | 44NS | 27 | 26 | 56.2 | 107 | 61 | I |
| | 2017.08-2018.06 | 6AT | R | L/R | SUV 4WD R9MA | | GCI81660 | Inner Joint | | 25 | 26 | 35 | 113.5 | 72 | |
| 2.5 (110 kw) | 2014.01-2019.12 | 6AT | F | L | SUV FWD YTMA | | GDS18373 | Drive Shaft | | 27 | 35 | 63.1 | 96 | 695 | |
| | 2014.01-2019.12 | 6AT | F | L/R | SUV FWD YTMA | | GCO18326 | Outer Joint | | 27 | 26 | 63.1 | 96 | 64 | I |
| 2.5 (132 kw) | 2024.01- | CVT | F | L | SUV FWD | | GDS58298 | Drive Shaft | | 27 | 35 | 60 | 96 | 668 | |
| | 2024.01- | CVT | F | R | SUV FWD | | GDS58300 | Drive Shaft | | 27 | 35 | 60 | 96 | 984 | |
| | 2024.01- | CVT | F | L/R | SUV FWD | | GCO83505 | Outer Joint | | 27 | 24 | 60 | 96 | 62 | M |
| | 2024.01- | CVT | F | L | SUV FWD | | GCI84055 | Inner Joint | | 35 | 24 | 38 | 73 | 125 | |
| | 2024.01- | CVT | F | R | SUV FWD | | GCI84057 | Inner Joint | | 35 | 24 | 38 | 376.5 | 96.5 | |
| 2.5 (134 kw) | 2024.01- | CVT | F | L | SUV 4WD | | GDS58298 | Drive Shaft | | 27 | 35 | 60 | 96 | 668 | |
| | 2024.01- | CVT | F | R | SUV 4WD | | GDS58299 | Drive Shaft | | 27 | 27 | 60 | 96 | 575 | |
| | 2024.01- | CVT | F | L/R | SUV 4WD | | GCO83505 | Outer Joint | | 27 | 24 | 60 | 96 | 62 | M |
| | 2024.01- | CVT | F | L | SUV 4WD | | GCI84055 | Inner Joint | | 35 | 24 | 38 | 73 | 125 | |
| | 2024.01- | CVT | F | R | SUV 4WD | | GCI84056 | Inner Joint | | 27 | 24 | 47 | | 130.5 | |
| 2.5 (140 kw) | 2021.01- | CVT | F | L | SUV 4WD BGDC | | GDS58298 | Drive Shaft | | 27 | 35 | 60 | 96 | 668 | |
| | 2021.01- | CVT | F | R | SUV 4WD BGDC | | GDS58299 | Drive Shaft | | 27 | 27 | 60 | 96 | 575 | |
| | 2021.01- | CVT | F | L/R | SUV 4WD BGDC | | GCO83505 | Outer Joint | | 27 | 24 | 60 | 96 | 62 | M |
| | 2021.01- | CVT | F | L | SUV 4WD BGDC | | GCI84055 | Inner Joint | | 35 | 24 | 38 | 73 | 125 | |
| | 2021.01- | CVT | F | R | SUV 4WD BGDC | | GCI84056 | Inner Joint | | 27 | 24 | 47 | | 130.5 | |
| | 2021.01- | CVT | F | L | SUV FWD BGDC;BGDE | | GDS58298 | Drive Shaft | | 27 | 35 | 60 | 96 | 668 | |
| | 2021.01- | CVT | F | R | SUV FWD BGDC;BGDE | | GDS58300 | Drive Shaft | | 27 | 35 | 60 | 96 | 984 | |
| | 2021.01- | CVT | F | L/R | SUV FWD BGDC;BGDE | | GCO83505 | Outer Joint | | 27 | 24 | 60 | 96 | 62 | M |
| | 2021.01- | CVT | F | L | SUV FWD BGDC;BGDE | | GCI84055 | Inner Joint | | 35 | 24 | 38 | 73 | 125 | |
| | 2021.01- | CVT | F | R | SUV FWD BGDC;BGDE | | GCI84057 | Inner Joint | | 35 | 24 | 38 | 376.5 | 96.5 | |
| | 2023.06- | CVT | F | L | SUV FWD | | GDS58298 | Drive Shaft | | 27 | 35 | 60 | 96 | 668 | |
| | 2023.06- | CVT | F | R | SUV FWD | | GDS58300 | Drive Shaft | | 27 | 35 | 60 | 96 | 984 | |
| | 2023.06- | CVT | F | L/R | SUV FWD | | GCO83505 | Outer Joint | | 27 | 24 | 60 | 96 | 62 | M |
| | 2023.06- | CVT | F | L | SUV FWD | | GCI84055 | Inner Joint | | 35 | 24 | 38 | 73 | 125 | |
| | 2023.06- | CVT | F | R | SUV FWD | | GCI84057 | Inner Joint | | 35 | 24 | 38 | 376.5 | 96.5 | |
| 2.5 (147 kw) | 2008.02-2012.11 | 6MT | F | L/R | SUV 4WD HYDB;HYDC | | GCO99318 | Outer Joint | | 27 | 36 | 63 | 91 | 68 | I |
| | 2008.02-2012.11 | AT/MT | R | L/R | SUV 4WD HYDB;HYDC | | GDS83926 | Drive Shaft | 44NS | 36 | 26 | 56.5 | 49.5 | 751 | |
| | 2008.02-2012.11 | AT/MT | R | L/R | SUV 4WD HYDB;HYDC | | GCI18187 | Inner Joint | | 26 | 29 | 35 | 69.5 | 107.5 | |
| | 2008.02-2012.11 | | R | L/R | SUV 4WD HYDB;HYDC | | GCO83248 | Outer Joint | 44NS | 36 | 29 | 56.5 | 49.5 | 64 | I |
| | 2008.02-2012.11 | 6MT | F | L/R | SUV Van 4WD HYDB;HYDC | | GCO99318 | Outer Joint | | 27 | 36 | 63 | 91 | 68 | I |
| | 2008.02-2012.11 | 5AT/6MT | R | L/R | SUV Van 4WD HYDB;HYDC | 8 balls | GDS83926 | Drive Shaft | 44NS | 36 | 26 | 56.5 | 49.5 | 751 | |
| | 2008.02-2012.11 | 5AT/6MT | R | L/R | SUV Van 4WD HYDB;HYDC | | GCI18187 | Inner Joint | | 26 | 29 | 35 | 69.5 | 107.5 | |
| 2.5 (165 kw) | 2019.07- | CVT | F | L | SUV 4WD BGDC | | GDS58298 | Drive Shaft | | 27 | 35 | 60 | 96 | 668 | |
| | 2019.07- | CVT | F | R | SUV 4WD BGDC | | GDS58299 | Drive Shaft | | 27 | 27 | 60 | 96 | 575 | |
| | 2019.07- | CVT | F | L/R | SUV 4WD BGDC | | GCO83505 | Outer Joint | | 27 | 24 | 60 | 96 | 62 | M |
| | 2019.07- | CVT | F | L | SUV 4WD BGDC | | GCI84055 | Inner Joint | | 35 | 24 | 38 | 73 | 125 | |
| | 2019.07- | CVT | F | R | SUV 4WD BGDC | | GCI84056 | Inner Joint | | 27 | 24 | 47 | | 130.5 | |
| | 2019.07- | CVT | F | L | SUV FWD BGDA | | GDS58298 | Drive Shaft | | 27 | 35 | 60 | 96 | 668 | |
| | 2019.07- | CVT | F | R | SUV FWD BGDA | | GDS58300 | Drive Shaft | | 27 | 35 | 60 | 96 | 984 | |
| | 2019.07- | CVT | F | L/R | SUV FWD BGDA | | GCO83505 | Outer Joint | | 27 | 24 | 60 | 96 | 62 | M |
| | 2019.07- | CVT | F | L | SUV FWD BGDA | | GCI84055 | Inner Joint | | 35 | 24 | 38 | 73 | 125 | |
| | 2019.07- | CVT | F | R | SUV FWD BGDA | | GCI84057 | Inner Joint | | 35 | 24 | 38 | 376.5 | 96.5 | |
| 2.5 (178 kw) | 2024.01- | CVT | F | L | SUV FWD | | GDS58298 | Drive Shaft | | 27 | 35 | 60 | 96 | 668 | |
| | 2024.01- | CVT | F | R | SUV FWD | | GDS58300 | Drive Shaft | | 27 | 35 | 60 | 96 | 984 | |
| | 2024.01- | CVT | F | L/R | SUV FWD | | GCO83505 | Outer Joint | | 27 | 24 | 60 | 96 | 62 | M |

| | YEAR | TRANSM. | F/R | L/R | BODY STYLE & DRIVE TYPE & ENGINE | REMARKS | G-AP Ref. | PRODUCT | ABS | Technical Specifications A | B | C | H | L | P |
|---|---|---|---|---|---|---|---|---|---|---|---|---|---|---|---|
| **FORD** | | | | | | | | | | | | | | | |
| **Kuga** | | | | | | | | | | | | | | | |
| 2.5 (178 kw) | 2024.01- | CVT | F | L | SUV FWD | | GCI84055 | Inner Joint | | 35 | 24 | 38 | 73 | 125 | |
| | 2024.01- | CVT | F | R | SUV FWD | | GCI84057 | Inner Joint | | 35 | 24 | 38 | 376.5 | 96.5 | |
| **Kuga Van** | | | | | | | | | | | | | | | |
| 1.5 (88 kw) | 2019.01-2019.12 | 6MT | F | L | SUV Van FWD XWMB;XWMC | | GDS57402 | Drive Shaft | | 27 | 26 | 63.1 | 96 | 662 | |
| | 2019.01-2019.12 | 6MT | F | R | SUV Van FWD XWMB;XWMC | | GDS57403 | Drive Shaft | | 27 | 26 | 63.1 | 96 | 1001 | |
| | 2019.01-2019.12 | 6MT | F | L/R | SUV Van FWD XWMB;XWMC | | GCO18252 | Outer Joint | | 27 | 26 | 63.1 | 96 | 64 | I |
| | 2019.01-2019.12 | 6MT | F | L | SUV Van FWD XWMB;XWMC | | GCI83648 | Inner Joint | | 26 | 26 | 40 | 60 | 116 | |
| | 2019.01-2019.12 | 6MT | F | R | SUV Van FWD XWMB;XWMC | | GCI83649 | Inner Joint | | 26 | 26 | 40 | 383 | 107 | |
| | 2019.06-2019.12 | 6MT | F | L | SUV Van FWD BNMA | Trans. code:B6 | GDS84523 | Drive Shaft | | 27 | 26 | 60.8 | 96 | 659 | |
| | 2019.06-2019.12 | 6MT | F | L | SUV Van FWD BNMA | Trans. code:MMT6 | GDS84623 | Drive Shaft | | 27 | 26 | 63.1 | 96 | 653 | |
| | 2019.06-2019.12 | 6MT | F | R | SUV Van FWD BNMA | Trans. code:B6 | GDS84353 | Drive Shaft | | 27 | 26 | 60.8 | 96 | 994 | |
| | 2019.06-2019.12 | 6MT | F | R | SUV Van FWD BNMA | Trans. code:MMT6 | GDS84621 | Drive Shaft | | 27 | 26 | 63.1 | 96 | 996 | |
| | 2019.06-2019.12 | 6MT | F | R | SUV Van FWD BNMA | Trans. code:B6 | GCO18241 | Outer Joint | | 27 | 24 | 60.8 | 96 | 59 | I |
| | 2019.06-2019.12 | 6MT | F | L/R | SUV Van FWD BNMA | Trans. code:MMT6 | GCO18252 | Outer Joint | | 27 | 26 | 63.1 | 96 | 64 | I |
| | 2019.06-2019.12 | 6MT | F | L | SUV Van FWD BNMA | Date from:2017.01,Trans. code:B6 | GCI81392 | Inner Joint | | 26 | 24 | 40 | 60 | 112 | |
| | 2019.06-2019.12 | 6MT | F | R | SUV Van FWD BNMA | Trans. code:B6 | GCI62055 | Inner Joint | | 26 | 24 | 40 | 447.5 | 98.5 | |
| 1.5 (110 kw) | 2014.09-2019.12 | 6MT | F | L | SUV Van FWD M8MA;M8MB;M8ME;M8MC;M8MD | Date to:2016.09,Trans. code:B6 | GDS57402 | Drive Shaft | | 27 | 26 | 63.1 | 96 | 662 | |
| | 2014.09-2019.12 | 6MT | F | L | SUV Van FWD M8MA;M8MB;M8ME;M8MC;M8MD | Date from:2017.09,Trans. code:B6 | GDS84523 | Drive Shaft | | 27 | 26 | 60.8 | 96 | 659 | |
| | 2014.09-2019.12 | 6MT | F | L | SUV Van FWD M8MA;M8MB;M8ME;M8MC;M8MD | Trans. code:MMT6 | GDS84623 | Drive Shaft | | 27 | 26 | 63.1 | 96 | 653 | |
| | 2014.09-2019.12 | 6MT | F | R | SUV Van FWD M8MA;M8MB;M8ME;M8MC;M8MD | Date to:2016.09,Trans. code:B6 | GDS57403 | Drive Shaft | | 27 | 26 | 63.1 | 96 | 1001 | |
| | 2014.09-2019.12 | 6MT | F | R | SUV Van FWD M8MA;M8MB;M8ME;M8MC;M8MD | Date from:2017.09,Trans. code:B6 | GDS84353 | Drive Shaft | | 27 | 26 | 60.8 | 96 | 994 | |
| | 2014.09-2019.12 | 6MT | F | R | SUV Van FWD M8MA;M8MB;M8ME;M8MC;M8MD | Trans. code:MMT6 | GDS84621 | Drive Shaft | | 27 | 26 | 63.1 | 96 | 996 | |
| | 2014.09-2019.12 | 6MT | F | L/R | SUV Van FWD M8MA;M8MB;M8ME;M8MC;M8MD | Trans. code:B6 | GCO18241 | Outer Joint | | 27 | 24 | 60.8 | 96 | 59 | I |
| | 2014.09-2019.12 | 6MT | F | L/R | SUV Van FWD M8MA;M8MB;M8ME;M8MC;M8MD | Trans. code:MMT6 | GCO18252 | Outer Joint | | 27 | 26 | 63.1 | 96 | 64 | I |
| | 2014.09-2019.12 | 6MT | F | L | SUV Van FWD M8MA;M8MB;M8ME;M8MC;M8MD | Date from:2017.09,Trans. code:B6 | GCI81392 | Inner Joint | | 26 | 24 | 40 | 60 | 112 | |
| | 2014.09-2019.12 | 6MT | F | L | SUV Van FWD M8MA;M8MB;M8ME;M8MC;M8MD | Date to:2016.09,Trans. code:B6 | GCI83648 | Inner Joint | | 26 | 26 | 40 | 60 | 116 | |
| | 2014.09-2019.12 | 6MT | F | R | SUV Van FWD M8MA;M8MB;M8ME;M8MC;M8MD | Date to:2016.09,Trans. code:B6 | GCI83649 | Inner Joint | | 26 | 26 | 40 | 383 | 107 | |
| 1.5 (129 kw) | 2019.06-2019.12 | 6AT | F | L | SUV Van 4WD M9ME | | GDS18373 | Drive Shaft | | 27 | 35 | 63.1 | 96 | 695 | |
| | 2019.06-2019.12 | 6AT | F | R | SUV Van 4WD M9ME | | GDS18374 | Drive Shaft | | 27 | 35 | 63.1 | 96 | 956 | |
| | 2019.06-2019.12 | 6AT | F | L/R | SUV Van 4WD M9ME | | GCO18326 | Outer Joint | | 27 | 26 | 63.1 | 96 | 64 | I |
| | 2019.06-2019.12 | 6AT | R | L/R | SUV Van 4WD M9ME | | GCO81687 | Outer Joint | 44NS | 27 | 26 | 56.2 | 107 | 61 | I |
| | 2019.06-2019.12 | 6DCT | R | L/R | SUV Van 4WD M9ME | | GDS82182 | Drive Shaft | 44NS | 27 | 25 | 56.2 | 107 | 811 | |
| | 2019.06-2019.12 | 6DCT | R | L/R | SUV Van 4WD M9ME | | GCI81660 | Inner Joint | | 25 | 26 | 35 | 113.5 | 72 | |
| 1.5 (134 kw) | 2014.09-2019.12 | 6AT | F | L | SUV Van 4WD M9MA | | GDS18373 | Drive Shaft | | 27 | 35 | 63.1 | 96 | 695 | |
| | 2014.09-2019.12 | 6AT | F | R | SUV Van 4WD M9MA | | GDS18374 | Drive Shaft | | 27 | 35 | 63.1 | 96 | 956 | |
| | 2014.09-2019.12 | 6AT | F | L/R | SUV Van 4WD M9MA | | GCO18326 | Outer Joint | | 27 | 26 | 63.1 | 96 | 64 | I |
| | 2014.09-2019.12 | 6AT | R | L/R | SUV Van 4WD M9MA | | GDS82182 | Drive Shaft | 44NS | 27 | 25 | 56.2 | 107 | 811 | |
| | 2014.09-2019.12 | 6AT | R | L/R | SUV Van 4WD M9MA | | GCO81687 | Outer Joint | 44NS | 27 | 26 | 56.2 | 107 | 61 | I |
| | 2014.09-2019.12 | 6AT | R | L/R | SUV Van 4WD M9MA | | GCI81660 | Inner Joint | | 25 | 26 | 35 | 113.5 | 72 | |
| 2.0 (88 kw) | 2014.09-2019.12 | 6DCT | F | L | SUV Van FWD XRMB;XRMA | Date from:2014.10,Date to:2016.09 | GDS82183 | Drive Shaft | | 27 | 31 | 63.1 | 96 | 645 | |
| | 2014.09-2019.12 | 6DCT | F | R | SUV Van FWD XRMB;XRMA | | GCI83233 | Inner Joint | | 28 | 27 | 30 | 397 | 100.5 | |
| | 2014.09-2019.12 | 6MT | F | L | SUV Van FWD XRMB;XRMA | | GDS82851 | Drive Shaft | | 27 | 26 | 63.1 | 96 | 660 | |
| | 2014.09-2019.12 | 6MT | F | R | SUV Van FWD XRMB;XRMA | | GDS56894 | Drive Shaft | | 27 | 26 | 63.1 | 96 | 1000 | |
| | 2014.09-2019.12 | 6MT | F | R | SUV Van FWD XRMB;XRMA | | GCI83546 | Inner Joint | | 26 | 27 | 40 | 391 | 101 | |
| | 2014.09-2019.12 | 6MT/6DCT | F | L/R | SUV Van FWD XRMB;XRMA | | GCO18326 | Outer Joint | | 27 | 26 | 63.1 | 96 | 64 | I |
| 2.0 (103 kw) | 2012.06-2019.12 | 6MT | F | L | SUV Van FWD UFMA | | GDS82851 | Drive Shaft | | 27 | 26 | 63.1 | 96 | 660 | |
| | 2012.06-2019.12 | 6MT | F | R | SUV Van FWD UFMA | | GDS56894 | Drive Shaft | | 27 | 26 | 63.1 | 96 | 1000 | |
| | 2012.06-2019.12 | 6MT | F | L | SUV Van FWD UFMA | | GCO18326 | Outer Joint | | 27 | 26 | 63.1 | 96 | 64 | I |
| | 2012.06-2019.12 | 6MT | F | R | SUV Van FWD UFMA | | GCI83546 | Inner Joint | | 26 | 27 | 40 | 391 | 101 | |
| 2.0 (110 kw) | 2014.09-2019.12 | 6DCT | F | L | SUV Van 4WD T7MB;T7MA | Date from:2014.10 | GDS82183 | Drive Shaft | | 27 | 31 | 63.1 | 96 | 645 | |
| | 2014.09-2019.12 | 6DCT | F | R | SUV Van 4WD T7MB;T7MA | Date from:2014.10 | GDS56302 | Drive Shaft | | 27 | 28 | 63.1 | 96 | 997 | |
| | 2014.09-2019.12 | 6DCT | F | L | SUV Van 4WD T7MB;T7MA | | GCI81661 | Inner Joint | | 31 | 27 | 35.85 | 78.5 | 100.5 | |
| | 2014.09-2019.12 | 6DCT | F | R | SUV Van 4WD T7MB;T7MA | Date to:2016.09 | GCI83233 | Inner Joint | | 28 | 27 | 30 | 397 | 100.5 | |
| | 2014.09-2019.12 | 6MT | F | L | SUV Van 4WD T7MB;T7MA | | GDS82851 | Drive Shaft | | 27 | 26 | 63.1 | 96 | 660 | |
| | 2014.09-2019.12 | 6MT | F | R | SUV Van 4WD T7MB;T7MA | | GDS82850 | Drive Shaft | | 27 | 26 | 63.1 | 96 | 1000 | |
| | 2014.09-2019.12 | 6MT | F | R | SUV Van 4WD T7MB;T7MA | | GCI82124 | Inner Joint | | 26 | 27 | 35 | 391 | 101 | |
| | 2014.09-2019.12 | 6MT/6DCT | F | L/R | SUV Van 4WD T7MB;T7MA | | GCO18326 | Outer Joint | | 27 | 26 | 63.1 | 96 | 64 | I |
| | 2014.09-2019.12 | 6AT/6MT | R | L/R | SUV Van 4WD T7MB;T7MA | | GDS82182 | Drive Shaft | 44NS | 27 | 25 | 56.2 | 107 | 811 | |
| | 2014.09-2019.12 | 6AT/6MT | R | L/R | SUV Van 4WD T7MB;T7MA | | GCO81687 | Outer Joint | 44NS | 27 | 26 | 56.2 | 107 | 61 | I |
| | 2014.09-2019.12 | 6AT/6MT | R | L/R | SUV Van 4WD T7MB;T7MA | | GCI81660 | Inner Joint | | 25 | 26 | 35 | 113.5 | 72 | |
| | 2014.09-2019.12 | 6MT | F | L | SUV Van FWD T7MB;T7MA | | GDS82851 | Drive Shaft | | 27 | 26 | 63.1 | 96 | 660 | |
| | 2014.09-2019.12 | 6MT | F | R | SUV Van FWD T7MB;T7MA | | GDS56894 | Drive Shaft | | 27 | 26 | 63.1 | 96 | 1000 | |
| | 2014.09-2019.12 | 6MT | F | L/R | SUV Van FWD T7MB;T7MA | | GCO18326 | Outer Joint | | 27 | 26 | 63.1 | 96 | 64 | I |
| | 2014.09-2019.12 | 6MT | F | R | SUV Van FWD T7MB;T7MA | | GCI83546 | Inner Joint | | 26 | 27 | 40 | 391 | 101 | |
| 2.0 (132 kw) | 2014.09-2019.12 | 6DCT | F | L | SUV Van 4WD T8MB;T8MA | Date from:2014.10 | GDS82183 | Drive Shaft | | 27 | 31 | 63.1 | 96 | 645 | |

| | YEAR | TRANSM. | F/R | L/R | BODY STYLE & DRIVE TYPE & ENGINE | REMARKS | G-AP Ref. | PRODUCT | ABS | Technical Specifications A | B | C | H | L | P |
|---|---|---|---|---|---|---|---|---|---|---|---|---|---|---|---|
| **FORD** | | | | | | | | | | | | | | | |
| **Kuga Van** | | | | | | | | | | | | | | | |
| 2.0 (132 kw) | 2014.09-2019.12 | 6DCT | F | R | SUV Van 4WD T8MB;T8MA | Date to:2014.09 | GDS18509 | Drive Shaft | | 27 | 28 | 63.1 | 96 | 990 | |
| | 2014.09-2019.12 | 6DCT | F | R | SUV Van 4WD T8MB;T8MA | Date from:2014.10 | GDS56302 | Drive Shaft | | 27 | 28 | 63.1 | 96 | 997 | |
| | 2014.09-2019.12 | 6DCT | F | L/R | SUV Van 4WD T8MB;T8MA | Date from:2016.10 | GCO18326 | Outer Joint | | 27 | 26 | 63.1 | 96 | 64 | I |
| | 2014.09-2019.12 | 6DCT | F | L | SUV Van 4WD T8MB;T8MA | Date from:2014.10 | GCI81661 | Inner Joint | | 31 | 27 | 35.85 | 78.5 | 100.5 | |
| | 2014.09-2019.12 | 6DCT | F | R | SUV Van 4WD T8MB;T8MA | Date to:2014.09 | GCI18280 | Inner Joint | | 28 | 27 | 32.2 | 371.5 | 100 | |
| | 2014.09-2019.12 | 6DCT | F | R | SUV Van 4WD T8MB;T8MA | Date from:2014.10 | GCI83233 | Inner Joint | | 28 | 27 | 30 | 397 | 100.5 | |
| | 2014.09-2019.12 | 6MT | F | L | SUV Van 4WD T8MB;T8MA | | GDS82851 | Drive Shaft | | 27 | 26 | 63.1 | 96 | 660 | |
| | 2014.09-2019.12 | 6MT | F | R | SUV Van 4WD T8MB;T8MA | Date to:2014.09 | GDS82850 | Drive Shaft | | 27 | 26 | 63.1 | 96 | 1000 | |
| | 2014.09-2019.12 | 6MT | F | R | SUV Van 4WD T8MB;T8MA | Date to:2014.09 | GCI82124 | Inner Joint | | 26 | 27 | 35 | 391 | 101 | |
| | 2014.09-2019.12 | 6AT | R | L/R | SUV Van 4WD T8MB;T8MA | | GCO81687 | Outer Joint | 44NS | 27 | 26 | 56.2 | 107 | 61 | I |
| | 2014.09-2019.12 | 6AT | R | L/R | SUV Van 4WD T8MB;T8MA | | GCI81660 | Inner Joint | | 25 | 26 | 35 | 113.5 | 72 | |
| | 2014.09-2019.12 | 6DCT | R | L/R | SUV Van 4WD T8MB;T8MA | | GDS82182 | Drive Shaft | 44NS | 27 | 25 | 56.2 | 107 | 811 | |
| **Maverick** | | | | | | | | | | | | | | | |
| 2.0 (91 kw) | 2001.02- | 5MT | F | L | SUV 4WD YF | | GDS34096 | Drive Shaft | 44T | 28 | 28 | 56 | 94 | 635 | |
| | 2001.02- | 5MT | F | R | SUV 4WD YF | | GDS34196 | Drive Shaft | 44T | 28 | 35 | 56 | 94 | 570 | |
| | 2001.02- | AT | F | R | SUV 4WD YF | | GDS34087 | Drive Shaft | 44T | 28 | 35 | 56 | 94 | 545 | |
| | 2001.02- | AT/MT | F | L/R | SUV 4WD YF | Date to:2007.12 | GCO34090 | Outer Joint | 44T | 28 | 24 | 56 | 89.1 | 59.5 | M |
| | 2001.02- | MT | F | L | SUV 4WD YF | | GCI34071 | Inner Joint | | 28 | 32 | 35 | 66.5 | 112 | |
| | 2001.02- | | F | | SUV 4WD YF | | GCO34064 | Outer Joint | 44T | 28 | 24 | 56 | 94 | 62 | M |
| | 2001.02- | 5MT | R | L/R | SUV 4WD YF | | GCO18204 | Outer Joint | 44T | 26 | 30 | 56 | 114 | 58 | I |
| | 2001.02- | 5MT | F | L | SUV FWD YF | Date to:2003.12;Driver Pos:For left-hand drive vehicles | GDS34096 | Drive Shaft | 44T | 28 | 28 | 56 | 94 | 635 | |
| | 2001.02- | 5MT | F | L/R | SUV FWD YF | | GCO34064 | Outer Joint | 44T | 28 | 24 | 56 | 94 | 62 | M |
| | 2001.02- | 5MT | F | L | SUV FWD YF | Date to:2003.12,For left-hand drive vehicles | GCI34071 | Inner Joint | | 28 | 32 | 35 | 66.5 | 112 | |
| | 2001.02- | | F | R | SUV FWD YF | Driver Pos:For right-hand drive vehicles | GDS34087 | Drive Shaft | 44T | 28 | 35 | 56 | 94 | 545 | |
| | 2001.02- | | F | R | SUV FWD YF | For vehicles with ABS;For left-hand drive vehicles;For vehicles without ABS;For right-hand drive vehicles | GDS34196 | Drive Shaft | 44T | 28 | 35 | 56 | 94 | 570 | |
| 2.3 (110 kw) | 2004.03- | AT | F | R | SUV 4WD GZ | Date to:2007.12 | GDS34087 | Drive Shaft | 44T | 28 | 35 | 56 | 94 | 545 | |
| | 2004.03- | AT/MT | F | L/R | SUV 4WD GZ | Date to:2007.12 | GCO34090 | Outer Joint | 44T | 28 | 24 | 56 | 89.1 | 59.5 | M |
| 2.7 (74 kw) | 1993.02-1996.06 | MT | F | L/R | SUV 4WD TD27 | | GCO41016 | Outer Joint | | 28 | 27 | 50 | 150 | 71 | I |
| | 1996.06-1998.04 | 5MT | F | L/R | Van 4WD TD27 | | GDS41055 | Drive Shaft | | 27 | | 50 | 150 | 520 | |
| 2.7 (92 kw) | 1996.06-1998.04 | 5MT | F | L/R | Van 4WD TD27E | | GDS41055 | Drive Shaft | | 27 | | 50 | 150 | 520 | |
| 3.0 (145 kw) | 2001.02- | 4AT | F | R | SUV 4WD AJ | | GDS34087 | Drive Shaft | 44T | 28 | 35 | 56 | 94 | 545 | |
| | 2001.02- | AT/MT | F | L/R | SUV 4WD AJ | | GCO34090 | Outer Joint | 44T | 28 | 24 | 56 | 89.1 | 59.5 | M |
| | 2001.02- | MT | F | L | SUV 4WD AJ | | GDS34096 | Drive Shaft | 44T | 28 | 28 | 56 | 94 | 635 | |
| | 2001.02- | MT | F | R | SUV 4WD AJ | | GDS34196 | Drive Shaft | 44T | 28 | 35 | 56 | 94 | 570 | |
| | 2001.02- | | F | | SUV 4WD AJ | | GCO34064 | Outer Joint | 44T | 28 | 24 | 56 | 94 | 62 | M |
| | 2001.02- | | R | L/R | SUV 4WD AJ | Date To:2003.12 | GCO18204 | Outer Joint | 44T | 26 | 30 | 56 | 114 | 58 | I |
| | 2001.02- | | F | R | SUV FWD AJ | For right-hand drive vehicles | GDS34087 | Drive Shaft | 44T | 28 | 35 | 56 | 94 | 545 | |
| | 2001.02- | | F | R | SUV FWD AJ | For right-hand drive vehicles | GDS34196 | Drive Shaft | 44T | 28 | 35 | 56 | 94 | 570 | |
| | 2001.02- | | F | L/R | SUV FWD AJ | For right-hand drive vehicles | GCO34064 | Outer Joint | 44T | 28 | 24 | 56 | 94 | 62 | M |
| 3.0 (149 kw) | 2004.03- | AT | F | R | SUV 4WD AJ | Date to:2007.12 | GDS34087 | Drive Shaft | 44T | 28 | 35 | 56 | 94 | 545 | |
| | 2004.03- | AT/MT | F | L/R | SUV 4WD AJ | Date to:2007.12 | GCO34090 | Outer Joint | 44T | 28 | 24 | 56 | 89.1 | 59.5 | M |
| | 2004.03- | MT | F | L | SUV 4WD AJ | Date to:2007.12 | GDS34096 | Drive Shaft | 44T | 28 | 28 | 56 | 94 | 635 | |
| | 2004.03- | MT | F | R | SUV 4WD AJ | Date to:2007.12 | GDS34196 | Drive Shaft | 44T | 28 | 35 | 56 | 94 | 570 | |
| | 2004.03- | | F | | SUV 4WD AJ | | GCO34064 | Outer Joint | 44T | 28 | 24 | 56 | 94 | 62 | M |
| | 2004.03- | | R | | SUV 4WD AJ | | GCO18204 | Outer Joint | 44T | 26 | 30 | 56 | 114 | 58 | I |
| **Mondeo** | | | | | | | | | | | | | | | |
| 1.0 (92 kw) | 2015.02-2022.03 | 6MT | F | L | Hatchback FWD M1CA;M1CB | | GDS81766 | Drive Shaft | | 27 | 26 | 55 | 105 | 667 | |
| | 2015.02-2022.03 | 6MT | F | R | Hatchback FWD M1CA;M1CB | | GDS81847 | Drive Shaft | | 27 | 26 | 55 | 105 | 1000 | |
| | 2015.02-2022.03 | 6MT | F | L/R | Hatchback FWD M1CA;M1CB | Date To:2019.01 | GCO81519 | Outer Joint | | 27 | 26 | 55 | 105 | 62.5 | M |
| | 2015.02-2022.03 | 6MT | F | L | Hatchback FWD M1CA;M1CB | | GCI21028 | Inner Joint | | 26 | 32 | 40 | 61 | 112.5 | |
| | 2015.02-2022.03 | 6MT | F | R | Hatchback FWD M1CA;M1CB | | GCI81338 | Inner Joint | | 26 | 32 | 40 | 383 | 99 | |
| | 2015.02-2022.03 | 6MT | F | L | Saloon FWD M1CA;M1CB | | GDS81766 | Drive Shaft | | 27 | 26 | 55 | 105 | 667 | |
| | 2015.02-2022.03 | 6MT | F | R | Saloon FWD M1CA;M1CB | | GDS81847 | Drive Shaft | | 27 | 26 | 55 | 105 | 1000 | |
| | 2015.02-2022.03 | 6MT | F | L/R | Saloon FWD M1CA;M1CB | Date To:2019.01 | GCO81519 | Outer Joint | | 27 | 26 | 55 | 105 | 62.5 | M |
| | 2015.02-2022.03 | 6MT | F | L | Saloon FWD M1CA;M1CB | | GCI21028 | Inner Joint | | 26 | 32 | 40 | 61 | 112.5 | |
| | 2015.02-2022.03 | 6MT | F | R | Saloon FWD M1CA;M1CB | | GCI81338 | Inner Joint | | 26 | 32 | 40 | 383 | 99 | |
| 1.5 (88 kw) | 2015.03-2022.03 | 6MT | F | L | Hatchback FWD UGCC;XUCA | | GDS81766 | Drive Shaft | | 27 | 26 | 55 | 105 | 667 | |
| | 2015.03-2022.03 | 6MT | F | R | Hatchback FWD UGCC;XUCA | | GDS81847 | Drive Shaft | | 27 | 26 | 55 | 105 | 1000 | |
| | 2015.03-2022.03 | 6MT | F | L/R | Hatchback FWD UGCC;XUCA | | GCO81519 | Outer Joint | | 27 | 26 | 55 | 105 | 62.5 | M |
| | 2015.03-2022.03 | 6MT | F | L | Hatchback FWD UGCC;XUCA | | GCI21028 | Inner Joint | | 26 | 32 | 40 | 61 | 112.5 | |
| | 2015.03-2022.03 | 6MT | F | R | Hatchback FWD UGCC;XUCA | | GCI81338 | Inner Joint | | 26 | 32 | 40 | 383 | 99 | |
| | 2015.03-2022.03 | 6MT | F | L | Saloon FWD UGCC;XUCA | | GDS81766 | Drive Shaft | | 27 | 26 | 55 | 105 | 667 | |
| | 2015.03-2022.03 | 6MT | F | R | Saloon FWD UGCC;XUCA | | GDS81847 | Drive Shaft | | 27 | 26 | 55 | 105 | 1000 | |
| | 2015.03-2022.03 | 6MT | F | L/R | Saloon FWD UGCC;XUCA | | GCO81519 | Outer Joint | | 27 | 26 | 55 | 105 | 62.5 | M |
| | 2015.03-2022.03 | 6MT | F | L | Saloon FWD UGCC;XUCA | | GCI21028 | Inner Joint | | 26 | 32 | 40 | 61 | 112.5 | |

| | YEAR | TRANSM. | F/R | L/R | BODY STYLE & DRIVE TYPE & ENGINE | REMARKS | G-AP Ref. | PRODUCT | ABS | Technical Specifications | | | | | |
|---|---|---|---|---|---|---|---|---|---|---|---|---|---|---|---|
| | | | | | | | | | | A | B | C | H | L | P |
| **FORD** **Mondeo** | | | | | | | | | | | | | | | |
| 1.5 (88 kw) | 2015.03-2022.03 | 6MT | F | R | Saloon FWD UGCC;XUCA | | GCI81338 | Inner Joint | | 26 | 32 | 40 | 383 | 99 | |
| 1.6 (65 kw) | 1994.07-1996.08 | AT | F | R | Hatchback FWD L1J | | GDS18005 | Drive Shaft | | 27 | 35 | 57 | 91 | 566 | |
| | 1994.07-1996.08 | AT/MT | F | R | Hatchback FWD L1J | | GDS18006 | Drive Shaft | 44T | 27 | 35 | 57 | 91 | 566 | |
| | 1994.07-1996.08 | AT/MT | F | L/R | Hatchback FWD L1J | | GCO18023 | Outer Joint | 44T | 27 | 30 | 57 | 91 | 56 | I |
| | 1994.07-1996.08 | AT/MT | F | L/R | Hatchback FWD L1J | | GCO18024 | Outer Joint | 44T | 27 | 30 | 57 | 91 | 56 | M |
| | 1994.07-1996.08 | MT | F | L | Hatchback FWD L1J | | GDS18001 | Drive Shaft | | 27 | 26 | 54.3 | 91 | 615 | |
| | 1994.07-1996.08 | MT | F | L | Hatchback FWD L1J | | GDS18002 | Drive Shaft | 44T | 27 | 26 | 54.3 | 91 | 615 | |
| | 1994.07-1996.08 | MT | F | L | Hatchback FWD L1J | | GDS18016 | Drive Shaft | | 27 | 26 | 57 | 91 | 618.5 | |
| | 1994.07-1996.08 | MT | F | L | Hatchback FWD L1J | | GDS18027 | Drive Shaft | | 27 | 26 | 57 | 91 | 627.5 | |
| | 1994.07-1996.08 | MT | F | R | Hatchback FWD L1J | | GDS18028 | Drive Shaft | | 27 | 35 | 57 | 91 | 576.5 | |
| | 1994.07-1996.08 | MT | F | L | Hatchback FWD L1J | | GCI36001 | Inner Joint | | 26 | 33 | 40 | 68.5 | 100 | |
| | 1994.07-1996.08 | AT | F | R | Saloon FWD L1J | | GDS18005 | Drive Shaft | | 27 | 35 | 57 | 91 | 566 | |
| | 1994.07-1996.08 | AT/MT | F | R | Saloon FWD L1J | | GDS18006 | Drive Shaft | 44T | 27 | 35 | 57 | 91 | 566 | |
| | 1994.07-1996.08 | AT/MT | F | L/R | Saloon FWD L1J | | GCO18023 | Outer Joint | 44T | 27 | 30 | 57 | 91 | 56 | I |
| | 1994.07-1996.08 | AT/MT | F | L/R | Saloon FWD L1J | | GCO18024 | Outer Joint | 44T | 27 | 30 | 57 | 91 | 56 | M |
| | 1994.07-1996.08 | MT | F | L | Saloon FWD L1J | | GDS18001 | Drive Shaft | | 27 | 26 | 54.3 | 91 | 615 | |
| | 1994.07-1996.08 | MT | F | L | Saloon FWD L1J | | GDS18002 | Drive Shaft | 44T | 27 | 26 | 54.3 | 91 | 615 | |
| | 1994.07-1996.08 | MT | F | L | Saloon FWD L1J | | GDS18016 | Drive Shaft | | 27 | 26 | 57 | 91 | 618.5 | |
| | 1994.07-1996.08 | MT | F | L | Saloon FWD L1J | | GDS18027 | Drive Shaft | | 27 | 26 | 57 | 91 | 627.5 | |
| | 1994.07-1996.08 | MT | F | R | Saloon FWD L1J | | GDS18028 | Drive Shaft | | 27 | 35 | 57 | 91 | 576.5 | |
| | 1994.07-1996.08 | MT | F | L | Saloon FWD L1J | | GCI36001 | Inner Joint | | 26 | 33 | 40 | 68.5 | 100 | |
| 1.6 (66 kw) | 1993.02-1996.08 | AT | F | R | Hatchback FWD L1F | | GDS18005 | Drive Shaft | | 27 | 35 | 57 | 91 | 566 | |
| | 1993.02-1996.08 | AT/MT | F | L/R | Hatchback FWD L1F | | GCO18023 | Outer Joint | 44T | 27 | 30 | 57 | 91 | 56 | I |
| | 1993.02-1996.08 | AT/MT | F | L/R | Hatchback FWD L1F | | GCO18024 | Outer Joint | 44T | 27 | 30 | 57 | 91 | 56 | M |
| | 1993.02-1996.08 | MT | F | L | Hatchback FWD L1F | | GDS18001 | Drive Shaft | | 27 | 26 | 54.3 | 91 | 615 | |
| | 1993.02-1996.08 | MT | F | L | Hatchback FWD L1F | | GDS18002 | Drive Shaft | 44T | 27 | 26 | 54.3 | 91 | 615 | |
| | 1993.02-1996.08 | MT | F | L | Hatchback FWD L1F | | GDS18016 | Drive Shaft | | 27 | 26 | 57 | 91 | 618.5 | |
| | 1993.02-1996.08 | MT | F | L | Hatchback FWD L1F | | GDS18027 | Drive Shaft | | 27 | 26 | 57 | 91 | 627.5 | |
| | 1993.02-1996.08 | MT | F | R | Hatchback FWD L1F | | GDS18006 | Drive Shaft | 44T | 27 | 35 | 57 | 91 | 566 | |
| | 1993.02-1996.08 | MT | F | R | Hatchback FWD L1F | | GDS18028 | Drive Shaft | | 27 | 35 | 57 | 91 | 576.5 | |
| | 1993.02-1996.08 | MT | F | L | Hatchback FWD L1F | | GCI36001 | Inner Joint | | 26 | 33 | 40 | 68.5 | 100 | |
| | 1993.02-1996.08 | AT | F | R | Saloon FWD L1F | | GDS18005 | Drive Shaft | | 27 | 35 | 57 | 91 | 566 | |
| | 1993.02-1996.08 | AT/MT | F | L/R | Saloon FWD L1F | | GCO18023 | Outer Joint | 44T | 27 | 30 | 57 | 91 | 56 | I |
| | 1993.02-1996.08 | AT/MT | F | L/R | Saloon FWD L1F | | GCO18024 | Outer Joint | 44T | 27 | 30 | 57 | 91 | 56 | M |
| | 1993.02-1996.08 | MT | F | L | Saloon FWD L1F | | GDS18001 | Drive Shaft | | 27 | 26 | 54.3 | 91 | 615 | |
| | 1993.02-1996.08 | MT | F | L | Saloon FWD L1F | | GDS18002 | Drive Shaft | 44T | 27 | 26 | 54.3 | 91 | 615 | |
| | 1993.02-1996.08 | MT | F | L | Saloon FWD L1F | | GDS18016 | Drive Shaft | | 27 | 26 | 57 | 91 | 618.5 | |
| | 1993.02-1996.08 | MT | F | L | Saloon FWD L1F | | GDS18027 | Drive Shaft | | 27 | 26 | 57 | 91 | 627.5 | |
| | 1993.02-1996.08 | MT | F | R | Saloon FWD L1F | | GDS18006 | Drive Shaft | 44T | 27 | 35 | 57 | 91 | 566 | |
| | 1993.02-1996.08 | MT | F | R | Saloon FWD L1F | | GDS18028 | Drive Shaft | | 27 | 35 | 57 | 91 | 576.5 | |
| | 1993.02-1996.08 | MT | F | L | Saloon FWD L1F | | GCI36001 | Inner Joint | | 26 | 33 | 40 | 68.5 | 100 | |
| | 1996.09-2000.11 | 4AT/5MT | F | L | Hatchback FWD L1J | | GDS18002 | Drive Shaft | 44T | 27 | 26 | 54.3 | 91 | 615 | |
| | 1996.09-2000.11 | 4AT/5MT | F | R | Hatchback FWD L1J | | GDS18006 | Drive Shaft | 44T | 27 | 35 | 57 | 91 | 566 | |
| | 1996.09-2000.11 | 4AT/5MT | F | L/R | Hatchback FWD L1J | | GCO18023 | Outer Joint | 44T | 27 | 30 | 57 | 91 | 56 | I |
| | 1996.09-2000.11 | MT | F | L | Hatchback FWD L1J | | GDS18001 | Drive Shaft | | 27 | 26 | 54.3 | 91 | 615 | |
| | 1996.09-2000.11 | MT | F | L | Hatchback FWD L1J | | GDS18016 | Drive Shaft | | 27 | 26 | 57 | 91 | 618.5 | |
| | 1996.09-2000.11 | MT | F | L | Hatchback FWD L1J | | GDS18027 | Drive Shaft | | 27 | 26 | 57 | 91 | 627.5 | |
| | 1996.09-2000.11 | MT | F | R | Hatchback FWD L1J | | GDS18028 | Drive Shaft | | 27 | 35 | 57 | 91 | 576.5 | |
| | 1996.09-2000.11 | MT | F | L/R | Hatchback FWD L1J | | GCO18024 | Outer Joint | 44T | 27 | 30 | 57 | 91 | 56 | M |
| | 1996.09-2000.11 | MT | F | L | Hatchback FWD L1J | | GCI36001 | Inner Joint | | 26 | 33 | 40 | 68.5 | 100 | |
| | 1996.09-2000.11 | 4AT/5MT | F | L | Saloon FWD L1J | | GDS18002 | Drive Shaft | 44T | 27 | 26 | 54.3 | 91 | 615 | |
| | 1996.09-2000.11 | 4AT/5MT | F | R | Saloon FWD L1J | | GDS18006 | Drive Shaft | 44T | 27 | 35 | 57 | 91 | 566 | |
| | 1996.09-2000.11 | 4AT/5MT | F | L/R | Saloon FWD L1J | | GCO18023 | Outer Joint | 44T | 27 | 30 | 57 | 91 | 56 | I |
| | 1996.09-2000.11 | MT | F | L | Saloon FWD L1J | | GDS18001 | Drive Shaft | | 27 | 26 | 54.3 | 91 | 615 | |
| | 1996.09-2000.11 | MT | F | L | Saloon FWD L1J | | GDS18016 | Drive Shaft | | 27 | 26 | 57 | 91 | 618.5 | |
| | 1996.09-2000.11 | MT | F | L | Saloon FWD L1J | | GDS18027 | Drive Shaft | | 27 | 26 | 57 | 91 | 627.5 | |
| | 1996.09-2000.11 | MT | F | R | Saloon FWD L1J | | GDS18028 | Drive Shaft | | 27 | 35 | 57 | 91 | 576.5 | |
| | 1996.09-2000.11 | MT | F | L/R | Saloon FWD L1J | | GCO18024 | Outer Joint | 44T | 27 | 30 | 57 | 91 | 56 | M |
| | 1996.09-2000.11 | MT | F | L | Saloon FWD L1J | | GCI36001 | Inner Joint | | 26 | 33 | 40 | 68.5 | 100 | |
| 1.6 (70 kw) | 1998.05-2000.09 | 5MT | F | L | Hatchback FWD L1L/L1N/L1Q | | GDS18002 | Drive Shaft | 44T | 27 | 26 | 54.3 | 91 | 615 | |
| | 1998.05-2000.09 | 5MT | F | R | Hatchback FWD L1L/L1N/L1Q | | GDS18006 | Drive Shaft | 44T | 27 | 35 | 57 | 91 | 566 | |
| | 1998.05-2000.09 | 5MT | F | L/R | Hatchback FWD L1L/L1N/L1Q | GrooveType:Inner | GCO18023 | Outer Joint | 44T | 27 | 30 | 57 | 91 | 56 | I |
| | 1998.05-2000.09 | MT | F | L | Hatchback FWD L1L/L1N/L1Q | | GDS18001 | Drive Shaft | | 27 | 26 | 54.3 | 91 | 615 | |
| | 1998.05-2000.09 | MT | F | L | Hatchback FWD L1L/L1N/L1Q | | GDS18016 | Drive Shaft | | 27 | 26 | 57 | 91 | 618.5 | |
| | 1998.05-2000.09 | MT | F | L | Hatchback FWD L1L/L1N/L1Q | | GDS18027 | Drive Shaft | | 27 | 26 | 57 | 91 | 627.5 | |

| | YEAR | TRANSM. | F/R | L/R | BODY STYLE & DRIVE TYPE & ENGINE | REMARKS | G-AP Ref. | PRODUCT | ABS | Technical Specifications | | | | | |
|---|---|---|---|---|---|---|---|---|---|---|---|---|---|---|---|
| | | | | | | | | | | A | B | C | H | L | P |
| **FORD** **Mondeo** | | | | | | | | | | | | | | | |
| 1.6 (70 kw) | 1998.05-2000.09 | MT | F | R | Hatchback FWD L1L/L1N/L1Q | | GDS18028 | Drive Shaft | | 27 | 35 | 57 | 91 | 576.5 | |
| | 1998.05-2000.09 | MT | F | L/R | Hatchback FWD L1L/L1N/L1Q | GrooveType:Middle | GCO18024 | Outer Joint | 44T | 27 | 30 | 57 | 91 | 56 | M |
| | 1998.05-2000.09 | MT | F | L | Hatchback FWD L1L/L1N/L1Q | | GCI36001 | Inner Joint | | 26 | 33 | 40 | 68.5 | 100 | |
| | 1998.05-2000.09 | 5MT | F | L | Saloon FWD L1L/L1N/L1Q | | GDS18002 | Drive Shaft | 44T | 27 | 26 | 54.3 | 91 | 615 | |
| | 1998.05-2000.09 | 5MT | F | R | Saloon FWD L1L/L1N/L1Q | | GDS18006 | Drive Shaft | 44T | 27 | 35 | 57 | 91 | 566 | |
| | 1998.05-2000.09 | 5MT | F | L/R | Saloon FWD L1L/L1N/L1Q | GrooveType:Inner | GCO18023 | Outer Joint | 44T | 27 | 30 | 57 | 91 | 56 | I |
| | 1998.05-2000.09 | MT | F | L | Saloon FWD L1L/L1N/L1Q | | GDS18001 | Drive Shaft | | 27 | 26 | 54.3 | 91 | 615 | |
| | 1998.05-2000.09 | MT | F | L | Saloon FWD L1L/L1N/L1Q | | GDS18016 | Drive Shaft | | 27 | 26 | 57 | 91 | 618.5 | |
| | 1998.05-2000.09 | MT | F | L | Saloon FWD L1L/L1N/L1Q | | GDS18027 | Drive Shaft | | 27 | 26 | 57 | 91 | 627.5 | |
| | 1998.05-2000.09 | MT | F | R | Saloon FWD L1L/L1N/L1Q | | GDS18028 | Drive Shaft | | 27 | 35 | 57 | 91 | 576.5 | |
| | 1998.05-2000.09 | MT | F | L/R | Saloon FWD L1L/L1N/L1Q | GrooveType:Middle | GCO18024 | Outer Joint | 44T | 27 | 30 | 57 | 91 | 56 | M |
| | 1998.05-2000.09 | MT | F | L | Saloon FWD L1L/L1N/L1Q | | GCI36001 | Inner Joint | | 26 | 33 | 40 | 68.5 | 100 | |
| 1.6 (81 kw) | 2007.03-2015.01 | 5MT | F | L | Hatchback FWD RHBA | | GDS83928 | Drive Shaft | | 40 | 23 | 57.5 | 52 | 629 | |
| | 2007.03-2015.01 | 5MT | F | R | Hatchback FWD RHBA | | GDS83555 | Drive Shaft | | 40 | 23 | 57.5 | 52 | 926 | |
| | 2007.03-2015.01 | 5MT | F | L | Hatchback FWD RHBA | | GCI18260 | Inner Joint | | 23 | 22 | 40 | 61 | 88 | |
| | 2007.03-2015.01 | AT/MT | F | | Hatchback FWD RHBA | Date From:2007.05 | GCO99271 | Outer Joint | | 40 | 28 | 57.7 | 51 | 63 | M |
| | 2007.03-2015.01 | | F | L/R | Hatchback FWD RHBA | | GCO34202 | Outer Joint | | 40 | 24 | 57.5 | 52 | 56.5 | M |
| | 2007.03-2015.01 | 5MT | F | L | Saloon FWD RHBA | | GDS83928 | Drive Shaft | | 40 | 23 | 57.5 | 52 | 629 | |
| | 2007.03-2015.01 | 5MT | F | R | Saloon FWD RHBA | | GDS83555 | Drive Shaft | | 40 | 23 | 57.5 | 52 | 926 | |
| | 2007.03-2015.01 | 5MT | F | L | Saloon FWD RHBA | | GCI18260 | Inner Joint | | 23 | 22 | 40 | 61 | 88 | |
| | 2007.03-2015.01 | AT/MT | F | | Saloon FWD RHBA | Date From:2007.05 | GCO99271 | Outer Joint | | 40 | 28 | 57.7 | 51 | 63 | M |
| | 2007.03-2015.01 | | F | L/R | Saloon FWD RHBA | | GCO34202 | Outer Joint | | 40 | 24 | 57.5 | 52 | 56.5 | M |
| 1.6 (85 kw) | 2010.12-2015.01 | 6MT | F | L | Saloon FWD T1BA;T1BB;T1BC | | GDS83397 | Drive Shaft | | 40 | 26 | 57.7 | 51 | 611 | |
| | 2010.12-2015.01 | 6MT | F | R | Saloon FWD T1BA;T1BB;T1BC | | GDS99212 | Drive Shaft | | 40 | 26 | 57.7 | 51 | 945 | |
| | 2010.12-2015.01 | 6MT | F | L/R | Saloon FWD T1BA;T1BB;T1BC | | GCO99271 | Outer Joint | | 40 | 28 | 57.7 | 51 | 63 | M |
| | 2010.12-2015.01 | 6MT | F | L | Saloon FWD T1BA;T1BB;T1BC | Date to:2012.10;TJ | GCI18128 | Inner Joint | | 26 | 28 | 40 | 68.5 | 111 | |
| | 2010.12-2015.01 | 6MT | F | L | Saloon FWD T1BA;T1BB;T1BC | AAR | GCI81533 | Inner Joint | | 26 | 28 | 40 | 68.5 | 108 | |
| | 2010.12-2015.01 | | F | R | Saloon FWD T1BA;T1BB;T1BC | | GCI18129 | Inner Joint | | 26 | 28 | 40 | 389 | 96.5 | |
| | 2011.02-2015.01 | 6MT | F | L | Hatchback FWD T1BA;T1BB;T1BC | | GDS83397 | Drive Shaft | | 40 | 26 | 57.7 | 51 | 611 | |
| | 2011.02-2015.01 | 6MT | F | R | Hatchback FWD T1BA;T1BB;T1BC | | GDS99212 | Drive Shaft | | 40 | 26 | 57.7 | 51 | 945 | |
| | 2011.02-2015.01 | 6MT | F | L | Hatchback FWD T1BA;T1BB;T1BC | Date to:2012.10;TJ | GCI18128 | Inner Joint | | 26 | 28 | 40 | 68.5 | 111 | |
| | 2011.02-2015.01 | 6MT | F | L | Hatchback FWD T1BA;T1BB;T1BC | AAR | GCI81533 | Inner Joint | | 26 | 28 | 40 | 68.5 | 108 | |
| | 2011.02-2015.01 | MT | F | L/R | Hatchback FWD T1BA;T1BB;T1BC | | GCO99271 | Outer Joint | | 40 | 28 | 57.7 | 51 | 63 | M |
| | 2011.02-2015.01 | | F | R | Hatchback FWD T1BA;T1BB;T1BC | | GCI18129 | Inner Joint | | 26 | 28 | 40 | 389 | 96.5 | |
| | 2014.09-2022.03 | 6MT | F | L | Hatchback FWD U3CA;NGCA | | GDS81766 | Drive Shaft | | 27 | 26 | 55 | 105 | 667 | |
| | 2014.09-2022.03 | 6MT | F | R | Hatchback FWD U3CA;NGCA | | GDS81847 | Drive Shaft | | 27 | 26 | 55 | 105 | 1000 | |
| | 2014.09-2022.03 | 6MT | F | L/R | Hatchback FWD U3CA;NGCA | | GCO81519 | Outer Joint | | 27 | 26 | 55 | 105 | 62.5 | M |
| | 2014.09-2022.03 | 6MT | F | L | Hatchback FWD U3CA;NGCA | | GCI21028 | Inner Joint | | 26 | 32 | 40 | 61 | 112.5 | |
| | 2014.09-2022.03 | 6MT | F | R | Hatchback FWD U3CA;NGCA | | GCI81338 | Inner Joint | | 26 | 32 | 40 | 383 | 99 | |
| 1.6 (88 kw) | 2010.03-2015.01 | 5MT | F | L | Saloon FWD KGBA | | GDS83928 | Drive Shaft | | 40 | 23 | 57.5 | 52 | 629 | |
| | 2010.03-2015.01 | 5MT | F | R | Saloon FWD KGBA | | GDS83555 | Drive Shaft | | 40 | 23 | 57.5 | 52 | 926 | |
| | 2010.03-2015.01 | 5MT | F | L | Saloon FWD KGBA | | GCI18260 | Inner Joint | | 23 | 22 | 40 | 61 | 88 | |
| | 2010.03-2015.01 | AT/MT | F | | Saloon FWD KGBA | Date To:2014.12 | GCO99271 | Outer Joint | | 40 | 28 | 57.7 | 51 | 63 | M |
| | 2010.03-2015.01 | | F | L/R | Saloon FWD KGBA | | GCO34202 | Outer Joint | | 40 | 24 | 57.5 | 52 | 56.5 | M |
| | 2010.07-2015.01 | 5MT | F | L | Hatchback FWD KGBA | | GDS83928 | Drive Shaft | | 40 | 23 | 57.5 | 52 | 629 | |
| | 2010.07-2015.01 | 5MT | F | R | Hatchback FWD KGBA | | GDS83555 | Drive Shaft | | 40 | 23 | 57.5 | 52 | 926 | |
| | 2010.07-2015.01 | 5MT | F | L | Hatchback FWD KGBA | | GCI18260 | Inner Joint | | 23 | 22 | 40 | 61 | 88 | |
| | 2010.07-2015.01 | AT/MT | F | | Hatchback FWD KGBA | | GCO99271 | Outer Joint | | 40 | 28 | 57.7 | 51 | 63 | M |
| | 2010.07-2015.01 | | F | L | Hatchback FWD KGBA | | GCO34202 | Outer Joint | | 40 | 24 | 57.5 | 52 | 56.5 | M |
| 1.6 (92 kw) | 2007.03-2015.01 | 5MT | F | L | Hatchback FWD PNBA | | GDS83928 | Drive Shaft | | 40 | 23 | 57.5 | 52 | 629 | |
| | 2007.03-2015.01 | 5MT | F | R | Hatchback FWD PNBA | | GDS83555 | Drive Shaft | | 40 | 23 | 57.5 | 52 | 926 | |
| | 2007.03-2015.01 | 5MT | F | L | Hatchback FWD PNBA | | GCI18260 | Inner Joint | | 23 | 22 | 40 | 61 | 88 | |
| | 2007.03-2015.01 | AT/MT | F | | Hatchback FWD PNBA | Date From:2007.05 | GCO99271 | Outer Joint | | 40 | 28 | 57.7 | 51 | 63 | M |
| | 2007.03-2015.01 | | F | L/R | Hatchback FWD PNBA | | GCO34202 | Outer Joint | | 40 | 24 | 57.5 | 52 | 56.5 | M |
| | 2007.03-2015.01 | 5MT | F | L | Saloon FWD PNBA | | GDS83928 | Drive Shaft | | 40 | 23 | 57.5 | 52 | 629 | |
| | 2007.03-2015.01 | 5MT | F | R | Saloon FWD PNBA | | GDS83555 | Drive Shaft | | 40 | 23 | 57.5 | 52 | 926 | |
| | 2007.03-2015.01 | 5MT | F | L | Saloon FWD PNBA | | GCI18260 | Inner Joint | | 23 | 22 | 40 | 61 | 88 | |
| | 2007.03-2015.01 | AT/MT | F | | Saloon FWD PNBA | Date From:2007.05 | GCO99271 | Outer Joint | | 40 | 28 | 57.7 | 51 | 63 | M |
| | 2007.03-2015.01 | MT | F | L/R | Saloon FWD PNBA | | GCO34202 | Outer Joint | | 40 | 24 | 57.5 | 52 | 56.5 | M |
| 1.6 (118 kw) | 2010.11-2015.01 | 6MT | F | L | Saloon FWD JTBB;JTBA | Date to:2012.10 | GCI18128 | Inner Joint | | 26 | 28 | 40 | 68.5 | 111 | |
| | 2010.11-2015.01 | | F | L | Saloon FWD JTBB;JTBA | | GCO99271 | Outer Joint | | 40 | 28 | 57.7 | 51 | 63 | M |
| | 2011.02-2015.01 | 6MT | F | L | Hatchback FWD JTBB;JTBA | Date to:2012.10 | GCI18128 | Inner Joint | | 26 | 28 | 40 | 68.5 | 111 | |
| | 2011.02-2015.01 | MT | F | L/R | Hatchback FWD JTBB;JTBA | | GCO99271 | Outer Joint | | 40 | 28 | 57.7 | 51 | 63 | M |
| 1.8 (65 kw) | 1993.02-1996.08 | AT/MT | F | R | Hatchback FWD RFM/RFN | | GDS18028 | Drive Shaft | | 27 | 35 | 57 | 91 | 576.5 | |
| | 1993.02-1996.08 | MT | F | L | Hatchback FWD RFM/RFN | | GDS18001 | Drive Shaft | | 27 | 26 | 54.3 | 91 | 615 | |

| | YEAR | TRANSM. | F/R | L/R | BODY STYLE & DRIVE TYPE & ENGINE | REMARKS | G-AP Ref. | PRODUCT | ABS | Technical Specifications | | | | | |
|---|---|---|---|---|---|---|---|---|---|---|---|---|---|---|---|
| | | | | | | | | | | A | B | C | H | L | P |
| **FORD** **Mondeo** | | | | | | | | | | | | | | | |
| 1.8 (65 kw) | 1993.02-1996.08 | MT | F | L | Hatchback FWD RFM/RFN | | GDS18002 | Drive Shaft | 44T | 27 | 26 | 54.3 | 91 | 615 | |
| | 1993.02-1996.08 | MT | F | L | Hatchback FWD RFM/RFN | | GDS18027 | Drive Shaft | | 27 | 26 | 57 | 91 | 627.5 | |
| | 1993.02-1996.08 | MT | F | R | Hatchback FWD RFM/RFN | | GDS18003 | Drive Shaft | | 27 | 35 | 54.3 | 91 | 566 | |
| | 1993.02-1996.08 | MT | F | R | Hatchback FWD RFM/RFN | | GDS18004 | Drive Shaft | 44T | 27 | 35 | 54.3 | 91 | 566 | |
| | 1993.02-1996.08 | MT | F | R | Hatchback FWD RFM/RFN | | GDS18006 | Drive Shaft | 44T | 27 | 35 | 57 | 91 | 566 | |
| | 1993.02-1996.08 | MT | F | L/R | Hatchback FWD RFM/RFN | | GCO18010 | Outer Joint | | 27 | 25 | 57 | 91 | 61 | I |
| | 1993.02-1996.08 | MT | F | L/R | Hatchback FWD RFM/RFN | | GCO18011 | Outer Joint | 44T | 27 | 25 | 57 | 91 | 61 | I |
| | 1993.02-1996.08 | MT | F | L | Hatchback FWD RFM/RFN | | GCI36001 | Inner Joint | | 26 | 33 | 40 | 68.5 | 100 | |
| | 1993.02-1996.08 | MT | F | L | Saloon FWD RFM/RFN | | GDS18001 | Drive Shaft | | 27 | 26 | 54.3 | 91 | 615 | |
| | 1993.02-1996.08 | MT | F | L | Saloon FWD RFM/RFN | | GDS18002 | Drive Shaft | 44T | 27 | 26 | 54.3 | 91 | 615 | |
| | 1993.02-1996.08 | MT | F | L | Saloon FWD RFM/RFN | | GDS18027 | Drive Shaft | | 27 | 26 | 57 | 91 | 627.5 | |
| | 1993.02-1996.08 | MT | F | R | Saloon FWD RFM/RFN | | GDS18003 | Drive Shaft | | 27 | 35 | 54.3 | 91 | 566 | |
| | 1993.02-1996.08 | MT | F | R | Saloon FWD RFM/RFN | | GDS18004 | Drive Shaft | 44T | 27 | 35 | 54.3 | 91 | 566 | |
| | 1993.02-1996.08 | MT | F | R | Saloon FWD RFM/RFN | | GDS18006 | Drive Shaft | 44T | 27 | 35 | 57 | 91 | 566 | |
| | 1993.02-1996.08 | MT | F | R | Saloon FWD RFM/RFN | | GDS18028 | Drive Shaft | | 27 | 35 | 57 | 91 | 576.5 | |
| | 1993.02-1996.08 | MT | F | L/R | Saloon FWD RFM/RFN | | GCO18010 | Outer Joint | | 27 | 25 | 57 | 91 | 61 | I |
| | 1993.02-1996.08 | MT | F | L/R | Saloon FWD RFM/RFN | | GCO18011 | Outer Joint | 44T | 27 | 25 | 57 | 91 | 61 | I |
| | 1993.02-1996.08 | MT | F | L | Saloon FWD RFM/RFN | | GCI36001 | Inner Joint | | 26 | 33 | 40 | 68.5 | 100 | |
| 1.8 (66 kw) | 1995.10-1996.08 | AT/MT | F | R | Hatchback FWD RFM/RFN | | GDS18028 | Drive Shaft | | 27 | 35 | 57 | 91 | 576.5 | |
| | 1995.10-1996.08 | MT | F | L | Hatchback FWD RFM/RFN | | GDS18001 | Drive Shaft | | 27 | 26 | 54.3 | 91 | 615 | |
| | 1995.10-1996.08 | MT | F | L | Hatchback FWD RFM/RFN | | GDS18002 | Drive Shaft | 44T | 27 | 26 | 54.3 | 91 | 615 | |
| | 1995.10-1996.08 | MT | F | L | Hatchback FWD RFM/RFN | | GDS18027 | Drive Shaft | | 27 | 26 | 57 | 91 | 627.5 | |
| | 1995.10-1996.08 | MT | F | R | Hatchback FWD RFM/RFN | | GDS18003 | Drive Shaft | | 27 | 35 | 54.3 | 91 | 566 | |
| | 1995.10-1996.08 | MT | F | R | Hatchback FWD RFM/RFN | | GDS18004 | Drive Shaft | 44T | 27 | 35 | 54.3 | 91 | 566 | |
| | 1995.10-1996.08 | MT | F | R | Hatchback FWD RFM/RFN | | GDS18006 | Drive Shaft | 44T | 27 | 35 | 57 | 91 | 566 | |
| | 1995.10-1996.08 | MT | F | L/R | Hatchback FWD RFM/RFN | | GCO18010 | Outer Joint | | 27 | 25 | 57 | 91 | 61 | I |
| | 1995.10-1996.08 | MT | F | L/R | Hatchback FWD RFM/RFN | | GCO18011 | Outer Joint | 44T | 27 | 25 | 57 | 91 | 61 | I |
| | 1995.10-1996.08 | MT | F | L | Hatchback FWD RFM/RFN | | GCI36001 | Inner Joint | | 26 | 33 | 40 | 68.5 | 100 | |
| | 1995.10-1996.08 | AT/MT | F | R | Saloon FWD RFM/RFN | | GDS18028 | Drive Shaft | | 27 | 35 | 57 | 91 | 576.5 | |
| | 1995.10-1996.08 | MT | F | L | Saloon FWD RFM/RFN | | GDS18001 | Drive Shaft | | 27 | 26 | 54.3 | 91 | 615 | |
| | 1995.10-1996.08 | MT | F | L | Saloon FWD RFM/RFN | | GDS18002 | Drive Shaft | 44T | 27 | 26 | 54.3 | 91 | 615 | |
| | 1995.10-1996.08 | MT | F | L | Saloon FWD RFM/RFN | | GDS18027 | Drive Shaft | | 27 | 26 | 57 | 91 | 627.5 | |
| | 1995.10-1996.08 | MT | F | R | Saloon FWD RFM/RFN | | GDS18003 | Drive Shaft | | 27 | 35 | 54.3 | 91 | 566 | |
| | 1995.10-1996.08 | MT | F | R | Saloon FWD RFM/RFN | | GDS18004 | Drive Shaft | 44T | 27 | 35 | 54.3 | 91 | 566 | |
| | 1995.10-1996.08 | MT | F | R | Saloon FWD RFM/RFN | | GDS18006 | Drive Shaft | 44T | 27 | 35 | 57 | 91 | 566 | |
| | 1995.10-1996.08 | MT | F | L/R | Saloon FWD RFM/RFN | | GCO18010 | Outer Joint | | 27 | 25 | 57 | 91 | 61 | I |
| | 1995.10-1996.08 | MT | F | L/R | Saloon FWD RFM/RFN | | GCO18011 | Outer Joint | 44T | 27 | 25 | 57 | 91 | 61 | I |
| | 1995.10-1996.08 | MT | F | L | Saloon FWD RFM/RFN | | GCI36001 | Inner Joint | | 26 | 33 | 40 | 68.5 | 100 | |
| | 1996.09-2000.11 | 5MT | F | L | Hatchback FWD RFN | inner teeth of transm. side:30 | GDS18001 | Drive Shaft | | 27 | 26 | 54.3 | 91 | 615 | |
| | 1996.09-2000.11 | 5MT | F | L | Hatchback FWD RFN | | GDS18002 | Drive Shaft | 44T | 27 | 26 | 54.3 | 91 | 615 | |
| | 1996.09-2000.11 | 5MT | F | R | Hatchback FWD RFN | | GDS18003 | Drive Shaft | | 27 | 35 | 54.3 | 91 | 566 | |
| | 1996.09-2000.11 | 5MT | F | R | Hatchback FWD RFN | inner teeth of transm. side:32 | GDS18004 | Drive Shaft | 44T | 27 | 35 | 54.3 | 91 | 566 | |
| | 1996.09-2000.11 | 5MT | F | L/R | Hatchback FWD RFN | | GCO18011 | Outer Joint | 44T | 27 | 25 | 57 | 91 | 61 | I |
| | 1996.09-2000.11 | AT/MT | F | R | Hatchback FWD RFN | | GDS18028 | Drive Shaft | | 27 | 35 | 57 | 91 | 576.5 | |
| | 1996.09-2000.11 | MT | F | L | Hatchback FWD RFN | inner teeth of transm. side:32 | GDS18027 | Drive Shaft | | 27 | 26 | 57 | 91 | 627.5 | |
| | 1996.09-2000.11 | MT | F | R | Hatchback FWD RFN | inner teeth of transm. side:30 | GDS18006 | Drive Shaft | 44T | 27 | 35 | 57 | 91 | 566 | |
| | 1996.09-2000.11 | MT | F | L/R | Hatchback FWD RFN | | GCO18010 | Outer Joint | | 27 | 25 | 57 | 91 | 61 | I |
| | 1996.09-2000.11 | 5MT | F | L | Saloon FWD RFN | inner teeth of transm. side:30 | GDS18001 | Drive Shaft | | 27 | 26 | 54.3 | 91 | 615 | |
| | 1996.09-2000.11 | 5MT | F | L | Saloon FWD RFN | inner teeth of transm. side:30 | GDS18002 | Drive Shaft | 44T | 27 | 26 | 54.3 | 91 | 615 | |
| | 1996.09-2000.11 | 5MT | F | R | Saloon FWD RFN | | GDS18003 | Drive Shaft | | 27 | 35 | 54.3 | 91 | 566 | |
| | 1996.09-2000.11 | 5MT | F | R | Saloon FWD RFN | inner teeth of transm. side:32 | GDS18004 | Drive Shaft | 44T | 27 | 35 | 54.3 | 91 | 566 | |
| | 1996.09-2000.11 | 5MT | F | L/R | Saloon FWD RFN | | GCO18011 | Outer Joint | 44T | 27 | 25 | 57 | 91 | 61 | I |
| | 1996.09-2000.11 | AT/MT | F | R | Saloon FWD RFN | | GDS18028 | Drive Shaft | | 27 | 35 | 57 | 91 | 576.5 | |
| | 1996.09-2000.11 | MT | F | L | Saloon FWD RFN | inner teeth of transm. side:32 | GDS18027 | Drive Shaft | | 27 | 26 | 57 | 91 | 627.5 | |
| | 1996.09-2000.11 | MT | F | R | Saloon FWD RFN | inner teeth of transm. side:30 | GDS18006 | Drive Shaft | 44T | 27 | 35 | 57 | 91 | 566 | |
| | 1996.09-2000.11 | MT | F | L/R | Saloon FWD RFN | | GCO18010 | Outer Joint | | 27 | 25 | 57 | 91 | 61 | I |
| | 1996.09-2000.11 | MT | F | L | Saloon FWD RFN | | GCI36001 | Inner Joint | | 26 | 33 | 40 | 68.5 | 100 | |
| 1.8 (74 kw) | 2007.03-2015.01 | 5MT/6MT | F | R | Hatchback FWD FFBA | | GDS99212 | Drive Shaft | | 40 | 26 | 57.7 | 51 | 945 | |
| | 2007.03-2015.01 | 5MT/6MT | F | L | Hatchback FWD FFBA | Date to:2012.10;TJ | GCI18128 | Inner Joint | | 26 | 28 | 40 | 68.5 | 111 | |
| | 2007.03-2015.01 | 6MT | F | L | Hatchback FWD FFBA | | GDS83397 | Drive Shaft | | 40 | 26 | 57.7 | 51 | 611 | |
| | 2007.03-2015.01 | 6MT | F | L | Hatchback FWD FFBA | AAR | GCI81533 | Inner Joint | | 26 | 28 | 40 | 68.5 | 108 | |
| | 2007.03-2015.01 | MT | F | L/R | Hatchback FWD FFBA | | GCO99271 | Outer Joint | | 40 | 28 | 57.7 | 51 | 63 | M |
| | 2007.03-2015.01 | | F | R | Hatchback FWD FFBA | | GCI18129 | Inner Joint | | 26 | 28 | 40 | 389 | 96.5 | |
| | 2007.03-2015.01 | 5MT/6MT | F | R | Saloon FWD FFBA | | GDS99212 | Drive Shaft | | 40 | 26 | 57.7 | 51 | 945 | |
| | 2007.03-2015.01 | 5MT/6MT | F | L | Saloon FWD FFBA | Date to:2012.10;TJ | GCI18128 | Inner Joint | | 26 | 28 | 40 | 68.5 | 111 | |

| | YEAR | TRANSM. | F/R | L/R | BODY STYLE & DRIVE TYPE & ENGINE | REMARKS | G-AP Ref. | PRODUCT | ABS | Technical Specifications A | B | C | H | L | P |
|---|---|---|---|---|---|---|---|---|---|---|---|---|---|---|---|
| **FORD** **Mondeo** | | | | | | | | | | | | | | | |
| 1.8 (74 kw) | 2007.03-2015.01 | 6MT | F | L | Saloon FWD FFBA | | GDS83397 | Drive Shaft | | 40 | 26 | 57.7 | 51 | 611 | |
| | 2007.03-2015.01 | 6MT | F | L | Saloon FWD FFBA | AAR | GCI81533 | Inner Joint | | 26 | 28 | 40 | 68.5 | 108 | |
| | 2007.03-2015.01 | MT | F | L/R | Saloon FWD FFBA | | GCO99271 | Outer Joint | | 40 | 28 | 57.7 | 51 | 63 | M |
| | 2007.03-2015.01 | | F | R | Saloon FWD FFBA | | GCI18129 | Inner Joint | | 26 | 28 | 40 | 389 | 96.5 | |
| 1.8 (81 kw) | 2000.10-2007.03 | 5MT | F | L | Hatchback FWD CGBA;CGBB | | GDS18220 | Drive Shaft | | 27 | 26 | 56.5 | 92 | 633 | |
| | 2000.10-2007.03 | 5MT | F | L/R | Hatchback FWD CGBA;CGBB | | GCO18072 | Outer Joint | | 27 | 23 | 56.1 | 91.5 | 56.5 | M |
| | 2000.10-2007.03 | 5MT | F | L | Hatchback FWD CGBA;CGBB | | GCI36001 | Inner Joint | | 26 | 33 | 40 | 68.5 | 100 | |
| | 2000.10-2007.03 | AT/MT | F | R | Hatchback FWD CGBA;CGBB | | GDS18043 | Drive Shaft | | 27 | 35 | 56.5 | 92 | 579 | |
| | 2000.10-2007.03 | AT/MT | F | R | Hatchback FWD CGBA;CGBB | | GCI18061 | Inner Joint | | 35 | 34 | 42 | | 117.5 | |
| | 2000.10-2007.03 | MT | F | L | Hatchback FWD CGBA;CGBB | | GDS18027 | Drive Shaft | | 27 | 26 | 57 | 91 | 627.5 | |
| | 2000.10-2007.03 | MT | F | L/R | Hatchback FWD CGBA;CGBB | Date from:2003.06 | GCO18007 | Outer Joint | | 27 | 23 | 56.1 | 91.5 | 58.5 | M |
| | 2000.10-2007.03 | | F | R | Hatchback FWD CGBA;CGBB | | GDS18028 | Drive Shaft | | 27 | 35 | 57 | 91 | 576.5 | |
| | 2000.10-2007.03 | 5MT | F | L | Saloon FWD CGBA;CGBB | | GDS18220 | Drive Shaft | | 27 | 26 | 56.5 | 92 | 633 | |
| | 2000.10-2007.03 | 5MT | F | L/R | Saloon FWD CGBA;CGBB | | GCO18072 | Outer Joint | | 27 | 23 | 56.1 | 91.5 | 56.5 | M |
| | 2000.10-2007.03 | 5MT | F | L | Saloon FWD CGBA;CGBB | | GCI36001 | Inner Joint | | 26 | 33 | 40 | 68.5 | 100 | |
| | 2000.10-2007.03 | AT/MT | F | R | Saloon FWD CGBA;CGBB | | GDS18043 | Drive Shaft | | 27 | 35 | 56.5 | 92 | 579 | |
| | 2000.10-2007.03 | AT/MT | F | R | Saloon FWD CGBA;CGBB | | GCI18061 | Inner Joint | | 35 | 34 | 42 | | 117.5 | |
| | 2000.10-2007.03 | MT | F | L | Saloon FWD CGBA;CGBB | | GDS18027 | Drive Shaft | | 27 | 26 | 57 | 91 | 627.5 | |
| | 2000.10-2007.03 | MT | F | R | Saloon FWD CGBA;CGBB | | GDS18028 | Drive Shaft | | 27 | 35 | 57 | 91 | 576.5 | |
| | 2000.10-2007.03 | MT | F | L/R | Saloon FWD CGBA;CGBB | Date from:2003.06 | GCO18007 | Outer Joint | | 27 | 23 | 56.1 | 91.5 | 58.5 | M |
| 1.8 (82 kw) | 1994.01-1996.08 | AT | F | R | Hatchback FWD RKB | Date to:1994.12 | GDS18003 | Drive Shaft | | 27 | 35 | 54.3 | 91 | 566 | |
| | 1994.01-1996.08 | AT | F | R | Hatchback FWD RKB | Date to:1994.12 | GDS18004 | Drive Shaft | 44T | 27 | 35 | 54.3 | 91 | 566 | |
| | 1994.01-1996.08 | AT | F | R | Hatchback FWD RKB | Date from:1994.12 | GDS18006 | Drive Shaft | 44T | 27 | 35 | 57 | 91 | 566 | |
| | 1994.01-1996.08 | AT | F | L/R | Hatchback FWD RKB | | GCO18010 | Outer Joint | | 27 | 25 | 57 | 91 | 61 | I |
| | 1994.01-1996.08 | AT | F | L/R | Hatchback FWD RKB | Date to:1994.12 | GCO18011 | Outer Joint | 44T | 27 | 25 | 57 | 91 | 61 | I |
| | 1994.01-1996.08 | AT | F | L/R | Hatchback FWD RKB | Date from:1994.12 | GCO18024 | Outer Joint | 44T | 27 | 30 | 57 | 91 | 56 | M |
| | 1994.01-1996.08 | AT/MT | F | R | Hatchback FWD RKB | | GDS18028 | Drive Shaft | | 27 | 35 | 57 | 91 | 576.5 | |
| | 1994.01-1996.08 | MT | F | L | Hatchback FWD RKB | | GDS18001 | Drive Shaft | | 27 | 26 | 54.3 | 91 | 615 | |
| | 1994.01-1996.08 | MT | F | L | Hatchback FWD RKB | | GDS18002 | Drive Shaft | 44T | 27 | 26 | 54.3 | 91 | 615 | |
| | 1994.01-1996.08 | MT | F | L | Hatchback FWD RKB | | GDS18016 | Drive Shaft | | 27 | 26 | 57 | 91 | 618.5 | |
| | 1994.01-1996.08 | MT | F | L | Hatchback FWD RKB | | GDS18027 | Drive Shaft | | 27 | 26 | 57 | 91 | 627.5 | |
| | 1994.01-1996.08 | MT | F | L/R | Hatchback FWD RKB | | GCO18023 | Outer Joint | 44T | 27 | 30 | 57 | 91 | 56 | I |
| | 1994.01-1996.08 | MT | F | L | Hatchback FWD RKB | | GCI36001 | Inner Joint | | 26 | 33 | 40 | 68.5 | 100 | |
| | 1994.01-1996.08 | AT | F | R | Saloon FWD RKB | Date to:1994.12 | GDS18003 | Drive Shaft | | 27 | 35 | 54.3 | 91 | 566 | |
| | 1994.01-1996.08 | AT | F | R | Saloon FWD RKB | Date to:1994.12 | GDS18004 | Drive Shaft | 44T | 27 | 35 | 54.3 | 91 | 566 | |
| | 1994.01-1996.08 | AT | F | R | Saloon FWD RKB | Date from:1994.12 | GDS18006 | Drive Shaft | 44T | 27 | 35 | 57 | 91 | 566 | |
| | 1994.01-1996.08 | AT | F | L/R | Saloon FWD RKB | | GCO18010 | Outer Joint | | 27 | 25 | 57 | 91 | 61 | I |
| | 1994.01-1996.08 | AT | F | L/R | Saloon FWD RKB | Date to:1994.12 | GCO18011 | Outer Joint | 44T | 27 | 25 | 57 | 91 | 61 | I |
| | 1994.01-1996.08 | AT | F | L/R | Saloon FWD RKB | Date from:1994.12 | GCO18024 | Outer Joint | 44T | 27 | 30 | 57 | 91 | 56 | M |
| | 1994.01-1996.08 | AT/MT | F | R | Saloon FWD RKB | | GDS18028 | Drive Shaft | | 27 | 35 | 57 | 91 | 576.5 | |
| | 1994.01-1996.08 | MT | F | L | Saloon FWD RKB | | GDS18001 | Drive Shaft | | 27 | 26 | 54.3 | 91 | 615 | |
| | 1994.01-1996.08 | MT | F | L | Saloon FWD RKB | | GDS18002 | Drive Shaft | 44T | 27 | 26 | 54.3 | 91 | 615 | |
| | 1994.01-1996.08 | MT | F | L | Saloon FWD RKB | | GDS18016 | Drive Shaft | | 27 | 26 | 57 | 91 | 618.5 | |
| | 1994.01-1996.08 | MT | F | L | Saloon FWD RKB | | GDS18027 | Drive Shaft | | 27 | 26 | 57 | 91 | 627.5 | |
| | 1994.01-1996.08 | MT | F | L/R | Saloon FWD RKB | | GCO18023 | Outer Joint | 44T | 27 | 30 | 57 | 91 | 56 | I |
| | 1994.01-1996.08 | MT | F | L | Saloon FWD RKB | | GCI36001 | Inner Joint | | 26 | 33 | 40 | 68.5 | 100 | |
| 1.8 (85 kw) | 1993.01-1996.08 | AT | F | R | Saloon FWD RKA | Date to:1994.12 | GDS18003 | Drive Shaft | | 27 | 35 | 54.3 | 91 | 566 | |
| | 1993.01-1996.08 | AT | F | R | Saloon FWD RKA | Date to:1994.12 | GDS18004 | Drive Shaft | 44T | 27 | 35 | 54.3 | 91 | 566 | |
| | 1993.01-1996.08 | AT | F | R | Saloon FWD RKA | | GDS18005 | Drive Shaft | | 27 | 35 | 57 | 91 | 566 | |
| | 1993.01-1996.08 | AT | F | R | Saloon FWD RKA | Date from:1994.12 | GDS18006 | Drive Shaft | 44T | 27 | 35 | 57 | 91 | 566 | |
| | 1993.01-1996.08 | AT | F | L/R | Saloon FWD RKA | Date to:1994.12 | GCO18011 | Outer Joint | 44T | 27 | 25 | 57 | 91 | 61 | I |
| | 1993.01-1996.08 | AT | F | L/R | Saloon FWD RKA | Date from:1994.12 | GCO18024 | Outer Joint | 44T | 27 | 30 | 57 | 91 | 56 | M |
| | 1993.01-1996.08 | AT/MT | F | R | Saloon FWD RKA | | GDS18028 | Drive Shaft | | 27 | 35 | 57 | 91 | 576.5 | |
| | 1993.01-1996.08 | AT/MT | F | L/R | Saloon FWD RKA | | GCO18023 | Outer Joint | 44T | 27 | 30 | 57 | 91 | 56 | I |
| | 1993.01-1996.08 | MT | F | L | Saloon FWD RKA | | GDS18001 | Drive Shaft | | 27 | 26 | 54.3 | 91 | 615 | |
| | 1993.01-1996.08 | MT | F | L | Saloon FWD RKA | | GDS18002 | Drive Shaft | 44T | 27 | 26 | 54.3 | 91 | 615 | |
| | 1993.01-1996.08 | MT | F | L | Saloon FWD RKA | | GDS18016 | Drive Shaft | | 27 | 26 | 57 | 91 | 618.5 | |
| | 1993.01-1996.08 | MT | F | L | Saloon FWD RKA | | GDS18027 | Drive Shaft | | 27 | 26 | 57 | 91 | 627.5 | |
| | 1993.01-1996.08 | MT | F | L | Saloon FWD RKA | | GCI36001 | Inner Joint | | 26 | 33 | 40 | 68.5 | 100 | |
| | 1993.01-1996.08 | | F | | Saloon FWD RKA | | GCO18010 | Outer Joint | | 27 | 25 | 57 | 91 | 61 | I |
| | 1993.02-1996.08 | AT | F | R | Hatchback 4WD RKA | Date to:1994.12 | GDS18003 | Drive Shaft | | 27 | 35 | 54.3 | 91 | 566 | |
| | 1993.02-1996.08 | AT | F | R | Hatchback 4WD RKA | Date to:1994.12 | GDS18004 | Drive Shaft | 44T | 27 | 35 | 54.3 | 91 | 566 | |
| | 1993.02-1996.08 | AT | F | R | Hatchback 4WD RKA | | GDS18005 | Drive Shaft | | 27 | 35 | 57 | 91 | 566 | |
| | 1993.02-1996.08 | AT | F | R | Hatchback 4WD RKA | Date from:1994.12 | GDS18006 | Drive Shaft | 44T | 27 | 35 | 57 | 91 | 566 | |
| | 1993.02-1996.08 | AT | F | L/R | Hatchback 4WD RKA | | GCO18010 | Outer Joint | | 27 | 25 | 57 | 91 | 61 | I |

| | YEAR | TRANSM. | F/R | L/R | BODY STYLE & DRIVE TYPE & ENGINE | REMARKS | G-AP Ref. | PRODUCT | ABS | Technical Specifications A | B | C | H | L | P |
|---|---|---|---|---|---|---|---|---|---|---|---|---|---|---|---|
| **FORD** **Mondeo** | | | | | | | | | | | | | | | |
| 1.8 (85 kw) | 1993.02-1996.08 | AT | F | L/R | Hatchback 4WD RKA | Date to:1994.12 | GCO18011 | Outer Joint | 44T | 27 | 25 | 57 | 91 | 61 | I |
| | 1993.02-1996.08 | AT | F | L/R | Hatchback 4WD RKA | Date from:1994.12 | GCO18024 | Outer Joint | 44T | 27 | 30 | 57 | 91 | 56 | M |
| | 1993.02-1996.08 | AT/MT | F | R | Hatchback 4WD RKA | | GDS18028 | Drive Shaft | | 27 | 35 | 57 | 91 | 576.5 | |
| | 1993.02-1996.08 | MT | F | L | Hatchback 4WD RKA | | GDS18001 | Drive Shaft | | 27 | 26 | 54.3 | 91 | 615 | |
| | 1993.02-1996.08 | MT | F | L | Hatchback 4WD RKA | | GDS18002 | Drive Shaft | 44T | 27 | 26 | 54.3 | 91 | 615 | |
| | 1993.02-1996.08 | MT | F | L | Hatchback 4WD RKA | | GDS18016 | Drive Shaft | | 27 | 26 | 57 | 91 | 618.5 | |
| | 1993.02-1996.08 | MT | F | L | Hatchback 4WD RKA | | GDS18027 | Drive Shaft | | 27 | 26 | 57 | 91 | 627.5 | |
| | 1993.02-1996.08 | MT | F | R | Hatchback 4WD RKA | | GDS18006 | Drive Shaft | 44T | 27 | 35 | 57 | 91 | 566 | |
| | 1993.02-1996.08 | MT | F | L/R | Hatchback 4WD RKA | | GCO18023 | Outer Joint | 44T | 27 | 30 | 57 | 91 | 56 | I |
| | 1993.02-1996.08 | MT | F | L | Hatchback 4WD RKA | | GCI36001 | Inner Joint | | 26 | 33 | 40 | 68.5 | 100 | |
| | 1993.02-1996.08 | AT | F | R | Hatchback FWD RKA | Date to:1994.12 | GDS18003 | Drive Shaft | | 27 | 35 | 54.3 | 91 | 566 | |
| | 1993.02-1996.08 | AT | F | R | Hatchback FWD RKA | Date to:1994.12 | GDS18004 | Drive Shaft | 44T | 27 | 35 | 54.3 | 91 | 566 | |
| | 1993.02-1996.08 | AT | F | R | Hatchback FWD RKA | | GDS18005 | Drive Shaft | | 27 | 35 | 57 | 91 | 566 | |
| | 1993.02-1996.08 | AT | F | R | Hatchback FWD RKA | Date from:1994.12 | GDS18006 | Drive Shaft | 44T | 27 | 35 | 57 | 91 | 566 | |
| | 1993.02-1996.08 | AT | F | L/R | Hatchback FWD RKA | Date to:1994.12 | GCO18011 | Outer Joint | 44T | 27 | 25 | 57 | 91 | 61 | I |
| | 1993.02-1996.08 | AT | F | L/R | Hatchback FWD RKA | Date from:1994.12 | GCO18024 | Outer Joint | 44T | 27 | 30 | 57 | 91 | 56 | M |
| | 1993.02-1996.08 | AT/MT | F | R | Hatchback FWD RKA | | GDS18028 | Drive Shaft | | 27 | 35 | 57 | 91 | 576.5 | |
| | 1993.02-1996.08 | AT/MT | F | L/R | Hatchback FWD RKA | | GCO18023 | Outer Joint | 44T | 27 | 30 | 57 | 91 | 56 | I |
| | 1993.02-1996.08 | MT | F | L | Hatchback FWD RKA | | GDS18001 | Drive Shaft | | 27 | 26 | 54.3 | 91 | 615 | |
| | 1993.02-1996.08 | MT | F | L | Hatchback FWD RKA | | GDS18002 | Drive Shaft | 44T | 27 | 26 | 54.3 | 91 | 615 | |
| | 1993.02-1996.08 | MT | F | L | Hatchback FWD RKA | | GDS18016 | Drive Shaft | | 27 | 26 | 57 | 91 | 618.5 | |
| | 1993.02-1996.08 | MT | F | L | Hatchback FWD RKA | | GDS18027 | Drive Shaft | | 27 | 26 | 57 | 91 | 627.5 | |
| | 1993.02-1996.08 | MT | F | L | Hatchback FWD RKA | | GCI36001 | Inner Joint | | 26 | 33 | 40 | 68.5 | 100 | |
| | 1993.02-1996.08 | | F | | Hatchback FWD RKA | | GCO18010 | Outer Joint | | 27 | 25 | 57 | 91 | 61 | I |
| | 1993.02-1996.08 | 4AT | F | L/R | Saloon 4WD RKA | | GCO18023 | Outer Joint | 44T | 27 | 30 | 57 | 91 | 56 | I |
| | 1993.02-1996.08 | MT | F | L | Saloon 4WD RKA | | GDS18016 | Drive Shaft | | 27 | 26 | 57 | 91 | 618.5 | |
| | 1996.09-2000.09 | 4AT/5MT | F | R | Hatchback FWD RKB/RKF/RKH/RKJ/RKK | | GDS18006 | Drive Shaft | 44T | 27 | 35 | 57 | 91 | 566 | |
| | 1996.09-2000.09 | 4AT/5MT | F | L/R | Hatchback FWD RKB/RKF/RKH/RKJ/RKK | | GCO18023 | Outer Joint | 44T | 27 | 30 | 57 | 91 | 56 | I |
| | 1996.09-2000.09 | AT/MT | F | R | Hatchback FWD RKB/RKF/RKH/RKJ/RKK | | GDS18028 | Drive Shaft | | 27 | 35 | 57 | 91 | 576.5 | |
| | 1996.09-2000.09 | AT/MT | F | L/R | Hatchback FWD RKB/RKF/RKH/RKJ/RKK | | GCO18024 | Outer Joint | 44T | 27 | 30 | 57 | 91 | 56 | M |
| | 1996.09-2000.09 | MT | F | L | Hatchback FWD RKB/RKF/RKH/RKJ/RKK | | GDS18001 | Drive Shaft | | 27 | 26 | 54.3 | 91 | 615 | |
| | 1996.09-2000.09 | MT | F | L | Hatchback FWD RKB/RKF/RKH/RKJ/RKK | | GDS18002 | Drive Shaft | 44T | 27 | 26 | 54.3 | 91 | 615 | |
| | 1996.09-2000.09 | MT | F | L | Hatchback FWD RKB/RKF/RKH/RKJ/RKK | | GDS18016 | Drive Shaft | | 27 | 26 | 57 | 91 | 618.5 | |
| | 1996.09-2000.09 | MT | F | L | Hatchback FWD RKB/RKF/RKH/RKJ/RKK | | GDS18027 | Drive Shaft | | 27 | 26 | 57 | 91 | 627.5 | |
| | 1996.09-2000.09 | MT | F | L | Hatchback FWD RKB/RKF/RKH/RKJ/RKK | | GCI36001 | Inner Joint | | 26 | 33 | 40 | 68.5 | 100 | |
| | 1996.09-2000.09 | 4AT/5MT | F | R | Saloon FWD RKB/RKF/RKH/RKJ/RKK | | GDS18006 | Drive Shaft | 44T | 27 | 35 | 57 | 91 | 566 | |
| | 1996.09-2000.09 | 4AT/5MT | F | L/R | Saloon FWD RKB/RKF/RKH/RKJ/RKK | | GCO18023 | Outer Joint | 44T | 27 | 30 | 57 | 91 | 56 | I |
| | 1996.09-2000.09 | AT/MT | F | R | Saloon FWD RKB/RKF/RKH/RKJ/RKK | | GDS18028 | Drive Shaft | | 27 | 35 | 57 | 91 | 576.5 | |
| | 1996.09-2000.09 | AT/MT | F | L/R | Saloon FWD RKB/RKF/RKH/RKJ/RKK | | GCO18024 | Outer Joint | 44T | 27 | 30 | 57 | 91 | 56 | M |
| | 1996.09-2000.09 | MT | F | L | Saloon FWD RKB/RKF/RKH/RKJ/RKK | | GDS18001 | Drive Shaft | | 27 | 26 | 54.3 | 91 | 615 | |
| | 1996.09-2000.09 | MT | F | L | Saloon FWD RKB/RKF/RKH/RKJ/RKK | | GDS18002 | Drive Shaft | 44T | 27 | 26 | 54.3 | 91 | 615 | |
| | 1996.09-2000.09 | MT | F | L | Saloon FWD RKB/RKF/RKH/RKJ/RKK | | GDS18016 | Drive Shaft | | 27 | 26 | 57 | 91 | 618.5 | |
| | 1996.09-2000.09 | MT | F | L | Saloon FWD RKB/RKF/RKH/RKJ/RKK | | GDS18027 | Drive Shaft | | 27 | 26 | 57 | 91 | 627.5 | |
| | 1996.09-2000.09 | MT | F | L | Saloon FWD RKB/RKF/RKH/RKJ/RKK | | GCI36001 | Inner Joint | | 26 | 33 | 40 | 68.5 | 100 | |
| 1.8 (92 kw) | 2000.10-2007.03 | 4AT/5MT | F | L/R | Hatchback FWD CHBA;CHBB | Date from:2003.06 | GCO18007 | Outer Joint | | 27 | 23 | 56.1 | 91.5 | 58.5 | M |
| | 2000.10-2007.03 | 4AT/5MT | F | L | Hatchback FWD CHBA;CHBB | | GCI36001 | Inner Joint | | 26 | 33 | 40 | 68.5 | 100 | |
| | 2000.10-2007.03 | 4AT/5MT | F | R | Hatchback FWD CHBA;CHBB | | GCI99076 | Inner Joint | | 35 | 33 | 42 | | 115 | |
| | 2000.10-2007.03 | AT | F | L | Hatchback FWD CHBA;CHBB | | GDS18297 | Drive Shaft | | 27 | 35 | 56.1 | 91.5 | 676 | |
| | 2000.10-2007.03 | AT/MT | F | R | Hatchback FWD CHBA;CHBB | Inner teeth of wheel side:26 | GDS18043 | Drive Shaft | | 27 | 35 | 56.5 | 92 | 579 | |
| | 2000.10-2007.03 | AT/MT | F | L/R | Hatchback FWD CHBA;CHBB | | GCO18072 | Outer Joint | | 27 | 23 | 56.1 | 91.5 | 56.5 | M |
| | 2000.10-2007.03 | MT | F | L | Hatchback FWD CHBA;CHBB | Inner teeth of wheel side:30 | GDS18027 | Drive Shaft | | 27 | 26 | 57 | 91 | 627.5 | |
| | 2000.10-2007.03 | MT | F | L | Hatchback FWD CHBA;CHBB | Inner teeth of wheel side:26 | GDS18220 | Drive Shaft | | 27 | 26 | 56.5 | 92 | 633 | |
| | 2000.10-2007.03 | MT | F | R | Hatchback FWD CHBA;CHBB | Inner teeth of wheel side:30 | GDS18028 | Drive Shaft | | 27 | 35 | 57 | 91 | 576.5 | |
| | 2000.10-2007.03 | 4AT/5MT | F | L/R | Saloon FWD CHBA;CHBB | Date from:2003.06 | GCO18007 | Outer Joint | | 27 | 23 | 56.1 | 91.5 | 58.5 | M |
| | 2000.10-2007.03 | 4AT/5MT | F | L | Saloon FWD CHBA;CHBB | | GCI36001 | Inner Joint | | 26 | 33 | 40 | 68.5 | 100 | |
| | 2000.10-2007.03 | 4AT/5MT | F | R | Saloon FWD CHBA;CHBB | | GCI99076 | Inner Joint | | 35 | 33 | 42 | | 115 | |
| | 2000.10-2007.03 | AT | F | L | Saloon FWD CHBA;CHBB | | GDS18297 | Drive Shaft | | 27 | 35 | 56.1 | 91.5 | 676 | |
| | 2000.10-2007.03 | AT | F | R | Saloon FWD CHBA;CHBB | | GCO18072 | Outer Joint | | 27 | 23 | 56.1 | 91.5 | 56.5 | M |
| | 2000.10-2007.03 | AT/MT | F | R | Saloon FWD CHBA;CHBB | | GDS18043 | Drive Shaft | | 27 | 35 | 56.5 | 92 | 579 | |
| | 2000.10-2007.03 | AT/MT | F | R | Saloon FWD CHBA;CHBB | | GCI18061 | Inner Joint | | 35 | 34 | 42 | | 117.5 | |
| | 2000.10-2007.03 | MT | F | L | Saloon FWD CHBA;CHBB | | GDS18027 | Drive Shaft | | 27 | 26 | 57 | 91 | 627.5 | |
| | 2000.10-2007.03 | MT | F | L | Saloon FWD CHBA;CHBB | | GDS18220 | Drive Shaft | | 27 | 26 | 56.5 | 92 | 633 | |
| | 2000.10-2007.03 | MT | F | R | Saloon FWD CHBA;CHBB | | GDS18028 | Drive Shaft | | 27 | 35 | 57 | 91 | 576.5 | |
| | 2000.10-2007.03 | MT | F | L/R | Saloon FWD CHBA;CHBB | | GCO18072 | Outer Joint | | 27 | 23 | 56.1 | 91.5 | 56.5 | M |
| | 2007.06-2015.01 | 5MT/6MT | F | R | Hatchback FWD QYBA;KHBA | | GDS99212 | Drive Shaft | | 40 | 26 | 57.7 | 51 | 945 | |

| | YEAR | TRANSM. | F/R | L/R | BODY STYLE & DRIVE TYPE & ENGINE | REMARKS | G-AP Ref. | PRODUCT | ABS | Technical Specifications | | | | | |
|---|---|---|---|---|---|---|---|---|---|---|---|---|---|---|---|
| | | | | | | | | | | A | B | C | H | L | P |
| **FORD** **Mondeo** | | | | | | | | | | | | | | | |
| 1.8 (92 kw) | 2007.06-2015.01 | 5MT/6MT | F | L | Hatchback FWD QYBA;KHBA | Date to:2012.10;TJ | GCI18128 | Inner Joint | | 26 | 28 | 40 | 68.5 | 111 | |
| | 2007.06-2015.01 | 6MT | F | L | Hatchback FWD QYBA;KHBA | | GDS83397 | Drive Shaft | | 40 | 26 | 57.7 | 51 | 611 | |
| | 2007.06-2015.01 | 6MT | F | L | Hatchback FWD QYBA;KHBA | AAR | GCI81533 | Inner Joint | | 26 | 28 | 40 | 68.5 | 108 | |
| | 2007.06-2015.01 | MT | F | L/R | Hatchback FWD QYBA;KHBA | | GCO99271 | Outer Joint | | 40 | 28 | 57.7 | 51 | 63 | M |
| | 2007.06-2015.01 | | F | R | Hatchback FWD QYBA;KHBA | | GCI18129 | Inner Joint | | 26 | 28 | 40 | 389 | 96.5 | |
| | 2007.06-2015.01 | 5MT/6MT | F | R | Saloon FWD QYBA;KHBA | | GDS99212 | Drive Shaft | | 40 | 26 | 57.7 | 51 | 945 | |
| | 2007.06-2015.01 | 5MT/6MT | F | L | Saloon FWD QYBA;KHBA | Date to:2012.10;TJ | GCI18128 | Inner Joint | | 26 | 28 | 40 | 68.5 | 111 | |
| | 2007.06-2015.01 | 6MT | F | L | Saloon FWD QYBA;KHBA | | GDS83397 | Drive Shaft | | 40 | 26 | 57.7 | 51 | 611 | |
| | 2007.06-2015.01 | 6MT | F | L | Saloon FWD QYBA;KHBA | AAR | GCI81533 | Inner Joint | | 26 | 28 | 40 | 68.5 | 108 | |
| | 2007.06-2015.01 | MT | F | L/R | Saloon FWD QYBA;KHBA | | GCO99271 | Outer Joint | | 40 | 28 | 57.7 | 51 | 63 | M |
| | 2007.06-2015.01 | | F | R | Saloon FWD QYBA;KHBA | | GCI18129 | Inner Joint | | 26 | 28 | 40 | 389 | 96.5 | |
| 1.8 (96 kw) | 2003.06-2007.03 | 6MT | F | L | Hatchback FWD CFBA | | GDS18220 | Drive Shaft | | 27 | 26 | 56.5 | 92 | 633 | |
| | 2003.06-2007.03 | 6MT | F | L/R | Hatchback FWD CFBA | | GCO18072 | Outer Joint | | 27 | 23 | 56.1 | 91.5 | 56.5 | M |
| | 2003.06-2007.03 | AT/MT | F | R | Hatchback FWD CFBA | | GDS18043 | Drive Shaft | | 27 | 35 | 56.5 | 92 | 579 | |
| | 2003.06-2007.03 | AT/MT | F | R | Hatchback FWD CFBA | | GCI18061 | Inner Joint | | 35 | 34 | 42 | | 117.5 | |
| | 2003.06-2007.03 | MT | F | L | Hatchback FWD CFBA | | GDS18027 | Drive Shaft | | 27 | 26 | 57 | 91 | 627.5 | |
| | 2003.06-2007.03 | MT | F | R | Hatchback FWD CFBA | | GDS18028 | Drive Shaft | | 27 | 35 | 57 | 91 | 576.5 | |
| | 2003.06-2007.03 | MT | F | L/R | Hatchback FWD CFBA | Date from:2003.06 | GCO18007 | Outer Joint | | 27 | 23 | 56.1 | 91.5 | 58.5 | M |
| | 2003.06-2007.03 | MT | F | L | Hatchback FWD CFBA | | GCI36001 | Inner Joint | | 26 | 33 | 40 | 68.5 | 100 | |
| | 2003.06-2007.03 | 6MT | F | L | Saloon FWD CFBA | | GDS18220 | Drive Shaft | | 27 | 26 | 56.5 | 92 | 633 | |
| | 2003.06-2007.03 | 6MT | F | L/R | Saloon FWD CFBA | | GCO18072 | Outer Joint | | 27 | 23 | 56.1 | 91.5 | 56.5 | M |
| | 2003.06-2007.03 | AT/MT | F | R | Saloon FWD CFBA | | GDS18043 | Drive Shaft | | 27 | 35 | 56.5 | 92 | 579 | |
| | 2003.06-2007.03 | AT/MT | F | R | Saloon FWD CFBA | | GCI18061 | Inner Joint | | 35 | 34 | 42 | | 117.5 | |
| | 2003.06-2007.03 | MT | F | L | Saloon FWD CFBA | | GDS18027 | Drive Shaft | | 27 | 26 | 57 | 91 | 627.5 | |
| | 2003.06-2007.03 | MT | F | R | Saloon FWD CFBA | | GDS18028 | Drive Shaft | | 27 | 35 | 57 | 91 | 576.5 | |
| | 2003.06-2007.03 | MT | F | L/R | Saloon FWD CFBA | Date from:2003.06 | GCO18007 | Outer Joint | | 27 | 23 | 56.1 | 91.5 | 58.5 | M |
| | 2003.06-2007.03 | MT | F | L | Saloon FWD CFBA | | GCI36001 | Inner Joint | | 26 | 33 | 40 | 68.5 | 100 | |
| 2.0 (66 kw) | 2000.10-2007.03 | AT/MT | F | R | Hatchback FWD D5BA;SDBA | | GDS18028 | Drive Shaft | | 27 | 35 | 57 | 91 | 576.5 | |
| | 2000.10-2007.03 | AT/MT | F | R | Hatchback FWD D5BA;SDBA | | GDS18043 | Drive Shaft | | 27 | 35 | 56.5 | 92 | 579 | |
| | 2000.10-2007.03 | MT | F | L | Hatchback FWD D5BA;SDBA | | GDS18027 | Drive Shaft | | 27 | 26 | 57 | 91 | 627.5 | |
| | 2000.10-2007.03 | MT | F | L/R | Hatchback FWD D5BA;SDBA | | GCO18002 | Outer Joint | | 27 | 26 | 56 | 91 | 64 | M |
| | 2000.10-2007.03 | | F | L | Hatchback FWD D5BA;SDBA | | GDS18220 | Drive Shaft | | 27 | 26 | 56.5 | 92 | 633 | |
| | 2000.10-2007.03 | | F | R | Hatchback FWD D5BA;SDBA | | GCI18061 | Inner Joint | | 35 | 34 | 42 | | 117.5 | |
| | 2000.10-2007.03 | AT/MT | F | R | Saloon FWD D5BA;SDBA | | GDS18028 | Drive Shaft | | 27 | 35 | 57 | 91 | 576.5 | |
| | 2000.10-2007.03 | AT/MT | F | R | Saloon FWD D5BA;SDBA | | GDS18043 | Drive Shaft | | 27 | 35 | 56.5 | 92 | 579 | |
| | 2000.10-2007.03 | MT | F | L | Saloon FWD D5BA;SDBA | | GDS18027 | Drive Shaft | | 27 | 26 | 57 | 91 | 627.5 | |
| | 2000.10-2007.03 | MT | F | L/R | Saloon FWD D5BA;SDBA | | GCO18002 | Outer Joint | | 27 | 26 | 56 | 91 | 64 | M |
| | 2000.10-2007.03 | | F | L | Saloon FWD D5BA;SDBA | | GDS18220 | Drive Shaft | | 27 | 26 | 56.5 | 92 | 633 | |
| | 2000.10-2007.03 | | F | R | Saloon FWD D5BA;SDBA | | GCI18061 | Inner Joint | | 35 | 34 | 42 | | 117.5 | |
| 2.0 (85 kw) | 2000.10-2007.03 | 5MT/6MT | F | R | Hatchback FWD D6BA;HJBA;HJBB;HJBC;HJBE | Date from:2002.03,Date to:2002.07;Inner teeth of wheel side:26 | GDS18043 | Drive Shaft | | 27 | 35 | 56.5 | 92 | 579 | |
| | 2000.10-2007.03 | AT/5MT/6MT | F | L | Hatchback FWD D6BA;HJBA;HJBB;HJBC;HJBE | Inner teeth of wheel side:30 | GDS18027 | Drive Shaft | | 27 | 26 | 57 | 91 | 627.5 | |
| | 2000.10-2007.03 | AT/5MT/6MT | F | L | Hatchback FWD D6BA;HJBA;HJBB;HJBC;HJBE | Inner teeth of wheel side:26 | GDS18220 | Drive Shaft | | 27 | 26 | 56.5 | 92 | 633 | |
| | 2000.10-2007.03 | AT/5MT/6MT | F | R | Hatchback FWD D6BA;HJBA;HJBB;HJBC;HJBE | Inner teeth of wheel side:30 | GDS18028 | Drive Shaft | | 27 | 35 | 57 | 91 | 576.5 | |
| | 2000.10-2007.03 | | F | R | Hatchback FWD D6BA;HJBA;HJBB;HJBC;HJBE | | GCI18061 | Inner Joint | | 35 | 34 | 42 | | 117.5 | |
| | 2000.10-2007.03 | 5MT/6MT | F | L | Saloon FWD D6BA;HJBA;HJBB;HJBC;HJBE | Groove Type:Middle | GDS18220 | Drive Shaft | | 27 | 26 | 56.5 | 92 | 633 | |
| | 2000.10-2007.03 | 5MT/6MT | F | R | Saloon FWD D6BA;HJBA;HJBB;HJBC;HJBE | Transmission:AT;Date from:2002.03,Date to:2002.07;Transmission:MT/6MT;Groove Type:Middle | GDS18043 | Drive Shaft | | 27 | 35 | 56.5 | 92 | 579 | |
| | 2000.10-2007.03 | AT/MT | F | R | Saloon FWD D6BA;HJBA;HJBB;HJBC;HJBE | Groove Type:Inner | GDS18028 | Drive Shaft | | 27 | 35 | 57 | 91 | 576.5 | |
| | 2000.10-2007.03 | MT | F | L | Saloon FWD D6BA;HJBA;HJBB;HJBC;HJBE | Groove Type:Inner | GDS18027 | Drive Shaft | | 27 | 26 | 57 | 91 | 627.5 | |
| | 2000.10-2007.03 | | F | R | Saloon FWD D6BA;HJBA;HJBB;HJBC;HJBE | | GCI18061 | Inner Joint | | 35 | 34 | 42 | | 117.5 | |
| | 2007.11-2015.01 | 6MT | F | L | Hatchback FWD KLBA;LPBA;TYBA | | GDS83397 | Drive Shaft | | 40 | 26 | 57.7 | 51 | 611 | |
| | 2007.11-2015.01 | 6MT | F | R | Hatchback FWD KLBA;LPBA;TYBA | | GDS99212 | Drive Shaft | | 40 | 26 | 57.7 | 51 | 945 | |
| | 2007.11-2015.01 | 6MT | F | L | Hatchback FWD KLBA;LPBA;TYBA | Date to:2012.10;TJ | GCI18128 | Inner Joint | | 26 | 28 | 40 | 68.5 | 111 | |
| | 2007.11-2015.01 | 6MT | F | L | Hatchback FWD KLBA;LPBA;TYBA | AAR | GCI81533 | Inner Joint | | 26 | 28 | 40 | 68.5 | 108 | |
| | 2007.11-2015.01 | 6MT | F | R | Hatchback FWD KLBA;LPBA;TYBA | | GCI18129 | Inner Joint | | 26 | 28 | 40 | 389 | 96.5 | |
| | 2007.11-2015.01 | AT | F | L | Hatchback FWD KLBA;LPBA;TYBA | | GDS18340 | Drive Shaft | | 40 | 28 | 57.7 | 52 | 592 | |
| | 2007.11-2015.01 | AT | F | L | Hatchback FWD KLBA;LPBA;TYBA | | GDS83288 | Drive Shaft | | 40 | 31 | 57.7 | 51 | 582 | |
| | 2007.11-2015.01 | AT | F | R | Hatchback FWD KLBA;LPBA;TYBA | | GDS83289 | Drive Shaft | | 40 | 28 | 57.7 | 51 | 932 | |
| | 2007.11-2015.01 | AT | F | L/R | Hatchback FWD KLBA;LPBA;TYBA | | GCO59344 | Outer Joint | | 40 | 26 | 57.7 | 52 | 63.5 | M |
| | 2007.11-2015.01 | MT/6MT | F | L/R | Hatchback FWD KLBA;LPBA;TYBA | | GCO99271 | Outer Joint | | 40 | 28 | 57.7 | 51 | 63 | M |
| | 2007.11-2015.01 | 6MT | F | L | Saloon FWD KLBA;LPBA;TYBA | | GDS83397 | Drive Shaft | | 40 | 26 | 57.7 | 51 | 611 | |
| | 2007.11-2015.01 | 6MT | F | R | Saloon FWD KLBA;LPBA;TYBA | | GDS99212 | Drive Shaft | | 40 | 26 | 57.7 | 51 | 945 | |
| | 2007.11-2015.01 | 6MT | F | L | Saloon FWD KLBA;LPBA;TYBA | Date to:2012.10;TJ | GCI18128 | Inner Joint | | 26 | 28 | 40 | 68.5 | 111 | |
| | 2007.11-2015.01 | 6MT | F | L | Saloon FWD KLBA;LPBA;TYBA | AAR | GCI81533 | Inner Joint | | 26 | 28 | 40 | 68.5 | 108 | |
| | 2007.11-2015.01 | 6MT | F | R | Saloon FWD KLBA;LPBA;TYBA | | GCI18129 | Inner Joint | | 26 | 28 | 40 | 389 | 96.5 | |
| | 2007.11-2015.01 | AT | F | L/R | Saloon FWD KLBA;LPBA;TYBA | | GCO59344 | Outer Joint | | 40 | 26 | 57.7 | 52 | 63.5 | M |

| | YEAR | TRANSM. | F/R | L/R | BODY STYLE & DRIVE TYPE & ENGINE | REMARKS | G-AP Ref. | PRODUCT | ABS | Technical Specifications A | B | C | H | L | P |
|---|---|---|---|---|---|---|---|---|---|---|---|---|---|---|---|
| **FORD** **Mondeo** | | | | | | | | | | | | | | | |
| 2.0 (85 kw) | 2007.11-2015.01 | MT/6MT | F | L/R | Saloon FWD KLBA;LPBA;TYBA | | GCO99271 | Outer Joint | | 40 | 28 | 57.7 | 51 | 63 | M |
| 2.0 (92 kw) | 2000.10-2007.03 | | F | R | Hatchback FWD PD20FMCR | | GDS18043 | Drive Shaft | | 27 | 35 | 56.5 | 92 | 579 | |
| | 2000.10-2007.03 | | F | | Hatchback FWD PD20FMCR | | GCO18002 | Outer Joint | | 27 | 26 | 56 | 91 | 64 | M |
| | 2000.10-2007.03 | | F | R | Hatchback FWD PD20FMCR | | GCI18061 | Inner Joint | | 35 | 34 | 42 | | 117.5 | |
| | 2000.10-2007.03 | | F | R | Saloon FWD PD20FMCR | | GDS18043 | Drive Shaft | | 27 | 35 | 56.5 | 92 | 579 | |
| | 2000.10-2007.03 | | F | | Saloon FWD PD20FMCR | | GCO18002 | Outer Joint | | 27 | 26 | 56 | 91 | 64 | M |
| | 2000.10-2007.03 | | F | R | Saloon FWD PD20FMCR | | GCI18061 | Inner Joint | | 35 | 34 | 42 | | 117.5 | |
| 2.0 (96 kw) | 1996.09-2000.11 | 4AT/5MT | F | L/R | Hatchback FWD NGA/NGB/NGC/NGD | | GCO18023 | Outer Joint | 44T | 27 | 30 | 57 | 91 | 56 | I |
| | 1996.09-2000.11 | AT/MT | F | R | Hatchback FWD NGA/NGB/NGC/NGD | | GDS18028 | Drive Shaft | | 27 | 35 | 57 | 91 | 576.5 | |
| | 1996.09-2000.11 | AT/MT | F | L/R | Hatchback FWD NGA/NGB/NGC/NGD | | GCO18024 | Outer Joint | 44T | 27 | 30 | 57 | 91 | 56 | M |
| | 1996.09-2000.11 | MT | F | L | Hatchback FWD NGA/NGB/NGC/NGD | | GDS18001 | Drive Shaft | | 27 | 26 | 54.3 | 91 | 615 | |
| | 1996.09-2000.11 | MT | F | L | Hatchback FWD NGA/NGB/NGC/NGD | | GDS18002 | Drive Shaft | 44T | 27 | 26 | 54.3 | 91 | 615 | |
| | 1996.09-2000.11 | MT | F | L | Hatchback FWD NGA/NGB/NGC/NGD | | GDS18016 | Drive Shaft | | 27 | 26 | 57 | 91 | 618.5 | |
| | 1996.09-2000.11 | MT | F | L | Hatchback FWD NGA/NGB/NGC/NGD | | GDS18027 | Drive Shaft | | 27 | 26 | 57 | 91 | 627.5 | |
| | 1996.09-2000.11 | MT | F | R | Hatchback FWD NGA/NGB/NGC/NGD | | GDS18006 | Drive Shaft | 44T | 27 | 35 | 57 | 91 | 566 | |
| | 1996.09-2000.11 | MT | F | L | Hatchback FWD NGA/NGB/NGC/NGD | | GCI36001 | Inner Joint | | 26 | 33 | 40 | 68.5 | 100 | |
| | 1996.09-2000.11 | 4AT/5MT | F | R | Saloon FWD NGA/NGB/NGC/NGD | | GDS18006 | Drive Shaft | 44T | 27 | 35 | 57 | 91 | 566 | |
| | 1996.09-2000.11 | 4AT/5MT | F | L/R | Saloon FWD NGA/NGB/NGC/NGD | | GCO18023 | Outer Joint | 44T | 27 | 30 | 57 | 91 | 56 | I |
| | 1996.09-2000.11 | AT/MT | F | R | Saloon FWD NGA/NGB/NGC/NGD | | GDS18028 | Drive Shaft | | 27 | 35 | 57 | 91 | 576.5 | |
| | 1996.09-2000.11 | AT/MT | F | L/R | Saloon FWD NGA/NGB/NGC/NGD | | GCO18024 | Outer Joint | 44T | 27 | 30 | 57 | 91 | 56 | M |
| | 1996.09-2000.11 | MT | F | L | Saloon FWD NGA/NGB/NGC/NGD | | GDS18001 | Drive Shaft | | 27 | 26 | 54.3 | 91 | 615 | |
| | 1996.09-2000.11 | MT | F | L | Saloon FWD NGA/NGB/NGC/NGD | | GDS18002 | Drive Shaft | 44T | 27 | 26 | 54.3 | 91 | 615 | |
| | 1996.09-2000.11 | MT | F | L | Saloon FWD NGA/NGB/NGC/NGD | | GDS18016 | Drive Shaft | | 27 | 26 | 57 | 91 | 618.5 | |
| | 1996.09-2000.11 | MT | F | L | Saloon FWD NGA/NGB/NGC/NGD | | GDS18027 | Drive Shaft | | 27 | 26 | 57 | 91 | 627.5 | |
| | 1996.09-2000.11 | MT | F | L | Saloon FWD NGA/NGB/NGC/NGD | | GCI36001 | Inner Joint | | 26 | 33 | 40 | 68.5 | 100 | |
| | 2001.10-2007.03 | AT/5MT/6MT | F | L | Hatchback FWD FMBA;N7BA;N7BB | Inner teeth of wheel side:30 | GDS18027 | Drive Shaft | | 27 | 26 | 57 | 91 | 627.5 | |
| | 2001.10-2007.03 | AT/5MT/6MT | F | L | Hatchback FWD FMBA;N7BA;N7BB | Inner teeth of wheel side:26 | GDS18220 | Drive Shaft | | 27 | 26 | 56.5 | 92 | 633 | |
| | 2001.10-2007.03 | AT/5MT/6MT | F | R | Hatchback FWD FMBA;N7BA;N7BB | Inner teeth of wheel side:30 | GDS18028 | Drive Shaft | | 27 | 35 | 57 | 91 | 576.5 | |
| | 2001.10-2007.03 | AT/5MT/6MT | F | R | Hatchback FWD FMBA;N7BA;N7BB | Date from:2002.03,Date to:2002.07;Inner teeth of wheel side:26 | GDS18043 | Drive Shaft | | 27 | 35 | 56.5 | 92 | 579 | |
| | 2001.10-2007.03 | | F | R | Hatchback FWD FMBA;N7BA;N7BB | | GCI18061 | Inner Joint | | 35 | 34 | 42 | | 117.5 | |
| | 2001.10-2007.03 | 5MT/6MT | F | L | Saloon FWD FMBA;N7BA;N7BB | Groove Type:Middle | GDS18220 | Drive Shaft | | 27 | 26 | 56.5 | 92 | 633 | |
| | 2001.10-2007.03 | AT/5MT/6MT | F | R | Saloon FWD FMBA;N7BA;N7BB | Horsepower:AT;Date from:2002.03,Date to:2002.07;Horsepower:6MT/6MT;Groove Type:Middle | GDS18043 | Drive Shaft | | 27 | 35 | 56.5 | 92 | 579 | |
| | 2001.10-2007.03 | AT/MT | F | R | Saloon FWD FMBA;N7BA;N7BB | Groove Type:Inner | GDS18028 | Drive Shaft | | 27 | 35 | 57 | 91 | 576.5 | |
| | 2001.10-2007.03 | MT | F | L | Saloon FWD FMBA;N7BA;N7BB | Groove Type:Inner | GDS18027 | Drive Shaft | | 27 | 26 | 57 | 91 | 627.5 | |
| | 2001.10-2007.03 | | F | R | Saloon FWD FMBA;N7BA;N7BB | | GCI18061 | Inner Joint | | 35 | 34 | 42 | | 117.5 | |
| | 2007.03-2015.01 | 6AT | F | L | Hatchback FWD AZBA | Date to:2012.10 | GCI83032 | Inner Joint | | 31 | 28 | 36.2 | 66 | 90 | |
| | 2007.03-2015.01 | 6AT | F | R | Hatchback FWD AZBA | Date to:2012.10 | GCI83031 | Inner Joint | | 28 | 28 | 33 | 391.5 | 95.5 | |
| | 2007.03-2015.01 | 6AT/6MT | F | L/R | Hatchback FWD AZBA | | GCO99271 | Outer Joint | | 40 | 28 | 57.7 | 51 | 63 | M |
| | 2007.03-2015.01 | 6MT | F | L | Hatchback FWD AZBA | | GDS83397 | Drive Shaft | | 40 | 26 | 57.7 | 51 | 611 | |
| | 2007.03-2015.01 | 6MT | F | L | Hatchback FWD AZBA | Date to:2012.10;TJ | GCI18128 | Inner Joint | | 26 | 28 | 40 | 68.5 | 111 | |
| | 2007.03-2015.01 | 6MT | F | L | Hatchback FWD AZBA | AAR | GCI81533 | Inner Joint | | 26 | 28 | 40 | 68.5 | 108 | |
| | 2007.03-2015.01 | AT | F | L | Hatchback FWD AZBA | Date to:2010.12;Trans. code:MPS6 Powershift | GDS18340 | Drive Shaft | | 40 | 28 | 57.7 | 52 | 592 | |
| | 2007.03-2015.01 | AT | F | L | Hatchback FWD AZBA | | GDS83288 | Drive Shaft | | 40 | 31 | 57.7 | 51 | 582 | |
| | 2007.03-2015.01 | AT | F | R | Hatchback FWD AZBA | Date from:2010.01;Production Date from:2010.12;Trans. code:MPS6 Powershift | GDS18347 | Drive Shaft | | 40 | 28 | 57.7 | 52 | 939 | |
| | 2007.03-2015.01 | AT | F | R | Hatchback FWD AZBA | | GDS83289 | Drive Shaft | | 40 | 28 | 57.7 | 51 | 932 | |
| | 2007.03-2015.01 | AT | F | L/R | Hatchback FWD AZBA | Trans. code:MPS6 Powershift | GCO59344 | Outer Joint | | 40 | 26 | 57.7 | 52 | 63.5 | M |
| | 2007.03-2015.01 | MT | F | R | Hatchback FWD AZBA | | GDS99212 | Drive Shaft | | 40 | 26 | 57.7 | 51 | 945 | |
| | 2007.03-2015.01 | MT | F | R | Hatchback FWD AZBA | | GCI18129 | Inner Joint | | 26 | 28 | 40 | 389 | 96.5 | |
| | 2007.03-2015.01 | 6AT | F | L | Saloon FWD AZBA | Date to:2012.10 | GCI83032 | Inner Joint | | 31 | 28 | 36.2 | 66 | 90 | |
| | 2007.03-2015.01 | 6AT | F | R | Saloon FWD AZBA | Date to:2012.10 | GCI83031 | Inner Joint | | 28 | 28 | 33 | 391.5 | 95.5 | |
| | 2007.03-2015.01 | 6AT/6MT | F | L/R | Saloon FWD AZBA | | GCO99271 | Outer Joint | | 40 | 28 | 57.7 | 51 | 63 | M |
| | 2007.03-2015.01 | 6MT | F | L | Saloon FWD AZBA | | GDS83397 | Drive Shaft | | 40 | 26 | 57.7 | 51 | 611 | |
| | 2007.03-2015.01 | 6MT | F | L | Saloon FWD AZBA | Date to:2012.10;TJ | GCI18128 | Inner Joint | | 26 | 28 | 40 | 68.5 | 111 | |
| | 2007.03-2015.01 | 6MT | F | L | Saloon FWD AZBA | AAR | GCI81533 | Inner Joint | | 26 | 28 | 40 | 68.5 | 108 | |
| | 2007.03-2015.01 | AT | F | L | Saloon FWD AZBA | Date to:2010.12;Trans. code:MPS6 Powershift | GDS18340 | Drive Shaft | | 40 | 28 | 57.7 | 52 | 592 | |
| | 2007.03-2015.01 | AT | F | L | Saloon FWD AZBA | | GDS83288 | Drive Shaft | | 40 | 31 | 57.7 | 51 | 582 | |
| | 2007.03-2015.01 | AT | F | R | Saloon FWD AZBA | Date from:2010.01;Production Date from:2010.12;Trans. code:MPS6 Powershift | GDS18347 | Drive Shaft | | 40 | 28 | 57.7 | 52 | 939 | |
| | 2007.03-2015.01 | AT | F | R | Saloon FWD AZBA | | GDS83289 | Drive Shaft | | 40 | 28 | 57.7 | 51 | 932 | |
| | 2007.03-2015.01 | AT | F | L/R | Saloon FWD AZBA | Trans. code:MPS6 Powershift | GCO59344 | Outer Joint | | 40 | 26 | 57.7 | 52 | 63.5 | M |
| | 2007.03-2015.01 | MT | F | R | Saloon FWD AZBA | | GDS99212 | Drive Shaft | | 40 | 26 | 57.7 | 51 | 945 | |
| | 2007.03-2015.01 | MT | F | R | Saloon FWD AZBA | | GCI18129 | Inner Joint | | 26 | 28 | 40 | 389 | 96.5 | |
| 2.0 (97 kw) | 1994.12-1996.08 | AT | F | R | Hatchback 4WD NGA | | GDS18005 | Drive Shaft | | 27 | 35 | 57 | 91 | 566 | |
| | 1994.12-1996.08 | AT/MT | F | R | Hatchback 4WD NGA | | GDS18006 | Drive Shaft | 44T | 27 | 35 | 57 | 91 | 566 | |
| | 1994.12-1996.08 | AT/MT | F | L/R | Hatchback 4WD NGA | | GCO18023 | Outer Joint | 44T | 27 | 30 | 57 | 91 | 56 | I |
| | 1994.12-1996.08 | AT/MT | F | L/R | Hatchback 4WD NGA | | GCO18024 | Outer Joint | 44T | 27 | 30 | 57 | 91 | 56 | M |

| | YEAR | TRANSM. | F/R | L/R | BODY STYLE & DRIVE TYPE & ENGINE | REMARKS | G-AP Ref. | PRODUCT | ABS | Technical Specifications A | B | C | H | L | P |
|---|---|---|---|---|---|---|---|---|---|---|---|---|---|---|---|
| **FORD** **Mondeo** | | | | | | | | | | | | | | | |
| 2.0 (97 kw) | 1994.12-1996.08 | MT | F | L | Hatchback 4WD NGA | | GDS18001 | Drive Shaft | | 27 | 26 | 54.3 | 91 | 615 | |
| | 1994.12-1996.08 | MT | F | L | Hatchback 4WD NGA | | GDS18002 | Drive Shaft | 44T | 27 | 26 | 54.3 | 91 | 615 | |
| | 1994.12-1996.08 | AT/MT | F | R | Hatchback FWD NGA | | GDS18006 | Drive Shaft | 44T | 27 | 35 | 57 | 91 | 566 | |
| | 1994.12-1996.08 | AT/MT | F | L/R | Hatchback FWD NGA | | GCO18024 | Outer Joint | 44T | 27 | 30 | 57 | 91 | 56 | M |
| | 1994.12-1996.08 | MT | F | L | Hatchback FWD NGA | | GDS18002 | Drive Shaft | 44T | 27 | 26 | 54.3 | 91 | 615 | |
| | 1994.12-1996.08 | MT | F | L | Hatchback FWD NGA | | GDS18016 | Drive Shaft | | 27 | 26 | 57 | 91 | 618.5 | |
| | 1994.12-1996.08 | AT | F | R | Saloon 4WD NGA | | GDS18005 | Drive Shaft | | 27 | 35 | 57 | 91 | 566 | |
| | 1994.12-1996.08 | AT/MT | F | R | Saloon 4WD NGA | | GDS18006 | Drive Shaft | 44T | 27 | 35 | 57 | 91 | 566 | |
| | 1994.12-1996.08 | AT/MT | F | R | Saloon 4WD NGA | | GDS18028 | Drive Shaft | | 27 | 35 | 57 | 91 | 576.5 | |
| | 1994.12-1996.08 | AT/MT | F | L/R | Saloon 4WD NGA | | GCO18023 | Outer Joint | 44T | 27 | 30 | 57 | 91 | 56 | I |
| | 1994.12-1996.08 | AT/MT | F | L/R | Saloon 4WD NGA | | GCO18024 | Outer Joint | 44T | 27 | 30 | 57 | 91 | 56 | M |
| | 1994.12-1996.08 | MT | F | L | Saloon 4WD NGA | | GDS18001 | Drive Shaft | | 27 | 26 | 54.3 | 91 | 615 | |
| | 1994.12-1996.08 | MT | F | L | Saloon 4WD NGA | | GDS18002 | Drive Shaft | 44T | 27 | 26 | 54.3 | 91 | 615 | |
| | 1994.12-1996.08 | MT | F | L | Saloon 4WD NGA | | GDS18027 | Drive Shaft | | 27 | 26 | 57 | 91 | 627.5 | |
| | 1994.12-1996.08 | MT | F | L | Saloon 4WD NGA | | GCI36001 | Inner Joint | | 26 | 33 | 40 | 68.5 | 100 | |
| | 1994.12-1996.08 | | F | | Saloon 4WD NGA | | GCO18010 | Outer Joint | | 27 | 25 | 57 | 91 | 61 | I |
| 2.0 (100 kw) | 1993.01-1996.08 | AT | F | R | Saloon FWD NGA | Date to:1994.12 | GDS18003 | Drive Shaft | | 27 | 35 | 54.3 | 91 | 566 | |
| | 1993.01-1996.08 | AT | F | R | Saloon FWD NGA | Date to:1994.12 | GDS18004 | Drive Shaft | 44T | 27 | 35 | 54.3 | 91 | 566 | |
| | 1993.01-1996.08 | AT | F | R | Saloon FWD NGA | | GDS18005 | Drive Shaft | | 27 | 35 | 57 | 91 | 566 | |
| | 1993.01-1996.08 | AT | F | R | Saloon FWD NGA | Date from:1994.12 | GDS18006 | Drive Shaft | 44T | 27 | 35 | 57 | 91 | 566 | |
| | 1993.01-1996.08 | AT | F | L/R | Saloon FWD NGA | | GCO18010 | Outer Joint | | 27 | 25 | 57 | 91 | 61 | I |
| | 1993.01-1996.08 | AT | F | L/R | Saloon FWD NGA | Date to:1994.12 | GCO18011 | Outer Joint | 44T | 27 | 25 | 57 | 91 | 61 | I |
| | 1993.01-1996.08 | AT | F | L/R | Saloon FWD NGA | Date from:1994.12 | GCO18024 | Outer Joint | 44T | 27 | 30 | 57 | 91 | 56 | M |
| | 1993.01-1996.08 | AT/MT | F | R | Saloon FWD NGA | | GDS18028 | Drive Shaft | | 27 | 35 | 57 | 91 | 576.5 | |
| | 1993.01-1996.08 | MT | F | L | Saloon FWD NGA | | GDS18001 | Drive Shaft | | 27 | 26 | 54.3 | 91 | 615 | |
| | 1993.01-1996.08 | MT | F | L | Saloon FWD NGA | | GDS18002 | Drive Shaft | 44T | 27 | 26 | 54.3 | 91 | 615 | |
| | 1993.01-1996.08 | MT | F | L | Saloon FWD NGA | | GDS18016 | Drive Shaft | | 27 | 26 | 57 | 91 | 618.5 | |
| | 1993.01-1996.08 | MT | F | L | Saloon FWD NGA | | GDS18027 | Drive Shaft | | 27 | 26 | 57 | 91 | 627.5 | |
| | 1993.01-1996.08 | MT | F | R | Saloon FWD NGA | | GDS18006 | Drive Shaft | 44T | 27 | 35 | 57 | 91 | 566 | |
| | 1993.01-1996.08 | MT | F | L/R | Saloon FWD NGA | | GCO18023 | Outer Joint | 44T | 27 | 30 | 57 | 91 | 56 | I |
| | 1993.01-1996.08 | MT | F | L | Saloon FWD NGA | | GCI36001 | Inner Joint | | 26 | 33 | 40 | 68.5 | 100 | |
| | 1993.02-1996.08 | AT | F | R | Hatchback FWD NGA | Date to:1994.12 | GDS18003 | Drive Shaft | | 27 | 35 | 54.3 | 91 | 566 | |
| | 1993.02-1996.08 | AT | F | R | Hatchback FWD NGA | Date to:1994.12 | GDS18004 | Drive Shaft | 44T | 27 | 35 | 54.3 | 91 | 566 | |
| | 1993.02-1996.08 | AT | F | R | Hatchback FWD NGA | | GDS18005 | Drive Shaft | | 27 | 35 | 57 | 91 | 566 | |
| | 1993.02-1996.08 | AT | F | R | Hatchback FWD NGA | Date from:1994.12 | GDS18006 | Drive Shaft | 44T | 27 | 35 | 57 | 91 | 566 | |
| | 1993.02-1996.08 | AT | F | L/R | Hatchback FWD NGA | | GCO18010 | Outer Joint | | 27 | 25 | 57 | 91 | 61 | I |
| | 1993.02-1996.08 | AT | F | L/R | Hatchback FWD NGA | Date to:1994.12 | GCO18011 | Outer Joint | 44T | 27 | 25 | 57 | 91 | 61 | I |
| | 1993.02-1996.08 | AT | F | L/R | Hatchback FWD NGA | Date from:1994.12 | GCO18024 | Outer Joint | 44T | 27 | 30 | 57 | 91 | 56 | M |
| | 1993.02-1996.08 | AT/MT | F | R | Hatchback FWD NGA | | GDS18028 | Drive Shaft | | 27 | 35 | 57 | 91 | 576.5 | |
| | 1993.02-1996.08 | MT | F | L | Hatchback FWD NGA | | GDS18001 | Drive Shaft | | 27 | 26 | 54.3 | 91 | 615 | |
| | 1993.02-1996.08 | MT | F | L | Hatchback FWD NGA | | GDS18002 | Drive Shaft | 44T | 27 | 26 | 54.3 | 91 | 615 | |
| | 1993.02-1996.08 | MT | F | L | Hatchback FWD NGA | | GDS18016 | Drive Shaft | | 27 | 26 | 57 | 91 | 618.5 | |
| | 1993.02-1996.08 | MT | F | L | Hatchback FWD NGA | | GDS18027 | Drive Shaft | | 27 | 26 | 57 | 91 | 627.5 | |
| | 1993.02-1996.08 | MT | F | R | Hatchback FWD NGA | | GDS18006 | Drive Shaft | 44T | 27 | 35 | 57 | 91 | 566 | |
| | 1993.02-1996.08 | MT | F | L/R | Hatchback FWD NGA | | GCO18023 | Outer Joint | 44T | 27 | 30 | 57 | 91 | 56 | I |
| | 1993.02-1996.08 | MT | F | L | Hatchback FWD NGA | | GCI36001 | Inner Joint | | 26 | 33 | 40 | 68.5 | 100 | |
| | 1993.02-1996.08 | MT | F | L | Saloon 4WD NGA | | GDS18002 | Drive Shaft | 44T | 27 | 26 | 54.3 | 91 | 615 | |
| | 1993.02-1996.08 | MT | F | L | Saloon 4WD NGA | | GDS18027 | Drive Shaft | | 27 | 26 | 57 | 91 | 627.5 | |
| | 1993.02-1996.08 | MT | F | R | Saloon 4WD NGA | | GDS18005 | Drive Shaft | | 27 | 35 | 57 | 91 | 566 | |
| | 1993.02-1996.08 | MT | F | L | Saloon 4WD NGA | | GCI36001 | Inner Joint | | 26 | 33 | 40 | 68.5 | 100 | |
| | 1993.02-1996.08 | | F | R | Saloon 4WD NGA | | GDS18028 | Drive Shaft | | 27 | 35 | 57 | 91 | 576.5 | |
| | 1993.02-1996.08 | | F | | Saloon 4WD NGA | | GCO18010 | Outer Joint | | 27 | 25 | 57 | 91 | 61 | I |
| | 1993.04-1996.08 | MT | F | R | Hatchback 4WD NGA | | GDS18005 | Drive Shaft | | 27 | 35 | 57 | 91 | 566 | |
| | 1993.04-1996.08 | | F | L | Hatchback 4WD NGA | | GCI36001 | Inner Joint | | 26 | 33 | 40 | 68.5 | 100 | |
| | 2007.03-2014.12 | 6AT | F | L | Hatchback FWD AZBC;UKBA;UKBB | | GDS83288 | Drive Shaft | | 40 | 31 | 57.7 | 51 | 582 | |
| | 2007.03-2014.12 | 6AT | F | R | Hatchback FWD AZBC;UKBA;UKBB | | GDS83289 | Drive Shaft | | 40 | 28 | 57.7 | 51 | 932 | |
| | 2007.03-2014.12 | 6AT | F | L | Hatchback FWD AZBC;UKBA;UKBB | Date to:2012.10 | GCI83032 | Inner Joint | | 31 | 28 | 36.2 | 66 | 90 | |
| | 2007.03-2014.12 | 6AT | F | R | Hatchback FWD AZBC;UKBA;UKBB | Date to:2012.10 | GCI83031 | Inner Joint | | 28 | 28 | 33 | 391.5 | 95.5 | |
| | 2007.03-2014.12 | 6AT/6MT | F | L/R | Hatchback FWD AZBC;UKBA;UKBB | | GCO99271 | Outer Joint | | 40 | 28 | 57.7 | 51 | 63 | M |
| | 2007.03-2014.12 | 6MT | F | L | Hatchback FWD AZBC;UKBA;UKBB | | GDS83397 | Drive Shaft | | 40 | 26 | 57.7 | 51 | 611 | |
| | 2007.03-2014.12 | 6MT | F | R | Hatchback FWD AZBC;UKBA;UKBB | | GDS99212 | Drive Shaft | | 40 | 26 | 57.7 | 51 | 945 | |
| | 2007.03-2014.12 | 6MT | F | L | Hatchback FWD AZBC;UKBA;UKBB | Date to:2012.10;TJ | GCI18128 | Inner Joint | | 26 | 28 | 40 | 68.5 | 111 | |
| | 2007.03-2014.12 | 6MT | F | L | Hatchback FWD AZBC;UKBA;UKBB | AAR | GCI81533 | Inner Joint | | 26 | 28 | 40 | 68.5 | 108 | |
| | 2007.03-2014.12 | AT | F | L/R | Hatchback FWD AZBC;UKBA;UKBB | Trans. code:MPS6 Powershift | GCO59344 | Outer Joint | | 40 | 26 | 57.7 | 52 | 63.5 | M |
| | 2008.08-2014.12 | 6AT | F | L | Saloon FWD AZBC;UKBA;UKBB | | GDS83288 | Drive Shaft | | 40 | 31 | 57.7 | 51 | 582 | |

| | YEAR | TRANSM. | F/R | L/R | BODY STYLE & DRIVE TYPE & ENGINE | REMARKS | G-AP Ref. | PRODUCT | ABS | Technical Specifications A | B | C | H | L | P |
|---|---|---|---|---|---|---|---|---|---|---|---|---|---|---|---|
| **FORD** **Mondeo** | | | | | | | | | | | | | | | |
| 2.0 (100 kw) | 2008.08-2014.12 | 6AT | F | R | Saloon FWD AZBC;UKBA;UKBB | | GDS83289 | Drive Shaft | | 40 | 28 | 57.7 | 51 | 932 | |
| | 2008.08-2014.12 | 6AT | F | L | Saloon FWD AZBC;UKBA;UKBB | Date to:2012.10 | GCI83032 | Inner Joint | | 31 | 28 | 36.2 | 66 | 90 | |
| | 2008.08-2014.12 | 6AT | F | R | Saloon FWD AZBC;UKBA;UKBB | Date to:2012.10 | GCI83031 | Inner Joint | | 28 | 28 | 33 | 391.5 | 95.5 | |
| | 2008.08-2014.12 | 6MT | F | L | Saloon FWD AZBC;UKBA;UKBB | | GDS83397 | Drive Shaft | | 40 | 26 | 57.7 | 51 | 611 | |
| | 2008.08-2014.12 | 6MT | F | R | Saloon FWD AZBC;UKBA;UKBB | | GDS99212 | Drive Shaft | | 40 | 26 | 57.7 | 51 | 945 | |
| | 2008.08-2014.12 | 6MT | F | L/R | Saloon FWD AZBC;UKBA;UKBB | | GCO99271 | Outer Joint | | 40 | 28 | 57.7 | 51 | 63 | M |
| | 2008.08-2014.12 | 6MT | F | L | Saloon FWD AZBC;UKBA;UKBB | Date to:2012.10;TJ | GCI18128 | Inner Joint | | 26 | 28 | 40 | 68.5 | 111 | |
| | 2008.08-2014.12 | 6MT | F | L | Saloon FWD AZBC;UKBA;UKBB | AAR | GCI81533 | Inner Joint | | 26 | 28 | 40 | 68.5 | 108 | |
| 2.0 (103 kw) | 2007.03-2015.01 | 6AT | F | L | Hatchback FWD QXBA;QXBB;UFBA;UFBB | | GDS83288 | Drive Shaft | | 40 | 31 | 57.7 | 51 | 582 | |
| | 2007.03-2015.01 | 6AT | F | R | Hatchback FWD QXBA;QXBB;UFBA;UFBB | | GDS83289 | Drive Shaft | | 40 | 28 | 57.7 | 51 | 932 | |
| | 2007.03-2015.01 | 6AT | F | L | Hatchback FWD QXBA;QXBB;UFBA;UFBB | Date to:2012.10 | GCI83032 | Inner Joint | | 31 | 28 | 36.2 | 66 | 90 | |
| | 2007.03-2015.01 | 6AT | F | R | Hatchback FWD QXBA;QXBB;UFBA;UFBB | Date to:2012.10 | GCI83031 | Inner Joint | | 28 | 28 | 33 | 391.5 | 95.5 | |
| | 2007.03-2015.01 | 6MT | F | L | Hatchback FWD QXBA;QXBB;UFBA;UFBB | | GDS83397 | Drive Shaft | | 40 | 26 | 57.7 | 51 | 611 | |
| | 2007.03-2015.01 | 6MT | F | L | Hatchback FWD QXBA;QXBB;UFBA;UFBB | | GCO99271 | Outer Joint | | 40 | 28 | 57.7 | 51 | 63 | M |
| | 2007.03-2015.01 | 6MT | F | L | Hatchback FWD QXBA;QXBB;UFBA;UFBB | Date to:2012.10;TJ | GCI18128 | Inner Joint | | 26 | 28 | 40 | 68.5 | 111 | |
| | 2007.03-2015.01 | 6MT | F | L | Hatchback FWD QXBA;QXBB;UFBA;UFBB | AAR | GCI81533 | Inner Joint | | 26 | 28 | 40 | 68.5 | 108 | |
| | 2007.03-2015.01 | AT | F | | Hatchback FWD QXBA;QXBB;UFBA;UFBB | | GCO59344 | Outer Joint | | 40 | 26 | 57.7 | 52 | 63.5 | M |
| | 2007.03-2015.01 | MT | F | R | Hatchback FWD QXBA;QXBB;UFBA;UFBB | | GDS99212 | Drive Shaft | | 40 | 26 | 57.7 | 51 | 945 | |
| | 2007.03-2015.01 | 6AT | F | L | Saloon FWD QXBA;QXBB;UFBA;UFBB | | GDS83288 | Drive Shaft | | 40 | 31 | 57.7 | 51 | 582 | |
| | 2007.03-2015.01 | 6AT | F | R | Saloon FWD QXBA;QXBB;UFBA;UFBB | | GDS83289 | Drive Shaft | | 40 | 28 | 57.7 | 51 | 932 | |
| | 2007.03-2015.01 | 6AT | F | L | Saloon FWD QXBA;QXBB;UFBA;UFBB | Date to:2012.10 | GCI83032 | Inner Joint | | 31 | 28 | 36.2 | 66 | 90 | |
| | 2007.03-2015.01 | 6AT | F | R | Saloon FWD QXBA;QXBB;UFBA;UFBB | Date to:2012.10 | GCI83031 | Inner Joint | | 28 | 28 | 33 | 391.5 | 95.5 | |
| | 2007.03-2015.01 | 6AT/6MT | F | L/R | Saloon FWD QXBA;QXBB;UFBA;UFBB | | GCO99271 | Outer Joint | | 40 | 28 | 57.7 | 51 | 63 | M |
| | 2007.03-2015.01 | 6MT | F | L | Saloon FWD QXBA;QXBB;UFBA;UFBB | | GDS83397 | Drive Shaft | | 40 | 26 | 57.7 | 51 | 611 | |
| | 2007.03-2015.01 | 6MT | F | L | Saloon FWD QXBA;QXBB;UFBA;UFBB | Date to:2012.10;TJ | GCI18128 | Inner Joint | | 26 | 28 | 40 | 68.5 | 111 | |
| | 2007.03-2015.01 | 6MT | F | L | Saloon FWD QXBA;QXBB;UFBA;UFBB | AAR | GCI81533 | Inner Joint | | 26 | 28 | 40 | 68.5 | 108 | |
| | 2007.03-2015.01 | DCT | F | | Saloon FWD QXBA;QXBB;UFBA;UFBB | | GCO59344 | Outer Joint | | 40 | 26 | 57.7 | 52 | 63.5 | M |
| | 2007.03-2015.01 | MT | F | R | Saloon FWD QXBA;QXBB;UFBA;UFBB | | GDS99212 | Drive Shaft | | 40 | 26 | 57.7 | 51 | 945 | |
| 2.0 (107 kw) | 2000.10-2007.03 | 4AT/5MT | F | L/R | Hatchback FWD CJBA;CJBB | Date from:2003.06 | GCO18007 | Outer Joint | | 27 | 23 | 56.1 | 91.5 | 58.5 | M |
| | 2000.10-2007.03 | 4AT/5MT | F | L | Hatchback FWD CJBA;CJBB | | GCI36001 | Inner Joint | | 26 | 33 | 40 | 68.5 | 100 | |
| | 2000.10-2007.03 | 4AT/5MT | F | R | Hatchback FWD CJBA;CJBB | | GCI99076 | Inner Joint | | 35 | 33 | 42 | | 115 | |
| | 2000.10-2007.03 | AT | F | L | Hatchback FWD CJBA;CJBB | | GDS18297 | Drive Shaft | | 27 | 35 | 56.1 | 91.5 | 676 | |
| | 2000.10-2007.03 | AT | F | R | Hatchback FWD CJBA;CJBB | | GCO18072 | Outer Joint | | 27 | 23 | 56.1 | 91.5 | 56.5 | M |
| | 2000.10-2007.03 | AT/MT | F | R | Hatchback FWD CJBA;CJBB | | GDS18043 | Drive Shaft | | 27 | 35 | 56.5 | 92 | 579 | |
| | 2000.10-2007.03 | AT/MT | F | R | Hatchback FWD CJBA;CJBB | | GCI18061 | Inner Joint | | 35 | 34 | 42 | | 117.5 | |
| | 2000.10-2007.03 | MT | F | L | Hatchback FWD CJBA;CJBB | Inner teeth of wheel side:30 | GDS18027 | Drive Shaft | | 27 | 26 | 57 | 91 | 627.5 | |
| | 2000.10-2007.03 | MT | F | L | Hatchback FWD CJBA;CJBB | | GDS18220 | Drive Shaft | | 27 | 26 | 56.5 | 92 | 633 | |
| | 2000.10-2007.03 | MT | F | R | Hatchback FWD CJBA;CJBB | Inner teeth of wheel side:30 | GDS18028 | Drive Shaft | | 27 | 35 | 57 | 91 | 576.5 | |
| | 2000.10-2007.03 | MT | F | L/R | Hatchback FWD CJBA;CJBB | | GCO18072 | Outer Joint | | 27 | 23 | 56.1 | 91.5 | 56.5 | M |
| | 2000.10-2007.03 | 4AT/5MT | F | L/R | Saloon FWD CJBA;CJBB | Date from:2003.06 | GCO18007 | Outer Joint | | 27 | 23 | 56.1 | 91.5 | 58.5 | M |
| | 2000.10-2007.03 | 4AT/5MT | F | L | Saloon FWD CJBA;CJBB | | GCI36001 | Inner Joint | | 26 | 33 | 40 | 68.5 | 100 | |
| | 2000.10-2007.03 | 4AT/5MT | F | R | Saloon FWD CJBA;CJBB | | GCI99076 | Inner Joint | | 35 | 33 | 42 | | 115 | |
| | 2000.10-2007.03 | AT | F | L | Saloon FWD CJBA;CJBB | | GDS18297 | Drive Shaft | | 27 | 35 | 56.1 | 91.5 | 676 | |
| | 2000.10-2007.03 | AT/MT | F | R | Saloon FWD CJBA;CJBB | | GDS18028 | Drive Shaft | | 27 | 35 | 57 | 91 | 576.5 | |
| | 2000.10-2007.03 | AT/MT | F | R | Saloon FWD CJBA;CJBB | | GDS18043 | Drive Shaft | | 27 | 35 | 56.5 | 92 | 579 | |
| | 2000.10-2007.03 | AT/MT | F | L/R | Saloon FWD CJBA;CJBB | | GCO18072 | Outer Joint | | 27 | 23 | 56.1 | 91.5 | 56.5 | M |
| | 2000.10-2007.03 | AT/MT | F | R | Saloon FWD CJBA;CJBB | | GCI18061 | Inner Joint | | 35 | 34 | 42 | | 117.5 | |
| | 2000.10-2007.03 | MT | F | L | Saloon FWD CJBA;CJBB | | GDS18027 | Drive Shaft | | 27 | 26 | 57 | 91 | 627.5 | |
| | 2000.10-2007.03 | MT | F | L | Saloon FWD CJBA;CJBB | | GDS18220 | Drive Shaft | | 27 | 26 | 56.5 | 92 | 633 | |
| | 2007.03-2015.01 | 5MT | F | L | Hatchback FWD AOBA;TBBA;AOBC;TBBB | | GDS83397 | Drive Shaft | | 40 | 26 | 57.7 | 51 | 611 | |
| | 2007.03-2015.01 | 5MT | F | R | Hatchback FWD AOBA;TBBA;AOBC;TBBB | | GDS99212 | Drive Shaft | | 40 | 26 | 57.7 | 51 | 945 | |
| | 2007.03-2015.01 | 5MT | F | L | Hatchback FWD AOBA;TBBA;AOBC;TBBB | Date to:2012.10;TJ | GCI18128 | Inner Joint | | 26 | 28 | 40 | 68.5 | 111 | |
| | 2007.03-2015.01 | 5MT | F | L | Hatchback FWD AOBA;TBBA;AOBC;TBBB | AAR | GCI81533 | Inner Joint | | 26 | 28 | 40 | 68.5 | 108 | |
| | 2007.03-2015.01 | AT | F | L/R | Hatchback FWD AOBA;TBBA;AOBC;TBBB | | GCO59344 | Outer Joint | | 40 | 26 | 57.7 | 52 | 63.5 | M |
| | 2007.03-2015.01 | AT | F | | Hatchback FWD AOBA;TBBA;AOBC;TBBB | Date From:2007.09 | GCO62045 | Outer Joint | | 40 | 26 | 57.7 | 52 | 62.5 | M |
| | 2007.03-2015.01 | MT | F | L/R | Hatchback FWD AOBA;TBBA;AOBC;TBBB | | GCO99271 | Outer Joint | | 40 | 28 | 57.7 | 51 | 63 | M |
| | 2007.03-2015.01 | | F | R | Hatchback FWD AOBA;TBBA;AOBC;TBBB | | GCI18129 | Inner Joint | | 26 | 28 | 40 | 389 | 96.5 | |
| | 2007.03-2015.01 | 5MT | F | L | Saloon FWD AOBA;TBBA;AOBC;TBBB | | GDS83397 | Drive Shaft | | 40 | 26 | 57.7 | 51 | 611 | |
| | 2007.03-2015.01 | 5MT | F | R | Saloon FWD AOBA;TBBA;AOBC;TBBB | | GDS99212 | Drive Shaft | | 40 | 26 | 57.7 | 51 | 945 | |
| | 2007.03-2015.01 | 5MT | F | L | Saloon FWD AOBA;TBBA;AOBC;TBBB | Date to:2012.10;TJ | GCI18128 | Inner Joint | | 26 | 28 | 40 | 68.5 | 111 | |
| | 2007.03-2015.01 | 5MT | F | L | Saloon FWD AOBA;TBBA;AOBC;TBBB | AAR | GCI81533 | Inner Joint | | 26 | 28 | 40 | 68.5 | 108 | |
| | 2007.03-2015.01 | AT | F | L/R | Saloon FWD AOBA;TBBA;AOBC;TBBB | | GCO59344 | Outer Joint | | 40 | 26 | 57.7 | 52 | 63.5 | M |
| | 2007.03-2015.01 | AT | F | | Saloon FWD AOBA;TBBA;AOBC;TBBB | Date from:2007.09 | GCO62045 | Outer Joint | | 40 | 26 | 57.7 | 52 | 62.5 | M |
| | 2007.03-2015.01 | MT | F | L/R | Saloon FWD AOBA;TBBA;AOBC;TBBB | | GCO99271 | Outer Joint | | 40 | 28 | 57.7 | 51 | 63 | M |
| | 2007.03-2015.01 | | F | R | Saloon FWD AOBA;TBBA;AOBC;TBBB | | GCI18129 | Inner Joint | | 26 | 28 | 40 | 389 | 96.5 | |

| | YEAR | TRANSM. | F/R | L/R | BODY STYLE & DRIVE TYPE & ENGINE | REMARKS | G-AP Ref. | PRODUCT | ABS | Technical Specifications | | | | | |
|---|---|---|---|---|---|---|---|---|---|---|---|---|---|---|---|
| | | | | | | | | | | A | B | C | H | L | P |
| **FORD** **Mondeo** | | | | | | | | | | | | | | | |
| 2.0 (107 kw) | 2009.03-2015.01 | 5MT | F | L | Hatchback FWD TBBA;TBBB | | GDS83397 | Drive Shaft | | 40 | 26 | 57.7 | 51 | 611 | |
| | 2009.03-2015.01 | 5MT | F | R | Hatchback FWD TBBA;TBBB | | GDS99212 | Drive Shaft | | 40 | 26 | 57.7 | 51 | 945 | |
| | 2009.03-2015.01 | 5MT | F | L | Hatchback FWD TBBA;TBBB | Date to:2012.10;TJ | GCI18128 | Inner Joint | | 26 | 28 | 40 | 68.5 | 111 | |
| | 2009.03-2015.01 | 5MT | F | L | Hatchback FWD TBBA;TBBB | AAR | GCI81533 | Inner Joint | | 26 | 28 | 40 | 68.5 | 108 | |
| | 2009.03-2015.01 | AT | F | | Hatchback FWD TBBA;TBBB | Date From:2010.03 | GCO62045 | Outer Joint | | 40 | 26 | 57.7 | 52 | 62.5 | M |
| | 2009.03-2015.01 | | F | L/R | Hatchback FWD TBBA;TBBB | | GCO99271 | Outer Joint | | 40 | 28 | 57.7 | 51 | 63 | M |
| | 2009.03-2015.01 | | F | R | Hatchback FWD TBBA;TBBB | | GCI18129 | Inner Joint | | 26 | 28 | 40 | 389 | 96.5 | |
| | 2009.03-2015.01 | 5MT | F | L | Saloon FWD TBBA;TBBB | | GDS83397 | Drive Shaft | | 40 | 26 | 57.7 | 51 | 611 | |
| | 2009.03-2015.01 | 5MT | F | R | Saloon FWD TBBA;TBBB | | GDS99212 | Drive Shaft | | 40 | 26 | 57.7 | 51 | 945 | |
| | 2009.03-2015.01 | 5MT | F | L | Saloon FWD TBBA;TBBB | Date to:2012.10;TJ | GCI18128 | Inner Joint | | 26 | 28 | 40 | 68.5 | 111 | |
| | 2009.03-2015.01 | 5MT | F | L | Saloon FWD TBBA;TBBB | AAR | GCI81533 | Inner Joint | | 26 | 28 | 40 | 68.5 | 108 | |
| | 2009.03-2015.01 | AT | F | | Saloon FWD TBBA;TBBB | Date From:2010.03 | GCO62045 | Outer Joint | | 40 | 26 | 57.7 | 52 | 62.5 | M |
| | 2009.03-2015.01 | | F | L/R | Saloon FWD TBBA;TBBB | | GCO99271 | Outer Joint | | 40 | 28 | 57.7 | 51 | 63 | M |
| | 2009.03-2015.01 | | F | R | Saloon FWD TBBA;TBBB | | GCI18129 | Inner Joint | | 26 | 28 | 40 | 389 | 96.5 | |
| | 2009.07-2015.01 | 5MT | F | L | Hatchback FWD TBBA;TBBB | | GDS83397 | Drive Shaft | | 40 | 26 | 57.7 | 51 | 611 | |
| | 2009.07-2015.01 | 5MT | F | R | Hatchback FWD TBBA;TBBB | | GDS99212 | Drive Shaft | | 40 | 26 | 57.7 | 51 | 945 | |
| | 2009.07-2015.01 | 5MT | F | L | Hatchback FWD TBBA;TBBB | Date to:2012.10;TJ | GCI18128 | Inner Joint | | 26 | 28 | 40 | 68.5 | 111 | |
| | 2009.07-2015.01 | 5MT | F | L | Hatchback FWD TBBA;TBBB | AAR | GCI81533 | Inner Joint | | 26 | 28 | 40 | 68.5 | 108 | |
| | 2009.07-2015.01 | AT | F | | Hatchback FWD TBBA;TBBB | Date From:2010.03 | GCO62045 | Outer Joint | | 40 | 26 | 57.7 | 52 | 62.5 | M |
| | 2009.07-2015.01 | | F | L/R | Hatchback FWD TBBA;TBBB | | GCO99271 | Outer Joint | | 40 | 28 | 57.7 | 51 | 63 | M |
| | 2009.07-2015.01 | | F | R | Hatchback FWD TBBA;TBBB | | GCI18129 | Inner Joint | | 26 | 28 | 40 | 389 | 96.5 | |
| | 2009.07-2015.01 | 5MT | F | L | Saloon FWD TBBA;TBBB | | GDS83397 | Drive Shaft | | 40 | 26 | 57.7 | 51 | 611 | |
| | 2009.07-2015.01 | 5MT | F | R | Saloon FWD TBBA;TBBB | | GDS99212 | Drive Shaft | | 40 | 26 | 57.7 | 51 | 945 | |
| | 2009.07-2015.01 | 5MT | F | L | Saloon FWD TBBA;TBBB | Date to:2012.10;TJ | GCI18128 | Inner Joint | | 26 | 28 | 40 | 68.5 | 111 | |
| | 2009.07-2015.01 | 5MT | F | L | Saloon FWD TBBA;TBBB | AAR | GCI81533 | Inner Joint | | 26 | 28 | 40 | 68.5 | 108 | |
| | 2009.07-2015.01 | AT | F | | Saloon FWD TBBA;TBBB | Date From:2010.03 | GCO62045 | Outer Joint | | 40 | 26 | 57.7 | 52 | 62.5 | M |
| | 2009.07-2015.01 | | F | L/R | Saloon FWD TBBA;TBBB | | GCO99271 | Outer Joint | | 40 | 28 | 57.7 | 51 | 63 | M |
| | 2009.07-2015.01 | | F | R | Saloon FWD TBBA;TBBB | | GCI18129 | Inner Joint | | 26 | 28 | 40 | 389 | 96.5 | |
| 2.0 (110 kw) | 2014.09-2022.03 | 6DCT | F | L | Hatchback FWD T7CE;T7CA;T7CC;T7CD;T7CF;T7CN;T7CP;T7CQ | | GDS82341 | Drive Shaft | | 27 | 28 | 55 | 105 | 658 | |
| | 2014.09-2022.03 | 6DCT | F | R | Hatchback FWD T7CE;T7CA;T7CC;T7CD;T7CF;T7CN;T7CP;T7CQ | | GDS82342 | Drive Shaft | | 27 | 28 | 55 | 105 | 1003 | |
| | 2014.09-2022.03 | 6DCT | F | L | Hatchback FWD T7CE;T7CA;T7CC;T7CD;T7CF;T7CN;T7CP;T7CQ | | GCI81762 | Inner Joint | | 28 | 28 | 33.8 | 80 | 95.5 | |
| | 2014.09-2022.03 | 6DCT | F | R | Hatchback FWD T7CE;T7CA;T7CC;T7CD;T7CF;T7CN;T7CP;T7CQ | | GCI81761 | Inner Joint | | 28 | 28 | 33.8 | 396.5 | 98.5 | |
| | 2014.09-2022.03 | 6DCT/6MT | F | L/R | Hatchback FWD T7CE;T7CA;T7CC;T7CD;T7CF;T7CN;T7CP;T7CQ | | GCO81552 | Outer Joint | | 27 | 28 | 55 | 105 | 66.5 | M |
| | 2014.09-2022.03 | 6MT | F | L | Hatchback FWD T7CE;T7CA;T7CC;T7CD;T7CF;T7CN;T7CP;T7CQ | | GDS83223 | Drive Shaft | | 27 | 26 | 55 | 105 | 658 | |
| | 2014.09-2022.03 | 6MT | F | R | Hatchback FWD T7CE;T7CA;T7CC;T7CD;T7CF;T7CN;T7CP;T7CQ | | GDS83140 | Drive Shaft | | 27 | 26 | 55 | 105 | 1017 | |
| | 2014.09-2022.03 | 6MT | F | L | Hatchback FWD T7CE;T7CA;T7CC;T7CD;T7CF;T7CN;T7CP;T7CQ | | GCI81533 | Inner Joint | | 26 | 28 | 40 | 68.5 | 108 | |
| | 2014.09-2022.03 | 6MT | F | R | Hatchback FWD T7CE;T7CA;T7CC;T7CD;T7CF;T7CN;T7CP;T7CQ | | GCI82393 | Inner Joint | | 26 | 28 | 40 | 403 | 96 | |
| | 2014.09-2022.03 | 6MT | F | L | Saloon 4WD T7CE;T7CA;T7CC;T7CD;T7CF;T7CN;T7CP;T7CQ | | GDS83223 | Drive Shaft | | 27 | 26 | 55 | 105 | 658 | |
| | 2014.09-2022.03 | 6MT | F | L/R | Saloon 4WD T7CE;T7CA;T7CC;T7CD;T7CF;T7CN;T7CP;T7CQ | | GCO81552 | Outer Joint | | 27 | 28 | 55 | 105 | 66.5 | M |
| | 2014.09-2022.03 | 6MT | F | L | Saloon 4WD T7CE;T7CA;T7CC;T7CD;T7CF;T7CN;T7CP;T7CQ | | GCI81533 | Inner Joint | | 26 | 28 | 40 | 68.5 | 108 | |
| | 2014.09-2022.03 | 6MT | R | L/R | Saloon 4WD T7CE;T7CA;T7CC;T7CD;T7CF;T7CN;T7CP;T7CQ | | GDS82338 | Drive Shaft | | 27 | 25 | 55 | 105 | 823 | |
| | 2014.09-2022.03 | 6MT | R | L/R | Saloon 4WD T7CE;T7CA;T7CC;T7CD;T7CF;T7CN;T7CP;T7CQ | | GCO81812 | Outer Joint | | 27 | 19 | 55 | 105 | 47 | M |
| | 2014.09-2022.03 | 6MT | R | L/R | Saloon 4WD T7CE;T7CA;T7CC;T7CD;T7CF;T7CN;T7CP;T7CQ | | GCI81764 | Inner Joint | | 25 | 22 | 35 | 91 | 106 | |
| | 2014.09-2022.03 | 6DCT | F | L | Saloon FWD T7CE;T7CA;T7CC;T7CD;T7CF;T7CN;T7CP;T7CQ | | GDS82341 | Drive Shaft | | 27 | 28 | 55 | 105 | 658 | |
| | 2014.09-2022.03 | 6DCT | F | R | Saloon FWD T7CE;T7CA;T7CC;T7CD;T7CF;T7CN;T7CP;T7CQ | | GDS82342 | Drive Shaft | | 27 | 28 | 55 | 105 | 1003 | |
| | 2014.09-2022.03 | 6DCT | F | L/R | Saloon FWD T7CE;T7CA;T7CC;T7CD;T7CF;T7CN;T7CP;T7CQ | | GCO81552 | Outer Joint | | 27 | 28 | 55 | 105 | 66.5 | M |
| | 2014.09-2022.03 | 6DCT | F | L | Saloon FWD T7CE;T7CA;T7CC;T7CD;T7CF;T7CN;T7CP;T7CQ | | GCI81762 | Inner Joint | | 28 | 28 | 33.8 | 80 | 95.5 | |
| | 2014.09-2022.03 | 6DCT | F | R | Saloon FWD T7CE;T7CA;T7CC;T7CD;T7CF;T7CN;T7CP;T7CQ | | GCI81761 | Inner Joint | | 28 | 28 | 33.8 | 396.5 | 98.5 | |
| | 2014.09-2022.03 | 6MT | F | L | Saloon FWD T7CE;T7CA;T7CC;T7CD;T7CF;T7CN;T7CP;T7CQ | | GDS83223 | Drive Shaft | | 27 | 26 | 55 | 105 | 658 | |
| | 2014.09-2022.03 | 6MT | F | R | Saloon FWD T7CE;T7CA;T7CC;T7CD;T7CF;T7CN;T7CP;T7CQ | | GDS83140 | Drive Shaft | | 27 | 26 | 55 | 105 | 1017 | |
| | 2014.09-2022.03 | 6MT | F | L | Saloon FWD T7CE;T7CA;T7CC;T7CD;T7CF;T7CN;T7CP;T7CQ | | GCI81533 | Inner Joint | | 26 | 28 | 40 | 68.5 | 108 | |
| | 2014.09-2022.03 | 6MT | F | R | Saloon FWD T7CE;T7CA;T7CC;T7CD;T7CF;T7CN;T7CP;T7CQ | | GCI82393 | Inner Joint | | 26 | 28 | 40 | 403 | 96 | |
| | 2015.02-2022.03 | 6MT | F | L | Hatchback 4WD T7CE;T7CA;T7CC;T7CD;T7CF;T7CN;T7CP;T7CQ | | GDS83223 | Drive Shaft | | 27 | 26 | 55 | 105 | 658 | |
| | 2015.02-2022.03 | 6MT | F | L/R | Hatchback 4WD T7CE;T7CA;T7CC;T7CD;T7CF;T7CN;T7CP;T7CQ | | GCO81552 | Outer Joint | | 27 | 28 | 55 | 105 | 66.5 | M |
| | 2015.02-2022.03 | 6MT | F | L | Hatchback 4WD T7CE;T7CA;T7CC;T7CD;T7CF;T7CN;T7CP;T7CQ | | GCI81533 | Inner Joint | | 26 | 28 | 40 | 68.5 | 108 | |
| | 2015.02-2022.03 | 6MT | R | L/R | Hatchback 4WD T7CE;T7CA;T7CC;T7CD;T7CF;T7CN;T7CP;T7CQ | | GDS82338 | Drive Shaft | | 27 | 25 | 55 | 105 | 823 | |
| | 2015.02-2022.03 | 6MT | R | L/R | Hatchback 4WD T7CE;T7CA;T7CC;T7CD;T7CF;T7CN;T7CP;T7CQ | | GCO81812 | Outer Joint | | 27 | 19 | 55 | 105 | 47 | M |
| | 2015.02-2022.03 | 6MT | R | L/R | Hatchback 4WD T7CE;T7CA;T7CC;T7CD;T7CF;T7CN;T7CP;T7CQ | | GCI81764 | Inner Joint | | 25 | 22 | 35 | 91 | 106 | |
| 2.0 (120 kw) | 2010.03-2015.01 | 6DCT | F | R | Hatchback FWD TXBA;TXBB | Date from:2010.12 | GDS18347 | Drive Shaft | | 40 | 28 | 57.7 | 52 | 939 | |
| | 2010.03-2015.01 | 6DCT | F | R | Hatchback FWD TXBA;TXBB | Date to:2010.11 | GDS83391 | Drive Shaft | | 40 | 28 | 57.7 | 52 | 940 | |
| | 2010.03-2015.01 | 6DCT | F | L/R | Hatchback FWD TXBA;TXBB | Date to:2010.11 | GCO18269 | Outer Joint | | 40 | 26 | 57.7 | 52 | 63.5 | I |
| | 2010.03-2015.01 | 6DCT | F | R | Hatchback FWD TXBA;TXBB | Date to:2010.11 | GCI82178 | Inner Joint | | 28 | 26 | 34 | 371 | 103 | |
| | 2010.03-2015.01 | 6MT | F | L | Hatchback FWD TXBA;TXBB | | GDS83397 | Drive Shaft | | 40 | 26 | 57.7 | 51 | 611 | |
| | 2010.03-2015.01 | 6MT | F | L/R | Hatchback FWD TXBA;TXBB | | GCO99271 | Outer Joint | | 40 | 28 | 57.7 | 51 | 63 | M |
| | 2010.03-2015.01 | 6MT | F | L | Hatchback FWD TXBA;TXBB | Date to:2012.10;TJ | GCI18128 | Inner Joint | | 26 | 28 | 40 | 68.5 | 111 | |

| | YEAR | TRANSM. | F/R | L/R | BODY STYLE & DRIVE TYPE & ENGINE | REMARKS | G-AP Ref. | PRODUCT | ABS | Technical Specifications A | B | C | H | L | P |
|---|---|---|---|---|---|---|---|---|---|---|---|---|---|---|---|
| **FORD** **Mondeo** | | | | | | | | | | | | | | | |
| 2.0 (120 kw) | 2010.03-2015.01 | 6MT | F | L | Hatchback FWD TXBA;TXBB | AAR | GCI81533 | Inner Joint | | 26 | 28 | 40 | 68.5 | 108 | |
| | 2010.03-2015.01 | 6MT | F | R | Hatchback FWD TXBA;TXBB | | GCI18129 | Inner Joint | | 26 | 28 | 40 | 389 | 96.5 | |
| | 2010.03-2015.01 | AT | F | L | Hatchback FWD TXBA;TXBB | Trans. code:MPS6;Date from:2010.12 | GDS18340 | Drive Shaft | | 40 | 28 | 57.7 | 52 | 592 | |
| | 2010.03-2015.01 | AT | F | | Hatchback FWD TXBA;TXBB | | GCO59344 | Outer Joint | | 40 | 26 | 57.7 | 52 | 63.5 | M |
| | 2010.03-2015.01 | MT | F | R | Hatchback FWD TXBA;TXBB | | GDS99212 | Drive Shaft | | 40 | 26 | 57.7 | 51 | 945 | |
| | 2010.03-2015.01 | 6DCT | F | R | Saloon FWD TXBA;TXBB | Date from:2010.12 | GDS18347 | Drive Shaft | | 40 | 28 | 57.7 | 52 | 939 | |
| | 2010.03-2015.01 | 6DCT | F | R | Saloon FWD TXBA;TXBB | Date to:2010.11 | GDS83391 | Drive Shaft | | 40 | 28 | 57.7 | 52 | 940 | |
| | 2010.03-2015.01 | 6DCT | F | L/R | Saloon FWD TXBA;TXBB | Date to:2010.11 | GCO18269 | Outer Joint | | 40 | 26 | 57.7 | 52 | 63.5 | I |
| | 2010.03-2015.01 | 6DCT | F | R | Saloon FWD TXBA;TXBB | Date to:2010.11 | GCI82178 | Inner Joint | | 28 | 26 | 34 | 371 | 103 | |
| | 2010.03-2015.01 | 6MT | F | L | Saloon FWD TXBA;TXBB | | GDS83397 | Drive Shaft | | 40 | 26 | 57.7 | 51 | 611 | |
| | 2010.03-2015.01 | 6MT | F | L/R | Saloon FWD TXBA;TXBB | | GCO99271 | Outer Joint | | 40 | 28 | 57.7 | 51 | 63 | M |
| | 2010.03-2015.01 | 6MT | F | L | Saloon FWD TXBA;TXBB | Date to:2012.10;TJ | GCI18128 | Inner Joint | | 26 | 28 | 40 | 68.5 | 111 | |
| | 2010.03-2015.01 | 6MT | F | L | Saloon FWD TXBA;TXBB | AAR | GCI81533 | Inner Joint | | 26 | 28 | 40 | 68.5 | 108 | |
| | 2010.03-2015.01 | 6MT | F | R | Saloon FWD TXBA;TXBB | | GCI18129 | Inner Joint | | 26 | 28 | 40 | 389 | 96.5 | |
| | 2010.03-2015.01 | AT | F | L | Saloon FWD TXBA;TXBB | Trans. code:MPS6;Date from:2010.12 | GDS18340 | Drive Shaft | | 40 | 28 | 57.7 | 52 | 592 | |
| | 2010.03-2015.01 | AT | F | | Saloon FWD TXBA;TXBB | | GCO59344 | Outer Joint | | 40 | 26 | 57.7 | 52 | 63.5 | M |
| | 2010.03-2015.01 | MT | F | R | Saloon FWD TXBA;TXBB | | GDS99212 | Drive Shaft | | 40 | 26 | 57.7 | 51 | 945 | |
| 2.0 (132 kw) | 2014.09-2022.03 | 6DCT | F | L | Hatchback FWD T8CC;T8CA;T8CD;T8CL;T8CP | | GDS82341 | Drive Shaft | | 27 | 28 | 55 | 105 | 658 | |
| | 2014.09-2022.03 | 6DCT | F | R | Hatchback FWD T8CC;T8CA;T8CD;T8CL;T8CP | | GDS82342 | Drive Shaft | | 27 | 28 | 55 | 105 | 1003 | |
| | 2014.09-2022.03 | 6DCT | F | L | Hatchback FWD T8CC;T8CA;T8CD;T8CL;T8CP | | GCI81762 | Inner Joint | | 28 | 28 | 33.8 | 80 | 95.5 | |
| | 2014.09-2022.03 | 6DCT | F | R | Hatchback FWD T8CC;T8CA;T8CD;T8CL;T8CP | | GCI81761 | Inner Joint | | 28 | 28 | 33.8 | 396.5 | 98.5 | |
| | 2014.09-2022.03 | 6DCT/6MT | F | L/R | Hatchback FWD T8CC;T8CA;T8CD;T8CL;T8CP | | GCO81552 | Outer Joint | | 27 | 28 | 55 | 105 | 66.5 | M |
| | 2014.09-2022.03 | 6MT | F | L | Hatchback FWD T8CC;T8CA;T8CD;T8CL;T8CP | | GDS83223 | Drive Shaft | | 27 | 26 | 55 | 105 | 658 | |
| | 2014.09-2022.03 | 6MT | F | R | Hatchback FWD T8CC;T8CA;T8CD;T8CL;T8CP | | GDS83140 | Drive Shaft | | 27 | 26 | 55 | 105 | 1017 | |
| | 2014.09-2022.03 | 6MT | F | L | Hatchback FWD T8CC;T8CA;T8CD;T8CL;T8CP | | GCI81533 | Inner Joint | | 26 | 28 | 40 | 68.5 | 108 | |
| | 2014.09-2022.03 | 6MT | F | R | Hatchback FWD T8CC;T8CA;T8CD;T8CL;T8CP | | GCI82393 | Inner Joint | | 26 | 28 | 40 | 403 | 96 | |
| | 2015.02-2022.03 | 6DCT | F | L | Hatchback 4WD T8CC;T8CA;T8CD;T8CL;T8CB | | GDS82339 | Drive Shaft | | 27 | 31 | 55 | 105 | 656 | |
| | 2015.02-2022.03 | 6DCT | F | R | Hatchback 4WD T8CC;T8CA;T8CD;T8CL;T8CB | | GDS82340 | Drive Shaft | | 27 | 28 | 55 | 105 | 1003 | |
| | 2015.02-2022.03 | 6DCT | F | L/R | Hatchback 4WD T8CC;T8CA;T8CD;T8CL;T8CB | | GCO81552 | Outer Joint | | 27 | 28 | 55 | 105 | 66.5 | M |
| | 2015.02-2022.03 | 6DCT | F | L | Hatchback 4WD T8CC;T8CA;T8CD;T8CL;T8CB | | GCI81765 | Inner Joint | | 31 | 28 | 42.5 | 78.5 | 95.5 | |
| | 2015.02-2022.03 | 6DCT | F | R | Hatchback 4WD T8CC;T8CA;T8CD;T8CL;T8CB | PTJ | GCI81761 | Inner Joint | | 28 | 28 | 33.8 | 396.5 | 98.5 | |
| | 2015.02-2022.03 | 6DCT | F | R | Hatchback 4WD T8CC;T8CA;T8CD;T8CL;T8CB | AAR | GCI81766 | Inner Joint | | 28 | 28 | 32.2 | 396.5 | 95.5 | |
| | 2015.02-2022.03 | 6AT | R | L/R | Hatchback 4WD T8CC;T8CA;T8CD;T8CL;T8CB | | GDS82338 | Drive Shaft | | 27 | 25 | 55 | 105 | 823 | |
| | 2015.02-2022.03 | 6AT | R | L/R | Hatchback 4WD T8CC;T8CA;T8CD;T8CL;T8CB | | GCO81812 | Outer Joint | | 27 | 19 | 55 | 105 | 47 | M |
| | 2015.02-2022.03 | 6AT | R | L/R | Hatchback 4WD T8CC;T8CA;T8CD;T8CL;T8CB | | GCI81764 | Inner Joint | | 25 | 22 | 35 | 91 | 106 | |
| | 2015.05-2022.03 | 6DCT | F | L | Saloon 4WD T8CC;T8CA;T8CD;T8CL | | GDS82339 | Drive Shaft | | 27 | 31 | 55 | 105 | 656 | |
| | 2015.05-2022.03 | 6DCT | F | R | Saloon 4WD T8CC;T8CA;T8CD;T8CL | | GDS82340 | Drive Shaft | | 27 | 28 | 55 | 105 | 1003 | |
| | 2015.05-2022.03 | 6DCT | F | L/R | Saloon 4WD T8CC;T8CA;T8CD;T8CL | | GCO81552 | Outer Joint | | 27 | 28 | 55 | 105 | 66.5 | M |
| | 2015.05-2022.03 | 6DCT | F | L | Saloon 4WD T8CC;T8CA;T8CD;T8CL | | GCI81765 | Inner Joint | | 31 | 28 | 42.5 | 78.5 | 95.5 | |
| | 2015.05-2022.03 | 6DCT | F | R | Saloon 4WD T8CC;T8CA;T8CD;T8CL | PTJ | GCI81761 | Inner Joint | | 28 | 28 | 33.8 | 396.5 | 98.5 | |
| | 2015.05-2022.03 | 6DCT | F | R | Saloon 4WD T8CC;T8CA;T8CD;T8CL | AAR | GCI81766 | Inner Joint | | 28 | 28 | 32.2 | 396.5 | 95.5 | |
| | 2015.05-2022.03 | 6AT | R | L/R | Saloon 4WD T8CC;T8CA;T8CD;T8CL | | GDS82338 | Drive Shaft | | 27 | 25 | 55 | 105 | 823 | |
| | 2015.05-2022.03 | 6AT | R | L/R | Saloon 4WD T8CC;T8CA;T8CD;T8CL | | GCO81812 | Outer Joint | | 27 | 19 | 55 | 105 | 47 | M |
| | 2015.05-2022.03 | 6AT | R | L/R | Saloon 4WD T8CC;T8CA;T8CD;T8CL | | GCI81764 | Inner Joint | | 25 | 22 | 35 | 91 | 106 | |
| | 2015.05-2022.03 | 6DCT | F | L | Saloon FWD T8CC;T8CA;T8CD;T8CL | | GDS82341 | Drive Shaft | | 27 | 28 | 55 | 105 | 658 | |
| | 2015.05-2022.03 | 6DCT | F | R | Saloon FWD T8CC;T8CA;T8CD;T8CL | | GDS82342 | Drive Shaft | | 27 | 28 | 55 | 105 | 1003 | |
| | 2015.05-2022.03 | 6DCT | F | L | Saloon FWD T8CC;T8CA;T8CD;T8CL | | GCI81762 | Inner Joint | | 28 | 28 | 33.8 | 80 | 95.5 | |
| | 2015.05-2022.03 | 6DCT | F | R | Saloon FWD T8CC;T8CA;T8CD;T8CL | | GCI81761 | Inner Joint | | 28 | 28 | 33.8 | 396.5 | 98.5 | |
| | 2015.05-2022.03 | 6DCT/6MT | F | L/R | Saloon FWD T8CC;T8CA;T8CD;T8CL | | GCO81552 | Outer Joint | | 27 | 28 | 55 | 105 | 66.5 | M |
| | 2015.05-2022.03 | 6MT | F | L | Saloon FWD T8CC;T8CA;T8CD;T8CL | | GDS83223 | Drive Shaft | | 27 | 26 | 55 | 105 | 658 | |
| | 2015.05-2022.03 | 6MT | F | R | Saloon FWD T8CC;T8CA;T8CD;T8CL | | GDS83140 | Drive Shaft | | 27 | 26 | 55 | 105 | 1017 | |
| | 2015.05-2022.03 | 6MT | F | L | Saloon FWD T8CC;T8CA;T8CD;T8CL | | GCI81533 | Inner Joint | | 26 | 28 | 40 | 68.5 | 108 | |
| | 2015.05-2022.03 | 6MT | F | R | Saloon FWD T8CC;T8CA;T8CD;T8CL | | GCI82393 | Inner Joint | | 26 | 28 | 40 | 403 | 96 | |
| 2.0 (140 kw) | 2014.08- | CVT | F | L | Saloon FWD C20EDEF | | GDS83950 | Drive Shaft | | 27 | 35 | 54.8 | 105 | 670 | |
| | 2014.08- | CVT | F | L/R | Saloon FWD C20EDEF | | GCO82377 | Outer Joint | | 27 | 24 | 54.8 | 105 | 59 | M |
| | 2014.08- | CVT | F | L | Saloon FWD C20EDEF | | GCI82432 | Inner Joint | | 35 | 24 | 35 | 87 | 108 | |
| | 2019.01-2022.03 | 8AT | R | L/R | Hatchback 4WD YMCC | | GDS82338 | Drive Shaft | | 27 | 25 | 55 | 105 | 823 | |
| | 2019.01-2022.03 | 8AT | R | L/R | Hatchback 4WD YMCC | | GCO81812 | Outer Joint | | 27 | 19 | 55 | 105 | 47 | M |
| | 2019.01-2022.03 | 8AT | R | L/R | Hatchback 4WD YMCC | | GCI81764 | Inner Joint | | 25 | 22 | 35 | 91 | 106 | |
| | 2019.01-2022.03 | 8AT | R | L/R | Saloon 4WD YMCC | | GDS82338 | Drive Shaft | | 27 | 25 | 55 | 105 | 823 | |
| | 2019.01-2022.03 | 8AT | R | L/R | Saloon 4WD YMCC | | GCO81812 | Outer Joint | | 27 | 19 | 55 | 105 | 47 | M |
| | 2019.01-2022.03 | 8AT | R | L/R | Saloon 4WD YMCC | | GCI81764 | Inner Joint | | 25 | 22 | 35 | 91 | 106 | |
| 2.0 (149 kw) | 2010.03-2015.01 | AT | F | L | Hatchback FWD TNBA | | GDS18340 | Drive Shaft | | 40 | 28 | 57.7 | 52 | 592 | |
| | 2010.03-2015.01 | AT | F | R | Hatchback FWD TNBA | | GDS18341 | Drive Shaft | | 40 | 28 | 57.7 | 52 | 952 | |
| | 2010.03-2015.01 | AT | F | L/R | Hatchback FWD TNBA | | GCO59344 | Outer Joint | | 40 | 26 | 57.7 | 52 | 63.5 | M |

| | YEAR | TRANSM. | F/R | L/R | BODY STYLE & DRIVE TYPE & ENGINE | REMARKS | G-AP Ref. | PRODUCT | ABS | Technical Specifications | | | | | |
|---|---|---|---|---|---|---|---|---|---|---|---|---|---|---|---|
| | | | | | | | | | | A | B | C | H | L | P |
| **FORD** **Mondeo** | | | | | | | | | | | | | | | |
| 2.0 (149 kw) | 2010.03-2015.01 | AT | F | | Hatchback FWD TNBA | | GCO62045 | Outer Joint | | 40 | 26 | 57.7 | 52 | 62.5 | M |
| | 2010.03-2015.01 | MT | F | L/R | Hatchback FWD TNBA | | GCO99271 | Outer Joint | | 40 | 28 | 57.7 | 51 | 63 | M |
| | 2010.03-2015.01 | MT | F | R | Hatchback FWD TNBA | | GCI18129 | Inner Joint | | 26 | 28 | 40 | 389 | 96.5 | |
| | 2010.03-2015.01 | AT | F | L | Saloon FWD TNBA | | GDS18340 | Drive Shaft | | 40 | 28 | 57.7 | 52 | 592 | |
| | 2010.03-2015.01 | AT | F | R | Saloon FWD TNBA | | GDS18341 | Drive Shaft | | 40 | 28 | 57.7 | 52 | 952 | |
| | 2010.03-2015.01 | AT | F | L/R | Saloon FWD TNBA | | GCO18269 | Outer Joint | | 40 | 26 | 57.7 | 52 | 63.5 | I |
| | 2010.03-2015.01 | MT | F | R | Saloon FWD TNBA | Date to:2014.12 | GCI18129 | Inner Joint | | 26 | 28 | 40 | 389 | 96.5 | |
| 2.0 (154 kw) | 2015.03-2022.03 | 6DCT | F | R | Hatchback FWD T9CA | | GDS82342 | Drive Shaft | | 27 | 28 | 55 | 105 | 1003 | |
| | 2015.03-2022.03 | 6DCT | F | L/R | Hatchback FWD T9CA | | GCO81552 | Outer Joint | | 27 | 28 | 55 | 105 | 66.5 | M |
| | 2015.03-2022.03 | 6DCT | F | L | Hatchback FWD T9CA | | GCI81762 | Inner Joint | | 28 | 28 | 33.8 | 80 | 95.5 | |
| | 2015.03-2022.03 | 6DCT | F | R | Hatchback FWD T9CA | | GCI81761 | Inner Joint | | 28 | 28 | 33.8 | 396.5 | 98.5 | |
| | 2015.03-2022.03 | DCT | F | L | Hatchback FWD T9CA | | GDS82341 | Drive Shaft | | 27 | 28 | 55 | 105 | 658 | |
| | 2015.05-2022.03 | 6DCT | F | R | Saloon FWD T9CA | | GDS82342 | Drive Shaft | | 27 | 28 | 55 | 105 | 1003 | |
| | 2015.05-2022.03 | 6DCT | F | L/R | Saloon FWD T9CA | | GCO81552 | Outer Joint | | 27 | 28 | 55 | 105 | 66.5 | M |
| | 2015.05-2022.03 | 6DCT | F | L | Saloon FWD T9CA | | GCI81762 | Inner Joint | | 28 | 28 | 33.8 | 80 | 95.5 | |
| | 2015.05-2022.03 | 6DCT | F | R | Saloon FWD T9CA | | GCI81761 | Inner Joint | | 28 | 28 | 33.8 | 396.5 | 98.5 | |
| | 2015.05-2022.03 | DCT | F | L | Saloon FWD T9CA | | GDS82341 | Drive Shaft | | 27 | 28 | 55 | 105 | 658 | |
| 2.0 (176 kw) | 2010.03-2014.09 | AT | F | L | Saloon FWD TPBA | | GDS18340 | Drive Shaft | | 40 | 28 | 57.7 | 52 | 592 | |
| | 2010.03-2014.09 | AT | F | R | Saloon FWD TPBA | | GDS18341 | Drive Shaft | | 40 | 28 | 57.7 | 52 | 952 | |
| | 2010.07-2015.01 | AT | F | L | Hatchback FWD TPBA | | GDS18340 | Drive Shaft | | 40 | 28 | 57.7 | 52 | 592 | |
| | 2010.07-2015.01 | AT | F | R | Hatchback FWD TPBA | | GDS18341 | Drive Shaft | | 40 | 28 | 57.7 | 52 | 952 | |
| | 2010.07-2015.01 | AT | F | L/R | Hatchback FWD TPBA | | GCO59344 | Outer Joint | | 40 | 26 | 57.7 | 52 | 63.5 | M |
| | 2010.07-2015.01 | AT | F | | Hatchback FWD TPBA | | GCO62045 | Outer Joint | | 40 | 26 | 57.7 | 52 | 62.5 | M |
| | 2010.07-2015.01 | MT | F | L/R | Hatchback FWD TPBA | | GCO99271 | Outer Joint | | 40 | 28 | 57.7 | 51 | 63 | M |
| | 2010.07-2015.01 | MT | F | R | Hatchback FWD TPBA | | GCI18129 | Inner Joint | | 26 | 28 | 40 | 389 | 96.5 | |
| 2.2 (110 kw) | 2004.09-2007.03 | AT/MT | F | L/R | Hatchback FWD QJBC;QJBD | | GCO18002 | Outer Joint | | 27 | 26 | 56 | 91 | 64 | M |
| | 2004.09-2007.03 | MT | F | L | Hatchback FWD QJBC;QJBD | | GDS18027 | Drive Shaft | | 27 | 26 | 57 | 91 | 627.5 | |
| | 2004.09-2007.03 | MT | F | R | Hatchback FWD QJBC;QJBD | | GDS18028 | Drive Shaft | | 27 | 35 | 57 | 91 | 576.5 | |
| | 2004.09-2007.03 | MT | F | R | Hatchback FWD QJBC;QJBD | | GDS18043 | Drive Shaft | | 27 | 35 | 56.5 | 92 | 579 | |
| | 2004.09-2007.03 | | F | R | Hatchback FWD QJBC;QJBD | | GCI18061 | Inner Joint | | 35 | 34 | 42 | | 117.5 | |
| | 2004.09-2007.03 | AT/MT | F | L/R | Saloon FWD QJBC;QJBD | | GCO18002 | Outer Joint | | 27 | 26 | 56 | 91 | 64 | M |
| | 2004.09-2007.03 | MT | F | L | Saloon FWD QJBC;QJBD | | GDS18027 | Drive Shaft | | 27 | 26 | 57 | 91 | 627.5 | |
| | 2004.09-2007.03 | MT | F | R | Saloon FWD QJBC;QJBD | | GDS18028 | Drive Shaft | | 27 | 35 | 57 | 91 | 576.5 | |
| | 2004.09-2007.03 | MT | F | R | Saloon FWD QJBC;QJBD | | GDS18043 | Drive Shaft | | 27 | 35 | 56.5 | 92 | 579 | |
| | 2004.09-2007.03 | | F | R | Saloon FWD QJBC;QJBD | | GCI18061 | Inner Joint | | 35 | 34 | 42 | | 117.5 | |
| 2.2 (114 kw) | 2004.09-2007.03 | AT/MT | F | L/R | Hatchback FWD QJBA;QJBB | | GCO18002 | Outer Joint | | 27 | 26 | 56 | 91 | 64 | M |
| | 2004.09-2007.03 | MT | F | L | Hatchback FWD QJBA;QJBB | | GDS18027 | Drive Shaft | | 27 | 26 | 57 | 91 | 627.5 | |
| | 2004.09-2007.03 | MT | F | R | Hatchback FWD QJBA;QJBB | | GDS18028 | Drive Shaft | | 27 | 35 | 57 | 91 | 576.5 | |
| | 2004.09-2007.03 | MT | F | R | Hatchback FWD QJBA;QJBB | | GDS18043 | Drive Shaft | | 27 | 35 | 56.5 | 92 | 579 | |
| | 2004.09-2007.03 | | F | R | Hatchback FWD QJBA;QJBB | | GCI18061 | Inner Joint | | 35 | 34 | 42 | | 117.5 | |
| | 2004.09-2007.03 | AT/MT | F | L/R | Saloon FWD QJBA;QJBB | | GCO18002 | Outer Joint | | 27 | 26 | 56 | 91 | 64 | M |
| | 2004.09-2007.03 | MT | F | L | Saloon FWD QJBA;QJBB | | GDS18027 | Drive Shaft | | 27 | 26 | 57 | 91 | 627.5 | |
| | 2004.09-2007.03 | MT | F | R | Saloon FWD QJBA;QJBB | | GDS18028 | Drive Shaft | | 27 | 35 | 57 | 91 | 576.5 | |
| | 2004.09-2007.03 | MT | F | R | Saloon FWD QJBA;QJBB | | GDS18043 | Drive Shaft | | 27 | 35 | 56.5 | 92 | 579 | |
| | 2004.09-2007.03 | | F | R | Saloon FWD QJBA;QJBB | | GCI18061 | Inner Joint | | 35 | 34 | 42 | | 117.5 | |
| 2.2 (129 kw) | 2008.03-2010.10 | 6AT/6MT | F | L | Hatchback FWD Q4BA | | GDS18363 | Drive Shaft | | 40 | 31 | 57.7 | 52 | 588.5 | |
| | 2008.03-2010.10 | 6AT/6MT | F | R | Hatchback FWD Q4BA | | GDS18350 | Drive Shaft | | 40 | 28 | 57.7 | 52 | 963 | |
| | 2008.03-2010.10 | AT/MT | F | L/R | Hatchback FWD Q4BA | Trans. code:AWF21;Trans. code:MMT6 | GCO99271 | Outer Joint | | 40 | 28 | 57.7 | 51 | 63 | M |
| | 2008.03-2010.10 | MT | F | R | Hatchback FWD Q4BA | Trans. code:MMT6 | GDS99212 | Drive Shaft | | 40 | 26 | 57.7 | 51 | 945 | |
| | 2008.03-2010.10 | | F | | Hatchback FWD Q4BA | | GCO59344 | Outer Joint | | 40 | 26 | 57.7 | 52 | 63.5 | M |
| | 2008.03-2010.10 | 6AT/6MT | F | L | Saloon FWD Q4BA | | GDS18363 | Drive Shaft | | 40 | 31 | 57.7 | 52 | 588.5 | |
| | 2008.03-2010.10 | 6AT/6MT | F | R | Saloon FWD Q4BA | | GDS18350 | Drive Shaft | | 40 | 28 | 57.7 | 52 | 963 | |
| | 2008.03-2010.10 | AT/MT | F | L/R | Saloon FWD Q4BA | Trans. code:AWF21;Trans. code:MMT6 | GCO99271 | Outer Joint | | 40 | 28 | 57.7 | 51 | 63 | M |
| | 2008.03-2010.10 | MT | F | R | Saloon FWD Q4BA | Trans. code:MMT6 | GDS99212 | Drive Shaft | | 40 | 26 | 57.7 | 51 | 945 | |
| | 2008.03-2010.10 | | F | | Saloon FWD Q4BA | | GCO59344 | Outer Joint | | 40 | 26 | 57.7 | 52 | 63.5 | M |
| 2.2 (147 kw) | 2010.07-2015.01 | AT/MT | F | L/R | Hatchback FWD KNBA | Trans. code:AWF21;Trans. code:MMT6 | GCO99271 | Outer Joint | | 40 | 28 | 57.7 | 51 | 63 | M |
| | 2010.07-2015.01 | MT | F | L | Hatchback FWD KNBA | | GDS18363 | Drive Shaft | | 40 | 31 | 57.7 | 52 | 588.5 | |
| | 2010.07-2015.01 | MT | F | R | Hatchback FWD KNBA | | GDS18350 | Drive Shaft | | 40 | 28 | 57.7 | 52 | 963 | |
| | 2010.07-2015.01 | MT | F | R | Hatchback FWD KNBA | Trans. code:MMT6 | GDS99212 | Drive Shaft | | 40 | 26 | 57.7 | 51 | 945 | |
| | 2010.07-2015.01 | | F | | Hatchback FWD KNBA | | GCO59344 | Outer Joint | | 40 | 26 | 57.7 | 52 | 63.5 | M |
| | 2010.10-2015.01 | MT | F | L | Saloon FWD KNBA | | GDS18363 | Drive Shaft | | 40 | 31 | 57.7 | 52 | 588.5 | |
| | 2010.10-2015.01 | MT | F | R | Saloon FWD KNBA | | GDS18350 | Drive Shaft | | 40 | 28 | 57.7 | 52 | 963 | |
| | 2010.10-2015.01 | MT | F | L/R | Saloon FWD KNBA | | GCO18269 | Outer Joint | | 40 | 26 | 57.7 | 52 | 63.5 | I |
| 2.3 (118 kw) | 2007.07-2015.01 | 6AT | F | R | Hatchback FWD SEBA | | GDS61106 | Drive Shaft | | 40 | 31 | 57.7 | 51 | 945 | |
| | 2007.07-2015.01 | 6AT | F | R | Hatchback FWD SEBA | Date from:2010.12 | GCO62045 | Outer Joint | | 40 | 26 | 57.7 | 52 | 62.5 | M |

| | YEAR | TRANSM. | F/R | L/R | BODY STYLE & DRIVE TYPE & ENGINE | REMARKS | G-AP Ref. | PRODUCT | ABS | Technical Specifications A | B | C | H | L | P |
|---|---|---|---|---|---|---|---|---|---|---|---|---|---|---|---|
| **FORD** **Mondeo** | | | | | | | | | | | | | | | |
| 2.3 (118 kw) | 2007.07-2015.01 | 6AT | F | L | Hatchback FWD SEBA | | GCI18267 | Inner Joint | | 31 | 26 | 36.2 | 68 | 93 | |
| | 2007.07-2015.01 | AT | F | L | Hatchback FWD SEBA | | GDS18346 | Drive Shaft | | 40 | 31 | 57.7 | 52 | 559 | |
| | 2007.07-2015.01 | 6AT | F | R | Saloon FWD SEBA | | GDS61106 | Drive Shaft | | 40 | 31 | 57.7 | 51 | 945 | |
| | 2007.07-2015.01 | 6AT | F | R | Saloon FWD SEBA | Date from:2010.12 | GCO62045 | Outer Joint | | 40 | 26 | 57.7 | 52 | 62.5 | M |
| | 2007.07-2015.01 | 6AT | F | L | Saloon FWD SEBA | | GCI18267 | Inner Joint | | 31 | 26 | 36.2 | 68 | 93 | |
| | 2007.07-2015.01 | AT | F | L | Saloon FWD SEBA | | GDS18346 | Drive Shaft | | 40 | 31 | 57.7 | 52 | 559 | |
| 2.5 (125 kw) | 1994.09-1996.08 | AT | F | L/R | Hatchback FWD SEA | | GCO18023 | Outer Joint | 44T | 27 | 30 | 57 | 91 | 56 | I |
| | 1994.09-1996.08 | AT | F | L/R | Hatchback FWD SEA | | GCO18024 | Outer Joint | 44T | 27 | 30 | 57 | 91 | 56 | M |
| | 1994.09-1996.08 | AT/MT | F | R | Hatchback FWD SEA | | GDS18003 | Drive Shaft | | 27 | 35 | 54.3 | 91 | 566 | |
| | 1994.09-1996.08 | AT/MT | F | R | Hatchback FWD SEA | | GDS18004 | Drive Shaft | 44T | 27 | 35 | 54.3 | 91 | 566 | |
| | 1994.09-1996.08 | AT/MT | F | R | Hatchback FWD SEA | | GDS18006 | Drive Shaft | 44T | 27 | 35 | 57 | 91 | 566 | |
| | 1994.09-1996.08 | AT/MT | F | R | Hatchback FWD SEA | | GDS18028 | Drive Shaft | | 27 | 35 | 57 | 91 | 576.5 | |
| | 1994.09-1996.08 | AT/MT | F | L/R | Hatchback FWD SEA | | GCO18011 | Outer Joint | 44T | 27 | 25 | 57 | 91 | 61 | I |
| | 1994.09-1996.08 | MT | F | L | Hatchback FWD SEA | | GDS18001 | Drive Shaft | | 27 | 26 | 54.3 | 91 | 615 | |
| | 1994.09-1996.08 | MT | F | L | Hatchback FWD SEA | | GDS18002 | Drive Shaft | 44T | 27 | 26 | 54.3 | 91 | 615 | |
| | 1994.09-1996.08 | MT | F | L | Hatchback FWD SEA | | GDS18027 | Drive Shaft | | 27 | 26 | 57 | 91 | 627.5 | |
| | 1994.09-1996.08 | MT | F | L/R | Hatchback FWD SEA | | GCO18010 | Outer Joint | | 27 | 25 | 57 | 91 | 61 | I |
| | 1994.09-1996.08 | MT | F | L | Hatchback FWD SEA | | GCI36001 | Inner Joint | | 26 | 33 | 40 | 68.5 | 100 | |
| | 1994.09-1996.08 | AT | F | L/R | Saloon FWD SEA | | GCO18023 | Outer Joint | 44T | 27 | 30 | 57 | 91 | 56 | I |
| | 1994.09-1996.08 | AT | F | L/R | Saloon FWD SEA | | GCO18024 | Outer Joint | 44T | 27 | 30 | 57 | 91 | 56 | M |
| | 1994.09-1996.08 | AT/MT | F | R | Saloon FWD SEA | | GDS18003 | Drive Shaft | | 27 | 35 | 54.3 | 91 | 566 | |
| | 1994.09-1996.08 | AT/MT | F | R | Saloon FWD SEA | | GDS18004 | Drive Shaft | 44T | 27 | 35 | 54.3 | 91 | 566 | |
| | 1994.09-1996.08 | AT/MT | F | R | Saloon FWD SEA | | GDS18006 | Drive Shaft | 44T | 27 | 35 | 57 | 91 | 566 | |
| | 1994.09-1996.08 | AT/MT | F | R | Saloon FWD SEA | | GDS18028 | Drive Shaft | | 27 | 35 | 57 | 91 | 576.5 | |
| | 1994.09-1996.08 | AT/MT | F | L/R | Saloon FWD SEA | | GCO18011 | Outer Joint | 44T | 27 | 25 | 57 | 91 | 61 | I |
| | 1994.09-1996.08 | MT | F | L | Saloon FWD SEA | | GDS18001 | Drive Shaft | | 27 | 26 | 54.3 | 91 | 615 | |
| | 1994.09-1996.08 | MT | F | L | Saloon FWD SEA | | GDS18002 | Drive Shaft | 44T | 27 | 26 | 54.3 | 91 | 615 | |
| | 1994.09-1996.08 | MT | F | L | Saloon FWD SEA | | GDS18027 | Drive Shaft | | 27 | 26 | 57 | 91 | 627.5 | |
| | 1994.09-1996.08 | MT | F | L/R | Saloon FWD SEA | | GCO18010 | Outer Joint | | 27 | 25 | 57 | 91 | 61 | I |
| | 1994.09-1996.08 | MT | F | L | Saloon FWD SEA | | GCI36001 | Inner Joint | | 26 | 33 | 40 | 68.5 | 100 | |
| | 1996.08-2000.09 | AT/MT | F | R | Hatchback FWD SEB/SEC | | GDS18003 | Drive Shaft | | 27 | 35 | 54.3 | 91 | 566 | |
| | 1996.08-2000.09 | AT/MT | F | R | Hatchback FWD SEB/SEC | | GDS18004 | Drive Shaft | 44T | 27 | 35 | 54.3 | 91 | 566 | |
| | 1996.08-2000.09 | AT/MT | F | R | Hatchback FWD SEB/SEC | | GDS18028 | Drive Shaft | | 27 | 35 | 57 | 91 | 576.5 | |
| | 1996.08-2000.09 | AT/MT | F | L/R | Hatchback FWD SEB/SEC | | GCO18011 | Outer Joint | 44T | 27 | 25 | 57 | 91 | 61 | I |
| | 1996.08-2000.09 | MT | F | L | Hatchback FWD SEB/SEC | | GDS18001 | Drive Shaft | | 27 | 26 | 54.3 | 91 | 615 | |
| | 1996.08-2000.09 | MT | F | L | Hatchback FWD SEB/SEC | | GDS18002 | Drive Shaft | 44T | 27 | 26 | 54.3 | 91 | 615 | |
| | 1996.08-2000.09 | MT | F | | Hatchback FWD SEB/SEC | | GCO18010 | Outer Joint | | 27 | 25 | 57 | 91 | 61 | I |
| | 1996.08-2000.09 | MT | F | | Hatchback FWD SEB/SEC | | GCO18023 | Outer Joint | 44T | 27 | 30 | 57 | 91 | 56 | I |
| | 1996.09-2000.09 | 4AT/5MT | F | R | Hatchback FWD SEA | | GDS18003 | Drive Shaft | | 27 | 35 | 54.3 | 91 | 566 | |
| | 1996.09-2000.09 | 4AT/5MT | F | R | Hatchback FWD SEA | inner teeth of transm. side:32 | GDS18004 | Drive Shaft | 44T | 27 | 35 | 54.3 | 91 | 566 | |
| | 1996.09-2000.09 | 4AT/5MT | F | L/R | Hatchback FWD SEA | inner teeth of wheel side:25 | GCO18011 | Outer Joint | 44T | 27 | 25 | 57 | 91 | 61 | I |
| | 1996.09-2000.09 | AT | F | L/R | Hatchback FWD SEA | inner teeth of wheel side:30 | GCO18023 | Outer Joint | 44T | 27 | 30 | 57 | 91 | 56 | I |
| | 1996.09-2000.09 | AT | F | L/R | Hatchback FWD SEA | inner teeth of wheel side:30 | GCO18024 | Outer Joint | 44T | 27 | 30 | 57 | 91 | 56 | M |
| | 1996.09-2000.09 | AT/MT | F | R | Hatchback FWD SEA | inner teeth of transm. side:30 | GDS18006 | Drive Shaft | 44T | 27 | 35 | 57 | 91 | 566 | |
| | 1996.09-2000.09 | AT/MT | F | R | Hatchback FWD SEA | | GDS18028 | Drive Shaft | | 27 | 35 | 57 | 91 | 576.5 | |
| | 1996.09-2000.09 | MT | F | L | Hatchback FWD SEA | inner teeth of transm. side:30 | GDS18001 | Drive Shaft | | 27 | 26 | 54.3 | 91 | 615 | |
| | 1996.09-2000.09 | MT | F | L | Hatchback FWD SEA | inner teeth of transm. side:30 | GDS18002 | Drive Shaft | 44T | 27 | 26 | 54.3 | 91 | 615 | |
| | 1996.09-2000.09 | MT | F | L | Hatchback FWD SEA | inner teeth of transm. side:32 | GDS18027 | Drive Shaft | | 27 | 26 | 57 | 91 | 627.5 | |
| | 1996.09-2000.09 | MT | F | L/R | Hatchback FWD SEA | | GCO18010 | Outer Joint | | 27 | 25 | 57 | 91 | 61 | I |
| | 1996.09-2000.09 | MT | F | L | Hatchback FWD SEA | | GCI36001 | Inner Joint | | 26 | 33 | 40 | 68.5 | 100 | |
| | 1996.09-2000.09 | 4AT/5MT | F | R | Saloon FWD SEA | | GDS18003 | Drive Shaft | | 27 | 35 | 54.3 | 91 | 566 | |
| | 1996.09-2000.09 | 4AT/5MT | F | R | Saloon FWD SEA | | GDS18004 | Drive Shaft | 44T | 27 | 35 | 54.3 | 91 | 566 | |
| | 1996.09-2000.09 | 4AT/5MT | F | L/R | Saloon FWD SEA | | GCO18011 | Outer Joint | 44T | 27 | 25 | 57 | 91 | 61 | I |
| | 1996.09-2000.09 | AT | F | L/R | Saloon FWD SEA | | GCO18023 | Outer Joint | 44T | 27 | 30 | 57 | 91 | 56 | I |
| | 1996.09-2000.09 | AT | F | L/R | Saloon FWD SEA | | GCO18024 | Outer Joint | 44T | 27 | 30 | 57 | 91 | 56 | M |
| | 1996.09-2000.09 | AT/MT | F | R | Saloon FWD SEA | | GDS18006 | Drive Shaft | 44T | 27 | 35 | 57 | 91 | 566 | |
| | 1996.09-2000.09 | AT/MT | F | R | Saloon FWD SEA | | GDS18028 | Drive Shaft | | 27 | 35 | 57 | 91 | 576.5 | |
| | 1996.09-2000.09 | MT | F | L | Saloon FWD SEA | | GDS18001 | Drive Shaft | | 27 | 26 | 54.3 | 91 | 615 | |
| | 1996.09-2000.09 | MT | F | L | Saloon FWD SEA | | GDS18002 | Drive Shaft | 44T | 27 | 26 | 54.3 | 91 | 615 | |
| | 1996.09-2000.09 | MT | F | L | Saloon FWD SEA | | GDS18027 | Drive Shaft | | 27 | 26 | 57 | 91 | 627.5 | |
| | 1996.09-2000.09 | MT | F | L/R | Saloon FWD SEA | | GCO18010 | Outer Joint | | 27 | 25 | 57 | 91 | 61 | I |
| | 1996.09-2000.09 | MT | F | L | Saloon FWD SEA | | GCI36001 | Inner Joint | | 26 | 33 | 40 | 68.5 | 100 | |
| | 1996.09-2000.09 | AT/MT | F | R | Saloon FWD SEB/SEC | | GDS18003 | Drive Shaft | | 27 | 35 | 54.3 | 91 | 566 | |
| | 1996.09-2000.09 | AT/MT | F | R | Saloon FWD SEB/SEC | | GDS18004 | Drive Shaft | 44T | 27 | 35 | 54.3 | 91 | 566 | |
| | 1996.09-2000.09 | AT/MT | F | R | Saloon FWD SEB/SEC | | GDS18028 | Drive Shaft | | 27 | 35 | 57 | 91 | 576.5 | |

| | YEAR | TRANSM. | F/R | L/R | BODY STYLE & DRIVE TYPE & ENGINE | REMARKS | G-AP Ref. | PRODUCT | ABS | Technical Specifications A | B | C | H | L | P |
|---|---|---|---|---|---|---|---|---|---|---|---|---|---|---|---|
| **FORD** **Mondeo** | | | | | | | | | | | | | | | |
| 2.5 (125 kw) | 1996.09-2000.09 | AT/MT | F | L/R | Saloon FWD SEB/SEC | | GCO18011 | Outer Joint | 44T | 27 | 25 | 57 | 91 | 61 | I |
| | 1996.09-2000.09 | MT | F | L | Saloon FWD SEB/SEC | | GDS18001 | Drive Shaft | | 27 | 26 | 54.3 | 91 | 615 | |
| | 1996.09-2000.09 | MT | F | L | Saloon FWD SEB/SEC | | GDS18002 | Drive Shaft | 44T | 27 | 26 | 54.3 | 91 | 615 | |
| | 1996.09-2000.09 | MT | F | | Saloon FWD SEB/SEC | | GCO18010 | Outer Joint | | 27 | 25 | 57 | 91 | 61 | I |
| | 1996.09-2000.09 | MT | F | L | Saloon FWD SEB/SEC | | GCI36001 | Inner Joint | | 26 | 33 | 40 | 68.5 | 100 | |
| | 2000.10-2007.03 | 5AT/5MT | F | R | Hatchback FWD LCBD | | GDS18028 | Drive Shaft | | 27 | 35 | 57 | 91 | 576.5 | |
| | 2000.10-2007.03 | 5MT | F | L | Hatchback FWD LCBD | | GDS18220 | Drive Shaft | | 27 | 26 | 56.5 | 92 | 633 | |
| | 2000.10-2007.03 | AT/MT | F | R | Hatchback FWD LCBD | | GDS18043 | Drive Shaft | | 27 | 35 | 56.5 | 92 | 579 | |
| | 2000.10-2007.03 | AT/MT | F | L/R | Hatchback FWD LCBD | | GCO18002 | Outer Joint | | 27 | 26 | 56 | 91 | 64 | M |
| | 2000.10-2007.03 | MT | F | L | Hatchback FWD LCBD | | GDS18027 | Drive Shaft | | 27 | 26 | 57 | 91 | 627.5 | |
| | 2000.10-2007.03 | | F | R | Hatchback FWD LCBD | Date To:2002.02 | GCO18095 | Outer Joint | | 27 | 26 | 56.5 | 92 | 64 | M |
| | 2000.10-2007.03 | | F | R | Hatchback FWD LCBD | | GCI18061 | Inner Joint | | 35 | 34 | 42 | | 117.5 | |
| | 2000.10-2007.03 | 5AT/5MT | F | R | Saloon FWD LCBD | | GDS18028 | Drive Shaft | | 27 | 35 | 57 | 91 | 576.5 | |
| | 2000.10-2007.03 | 5AT/5MT | F | R | Saloon FWD LCBD | Inner teeth of wheel side:30 | GDS18028 | Drive Shaft | | 27 | 35 | 57 | 91 | 576.5 | |
| | 2000.10-2007.03 | 5AT/5MT | F | R | Saloon FWD LCBD | Date from:2006.05 | GDS18043 | Drive Shaft | | 27 | 35 | 56.5 | 92 | 579 | |
| | 2000.10-2007.03 | 5AT/5MT | F | R | Saloon FWD LCBD | Inner teeth of wheel side:26 | GDS18043 | Drive Shaft | | 27 | 35 | 56.5 | 92 | 579 | |
| | 2000.10-2007.03 | 5AT/5MT | F | R | Saloon FWD LCBD | | GCI18061 | Inner Joint | | 35 | 34 | 42 | | 117.5 | |
| | 2000.10-2007.03 | 5MT | F | L | Saloon FWD LCBD | | GDS18220 | Drive Shaft | | 27 | 26 | 56.5 | 92 | 633 | |
| | 2000.10-2007.03 | AT/MT | F | L/R | Saloon FWD LCBD | | GCO18002 | Outer Joint | | 27 | 26 | 56 | 91 | 64 | M |
| | 2000.10-2007.03 | MT | F | L | Saloon FWD LCBD | | GDS18027 | Drive Shaft | | 27 | 26 | 57 | 91 | 627.5 | |
| | 2000.10-2007.03 | | F | R | Saloon FWD LCBD | Date To:2002.02 | GCO18095 | Outer Joint | | 27 | 26 | 56.5 | 92 | 64 | M |
| 2.5 (151 kw) | 1999.04-2000.11 | 4AT/5MT | F | L | Hatchback FWD SGA | | GDS18001 | Drive Shaft | | 27 | 26 | 54.3 | 91 | 615 | |
| | 1999.04-2000.11 | 4AT/5MT | F | L | Hatchback FWD SGA | | GDS18002 | Drive Shaft | 44T | 27 | 26 | 54.3 | 91 | 615 | |
| | 1999.04-2000.11 | 4AT/5MT | F | R | Hatchback FWD SGA | | GDS18003 | Drive Shaft | | 27 | 35 | 54.3 | 91 | 566 | |
| | 1999.04-2000.11 | 4AT/5MT | F | R | Hatchback FWD SGA | | GDS18004 | Drive Shaft | 44T | 27 | 35 | 54.3 | 91 | 566 | |
| | 1999.04-2000.11 | 4AT/5MT | F | L/R | Hatchback FWD SGA | | GCO18011 | Outer Joint | 44T | 27 | 25 | 57 | 91 | 61 | I |
| | 1999.04-2000.11 | MT | F | | Hatchback FWD SGA | | GCO18023 | Outer Joint | 44T | 27 | 30 | 57 | 91 | 56 | I |
| | 1999.04-2000.11 | MT | F | L | Hatchback FWD SGA | | GCI36001 | Inner Joint | | 26 | 33 | 40 | 68.5 | 100 | |
| | 1999.04-2000.11 | 4AT/5MT | F | L | Saloon FWD SGA | | GDS18001 | Drive Shaft | | 27 | 26 | 54.3 | 91 | 615 | |
| | 1999.04-2000.11 | 4AT/5MT | F | L | Saloon FWD SGA | | GDS18002 | Drive Shaft | 44T | 27 | 26 | 54.3 | 91 | 615 | |
| | 1999.04-2000.11 | 4AT/5MT | F | R | Saloon FWD SGA | | GDS18003 | Drive Shaft | | 27 | 35 | 54.3 | 91 | 566 | |
| | 1999.04-2000.11 | 4AT/5MT | F | R | Saloon FWD SGA | | GDS18004 | Drive Shaft | 44T | 27 | 35 | 54.3 | 91 | 566 | |
| | 1999.04-2000.11 | 4AT/5MT | F | L/R | Saloon FWD SGA | | GCO18011 | Outer Joint | 44T | 27 | 25 | 57 | 91 | 61 | I |
| | 1999.04-2000.11 | MT | F | L | Saloon FWD SGA | | GCI36001 | Inner Joint | | 26 | 33 | 40 | 68.5 | 100 | |
| 2.5 (162 kw) | 2007.03-2015.01 | 6MT | F | L | Hatchback FWD HUBA | | GDS21070 | Drive Shaft | | 40 | 26 | 57.7 | 52 | 556 | |
| | 2007.03-2015.01 | 6MT | F | L | Hatchback FWD HUBA | | GCO59285 | Outer Joint | | 40 | 27 | 57.7 | 52 | 63.5 | M |
| | 2007.03-2015.01 | 6MT | F | R | Hatchback FWD HUBA | | GCO59441 | Outer Joint | | 40 | 27 | 57.7 | 52 | 63.5 | M |
| | 2007.03-2015.01 | 6MT | F | R | Hatchback FWD HUBA | | GCI81076 | Inner Joint | | 26 | 28 | 40 | 522.5 | 123.7 | |
| | 2007.03-2015.01 | | F | R | Hatchback FWD HUBA | | GDS18348 | Drive Shaft | | 40 | 26 | 57.7 | 52 | 1001 | |
| | 2007.03-2015.01 | 6MT | F | L | Saloon FWD HUBA | | GDS21070 | Drive Shaft | | 40 | 26 | 57.7 | 52 | 556 | |
| | 2007.03-2015.01 | 6MT | F | L | Saloon FWD HUBA | | GCO59285 | Outer Joint | | 40 | 27 | 57.7 | 52 | 63.5 | M |
| | 2007.03-2015.01 | 6MT | F | R | Saloon FWD HUBA | | GCO59441 | Outer Joint | | 40 | 27 | 57.7 | 52 | 63.5 | M |
| | 2007.03-2015.01 | 6MT | F | R | Saloon FWD HUBA | | GCI81076 | Inner Joint | | 26 | 28 | 40 | 522.5 | 123.7 | |
| | 2007.03-2015.01 | | F | R | Saloon FWD HUBA | | GDS18348 | Drive Shaft | | 40 | 26 | 57.7 | 52 | 1001 | |
| 3.0 (150 kw) | 2004.09-2007.03 | 6MT | F | R | Hatchback FWD REBA | | GDS18028 | Drive Shaft | | 27 | 35 | 57 | 91 | 576.5 | |
| | 2004.09-2007.03 | AT/MT | F | L/R | Hatchback FWD REBA | | GCO18002 | Outer Joint | | 27 | 26 | 56 | 91 | 64 | M |
| | 2004.09-2007.03 | MT | F | L | Hatchback FWD REBA | | GDS18027 | Drive Shaft | | 27 | 26 | 57 | 91 | 627.5 | |
| | 2004.09-2007.03 | MT | F | R | Hatchback FWD REBA | | GDS18043 | Drive Shaft | | 27 | 35 | 56.5 | 92 | 579 | |
| | 2004.09-2007.03 | | F | R | Hatchback FWD REBA | | GCI18061 | Inner Joint | | 35 | 34 | 42 | | 117.5 | |
| | 2004.09-2007.03 | 6MT | F | R | Saloon FWD REBA | | GDS18028 | Drive Shaft | | 27 | 35 | 57 | 91 | 576.5 | |
| | 2004.09-2007.03 | AT/MT | F | L/R | Saloon FWD REBA | | GCO18002 | Outer Joint | | 27 | 26 | 56 | 91 | 64 | M |
| | 2004.09-2007.03 | MT | F | L | Saloon FWD REBA | | GDS18027 | Drive Shaft | | 27 | 26 | 57 | 91 | 627.5 | |
| | 2004.09-2007.03 | MT | F | R | Saloon FWD REBA | | GDS18043 | Drive Shaft | | 27 | 35 | 56.5 | 92 | 579 | |
| | 2004.09-2007.03 | | F | R | Saloon FWD REBA | | GCI18061 | Inner Joint | | 35 | 34 | 42 | | 117.5 | |
| 3.0 (166 kw) | 2002.04-2007.03 | 6MT | F | R | Hatchback FWD MEBA | | GDS18028 | Drive Shaft | | 27 | 35 | 57 | 91 | 576.5 | |
| | 2002.04-2007.03 | AT/MT | F | L/R | Hatchback FWD MEBA | | GCO18002 | Outer Joint | | 27 | 26 | 56 | 91 | 64 | M |
| | 2002.04-2007.03 | MT | F | L | Hatchback FWD MEBA | | GDS18027 | Drive Shaft | | 27 | 26 | 57 | 91 | 627.5 | |
| | 2002.04-2007.03 | MT | F | R | Hatchback FWD MEBA | | GDS18043 | Drive Shaft | | 27 | 35 | 56.5 | 92 | 579 | |
| | 2002.04-2007.03 | | F | R | Hatchback FWD MEBA | | GCI18061 | Inner Joint | | 35 | 34 | 42 | | 117.5 | |
| | 2002.04-2007.03 | 6MT | F | R | Saloon FWD MEBA | | GDS18028 | Drive Shaft | | 27 | 35 | 57 | 91 | 576.5 | |
| | 2002.04-2007.03 | AT/MT | F | L/R | Saloon FWD MEBA | | GCO18002 | Outer Joint | | 27 | 26 | 56 | 91 | 64 | M |
| | 2002.04-2007.03 | MT | F | L | Saloon FWD MEBA | | GDS18027 | Drive Shaft | | 27 | 26 | 57 | 91 | 627.5 | |
| | 2002.04-2007.03 | MT | F | R | Saloon FWD MEBA | | GDS18043 | Drive Shaft | | 27 | 35 | 56.5 | 92 | 579 | |
| | 2002.04-2007.03 | | F | R | Saloon FWD MEBA | | GCI18061 | Inner Joint | | 35 | 34 | 42 | | 117.5 | |

| | YEAR | TRANSM. | F/R | L/R | BODY STYLE & DRIVE TYPE & ENGINE | REMARKS | G-AP Ref. | PRODUCT | ABS | Technical Specifications A | B | C | H | L | P |
|---|---|---|---|---|---|---|---|---|---|---|---|---|---|---|---|
| **FORD** **Mondeo Estate/Wagon** | | | | | | | | | | | | | | | |
| 1.0 (92 kw) | 2015.02-2022.03 | 6MT | F | L | Estate FWD M1CA;M1CB | | GDS81766 | Drive Shaft | | 27 | 26 | 55 | 105 | 667 | |
| | 2015.02-2022.03 | 6MT | F | R | Estate FWD M1CA;M1CB | | GDS81847 | Drive Shaft | | 27 | 26 | 55 | 105 | 1000 | |
| | 2015.02-2022.03 | 6MT | F | L/R | Estate FWD M1CA;M1CB | Date To:2019.01 | GCO81519 | Outer Joint | | 27 | 26 | 55 | 105 | 62.5 | M |
| | 2015.02-2022.03 | 6MT | F | L | Estate FWD M1CA;M1CB | | GCI21028 | Inner Joint | | 26 | 32 | 40 | 61 | 112.5 | |
| | 2015.02-2022.03 | 6MT | F | R | Estate FWD M1CA;M1CB | | GCI81338 | Inner Joint | | 26 | 32 | 40 | 383 | 99 | |
| 1.5 (88 kw) | 2015.03-2022.03 | 6MT | F | L | Estate FWD UGCC;XUCA | | GDS81766 | Drive Shaft | | 27 | 26 | 55 | 105 | 667 | |
| | 2015.03-2022.03 | 6MT | F | R | Estate FWD UGCC;XUCA | | GDS81847 | Drive Shaft | | 27 | 26 | 55 | 105 | 1000 | |
| | 2015.03-2022.03 | 6MT | F | L/R | Estate FWD UGCC;XUCA | | GCO81519 | Outer Joint | | 27 | 26 | 55 | 105 | 62.5 | M |
| | 2015.03-2022.03 | 6MT | F | L | Estate FWD UGCC;XUCA | | GCI21028 | Inner Joint | | 26 | 32 | 40 | 61 | 112.5 | |
| | 2015.03-2022.03 | 6MT | F | R | Estate FWD UGCC;XUCA | | GCI81338 | Inner Joint | | 26 | 32 | 40 | 383 | 99 | |
| 1.6 (65 kw) | 1993.02-1996.08 | AT | F | R | Estate FWD L1J | | GDS18005 | Drive Shaft | | 27 | 35 | 57 | 91 | 566 | |
| | 1993.02-1996.08 | AT/MT | F | R | Estate FWD L1J | | GDS18006 | Drive Shaft | 44T | 27 | 35 | 57 | 91 | 566 | |
| | 1993.02-1996.08 | AT/MT | F | L/R | Estate FWD L1J | | GCO18023 | Outer Joint | 44T | 27 | 30 | 57 | 91 | 56 | I |
| | 1993.02-1996.08 | AT/MT | F | L/R | Estate FWD L1J | | GCO18024 | Outer Joint | 44T | 27 | 30 | 57 | 91 | 56 | M |
| | 1993.02-1996.08 | MT | F | L | Estate FWD L1J | | GDS18001 | Drive Shaft | | 27 | 26 | 54.3 | 91 | 615 | |
| | 1993.02-1996.08 | MT | F | L | Estate FWD L1J | | GDS18002 | Drive Shaft | 44T | 27 | 26 | 54.3 | 91 | 615 | |
| | 1993.02-1996.08 | MT | F | L | Estate FWD L1J | | GDS18016 | Drive Shaft | | 27 | 26 | 57 | 91 | 618.5 | |
| | 1993.02-1996.08 | MT | F | L | Estate FWD L1J | | GDS18027 | Drive Shaft | | 27 | 26 | 57 | 91 | 627.5 | |
| | 1993.02-1996.08 | MT | F | R | Estate FWD L1J | | GDS18028 | Drive Shaft | | 27 | 35 | 57 | 91 | 576.5 | |
| | 1993.02-1996.08 | MT | F | L | Estate FWD L1J | | GCI36001 | Inner Joint | | 26 | 33 | 40 | 68.5 | 100 | |
| 1.6 (66 kw) | 1993.02-1996.08 | AT | F | R | Estate FWD L1F | | GDS18005 | Drive Shaft | | 27 | 35 | 57 | 91 | 566 | |
| | 1993.02-1996.08 | AT/MT | F | L/R | Estate FWD L1F | | GCO18023 | Outer Joint | 44T | 27 | 30 | 57 | 91 | 56 | I |
| | 1993.02-1996.08 | AT/MT | F | L/R | Estate FWD L1F | | GCO18024 | Outer Joint | 44T | 27 | 30 | 57 | 91 | 56 | M |
| | 1993.02-1996.08 | MT | F | L | Estate FWD L1F | | GDS18001 | Drive Shaft | | 27 | 26 | 54.3 | 91 | 615 | |
| | 1993.02-1996.08 | MT | F | L | Estate FWD L1F | | GDS18002 | Drive Shaft | 44T | 27 | 26 | 54.3 | 91 | 615 | |
| | 1993.02-1996.08 | MT | F | L | Estate FWD L1F | | GDS18016 | Drive Shaft | | 27 | 26 | 57 | 91 | 618.5 | |
| | 1993.02-1996.08 | MT | F | L | Estate FWD L1F | | GDS18027 | Drive Shaft | | 27 | 26 | 57 | 91 | 627.5 | |
| | 1993.02-1996.08 | MT | F | R | Estate FWD L1F | | GDS18006 | Drive Shaft | 44T | 27 | 35 | 57 | 91 | 566 | |
| | 1993.02-1996.08 | MT | F | R | Estate FWD L1F | | GDS18028 | Drive Shaft | | 27 | 35 | 57 | 91 | 576.5 | |
| | 1993.02-1996.08 | MT | F | L | Estate FWD L1F | | GCI36001 | Inner Joint | | 26 | 33 | 40 | 68.5 | 100 | |
| | 1996.09-2000.11 | 4AT/5MT | F | L | Estate FWD L1J | | GDS18002 | Drive Shaft | 44T | 27 | 26 | 54.3 | 91 | 615 | |
| | 1996.09-2000.11 | 4AT/5MT | F | R | Estate FWD L1J | | GDS18006 | Drive Shaft | 44T | 27 | 35 | 57 | 91 | 566 | |
| | 1996.09-2000.11 | 4AT/5MT | F | L/R | Estate FWD L1J | | GCO18023 | Outer Joint | 44T | 27 | 30 | 57 | 91 | 56 | I |
| | 1996.09-2000.11 | MT | F | L | Estate FWD L1J | | GDS18001 | Drive Shaft | | 27 | 26 | 54.3 | 91 | 615 | |
| | 1996.09-2000.11 | MT | F | L | Estate FWD L1J | | GDS18016 | Drive Shaft | | 27 | 26 | 57 | 91 | 618.5 | |
| | 1996.09-2000.11 | MT | F | L | Estate FWD L1J | | GDS18027 | Drive Shaft | | 27 | 26 | 57 | 91 | 627.5 | |
| | 1996.09-2000.11 | MT | F | R | Estate FWD L1J | | GDS18028 | Drive Shaft | | 27 | 35 | 57 | 91 | 576.5 | |
| | 1996.09-2000.11 | MT | F | L/R | Estate FWD L1J | | GCO18024 | Outer Joint | 44T | 27 | 30 | 57 | 91 | 56 | M |
| | 1996.09-2000.11 | MT | F | L | Estate FWD L1J | | GCI36001 | Inner Joint | | 26 | 33 | 40 | 68.5 | 100 | |
| 1.6 (70 kw) | 1998.05-2000.09 | 5MT | F | L | Estate FWD L1L/L1N/L1Q | | GDS18002 | Drive Shaft | 44T | 27 | 26 | 54.3 | 91 | 615 | |
| | 1998.05-2000.09 | 5MT | F | R | Estate FWD L1L/L1N/L1Q | | GDS18006 | Drive Shaft | 44T | 27 | 35 | 57 | 91 | 566 | |
| | 1998.05-2000.09 | 5MT | F | L/R | Estate FWD L1L/L1N/L1Q | GrooveType:Inner | GCO18023 | Outer Joint | 44T | 27 | 30 | 57 | 91 | 56 | I |
| | 1998.05-2000.09 | MT | F | L | Estate FWD L1L/L1N/L1Q | | GDS18001 | Drive Shaft | | 27 | 26 | 54.3 | 91 | 615 | |
| | 1998.05-2000.09 | MT | F | L | Estate FWD L1L/L1N/L1Q | | GDS18016 | Drive Shaft | | 27 | 26 | 57 | 91 | 618.5 | |
| | 1998.05-2000.09 | MT | F | L | Estate FWD L1L/L1N/L1Q | | GDS18027 | Drive Shaft | | 27 | 26 | 57 | 91 | 627.5 | |
| | 1998.05-2000.09 | MT | F | R | Estate FWD L1L/L1N/L1Q | | GDS18028 | Drive Shaft | | 27 | 35 | 57 | 91 | 576.5 | |
| | 1998.05-2000.09 | MT | F | L/R | Estate FWD L1L/L1N/L1Q | GrooveType:Middle | GCO18024 | Outer Joint | 44T | 27 | 30 | 57 | 91 | 56 | M |
| | 1998.05-2000.09 | MT | F | L | Estate FWD L1L/L1N/L1Q | | GCI36001 | Inner Joint | | 26 | 33 | 40 | 68.5 | 100 | |
| 1.6 (81 kw) | 2007.03-2012.12 | 5MT | F | L | Estate FWD RHBA | | GDS83928 | Drive Shaft | | 40 | 23 | 57.5 | 52 | 629 | |
| | 2007.03-2012.12 | 5MT | F | R | Estate FWD RHBA | | GDS83555 | Drive Shaft | | 40 | 23 | 57.5 | 52 | 926 | |
| | 2007.03-2012.12 | 5MT | F | L | Estate FWD RHBA | | GCI18260 | Inner Joint | | 23 | 22 | 40 | 61 | 88 | |
| | 2007.03-2012.12 | | F | L/R | Estate FWD RHBA | | GCO34202 | Outer Joint | | 40 | 24 | 57.5 | 52 | 56.5 | M |
| 1.6 (85 kw) | 2011.02-2015.01 | 6MT | F | L | Estate FWD T1BA;T1BB;T1BC | | GDS83397 | Drive Shaft | | 40 | 26 | 57.7 | 51 | 611 | |
| | 2011.02-2015.01 | 6MT | F | R | Estate FWD T1BA;T1BB;T1BC | | GDS99212 | Drive Shaft | | 40 | 26 | 57.7 | 51 | 945 | |
| | 2011.02-2015.01 | 6MT | F | L | Estate FWD T1BA;T1BB;T1BC | Date to:2012.10;TJ | GCI18128 | Inner Joint | | 26 | 28 | 40 | 68.5 | 111 | |
| | 2011.02-2015.01 | 6MT | F | L | Estate FWD T1BA;T1BB;T1BC | AAR | GCI81533 | Inner Joint | | 26 | 28 | 40 | 68.5 | 108 | |
| | 2011.02-2015.01 | MT | F | L/R | Estate FWD T1BA;T1BB;T1BC | | GCO99271 | Outer Joint | | 40 | 28 | 57.7 | 51 | 63 | M |
| | 2011.02-2015.01 | | F | R | Estate FWD T1BA;T1BB;T1BC | | GCI18129 | Inner Joint | | 26 | 28 | 40 | 389 | 96.5 | |
| | 2013.03-2014.09 | 6MT | F | L | Estate Van FWD T1BA;T1BB;T1BC | | GDS83397 | Drive Shaft | | 40 | 26 | 57.7 | 51 | 611 | |
| | 2013.03-2014.09 | 6MT | F | L | Estate Van FWD T1BA;T1BB;T1BC | TJ | GCI18128 | Inner Joint | | 26 | 28 | 40 | 68.5 | 111 | |
| | 2013.03-2014.09 | 6MT | F | L | Estate Van FWD T1BA;T1BB;T1BC | AAR | GCI81533 | Inner Joint | | 26 | 28 | 40 | 68.5 | 108 | |
| | 2013.03-2014.09 | MT | F | R | Estate Van FWD T1BA;T1BB;T1BC | | GDS99212 | Drive Shaft | | 40 | 26 | 57.7 | 51 | 945 | |
| | 2013.03-2014.09 | | F | L/R | Estate Van FWD T1BA;T1BB;T1BC | | GCO99271 | Outer Joint | | 40 | 28 | 57.7 | 51 | 63 | M |
| | 2013.03-2014.09 | | F | R | Estate Van FWD T1BA;T1BB;T1BC | | GCI18129 | Inner Joint | | 26 | 28 | 40 | 389 | 96.5 | |
| | 2014.09-2022.03 | 6MT | F | L | Estate FWD U3CA;NGCA | | GDS81766 | Drive Shaft | | 27 | 26 | 55 | 105 | 667 | |

| | YEAR | TRANSM. | F/R | L/R | BODY STYLE & DRIVE TYPE & ENGINE | REMARKS | G-AP Ref. | PRODUCT | ABS | Technical Specifications A | B | C | H | L | P |
|---|---|---|---|---|---|---|---|---|---|---|---|---|---|---|---|
| **FORD** **Mondeo Estate/Wagon** | | | | | | | | | | | | | | | |
| 1.6 (85 kw) | 2014.09-2022.03 | 6MT | F | R | Estate FWD U3CA;NGCA | | GDS81847 | Drive Shaft | | 27 | 26 | 55 | 105 | 1000 | |
| | 2014.09-2022.03 | 6MT | F | L/R | Estate FWD U3CA;NGCA | | GCO81519 | Outer Joint | | 27 | 26 | 55 | 105 | 62.5 | M |
| | 2014.09-2022.03 | 6MT | F | L | Estate FWD U3CA;NGCA | | GCI21028 | Inner Joint | | 26 | 32 | 40 | 61 | 112.5 | |
| | 2014.09-2022.03 | 6MT | F | R | Estate FWD U3CA;NGCA | | GCI81338 | Inner Joint | | 26 | 32 | 40 | 383 | 99 | |
| 1.6 (88 kw) | 2010.07-2015.01 | 5MT | F | L | Estate FWD KGBA | | GDS83928 | Drive Shaft | | 40 | 23 | 57.5 | 52 | 629 | |
| | 2010.07-2015.01 | 5MT | F | R | Estate FWD KGBA | | GDS83555 | Drive Shaft | | 40 | 23 | 57.5 | 52 | 926 | |
| | 2010.07-2015.01 | 5MT | F | L | Estate FWD KGBA | | GCI18260 | Inner Joint | | 23 | 22 | 40 | 61 | 88 | |
| | 2010.07-2015.01 | | F | L | Estate FWD KGBA | | GCO34202 | Outer Joint | | 40 | 24 | 57.5 | 52 | 56.5 | M |
| 1.6 (92 kw) | 2007.03-2010.12 | 5MT | F | L | Estate FWD PNBA | | GDS83928 | Drive Shaft | | 40 | 23 | 57.5 | 52 | 629 | |
| | 2007.03-2010.12 | 5MT | F | R | Estate FWD PNBA | | GDS83555 | Drive Shaft | | 40 | 23 | 57.5 | 52 | 926 | |
| | 2007.03-2010.12 | 5MT | F | L | Estate FWD PNBA | | GCI18260 | Inner Joint | | 23 | 22 | 40 | 61 | 88 | |
| | 2007.03-2010.12 | | F | L/R | Estate FWD PNBA | | GCO34202 | Outer Joint | | 40 | 24 | 57.5 | 52 | 56.5 | M |
| 1.6 (118 kw) | 2010.11-2014.09 | 6MT | F | L | Estate Van FWD JTBA | Date to:2012.10 | GCI18128 | Inner Joint | | 26 | 28 | 40 | 68.5 | 111 | |
| | 2010.11-2014.09 | | F | L | Estate Van FWD JTBA | | GCO99271 | Outer Joint | | 40 | 28 | 57.7 | 51 | 63 | M |
| | 2011.02-2015.01 | 6MT | F | L | Estate FWD JTBB;JTBA | Date to:2012.10 | GCI18128 | Inner Joint | | 26 | 28 | 40 | 68.5 | 111 | |
| | 2011.02-2015.01 | MT | F | L/R | Estate FWD JTBB;JTBA | | GCO99271 | Outer Joint | | 40 | 28 | 57.7 | 51 | 63 | M |
| 1.8 (65 kw) | 1993.06-1996.08 | MT | F | L | Estate FWD RFM/RFN | | GDS18001 | Drive Shaft | | 27 | 26 | 54.3 | 91 | 615 | |
| | 1993.06-1996.08 | MT | F | L | Estate FWD RFM/RFN | | GDS18002 | Drive Shaft | 44T | 27 | 26 | 54.3 | 91 | 615 | |
| | 1993.06-1996.08 | MT | F | L | Estate FWD RFM/RFN | | GDS18027 | Drive Shaft | | 27 | 26 | 57 | 91 | 627.5 | |
| | 1993.06-1996.08 | MT | F | R | Estate FWD RFM/RFN | | GDS18003 | Drive Shaft | | 27 | 35 | 54.3 | 91 | 566 | |
| | 1993.06-1996.08 | MT | F | R | Estate FWD RFM/RFN | | GDS18004 | Drive Shaft | 44T | 27 | 35 | 54.3 | 91 | 566 | |
| | 1993.06-1996.08 | MT | F | R | Estate FWD RFM/RFN | | GDS18006 | Drive Shaft | 44T | 27 | 35 | 57 | 91 | 566 | |
| | 1993.06-1996.08 | MT | F | R | Estate FWD RFM/RFN | | GDS18028 | Drive Shaft | | 27 | 35 | 57 | 91 | 576.5 | |
| | 1993.06-1996.08 | MT | F | L/R | Estate FWD RFM/RFN | | GCO18010 | Outer Joint | | 27 | 25 | 57 | 91 | 61 | I |
| | 1993.06-1996.08 | MT | F | L/R | Estate FWD RFM/RFN | | GCO18011 | Outer Joint | 44T | 27 | 25 | 57 | 91 | 61 | I |
| | 1993.06-1996.08 | MT | F | L | Estate FWD RFM/RFN | | GCI36001 | Inner Joint | | 26 | 33 | 40 | 68.5 | 100 | |
| 1.8 (66 kw) | 1995.11-1996.08 | AT/MT | F | R | Estate FWD RFM/RFN | | GDS18028 | Drive Shaft | | 27 | 35 | 57 | 91 | 576.5 | |
| | 1995.11-1996.08 | MT | F | L | Estate FWD RFM/RFN | | GDS18001 | Drive Shaft | | 27 | 26 | 54.3 | 91 | 615 | |
| | 1995.11-1996.08 | MT | F | L | Estate FWD RFM/RFN | | GDS18002 | Drive Shaft | 44T | 27 | 26 | 54.3 | 91 | 615 | |
| | 1995.11-1996.08 | MT | F | L | Estate FWD RFM/RFN | | GDS18027 | Drive Shaft | | 27 | 26 | 57 | 91 | 627.5 | |
| | 1995.11-1996.08 | MT | F | R | Estate FWD RFM/RFN | | GDS18003 | Drive Shaft | | 27 | 35 | 54.3 | 91 | 566 | |
| | 1995.11-1996.08 | MT | F | R | Estate FWD RFM/RFN | | GDS18004 | Drive Shaft | 44T | 27 | 35 | 54.3 | 91 | 566 | |
| | 1995.11-1996.08 | MT | F | R | Estate FWD RFM/RFN | | GDS18006 | Drive Shaft | 44T | 27 | 35 | 57 | 91 | 566 | |
| | 1995.11-1996.08 | MT | F | L/R | Estate FWD RFM/RFN | | GCO18010 | Outer Joint | | 27 | 25 | 57 | 91 | 61 | I |
| | 1995.11-1996.08 | MT | F | L/R | Estate FWD RFM/RFN | | GCO18011 | Outer Joint | 44T | 27 | 25 | 57 | 91 | 61 | I |
| | 1995.11-1996.08 | MT | F | L | Estate FWD RFM/RFN | | GCI36001 | Inner Joint | | 26 | 33 | 40 | 68.5 | 100 | |
| | 1996.09-2000.11 | 5MT | F | L | Estate FWD RFN | inner teeth of transm. side:32 | GDS18001 | Drive Shaft | | 27 | 26 | 54.3 | 91 | 615 | |
| | 1996.09-2000.11 | 5MT | F | L | Estate FWD RFN | inner teeth of transm. side:30 | GDS18002 | Drive Shaft | 44T | 27 | 26 | 54.3 | 91 | 615 | |
| | 1996.09-2000.11 | 5MT | F | R | Estate FWD RFN | | GDS18003 | Drive Shaft | | 27 | 35 | 54.3 | 91 | 566 | |
| | 1996.09-2000.11 | 5MT | F | R | Estate FWD RFN | inner teeth of transm. side:32 | GDS18004 | Drive Shaft | 44T | 27 | 35 | 54.3 | 91 | 566 | |
| | 1996.09-2000.11 | 5MT | F | L/R | Estate FWD RFN | | GCO18011 | Outer Joint | 44T | 27 | 25 | 57 | 91 | 61 | I |
| | 1996.09-2000.11 | AT/MT | F | R | Estate FWD RFN | | GDS18028 | Drive Shaft | | 27 | 35 | 57 | 91 | 576.5 | |
| | 1996.09-2000.11 | MT | F | L | Estate FWD RFN | inner teeth of transm. side:32 | GDS18027 | Drive Shaft | | 27 | 26 | 57 | 91 | 627.5 | |
| | 1996.09-2000.11 | MT | F | R | Estate FWD RFN | inner teeth of transm. side:30 | GDS18006 | Drive Shaft | 44T | 27 | 35 | 57 | 91 | 566 | |
| | 1996.09-2000.11 | MT | F | L/R | Estate FWD RFN | | GCO18010 | Outer Joint | | 27 | 25 | 57 | 91 | 61 | I |
| | 1996.09-2000.11 | MT | F | L | Estate FWD RFN | | GCI36001 | Inner Joint | | 26 | 33 | 40 | 68.5 | 100 | |
| 1.8 (74 kw) | 2007.03-2012.12 | 5MT/6MT | F | R | Estate FWD FFBA | | GDS99212 | Drive Shaft | | 40 | 26 | 57.7 | 51 | 945 | |
| | 2007.03-2012.12 | 5MT/6MT | F | L | Estate FWD FFBA | Date to:2012.10;TJ | GCI18128 | Inner Joint | | 26 | 28 | 40 | 68.5 | 111 | |
| | 2007.03-2012.12 | 6MT | F | L | Estate FWD FFBA | | GDS83397 | Drive Shaft | | 40 | 26 | 57.7 | 51 | 611 | |
| | 2007.03-2012.12 | 6MT | F | L | Estate FWD FFBA | AAR | GCI81533 | Inner Joint | | 26 | 28 | 40 | 68.5 | 108 | |
| | 2007.03-2012.12 | MT | F | L/R | Estate FWD FFBA | | GCO99271 | Outer Joint | | 40 | 28 | 57.7 | 51 | 63 | M |
| | 2007.03-2012.12 | | F | R | Estate FWD FFBA | | GCI18129 | Inner Joint | | 26 | 28 | 40 | 389 | 96.5 | |
| 1.8 (81 kw) | 2000.10-2007.03 | 5MT | F | L | Estate FWD CGBA;CGBB | | GDS18220 | Drive Shaft | | 27 | 26 | 56.5 | 92 | 633 | |
| | 2000.10-2007.03 | 5MT | F | L/R | Estate FWD CGBA;CGBB | | GCO18072 | Outer Joint | | 27 | 23 | 56.1 | 91.5 | 56.5 | M |
| | 2000.10-2007.03 | 5MT | F | L | Estate FWD CGBA;CGBB | | GCI36001 | Inner Joint | | 26 | 33 | 40 | 68.5 | 100 | |
| | 2000.10-2007.03 | AT/MT | F | R | Estate FWD CGBA;CGBB | | GDS18043 | Drive Shaft | | 27 | 35 | 56.5 | 92 | 579 | |
| | 2000.10-2007.03 | AT/MT | F | L/R | Estate FWD CGBA;CGBB | | GCO18007 | Outer Joint | | 27 | 23 | 56.1 | 91.5 | 58.5 | M |
| | 2000.10-2007.03 | AT/MT | F | R | Estate FWD CGBA;CGBB | | GCI18061 | Inner Joint | | 35 | 34 | 42 | | 117.5 | |
| | 2000.10-2007.03 | MT | F | L | Estate FWD CGBA;CGBB | | GDS18027 | Drive Shaft | | 27 | 26 | 57 | 91 | 627.5 | |
| | 2000.10-2007.03 | | F | R | Estate FWD CGBA;CGBB | | GDS18028 | Drive Shaft | | 27 | 35 | 57 | 91 | 576.5 | |
| 1.8 (82 kw) | 1994.07-1996.08 | AT | F | R | Estate FWD RKB | Date to:1994.12 | GDS18003 | Drive Shaft | | 27 | 35 | 54.3 | 91 | 566 | |
| | 1994.07-1996.08 | AT | F | R | Estate FWD RKB | Date to:1994.12 | GDS18004 | Drive Shaft | 44T | 27 | 35 | 54.3 | 91 | 566 | |
| | 1994.07-1996.08 | AT | F | R | Estate FWD RKB | Date from:1994.12 | GDS18006 | Drive Shaft | 44T | 27 | 35 | 57 | 91 | 566 | |
| | 1994.07-1996.08 | AT | F | L/R | Estate FWD RKB | | GCO18010 | Outer Joint | | 27 | 25 | 57 | 91 | 61 | I |
| | 1994.07-1996.08 | AT | F | L/R | Estate FWD RKB | Date to:1994.12 | GCO18011 | Outer Joint | 44T | 27 | 25 | 57 | 91 | 61 | I |

| | YEAR | TRANSM. | F/R | L/R | BODY STYLE & DRIVE TYPE & ENGINE | REMARKS | G-AP Ref. | PRODUCT | ABS | Technical Specifications A | B | C | H | L | P |
|---|---|---|---|---|---|---|---|---|---|---|---|---|---|---|---|
| **FORD** **Mondeo Estate/Wagon** | | | | | | | | | | | | | | | |
| 1.8 (82 kw) | 1994.07-1996.08 | AT | F | L/R | Estate FWD RKB | Date from:1994.12 | GCO18024 | Outer Joint | 44T | 27 | 30 | 57 | 91 | 56 | M |
| | 1994.07-1996.08 | AT/MT | F | R | Estate FWD RKB | | GDS18028 | Drive Shaft | | 27 | 35 | 57 | 91 | 576.5 | |
| | 1994.07-1996.08 | MT | F | L | Estate FWD RKB | | GDS18001 | Drive Shaft | | 27 | 26 | 54.3 | 91 | 615 | |
| | 1994.07-1996.08 | MT | F | L | Estate FWD RKB | | GDS18002 | Drive Shaft | 44T | 27 | 26 | 54.3 | 91 | 615 | |
| | 1994.07-1996.08 | MT | F | L | Estate FWD RKB | | GDS18016 | Drive Shaft | | 27 | 26 | 57 | 91 | 618.5 | |
| | 1994.07-1996.08 | MT | F | L | Estate FWD RKB | | GDS18027 | Drive Shaft | | 27 | 26 | 57 | 91 | 627.5 | |
| | 1994.07-1996.08 | MT | F | L/R | Estate FWD RKB | | GCO18023 | Outer Joint | 44T | 27 | 30 | 57 | 91 | 56 | I |
| | 1994.07-1996.08 | MT | F | L | Estate FWD RKB | | GCI36001 | Inner Joint | | 26 | 33 | 40 | 68.5 | 100 | |
| 1.8 (85 kw) | 1993.02-1996.08 | AT | F | R | Estate FWD RKA | Date to:1994.12 | GDS18003 | Drive Shaft | | 27 | 35 | 54.3 | 91 | 566 | |
| | 1993.02-1996.08 | AT | F | R | Estate FWD RKA | Date to:1994.12 | GDS18004 | Drive Shaft | 44T | 27 | 35 | 54.3 | 91 | 566 | |
| | 1993.02-1996.08 | AT | F | R | Estate FWD RKA | | GDS18005 | Drive Shaft | | 27 | 35 | 57 | 91 | 566 | |
| | 1993.02-1996.08 | AT | F | R | Estate FWD RKA | Date from:1994.12 | GDS18006 | Drive Shaft | 44T | 27 | 35 | 57 | 91 | 566 | |
| | 1993.02-1996.08 | AT | F | L/R | Estate FWD RKA | Date to:1994.12 | GCO18011 | Outer Joint | 44T | 27 | 25 | 57 | 91 | 61 | I |
| | 1993.02-1996.08 | AT | F | L/R | Estate FWD RKA | Date from:1994.12 | GCO18024 | Outer Joint | 44T | 27 | 30 | 57 | 91 | 56 | M |
| | 1993.02-1996.08 | AT | F | | Estate FWD RKA | | GCO18010 | Outer Joint | | 27 | 25 | 57 | 91 | 61 | I |
| | 1993.02-1996.08 | AT/MT | F | R | Estate FWD RKA | | GDS18028 | Drive Shaft | | 27 | 35 | 57 | 91 | 576.5 | |
| | 1993.02-1996.08 | AT/MT | F | L/R | Estate FWD RKA | | GCO18023 | Outer Joint | 44T | 27 | 30 | 57 | 91 | 56 | I |
| | 1993.02-1996.08 | MT | F | L | Estate FWD RKA | | GDS18001 | Drive Shaft | | 27 | 26 | 54.3 | 91 | 615 | |
| | 1993.02-1996.08 | MT | F | L | Estate FWD RKA | | GDS18002 | Drive Shaft | 44T | 27 | 26 | 54.3 | 91 | 615 | |
| | 1993.02-1996.08 | MT | F | L | Estate FWD RKA | | GDS18016 | Drive Shaft | | 27 | 26 | 57 | 91 | 618.5 | |
| | 1993.02-1996.08 | MT | F | L | Estate FWD RKA | | GDS18027 | Drive Shaft | | 27 | 26 | 57 | 91 | 627.5 | |
| | 1993.02-1996.08 | MT | F | L | Estate FWD RKA | | GCI36001 | Inner Joint | | 26 | 33 | 40 | 68.5 | 100 | |
| | 1994.04-1996.08 | AT | F | R | Estate 4WD RKA | Date from:1994.04;Date to:1994.12 | GDS18003 | Drive Shaft | | 27 | 35 | 54.3 | 91 | 566 | |
| | 1994.04-1996.08 | AT | F | R | Estate 4WD RKA | Date from:1994.04;Date to:1994.12 | GDS18004 | Drive Shaft | 44T | 27 | 35 | 54.3 | 91 | 566 | |
| | 1994.04-1996.08 | AT | F | R | Estate 4WD RKA | | GDS18005 | Drive Shaft | | 27 | 35 | 57 | 91 | 566 | |
| | 1994.04-1996.08 | AT | F | R | Estate 4WD RKA | Date from:1994.12 | GDS18006 | Drive Shaft | 44T | 27 | 35 | 57 | 91 | 566 | |
| | 1994.04-1996.08 | AT | F | L/R | Estate 4WD RKA | | GCO18010 | Outer Joint | | 27 | 25 | 57 | 91 | 61 | I |
| | 1994.04-1996.08 | AT | F | L/R | Estate 4WD RKA | Date from:1994.04;Date to:1994.12 | GCO18011 | Outer Joint | 44T | 27 | 25 | 57 | 91 | 61 | I |
| | 1994.04-1996.08 | AT | F | L/R | Estate 4WD RKA | Date from:1994.12 | GCO18024 | Outer Joint | 44T | 27 | 30 | 57 | 91 | 56 | M |
| | 1994.04-1996.08 | AT/MT | F | R | Estate 4WD RKA | | GDS18028 | Drive Shaft | | 27 | 35 | 57 | 91 | 576.5 | |
| | 1994.04-1996.08 | MT | F | L | Estate 4WD RKA | | GDS18001 | Drive Shaft | | 27 | 26 | 54.3 | 91 | 615 | |
| | 1994.04-1996.08 | MT | F | L | Estate 4WD RKA | Date from:1994.04 | GDS18002 | Drive Shaft | 44T | 27 | 26 | 54.3 | 91 | 615 | |
| | 1994.04-1996.08 | MT | F | L | Estate 4WD RKA | Date from:1994.04 | GDS18016 | Drive Shaft | | 27 | 26 | 57 | 91 | 618.5 | |
| | 1994.04-1996.08 | MT | F | L | Estate 4WD RKA | | GDS18027 | Drive Shaft | | 27 | 26 | 57 | 91 | 627.5 | |
| | 1994.04-1996.08 | MT | F | R | Estate 4WD RKA | Date from:1994.04 | GDS18006 | Drive Shaft | 44T | 27 | 35 | 57 | 91 | 566 | |
| | 1994.04-1996.08 | MT | F | L/R | Estate 4WD RKA | | GCO18023 | Outer Joint | 44T | 27 | 30 | 57 | 91 | 56 | I |
| | 1994.04-1996.08 | MT | F | L/R | Estate 4WD RKA | Date from:1994.04 | GCO18024 | Outer Joint | 44T | 27 | 30 | 57 | 91 | 56 | M |
| | 1994.04-1996.08 | MT | F | L | Estate 4WD RKA | | GCI36001 | Inner Joint | | 26 | 33 | 40 | 68.5 | 100 | |
| | 1996.09-2000.11 | 4AT/5MT | F | L/R | Estate FWD RKA/RKB/RKF/RKH/RKJ/RKK | | GCO18023 | Outer Joint | 44T | 27 | 30 | 57 | 91 | 56 | I |
| | 1996.09-2000.11 | AT/MT | F | R | Estate FWD RKA/RKB/RKF/RKH/RKJ/RKK | | GDS18028 | Drive Shaft | | 27 | 35 | 57 | 91 | 576.5 | |
| | 1996.09-2000.11 | AT/MT | F | L/R | Estate FWD RKA/RKB/RKF/RKH/RKJ/RKK | | GCO18024 | Outer Joint | 44T | 27 | 30 | 57 | 91 | 56 | M |
| | 1996.09-2000.11 | MT | F | L | Estate FWD RKA/RKB/RKF/RKH/RKJ/RKK | | GDS18001 | Drive Shaft | | 27 | 26 | 54.3 | 91 | 615 | |
| | 1996.09-2000.11 | MT | F | L | Estate FWD RKA/RKB/RKF/RKH/RKJ/RKK | | GDS18002 | Drive Shaft | 44T | 27 | 26 | 54.3 | 91 | 615 | |
| | 1996.09-2000.11 | MT | F | L | Estate FWD RKA/RKB/RKF/RKH/RKJ/RKK | | GDS18016 | Drive Shaft | | 27 | 26 | 57 | 91 | 618.5 | |
| | 1996.09-2000.11 | MT | F | L | Estate FWD RKA/RKB/RKF/RKH/RKJ/RKK | | GDS18027 | Drive Shaft | | 27 | 26 | 57 | 91 | 627.5 | |
| | 1996.09-2000.11 | MT | F | R | Estate FWD RKA/RKB/RKF/RKH/RKJ/RKK | | GDS18006 | Drive Shaft | 44T | 27 | 35 | 57 | 91 | 566 | |
| | 1996.09-2000.11 | MT | F | | Estate FWD RKA/RKB/RKF/RKH/RKJ/RKK | | GCO18010 | Outer Joint | | 27 | 25 | 57 | 91 | 61 | I |
| | 1996.09-2000.11 | MT | F | L | Estate FWD RKA/RKB/RKF/RKH/RKJ/RKK | | GCI36001 | Inner Joint | | 26 | 33 | 40 | 68.5 | 100 | |
| 1.8 (92 kw) | 2000.10-2007.03 | 4AT/5MT | F | L/R | Estate FWD CHBA;CHBB | Date from:2003.06 | GCO18007 | Outer Joint | | 27 | 23 | 56.1 | 91.5 | 58.5 | M |
| | 2000.10-2007.03 | 4AT/5MT | F | L | Estate FWD CHBA;CHBB | | GCI36001 | Inner Joint | | 26 | 33 | 40 | 68.5 | 100 | |
| | 2000.10-2007.03 | 4AT/5MT | F | R | Estate FWD CHBA;CHBB | | GCI99076 | Inner Joint | | 35 | 33 | 42 | | 115 | |
| | 2000.10-2007.03 | AT | F | L | Estate FWD CHBA;CHBB | | GDS18297 | Drive Shaft | | 27 | 35 | 56.1 | 91.5 | 676 | |
| | 2000.10-2007.03 | AT/MT | F | R | Estate FWD CHBA;CHBB | Groove Type:Inner | GDS18028 | Drive Shaft | | 27 | 35 | 57 | 91 | 576.5 | |
| | 2000.10-2007.03 | AT/MT | F | R | Estate FWD CHBA;CHBB | Groove Type:Middle | GDS18043 | Drive Shaft | | 27 | 35 | 56.5 | 92 | 579 | |
| | 2000.10-2007.03 | MT | F | L | Estate FWD CHBA;CHBB | Groove Type:Inner | GDS18027 | Drive Shaft | | 27 | 26 | 57 | 91 | 627.5 | |
| | 2000.10-2007.03 | MT | F | L | Estate FWD CHBA;CHBB | Groove Type:Middle | GDS18220 | Drive Shaft | | 27 | 26 | 56.5 | 92 | 633 | |
| | 2000.10-2007.03 | MT/AT | F | L/R | Estate FWD CHBA;CHBB | | GCO18072 | Outer Joint | | 27 | 23 | 56.1 | 91.5 | 56.5 | M |
| | 2007.06-2012.12 | 5MT/6MT | F | R | Estate FWD QYBA;KHBA | | GDS99212 | Drive Shaft | | 40 | 26 | 57.7 | 51 | 945 | |
| | 2007.06-2012.12 | 5MT/6MT | F | L | Estate FWD QYBA;KHBA | Date to:2012.10;TJ | GCI18128 | Inner Joint | | 26 | 28 | 40 | 68.5 | 111 | |
| | 2007.06-2012.12 | 6MT | F | L | Estate FWD QYBA;KHBA | | GDS83397 | Drive Shaft | | 40 | 26 | 57.7 | 51 | 611 | |
| | 2007.06-2012.12 | 6MT | F | L | Estate FWD QYBA;KHBA | AAR | GCI81533 | Inner Joint | | 26 | 28 | 40 | 68.5 | 108 | |
| | 2007.06-2012.12 | MT | F | L/R | Estate FWD QYBA;KHBA | | GCO99271 | Outer Joint | | 40 | 28 | 57.7 | 51 | 63 | M |
| | 2007.06-2012.12 | | F | R | Estate FWD QYBA;KHBA | | GCI18129 | Inner Joint | | 26 | 28 | 40 | 389 | 96.5 | |
| 1.8 (96 kw) | 2003.06-2007.03 | 6MT | F | L | Estate FWD CFBA | | GDS18220 | Drive Shaft | | 27 | 26 | 56.5 | 92 | 633 | |
| | 2003.06-2007.03 | 6MT | F | L/R | Estate FWD CFBA | | GCO18072 | Outer Joint | | 27 | 23 | 56.1 | 91.5 | 56.5 | M |

| | YEAR | TRANSM. | F/R | L/R | BODY STYLE & DRIVE TYPE & ENGINE | REMARKS | G-AP Ref. | PRODUCT | ABS | Technical Specifications A | B | C | H | L | P |
|---|---|---|---|---|---|---|---|---|---|---|---|---|---|---|---|
| **FORD**<br>**Mondeo Estate/Wagon** | | | | | | | | | | | | | | | |
| 1.8 (96 kw) | 2003.06-2007.03 | AT/MT | F | R | Estate FWD CFBA | | GDS18043 | Drive Shaft | | 27 | 35 | 56.5 | 92 | 579 | |
| | 2003.06-2007.03 | AT/MT | F | L/R | Estate FWD CFBA | | GCO18007 | Outer Joint | | 27 | 23 | 56.1 | 91.5 | 58.5 | M |
| | 2003.06-2007.03 | AT/MT | F | R | Estate FWD CFBA | | GCI18061 | Inner Joint | | 35 | 34 | 42 | | 117.5 | |
| | 2003.06-2007.03 | MT | F | L | Estate FWD CFBA | | GDS18027 | Drive Shaft | | 27 | 26 | 57 | 91 | 627.5 | |
| | 2003.06-2007.03 | MT | F | R | Estate FWD CFBA | | GDS18028 | Drive Shaft | | 27 | 35 | 57 | 91 | 576.5 | |
| | 2003.06-2007.03 | MT | F | L | Estate FWD CFBA | | GCI36001 | Inner Joint | | 26 | 33 | 40 | 68.5 | 100 | |
| 2.0 (66 kw) | 2000.10-2007.03 | AT/MT | F | R | Estate FWD D5BA;SDBA | | GDS18028 | Drive Shaft | | 27 | 35 | 57 | 91 | 576.5 | |
| | 2000.10-2007.03 | AT/MT | F | R | Estate FWD D5BA;SDBA | | GDS18043 | Drive Shaft | | 27 | 35 | 56.5 | 92 | 579 | |
| | 2000.10-2007.03 | MT | F | L | Estate FWD D5BA;SDBA | | GDS18027 | Drive Shaft | | 27 | 26 | 57 | 91 | 627.5 | |
| | 2000.10-2007.03 | MT | F | L/R | Estate FWD D5BA;SDBA | | GCO18002 | Outer Joint | | 27 | 26 | 56 | 91 | 64 | M |
| | 2000.10-2007.03 | | F | L | Estate FWD D5BA;SDBA | | GDS18220 | Drive Shaft | | 27 | 26 | 56.5 | 92 | 633 | |
| | 2000.10-2007.03 | | F | R | Estate FWD D5BA;SDBA | | GCI18061 | Inner Joint | | 35 | 34 | 42 | | 117.5 | |
| 2.0 (85 kw) | 2000.10-2007.03 | AT/5MT/6MT | F | L | Estate FWD D6BA;HJBA;HJBB;HJBC;HJBE | Inner teeth of wheel side:30 | GDS18027 | Drive Shaft | | 27 | 26 | 57 | 91 | 627.5 | |
| | 2000.10-2007.03 | AT/5MT/6MT | F | L | Estate FWD D6BA;HJBA;HJBB;HJBC;HJBE | Inner teeth of wheel side:26 | GDS18220 | Drive Shaft | | 27 | 26 | 56.5 | 92 | 633 | |
| | 2000.10-2007.03 | AT/5MT/6MT | F | R | Estate FWD D6BA;HJBA;HJBB;HJBC;HJBE | Inner teeth of wheel side:30 | GDS18028 | Drive Shaft | | 27 | 35 | 57 | 91 | 576.5 | |
| | 2000.10-2007.03 | AT/5MT/6MT | F | R | Estate FWD D6BA;HJBA;HJBB;HJBC;HJBE | Transmission:AT;Date from:2000.05;Date to:2003.07;Transmission:5MT/6MT;Inner teeth of wheel side:26 | GDS18043 | Drive Shaft | | 27 | 35 | 56.5 | 92 | 579 | |
| | 2000.10-2007.03 | | F | R | Estate FWD D6BA;HJBA;HJBB;HJBC;HJBE | | GCI18061 | Inner Joint | | 35 | 34 | 42 | | 117.5 | |
| | 2007.11-2014.09 | 6MT | F | L | Estate Van FWD KLBA | | GDS83397 | Drive Shaft | | 40 | 26 | 57.7 | 51 | 611 | |
| | 2007.11-2014.09 | 6MT | F | R | Estate Van FWD KLBA | | GDS99212 | Drive Shaft | | 40 | 26 | 57.7 | 51 | 945 | |
| | 2007.11-2014.09 | 6MT | F | L | Estate Van FWD KLBA | Date to:2012.10;TJ | GCI18128 | Inner Joint | | 26 | 28 | 40 | 68.5 | 111 | |
| | 2007.11-2014.09 | 6MT | F | L | Estate Van FWD KLBA | AAR | GCI81533 | Inner Joint | | 26 | 28 | 40 | 68.5 | 108 | |
| | 2007.11-2014.09 | 6MT | F | R | Estate Van FWD KLBA | | GCI18129 | Inner Joint | | 26 | 28 | 40 | 389 | 96.5 | |
| | 2007.11-2014.09 | | F | | Estate Van FWD KLBA | | GCO99271 | Outer Joint | | 40 | 28 | 57.7 | 51 | 63 | M |
| | 2007.11-2015.01 | 6MT | F | L | Estate FWD KLBA;LPBA;TYBA | | GDS83397 | Drive Shaft | | 40 | 26 | 57.7 | 51 | 611 | |
| | 2007.11-2015.01 | 6MT | F | R | Estate FWD KLBA;LPBA;TYBA | | GDS99212 | Drive Shaft | | 40 | 26 | 57.7 | 51 | 945 | |
| | 2007.11-2015.01 | 6MT | F | L | Estate FWD KLBA;LPBA;TYBA | Date to:2012.10;TJ | GCI18128 | Inner Joint | | 26 | 28 | 40 | 68.5 | 111 | |
| | 2007.11-2015.01 | 6MT | F | L | Estate FWD KLBA;LPBA;TYBA | AAR | GCI81533 | Inner Joint | | 26 | 28 | 40 | 68.5 | 108 | |
| | 2007.11-2015.01 | 6MT | F | R | Estate FWD KLBA;LPBA;TYBA | | GCI18129 | Inner Joint | | 26 | 28 | 40 | 389 | 96.5 | |
| | 2007.11-2015.01 | AT | F | L/R | Estate FWD KLBA;LPBA;TYBA | | GCO59344 | Outer Joint | | 40 | 26 | 57.7 | 52 | 63.5 | M |
| | 2007.11-2015.01 | MT | F | L/R | Estate FWD KLBA;LPBA;TYBA | | GCO99271 | Outer Joint | | 40 | 28 | 57.7 | 51 | 63 | M |
| 2.0 (96 kw) | 1996.09-2000.11 | 4AT/5MT | F | L/R | Estate FWD NGA/NGB/NGC/NGD | | GCO18023 | Outer Joint | 44T | 27 | 30 | 57 | 91 | 56 | I |
| | 1996.09-2000.11 | AT/MT | F | R | Estate FWD NGA/NGB/NGC/NGD | | GDS18028 | Drive Shaft | | 27 | 35 | 57 | 91 | 576.5 | |
| | 1996.09-2000.11 | AT/MT | F | L/R | Estate FWD NGA/NGB/NGC/NGD | | GCO18024 | Outer Joint | 44T | 27 | 30 | 57 | 91 | 56 | M |
| | 1996.09-2000.11 | MT | F | L | Estate FWD NGA/NGB/NGC/NGD | | GDS18001 | Drive Shaft | | 27 | 26 | 54.3 | 91 | 615 | |
| | 1996.09-2000.11 | MT | F | L | Estate FWD NGA/NGB/NGC/NGD | | GDS18002 | Drive Shaft | 44T | 27 | 26 | 54.3 | 91 | 615 | |
| | 1996.09-2000.11 | MT | F | L | Estate FWD NGA/NGB/NGC/NGD | | GDS18016 | Drive Shaft | | 27 | 26 | 57 | 91 | 618.5 | |
| | 1996.09-2000.11 | MT | F | L | Estate FWD NGA/NGB/NGC/NGD | | GDS18027 | Drive Shaft | | 27 | 26 | 57 | 91 | 627.5 | |
| | 1996.09-2000.11 | MT | F | R | Estate FWD NGA/NGB/NGC/NGD | | GDS18006 | Drive Shaft | 44T | 27 | 35 | 57 | 91 | 566 | |
| | 1996.09-2000.11 | MT | F | L | Estate FWD NGA/NGB/NGC/NGD | | GCI36001 | Inner Joint | | 26 | 33 | 40 | 68.5 | 100 | |
| | 2001.10-2007.03 | 5MT/6MT | F | L | Estate FWD FMBA;N7BA;N7BB | Inner teeth of wheel side:26 | GDS18220 | Drive Shaft | | 27 | 26 | 56.5 | 92 | 633 | |
| | 2001.10-2007.03 | 5MT/6MT | F | R | Estate FWD FMBA;N7BA;N7BB | Date from:2002.03,Date to:2002.07;Inner teeth of wheel side:26 | GDS18043 | Drive Shaft | | 27 | 35 | 56.5 | 92 | 579 | |
| | 2001.10-2007.03 | AT/5MT/6MT | F | L | Estate FWD FMBA;N7BA;N7BB | Inner teeth of wheel side:30 | GDS18027 | Drive Shaft | | 27 | 26 | 57 | 91 | 627.5 | |
| | 2001.10-2007.03 | AT/5MT/6MT | F | R | Estate FWD FMBA;N7BA;N7BB | Inner teeth of wheel side:30 | GDS18028 | Drive Shaft | | 27 | 35 | 57 | 91 | 576.5 | |
| | 2001.10-2007.03 | | F | R | Estate FWD FMBA;N7BA;N7BB | | GCI18061 | Inner Joint | | 35 | 34 | 42 | | 117.5 | |
| | 2007.03-2012.12 | 6AT | F | L | Estate FWD AZBA | Date to:2012.10 | GCI83032 | Inner Joint | | 31 | 28 | 36.2 | 66 | 90 | |
| | 2007.03-2012.12 | 6AT | F | R | Estate FWD AZBA | Date to:2012.10 | GCI83031 | Inner Joint | | 28 | 28 | 33 | 391.5 | 95.5 | |
| | 2007.03-2012.12 | 6AT/6MT | F | L/R | Estate FWD AZBA | | GCO99271 | Outer Joint | | 40 | 28 | 57.7 | 51 | 63 | M |
| | 2007.03-2012.12 | 6MT | F | L | Estate FWD AZBA | | GDS83397 | Drive Shaft | | 40 | 26 | 57.7 | 51 | 611 | |
| | 2007.03-2012.12 | 6MT | F | L | Estate FWD AZBA | Date to:2012.10;TJ | GCI18128 | Inner Joint | | 26 | 28 | 40 | 68.5 | 111 | |
| | 2007.03-2012.12 | 6MT | F | L | Estate FWD AZBA | AAR | GCI81533 | Inner Joint | | 26 | 28 | 40 | 68.5 | 108 | |
| | 2007.03-2012.12 | AT | F | L | Estate FWD AZBA | Date to:2010.12;Trans. code:MPS6 Powershift | GDS18340 | Drive Shaft | | 40 | 28 | 57.7 | 52 | 592 | |
| | 2007.03-2012.12 | AT | F | L | Estate FWD AZBA | | GDS83288 | Drive Shaft | | 40 | 31 | 57.7 | 51 | 582 | |
| | 2007.03-2012.12 | AT | F | R | Estate FWD AZBA | Date from:2010.01;Production Date from:2010.12;Trans. code:MPS6 Powershift | GDS18347 | Drive Shaft | | 40 | 28 | 57.7 | 52 | 939 | |
| | 2007.03-2012.12 | AT | F | R | Estate FWD AZBA | | GDS83289 | Drive Shaft | | 40 | 28 | 57.7 | 51 | 932 | |
| | 2007.03-2012.12 | AT | F | L/R | Estate FWD AZBA | Trans. code:MPS6 Powershift | GCO59344 | Outer Joint | | 40 | 26 | 57.7 | 52 | 63.5 | M |
| | 2007.03-2012.12 | MT | F | R | Estate FWD AZBA | | GDS99212 | Drive Shaft | | 40 | 26 | 57.7 | 51 | 945 | |
| 2.0 (97 kw) | 1993.01-1996.08 | AT | F | R | Estate 4WD NGA | | GDS18005 | Drive Shaft | | 27 | 35 | 57 | 91 | 566 | |
| | 1993.01-1996.08 | AT/MT | F | R | Estate 4WD NGA | | GDS18006 | Drive Shaft | 44T | 27 | 35 | 57 | 91 | 566 | |
| | 1993.01-1996.08 | AT/MT | F | L/R | Estate 4WD NGA | | GCO18023 | Outer Joint | 44T | 27 | 30 | 57 | 91 | 56 | I |
| | 1993.01-1996.08 | AT/MT | F | L/R | Estate 4WD NGA | | GCO18024 | Outer Joint | 44T | 27 | 30 | 57 | 91 | 56 | M |
| | 1993.01-1996.08 | MT | F | L | Estate 4WD NGA | | GDS18001 | Drive Shaft | | 27 | 26 | 54.3 | 91 | 615 | |
| | 1993.01-1996.08 | MT | F | L | Estate 4WD NGA | | GDS18002 | Drive Shaft | 44T | 27 | 26 | 54.3 | 91 | 615 | |
| | 1993.01-1996.08 | AT | F | R | Estate FWD NGA | | GDS18003 | Drive Shaft | | 27 | 35 | 54.3 | 91 | 566 | |
| | 1993.01-1996.08 | AT | F | R | Estate FWD NGA | | GDS18004 | Drive Shaft | 44T | 27 | 35 | 54.3 | 91 | 566 | |
| | 1993.01-1996.08 | AT | F | L/R | Estate FWD NGA | | GCO18011 | Outer Joint | 44T | 27 | 25 | 57 | 91 | 61 | I |

| | YEAR | TRANSM. | F/R | L/R | BODY STYLE & DRIVE TYPE & ENGINE | REMARKS | G-AP Ref. | PRODUCT | ABS | Technical Specifications A | B | C | H | L | P |
|---|---|---|---|---|---|---|---|---|---|---|---|---|---|---|---|
| **FORD** **Mondeo Estate/Wagon** | | | | | | | | | | | | | | | |
| 2.0 (97 kw) | 1993.01-1996.08 | MT | F | L | Estate FWD NGA | | GDS18002 | Drive Shaft | 44T | 27 | 26 | 54.3 | 91 | 615 | |
| | 1993.01-1996.08 | MT | F | L | Estate FWD NGA | | GDS18016 | Drive Shaft | | 27 | 26 | 57 | 91 | 618.5 | |
| | 1993.01-1996.08 | MT | F | R | Estate FWD NGA | | GDS18006 | Drive Shaft | 44T | 27 | 35 | 57 | 91 | 566 | |
| | 1993.01-1996.08 | MT | F | L/R | Estate FWD NGA | | GCO18024 | Outer Joint | 44T | 27 | 30 | 57 | 91 | 56 | M |
| 2.0 (100 kw) | 1993.02-1996.08 | AT | F | R | Estate FWD NGA | Date to:1994.12 | GDS18003 | Drive Shaft | | 27 | 35 | 54.3 | 91 | 566 | |
| | 1993.02-1996.08 | AT | F | R | Estate FWD NGA | Date to:1994.12 | GDS18004 | Drive Shaft | 44T | 27 | 35 | 54.3 | 91 | 566 | |
| | 1993.02-1996.08 | AT | F | R | Estate FWD NGA | | GDS18005 | Drive Shaft | | 27 | 35 | 57 | 91 | 566 | |
| | 1993.02-1996.08 | AT | F | R | Estate FWD NGA | Date from:1994.12 | GDS18006 | Drive Shaft | 44T | 27 | 35 | 57 | 91 | 566 | |
| | 1993.02-1996.08 | AT | F | L/R | Estate FWD NGA | | GCO18010 | Outer Joint | | 27 | 25 | 57 | 91 | 61 | I |
| | 1993.02-1996.08 | AT | F | L/R | Estate FWD NGA | Date to:1994.12 | GCO18011 | Outer Joint | 44T | 27 | 25 | 57 | 91 | 61 | I |
| | 1993.02-1996.08 | AT | F | L/R | Estate FWD NGA | Date from:1994.12 | GCO18024 | Outer Joint | 44T | 27 | 30 | 57 | 91 | 56 | M |
| | 1993.02-1996.08 | AT/MT | F | R | Estate FWD NGA | | GDS18028 | Drive Shaft | | 27 | 35 | 57 | 91 | 576.5 | |
| | 1993.02-1996.08 | MT | F | L | Estate FWD NGA | | GDS18001 | Drive Shaft | | 27 | 26 | 54.3 | 91 | 615 | |
| | 1993.02-1996.08 | MT | F | L | Estate FWD NGA | | GDS18002 | Drive Shaft | 44T | 27 | 26 | 54.3 | 91 | 615 | |
| | 1993.02-1996.08 | MT | F | L | Estate FWD NGA | | GDS18016 | Drive Shaft | | 27 | 26 | 57 | 91 | 618.5 | |
| | 1993.02-1996.08 | MT | F | L | Estate FWD NGA | | GDS18027 | Drive Shaft | | 27 | 26 | 57 | 91 | 627.5 | |
| | 1993.02-1996.08 | MT | F | R | Estate FWD NGA | | GDS18006 | Drive Shaft | 44T | 27 | 35 | 57 | 91 | 566 | |
| | 1993.02-1996.08 | MT | F | L/R | Estate FWD NGA | | GCO18023 | Outer Joint | 44T | 27 | 30 | 57 | 91 | 56 | I |
| | 1993.02-1996.08 | MT | F | L/R | Estate FWD NGA | | GCO18024 | Outer Joint | 44T | 27 | 30 | 57 | 91 | 56 | M |
| | 1993.02-1996.08 | MT | F | L | Estate FWD NGA | | GCI36001 | Inner Joint | | 26 | 33 | 40 | 68.5 | 100 | |
| | 1993.07-1996.08 | AT | F | R | Estate 4WD NGA | Date from:1993.07;Date to:1994.12 | GDS18003 | Drive Shaft | | 27 | 35 | 54.3 | 91 | 566 | |
| | 1993.07-1996.08 | AT | F | R | Estate 4WD NGA | Date from:1993.07;Date to:1994.12 | GDS18004 | Drive Shaft | 44T | 27 | 35 | 54.3 | 91 | 566 | |
| | 1993.07-1996.08 | AT | F | R | Estate 4WD NGA | | GDS18005 | Drive Shaft | | 27 | 35 | 57 | 91 | 566 | |
| | 1993.07-1996.08 | AT | F | R | Estate 4WD NGA | Date from:1994.12 | GDS18006 | Drive Shaft | 44T | 27 | 35 | 57 | 91 | 566 | |
| | 1993.07-1996.08 | AT | F | L/R | Estate 4WD NGA | | GCO18010 | Outer Joint | | 27 | 25 | 57 | 91 | 61 | I |
| | 1993.07-1996.08 | AT | F | L/R | Estate 4WD NGA | Date from:1993.07;Date to:1994.12 | GCO18011 | Outer Joint | 44T | 27 | 25 | 57 | 91 | 61 | I |
| | 1993.07-1996.08 | AT | F | L/R | Estate 4WD NGA | Date from:1994.12 | GCO18024 | Outer Joint | 44T | 27 | 30 | 57 | 91 | 56 | M |
| | 1993.07-1996.08 | MT | F | L | Estate 4WD NGA | | GDS18001 | Drive Shaft | | 27 | 26 | 54.3 | 91 | 615 | |
| | 1993.07-1996.08 | MT | F | L | Estate 4WD NGA | Date from:1993.07 | GDS18002 | Drive Shaft | 44T | 27 | 26 | 54.3 | 91 | 615 | |
| | 1993.07-1996.08 | MT | F | L | Estate 4WD NGA | Date from:1993.07 | GDS18016 | Drive Shaft | | 27 | 26 | 57 | 91 | 618.5 | |
| | 1993.07-1996.08 | MT | F | L | Estate 4WD NGA | | GDS18027 | Drive Shaft | | 27 | 26 | 57 | 91 | 627.5 | |
| | 1993.07-1996.08 | MT | F | R | Estate 4WD NGA | Date from:1993.07 | GDS18006 | Drive Shaft | 44T | 27 | 35 | 57 | 91 | 566 | |
| | 1993.07-1996.08 | MT | F | L/R | Estate 4WD NGA | | GCO18023 | Outer Joint | 44T | 27 | 30 | 57 | 91 | 56 | I |
| | 1993.07-1996.08 | MT | F | L/R | Estate 4WD NGA | Date from:1993.07 | GCO18024 | Outer Joint | 44T | 27 | 30 | 57 | 91 | 56 | M |
| | 1993.07-1996.08 | MT | F | L | Estate 4WD NGA | | GCI36001 | Inner Joint | | 26 | 33 | 40 | 68.5 | 100 | |
| | 1993.07-1996.08 | | F | R | Estate 4WD NGA | | GDS18028 | Drive Shaft | | 27 | 35 | 57 | 91 | 576.5 | |
| | 2007.03-2014.12 | 6AT | F | L | Estate FWD AZBC;UKBA;UKBB | | GDS83288 | Drive Shaft | | 40 | 31 | 57.7 | 51 | 582 | |
| | 2007.03-2014.12 | 6AT | F | R | Estate FWD AZBC;UKBA;UKBB | | GDS83289 | Drive Shaft | | 40 | 28 | 57.7 | 51 | 932 | |
| | 2007.03-2014.12 | 6AT | F | L | Estate FWD AZBC;UKBA;UKBB | Date to:2012.10 | GCI83032 | Inner Joint | | 31 | 28 | 36.2 | 66 | 90 | |
| | 2007.03-2014.12 | 6AT | F | R | Estate FWD AZBC;UKBA;UKBB | Date to:2012.10 | GCI83031 | Inner Joint | | 28 | 28 | 33 | 391.5 | 95.5 | |
| | 2007.03-2014.12 | 6AT/6MT | F | L/R | Estate FWD AZBC;UKBA;UKBB | | GCO99271 | Outer Joint | | 40 | 28 | 57.7 | 51 | 63 | M |
| | 2007.03-2014.12 | 6MT | F | L | Estate FWD AZBC;UKBA;UKBB | | GDS83397 | Drive Shaft | | 40 | 26 | 57.7 | 51 | 611 | |
| | 2007.03-2014.12 | 6MT | F | R | Estate FWD AZBC;UKBA;UKBB | | GDS99212 | Drive Shaft | | 40 | 26 | 57.7 | 51 | 945 | |
| | 2007.03-2014.12 | 6MT | F | L | Estate FWD AZBC;UKBA;UKBB | Date to:2012.10;TJ | GCI18128 | Inner Joint | | 26 | 28 | 40 | 68.5 | 111 | |
| | 2007.03-2014.12 | 6MT | F | L | Estate FWD AZBC;UKBA;UKBB | AAR | GCI81533 | Inner Joint | | 26 | 28 | 40 | 68.5 | 108 | |
| | 2007.03-2014.12 | AT | F | L/R | Estate FWD AZBC;UKBA;UKBB | Trans. code:MPS6 Powershift | GCO59344 | Outer Joint | | 40 | 26 | 57.7 | 52 | 63.5 | M |
| 2.0 (103 kw) | 2007.03-2014.09 | 6AT | F | L | Estate Van FWD QXBB;UFBA;UFBB | | GDS83288 | Drive Shaft | | 40 | 31 | 57.7 | 51 | 582 | |
| | 2007.03-2014.09 | 6AT | F | R | Estate Van FWD QXBB;UFBA;UFBB | | GDS83289 | Drive Shaft | | 40 | 28 | 57.7 | 51 | 932 | |
| | 2007.03-2014.09 | 6AT | F | R | Estate Van FWD QXBB;UFBA;UFBB | | GCO99271 | Outer Joint | | 40 | 28 | 57.7 | 51 | 63 | M |
| | 2007.03-2014.09 | 6AT | F | L | Estate Van FWD QXBB;UFBA;UFBB | Date to:2012.10 | GCI83032 | Inner Joint | | 31 | 28 | 36.2 | 66 | 90 | |
| | 2007.03-2014.09 | 6AT | F | R | Estate Van FWD QXBB;UFBA;UFBB | Date to:2012.10 | GCI83031 | Inner Joint | | 28 | 28 | 33 | 391.5 | 95.5 | |
| | 2007.03-2014.09 | 6MT | F | L | Estate Van FWD QXBB;UFBA;UFBB | | GDS83397 | Drive Shaft | | 40 | 26 | 57.7 | 51 | 611 | |
| | 2007.03-2014.09 | 6MT | F | L | Estate Van FWD QXBB;UFBA;UFBB | Date to:2012.10;TJ | GCI18128 | Inner Joint | | 26 | 28 | 40 | 68.5 | 111 | |
| | 2007.03-2014.09 | 6MT | F | L | Estate Van FWD QXBB;UFBA;UFBB | AAR | GCI81533 | Inner Joint | | 26 | 28 | 40 | 68.5 | 108 | |
| | 2007.03-2014.09 | MT | F | R | Estate Van FWD QXBB;UFBA;UFBB | | GDS99212 | Drive Shaft | | 40 | 26 | 57.7 | 51 | 945 | |
| | 2007.03-2015.01 | 6AT | F | L | Estate FWD QXBA;QXBB;UFBA;UFBB | | GDS83288 | Drive Shaft | | 40 | 31 | 57.7 | 51 | 582 | |
| | 2007.03-2015.01 | 6AT | F | R | Estate FWD QXBA;QXBB;UFBA;UFBB | | GDS83289 | Drive Shaft | | 40 | 28 | 57.7 | 51 | 932 | |
| | 2007.03-2015.01 | 6AT | F | L | Estate FWD QXBA;QXBB;UFBA;UFBB | Date to:2012.10 | GCI83032 | Inner Joint | | 31 | 28 | 36.2 | 66 | 90 | |
| | 2007.03-2015.01 | 6AT | F | R | Estate FWD QXBA;QXBB;UFBA;UFBB | Date to:2012.10 | GCI83031 | Inner Joint | | 28 | 28 | 33 | 391.5 | 95.5 | |
| | 2007.03-2015.01 | 6MT | F | L | Estate FWD QXBA;QXBB;UFBA;UFBB | | GDS83397 | Drive Shaft | | 40 | 26 | 57.7 | 51 | 611 | |
| | 2007.03-2015.01 | 6MT | F | L | Estate FWD QXBA;QXBB;UFBA;UFBB | Date to:2012.10;TJ | GCI18128 | Inner Joint | | 26 | 28 | 40 | 68.5 | 111 | |
| | 2007.03-2015.01 | 6MT | F | L | Estate FWD QXBA;QXBB;UFBA;UFBB | AAR | GCI81533 | Inner Joint | | 26 | 28 | 40 | 68.5 | 108 | |
| | 2007.03-2015.01 | AT | F | | Estate FWD QXBA;QXBB;UFBA;UFBB | | GCO59344 | Outer Joint | | 40 | 26 | 57.7 | 52 | 63.5 | M |
| | 2007.03-2015.01 | AT/MT | F | L/R | Estate FWD QXBA;QXBB;UFBA;UFBB | Trans. code:AWF21 | GCO99271 | Outer Joint | | 40 | 28 | 57.7 | 51 | 63 | M |
| | 2007.03-2015.01 | MT | F | R | Estate FWD QXBA;QXBB;UFBA;UFBB | | GDS99212 | Drive Shaft | | 40 | 26 | 57.7 | 51 | 945 | |

| | YEAR | TRANSM. | F/R | L/R | BODY STYLE & DRIVE TYPE & ENGINE | REMARKS | G-AP Ref. | PRODUCT | ABS | Technical Specifications A | B | C | H | L | P |
|---|---|---|---|---|---|---|---|---|---|---|---|---|---|---|---|
| **FORD** **Mondeo Estate/Wagon** | | | | | | | | | | | | | | | |
| 2.0 (107 kw) | 2000.10-2007.03 | 4AT/5MT | F | L/R | Estate FWD CJBA;CJBB | Date from:2003.06 | GCO18007 | Outer Joint | | 27 | 23 | 56.1 | 91.5 | 58.5 | M |
| | 2000.10-2007.03 | 4AT/5MT | F | L | Estate FWD CJBA;CJBB | | GCI36001 | Inner Joint | | 26 | 33 | 40 | 68.5 | 100 | |
| | 2000.10-2007.03 | 4AT/5MT | F | R | Estate FWD CJBA;CJBB | | GCI99076 | Inner Joint | | 35 | 33 | 42 | | 115 | |
| | 2000.10-2007.03 | AT | F | L | Estate FWD CJBA;CJBB | | GDS18297 | Drive Shaft | | 27 | 35 | 56.1 | 91.5 | 676 | |
| | 2000.10-2007.03 | AT | F | R | Estate FWD CJBA;CJBB | | GCO18072 | Outer Joint | | 27 | 23 | 56.1 | 91.5 | 56.5 | M |
| | 2000.10-2007.03 | AT/MT | F | R | Estate FWD CJBA;CJBB | | GDS18028 | Drive Shaft | | 27 | 35 | 57 | 91 | 576.5 | |
| | 2000.10-2007.03 | AT/MT | F | R | Estate FWD CJBA;CJBB | | GDS18043 | Drive Shaft | | 27 | 35 | 56.5 | 92 | 579 | |
| | 2000.10-2007.03 | AT/MT | F | R | Estate FWD CJBA;CJBB | | GCI18061 | Inner Joint | | 35 | 34 | 42 | | 117.5 | |
| | 2000.10-2007.03 | MT | F | L | Estate FWD CJBA;CJBB | | GDS18027 | Drive Shaft | | 27 | 26 | 57 | 91 | 627.5 | |
| | 2000.10-2007.03 | MT | F | L | Estate FWD CJBA;CJBB | | GDS18220 | Drive Shaft | | 27 | 26 | 56.5 | 92 | 633 | |
| | 2000.10-2007.03 | MT | F | L/R | Estate FWD CJBA;CJBB | | GCO18072 | Outer Joint | | 27 | 23 | 56.1 | 91.5 | 56.5 | M |
| | 2007.03-2014.09 | 5MT | F | L | Estate Van FWD AOBC | | GDS83397 | Drive Shaft | | 40 | 26 | 57.7 | 51 | 611 | |
| | 2007.03-2014.09 | 5MT | F | R | Estate Van FWD AOBC | | GDS99212 | Drive Shaft | | 40 | 26 | 57.7 | 51 | 945 | |
| | 2007.03-2014.09 | 5MT | F | L | Estate Van FWD AOBC | Date to:2012.10;TJ | GCI18128 | Inner Joint | | 26 | 28 | 40 | 68.5 | 111 | |
| | 2007.03-2014.09 | 5MT | F | L | Estate Van FWD AOBC | AAR | GCI81533 | Inner Joint | | 26 | 28 | 40 | 68.5 | 108 | |
| | 2007.03-2014.09 | | F | L/R | Estate Van FWD AOBC | | GCO99271 | Outer Joint | | 40 | 28 | 57.7 | 51 | 63 | M |
| | 2007.03-2014.09 | | F | R | Estate Van FWD AOBC | | GCI18129 | Inner Joint | | 26 | 28 | 40 | 389 | 96.5 | |
| | 2007.03-2015.01 | 5MT | F | L | Estate FWD AOBA;TBBA;AOBC;TBBB | | GDS83397 | Drive Shaft | | 40 | 26 | 57.7 | 51 | 611 | |
| | 2007.03-2015.01 | 5MT | F | R | Estate FWD AOBA;TBBA;AOBC;TBBB | | GDS99212 | Drive Shaft | | 40 | 26 | 57.7 | 51 | 945 | |
| | 2007.03-2015.01 | 5MT | F | L | Estate FWD AOBA;TBBA;AOBC;TBBB | Date to:2012.10;TJ | GCI18128 | Inner Joint | | 26 | 28 | 40 | 68.5 | 111 | |
| | 2007.03-2015.01 | 5MT | F | L | Estate FWD AOBA;TBBA;AOBC;TBBB | AAR | GCI81533 | Inner Joint | | 26 | 28 | 40 | 68.5 | 108 | |
| | 2007.03-2015.01 | AT | F | L/R | Estate FWD AOBA;TBBA;AOBC;TBBB | | GCO59344 | Outer Joint | | 40 | 26 | 57.7 | 52 | 63.5 | M |
| | 2007.03-2015.01 | MT | F | L/R | Estate FWD AOBA;TBBA;AOBC;TBBB | | GCO99271 | Outer Joint | | 40 | 28 | 57.7 | 51 | 63 | M |
| | 2007.03-2015.01 | | F | R | Estate FWD AOBA;TBBA;AOBC;TBBB | | GCI18129 | Inner Joint | | 26 | 28 | 40 | 389 | 96.5 | |
| | 2009.03-2015.01 | 5MT | F | L | Estate FWD TBBA;TBBB | | GDS83397 | Drive Shaft | | 40 | 26 | 57.7 | 51 | 611 | |
| | 2009.03-2015.01 | 5MT | F | R | Estate FWD TBBA;TBBB | | GDS99212 | Drive Shaft | | 40 | 26 | 57.7 | 51 | 945 | |
| | 2009.03-2015.01 | 5MT | F | L | Estate FWD TBBA;TBBB | Date to:2012.10;TJ | GCI18128 | Inner Joint | | 26 | 28 | 40 | 68.5 | 111 | |
| | 2009.03-2015.01 | 5MT | F | L | Estate FWD TBBA;TBBB | AAR | GCI81533 | Inner Joint | | 26 | 28 | 40 | 68.5 | 108 | |
| | 2009.03-2015.01 | | F | L/R | Estate FWD TBBA;TBBB | | GCO99271 | Outer Joint | | 40 | 28 | 57.7 | 51 | 63 | M |
| | 2009.03-2015.01 | | F | R | Estate FWD TBBA;TBBB | | GCI18129 | Inner Joint | | 26 | 28 | 40 | 389 | 96.5 | |
| | 2009.07-2015.01 | 5MT | F | L | Estate FWD TBBA;TBBB | | GDS83397 | Drive Shaft | | 40 | 26 | 57.7 | 51 | 611 | |
| | 2009.07-2015.01 | 5MT | F | R | Estate FWD TBBA;TBBB | | GDS99212 | Drive Shaft | | 40 | 26 | 57.7 | 51 | 945 | |
| | 2009.07-2015.01 | 5MT | F | L | Estate FWD TBBA;TBBB | Date to:2012.10;TJ | GCI18128 | Inner Joint | | 26 | 28 | 40 | 68.5 | 111 | |
| | 2009.07-2015.01 | 5MT | F | L | Estate FWD TBBA;TBBB | AAR | GCI81533 | Inner Joint | | 26 | 28 | 40 | 68.5 | 108 | |
| | 2009.07-2015.01 | | F | L/R | Estate FWD TBBA;TBBB | | GCO99271 | Outer Joint | | 40 | 28 | 57.7 | 51 | 63 | M |
| | 2009.07-2015.01 | | F | R | Estate FWD TBBA;TBBB | | GCI18129 | Inner Joint | | 26 | 28 | 40 | 389 | 96.5 | |
| 2.0 (110 kw) | 2014.09-2022.03 | 6DCT | F | L | Estate FWD T7CE;T7CA;T7CC;T7CD;T7CF;T7CN;T7CP;T7CQ | | GDS82341 | Drive Shaft | | 27 | 28 | 55 | 105 | 658 | |
| | 2014.09-2022.03 | 6DCT | F | R | Estate FWD T7CE;T7CA;T7CC;T7CD;T7CF;T7CN;T7CP;T7CQ | | GDS82342 | Drive Shaft | | 27 | 28 | 55 | 105 | 1003 | |
| | 2014.09-2022.03 | 6DCT | F | L | Estate FWD T7CE;T7CA;T7CC;T7CD;T7CF;T7CN;T7CP;T7CQ | | GCI81762 | Inner Joint | | 28 | 28 | 33.8 | 80 | 95.5 | |
| | 2014.09-2022.03 | 6DCT | F | R | Estate FWD T7CE;T7CA;T7CC;T7CD;T7CF;T7CN;T7CP;T7CQ | | GCI81761 | Inner Joint | | 28 | 28 | 33.8 | 396.5 | 98.5 | |
| | 2014.09-2022.03 | 6DCT/6MT | F | L/R | Estate FWD T7CE;T7CA;T7CC;T7CD;T7CF;T7CN;T7CP;T7CQ | | GCO81552 | Outer Joint | | 27 | 28 | 55 | 105 | 66.5 | M |
| | 2014.09-2022.03 | 6MT | F | L | Estate FWD T7CE;T7CA;T7CC;T7CD;T7CF;T7CN;T7CP;T7CQ | | GDS83223 | Drive Shaft | | 27 | 26 | 55 | 105 | 658 | |
| | 2014.09-2022.03 | 6MT | F | R | Estate FWD T7CE;T7CA;T7CC;T7CD;T7CF;T7CN;T7CP;T7CQ | | GDS83140 | Drive Shaft | | 27 | 26 | 55 | 105 | 1017 | |
| | 2014.09-2022.03 | 6MT | F | L | Estate FWD T7CE;T7CA;T7CC;T7CD;T7CF;T7CN;T7CP;T7CQ | | GCI81533 | Inner Joint | | 26 | 28 | 40 | 68.5 | 108 | |
| | 2014.09-2022.03 | 6MT | F | R | Estate FWD T7CE;T7CA;T7CC;T7CD;T7CF;T7CN;T7CP;T7CQ | | GCI82393 | Inner Joint | | 26 | 28 | 40 | 403 | 96 | |
| | 2015.02-2022.03 | 6MT | F | L | Estate 4WD T7CE;T7CA;T7CC;T7CD;T7CF;T7CN;T7CP;T7CQ | | GDS83223 | Drive Shaft | | 27 | 26 | 55 | 105 | 658 | |
| | 2015.02-2022.03 | 6MT | F | L/R | Estate 4WD T7CE;T7CA;T7CC;T7CD;T7CF;T7CN;T7CP;T7CQ | | GCO81552 | Outer Joint | | 27 | 28 | 55 | 105 | 66.5 | M |
| | 2015.02-2022.03 | 6MT | F | L | Estate 4WD T7CE;T7CA;T7CC;T7CD;T7CF;T7CN;T7CP;T7CQ | | GCI81533 | Inner Joint | | 26 | 28 | 40 | 68.5 | 108 | |
| | 2015.02-2022.03 | 6MT | R | L/R | Estate 4WD T7CE;T7CA;T7CC;T7CD;T7CF;T7CN;T7CP;T7CQ | | GDS82338 | Drive Shaft | | 27 | 25 | 55 | 105 | 823 | |
| | 2015.02-2022.03 | 6MT | R | L/R | Estate 4WD T7CE;T7CA;T7CC;T7CD;T7CF;T7CN;T7CP;T7CQ | | GCO81812 | Outer Joint | | 27 | 19 | 55 | 105 | 47 | M |
| | 2015.02-2022.03 | 6MT | R | L/R | Estate 4WD T7CE;T7CA;T7CC;T7CD;T7CF;T7CN;T7CP;T7CQ | | GCI81764 | Inner Joint | | 25 | 22 | 35 | 91 | 106 | |
| 2.0 (120 kw) | 2010.03-2014.09 | 6AT | F | R | Estate Van FWD TXBA | | GCO99271 | Outer Joint | | 40 | 28 | 57.7 | 51 | 63 | M |
| | 2010.03-2014.09 | 6DCT | F | L | Estate Van FWD TXBA | | GDS18340 | Drive Shaft | | 40 | 28 | 57.7 | 52 | 592 | |
| | 2010.03-2014.09 | 6DCT | F | R | Estate Van FWD TXBA | Date from:2010.12 | GDS18347 | Drive Shaft | | 40 | 28 | 57.7 | 52 | 939 | |
| | 2010.03-2014.09 | 6DCT | F | R | Estate Van FWD TXBA | Date to:2010.11 | GDS83391 | Drive Shaft | | 40 | 28 | 57.7 | 52 | 940 | |
| | 2010.03-2014.09 | 6DCT | F | L/R | Estate Van FWD TXBA | Date to:2010.11 | GCO18269 | Outer Joint | | 40 | 26 | 57.7 | 52 | 63.5 | I |
| | 2010.03-2014.09 | 6DCT | F | R | Estate Van FWD TXBA | Date to:2010.11 | GCI82178 | Inner Joint | | 28 | 26 | 34 | 371 | 103 | |
| | 2010.03-2014.09 | 6MT | F | L | Estate Van FWD TXBA | | GDS83397 | Drive Shaft | | 40 | 26 | 57.7 | 51 | 611 | |
| | 2010.03-2014.09 | 6MT | F | L | Estate Van FWD TXBA | Date to:2012.10;TJ | GCI18128 | Inner Joint | | 26 | 28 | 40 | 68.5 | 111 | |
| | 2010.03-2014.09 | 6MT | F | L | Estate Van FWD TXBA | AAR | GCI81533 | Inner Joint | | 26 | 28 | 40 | 68.5 | 108 | |
| | 2010.03-2014.09 | 6MT | F | R | Estate Van FWD TXBA | | GCI18129 | Inner Joint | | 26 | 28 | 40 | 389 | 96.5 | |
| | 2010.03-2014.09 | MT | F | R | Estate Van FWD TXBA | | GDS99212 | Drive Shaft | | 40 | 26 | 57.7 | 51 | 945 | |
| | 2010.03-2015.01 | 6DCT | F | R | Estate FWD TXBA;TXBB | Date from:2010.12 | GDS18347 | Drive Shaft | | 40 | 28 | 57.7 | 52 | 939 | |
| | 2010.03-2015.01 | 6DCT | F | R | Estate FWD TXBA;TXBB | Date to:2010.11 | GDS83391 | Drive Shaft | | 40 | 28 | 57.7 | 52 | 940 | |
| | 2010.03-2015.01 | 6DCT | F | L/R | Estate FWD TXBA;TXBB | Date to:2010.11 | GCO18269 | Outer Joint | | 40 | 26 | 57.7 | 52 | 63.5 | I |

| | YEAR | TRANSM. | F/R | L/R | BODY STYLE & DRIVE TYPE & ENGINE | REMARKS | G-AP Ref. | PRODUCT | ABS | Technical Specifications | | | | | |
|---|---|---|---|---|---|---|---|---|---|---|---|---|---|---|---|
| | | | | | | | | | | A | B | C | H | L | P |
| **FORD**<br>**Mondeo Estate/Wagon** | | | | | | | | | | | | | | | |
| 2.0 (120 kw) | 2010.03-2015.01 | 6DCT | F | R | Estate FWD TXBA;TXBB | Date to:2010.11 | GCI82178 | Inner Joint | | 28 | 26 | 34 | 371 | 103 | |
| | 2010.03-2015.01 | 6MT | F | L | Estate FWD TXBA;TXBB | | GDS83397 | Drive Shaft | | 40 | 26 | 57.7 | 51 | 611 | |
| | 2010.03-2015.01 | 6MT | F | L | Estate FWD TXBA;TXBB | Date to:2012.10;TJ | GCI18128 | Inner Joint | | 26 | 28 | 40 | 68.5 | 111 | |
| | 2010.03-2015.01 | 6MT | F | L | Estate FWD TXBA;TXBB | AAR | GCI81533 | Inner Joint | | 26 | 28 | 40 | 68.5 | 108 | |
| | 2010.03-2015.01 | 6MT | F | R | Estate FWD TXBA;TXBB | | GCI18129 | Inner Joint | | 26 | 28 | 40 | 389 | 96.5 | |
| | 2010.03-2015.01 | AT | F | L | Estate FWD TXBA;TXBB | Trans. code:MPS6;Date from:2010.12 | GDS18340 | Drive Shaft | | 40 | 28 | 57.7 | 52 | 592 | |
| | 2010.03-2015.01 | AT/MT | F | L/R | Estate FWD TXBA;TXBB | Trans. code:AWF21 | GCO99271 | Outer Joint | | 40 | 28 | 57.7 | 51 | 63 | M |
| | 2010.03-2015.01 | MT | F | R | Estate FWD TXBA;TXBB | | GDS99212 | Drive Shaft | | 40 | 26 | 57.7 | 51 | 945 | |
| 2.0 (132 kw) | 2014.09-2022.03 | 6DCT | F | L | Estate FWD T8CC;T8CA;T8CD;T8CL;T8CB | | GDS82341 | Drive Shaft | | 27 | 28 | 55 | 105 | 658 | |
| | 2014.09-2022.03 | 6DCT | F | R | Estate FWD T8CC;T8CA;T8CD;T8CL;T8CB | | GDS82342 | Drive Shaft | | 27 | 28 | 55 | 105 | 1003 | |
| | 2014.09-2022.03 | 6DCT | F | L | Estate FWD T8CC;T8CA;T8CD;T8CL;T8CB | | GCI81762 | Inner Joint | | 28 | 28 | 33.8 | 80 | 95.5 | |
| | 2014.09-2022.03 | 6DCT | F | R | Estate FWD T8CC;T8CA;T8CD;T8CL;T8CB | | GCI81761 | Inner Joint | | 28 | 28 | 33.8 | 396.5 | 98.5 | |
| | 2014.09-2022.03 | 6DCT/6MT | F | L/R | Estate FWD T8CC;T8CA;T8CD;T8CL;T8CB | | GCO81552 | Outer Joint | | 27 | 28 | 55 | 105 | 66.5 | M |
| | 2014.09-2022.03 | 6MT | F | L | Estate FWD T8CC;T8CA;T8CD;T8CL;T8CB | | GDS83223 | Drive Shaft | | 27 | 26 | 55 | 105 | 658 | |
| | 2014.09-2022.03 | 6MT | F | R | Estate FWD T8CC;T8CA;T8CD;T8CL;T8CB | | GDS83140 | Drive Shaft | | 27 | 26 | 55 | 105 | 1017 | |
| | 2014.09-2022.03 | 6MT | F | L | Estate FWD T8CC;T8CA;T8CD;T8CL;T8CB | | GCI81533 | Inner Joint | | 26 | 28 | 40 | 68.5 | 108 | |
| | 2014.09-2022.03 | 6MT | F | R | Estate FWD T8CC;T8CA;T8CD;T8CL;T8CB | | GCI82393 | Inner Joint | | 26 | 28 | 40 | 403 | 96 | |
| | 2015.02-2022.03 | 6DCT | F | L | Estate 4WD T8CC;T8CA;T8CD;T8CL;T8CB | | GDS82339 | Drive Shaft | | 27 | 31 | 55 | 105 | 656 | |
| | 2015.02-2022.03 | 6DCT | F | R | Estate 4WD T8CC;T8CA;T8CD;T8CL;T8CB | | GDS82340 | Drive Shaft | | 27 | 28 | 55 | 105 | 1003 | |
| | 2015.02-2022.03 | 6DCT | F | L/R | Estate 4WD T8CC;T8CA;T8CD;T8CL;T8CB | | GCO81552 | Outer Joint | | 27 | 28 | 55 | 105 | 66.5 | M |
| | 2015.02-2022.03 | 6DCT | F | L | Estate 4WD T8CC;T8CA;T8CD;T8CL;T8CB | | GCI81765 | Inner Joint | | 31 | 28 | 42.5 | 78.5 | 95.5 | |
| | 2015.02-2022.03 | 6DCT | F | R | Estate 4WD T8CC;T8CA;T8CD;T8CL;T8CB | PTJ | GCI81761 | Inner Joint | | 28 | 28 | 33.8 | 396.5 | 98.5 | |
| | 2015.02-2022.03 | 6DCT | F | R | Estate 4WD T8CC;T8CA;T8CD;T8CL;T8CB | AAR | GCI81766 | Inner Joint | | 28 | 28 | 32.2 | 396.5 | 95.5 | |
| | 2015.02-2022.03 | 6AT | R | L/R | Estate 4WD T8CC;T8CA;T8CD;T8CL;T8CB | | GDS82338 | Drive Shaft | | 27 | 25 | 55 | 105 | 823 | |
| | 2015.02-2022.03 | 6AT | R | L/R | Estate 4WD T8CC;T8CA;T8CD;T8CL;T8CB | | GCO81812 | Outer Joint | | 27 | 19 | 55 | 105 | 47 | M |
| | 2015.02-2022.03 | 6AT | R | L/R | Estate 4WD T8CC;T8CA;T8CD;T8CL;T8CB | | GCI81764 | Inner Joint | | 25 | 22 | 35 | 91 | 106 | |
| 2.0 (140 kw) | 2019.01-2022.03 | 8AT | R | L/R | Estate 4WD YMCC | | GDS82338 | Drive Shaft | | 27 | 25 | 55 | 105 | 823 | |
| | 2019.01-2022.03 | 8AT | R | L/R | Estate 4WD YMCC | | GCO81812 | Outer Joint | | 27 | 19 | 55 | 105 | 47 | M |
| | 2019.01-2022.03 | 8AT | R | L/R | Estate 4WD YMCC | | GCI81764 | Inner Joint | | 25 | 22 | 35 | 91 | 106 | |
| 2.0 (149 kw) | 2010.03-2014.09 | 6AT/6MT | F | L | Estate Van FWD TNBA | | GDS18340 | Drive Shaft | | 40 | 28 | 57.7 | 52 | 592 | |
| | 2010.03-2014.09 | 6AT/6MT | F | R | Estate Van FWD TNBA | | GDS18341 | Drive Shaft | | 40 | 28 | 57.7 | 52 | 952 | |
| | 2010.03-2014.09 | 6AT/6MT | F | L/R | Estate Van FWD TNBA | | GCO18269 | Outer Joint | | 40 | 26 | 57.7 | 52 | 63.5 | I |
| | 2010.03-2014.09 | 6MT | F | L | Estate Van FWD TNBA | | GCI18128 | Inner Joint | | 26 | 28 | 40 | 68.5 | 111 | |
| | 2010.03-2015.01 | 6AT/6MT | F | L | Estate FWD TNBA | | GDS18340 | Drive Shaft | | 40 | 28 | 57.7 | 52 | 592 | |
| | 2010.03-2015.01 | 6AT/6MT | F | R | Estate FWD TNBA | | GDS18341 | Drive Shaft | | 40 | 28 | 57.7 | 52 | 952 | |
| | 2010.03-2015.01 | AT | F | L/R | Estate FWD TNBA | | GCO59344 | Outer Joint | | 40 | 26 | 57.7 | 52 | 63.5 | M |
| | 2010.03-2015.01 | MT | F | L/R | Estate FWD TNBA | | GCO99271 | Outer Joint | | 40 | 28 | 57.7 | 51 | 63 | M |
| 2.0 (154 kw) | 2015.03-2022.03 | 6DCT | F | R | Estate FWD T9CA | | GDS82342 | Drive Shaft | | 27 | 28 | 55 | 105 | 1003 | |
| | 2015.03-2022.03 | 6DCT | F | L/R | Estate FWD T9CA | | GCO81552 | Outer Joint | | 27 | 28 | 55 | 105 | 66.5 | M |
| | 2015.03-2022.03 | 6DCT | F | L | Estate FWD T9CA | | GCI81762 | Inner Joint | | 28 | 28 | 33.8 | 80 | 95.5 | |
| | 2015.03-2022.03 | 6DCT | F | R | Estate FWD T9CA | | GCI81761 | Inner Joint | | 28 | 28 | 33.8 | 396.5 | 98.5 | |
| | 2015.03-2022.03 | DCT | F | L | Estate FWD T9CA | | GDS82341 | Drive Shaft | | 27 | 28 | 55 | 105 | 658 | |
| 2.0 (176 kw) | 2010.03-2014.09 | 6AT/6MT | F | L | Estate Van FWD TPBA | | GDS18340 | Drive Shaft | | 40 | 28 | 57.7 | 52 | 592 | |
| | 2010.03-2014.09 | 6AT/6MT | F | R | Estate Van FWD TPBA | | GDS18341 | Drive Shaft | | 40 | 28 | 57.7 | 52 | 952 | |
| | 2010.03-2014.09 | 6AT/6MT | F | L/R | Estate Van FWD TPBA | | GCO18269 | Outer Joint | | 40 | 26 | 57.7 | 52 | 63.5 | I |
| | 2010.03-2014.09 | 6MT | F | L | Estate Van FWD TPBA | | GCI18128 | Inner Joint | | 26 | 28 | 40 | 68.5 | 111 | |
| | 2010.07-2015.01 | 6AT/6MT | F | L | Estate FWD TPBA | | GDS18340 | Drive Shaft | | 40 | 28 | 57.7 | 52 | 592 | |
| | 2010.07-2015.01 | 6AT/6MT | F | R | Estate FWD TPBA | | GDS18341 | Drive Shaft | | 40 | 28 | 57.7 | 52 | 952 | |
| | 2010.07-2015.01 | AT | F | L/R | Estate FWD TPBA | | GCO59344 | Outer Joint | | 40 | 26 | 57.7 | 52 | 63.5 | M |
| | 2010.07-2015.01 | MT | F | L/R | Estate FWD TPBA | | GCO99271 | Outer Joint | | 40 | 28 | 57.7 | 51 | 63 | M |
| 2.2 (110 kw) | 2004.09-2007.03 | AT/MT | F | L/R | Estate FWD QJBC;QJBD | | GCO18002 | Outer Joint | | 27 | 26 | 56 | 91 | 64 | M |
| | 2004.09-2007.03 | MT | F | L | Estate FWD QJBC;QJBD | | GDS18027 | Drive Shaft | | 27 | 26 | 57 | 91 | 627.5 | |
| | 2004.09-2007.03 | MT | F | R | Estate FWD QJBC;QJBD | | GDS18043 | Drive Shaft | | 27 | 35 | 56.5 | 92 | 579 | |
| | 2004.09-2007.03 | | F | R | Estate FWD QJBC;QJBD | | GDS18028 | Drive Shaft | | 27 | 35 | 57 | 91 | 576.5 | |
| | 2004.09-2007.03 | | F | R | Estate FWD QJBC;QJBD | | GCI18061 | Inner Joint | | 35 | 34 | 42 | | 117.5 | |
| 2.2 (114 kw) | 2004.09-2007.03 | AT/MT | F | L/R | Estate FWD QJBA;QJBB | | GCO18002 | Outer Joint | | 27 | 26 | 56 | 91 | 64 | M |
| | 2004.09-2007.03 | MT | F | L | Estate FWD QJBA;QJBB | | GDS18027 | Drive Shaft | | 27 | 26 | 57 | 91 | 627.5 | |
| | 2004.09-2007.03 | MT | F | R | Estate FWD QJBA;QJBB | | GDS18028 | Drive Shaft | | 27 | 35 | 57 | 91 | 576.5 | |
| | 2004.09-2007.03 | MT | F | R | Estate FWD QJBA;QJBB | | GDS18043 | Drive Shaft | | 27 | 35 | 56.5 | 92 | 579 | |
| | 2004.09-2007.03 | | F | R | Estate FWD QJBA;QJBB | | GCI18061 | Inner Joint | | 35 | 34 | 42 | | 117.5 | |
| 2.2 (129 kw) | 2008.03-2010.10 | 6AT/6MT | F | L | Estate FWD Q4BA | | GDS18363 | Drive Shaft | | 40 | 31 | 57.7 | 52 | 588.5 | |
| | 2008.03-2010.10 | 6AT/6MT | F | R | Estate FWD Q4BA | | GDS18350 | Drive Shaft | | 40 | 28 | 57.7 | 52 | 963 | |
| | 2008.03-2010.10 | AT/MT | F | L/R | Estate FWD Q4BA | Trans. code:AWF21;Trans. code:MMT6 | GCO99271 | Outer Joint | | 40 | 28 | 57.7 | 51 | 63 | M |
| | 2008.03-2010.10 | MT | F | R | Estate FWD Q4BA | Trans. code:MMT6 | GDS99212 | Drive Shaft | | 40 | 26 | 57.7 | 51 | 945 | |
| | 2008.03-2010.10 | | F | | Estate FWD Q4BA | | GCO59344 | Outer Joint | | 40 | 26 | 57.7 | 52 | 63.5 | M |

| | YEAR | TRANSM. | F/R | L/R | BODY STYLE & DRIVE TYPE & ENGINE | REMARKS | G-AP Ref. | PRODUCT | ABS | Technical Specifications A | B | C | H | L | P |
|---|---|---|---|---|---|---|---|---|---|---|---|---|---|---|---|
| **FORD** **Mondeo Estate/Wagon** | | | | | | | | | | | | | | | |
| 2.2 (147 kw) | 2010.07-2015.01 | AT/MT | F | L/R | Estate FWD KNBA | Trans. code:AWF21;Trans. code:MMT6 | GCO99271 | Outer Joint | | 40 | 28 | 57.7 | 51 | 63 | M |
| | 2010.07-2015.01 | MT | F | L | Estate FWD KNBA | | GDS18363 | Drive Shaft | | 40 | 31 | 57.7 | 52 | 588.5 | |
| | 2010.07-2015.01 | MT | F | R | Estate FWD KNBA | | GDS18350 | Drive Shaft | | 40 | 28 | 57.7 | 52 | 963 | |
| | 2010.07-2015.01 | MT | F | R | Estate FWD KNBA | Trans. code:MMT6 | GDS99212 | Drive Shaft | | 40 | 26 | 57.7 | 51 | 945 | |
| | 2010.07-2015.01 | | F | | Estate FWD KNBA | | GCO59344 | Outer Joint | | 40 | 26 | 57.7 | 52 | 63.5 | M |
| 2.3 (118 kw) | 2007.07-2015.01 | 6AT | F | R | Estate FWD SEBA | | GDS61106 | Drive Shaft | | 40 | 31 | 57.7 | 51 | 945 | |
| | 2007.07-2015.01 | 6AT | F | R | Estate FWD SEBA | Date from:2010.12 | GCO62045 | Outer Joint | | 40 | 26 | 57.7 | 52 | 62.5 | M |
| | 2007.07-2015.01 | 6AT | F | L | Estate FWD SEBA | | GCI18267 | Inner Joint | | 31 | 26 | 36.2 | 68 | 93 | |
| | 2007.07-2015.01 | AT | F | L | Estate FWD SEBA | | GDS18346 | Drive Shaft | | 40 | 31 | 57.7 | 52 | 559 | |
| 2.5 (125 kw) | 1994.09-1996.08 | AT | F | L/R | Estate FWD SEA | | GCO18023 | Outer Joint | 44T | 27 | 30 | 57 | 91 | 56 | I |
| | 1994.09-1996.08 | AT | F | L/R | Estate FWD SEA | | GCO18024 | Outer Joint | 44T | 27 | 30 | 57 | 91 | 56 | M |
| | 1994.09-1996.08 | AT/MT | F | R | Estate FWD SEA | | GDS18003 | Drive Shaft | | 27 | 35 | 54.3 | 91 | 566 | |
| | 1994.09-1996.08 | AT/MT | F | R | Estate FWD SEA | | GDS18004 | Drive Shaft | 44T | 27 | 35 | 54.3 | 91 | 566 | |
| | 1994.09-1996.08 | AT/MT | F | R | Estate FWD SEA | | GDS18006 | Drive Shaft | 44T | 27 | 35 | 57 | 91 | 566 | |
| | 1994.09-1996.08 | AT/MT | F | R | Estate FWD SEA | | GDS18028 | Drive Shaft | | 27 | 35 | 57 | 91 | 576.5 | |
| | 1994.09-1996.08 | AT/MT | F | L/R | Estate FWD SEA | | GCO18011 | Outer Joint | 44T | 27 | 25 | 57 | 91 | 61 | I |
| | 1994.09-1996.08 | MT | F | L | Estate FWD SEA | | GDS18001 | Drive Shaft | | 27 | 26 | 54.3 | 91 | 615 | |
| | 1994.09-1996.08 | MT | F | L | Estate FWD SEA | | GDS18002 | Drive Shaft | 44T | 27 | 26 | 54.3 | 91 | 615 | |
| | 1994.09-1996.08 | MT | F | L | Estate FWD SEA | | GDS18027 | Drive Shaft | | 27 | 26 | 57 | 91 | 627.5 | |
| | 1994.09-1996.08 | MT | F | L/R | Estate FWD SEA | | GCO18010 | Outer Joint | | 27 | 25 | 57 | 91 | 61 | I |
| | 1994.09-1996.08 | MT | F | L | Estate FWD SEA | | GCI36001 | Inner Joint | | 26 | 33 | 40 | 68.5 | 100 | |
| | 1996.09-2000.09 | 4AT/5MT | F | R | Estate FWD SEA | | GDS18003 | Drive Shaft | | 27 | 35 | 54.3 | 91 | 566 | |
| | 1996.09-2000.09 | 4AT/5MT | F | R | Estate FWD SEA | | GDS18004 | Drive Shaft | 44T | 27 | 35 | 54.3 | 91 | 566 | |
| | 1996.09-2000.09 | 4AT/5MT | F | L/R | Estate FWD SEA | | GCO18011 | Outer Joint | 44T | 27 | 25 | 57 | 91 | 61 | I |
| | 1996.09-2000.09 | AT | F | L/R | Estate FWD SEA | | GCO18023 | Outer Joint | 44T | 27 | 30 | 57 | 91 | 56 | I |
| | 1996.09-2000.09 | AT | F | L/R | Estate FWD SEA | | GCO18024 | Outer Joint | 44T | 27 | 30 | 57 | 91 | 56 | M |
| | 1996.09-2000.09 | AT/MT | F | R | Estate FWD SEA | | GDS18006 | Drive Shaft | 44T | 27 | 35 | 57 | 91 | 566 | |
| | 1996.09-2000.09 | AT/MT | F | R | Estate FWD SEA | | GDS18028 | Drive Shaft | | 27 | 35 | 57 | 91 | 576.5 | |
| | 1996.09-2000.09 | MT | F | L | Estate FWD SEA | | GDS18001 | Drive Shaft | | 27 | 26 | 54.3 | 91 | 615 | |
| | 1996.09-2000.09 | MT | F | L | Estate FWD SEA | | GDS18002 | Drive Shaft | 44T | 27 | 26 | 54.3 | 91 | 615 | |
| | 1996.09-2000.09 | MT | F | L/R | Estate FWD SEA | | GCO18010 | Outer Joint | | 27 | 25 | 57 | 91 | 61 | I |
| | 1999.10-2000.09 | AT/MT | F | R | Estate FWD SEB/SEC | | GDS18003 | Drive Shaft | | 27 | 35 | 54.3 | 91 | 566 | |
| | 1999.10-2000.09 | AT/MT | F | R | Estate FWD SEB/SEC | | GDS18004 | Drive Shaft | 44T | 27 | 35 | 54.3 | 91 | 566 | |
| | 1999.10-2000.09 | AT/MT | F | R | Estate FWD SEB/SEC | | GDS18028 | Drive Shaft | | 27 | 35 | 57 | 91 | 576.5 | |
| | 1999.10-2000.09 | AT/MT | F | L/R | Estate FWD SEB/SEC | | GCO18011 | Outer Joint | 44T | 27 | 25 | 57 | 91 | 61 | I |
| | 1999.10-2000.09 | MT | F | L | Estate FWD SEB/SEC | | GDS18001 | Drive Shaft | | 27 | 26 | 54.3 | 91 | 615 | |
| | 1999.10-2000.09 | MT | F | L | Estate FWD SEB/SEC | | GDS18002 | Drive Shaft | 44T | 27 | 26 | 54.3 | 91 | 615 | |
| | 1999.10-2000.09 | MT | F | | Estate FWD SEB/SEC | | GCO18010 | Outer Joint | | 27 | 25 | 57 | 91 | 61 | I |
| | 2000.10-2007.03 | 5AT/5MT | F | R | Estate FWD LCBD | | GDS18028 | Drive Shaft | | 27 | 35 | 57 | 91 | 576.5 | |
| | 2000.10-2007.03 | 5MT | F | L | Estate FWD LCBD | | GDS18220 | Drive Shaft | | 27 | 26 | 56.5 | 92 | 633 | |
| | 2000.10-2007.03 | AT/MT | F | R | Estate FWD LCBD | | GDS18043 | Drive Shaft | | 27 | 35 | 56.5 | 92 | 579 | |
| | 2000.10-2007.03 | AT/MT | F | L/R | Estate FWD LCBD | | GCO18002 | Outer Joint | | 27 | 26 | 56 | 91 | 64 | M |
| | 2000.10-2007.03 | MT | F | L | Estate FWD LCBD | | GDS18027 | Drive Shaft | | 27 | 26 | 57 | 91 | 627.5 | |
| | 2000.10-2007.03 | | F | R | Estate FWD LCBD | Date To:2002.02 | GCO18095 | Outer Joint | | 27 | 26 | 56.5 | 92 | 64 | M |
| | 2000.10-2007.03 | | F | R | Estate FWD LCBD | | GCI18061 | Inner Joint | | 35 | 34 | 42 | | 117.5 | |
| 2.5 (151 kw) | 1999.05-2000.11 | 4AT/5MT | F | L | Estate FWD SGA | | GDS18001 | Drive Shaft | | 27 | 26 | 54.3 | 91 | 615 | |
| | 1999.05-2000.11 | 4AT/5MT | F | L | Estate FWD SGA | | GDS18002 | Drive Shaft | 44T | 27 | 26 | 54.3 | 91 | 615 | |
| | 1999.05-2000.11 | 4AT/5MT | F | R | Estate FWD SGA | | GDS18003 | Drive Shaft | | 27 | 35 | 54.3 | 91 | 566 | |
| | 1999.05-2000.11 | 4AT/5MT | F | R | Estate FWD SGA | | GDS18004 | Drive Shaft | 44T | 27 | 35 | 54.3 | 91 | 566 | |
| | 1999.05-2000.11 | 4AT/5MT | F | L/R | Estate FWD SGA | | GCO18011 | Outer Joint | 44T | 27 | 25 | 57 | 91 | 61 | I |
| | 1999.05-2000.11 | MT | F | L | Estate FWD SGA | | GCI36001 | Inner Joint | | 26 | 33 | 40 | 68.5 | 100 | |
| 2.5 (162 kw) | 2007.03-2012.12 | 6MT | F | L | Estate FWD HUBA | | GDS21070 | Drive Shaft | | 40 | 26 | 57.7 | 52 | 556 | |
| | 2007.03-2012.12 | 6MT | F | L | Estate FWD HUBA | | GCO59285 | Outer Joint | | 40 | 27 | 57.7 | 52 | 63.5 | M |
| | 2007.03-2012.12 | 6MT | F | R | Estate FWD HUBA | | GCO59441 | Outer Joint | | 40 | 27 | 57.7 | 52 | 63.5 | M |
| | 2007.03-2012.12 | 6MT | F | R | Estate FWD HUBA | | GCI81076 | Inner Joint | | 26 | 28 | 40 | 522.5 | 123.7 | |
| | 2007.03-2012.12 | | F | R | Estate FWD HUBA | | GDS18348 | Drive Shaft | | 40 | 26 | 57.7 | 52 | 1001 | |
| 3.0 (150 kw) | 2004.09-2007.03 | 6MT | F | R | Estate FWD REBA | | GDS18028 | Drive Shaft | | 27 | 35 | 57 | 91 | 576.5 | |
| | 2004.09-2007.03 | AT/MT | F | L/R | Estate FWD REBA | | GCO18002 | Outer Joint | | 27 | 26 | 56 | 91 | 64 | M |
| | 2004.09-2007.03 | MT | F | L | Estate FWD REBA | | GDS18027 | Drive Shaft | | 27 | 26 | 57 | 91 | 627.5 | |
| | 2004.09-2007.03 | MT | F | R | Estate FWD REBA | | GDS18043 | Drive Shaft | | 27 | 35 | 56.5 | 92 | 579 | |
| | 2004.09-2007.03 | | F | R | Estate FWD REBA | | GCI18061 | Inner Joint | | 35 | 34 | 42 | | 117.5 | |
| 3.0 (166 kw) | 2002.04-2007.03 | 6MT | F | R | Estate FWD MEBA | | GDS18028 | Drive Shaft | | 27 | 35 | 57 | 91 | 576.5 | |
| | 2002.04-2007.03 | AT/MT | F | L/R | Estate FWD MEBA | | GCO18002 | Outer Joint | | 27 | 26 | 56 | 91 | 64 | M |
| | 2002.04-2007.03 | MT | F | L | Estate FWD MEBA | | GDS18027 | Drive Shaft | | 27 | 26 | 57 | 91 | 627.5 | |
| | 2002.04-2007.03 | MT | F | R | Estate FWD MEBA | | GDS18043 | Drive Shaft | | 27 | 35 | 56.5 | 92 | 579 | |

| | YEAR | TRANSM. | F/R | L/R | BODY STYLE & DRIVE TYPE & ENGINE | REMARKS | G-AP Ref. | PRODUCT | ABS | Technical Specifications A | B | C | H | L | P |
|---|---|---|---|---|---|---|---|---|---|---|---|---|---|---|---|
| **FORD** | | | | | | | | | | | | | | | |
| **Mondeo Estate/Wagon** | | | | | | | | | | | | | | | |
| 3.0 (166 kw) | 2002.04-2007.03 | | F | R | Estate FWD MEBA | | GCI18061 | Inner Joint | | 35 | 34 | 42 | | 117.5 | |
| **Puma** | | | | | | | | | | | | | | | |
| 1.0 (70 kw) | 2019.09- | 6MT | F | L | SUV FWD M0JA | | GDS56624 | Drive Shaft | | 27 | 23 | 56 | 96.5 | 657 | |
| | 2019.09- | 6MT | F | R | SUV FWD M0JA | | GDS56633 | Drive Shaft | | 27 | 23 | 56 | 96.5 | 958 | |
| | 2019.09- | 6MT | F | L/R | SUV FWD M0JA | | GCO82450 | Outer Joint | | 27 | 33 | 56 | 96.5 | 58 | M |
| | 2019.09- | 6MT | F | L | SUV FWD M0JA | | GCI83409 | Inner Joint | | 23 | 33 | 40 | 60.5 | 97.5 | |
| | 2019.09- | 6MT | F | R | SUV FWD M0JA | | GCI83414 | Inner Joint | | 23 | 33 | 40 | 60.5 | 104.5 | |
| 1.0 (92 kw) | 2019.09- | 6MT | F | L | SUV FWD B7JA;B7JB | | GDS56624 | Drive Shaft | | 27 | 23 | 56 | 96.5 | 657 | |
| | 2019.09- | 6MT | F | R | SUV FWD B7JA;B7JB | | GDS56633 | Drive Shaft | | 27 | 23 | 56 | 96.5 | 958 | |
| | 2019.09- | 6MT | F | L/R | SUV FWD B7JA;B7JB | | GCO82450 | Outer Joint | | 27 | 33 | 56 | 96.5 | 58 | M |
| | 2019.09- | 6MT | F | L | SUV FWD B7JA;B7JB | | GCI83409 | Inner Joint | | 23 | 33 | 40 | 60.5 | 97.5 | |
| | 2019.09- | 6MT | F | R | SUV FWD B7JA;B7JB | | GCI83414 | Inner Joint | | 23 | 33 | 40 | 60.5 | 104.5 | |
| | 2019.09- | 7DCT | F | L | SUV FWD B7JA;B7JB | Date to:2023.04 | GDS56811 | Drive Shaft | | 27 | 27 | 55.9 | 96.5 | 606 | |
| | 2019.09- | 7DCT | F | R | SUV FWD B7JA;B7JB | Date to:2023.04 | GDS57558 | Drive Shaft | | 27 | 27 | 55.9 | 96.5 | 998 | |
| | 2019.09- | 7DCT | F | L/R | SUV FWD B7JA;B7JB | Date to:2023.03 | GCO82249 | Outer Joint | | 27 | 24 | 55.9 | 96.5 | 58.5 | M |
| | 2019.09- | 7DCT | F | L | SUV FWD B7JA;B7JB | | GCI83509 | Inner Joint | | 27 | 24 | 40 | 56.5 | 104.5 | |
| | 2019.09- | 7DCT | F | R | SUV FWD B7JA;B7JB | | GCI83740 | Inner Joint | | 27 | 24 | 40 | 418 | 88.5 | |
| | 2019.09- | 6MT | F | L | SUV FWD B7JA;B7JB;B7JE | | GDS56624 | Drive Shaft | | 27 | 23 | 56 | 96.5 | 657 | |
| | 2019.09- | 6MT | F | R | SUV FWD B7JA;B7JB;B7JE | | GDS56633 | Drive Shaft | | 27 | 23 | 56 | 96.5 | 958 | |
| | 2019.09- | 6MT | F | L/R | SUV FWD B7JA;B7JB;B7JE | | GCO82450 | Outer Joint | | 27 | 33 | 56 | 96.5 | 58 | M |
| | 2019.09- | 6MT | F | L | SUV FWD B7JA;B7JB;B7JE | | GCI83409 | Inner Joint | | 23 | 33 | 40 | 60.5 | 97.5 | |
| | 2019.09- | 6MT | F | R | SUV FWD B7JA;B7JB;B7JE | | GCI83414 | Inner Joint | | 23 | 33 | 40 | 60.5 | 104.5 | |
| | 2021.12- | 6MT | F | L | SUV FWD B7JG | | GDS56624 | Drive Shaft | | 27 | 23 | 56 | 96.5 | 657 | |
| | 2021.12- | 6MT | F | R | SUV FWD B7JG | | GDS56633 | Drive Shaft | | 27 | 23 | 56 | 96.5 | 958 | |
| | 2021.12- | 6MT | F | L/R | SUV FWD B7JG | | GCO82450 | Outer Joint | | 27 | 33 | 56 | 96.5 | 58 | M |
| | 2021.12- | 6MT | F | L | SUV FWD B7JG | | GCI83409 | Inner Joint | | 23 | 33 | 40 | 60.5 | 97.5 | |
| | 2021.12- | 6MT | F | R | SUV FWD B7JG | | GCI83414 | Inner Joint | | 23 | 33 | 40 | 60.5 | 104.5 | |
| 1.0 (114 kw) | 2019.09- | 6MT | F | L | SUV FWD BZJA | | GDS56624 | Drive Shaft | | 27 | 23 | 56 | 96.5 | 657 | |
| | 2019.09- | 6MT | F | R | SUV FWD BZJA | | GDS56633 | Drive Shaft | | 27 | 23 | 56 | 96.5 | 958 | |
| | 2019.09- | 6MT | F | L/R | SUV FWD BZJA | | GCO82450 | Outer Joint | | 27 | 33 | 56 | 96.5 | 58 | M |
| | 2019.09- | 6MT | F | L | SUV FWD BZJA | | GCI83409 | Inner Joint | | 23 | 33 | 40 | 60.5 | 97.5 | |
| | 2019.09- | 6MT | F | R | SUV FWD BZJA | | GCI83414 | Inner Joint | | 23 | 33 | 40 | 60.5 | 104.5 | |
| 1.0 (118 kw) | 2023.03- | 6MT | F | L | SUV FWD | | GDS56624 | Drive Shaft | | 27 | 23 | 56 | 96.5 | 657 | |
| | 2023.03- | 6MT | F | R | SUV FWD | | GDS56633 | Drive Shaft | | 27 | 23 | 56 | 96.5 | 958 | |
| | 2023.03- | 6MT | F | L/R | SUV FWD | | GCO82450 | Outer Joint | | 27 | 33 | 56 | 96.5 | 58 | M |
| | 2023.03- | 6MT | F | L | SUV FWD | | GCI83409 | Inner Joint | | 23 | 33 | 40 | 60.5 | 97.5 | |
| | 2023.03- | 6MT | F | R | SUV FWD | | GCI83414 | Inner Joint | | 23 | 33 | 40 | 60.5 | 104.5 | |
| | 2023.03- | 7DCT | F | L | SUV FWD | Date to:2023.04 | GDS56811 | Drive Shaft | | 27 | 27 | 55.9 | 96.5 | 606 | |
| | 2023.03- | 7DCT | F | R | SUV FWD | Date to:2023.04 | GDS57558 | Drive Shaft | | 27 | 27 | 55.9 | 96.5 | 998 | |
| | 2023.03- | 7DCT | F | L/R | SUV FWD | Date to:2023.03 | GCO82249 | Outer Joint | | 27 | 24 | 55.9 | 96.5 | 58.5 | M |
| | 2023.03- | 7DCT | F | L | SUV FWD | Date to:2023.03 | GCI83509 | Inner Joint | | 27 | 24 | 40 | 56.5 | 104.5 | |
| | 2023.03- | 7DCT | F | R | SUV FWD | Date to:2023.03 | GCI83740 | Inner Joint | | 27 | 24 | 40 | 418 | 88.5 | |
| 1.0 (125 kw) | 2023.03- | 7DCT | F | L | SUV FWD Q0JA | Date to:2023.04 | GDS56811 | Drive Shaft | | 27 | 27 | 55.9 | 96.5 | 606 | |
| | 2023.03- | 7DCT | F | R | SUV FWD Q0JA | Date to:2023.04 | GDS57558 | Drive Shaft | | 27 | 27 | 55.9 | 96.5 | 998 | |
| | 2023.03- | 7DCT | F | L/R | SUV FWD Q0JA | Date to:2023.03 | GCO82249 | Outer Joint | | 27 | 24 | 55.9 | 96.5 | 58.5 | M |
| | 2023.03- | 7DCT | F | L | SUV FWD Q0JA | Date to:2023.03 | GCI83509 | Inner Joint | | 27 | 24 | 40 | 56.5 | 104.5 | |
| | 2023.03- | 7DCT | F | R | SUV FWD Q0JA | | GCI83740 | Inner Joint | | 27 | 24 | 40 | 418 | 88.5 | |
| 1.4 (66 kw) | 1997.11-2000.10 | AT/MT | F | L | Coupe FWD FHD/FHF | | GDS18040 | Drive Shaft | | 25 | 23 | 56.5 | 88.5 | 608 | |
| | 1997.11-2000.10 | AT/MT | F | R | Coupe FWD FHD/FHF | | GDS18175 | Drive Shaft | | 25 | 23 | 56.5 | 88.5 | 898 | |
| | 1997.11-2000.10 | AT/MT | F | L/R | Coupe FWD FHD/FHF | | GCO18004 | Outer Joint | | 25 | 22 | 56.5 | 88.5 | 53.5 | O |
| 1.5 (147 kw) | 2020.11- | 6MT | F | L | SUV FWD YZJA | | GCI83240 | Inner Joint | | 28 | 35 | 40 | 64 | 112 | |
| 1.6 (76 kw) | 2000.07-2002.05 | AT/MT | F | L | Coupe FWD L1W | | GDS18040 | Drive Shaft | | 25 | 23 | 56.5 | 88.5 | 608 | |
| | 2000.07-2002.05 | AT/MT | F | R | Coupe FWD L1W | | GDS18175 | Drive Shaft | | 25 | 23 | 56.5 | 88.5 | 898 | |
| | 2000.07-2002.05 | AT/MT | F | L/R | Coupe FWD L1W | | GCO18004 | Outer Joint | | 25 | 22 | 56.5 | 88.5 | 53.5 | O |
| 1.7 (92 kw) | 1997.03-2002.06 | 5MT | F | L/R | Coupe FWD MHA/MHB | | GCO18004 | Outer Joint | | 25 | 22 | 56.5 | 88.5 | 53.5 | O |
| | 1997.03-2002.06 | AT/MT | F | L | Coupe FWD MHA/MHB | | GDS18040 | Drive Shaft | | 25 | 23 | 56.5 | 88.5 | 608 | |
| | 1997.03-2002.06 | AT/MT | F | R | Coupe FWD MHA/MHB | | GDS18175 | Drive Shaft | | 25 | 23 | 56.5 | 88.5 | 898 | |
| 1.7 (114 kw) | 1999.06-2002.06 | 5MT | F | L/R | Coupe FWD MHA | | GCO18004 | Outer Joint | | 25 | 22 | 56.5 | 88.5 | 53.5 | O |
| | 1999.06-2002.06 | AT/MT | F | R | Coupe FWD MHA | | GDS18175 | Drive Shaft | | 25 | 23 | 56.5 | 88.5 | 898 | |
| | 1999.06-2002.06 | AT/MT | F | R | Coupe FWD MHA | | GCI18087 | Inner Joint | | 23 | 22 | 40 | 371 | 78.5 | |
| **S-Max** | | | | | | | | | | | | | | | |
| 1.5 (118 kw) | 2015.01-2018.06 | 6MT | F | L | MPV FWD UNCI;UNCJ;UNCK | | GDS81874 | Drive Shaft | | 27 | 26 | 55 | 105 | 664 | |
| | 2015.01-2018.06 | 6MT | F | L/R | MPV FWD UNCI;UNCJ;UNCK | | GCO81552 | Outer Joint | | 27 | 28 | 55 | 105 | 66.5 | M |
| | 2015.01-2018.06 | 6MT | F | L | MPV FWD UNCI;UNCJ;UNCK | | GCI81533 | Inner Joint | | 26 | 28 | 40 | 68.5 | 108 | |
| 1.5 (121 kw) | 2018.07-2023.04 | 6MT | F | L | MPV FWD C15HDTX;UNCP | | GDS81874 | Drive Shaft | | 27 | 26 | 55 | 105 | 664 | |

| | YEAR | TRANSM. | F/R | L/R | BODY STYLE & DRIVE TYPE & ENGINE | REMARKS | G-AP Ref. | PRODUCT | ABS | Technical Specifications | | | | | |
|---|---|---|---|---|---|---|---|---|---|---|---|---|---|---|---|
| | | | | | | | | | | A | B | C | H | L | P |
| **FORD** | | | | | | | | | | | | | | | |
| **S-Max** | | | | | | | | | | | | | | | |
| 1.5 (121 kw) | 2018.07-2023.04 | 6MT | F | L/R | MPV FWD C15HDTX;UNCP | | GCO81552 | Outer Joint | | 27 | 28 | 55 | 105 | 66.5 | M |
| | 2018.07-2023.04 | 6MT | F | L | MPV FWD C15HDTX;UNCP | | GCI81533 | Inner Joint | | 26 | 28 | 40 | 68.5 | 108 | |
| 1.6 (85 kw) | 2011.02-2014.12 | 6MT | F | L | MPV FWD T1WA;T1WB | | GDS83397 | Drive Shaft | | 40 | 26 | 57.7 | 51 | 611 | |
| | 2011.02-2014.12 | 6MT | F | R | MPV FWD T1WA;T1WB | | GDS99212 | Drive Shaft | | 40 | 26 | 57.7 | 51 | 945 | |
| | 2011.02-2014.12 | 6MT | F | L | MPV FWD T1WA;T1WB | Trans. code:MMT6;TJ | GCI18128 | Inner Joint | | 26 | 28 | 40 | 68.5 | 111 | |
| | 2011.02-2014.12 | 6MT | F | L | MPV FWD T1WA;T1WB | AAR | GCI81533 | Inner Joint | | 26 | 28 | 40 | 68.5 | 108 | |
| | 2011.02-2014.12 | MT | F | L/R | MPV FWD T1WA;T1WB | | GCO99271 | Outer Joint | | 40 | 28 | 57.7 | 51 | 63 | M |
| | 2011.02-2014.12 | | F | R | MPV FWD T1WA;T1WB | Trans. code:MMT6 | GCI18129 | Inner Joint | | 26 | 28 | 40 | 389 | 96.5 | |
| 1.6 (118 kw) | 2011.02-2014.12 | 6MT | F | L | Box Body/MPV FWD JTWA | | GCO99271 | Outer Joint | | 40 | 28 | 57.7 | 51 | 63 | M |
| | 2011.02-2014.12 | MT | F | L | Box Body/MPV FWD JTWA | | GCI18128 | Inner Joint | | 26 | 28 | 40 | 68.5 | 111 | |
| | 2011.02-2014.12 | MT | F | L/R | MPV FWD JTWA;JTWB | | GCO99271 | Outer Joint | | 40 | 28 | 57.7 | 51 | 63 | M |
| | 2011.02-2014.12 | MT | F | L | MPV FWD JTWA;JTWB | | GCI18128 | Inner Joint | | 26 | 28 | 40 | 68.5 | 111 | |
| 1.8 (74 kw) | 2007.01-2010.12 | 5MT | F | L | MPV FWD FFWA | | GDS83397 | Drive Shaft | | 40 | 26 | 57.7 | 51 | 611 | |
| | 2007.01-2010.12 | 5MT | F | R | MPV FWD FFWA | | GDS99212 | Drive Shaft | | 40 | 26 | 57.7 | 51 | 945 | |
| | 2007.01-2010.12 | 5MT | F | L | MPV FWD FFWA | TJ | GCI18128 | Inner Joint | | 26 | 28 | 40 | 68.5 | 111 | |
| | 2007.01-2010.12 | 5MT | F | L | MPV FWD FFWA | AAR | GCI81533 | Inner Joint | | 26 | 28 | 40 | 68.5 | 108 | |
| | 2007.01-2010.12 | MT | F | R | MPV FWD FFWA | | GCI18129 | Inner Joint | | 26 | 28 | 40 | 389 | 96.5 | |
| | 2007.01-2010.12 | | F | L/R | MPV FWD FFWA | | GCO99271 | Outer Joint | | 40 | 28 | 57.7 | 51 | 63 | M |
| 1.8 (92 kw) | 2006.05-2014.12 | 5MT | F | L | MPV FWD QYWA | | GDS83397 | Drive Shaft | | 40 | 26 | 57.7 | 51 | 611 | |
| | 2006.05-2014.12 | 5MT | F | R | MPV FWD QYWA | | GDS99212 | Drive Shaft | | 40 | 26 | 57.7 | 51 | 945 | |
| | 2006.05-2014.12 | 5MT | F | L | MPV FWD QYWA | TJ | GCI18128 | Inner Joint | | 26 | 28 | 40 | 68.5 | 111 | |
| | 2006.05-2014.12 | 5MT | F | L | MPV FWD QYWA | AAR | GCI81533 | Inner Joint | | 26 | 28 | 40 | 68.5 | 108 | |
| | 2006.05-2014.12 | MT | F | L/R | MPV FWD QYWA | | GCO99271 | Outer Joint | | 40 | 28 | 57.7 | 51 | 63 | M |
| | 2006.05-2014.12 | MT | F | R | MPV FWD QYWA | Date to:2012.10 | GCI18129 | Inner Joint | | 26 | 28 | 40 | 389 | 96.5 | |
| 2.0 (85 kw) | 2007.01-2014.12 | 6MT | F | L | Box Body/MPV FWD TYWA;KLWA | | GDS83397 | Drive Shaft | | 40 | 26 | 57.7 | 51 | 611 | |
| | 2007.01-2014.12 | 6MT | F | R | Box Body/MPV FWD TYWA;KLWA | | GDS99212 | Drive Shaft | | 40 | 26 | 57.7 | 51 | 945 | |
| | 2007.01-2014.12 | 6MT | F | L | Box Body/MPV FWD TYWA;KLWA | | GCO99271 | Outer Joint | | 40 | 28 | 57.7 | 51 | 63 | M |
| | 2007.01-2014.12 | 6MT | F | L | Box Body/MPV FWD TYWA;KLWA | AAR | GCI81533 | Inner Joint | | 26 | 28 | 40 | 68.5 | 108 | |
| | 2007.01-2014.12 | 6MT | F | R | Box Body/MPV FWD TYWA;KLWA | | GCI18129 | Inner Joint | | 26 | 28 | 40 | 389 | 96.5 | |
| | 2007.01-2014.12 | MT | F | L | Box Body/MPV FWD TYWA;KLWA | Date to:2008.02;TJ | GCI18128 | Inner Joint | | 26 | 28 | 40 | 68.5 | 111 | |
| | 2007.11-2014.12 | 6MT | F | L | MPV FWD TYWA;KLWA | | GDS83397 | Drive Shaft | | 40 | 26 | 57.7 | 51 | 611 | |
| | 2007.11-2014.12 | 6MT | F | L | MPV FWD TYWA;KLWA | AAR | GCI81533 | Inner Joint | | 26 | 28 | 40 | 68.5 | 108 | |
| | 2007.11-2014.12 | AT | F | L/R | MPV FWD TYWA;KLWA | | GCO59344 | Outer Joint | | 40 | 26 | 57.7 | 52 | 63.5 | M |
| | 2007.11-2014.12 | MT | F | R | MPV FWD TYWA;KLWA | | GDS99212 | Drive Shaft | | 40 | 26 | 57.7 | 51 | 945 | |
| | 2007.11-2014.12 | MT | F | L/R | MPV FWD TYWA;KLWA | | GCO99271 | Outer Joint | | 40 | 28 | 57.7 | 51 | 63 | M |
| | 2007.11-2014.12 | MT | F | L | MPV FWD TYWA;KLWA | Date to:2008.02;TJ | GCI18128 | Inner Joint | | 26 | 28 | 40 | 68.5 | 111 | |
| | 2007.11-2014.12 | MT | F | R | MPV FWD TYWA;KLWA | | GCI18129 | Inner Joint | | 26 | 28 | 40 | 389 | 96.5 | |
| 2.0 (88 kw) | 2015.01-2018.06 | 6MT | F | L | MPV FWD UFCA;UFCB;UFCD | | GDS81874 | Drive Shaft | | 27 | 26 | 55 | 105 | 664 | |
| | 2015.01-2018.06 | 6MT | F | R | MPV FWD UFCA;UFCB;UFCD | | GDS83141 | Drive Shaft | | 27 | 26 | 55 | 105 | 1025 | |
| | 2015.01-2018.06 | 6MT | F | L | MPV FWD UFCA;UFCB;UFCD | | GCI81533 | Inner Joint | | 26 | 28 | 40 | 68.5 | 108 | |
| | 2015.01-2018.06 | 6MT | F | R | MPV FWD UFCA;UFCB;UFCD | | GCI82393 | Inner Joint | | 26 | 28 | 40 | 403 | 96 | |
| | 2018.07-2023.04 | 6MT | F | R | MPV FWD YNCA | | GDS83141 | Drive Shaft | | 27 | 26 | 55 | 105 | 1025 | |
| | 2018.07-2023.04 | 6MT | F | L/R | MPV FWD YNCA | | GCO81552 | Outer Joint | | 27 | 28 | 55 | 105 | 66.5 | M |
| | 2018.07-2023.04 | 6MT | F | L | MPV FWD YNCA | | GCI81533 | Inner Joint | | 26 | 28 | 40 | 68.5 | 108 | |
| | 2018.07-2023.04 | 6MT | F | R | MPV FWD YNCA | | GCI82393 | Inner Joint | | 26 | 28 | 40 | 403 | 96 | |
| 2.0 (96 kw) | 2006.05-2014.12 | 6MT | F | L | MPV FWD AZWA | | GDS83397 | Drive Shaft | | 40 | 26 | 57.7 | 51 | 611 | |
| | 2006.05-2014.12 | 6MT | F | R | MPV FWD AZWA | | GDS99212 | Drive Shaft | | 40 | 26 | 57.7 | 51 | 945 | |
| | 2006.05-2014.12 | 6MT | F | L/R | MPV FWD AZWA | Date from:2006.11 | GCO99271 | Outer Joint | | 40 | 28 | 57.7 | 51 | 63 | M |
| | 2006.05-2014.12 | 6MT | F | L | MPV FWD AZWA | TJ | GCI18128 | Inner Joint | | 26 | 28 | 40 | 68.5 | 111 | |
| | 2006.05-2014.12 | 6MT | F | L | MPV FWD AZWA | AAR | GCI81533 | Inner Joint | | 26 | 28 | 40 | 68.5 | 108 | |
| | 2006.05-2014.12 | AT | F | L | MPV FWD AZWA | Date to:2010.12;Trans. code:MPS6 Powershift | GDS18340 | Drive Shaft | | 40 | 28 | 57.7 | 52 | 592 | |
| | 2006.05-2014.12 | AT | F | L | MPV FWD AZWA | Trans. code:AWF21 | GDS83288 | Drive Shaft | | 40 | 31 | 57.7 | 51 | 582 | |
| | 2006.05-2014.12 | AT | F | R | MPV FWD AZWA | Date from:2010.12;Trans. code:MPS6 Powershift | GDS18347 | Drive Shaft | | 40 | 28 | 57.7 | 52 | 939 | |
| | 2006.05-2014.12 | AT | F | R | MPV FWD AZWA | Trans. code:AWF21 | GDS83289 | Drive Shaft | | 40 | 28 | 57.7 | 51 | 932 | |
| | 2006.05-2014.12 | AT | F | L/R | MPV FWD AZWA | Trans. code:MPS6 Powershift | GCO59344 | Outer Joint | | 40 | 26 | 57.7 | 52 | 63.5 | M |
| | 2006.05-2014.12 | MT | F | R | MPV FWD AZWA | Date to:2012.10 | GCI18129 | Inner Joint | | 26 | 28 | 40 | 389 | 96.5 | |
| 2.0 (100 kw) | 2006.05-2014.12 | 6DCT | F | R | MPV FWD UKWA;AZWC | Date from:2010.12 | GDS18347 | Drive Shaft | | 40 | 28 | 57.7 | 52 | 939 | |
| | 2006.05-2014.12 | 6DCT | F | R | MPV FWD UKWA;AZWC | Date to:2010.11 | GDS83391 | Drive Shaft | | 40 | 28 | 57.7 | 52 | 940 | |
| | 2006.05-2014.12 | 6DCT | F | L/R | MPV FWD UKWA;AZWC | Date to:2010.11 | GCO18269 | Outer Joint | | 40 | 26 | 57.7 | 52 | 63.5 | I |
| | 2006.05-2014.12 | 6DCT | F | R | MPV FWD UKWA;AZWC | Date to:2010.11 | GCI82178 | Inner Joint | | 28 | 26 | 34 | 371 | 103 | |
| | 2006.05-2014.12 | 6MT | F | L | MPV FWD UKWA;AZWC | | GDS83397 | Drive Shaft | | 40 | 26 | 57.7 | 51 | 611 | |
| | 2006.05-2014.12 | 6MT | F | L/R | MPV FWD UKWA;AZWC | | GCO99271 | Outer Joint | | 40 | 28 | 57.7 | 51 | 63 | M |
| | 2006.05-2014.12 | 6MT | F | L | MPV FWD UKWA;AZWC | AAR | GCI81533 | Inner Joint | | 26 | 28 | 40 | 68.5 | 108 | |
| | 2006.05-2014.12 | AT | F | L | MPV FWD UKWA;AZWC | Date from:2008.01;Date to:2010.12;Trans. code:MPS6 Powershift | GDS18340 | Drive Shaft | | 40 | 28 | 57.7 | 52 | 592 | |
| | 2006.05-2014.12 | AT | F | L/R | MPV FWD UKWA;AZWC | Date from:2008.01;Trans. code:MPS6 Powershift | GCO59344 | Outer Joint | | 40 | 26 | 57.7 | 52 | 63.5 | M |

| | YEAR | TRANSM. | F/R | L/R | BODY STYLE & DRIVE TYPE & ENGINE | REMARKS | G-AP Ref. | PRODUCT | ABS | Technical Specifications A | B | C | H | L | P |
|---|---|---|---|---|---|---|---|---|---|---|---|---|---|---|---|
| **FORD** **S-Max** | | | | | | | | | | | | | | | |
| 2.0 (100 kw) | 2006.05-2014.12 | MT | F | R | MPV FWD UKWA;AZWC | | GDS99212 | Drive Shaft | | 40 | 26 | 57.7 | 51 | 945 | |
| | 2006.05-2014.12 | MT | F | L | MPV FWD UKWA;AZWC | TJ | GCI18128 | Inner Joint | | 26 | 28 | 40 | 68.5 | 111 | |
| | 2006.05-2014.12 | MT | F | R | MPV FWD UKWA;AZWC | | GCI18129 | Inner Joint | | 26 | 28 | 40 | 389 | 96.5 | |
| 2.0 (103 kw) | 2006.05-2014.12 | 6AT | F | L | MPV FWD QXWA;QXWB;QXWC;UFWA | | GCI83032 | Inner Joint | | 31 | 28 | 36.2 | 66 | 90 | |
| | 2006.05-2014.12 | 6AT | F | R | MPV FWD QXWA;QXWB;QXWC;UFWA | | GCI83031 | Inner Joint | | 28 | 28 | 33 | 391.5 | 95.5 | |
| | 2006.05-2014.12 | 6MT | F | L | MPV FWD QXWA;QXWB;QXWC;UFWA | | GDS83397 | Drive Shaft | | 40 | 26 | 57.7 | 51 | 611 | |
| | 2006.05-2014.12 | 6MT | F | R | MPV FWD QXWA;QXWB;QXWC;UFWA | Date from:2006.11 | GDS99212 | Drive Shaft | | 40 | 26 | 57.7 | 51 | 945 | |
| | 2006.05-2014.12 | 6MT | F | L | MPV FWD QXWA;QXWB;QXWC;UFWA | TJ | GCI18128 | Inner Joint | | 26 | 28 | 40 | 68.5 | 111 | |
| | 2006.05-2014.12 | 6MT | F | L | MPV FWD QXWA;QXWB;QXWC;UFWA | AAR | GCI81533 | Inner Joint | | 26 | 28 | 40 | 68.5 | 108 | |
| | 2006.05-2014.12 | AT | F | L | MPV FWD QXWA;QXWB;QXWC;UFWA | | GDS18340 | Drive Shaft | | 40 | 28 | 57.7 | 52 | 592 | |
| | 2006.05-2014.12 | AT | F | L | MPV FWD QXWA;QXWB;QXWC;UFWA | Trans. code:AWF21 | GDS83288 | Drive Shaft | | 40 | 31 | 57.7 | 51 | 582 | |
| | 2006.05-2014.12 | AT | F | R | MPV FWD QXWA;QXWB;QXWC;UFWA | Trans. code:MPS6 Powershift | GDS18347 | Drive Shaft | | 40 | 28 | 57.7 | 52 | 939 | |
| | 2006.05-2014.12 | AT | F | R | MPV FWD QXWA;QXWB;QXWC;UFWA | Trans. code:AWF21 | GDS83289 | Drive Shaft | | 40 | 28 | 57.7 | 51 | 932 | |
| | 2006.05-2014.12 | AT | F | | MPV FWD QXWA;QXWB;QXWC;UFWA | | GCO59344 | Outer Joint | | 40 | 26 | 57.7 | 52 | 63.5 | M |
| | 2006.05-2014.12 | AT/MT | F | L/R | MPV FWD QXWA;QXWB;QXWC;UFWA | Trans. code:AWF21 | GCO99271 | Outer Joint | | 40 | 28 | 57.7 | 51 | 63 | M |
| | 2006.05-2014.12 | MT | F | R | MPV FWD QXWA;QXWB;QXWC;UFWA | Date to:2012.10 | GCI18129 | Inner Joint | | 26 | 28 | 40 | 389 | 96.5 | |
| | 2010.03-2014.12 | 6AT | F | L | Box Body/MPV FWD QXWA;QXWB;QXWC;UFWA | | GDS83288 | Drive Shaft | | 40 | 31 | 57.7 | 51 | 582 | |
| | 2010.03-2014.12 | 6AT | F | R | Box Body/MPV FWD QXWA;QXWB;QXWC;UFWA | | GDS83289 | Drive Shaft | | 40 | 28 | 57.7 | 51 | 932 | |
| | 2010.03-2014.12 | 6AT | F | L | Box Body/MPV FWD QXWA;QXWB;QXWC;UFWA | | GCI83032 | Inner Joint | | 31 | 28 | 36.2 | 66 | 90 | |
| | 2010.03-2014.12 | 6AT | F | R | Box Body/MPV FWD QXWA;QXWB;QXWC;UFWA | | GCI83031 | Inner Joint | | 28 | 28 | 33 | 391.5 | 95.5 | |
| | 2010.03-2014.12 | 6AT/6MT | F | L | Box Body/MPV FWD QXWA;QXWB;QXWC;UFWA | | GCO99271 | Outer Joint | | 40 | 28 | 57.7 | 51 | 63 | M |
| | 2010.03-2014.12 | 6MT | F | L | Box Body/MPV FWD QXWA;QXWB;QXWC;UFWA | | GDS83397 | Drive Shaft | | 40 | 26 | 57.7 | 51 | 611 | |
| | 2010.03-2014.12 | 6MT | F | R | Box Body/MPV FWD QXWA;QXWB;QXWC;UFWA | | GDS99212 | Drive Shaft | | 40 | 26 | 57.7 | 51 | 945 | |
| | 2010.03-2014.12 | 6MT | F | L | Box Body/MPV FWD QXWA;QXWB;QXWC;UFWA | TJ | GCI18128 | Inner Joint | | 26 | 28 | 40 | 68.5 | 111 | |
| | 2010.03-2014.12 | 6MT | F | L | Box Body/MPV FWD QXWA;QXWB;QXWC;UFWA | AAR | GCI81533 | Inner Joint | | 26 | 28 | 40 | 68.5 | 108 | |
| | 2010.03-2014.12 | 6MT | F | R | Box Body/MPV FWD QXWA;QXWB;QXWC;UFWA | | GCI18129 | Inner Joint | | 26 | 28 | 40 | 389 | 96.5 | |
| 2.0 (107 kw) | 2006.05-2014.12 | 5MT | F | L | MPV FWD AOWA;AOWB;TBWA;TBWB | | GDS83397 | Drive Shaft | | 40 | 26 | 57.7 | 51 | 611 | |
| | 2006.05-2014.12 | 5MT | F | R | MPV FWD AOWA;AOWB;TBWA;TBWB | | GDS99212 | Drive Shaft | | 40 | 26 | 57.7 | 51 | 945 | |
| | 2006.05-2014.12 | 5MT | F | L | MPV FWD AOWA;AOWB;TBWA;TBWB | TJ | GCI18128 | Inner Joint | | 26 | 28 | 40 | 68.5 | 111 | |
| | 2006.05-2014.12 | 5MT | F | L | MPV FWD AOWA;AOWB;TBWA;TBWB | AAR | GCI81533 | Inner Joint | | 26 | 28 | 40 | 68.5 | 108 | |
| | 2006.05-2014.12 | AT | F | L/R | MPV FWD AOWA;AOWB;TBWA;TBWB | | GCO59344 | Outer Joint | | 40 | 26 | 57.7 | 52 | 63.5 | M |
| | 2006.05-2014.12 | AT | F | | MPV FWD AOWA;AOWB;TBWA;TBWB | Date From:2007.09 | GCO62045 | Outer Joint | | 40 | 26 | 57.7 | 52 | 62.5 | M |
| | 2006.05-2014.12 | MT | F | L/R | MPV FWD AOWA;AOWB;TBWA;TBWB | | GCO99271 | Outer Joint | | 40 | 28 | 57.7 | 51 | 63 | M |
| | 2006.05-2014.12 | MT | F | R | MPV FWD AOWA;AOWB;TBWA;TBWB | Date to:2012.10 | GCI18129 | Inner Joint | | 26 | 28 | 40 | 389 | 96.5 | |
| | 2006.05-2014.12 | 5MT | F | L | MPV FWD TBWA;TBWB | | GDS83397 | Drive Shaft | | 40 | 26 | 57.7 | 51 | 611 | |
| | 2006.05-2014.12 | 5MT | F | L | MPV FWD TBWA;TBWB | AAR | GCI81533 | Inner Joint | | 26 | 28 | 40 | 68.5 | 108 | |
| | 2006.05-2014.12 | 5MT/6MT | F | L | MPV FWD TBWA;TBWB | TJ | GCI18128 | Inner Joint | | 26 | 28 | 40 | 68.5 | 111 | |
| | 2006.05-2014.12 | 6AT/5MT/6MT | F | R | MPV FWD TBWA;TBWB | | GDS99212 | Drive Shaft | | 40 | 26 | 57.7 | 51 | 945 | |
| | 2006.05-2014.12 | AT | F | | MPV FWD TBWA;TBWB | Date From:2007.09 | GCO62045 | Outer Joint | | 40 | 26 | 57.7 | 52 | 62.5 | M |
| | 2006.05-2014.12 | MT | F | R | MPV FWD TBWA;TBWB | Date to:2012.10 | GCI18129 | Inner Joint | | 26 | 28 | 40 | 389 | 96.5 | |
| | 2006.05-2014.12 | | F | L/R | MPV FWD TBWA;TBWB | | GCO99271 | Outer Joint | | 40 | 28 | 57.7 | 51 | 63 | M |
| | 2010.03-2014.12 | 5MT | F | L | Box Body/MPV FWD AODE | | GDS83397 | Drive Shaft | | 40 | 26 | 57.7 | 51 | 611 | |
| | 2010.03-2014.12 | 5MT | F | R | Box Body/MPV FWD AODE | | GDS99212 | Drive Shaft | | 40 | 26 | 57.7 | 51 | 945 | |
| | 2010.03-2014.12 | 5MT | F | L | Box Body/MPV FWD AODE | TJ | GCI18128 | Inner Joint | | 26 | 28 | 40 | 68.5 | 111 | |
| | 2010.03-2014.12 | 5MT | F | L | Box Body/MPV FWD AODE | AAR | GCI81533 | Inner Joint | | 26 | 28 | 40 | 68.5 | 108 | |
| | 2010.03-2014.12 | 6MT | F | L/R | Box Body/MPV FWD AODE | | GCO99271 | Outer Joint | | 40 | 28 | 57.7 | 51 | 63 | M |
| 2.0 (110 kw) | 2015.01-2018.06 | 6MT | F | L | MPV 4WD T7CI;T7CJ;T7CL;T7CK | | GDS81874 | Drive Shaft | | 27 | 26 | 55 | 105 | 664 | |
| | 2015.01-2018.06 | 6MT | F | L/R | MPV 4WD T7CI;T7CJ;T7CL;T7CK | | GCO81552 | Outer Joint | | 27 | 28 | 55 | 105 | 66.5 | M |
| | 2015.01-2018.06 | 6MT | F | L | MPV 4WD T7CI;T7CJ;T7CL;T7CK | | GCI81533 | Inner Joint | | 26 | 28 | 40 | 68.5 | 108 | |
| | 2015.01-2018.06 | 6DCT | F | L/R | MPV FWD T7CI;T7CJ;T7CL;T7CK | | GCO81552 | Outer Joint | | 27 | 28 | 55 | 105 | 66.5 | M |
| | 2015.01-2018.06 | 6DCT | F | L | MPV FWD T7CI;T7CJ;T7CL;T7CK | | GCI81762 | Inner Joint | | 28 | 28 | 33.8 | 80 | 95.5 | |
| | 2015.01-2018.06 | 6MT | F | L | MPV FWD T7CI;T7CJ;T7CL;T7CK | | GDS81874 | Drive Shaft | | 27 | 26 | 55 | 105 | 664 | |
| | 2015.01-2018.06 | 6MT | F | R | MPV FWD T7CI;T7CJ;T7CL;T7CK | | GDS83141 | Drive Shaft | | 27 | 26 | 55 | 105 | 1025 | |
| | 2015.01-2018.06 | 6MT | F | L | MPV FWD T7CI;T7CJ;T7CL;T7CK | | GCI81533 | Inner Joint | | 26 | 28 | 40 | 68.5 | 108 | |
| | 2015.01-2018.06 | 6MT | F | R | MPV FWD T7CI;T7CJ;T7CL;T7CK | | GCI82393 | Inner Joint | | 26 | 28 | 40 | 403 | 96 | |
| | 2018.07-2023.04 | 6MT | F | R | MPV FWD YMCB | | GDS83141 | Drive Shaft | | 27 | 26 | 55 | 105 | 1025 | |
| | 2018.07-2023.04 | 6MT | F | L/R | MPV FWD YMCB | | GCO81552 | Outer Joint | | 27 | 28 | 55 | 105 | 66.5 | M |
| | 2018.07-2023.04 | 6MT | F | L | MPV FWD YMCB | | GCI81533 | Inner Joint | | 26 | 28 | 40 | 68.5 | 108 | |
| | 2018.07-2023.04 | 6MT | F | R | MPV FWD YMCB | | GCI82393 | Inner Joint | | 26 | 28 | 40 | 403 | 96 | |
| 2.0 (120 kw) | 2010.03-2014.12 | 6DCT | F | L | Box Body/MPV FWD TXWA | | GDS18340 | Drive Shaft | | 40 | 28 | 57.7 | 52 | 592 | |
| | 2010.03-2014.12 | 6DCT | F | R | Box Body/MPV FWD TXWA | Date from:2010.12 | GDS18347 | Drive Shaft | | 40 | 28 | 57.7 | 52 | 939 | |
| | 2010.03-2014.12 | 6DCT | F | R | Box Body/MPV FWD TXWA | Date to:2010.11 | GDS83391 | Drive Shaft | | 40 | 28 | 57.7 | 52 | 940 | |
| | 2010.03-2014.12 | 6DCT | F | L/R | Box Body/MPV FWD TXWA | Date to:2010.11 | GCO18269 | Outer Joint | | 40 | 26 | 57.7 | 52 | 63.5 | I |
| | 2010.03-2014.12 | 6DCT | F | R | Box Body/MPV FWD TXWA | Date to:2010.11 | GCI82178 | Inner Joint | | 28 | 26 | 34 | 371 | 103 | |
| | 2010.03-2014.12 | 6MT | F | L | Box Body/MPV FWD TXWA | | GDS83397 | Drive Shaft | | 40 | 26 | 57.7 | 51 | 611 | |

| | YEAR | TRANSM. | F/R | L/R | BODY STYLE & DRIVE TYPE & ENGINE | REMARKS | G-AP Ref. | PRODUCT | ABS | Technical Specifications | | | | | |
|---|---|---|---|---|---|---|---|---|---|---|---|---|---|---|---|
| | | | | | | | | | | A | B | C | H | L | P |
| **FORD** **S-Max** | | | | | | | | | | | | | | | |
| 2.0 (120 kw) | 2010.03-2014.12 | 6MT | F | R | Box Body/MPV FWD TXWA | | GDS99212 | Drive Shaft | | 40 | 26 | 57.7 | 51 | 945 | |
| | 2010.03-2014.12 | 6MT | F | L | Box Body/MPV FWD TXWA | | GCO99271 | Outer Joint | | 40 | 28 | 57.7 | 51 | 63 | M |
| | 2010.03-2014.12 | 6MT | F | L | Box Body/MPV FWD TXWA | AAR | GCI81533 | Inner Joint | | 26 | 28 | 40 | 68.5 | 108 | |
| | 2010.03-2014.12 | 6MT | F | R | Box Body/MPV FWD TXWA | | GCI18129 | Inner Joint | | 26 | 28 | 40 | 389 | 96.5 | |
| | 2010.03-2014.12 | 6DCT | F | R | MPV FWD TXWA | Date from:2010.12 | GDS18347 | Drive Shaft | | 40 | 28 | 57.7 | 52 | 939 | |
| | 2010.03-2014.12 | 6DCT | F | R | MPV FWD TXWA | Date to:2010.11 | GDS83391 | Drive Shaft | | 40 | 28 | 57.7 | 52 | 940 | |
| | 2010.03-2014.12 | 6DCT | F | L/R | MPV FWD TXWA | Date to:2010.11 | GCO18269 | Outer Joint | | 40 | 26 | 57.7 | 52 | 63.5 | I |
| | 2010.03-2014.12 | 6DCT | F | R | MPV FWD TXWA | Date to:2010.11 | GCI82178 | Inner Joint | | 28 | 26 | 34 | 371 | 103 | |
| | 2010.03-2014.12 | 6MT | F | L | MPV FWD TXWA | | GDS83397 | Drive Shaft | | 40 | 26 | 57.7 | 51 | 611 | |
| | 2010.03-2014.12 | 6MT | F | L | MPV FWD TXWA | AAR | GCI81533 | Inner Joint | | 26 | 28 | 40 | 68.5 | 108 | |
| | 2010.03-2014.12 | AT | F | L | MPV FWD TXWA | Date to:2010.12;Trans. code:MPS6 Powershift | GDS18340 | Drive Shaft | | 40 | 28 | 57.7 | 52 | 592 | |
| | 2010.03-2014.12 | AT | F | | MPV FWD TXWA | | GCO59344 | Outer Joint | | 40 | 26 | 57.7 | 52 | 63.5 | M |
| | 2010.03-2014.12 | AT/MT | F | L/R | MPV FWD TXWA | Trans. code:AWF21 | GCO99271 | Outer Joint | | 40 | 28 | 57.7 | 51 | 63 | M |
| | 2010.03-2014.12 | MT | F | R | MPV FWD TXWA | | GDS99212 | Drive Shaft | | 40 | 26 | 57.7 | 51 | 945 | |
| | 2010.03-2014.12 | MT | F | R | MPV FWD TXWA | Date to:2012.10 | GCI18129 | Inner Joint | | 26 | 28 | 40 | 389 | 96.5 | |
| 2.0 (132 kw) | 2015.01-2018.06 | 6DCT | F | L | MPV 4WD T8CH;T8CJ;T8CI;T8CG | | GCI81765 | Inner Joint | | 31 | 28 | 42.5 | 78.5 | 95.5 | |
| | 2015.01-2018.06 | 6DCT | F | R | MPV 4WD T8CH;T8CJ;T8CI;T8CG | | GCI81761 | Inner Joint | | 28 | 28 | 33.8 | 396.5 | 98.5 | |
| | 2015.01-2018.06 | 6MT | F | L/R | MPV 4WD T8CH;T8CJ;T8CI;T8CG | | GCO81552 | Outer Joint | | 27 | 28 | 55 | 105 | 66.5 | M |
| | 2015.01-2018.06 | 6DCT | F | L/R | MPV FWD T8CH;T8CJ;T8CI;T8CG | | GCO81552 | Outer Joint | | 27 | 28 | 55 | 105 | 66.5 | M |
| | 2015.01-2018.06 | 6DCT | F | L | MPV FWD T8CH;T8CJ;T8CI;T8CG | | GCI81762 | Inner Joint | | 28 | 28 | 33.8 | 80 | 95.5 | |
| | 2015.01-2018.06 | 6MT | F | L | MPV FWD T8CH;T8CJ;T8CI;T8CG | | GDS81874 | Drive Shaft | | 27 | 26 | 55 | 105 | 664 | |
| | 2015.01-2018.06 | 6MT | F | R | MPV FWD T8CH;T8CJ;T8CI;T8CG | | GDS83141 | Drive Shaft | | 27 | 26 | 55 | 105 | 1025 | |
| | 2015.01-2018.06 | 6MT | F | L | MPV FWD T8CH;T8CJ;T8CI;T8CG | | GCI81533 | Inner Joint | | 26 | 28 | 40 | 68.5 | 108 | |
| | 2015.01-2018.06 | 6MT | F | R | MPV FWD T8CH;T8CJ;T8CI;T8CG | | GCI82393 | Inner Joint | | 26 | 28 | 40 | 403 | 96 | |
| 2.0 (140 kw) | 2018.07-2023.04 | 6MT | F | L | MPV FWD BCCC | | GCI81533 | Inner Joint | | 26 | 28 | 40 | 68.5 | 108 | |
| | 2018.07-2023.04 | 6MT | F | R | MPV FWD BCCC | | GCI82393 | Inner Joint | | 26 | 28 | 40 | 403 | 96 | |
| 2.0 (146 kw) | 2010.07-2014.12 | AT | F | L | MPV FWD TNWB | | GDS18340 | Drive Shaft | | 40 | 28 | 57.7 | 52 | 592 | |
| | 2010.07-2014.12 | AT | F | R | MPV FWD TNWB | | GDS18341 | Drive Shaft | | 40 | 28 | 57.7 | 52 | 952 | |
| | 2010.07-2014.12 | AT | F | | MPV FWD TNWB | | GCO62045 | Outer Joint | | 40 | 26 | 57.7 | 52 | 62.5 | M |
| | 2010.07-2014.12 | AT/MT | F | | MPV FWD TNWB | | GCO99271 | Outer Joint | | 40 | 28 | 57.7 | 51 | 63 | M |
| | 2010.07-2014.12 | MT | F | R | MPV FWD TNWB | Date to:2012.10 | GCI18129 | Inner Joint | | 26 | 28 | 40 | 389 | 96.5 | |
| 2.0 (149 kw) | 2010.03-2014.12 | 6DCT | F | L | Box Body/MPV FWD TNWA | | GDS18340 | Drive Shaft | | 40 | 28 | 57.7 | 52 | 592 | |
| | 2010.03-2014.12 | 6DCT | F | R | Box Body/MPV FWD TNWA | | GDS18341 | Drive Shaft | | 40 | 28 | 57.7 | 52 | 952 | |
| | 2010.03-2014.12 | 6DCT | F | L/R | Box Body/MPV FWD TNWA | | GCO18269 | Outer Joint | | 40 | 26 | 57.7 | 52 | 63.5 | I |
| | 2010.03-2014.12 | AT | F | L | MPV FWD TNWA | | GDS18340 | Drive Shaft | | 40 | 28 | 57.7 | 52 | 592 | |
| | 2010.03-2014.12 | AT | F | R | MPV FWD TNWA | | GDS18341 | Drive Shaft | | 40 | 28 | 57.7 | 52 | 952 | |
| | 2010.03-2014.12 | AT | F | L/R | MPV FWD TNWA | | GCO59344 | Outer Joint | | 40 | 26 | 57.7 | 52 | 63.5 | M |
| | 2010.03-2014.12 | AT | F | | MPV FWD TNWA | | GCO62045 | Outer Joint | | 40 | 26 | 57.7 | 52 | 62.5 | M |
| | 2010.03-2014.12 | MT | F | L/R | MPV FWD TNWA | | GCO99271 | Outer Joint | | 40 | 28 | 57.7 | 51 | 63 | M |
| | 2010.03-2014.12 | MT | F | R | MPV FWD TNWA | Date to:2012.10 | GCI18129 | Inner Joint | | 26 | 28 | 40 | 389 | 96.5 | |
| 2.0 (154 kw) | 2015.01-2018.06 | 6AT | F | L/R | MPV FWD T9CB;T9CC | | GCO81552 | Outer Joint | | 27 | 28 | 55 | 105 | 66.5 | M |
| | 2015.01-2018.06 | 6DCT | F | L | MPV FWD T9CB;T9CC | | GCI81762 | Inner Joint | | 28 | 28 | 33.8 | 80 | 95.5 | |
| 2.0 (176 kw) | 2010.07-2014.12 | 6DCT | F | L | Box Body/MPV FWD TPWA | | GDS18340 | Drive Shaft | | 40 | 28 | 57.7 | 52 | 592 | |
| | 2010.07-2014.12 | 6DCT | F | R | Box Body/MPV FWD TPWA | | GDS18341 | Drive Shaft | | 40 | 28 | 57.7 | 52 | 952 | |
| | 2010.07-2014.12 | 6DCT | F | L/R | Box Body/MPV FWD TPWA | | GCO18269 | Outer Joint | | 40 | 26 | 57.7 | 52 | 63.5 | I |
| | 2010.07-2014.12 | AT | F | L | MPV FWD TPWA | | GDS18340 | Drive Shaft | | 40 | 28 | 57.7 | 52 | 592 | |
| | 2010.07-2014.12 | AT | F | R | MPV FWD TPWA | | GDS18341 | Drive Shaft | | 40 | 28 | 57.7 | 52 | 952 | |
| | 2010.07-2014.12 | AT | F | L/R | MPV FWD TPWA | | GCO59344 | Outer Joint | | 40 | 26 | 57.7 | 52 | 63.5 | M |
| | 2010.07-2014.12 | AT | F | | MPV FWD TPWA | | GCO62045 | Outer Joint | | 40 | 26 | 57.7 | 52 | 62.5 | M |
| | 2010.07-2014.12 | MT | F | L/R | MPV FWD TPWA | | GCO99271 | Outer Joint | | 40 | 28 | 57.7 | 51 | 63 | M |
| | 2010.07-2014.12 | MT | F | R | MPV FWD TPWA | Date to:2012.10 | GCI18129 | Inner Joint | | 26 | 28 | 40 | 389 | 96.5 | |
| 2.2 (129 kw) | 2008.03-2012.12 | 6AT | F | L | MPV FWD Q4WA | | GCI83032 | Inner Joint | | 31 | 28 | 36.2 | 66 | 90 | |
| | 2008.03-2012.12 | 6AT | F | R | MPV FWD Q4WA | | GCI83031 | Inner Joint | | 28 | 28 | 33 | 391.5 | 95.5 | |
| | 2008.03-2012.12 | 6AT/6MT | F | L/R | MPV FWD Q4WA | | GCO99271 | Outer Joint | | 40 | 28 | 57.7 | 51 | 63 | M |
| | 2008.03-2012.12 | AT | F | L | MPV FWD Q4WA | | GDS83288 | Drive Shaft | | 40 | 31 | 57.7 | 51 | 582 | |
| | 2008.03-2012.12 | AT | F | R | MPV FWD Q4WA | | GDS83289 | Drive Shaft | | 40 | 28 | 57.7 | 51 | 932 | |
| | 2008.03-2012.12 | MT | F | L | MPV FWD Q4WA | | GDS18363 | Drive Shaft | | 40 | 31 | 57.7 | 52 | 588.5 | |
| | 2008.03-2012.12 | MT | F | R | MPV FWD Q4WA | Trans. code:MMT6 | GDS99212 | Drive Shaft | | 40 | 26 | 57.7 | 51 | 945 | |
| | 2008.03-2012.12 | MT | F | R | MPV FWD Q4WA | Date to:2012.10 | GCI18129 | Inner Joint | | 26 | 28 | 40 | 389 | 96.5 | |
| 2.2 (147 kw) | 2010.07-2014.12 | AT/MT | F | L/R | MPV FWD KNWA | Trans. code:AWF21;Trans. code:MMT6 | GCO99271 | Outer Joint | | 40 | 28 | 57.7 | 51 | 63 | M |
| | 2010.07-2014.12 | MT | F | L | MPV FWD KNWA | | GDS18363 | Drive Shaft | | 40 | 31 | 57.7 | 52 | 588.5 | |
| | 2010.07-2014.12 | MT | F | R | MPV FWD KNWA | | GDS18350 | Drive Shaft | | 40 | 28 | 57.7 | 52 | 963 | |
| | 2010.07-2014.12 | MT | F | R | MPV FWD KNWA | Trans. code:MMT6 | GDS99212 | Drive Shaft | | 40 | 26 | 57.7 | 51 | 945 | |
| | 2010.07-2014.12 | MT | F | R | MPV FWD KNWA | Date to:2012.10 | GCI18129 | Inner Joint | | 26 | 28 | 40 | 389 | 96.5 | |
| 2.3 (118 kw) | 2007.07-2014.12 | 6AT | F | R | MPV FWD SEWA | | GCO62045 | Outer Joint | | 40 | 26 | 57.7 | 52 | 62.5 | M |

| | YEAR | TRANSM. | F/R | L/R | BODY STYLE & DRIVE TYPE & ENGINE | REMARKS | G-AP Ref. | PRODUCT | ABS | Technical Specifications A | B | C | H | L | P |
|---|---|---|---|---|---|---|---|---|---|---|---|---|---|---|---|
| **FORD** | | | | | | | | | | | | | | | |
| **S-Max** | | | | | | | | | | | | | | | |
| 2.3 (118 kw) | 2007.07-2014.12 | AT | F | L | MPV FWD SEWA | | GDS18346 | Drive Shaft | | 40 | 31 | 57.7 | 52 | 559 | |
| | 2007.07-2014.12 | AT | F | R | MPV FWD SEWA | | GDS61106 | Drive Shaft | | 40 | 31 | 57.7 | 51 | 945 | |
| | 2007.07-2014.12 | | F | L | MPV FWD SEWA | | GCI18267 | Inner Joint | | 31 | 26 | 36.2 | 68 | 93 | |
| 2.5 (162 kw) | 2006.05-2014.12 | 6MT | F | L | MPV FWD HUWA | | GDS21070 | Drive Shaft | | 40 | 26 | 57.7 | 52 | 556 | |
| | 2006.05-2014.12 | 6MT | F | L | MPV FWD HUWA | | GCO59285 | Outer Joint | | 40 | 27 | 57.7 | 52 | 63.5 | M |
| | 2006.05-2014.12 | 6MT | F | R | MPV FWD HUWA | | GCO59441 | Outer Joint | | 40 | 27 | 57.7 | 52 | 63.5 | M |
| | 2006.05-2014.12 | 6MT | F | R | MPV FWD HUWA | | GCI81076 | Inner Joint | | 26 | 28 | 40 | 522.5 | 123.7 | |
| | 2006.05-2014.12 | | F | R | MPV FWD HUWA | | GDS18348 | Drive Shaft | | 40 | 26 | 57.7 | 52 | 1001 | |
| **Scorpio** | | | | | | | | | | | | | | | |
| 2.0 (85 kw) | 1994.10-1997.12 | | R | | Estate RWD NSD | | GCI82006 | Inner Joint | | | 25 | | | 32 | |
| | 1994.10-1998.08 | | R | | Saloon RWD NSD | | GCI82006 | Inner Joint | | | 25 | | | 32 | |
| 2.0 (100 kw) | 1994.10-1996.05 | | R | | Estate RWD N3A | | GCI82006 | Inner Joint | | | 25 | | | 32 | |
| | 1994.10-1996.05 | | R | | Saloon RWD N3A | | GCI82006 | Inner Joint | | | 25 | | | 32 | |
| 2.3 (108 kw) | 1996.06-1998.12 | | R | | Estate RWD Y5A | | GCI82006 | Inner Joint | | | 25 | | | 32 | |
| | 1996.06-1998.12 | | R | | Saloon RWD Y5A | | GCI82006 | Inner Joint | | | 25 | | | 32 | |
| 2.5 (85 kw) | 1994.10-1996.06 | | R | | Estate RWD SCC | | GCI82006 | Inner Joint | | | 25 | | | 32 | |
| | 1994.10-1996.06 | | R | | Saloon RWD SCC | | GCI82006 | Inner Joint | | | 25 | | | 32 | |
| 2.5 (92 kw) | 1996.06-1998.12 | | R | | Estate RWD SCD | | GCI82006 | Inner Joint | | | 25 | | | 32 | |
| | 1996.06-1998.12 | | R | | Saloon RWD SCD | | GCI82006 | Inner Joint | | | 25 | | | 32 | |
| **StreetKa** | | | | | | | | | | | | | | | |
| 1.6 (70 kw) | 2003.05-2005.07 | AT/MT | F | L/R | Cabriolet FWD CDRA/CDRB | | GCO18009 | Outer Joint | | 25 | 22 | 53.3 | 90 | 51 | M |
| | 2003.05-2005.07 | MT | F | L | Cabriolet FWD CDRA/CDRB | | GDS82179 | Drive Shaft | | 25 | 23 | 53.3 | 87 | 588 | |
| | 2003.05-2005.07 | MT | F | R | Cabriolet FWD CDRA/CDRB | | GDS82178 | Drive Shaft | | 25 | 23 | 53.3 | 87 | 868 | |
| | 2003.05-2005.07 | MT | F | R | Cabriolet FWD CDRA/CDRB | | GDS99044 | Drive Shaft | | 25 | 23 | 56.5 | 88.5 | 866 | |
| | 2003.05-2005.07 | MT | F | L | Cabriolet FWD CDRA/CDRB | | GCI18168 | Inner Joint | | 23 | 22 | 40 | 61 | 90 | |
| | 2003.05-2005.07 | MT | F | R | Cabriolet FWD CDRA/CDRB | | GCI18086 | Inner Joint | | 23 | 22 | 40 | 61 | 90 | |
| | 2003.05-2005.07 | | F | | Cabriolet FWD CDRA/CDRB | | GCO18222 | Outer Joint | | 25 | 23 | 53.3 | 87 | 56 | M |
| **Tourneo Connect** | | | | | | | | | | | | | | | |
| 1.8 (55 kw) | 2002.06-2013.12 | 5MT | F | L | MPV FWD BHPA;P7PA;P7PB;R2PA | | GDS18041 | Drive Shaft | | 25 | 26 | 53.3 | 94.5 | 632 | |
| | 2002.06-2013.12 | 5MT | F | R | MPV FWD BHPA;P7PA;P7PB;R2PA | | GDS99042 | Drive Shaft | | 25 | 26 | 53.3 | 94.5 | 963 | |
| | 2002.06-2013.12 | 5MT | F | L/R | MPV FWD BHPA;P7PA;P7PB;R2PA | | GCO18067 | Outer Joint | | 25 | 26 | 53.3 | 94.5 | 64.5 | M |
| | 2002.06-2013.12 | 5MT | F | L/R | MPV FWD BHPA;P7PA;P7PB;R2PA | | GCO18207 | Outer Joint | | 25 | 24 | 53.5 | 94.5 | 62 | M |
| | 2002.06-2013.12 | 5MT | F | L | MPV FWD BHPA;P7PA;P7PB;R2PA | Date from:2003.04,Date to:2010.07;TJ | GCI18059 | Inner Joint | | 26 | 26 | 40 | 68.5 | 111 | |
| | 2002.06-2013.12 | 5MT | F | L | MPV FWD BHPA;P7PA;P7PB;R2PA | Date from:2003.04,Date to:2010.07;TJ | GCI18101 | Inner Joint | | 26 | 24 | 40 | 69 | 111.5 | |
| | 2002.06-2013.12 | 5MT | F | R | MPV FWD BHPA;P7PA;P7PB;R2PA | | GCI18058 | Inner Joint | | 26 | 26 | 40 | 389 | 99.5 | |
| | 2002.06-2013.12 | 5MT | F | R | MPV FWD BHPA;P7PA;P7PB;R2PA | | GCI18102 | Inner Joint | | 26 | 24 | 40 | 390 | 97 | |
| 1.8 (66 kw) | 2002.06-2013.12 | 5MT | F | L | MPV FWD HCPA;HCPB;P9PA;P9PB;P9PC;P9PD;R3PA;R9PE;R9PF;HCPC;HCPD | | GDS18041 | Drive Shaft | | 25 | 26 | 53.3 | 94.5 | 632 | |
| | 2002.06-2013.12 | 5MT | F | R | MPV FWD HCPA;HCPB;P9PA;P9PB;P9PC;P9PD;R3PA;R9PE;R9PF;HCPC;HCPD | | GDS99042 | Drive Shaft | | 25 | 26 | 53.3 | 94.5 | 963 | |
| | 2002.06-2013.12 | 5MT | F | L/R | MPV FWD HCPA;HCPB;P9PA;P9PB;P9PC;P9PD;R3PA;R9PE;R9PF;HCPC;HCPD | | GCO18067 | Outer Joint | | 25 | 26 | 53.3 | 94.5 | 64.5 | M |
| | 2002.06-2013.12 | 5MT | F | L/R | MPV FWD HCPA;HCPB;P9PA;P9PB;P9PC;P9PD;R3PA;R9PE;R9PF;HCPC;HCPD | | GCO18207 | Outer Joint | | 25 | 24 | 53.5 | 94.5 | 62 | M |
| | 2002.06-2013.12 | 5MT | F | L | MPV FWD HCPA;HCPB;P9PA;P9PB;P9PC;P9PD;R3PA;R9PE;R9PF;HCPC;HCPD | | GCI18059 | Inner Joint | | 26 | 26 | 40 | 68.5 | 111 | |
| | 2002.06-2013.12 | 5MT | F | L | MPV FWD HCPA;HCPB;P9PA;P9PB;P9PC;P9PD;R3PA;R9PE;R9PF;HCPC;HCPD | | GCI18101 | Inner Joint | | 26 | 24 | 40 | 69 | 111.5 | |
| | 2002.06-2013.12 | 5MT | F | R | MPV FWD HCPA;HCPB;P9PA;P9PB;P9PC;P9PD;R3PA;R9PE;R9PF;HCPC;HCPD | | GCI18058 | Inner Joint | | 26 | 26 | 40 | 389 | 99.5 | |
| | 2002.06-2013.12 | 5MT | F | R | MPV FWD HCPA;HCPB;P9PA;P9PB;P9PC;P9PD;R3PA;R9PE;R9PF;HCPC;HCPD | | GCI18102 | Inner Joint | | 26 | 24 | 40 | 390 | 97 | |
| 1.8 (81 kw) | 2006.08-2013.12 | 5MT | F | L | MPV FWD RWPA;RWPC;RWPD;RWPB | | GDS18041 | Drive Shaft | | 25 | 26 | 53.3 | 94.5 | 632 | |
| | 2006.08-2013.12 | 5MT | F | R | MPV FWD RWPA;RWPC;RWPD;RWPB | | GDS99042 | Drive Shaft | | 25 | 26 | 53.3 | 94.5 | 963 | |
| | 2006.08-2013.12 | 5MT | F | L/R | MPV FWD RWPA;RWPC;RWPD;RWPB | | GCO18067 | Outer Joint | | 25 | 26 | 53.3 | 94.5 | 64.5 | M |
| | 2006.08-2013.12 | 5MT | F | L/R | MPV FWD RWPA;RWPC;RWPD;RWPB | | GCO18207 | Outer Joint | | 25 | 24 | 53.5 | 94.5 | 62 | M |
| | 2006.08-2013.12 | 5MT | F | L | MPV FWD RWPA;RWPC;RWPD;RWPB | | GCI18059 | Inner Joint | | 26 | 26 | 40 | 68.5 | 111 | |
| | 2006.08-2013.12 | 5MT | F | L | MPV FWD RWPA;RWPC;RWPD;RWPB | | GCI18101 | Inner Joint | | 26 | 24 | 40 | 69 | 111.5 | |
| | 2006.08-2013.12 | 5MT | F | R | MPV FWD RWPA;RWPC;RWPD;RWPB | | GCI18058 | Inner Joint | | 26 | 26 | 40 | 389 | 99.5 | |
| | 2006.08-2013.12 | 5MT | F | R | MPV FWD RWPA;RWPC;RWPD;RWPB | | GCI18102 | Inner Joint | | 26 | 24 | 40 | 390 | 97 | |
| 1.8 (85 kw) | 2002.06-2013.12 | 5MT | F | L | MPV FWD EYPA;EYPC;EYPD;EYPB | | GDS18041 | Drive Shaft | | 25 | 26 | 53.3 | 94.5 | 632 | |
| | 2002.06-2013.12 | 5MT | F | R | MPV FWD EYPA;EYPC;EYPD;EYPB | | GDS99042 | Drive Shaft | | 25 | 26 | 53.3 | 94.5 | 963 | |
| | 2002.06-2013.12 | 5MT | F | L/R | MPV FWD EYPA;EYPC;EYPD;EYPB | | GCO18067 | Outer Joint | | 25 | 26 | 53.3 | 94.5 | 64.5 | M |
| | 2002.06-2013.12 | 5MT | F | L/R | MPV FWD EYPA;EYPC;EYPD;EYPB | | GCO18207 | Outer Joint | | 25 | 24 | 53.5 | 94.5 | 62 | M |
| | 2002.06-2013.12 | 5MT | F | L | MPV FWD EYPA;EYPC;EYPD;EYPB | | GCI18059 | Inner Joint | | 26 | 26 | 40 | 68.5 | 111 | |
| | 2002.06-2013.12 | 5MT | F | L | MPV FWD EYPA;EYPC;EYPD;EYPB | | GCI18101 | Inner Joint | | 26 | 24 | 40 | 69 | 111.5 | |
| | 2002.06-2013.12 | 5MT | F | R | MPV FWD EYPA;EYPC;EYPD;EYPB | TJ | GCI18058 | Inner Joint | | 26 | 26 | 40 | 389 | 99.5 | |
| | 2002.06-2013.12 | 5MT | F | R | MPV FWD EYPA;EYPC;EYPD;EYPB | | GCI18102 | Inner Joint | | 26 | 24 | 40 | 390 | 97 | |
| **Tourneo Connect/Grand Tourneo Connect** | | | | | | | | | | | | | | | |
| 1.5 (55 kw) | 2015.05-2022.12 | 5MT | F | L | MPV FWD XUGA | Date From:2016.09;Date To:2018.05 | GDS83222 | Drive Shaft | | 27 | 26 | 62.5 | 96 | 645 | |
| | 2015.05-2022.12 | 5MT | F | R | MPV FWD XUGA | Date From:2016.09 | GDS83221 | Drive Shaft | | 27 | 26 | 62.5 | 96 | 982 | |
| | 2015.05-2022.12 | 5MT | F | L | MPV FWD XUGA | Date from:2016.09,Date to:2018.05 | GCO82320 | Outer Joint | | 27 | 26 | 62.5 | 96 | 62 | M |
| | 2015.05-2022.12 | 5MT | F | R | MPV FWD XUGA | Date From:2016.09 | GCO82350 | Outer Joint | | 27 | 35 | 62.5 | 96 | 62 | M |

| | YEAR | TRANSM. | F/R | L/R | BODY STYLE & DRIVE TYPE & ENGINE | REMARKS | G-AP Ref. | PRODUCT | ABS | Technical Specifications | | | | | |
|---|---|---|---|---|---|---|---|---|---|---|---|---|---|---|---|
| | | | | | | | | | | A | B | C | H | L | P |
| **FORD** Tourneo Connect/Grand Tourneo Connect | | | | | | | | | | | | | | | |
| 1.5 (55 kw) | 2015.05-2022.12 | 5MT | F | L | MPV FWD XUGA | | GCI82180 | Inner Joint | | 26 | 32 | 40 | 68.5 | 110.5 | |
| | 2015.05-2022.12 | 5MT | F | R | MPV FWD XUGA | | GCI82179 | Inner Joint | | 26 | 32 | 40 | 388 | 99 | |
| | 2015.05-2022.12 | 6MT | F | R | MPV FWD XUGA | | GDS84091 | Drive Shaft | | 27 | 26 | 62.5 | 96 | 983 | |
| | 2015.05-2022.12 | MT | F | R | MPV FWD XUGA | | GDS18420 | Drive Shaft | | 27 | 26 | 62.8 | 95.5 | 981 | |
| | 2018.05-2022.12 | 6MT | F | L | MPV FWD BEGA | | GDS56321 | Drive Shaft | | 27 | 28 | 62.5 | 96 | 633 | |
| | 2018.05-2022.12 | 6MT | F | R | MPV FWD BEGA | | GDS56713 | Drive Shaft | | 27 | 28 | 62.5 | 96 | 985 | |
| | 2018.05-2022.12 | 6MT | F | L/R | MPV FWD BEGA | | GCO82320 | Outer Joint | | 27 | 26 | 62.5 | 96 | 62 | M |
| | 2018.05-2022.12 | 6MT | F | L | MPV FWD BEGA | | GCI83240 | Inner Joint | | 28 | 35 | 40 | 64 | 112 | |
| | 2018.05-2022.12 | 6MT | F | R | MPV FWD BEGA | | GCI84311 | Inner Joint | | 28 | 35 | 40 | 393.5 | 98.5 | |
| 1.5 (70 kw) | 2016.08-2022.12 | 6DCT | F | L | MPV FWD XXGA | Date to:2020.09 | GDS56174 | Drive Shaft | | 27 | 28 | 60.5 | 96 | 635 | |
| | 2016.08-2022.12 | 6DCT | F | R | MPV FWD XXGA | | GDS84331 | Drive Shaft | | 27 | 28 | 60.5 | 96 | 983 | |
| | 2016.08-2022.12 | 6DCT | F | L | MPV FWD XXGA | | GCI81762 | Inner Joint | | 28 | 28 | 33.8 | 80 | 95.5 | |
| | 2016.08-2022.12 | 6DCT | F | R | MPV FWD XXGA | | GCI82714 | Inner Joint | | 28 | 28 | 33.85 | 377 | 95.5 | |
| | 2016.08-2022.12 | | F | L/R | MPV FWD XXGA | | GCO82786 | Outer Joint | | 27 | 28 | 60.5 | 96 | 65 | M |
| 1.5 (74 kw) | 2015.05-2022.12 | 5MT | F | L | MPV FWD XVGB, XXGA, XVGC, XVGA | Date From:2016.09;Date To:2018.05 | GDS83222 | Drive Shaft | | 27 | 26 | 62.5 | 96 | 645 | |
| | 2015.05-2022.12 | 5MT | F | R | MPV FWD XVGB, XXGA, XVGC, XVGA | Date From:2016.09 | GDS83221 | Drive Shaft | | 27 | 26 | 62.5 | 96 | 982 | |
| | 2015.05-2022.12 | 5MT | F | L | MPV FWD XVGB, XXGA, XVGC, XVGA | Date from:2016.09,Date to:2018.05 | GCO82320 | Outer Joint | | 27 | 26 | 62.5 | 96 | 62 | M |
| | 2015.05-2022.12 | 5MT | F | R | MPV FWD XVGB, XXGA, XVGC, XVGA | Date From:2016.09 | GCO82350 | Outer Joint | | 27 | 35 | 62.5 | 96 | 62 | M |
| | 2015.05-2022.12 | 5MT | F | L | MPV FWD XVGB, XXGA, XVGC, XVGA | | GCI82180 | Inner Joint | | 26 | 32 | 40 | 68.5 | 110.5 | |
| | 2015.05-2022.12 | 5MT | F | R | MPV FWD XVGB, XXGA, XVGC, XVGA | | GCI82179 | Inner Joint | | 26 | 32 | 40 | 388 | 99 | |
| | 2015.05-2022.12 | MT | F | R | MPV FWD XVGB, XXGA, XVGC, XVGA | | GDS18420 | Drive Shaft | | 27 | 26 | 62.8 | 95.5 | 981 | |
| | 2018.05-2022.12 | 6MT | F | L | MPV FWD Z2GA | | GDS56321 | Drive Shaft | | 27 | 28 | 62.5 | 96 | 633 | |
| | 2018.05-2022.12 | 6MT | F | R | MPV FWD Z2GA | | GDS56713 | Drive Shaft | | 27 | 28 | 62.5 | 96 | 985 | |
| | 2018.05-2022.12 | 6MT | F | L/R | MPV FWD Z2GA | | GCO82320 | Outer Joint | | 27 | 26 | 62.5 | 96 | 62 | M |
| | 2018.05-2022.12 | 6MT | F | L | MPV FWD Z2GA | | GCI83240 | Inner Joint | | 28 | 35 | 40 | 64 | 112 | |
| | 2018.05-2022.12 | 6MT | F | R | MPV FWD Z2GA | | GCI84311 | Inner Joint | | 28 | 35 | 40 | 393.5 | 98.5 | |
| | 2018.05-2022.12 | 8AT | F | L | MPV FWD Z2GA | | GDS58121 | Drive Shaft | | 27 | 35 | 62.5 | 95.5 | 684 | |
| | 2018.05-2022.12 | 8AT | F | R | MPV FWD Z2GA | | GDS58094 | Drive Shaft | | 27 | 35 | 62.5 | 95.5 | 933 | |
| | 2018.05-2022.12 | 8AT | F | L/R | MPV FWD Z2GA | | GCO18277 | Outer Joint | | 27 | 33 | 62.8 | 95.5 | 59 | M |
| | 2018.05-2022.12 | 8AT | F | R | MPV FWD Z2GA | | GCI84014 | Inner Joint | | 35 | 33 | 38 | 341 | 97 | |
| 1.5 (88 kw) | 2015.05-2022.12 | 6DCT | F | L | MPV FWD XWGA, XWGB, XWGC | | GDS56174 | Drive Shaft | | 27 | 28 | 60.5 | 96 | 635 | |
| | 2015.05-2022.12 | 6DCT | F | R | MPV FWD XWGA, XWGB, XWGC | | GDS84331 | Drive Shaft | | 27 | 28 | 60.5 | 96 | 983 | |
| | 2015.05-2022.12 | 6DCT | F | L/R | MPV FWD XWGA, XWGB, XWGC | | GCO82786 | Outer Joint | | 27 | 28 | 60.5 | 96 | 65 | M |
| | 2015.05-2022.12 | 6DCT | F | L | MPV FWD XWGA, XWGB, XWGC | | GCI81762 | Inner Joint | | 28 | 28 | 33.8 | 80 | 95.5 | |
| | 2015.05-2022.12 | 6DCT | F | R | MPV FWD XWGA, XWGB, XWGC | | GCI82714 | Inner Joint | | 28 | 28 | 33.85 | 377 | 95.5 | |
| | 2015.05-2022.12 | 6MT | F | L | MPV FWD XWGA, XWGB, XWGC | | GDS83169 | Drive Shaft | | 27 | 26 | 62.5 | 96 | 648 | |
| | 2015.05-2022.12 | 6MT | F | R | MPV FWD XWGA, XWGB, XWGC | | GDS84091 | Drive Shaft | | 27 | 26 | 62.5 | 96 | 983 | |
| | 2015.05-2022.12 | 6MT | F | L/R | MPV FWD XWGA, XWGB, XWGC | | GCO82320 | Outer Joint | | 27 | 26 | 62.5 | 96 | 62 | M |
| | 2015.05-2022.12 | 6MT | F | L | MPV FWD XWGA, XWGB, XWGC | | GCI81526 | Inner Joint | | 26 | 32 | 40 | 61 | 116 | |
| | 2015.05-2022.12 | 6MT | F | R | MPV FWD XWGA, XWGB, XWGC | Date from:2018.06 | GCI81338 | Inner Joint | | 26 | 32 | 40 | 383 | 99 | |
| | 2018.05-2022.12 | 6MT | F | L | MPV FWD ZTGA | | GDS56321 | Drive Shaft | | 27 | 28 | 62.5 | 96 | 633 | |
| | 2018.05-2022.12 | 6MT | F | R | MPV FWD ZTGA | | GDS56713 | Drive Shaft | | 27 | 28 | 62.5 | 96 | 985 | |
| | 2018.05-2022.12 | 6MT | F | L/R | MPV FWD ZTGA | | GCO82320 | Outer Joint | | 27 | 26 | 62.5 | 96 | 62 | M |
| | 2018.05-2022.12 | 6MT | F | L | MPV FWD ZTGA | | GCI83240 | Inner Joint | | 28 | 35 | 40 | 64 | 112 | |
| | 2018.05-2022.12 | 6MT | F | R | MPV FWD ZTGA | | GCI84311 | Inner Joint | | 28 | 35 | 40 | 393.5 | 98.5 | |
| | 2018.05-2022.12 | 8AT | F | L | MPV FWD ZTGA | | GDS58121 | Drive Shaft | | 27 | 35 | 62.5 | 95.5 | 684 | |
| | 2018.05-2022.12 | 8AT | F | R | MPV FWD ZTGA | | GDS58094 | Drive Shaft | | 27 | 35 | 62.5 | 95.5 | 933 | |
| | 2018.05-2022.12 | 8AT | F | L/R | MPV FWD ZTGA | | GCO18277 | Outer Joint | | 27 | 33 | 62.8 | 95.5 | 59 | M |
| | 2018.05-2022.12 | 8AT | F | R | MPV FWD ZTGA | | GCI84014 | Inner Joint | | 35 | 33 | 38 | 341 | 97 | |
| 1.6 (55 kw) | 2013.09-2022.12 | 5MT | F | L | MPV FWD UBGA | | GDS56085 | Drive Shaft | | 27 | 26 | 62.8 | 95.5 | 648 | |
| | 2013.09-2022.12 | 5MT | F | R | MPV FWD UBGA | | GDS18420 | Drive Shaft | | 27 | 26 | 62.8 | 95.5 | 981 | |
| | 2013.09-2022.12 | 5MT | F | L | MPV FWD UBGA | | GCO18277 | Outer Joint | | 27 | 33 | 62.8 | 95.5 | 59 | M |
| | 2013.09-2022.12 | 5MT | F | L | MPV FWD UBGA | | GCI82180 | Inner Joint | | 26 | 32 | 40 | 68.5 | 110.5 | |
| | 2013.09-2022.12 | MT | F | L/R | MPV FWD UBGA | Date from:2018.06 | GCO18276 | Outer Joint | | 27 | 33 | 62.8 | 95.5 | 59 | M |
| 1.6 (70 kw) | 2013.09-2022.12 | 5MT | F | L | MPV FWD TZGA, TZGB | | GDS56085 | Drive Shaft | | 27 | 26 | 62.8 | 95.5 | 648 | |
| | 2013.09-2022.12 | 5MT | F | R | MPV FWD TZGA, TZGB | | GDS18420 | Drive Shaft | | 27 | 26 | 62.8 | 95.5 | 981 | |
| | 2013.09-2022.12 | 5MT | F | L | MPV FWD TZGA, TZGB | | GCO18277 | Outer Joint | | 27 | 33 | 62.8 | 95.5 | 59 | M |
| | 2013.09-2022.12 | 5MT | F | L | MPV FWD TZGA, TZGB | | GCI82180 | Inner Joint | | 26 | 32 | 40 | 68.5 | 110.5 | |
| | 2013.09-2022.12 | MT | F | R | MPV FWD TZGA, TZGB | Date from:2018.06 | GCO18276 | Outer Joint | | 27 | 33 | 62.8 | 95.5 | 59 | M |
| 1.6 (85 kw) | 2013.09-2022.12 | 6MT | F | L | MPV FWD T1GA | | GDS56085 | Drive Shaft | | 27 | 26 | 62.8 | 95.5 | 648 | |
| | 2013.09-2022.12 | 6MT | F | R | MPV FWD T1GA | | GDS18420 | Drive Shaft | | 27 | 26 | 62.8 | 95.5 | 981 | |
| | 2013.09-2022.12 | 6MT | F | L | MPV FWD T1GA | | GCO18277 | Outer Joint | | 27 | 33 | 62.8 | 95.5 | 59 | M |
| | 2013.09-2022.12 | 6MT | F | L | MPV FWD T1GA | | GCI82180 | Inner Joint | | 26 | 32 | 40 | 68.5 | 110.5 | |
| | 2013.09-2022.12 | MT | F | R | MPV FWD T1GA | Date from:2018.06 | GCO18276 | Outer Joint | | 27 | 33 | 62.8 | 95.5 | 59 | M |
| 1.6 (110 kw) | 2013.11-2022.12 | MT | F | L/R | MPV FWD JQGA | Date from:2015.01 | GCO18240 | Outer Joint | | 27 | 26 | 62.7 | 96 | 62.5 | M |

| | YEAR | TRANSM. | F/R | L/R | BODY STYLE & DRIVE TYPE & ENGINE | REMARKS | G-AP Ref. | PRODUCT | ABS | Technical Specifications A | B | C | H | L | P |
|---|---|---|---|---|---|---|---|---|---|---|---|---|---|---|---|
| **FORD** | | | | | | | | | | | | | | | |
| **Tourneo Courier** | | | | | | | | | | | | | | | |
| 1.0 (74 kw) | 2014.02-2023.12 | 5MT/6MT | F | L | MPV FWD SFCA;SFCB;SFCC;SFCD;SFCE;SFCF | Date to:2018.03 | GDS18516 | Drive Shaft | | 25 | 23 | 53.3 | 89 | 614 | |
| | 2014.02-2023.12 | 5MT/6MT | F | L | MPV FWD SFCA;SFCB;SFCC;SFCD;SFCE;SFCF | Date from:2018.04 | GDS82853 | Drive Shaft | | 25 | 23 | 53.4 | 88.5 | 615 | |
| | 2014.02-2023.12 | 5MT/6MT | F | R | MPV FWD SFCA;SFCB;SFCC;SFCD;SFCE;SFCF | Date to:2018.03 | GDS18517 | Drive Shaft | | 25 | 23 | 53.3 | 89 | 912 | |
| | 2014.02-2023.12 | 5MT/6MT | F | R | MPV FWD SFCA;SFCB;SFCC;SFCD;SFCE;SFCF | Date from:2018.04 | GDS82854 | Drive Shaft | | 25 | 23 | 53.4 | 88.5 | 918 | |
| | 2014.02-2023.12 | 5MT/6MT | F | L/R | MPV FWD SFCA;SFCB;SFCC;SFCD;SFCE;SFCF | Date to:2018.03 | GCO18014 | Outer Joint | | 25 | 21 | 53.2 | 89 | 54 | M |
| | 2014.02-2023.12 | 5MT/6MT | F | L/R | MPV FWD SFCA;SFCB;SFCC;SFCD;SFCE;SFCF | Date from:2018.04 | GCO82257 | Outer Joint | | 25 | 21 | 53.4 | 88.5 | 54 | M |
| | 2014.02-2023.12 | 5MT/6MT | F | L | MPV FWD SFCA;SFCB;SFCC;SFCD;SFCE;SFCF | Date to:2018.03 | GCI18113 | Inner Joint | | 23 | 21 | 40 | 61.5 | 96.5 | |
| | 2014.02-2023.12 | 5MT/6MT | F | L/R | MPV FWD SFCA;SFCB;SFCC;SFCD;SFCE;SFCF | Date from:2018.04 | GCI82085 | Inner Joint | | 23 | 21 | 40 | 60.5 | 106 | |
| 1.5 (55 kw) | 2014.02-2023.12 | 5MT/6MT | F | L | MPV FWD UGCA;UGCB;XUCC;XUCD;XWCA;XWCB;XUCE;XUCF;XUCG | Date from:2018.04 | GDS82853 | Drive Shaft | | 25 | 23 | 53.4 | 88.5 | 615 | |
| | 2014.02-2023.12 | 5MT/6MT | F | R | MPV FWD UGCA;UGCB;XUCC;XUCD;XWCA;XWCB;XUCE;XUCF;XUCG | Date to:2018.03 | GDS18517 | Drive Shaft | | 25 | 23 | 53.3 | 89 | 912 | |
| | 2014.02-2023.12 | 5MT/6MT | F | R | MPV FWD UGCA;UGCB;XUCC;XUCD;XWCA;XWCB;XUCE;XUCF;XUCG | Date from:2018.04 | GDS82854 | Drive Shaft | | 25 | 23 | 53.4 | 88.5 | 918 | |
| | 2014.02-2023.12 | 5MT/6MT | F | L/R | MPV FWD UGCA;UGCB;XUCC;XUCD;XWCA;XWCB;XUCE;XUCF;XUCG | Date to:2018.03 | GCO18014 | Outer Joint | | 25 | 21 | 53.2 | 89 | 54 | M |
| | 2014.02-2023.12 | 5MT/6MT | F | L/R | MPV FWD UGCA;UGCB;XUCC;XUCD;XWCA;XWCB;XUCE;XUCF;XUCG | Date from:2018.04 | GCO82257 | Outer Joint | | 25 | 21 | 53.4 | 88.5 | 54 | M |
| | 2014.02-2023.12 | 5MT/6MT | F | L/R | MPV FWD UGCA;UGCB;XUCC;XUCD;XWCA;XWCB;XUCE;XUCF;XUCG | Date from:2018.04 | GCI82085 | Inner Joint | | 23 | 21 | 40 | 60.5 | 106 | |
| | 2014.02-2023.12 | MT | F | L | MPV FWD UGCA;UGCB;XUCC;XUCD;XWCA;XWCB;XUCE;XUCF;XUCG | | GDS18516 | Drive Shaft | | 25 | 23 | 53.3 | 89 | 614 | |
| | 2014.02-2023.12 | MT | F | L | MPV FWD UGCA;UGCB;XUCC;XUCD;XWCA;XWCB;XUCE;XUCF;XUCG | Date To:03/18 | GCI18113 | Inner Joint | | 23 | 21 | 40 | 61.5 | 96.5 | |
| | 2014.02-2023.12 | | F | L | MPV FWD UGCA;UGCB;XUCC;XUCD;XWCA;XWCB;XUCE;XUCF;XUCG | Date To:2018.03 | GDS18516 | Drive Shaft | | 25 | 23 | 53.3 | 89 | 614 | |
| 1.5 (70 kw) | 2015.05-2023.12 | 5MT | F | L | MPV FWD XVCA;XVCB;XVCC;XVCD | Date from:2018.04 | GDS82853 | Drive Shaft | | 25 | 23 | 53.4 | 88.5 | 615 | |
| | 2015.05-2023.12 | 5MT | F | R | MPV FWD XVCA;XVCB;XVCC;XVCD | Date to:2018.03 | GDS18517 | Drive Shaft | | 25 | 23 | 53.3 | 89 | 912 | |
| | 2015.05-2023.12 | 5MT | F | R | MPV FWD XVCA;XVCB;XVCC;XVCD | Date from:2018.04 | GDS82854 | Drive Shaft | | 25 | 23 | 53.4 | 88.5 | 918 | |
| | 2015.05-2023.12 | 5MT | F | L/R | MPV FWD XVCA;XVCB;XVCC;XVCD | Date to:2018.03 | GCO18014 | Outer Joint | | 25 | 21 | 53.2 | 89 | 54 | M |
| | 2015.05-2023.12 | 5MT | F | L/R | MPV FWD XVCA;XVCB;XVCC;XVCD | Date from:2018.04 | GCO82257 | Outer Joint | | 25 | 21 | 53.4 | 88.5 | 54 | M |
| | 2015.05-2023.12 | 5MT | F | L/R | MPV FWD XVCA;XVCB;XVCC;XVCD | Date from:2018.04 | GCI82085 | Inner Joint | | 23 | 21 | 40 | 60.5 | 106 | |
| | 2015.05-2023.12 | MT | F | L | MPV FWD XVCA;XVCB;XVCC;XVCD | | GDS18516 | Drive Shaft | | 25 | 23 | 53.3 | 89 | 614 | |
| | 2015.05-2023.12 | MT | F | L | MPV FWD XVCA;XVCB;XVCC;XVCD | Date to:2018.03 | GCI18113 | Inner Joint | | 23 | 21 | 40 | 61.5 | 96.5 | |
| | 2015.05-2023.12 | | F | L | MPV FWD XVCA;XVCB;XVCC;XVCD | Date To:2018.03 | GDS18516 | Drive Shaft | | 25 | 23 | 53.3 | 89 | 614 | |
| 1.5 (74 kw) | 2018.04-2023.12 | 5MT/6MT | F | L | MPV FWD XXCA;XXCB;XXCC;XVCE;XVCF | | GDS82853 | Drive Shaft | | 25 | 23 | 53.4 | 88.5 | 615 | |
| | 2018.04-2023.12 | 5MT/6MT | F | R | MPV FWD XXCA;XXCB;XXCC;XVCE;XVCF | | GDS82854 | Drive Shaft | | 25 | 23 | 53.4 | 88.5 | 918 | |
| | 2018.04-2023.12 | 5MT/6MT | F | L/R | MPV FWD XXCA;XXCB;XXCC;XVCE;XVCF | | GCO82257 | Outer Joint | | 25 | 21 | 53.4 | 88.5 | 54 | M |
| | 2018.04-2023.12 | 5MT/6MT | F | L/R | MPV FWD XXCA;XXCB;XXCC;XVCE;XVCF | | GCI82085 | Inner Joint | | 23 | 21 | 40 | 60.5 | 106 | |
| 1.6 (70 kw) | 2014.02-2023.12 | 5MT | F | L | MPV FWD T3CA;T3CB;T3CC | Date from:2018.04 | GDS82853 | Drive Shaft | | 25 | 23 | 53.4 | 88.5 | 615 | |
| | 2014.02-2023.12 | 5MT | F | R | MPV FWD T3CA;T3CB;T3CC | Date to:2018.03 | GDS18517 | Drive Shaft | | 25 | 23 | 53.3 | 89 | 912 | |
| | 2014.02-2023.12 | 5MT | F | R | MPV FWD T3CA;T3CB;T3CC | Date from:2018.04 | GDS82854 | Drive Shaft | | 25 | 23 | 53.4 | 88.5 | 918 | |
| | 2014.02-2023.12 | 5MT | F | L/R | MPV FWD T3CA;T3CB;T3CC | Date to:2018.03 | GCO18014 | Outer Joint | | 25 | 21 | 53.2 | 89 | 54 | M |
| | 2014.02-2023.12 | 5MT | F | L/R | MPV FWD T3CA;T3CB;T3CC | Date from:2018.04 | GCO82257 | Outer Joint | | 25 | 21 | 53.4 | 88.5 | 54 | M |
| | 2014.02-2023.12 | 5MT | F | L/R | MPV FWD T3CA;T3CB;T3CC | Date from:2018.04 | GCI82085 | Inner Joint | | 23 | 21 | 40 | 60.5 | 106 | |
| | 2014.02-2023.12 | MT | F | L | MPV FWD T3CA;T3CB;T3CC | Date to:2018.03 | GCI18113 | Inner Joint | | 23 | 21 | 40 | 61.5 | 96.5 | |
| | 2014.02-2023.12 | | F | L | MPV FWD T3CA;T3CB;T3CC | Date To:2018.03 | GDS18516 | Drive Shaft | | 25 | 23 | 53.3 | 89 | 614 | |
| **Tourneo Custom** | | | | | | | | | | | | | | | |
| 2.0 (77 kw) | 2015.12-2023.12 | 6MT | F | L | Bus FWD YLFS;YLF6;YLFA;YLFB;BJFA;BJFB | | GDS18334 | Drive Shaft | | 31 | 41 | 57.7 | 121 | 752 | |
| | 2015.12-2023.12 | 6MT | F | R | Bus FWD YLFS;YLF6;YLFA;YLFB;BJFA;BJFB | | GDS18335 | Drive Shaft | | 31 | 41 | 57.7 | 121 | 1092 | |
| | 2015.12-2023.12 | 6MT | F | L/R | Bus FWD YLFS;YLF6;YLFA;YLFB;BJFA;BJFB | | GCO18286 | Outer Joint | | 31 | 28 | 57.7 | 121 | 68 | I |
| | 2015.12-2023.12 | 6MT | F | L/R | Bus FWD YLFS;YLF6;YLFA;YLFB;BJFA;BJFB | | GCO18293 | Outer Joint | | 31 | 30 | 57.5 | 121 | 77.5 | I |
| | 2015.12-2023.12 | 6MT | F | L | Bus FWD YLFS;YLF6;YLFA;YLFB;BJFA;BJFB | Date to:2015.12 | GCI82506 | Inner Joint | | 41 | 29 | 44 | 76 | 127 | |
| | 2015.12-2023.12 | 6MT | F | R | Bus FWD YLFS;YLF6;YLFA;YLFB;BJFA;BJFB | Date to:2021.06 | GCI82507 | Inner Joint | | 41 | 29 | 44 | 408 | 130 | |
| 2.0 (96 kw) | 2015.12-2023.12 | 6AT | F | L | Bus FWD YMFS;YMF6;YMFA;YMFB;BKFA;BKFB | Date to:2023.05 | GDS56279 | Drive Shaft | | 31 | 27 | 63 | 121 | 737 | |
| | 2015.12-2023.12 | 6AT | F | R | Bus FWD YMFS;YMF6;YMFA;YMFB;BKFA;BKFB | Date to:2021.12 | GDS56280 | Drive Shaft | | 31 | 27 | 63 | 121 | 1106 | |
| | 2015.12-2023.12 | 6AT | F | L/R | Bus FWD YMFS;YMF6;YMFA;YMFB;BKFA;BKFB | Date to:2021.06 | GCO83240 | Outer Joint | | 31 | 31 | 63 | 121 | 79 | I |
| | 2015.12-2023.12 | 6AT | F | L | Bus FWD YMFS;YMF6;YMFA;YMFB;BKFA;BKFB | | GCI83225 | Inner Joint | | 27 | 29 | 35 | 107 | 102.5 | |
| | 2015.12-2023.12 | 6AT | F | R | Bus FWD YMFS;YMF6;YMFA;YMFB;BKFA;BKFB | Date to:2021.06 | GCI83226 | Inner Joint | | 27 | 29 | 35 | 417 | 131 | |
| | 2015.12-2023.12 | 6MT | F | L | Bus FWD YMFS;YMF6;YMFA;YMFB;BKFA;BKFB | | GDS18334 | Drive Shaft | | 31 | 41 | 57.7 | 121 | 752 | |
| | 2015.12-2023.12 | 6MT | F | R | Bus FWD YMFS;YMF6;YMFA;YMFB;BKFA;BKFB | | GDS18335 | Drive Shaft | | 31 | 41 | 57.7 | 121 | 1092 | |
| | 2015.12-2023.12 | 6MT | F | L/R | Bus FWD YMFS;YMF6;YMFA;YMFB;BKFA;BKFB | | GCO18286 | Outer Joint | | 31 | 28 | 57.7 | 121 | 68 | I |
| | 2015.12-2023.12 | 6MT | F | L/R | Bus FWD YMFS;YMF6;YMFA;YMFB;BKFA;BKFB | | GCO18293 | Outer Joint | | 31 | 30 | 57.5 | 121 | 77.5 | I |
| | 2015.12-2023.12 | 6MT | F | L | Bus FWD YMFS;YMF6;YMFA;YMFB;BKFA;BKFB | Date to:2015.12 | GCI82506 | Inner Joint | | 41 | 29 | 44 | 76 | 127 | |
| | 2015.12-2023.12 | 6MT | F | R | Bus FWD YMFS;YMF6;YMFA;YMFB;BKFA;BKFB | Date to:2021.06 | GCI82507 | Inner Joint | | 41 | 29 | 44 | 408 | 130 | |
| | 2019.05-2023.12 | 6MT | F | L | Bus FWD BKFC;BKFD | | GDS18334 | Drive Shaft | | 31 | 41 | 57.7 | 121 | 752 | |
| | 2019.05-2023.12 | 6MT | F | R | Bus FWD BKFC;BKFD | | GDS18335 | Drive Shaft | | 31 | 41 | 57.7 | 121 | 1092 | |
| | 2019.05-2023.12 | 6MT | F | L | Bus FWD BKFC;BKFD | | GCO18293 | Outer Joint | | 31 | 30 | 57.5 | 121 | 77.5 | I |
| | 2019.05-2023.12 | 6MT | F | L/R | Bus FWD BKFC;BKFD | | GCO18286 | Outer Joint | | 31 | 28 | 57.7 | 121 | 68 | I |
| | 2019.05-2023.12 | 6MT | F | R | Bus FWD BKFC;BKFD | Date to:2021.06 | GCI82507 | Inner Joint | | 41 | 29 | 44 | 408 | 130 | |
| 2.0 (110 kw) | 2022.01-2023.12 | 6AT | F | L | Bus FWD P0FA | Date to:2023.05 | GDS56279 | Drive Shaft | | 31 | 27 | 63 | 121 | 737 | |
| | 2022.01-2023.12 | 6AT | F | R | Bus FWD P0FA | | GDS56280 | Drive Shaft | | 31 | 27 | 63 | 121 | 1106 | |
| | 2022.01-2023.12 | 6AT | F | L | Bus FWD P0FA | Date to:2023.05 | GCO83240 | Outer Joint | | 31 | 31 | 63 | 121 | 79 | I |
| | 2022.01-2023.12 | 6AT | F | L | Bus FWD P0FA | | GCI83225 | Inner Joint | | 27 | 29 | 35 | 107 | 102.5 | |

| | YEAR | TRANSM. | F/R | L/R | BODY STYLE & DRIVE TYPE & ENGINE | REMARKS | G-AP Ref. | PRODUCT | ABS | Technical Specifications A | B | C | H | L | P |
|---|---|---|---|---|---|---|---|---|---|---|---|---|---|---|---|
| **FORD** | | | | | | | | | | | | | | | |
| **Tourneo Custom** | | | | | | | | | | | | | | | |
| 2.0 (110 kw) | 2022.01-2023.12 | 6MT | F | L | Bus FWD P0FA | | GDS18334 | Drive Shaft | | 31 | 41 | 57.7 | 121 | 752 | |
| | 2022.01-2023.12 | 6MT | F | R | Bus FWD P0FA | | GDS18335 | Drive Shaft | | 31 | 41 | 57.7 | 121 | 1092 | |
| | 2022.01-2023.12 | 6MT | F | L/R | Bus FWD P0FA | | GCO18293 | Outer Joint | | 31 | 30 | 57.5 | 121 | 77.5 | I |
| | 2022.01-2023.12 | 6MT | F | R | Bus FWD P0FA | | GCI82507 | Inner Joint | | 41 | 29 | 44 | 408 | 130 | |
| | 2022.01-2023.12 | 6MT | F | L | Bus FWD P0FB | | GDS18334 | Drive Shaft | | 31 | 41 | 57.7 | 121 | 752 | |
| | 2022.01-2023.12 | 6MT | F | R | Bus FWD P0FB | | GDS18335 | Drive Shaft | | 31 | 41 | 57.7 | 121 | 1092 | |
| | 2022.01-2023.12 | 6MT | F | L/R | Bus FWD P0FB | | GCO18293 | Outer Joint | | 31 | 30 | 57.5 | 121 | 77.5 | I |
| | 2022.01-2023.12 | 6MT | F | R | Bus FWD P0FB | | GCI82507 | Inner Joint | | 41 | 29 | 44 | 408 | 130 | |
| 2.0 (125 kw) | 2015.12-2023.12 | 6AT | F | L | Bus FWD YNFS;YNF6;YNFA;YNFB;BLFA;BLFB | Date to:2023.05 | GDS56279 | Drive Shaft | | 31 | 27 | 63 | 121 | 737 | |
| | 2015.12-2023.12 | 6AT | F | R | Bus FWD YNFS;YNF6;YNFA;YNFB;BLFA;BLFB | Date to:2021.12 | GDS56280 | Drive Shaft | | 31 | 27 | 63 | 121 | 1106 | |
| | 2015.12-2023.12 | 6AT | F | L/R | Bus FWD YNFS;YNF6;YNFA;YNFB;BLFA;BLFB | Date to:2021.06 | GCO83240 | Outer Joint | | 31 | 31 | 63 | 121 | 79 | I |
| | 2015.12-2023.12 | 6AT | F | L | Bus FWD YNFS;YNF6;YNFA;YNFB;BLFA;BLFB | | GCI83225 | Inner Joint | | 27 | 29 | 35 | 107 | 102.5 | |
| | 2015.12-2023.12 | 6AT | F | R | Bus FWD YNFS;YNF6;YNFA;YNFB;BLFA;BLFB | Date to:2021.06 | GCI83226 | Inner Joint | | 27 | 29 | 35 | 417 | 131 | |
| | 2015.12-2023.12 | 6MT | F | L | Bus FWD YNFS;YNF6;YNFA;YNFB;BLFA;BLFB | | GDS18334 | Drive Shaft | | 31 | 41 | 57.7 | 121 | 752 | |
| | 2015.12-2023.12 | 6MT | F | R | Bus FWD YNFS;YNF6;YNFA;YNFB;BLFA;BLFB | | GDS18335 | Drive Shaft | | 31 | 41 | 57.7 | 121 | 1092 | |
| | 2015.12-2023.12 | 6MT | F | L/R | Bus FWD YNFS;YNF6;YNFA;YNFB;BLFA;BLFB | | GCO18286 | Outer Joint | | 31 | 28 | 57.7 | 121 | 68 | I |
| | 2015.12-2023.12 | 6MT | F | L/R | Bus FWD YNFS;YNF6;YNFA;YNFB;BLFA;BLFB | | GCO18293 | Outer Joint | | 31 | 30 | 57.5 | 121 | 77.5 | I |
| | 2015.12-2023.12 | 6MT | F | L | Bus FWD YNFS;YNF6;YNFA;YNFB;BLFA;BLFB | Date to:2015.12 | GCI82506 | Inner Joint | | 41 | 29 | 44 | 76 | 127 | |
| | 2015.12-2023.12 | 6MT | F | R | Bus FWD YNFS;YNF6;YNFA;YNFB;BLFA;BLFB | Date to:2021.06 | GCI82507 | Inner Joint | | 41 | 29 | 44 | 408 | 130 | |
| 2.0 (136 kw) | 2019.05-2023.12 | 6AT | F | L | Bus FWD BCFB;BCFA | Date to:2023.05 | GDS56279 | Drive Shaft | | 31 | 27 | 63 | 121 | 737 | |
| | 2019.05-2023.12 | 6AT | F | R | Bus FWD BCFB;BCFA | Date to:2021.12 | GDS56280 | Drive Shaft | | 31 | 27 | 63 | 121 | 1106 | |
| | 2019.05-2023.12 | 6AT | F | L/R | Bus FWD BCFB;BCFA | Date to:2021.06 | GCO83240 | Outer Joint | | 31 | 31 | 63 | 121 | 79 | I |
| | 2019.05-2023.12 | 6AT | F | L | Bus FWD BCFB;BCFA | | GCI83225 | Inner Joint | | 27 | 29 | 35 | 107 | 102.5 | |
| | 2019.05-2023.12 | 6AT | F | R | Bus FWD BCFB;BCFA | Date to:2021.06 | GCI83226 | Inner Joint | | 27 | 29 | 35 | 417 | 131 | |
| | 2019.05-2023.12 | 6MT | F | L | Bus FWD BCFB;BCFA | Trim Level:2 | GDS18334 | Drive Shaft | | 31 | 41 | 57.7 | 121 | 752 | |
| | 2019.05-2023.12 | 6MT | F | R | Bus FWD BCFB;BCFA | Trim Level:2 | GDS18335 | Drive Shaft | | 31 | 41 | 57.7 | 121 | 1092 | |
| | 2019.05-2023.12 | 6MT | F | L | Bus FWD BCFB;BCFA | | GCO18293 | Outer Joint | | 31 | 30 | 57.5 | 121 | 77.5 | I |
| | 2019.05-2023.12 | 6MT | F | L/R | Bus FWD BCFB;BCFA | | GCO18286 | Outer Joint | | 31 | 28 | 57.7 | 121 | 68 | I |
| | 2019.05-2023.12 | 6MT | F | R | Bus FWD BCFB;BCFA | Date to:2021.06 | GCI82507 | Inner Joint | | 41 | 29 | 44 | 408 | 130 | |
| | 2019.05-2023.12 | 6MT | F | L | Bus FWD BCFD;BCFC | | GDS18334 | Drive Shaft | | 31 | 41 | 57.7 | 121 | 752 | |
| | 2019.05-2023.12 | 6MT | F | R | Bus FWD BCFD;BCFC | | GDS18335 | Drive Shaft | | 31 | 41 | 57.7 | 121 | 1092 | |
| | 2019.05-2023.12 | 6MT | F | L | Bus FWD BCFD;BCFC | | GCO18293 | Outer Joint | | 31 | 30 | 57.5 | 121 | 77.5 | I |
| | 2019.05-2023.12 | 6MT | F | L/R | Bus FWD BCFD;BCFC | | GCO18286 | Outer Joint | | 31 | 28 | 57.7 | 121 | 68 | I |
| | 2019.05-2023.12 | 6MT | F | R | Bus FWD BCFD;BCFC | Date to:2021.06 | GCI82507 | Inner Joint | | 41 | 29 | 44 | 408 | 130 | |
| 2.2 (74 kw) | 2012.09-2015.12 | 6MT | F | L | Bus FWD DRFG;DRFF;DRF4 | | GDS18334 | Drive Shaft | | 31 | 41 | 57.7 | 121 | 752 | |
| | 2012.09-2015.12 | 6MT | F | R | Bus FWD DRFG;DRFF;DRF4 | | GDS18335 | Drive Shaft | | 31 | 41 | 57.7 | 121 | 1092 | |
| | 2012.09-2015.12 | 6MT | F | L/R | Bus FWD DRFG;DRFF;DRF4 | | GCO18286 | Outer Joint | | 31 | 28 | 57.7 | 121 | 68 | I |
| | 2012.09-2015.12 | 6MT | F | L/R | Bus FWD DRFG;DRFF;DRF4 | Date From:2012.09 | GCO18293 | Outer Joint | | 31 | 30 | 57.5 | 121 | 77.5 | I |
| | 2012.09-2015.12 | 6MT | F | L | Bus FWD DRFG;DRFF;DRF4 | | GCI82506 | Inner Joint | | 41 | 29 | 44 | 76 | 127 | |
| | 2012.09-2015.12 | 6MT | F | R | Bus FWD DRFG;DRFF;DRF4 | | GCI82507 | Inner Joint | | 41 | 29 | 44 | 408 | 130 | |
| 2.2 (92 kw) | 2012.09-2015.12 | 6MT | F | L | Bus FWD CYF4;CYFF | | GDS18334 | Drive Shaft | | 31 | 41 | 57.7 | 121 | 752 | |
| | 2012.09-2015.12 | 6MT | F | R | Bus FWD CYF4;CYFF | | GDS18335 | Drive Shaft | | 31 | 41 | 57.7 | 121 | 1092 | |
| | 2012.09-2015.12 | 6MT | F | L/R | Bus FWD CYF4;CYFF | | GCO18286 | Outer Joint | | 31 | 28 | 57.7 | 121 | 68 | I |
| | 2012.09-2015.12 | 6MT | F | L/R | Bus FWD CYF4;CYFF | Date From:2012.09 | GCO18293 | Outer Joint | | 31 | 30 | 57.5 | 121 | 77.5 | I |
| | 2012.09-2015.12 | 6MT | F | L | Bus FWD CYF4;CYFF | | GCI82506 | Inner Joint | | 41 | 29 | 44 | 76 | 127 | |
| | 2012.09-2015.12 | 6MT | F | R | Bus FWD CYF4;CYFF | | GCI82507 | Inner Joint | | 41 | 29 | 44 | 408 | 130 | |
| 2.2 (114 kw) | 2012.09-2015.12 | 6MT | F | L | Bus FWD CVFF | | GDS18334 | Drive Shaft | | 31 | 41 | 57.7 | 121 | 752 | |
| | 2012.09-2015.12 | 6MT | F | R | Bus FWD CVFF | | GDS18335 | Drive Shaft | | 31 | 41 | 57.7 | 121 | 1092 | |
| | 2012.09-2015.12 | 6MT | F | L/R | Bus FWD CVFF | | GCO18286 | Outer Joint | | 31 | 28 | 57.7 | 121 | 68 | I |
| | 2012.09-2015.12 | 6MT | F | L/R | Bus FWD CVFF | Date From:2012.09 | GCO18293 | Outer Joint | | 31 | 30 | 57.5 | 121 | 77.5 | I |
| | 2012.09-2015.12 | 6MT | F | L | Bus FWD CVFF | | GCI82506 | Inner Joint | | 41 | 29 | 44 | 76 | 127 | |
| | 2012.09-2015.12 | 6MT | F | R | Bus FWD CVFF | | GCI82507 | Inner Joint | | 41 | 29 | 44 | 408 | 130 | |
| **Tourneo Custom 320** | | | | | | | | | | | | | | | |
| 2.0 (81 kw) | 2023.12- | 6MT | F | L | Bus FWD BCFA(DZJE) | | GDS58041 | Drive Shaft | | 31 | 41 | 63 | 115 | 722 | |
| | 2023.12- | 6MT | F | R | Bus FWD BCFA(DZJE) | | GDS58042 | Drive Shaft | | 31 | 41 | 63 | 115 | 1083 | |
| | 2023.12- | 6MT | F | L/R | Bus FWD BCFA(DZJE) | | GCO83826 | Outer Joint | | 31 | 31 | 63 | 115 | 75 | M |
| | 2023.12- | 6MT | F | L | Bus FWD BCFA(DZJE) | | GCI83984 | Inner Joint | | 41 | 31 | 44 | 75.5 | 127 | |
| | 2023.12- | 6MT | F | R | Bus FWD BCFA(DZJE) | | GCI83985 | Inner Joint | | 41 | 31 | 44 | 443.5 | 116 | |
| 2.0 (100 kw) | 2023.12- | 6MT | F | L | Bus FWD BJFA(ENBJ) | | GDS58041 | Drive Shaft | | 31 | 41 | 63 | 115 | 722 | |
| | 2023.12- | 6MT | F | R | Bus FWD BJFA(ENBJ) | | GDS58042 | Drive Shaft | | 31 | 41 | 63 | 115 | 1083 | |
| | 2023.12- | 6MT | F | L/R | Bus FWD BJFA(ENBJ) | | GCO83826 | Outer Joint | | 31 | 31 | 63 | 115 | 75 | M |
| | 2023.12- | 6MT | F | L | Bus FWD BJFA(ENBJ) | | GCI83984 | Inner Joint | | 41 | 31 | 44 | 75.5 | 127 | |
| | 2023.12- | 6MT | F | R | Bus FWD BJFA(ENBJ) | | GCI83985 | Inner Joint | | 41 | 31 | 44 | 443.5 | 116 | |
| 2.0 (110 kw) | 2023.12- | 6MT | F | L | Bus FWD BKFB(ENBK) | | GDS58041 | Drive Shaft | | 31 | 41 | 63 | 115 | 722 | |
| | 2023.12- | 6MT | F | R | Bus FWD BKFB(ENBK) | | GDS58042 | Drive Shaft | | 31 | 41 | 63 | 115 | 1083 | |

| | YEAR | TRANSM. | F/R | L/R | BODY STYLE & DRIVE TYPE & ENGINE | REMARKS | G-AP Ref. | PRODUCT | ABS | Technical Specifications A | B | C | H | L | P |
|---|---|---|---|---|---|---|---|---|---|---|---|---|---|---|---|
| **FORD** | | | | | | | | | | | | | | | |
| **Tourneo Custom 320** | | | | | | | | | | | | | | | |
| 2.0 (110 kw) | 2023.12- | 6MT | F | L/R | Bus FWD BKFB(ENBK) | | GCO83826 | Outer Joint | | 31 | 31 | 63 | 115 | 75 | M |
| | 2023.12- | 6MT | F | L | Bus FWD BKFB(ENBK) | | GCI83984 | Inner Joint | | 41 | 31 | 44 | 75.5 | 127 | |
| | 2023.12- | 6MT | F | R | Bus FWD BKFB(ENBK) | | GCI83985 | Inner Joint | | 41 | 31 | 44 | 443.5 | 116 | |
| 2.0 (125 kw) | 2023.12- | 6MT | F | L | Bus FWD BKFA(DZJA) | | GDS58041 | Drive Shaft | | 31 | 41 | 63 | 115 | 722 | |
| | 2023.12- | 6MT | F | R | Bus FWD BKFA(DZJA) | | GDS58042 | Drive Shaft | | 31 | 41 | 63 | 115 | 1083 | |
| | 2023.12- | 6MT | F | L/R | Bus FWD BKFA(DZJA) | | GCO83826 | Outer Joint | | 31 | 31 | 63 | 115 | 75 | M |
| | 2023.12- | 6MT | F | L | Bus FWD BKFA(DZJA) | | GCI83984 | Inner Joint | | 41 | 31 | 44 | 75.5 | 127 | |
| | 2023.12- | 6MT | F | R | Bus FWD BKFA(DZJA) | | GCI83985 | Inner Joint | | 41 | 31 | 44 | 443.5 | 116 | |
| **Transit** | | | | | | | | | | | | | | | |
| 2.0 (55 kw) | 2000.08-2006.05 | 5MT | F | L | Bus FWD D3FA | | GDS18035 | Drive Shaft | | 28 | 26 | 57 | 120.5 | 797 | |
| | 2000.08-2006.05 | 5MT | F | L | Bus FWD D3FA | | GDS18036 | Drive Shaft | 48T | 28 | 26 | 57 | 120.5 | 797 | |
| | 2000.08-2006.05 | 5MT | F | R | Bus FWD D3FA | Outer teeth of differential side:26 | GDS18142 | Drive Shaft | | 28 | 26 | 57 | 120.5 | 1056 | |
| | 2000.08-2006.05 | 5MT | F | R | Bus FWD D3FA | Outer teeth of differential side:26 | GDS18242 | Drive Shaft | 48T | 28 | 26 | 57 | 120.5 | 1056 | |
| | 2000.08-2006.05 | 5MT | F | R | Bus FWD D3FA | Outer teeth of differential side:36 | GDS18265 | Drive Shaft | 48T | 28 | 36 | 57 | 120.5 | 1053 | |
| | 2000.08-2006.05 | 5MT | F | L/R | Bus FWD D3FA | | GCO18005 | Outer Joint | 48T | 28 | 26 | 57 | 120.5 | 64 | M |
| | 2000.08-2006.05 | 5MT | F | L/R | Bus FWD D3FA | | GCO18061 | Outer Joint | | 28 | 26 | 57 | 120.5 | 64 | M |
| | 2000.08-2006.05 | 5MT | F | L | Bus FWD D3FA | Outer teeth of differential side:26 | GCI18055 | Inner Joint | | 26 | 26 | 40 | 77.5 | 104 | |
| | 2000.08-2006.05 | 5MT | F | L | Bus FWD D3FA | Outer teeth of differential side:36 | GCI18173 | Inner Joint | | 36 | 28 | 40 | 77 | 111.5 | |
| | 2000.08-2006.05 | 5MT | F | R | Bus FWD D3FA | Outer teeth of differential side:26 | GCI18213 | Inner Joint | | 26 | 26 | 40 | 331 | 110 | |
| | 2000.08-2006.05 | 5MT | F | R | Bus FWD D3FA | Outer teeth of differential side:36 | GCI18274 | Inner Joint | | 36 | 26 | 40 | 330 | 110 | |
| | 2000.08-2006.05 | 5MT | F | L | Platform/Chassis FWD D3FA | | GDS18035 | Drive Shaft | | 28 | 26 | 57 | 120.5 | 797 | |
| | 2000.08-2006.05 | 5MT | F | L | Platform/Chassis FWD D3FA | | GDS18036 | Drive Shaft | 48T | 28 | 26 | 57 | 120.5 | 797 | |
| | 2000.08-2006.05 | 5MT | F | L | Platform/Chassis FWD D3FA | Outer teeth of differential side:36 | GDS18209 | Drive Shaft | 48T | 28 | 36 | 57 | 120.5 | 794.5 | |
| | 2000.08-2006.05 | 5MT | F | R | Platform/Chassis FWD D3FA | Outer teeth of differential side:26 | GDS18142 | Drive Shaft | | 28 | 26 | 57 | 120.5 | 1056 | |
| | 2000.08-2006.05 | 5MT | F | R | Platform/Chassis FWD D3FA | Outer teeth of differential side:26 | GDS18242 | Drive Shaft | 48T | 28 | 26 | 57 | 120.5 | 1056 | |
| | 2000.08-2006.05 | 5MT | F | R | Platform/Chassis FWD D3FA | Outer teeth of differential side:36 | GDS18265 | Drive Shaft | 48T | 28 | 36 | 57 | 120.5 | 1053 | |
| | 2000.08-2006.05 | 5MT | F | L/R | Platform/Chassis FWD D3FA | | GCO18005 | Outer Joint | 48T | 28 | 26 | 57 | 120.5 | 64 | M |
| | 2000.08-2006.05 | 5MT | F | L/R | Platform/Chassis FWD D3FA | | GCO18061 | Outer Joint | | 28 | 26 | 57 | 120.5 | 64 | M |
| | 2000.08-2006.05 | 5MT | F | L | Platform/Chassis FWD D3FA | Outer teeth of differential side:26 | GCI18055 | Inner Joint | | 26 | 26 | 40 | 77.5 | 104 | |
| | 2000.08-2006.05 | 5MT | F | L | Platform/Chassis FWD D3FA | Outer teeth of differential side:36 | GCI18173 | Inner Joint | | 36 | 28 | 40 | 77 | 111.5 | |
| | 2000.08-2006.05 | 5MT | F | R | Platform/Chassis FWD D3FA | Outer teeth of differential side:26 | GCI18213 | Inner Joint | | 26 | 26 | 40 | 331 | 110 | |
| | 2000.08-2006.05 | 5MT | F | R | Platform/Chassis FWD D3FA | Outer teeth of differential side:36 | GCI18274 | Inner Joint | | 36 | 26 | 40 | 330 | 110 | |
| | 2000.08-2006.05 | 5MT | F | L | Van FWD D3FA | | GDS18035 | Drive Shaft | | 28 | 26 | 57 | 120.5 | 797 | |
| | 2000.08-2006.05 | 5MT | F | L | Van FWD D3FA | | GDS18036 | Drive Shaft | 48T | 28 | 26 | 57 | 120.5 | 797 | |
| | 2000.08-2006.05 | 5MT | F | L | Van FWD D3FA | Outer teeth of differential side:36 | GDS18209 | Drive Shaft | 48T | 28 | 36 | 57 | 120.5 | 794.5 | |
| | 2000.08-2006.05 | 5MT | F | R | Van FWD D3FA | Outer teeth of differential side:26 | GDS18142 | Drive Shaft | | 28 | 26 | 57 | 120.5 | 1056 | |
| | 2000.08-2006.05 | 5MT | F | R | Van FWD D3FA | Outer teeth of differential side:26 | GDS18242 | Drive Shaft | 48T | 28 | 26 | 57 | 120.5 | 1056 | |
| | 2000.08-2006.05 | 5MT | F | R | Van FWD D3FA | Outer teeth of differential side:36 | GDS18265 | Drive Shaft | 48T | 28 | 36 | 57 | 120.5 | 1053 | |
| | 2000.08-2006.05 | 5MT | F | L/R | Van FWD D3FA | | GCO18005 | Outer Joint | 48T | 28 | 26 | 57 | 120.5 | 64 | M |
| | 2000.08-2006.05 | 5MT | F | L/R | Van FWD D3FA | | GCO18061 | Outer Joint | | 28 | 26 | 57 | 120.5 | 64 | M |
| | 2000.08-2006.05 | 5MT | F | L | Van FWD D3FA | Outer teeth of differential side:26 | GCI18055 | Inner Joint | | 26 | 26 | 40 | 77.5 | 104 | |
| | 2000.08-2006.05 | 5MT | F | L | Van FWD D3FA | Outer teeth of differential side:36 | GCI18173 | Inner Joint | | 36 | 28 | 40 | 77 | 111.5 | |
| | 2000.08-2006.05 | 5MT | F | R | Van FWD D3FA | Outer teeth of differential side:26 | GCI18213 | Inner Joint | | 26 | 26 | 40 | 331 | 110 | |
| | 2000.08-2006.05 | 5MT | F | R | Van FWD D3FA | Outer teeth of differential side:36 | GCI18274 | Inner Joint | | 36 | 26 | 40 | 330 | 110 | |
| 2.0 (63 kw) | 2000.08-2006.05 | 5MT | F | L | Bus FWD F3FA | | GDS18035 | Drive Shaft | | 28 | 26 | 57 | 120.5 | 797 | |
| | 2000.08-2006.05 | 5MT | F | L | Bus FWD F3FA | | GDS18036 | Drive Shaft | 48T | 28 | 26 | 57 | 120.5 | 797 | |
| | 2000.08-2006.05 | 5MT | F | L | Bus FWD F3FA | Outer teeth of differential side:36 | GDS18209 | Drive Shaft | 48T | 28 | 36 | 57 | 120.5 | 794.5 | |
| | 2000.08-2006.05 | 5MT | F | R | Bus FWD F3FA | Outer teeth of differential side:26 | GDS18142 | Drive Shaft | | 28 | 26 | 57 | 120.5 | 1056 | |
| | 2000.08-2006.05 | 5MT | F | R | Bus FWD F3FA | Outer teeth of differential side:26 | GDS18242 | Drive Shaft | 48T | 28 | 26 | 57 | 120.5 | 1056 | |
| | 2000.08-2006.05 | 5MT | F | R | Bus FWD F3FA | Outer teeth of differential side:36 | GDS18265 | Drive Shaft | 48T | 28 | 36 | 57 | 120.5 | 1053 | |
| | 2000.08-2006.05 | 5MT | F | L/R | Bus FWD F3FA | | GCO18005 | Outer Joint | 48T | 28 | 26 | 57 | 120.5 | 64 | M |
| | 2000.08-2006.05 | 5MT | F | L/R | Bus FWD F3FA | | GCO18061 | Outer Joint | | 28 | 26 | 57 | 120.5 | 64 | M |
| | 2000.08-2006.05 | 5MT | F | L | Bus FWD F3FA | Outer teeth of differential side:26 | GCI18055 | Inner Joint | | 26 | 26 | 40 | 77.5 | 104 | |
| | 2000.08-2006.05 | 5MT | F | L | Bus FWD F3FA | Outer teeth of differential side:36 | GCI18173 | Inner Joint | | 36 | 28 | 40 | 77 | 111.5 | |
| | 2000.08-2006.05 | 5MT | F | R | Bus FWD F3FA | Outer teeth of differential side:26 | GCI18213 | Inner Joint | | 26 | 26 | 40 | 331 | 110 | |
| | 2000.08-2006.05 | 5MT | F | R | Bus FWD F3FA | Outer teeth of differential side:36 | GCI18274 | Inner Joint | | 36 | 26 | 40 | 330 | 110 | |
| | 2000.08-2006.05 | 5MT | F | L | Platform/Chassis FWD F3FA | | GDS18035 | Drive Shaft | | 28 | 26 | 57 | 120.5 | 797 | |
| | 2000.08-2006.05 | 5MT | F | L | Platform/Chassis FWD F3FA | | GDS18036 | Drive Shaft | 48T | 28 | 26 | 57 | 120.5 | 797 | |
| | 2000.08-2006.05 | 5MT | F | L | Platform/Chassis FWD F3FA | Outer teeth of differential side:36 | GDS18209 | Drive Shaft | 48T | 28 | 36 | 57 | 120.5 | 794.5 | |
| | 2000.08-2006.05 | 5MT | F | R | Platform/Chassis FWD F3FA | Outer teeth of differential side:26 | GDS18142 | Drive Shaft | | 28 | 26 | 57 | 120.5 | 1056 | |
| | 2000.08-2006.05 | 5MT | F | R | Platform/Chassis FWD F3FA | Outer teeth of differential side:26 | GDS18242 | Drive Shaft | 48T | 28 | 26 | 57 | 120.5 | 1056 | |
| | 2000.08-2006.05 | 5MT | F | R | Platform/Chassis FWD F3FA | Outer teeth of differential side:36 | GDS18265 | Drive Shaft | 48T | 28 | 36 | 57 | 120.5 | 1053 | |
| | 2000.08-2006.05 | 5MT | F | L/R | Platform/Chassis FWD F3FA | | GCO18005 | Outer Joint | 48T | 28 | 26 | 57 | 120.5 | 64 | M |
| | 2000.08-2006.05 | 5MT | F | L/R | Platform/Chassis FWD F3FA | | GCO18061 | Outer Joint | | 28 | 26 | 57 | 120.5 | 64 | M |
| | 2000.08-2006.05 | 5MT | F | L | Platform/Chassis FWD F3FA | Outer teeth of differential side:26 | GCI18055 | Inner Joint | | 26 | 26 | 40 | 77.5 | 104 | |

| | YEAR | TRANSM. | F/R | L/R | BODY STYLE & DRIVE TYPE & ENGINE | REMARKS | G-AP Ref. | PRODUCT | ABS | Technical Specifications A | B | C | H | L | P |
|---|---|---|---|---|---|---|---|---|---|---|---|---|---|---|---|
| **FORD** **Transit** | | | | | | | | | | | | | | | |
| 2.0 (63 kw) | 2000.08-2006.05 | 5MT | F | L | Platform/Chassis FWD F3FA | Outer teeth of differential side:36 | GCI18173 | Inner Joint | | 36 | 28 | 40 | 77 | 111.5 | |
| | 2000.08-2006.05 | 5MT | F | R | Platform/Chassis FWD F3FA | Outer teeth of differential side:26 | GCI18213 | Inner Joint | | 26 | 26 | 40 | 331 | 110 | |
| | 2000.08-2006.05 | 5MT | F | R | Platform/Chassis FWD F3FA | Outer teeth of differential side:36 | GCI18274 | Inner Joint | | 36 | 26 | 40 | 330 | 110 | |
| | 2000.08-2006.05 | 5MT | F | L | Van FWD F3FA | | GDS18035 | Drive Shaft | | 28 | 26 | 57 | 120.5 | 797 | |
| | 2000.08-2006.05 | 5MT | F | L | Van FWD F3FA | | GDS18036 | Drive Shaft | 48T | 28 | 26 | 57 | 120.5 | 797 | |
| | 2000.08-2006.05 | 5MT | F | L | Van FWD F3FA | Outer teeth of differential side:36 | GDS18209 | Drive Shaft | 48T | 28 | 36 | 57 | 120.5 | 794.5 | |
| | 2000.08-2006.05 | 5MT | F | R | Van FWD F3FA | Outer teeth of differential side:26 | GDS18142 | Drive Shaft | | 28 | 26 | 57 | 120.5 | 1056 | |
| | 2000.08-2006.05 | 5MT | F | R | Van FWD F3FA | Outer teeth of differential side:26 | GDS18242 | Drive Shaft | 48T | 28 | 26 | 57 | 120.5 | 1056 | |
| | 2000.08-2006.05 | 5MT | F | R | Van FWD F3FA | Outer teeth of differential side:36 | GDS18265 | Drive Shaft | 48T | 28 | 36 | 57 | 120.5 | 1053 | |
| | 2000.08-2006.05 | 5MT | F | L/R | Van FWD F3FA | | GCO18005 | Outer Joint | 48T | 28 | 26 | 57 | 120.5 | 64 | M |
| | 2000.08-2006.05 | 5MT | F | L/R | Van FWD F3FA | | GCO18061 | Outer Joint | | 28 | 26 | 57 | 120.5 | 64 | M |
| | 2000.08-2006.05 | 5MT | F | L | Van FWD F3FA | Outer teeth of differential side:26 | GCI18055 | Inner Joint | | 26 | 26 | 40 | 77.5 | 104 | |
| | 2000.08-2006.05 | 5MT | F | L | Van FWD F3FA | Outer teeth of differential side:36 | GCI18173 | Inner Joint | | 36 | 28 | 40 | 77 | 111.5 | |
| | 2000.08-2006.05 | 5MT | F | R | Van FWD F3FA | Outer teeth of differential side:26 | GCI18213 | Inner Joint | | 26 | 26 | 40 | 331 | 110 | |
| | 2000.08-2006.05 | 5MT | F | R | Van FWD F3FA | Outer teeth of differential side:36 | GCI18274 | Inner Joint | | 36 | 26 | 40 | 330 | 110 | |
| 2.0 (74 kw) | 2000.08-2006.05 | 5MT | F | L | Bus FWD ABFA | | GDS18035 | Drive Shaft | | 28 | 26 | 57 | 120.5 | 797 | |
| | 2000.08-2006.05 | 5MT | F | L | Bus FWD ABFA | | GDS18036 | Drive Shaft | 48T | 28 | 26 | 57 | 120.5 | 797 | |
| | 2000.08-2006.05 | 5MT | F | L | Bus FWD ABFA | Outer teeth of differential side:36 | GDS18209 | Drive Shaft | 48T | 28 | 36 | 57 | 120.5 | 794.5 | |
| | 2000.08-2006.05 | 5MT | F | R | Bus FWD ABFA | Outer teeth of differential side:26 | GDS18142 | Drive Shaft | | 28 | 26 | 57 | 120.5 | 1056 | |
| | 2000.08-2006.05 | 5MT | F | R | Bus FWD ABFA | Outer teeth of differential side:26 | GDS18242 | Drive Shaft | 48T | 28 | 26 | 57 | 120.5 | 1056 | |
| | 2000.08-2006.05 | 5MT | F | R | Bus FWD ABFA | Outer teeth of differential side:36 | GDS18265 | Drive Shaft | 48T | 28 | 36 | 57 | 120.5 | 1053 | |
| | 2000.08-2006.05 | 5MT | F | L/R | Bus FWD ABFA | | GCO18005 | Outer Joint | 48T | 28 | 26 | 57 | 120.5 | 64 | M |
| | 2000.08-2006.05 | 5MT | F | L/R | Bus FWD ABFA | | GCO18061 | Outer Joint | | 28 | 26 | 57 | 120.5 | 64 | M |
| | 2000.08-2006.05 | 5MT | F | L | Bus FWD ABFA | Outer teeth of differential side:26 | GCI18055 | Inner Joint | | 26 | 26 | 40 | 77.5 | 104 | |
| | 2000.08-2006.05 | 5MT | F | L | Bus FWD ABFA | Outer teeth of differential side:36 | GCI18173 | Inner Joint | | 36 | 28 | 40 | 77 | 111.5 | |
| | 2000.08-2006.05 | 5MT | F | R | Bus FWD ABFA | Outer teeth of differential side:26 | GCI18213 | Inner Joint | | 26 | 26 | 40 | 331 | 110 | |
| | 2000.08-2006.05 | 5MT | F | R | Bus FWD ABFA | Outer teeth of differential side:36 | GCI18274 | Inner Joint | | 36 | 26 | 40 | 330 | 110 | |
| | 2000.08-2006.05 | 5MT | F | L | Platform/Chassis FWD ABFA | Model:Transit 260/280/300,Date to:2003.07 | GDS18035 | Drive Shaft | | 28 | 26 | 57 | 120.5 | 797 | |
| | 2000.08-2006.05 | 5MT | F | L | Platform/Chassis FWD ABFA | Model:Transit 260/280/300,Date to:2003.07 | GDS18036 | Drive Shaft | 48T | 28 | 26 | 57 | 120.5 | 797 | |
| | 2000.08-2006.05 | 5MT | F | L | Platform/Chassis FWD ABFA | Model:Transit 260/280/300,Date from:2003.08 | GDS18209 | Drive Shaft | 48T | 28 | 36 | 57 | 120.5 | 794.5 | |
| | 2000.08-2006.05 | 5MT | F | L | Platform/Chassis FWD ABFA | Model:Transit 330/350 | GDS18259 | Drive Shaft | 48T | 28 | 36 | 57 | 120.5 | 798.5 | |
| | 2000.08-2006.05 | 5MT | F | L | Platform/Chassis FWD ABFA | Model:Transit 330/350 | GDS18434 | Drive Shaft | | 28 | 36 | 57 | 120.5 | 798 | |
| | 2000.08-2006.05 | 5MT | F | R | Platform/Chassis FWD ABFA | Model:Transit 260/280/300,Date to:2003.07 | GDS18142 | Drive Shaft | | 28 | 26 | 57 | 120.5 | 1056 | |
| | 2000.08-2006.05 | 5MT | F | R | Platform/Chassis FWD ABFA | Model:Transit 260/280/300,Date to:2003.07 | GDS18242 | Drive Shaft | 48T | 28 | 26 | 57 | 120.5 | 1056 | |
| | 2000.08-2006.05 | 5MT | F | R | Platform/Chassis FWD ABFA | Model:Transit 260/280/300,Date from:2003.08,Inner teeth of wheel side:26 | GDS18265 | Drive Shaft | 48T | 28 | 36 | 57 | 120.5 | 1053 | |
| | 2000.08-2006.05 | 5MT | F | R | Platform/Chassis FWD ABFA | Model:Transit 330/350 | GDS18435 | Drive Shaft | | 28 | 36 | 57 | 120.5 | 1060 | |
| | 2000.08-2006.05 | 5MT | F | R | Platform/Chassis FWD ABFA | Model:Transit 260/280/300,Date from:2003.08,Inner teeth of wheel side:28 | GDS99178 | Drive Shaft | 48T | 28 | 36 | 59 | 128 | 1057 | |
| | 2000.08-2006.05 | 5MT | F | L/R | Platform/Chassis FWD ABFA | Model:Transit 260/280/300 | GCO18005 | Outer Joint | 48T | 28 | 26 | 57 | 120.5 | 64 | M |
| | 2000.08-2006.05 | 5MT | F | L/R | Platform/Chassis FWD ABFA | Model:Transit 260/280/300,Date to:2003.07 | GCO18061 | Outer Joint | | 28 | 26 | 57 | 120.5 | 64 | M |
| | 2000.08-2006.05 | 5MT | F | L/R | Platform/Chassis FWD ABFA | Model:Transit 330/350 | GCO18220 | Outer Joint | | 28 | 36 | 57 | 120.5 | 72 | I |
| | 2000.08-2006.05 | 5MT | F | L/R | Platform/Chassis FWD ABFA | Model:Transit 330/350 | GCO99349 | Outer Joint | 48T | 28 | 36 | 57 | 120.5 | 72 | I |
| | 2000.08-2006.05 | 5MT | F | L | Platform/Chassis FWD ABFA | Model:Transit 260/280/300 | GCI18055 | Inner Joint | | 26 | 26 | 40 | 77.5 | 104 | |
| | 2000.08-2006.05 | 5MT | F | L | Platform/Chassis FWD ABFA | Model:Transit 260/280/300,Date from:2003.08 | GCI18173 | Inner Joint | | 36 | 28 | 40 | 77 | 111.5 | |
| | 2000.08-2006.05 | 5MT | F | L | Platform/Chassis FWD ABFA | | GCI18180 | Inner Joint | | 36 | 27 | 40 | 77.5 | 111 | |
| | 2000.08-2006.05 | 5MT | F | R | Platform/Chassis FWD ABFA | Model:Transit 260/280/300,Date to:2003.07 | GCI18213 | Inner Joint | | 26 | 26 | 40 | 331 | 110 | |
| | 2000.08-2006.05 | 5MT | F | R | Platform/Chassis FWD ABFA | Model:Transit 260/280/300,Date from:2003.08 | GCI18274 | Inner Joint | | 36 | 26 | 40 | 330 | 110 | |
| | 2000.08-2006.05 | 5MT | F | R | Van FWD ABFA | Date From:2003.08,Date To:2004.05,inner teeth of tranm.side:28 | GDS99178 | Drive Shaft | 48T | 28 | 36 | 59 | 128 | 1057 | |
| | 2000.08-2006.05 | MT | F | L | Van FWD ABFA | | GDS18035 | Drive Shaft | | 28 | 26 | 57 | 120.5 | 797 | |
| | 2000.08-2006.05 | MT | F | L | Van FWD ABFA | | GDS18036 | Drive Shaft | 48T | 28 | 26 | 57 | 120.5 | 797 | |
| | 2000.08-2006.05 | MT | F | L | Van FWD ABFA | inner teeth of tranm side:28 | GDS18209 | Drive Shaft | 48T | 28 | 36 | 57 | 120.5 | 794.5 | |
| | 2000.08-2006.05 | MT | F | L | Van FWD ABFA | inner teeth of tranm.side:27 | GDS18259 | Drive Shaft | 48T | 28 | 36 | 57 | 120.5 | 798.5 | |
| | 2000.08-2006.05 | MT | F | L | Van FWD ABFA | | GDS18434 | Drive Shaft | | 28 | 36 | 57 | 120.5 | 798 | |
| | 2000.08-2006.05 | MT | F | R | Van FWD ABFA | | GDS18142 | Drive Shaft | | 28 | 26 | 57 | 120.5 | 1056 | |
| | 2000.08-2006.05 | MT | F | R | Van FWD ABFA | | GDS18242 | Drive Shaft | 48T | 28 | 26 | 57 | 120.5 | 1056 | |
| | 2000.08-2006.05 | MT | F | R | Van FWD ABFA | inner teeth of tranm side:26 | GDS18265 | Drive Shaft | 48T | 28 | 36 | 57 | 120.5 | 1053 | |
| | 2000.08-2006.05 | MT | F | R | Van FWD ABFA | | GDS18435 | Drive Shaft | | 28 | 36 | 57 | 120.5 | 1060 | |
| | 2000.08-2006.05 | MT | F | L/R | Van FWD ABFA | | GCO18005 | Outer Joint | 48T | 28 | 26 | 57 | 120.5 | 64 | M |
| | 2000.08-2006.05 | MT | F | L/R | Van FWD ABFA | | GCO18061 | Outer Joint | | 28 | 26 | 57 | 120.5 | 64 | M |
| | 2000.08-2006.05 | MT | F | L/R | Van FWD ABFA | | GCO18220 | Outer Joint | | 28 | 36 | 57 | 120.5 | 72 | I |
| | 2000.08-2006.05 | MT | F | L/R | Van FWD ABFA | | GCO99349 | Outer Joint | 48T | 28 | 36 | 57 | 120.5 | 72 | I |
| | 2000.08-2006.05 | MT | F | L | Van FWD ABFA | | GCI18055 | Inner Joint | | 26 | 26 | 40 | 77.5 | 104 | |
| | 2000.08-2006.05 | MT | F | L | Van FWD ABFA | | GCI18173 | Inner Joint | | 36 | 28 | 40 | 77 | 111.5 | |
| | 2000.08-2006.05 | MT | F | L | Van FWD ABFA | | GCI18180 | Inner Joint | | 36 | 27 | 40 | 77.5 | 111 | |
| | 2000.08-2006.05 | MT | F | R | Van FWD ABFA | | GCI18213 | Inner Joint | | 26 | 26 | 40 | 331 | 110 | |
| | 2000.08-2006.05 | MT | F | R | Van FWD ABFA | | GCI18274 | Inner Joint | | 36 | 26 | 40 | 330 | 110 | |

| | YEAR | TRANSM. | F/R | L/R | BODY STYLE & DRIVE TYPE & ENGINE | REMARKS | G-AP Ref. | PRODUCT | ABS | Technical Specifications A | B | C | H | L | P |
|---|---|---|---|---|---|---|---|---|---|---|---|---|---|---|---|
| **FORD** **Transit** | | | | | | | | | | | | | | | |
| 2.0 (77 kw) | 2016.03- | 6MT | F | L | Bus FWD YLFS, YLF6, YLFA, YLFB, BJFA, BJFB | | GDS18334 | Drive Shaft | | 31 | 41 | 57.7 | 121 | 752 | |
| | 2016.03- | 6MT | F | R | Bus FWD YLFS, YLF6, YLFA, YLFB, BJFA, BJFB | | GDS18335 | Drive Shaft | | 31 | 41 | 57.7 | 121 | 1092 | |
| | 2016.03- | 6MT | F | L/R | Bus FWD YLFS, YLF6, YLFA, YLFB, BJFA, BJFB | | GCO18286 | Outer Joint | | 31 | 28 | 57.7 | 121 | 68 | I |
| | 2016.03- | 6MT | F | L/R | Bus FWD YLFS, YLF6, YLFA, YLFB, BJFA, BJFB | | GCO18293 | Outer Joint | | 31 | 30 | 57.5 | 121 | 77.5 | I |
| | 2016.03- | 6MT | F | L | Bus FWD YLFS, YLF6, YLFA, YLFB, BJFA, BJFB | Date to:2021.06 | GCI82506 | Inner Joint | | 41 | 29 | 44 | 76 | 127 | |
| | 2016.03- | 6MT | F | R | Bus FWD YLFS, YLF6, YLFA, YLFB, BJFA, BJFB | Date to:2021.06 | GCI82507 | Inner Joint | | 41 | 29 | 44 | 408 | 130 | |
| | 2016.03- | 6MT | F | L | Platform/Chassis FWD YLFS, YLF6, YLFA, YLFB, BJFA, BJFB | | GDS18334 | Drive Shaft | | 31 | 41 | 57.7 | 121 | 752 | |
| | 2016.03- | 6MT | F | R | Platform/Chassis FWD YLFS, YLF6, YLFA, YLFB, BJFA, BJFB | | GDS18335 | Drive Shaft | | 31 | 41 | 57.7 | 121 | 1092 | |
| | 2016.03- | 6MT | F | L/R | Platform/Chassis FWD YLFS, YLF6, YLFA, YLFB, BJFA, BJFB | Reconditioned | GCO18286 | Outer Joint | | 31 | 28 | 57.7 | 121 | 68 | I |
| | 2016.03- | 6MT | F | L/R | Platform/Chassis FWD YLFS, YLF6, YLFA, YLFB, BJFA, BJFB | | GCO18293 | Outer Joint | | 31 | 30 | 57.5 | 121 | 77.5 | I |
| | 2016.03- | 6MT | F | L | Platform/Chassis FWD YLFS, YLF6, YLFA, YLFB, BJFA, BJFB | Date to:2021.06 | GCI82506 | Inner Joint | | 41 | 29 | 44 | 76 | 127 | |
| | 2016.03- | 6MT | F | R | Platform/Chassis FWD YLFS, YLF6, YLFA, YLFB, BJFA, BJFB | Date to:2021.06 | GCI82507 | Inner Joint | | 41 | 29 | 44 | 408 | 130 | |
| | 2016.03- | | R | L/R | Platform/Chassis RWD YLRA, BJRA, YLR6 | | GDS57887 | Drive Shaft | | | 35 | | | 919.5 | |
| | 2016.03- | | R | L/R | Platform/Chassis RWD YLRA, BJRA, YLR6 | Date from:2019.05 | GDS57888 | Drive Shaft | | | 34 | | | 912.5 | |
| | 2016.03- | 6MT | F | L | Van FWD YLFS, YLF6, YLFA, YLFB, BJFA, BJFB | | GDS18334 | Drive Shaft | | 31 | 41 | 57.7 | 121 | 752 | |
| | 2016.03- | 6MT | F | R | Van FWD YLFS, YLF6, YLFA, YLFB, BJFA, BJFB | | GDS18335 | Drive Shaft | | 31 | 41 | 57.7 | 121 | 1092 | |
| | 2016.03- | 6MT | F | L/R | Van FWD YLFS, YLF6, YLFA, YLFB, BJFA, BJFB | | GCO18286 | Outer Joint | | 31 | 28 | 57.7 | 121 | 68 | I |
| | 2016.03- | 6MT | F | L/R | Van FWD YLFS, YLF6, YLFA, YLFB, BJFA, BJFB | | GCO18293 | Outer Joint | | 31 | 30 | 57.5 | 121 | 77.5 | I |
| | 2016.03- | 6MT | F | L | Van FWD YLFS, YLF6, YLFA, YLFB, BJFA, BJFB | Date to:2021.06 | GCI82506 | Inner Joint | | 41 | 29 | 44 | 76 | 127 | |
| | 2016.03- | 6MT | F | R | Van FWD YLFS, YLF6, YLFA, YLFB, BJFA, BJFB | Date to:2021.06 | GCI82507 | Inner Joint | | 41 | 29 | 44 | 408 | 130 | |
| 2.0 (92 kw) | 2002.08-2006.05 | 5MT | F | L | Bus FWD FIFA | | GDS18035 | Drive Shaft | | 28 | 26 | 57 | 120.5 | 797 | |
| | 2002.08-2006.05 | 5MT | F | L | Bus FWD FIFA | | GDS18036 | Drive Shaft | 48T | 28 | 26 | 57 | 120.5 | 797 | |
| | 2002.08-2006.05 | 5MT | F | L | Bus FWD FIFA | Outer teeth of differential side:36 | GDS18209 | Drive Shaft | 48T | 28 | 36 | 57 | 120.5 | 794.5 | |
| | 2002.08-2006.05 | 5MT | F | R | Bus FWD FIFA | Outer teeth of differential side:26 | GDS18142 | Drive Shaft | | 28 | 26 | 57 | 120.5 | 1056 | |
| | 2002.08-2006.05 | 5MT | F | R | Bus FWD FIFA | Outer teeth of differential side:26 | GDS18242 | Drive Shaft | 48T | 28 | 26 | 57 | 120.5 | 1056 | |
| | 2002.08-2006.05 | 5MT | F | R | Bus FWD FIFA | Outer teeth of differential side:36 | GDS18265 | Drive Shaft | 48T | 28 | 36 | 57 | 120.5 | 1053 | |
| | 2002.08-2006.05 | 5MT | F | R | Bus FWD FIFA | Date from:2003.08 | GDS99178 | Drive Shaft | 48T | 28 | 36 | 59 | 128 | 1057 | |
| | 2002.08-2006.05 | 5MT | F | L/R | Bus FWD FIFA | | GCO18005 | Outer Joint | 48T | 28 | 26 | 57 | 120.5 | 64 | M |
| | 2002.08-2006.05 | 5MT | F | L/R | Bus FWD FIFA | | GCO18061 | Outer Joint | | 28 | 26 | 57 | 120.5 | 64 | M |
| | 2002.08-2006.05 | 5MT | F | L | Bus FWD FIFA | Outer teeth of differential side:26 | GCI18055 | Inner Joint | | 26 | 26 | 40 | 77.5 | 104 | |
| | 2002.08-2006.05 | 5MT | F | L | Bus FWD FIFA | Outer teeth of differential side:36 | GCI18173 | Inner Joint | | 36 | 28 | 40 | 77 | 111.5 | |
| | 2002.08-2006.05 | 5MT | F | L | Bus FWD FIFA | Outer teeth of differential side:36 | GCI18180 | Inner Joint | | 36 | 27 | 40 | 77.5 | 111 | |
| | 2002.08-2006.05 | 5MT | F | R | Bus FWD FIFA | Outer teeth of differential side:26 | GCI18213 | Inner Joint | | 26 | 26 | 40 | 331 | 110 | |
| | 2002.08-2006.05 | 5MT | F | R | Bus FWD FIFA | Outer teeth of differential side:36 | GCI18274 | Inner Joint | | 36 | 26 | 40 | 330 | 110 | |
| | 2002.08-2006.05 | 5MT | F | R | Platform/Chassis FWD FIFA | Date From:2003.08,Date To:2004.05,inner teeth of tranm.side:28 | GDS99178 | Drive Shaft | 48T | 28 | 36 | 59 | 128 | 1057 | |
| | 2002.08-2006.05 | MT | F | L | Platform/Chassis FWD FIFA | | GDS18035 | Drive Shaft | | 28 | 26 | 57 | 120.5 | 797 | |
| | 2002.08-2006.05 | MT | F | L | Platform/Chassis FWD FIFA | | GDS18036 | Drive Shaft | 48T | 28 | 26 | 57 | 120.5 | 797 | |
| | 2002.08-2006.05 | MT | F | L | Platform/Chassis FWD FIFA | inner teeth of tranm side:28 | GDS18209 | Drive Shaft | 48T | 28 | 36 | 57 | 120.5 | 794.5 | |
| | 2002.08-2006.05 | MT | F | L | Platform/Chassis FWD FIFA | inner teeth of tranm.side:27 | GDS18259 | Drive Shaft | 48T | 28 | 36 | 57 | 120.5 | 798.5 | |
| | 2002.08-2006.05 | MT | F | L | Platform/Chassis FWD FIFA | | GDS18434 | Drive Shaft | | 28 | 36 | 57 | 120.5 | 798 | |
| | 2002.08-2006.05 | MT | F | R | Platform/Chassis FWD FIFA | | GDS18142 | Drive Shaft | | 28 | 26 | 57 | 120.5 | 1056 | |
| | 2002.08-2006.05 | MT | F | R | Platform/Chassis FWD FIFA | | GDS18242 | Drive Shaft | 48T | 28 | 26 | 57 | 120.5 | 1056 | |
| | 2002.08-2006.05 | MT | F | R | Platform/Chassis FWD FIFA | inner teeth of tranm side:26 | GDS18265 | Drive Shaft | 48T | 28 | 36 | 57 | 120.5 | 1053 | |
| | 2002.08-2006.05 | MT | F | R | Platform/Chassis FWD FIFA | | GDS18435 | Drive Shaft | | 28 | 36 | 57 | 120.5 | 1060 | |
| | 2002.08-2006.05 | MT | F | L/R | Platform/Chassis FWD FIFA | | GCO18005 | Outer Joint | 48T | 28 | 26 | 57 | 120.5 | 64 | M |
| | 2002.08-2006.05 | MT | F | L/R | Platform/Chassis FWD FIFA | | GCO18061 | Outer Joint | | 28 | 26 | 57 | 120.5 | 64 | M |
| | 2002.08-2006.05 | MT | F | L/R | Platform/Chassis FWD FIFA | | GCO18220 | Outer Joint | | 28 | 36 | 57 | 120.5 | 72 | I |
| | 2002.08-2006.05 | MT | F | L/R | Platform/Chassis FWD FIFA | | GCO99349 | Outer Joint | 48T | 28 | 36 | 57 | 120.5 | 72 | I |
| | 2002.08-2006.05 | MT | F | L | Platform/Chassis FWD FIFA | | GCI18055 | Inner Joint | | 26 | 26 | 40 | 77.5 | 104 | |
| | 2002.08-2006.05 | MT | F | L | Platform/Chassis FWD FIFA | | GCI18173 | Inner Joint | | 36 | 28 | 40 | 77 | 111.5 | |
| | 2002.08-2006.05 | MT | F | L | Platform/Chassis FWD FIFA | | GCI18180 | Inner Joint | | 36 | 27 | 40 | 77.5 | 111 | |
| | 2002.08-2006.05 | MT | F | R | Platform/Chassis FWD FIFA | | GCI18213 | Inner Joint | | 26 | 26 | 40 | 331 | 110 | |
| | 2002.08-2006.05 | MT | F | R | Platform/Chassis FWD FIFA | | GCI18274 | Inner Joint | | 36 | 26 | 40 | 330 | 110 | |
| | 2002.08-2006.05 | 5MT | F | R | Van FWD FIFA | Date From:2003.08,Date To:2004.05,inner teeth of tranm.side:28 | GDS99178 | Drive Shaft | 48T | 28 | 36 | 59 | 128 | 1057 | |
| | 2002.08-2006.05 | MT | F | L | Van FWD FIFA | | GDS18035 | Drive Shaft | | 28 | 26 | 57 | 120.5 | 797 | |
| | 2002.08-2006.05 | MT | F | L | Van FWD FIFA | | GDS18036 | Drive Shaft | 48T | 28 | 26 | 57 | 120.5 | 797 | |
| | 2002.08-2006.05 | MT | F | L | Van FWD FIFA | inner teeth of tranm side:28 | GDS18209 | Drive Shaft | 48T | 28 | 36 | 57 | 120.5 | 794.5 | |
| | 2002.08-2006.05 | MT | F | L | Van FWD FIFA | inner teeth of tranm.side:27 | GDS18259 | Drive Shaft | 48T | 28 | 36 | 57 | 120.5 | 798.5 | |
| | 2002.08-2006.05 | MT | F | L | Van FWD FIFA | | GDS18434 | Drive Shaft | | 28 | 36 | 57 | 120.5 | 798 | |
| | 2002.08-2006.05 | MT | F | R | Van FWD FIFA | | GDS18142 | Drive Shaft | | 28 | 26 | 57 | 120.5 | 1056 | |
| | 2002.08-2006.05 | MT | F | R | Van FWD FIFA | | GDS18242 | Drive Shaft | 48T | 28 | 26 | 57 | 120.5 | 1056 | |
| | 2002.08-2006.05 | MT | F | R | Van FWD FIFA | inner teeth of tranm side:26 | GDS18265 | Drive Shaft | 48T | 28 | 36 | 57 | 120.5 | 1053 | |
| | 2002.08-2006.05 | MT | F | R | Van FWD FIFA | | GDS18435 | Drive Shaft | | 28 | 36 | 57 | 120.5 | 1060 | |
| | 2002.08-2006.05 | MT | F | L/R | Van FWD FIFA | | GCO18005 | Outer Joint | 48T | 28 | 26 | 57 | 120.5 | 64 | M |
| | 2002.08-2006.05 | MT | F | L/R | Van FWD FIFA | | GCO18061 | Outer Joint | | 28 | 26 | 57 | 120.5 | 64 | M |

| | YEAR | TRANSM. | F/R | L/R | BODY STYLE & DRIVE TYPE & ENGINE | REMARKS | G-AP Ref. | PRODUCT | ABS | Technical Specifications A | B | C | H | L | P |
|---|---|---|---|---|---|---|---|---|---|---|---|---|---|---|---|
| **FORD** **Transit** | | | | | | | | | | | | | | | |
| 2.0 (92 kw) | 2002.08-2006.05 | MT | F | L/R | Van FWD FIFA | | GCO18220 | Outer Joint | | 28 | 36 | 57 | 120.5 | 72 | I |
| | 2002.08-2006.05 | MT | F | L/R | Van FWD FIFA | | GCO99349 | Outer Joint | 48T | 28 | 36 | 57 | 120.5 | 72 | I |
| | 2002.08-2006.05 | MT | F | L | Van FWD FIFA | | GCI18055 | Inner Joint | | 26 | 26 | 40 | 77.5 | 104 | |
| | 2002.08-2006.05 | MT | F | L | Van FWD FIFA | | GCI18173 | Inner Joint | | 36 | 28 | 40 | 77 | 111.5 | |
| | 2002.08-2006.05 | MT | F | L | Van FWD FIFA | | GCI18180 | Inner Joint | | 36 | 27 | 40 | 77.5 | 111 | |
| | 2002.08-2006.05 | MT | F | R | Van FWD FIFA | | GCI18213 | Inner Joint | | 26 | 26 | 40 | 331 | 110 | |
| | 2002.08-2006.05 | MT | F | R | Van FWD FIFA | | GCI18274 | Inner Joint | | 36 | 26 | 40 | 330 | 110 | |
| 2.0 (96 kw) | 2016.03- | 6AT | F | L | Bus FWD YMFS, YMF6, YMFA, YMFB, BKFA, BKFB | Date from:2020.12 | GDS56279 | Drive Shaft | | 31 | 27 | 63 | 121 | 737 | |
| | 2016.03- | 6AT | F | R | Bus FWD YMFS, YMF6, YMFA, YMFB, BKFA, BKFB | Date from:2020.12 | GDS56280 | Drive Shaft | | 31 | 27 | 63 | 121 | 1106 | |
| | 2016.03- | 6AT | F | L/R | Bus FWD YMFS, YMF6, YMFA, YMFB, BKFA, BKFB | | GCO83240 | Outer Joint | | 31 | 31 | 63 | 121 | 79 | I |
| | 2016.03- | 6AT | F | L | Bus FWD YMFS, YMF6, YMFA, YMFB, BKFA, BKFB | | GCI83225 | Inner Joint | | 27 | 29 | 35 | 107 | 102.5 | |
| | 2016.03- | 6AT | F | R | Bus FWD YMFS, YMF6, YMFA, YMFB, BKFA, BKFB | | GCI83226 | Inner Joint | | 27 | 29 | 35 | 417 | 131 | |
| | 2016.03- | 6MT | F | L | Bus FWD YMFS, YMF6, YMFA, YMFB, BKFA, BKFB | | GDS18334 | Drive Shaft | | 31 | 41 | 57.7 | 121 | 752 | |
| | 2016.03- | 6MT | F | R | Bus FWD YMFS, YMF6, YMFA, YMFB, BKFA, BKFB | | GDS18335 | Drive Shaft | | 31 | 41 | 57.7 | 121 | 1092 | |
| | 2016.03- | 6MT | F | R | Bus FWD YMFS, YMF6, YMFA, YMFB, BKFA, BKFB | Date to:2021.06 | GCO18293 | Outer Joint | | 31 | 30 | 57.5 | 121 | 77.5 | I |
| | 2016.03- | 6MT | F | L/R | Bus FWD YMFS, YMF6, YMFA, YMFB, BKFA, BKFB | | GCO18286 | Outer Joint | | 31 | 28 | 57.7 | 121 | 68 | I |
| | 2016.03- | 6MT | F | L | Bus FWD YMFS, YMF6, YMFA, YMFB, BKFA, BKFB | Date to:2021.06 | GCI82506 | Inner Joint | | 41 | 29 | 44 | 76 | 127 | |
| | 2016.03- | 6MT | F | R | Bus FWD YMFS, YMF6, YMFA, YMFB, BKFA, BKFB | Date to:2021.06 | GCI82507 | Inner Joint | | 41 | 29 | 44 | 408 | 130 | |
| | 2016.03- | 6AT | F | L | Platform/Chassis FWD YMFS, YMF6, YMFA, YMFB, BKFA, BKFB | Date from:2020.12 | GDS56279 | Drive Shaft | | 31 | 27 | 63 | 121 | 737 | |
| | 2016.03- | 6AT | F | R | Platform/Chassis FWD YMFS, YMF6, YMFA, YMFB, BKFA, BKFB | Date from:2020.12 | GDS56280 | Drive Shaft | | 31 | 27 | 63 | 121 | 1106 | |
| | 2016.03- | 6AT | F | L/R | Platform/Chassis FWD YMFS, YMF6, YMFA, YMFB, BKFA, BKFB | | GCO83240 | Outer Joint | | 31 | 31 | 63 | 121 | 79 | I |
| | 2016.03- | 6AT | F | L | Platform/Chassis FWD YMFS, YMF6, YMFA, YMFB, BKFA, BKFB | | GCI83225 | Inner Joint | | 27 | 29 | 35 | 107 | 102.5 | |
| | 2016.03- | 6AT | F | R | Platform/Chassis FWD YMFS, YMF6, YMFA, YMFB, BKFA, BKFB | | GCI83226 | Inner Joint | | 27 | 29 | 35 | 417 | 131 | |
| | 2016.03- | 6MT | F | L | Platform/Chassis FWD YMFS, YMF6, YMFA, YMFB, BKFA, BKFB | | GDS18334 | Drive Shaft | | 31 | 41 | 57.7 | 121 | 752 | |
| | 2016.03- | 6MT | F | R | Platform/Chassis FWD YMFS, YMF6, YMFA, YMFB, BKFA, BKFB | | GDS18335 | Drive Shaft | | 31 | 41 | 57.7 | 121 | 1092 | |
| | 2016.03- | 6MT | F | R | Platform/Chassis FWD YMFS, YMF6, YMFA, YMFB, BKFA, BKFB | Date to:2021.06 | GCO18293 | Outer Joint | | 31 | 30 | 57.5 | 121 | 77.5 | I |
| | 2016.03- | 6MT | F | L/R | Platform/Chassis FWD YMFS, YMF6, YMFA, YMFB, BKFA, BKFB | Reconditioned | GCO18286 | Outer Joint | | 31 | 28 | 57.7 | 121 | 68 | I |
| | 2016.03- | 6MT | F | L | Platform/Chassis FWD YMFS, YMF6, YMFA, YMFB, BKFA, BKFB | Date to:2021.06 | GCI82506 | Inner Joint | | 41 | 29 | 44 | 76 | 127 | |
| | 2016.03- | 6MT | F | R | Platform/Chassis FWD YMFS, YMF6, YMFA, YMFB, BKFA, BKFB | Date to:2021.06 | GCI82507 | Inner Joint | | 41 | 29 | 44 | 408 | 130 | |
| | 2016.03- | | R | L/R | Platform/Chassis RWD BKRA, YMR6, YMHA | | GDS57887 | Drive Shaft | | | 35 | | | 919.5 | |
| | 2016.03- | | R | L/R | Platform/Chassis RWD BKRA, YMR6, YMHA | Date from:2019.05 | GDS57888 | Drive Shaft | | | 34 | | | 912.5 | |
| | 2016.03- | 6AT | F | L | Van FWD YMFS, YMF6, YMFA, YMFB, BKFA, BKFB | Model:Transit 310/330/350,For Enginecode:BKFA/BKFB | GDS56279 | Drive Shaft | | 31 | 27 | 63 | 121 | 737 | |
| | 2016.03- | 6AT | F | R | Van FWD YMFS, YMF6, YMFA, YMFB, BKFA, BKFB | Model:Transit 310/330/350,For Enginecode:BKFA/BKFB | GDS56280 | Drive Shaft | | 31 | 27 | 63 | 121 | 1106 | |
| | 2016.03- | 6AT | F | L/R | Van FWD YMFS, YMF6, YMFA, YMFB, BKFA, BKFB | Model:Transit 310/330/350,For Enginecode:YMF6/YMFA/YMFB | GCO83240 | Outer Joint | | 31 | 31 | 63 | 121 | 79 | I |
| | 2016.03- | 6AT | F | L | Van FWD YMFS, YMF6, YMFA, YMFB, BKFA, BKFB | Model:Transit 310/330/350 | GCI83225 | Inner Joint | | 27 | 29 | 35 | 107 | 102.5 | |
| | 2016.03- | 6AT | F | R | Van FWD YMFS, YMF6, YMFA, YMFB, BKFA, BKFB | Model:Transit 310/330/350 | GCI83226 | Inner Joint | | 27 | 29 | 35 | 417 | 131 | |
| | 2016.03- | 6MT | F | L | Van FWD YMFS, YMF6, YMFA, YMFB, BKFA, BKFB | Model:Transit 290/310/330/350,Date from:2016.06,Date to:2019.05;Model:Transit 330/350,Date to:2019.05 | GDS18334 | Drive Shaft | | 31 | 41 | 57.7 | 121 | 752 | |
| | 2016.03- | 6MT | F | R | Van FWD YMFS, YMF6, YMFA, YMFB, BKFA, BKFB | Model:Transit 290/310/330/350,Date from:2016.06,Date to:2019.05;Model:Transit 330/350,Date to:2019.05 | GDS18335 | Drive Shaft | | 31 | 41 | 57.7 | 121 | 1092 | |
| | 2016.03- | 6MT | F | R | Van FWD YMFS, YMF6, YMFA, YMFB, BKFA, BKFB | Model:Transit 290/310/330/350,Date to:2019.05 | GCO18293 | Outer Joint | | 31 | 30 | 57.5 | 121 | 77.5 | I |
| | 2016.03- | 6MT | F | L/R | Van FWD YMFS, YMF6, YMFA, YMFB, BKFA, BKFB | Model:Transit 290/310/330/350,Date from:2016.06,Date to:2019.05;Model:Transit 330/350,Date to:2019.05 | GCO18286 | Outer Joint | | 31 | 28 | 57.7 | 121 | 68 | I |
| | 2016.03- | 6MT | F | L | Van FWD YMFS, YMF6, YMFA, YMFB, BKFA, BKFB | Model:Transit 290/310/330/350,Date to:2024.04 | GCI82506 | Inner Joint | | 41 | 29 | 44 | 76 | 127 | |
| | 2016.03- | 6MT | F | R | Van FWD YMFS, YMF6, YMFA, YMFB, BKFA, BKFB | Model:Transit 330/350,Date to:2024.04 | GCI82507 | Inner Joint | | 41 | 29 | 44 | 408 | 130 | |
| | 2016.03- | | R | L/R | Van RWD BKRA, YMR6, YMHA | | GDS57887 | Drive Shaft | | | 35 | | | 919.5 | |
| | 2016.03- | | R | L/R | Van RWD BKRA, YMR6, YMHA | Date from:2019.05 | GDS57888 | Drive Shaft | | | 34 | | | 912.5 | |
| | 2017.01- | 6MT | F | L | Platform/Chassis 4WD BKRA, YMRA, YMR6 | | GDS56659 | Drive Shaft | | 31 | 29 | 63 | 121 | 679 | |
| | 2017.01- | 6MT | F | R | Platform/Chassis 4WD BKRA, YMRA, YMR6 | | GDS56707 | Drive Shaft | | 31 | 28 | 63 | 121 | 745 | |
| | 2017.01- | 6MT | F | L | Platform/Chassis 4WD BKRA, YMRA, YMR6 | | GCI83431 | Inner Joint | | 29 | 26 | 44 | 71.5 | 110 | |
| | 2017.01- | 6MT | F | R | Platform/Chassis 4WD BKRA, YMRA, YMR6 | | GCI83448 | Inner Joint | | 28 | 26 | 44 | | 121 | |
| | 2019.05- | 6MT | F | L | Bus FWD BKFC, BKFD | | GDS18334 | Drive Shaft | | 31 | 41 | 57.7 | 121 | 752 | |
| | 2019.05- | 6MT | F | R | Bus FWD BKFC, BKFD | | GDS18335 | Drive Shaft | | 31 | 41 | 57.7 | 121 | 1092 | |
| | 2019.05- | 6MT | F | R | Bus FWD BKFC, BKFD | Date to:2021.06 | GCO18293 | Outer Joint | | 31 | 30 | 57.5 | 121 | 77.5 | I |
| | 2019.05- | 6MT | F | L/R | Bus FWD BKFC, BKFD | | GCO18286 | Outer Joint | | 31 | 28 | 57.7 | 121 | 68 | I |
| | 2019.05- | 6MT | F | L | Bus FWD BKFC, BKFD | Date to:2021.06 | GCI82506 | Inner Joint | | 41 | 29 | 44 | 76 | 127 | |
| | 2019.05- | 6MT | F | R | Bus FWD BKFC, BKFD | Date to:2021.06 | GCI82507 | Inner Joint | | 41 | 29 | 44 | 408 | 130 | |
| | 2019.05- | | R | L/R | Bus RWD BKHA, YMHA | Date to:2022.01 | GDS57887 | Drive Shaft | | | 35 | | | 919.5 | |
| | 2019.05- | 6MT | F | L | Platform/Chassis FWD BKFC, BKFD | | GDS18334 | Drive Shaft | | 31 | 41 | 57.7 | 121 | 752 | |
| | 2019.05- | 6MT | F | R | Platform/Chassis FWD BKFC, BKFD | | GDS18335 | Drive Shaft | | 31 | 41 | 57.7 | 121 | 1092 | |
| | 2019.05- | 6MT | F | R | Platform/Chassis FWD BKFC, BKFD | Date to:2021.06 | GCO18293 | Outer Joint | | 31 | 30 | 57.5 | 121 | 77.5 | I |
| | 2019.05- | 6MT | F | L/R | Platform/Chassis FWD BKFC, BKFD | | GCO18286 | Outer Joint | | 31 | 28 | 57.7 | 121 | 68 | I |
| | 2019.05- | 6MT | F | L | Platform/Chassis FWD BKFC, BKFD | Date to:2021.06 | GCI82506 | Inner Joint | | 41 | 29 | 44 | 76 | 127 | |
| | 2019.05- | 6MT | F | R | Platform/Chassis FWD BKFC, BKFD | Date to:2021.06 | GCI82507 | Inner Joint | | 41 | 29 | 44 | 408 | 130 | |
| | 2019.05- | | R | L/R | Platform/Chassis RWD BKRB | Date to:2022.01 | GDS57887 | Drive Shaft | | | 35 | | | 919.5 | |
| | 2019.05- | 6MT | F | L | Van FWD BKFC, BKFD | | GDS18334 | Drive Shaft | | 31 | 41 | 57.7 | 121 | 752 | |
| | 2019.05- | 6MT | F | R | Van FWD BKFC, BKFD | | GDS18335 | Drive Shaft | | 31 | 41 | 57.7 | 121 | 1092 | |
| | 2019.05- | 6MT | F | R | Van FWD BKFC, BKFD | Date to:2021.06 | GCO18293 | Outer Joint | | 31 | 30 | 57.5 | 121 | 77.5 | I |

| | YEAR | TRANSM. | F/R | L/R | BODY STYLE & DRIVE TYPE & ENGINE | REMARKS | G-AP Ref. | PRODUCT | ABS | Technical Specifications A | B | C | H | L | P |
|---|---|---|---|---|---|---|---|---|---|---|---|---|---|---|---|
| **FORD** **Transit** | | | | | | | | | | | | | | | |
| 2.0 (96 kw) | 2019.05- | 6MT | F | L/R | Van FWD BKFC, BKFD | | GCO18286 | Outer Joint | | 31 | 28 | 57.7 | 121 | 68 | I |
| | 2019.05- | 6MT | F | L | Van FWD BKFC, BKFD | Date to:2021.06 | GCI82506 | Inner Joint | | 41 | 29 | 44 | 76 | 127 | |
| | 2019.05- | 6MT | F | R | Van FWD BKFC, BKFD | Date to:2021.06 | GCI82507 | Inner Joint | | 41 | 29 | 44 | 408 | 130 | |
| 2.0 (110 kw) | 2021.10- | 6AT | F | L | Bus FWD P0FA | | GDS56279 | Drive Shaft | | 31 | 27 | 63 | 121 | 737 | |
| | 2021.10- | 6AT | F | R | Bus FWD P0FA | | GDS56280 | Drive Shaft | | 31 | 27 | 63 | 121 | 1106 | |
| | 2021.10- | 6AT | F | L/R | Bus FWD P0FA | | GCO83240 | Outer Joint | | 31 | 31 | 63 | 121 | 79 | I |
| | 2021.10- | 6AT | F | L | Bus FWD P0FA | | GCI83225 | Inner Joint | | 27 | 29 | 35 | 107 | 102.5 | |
| | 2021.10- | 6AT | F | R | Bus FWD P0FA | | GCI83226 | Inner Joint | | 27 | 29 | 35 | 417 | 131 | |
| | 2021.10- | 6MT | F | L | Bus FWD P0FA | | GDS18334 | Drive Shaft | | 31 | 41 | 57.7 | 121 | 752 | |
| | 2021.10- | 6MT | F | R | Bus FWD P0FA | | GDS18335 | Drive Shaft | | 31 | 41 | 57.7 | 121 | 1092 | |
| | 2021.10- | 6MT | F | R | Bus FWD P0FA | Model:Transit 330/Transit 350,Date to:2024.04 | GCI82507 | Inner Joint | | 41 | 29 | 44 | 408 | 130 | |
| | 2021.10- | 6MT | F | L | Bus FWD P0FB | | GDS18334 | Drive Shaft | | 31 | 41 | 57.7 | 121 | 752 | |
| | 2021.10- | 6MT | F | R | Bus FWD P0FB | | GDS18335 | Drive Shaft | | 31 | 41 | 57.7 | 121 | 1092 | |
| | 2021.10- | 6MT | F | L/R | Bus FWD P0FB | | GCO18286 | Outer Joint | | 31 | 28 | 57.7 | 121 | 68 | I |
| | 2021.10- | 6MT | F | L | Bus FWD P0FB | Date to:2024.04 | GCI82506 | Inner Joint | | 41 | 29 | 44 | 76 | 127 | |
| | 2021.10- | 6MT | F | R | Bus FWD P0FB | Date to:2024.04 | GCI82507 | Inner Joint | | 41 | 29 | 44 | 408 | 130 | |
| 2.0 (118 kw) | 2021.01- | 6AT | F | L | Van FWD N0HA | | GDS56279 | Drive Shaft | | 31 | 27 | 63 | 121 | 737 | |
| | 2021.01- | 6AT | F | R | Van FWD N0HA | | GDS56280 | Drive Shaft | | 31 | 27 | 63 | 121 | 1106 | |
| | 2021.01- | 6AT | F | L/R | Van FWD N0HA | | GCO83240 | Outer Joint | | 31 | 31 | 63 | 121 | 79 | I |
| | 2021.01- | 6AT | F | L | Van FWD N0HA | | GCI83225 | Inner Joint | | 27 | 29 | 35 | 107 | 102.5 | |
| | 2021.01- | 6AT | F | R | Van FWD N0HA | | GCI83226 | Inner Joint | | 27 | 29 | 35 | 417 | 131 | |
| | 2021.01- | 6MT | F | L | Van FWD N0HA | | GDS18334 | Drive Shaft | | 31 | 41 | 57.7 | 121 | 752 | |
| | 2021.01- | 6MT | F | R | Van FWD N0HA | | GDS18335 | Drive Shaft | | 31 | 41 | 57.7 | 121 | 1092 | |
| | 2021.01- | 6MT | F | R | Van FWD N0HA | Date to:2021.06 | GCO18293 | Outer Joint | | 31 | 30 | 57.5 | 121 | 77.5 | I |
| | 2021.01- | 6MT | F | L/R | Van FWD N0HA | | GCO18286 | Outer Joint | | 31 | 28 | 57.7 | 121 | 68 | I |
| | 2021.01- | 6MT | F | L | Van FWD N0HA | Date to:2021.06 | GCI82506 | Inner Joint | | 41 | 29 | 44 | 76 | 127 | |
| | 2021.01- | 6MT | F | R | Van FWD N0HA | Date to:2021.06 | GCI82507 | Inner Joint | | 41 | 29 | 44 | 408 | 130 | |
| 2.0 (121 kw) | 2023.07- | 6MT | F | L | Bus FWD BLFB | Date to:2024.04 | GDS18334 | Drive Shaft | | 31 | 41 | 57.7 | 121 | 752 | |
| | 2023.07- | 6MT | F | R | Bus FWD BLFB | Date to:2024.04 | GDS18335 | Drive Shaft | | 31 | 41 | 57.7 | 121 | 1092 | |
| | 2023.07- | 6MT | F | L | Bus FWD BLFB | Date to:2024.04 | GCI82506 | Inner Joint | | 41 | 29 | 44 | 76 | 127 | |
| | 2023.07- | 6MT | F | R | Bus FWD BLFB | Date to:2024.04 | GCI82507 | Inner Joint | | 41 | 29 | 44 | 408 | 130 | |
| | 2023.07- | | F | L | Platform/Chassis 4WD | Date to:2024.04 | GDS56659 | Drive Shaft | | 31 | 29 | 63 | 121 | 679 | |
| | 2023.07- | | F | R | Platform/Chassis 4WD | Date to:2024.04 | GDS56707 | Drive Shaft | | 31 | 28 | 63 | 121 | 745 | |
| | 2023.07- | | F | L | Platform/Chassis 4WD | Date to:2024.04 | GCI83431 | Inner Joint | | 29 | 26 | 44 | 71.5 | 110 | |
| | 2023.07- | 6MT | F | L | Platform/Chassis FWD BLFB | Date to:2024.04 | GDS18334 | Drive Shaft | | 31 | 41 | 57.7 | 121 | 752 | |
| | 2023.07- | 6MT | F | R | Platform/Chassis FWD BLFB | Date to:2024.04 | GDS18335 | Drive Shaft | | 31 | 41 | 57.7 | 121 | 1092 | |
| | 2023.07- | 6MT | F | L | Platform/Chassis FWD BLFB | Date to:2024.04 | GCI82506 | Inner Joint | | 41 | 29 | 44 | 76 | 127 | |
| | 2023.07- | 6MT | F | R | Platform/Chassis FWD BLFB | Date to:2024.04 | GCI82507 | Inner Joint | | 41 | 29 | 44 | 408 | 130 | |
| | 2023.07- | | F | L | Van 4WD | Date to:2024.04 | GDS56659 | Drive Shaft | | 31 | 29 | 63 | 121 | 679 | |
| | 2023.07- | | F | R | Van 4WD | Date to:2024.04 | GDS56707 | Drive Shaft | | 31 | 28 | 63 | 121 | 745 | |
| | 2023.07- | | F | L | Van 4WD | Date to:2024.04 | GCI83431 | Inner Joint | | 29 | 26 | 44 | 71.5 | 110 | |
| | 2023.07- | 6MT | F | L | Van FWD BLFB | Date to:2024.04 | GDS18334 | Drive Shaft | | 31 | 41 | 57.7 | 121 | 752 | |
| | 2023.07- | 6MT | F | R | Van FWD BLFB | Date to:2024.04 | GDS18335 | Drive Shaft | | 31 | 41 | 57.7 | 121 | 1092 | |
| | 2023.07- | 6MT | F | L | Van FWD BLFB | Date to:2024.04 | GCI82506 | Inner Joint | | 41 | 29 | 44 | 76 | 127 | |
| | 2023.07- | 6MT | F | R | Van FWD BLFB | Date to:2024.04 | GCI82507 | Inner Joint | | 41 | 29 | 44 | 408 | 130 | |
| 2.0 (125 kw) | 2016.03-2024.06 | 6AT | F | L | Bus FWD YNFA, YNFB, BLFA, BLFB, YNFS, YNF6 | Date from:2020.12 | GDS56279 | Drive Shaft | | 31 | 27 | 63 | 121 | 737 | |
| | 2016.03-2024.06 | 6AT | F | R | Bus FWD YNFA, YNFB, BLFA, BLFB, YNFS, YNF6 | Date from:2020.12 | GDS56280 | Drive Shaft | | 31 | 27 | 63 | 121 | 1106 | |
| | 2016.03-2024.06 | 6AT | F | L/R | Bus FWD YNFA, YNFB, BLFA, BLFB, YNFS, YNF6 | | GCO83240 | Outer Joint | | 31 | 31 | 63 | 121 | 79 | I |
| | 2016.03-2024.06 | 6AT | F | L | Bus FWD YNFA, YNFB, BLFA, BLFB, YNFS, YNF6 | | GCI83225 | Inner Joint | | 27 | 29 | 35 | 107 | 102.5 | |
| | 2016.03-2024.06 | 6AT | F | R | Bus FWD YNFA, YNFB, BLFA, BLFB, YNFS, YNF6 | | GCI83226 | Inner Joint | | 27 | 29 | 35 | 417 | 131 | |
| | 2016.03-2024.06 | 6MT | F | L | Bus FWD YNFA, YNFB, BLFA, BLFB, YNFS, YNF6 | | GDS18334 | Drive Shaft | | 31 | 41 | 57.7 | 121 | 752 | |
| | 2016.03-2024.06 | 6MT | F | R | Bus FWD YNFA, YNFB, BLFA, BLFB, YNFS, YNF6 | | GDS18335 | Drive Shaft | | 31 | 41 | 57.7 | 121 | 1092 | |
| | 2016.03-2024.06 | 6MT | F | R | Bus FWD YNFA, YNFB, BLFA, BLFB, YNFS, YNF6 | Date to:2021.06 | GCO18293 | Outer Joint | | 31 | 30 | 57.5 | 121 | 77.5 | I |
| | 2016.03-2024.06 | 6MT | F | L/R | Bus FWD YNFA, YNFB, BLFA, BLFB, YNFS, YNF6 | | GCO18286 | Outer Joint | | 31 | 28 | 57.7 | 121 | 68 | I |
| | 2016.03-2024.06 | 6MT | F | L | Bus FWD YNFA, YNFB, BLFA, BLFB, YNFS, YNF6 | Date to:2021.06 | GCI82506 | Inner Joint | | 41 | 29 | 44 | 76 | 127 | |
| | 2016.03-2024.06 | 6MT | F | R | Bus FWD YNFA, YNFB, BLFA, BLFB, YNFS, YNF6 | Date to:2021.06 | GCI82507 | Inner Joint | | 41 | 29 | 44 | 408 | 130 | |
| | 2016.03-2024.06 | 6AT | F | L | Platform/Chassis FWD YNFA, YNFB, BLFA, BLFB, YNFS, YNF6 | Date from:2020.12 | GDS56279 | Drive Shaft | | 31 | 27 | 63 | 121 | 737 | |
| | 2016.03-2024.06 | 6AT | F | R | Platform/Chassis FWD YNFA, YNFB, BLFA, BLFB, YNFS, YNF6 | Date from:2020.12 | GDS56280 | Drive Shaft | | 31 | 27 | 63 | 121 | 1106 | |
| | 2016.03-2024.06 | 6AT | F | L/R | Platform/Chassis FWD YNFA, YNFB, BLFA, BLFB, YNFS, YNF6 | | GCO83240 | Outer Joint | | 31 | 31 | 63 | 121 | 79 | I |
| | 2016.03-2024.06 | 6AT | F | L | Platform/Chassis FWD YNFA, YNFB, BLFA, BLFB, YNFS, YNF6 | | GCI83225 | Inner Joint | | 27 | 29 | 35 | 107 | 102.5 | |
| | 2016.03-2024.06 | 6AT | F | R | Platform/Chassis FWD YNFA, YNFB, BLFA, BLFB, YNFS, YNF6 | | GCI83226 | Inner Joint | | 27 | 29 | 35 | 417 | 131 | |
| | 2016.03-2024.06 | 6MT | F | L | Platform/Chassis FWD YNFA, YNFB, BLFA, BLFB, YNFS, YNF6 | | GDS18334 | Drive Shaft | | 31 | 41 | 57.7 | 121 | 752 | |
| | 2016.03-2024.06 | 6MT | F | R | Platform/Chassis FWD YNFA, YNFB, BLFA, BLFB, YNFS, YNF6 | | GDS18335 | Drive Shaft | | 31 | 41 | 57.7 | 121 | 1092 | |
| | 2016.03-2024.06 | 6MT | F | R | Platform/Chassis FWD YNFA, YNFB, BLFA, BLFB, YNFS, YNF6 | Date to:2021.06 | GCO18293 | Outer Joint | | 31 | 30 | 57.5 | 121 | 77.5 | I |
| | 2016.03-2024.06 | 6MT | F | L/R | Platform/Chassis FWD YNFA, YNFB, BLFA, BLFB, YNFS, YNF6 | | GCO18286 | Outer Joint | | 31 | 28 | 57.7 | 121 | 68 | I |

| | YEAR | TRANSM. | F/R | L/R | BODY STYLE & DRIVE TYPE & ENGINE | REMARKS | G-AP Ref. | PRODUCT | ABS | Technical Specifications A | B | C | H | L | P |
|---|---|---|---|---|---|---|---|---|---|---|---|---|---|---|---|
| **FORD** **Transit** | | | | | | | | | | | | | | | |
| 2.0 (125 kw) | 2016.03-2024.06 | 6MT | F | L | Platform/Chassis FWD YNFA, YNFB, BLFA, BLFB, YNFS, YNF6 | Date to:2021.06 | GCI82506 | Inner Joint | | 41 | 29 | 44 | 76 | 127 | |
| | 2016.03-2024.06 | 6MT | F | R | Platform/Chassis FWD YNFA, YNFB, BLFA, BLFB, YNFS, YNF6 | Date to:2021.06 | GCI82507 | Inner Joint | | 41 | 29 | 44 | 408 | 130 | |
| | 2016.03-2024.06 | | R | L/R | Platform/Chassis RWD YNHA, BLHA, YNR6, BLRA | | GDS57887 | Drive Shaft | | | 35 | | | 919.5 | |
| | 2016.03-2024.06 | | R | L/R | Platform/Chassis RWD YNHA, BLHA, YNR6, BLRA | Date from:2019.05 | GDS57888 | Drive Shaft | | | 34 | | | 912.5 | |
| | 2016.03-2024.06 | 6AT | F | L | Van FWD YNFA, YNFB, BLFA, BLFB, YNFS, YNF6 | Date from:2020.12 | GDS56279 | Drive Shaft | | 31 | 27 | 63 | 121 | 737 | |
| | 2016.03-2024.06 | 6AT | F | R | Van FWD YNFA, YNFB, BLFA, BLFB, YNFS, YNF6 | Date from:2020.12 | GDS56280 | Drive Shaft | | 31 | 27 | 63 | 121 | 1106 | |
| | 2016.03-2024.06 | 6AT | F | L/R | Van FWD YNFA, YNFB, BLFA, BLFB, YNFS, YNF6 | | GCO83240 | Outer Joint | | 31 | 31 | 63 | 121 | 79 | I |
| | 2016.03-2024.06 | 6AT | F | L | Van FWD YNFA, YNFB, BLFA, BLFB, YNFS, YNF6 | | GCI83225 | Inner Joint | | 27 | 29 | 35 | 107 | 102.5 | |
| | 2016.03-2024.06 | 6AT | F | R | Van FWD YNFA, YNFB, BLFA, BLFB, YNFS, YNF6 | | GCI83226 | Inner Joint | | 27 | 29 | 35 | 417 | 131 | |
| | 2016.03-2024.06 | 6MT | F | L | Van FWD YNFA, YNFB, BLFA, BLFB, YNFS, YNF6 | | GDS18334 | Drive Shaft | | 31 | 41 | 57.7 | 121 | 752 | |
| | 2016.03-2024.06 | 6MT | F | R | Van FWD YNFA, YNFB, BLFA, BLFB, YNFS, YNF6 | | GDS18335 | Drive Shaft | | 31 | 41 | 57.7 | 121 | 1092 | |
| | 2016.03-2024.06 | 6MT | F | R | Van FWD YNFA, YNFB, BLFA, BLFB, YNFS, YNF6 | Date to:2021.06 | GCO18293 | Outer Joint | | 31 | 30 | 57.5 | 121 | 77.5 | I |
| | 2016.03-2024.06 | 6MT | F | L/R | Van FWD YNFA, YNFB, BLFA, BLFB, YNFS, YNF6 | Reconditioned | GCO18286 | Outer Joint | | 31 | 28 | 57.7 | 121 | 68 | I |
| | 2016.03-2024.06 | 6MT | F | L | Van FWD YNFA, YNFB, BLFA, BLFB, YNFS, YNF6 | Date to:2021.06 | GCI82506 | Inner Joint | | 41 | 29 | 44 | 76 | 127 | |
| | 2016.03-2024.06 | 6MT | F | R | Van FWD YNFA, YNFB, BLFA, BLFB, YNFS, YNF6 | Date to:2021.06 | GCI82507 | Inner Joint | | 41 | 29 | 44 | 408 | 130 | |
| | 2016.03-2024.06 | | R | L/R | Van RWD YNHA, BLHA, YNR6, BLRA | | GDS57887 | Drive Shaft | | | 35 | | | 919.5 | |
| | 2016.03-2024.06 | | R | L/R | Van RWD YNHA, BLHA, YNR6, BLRA | Date from:2019.05 | GDS57888 | Drive Shaft | | | 34 | | | 912.5 | |
| | 2017.01-2024.06 | 6MT | F | L | Platform/Chassis 4WD YNRB, YNR6, BLRA | | GDS56659 | Drive Shaft | | 31 | 29 | 63 | 121 | 679 | |
| | 2017.01-2024.06 | 6MT | F | R | Platform/Chassis 4WD YNRB, YNR6, BLRA | | GDS56707 | Drive Shaft | | 31 | 28 | 63 | 121 | 745 | |
| | 2017.01-2024.06 | 6MT | F | L | Platform/Chassis 4WD YNRB, YNR6, BLRA | | GCI83431 | Inner Joint | | 29 | 26 | 44 | 71.5 | 110 | |
| | 2017.01-2024.06 | 6MT | F | R | Platform/Chassis 4WD YNRB, YNR6, BLRA | | GCI83448 | Inner Joint | | 28 | 26 | 44 | | 121 | |
| | 2017.01-2024.06 | 6MT | F | L | Van 4WD YNRB, YNR6, BLRA | | GDS56659 | Drive Shaft | | 31 | 29 | 63 | 121 | 679 | |
| | 2017.01-2024.06 | 6MT | F | R | Van 4WD YNRB, YNR6, BLRA | | GDS56707 | Drive Shaft | | 31 | 28 | 63 | 121 | 745 | |
| | 2017.01-2024.06 | 6MT | F | L | Van 4WD YNRB, YNR6, BLRA | | GCI83431 | Inner Joint | | 29 | 26 | 44 | 71.5 | 110 | |
| | 2017.01-2024.06 | 6MT | F | R | Van 4WD YNRB, YNR6, BLRA | | GCI83448 | Inner Joint | | 28 | 26 | 44 | | 121 | |
| | 2019.05-2024.06 | 6MT | F | L | Bus FWD BLFC, BLFD | | GDS18334 | Drive Shaft | | 31 | 41 | 57.7 | 121 | 752 | |
| | 2019.05-2024.06 | 6MT | F | R | Bus FWD BLFC, BLFD | | GDS18335 | Drive Shaft | | 31 | 41 | 57.7 | 121 | 1092 | |
| | 2019.05-2024.06 | 6MT | F | R | Bus FWD BLFC, BLFD | Date to:2021.06 | GCO18293 | Outer Joint | | 31 | 30 | 57.5 | 121 | 77.5 | I |
| | 2019.05-2024.06 | 6MT | F | L | Bus FWD BLFC, BLFD | Date to:2021.06 | GCI82506 | Inner Joint | | 41 | 29 | 44 | 76 | 127 | |
| | 2019.05-2024.06 | 6MT | F | R | Bus FWD BLFC, BLFD | Date to:2021.06 | GCI82507 | Inner Joint | | 41 | 29 | 44 | 408 | 130 | |
| | 2019.05-2024.06 | | R | L/R | Bus RWD YNHA, BLHA | Date to:2022.01 | GDS57887 | Drive Shaft | | | 35 | | | 919.5 | |
| | 2019.05-2024.06 | 6MT | F | L | Van FWD BLFC, BLFD | | GDS18334 | Drive Shaft | | 31 | 41 | 57.7 | 121 | 752 | |
| | 2019.05-2024.06 | 6MT | F | R | Van FWD BLFC, BLFD | | GDS18335 | Drive Shaft | | 31 | 41 | 57.7 | 121 | 1092 | |
| | 2019.05-2024.06 | 6MT | F | R | Van FWD BLFC, BLFD | Date to:2021.06 | GCO18293 | Outer Joint | | 31 | 30 | 57.5 | 121 | 77.5 | I |
| | 2019.05-2024.06 | 6MT | F | L/R | Van FWD BLFC, BLFD | | GCO18286 | Outer Joint | | 31 | 28 | 57.7 | 121 | 68 | I |
| | 2019.05-2024.06 | 6MT | F | L | Van FWD BLFC, BLFD | Date to:2021.06 | GCI82506 | Inner Joint | | 41 | 29 | 44 | 76 | 127 | |
| | 2019.05-2024.06 | 6MT | F | R | Van FWD BLFC, BLFD | Date to:2021.06 | GCI82507 | Inner Joint | | 41 | 29 | 44 | 408 | 130 | |
| 2.0 (136 kw) | 2019.05- | | R | L/R | Van RWD BCRA, BCRB | Date to:2022.01 | GDS57887 | Drive Shaft | | | 35 | | | 919.5 | |
| 2.2 (63 kw) | 2006.04-2014.08 | 5AT | F | | Bus FWD P8FA, P8FB | | GCO99349 | Outer Joint | 48T | 28 | 36 | 57 | 120.5 | 72 | I |
| | 2006.04-2014.08 | 5AT | F | L | Bus FWD P8FA, P8FB | | GCI18173 | Inner Joint | | 36 | 28 | 40 | 77 | 111.5 | |
| | 2006.04-2014.08 | 5MT | F | L | Bus FWD P8FA, P8FB | Date from:2011.10 | GDS18472 | Drive Shaft | 48T | 28 | 41 | 57 | 124.5 | 761 | |
| | 2006.04-2014.08 | 5MT | F | L | Bus FWD P8FA, P8FB | Date to:2011.09 | GDS99179 | Drive Shaft | 48T | 28 | 36 | 59 | 128 | 796 | |
| | 2006.04-2014.08 | 5MT | F | R | Bus FWD P8FA, P8FB | Date from:2011.10 | GDS83779 | Drive Shaft | 48T | 28 | 41 | 57 | 124.5 | 1104 | |
| | 2006.04-2014.08 | 5MT | F | R | Bus FWD P8FA, P8FB | Date to:2011.09 | GDS99194 | Drive Shaft | 48T | 28 | 36 | 59 | 128 | 1057 | |
| | 2006.04-2014.08 | 5MT | F | L | Bus FWD P8FA, P8FB | Date from:2011.10 | GCI81231 | Inner Joint | | 41 | 29 | 44 | 76 | 128 | |
| | 2006.04-2014.08 | 5MT | F | R | Bus FWD P8FA, P8FB | Date to:2011.09 | GCI18120 | Inner Joint | | 36 | 28 | 40 | 330 | 120 | |
| | 2006.04-2014.08 | 5MT | F | R | Bus FWD P8FA, P8FB | Date from:2011.10 | GCI81725 | Inner Joint | | 41 | 29 | 44 | 408.5 | 131.5 | |
| | 2006.04-2014.08 | MT | F | L/R | Bus FWD P8FA, P8FB | | GCO99270 | Outer Joint | 48T | 28 | 28 | 59 | 128 | 61.5 | M |
| | 2006.04-2014.08 | 5AT | F | L | Van FWD P8FA, P8FB | | GCI18173 | Inner Joint | | 36 | 28 | 40 | 77 | 111.5 | |
| | 2006.04-2014.08 | 5MT | F | L | Van FWD P8FA, P8FB | Date from:2011.10 | GDS18472 | Drive Shaft | 48T | 28 | 41 | 57 | 124.5 | 761 | |
| | 2006.04-2014.08 | 5MT | F | L | Van FWD P8FA, P8FB | Date to:2011.09 | GDS99179 | Drive Shaft | 48T | 28 | 36 | 59 | 128 | 796 | |
| | 2006.04-2014.08 | 5MT | F | R | Van FWD P8FA, P8FB | Date from:2011.10 | GDS83779 | Drive Shaft | 48T | 28 | 41 | 57 | 124.5 | 1104 | |
| | 2006.04-2014.08 | 5MT | F | R | Van FWD P8FA, P8FB | Date to:2011.09 | GDS99194 | Drive Shaft | 48T | 28 | 36 | 59 | 128 | 1057 | |
| | 2006.04-2014.08 | 5MT | F | L/R | Van FWD P8FA, P8FB | | GCO99349 | Outer Joint | 48T | 28 | 36 | 57 | 120.5 | 72 | I |
| | 2006.04-2014.08 | 5MT | F | L | Van FWD P8FA, P8FB | Date from:2011.10 | GCI81231 | Inner Joint | | 41 | 29 | 44 | 76 | 128 | |
| | 2006.04-2014.08 | 5MT | F | R | Van FWD P8FA, P8FB | Date to:2011.09 | GCI18120 | Inner Joint | | 36 | 28 | 40 | 330 | 120 | |
| | 2006.04-2014.08 | 5MT | F | R | Van FWD P8FA, P8FB | Date from:2011.10 | GCI81725 | Inner Joint | | 41 | 29 | 44 | 408.5 | 131.5 | |
| | 2006.04-2014.08 | MT | F | L/R | Van FWD P8FA, P8FB | | GCO99270 | Outer Joint | 48T | 28 | 28 | 59 | 128 | 61.5 | M |
| 2.2 (74 kw) | 2011.10-2014.08 | MT | F | L | Bus FWD DRFA, DRFB, DRFC, DRFD, DRFE | | GDS18472 | Drive Shaft | 48T | 28 | 41 | 57 | 124.5 | 761 | |
| | 2011.10-2014.08 | MT | F | R | Bus FWD DRFA, DRFB, DRFC, DRFD, DRFE | | GDS83779 | Drive Shaft | 48T | 28 | 41 | 57 | 124.5 | 1104 | |
| | 2011.10-2014.08 | MT | F | L/R | Bus FWD DRFA, DRFB, DRFC, DRFD, DRFE | | GCO18237 | Outer Joint | 48T | 28 | 31 | 65 | 124 | 78 | M |
| | 2011.10-2014.08 | MT | F | L/R | Bus FWD DRFA, DRFB, DRFC, DRFD, DRFE | | GCO18298 | Outer Joint | 48T | 28 | 29 | 57 | 124.5 | 79.5 | I |
| | 2011.10-2014.08 | MT | F | L | Bus FWD DRFA, DRFB, DRFC, DRFD, DRFE | | GCI81231 | Inner Joint | | 41 | 29 | 44 | 76 | 128 | |
| | 2011.10-2014.08 | MT | F | R | Bus FWD DRFA, DRFB, DRFC, DRFD, DRFE | | GCI81725 | Inner Joint | | 41 | 29 | 44 | 408.5 | 131.5 | |
| | 2011.10-2014.08 | MT | F | L | Platform/Chassis FWD DRFA, DRFB, DRFC, DRFD, DRFE | | GDS18472 | Drive Shaft | 48T | 28 | 41 | 57 | 124.5 | 761 | |

| | YEAR | TRANSM. | F/R | L/R | BODY STYLE & DRIVE TYPE & ENGINE | REMARKS | G-AP Ref. | PRODUCT | ABS | Technical Specifications A | B | C | H | L | P |
|---|---|---|---|---|---|---|---|---|---|---|---|---|---|---|---|
| **FORD** **Transit** | | | | | | | | | | | | | | | |
| 2.2 (74 kw) | 2011.10-2014.08 | MT | F | R | Platform/Chassis FWD DRFA, DRFB, DRFC, DRFD, DRFE | | GDS83779 | Drive Shaft | 48T | 28 | 41 | 57 | 124.5 | 1104 | |
| | 2011.10-2014.08 | MT | F | L/R | Platform/Chassis FWD DRFA, DRFB, DRFC, DRFD, DRFE | | GCO18237 | Outer Joint | 48T | 28 | 31 | 65 | 124 | 78 | M |
| | 2011.10-2014.08 | MT | F | L/R | Platform/Chassis FWD DRFA, DRFB, DRFC, DRFD, DRFE | | GCO18298 | Outer Joint | 48T | 28 | 29 | 57 | 124.5 | 79.5 | I |
| | 2011.10-2014.08 | MT | F | L | Platform/Chassis FWD DRFA, DRFB, DRFC, DRFD, DRFE | | GCI81231 | Inner Joint | | 41 | 29 | 44 | 76 | 128 | |
| | 2011.10-2014.08 | MT | F | R | Platform/Chassis FWD DRFA, DRFB, DRFC, DRFD, DRFE | | GCI81725 | Inner Joint | | 41 | 29 | 44 | 408.5 | 131.5 | |
| | 2011.10-2014.08 | MT | F | L | Van FWD DRFA, DRFB, DRFC, DRFD, DRFE | | GDS18472 | Drive Shaft | 48T | 28 | 41 | 57 | 124.5 | 761 | |
| | 2011.10-2014.08 | MT | F | R | Van FWD DRFA, DRFB, DRFC, DRFD, DRFE | | GDS83779 | Drive Shaft | 48T | 28 | 41 | 57 | 124.5 | 1104 | |
| | 2011.10-2014.08 | MT | F | L/R | Van FWD DRFA, DRFB, DRFC, DRFD, DRFE | | GCO18237 | Outer Joint | 48T | 28 | 31 | 65 | 124 | 78 | M |
| | 2011.10-2014.08 | MT | F | L/R | Van FWD DRFA, DRFB, DRFC, DRFD, DRFE | | GCO18298 | Outer Joint | 48T | 28 | 29 | 57 | 124.5 | 79.5 | I |
| | 2011.10-2014.08 | MT | F | L | Van FWD DRFA, DRFB, DRFC, DRFD, DRFE | | GCI81231 | Inner Joint | | 41 | 29 | 44 | 76 | 128 | |
| | 2011.10-2014.08 | MT | F | R | Van FWD DRFA, DRFB, DRFC, DRFD, DRFE | | GCI81725 | Inner Joint | | 41 | 29 | 44 | 408.5 | 131.5 | |
| | 2013.08-2018.12 | 6MT | F | L | Bus FWD DRF5, DRFG, DRFF | | GDS18334 | Drive Shaft | | 31 | 41 | 57.7 | 121 | 752 | |
| | 2013.08-2018.12 | 6MT | F | R | Bus FWD DRF5, DRFG, DRFF | | GDS18335 | Drive Shaft | | 31 | 41 | 57.7 | 121 | 1092 | |
| | 2013.08-2018.12 | 6MT | F | L/R | Bus FWD DRF5, DRFG, DRFF | | GCO18286 | Outer Joint | | 31 | 28 | 57.7 | 121 | 68 | I |
| | 2013.08-2018.12 | 6MT | F | L/R | Bus FWD DRF5, DRFG, DRFF | Model:Transit 330/350 | GCO18293 | Outer Joint | | 31 | 30 | 57.5 | 121 | 77.5 | I |
| | 2013.08-2018.12 | 6MT | F | L | Bus FWD DRF5, DRFG, DRFF | Model:Transit 330/350,Date to:2015.07 | GCI81231 | Inner Joint | | 41 | 29 | 44 | 76 | 128 | |
| | 2013.08-2018.12 | 6MT | F | L | Bus FWD DRF5, DRFG, DRFF | Model:Transit 290/310,Date to:2015.12;Model:Transit 330/350,Date from:2015.08 | GCI82506 | Inner Joint | | 41 | 29 | 44 | 76 | 127 | |
| | 2013.08-2018.12 | 6MT | F | R | Bus FWD DRF5, DRFG, DRFF | | GCI82507 | Inner Joint | | 41 | 29 | 44 | 408 | 130 | |
| | 2013.08-2018.12 | 6MT | F | L | Platform/Chassis FWD DRF5, DRFG, DRFF | | GDS18334 | Drive Shaft | | 31 | 41 | 57.7 | 121 | 752 | |
| | 2013.08-2018.12 | 6MT | F | R | Platform/Chassis FWD DRF5, DRFG, DRFF | | GDS18335 | Drive Shaft | | 31 | 41 | 57.7 | 121 | 1092 | |
| | 2013.08-2018.12 | 6MT | F | L/R | Platform/Chassis FWD DRF5, DRFG, DRFF | | GCO18286 | Outer Joint | | 31 | 28 | 57.7 | 121 | 68 | I |
| | 2013.08-2018.12 | 6MT | F | L/R | Platform/Chassis FWD DRF5, DRFG, DRFF | Model:Transit 330/350 | GCO18293 | Outer Joint | | 31 | 30 | 57.5 | 121 | 77.5 | I |
| | 2013.08-2018.12 | 6MT | F | L | Platform/Chassis FWD DRF5, DRFG, DRFF | Model:Transit 330/350,Date to:2015.07 | GCI81231 | Inner Joint | | 41 | 29 | 44 | 76 | 128 | |
| | 2013.08-2018.12 | 6MT | F | L | Platform/Chassis FWD DRF5, DRFG, DRFF | Model:Transit 290/310,Date to:2015.12;Model:Transit 330/350,Date from:2015.08 | GCI82506 | Inner Joint | | 41 | 29 | 44 | 76 | 127 | |
| | 2013.08-2018.12 | 6MT | F | R | Platform/Chassis FWD DRF5, DRFG, DRFF | | GCI82507 | Inner Joint | | 41 | 29 | 44 | 408 | 130 | |
| | 2013.08-2018.12 | | R | L/R | Platform/Chassis RWD DRR5 | | GDS57887 | Drive Shaft | | | 35 | | | 919.5 | |
| | 2013.08-2018.12 | 6MT | F | L | Van FWD DRF5, DRFG, DRFF | | GDS18334 | Drive Shaft | | 31 | 41 | 57.7 | 121 | 752 | |
| | 2013.08-2018.12 | 6MT | F | R | Van FWD DRF5, DRFG, DRFF | | GDS18335 | Drive Shaft | | 31 | 41 | 57.7 | 121 | 1092 | |
| | 2013.08-2018.12 | 6MT | F | L/R | Van FWD DRF5, DRFG, DRFF | | GCO18286 | Outer Joint | | 31 | 28 | 57.7 | 121 | 68 | I |
| | 2013.08-2018.12 | 6MT | F | L/R | Van FWD DRF5, DRFG, DRFF | | GCO18293 | Outer Joint | | 31 | 30 | 57.5 | 121 | 77.5 | I |
| | 2013.08-2018.12 | 6MT | F | L | Van FWD DRF5, DRFG, DRFF | Model:Transit 330/350,Date to:2015.07 | GCI81231 | Inner Joint | | 41 | 29 | 44 | 76 | 128 | |
| | 2013.08-2018.12 | 6MT | F | L | Van FWD DRF5, DRFG, DRFF | Model:Transit 290/310,Date to:2015.12;Model:Transit 330/350,Date from:2015.08 | GCI82506 | Inner Joint | | 41 | 29 | 44 | 76 | 127 | |
| | 2013.08-2018.12 | 6MT | F | R | Van FWD DRF5, DRFG, DRFF | | GCI82507 | Inner Joint | | 41 | 29 | 44 | 408 | 130 | |
| 2.2 (81 kw) | 2006.04-2014.08 | 5AT | F | | Bus FWD QVFA | | GCO99270 | Outer Joint | 48T | 28 | 28 | 59 | 128 | 61.5 | M |
| | 2006.04-2014.08 | 5AT | F | | Bus FWD QVFA | | GCO99349 | Outer Joint | 48T | 28 | 36 | 57 | 120.5 | 72 | I |
| | 2006.04-2014.08 | 5AT | F | L | Bus FWD QVFA | | GCI18173 | Inner Joint | | 36 | 28 | 40 | 77 | 111.5 | |
| | 2006.04-2014.08 | 5MT | F | L | Bus FWD QVFA | Date from:2011.10 | GDS18472 | Drive Shaft | 48T | 28 | 41 | 57 | 124.5 | 761 | |
| | 2006.04-2014.08 | 5MT | F | R | Bus FWD QVFA | Date from:2008.10,Date to:2011.09 | GDS18292 | Drive Shaft | 48T | 28 | 41 | 65 | 124 | 1093 | |
| | 2006.04-2014.08 | 5MT | F | R | Bus FWD QVFA | Date from:2011.10 | GDS83779 | Drive Shaft | 48T | 28 | 41 | 57 | 124.5 | 1104 | |
| | 2006.04-2014.08 | 5MT | F | R | Bus FWD QVFA | Date from:2008.10,Date to:2011.09 | GCI18121 | Inner Joint | | 41 | 31 | 44 | 407 | 128 | |
| | 2006.04-2014.08 | MT | F | L | Bus FWD QVFA | Date to:2011.09;Inner teeth of wheel side:29 | GDS18455 | Drive Shaft | 48T | 28 | 36 | 60 | 126.5 | 797 | |
| | 2006.04-2014.08 | MT | F | L | Bus FWD QVFA | Date to:2011.12;Inner teeth of wheel side:28 | GDS99179 | Drive Shaft | 48T | 28 | 36 | 59 | 128 | 796 | |
| | 2006.04-2014.08 | MT | F | R | Bus FWD QVFA | Date to:2008.09 | GDS99194 | Drive Shaft | 48T | 28 | 36 | 59 | 128 | 1057 | |
| | 2006.04-2014.08 | MT | F | L/R | Bus FWD QVFA | Date from:2011.10 | GCO18298 | Outer Joint | 48T | 28 | 29 | 57 | 124.5 | 79.5 | I |
| | 2006.04-2014.08 | MT | F | L/R | Bus FWD QVFA | Date to:2011.09 | GCO99284 | Outer Joint | 48T | 28 | 29 | 60 | 126.5 | 72 | M |
| | 2006.04-2014.08 | MT | F | L | Bus FWD QVFA | Date to:2011.09 | GCI18177 | Inner Joint | | 36 | 30 | 40 | 77.5 | 111 | |
| | 2006.04-2014.08 | MT | F | L | Bus FWD QVFA | Date from:2011.10 | GCI81231 | Inner Joint | | 41 | 29 | 44 | 76 | 128 | |
| | 2006.04-2014.08 | MT | F | R | Bus FWD QVFA | Date from:2011.10 | GCI81725 | Inner Joint | | 41 | 29 | 44 | 408.5 | 131.5 | |
| | 2006.04-2014.08 | 5AT | F | | Platform/Chassis FWD QVFA | | GCO99270 | Outer Joint | 48T | 28 | 28 | 59 | 128 | 61.5 | M |
| | 2006.04-2014.08 | 5AT | F | | Platform/Chassis FWD QVFA | | GCO99349 | Outer Joint | 48T | 28 | 36 | 57 | 120.5 | 72 | I |
| | 2006.04-2014.08 | 5AT | F | L | Platform/Chassis FWD QVFA | | GCI18173 | Inner Joint | | 36 | 28 | 40 | 77 | 111.5 | |
| | 2006.04-2014.08 | 5MT | F | L | Platform/Chassis FWD QVFA | Date from:2011.10 | GDS18472 | Drive Shaft | 48T | 28 | 41 | 57 | 124.5 | 761 | |
| | 2006.04-2014.08 | 5MT | F | R | Platform/Chassis FWD QVFA | Date from:2008.10,Date to:2011.09 | GDS18292 | Drive Shaft | 48T | 28 | 41 | 65 | 124 | 1093 | |
| | 2006.04-2014.08 | 5MT | F | R | Platform/Chassis FWD QVFA | Date from:2011.10 | GDS83779 | Drive Shaft | 48T | 28 | 41 | 57 | 124.5 | 1104 | |
| | 2006.04-2014.08 | 5MT | F | R | Platform/Chassis FWD QVFA | Date from:2008.10,Date to:2011.09 | GCI18121 | Inner Joint | | 41 | 31 | 44 | 407 | 128 | |
| | 2006.04-2014.08 | MT | F | L | Platform/Chassis FWD QVFA | Date to:2011.09;Inner teeth of wheel side:29 | GDS18455 | Drive Shaft | 48T | 28 | 36 | 60 | 126.5 | 797 | |
| | 2006.04-2014.08 | MT | F | L | Platform/Chassis FWD QVFA | Date to:2011.12;Inner teeth of wheel side:28 | GDS99179 | Drive Shaft | 48T | 28 | 36 | 59 | 128 | 796 | |
| | 2006.04-2014.08 | MT | F | R | Platform/Chassis FWD QVFA | Date to:2008.09 | GDS99194 | Drive Shaft | 48T | 28 | 36 | 59 | 128 | 1057 | |
| | 2006.04-2014.08 | MT | F | L/R | Platform/Chassis FWD QVFA | Date from:2011.10 | GCO18298 | Outer Joint | 48T | 28 | 29 | 57 | 124.5 | 79.5 | I |
| | 2006.04-2014.08 | MT | F | L/R | Platform/Chassis FWD QVFA | Date to:2011.09 | GCO99284 | Outer Joint | 48T | 28 | 29 | 60 | 126.5 | 72 | M |
| | 2006.04-2014.08 | MT | F | L | Platform/Chassis FWD QVFA | Date to:2011.09 | GCI18177 | Inner Joint | | 36 | 30 | 40 | 77.5 | 111 | |
| | 2006.04-2014.08 | MT | F | L | Platform/Chassis FWD QVFA | Date from:2011.10 | GCI81231 | Inner Joint | | 41 | 29 | 44 | 76 | 128 | |
| | 2006.04-2014.08 | MT | F | R | Platform/Chassis FWD QVFA | Date from:2011.10 | GCI81725 | Inner Joint | | 41 | 29 | 44 | 408.5 | 131.5 | |
| | 2006.04-2014.08 | 5AT | F | | Van FWD QVFA | | GCO99270 | Outer Joint | 48T | 28 | 28 | 59 | 128 | 61.5 | M |
| | 2006.04-2014.08 | 5AT | F | | Van FWD QVFA | | GCO99349 | Outer Joint | 48T | 28 | 36 | 57 | 120.5 | 72 | I |

| | YEAR | TRANSM. | F/R | L/R | BODY STYLE & DRIVE TYPE & ENGINE | REMARKS | G-AP Ref. | PRODUCT | ABS | Technical Specifications | | | | | |
|---|---|---|---|---|---|---|---|---|---|---|---|---|---|---|---|
| | | | | | | | | | | A | B | C | H | L | P |
| **FORD** **Transit** | | | | | | | | | | | | | | | |
| 2.2 (81 kw) | 2006.04-2014.08 | 5AT | F | L | Van FWD QVFA | | GCI18173 | Inner Joint | | 36 | 28 | 40 | 77 | 111.5 | |
| | 2006.04-2014.08 | 5MT | F | L | Van FWD QVFA | Date from:2011.10 | GDS18472 | Drive Shaft | 48T | 28 | 41 | 57 | 124.5 | 761 | |
| | 2006.04-2014.08 | 5MT | F | R | Van FWD QVFA | Date from:2008.10,Date to:2011.09 | GDS18292 | Drive Shaft | 48T | 28 | 41 | 65 | 124 | 1093 | |
| | 2006.04-2014.08 | 5MT | F | R | Van FWD QVFA | Date from:2011.10 | GDS83779 | Drive Shaft | 48T | 28 | 41 | 57 | 124.5 | 1104 | |
| | 2006.04-2014.08 | 5MT | F | R | Van FWD QVFA | Date from:2008.10,Date to:2011.09 | GCI18121 | Inner Joint | | 41 | 31 | 44 | 407 | 128 | |
| | 2006.04-2014.08 | MT | F | L | Van FWD QVFA | Date to:2011.09;Inner teeth of wheel side:29 | GDS18455 | Drive Shaft | 48T | 28 | 36 | 60 | 126.5 | 797 | |
| | 2006.04-2014.08 | MT | F | L | Van FWD QVFA | Date to:2011.12;Inner teeth of wheel side:28 | GDS99179 | Drive Shaft | 48T | 28 | 36 | 59 | 128 | 796 | |
| | 2006.04-2014.08 | MT | F | R | Van FWD QVFA | Date to:2008.09 | GDS99194 | Drive Shaft | 48T | 28 | 36 | 59 | 128 | 1057 | |
| | 2006.04-2014.08 | MT | F | L/R | Van FWD QVFA | Date from:2011.10 | GCO18298 | Outer Joint | 48T | 28 | 29 | 57 | 124.5 | 79.5 | I |
| | 2006.04-2014.08 | MT | F | L/R | Van FWD QVFA | Date to:2011.09 | GCO99284 | Outer Joint | 48T | 28 | 29 | 60 | 126.5 | 72 | M |
| | 2006.04-2014.08 | MT | F | L | Van FWD QVFA | Date to:2011.09 | GCI18177 | Inner Joint | | 36 | 30 | 40 | 77.5 | 111 | |
| | 2006.04-2014.08 | MT | F | L | Van FWD QVFA | Date from:2011.10 | GCI81231 | Inner Joint | | 41 | 29 | 44 | 76 | 128 | |
| | 2006.04-2014.08 | MT | F | R | Van FWD QVFA | Date from:2011.10 | GCI81725 | Inner Joint | | 41 | 29 | 44 | 408.5 | 131.5 | |
| 2.2 (85 kw) | 2008.10-2014.08 | 5MT/6MT | F | L | Bus FWD SRFA, SRFB, SRFC, SRFD, SRFE | Date to:2011.09 | GDS18293 | Drive Shaft | 48T | 28 | 41 | 65 | 124 | 754 | |
| | 2008.10-2014.08 | 5MT/6MT | F | L | Bus FWD SRFA, SRFB, SRFC, SRFD, SRFE | Date from:2011.10\|Normal | GDS83779 | Drive Shaft | 48T | 28 | 41 | 57 | 124.5 | 1104 | |
| | 2008.10-2014.08 | 5MT/6MT | F | R | Bus FWD SRFA, SRFB, SRFC, SRFD, SRFE | Date to:2011.09 | GDS18292 | Drive Shaft | 48T | 28 | 41 | 65 | 124 | 1093 | |
| | 2008.10-2014.08 | 5MT/6MT | F | R | Bus FWD SRFA, SRFB, SRFC, SRFD, SRFE | Date from:2011.10\|Normal | GDS18472 | Drive Shaft | 48T | 28 | 41 | 57 | 124.5 | 761 | |
| | 2008.10-2014.08 | MT | F | L/R | Bus FWD SRFA, SRFB, SRFC, SRFD, SRFE | | GCO18237 | Outer Joint | 48T | 28 | 31 | 65 | 124 | 78 | M |
| | 2008.10-2014.08 | MT | F | L/R | Bus FWD SRFA, SRFB, SRFC, SRFD, SRFE | | GCO18298 | Outer Joint | 48T | 28 | 29 | 57 | 124.5 | 79.5 | I |
| | 2008.10-2014.08 | MT | F | L/R | Bus FWD SRFA, SRFB, SRFC, SRFD, SRFE | | GCO99284 | Outer Joint | 48T | 28 | 29 | 60 | 126.5 | 72 | M |
| | 2008.10-2014.08 | MT | F | L | Bus FWD SRFA, SRFB, SRFC, SRFD, SRFE | | GCI18119 | Inner Joint | | 41 | 31 | 44 | 76.5 | 121 | |
| | 2008.10-2014.08 | MT | F | R | Bus FWD SRFA, SRFB, SRFC, SRFD, SRFE | | GCI18121 | Inner Joint | | 41 | 31 | 44 | 407 | 128 | |
| | 2008.10-2014.08 | 5MT/6MT | F | L | Platform/Chassis FWD SRFA, SRFB, SRFC, SRFD, SRFE | Date to:2011.09 | GDS18293 | Drive Shaft | 48T | 28 | 41 | 65 | 124 | 754 | |
| | 2008.10-2014.08 | 5MT/6MT | F | L | Platform/Chassis FWD SRFA, SRFB, SRFC, SRFD, SRFE | Date from:2011.10\|Normal | GDS83779 | Drive Shaft | 48T | 28 | 41 | 57 | 124.5 | 1104 | |
| | 2008.10-2014.08 | 5MT/6MT | F | R | Platform/Chassis FWD SRFA, SRFB, SRFC, SRFD, SRFE | Date to:2011.09 | GDS18292 | Drive Shaft | 48T | 28 | 41 | 65 | 124 | 1093 | |
| | 2008.10-2014.08 | 5MT/6MT | F | R | Platform/Chassis FWD SRFA, SRFB, SRFC, SRFD, SRFE | Date from:2011.10\|Normal | GDS18472 | Drive Shaft | 48T | 28 | 41 | 57 | 124.5 | 761 | |
| | 2008.10-2014.08 | MT | F | L/R | Platform/Chassis FWD SRFA, SRFB, SRFC, SRFD, SRFE | | GCO18237 | Outer Joint | 48T | 28 | 31 | 65 | 124 | 78 | M |
| | 2008.10-2014.08 | MT | F | L/R | Platform/Chassis FWD SRFA, SRFB, SRFC, SRFD, SRFE | | GCO18298 | Outer Joint | 48T | 28 | 29 | 57 | 124.5 | 79.5 | I |
| | 2008.10-2014.08 | MT | F | L/R | Platform/Chassis FWD SRFA, SRFB, SRFC, SRFD, SRFE | | GCO99284 | Outer Joint | 48T | 28 | 29 | 60 | 126.5 | 72 | M |
| | 2008.10-2014.08 | MT | F | L | Platform/Chassis FWD SRFA, SRFB, SRFC, SRFD, SRFE | | GCI18119 | Inner Joint | | 41 | 31 | 44 | 76.5 | 121 | |
| | 2008.10-2014.08 | MT | F | R | Platform/Chassis FWD SRFA, SRFB, SRFC, SRFD, SRFE | | GCI18121 | Inner Joint | | 41 | 31 | 44 | 407 | 128 | |
| | 2008.10-2014.08 | 5MT/6MT | F | L | Van FWD SRFA, SRFB, SRFC, SRFD, SRFE | Date to:2011.09 | GDS18293 | Drive Shaft | 48T | 28 | 41 | 65 | 124 | 754 | |
| | 2008.10-2014.08 | 5MT/6MT | F | L | Van FWD SRFA, SRFB, SRFC, SRFD, SRFE | Date from:2011.10\|Normal | GDS83779 | Drive Shaft | 48T | 28 | 41 | 57 | 124.5 | 1104 | |
| | 2008.10-2014.08 | 5MT/6MT | F | R | Van FWD SRFA, SRFB, SRFC, SRFD, SRFE | Date to:2011.09 | GDS18292 | Drive Shaft | 48T | 28 | 41 | 65 | 124 | 1093 | |
| | 2008.10-2014.08 | 5MT/6MT | F | R | Van FWD SRFA, SRFB, SRFC, SRFD, SRFE | Date from:2011.10\|Normal | GDS18472 | Drive Shaft | 48T | 28 | 41 | 57 | 124.5 | 761 | |
| | 2008.10-2014.08 | MT | F | L/R | Van FWD SRFA, SRFB, SRFC, SRFD, SRFE | | GCO18237 | Outer Joint | 48T | 28 | 31 | 65 | 124 | 78 | M |
| | 2008.10-2014.08 | MT | F | L/R | Van FWD SRFA, SRFB, SRFC, SRFD, SRFE | | GCO18298 | Outer Joint | 48T | 28 | 29 | 57 | 124.5 | 79.5 | I |
| | 2008.10-2014.08 | MT | F | L | Van FWD SRFA, SRFB, SRFC, SRFD, SRFE | | GCI18119 | Inner Joint | | 41 | 31 | 44 | 76.5 | 121 | |
| | 2008.10-2014.08 | MT | F | R | Van FWD SRFA, SRFB, SRFC, SRFD, SRFE | | GCI18121 | Inner Joint | | 41 | 31 | 44 | 407 | 128 | |
| 2.2 (92 kw) | 2011.09-2014.12 | 6MT | R | L/R | Van RWD CYRA | | GDS98001 | Drive Shaft | | | 35 | | | 910 | |
| | 2011.10-2014.08 | MT | F | L | Bus FWD CYFD, CYFA, CYFB, CYFC | | GDS18472 | Drive Shaft | 48T | 28 | 41 | 57 | 124.5 | 761 | |
| | 2011.10-2014.08 | MT | F | R | Bus FWD CYFD, CYFA, CYFB, CYFC | | GDS83779 | Drive Shaft | 48T | 28 | 41 | 57 | 124.5 | 1104 | |
| | 2011.10-2014.08 | MT | F | L/R | Bus FWD CYFD, CYFA, CYFB, CYFC | | GCO18237 | Outer Joint | 48T | 28 | 31 | 65 | 124 | 78 | M |
| | 2011.10-2014.08 | MT | F | L/R | Bus FWD CYFD, CYFA, CYFB, CYFC | | GCO18298 | Outer Joint | 48T | 28 | 29 | 57 | 124.5 | 79.5 | I |
| | 2011.10-2014.08 | MT | F | L | Bus FWD CYFD, CYFA, CYFB, CYFC | | GCI81231 | Inner Joint | | 41 | 29 | 44 | 76 | 128 | |
| | 2011.10-2014.08 | MT | F | R | Bus FWD CYFD, CYFA, CYFB, CYFC | | GCI81725 | Inner Joint | | 41 | 29 | 44 | 408.5 | 131.5 | |
| | 2011.10-2014.08 | MT | F | L | Platform/Chassis FWD CYFD, CYFA, CYFB, CYFC | | GDS18472 | Drive Shaft | 48T | 28 | 41 | 57 | 124.5 | 761 | |
| | 2011.10-2014.08 | MT | F | R | Platform/Chassis FWD CYFD, CYFA, CYFB, CYFC | | GDS83779 | Drive Shaft | 48T | 28 | 41 | 57 | 124.5 | 1104 | |
| | 2011.10-2014.08 | MT | F | L/R | Platform/Chassis FWD CYFD, CYFA, CYFB, CYFC | | GCO18237 | Outer Joint | 48T | 28 | 31 | 65 | 124 | 78 | M |
| | 2011.10-2014.08 | MT | F | L/R | Platform/Chassis FWD CYFD, CYFA, CYFB, CYFC | | GCO18298 | Outer Joint | 48T | 28 | 29 | 57 | 124.5 | 79.5 | I |
| | 2011.10-2014.08 | MT | F | L | Platform/Chassis FWD CYFD, CYFA, CYFB, CYFC | | GCI81231 | Inner Joint | | 41 | 29 | 44 | 76 | 128 | |
| | 2011.10-2014.08 | MT | F | R | Platform/Chassis FWD CYFD, CYFA, CYFB, CYFC | | GCI81725 | Inner Joint | | 41 | 29 | 44 | 408.5 | 131.5 | |
| | 2011.10-2014.08 | 6MT | R | L/R | Van 4WD CYRB, CYRC | | GDS98001 | Drive Shaft | | | 35 | | | 910 | |
| | 2011.10-2014.08 | MT | F | L | Van FWD CYFD, CYFA, CYFB, CYFC | | GDS18472 | Drive Shaft | 48T | 28 | 41 | 57 | 124.5 | 761 | |
| | 2011.10-2014.08 | MT | F | R | Van FWD CYFD, CYFA, CYFB, CYFC | | GDS83779 | Drive Shaft | 48T | 28 | 41 | 57 | 124.5 | 1104 | |
| | 2011.10-2014.08 | MT | F | L/R | Van FWD CYFD, CYFA, CYFB, CYFC | | GCO18237 | Outer Joint | 48T | 28 | 31 | 65 | 124 | 78 | M |
| | 2011.10-2014.08 | MT | F | L/R | Van FWD CYFD, CYFA, CYFB, CYFC | | GCO18298 | Outer Joint | 48T | 28 | 29 | 57 | 124.5 | 79.5 | I |
| | 2011.10-2014.08 | MT | F | L | Van FWD CYFD, CYFA, CYFB, CYFC | | GCI81231 | Inner Joint | | 41 | 29 | 44 | 76 | 128 | |
| | 2011.10-2014.08 | MT | F | R | Van FWD CYFD, CYFA, CYFB, CYFC | | GCI81725 | Inner Joint | | 41 | 29 | 44 | 408.5 | 131.5 | |
| | 2013.08-2018.12 | 6MT | F | L | Bus FWD CYF5, CYFG, CY14, USF6 | | GDS18334 | Drive Shaft | | 31 | 41 | 57.7 | 121 | 752 | |
| | 2013.08-2018.12 | 6MT | F | R | Bus FWD CYF5, CYFG, CY14, USF6 | | GDS18335 | Drive Shaft | | 31 | 41 | 57.7 | 121 | 1092 | |
| | 2013.08-2018.12 | 6MT | F | L/R | Bus FWD CYF5, CYFG, CY14, USF6 | | GCO18286 | Outer Joint | | 31 | 28 | 57.7 | 121 | 68 | I |
| | 2013.08-2018.12 | 6MT | F | L/R | Bus FWD CYF5, CYFG, CY14, USF6 | Model:Transit 330/350 | GCO18293 | Outer Joint | | 31 | 30 | 57.5 | 121 | 77.5 | I |
| | 2013.08-2018.12 | 6MT | F | L | Bus FWD CYF5, CYFG, CY14, USF6 | Model:Transit 330/350,Date to:2015.07 | GCI81231 | Inner Joint | | 41 | 29 | 44 | 76 | 128 | |
| | 2013.08-2018.12 | 6MT | F | L | Bus FWD CYF5, CYFG, CY14, USF6 | Model:Transit 290/310,Date to:2015.12;Model:Transit 330/350;Date from:2015.08 | GCI82506 | Inner Joint | | 41 | 29 | 44 | 76 | 127 | |

| | YEAR | TRANSM. | F/R | L/R | BODY STYLE & DRIVE TYPE & ENGINE | REMARKS | G-AP Ref. | PRODUCT | ABS | Technical Specifications A | B | C | H | L | P |
|---|---|---|---|---|---|---|---|---|---|---|---|---|---|---|---|
| **FORD** **Transit** | | | | | | | | | | | | | | | |
| 2.2 (92 kw) | 2013.08-2018.12 | 6MT | F | R | Bus FWD CYF5, CYFG, CY14, USF6 | | GCI82507 | Inner Joint | | 41 | 29 | 44 | 408 | 130 | |
| | 2013.08-2018.12 | | R | L/R | Bus RWD USR6, CYR5 | | GDS57887 | Drive Shaft | | | 35 | | | 919.5 | |
| | 2013.08-2018.12 | 6MT | F | L | Platform/Chassis 4WD CYR5, CY24 | | GDS56658 | Drive Shaft | | 31 | 29 | 63 | 121 | 707 | |
| | 2013.08-2018.12 | 6MT | F | R | Platform/Chassis 4WD CYR5, CY24 | | GDS56659 | Drive Shaft | | 31 | 29 | 63 | 121 | 679 | |
| | 2013.08-2018.12 | 6MT | F | L/R | Platform/Chassis 4WD CYR5, CY24 | | GCI83431 | Inner Joint | | 29 | 26 | 44 | 71.5 | 110 | |
| | 2013.08-2018.12 | AT/MT | F | L/R | Platform/Chassis 4WD CYR5, CY24 | | GCO18293 | Outer Joint | | 31 | 30 | 57.5 | 121 | 77.5 | I |
| | 2013.08-2018.12 | 6MT | F | L | Platform/Chassis FWD CYF5, CYFG, CY14, USF6 | | GDS18334 | Drive Shaft | | 31 | 41 | 57.7 | 121 | 752 | |
| | 2013.08-2018.12 | 6MT | F | R | Platform/Chassis FWD CYF5, CYFG, CY14, USF6 | | GDS18335 | Drive Shaft | | 31 | 41 | 57.7 | 121 | 1092 | |
| | 2013.08-2018.12 | 6MT | F | L/R | Platform/Chassis FWD CYF5, CYFG, CY14, USF6 | | GCO18286 | Outer Joint | | 31 | 28 | 57.7 | 121 | 68 | I |
| | 2013.08-2018.12 | 6MT | F | L/R | Platform/Chassis FWD CYF5, CYFG, CY14, USF6 | Model:Transit 330/350 | GCO18293 | Outer Joint | | 31 | 30 | 57.5 | 121 | 77.5 | I |
| | 2013.08-2018.12 | 6MT | F | L | Platform/Chassis FWD CYF5, CYFG, CY14, USF6 | Model:Transit 330/350,Date to:2015.07 | GCI81231 | Inner Joint | | 41 | 29 | 44 | 76 | 128 | |
| | 2013.08-2018.12 | 6MT | F | L | Platform/Chassis FWD CYF5, CYFG, CY14, USF6 | Model:Transit 290/310,Date to:2015.12;Model:Transit 330/350,Date from:2015.08 | GCI82506 | Inner Joint | | 41 | 29 | 44 | 76 | 127 | |
| | 2013.08-2018.12 | 6MT | F | R | Platform/Chassis FWD CYF5, CYFG, CY14, USF6 | | GCI82507 | Inner Joint | | 41 | 29 | 44 | 408 | 130 | |
| | 2013.08-2018.12 | | R | L/R | Platform/Chassis RWD USR6, CYR5 | | GDS57887 | Drive Shaft | | | 35 | | | 919.5 | |
| | 2013.08-2018.12 | 6MT | F | L | Van FWD CYF5, CYFG, CY14, USF6 | | GDS18334 | Drive Shaft | | 31 | 41 | 57.7 | 121 | 752 | |
| | 2013.08-2018.12 | 6MT | F | R | Van FWD CYF5, CYFG, CY14, USF6 | | GDS18335 | Drive Shaft | | 31 | 41 | 57.7 | 121 | 1092 | |
| | 2013.08-2018.12 | 6MT | F | L/R | Van FWD CYF5, CYFG, CY14, USF6 | | GCO18286 | Outer Joint | | 31 | 28 | 57.7 | 121 | 68 | I |
| | 2013.08-2018.12 | 6MT | F | L/R | Van FWD CYF5, CYFG, CY14, USF6 | | GCO18293 | Outer Joint | | 31 | 30 | 57.5 | 121 | 77.5 | I |
| | 2013.08-2018.12 | 6MT | F | L | Van FWD CYF5, CYFG, CY14, USF6 | Model:Transit 330/350,Date to:2015.07 | GCI81231 | Inner Joint | | 41 | 29 | 44 | 76 | 128 | |
| | 2013.08-2018.12 | 6MT | F | L | Van FWD CYF5, CYFG, CY14, USF6 | Model:Transit 290/310,Date to:2015.12;Model:Transit 330/350,Date from:2015.08 | GCI82506 | Inner Joint | | 41 | 29 | 44 | 76 | 127 | |
| | 2013.08-2018.12 | 6MT | F | R | Van FWD CYF5, CYFG, CY14, USF6 | | GCI82507 | Inner Joint | | 41 | 29 | 44 | 408 | 130 | |
| | 2013.08-2018.12 | | R | L/R | Van RWD USR6, CYR5 | | GDS57887 | Drive Shaft | | | 35 | | | 919.5 | |
| 2.2 (96 kw) | 2006.04-2014.08 | 5AT | F | | Bus FWD QWFA | | GCO99270 | Outer Joint | 48T | 28 | 28 | 59 | 128 | 61.5 | M |
| | 2006.04-2014.08 | 5AT | F | | Bus FWD QWFA | | GCO99349 | Outer Joint | 48T | 28 | 36 | 57 | 120.5 | 72 | I |
| | 2006.04-2014.08 | 5AT | F | L | Bus FWD QWFA | | GCI18173 | Inner Joint | | 36 | 28 | 40 | 77 | 111.5 | |
| | 2006.04-2014.08 | 5MT | F | L | Bus FWD QWFA | Date from:2011.10 | GDS18472 | Drive Shaft | 48T | 28 | 41 | 57 | 124.5 | 761 | |
| | 2006.04-2014.08 | 5MT | F | R | Bus FWD QWFA | Date from:2011.10 | GDS83779 | Drive Shaft | 48T | 28 | 41 | 57 | 124.5 | 1104 | |
| | 2006.04-2014.08 | MT | F | L | Bus FWD QWFA | Date to:2011.09;Inner teeth of wheel side:29 | GDS18455 | Drive Shaft | 48T | 28 | 36 | 60 | 126.5 | 797 | |
| | 2006.04-2014.08 | MT | F | L | Bus FWD QWFA | Date to:2011.12;Inner teeth of wheel side:28 | GDS99179 | Drive Shaft | 48T | 28 | 36 | 59 | 128 | 796 | |
| | 2006.04-2014.08 | MT | F | R | Bus FWD QWFA | Date to:2011.09 | GDS99194 | Drive Shaft | 48T | 28 | 36 | 59 | 128 | 1057 | |
| | 2006.04-2014.08 | MT | F | L/R | Bus FWD QWFA | Date from:2011.10 | GCO18298 | Outer Joint | 48T | 28 | 29 | 57 | 124.5 | 79.5 | I |
| | 2006.04-2014.08 | MT | F | L/R | Bus FWD QWFA | Date to:2011.09 | GCO99284 | Outer Joint | 48T | 28 | 29 | 60 | 126.5 | 72 | M |
| | 2006.04-2014.08 | MT | F | L | Bus FWD QWFA | Date to:2011.09 | GCI18177 | Inner Joint | | 36 | 30 | 40 | 77.5 | 111 | |
| | 2006.04-2014.08 | MT | F | L | Bus FWD QWFA | Date from:2011.10 | GCI81231 | Inner Joint | | 41 | 29 | 44 | 76 | 128 | |
| | 2006.04-2014.08 | MT | F | R | Bus FWD QWFA | Date from:2011.10 | GCI81725 | Inner Joint | | 41 | 29 | 44 | 408.5 | 131.5 | |
| | 2006.04-2014.08 | 5AT | F | | Platform/Chassis FWD QWFA | | GCO99270 | Outer Joint | 48T | 28 | 28 | 59 | 128 | 61.5 | M |
| | 2006.04-2014.08 | 5AT | F | | Platform/Chassis FWD QWFA | | GCO99349 | Outer Joint | 48T | 28 | 36 | 57 | 120.5 | 72 | I |
| | 2006.04-2014.08 | 5AT | F | L | Platform/Chassis FWD QWFA | | GCI18173 | Inner Joint | | 36 | 28 | 40 | 77 | 111.5 | |
| | 2006.04-2014.08 | 5MT | F | L | Platform/Chassis FWD QWFA | Date from:2011.10 | GDS18472 | Drive Shaft | 48T | 28 | 41 | 57 | 124.5 | 761 | |
| | 2006.04-2014.08 | 5MT | F | R | Platform/Chassis FWD QWFA | Date from:2011.10 | GDS83779 | Drive Shaft | 48T | 28 | 41 | 57 | 124.5 | 1104 | |
| | 2006.04-2014.08 | MT | F | L | Platform/Chassis FWD QWFA | Date to:2011.09;Inner teeth of wheel side:29 | GDS18455 | Drive Shaft | 48T | 28 | 36 | 60 | 126.5 | 797 | |
| | 2006.04-2014.08 | MT | F | L | Platform/Chassis FWD QWFA | Date to:2011.12;Inner teeth of wheel side:28 | GDS99179 | Drive Shaft | 48T | 28 | 36 | 59 | 128 | 796 | |
| | 2006.04-2014.08 | MT | F | R | Platform/Chassis FWD QWFA | Date to:2011.09 | GDS99194 | Drive Shaft | 48T | 28 | 36 | 59 | 128 | 1057 | |
| | 2006.04-2014.08 | MT | F | L/R | Platform/Chassis FWD QWFA | Date from:2011.10 | GCO18298 | Outer Joint | 48T | 28 | 29 | 57 | 124.5 | 79.5 | I |
| | 2006.04-2014.08 | MT | F | L/R | Platform/Chassis FWD QWFA | Date to:2011.09 | GCO99284 | Outer Joint | 48T | 28 | 29 | 60 | 126.5 | 72 | M |
| | 2006.04-2014.08 | MT | F | L | Platform/Chassis FWD QWFA | Date to:2011.09 | GCI18177 | Inner Joint | | 36 | 30 | 40 | 77.5 | 111 | |
| | 2006.04-2014.08 | MT | F | L | Platform/Chassis FWD QWFA | Date from:2011.10 | GCI81231 | Inner Joint | | 41 | 29 | 44 | 76 | 128 | |
| | 2006.04-2014.08 | MT | F | R | Platform/Chassis FWD QWFA | Date from:2011.10 | GCI81725 | Inner Joint | | 41 | 29 | 44 | 408.5 | 131.5 | |
| | 2006.04-2014.08 | 5AT | F | | Van FWD QWFA | | GCO99270 | Outer Joint | 48T | 28 | 28 | 59 | 128 | 61.5 | M |
| | 2006.04-2014.08 | 5AT | F | | Van FWD QWFA | | GCO99349 | Outer Joint | 48T | 28 | 36 | 57 | 120.5 | 72 | I |
| | 2006.04-2014.08 | 5AT | F | L | Van FWD QWFA | | GCI18173 | Inner Joint | | 36 | 28 | 40 | 77 | 111.5 | |
| | 2006.04-2014.08 | 5MT | F | L | Van FWD QWFA | Date from:2011.10 | GDS18472 | Drive Shaft | 48T | 28 | 41 | 57 | 124.5 | 761 | |
| | 2006.04-2014.08 | 5MT | F | R | Van FWD QWFA | Date from:2011.10 | GDS83779 | Drive Shaft | 48T | 28 | 41 | 57 | 124.5 | 1104 | |
| | 2006.04-2014.08 | MT | F | L | Van FWD QWFA | Date to:2011.09;Inner teeth of wheel side:29 | GDS18455 | Drive Shaft | 48T | 28 | 36 | 60 | 126.5 | 797 | |
| | 2006.04-2014.08 | MT | F | L | Van FWD QWFA | Date to:2011.12;Inner teeth of wheel side:28 | GDS99179 | Drive Shaft | 48T | 28 | 36 | 59 | 128 | 796 | |
| | 2006.04-2014.08 | MT | F | R | Van FWD QWFA | Date to:2011.09 | GDS99194 | Drive Shaft | 48T | 28 | 36 | 59 | 128 | 1057 | |
| | 2006.04-2014.08 | MT | F | L/R | Van FWD QWFA | Date from:2011.10 | GCO18298 | Outer Joint | 48T | 28 | 29 | 57 | 124.5 | 79.5 | I |
| | 2006.04-2014.08 | MT | F | L/R | Van FWD QWFA | Date to:2011.09 | GCO99284 | Outer Joint | 48T | 28 | 29 | 60 | 126.5 | 72 | M |
| | 2006.04-2014.08 | MT | F | L | Van FWD QWFA | Date to:2011.09 | GCI18177 | Inner Joint | | 36 | 30 | 40 | 77.5 | 111 | |
| | 2006.04-2014.08 | MT | F | L | Van FWD QWFA | Date from:2011.10 | GCI81231 | Inner Joint | | 41 | 29 | 44 | 76 | 128 | |
| | 2006.04-2014.08 | MT | F | R | Van FWD QWFA | Date from:2011.10 | GCI81725 | Inner Joint | | 41 | 29 | 44 | 408.5 | 131.5 | |
| 2.2 (103 kw) | 2007.10-2014.08 | MT | F | L | Bus FWD UHFA, UHFB, UHFC, PGFA, PGFB | Date to:2011.09,Trim Level:TDCI | GDS18293 | Drive Shaft | 48T | 28 | 41 | 65 | 124 | 754 | |
| | 2007.10-2014.08 | MT | F | L | Bus FWD UHFA, UHFB, UHFC, PGFA, PGFB | Date from:2011.10,Trim Level:CRTC | GDS18472 | Drive Shaft | 48T | 28 | 41 | 57 | 124.5 | 761 | |
| | 2007.10-2014.08 | MT | F | R | Bus FWD UHFA, UHFB, UHFC, PGFA, PGFB | Date to:2011.09,Trim Level:TDCI | GDS18292 | Drive Shaft | 48T | 28 | 41 | 65 | 124 | 1093 | |
| | 2007.10-2014.08 | MT | F | R | Bus FWD UHFA, UHFB, UHFC, PGFA, PGFB | Date from:2011.10,Trim Level:CRTC | GDS83779 | Drive Shaft | 48T | 28 | 41 | 57 | 124.5 | 1104 | |

| | YEAR | TRANSM. | F/R | L/R | BODY STYLE & DRIVE TYPE & ENGINE | REMARKS | G-AP Ref. | PRODUCT | ABS | Technical Specifications A | B | C | H | L | P |
|---|---|---|---|---|---|---|---|---|---|---|---|---|---|---|---|
| **FORD** | | | | | | | | | | | | | | | |
| **Transit** | | | | | | | | | | | | | | | |
| 2.2 (103 kw) | 2007.10-2014.08 | MT | F | L/R | Bus FWD UHFA, UHFB, UHFC, PGFA, PGFB | | GCO18237 | Outer Joint | 48T | 28 | 31 | 65 | 124 | 78 | M |
| | 2007.10-2014.08 | MT | F | L/R | Bus FWD UHFA, UHFB, UHFC, PGFA, PGFB | | GCO18298 | Outer Joint | 48T | 28 | 29 | 57 | 124.5 | 79.5 | I |
| | 2007.10-2014.08 | MT | F | L | Bus FWD UHFA, UHFB, UHFC, PGFA, PGFB | Date to:2011.09,Trim Level:TDCI | GCI18119 | Inner Joint | | 41 | 31 | 44 | 76.5 | 121 | |
| | 2007.10-2014.08 | MT | F | L | Bus FWD UHFA, UHFB, UHFC, PGFA, PGFB | Date from:2011.10.Trim Level:CRTC | GCI81231 | Inner Joint | | 41 | 29 | 44 | 76 | 128 | |
| | 2007.10-2014.08 | MT | F | R | Bus FWD UHFA, UHFB, UHFC, PGFA, PGFB | Date to:2011.09,Trim Level:TDCI | GCI18121 | Inner Joint | | 41 | 31 | 44 | 407 | 128 | |
| | 2007.10-2014.08 | MT | F | R | Bus FWD UHFA, UHFB, UHFC, PGFA, PGFB | Date from:2011.10.Trim Level:CRTC | GCI81725 | Inner Joint | | 41 | 29 | 44 | 408.5 | 131.5 | |
| | 2007.10-2014.08 | MT | F | L | Platform/Chassis FWD UHFA, UHFB, UHFC, PGFA, PGFB | Date to:2011.09,Trim Level:TDCI | GDS18293 | Drive Shaft | 48T | 28 | 41 | 65 | 124 | 754 | |
| | 2007.10-2014.08 | MT | F | L | Platform/Chassis FWD UHFA, UHFB, UHFC, PGFA, PGFB | Date from:2011.10,Trim Level:CRTC | GDS18472 | Drive Shaft | 48T | 28 | 41 | 57 | 124.5 | 761 | |
| | 2007.10-2014.08 | MT | F | R | Platform/Chassis FWD UHFA, UHFB, UHFC, PGFA, PGFB | Date to:2011.09,Trim Level:TDCI | GDS18292 | Drive Shaft | 48T | 28 | 41 | 65 | 124 | 1093 | |
| | 2007.10-2014.08 | MT | F | R | Platform/Chassis FWD UHFA, UHFB, UHFC, PGFA, PGFB | Date from:2011.10,Trim Level:CRTC | GDS83779 | Drive Shaft | 48T | 28 | 41 | 57 | 124.5 | 1104 | |
| | 2007.10-2014.08 | MT | F | L/R | Platform/Chassis FWD UHFA, UHFB, UHFC, PGFA, PGFB | | GCO18237 | Outer Joint | 48T | 28 | 31 | 65 | 124 | 78 | M |
| | 2007.10-2014.08 | MT | F | L/R | Platform/Chassis FWD UHFA, UHFB, UHFC, PGFA, PGFB | | GCO18298 | Outer Joint | 48T | 28 | 29 | 57 | 124.5 | 79.5 | I |
| | 2007.10-2014.08 | MT | F | L | Platform/Chassis FWD UHFA, UHFB, UHFC, PGFA, PGFB | Date to:2011.09,Trim Level:TDCI | GCI18119 | Inner Joint | | 41 | 31 | 44 | 76.5 | 121 | |
| | 2007.10-2014.08 | MT | F | L | Platform/Chassis FWD UHFA, UHFB, UHFC, PGFA, PGFB | Date from:2011.10.Trim Level:CRTC | GCI81231 | Inner Joint | | 41 | 29 | 44 | 76 | 128 | |
| | 2007.10-2014.08 | MT | F | R | Platform/Chassis FWD UHFA, UHFB, UHFC, PGFA, PGFB | Date to:2011.09,Trim Level:TDCI | GCI18121 | Inner Joint | | 41 | 31 | 44 | 407 | 128 | |
| | 2007.10-2014.08 | MT | F | R | Platform/Chassis FWD UHFA, UHFB, UHFC, PGFA, PGFB | Date from:2011.10.Trim Level:CRTC | GCI81725 | Inner Joint | | 41 | 29 | 44 | 408.5 | 131.5 | |
| | 2007.10-2014.08 | MT | F | L | Van FWD UHFA, UHFB, UHFC, PGFA, PGFB | Date to:2011.09,Trim Level:TDCI | GDS18293 | Drive Shaft | 48T | 28 | 41 | 65 | 124 | 754 | |
| | 2007.10-2014.08 | MT | F | L | Van FWD UHFA, UHFB, UHFC, PGFA, PGFB | Date from:2011.10,Trim Level:CRTC | GDS18472 | Drive Shaft | 48T | 28 | 41 | 57 | 124.5 | 761 | |
| | 2007.10-2014.08 | MT | F | R | Van FWD UHFA, UHFB, UHFC, PGFA, PGFB | Date to:2011.09,Trim Level:TDCI | GDS18292 | Drive Shaft | 48T | 28 | 41 | 65 | 124 | 1093 | |
| | 2007.10-2014.08 | MT | F | R | Van FWD UHFA, UHFB, UHFC, PGFA, PGFB | Date from:2011.10,Trim Level:CRTC | GDS83779 | Drive Shaft | 48T | 28 | 41 | 57 | 124.5 | 1104 | |
| | 2007.10-2014.08 | MT | F | L/R | Van FWD UHFA, UHFB, UHFC, PGFA, PGFB | | GCO18237 | Outer Joint | 48T | 28 | 31 | 65 | 124 | 78 | M |
| | 2007.10-2014.08 | MT | F | L/R | Van FWD UHFA, UHFB, UHFC, PGFA, PGFB | | GCO18298 | Outer Joint | 48T | 28 | 29 | 57 | 124.5 | 79.5 | I |
| | 2007.10-2014.08 | MT | F | L | Van FWD UHFA, UHFB, UHFC, PGFA, PGFB | Date to:2011.09,Trim Level:TDCI | GCI18119 | Inner Joint | | 41 | 31 | 44 | 76.5 | 121 | |
| | 2007.10-2014.08 | MT | F | L | Van FWD UHFA, UHFB, UHFC, PGFA, PGFB | Date from:2011.10.Trim Level:CRTC | GCI81231 | Inner Joint | | 41 | 29 | 44 | 76 | 128 | |
| | 2007.10-2014.08 | MT | F | R | Van FWD UHFA, UHFB, UHFC, PGFA, PGFB | Date to:2011.09,Trim Level:TDCI | GCI18121 | Inner Joint | | 41 | 31 | 44 | 407 | 128 | |
| | 2007.10-2014.08 | MT | F | R | Van FWD UHFA, UHFB, UHFC, PGFA, PGFB | Date from:2011.10.Trim Level:CRTC | GCI81725 | Inner Joint | | 41 | 29 | 44 | 408.5 | 131.5 | |
| 2.2 (114 kw) | 2013.08-2018.12 | | R | L/R | Bus RWD CVR5, UYR6, CV24 | | GDS57887 | Drive Shaft | | | 35 | | | 919.5 | |
| | 2013.08-2018.12 | 6MT | F | L | Platform/Chassis FWD CVF5 | | GDS18334 | Drive Shaft | | 31 | 41 | 57.7 | 121 | 752 | |
| | 2013.08-2018.12 | 6MT | F | R | Platform/Chassis FWD CVF5 | | GDS18335 | Drive Shaft | | 31 | 41 | 57.7 | 121 | 1092 | |
| | 2013.08-2018.12 | 6MT | F | L/R | Platform/Chassis FWD CVF5 | | GCO18286 | Outer Joint | | 31 | 28 | 57.7 | 121 | 68 | I |
| | 2013.08-2018.12 | 6MT | F | L/R | Platform/Chassis FWD CVF5 | Model:Transit 350 | GCO18293 | Outer Joint | | 31 | 30 | 57.5 | 121 | 77.5 | I |
| | 2013.08-2018.12 | 6MT | F | L | Platform/Chassis FWD CVF5 | Model:Transit 350,Date to:2015.07 | GCI81231 | Inner Joint | | 41 | 29 | 44 | 76 | 128 | |
| | 2013.08-2018.12 | 6MT | F | L | Platform/Chassis FWD CVF5 | Model:Transit 310,Date to:2015.12;Model:Transit 350,Date from:2015.08 | GCI82506 | Inner Joint | | 41 | 29 | 44 | 76 | 127 | |
| | 2013.08-2018.12 | 6MT | F | R | Platform/Chassis FWD CVF5 | | GCI82507 | Inner Joint | | 41 | 29 | 44 | 408 | 130 | |
| | 2013.08-2018.12 | | R | L/R | Platform/Chassis RWD CVR5, UYR6, CV24, CYR5 | | GDS57887 | Drive Shaft | | | 35 | | | 919.5 | |
| | 2013.08-2018.12 | 6MT | F | L | Van FWD CVF5 | | GDS18334 | Drive Shaft | | 31 | 41 | 57.7 | 121 | 752 | |
| | 2013.08-2018.12 | 6MT | F | R | Van FWD CVF5 | | GDS18335 | Drive Shaft | | 31 | 41 | 57.7 | 121 | 1092 | |
| | 2013.08-2018.12 | 6MT | F | L/R | Van FWD CVF5 | | GCO18286 | Outer Joint | | 31 | 28 | 57.7 | 121 | 68 | I |
| | 2013.08-2018.12 | 6MT | F | L/R | Van FWD CVF5 | | GCO18293 | Outer Joint | | 31 | 30 | 57.5 | 121 | 77.5 | I |
| | 2013.08-2018.12 | 6MT | F | L | Van FWD CVF5 | Model:Transit 330/350,Date to:2015.07 | GCI81231 | Inner Joint | | 41 | 29 | 44 | 76 | 128 | |
| | 2013.08-2018.12 | 6MT | F | L | Van FWD CVF5 | Model:Transit 290/310,Date to:2015.12;Model:Transit 330/350,Date from:2015.08 | GCI82506 | Inner Joint | | 41 | 29 | 44 | 76 | 127 | |
| | 2013.08-2018.12 | 6MT | F | R | Van FWD CVF5 | | GCI82507 | Inner Joint | | 41 | 29 | 44 | 408 | 130 | |
| | 2013.08-2018.12 | | R | L/R | Van RWD CVR5, UYR6, CV24 | | GDS57887 | Drive Shaft | | | 35 | | | 919.5 | |
| | 2014.12-2018.12 | 6MT | F | L | Bus FWD CVF5 | | GDS18334 | Drive Shaft | | 31 | 41 | 57.7 | 121 | 752 | |
| | 2014.12-2018.12 | 6MT | F | R | Bus FWD CVF5 | | GDS18335 | Drive Shaft | | 31 | 41 | 57.7 | 121 | 1092 | |
| | 2014.12-2018.12 | 6MT | F | L/R | Bus FWD CVF5 | Reconditioned | GCO18286 | Outer Joint | | 31 | 28 | 57.7 | 121 | 68 | I |
| | 2014.12-2018.12 | 6MT | F | L/R | Bus FWD CVF5 | | GCO18293 | Outer Joint | | 31 | 30 | 57.5 | 121 | 77.5 | I |
| | 2014.12-2018.12 | 6MT | F | L | Bus FWD CVF5 | Date to:2015.07 | GCI81231 | Inner Joint | | 41 | 29 | 44 | 76 | 128 | |
| | 2014.12-2018.12 | 6MT | F | L | Bus FWD CVF5 | Date from:2015.08 | GCI82506 | Inner Joint | | 41 | 29 | 44 | 76 | 127 | |
| | 2014.12-2018.12 | 6MT | F | R | Bus FWD CVF5 | | GCI82507 | Inner Joint | | 41 | 29 | 44 | 408 | 130 | |
| **Transit 300** | | | | | | | | | | | | | | | |
| 2.2 (63 kw) | 2006.04-2014.08 | 5AT | F | | Platform/Chassis FWD P8FA;P8FB | | GCO99349 | Outer Joint | 48T | 28 | 36 | 57 | 120.5 | 72 | I |
| | 2006.04-2014.08 | 5AT | F | L | Platform/Chassis FWD P8FA;P8FB | | GCI18173 | Inner Joint | | 36 | 28 | 40 | 77 | 111.5 | |
| | 2006.04-2014.08 | 5MT | F | L | Platform/Chassis FWD P8FA;P8FB | Date from:2011.10 | GDS18472 | Drive Shaft | 48T | 28 | 41 | 57 | 124.5 | 761 | |
| | 2006.04-2014.08 | 5MT | F | L | Platform/Chassis FWD P8FA;P8FB | Date to:2011.09 | GDS99179 | Drive Shaft | 48T | 28 | 36 | 59 | 128 | 796 | |
| | 2006.04-2014.08 | 5MT | F | R | Platform/Chassis FWD P8FA;P8FB | Date from:2011.10 | GDS83779 | Drive Shaft | 48T | 28 | 41 | 57 | 124.5 | 1104 | |
| | 2006.04-2014.08 | 5MT | F | R | Platform/Chassis FWD P8FA;P8FB | Date to:2011.09 | GDS99194 | Drive Shaft | 48T | 28 | 36 | 59 | 128 | 1057 | |
| | 2006.04-2014.08 | 5MT | F | L | Platform/Chassis FWD P8FA;P8FB | Date from:2011.10 | GCI81231 | Inner Joint | | 41 | 29 | 44 | 76 | 128 | |
| | 2006.04-2014.08 | 5MT | F | R | Platform/Chassis FWD P8FA;P8FB | Date to:2011.09 | GCI18120 | Inner Joint | | 36 | 28 | 40 | 330 | 120 | |
| | 2006.04-2014.08 | 5MT | F | R | Platform/Chassis FWD P8FA;P8FB | Date from:2011.10 | GCI81725 | Inner Joint | | 41 | 29 | 44 | 408.5 | 131.5 | |
| | 2006.04-2014.08 | MT | F | L/R | Platform/Chassis FWD P8FA;P8FB | | GCO99270 | Outer Joint | 48T | 28 | 28 | 59 | 128 | 61.5 | M |
| | 2006.04-2014.08 | MT | F | L | Platform/Chassis FWD P8FA;P8FB | Date to:2011.09 | GCI18177 | Inner Joint | | 36 | 30 | 40 | 77.5 | 111 | |
| | 2006.04-2014.08 | | F | | Platform/Chassis FWD P8FA;P8FB | Date To:2011.09 | GCO99284 | Outer Joint | 48T | 28 | 29 | 60 | 126.5 | 72 | M |

| | YEAR | TRANSM. | F/R | L/R | BODY STYLE & DRIVE TYPE & ENGINE | REMARKS | G-AP Ref. | PRODUCT | ABS | Technical Specifications A | B | C | H | L | P |
|---|---|---|---|---|---|---|---|---|---|---|---|---|---|---|---|
| **FORD** **Transit 350** | | | | | | | | | | | | | | | |
| 2.0 (77 kw) | 2016.03- | | R | L/R | Van RWD YLR6;YLRA;BJRA | | GDS57887 | Drive Shaft | | | 35 | | | 919.5 | |
| | 2016.03- | | R | L/R | Van RWD YLR6;YLRA;BJRA | Date from:2019.05 | GDS57888 | Drive Shaft | | | 34 | | | 912.5 | |
| 2.0 (96 kw) | 2017.01- | 6MT | F | L | Van 4WD YMR6;BKRA;YMRA | | GDS56659 | Drive Shaft | | 31 | 29 | 63 | 121 | 679 | |
| | 2017.01- | 6MT | F | R | Van 4WD YMR6;BKRA;YMRA | | GDS56707 | Drive Shaft | | 31 | 28 | 63 | 121 | 745 | |
| | 2017.01- | 6MT | F | L | Van 4WD YMR6;BKRA;YMRA | | GCI83431 | Inner Joint | | 29 | 26 | 44 | 71.5 | 110 | |
| | 2017.01- | 6MT | F | R | Van 4WD YMR6;BKRA;YMRA | | GCI83448 | Inner Joint | | 28 | 26 | 44 | | 121 | |
| | 2019.05- | | R | L/R | Van RWD BKRB | Date to:2022.01 | GDS57887 | Drive Shaft | | | 35 | | | 919.5 | |
| 2.0 (114 kw) | 2022.05- | 6AT | F | L | Platform/Chassis FWD N0HA | | GDS56279 | Drive Shaft | | 31 | 27 | 63 | 121 | 737 | |
| | 2022.05- | 6AT | F | R | Platform/Chassis FWD N0HA | | GDS56280 | Drive Shaft | | 31 | 27 | 63 | 121 | 1106 | |
| | 2022.05- | 6MT | F | L | Platform/Chassis FWD N0HA | Date to:2024.04 | GDS18334 | Drive Shaft | | 31 | 41 | 57.7 | 121 | 752 | |
| | 2022.05- | 6MT | F | R | Platform/Chassis FWD N0HA | Date to:2024.04 | GDS18335 | Drive Shaft | | 31 | 41 | 57.7 | 121 | 1092 | |
| | 2022.05- | 6MT | F | L | Platform/Chassis FWD N0HA | Date to:2024.04 | GCI82506 | Inner Joint | | 41 | 29 | 44 | 76 | 127 | |
| | 2022.05- | 6MT | F | R | Platform/Chassis FWD N0HA | Date to:2024.04 | GCI82507 | Inner Joint | | 41 | 29 | 44 | 408 | 130 | |
| | 2022.05- | 6AT | F | L | Van FWD N0HA | | GDS56279 | Drive Shaft | | 31 | 27 | 63 | 121 | 737 | |
| | 2022.05- | 6AT | F | R | Van FWD N0HA | | GDS56280 | Drive Shaft | | 31 | 27 | 63 | 121 | 1106 | |
| | 2022.05- | 6MT | F | L | Van FWD N0HA | Date to:2024.04 | GDS18334 | Drive Shaft | | 31 | 41 | 57.7 | 121 | 752 | |
| | 2022.05- | 6MT | F | R | Van FWD N0HA | Date to:2024.04 | GDS18335 | Drive Shaft | | 31 | 41 | 57.7 | 121 | 1092 | |
| | 2022.05- | 6MT | F | L | Van FWD N0HA | Date to:2024.04 | GCI82506 | Inner Joint | | 41 | 29 | 44 | 76 | 127 | |
| | 2022.05- | 6MT | F | R | Van FWD N0HA | Date to:2024.04 | GCI82507 | Inner Joint | | 41 | 29 | 44 | 408 | 130 | |
| 2.0 (118 kw) | 2021.01- | 6AT | F | L | Platform/Chassis FWD N0HA | | GDS56279 | Drive Shaft | | 31 | 27 | 63 | 121 | 737 | |
| | 2021.01- | 6AT | F | R | Platform/Chassis FWD N0HA | | GDS56280 | Drive Shaft | | 31 | 27 | 63 | 121 | 1106 | |
| | 2021.01- | 6AT | F | L/R | Platform/Chassis FWD N0HA | | GCO83240 | Outer Joint | | 31 | 31 | 63 | 121 | 79 | I |
| | 2021.01- | 6AT | F | L | Platform/Chassis FWD N0HA | | GCI83225 | Inner Joint | | 27 | 29 | 35 | 107 | 102.5 | |
| | 2021.01- | 6AT | F | R | Platform/Chassis FWD N0HA | | GCI83226 | Inner Joint | | 27 | 29 | 35 | 417 | 131 | |
| | 2021.01- | 6MT | F | L | Platform/Chassis FWD N0HA | | GDS18334 | Drive Shaft | | 31 | 41 | 57.7 | 121 | 752 | |
| | 2021.01- | 6MT | F | R | Platform/Chassis FWD N0HA | | GDS18335 | Drive Shaft | | 31 | 41 | 57.7 | 121 | 1092 | |
| | 2021.01- | 6MT | F | R | Platform/Chassis FWD N0HA | Date to:2021.06 | GCO18293 | Outer Joint | | 31 | 30 | 57.5 | 121 | 77.5 | I |
| | 2021.01- | 6MT | F | L | Platform/Chassis FWD N0HA | Date to:2021.06 | GCI82506 | Inner Joint | | 41 | 29 | 44 | 76 | 127 | |
| | 2021.01- | 6MT | F | R | Platform/Chassis FWD N0HA | Date to:2021.06 | GCI82507 | Inner Joint | | 41 | 29 | 44 | 408 | 130 | |
| 2.0 (125 kw) | 2019.05-2024.06 | 6MT | F | L | Platform/Chassis FWD BLFC;BLFD | | GDS18334 | Drive Shaft | | 31 | 41 | 57.7 | 121 | 752 | |
| | 2019.05-2024.06 | 6MT | F | R | Platform/Chassis FWD BLFC;BLFD | | GDS18335 | Drive Shaft | | 31 | 41 | 57.7 | 121 | 1092 | |
| | 2019.05-2024.06 | 6MT | F | R | Platform/Chassis FWD BLFC;BLFD | Date to:2021.06 | GCO18293 | Outer Joint | | 31 | 30 | 57.5 | 121 | 77.5 | I |
| | 2019.05-2024.06 | 6MT | F | L | Platform/Chassis FWD BLFC;BLFD | Date to:2021.06 | GCI82506 | Inner Joint | | 41 | 29 | 44 | 76 | 127 | |
| | 2019.05-2024.06 | 6MT | F | R | Platform/Chassis FWD BLFC;BLFD | Date to:2021.06 | GCI82507 | Inner Joint | | 41 | 29 | 44 | 408 | 130 | |
| | 2019.05-2024.06 | | R | L/R | Platform/Chassis RWD BLRB | Date to:2022.01 | GDS57887 | Drive Shaft | | | 35 | | | 919.5 | |
| | 2019.05-2024.06 | | R | L/R | Van RWD BLRB | Date to:2022.01 | GDS57887 | Drive Shaft | | | 35 | | | 919.5 | |
| 2.0 (136 kw) | 2019.05- | 6AT | F | L | Platform/Chassis FWD BCFB | Date from:2020.12 | GDS56279 | Drive Shaft | | 31 | 27 | 63 | 121 | 737 | |
| | 2019.05- | 6AT | F | R | Platform/Chassis FWD BCFB | Date from:2020.12 | GDS56280 | Drive Shaft | | 31 | 27 | 63 | 121 | 1106 | |
| | 2019.05- | 6AT | F | L/R | Platform/Chassis FWD BCFB | Date from:2020.12 | GCO83240 | Outer Joint | | 31 | 31 | 63 | 121 | 79 | I |
| | 2019.05- | 6AT | F | L | Platform/Chassis FWD BCFB | | GCI83225 | Inner Joint | | 27 | 29 | 35 | 107 | 102.5 | |
| | 2019.05- | 6AT | F | R | Platform/Chassis FWD BCFB | Date from:2020.12 | GCI83226 | Inner Joint | | 27 | 29 | 35 | 417 | 131 | |
| | 2019.05- | 6MT | F | L | Platform/Chassis FWD BCFB | | GDS18334 | Drive Shaft | | 31 | 41 | 57.7 | 121 | 752 | |
| | 2019.05- | 6MT | F | R | Platform/Chassis FWD BCFB | | GDS18335 | Drive Shaft | | 31 | 41 | 57.7 | 121 | 1092 | |
| | 2019.05- | 6MT | F | R | Platform/Chassis FWD BCFB | Date to:2021.06 | GCO18293 | Outer Joint | | 31 | 30 | 57.5 | 121 | 77.5 | I |
| | 2019.05- | 6MT | F | L | Platform/Chassis FWD BCFB | Date to:2021.06 | GCI82506 | Inner Joint | | 41 | 29 | 44 | 76 | 127 | |
| | 2019.05- | 6MT | F | R | Platform/Chassis FWD BCFB | Date to:2021.06 | GCI82507 | Inner Joint | | 41 | 29 | 44 | 408 | 130 | |
| | 2019.05- | | R | L/R | Platform/Chassis RWD BCRA;BCRB | Date to:2022.01 | GDS57887 | Drive Shaft | | | 35 | | | 919.5 | |
| | 2019.05- | 6AT | F | L | Van FWD BCFB | Date from:2020.12 | GDS56279 | Drive Shaft | | 31 | 27 | 63 | 121 | 737 | |
| | 2019.05- | 6AT | F | R | Van FWD BCFB | Date from:2020.12 | GDS56280 | Drive Shaft | | 31 | 27 | 63 | 121 | 1106 | |
| | 2019.05- | 6AT | F | L/R | Van FWD BCFB | Date from:2020.12 | GCO83240 | Outer Joint | | 31 | 31 | 63 | 121 | 79 | I |
| | 2019.05- | 6AT | F | L | Van FWD BCFB | | GCI83225 | Inner Joint | | 27 | 29 | 35 | 107 | 102.5 | |
| | 2019.05- | 6AT | F | R | Van FWD BCFB | Date from:2020.12 | GCI83226 | Inner Joint | | 27 | 29 | 35 | 417 | 131 | |
| | 2019.05- | 6MT | F | L | Van FWD BCFB | | GDS18334 | Drive Shaft | | 31 | 41 | 57.7 | 121 | 752 | |
| | 2019.05- | 6MT | F | R | Van FWD BCFB | | GDS18335 | Drive Shaft | | 31 | 41 | 57.7 | 121 | 1092 | |
| | 2019.05- | 6MT | F | R | Van FWD BCFB | Date to:2021.06 | GCO18293 | Outer Joint | | 31 | 30 | 57.5 | 121 | 77.5 | I |
| | 2019.05- | 6MT | F | L | Van FWD BCFB | Date to:2021.06 | GCI82506 | Inner Joint | | 41 | 29 | 44 | 76 | 127 | |
| | 2019.05- | 6MT | F | R | Van FWD BCFB | Date to:2021.06 | GCI82507 | Inner Joint | | 41 | 29 | 44 | 408 | 130 | |
| 2.2 (74 kw) | 2013.08-2018.12 | | R | L/R | Bus RWD DRR5 | | GDS57887 | Drive Shaft | | | 35 | | | 919.5 | |
| | 2013.08-2018.12 | | R | L/R | Van RWD DRR5 | | GDS57887 | Drive Shaft | | | 35 | | | 919.5 | |
| 2.2 (92 kw) | 2013.08-2018.12 | 6MT | F | L | Bus 4WD CYR5;CY24 | | GDS56658 | Drive Shaft | | 31 | 29 | 63 | 121 | 707 | |
| | 2013.08-2018.12 | 6MT | F | R | Bus 4WD CYR5;CY24 | | GDS56659 | Drive Shaft | | 31 | 29 | 63 | 121 | 679 | |
| | 2013.08-2018.12 | 6MT | F | L/R | Bus 4WD CYR5;CY24 | | GCI83431 | Inner Joint | | 29 | 26 | 44 | 71.5 | 110 | |
| | 2013.08-2018.12 | MT | F | L/R | Bus 4WD CYR5;CY24 | | GCO18293 | Outer Joint | | 31 | 30 | 57.5 | 121 | 77.5 | I |
| | 2013.08-2018.12 | 6MT | F | L | Van 4WD CYR5;CY24 | | GDS56658 | Drive Shaft | | 31 | 29 | 63 | 121 | 707 | |
| | 2013.08-2018.12 | 6MT | F | R | Van 4WD CYR5;CY24 | | GDS56659 | Drive Shaft | | 31 | 29 | 63 | 121 | 679 | |

| | YEAR | TRANSM. | F/R | L/R | BODY STYLE & DRIVE TYPE & ENGINE | REMARKS | G-AP Ref. | PRODUCT | ABS | Technical Specifications A | B | C | H | L | P |
|---|---|---|---|---|---|---|---|---|---|---|---|---|---|---|---|
| **FORD** | | | | | | | | | | | | | | | |
| **Transit 350** | | | | | | | | | | | | | | | |
| 2.2 (92 kw) | 2013.08-2018.12 | 6MT | F | L/R | Van 4WD CYR5;CY24 | | GCI83431 | Inner Joint | | 29 | 26 | 44 | 71.5 | 110 | |
| | 2013.08-2018.12 | MT | F | L/R | Van 4WD CYR5;CY24 | | GCO18293 | Outer Joint | | 31 | 30 | 57.5 | 121 | 77.5 | I |
| 2.2 (114 kw) | 2013.08-2018.12 | 6MT | F | L | Platform/Chassis 4WD CVR5;CV24 | | GDS56658 | Drive Shaft | | 31 | 29 | 63 | 121 | 707 | |
| | 2013.08-2018.12 | 6MT | F | R | Platform/Chassis 4WD CVR5;CV24 | | GDS56659 | Drive Shaft | | 31 | 29 | 63 | 121 | 679 | |
| | 2013.08-2018.12 | 6MT | F | L/R | Platform/Chassis 4WD CVR5;CV24 | Transm. code:VMT6 | GCO18286 | Outer Joint | | 31 | 28 | 57.7 | 121 | 68 | I |
| | 2013.08-2018.12 | 6MT | F | L/R | Platform/Chassis 4WD CVR5;CV24 | | GCI83431 | Inner Joint | | 29 | 26 | 44 | 71.5 | 110 | |
| | 2013.08-2018.12 | MT | F | L/R | Platform/Chassis 4WD CVR5;CV24 | | GCO18293 | Outer Joint | | 31 | 30 | 57.5 | 121 | 77.5 | I |
| | 2015.08-2018.12 | 6MT | F | L | Bus 4WD CVR5;CV24 | | GDS56658 | Drive Shaft | | 31 | 29 | 63 | 121 | 707 | |
| | 2015.08-2018.12 | 6MT | F | R | Bus 4WD CVR5;CV24 | | GDS56659 | Drive Shaft | | 31 | 29 | 63 | 121 | 679 | |
| | 2015.08-2018.12 | 6MT | F | L/R | Bus 4WD CVR5;CV24 | | GCI83431 | Inner Joint | | 29 | 26 | 44 | 71.5 | 110 | |
| | 2015.08-2018.12 | 6MT | F | L | Van 4WD CVR5;CV24 | | GDS56658 | Drive Shaft | | 31 | 29 | 63 | 121 | 707 | |
| | 2015.08-2018.12 | 6MT | F | R | Van 4WD CVR5;CV24 | | GDS56659 | Drive Shaft | | 31 | 29 | 63 | 121 | 679 | |
| | 2015.08-2018.12 | 6MT | F | L/R | Van 4WD CVR5;CV24 | | GCI83431 | Inner Joint | | 29 | 26 | 44 | 71.5 | 110 | |
| **Transit 430** | | | | | | | | | | | | | | | |
| 2.2 (99 kw) | 2013.08-2018.12 | | R | L/R | Platform/Chassis RWD UHR5 | | GDS57887 | Drive Shaft | | | 35 | | | 919.5 | |
| **Transit 460** | | | | | | | | | | | | | | | |
| 2.2 (99 kw) | 2013.08- | | R | L/R | Bus RWD UHR5 | | GDS57887 | Drive Shaft | | | 35 | | | 919.5 | |
| | 2013.08- | | R | L/R | Bus RWD UHR5 | Date from:2019.05 | GDS57888 | Drive Shaft | | | 34 | | | 912.5 | |
| **Transit Connect** | | | | | | | | | | | | | | | |
| 1.5 (55 kw) | 2015.08- | 5MT | F | L | Box Body/MPV FWD XUGA | Date From:2016.09;Date To:2018.05 | GDS83222 | Drive Shaft | | 27 | 26 | 62.5 | 96 | 645 | |
| | 2015.08- | 5MT | F | R | Box Body/MPV FWD XUGA | Date From:2016.09 | GDS83221 | Drive Shaft | | 27 | 26 | 62.5 | 96 | 982 | |
| | 2015.08- | 5MT | F | L | Box Body/MPV FWD XUGA | | GCO82320 | Outer Joint | | 27 | 26 | 62.5 | 96 | 62 | M |
| | 2015.08- | 5MT | F | R | Box Body/MPV FWD XUGA | | GCO82350 | Outer Joint | | 27 | 35 | 62.5 | 96 | 62 | M |
| | 2015.08- | 5MT | F | L | Box Body/MPV FWD XUGA | | GCI82180 | Inner Joint | | 26 | 32 | 40 | 68.5 | 110.5 | |
| | 2015.08- | 5MT | F | R | Box Body/MPV FWD XUGA | | GCI82179 | Inner Joint | | 26 | 32 | 40 | 388 | 99 | |
| | 2015.08- | MT | F | R | Box Body/MPV FWD XUGA | Date From:2016.01 | GDS18420 | Drive Shaft | | 27 | 26 | 62.8 | 95.5 | 981 | |
| | 2015.08- | 5MT | F | L | MPV FWD XUGA | Date From:2016.09;Date To:2018.05 | GDS83222 | Drive Shaft | | 27 | 26 | 62.5 | 96 | 645 | |
| | 2015.08- | 5MT | F | R | MPV FWD XUGA | Date From:2016.09 | GDS83221 | Drive Shaft | | 27 | 26 | 62.5 | 96 | 982 | |
| | 2015.08- | 5MT | F | L | MPV FWD XUGA | | GCO82320 | Outer Joint | | 27 | 26 | 62.5 | 96 | 62 | M |
| | 2015.08- | 5MT | F | R | MPV FWD XUGA | | GCO82350 | Outer Joint | | 27 | 35 | 62.5 | 96 | 62 | M |
| | 2015.08- | 5MT | F | L | MPV FWD XUGA | | GCI82180 | Inner Joint | | 26 | 32 | 40 | 68.5 | 110.5 | |
| | 2015.08- | 5MT | F | R | MPV FWD XUGA | | GCI82179 | Inner Joint | | 26 | 32 | 40 | 388 | 99 | |
| | 2015.08- | MT | F | R | MPV FWD XUGA | Date From:2016.01 | GDS18420 | Drive Shaft | | 27 | 26 | 62.8 | 95.5 | 981 | |
| | 2018.05- | 6MT | F | L | Box Body/MPV FWD BEGA | | GDS56321 | Drive Shaft | | 27 | 28 | 62.5 | 96 | 633 | |
| | 2018.05- | 6MT | F | R | Box Body/MPV FWD BEGA | | GDS56713 | Drive Shaft | | 27 | 28 | 62.5 | 96 | 985 | |
| | 2018.05- | 6MT | F | L/R | Box Body/MPV FWD BEGA | | GCO82320 | Outer Joint | | 27 | 26 | 62.5 | 96 | 62 | M |
| | 2018.05- | 6MT | F | L | Box Body/MPV FWD BEGA | | GCI83240 | Inner Joint | | 28 | 35 | 40 | 64 | 112 | |
| | 2018.05- | 6MT | F | R | Box Body/MPV FWD BEGA | | GCI84311 | Inner Joint | | 28 | 35 | 40 | 393.5 | 98.5 | |
| | 2018.05- | 6MT | F | L | MPV FWD BEGA | | GDS56321 | Drive Shaft | | 27 | 28 | 62.5 | 96 | 633 | |
| | 2018.05- | 6MT | F | R | MPV FWD BEGA | | GDS56713 | Drive Shaft | | 27 | 28 | 62.5 | 96 | 985 | |
| | 2018.05- | 6MT | F | L/R | MPV FWD BEGA | | GCO82320 | Outer Joint | | 27 | 26 | 62.5 | 96 | 62 | M |
| | 2018.05- | 6MT | F | L | MPV FWD BEGA | | GCI83240 | Inner Joint | | 28 | 35 | 40 | 64 | 112 | |
| | 2018.05- | 6MT | F | R | MPV FWD BEGA | | GCI84311 | Inner Joint | | 28 | 35 | 40 | 393.5 | 98.5 | |
| 1.5 (70 kw) | 2016.03- | 6DCT | F | L | Box Body/MPV FWD XXGA | Date to:2020.09 | GDS56174 | Drive Shaft | | 27 | 28 | 60.5 | 96 | 635 | |
| | 2016.03- | 6DCT | F | R | Box Body/MPV FWD XXGA | | GDS84331 | Drive Shaft | | 27 | 28 | 60.5 | 96 | 983 | |
| | 2016.03- | 6DCT | F | L | Box Body/MPV FWD XXGA | | GCI81762 | Inner Joint | | 28 | 28 | 33.8 | 80 | 95.5 | |
| | 2016.03- | 6DCT | F | R | Box Body/MPV FWD XXGA | | GCI82714 | Inner Joint | | 28 | 28 | 33.85 | 377 | 95.5 | |
| | 2016.03- | | F | L/R | Box Body/MPV FWD XXGA | | GCO82786 | Outer Joint | | 27 | 28 | 60.5 | 96 | 65 | M |
| 1.5 (74 kw) | 2015.05- | 5MT | F | L | Box Body/MPV FWD XVGA;XVGB;XVGC;XXGA | Date from:2016.09,Date to:2018.05 | GDS83222 | Drive Shaft | | 27 | 26 | 62.5 | 96 | 645 | |
| | 2015.05- | 5MT | F | R | Box Body/MPV FWD XVGA;XVGB;XVGC;XXGA | Date from:2016.09 | GDS83221 | Drive Shaft | | 27 | 26 | 62.5 | 96 | 982 | |
| | 2015.05- | 5MT | F | L | Box Body/MPV FWD XVGA;XVGB;XVGC;XXGA | | GCO82320 | Outer Joint | | 27 | 26 | 62.5 | 96 | 62 | M |
| | 2015.05- | 5MT | F | R | Box Body/MPV FWD XVGA;XVGB;XVGC;XXGA | | GCO82350 | Outer Joint | | 27 | 35 | 62.5 | 96 | 62 | M |
| | 2015.05- | 5MT | F | L | Box Body/MPV FWD XVGA;XVGB;XVGC;XXGA | | GCI82180 | Inner Joint | | 26 | 32 | 40 | 68.5 | 110.5 | |
| | 2015.05- | 5MT | F | R | Box Body/MPV FWD XVGA;XVGB;XVGC;XXGA | | GCI82179 | Inner Joint | | 26 | 32 | 40 | 388 | 99 | |
| | 2015.05- | 6DCT | F | L | Box Body/MPV FWD XVGA;XVGB;XVGC;XXGA | | GDS56174 | Drive Shaft | | 27 | 28 | 60.5 | 96 | 635 | |
| | 2015.05- | 6DCT | F | R | Box Body/MPV FWD XVGA;XVGB;XVGC;XXGA | | GDS84331 | Drive Shaft | | 27 | 28 | 60.5 | 96 | 983 | |
| | 2015.05- | 6DCT | F | R | Box Body/MPV FWD XVGA;XVGB;XVGC;XXGA | | GCO82786 | Outer Joint | | 27 | 28 | 60.5 | 96 | 65 | M |
| | 2015.05- | 6DCT | F | L | Box Body/MPV FWD XVGA;XVGB;XVGC;XXGA | | GCI81762 | Inner Joint | | 28 | 28 | 33.8 | 80 | 95.5 | |
| | 2015.05- | 6DCT | F | R | Box Body/MPV FWD XVGA;XVGB;XVGC;XXGA | | GCI82714 | Inner Joint | | 28 | 28 | 33.85 | 377 | 95.5 | |
| | 2015.05- | 5MT | F | L | MPV FWD XVGA;XVGB;XVGC;XXGA | Date from:2016.09,Date to:2018.05 | GDS83222 | Drive Shaft | | 27 | 26 | 62.5 | 96 | 645 | |
| | 2015.05- | 5MT | F | R | MPV FWD XVGA;XVGB;XVGC;XXGA | Inner teeth of wheel side:35 | GDS83221 | Drive Shaft | | 27 | 26 | 62.5 | 96 | 982 | |
| | 2015.05- | 5MT | F | L | MPV FWD XVGA;XVGB;XVGC;XXGA | | GCO82320 | Outer Joint | | 27 | 26 | 62.5 | 96 | 62 | M |
| | 2015.05- | 5MT | F | R | MPV FWD XVGA;XVGB;XVGC;XXGA | | GCO82350 | Outer Joint | | 27 | 35 | 62.5 | 96 | 62 | M |
| | 2015.05- | 5MT | F | L | MPV FWD XVGA;XVGB;XVGC;XXGA | | GCI82180 | Inner Joint | | 26 | 32 | 40 | 68.5 | 110.5 | |
| | 2015.05- | 5MT | F | R | MPV FWD XVGA;XVGB;XVGC;XXGA | | GCI82179 | Inner Joint | | 26 | 32 | 40 | 388 | 99 | |

| | YEAR | TRANSM. | F/R | L/R | BODY STYLE & DRIVE TYPE & ENGINE | REMARKS | G-AP Ref. | PRODUCT | ABS | Technical Specifications | | | | | |
|---|---|---|---|---|---|---|---|---|---|---|---|---|---|---|---|
| | | | | | | | | | | A | B | C | H | L | P |
| **FORD**<br>**Transit Connect** | | | | | | | | | | | | | | | |
| 1.5 (74 kw) | 2015.05- | MT | F | R | MPV FWD XVGA;XVGB;XVGC;XXGA | Inner teeth of wheel side:33 | GDS18420 | Drive Shaft | | 27 | 26 | 62.8 | 95.5 | 981 | |
| | 2018.05- | 6MT | F | L | Box Body/MPV FWD Z2GA | | GDS56321 | Drive Shaft | | 27 | 28 | 62.5 | 96 | 633 | |
| | 2018.05- | 6MT | F | R | Box Body/MPV FWD Z2GA | | GDS56713 | Drive Shaft | | 27 | 28 | 62.5 | 96 | 985 | |
| | 2018.05- | 6MT | F | L/R | Box Body/MPV FWD Z2GA | | GCO82320 | Outer Joint | | 27 | 26 | 62.5 | 96 | 62 | M |
| | 2018.05- | 6MT | F | L | Box Body/MPV FWD Z2GA | | GCI83240 | Inner Joint | | 28 | 35 | 40 | 64 | 112 | |
| | 2018.05- | 6MT | F | R | Box Body/MPV FWD Z2GA | | GCI84311 | Inner Joint | | 28 | 35 | 40 | 393.5 | 98.5 | |
| | 2018.05- | 8AT | F | L | Box Body/MPV FWD Z2GA | | GDS58121 | Drive Shaft | | 27 | 35 | 62.5 | 95.5 | 684 | |
| | 2018.05- | 8AT | F | R | Box Body/MPV FWD Z2GA | | GDS58094 | Drive Shaft | | 27 | 35 | 62.5 | 95.5 | 933 | |
| | 2018.05- | 8AT | F | L/R | Box Body/MPV FWD Z2GA | | GCO18277 | Outer Joint | | 27 | 33 | 62.8 | 95.5 | 59 | M |
| | 2018.05- | 8AT | F | R | Box Body/MPV FWD Z2GA | | GCI84014 | Inner Joint | | 35 | 33 | 38 | 341 | 97 | |
| | 2018.05- | 6MT | F | L | MPV FWD Z2GA | | GDS56321 | Drive Shaft | | 27 | 28 | 62.5 | 96 | 633 | |
| | 2018.05- | 6MT | F | R | MPV FWD Z2GA | | GDS56713 | Drive Shaft | | 27 | 28 | 62.5 | 96 | 985 | |
| | 2018.05- | 6MT | F | L/R | MPV FWD Z2GA | | GCO82320 | Outer Joint | | 27 | 26 | 62.5 | 96 | 62 | M |
| | 2018.05- | 6MT | F | L | MPV FWD Z2GA | | GCI83240 | Inner Joint | | 28 | 35 | 40 | 64 | 112 | |
| | 2018.05- | 6MT | F | R | MPV FWD Z2GA | | GCI84311 | Inner Joint | | 28 | 35 | 40 | 393.5 | 98.5 | |
| | 2018.05- | 8AT | F | L | MPV FWD Z2GA | | GDS58121 | Drive Shaft | | 27 | 35 | 62.5 | 95.5 | 684 | |
| | 2018.05- | 8AT | F | R | MPV FWD Z2GA | | GDS58094 | Drive Shaft | | 27 | 35 | 62.5 | 95.5 | 933 | |
| | 2018.05- | 8AT | F | L/R | MPV FWD Z2GA | | GCO18277 | Outer Joint | | 27 | 33 | 62.8 | 95.5 | 59 | M |
| | 2018.05- | 8AT | F | R | MPV FWD Z2GA | | GCI84014 | Inner Joint | | 35 | 33 | 38 | 341 | 97 | |
| 1.5 (88 kw) | 2015.05- | 6DCT | F | L | Box Body/MPV FWD XWGA;XWGB;XWGC | | GDS56174 | Drive Shaft | | 27 | 28 | 60.5 | 96 | 635 | |
| | 2015.05- | 6DCT | F | R | Box Body/MPV FWD XWGA;XWGB;XWGC | | GDS84331 | Drive Shaft | | 27 | 28 | 60.5 | 96 | 983 | |
| | 2015.05- | 6DCT | F | L/R | Box Body/MPV FWD XWGA;XWGB;XWGC | | GCO82786 | Outer Joint | | 27 | 28 | 60.5 | 96 | 65 | M |
| | 2015.05- | 6DCT | F | L | Box Body/MPV FWD XWGA;XWGB;XWGC | | GCI81762 | Inner Joint | | 28 | 28 | 33.8 | 80 | 95.5 | |
| | 2015.05- | 6DCT | F | R | Box Body/MPV FWD XWGA;XWGB;XWGC | | GCI82714 | Inner Joint | | 28 | 28 | 33.85 | 377 | 95.5 | |
| | 2015.05- | 6MT | F | L | Box Body/MPV FWD XWGA;XWGB;XWGC | | GDS83169 | Drive Shaft | | 27 | 26 | 62.5 | 96 | 648 | |
| | 2015.05- | 6MT | F | R | Box Body/MPV FWD XWGA;XWGB;XWGC | | GDS84091 | Drive Shaft | | 27 | 26 | 62.5 | 96 | 983 | |
| | 2015.05- | 6MT | F | L/R | Box Body/MPV FWD XWGA;XWGB;XWGC | | GCO82320 | Outer Joint | | 27 | 26 | 62.5 | 96 | 62 | M |
| | 2015.05- | 6MT | F | L | Box Body/MPV FWD XWGA;XWGB;XWGC | | GCI81526 | Inner Joint | | 26 | 32 | 40 | 61 | 116 | |
| | 2015.05- | 6MT | F | R | Box Body/MPV FWD XWGA;XWGB;XWGC | Date from:2018.06 | GCI81338 | Inner Joint | | 26 | 32 | 40 | 383 | 99 | |
| | 2015.05- | 6DCT | F | L | MPV FWD XWGA;XWGB;XWGC | | GDS56174 | Drive Shaft | | 27 | 28 | 60.5 | 96 | 635 | |
| | 2015.05- | 6DCT | F | R | MPV FWD XWGA;XWGB;XWGC | | GDS84331 | Drive Shaft | | 27 | 28 | 60.5 | 96 | 983 | |
| | 2015.05- | 6DCT | F | L/R | MPV FWD XWGA;XWGB;XWGC | | GCO82786 | Outer Joint | | 27 | 28 | 60.5 | 96 | 65 | M |
| | 2015.05- | 6DCT | F | L | MPV FWD XWGA;XWGB;XWGC | | GCI81762 | Inner Joint | | 28 | 28 | 33.8 | 80 | 95.5 | |
| | 2015.05- | 6DCT | F | R | MPV FWD XWGA;XWGB;XWGC | | GCI82714 | Inner Joint | | 28 | 28 | 33.85 | 377 | 95.5 | |
| | 2015.05- | 6MT | F | L | MPV FWD XWGA;XWGB;XWGC | | GDS83169 | Drive Shaft | | 27 | 26 | 62.5 | 96 | 648 | |
| | 2015.05- | 6MT | F | R | MPV FWD XWGA;XWGB;XWGC | | GDS84091 | Drive Shaft | | 27 | 26 | 62.5 | 96 | 983 | |
| | 2015.05- | 6MT | F | L/R | MPV FWD XWGA;XWGB;XWGC | | GCO82320 | Outer Joint | | 27 | 26 | 62.5 | 96 | 62 | M |
| | 2015.05- | 6MT | F | L | MPV FWD XWGA;XWGB;XWGC | | GCI81526 | Inner Joint | | 26 | 32 | 40 | 61 | 116 | |
| | 2015.05- | 6MT | F | R | MPV FWD XWGA;XWGB;XWGC | Date from:2018.06 | GCI81338 | Inner Joint | | 26 | 32 | 40 | 383 | 99 | |
| | 2018.05- | 6MT | F | L | Box Body/MPV FWD ZTGA | | GDS56321 | Drive Shaft | | 27 | 28 | 62.5 | 96 | 633 | |
| | 2018.05- | 6MT | F | R | Box Body/MPV FWD ZTGA | | GDS56713 | Drive Shaft | | 27 | 28 | 62.5 | 96 | 985 | |
| | 2018.05- | 6MT | F | L/R | Box Body/MPV FWD ZTGA | | GCO82320 | Outer Joint | | 27 | 26 | 62.5 | 96 | 62 | M |
| | 2018.05- | 6MT | F | L | Box Body/MPV FWD ZTGA | | GCI83240 | Inner Joint | | 28 | 35 | 40 | 64 | 112 | |
| | 2018.05- | 6MT | F | R | Box Body/MPV FWD ZTGA | | GCI84311 | Inner Joint | | 28 | 35 | 40 | 393.5 | 98.5 | |
| | 2018.05- | 8AT | F | L | Box Body/MPV FWD ZTGA | | GDS58121 | Drive Shaft | | 27 | 35 | 62.5 | 95.5 | 684 | |
| | 2018.05- | 8AT | F | R | Box Body/MPV FWD ZTGA | | GDS58094 | Drive Shaft | | 27 | 35 | 62.5 | 95.5 | 933 | |
| | 2018.05- | 8AT | F | L/R | Box Body/MPV FWD ZTGA | | GCO18277 | Outer Joint | | 27 | 33 | 62.8 | 95.5 | 59 | M |
| | 2018.05- | 8AT | F | R | Box Body/MPV FWD ZTGA | | GCI84014 | Inner Joint | | 35 | 33 | 38 | 341 | 97 | |
| | 2018.05- | 6MT | F | L | MPV FWD ZTGA | | GDS56321 | Drive Shaft | | 27 | 28 | 62.5 | 96 | 633 | |
| | 2018.05- | 6MT | F | R | MPV FWD ZTGA | | GDS56713 | Drive Shaft | | 27 | 28 | 62.5 | 96 | 985 | |
| | 2018.05- | 6MT | F | L/R | MPV FWD ZTGA | | GCO82320 | Outer Joint | | 27 | 26 | 62.5 | 96 | 62 | M |
| | 2018.05- | 6MT | F | L | MPV FWD ZTGA | | GCI83240 | Inner Joint | | 28 | 35 | 40 | 64 | 112 | |
| | 2018.05- | 6MT | F | R | MPV FWD ZTGA | | GCI84311 | Inner Joint | | 28 | 35 | 40 | 393.5 | 98.5 | |
| | 2018.05- | 8AT | F | L | MPV FWD ZTGA | | GDS58121 | Drive Shaft | | 27 | 35 | 62.5 | 95.5 | 684 | |
| | 2018.05- | 8AT | F | R | MPV FWD ZTGA | | GDS58094 | Drive Shaft | | 27 | 35 | 62.5 | 95.5 | 933 | |
| | 2018.05- | 8AT | F | L/R | MPV FWD ZTGA | | GCO18277 | Outer Joint | | 27 | 33 | 62.8 | 95.5 | 59 | M |
| | 2018.05- | 8AT | F | R | MPV FWD ZTGA | | GCI84014 | Inner Joint | | 35 | 33 | 38 | 341 | 97 | |
| 1.6 (55 kw) | 2013.09- | 5MT | F | L | Box Body/MPV FWD UBGA | | GDS56085 | Drive Shaft | | 27 | 26 | 62.8 | 95.5 | 648 | |
| | 2013.09- | 5MT | F | R | Box Body/MPV FWD UBGA | | GDS18420 | Drive Shaft | | 27 | 26 | 62.8 | 95.5 | 981 | |
| | 2013.09- | 5MT | F | L | Box Body/MPV FWD UBGA | | GCO18277 | Outer Joint | | 27 | 33 | 62.8 | 95.5 | 59 | M |
| | 2013.09- | 5MT | F | R | Box Body/MPV FWD UBGA | | GCO18276 | Outer Joint | | 27 | 33 | 62.8 | 95.5 | 59 | M |
| | 2013.09- | 5MT | F | L | Box Body/MPV FWD UBGA | | GCI82180 | Inner Joint | | 26 | 32 | 40 | 68.5 | 110.5 | |
| | 2013.09- | 5MT | F | L | MPV FWD UBGA | | GDS56085 | Drive Shaft | | 27 | 26 | 62.8 | 95.5 | 648 | |
| | 2013.09- | 5MT | F | R | MPV FWD UBGA | | GDS18420 | Drive Shaft | | 27 | 26 | 62.8 | 95.5 | 981 | |
| | 2013.09- | 5MT | F | L | MPV FWD UBGA | | GCO18277 | Outer Joint | | 27 | 33 | 62.8 | 95.5 | 59 | M |

| | YEAR | TRANSM. | F/R | L/R | BODY STYLE & DRIVE TYPE & ENGINE | REMARKS | G-AP Ref. | PRODUCT | ABS | Technical Specifications | | | | | |
|---|---|---|---|---|---|---|---|---|---|---|---|---|---|---|---|
| | | | | | | | | | | A | B | C | H | L | P |
| **FORD** | | | | | | | | | | | | | | | |
| **Transit Connect** | | | | | | | | | | | | | | | |
| 1.6 (55 kw) | 2013.09- | 5MT | F | L | MPV FWD UBGA | | GCI82180 | Inner Joint | | 26 | 32 | 40 | 68.5 | 110.5 | |
| | 2013.09- | MT | F | R | MPV FWD UBGA | | GCO18276 | Outer Joint | | 27 | 33 | 62.8 | 95.5 | 59 | M |
| 1.6 (70 kw) | 2013.09- | 5MT | F | L | Box Body/MPV FWD TZGA;TZGB | | GDS56085 | Drive Shaft | | 27 | 26 | 62.8 | 95.5 | 648 | |
| | 2013.09- | 5MT | F | R | Box Body/MPV FWD TZGA;TZGB | | GDS18420 | Drive Shaft | | 27 | 26 | 62.8 | 95.5 | 981 | |
| | 2013.09- | 5MT | F | L | Box Body/MPV FWD TZGA;TZGB | | GCO18277 | Outer Joint | | 27 | 33 | 62.8 | 95.5 | 59 | M |
| | 2013.09- | 5MT | F | R | Box Body/MPV FWD TZGA;TZGB | | GCO18276 | Outer Joint | | 27 | 33 | 62.8 | 95.5 | 59 | M |
| | 2013.09- | 5MT | F | L | Box Body/MPV FWD TZGA;TZGB | | GCI82180 | Inner Joint | | 26 | 32 | 40 | 68.5 | 110.5 | |
| | 2013.09- | 5MT | F | L | MPV FWD TZGA;TZGB | | GDS56085 | Drive Shaft | | 27 | 26 | 62.8 | 95.5 | 648 | |
| | 2013.09- | 5MT | F | R | MPV FWD TZGA;TZGB | | GDS18420 | Drive Shaft | | 27 | 26 | 62.8 | 95.5 | 981 | |
| | 2013.09- | 5MT | F | L | MPV FWD TZGA;TZGB | | GCO18277 | Outer Joint | | 27 | 33 | 62.8 | 95.5 | 59 | M |
| | 2013.09- | 5MT | F | R | MPV FWD TZGA;TZGB | | GCO18276 | Outer Joint | | 27 | 33 | 62.8 | 95.5 | 59 | M |
| | 2013.09- | 5MT | F | L | MPV FWD TZGA;TZGB | | GCI82180 | Inner Joint | | 26 | 32 | 40 | 68.5 | 110.5 | |
| 1.6 (85 kw) | 2013.09- | 5MT | F | L | Box Body/MPV FWD T1GA | | GDS56085 | Drive Shaft | | 27 | 26 | 62.8 | 95.5 | 648 | |
| | 2013.09- | 5MT | F | R | Box Body/MPV FWD T1GA | | GDS18420 | Drive Shaft | | 27 | 26 | 62.8 | 95.5 | 981 | |
| | 2013.09- | 5MT | F | L | Box Body/MPV FWD T1GA | | GCO18277 | Outer Joint | | 27 | 33 | 62.8 | 95.5 | 59 | M |
| | 2013.09- | 5MT | F | R | Box Body/MPV FWD T1GA | | GCO18276 | Outer Joint | | 27 | 33 | 62.8 | 95.5 | 59 | M |
| | 2013.09- | 5MT | F | L | Box Body/MPV FWD T1GA | | GCI82180 | Inner Joint | | 26 | 32 | 40 | 68.5 | 110.5 | |
| | 2013.09- | 5MT | F | L | MPV FWD T1GA | | GDS56085 | Drive Shaft | | 27 | 26 | 62.8 | 95.5 | 648 | |
| | 2013.09- | 5MT | F | R | MPV FWD T1GA | | GDS18420 | Drive Shaft | | 27 | 26 | 62.8 | 95.5 | 981 | |
| | 2013.09- | 5MT | F | L | MPV FWD T1GA | | GCO18277 | Outer Joint | | 27 | 33 | 62.8 | 95.5 | 59 | M |
| | 2013.09- | 5MT | F | L | MPV FWD T1GA | | GCI82180 | Inner Joint | | 26 | 32 | 40 | 68.5 | 110.5 | |
| | 2013.09- | MT | F | R | MPV FWD T1GA | | GCO18276 | Outer Joint | | 27 | 33 | 62.8 | 95.5 | 59 | M |
| 1.6 (110 kw) | 2013.11- | MT | F | L/R | Box Body/MPV FWD JQGA | Date from:2015.01 | GCO18240 | Outer Joint | | 27 | 26 | 62.7 | 96 | 62.5 | M |
| 1.8 (55 kw) | 2002.06-2013.12 | 5MT | F | L | Box Body/MPV FWD BHPA;P7PA;P7PB;R2PA | | GDS18041 | Drive Shaft | | 25 | 26 | 53.3 | 94.5 | 632 | |
| | 2002.06-2013.12 | 5MT | F | R | Box Body/MPV FWD BHPA;P7PA;P7PB;R2PA | | GDS99042 | Drive Shaft | | 25 | 26 | 53.3 | 94.5 | 963 | |
| | 2002.06-2013.12 | 5MT | F | L/R | Box Body/MPV FWD BHPA;P7PA;P7PB;R2PA | | GCO18067 | Outer Joint | | 25 | 26 | 53.3 | 94.5 | 64.5 | M |
| | 2002.06-2013.12 | 5MT | F | L | Box Body/MPV FWD BHPA;P7PA;P7PB;R2PA | Date from:2003.04,Date to:2010.07;TJ | GCI18059 | Inner Joint | | 26 | 26 | 40 | 68.5 | 111 | |
| | 2002.06-2013.12 | 5MT | F | L | Box Body/MPV FWD BHPA;P7PA;P7PB;R2PA | Date from:2003.04,Date to:2010.07;TJ | GCI18101 | Inner Joint | | 26 | 24 | 40 | 69 | 111.5 | |
| | 2002.06-2013.12 | 5MT | F | R | Box Body/MPV FWD BHPA;P7PA;P7PB;R2PA | Date to:2010.06 | GCI18102 | Inner Joint | | 26 | 24 | 40 | 390 | 97 | |
| 1.8 (66 kw) | 2002.06-2013.12 | 5MT | F | L | Box Body/MPV FWD HCPA;HCPB;PWPA;PWPB;PWPC;PWPD;RDPA;RSPE;RWPF;HCPC;HCPD | | GDS18041 | Drive Shaft | | 25 | 26 | 53.3 | 94.5 | 632 | |
| | 2002.06-2013.12 | 5MT | F | R | Box Body/MPV FWD HCPA;HCPB;PWPA;PWPB;PWPC;PWPD;RDPA;RSPE;RWPF;HCPC;HCPD | | GDS99042 | Drive Shaft | | 25 | 26 | 53.3 | 94.5 | 963 | |
| | 2002.06-2013.12 | 5MT | F | L/R | Box Body/MPV FWD HCPA;HCPB;PWPA;PWPB;PWPC;PWPD;RDPA;RSPE;RWPF;HCPC;HCPD | | GCO18067 | Outer Joint | | 25 | 26 | 53.3 | 94.5 | 64.5 | M |
| | 2002.06-2013.12 | 5MT | F | L/R | Box Body/MPV FWD HCPA;HCPB;PWPA;PWPB;PWPC;PWPD;RDPA;RSPE;RWPF;HCPC;HCPD | | GCO18207 | Outer Joint | | 25 | 24 | 53.5 | 94.5 | 62 | M |
| | 2002.06-2013.12 | 5MT | F | L | Box Body/MPV FWD HCPA;HCPB;PWPA;PWPB;PWPC;PWPD;RDPA;RSPE;RWPF;HCPC;HCPD | | GCI18059 | Inner Joint | | 26 | 26 | 40 | 68.5 | 111 | |
| | 2002.06-2013.12 | 5MT | F | L | Box Body/MPV FWD HCPA;HCPB;PWPA;PWPB;PWPC;PWPD;RDPA;RSPE;RWPF;HCPC;HCPD | | GCI18101 | Inner Joint | | 26 | 24 | 40 | 69 | 111.5 | |
| | 2002.06-2013.12 | 5MT | F | R | Box Body/MPV FWD HCPA;HCPB;PWPA;PWPB;PWPC;PWPD;RDPA;RSPE;RWPF;HCPC;HCPD | | GCI18058 | Inner Joint | | 26 | 26 | 40 | 389 | 99.5 | |
| | 2002.06-2013.12 | 5MT | F | R | Box Body/MPV FWD HCPA;HCPB;PWPA;PWPB;PWPC;PWPD;RDPA;RSPE;RWPF;HCPC;HCPD | | GCI18102 | Inner Joint | | 26 | 24 | 40 | 390 | 97 | |
| 1.8 (81 kw) | 2006.08-2013.12 | 5MT | F | L | Box Body/MPV FWD RWPA;RWPC;RWPD;RWPB | | GDS18041 | Drive Shaft | | 25 | 26 | 53.3 | 94.5 | 632 | |
| | 2006.08-2013.12 | 5MT | F | R | Box Body/MPV FWD RWPA;RWPC;RWPD;RWPB | | GDS99042 | Drive Shaft | | 25 | 26 | 53.3 | 94.5 | 963 | |
| | 2006.08-2013.12 | 5MT | F | L/R | Box Body/MPV FWD RWPA;RWPC;RWPD;RWPB | | GCO18067 | Outer Joint | | 25 | 26 | 53.3 | 94.5 | 64.5 | M |
| | 2006.08-2013.12 | 5MT | F | L/R | Box Body/MPV FWD RWPA;RWPC;RWPD;RWPB | | GCO18207 | Outer Joint | | 25 | 24 | 53.5 | 94.5 | 62 | M |
| | 2006.08-2013.12 | 5MT | F | L | Box Body/MPV FWD RWPA;RWPC;RWPD;RWPB | | GCI18059 | Inner Joint | | 26 | 26 | 40 | 68.5 | 111 | |
| | 2006.08-2013.12 | 5MT | F | L | Box Body/MPV FWD RWPA;RWPC;RWPD;RWPB | | GCI18101 | Inner Joint | | 26 | 24 | 40 | 69 | 111.5 | |
| | 2006.08-2013.12 | 5MT | F | R | Box Body/MPV FWD RWPA;RWPC;RWPD;RWPB | | GCI18058 | Inner Joint | | 26 | 26 | 40 | 389 | 99.5 | |
| | 2006.08-2013.12 | 5MT | F | R | Box Body/MPV FWD RWPA;RWPC;RWPD;RWPB | | GCI18102 | Inner Joint | | 26 | 24 | 40 | 390 | 97 | |
| 1.8 (85 kw) | 2002.06-2013.12 | 5MT | F | L | Box Body/MPV FWD EYPA;EYPC;EYPD | | GDS18041 | Drive Shaft | | 25 | 26 | 53.3 | 94.5 | 632 | |
| | 2002.06-2013.12 | 5MT | F | R | Box Body/MPV FWD EYPA;EYPC;EYPD | | GDS99042 | Drive Shaft | | 25 | 26 | 53.3 | 94.5 | 963 | |
| | 2002.06-2013.12 | 5MT | F | L/R | Box Body/MPV FWD EYPA;EYPC;EYPD | | GCO18067 | Outer Joint | | 25 | 26 | 53.3 | 94.5 | 64.5 | M |
| | 2002.06-2013.12 | 5MT | F | L/R | Box Body/MPV FWD EYPA;EYPC;EYPD | | GCO18207 | Outer Joint | | 25 | 24 | 53.5 | 94.5 | 62 | M |
| | 2002.06-2013.12 | 5MT | F | L | Box Body/MPV FWD EYPA;EYPC;EYPD | | GCI18059 | Inner Joint | | 26 | 26 | 40 | 68.5 | 111 | |
| | 2002.06-2013.12 | 5MT | F | L | Box Body/MPV FWD EYPA;EYPC;EYPD | Date from:2003.03;TJ | GCI18059 | Inner Joint | | 26 | 26 | 40 | 68.5 | 111 | |
| | 2002.06-2013.12 | 5MT | F | L | Box Body/MPV FWD EYPA;EYPC;EYPD | | GCI18101 | Inner Joint | | 26 | 24 | 40 | 69 | 111.5 | |
| | 2002.06-2013.12 | 5MT | F | L | Box Body/MPV FWD EYPA;EYPC;EYPD | Date from:2003.03;TJ | GCI18101 | Inner Joint | | 26 | 24 | 40 | 69 | 111.5 | |
| | 2002.06-2013.12 | 5MT | F | R | Box Body/MPV FWD EYPA;EYPC;EYPD | | GCI18058 | Inner Joint | | 26 | 26 | 40 | 389 | 99.5 | |
| | 2002.06-2013.12 | 5MT | F | R | Box Body/MPV FWD EYPA;EYPC;EYPD | | GCI18102 | Inner Joint | | 26 | 24 | 40 | 390 | 97 | |
| | 2002.06-2013.12 | 5MT | F | R | Box Body/MPV FWD EYPA;EYPC;EYPD | Date from:2003.03 | GCI18102 | Inner Joint | | 26 | 24 | 40 | 390 | 97 | |
| **Transit Courier** | | | | | | | | | | | | | | | |
| 1.0 (74 kw) | 2014.02-2023.12 | 5MT | F | L | Box Body/MPV FWD SFCA;SFCB;SFCC;SFCD;SFCE;SFCF | Date from:2018.04 | GDS82853 | Drive Shaft | | 25 | 23 | 53.4 | 88.5 | 615 | |
| | 2014.02-2023.12 | 5MT | F | R | Box Body/MPV FWD SFCA;SFCB;SFCC;SFCD;SFCE;SFCF | Date from:2018.04 | GDS82854 | Drive Shaft | | 25 | 23 | 53.4 | 88.5 | 918 | |
| | 2014.02-2023.12 | 5MT | F | L/R | Box Body/MPV FWD SFCA;SFCB;SFCC;SFCD;SFCE;SFCF | Date from:2018.04 | GCO82257 | Outer Joint | | 25 | 21 | 53.4 | 88.5 | 54 | M |
| | 2014.02-2023.12 | 5MT | F | L/R | Box Body/MPV FWD SFCA;SFCB;SFCC;SFCD;SFCE;SFCF | Date from:2018.04 | GCI82085 | Inner Joint | | 23 | 21 | 40 | 60.5 | 106 | |
| | 2014.02-2023.12 | 5MT/6MT | F | R | Box Body/MPV FWD SFCA;SFCB;SFCC;SFCD;SFCE;SFCF | Date to:2018.03 | GDS18517 | Drive Shaft | | 25 | 23 | 53.3 | 89 | 912 | |
| | 2014.02-2023.12 | 5MT/6MT | F | L/R | Box Body/MPV FWD SFCA;SFCB;SFCC;SFCD;SFCE;SFCF | Date to:2018.03 | GCO18014 | Outer Joint | | 25 | 21 | 53.2 | 89 | 54 | M |
| | 2014.02-2023.12 | MT | F | L | Box Body/MPV FWD SFCA;SFCB;SFCC;SFCD;SFCE;SFCF | | GDS18516 | Drive Shaft | | 25 | 23 | 53.3 | 89 | 614 | |
| | 2014.02-2023.12 | MT | F | L | Box Body/MPV FWD SFCA;SFCB;SFCC;SFCD;SFCE;SFCF | Date to:2018.03 | GCI18113 | Inner Joint | | 23 | 21 | 40 | 61.5 | 96.5 | |

| | YEAR | TRANSM. | F/R | L/R | BODY STYLE & DRIVE TYPE & ENGINE | REMARKS | G-AP Ref. | PRODUCT | ABS | Technical Specifications A | B | C | H | L | P |
|---|---|---|---|---|---|---|---|---|---|---|---|---|---|---|---|
| **FORD** **Transit Courier** | | | | | | | | | | | | | | | |
| 1.0 (74 kw) | 2014.02-2023.12 | | F | L | Box Body/MPV FWD SFCA;SFCB;SFCC;SFCD;SFCE;SFCF | Date To:2018.03 | GDS18516 | Drive Shaft | | 25 | 23 | 53.3 | 89 | 614 | |
| | 2014.02-2023.12 | 5MT | F | L | MPV FWD SFCA;SFCB;SFCC;SFCD;SFCE;SFCF | Date from:2018.04 | GDS82853 | Drive Shaft | | 25 | 23 | 53.4 | 88.5 | 615 | |
| | 2014.02-2023.12 | 5MT | F | R | MPV FWD SFCA;SFCB;SFCC;SFCD;SFCE;SFCF | Date from:2018.04 | GDS82854 | Drive Shaft | | 25 | 23 | 53.4 | 88.5 | 918 | |
| | 2014.02-2023.12 | 5MT | F | L/R | MPV FWD SFCA;SFCB;SFCC;SFCD;SFCE;SFCF | Date from:2018.04 | GCO82257 | Outer Joint | | 25 | 21 | 53.4 | 88.5 | 54 | M |
| | 2014.02-2023.12 | 5MT | F | L/R | MPV FWD SFCA;SFCB;SFCC;SFCD;SFCE;SFCF | Date from:2018.04 | GCI82085 | Inner Joint | | 23 | 21 | 40 | 60.5 | 106 | |
| | 2014.02-2023.12 | 5MT/6MT | F | R | MPV FWD SFCA;SFCB;SFCC;SFCD;SFCE;SFCF | Date to:2018.03 | GDS18517 | Drive Shaft | | 25 | 23 | 53.3 | 89 | 912 | |
| | 2014.02-2023.12 | 5MT/6MT | F | L/R | MPV FWD SFCA;SFCB;SFCC;SFCD;SFCE;SFCF | Date to:2018.03 | GCO18014 | Outer Joint | | 25 | 21 | 53.2 | 89 | 54 | M |
| | 2014.02-2023.12 | MT | F | L | MPV FWD SFCA;SFCB;SFCC;SFCD;SFCE;SFCF | | GDS18516 | Drive Shaft | | 25 | 23 | 53.3 | 89 | 614 | |
| | 2014.02-2023.12 | MT | F | L | MPV FWD SFCA;SFCB;SFCC;SFCD;SFCE;SFCF | Date to:2018.03 | GCI18113 | Inner Joint | | 23 | 21 | 40 | 61.5 | 96.5 | |
| | 2014.02-2023.12 | | F | L | MPV FWD SFCA;SFCB;SFCC;SFCD;SFCE;SFCF | Date To:2018.03 | GDS18516 | Drive Shaft | | 25 | 23 | 53.3 | 89 | 614 | |
| 1.5 (55 kw) | 2014.02-2023.12 | 5MT/6MT | F | L | Box Body/MPV FWD UGCA;UGCB;XUCC;XUCD;XWCA;XWCB;XUCE;XUCF;XUCG | Date to:2018.03 | GDS18516 | Drive Shaft | | 25 | 23 | 53.3 | 89 | 614 | |
| | 2014.02-2023.12 | 5MT/6MT | F | L | Box Body/MPV FWD UGCA;UGCB;XUCC;XUCD;XWCA;XWCB;XUCE;XUCF;XUCG | Date from:2018.04 | GDS82853 | Drive Shaft | | 25 | 23 | 53.4 | 88.5 | 615 | |
| | 2014.02-2023.12 | 5MT/6MT | F | R | Box Body/MPV FWD UGCA;UGCB;XUCC;XUCD;XWCA;XWCB;XUCE;XUCF;XUCG | Date to:2018.03 | GDS18517 | Drive Shaft | | 25 | 23 | 53.3 | 89 | 912 | |
| | 2014.02-2023.12 | 5MT/6MT | F | R | Box Body/MPV FWD UGCA;UGCB;XUCC;XUCD;XWCA;XWCB;XUCE;XUCF;XUCG | Date from:2018.04 | GDS82854 | Drive Shaft | | 25 | 23 | 53.4 | 88.5 | 918 | |
| | 2014.02-2023.12 | 5MT/6MT | F | L/R | Box Body/MPV FWD UGCA;UGCB;XUCC;XUCD;XWCA;XWCB;XUCE;XUCF;XUCG | Date to:2018.03 | GCO18014 | Outer Joint | | 25 | 21 | 53.2 | 89 | 54 | M |
| | 2014.02-2023.12 | 5MT/6MT | F | L/R | Box Body/MPV FWD UGCA;UGCB;XUCC;XUCD;XWCA;XWCB;XUCE;XUCF;XUCG | Date from:2018.04 | GCO82257 | Outer Joint | | 25 | 21 | 53.4 | 88.5 | 54 | M |
| | 2014.02-2023.12 | 5MT/6MT | F | L | Box Body/MPV FWD UGCA;UGCB;XUCC;XUCD;XWCA;XWCB;XUCE;XUCF;XUCG | Date to:2018.03 | GCI18113 | Inner Joint | | 23 | 21 | 40 | 61.5 | 96.5 | |
| | 2014.02-2023.12 | 5MT/6MT | F | L/R | Box Body/MPV FWD UGCA;UGCB;XUCC;XUCD;XWCA;XWCB;XUCE;XUCF;XUCG | Date from:2018.04 | GCI82085 | Inner Joint | | 23 | 21 | 40 | 60.5 | 106 | |
| | 2014.02-2023.12 | 5MT/6MT | F | L | MPV FWD UGCA;UGCB;XUCC;XUCD;XWCA;XWCB;XUCE;XUCF;XUCG | Date from:2018.04 | GDS82853 | Drive Shaft | | 25 | 23 | 53.4 | 88.5 | 615 | |
| | 2014.02-2023.12 | 5MT/6MT | F | R | MPV FWD UGCA;UGCB;XUCC;XUCD;XWCA;XWCB;XUCE;XUCF;XUCG | Date to:2018.03 | GDS18517 | Drive Shaft | | 25 | 23 | 53.3 | 89 | 912 | |
| | 2014.02-2023.12 | 5MT/6MT | F | R | MPV FWD UGCA;UGCB;XUCC;XUCD;XWCA;XWCB;XUCE;XUCF;XUCG | Date from:2018.04 | GDS82854 | Drive Shaft | | 25 | 23 | 53.4 | 88.5 | 918 | |
| | 2014.02-2023.12 | 5MT/6MT | F | L/R | MPV FWD UGCA;UGCB;XUCC;XUCD;XWCA;XWCB;XUCE;XUCF;XUCG | Date to:2018.03 | GCO18014 | Outer Joint | | 25 | 21 | 53.2 | 89 | 54 | M |
| | 2014.02-2023.12 | 5MT/6MT | F | L/R | MPV FWD UGCA;UGCB;XUCC;XUCD;XWCA;XWCB;XUCE;XUCF;XUCG | Date from:2018.04 | GCO82257 | Outer Joint | | 25 | 21 | 53.4 | 88.5 | 54 | M |
| | 2014.02-2023.12 | 5MT/6MT | F | L/R | MPV FWD UGCA;UGCB;XUCC;XUCD;XWCA;XWCB;XUCE;XUCF;XUCG | Date from:2018.04 | GCI82085 | Inner Joint | | 23 | 21 | 40 | 60.5 | 106 | |
| | 2014.02-2023.12 | MT | F | L | MPV FWD UGCA;UGCB;XUCC;XUCD;XWCA;XWCB;XUCE;XUCF;XUCG | | GDS18516 | Drive Shaft | | 25 | 23 | 53.3 | 89 | 614 | |
| | 2014.02-2023.12 | MT | F | L | MPV FWD UGCA;UGCB;XUCC;XUCD;XWCA;XWCB;XUCE;XUCF;XUCG | Date to:2018.03 | GCI18113 | Inner Joint | | 23 | 21 | 40 | 61.5 | 96.5 | |
| | 2014.02-2023.12 | | F | L | MPV FWD UGCA;UGCB;XUCC;XUCD;XWCA;XWCB;XUCE;XUCF;XUCG | Date To:2018.03 | GDS18516 | Drive Shaft | | 25 | 23 | 53.3 | 89 | 614 | |
| 1.5 (70 kw) | 2015.05-2023.12 | 5MT | F | L | Box Body/MPV FWD XVCA;XVCB;XVCC;XVCD | Date from:2018.04 | GDS82853 | Drive Shaft | | 25 | 23 | 53.4 | 88.5 | 615 | |
| | 2015.05-2023.12 | 5MT | F | R | Box Body/MPV FWD XVCA;XVCB;XVCC;XVCD | Date to:2018.03 | GDS18517 | Drive Shaft | | 25 | 23 | 53.3 | 89 | 912 | |
| | 2015.05-2023.12 | 5MT | F | R | Box Body/MPV FWD XVCA;XVCB;XVCC;XVCD | Date from:2018.04 | GDS82854 | Drive Shaft | | 25 | 23 | 53.4 | 88.5 | 918 | |
| | 2015.05-2023.12 | 5MT | F | L/R | Box Body/MPV FWD XVCA;XVCB;XVCC;XVCD | Date to:2018.03 | GCO18014 | Outer Joint | | 25 | 21 | 53.2 | 89 | 54 | M |
| | 2015.05-2023.12 | 5MT | F | L/R | Box Body/MPV FWD XVCA;XVCB;XVCC;XVCD | Date from:2018.04 | GCO82257 | Outer Joint | | 25 | 21 | 53.4 | 88.5 | 54 | M |
| | 2015.05-2023.12 | 5MT | F | L/R | Box Body/MPV FWD XVCA;XVCB;XVCC;XVCD | Date from:2018.04 | GCI82085 | Inner Joint | | 23 | 21 | 40 | 60.5 | 106 | |
| | 2015.05-2023.12 | MT | F | L | Box Body/MPV FWD XVCA;XVCB;XVCC;XVCD | | GDS18516 | Drive Shaft | | 25 | 23 | 53.3 | 89 | 614 | |
| | 2015.05-2023.12 | MT | F | L | Box Body/MPV FWD XVCA;XVCB;XVCC;XVCD | Date to:2018.03 | GCI18113 | Inner Joint | | 23 | 21 | 40 | 61.5 | 96.5 | |
| | 2015.05-2023.12 | | F | L | Box Body/MPV FWD XVCA;XVCB;XVCC;XVCD | Date To:2018.03 | GDS18516 | Drive Shaft | | 25 | 23 | 53.3 | 89 | 614 | |
| | 2015.05-2023.12 | 5MT | F | L | MPV FWD XVCA;XVCB;XVCC;XVCD | Date from:2018.04 | GDS82853 | Drive Shaft | | 25 | 23 | 53.4 | 88.5 | 615 | |
| | 2015.05-2023.12 | 5MT | F | R | MPV FWD XVCA;XVCB;XVCC;XVCD | Date to:2018.03 | GDS18517 | Drive Shaft | | 25 | 23 | 53.3 | 89 | 912 | |
| | 2015.05-2023.12 | 5MT | F | R | MPV FWD XVCA;XVCB;XVCC;XVCD | Date from:2018.04 | GDS82854 | Drive Shaft | | 25 | 23 | 53.4 | 88.5 | 918 | |
| | 2015.05-2023.12 | 5MT | F | L/R | MPV FWD XVCA;XVCB;XVCC;XVCD | Date to:2018.03 | GCO18014 | Outer Joint | | 25 | 21 | 53.2 | 89 | 54 | M |
| | 2015.05-2023.12 | 5MT | F | L/R | MPV FWD XVCA;XVCB;XVCC;XVCD | Date from:2018.04 | GCO82257 | Outer Joint | | 25 | 21 | 53.4 | 88.5 | 54 | M |
| | 2015.05-2023.12 | 5MT | F | L/R | MPV FWD XVCA;XVCB;XVCC;XVCD | Date from:2018.04 | GCI82085 | Inner Joint | | 23 | 21 | 40 | 60.5 | 106 | |
| | 2015.05-2023.12 | MT | F | L | MPV FWD XVCA;XVCB;XVCC;XVCD | | GDS18516 | Drive Shaft | | 25 | 23 | 53.3 | 89 | 614 | |
| | 2015.05-2023.12 | MT | F | L | MPV FWD XVCA;XVCB;XVCC;XVCD | Date to:2018.03 | GCI18113 | Inner Joint | | 23 | 21 | 40 | 61.5 | 96.5 | |
| | 2015.05-2023.12 | | F | L | MPV FWD XVCA;XVCB;XVCC;XVCD | Date To:2018.03 | GDS18516 | Drive Shaft | | 25 | 23 | 53.3 | 89 | 614 | |
| 1.5 (74 kw) | 2018.04-2023.12 | 6MT | F | L | Box Body/MPV FWD XXCA;XXCB;XXCC;XVCE;XVCF | | GDS82853 | Drive Shaft | | 25 | 23 | 53.4 | 88.5 | 615 | |
| | 2018.04-2023.12 | 6MT | F | R | Box Body/MPV FWD XXCA;XXCB;XXCC;XVCE;XVCF | | GDS82854 | Drive Shaft | | 25 | 23 | 53.4 | 88.5 | 918 | |
| | 2018.04-2023.12 | 6MT | F | L/R | Box Body/MPV FWD XXCA;XXCB;XXCC;XVCE;XVCF | | GCO82257 | Outer Joint | | 25 | 21 | 53.4 | 88.5 | 54 | M |
| | 2018.04-2023.12 | 6MT | F | L/R | Box Body/MPV FWD XXCA;XXCB;XXCC;XVCE;XVCF | | GCI82085 | Inner Joint | | 23 | 21 | 40 | 60.5 | 106 | |
| | 2018.04-2023.12 | 6MT | F | L | MPV FWD XXCA;XXCB;XXCC;XVCE;XVCF | | GDS82853 | Drive Shaft | | 25 | 23 | 53.4 | 88.5 | 615 | |
| | 2018.04-2023.12 | 6MT | F | R | MPV FWD XXCA;XXCB;XXCC;XVCE;XVCF | | GDS82854 | Drive Shaft | | 25 | 23 | 53.4 | 88.5 | 918 | |
| | 2018.04-2023.12 | 6MT | F | L/R | MPV FWD XXCA;XXCB;XXCC;XVCE;XVCF | | GCO82257 | Outer Joint | | 25 | 21 | 53.4 | 88.5 | 54 | M |
| | 2018.04-2023.12 | 6MT | F | L/R | MPV FWD XXCA;XXCB;XXCC;XVCE;XVCF | | GCI82085 | Inner Joint | | 23 | 21 | 40 | 60.5 | 106 | |
| 1.6 (70 kw) | 2014.02-2023.12 | 5MT | F | L | Box Body/MPV FWD T3CA;T3CB;T3CC | Date from:2018.04 | GDS82853 | Drive Shaft | | 25 | 23 | 53.4 | 88.5 | 615 | |
| | 2014.02-2023.12 | 5MT | F | R | Box Body/MPV FWD T3CA;T3CB;T3CC | Date to:2018.03 | GDS18517 | Drive Shaft | | 25 | 23 | 53.3 | 89 | 912 | |
| | 2014.02-2023.12 | 5MT | F | R | Box Body/MPV FWD T3CA;T3CB;T3CC | Date from:2018.04 | GDS82854 | Drive Shaft | | 25 | 23 | 53.4 | 88.5 | 918 | |
| | 2014.02-2023.12 | 5MT | F | L/R | Box Body/MPV FWD T3CA;T3CB;T3CC | Date to:2018.03 | GCO18014 | Outer Joint | | 25 | 21 | 53.2 | 89 | 54 | M |
| | 2014.02-2023.12 | 5MT | F | L/R | Box Body/MPV FWD T3CA;T3CB;T3CC | Date from:2018.04 | GCO82257 | Outer Joint | | 25 | 21 | 53.4 | 88.5 | 54 | M |
| | 2014.02-2023.12 | 5MT | F | L/R | Box Body/MPV FWD T3CA;T3CB;T3CC | Date from:2018.04 | GCI82085 | Inner Joint | | 23 | 21 | 40 | 60.5 | 106 | |
| | 2014.02-2023.12 | MT | F | L | Box Body/MPV FWD T3CA;T3CB;T3CC | Date to:2018.03 | GCI18113 | Inner Joint | | 23 | 21 | 40 | 61.5 | 96.5 | |
| | 2014.02-2023.12 | | F | L | Box Body/MPV FWD T3CA;T3CB;T3CC | Date To:2018.03 | GDS18516 | Drive Shaft | | 25 | 23 | 53.3 | 89 | 614 | |
| | 2014.02-2023.12 | 5MT | F | L | MPV FWD T3CA;T3CB;T3CC | Date from:2018.04 | GDS82853 | Drive Shaft | | 25 | 23 | 53.4 | 88.5 | 615 | |
| | 2014.02-2023.12 | 5MT | F | R | MPV FWD T3CA;T3CB;T3CC | Date to:2018.03 | GDS18517 | Drive Shaft | | 25 | 23 | 53.3 | 89 | 912 | |
| | 2014.02-2023.12 | 5MT | F | R | MPV FWD T3CA;T3CB;T3CC | Date from:2018.04 | GDS82854 | Drive Shaft | | 25 | 23 | 53.4 | 88.5 | 918 | |
| | 2014.02-2023.12 | 5MT | F | L/R | MPV FWD T3CA;T3CB;T3CC | Date to:2018.03 | GCO18014 | Outer Joint | | 25 | 21 | 53.2 | 89 | 54 | M |

| | YEAR | TRANSM. | F/R | L/R | BODY STYLE & DRIVE TYPE & ENGINE | REMARKS | G-AP Ref. | PRODUCT | ABS | Technical Specifications A | B | C | H | L | P |
|---|---|---|---|---|---|---|---|---|---|---|---|---|---|---|---|
| **FORD** | | | | | | | | | | | | | | | |
| **Transit Courier** | | | | | | | | | | | | | | | |
| 1.6 (70 kw) | 2014.02-2023.12 | 5MT | F | L/R | MPV FWD T3CA;T3CB;T3CC | Date from:2018.04 | GCO82257 | Outer Joint | | 25 | 21 | 53.4 | 88.5 | 54 | M |
| | 2014.02-2023.12 | 5MT | F | L/R | MPV FWD T3CA;T3CB;T3CC | Date from:2018.04 | GCI82085 | Inner Joint | | 23 | 21 | 40 | 60.5 | 106 | |
| | 2014.02-2023.12 | MT | F | L | MPV FWD T3CA;T3CB;T3CC | Date to:2018.03 | GCI18113 | Inner Joint | | 23 | 21 | 40 | 61.5 | 96.5 | |
| | 2014.02-2023.12 | | F | L | MPV FWD T3CA;T3CB;T3CC | Date To:2018.03 | GDS18516 | Drive Shaft | | 25 | 23 | 53.3 | 89 | 614 | |
| **Transit Custom** | | | | | | | | | | | | | | | |
| 2.0 (77 kw) | 2015.12-2023.12 | 6MT | F | L | Bus FWD YLFS, YLF6, YLFA, YLFB, BJFA, BJFB | | GDS18334 | Drive Shaft | | 31 | 41 | 57.7 | 121 | 752 | |
| | 2015.12-2023.12 | 6MT | F | R | Bus FWD YLFS, YLF6, YLFA, YLFB, BJFA, BJFB | | GDS18335 | Drive Shaft | | 31 | 41 | 57.7 | 121 | 1092 | |
| | 2015.12-2023.12 | 6MT | F | L/R | Bus FWD YLFS, YLF6, YLFA, YLFB, BJFA, BJFB | | GCO18286 | Outer Joint | | 31 | 28 | 57.7 | 121 | 68 | I |
| | 2015.12-2023.12 | 6MT | F | L/R | Bus FWD YLFS, YLF6, YLFA, YLFB, BJFA, BJFB | | GCO18293 | Outer Joint | | 31 | 30 | 57.5 | 121 | 77.5 | I |
| | 2015.12-2023.12 | 6MT | F | L | Bus FWD YLFS, YLF6, YLFA, YLFB, BJFA, BJFB | Date to:2015.12 | GCI82506 | Inner Joint | | 41 | 29 | 44 | 76 | 127 | |
| | 2015.12-2023.12 | 6MT | F | R | Bus FWD YLFS, YLF6, YLFA, YLFB, BJFA, BJFB | | GCI82507 | Inner Joint | | 41 | 29 | 44 | 408 | 130 | |
| | 2015.12-2023.12 | 6MT | F | L | Van FWD YLFS, YLF6, YLFA, YLFB, BJFA, BJFB | | GDS18334 | Drive Shaft | | 31 | 41 | 57.7 | 121 | 752 | |
| | 2015.12-2023.12 | 6MT | F | R | Van FWD YLFS, YLF6, YLFA, YLFB, BJFA, BJFB | | GDS18335 | Drive Shaft | | 31 | 41 | 57.7 | 121 | 1092 | |
| | 2015.12-2023.12 | 6MT | F | L/R | Van FWD YLFS, YLF6, YLFA, YLFB, BJFA, BJFB | | GCO18286 | Outer Joint | | 31 | 28 | 57.7 | 121 | 68 | I |
| | 2015.12-2023.12 | 6MT | F | L/R | Van FWD YLFS, YLF6, YLFA, YLFB, BJFA, BJFB | | GCO18293 | Outer Joint | | 31 | 30 | 57.5 | 121 | 77.5 | I |
| | 2015.12-2023.12 | 6MT | F | L | Van FWD YLFS, YLF6, YLFA, YLFB, BJFA, BJFB | Date to:2015.12 | GCI82506 | Inner Joint | | 41 | 29 | 44 | 76 | 127 | |
| | 2015.12-2023.12 | 6MT | F | R | Van FWD YLFS, YLF6, YLFA, YLFB, BJFA, BJFB | Date to:2021.06 | GCI82507 | Inner Joint | | 41 | 29 | 44 | 408 | 130 | |
| 2.0 (81 kw) | 2023.10- | 6MT | F | L | Van FWD BCFA(DZJE) | | GDS58041 | Drive Shaft | | 31 | 41 | 63 | 115 | 722 | |
| | 2023.10- | 6MT | F | R | Van FWD BCFA(DZJE) | | GDS58042 | Drive Shaft | | 31 | 41 | 63 | 115 | 1083 | |
| | 2023.10- | 6MT | F | L/R | Van FWD BCFA(DZJE) | | GCO83826 | Outer Joint | | 31 | 31 | 63 | 115 | 75 | M |
| | 2023.10- | 6MT | F | L | Van FWD BCFA(DZJE) | | GCI83984 | Inner Joint | | 41 | 31 | 44 | 75.5 | 127 | |
| | 2023.10- | 6MT | F | R | Van FWD BCFA(DZJE) | | GCI83985 | Inner Joint | | 41 | 31 | 44 | 443.5 | 116 | |
| 2.0 (96 kw) | 2015.12-2023.12 | 6AT | F | L | Bus FWD YMFS, YMF6, YMFA, YMFB, BKFA, BKFB | Date to:2023.05 | GDS56279 | Drive Shaft | | 31 | 27 | 63 | 121 | 737 | |
| | 2015.12-2023.12 | 6AT | F | R | Bus FWD YMFS, YMF6, YMFA, YMFB, BKFA, BKFB | Date to:2021.12 | GDS56280 | Drive Shaft | | 31 | 27 | 63 | 121 | 1106 | |
| | 2015.12-2023.12 | 6AT | F | L/R | Bus FWD YMFS, YMF6, YMFA, YMFB, BKFA, BKFB | Date to:2023.05 | GCO83240 | Outer Joint | | 31 | 31 | 63 | 121 | 79 | I |
| | 2015.12-2023.12 | 6AT | F | L | Bus FWD YMFS, YMF6, YMFA, YMFB, BKFA, BKFB | Date to:2023.05 | GCI83225 | Inner Joint | | 27 | 29 | 35 | 107 | 102.5 | |
| | 2015.12-2023.12 | 6AT | F | R | Bus FWD YMFS, YMF6, YMFA, YMFB, BKFA, BKFB | Date to:2021.12 | GCI83226 | Inner Joint | | 27 | 29 | 35 | 417 | 131 | |
| | 2015.12-2023.12 | 6MT | F | L | Bus FWD YMFS, YMF6, YMFA, YMFB, BKFA, BKFB | | GDS18334 | Drive Shaft | | 31 | 41 | 57.7 | 121 | 752 | |
| | 2015.12-2023.12 | 6MT | F | R | Bus FWD YMFS, YMF6, YMFA, YMFB, BKFA, BKFB | | GDS18335 | Drive Shaft | | 31 | 41 | 57.7 | 121 | 1092 | |
| | 2015.12-2023.12 | 6MT | F | L/R | Bus FWD YMFS, YMF6, YMFA, YMFB, BKFA, BKFB | | GCO18286 | Outer Joint | | 31 | 28 | 57.7 | 121 | 68 | I |
| | 2015.12-2023.12 | 6MT | F | L/R | Bus FWD YMFS, YMF6, YMFA, YMFB, BKFA, BKFB | | GCO18293 | Outer Joint | | 31 | 30 | 57.5 | 121 | 77.5 | I |
| | 2015.12-2023.12 | 6MT | F | L | Bus FWD YMFS, YMF6, YMFA, YMFB, BKFA, BKFB | Date to:2015.12 | GCI82506 | Inner Joint | | 41 | 29 | 44 | 76 | 127 | |
| | 2015.12-2023.12 | 6MT | F | R | Bus FWD YMFS, YMF6, YMFA, YMFB, BKFA, BKFB | | GCI82507 | Inner Joint | | 41 | 29 | 44 | 408 | 130 | |
| | 2015.12-2023.12 | 6AT | F | L | Van FWD YMFS, YMF6, YMFA, YMFB, BKFA, BKFB | Date to:2023.05 | GDS56279 | Drive Shaft | | 31 | 27 | 63 | 121 | 737 | |
| | 2015.12-2023.12 | 6AT | F | R | Van FWD YMFS, YMF6, YMFA, YMFB, BKFA, BKFB | Date to:2021.12 | GDS56280 | Drive Shaft | | 31 | 27 | 63 | 121 | 1106 | |
| | 2015.12-2023.12 | 6AT | F | L/R | Van FWD YMFS, YMF6, YMFA, YMFB, BKFA, BKFB | Date to:2021.06 | GCO83240 | Outer Joint | | 31 | 31 | 63 | 121 | 79 | I |
| | 2015.12-2023.12 | 6AT | F | L | Van FWD YMFS, YMF6, YMFA, YMFB, BKFA, BKFB | | GCI83225 | Inner Joint | | 27 | 29 | 35 | 107 | 102.5 | |
| | 2015.12-2023.12 | 6AT | F | R | Van FWD YMFS, YMF6, YMFA, YMFB, BKFA, BKFB | Date to:2021.06 | GCI83226 | Inner Joint | | 27 | 29 | 35 | 417 | 131 | |
| | 2015.12-2023.12 | 6MT | F | L | Van FWD YMFS, YMF6, YMFA, YMFB, BKFA, BKFB | | GDS18334 | Drive Shaft | | 31 | 41 | 57.7 | 121 | 752 | |
| | 2015.12-2023.12 | 6MT | F | R | Van FWD YMFS, YMF6, YMFA, YMFB, BKFA, BKFB | | GDS18335 | Drive Shaft | | 31 | 41 | 57.7 | 121 | 1092 | |
| | 2015.12-2023.12 | 6MT | F | L/R | Van FWD YMFS, YMF6, YMFA, YMFB, BKFA, BKFB | | GCO18286 | Outer Joint | | 31 | 28 | 57.7 | 121 | 68 | I |
| | 2015.12-2023.12 | 6MT | F | L/R | Van FWD YMFS, YMF6, YMFA, YMFB, BKFA, BKFB | | GCO18293 | Outer Joint | | 31 | 30 | 57.5 | 121 | 77.5 | I |
| | 2015.12-2023.12 | 6MT | F | L | Van FWD YMFS, YMF6, YMFA, YMFB, BKFA, BKFB | Date to:2015.12 | GCI82506 | Inner Joint | | 41 | 29 | 44 | 76 | 127 | |
| | 2015.12-2023.12 | 6MT | F | R | Van FWD YMFS, YMF6, YMFA, YMFB, BKFA, BKFB | Date to:2021.06 | GCI82507 | Inner Joint | | 41 | 29 | 44 | 408 | 130 | |
| | 2019.05-2023.12 | 6MT | F | L | Bus FWD BKFC, BKFD | | GDS18334 | Drive Shaft | | 31 | 41 | 57.7 | 121 | 752 | |
| | 2019.05-2023.12 | 6MT | F | R | Bus FWD BKFC, BKFD | | GDS18335 | Drive Shaft | | 31 | 41 | 57.7 | 121 | 1092 | |
| | 2019.05-2023.12 | 6MT | F | L/R | Bus FWD BKFC, BKFD | | GCO18286 | Outer Joint | | 31 | 28 | 57.7 | 121 | 68 | I |
| | 2019.05-2023.12 | 6MT | F | L/R | Bus FWD BKFC, BKFD | Model:Transit Custom 340,Type:1 | GCO18293 | Outer Joint | | 31 | 30 | 57.5 | 121 | 77.5 | I |
| | 2019.05-2023.12 | 6MT | F | L | Bus FWD BKFC, BKFD | Model:Transit Custom 340 | GCI82506 | Inner Joint | | 41 | 29 | 44 | 76 | 127 | |
| | 2019.05-2023.12 | 6MT | F | R | Bus FWD BKFC, BKFD | Date to:2021.06 | GCI82507 | Inner Joint | | 41 | 29 | 44 | 408 | 130 | |
| | 2019.05-2023.12 | 6AT | F | L | Van FWD BKFC, BKFD | Date to:2023.05 | GDS56279 | Drive Shaft | | 31 | 27 | 63 | 121 | 737 | |
| | 2019.05-2023.12 | 6AT | F | R | Van FWD BKFC, BKFD | Date to:2021.12 | GDS56280 | Drive Shaft | | 31 | 27 | 63 | 121 | 1106 | |
| | 2019.05-2023.12 | 6AT | F | L/R | Van FWD BKFC, BKFD | Date to:2021.06 | GCO83240 | Outer Joint | | 31 | 31 | 63 | 121 | 79 | I |
| | 2019.05-2023.12 | 6AT | F | L | Van FWD BKFC, BKFD | | GCI83225 | Inner Joint | | 27 | 29 | 35 | 107 | 102.5 | |
| | 2019.05-2023.12 | 6AT | F | R | Van FWD BKFC, BKFD | Date to:2021.06 | GCI83226 | Inner Joint | | 27 | 29 | 35 | 417 | 131 | |
| | 2019.05-2023.12 | 6MT | F | L | Van FWD BKFC, BKFD | | GDS18334 | Drive Shaft | | 31 | 41 | 57.7 | 121 | 752 | |
| | 2019.05-2023.12 | 6MT | F | R | Van FWD BKFC, BKFD | | GDS18335 | Drive Shaft | | 31 | 41 | 57.7 | 121 | 1092 | |
| | 2019.05-2023.12 | 6MT | F | R | Van FWD BKFC, BKFD | Date to:2021.06 | GCO18293 | Outer Joint | | 31 | 30 | 57.5 | 121 | 77.5 | I |
| | 2019.05-2023.12 | 6MT | F | L/R | Van FWD BKFC, BKFD | | GCO18286 | Outer Joint | | 31 | 28 | 57.7 | 121 | 68 | I |
| | 2019.05-2023.12 | 6MT | F | L | Van FWD BKFC, BKFD | Model:Transit Custom 340 | GCI82506 | Inner Joint | | 41 | 29 | 44 | 76 | 127 | |
| | 2019.05-2023.12 | 6MT | F | R | Van FWD BKFC, BKFD | Date to:2021.06 | GCI82507 | Inner Joint | | 41 | 29 | 44 | 408 | 130 | |
| 2.0 (100 kw) | 2023.10- | 6MT | F | L | Van FWD BJFA(ENBJ) | | GDS58041 | Drive Shaft | | 31 | 41 | 63 | 115 | 722 | |
| | 2023.10- | 6MT | F | R | Van FWD BJFA(ENBJ) | | GDS58042 | Drive Shaft | | 31 | 41 | 63 | 115 | 1083 | |
| | 2023.10- | 6MT | F | L/R | Van FWD BJFA(ENBJ) | | GCO83826 | Outer Joint | | 31 | 31 | 63 | 115 | 75 | M |
| | 2023.10- | 6MT | F | L | Van FWD BJFA(ENBJ) | | GCI83984 | Inner Joint | | 41 | 31 | 44 | 75.5 | 127 | |

| | YEAR | TRANSM. | F/R | L/R | BODY STYLE & DRIVE TYPE & ENGINE | REMARKS | G-AP Ref. | PRODUCT | ABS | Technical Specifications | | | | | |
|---|---|---|---|---|---|---|---|---|---|---|---|---|---|---|---|
| | | | | | | | | | | A | B | C | H | L | P |
| **FORD**<br>**Transit Custom** | | | | | | | | | | | | | | | |
| 2.0 (100 kw) | 2023.10- | 6MT | F | R | Van FWD BJFA(ENBJ) | | GCI83985 | Inner Joint | | 41 | 31 | 44 | 443.5 | 116 | |
| 2.0 (110 kw) | 2022.01-2023.12 | 6AT | F | L | Bus FWD P0FA | Date to:2023.05 | GDS56279 | Drive Shaft | | 31 | 27 | 63 | 121 | 737 | |
| | 2022.01-2023.12 | 6AT | F | R | Bus FWD P0FA | | GDS56280 | Drive Shaft | | 31 | 27 | 63 | 121 | 1106 | |
| | 2022.01-2023.12 | 6AT | F | L | Bus FWD P0FA | Date to:2023.05 | GCO83240 | Outer Joint | | 31 | 31 | 63 | 121 | 79 | I |
| | 2022.01-2023.12 | 6AT | F | L | Bus FWD P0FA | | GCI83225 | Inner Joint | | 27 | 29 | 35 | 107 | 102.5 | |
| | 2022.01-2023.12 | 6MT | F | L | Bus FWD P0FA | | GDS18334 | Drive Shaft | | 31 | 41 | 57.7 | 121 | 752 | |
| | 2022.01-2023.12 | 6MT | F | R | Bus FWD P0FA | | GDS18335 | Drive Shaft | | 31 | 41 | 57.7 | 121 | 1092 | |
| | 2022.01-2023.12 | 6MT | F | L/R | Bus FWD P0FA | | GCO18293 | Outer Joint | | 31 | 30 | 57.5 | 121 | 77.5 | I |
| | 2022.01-2023.12 | 6MT | F | L | Bus FWD P0FA | Model:Transit Custom 340 | GCI82506 | Inner Joint | | 41 | 29 | 44 | 76 | 127 | |
| | 2022.01-2023.12 | 6MT | F | R | Bus FWD P0FA | | GCI82507 | Inner Joint | | 41 | 29 | 44 | 408 | 130 | |
| | 2022.01-2023.12 | 6MT | F | L | Bus FWD P0FB | | GDS18334 | Drive Shaft | | 31 | 41 | 57.7 | 121 | 752 | |
| | 2022.01-2023.12 | 6MT | F | R | Bus FWD P0FB | | GDS18335 | Drive Shaft | | 31 | 41 | 57.7 | 121 | 1092 | |
| | 2022.01-2023.12 | 6MT | F | L/R | Bus FWD P0FB | | GCO18293 | Outer Joint | | 31 | 30 | 57.5 | 121 | 77.5 | I |
| | 2022.01-2023.12 | 6MT | F | L | Bus FWD P0FB | Model:Transit Custom 340 | GCI82506 | Inner Joint | | 41 | 29 | 44 | 76 | 127 | |
| | 2022.01-2023.12 | 6MT | F | R | Bus FWD P0FB | | GCI82507 | Inner Joint | | 41 | 29 | 44 | 408 | 130 | |
| | 2023.10- | 6MT | F | L | Van FWD BKFB(ENBK) | | GDS58041 | Drive Shaft | | 31 | 41 | 63 | 115 | 722 | |
| | 2023.10- | 6MT | F | R | Van FWD BKFB(ENBK) | | GDS58042 | Drive Shaft | | 31 | 41 | 63 | 115 | 1083 | |
| | 2023.10- | 6MT | F | L/R | Van FWD BKFB(ENBK) | | GCO83826 | Outer Joint | | 31 | 31 | 63 | 115 | 75 | M |
| | 2023.10- | 6MT | F | L | Van FWD BKFB(ENBK) | | GCI83984 | Inner Joint | | 41 | 31 | 44 | 75.5 | 127 | |
| | 2023.10- | 6MT | F | R | Van FWD BKFB(ENBK) | | GCI83985 | Inner Joint | | 41 | 31 | 44 | 443.5 | 116 | |
| 2.0 (125 kw) | 2015.12-2023.12 | 6AT | F | L | Bus FWD YNFA, YNFB, BLFA, BLFB, YNFS, YNF6 | Date to:2023.05 | GDS56279 | Drive Shaft | | 31 | 27 | 63 | 121 | 737 | |
| | 2015.12-2023.12 | 6AT | F | R | Bus FWD YNFA, YNFB, BLFA, BLFB, YNFS, YNF6 | Date to:2021.12 | GDS56280 | Drive Shaft | | 31 | 27 | 63 | 121 | 1106 | |
| | 2015.12-2023.12 | 6AT | F | L/R | Bus FWD YNFA, YNFB, BLFA, BLFB, YNFS, YNF6 | Date to:2021.06 | GCO83240 | Outer Joint | | 31 | 31 | 63 | 121 | 79 | I |
| | 2015.12-2023.12 | 6AT | F | L | Bus FWD YNFA, YNFB, BLFA, BLFB, YNFS, YNF6 | | GCI83225 | Inner Joint | | 27 | 29 | 35 | 107 | 102.5 | |
| | 2015.12-2023.12 | 6AT | F | R | Bus FWD YNFA, YNFB, BLFA, BLFB, YNFS, YNF6 | Date to:2021.06 | GCI83226 | Inner Joint | | 27 | 29 | 35 | 417 | 131 | |
| | 2015.12-2023.12 | 6MT | F | L | Bus FWD YNFA, YNFB, BLFA, BLFB, YNFS, YNF6 | | GDS18334 | Drive Shaft | | 31 | 41 | 57.7 | 121 | 752 | |
| | 2015.12-2023.12 | 6MT | F | R | Bus FWD YNFA, YNFB, BLFA, BLFB, YNFS, YNF6 | | GDS18335 | Drive Shaft | | 31 | 41 | 57.7 | 121 | 1092 | |
| | 2015.12-2023.12 | 6MT | F | L/R | Bus FWD YNFA, YNFB, BLFA, BLFB, YNFS, YNF6 | | GCO18286 | Outer Joint | | 31 | 28 | 57.7 | 121 | 68 | I |
| | 2015.12-2023.12 | 6MT | F | L/R | Bus FWD YNFA, YNFB, BLFA, BLFB, YNFS, YNF6 | | GCO18293 | Outer Joint | | 31 | 30 | 57.5 | 121 | 77.5 | I |
| | 2015.12-2023.12 | 6MT | F | L | Bus FWD YNFA, YNFB, BLFA, BLFB, YNFS, YNF6 | Date to:2015.12 | GCI82506 | Inner Joint | | 41 | 29 | 44 | 76 | 127 | |
| | 2015.12-2023.12 | 6MT | F | R | Bus FWD YNFA, YNFB, BLFA, BLFB, YNFS, YNF6 | | GCI82507 | Inner Joint | | 41 | 29 | 44 | 408 | 130 | |
| | 2015.12-2023.12 | 6AT | F | L | Van FWD YNFA, YNFB, BLFA, BLFB, YNFS, YNF6 | Date to:2023.05 | GDS56279 | Drive Shaft | | 31 | 27 | 63 | 121 | 737 | |
| | 2015.12-2023.12 | 6AT | F | R | Van FWD YNFA, YNFB, BLFA, BLFB, YNFS, YNF6 | Date to:2021.12 | GDS56280 | Drive Shaft | | 31 | 27 | 63 | 121 | 1106 | |
| | 2015.12-2023.12 | 6AT | F | L/R | Van FWD YNFA, YNFB, BLFA, BLFB, YNFS, YNF6 | Date to:2021.06 | GCO83240 | Outer Joint | | 31 | 31 | 63 | 121 | 79 | I |
| | 2015.12-2023.12 | 6AT | F | L | Van FWD YNFA, YNFB, BLFA, BLFB, YNFS, YNF6 | | GCI83225 | Inner Joint | | 27 | 29 | 35 | 107 | 102.5 | |
| | 2015.12-2023.12 | 6AT | F | R | Van FWD YNFA, YNFB, BLFA, BLFB, YNFS, YNF6 | Date to:2021.06 | GCI83226 | Inner Joint | | 27 | 29 | 35 | 417 | 131 | |
| | 2015.12-2023.12 | 6MT | F | L | Van FWD YNFA, YNFB, BLFA, BLFB, YNFS, YNF6 | | GDS18334 | Drive Shaft | | 31 | 41 | 57.7 | 121 | 752 | |
| | 2015.12-2023.12 | 6MT | F | R | Van FWD YNFA, YNFB, BLFA, BLFB, YNFS, YNF6 | | GDS18335 | Drive Shaft | | 31 | 41 | 57.7 | 121 | 1092 | |
| | 2015.12-2023.12 | 6MT | F | L/R | Van FWD YNFA, YNFB, BLFA, BLFB, YNFS, YNF6 | | GCO18286 | Outer Joint | | 31 | 28 | 57.7 | 121 | 68 | I |
| | 2015.12-2023.12 | 6MT | F | L/R | Van FWD YNFA, YNFB, BLFA, BLFB, YNFS, YNF6 | | GCO18293 | Outer Joint | | 31 | 30 | 57.5 | 121 | 77.5 | I |
| | 2015.12-2023.12 | 6MT | F | L | Van FWD YNFA, YNFB, BLFA, BLFB, YNFS, YNF6 | Date to:2015.12 | GCI82506 | Inner Joint | | 41 | 29 | 44 | 76 | 127 | |
| | 2015.12-2023.12 | 6MT | F | R | Van FWD YNFA, YNFB, BLFA, BLFB, YNFS, YNF6 | Date to:2021.06 | GCI82507 | Inner Joint | | 41 | 29 | 44 | 408 | 130 | |
| | 2019.05-2023.12 | 6MT | F | L | Bus FWD BLFC, BLFD | | GDS18334 | Drive Shaft | | 31 | 41 | 57.7 | 121 | 752 | |
| | 2019.05-2023.12 | 6MT | F | R | Bus FWD BLFC, BLFD | | GDS18335 | Drive Shaft | | 31 | 41 | 57.7 | 121 | 1092 | |
| | 2019.05-2023.12 | 6MT | F | L/R | Bus FWD BLFC, BLFD | | GCO18286 | Outer Joint | | 31 | 28 | 57.7 | 121 | 68 | I |
| | 2019.05-2023.12 | 6MT | F | L/R | Bus FWD BLFC, BLFD | Model:Transit Custom 340,Type:1 | GCO18293 | Outer Joint | | 31 | 30 | 57.5 | 121 | 77.5 | I |
| | 2019.05-2023.12 | 6MT | F | L | Bus FWD BLFC, BLFD | Model:Transit Custom 340 | GCI82506 | Inner Joint | | 41 | 29 | 44 | 76 | 127 | |
| | 2019.05-2023.12 | 6MT | F | R | Bus FWD BLFC, BLFD | Date to:2021.06 | GCI82507 | Inner Joint | | 41 | 29 | 44 | 408 | 130 | |
| | 2019.05-2023.12 | 6MT | F | L | Van FWD BLFC, BLFD | | GDS18334 | Drive Shaft | | 31 | 41 | 57.7 | 121 | 752 | |
| | 2019.05-2023.12 | 6MT | F | R | Van FWD BLFC, BLFD | | GDS18335 | Drive Shaft | | 31 | 41 | 57.7 | 121 | 1092 | |
| | 2019.05-2023.12 | 6MT | F | L/R | Van FWD BLFC, BLFD | | GCO18286 | Outer Joint | | 31 | 28 | 57.7 | 121 | 68 | I |
| | 2019.05-2023.12 | 6MT | F | L/R | Van FWD BLFC, BLFD | Model:Transit Custom 340,Type:1 | GCO18293 | Outer Joint | | 31 | 30 | 57.5 | 121 | 77.5 | I |
| | 2019.05-2023.12 | 6MT | F | L | Van FWD BLFC, BLFD | Model:Transit Custom 340 | GCI82506 | Inner Joint | | 41 | 29 | 44 | 76 | 127 | |
| | 2019.05-2023.12 | 6MT | F | R | Van FWD BLFC, BLFD | Date to:2021.06 | GCI82507 | Inner Joint | | 41 | 29 | 44 | 408 | 130 | |
| | 2023.10- | 6MT | F | L | Van FWD BKFA(DZJA) | | GDS58041 | Drive Shaft | | 31 | 41 | 63 | 115 | 722 | |
| | 2023.10- | 6MT | F | R | Van FWD BKFA(DZJA) | | GDS58042 | Drive Shaft | | 31 | 41 | 63 | 115 | 1083 | |
| | 2023.10- | 6MT | F | L/R | Van FWD BKFA(DZJA) | | GCO83826 | Outer Joint | | 31 | 31 | 63 | 115 | 75 | M |
| | 2023.10- | 6MT | F | L | Van FWD BKFA(DZJA) | | GCI83984 | Inner Joint | | 41 | 31 | 44 | 75.5 | 127 | |
| | 2023.10- | 6MT | F | R | Van FWD BKFA(DZJA) | | GCI83985 | Inner Joint | | 41 | 31 | 44 | 443.5 | 116 | |
| 2.0 (136 kw) | 2019.05-2023.12 | 6AT | F | L | Bus FWD BCFB, BCFA | Date to:2023.05 | GDS56279 | Drive Shaft | | 31 | 27 | 63 | 121 | 737 | |
| | 2019.05-2023.12 | 6AT | F | R | Bus FWD BCFB, BCFA | Date to:2021.12 | GDS56280 | Drive Shaft | | 31 | 27 | 63 | 121 | 1106 | |
| | 2019.05-2023.12 | 6AT | F | L/R | Bus FWD BCFB, BCFA | Date to:2021.06 | GCO83240 | Outer Joint | | 31 | 31 | 63 | 121 | 79 | I |
| | 2019.05-2023.12 | 6AT | F | L | Bus FWD BCFB, BCFA | | GCI83225 | Inner Joint | | 27 | 29 | 35 | 107 | 102.5 | |
| | 2019.05-2023.12 | 6AT | F | R | Bus FWD BCFB, BCFA | Date to:2021.06 | GCI83226 | Inner Joint | | 27 | 29 | 35 | 417 | 131 | |
| | 2019.05-2023.12 | 6MT | F | L | Bus FWD BCFB, BCFA | | GDS18334 | Drive Shaft | | 31 | 41 | 57.7 | 121 | 752 | |

| | YEAR | TRANSM. | F/R | L/R | BODY STYLE & DRIVE TYPE & ENGINE | REMARKS | G-AP Ref. | PRODUCT | ABS | Technical Specifications | | | | | |
|---|---|---|---|---|---|---|---|---|---|---|---|---|---|---|---|
| | | | | | | | | | | A | B | C | H | L | P |
| **FORD**<br>**Transit Custom** | | | | | | | | | | | | | | | |
| 2.0 (136 kw) | 2019.05-2023.12 | 6MT | F | R | Bus FWD BCFB, BCFA | | GDS18335 | Drive Shaft | | 31 | 41 | 57.7 | 121 | 1092 | |
| | 2019.05-2023.12 | 6MT | F | L/R | Bus FWD BCFB, BCFA | | GCO18286 | Outer Joint | | 31 | 28 | 57.7 | 121 | 68 | I |
| | 2019.05-2023.12 | 6MT | F | L/R | Bus FWD BCFB, BCFA | Type:1 | GCO18293 | Outer Joint | | 31 | 30 | 57.5 | 121 | 77.5 | I |
| | 2019.05-2023.12 | 6MT | F | L | Bus FWD BCFB, BCFA | Model:Transit Custom 340 | GCI82506 | Inner Joint | | 41 | 29 | 44 | 76 | 127 | |
| | 2019.05-2023.12 | 6MT | F | R | Bus FWD BCFB, BCFA | Date to:2021.06 | GCI82507 | Inner Joint | | 41 | 29 | 44 | 408 | 130 | |
| | 2019.05-2023.12 | 6MT | F | L | Bus FWD BCFD, BCFC | | GDS18334 | Drive Shaft | | 31 | 41 | 57.7 | 121 | 752 | |
| | 2019.05-2023.12 | 6MT | F | R | Bus FWD BCFD, BCFC | | GDS18335 | Drive Shaft | | 31 | 41 | 57.7 | 121 | 1092 | |
| | 2019.05-2023.12 | 6MT | F | L/R | Bus FWD BCFD, BCFC | | GCO18286 | Outer Joint | | 31 | 28 | 57.7 | 121 | 68 | I |
| | 2019.05-2023.12 | 6MT | F | L/R | Bus FWD BCFD, BCFC | Model:Transit Custom 340,Type:1 | GCO18293 | Outer Joint | | 31 | 30 | 57.5 | 121 | 77.5 | I |
| | 2019.05-2023.12 | 6MT | F | L | Bus FWD BCFD, BCFC | Model:Transit Custom 340 | GCI82506 | Inner Joint | | 41 | 29 | 44 | 76 | 127 | |
| | 2019.05-2023.12 | 6MT | F | R | Bus FWD BCFD, BCFC | Date to:2021.06 | GCI82507 | Inner Joint | | 41 | 29 | 44 | 408 | 130 | |
| | 2019.05-2023.12 | 6AT | F | L | Van FWD BCFB, BCFA | Date to:2023.05 | GDS56279 | Drive Shaft | | 31 | 27 | 63 | 121 | 737 | |
| | 2019.05-2023.12 | 6AT | F | R | Van FWD BCFB, BCFA | Date to:2021.12 | GDS56280 | Drive Shaft | | 31 | 27 | 63 | 121 | 1106 | |
| | 2019.05-2023.12 | 6AT | F | L/R | Van FWD BCFB, BCFA | Date to:2021.06 | GCO83240 | Outer Joint | | 31 | 31 | 63 | 121 | 79 | I |
| | 2019.05-2023.12 | 6AT | F | L | Van FWD BCFB, BCFA | | GCI83225 | Inner Joint | | 27 | 29 | 35 | 107 | 102.5 | |
| | 2019.05-2023.12 | 6AT | F | R | Van FWD BCFB, BCFA | Date to:2021.06 | GCI83226 | Inner Joint | | 27 | 29 | 35 | 417 | 131 | |
| | 2019.05-2023.12 | 6MT | F | L | Van FWD BCFB, BCFA | | GDS18334 | Drive Shaft | | 31 | 41 | 57.7 | 121 | 752 | |
| | 2019.05-2023.12 | 6MT | F | R | Van FWD BCFB, BCFA | | GDS18335 | Drive Shaft | | 31 | 41 | 57.7 | 121 | 1092 | |
| | 2019.05-2023.12 | 6MT | F | L | Van FWD BCFB, BCFA | | GCO18293 | Outer Joint | | 31 | 30 | 57.5 | 121 | 77.5 | I |
| | 2019.05-2023.12 | 6MT | F | L/R | Van FWD BCFB, BCFA | | GCO18286 | Outer Joint | | 31 | 28 | 57.7 | 121 | 68 | I |
| | 2019.05-2023.12 | 6MT | F | L | Van FWD BCFB, BCFA | Model:Transit Custom 310,For vehicles with sports package | GCI82506 | Inner Joint | | 41 | 29 | 44 | 76 | 127 | |
| | 2019.05-2023.12 | 6MT | F | R | Van FWD BCFB, BCFA | Date to:2021.06 | GCI82507 | Inner Joint | | 41 | 29 | 44 | 408 | 130 | |
| | 2019.05-2023.12 | 6MT | F | L | Van FWD BCFD, BCFC | | GDS18334 | Drive Shaft | | 31 | 41 | 57.7 | 121 | 752 | |
| | 2019.05-2023.12 | 6MT | F | R | Van FWD BCFD, BCFC | | GDS18335 | Drive Shaft | | 31 | 41 | 57.7 | 121 | 1092 | |
| | 2019.05-2023.12 | 6MT | F | L | Van FWD BCFD, BCFC | | GCO18293 | Outer Joint | | 31 | 30 | 57.5 | 121 | 77.5 | I |
| | 2019.05-2023.12 | 6MT | F | L/R | Van FWD BCFD, BCFC | | GCO18286 | Outer Joint | | 31 | 28 | 57.7 | 121 | 68 | I |
| | 2019.05-2023.12 | 6MT | F | L | Van FWD BCFD, BCFC | Model:Transit Custom 310,For vehicles with sports package | GCI82506 | Inner Joint | | 41 | 29 | 44 | 76 | 127 | |
| | 2019.05-2023.12 | 6MT | F | R | Van FWD BCFD, BCFC | Date to:2021.06 | GCI82507 | Inner Joint | | 41 | 29 | 44 | 408 | 130 | |
| 2.2 (74 kw) | 2012.09-2016.06 | 6MT | F | L | Bus FWD DRFG, DRFF, DRF4 | | GDS18334 | Drive Shaft | | 31 | 41 | 57.7 | 121 | 752 | |
| | 2012.09-2016.06 | 6MT | F | R | Bus FWD DRFG, DRFF, DRF4 | | GDS18335 | Drive Shaft | | 31 | 41 | 57.7 | 121 | 1092 | |
| | 2012.09-2016.06 | 6MT | F | L/R | Bus FWD DRFG, DRFF, DRF4 | | GCO18286 | Outer Joint | | 31 | 28 | 57.7 | 121 | 68 | I |
| | 2012.09-2016.06 | 6MT | F | L/R | Bus FWD DRFG, DRFF, DRF4 | Date From:2012.09 | GCO18293 | Outer Joint | | 31 | 30 | 57.5 | 121 | 77.5 | I |
| | 2012.09-2016.06 | 6MT | F | L | Bus FWD DRFG, DRFF, DRF4 | | GCI82506 | Inner Joint | | 41 | 29 | 44 | 76 | 127 | |
| | 2012.09-2016.06 | 6MT | F | R | Bus FWD DRFG, DRFF, DRF4 | | GCI82507 | Inner Joint | | 41 | 29 | 44 | 408 | 130 | |
| | 2012.09-2016.06 | 6MT | F | L | Van FWD DRFG, DRFF, DRF4 | | GDS18334 | Drive Shaft | | 31 | 41 | 57.7 | 121 | 752 | |
| | 2012.09-2016.06 | 6MT | F | R | Van FWD DRFG, DRFF, DRF4 | | GDS18335 | Drive Shaft | | 31 | 41 | 57.7 | 121 | 1092 | |
| | 2012.09-2016.06 | 6MT | F | L/R | Van FWD DRFG, DRFF, DRF4 | | GCO18286 | Outer Joint | | 31 | 28 | 57.7 | 121 | 68 | I |
| | 2012.09-2016.06 | 6MT | F | L/R | Van FWD DRFG, DRFF, DRF4 | | GCO18293 | Outer Joint | | 31 | 30 | 57.5 | 121 | 77.5 | I |
| | 2012.09-2016.06 | 6MT | F | L | Van FWD DRFG, DRFF, DRF4 | Date to:2015.12 | GCI82506 | Inner Joint | | 41 | 29 | 44 | 76 | 127 | |
| | 2012.09-2016.06 | 6MT | F | R | Van FWD DRFG, DRFF, DRF4 | Date to:2021.06 | GCI82507 | Inner Joint | | 41 | 29 | 44 | 408 | 130 | |
| 2.2 (92 kw) | 2012.09-2015.12 | 6MT | F | L | Bus FWD CYFF, CYF4 | | GDS18334 | Drive Shaft | | 31 | 41 | 57.7 | 121 | 752 | |
| | 2012.09-2015.12 | 6MT | F | R | Bus FWD CYFF, CYF4 | | GDS18335 | Drive Shaft | | 31 | 41 | 57.7 | 121 | 1092 | |
| | 2012.09-2015.12 | 6MT | F | L/R | Bus FWD CYFF, CYF4 | | GCO18286 | Outer Joint | | 31 | 28 | 57.7 | 121 | 68 | I |
| | 2012.09-2015.12 | 6MT | F | L/R | Bus FWD CYFF, CYF4 | Model:Transit Custom 330 | GCO18293 | Outer Joint | | 31 | 30 | 57.5 | 121 | 77.5 | I |
| | 2012.09-2015.12 | 6MT | F | L | Bus FWD CYFF, CYF4 | Model:Transit Custom 330,Date to:2015.07 | GCI81231 | Inner Joint | | 41 | 29 | 44 | 76 | 128 | |
| | 2012.09-2015.12 | 6MT | F | L | Bus FWD CYFF, CYF4 | Model:Transit Custom 300/310;Model:Transit Custom 330,Date from:2015.08 | GCI82506 | Inner Joint | | 41 | 29 | 44 | 76 | 127 | |
| | 2012.09-2015.12 | 6MT | F | R | Bus FWD CYFF, CYF4 | | GCI82507 | Inner Joint | | 41 | 29 | 44 | 408 | 130 | |
| | 2012.09-2023.12 | 6MT | F | L | Van FWD CYFF, CYF4 | | GDS18334 | Drive Shaft | | 31 | 41 | 57.7 | 121 | 752 | |
| | 2012.09-2023.12 | 6MT | F | R | Van FWD CYFF, CYF4 | | GDS18335 | Drive Shaft | | 31 | 41 | 57.7 | 121 | 1092 | |
| | 2012.09-2023.12 | 6MT | F | L/R | Van FWD CYFF, CYF4 | | GCO18286 | Outer Joint | | 31 | 28 | 57.7 | 121 | 68 | I |
| | 2012.09-2023.12 | 6MT | F | L/R | Van FWD CYFF, CYF4 | Model:Transit Custom 330 | GCO18293 | Outer Joint | | 31 | 30 | 57.5 | 121 | 77.5 | I |
| | 2012.09-2023.12 | 6MT | F | L | Van FWD CYFF, CYF4 | Model:Transit Custom 330,Date to:2015.07 | GCI81231 | Inner Joint | | 41 | 29 | 44 | 76 | 128 | |
| | 2012.09-2023.12 | 6MT | F | L | Van FWD CYFF, CYF4 | Model:Transit Custom 270/290/310,Date to:2015.12;Model:Transit Custom 330,Date from:2015.08 | GCI82506 | Inner Joint | | 41 | 29 | 44 | 76 | 127 | |
| | 2012.09-2023.12 | 6MT | F | R | Van FWD CYFF, CYF4 | | GCI82507 | Inner Joint | | 41 | 29 | 44 | 408 | 130 | |
| 2.2 (114 kw) | 2012.09-2015.12 | 6MT | F | L | Bus FWD CVFF | | GDS18334 | Drive Shaft | | 31 | 41 | 57.7 | 121 | 752 | |
| | 2012.09-2015.12 | 6MT | F | R | Bus FWD CVFF | | GDS18335 | Drive Shaft | | 31 | 41 | 57.7 | 121 | 1092 | |
| | 2012.09-2015.12 | 6MT | F | L/R | Bus FWD CVFF | | GCO18286 | Outer Joint | | 31 | 28 | 57.7 | 121 | 68 | I |
| | 2012.09-2015.12 | 6MT | F | L/R | Bus FWD CVFF | Model:Transit Custom 330 | GCO18293 | Outer Joint | | 31 | 30 | 57.5 | 121 | 77.5 | I |
| | 2012.09-2015.12 | 6MT | F | L | Bus FWD CVFF | Model:Transit Custom 330,Date to:2015.07 | GCI81231 | Inner Joint | | 41 | 29 | 44 | 76 | 128 | |
| | 2012.09-2015.12 | 6MT | F | L | Bus FWD CVFF | Model:Transit Custom 300/310;Model:Transit Custom 330,Date from:2015.08 | GCI82506 | Inner Joint | | 41 | 29 | 44 | 76 | 127 | |
| | 2012.09-2015.12 | 6MT | F | R | Bus FWD CVFF | | GCI82507 | Inner Joint | | 41 | 29 | 44 | 408 | 130 | |
| | 2012.09-2015.12 | 6MT | F | L | Van FWD CVFF | | GDS18334 | Drive Shaft | | 31 | 41 | 57.7 | 121 | 752 | |
| | 2012.09-2015.12 | 6MT | F | R | Van FWD CVFF | | GDS18335 | Drive Shaft | | 31 | 41 | 57.7 | 121 | 1092 | |
| | 2012.09-2015.12 | 6MT | F | L/R | Van FWD CVFF | | GCO18286 | Outer Joint | | 31 | 28 | 57.7 | 121 | 68 | I |
| | 2012.09-2015.12 | 6MT | F | L/R | Van FWD CVFF | Model:Transit Custom 330 | GCO18293 | Outer Joint | | 31 | 30 | 57.5 | 121 | 77.5 | I |

| | YEAR | TRANSM. | F/R | L/R | BODY STYLE & DRIVE TYPE & ENGINE | REMARKS | G-AP Ref. | PRODUCT | ABS | Technical Specifications A | B | C | H | L | P |
|---|---|---|---|---|---|---|---|---|---|---|---|---|---|---|---|
| **FORD** | | | | | | | | | | | | | | | |
| **Transit Custom** | | | | | | | | | | | | | | | |
| 2.2 (114 kw) | 2012.09-2015.12 | 6MT | F | L | Van FWD CVFF | Model:Transit Custom 330,Date to:2015.07 | GCI81231 | Inner Joint | | 41 | 29 | 44 | 76 | 128 | |
| | 2012.09-2015.12 | 6MT | F | L | Van FWD CVFF | Model:Transit Custom 270/290/310;Model:Transit Custom 330;Date from:2015.08 | GCI82506 | Inner Joint | | 41 | 29 | 44 | 76 | 127 | |
| | 2012.09-2015.12 | 6MT | F | R | Van FWD CVFF | Date to:2021.06 | GCI82507 | Inner Joint | | 41 | 29 | 44 | 408 | 130 | |
| **Transit Custom 320** | | | | | | | | | | | | | | | |
| 2.0 (77 kw) | 2019.05-2023.12 | 6MT | F | L | Bus FWD BJFC;BJFD | | GDS18334 | Drive Shaft | | 31 | 41 | 57.7 | 121 | 752 | |
| | 2019.05-2023.12 | 6MT | F | R | Bus FWD BJFC;BJFD | | GDS18335 | Drive Shaft | | 31 | 41 | 57.7 | 121 | 1092 | |
| | 2019.05-2023.12 | 6MT | F | L | Bus FWD BJFC;BJFD | | GCO18293 | Outer Joint | | 31 | 30 | 57.5 | 121 | 77.5 | I |
| | 2019.05-2023.12 | 6MT | F | L/R | Bus FWD BJFC;BJFD | | GCO18286 | Outer Joint | | 31 | 28 | 57.7 | 121 | 68 | I |
| | 2019.05-2023.12 | 6MT | F | R | Bus FWD BJFC;BJFD | Date to:2021.06 | GCI82507 | Inner Joint | | 41 | 29 | 44 | 408 | 130 | |
| 2.0 (81 kw) | 2024.04- | 6MT | F | L | Bus FWD BCFA(DZJE) | | GDS58041 | Drive Shaft | | 31 | 41 | 63 | 115 | 722 | |
| | 2024.04- | 6MT | F | R | Bus FWD BCFA(DZJE) | | GDS58042 | Drive Shaft | | 31 | 41 | 63 | 115 | 1083 | |
| | 2024.04- | 6MT | F | L/R | Bus FWD BCFA(DZJE) | | GCO83826 | Outer Joint | | 31 | 31 | 63 | 115 | 75 | M |
| | 2024.04- | 6MT | F | L | Bus FWD BCFA(DZJE) | | GCI83984 | Inner Joint | | 41 | 31 | 44 | 75.5 | 127 | |
| | 2024.04- | 6MT | F | R | Bus FWD BCFA(DZJE) | | GCI83985 | Inner Joint | | 41 | 31 | 44 | 443.5 | 116 | |
| 2.0 (100 kw) | 2024.04- | 6MT | F | L | Bus FWD BJFA(ENBJ) | | GDS58041 | Drive Shaft | | 31 | 41 | 63 | 115 | 722 | |
| | 2024.04- | 6MT | F | R | Bus FWD BJFA(ENBJ) | | GDS58042 | Drive Shaft | | 31 | 41 | 63 | 115 | 1083 | |
| | 2024.04- | 6MT | F | L/R | Bus FWD BJFA(ENBJ) | | GCO83826 | Outer Joint | | 31 | 31 | 63 | 115 | 75 | M |
| | 2024.04- | 6MT | F | L | Bus FWD BJFA(ENBJ) | | GCI83984 | Inner Joint | | 41 | 31 | 44 | 75.5 | 127 | |
| | 2024.04- | 6MT | F | R | Bus FWD BJFA(ENBJ) | | GCI83985 | Inner Joint | | 41 | 31 | 44 | 443.5 | 116 | |
| 2.0 (110 kw) | 2024.04- | 6MT | F | L | Bus FWD BKFB(ENBK) | | GDS58041 | Drive Shaft | | 31 | 41 | 63 | 115 | 722 | |
| | 2024.04- | 6MT | F | R | Bus FWD BKFB(ENBK) | | GDS58042 | Drive Shaft | | 31 | 41 | 63 | 115 | 1083 | |
| | 2024.04- | 6MT | F | L/R | Bus FWD BKFB(ENBK) | | GCO83826 | Outer Joint | | 31 | 31 | 63 | 115 | 75 | M |
| | 2024.04- | 6MT | F | L | Bus FWD BKFB(ENBK) | | GCI83984 | Inner Joint | | 41 | 31 | 44 | 75.5 | 127 | |
| | 2024.04- | 6MT | F | R | Bus FWD BKFB(ENBK) | | GCI83985 | Inner Joint | | 41 | 31 | 44 | 443.5 | 116 | |
| 2.0 (125 kw) | 2024.04- | 6MT | F | L | Bus FWD BKFA(DZJA) | | GDS58041 | Drive Shaft | | 31 | 41 | 63 | 115 | 722 | |
| | 2024.04- | 6MT | F | R | Bus FWD BKFA(DZJA) | | GDS58042 | Drive Shaft | | 31 | 41 | 63 | 115 | 1083 | |
| | 2024.04- | 6MT | F | L/R | Bus FWD BKFA(DZJA) | | GCO83826 | Outer Joint | | 31 | 31 | 63 | 115 | 75 | M |
| | 2024.04- | 6MT | F | L | Bus FWD BKFA(DZJA) | | GCI83984 | Inner Joint | | 41 | 31 | 44 | 75.5 | 127 | |
| | 2024.04- | 6MT | F | R | Bus FWD BKFA(DZJA) | | GCI83985 | Inner Joint | | 41 | 31 | 44 | 443.5 | 116 | |
| **Transit Tourneo** | | | | | | | | | | | | | | | |
| 2.0 (55 kw) | 2000.06-2003.08 | 5MT | F | L | Bus FWD D3FA | | GDS18035 | Drive Shaft | | 28 | 26 | 57 | 120.5 | 797 | |
| | 2000.06-2003.08 | 5MT | F | L | Bus FWD D3FA | | GDS18036 | Drive Shaft | 48T | 28 | 26 | 57 | 120.5 | 797 | |
| | 2000.06-2003.08 | 5MT | F | R | Bus FWD D3FA | | GDS18142 | Drive Shaft | | 28 | 26 | 57 | 120.5 | 1056 | |
| | 2000.06-2003.08 | 5MT | F | R | Bus FWD D3FA | | GDS18242 | Drive Shaft | 48T | 28 | 26 | 57 | 120.5 | 1056 | |
| | 2000.06-2003.08 | 5MT | F | L/R | Bus FWD D3FA | | GCO18005 | Outer Joint | 48T | 28 | 26 | 57 | 120.5 | 64 | M |
| | 2000.06-2003.08 | 5MT | F | L | Bus FWD D3FA | | GCI18055 | Inner Joint | | 26 | 26 | 40 | 77.5 | 104 | |
| | 2000.06-2003.08 | 5MT | F | R | Bus FWD D3FA | | GCI18213 | Inner Joint | | 26 | 26 | 40 | 331 | 110 | |
| | 2000.06-2003.08 | 5MT | F | R | Bus FWD D3FA | | GCI18274 | Inner Joint | | 36 | 26 | 40 | 330 | 110 | |
| 2.0 (74 kw) | 2000.06-2005.03 | 5MT | F | L | Bus FWD ABFA | | GDS18035 | Drive Shaft | | 28 | 26 | 57 | 120.5 | 797 | |
| | 2000.06-2005.03 | 5MT | F | L | Bus FWD ABFA | | GDS18036 | Drive Shaft | 48T | 28 | 26 | 57 | 120.5 | 797 | |
| | 2000.06-2005.03 | 5MT | F | L | Bus FWD ABFA | Outer teeth of differential side:36 | GDS18209 | Drive Shaft | 48T | 28 | 36 | 57 | 120.5 | 794.5 | |
| | 2000.06-2005.03 | 5MT | F | R | Bus FWD ABFA | Outer teeth of differential side:26 | GDS18142 | Drive Shaft | | 28 | 26 | 57 | 120.5 | 1056 | |
| | 2000.06-2005.03 | 5MT | F | R | Bus FWD ABFA | Outer teeth of differential side:26 | GDS18242 | Drive Shaft | 48T | 28 | 26 | 57 | 120.5 | 1056 | |
| | 2000.06-2005.03 | 5MT | F | R | Bus FWD ABFA | Outer teeth of differential side:36 | GDS18265 | Drive Shaft | 48T | 28 | 36 | 57 | 120.5 | 1053 | |
| | 2000.06-2005.03 | 5MT | F | R | Bus FWD ABFA | Date From:2003.08,Date To:2004.05 | GDS99178 | Drive Shaft | 48T | 28 | 36 | 59 | 128 | 1057 | |
| | 2000.06-2005.03 | 5MT | F | L/R | Bus FWD ABFA | | GCO18005 | Outer Joint | 48T | 28 | 26 | 57 | 120.5 | 64 | M |
| | 2000.06-2005.03 | 5MT | F | L/R | Bus FWD ABFA | | GCO18061 | Outer Joint | | 28 | 26 | 57 | 120.5 | 64 | M |
| | 2000.06-2005.03 | 5MT | F | L | Bus FWD ABFA | Outer teeth of differential side:26 | GCI18055 | Inner Joint | | 26 | 26 | 40 | 77.5 | 104 | |
| | 2000.06-2005.03 | 5MT | F | L | Bus FWD ABFA | Outer teeth of differential side:36 | GCI18173 | Inner Joint | | 36 | 28 | 40 | 77 | 111.5 | |
| | 2000.06-2005.03 | 5MT | F | R | Bus FWD ABFA | Outer teeth of differential side:26 | GCI18213 | Inner Joint | | 26 | 26 | 40 | 331 | 110 | |
| | 2000.06-2005.03 | 5MT | F | R | Bus FWD ABFA | Outer teeth of differential side:36 | GCI18274 | Inner Joint | | 36 | 26 | 40 | 330 | 110 | |
| 2.0 (92 kw) | 2002.03-2006.03 | 5MT | F | L | Bus FWD FIFA | | GDS18035 | Drive Shaft | | 28 | 26 | 57 | 120.5 | 797 | |
| | 2002.03-2006.03 | 5MT | F | L | Bus FWD FIFA | | GDS18036 | Drive Shaft | 48T | 28 | 26 | 57 | 120.5 | 797 | |
| | 2002.03-2006.03 | 5MT | F | L | Bus FWD FIFA | Outer teeth of differential side:36 | GDS18209 | Drive Shaft | 48T | 28 | 36 | 57 | 120.5 | 794.5 | |
| | 2002.03-2006.03 | 5MT | F | R | Bus FWD FIFA | Outer teeth of differential side:26 | GDS18142 | Drive Shaft | | 28 | 26 | 57 | 120.5 | 1056 | |
| | 2002.03-2006.03 | 5MT | F | R | Bus FWD FIFA | Outer teeth of differential side:26 | GDS18242 | Drive Shaft | 48T | 28 | 26 | 57 | 120.5 | 1056 | |
| | 2002.03-2006.03 | 5MT | F | R | Bus FWD FIFA | Outer teeth of differential side:36 | GDS18265 | Drive Shaft | 48T | 28 | 36 | 57 | 120.5 | 1053 | |
| | 2002.03-2006.03 | 5MT | F | R | Bus FWD FIFA | Date From:2003.08,Date To:2004.05 | GDS99178 | Drive Shaft | 48T | 28 | 36 | 59 | 128 | 1057 | |
| | 2002.03-2006.03 | 5MT | F | L/R | Bus FWD FIFA | | GCO18005 | Outer Joint | 48T | 28 | 26 | 57 | 120.5 | 64 | M |
| | 2002.03-2006.03 | 5MT | F | L/R | Bus FWD FIFA | | GCO18061 | Outer Joint | | 28 | 26 | 57 | 120.5 | 64 | M |
| | 2002.03-2006.03 | 5MT | F | L | Bus FWD FIFA | Outer teeth of differential side:26 | GCI18055 | Inner Joint | | 26 | 26 | 40 | 77.5 | 104 | |
| | 2002.03-2006.03 | 5MT | F | L | Bus FWD FIFA | Outer teeth of differential side:36 | GCI18173 | Inner Joint | | 36 | 28 | 40 | 77 | 111.5 | |
| | 2002.03-2006.03 | 5MT | F | L | Bus FWD FIFA | Outer teeth of differential side:36 | GCI18180 | Inner Joint | | 36 | 27 | 40 | 77.5 | 111 | |
| | 2002.03-2006.03 | 5MT | F | R | Bus FWD FIFA | Outer teeth of differential side:26 | GCI18213 | Inner Joint | | 26 | 26 | 40 | 331 | 110 | |
| | 2002.03-2006.03 | 5MT | F | R | Bus FWD FIFA | Outer teeth of differential side:36 | GCI18274 | Inner Joint | | 36 | 26 | 40 | 330 | 110 | |

| | YEAR | TRANSM. | F/R | L/R | BODY STYLE & DRIVE TYPE & ENGINE | REMARKS | G-AP Ref. | PRODUCT | ABS | Technical Specifications A | B | C | H | L | P |
|---|---|---|---|---|---|---|---|---|---|---|---|---|---|---|---|
| **FORD** | | | | | | | | | | | | | | | |
| **Transit Tourneo** | | | | | | | | | | | | | | | |
| 2.2 (81 kw) | 2006.07-2014.08 | 5AT | F | L | Bus FWD QVFA | | GDS99179 | Drive Shaft | 48T | 28 | 36 | 59 | 128 | 796 | |
| | 2006.07-2014.08 | 5AT | F | | Bus FWD QVFA | | GCO99270 | Outer Joint | 48T | 28 | 28 | 59 | 128 | 61.5 | M |
| | 2006.07-2014.08 | 5AT | F | | Bus FWD QVFA | | GCO99349 | Outer Joint | 48T | 28 | 36 | 57 | 120.5 | 72 | I |
| | 2006.07-2014.08 | 5AT | F | L | Bus FWD QVFA | | GCI18173 | Inner Joint | | 36 | 28 | 40 | 77 | 111.5 | |
| | 2006.07-2014.08 | 5MT | F | L | Bus FWD QVFA | Date from:2011.10 | GDS18472 | Drive Shaft | 48T | 28 | 41 | 57 | 124.5 | 761 | |
| | 2006.07-2014.08 | 5MT | F | R | Bus FWD QVFA | Date from:2008.10,Date to:2011.09 | GDS18292 | Drive Shaft | 48T | 28 | 41 | 65 | 124 | 1093 | |
| | 2006.07-2014.08 | 5MT | F | R | Bus FWD QVFA | Date from:2011.10 | GDS83779 | Drive Shaft | 48T | 28 | 41 | 57 | 124.5 | 1104 | |
| | 2006.07-2014.08 | 5MT | F | R | Bus FWD QVFA | Date from:2008.10,Date to:2011.09 | GCI18121 | Inner Joint | | 41 | 31 | 44 | 407 | 128 | |
| | 2006.07-2014.08 | MT | F | L | Bus FWD QVFA | Date to:2011.09;Inner teeth of wheel side:29 | GDS18455 | Drive Shaft | 48T | 28 | 36 | 60 | 126.5 | 797 | |
| | 2006.07-2014.08 | MT | F | R | Bus FWD QVFA | Date to:2008.09 | GDS99194 | Drive Shaft | 48T | 28 | 36 | 59 | 128 | 1057 | |
| | 2006.07-2014.08 | MT | F | L/R | Bus FWD QVFA | Date from:2011.10 | GCO18298 | Outer Joint | 48T | 28 | 29 | 57 | 124.5 | 79.5 | I |
| | 2006.07-2014.08 | MT | F | L/R | Bus FWD QVFA | Date to:2011.09 | GCO99284 | Outer Joint | 48T | 28 | 29 | 60 | 126.5 | 72 | M |
| | 2006.07-2014.08 | MT | F | L | Bus FWD QVFA | Date to:2011.09 | GCI18177 | Inner Joint | | 36 | 30 | 40 | 77.5 | 111 | |
| | 2006.07-2014.08 | MT | F | L | Bus FWD QVFA | Date from:2011.10 | GCI81231 | Inner Joint | | 41 | 29 | 44 | 76 | 128 | |
| | 2006.07-2014.08 | MT | F | R | Bus FWD QVFA | Date from:2011.10 | GCI81725 | Inner Joint | | 41 | 29 | 44 | 408.5 | 131.5 | |
| 2.2 (85 kw) | 2008.10-2014.08 | 5MT/6MT | F | L | Bus FWD SRFA;SRFB;SRFC;SRFD;SRFE | Date to:2011.09 | GDS18293 | Drive Shaft | 48T | 28 | 41 | 65 | 124 | 754 | |
| | 2008.10-2014.08 | 5MT/6MT | F | L | Bus FWD SRFA;SRFB;SRFC;SRFD;SRFE | Date from:2011.10\|Normal | GDS83779 | Drive Shaft | 48T | 28 | 41 | 57 | 124.5 | 1104 | |
| | 2008.10-2014.08 | 5MT/6MT | F | R | Bus FWD SRFA;SRFB;SRFC;SRFD;SRFE | Date to:2011.09 | GDS18292 | Drive Shaft | 48T | 28 | 41 | 65 | 124 | 1093 | |
| | 2008.10-2014.08 | 5MT/6MT | F | R | Bus FWD SRFA;SRFB;SRFC;SRFD;SRFE | Date from:2011.10\|Normal | GDS18472 | Drive Shaft | 48T | 28 | 41 | 57 | 124.5 | 761 | |
| | 2008.10-2014.08 | MT | F | L/R | Bus FWD SRFA;SRFB;SRFC;SRFD;SRFE | | GCO18237 | Outer Joint | 48T | 28 | 31 | 65 | 124 | 78 | M |
| | 2008.10-2014.08 | MT | F | L/R | Bus FWD SRFA;SRFB;SRFC;SRFD;SRFE | | GCO18298 | Outer Joint | 48T | 28 | 29 | 57 | 124.5 | 79.5 | I |
| | 2008.10-2014.08 | MT | F | L | Bus FWD SRFA;SRFB;SRFC;SRFD;SRFE | | GCI18119 | Inner Joint | | 41 | 31 | 44 | 76.5 | 121 | |
| | 2008.10-2014.08 | MT | F | R | Bus FWD SRFA;SRFB;SRFC;SRFD;SRFE | | GCI18121 | Inner Joint | | 41 | 31 | 44 | 407 | 128 | |
| 2.2 (92 kw) | 2011.10-2014.08 | MT | F | L | Bus FWD CYFA;CYFB;CYFC;CYFD | | GDS18472 | Drive Shaft | 48T | 28 | 41 | 57 | 124.5 | 761 | |
| | 2011.10-2014.08 | MT | F | R | Bus FWD CYFA;CYFB;CYFC;CYFD | | GDS83779 | Drive Shaft | 48T | 28 | 41 | 57 | 124.5 | 1104 | |
| | 2011.10-2014.08 | MT | F | L/R | Bus FWD CYFA;CYFB;CYFC;CYFD | | GCO18237 | Outer Joint | 48T | 28 | 31 | 65 | 124 | 78 | M |
| | 2011.10-2014.08 | MT | F | L/R | Bus FWD CYFA;CYFB;CYFC;CYFD | | GCO18298 | Outer Joint | 48T | 28 | 29 | 57 | 124.5 | 79.5 | I |
| | 2011.10-2014.08 | MT | F | L | Bus FWD CYFA;CYFB;CYFC;CYFD | | GCI81231 | Inner Joint | | 41 | 29 | 44 | 76 | 128 | |
| | 2011.10-2014.08 | MT | F | R | Bus FWD CYFA;CYFB;CYFC;CYFD | | GCI81725 | Inner Joint | | 41 | 29 | 44 | 408.5 | 131.5 | |
| 2.2 (96 kw) | 2006.07-2014.08 | 5AT | F | L | Bus FWD QWFA | | GDS99179 | Drive Shaft | 48T | 28 | 36 | 59 | 128 | 796 | |
| | 2006.07-2014.08 | 5AT | F | | Bus FWD QWFA | | GCO99270 | Outer Joint | 48T | 28 | 28 | 59 | 128 | 61.5 | M |
| | 2006.07-2014.08 | 5AT | F | | Bus FWD QWFA | | GCO99349 | Outer Joint | 48T | 28 | 36 | 57 | 120.5 | 72 | I |
| | 2006.07-2014.08 | 5AT | F | L | Bus FWD QWFA | | GCI18173 | Inner Joint | | 36 | 28 | 40 | 77 | 111.5 | |
| | 2006.07-2014.08 | 5MT | F | L | Bus FWD QWFA | Date from:2011.10 | GDS18472 | Drive Shaft | 48T | 28 | 41 | 57 | 124.5 | 761 | |
| | 2006.07-2014.08 | 5MT | F | R | Bus FWD QWFA | Date from:2011.10 | GDS83779 | Drive Shaft | 48T | 28 | 41 | 57 | 124.5 | 1104 | |
| | 2006.07-2014.08 | MT | F | L | Bus FWD QWFA | Date to:2011.09;Inner teeth of wheel side:29 | GDS18455 | Drive Shaft | 48T | 28 | 36 | 60 | 126.5 | 797 | |
| | 2006.07-2014.08 | MT | F | R | Bus FWD QWFA | Date to:2011.09 | GDS99194 | Drive Shaft | 48T | 28 | 36 | 59 | 128 | 1057 | |
| | 2006.07-2014.08 | MT | F | L/R | Bus FWD QWFA | Date from:2011.10 | GCO18298 | Outer Joint | 48T | 28 | 29 | 57 | 124.5 | 79.5 | I |
| | 2006.07-2014.08 | MT | F | L/R | Bus FWD QWFA | Date to:2011.09 | GCO99284 | Outer Joint | 48T | 28 | 29 | 60 | 126.5 | 72 | M |
| | 2006.07-2014.08 | MT | F | L | Bus FWD QWFA | Date to:2011.09 | GCI18177 | Inner Joint | | 36 | 30 | 40 | 77.5 | 111 | |
| | 2006.07-2014.08 | MT | F | L | Bus FWD QWFA | Date from:2011.10 | GCI81231 | Inner Joint | | 41 | 29 | 44 | 76 | 128 | |
| | 2006.07-2014.08 | MT | F | R | Bus FWD QWFA | Date from:2011.10 | GCI81725 | Inner Joint | | 41 | 29 | 44 | 408.5 | 131.5 | |
| 2.2 (103 kw) | 2007.10-2014.08 | MT | F | L | Bus FWD PGFA;PGFB;UHFA;UHFB;UHFC | Date to:2011.09,Trim Level:TDCI | GDS18293 | Drive Shaft | 48T | 28 | 41 | 65 | 124 | 754 | |
| | 2007.10-2014.08 | MT | F | L | Bus FWD PGFA;PGFB;UHFA;UHFB;UHFC | Date from:2011.10,Trim Level:CRTC | GDS18472 | Drive Shaft | 48T | 28 | 41 | 57 | 124.5 | 761 | |
| | 2007.10-2014.08 | MT | F | R | Bus FWD PGFA;PGFB;UHFA;UHFB;UHFC | Date to:2011.09,Trim Level:TDCI | GDS18292 | Drive Shaft | 48T | 28 | 41 | 65 | 124 | 1093 | |
| | 2007.10-2014.08 | MT | F | R | Bus FWD PGFA;PGFB;UHFA;UHFB;UHFC | Date from:2011.10,Trim Level:CRTC | GDS83779 | Drive Shaft | 48T | 28 | 41 | 57 | 124.5 | 1104 | |
| | 2007.10-2014.08 | MT | F | L/R | Bus FWD PGFA;PGFB;UHFA;UHFB;UHFC | | GCO18237 | Outer Joint | 48T | 28 | 31 | 65 | 124 | 78 | M |
| | 2007.10-2014.08 | MT | F | L/R | Bus FWD PGFA;PGFB;UHFA;UHFB;UHFC | | GCO18298 | Outer Joint | 48T | 28 | 29 | 57 | 124.5 | 79.5 | I |
| | 2007.10-2014.08 | MT | F | L | Bus FWD PGFA;PGFB;UHFA;UHFB;UHFC | Date to:2011.09,Trim Level:TDCI | GCI18119 | Inner Joint | | 41 | 31 | 44 | 76.5 | 121 | |
| | 2007.10-2014.08 | MT | F | L | Bus FWD PGFA;PGFB;UHFA;UHFB;UHFC | Date from:2011.10.Trim Level:CRTC | GCI81231 | Inner Joint | | 41 | 29 | 44 | 76 | 128 | |
| | 2007.10-2014.08 | MT | F | R | Bus FWD PGFA;PGFB;UHFA;UHFB;UHFC | Date to:2011.09,Trim Level:TDCI | GCI18121 | Inner Joint | | 41 | 31 | 44 | 407 | 128 | |
| | 2007.10-2014.08 | MT | F | R | Bus FWD PGFA;PGFB;UHFA;UHFB;UHFC | Date from:2011.10.Trim Level:CRTC | GCI81725 | Inner Joint | | 41 | 29 | 44 | 408.5 | 131.5 | |
| **FORD (CHANGAN)** | | | | | | | | | | | | | | | |
| **Mondeo** | | | | | | | | | | | | | | | |
| 2.5 (127 kw) | 2003.05-2007.12 | AT | F | R | Saloon FWD MP25LCBD | | GDS18043 | Drive Shaft | | 27 | 35 | 56.5 | 92 | 579 | |
| **FORD ASIA & OCEANIA** | | | | | | | | | | | | | | | |
| **Everest** | | | | | | | | | | | | | | | |
| 2.2 (118 kw) | 2015.01- | 6MT | F | L | SUV 4WD T22DD0P | | GDS34221 | Drive Shaft | | 28 | 29 | 61 | 104 | 608 | |
| | 2015.01- | 6MT | F | R | SUV 4WD T22DD0P | | GDS34220 | Drive Shaft | | 28 | 29 | 61 | 104 | 566 | |
| | 2015.01- | 6MT | F | L/R | SUV 4WD T22DD0P | | GCO34165 | Outer Joint | | 28 | 26 | 61 | 104 | 70.5 | I |
| | 2015.01- | 6MT | F | L | SUV 4WD T22DD0P | | GCI34116 | Inner Joint | | 29 | 27 | 35.5 | 97.5 | 95 | |
| | 2015.01- | 6MT | F | R | SUV 4WD T22DD0P | | GCI34117 | Inner Joint | | 29 | 27 | 56 | | 149 | |
| **Fiesta** | | | | | | | | | | | | | | | |
| 1.6 (89 kw) | 2010.10-2017.04 | 6AT/5MT | F | R | Hatchback FWD HXJA | | GDS18201 | Drive Shaft | | 25 | 23 | 53.3 | 90 | 919 | |
| | 2010.10-2017.04 | 6AT/5MT | F | R | Hatchback FWD HXJA | | GCO18222 | Outer Joint | | 25 | 23 | 53.3 | 87 | 56 | M |

| | YEAR | TRANSM. | F/R | L/R | BODY STYLE & DRIVE TYPE & ENGINE | REMARKS | G-AP Ref. | PRODUCT | ABS | Technical Specifications A | B | C | H | L | P |
|---|---|---|---|---|---|---|---|---|---|---|---|---|---|---|---|
| **FORD ASIA & OCEANIA** | | | | | | | | | | | | | | | |
| **Fiesta** | | | | | | | | | | | | | | | |
| 1.6 (89 kw) | 2010.10-2017.04 | 6DCT/5MT | F | L | Hatchback FWD HXJA | | GDS18216 | Drive Shaft | | 25 | 23 | 53.3 | 90 | 621 | |
| **Focus** | | | | | | | | | | | | | | | |
| 1.5 (132 kw) | 2015.05-2017.12 | MT | F | L/R | Hatchback FWD M9DA, M9DB | | GCO18244 | Outer Joint | | 27 | 24 | 62.8 | 95.5 | 59 | M |
| | 2015.05-2020.02 | MT | F | L/R | Saloon FWD M9DA, M9DB | | GCO18244 | Outer Joint | | 27 | 24 | 62.8 | 95.5 | 59 | M |
| **FORD AUSTRALIA** | | | | | | | | | | | | | | | |
| **Focus** | | | | | | | | | | | | | | | |
| 1.6 (92 kw) | 2011.08-2015.07 | | F | R | Hatchback FWD PNDA | | GCI18263 | Inner Joint | | 23 | 22 | 40 | 375 | 76 | |
| | 2011.08-2015.07 | | F | R | Saloon FWD PNDA | | GCI18263 | Inner Joint | | 23 | 22 | 40 | 375 | 76 | |
| **Puma** | | | | | | | | | | | | | | | |
| 1.0 (92 kw) | 2020.11- | 6MT | F | L/R | SUV FWD B7JE | | GCO82450 | Outer Joint | | 27 | 33 | 56 | 96.5 | 58 | M |
| | 2020.11- | 6MT | F | L | SUV FWD B7JE | | GCI83409 | Inner Joint | | 23 | 33 | 40 | 60.5 | 97.5 | |
| | 2020.11- | 6MT | F | R | SUV FWD B7JE | | GCI83414 | Inner Joint | | 23 | 33 | 40 | 60.5 | 104.5 | |
| **FORD USA** | | | | | | | | | | | | | | | |
| **Edge** | | | | | | | | | | | | | | | |
| 2.0 (183 kw) | 2014.09- | 6AT | F | L/R | SUV FWD C20HDTX | Model year from:2015,Model year to:2018 | GCO81209 | Outer Joint | | 27 | 26 | 55 | 105 | 64 | I |
| | 2014.09- | 6AT | F | R | SUV FWD C20HDTX | Model year from:2015,Model year to:2018 | GCI18155 | Inner Joint | | 35 | 27 | 42 | 407.5 | 100.5 | |
| 2.0 (186 kw) | 2015.01- | 6AT | F | L/R | SUV FWD C20HDTX | Model year from:2015,Model year to:2018 | GCO81209 | Outer Joint | | 27 | 26 | 55 | 105 | 64 | I |
| | 2015.01- | 6AT | F | R | SUV FWD C20HDTX | Model year from:2015,Model year to:2018 | GCI18155 | Inner Joint | | 35 | 27 | 42 | 407.5 | 100.5 | |
| 3.5 (208 kw) | 2014.09- | AT | F | L | SUV 4WD C35PDED | | GDS81478 | Drive Shaft | | 27 | 27 | 55 | 105 | 658 | |
| | 2014.09- | AT | F | R | SUV 4WD C35PDED | | GDS81477 | Drive Shaft | | 27 | 27 | 55 | 105 | 1074 | |
| | 2014.09- | AT | F | L/R | SUV 4WD C35PDED | | GCO81209 | Outer Joint | | 27 | 26 | 55 | 105 | 64 | I |
| | 2014.09- | AT | F | L | SUV 4WD C35PDED | | GCI18246 | Inner Joint | | 27 | 27 | 35 | 104 | 92.5 | |
| | 2014.09- | AT | F | L | SUV FWD C35PDED | | GDS81478 | Drive Shaft | | 27 | 27 | 55 | 105 | 658 | |
| | 2014.09- | AT | F | R | SUV FWD C35PDED | | GDS81477 | Drive Shaft | | 27 | 27 | 55 | 105 | 1074 | |
| | 2014.09- | AT | F | L/R | SUV FWD C35PDED | | GCO81209 | Outer Joint | | 27 | 26 | 55 | 105 | 64 | I |
| | 2014.09- | AT | F | L | SUV FWD C35PDED | | GCI18246 | Inner Joint | | 27 | 27 | 35 | 104 | 92.5 | |
| 3.5 (209 kw) | 2014.09- | AT | F | L | SUV 4WD C35PDED | | GDS81478 | Drive Shaft | | 27 | 27 | 55 | 105 | 658 | |
| | 2014.09- | AT | F | R | SUV 4WD C35PDED | | GDS81477 | Drive Shaft | | 27 | 27 | 55 | 105 | 1074 | |
| | 2014.09- | AT | F | L/R | SUV 4WD C35PDED | | GCO81209 | Outer Joint | | 27 | 26 | 55 | 105 | 64 | I |
| | 2014.09- | AT | F | L | SUV 4WD C35PDED | | GCI18246 | Inner Joint | | 27 | 27 | 35 | 104 | 92.5 | |
| 3.5 (213 kw) | 2014.09- | AT | F | L | SUV FWD C35PDED | | GDS81478 | Drive Shaft | | 27 | 27 | 55 | 105 | 658 | |
| | 2014.09- | AT | F | R | SUV FWD C35PDED | | GDS81477 | Drive Shaft | | 27 | 27 | 55 | 105 | 1074 | |
| | 2014.09- | AT | F | L/R | SUV FWD C35PDED | | GCO81209 | Outer Joint | | 27 | 26 | 55 | 105 | 64 | I |
| | 2014.09- | AT | F | L | SUV FWD C35PDED | | GCI18246 | Inner Joint | | 27 | 27 | 35 | 104 | 92.5 | |
| **Escape** | | | | | | | | | | | | | | | |
| 2.0 (179 kw) | 2013.03-2016.06 | 6AT | F | R | SUV FWD TPWA | | GDS82844 | Drive Shaft | | 27 | 35 | 63.5 | 96 | 958 | |
| | 2013.03-2016.06 | 6AT | F | L/R | SUV FWD TPWA | | GCO82141 | Outer Joint | | 27 | 27 | 63.5 | 96 | 65 | I |
| | 2013.03-2016.06 | 6AT | F | R | SUV FWD TPWA | | GCI18155 | Inner Joint | | 35 | 27 | 42 | 407.5 | 100.5 | |
| 2.3 (110 kw) | 2007.08-2010.12 | AT | F | L | SUV FWD T23HDEX | | GDS56129 | Drive Shaft | 44T | 28 | 28 | 56.5 | 93.5 | 626 | |
| | 2007.08-2010.12 | AT | F | R | SUV FWD T23HDEX | | GDS56130 | Drive Shaft | 44T | 28 | 28 | 56.5 | 93.5 | 580 | |
| | 2007.08-2010.12 | AT | F | L/R | SUV FWD T23HDEX | | GCO82914 | Outer Joint | 44T | 28 | 33 | 56.5 | 93.5 | 58.5 | I |
| | 2007.08-2010.12 | AT | F | L | SUV FWD T23HDEX | | GCI34135 | Inner Joint | | 28 | 33 | 35 | 66.5 | 113.5 | |
| | 2007.08-2010.12 | AT | F | R | SUV FWD T23HDEX | | GCI81449 | Inner Joint | | 28 | 33 | 43 | | 133 | |
| **Expedition** | | | | | | | | | | | | | | | |
| 3.5 (272 kw) | 2014.07- | | F | L/R | SUV 4WD T35PDTD | | GCO18234 | Outer Joint | | 45 | 28 | 68 | 92.5 | 83.5 | I |
| 4.6 (173 kw) | 2002.10-2006.02 | | F | L/R | SUV 4WD 99W | | GCO18234 | Outer Joint | | 45 | 28 | 68 | 92.5 | 83.5 | I |
| 5.4 (194 kw) | 2002.10-2006.02 | | F | L/R | SUV 4WD T54MSEM | | GCO18234 | Outer Joint | | 45 | 28 | 68 | 92.5 | 83.5 | I |
| 5.4 (224 kw) | 2006.09- | 6AT | F | L/R | SUV 4WD 995 | Date to:2017.06 | GCO18234 | Outer Joint | | 45 | 28 | 68 | 92.5 | 83.5 | I |
| 5.4 (231 kw) | 2010.01- | | F | L/R | SUV 4WD T54RSEM | | GCO18234 | Outer Joint | | 45 | 28 | 68 | 92.5 | 83.5 | I |
| **Explorer** | | | | | | | | | | | | | | | |
| 3.5 (183 kw) | 2014.01- | 6AT | F | R | SUV 4WD T35PDED | | GDS83717 | Drive Shaft | | 38 | 27 | 54.9 | 107 | 1095 | |
| | 2014.01- | 6AT | F | L/R | SUV 4WD T35PDED | | GCO18257 | Outer Joint | | 38 | 27 | 54.9 | 107 | 74 | M |
| | 2014.01- | 6AT | F | R | SUV 4WD T35PDED | | GCI82269 | Inner Joint | | 27 | 27 | 32 | 488 | 110 | |
| 3.5 (214 kw) | 2013.03- | 6AT | F | L | SUV 4WD T35PDED | For vehicles with towbar | GDS83716 | Drive Shaft | | 38 | 27 | 55 | 106 | 682 | |
| | 2013.03- | 6AT | F | R | SUV 4WD T35PDED | Date From:2015.05,Date To:2016.06,For vehicles with towbar | GDS83540 | Drive Shaft | | 38 | 27 | 55 | 106 | 1095 | |
| | 2013.03- | 6AT | F | R | SUV 4WD T35PDED | For vehicles without towbar;Country Version:Russia | GDS83717 | Drive Shaft | | 38 | 27 | 54.9 | 107 | 1095 | |
| | 2013.03- | 6AT | F | L/R | SUV 4WD T35PDED | For vehicles without towbar;Country Version:Russia | GCO18257 | Outer Joint | | 38 | 27 | 54.9 | 107 | 74 | M |
| | 2013.03- | 6AT | F | L/R | SUV 4WD T35PDED | Date from:2016.08,For vehicles with towbar | GCO82407 | Outer Joint | | 38 | 28 | 55 | 106 | 69 | I |
| | 2013.03- | 6AT | F | R | SUV 4WD T35PDED | For vehicles without towbar;Country Version:Russia | GCI82269 | Inner Joint | | 27 | 27 | 32 | 488 | 110 | |
| 3.5 (216 kw) | 2010.10- | 6AT | F | L | SUV 4WD | For vehicles with towbar | GDS83716 | Drive Shaft | | 38 | 27 | 55 | 106 | 682 | |
| | 2010.10- | 6AT | F | R | SUV 4WD | Date From:2015.05,Date To:2016.06,For vehicles with towbar | GDS83540 | Drive Shaft | | 38 | 27 | 55 | 106 | 1095 | |
| | 2010.10- | 6AT | F | R | SUV 4WD | For vehicles without towbar;Country Version:Russia | GDS83717 | Drive Shaft | | 38 | 27 | 54.9 | 107 | 1095 | |
| | 2010.10- | 6AT | F | L/R | SUV 4WD | For vehicles without towbar;Country Version:Russia | GCO18257 | Outer Joint | | 38 | 27 | 54.9 | 107 | 74 | M |
| | 2010.10- | 6AT | F | L/R | SUV 4WD | Date from:2016.08,For vehicles with towbar | GCO82407 | Outer Joint | | 38 | 28 | 55 | 106 | 69 | I |
| | 2010.10- | 6AT | F | L | SUV 4WD | Date from:2011.08 | GCI18246 | Inner Joint | | 27 | 27 | 35 | 104 | 92.5 | |

| | YEAR | TRANSM. | F/R | L/R | BODY STYLE & DRIVE TYPE & ENGINE | REMARKS | G-AP Ref. | PRODUCT | ABS | Technical Specifications A | B | C | H | L | P |
|---|---|---|---|---|---|---|---|---|---|---|---|---|---|---|---|
| **FORD USA** | | | | | | | | | | | | | | | |
| **Explorer** | | | | | | | | | | | | | | | |
| 3.5 (216 kw) | 2010.10- | 6AT | F | R | SUV 4WD | For vehicles without towbar;Country Version:Russia | GCI82269 | Inner Joint | | 27 | 27 | 32 | 488 | 110 | |
| 3.5 (254 kw) | 2014.01- | 6AT | F | L | SUV 4WD T35PDTD | | GDS83716 | Drive Shaft | | 38 | 27 | 55 | 106 | 682 | |
| | 2014.01- | 6AT | F | R | SUV 4WD T35PDTD | Date From:2015.10 | GDS83540 | Drive Shaft | | 38 | 27 | 55 | 106 | 1095 | |
| | 2014.01- | 6AT | F | L/R | SUV 4WD T35PDTD | Date to:2015.04;Date from:2016.09 | GCO82407 | Outer Joint | | 38 | 28 | 55 | 106 | 69 | I |
| | 2014.01- | 6AT | F | L | SUV 4WD T35PDTD | Date from:2015.05 | GCI18246 | Inner Joint | | 27 | 27 | 35 | 104 | 92.5 | |
| | 2014.01- | 6AT | F | R | SUV 4WD T35PDTD | Date from:2015.10 | GCI82269 | Inner Joint | | 27 | 27 | 32 | 488 | 110 | |
| 3.5 (272 kw) | 2013.09- | 6AT | F | L | SUV 4WD T35PDTD | | GDS83716 | Drive Shaft | | 38 | 27 | 55 | 106 | 682 | |
| | 2013.09- | 6AT | F | R | SUV 4WD T35PDTD | Date From:2015.05,Date To:2016.06 | GDS83540 | Drive Shaft | | 38 | 27 | 55 | 106 | 1095 | |
| | 2013.09- | 6AT | F | L/R | SUV 4WD T35PDTD | Date to:2015.04;Date from:2016.09 | GCO82407 | Outer Joint | | 38 | 28 | 55 | 106 | 69 | I |
| | 2013.09- | 6AT | F | L | SUV 4WD T35PDTD | Date from:2015.01 | GCI18246 | Inner Joint | | 27 | 27 | 35 | 104 | 92.5 | |
| | 2013.09- | 6AT | F | R | SUV 4WD T35PDTD | Date from:2015.05,Date to:2016.06 | GCI82269 | Inner Joint | | 27 | 27 | 32 | 488 | 110 | |
| **F-150** | | | | | | | | | | | | | | | |
| 3.5 (272 kw) | 2011.01- | | F | L/R | Pickup 4WD T35PDTD | | GCO18234 | Outer Joint | | 45 | 28 | 68 | 92.5 | 83.5 | I |
| 4.2 (157 kw) | 2003.10-2007.09 | | F | L/R | Pickup 4WD 992 | | GCO18234 | Outer Joint | | 45 | 28 | 68 | 92.5 | 83.5 | I |
| 4.6 (170 kw) | 2003.10-2007.09 | | F | L/R | Pickup 4WD 99W | | GCO18234 | Outer Joint | | 45 | 28 | 68 | 92.5 | 83.5 | I |
| 4.6 (248 kw) | 2003.10-2007.09 | | F | L/R | Pickup 4WD 999 | | GCO18234 | Outer Joint | | 45 | 28 | 68 | 92.5 | 83.5 | I |
| 6.2 (306 kw) | 2010.01- | | F | L/R | Pickup 4WD C62RSEM | | GCO18234 | Outer Joint | | 45 | 28 | 68 | 92.5 | 83.5 | I |
| **F-150 Crew Cab Pickup** | | | | | | | | | | | | | | | |
| 3.5 (272 kw) | 2014.09- | 6AT | F | L | Pickup 4WD T35PDTD | | GDS82684 | Drive Shaft | | 45 | 31 | 68 | 92.5 | 642 | |
| | 2014.09- | 6AT | F | R | Pickup 4WD T35PDTD | | GDS82683 | Drive Shaft | | 45 | 31 | 68 | 92.5 | 568 | |
| | 2014.09- | 6AT | F | R | Pickup 4WD T35PDTD | | GCO18234 | Outer Joint | | 45 | 28 | 68 | 92.5 | 83.5 | I |
| | 2014.09- | 6AT | F | L | Pickup 4WD T35PDTD | | GCI81961 | Inner Joint | | 31 | 37 | 46 | 130 | 91 | |
| | 2014.09- | 6AT | F | R | Pickup 4WD T35PDTD | | GCI81962 | Inner Joint | | 31 | 37 | 50 | | 148 | |
| 3.5 (336 kw) | 2017.09- | 10AT | F | L | Pickup 4WD T35PDTD | | GCI81961 | Inner Joint | | 31 | 37 | 46 | 130 | 91 | |
| | 2017.09- | 10AT | F | R | Pickup 4WD T35PDTD | | GCI81962 | Inner Joint | | 31 | 37 | 50 | | 148 | |
| | 2017.09- | AT | F | L | Pickup 4WD T35PDTD | | GDS82684 | Drive Shaft | | 45 | 31 | 68 | 92.5 | 642 | |
| | 2017.09- | AT | F | R | Pickup 4WD T35PDTD | | GDS82683 | Drive Shaft | | 45 | 31 | 68 | 92.5 | 568 | |
| | 2017.09- | AT | F | L/R | Pickup 4WD T35PDTD | | GCO18234 | Outer Joint | | 45 | 28 | 68 | 92.5 | 83.5 | I |
| 3.7 (225 kw) | 2010.09- | | F | L/R | Pickup 4WD 99M | | GCO18234 | Outer Joint | | 45 | 28 | 68 | 92.5 | 83.5 | I |
| 4.2 (157 kw) | 2004.09-2008.12 | | F | L/R | Pickup 4WD 992 | | GCO18234 | Outer Joint | | 45 | 28 | 68 | 92.5 | 83.5 | I |
| 5.0 (268 kw) | 2010.09- | | F | L/R | Pickup 4WD 99F | | GCO18234 | Outer Joint | | 45 | 28 | 68 | 92.5 | 83.5 | I |
| 5.0 (560 kw) | 2017.01- | 6AT | F | L | Pickup 4WD T50SDEM | | GDS82684 | Drive Shaft | | 45 | 31 | 68 | 92.5 | 642 | |
| | 2017.01- | 6AT | F | R | Pickup 4WD T50SDEM | | GDS82683 | Drive Shaft | | 45 | 31 | 68 | 92.5 | 568 | |
| | 2017.01- | 6AT | F | L/R | Pickup 4WD T50SDEM | | GCO18234 | Outer Joint | | 45 | 28 | 68 | 92.5 | 83.5 | I |
| | 2017.01- | 6AT | F | L | Pickup 4WD T50SDEM | | GCI81961 | Inner Joint | | 31 | 37 | 46 | 130 | 91 | |
| | 2017.01- | 6AT | F | R | Pickup 4WD T50SDEM | | GCI81962 | Inner Joint | | 31 | 37 | 50 | | 148 | |
| 5.4 (231 kw) | 2008.09-2010.12 | | F | L/R | Pickup 4WD 99L | | GCO18234 | Outer Joint | | 45 | 28 | 68 | 92.5 | 83.5 | I |
| **F-150 Extended Cab** | | | | | | | | | | | | | | | |
| 3.7 (225 kw) | 2010.09- | | F | L/R | Pickup 4WD 99M | | GCO18234 | Outer Joint | | 45 | 28 | 68 | 92.5 | 83.5 | I |
| | 2013.09- | AT | F | L/R | Pickup 4WD 99M | | GCO18234 | Outer Joint | | 45 | 28 | 68 | 92.5 | 83.5 | I |
| 4.2 (157 kw) | 2004.09-2008.12 | | F | L/R | Pickup 4WD 992 | | GCO18234 | Outer Joint | | 45 | 28 | 68 | 92.5 | 83.5 | I |
| 5.4 (231 kw) | 2008.09-2010.12 | | F | L/R | Pickup 4WD 99L | | GCO18234 | Outer Joint | | 45 | 28 | 68 | 92.5 | 83.5 | I |
| **F-150 Extended Cab Pickup** | | | | | | | | | | | | | | | |
| 3.5 (272 kw) | 2014.09- | 6AT | F | L | Pickup 4WD T35PDTD | | GDS82684 | Drive Shaft | | 45 | 31 | 68 | 92.5 | 642 | |
| | 2014.09- | 6AT | F | R | Pickup 4WD T35PDTD | | GDS82683 | Drive Shaft | | 45 | 31 | 68 | 92.5 | 568 | |
| | 2014.09- | 6AT | F | R | Pickup 4WD T35PDTD | | GCO18234 | Outer Joint | | 45 | 28 | 68 | 92.5 | 83.5 | I |
| | 2014.09- | 6AT | F | L | Pickup 4WD T35PDTD | | GCI81961 | Inner Joint | | 31 | 37 | 46 | 130 | 91 | |
| | 2014.09- | 6AT | F | R | Pickup 4WD T35PDTD | | GCI81962 | Inner Joint | | 31 | 37 | 50 | | 148 | |
| 3.5 (336 kw) | 2017.09- | AT | F | L | Pickup 4WD T35PDTD | | GDS82684 | Drive Shaft | | 45 | 31 | 68 | 92.5 | 642 | |
| | 2017.09- | AT | F | R | Pickup 4WD T35PDTD | | GDS82683 | Drive Shaft | | 45 | 31 | 68 | 92.5 | 568 | |
| | 2017.09- | AT | F | L/R | Pickup 4WD T35PDTD | | GCO18234 | Outer Joint | | 45 | 28 | 68 | 92.5 | 83.5 | I |
| | 2017.09- | AT | F | L | Pickup 4WD T35PDTD | | GCI81961 | Inner Joint | | 31 | 37 | 46 | 130 | 91 | |
| | 2017.09- | AT | F | R | Pickup 4WD T35PDTD | | GCI81962 | Inner Joint | | 31 | 37 | 50 | | 148 | |
| 4.6 (218 kw) | 2008.09-2010.12 | | F | L/R | Pickup 4WD T46USEM | | GCO18234 | Outer Joint | | 45 | 28 | 68 | 92.5 | 83.5 | I |
| 5.4 (224 kw) | 2003.09-2008.12 | | F | L/R | Pickup 4WD | | GCO18234 | Outer Joint | | 45 | 28 | 68 | 92.5 | 83.5 | I |
| **F-150 Lightning Crew Cab Pickup** | | | | | | | | | | | | | | | |
| EV (337 kw) | 2023.04- | ET | R | L | Pickup 4WD | | GDS56231 | Drive Shaft | | 34 | 34 | 96.5 | 123 | 736 | |
| | 2023.04- | ET | R | R | Pickup 4WD | | GDS56230 | Drive Shaft | | 34 | 34 | 96.5 | 123 | 642 | |
| | 2023.04- | ET | R | L/R | Pickup 4WD | | GCO83213 | Outer Joint | | 34 | 40 | 96.5 | 123 | 64 | I |
| **F-150 Standard Cab Pickup** | | | | | | | | | | | | | | | |
| 2.7 (242 kw) | 2014.09- | | F | L/R | Pickup 4WD 27PD0X | | GCO18234 | Outer Joint | | 45 | 28 | 68 | 92.5 | 83.5 | I |
| 3.5 (210 kw) | 2014.09- | | F | L/R | Pickup 4WD T35PDED | | GCO18234 | Outer Joint | | 45 | 28 | 68 | 92.5 | 83.5 | I |
| 3.5 (272 kw) | 2014.09- | 6AT | F | L | Pickup 4WD T35PDTD | | GDS82684 | Drive Shaft | | 45 | 31 | 68 | 92.5 | 642 | |
| | 2014.09- | 6AT | F | R | Pickup 4WD T35PDTD | | GDS82683 | Drive Shaft | | 45 | 31 | 68 | 92.5 | 568 | |
| | 2014.09- | AT | F | L | Pickup 4WD T35PDTD | | GCI81961 | Inner Joint | | 31 | 37 | 46 | 130 | 91 | |

| | YEAR | TRANSM. | F/R | L/R | BODY STYLE & DRIVE TYPE & ENGINE | REMARKS | G-AP Ref. | PRODUCT | ABS | Technical Specifications A | B | C | H | L | P |
|---|---|---|---|---|---|---|---|---|---|---|---|---|---|---|---|
| **FORD USA** | | | | | | | | | | | | | | | |
| **F-150 Standard Cab Pickup** | | | | | | | | | | | | | | | |
| 3.5 (272 kw) | 2014.09- | AT | F | R | Pickup 4WD T35PDTD | | GCI81962 | Inner Joint | | 31 | 37 | 50 | | 148 | |
| | 2014.09- | | F | L/R | Pickup 4WD T35PDTD | | GCO18234 | Outer Joint | | 45 | 28 | 68 | 92.5 | 83.5 | I |
| 3.5 (280 kw) | 2016.11- | | F | L/R | Pickup 4WD T35PDTD | | GCO18234 | Outer Joint | | 45 | 28 | 68 | 92.5 | 83.5 | I |
| 3.5 (336 kw) | 2017.09- | AT | F | L | Pickup 4WD T35PDTD | | GDS82684 | Drive Shaft | | 45 | 31 | 68 | 92.5 | 642 | |
| | 2017.09- | AT | F | R | Pickup 4WD T35PDTD | | GDS82683 | Drive Shaft | | 45 | 31 | 68 | 92.5 | 568 | |
| | 2017.09- | AT | F | L/R | Pickup 4WD T35PDTD | | GCO18234 | Outer Joint | | 45 | 28 | 68 | 92.5 | 83.5 | I |
| | 2017.09- | AT | F | L | Pickup 4WD T35PDTD | | GCI81961 | Inner Joint | | 31 | 37 | 46 | 130 | 91 | |
| | 2017.09- | AT | F | R | Pickup 4WD T35PDTD | | GCI81962 | Inner Joint | | 31 | 37 | 50 | | 148 | |
| 3.7 (225 kw) | 2010.09- | | F | L/R | Pickup 4WD 99M | | GCO18234 | Outer Joint | | 45 | 28 | 68 | 92.5 | 83.5 | I |
| 4.2 (157 kw) | 2003.09-2008.12 | | F | L/R | Pickup 4WD 992 | | GCO18234 | Outer Joint | | 45 | 28 | 68 | 92.5 | 83.5 | I |
| 4.6 (185 kw) | 2008.09-2010.12 | AT | F | L/R | Pickup 4WD 999 | | GCO18234 | Outer Joint | | 45 | 28 | 68 | 92.5 | 83.5 | I |
| 5.0 (268 kw) | 2010.09- | | F | L/R | Pickup 4WD 99F | | GCO18234 | Outer Joint | | 45 | 28 | 68 | 92.5 | 83.5 | I |
| 5.4 (224 kw) | 2005.09-2008.12 | | F | L/R | Pickup 4WD 99L | | GCO18234 | Outer Joint | | 45 | 28 | 68 | 92.5 | 83.5 | I |
| **Fiesta** | | | | | | | | | | | | | | | |
| 1.6 (90 kw) | 2011.01-2017.04 | 5MT | F | L | Hatchback FWD | | GDS18405 | Drive Shaft | | 25 | 23 | 53.2 | 88.5 | 622 | |
| | 2011.01-2017.04 | 5MT | F | R | Hatchback FWD | | GDS18380 | Drive Shaft | | 25 | 23 | 53.2 | 88.5 | 920 | |
| | 2011.01-2017.04 | 6DCT | F | R | Hatchback FWD | | GDS18406 | Drive Shaft | | 25 | 34 | 53.3 | 87 | 974 | |
| **Flex** | | | | | | | | | | | | | | | |
| 3.5 (265 kw) | 2009.09- | 6AT | F | L | SUV 4WD T35PDTD | | GDS83680 | Drive Shaft | | 38 | 27 | 55 | 98 | 639 | |
| | 2009.09- | 6AT | F | L | SUV 4WD T35PDTD | | GCO82142 | Outer Joint | | 38 | 36 | 55 | 98 | 62 | I |
| | 2009.09- | 6AT | F | L | SUV 4WD T35PDTD | | GCI81978 | Inner Joint | | 27 | 36 | 35 | 106.5 | 108 | |
| 3.5 (272 kw) | 2012.09- | 6AT | F | L | SUV 4WD T35PDTD | | GDS83680 | Drive Shaft | | 38 | 27 | 55 | 98 | 639 | |
| | 2012.09- | 6AT | F | L | SUV 4WD T35PDTD | | GCO82142 | Outer Joint | | 38 | 36 | 55 | 98 | 62 | I |
| | 2012.09- | 6AT | F | L | SUV 4WD T35PDTD | | GCI81978 | Inner Joint | | 27 | 36 | 35 | 106.5 | 108 | |
| **Focus** | | | | | | | | | | | | | | | |
| 2.0 (97 kw) | 1999.09-2004.12 | | F | R | Estate FWD | | GCI18161 | Inner Joint | | 26 | 23 | 40 | 389 | 86 | |
| | 1999.09-2004.12 | | F | R | Hatchback FWD | | GCI18161 | Inner Joint | | 26 | 23 | 40 | 389 | 86 | |
| | 1999.09-2004.12 | | F | R | Saloon FWD C20HDEZ | | GCI18161 | Inner Joint | | 26 | 23 | 40 | 389 | 86 | |
| 2.0 (101 kw) | 2004.09-2007.12 | | F | R | Hatchback FWD | | GCI18161 | Inner Joint | | 26 | 23 | 40 | 389 | 86 | |
| 2.0 (102 kw) | 2004.09-2007.12 | | F | R | Saloon FWD | | GCI18161 | Inner Joint | | 26 | 23 | 40 | 389 | 86 | |
| 2.0 (104 kw) | 2007.09-2011.12 | | F | R | Coupe FWD C20HDEA | | GCI18161 | Inner Joint | | 26 | 23 | 40 | 389 | 86 | |
| 2.0 (105 kw) | 2007.09-2011.12 | AT | F | R | Saloon FWD C20HDEA | | GCI18161 | Inner Joint | | 26 | 23 | 40 | 389 | 86 | |
| 2.0 (127 kw) | 2002.01-2004.12 | | F | R | Hatchback FWD ALDA | | GCI18161 | Inner Joint | | 26 | 23 | 40 | 389 | 86 | |
| **Fusion** | | | | | | | | | | | | | | | |
| 2.0 (140 kw) | 2014.09-2022.03 | CVT | F | L | Saloon FWD UACA;UACC | | GDS83950 | Drive Shaft | | 27 | 35 | 54.8 | 105 | 670 | |
| | 2014.09-2022.03 | CVT | F | L/R | Saloon FWD UACA;UACC | | GCO82377 | Outer Joint | | 27 | 24 | 54.8 | 105 | 59 | M |
| | 2014.09-2022.03 | CVT | F | L | Saloon FWD UACA;UACC | | GCI82432 | Inner Joint | | 35 | 24 | 35 | 87 | 108 | |
| **Mustang** | | | | | | | | | | | | | | | |
| 5.0 (308 kw) | 2015.01-2023.04 | | R | L | Convertible RWD MF8F | Date To:2017.09 | GDS81943 | Drive Shaft | | 32 | 34 | 60 | 89.5 | 853 | |
| | 2015.01-2023.04 | | R | R | Convertible RWD MF8F | Date To:2017.11 | GDS81944 | Drive Shaft | | 32 | 34 | 60 | 89.5 | 835 | |
| | 2015.01-2023.04 | | R | L | Coupe RWD MF8F | Date To:2017.09 | GDS81943 | Drive Shaft | | 32 | 34 | 60 | 89.5 | 853 | |
| | 2015.01-2023.04 | | R | R | Coupe RWD MF8F | Date To:2017.11 | GDS81944 | Drive Shaft | | 32 | 34 | 60 | 89.5 | 835 | |
| 5.0 (310 kw) | 2015.07- | 6AT/6MT | R | L | Coupe RWD MF8F | Date to:2017.09 | GDS81943 | Drive Shaft | | 32 | 34 | 60 | 89.5 | 853 | |
| | 2015.07- | 6AT/6MT | R | R | Coupe RWD MF8F | Date to:2017.11 | GDS81944 | Drive Shaft | | 32 | 34 | 60 | 89.5 | 835 | |
| | 2015.07-2023.04 | 6AT/6MT | R | L | Convertible RWD MF8F | Date to:2017.09 | GDS81943 | Drive Shaft | | 32 | 34 | 60 | 89.5 | 853 | |
| | 2015.07-2023.04 | 6AT/6MT | R | R | Convertible RWD MF8F | Date to:2017.11 | GDS81944 | Drive Shaft | | 32 | 34 | 60 | 89.5 | 835 | |
| 5.0 (320 kw) | 2014.12- | | R | L | Coupe RWD MF8F | Date To:2017.09 | GDS81943 | Drive Shaft | | 32 | 34 | 60 | 89.5 | 853 | |
| | 2014.12- | | R | R | Coupe RWD MF8F | Date To:2017.11 | GDS81944 | Drive Shaft | | 32 | 34 | 60 | 89.5 | 835 | |
| 5.0 (324 kw) | 2014.02- | 10AT | R | L | Coupe RWD 99F | | GDS81943 | Drive Shaft | | 32 | 34 | 60 | 89.5 | 853 | |
| | 2014.02-2023.04 | 10AT | R | L | Convertible RWD 99F | | GDS81943 | Drive Shaft | | 32 | 34 | 60 | 89.5 | 853 | |
| | 2019.06-2023.04 | | R | L | Convertible RWD C50SDEM (4952cc) | Date To:2017.09 | GDS81943 | Drive Shaft | | 32 | 34 | 60 | 89.5 | 853 | |
| | 2019.06-2023.04 | | R | L | Coupe RWD C50SDEM (4952cc) | Date To:2017.09 | GDS81943 | Drive Shaft | | 32 | 34 | 60 | 89.5 | 853 | |
| 5.0 (331 kw) | 2017.11-2023.04 | 10AT | R | L | Convertible RWD C50SDEM (4952cc) | | GDS81943 | Drive Shaft | | 32 | 34 | 60 | 89.5 | 853 | |
| | 2017.11-2023.04 | 6MT/10AT | R | R | Convertible RWD C50SDEM (4952cc) | Date to:2017.11 | GDS81944 | Drive Shaft | | 32 | 34 | 60 | 89.5 | 835 | |
| | 2017.11-2023.04 | 10AT | R | L | Coupe RWD C50SDEM (4952cc) | | GDS81943 | Drive Shaft | | 32 | 34 | 60 | 89.5 | 853 | |
| | 2017.11-2023.04 | 6MT/10AT | R | R | Coupe RWD C50SDEM (4952cc) | Date to:2017.11 | GDS81944 | Drive Shaft | | 32 | 34 | 60 | 89.5 | 835 | |
| **Probe** | | | | | | | | | | | | | | | |
| 2.0 (85 kw) | 1993.10-1998.03 | AT | F | L/R | Coupe FWD JA20FS | for vehicles with automatic transmission | GCO34117 | Outer Joint | 44T | 28 | 32 | 56 | 89 | 59 | M |
| | 1993.10-1998.03 | AT/MT | F | R | Coupe FWD JA20FS | | GDS18085 | Drive Shaft | 44T | 28 | 28 | 56 | 89 | 575.5 | |
| | 1993.10-1998.03 | MT | F | L/R | Coupe FWD JA20FS | | GCO18035 | Outer Joint | | 28 | 23 | 56 | 90 | 59 | I |
| | 1993.10-1998.03 | MT | F | L/R | Coupe FWD JA20FS | | GCO34021 | Outer Joint | 44T | 28 | 23 | 56 | 90 | 59 | I |
| | 1993.10-1998.03 | MT | F | L/R | Coupe FWD JA20FS | | GCO34080 | Outer Joint | 44T | 28 | 23 | 56 | 90 | 59 | M |
| | 1993.10-1998.03 | | F | | Coupe FWD JA20FS | | GCO34082 | Outer Joint | 44T | 28 | 26 | 56 | 94 | 63 | M |
| 2.5 (119 kw) | 1993.10-1998.03 | AT | F | L/R | Coupe FWD JB25KL | for vehicles with automatic transmission | GCO34117 | Outer Joint | 44T | 28 | 32 | 56 | 89 | 59 | M |
| | 1993.10-1998.03 | AT/MT | F | R | Coupe FWD JB25KL | | GDS18085 | Drive Shaft | 44T | 28 | 28 | 56 | 89 | 575.5 | |

| | YEAR | TRANSM. | F/R | L/R | BODY STYLE & DRIVE TYPE & ENGINE | REMARKS | G-AP Ref. | PRODUCT | ABS | Technical Specifications A | B | C | H | L | P |
|---|---|---|---|---|---|---|---|---|---|---|---|---|---|---|---|
| **FORD USA** | | | | | | | | | | | | | | | |
| **Probe** | | | | | | | | | | | | | | | |
| 2.5 (119 kw) | 1993.10-1998.03 | MT | F | L/R | Coupe FWD JB25KL | | GCO18029 | Outer Joint | 44T | 28 | 26 | 56 | 89 | 65 | I |
| | 1993.10-1998.03 | MT | F | | Coupe FWD JB25KL | | GCO34082 | Outer Joint | 44T | 28 | 26 | 56 | 94 | 63 | M |
| 2.5 (120 kw) | 1994.12-1998.03 | MT | F | L/R | Coupe FWD KL | | GCO34082 | Outer Joint | 44T | 28 | 26 | 56 | 94 | 63 | M |
| **Ranger** | | | | | | | | | | | | | | | |
| 2.0 (96 kw) | 2019.03- | 6MT | F | L | Pickup 4WD T20DD0J | 6 balls,AAR | GDS34221 | Drive Shaft | | 28 | 29 | 61 | 104 | 608 | |
| | 2019.03- | 6MT | F | L | Pickup 4WD T20DD0J | Trim Level:XLS/XLT/WILDTRAK;For base grade | GDS84475 | Drive Shaft | | 28 | 29 | 61 | 104 | 615 | |
| | 2019.03- | 6MT | F | R | Pickup 4WD T20DD0J | 6 balls,AAR | GDS34220 | Drive Shaft | | 28 | 29 | 61 | 104 | 566 | |
| | 2019.03- | 6MT | F | R | Pickup 4WD T20DD0J | Trim Level:XLS/XLT/WILDTRAK;For base grade | GDS84476 | Drive Shaft | | 28 | 29 | 61 | 104 | 576 | |
| | 2019.03- | 6MT | F | L/R | Pickup 4WD T20DD0J | 6 balls | GCO34165 | Outer Joint | | 28 | 26 | 61 | 104 | 70.5 | I |
| | 2019.03- | 6MT | F | L/R | Pickup 4WD T20DD0J | Trim Level:XLS/XLT/WILDTRAK;For base grade | GCO82846 | Outer Joint | | 28 | 37 | 61 | 104 | 72 | I |
| | 2019.03- | 6MT | F | L | Pickup 4WD T20DD0J | AAR | GCI34116 | Inner Joint | | 29 | 27 | 35.5 | 97.5 | 95 | |
| | 2019.03- | 6MT | F | L | Pickup 4WD T20DD0J | Trim Level:XLS/XLT/WILDTRAK;For base grade | GCI82779 | Inner Joint | | 29 | 37 | 35.6 | 98 | 74 | |
| | 2019.03- | 6MT | F | R | Pickup 4WD T20DD0J | AAR | GCI34117 | Inner Joint | | 29 | 27 | 56 | | 149 | |
| | 2019.03- | 6MT | F | R | Pickup 4WD T20DD0J | Trim Level:XLS/XLT/WILDTRAK;For base grade | GCI82780 | Inner Joint | | 29 | 37 | 57 | | 133 | |
| 2.0 (125 kw) | 2019.03- | 10AT/6MT | F | L | Pickup 4WD T20DD0J;BC2X | 6 balls,AAR | GDS34221 | Drive Shaft | | 28 | 29 | 61 | 104 | 608 | |
| | 2019.03- | 10AT/6MT | F | L | Pickup 4WD T20DD0J;BC2X | Trim Level:XLS/XLT/WILDTRAK;For base grade | GDS84475 | Drive Shaft | | 28 | 29 | 61 | 104 | 615 | |
| | 2019.03- | 10AT/6MT | F | R | Pickup 4WD T20DD0J;BC2X | 6 balls,AAR | GDS34220 | Drive Shaft | | 28 | 29 | 61 | 104 | 566 | |
| | 2019.03- | 10AT/6MT | F | R | Pickup 4WD T20DD0J;BC2X | Trim Level:XLS/XLT/WILDTRAK;For base grade | GDS84476 | Drive Shaft | | 28 | 29 | 61 | 104 | 576 | |
| | 2019.03- | 10AT/6MT | F | L/R | Pickup 4WD T20DD0J;BC2X | 6 balls | GCO34165 | Outer Joint | | 28 | 26 | 61 | 104 | 70.5 | I |
| | 2019.03- | 10AT/6MT | F | L/R | Pickup 4WD T20DD0J;BC2X | Trim Level:XLS/XLT/WILDTRAK;For base grade | GCO82846 | Outer Joint | | 28 | 37 | 61 | 104 | 72 | I |
| | 2019.03- | 10AT/6MT | F | L | Pickup 4WD T20DD0J;BC2X | AAR | GCI34116 | Inner Joint | | 29 | 27 | 35.5 | 97.5 | 95 | |
| | 2019.03- | 10AT/6MT | F | L | Pickup 4WD T20DD0J;BC2X | Trim Level:XLS/XLT/WILDTRAK;For base grade | GCI82779 | Inner Joint | | 29 | 37 | 35.6 | 98 | 74 | |
| | 2019.03- | 10AT/6MT | F | R | Pickup 4WD T20DD0J;BC2X | AAR | GCI34117 | Inner Joint | | 29 | 27 | 56 | | 149 | |
| | 2019.03- | 10AT/6MT | F | R | Pickup 4WD T20DD0J;BC2X | Trim Level:XLS/XLT/WILDTRAK;For base grade | GCI82780 | Inner Joint | | 29 | 37 | 57 | | 133 | |
| | 2022.04- | MT/AT | F | L | Platform/Chassis 4WD P02X | | GDS56722 | Drive Shaft | | 28 | 29 | 60 | 114.5 | 652 | |
| | 2022.04- | MT/AT | F | R | Platform/Chassis 4WD P02X | | GDS56723 | Drive Shaft | | 28 | 29 | 60 | 114.5 | 691 | |
| | 2022.04- | MT/AT | F | L/R | Platform/Chassis 4WD P02X | | GCO83408 | Outer Joint | | 28 | 37 | 60 | 114.5 | 72.5 | I |
| | 2022.04- | MT/AT | F | L | Platform/Chassis 4WD P02X | | GCI83453 | Inner Joint | | 29 | 37 | 35.6 | 110 | 78.5 | |
| | 2022.04- | MT/AT | F | R | Platform/Chassis 4WD P02X | | GCI83454 | Inner Joint | | 29 | 37 | 35.6 | 149 | 78.5 | |
| | 2023.03- | 10AT | F | L | Pickup 4WD P02X | | GDS56722 | Drive Shaft | | 28 | 29 | 60 | 114.5 | 652 | |
| | 2023.03- | 10AT | F | R | Pickup 4WD P02X | | GDS56723 | Drive Shaft | | 28 | 29 | 60 | 114.5 | 691 | |
| | 2023.03- | 10AT | F | L/R | Pickup 4WD P02X | | GCO83408 | Outer Joint | | 28 | 37 | 60 | 114.5 | 72.5 | I |
| | 2023.03- | 10AT | F | L | Pickup 4WD P02X | | GCI83453 | Inner Joint | | 29 | 37 | 35.6 | 110 | 78.5 | |
| | 2023.03- | 10AT | F | R | Pickup 4WD P02X | | GCI83454 | Inner Joint | | 29 | 37 | 35.6 | 149 | 78.5 | |
| | 2023.03- | MT/AT | F | L | Pickup 4WD P02X | | GDS56722 | Drive Shaft | | 28 | 29 | 60 | 114.5 | 652 | |
| | 2023.03- | MT/AT | F | R | Pickup 4WD P02X | | GDS56723 | Drive Shaft | | 28 | 29 | 60 | 114.5 | 691 | |
| | 2023.03- | MT/AT | F | L/R | Pickup 4WD P02X | | GCO83408 | Outer Joint | | 28 | 37 | 60 | 114.5 | 72.5 | I |
| | 2023.03- | MT/AT | F | L | Pickup 4WD P02X | | GCI83453 | Inner Joint | | 29 | 37 | 35.6 | 110 | 78.5 | |
| | 2023.03- | MT/AT | F | R | Pickup 4WD P02X | | GCI83454 | Inner Joint | | 29 | 37 | 35.6 | 149 | 78.5 | |
| 2.0 (151 kw) | 2023.03- | 10AT | F | L | Pickup 4WD YN2X | Modelcode:P703 | GDS56722 | Drive Shaft | | 28 | 29 | 60 | 114.5 | 652 | |
| | 2023.03- | 10AT | F | R | Pickup 4WD YN2X | Modelcode:P703 | GDS56723 | Drive Shaft | | 28 | 29 | 60 | 114.5 | 691 | |
| | 2023.03- | 10AT | F | L/R | Pickup 4WD YN2X | Modelcode:P703 | GCO83408 | Outer Joint | | 28 | 37 | 60 | 114.5 | 72.5 | I |
| | 2023.03- | 10AT | F | L | Pickup 4WD YN2X | Modelcode:P703 | GCI83453 | Inner Joint | | 29 | 37 | 35.6 | 110 | 78.5 | |
| | 2023.03- | 10AT | F | R | Pickup 4WD YN2X | Modelcode:P703 | GCI83454 | Inner Joint | | 29 | 37 | 35.6 | 149 | 78.5 | |
| 2.0 (157 kw) | 2018.09- | 10AT/6MT | F | L | Pickup 4WD T20DD0J;YN2X | Trim Level:XLS/XLT/WILDTRAK | GDS84475 | Drive Shaft | | 28 | 29 | 61 | 104 | 615 | |
| | 2018.09- | 10AT/6MT | F | R | Pickup 4WD T20DD0J;YN2X | Trim Level:XLS/XLT/WILDTRAK | GDS84476 | Drive Shaft | | 28 | 29 | 61 | 104 | 576 | |
| | 2018.09- | 10AT/6MT | F | L/R | Pickup 4WD T20DD0J;YN2X | Trim Level:XLS/XLT/WILDTRAK | GCO82846 | Outer Joint | | 28 | 37 | 61 | 104 | 72 | I |
| | 2018.09- | 10AT/6MT | F | L | Pickup 4WD T20DD0J;YN2X | Trim Level:XLS/XLT/WILDTRAK | GCI82779 | Inner Joint | | 29 | 37 | 35.6 | 98 | 74 | |
| | 2018.09- | 10AT/6MT | F | R | Pickup 4WD T20DD0J;YN2X | Trim Level:XLS/XLT/WILDTRAK | GCI82780 | Inner Joint | | 29 | 37 | 57 | | 133 | |
| 2.2 (92 kw) | 2011.04- | AT/MT | F | L | Pickup 4WD GBVAJQW;ENQW | | GDS34221 | Drive Shaft | | 28 | 29 | 61 | 104 | 608 | |
| | 2011.04- | AT/MT | F | R | Pickup 4WD GBVAJQW;ENQW | | GDS34220 | Drive Shaft | | 28 | 29 | 61 | 104 | 566 | |
| | 2011.04- | AT/MT | F | L/R | Pickup 4WD GBVAJQW;ENQW | | GCO34165 | Outer Joint | | 28 | 26 | 61 | 104 | 70.5 | I |
| | 2011.04- | AT/MT | F | L/R | Pickup 4WD GBVAJQW;ENQW | | GCO34248 | Outer Joint | | 28 | 26 | 61 | 104 | 70.5 | I |
| | 2011.04- | AT/MT | F | L | Pickup 4WD GBVAJQW;ENQW | | GCI34116 | Inner Joint | | 29 | 27 | 35.5 | 97.5 | 95 | |
| | 2011.04- | AT/MT | F | R | Pickup 4WD GBVAJQW;ENQW | | GCI34117 | Inner Joint | | 29 | 27 | 56 | | 149 | |
| 2.2 (96 kw) | 2015.05- | AT/MT | F | L | Pickup 4WD T22DD0P | | GDS34221 | Drive Shaft | | 28 | 29 | 61 | 104 | 608 | |
| | 2015.05- | AT/MT | F | R | Pickup 4WD T22DD0P | | GDS34220 | Drive Shaft | | 28 | 29 | 61 | 104 | 566 | |
| | 2015.05- | AT/MT | F | L/R | Pickup 4WD T22DD0P | | GCO34165 | Outer Joint | | 28 | 26 | 61 | 104 | 70.5 | I |
| | 2015.05- | AT/MT | F | L/R | Pickup 4WD T22DD0P | | GCO34248 | Outer Joint | | 28 | 26 | 61 | 104 | 70.5 | I |
| | 2015.05- | AT/MT | F | R | Pickup 4WD T22DD0P | | GCI34117 | Inner Joint | | 29 | 27 | 56 | | 149 | |
| 2.2 (110 kw) | 2011.04- | 6AT/6MT | F | L | Pickup 4WD GBVAJQJ;ENQJ | | GDS34221 | Drive Shaft | | 28 | 29 | 61 | 104 | 608 | |
| | 2011.04- | 6AT/6MT | F | R | Pickup 4WD GBVAJQJ;ENQJ | | GDS34220 | Drive Shaft | | 28 | 29 | 61 | 104 | 566 | |
| | 2011.04- | 6AT/6MT | F | L/R | Pickup 4WD GBVAJQJ;ENQJ | Bellows Material:Neoprene | GCO34165 | Outer Joint | | 28 | 26 | 61 | 104 | 70.5 | I |
| | 2011.04- | 6AT/6MT | F | R | Pickup 4WD GBVAJQJ;ENQJ | | GCI34117 | Inner Joint | | 29 | 27 | 56 | | 149 | |
| | 2011.04- | AT/MT | F | L/R | Pickup 4WD GBVAJQJ;ENQJ | Bellows Material:Thermoplastic | GCO34248 | Outer Joint | | 28 | 26 | 61 | 104 | 70.5 | I |

| | YEAR | TRANSM. | F/R | L/R | BODY STYLE & DRIVE TYPE & ENGINE | REMARKS | G-AP Ref. | PRODUCT | ABS | Technical Specifications A | B | C | H | L | P |
|---|---|---|---|---|---|---|---|---|---|---|---|---|---|---|---|
| **FORD USA** | | | | | | | | | | | | | | | |
| **Ranger** | | | | | | | | | | | | | | | |
| 2.2 (118 kw) | 2015.05- | AT/MT | F | L | Pickup 4WD GBVAJQJ;T22DD0P | | GDS34221 | Drive Shaft | | 28 | 29 | 61 | 104 | 608 | |
| | 2015.05- | AT/MT | F | R | Pickup 4WD GBVAJQJ;T22DD0P | | GDS34220 | Drive Shaft | | 28 | 29 | 61 | 104 | 566 | |
| | 2015.05- | AT/MT | F | L/R | Pickup 4WD GBVAJQJ;T22DD0P | Bellows Material:Neoprene | GCO34165 | Outer Joint | | 28 | 26 | 61 | 104 | 70.5 | I |
| | 2015.05- | AT/MT | F | L/R | Pickup 4WD GBVAJQJ;T22DD0P | Bellows Material:Thermoplastic | GCO34248 | Outer Joint | | 28 | 26 | 61 | 104 | 70.5 | I |
| | 2015.05- | AT/MT | F | R | Pickup 4WD GBVAJQJ;T22DD0P | | GCI34117 | Inner Joint | | 29 | 27 | 56 | | 149 | |
| 2.5 (57 kw) | 1998.10-2002.02 | AT/MT | F | L | Pickup 4WD WL31 | | GDS34020 | Drive Shaft | | 26 | 26 | 65 | 143.5 | 536 | |
| | 1998.10-2002.02 | AT/MT | F | R | Pickup 4WD WL31 | | GDS34019 | Drive Shaft | | 26 | 26 | 65 | 143.5 | 606 | |
| | 1998.10-2002.02 | MT | F | L | Pickup 4WD WL31 | | GDS39001 | Drive Shaft | | 26 | 26 | 65 | 143.5 | 527 | |
| | 1998.10-2002.02 | MT | F | R | Pickup 4WD WL31 | | GDS34012 | Drive Shaft | | 26 | 26 | 65 | 143.5 | 606 | |
| | 1998.10-2002.02 | MT | F | L | Pickup 4WD WL31 | | GCI34011 | Inner Joint | | 26 | 25 | 40 | | 120 | |
| | 1998.10-2002.02 | | F | L | Pickup 4WD WL31 | | GDS27063 | Drive Shaft | 44W | 26 | 26 | 61 | 103.5 | 509 | |
| | 1998.10-2002.02 | | F | R | Pickup 4WD WL31 | | GDS27062 | Drive Shaft | 44W | 26 | 26 | 61 | 103.5 | 579.5 | |
| 2.5 (62 kw) | 1998.06-2006.06 | AT/MT | F | R | Pickup 4WD WLT | | GDS34031 | Drive Shaft | | 26 | 26 | 61 | 103.5 | 579.5 | |
| | 1998.06-2006.06 | AT/MT | F | L/R | Pickup 4WD WLT | | GCO27017 | Outer Joint | | 26 | 25 | 61 | 103.5 | 75.5 | M |
| | 1998.06-2006.06 | AT/MT | F | L/R | Pickup 4WD WLT | | GCO34067 | Outer Joint | 44W | 26 | 25 | 61 | 103.5 | 75.5 | M |
| | 1998.06-2006.06 | MT | F | L | Pickup 4WD WLT | | GDS27063 | Drive Shaft | 44W | 26 | 26 | 61 | 103.5 | 509 | |
| | 1998.06-2006.06 | MT | F | R | Pickup 4WD WLT | | GDS27062 | Drive Shaft | 44W | 26 | 26 | 61 | 103.5 | 579.5 | |
| 2.5 (80 kw) | 1998.10-2006.06 | MT | F | L | Pickup 4WD WLT | | GDS27063 | Drive Shaft | 44W | 26 | 26 | 61 | 103.5 | 509 | |
| | 1998.10-2006.06 | MT | F | L | Pickup 4WD WLT | Vehicle Equipment:for vehicles with automatically activated freewheel hub;Date to:2003-12 | GDS34020 | Drive Shaft | | 26 | 26 | 65 | 143.5 | 536 | |
| | 1998.10-2006.06 | MT | F | L | Pickup 4WD WLT | | GDS39001 | Drive Shaft | | 26 | 26 | 65 | 143.5 | 527 | |
| | 1998.10-2006.06 | MT | F | R | Pickup 4WD WLT | | GDS27062 | Drive Shaft | 44W | 26 | 26 | 61 | 103.5 | 579.5 | |
| | 1998.10-2006.06 | MT | F | R | Pickup 4WD WLT | | GDS34012 | Drive Shaft | | 26 | 26 | 65 | 143.5 | 606 | |
| | 1998.10-2006.06 | MT | F | R | Pickup 4WD WLT | Vehicle Equipment:for vehicles with automatically activated freewheel hub;Date to:2003-12 | GDS34019 | Drive Shaft | | 26 | 26 | 65 | 143.5 | 606 | |
| | 1998.10-2006.06 | MT | F | R | Pickup 4WD WLT | Vehicle Equipment:for vehicles with manually activated freewheel hub | GDS34031 | Drive Shaft | | 26 | 26 | 61 | 103.5 | 579.5 | |
| | 1998.10-2006.06 | MT | F | L/R | Pickup 4WD WLT | Vehicle Equipment:for vehicles with manually activated freewheel hub | GCO27017 | Outer Joint | | 26 | 25 | 61 | 103.5 | 75.5 | M |
| | 1998.10-2006.06 | MT | F | L/R | Pickup 4WD WLT | Vehicle Equipment:for vehicles with manually activated freewheel hub | GCO34067 | Outer Joint | 44W | 26 | 25 | 61 | 103.5 | 75.5 | M |
| | 1998.10-2006.06 | MT | F | L | Pickup 4WD WLT | | GCI34011 | Inner Joint | | 26 | 25 | 40 | | 120 | |
| 2.5 (105 kw) | 2006.05-2012.07 | 5MT | F | L | Pickup 4WD WLAA | Trim Level:STAGE 2 + 4 | GDS18210 | Drive Shaft | 44W | 28 | 28 | 61 | 104.5 | 492 | |
| | 2006.05-2012.07 | 5MT | F | L | Pickup 4WD WLAA | Trim Level:STAGE 3 | GDS18211 | Drive Shaft | 44W | 28 | 30 | 61 | 104.5 | 577 | |
| | 2006.05-2012.07 | 5MT | F | R | Pickup 4WD WLAA | Trim Level:STAGE 3 | GDS18210 | Drive Shaft | 44W | 28 | 28 | 61 | 104.5 | 492 | |
| | 2006.05-2012.07 | 5MT | F | R | Pickup 4WD WLAA | Trim Level:STAGE 2 + 4 | GDS18211 | Drive Shaft | 44W | 28 | 30 | 61 | 104.5 | 577 | |
| | 2006.05-2012.07 | 5MT | F | L/R | Pickup 4WD WLAA | Trim Level:STAGE 2 + 4/STAGE 3 | GCO18206 | Outer Joint | 44W | 28 | 36 | 61 | 104.5 | 78.5 | I |
| | 2006.05-2012.07 | 5MT | F | L | Pickup 4WD WLAA | Trim Level:STAGE 2 + 4;Trim Level:STAGE 3 | GCI18076 | Inner Joint | | 28 | 36 | 42 | | 112 | |
| | 2006.05-2012.07 | 5MT | F | R | Pickup 4WD WLAA | Trim Level:STAGE 2 + 4 | GCI18077 | Inner Joint | | 30 | 36 | 38 | 94.5 | 101 | |
| | 2006.05-2012.07 | 5MT | F | R | Pickup 4WD WLAA | Trim Level:STAGE 3 | GCI18077 | Inner Joint | | 30 | 36 | 38 | 94.5 | 101 | |
| 2.5 (122 kw) | 2011.11- | MT | F | L | Pickup 4WD GBVAF;GBVAL;GBVAK | | GDS34221 | Drive Shaft | | 28 | 29 | 61 | 104 | 608 | |
| | 2011.11- | MT | F | R | Pickup 4WD GBVAF;GBVAL;GBVAK | | GDS34220 | Drive Shaft | | 28 | 29 | 61 | 104 | 566 | |
| | 2011.11- | MT | F | L/R | Pickup 4WD GBVAF;GBVAL;GBVAK | | GCO34165 | Outer Joint | | 28 | 26 | 61 | 104 | 70.5 | I |
| | 2011.11- | MT | F | R | Pickup 4WD GBVAF;GBVAL;GBVAK | | GCI34117 | Inner Joint | | 29 | 27 | 56 | | 149 | |
| 3.0 (115 kw) | 2006.05-2012.07 | 5MT | F | L | Pickup 4WD WEC;MD30DITC | Trim Level:STAGE 2 + 4 | GDS18210 | Drive Shaft | 44W | 28 | 28 | 61 | 104.5 | 492 | |
| | 2006.05-2012.07 | 5MT | F | L | Pickup 4WD WEC;MD30DITC | Trim Level:STAGE 3 | GDS18211 | Drive Shaft | 44W | 28 | 30 | 61 | 104.5 | 577 | |
| | 2006.05-2012.07 | 5MT | F | R | Pickup 4WD WEC;MD30DITC | Trim Level:STAGE 3 | GDS18210 | Drive Shaft | 44W | 28 | 28 | 61 | 104.5 | 492 | |
| | 2006.05-2012.07 | 5MT | F | R | Pickup 4WD WEC;MD30DITC | Trim Level:STAGE 2 + 4 | GDS18211 | Drive Shaft | 44W | 28 | 30 | 61 | 104.5 | 577 | |
| | 2006.05-2012.07 | 5MT | F | L/R | Pickup 4WD WEC;MD30DITC | Trim Level:STAGE 2 + 4/STAGE 3 | GCO18206 | Outer Joint | 44W | 28 | 36 | 61 | 104.5 | 78.5 | I |
| | 2006.05-2012.07 | 5MT | F | L | Pickup 4WD WEC;MD30DITC | Trim Level:STAGE 2 + 4;Trim Level:STAGE 3 | GCI18076 | Inner Joint | | 28 | 36 | 42 | | 112 | |
| | 2006.05-2012.07 | 5MT | F | R | Pickup 4WD WEC;MD30DITC | Trim Level:STAGE 2 + 4 | GCI18077 | Inner Joint | | 30 | 36 | 38 | 94.5 | 101 | |
| | 2006.05-2012.07 | 5MT | F | R | Pickup 4WD WEC;MD30DITC | Trim Level:STAGE 3 | GCI18077 | Inner Joint | | 30 | 36 | 38 | 94.5 | 101 | |
| 3.0 (177 kw) | 2023.03- | 10AT | F | L | Pickup 4WD BF2X | | GDS56722 | Drive Shaft | | 28 | 29 | 60 | 114.5 | 652 | |
| | 2023.03- | 10AT | F | R | Pickup 4WD BF2X | | GDS56723 | Drive Shaft | | 28 | 29 | 60 | 114.5 | 691 | |
| | 2023.03- | 10AT | F | L/R | Pickup 4WD BF2X | | GCO83408 | Outer Joint | | 28 | 37 | 60 | 114.5 | 72.5 | I |
| | 2023.03- | 10AT | F | L | Pickup 4WD BF2X | | GCI83453 | Inner Joint | | 29 | 37 | 35.6 | 110 | 78.5 | |
| | 2023.03- | 10AT | F | R | Pickup 4WD BF2X | | GCI83454 | Inner Joint | | 29 | 37 | 35.6 | 149 | 78.5 | |
| 3.2 (147 kw) | 2011.04- | 6AT/6MT | F | L | Pickup 4WD SAFA;SA2R;SA2S;SA2W;ENSA;P5-AT | | GDS34221 | Drive Shaft | | 28 | 29 | 61 | 104 | 608 | |
| | 2011.04- | 6AT/6MT | F | R | Pickup 4WD SAFA;SA2R;SA2S;SA2W;ENSA;P5-AT | | GDS34220 | Drive Shaft | | 28 | 29 | 61 | 104 | 566 | |
| | 2011.04- | 6AT/6MT | F | L/R | Pickup 4WD SAFA;SA2R;SA2S;SA2W;ENSA;P5-AT | Bellows Material:Neoprene | GCO34165 | Outer Joint | | 28 | 26 | 61 | 104 | 70.5 | I |
| | 2011.04- | 6AT/6MT | F | R | Pickup 4WD SAFA;SA2R;SA2S;SA2W;ENSA;P5-AT | | GCI34117 | Inner Joint | | 29 | 27 | 56 | | 149 | |
| | 2011.04- | AT/MT | F | L/R | Pickup 4WD SAFA;SA2R;SA2S;SA2W;ENSA;P5-AT | Bellows Material:Thermoplastic | GCO34248 | Outer Joint | | 28 | 26 | 61 | 104 | 70.5 | I |
| 4.0 (152 kw) | 2005.10-2010.09 | 5MT | F | L | Pickup 4WD C40VSEX | | GDS27063 | Drive Shaft | 44W | 26 | 26 | 61 | 103.5 | 509 | |
| | 2005.10-2010.09 | 5MT | F | R | Pickup 4WD C40VSEX | | GDS27062 | Drive Shaft | 44W | 26 | 26 | 61 | 103.5 | 579.5 | |
| | 2005.10-2010.09 | | F | L/R | Pickup 4WD C40VSEX | | GCO34067 | Outer Joint | 44W | 26 | 25 | 61 | 103.5 | 75.5 | M |
| | 2005.10-2010.09 | | F | L | Pickup 4WD C40VSEX | | GCI18076 | Inner Joint | | 28 | 36 | 42 | | 112 | |
| **Ranger Cab & Chassis** | | | | | | | | | | | | | | | |
| 2.0 (125 kw) | 2022.11- | MT/AT | F | L | Platform/Chassis RWD P02X | | GDS56722 | Drive Shaft | | 28 | 29 | 60 | 114.5 | 652 | |
| | 2022.11- | MT/AT | F | R | Platform/Chassis RWD P02X | | GDS56723 | Drive Shaft | | 28 | 29 | 60 | 114.5 | 691 | |
| | 2022.11- | MT/AT | F | L/R | Platform/Chassis RWD P02X | | GCO83408 | Outer Joint | | 28 | 37 | 60 | 114.5 | 72.5 | I |

| | YEAR | TRANSM. | F/R | L/R | BODY STYLE & DRIVE TYPE & ENGINE | REMARKS | G-AP Ref. | PRODUCT | ABS | Technical Specifications A | B | C | H | L | P |
|---|---|---|---|---|---|---|---|---|---|---|---|---|---|---|---|
| **FORD USA** | | | | | | | | | | | | | | | |
| **Ranger Cab & Chassis** | | | | | | | | | | | | | | | |
| 2.0 (125 kw) | 2022.11- | MT/AT | F | L | Platform/Chassis RWD P02X | | GCI83453 | Inner Joint | | 29 | 37 | 35.6 | 110 | 78.5 | |
| | 2022.11- | MT/AT | F | R | Platform/Chassis RWD P02X | | GCI83454 | Inner Joint | | 29 | 37 | 35.6 | 149 | 78.5 | |
| **Ranger Crew Cab Pickup** | | | | | | | | | | | | | | | |
| 2.3 (207 kw) | 2024.09- | MT/AT | F | L | Pickup 4WD | | GDS56722 | Drive Shaft | | 28 | 29 | 60 | 114.5 | 652 | |
| | 2024.09- | MT/AT | F | R | Pickup 4WD | | GDS56723 | Drive Shaft | | 28 | 29 | 60 | 114.5 | 691 | |
| | 2024.09- | MT/AT | F | L/R | Pickup 4WD | | GCO83408 | Outer Joint | | 28 | 37 | 60 | 114.5 | 72.5 | I |
| | 2024.09- | MT/AT | F | L | Pickup 4WD | | GCI83453 | Inner Joint | | 29 | 37 | 35.6 | 110 | 78.5 | |
| | 2024.09- | MT/AT | F | R | Pickup 4WD | | GCI83454 | Inner Joint | | 29 | 37 | 35.6 | 149 | 78.5 | |
| **GAC** | | | | | | | | | | | | | | | |
| **Trumpchi GA6** | | | | | | | | | | | | | | | |
| 1.5 (112 kw) | 2016.03- | 5MT | F | L | Saloon FWD 4A15-M1 | For model year:2016 | GDS75062 | Drive Shaft | | 27 | 24 | 56 | 98 | 641 | |
| | 2016.03- | 5MT | F | L | Saloon FWD 4A15-M1 | For model year:2016 | GCO75035 | Outer Joint | | 27 | 25 | 56 | 98 | 64.5 | M |
| | 2016.03- | 5MT | F | L | Saloon FWD 4A15-M1 | For model year:2016 | GCI75043 | Inner Joint | | 24 | 25 | 50 | 67 | 109.5 | |
| 1.6 (116 kw) | 2014.12- | 5MT | F | L | Saloon FWD 4B16M1 | | GDS75062 | Drive Shaft | | 27 | 24 | 56 | 98 | 641 | |
| | 2014.12- | 5MT | F | L/R | Saloon FWD 4B16M1 | For model year:2015 | GCO75035 | Outer Joint | | 27 | 25 | 56 | 98 | 64.5 | M |
| | 2014.12- | 5MT | F | L | Saloon FWD 4B16M1 | | GCI75043 | Inner Joint | | 24 | 25 | 50 | 67 | 109.5 | |
| 1.8 (130 kw) | 2014.12- | 5MT | F | L | Saloon FWD 4B18M1 | For model year:2015 | GCI75043 | Inner Joint | | 24 | 25 | 50 | 67 | 109.5 | |
| **Trumpchi GM8** | | | | | | | | | | | | | | | |
| 1.8 (166 kw) | 2020.06- | 8AT | F | R | MPV FWD 4B18J1 | Model year to:2022 | GDS56605 | Drive Shaft | | 30 | 28 | 55.1 | 98 | 997 | |
| | 2020.06- | 8AT | F | L/R | MPV FWD 4B18J1 | Model year to:2022 | GCO83332 | Outer Joint | | 30 | 36 | 55.1 | 98 | 65.5 | I |
| | 2020.06- | 8AT | F | R | MPV FWD 4B18J1 | Model year to:2022 | GCI83400 | Inner Joint | | 28 | 36 | 33.2 | 359 | 127 | |
| 2.0 (148 kw) | 2017.12- | 5AMT | F | L | MPV FWD 4B20M1 | Model year to:2019 | GDS56566 | Drive Shaft | | 30 | 28 | 55.1 | 98 | 655 | |
| | 2017.12- | 5AMT | F | R | MPV FWD 4B20M1 | Model year to:2019 | GDS56605 | Drive Shaft | | 30 | 28 | 55.1 | 98 | 997 | |
| | 2017.12- | 5AMT | F | L/R | MPV FWD 4B20M1 | Model year to:2019 | GCO83332 | Outer Joint | | 30 | 36 | 55.1 | 98 | 65.5 | I |
| | 2017.12- | 5AMT | F | L | MPV FWD 4B20M1 | Model year to:2019 | GCI83376 | Inner Joint | | 28 | 36 | 33.2 | 73 | 97 | |
| | 2017.12- | 5AMT | F | R | MPV FWD 4B20M1 | Model year to:2019 | GCI83400 | Inner Joint | | 28 | 36 | 33.2 | 359 | 127 | |
| 2.0 (185 kw) | 2019.09- | 8AT | F | R | MPV FWD 4B20J1 | Model year to:2020 | GDS56605 | Drive Shaft | | 30 | 28 | 55.1 | 98 | 997 | |
| | 2019.09- | 8AT | F | L/R | MPV FWD 4B20J1 | Model year to:2020 | GCO83332 | Outer Joint | | 30 | 36 | 55.1 | 98 | 65.5 | I |
| | 2019.09- | 8AT | F | R | MPV FWD 4B20J1 | Model year to:2020 | GCI83400 | Inner Joint | | 28 | 36 | 33.2 | 359 | 127 | |
| **Trumpchi GS4** | | | | | | | | | | | | | | | |
| 1.5 (112 kw) | 2016.03-2019.09 | 6AT | F | L | SUV FWD 4A15-M1 | Model year from:2018,Model year to:2019 | GDS18514 | Drive Shaft | | 27 | 26 | 56 | 98 | 674 | |
| | 2016.03-2019.09 | 6AT | F | L/R | SUV FWD 4A15-M1 | Model year from:2018,Model year to:2019 | GCO18331 | Outer Joint | | 27 | 27 | 56 | 98 | 66.5 | I |
| | 2016.03-2019.09 | 6AT | F | L | SUV FWD 4A15-M1 | Model year from:2018,Model year to:2019 | GCI18286 | Inner Joint | | 26 | 32 | 31 | 68.5 | 87 | |
| **Trumpchi GS5** | | | | | | | | | | | | | | | |
| 1.8 (130 kw) | 2012.03- | AT | F | L | SUV 4WD 4B18M1 | For model year:2012/2014 | GDS75059 | Drive Shaft | | 27 | 27 | 56 | 98 | 645 | |
| | 2012.03- | AT | F | L/R | SUV 4WD 4B18M1 | For model year:2012/2014 | GCO75035 | Outer Joint | | 27 | 25 | 56 | 98 | 64.5 | M |
| | 2012.03- | AT | F | L | SUV 4WD 4B18M1 | For model year:2014 | GCI75040 | Inner Joint | | 27 | 25 | 34.95 | 99 | 95 | |
| | 2012.03- | AT | F | R | SUV 4WD 4B18M1 | For model year:2014 | GCI75042 | Inner Joint | | 27 | 25 | 34.95 | 416 | 112 | |
| | 2012.03- | AT | R | L | SUV 4WD 4B18M1 | Model year to:2014 | GDS56584 | Drive Shaft | | 27 | 22 | 56 | 103 | 806 | |
| | 2012.03- | AT | R | R | SUV 4WD 4B18M1 | Model year to:2014 | GDS56600 | Drive Shaft | | 27 | 22 | 56 | 103 | 816 | |
| | 2012.03- | AT | R | L/R | SUV 4WD 4B18M1 | Model year to:2014 | GCO83349 | Outer Joint | | 27 | 20 | 56 | 103 | 60 | M |
| | 2012.03- | AT | R | L | SUV 4WD 4B18M1 | Model year to:2014 | GCI83390 | Inner Joint | | 22 | 20 | 34.95 | 66 | 111 | |
| | 2012.03- | AT | R | R | SUV 4WD 4B18M1 | Model year to:2014 | GCI83397 | Inner Joint | | 22 | 20 | 35 | 108.5 | 78.5 | |
| | 2012.03-2017.12 | AT | F | L | SUV FWD 4B18M1 | Model year to:2014 | GDS75059 | Drive Shaft | | 27 | 27 | 56 | 98 | 645 | |
| | 2012.03-2017.12 | AT | F | L | SUV FWD 4B18M1 | For model year:2014 | GCI75040 | Inner Joint | | 27 | 25 | 34.95 | 99 | 95 | |
| | 2012.03-2017.12 | AT | F | R | SUV FWD 4B18M1 | For model year:2014 | GCI75042 | Inner Joint | | 27 | 25 | 34.95 | 416 | 112 | |
| | 2012.03-2017.12 | AT/MT | F | L/R | SUV FWD 4B18M1 | Model year to:2014,Transmission:AT;for model year:2012%2014,Transmission:AT/MT | GCO75035 | Outer Joint | | 27 | 25 | 56 | 98 | 64.5 | M |
| | 2012.03-2017.12 | MT | F | L | SUV FWD 4B18M1 | For model year:2012/2014 | GDS75062 | Drive Shaft | | 27 | 24 | 56 | 98 | 641 | |
| | 2012.03-2017.12 | MT | F | L | SUV FWD 4B18M1 | For model year:2012/2014 | GCI75043 | Inner Joint | | 24 | 25 | 50 | 67 | 109.5 | |
| 2.0 (108 kw) | 2012.03- | AT | F | L | SUV FWD 4B20K2 | For model year:2012/2014 | GDS75059 | Drive Shaft | | 27 | 27 | 56 | 98 | 645 | |
| | 2012.03- | AT | F | R | SUV FWD 4B20K2 | For model year:2012/2014 | GDS75061 | Drive Shaft | | 27 | 27 | 56 | 98 | 979 | |
| | 2012.03- | AT | F | L | SUV FWD 4B20K2 | For model year:2012/2014 | GCI75040 | Inner Joint | | 27 | 25 | 34.95 | 99 | 95 | |
| | 2012.03- | AT | F | R | SUV FWD 4B20K2 | For model year:2012/2014 | GCI75042 | Inner Joint | | 27 | 25 | 34.95 | 416 | 112 | |
| | 2012.03- | AT/MT | F | L/R | SUV FWD 4B20K2 | For model year:2012/2014 | GCO75035 | Outer Joint | | 27 | 25 | 56 | 98 | 64.5 | M |
| | 2012.03- | MT | F | L | SUV FWD 4B20K2 | For model year:2012/2014 | GDS75062 | Drive Shaft | | 27 | 24 | 56 | 98 | 641 | |
| | 2012.03- | MT | F | R | SUV FWD 4B20K2 | For model year:2012/2014 | GDS75063 | Drive Shaft | | 27 | 24 | 56 | 98 | 983 | |
| | 2012.03- | MT | F | L | SUV FWD 4B20K2 | For model year:2012/2014 | GCI75043 | Inner Joint | | 24 | 25 | 50 | 67 | 109.5 | |
| | 2012.03- | MT | F | R | SUV FWD 4B20K2 | For model year:2012/2014 | GCI75044 | Inner Joint | | 24 | 25 | 39.95 | 418 | 100 | |
| **Trumpchi GS7** | | | | | | | | | | | | | | | |
| 1.8 (138 kw) | 2017.08- | 6AMT | F | L | SUV FWD 4B18M2 | Model year to:2019 | GDS56566 | Drive Shaft | | 30 | 28 | 55.1 | 98 | 655 | |
| | 2017.08- | 6AMT | F | R | SUV FWD 4B18M2 | Model year to:2019 | GDS56605 | Drive Shaft | | 30 | 28 | 55.1 | 98 | 997 | |
| | 2017.08- | 6AMT | F | L/R | SUV FWD 4B18M2 | Model year to:2019 | GCO83332 | Outer Joint | | 30 | 36 | 55.1 | 98 | 65.5 | I |
| | 2017.08- | 6AMT | F | L | SUV FWD 4B18M2 | Model year to:2019 | GCI83376 | Inner Joint | | 28 | 36 | 33.2 | 73 | 97 | |
| | 2017.08- | 6AMT | F | R | SUV FWD 4B18M2 | Model year to:2019 | GCI83400 | Inner Joint | | 28 | 36 | 33.2 | 359 | 127 | |
| 2.0 (148 kw) | 2017.08- | 6AMT | F | L | SUV FWD 4B20M1 | Model year to:2019 | GDS56566 | Drive Shaft | | 30 | 28 | 55.1 | 98 | 655 | |

| | YEAR | TRANSM. | F/R | L/R | BODY STYLE & DRIVE TYPE & ENGINE | REMARKS | G-AP Ref. | PRODUCT | ABS | Technical Specifications A | B | C | H | L | P |
|---|---|---|---|---|---|---|---|---|---|---|---|---|---|---|---|
| **GAC** | | | | | | | | | | | | | | | |
| **Trumpchi GS7** | | | | | | | | | | | | | | | |
| 2.0 (148 kw) | 2017.08- | 6AMT | F | R | SUV FWD 4B20M1 | Model year to:2019 | GDS56605 | Drive Shaft | | 30 | 28 | 55.1 | 98 | 997 | |
| | 2017.08- | 6AMT | F | L/R | SUV FWD 4B20M1 | Model year to:2019 | GCO83332 | Outer Joint | | 30 | 36 | 55.1 | 98 | 65.5 | I |
| | 2017.08- | 6AMT | F | L | SUV FWD 4B20M1 | Model year to:2019 | GCI83376 | Inner Joint | | 28 | 36 | 33.2 | 73 | 97 | |
| | 2017.08- | 6AMT | F | R | SUV FWD 4B20M1 | Model year to:2019 | GCI83400 | Inner Joint | | 28 | 36 | 33.2 | 359 | 127 | |
| **Trumpchi GS8** | | | | | | | | | | | | | | | |
| 2.0 (140 kw) | 2021.12- | AT | F | L/R | SUV 4WD 4B20J2 | | GCO83332 | Outer Joint | | 30 | 36 | 55.1 | 98 | 65.5 | I |
| | 2021.12- | AT | F | L/R | SUV FWD 4B20J2 | | GCO83332 | Outer Joint | | 30 | 36 | 55.1 | 98 | 65.5 | I |
| 2.0 (148 kw) | 2016.10- | 6AMT | F | L | Closed Off-Road Vehicle 4WD 4B20M1 | Model year to:2019 | GDS56566 | Drive Shaft | | 30 | 28 | 55.1 | 98 | 655 | |
| | 2016.10- | 6AMT | F | L | Closed Off-Road Vehicle 4WD 4B20M1 | Model year to:2019 | GCO83332 | Outer Joint | | 30 | 36 | 55.1 | 98 | 65.5 | I |
| | 2016.10- | 6AMT | F | L | Closed Off-Road Vehicle 4WD 4B20M1 | Model year to:2019 | GCI83376 | Inner Joint | | 28 | 36 | 33.2 | 73 | 97 | |
| | 2016.10- | AT | F | R | Closed Off-Road Vehicle 4WD 4B20M1 | | GDS56541 | Drive Shaft | | 30 | 31 | 55.1 | 98 | 639 | |
| | 2016.10- | AT | F | R | Closed Off-Road Vehicle 4WD 4B20M1 | | GCO83332 | Outer Joint | | 30 | 36 | 55.1 | 98 | 65.5 | I |
| | 2016.10- | AT | F | R | Closed Off-Road Vehicle 4WD 4B20M1 | | GCI83358 | Inner Joint | | 31 | 36 | 46 | | 127.5 | |
| | 2016.10- | AT | R | L | Closed Off-Road Vehicle 4WD 4B20M1 | | GDS56565 | Drive Shaft | | 30 | 23 | 56 | 98 | 859 | |
| | 2016.10- | AT | R | R | Closed Off-Road Vehicle 4WD 4B20M1 | | GDS56564 | Drive Shaft | | 30 | 23 | 56 | 98 | 815 | |
| | 2016.10- | AT | R | L/R | Closed Off-Road Vehicle 4WD 4B20M1 | | GCO83343 | Outer Joint | | 30 | 23 | 56 | 98 | 59 | I |
| | 2016.10- | AT | R | L/R | Closed Off-Road Vehicle 4WD 4B20M1 | | GCI83375 | Inner Joint | | 23 | 22 | 35.6 | 60 | 105.5 | |
| | 2016.10- | 6AMT | F | L | Closed Off-Road Vehicle FWD 4B20M1 | Model year to:2019 | GDS56566 | Drive Shaft | | 30 | 28 | 55.1 | 98 | 655 | |
| | 2016.10- | 6AMT | F | R | Closed Off-Road Vehicle FWD 4B20M1 | Model year to:2019 | GDS56605 | Drive Shaft | | 30 | 28 | 55.1 | 98 | 997 | |
| | 2016.10- | 6AMT | F | L/R | Closed Off-Road Vehicle FWD 4B20M1 | Model year to:2019 | GCO83332 | Outer Joint | | 30 | 36 | 55.1 | 98 | 65.5 | I |
| | 2016.10- | 6AMT | F | L | Closed Off-Road Vehicle FWD 4B20M1 | Model year to:2019 | GCI83376 | Inner Joint | | 28 | 36 | 33.2 | 73 | 97 | |
| | 2016.10- | 6AMT | F | R | Closed Off-Road Vehicle FWD 4B20M1 | Model year to:2019 | GCI83400 | Inner Joint | | 28 | 36 | 33.2 | 359 | 127 | |
| | 2016.10- | AT | F | R | Closed Off-Road Vehicle FWD 4B20M1 | | GDS56541 | Drive Shaft | | 30 | 31 | 55.1 | 98 | 639 | |
| | 2016.10- | AT | F | R | Closed Off-Road Vehicle FWD 4B20M1 | | GCO83332 | Outer Joint | | 30 | 36 | 55.1 | 98 | 65.5 | I |
| | 2016.10- | AT | F | R | Closed Off-Road Vehicle FWD 4B20M1 | | GCI83358 | Inner Joint | | 31 | 36 | 46 | | 127.5 | |
| 2.0 (185 kw) | 2019.07- | 6AMT | F | L | Closed Off-Road Vehicle FWD 4B20J1 | Date to:2020.04 | GDS56566 | Drive Shaft | | 30 | 28 | 55.1 | 98 | 655 | |
| | 2019.07- | 6AMT | F | R | Closed Off-Road Vehicle FWD 4B20J1 | Date to:2020.04 | GDS56605 | Drive Shaft | | 30 | 28 | 55.1 | 98 | 997 | |
| | 2019.07- | 6AMT | F | R | Closed Off-Road Vehicle FWD 4B20J1 | Date to:2020.04 | GCO83332 | Outer Joint | | 30 | 36 | 55.1 | 98 | 65.5 | I |
| | 2019.07- | 6AMT | F | L | Closed Off-Road Vehicle FWD 4B20J1 | Date to:2020.04 | GCI83376 | Inner Joint | | 28 | 36 | 33.2 | 73 | 97 | |
| | 2019.07- | 6AMT | F | R | Closed Off-Road Vehicle FWD 4B20J1 | Date to:2020.04 | GCI83400 | Inner Joint | | 28 | 36 | 33.2 | 359 | 127 | |
| | 2019.07- | AT | F | R | Closed Off-Road Vehicle FWD 4B20J1 | | GDS56541 | Drive Shaft | | 30 | 31 | 55.1 | 98 | 639 | |
| | 2019.07- | AT | F | R | Closed Off-Road Vehicle FWD 4B20J1 | | GCI83358 | Inner Joint | | 31 | 36 | 46 | | 127.5 | |
| | 2019.07- | AT | R | L | Closed Off-Road Vehicle FWD 4B20J1 | | GDS56565 | Drive Shaft | | 30 | 23 | 56 | 98 | 859 | |
| | 2019.07- | AT | R | R | Closed Off-Road Vehicle FWD 4B20J1 | | GDS56564 | Drive Shaft | | 30 | 23 | 56 | 98 | 815 | |
| | 2019.07- | AT | R | L/R | Closed Off-Road Vehicle FWD 4B20J1 | | GCO83343 | Outer Joint | | 30 | 23 | 56 | 98 | 59 | I |
| | 2019.07- | AT | R | L/R | Closed Off-Road Vehicle FWD 4B20J1 | | GCI83375 | Inner Joint | | 23 | 22 | 35.6 | 60 | 105.5 | |
| | 2019.10- | AT | F | R | Closed Off-Road Vehicle 4WD 4B20J1 | | GDS56541 | Drive Shaft | | 30 | 31 | 55.1 | 98 | 639 | |
| | 2019.10- | AT | F | R | Closed Off-Road Vehicle 4WD 4B20J1 | | GCO83332 | Outer Joint | | 30 | 36 | 55.1 | 98 | 65.5 | I |
| | 2019.10- | AT | F | R | Closed Off-Road Vehicle 4WD 4B20J1 | | GCI83358 | Inner Joint | | 31 | 36 | 46 | | 127.5 | |
| | 2021.12- | AT | F | R | SUV 4WD 4B20J1 | | GDS56541 | Drive Shaft | | 30 | 31 | 55.1 | 98 | 639 | |
| | 2021.12- | AT | F | R | SUV 4WD 4B20J1 | | GCO83332 | Outer Joint | | 30 | 36 | 55.1 | 98 | 65.5 | I |
| | 2021.12- | AT | F | R | SUV 4WD 4B20J1 | | GCI83358 | Inner Joint | | 31 | 36 | 46 | | 127.5 | |
| | 2021.12- | AT | R | L | SUV 4WD 4B20J1 | | GDS56565 | Drive Shaft | | 30 | 23 | 56 | 98 | 859 | |
| | 2021.12- | AT | R | R | SUV 4WD 4B20J1 | | GDS56564 | Drive Shaft | | 30 | 23 | 56 | 98 | 815 | |
| | 2021.12- | AT | R | L/R | SUV 4WD 4B20J1 | | GCO83343 | Outer Joint | | 30 | 23 | 56 | 98 | 59 | I |
| | 2021.12- | AT | R | L/R | SUV 4WD 4B20J1 | | GCI83375 | Inner Joint | | 23 | 22 | 35.6 | 60 | 105.5 | |
| | 2021.12- | AT | F | R | SUV FWD 4B20J1 | | GDS56541 | Drive Shaft | | 30 | 31 | 55.1 | 98 | 639 | |
| | 2021.12- | AT | F | R | SUV FWD 4B20J1 | | GCO83332 | Outer Joint | | 30 | 36 | 55.1 | 98 | 65.5 | I |
| | 2021.12- | AT | F | R | SUV FWD 4B20J1 | | GCI83358 | Inner Joint | | 31 | 36 | 46 | | 127.5 | |
| **Trumpchi M8** | | | | | | | | | | | | | | | |
| 2.0 (185 kw) | 2020.09- | 8AT | F | R | MPV FWD 4B20J1 | Date to:2022.06 | GDS56605 | Drive Shaft | | 30 | 28 | 55.1 | 98 | 997 | |
| | 2020.09- | 8AT | F | L/R | MPV FWD 4B20J1 | Date to:2022.06 | GCO83332 | Outer Joint | | 30 | 36 | 55.1 | 98 | 65.5 | I |
| | 2020.09- | 8AT | F | R | MPV FWD 4B20J1 | Date to:2022.06 | GCI83400 | Inner Joint | | 28 | 36 | 33.2 | 359 | 127 | |
| **GAC NE** | | | | | | | | | | | | | | | |
| **Aion S** | | | | | | | | | | | | | | | |
| EV (100 kw) | 2020.07- | ET | F | L | Saloon FWD TZ180XS127, TZ180XS130, TZ180XYA2001, TZ184KYA2001 | Engine Code:TZ160XS130/TZ180XS127/TZ184KYA2001,Model year from:2023 | GDS57340 | Drive Shaft | | 27 | 25 | 56 | 98 | 719 | |
| | 2020.07- | ET | F | L | Saloon FWD TZ180XS127, TZ180XS130, TZ180XYA2001, TZ184KYA2001 | Model year to:2023;ia/A26 | GDS84357 | Drive Shaft | | 27 | 37 | 56 | 98 | 798 | |
| | 2020.07- | ET | F | R | Saloon FWD TZ180XS127, TZ180XS130, TZ180XYA2001, TZ184KYA2001 | Engine Code:TZ160XS130/TZ180XS127/TZ184KYA2001,Model year from:2023 | GDS57339 | Drive Shaft | | 27 | 25 | 26 | 98 | 949 | |
| | 2020.07- | ET | F | R | Saloon FWD TZ180XS127, TZ180XS130, TZ180XYA2001, TZ184KYA2001 | Model year to:2023;ia/A26 | GDS84356 | Drive Shaft | | 27 | 37 | 56 | 98 | 870 | |
| | 2020.07- | ET | F | L/R | Saloon FWD TZ180XS127, TZ180XS130, TZ180XYA2001, TZ184KYA2001 | Model year to:2023;ia/A26 | GCO83354 | Outer Joint | | 27 | 27 | 56 | 98 | 64 | M |
| | 2020.07- | ET | F | L/R | Saloon FWD TZ180XS127, TZ180XS130, TZ180XYA2001, TZ184KYA2001 | Engine Code:TZ160XS130/TZ180XS127/TZ184KYA2001,Model year from:2023 | GCO83507 | Outer Joint | | 27 | 25 | 56 | 98 | 58 | M |
| | 2020.07- | ET | F | L | Saloon FWD TZ180XS127, TZ180XS130, TZ180XYA2001, TZ184KYA2001 | Model year to:2023;ia/A26 | GCI82730 | Inner Joint | | 37 | 26 | 40 | 60.5 | 112 | |
| | 2020.07- | ET | F | L | Saloon FWD TZ180XS127, TZ180XS130, TZ180XYA2001, TZ184KYA2001 | Engine Code:TZ160XS130/TZ180XS127/TZ184KYA2001,Model year from:2023 | GCI83607 | Inner Joint | | 25 | 24 | 41 | 51 | 118 | |
| | 2020.07- | ET | F | R | Saloon FWD TZ180XS127, TZ180XS130, TZ180XYA2001, TZ184KYA2001 | Model year to:2023;ia/A26 | GCI82729 | Inner Joint | | 37 | 26 | 40 | 60.5 | 128.5 | |
| | 2020.07- | ET | F | R | Saloon FWD TZ180XS127, TZ180XS130, TZ180XYA2001, TZ184KYA2001 | Engine Code:TZ160XS130/TZ180XS127/TZ184KYA2001,Model year from:2023 | GCI83606 | Inner Joint | | 25 | 24 | 41 | 293 | 114 | |

| | YEAR | TRANSM. | F/R | L/R | BODY STYLE & DRIVE TYPE & ENGINE | REMARKS | G-AP Ref. | PRODUCT | ABS | Technical Specifications A | B | C | H | L | P |
|---|---|---|---|---|---|---|---|---|---|---|---|---|---|---|---|
| **GAC NE** | | | | | | | | | | | | | | | |
| **Aion S** | | | | | | | | | | | | | | | |
| EV (135 kw) | 2019.04- | ET | F | L | Saloon FWD TZ180XYA2601 | Model year to:2021;ia/A27 | GDS84342 | Drive Shaft | | 27 | 26 | 56 | 98 | 769 | |
| | 2019.04- | ET | F | L | Saloon FWD TZ180XYA2601 | Model year to:2021;ia/A26 | GDS84357 | Drive Shaft | | 27 | 37 | 56 | 98 | 798 | |
| | 2019.04- | ET | F | R | Saloon FWD TZ180XYA2601 | Model year to:2021;ia/A27 | GDS84341 | Drive Shaft | | 27 | 26 | 56 | 98 | 892 | |
| | 2019.04- | ET | F | R | Saloon FWD TZ180XYA2601 | Model year to:2021;ia/A26 | GDS84356 | Drive Shaft | | 27 | 37 | 56 | 98 | 870 | |
| | 2019.04- | ET | F | L/R | Saloon FWD TZ180XYA2601 | Model year to:2021;ia/A27 | GCO82791 | Outer Joint | | 27 | 25 | 56 | 98 | 61.5 | M |
| | 2019.04- | ET | F | L/R | Saloon FWD TZ180XYA2601 | Model year to:2021;ia/A26 | GCO83354 | Outer Joint | | 27 | 27 | 56 | 98 | 64 | M |
| | 2019.04- | ET | F | L | Saloon FWD TZ180XYA2601 | Model year to:2021;ia/A27 | GCI82720 | Inner Joint | | 26 | 24 | 40 | 58.5 | 117 | |
| | 2019.04- | ET | F | L | Saloon FWD TZ180XYA2601 | Model year to:2021;ia/A26 | GCI82730 | Inner Joint | | 37 | 26 | 40 | 60.5 | 112 | |
| | 2019.04- | ET | F | R | Saloon FWD TZ180XYA2601 | Model year to:2021;ia/A27 | GCI82719 | Inner Joint | | 26 | 24 | 40 | 210.5 | 110 | |
| | 2019.04- | ET | F | R | Saloon FWD TZ180XYA2601 | Model year to:2021;ia/A26 | GCI82729 | Inner Joint | | 37 | 26 | 40 | 60.5 | 128.5 | |
| EV (150 kw) | 2019.08-2020.12 | ET | F | L | Saloon FWD TZ180XYA2602 | ia/A27 | GDS84342 | Drive Shaft | | 27 | 26 | 56 | 98 | 769 | |
| | 2019.08-2020.12 | ET | F | R | Saloon FWD TZ180XYA2602 | ia/A27 | GDS84341 | Drive Shaft | | 27 | 26 | 56 | 98 | 892 | |
| | 2019.08-2020.12 | ET | F | L/R | Saloon FWD TZ180XYA2602 | ia/A27 | GCO82791 | Outer Joint | | 27 | 25 | 56 | 98 | 61.5 | M |
| | 2019.08-2020.12 | ET | F | L | Saloon FWD TZ180XYA2602 | ia/A27 | GCI82720 | Inner Joint | | 26 | 24 | 40 | 58.5 | 117 | |
| | 2019.08-2020.12 | ET | F | R | Saloon FWD TZ180XYA2602 | ia/A27 | GCI82719 | Inner Joint | | 26 | 24 | 40 | 210.5 | 110 | |
| **Aion S Max** | | | | | | | | | | | | | | | |
| EV (150 kw) | 2023.10- | ET | F | L | Saloon FWD TZ180XS127, TZ184XYA2001 | Engine Code:TZ180XS127/TZ184XYA2001 | GDS57340 | Drive Shaft | | 27 | 25 | 56 | 98 | 719 | |
| | 2023.10- | ET | F | R | Saloon FWD TZ180XS127, TZ184XYA2001 | Engine Code:TZ180XS127/TZ184XYA2001 | GDS57339 | Drive Shaft | | 27 | 25 | 26 | 98 | 949 | |
| | 2023.10- | ET | F | L/R | Saloon FWD TZ180XS127, TZ184XYA2001 | Engine Code:TZ180XS127/TZ184XYA2001 | GCO83507 | Outer Joint | | 27 | 25 | 56 | 98 | 58 | M |
| | 2023.10- | ET | F | L | Saloon FWD TZ180XS127, TZ184XYA2001 | Engine Code:TZ180XS127/TZ184XYA2001 | GCI83607 | Inner Joint | | 25 | 24 | 41 | 51 | 118 | |
| | 2023.10- | ET | F | R | Saloon FWD TZ180XS127, TZ184XYA2001 | Engine Code:TZ180XS127/TZ184XYA2001 | GCI83606 | Inner Joint | | 25 | 24 | 41 | 293 | 114 | |
| EV (180 kw) | 2023.10- | ET | F | L | Saloon FWD TZ180XYX3T11, TZ190XY105 | Engine Code:TZ190XY105 | GDS57340 | Drive Shaft | | 27 | 25 | 56 | 98 | 719 | |
| | 2023.10- | ET | F | R | Saloon FWD TZ180XYX3T11, TZ190XY105 | Engine Code:TZ190XY105 | GDS57339 | Drive Shaft | | 27 | 25 | 26 | 98 | 949 | |
| | 2023.10- | ET | F | L/R | Saloon FWD TZ180XYX3T11, TZ190XY105 | Engine Code:TZ190XY105 | GCO83507 | Outer Joint | | 27 | 25 | 56 | 98 | 58 | M |
| | 2023.10- | ET | F | L | Saloon FWD TZ180XYX3T11, TZ190XY105 | Engine Code:TZ190XY105 | GCI83607 | Inner Joint | | 25 | 24 | 41 | 51 | 118 | |
| | 2023.10- | ET | F | R | Saloon FWD TZ180XYX3T11, TZ190XY105 | Engine Code:TZ190XY105 | GCI83606 | Inner Joint | | 25 | 24 | 41 | 293 | 114 | |
| **Aion S Plus** | | | | | | | | | | | | | | | |
| EV (150 kw) | 2021.06- | ET | F | L | Saloon FWD TZ180XS127, TZ180XYA1203, TZ184XYA2001 | Model year for:2023,Engine Code:TZ180XS127/TZ184XYA2001 | GDS57340 | Drive Shaft | | 27 | 25 | 56 | 98 | 719 | |
| | 2021.06- | ET | F | R | Saloon FWD TZ180XS127, TZ180XYA1203, TZ184XYA2001 | Model year for:2023,Engine Code:TZ180XS127/TZ184XYA2001 | GDS57339 | Drive Shaft | | 27 | 25 | 26 | 98 | 949 | |
| | 2021.06- | ET | F | L/R | Saloon FWD TZ180XS127, TZ180XYA1203, TZ184XYA2001 | Model year for:2023,Engine Code:TZ180XS127/TZ184XYA2001 | GCO83507 | Outer Joint | | 27 | 25 | 56 | 98 | 58 | M |
| | 2021.06- | ET | F | L | Saloon FWD TZ180XS127, TZ180XYA1203, TZ184XYA2001 | Model year for:2023,Engine Code:TZ180XS127/TZ184XYA2001 | GCI83607 | Inner Joint | | 25 | 24 | 41 | 51 | 118 | |
| | 2021.06- | ET | F | R | Saloon FWD TZ180XS127, TZ180XYA1203, TZ184XYA2001 | Model year for:2023,Engine Code:TZ180XS127/TZ184XYA2001 | GCI83606 | Inner Joint | | 25 | 24 | 41 | 293 | 114 | |
| **Aion V** | | | | | | | | | | | | | | | |
| EV (135 kw) | 2020.06- | ET | F | L | SUV FWD TZ180XYA1202 | | GDS84359 | Drive Shaft | | 30 | 37 | 56 | 95 | 809 | |
| | 2020.06- | ET | F | R | SUV FWD TZ180XYA1202 | | GDS84358 | Drive Shaft | | 30 | 37 | 56 | 95 | 880 | |
| | 2020.06- | ET | F | L/R | SUV FWD TZ180XYA1202 | | GCO82794 | Outer Joint | | 30 | 27 | 56 | 95 | 69.5 | M |
| | 2020.06- | ET | F | L/R | SUV FWD TZ180XYA1202 | | GCI82731 | Inner Joint | | 37 | 26 | 40 | 60.5 | 108 | |
| **Aion Y** | | | | | | | | | | | | | | | |
| EV (70 kw) | 2021.04- | ET | F | L | SUV FWD TZ184XYA2001 | Model year to:2021 | GDS84340 | Drive Shaft | | 27 | 26 | 56 | 98 | 776 | |
| | 2021.04- | ET | F | R | SUV FWD TZ184XYA2001 | Model year to:2021 | GDS84339 | Drive Shaft | | 27 | 26 | 56 | 98 | 879 | |
| | 2021.04- | ET | F | L/R | SUV FWD TZ184XYA2001 | Model year to:2021 | GCO82791 | Outer Joint | | 27 | 25 | 56 | 98 | 61.5 | M |
| | 2021.04- | ET | F | L | SUV FWD TZ184XYA2001 | Model year to:2021 | GCI82718 | Inner Joint | | 26 | 25 | 40 | 58.5 | 115 | |
| | 2021.04- | ET | F | R | SUV FWD TZ184XYA2001 | Model year to:2021 | GCI82717 | Inner Joint | | 26 | 25 | 40 | 210.5 | 99 | |
| EV (135 kw) | 2021.04- | ET | F | L | SUV FWD TZ180XS116, TZ184XYA2001 | Model year to:2022 | GDS84340 | Drive Shaft | | 27 | 26 | 56 | 98 | 776 | |
| | 2021.04- | ET | F | R | SUV FWD TZ180XS116, TZ184XYA2001 | Model year to:2022 | GDS84339 | Drive Shaft | | 27 | 26 | 56 | 98 | 879 | |
| | 2021.04- | ET | F | L/R | SUV FWD TZ180XS116, TZ184XYA2001 | Model year to:2022 | GCO82791 | Outer Joint | | 27 | 25 | 56 | 98 | 61.5 | M |
| | 2021.04- | ET | F | L | SUV FWD TZ180XS116, TZ184XYA2001 | Model year to:2022 | GCI82718 | Inner Joint | | 26 | 25 | 40 | 58.5 | 115 | |
| | 2021.04- | ET | F | R | SUV FWD TZ180XS116, TZ184XYA2001 | Model year to:2022 | GCI82717 | Inner Joint | | 26 | 25 | 40 | 210.5 | 99 | |
| **GEELY** | | | | | | | | | | | | | | | |
| **Atlas** | | | | | | | | | | | | | | | |
| 2.0 (102 kw) | 2018.02- | 6MT | F | R | SUV FWD JLD4G20 | | GCI83183 | Inner Joint | | 26 | 26 | 40 | 428.5 | 114.5 | |
| 2.4 (110 kw) | 2018.02- | 6AT | F | L | SUV FWD JLD4G24 | | GDS82547 | Drive Shaft | 48T | 28 | 27 | 60 | 88.5 | 617 | |
| | 2018.02- | 6AT | F | R | SUV FWD JLD4G24 | | GDS57720 | Drive Shaft | 48T | 28 | 27 | 60 | 88.5 | 976 | |
| | 2018.02- | 6AT | F | L/R | SUV FWD JLD4G24 | | GCO81996 | Outer Joint | 48T | 28 | 29 | 60 | 88.5 | 68.5 | M |
| | 2018.02- | 6AT | F | L | SUV FWD JLD4G24 | | GCI81877 | Inner Joint | | 27 | 34 | 41 | 77 | 94.5 | |
| | 2018.02- | 6AT | F | R | SUV FWD JLD4G24 | | GCI83822 | Inner Joint | | 27 | 34 | 31.8 | 433.5 | 97.5 | |
| **Binyue** | | | | | | | | | | | | | | | |
| 1.4 (104 kw) | 2020.12- | 6DCT | F | L | SUV FWD JLB-4G14TB | For model year:2022 | GDS56508 | Drive Shaft | 48T | 27 | 27 | 58.1 | 90 | 607 | |
| | 2020.12- | 6DCT | F | R | SUV FWD JLB-4G14TB | For model year:2022 | GDS56512 | Drive Shaft | 48T | 27 | 27 | 58.1 | 90 | 996 | |
| | 2020.12- | 6DCT | F | L/R | SUV FWD JLB-4G14TB | For model year:2022 | GCO83309 | Outer Joint | 48T | 27 | 32 | 58.1 | 90 | 60 | M |
| | 2020.12- | 6DCT | F | L | SUV FWD JLB-4G14TB | For model year:2022 | GCI83340 | Inner Joint | | 27 | 23 | 40 | 55.5 | 114 | |
| | 2020.12- | 6DCT | F | R | SUV FWD JLB-4G14TB | For model year:2022 | GCI83342 | Inner Joint | | 27 | 23 | 40 | 479 | 101 | |
| | 2020.12- | 6MT | F | L | SUV FWD JLB-4G14TB | | GDS56492 | Drive Shaft | 48T | 27 | 27 | 58.1 | 90 | 646 | |
| | 2020.12- | 6MT | F | R | SUV FWD JLB-4G14TB | | GDS56491 | Drive Shaft | 48T | 27 | 27 | 58.1 | 90 | 955 | |
| | 2020.12- | 6MT | F | L/R | SUV FWD JLB-4G14TB | | GCO83315 | Outer Joint | 48T | 27 | 23 | 58.1 | 90 | 60 | I |

| | YEAR | TRANSM. | F/R | L/R | BODY STYLE & DRIVE TYPE & ENGINE | REMARKS | G-AP Ref. | PRODUCT | ABS | Technical Specifications A | B | C | H | L | P |
|---|---|---|---|---|---|---|---|---|---|---|---|---|---|---|---|
| **GEELY** | | | | | | | | | | | | | | | |
| **Binyue** | | | | | | | | | | | | | | | |
| 1.4 (104 kw) | 2020.12- | 6MT | F | L | SUV FWD JLB-4G14TB | | GCI83331 | Inner Joint | | 27 | 31 | 40 | 60 | 114 | |
| | 2020.12- | 6MT | F | R | SUV FWD JLB-4G14TB | | GCI83330 | Inner Joint | | 27 | 31 | 40 | 62 | 133.5 | |
| 1.5 (130 kw) | 2018.10- | 7DCT | F | L | SUV FWD JLH-3G15TD | For Model year:2019 | GDS56490 | Drive Shaft | 48T | 27 | 28 | 58.1 | 90 | 610 | |
| | 2018.10- | 7DCT | F | R | SUV FWD JLH-3G15TD | For Model year:2019 | GDS56533 | Drive Shaft | 48T | 27 | 28 | 58.1 | 90 | 962 | |
| | 2018.10- | 7DCT | F | L/R | SUV FWD JLH-3G15TD | For Model year:2019 | GCO83314 | Outer Joint | 48T | 27 | 33 | 58.1 | 90 | 61 | M |
| | 2018.10- | 7DCT | F | L | SUV FWD JLH-3G15TD | For Model year:2019 | GCI83329 | Inner Joint | | 28 | 33 | 33 | 62 | 93 | |
| | 2018.10- | 7DCT | F | R | SUV FWD JLH-3G15TD | For Model year:2019 | GCI83354 | Inner Joint | | 28 | 33 | 33 | 424 | 84 | |
| | 2019.06- | 7DCT | F | L | SUV FWD JLH-3G15TD | For Model year:2019 | GDS56490 | Drive Shaft | 48T | 27 | 28 | 58.1 | 90 | 610 | |
| | 2019.06- | 7DCT | F | R | SUV FWD JLH-3G15TD | For Model year:2019 | GDS56533 | Drive Shaft | 48T | 27 | 28 | 58.1 | 90 | 962 | |
| | 2019.06- | 7DCT | F | L/R | SUV FWD JLH-3G15TD | For Model year:2019 | GCO83314 | Outer Joint | 48T | 27 | 33 | 58.1 | 90 | 61 | M |
| | 2019.06- | 7DCT | F | L | SUV FWD JLH-3G15TD | For Model year:2019 | GCI83329 | Inner Joint | | 28 | 33 | 33 | 62 | 93 | |
| | 2019.06- | 7DCT | F | R | SUV FWD JLH-3G15TD | For Model year:2019 | GCI83354 | Inner Joint | | 28 | 33 | 33 | 424 | 84 | |
| **Binyue Cool** | | | | | | | | | | | | | | | |
| 1.5 (133 kw) | 2022.08- | 7DCT | F | L | SUV FWD BHE15-EFZ | For Model year:2022 | GDS56490 | Drive Shaft | 48T | 27 | 28 | 58.1 | 90 | 610 | |
| | 2022.08- | 7DCT | F | R | SUV FWD BHE15-EFZ | For Model year:2022 | GDS56533 | Drive Shaft | 48T | 27 | 28 | 58.1 | 90 | 962 | |
| | 2022.08- | 7DCT | F | L/R | SUV FWD BHE15-EFZ | For Model year:2022 | GCO83314 | Outer Joint | 48T | 27 | 33 | 58.1 | 90 | 61 | M |
| | 2022.08- | 7DCT | F | L | SUV FWD BHE15-EFZ | For Model year:2022 | GCI83329 | Inner Joint | | 28 | 33 | 33 | 62 | 93 | |
| | 2022.08- | 7DCT | F | R | SUV FWD BHE15-EFZ | For Model year:2022 | GCI83354 | Inner Joint | | 28 | 33 | 33 | 424 | 84 | |
| **Binyue Pro** | | | | | | | | | | | | | | | |
| 1.4 (104 kw) | 2020.04- | 6DCT | F | L | SUV FWD JLB4G14TB | For model year:2020&2022 | GDS56508 | Drive Shaft | 48T | 27 | 27 | 58.1 | 90 | 607 | |
| | 2020.04- | 6DCT | F | R | SUV FWD JLB4G14TB | For model year:2020&2022 | GDS56512 | Drive Shaft | 48T | 27 | 27 | 58.1 | 90 | 996 | |
| | 2020.04- | 6DCT | F | L/R | SUV FWD JLB4G14TB | For model year:2020&2022 | GCO83309 | Outer Joint | 48T | 27 | 32 | 58.1 | 90 | 60 | M |
| | 2020.04- | 6DCT | F | L | SUV FWD JLB4G14TB | For model year:2020&2022 | GCI83340 | Inner Joint | | 27 | 23 | 40 | 55.5 | 114 | |
| | 2020.04- | 6DCT | F | R | SUV FWD JLB4G14TB | For model year:2020&2022 | GCI83342 | Inner Joint | | 27 | 23 | 40 | 479 | 101 | |
| | 2020.04- | 6MT | F | L | SUV FWD JLB4G14TB | | GDS56492 | Drive Shaft | 48T | 27 | 27 | 58.1 | 90 | 646 | |
| | 2020.04- | 6MT | F | R | SUV FWD JLB4G14TB | | GDS56491 | Drive Shaft | 48T | 27 | 27 | 58.1 | 90 | 955 | |
| | 2020.04- | 6MT | F | L/R | SUV FWD JLB4G14TB | | GCO83315 | Outer Joint | 48T | 27 | 23 | 58.1 | 90 | 60 | I |
| | 2020.04- | 6MT | F | L | SUV FWD JLB4G14TB | | GCI83331 | Inner Joint | | 27 | 31 | 40 | 60 | 114 | |
| | 2020.04- | 6MT | F | R | SUV FWD JLB4G14TB | | GCI83330 | Inner Joint | | 27 | 31 | 40 | 62 | 133.5 | |
| **BL** | | | | | | | | | | | | | | | |
| 1.3 (63 kw) | 2005.09- | 5MT | F | L/R | Coupe FWD 8A,MR479Q | Model year to:2005 | GCO14013 | Outer Joint | | 24 | 21 | 54 | 92 | 50 | M |
| 1.5 (69 kw) | 2005.09- | 5MT | F | L/R | Coupe FWD 5AFE,MR479QA | Model year to:2008 | GCO14013 | Outer Joint | | 24 | 21 | 54 | 92 | 50 | M |
| **Boyue** | | | | | | | | | | | | | | | |
| 1.5 (130 kw) | 2020.03- | 7DCT | F | L | SUV 4WD JLH-3G15TD | | GDS57616 | Drive Shaft | | 36 | 28 | 60 | 102 | 618 | |
| | 2020.03- | 7DCT | F | R | SUV 4WD JLH-3G15TD | | GDS56550 | Drive Shaft | | 36 | 28 | 60 | 102 | 977 | |
| | 2020.03- | 7DCT | F | L/R | SUV 4WD JLH-3G15TD | | GCO83334 | Outer Joint | | 36 | 28 | 60 | 102 | 70 | M |
| | 2020.03- | 7DCT | F | L | SUV 4WD JLH-3G15TD | | GCI83360 | Inner Joint | | 28 | 28 | 33 | 64 | 100 | |
| | 2020.03- | 7DCT | F | R | SUV 4WD JLH-3G15TD | | GCI83366 | Inner Joint | | 28 | 28 | 30 | 424 | 99 | |
| | 2020.03- | 7DCT | R | L/R | SUV 4WD JLH-3G15TD | | GDS56547 | Drive Shaft | | 26 | 23 | 56 | 102 | 805 | |
| | 2020.03- | 7DCT | R | L/R | SUV 4WD JLH-3G15TD | | GCO83336 | Outer Joint | | 26 | 23 | 56 | 102 | 70 | I |
| | 2020.03- | 7DCT | R | L/R | SUV 4WD JLH-3G15TD | | GCI83364 | Inner Joint | | 23 | 22 | 28 | 64 | 102 | |
| 1.8 (120 kw) | 2016.03- | 6MT | F | L | SUV FWD JLE-4G18TD | Model year to:2022 | GDS56515 | Drive Shaft | 48T | 28 | 26 | 61.9 | 89 | 626 | |
| | 2016.03- | 6MT | F | R | SUV FWD JLE-4G18TD | Model year to:2022 | GDS56741 | Drive Shaft | 48T | 28 | 28 | 61.9 | 89 | 990 | |
| | 2016.03- | 6MT | F | R | SUV FWD JLE-4G18TD | Model year to:2022 | GDS56912 | Drive Shaft | 48T | 28 | 27 | 61.9 | 89 | 973 | |
| | 2016.03- | 6MT | F | L/R | SUV FWD JLE-4G18TD | Model year to:2022 | GCO82049 | Outer Joint | 48T | 28 | 26 | 61.9 | 89 | 70 | M |
| | 2016.03- | 6MT | F | L | SUV FWD JLE-4G18TD | Model year to:2022 | GCI83343 | Inner Joint | | 26 | 34 | 40 | 60 | 101 | |
| | 2016.03- | 6MT | F | R | SUV FWD JLE-4G18TD | Model year to:2022 | GCI83466 | Inner Joint | | 26 | 34 | 40 | 432.5 | 120 | |
| | 2016.03- | 6MT | F | R | SUV FWD JLE-4G18TD | Model year to:2022 | GCI83556 | Inner Joint | | 27 | 34 | 34 | 433 | 94 | |
| 1.8 (135 kw) | 2016.03- | 6AT | F | L | SUV 4WD JLE-4G18TDB | Model year to:2018 | GDS82547 | Drive Shaft | 48T | 28 | 27 | 60 | 88.5 | 617 | |
| | 2016.03- | 6AT | F | R | SUV 4WD JLE-4G18TDB | Model year to:2018 | GDS56263 | Drive Shaft | 48T | 28 | 27 | 60 | 88.5 | 976 | |
| | 2016.03- | 6AT | F | L/R | SUV 4WD JLE-4G18TDB | Model year to:2018 | GCO81996 | Outer Joint | 48T | 28 | 29 | 60 | 88.5 | 68.5 | M |
| | 2016.03- | 6AT | F | L | SUV 4WD JLE-4G18TDB | Model year to:2018 | GCI81877 | Inner Joint | | 27 | 34 | 41 | 77 | 94.5 | |
| | 2016.03- | 6AT | F | R | SUV 4WD JLE-4G18TDB | Model year to:2018 | GCI83220 | Inner Joint | | 27 | 34 | 30 | 434 | 97 | |
| | 2016.03- | 6AT | R | L/R | SUV 4WD JLE-4G18TDB | | GDS56548 | Drive Shaft | | 26 | 25 | 56 | 98 | 802 | |
| | 2016.03- | 6AT | R | L/R | SUV 4WD JLE-4G18TDB | | GCO83337 | Outer Joint | | 26 | 21 | 56 | 98 | 57.5 | M |
| | 2016.03- | 6AT | R | L/R | SUV 4WD JLE-4G18TDB | | GCI83365 | Inner Joint | | 25 | 21 | 35 | 61 | 82.5 | |
| 2.0 (104 kw) | 2016.03- | 6MT | F | L | SUV FWD JLD-4G20 | Model year to:2018 | GDS56515 | Drive Shaft | 48T | 28 | 26 | 61.9 | 89 | 626 | |
| | 2016.03- | 6MT | F | R | SUV FWD JLD-4G20 | Model year to:2018 | GDS56182 | Drive Shaft | 48T | 28 | 26 | 61.9 | 89 | 988 | |
| | 2016.03- | MT | F | R | SUV FWD JLD-4G20 | For model year:2016 | GDS56182 | Drive Shaft | 48T | 28 | 26 | 61.9 | 89 | 988 | |
| | 2016.03- | MT | F | L/R | SUV FWD JLD-4G20 | For model year:2016 | GCO82049 | Outer Joint | 48T | 28 | 26 | 61.9 | 89 | 70 | M |
| | 2016.03- | MT | F | R | SUV FWD JLD-4G20 | For model year:2016 | GCI83183 | Inner Joint | | 26 | 26 | 40 | 428.5 | 114.5 | |
| **Boyue Pro** | | | | | | | | | | | | | | | |
| 1.5 (130 kw) | 2019.09- | 6AT | F | L | SUV FWD JLH-3G15TD | Model year from:2020 | GDS56545 | Drive Shaft | | 36 | 26 | 60 | 102 | 628 | |
| | 2019.09- | 6AT | F | R | SUV FWD JLH-3G15TD | Model year from:2020 | GDS56544 | Drive Shaft | | 36 | 26 | 60 | 102 | 969 | |
| | 2019.09- | 6AT | F | L/R | SUV FWD JLH-3G15TD | Model year from:2020 | GCO83335 | Outer Joint | | 36 | 32 | 60 | 102 | 70 | M |

| | YEAR | TRANSM. | F/R | L/R | BODY STYLE & DRIVE TYPE & ENGINE | REMARKS | G-AP Ref. | PRODUCT | ABS | Technical Specifications A | B | C | H | L | P |
|---|---|---|---|---|---|---|---|---|---|---|---|---|---|---|---|
| **GEELY** | | | | | | | | | | | | | | | |
| **Boyue Pro** | | | | | | | | | | | | | | | |
| 1.5 (130 kw) | 2019.09- | 6AT | F | L | SUV FWD JLH-3G15TD | Model year from:2020 | GCI83362 | Inner Joint | | 26 | 25 | 31 | 71.5 | 95.5 | |
| | 2019.09- | 6AT | F | R | SUV FWD JLH-3G15TD | Model year from:2020 | GCI83361 | Inner Joint | | 26 | 25 | 31 | 425 | 100.5 | |
| 1.8 (135 kw) | 2019.09- | 7DCT | F | L | SUV FWD JLE-4G18TDC | For model year:2020 | GDS56543 | Drive Shaft | | 36 | 28 | 60 | 102 | 610 | |
| | 2019.09- | 7DCT | F | L | SUV FWD JLE-4G18TDC | Model year to:2021;Inner teeth of wheel side:35 | GDS56578 | Drive Shaft | 48T | 28 | 28 | 60 | 88.5 | 595 | |
| | 2019.09- | 7DCT | F | R | SUV FWD JLE-4G18TDC | Model year to:2021 | GDS56568 | Drive Shaft | | 36 | 28 | 60 | 102 | 998 | |
| | 2019.09- | 7DCT | F | R | SUV FWD JLE-4G18TDC | Model year to:2021;Inner teeth of wheel side:29 | GDS56678 | Drive Shaft | 48T | 28 | 28 | 60 | 88.5 | 983 | |
| | 2019.09- | 7DCT | F | L/R | SUV FWD JLE-4G18TDC | Model year to:2021 | GCO81996 | Outer Joint | 48T | 28 | 29 | 60 | 88.5 | 68.5 | M |
| | 2019.09- | 7DCT | F | L/R | SUV FWD JLE-4G18TDC | For model year:2021 | GCO83321 | Outer Joint | 48T | 28 | 35 | 60 | 88.5 | 68.5 | I |
| | 2019.09- | 7DCT | F | L/R | SUV FWD JLE-4G18TDC | Model year to:2021 | GCO83334 | Outer Joint | | 36 | 28 | 60 | 102 | 70 | M |
| | 2019.09- | 7DCT | F | L | SUV FWD JLE-4G18TDC | | GCI83360 | Inner Joint | | 28 | 28 | 33 | 64 | 100 | |
| | 2019.09- | 7DCT | F | R | SUV FWD JLE-4G18TDC | Model year to:2021 | GCI83378 | Inner Joint | | 28 | 28 | 33 | 433 | 107 | |
| | 2019.09- | 7DCT | F | R | SUV FWD JLE-4G18TDC | Model year to:2021 | GCI83440 | Inner Joint | | 28 | 25 | 33 | 433 | 101 | |
| **Boyue X** | | | | | | | | | | | | | | | |
| 1.8 (135 kw) | 2021.10- | 7DCT | F | L | SUV FWD JLE-4G18TDC | | GCI83360 | Inner Joint | | 28 | 28 | 33 | 64 | 100 | |
| **Boyue/Atlas/Emgrand X7 Sport** | | | | | | | | | | | | | | | |
| 1.8 (135 kw) | 2016.03- | 6AT | F | L | SUV FWD JLE-4G18TDB, JLE-4G18TDC | Engine code:JLE-4G18TDB,Model year to:2019 | GDS82547 | Drive Shaft | 48T | 28 | 27 | 60 | 88.5 | 617 | |
| | 2016.03- | 6AT | F | R | SUV FWD JLE-4G18TDB, JLE-4G18TDC | Engine code:JLE-4G18TDB,Model year to:2019 | GDS56912 | Drive Shaft | 48T | 28 | 27 | 61.9 | 89 | 973 | |
| | 2016.03- | 6AT | F | L/R | SUV FWD JLE-4G18TDB, JLE-4G18TDC | Engine code:JLE-4G18TDB,Model year to:2019 | GCO81996 | Outer Joint | 48T | 28 | 29 | 60 | 88.5 | 68.5 | M |
| | 2016.03- | 6AT | F | L | SUV FWD JLE-4G18TDB, JLE-4G18TDC | Engine code:JLE-4G18TDB,Model year to:2019 | GCI81877 | Inner Joint | | 27 | 34 | 41 | 77 | 94.5 | |
| | 2016.03- | 6AT | F | R | SUV FWD JLE-4G18TDB, JLE-4G18TDC | Engine code:JLE-4G18TDB,Model year to:2019 | GCI83822 | Inner Joint | | 27 | 34 | 31.8 | 433.5 | 97.5 | |
| | 2016.03- | 7DCT | F | L | SUV FWD JLE-4G18TDB, JLE-4G18TDC | For model year:2021 | GDS56543 | Drive Shaft | | 36 | 28 | 60 | 102 | 610 | |
| | 2016.03- | 7DCT | F | R | SUV FWD JLE-4G18TDB, JLE-4G18TDC | For model year:2021 | GDS56568 | Drive Shaft | | 36 | 28 | 60 | 102 | 998 | |
| | 2016.03- | 7DCT | F | L/R | SUV FWD JLE-4G18TDB, JLE-4G18TDC | For model year:2021 | GCO83334 | Outer Joint | | 36 | 28 | 60 | 102 | 70 | M |
| | 2016.03- | 7DCT | F | L | SUV FWD JLE-4G18TDB, JLE-4G18TDC | Date from:2019.06 | GCI83360 | Inner Joint | | 28 | 28 | 33 | 64 | 100 | |
| | 2016.03- | 7DCT | F | R | SUV FWD JLE-4G18TDB, JLE-4G18TDC | For model year:2021 | GCI83378 | Inner Joint | | 28 | 28 | 33 | 433 | 107 | |
| **Coolray** | | | | | | | | | | | | | | | |
| 1.5 (110 kw) | 2020.02- | AMT | F | L | SUV FWD JLH3G15TD | Inner teeth of wheel side:33 | GDS56490 | Drive Shaft | 48T | 27 | 28 | 58.1 | 90 | 610 | |
| **Emgrand** | | | | | | | | | | | | | | | |
| 1.3 (98 kw) | 2014.07- | 6MT/CVT | F | L/R | Saloon FWD JLB4G13T | Model year to:2017 | GCO14100 | Outer Joint | 48T | 26 | 23 | 58 | 91 | 54.5 | I |
| 1.5 (80 kw) | 2014.07- | 5MT | F | L/R | Saloon FWD JLY4G15 | Model year for:2015 | GCO69005 | Outer Joint | 48T | 26 | 32 | 58 | 96.5 | 64.5 | M |
| **Emgrand RS** | | | | | | | | | | | | | | | |
| 1.3 (98 kw) | 2015.01-2017.12 | CVT | F | L/R | Hatchback FWD JLB4G13T | | GCO14100 | Outer Joint | 48T | 26 | 23 | 58 | 91 | 54.5 | I |
| **GC7** | | | | | | | | | | | | | | | |
| 1.5 (77 kw) | 2011.12- | | F | R | Saloon FWD JLY-4G15 | Model year to:2013 | GDS81256 | Drive Shaft | 48T | 26 | 27 | 60 | 88 | 970 | |
| **GX7** | | | | | | | | | | | | | | | |
| 1.8 (98 kw) | 2015.03-2017.12 | 5MT | F | L | SUV FWD JLC-4G18 | | GDS81258 | Drive Shaft | 48T | 26 | 25 | 61 | 88.5 | 639 | |
| | 2015.03-2017.12 | 5MT | F | R | SUV FWD JLC-4G18 | | GDS81257 | Drive Shaft | 48T | 26 | 25 | 61 | 88.5 | 981 | |
| **Haoqing (HQ)** | | | | | | | | | | | | | | | |
| 1.0 (38 kw) | 2000.01-2008.12 | 5MT | F | L/R | Hatchback FWD JL376QE | Model year from:2003,Model year to:2006 | GCO14014 | Outer Joint | | 24 | 21 | 54 | 92 | 47.5 | M |
| 1.0 (40 kw) | 2004.01-2008.12 | 5MT | F | L/R | Hatchback FWD JL378QE | Model year to:2007 | GCO14014 | Outer Joint | | 24 | 21 | 54 | 92 | 47.5 | M |
| 1.3 (63 kw) | 2000.01-2008.12 | 5MT | F | L/R | Hatchback FWD 8A, MR479Q | Model year from:2003,Model year to:2007;GrooveType:Middle | GCO14013 | Outer Joint | | 24 | 21 | 54 | 92 | 50 | M |
| **Haoqing SRV** | | | | | | | | | | | | | | | |
| 1.0 (38 kw) | 2005.07-2007.12 | 5MT | F | L/R | Estate FWD JL376QE | | GCO14014 | Outer Joint | | 24 | 21 | 54 | 92 | 47.5 | M |
| 1.3 (63 kw) | 2005.07-2007.12 | 5MT | F | L/R | Estate FWD MR479Q | GrooveType:Middle | GCO14013 | Outer Joint | | 24 | 21 | 54 | 92 | 50 | M |
| 1.5 (69 kw) | 2005.07-2006.12 | 4AT | F | L/R | Estate FWD MR479QA | | GCO14013 | Outer Joint | | 24 | 21 | 54 | 92 | 50 | M |
| **Icon** | | | | | | | | | | | | | | | |
| 1.5 (130 kw) | 2020.02- | 7DCT | F | L | SUV FWD JLH-3G15TD | Model year to:2021 | GDS56490 | Drive Shaft | 48T | 27 | 28 | 58.1 | 90 | 610 | |
| | 2020.02- | 7DCT | F | R | SUV FWD JLH-3G15TD | Model year to:2021 | GDS56533 | Drive Shaft | 48T | 27 | 28 | 58.1 | 90 | 962 | |
| | 2020.02- | 7DCT | F | L/R | SUV FWD JLH-3G15TD | Model year to:2021 | GCO83314 | Outer Joint | 48T | 27 | 33 | 58.1 | 90 | 61 | M |
| | 2020.02- | 7DCT | F | L | SUV FWD JLH-3G15TD | Model year to:2021 | GCI83329 | Inner Joint | | 28 | 33 | 33 | 62 | 93 | |
| | 2020.02- | 7DCT | F | R | SUV FWD JLH-3G15TD | Model year to:2021 | GCI83354 | Inner Joint | | 28 | 33 | 33 | 424 | 84 | |
| **Leading** | | | | | | | | | | | | | | | |
| 1.8 (83 kw) | 2006.11-2008.12 | 5MT | F | L/R | Coupe FWD JL481Q | Model year to:2007 | GCO14013 | Outer Joint | | 24 | 21 | 54 | 92 | 50 | M |
| **Tugella** | | | | | | | | | | | | | | | |
| 2.0 (175 kw) | 2019.05- | 8AT | F | L | SUV 4WD JLH-4G20TDB | Model year to:2021 | GDS56530 | Drive Shaft | | 36 | 31 | 56 | 94 | 632 | |
| | 2019.05- | 8AT | F | R | SUV 4WD JLH-4G20TDB | Model year to:2021 | GDS56570 | Drive Shaft | | 36 | 28 | 56 | 42 | 956 | |
| | 2019.05- | 8AT | F | L | SUV 4WD JLH-4G20TDB | Model year to:2021 | GCO83328 | Outer Joint | | 36 | 28 | 56 | 94 | 65 | M |
| | 2019.05- | 8AT | F | R | SUV 4WD JLH-4G20TDB | Model year to:2021 | GCO83345 | Outer Joint | | 36 | 28 | 56 | 42 | 64.5 | M |
| | 2019.05- | 8AT | F | L | SUV 4WD JLH-4G20TDB | Model year to:2021 | GCI83351 | Inner Joint | | 31 | 28 | 36.2 | 68 | 91 | |
| | 2019.05- | 8AT | F | R | SUV 4WD JLH-4G20TDB | Model year to:2021 | GCI83380 | Inner Joint | | 28 | 28 | 30 | 470 | 89 | |
| | 2019.05- | AT | F | R | SUV 4WD JLH-4G20TDB | Model year to:2022 | GDS57961 | Drive Shaft | | 36 | 28 | 56 | 94 | 1007 | |
| | 2019.05- | 8AT | R | L | SUV 4WD JLH-4G20TDB | Data from:2021.07 | GDS57901 | Drive Shaft | | 36 | 23 | 52.4 | 42 | 813 | |
| | 2019.05- | 8AT | R | R | SUV 4WD JLH-4G20TDB | Data from:2021.07 | GDS57900 | Drive Shaft | | 36 | 23 | 52.4 | 42 | 773 | |
| | 2019.05- | 8AT | R | L/R | SUV 4WD JLH-4G20TDB | Data from:2021.07 | GCO83781 | Outer Joint | | 36 | 29 | 52.4 | 42 | 58.5 | I |
| | 2019.05- | 8AT | R | L/R | SUV 4WD JLH-4G20TDB | Data from:2021.07 | GCI83341 | Inner Joint | | 23 | 33 | 28 | 64 | 95 | |

| | YEAR | TRANSM. | F/R | L/R | BODY STYLE & DRIVE TYPE & ENGINE | REMARKS | G-AP Ref. | PRODUCT | ABS | Technical Specifications A | B | C | H | L | P |
|---|---|---|---|---|---|---|---|---|---|---|---|---|---|---|---|
| **GEELY** | | | | | | | | | | | | | | | |
| **Ulio** | | | | | | | | | | | | | | | |
| 1.3 (63 kw) | 2005.01- | 5MT | F | L/R | Saloon FWD MR479Q | Model year to:2007;GrooveType:Middle | GCO14014 | Outer Joint | | 24 | 21 | 54 | 92 | 47.5 | M |
| **Uliou** | | | | | | | | | | | | | | | |
| 1.0 (38 kw) | 2002.04-2008.12 | 5MT | F | L/R | Saloon FWD JL376QE | Model year from:2005,Model year to:2006 | GCO14014 | Outer Joint | | 24 | 21 | 54 | 92 | 47.5 | M |
| 1.1 (40 kw) | 2005.01-2009.12 | 5MT | F | L/R | Saloon FWD JL378QE | GrooveType:Middle | GCO14014 | Outer Joint | | 24 | 21 | 54 | 92 | 47.5 | M |
| 1.3 (63 kw) | 2002.04-2007.12 | 5MT | F | L/R | Saloon FWD 8A,MR479Q | Model year from:2003 | GCO14014 | Outer Joint | | 24 | 21 | 54 | 92 | 47.5 | M |
| 1.5 (69 kw) | 2002.04-2004.12 | 5MT | F | L/R | Saloon FWD 5AFE,MR479QA | for model year:2004 | GCO14014 | Outer Joint | | 24 | 21 | 54 | 92 | 47.5 | M |
| **Vision** | | | | | | | | | | | | | | | |
| 1.3 (98 kw) | 2014.11- | 6MT | F | L/R | Saloon FWD JLB4G13T | Model year to:2016 | GCO14100 | Outer Joint | 48T | 26 | 23 | 58 | 91 | 54.5 | I |
| 1.5 (80 kw) | 2014.11- | 5MT | F | L | Saloon FWD JLY-4G15 | Model year to:2017;Without oil seal sleeve | GCI14038 | Inner Joint | | 25 | 23 | 45 | 57.5 | 110.5 | |
| **Xingyue** | | | | | | | | | | | | | | | |
| 1.5 (130 kw) | 2020.07- | 7DCT | F | L | SUV FWD JLH-3G15TD | Model year to:2021 | GDS56572 | Drive Shaft | | 36 | 28 | 56 | 42 | 596 | |
| | 2020.07- | 7DCT | F | L | SUV FWD JLH-3G15TD | Model year to:2021 | GDS56575 | Drive Shaft | | 36 | 28 | 56 | 42.5 | 596 | |
| | 2020.07- | 7DCT | F | R | SUV FWD JLH-3G15TD | Model year to:2021 | GDS56573 | Drive Shaft | | 36 | 28 | 56 | 42 | 952 | |
| | 2020.07- | 7DCT | F | R | SUV FWD JLH-3G15TD | Model year to:2021 | GDS56574 | Drive Shaft | | 36 | 28 | 56 | 42.5 | 950 | |
| | 2020.07- | 7DCT | F | L/R | SUV FWD JLH-3G15TD | Model year to:2021 | GCO83346 | Outer Joint | | 36 | 26 | 56 | 42 | 64.5 | M |
| | 2020.07- | 7DCT | F | L/R | SUV FWD JLH-3G15TD | Model year to:2021 | GCO83347 | Outer Joint | | 36 | 35 | 56 | 42.5 | 64.5 | I |
| | 2020.07- | 7DCT | F | L | SUV FWD JLH-3G15TD | Model year to:2021 | GCI83382 | Inner Joint | | 28 | 26 | 33 | 71.5 | 93 | |
| | 2020.07- | 7DCT | F | L | SUV FWD JLH-3G15TD | Model year to:2021 | GCI83385 | Inner Joint | | 28 | 34 | 33 | 71.5 | 93.5 | |
| | 2020.07- | 7DCT | F | R | SUV FWD JLH-3G15TD | Model year to:2021 | GCI83383 | Inner Joint | | 28 | 26 | 33 | 425 | 95 | |
| | 2020.07- | 7DCT | F | R | SUV FWD JLH-3G15TD | Model year to:2021 | GCI83384 | Inner Joint | | 28 | 34 | 33 | 431 | 98 | |
| 2.0 (175 kw) | 2019.05- | 8AT | F | L | SUV FWD JLH-4G20TDB | Model year to:2021 | GDS56530 | Drive Shaft | | 36 | 31 | 56 | 94 | 632 | |
| | 2019.05- | 8AT | F | R | SUV FWD JLH-4G20TDB | Model year to:2021 | GDS56571 | Drive Shaft | | 36 | 28 | 56 | 42 | 956 | |
| | 2019.05- | 8AT | F | L | SUV FWD JLH-4G20TDB | Model year to:2021 | GCO83328 | Outer Joint | | 36 | 28 | 56 | 94 | 65 | M |
| | 2019.05- | 8AT | F | R | SUV FWD JLH-4G20TDB | Model year to:2021 | GCO83345 | Outer Joint | | 36 | 28 | 56 | 42 | 64.5 | M |
| | 2019.05- | 8AT | F | L | SUV FWD JLH-4G20TDB | Model year to:2021 | GCI83351 | Inner Joint | | 31 | 28 | 36.2 | 68 | 91 | |
| | 2019.05- | 8AT | F | R | SUV FWD JLH-4G20TDB | Model year to:2021 | GCI83381 | Inner Joint | | 28 | 28 | 33 | 470 | 91 | |
| **Xingyue L** | | | | | | | | | | | | | | | |
| 1.5 (110 kw) | 2022.11- | 3DHT | F | L | SUV FWD DHE15-ESZ/TZ270WY000 | | GDS56595 | Drive Shaft | | 36 | 27 | 56 | 90 | 616 | |
| | 2022.11- | 3DHT | F | R | SUV FWD DHE15-ESZ/TZ270WY000 | | GDS56596 | Drive Shaft | | 36 | 27 | 56 | 90 | 1018 | |
| | 2022.11- | 3DHT | F | L/R | SUV FWD DHE15-ESZ/TZ270WY000 | | GCO83355 | Outer Joint | | 36 | 26 | 56 | 90 | 68.5 | I |
| 1.5 (180 kw) | 2022.03- | 3DHT | F | L | SUV FWD DHE15-ESZ | | GDS56595 | Drive Shaft | | 36 | 27 | 56 | 90 | 616 | |
| | 2022.03- | 3DHT | F | R | SUV FWD DHE15-ESZ | | GDS56596 | Drive Shaft | | 36 | 27 | 56 | 90 | 1018 | |
| | 2022.03- | 3DHT | F | L/R | SUV FWD DHE15-ESZ | | GCO83355 | Outer Joint | | 36 | 26 | 56 | 90 | 68.5 | I |
| 2.0 (160 kw) | 2021.07- | 7DCT | F | L | SUV FWD JLH-4G20TDJ | For Model year:2021 | GDS56506 | Drive Shaft | | 36 | 28 | 54 | 92 | 650 | |
| | 2021.07- | 7DCT | F | R | SUV FWD JLH-4G20TDJ | For Model year:2021 | GDS56507 | Drive Shaft | | 36 | 28 | 54 | 92 | 1010 | |
| | 2021.07- | 7DCT | F | L/R | SUV FWD JLH-4G20TDJ | For Model year:2021 | GCO83320 | Outer Joint | | 36 | 28 | 54 | 92 | 78 | M |
| | 2021.07- | 7DCT | F | L | SUV FWD JLH-4G20TDJ | For Model year:2021 | GCI83338 | Inner Joint | | 28 | 28 | 33 | 64 | 94.5 | |
| | 2021.07- | 7DCT | F | R | SUV FWD JLH-4G20TDJ | For Model year:2021 | GCI83339 | Inner Joint | | 28 | 28 | 33 | 458 | 91 | |
| 2.0 (175 kw) | 2021.07- | 8AT | F | L | SUV 4WD JLH-4G20TDB | For Model year:2021 | GDS56504 | Drive Shaft | | 36 | 31 | 54 | 92 | 640 | |
| | 2021.07- | 8AT | F | R | SUV 4WD JLH-4G20TDB | For Model year:2021 | GDS56505 | Drive Shaft | | 36 | 28 | 54 | 92 | 1020 | |
| | 2021.07- | 8AT | F | L/R | SUV 4WD JLH-4G20TDB | For Model year:2021 | GCO83320 | Outer Joint | | 36 | 28 | 54 | 92 | 78 | M |
| | 2021.07- | 8AT | F | L | SUV 4WD JLH-4G20TDB | For Model year:2021 | GCI83336 | Inner Joint | | 31 | 28 | 36.2 | 68 | 91 | |
| | 2021.07- | 8AT | F | R | SUV 4WD JLH-4G20TDB | For Model year:2021 | GCI83337 | Inner Joint | | 28 | 28 | 30 | 469 | 91 | |
| | 2021.07- | 8AT | R | L | SUV 4WD JLH-4G20TDB | For model year:2021 | GDS56510 | Drive Shaft | | 36 | 23 | 54 | 92 | 867 | |
| | 2021.07- | 8AT | R | R | SUV 4WD JLH-4G20TDB | For model year:2021 | GDS56511 | Drive Shaft | | 36 | 23 | 54 | 92 | 827 | |
| | 2021.07- | 8AT | R | L/R | SUV 4WD JLH-4G20TDB | For model year:2021 | GCO83322 | Outer Joint | | 36 | 29 | 54 | 92 | 58.5 | I |
| | 2021.07- | 8AT | R | L/R | SUV 4WD JLH-4G20TDB | For model year:2021 | GCI83341 | Inner Joint | | 23 | 33 | 28 | 64 | 95 | |
| | 2023.01- | 8AT | F | L | SUV FWD JLH-4G20TDB | | GDS56506 | Drive Shaft | | 36 | 28 | 54 | 92 | 650 | |
| | 2023.01- | 8AT | F | R | SUV FWD JLH-4G20TDB | | GDS56507 | Drive Shaft | | 36 | 28 | 54 | 92 | 1010 | |
| | 2023.01- | 8AT | F | L/R | SUV FWD JLH-4G20TDB | | GCO83320 | Outer Joint | | 36 | 28 | 54 | 92 | 78 | M |
| | 2023.01- | 8AT | F | L | SUV FWD JLH-4G20TDB | | GCI83338 | Inner Joint | | 28 | 28 | 33 | 64 | 94.5 | |
| | 2023.01- | 8AT | F | R | SUV FWD JLH-4G20TDB | | GCI83339 | Inner Joint | | 28 | 28 | 33 | 458 | 91 | |
| **Xingyue S** | | | | | | | | | | | | | | | |
| 2.0 (140 kw) | 2021.07- | 7DCT | F | L | SUV FWD JLH-4G20TD | Model year to:2021 | GDS56671 | Drive Shaft | | 36 | 28 | 56 | 42 | 582 | |
| | 2021.07- | 7DCT | F | R | SUV FWD JLH-4G20TD | Model year to:2021 | GDS56569 | Drive Shaft | | 36 | 28 | 56 | 42 | 946 | |
| | 2021.07- | 7DCT | F | L/R | SUV FWD JLH-4G20TD | Model year to:2023 | GCO83345 | Outer Joint | | 36 | 28 | 56 | 42 | 64.5 | M |
| | 2021.07- | 7DCT | F | L | SUV FWD JLH-4G20TD | Model year to:2021 | GCI83338 | Inner Joint | | 28 | 28 | 33 | 64 | 94.5 | |
| | 2021.07- | 7DCT | F | R | SUV FWD JLH-4G20TD | Model year to:2021 | GCI83379 | Inner Joint | | 28 | 28 | 33 | 458 | 91 | |
| 2.0 (175 kw) | 2021.07- | 8AT | F | L | SUV 4WD JLH-4G20TDB | Model year to:2023 | GDS56530 | Drive Shaft | | 36 | 31 | 56 | 94 | 632 | |
| | 2021.07- | 8AT | F | R | SUV 4WD JLH-4G20TDB | Model year to:2023 | GDS56570 | Drive Shaft | | 36 | 28 | 56 | 42 | 956 | |
| | 2021.07- | 8AT | F | L | SUV 4WD JLH-4G20TDB | Model year to:2023 | GCO83328 | Outer Joint | | 36 | 28 | 56 | 94 | 65 | M |
| | 2021.07- | 8AT | F | R | SUV 4WD JLH-4G20TDB | Model year to:2023 | GCO83345 | Outer Joint | | 36 | 28 | 56 | 42 | 64.5 | M |
| | 2021.07- | 8AT | F | L | SUV 4WD JLH-4G20TDB | Model year to:2023 | GCI83351 | Inner Joint | | 31 | 28 | 36.2 | 68 | 91 | |
| | 2021.07- | 8AT | F | R | SUV 4WD JLH-4G20TDB | for Model year:2021 | GCI83380 | Inner Joint | | 28 | 28 | 30 | 470 | 89 | |
| | 2021.07- | 8AT | R | L | SUV 4WD JLH-4G20TDB | for Model year:2021 | GDS56577 | Drive Shaft | | 36 | 23 | 52.4 | 42 | 812 | |

| | YEAR | TRANSM. | F/R | L/R | BODY STYLE & DRIVE TYPE & ENGINE | REMARKS | G-AP Ref. | PRODUCT | ABS | Technical Specifications A | B | C | H | L | P |
|---|---|---|---|---|---|---|---|---|---|---|---|---|---|---|---|
| **GEELY** | | | | | | | | | | | | | | | |
| **Xingyue S** | | | | | | | | | | | | | | | |
| 2.0 (175 kw) | 2021.07- | 8AT | R | R | SUV 4WD JLH-4G20TDB | for Model year:2021 | GDS56576 | Drive Shaft | | 36 | 23 | 52.4 | 42 | 770 | |
| | 2021.07- | 8AT | F | L | SUV FWD JLH-4G20TDB | Model year to:2023 | GDS56530 | Drive Shaft | | 36 | 31 | 56 | 94 | 632 | |
| | 2021.07- | 8AT | F | R | SUV FWD JLH-4G20TDB | Model year to:2023 | GDS56571 | Drive Shaft | | 36 | 28 | 56 | 42 | 956 | |
| | 2021.07- | 8AT | F | L | SUV FWD JLH-4G20TDB | Model year to:2023 | GCO83328 | Outer Joint | | 36 | 28 | 56 | 94 | 65 | M |
| | 2021.07- | 8AT | F | R | SUV FWD JLH-4G20TDB | Model year to:2023 | GCO83345 | Outer Joint | | 36 | 28 | 56 | 42 | 64.5 | M |
| | 2021.07- | 8AT | F | L | SUV FWD JLH-4G20TDB | Model year to:2023 | GCI83351 | Inner Joint | | 31 | 28 | 36.2 | 68 | 91 | |
| | 2021.07- | 8AT | F | R | SUV FWD JLH-4G20TDB | Model year to:2023 | GCI83381 | Inner Joint | | 28 | 28 | 33 | 470 | 91 | |
| **GLEAGLE** | | | | | | | | | | | | | | | |
| **GC7** | | | | | | | | | | | | | | | |
| 1.5 (78 kw) | 2011.12- | | F | R | Saloon FWD JL4G15D, JLY-4G15 | Model year to:2013 | GDS81256 | Drive Shaft | 48T | 26 | 27 | 60 | 88 | 970 | |
| 1.8 (98 kw) | 2011.12-2013.01 | | F | R | Saloon FWD JLY-4G18 | | GDS81256 | Drive Shaft | 48T | 26 | 27 | 60 | 88 | 970 | |
| **GX7** | | | | | | | | | | | | | | | |
| 1.8 (102 kw) | 2012.04-2015.01 | 5MT | F | L | SUV FWD JL4G18 | | GDS81258 | Drive Shaft | 48T | 26 | 25 | 61 | 88.5 | 639 | |
| | 2012.04-2015.01 | 5MT | F | R | SUV FWD JL4G18 | | GDS81257 | Drive Shaft | 48T | 26 | 25 | 61 | 88.5 | 981 | |
| | 2012.04-2015.01 | 5MT | F | L/R | SUV FWD JL4G18 | | GCO81028 | Outer Joint | 48T | 26 | 25 | 61 | 88.5 | 60 | O |
| 2.0 (104 kw) | 2012.04-2015.01 | 5MT | F | L | SUV FWD JLD4G20 | | GDS81102 | Drive Shaft | 48T | 26 | 27 | 61 | 88.5 | 638 | |
| | 2012.04-2015.01 | 5MT | F | R | SUV FWD JLD4G20 | | GDS81256 | Drive Shaft | 48T | 26 | 27 | 60 | 88 | 970 | |
| | 2012.04-2015.01 | 5MT | F | L | SUV FWD JLD4G20 | | GCO81028 | Outer Joint | 48T | 26 | 25 | 61 | 88.5 | 60 | O |
| | 2012.04-2015.01 | 5MT | F | R | SUV FWD JLD4G20 | | GCO81097 | Outer Joint | 48T | 26 | 25 | 60 | 88 | 60 | O |
| | 2012.04-2015.01 | 6AT | F | L | SUV FWD JLD4G20 | | GDS81260 | Drive Shaft | 48T | 26 | 27 | 61 | 88.5 | 615 | |
| | 2012.04-2015.01 | 6AT | F | R | SUV FWD JLD4G20 | | GDS81259 | Drive Shaft | 48T | 26 | 27 | 60 | 88 | 979 | |
| 2.4 (119 kw) | 2012.04-2015.01 | 6AT | F | L | SUV FWD JLD4G24 | Model year to:2014 | GDS81260 | Drive Shaft | 48T | 26 | 27 | 61 | 88.5 | 615 | |
| | 2012.04-2015.01 | 6AT | F | R | SUV FWD JLD4G24 | Model year to:2014 | GDS81259 | Drive Shaft | 48T | 26 | 27 | 60 | 88 | 979 | |
| | 2012.04-2015.01 | 6AT | F | L/R | SUV FWD JLD4G24 | Model year to:2014 | GCO81028 | Outer Joint | 48T | 26 | 25 | 61 | 88.5 | 60 | O |
| **Vision** | | | | | | | | | | | | | | | |
| 1.5 (80 kw) | 2011.09-2014.11 | 5MT | F | L | Saloon FWD JLY-4G15 | | GDS14087 | Drive Shaft | 48T | 26 | 25 | 58 | 91 | 614 | |
| | 2011.09-2014.11 | 5MT | F | R | Saloon FWD JLY-4G15 | | GDS81103 | Drive Shaft | 48T | 26 | 25 | 58 | 91 | 914 | |
| | 2011.09-2014.11 | 5MT | F | L/R | Saloon FWD JLY-4G15 | | GCO14100 | Outer Joint | 48T | 26 | 23 | 58 | 91 | 54.5 | I |
| | 2011.09-2014.11 | 5MT | F | L | Saloon FWD JLY-4G15 | | GCI14038 | Inner Joint | | 25 | 23 | 45 | 57.5 | 110.5 | |
| | 2011.09-2014.11 | 5MT | F | R | Saloon FWD JLY-4G15 | | GCI81042 | Inner Joint | | 25 | 23 | 45 | 53.5 | 140 | |
| **GMC** | | | | | | | | | | | | | | | |
| **Yukon** | | | | | | | | | | | | | | | |
| 6.2 (301 kw) | 2010.09-2013.12 | | F | | SUV 4WD L92 | Date from:2011,Date to:2013 | GCO87001 | Outer Joint | | 33 | 41 | 80 | 112 | 88.5 | O |
| **GREAT WALL** | | | | | | | | | | | | | | | |
| **C30** | | | | | | | | | | | | | | | |
| 1.5 (78 kw) | 2012.12- | CVT | F | L | Saloon FWD GW4G15 | | GDS82498 | Drive Shaft | 48T | 26 | 23 | 55.9 | 90 | 648 | |
| | 2012.12- | CVT | F | R | Saloon FWD GW4G15 | | GDS82497 | Drive Shaft | 48T | 26 | 23 | 55.9 | 90 | 890 | |
| **Coolbear** | | | | | | | | | | | | | | | |
| 1.5 (77 kw) | 2009.03-2013.12 | CVT | F | L | MPV FWD GW4G15 | Model year to:2010 | GDS82502 | Drive Shaft | 48T | 24 | 23 | 55.9 | 91 | 642 | |
| | 2009.03-2013.12 | CVT | F | R | MPV FWD GW4G15 | Model year to:2010 | GDS82501 | Drive Shaft | 48T | 24 | 23 | 55.9 | 91 | 881 | |
| | 2009.03-2013.12 | CVT | F | L/R | MPV FWD GW4G15 | Model year to:2010 | GCO81969 | Outer Joint | 48T | 24 | 21 | 55.9 | 91 | 54 | M |
| **Cowry** | | | | | | | | | | | | | | | |
| 2.0 (105 kw) | 2007.11-2010.08 | 4AT | F | L | MPV FWD 4G63S4N | | GDS82500 | Drive Shaft | 48T | 26 | 27 | 56.2 | 91 | 609 | |
| | 2007.11-2010.08 | 4AT | F | R | MPV FWD 4G63S4N | | GDS82499 | Drive Shaft | 48T | 26 | 27 | 56.2 | 91 | 934 | |
| | 2007.11-2010.08 | 4AT | F | L | MPV FWD 4G63S4N | | GCI51029 | Inner Joint | | 27 | 24 | 41 | 62 | 91 | |
| | 2007.11-2010.08 | 4AT | F | R | MPV FWD 4G63S4N | | GCI39092 | Inner Joint | | 27 | 24 | 41 | 384 | 96 | |
| | 2007.11-2010.08 | 5MT | F | L | MPV FWD 4G63S4N | Model year from:2008,Model year to:2010 | GDS82508 | Drive Shaft | 48T | 26 | 25 | 56.2 | 91 | 609 | |
| | 2007.11-2010.08 | 5MT | F | R | MPV FWD 4G63S4N | Model year from:2008,Model year to:2010 | GDS82507 | Drive Shaft | 48T | 26 | 25 | 56.2 | 91 | 934 | |
| | 2007.11-2010.08 | 5MT | F | L/R | MPV FWD 4G63S4N | Model year from:2008,Model year to:2010 | GCO81962 | Outer Joint | 48T | 26 | 24 | 56.2 | 91 | 60 | M |
| | 2007.11-2010.08 | 5MT | F | L | MPV FWD 4G63S4N | Model year from:2008,Model year to:2010 | GCI71001 | Inner Joint | | 25 | 24 | 41 | 62 | 93 | |
| | 2007.11-2010.08 | 5MT | F | R | MPV FWD 4G63S4N | Model year from:2008,Model year to:2010 | GCI81852 | Inner Joint | | 25 | 24 | 41 | 384 | 96 | |
| 2.4 (120 kw) | 2009.09-2010.08 | 4AT | F | R | MPV FWD 4G69-S4M | | GCI39092 | Inner Joint | | 27 | 24 | 41 | 384 | 96 | |
| **Fengjun 3** | | | | | | | | | | | | | | | |
| 2.4 (100 kw) | 2008.09-2013.12 | 5MT | F | L/R | Pickup 4WD 4G69S4N | Model year to:2011 | GDS26008 | Drive Shaft | | 17 | 17 | 53 | 136.5 | 608 | |
| 2.8 (70 kw) | 2006.08-2013.12 | 5MT | F | L/R | Pickup 4WD GW28TC2 | Model year from:2007,Model year to:2011 | GDS82570 | Drive Shaft | | 27 | 27 | 53 | 137 | 626 | |
| | 2006.08-2013.12 | 5MT | F | L/R | Pickup 4WD GW28TC2 | Model year from:2007,Model year to:2011 | GCO75046 | Outer Joint | | 27 | 27 | 53 | 137 | 74 | M |
| | 2006.08-2013.12 | 5MT | F | L/R | Pickup 4WD GW28TC2 | Model year from:2007,Model year to:2011 | GCI81887 | Inner Joint | | 27 | 25 | 35 | 103 | 89 | |
| **Fengjun 5** | | | | | | | | | | | | | | | |
| 2.0 (75 kw) | 2017.09- | 5MT | F | L/R | Pickup 4WD GW4D20E | Model year to:2020 | GDS56518 | Drive Shaft | | 27 | 27 | 53 | 137 | 626 | |
| | 2017.09- | 5MT | F | L/R | Pickup 4WD GW4D20E | Model year to:2020 | GCO75046 | Outer Joint | | 27 | 27 | 53 | 137 | 74 | M |
| | 2017.09- | 5MT | F | L/R | Pickup 4WD GW4D20E | Model year to:2020 | GCI83346 | Inner Joint | | 27 | 25 | | 107 | 84 | |
| | 2017.09- | 5MT | F | | Pickup 4WD GW4D20E | Model year to:2020 | GDS86107 | Stub Axle,differential | | 27 | 29 | | | 420 | |
| **Fengjun 5/Wingle 5** | | | | | | | | | | | | | | | |
| 2.0 (95 kw) | 2013.02- | 6MT | F | L/R | Pickup 4WD GW4D20/GW4D20B | Model year to:2017,For Engine no.:GW4D20B | GDS56518 | Drive Shaft | | 27 | 27 | 53 | 137 | 626 | |
| | 2013.02- | 6MT | F | L/R | Pickup 4WD GW4D20/GW4D20B | Model year to:2017,For Engine no.:GW4D20 | GDS82570 | Drive Shaft | | 27 | 27 | 53 | 137 | 626 | |

| | YEAR | TRANSM. | F/R | L/R | BODY STYLE & DRIVE TYPE & ENGINE | REMARKS | G-AP Ref. | PRODUCT | ABS | Technical Specifications A | B | C | H | L | P |
|---|---|---|---|---|---|---|---|---|---|---|---|---|---|---|---|
| **GREAT WALL** | | | | | | | | | | | | | | | |
| **Fengjun 5/Wingle 5** | | | | | | | | | | | | | | | |
| 2.0 (95 kw) | 2013.02- | 6MT | F | L/R | Pickup 4WD GW4D20/GW4D20B | Model year to:2017 | GCO75046 | Outer Joint | | 27 | 27 | 53 | 137 | 74 | M |
| | 2013.02- | 6MT | F | L/R | Pickup 4WD GW4D20/GW4D20B | Model year to:2017,For Engine no.:GW4D20 | GCI81887 | Inner Joint | | 27 | 25 | 35 | 103 | 89 | |
| | 2013.02- | 6MT | F | L/R | Pickup 4WD GW4D20/GW4D20B | Model year to:2017,For Engine no.:GW4D20B | GCI83346 | Inner Joint | | 27 | 25 | | 107 | 84 | |
| | 2013.02- | 6MT | F | | Pickup 4WD GW4D20/GW4D20B | Model year to:2017 | GDS86107 | Stub Axle,differential | | 27 | 29 | | | 420 | |
| 2.4 (100 kw) | 2009.10-2015.12 | 5MT | F | L/R | Pickup 4WD 4G69-S4N | Model year from:2011 | GDS26008 | Drive Shaft | | 17 | 17 | 53 | 136.5 | 608 | |
| **Fengjun 7** | | | | | | | | | | | | | | | |
| 2.0 (115 kw) | 2019.07- | 6MT | F | L/R | Pickup 4WD GW4D20M | Model year to:2020 | GDS56518 | Drive Shaft | | 27 | 27 | 53 | 137 | 626 | |
| | 2019.07- | 6MT | F | L/R | Pickup 4WD GW4D20M | Model year to:2020 | GCO75046 | Outer Joint | | 27 | 27 | 53 | 137 | 74 | M |
| | 2019.07- | 6MT | F | L/R | Pickup 4WD GW4D20M | Model year to:2020;Without Rim protector | GCI81887 | Inner Joint | | 27 | 25 | 35 | 103 | 89 | |
| | 2019.07- | 6MT | F | L/R | Pickup 4WD GW4D20M | Model year to:2020,with Rim protector | GCI83346 | Inner Joint | | 27 | 25 | | 107 | 84 | |
| | 2019.07- | 6MT | F | | Pickup 4WD GW4D20M | Model year to:2020 | GDS86107 | Stub Axle,differential | | 27 | 29 | | | 420 | |
| 2.0 (120 kw) | 2019.05- | 6MT | F | L/R | Pickup 4WD GW4C20B | Model year to:2020 | GDS56518 | Drive Shaft | | 27 | 27 | 53 | 137 | 626 | |
| | 2019.05- | 6MT | F | L/R | Pickup 4WD GW4C20B | Model year to:2020 | GCO75046 | Outer Joint | | 27 | 27 | 53 | 137 | 74 | M |
| | 2019.05- | 6MT | F | L/R | Pickup 4WD GW4C20B | Model year to:2020 | GCI83346 | Inner Joint | | 27 | 25 | | 107 | 84 | |
| | 2019.05- | 6MT | F | | Pickup 4WD GW4C20B | Model year to:2020 | GDS86107 | Stub Axle,differential | | 27 | 29 | | | 420 | |
| **Fengjun 7/Wingle 7** | | | | | | | | | | | | | | | |
| 2.0 (105 kw) | 2018.11- | 6MT | F | L/R | Pickup 4WD GW4D20D | Model year to:2020 | GDS56518 | Drive Shaft | | 27 | 27 | 53 | 137 | 626 | |
| | 2018.11- | 6MT | F | L/R | Pickup 4WD GW4D20D | Model year from:2018,Model year to:2019 | GCO75046 | Outer Joint | | 27 | 27 | 53 | 137 | 74 | M |
| | 2018.11- | 6MT | F | L/R | Pickup 4WD GW4D20D | Model year to:2020 | GCI83346 | Inner Joint | | 27 | 25 | | 107 | 84 | |
| | 2018.11- | 6MT | F | | Pickup 4WD GW4D20D | Model year to:2020 | GDS86107 | Stub Axle,differential | | 27 | 29 | | | 420 | |
| **Florid** | | | | | | | | | | | | | | | |
| 1.3 (65 kw) | 2008.09-2010.12 | 5MT | F | L | Hatchback FWD GW413EF | Model year to:2009 | GDS82480 | Drive Shaft | 48T | 24 | 25 | 56 | 92 | 576 | |
| | 2008.09-2010.12 | 5MT | F | R | Hatchback FWD GW413EF | Model year to:2009 | GDS82479 | Drive Shaft | 48T | 24 | 25 | 56 | 92 | 940 | |
| | 2008.09-2013.09 | 5MT/5AMT | F | L | Hatchback FWD GW4G13 | | GDS82480 | Drive Shaft | 48T | 24 | 25 | 56 | 92 | 576 | |
| | 2008.09-2013.09 | 5MT/5AMT | F | R | Hatchback FWD GW4G13 | | GDS82479 | Drive Shaft | 48T | 24 | 25 | 56 | 92 | 940 | |
| 1.3 (68 kw) | 2009.05-2012.12 | 5MT | F | L | Hatchback FWD | Model year to:2010 | GDS82480 | Drive Shaft | 48T | 24 | 25 | 56 | 92 | 576 | |
| | 2009.05-2012.12 | 5MT | F | R | Hatchback FWD | Model year to:2010 | GDS82479 | Drive Shaft | 48T | 24 | 25 | 56 | 92 | 940 | |
| | 2009.05-2012.12 | 5MT | F | L/R | Hatchback FWD | Model year to:2010;GrooveType:Middle | GCO81969 | Outer Joint | 48T | 24 | 21 | 55.9 | 91 | 54 | M |
| 1.5 (77 kw) | 2009.02-2012.12 | 5MT | F | L | Hatchback FWD GW4G15 | Model year to:2010 | GDS82504 | Drive Shaft | 48T | 24 | 23 | 55.9 | 86 | 628 | |
| | 2009.02-2012.12 | 5MT | F | R | Hatchback FWD GW4G15 | Model year to:2010 | GDS82503 | Drive Shaft | 48T | 24 | 23 | 55.9 | 86 | 868 | |
| | 2009.02-2012.12 | 5MT | F | L/R | Hatchback FWD GW4G15 | Model year to:2010 | GCO81970 | Outer Joint | 48T | 24 | 21 | 55.9 | 86 | 54 | M |
| | 2009.02-2012.12 | 5MT | F | L/R | Hatchback FWD GW4G15 | Model year to:2010 | GCO82112 | Outer Joint | 48T | 24 | 22 | 56 | 86 | 60 | M |
| | 2009.02-2012.12 | 5MT | F | L/R | Hatchback FWD GW4G15 | Model year to:2010 | GCI81859 | Inner Joint | | 23 | 21 | 34 | 56 | 106 | |
| **Florid Cross** | | | | | | | | | | | | | | | |
| 1.3 (68 kw) | 2009.10-2014.12 | 5MT | F | L | Hatchback FWD GW4G13 | Model year to:2010 | GDS82480 | Drive Shaft | 48T | 24 | 25 | 56 | 92 | 576 | |
| | 2009.10-2014.12 | 5MT | F | L | Hatchback FWD GW4G13 | Model year from:2010,Model year to:2012 | GDS82504 | Drive Shaft | 48T | 24 | 23 | 55.9 | 86 | 628 | |
| | 2009.10-2014.12 | 5MT | F | R | Hatchback FWD GW4G13 | Model year to:2010 | GDS82479 | Drive Shaft | 48T | 24 | 25 | 56 | 92 | 940 | |
| | 2009.10-2014.12 | 5MT | F | R | Hatchback FWD GW4G13 | Model year from:2010,Model year to:2012 | GDS82503 | Drive Shaft | 48T | 24 | 23 | 55.9 | 86 | 868 | |
| | 2009.10-2014.12 | 5MT | F | L/R | Hatchback FWD GW4G13 | Model year to:2010;GrooveType:Middle | GCO81969 | Outer Joint | 48T | 24 | 21 | 55.9 | 91 | 54 | M |
| | 2009.10-2014.12 | 5MT | F | L/R | Hatchback FWD GW4G13 | Model year from:2010,Model year to:2012 | GCO81970 | Outer Joint | 48T | 24 | 21 | 55.9 | 86 | 54 | M |
| | 2009.10-2014.12 | 5MT | F | L/R | Hatchback FWD GW4G13 | Model year from:2010,Model year to:2012 | GCI81859 | Inner Joint | | 23 | 21 | 34 | 56 | 106 | |
| 1.5 (77 kw) | 2009.08-2014.12 | 5MT | F | L | Hatchback FWD GW4G15 | Model year to:2012 | GDS82504 | Drive Shaft | 48T | 24 | 23 | 55.9 | 86 | 628 | |
| | 2009.08-2014.12 | 5MT | F | R | Hatchback FWD GW4G15 | Model year to:2012 | GDS82503 | Drive Shaft | 48T | 24 | 23 | 55.9 | 86 | 868 | |
| | 2009.08-2014.12 | 5MT | F | L/R | Hatchback FWD GW4G15 | Model year to:2012 | GCO81970 | Outer Joint | 48T | 24 | 21 | 55.9 | 86 | 54 | M |
| | 2009.08-2014.12 | 5MT | F | L/R | Hatchback FWD GW4G15 | Model year to:2012 | GCI81859 | Inner Joint | | 23 | 21 | 34 | 56 | 106 | |
| **Hover H3 (Haval)** | | | | | | | | | | | | | | | |
| 2.0 (90 kw) | 2010.01- | 5MT | F | L/R | SUV 4WD 4G63-S4M | for model year:2012 | GDS26008 | Drive Shaft | | 17 | 17 | 53 | 136.5 | 608 | |
| 2.4 (93 kw) | 2007.01-2010.12 | 5MT | F | L/R | SUV 4WD 4G64-S4M | Model year to:2008 | GDS26008 | Drive Shaft | | 17 | 17 | 53 | 136.5 | 608 | |
| 2.4 (100 kw) | 2010.07-2013.12 | 5MT | F | L/R | SUV 4WD 4G69-S4N | Model year to:2012 | GDS26008 | Drive Shaft | | 17 | 17 | 53 | 136.5 | 608 | |
| 2.5 (80 kw) | 2010.01-2013.12 | 5MT | F | L/R | SUV 4WD GW25TCI | Model year to:2012 | GDS26008 | Drive Shaft | | 17 | 17 | 53 | 136.5 | 608 | |
| **Hover H5** | | | | | | | | | | | | | | | |
| 2.0 (90 kw) | 2012.03-2014.12 | 5MT | F | L/R | SUV 4WD 4G63S4M | | GDS26008 | Drive Shaft | | 17 | 17 | 53 | 136.5 | 608 | |
| 2.0 (100 kw) | 2011.07-2014.12 | 6MT | F | L/R | SUV 4WD GW4D20B | Model year from:2013 | GDS56518 | Drive Shaft | | 27 | 27 | 53 | 137 | 626 | |
| | 2011.07-2014.12 | 6MT | F | L/R | SUV 4WD GW4D20B | Model year from:2013 | GCO75046 | Outer Joint | | 27 | 27 | 53 | 137 | 74 | M |
| | 2011.07-2014.12 | 6MT | F | L/R | SUV 4WD GW4D20B | without Rim protector | GCI81887 | Inner Joint | | 27 | 25 | 35 | 103 | 89 | |
| | 2011.07-2014.12 | 6MT | F | L/R | SUV 4WD GW4D20B | Model year from:2013,with Rim protector | GCI83346 | Inner Joint | | 27 | 25 | | 107 | 84 | |
| 2.0 (110 kw) | 2010.10-2014.12 | 6MT | F | L/R | SUV 4WD GW4D20 | Model year to:2011 | GDS82570 | Drive Shaft | | 27 | 27 | 53 | 137 | 626 | |
| | 2010.10-2014.12 | 6MT | F | L/R | SUV 4WD GW4D20 | Model year to:2011 | GCO75046 | Outer Joint | | 27 | 27 | 53 | 137 | 74 | M |
| | 2010.10-2014.12 | 6MT | F | L/R | SUV 4WD GW4D20 | Model year to:2011 | GCI81887 | Inner Joint | | 27 | 25 | 35 | 103 | 89 | |
| 2.5 (80 kw) | 2010.06-2011.12 | 5MT | F | L/R | SUV 4WD GW25TCI | | GDS26008 | Drive Shaft | | 17 | 17 | 53 | 136.5 | 608 | |
| | 2010.06-2011.12 | 5MT | F | L/R | SUV 4WD GW25TCI | | GDS82570 | Drive Shaft | | 27 | 27 | 53 | 137 | 626 | |
| | 2010.06-2011.12 | 5MT | F | L/R | SUV 4WD GW25TCI | | GCO75046 | Outer Joint | | 27 | 27 | 53 | 137 | 74 | M |
| | 2010.06-2011.12 | 5MT | F | L/R | SUV 4WD GW25TCI | | GCI81887 | Inner Joint | | 27 | 25 | 35 | 103 | 89 | |

| | YEAR | TRANSM. | F/R | L/R | BODY STYLE & DRIVE TYPE & ENGINE | REMARKS | G-AP Ref. | PRODUCT | ABS | Technical Specifications A | B | C | H | L | P |
|---|---|---|---|---|---|---|---|---|---|---|---|---|---|---|---|
| **GREAT WALL** | | | | | | | | | | | | | | | |
| **Hover H5/Haval 5** | | | | | | | | | | | | | | | |
| 2.4 (100 kw) | 2010.06- | 5MT | F | L/R | SUV 4WD 4G69-S4N | Model year to:2014 | GDS26008 | Drive Shaft | | 17 | 17 | 53 | 136.5 | 608 | |
| **Hover H6** | | | | | | | | | | | | | | | |
| 1.5 (105 kw) | 2011.08- | 6MT | F | L | SUV 4WD GW4G15B | | GDS56225 | Drive Shaft | 48T | 28 | 37 | 68 | 89.5 | 624 | |
| | 2011.08- | 6MT | F | R | SUV 4WD GW4G15B | | GDS57455 | Drive Shaft | 48T | 28 | 37 | 68 | 89.5 | 1007 | |
| | 2011.08- | 6MT | F | L/R | SUV 4WD GW4G15B | | GCO83211 | Outer Joint | 48T | 28 | 27 | 68 | 89.5 | 64 | M |
| | 2011.08- | 6MT | F | L | SUV 4WD GW4G15B | | GCI81301 | Inner Joint | | 37 | 26 | 42 | 75 | 103.5 | |
| | 2011.08- | 6MT | F | L | SUV FWD GW4G15B | | GDS56225 | Drive Shaft | 48T | 28 | 37 | 68 | 89.5 | 624 | |
| | 2011.08- | 6MT | F | R | SUV FWD GW4G15B | | GDS81502 | Drive Shaft | 48T | 28 | 37 | 68 | 89.5 | 1008 | |
| | 2011.08- | 6MT | F | L/R | SUV FWD GW4G15B | | GCO83211 | Outer Joint | 48T | 28 | 27 | 68 | 89.5 | 64 | M |
| | 2011.08- | 6MT | F | L | SUV FWD GW4G15B | | GCI81301 | Inner Joint | | 37 | 26 | 42 | 75 | 103.5 | |
| **Hover H6 (Haval)** | | | | | | | | | | | | | | | |
| 1.5 (105 kw) | 2018.12- | 6MT | F | L | SUV 4WD GW4G15B | | GDS56225 | Drive Shaft | 48T | 28 | 37 | 68 | 89.5 | 624 | |
| | 2018.12- | 6MT | F | R | SUV 4WD GW4G15B | | GDS57455 | Drive Shaft | 48T | 28 | 37 | 68 | 89.5 | 1007 | |
| | 2018.12- | 6MT | F | L/R | SUV 4WD GW4G15B | | GCO83211 | Outer Joint | 48T | 28 | 27 | 68 | 89.5 | 64 | M |
| | 2018.12- | 6MT | F | L | SUV 4WD GW4G15B | | GCI81301 | Inner Joint | | 37 | 26 | 42 | 75 | 103.5 | |
| 1.5 (110 kw) | 2012.09- | 6AT | F | L | SUV FWD GW4G15B | Model year from:2016,Model year to:2017 | GDS57505 | Drive Shaft | 48T | 28 | 27 | 68 | 90 | 628 | |
| | 2012.09- | 6AT | F | R | SUV FWD GW4G15B | Model year from:2015,Model year to:2017 | GDS57563 | Drive Shaft | 48T | 28 | 27 | 68 | 90 | 981 | |
| | 2012.09- | 6AT | F | L/R | SUV FWD GW4G15B | Model year from:2015,Model year to:2017 | GCO83344 | Outer Joint | 48T | 28 | 26 | 68 | 90 | 64 | M |
| | 2012.09- | 6AT | F | L | SUV FWD GW4G15B | Model year from:2015,Model year to:2017 | GCI83717 | Inner Joint | | 27 | 26 | 30 | 67 | 94 | |
| | 2012.09- | 6AT | F | R | SUV FWD GW4G15B | Model year from:2015,Model year to:2017 | GCI83742 | Inner Joint | | 27 | 26 | 30 | 369 | 95 | |
| | 2012.09- | 6MT | F | L | SUV FWD GW4G15B | Model year to:2017 | GDS56225 | Drive Shaft | 48T | 28 | 37 | 68 | 89.5 | 624 | |
| | 2012.09- | 6MT | F | R | SUV FWD GW4G15B | Model year to:2017 | GDS81502 | Drive Shaft | 48T | 28 | 37 | 68 | 89.5 | 1008 | |
| | 2014.12- | 6MT | F | L | SUV 4WD GW4G15B | Model year to:2017 | GDS56225 | Drive Shaft | 48T | 28 | 37 | 68 | 89.5 | 624 | |
| | 2014.12- | 6MT | F | R | SUV 4WD GW4G15B | Model year to:2017 | GDS57455 | Drive Shaft | 48T | 28 | 37 | 68 | 89.5 | 1007 | |
| | 2014.12- | 6MT | F | R | SUV 4WD GW4G15B | Model year to:2017 | GDS81502 | Drive Shaft | 48T | 28 | 37 | 68 | 89.5 | 1008 | |
| | 2014.12- | 6MT | F | L/R | SUV 4WD GW4G15B | Model year to:2017 | GCO83211 | Outer Joint | 48T | 28 | 27 | 68 | 89.5 | 64 | M |
| | 2014.12- | 6MT | F | L | SUV 4WD GW4G15B | Model year to:2017 | GCI81301 | Inner Joint | | 37 | 26 | 42 | 75 | 103.5 | |
| | 2014.12- | 6MT | F | R | SUV 4WD GW4G15B | Model year to:2017 | GCI75050 | Inner Joint | | 37 | 26 | 42 | 385 | 93.5 | |
| | 2014.12- | 6MT | F | R | SUV 4WD GW4G15B | Model year to:2017 | GCI83359 | Inner Joint | | 37 | 26 | 36 | 347 | 107 | |
| | 2014.12- | 6MT | R | L | SUV 4WD GW4G15B | Model year to:2017 | GDS81538 | Drive Shaft | 48T | 28 | 22 | 55 | 90 | 768 | |
| | 2014.12- | 6MT | R | R | SUV 4WD GW4G15B | Model year to:2017 | GDS81537 | Drive Shaft | 48T | 28 | 22 | 55 | 90 | 822 | |
| | 2014.12- | 6MT | R | L/R | SUV 4WD GW4G15B | Model year to:2017 | GCO81364 | Outer Joint | 48T | 28 | 20 | 55 | 90 | 52 | M |
| | 2014.12- | 6MT | R | L/R | SUV 4WD GW4G15B | Model year to:2017 | GCO81964 | Outer Joint | 48T | 28 | 20 | 55 | 90 | 52 | M |
| | 2014.12- | 6MT | R | L/R | SUV 4WD GW4G15B | Model year to:2017 | GCI81402 | Inner Joint | | 22 | 19 | 36 | 61.5 | 101.5 | |
| 2.0 (98 kw) | 2011.08-2014.12 | 5MT | F | L | SUV FWD 4G63S4M | | GDS75040 | Drive Shaft | 48T | 28 | 25 | 65 | 89.5 | 649 | |
| | 2011.08-2014.12 | 5MT | F | R | SUV FWD 4G63S4M | | GDS75041 | Drive Shaft | 48T | 28 | 25 | 68 | 89.5 | 988 | |
| | 2011.08-2014.12 | 5MT | F | L | SUV FWD 4G63S4M | | GCO75026 | Outer Joint | 48T | 28 | 27 | 65 | 89.5 | 64 | M |
| | 2011.08-2014.12 | 5MT | F | R | SUV FWD 4G63S4M | | GCO83211 | Outer Joint | 48T | 28 | 27 | 68 | 89.5 | 64 | M |
| | 2011.08-2014.12 | 5MT | F | L | SUV FWD 4G63S4M | | GCI75025 | Inner Joint | | 25 | 24 | 41 | 62.5 | 92.5 | |
| 2.0 (103 kw) | 2011.08- | 6MT | R | L/R | SUV 4WD GW4D20 | | GCO81364 | Outer Joint | 48T | 28 | 20 | 55 | 90 | 52 | M |
| | 2011.08- | 6MT | R | L/R | SUV 4WD GW4D20 | | GCO81964 | Outer Joint | 48T | 28 | 20 | 55 | 90 | 52 | M |
| 2.0 (105 kw) | 2013.01- | 6MT | R | L/R | SUV 4WD GW4D20 | | GCO81364 | Outer Joint | 48T | 28 | 20 | 55 | 90 | 52 | M |
| | 2013.01- | 6MT | R | L/R | SUV 4WD GW4D20 | | GCO81964 | Outer Joint | 48T | 28 | 20 | 55 | 90 | 52 | M |
| 2.0 (110 kw) | 2011.01-2014.12 | 6MT | F | L | SUV 4WD GW4D20 | Model year from:2012 | GCO83211 | Outer Joint | 48T | 28 | 27 | 68 | 89.5 | 64 | M |
| | 2011.01-2014.12 | 6MT | F | R | SUV 4WD GW4D20 | Model year from:2012 | GCO75026 | Outer Joint | 48T | 28 | 27 | 65 | 89.5 | 64 | M |
| | 2011.01-2014.12 | 6MT | R | L | SUV 4WD GW4D20 | Model year from:2012 | GDS81538 | Drive Shaft | 48T | 28 | 22 | 55 | 90 | 768 | |
| | 2011.01-2014.12 | 6MT | R | R | SUV 4WD GW4D20 | Model year from:2012 | GDS81537 | Drive Shaft | 48T | 28 | 22 | 55 | 90 | 822 | |
| | 2011.01-2014.12 | 6MT | R | L/R | SUV 4WD GW4D20 | Model year from:2012 | GCO81364 | Outer Joint | 48T | 28 | 20 | 55 | 90 | 52 | M |
| | 2011.01-2014.12 | 6MT | R | L/R | SUV 4WD GW4D20 | Model year from:2012 | GCO81964 | Outer Joint | 48T | 28 | 20 | 55 | 90 | 52 | M |
| | 2011.01-2014.12 | 6MT | R | L/R | SUV 4WD GW4D20 | Model year from:2012 | GCI81402 | Inner Joint | | 22 | 19 | 36 | 61.5 | 101.5 | |
| | 2011.08-2014.12 | 6MT | F | L | SUV FWD GW4D20 | Model year to:2016 | GCO83211 | Outer Joint | 48T | 28 | 27 | 68 | 89.5 | 64 | M |
| | 2011.08-2014.12 | 6MT | F | R | SUV FWD GW4D20 | Model year to:2016 | GCO75026 | Outer Joint | 48T | 28 | 27 | 65 | 89.5 | 64 | M |
| 2.4 (120 kw) | 2012.06- | 4AT/5MT | F | L | SUV FWD 4G69-S4M | Model year to:2015 | GCI51029 | Inner Joint | | 27 | 24 | 41 | 62 | 91 | |
| | 2012.06- | 4AT/5MT | F | R | SUV FWD 4G69-S4M | Model year to:2015 | GCI39092 | Inner Joint | | 27 | 24 | 41 | 384 | 96 | |
| | 2012.06- | 5MT | F | L | SUV FWD 4G69-S4M | | GDS75040 | Drive Shaft | 48T | 28 | 25 | 65 | 89.5 | 649 | |
| | 2012.06- | 5MT | F | R | SUV FWD 4G69-S4M | | GDS75041 | Drive Shaft | 48T | 28 | 25 | 68 | 89.5 | 988 | |
| | 2012.06- | 5MT | F | L | SUV FWD 4G69-S4M | | GCO83211 | Outer Joint | 48T | 28 | 27 | 68 | 89.5 | 64 | M |
| | 2012.06- | 5MT | F | R | SUV FWD 4G69-S4M | | GCO75026 | Outer Joint | 48T | 28 | 27 | 65 | 89.5 | 64 | M |
| **Hover M4** | | | | | | | | | | | | | | | |
| 1.5 (71 kw) | 2013.01- | 5MT | F | L | SUV FWD GW4G15 | | GDS82671 | Drive Shaft | 48T | 24 | 23 | 56 | 86 | 635 | |
| | 2013.01- | 5MT | F | R | SUV FWD GW4G15 | | GDS83100 | Drive Shaft | 48T | 24 | 23 | 56 | 86 | 869 | |
| | 2013.01- | 5MT | F | L | SUV FWD GW4G15 | | GCI81948 | Inner Joint | | 23 | 22 | 34 | 56 | 109 | |
| | 2013.01- | 6AMT | F | L/R | SUV FWD GW4G15 | | GCO82112 | Outer Joint | 48T | 24 | 22 | 56 | 86 | 60 | M |
| | 2013.01- | 6AMT | F | L | SUV FWD GW4G15 | | GCI81941 | Inner Joint | | 33 | 22 | 35 | 56 | 117 | |

| | YEAR | TRANSM. | F/R | L/R | BODY STYLE & DRIVE TYPE & ENGINE | REMARKS | G-AP Ref. | PRODUCT | ABS | Technical Specifications A | B | C | H | L | P |
|---|---|---|---|---|---|---|---|---|---|---|---|---|---|---|---|
| **GREAT WALL** | | | | | | | | | | | | | | | |
| **Lingao** | | | | | | | | | | | | | | | |
| 1.5 (77 kw) | 2009.11-2013.12 | CVT | F | L | Hatchback FWD GW4G15 | for model year:2010 | GDS82498 | Drive Shaft | 48T | 26 | 23 | 55.9 | 90 | 648 | |
| | 2009.11-2013.12 | CVT | F | R | Hatchback FWD GW4G15 | for model year:2010 | GDS82497 | Drive Shaft | 48T | 26 | 23 | 55.9 | 90 | 890 | |
| **M4** | | | | | | | | | | | | | | | |
| 1.5 (78 kw) | 2012.05- | 5MT | F | L | SUV FWD GW4G15 | Model year to:2017 | GDS82671 | Drive Shaft | 48T | 24 | 23 | 56 | 86 | 635 | |
| | 2012.05- | 5MT | F | R | SUV FWD GW4G15 | Model year to:2017 | GDS83100 | Drive Shaft | 48T | 24 | 23 | 56 | 86 | 869 | |
| | 2012.05- | 5MT | F | L | SUV FWD GW4G15 | Model year to:2017,Bellows Material:Neoprene | GCO82112 | Outer Joint | 48T | 24 | 22 | 56 | 86 | 60 | M |
| | 2012.05- | 5MT | F | L | SUV FWD GW4G15 | Model year to:2017 | GCI81948 | Inner Joint | | 23 | 22 | 34 | 56 | 109 | |
| **Pao** | | | | | | | | | | | | | | | |
| 2.0 (120 kw) | 2019.10- | 6MT | F | L/R | Pickup 4WD GW4D20M | Model year to:2020 | GDS57318 | Drive Shaft | 48T | 28 | 30 | 65 | 100 | 630 | |
| | 2019.10- | 6MT | F | L/R | Pickup 4WD GW4D20M | Model year to:2020 | GCO83500 | Outer Joint | 48T | 28 | 27 | 65 | 100 | 71 | I |
| | 2019.10- | 6MT | F | L/R | Pickup 4WD GW4D20M | Model year to:2020 | GCI83592 | Inner Joint | | 30 | 25 | 44 | 73.5 | 118 | |
| 2.0 (140 kw) | 2019.09- | 6MT | F | L/R | Pickup 4WD GW4C20B | Model year to:2020 | GDS57318 | Drive Shaft | 48T | 28 | 30 | 65 | 100 | 630 | |
| | 2019.09- | 8AT | F | L | Pickup 4WD GW4C20B | Model year to:2020 | GDS57319 | Drive Shaft | 48T | 28 | 30 | 65 | 100 | 625 | |
| | 2019.09- | 8AT | F | R | Pickup 4WD GW4C20B | Model year to:2020 | GDS57320 | Drive Shaft | 48T | 28 | 30 | 65 | 100 | 635 | |
| | 2019.09- | 8AT/6MT | F | L/R | Pickup 4WD GW4C20B | Model year to:2020 | GCO83500 | Outer Joint | 48T | 28 | 27 | 65 | 100 | 71 | I |
| | 2019.09- | 8AT/6MT | F | L/R | Pickup 4WD GW4C20B | Model year to:2020 | GCI83592 | Inner Joint | | 30 | 25 | 44 | 73.5 | 118 | |
| **Peri** | | | | | | | | | | | | | | | |
| 1.3 (65 kw) | 2008.03-2010.01 | 5MT | F | L | Hatchback FWD GW413EF | Model year to:2009 | GDS75045 | Drive Shaft | 48T | 24 | 25 | 56 | 87 | 514 | |
| | 2008.03-2010.01 | 5MT | F | L | Hatchback FWD GW413EF | Model year to:2009 | GDS82478 | Drive Shaft | 48T | 24 | 25 | 56 | 87 | 503 | |
| | 2008.03-2010.01 | 5MT | F | R | Hatchback FWD GW413EF | Model year to:2009 | GDS75044 | Drive Shaft | 48T | 24 | 25 | 56 | 87 | 914 | |
| | 2008.03-2010.01 | 5MT | F | R | Hatchback FWD GW413EF | Model year to:2009 | GDS82477 | Drive Shaft | 48T | 24 | 25 | 56 | 87 | 916 | |
| | 2008.03-2010.01 | 5MT | F | L/R | Hatchback FWD GW413EF | Model year to:2009 | GCO81972 | Outer Joint | 48T | 24 | 21 | 56 | 87 | 52 | I |
| **Safe F1** | | | | | | | | | | | | | | | |
| 2.2 (78 kw) | 2006.04-2009.04 | 5MT | F | L/R | SUV 4WD 491QE | | GCO59001 | Outer Joint | | 26 | 24 | 56 | 95.5 | 55 | I |
| **Steed 6** | | | | | | | | | | | | | | | |
| 2.4 (90 kw) | 2016.12- | 5MT | F | L/R | Pickup 4WD 4G69S4N | | GDS82570 | Drive Shaft | | 27 | 27 | 53 | 137 | 626 | |
| | 2016.12- | 5MT | F | L/R | Pickup 4WD 4G69S4N | | GCO75046 | Outer Joint | | 27 | 27 | 53 | 137 | 74 | M |
| | 2016.12- | 5MT | F | L/R | Pickup 4WD 4G69S4N | | GCI83346 | Inner Joint | | 27 | 25 | | 107 | 84 | |
| **Tengyi C30** | | | | | | | | | | | | | | | |
| 1.5 (71 kw) | 2010.05- | CVT | F | L | Saloon FWD GW4G15 | | GDS82498 | Drive Shaft | 48T | 26 | 23 | 55.9 | 90 | 648 | |
| | 2010.05- | CVT | F | R | Saloon FWD GW4G15 | | GDS82497 | Drive Shaft | 48T | 26 | 23 | 55.9 | 90 | 890 | |
| **Voleex (Tengyi) C10** | | | | | | | | | | | | | | | |
| 1.5 (71 kw) | 2010.01- | CVT | F | L | Hatchback FWD GW4G15 | Model year to:2014 | GDS82498 | Drive Shaft | 48T | 26 | 23 | 55.9 | 90 | 648 | |
| | 2010.01- | CVT | F | R | Hatchback FWD GW4G15 | Model year to:2014 | GDS82497 | Drive Shaft | 48T | 26 | 23 | 55.9 | 90 | 890 | |
| 1.5 (77 kw) | 2009.11- | CVT | F | L | Hatchback FWD GW4G15 | | GDS82498 | Drive Shaft | 48T | 26 | 23 | 55.9 | 90 | 648 | |
| | 2009.11- | CVT | F | R | Hatchback FWD GW4G15 | | GDS82497 | Drive Shaft | 48T | 26 | 23 | 55.9 | 90 | 890 | |
| **Voleex (Tengyi) C20R** | | | | | | | | | | | | | | | |
| 1.5 (78 kw) | 2011.09- | 5MT | F | L | Hatchback FWD GW4G15 | Model year to:2014 | GDS82672 | Drive Shaft | 48T | 26 | 23 | 56 | 90 | 646 | |
| | 2011.09- | 5MT | F | R | Hatchback FWD GW4G15 | Model year to:2014 | GDS82664 | Drive Shaft | 48T | 26 | 23 | 56 | 90 | 886 | |
| **Voleex (Tengyi) C30** | | | | | | | | | | | | | | | |
| 1.5 (77 kw) | 2010.05-2011.12 | CVT | F | L | Saloon FWD GW4G15 | | GDS82498 | Drive Shaft | 48T | 26 | 23 | 55.9 | 90 | 648 | |
| | 2010.05-2011.12 | CVT | F | R | Saloon FWD GW4G15 | | GDS82497 | Drive Shaft | 48T | 26 | 23 | 55.9 | 90 | 890 | |
| **Voleex (Tengyi) C50** | | | | | | | | | | | | | | | |
| 1.5 (93 kw) | 2011.11- | | F | L | Saloon FWD GW4G15T | | GCI81940 | Inner Joint | | 23 | 28 | 34 | 56 | 109 | |
| **Voleex (Tengyi) V80** | | | | | | | | | | | | | | | |
| 2.0 (98 kw) | 2010.09-2013.12 | 5MT | F | L | MPV FWD 4G63S4M | | GCI71001 | Inner Joint | | 25 | 24 | 41 | 62 | 93 | |
| 2.0 (105 kw) | 2010.09-2014.12 | 4AT | F | R | MPV FWD 4G63-S4N | Model year to:2013 | GCI39092 | Inner Joint | | 27 | 24 | 41 | 384 | 96 | |
| 2.4 (120 kw) | 2010.09-2014.12 | 4AT | F | R | MPV FWD 4G69S4M | | GCI39092 | Inner Joint | | 27 | 24 | 41 | 384 | 96 | |
| **Wingle** | | | | | | | | | | | | | | | |
| 2.8 (70 kw) | 2006.06- | 5MT | F | L/R | Pickup 4WD GW28TC2 | Model year from:2007,Model year to:2013 | GDS82570 | Drive Shaft | | 27 | 27 | 53 | 137 | 626 | |
| | 2006.06- | 5MT | F | L/R | Pickup 4WD GW28TC2 | Model year from:2007,Model year to:2013 | GCO75046 | Outer Joint | | 27 | 27 | 53 | 137 | 74 | M |
| | 2006.06- | 5MT | F | L/R | Pickup 4WD GW28TC2 | Model year from:2007,Model year to:2013 | GCI81887 | Inner Joint | | 27 | 25 | 35 | 103 | 89 | |
| **Wingle 3** | | | | | | | | | | | | | | | |
| 2.8 (70 kw) | 2011.01- | 5MT | F | L/R | Pickup 4WD GW28TC2 | Model year from:2007,Model year to:2013 | GDS82570 | Drive Shaft | | 27 | 27 | 53 | 137 | 626 | |
| | 2011.01- | 5MT | F | L/R | Pickup 4WD GW28TC2 | Model year from:2007,Model year to:2013 | GCO75046 | Outer Joint | | 27 | 27 | 53 | 137 | 74 | M |
| | 2011.01- | 5MT | F | L/R | Pickup 4WD GW28TC2 | Model year from:2007,Model year to:2013 | GCI81887 | Inner Joint | | 27 | 25 | 35 | 103 | 89 | |
| **Wingle 5** | | | | | | | | | | | | | | | |
| 2.0 (105 kw) | 2011.06- | MT | F | L/R | Pickup 4WD GW4D20 | | GDS82570 | Drive Shaft | | 27 | 27 | 53 | 137 | 626 | |
| **Wingle 6** | | | | | | | | | | | | | | | |
| 2.0 (105 kw) | 2014.05- | 6MT | F | L/R | Pickup 4WD GW4D20 | | GDS82570 | Drive Shaft | | 27 | 27 | 53 | 137 | 626 | |
| | 2014.05- | 6MT | F | L/R | Pickup 4WD GW4D20 | | GCO75046 | Outer Joint | | 27 | 27 | 53 | 137 | 74 | M |
| | 2014.05- | 6MT | F | L/R | Pickup 4WD GW4D20 | | GCI83346 | Inner Joint | | 27 | 25 | | 107 | 84 | |
| 2.4 (90 kw) | 2014.05-2021.12 | 5MT | F | L/R | Pickup 4WD 4G69-S4N | | GDS82570 | Drive Shaft | | 27 | 27 | 53 | 137 | 626 | |
| | 2014.05-2021.12 | 5MT | F | L/R | Pickup 4WD 4G69-S4N | | GCO75046 | Outer Joint | | 27 | 27 | 53 | 137 | 74 | M |
| | 2014.05-2021.12 | 5MT | F | L/R | Pickup 4WD 4G69-S4N | | GCI83346 | Inner Joint | | 27 | 25 | | 107 | 84 | |

| | YEAR | TRANSM. | F/R | L/R | BODY STYLE & DRIVE TYPE & ENGINE | REMARKS | G-AP Ref. | PRODUCT | ABS | Technical Specifications A | B | C | H | L | P |
|---|---|---|---|---|---|---|---|---|---|---|---|---|---|---|---|
| **GREAT WALL** | | | | | | | | | | | | | | | |
| **Wingle 6/Fengjun 6/Steed 6** | | | | | | | | | | | | | | | |
| 2.4 (110 kw) | 2022.01- | | F | L/R | Pickup 4WD 4K22D4M | | GDS82570 | Drive Shaft | | 27 | 27 | 53 | 137 | 626 | |
| | 2022.01- | | F | L/R | Pickup 4WD 4K22D4M | | GCO75046 | Outer Joint | | 27 | 27 | 53 | 137 | 74 | M |
| | 2022.01- | | F | L/R | Pickup 4WD 4K22D4M | | GCI83346 | Inner Joint | | 27 | 25 | | 107 | 84 | |
| **HAIMA (FAW)** | | | | | | | | | | | | | | | |
| **3** | | | | | | | | | | | | | | | |
| 1.8 (90 kw) | 2007.06-2010.12 | 5MT | F | L/R | Saloon FWD FP-DE, HM483Q | Model year to:2008 | GCO82154 | Outer Joint | 48T | 26 | 32 | 58 | 90.5 | 64 | M |
| | 2007.06-2010.12 | 5MT | F | L/R | Saloon FWD FP-DE, HM483Q | Model year to:2008 | GCI81735 | Inner Joint | | 25 | 30 | 35 | 58.5 | 89.5 | |
| **M3** | | | | | | | | | | | | | | | |
| 1.5 (82 kw) | 2013.04- | 5MT | F | L | Saloon FWD HMAGN15VF | Model year to:2017;Inner teeth of wheel side:29 | GDS82300 | Drive Shaft | 48T | 25 | 23 | 56 | 87.5 | 612 | |
| | 2013.04- | 5MT | F | R | Saloon FWD HMAGN15VF | Model year to:2017;Inner teeth of wheel side:29 | GDS82299 | Drive Shaft | 48T | 25 | 23 | 56 | 87.5 | 917 | |
| | 2013.04- | 5MT | F | L | Saloon FWD HMAGN15VF | Model year to:2017 | GCI34052 | Inner Joint | | 23 | 29 | 40 | 61 | 91 | |
| | 2013.04- | 5MT | F | R | Saloon FWD HMAGN15VF | Model year to:2017 | GCI81737 | Inner Joint | | 23 | 29 | 40 | 61 | 119 | |
| | 2013.04- | CVT/5MT | F | L/R | Saloon FWD HMAGN15VF | Model year to:2017 | GCO81795 | Outer Joint | 48T | 25 | 29 | 56 | 87.5 | 61 | I |
| **M8** | | | | | | | | | | | | | | | |
| 1.8 (138 kw) | 2013.12- | 6AMT | F | L | Saloon FWD HM484Q-T | Model year to:2017 | GCI83251 | Inner Joint | | 27 | 25 | 30.4 | 66.5 | 87 | |
| | 2013.12- | 6AMT | F | R | Saloon FWD HM484Q-T | Model year to:2017 | GCI83252 | Inner Joint | | 28 | 25 | 43 | | 136.5 | |
| **S5** | | | | | | | | | | | | | | | |
| 1.5 (120 kw) | 2014.10- | CVT | F | L | SUV FWD HMA GN15-TF | Model year to:2017 | GDS56342 | Drive Shaft | | 29 | 23 | 56 | 102 | 698 | |
| | 2014.10- | CVT | F | R | SUV FWD HMA GN15-TF | Model year to:2017 | GDS56320 | Drive Shaft | | 29 | 23 | 56 | 102 | 935 | |
| | 2014.10- | CVT | F | L/R | SUV FWD HMA GN15-TF | Model year to:2017 | GCO83250 | Outer Joint | | 29 | 32 | 56 | 102 | 58.5 | M |
| | 2014.10- | CVT | F | L | SUV FWD HMA GN15-TF | Model year to:2017 | GCI83255 | Inner Joint | | 23 | 32 | 37.95 | 64 | 110 | |
| | 2014.10- | CVT | F | R | SUV FWD HMA GN15-TF | Model year to:2017 | GCI83239 | Inner Joint | | 23 | 32 | 38 | 301 | 121 | |
| **S7 (Qishi)** | | | | | | | | | | | | | | | |
| 1.8 (138 kw) | 2015.05- | 6AMT | F | L | SUV FWD HM484Q-T | Model year to:2017 | GDS56338 | Drive Shaft | 44T | 28 | 27 | 56.6 | 94.5 | 615 | |
| | 2015.05- | 6AMT | F | R | SUV FWD HM484Q-T | Model year to:2017 | GDS56339 | Drive Shaft | 44T | 28 | 28 | 56.6 | 94.5 | 613 | |
| | 2015.05- | 6AMT | F | L/R | SUV FWD HM484Q-T | Model year to:2017 | GCO83259 | Outer Joint | 44T | 28 | 25 | 56.6 | 94.5 | 60 | M |
| | 2015.05- | 6AMT | F | L | SUV FWD HM484Q-T | Model year to:2017 | GCI83251 | Inner Joint | | 27 | 25 | 30.4 | 66.5 | 87 | |
| | 2015.05- | 6AMT | F | R | SUV FWD HM484Q-T | Model year to:2017 | GCI83252 | Inner Joint | | 28 | 25 | 43 | | 136.5 | |
| 2.0 (110 kw) | 2010.01-2017.12 | 5AT/5MT | F | R | SUV FWD HM484Q, HM484Q-A | Model year from:2013 | GDS82305 | Drive Shaft | 44T | 28 | 28 | 56.6 | 94 | 623 | |
| | 2010.01-2017.12 | 5MT/5AT | F | L/R | SUV FWD HM484Q, HM484Q-A | Model year from:2013 | GCO81799 | Outer Joint | 44T | 28 | 24 | 56.6 | 94 | 57 | I |
| | 2010.01-2017.12 | 5MT/5AT | F | R | SUV FWD HM484Q, HM484Q-A | Model year from:2013 | GCI81740 | Inner Joint | | 28 | 24 | 43 | | 115 | |
| **V70** | | | | | | | | | | | | | | | |
| 1.5 (115 kw) | 2016.04- | 6MT | F | L/R | MPV FWD HM474Q-T | Model year to:2017 | GCO83259 | Outer Joint | 44T | 28 | 25 | 56.6 | 94.5 | 60 | M |
| | 2016.04- | 6MT | F | R | MPV FWD HM474Q-T | Model year to:2017 | GCI83252 | Inner Joint | | 28 | 25 | 43 | | 136.5 | |
| 1.5 (121 kw) | 2017.09- | 6MT | F | L/R | MPV FWD HM474Q-T | Model year to:2018 | GCO83259 | Outer Joint | 44T | 28 | 25 | 56.6 | 94.5 | 60 | M |
| | 2017.09- | 6MT | F | R | MPV FWD HM474Q-T | Model year to:2018 | GCI83252 | Inner Joint | | 28 | 25 | 43 | | 136.5 | |
| 2.0 (112 kw) | 2016.04- | 6MT | F | L/R | MPV FWD HM484Q-EG | Model year to:2016 | GCO83259 | Outer Joint | 44T | 28 | 25 | 56.6 | 94.5 | 60 | M |
| | 2016.04- | 6MT | F | R | MPV FWD HM484Q-EG | Model year to:2016 | GCI83252 | Inner Joint | | 28 | 25 | 43 | | 136.5 | |
| **HANTENG** | | | | | | | | | | | | | | | |
| **X7** | | | | | | | | | | | | | | | |
| 1.5 (119 kw) | 2016.09- | 5MT | F | R | SUV FWD 15S4G | Model year to:2017 | GDS81954 | Drive Shaft | 48T | 27 | 25 | 62.2 | 95 | 982 | |
| | 2016.09- | 5MT | F | R | SUV FWD 15S4G | Model year to:2017 | GCO81583 | Outer Joint | 48T | 27 | 25 | 62.2 | 95 | 63 | M |
| | 2016.09- | 5MT | F | R | SUV FWD 15S4G | Model year to:2017 | GCI81562 | Inner Joint | | 25 | 24 | 48 | 400 | 149 | |
| **HAVAL** | | | | | | | | | | | | | | | |
| **Chulian** | | | | | | | | | | | | | | | |
| 1.5 (110 kw) | 2021.01- | 7DCT | F | L | SUV FWD GW4G15K | | GDS56969 | Drive Shaft | | 28 | 37 | 55 | 89.5 | 636 | |
| | 2021.01- | 7DCT | F | R | SUV FWD GW4G15K | | GDS56968 | Drive Shaft | | 28 | 37 | 55 | 89.5 | 966 | |
| | 2021.01- | 7DCT | F | L/R | SUV FWD GW4G15K | | GCO84435 | Outer Joint | | 28 | 34 | 55 | 89.5 | 63 | M |
| | 2021.01- | 7DCT | F | L | SUV FWD GW4G15K | | GCI83182 | Inner Joint | | 37 | 33 | 42 | 64 | 109.5 | |
| | 2021.01- | 7DCT | F | R | SUV FWD GW4G15K | | GCI83181 | Inner Joint | | 37 | 33 | 42 | 386 | 117 | |
| **F5** | | | | | | | | | | | | | | | |
| 1.5 (124 kw) | 2018.09- | 7DCT | F | L | SUV FWD GW4B15, GW4B15A | Model year to:2019 | GDS56567 | Drive Shaft | 48T | 28 | 37 | 68 | 90 | 623 | |
| | 2018.09- | 7DCT | F | R | SUV FWD GW4B15, GW4B15A | Model year to:2019 | GDS56648 | Drive Shaft | 48T | 28 | 37 | 68 | 90 | 1000 | |
| | 2018.09- | 7DCT | F | L/R | SUV FWD GW4B15, GW4B15A | Model year to:2019 | GCO83344 | Outer Joint | 48T | 28 | 26 | 68 | 90 | 64 | M |
| | 2018.09- | 7DCT | F | L | SUV FWD GW4B15, GW4B15A | Model year to:2019 | GCI83377 | Inner Joint | | 37 | 26 | 42 | 64 | 112 | |
| | 2018.09- | 7DCT | F | R | SUV FWD GW4B15, GW4B15A | Model year to:2019 | GCI83420 | Inner Joint | | 37 | 26 | 42 | 384 | 120 | |
| **F7** | | | | | | | | | | | | | | | |
| 1.5 (110 kw) | 2021.12- | 7DCT | F | R | SUV FWD GW4B15, GW4B15A | | GDS56648 | Drive Shaft | 48T | 28 | 37 | 68 | 90 | 1000 | |
| 1.5 (124 kw) | 2018.11- | 7DCT | F | L | SUV FWD GW4B15, GW4B15A | Model year to:2019 | GDS56567 | Drive Shaft | 48T | 28 | 37 | 68 | 90 | 623 | |
| | 2018.11- | 7DCT | F | R | SUV FWD GW4B15, GW4B15A | Model year to:2019 | GDS56648 | Drive Shaft | 48T | 28 | 37 | 68 | 90 | 1000 | |
| | 2018.11- | 7DCT | F | L/R | SUV FWD GW4B15, GW4B15A | Model year to:2019 | GCO83344 | Outer Joint | 48T | 28 | 26 | 68 | 90 | 64 | M |
| | 2018.11- | 7DCT | F | L | SUV FWD GW4B15, GW4B15A | Model year to:2019 | GCI83377 | Inner Joint | | 37 | 26 | 42 | 64 | 112 | |
| | 2018.11- | 7DCT | F | R | SUV FWD GW4B15, GW4B15A | Model year to:2019 | GCI83420 | Inner Joint | | 37 | 26 | 42 | 384 | 120 | |
| 2.0 (145 kw) | 2018.11- | 7DCT | F | R | SUV 4WD GW4C20 | | GDS57429 | Drive Shaft | 48T | 28 | 37 | 68 | 90 | 1006 | |
| | 2018.11- | 7DCT | F | L/R | SUV 4WD GW4C20 | | GCO83344 | Outer Joint | 48T | 28 | 26 | 68 | 90 | 64 | M |

| | YEAR | TRANSM. | F/R | L/R | BODY STYLE & DRIVE TYPE & ENGINE | REMARKS | G-AP Ref. | PRODUCT | ABS | Technical Specifications A | B | C | H | L | P |
|---|---|---|---|---|---|---|---|---|---|---|---|---|---|---|---|
| **HAVAL** | | | | | | | | | | | | | | | |
| **F7** | | | | | | | | | | | | | | | |
| 2.0 (145 kw) | 2018.11- | 7DCT | F | R | SUV 4WD GW4C20 | | GCI83663 | Inner Joint | | 37 | 26 | | 421 | 103 | |
| | 2018.11- | 7DCT | R | L | SUV 4WD GW4C20 | Model year to:2019 | GDS56454 | Drive Shaft | 48T | 28 | 22 | 55 | 90 | 776 | |
| | 2018.11- | 7DCT | R | R | SUV 4WD GW4C20 | Model year to:2019 | GDS56453 | Drive Shaft | 48T | 28 | 22 | 55 | 90 | 818 | |
| | 2018.11- | 7DCT | R | L/R | SUV 4WD GW4C20 | Model year to:2019 | GCO83300 | Outer Joint | 48T | 28 | 22 | 55 | 90 | 60 | M |
| | 2018.11- | 7DCT | R | L/R | SUV 4WD GW4C20 | Model year to:2019 | GCI83315 | Inner Joint | | 22 | 22 | 36 | 69 | 115.5 | |
| | 2018.11- | 7DCT | F | L | SUV FWD GW4C20 | Model year to:2019 | GDS56567 | Drive Shaft | 48T | 28 | 37 | 68 | 90 | 623 | |
| | 2018.11- | 7DCT | F | R | SUV FWD GW4C20 | Model year to:2019 | GDS56648 | Drive Shaft | 48T | 28 | 37 | 68 | 90 | 1000 | |
| | 2018.11- | 7DCT | F | L/R | SUV FWD GW4C20 | Model year to:2019 | GCO83344 | Outer Joint | 48T | 28 | 26 | 68 | 90 | 64 | M |
| | 2018.11- | 7DCT | F | L | SUV FWD GW4C20 | Model year to:2019 | GCI83377 | Inner Joint | | 37 | 26 | 42 | 64 | 112 | |
| | 2018.11- | 7DCT | F | R | SUV FWD GW4C20 | Model year to:2019 | GCI83420 | Inner Joint | | 37 | 26 | 42 | 384 | 120 | |
| 2.0 (165 kw) | 2019.06- | 7DCT | F | R | SUV 4WD GW4C20B | | GDS57429 | Drive Shaft | 48T | 28 | 37 | 68 | 90 | 1006 | |
| | 2019.06- | 7DCT | F | L/R | SUV 4WD GW4C20B | | GCO83344 | Outer Joint | 48T | 28 | 26 | 68 | 90 | 64 | M |
| | 2019.06- | 7DCT | F | R | SUV 4WD GW4C20B | | GCI83663 | Inner Joint | | 37 | 26 | | 421 | 103 | |
| | 2019.06- | 7DCT | R | L | SUV 4WD GW4C20B | Model year to:2020 | GDS56454 | Drive Shaft | 48T | 28 | 22 | 55 | 90 | 776 | |
| | 2019.06- | 7DCT | R | R | SUV 4WD GW4C20B | Model year to:2020 | GDS56453 | Drive Shaft | 48T | 28 | 22 | 55 | 90 | 818 | |
| | 2019.06- | 7DCT | R | L/R | SUV 4WD GW4C20B | Model year to:2020 | GCO83300 | Outer Joint | 48T | 28 | 22 | 55 | 90 | 60 | M |
| | 2019.06- | 7DCT | R | L/R | SUV 4WD GW4C20B | Model year to:2020 | GCI83315 | Inner Joint | | 22 | 22 | 36 | 69 | 115.5 | |
| | 2019.06- | 7DCT | F | L | SUV FWD GW4C20B | Model year to:2020 | GDS56567 | Drive Shaft | 48T | 28 | 37 | 68 | 90 | 623 | |
| | 2019.06- | 7DCT | F | R | SUV FWD GW4C20B | Model year to:2020 | GDS56648 | Drive Shaft | 48T | 28 | 37 | 68 | 90 | 1000 | |
| | 2019.06- | 7DCT | F | L/R | SUV FWD GW4C20B | Model year to:2020 | GCO83344 | Outer Joint | 48T | 28 | 26 | 68 | 90 | 64 | M |
| | 2019.06- | 7DCT | F | L | SUV FWD GW4C20B | Model year to:2020 | GCI83377 | Inner Joint | | 37 | 26 | 42 | 64 | 112 | |
| | 2019.06- | 7DCT | F | R | SUV FWD GW4C20B | Model year to:2020 | GCI83420 | Inner Joint | | 37 | 26 | 42 | 384 | 120 | |
| **F7X** | | | | | | | | | | | | | | | |
| 1.5 (124 kw) | 2019.04- | 7DCT | F | L | SUV FWD GW4B15A | Model year to:2020 | GDS56567 | Drive Shaft | 48T | 28 | 37 | 68 | 90 | 623 | |
| | 2019.04- | 7DCT | F | R | SUV FWD GW4B15A | Model year to:2020 | GDS56648 | Drive Shaft | 48T | 28 | 37 | 68 | 90 | 1000 | |
| | 2019.04- | 7DCT | F | L/R | SUV FWD GW4B15A | Model year to:2020 | GCO83344 | Outer Joint | 48T | 28 | 26 | 68 | 90 | 64 | M |
| | 2019.04- | 7DCT | F | L | SUV FWD GW4B15A | Model year to:2020 | GCI83377 | Inner Joint | | 37 | 26 | 42 | 64 | 112 | |
| | 2019.04- | 7DCT | F | R | SUV FWD GW4B15A | Model year to:2020 | GCI83420 | Inner Joint | | 37 | 26 | 42 | 384 | 120 | |
| 2.0 (165 kw) | 2019.04- | 7DCT | F | L | SUV FWD GW4C20B | Model year to:2020 | GDS56567 | Drive Shaft | 48T | 28 | 37 | 68 | 90 | 623 | |
| | 2019.04- | 7DCT | F | R | SUV FWD GW4C20B | Model year to:2020 | GDS56648 | Drive Shaft | 48T | 28 | 37 | 68 | 90 | 1000 | |
| | 2019.04- | 7DCT | F | L/R | SUV FWD GW4C20B | Model year to:2020 | GCO83344 | Outer Joint | 48T | 28 | 26 | 68 | 90 | 64 | M |
| | 2019.04- | 7DCT | F | L | SUV FWD GW4C20B | Model year to:2020 | GCI83377 | Inner Joint | | 37 | 26 | 42 | 64 | 112 | |
| | 2019.04- | 7DCT | F | R | SUV FWD GW4C20B | Model year to:2020 | GCI83420 | Inner Joint | | 37 | 26 | 42 | 384 | 120 | |
| | 2019.05- | 7DCT | F | L | SUV 4WD GW4C20B | Model year to:2020 | GDS56567 | Drive Shaft | 48T | 28 | 37 | 68 | 90 | 623 | |
| | 2019.05- | 7DCT | F | R | SUV 4WD GW4C20B | Model year to:2020 | GDS56648 | Drive Shaft | 48T | 28 | 37 | 68 | 90 | 1000 | |
| | 2019.05- | 7DCT | F | L/R | SUV 4WD GW4C20B | Model year to:2020 | GCO83344 | Outer Joint | 48T | 28 | 26 | 68 | 90 | 64 | M |
| | 2019.05- | 7DCT | F | L | SUV 4WD GW4C20B | Model year to:2020 | GCI83377 | Inner Joint | | 37 | 26 | 42 | 64 | 112 | |
| | 2019.05- | 7DCT | F | R | SUV 4WD GW4C20B | Model year to:2020 | GCI83420 | Inner Joint | | 37 | 26 | 42 | 384 | 120 | |
| **H1** | | | | | | | | | | | | | | | |
| 1.5 (78 kw) | 2014.11- | 5MT | F | L | SUV FWD GW4G15 | | GDS82671 | Drive Shaft | 48T | 24 | 23 | 56 | 86 | 635 | |
| | 2014.11- | 5MT | F | L | SUV FWD GW4G15 | | GDS82672 | Drive Shaft | 48T | 26 | 23 | 56 | 90 | 646 | |
| | 2014.11- | 5MT | F | R | SUV FWD GW4G15 | | GDS82664 | Drive Shaft | 48T | 26 | 23 | 56 | 90 | 886 | |
| | 2014.11- | 5MT | F | R | SUV FWD GW4G15 | | GDS83100 | Drive Shaft | 48T | 24 | 23 | 56 | 86 | 869 | |
| | 2014.11- | 5MT | F | L/R | SUV FWD GW4G15 | | GCO82108 | Outer Joint | 48T | 26 | 21 | 56 | 90 | 53.5 | I |
| | 2014.11- | 5MT | F | L/R | SUV FWD GW4G15 | | GCI81940 | Inner Joint | | 23 | 28 | 34 | 56 | 109 | |
| | 2014.11- | 5MT | F | L/R | SUV FWD GW4G15 | Red Label,Date from:2015.12 | GCI81948 | Inner Joint | | 23 | 22 | 34 | 56 | 109 | |
| | 2014.11- | 6AMT | F | L | SUV FWD GW4G15 | | GDS82666 | Drive Shaft | 48T | 26 | 33 | 56 | 90 | 642 | |
| | 2014.11- | 6AMT | F | R | SUV FWD GW4G15 | | GDS82665 | Drive Shaft | 48T | 26 | 33 | 56 | 90 | 894 | |
| | 2014.11- | 6AMT | F | L/R | SUV FWD GW4G15 | | GCO82109 | Outer Joint | 48T | 26 | 22 | 56 | 90 | 60 | M |
| | 2014.11- | 6AMT | F | L | SUV FWD GW4G15 | | GCI81941 | Inner Joint | | 33 | 22 | 35 | 56 | 117 | |
| | 2014.11- | 6AMT | F | L/R | SUV FWD GW4G15 | | GCI81941 | Inner Joint | | 33 | 22 | 35 | 56 | 117 | |
| | 2014.11- | 6AMT/5MT | F | L | SUV FWD GW4G15 | | GCO82112 | Outer Joint | 48T | 24 | 22 | 56 | 86 | 60 | M |
| **H2** | | | | | | | | | | | | | | | |
| 1.5 (110 kw) | 2014.07- | 6MT | F | L | SUV 4WD GW4G15B | Model year to:2017 | GDS81501 | Drive Shaft | 48T | 28 | 37 | 63 | 89.5 | 598 | |
| | 2014.07- | 6MT | F | R | SUV 4WD GW4G15B | Model year to:2017 | GDS56542 | Drive Shaft | 48T | 28 | 37 | 63 | 90 | 960 | |
| | 2014.07- | 6MT | F | L/R | SUV 4WD GW4G15B | Model year to:2017 | GCO39258 | Outer Joint | 48T | 28 | 27 | 63 | 89.5 | 64 | M |
| | 2014.07- | 6MT | F | L/R | SUV 4WD GW4G15B | Model year to:2017 | GCO83333 | Outer Joint | 48T | 28 | 27 | 63 | 90 | 64 | M |
| | 2014.07- | 6MT | F | R | SUV 4WD GW4G15B | Model year to:2017 | GCI83359 | Inner Joint | | 37 | 26 | 36 | 347 | 107 | |
| | 2014.07- | 6MT | R | L | SUV 4WD GW4G15B | Model year to:2017 | GDS56532 | Drive Shaft | 48T | 28 | 22 | 56.5 | 92.5 | 728 | |
| | 2014.07- | 6MT | R | R | SUV 4WD GW4G15B | Model year to:2017 | GDS56531 | Drive Shaft | 48T | 28 | 22 | 56.5 | 92.5 | 797 | |
| | 2014.07- | 6MT | R | L/R | SUV 4WD GW4G15B | Model year to:2017 | GCO83330 | Outer Joint | 48T | 28 | 20 | 56.5 | 92.5 | 59.5 | M |
| | 2014.07- | 6MT | R | L | SUV 4WD GW4G15B | Model year to:2017 | GCI83353 | Inner Joint | | 22 | 19 | 36 | 65.5 | 101.5 | |
| | 2014.07- | 6MT | R | R | SUV 4WD GW4G15B | Model year to:2017 | GCI83352 | Inner Joint | | 22 | 19 | 36 | 87.5 | 101.5 | |
| | 2014.07- | 6AT | F | L | SUV FWD GW4G15B | Model year from:2015, Model year to:2017 | GDS56534 | Drive Shaft | 48T | 28 | 27 | 62.2 | 90 | 616 | |
| | 2014.07- | 6AT | F | R | SUV FWD GW4G15B | Model year from:2015,Model year to:2017 | GDS56585 | Drive Shaft | 48T | 28 | 27 | 65 | 90 | 907 | |

| | YEAR | TRANSM. | F/R | L/R | BODY STYLE & DRIVE TYPE & ENGINE | REMARKS | G-AP Ref. | PRODUCT | ABS | Technical Specifications A | B | C | H | L | P |
|---|---|---|---|---|---|---|---|---|---|---|---|---|---|---|---|
| **HAVAL** | | | | | | | | | | | | | | | |
| **H2** | | | | | | | | | | | | | | | |
| 1.5 (110 kw) | 2014.07- | 6AT | F | L/R | SUV FWD GW4G15B | Model year from:2015, Model year to:2017 | GCO83331 | Outer Joint | 48T | 28 | 26 | 62.2 | 90 | 64 | M |
| | 2014.07- | 6AT | F | L/R | SUV FWD GW4G15B | Model year from:2015,Model year to:2017 | GCO83350 | Outer Joint | 48T | 28 | 34 | 65 | 90 | 64 | M |
| | 2014.07- | 6AT | F | L | SUV FWD GW4G15B | Model year from:2015, Model year to:2017 | GCI83355 | Inner Joint | | 27 | 26 | 30 | 67 | 99 | |
| | 2014.07- | 6AT | F | R | SUV FWD GW4G15B | Model year from:2015,Model year to:2017 | GCI83391 | Inner Joint | | 27 | 34 | 30 | 369 | 107 | |
| | 2014.07- | 6MT | F | L | SUV FWD GW4G15B | | GDS81501 | Drive Shaft | 48T | 28 | 37 | 63 | 89.5 | 598 | |
| | 2014.07- | 6MT | F | R | SUV FWD GW4G15B | for OE NO.:2303200XSZ08B | GDS57719 | Drive Shaft | 48T | 28 | 37 | 63 | 90 | 962 | |
| | 2014.07- | 6MT | F | R | SUV FWD GW4G15B | CR | GCO83333 | Outer Joint | 48T | 28 | 27 | 63 | 90 | 64 | M |
| | 2014.07- | 6MT | F | L/R | SUV FWD GW4G15B | Model year to:2019;TPE | GCO39258 | Outer Joint | 48T | 28 | 27 | 63 | 89.5 | 64 | M |
| | 2014.07- | 6MT | F | L | SUV FWD GW4G15B | Model year to:2019 | GCI81301 | Inner Joint | | 37 | 26 | 42 | 75 | 103.5 | |
| | 2014.07- | 6MT | F | R | SUV FWD GW4G15B | Model year to:2019 | GCI75050 | Inner Joint | | 37 | 26 | 42 | 385 | 93.5 | |
| | 2014.07- | 6MT | F | R | SUV FWD GW4G15B | | GCI83821 | Inner Joint | | 37 | 26 | 42 | 383.5 | 93.5 | |
| **H4** | | | | | | | | | | | | | | | |
| 1.3 (102 kw) | 2018.03- | 7DCT | F | L | SUV FWD GW4B13 | Model year for:2018 | GDS57428 | Drive Shaft | 48T | 28 | 27 | 68 | 90 | 595 | |
| | 2018.03- | 7DCT | F | R | SUV FWD GW4B13 | Model year for:2018 | GDS57489 | Drive Shaft | 48T | 28 | 27 | 68 | 90 | 1038 | |
| | 2018.03- | 7DCT | F | L/R | SUV FWD GW4B13 | Model year for:2018 | GCO83344 | Outer Joint | 48T | 28 | 26 | 68 | 90 | 64 | M |
| | 2018.03- | 7DCT | F | L | SUV FWD GW4B13 | Model year for:2018 | GCI83662 | Inner Joint | | 27 | 26 | 40 | 56 | 116 | |
| | 2018.03- | 7DCT | F | R | SUV FWD GW4B13 | Model year for:2018 | GCI83693 | Inner Joint | | 27 | 26 | | 423.5 | 118 | |
| 1.5 (110 kw) | 2019.10- | 7DCT | F | L | SUV FWD GW4G15F | | GDS56567 | Drive Shaft | 48T | 28 | 37 | 68 | 90 | 623 | |
| | 2019.10- | 7DCT | F | R | SUV FWD GW4G15F | | GDS56648 | Drive Shaft | 48T | 28 | 37 | 68 | 90 | 1000 | |
| | 2019.10- | 7DCT | F | L/R | SUV FWD GW4G15F | | GCO83344 | Outer Joint | 48T | 28 | 26 | 68 | 90 | 64 | M |
| | 2019.10- | 7DCT | F | L | SUV FWD GW4G15F | | GCI83377 | Inner Joint | | 37 | 26 | 42 | 64 | 112 | |
| | 2019.10- | 7DCT | F | R | SUV FWD GW4G15F | | GCI83420 | Inner Joint | | 37 | 26 | 42 | 384 | 120 | |
| 1.5 (124 kw) | 2018.03- | 6MT | F | L | SUV FWD GW4B15/GW4B15A | Model year to:2019 | GDS56225 | Drive Shaft | 48T | 28 | 37 | 68 | 89.5 | 624 | |
| | 2018.03- | 6MT | F | R | SUV FWD GW4B15/GW4B15A | Model year from:2018,Model year to:2019 | GDS81502 | Drive Shaft | 48T | 28 | 37 | 68 | 89.5 | 1008 | |
| | 2018.03- | 6MT | F | L/R | SUV FWD GW4B15/GW4B15A | Model year to:2019 | GCO83211 | Outer Joint | 48T | 28 | 27 | 68 | 89.5 | 64 | M |
| | 2018.03- | 6MT | F | L | SUV FWD GW4B15/GW4B15A | Model year from:2018,Model year to:2019 | GCI81301 | Inner Joint | | 37 | 26 | 42 | 75 | 103.5 | |
| | 2018.03- | 6MT | F | R | SUV FWD GW4B15/GW4B15A | Model year from:2018,Model year to:2019 | GCI75050 | Inner Joint | | 37 | 26 | 42 | 385 | 93.5 | |
| | 2018.03- | 7DCT | F | L | SUV FWD GW4B15/GW4B15A | | GDS56567 | Drive Shaft | 48T | 28 | 37 | 68 | 90 | 623 | |
| | 2018.03- | 7DCT | F | R | SUV FWD GW4B15/GW4B15A | | GDS56648 | Drive Shaft | 48T | 28 | 37 | 68 | 90 | 1000 | |
| | 2018.03- | 7DCT | F | L/R | SUV FWD GW4B15/GW4B15A | | GCO83344 | Outer Joint | 48T | 28 | 26 | 68 | 90 | 64 | M |
| | 2018.03- | 7DCT | F | L | SUV FWD GW4B15/GW4B15A | | GCI83377 | Inner Joint | | 37 | 26 | 42 | 64 | 112 | |
| | 2018.03- | 7DCT | F | R | SUV FWD GW4B15/GW4B15A | | GCI83420 | Inner Joint | | 37 | 26 | 42 | 384 | 120 | |
| **H5** | | | | | | | | | | | | | | | |
| 2.0 (90 kw) | 2013.09-2017.12 | 5MT | F | L/R | SUV 4WD 4G63S4M | Model year to:2016 | GDS26008 | Drive Shaft | | 17 | 17 | 53 | 136.5 | 608 | |
| 2.0 (100 kw) | 2013.09-2017.12 | 6MT | F | L/R | SUV 4WD GW4D20B | | GDS56518 | Drive Shaft | | 27 | 27 | 53 | 137 | 626 | |
| | 2013.09-2017.12 | 6MT | F | L/R | SUV 4WD GW4D20B | | GCO75046 | Outer Joint | | 27 | 27 | 53 | 137 | 74 | M |
| | 2013.09-2017.12 | 6MT | F | L/R | SUV 4WD GW4D20B | | GCI83346 | Inner Joint | | 27 | 25 | | 107 | 84 | |
| | 2013.09-2017.12 | 6MT | F | | SUV 4WD GW4D20B | | GDS86107 | Stub Axle,differential | | 27 | 29 | | | 420 | |
| 2.0 (110 kw) | 2014.10- | 5AMT | F | L/R | SUV 4WD GW4D20/GW4D20D | Model year to:2017 | GDS56518 | Drive Shaft | | 27 | 27 | 53 | 137 | 626 | |
| | 2014.10- | 5AMT | F | L/R | SUV 4WD GW4D20/GW4D20D | Model year to:2017 | GCO75046 | Outer Joint | | 27 | 27 | 53 | 137 | 74 | M |
| | 2014.10- | 5AMT | F | L/R | SUV 4WD GW4D20/GW4D20D | Model year to:2017 | GCI83346 | Inner Joint | | 27 | 25 | | 107 | 84 | |
| | 2014.10- | 5AMT | F | | SUV 4WD GW4D20/GW4D20D | Model year to:2020 | GDS86107 | Stub Axle,differential | | 27 | 29 | | | 420 | |
| 2.0 (140 kw) | 2013.03- | 6MT | F | L/R | SUV 4WD 4G63-S4T | Model year to:2020 | GDS26008 | Drive Shaft | | 17 | 17 | 53 | 136.5 | 608 | |
| **H6** | | | | | | | | | | | | | | | |
| 1.3 (102 kw) | 2017.04- | 7DCT | F | L | SUV FWD GW4B13 | Model year for:2017 | GDS57428 | Drive Shaft | 48T | 28 | 27 | 68 | 90 | 595 | |
| | 2017.04- | 7DCT | F | R | SUV FWD GW4B13 | Model year for:2017 | GDS57489 | Drive Shaft | 48T | 28 | 27 | 68 | 90 | 1038 | |
| | 2017.04- | 7DCT | F | L/R | SUV FWD GW4B13 | Model year for:2017 | GCO83344 | Outer Joint | 48T | 28 | 26 | 68 | 90 | 64 | M |
| | 2017.04- | 7DCT | F | L | SUV FWD GW4B13 | Model year for:2017 | GCI83662 | Inner Joint | | 27 | 26 | 40 | 56 | 116 | |
| | 2017.04- | 7DCT | F | R | SUV FWD GW4B13 | Model year for:2017 | GCI83693 | Inner Joint | | 27 | 26 | | 423.5 | 118 | |
| 1.5 (110 kw) | 2013.03- | 6MT | F | L | SUV 4WD 4G15B | Model year to:2017 | GDS56225 | Drive Shaft | 48T | 28 | 37 | 68 | 89.5 | 624 | |
| | 2013.03- | 6MT | F | R | SUV 4WD 4G15B | Model year to:2017 | GDS81502 | Drive Shaft | 48T | 28 | 37 | 68 | 89.5 | 1008 | |
| | 2013.03- | 6MT | F | L/R | SUV 4WD 4G15B | Model year to:2017 | GCO83211 | Outer Joint | 48T | 28 | 27 | 68 | 89.5 | 64 | M |
| | 2013.03- | 6MT | F | L | SUV 4WD 4G15B | Model year to:2017 | GCI81301 | Inner Joint | | 37 | 26 | 42 | 75 | 103.5 | |
| | 2013.03- | 6MT | F | R | SUV 4WD 4G15B | Model year to:2017 | GCI75050 | Inner Joint | | 37 | 26 | 42 | 385 | 93.5 | |
| | 2013.03- | 6MT | R | L | SUV 4WD 4G15B | Model year to:2017 | GDS81538 | Drive Shaft | 48T | 28 | 22 | 55 | 90 | 768 | |
| | 2013.03- | 6MT | R | R | SUV 4WD 4G15B | Model year to:2017 | GDS81537 | Drive Shaft | 48T | 28 | 22 | 55 | 90 | 822 | |
| | 2013.03- | 6MT | R | L/R | SUV 4WD 4G15B | Model year to:2017 | GCI81402 | Inner Joint | | 22 | 19 | 36 | 61.5 | 101.5 | |
| | 2013.03- | 6MT | F | L | SUV FWD 4G15B, GW4G15E | Model year to:2017 | GDS56225 | Drive Shaft | 48T | 28 | 37 | 68 | 89.5 | 624 | |
| | 2013.03- | 6MT | F | R | SUV FWD 4G15B, GW4G15E | Model year from:2015,Model year to:2016 | GDS57455 | Drive Shaft | 48T | 28 | 37 | 68 | 89.5 | 1007 | |
| | 2013.03- | 6MT | F | R | SUV FWD 4G15B, GW4G15E | Model year to:2017 | GDS81502 | Drive Shaft | 48T | 28 | 37 | 68 | 89.5 | 1008 | |
| | 2013.03- | 6MT | F | L/R | SUV FWD 4G15B, GW4G15E | Model year to:2017 | GCO83211 | Outer Joint | 48T | 28 | 27 | 68 | 89.5 | 64 | M |
| | 2013.03- | 6MT | F | L | SUV FWD 4G15B, GW4G15E | Model year to:2017 | GCI81301 | Inner Joint | | 37 | 26 | 42 | 75 | 103.5 | |
| | 2013.03- | 6MT | F | R | SUV FWD 4G15B, GW4G15E | Model year to:2017 | GCI75050 | Inner Joint | | 37 | 26 | 42 | 385 | 93.5 | |
| | 2013.03- | 6MT | F | R | SUV FWD 4G15B, GW4G15E | Model year from:2015,Model year to:2016 | GCI83359 | Inner Joint | | 37 | 26 | 36 | 347 | 107 | |
| | 2013.03- | 6MT | R | L | SUV FWD 4G15B, GW4G15E | | GDS82510 | Drive Shaft | 48T | 28 | 22 | 55 | 90 | 782 | |

| | YEAR | TRANSM. | F/R | L/R | BODY STYLE & DRIVE TYPE & ENGINE | REMARKS | G-AP Ref. | PRODUCT | ABS | Technical Specifications A | B | C | H | L | P |
|---|---|---|---|---|---|---|---|---|---|---|---|---|---|---|---|
| **HAVAL H6** | | | | | | | | | | | | | | | |
| 1.5 (110 kw) | 2013.03- | 6MT | R | R | SUV FWD 4G15B, GW4G15E | | GDS82509 | Drive Shaft | 48T | 28 | 22 | 55 | 90 | 822 | |
| | 2013.03- | 6MT | R | L/R | SUV FWD 4G15B, GW4G15E | | GCO81964 | Outer Joint | 48T | 28 | 20 | 55 | 90 | 52 | M |
| | 2013.03- | 6MT | R | L/R | SUV FWD 4G15B, GW4G15E | | GCI81801 | Inner Joint | | 22 | 19 | 36 | 69 | 109 | |
| | 2017.07- | 6AT | F | L | SUV FWD GW4G15B, GW4G15F (08.19-.) | | GDS57505 | Drive Shaft | 48T | 28 | 27 | 68 | 90 | 628 | |
| | 2017.07- | 6AT | F | R | SUV FWD GW4G15B, GW4G15F (08.19-.) | | GDS57563 | Drive Shaft | 48T | 28 | 27 | 68 | 90 | 981 | |
| | 2017.07- | 6AT | F | L/R | SUV FWD GW4G15B, GW4G15F (08.19-.) | | GCO83344 | Outer Joint | 48T | 28 | 26 | 68 | 90 | 64 | M |
| | 2017.07- | 6AT | F | L | SUV FWD GW4G15B, GW4G15F (08.19-.) | | GCI83717 | Inner Joint | | 27 | 26 | 30 | 67 | 94 | |
| | 2017.07- | 6AT | F | R | SUV FWD GW4G15B, GW4G15F (08.19-.) | | GCI83742 | Inner Joint | | 27 | 26 | 30 | 369 | 95 | |
| | 2017.07- | 6MT | F | L | SUV FWD GW4G15B, GW4G15F (08.19-.) | for model year:2017 | GDS56225 | Drive Shaft | 48T | 28 | 37 | 68 | 89.5 | 624 | |
| | 2017.07- | 6MT | F | L | SUV FWD GW4G15B, GW4G15F (08.19-.) | Date from:2019.08,Date to:2020.08 | GDS57716 | Drive Shaft | 48T | 28 | 37 | 68 | 89.5 | 654 | |
| | 2017.07- | 6MT | F | R | SUV FWD GW4G15B, GW4G15F (08.19-.) | Date from:2019.08,Date to:2020.08 | GDS57715 | Drive Shaft | 48T | 28 | 37 | 68 | 89.5 | 980 | |
| | 2017.07- | 6MT | F | R | SUV FWD GW4G15B, GW4G15F (08.19-.) | for model year:2017 | GDS81502 | Drive Shaft | 48T | 28 | 37 | 68 | 89.5 | 1008 | |
| | 2017.07- | 6MT | F | L | SUV FWD GW4G15B, GW4G15F (08.19-.) | for model year:2017 | GCI81301 | Inner Joint | | 37 | 26 | 42 | 75 | 103.5 | |
| | 2017.07- | 6MT | F | L | SUV FWD GW4G15B, GW4G15F (08.19-.) | Date from:2019.08,Date to:2020.08 | GCI83818 | Inner Joint | | 37 | 26 | 42 | 65 | 116.5 | |
| | 2017.07- | 6MT | F | R | SUV FWD GW4G15B, GW4G15F (08.19-.) | for model year:2017 | GCI75050 | Inner Joint | | 37 | 26 | 42 | 385 | 93.5 | |
| | 2017.07- | 6MT | F | R | SUV FWD GW4G15B, GW4G15F (08.19-.) | Date from:2019.08,Date to:2020.08 | GCI83813 | Inner Joint | | 37 | 26 | 42 | 381.5 | 115 | |
| | 2017.07- | 6MT/7DCT | F | L/R | SUV FWD GW4G15B, GW4G15F (08.19-.) | Date from:2019.08,Date to:2020.08 | GCO83211 | Outer Joint | 48T | 28 | 27 | 68 | 89.5 | 64 | M |
| 1.5 (113 kw) | 2021.12- | 7DCT | F | L | SUV FWD GW4B15D | Model year to:2022;PTJ | GDS57345 | Drive Shaft | | 28 | 37 | 55 | 89.5 | 664 | |
| | 2021.12- | 7DCT | F | R | SUV FWD GW4B15D | Model year to:2022;PTJ | GDS57344 | Drive Shaft | | 28 | 37 | 55 | 89.5 | 1000 | |
| | 2021.12- | 7DCT | F | L/R | SUV FWD GW4B15D | Model year to:2022;TPE | GCO83493 | Outer Joint | | 28 | 25 | 55 | 89.5 | 63 | M |
| | 2021.12- | 7DCT | F | L | SUV FWD GW4B15D | Model year to:2022;PTJ | GCI83610 | Inner Joint | | 37 | 25 | 42 | 64 | 117 | |
| | 2021.12- | 7DCT | F | R | SUV FWD GW4B15D | Model year to:2022;PTJ | GCI83609 | Inner Joint | | 37 | 25 | 32.5 | 393 | 124 | |
| 1.5 (124 kw) | 2017.11- | 7DCT | F | L | SUV FWD GW4B15, GW4B15A | Model year to:2020 | GDS56567 | Drive Shaft | 48T | 28 | 37 | 68 | 90 | 623 | |
| | 2017.11- | 7DCT | F | R | SUV FWD GW4B15, GW4B15A | Model year to:2020 | GDS56648 | Drive Shaft | 48T | 28 | 37 | 68 | 90 | 1000 | |
| | 2017.11- | 7DCT | F | L/R | SUV FWD GW4B15, GW4B15A | Model year to:2020 | GCO83344 | Outer Joint | 48T | 28 | 26 | 68 | 90 | 64 | M |
| | 2017.11- | 7DCT | F | L/R | SUV FWD GW4B15, GW4B15A | Engine Code:GW4B15A,Model year from:2020,Model year to:2022 | GCO83493 | Outer Joint | | 28 | 25 | 55 | 89.5 | 63 | M |
| | 2017.11- | 7DCT | F | L | SUV FWD GW4B15, GW4B15A | Model year to:2020 | GCI83377 | Inner Joint | | 37 | 26 | 42 | 64 | 112 | |
| | 2017.11- | 7DCT | F | L | SUV FWD GW4B15, GW4B15A | Engine Code:GW4B15A,Model year from:2020,Model year to:2022 | GCI83610 | Inner Joint | | 37 | 25 | 42 | 64 | 117 | |
| | 2017.11- | 7DCT | F | R | SUV FWD GW4B15, GW4B15A | Model year to:2020 | GCI83420 | Inner Joint | | 37 | 26 | 42 | 384 | 120 | |
| | 2017.11- | 7DCT | F | R | SUV FWD GW4B15, GW4B15A | Engine Code:GW4B15A,Model year from:2020,Model year to:2022 | GCI83609 | Inner Joint | | 37 | 25 | 32.5 | 393 | 124 | |
| | 2020.08- | 7DCT | F | L | SUV FWD GW4B15A | Model year to:2022;PTJ | GDS57345 | Drive Shaft | | 28 | 37 | 55 | 89.5 | 664 | |
| | 2020.08- | 7DCT | F | R | SUV FWD GW4B15A | Model year to:2022;PTJ | GDS57344 | Drive Shaft | | 28 | 37 | 55 | 89.5 | 1000 | |
| | 2020.08- | 7DCT | F | L/R | SUV FWD GW4B15A | Model year to:2022;TPE | GCO83493 | Outer Joint | | 28 | 25 | 55 | 89.5 | 63 | M |
| | 2020.08- | 7DCT | F | L | SUV FWD GW4B15A | Model year to:2022;PTJ | GCI83610 | Inner Joint | | 37 | 25 | 42 | 64 | 117 | |
| | 2020.08- | 7DCT | F | R | SUV FWD GW4B15A | Model year to:2022;PTJ | GCI83609 | Inner Joint | | 37 | 25 | 32.5 | 393 | 124 | |
| 1.5 (135 kw) | 2022.10- | 7DCT | F | L | SUV FWD GW4B15L | PTJ | GDS57345 | Drive Shaft | | 28 | 37 | 55 | 89.5 | 664 | |
| | 2022.10- | 7DCT | F | R | SUV FWD GW4B15L | PTJ | GDS57344 | Drive Shaft | | 28 | 37 | 55 | 89.5 | 1000 | |
| | 2022.10- | 7DCT | F | L/R | SUV FWD GW4B15L | TPE | GCO83493 | Outer Joint | | 28 | 25 | 55 | 89.5 | 63 | M |
| | 2022.10- | 7DCT | F | L | SUV FWD GW4B15L | PTJ | GCI83610 | Inner Joint | | 37 | 25 | 42 | 64 | 117 | |
| | 2022.10- | 7DCT | F | R | SUV FWD GW4B15L | PTJ | GCI83609 | Inner Joint | | 37 | 25 | 32.5 | 393 | 124 | |
| 1.5 (179 kw) | 2022.08- | 2DHT | F | L | SUV FWD GW4B15D, TZ220XS003 | Engine Code:GW4B15D | GDS56786 | Drive Shaft | | 28 | 37 | 55 | 90 | 678 | |
| | 2022.08- | 2DHT | F | R | SUV FWD GW4B15D, TZ220XS003 | Engine Code:GW4B15D | GDS57479 | Drive Shaft | | 28 | 37 | 55 | 90 | 985 | |
| | 2022.08- | 2DHT | F | L/R | SUV FWD GW4B15D, TZ220XS003 | Engine Code:GW4B15D | GCO83433 | Outer Joint | | 28 | 28 | 55 | 90 | 65.5 | I |
| | 2022.08- | 2DHT | F | L | SUV FWD GW4B15D, TZ220XS003 | Engine Code:GW4B15D | GCI83490 | Inner Joint | | 37 | 27 | 42 | 65 | 123.5 | |
| | 2022.08- | 2DHT | F | R | SUV FWD GW4B15D, TZ220XS003 | Engine Code:GW4B15D | GCI83689 | Inner Joint | | 37 | 27 | 42 | 389 | 106 | |
| 2.0 (110 kw) | 2013.03- | 6MT | R | L | SUV 4WD GW4D20 | | GDS82510 | Drive Shaft | 48T | 28 | 22 | 55 | 90 | 782 | |
| | 2013.03- | 6MT | R | R | SUV 4WD GW4D20 | | GDS82509 | Drive Shaft | 48T | 28 | 22 | 55 | 90 | 822 | |
| | 2013.03- | 6MT | R | L/R | SUV 4WD GW4D20 | | GCO81964 | Outer Joint | 48T | 28 | 20 | 55 | 90 | 52 | M |
| | 2013.03- | 6MT | R | L/R | SUV 4WD GW4D20 | | GCI81801 | Inner Joint | | 22 | 19 | 36 | 69 | 109 | |
| 2.0 (120 kw) | 2016.08- | 6MT | R | L | SUV 4WD GW4D20D | | GDS82510 | Drive Shaft | 48T | 28 | 22 | 55 | 90 | 782 | |
| | 2016.08- | 6MT | R | R | SUV 4WD GW4D20D | | GDS82509 | Drive Shaft | 48T | 28 | 22 | 55 | 90 | 822 | |
| | 2016.08- | 6MT | R | L/R | SUV 4WD GW4D20D | | GCO81964 | Outer Joint | 48T | 28 | 20 | 55 | 90 | 52 | M |
| | 2016.08- | 6MT | R | L/R | SUV 4WD GW4D20D | | GCI81801 | Inner Joint | | 22 | 19 | 36 | 69 | 109 | |
| 2.0 (145 kw) | 2017.04- | 7DCT | F | L | SUV FWD GW4C20 | Model year from:2018,Model year to:2019 | GDS56567 | Drive Shaft | 48T | 28 | 37 | 68 | 90 | 623 | |
| | 2017.04- | 7DCT | F | L | SUV FWD GW4C20 | Model year for:2017 | GDS57428 | Drive Shaft | 48T | 28 | 27 | 68 | 90 | 595 | |
| | 2017.04- | 7DCT | F | R | SUV FWD GW4C20 | Model year from:2018,Model year to:2019 | GDS56648 | Drive Shaft | 48T | 28 | 37 | 68 | 90 | 1000 | |
| | 2017.04- | 7DCT | F | L/R | SUV FWD GW4C20 | Model year from:2018,Model year to:2019 | GCO83344 | Outer Joint | 48T | 28 | 26 | 68 | 90 | 64 | M |
| | 2017.04- | 7DCT | F | L | SUV FWD GW4C20 | Model year from:2018,Model year to:2019 | GCI83377 | Inner Joint | | 37 | 26 | 42 | 64 | 112 | |
| | 2017.04- | 7DCT | F | L | SUV FWD GW4C20 | Model year for:2017 | GCI83662 | Inner Joint | | 27 | 26 | 40 | 56 | 116 | |
| | 2017.04- | 7DCT | F | R | SUV FWD GW4C20 | Model year from:2018,Model year to:2019 | GCI83420 | Inner Joint | | 37 | 26 | 42 | 384 | 120 | |
| 2.0 (155 kw) | 2021.01- | 7DCT | F | L/R | SUV 4WD GW4N20 | Model year for:2021 | GCI81402 | Inner Joint | | 22 | 19 | 36 | 61.5 | 101.5 | |
| | 2021.01- | 7DCT | F | L | SUV FWD GW4N20 | Model year to:2024 | GDS57345 | Drive Shaft | | 28 | 37 | 55 | 89.5 | 664 | |
| | 2021.01- | 7DCT | F | R | SUV FWD GW4N20 | Model year to:2024 | GDS57344 | Drive Shaft | | 28 | 37 | 55 | 89.5 | 1000 | |
| | 2021.01- | 7DCT | F | L/R | SUV FWD GW4N20 | Model year to:2024 | GCO83493 | Outer Joint | | 28 | 25 | 55 | 89.5 | 63 | M |
| | 2021.01- | 7DCT | F | L | SUV FWD GW4N20 | Model year to:2024 | GCI83610 | Inner Joint | | 37 | 25 | 42 | 64 | 117 | |

| | YEAR | TRANSM. | F/R | L/R | BODY STYLE & DRIVE TYPE & ENGINE | REMARKS | G-AP Ref. | PRODUCT | ABS | Technical Specifications A | B | C | H | L | P |
|---|---|---|---|---|---|---|---|---|---|---|---|---|---|---|---|
| **HAVAL** | | | | | | | | | | | | | | | |
| **H6** | | | | | | | | | | | | | | | |
| 2.0 (155 kw) | 2021.01- | 7DCT | F | R | SUV FWD GW4N20 | Model year to:2024 | GCI83609 | Inner Joint | | 37 | 25 | 32.5 | 393 | 124 | |
| 2.0 (165 kw) | 2019.09- | 7DCT | F | L | SUV FWD GW4C20B | Model year to:2020 | GDS56567 | Drive Shaft | 48T | 28 | 37 | 68 | 90 | 623 | |
| | 2019.09- | 7DCT | F | R | SUV FWD GW4C20B | Model year to:2020 | GDS56648 | Drive Shaft | 48T | 28 | 37 | 68 | 90 | 1000 | |
| | 2019.09- | 7DCT | F | L/R | SUV FWD GW4C20B | Model year to:2020 | GCO83344 | Outer Joint | 48T | 28 | 26 | 68 | 90 | 64 | M |
| | 2019.09- | 7DCT | F | L | SUV FWD GW4C20B | Model year to:2020 | GCI83377 | Inner Joint | | 37 | 26 | 42 | 64 | 112 | |
| | 2019.09- | 7DCT | F | R | SUV FWD GW4C20B | Model year to:2020 | GCI83420 | Inner Joint | | 37 | 26 | 42 | 384 | 120 | |
| 2.0 (175 kw) | 2024.06- | 9DCT | F | L | SUV FWD GW4N20A | | GDS57345 | Drive Shaft | | 28 | 37 | 55 | 89.5 | 664 | |
| | 2024.06- | 9DCT | F | R | SUV FWD GW4N20A | | GDS57344 | Drive Shaft | | 28 | 37 | 55 | 89.5 | 1000 | |
| | 2024.06- | 9DCT | F | L/R | SUV FWD GW4N20A | | GCO83493 | Outer Joint | | 28 | 25 | 55 | 89.5 | 63 | M |
| | 2024.06- | 9DCT | F | L | SUV FWD GW4N20A | | GCI83610 | Inner Joint | | 37 | 25 | 42 | 64 | 117 | |
| | 2024.06- | 9DCT | F | R | SUV FWD GW4N20A | | GCI83609 | Inner Joint | | 37 | 25 | 32.5 | 393 | 124 | |
| 2.4 (120 kw) | 2013.03- | 4AT | F | L | SUV FWD 4G69S4M | Model year to:2015 | GCI51029 | Inner Joint | | 27 | 24 | 41 | 62 | 91 | |
| | 2013.03- | 4AT | F | R | SUV FWD 4G69S4M | Model year to:2015 | GCI39092 | Inner Joint | | 27 | 24 | 41 | 384 | 96 | |
| **H6 Coupe** | | | | | | | | | | | | | | | |
| 1.5 (110 kw) | 2016.04- | 6AT | F | L | SUV FWD GW4G15B, GW4G15F (08.20-.) | Engine Code:GW4G15B,Model year to:2017 | GDS57505 | Drive Shaft | 48T | 28 | 27 | 68 | 90 | 628 | |
| | 2016.04- | 6AT | F | R | SUV FWD GW4G15B, GW4G15F (08.20-.) | Engine Code:GW4G15B,Model year to:2017 | GDS57563 | Drive Shaft | 48T | 28 | 27 | 68 | 90 | 981 | |
| | 2016.04- | 6AT | F | L | SUV FWD GW4G15B, GW4G15F (08.20-.) | Engine Code:GW4G15B,Model year to:2017 | GCI83717 | Inner Joint | | 27 | 26 | 30 | 67 | 94 | |
| | 2016.04- | 6AT | F | R | SUV FWD GW4G15B, GW4G15F (08.20-.) | Engine Code:GW4G15B,Model year to:2017 | GCI83742 | Inner Joint | | 27 | 26 | 30 | 369 | 95 | |
| | 2016.04- | 6MT | F | L | SUV FWD GW4G15B, GW4G15F (08.20-.) | Model year to:2017 | GDS56225 | Drive Shaft | 48T | 28 | 37 | 68 | 89.5 | 624 | |
| | 2016.04- | 6MT | F | R | SUV FWD GW4G15B, GW4G15F (08.20-.) | Model year to:2017 | GDS81502 | Drive Shaft | 48T | 28 | 37 | 68 | 89.5 | 1008 | |
| | 2016.04- | 6MT | F | L/R | SUV FWD GW4G15B, GW4G15F (08.20-.) | Model year to:2017 | GCO83211 | Outer Joint | 48T | 28 | 27 | 68 | 89.5 | 64 | M |
| | 2016.04- | 6MT | F | L | SUV FWD GW4G15B, GW4G15F (08.20-.) | Model year to:2017 | GCI81301 | Inner Joint | | 37 | 26 | 42 | 75 | 103.5 | |
| | 2016.04- | 6MT | F | R | SUV FWD GW4G15B, GW4G15F (08.20-.) | Model year to:2017 | GCI75050 | Inner Joint | | 37 | 26 | 42 | 385 | 93.5 | |
| | 2016.04- | 7DCT | F | L | SUV FWD GW4G15B, GW4G15F (08.20-.) | Model year from:2019,Model year to:2020 | GDS56567 | Drive Shaft | 48T | 28 | 37 | 68 | 90 | 623 | |
| | 2016.04- | 7DCT | F | L | SUV FWD GW4G15B, GW4G15F (08.20-.) | Model year from:2017,Model year to:2019 | GDS57428 | Drive Shaft | 48T | 28 | 27 | 68 | 90 | 595 | |
| | 2016.04- | 7DCT | F | R | SUV FWD GW4G15B, GW4G15F (08.20-.) | Model year from:2019,Model year to:2020 | GDS56648 | Drive Shaft | 48T | 28 | 37 | 68 | 90 | 1000 | |
| | 2016.04- | 7DCT | F | L/R | SUV FWD GW4G15B, GW4G15F (08.20-.) | Model year from:2019,Model year to:2020 | GCO83344 | Outer Joint | 48T | 28 | 26 | 68 | 90 | 64 | M |
| | 2016.04- | 7DCT | F | L | SUV FWD GW4G15B, GW4G15F (08.20-.) | Model year from:2019,Model year to:2020 | GCI83377 | Inner Joint | | 37 | 26 | 42 | 64 | 112 | |
| | 2016.04- | 7DCT | F | L | SUV FWD GW4G15B, GW4G15F (08.20-.) | Model year from:2017,Model year to:2019 | GCI83662 | Inner Joint | | 27 | 26 | 40 | 56 | 116 | |
| | 2016.04- | 7DCT | F | R | SUV FWD GW4G15B, GW4G15F (08.20-.) | Model year from:2019,Model year to:2020 | GCI83420 | Inner Joint | | 37 | 26 | 42 | 384 | 120 | |
| 1.5 (124 kw) | 2018.01- | 7DCT | F | L | SUV FWD GW4B15, GW4B15A | Model year to:2020 | GDS56567 | Drive Shaft | 48T | 28 | 37 | 68 | 90 | 623 | |
| | 2018.01- | 7DCT | F | R | SUV FWD GW4B15, GW4B15A | Model year to:2020 | GDS56648 | Drive Shaft | 48T | 28 | 37 | 68 | 90 | 1000 | |
| | 2018.01- | 7DCT | F | L/R | SUV FWD GW4B15, GW4B15A | Model year to:2020 | GCO83344 | Outer Joint | 48T | 28 | 26 | 68 | 90 | 64 | M |
| | 2018.01- | 7DCT | F | L | SUV FWD GW4B15, GW4B15A | Model year to:2020 | GCI83377 | Inner Joint | | 37 | 26 | 42 | 64 | 112 | |
| | 2018.01- | 7DCT | F | R | SUV FWD GW4B15, GW4B15A | Model year to:2020 | GCI83420 | Inner Joint | | 37 | 26 | 42 | 384 | 120 | |
| 2.0 (120 kw) | 2016.07- | 6MT | R | L | SUV 4WD GW4D20D | Model year to:2017 | GDS82510 | Drive Shaft | 48T | 28 | 22 | 55 | 90 | 782 | |
| | 2016.07- | 6MT | R | R | SUV 4WD GW4D20D | Model year to:2017 | GDS82509 | Drive Shaft | 48T | 28 | 22 | 55 | 90 | 822 | |
| | 2016.07- | 6MT | R | L/R | SUV 4WD GW4D20D | Model year to:2017 | GCO81964 | Outer Joint | 48T | 28 | 20 | 55 | 90 | 52 | M |
| | 2016.07- | 6MT | R | L/R | SUV 4WD GW4D20D | Model year to:2017 | GCI81801 | Inner Joint | | 22 | 19 | 36 | 69 | 109 | |
| | 2016.07- | 6MT | F | L | SUV FWD GW4D20D | Model year for:2017 | GDS57505 | Drive Shaft | 48T | 28 | 27 | 68 | 90 | 628 | |
| | 2016.07- | 6MT | F | R | SUV FWD GW4D20D | Model year for:2017 | GDS57563 | Drive Shaft | 48T | 28 | 27 | 68 | 90 | 981 | |
| | 2016.07- | 6MT | F | L/R | SUV FWD GW4D20D | Model year for:2017 | GCO83344 | Outer Joint | 48T | 28 | 26 | 68 | 90 | 64 | M |
| | 2016.07- | 6MT | F | L | SUV FWD GW4D20D | Model year for:2017 | GCI83717 | Inner Joint | | 27 | 26 | 30 | 67 | 94 | |
| | 2016.07- | 6MT | F | R | SUV FWD GW4D20D | Model year for:2017 | GCI83742 | Inner Joint | | 27 | 26 | 30 | 369 | 95 | |
| 2.0 (145 kw) | 2015.04- | 6MT | R | L | SUV 4WD GW4C20 | Model year to:2017 | GDS82510 | Drive Shaft | 48T | 28 | 22 | 55 | 90 | 782 | |
| | 2015.04- | 6MT | R | R | SUV 4WD GW4C20 | Model year to:2017 | GDS82509 | Drive Shaft | 48T | 28 | 22 | 55 | 90 | 822 | |
| | 2015.04- | 6MT | R | L/R | SUV 4WD GW4C20 | Model year to:2017 | GCO81964 | Outer Joint | 48T | 28 | 20 | 55 | 90 | 52 | M |
| | 2015.04- | 6MT | R | L/R | SUV 4WD GW4C20 | Model year to:2017 | GCI81801 | Inner Joint | | 22 | 19 | 36 | 69 | 109 | |
| | 2015.04- | 7DCT | F | L | SUV FWD GW4C20 | Model year for:2017 | GDS57428 | Drive Shaft | 48T | 28 | 27 | 68 | 90 | 595 | |
| | 2015.04- | 7DCT | F | L/R | SUV FWD GW4C20 | Model year for:2017 | GCO83344 | Outer Joint | 48T | 28 | 26 | 68 | 90 | 64 | M |
| | 2015.04- | 7DCT | F | L | SUV FWD GW4C20 | Model year for:2017 | GCI83662 | Inner Joint | | 27 | 26 | 40 | 56 | 116 | |
| **H7** | | | | | | | | | | | | | | | |
| 2.0 (167 kw) | 2019.07- | 7DCT | F | L | SUV FWD GW4C20B | Date from:2020.09 | GDS57412 | Drive Shaft | 48T | 30 | 37 | 70 | 87 | 668 | |
| | 2019.07- | 7DCT | F | L | SUV FWD GW4C20B | Date to:2020.08 | GDS57512 | Drive Shaft | 48T | 30 | 37 | 70 | 87 | 656 | |
| | 2019.07- | 7DCT | F | R | SUV FWD GW4C20B | Date from:2020.09 | GDS57443 | Drive Shaft | 48T | 30 | 37 | 70 | 87 | 1007 | |
| | 2019.07- | 7DCT | F | R | SUV FWD GW4C20B | Date to:2020.08 | GDS57511 | Drive Shaft | 48T | 30 | 37 | 70 | 87 | 1015 | |
| | 2019.07- | 7DCT | F | L/R | SUV FWD GW4C20B | | GCO83540 | Outer Joint | 48T | 30 | 27 | 70 | 87 | 65 | M |
| | 2019.07- | 7DCT | F | L | SUV FWD GW4C20B | | GCI83653 | Inner Joint | | 37 | 27 | 42 | 63.5 | 122.5 | |
| | 2019.07- | 7DCT | F | R | SUV FWD GW4C20B | | GCI83673 | Inner Joint | | 37 | 27 | 42 | 384 | 130 | |
| 2.0 (170 kw) | 2016.04- | 7DCT | F | L | SUV FWD GW4C20A | Model year for:2019 | GDS57412 | Drive Shaft | 48T | 30 | 37 | 70 | 87 | 668 | |
| | 2016.04- | 7DCT | F | R | SUV FWD GW4C20A | Model year for:2019 | GDS57443 | Drive Shaft | 48T | 30 | 37 | 70 | 87 | 1007 | |
| | 2016.04- | 7DCT | F | L/R | SUV FWD GW4C20A | Model year for:2019 | GCO83540 | Outer Joint | 48T | 30 | 27 | 70 | 87 | 65 | M |
| | 2016.04- | 7DCT | F | L | SUV FWD GW4C20A | Model year for:2019 | GCI83653 | Inner Joint | | 37 | 27 | 42 | 63.5 | 122.5 | |
| | 2016.04- | 7DCT | F | R | SUV FWD GW4C20A | Model year for:2019 | GCI83673 | Inner Joint | | 37 | 27 | 42 | 384 | 130 | |

| | YEAR | TRANSM. | F/R | L/R | BODY STYLE & DRIVE TYPE & ENGINE | REMARKS | G-AP Ref. | PRODUCT | ABS | Technical Specifications A | B | C | H | L | P |
|---|---|---|---|---|---|---|---|---|---|---|---|---|---|---|---|
| **HAVAL** | | | | | | | | | | | | | | | |
| **H7L** | | | | | | | | | | | | | | | |
| 2.0 (170 kw) | 2016.01- | 7DCT | F | L | SUV FWD GW4C20A | Model year for:2019 | GDS57412 | Drive Shaft | 48T | 30 | 37 | 70 | 87 | 668 | |
| | 2016.01- | 7DCT | F | R | SUV FWD GW4C20A | Model year for:2019 | GDS57443 | Drive Shaft | 48T | 30 | 37 | 70 | 87 | 1007 | |
| | 2016.01- | 7DCT | F | L/R | SUV FWD GW4C20A | Model year for:2019 | GCO83540 | Outer Joint | 48T | 30 | 27 | 70 | 87 | 65 | M |
| | 2016.01- | 7DCT | F | L | SUV FWD GW4C20A | Model year for:2019 | GCI83653 | Inner Joint | | 37 | 27 | 42 | 63.5 | 122.5 | |
| | 2016.01- | 7DCT | F | R | SUV FWD GW4C20A | Model year for:2019 | GCI83673 | Inner Joint | | 37 | 27 | 42 | 384 | 130 | |
| **H8** | | | | | | | | | | | | | | | |
| 2.0 (140 kw) | 2017.05- | 8AT | F | L | SUV 4WD GW4D20T | for model year:2017 | GDS82670 | Drive Shaft | 48T | 30 | 27 | 70 | 87 | 667 | |
| | 2017.05- | 8AT | F | R | SUV 4WD GW4D20T | for model year:2017 | GDS82668 | Drive Shaft | 48T | 30 | 27 | 70 | 87 | 1025 | |
| | 2017.05- | 8AT | F | L/R | SUV 4WD GW4D20T | for model year:2017 | GCO82111 | Outer Joint | 48T | 30 | 25 | 70 | 87 | 63.5 | M |
| | 2017.05- | 8AT | F | L | SUV 4WD GW4D20T | for model year:2017 | GCI81947 | Inner Joint | | 27 | 24 | 45 | 69 | 122 | |
| | 2017.05- | 8AT | F | R | SUV 4WD GW4D20T | for model year:2017 | GCI81946 | Inner Joint | | 27 | 24 | 45 | 275.5 | 105 | |
| 2.0 (160 kw) | 2013.11- | 6AT | F | L | SUV 4WD GW4C20 | Model year from:2015 | GDS82670 | Drive Shaft | 48T | 30 | 27 | 70 | 87 | 667 | |
| | 2013.11- | 6AT | F | R | SUV 4WD GW4C20 | Model year from:2015 | GDS82668 | Drive Shaft | 48T | 30 | 27 | 70 | 87 | 1025 | |
| | 2013.11- | 6AT | F | L/R | SUV 4WD GW4C20 | Model year from:2015 | GCO82111 | Outer Joint | 48T | 30 | 25 | 70 | 87 | 63.5 | M |
| | 2013.11- | 6AT | F | L | SUV 4WD GW4C20 | Model year from:2015 | GCI81947 | Inner Joint | | 27 | 24 | 45 | 69 | 122 | |
| | 2013.11- | 6AT | F | R | SUV 4WD GW4C20 | Model year from:2015,Model year to:2017 | GCI81852 | Inner Joint | | 25 | 24 | 41 | 384 | 96 | |
| | 2013.11- | 6AT | F | R | SUV 4WD GW4C20 | Model year from:2015 | GCI81946 | Inner Joint | | 27 | 24 | 45 | 275.5 | 105 | |
| | 2013.11- | 6AT | R | L | SUV 4WD GW4C20 | Model year from:2015 | GDS82669 | Drive Shaft | 48T | 30 | 32 | 70 | 87 | 862 | |
| | 2013.11- | 6AT | R | R | SUV 4WD GW4C20 | Model year from:2015 | GDS82667 | Drive Shaft | 48T | 30 | 32 | 70 | 87 | 814 | |
| | 2013.11- | 6AT | R | L/R | SUV 4WD GW4C20 | Model year from:2015 | GCO82110 | Outer Joint | 48T | 30 | 27 | 70 | 87 | 65 | M |
| | 2013.11- | 6AT | R | L | SUV 4WD GW4C20 | Model year from:2015 | GCI81945 | Inner Joint | | 32 | 28 | 79.95 | 137 | 105 | |
| | 2013.11- | 6AT | R | R | SUV 4WD GW4C20 | Model year from:2015 | GCI81944 | Inner Joint | | 32 | 28 | 49.95 | 73.5 | 120 | |
| | 2013.11- | 6AT | R | L | SUV RWD GW4C20 | Model year from:2015 | GDS82669 | Drive Shaft | 48T | 30 | 32 | 70 | 87 | 862 | |
| | 2013.11- | 6AT | R | R | SUV RWD GW4C20 | Model year from:2015 | GDS82667 | Drive Shaft | 48T | 30 | 32 | 70 | 87 | 814 | |
| | 2013.11- | 6AT | R | L/R | SUV RWD GW4C20 | Model year from:2015 | GCO82110 | Outer Joint | 48T | 30 | 27 | 70 | 87 | 65 | M |
| | 2013.11- | 6AT | R | L | SUV RWD GW4C20 | Model year from:2015 | GCI81945 | Inner Joint | | 32 | 28 | 79.95 | 137 | 105 | |
| | 2013.11- | 6AT | R | R | SUV RWD GW4C20 | Model year from:2015 | GCI81944 | Inner Joint | | 32 | 28 | 49.95 | 73.5 | 120 | |
| 2.0 (185 kw) | 2017.05- | 8AT | F | L | SUV 4WD GW4C20A | for model year:2017 | GDS82670 | Drive Shaft | 48T | 30 | 27 | 70 | 87 | 667 | |
| | 2017.05- | 8AT | F | R | SUV 4WD GW4C20A | for model year:2017 | GDS82668 | Drive Shaft | 48T | 30 | 27 | 70 | 87 | 1025 | |
| | 2017.05- | 8AT | F | L/R | SUV 4WD GW4C20A | for model year:2017 | GCO82111 | Outer Joint | 48T | 30 | 25 | 70 | 87 | 63.5 | M |
| | 2017.05- | 8AT | F | L | SUV 4WD GW4C20A | for model year:2017 | GCI81947 | Inner Joint | | 27 | 24 | 45 | 69 | 122 | |
| | 2017.05- | 8AT | F | R | SUV 4WD GW4C20A | Model year for:2017 | GCI81852 | Inner Joint | | 25 | 24 | 41 | 384 | 96 | |
| | 2017.05- | 8AT | F | R | SUV 4WD GW4C20A | for model year:2017 | GCI81946 | Inner Joint | | 27 | 24 | 45 | 275.5 | 105 | |
| **H9** | | | | | | | | | | | | | | | |
| 2.0 (140 kw) | 2017.05- | 8AT | F | L/R | SUV 4WD GW4D20T | Model year to:2020 | GCO82759 | Outer Joint | 48T | 30 | 26 | 70 | 111.5 | 64.5 | M |
| | 2017.05- | 8AT | F | L/R | SUV 4WD GW4D20T | Model year to:2020 | GCI82687 | Inner Joint | | 30 | 24 | 44 | 73.5 | 124 | |
| | 2017.05- | 8AT/8AMT | F | L/R | SUV 4WD GW4D20T | Model year to:2020 | GDS83850 | Drive Shaft | 48T | 30 | 30 | 70 | 111.5 | 624 | |
| 2.0 (160 kw) | 2014.11- | 6AT | F | L/R | SUV 4WD GW4C20 | Model year to:2017 | GCO82759 | Outer Joint | 48T | 30 | 26 | 70 | 111.5 | 64.5 | M |
| | 2014.11- | 6AT | F | L/R | SUV 4WD GW4C20 | Model year to:2017 | GCI82687 | Inner Joint | | 30 | 24 | 44 | 73.5 | 124 | |
| | 2014.11- | 6AT/6AMT | F | L/R | SUV 4WD GW4C20 | Model year to:2017 | GDS83850 | Drive Shaft | 48T | 30 | 30 | 70 | 111.5 | 624 | |
| 2.0 (165 kw) | 2019.08- | 8AT | F | L/R | SUV 4WD GW4C20B | Model year to:2021 | GCO82759 | Outer Joint | 48T | 30 | 26 | 70 | 111.5 | 64.5 | M |
| | 2019.08- | 8AT | F | L/R | SUV 4WD GW4C20B | Model year to:2021 | GCI82687 | Inner Joint | | 30 | 24 | 44 | 73.5 | 124 | |
| | 2019.08- | 8AT/8AMT | F | L/R | SUV 4WD GW4C20B | Model year to:2021 | GDS83850 | Drive Shaft | 48T | 30 | 30 | 70 | 111.5 | 624 | |
| 2.0 (185 kw) | 2017.05- | 8AT | F | L/R | SUV 4WD GW4C20A | Model year to:2019 | GCO82759 | Outer Joint | 48T | 30 | 26 | 70 | 111.5 | 64.5 | M |
| | 2017.05- | 8AT | F | L/R | SUV 4WD GW4C20A | Model year to:2019 | GCI82687 | Inner Joint | | 30 | 24 | 44 | 73.5 | 124 | |
| | 2017.05- | 8AT/8AMT | F | L/R | SUV 4WD GW4C20A | Model year to:2019 | GDS83850 | Drive Shaft | 48T | 30 | 30 | 70 | 111.5 | 624 | |
| **Jolion** | | | | | | | | | | | | | | | |
| 1.5 (105 kw) | 2021.01- | 7DCT | F | L | SUV FWD GW4G15K | | GDS57703 | Drive Shaft | | 28 | 37 | 55 | 90 | 642 | |
| | 2021.01- | 7DCT | F | R | SUV FWD GW4G15K | | GDS57680 | Drive Shaft | | 28 | 37 | 55 | 90 | 958 | |
| | 2021.01- | 7DCT | F | L/R | SUV FWD GW4G15K | | GCO83434 | Outer Joint | | 28 | 27 | 55 | 90 | 65 | M |
| | 2021.01- | 7DCT | F | L | SUV FWD GW4G15K | | GCI83810 | Inner Joint | | 37 | 26 | 42 | 64 | 111.5 | |
| | 2021.01- | 7DCT | F | R | SUV FWD GW4G15K | | GCI83804 | Inner Joint | | 37 | 26 | 42 | 392 | 100 | |
| | 2021.01- | MT | F | L | SUV FWD GW4G15K | | GDS56181 | Drive Shaft | | 28 | 37 | 55 | 89.5 | 635 | |
| | 2021.01- | MT | F | R | SUV FWD GW4G15K | | GDS56180 | Drive Shaft | | 28 | 37 | 55 | 89.5 | 964 | |
| | 2021.01- | MT | F | L/R | SUV FWD GW4G15K | | GCO83163 | Outer Joint | | 28 | 34 | 55 | 89.5 | 63 | M |
| | 2021.01- | MT | F | L | SUV FWD GW4G15K | | GCI83182 | Inner Joint | | 37 | 33 | 42 | 64 | 109.5 | |
| | 2021.01- | MT | F | R | SUV FWD GW4G15K | | GCI83181 | Inner Joint | | 37 | 33 | 42 | 386 | 117 | |
| 1.5 (110 kw) | 2021.01- | 7DCT | F | L | SUV 4WD GW4B15D | | GDS56137 | Drive Shaft | | 28 | 37 | 55 | 89.5 | 633 | |
| | 2021.01- | 7DCT | F | R | SUV 4WD GW4B15D | | GDS56141 | Drive Shaft | | 28 | 37 | 55 | 89.5 | 959 | |
| | 2021.01- | 7DCT | F | L/R | SUV 4WD GW4B15D | | GCO83168 | Outer Joint | | 28 | 25 | 55 | 89.5 | 57.5 | I |
| | 2021.01- | 7DCT | F | L | SUV 4WD GW4B15D | | GCI83100 | Inner Joint | | 37 | 24 | 42 | 63.5 | 104 | |
| | 2021.01- | 7DCT | F | R | SUV 4WD GW4B15D | | GCI83102 | Inner Joint | | 37 | 24 | 36.2 | 449 | 99 | |
| | 2021.01- | 7DCT | R | L | SUV 4WD GW4B15D | | GDS56139 | Drive Shaft | | 28 | 37 | 55 | 90 | 835 | |
| | 2021.01- | 7DCT | R | R | SUV 4WD GW4B15D | | GDS56138 | Drive Shaft | | 28 | 37 | 55 | 90 | 783 | |
| | 2021.01- | 7DCT | R | L/R | SUV 4WD GW4B15D | | GCO83169 | Outer Joint | | 28 | 24 | 55 | 90 | 64 | M |

| | YEAR | TRANSM. | F/R | L/R | BODY STYLE & DRIVE TYPE & ENGINE | REMARKS | G-AP Ref. | PRODUCT | ABS | Technical Specifications A | B | C | H | L | P |
|---|---|---|---|---|---|---|---|---|---|---|---|---|---|---|---|
| **HAVAL** | | | | | | | | | | | | | | | |
| **Jolion** | | | | | | | | | | | | | | | |
| 1.5 (110 kw) | 2021.01- | 7DCT | R | L/R | SUV 4WD GW4B15D | | GCI83101 | Inner Joint | | 37 | 24 | 35.95 | 80 | 118 | |
| | 2021.01- | 7DCT | F | L | SUV FWD GW4G15K | | GDS56969 | Drive Shaft | | 28 | 37 | 55 | 89.5 | 636 | |
| | 2021.01- | 7DCT | F | R | SUV FWD GW4G15K | | GDS56968 | Drive Shaft | | 28 | 37 | 55 | 89.5 | 966 | |
| | 2021.01- | 7DCT | F | L/R | SUV FWD GW4G15K | | GCO84435 | Outer Joint | | 28 | 34 | 55 | 89.5 | 63 | M |
| | 2021.01- | MT | F | L | SUV FWD GW4G15K | | GDS56181 | Drive Shaft | | 28 | 37 | 55 | 89.5 | 635 | |
| | 2021.01- | MT | F | R | SUV FWD GW4G15K | | GDS56180 | Drive Shaft | | 28 | 37 | 55 | 89.5 | 964 | |
| | 2021.01- | MT | F | L/R | SUV FWD GW4G15K | | GCO83163 | Outer Joint | | 28 | 34 | 55 | 89.5 | 63 | M |
| | 2021.01- | MT/7DCT | F | L | SUV FWD GW4G15K | | GCI83182 | Inner Joint | | 37 | 33 | 42 | 64 | 109.5 | |
| | 2021.01- | MT/7DCT | F | R | SUV FWD GW4G15K | | GCI83181 | Inner Joint | | 37 | 33 | 42 | 386 | 117 | |
| 1.5 (130 kw) | 2023.01- | 7DCT | F | L | SUV FWD GW4B15D | | GDS57703 | Drive Shaft | | 28 | 37 | 55 | 90 | 642 | |
| | 2023.01- | 7DCT | F | R | SUV FWD GW4B15D | | GDS57680 | Drive Shaft | | 28 | 37 | 55 | 90 | 958 | |
| | 2023.01- | 7DCT | F | L/R | SUV FWD GW4B15D | | GCO83434 | Outer Joint | | 28 | 27 | 55 | 90 | 65 | M |
| | 2023.01- | 7DCT | F | L | SUV FWD GW4B15D | | GCI83810 | Inner Joint | | 37 | 26 | 42 | 64 | 111.5 | |
| | 2023.01- | 7DCT | F | R | SUV FWD GW4B15D | | GCI83804 | Inner Joint | | 37 | 26 | 42 | 392 | 100 | |
| | 2023.01- | MT | F | L | SUV FWD GW4B15D | | GDS56123 | Drive Shaft | | 28 | 37 | 55 | 89.5 | 647 | |
| | 2023.01- | MT | F | R | SUV FWD GW4B15D | | GDS56179 | Drive Shaft | | 28 | 37 | 55 | 89.5 | 950 | |
| | 2023.01- | MT | F | L/R | SUV FWD GW4B15D | | GCO83163 | Outer Joint | | 28 | 34 | 55 | 89.5 | 63 | M |
| | 2023.01- | MT | F | L | SUV FWD GW4B15D | | GCI83097 | Inner Joint | | 37 | 33 | 42 | 65 | 111.5 | |
| | 2023.01- | MT | F | R | SUV FWD GW4B15D | | GCI83180 | Inner Joint | | 37 | 33 | 42 | 376 | 106 | |
| 1.5 (140 kw) | 2021.09- | MT | F | L | SUV FWD | | GDS56123 | Drive Shaft | | 28 | 37 | 55 | 89.5 | 647 | |
| | 2021.09- | MT | F | R | SUV FWD | | GDS56179 | Drive Shaft | | 28 | 37 | 55 | 89.5 | 950 | |
| | 2021.09- | MT | F | L/R | SUV FWD | | GCO83163 | Outer Joint | | 28 | 34 | 55 | 89.5 | 63 | M |
| | 2021.09- | MT | F | L | SUV FWD | | GCI83097 | Inner Joint | | 37 | 33 | 42 | 65 | 111.5 | |
| | 2021.09- | MT | F | R | SUV FWD | | GCI83180 | Inner Joint | | 37 | 33 | 42 | 376 | 106 | |
| **M6** | | | | | | | | | | | | | | | |
| 1.5 (110 kw) | 2017.07- | 6AT | F | L | SUV FWD GW4G15B/GW4G15F | Model year for:2017 | GDS57505 | Drive Shaft | 48T | 28 | 27 | 68 | 90 | 628 | |
| | 2017.07- | 6AT | F | R | SUV FWD GW4G15B/GW4G15F | Model year for:2017 | GDS57563 | Drive Shaft | 48T | 28 | 27 | 68 | 90 | 981 | |
| | 2017.07- | 6AT | F | L/R | SUV FWD GW4G15B/GW4G15F | Model year for:2017 | GCO83344 | Outer Joint | 48T | 28 | 26 | 68 | 90 | 64 | M |
| | 2017.07- | 6AT | F | L | SUV FWD GW4G15B/GW4G15F | Model year for:2017 | GCI83717 | Inner Joint | | 27 | 26 | 30 | 67 | 94 | |
| | 2017.07- | 6AT | F | R | SUV FWD GW4G15B/GW4G15F | Model year for:2017 | GCI83742 | Inner Joint | | 27 | 26 | 30 | 369 | 95 | |
| | 2017.07- | 6MT | F | L | SUV FWD GW4G15B/GW4G15F | Engine code:GW4G15B | GDS56225 | Drive Shaft | 48T | 28 | 37 | 68 | 89.5 | 624 | |
| | 2017.07- | 6MT | F | L | SUV FWD GW4G15B/GW4G15F | Engine code:GW4G15F | GDS57716 | Drive Shaft | 48T | 28 | 37 | 68 | 89.5 | 654 | |
| | 2017.07- | 6MT | F | R | SUV FWD GW4G15B/GW4G15F | Engine code:GW4G15F | GDS57715 | Drive Shaft | 48T | 28 | 37 | 68 | 89.5 | 980 | |
| | 2017.07- | 6MT | F | R | SUV FWD GW4G15B/GW4G15F | Engine code:GW4G15B | GDS81502 | Drive Shaft | 48T | 28 | 37 | 68 | 89.5 | 1008 | |
| | 2017.07- | 6MT | F | L | SUV FWD GW4G15B/GW4G15F | Engine code:GW4G15B | GCI81301 | Inner Joint | | 37 | 26 | 42 | 75 | 103.5 | |
| | 2017.07- | 6MT | F | L | SUV FWD GW4G15B/GW4G15F | Engine code:GW4G15F | GCI83818 | Inner Joint | | 37 | 26 | 42 | 65 | 116.5 | |
| | 2017.07- | 6MT | F | R | SUV FWD GW4G15B/GW4G15F | Engine code:GW4G15F | GCI83813 | Inner Joint | | 37 | 26 | 42 | 381.5 | 115 | |
| | 2017.07- | 6MT/7DCT | F | L/R | SUV FWD GW4G15B/GW4G15F | Model year to:2019 | GCO83211 | Outer Joint | 48T | 28 | 27 | 68 | 89.5 | 64 | M |
| **HAWTAI** | | | | | | | | | | | | | | | |
| **B35 (Boliger/Baolige)** | | | | | | | | | | | | | | | |
| 1.8 (118 kw) | 2011.09- | 4AT | F | L/R | SUV FWD 18K4G | Model year to:2014 | GCO24128 | Outer Joint | 52T | 27 | 25 | 60 | 95 | 68 | M |
| | 2011.12- | 4AT | F | L/R | SUV 4WD 18K4G | Model year to:2014 | GCO24128 | Outer Joint | 52T | 27 | 25 | 60 | 95 | 68 | M |
| **Santa Fé C9** | | | | | | | | | | | | | | | |
| 1.8 (118 kw) | 2008.06-2015.12 | 4AT | F | L/R | SUV FWD 18 K4G | Model year from:2010,Model year to:2013 | GCO24128 | Outer Joint | 52T | 27 | 25 | 60 | 95 | 68 | M |
| 2.0 (100 kw) | 2012.09- | 5MT | F | L/R | SUV FWD 4G94D-F1 | Model year to:2016 | GCO24128 | Outer Joint | 52T | 27 | 25 | 60 | 95 | 68 | M |
| **HONDA** | | | | | | | | | | | | | | | |
| **Accord** | | | | | | | | | | | | | | | |
| 1.8 (85 kw) | 1996.02-1998.10 | AT/MT | F | L/R | Saloon FWD F18A3 | | GCO23014 | Outer Joint | 50T | 28 | 32 | 60 | 88 | 59 | M |
| | 1996.02-1998.10 | AT/MT | F | L/R | Saloon FWD F18A3 | | GCO51001 | Outer Joint | 50T | 28 | 32 | 60 | 89 | 61 | I |
| 1.8 (100 kw) | 1998.10-2002.12 | 4AT/5MT | F | L/R | Saloon FWD F18B2 | | GCO23036 | Outer Joint | 50T | 28 | 32 | 64 | 88.5 | 60.5 | I |
| | 1998.10-2002.12 | 4AT/5MT | F | L/R | Saloon FWD F18B2 | | GCO23080 | Outer Joint | 50T | 28 | 32 | 64 | 88.5 | 62 | M |
| | 1999.04-2002.12 | 4AT/5MT | F | L/R | Hatchback FWD F18B2/F18B4 | | GCO23036 | Outer Joint | 50T | 28 | 32 | 64 | 88.5 | 60.5 | I |
| 1.9 (85 kw) | 1996.02-1998.10 | AT/MT | F | L/R | Saloon FWD F18A3 (02.96-.) | | GCO23014 | Outer Joint | 50T | 28 | 32 | 60 | 88 | 59 | M |
| | 1996.02-1998.10 | AT/MT | F | L/R | Saloon FWD F18A3 (02.96-.) | | GCO51001 | Outer Joint | 50T | 28 | 32 | 60 | 89 | 61 | I |
| 2.0 (77 kw) | 1996.04-1998.10 | AT/MT | F | L/R | Saloon FWD 20T2N | | GCO23014 | Outer Joint | 50T | 28 | 32 | 60 | 88 | 59 | M |
| | 1996.04-1998.10 | AT/MT | F | L/R | Saloon FWD 20T2N | | GCO51001 | Outer Joint | 50T | 28 | 32 | 60 | 89 | 61 | I |
| | 1998.10-2000.10 | 5MT | F | L/R | Hatchback FWD 20T2N | | GCO23036 | Outer Joint | 50T | 28 | 32 | 64 | 88.5 | 60.5 | I |
| | 1998.10-2000.10 | 5MT | F | L/R | Saloon FWD 20T2N | | GCO23036 | Outer Joint | 50T | 28 | 32 | 64 | 88.5 | 60.5 | I |
| 2.0 (85 kw) | 1993.06-1996.01 | AT/MT | F | L/R | Saloon FWD F20Z2 | | GCO23013 | Outer Joint | | 28 | 32 | 60 | 88 | 59 | M |
| | 1993.06-1996.01 | AT/MT | F | L/R | Saloon FWD F20Z2 | | GCO23014 | Outer Joint | 50T | 28 | 32 | 60 | 88 | 59 | M |
| 2.0 (96 kw) | 1993.03-1996.01 | AT/MT | F | L/R | Saloon FWD F20Z1 (03.93-.), MA420 | Date from:1993.06 | GCO23013 | Outer Joint | | 28 | 32 | 60 | 88 | 59 | M |
| | 1993.03-1996.01 | AT/MT | F | L/R | Saloon FWD F20Z1 (03.93-.), MA420 | Date from:1993.06 | GCO23014 | Outer Joint | 50T | 28 | 32 | 60 | 88 | 59 | M |
| | 1993.03-1996.01 | AT/MT | F | L/R | Saloon FWD F20Z1 (03.93-.), MA420 | Date from:1993.06 | GCO51001 | Outer Joint | 50T | 28 | 32 | 60 | 89 | 61 | I |
| 2.0 (108 kw) | 1998.10-2001.01 | AT | F | L/R | Saloon FWD F20B6 | Vehicle Production Country:Great Britain | GCO23118 | Outer Joint | 50T | 28 | 32 | 64 | 88.5 | 62 | M |
| | 1998.10-2001.01 | MT | F | | Saloon FWD F20B6 | | GCO23080 | Outer Joint | 50T | 28 | 32 | 64 | 88.5 | 62 | M |

| | YEAR | TRANSM. | F/R | L/R | BODY STYLE & DRIVE TYPE & ENGINE | REMARKS | G-AP Ref. | PRODUCT | ABS | Technical Specifications A | B | C | H | L | P |
|---|---|---|---|---|---|---|---|---|---|---|---|---|---|---|---|
| **HONDA** **Accord** | | | | | | | | | | | | | | | |
| 2.0 (108 kw) | 1998.10-2001.01 | | F | L/R | Saloon FWD F20B6 | | GCO23036 | Outer Joint | 50T | 28 | 32 | 64 | 88.5 | 60.5 | I |
| | 1999.12-2002.12 | AT | F | L/R | Hatchback FWD F20B6 | Vehicle Production Country:Great Britain | GCO23014 | Outer Joint | 50T | 28 | 32 | 60 | 88 | 59 | M |
| | 1999.12-2002.12 | | F | L/R | Hatchback FWD F20B6 | | GCO23036 | Outer Joint | 50T | 28 | 32 | 64 | 88.5 | 60.5 | I |
| | 1999.12-2002.12 | | F | | Hatchback FWD F20B6 | | GCO23080 | Outer Joint | 50T | 28 | 32 | 64 | 88.5 | 62 | M |
| 2.0 (110 kw) | 2003.01-2006.06 | 5MT | F | R | Saloon FWD K20A7 | | GDS23021 | Drive Shaft | | 28 | 27 | 63 | 88.5 | 575 | |
| 2.0 (114 kw) | 2003.01-2008.05 | AT/MT | F | L/R | Saloon 4WD K20A6 | | GCO23034 | Outer Joint | | 28 | 32 | 63 | 88.5 | 59.5 | M |
| | 2003.01-2008.05 | MT | F | L | Saloon 4WD K20A6 | | GDS81047 | Drive Shaft | | 28 | 27 | 63 | 88.5 | 655 | |
| | 2003.01-2008.05 | MT | F | R | Saloon 4WD K20A6 | | GDS23250 | Drive Shaft | | 28 | 27 | 63 | 88.5 | 550 | |
| | 2003.01-2008.05 | MT | F | L | Saloon 4WD K20A6 | | GCI23009 | Inner Joint | | 27 | 32 | 40 | 58.5 | 97 | |
| | 2003.01-2008.05 | MT | F | R | Saloon 4WD K20A6 | | GCI23013 | Inner Joint | | 27 | 32 | 40 | | 120.5 | |
| | 2003.01-2008.05 | MT | F | R | Saloon 4WD K20A6 | | GCI23052 | Inner Joint | | 27 | 34 | 40 | | 120.5 | |
| | 2003.02-2008.05 | 5AT/5MT | F | L | Saloon FWD K20A6;K20Z2 | | GDS81047 | Drive Shaft | | 28 | 27 | 63 | 88.5 | 655 | |
| | 2003.02-2008.05 | 5AT/5MT | F | R | Saloon FWD K20A6;K20Z2 | | GDS22019 | Drive Shaft | | 28 | 27 | 63 | 88.5 | 548 | |
| | 2003.02-2008.05 | 5AT/5MT | F | L/R | Saloon FWD K20A6;K20Z2 | | GCO23034 | Outer Joint | | 28 | 32 | 63 | 88.5 | 59.5 | M |
| | 2003.02-2008.05 | 5AT/5MT | F | L | Saloon FWD K20A6;K20Z2 | | GCI23009 | Inner Joint | | 27 | 32 | 40 | 58.5 | 97 | |
| | 2003.02-2008.05 | 5AT/5MT | F | R | Saloon FWD K20A6;K20Z2 | | GCI23013 | Inner Joint | | 27 | 32 | 40 | | 120.5 | |
| | 2013.06- | 5AT | F | L | Saloon FWD R20Z2, R20Z3 | | GDS81687 | Drive Shaft | | 30 | 27 | 68 | 89 | 680 | |
| | 2013.06- | 5AT | F | R | Saloon FWD R20Z2, R20Z3 | | GDS81686 | Drive Shaft | | 30 | 27 | 68 | 89 | 645 | |
| | 2013.06- | 5AT | F | L | Saloon FWD R20Z2, R20Z3 | | GCI23072 | Inner Joint | | 27 | 30 | 40 | 58 | 97.5 | |
| | 2013.06- | 5AT | F | R | Saloon FWD R20Z2, R20Z3 | | GCI23056 | Inner Joint | | 27 | 30 | 40 | | 120.5 | |
| | 2013.09- | 5AT | F | L | Saloon FWD R20Z2 | | GDS81687 | Drive Shaft | | 30 | 27 | 68 | 89 | 680 | |
| | 2013.09- | 5AT | F | R | Saloon FWD R20Z2 | | GDS81686 | Drive Shaft | | 30 | 27 | 68 | 89 | 645 | |
| | 2013.09- | 5AT | F | L | Saloon FWD R20Z2 | | GCI23072 | Inner Joint | | 27 | 30 | 40 | 58 | 97.5 | |
| | 2013.09- | 5AT | F | R | Saloon FWD R20Z2 | | GCI23056 | Inner Joint | | 27 | 30 | 40 | | 120.5 | |
| 2.0 (115 kw) | 2008.06-2015.06 | 5AT | F | L | Saloon FWD R20A3 | | GDS23331 | Drive Shaft | | 30 | 27 | 68.1 | 88 | 680 | |
| | 2008.06-2015.06 | 5AT | F | L | Saloon FWD R20A3 | | GCI99079 | Inner Joint | | 27 | 30 | 40 | 55.5 | 97 | |
| | 2008.06-2015.06 | 5AT | F | R | Saloon FWD R20A3 | | GCI23023 | Inner Joint | | 27 | 30 | 40 | | 120.5 | |
| | 2008.06-2015.06 | 5AT/6MT | F | R | Saloon FWD R20A3 | | GDS23332 | Drive Shaft | | 30 | 27 | 68.1 | 88 | 645 | |
| | 2008.06-2015.06 | 6MT | F | L | Saloon FWD R20A3 | | GDS23311 | Drive Shaft | | 30 | 27 | 68.1 | 88 | 685 | |
| | 2008.06-2015.06 | 6MT | F | L/R | Saloon FWD R20A3 | | GCO23145 | Outer Joint | | 30 | 34 | 68.1 | 88 | 59.5 | M |
| | 2008.06-2015.06 | 6MT | F | L | Saloon FWD R20A3 | | GCI23053 | Inner Joint | | 27 | 34 | 40 | 58 | 97.5 | |
| | 2008.06-2015.06 | 6MT | F | R | Saloon FWD R20A3 | | GCI23052 | Inner Joint | | 27 | 34 | 40 | | 120.5 | |
| | 2008.06-2015.06 | AT | F | L/R | Saloon FWD R20A3 | | GCO23103 | Outer Joint | | 30 | 30 | 68 | 89 | 59 | M |
| 2.2 (103 kw) | 2004.01-2008.05 | 5MT/6MT | F | L | Saloon FWD N22A1 | | GDS23026 | Drive Shaft | | 28 | 29 | 63 | 88.5 | 620 | |
| | 2004.01-2008.05 | 5MT/6MT | F | R | Saloon FWD N22A1 | | GDS23027 | Drive Shaft | | 28 | 29 | 63 | 88.5 | 557 | |
| | 2004.01-2008.05 | 5MT/6MT | F | L/R | Saloon FWD N22A1 | | GCO23146 | Outer Joint | | 28 | 34 | 63 | 88.5 | 59.5 | M |
| | 2004.01-2008.05 | 6MT | F | R | Saloon FWD N22A1 | | GDS81201 | Intermediate Shaft | | 29 | 29 | | | 465 | |
| | 2004.01-2008.05 | | F | L/R | Saloon FWD N22A1 | | GCO23117 | Outer Joint | | 28 | 34 | 63 | 88.5 | 59.5 | M |
| | 2004.01-2008.05 | | F | L | Saloon FWD N22A1 | | GCI23037 | Inner Joint | | 29 | 34 | 40 | 57 | 97 | |
| 2.2 (110 kw) | 1996.02-1998.10 | AT/MT | F | L/R | Saloon FWD F22Z2 (02.96-.) | | GCO23014 | Outer Joint | 50T | 28 | 32 | 60 | 88 | 59 | M |
| | 1996.02-1998.10 | AT/MT | F | L/R | Saloon FWD F22Z2 (02.96-.) | | GCO51001 | Outer Joint | 50T | 28 | 32 | 60 | 89 | 61 | I |
| | 2008.07-2015.06 | 5AT | F | L | Saloon FWD N22B1 | | GCI81901 | Inner Joint | | 29 | 34 | 40 | 62 | 94.5 | |
| | 2008.07-2015.06 | 5AT | F | R | Saloon FWD N22B1 | | GDS81199 | Intermediate Shaft | | 29 | 29 | | | 460 | |
| | 2008.07-2015.06 | 5AT/6MT | F | L | Saloon FWD N22B1 | | GDS23270 | Drive Shaft | | 30 | 29 | 68.1 | 88 | 651 | |
| | 2008.07-2015.06 | 5AT/6MT | F | R | Saloon FWD N22B1 | | GDS23355 | Drive Shaft | | 30 | 29 | 68.1 | 88 | 580 | |
| | 2008.07-2015.06 | 6MT | F | L | Saloon FWD N22B1 | | GCI23037 | Inner Joint | | 29 | 34 | 40 | 57 | 97 | |
| | 2008.07-2015.06 | AT/MT | F | L/R | Saloon FWD N22B1 | | GCO23145 | Outer Joint | | 30 | 34 | 68.1 | 88 | 59.5 | M |
| | 2008.07-2015.06 | | F | R | Saloon FWD N22B1 | Date From:2009.01,Date To:2009.01 | GCI23038 | Inner Joint | | 29 | 34 | 42 | | 122 | |
| 2.2 (132 kw) | 2008.07-2015.06 | 6MT | F | L | Saloon FWD N22B2 | | GDS23270 | Drive Shaft | | 30 | 29 | 68.1 | 88 | 651 | |
| | 2008.07-2015.06 | 6MT | F | R | Saloon FWD N22B2 | | GDS23355 | Drive Shaft | | 30 | 29 | 68.1 | 88 | 580 | |
| | 2008.07-2015.06 | AT/MT | F | L/R | Saloon FWD N22B2 | | GCO23145 | Outer Joint | | 30 | 34 | 68.1 | 88 | 59.5 | M |
| | 2008.07-2015.06 | MT | F | R | Saloon FWD N22B2 | Date from:2010.01,Date to:2010.01 | GCI23038 | Inner Joint | | 29 | 34 | 42 | | 122 | |
| | 2008.07-2015.06 | | F | L | Saloon FWD N22B2 | | GCI23037 | Inner Joint | | 29 | 34 | 40 | 57 | 97 | |
| 2.2 (156 kw) | 1998.10-2002.12 | 5MT | F | L/R | Saloon FWD H22A7 | | GCO23118 | Outer Joint | 50T | 28 | 32 | 64 | 88.5 | 62 | M |
| | 1998.10-2002.12 | AT/MT | F | L/R | Saloon FWD H22A7 | Vehicle Production Country:Great Britain | GCO23014 | Outer Joint | 50T | 28 | 32 | 60 | 88 | 59 | M |
| | 1998.10-2002.12 | MT | F | | Saloon FWD H22A7 | | GCO23029 | Outer Joint | 50T | 28 | 32 | 64 | 89 | 60 | M |
| | 1998.10-2002.12 | MT | F | | Saloon FWD H22A7 | | GCO23080 | Outer Joint | 50T | 28 | 32 | 64 | 88.5 | 62 | M |
| 2.3 (110 kw) | 1997.12-2003.03 | 4AT/5MT | F | L/R | Saloon FWD F23A2/F23Z2 | Vehicle Production Country:USA | GCO23029 | Outer Joint | 50T | 28 | 32 | 64 | 89 | 60 | M |
| | 1997.12-2003.03 | 4AT/5MT | F | | Saloon FWD F23A2/F23Z2 | Vehicle Production Country:USA/JAPAN | GCI23013 | Inner Joint | | 27 | 32 | 40 | | 120.5 | |
| | 1997.12-2003.03 | 5MT | F | L/R | Saloon FWD F23A2/F23Z2 | Vehicle Production Country:USA | GCO23035 | Outer Joint | | 28 | 32 | 64 | 89 | 60 | M |
| | 1997.12-2003.03 | AT/MT | F | L/R | Saloon FWD F23A2/F23Z2 | | GCO23080 | Outer Joint | 50T | 28 | 32 | 64 | 88.5 | 62 | M |
| 2.3 (112 kw) | 1997.06-2003.03 | 4AT/5MT | F | L/R | Saloon FWD F23Z5 | Vehicle Production Country:USA | GCO23035 | Outer Joint | | 28 | 32 | 64 | 89 | 60 | M |
| | 1997.06-2003.03 | 4AT/5MT | F | L | Saloon FWD F23Z5 | Vehicle Production Country:USA/JAPAN | GCI23013 | Inner Joint | | 27 | 32 | 40 | | 120.5 | |
| 2.3 (113 kw) | 2000.11-2002.12 | AT/MT | F | L/R | Hatchback FWD F23Z5 | | GCO23118 | Outer Joint | 50T | 28 | 32 | 64 | 88.5 | 62 | M |
| | 2000.11-2002.12 | MT | F | | Hatchback FWD F23Z5 | Date From:2001.01,Date To:2001.01 | GCO23029 | Outer Joint | 50T | 28 | 32 | 64 | 89 | 60 | M |

| | YEAR | TRANSM. | F/R | L/R | BODY STYLE & DRIVE TYPE & ENGINE | REMARKS | G-AP Ref. | PRODUCT | ABS | Technical Specifications A | B | C | H | L | P |
|---|---|---|---|---|---|---|---|---|---|---|---|---|---|---|---|
| **HONDA** | | | | | | | | | | | | | | | |
| **Accord** | | | | | | | | | | | | | | | |
| 2.3 (113 kw) | 2000.11-2002.12 | | F | L/R | Hatchback FWD F23Z5 | | GCO23036 | Outer Joint | 50T | 28 | 32 | 64 | 88.5 | 60.5 | I |
| | 2000.11-2002.12 | | F | | Hatchback FWD F23Z5 | | GCO23080 | Outer Joint | 50T | 28 | 32 | 64 | 88.5 | 62 | M |
| | 2000.11-2002.12 | AT/MT | F | L/R | Saloon FWD F23Z5 | | GCO23118 | Outer Joint | 50T | 28 | 32 | 64 | 88.5 | 62 | M |
| | 2000.11-2002.12 | MT | F | | Saloon FWD F23Z5 | | GCO23029 | Outer Joint | 50T | 28 | 32 | 64 | 89 | 60 | M |
| | 2000.11-2002.12 | | F | L/R | Saloon FWD F23Z5 | | GCO23036 | Outer Joint | 50T | 28 | 32 | 64 | 88.5 | 60.5 | I |
| | 2000.11-2002.12 | | F | | Saloon FWD F23Z5 | | GCO23080 | Outer Joint | 50T | 28 | 32 | 64 | 88.5 | 62 | M |
| 2.4 (118 kw) | 2003.01-2006.03 | 5AT/6MT | F | L/R | Saloon FWD K24A4 | | GCO23056 | Outer Joint | | 26 | 30 | 63 | 79 | 59 | M |
| 2.4 (129 kw) | 2013.11- | 5AT | F | L | Saloon FWD K24W | For Engine code:K24W3 | GDS81687 | Drive Shaft | | 30 | 27 | 68 | 89 | 680 | |
| | 2013.11- | 5AT | F | R | Saloon FWD K24W | For Engine code:K24W3 | GDS81688 | Drive Shaft | | 30 | 27 | 68 | 89 | 584 | |
| | 2013.11- | 5AT | F | L/R | Saloon FWD K24W | For Engine code:K24W3 | GCO23103 | Outer Joint | | 30 | 30 | 68 | 89 | 59 | M |
| | 2013.11- | 5AT | F | L | Saloon FWD K24W | | GCI23072 | Inner Joint | | 27 | 30 | 40 | 58 | 97.5 | |
| | 2013.11- | 5AT | F | R | Saloon FWD K24W | For Engine code:K24W2/K24W3 | GCI23056 | Inner Joint | | 27 | 30 | 40 | | 120.5 | |
| 2.4 (132 kw) | 2014.07- | 5AT | F | L | Saloon FWD K24W3;K24W2 | | GDS81625 | Drive Shaft | | 30 | 27 | 68 | 89 | 679 | |
| | 2014.07- | 5AT | F | R | Saloon FWD K24W3;K24W2 | | GDS81624 | Drive Shaft | | 30 | 27 | 68 | 89 | 584 | |
| | 2014.07- | 5AT | F | L/R | Saloon FWD K24W3;K24W2 | | GCO23103 | Outer Joint | | 30 | 30 | 68 | 89 | 59 | M |
| | 2014.07- | 5AT | F | L | Saloon FWD K24W3;K24W2 | | GCI23072 | Inner Joint | | 27 | 30 | 40 | 58 | 97.5 | |
| | 2014.07- | 5AT | F | R | Saloon FWD K24W3;K24W2 | | GCI23056 | Inner Joint | | 27 | 30 | 40 | | 120.5 | |
| 2.4 (139 kw) | 2017.04- | CVT | F | L | Saloon FWD K24W1 | | GDS81625 | Drive Shaft | | 30 | 27 | 68 | 89 | 679 | |
| | 2017.04- | CVT | F | R | Saloon FWD K24W1 | | GDS81624 | Drive Shaft | | 30 | 27 | 68 | 89 | 584 | |
| | 2017.04- | CVT | F | L/R | Saloon FWD K24W1 | | GCO23103 | Outer Joint | | 30 | 30 | 68 | 89 | 59 | M |
| | 2017.04- | CVT | F | L | Saloon FWD K24W1 | | GCI23072 | Inner Joint | | 27 | 30 | 40 | 58 | 97.5 | |
| | 2017.04- | CVT | F | R | Saloon FWD K24W1 | | GCI23056 | Inner Joint | | 27 | 30 | 40 | | 120.5 | |
| 2.4 (140 kw) | 2003.02-2008.05 | AT | F | L | Saloon FWD K24A;K24A3 | | GCI23009 | Inner Joint | | 27 | 32 | 40 | 58.5 | 97 | |
| | 2003.02-2008.05 | AT/MT | F | L | Saloon FWD K24A;K24A3 | | GDS81047 | Drive Shaft | | 28 | 27 | 63 | 88.5 | 655 | |
| | 2003.02-2008.05 | AT/MT | F | R | Saloon FWD K24A;K24A3 | | GDS22019 | Drive Shaft | | 28 | 27 | 63 | 88.5 | 548 | |
| | 2003.02-2008.05 | AT/MT | F | L/R | Saloon FWD K24A;K24A3 | | GCO23034 | Outer Joint | | 28 | 32 | 63 | 88.5 | 59.5 | M |
| | 2003.02-2008.05 | AT/MT | F | R | Saloon FWD K24A;K24A3 | | GCI23013 | Inner Joint | | 27 | 32 | 40 | | 120.5 | |
| 2.4 (141 kw) | 2012.09- | CVT | F | L | Saloon FWD K24W1 | | GDS81625 | Drive Shaft | | 30 | 27 | 68 | 89 | 679 | |
| | 2012.09- | CVT | F | R | Saloon FWD K24W1 | | GDS81624 | Drive Shaft | | 30 | 27 | 68 | 89 | 584 | |
| | 2012.09- | CVT | F | L | Saloon FWD K24W1 | | GCI23072 | Inner Joint | | 27 | 30 | 40 | 58 | 97.5 | |
| | 2012.09- | CVT | F | R | Saloon FWD K24W1 | | GCI23056 | Inner Joint | | 27 | 30 | 40 | | 120.5 | |
| 2.4 (148 kw) | 2008.07-2015.06 | 5AT | F | L | Saloon FWD K24Z3 | | GDS23324 | Drive Shaft | | 30 | 27 | 68.1 | 88 | 677 | |
| | 2008.07-2015.06 | 5AT | F | R | Saloon FWD K24Z3 | | GDS23325 | Drive Shaft | | 30 | 27 | 68.1 | 88 | 579 | |
| | 2008.07-2015.06 | 5AT | F | L/R | Saloon FWD K24Z3 | | GCO23124 | Outer Joint | | 30 | 32 | 68.1 | 88 | 59.5 | M |
| | 2008.07-2015.06 | 5AT | F | L | Saloon FWD K24Z3 | | GCI23009 | Inner Joint | | 27 | 32 | 40 | 58.5 | 97 | |
| | 2008.07-2015.06 | 5AT | F | R | Saloon FWD K24Z3 | | GCI23013 | Inner Joint | | 27 | 32 | 40 | | 120.5 | |
| | 2008.07-2015.06 | 6MT | F | L | Saloon FWD K24Z3 | | GDS23311 | Drive Shaft | | 30 | 27 | 68.1 | 88 | 685 | |
| | 2008.07-2015.06 | 6MT | F | L/R | Saloon FWD K24Z3 | | GCO23145 | Outer Joint | | 30 | 34 | 68.1 | 88 | 59.5 | M |
| | 2008.07-2015.06 | 6MT | F | L | Saloon FWD K24Z3 | | GCI23053 | Inner Joint | | 27 | 34 | 40 | 58 | 97.5 | |
| | 2008.07-2015.06 | 6MT | F | R | Saloon FWD K24Z3 | | GCI23052 | Inner Joint | | 27 | 34 | 40 | | 120.5 | |
| **Accord Aerodeck** | | | | | | | | | | | | | | | |
| 2.0 (100 kw) | 1993.09-1998.02 | AT/MT | F | L/R | Estate FWD F20B3 | | GCO23013 | Outer Joint | | 28 | 32 | 60 | 88 | 59 | M |
| | 1993.09-1998.02 | AT/MT | F | L/R | Estate FWD F20B3 | | GCO23014 | Outer Joint | 50T | 28 | 32 | 60 | 88 | 59 | M |
| 2.2 (110 kw) | 1994.01-1997.10 | AT/MT | F | L/R | Estate FWD F22B5 | | GCO23013 | Outer Joint | | 28 | 32 | 60 | 88 | 59 | M |
| | 1994.01-1997.10 | AT/MT | F | L/R | Estate FWD F22B5 | | GCO23014 | Outer Joint | 50T | 28 | 32 | 60 | 88 | 59 | M |
| **Accord Coupe** | | | | | | | | | | | | | | | |
| 2.0 (100 kw) | 1993.09-1997.12 | AT/MT | F | L/R | Coupe FWD F20B3 | | GCO23014 | Outer Joint | 50T | 28 | 32 | 60 | 88 | 59 | M |
| 2.0 (107 kw) | 1999.11-2002.10 | AT | F | L/R | Coupe FWD F20B7 | | GCI23009 | Inner Joint | | 27 | 32 | 40 | 58.5 | 97 | |
| | 1999.11-2002.10 | AT/MT | F | L/R | Coupe FWD F20B7 | Date From:2000.01 | GCO23031 | Outer Joint | 50T | 28 | 32 | 60 | 88 | 59 | M |
| | 1999.11-2002.10 | MT | F | L/R | Coupe FWD F20B7 | Date from:2000.01 | GCI23013 | Inner Joint | | 27 | 32 | 40 | | 120.5 | |
| 2.0 (108 kw) | 1998.01-2003.06 | AT | F | L | Coupe FWD F20B5/F20B7 | | GCI23009 | Inner Joint | | 27 | 32 | 40 | 58.5 | 97 | |
| | 1998.01-2003.06 | AT/MT | F | L/R | Coupe FWD F20B5/F20B7 | Date To:1998.12 | GCO23032 | Outer Joint | 50T | 28 | 32 | 64 | 88.5 | 62 | M |
| | 1998.01-2003.06 | MT | F | L/R | Coupe FWD F20B5/F20B7 | | GCI23013 | Inner Joint | | 27 | 32 | 40 | | 120.5 | |
| 2.2 (110 kw) | 1993.08-1997.12 | AT/MT | F | L/R | Coupe FWD F22B5 | | GCO23013 | Outer Joint | | 28 | 32 | 60 | 88 | 59 | M |
| | 1993.08-1997.12 | AT/MT | F | L/R | Coupe FWD F22B5 | | GCO23014 | Outer Joint | 50T | 28 | 32 | 60 | 88 | 59 | M |
| 2.4 (118 kw) | 2003.07-2006.03 | MT | F | R | Coupe FWD K24A4 | | GDS87073 | Intermediate Shaft | | 27 | 27 | | | 443 | |
| 3.0 (147 kw) | 1998.01-2003.06 | 4AT/5MT | F | | Coupe FWD J30A1 | | GCI23013 | Inner Joint | | 27 | 32 | 40 | | 120.5 | |
| | 1998.01-2003.06 | AT | F | R | Coupe FWD J30A1 | | GDS23012 | Drive Shaft | 50T | 28 | 27 | 60 | 88 | 659 | |
| | 1998.01-2003.06 | AT | F | L/R | Coupe FWD J30A1 | Date To:1998.12 | GCO23032 | Outer Joint | 50T | 28 | 32 | 64 | 88.5 | 62 | M |
| 3.0 (180 kw) | 2003.07-2008.12 | MT | F | R | Coupe FWD J30A4 | Model year to:2007 | GDS87073 | Intermediate Shaft | | 27 | 27 | | | 443 | |
| **Accord Estate/Wagon** | | | | | | | | | | | | | | | |
| 2.0 (114 kw) | 2003.04-2008.05 | 5AT/5MT | F | L | Estate FWD K20A6;K20Z2 | | GDS81047 | Drive Shaft | | 28 | 27 | 63 | 88.5 | 655 | |
| | 2003.04-2008.05 | 5AT/5MT | F | R | Estate FWD K20A6;K20Z2 | | GDS22019 | Drive Shaft | | 28 | 27 | 63 | 88.5 | 548 | |
| | 2003.04-2008.05 | 5AT/5MT | F | L/R | Estate FWD K20A6;K20Z2 | | GCO23034 | Outer Joint | | 28 | 32 | 63 | 88.5 | 59.5 | M |
| | 2003.04-2008.05 | 5AT/5MT | F | L | Estate FWD K20A6;K20Z2 | | GCI23009 | Inner Joint | | 27 | 32 | 40 | 58.5 | 97 | |

| | YEAR | TRANSM. | F/R | L/R | BODY STYLE & DRIVE TYPE & ENGINE | REMARKS | G-AP Ref. | PRODUCT | ABS | Technical Specifications A | B | C | H | L | P |
|---|---|---|---|---|---|---|---|---|---|---|---|---|---|---|---|
| **HONDA** | | | | | | | | | | | | | | | |
| **Accord Estate/Wagon** | | | | | | | | | | | | | | | |
| 2.0 (114 kw) | 2003.04-2008.05 | 5AT/5MT | F | R | Estate FWD K20A6;K20Z2 | | GCI23013 | Inner Joint | | 27 | 32 | 40 | | 120.5 | |
| 2.0 (115 kw) | 2008.07-2015.06 | 5AT | F | L | Estate FWD R20A3 | | GDS23331 | Drive Shaft | | 30 | 27 | 68.1 | 88 | 680 | |
| | 2008.07-2015.06 | 5AT | F | L/R | Estate FWD R20A3 | | GCO23103 | Outer Joint | | 30 | 30 | 68 | 89 | 59 | M |
| | 2008.07-2015.06 | 5AT | F | L | Estate FWD R20A3 | | GCI99079 | Inner Joint | | 27 | 30 | 40 | 55.5 | 97 | |
| | 2008.07-2015.06 | 5AT | F | R | Estate FWD R20A3 | | GCI23023 | Inner Joint | | 27 | 30 | 40 | | 120.5 | |
| | 2008.07-2015.06 | 5AT/6MT | F | R | Estate FWD R20A3 | | GDS23332 | Drive Shaft | | 30 | 27 | 68.1 | 88 | 645 | |
| | 2008.07-2015.06 | 6MT | F | L | Estate FWD R20A3 | | GDS23311 | Drive Shaft | | 30 | 27 | 68.1 | 88 | 685 | |
| | 2008.07-2015.06 | 6MT | F | L/R | Estate FWD R20A3 | | GCO23145 | Outer Joint | | 30 | 34 | 68.1 | 88 | 59.5 | M |
| | 2008.07-2015.06 | 6MT | F | L | Estate FWD R20A3 | | GCI23053 | Inner Joint | | 27 | 34 | 40 | 58 | 97.5 | |
| | 2008.07-2015.06 | 6MT | F | R | Estate FWD R20A3 | | GCI23052 | Inner Joint | | 27 | 34 | 40 | | 120.5 | |
| 2.2 (103 kw) | 2004.01-2008.05 | 5MT/6MT | F | L | Estate FWD N22A1 | | GDS23026 | Drive Shaft | | 28 | 29 | 63 | 88.5 | 620 | |
| | 2004.01-2008.05 | 5MT/6MT | F | R | Estate FWD N22A1 | | GDS23027 | Drive Shaft | | 28 | 29 | 63 | 88.5 | 557 | |
| | 2004.01-2008.05 | 5MT/6MT | F | L/R | Estate FWD N22A1 | | GCO23146 | Outer Joint | | 28 | 34 | 63 | 88.5 | 59.5 | M |
| | 2004.01-2008.05 | 6MT | F | R | Estate FWD N22A1 | | GDS81201 | Intermediate Shaft | | 29 | 29 | | | 465 | |
| | 2004.01-2008.05 | | F | | Estate FWD N22A1 | | GCO23117 | Outer Joint | | 28 | 34 | 63 | 88.5 | 59.5 | M |
| | 2004.01-2008.05 | | F | L | Estate FWD N22A1 | | GCI23037 | Inner Joint | | 29 | 34 | 40 | 57 | 97 | |
| 2.2 (110 kw) | 2008.07-2015.06 | 5AT | F | L | Estate FWD N22B1 | | GCI81901 | Inner Joint | | 29 | 34 | 40 | 62 | 94.5 | |
| | 2008.07-2015.06 | 5AT | F | R | Estate FWD N22B1 | | GDS81199 | Intermediate Shaft | | 29 | 29 | | | 460 | |
| | 2008.07-2015.06 | 5AT/6MT | F | L | Estate FWD N22B1 | | GDS23270 | Drive Shaft | | 30 | 29 | 68.1 | 88 | 651 | |
| | 2008.07-2015.06 | 5AT/6MT | F | R | Estate FWD N22B1 | | GDS23355 | Drive Shaft | | 30 | 29 | 68.1 | 88 | 580 | |
| | 2008.07-2015.06 | 6MT | F | L | Estate FWD N22B1 | | GCI23037 | Inner Joint | | 29 | 34 | 40 | 57 | 97 | |
| | 2008.07-2015.06 | AT/MT | F | L/R | Estate FWD N22B1 | | GCO23145 | Outer Joint | | 30 | 34 | 68.1 | 88 | 59.5 | M |
| | 2008.07-2015.06 | | F | R | Estate FWD N22B1 | Date From:2009.01,Date To:2009.01 | GCI23038 | Inner Joint | | 29 | 34 | 42 | | 122 | |
| 2.2 (132 kw) | 2008.07-2015.06 | 6MT | F | L | Estate FWD N22B2 | | GDS23270 | Drive Shaft | | 30 | 29 | 68.1 | 88 | 651 | |
| | 2008.07-2015.06 | 6MT | F | R | Estate FWD N22B2 | | GDS23355 | Drive Shaft | | 30 | 29 | 68.1 | 88 | 580 | |
| | 2008.07-2015.06 | AT/MT | F | L/R | Estate FWD N22B2 | | GCO23145 | Outer Joint | | 30 | 34 | 68.1 | 88 | 59.5 | M |
| | 2008.07-2015.06 | MT | F | R | Estate FWD N22B2 | Date from:2010.01,Date to:2010.01 | GCI23038 | Inner Joint | | 29 | 34 | 42 | | 122 | |
| | 2008.07-2015.06 | | F | L | Estate FWD N22B2 | | GCI23037 | Inner Joint | | 29 | 34 | 40 | 57 | 97 | |
| 2.4 (140 kw) | 2003.04-2008.05 | AT | F | L | Estate FWD K24A3 | | GCI23009 | Inner Joint | | 27 | 32 | 40 | 58.5 | 97 | |
| | 2003.04-2008.05 | AT | F | R | Estate FWD K24A3 | | GCI23023 | Inner Joint | | 27 | 30 | 40 | | 120.5 | |
| | 2003.04-2008.05 | AT/MT | F | L | Estate FWD K24A3 | | GDS81047 | Drive Shaft | | 28 | 27 | 63 | 88.5 | 655 | |
| | 2003.04-2008.05 | AT/MT | F | R | Estate FWD K24A3 | | GDS22019 | Drive Shaft | | 28 | 27 | 63 | 88.5 | 548 | |
| | 2003.04-2008.05 | AT/MT | F | L/R | Estate FWD K24A3 | | GCO23034 | Outer Joint | | 28 | 32 | 63 | 88.5 | 59.5 | M |
| | 2003.04-2008.05 | AT/MT | F | R | Estate FWD K24A3 | | GCI23013 | Inner Joint | | 27 | 32 | 40 | | 120.5 | |
| 2.4 (147 kw) | 2003.09-2008.05 | | F | | Estate FWD K24A1 | | GCO23056 | Outer Joint | | 26 | 30 | 63 | 79 | 59 | M |
| 2.4 (148 kw) | 2008.07-2015.06 | 5AT | F | L | Estate FWD K24Z3 | | GDS23324 | Drive Shaft | | 30 | 27 | 68.1 | 88 | 677 | |
| | 2008.07-2015.06 | 5AT | F | R | Estate FWD K24Z3 | | GDS23325 | Drive Shaft | | 30 | 27 | 68.1 | 88 | 579 | |
| | 2008.07-2015.06 | 5AT | F | L/R | Estate FWD K24Z3 | | GCO23124 | Outer Joint | | 30 | 32 | 68.1 | 88 | 59.5 | M |
| | 2008.07-2015.06 | 5AT | F | L | Estate FWD K24Z3 | | GCI23009 | Inner Joint | | 27 | 32 | 40 | 58.5 | 97 | |
| | 2008.07-2015.06 | 5AT | F | R | Estate FWD K24Z3 | | GCI23013 | Inner Joint | | 27 | 32 | 40 | | 120.5 | |
| | 2008.07-2015.06 | 6MT | F | L | Estate FWD K24Z3 | | GDS23311 | Drive Shaft | | 30 | 27 | 68.1 | 88 | 685 | |
| | 2008.07-2015.06 | 6MT | F | L/R | Estate FWD K24Z3 | | GCO23145 | Outer Joint | | 30 | 34 | 68.1 | 88 | 59.5 | M |
| | 2008.07-2015.06 | 6MT | F | L | Estate FWD K24Z3 | | GCI23053 | Inner Joint | | 27 | 34 | 40 | 58 | 97.5 | |
| | 2008.07-2015.06 | 6MT | F | R | Estate FWD K24Z3 | | GCI23052 | Inner Joint | | 27 | 34 | 40 | | 120.5 | |
| **Avancier** | | | | | | | | | | | | | | | |
| 2.3 (110 kw) | 1999.09-2003.09 | AT | F | | Estate 4WD F23A | | GCI23013 | Inner Joint | | 27 | 32 | 40 | | 120.5 | |
| **Brio** | | | | | | | | | | | | | | | |
| 1.2 (66 kw) | 2011.01- | CVT | F | L | Hatchback FWD L12B3 | | GDS23174 | Drive Shaft | | 26 | 25 | 52 | 78.5 | 641 | |
| | 2011.01- | CVT | F | R | Hatchback FWD L12B3 | | GDS23326 | Drive Shaft | | 26 | 25 | 52 | 78.5 | 895 | |
| | 2011.01- | CVT | F | L/R | Hatchback FWD L12B3 | | GCO23138 | Outer Joint | | 26 | 27 | 52 | 78.5 | 52.5 | M |
| | 2011.01- | CVT | F | L/R | Hatchback FWD L12B3 | | GCI23050 | Inner Joint | | 25 | 27 | 35 | 58 | 94.5 | |
| | 2012.01- | CVT/5MT | F | L | Saloon FWD L12B3 | | GDS23174 | Drive Shaft | | 26 | 25 | 52 | 78.5 | 641 | |
| | 2012.01- | CVT/5MT | F | R | Saloon FWD L12B3 | | GDS23326 | Drive Shaft | | 26 | 25 | 52 | 78.5 | 895 | |
| | 2012.01- | CVT/5MT | F | L/R | Saloon FWD L12B3 | | GCO23138 | Outer Joint | | 26 | 27 | 52 | 78.5 | 52.5 | M |
| | 2012.01- | CVT/5MT | F | L/R | Saloon FWD L12B3 | | GCI23050 | Inner Joint | | 25 | 27 | 35 | 58 | 94.5 | |
| **Capa** | | | | | | | | | | | | | | | |
| 1.5 (72 kw) | 1997.10-2002.09 | AT/MT | F | L/R | MPV FWD D15B | | GCO23073 | Outer Joint | 50T | 26 | 28 | 55 | 78.5 | 56.5 | M |
| **City** | | | | | | | | | | | | | | | |
| 1.3 (73 kw) | 2008.09-2013.12 | AT | F | R | Saloon FWD L13Z1 | | GDS23173 | Drive Shaft | | 26 | 27 | 52 | 78.5 | 570 | |
| | 2008.09-2013.12 | AT | F | L | Saloon FWD L13Z1 | | GCO23184 | Outer Joint | | 26 | 27 | 52 | 78.5 | 54 | M |
| | 2008.09-2013.12 | AT | F | R | Saloon FWD L13Z1 | | GCO23165 | Outer Joint | | 26 | 27 | 52 | 78.6 | 54.3 | M |
| | 2008.09-2013.12 | AT | F | L | Saloon FWD L13Z1 | | GCI23050 | Inner Joint | | 25 | 27 | 35 | 58 | 94.5 | |
| | 2008.09-2013.12 | AT/MT | F | L | Saloon FWD L13Z1 | | GDS23174 | Drive Shaft | | 26 | 25 | 52 | 78.5 | 641 | |
| | 2008.09-2013.12 | MT | F | R | Saloon FWD L13Z1 | | GDS23326 | Drive Shaft | | 26 | 25 | 52 | 78.5 | 895 | |
| | 2008.09-2013.12 | MT | F | L/R | Saloon FWD L13Z1 | | GCO23106 | Outer Joint | | 26 | 28 | 52 | 79 | 54 | M |

| | YEAR | TRANSM. | F/R | L/R | BODY STYLE & DRIVE TYPE & ENGINE | REMARKS | G-AP Ref. | PRODUCT | ABS | Technical Specifications A | B | C | H | L | P |
|---|---|---|---|---|---|---|---|---|---|---|---|---|---|---|---|
| **HONDA** | | | | | | | | | | | | | | | |
| **City** | | | | | | | | | | | | | | | |
| 1.3 (73 kw) | 2008.09-2013.12 | MT | F | L/R | Saloon FWD L13Z1 | | GCI23018 | Inner Joint | | 25 | 28 | 35 | 58 | 95.5 | |
| 1.5 (88 kw) | 2009.07-2013.11 | 5AT | F | L | Saloon FWD L15A7 | | GDS23350 | Drive Shaft | | 26 | 25 | 58 | 78.5 | 641 | |
| | 2009.07-2013.11 | 5AT | F | R | Saloon FWD L15A7 | | GDS23173 | Drive Shaft | | 26 | 27 | 52 | 78.5 | 570 | |
| | 2009.07-2013.11 | 5AT | F | L | Saloon FWD L15A7 | | GCO23208 | Outer Joint | | 26 | 27 | 58 | 78.5 | 53 | M |
| | 2009.07-2013.11 | 5AT | F | R | Saloon FWD L15A7 | | GCO23138 | Outer Joint | | 26 | 27 | 52 | 78.5 | 52.5 | M |
| | 2009.07-2013.11 | 5AT | F | L | Saloon FWD L15A7 | | GCI23050 | Inner Joint | | 25 | 27 | 35 | 58 | 94.5 | |
| | 2009.07-2013.11 | 5MT | F | L | Saloon FWD L15A7 | | GDS23174 | Drive Shaft | | 26 | 25 | 52 | 78.5 | 641 | |
| | 2009.07-2013.11 | 5MT | F | R | Saloon FWD L15A7 | | GDS23326 | Drive Shaft | | 26 | 25 | 52 | 78.5 | 895 | |
| | 2009.07-2013.11 | 5MT | F | L/R | Saloon FWD L15A7 | | GCO23138 | Outer Joint | | 26 | 27 | 52 | 78.5 | 52.5 | M |
| | 2009.07-2013.11 | 5MT | F | L/R | Saloon FWD L15A7 | | GCI23050 | Inner Joint | | 25 | 27 | 35 | 58 | 94.5 | |
| **City V** | | | | | | | | | | | | | | | |
| 1.5 (75 kw) | 2011.01-2013.11 | 5AT | F | L | Saloon FWD L15A7CNG | | GDS23350 | Drive Shaft | | 26 | 25 | 58 | 78.5 | 641 | |
| | 2011.01-2013.11 | 5AT | F | R | Saloon FWD L15A7CNG | | GDS23173 | Drive Shaft | | 26 | 27 | 52 | 78.5 | 570 | |
| | 2011.01-2013.11 | 5AT | F | L | Saloon FWD L15A7CNG | | GCO23208 | Outer Joint | | 26 | 27 | 58 | 78.5 | 53 | M |
| | 2011.01-2013.11 | 5AT | F | R | Saloon FWD L15A7CNG | | GCO23138 | Outer Joint | | 26 | 27 | 52 | 78.5 | 52.5 | M |
| | 2011.01-2013.11 | 5AT | F | L | Saloon FWD L15A7CNG | | GCI23050 | Inner Joint | | 25 | 27 | 35 | 58 | 94.5 | |
| **City/Fit Aria** | | | | | | | | | | | | | | | |
| 1.3 (63 kw) | 2003.05-2008.07 | MT | F | L | Saloon FWD L13A1 | | GDS23070 | Drive Shaft | | 26 | 25 | 52 | 79 | 612.5 | |
| | 2003.05-2008.07 | MT | F | R | Saloon FWD L13A1 | | GDS23071 | Drive Shaft | | 26 | 25 | 52 | 79 | 899 | |
| | 2003.05-2008.07 | MT | F | L | Saloon FWD L13A1, L13A8 | | GDS23070 | Drive Shaft | | 26 | 25 | 52 | 79 | 612.5 | |
| | 2003.05-2008.07 | MT | F | R | Saloon FWD L13A1, L13A8 | | GDS23071 | Drive Shaft | | 26 | 25 | 52 | 79 | 899 | |
| **Civic** | | | | | | | | | | | | | | | |
| 1.0 (93 kw) | 2018.07-2022.12 | 6MT | F | L | Hatchback FWD P10A2 | | GDS82324 | Drive Shaft | | 28 | 27 | 63 | 88.5 | 656 | |
| | 2018.07-2022.12 | 6MT | F | R | Hatchback FWD P10A2 | | GDS82325 | Drive Shaft | | 28 | 27 | 63 | 88.5 | 625 | |
| | 2018.07-2022.12 | 6MT | F | L/R | Hatchback FWD P10A2 | | GCO81829 | Outer Joint | | 28 | 26 | 63 | 88.5 | 64.5 | M |
| | 2018.07-2022.12 | 6MT | F | L | Hatchback FWD P10A2 | | GCI81199 | Inner Joint | | 27 | 26 | 40 | 58 | 100.5 | |
| | 2018.07-2022.12 | 6MT | F | R | Hatchback FWD P10A2 | | GCI81198 | Inner Joint | | 27 | 26 | 40 | | 126.5 | |
| | 2018.07-2022.12 | 6MT | F | R | Hatchback FWD P10A2 | | GDS82814 | Intermediate Shaft | | 27 | 27 | | | 367 | |
| | 2018.07-2022.12 | 6MT | F | L | Saloon FWD P10A4 | | GDS82324 | Drive Shaft | | 28 | 27 | 63 | 88.5 | 656 | |
| | 2018.07-2022.12 | 6MT | F | R | Saloon FWD P10A4 | | GDS82325 | Drive Shaft | | 28 | 27 | 63 | 88.5 | 625 | |
| | 2018.07-2022.12 | 6MT | F | L/R | Saloon FWD P10A4 | | GCO81829 | Outer Joint | | 28 | 26 | 63 | 88.5 | 64.5 | M |
| | 2018.07-2022.12 | 6MT | F | L | Saloon FWD P10A4 | | GCI81199 | Inner Joint | | 27 | 26 | 40 | 58 | 100.5 | |
| | 2018.07-2022.12 | 6MT | F | R | Saloon FWD P10A4 | | GCI81198 | Inner Joint | | 27 | 26 | 40 | | 126.5 | |
| | 2018.07-2022.12 | 6MT | F | R | Saloon FWD P10A4 | | GDS82814 | Intermediate Shaft | | 27 | 27 | | | 367 | |
| 1.0 (95 kw) | 2017.02-2022.12 | 6MT | F | L | Hatchback FWD P10A2 | | GDS82324 | Drive Shaft | | 28 | 27 | 63 | 88.5 | 656 | |
| | 2017.02-2022.12 | 6MT | F | R | Hatchback FWD P10A2 | | GDS82325 | Drive Shaft | | 28 | 27 | 63 | 88.5 | 625 | |
| | 2017.02-2022.12 | 6MT | F | L/R | Hatchback FWD P10A2 | | GCO81829 | Outer Joint | | 28 | 26 | 63 | 88.5 | 64.5 | M |
| | 2017.02-2022.12 | 6MT | F | L | Hatchback FWD P10A2 | | GCI81199 | Inner Joint | | 27 | 26 | 40 | 58 | 100.5 | |
| | 2017.02-2022.12 | 6MT | F | R | Hatchback FWD P10A2 | | GCI81198 | Inner Joint | | 27 | 26 | 40 | | 126.5 | |
| | 2017.02-2022.12 | 6MT | F | R | Hatchback FWD P10A2 | | GDS82814 | Intermediate Shaft | | 27 | 27 | | | 367 | |
| 1.3 (61 kw) | 2003.10-2005.09 | 5MT | F | R | Saloon FWD LDA1 | | GDS84214 | Drive Shaft | 50T | 26 | 27 | 60 | 78.5 | 529 | |
| | 2003.10-2005.09 | 5MT | F | L/R | Saloon FWD LDA1 | | GCO23039 | Outer Joint | 50T | 26 | 28 | 60 | 77.5 | 53 | M |
| | 2003.10-2005.09 | 5MT | F | L | Saloon FWD LDA1 | | GCI23018 | Inner Joint | | 25 | 28 | 35 | 58 | 95.5 | |
| | 2003.10-2005.09 | 5MT | F | R | Saloon FWD LDA1 | | GCI23059 | Inner Joint | | 27 | 28 | 40 | | 119.5 | |
| | 2005.09-2008.09 | AT | F | L | Hatchback FWD L13A7 | | GCI82345 | Inner Joint | | 25 | 30 | 35 | 62 | 101 | |
| | 2005.09-2008.09 | MT | F | L | Hatchback FWD L13A7 | | GDS23164 | Drive Shaft | | 26 | 27 | 58 | 79 | 633 | |
| | 2005.09-2008.09 | MT | F | L/R | Hatchback FWD L13A7 | | GCO23125 | Outer Joint | | 26 | 30 | 58 | 79 | 59 | M |
| | 2005.09-2008.09 | MT | F | L | Hatchback FWD L13A7 | | GCI23086 | Inner Joint | | 27 | 30 | 40 | 58 | 97.5 | |
| 1.3 (70 kw) | 2006.01-2012.12 | CVT | F | L | Saloon FWD LDA2 | | GDS82135 | Drive Shaft | | 26 | 25 | 58 | 78.5 | 601 | |
| | 2006.01-2012.12 | CVT | F | R | Saloon FWD LDA2 | | GDS82347 | Drive Shaft | | 26 | 27 | 58 | 78.5 | 537 | |
| | 2006.01-2012.12 | CVT | F | L/R | Saloon FWD LDA2 | | GCO23155 | Outer Joint | | 26 | 28 | 58 | 78 | 51.5 | M |
| | 2006.01-2012.12 | CVT | F | R | Saloon FWD LDA2 | | GCI23059 | Inner Joint | | 27 | 28 | 40 | | 119.5 | |
| | 2006.01-2012.12 | CVT | F | R | Saloon FWD LDA2 | | GDS82377 | Intermediate Shaft | | 27 | 25 | | | 432 | |
| | 2006.01-2012.12 | | F | L/R | Saloon FWD LDA2 | | GCO23066 | Outer Joint | | 26 | 28 | 58 | 78.5 | 51 | M |
| | 2006.01-2012.12 | | F | L | Saloon FWD LDA2 | | GCI23018 | Inner Joint | | 25 | 28 | 35 | 58 | 95.5 | |
| 1.3 (85 kw) | 2010.01-2012.02 | AT | F | L | Saloon FWD LDA2 | | GDS82135 | Drive Shaft | | 26 | 25 | 58 | 78.5 | 601 | |
| | 2010.01-2012.02 | CVT | F | R | Saloon FWD LDA2 | | GDS82347 | Drive Shaft | | 26 | 27 | 58 | 78.5 | 537 | |
| | 2010.01-2012.02 | CVT | F | L/R | Saloon FWD LDA2 | | GCO23155 | Outer Joint | | 26 | 28 | 58 | 78 | 51.5 | M |
| | 2010.01-2012.02 | CVT | F | L | Saloon FWD LDA2 | | GCI23018 | Inner Joint | | 25 | 28 | 35 | 58 | 95.5 | |
| | 2010.01-2012.02 | CVT | F | R | Saloon FWD LDA2 | | GCI23059 | Inner Joint | | 27 | 28 | 40 | | 119.5 | |
| | 2010.01-2012.02 | | F | L/R | Saloon FWD LDA2 | | GCO23066 | Outer Joint | | 26 | 28 | 58 | 78.5 | 51 | M |
| 1.4 (55 kw) | 1995.09-2001.03 | 5MT | F | L | Hatchback FWD D14A3/D14A5/D14A7/D14Z1/D14Z3 | For Engine Code:D14A3/D14Z1 | GDS23051 | Drive Shaft | 50T | 26 | 25 | 55 | 77.5 | 901.5 | |
| | 1995.09-2001.03 | 5MT | F | L | Hatchback FWD D14A3/D14A5/D14A7/D14Z1/D14Z3 | For Engine Code:D14A3/D14Z1 | GDS23083 | Drive Shaft | | 26 | 25 | 55 | 77.5 | 901.5 | |
| | 1995.09-2001.03 | 5MT | F | R | Hatchback FWD D14A3/D14A5/D14A7/D14Z1/D14Z3 | For Engine Code:D14A3/D14Z1 | GDS81025 | Drive Shaft | 50T | 26 | 25 | 55 | 77.5 | 619.5 | |
| | 1995.09-2001.03 | 5MT | F | L | Hatchback FWD D14A3/D14A5/D14A7/D14Z1/D14Z3 | For Engine Code:D14A7 | GCO23108 | Outer Joint | 50T | 26 | 32 | 55 | 78 | 58.5 | I |

| | YEAR | TRANSM. | F/R | L/R | BODY STYLE & DRIVE TYPE & ENGINE | REMARKS | G-AP Ref. | PRODUCT | ABS | Technical Specifications A | B | C | H | L | P |
|---|---|---|---|---|---|---|---|---|---|---|---|---|---|---|---|
| **HONDA** **Civic** | | | | | | | | | | | | | | | |
| 1.4 (55 kw) | 1995.09-2001.03 | 5MT | F | R | Hatchback FWD D14A3/D14A5/D14A7/D14Z1/D14Z3 | For Engine Code:D14A7 | GCO23179 | Outer Joint | 50T | 26 | 32 | 55 | 78.5 | 56.5 | I |
| | 1995.09-2001.03 | 5MT | F | L/R | Hatchback FWD D14A3/D14A5/D14A7/D14Z1/D14Z3 | For Engine Code:D14A3/D14Z1 | GCO23024 | Outer Joint | 50T | 26 | 28 | 55 | 77.5 | 53 | M |
| | 1995.09-2001.03 | 5MT | F | L/R | Hatchback FWD D14A3/D14A5/D14A7/D14Z1/D14Z3 | For Engine Code:D14A3/D14Z1 | GCO23038 | Outer Joint | | 26 | 28 | 55 | 78 | 55 | M |
| | 1995.09-2001.03 | 5MT | F | L/R | Hatchback FWD D14A3/D14A5/D14A7/D14Z1/D14Z3 | For Engine Code:D14A3/D14Z1 | GCO23047 | Outer Joint | | 26 | 28 | 55 | 77.5 | 53 | M |
| | 1995.09-2001.03 | 5MT | F | L/R | Hatchback FWD D14A3/D14A5/D14A7/D14Z1/D14Z3 | For Engine Code:D14A3/D14Z1 | GCO23073 | Outer Joint | 50T | 26 | 28 | 55 | 78.5 | 56.5 | M |
| | 1995.09-2001.03 | 5MT | F | L/R | Hatchback FWD D14A3/D14A5/D14A7/D14Z1/D14Z3 | For Engine Code:D14A7/D14Z3 | GCO23109 | Outer Joint | | 26 | 32 | 55 | 78 | 58.5 | I |
| | 1995.09-2001.03 | 5MT | F | L/R | Hatchback FWD D14A3/D14A5/D14A7/D14Z1/D14Z3 | For Engine Code:D14A7/D14Z3 | GCO51021 | Outer Joint | 50T | 26 | 32 | 55 | 78.5 | 56.5 | I |
| | 1995.09-2001.03 | 5MT | F | L/R | Hatchback FWD D14A3/D14A5/D14A7/D14Z1/D14Z3 | For Engine Code:D14A7/D14Z3 | GCO99225 | Outer Joint | 50T | 26 | 32 | 55 | 78.5 | 56.5 | I |
| | 1995.09-2001.03 | 5MT | F | L | Hatchback FWD D14A3/D14A5/D14A7/D14Z1/D14Z3 | For Engine Code:D14A7/D14Z3 | GCI23004 | Inner Joint | | 25 | 30 | 35 | 62 | 97.5 | |
| | 1995.09-2001.03 | 5MT | F | L | Hatchback FWD D14A3/D14A5/D14A7/D14Z1/D14Z3 | For Engine Code:D14A3/D14Z1 | GCI23021 | Inner Joint | | 25 | 28 | 35 | 61.5 | 97.5 | |
| | 1995.09-2001.03 | 5MT | F | R | Hatchback FWD D14A3/D14A5/D14A7/D14Z1/D14Z3 | For Engine Code:D14A7/D14Z3 | GCI23005 | Inner Joint | | 25 | 30 | 35 | 54.5 | 97 | |
| | 1995.09-2001.03 | 5MT | F | R | Hatchback FWD D14A3/D14A5/D14A7/D14Z1/D14Z3 | For Engine Code:D14A3/D14Z1 | GCI23020 | Inner Joint | | 25 | 28 | 35 | 54.5 | 96.5 | |
| | 1995.09-2001.03 | AT/MT | F | L/R | Hatchback FWD D14A3/D14A5/D14A7/D14Z1/D14Z3 | Vehicle Production Country:Great Britain | GCO23063 | Outer Joint | | 26 | 32 | 55 | 78.5 | 56.5 | I |
| | 1995.09-2001.03 | MT | F | L/R | Hatchback FWD D14A3/D14A5/D14A7/D14Z1/D14Z3 | inner teeth:30 | GCO23019 | Outer Joint | | 26 | 30 | 55 | 78.5 | 56 | M |
| | 1995.09-2001.03 | MT | F | L/R | Hatchback FWD D14A3/D14A5/D14A7/D14Z1/D14Z3 | | GCO23086 | Outer Joint | 50T | 26 | 30 | 55 | 78.5 | 56.5 | M |
| | 1995.09-2001.03 | MT/5MT | F | L/R | Hatchback FWD D14A3/D14A5/D14A7/D14Z1/D14Z3 | For Engine Code:D14A3/D14Z1 | GCO23050 | Outer Joint | | 26 | 28 | 55 | 78.5 | 56.5 | M |
| | 1995.11-1998.10 | MT | F | L | Saloon FWD D14A4 | | GDS23051 | Drive Shaft | 50T | 26 | 25 | 55 | 77.5 | 901.5 | |
| | 1995.11-1998.10 | MT | F | R | Saloon FWD D14A4 | | GDS81025 | Drive Shaft | 50T | 26 | 25 | 55 | 77.5 | 619.5 | |
| | 1995.11-1998.10 | MT | F | L/R | Saloon FWD D14A4 | | GCO23019 | Outer Joint | | 26 | 30 | 55 | 78.5 | 56 | M |
| | 1995.11-1998.10 | MT | F | L/R | Saloon FWD D14A4 | | GCO23024 | Outer Joint | 50T | 26 | 28 | 55 | 77.5 | 53 | M |
| | 1995.11-1998.10 | MT | F | L/R | Saloon FWD D14A4 | | GCO23038 | Outer Joint | | 26 | 28 | 55 | 78 | 55 | M |
| | 1995.11-1998.10 | MT | F | L/R | Saloon FWD D14A4 | | GCO23047 | Outer Joint | | 26 | 28 | 55 | 77.5 | 53 | M |
| | 1995.11-1998.10 | MT | F | L | Saloon FWD D14A4 | | GCI23021 | Inner Joint | | 25 | 28 | 35 | 61.5 | 97.5 | |
| | 1995.11-1998.10 | MT | F | R | Saloon FWD D14A4 | | GCI23020 | Inner Joint | | 25 | 28 | 35 | 54.5 | 96.5 | |
| | 2001.02-2005.09 | 5MT | F | L/R | Hatchback FWD D14Z6 | | GCO23095 | Outer Joint | 50T | 26 | 22 | 60 | 79 | 56 | M |
| | 2001.02-2005.09 | 5MT | F | R | Hatchback FWD D14Z6 | | GCI81555 | Inner Joint | | 25 | 22 | 35 | 58 | 96 | |
| | 2001.02-2005.09 | MT | F | L | Hatchback FWD D14Z6 | | GDS23089 | Drive Shaft | 50T | 26 | 25 | 60 | 78 | 895 | |
| | 2001.02-2005.09 | MT | F | R | Hatchback FWD D14Z6 | Inner teeth of wheel side:23 | GDS23097 | Drive Shaft | 50T | 26 | 25 | 60 | 78 | 610 | |
| | 2001.02-2005.09 | MT | F | R | Hatchback FWD D14Z6 | Inner teeth of wheel side:22 | GDS23268 | Drive Shaft | 50T | 26 | 25 | 60 | 79 | 618 | |
| | 2001.02-2005.09 | MT | F | | Hatchback FWD D14Z6 | Date From:2004.01 | GCO23039 | Outer Joint | 50T | 26 | 28 | 60 | 77.5 | 53 | M |
| | 2001.02-2005.09 | MT | F | L | Hatchback FWD D14Z6 | Date from:2004.01 | GCI23018 | Inner Joint | | 25 | 28 | 35 | 58 | 95.5 | |
| 1.4 (66 kw) | 1995.06-2001.02 | 4AT/5MT | F | L | Hatchback FWD D14A2/D14A4/D14A8/D14Z2/D14Z3/D14Z4 | For Engine Code:D14A4/D14Z2 | GDS23051 | Drive Shaft | 50T | 26 | 25 | 55 | 77.5 | 901.5 | |
| | 1995.06-2001.02 | 4AT/5MT | F | L | Hatchback FWD D14A2/D14A4/D14A8/D14Z2/D14Z3/D14Z4 | For Engine Code:D14A4/D14Z2 | GDS23083 | Drive Shaft | | 26 | 25 | 55 | 77.5 | 901.5 | |
| | 1995.06-2001.02 | 4AT/5MT | F | R | Hatchback FWD D14A2/D14A4/D14A8/D14Z2/D14Z3/D14Z4 | For Engine Code:D14A4/D14Z2 | GDS81025 | Drive Shaft | 50T | 26 | 25 | 55 | 77.5 | 619.5 | |
| | 1995.06-2001.02 | 4AT/5MT | F | L/R | Hatchback FWD D14A2/D14A4/D14A8/D14Z2/D14Z3/D14Z4 | Engine code:D14A4/D14Z2 | GCO23024 | Outer Joint | 50T | 26 | 28 | 55 | 77.5 | 53 | M |
| | 1995.06-2001.02 | 4AT/5MT | F | L/R | Hatchback FWD D14A2/D14A4/D14A8/D14Z2/D14Z3/D14Z4 | For Engine Code:D14A4/D14Z2 | GCO23038 | Outer Joint | | 26 | 28 | 55 | 78 | 55 | M |
| | 1995.06-2001.02 | 4AT/5MT | F | L/R | Hatchback FWD D14A2/D14A4/D14A8/D14Z2/D14Z3/D14Z4 | For Engine Code:D14A4/D14Z2 | GCO23047 | Outer Joint | | 26 | 28 | 55 | 77.5 | 53 | M |
| | 1995.06-2001.02 | 4AT/5MT | F | L/R | Hatchback FWD D14A2/D14A4/D14A8/D14Z2/D14Z3/D14Z4 | For Engine Code:D14A2/D14Z4 | GCO23063 | Outer Joint | | 26 | 32 | 55 | 78.5 | 56.5 | I |
| | 1995.06-2001.02 | 4AT/5MT | F | L/R | Hatchback FWD D14A2/D14A4/D14A8/D14Z2/D14Z3/D14Z4 | For Engine Code:D14A2/D14Z4 | GCO23109 | Outer Joint | | 26 | 32 | 55 | 78 | 58.5 | I |
| | 1995.06-2001.02 | 4AT/5MT | F | L/R | Hatchback FWD D14A2/D14A4/D14A8/D14Z2/D14Z3/D14Z4 | Engine code:D14A2;With ABS:50T | GCO23179 | Outer Joint | 50T | 26 | 32 | 55 | 78.5 | 56.5 | I |
| | 1995.06-2001.02 | 4AT/5MT | F | L/R | Hatchback FWD D14A2/D14A4/D14A8/D14Z2/D14Z3/D14Z4 | For Engine Code:D14A2/D14Z4 | GCO51021 | Outer Joint | 50T | 26 | 32 | 55 | 78.5 | 56.5 | I |
| | 1995.06-2001.02 | 4AT/5MT | F | L/R | Hatchback FWD D14A2/D14A4/D14A8/D14Z2/D14Z3/D14Z4 | For Engine Code:D14A2/D14Z4 | GCO99225 | Outer Joint | 50T | 26 | 32 | 55 | 78.5 | 56.5 | I |
| | 1995.06-2001.02 | 4AT/5MT | F | L | Hatchback FWD D14A2/D14A4/D14A8/D14Z2/D14Z3/D14Z4 | For Engine Code:D14A2 | GCI23004 | Inner Joint | | 25 | 30 | 35 | 62 | 97.5 | |
| | 1995.06-2001.02 | 4AT/5MT | F | L | Hatchback FWD D14A2/D14A4/D14A8/D14Z2/D14Z3/D14Z4 | For Engine Code:D14A4/D14Z2 | GCI23021 | Inner Joint | | 25 | 28 | 35 | 61.5 | 97.5 | |
| | 1995.06-2001.02 | 4AT/5MT | F | R | Hatchback FWD D14A2/D14A4/D14A8/D14Z2/D14Z3/D14Z4 | For Engine Code:D14A2/D14Z4 | GCI23005 | Inner Joint | | 25 | 30 | 35 | 54.5 | 97 | |
| | 1995.06-2001.02 | 4AT/5MT | F | R | Hatchback FWD D14A2/D14A4/D14A8/D14Z2/D14Z3/D14Z4 | For Engine Code:D14A4/D14Z2 | GCI23020 | Inner Joint | | 25 | 28 | 35 | 54.5 | 96.5 | |
| | 1995.06-2001.02 | AT | F | L/R | Hatchback FWD D14A2/D14A4/D14A8/D14Z2/D14Z3/D14Z4 | | GCO23086 | Outer Joint | 50T | 26 | 30 | 55 | 78.5 | 56.5 | M |
| | 1995.06-2001.02 | AT/MT | F | L/R | Hatchback FWD D14A2/D14A4/D14A8/D14Z2/D14Z3/D14Z4 | | GCO23019 | Outer Joint | | 26 | 30 | 55 | 78.5 | 56 | M |
| | 1995.06-2001.02 | AT/MT | F | L/R | Hatchback FWD D14A2/D14A4/D14A8/D14Z2/D14Z3/D14Z4 | For Engine Code:D14A4/D14Z2 | GCO23050 | Outer Joint | | 26 | 28 | 55 | 78.5 | 56.5 | M |
| | 1995.06-2001.02 | AT/MT | F | L/R | Hatchback FWD D14A2/D14A4/D14A8/D14Z2/D14Z3/D14Z4 | Engine code:D14A4/D14Z2 | GCO23073 | Outer Joint | 50T | 26 | 28 | 55 | 78.5 | 56.5 | M |
| | 1995.11-2001.02 | AT | F | L/R | Saloon FWD D14A4/D14Z2/D14Z4 | inner teeth:30 | GCO23086 | Outer Joint | 50T | 26 | 30 | 55 | 78.5 | 56.5 | M |
| | 1995.11-2001.02 | AT/MT | F | L | Saloon FWD D14A4/D14Z2/D14Z4 | | GDS23051 | Drive Shaft | 50T | 26 | 25 | 55 | 77.5 | 901.5 | |
| | 1995.11-2001.02 | AT/MT | F | L | Saloon FWD D14A4/D14Z2/D14Z4 | | GDS23083 | Drive Shaft | | 26 | 25 | 55 | 77.5 | 901.5 | |
| | 1995.11-2001.02 | AT/MT | F | R | Saloon FWD D14A4/D14Z2/D14Z4 | | GDS81025 | Drive Shaft | 50T | 26 | 25 | 55 | 77.5 | 619.5 | |
| | 1995.11-2001.02 | AT/MT | F | L/R | Saloon FWD D14A4/D14Z2/D14Z4 | inner teeth:30 | GCO23019 | Outer Joint | | 26 | 30 | 55 | 78.5 | 56 | M |
| | 1995.11-2001.02 | AT/MT | F | L/R | Saloon FWD D14A4/D14Z2/D14Z4 | inner teeth:28 | GCO23024 | Outer Joint | 50T | 26 | 28 | 55 | 77.5 | 53 | M |
| | 1995.11-2001.02 | AT/MT | F | L/R | Saloon FWD D14A4/D14Z2/D14Z4 | inner teeth:28 | GCO23038 | Outer Joint | | 26 | 28 | 55 | 78 | 55 | M |
| | 1995.11-2001.02 | AT/MT | F | L/R | Saloon FWD D14A4/D14Z2/D14Z4 | inner teeth:28 | GCO23047 | Outer Joint | | 26 | 28 | 55 | 77.5 | 53 | M |
| | 1995.11-2001.02 | AT/MT | F | L/R | Saloon FWD D14A4/D14Z2/D14Z4 | inner teeth:28 | GCO23050 | Outer Joint | | 26 | 28 | 55 | 78.5 | 56.5 | M |
| | 1995.11-2001.02 | AT/MT | F | L/R | Saloon FWD D14A4/D14Z2/D14Z4 | Vehicle Production Country:Great Britain | GCO23063 | Outer Joint | | 26 | 32 | 55 | 78.5 | 56.5 | I |
| | 1995.11-2001.02 | AT/MT | F | L/R | Saloon FWD D14A4/D14Z2/D14Z4 | inner teeth:28 | GCO23073 | Outer Joint | 50T | 26 | 28 | 55 | 78.5 | 56.5 | M |
| | 1995.11-2001.02 | AT/MT | F | L/R | Saloon FWD D14A4/D14Z2/D14Z4 | Vehicle Production Country:Great Britain | GCO51021 | Outer Joint | 50T | 26 | 32 | 55 | 78.5 | 56.5 | I |
| | 1995.11-2001.02 | AT/MT | F | L/R | Saloon FWD D14A4/D14Z2/D14Z4 | Vehicle Production Country:Great Britain | GCO99225 | Outer Joint | 50T | 26 | 32 | 55 | 78.5 | 56.5 | I |
| | 1995.11-2001.02 | AT/MT | F | L | Saloon FWD D14A4/D14Z2/D14Z4 | | GCI23021 | Inner Joint | | 25 | 28 | 35 | 61.5 | 97.5 | |
| | 1995.11-2001.02 | AT/MT | F | R | Saloon FWD D14A4/D14Z2/D14Z4 | | GCI23020 | Inner Joint | | 25 | 28 | 35 | 54.5 | 96.5 | |

| | YEAR | TRANSM. | F/R | L/R | BODY STYLE & DRIVE TYPE & ENGINE | REMARKS | G-AP Ref. | PRODUCT | ABS | Technical Specifications A | B | C | H | L | P |
|---|---|---|---|---|---|---|---|---|---|---|---|---|---|---|---|
| **HONDA** Civic | | | | | | | | | | | | | | | |
| 1.4 (66 kw) | 1995.11-2001.02 | | F | L/R | Saloon FWD D14A4/D14Z2/D14Z4 | | GCO23156 | Outer Joint | 50T | 26 | 28 | 55 | 78 | 52 | M |
| | 1996.01-2001.02 | 5MT | F | L/R | Hatchback FWD D14A4/D14Z4 | | GCO23109 | Outer Joint | | 26 | 32 | 55 | 78 | 58.5 | I |
| | 1996.01-2001.02 | 5MT | F | L/R | Hatchback FWD D14A4/D14Z4 | | GCO99225 | Outer Joint | 50T | 26 | 32 | 55 | 78.5 | 56.5 | I |
| | 1996.01-2001.02 | AT/MT | F | L | Hatchback FWD D14A4/D14Z4 | | GDS23020 | Drive Shaft | 50T | 26 | 25 | 49 | 78.8 | 909 | |
| | 1996.01-2001.02 | AT/MT | F | R | Hatchback FWD D14A4/D14Z4 | | GDS81010 | Drive Shaft | 50T | 26 | 25 | 55 | 78.5 | 627 | |
| | 1996.01-2001.02 | | F | L/R | Hatchback FWD D14A4/D14Z4 | | GCO23050 | Outer Joint | | 26 | 28 | 55 | 78.5 | 56.5 | M |
| | 1996.01-2001.02 | | F | L/R | Hatchback FWD D14A4/D14Z4 | | GCO51021 | Outer Joint | 50T | 26 | 32 | 55 | 78.5 | 56.5 | I |
| | 1996.01-2001.02 | | F | | Hatchback FWD D14A4/D14Z4 | | GCO23073 | Outer Joint | 50T | 26 | 28 | 55 | 78.5 | 56.5 | M |
| | 1996.01-2001.02 | | F | R | Hatchback FWD D14A4/D14Z4 | | GCI23005 | Inner Joint | | 25 | 30 | 35 | 54.5 | 97 | |
| | 2000.11-2005.09 | 4AT/5MT | F | L/R | Hatchback FWD D14Z5;D14Z6 | | GCO23095 | Outer Joint | 50T | 26 | 22 | 60 | 79 | 56 | M |
| | 2000.11-2005.09 | MT | F | L | Hatchback FWD D14Z5;D14Z6 | | GDS23089 | Drive Shaft | 50T | 26 | 25 | 60 | 78 | 895 | |
| | 2000.11-2005.09 | MT | F | R | Hatchback FWD D14Z5;D14Z6 | Inner teeth of wheel side:23 | GDS23097 | Drive Shaft | 50T | 26 | 25 | 60 | 78 | 610 | |
| | 2000.11-2005.09 | MT | F | R | Hatchback FWD D14Z5;D14Z6 | Inner teeth of wheel side:22 | GDS23268 | Drive Shaft | 50T | 26 | 25 | 60 | 79 | 618 | |
| | 2000.11-2005.09 | MT | F | R | Hatchback FWD D14Z5;D14Z6 | | GCI81555 | Inner Joint | | 25 | 22 | 35 | 58 | 96 | |
| | 2000.11-2005.09 | | F | L/R | Hatchback FWD D14Z5;D14Z6 | Date From:2004.01 | GCO23039 | Outer Joint | 50T | 26 | 28 | 60 | 77.5 | 53 | M |
| | 2000.11-2005.09 | | F | L | Hatchback FWD D14Z5;D14Z6 | Date From:2004.01 | GCI23018 | Inner Joint | | 25 | 28 | 35 | 58 | 95.5 | |
| | 2000.12-2005.09 | 4AT/5MT | F | L/R | Saloon FWD D14Z5 | | GCO23039 | Outer Joint | 50T | 26 | 28 | 60 | 77.5 | 53 | M |
| | 2000.12-2005.09 | MT | F | L | Saloon FWD D14Z5 | | GDS23089 | Drive Shaft | 50T | 26 | 25 | 60 | 78 | 895 | |
| | 2000.12-2005.09 | MT | F | L | Saloon FWD D14Z5 | | GDS23192 | Drive Shaft | 50T | 26 | 25 | 55 | 77.5 | 893 | |
| | 2000.12-2005.09 | MT | F | R | Saloon FWD D14Z5 | | GDS23097 | Drive Shaft | 50T | 26 | 25 | 60 | 78 | 610 | |
| | 2000.12-2005.09 | MT | F | R | Saloon FWD D14Z5 | | GDS23259 | Drive Shaft | 50T | 26 | 25 | 60 | 77.5 | 622 | |
| | 2000.12-2005.09 | MT | F | L/R | Saloon FWD D14Z5 | | GCI23018 | Inner Joint | | 25 | 28 | 35 | 58 | 95.5 | |
| 1.4 (73 kw) | 2008.10-2011.12 | AT | F | L | Hatchback FWD L13Z1 | | GCI82345 | Inner Joint | | 25 | 30 | 35 | 62 | 101 | |
| | 2008.10-2011.12 | MT | F | L | Hatchback FWD L13Z1 | | GDS23164 | Drive Shaft | | 26 | 27 | 58 | 79 | 633 | |
| | 2008.10-2011.12 | MT | F | L/R | Hatchback FWD L13Z1 | | GCO23125 | Outer Joint | | 26 | 30 | 58 | 79 | 59 | M |
| | 2008.10-2011.12 | MT | F | L | Hatchback FWD L13Z1 | | GCI23086 | Inner Joint | | 27 | 30 | 40 | 58 | 97.5 | |
| | 2012.02-2016.12 | 6MT | F | L/R | Hatchback FWD L13Z4 | | GCO23125 | Outer Joint | | 26 | 30 | 58 | 79 | 59 | M |
| | 2012.02-2016.12 | MT | F | L | Hatchback FWD L13Z4 | | GCI23086 | Inner Joint | | 27 | 30 | 40 | 58 | 97.5 | |
| 1.5 (66 kw) | 1991.10-1996.07 | AT/MT | F | R | Hatchback FWD D15B2/D15Z1/D15Z3 | | GDS81010 | Drive Shaft | 50T | 26 | 25 | 55 | 78.5 | 627 | |
| | 1991.10-1996.07 | AT/MT | F | L/R | Hatchback FWD D15B2/D15Z1/D15Z3 | | GCO23022 | Outer Joint | | 26 | 30 | 55 | 79 | 56 | M |
| | 1991.10-1996.07 | AT/MT | F | L/R | Hatchback FWD D15B2/D15Z1/D15Z3 | | GCO23083 | Outer Joint | 50T | 26 | 30 | 55 | 78.5 | 56 | M |
| | 1991.10-1996.07 | MT | F | R | Hatchback FWD D15B2/D15Z1/D15Z3 | | GDS81054 | Drive Shaft | | 26 | 25 | 55 | 78.5 | 627 | |
| | 1991.10-1996.07 | | F | | Hatchback FWD D15B2/D15Z1/D15Z3 | Date From:1992.01 | GCO23023 | Outer Joint | | 26 | 30 | 55 | 78.5 | 56.5 | M |
| | 1991.10-1996.07 | | F | L | Hatchback FWD D15B2/D15Z1/D15Z3 | | GCI23004 | Inner Joint | | 25 | 30 | 35 | 62 | 97.5 | |
| | 1991.10-1996.07 | | F | R | Hatchback FWD D15B2/D15Z1/D15Z3 | | GCI23005 | Inner Joint | | 25 | 30 | 35 | 54.5 | 97 | |
| | 1995.07-1997.01 | AT/MT | F | L/R | Hatchback FWD D15Z3 | | GCO23016 | Outer Joint | | 26 | 32 | 55 | 78.5 | 56.5 | M |
| | 1995.07-1997.01 | MT | F | R | Hatchback FWD D15Z3 | | GDS81010 | Drive Shaft | 50T | 26 | 25 | 55 | 78.5 | 627 | |
| | 1995.07-1997.01 | | F | L | Hatchback FWD D15Z3 | | GCO23017 | Outer Joint | 50T | 26 | 32 | 55 | 78.5 | 56.5 | M |
| | 1995.07-1997.01 | | F | R | Hatchback FWD D15Z3 | | GCO23179 | Outer Joint | 50T | 26 | 32 | 55 | 78.5 | 56.5 | I |
| | 1995.07-1997.01 | | F | | Hatchback FWD D15Z3 | | GCO23038 | Outer Joint | | 26 | 28 | 55 | 78 | 55 | M |
| | 1995.07-1997.01 | | F | L | Hatchback FWD D15Z3 | | GCI23004 | Inner Joint | | 25 | 30 | 35 | 62 | 97.5 | |
| | 1995.07-1997.01 | | F | R | Hatchback FWD D15Z3 | | GCI23005 | Inner Joint | | 25 | 30 | 35 | 54.5 | 97 | |
| 1.5 (82 kw) | 2003.02-2005.09 | 4AT/5MT | F | L/R | Saloon FWD D15Y3 | | GCO23039 | Outer Joint | 50T | 26 | 28 | 60 | 77.5 | 53 | M |
| | 2003.02-2005.09 | | F | L | Saloon FWD D15Y3 | | GDS23089 | Drive Shaft | 50T | 26 | 25 | 60 | 78 | 895 | |
| | 2003.02-2005.09 | | F | L/R | Saloon FWD D15Y3 | | GCI23018 | Inner Joint | | 25 | 28 | 35 | 58 | 95.5 | |
| 1.5 (84 kw) | 1995.11-2000.09 | AT/MT | F | L | Saloon FWD D15Z6 | | GDS23051 | Drive Shaft | 50T | 26 | 25 | 55 | 77.5 | 901.5 | |
| | 1995.11-2000.09 | AT/MT | F | L | Saloon FWD D15Z6 | | GDS23083 | Drive Shaft | | 26 | 25 | 55 | 77.5 | 901.5 | |
| | 1995.11-2000.09 | AT/MT | F | R | Saloon FWD D15Z6 | | GDS81025 | Drive Shaft | 50T | 26 | 25 | 55 | 77.5 | 619.5 | |
| | 1995.11-2000.09 | AT/MT | F | L/R | Saloon FWD D15Z6 | inner teeth:28 | GCO23024 | Outer Joint | 50T | 26 | 28 | 55 | 77.5 | 53 | M |
| | 1995.11-2000.09 | AT/MT | F | L/R | Saloon FWD D15Z6 | inner teeth:28 | GCO23038 | Outer Joint | | 26 | 28 | 55 | 78 | 55 | M |
| | 1995.11-2000.09 | AT/MT | F | L/R | Saloon FWD D15Z6 | inner teeth:28 | GCO23047 | Outer Joint | | 26 | 28 | 55 | 77.5 | 53 | M |
| | 1995.11-2000.09 | AT/MT | F | L/R | Saloon FWD D15Z6 | Vehicle Production Country:Great Britain | GCO23063 | Outer Joint | | 26 | 32 | 55 | 78.5 | 56.5 | I |
| | 1995.11-2000.09 | AT/MT | F | L/R | Saloon FWD D15Z6 | Vehicle Production Country:Japan | GCO23073 | Outer Joint | 50T | 26 | 28 | 55 | 78.5 | 56.5 | M |
| | 1995.11-2000.09 | AT/MT | F | L/R | Saloon FWD D15Z6 | Vehicle Production Country:Great Britain | GCO51021 | Outer Joint | 50T | 26 | 32 | 55 | 78.5 | 56.5 | I |
| | 1995.11-2000.09 | AT/MT | F | L/R | Saloon FWD D15Z6 | Vehicle Production Country:Great Britain | GCO99225 | Outer Joint | 50T | 26 | 32 | 55 | 78.5 | 56.5 | I |
| | 1995.11-2000.09 | AT/MT | F | L | Saloon FWD D15Z6 | | GCI23021 | Inner Joint | | 25 | 28 | 35 | 61.5 | 97.5 | |
| | 1995.11-2000.09 | AT/MT | F | R | Saloon FWD D15Z6 | | GCI23020 | Inner Joint | | 25 | 28 | 35 | 54.5 | 96.5 | |
| | 1995.11-2000.09 | MT | F | L/R | Saloon FWD D15Z6 | | GCO23050 | Outer Joint | | 26 | 28 | 55 | 78.5 | 56.5 | M |
| | 1995.11-2000.09 | | F | L/R | Saloon FWD D15Z6 | | GCO23156 | Outer Joint | 50T | 26 | 28 | 55 | 78 | 52 | M |
| | 1995.11-2001.03 | 4AT/5MT | F | L | Hatchback FWD D15Z6/D15Z8 | For Engine Code:D15Z6 | GDS23051 | Drive Shaft | 50T | 26 | 25 | 55 | 77.5 | 901.5 | |
| | 1995.11-2001.03 | 4AT/5MT | F | R | Hatchback FWD D15Z6/D15Z8 | For Engine code:D15Z6 | GDS81025 | Drive Shaft | 50T | 26 | 25 | 55 | 77.5 | 619.5 | |
| | 1995.11-2001.03 | 4AT/5MT | F | L | Hatchback FWD D15Z6/D15Z8 | For Engine Code:D15Z8 | GCO23108 | Outer Joint | 50T | 26 | 32 | 55 | 78 | 58.5 | I |
| | 1995.11-2001.03 | 4AT/5MT | F | R | Hatchback FWD D15Z6/D15Z8 | For Engine Code:D15Z8 | GCO23179 | Outer Joint | 50T | 26 | 32 | 55 | 78.5 | 56.5 | I |
| | 1995.11-2001.03 | 4AT/5MT | F | L/R | Hatchback FWD D15Z6/D15Z8 | For Engine Code:D15Z8 | GCO51021 | Outer Joint | 50T | 26 | 32 | 55 | 78.5 | 56.5 | I |
| | 1995.11-2001.03 | 4AT/5MT | F | L | Hatchback FWD D15Z6/D15Z8 | For Engine Code:D15Z8 | GCI23004 | Inner Joint | | 25 | 30 | 35 | 62 | 97.5 | |

| | YEAR | TRANSM. | F/R | L/R | BODY STYLE & DRIVE TYPE & ENGINE | REMARKS | G-AP Ref. | PRODUCT | ABS | Technical Specifications A | B | C | H | L | P |
|---|---|---|---|---|---|---|---|---|---|---|---|---|---|---|---|
| **HONDA** Civic | | | | | | | | | | | | | | | |
| 1.5 (84 kw) | 1995.11-2001.03 | 4AT/5MT | F | L | Hatchback FWD D15Z6/D15Z8 | For Engine Code:D15Z6 | GCI23021 | Inner Joint | | 25 | 28 | 35 | 61.5 | 97.5 | |
| | 1995.11-2001.03 | 4AT/5MT | F | R | Hatchback FWD D15Z6/D15Z8 | For Engine Code:D15Z8 | GCI23005 | Inner Joint | | 25 | 30 | 35 | 54.5 | 97 | |
| | 1995.11-2001.03 | 4AT/5MT | F | R | Hatchback FWD D15Z6/D15Z8 | For Engine Code:D15Z6 | GCI23020 | Inner Joint | | 25 | 28 | 35 | 54.5 | 96.5 | |
| | 1995.11-2001.03 | AT/MT | F | L | Hatchback FWD D15Z6/D15Z8 | For Engine Code:D15Z6 | GDS23083 | Drive Shaft | | 26 | 25 | 55 | 77.5 | 901.5 | |
| | 1995.11-2001.03 | AT/MT | F | R | Hatchback FWD D15Z6/D15Z8 | For Engine code:D15Z6 | GDS81025 | Drive Shaft | 50T | 26 | 25 | 55 | 77.5 | 619.5 | |
| | 1995.11-2001.03 | AT/MT | F | L/R | Hatchback FWD D15Z6/D15Z8 | Engine code:D15Z6 | GCO23038 | Outer Joint | | 26 | 28 | 55 | 78 | 55 | M |
| | 1995.11-2001.03 | AT/MT | F | L/R | Hatchback FWD D15Z6/D15Z8 | Engine code:D15Z6 | GCO23047 | Outer Joint | | 26 | 28 | 55 | 77.5 | 53 | M |
| | 1995.11-2001.03 | AT/MT | F | L/R | Hatchback FWD D15Z6/D15Z8 | Vehicle Production Country:Great Britain | GCO23063 | Outer Joint | | 26 | 32 | 55 | 78.5 | 56.5 | I |
| | 1995.11-2001.03 | AT/MT | F | L/R | Hatchback FWD D15Z6/D15Z8 | Vehicle Production Country:Japan | GCO23073 | Outer Joint | 50T | 26 | 28 | 55 | 78.5 | 56.5 | M |
| | 1995.11-2001.03 | AT/MT | F | L/R | Hatchback FWD D15Z6/D15Z8 | Vehicle Production Country:Great Britain | GCO99225 | Outer Joint | 50T | 26 | 32 | 55 | 78.5 | 56.5 | I |
| | 1995.11-2001.03 | AT/MT/4AT/5MT | F | L/R | Hatchback FWD D15Z6/D15Z8 | For Engine Code:D15Z6 | GCO23024 | Outer Joint | 50T | 26 | 28 | 55 | 77.5 | 53 | M |
| | 1995.11-2001.03 | MT | F | L/R | Hatchback FWD D15Z6/D15Z8 | | GCO23050 | Outer Joint | | 26 | 28 | 55 | 78.5 | 56.5 | M |
| 1.5 (127 kw) | 2016.06-2022.08 | CVT | F | L | Saloon FWD L15B7;L15BB | | GDS82322 | Drive Shaft | | 28 | 27 | 63 | 89 | 693 | |
| | 2016.06-2022.08 | CVT | F | R | Saloon FWD L15B7;L15BB | | GDS82323 | Drive Shaft | | 28 | 27 | 63 | 89 | 607 | |
| | 2016.06-2022.08 | CVT | F | L/R | Saloon FWD L15B7;L15BB | | GCO81828 | Outer Joint | | 28 | 24 | 63 | 89 | 59 | M |
| | 2016.06-2022.08 | CVT | F | R | Saloon FWD L15B7;L15BB | | GCI81271 | Inner Joint | | 27 | 23 | 40 | | 122.5 | |
| 1.5 (134 kw) | 2016.08-2022.12 | 6MT | F | L | Saloon FWD L15B7;L15BB | | GDS82618 | Drive Shaft | | 28 | 27 | 63 | 88.5 | 671 | |
| | 2016.08-2022.12 | 6MT | F | R | Saloon FWD L15B7;L15BB | | GDS82619 | Drive Shaft | | 28 | 27 | 63 | 88.5 | 608 | |
| | 2016.08-2022.12 | 6MT | F | L/R | Saloon FWD L15B7;L15BB | | GCO81829 | Outer Joint | | 28 | 26 | 63 | 88.5 | 64.5 | M |
| | 2016.08-2022.12 | 6MT | F | L | Saloon FWD L15B7;L15BB | | GCI81199 | Inner Joint | | 27 | 26 | 40 | 58 | 100.5 | |
| | 2016.08-2022.12 | 6MT | F | R | Saloon FWD L15B7;L15BB | | GCI81198 | Inner Joint | | 27 | 26 | 40 | | 126.5 | |
| | 2016.08-2022.12 | AT/CVT | F | L/R | Saloon FWD L15B7;L15BB | | GCO81828 | Outer Joint | | 28 | 24 | 63 | 89 | 59 | M |
| | 2016.08-2022.12 | AT/CVT | F | R | Saloon FWD L15B7;L15BB | | GDS82813 | Intermediate Shaft | | 27 | 27 | | | 347 | |
| | 2016.08-2022.12 | CVT | F | L | Saloon FWD L15B7;L15BB | | GDS82322 | Drive Shaft | | 28 | 27 | 63 | 89 | 693 | |
| | 2016.08-2022.12 | CVT | F | R | Saloon FWD L15B7;L15BB | | GDS82323 | Drive Shaft | | 28 | 27 | 63 | 89 | 607 | |
| | 2016.08-2022.12 | CVT | F | R | Saloon FWD L15B7;L15BB | | GCI81271 | Inner Joint | | 27 | 23 | 40 | | 122.5 | |
| | 2017.02-2022.12 | 6MT | F | L | Hatchback FWD L15B7 | | GDS82618 | Drive Shaft | | 28 | 27 | 63 | 88.5 | 671 | |
| | 2017.02-2022.12 | 6MT | F | R | Hatchback FWD L15B7 | | GDS82619 | Drive Shaft | | 28 | 27 | 63 | 88.5 | 608 | |
| | 2017.02-2022.12 | 6MT | F | L/R | Hatchback FWD L15B7 | | GCO81829 | Outer Joint | | 28 | 26 | 63 | 88.5 | 64.5 | M |
| | 2017.02-2022.12 | 6MT | F | L | Hatchback FWD L15B7 | | GCI81199 | Inner Joint | | 27 | 26 | 40 | 58 | 100.5 | |
| | 2017.02-2022.12 | 6MT | F | R | Hatchback FWD L15B7 | | GCI81198 | Inner Joint | | 27 | 26 | 40 | | 126.5 | |
| | 2017.02-2022.12 | AT/CVT | F | L/R | Hatchback FWD L15B7 | | GCO81828 | Outer Joint | | 28 | 24 | 63 | 89 | 59 | M |
| | 2017.02-2022.12 | AT/CVT | F | R | Hatchback FWD L15B7 | | GDS82813 | Intermediate Shaft | | 27 | 27 | | | 347 | |
| | 2017.02-2022.12 | CVT | F | L | Hatchback FWD L15B7 | | GDS82322 | Drive Shaft | | 28 | 27 | 63 | 89 | 693 | |
| | 2017.02-2022.12 | CVT | F | R | Hatchback FWD L15B7 | | GDS82323 | Drive Shaft | | 28 | 27 | 63 | 89 | 607 | |
| | 2017.02-2022.12 | CVT | F | R | Hatchback FWD L15B7 | | GCI81271 | Inner Joint | | 27 | 23 | 40 | | 122.5 | |
| 1.6 (79 kw) | 1995.11-1996.12 | MT | F | L/R | Hatchback FWD D16Y2 | | GCO51021 | Outer Joint | 50T | 26 | 32 | 55 | 78.5 | 56.5 | I |
| | 1995.11-1996.12 | | F | R | Hatchback FWD D16Y2 | | GCO23179 | Outer Joint | 50T | 26 | 32 | 55 | 78.5 | 56.5 | I |
| | 1995.11-1996.12 | | F | L | Hatchback FWD D16Y2 | | GCI23004 | Inner Joint | | 25 | 30 | 35 | 62 | 97.5 | |
| | 1995.11-1996.12 | | F | R | Hatchback FWD D16Y2 | | GCI23005 | Inner Joint | | 25 | 30 | 35 | 54.5 | 97 | |
| 1.6 (81 kw) | 2001.02-2005.09 | 4AT/5MT | F | L/R | Hatchback FWD D16V1;D16W7 | | GCO23039 | Outer Joint | 50T | 26 | 28 | 60 | 77.5 | 53 | M |
| | 2001.02-2005.09 | AT/MT | F | L | Hatchback FWD D16V1;D16W7 | Inner teeth of wheel side:28 | GDS23192 | Drive Shaft | 50T | 26 | 25 | 55 | 77.5 | 893 | |
| | 2001.02-2005.09 | AT/MT | F | R | Hatchback FWD D16V1;D16W7 | | GCI23018 | Inner Joint | | 25 | 28 | 35 | 58 | 95.5 | |
| | 2001.02-2005.09 | MT | F | L | Hatchback FWD D16V1;D16W7 | Inner teeth of wheel side:23 | GDS23089 | Drive Shaft | 50T | 26 | 25 | 60 | 78 | 895 | |
| | 2001.02-2005.09 | MT | F | R | Hatchback FWD D16V1;D16W7 | | GDS23097 | Drive Shaft | 50T | 26 | 25 | 60 | 78 | 610 | |
| | 2001.02-2005.09 | 4AT/5MT | F | L/R | Saloon FWD D16W7 | | GCO23039 | Outer Joint | 50T | 26 | 28 | 60 | 77.5 | 53 | M |
| | 2001.02-2005.09 | AT/MT | F | R | Saloon FWD D16W7 | | GCI23018 | Inner Joint | | 25 | 28 | 35 | 58 | 95.5 | |
| | 2001.02-2005.09 | MT | F | L | Saloon FWD D16W7 | | GDS23089 | Drive Shaft | 50T | 26 | 25 | 60 | 78 | 895 | |
| | 2001.02-2005.09 | MT | F | R | Saloon FWD D16W7 | | GDS23097 | Drive Shaft | 50T | 26 | 25 | 60 | 78 | 610 | |
| | 2001.02-2005.09 | | F | L | Saloon FWD D16W7 | | GDS23192 | Drive Shaft | 50T | 26 | 25 | 55 | 77.5 | 893 | |
| | 2001.02-2005.09 | | F | R | Saloon FWD D16W7 | | GDS23259 | Drive Shaft | 50T | 26 | 25 | 60 | 77.5 | 622 | |
| 1.6 (83 kw) | 1995.11-1997.01 | MT | F | R | Hatchback FWD D16Y3 | | GDS81010 | Drive Shaft | 50T | 26 | 25 | 55 | 78.5 | 627 | |
| | 1995.11-1997.01 | MT | F | L/R | Hatchback FWD D16Y3 | | GCO51021 | Outer Joint | 50T | 26 | 32 | 55 | 78.5 | 56.5 | I |
| | 1995.11-1997.01 | | F | R | Hatchback FWD D16Y3 | | GCO23179 | Outer Joint | 50T | 26 | 32 | 55 | 78.5 | 56.5 | I |
| | 1995.11-1997.01 | | F | L | Hatchback FWD D16Y3 | | GCI23004 | Inner Joint | | 25 | 30 | 35 | 62 | 97.5 | |
| | 1995.11-1997.01 | | F | R | Hatchback FWD D16Y3 | | GCI23005 | Inner Joint | | 25 | 30 | 35 | 54.5 | 97 | |
| 1.6 (84 kw) | 1995.11-2001.03 | CVT | F | L | Hatchback FWD D16Y5 | | GDS23051 | Drive Shaft | 50T | 26 | 25 | 55 | 77.5 | 901.5 | |
| | 1995.11-2001.03 | CVT | F | L | Hatchback FWD D16Y5 | | GDS23083 | Drive Shaft | | 26 | 25 | 55 | 77.5 | 901.5 | |
| | 1995.11-2001.03 | CVT | F | R | Hatchback FWD D16Y5 | | GDS81025 | Drive Shaft | 50T | 26 | 25 | 55 | 77.5 | 619.5 | |
| | 1995.11-2001.03 | CVT | F | L/R | Hatchback FWD D16Y5 | | GCO23024 | Outer Joint | 50T | 26 | 28 | 55 | 77.5 | 53 | M |
| | 1995.11-2001.03 | CVT | F | L/R | Hatchback FWD D16Y5 | inner teeth:28 | GCO23038 | Outer Joint | | 26 | 28 | 55 | 78 | 55 | M |
| | 1995.11-2001.03 | CVT | F | L/R | Hatchback FWD D16Y5 | | GCO23047 | Outer Joint | | 26 | 28 | 55 | 77.5 | 53 | M |
| | 1995.11-2001.03 | CVT | F | L/R | Hatchback FWD D16Y5 | | GCO23050 | Outer Joint | | 26 | 28 | 55 | 78.5 | 56.5 | M |
| | 1995.11-2001.03 | CVT | F | L/R | Hatchback FWD D16Y5 | | GCO23073 | Outer Joint | 50T | 26 | 28 | 55 | 78.5 | 56.5 | M |
| | 1995.11-2001.03 | CVT | F | L | Hatchback FWD D16Y5 | | GCI23021 | Inner Joint | | 25 | 28 | 35 | 61.5 | 97.5 | |

| | YEAR | TRANSM. | F/R | L/R | BODY STYLE & DRIVE TYPE & ENGINE | REMARKS | G-AP Ref. | PRODUCT | ABS | Technical Specifications A | B | C | H | L | P |
|---|---|---|---|---|---|---|---|---|---|---|---|---|---|---|---|
| **HONDA** Civic | | | | | | | | | | | | | | | |
| 1.6 (84 kw) | 1995.11-2001.03 | CVT | F | R | Hatchback FWD D16Y5 | | GCI23020 | Inner Joint | | 25 | 28 | 35 | 54.5 | 96.5 | |
| | 2005.09-2012.12 | 5AT | F | L | Saloon FWD R16A1 | | GDS23022 | Drive Shaft | | 26 | 25 | 58 | 78.5 | 623 | |
| | 2005.09-2012.12 | 5AT | F | R | Saloon FWD R16A1 | | GDS23023 | Drive Shaft | | 26 | 25 | 58 | 78.5 | 912 | |
| | 2005.09-2012.12 | 5MT | F | L | Saloon FWD R16A1 | | GDS23214 | Drive Shaft | | 26 | 27 | 58 | 79.5 | 606 | |
| | 2005.09-2012.12 | 5MT | F | R | Saloon FWD R16A1 | Date from:2009.09 | GDS23215 | Drive Shaft | | 26 | 27 | 58 | 79.5 | 580 | |
| | 2005.09-2012.12 | 5MT | F | R | Saloon FWD R16A1 | Date from:2009.09 | GCO23125 | Outer Joint | | 26 | 30 | 58 | 79 | 59 | M |
| 1.6 (85 kw) | 1997.01-2001.03 | 4AT/5MT | F | L/R | Hatchback FWD D16B2/D16W3 | | GCO23109 | Outer Joint | | 26 | 32 | 55 | 78 | 58.5 | I |
| | 1997.01-2001.03 | AT/MT | F | L/R | Hatchback FWD D16B2/D16W3 | | GCO23038 | Outer Joint | | 26 | 28 | 55 | 78 | 55 | M |
| | 1997.01-2001.03 | AT/MT | F | L/R | Hatchback FWD D16B2/D16W3 | | GCO23047 | Outer Joint | | 26 | 28 | 55 | 77.5 | 53 | M |
| | 1997.01-2001.03 | | F | L | Hatchback FWD D16B2/D16W3 | For Engine code:D16B2 | GCO23108 | Outer Joint | 50T | 26 | 32 | 55 | 78 | 58.5 | I |
| | 1997.01-2001.03 | | F | L | Hatchback FWD D16B2/D16W3 | | GCO51021 | Outer Joint | 50T | 26 | 32 | 55 | 78.5 | 56.5 | I |
| | 1997.01-2001.03 | | F | R | Hatchback FWD D16B2/D16W3 | | GCO23179 | Outer Joint | 50T | 26 | 32 | 55 | 78.5 | 56.5 | I |
| | 1997.01-2001.03 | | F | L/R | Hatchback FWD D16B2/D16W3 | Equipment Variant:GKN Prod. | GCO99225 | Outer Joint | 50T | 26 | 32 | 55 | 78.5 | 56.5 | I |
| | 1997.01-2001.03 | | F | R | Hatchback FWD D16B2/D16W3 | | GCI23005 | Inner Joint | | 25 | 30 | 35 | 54.5 | 97 | |
| 1.6 (88 kw) | 2013.02-2016.12 | MT | F | L | Hatchback FWD N16A1 | | GDS82158 | Drive Shaft | | 28 | 29 | 63 | 88.5 | 649 | |
| | 2013.02-2016.12 | MT | F | R | Hatchback FWD N16A1 | | GDS82159 | Drive Shaft | | 28 | 29 | 63 | 88.5 | 581 | |
| | 2013.02-2016.12 | MT | F | L/R | Hatchback FWD N16A1 | | GCO81675 | Outer Joint | | 28 | 33 | 63 | 88.5 | 58 | I |
| | 2013.02-2016.12 | MT | F | L | Hatchback FWD N16A1 | | GCI81651 | Inner Joint | | 29 | 33 | 40 | 58 | 97 | |
| | 2013.02-2016.12 | MT | F | R | Hatchback FWD N16A1 | | GCI81652 | Inner Joint | | 29 | 33 | 42 | | 124 | |
| | 2013.02-2016.12 | MT | F | R | Hatchback FWD N16A1 | | GDS82378 | Intermediate Shaft | | 29 | 29 | | | 414 | |
| | 2014.01-2016.12 | MT | F | L | Estate FWD N16A1 | | GDS82158 | Drive Shaft | | 28 | 29 | 63 | 88.5 | 649 | |
| | 2014.01-2016.12 | MT | F | R | Estate FWD N16A1 | | GDS82159 | Drive Shaft | | 28 | 29 | 63 | 88.5 | 581 | |
| | 2014.01-2016.12 | MT | F | L/R | Estate FWD N16A1 | | GCO81675 | Outer Joint | | 28 | 33 | 63 | 88.5 | 58 | I |
| | 2014.01-2016.12 | MT | F | L | Estate FWD N16A1 | | GCI81651 | Inner Joint | | 29 | 33 | 40 | 58 | 97 | |
| | 2014.01-2016.12 | MT | F | R | Estate FWD N16A1 | | GCI81652 | Inner Joint | | 29 | 33 | 42 | | 124 | |
| | 2014.01-2016.12 | MT | F | R | Estate FWD N16A1 | | GDS82378 | Intermediate Shaft | | 29 | 29 | | | 414 | |
| | 2018.01-2022.12 | 9AT | F | L | Hatchback FWD N16A1 | | GDS57756 | Drive Shaft | | 28 | 31 | 63 | 88.5 | 632 | |
| | 2018.01-2022.12 | 9AT | F | R | Hatchback FWD N16A1 | | GDS56246 | Drive Shaft | | 28 | 27 | 63 | 88.5 | 537 | |
| | 2018.01-2022.12 | 9AT | F | L/R | Hatchback FWD N16A1 | | GCO83219 | Outer Joint | | 28 | 35 | 63 | 88.5 | 64.5 | I |
| | 2018.01-2022.12 | 9AT | F | L | Hatchback FWD N16A1 | | GCI83843 | Inner Joint | | 31 | 32 | 42 | 50.5 | 101.5 | |
| | 2018.01-2022.12 | 9AT | F | R | Hatchback FWD N16A1 | | GCI83210 | Inner Joint | | 27 | 32 | 40 | | 136.5 | |
| | 2018.05-2022.12 | 9AT | F | L | Saloon FWD N16A1 | | GDS57756 | Drive Shaft | | 28 | 31 | 63 | 88.5 | 632 | |
| | 2018.05-2022.12 | 9AT | F | R | Saloon FWD N16A1 | | GDS56246 | Drive Shaft | | 28 | 27 | 63 | 88.5 | 537 | |
| | 2018.05-2022.12 | 9AT | F | L/R | Saloon FWD N16A1 | | GCO83219 | Outer Joint | | 28 | 35 | 63 | 88.5 | 64.5 | I |
| | 2018.05-2022.12 | 9AT | F | L | Saloon FWD N16A1 | | GCI83843 | Inner Joint | | 31 | 32 | 42 | 50.5 | 101.5 | |
| | 2018.05-2022.12 | 9AT | F | R | Saloon FWD N16A1 | | GCI83210 | Inner Joint | | 27 | 32 | 40 | | 136.5 | |
| 1.6 (92 kw) | 1995.11-2001.03 | 4AT/5MT | F | L | Saloon FWD D16Y8 | | GDS81023 | Drive Shaft | 50T | 26 | 27 | 55 | 78.5 | 566.5 | |
| | 1995.11-2001.03 | 4AT/5MT | F | R | Saloon FWD D16Y8 | | GDS81016 | Drive Shaft | 50T | 26 | 27 | 55 | 78.5 | 596 | |
| | 1995.11-2001.03 | AT/MT | F | R | Saloon FWD D16Y8 | | GDS81025 | Drive Shaft | 50T | 26 | 25 | 55 | 77.5 | 619.5 | |
| | 1995.11-2001.03 | AT/MT | F | L/R | Saloon FWD D16Y8 | inner teeth:30 | GCO23019 | Outer Joint | | 26 | 30 | 55 | 78.5 | 56 | M |
| | 1995.11-2001.03 | AT/MT | F | L/R | Saloon FWD D16Y8 | inner teeth:28 | GCO23024 | Outer Joint | 50T | 26 | 28 | 55 | 77.5 | 53 | M |
| | 1995.11-2001.03 | AT/MT | F | L/R | Saloon FWD D16Y8 | inner teeth:28 | GCO23038 | Outer Joint | | 26 | 28 | 55 | 78 | 55 | M |
| | 1995.11-2001.03 | AT/MT | F | L/R | Saloon FWD D16Y8 | inner teeth:28 | GCO23047 | Outer Joint | | 26 | 28 | 55 | 77.5 | 53 | M |
| | 1995.11-2001.03 | AT/MT | F | L/R | Saloon FWD D16Y8 | inner teeth:30 | GCO23086 | Outer Joint | 50T | 26 | 30 | 55 | 78.5 | 56.5 | M |
| | 1995.11-2001.03 | MT | F | L/R | Saloon FWD D16Y8 | inner teeth:28 | GCO23050 | Outer Joint | | 26 | 28 | 55 | 78.5 | 56.5 | M |
| | 1995.11-2001.03 | MT | F | L/R | Saloon FWD D16Y8 | inner teeth:28 | GCO23073 | Outer Joint | 50T | 26 | 28 | 55 | 78.5 | 56.5 | M |
| | 1998.11-2001.03 | 5MT | F | L/R | Hatchback FWD D16W4 | | GCO23109 | Outer Joint | | 26 | 32 | 55 | 78 | 58.5 | I |
| | 1998.11-2001.03 | 5MT | F | L/R | Hatchback FWD D16W4 | | GCO99225 | Outer Joint | 50T | 26 | 32 | 55 | 78.5 | 56.5 | I |
| | 1998.11-2001.03 | AT/MT | F | L | Hatchback FWD D16W4 | | GDS23020 | Drive Shaft | 50T | 26 | 25 | 49 | 78.8 | 909 | |
| | 1998.11-2001.03 | AT/MT | F | R | Hatchback FWD D16W4 | | GDS81010 | Drive Shaft | 50T | 26 | 25 | 55 | 78.5 | 627 | |
| | 1998.11-2001.03 | MT | F | L/R | Hatchback FWD D16W4 | | GCO23050 | Outer Joint | | 26 | 28 | 55 | 78.5 | 56.5 | M |
| | 1998.11-2001.03 | MT | F | | Hatchback FWD D16W4 | | GCO23073 | Outer Joint | 50T | 26 | 28 | 55 | 78.5 | 56.5 | M |
| | 1998.11-2001.03 | | F | L/R | Hatchback FWD D16W4 | | GCO51021 | Outer Joint | 50T | 26 | 32 | 55 | 78.5 | 56.5 | I |
| | 1998.11-2001.03 | | F | | Hatchback FWD D16W4 | | GCO23038 | Outer Joint | | 26 | 28 | 55 | 78 | 55 | M |
| | 1998.11-2001.03 | | F | L | Hatchback FWD D16W4 | Date From:1999.01,Date To:1999.01 | GCI23004 | Inner Joint | | 25 | 30 | 35 | 62 | 97.5 | |
| | 1998.11-2001.03 | | F | R | Hatchback FWD D16W4 | | GCI23005 | Inner Joint | | 25 | 30 | 35 | 54.5 | 97 | |
| | 2005.09-2012.12 | 5MT | F | R | Saloon FWD R16A1 | Date from:2009.09 | GDS23215 | Drive Shaft | | 26 | 27 | 58 | 79.5 | 580 | |
| | 2005.09-2012.12 | 5MT | F | R | Saloon FWD R16A1 | Date from:2009.09 | GCO23125 | Outer Joint | | 26 | 30 | 58 | 79 | 59 | M |
| | 2005.09-2012.12 | AT | F | L | Saloon FWD R16A1 | | GDS23022 | Drive Shaft | | 26 | 25 | 58 | 78.5 | 623 | |
| | 2005.09-2012.12 | AT | F | R | Saloon FWD R16A1 | | GDS23023 | Drive Shaft | | 26 | 25 | 58 | 78.5 | 912 | |
| | 2005.09-2012.12 | AT | F | L/R | Saloon FWD R16A1 | | GCO23066 | Outer Joint | | 26 | 28 | 58 | 78.5 | 51 | M |
| | 2005.09-2012.12 | AT | F | L/R | Saloon FWD R16A1 | | GCO23155 | Outer Joint | | 26 | 28 | 58 | 78 | 51.5 | M |
| | 2005.09-2012.12 | AT | F | R | Saloon FWD R16A1 | | GCI23018 | Inner Joint | | 25 | 28 | 35 | 58 | 95.5 | |
| | 2005.09-2012.12 | MT | F | L | Saloon FWD R16A1 | | GDS23214 | Drive Shaft | | 26 | 27 | 58 | 79.5 | 606 | |
| | 2005.09-2012.12 | MT | F | L | Saloon FWD R16A1 | | GCI23086 | Inner Joint | | 27 | 30 | 40 | 58 | 97.5 | |

| | YEAR | TRANSM. | F/R | L/R | BODY STYLE & DRIVE TYPE & ENGINE | REMARKS | G-AP Ref. | PRODUCT | ABS | Technical Specifications A | B | C | H | L | P |
|---|---|---|---|---|---|---|---|---|---|---|---|---|---|---|---|
| **HONDA** Civic | | | | | | | | | | | | | | | |
| 1.6 (92 kw) | 2011.09-2016.12 | 5AT | F | L/R | Saloon FWD R16B1;R16B2 | | GCO23110 | Outer Joint | | 26 | 22 | 58 | 78.5 | 56 | M |
| | 2011.09-2016.12 | 5AT | F | L | Saloon FWD R16B1;R16B2 | | GCI81555 | Inner Joint | | 25 | 22 | 35 | 58 | 96 | |
| | 2012.01-2012.12 | 5AT | F | L | Saloon FWD R16B1 | | GDS23022 | Drive Shaft | | 26 | 25 | 58 | 78.5 | 623 | |
| | 2012.01-2012.12 | 5AT | F | R | Saloon FWD R16B1 | | GDS23023 | Drive Shaft | | 26 | 25 | 58 | 78.5 | 912 | |
| | 2012.01-2012.12 | 5MT | F | L | Saloon FWD R16B1 | Date from:2009.09 | GDS23214 | Drive Shaft | | 26 | 27 | 58 | 79.5 | 606 | |
| | 2012.01-2012.12 | 5MT | F | R | Saloon FWD R16B1 | Date from:2009.09 | GDS23215 | Drive Shaft | | 26 | 27 | 58 | 79.5 | 580 | |
| | 2012.01-2012.12 | 5MT | F | R | Saloon FWD R16B1 | Date from:2009.09 | GCO23125 | Outer Joint | | 26 | 30 | 58 | 79 | 59 | M |
| | 2016.09-2022.12 | CVT | F | L | Saloon FWD R16B1;R16B2 | | GDS82720 | Drive Shaft | | 28 | 25 | 63 | 88.5 | 657 | |
| | 2016.09-2022.12 | CVT | F | R | Saloon FWD R16B1;R16B2 | | GDS82721 | Drive Shaft | | 28 | 27 | 63 | 88.5 | 606 | |
| | 2016.09-2022.12 | CVT | F | L/R | Saloon FWD R16B1;R16B2 | | GCO82189 | Outer Joint | | 28 | 22 | 63 | 88.5 | 55 | M |
| | 2016.09-2022.12 | CVT | F | L | Saloon FWD R16B1;R16B2 | | GCI81555 | Inner Joint | | 25 | 22 | 35 | 58 | 96 | |
| | 2016.09-2022.12 | CVT | F | R | Saloon FWD R16B1;R16B2 | | GCI81271 | Inner Joint | | 27 | 23 | 40 | | 122.5 | |
| | 2019.01-2022.12 | CVT | F | L | Saloon FWD R16B1 | | GDS82720 | Drive Shaft | | 28 | 25 | 63 | 88.5 | 657 | |
| | 2019.01-2022.12 | CVT | F | R | Saloon FWD R16B1 | | GDS82721 | Drive Shaft | | 28 | 27 | 63 | 88.5 | 606 | |
| | 2019.01-2022.12 | CVT | F | L/R | Saloon FWD R16B1 | | GCO82189 | Outer Joint | | 28 | 22 | 63 | 88.5 | 55 | M |
| | 2019.01-2022.12 | CVT | F | L | Saloon FWD R16B1 | | GCI81555 | Inner Joint | | 25 | 22 | 35 | 58 | 96 | |
| | 2019.01-2022.12 | CVT | F | R | Saloon FWD R16B1 | | GCI81271 | Inner Joint | | 27 | 23 | 40 | | 122.5 | |
| 1.6 (93 kw) | 1994.09-1997.01 | MT | F | R | Hatchback FWD D16Y2 | | GDS81010 | Drive Shaft | 50T | 26 | 25 | 55 | 78.5 | 627 | |
| | 1994.09-1997.01 | MT | F | L | Hatchback FWD D16Y2 | Date from:1995.01,Date to:1995.01 | GCI23004 | Inner Joint | | 25 | 30 | 35 | 62 | 97.5 | |
| | 1994.09-1997.01 | MT | F | R | Hatchback FWD D16Y2 | Date from:1995.01,Date to:1995.01 | GCI23005 | Inner Joint | | 25 | 30 | 35 | 54.5 | 97 | |
| | 1995.06-2001.03 | AT/MT | F | L | Hatchback FWD D16Y2 | | GDS23020 | Drive Shaft | 50T | 26 | 25 | 49 | 78.8 | 909 | |
| | 1995.06-2001.03 | AT/MT | F | R | Hatchback FWD D16Y2 | | GDS81010 | Drive Shaft | 50T | 26 | 25 | 55 | 78.5 | 627 | |
| | 1995.06-2001.03 | MT | F | L/R | Hatchback FWD D16Y2 | | GCO23050 | Outer Joint | | 26 | 28 | 55 | 78.5 | 56.5 | M |
| | 1995.06-2001.03 | MT | F | | Hatchback FWD D16Y2 | | GCO23073 | Outer Joint | 50T | 26 | 28 | 55 | 78.5 | 56.5 | M |
| | 1995.06-2001.03 | | F | L | Hatchback FWD D16Y2 | | GCO51021 | Outer Joint | 50T | 26 | 32 | 55 | 78.5 | 56.5 | I |
| | 1995.06-2001.03 | | F | R | Hatchback FWD D16Y2 | | GCO23179 | Outer Joint | 50T | 26 | 32 | 55 | 78.5 | 56.5 | I |
| | 1995.06-2001.03 | | F | | Hatchback FWD D16Y2 | | GCO23038 | Outer Joint | | 26 | 28 | 55 | 78 | 55 | M |
| | 1995.06-2001.03 | | F | L | Hatchback FWD D16Y2 | | GCI23004 | Inner Joint | | 25 | 30 | 35 | 62 | 97.5 | |
| | 1995.06-2001.03 | | F | R | Hatchback FWD D16Y2 | | GCI23005 | Inner Joint | | 25 | 30 | 35 | 54.5 | 97 | |
| 1.6 (118 kw) | 1995.11-2000.09 | 5MT | F | L | Saloon FWD B16A2 | | GDS81023 | Drive Shaft | 50T | 26 | 27 | 55 | 78.5 | 566.5 | |
| | 1995.11-2000.09 | 5MT | F | R | Saloon FWD B16A2 | Date to:1999.10 | GDS81016 | Drive Shaft | 50T | 26 | 27 | 55 | 78.5 | 596 | |
| | 1995.11-2000.09 | 5MT | F | L/R | Saloon FWD B16A2 | Date From:1999.11 | GCO23033 | Outer Joint | 50T | 26 | 30 | 60 | 78.5 | 57 | M |
| | 1995.11-2000.09 | 5MT | F | L/R | Saloon FWD B16A2 | Date To:1999.10 | GCO23086 | Outer Joint | 50T | 26 | 30 | 55 | 78.5 | 56.5 | M |
| | 1995.11-2000.09 | 5MT | F | R | Saloon FWD B16A2 | Date from:1999.11 | GCI23017 | Inner Joint | | 27 | 30 | 40 | 58.5 | 97 | |
| | 1995.11-2001.02 | 5MT | F | L | Hatchback FWD B16A2 | | GDS81023 | Drive Shaft | 50T | 26 | 27 | 55 | 78.5 | 566.5 | |
| | 1995.11-2001.02 | 5MT | F | R | Hatchback FWD B16A2 | Date To:1999.10 | GDS81016 | Drive Shaft | 50T | 26 | 27 | 55 | 78.5 | 596 | |
| | 1995.11-2001.02 | 5MT | F | L/R | Hatchback FWD B16A2 | Date From:1999.11 | GCO23033 | Outer Joint | 50T | 26 | 30 | 60 | 78.5 | 57 | M |
| | 1995.11-2001.02 | 5MT | F | L/R | Hatchback FWD B16A2 | Date To:1999.10 | GCO23086 | Outer Joint | 50T | 26 | 30 | 55 | 78.5 | 56.5 | M |
| | 1995.11-2001.02 | 5MT | F | R | Hatchback FWD B16A2 | Date from:1999.11 | GCI23017 | Inner Joint | | 27 | 30 | 40 | 58.5 | 97 | |
| | 1995.11-2001.02 | AT/MT | F | L | Hatchback FWD B16A2 | | GDS23083 | Drive Shaft | | 26 | 25 | 55 | 77.5 | 901.5 | |
| | 1995.11-2001.02 | | F | L | Hatchback FWD B16A2 | | GDS23155 | Drive Shaft | 50T | 26 | 27 | 55 | 78.5 | 557 | |
| 1.7 (74 kw) | 2002.01-2005.09 | 5MT | F | L/R | Hatchback FWD 4EE-2 | | GCO23001 | Outer Joint | 50T | 26 | 32 | 60 | 79 | 62.5 | I |
| 1.7 (88 kw) | 2000.10-2005.12 | 4AT | F | R | Saloon FWD D17Z1 | | GDS23127 | Drive Shaft | 50T | 26 | 25 | 60 | 78 | 606 | |
| | 2000.10-2005.12 | 4AT/5MT | F | L/R | Saloon FWD D17Z1 | | GCO23087 | Outer Joint | 50T | 26 | 23 | 60 | 78 | 61 | M |
| | 2000.10-2005.12 | 5MT | F | L | Saloon FWD D17Z1 | | GDS23304 | Drive Shaft | 50T | 26 | 25 | 60 | 78 | 895 | |
| | 2000.10-2005.12 | 5MT | F | R | Saloon FWD D17Z1 | | GDS23097 | Drive Shaft | 50T | 26 | 25 | 60 | 78 | 610 | |
| | 2000.10-2005.12 | 5MT | F | L | Saloon FWD D17Z1 | | GCI23084 | Inner Joint | | 25 | 23 | 35 | 58 | 97 | |
| | 2000.10-2005.12 | 5MT | F | R | Saloon FWD D17Z1 | | GCI23018 | Inner Joint | | 25 | 28 | 35 | 58 | 95.5 | |
| 1.8 (97 kw) | 2006.01-2013.12 | 5AT | F | L | Saloon FWD R18A1 | | GDS23022 | Drive Shaft | | 26 | 25 | 58 | 78.5 | 623 | |
| | 2006.01-2013.12 | 5AT | F | R | Saloon FWD R18A1 | | GDS23023 | Drive Shaft | | 26 | 25 | 58 | 78.5 | 912 | |
| | 2006.01-2013.12 | 5AT | F | L/R | Saloon FWD R18A1 | | GCO23066 | Outer Joint | | 26 | 28 | 58 | 78.5 | 51 | M |
| | 2006.01-2013.12 | 5AT | F | L/R | Saloon FWD R18A1 | | GCI23018 | Inner Joint | | 25 | 28 | 35 | 58 | 95.5 | |
| 1.8 (103 kw) | 2005.09-2011.12 | AT | F | L/R | Hatchback FWD R18A2 | Date from:2006.01,Date to:2006.12 | GCO23066 | Outer Joint | | 26 | 28 | 58 | 78.5 | 51 | M |
| | 2005.09-2011.12 | AT | F | L | Hatchback FWD R18A2 | Date from:2008.10 | GCI82345 | Inner Joint | | 25 | 30 | 35 | 62 | 101 | |
| | 2005.09-2011.12 | MT | F | L | Hatchback FWD R18A2 | Date from:2008.10 | GDS23164 | Drive Shaft | | 26 | 27 | 58 | 79 | 633 | |
| | 2005.09-2011.12 | MT | F | R | Hatchback FWD R18A2 | Date from:2008.10 | GDS23165 | Drive Shaft | | 26 | 27 | 58 | 79 | 590 | |
| | 2005.09-2011.12 | MT | F | L/R | Hatchback FWD R18A2 | Date from:2008.10 | GCO23125 | Outer Joint | | 26 | 30 | 58 | 79 | 59 | M |
| | 2005.09-2011.12 | MT | F | L | Hatchback FWD R18A2 | Date from:2008.10 | GCI23017 | Inner Joint | | 27 | 30 | 40 | 58.5 | 97 | |
| | 2005.09-2011.12 | MT | F | L | Hatchback FWD R18A2 | Date from:2008.10 | GCI23086 | Inner Joint | | 27 | 30 | 40 | 58 | 97.5 | |
| | 2005.09-2011.12 | MT | F | R | Hatchback FWD R18A2 | Date from:2008.10 | GCI23023 | Inner Joint | | 27 | 30 | 40 | | 120.5 | |
| | 2005.09-2012.02 | AT | F | L | Saloon FWD R18A1;R18A2 | Inner teeth of wheel side:28 | GDS23022 | Drive Shaft | | 26 | 25 | 58 | 78.5 | 623 | |
| | 2005.09-2012.02 | AT | F | R | Saloon FWD R18A1;R18A2 | Inner teeth of wheel side:28 | GDS23023 | Drive Shaft | | 26 | 25 | 58 | 78.5 | 912 | |
| | 2005.09-2012.02 | AT | F | L/R | Saloon FWD R18A1;R18A2 | | GCO23066 | Outer Joint | | 26 | 28 | 58 | 78.5 | 51 | M |
| | 2005.09-2012.02 | AT | F | L/R | Saloon FWD R18A1;R18A2 | | GCO23155 | Outer Joint | | 26 | 28 | 58 | 78 | 51.5 | M |
| | 2005.09-2012.02 | AT | F | L/R | Saloon FWD R18A1;R18A2 | | GCI23018 | Inner Joint | | 25 | 28 | 35 | 58 | 95.5 | |

| | YEAR | TRANSM. | F/R | L/R | BODY STYLE & DRIVE TYPE & ENGINE | REMARKS | G-AP Ref. | PRODUCT | ABS | Technical Specifications | | | | | |
|---|---|---|---|---|---|---|---|---|---|---|---|---|---|---|---|
| | | | | | | | | | | A | B | C | H | L | P |
| **HONDA** | | | | | | | | | | | | | | | |
| **Civic** | | | | | | | | | | | | | | | |
| 1.8 (103 kw) | 2005.09-2012.02 | MT | F | L | Saloon FWD R18A1;R18A2 | Inner teeth of wheel side:30 | GDS23164 | Drive Shaft | | 26 | 27 | 58 | 79 | 633 | |
| | 2005.09-2012.02 | MT | F | L | Saloon FWD R18A1;R18A2 | Inner teeth of wheel side:24 | GDS23214 | Drive Shaft | | 26 | 27 | 58 | 79.5 | 606 | |
| | 2005.09-2012.02 | MT | F | R | Saloon FWD R18A1;R18A2 | Inner teeth of wheel side:30 | GDS23165 | Drive Shaft | | 26 | 27 | 58 | 79 | 590 | |
| | 2005.09-2012.02 | MT | F | R | Saloon FWD R18A1;R18A2 | Date to:2009.08;Inner teeth of wheel side:24 | GDS23215 | Drive Shaft | | 26 | 27 | 58 | 79.5 | 580 | |
| | 2005.09-2012.02 | MT | F | R | Saloon FWD R18A1;R18A2 | | GCO23107 | Outer Joint | | 26 | 24 | 58 | 79.5 | 60.5 | M |
| | 2005.09-2012.02 | MT | F | L/R | Saloon FWD R18A1;R18A2 | | GCO23125 | Outer Joint | | 26 | 30 | 58 | 79 | 59 | M |
| | 2005.09-2012.02 | MT | F | L | Saloon FWD R18A1;R18A2 | | GCI23009 | Inner Joint | | 27 | 32 | 40 | 58.5 | 97 | |
| | 2005.09-2012.02 | MT | F | L | Saloon FWD R18A1;R18A2 | | GCI23086 | Inner Joint | | 27 | 30 | 40 | 58 | 97.5 | |
| | 2005.09-2012.02 | MT | F | R | Saloon FWD R18A1;R18A2 | Date to:2009.08 | GCI23013 | Inner Joint | | 27 | 32 | 40 | | 120.5 | |
| | 2005.09-2012.02 | MT | F | R | Saloon FWD R18A1;R18A2 | Model year from:2006,Model year to:2009 | GCI23023 | Inner Joint | | 27 | 30 | 40 | | 120.5 | |
| | 2006.11-2013.05 | AT | F | L | Saloon FWD R18A1 | | GDS23022 | Drive Shaft | | 26 | 25 | 58 | 78.5 | 623 | |
| | 2006.11-2013.05 | AT | F | R | Saloon FWD R18A1 | | GDS23023 | Drive Shaft | | 26 | 25 | 58 | 78.5 | 912 | |
| | 2006.11-2013.05 | AT | F | L/R | Saloon FWD R18A1 | | GCO23066 | Outer Joint | | 26 | 28 | 58 | 78.5 | 51 | M |
| | 2006.11-2013.05 | AT | F | L/R | Saloon FWD R18A1 | | GCO23155 | Outer Joint | | 26 | 28 | 58 | 78 | 51.5 | M |
| | 2006.11-2013.05 | AT | F | L/R | Saloon FWD R18A1 | | GCI23018 | Inner Joint | | 25 | 28 | 35 | 58 | 95.5 | |
| | 2006.11-2013.05 | MT | F | L | Saloon FWD R18A1 | | GDS23214 | Drive Shaft | | 26 | 27 | 58 | 79.5 | 606 | |
| | 2006.11-2013.05 | MT | F | R | Saloon FWD R18A1 | Date from:2009.09 | GDS23215 | Drive Shaft | | 26 | 27 | 58 | 79.5 | 580 | |
| | 2006.11-2013.05 | MT | F | L/R | Saloon FWD R18A1 | | GCO23125 | Outer Joint | | 26 | 30 | 58 | 79 | 59 | M |
| | 2006.11-2013.05 | MT | F | L | Saloon FWD R18A1 | | GCI23086 | Inner Joint | | 27 | 30 | 40 | 58 | 97.5 | |
| 1.8 (104 kw) | 2012.02-2016.12 | 5AT | F | L | Hatchback FWD R18Z4 | | GDS23345 | Drive Shaft | | 26 | 25 | 58 | 78.5 | 617 | |
| | 2012.02-2016.12 | 5AT | F | R | Hatchback FWD R18Z4 | | GDS23349 | Drive Shaft | | 26 | 25 | 52 | 78.5 | 914 | |
| | 2012.02-2016.12 | 5AT | F | L | Hatchback FWD R18Z4 | | GCO23208 | Outer Joint | | 26 | 27 | 58 | 78.5 | 53 | M |
| | 2012.02-2016.12 | 5AT | F | R | Hatchback FWD R18Z4 | | GCO23138 | Outer Joint | | 26 | 27 | 52 | 78.5 | 52.5 | M |
| | 2012.02-2016.12 | 5AT | F | L/R | Hatchback FWD R18Z4 | | GCI23100 | Inner Joint | | 25 | 27 | 35 | 58 | 94.5 | |
| | 2012.02-2016.12 | AT | F | R | Hatchback FWD R18Z4 | | GCI23073 | Inner Joint | | 27 | 29 | 40 | | 119.5 | |
| | 2012.02-2016.12 | MT | F | L | Hatchback FWD R18Z4 | | GCI82391 | Inner Joint | | 27 | 29 | 40 | 58 | 97.5 | |
| | 2012.02-2016.12 | MT | F | R | Hatchback FWD R18Z4 | | GCI82213 | Inner Joint | | 27 | 29 | 40 | | 120.5 | |
| | 2012.02-2016.12 | AT | F | L | Saloon FWD R18A1;R18Z4;R18Z1 | | GDS23345 | Drive Shaft | | 26 | 25 | 58 | 78.5 | 617 | |
| | 2012.02-2016.12 | AT | F | R | Saloon FWD R18A1;R18Z4;R18Z1 | | GDS23349 | Drive Shaft | | 26 | 25 | 52 | 78.5 | 914 | |
| | 2012.02-2016.12 | AT | F | R | Saloon FWD R18A1;R18Z4;R18Z1 | | GCO23138 | Outer Joint | | 26 | 27 | 52 | 78.5 | 52.5 | M |
| | 2012.02-2016.12 | AT | F | L/R | Saloon FWD R18A1;R18Z4;R18Z1 | | GCI23100 | Inner Joint | | 25 | 27 | 35 | 58 | 94.5 | |
| | 2012.02-2016.12 | MT | F | L | Saloon FWD R18A1;R18Z4;R18Z1 | | GDS83838 | Drive Shaft | | 26 | 27 | 58 | 78.5 | 620 | |
| | 2012.02-2016.12 | MT | F | R | Saloon FWD R18A1;R18Z4;R18Z1 | | GDS83195 | Drive Shaft | | 26 | 27 | 58 | 78.5 | 574 | |
| | 2012.02-2016.12 | MT | F | L/R | Saloon FWD R18A1;R18Z4;R18Z1 | | GCO23253 | Outer Joint | | 26 | 29 | 58 | 78.5 | 51 | M |
| | 2012.02-2016.12 | MT | F | L | Saloon FWD R18A1;R18Z4;R18Z1 | | GCI82391 | Inner Joint | | 27 | 29 | 40 | 58 | 97.5 | |
| | 2012.02-2016.12 | MT | F | R | Saloon FWD R18A1;R18Z4;R18Z1 | | GCI82213 | Inner Joint | | 27 | 29 | 40 | | 120.5 | |
| 1.8 (124 kw) | 1997.01-2001.02 | 5MT | F | L | Hatchback FWD B18C4 | | GDS23155 | Drive Shaft | 50T | 26 | 27 | 55 | 78.5 | 557 | |
| | 1997.01-2001.02 | 5MT | F | R | Hatchback FWD B18C4 | | GDS81056 | Drive Shaft | 50T | 26 | 27 | 55 | 78.5 | 591.5 | |
| | 1997.01-2001.02 | 5MT | F | L | Hatchback FWD B18C4 | | GCI23013 | Inner Joint | | 27 | 32 | 40 | | 120.5 | |
| | 1997.01-2001.02 | 5MT | F | R | Hatchback FWD B18C4 | | GCI81001 | Inner Joint | | 27 | 32 | 40 | 55.5 | 97 | |
| | 1997.01-2001.02 | | F | L/R | Hatchback FWD B18C4 | | GCO23017 | Outer Joint | 50T | 26 | 32 | 55 | 78.5 | 56.5 | M |
| | 1997.01-2001.03 | 4AT | F | L | Saloon FWD B18C4 | | GDS23051 | Drive Shaft | 50T | 26 | 25 | 55 | 77.5 | 901.5 | |
| | 1997.01-2001.03 | 4AT | F | L | Saloon FWD B18C4 | | GCO23024 | Outer Joint | 50T | 26 | 28 | 55 | 77.5 | 53 | M |
| 2.0 (63 kw) | 1997.01-2001.02 | AT/MT | F | R | Hatchback FWD 20T2R | | GCO23002 | Outer Joint | 43T | 26 | 32 | 55 | 78 | 68.5 | I |
| 2.0 (74 kw) | 1998.11-2000.10 | | F | R | Hatchback FWD 20T2N | | GCO23002 | Outer Joint | 43T | 26 | 32 | 55 | 78 | 68.5 | I |
| 2.0 (77 kw) | 1998.11-2000.10 | | F | R | Hatchback FWD 20T2N | | GCO23002 | Outer Joint | 43T | 26 | 32 | 55 | 78 | 68.5 | I |
| 2.0 (114 kw) | 2012.06-2016.12 | 5AT | F | L | Saloon FWD R20A5 | | GDS81676 | Drive Shaft | | 26 | 27 | 63 | 78.5 | 625 | |
| | 2012.06-2016.12 | 5AT | F | R | Saloon FWD R20A5 | | GDS81675 | Drive Shaft | | 26 | 27 | 63 | 78.5 | 582 | |
| | 2012.06-2016.12 | 5AT | F | R | Saloon FWD R20A5 | | GCI23073 | Inner Joint | | 27 | 29 | 40 | | 119.5 | |
| 2.0 (118 kw) | 2001.09-2005.09 | 5MT | F | L/R | Hatchback FWD K20A3 | | GCO23033 | Outer Joint | 50T | 26 | 30 | 60 | 78.5 | 57 | M |
| | 2001.09-2005.09 | MT | F | R | Hatchback FWD K20A3 | Date from:2004.01 | GCI23023 | Inner Joint | | 27 | 30 | 40 | | 120.5 | |
| | 2001.09-2005.09 | | F | L | Hatchback FWD K20A3 | | GCI23086 | Inner Joint | | 27 | 30 | 40 | 58 | 97.5 | |
| 2.0 (135 kw) | 2022.07- | CVT | F | L | Hatchback FWD LFC1 | | GDS57708 | Drive Shaft | | 28 | 29 | 63 | 88.5 | 640 | |
| | 2022.07- | CVT | F | R | Hatchback FWD LFC1 | | GDS57707 | Drive Shaft | | 28 | 29 | 63 | 88.5 | 612 | |
| | 2022.07- | CVT | F | L/R | Hatchback FWD LFC1 | | GCO23034 | Outer Joint | | 28 | 32 | 63 | 88.5 | 59.5 | M |
| | 2022.07- | CVT | F | L | Hatchback FWD LFC1 | | GCI82667 | Inner Joint | | 29 | 32 | 40 | 58.5 | 97.5 | |
| | 2022.07- | CVT | F | R | Hatchback FWD LFC1 | | GCI82666 | Inner Joint | | 29 | 32 | 42 | | 122 | |
| 2.0 (147 kw) | 2001.09-2005.09 | 6MT | F | L | Hatchback FWD K20A2 | | GDS23266 | Drive Shaft | 50T | 28 | 27 | 64 | 88 | 624 | |
| | 2001.09-2005.09 | 6MT | F | L/R | Hatchback FWD K20A2 | | GCO23080 | Outer Joint | 50T | 28 | 32 | 64 | 88.5 | 62 | M |
| | 2001.09-2005.09 | 6MT | F | L/R | Hatchback FWD K20A2 | | GCO23139 | Outer Joint | 50T | 28 | 32 | 64 | 88 | 58.5 | M |
| | 2001.09-2005.09 | 6MT | F | L | Hatchback FWD K20A2 | | GCI23009 | Inner Joint | | 27 | 32 | 40 | 58.5 | 97 | |
| | 2001.09-2005.09 | 6MT | F | R | Hatchback FWD K20A2 | | GCI23013 | Inner Joint | | 27 | 32 | 40 | | 120.5 | |
| | 2001.09-2005.09 | MT | F | R | Hatchback FWD K20A2 | | GDS23284 | Drive Shaft | 50T | 28 | 27 | 64 | 88 | 581 | |
| 2.0 (148 kw) | 2006.09-2012.01 | 6MT | F | L | Hatchback FWD K20Z4 | | GDS23291 | Drive Shaft | | 28 | 27 | 63 | 88.5 | 639 | |
| | 2006.09-2012.01 | 6MT | F | R | Hatchback FWD K20Z4 | | GDS23287 | Drive Shaft | | 28 | 27 | 63 | 88.5 | 602 | |

| | YEAR | TRANSM. | F/R | L/R | BODY STYLE & DRIVE TYPE & ENGINE | REMARKS | G-AP Ref. | PRODUCT | ABS | Technical Specifications A | B | C | H | L | P |
|---|---|---|---|---|---|---|---|---|---|---|---|---|---|---|---|
| **HONDA** | | | | | | | | | | | | | | | |
| **Civic** | | | | | | | | | | | | | | | |
| 2.0 (148 kw) | 2006.09-2012.01 | 6MT | F | L/R | Hatchback FWD K20Z4 | | GCO23034 | Outer Joint | | 28 | 32 | 63 | 88.5 | 59.5 | M |
| | 2006.09-2012.01 | 6MT | F | L | Hatchback FWD K20Z4 | | GCI23009 | Inner Joint | | 27 | 32 | 40 | 58.5 | 97 | |
| | 2006.09-2012.01 | 6MT | F | R | Hatchback FWD K20Z4 | Date To:2008.09 | GCI23013 | Inner Joint | | 27 | 32 | 40 | | 120.5 | |
| 2.0 (165 kw) | 2007.08-2012.06 | MT | F | | Saloon FWD K20A/K20A5/K20Z2 | | GCO23124 | Outer Joint | | 30 | 32 | 68.1 | 88 | 59.5 | M |
| | 2007.08-2012.06 | MT | F | | Saloon FWD K20A/K20A5/K20Z2 | | GCI23013 | Inner Joint | | 27 | 32 | 40 | | 120.5 | |
| 2.0 (177 kw) | 2010.03-2010.12 | MT | F | L | Hatchback FWD K20Z4 | | GDS23291 | Drive Shaft | | 28 | 27 | 63 | 88.5 | 639 | |
| | 2010.03-2010.12 | MT | F | R | Hatchback FWD K20Z4 | | GDS23287 | Drive Shaft | | 28 | 27 | 63 | 88.5 | 602 | |
| | 2010.03-2010.12 | MT | F | L/R | Hatchback FWD K20Z4 | | GCO23034 | Outer Joint | | 28 | 32 | 63 | 88.5 | 59.5 | M |
| | 2010.03-2010.12 | MT | F | L | Hatchback FWD K20Z4 | | GCI23009 | Inner Joint | | 27 | 32 | 40 | 58.5 | 97 | |
| 2.2 (103 kw) | 2005.09-2011.12 | 6MT | F | R | Hatchback FWD N22A2 | | GDS23191 | Drive Shaft | | 28 | 29 | 63 | 89 | 616 | |
| | 2005.09-2011.12 | 6MT | F | R | Hatchback FWD N22A2 | | GCO23147 | Outer Joint | | 28 | 35 | 63 | 89 | 60 | I |
| | 2005.09-2011.12 | 6MT | F | L | Hatchback FWD N22A2 | | GCI81551 | Inner Joint | | 29 | 35 | 40 | 56.7 | 97 | |
| 2.2 (110 kw) | 2012.02-2016.12 | MT | F | R | Hatchback FWD N22B4 | | GDS23191 | Drive Shaft | | 28 | 29 | 63 | 89 | 616 | |
| | 2012.02-2016.12 | MT | F | L/R | Hatchback FWD N22B4 | | GCO23147 | Outer Joint | | 28 | 35 | 63 | 89 | 60 | I |
| | 2012.02-2016.12 | MT | F | L | Hatchback FWD N22B4 | | GCI81551 | Inner Joint | | 29 | 35 | 40 | 56.7 | 97 | |
| | 2012.02-2016.12 | MT | F | R | Hatchback FWD N22B4 | | GCI23040 | Inner Joint | | 29 | 35 | 42 | | 123.5 | |
| **Civic Aerodeck** | | | | | | | | | | | | | | | |
| 1.4 (55 kw) | 1998.02-1999.12 | 4AT/5MT | F | L/R | Estate FWD D14A7/D14Z3 | | GCO23109 | Outer Joint | | 26 | 32 | 55 | 78 | 58.5 | I |
| | 1998.02-1999.12 | 4AT/5MT | F | L/R | Estate FWD D14A7/D14Z3 | | GCO99225 | Outer Joint | 50T | 26 | 32 | 55 | 78.5 | 56.5 | I |
| | 1998.02-1999.12 | AT/MT | F | L | Estate FWD D14A7/D14Z3 | | GDS23020 | Drive Shaft | 50T | 26 | 25 | 49 | 78.8 | 909 | |
| | 1998.02-1999.12 | AT/MT | F | R | Estate FWD D14A7/D14Z3 | | GDS81010 | Drive Shaft | 50T | 26 | 25 | 55 | 78.5 | 627 | |
| | 1998.02-1999.12 | AT/MT | F | L/R | Estate FWD D14A7/D14Z3 | Date to:1999.12 | GCO23047 | Outer Joint | | 26 | 28 | 55 | 77.5 | 53 | M |
| | 1998.02-1999.12 | AT/MT | F | L/R | Estate FWD D14A7/D14Z3 | | GCO23050 | Outer Joint | | 26 | 28 | 55 | 78.5 | 56.5 | M |
| | 1998.02-1999.12 | AT/MT | F | L/R | Estate FWD D14A7/D14Z3 | | GCO23073 | Outer Joint | 50T | 26 | 28 | 55 | 78.5 | 56.5 | M |
| | 1998.02-1999.12 | AT/MT | F | L/R | Estate FWD D14A7/D14Z3 | | GCO23108 | Outer Joint | 50T | 26 | 32 | 55 | 78 | 58.5 | I |
| | 1998.02-1999.12 | | F | L/R | Estate FWD D14A7/D14Z3 | | GCO51021 | Outer Joint | 50T | 26 | 32 | 55 | 78.5 | 56.5 | I |
| | 1998.02-1999.12 | | F | R | Estate FWD D14A7/D14Z3 | | GCI23005 | Inner Joint | | 25 | 30 | 35 | 54.5 | 97 | |
| 1.4 (66 kw) | 1998.02-2001.02 | 4AT/5MT | F | L/R | Estate FWD D14A8/D14Z4 | | GCO23109 | Outer Joint | | 26 | 32 | 55 | 78 | 58.5 | I |
| | 1998.02-2001.02 | 4AT/5MT | F | L/R | Estate FWD D14A8/D14Z4 | | GCO99225 | Outer Joint | 50T | 26 | 32 | 55 | 78.5 | 56.5 | I |
| | 1998.02-2001.02 | AT/MT | F | R | Estate FWD D14A8/D14Z4 | | GDS81010 | Drive Shaft | 50T | 26 | 25 | 55 | 78.5 | 627 | |
| | 1998.02-2001.02 | AT/MT | F | L/R | Estate FWD D14A8/D14Z4 | | GCO23047 | Outer Joint | | 26 | 28 | 55 | 77.5 | 53 | M |
| | 1998.02-2001.02 | AT/MT | F | L/R | Estate FWD D14A8/D14Z4 | | GCO23050 | Outer Joint | | 26 | 28 | 55 | 78.5 | 56.5 | M |
| | 1998.02-2001.02 | AT/MT | F | L/R | Estate FWD D14A8/D14Z4 | | GCO23073 | Outer Joint | 50T | 26 | 28 | 55 | 78.5 | 56.5 | M |
| | 1998.02-2001.02 | AT/MT | F | L/R | Estate FWD D14A8/D14Z4 | | GCO23108 | Outer Joint | 50T | 26 | 32 | 55 | 78 | 58.5 | I |
| | 1998.02-2001.02 | | F | L/R | Estate FWD D14A8/D14Z4 | | GCO51021 | Outer Joint | 50T | 26 | 32 | 55 | 78.5 | 56.5 | I |
| | 1998.02-2001.02 | | F | R | Estate FWD D14A8/D14Z4 | | GCI23005 | Inner Joint | | 25 | 30 | 35 | 54.5 | 97 | |
| 1.5 (84 kw) | 1998.02-2000.03 | 5MT | F | L/R | Estate FWD D15Z8 | | GCO99225 | Outer Joint | 50T | 26 | 32 | 55 | 78.5 | 56.5 | I |
| | 1998.02-2000.03 | AT/MT | F | L | Estate FWD D15Z8 | | GDS23020 | Drive Shaft | 50T | 26 | 25 | 49 | 78.8 | 909 | |
| | 1998.02-2000.03 | AT/MT | F | R | Estate FWD D15Z8 | | GDS81010 | Drive Shaft | 50T | 26 | 25 | 55 | 78.5 | 627 | |
| | 1998.02-2000.03 | AT/MT | F | L/R | Estate FWD D15Z8 | Date to:2000.03 | GCO23047 | Outer Joint | | 26 | 28 | 55 | 77.5 | 53 | M |
| | 1998.02-2000.03 | AT/MT | F | L/R | Estate FWD D15Z8 | Date to:2000.03;Vehicle Production Country:Great Britain | GCO23063 | Outer Joint | | 26 | 32 | 55 | 78.5 | 56.5 | I |
| | 1998.02-2000.03 | AT/MT | F | L/R | Estate FWD D15Z8 | | GCO23073 | Outer Joint | 50T | 26 | 28 | 55 | 78.5 | 56.5 | M |
| | 1998.02-2000.03 | AT/MT | F | L/R | Estate FWD D15Z8 | | GCO23108 | Outer Joint | 50T | 26 | 32 | 55 | 78 | 58.5 | I |
| | 1998.02-2000.03 | | F | L/R | Estate FWD D15Z8 | | GCO23109 | Outer Joint | | 26 | 32 | 55 | 78 | 58.5 | I |
| | 1998.02-2000.03 | | F | L/R | Estate FWD D15Z8 | | GCO51021 | Outer Joint | 50T | 26 | 32 | 55 | 78.5 | 56.5 | I |
| | 1998.02-2000.03 | | F | R | Estate FWD D15Z8 | | GCI23005 | Inner Joint | | 25 | 30 | 35 | 54.5 | 97 | |
| 1.6 (85 kw) | 1998.02-2001.03 | AT/MT | F | L | Estate FWD D16B2/D16W3 | | GDS23020 | Drive Shaft | 50T | 26 | 25 | 49 | 78.8 | 909 | |
| | 1998.02-2001.03 | AT/MT | F | R | Estate FWD D16B2/D16W3 | | GDS81010 | Drive Shaft | 50T | 26 | 25 | 55 | 78.5 | 627 | |
| | 1998.02-2001.03 | AT/MT | F | L/R | Estate FWD D16B2/D16W3 | | GCO23047 | Outer Joint | | 26 | 28 | 55 | 77.5 | 53 | M |
| | 1998.02-2001.03 | AT/MT | F | L/R | Estate FWD D16B2/D16W3 | | GCO23050 | Outer Joint | | 26 | 28 | 55 | 78.5 | 56.5 | M |
| | 1998.02-2001.03 | AT/MT | F | L/R | Estate FWD D16B2/D16W3 | | GCO23073 | Outer Joint | 50T | 26 | 28 | 55 | 78.5 | 56.5 | M |
| | 1998.02-2001.03 | | F | L | Estate FWD D16B2/D16W3 | | GCO23108 | Outer Joint | 50T | 26 | 32 | 55 | 78 | 58.5 | I |
| | 1998.02-2001.03 | | F | L | Estate FWD D16B2/D16W3 | | GCO51021 | Outer Joint | 50T | 26 | 32 | 55 | 78.5 | 56.5 | I |
| | 1998.02-2001.03 | | F | R | Estate FWD D16B2/D16W3 | | GCO23179 | Outer Joint | 50T | 26 | 32 | 55 | 78.5 | 56.5 | I |
| | 1998.02-2001.03 | | F | R | Estate FWD D16B2/D16W3 | | GCI23005 | Inner Joint | | 25 | 30 | 35 | 54.5 | 97 | |
| 1.6 (92 kw) | 1998.04-2001.02 | 5MT | F | L/R | Estate FWD D16W4 | | GCO23109 | Outer Joint | | 26 | 32 | 55 | 78 | 58.5 | I |
| | 1998.04-2001.02 | 5MT | F | L/R | Estate FWD D16W4 | | GCO99225 | Outer Joint | 50T | 26 | 32 | 55 | 78.5 | 56.5 | I |
| | 1998.04-2001.02 | AT/MT | F | L | Estate FWD D16W4 | | GDS23020 | Drive Shaft | 50T | 26 | 25 | 49 | 78.8 | 909 | |
| | 1998.04-2001.02 | AT/MT | F | R | Estate FWD D16W4 | | GDS81010 | Drive Shaft | 50T | 26 | 25 | 55 | 78.5 | 627 | |
| | 1998.04-2001.02 | | F | L/R | Estate FWD D16W4 | | GCO23050 | Outer Joint | | 26 | 28 | 55 | 78.5 | 56.5 | M |
| | 1998.04-2001.02 | | F | L/R | Estate FWD D16W4 | | GCO51021 | Outer Joint | 50T | 26 | 32 | 55 | 78.5 | 56.5 | I |
| | 1998.04-2001.02 | | F | | Estate FWD D16W4 | | GCO23073 | Outer Joint | 50T | 26 | 28 | 55 | 78.5 | 56.5 | M |
| | 1998.04-2001.02 | | F | R | Estate FWD D16W4 | | GCI23005 | Inner Joint | | 25 | 30 | 35 | 54.5 | 97 | |
| 1.8 (124 kw) | 1998.04-2001.02 | 5MT | F | L | Estate FWD B18C4 | | GDS23155 | Drive Shaft | 50T | 26 | 27 | 55 | 78.5 | 557 | |
| | 1998.04-2001.02 | 5MT | F | R | Estate FWD B18C4 | | GDS81056 | Drive Shaft | 50T | 26 | 27 | 55 | 78.5 | 591.5 | |

| | YEAR | TRANSM. | F/R | L/R | BODY STYLE & DRIVE TYPE & ENGINE | REMARKS | G-AP Ref. | PRODUCT | ABS | Technical Specifications A | B | C | H | L | P |
|---|---|---|---|---|---|---|---|---|---|---|---|---|---|---|---|
| **HONDA** | | | | | | | | | | | | | | | |
| **Civic Aerodeck** | | | | | | | | | | | | | | | |
| 1.8 (124 kw) | 1998.04-2001.02 | 5MT | F | L | Estate FWD B18C4 | | GCI23013 | Inner Joint | | 27 | 32 | 40 | | 120.5 | |
| | 1998.04-2001.02 | 5MT | F | R | Estate FWD B18C4 | | GCI81001 | Inner Joint | | 27 | 32 | 40 | 55.5 | 97 | |
| | 1998.04-2001.02 | AT/MT | F | L/R | Estate FWD B18C4 | | GCO23017 | Outer Joint | 50T | 26 | 32 | 55 | 78.5 | 56.5 | M |
| 2.0 (77 kw) | 1998.04-2001.02 | AT/MT | F | R | Estate FWD 20T2N | | GCO23002 | Outer Joint | 43T | 26 | 32 | 55 | 78 | 68.5 | I |
| **Civic Coupe** | | | | | | | | | | | | | | | |
| 1.6 (77 kw) | 1996.01-2000.12 | 4AT/5MT | F | R | Coupe FWD D16Y7 | Manufacturer:GKN | GDS81010 | Drive Shaft | 50T | 26 | 25 | 55 | 78.5 | 627 | |
| | 1996.01-2000.12 | 4AT/5MT | F | L/R | Coupe FWD D16Y7 | | GCO23024 | Outer Joint | 50T | 26 | 28 | 55 | 77.5 | 53 | M |
| | 1996.01-2000.12 | 4AT/5MT | F | L/R | Coupe FWD D16Y7 | | GCO23086 | Outer Joint | 50T | 26 | 30 | 55 | 78.5 | 56.5 | M |
| | 1996.01-2000.12 | 4AT/5MT | F | L | Coupe FWD D16Y7 | | GCI23004 | Inner Joint | | 25 | 30 | 35 | 62 | 97.5 | |
| | 1996.01-2000.12 | 4AT/5MT | F | R | Coupe FWD D16Y7 | | GCI23005 | Inner Joint | | 25 | 30 | 35 | 54.5 | 97 | |
| | 1996.01-2000.12 | 5MT | F | L/R | Coupe FWD D16Y7 | Vehicle Production Country:USA | GCO23023 | Outer Joint | | 26 | 30 | 55 | 78.5 | 56.5 | M |
| 1.6 (79 kw) | 1996.05-2000.12 | 4AT/5MT | F | | Coupe FWD D16Y7 | Model year from:1999,Model year to:1999,Vehicle Production Country:USA | GCO23023 | Outer Joint | | 26 | 30 | 55 | 78.5 | 56.5 | M |
| | 1996.05-2000.12 | 4AT/5MT | F | | Coupe FWD D16Y7 | Model year from:1996,Model year to:1999,Vehicle Production Country:USA | GCO23086 | Outer Joint | 50T | 26 | 30 | 55 | 78.5 | 56.5 | M |
| | 1996.05-2000.12 | 4AT/5MT | F | L | Coupe FWD D16Y7 | Date from:1996,Date to:1998,Vehicle Production Country:USA | GCI23004 | Inner Joint | | 25 | 30 | 35 | 62 | 97.5 | |
| | 1996.05-2000.12 | 5MT | F | | Coupe FWD D16Y7 | Model year from:2000,Model year to:2000,Vehicle Production Country:USA | GCO23033 | Outer Joint | 50T | 26 | 30 | 60 | 78.5 | 57 | M |
| | 1996.05-2000.12 | 5MT | F | R | Coupe FWD D16Y7 | Date from:1999,Date to:2000,Vehicle Production Country:USA | GCI23017 | Inner Joint | | 27 | 30 | 40 | 58.5 | 97 | |
| | 1996.05-2000.12 | AT/MT | F | L | Coupe FWD D16Y7 | | GDS23020 | Drive Shaft | 50T | 26 | 25 | 49 | 78.8 | 909 | |
| | 1996.05-2000.12 | AT/MT | F | R | Coupe FWD D16Y7 | | GDS81010 | Drive Shaft | 50T | 26 | 25 | 55 | 78.5 | 627 | |
| | 1996.05-2000.12 | CVT | F | R | Coupe FWD D16Y7 | Date from:1996,Date to:2000,Vehicle Production Country:USA | GCI23020 | Inner Joint | | 25 | 28 | 35 | 54.5 | 96.5 | |
| | 1996.05-2000.12 | CVT/4AT/5MT | F | R | Coupe FWD D16Y7 | Date from:1996,Date to:1999,Vehicle Production Country:USA | GCI23005 | Inner Joint | | 25 | 30 | 35 | 54.5 | 97 | |
| | 1996.05-2000.12 | CVT/5MT | F | R | Coupe FWD D16Y7 | Date from:1999,Date to:2000,Vehicle Production Country:USA | GCI23023 | Inner Joint | | 27 | 30 | 40 | | 120.5 | |
| | 1996.05-2000.12 | | F | | Coupe FWD D16Y7 | | GCO23050 | Outer Joint | | 26 | 28 | 55 | 78.5 | 56.5 | M |
| | 1996.05-2000.12 | | F | | Coupe FWD D16Y7 | | GCO23073 | Outer Joint | 50T | 26 | 28 | 55 | 78.5 | 56.5 | M |
| 1.6 (81 kw) | 2001.01-2004.10 | MT | F | L | Coupe FWD D16V1 | | GDS23089 | Drive Shaft | 50T | 26 | 25 | 60 | 78 | 895 | |
| | 2001.01-2004.10 | MT | F | R | Coupe FWD D16V1 | | GDS23097 | Drive Shaft | 50T | 26 | 25 | 60 | 78 | 610 | |
| | 2001.01-2004.10 | | F | L | Coupe FWD D16V1 | | GDS23192 | Drive Shaft | 50T | 26 | 25 | 55 | 77.5 | 893 | |
| | 2001.01-2004.10 | | F | R | Coupe FWD D16V1 | | GDS23259 | Drive Shaft | 50T | 26 | 25 | 60 | 77.5 | 622 | |
| 1.6 (92 kw) | 1996.03-2000.12 | 4AT/5MT | F | R | Coupe FWD D16Y8 | Manufacturer:GKN | GDS81010 | Drive Shaft | 50T | 26 | 25 | 55 | 78.5 | 627 | |
| | 1996.03-2000.12 | 4AT/5MT | F | L/R | Coupe FWD D16Y8 | | GCO23019 | Outer Joint | | 26 | 30 | 55 | 78.5 | 56 | M |
| | 1996.03-2000.12 | 4AT/5MT | F | L/R | Coupe FWD D16Y8 | | GCO23024 | Outer Joint | 50T | 26 | 28 | 55 | 77.5 | 53 | M |
| | 1996.03-2000.12 | 4AT/5MT | F | L/R | Coupe FWD D16Y8 | | GCO23086 | Outer Joint | 50T | 26 | 30 | 55 | 78.5 | 56.5 | M |
| | 1996.03-2000.12 | 4AT/5MT | F | L | Coupe FWD D16Y8 | | GCI23004 | Inner Joint | | 25 | 30 | 35 | 62 | 97.5 | |
| | 1996.03-2000.12 | 4AT/5MT | F | R | Coupe FWD D16Y8 | | GCI23005 | Inner Joint | | 25 | 30 | 35 | 54.5 | 97 | |
| 1.6 (118 kw) | 1999.04-2000.12 | 4AT/5MT | F | L | Coupe FWD B16A2 | | GCI23004 | Inner Joint | | 25 | 30 | 35 | 62 | 97.5 | |
| | 1999.04-2000.12 | 4AT/5MT | F | R | Coupe FWD B16A2 | | GCI23005 | Inner Joint | | 25 | 30 | 35 | 54.5 | 97 | |
| | 1999.04-2000.12 | 5MT | F | R | Coupe FWD B16A2 | Manufacturer:GKN | GDS81010 | Drive Shaft | 50T | 26 | 25 | 55 | 78.5 | 627 | |
| | 1999.04-2000.12 | 5MT | F | L/R | Coupe FWD B16A2 | | GCO23024 | Outer Joint | 50T | 26 | 28 | 55 | 77.5 | 53 | M |
| | 1999.04-2000.12 | 5MT | F | L/R | Coupe FWD B16A2 | | GCO23086 | Outer Joint | 50T | 26 | 30 | 55 | 78.5 | 56.5 | M |
| | 1999.04-2000.12 | MT | F | L/R | Coupe FWD B16A2 | | GCO23019 | Outer Joint | | 26 | 30 | 55 | 78.5 | 56 | M |
| | 1999.04-2000.12 | MT | F | L/R | Coupe FWD B16A2 | | GCO23023 | Outer Joint | | 26 | 30 | 55 | 78.5 | 56.5 | M |
| | 1999.04-2000.12 | MT | F | L/R | Coupe FWD B16A2 | | GCO23038 | Outer Joint | | 26 | 28 | 55 | 78 | 55 | M |
| 1.7 (88 kw) | 2001.05-2005.12 | 4AT/5MT | F | L/R | Coupe FWD D17A8 | | GCO23087 | Outer Joint | 50T | 26 | 23 | 60 | 78 | 61 | M |
| | 2001.05-2005.12 | AT | F | L | Coupe FWD D17A8 | | GDS23128 | Drive Shaft | 50T | 26 | 25 | 60 | 78 | 903 | |
| | 2001.05-2005.12 | AT | F | R | Coupe FWD D17A8 | | GDS23127 | Drive Shaft | 50T | 26 | 25 | 60 | 78 | 606 | |
| | 2001.05-2005.12 | MT | F | L | Coupe FWD D17A8 | | GDS23089 | Drive Shaft | 50T | 26 | 25 | 60 | 78 | 895 | |
| | 2001.05-2005.12 | MT | F | L | Coupe FWD D17A8 | | GDS23304 | Drive Shaft | 50T | 26 | 25 | 60 | 78 | 895 | |
| | 2001.05-2005.12 | MT | F | R | Coupe FWD D17A8 | | GDS23097 | Drive Shaft | 50T | 26 | 25 | 60 | 78 | 610 | |
| | 2001.05-2005.12 | MT | F | L | Coupe FWD D17A8 | | GCI23084 | Inner Joint | | 25 | 23 | 35 | 58 | 97 | |
| | 2001.05-2005.12 | MT | F | R | Coupe FWD D17A8 | | GCI81555 | Inner Joint | | 25 | 22 | 35 | 58 | 96 | |
| 1.7 (92 kw) | 2001.05-2005.12 | 4AT/5MT | F | L/R | Coupe FWD D17A5;D17A9 | | GCO23087 | Outer Joint | 50T | 26 | 23 | 60 | 78 | 61 | M |
| | 2001.05-2005.12 | AT | F | L | Coupe FWD D17A5;D17A9 | | GDS23128 | Drive Shaft | 50T | 26 | 25 | 60 | 78 | 903 | |
| | 2001.05-2005.12 | AT | F | R | Coupe FWD D17A5;D17A9 | | GDS23127 | Drive Shaft | 50T | 26 | 25 | 60 | 78 | 606 | |
| | 2001.05-2005.12 | MT | F | L | Coupe FWD D17A5;D17A9 | | GDS23089 | Drive Shaft | 50T | 26 | 25 | 60 | 78 | 895 | |
| | 2001.05-2005.12 | MT | F | L | Coupe FWD D17A5;D17A9 | | GDS23304 | Drive Shaft | 50T | 26 | 25 | 60 | 78 | 895 | |
| | 2001.05-2005.12 | MT | F | R | Coupe FWD D17A5;D17A9 | | GDS23097 | Drive Shaft | 50T | 26 | 25 | 60 | 78 | 610 | |
| | 2001.05-2005.12 | MT | F | L | Coupe FWD D17A5;D17A9 | | GCI23084 | Inner Joint | | 25 | 23 | 35 | 58 | 97 | |
| | 2001.05-2005.12 | MT | F | R | Coupe FWD D17A5;D17A9 | | GCI81555 | Inner Joint | | 25 | 22 | 35 | 58 | 96 | |
| **Civic/Civic Ferio** | | | | | | | | | | | | | | | |
| 1.7 (85 kw) | 2001.02-2005.09 | MT | F | L | Saloon FWD D17A6, D17Z2 | | GDS23089 | Drive Shaft | 50T | 26 | 25 | 60 | 78 | 895 | |
| | 2001.02-2005.09 | MT | F | R | Saloon FWD D17A6, D17Z2 | | GDS23097 | Drive Shaft | 50T | 26 | 25 | 60 | 78 | 610 | |
| **CR-V** | | | | | | | | | | | | | | | |
| 1.5 (127 kw) | 2017.08- | 6MT | F | L | SUV 4WD L15BY | | GCI83476 | Inner Joint | | 29 | 35 | 40 | 58 | 101 | |
| | 2017.08- | 6MT | F | L | SUV FWD L15BY | | GCI83476 | Inner Joint | | 29 | 35 | 40 | 58 | 101 | |
| 1.5 (140 kw) | 2017.05- | CVT | F | R | SUV 4WD L15B7;L15BY | | GDS83081 | Drive Shaft | | 30 | 27 | 68.1 | 88 | 669 | |
| | 2017.05- | CVT | F | R | SUV 4WD L15B7;L15BY | | GCO23124 | Outer Joint | | 30 | 32 | 68.1 | 88 | 59.5 | M |

| | YEAR | TRANSM. | F/R | L/R | BODY STYLE & DRIVE TYPE & ENGINE | REMARKS | G-AP Ref. | PRODUCT | ABS | Technical Specifications A | B | C | H | L | P |
|---|---|---|---|---|---|---|---|---|---|---|---|---|---|---|---|
| **HONDA** | | | | | | | | | | | | | | | |
| **CR-V** | | | | | | | | | | | | | | | |
| 1.5 (140 kw) | 2017.05- | CVT | F | R | SUV 4WD L15B7;L15BY | | GCI82105 | Inner Joint | | 27 | 32 | 40 | | 120.5 | |
| 1.5 (142 kw) | 2016.12- | CVT | F | R | SUV 4WD L15BE;L15BG;L15BY;L15BH | | GDS83081 | Drive Shaft | | 30 | 27 | 68.1 | 88 | 669 | |
| | 2016.12- | CVT | F | R | SUV 4WD L15BE;L15BG;L15BY;L15BH | | GCO23124 | Outer Joint | | 30 | 32 | 68.1 | 88 | 59.5 | M |
| | 2016.12- | CVT | F | R | SUV 4WD L15BE;L15BG;L15BY;L15BH | | GCI82105 | Inner Joint | | 27 | 32 | 40 | | 120.5 | |
| 1.6 (88 kw) | 2013.10-2018.08 | 6MT | F | L | SUV FWD N16A1;N16A2 | | GDS56837 | Drive Shaft | | 30 | 29 | 68.1 | 88 | 656 | |
| | 2013.10-2018.08 | 6MT | F | R | SUV FWD N16A1;N16A2 | | GDS57972 | Drive Shaft | | 30 | 29 | 68 | 88.5 | 604 | |
| | 2013.10-2018.08 | 6MT | F | L/R | SUV FWD N16A1;N16A2 | | GCO82378 | Outer Joint | | 30 | 35 | 68.1 | 88 | 59.5 | I |
| | 2013.10-2018.08 | 6MT | F | L | SUV FWD N16A1;N16A2 | | GCI83476 | Inner Joint | | 29 | 35 | 40 | 58 | 101 | |
| | 2013.10-2018.08 | 6MT | F | R | SUV FWD N16A1;N16A2 | | GCI83969 | Inner Joint | | 29 | 35 | 42 | | 127.5 | |
| 1.6 (118 kw) | 2015.02-2018.08 | AT/MT | R | L | SUV 4WD N16A4 | | GDS82165 | Drive Shaft | | 23 | 20 | 52 | 88 | 777 | |
| | 2015.02-2018.08 | AT/MT | R | R | SUV 4WD N16A4 | | GDS82164 | Drive Shaft | | 23 | 20 | 52 | 88 | 820 | |
| | 2015.02-2018.08 | AT/MT | R | L/R | SUV 4WD N16A4 | | GCO81679 | Outer Joint | | 23 | 19 | 52 | 88 | 45 | M |
| | 2015.02-2018.08 | AT/MT | R | L/R | SUV 4WD N16A4 | | GCI81654 | Inner Joint | | 20 | 19 | 32 | 54.5 | 111 | |
| 2.0 (94 kw) | 1997.02-2000.12 | 4AT/5MT | F | L | SUV 4WD B20B3/B20B9 | | GDS23042 | Drive Shaft | 50T | 28 | 27 | 64 | 88.5 | 601 | |
| | 1997.02-2000.12 | 5MT/4AT | F | L/R | SUV 4WD B20B3/B20B9 | Date from:1997,Date to:1998 | GCO23035 | Outer Joint | | 28 | 32 | 64 | 89 | 60 | M |
| | 1997.02-2000.12 | AT | F | R | SUV 4WD B20B3/B20B9 | Date from:1999.01 | GDS84240 | Drive Shaft | 50T | 28 | 27 | 64 | 88 | 639 | |
| | 1997.02-2000.12 | AT | F | R | SUV 4WD B20B3/B20B9 | Date to:1998.12 | GDS99146 | Drive Shaft | 50T | 28 | 27 | 64 | 88.5 | 640 | |
| | 1997.02-2000.12 | AT | F | R | SUV 4WD B20B3/B20B9 | | GCI81001 | Inner Joint | | 27 | 32 | 40 | 55.5 | 97 | |
| | 1997.02-2000.12 | AT/MT | F | R | SUV 4WD B20B3/B20B9 | Date to:1998.12 | GCO81006 | Outer Joint | | 28 | 32 | 64 | 88.5 | 62 | M |
| | 1997.02-2000.12 | AT/MT | F | L/R | SUV 4WD B20B3/B20B9 | Date From:1999.01 | GCO23029 | Outer Joint | 50T | 28 | 32 | 64 | 89 | 60 | M |
| | 1997.02-2000.12 | AT/MT | F | L/R | SUV 4WD B20B3/B20B9 | Date To:1998.12 | GCO23080 | Outer Joint | 50T | 28 | 32 | 64 | 88.5 | 62 | M |
| | 1997.02-2000.12 | AT/MT | F | L/R | SUV 4WD B20B3/B20B9 | Date From:1999.01 | GCO23139 | Outer Joint | 50T | 28 | 32 | 64 | 88 | 58.5 | M |
| | 1997.02-2000.12 | MT | F | R | SUV 4WD B20B3/B20B9 | | GCI23009 | Inner Joint | | 27 | 32 | 40 | 58.5 | 97 | |
| | 1997.02-2000.12 | | F | | SUV 4WD B20B3/B20B9 | | GCO99248 | Outer Joint | 50T | 26 | 32 | 60 | 78 | 56.5 | M |
| | 1997.02-2000.12 | 4AT/5MT | R | R | SUV 4WD B20B3/B20B9 | | GDS84001 | Drive Shaft | 50T | 23 | 23 | 55 | 78 | 742 | |
| | 1997.02-2000.12 | AT | R | L | SUV 4WD B20B3/B20B9 | Date to:1997.12 | GDS83229 | Drive Shaft | 50T | 23 | 23 | 55 | 78 | 792 | |
| | 1997.02-2000.12 | AT | R | L | SUV 4WD B20B3/B20B9 | Date To:1997.12 | GCI23054 | Outer Joint | 50T | 23 | 25 | 55 | 78 | 85 | |
| | 1997.02-2000.12 | AT | R | L | SUV 4WD B20B3/B20B9 | Date To:1997.12 | GCI23104 | Inner Joint | | 23 | 25 | 35 | 58.5 | 95 | |
| | 1997.02-2000.12 | AT | R | R | SUV 4WD B20B3/B20B9 | Date To:1997.12 | GCI23103 | Inner Joint | | 23 | 25 | 35 | 58.5 | 95 | |
| | 1997.02-2000.12 | AT | R | L/R | SUV 4WD B20B3/B20B9 | Date From:1998.01 | GCI23069 | Inner Joint | | 23 | 25 | 35 | 60 | 94.5 | |
| 2.0 (98 kw) | 1999.04-2002.02 | 4AT/5AT | F | L/R | SUV 4WD B20Z1 | | GCO23023 | Outer Joint | | 26 | 30 | 55 | 78.5 | 56.5 | M |
| 2.0 (105 kw) | 2009.11-2012.06 | | F | L | SUV FWD R20A2 | | GDS23241 | Drive Shaft | | 30 | 27 | 68.1 | 88 | 668 | |
| | 2009.11-2012.06 | | F | R | SUV FWD R20A2 | | GDS82134 | Drive Shaft | | 30 | 27 | 68.1 | 88 | 965 | |
| | 2009.11-2012.06 | | F | L/R | SUV FWD R20A2 | | GCO23124 | Outer Joint | | 30 | 32 | 68.1 | 88 | 59.5 | M |
| | 2009.11-2012.06 | | F | L | SUV FWD R20A2 | | GCI23009 | Inner Joint | | 27 | 32 | 40 | 58.5 | 97 | |
| 2.0 (108 kw) | 1999.01-2002.02 | 4AT/5MT | F | L | SUV 4WD B20Z1/B20Z3 | | GDS23042 | Drive Shaft | 50T | 28 | 27 | 64 | 88.5 | 601 | |
| | 1999.01-2002.02 | AT | F | R | SUV 4WD B20Z1/B20Z3 | | GDS84240 | Drive Shaft | 50T | 28 | 27 | 64 | 88 | 639 | |
| | 1999.01-2002.02 | AT | F | R | SUV 4WD B20Z1/B20Z3 | | GCI81001 | Inner Joint | | 27 | 32 | 40 | 55.5 | 97 | |
| | 1999.01-2002.02 | AT/MT | F | L | SUV 4WD B20Z1/B20Z3 | | GCO23029 | Outer Joint | 50T | 28 | 32 | 64 | 89 | 60 | M |
| | 1999.01-2002.02 | AT/MT | F | L/R | SUV 4WD B20Z1/B20Z3 | | GCO23080 | Outer Joint | 50T | 28 | 32 | 64 | 88.5 | 62 | M |
| | 1999.01-2002.02 | AT/MT | F | L/R | SUV 4WD B20Z1/B20Z3 | | GCO23139 | Outer Joint | 50T | 28 | 32 | 64 | 88 | 58.5 | M |
| | 1999.01-2002.02 | AT/MT | F | L/R | SUV 4WD B20Z1/B20Z3 | | GCO81006 | Outer Joint | | 28 | 32 | 64 | 88.5 | 62 | M |
| | 1999.01-2002.02 | MT | F | R | SUV 4WD B20Z1/B20Z3 | | GCI23009 | Inner Joint | | 27 | 32 | 40 | 58.5 | 97 | |
| | 1999.01-2002.02 | 5MT | R | R | SUV 4WD B20Z1/B20Z3 | | GDS84001 | Drive Shaft | 50T | 23 | 23 | 55 | 78 | 742 | |
| | 1999.01-2002.02 | 5MT | R | R | SUV 4WD B20Z1/B20Z3 | with Rim protector | GCI23103 | Inner Joint | | 23 | 25 | 35 | 58.5 | 95 | |
| | 1999.01-2002.02 | AT/MT | R | L | SUV 4WD B20Z1/B20Z3 | | GDS83229 | Drive Shaft | 50T | 23 | 23 | 55 | 78 | 792 | |
| | 1999.01-2002.02 | AT/MT | R | L/R | SUV 4WD B20Z1/B20Z3 | | GCI23054 | Outer Joint | 50T | 23 | 25 | 55 | 78 | 85 | |
| | 1999.01-2002.02 | AT/MT | R | L | SUV 4WD B20Z1/B20Z3 | with Rim protector | GCI23104 | Inner Joint | | 23 | 25 | 35 | 58.5 | 95 | |
| | 1999.01-2002.02 | AT/MT | R | L/R | SUV 4WD B20Z1/B20Z3 | without Rim protector | GCI23069 | Inner Joint | | 23 | 25 | 35 | 60 | 94.5 | |
| 2.0 (110 kw) | 2001.09-2007.03 | 4AT/5MT | F | L | SUV 4WD K20A4 | | GDS23011 | Drive Shaft | | 28 | 27 | 63 | 88.5 | 663 | |
| | 2001.09-2007.03 | 4AT/5MT | F | R | SUV 4WD K20A4 | | GDS23074 | Drive Shaft | | 28 | 27 | 63 | 88.5 | 618 | |
| | 2001.09-2007.03 | 4AT/5MT | F | L/R | SUV 4WD K20A4 | | GCO23034 | Outer Joint | | 28 | 32 | 63 | 88.5 | 59.5 | M |
| | 2001.09-2007.03 | 4AT/5MT | F | L | SUV 4WD K20A4 | | GCI23009 | Inner Joint | | 27 | 32 | 40 | 58.5 | 97 | |
| | 2001.09-2007.03 | 4AT/5MT | F | R | SUV 4WD K20A4 | | GCI23013 | Inner Joint | | 27 | 32 | 40 | | 120.5 | |
| | 2001.09-2007.03 | AT | F | R | SUV 4WD K20A4 | Model year from:2003 | GDS87086 | Intermediate Shaft | | 27 | 27 | | | 378 | |
| | 2001.09-2007.03 | 4AT/5MT | R | L | SUV 4WD K20A4 | Date from:2003.01 | GDS81887 | Drive Shaft | | 23 | 23 | 55 | 78 | 750 | |
| | 2001.09-2007.03 | 4AT/5MT | R | L | SUV 4WD K20A4 | Date to:2002.12 | GDS83720 | Drive Shaft | | 23 | 23 | 55 | 78 | 742 | |
| | 2001.09-2007.03 | 4AT/5MT | R | R | SUV 4WD K20A4 | Date from:2003.01 | GDS81942 | Drive Shaft | | 23 | 23 | 55 | 78 | 801 | |
| | 2001.09-2007.03 | 4AT/5MT | R | L/R | SUV 4WD K20A4 | Date from:2003.01 | GCO81558 | Outer Joint | | 23 | 20 | 55 | 78 | 52.5 | M |
| | 2001.09-2007.03 | 4AT/5MT | R | L | SUV 4WD K20A4 | Date from:2003.01 | GCI81538 | Inner Joint | | 23 | 20 | 35 | 58.5 | 104.5 | |
| | 2001.09-2007.03 | 4AT/5MT | R | R | SUV 4WD K20A4 | Date from:2003.01 | GCI23045 | Inner Joint | | 23 | 20 | 35 | 58.5 | 104.5 | |
| | 2006.10-2012.06 | 5AT/6MT | F | L | SUV 4WD R20A2;R20A1 | | GDS23241 | Drive Shaft | | 30 | 27 | 68.1 | 88 | 668 | |
| | 2006.10-2012.06 | 5AT/6MT | F | R | SUV 4WD R20A2;R20A1 | Date to:2009.08 | GDS23175 | Drive Shaft | | 30 | 27 | 68.1 | 88 | 564 | |
| | 2006.10-2012.06 | 5AT/6MT | F | R | SUV 4WD R20A2;R20A1 | Date from:2009.09 | GDS82134 | Drive Shaft | | 30 | 27 | 68.1 | 88 | 965 | |
| | 2006.10-2012.06 | 5AT/6MT | F | L | SUV 4WD R20A2;R20A1 | Date from:2009.09;Thread Size:M22x1.5 | GCO23153 | Outer Joint | | 30 | 32 | 68 | 88.5 | 59.5 | M |

| | YEAR | TRANSM. | F/R | L/R | BODY STYLE & DRIVE TYPE & ENGINE | REMARKS | G-AP Ref. | PRODUCT | ABS | Technical Specifications A | B | C | H | L | P |
|---|---|---|---|---|---|---|---|---|---|---|---|---|---|---|---|
| **HONDA** | | | | | | | | | | | | | | | |
| **CR-V** | | | | | | | | | | | | | | | |
| 2.0 (110 kw) | 2006.10-2012.06 | 5AT/6MT | F | L/R | SUV 4WD R20A2;R20A1 | Thread Size:M26x1.5 | GCO23124 | Outer Joint | | 30 | 32 | 68.1 | 88 | 59.5 | M |
| | 2006.10-2012.06 | 5AT/6MT | F | L/R | SUV 4WD R20A2;R20A1 | Date to:2009.08;Thread Size:M26x1.5,Length:153mm | GCO23131 | Outer Joint | | 30 | 32 | 68 | 90 | 63 | M |
| | 2006.10-2012.06 | 5AT/6MT | F | L | SUV 4WD R20A2;R20A1 | | GCI23009 | Inner Joint | | 27 | 32 | 40 | 58.5 | 97 | |
| | 2006.10-2012.06 | 5AT/6MT | R | L | SUV 4WD R20A2;R20A1 | | GDS23199 | Drive Shaft | | 28 | 23 | 55 | 91 | 770 | |
| | 2006.10-2012.06 | 5AT/6MT | R | R | SUV 4WD R20A2;R20A1 | | GDS23198 | Drive Shaft | | 28 | 23 | 55 | 91 | 820 | |
| | 2006.10-2012.06 | 5AT/6MT | R | L/R | SUV 4WD R20A2;R20A1 | | GCO23160 | Outer Joint | | 28 | 20 | 55 | 91 | 52.5 | M |
| | 2006.10-2012.06 | 5AT/6MT | R | L | SUV 4WD R20A2;R20A1 | | GCI81538 | Inner Joint | | 23 | 20 | 35 | 58.5 | 104.5 | |
| | 2006.10-2012.06 | 5AT/6MT | R | L/R | SUV 4WD R20A2;R20A1 | | GCI23045 | Inner Joint | | 23 | 20 | 35 | 58.5 | 104.5 | |
| | 2007.01-2012.06 | AT/MT | F | L | SUV FWD R20A2;R20A1 | | GDS23241 | Drive Shaft | | 30 | 27 | 68.1 | 88 | 668 | |
| | 2007.01-2012.06 | AT/MT | F | R | SUV FWD R20A2;R20A1 | Date to:2009.08 | GDS23175 | Drive Shaft | | 30 | 27 | 68.1 | 88 | 564 | |
| | 2007.01-2012.06 | AT/MT | F | R | SUV FWD R20A2;R20A1 | Date from:2009.09 | GDS82134 | Drive Shaft | | 30 | 27 | 68.1 | 88 | 965 | |
| | 2007.01-2012.06 | AT/MT | F | L | SUV FWD R20A2;R20A1 | Date from:2009.09;Thread Size:M22x1.5 | GCO23153 | Outer Joint | | 30 | 32 | 68 | 88.5 | 59.5 | M |
| | 2007.01-2012.06 | AT/MT | F | L/R | SUV FWD R20A2;R20A1 | Thread Size:M26x1.5 | GCO23124 | Outer Joint | | 30 | 32 | 68.1 | 88 | 59.5 | M |
| | 2007.01-2012.06 | AT/MT | F | L/R | SUV FWD R20A2;R20A1 | Date to:2009.08;Thread Size:M26x1.5 | GCO23131 | Outer Joint | | 30 | 32 | 68 | 90 | 63 | M |
| | 2007.01-2012.06 | AT/MT | F | L | SUV FWD R20A2;R20A1 | | GCI23009 | Inner Joint | | 27 | 32 | 40 | 58.5 | 97 | |
| | 2012.01-2018.12 | 6MT | F | L | SUV FWD R20A | | GDS23306 | Drive Shaft | | 30 | 27 | 68.1 | 88 | 663 | |
| | 2012.01-2018.12 | 6MT | F | R | SUV FWD R20A | | GDS82155 | Drive Shaft | | 30 | 27 | 68.1 | 88 | 627 | |
| | 2012.01-2018.12 | 6MT | F | L/R | SUV FWD R20A | | GCO23145 | Outer Joint | | 30 | 34 | 68.1 | 88 | 59.5 | M |
| | 2012.01-2018.12 | 6MT | F | L | SUV FWD R20A | | GCI23072 | Inner Joint | | 27 | 30 | 40 | 58 | 97.5 | |
| | 2012.01-2018.12 | 6MT | F | L | SUV FWD R20A | | GCI81644 | Inner Joint | | 27 | 34 | 40 | 58 | 97.5 | |
| | 2012.01-2018.12 | 6MT | F | R | SUV FWD R20A | | GCI81649 | Inner Joint | | 27 | 34 | 40 | | 120.5 | |
| | 2017.09- | CVT | F | L | SUV 4WD R20Z9 | | GDS83584 | Drive Shaft | | 30 | 27 | 68.1 | 88.5 | 671 | |
| | 2017.09- | CVT | F | L | SUV 4WD R20Z9 | | GCO82428 | Outer Joint | | 30 | 33 | 68.1 | 88.5 | 59 | I |
| | 2017.09- | CVT | F | L | SUV 4WD R20Z9 | | GCI81723 | Inner Joint | | 27 | 32 | 40 | 58 | 106 | |
| | 2017.09- | CVT | F | R | SUV 4WD R20Z9 | | GCI23094 | Inner Joint | | 27 | 32 | 40 | | 133 | |
| | 2017.09- | CVT | R | L | SUV 4WD R20Z9 | Model year from:2020 | GDS56274 | Drive Shaft | | 23 | 20 | 52 | 88 | 798 | |
| | 2017.09- | CVT | R | L | SUV 4WD R20Z9 | Model year to:2019 | GDS83103 | Drive Shaft | | 23 | 20 | 52 | 88 | 797 | |
| | 2017.09- | CVT | R | R | SUV 4WD R20Z9 | Model year from:2020 | GDS56273 | Drive Shaft | | 23 | 20 | 52 | 88 | 843 | |
| | 2017.09- | CVT | R | R | SUV 4WD R20Z9 | Model year to:2019 | GDS83102 | Drive Shaft | | 23 | 20 | 52 | 88 | 841 | |
| | 2017.09- | CVT | R | L/R | SUV 4WD R20Z9 | | GCO81679 | Outer Joint | | 23 | 19 | 52 | 88 | 45 | M |
| | 2017.09- | CVT | R | L/R | SUV 4WD R20Z9 | Model year to:2019 | GCI81654 | Inner Joint | | 20 | 19 | 32 | 54.5 | 111 | |
| | 2017.09- | CVT | R | L/R | SUV 4WD R20Z9 | Model year from:2020 | GCI83222 | Inner Joint | | 20 | 19 | 32 | 54.5 | 111 | |
| 2.0 (114 kw) | 2012.10-2018.12 | 5AT | F | L | SUV 4WD R20A9;R20A6 | | GCI23072 | Inner Joint | | 27 | 30 | 40 | 58 | 97.5 | |
| | 2012.10-2018.12 | 5AT/6MT | F | L | SUV 4WD R20A9;R20A6 | | GDS23306 | Drive Shaft | | 30 | 27 | 68.1 | 88 | 663 | |
| | 2012.10-2018.12 | 5AT/6MT | F | L | SUV 4WD R20A9;R20A6 | | GCO23221 | Outer Joint | | 30 | 30 | 68.1 | 88 | 58 | M |
| | 2012.10-2018.12 | 6MT | F | R | SUV 4WD R20A9;R20A6 | | GDS82155 | Drive Shaft | | 30 | 27 | 68.1 | 88 | 627 | |
| | 2012.10-2018.12 | 6MT | F | L | SUV 4WD R20A9;R20A6 | | GCI81644 | Inner Joint | | 27 | 34 | 40 | 58 | 97.5 | |
| | 2012.10-2018.12 | 6MT | F | R | SUV 4WD R20A9;R20A6 | | GCI81649 | Inner Joint | | 27 | 34 | 40 | | 120.5 | |
| | 2012.10-2018.12 | MT | F | L/R | SUV 4WD R20A9;R20A6 | Date from:2013.01 | GCO23145 | Outer Joint | | 30 | 34 | 68.1 | 88 | 59.5 | M |
| | 2012.10-2018.12 | MT | F | R | SUV 4WD R20A9;R20A6 | | GDS81202 | Intermediate Shaft | | 27 | 27 | | | 378 | |
| | 2012.10-2018.12 | 5AT/6MT | R | L | SUV 4WD R20A9;R20A6 | | GDS82163 | Drive Shaft | | 23 | 20 | 52 | 88 | 774 | |
| | 2012.10-2018.12 | 5AT/6MT | R | R | SUV 4WD R20A9;R20A6 | | GDS82162 | Drive Shaft | | 23 | 20 | 52 | 88 | 819 | |
| | 2012.10-2018.12 | 5AT/6MT | R | L/R | SUV 4WD R20A9;R20A6 | | GCO81678 | Outer Joint | | 23 | 18 | 52 | 88 | 45 | M |
| | 2012.10-2018.12 | 5AT/6MT | R | L/R | SUV 4WD R20A9;R20A6 | | GCI81653 | Inner Joint | | 20 | 16 | 32 | 54.5 | 97.5 | |
| | 2012.10-2018.12 | 5AT | F | L/R | SUV FWD R20A5;R20A9;R20A6 | | GCO23103 | Outer Joint | | 30 | 30 | 68 | 89 | 59 | M |
| | 2012.10-2018.12 | 5AT | F | L | SUV FWD R20A5;R20A9;R20A6 | | GCI23072 | Inner Joint | | 27 | 30 | 40 | 58 | 97.5 | |
| | 2012.10-2018.12 | 5AT/6MT | F | L | SUV FWD R20A5;R20A9;R20A6 | | GDS23306 | Drive Shaft | | 30 | 27 | 68.1 | 88 | 663 | |
| | 2012.10-2018.12 | 5AT/6MT | F | R | SUV FWD R20A5;R20A9;R20A6 | | GDS82155 | Drive Shaft | | 30 | 27 | 68.1 | 88 | 627 | |
| | 2012.10-2018.12 | 6MT | F | L | SUV FWD R20A5;R20A9;R20A6 | | GCI81644 | Inner Joint | | 27 | 34 | 40 | 58 | 97.5 | |
| | 2012.10-2018.12 | 6MT | F | R | SUV FWD R20A5;R20A9;R20A6 | | GCI81649 | Inner Joint | | 27 | 34 | 40 | | 120.5 | |
| | 2012.10-2018.12 | MT | F | L/R | SUV FWD R20A5;R20A9;R20A6 | Date from:2013.01 | GCO23145 | Outer Joint | | 30 | 34 | 68.1 | 88 | 59.5 | M |
| 2.2 (103 kw) | 2005.02-2006.09 | AT | F | L | SUV 4WD N22A2 | | GDS23011 | Drive Shaft | | 28 | 27 | 63 | 88.5 | 663 | |
| | 2005.02-2006.09 | AT | F | R | SUV 4WD N22A2 | | GDS23074 | Drive Shaft | | 28 | 27 | 63 | 88.5 | 618 | |
| | 2005.02-2006.09 | AT | F | R | SUV 4WD N22A2 | | GCI23013 | Inner Joint | | 27 | 32 | 40 | | 120.5 | |
| | 2005.02-2006.09 | MT | F | L | SUV 4WD N22A2 | | GDS23188 | Drive Shaft | | 28 | 29 | 63 | 88.5 | 640 | |
| | 2005.02-2006.09 | MT | F | R | SUV 4WD N22A2 | | GDS23190 | Drive Shaft | | 28 | 29 | 63 | 88.5 | 627 | |
| | 2005.02-2006.09 | MT | F | L/R | SUV 4WD N22A2 | | GCO23034 | Outer Joint | | 28 | 32 | 63 | 88.5 | 59.5 | M |
| | 2005.02-2006.09 | MT | F | L/R | SUV 4WD N22A2 | | GCO23117 | Outer Joint | | 28 | 34 | 63 | 88.5 | 59.5 | M |
| | 2005.02-2006.09 | MT | F | L | SUV 4WD N22A2 | | GCI23037 | Inner Joint | | 29 | 34 | 40 | 57 | 97 | |
| | 2005.02-2006.09 | MT | R | L | SUV 4WD N22A2 | | GDS81887 | Drive Shaft | | 23 | 23 | 55 | 78 | 750 | |
| | 2005.02-2006.09 | MT | R | R | SUV 4WD N22A2 | | GDS81942 | Drive Shaft | | 23 | 23 | 55 | 78 | 801 | |
| | 2005.02-2006.09 | MT | R | L/R | SUV 4WD N22A2 | | GCO81558 | Outer Joint | | 23 | 20 | 55 | 78 | 52.5 | M |
| | 2005.02-2006.09 | MT | R | L | SUV 4WD N22A2 | | GCI81538 | Inner Joint | | 23 | 20 | 35 | 58.5 | 104.5 | |
| | 2005.02-2006.09 | MT | R | R | SUV 4WD N22A2 | | GCI23045 | Inner Joint | | 23 | 20 | 35 | 58.5 | 104.5 | |
| | 2007.01-2010.02 | 6MT | F | L | SUV 4WD N22A2 | | GDS23216 | Drive Shaft | | 30 | 29 | 68.1 | 88 | 640 | |

| | YEAR | TRANSM. | F/R | L/R | BODY STYLE & DRIVE TYPE & ENGINE | REMARKS | G-AP Ref. | PRODUCT | ABS | Technical Specifications A | B | C | H | L | P |
|---|---|---|---|---|---|---|---|---|---|---|---|---|---|---|---|
| **HONDA** | | | | | | | | | | | | | | | |
| **CR-V** | | | | | | | | | | | | | | | |
| 2.2 (103 kw) | 2007.01-2010.02 | 6MT | F | R | SUV 4WD N22A2 | | GDS23189 | Drive Shaft | | 30 | 29 | 68.1 | 88 | 557 | |
| | 2007.01-2010.02 | 6MT | F | L/R | SUV 4WD N22A2 | | GCO23145 | Outer Joint | | 30 | 34 | 68.1 | 88 | 59.5 | M |
| | 2007.01-2010.02 | 6MT | F | L | SUV 4WD N22A2 | | GCI23037 | Inner Joint | | 29 | 34 | 40 | 57 | 97 | |
| | 2007.01-2010.02 | 6MT | F | R | SUV 4WD N22A2 | | GCI23038 | Inner Joint | | 29 | 34 | 42 | | 122 | |
| | 2007.01-2010.02 | 6MT | F | R | SUV 4WD N22A2 | | GDS81199 | Intermediate Shaft | | 29 | 29 | | | 460 | |
| | 2007.01-2010.02 | 6MT | R | L | SUV 4WD N22A2 | | GDS23199 | Drive Shaft | | 28 | 23 | 55 | 91 | 770 | |
| | 2007.01-2010.02 | 6MT | R | R | SUV 4WD N22A2 | | GDS23198 | Drive Shaft | | 28 | 23 | 55 | 91 | 820 | |
| | 2007.01-2010.02 | 6MT | R | L/R | SUV 4WD N22A2 | | GCO23160 | Outer Joint | | 28 | 20 | 55 | 91 | 52.5 | M |
| | 2007.01-2010.02 | 6MT | R | L/R | SUV 4WD N22A2 | | GCI23045 | Inner Joint | | 23 | 20 | 35 | 58.5 | 104.5 | |
| 2.2 (110 kw) | 2007.01-2012.06 | 5AT | F | L | SUV 4WD N22B3 | For Engine code:N22B3 | GCI81901 | Inner Joint | | 29 | 34 | 40 | 62 | 94.5 | |
| | 2007.01-2012.06 | 6MT | F | L | SUV 4WD N22B3 | | GDS23216 | Drive Shaft | | 30 | 29 | 68.1 | 88 | 640 | |
| | 2007.01-2012.06 | 6MT | F | R | SUV 4WD N22B3 | | GDS23189 | Drive Shaft | | 30 | 29 | 68.1 | 88 | 557 | |
| | 2007.01-2012.06 | 6MT | F | L/R | SUV 4WD N22B3 | | GCO23145 | Outer Joint | | 30 | 34 | 68.1 | 88 | 59.5 | M |
| | 2007.01-2012.06 | 6MT | F | R | SUV 4WD N22B3 | | GDS81199 | Intermediate Shaft | | 29 | 29 | | | 460 | |
| | 2007.01-2012.06 | 5AT/6MT | R | L | SUV 4WD N22B3 | | GDS23199 | Drive Shaft | | 28 | 23 | 55 | 91 | 770 | |
| | 2007.01-2012.06 | 5AT/6MT | R | R | SUV 4WD N22B3 | | GDS23198 | Drive Shaft | | 28 | 23 | 55 | 91 | 820 | |
| | 2007.01-2012.06 | 5AT/6MT | R | L/R | SUV 4WD N22B3 | | GCO23160 | Outer Joint | | 28 | 20 | 55 | 91 | 52.5 | M |
| | 2007.01-2012.06 | 5AT/6MT | R | L/R | SUV 4WD N22B3 | | GCI23045 | Inner Joint | | 23 | 20 | 35 | 58.5 | 104.5 | |
| | 2012.10- | AT/MT | R | L/R | SUV 4WD N22B4 | | GCO81679 | Outer Joint | | 23 | 19 | 52 | 88 | 45 | M |
| | 2012.11-2015.05 | 6MT | F | L | SUV 4WD N22B4 | | GDS56781 | Drive Shaft | | 30 | 31 | 68.1 | 88.5 | 637 | |
| | 2012.11-2015.05 | 6MT | F | R | SUV 4WD N22B4 | | GDS56782 | Drive Shaft | | 30 | 31 | 68.1 | 88.5 | 565 | |
| | 2012.11-2015.05 | 6MT | F | L | SUV 4WD N22B4 | | GCI83485 | Inner Joint | | 31 | 34 | 42 | 56.5 | 97.5 | |
| | 2012.11-2015.05 | 6MT | F | R | SUV 4WD N22B4 | | GCI83486 | Inner Joint | | 31 | 34 | 42 | | 122 | |
| | 2012.11-2015.05 | 5AT/6MT | R | L | SUV 4WD N22B4 | | GDS82165 | Drive Shaft | | 23 | 20 | 52 | 88 | 777 | |
| | 2012.11-2015.05 | 5AT/6MT | R | R | SUV 4WD N22B4 | | GDS82164 | Drive Shaft | | 23 | 20 | 52 | 88 | 820 | |
| | 2012.11-2015.05 | 5AT/6MT | R | L/R | SUV 4WD N22B4 | | GCI81654 | Inner Joint | | 20 | 19 | 32 | 54.5 | 111 | |
| 2.4 (112 kw) | 2004.01-2006.09 | MT | R | L | SUV 4WD K24A1 | | GDS83720 | Drive Shaft | | 23 | 23 | 55 | 78 | 742 | |
| | 2004.01-2006.09 | MT | R | R | SUV 4WD K24A1 | | GDS83721 | Drive Shaft | | 23 | 23 | 55 | 78 | 798 | |
| | 2004.01-2006.09 | MT | R | L/R | SUV 4WD K24A1 | | GCI23046 | Outer Joint | | 23 | 25 | 55 | 78 | 85 | |
| | 2004.01-2006.09 | MT | R | L | SUV 4WD K24A1 | | GCI23104 | Inner Joint | | 23 | 25 | 35 | 58.5 | 95 | |
| | 2004.01-2006.09 | MT | R | R | SUV 4WD K24A1 | | GCI23103 | Inner Joint | | 23 | 25 | 35 | 58.5 | 95 | |
| 2.4 (115 kw) | 2002.08-2004.12 | MT | R | L | SUV 4WD K24A1 | | GDS83720 | Drive Shaft | | 23 | 23 | 55 | 78 | 742 | |
| | 2002.08-2004.12 | MT | R | R | SUV 4WD K24A1 | | GDS83721 | Drive Shaft | | 23 | 23 | 55 | 78 | 798 | |
| | 2002.08-2004.12 | MT | R | L/R | SUV 4WD K24A1 | | GCI23046 | Outer Joint | | 23 | 25 | 55 | 78 | 85 | |
| | 2002.08-2004.12 | MT | R | L | SUV 4WD K24A1 | | GCI23104 | Inner Joint | | 23 | 25 | 35 | 58.5 | 95 | |
| | 2002.08-2004.12 | MT | R | R | SUV 4WD K24A1 | | GCI23103 | Inner Joint | | 23 | 25 | 35 | 58.5 | 95 | |
| 2.4 (118 kw) | 2002.03-2006.09 | 5AT | F | L/R | SUV 4WD K24A1 | | GCO23023 | Outer Joint | | 26 | 30 | 55 | 78.5 | 56.5 | M |
| | 2002.03-2006.09 | MT | F | L | SUV 4WD K24A1 | | GDS23011 | Drive Shaft | | 28 | 27 | 63 | 88.5 | 663 | |
| | 2002.03-2006.09 | MT | R | L | SUV 4WD K24A1 | | GDS83720 | Drive Shaft | | 23 | 23 | 55 | 78 | 742 | |
| | 2002.03-2006.09 | MT | R | R | SUV 4WD K24A1 | | GDS83721 | Drive Shaft | | 23 | 23 | 55 | 78 | 798 | |
| | 2002.03-2006.09 | MT | R | L/R | SUV 4WD K24A1 | | GCI23046 | Outer Joint | | 23 | 25 | 55 | 78 | 85 | |
| | 2002.03-2006.09 | MT | R | L | SUV 4WD K24A1 | | GCI23104 | Inner Joint | | 23 | 25 | 35 | 58.5 | 95 | |
| | 2002.03-2006.09 | MT | R | R | SUV 4WD K24A1 | | GCI23103 | Inner Joint | | 23 | 25 | 35 | 58.5 | 95 | |
| | 2006.10-2012.10 | 5AT/6MT | F | L | SUV 4WD K24Z1 | | GDS23241 | Drive Shaft | | 30 | 27 | 68.1 | 88 | 668 | |
| | 2006.10-2012.10 | 5AT/6MT | F | R | SUV 4WD K24Z1 | Date to:2009.08 | GDS23175 | Drive Shaft | | 30 | 27 | 68.1 | 88 | 564 | |
| | 2006.10-2012.10 | 5AT/6MT | F | R | SUV 4WD K24Z1 | Date from:2009.09 | GDS82134 | Drive Shaft | | 30 | 27 | 68.1 | 88 | 965 | |
| | 2006.10-2012.10 | 5AT/6MT | F | L/R | SUV 4WD K24Z1 | | GCO23124 | Outer Joint | | 30 | 32 | 68.1 | 88 | 59.5 | M |
| | 2006.10-2012.10 | 5AT/6MT | F | L | SUV 4WD K24Z1 | | GCI23009 | Inner Joint | | 27 | 32 | 40 | 58.5 | 97 | |
| | 2006.10-2012.10 | 5AT | R | L | SUV 4WD K24Z1 | | GDS23330 | Drive Shaft | | 28 | 23 | 55 | 90.5 | 769 | |
| | 2006.10-2012.10 | 5AT | R | R | SUV 4WD K24Z1 | | GDS23329 | Drive Shaft | | 28 | 23 | 55 | 90.5 | 820 | |
| | 2006.10-2012.10 | 5AT/6MT | R | L | SUV 4WD K24Z1 | | GDS23199 | Drive Shaft | | 28 | 23 | 55 | 91 | 770 | |
| | 2006.10-2012.10 | 5AT/6MT | R | R | SUV 4WD K24Z1 | | GDS23198 | Drive Shaft | | 28 | 23 | 55 | 91 | 820 | |
| | 2006.10-2012.10 | 5AT/6MT | R | L/R | SUV 4WD K24Z1 | | GCO23160 | Outer Joint | | 28 | 20 | 55 | 91 | 52.5 | M |
| | 2006.10-2012.10 | 5AT/6MT | R | L | SUV 4WD K24Z1 | | GCI81538 | Inner Joint | | 23 | 20 | 35 | 58.5 | 104.5 | |
| | 2006.10-2012.10 | 5AT/6MT | R | L/R | SUV 4WD K24Z1 | | GCI23045 | Inner Joint | | 23 | 20 | 35 | 58.5 | 104.5 | |
| 2.4 (119 kw) | 2001.09-2006.12 | MT | R | L | SUV 4WD K24A1 | | GDS83720 | Drive Shaft | | 23 | 23 | 55 | 78 | 742 | |
| | 2001.09-2006.12 | MT | R | R | SUV 4WD K24A1 | | GDS83721 | Drive Shaft | | 23 | 23 | 55 | 78 | 798 | |
| | 2001.09-2006.12 | MT | R | L/R | SUV 4WD K24A1 | | GCI23046 | Outer Joint | | 23 | 25 | 55 | 78 | 85 | |
| | 2001.09-2006.12 | MT | R | L | SUV 4WD K24A1 | | GCI23104 | Inner Joint | | 23 | 25 | 35 | 58.5 | 95 | |
| | 2001.09-2006.12 | MT | R | R | SUV 4WD K24A1 | | GCI23103 | Inner Joint | | 23 | 25 | 35 | 58.5 | 95 | |
| 2.4 (122 kw) | 2009.09-2012.12 | 5AT/6MT | F | L | SUV 4WD K24Z4;K24Z1 | | GDS23241 | Drive Shaft | | 30 | 27 | 68.1 | 88 | 668 | |
| | 2009.09-2012.12 | 5AT/6MT | F | R | SUV 4WD K24Z4;K24Z1 | | GDS82134 | Drive Shaft | | 30 | 27 | 68.1 | 88 | 965 | |
| | 2009.09-2012.12 | 5AT/6MT | F | L/R | SUV 4WD K24Z4;K24Z1 | | GCO23124 | Outer Joint | | 30 | 32 | 68.1 | 88 | 59.5 | M |
| | 2009.09-2012.12 | 5AT/6MT | F | L | SUV 4WD K24Z4;K24Z1 | | GCI23009 | Inner Joint | | 27 | 32 | 40 | 58.5 | 97 | |
| | 2009.09-2012.12 | 5AT/6MT | R | L | SUV 4WD K24Z4;K24Z1 | | GDS23199 | Drive Shaft | | 28 | 23 | 55 | 91 | 770 | |

| | YEAR | TRANSM. | F/R | L/R | BODY STYLE & DRIVE TYPE & ENGINE | REMARKS | G-AP Ref. | PRODUCT | ABS | Technical Specifications A | B | C | H | L | P |
|---|---|---|---|---|---|---|---|---|---|---|---|---|---|---|---|
| **HONDA** | | | | | | | | | | | | | | | |
| **CR-V** | | | | | | | | | | | | | | | |
| 2.4 (122 kw) | 2009.09-2012.12 | 5AT/6MT | R | R | SUV 4WD K24Z4;K24Z1 | | GDS23198 | Drive Shaft | | 28 | 23 | 55 | 91 | 820 | |
| | 2009.09-2012.12 | 5AT/6MT | R | L/R | SUV 4WD K24Z4;K24Z1 | | GCO23160 | Outer Joint | | 28 | 20 | 55 | 91 | 52.5 | M |
| | 2009.09-2012.12 | 5AT/6MT | R | L | SUV 4WD K24Z4;K24Z1 | | GCI81538 | Inner Joint | | 23 | 20 | 35 | 58.5 | 104.5 | |
| | 2009.09-2012.12 | 5AT/6MT | R | L/R | SUV 4WD K24Z4;K24Z1 | | GCI23045 | Inner Joint | | 23 | 20 | 35 | 58.5 | 104.5 | |
| 2.4 (124 kw) | 2006.06-2012.06 | 5AT | F | L | SUV FWD K24Z1 | | GDS23241 | Drive Shaft | | 30 | 27 | 68.1 | 88 | 668 | |
| | 2006.06-2012.06 | 5AT | F | R | SUV FWD K24Z1 | Date to:2009.08 | GDS23175 | Drive Shaft | | 30 | 27 | 68.1 | 88 | 564 | |
| | 2006.06-2012.06 | 5AT | F | R | SUV FWD K24Z1 | Date from:2009.09 | GDS82134 | Drive Shaft | | 30 | 27 | 68.1 | 88 | 965 | |
| | 2006.06-2012.06 | 5AT | F | L | SUV FWD K24Z1 | Date from:2009.09 | GCO23153 | Outer Joint | | 30 | 32 | 68 | 88.5 | 59.5 | M |
| | 2006.06-2012.06 | 5AT | F | L/R | SUV FWD K24Z1 | | GCO23124 | Outer Joint | | 30 | 32 | 68.1 | 88 | 59.5 | M |
| | 2006.06-2012.06 | 5AT | F | L/R | SUV FWD K24Z1 | | GCO23131 | Outer Joint | | 30 | 32 | 68 | 90 | 63 | M |
| | 2006.06-2012.06 | 5AT | F | L | SUV FWD K24Z1 | | GCI23009 | Inner Joint | | 27 | 32 | 40 | 58.5 | 97 | |
| | 2006.09-2012.06 | AT | F | L | SUV 4WD K24A;K24Z1 | | GDS23241 | Drive Shaft | | 30 | 27 | 68.1 | 88 | 668 | |
| | 2006.09-2012.06 | AT | F | R | SUV 4WD K24A;K24Z1 | Date to:2009.08 | GDS23175 | Drive Shaft | | 30 | 27 | 68.1 | 88 | 564 | |
| | 2006.09-2012.06 | AT | F | R | SUV 4WD K24A;K24Z1 | Date from:2009.09 | GDS82134 | Drive Shaft | | 30 | 27 | 68.1 | 88 | 965 | |
| | 2006.09-2012.06 | AT | F | L | SUV 4WD K24A;K24Z1 | | GCO23153 | Outer Joint | | 30 | 32 | 68 | 88.5 | 59.5 | M |
| | 2006.09-2012.06 | AT | F | L/R | SUV 4WD K24A;K24Z1 | | GCO23124 | Outer Joint | | 30 | 32 | 68.1 | 88 | 59.5 | M |
| | 2006.09-2012.06 | AT | F | L/R | SUV 4WD K24A;K24Z1 | | GCO23131 | Outer Joint | | 30 | 32 | 68 | 90 | 63 | M |
| | 2006.09-2012.06 | AT | F | L | SUV 4WD K24A;K24Z1 | | GCI23009 | Inner Joint | | 27 | 32 | 40 | 58.5 | 97 | |
| | 2006.09-2012.06 | AT | F | R | SUV 4WD K24A;K24Z1 | Model year from:2007,Model year to:2011 | GDS87071 | Intermediate Shaft | | 27 | 27 | | | 442 | |
| | 2006.09-2012.06 | AT | R | L | SUV 4WD K24A;K24Z1 | | GDS23199 | Drive Shaft | | 28 | 23 | 55 | 91 | 770 | |
| | 2006.09-2012.06 | AT | R | R | SUV 4WD K24A;K24Z1 | | GDS23198 | Drive Shaft | | 28 | 23 | 55 | 91 | 820 | |
| | 2006.09-2012.06 | AT | R | L/R | SUV 4WD K24A;K24Z1 | | GCO23160 | Outer Joint | | 28 | 20 | 55 | 91 | 52.5 | M |
| | 2006.09-2012.06 | AT | R | L | SUV 4WD K24A;K24Z1 | | GCI81538 | Inner Joint | | 23 | 20 | 35 | 58.5 | 104.5 | |
| | 2006.09-2012.06 | AT | R | L/R | SUV 4WD K24A;K24Z1 | | GCI23045 | Inner Joint | | 23 | 20 | 35 | 58.5 | 104.5 | |
| | 2006.09-2012.06 | AT | R | L/R | SUV 4WD K24A;K24Z1 | | GCI23105 | Inner Joint | | 28 | 25 | 55 | 90.5 | 85 | |
| 2.4 (125 kw) | 2007.04-2012.12 | 5AT/6MT | F | L | SUV 4WD K24A1;K24Z1 | | GDS23241 | Drive Shaft | | 30 | 27 | 68.1 | 88 | 668 | |
| | 2007.04-2012.12 | 5AT/6MT | F | R | SUV 4WD K24A1;K24Z1 | Date to:2009.08 | GDS23175 | Drive Shaft | | 30 | 27 | 68.1 | 88 | 564 | |
| | 2007.04-2012.12 | 5AT/6MT | F | R | SUV 4WD K24A1;K24Z1 | Date from:2009.09 | GDS82134 | Drive Shaft | | 30 | 27 | 68.1 | 88 | 965 | |
| | 2007.04-2012.12 | 5AT/6MT | F | L | SUV 4WD K24A1;K24Z1 | | GCO23153 | Outer Joint | | 30 | 32 | 68 | 88.5 | 59.5 | M |
| | 2007.04-2012.12 | 5AT/6MT | F | L/R | SUV 4WD K24A1;K24Z1 | | GCO23124 | Outer Joint | | 30 | 32 | 68.1 | 88 | 59.5 | M |
| | 2007.04-2012.12 | 5AT/6MT | F | L/R | SUV 4WD K24A1;K24Z1 | | GCO23131 | Outer Joint | | 30 | 32 | 68 | 90 | 63 | M |
| | 2007.04-2012.12 | 5AT/6MT | F | L | SUV 4WD K24A1;K24Z1 | | GCI23009 | Inner Joint | | 27 | 32 | 40 | 58.5 | 97 | |
| | 2007.04-2012.12 | 5AT/6MT | R | L | SUV 4WD K24A1;K24Z1 | | GDS23199 | Drive Shaft | | 28 | 23 | 55 | 91 | 770 | |
| | 2007.04-2012.12 | 5AT/6MT | R | R | SUV 4WD K24A1;K24Z1 | | GDS23198 | Drive Shaft | | 28 | 23 | 55 | 91 | 820 | |
| | 2007.04-2012.12 | 5AT/6MT | R | L/R | SUV 4WD K24A1;K24Z1 | | GCO23160 | Outer Joint | | 28 | 20 | 55 | 91 | 52.5 | M |
| | 2007.04-2012.12 | 5AT/6MT | R | L | SUV 4WD K24A1;K24Z1 | | GCI81538 | Inner Joint | | 23 | 20 | 35 | 58.5 | 104.5 | |
| | 2007.04-2012.12 | 5AT/6MT | R | L/R | SUV 4WD K24A1;K24Z1 | | GCI23045 | Inner Joint | | 23 | 20 | 35 | 58.5 | 104.5 | |
| | 2007.04-2012.12 | 5AT/6MT | F | L | SUV FWD K24A1;K24Z1 | | GDS23241 | Drive Shaft | | 30 | 27 | 68.1 | 88 | 668 | |
| | 2007.04-2012.12 | 5AT/6MT | F | R | SUV FWD K24A1;K24Z1 | Date to:2009.08 | GDS23175 | Drive Shaft | | 30 | 27 | 68.1 | 88 | 564 | |
| | 2007.04-2012.12 | 5AT/6MT | F | R | SUV FWD K24A1;K24Z1 | Date from:2009.09 | GDS82134 | Drive Shaft | | 30 | 27 | 68.1 | 88 | 965 | |
| | 2007.04-2012.12 | 5AT/6MT | F | L | SUV FWD K24A1;K24Z1 | Date from:2009.09 | GCO23153 | Outer Joint | | 30 | 32 | 68 | 88.5 | 59.5 | M |
| | 2007.04-2012.12 | 5AT/6MT | F | L/R | SUV FWD K24A1;K24Z1 | | GCO23124 | Outer Joint | | 30 | 32 | 68.1 | 88 | 59.5 | M |
| | 2007.04-2012.12 | 5AT/6MT | F | L/R | SUV FWD K24A1;K24Z1 | | GCO23131 | Outer Joint | | 30 | 32 | 68 | 90 | 63 | M |
| | 2007.04-2012.12 | 5AT/6MT | F | L | SUV FWD K24A1;K24Z1 | | GCI23009 | Inner Joint | | 27 | 32 | 40 | 58.5 | 97 | |
| | 2012.01- | 5AT | F | L | SUV 4WD K24A1 | | GDS23306 | Drive Shaft | | 30 | 27 | 68.1 | 88 | 663 | |
| | 2012.01- | 5AT | F | R | SUV 4WD K24A1 | | GDS23335 | Drive Shaft | | 30 | 27 | 68.1 | 88 | 564 | |
| | 2012.01- | 5AT | F | L/R | SUV 4WD K24A1 | | GCO23221 | Outer Joint | | 30 | 30 | 68.1 | 88 | 58 | M |
| | 2012.01- | 5AT | F | L | SUV 4WD K24A1 | | GCI23072 | Inner Joint | | 27 | 30 | 40 | 58 | 97.5 | |
| | 2013.01- | 5AT | F | L | SUV 4WD K24Y1 | | GDS23306 | Drive Shaft | | 30 | 27 | 68.1 | 88 | 663 | |
| | 2013.01- | 5AT | F | R | SUV 4WD K24Y1 | | GDS23335 | Drive Shaft | | 30 | 27 | 68.1 | 88 | 564 | |
| | 2013.01- | 5AT | F | L/R | SUV 4WD K24Y1 | | GCO23221 | Outer Joint | | 30 | 30 | 68.1 | 88 | 58 | M |
| | 2013.01- | 5AT | F | L | SUV 4WD K24Y1 | | GCI23072 | Inner Joint | | 27 | 30 | 40 | 58 | 97.5 | |
| 2.4 (132 kw) | 2012.01-2016.12 | 5AT/6MT | F | L | SUV 4WD K24Z4;K24Z6 | | GDS23306 | Drive Shaft | | 30 | 27 | 68.1 | 88 | 663 | |
| | 2012.01-2016.12 | 5AT/6MT | R | L | SUV 4WD K24Z4;K24Z6 | | GDS82163 | Drive Shaft | | 23 | 20 | 52 | 88 | 774 | |
| | 2012.01-2016.12 | 5AT/6MT | R | R | SUV 4WD K24Z4;K24Z6 | | GDS82162 | Drive Shaft | | 23 | 20 | 52 | 88 | 819 | |
| 2.4 (134 kw) | 2006.06-2012.06 | AT | F | R | SUV FWD K24A | Model year from:2007,Model year to:2011 | GDS87071 | Intermediate Shaft | | 27 | 27 | | | 442 | |
| 2.4 (137 kw) | 2017.09- | CVT | F | L | SUV 4WD K24W9 | | GDS83584 | Drive Shaft | | 30 | 27 | 68.1 | 88.5 | 671 | |
| | 2017.09- | CVT | F | R | SUV 4WD K24W9 | | GDS83583 | Drive Shaft | | 30 | 27 | 68.1 | 88.5 | 581 | |
| | 2017.09- | CVT | F | L/R | SUV 4WD K24W9 | | GCO82428 | Outer Joint | | 30 | 33 | 68.1 | 88.5 | 59 | I |
| | 2017.09- | CVT | F | L | SUV 4WD K24W9 | | GCI81723 | Inner Joint | | 27 | 32 | 40 | 58 | 106 | |
| | 2017.09- | CVT | F | R | SUV 4WD K24W9 | | GCI81722 | Inner Joint | | 27 | 32 | 40 | | 133 | |
| | 2017.09- | CVT | R | L | SUV 4WD K24W9 | Model year from:2020 | GDS56274 | Drive Shaft | | 23 | 20 | 52 | 88 | 798 | |
| | 2017.09- | CVT | R | L | SUV 4WD K24W9 | Model year to:2019 | GDS83103 | Drive Shaft | | 23 | 20 | 52 | 88 | 797 | |
| | 2017.09- | CVT | R | R | SUV 4WD K24W9 | Model year from:2020 | GDS56273 | Drive Shaft | | 23 | 20 | 52 | 88 | 843 | |
| | 2017.09- | CVT | R | R | SUV 4WD K24W9 | Model year to:2019 | GDS83102 | Drive Shaft | | 23 | 20 | 52 | 88 | 841 | |

| | YEAR | TRANSM. | F/R | L/R | BODY STYLE & DRIVE TYPE & ENGINE | REMARKS | G-AP Ref. | PRODUCT | ABS | Technical Specifications A | B | C | H | L | P |
|---|---|---|---|---|---|---|---|---|---|---|---|---|---|---|---|
| **HONDA** | | | | | | | | | | | | | | | |
| **CR-V** | | | | | | | | | | | | | | | |
| 2.4 (137 kw) | 2017.09- | CVT | R | L/R | SUV 4WD K24W9 | | GCO81679 | Outer Joint | | 23 | 19 | 52 | 88 | 45 | M |
| | 2017.09- | CVT | R | L/R | SUV 4WD K24W9 | Model year to:2019 | GCI81654 | Inner Joint | | 20 | 19 | 32 | 54.5 | 111 | |
| | 2017.09- | CVT | R | L/R | SUV 4WD K24W9 | Model year from:2020 | GCI83222 | Inner Joint | | 20 | 19 | 32 | 54.5 | 111 | |
| 2.4 (138 kw) | 2015.09-2018.12 | CVT | F | L | SUV 4WD K24W | | GCI81723 | Inner Joint | | 27 | 32 | 40 | 58 | 106 | |
| | 2015.09-2018.12 | CVT | F | R | SUV 4WD K24W | | GCI81722 | Inner Joint | | 27 | 32 | 40 | | 133 | |
| | 2015.09-2018.12 | CVT | R | L | SUV 4WD K24W | | GDS82163 | Drive Shaft | | 23 | 20 | 52 | 88 | 774 | |
| | 2015.09-2018.12 | CVT | R | R | SUV 4WD K24W | | GDS82162 | Drive Shaft | | 23 | 20 | 52 | 88 | 819 | |
| | 2015.09-2018.12 | CVT | R | L/R | SUV 4WD K24W | | GCO81678 | Outer Joint | | 23 | 18 | 52 | 88 | 45 | M |
| | 2015.09-2018.12 | CVT | R | L/R | SUV 4WD K24W | | GCI81653 | Inner Joint | | 20 | 16 | 32 | 54.5 | 97.5 | |
| 2.4 (140 kw) | 2012.01-2018.12 | 5AT | F | L | SUV 4WD K24Z9 | | GDS23306 | Drive Shaft | | 30 | 27 | 68.1 | 88 | 663 | |
| | 2012.01-2018.12 | 5AT | F | R | SUV 4WD K24Z9 | Inner teeth of wheel side:32 | GDS23175 | Drive Shaft | | 30 | 27 | 68.1 | 88 | 564 | |
| | 2012.01-2018.12 | 5AT | F | R | SUV 4WD K24Z9 | Inner teeth of wheel side:30 | GDS23335 | Drive Shaft | | 30 | 27 | 68.1 | 88 | 564 | |
| | 2012.01-2018.12 | 5AT | F | L/R | SUV 4WD K24Z9 | | GCO23103 | Outer Joint | | 30 | 30 | 68 | 89 | 59 | M |
| | 2012.01-2018.12 | 5AT | F | L | SUV 4WD K24Z9 | | GCI23072 | Inner Joint | | 27 | 30 | 40 | 58 | 97.5 | |
| | 2012.01-2018.12 | 5AT | R | L | SUV 4WD K24Z9 | | GDS23329 | Drive Shaft | | 28 | 23 | 55 | 90.5 | 820 | |
| | 2012.01-2018.12 | 5AT | R | L | SUV 4WD K24Z9 | | GDS82163 | Drive Shaft | | 23 | 20 | 52 | 88 | 774 | |
| | 2012.01-2018.12 | 5AT | R | R | SUV 4WD K24Z9 | | GDS23330 | Drive Shaft | | 28 | 23 | 55 | 90.5 | 769 | |
| | 2012.01-2018.12 | 5AT | R | R | SUV 4WD K24Z9 | | GDS82162 | Drive Shaft | | 23 | 20 | 52 | 88 | 819 | |
| | 2012.01-2018.12 | 5AT | R | L/R | SUV 4WD K24Z9 | | GCI81653 | Inner Joint | | 20 | 16 | 32 | 54.5 | 97.5 | |
| | 2012.01-2018.12 | 5AT/5MT | R | L/R | SUV 4WD K24Z9 | | GCO81678 | Outer Joint | | 23 | 18 | 52 | 88 | 45 | M |
| **CR-Z** | | | | | | | | | | | | | | | |
| 1.5 (91 kw) | 2010.09-2013.12 | 6MT | F | L | Coupe FWD LEA1;LEA3 | | GDS23333 | Drive Shaft | | 26 | 27 | 58 | 78.5 | 624 | |
| | 2010.09-2013.12 | 6MT | F | L | Coupe FWD LEA1;LEA3 | | GCO23253 | Outer Joint | | 26 | 29 | 58 | 78.5 | 51 | M |
| | 2010.09-2013.12 | 6MT | F | L/R | Coupe FWD LEA1;LEA3 | | GCO23260 | Outer Joint | | 26 | 29 | 58 | 78 | 52 | M |
| | 2010.09-2013.12 | 6MT | F | L | Coupe FWD LEA1;LEA3 | | GCI23079 | Inner Joint | | 27 | 29 | 40 | 58 | 95.5 | |
| | 2010.09-2013.12 | MT | F | R | Coupe FWD LEA1;LEA3 | | GDS83819 | Drive Shaft | | 26 | 27 | 58 | 78.5 | 567 | |
| 1.5 (101 kw) | 2012.11- | CVT/6MT | F | L | Coupe FWD LEA1;LEA3 | | GDS23333 | Drive Shaft | | 26 | 27 | 58 | 78.5 | 624 | |
| | 2012.11- | CVT/6MT | F | L/R | Coupe FWD LEA1;LEA3 | | GCO23260 | Outer Joint | | 26 | 29 | 58 | 78 | 52 | M |
| | 2012.11- | MT | F | R | Coupe FWD LEA1;LEA3 | | GDS83819 | Drive Shaft | | 26 | 27 | 58 | 78.5 | 567 | |
| | 2012.11- | MT | F | L | Coupe FWD LEA1;LEA3 | | GCI23079 | Inner Joint | | 27 | 29 | 40 | 58 | 95.5 | |
| | 2013.12- | CVT/6MT | F | L | Coupe FWD LEA1;LEA3 | | GDS23333 | Drive Shaft | | 26 | 27 | 58 | 78.5 | 624 | |
| | 2013.12- | CVT/6MT | F | L/R | Coupe FWD LEA1;LEA3 | | GCO23260 | Outer Joint | | 26 | 29 | 58 | 78 | 52 | M |
| | 2013.12- | MT | F | R | Coupe FWD LEA1;LEA3 | | GDS83819 | Drive Shaft | | 26 | 27 | 58 | 78.5 | 567 | |
| | 2013.12- | MT | F | L | Coupe FWD LEA1;LEA3 | | GCI23079 | Inner Joint | | 27 | 29 | 40 | 58 | 95.5 | |
| **Crosstour** | | | | | | | | | | | | | | | |
| 2.4 (143 kw) | 2012.09- | 5AT | F | L | Hatchback FWD K24Y2 | | GDS81348 | Drive Shaft | | 30 | 27 | 68.1 | 88 | 712 | |
| | 2012.09- | 5AT | F | R | Hatchback FWD K24Y2 | | GDS81347 | Drive Shaft | | 30 | 27 | 68.1 | 88 | 609 | |
| | 2012.09- | 5AT | F | L/R | Hatchback FWD K24Y2 | | GCO23145 | Outer Joint | | 30 | 34 | 68.1 | 88 | 59.5 | M |
| | 2012.09- | 5AT | F | L | Hatchback FWD K24Y2 | | GCI23053 | Inner Joint | | 27 | 34 | 40 | 58 | 97.5 | |
| | 2012.09- | 5AT | F | R | Hatchback FWD K24Y2 | | GCI23052 | Inner Joint | | 27 | 34 | 40 | | 120.5 | |
| 3.5 (202 kw) | 2012.01- | 5AT | F | L | Hatchback 4WD J35Z2 | | GCI81901 | Inner Joint | | 29 | 34 | 40 | 62 | 94.5 | |
| | 2012.01- | AT | F | L/R | Hatchback 4WD J35Z2 | | GCO23145 | Outer Joint | | 30 | 34 | 68.1 | 88 | 59.5 | M |
| | 2012.01- | AT | R | L | Hatchback 4WD J35Z2 | | GCI23045 | Inner Joint | | 23 | 20 | 35 | 58.5 | 104.5 | |
| 3.5 (207 kw) | 2012.09- | AT | R | L | Hatchback 4WD J35Y1 | | GCI23045 | Inner Joint | | 23 | 20 | 35 | 58.5 | 104.5 | |
| **CRX** | | | | | | | | | | | | | | | |
| 1.6 (92 kw) | 1992.03-1998.12 | AT/MT | F | R | Targa FWD D16Y8, D16Z6 | | GDS81010 | Drive Shaft | 50T | 26 | 25 | 55 | 78.5 | 627 | |
| | 1992.03-1998.12 | AT/MT | F | L/R | Targa FWD D16Y8, D16Z6 | Date From:1992.06;Date To:1998.04 | GCO23016 | Outer Joint | | 26 | 32 | 55 | 78.5 | 56.5 | M |
| | 1992.03-1998.12 | AT/MT | F | L/R | Targa FWD D16Y8, D16Z6 | Date From:1992.06;Date To:1998.04 | GCO23017 | Outer Joint | 50T | 26 | 32 | 55 | 78.5 | 56.5 | M |
| | 1992.03-1998.12 | AT/MT | F | L/R | Targa FWD D16Y8, D16Z6 | | GCO23023 | Outer Joint | | 26 | 30 | 55 | 78.5 | 56.5 | M |
| | 1992.03-1998.12 | | F | L | Targa FWD D16Y8, D16Z6 | | GDS23155 | Drive Shaft | 50T | 26 | 27 | 55 | 78.5 | 557 | |
| | 1992.03-1998.12 | | F | | Targa FWD D16Y8, D16Z6 | Date From:1995.01,Date To:1995.01 | GCO23086 | Outer Joint | 50T | 26 | 30 | 55 | 78.5 | 56.5 | M |
| | 1992.03-1998.12 | | F | L | Targa FWD D16Y8, D16Z6 | | GCI23004 | Inner Joint | | 25 | 30 | 35 | 62 | 97.5 | |
| | 1992.03-1998.12 | | F | R | Targa FWD D16Y8, D16Z6 | | GCI23005 | Inner Joint | | 25 | 30 | 35 | 54.5 | 97 | |
| | 1992.03-1998.12 | | F | R | Targa FWD D16Y8, D16Z6 | | GCI23020 | Inner Joint | | 25 | 28 | 35 | 54.5 | 96.5 | |
| 1.6 (118 kw) | 1992.06-1998.04 | AT/MT | F | L | Targa FWD B16A2 | | GDS23155 | Drive Shaft | 50T | 26 | 27 | 55 | 78.5 | 557 | |
| | 1992.06-1998.04 | AT/MT | F | L/R | Targa FWD B16A2 | Date from:1992.06,Date to:1998.04 | GCO23016 | Outer Joint | | 26 | 32 | 55 | 78.5 | 56.5 | M |
| | 1992.06-1998.04 | AT/MT | F | L/R | Targa FWD B16A2 | Date from:1992.06,Date to:1998.04 | GCO23017 | Outer Joint | 50T | 26 | 32 | 55 | 78.5 | 56.5 | M |
| | 1992.06-1998.04 | MT | F | L/R | Targa FWD B16A2 | | GCO23023 | Outer Joint | | 26 | 30 | 55 | 78.5 | 56.5 | M |
| | 1992.06-1998.04 | MT | F | L/R | Targa FWD B16A2 | | GCO23086 | Outer Joint | 50T | 26 | 30 | 55 | 78.5 | 56.5 | M |
| | 1992.06-1998.04 | MT | F | L | Targa FWD B16A2 | | GCI23013 | Inner Joint | | 27 | 32 | 40 | | 120.5 | |
| **Domani** | | | | | | | | | | | | | | | |
| 1.6 (88 kw) | 1995.10-1999.09 | | F | | Saloon FWD D16A | | GCO23038 | Outer Joint | | 26 | 28 | 55 | 78 | 55 | M |
| 1.8 (103 kw) | 1992.10-1997.12 | 4AT/5AT | F | L/R | Saloon FWD B18B6 | | GCO23016 | Outer Joint | | 26 | 32 | 55 | 78.5 | 56.5 | M |
| | 1992.10-1997.12 | 4AT/5AT | F | L/R | Saloon FWD B18B6 | | GCO23017 | Outer Joint | 50T | 26 | 32 | 55 | 78.5 | 56.5 | M |

| | YEAR | TRANSM. | F/R | L/R | BODY STYLE & DRIVE TYPE & ENGINE | REMARKS | G-AP Ref. | PRODUCT | ABS | Technical Specifications A | B | C | H | L | P |
|---|---|---|---|---|---|---|---|---|---|---|---|---|---|---|---|
| **HONDA** | | | | | | | | | | | | | | | |
| **Elysion** | | | | | | | | | | | | | | | |
| 2.4 (118 kw) | 2004.05-2013.10 | | F | | MPV FWD K24A6 | | GCO23124 | Outer Joint | | 30 | 32 | 68.1 | 88 | 59.5 | M |
| **Fit** | | | | | | | | | | | | | | | |
| 1.3 (63 kw) | 2002.03-2007.09 | CVT/5MT | F | L | Hatchback FWD L13A1 | | GDS23070 | Drive Shaft | | 26 | 25 | 52 | 79 | 612.5 | |
| | 2002.03-2007.09 | CVT/5MT | F | R | Hatchback FWD L13A1 | | GDS23071 | Drive Shaft | | 26 | 25 | 52 | 79 | 899 | |
| | 2002.03-2007.09 | CVT/5MT | F | L/R | Hatchback FWD L13A1 | | GCO23030 | Outer Joint | | 26 | 28 | 52 | 79 | 56 | M |
| | 2002.03-2007.09 | CVT/5MT | F | L/R | Hatchback FWD L13A1 | | GCI23018 | Inner Joint | | 25 | 28 | 35 | 58 | 95.5 | |
| 1.5 (81 kw) | 2002.04-2008.07 | CVT/5MT | F | L | Hatchback FWD L15A1 | | GDS23070 | Drive Shaft | | 26 | 25 | 52 | 79 | 612.5 | |
| | 2002.04-2008.07 | CVT/5MT | F | R | Hatchback FWD L15A1 | | GDS23071 | Drive Shaft | | 26 | 25 | 52 | 79 | 899 | |
| 1.5 (88 kw) | 2008.07-2014.06 | 5AT | F | L | Hatchback FWD L15-A7 | | GDS23350 | Drive Shaft | | 26 | 25 | 58 | 78.5 | 641 | |
| | 2008.07-2014.06 | 5AT | F | R | Hatchback FWD L15-A7 | | GDS23173 | Drive Shaft | | 26 | 27 | 52 | 78.5 | 570 | |
| | 2008.07-2014.06 | 5AT | F | L | Hatchback FWD L15-A7 | | GCO23208 | Outer Joint | | 26 | 27 | 58 | 78.5 | 53 | M |
| | 2008.07-2014.06 | 5AT | F | R | Hatchback FWD L15-A7 | | GCO23138 | Outer Joint | | 26 | 27 | 52 | 78.5 | 52.5 | M |
| | 2008.07-2014.06 | 5AT | F | L | Hatchback FWD L15-A7 | | GCI23050 | Inner Joint | | 25 | 27 | 35 | 58 | 94.5 | |
| | 2008.07-2014.06 | 5MT | F | L | Hatchback FWD L15-A7 | | GDS23174 | Drive Shaft | | 26 | 25 | 52 | 78.5 | 641 | |
| | 2008.07-2014.06 | 5MT | F | R | Hatchback FWD L15-A7 | | GDS23326 | Drive Shaft | | 26 | 25 | 52 | 78.5 | 895 | |
| | 2008.07-2014.06 | 5MT | F | L/R | Hatchback FWD L15-A7 | | GCO23138 | Outer Joint | | 26 | 27 | 52 | 78.5 | 52.5 | M |
| | 2008.07-2014.06 | 5MT | F | L/R | Hatchback FWD L15-A7 | | GCI23050 | Inner Joint | | 25 | 27 | 35 | 58 | 94.5 | |
| **Fit Aria** | | | | | | | | | | | | | | | |
| 1.5 (81 kw) | 2004.09-2008.07 | CVT | F | L | Saloon FWD L15A2 | | GDS23070 | Drive Shaft | | 26 | 25 | 52 | 79 | 612.5 | |
| | 2004.09-2008.07 | CVT | F | R | Saloon FWD L15A2 | | GDS23071 | Drive Shaft | | 26 | 25 | 52 | 79 | 899 | |
| **FR-V** | | | | | | | | | | | | | | | |
| 1.7 (92 kw) | 2004.08-2006.09 | 5MT | F | L | MPV FWD D17A2 | | GDS82157 | Drive Shaft | | 28 | 27 | 63 | 88.5 | 956 | |
| | 2004.08-2006.09 | 5MT | F | R | MPV FWD D17A2 | | GDS23011 | Drive Shaft | | 28 | 27 | 63 | 88.5 | 663 | |
| | 2004.08-2006.09 | 5MT | F | L/R | MPV FWD D17A2 | | GCO99159 | Outer Joint | | 28 | 32 | 60 | 87 | 61 | M |
| | 2004.08-2006.09 | 5MT | F | L | MPV FWD D17A2 | | GCI81650 | Inner Joint | | 27 | 32 | 40 | 58 | 109 | |
| | 2004.08-2006.09 | AT/MT | F | L/R | MPV FWD D17A2 | | GCO23034 | Outer Joint | | 28 | 32 | 63 | 88.5 | 59.5 | M |
| | 2004.08-2006.09 | | F | R | MPV FWD D17A2 | | GCI23009 | Inner Joint | | 27 | 32 | 40 | 58.5 | 97 | |
| 1.8 (103 kw) | 2007.01-2009.12 | AT | F | L | MPV FWD R18A1 | | GDS81026 | Drive Shaft | | 26 | 27 | 63 | 79 | 661 | |
| | 2007.01-2009.12 | AT | F | R | MPV FWD R18A1 | | GDS81027 | Drive Shaft | | 26 | 27 | 63 | 79 | 961 | |
| | 2007.01-2009.12 | AT | F | L/R | MPV FWD R18A1 | | GCO23056 | Outer Joint | | 26 | 30 | 63 | 79 | 59 | M |
| | 2007.01-2009.12 | AT | F | L/R | MPV FWD R18A1 | Original design | GCI23017 | Inner Joint | | 27 | 30 | 40 | 58.5 | 97 | |
| | 2007.01-2009.12 | AT | F | L/R | MPV FWD R18A1 | Non-Original design | GCI23086 | Inner Joint | | 27 | 30 | 40 | 58 | 97.5 | |
| | 2007.01-2009.12 | MT | F | L/R | MPV FWD R18A1 | | GCO99159 | Outer Joint | | 28 | 32 | 60 | 87 | 61 | M |
| | 2007.01-2009.12 | MT | F | L | MPV FWD R18A1 | | GCI23009 | Inner Joint | | 27 | 32 | 40 | 58.5 | 97 | |
| | 2007.01-2009.12 | MT | F | R | MPV FWD R18A1 | | GCI23013 | Inner Joint | | 27 | 32 | 40 | | 120.5 | |
| 2.0 (110 kw) | 2005.02-2006.12 | 6MT | F | L | MPV FWD K20A9 | | GCI23009 | Inner Joint | | 27 | 32 | 40 | 58.5 | 97 | |
| | 2005.02-2006.12 | 6MT | F | R | MPV FWD K20A9 | | GCI23013 | Inner Joint | | 27 | 32 | 40 | | 120.5 | |
| | 2005.02-2006.12 | AT/MT | F | L/R | MPV FWD K20A9 | | GCO23034 | Outer Joint | | 28 | 32 | 63 | 88.5 | 59.5 | M |
| | 2005.02-2006.12 | MT | F | L/R | MPV FWD K20A9 | | GCO99159 | Outer Joint | | 28 | 32 | 60 | 87 | 61 | M |
| 2.2 (103 kw) | 2005.07-2009.12 | 6MT | F | L | MPV FWD N22A1 | | GDS23188 | Drive Shaft | | 28 | 29 | 63 | 88.5 | 640 | |
| | 2005.07-2009.12 | 6MT | F | R | MPV FWD N22A1 | | GDS23190 | Drive Shaft | | 28 | 29 | 63 | 88.5 | 627 | |
| | 2005.07-2009.12 | 6MT | F | L/R | MPV FWD N22A1 | Inner Teeth:32 | GCO23034 | Outer Joint | | 28 | 32 | 63 | 88.5 | 59.5 | M |
| | 2005.07-2009.12 | 6MT | F | L/R | MPV FWD N22A1 | Inner Teeth:34 | GCO23117 | Outer Joint | | 28 | 34 | 63 | 88.5 | 59.5 | M |
| | 2005.07-2009.12 | 6MT | F | L | MPV FWD N22A1 | Inner Teeth:34 | GCI23037 | Inner Joint | | 29 | 34 | 40 | 57 | 97 | |
| **Freed** | | | | | | | | | | | | | | | |
| 1.5 (73 kw) | 2011.10-2016.08 | 5AT | F | L | MPV FWD L15-A7 | | GDS56165 | Drive Shaft | | 26 | 25 | 58 | 79 | 643 | |
| | 2011.10-2016.08 | 5AT | F | R | MPV FWD L15-A7 | | GDS56189 | Drive Shaft | | 26 | 27 | 58 | 79 | 577 | |
| | 2011.10-2016.08 | 5AT | F | L | MPV FWD L15-A7 | | GCI23036 | Inner Joint | | 25 | 28 | 35 | 58 | 95 | |
| | 2011.10-2016.08 | 5AT | F | R | MPV FWD L15-A7 | | GCI23059 | Inner Joint | | 27 | 28 | 40 | | 119.5 | |
| | 2011.10-2016.08 | AT | F | | MPV FWD L15-A7 | | GCO23208 | Outer Joint | | 26 | 27 | 58 | 78.5 | 53 | M |
| 1.5 (87 kw) | 2010.10-2016.08 | AT | F | | MPV 4WD L15A | | GCO23208 | Outer Joint | | 26 | 27 | 58 | 78.5 | 53 | M |
| **HR-V** | | | | | | | | | | | | | | | |
| 1.5 (88 kw) | 2015.01- | 6MT | F | L | SUV FWD L15Z6/L15Z7 | | GDS81777 | Drive Shaft | | 30 | 27 | 68 | 88.5 | 670 | |
| | 2015.01- | 6MT | F | R | SUV FWD L15Z6/L15Z7 | | GDS81779 | Drive Shaft | | 30 | 27 | 68 | 88.5 | 630 | |
| | 2015.01- | 6MT | F | L | SUV FWD L15Z6/L15Z7 | | GCI81199 | Inner Joint | | 27 | 26 | 40 | 58 | 100.5 | |
| | 2015.01- | 6MT | F | R | SUV FWD L15Z6/L15Z7 | | GCI81198 | Inner Joint | | 27 | 26 | 40 | | 126.5 | |
| | 2015.01- | 6MT/CVT | F | L/R | SUV FWD L15Z6/L15Z7 | | GCO81485 | Outer Joint | | 30 | 25 | 68 | 88.5 | 63.5 | M |
| | 2015.01- | CVT | F | L | SUV FWD L15Z6/L15Z7 | | GDS81780 | Drive Shaft | | 30 | 25 | 68 | 88.5 | 675 | |
| | 2015.01- | CVT | F | R | SUV FWD L15Z6/L15Z7 | | GDS81778 | Drive Shaft | | 30 | 27 | 68 | 88.5 | 624 | |
| | 2015.01- | CVT | F | L | SUV FWD L15Z6/L15Z7 | | GCI81504 | Inner Joint | | 25 | 24 | 35 | 58 | 98 | |
| | 2015.01- | CVT | F | R | SUV FWD L15Z6/L15Z7 | | GCI81464 | Inner Joint | | 27 | 24 | 40 | | 123 | |
| 1.5 (96 kw) | 2013.09- | 6MT | F | L | SUV FWD L15B1 | | GDS81777 | Drive Shaft | | 30 | 27 | 68 | 88.5 | 670 | |
| | 2013.09- | 6MT | F | R | SUV FWD L15B1 | | GDS81779 | Drive Shaft | | 30 | 27 | 68 | 88.5 | 630 | |
| | 2013.09- | 6MT | F | L | SUV FWD L15B1 | | GCI81199 | Inner Joint | | 27 | 26 | 40 | 58 | 100.5 | |
| | 2013.09- | 6MT | F | R | SUV FWD L15B1 | | GCI81198 | Inner Joint | | 27 | 26 | 40 | | 126.5 | |

| | YEAR | TRANSM. | F/R | L/R | BODY STYLE & DRIVE TYPE & ENGINE | REMARKS | G-AP Ref. | PRODUCT | ABS | Technical Specifications A | B | C | H | L | P |
|---|---|---|---|---|---|---|---|---|---|---|---|---|---|---|---|
| **HONDA** | | | | | | | | | | | | | | | |
| **HR-V** | | | | | | | | | | | | | | | |
| 1.5 (96 kw) | 2013.09- | CVT | F | L | SUV FWD L15B1 | | GDS81780 | Drive Shaft | | 30 | 25 | 68 | 88.5 | 675 | |
| | 2013.09- | CVT | F | R | SUV FWD L15B1 | | GDS81778 | Drive Shaft | | 30 | 27 | 68 | 88.5 | 624 | |
| | 2013.09- | CVT | F | L | SUV FWD L15B1 | | GCI81504 | Inner Joint | | 25 | 24 | 35 | 58 | 98 | |
| | 2013.09- | CVT | F | R | SUV FWD L15B1 | | GCI81464 | Inner Joint | | 27 | 24 | 40 | | 123 | |
| | 2013.09- | CVT/6MT | F | L/R | SUV FWD L15B1 | | GCO81485 | Outer Joint | | 30 | 25 | 68 | 88.5 | 63.5 | M |
| | 2015.08- | 6MT | F | L | SUV FWD L15B4 | | GDS81777 | Drive Shaft | | 30 | 27 | 68 | 88.5 | 670 | |
| | 2015.08- | 6MT | F | R | SUV FWD L15B4 | | GDS81779 | Drive Shaft | | 30 | 27 | 68 | 88.5 | 630 | |
| | 2015.08- | 6MT | F | L | SUV FWD L15B4 | | GCI81199 | Inner Joint | | 27 | 26 | 40 | 58 | 100.5 | |
| | 2015.08- | 6MT | F | R | SUV FWD L15B4 | | GCI81198 | Inner Joint | | 27 | 26 | 40 | | 126.5 | |
| | 2015.08- | 6MT/CVT | F | L/R | SUV FWD L15B4 | | GCO81485 | Outer Joint | | 30 | 25 | 68 | 88.5 | 63.5 | M |
| | 2015.08- | CVT | F | L | SUV FWD L15B4 | | GDS81780 | Drive Shaft | | 30 | 25 | 68 | 88.5 | 675 | |
| | 2015.08- | CVT | F | R | SUV FWD L15B4 | | GDS81778 | Drive Shaft | | 30 | 27 | 68 | 88.5 | 624 | |
| | 2015.08- | CVT | F | L | SUV FWD L15B4 | | GCI81504 | Inner Joint | | 25 | 24 | 35 | 58 | 98 | |
| | 2015.08- | CVT | F | R | SUV FWD L15B4 | | GCI81464 | Inner Joint | | 27 | 24 | 40 | | 123 | |
| 1.5 (134 kw) | 2019.04- | CVT | F | L | SUV FWD L15BY | | GDS56481 | Drive Shaft | | 30 | 27 | 68.1 | 88 | 680 | |
| | 2019.04- | CVT | F | R | SUV FWD L15BY | | GDS56870 | Drive Shaft | | 30 | 27 | 68.1 | 88 | 636 | |
| | 2019.04- | CVT | F | L/R | SUV FWD L15BY | | GCO23124 | Outer Joint | | 30 | 32 | 68.1 | 88 | 59.5 | M |
| | 2019.04- | CVT | F | L | SUV FWD L15BY | | GCI82104 | Inner Joint | | 27 | 32 | 40 | 58 | 97.5 | |
| | 2019.04- | CVT | F | R | SUV FWD L15BY | | GCI82105 | Inner Joint | | 27 | 32 | 40 | | 120.5 | |
| 1.6 (77 kw) | 1999.02-2005.09 | AT/MT/CVT | F | L/R | SUV 4WD D16W1 | | GCO23033 | Outer Joint | 50T | 26 | 30 | 60 | 78.5 | 57 | M |
| | 1999.02-2005.09 | CVT | F | R | SUV 4WD D16W1 | | GCI23017 | Inner Joint | | 27 | 30 | 40 | 58.5 | 97 | |
| | 1999.02-2005.09 | CVT/5MT | F | L | SUV 4WD D16W1 | | GDS23251 | Drive Shaft | 50T | 26 | 27 | 60 | 78.5 | 593 | |
| | 1999.02-2005.09 | MT | F | R | SUV 4WD D16W1 | | GDS23249 | Drive Shaft | 50T | 26 | 27 | 60 | 78.5 | 595 | |
| | 1999.02-2005.09 | MT | F | L/R | SUV 4WD D16W1 | | GCO23060 | Outer Joint | | 26 | 30 | 60 | 78.5 | 57 | M |
| | 1999.02-2005.09 | MT | F | R | SUV 4WD D16W1 | | GCI23086 | Inner Joint | | 27 | 30 | 40 | 58 | 97.5 | |
| | 1999.02-2005.09 | | F | R | SUV 4WD D16W1 | | GCI23023 | Inner Joint | | 27 | 30 | 40 | | 120.5 | |
| | 1999.02-2005.09 | MT/CVT | R | L/R | SUV 4WD D16W1 | | GCI23083 | Inner Joint | | 23 | 23 | 35 | 58.5 | 89.5 | |
| | 1999.02-2005.09 | CVT | F | R | SUV FWD D16W1 | | GCI23017 | Inner Joint | | 27 | 30 | 40 | 58.5 | 97 | |
| | 1999.02-2005.09 | CVT/5MT | F | L | SUV FWD D16W1 | | GDS23251 | Drive Shaft | 50T | 26 | 27 | 60 | 78.5 | 593 | |
| | 1999.02-2005.09 | CVT/5MT | F | L/R | SUV FWD D16W1 | | GCO23033 | Outer Joint | 50T | 26 | 30 | 60 | 78.5 | 57 | M |
| | 1999.02-2005.09 | MT | F | R | SUV FWD D16W1 | | GDS23249 | Drive Shaft | 50T | 26 | 27 | 60 | 78.5 | 595 | |
| | 1999.02-2005.09 | MT | F | R | SUV FWD D16W1 | | GCI23086 | Inner Joint | | 27 | 30 | 40 | 58 | 97.5 | |
| | 1999.02-2005.09 | | F | R | SUV FWD D16W1 | | GCI23023 | Inner Joint | | 27 | 30 | 40 | | 120.5 | |
| 1.6 (91 kw) | 1999.10-2005.09 | 5MT | F | L | SUV 4WD D16W5 | | GDS23251 | Drive Shaft | 50T | 26 | 27 | 60 | 78.5 | 593 | |
| | 1999.10-2005.09 | MT | F | R | SUV 4WD D16W5 | | GDS23249 | Drive Shaft | 50T | 26 | 27 | 60 | 78.5 | 595 | |
| | 1999.10-2005.09 | MT | F | L/R | SUV 4WD D16W5 | | GCO23033 | Outer Joint | 50T | 26 | 30 | 60 | 78.5 | 57 | M |
| | 1999.10-2005.09 | MT | F | L/R | SUV 4WD D16W5 | | GCO23060 | Outer Joint | | 26 | 30 | 60 | 78.5 | 57 | M |
| | 1999.10-2005.09 | MT | F | R | SUV 4WD D16W5 | | GCI23086 | Inner Joint | | 27 | 30 | 40 | 58 | 97.5 | |
| | 1999.10-2005.09 | | F | R | SUV 4WD D16W5 | Date From:2000.01,Date To:2000.01 | GCI23023 | Inner Joint | | 27 | 30 | 40 | | 120.5 | |
| | 1999.10-2005.09 | | R | L/R | SUV 4WD D16W5 | | GCI23083 | Inner Joint | | 23 | 23 | 35 | 58.5 | 89.5 | |
| 1.8 (102 kw) | 2015.01- | CVT | F | L | SUV FWD R18ZE | | GDS82679 | Drive Shaft | | 30 | 25 | 68 | 88.5 | 668 | |
| | 2015.01- | CVT | F | L | SUV FWD R18ZE | | GCO81485 | Outer Joint | | 30 | 25 | 68 | 88.5 | 63.5 | M |
| | 2015.01- | CVT | F | L | SUV FWD R18ZE | | GCI81504 | Inner Joint | | 25 | 24 | 35 | 58 | 98 | |
| 1.8 (104 kw) | 2014.01- | CVT | F | L | SUV 4WD R18Z7 | | GDS82679 | Drive Shaft | | 30 | 25 | 68 | 88.5 | 668 | |
| | 2014.01- | CVT | F | L | SUV 4WD R18Z7 | | GCO81485 | Outer Joint | | 30 | 25 | 68 | 88.5 | 63.5 | M |
| | 2014.01- | CVT | F | L | SUV 4WD R18Z7 | | GCI81504 | Inner Joint | | 25 | 24 | 35 | 58 | 98 | |
| | 2014.11- | CVT | F | L | SUV FWD R18Z7/R18ZG | | GCO81485 | Outer Joint | | 30 | 25 | 68 | 88.5 | 63.5 | M |
| | 2014.11- | CVT | F | L | SUV FWD R18Z7/R18ZG | | GCI81504 | Inner Joint | | 25 | 24 | 35 | 58 | 98 | |
| 1.8 (105 kw) | 2015.01- | CVT | F | L | SUV 4WD R18Z9 | | GDS82679 | Drive Shaft | | 30 | 25 | 68 | 88.5 | 668 | |
| | 2015.01- | CVT | F | L | SUV 4WD R18Z9 | | GCO81485 | Outer Joint | | 30 | 25 | 68 | 88.5 | 63.5 | M |
| | 2015.01- | CVT | F | L | SUV 4WD R18Z9 | | GCI81504 | Inner Joint | | 25 | 24 | 35 | 58 | 98 | |
| | 2015.01- | CVT | F | L | SUV FWD R18Z9, R18ZF | | GDS82679 | Drive Shaft | | 30 | 25 | 68 | 88.5 | 668 | |
| | 2015.01- | CVT | F | L | SUV FWD R18Z9, R18ZF | | GCO81485 | Outer Joint | | 30 | 25 | 68 | 88.5 | 63.5 | M |
| | 2015.01- | CVT | F | L | SUV FWD R18Z9, R18ZF | | GCI81504 | Inner Joint | | 25 | 24 | 35 | 58 | 98 | |
| **Insight** | | | | | | | | | | | | | | | |
| 1.3 (65 kw) | 2009.04-2013.12 | CVT | F | L | Hatchback FWD LDA3 | | GDS83521 | Drive Shaft | | 26 | 25 | 52 | 78.5 | 603 | |
| | 2009.04-2013.12 | CVT | F | L/R | Hatchback FWD LDA3 | | GCO23138 | Outer Joint | | 26 | 27 | 52 | 78.5 | 52.5 | M |
| | 2009.04-2013.12 | CVT | F | R | Hatchback FWD LDA3 | | GCI23050 | Inner Joint | | 25 | 27 | 35 | 58 | 94.5 | |
| 1.3 (73 kw) | 2009.04-2013.12 | CVT | F | L | Hatchback FWD LDA3 | Chassis no. to:BS200524 | GDS83521 | Drive Shaft | | 26 | 25 | 52 | 78.5 | 603 | |
| | 2009.04-2013.12 | CVT | F | L | Hatchback FWD LDA3 | | GCO23138 | Outer Joint | | 26 | 27 | 52 | 78.5 | 52.5 | M |
| | 2009.04-2013.12 | CVT | F | L | Hatchback FWD LDA3 | | GCI23050 | Inner Joint | | 25 | 27 | 35 | 58 | 94.5 | |
| **Integra** | | | | | | | | | | | | | | | |
| 1.8 (140 kw) | 1997.10-2001.08 | 5MT | F | L | Coupe FWD B18C6 | Date from:1999.10 | GDS81023 | Drive Shaft | 50T | 26 | 27 | 55 | 78.5 | 566.5 | |
| | 1997.10-2001.08 | 5MT | F | L | Coupe FWD B18C6 | | GCI23013 | Inner Joint | | 27 | 32 | 40 | | 120.5 | |
| | 1997.10-2001.08 | 5MT | F | R | Coupe FWD B18C6 | for right-hand drive vehicles,Model Year from:2000,Model Year to:2001 | GCI23005 | Inner Joint | | 25 | 30 | 35 | 54.5 | 97 | |

| | YEAR | TRANSM. | F/R | L/R | BODY STYLE & DRIVE TYPE & ENGINE | REMARKS | G-AP Ref. | PRODUCT | ABS | Technical Specifications A | B | C | H | L | P |
|---|---|---|---|---|---|---|---|---|---|---|---|---|---|---|---|
| **HONDA** | | | | | | | | | | | | | | | |
| **Integra** | | | | | | | | | | | | | | | |
| 1.8 (140 kw) | 1997.10-2001.08 | 5MT | F | R | Coupe FWD B18C6 | Date from:1999.10 | GCI81001 | Inner Joint | | 27 | 32 | 40 | 55.5 | 97 | |
| | 1997.10-2001.08 | AT/MT | F | L/R | Coupe FWD B18C6 | | GCO23016 | Outer Joint | | 26 | 32 | 55 | 78.5 | 56.5 | M |
| | 1997.10-2001.08 | MT | F | L/R | Coupe FWD B18C6 | | GCO23017 | Outer Joint | 50T | 26 | 32 | 55 | 78.5 | 56.5 | M |
| 2.0 (118 kw) | 2001.09-2008.11 | | F | | Coupe FWD K20A3 | | GCO23033 | Outer Joint | 50T | 26 | 30 | 60 | 78.5 | 57 | M |
| | 2001.09-2008.11 | | F | R | Coupe FWD K20A3 | | GCI23023 | Inner Joint | | 27 | 30 | 40 | | 120.5 | |
| **Jazz** | | | | | | | | | | | | | | | |
| 1.2 (57 kw) | 2002.03-2008.07 | 5MT | F | L | Hatchback FWD L12A1;L12A4 | | GDS23070 | Drive Shaft | | 26 | 25 | 52 | 79 | 612.5 | |
| | 2002.03-2008.07 | 5MT | F | R | Hatchback FWD L12A1;L12A4 | | GDS23071 | Drive Shaft | | 26 | 25 | 52 | 79 | 899 | |
| | 2002.03-2008.07 | 5MT | F | L/R | Hatchback FWD L12A1;L12A4 | | GCO23030 | Outer Joint | | 26 | 28 | 52 | 79 | 56 | M |
| | 2002.03-2008.07 | 5MT | F | L/R | Hatchback FWD L12A1;L12A4 | | GCI23018 | Inner Joint | | 25 | 28 | 35 | 58 | 95.5 | |
| 1.2 (66 kw) | 2008.07-2015.12 | 5MT | F | L | Hatchback FWD L12B1;L12B2 | | GDS23174 | Drive Shaft | | 26 | 25 | 52 | 78.5 | 641 | |
| | 2008.07-2015.12 | 5MT | F | R | Hatchback FWD L12B1;L12B2 | | GDS23326 | Drive Shaft | | 26 | 25 | 52 | 78.5 | 895 | |
| | 2008.07-2015.12 | 5MT | F | R | Hatchback FWD L12B1;L12B2 | | GCO23138 | Outer Joint | | 26 | 27 | 52 | 78.5 | 52.5 | M |
| | 2008.07-2015.12 | 5MT | F | L/R | Hatchback FWD L12B1;L12B2 | | GCO23106 | Outer Joint | | 26 | 28 | 52 | 79 | 54 | M |
| | 2008.07-2015.12 | 5MT | F | R | Hatchback FWD L12B1;L12B2 | | GCI23050 | Inner Joint | | 25 | 27 | 35 | 58 | 94.5 | |
| | 2008.07-2015.12 | 5MT | F | L/R | Hatchback FWD L12B1;L12B2 | | GCI23018 | Inner Joint | | 25 | 28 | 35 | 58 | 95.5 | |
| 1.3 (61 kw) | 2002.03-2008.07 | CVT/5MT | F | L | Hatchback FWD L13A1 | | GDS23070 | Drive Shaft | | 26 | 25 | 52 | 79 | 612.5 | |
| | 2002.03-2008.07 | CVT/5MT | F | R | Hatchback FWD L13A1 | | GDS23071 | Drive Shaft | | 26 | 25 | 52 | 79 | 899 | |
| | 2002.03-2008.07 | CVT/5MT | F | L/R | Hatchback FWD L13A1 | | GCO23030 | Outer Joint | | 26 | 28 | 52 | 79 | 56 | M |
| | 2002.03-2008.07 | CVT/5MT | F | L/R | Hatchback FWD L13A1 | | GCI23018 | Inner Joint | | 25 | 28 | 35 | 58 | 95.5 | |
| | 2006.12-2008.10 | CVT/5MT | F | L | Hatchback FWD L13A5;L13A6 | | GDS23070 | Drive Shaft | | 26 | 25 | 52 | 79 | 612.5 | |
| | 2006.12-2008.10 | CVT/5MT | F | R | Hatchback FWD L13A5;L13A6 | | GDS23071 | Drive Shaft | | 26 | 25 | 52 | 79 | 899 | |
| | 2006.12-2008.10 | CVT/5MT | F | L/R | Hatchback FWD L13A5;L13A6 | | GCO23030 | Outer Joint | | 26 | 28 | 52 | 79 | 56 | M |
| | 2006.12-2008.10 | CVT/5MT | F | L/R | Hatchback FWD L13A5;L13A6 | | GCI23018 | Inner Joint | | 25 | 28 | 35 | 58 | 95.5 | |
| 1.3 (73 kw) | 2008.07-2015.12 | 5MT/5AMT | F | L/R | Hatchback FWD L13Z1;L13A;L13Z2 | | GCO23106 | Outer Joint | | 26 | 28 | 52 | 79 | 54 | M |
| | 2008.07-2015.12 | 5MT/5AMT | F | L/R | Hatchback FWD L13Z1;L13A;L13Z2 | | GCI23018 | Inner Joint | | 25 | 28 | 35 | 58 | 95.5 | |
| | 2008.07-2015.12 | AMT | F | L/R | Hatchback FWD L13Z1;L13A;L13Z2 | Date to:2015.12 | GCO23030 | Outer Joint | | 26 | 28 | 52 | 79 | 56 | M |
| | 2008.07-2015.12 | CVT | F | R | Hatchback FWD L13Z1;L13A;L13Z2 | Date to:2012.06 | GCO23184 | Outer Joint | | 26 | 27 | 52 | 78.5 | 54 | M |
| | 2008.07-2015.12 | CVT | F | L/R | Hatchback FWD L13Z1;L13A;L13Z2 | | GCO23138 | Outer Joint | | 26 | 27 | 52 | 78.5 | 52.5 | M |
| | 2008.07-2015.12 | CVT | F | L/R | Hatchback FWD L13Z1;L13A;L13Z2 | | GCI23050 | Inner Joint | | 25 | 27 | 35 | 58 | 94.5 | |
| | 2008.07-2015.12 | CVT/5MT/5AMT | F | L | Hatchback FWD L13Z1;L13A;L13Z2 | | GDS23174 | Drive Shaft | | 26 | 25 | 52 | 78.5 | 641 | |
| | 2008.07-2015.12 | CVT/5MT/5AMT | F | R | Hatchback FWD L13Z1;L13A;L13Z2 | | GDS23326 | Drive Shaft | | 26 | 25 | 52 | 78.5 | 895 | |
| 1.3 (75 kw) | 2011.04-2015.12 | CVT | F | L | Hatchback FWD LDA3 | | GDS83521 | Drive Shaft | | 26 | 25 | 52 | 78.5 | 603 | |
| | 2011.04-2015.12 | CVT | F | L | Hatchback FWD LDA3 | | GCO23138 | Outer Joint | | 26 | 27 | 52 | 78.5 | 52.5 | M |
| | 2011.04-2015.12 | CVT | F | L | Hatchback FWD LDA3 | | GCI23050 | Inner Joint | | 25 | 27 | 35 | 58 | 94.5 | |
| | 2015.09- | 6MT | F | L | Hatchback FWD L13B;L13B2 | | GDS83916 | Drive Shaft | | 26 | 25 | 52 | 78.5 | 634 | |
| | 2015.09- | 6MT | F | R | Hatchback FWD L13B;L13B2 | | GDS83910 | Drive Shaft | | 26 | 25 | 52 | 78.5 | 903 | |
| | 2015.09- | 6MT | F | L/R | Hatchback FWD L13B;L13B2 | | GCO23149 | Outer Joint | | 26 | 29 | 52 | 78.5 | 56 | M |
| | 2015.09- | CVT | F | L | Hatchback FWD L13B;L13B2 | | GDS83688 | Drive Shaft | | 26 | 25 | 52 | 78.5 | 639 | |
| | 2015.09- | CVT | F | R | Hatchback FWD L13B;L13B2 | | GDS83687 | Drive Shaft | | 26 | 25 | 52 | 78.5 | 907 | |
| | 2015.09- | CVT | F | L/R | Hatchback FWD L13B;L13B2 | Date from:2015.10 | GCO82463 | Outer Joint | | 26 | 26 | 52 | 78.5 | 50 | M |
| | 2015.09- | CVT | F | L/R | Hatchback FWD L13B;L13B2 | | GCI82333 | Inner Joint | | 25 | 26 | 35 | 58 | 85 | |
| 1.4 (74 kw) | 2008.11-2015.12 | 5AT/5MT | F | L/R | Hatchback FWD L13Z1 | Date to:2012.06 | GCO23106 | Outer Joint | | 26 | 28 | 52 | 79 | 54 | M |
| | 2008.11-2015.12 | AT/MT/CVT/Semi-AT | F | L | Hatchback FWD L13Z1 | | GDS23174 | Drive Shaft | | 26 | 25 | 52 | 78.5 | 641 | |
| | 2008.11-2015.12 | AT/MT/CVT/Semi-AT | F | R | Hatchback FWD L13Z1 | | GDS23326 | Drive Shaft | | 26 | 25 | 52 | 78.5 | 895 | |
| | 2008.11-2015.12 | CVT | F | R | Hatchback FWD L13Z1 | Date to:2012.06 | GCO23184 | Outer Joint | | 26 | 27 | 52 | 78.5 | 54 | M |
| | 2008.11-2015.12 | CVT | F | R | Hatchback FWD L13Z1 | | GCI23050 | Inner Joint | | 25 | 27 | 35 | 58 | 94.5 | |
| | 2008.11-2015.12 | | F | L/R | Hatchback FWD L13Z1 | | GCI23018 | Inner Joint | | 25 | 28 | 35 | 58 | 95.5 | |
| 1.5 (96 kw) | 2017.09- | 6MT | F | L | Hatchback FWD L15B3 | | GDS83916 | Drive Shaft | | 26 | 25 | 52 | 78.5 | 634 | |
| | 2017.09- | 6MT | F | R | Hatchback FWD L15B3 | | GDS83910 | Drive Shaft | | 26 | 25 | 52 | 78.5 | 903 | |
| | 2017.09- | 6MT | F | L/R | Hatchback FWD L15B3 | | GCO23149 | Outer Joint | | 26 | 29 | 52 | 78.5 | 56 | M |
| **Legend** | | | | | | | | | | | | | | | |
| 3.5 (151 kw) | 1996.01-1997.10 | 4AT | F | L/R | Saloon FWD C35A2 | | GCO23032 | Outer Joint | 50T | 28 | 32 | 64 | 88.5 | 62 | M |
| 3.5 (153 kw) | 1997.11-2004.09 | 4AT | F | L/R | Saloon FWD C35A5 | Date to:1998.10 | GCO23032 | Outer Joint | 50T | 28 | 32 | 64 | 88.5 | 62 | M |
| 3.5 (217 kw) | 2006.05-2012.12 | 5AT | F | L/R | Saloon 4WD J35A8 | | GCO23124 | Outer Joint | | 30 | 32 | 68.1 | 88 | 59.5 | M |
| | 2006.05-2012.12 | AT | F | | Saloon 4WD J35A8 | Date from:2007.01,Date to:2007.01 | GCO23124 | Outer Joint | | 30 | 32 | 68.1 | 88 | 59.5 | M |
| 3.7 (217 kw) | 2008.07-2012.12 | 5AT | F | L | Saloon 4WD J37A3;J37A2 | | GCI81901 | Inner Joint | | 29 | 34 | 40 | 62 | 94.5 | |
| | 2008.07-2012.12 | AT | F | R | Saloon 4WD J37A3;J37A2 | Date from:2009.01,Date to:2009.01 | GCI23038 | Inner Joint | | 29 | 34 | 42 | | 122 | |
| 3.7 (226 kw) | 2008.08-2013.12 | 5AT | F | L | Saloon 4WD J37A3;J37A2 | | GCI81901 | Inner Joint | | 29 | 34 | 40 | 62 | 94.5 | |
| **Logo** | | | | | | | | | | | | | | | |
| 1.3 (48 kw) | 1999.03-2001.11 | AT/MT | F | L/R | Hatchback FWD D13B7 | | GCO23073 | Outer Joint | 50T | 26 | 28 | 55 | 78.5 | 56.5 | M |
| | 1999.03-2001.11 | CVT/5MT | F | L/R | Hatchback FWD D13B7 | | GCO23024 | Outer Joint | 50T | 26 | 28 | 55 | 77.5 | 53 | M |
| | 1999.03-2001.11 | CVT/5MT | F | L/R | Hatchback FWD D13B7 | Date To:2001.11 | GCO23126 | Outer Joint | 50T | 23 | 26 | 49 | 78 | 50.5 | M |
| | 1999.03-2001.11 | CVT/5MT | F | L | Hatchback FWD D13B7 | | GCI23021 | Inner Joint | | 25 | 28 | 35 | 61.5 | 97.5 | |
| | 1999.03-2001.11 | CVT/5MT | F | R | Hatchback FWD D13B7 | | GCI23020 | Inner Joint | | 25 | 28 | 35 | 54.5 | 96.5 | |

| | YEAR | TRANSM. | F/R | L/R | BODY STYLE & DRIVE TYPE & ENGINE | REMARKS | G-AP Ref. | PRODUCT | ABS | Technical Specifications A | B | C | H | L | P |
|---|---|---|---|---|---|---|---|---|---|---|---|---|---|---|---|
| **HONDA** | | | | | | | | | | | | | | | |
| **Logo** | | | | | | | | | | | | | | | |
| 1.3 (48 kw) | 1999.03-2001.11 | | F | L/R | Hatchback FWD D13B7 | | GCO23156 | Outer Joint | 50T | 26 | 28 | 55 | 78 | 52 | M |
| **Odyssey** | | | | | | | | | | | | | | | |
| 2.3 (110 kw) | 1997.10-1999.12 | 4AT | F | L/R | MPV FWD F23A7 | Vehicle Production Country:JAPAN | GCO23029 | Outer Joint | 50T | 28 | 32 | 64 | 89 | 60 | M |
| | 1997.10-1999.12 | 4AT | F | | MPV FWD F23A7 | Vehicle Production Country:JAPAN | GCI23013 | Inner Joint | | 27 | 32 | 40 | | 120.5 | |
| | 1997.10-1999.12 | | F | | MPV FWD F23A7 | | GCO23080 | Outer Joint | 50T | 28 | 32 | 64 | 88.5 | 62 | M |
| 2.4 (132 kw) | 2009.04-2013.12 | 5AT/5MT | F | R | MPV FWD K24Z2 | | GDS23021 | Drive Shaft | | 28 | 27 | 63 | 88.5 | 575 | |
| 3.0 (154 kw) | 1998.06-2002.06 | AT | F | L/R | MPV 4WD J30A1 | | GCO23029 | Outer Joint | 50T | 28 | 32 | 64 | 89 | 60 | M |
| | 1998.06-2002.06 | AT | F | | MPV 4WD J30A1 | | GCI23013 | Inner Joint | | 27 | 32 | 40 | | 120.5 | |
| | 1998.06-2002.06 | AT | R | L/R | MPV 4WD J30A1 | | GCI23054 | Outer Joint | 50T | 23 | 25 | 55 | 78 | 85 | |
| | 1998.06-2002.06 | AT | R | | MPV 4WD J30A1 | | GCI23069 | Inner Joint | | 23 | 25 | 35 | 60 | 94.5 | |
| | 1998.06-2004.06 | AT | F | L/R | MPV FWD J30A1 | | GCO23029 | Outer Joint | 50T | 28 | 32 | 64 | 89 | 60 | M |
| | 1998.06-2004.06 | AT | F | | MPV FWD J30A1 | | GCI23013 | Inner Joint | | 27 | 32 | 40 | | 120.5 | |
| | 1998.06-2004.06 | | F | L/R | MPV FWD J30A1 | | GCO23080 | Outer Joint | 50T | 28 | 32 | 64 | 88.5 | 62 | M |
| 3.5 (185 kw) | 2011.01-2016.12 | 5AT | F | L | MPV FWD J35A8/J35Z8 | | GDS23348 | Drive Shaft | | 30 | 31 | 64 | 89 | 723 | |
| | 2011.01-2016.12 | 5AT | F | R | MPV FWD J35A8/J35Z8 | | GDS23351 | Drive Shaft | | 30 | 31 | 64 | 89 | 1041 | |
| **Pilot** | | | | | | | | | | | | | | | |
| 3.5 (183 kw) | 2011.01- | 5AT | F | L | SUV 4WD J35Z4 | | GDS23346 | Drive Shaft | | 30 | 29 | 64 | 106 | 733 | |
| | 2011.01- | 5AT | F | R | SUV 4WD J35Z4 | | GDS23347 | Drive Shaft | | 30 | 29 | 64 | 106 | 1039 | |
| | 2011.01- | 5AT | F | L/R | SUV 4WD J35Z4 | Date to:2014.12 | GCO23148 | Outer Joint | | 30 | 36 | 64 | 106 | 64 | I |
| | 2011.01- | 5AT | F | L/R | SUV 4WD J35Z4 | Date from:2015.01 | GCO23251 | Outer Joint | | 30 | 36 | 64 | 106 | 70 | I |
| | 2011.01- | 5AT | F | L | SUV 4WD J35Z4 | Date from:2015.01 | GCI23101 | Inner Joint | | 29 | 35 | 40 | 61.5 | 101 | |
| | 2011.01- | 5AT | F | R | SUV 4WD J35Z4 | Date to:2011.12 | GCI23107 | Inner Joint | | 29 | 35 | 42 | | 126.5 | |
| 3.5 (186 kw) | 2008.09- | 5AT | F | L/R | SUV 4WD J35Z4 | | GCO23148 | Outer Joint | | 30 | 36 | 64 | 106 | 64 | I |
| | 2008.09- | 5AT | F | L | SUV 4WD J35Z4 | | GCI23101 | Inner Joint | | 29 | 35 | 40 | 61.5 | 101 | |
| | 2008.09- | 5AT | F | R | SUV 4WD J35Z4 | Date to:2011.12 | GCI23107 | Inner Joint | | 29 | 35 | 42 | | 126.5 | |
| | 2014.04-2016.04 | AT | F | | SUV FWD J35Z4 | Date From:2009.01; Date To:2011.12 | GCO23148 | Outer Joint | | 30 | 36 | 64 | 106 | 64 | I |
| 3.5 (189 kw) | 2010.01-2015.06 | 5AT | F | L | SUV 4WD J35Z4 | | GDS23346 | Drive Shaft | | 30 | 29 | 64 | 106 | 733 | |
| | 2010.01-2015.06 | 5AT | F | R | SUV 4WD J35Z4 | | GDS23347 | Drive Shaft | | 30 | 29 | 64 | 106 | 1039 | |
| | 2010.01-2015.06 | 5AT | F | L/R | SUV 4WD J35Z4 | Date to:2014.12 | GCO23148 | Outer Joint | | 30 | 36 | 64 | 106 | 64 | I |
| | 2010.01-2015.06 | 5AT | F | L/R | SUV 4WD J35Z4 | Date from:2015.01 | GCO23251 | Outer Joint | | 30 | 36 | 64 | 106 | 70 | I |
| | 2010.01-2015.06 | 5AT | F | L | SUV 4WD J35Z4 | Date from:2015.01 | GCI23101 | Inner Joint | | 29 | 35 | 40 | 61.5 | 101 | |
| | 2010.01-2015.06 | 5AT | F | R | SUV 4WD J35Z4 | Date to:2011.12 | GCI23107 | Inner Joint | | 29 | 35 | 42 | | 126.5 | |
| **Prelude** | | | | | | | | | | | | | | | |
| 2.0 (98 kw) | 1991.10-1996.09 | AT/MT | F | L/R | Coupe FWD F20A4 | | GCO23013 | Outer Joint | | 28 | 32 | 60 | 88 | 59 | M |
| | 1991.10-1996.09 | AT/MT | F | L/R | Coupe FWD F20A4 | | GCO23014 | Outer Joint | 50T | 28 | 32 | 60 | 88 | 59 | M |
| | 1991.10-1996.09 | MT | F | L | Coupe FWD F20A4 | | GDS23017 | Drive Shaft | 50T | 28 | 27 | 64 | 88.5 | 578.5 | |
| | 1991.10-1996.09 | | F | | Coupe FWD F20A4 | | GCO23046 | Outer Joint | | 28 | 32 | 60 | 93 | 59 | M |
| | 1996.10-2000.10 | 4AT/5MT | F | L/R | Coupe FWD F20A4 | | GCO23080 | Outer Joint | 50T | 28 | 32 | 64 | 88.5 | 62 | M |
| | 1996.10-2000.10 | 4AT/5MT | F | L/R | Coupe FWD F20A4 | | GCO23118 | Outer Joint | 50T | 28 | 32 | 64 | 88.5 | 62 | M |
| | 1996.10-2000.10 | AT/MT | F | R | Coupe FWD F20A4 | Transmission:MT;Transmission:AT,Date to:1997.12 | GDS23095 | Drive Shaft | 50T | 28 | 27 | 64 | 88.5 | 628.5 | |
| | 1996.10-2000.10 | AT/MT | F | L/R | Coupe FWD F20A4 | | GCO23029 | Outer Joint | 50T | 28 | 32 | 64 | 89 | 60 | M |
| | 1996.10-2000.10 | AT/MT | F | R | Coupe FWD F20A4 | Transmission:AT,Date to:1997.12;Transmission:MT | GCI23009 | Inner Joint | | 27 | 32 | 40 | 58.5 | 97 | |
| | 1996.10-2000.10 | MT | F | L | Coupe FWD F20A4 | Date to:1997.12 | GDS23101 | Drive Shaft | 50T | 28 | 27 | 64 | 88.5 | 576 | |
| | 1996.10-2000.10 | | F | | Coupe FWD F20A4 | Date From:1997.01,Date To:1997.01 | GCO23035 | Outer Joint | | 28 | 32 | 64 | 89 | 60 | M |
| 2.2 (136 kw) | 1993.01-1996.09 | AT/MT | F | L/R | Coupe FWD H22A2 | | GCO23013 | Outer Joint | | 28 | 32 | 60 | 88 | 59 | M |
| | 1993.01-1996.09 | AT/MT | F | L/R | Coupe FWD H22A2 | | GCO23014 | Outer Joint | 50T | 28 | 32 | 60 | 88 | 59 | M |
| | 1993.01-1996.09 | MT | F | L | Coupe FWD H22A2 | | GDS23017 | Drive Shaft | 50T | 28 | 27 | 64 | 88.5 | 578.5 | |
| | 1996.10-2000.10 | 4AT/5MT | F | L/R | Coupe FWD H22A5 | | GCO23080 | Outer Joint | 50T | 28 | 32 | 64 | 88.5 | 62 | M |
| | 1996.10-2000.10 | AT | F | L/R | Coupe FWD H22A5 | Date from:1999.01 | GCO23139 | Outer Joint | 50T | 28 | 32 | 64 | 88 | 58.5 | M |
| | 1996.10-2000.10 | AT/MT | F | R | Coupe FWD H22A5 | Transmission:MT,Date to:1998.12,Trans. code:M2V5;Transmission:MT,Date from:1999.01,Transmission:A | GDS23095 | Drive Shaft | 50T | 28 | 27 | 64 | 88.5 | 628.5 | |
| | 1996.10-2000.10 | AT/MT | F | L/R | Coupe FWD H22A5 | | GCO23029 | Outer Joint | 50T | 28 | 32 | 64 | 89 | 60 | M |
| | 1996.10-2000.10 | AT/MT | F | R | Coupe FWD H22A5 | | GCI23009 | Inner Joint | | 27 | 32 | 40 | 58.5 | 97 | |
| | 1996.10-2000.10 | MT | F | L/R | Coupe FWD H22A5 | Date from:1999.01,Trans. code:M2V5 | GCO23139 | Outer Joint | 50T | 28 | 32 | 64 | 88 | 58.5 | M |
| | 1996.10-2000.10 | | F | | Coupe FWD H22A5 | Date From:1997.01,Date To:1997.01 | GCO23035 | Outer Joint | | 28 | 32 | 64 | 89 | 60 | M |
| 2.2 (147 kw) | 1998.10-2000.10 | 5MT | F | R | Coupe FWD H22A5/H22A8 | Transm. code:M2V5 | GDS23095 | Drive Shaft | 50T | 28 | 27 | 64 | 88.5 | 628.5 | |
| | 1998.10-2000.10 | 5MT | F | L/R | Coupe FWD H22A5/H22A8 | Trans. code:M2X5 | GCO23080 | Outer Joint | 50T | 28 | 32 | 64 | 88.5 | 62 | M |
| | 1998.10-2000.10 | 5MT | F | L/R | Coupe FWD H22A5/H22A8 | Trans. code:M2V5 | GCO23139 | Outer Joint | 50T | 28 | 32 | 64 | 88 | 58.5 | M |
| | 1998.10-2000.10 | 5MT | F | R | Coupe FWD H22A5/H22A8 | Transm. code:M2V5 | GCI23009 | Inner Joint | | 27 | 32 | 40 | 58.5 | 97 | |
| | 1998.10-2000.10 | MT | F | L/R | Coupe FWD H22A5/H22A8 | Trans. code:M2X5 | GCO23029 | Outer Joint | 50T | 28 | 32 | 64 | 89 | 60 | M |
| | 1998.10-2000.10 | | F | | Coupe FWD H22A5/H22A8 | Date From:1997.01,Date To:1997.01 | GCO23035 | Outer Joint | | 28 | 32 | 64 | 89 | 60 | M |
| 2.3 (118 kw) | 1991.10-1996.09 | AT/MT | F | L/R | Coupe FWD H23A2 | | GCO23013 | Outer Joint | | 28 | 32 | 60 | 88 | 59 | M |
| | 1991.10-1996.09 | AT/MT | F | L/R | Coupe FWD H23A2 | | GCO23014 | Outer Joint | 50T | 28 | 32 | 60 | 88 | 59 | M |
| | 1991.10-1996.09 | MT | F | L | Coupe FWD H23A2 | | GDS23017 | Drive Shaft | 50T | 28 | 27 | 64 | 88.5 | 578.5 | |

| | YEAR | TRANSM. | F/R | L/R | BODY STYLE & DRIVE TYPE & ENGINE | REMARKS | G-AP Ref. | PRODUCT | ABS | Technical Specifications A | B | C | H | L | P |
|---|---|---|---|---|---|---|---|---|---|---|---|---|---|---|---|
| **HONDA** | | | | | | | | | | | | | | | |
| **S2000** | | | | | | | | | | | | | | | |
| 2.0 (177 kw) | 1999.06-2009.06 | 6MT | R | L | Cabriolet RWD F20C2 | | GDS82607 | Drive Shaft | 50T | 28 | | 64 | 88.5 | 681 | |
| | 1999.06-2009.06 | 6MT | R | R | Cabriolet RWD F20C2 | | GDS82608 | Drive Shaft | 50T | 28 | | 64 | 88.5 | 726 | |
| | 1999.06-2009.06 | 6MT | R | L/R | Cabriolet RWD F20C2 | | GCO82074 | Outer Joint | 50T | 28 | 32 | 64 | 88.5 | 58.5 | M |
| | 1999.06-2009.06 | 6MT | R | L/R | Cabriolet RWD F20C2 | | GCI81915 | Inner Joint | | | 32 | 44 | 49 | 100 | |
| **Shuttle** | | | | | | | | | | | | | | | |
| 2.2 (110 kw) | 1995.03-1998.02 | AT | F | L/R | MPV FWD F22B8 | | GCO23029 | Outer Joint | 50T | 28 | 32 | 64 | 89 | 60 | M |
| | 1995.03-1998.02 | AT | F | | MPV FWD F22B8 | | GCI23013 | Inner Joint | | 27 | 32 | 40 | | 120.5 | |
| | 1995.03-1998.02 | AT/MT | F | L/R | MPV FWD F22B8 | | GCO23080 | Outer Joint | 50T | 28 | 32 | 64 | 88.5 | 62 | M |
| | 1995.03-1998.02 | AT/MT | F | L/R | MPV FWD F22B8 | | GCO81006 | Outer Joint | | 28 | 32 | 64 | 88.5 | 62 | M |
| 2.3 (110 kw) | 1997.10-2002.06 | AT | F | L/R | MPV FWD F23A7 | | GCO23029 | Outer Joint | 50T | 28 | 32 | 64 | 89 | 60 | M |
| | 1997.10-2002.06 | AT | F | | MPV FWD F23A7 | | GCI23013 | Inner Joint | | 27 | 32 | 40 | | 120.5 | |
| | 1997.10-2002.06 | AT/MT | F | L/R | MPV FWD F23A7 | | GCO23080 | Outer Joint | 50T | 28 | 32 | 64 | 88.5 | 62 | M |
| **Stream** | | | | | | | | | | | | | | | |
| 1.7 (92 kw) | 2001.05-2006.09 | AT | F | L/R | MPV FWD D17A2;D17A5 | | GCO23033 | Outer Joint | 50T | 26 | 30 | 60 | 78.5 | 57 | M |
| | 2001.05-2006.09 | MT | F | | MPV FWD D17A2;D17A5 | Date From:2002.01,Date To:2002.01 | GCO23029 | Outer Joint | 50T | 28 | 32 | 64 | 89 | 60 | M |
| | 2001.05-2006.09 | | F | L/R | MPV FWD D17A2;D17A5 | | GCO23118 | Outer Joint | 50T | 28 | 32 | 64 | 88.5 | 62 | M |
| | 2001.05-2006.09 | | F | | MPV FWD D17A2;D17A5 | | GCO23080 | Outer Joint | 50T | 28 | 32 | 64 | 88.5 | 62 | M |
| | 2001.05-2006.09 | | F | R | MPV FWD D17A2;D17A5 | | GCI23009 | Inner Joint | | 27 | 32 | 40 | 58.5 | 97 | |
| 2.0 (115 kw) | 2001.05-2006.09 | AT | F | L/R | MPV FWD K20A1;K20A5 | | GCO23033 | Outer Joint | 50T | 26 | 30 | 60 | 78.5 | 57 | M |
| | 2001.05-2006.09 | AT | F | L | MPV FWD K20A1;K20A5 | | GCI23086 | Inner Joint | | 27 | 30 | 40 | 58 | 97.5 | |
| | 2001.05-2006.09 | AT | F | R | MPV FWD K20A1;K20A5 | | GCI23023 | Inner Joint | | 27 | 30 | 40 | | 120.5 | |
| | 2001.05-2006.09 | MT | F | L/R | MPV FWD K20A1;K20A5 | | GCO23118 | Outer Joint | 50T | 28 | 32 | 64 | 88.5 | 62 | M |
| | 2001.05-2006.09 | MT | F | L | MPV FWD K20A1;K20A5 | | GCI23009 | Inner Joint | | 27 | 32 | 40 | 58.5 | 97 | |
| | 2001.05-2006.09 | MT | F | R | MPV FWD K20A1;K20A5 | | GCI23013 | Inner Joint | | 27 | 32 | 40 | | 120.5 | |
| | 2003.12- | AT | F | L | MPV FWD K20B | | GCI23086 | Inner Joint | | 27 | 30 | 40 | 58 | 97.5 | |
| | 2003.12- | AT | F | R | MPV FWD K20B | | GCI23023 | Inner Joint | | 27 | 30 | 40 | | 120.5 | |
| | 2003.12- | MT | F | L | MPV FWD K20B | | GCI23009 | Inner Joint | | 27 | 32 | 40 | 58.5 | 97 | |
| | 2003.12- | MT | F | R | MPV FWD K20B | | GCI23013 | Inner Joint | | 27 | 32 | 40 | | 120.5 | |
| **HONDA (DONGFENG)** | | | | | | | | | | | | | | | |
| **XR-V** | | | | | | | | | | | | | | | |
| 1.5 (91 kw) | 2022.08- | CVT | F | L | SUV FWD L15CE | | GDS56326 | Drive Shaft | | 30 | 25 | 68 | 88.5 | 674 | |
| | 2022.08- | CVT | F | R | SUV FWD L15CE | | GDS56327 | Drive Shaft | | 30 | 27 | 68 | 88.5 | 621 | |
| | 2022.08- | CVT | F | L/R | SUV FWD L15CE | | GCO82029 | Outer Joint | | 30 | 32 | 68 | 88.5 | 57 | I |
| | 2022.08- | CVT | F | L | SUV FWD L15CE | | GCI23093 | Inner Joint | | 25 | 32 | 35 | 58 | 105.5 | |
| | 2022.08- | CVT | F | R | SUV FWD L15CE | | GCI23094 | Inner Joint | | 27 | 32 | 40 | | 133 | |
| **HONDA (GAC)** | | | | | | | | | | | | | | | |
| **Accord** | | | | | | | | | | | | | | | |
| 2.0 (110 kw) | 2003.01-2007.12 | 5MT | F | R | Saloon FWD K20A7 | | GDS23021 | Drive Shaft | | 28 | 27 | 63 | 88.5 | 575 | |
| 2.4 (132 kw) | 2008.01-2013.12 | AT | F | L | Saloon FWD K24Z2 | | GDS23241 | Drive Shaft | | 30 | 27 | 68.1 | 88 | 668 | |
| **Odyssey** | | | | | | | | | | | | | | | |
| 2.4 (118 kw) | 2005.03-2009.07 | 5AT/5MT | F | R | MPV FWD K24A6 | | GDS23021 | Drive Shaft | | 28 | 27 | 63 | 88.5 | 575 | |
| | 2005.03-2009.07 | | F | L | MPV FWD K24A6 | | GDS23011 | Drive Shaft | | 28 | 27 | 63 | 88.5 | 663 | |
| 2.4 (133 kw) | 2009.08-2014.12 | | F | L | MPV FWD K24Z2 | | GDS23011 | Drive Shaft | | 28 | 27 | 63 | 88.5 | 663 | |
| **Vezel** | | | | | | | | | | | | | | | |
| 1.5 (91 kw) | 2022.11- | CVT | F | L | SUV FWD L15CC | | GDS56326 | Drive Shaft | | 30 | 25 | 68 | 88.5 | 674 | |
| | 2022.11- | CVT | F | R | SUV FWD L15CC | | GDS56327 | Drive Shaft | | 30 | 27 | 68 | 88.5 | 621 | |
| | 2022.11- | CVT | F | L/R | SUV FWD L15CC | | GCO82029 | Outer Joint | | 30 | 32 | 68 | 88.5 | 57 | I |
| | 2022.11- | CVT | F | L | SUV FWD L15CC | | GCI23093 | Inner Joint | | 25 | 32 | 35 | 58 | 105.5 | |
| | 2022.11- | CVT | F | R | SUV FWD L15CC | | GCI23094 | Inner Joint | | 27 | 32 | 40 | | 133 | |
| **HONGQI** | | | | | | | | | | | | | | | |
| **E-HS9** | | | | | | | | | | | | | | | |
| EV (320 kw) | 2020.12- | ET | F | L | SUV 4WD CAM220PT2 | Date to:2023.02 | GDS56496 | Drive Shaft | | 32 | 30 | 64 | 104.5 | 1004 | |
| | 2020.12- | ET | F | R | SUV 4WD CAM220PT2 | Date to:2023.02 | GDS56466 | Drive Shaft | | 32 | 30 | 64 | 104.5 | 784 | |
| | 2020.12- | ET | F | L/R | SUV 4WD CAM220PT2 | Date to:2023.02 | GCO83305 | Outer Joint | | 32 | 28 | 64 | 104.5 | 64.5 | I |
| | 2020.12- | ET | R | L | SUV 4WD CAM220PT2 | | GDS56679 | Drive Shaft | | 32 | 29 | 76.5 | 105 | 945 | |
| | 2020.12- | ET | R | R | SUV 4WD CAM220PT2 | | GDS56680 | Drive Shaft | | 32 | 29 | 76.5 | 105 | 793 | |
| | 2020.12- | ET | R | L/R | SUV 4WD CAM220PT2 | | GCO83391 | Outer Joint | | 32 | 24 | 76.5 | 105 | 69 | I |
| EV (405 kw) | 2020.12- | ET | F | L | SUV 4WD CAM220PT2/CAM250PT1 | Date to:2023.02 | GDS56496 | Drive Shaft | | 32 | 30 | 64 | 104.5 | 1004 | |
| | 2020.12- | ET | F | R | SUV 4WD CAM220PT2/CAM250PT1 | Date to:2023.02 | GDS56466 | Drive Shaft | | 32 | 30 | 64 | 104.5 | 784 | |
| | 2020.12- | ET | F | L/R | SUV 4WD CAM220PT2/CAM250PT1 | Date to:2023.02 | GCO83305 | Outer Joint | | 32 | 28 | 64 | 104.5 | 64.5 | I |
| | 2020.12- | ET | R | L | SUV 4WD CAM220PT2/CAM250PT1 | | GDS56679 | Drive Shaft | | 32 | 29 | 76.5 | 105 | 945 | |
| | 2020.12- | ET | R | R | SUV 4WD CAM220PT2/CAM250PT1 | | GDS56680 | Drive Shaft | | 32 | 29 | 76.5 | 105 | 793 | |
| | 2020.12- | ET | R | L/R | SUV 4WD CAM220PT2/CAM250PT1 | | GCO83391 | Outer Joint | | 32 | 24 | 76.5 | 105 | 69 | I |

| | YEAR | TRANSM. | F/R | L/R | BODY STYLE & DRIVE TYPE & ENGINE | REMARKS | G-AP Ref. | PRODUCT | ABS | Technical Specifications A | B | C | H | L | P |
|---|---|---|---|---|---|---|---|---|---|---|---|---|---|---|---|
| **HORKI (DYK)** | | | | | | | | | | | | | | | |
| **300E** | | | | | | | | | | | | | | | |
| EV (81 kw) | 2017.10- | ET | F | L | Saloon FWD 36500-0E200 | | GDS56228 | Drive Shaft | 44T | 27 | 27 | 60 | 85.5 | 637 | |
| | 2017.10- | ET | F | R | Saloon FWD 36500-0E200 | | GDS56227 | Drive Shaft | 44T | 27 | 27 | 60 | 85.5 | 893 | |
| | 2017.10- | ET | F | L/R | Saloon FWD 36500-0E200 | | GCO83212 | Outer Joint | 44T | 27 | 24 | 60 | 85.5 | 64 | M |
| | 2017.10- | ET | F | L/R | Saloon FWD 36500-0E200 | | GCI82770 | Inner Joint | | 27 | 24 | 30 | 67.5 | 80 | |
| **HUMMER** | | | | | | | | | | | | | | | |
| **H3** | | | | | | | | | | | | | | | |
| 3.5 (162 kw) | 2005.04-2010.12 | 4AT | F | L/R | Terrain cab wagon closed 4WD L52 | | GDS21067 | Drive Shaft | | 33 | 28 | 72.8 | 112.5 | 634 | |
| 3.7 (180 kw) | 2006.09- | 4AT | F | L/R | Closed Off-Road Vehicle 4WD LLR | | GDS21067 | Drive Shaft | | 33 | 28 | 72.8 | 112.5 | 634 | |
| | 2007.01- | 4AT/5MT | F | L/R | Closed Off-Road Vehicle 4WD LLR | | GDS21067 | Drive Shaft | | 33 | 28 | 72.8 | 112.5 | 634 | |
| 5.3 (224 kw) | 2008.01-2010.12 | 4AT | F | L/R | Terrain cab wagon closed 4WD LH8(325CUV8) | | GDS21067 | Drive Shaft | | 33 | 28 | 72.8 | 112.5 | 634 | |
| **HYUNDAI** | | | | | | | | | | | | | | | |
| **Accent** | | | | | | | | | | | | | | | |
| 1.3 (44 kw) | 1994.07-1999.08 | 5MT | F | L/R | Saloon FWD G4EH | | GCO24002 | Outer Joint | 29T | 25 | 22 | 50 | 95 | 58 | M |
| | 1994.07-1999.08 | 5MT | F | L/R | Saloon FWD G4EH | | GCI39025 | Inner Joint | | 25 | 22 | 35 | 54.7 | 90.8 | |
| | 1994.10-2000.01 | 5MT | F | L/R | Hatchback FWD G4CH, G4EH | | GCO24002 | Outer Joint | 29T | 25 | 22 | 50 | 95 | 58 | M |
| | 1994.10-2000.01 | 5MT | F | L/R | Hatchback FWD G4CH, G4EH | | GCI39025 | Inner Joint | | 25 | 22 | 35 | 54.7 | 90.8 | |
| 1.3 (55 kw) | 1994.10-2000.01 | 5MT | F | L/R | Hatchback FWD G4EH, G4DH | | GCO24002 | Outer Joint | 29T | 25 | 22 | 50 | 95 | 58 | M |
| | 1994.10-2000.01 | 5MT | F | L/R | Hatchback FWD G4EH, G4DH | | GCI39025 | Inner Joint | | 25 | 22 | 35 | 54.7 | 90.8 | |
| | 1994.10-2000.01 | 4AT/5MT | F | L/R | Saloon FWD G4EH, G4DH | | GCO24002 | Outer Joint | 29T | 25 | 22 | 50 | 95 | 58 | M |
| | 1994.10-2000.01 | 4AT/5MT | F | L/R | Saloon FWD G4EH, G4DH | | GCI39025 | Inner Joint | | 25 | 22 | 35 | 54.7 | 90.8 | |
| | 2000.01-2005.11 | 4AT/5MT | F | L/R | Hatchback FWD G4EA | | GCI24010 | Inner Joint | | 25 | 22 | 35 | 63 | 87 | |
| | 2000.01-2005.11 | AT | F | L | Hatchback FWD G4EA | Date To:2001.07 | GDS39213 | Drive Shaft | 44T | 25 | 25 | 52.5 | 95 | 625 | |
| | 2000.01-2005.11 | AT | F | R | Hatchback FWD G4EA | Date From:2001.08 | GDS24482 | Drive Shaft | 44T | 25 | 25 | 52.5 | 95 | 911 | |
| | 2000.01-2005.11 | AT | F | R | Hatchback FWD G4EA | Date To:2001.07 | GDS39212 | Drive Shaft | 44T | 25 | 25 | 52.5 | 95 | 911 | |
| | 2000.01-2005.11 | AT/MT | F | L/R | Hatchback FWD G4EA | Date to:2001.07 | GCO24033 | Outer Joint | 44T | 25 | 22 | 50 | 95 | 58 | M |
| | 2000.01-2005.11 | AT/MT | F | L/R | Hatchback FWD G4EA | Date from:2001.08 | GCO24065 | Outer Joint | 44T | 25 | 22 | 52.5 | 95 | 58 | M |
| | 2000.01-2005.11 | AT/MT | F | L/R | Hatchback FWD G4EA | Date to:2001.07 | GCO39105 | Outer Joint | 44T | 25 | 22 | 52.5 | 95 | 58 | M |
| | 2000.01-2005.11 | MT | F | L | Hatchback FWD G4EA | Date From:2001.08 | GDS24038 | Drive Shaft | | 25 | 25 | 52.5 | 95 | 622 | |
| | 2000.01-2005.11 | MT | F | L | Hatchback FWD G4EA | Date From:2001.08 | GDS24558 | Drive Shaft | 44T | 25 | 25 | 52.5 | 95 | 622 | |
| | 2000.01-2005.11 | MT | F | L | Hatchback FWD G4EA | Date To:2001.07 | GDS39211 | Drive Shaft | 44T | 25 | 25 | 52.5 | 95 | 622 | |
| | 2000.01-2005.11 | MT | F | R | Hatchback FWD G4EA | Date From:2001.08 | GDS24129 | Drive Shaft | | 25 | 25 | 52.5 | 95 | 908.5 | |
| | 2000.01-2005.11 | MT | F | R | Hatchback FWD G4EA | Date From:2001.08 | GDS24507 | Drive Shaft | 44T | 25 | 25 | 52.5 | 95 | 908.5 | |
| | 2000.01-2005.11 | MT | F | R | Hatchback FWD G4EA | Date To:2001.07 | GDS39214 | Drive Shaft | 44T | 25 | 25 | 52.5 | 95 | 912 | |
| | 2000.01-2005.11 | MT | F | L/R | Hatchback FWD G4EA | Date From:2001.08;without Rim protector | GCO24075 | Outer Joint | | 25 | 22 | 52.5 | 95 | 58 | M |
| | 2000.01-2005.11 | MT | F | L/R | Hatchback FWD G4EA | Date from:2005.11 | GCO27076 | Outer Joint | 44T | 25 | 22 | 50 | 95 | 58 | M |
| | 2000.01-2005.11 | MT | F | L/R | Hatchback FWD G4EA | Date From:2001.08;with Rim protector | GCO99172 | Outer Joint | | 25 | 22 | 52.5 | 95 | 58 | M |
| | 2000.01-2005.11 | MT | F | L/R | Hatchback FWD G4EA | | GCI24009 | Inner Joint | | 25 | 22 | 35 | 54.5 | 87 | |
| | 2000.01-2005.11 | 5MT | F | L/R | Saloon FWD G4EA | | GCI24010 | Inner Joint | | 25 | 22 | 35 | 63 | 87 | |
| | 2000.01-2005.11 | MT | F | L | Saloon FWD G4EA | Date from:2001.08 | GDS24038 | Drive Shaft | | 25 | 25 | 52.5 | 95 | 622 | |
| | 2000.01-2005.11 | MT | F | L | Saloon FWD G4EA | Date from:2001.08 | GDS24558 | Drive Shaft | 44T | 25 | 25 | 52.5 | 95 | 622 | |
| | 2000.01-2005.11 | MT | F | L | Saloon FWD G4EA | Date to:2001.07 | GDS39211 | Drive Shaft | 44T | 25 | 25 | 52.5 | 95 | 622 | |
| | 2000.01-2005.11 | MT | F | R | Saloon FWD G4EA | Date from:2001.08 | GDS24129 | Drive Shaft | | 25 | 25 | 52.5 | 95 | 908.5 | |
| | 2000.01-2005.11 | MT | F | R | Saloon FWD G4EA | Date from:2001.08 | GDS24507 | Drive Shaft | 44T | 25 | 25 | 52.5 | 95 | 908.5 | |
| | 2000.01-2005.11 | MT | F | R | Saloon FWD G4EA | Date to:2001.07 | GDS39214 | Drive Shaft | 44T | 25 | 25 | 52.5 | 95 | 912 | |
| | 2000.01-2005.11 | MT | F | L/R | Saloon FWD G4EA | Date to:2001.07 | GCO24033 | Outer Joint | 44T | 25 | 22 | 50 | 95 | 58 | M |
| | 2000.01-2005.11 | MT | F | L/R | Saloon FWD G4EA | Date from:2001.08 | GCO24065 | Outer Joint | 44T | 25 | 22 | 52.5 | 95 | 58 | M |
| | 2000.01-2005.11 | MT | F | L/R | Saloon FWD G4EA | Date from:2001.08;without Rim protector | GCO24075 | Outer Joint | | 25 | 22 | 52.5 | 95 | 58 | M |
| | 2000.01-2005.11 | MT | F | L/R | Saloon FWD G4EA | Date to:2001.07 | GCO39105 | Outer Joint | 44T | 25 | 22 | 52.5 | 95 | 58 | M |
| | 2000.01-2005.11 | MT | F | L/R | Saloon FWD G4EA | Date from:2001.08;with Rim protector | GCO99172 | Outer Joint | | 25 | 22 | 52.5 | 95 | 58 | M |
| | 2000.01-2005.11 | MT | F | L/R | Saloon FWD G4EA | | GCI24009 | Inner Joint | | 25 | 22 | 35 | 54.5 | 87 | |
| 1.3 (61 kw) | 2000.01-2005.11 | 5MT | F | L | Hatchback FWD G4EA | | GDS24038 | Drive Shaft | | 25 | 25 | 52.5 | 95 | 622 | |
| | 2000.01-2005.11 | 5MT | F | L | Hatchback FWD G4EA | | GDS24558 | Drive Shaft | 44T | 25 | 25 | 52.5 | 95 | 622 | |
| | 2000.01-2005.11 | 5MT | F | R | Hatchback FWD G4EA | | GDS24129 | Drive Shaft | | 25 | 25 | 52.5 | 95 | 908.5 | |
| | 2000.01-2005.11 | 5MT | F | R | Hatchback FWD G4EA | For vehicles with ABS | GDS24507 | Drive Shaft | 44T | 25 | 25 | 52.5 | 95 | 908.5 | |
| | 2000.01-2005.11 | 5MT | F | R | Hatchback FWD G4EA | For vehicles without ABS | GDS39214 | Drive Shaft | 44T | 25 | 25 | 52.5 | 95 | 912 | |
| | 2000.01-2005.11 | 5MT | F | L/R | Hatchback FWD G4EA | Non-Original design | GCO24033 | Outer Joint | 44T | 25 | 22 | 50 | 95 | 58 | M |
| | 2000.01-2005.11 | 5MT | F | L/R | Hatchback FWD G4EA | Original design | GCO24065 | Outer Joint | 44T | 25 | 22 | 52.5 | 95 | 58 | M |
| | 2000.01-2005.11 | 5MT | F | L/R | Hatchback FWD G4EA | without Rim protector | GCO24075 | Outer Joint | | 25 | 22 | 52.5 | 95 | 58 | M |
| | 2000.01-2005.11 | 5MT | F | L/R | Hatchback FWD G4EA | with Rim protector | GCO99172 | Outer Joint | | 25 | 22 | 52.5 | 95 | 58 | M |
| | 2000.01-2005.11 | 5MT | F | L/R | Hatchback FWD G4EA | | GCI24009 | Inner Joint | | 25 | 22 | 35 | 54.5 | 87 | |
| | 2000.01-2005.11 | 5MT | F | L/R | Hatchback FWD G4EA | | GCI24010 | Inner Joint | | 25 | 22 | 35 | 63 | 87 | |
| 1.3 (62 kw) | 1994.10-2000.01 | 4AT/5MT | F | L/R | Hatchback FWD G4EH | | GCO24002 | Outer Joint | 29T | 25 | 22 | 50 | 95 | 58 | M |
| | 1994.10-2000.01 | 4AT/5MT | F | L/R | Hatchback FWD G4EH | | GCI39025 | Inner Joint | | 25 | 22 | 35 | 54.7 | 90.8 | |
| | 1994.10-2000.01 | 4AT/5MT | F | L/R | Saloon FWD G4EH | | GCO24002 | Outer Joint | 29T | 25 | 22 | 50 | 95 | 58 | M |
| | 1994.10-2000.01 | 4AT/5MT | F | L/R | Saloon FWD G4EH | | GCI39025 | Inner Joint | | 25 | 22 | 35 | 54.7 | 90.8 | |

| | YEAR | TRANSM. | F/R | L/R | BODY STYLE & DRIVE TYPE & ENGINE | REMARKS | G-AP Ref. | PRODUCT | ABS | Technical Specifications A | B | C | H | L | P |
|---|---|---|---|---|---|---|---|---|---|---|---|---|---|---|---|
| **HYUNDAI** | | | | | | | | | | | | | | | |
| **Accent** | | | | | | | | | | | | | | | |
| 1.3 (62 kw) | 2002.08-2005.11 | 5MT | F | L/R | Hatchback FWD G4EA | | GCI24010 | Inner Joint | | 25 | 22 | 35 | 63 | 87 | |
| | 2002.08-2005.11 | AT | F | R | Hatchback FWD G4EA | | GDS24482 | Drive Shaft | 44T | 25 | 25 | 52.5 | 95 | 911 | |
| | 2002.08-2005.11 | AT/MT | F | L/R | Hatchback FWD G4EA | | GCO24065 | Outer Joint | 44T | 25 | 22 | 52.5 | 95 | 58 | M |
| | 2002.08-2005.11 | MT | F | L | Hatchback FWD G4EA | | GDS24038 | Drive Shaft | | 25 | 25 | 52.5 | 95 | 622 | |
| | 2002.08-2005.11 | MT | F | L | Hatchback FWD G4EA | | GDS24558 | Drive Shaft | 44T | 25 | 25 | 52.5 | 95 | 622 | |
| | 2002.08-2005.11 | MT | F | R | Hatchback FWD G4EA | Model:Accent/Excel | GDS24129 | Drive Shaft | | 25 | 25 | 52.5 | 95 | 908.5 | |
| | 2002.08-2005.11 | MT | F | R | Hatchback FWD G4EA | Model:Accent/Excel;Date to:2005.10;For vehicles with ABS;Date from:2005.11 | GDS24507 | Drive Shaft | 44T | 25 | 25 | 52.5 | 95 | 908.5 | |
| | 2002.08-2005.11 | MT | F | R | Hatchback FWD G4EA | Model:Accent/Excel;Date to:2005.10;For vehicles without ABS | GDS39214 | Drive Shaft | 44T | 25 | 25 | 52.5 | 95 | 912 | |
| | 2002.08-2005.11 | MT | F | L/R | Hatchback FWD G4EA | without Rim protector | GCO24075 | Outer Joint | | 25 | 22 | 52.5 | 95 | 58 | M |
| | 2002.08-2005.11 | MT | F | L/R | Hatchback FWD G4EA | Date from:2005.11 | GCO27076 | Outer Joint | 44T | 25 | 22 | 50 | 95 | 58 | M |
| | 2002.08-2005.11 | MT | F | L/R | Hatchback FWD G4EA | with Rim protector | GCO99172 | Outer Joint | | 25 | 22 | 52.5 | 95 | 58 | M |
| | 2002.08-2005.11 | MT | F | L/R | Hatchback FWD G4EA | | GCI24009 | Inner Joint | | 25 | 22 | 35 | 54.5 | 87 | |
| 1.3 (63 kw) | 2000.01-2005.11 | 4AT/5MT | F | L/R | Hatchback FWD G4EA | | GCI24010 | Inner Joint | | 25 | 22 | 35 | 63 | 87 | |
| | 2000.01-2005.11 | AT | F | L | Hatchback FWD G4EA | Date to:2001.07 | GDS39213 | Drive Shaft | 44T | 25 | 25 | 52.5 | 95 | 625 | |
| | 2000.01-2005.11 | AT | F | R | Hatchback FWD G4EA | Date from:2001.08 | GDS24482 | Drive Shaft | 44T | 25 | 25 | 52.5 | 95 | 911 | |
| | 2000.01-2005.11 | AT | F | R | Hatchback FWD G4EA | Date to:2001.07 | GDS39212 | Drive Shaft | 44T | 25 | 25 | 52.5 | 95 | 911 | |
| | 2000.01-2005.11 | AT/MT | F | L/R | Hatchback FWD G4EA | Date to:2001.07 | GCO24033 | Outer Joint | 44T | 25 | 22 | 50 | 95 | 58 | M |
| | 2000.01-2005.11 | AT/MT | F | L/R | Hatchback FWD G4EA | Date from:2001.08 | GCO24065 | Outer Joint | 44T | 25 | 22 | 52.5 | 95 | 58 | M |
| | 2000.01-2005.11 | AT/MT | F | L/R | Hatchback FWD G4EA | Date to:2001.07 | GCO39105 | Outer Joint | 44T | 25 | 22 | 52.5 | 95 | 58 | M |
| | 2000.01-2005.11 | MT | F | L | Hatchback FWD G4EA | Date from:2001.08 | GDS24038 | Drive Shaft | | 25 | 25 | 52.5 | 95 | 622 | |
| | 2000.01-2005.11 | MT | F | L | Hatchback FWD G4EA | Date from:2001.08 | GDS24558 | Drive Shaft | 44T | 25 | 25 | 52.5 | 95 | 622 | |
| | 2000.01-2005.11 | MT | F | L | Hatchback FWD G4EA | Date to:2001.07 | GDS39211 | Drive Shaft | 44T | 25 | 25 | 52.5 | 95 | 622 | |
| | 2000.01-2005.11 | MT | F | R | Hatchback FWD G4EA | Date from:2001.08 | GDS24129 | Drive Shaft | | 25 | 25 | 52.5 | 95 | 908.5 | |
| | 2000.01-2005.11 | MT | F | R | Hatchback FWD G4EA | Date from:2001.08 | GDS24507 | Drive Shaft | 44T | 25 | 25 | 52.5 | 95 | 908.5 | |
| | 2000.01-2005.11 | MT | F | R | Hatchback FWD G4EA | Date to:2001.07 | GDS39214 | Drive Shaft | 44T | 25 | 25 | 52.5 | 95 | 912 | |
| | 2000.01-2005.11 | MT | F | L/R | Hatchback FWD G4EA | Date From:2001.08;without Rim protector | GCO24075 | Outer Joint | | 25 | 22 | 52.5 | 95 | 58 | M |
| | 2000.01-2005.11 | MT | F | L/R | Hatchback FWD G4EA | Date from:2005.11 | GCO27076 | Outer Joint | 44T | 25 | 22 | 50 | 95 | 58 | M |
| | 2000.01-2005.11 | MT | F | L/R | Hatchback FWD G4EA | Date From:2001.08;with Rim protector | GCO99172 | Outer Joint | | 25 | 22 | 52.5 | 95 | 58 | M |
| | 2000.01-2005.11 | MT | F | L/R | Hatchback FWD G4EA | | GCI24009 | Inner Joint | | 25 | 22 | 35 | 54.5 | 87 | |
| | 2000.01-2005.11 | 4AT/5MT | F | L/R | Saloon FWD G4EA | | GCI24010 | Inner Joint | | 25 | 22 | 35 | 63 | 87 | |
| | 2000.01-2005.11 | AT | F | L | Saloon FWD G4EA | | GDS39213 | Drive Shaft | 44T | 25 | 25 | 52.5 | 95 | 625 | |
| | 2000.01-2005.11 | AT | F | R | Saloon FWD G4EA | Date from:2001.08 | GDS24482 | Drive Shaft | 44T | 25 | 25 | 52.5 | 95 | 911 | |
| | 2000.01-2005.11 | AT | F | R | Saloon FWD G4EA | Date to:2001.07 | GDS39212 | Drive Shaft | 44T | 25 | 25 | 52.5 | 95 | 911 | |
| | 2000.01-2005.11 | AT/MT | F | L/R | Saloon FWD G4EA | Date to:2001.07 | GCO24033 | Outer Joint | 44T | 25 | 22 | 50 | 95 | 58 | M |
| | 2000.01-2005.11 | AT/MT | F | L/R | Saloon FWD G4EA | Date from:2001.08 | GCO24065 | Outer Joint | 44T | 25 | 22 | 52.5 | 95 | 58 | M |
| | 2000.01-2005.11 | AT/MT | F | L/R | Saloon FWD G4EA | Date to:2001.07 | GCO39105 | Outer Joint | 44T | 25 | 22 | 52.5 | 95 | 58 | M |
| | 2000.01-2005.11 | MT | F | L | Saloon FWD G4EA | Date from:2001.08 | GDS24038 | Drive Shaft | | 25 | 25 | 52.5 | 95 | 622 | |
| | 2000.01-2005.11 | MT | F | L | Saloon FWD G4EA | Date from:2001.08 | GDS24558 | Drive Shaft | 44T | 25 | 25 | 52.5 | 95 | 622 | |
| | 2000.01-2005.11 | MT | F | L | Saloon FWD G4EA | Date to:2001.07 | GDS39211 | Drive Shaft | 44T | 25 | 25 | 52.5 | 95 | 622 | |
| | 2000.01-2005.11 | MT | F | R | Saloon FWD G4EA | Date from:2001.08 | GDS24129 | Drive Shaft | | 25 | 25 | 52.5 | 95 | 908.5 | |
| | 2000.01-2005.11 | MT | F | R | Saloon FWD G4EA | Date from:2001.08 | GDS24507 | Drive Shaft | 44T | 25 | 25 | 52.5 | 95 | 908.5 | |
| | 2000.01-2005.11 | MT | F | R | Saloon FWD G4EA | Date to:2001.07 | GDS39214 | Drive Shaft | 44T | 25 | 25 | 52.5 | 95 | 912 | |
| | 2000.01-2005.11 | MT | F | L/R | Saloon FWD G4EA | Date From:2001.08;without Rim protector | GCO24075 | Outer Joint | | 25 | 22 | 52.5 | 95 | 58 | M |
| | 2000.01-2005.11 | MT | F | L/R | Saloon FWD G4EA | Date From:2001.08;with Rim protector | GCO99172 | Outer Joint | | 25 | 22 | 52.5 | 95 | 58 | M |
| | 2000.01-2005.11 | MT | F | L/R | Saloon FWD G4EA | | GCI24009 | Inner Joint | | 25 | 22 | 35 | 54.5 | 87 | |
| 1.4 (71 kw) | 2005.11-2010.11 | AT | F | L | Hatchback FWD G4EE | | GDS24412 | Drive Shaft | 48T | 25 | 25 | 52.5 | 95 | 639 | |
| | 2005.11-2010.11 | AT | F | R | Hatchback FWD G4EE | | GDS24201 | Drive Shaft | 48T | 25 | 25 | 52.5 | 95 | 925 | |
| | 2005.11-2010.11 | AT | F | R | Hatchback FWD G4EE | | GCI24010 | Inner Joint | | 25 | 22 | 35 | 63 | 87 | |
| | 2005.11-2010.11 | AT/MT | F | L/R | Hatchback FWD G4EE | | GCO24046 | Outer Joint | 48T | 25 | 22 | 52.5 | 95 | 58 | M |
| | 2005.11-2010.11 | AT/MT | F | L/R | Hatchback FWD G4EE | | GCO24098 | Outer Joint | 48T | 25 | 22 | 52.5 | 95 | 58 | M |
| | 2005.11-2010.11 | MT | F | L | Hatchback FWD G4EE | | GDS24188 | Drive Shaft | 48T | 25 | 25 | 52.5 | 95 | 640 | |
| | 2005.11-2010.11 | MT | F | R | Hatchback FWD G4EE | | GDS24044 | Drive Shaft | 48T | 25 | 25 | 52.5 | 95 | 924 | |
| | 2005.11-2010.11 | MT | F | L/R | Hatchback FWD G4EE | | GCI24012 | Inner Joint | | 25 | 22 | 41 | 63 | 86.5 | |
| | 2005.11-2010.11 | AT | F | L | Saloon FWD G4EE | | GDS24412 | Drive Shaft | 48T | 25 | 25 | 52.5 | 95 | 639 | |
| | 2005.11-2010.11 | AT | F | R | Saloon FWD G4EE | | GDS24201 | Drive Shaft | 48T | 25 | 25 | 52.5 | 95 | 925 | |
| | 2005.11-2010.11 | AT | F | R | Saloon FWD G4EE | | GCI24010 | Inner Joint | | 25 | 22 | 35 | 63 | 87 | |
| | 2005.11-2010.11 | AT/MT | F | L/R | Saloon FWD G4EE | | GCO24046 | Outer Joint | 48T | 25 | 22 | 52.5 | 95 | 58 | M |
| | 2005.11-2010.11 | AT/MT | F | L/R | Saloon FWD G4EE | | GCO24098 | Outer Joint | 48T | 25 | 22 | 52.5 | 95 | 58 | M |
| | 2005.11-2010.11 | AT/MT | F | L/R | Saloon FWD G4EE | | GCI24012 | Inner Joint | | 25 | 22 | 41 | 63 | 86.5 | |
| | 2005.11-2010.11 | MT | F | L | Saloon FWD G4EE | | GDS24188 | Drive Shaft | 48T | 25 | 25 | 52.5 | 95 | 640 | |
| | 2005.11-2010.11 | MT | F | R | Saloon FWD G4EE | | GDS24044 | Drive Shaft | 48T | 25 | 25 | 52.5 | 95 | 924 | |
| 1.4 (73 kw) | 2018.07- | 6AT | F | L | Saloon FWD G4LC | For options:2841B5/5891A2 | GDS83706 | Drive Shaft | 48T | 25 | 27 | 52.5 | 94.5 | 656 | |
| | 2018.07- | 6AT | F | L | Saloon FWD G4LC | | GDS84072 | Drive Shaft | | 25 | 27 | 52.5 | 94.5 | 656 | |
| | 2018.07- | 6AT | F | R | Saloon FWD G4LC | For options:2841B5/5891A2 | GDS83707 | Drive Shaft | 48T | 25 | 27 | 52.5 | 94.5 | 916 | |
| | 2018.07- | 6AT | F | R | Saloon FWD G4LC | | GDS84073 | Drive Shaft | | 25 | 27 | 52.5 | 94.5 | 916 | |

| | YEAR | TRANSM. | F/R | L/R | BODY STYLE & DRIVE TYPE & ENGINE | REMARKS | G-AP Ref. | PRODUCT | ABS | Technical Specifications A | B | C | H | L | P |
|---|---|---|---|---|---|---|---|---|---|---|---|---|---|---|---|
| **HYUNDAI** | | | | | | | | | | | | | | | |
| **Accent** | | | | | | | | | | | | | | | |
| 1.4 (73 kw) | 2018.07- | 6AT | F | L/R | Saloon FWD G4LC | For options:2841B5/5891A2 | GCO39198 | Outer Joint | 48T | 25 | 22 | 52.5 | 94.5 | 54 | M |
| | 2018.07- | 6AT | F | L/R | Saloon FWD G4LC | | GCI24065 | Inner Joint | | 27 | 22 | 30 | 68 | 77 | |
| | 2018.07- | 6AT/6MT | F | L/R | Saloon FWD G4LC | | GCO82443 | Outer Joint | | 25 | 22 | 52.5 | 94.5 | 54 | M |
| | 2018.07- | 6MT | F | L | Saloon FWD G4LC | | GDS83763 | Drive Shaft | | 25 | 25 | 52.5 | 94.5 | 675 | |
| | 2018.07- | 6MT | F | L | Saloon FWD G4LC | For options:2841B6/5891A2 | GDS84076 | Drive Shaft | 48T | 25 | 25 | 52.5 | 94.5 | 677 | |
| | 2018.07- | 6MT | F | R | Saloon FWD G4LC | | GDS83762 | Drive Shaft | | 25 | 25 | 52.5 | 94.5 | 920 | |
| | 2018.07- | 6MT | F | R | Saloon FWD G4LC | For options:2841B6/5891A2 | GDS84075 | Drive Shaft | 48T | 25 | 25 | 52.5 | 94.5 | 921 | |
| | 2018.07- | 6MT | F | L/R | Saloon FWD G4LC | For options:2841B6/5891A2 | GCO82577 | Outer Joint | 48T | 25 | 22 | 52.5 | 94.5 | 54 | M |
| | 2018.07- | 6MT | F | L/R | Saloon FWD G4LC | Exhaust Emis Nm:Euro 5 | GCI24137 | Inner Joint | | 25 | 22 | 41 | 62.5 | 86 | |
| | 2018.07- | 6MT | F | L/R | Saloon FWD G4LC | For options:2841B6/5891A2 | GCI39052 | Inner Joint | | 25 | 22 | 41 | 63 | 86 | |
| 1.4 (74 kw) | 2010.11- | MT | F | L | Saloon FWD G4LC | | GDS24246 | Drive Shaft | 48T | 25 | 25 | 52.5 | 93.5 | 652 | |
| | 2010.11- | MT | F | R | Saloon FWD G4LC | | GDS24247 | Drive Shaft | 48T | 25 | 25 | 52.5 | 93.5 | 927 | |
| | 2010.11- | MT | F | L/R | Saloon FWD G4LC | | GCO24131 | Outer Joint | 48T | 25 | 22 | 52.5 | 93.5 | 59.5 | M |
| | 2010.11- | MT | F | L/R | Saloon FWD G4LC | | GCI39052 | Inner Joint | | 25 | 22 | 41 | 63 | 86 | |
| | 2015.09-2019.04 | AT | F | R | Hatchback FWD G4LC | | GDS24247 | Drive Shaft | 48T | 25 | 25 | 52.5 | 93.5 | 927 | |
| | 2015.09-2019.04 | | F | L | Hatchback FWD G4LC | | GDS24246 | Drive Shaft | 48T | 25 | 25 | 52.5 | 93.5 | 652 | |
| 1.4 (79 kw) | 2010.11-2013.12 | 4AT/5MT | F | L | Saloon FWD G4FA | | GDS24246 | Drive Shaft | 48T | 25 | 25 | 52.5 | 93.5 | 652 | |
| | 2010.11-2013.12 | 4AT/5MT | F | L | Saloon FWD G4FA | | GDS24260 | Drive Shaft | | 25 | 25 | 52.5 | 93.5 | 652 | |
| | 2010.11-2013.12 | 4AT/5MT | F | R | Saloon FWD G4FA | | GDS24247 | Drive Shaft | 48T | 25 | 25 | 52.5 | 93.5 | 927 | |
| | 2010.11-2013.12 | 4AT/5MT | F | R | Saloon FWD G4FA | | GCO24131 | Outer Joint | 48T | 25 | 22 | 52.5 | 93.5 | 59.5 | M |
| | 2010.11-2013.12 | 4AT/5MT | F | L/R | Saloon FWD G4FA | | GCI39052 | Inner Joint | | 25 | 22 | 41 | 63 | 86 | |
| | 2010.11-2018.03 | 4AT/5MT | F | L | Hatchback FWD G4FA | | GDS24246 | Drive Shaft | 48T | 25 | 25 | 52.5 | 93.5 | 652 | |
| | 2010.11-2018.03 | 4AT/5MT | F | L | Hatchback FWD G4FA | | GDS24260 | Drive Shaft | | 25 | 25 | 52.5 | 93.5 | 652 | |
| | 2010.11-2018.03 | 4AT/5MT | F | R | Hatchback FWD G4FA | | GDS24247 | Drive Shaft | 48T | 25 | 25 | 52.5 | 93.5 | 927 | |
| | 2010.11-2018.03 | 4AT/5MT | F | L/R | Hatchback FWD G4FA | | GCO24131 | Outer Joint | 48T | 25 | 22 | 52.5 | 93.5 | 59.5 | M |
| | 2010.11-2018.03 | 4AT/5MT | F | L/R | Hatchback FWD G4FA | | GCO24136 | Outer Joint | | 25 | 22 | 52.5 | 93.5 | 59.5 | M |
| | 2010.11-2018.03 | 4AT/5MT | F | L/R | Hatchback FWD G4FA | | GCI39052 | Inner Joint | | 25 | 22 | 41 | 63 | 86 | |
| 1.5 (60 kw) | 2002.01-2005.11 | 5MT | F | L | Saloon FWD D3DA, D3EA | | GDS39122 | Drive Shaft | 44T | 25 | 25 | 50 | 94.5 | 618 | |
| | 2002.01-2005.11 | 5MT | F | R | Saloon FWD D3DA, D3EA | | GDS39123 | Drive Shaft | 44T | 25 | 26 | 50 | 94.5 | 572 | |
| | 2002.01-2005.11 | 5MT | F | L/R | Saloon FWD D3DA, D3EA | | GCO39128 | Outer Joint | 44T | 25 | 23 | 50 | 94.5 | 63.5 | M |
| | 2002.01-2005.11 | 5MT | F | L | Saloon FWD D3DA, D3EA | | GCI39041 | Inner Joint | | 25 | 23 | 35 | 63 | 92.5 | |
| | 2002.01-2005.11 | 5MT | F | R | Saloon FWD D3DA, D3EA | | GCI24031 | Inner Joint | | 26 | 23 | 42 | | 108 | |
| | 2002.04-2005.11 | 5MT | F | L | Hatchback FWD D3EA | Date To:2005.10 | GDS39122 | Drive Shaft | 44T | 25 | 25 | 50 | 94.5 | 618 | |
| | 2002.04-2005.11 | 5MT | F | R | Hatchback FWD D3EA | Date To:2005.10 | GDS39123 | Drive Shaft | 44T | 25 | 26 | 50 | 94.5 | 572 | |
| | 2002.04-2005.11 | 5MT | F | L/R | Hatchback FWD D3EA | Date To:2005.10 | GCO39128 | Outer Joint | 44T | 25 | 23 | 50 | 94.5 | 63.5 | M |
| | 2002.04-2005.11 | 5MT | F | L | Hatchback FWD D3EA | Date To:2005.10 | GCI39041 | Inner Joint | | 25 | 23 | 35 | 63 | 92.5 | |
| | 2002.04-2005.11 | 5MT | F | R | Hatchback FWD D3EA | Date To:2005.10 | GCI24031 | Inner Joint | | 26 | 23 | 42 | | 108 | |
| 1.5 (65 kw) | 1994.10-2000.01 | 4AT/5MT | F | L | Hatchback FWD G4EK | | GDS24165 | Drive Shaft | 29T | 25 | 25 | 50 | 95 | 613 | |
| | 1994.10-2000.01 | 4AT/5MT | F | L/R | Hatchback FWD G4EK | | GCO24002 | Outer Joint | 29T | 25 | 22 | 50 | 95 | 58 | M |
| | 1994.10-2000.01 | 4AT/5MT | F | L/R | Hatchback FWD G4EK | | GCO89004 | Outer Joint | | 25 | 22 | 50 | 95 | 58 | M |
| | 1994.10-2000.01 | 4AT | F | L | Saloon FWD G4EK | Date from:1999.06,Date to:2005.09 | GDS39213 | Drive Shaft | 44T | 25 | 25 | 52.5 | 95 | 625 | |
| | 1994.10-2000.01 | 4AT | F | R | Saloon FWD G4EK | Date from:2001.08 | GDS24482 | Drive Shaft | 44T | 25 | 25 | 52.5 | 95 | 911 | |
| | 1994.10-2000.01 | 4AT | F | R | Saloon FWD G4EK | Date from:1999.06,Date to:2005.09 | GDS39212 | Drive Shaft | 44T | 25 | 25 | 52.5 | 95 | 911 | |
| | 1994.10-2000.01 | 4AT/5MT | F | L | Saloon FWD G4EK | Date to:1999.05 | GDS24165 | Drive Shaft | 29T | 25 | 25 | 50 | 95 | 613 | |
| | 1994.10-2000.01 | 5MT | F | L | Saloon FWD G4EK | Date from:1999.06,Date to:2005.09 | GDS24038 | Drive Shaft | | 25 | 25 | 52.5 | 95 | 622 | |
| | 1994.10-2000.01 | 5MT | F | L | Saloon FWD G4EK | Date from:2001.08 | GDS24558 | Drive Shaft | 44T | 25 | 25 | 52.5 | 95 | 622 | |
| | 1994.10-2000.01 | 5MT | F | L | Saloon FWD G4EK | Date from:1999.06,Date to:2001.07 | GDS39211 | Drive Shaft | 44T | 25 | 25 | 52.5 | 95 | 622 | |
| | 1994.10-2000.01 | 5MT | F | R | Saloon FWD G4EK | Date from:1999.06,Date to:2005.09 | GDS24129 | Drive Shaft | | 25 | 25 | 52.5 | 95 | 908.5 | |
| | 1994.10-2000.01 | 5MT | F | R | Saloon FWD G4EK | Date from:2001.08 | GDS24507 | Drive Shaft | 44T | 25 | 25 | 52.5 | 95 | 908.5 | |
| | 1994.10-2000.01 | 5MT | F | R | Saloon FWD G4EK | Date from:1999.06,Date to:2001.07 | GDS39214 | Drive Shaft | 44T | 25 | 25 | 52.5 | 95 | 912 | |
| | 1994.10-2000.01 | AT/MT | F | L/R | Saloon FWD G4EK | | GCO24002 | Outer Joint | 29T | 25 | 22 | 50 | 95 | 58 | M |
| | 1994.10-2000.01 | AT/MT | F | L/R | Saloon FWD G4EK | | GCO89004 | Outer Joint | | 25 | 22 | 50 | 95 | 58 | M |
| | 1999.09-2002.10 | 5MT | F | L | Hatchback FWD G4EK | | GCI24009 | Inner Joint | | 25 | 22 | 35 | 54.5 | 87 | |
| | 1999.09-2002.10 | 5MT | F | R | Hatchback FWD G4EK | | GCI24010 | Inner Joint | | 25 | 22 | 35 | 63 | 87 | |
| | 1999.09-2002.10 | MT | F | L | Hatchback FWD G4EK | | GDS24038 | Drive Shaft | | 25 | 25 | 52.5 | 95 | 622 | |
| | 1999.09-2002.10 | MT | F | L | Hatchback FWD G4EK | Date from:2001.08 | GDS24558 | Drive Shaft | 44T | 25 | 25 | 52.5 | 95 | 622 | |
| | 1999.09-2002.10 | MT | F | L | Hatchback FWD G4EK | Date to:2001.07 | GDS39211 | Drive Shaft | 44T | 25 | 25 | 52.5 | 95 | 622 | |
| | 1999.09-2002.10 | MT | F | R | Hatchback FWD G4EK | | GDS24129 | Drive Shaft | | 25 | 25 | 52.5 | 95 | 908.5 | |
| | 1999.09-2002.10 | MT | F | R | Hatchback FWD G4EK | Date from:2001.08 | GDS24507 | Drive Shaft | 44T | 25 | 25 | 52.5 | 95 | 908.5 | |
| | 1999.09-2002.10 | MT | F | R | Hatchback FWD G4EK | Date to:2001.07 | GDS39214 | Drive Shaft | 44T | 25 | 25 | 52.5 | 95 | 912 | |
| | 1999.09-2002.10 | MT | F | L/R | Hatchback FWD G4EK | Date from:2001.08 | GCO24065 | Outer Joint | 44T | 25 | 22 | 52.5 | 95 | 58 | M |
| | 1999.09-2002.10 | MT | F | L/R | Hatchback FWD G4EK | Date to:2001.07 | GCO39105 | Outer Joint | 44T | 25 | 22 | 52.5 | 95 | 58 | M |
| | 1999.09-2002.10 | MT | F | L/R | Hatchback FWD G4EK | | GCO99172 | Outer Joint | | 25 | 22 | 52.5 | 95 | 58 | M |
| 1.5 (66 kw) | 2000.01-2005.11 | 4AT/5MT | F | L/R | Hatchback FWD G4EB | | GCI24010 | Inner Joint | | 25 | 22 | 35 | 63 | 87 | |
| | 2000.01-2005.11 | AT | F | L | Hatchback FWD G4EB | Date to:2001.07 | GDS39213 | Drive Shaft | 44T | 25 | 25 | 52.5 | 95 | 625 | |

| | YEAR | TRANSM. | F/R | L/R | BODY STYLE & DRIVE TYPE & ENGINE | REMARKS | G-AP Ref. | PRODUCT | ABS | Technical Specifications A | B | C | H | L | P |
|---|---|---|---|---|---|---|---|---|---|---|---|---|---|---|---|
| **HYUNDAI** **Accent** | | | | | | | | | | | | | | | |
| 1.5 (66 kw) | 2000.01-2005.11 | AT | F | R | Hatchback FWD G4EB | Date from:2001.08 | GDS24482 | Drive Shaft | 44T | 25 | 25 | 52.5 | 95 | 911 | |
| | 2000.01-2005.11 | AT | F | R | Hatchback FWD G4EB | Date to:2001.07 | GDS39212 | Drive Shaft | 44T | 25 | 25 | 52.5 | 95 | 911 | |
| | 2000.01-2005.11 | AT/MT | F | L/R | Hatchback FWD G4EB | Date to:2001.07 | GCO24033 | Outer Joint | 44T | 25 | 22 | 50 | 95 | 58 | M |
| | 2000.01-2005.11 | AT/MT | F | L/R | Hatchback FWD G4EB | Date from:2001.08 | GCO24065 | Outer Joint | 44T | 25 | 22 | 52.5 | 95 | 58 | M |
| | 2000.01-2005.11 | AT/MT | F | L/R | Hatchback FWD G4EB | Date to:2001.07 | GCO39105 | Outer Joint | 44T | 25 | 22 | 52.5 | 95 | 58 | M |
| | 2000.01-2005.11 | MT | F | L | Hatchback FWD G4EB | Date from:2001.08 | GDS24038 | Drive Shaft | | 25 | 25 | 52.5 | 95 | 622 | |
| | 2000.01-2005.11 | MT | F | L | Hatchback FWD G4EB | Date from:2001.08 | GDS24558 | Drive Shaft | 44T | 25 | 25 | 52.5 | 95 | 622 | |
| | 2000.01-2005.11 | MT | F | L | Hatchback FWD G4EB | Date to:2001.07 | GDS39211 | Drive Shaft | 44T | 25 | 25 | 52.5 | 95 | 622 | |
| | 2000.01-2005.11 | MT | F | R | Hatchback FWD G4EB | Date from:2001.08 | GDS24129 | Drive Shaft | | 25 | 25 | 52.5 | 95 | 908.5 | |
| | 2000.01-2005.11 | MT | F | R | Hatchback FWD G4EB | Date from:2001.08 | GDS24507 | Drive Shaft | 44T | 25 | 25 | 52.5 | 95 | 908.5 | |
| | 2000.01-2005.11 | MT | F | R | Hatchback FWD G4EB | Date to:2001.07 | GDS39214 | Drive Shaft | 44T | 25 | 25 | 52.5 | 95 | 912 | |
| | 2000.01-2005.11 | MT | F | L/R | Hatchback FWD G4EB | Date From:2001.08;without Rim protector | GCO24075 | Outer Joint | | 25 | 22 | 52.5 | 95 | 58 | M |
| | 2000.01-2005.11 | MT | F | L/R | Hatchback FWD G4EB | Date From:2001.08;with Rim protector | GCO99172 | Outer Joint | | 25 | 22 | 52.5 | 95 | 58 | M |
| | 2000.01-2005.11 | MT | F | L/R | Hatchback FWD G4EB | | GCI24009 | Inner Joint | | 25 | 22 | 35 | 54.5 | 87 | |
| | 2000.01-2005.11 | 4AT | F | L | Saloon FWD G4EB | | GDS39213 | Drive Shaft | 44T | 25 | 25 | 52.5 | 95 | 625 | |
| | 2000.01-2005.11 | 4AT/5MT | F | L/R | Saloon FWD G4EB | | GCI24010 | Inner Joint | | 25 | 22 | 35 | 63 | 87 | |
| | 2000.01-2005.11 | AT | F | R | Saloon FWD G4EB | Date from:2001.08 | GDS24482 | Drive Shaft | 44T | 25 | 25 | 52.5 | 95 | 911 | |
| | 2000.01-2005.11 | AT | F | R | Saloon FWD G4EB | Date to:2001.07 | GDS39212 | Drive Shaft | 44T | 25 | 25 | 52.5 | 95 | 911 | |
| | 2000.01-2005.11 | AT/MT | F | L/R | Saloon FWD G4EB | Date to:2001.07 | GCO24033 | Outer Joint | 44T | 25 | 22 | 50 | 95 | 58 | M |
| | 2000.01-2005.11 | AT/MT | F | L/R | Saloon FWD G4EB | Date from:2001.08 | GCO24065 | Outer Joint | 44T | 25 | 22 | 52.5 | 95 | 58 | M |
| | 2000.01-2005.11 | AT/MT | F | L/R | Saloon FWD G4EB | Date to:2001.07 | GCO39105 | Outer Joint | 44T | 25 | 22 | 52.5 | 95 | 58 | M |
| | 2000.01-2005.11 | MT | F | L | Saloon FWD G4EB | Date from:2001.08 | GDS24038 | Drive Shaft | | 25 | 25 | 52.5 | 95 | 622 | |
| | 2000.01-2005.11 | MT | F | L | Saloon FWD G4EB | Date from:2001.08 | GDS24558 | Drive Shaft | 44T | 25 | 25 | 52.5 | 95 | 622 | |
| | 2000.01-2005.11 | MT | F | L | Saloon FWD G4EB | Date to:2001.07 | GDS39211 | Drive Shaft | 44T | 25 | 25 | 52.5 | 95 | 622 | |
| | 2000.01-2005.11 | MT | F | R | Saloon FWD G4EB | Date from:2001.08 | GDS24129 | Drive Shaft | | 25 | 25 | 52.5 | 95 | 908.5 | |
| | 2000.01-2005.11 | MT | F | R | Saloon FWD G4EB | Date from:2001.08 | GDS24507 | Drive Shaft | 44T | 25 | 25 | 52.5 | 95 | 908.5 | |
| | 2000.01-2005.11 | MT | F | R | Saloon FWD G4EB | Date to:2001.07 | GDS39214 | Drive Shaft | 44T | 25 | 25 | 52.5 | 95 | 912 | |
| | 2000.01-2005.11 | MT | F | L/R | Saloon FWD G4EB | Date From:2001.08;without Rim protector | GCO24075 | Outer Joint | | 25 | 22 | 52.5 | 95 | 58 | M |
| | 2000.01-2005.11 | MT | F | L/R | Saloon FWD G4EB | Date From:2001.08;with Rim protector | GCO99172 | Outer Joint | | 25 | 22 | 52.5 | 95 | 58 | M |
| | 2000.01-2005.11 | MT | F | L/R | Saloon FWD G4EB | | GCI24009 | Inner Joint | | 25 | 22 | 35 | 54.5 | 87 | |
| 1.5 (68 kw) | 2000.01-2002.10 | 4AT/5MT | F | L/R | Hatchback FWD G4EK | | GCI24010 | Inner Joint | | 25 | 22 | 35 | 63 | 87 | |
| | 2000.01-2002.10 | AT | F | L | Hatchback FWD G4EK | Date to:2001.07 | GDS39213 | Drive Shaft | 44T | 25 | 25 | 52.5 | 95 | 625 | |
| | 2000.01-2002.10 | AT | F | R | Hatchback FWD G4EK | Date from:2001.08 | GDS24482 | Drive Shaft | 44T | 25 | 25 | 52.5 | 95 | 911 | |
| | 2000.01-2002.10 | AT | F | R | Hatchback FWD G4EK | Date to:2001.07 | GDS39212 | Drive Shaft | 44T | 25 | 25 | 52.5 | 95 | 911 | |
| | 2000.01-2002.10 | AT/MT | F | L/R | Hatchback FWD G4EK | Date to:2001.07 | GCO24033 | Outer Joint | 44T | 25 | 22 | 50 | 95 | 58 | M |
| | 2000.01-2002.10 | AT/MT | F | L/R | Hatchback FWD G4EK | Date from:2001.08 | GCO24065 | Outer Joint | 44T | 25 | 22 | 52.5 | 95 | 58 | M |
| | 2000.01-2002.10 | AT/MT | F | L/R | Hatchback FWD G4EK | Date to:2001.07 | GCO39105 | Outer Joint | 44T | 25 | 22 | 52.5 | 95 | 58 | M |
| | 2000.01-2002.10 | MT | F | L | Hatchback FWD G4EK | Date from:2001.08 | GDS24038 | Drive Shaft | | 25 | 25 | 52.5 | 95 | 622 | |
| | 2000.01-2002.10 | MT | F | L | Hatchback FWD G4EK | Date from:2001.08 | GDS24558 | Drive Shaft | 44T | 25 | 25 | 52.5 | 95 | 622 | |
| | 2000.01-2002.10 | MT | F | L | Hatchback FWD G4EK | Date to:2001.07 | GDS39211 | Drive Shaft | 44T | 25 | 25 | 52.5 | 95 | 622 | |
| | 2000.01-2002.10 | MT | F | R | Hatchback FWD G4EK | Date from:2001.08 | GDS24129 | Drive Shaft | | 25 | 25 | 52.5 | 95 | 908.5 | |
| | 2000.01-2002.10 | MT | F | R | Hatchback FWD G4EK | Date from:2001.08 | GDS24507 | Drive Shaft | 44T | 25 | 25 | 52.5 | 95 | 908.5 | |
| | 2000.01-2002.10 | MT | F | R | Hatchback FWD G4EK | Date to:2001.07 | GDS39214 | Drive Shaft | 44T | 25 | 25 | 52.5 | 95 | 912 | |
| | 2000.01-2002.10 | MT | F | L/R | Hatchback FWD G4EK | Date From:2001.08;without Rim protector | GCO24075 | Outer Joint | | 25 | 22 | 52.5 | 95 | 58 | M |
| | 2000.01-2002.10 | MT | F | L/R | Hatchback FWD G4EK | Date From:2001.08;with Rim protector | GCO99172 | Outer Joint | | 25 | 22 | 52.5 | 95 | 58 | M |
| | 2000.01-2002.10 | MT | F | L/R | Hatchback FWD G4EK | | GCI24009 | Inner Joint | | 25 | 22 | 35 | 54.5 | 87 | |
| 1.5 (69 kw) | 2000.01-2006.12 | 5MT | F | R | Saloon FWD G4EK | | GCI24010 | Inner Joint | | 25 | 22 | 35 | 63 | 87 | |
| | 2000.01-2006.12 | MT | F | L | Saloon FWD G4EK | Date from:2001.08 | GDS24038 | Drive Shaft | | 25 | 25 | 52.5 | 95 | 622 | |
| | 2000.01-2006.12 | MT | F | L | Saloon FWD G4EK | Date from:2001.08 | GDS24558 | Drive Shaft | 44T | 25 | 25 | 52.5 | 95 | 622 | |
| | 2000.01-2006.12 | MT | F | L | Saloon FWD G4EK | Date to:2001.07 | GDS39211 | Drive Shaft | 44T | 25 | 25 | 52.5 | 95 | 622 | |
| | 2000.01-2006.12 | MT | F | R | Saloon FWD G4EK | Date from:2001.08 | GDS24129 | Drive Shaft | | 25 | 25 | 52.5 | 95 | 908.5 | |
| | 2000.01-2006.12 | MT | F | R | Saloon FWD G4EK | Date from:2001.08 | GDS24507 | Drive Shaft | 44T | 25 | 25 | 52.5 | 95 | 908.5 | |
| | 2000.01-2006.12 | MT | F | R | Saloon FWD G4EK | Date to:2001.07 | GDS39214 | Drive Shaft | 44T | 25 | 25 | 52.5 | 95 | 912 | |
| | 2000.01-2006.12 | MT | F | L/R | Saloon FWD G4EK | Date from:2001.08 | GCO24065 | Outer Joint | 44T | 25 | 22 | 52.5 | 95 | 58 | M |
| | 2000.01-2006.12 | MT | F | L/R | Saloon FWD G4EK | Date from:2001.08;without Rim protector | GCO24075 | Outer Joint | | 25 | 22 | 52.5 | 95 | 58 | M |
| | 2000.01-2006.12 | MT | F | L/R | Saloon FWD G4EK | Date to:2001.07 | GCO39105 | Outer Joint | 44T | 25 | 22 | 52.5 | 95 | 58 | M |
| | 2000.01-2006.12 | MT | F | L/R | Saloon FWD G4EK | Date from:2001.08;with Rim protector | GCO99172 | Outer Joint | | 25 | 22 | 52.5 | 95 | 58 | M |
| | 2000.01-2006.12 | MT | F | L/R | Saloon FWD G4EK | | GCI24009 | Inner Joint | | 25 | 22 | 35 | 54.5 | 87 | |
| 1.5 (73 kw) | 1995.12-2000.01 | 5MT | F | L | Hatchback FWD G4FK | | GDS24165 | Drive Shaft | 29T | 25 | 25 | 50 | 95 | 613 | |
| | 1995.12-2000.01 | 5MT | F | L/R | Hatchback FWD G4FK | | GCO24002 | Outer Joint | 29T | 25 | 22 | 50 | 95 | 58 | M |
| | 1995.12-2000.01 | 5MT | F | L/R | Hatchback FWD G4FK | | GCO89004 | Outer Joint | | 25 | 22 | 50 | 95 | 58 | M |
| | 1999.09-2002.10 | 4AT/5MT | F | L/R | Saloon FWD G4FK | | GCI24010 | Inner Joint | | 25 | 22 | 35 | 63 | 87 | |
| | 1999.09-2002.10 | AT | F | L | Saloon FWD G4FK | Date to:2001.07 | GDS39213 | Drive Shaft | 44T | 25 | 25 | 52.5 | 95 | 625 | |
| | 1999.09-2002.10 | AT | F | R | Saloon FWD G4FK | Date from:2001.08 | GDS24482 | Drive Shaft | 44T | 25 | 25 | 52.5 | 95 | 911 | |
| | 1999.09-2002.10 | AT | F | R | Saloon FWD G4FK | Date to:2001.07 | GDS39212 | Drive Shaft | 44T | 25 | 25 | 52.5 | 95 | 911 | |

| | YEAR | TRANSM. | F/R | L/R | BODY STYLE & DRIVE TYPE & ENGINE | REMARKS | G-AP Ref. | PRODUCT | ABS | Technical Specifications A | B | C | H | L | P |
|---|---|---|---|---|---|---|---|---|---|---|---|---|---|---|---|
| **HYUNDAI** | | | | | | | | | | | | | | | |
| **Accent** | | | | | | | | | | | | | | | |
| 1.5 (73 kw) | 1999.09-2002.10 | AT/MT | F | L/R | Saloon FWD G4FK | Date to:2001.07 | GCO24033 | Outer Joint | 44T | 25 | 22 | 50 | 95 | 58 | M |
| | 1999.09-2002.10 | AT/MT | F | L/R | Saloon FWD G4FK | Date from:2001.08 | GCO24065 | Outer Joint | 44T | 25 | 22 | 52.5 | 95 | 58 | M |
| | 1999.09-2002.10 | AT/MT | F | L/R | Saloon FWD G4FK | Date to:2001.07 | GCO39105 | Outer Joint | 44T | 25 | 22 | 52.5 | 95 | 58 | M |
| | 1999.09-2002.10 | MT | F | L | Saloon FWD G4FK | Date from:2001.08 | GDS24038 | Drive Shaft | | 25 | 25 | 52.5 | 95 | 622 | |
| | 1999.09-2002.10 | MT | F | L | Saloon FWD G4FK | Date from:2001.08 | GDS24558 | Drive Shaft | 44T | 25 | 25 | 52.5 | 95 | 622 | |
| | 1999.09-2002.10 | MT | F | L | Saloon FWD G4FK | Date to:2001.07 | GDS39211 | Drive Shaft | 44T | 25 | 25 | 52.5 | 95 | 622 | |
| | 1999.09-2002.10 | MT | F | R | Saloon FWD G4FK | Date from:2001.08 | GDS24129 | Drive Shaft | | 25 | 25 | 52.5 | 95 | 908.5 | |
| | 1999.09-2002.10 | MT | F | R | Saloon FWD G4FK | Date from:2001.08 | GDS24507 | Drive Shaft | 44T | 25 | 25 | 52.5 | 95 | 908.5 | |
| | 1999.09-2002.10 | MT | F | R | Saloon FWD G4FK | Date to:2001.07 | GDS39214 | Drive Shaft | 44T | 25 | 25 | 52.5 | 95 | 912 | |
| | 1999.09-2002.10 | MT | F | L/R | Saloon FWD G4FK | Date From:2001.08;without Rim protector | GCO24075 | Outer Joint | | 25 | 22 | 52.5 | 95 | 58 | M |
| | 1999.09-2002.10 | MT | F | L/R | Saloon FWD G4FK | Date From:2001.08;with Rim protector | GCO99172 | Outer Joint | | 25 | 22 | 52.5 | 95 | 58 | M |
| | 1999.09-2002.10 | MT | F | L/R | Saloon FWD G4FK | | GCI24009 | Inner Joint | | 25 | 22 | 35 | 54.5 | 87 | |
| 1.5 (75 kw) | 1999.09-2002.10 | 5MT | F | R | Saloon FWD G4FK | | GCI24010 | Inner Joint | | 25 | 22 | 35 | 63 | 87 | |
| | 1999.09-2002.10 | MT | F | L | Saloon FWD G4FK | For vehicles without ABS | GDS24038 | Drive Shaft | | 25 | 25 | 52.5 | 95 | 622 | |
| | 1999.09-2002.10 | MT | F | L | Saloon FWD G4FK | Date from:2001.08,For vehicles with ABS | GDS24558 | Drive Shaft | 44T | 25 | 25 | 52.5 | 95 | 622 | |
| | 1999.09-2002.10 | MT | F | L | Saloon FWD G4FK | Date to:2001.07,For vehicles with ABS | GDS39211 | Drive Shaft | 44T | 25 | 25 | 52.5 | 95 | 622 | |
| | 1999.09-2002.10 | MT | F | R | Saloon FWD G4FK | Date to:2001.07 | GDS24129 | Drive Shaft | | 25 | 25 | 52.5 | 95 | 908.5 | |
| | 1999.09-2002.10 | MT | F | R | Saloon FWD G4FK | Date from:2001.08 | GDS24507 | Drive Shaft | 44T | 25 | 25 | 52.5 | 95 | 908.5 | |
| | 1999.09-2002.10 | MT | F | R | Saloon FWD G4FK | Date to:2001.07 | GDS39214 | Drive Shaft | 44T | 25 | 25 | 52.5 | 95 | 912 | |
| | 1999.09-2002.10 | MT | F | L/R | Saloon FWD G4FK | Date from:2001.08 | GCO24065 | Outer Joint | 44T | 25 | 22 | 52.5 | 95 | 58 | M |
| | 1999.09-2002.10 | MT | F | L/R | Saloon FWD G4FK | Date to:2001.07 | GCO39105 | Outer Joint | 44T | 25 | 22 | 52.5 | 95 | 58 | M |
| | 1999.09-2002.10 | MT | F | L/R | Saloon FWD G4FK | | GCI24009 | Inner Joint | | 25 | 22 | 35 | 54.5 | 87 | |
| | 2000.09-2003.02 | 5MT | F | L/R | Hatchback FWD G4EC-G | | GCI24010 | Inner Joint | | 25 | 22 | 35 | 63 | 87 | |
| | 2000.09-2003.02 | AT | F | L | Hatchback FWD G4EC-G | Date to:2001.07 | GDS39213 | Drive Shaft | 44T | 25 | 25 | 52.5 | 95 | 625 | |
| | 2000.09-2003.02 | AT | F | R | Hatchback FWD G4EC-G | Date from:2001.08 | GDS24482 | Drive Shaft | 44T | 25 | 25 | 52.5 | 95 | 911 | |
| | 2000.09-2003.02 | AT | F | R | Hatchback FWD G4EC-G | Date to:2001.07 | GDS39212 | Drive Shaft | 44T | 25 | 25 | 52.5 | 95 | 911 | |
| | 2000.09-2003.02 | AT/MT | F | L/R | Hatchback FWD G4EC-G | Date to:2001.07 | GCO24033 | Outer Joint | 44T | 25 | 22 | 50 | 95 | 58 | M |
| | 2000.09-2003.02 | AT/MT | F | L/R | Hatchback FWD G4EC-G | Date from:2001.08 | GCO24065 | Outer Joint | 44T | 25 | 22 | 52.5 | 95 | 58 | M |
| | 2000.09-2003.02 | AT/MT | F | L/R | Hatchback FWD G4EC-G | Date to:2001.07 | GCO39105 | Outer Joint | 44T | 25 | 22 | 52.5 | 95 | 58 | M |
| | 2000.09-2003.02 | MT | F | L | Hatchback FWD G4EC-G | Date from:2001.08 | GDS24038 | Drive Shaft | | 25 | 25 | 52.5 | 95 | 622 | |
| | 2000.09-2003.02 | MT | F | L | Hatchback FWD G4EC-G | Date from:2001.08 | GDS24558 | Drive Shaft | 44T | 25 | 25 | 52.5 | 95 | 622 | |
| | 2000.09-2003.02 | MT | F | L | Hatchback FWD G4EC-G | Date to:2001.07 | GDS39211 | Drive Shaft | 44T | 25 | 25 | 52.5 | 95 | 622 | |
| | 2000.09-2003.02 | MT | F | R | Hatchback FWD G4EC-G | Date from:2001.08 | GDS24129 | Drive Shaft | | 25 | 25 | 52.5 | 95 | 908.5 | |
| | 2000.09-2003.02 | MT | F | R | Hatchback FWD G4EC-G | Date from:2001.08 | GDS24507 | Drive Shaft | 44T | 25 | 25 | 52.5 | 95 | 908.5 | |
| | 2000.09-2003.02 | MT | F | R | Hatchback FWD G4EC-G | Date to:2001.07 | GDS39214 | Drive Shaft | 44T | 25 | 25 | 52.5 | 95 | 912 | |
| | 2000.09-2003.02 | MT | F | L/R | Hatchback FWD G4EC-G | Date From:2001.08;without Rim protector | GCO24075 | Outer Joint | | 25 | 22 | 52.5 | 95 | 58 | M |
| | 2000.09-2003.02 | MT | F | L/R | Hatchback FWD G4EC-G | Date From:2001.08;with Rim protector | GCO99172 | Outer Joint | | 25 | 22 | 52.5 | 95 | 58 | M |
| | 2000.09-2003.02 | MT | F | L/R | Hatchback FWD G4EC-G | | GCI24009 | Inner Joint | | 25 | 22 | 35 | 54.5 | 87 | |
| 1.5 (77 kw) | 1999.09-2002.10 | 5MT | F | L/R | Hatchback FWD G4FK | | GCI24010 | Inner Joint | | 25 | 22 | 35 | 63 | 87 | |
| | 1999.09-2002.10 | MT | F | L | Hatchback FWD G4FK | Date from:2001.08 | GDS24038 | Drive Shaft | | 25 | 25 | 52.5 | 95 | 622 | |
| | 1999.09-2002.10 | MT | F | L | Hatchback FWD G4FK | Date from:2001.08 | GDS24558 | Drive Shaft | 44T | 25 | 25 | 52.5 | 95 | 622 | |
| | 1999.09-2002.10 | MT | F | L | Hatchback FWD G4FK | Date to:2001.07 | GDS39211 | Drive Shaft | 44T | 25 | 25 | 52.5 | 95 | 622 | |
| | 1999.09-2002.10 | MT | F | R | Hatchback FWD G4FK | Date from:2001.08 | GDS24129 | Drive Shaft | | 25 | 25 | 52.5 | 95 | 908.5 | |
| | 1999.09-2002.10 | MT | F | R | Hatchback FWD G4FK | Date from:2001.08 | GDS24507 | Drive Shaft | 44T | 25 | 25 | 52.5 | 95 | 908.5 | |
| | 1999.09-2002.10 | MT | F | R | Hatchback FWD G4FK | Date to:2001.07 | GDS39214 | Drive Shaft | 44T | 25 | 25 | 52.5 | 95 | 912 | |
| | 1999.09-2002.10 | MT | F | L/R | Hatchback FWD G4FK | Date to:2001.07 | GCO24033 | Outer Joint | 44T | 25 | 22 | 50 | 95 | 58 | M |
| | 1999.09-2002.10 | MT | F | L/R | Hatchback FWD G4FK | Date from:2001.08 | GCO24065 | Outer Joint | 44T | 25 | 22 | 52.5 | 95 | 58 | M |
| | 1999.09-2002.10 | MT | F | L/R | Hatchback FWD G4FK | Date from:2001.08;without Rim protector | GCO24075 | Outer Joint | | 25 | 22 | 52.5 | 95 | 58 | M |
| | 1999.09-2002.10 | MT | F | L/R | Hatchback FWD G4FK | Date to:2001.07 | GCO39105 | Outer Joint | 44T | 25 | 22 | 52.5 | 95 | 58 | M |
| | 1999.09-2002.10 | MT | F | L/R | Hatchback FWD G4FK | Date from:2001.08;with Rim protector | GCO99172 | Outer Joint | | 25 | 22 | 52.5 | 95 | 58 | M |
| | 1999.09-2002.10 | MT | F | L/R | Hatchback FWD G4FK | | GCI24009 | Inner Joint | | 25 | 22 | 35 | 54.5 | 87 | |
| 1.5 (81 kw) | 2005.11-2010.11 | 4AT/5MT | F | L | Hatchback FWD D4FA | | GDS24045 | Drive Shaft | | 25 | 27 | 50 | 94.5 | 633 | |
| | 2005.11-2010.11 | 4AT/5MT | F | L | Hatchback FWD D4FA | | GDS24120 | Drive Shaft | 48T | 25 | 27 | 50 | 94.5 | 633 | |
| | 2005.11-2010.11 | 4AT/5MT | F | R | Hatchback FWD D4FA | | GDS24046 | Drive Shaft | 48T | 25 | 26 | 50 | 94.5 | 588 | |
| | 2005.11-2010.11 | 4AT/5MT | F | L/R | Hatchback FWD D4FA | Inner teeth:23 | GCO24047 | Outer Joint | 48T | 25 | 23 | 50 | 94.5 | 63.5 | M |
| | 2005.11-2010.11 | 4AT/5MT | F | L | Hatchback FWD D4FA | | GCI24013 | Inner Joint | | 27 | 33 | 41 | 61.5 | 107 | |
| | 2005.11-2010.11 | 4AT/5MT | F | R | Hatchback FWD D4FA | | GCI24014 | Inner Joint | | 26 | 33 | 42 | | 124 | |
| | 2005.11-2010.11 | 4AT/5MT | F | L | Saloon FWD D4FA | | GDS24045 | Drive Shaft | | 25 | 27 | 50 | 94.5 | 633 | |
| | 2005.11-2010.11 | 4AT/5MT | F | L | Saloon FWD D4FA | | GDS24120 | Drive Shaft | 48T | 25 | 27 | 50 | 94.5 | 633 | |
| | 2005.11-2010.11 | 4AT/5MT | F | R | Saloon FWD D4FA | | GDS24046 | Drive Shaft | 48T | 25 | 26 | 50 | 94.5 | 588 | |
| | 2005.11-2010.11 | 4AT/5MT | F | L/R | Saloon FWD D4FA | Inner teeth:23 | GCO24047 | Outer Joint | 48T | 25 | 23 | 50 | 94.5 | 63.5 | M |
| | 2005.11-2010.11 | 4AT/5MT | F | L | Saloon FWD D4FA | | GCI24013 | Inner Joint | | 27 | 33 | 41 | 61.5 | 107 | |
| | 2005.11-2010.11 | 4AT/5MT | F | R | Saloon FWD D4FA | | GCI24014 | Inner Joint | | 26 | 33 | 42 | | 124 | |
| 1.6 (77 kw) | 2002.12-2005.11 | 4AT/5MT | F | L/R | Hatchback FWD G4ED | | GCI24010 | Inner Joint | | 25 | 22 | 35 | 63 | 87 | |
| | 2002.12-2005.11 | AT | F | R | Hatchback FWD G4ED | | GDS24482 | Drive Shaft | 44T | 25 | 25 | 52.5 | 95 | 911 | |

| | YEAR | TRANSM. | F/R | L/R | BODY STYLE & DRIVE TYPE & ENGINE | REMARKS | G-AP Ref. | PRODUCT | ABS | Technical Specifications | | | | | |
|---|---|---|---|---|---|---|---|---|---|---|---|---|---|---|---|
| | | | | | | | | | | A | B | C | H | L | P |
| **HYUNDAI** | | | | | | | | | | | | | | | |
| **Accent** | | | | | | | | | | | | | | | |
| 1.6 (77 kw) | 2002.12-2005.11 | AT/MT | F | L/R | Hatchback FWD G4ED | | GCO24065 | Outer Joint | 44T | 25 | 22 | 52.5 | 95 | 58 | M |
| | 2002.12-2005.11 | MT | F | L | Hatchback FWD G4ED | Model:Excel | GDS24038 | Drive Shaft | | 25 | 25 | 52.5 | 95 | 622 | |
| | 2002.12-2005.11 | MT | F | L | Hatchback FWD G4ED | Model:Excel | GDS24558 | Drive Shaft | 44T | 25 | 25 | 52.5 | 95 | 622 | |
| | 2002.12-2005.11 | MT | F | R | Hatchback FWD G4ED | Model:Excel | GDS24129 | Drive Shaft | | 25 | 25 | 52.5 | 95 | 908.5 | |
| | 2002.12-2005.11 | MT | F | R | Hatchback FWD G4ED | Model:Excel;For vehicles with ABS | GDS24507 | Drive Shaft | 44T | 25 | 25 | 52.5 | 95 | 908.5 | |
| | 2002.12-2005.11 | MT | F | R | Hatchback FWD G4ED | Model:Accent/Excel;For vehicles without ABS | GDS39214 | Drive Shaft | 44T | 25 | 25 | 52.5 | 95 | 912 | |
| | 2002.12-2005.11 | MT | F | L/R | Hatchback FWD G4ED | Model:Excel;without Rim protector | GCO24075 | Outer Joint | | 25 | 22 | 52.5 | 95 | 58 | M |
| | 2002.12-2005.11 | MT | F | L/R | Hatchback FWD G4ED | Model:Excel;with Rim protector | GCO99172 | Outer Joint | | 25 | 22 | 52.5 | 95 | 58 | M |
| | 2002.12-2005.11 | MT | F | L/R | Hatchback FWD G4ED | Model:Excel | GCI24009 | Inner Joint | | 25 | 22 | 35 | 54.5 | 87 | |
| | 2002.12-2005.11 | 5MT | F | L/R | Saloon FWD G4ED | | GCI24009 | Inner Joint | | 25 | 22 | 35 | 54.5 | 87 | |
| | 2002.12-2005.11 | 5MT | F | L/R | Saloon FWD G4ED | | GCI24010 | Inner Joint | | 25 | 22 | 35 | 63 | 87 | |
| | 2002.12-2005.11 | AT | F | R | Saloon FWD G4ED | | GDS24482 | Drive Shaft | 44T | 25 | 25 | 52.5 | 95 | 911 | |
| | 2002.12-2005.11 | AT | F | L/R | Saloon FWD G4ED | with Rim protector | GCO24065 | Outer Joint | 44T | 25 | 22 | 52.5 | 95 | 58 | M |
| | 2002.12-2005.11 | AT/MT | F | L/R | Saloon FWD G4ED | with Rim protector | GCO24033 | Outer Joint | 44T | 25 | 22 | 50 | 95 | 58 | M |
| | 2002.12-2005.11 | MT | F | R | Saloon FWD G4ED | For vehicles without ABS | GDS24129 | Drive Shaft | | 25 | 25 | 52.5 | 95 | 908.5 | |
| | 2002.12-2005.11 | MT | F | R | Saloon FWD G4ED | For vehicles without ABS | GDS39214 | Drive Shaft | 44T | 25 | 25 | 52.5 | 95 | 912 | |
| 1.6 (82 kw) | 2005.11-2010.11 | AT | F | L | Hatchback FWD G4ED | | GDS24412 | Drive Shaft | 48T | 25 | 25 | 52.5 | 95 | 639 | |
| | 2005.11-2010.11 | AT | F | R | Hatchback FWD G4ED | | GDS24201 | Drive Shaft | 48T | 25 | 25 | 52.5 | 95 | 925 | |
| | 2005.11-2010.11 | AT | F | R | Hatchback FWD G4ED | | GCI24010 | Inner Joint | | 25 | 22 | 35 | 63 | 87 | |
| | 2005.11-2010.11 | AT/MT | F | L/R | Hatchback FWD G4ED | | GCO24046 | Outer Joint | 48T | 25 | 22 | 52.5 | 95 | 58 | M |
| | 2005.11-2010.11 | AT/MT | F | L/R | Hatchback FWD G4ED | | GCO24098 | Outer Joint | 48T | 25 | 22 | 52.5 | 95 | 58 | M |
| | 2005.11-2010.11 | MT | F | L | Hatchback FWD G4ED | | GDS24188 | Drive Shaft | 48T | 25 | 25 | 52.5 | 95 | 640 | |
| | 2005.11-2010.11 | MT | F | R | Hatchback FWD G4ED | | GDS24044 | Drive Shaft | 48T | 25 | 25 | 52.5 | 95 | 924 | |
| | 2005.11-2010.11 | MT | F | L/R | Hatchback FWD G4ED | | GCI24012 | Inner Joint | | 25 | 22 | 41 | 63 | 86.5 | |
| | 2005.11-2010.11 | 4AT | F | R | Saloon FWD G4ED | | GCI24010 | Inner Joint | | 25 | 22 | 35 | 63 | 87 | |
| | 2005.11-2010.11 | 5MT | F | L | Saloon FWD G4ED | | GDS24246 | Drive Shaft | 48T | 25 | 25 | 52.5 | 93.5 | 652 | |
| | 2005.11-2010.11 | 5MT | F | R | Saloon FWD G4ED | | GDS24247 | Drive Shaft | 48T | 25 | 25 | 52.5 | 93.5 | 927 | |
| | 2005.11-2010.11 | AT | F | L | Saloon FWD G4ED | | GDS24412 | Drive Shaft | 48T | 25 | 25 | 52.5 | 95 | 639 | |
| | 2005.11-2010.11 | AT | F | R | Saloon FWD G4ED | | GDS24201 | Drive Shaft | 48T | 25 | 25 | 52.5 | 95 | 925 | |
| | 2005.11-2010.11 | AT/MT | F | L/R | Saloon FWD G4ED | | GCO24046 | Outer Joint | 48T | 25 | 22 | 52.5 | 95 | 58 | M |
| | 2005.11-2010.11 | AT/MT | F | L/R | Saloon FWD G4ED | | GCO24098 | Outer Joint | 48T | 25 | 22 | 52.5 | 95 | 58 | M |
| | 2005.11-2010.11 | AT/MT | F | L/R | Saloon FWD G4ED | | GCI24012 | Inner Joint | | 25 | 22 | 41 | 63 | 86.5 | |
| | 2005.11-2010.11 | MT | F | L | Saloon FWD G4ED | | GDS24188 | Drive Shaft | 48T | 25 | 25 | 52.5 | 95 | 640 | |
| | 2005.11-2010.11 | MT | F | R | Saloon FWD G4ED | | GDS24044 | Drive Shaft | 48T | 25 | 25 | 52.5 | 95 | 924 | |
| 1.6 (89 kw) | 2017.01- | 6AT | F | L | Saloon FWD G4FG | Date from:2017.11 | GDS83963 | Drive Shaft | | 25 | 27 | 52.5 | 94.5 | 641 | |
| | 2017.01- | 6AT | F | L | Saloon FWD G4FG | Date to:2017.10 | GDS83966 | Drive Shaft | 48T | 25 | 27 | 52.5 | 92.5 | 640 | |
| | 2017.01- | 6AT | F | R | Saloon FWD G4FG | Date from:2017.11 | GDS83965 | Drive Shaft | | 25 | 27 | 52.5 | 94.5 | 930 | |
| | 2017.01- | 6AT | F | R | Saloon FWD G4FG | Date to:2017.10 | GDS83967 | Drive Shaft | 48T | 25 | 27 | 52.5 | 92.5 | 930 | |
| | 2017.01- | 6AT | F | L/R | Saloon FWD G4FG | Date to:2017.10 | GCO39261 | Outer Joint | 48T | 25 | 22 | 52.5 | 92.5 | 54.5 | M |
| | 2017.01- | 6AT | F | L/R | Saloon FWD G4FG | Date from:2017.11 | GCO82443 | Outer Joint | | 25 | 22 | 52.5 | 94.5 | 54 | M |
| | 2017.01- | 6AT | F | L/R | Saloon FWD G4FG | | GCI24065 | Inner Joint | | 27 | 22 | 30 | 68 | 77 | |
| | 2017.01- | 6MT | F | L | Saloon FWD G4FG | Date to:2017.09 | GDS83961 | Drive Shaft | 48T | 25 | 25 | 52.5 | 94.5 | 660 | |
| | 2017.01- | 6MT | F | L | Saloon FWD G4FG | Date from:2017.10 | GDS83962 | Drive Shaft | | 25 | 25 | 52.5 | 94.5 | 660 | |
| | 2017.01- | 6MT | F | R | Saloon FWD G4FG | Date to:2017.09 | GDS83873 | Drive Shaft | 48T | 25 | 25 | 52.5 | 92.5 | 934 | |
| | 2017.01- | 6MT | F | R | Saloon FWD G4FG | Date from:2017.10 | GDS83964 | Drive Shaft | | 25 | 25 | 52.5 | 94.5 | 935 | |
| | 2017.01- | 6MT | F | L | Saloon FWD G4FG | Date to:2017.09 | GCO24131 | Outer Joint | 48T | 25 | 22 | 52.5 | 93.5 | 59.5 | M |
| | 2017.01- | 6MT | F | R | Saloon FWD G4FG | Date from:2017.10 | GCO39261 | Outer Joint | 48T | 25 | 22 | 52.5 | 92.5 | 54.5 | M |
| | 2017.01- | 6MT | F | L/R | Saloon FWD G4FG | Date from:2017.10 | GCO82443 | Outer Joint | | 25 | 22 | 52.5 | 94.5 | 54 | M |
| | 2017.01- | 6MT | F | L/R | Saloon FWD G4FG | | GCI24137 | Inner Joint | | 25 | 22 | 41 | 62.5 | 86 | |
| | 2017.01- | 6MT | F | L/R | Saloon FWD G4FG | | GCI39052 | Inner Joint | | 25 | 22 | 41 | 63 | 86 | |
| 1.6 (90 kw) | 2010.11- | AT/MT | F | L | Saloon FWD G4FC | | GDS24246 | Drive Shaft | 48T | 25 | 25 | 52.5 | 93.5 | 652 | |
| | 2010.11- | AT/MT | F | L | Saloon FWD G4FC | | GDS24260 | Drive Shaft | | 25 | 25 | 52.5 | 93.5 | 652 | |
| | 2010.11- | AT/MT | F | R | Saloon FWD G4FC | | GDS24247 | Drive Shaft | 48T | 25 | 25 | 52.5 | 93.5 | 927 | |
| | 2010.11- | AT/MT | F | L/R | Saloon FWD G4FC | | GCO24131 | Outer Joint | 48T | 25 | 22 | 52.5 | 93.5 | 59.5 | M |
| | 2010.11- | AT/MT | F | L/R | Saloon FWD G4FC | | GCO24136 | Outer Joint | | 25 | 22 | 52.5 | 93.5 | 59.5 | M |
| | 2010.11- | AT/MT | F | L/R | Saloon FWD G4FC | | GCI39052 | Inner Joint | | 25 | 22 | 41 | 63 | 86 | |
| 1.6 (91 kw) | 2010.11-2018.03 | AT/MT | F | R | Hatchback FWD G4FC | Date from:2011.01 | GDS39167 | Drive Shaft | 48T | 25 | 25 | 52.5 | 93.5 | 933 | |
| | 2010.11-2018.03 | | F | L | Hatchback FWD G4FC | | GDS24246 | Drive Shaft | 48T | 25 | 25 | 52.5 | 93.5 | 652 | |
| | 2010.11-2018.03 | | F | R | Hatchback FWD G4FC | Date To:2014.12 | GDS24247 | Drive Shaft | 48T | 25 | 25 | 52.5 | 93.5 | 927 | |
| 1.6 (94 kw) | 2010.11-2017.12 | AT | F | L | Saloon FWD D4FB | | GDS24294 | Drive Shaft | 48T | 25 | 27 | 52.5 | 94.5 | 646 | |
| | 2010.11-2017.12 | AT | F | R | Saloon FWD D4FB | | GDS24293 | Drive Shaft | 48T | 25 | 27 | 52.5 | 94.5 | 929 | |
| | 2010.11-2017.12 | AT | F | L | Saloon FWD D4FB | | GCI27043 | Inner Joint | | 27 | 24 | 41 | 61.5 | 91 | |
| | 2010.11-2017.12 | AT | F | L/R | Saloon FWD D4FB | | GCI27044 | Inner Joint | | 27 | 24 | 41 | 62.5 | 88.5 | |
| | 2010.11-2017.12 | AT/MT | F | L | Saloon FWD D4FB | | GDS24368 | Drive Shaft | | 25 | 27 | 52.5 | 94.5 | 648 | |
| | 2010.11-2017.12 | AT/MT | F | L | Saloon FWD D4FB | | GCO24197 | Outer Joint | | 25 | 24 | 52.5 | 94.5 | 64 | M |

| | YEAR | TRANSM. | F/R | L/R | BODY STYLE & DRIVE TYPE & ENGINE | REMARKS | G-AP Ref. | PRODUCT | ABS | Technical Specifications A | B | C | H | L | P |
|---|---|---|---|---|---|---|---|---|---|---|---|---|---|---|---|
| **HYUNDAI** | | | | | | | | | | | | | | | |
| **Accent** | | | | | | | | | | | | | | | |
| 1.6 (94 kw) | 2010.11-2017.12 | MT | F | L | Saloon FWD D4FB | | GDS24290 | Drive Shaft | 48T | 25 | 27 | 52.5 | 94.5 | 647 | |
| | 2010.11-2017.12 | MT | F | R | Saloon FWD D4FB | | GDS24291 | Drive Shaft | 48T | 25 | 27 | 52.5 | 94.5 | 930 | |
| | 2010.11-2017.12 | MT | F | L/R | Saloon FWD D4FB | | GCI27043 | Inner Joint | | 27 | 24 | 41 | 61.5 | 91 | |
| | 2010.11-2017.12 | | F | R | Saloon FWD D4FB | | GDS24386 | Drive Shaft | | 25 | 27 | 52.5 | 94.5 | 932 | |
| | 2011.07-2017.10 | 6MT | F | L | Hatchback FWD D4FB | | GDS24246 | Drive Shaft | 48T | 25 | 25 | 52.5 | 93.5 | 652 | |
| 1.6 (100 kw) | 2011.04-2017.12 | DCT | F | L | Saloon FWD D4FB | | GDS82833 | Drive Shaft | 48T | 25 | 28 | 52.5 | 94.5 | 605 | |
| | 2011.04-2017.12 | DCT | F | R | Saloon FWD D4FB | | GDS82834 | Drive Shaft | 48T | 25 | 28 | 52.5 | 94.5 | 977 | |
| | 2011.04-2017.12 | DCT | F | L/R | Saloon FWD D4FB | | GCO82253 | Outer Joint | 48T | 25 | 24 | 52.5 | 94.5 | 64 | M |
| | 2011.04-2017.12 | DCT | F | L/R | Saloon FWD D4FB | | GCI81692 | Inner Joint | | 28 | 24 | 41 | 61.5 | 95 | |
| | 2011.04-2017.12 | MT | F | L | Saloon FWD D4FB | | GDS24290 | Drive Shaft | 48T | 25 | 27 | 52.5 | 94.5 | 647 | |
| | 2011.04-2017.12 | MT | F | L | Saloon FWD D4FB | | GDS24368 | Drive Shaft | | 25 | 27 | 52.5 | 94.5 | 648 | |
| | 2011.04-2017.12 | MT | F | R | Saloon FWD D4FB | | GDS24291 | Drive Shaft | 48T | 25 | 27 | 52.5 | 94.5 | 930 | |
| | 2011.04-2017.12 | MT | F | R | Saloon FWD D4FB | | GDS24386 | Drive Shaft | | 25 | 27 | 52.5 | 94.5 | 932 | |
| | 2011.04-2017.12 | MT | F | L/R | Saloon FWD D4FB | | GCO24197 | Outer Joint | | 25 | 24 | 52.5 | 94.5 | 64 | M |
| | 2011.04-2017.12 | MT | F | L/R | Saloon FWD D4FB | | GCI27043 | Inner Joint | | 27 | 24 | 41 | 61.5 | 91 | |
| 1.6 (103 kw) | 2010.11-2017.12 | 6MT | F | L | Saloon FWD G4FD | | GDS24246 | Drive Shaft | 48T | 25 | 25 | 52.5 | 93.5 | 652 | |
| | 2010.11-2017.12 | AT/MT | F | L | Saloon FWD G4FD | | GCO24131 | Outer Joint | 48T | 25 | 22 | 52.5 | 93.5 | 59.5 | M |
| | 2010.11-2017.12 | AT/MT | F | L/R | Saloon FWD G4FD | | GCI39052 | Inner Joint | | 25 | 22 | 41 | 63 | 86 | |
| | 2010.11-2017.12 | | F | R | Saloon FWD G4FD | Date To:2014.12 | GDS24247 | Drive Shaft | 48T | 25 | 25 | 52.5 | 93.5 | 927 | |
| | 2011.09-2019.04 | 6MT | F | L | Hatchback FWD G4FD | | GDS24246 | Drive Shaft | 48T | 25 | 25 | 52.5 | 93.5 | 652 | |
| | 2011.09-2019.04 | | F | R | Hatchback FWD G4FD | Date To:2014.12 | GDS24247 | Drive Shaft | 48T | 25 | 25 | 52.5 | 93.5 | 927 | |
| **Accent/i25/Solaris** | | | | | | | | | | | | | | | |
| 1.4 (80 kw) | 2010.11-2017.12 | 4AT/5MT | F | L | Saloon FWD G4FA | | GDS24246 | Drive Shaft | 48T | 25 | 25 | 52.5 | 93.5 | 652 | |
| | 2010.11-2017.12 | 4AT/5MT | F | L | Saloon FWD G4FA | Date to:2014.04 | GDS24260 | Drive Shaft | | 25 | 25 | 52.5 | 93.5 | 652 | |
| | 2010.11-2017.12 | 4AT/5MT | F | R | Saloon FWD G4FA | | GDS24247 | Drive Shaft | 48T | 25 | 25 | 52.5 | 93.5 | 927 | |
| | 2010.11-2017.12 | 4AT/5MT | F | L/R | Saloon FWD G4FA | | GCO24131 | Outer Joint | 48T | 25 | 22 | 52.5 | 93.5 | 59.5 | M |
| | 2010.11-2017.12 | 4AT/5MT | F | L/R | Saloon FWD G4FA | | GCO24136 | Outer Joint | | 25 | 22 | 52.5 | 93.5 | 59.5 | M |
| | 2010.11-2017.12 | 4AT/5MT | F | L/R | Saloon FWD G4FA | | GCI39052 | Inner Joint | | 25 | 22 | 41 | 63 | 86 | |
| **Atos** | | | | | | | | | | | | | | | |
| 1.0 (40 kw) | 1998.02-2000.12 | AT | F | L | Hatchback FWD G4HC | Model:Atos Prime,Date From:2001.07 | GDS27017 | Drive Shaft | 38T | 25 | 22 | 50 | 94.5 | 570 | |
| | 1998.02-2000.12 | AT | F | R | Hatchback FWD G4HC | Model:Atos Prime,Date From:2001.07 | GDS24033 | Drive Shaft | 38T | 25 | 22 | 50 | 94.5 | 844 | |
| | 1998.02-2000.12 | AT/MT | F | L/R | Hatchback FWD G4HC | | GCO24004 | Outer Joint | 38T | 25 | 19 | 50 | 94.5 | 52.5 | M |
| | 1998.02-2000.12 | AT/MT | F | L/R | Hatchback FWD G4HC | | GCO24011 | Outer Joint | | 25 | 19 | 50 | 94.5 | 52.5 | M |
| | 1998.02-2000.12 | AT/MT | F | L/R | Hatchback FWD G4HC | | GCI24002 | Inner Joint | | 22 | 19 | 35 | 52 | 86 | |
| | 1998.02-2000.12 | MT | F | L | Hatchback FWD G4HC | Date From:2001.07 | GDS24034 | Drive Shaft | 38T | 25 | 22 | 50 | 94.5 | 596 | |
| | 1998.02-2000.12 | MT | F | R | Hatchback FWD G4HC | Model:Atos Prime,Date From:2001.07 | GDS24528 | Drive Shaft | | 25 | 22 | 52.5 | 95 | 814 | |
| | 1998.02-2000.12 | MT | F | R | Hatchback FWD G4HC | Model:Atos Prime,Date From:2001.07 | GCO24018 | Outer Joint | | 25 | 19 | 52.5 | 95 | 52 | M |
| | 1998.02-2000.12 | MT | F | L/R | Hatchback FWD G4HC | | GCO24005 | Outer Joint | | 25 | 19 | 50 | 96 | 52 | M |
| 1.0 (41 kw) | 1998.02-2002.03 | AT | F | L | Hatchback FWD G4HC | Date From:2001.07 | GDS27017 | Drive Shaft | 38T | 25 | 22 | 50 | 94.5 | 570 | |
| | 1998.02-2002.03 | AT | F | R | Hatchback FWD G4HC | Date From:2001.07 | GDS24033 | Drive Shaft | 38T | 25 | 22 | 50 | 94.5 | 844 | |
| | 1998.02-2002.03 | AT | F | L/R | Hatchback FWD G4HC | Date From:2001.07 | GCO24004 | Outer Joint | 38T | 25 | 19 | 50 | 94.5 | 52.5 | M |
| | 1998.02-2002.03 | AT/MT | F | L/R | Hatchback FWD G4HC | Date To:2001.06 | GCO24004 | Outer Joint | 38T | 25 | 19 | 50 | 94.5 | 52.5 | M |
| | 1998.02-2002.03 | AT/MT | F | L/R | Hatchback FWD G4HC | Date To:2001.06 | GCO24011 | Outer Joint | | 25 | 19 | 50 | 94.5 | 52.5 | M |
| | 1998.02-2002.03 | AT/MT | F | L/R | Hatchback FWD G4HC | | GCI24002 | Inner Joint | | 22 | 19 | 35 | 52 | 86 | |
| | 1998.02-2002.03 | MT | F | L | Hatchback FWD G4HC | Date From:2001.07 | GDS24034 | Drive Shaft | 38T | 25 | 22 | 50 | 94.5 | 596 | |
| | 1998.02-2002.03 | MT | F | R | Hatchback FWD G4HC | Date From:2001.07 | GDS24528 | Drive Shaft | | 25 | 22 | 52.5 | 95 | 814 | |
| | 1998.02-2002.03 | MT | F | L | Hatchback FWD G4HC | Date to:2001.06 | GCO24005 | Outer Joint | | 25 | 19 | 50 | 96 | 52 | M |
| | 1998.02-2002.03 | MT | F | R | Hatchback FWD G4HC | Date From:2001.07 | GCO24018 | Outer Joint | | 25 | 19 | 52.5 | 95 | 52 | M |
| 1.0 (43 kw) | 2001.03-2003.07 | AT | F | L | Hatchback FWD G4HC | Date From:2001.07 | GDS27017 | Drive Shaft | 38T | 25 | 22 | 50 | 94.5 | 570 | |
| | 2001.03-2003.07 | AT | F | R | Hatchback FWD G4HC | Date From:2001.07 | GDS24033 | Drive Shaft | 38T | 25 | 22 | 50 | 94.5 | 844 | |
| | 2001.03-2003.07 | AT | F | L/R | Hatchback FWD G4HC | Date To:2001.06 | GCO24011 | Outer Joint | | 25 | 19 | 50 | 94.5 | 52.5 | M |
| | 2001.03-2003.07 | AT/MT | F | L/R | Hatchback FWD G4HC | | GCO24004 | Outer Joint | 38T | 25 | 19 | 50 | 94.5 | 52.5 | M |
| | 2001.03-2003.07 | AT/MT | F | L/R | Hatchback FWD G4HC | | GCI24002 | Inner Joint | | 22 | 19 | 35 | 52 | 86 | |
| | 2001.03-2003.07 | MT | F | L | Hatchback FWD G4HC | | GDS24034 | Drive Shaft | 38T | 25 | 22 | 50 | 94.5 | 596 | |
| | 2001.03-2003.07 | MT | F | R | Hatchback FWD G4HC | Date From:2001.07 | GDS24528 | Drive Shaft | | 25 | 22 | 52.5 | 95 | 814 | |
| | 2001.03-2003.07 | MT | F | R | Hatchback FWD G4HC | Date From:2001.07 | GCO24018 | Outer Joint | | 25 | 19 | 52.5 | 95 | 52 | M |
| | 2001.03-2003.07 | MT | F | L/R | Hatchback FWD G4HC | | GCO24005 | Outer Joint | | 25 | 19 | 50 | 96 | 52 | M |
| 1.1 (43 kw) | 2003.08-2008.12 | 4AT | F | L/R | Hatchback FWD G4HD | | GCO24159 | Outer Joint | 38T | 25 | 20 | 50 | 94.5 | 56 | I |
| | 2003.08-2008.12 | 4AT | F | L/R | Hatchback FWD G4HD | Type:GL/GLS | GCO99025 | Outer Joint | | 25 | 20 | 50 | 94.5 | 52.5 | I |
| | 2003.08-2008.12 | 5MT | F | L | Hatchback FWD G4HD | | GDS24547 | Drive Shaft | 38T | 25 | 22 | 50 | 94.5 | 591 | |
| | 2003.08-2008.12 | 5MT | F | R | Hatchback FWD G4HD | | GDS24544 | Drive Shaft | 38T | 25 | 22 | 50 | 94.5 | 804 | |
| | 2003.08-2008.12 | 5MT | F | L/R | Hatchback FWD G4HD | | GCO24004 | Outer Joint | 38T | 25 | 19 | 50 | 94.5 | 52.5 | M |
| | 2003.08-2008.12 | 5MT | F | L/R | Hatchback FWD G4HD | | GCO24099 | Outer Joint | 38T | 25 | 20 | 50 | 94.5 | 56 | I |
| | 2003.08-2008.12 | 5MT | F | L/R | Hatchback FWD G4HD | | GCI99106 | Inner Joint | | 22 | 20 | 35 | 51.5 | 87 | |
| | 2003.08-2008.12 | AT | F | L/R | Hatchback FWD G4HD | Type:GLS | GCO24011 | Outer Joint | | 25 | 19 | 50 | 94.5 | 52.5 | M |

| | YEAR | TRANSM. | F/R | L/R | BODY STYLE & DRIVE TYPE & ENGINE | REMARKS | G-AP Ref. | PRODUCT | ABS | Technical Specifications A | B | C | H | L | P |
|---|---|---|---|---|---|---|---|---|---|---|---|---|---|---|---|
| **HYUNDAI** | | | | | | | | | | | | | | | |
| **Atos** | | | | | | | | | | | | | | | |
| 1.1 (45 kw) | 2003.06-2010.12 | MT | F | L | Hatchback FWD G4HG | | GDS24547 | Drive Shaft | 38T | 25 | 22 | 50 | 94.5 | 591 | |
| | 2003.06-2010.12 | MT | F | R | Hatchback FWD G4HG | | GDS24544 | Drive Shaft | 38T | 25 | 22 | 50 | 94.5 | 804 | |
| | 2003.06-2010.12 | MT | F | L/R | Hatchback FWD G4HG | | GCO24159 | Outer Joint | 38T | 25 | 20 | 50 | 94.5 | 56 | I |
| | 2003.06-2010.12 | MT | F | L/R | Hatchback FWD G4HG | | GCI99106 | Inner Joint | | 22 | 20 | 35 | 51.5 | 87 | |
| 1.1 (46 kw) | 2003.08-2008.12 | 4AT | F | L | Hatchback FWD G4HG | | GDS27017 | Drive Shaft | 38T | 25 | 22 | 50 | 94.5 | 570 | |
| | 2003.08-2008.12 | 4AT | F | R | Hatchback FWD G4HG | | GDS24033 | Drive Shaft | 38T | 25 | 22 | 50 | 94.5 | 844 | |
| | 2003.08-2008.12 | 4AT | F | L/R | Hatchback FWD G4HG | | GCO24159 | Outer Joint | 38T | 25 | 20 | 50 | 94.5 | 56 | I |
| | 2003.08-2008.12 | 4AT | F | L/R | Hatchback FWD G4HG | | GCO99025 | Outer Joint | | 25 | 20 | 50 | 94.5 | 52.5 | I |
| | 2003.08-2008.12 | 5MT | F | L | Hatchback FWD G4HG | | GDS24547 | Drive Shaft | 38T | 25 | 22 | 50 | 94.5 | 591 | |
| | 2003.08-2008.12 | 5MT | F | R | Hatchback FWD G4HG | | GDS24528 | Drive Shaft | | 25 | 22 | 52.5 | 95 | 814 | |
| | 2003.08-2008.12 | 5MT | F | R | Hatchback FWD G4HG | | GDS24544 | Drive Shaft | 38T | 25 | 22 | 50 | 94.5 | 804 | |
| | 2003.08-2008.12 | 5MT | F | L/R | Hatchback FWD G4HG | | GCO24004 | Outer Joint | 38T | 25 | 19 | 50 | 94.5 | 52.5 | M |
| | 2003.08-2008.12 | 5MT | F | L/R | Hatchback FWD G4HG | | GCO24099 | Outer Joint | 38T | 25 | 20 | 50 | 94.5 | 56 | I |
| | 2003.08-2008.12 | 5MT | F | L/R | Hatchback FWD G4HG | | GCI99106 | Inner Joint | | 22 | 20 | 35 | 51.5 | 87 | |
| | 2003.08-2008.12 | AT | F | L/R | Hatchback FWD G4HG | | GCO24011 | Outer Joint | | 25 | 19 | 50 | 94.5 | 52.5 | M |
| **Avante** | | | | | | | | | | | | | | | |
| 1.5 (77 kw) | 2003.08-2006.05 | 5MT | F | L/R | Hatchback FWD | | GCO24120 | Outer Joint | 44T | 25 | 23 | 50 | 95.5 | 60.5 | M |
| | 2003.08-2006.05 | 5MT | F | L/R | Saloon FWD | | GCO24120 | Outer Joint | 44T | 25 | 23 | 50 | 95.5 | 60.5 | M |
| 1.6 (84 kw) | 2010.09-2015.08 | AT | F | L/R | Saloon FWD G4FG | Date to:2010.10 | GCO24305 | Outer Joint | 46T | 27 | 30 | 60 | 95.5 | 56.5 | M |
| **Azera** | | | | | | | | | | | | | | | |
| 2.4 (148 kw) | 2011.01-2016.10 | AT | F | L | Saloon FWD G4KE | | GDS24262 | Drive Shaft | 48T | 27 | 27 | 62 | 92.5 | 672 | |
| | 2011.01-2016.10 | AT | F | R | Saloon FWD G4KE | | GDS24261 | Drive Shaft | 48T | 27 | 27 | 62 | 92.5 | 970 | |
| | 2011.01-2016.10 | AT | F | L/R | Saloon FWD G4KE | ABS ring thickness 13.5mm | GCO24090 | Outer Joint | 48T | 27 | 25 | 61.9 | 95 | 61 | M |
| | 2011.01-2016.10 | AT | F | L/R | Saloon FWD G4KE | ABS ring thickness 15.5mm | GCO24138 | Outer Joint | 48T | 27 | 25 | 62 | 92.5 | 61 | M |
| | 2011.01-2016.10 | AT | F | L/R | Saloon FWD G4KE | | GCI24056 | Inner Joint | | 27 | 25 | 30 | 67 | 83.5 | |
| 3.0 (184 kw) | 2011.07-2017.12 | AT | F | L | Saloon FWD G6DE | | GDS24270 | Drive Shaft | 48T | 30 | 28 | 65 | 93 | 654 | |
| | 2011.07-2017.12 | AT | F | R | Saloon FWD G6DE | Date to:2013.08 | GDS24320 | Drive Shaft | 48T | 30 | 28 | 65 | 93 | 982 | |
| | 2011.07-2017.12 | AT | F | L/R | Saloon FWD G6DE | | GCO24148 | Outer Joint | 48T | 30 | 36 | 65 | 93 | 67.5 | I |
| 3.3 (198 kw) | 2007.02-2011.12 | AT | F | L | Saloon FWD G6DB | Date to:2010.06 | GDS24127 | Drive Shaft | 47T | 30 | 28 | 65 | 95 | 662 | |
| | 2007.02-2011.12 | AT | F | R | Saloon FWD G6DB | Date to:2010.06 | GDS24128 | Drive Shaft | 47T | 30 | 28 | 65 | 95 | 981.5 | |
| | 2007.02-2011.12 | AT | F | L/R | Saloon FWD G6DB | Date to:2010.06 | GCO24063 | Outer Joint | 47T | 30 | 36 | 65 | 95 | 68 | I |
| **Bayon** | | | | | | | | | | | | | | | |
| 1.0 (74 kw) | 2021.05- | 7DCT | F | R | SUV FWD G3LE | | GDS56554 | Drive Shaft | | 25 | 27 | 52.5 | 94.5 | 926 | |
| | 2021.05- | 7DCT | F | R | SUV FWD G3LE | | GCO82726 | Outer Joint | | 25 | 22 | 52.5 | 94.5 | 54 | M |
| | 2021.05- | 7DCT | F | L/R | SUV FWD G3LE | | GCI83368 | Inner Joint | | 27 | 22 | 30 | 67.5 | 79.5 | |
| | 2021.05- | 7DCT | F | R | SUV FWD G3LE;G3LF | | GDS56554 | Drive Shaft | | 25 | 27 | 52.5 | 94.5 | 926 | |
| | 2021.05- | 7DCT | F | R | SUV FWD G3LE;G3LF | | GCO82726 | Outer Joint | | 25 | 22 | 52.5 | 94.5 | 54 | M |
| | 2021.05- | 7DCT | F | L/R | SUV FWD G3LE;G3LF | | GCI83368 | Inner Joint | | 27 | 22 | 30 | 67.5 | 79.5 | |
| 1.0 (88 kw) | 2021.05- | 7DCT | F | R | SUV FWD G3LE;G3LF | | GDS56554 | Drive Shaft | | 25 | 27 | 52.5 | 94.5 | 926 | |
| | 2021.05- | 7DCT | F | R | SUV FWD G3LE;G3LF | | GCO82726 | Outer Joint | | 25 | 22 | 52.5 | 94.5 | 54 | M |
| | 2021.05- | 7DCT | F | L/R | SUV FWD G3LE;G3LF | | GCI83368 | Inner Joint | | 27 | 22 | 30 | 67.5 | 79.5 | |
| 1.4 (74 kw) | 2021.05- | 6AT | F | R | SUV FWD G4LC | | GDS56554 | Drive Shaft | | 25 | 27 | 52.5 | 94.5 | 926 | |
| | 2021.05- | 6AT | F | L/R | SUV FWD G4LC | | GCO82726 | Outer Joint | | 25 | 22 | 52.5 | 94.5 | 54 | M |
| | 2021.05- | 6AT | F | L/R | SUV FWD G4LC | | GCI83368 | Inner Joint | | 27 | 22 | 30 | 67.5 | 79.5 | |
| **Coupe** | | | | | | | | | | | | | | | |
| 1.6 (77 kw) | 2002.03-2009.08 | 4AT/5MT | F | R | Coupe FWD G4ED | Date to:2003.04 | GCO24061 | Outer Joint | 44T | 25 | 23 | 50 | 94.5 | 63.5 | M |
| | 2002.03-2009.08 | 5MT | F | L | Coupe FWD G4ED | | GDS24364 | Drive Shaft | 44T | 25 | 25 | 50 | 95.5 | 655 | |
| | 2002.03-2009.08 | 5MT | F | R | Coupe FWD G4ED | | GDS24149 | Drive Shaft | 44T | 25 | 25 | 50 | 95.5 | 934 | |
| | 2002.03-2009.08 | 5MT | F | R | Coupe FWD G4ED | Date to:2004.08 | GDS24163 | Drive Shaft | 44T | 25 | 25 | 50 | 94.5 | 928 | |
| | 2002.03-2009.08 | 5MT | F | L/R | Coupe FWD G4ED | | GCO24038 | Outer Joint | 44T | 25 | 25 | 50 | 94.5 | 65 | M |
| | 2002.03-2009.08 | 5MT | F | L/R | Coupe FWD G4ED | Date to:2004.09 | GCO39190 | Outer Joint | 44T | 25 | 23 | 50 | 95.5 | 60.5 | M |
| | 2002.03-2009.08 | 5MT | F | L/R | Coupe FWD G4ED | | GCI24049 | Inner Joint | | 25 | 25 | 35 | 63 | 87.5 | |
| | 2002.03-2009.08 | 5MT | F | L/R | Coupe FWD G4ED | | GCI39041 | Inner Joint | | 25 | 23 | 35 | 63 | 92.5 | |
| | 2002.03-2009.08 | MT | F | L/R | Coupe FWD G4ED | | GCO39276 | Outer Joint | | 25 | 23 | 50 | 95.5 | 60.5 | M |
| 1.6 (79 kw) | 2000.08-2002.01 | 5MT | F | R | Coupe FWD G4ED-G | | GCO39067 | Outer Joint | 29T | 25 | 30 | 50 | 95 | 60.5 | M |
| | 2000.08-2002.01 | 5MT | F | L/R | Coupe FWD G4ED-G | | GCO24006 | Outer Joint | 44T | 25 | 25 | 50 | 94.5 | 65 | M |
| | 2000.08-2002.01 | MT | F | L | Coupe FWD G4ED-G | | GDS24113 | Drive Shaft | 44T | 25 | 30 | 50 | 95.5 | 554 | |
| | 2000.08-2002.01 | | F | L/R | Coupe FWD G4ED-G | | GCI24072 | Inner Joint | | 25 | 30 | 35 | 62.5 | 88 | |
| | 2002.03-2009.08 | 5MT | F | L | Coupe FWD G4ED | | GDS24364 | Drive Shaft | 44T | 25 | 25 | 50 | 95.5 | 655 | |
| | 2002.03-2009.08 | AT | F | L | Coupe FWD G4ED | | GDS24203 | Drive Shaft | 44T | 25 | 25 | 50 | 94.5 | 652 | |
| | 2002.03-2009.08 | AT | F | R | Coupe FWD G4ED | | GDS24204 | Drive Shaft | 44T | 25 | 25 | 50 | 94.5 | 936 | |
| | 2002.03-2009.08 | MT | F | R | Coupe FWD G4ED | | GDS24163 | Drive Shaft | 44T | 25 | 25 | 50 | 94.5 | 928 | |
| | 2002.03-2009.08 | MT | F | | Coupe FWD G4ED | | GCO24038 | Outer Joint | 44T | 25 | 25 | 50 | 94.5 | 65 | M |
| | 2002.03-2009.08 | | F | L | Coupe FWD G4ED | | GCO39190 | Outer Joint | 44T | 25 | 23 | 50 | 95.5 | 60.5 | M |
| | 2002.03-2009.08 | | F | | Coupe FWD G4ED | | GCO24120 | Outer Joint | 44T | 25 | 23 | 50 | 95.5 | 60.5 | M |

| | YEAR | TRANSM. | F/R | L/R | BODY STYLE & DRIVE TYPE & ENGINE | REMARKS | G-AP Ref. | PRODUCT | ABS | Technical Specifications A | B | C | H | L | P |
|---|---|---|---|---|---|---|---|---|---|---|---|---|---|---|---|
| **HYUNDAI** Coupe | | | | | | | | | | | | | | | |
| 1.6 (79 kw) | 2002.03-2009.08 | | F | | Coupe FWD G4ED | | GCO39276 | Outer Joint | | 25 | 23 | 50 | 95.5 | 60.5 | M |
| 1.6 (84 kw) | 1996.12-2002.04 | 4AT | F | R | Coupe FWD G4GR | | GCI24072 | Inner Joint | | 25 | 30 | 35 | 62.5 | 88 | |
| | 1996.12-2002.04 | 4AT/5MT | F | L/R | Coupe FWD G4GR | | GCO24006 | Outer Joint | 44T | 25 | 25 | 50 | 94.5 | 65 | M |
| | 1996.12-2002.04 | 4AT/5MT | F | L/R | Coupe FWD G4GR | | GCO39067 | Outer Joint | 29T | 25 | 30 | 50 | 95 | 60.5 | M |
| | 1996.12-2002.04 | 5MT | F | L/R | Coupe FWD G4GR | | GCI24072 | Inner Joint | | 25 | 30 | 35 | 62.5 | 88 | |
| | 1996.12-2002.04 | AT/MT | F | L | Coupe FWD G4GR | | GCO39032 | Outer Joint | | 25 | 23 | 50 | 95 | 60.5 | M |
| | 1996.12-2002.04 | MT | F | L | Coupe FWD G4GR | | GDS24113 | Drive Shaft | 44T | 25 | 30 | 50 | 95.5 | 554 | |
| | 1996.12-2002.04 | MT | F | R | Coupe FWD G4GR | | GDS24163 | Drive Shaft | 44T | 25 | 25 | 50 | 94.5 | 928 | |
| | 1996.12-2002.04 | MT | F | L | Coupe FWD G4GR | | GCO24039 | Outer Joint | 29T | 25 | 23 | 50 | 95 | 60.5 | M |
| | 1996.12-2002.04 | | F | R | Coupe FWD G4GR | | GCO24044 | Outer Joint | 29T | 25 | 25 | 50 | 94.5 | 65 | M |
| | 1996.12-2002.04 | | F | R | Coupe FWD G4GR | | GCO39033 | Outer Joint | | 25 | 25 | 50 | 95 | 65 | M |
| 1.6 (85 kw) | 1998.03-2002.04 | 5MT | F | L/R | Coupe FWD G4GR | | GCO24006 | Outer Joint | 44T | 25 | 25 | 50 | 94.5 | 65 | M |
| | 1998.03-2002.04 | 5MT | F | L/R | Coupe FWD G4GR | | GCO39067 | Outer Joint | 29T | 25 | 30 | 50 | 95 | 60.5 | M |
| | 1998.03-2002.04 | AT/MT | F | L | Coupe FWD G4GR | | GCO39032 | Outer Joint | | 25 | 23 | 50 | 95 | 60.5 | M |
| | 1998.03-2002.04 | MT | F | L | Coupe FWD G4GR | | GDS24113 | Drive Shaft | 44T | 25 | 30 | 50 | 95.5 | 554 | |
| | 1998.03-2002.04 | MT | F | R | Coupe FWD G4GR | | GDS24163 | Drive Shaft | 44T | 25 | 25 | 50 | 94.5 | 928 | |
| | 1998.03-2002.04 | MT | F | L | Coupe FWD G4GR | | GCO24039 | Outer Joint | 29T | 25 | 23 | 50 | 95 | 60.5 | M |
| | 1998.03-2002.04 | | F | R | Coupe FWD G4GR | | GCO24044 | Outer Joint | 29T | 25 | 25 | 50 | 94.5 | 65 | M |
| | 1998.03-2002.04 | | F | R | Coupe FWD G4GR | | GCO39033 | Outer Joint | | 25 | 25 | 50 | 95 | 65 | M |
| | 1998.03-2002.04 | | F | L/R | Coupe FWD G4GR | | GCI24072 | Inner Joint | | 25 | 30 | 35 | 62.5 | 88 | |
| 2.0 (99 kw) | 2001.03-2002.04 | 5MT | F | L | Coupe FWD G4DF | | GCO24006 | Outer Joint | 44T | 25 | 25 | 50 | 94.5 | 65 | M |
| | 2001.03-2002.04 | 5MT | F | R | Coupe FWD G4DF | | GCO24038 | Outer Joint | 44T | 25 | 25 | 50 | 94.5 | 65 | M |
| 2.0 (100 kw) | 2001.08-2009.08 | 5MT | F | L | Coupe FWD G4GC | | GDS24364 | Drive Shaft | 44T | 25 | 25 | 50 | 95.5 | 655 | |
| | 2001.08-2009.08 | 5MT | F | R | Coupe FWD G4GC | | GDS24149 | Drive Shaft | 44T | 25 | 25 | 50 | 95.5 | 934 | |
| | 2001.08-2009.08 | 5MT | F | L/R | Coupe FWD G4GC | inner teeth:25 | GCO24038 | Outer Joint | 44T | 25 | 25 | 50 | 94.5 | 65 | M |
| | 2001.08-2009.08 | 5MT | F | L/R | Coupe FWD G4GC | | GCO39190 | Outer Joint | 44T | 25 | 23 | 50 | 95.5 | 60.5 | M |
| | 2001.08-2009.08 | 5MT | F | L/R | Coupe FWD G4GC | | GCI24049 | Inner Joint | | 25 | 25 | 35 | 63 | 87.5 | |
| 2.0 (101 kw) | 1996.05-2002.04 | 4AT/5MT | F | L | Coupe FWD G4DF | | GCO24006 | Outer Joint | 44T | 25 | 25 | 50 | 94.5 | 65 | M |
| | 1996.05-2002.04 | 5MT | F | R | Coupe FWD G4DF | | GCO24038 | Outer Joint | 44T | 25 | 25 | 50 | 94.5 | 65 | M |
| | 1996.05-2002.04 | MT | F | R | Coupe FWD G4DF | | GDS24163 | Drive Shaft | 44T | 25 | 25 | 50 | 94.5 | 928 | |
| 2.0 (102 kw) | 1996.04-2002.01 | 4AT/5MT | F | L | Coupe FWD G4GF | | GCO24006 | Outer Joint | 44T | 25 | 25 | 50 | 94.5 | 65 | M |
| | 1996.04-2002.01 | 5MT | F | R | Coupe FWD G4GF | | GCO24038 | Outer Joint | 44T | 25 | 25 | 50 | 94.5 | 65 | M |
| | 1996.04-2002.01 | MT | F | R | Coupe FWD G4GF | | GDS24163 | Drive Shaft | 44T | 25 | 25 | 50 | 94.5 | 928 | |
| | 1996.04-2002.01 | MT | F | | Coupe FWD G4GF | | GCO24044 | Outer Joint | 29T | 25 | 25 | 50 | 94.5 | 65 | M |
| | 2002.03-2009.08 | 4AT/5MT | F | L | Coupe FWD G4GC-G | Date to:2004.09 | GDS24364 | Drive Shaft | 44T | 25 | 25 | 50 | 95.5 | 655 | |
| | 2002.03-2009.08 | 4AT/5MT | F | R | Coupe FWD G4GC-G | | GDS24149 | Drive Shaft | 44T | 25 | 25 | 50 | 95.5 | 934 | |
| | 2002.03-2009.08 | 4AT/5MT | F | R | Coupe FWD G4GC-G | | GDS24163 | Drive Shaft | 44T | 25 | 25 | 50 | 94.5 | 928 | |
| | 2002.03-2009.08 | 4AT/5MT | F | L/R | Coupe FWD G4GC-G | | GCO24038 | Outer Joint | 44T | 25 | 25 | 50 | 94.5 | 65 | M |
| | 2002.03-2009.08 | 4AT/5MT | F | L/R | Coupe FWD G4GC-G | | GCI24049 | Inner Joint | | 25 | 25 | 35 | 63 | 87.5 | |
| | 2002.03-2009.08 | 5MT | F | L/R | Coupe FWD G4GC-G | For model:Coupe,Date to:2004.09;For model:Tiburon | GCO39190 | Outer Joint | 44T | 25 | 23 | 50 | 95.5 | 60.5 | M |
| | 2002.03-2009.08 | AT | F | L | Coupe FWD G4GC-G | Date from:2004.10 | GDS24203 | Drive Shaft | 44T | 25 | 25 | 50 | 94.5 | 652 | |
| | 2002.03-2009.08 | AT | F | R | Coupe FWD G4GC-G | Date from:2004.10 | GDS24204 | Drive Shaft | 44T | 25 | 25 | 50 | 94.5 | 936 | |
| 2.0 (105 kw) | 2003.02-2009.08 | 5MT | F | L | Coupe FWD G4GC | Date to:2004.08;Date from:2006.10 | GDS24364 | Drive Shaft | 44T | 25 | 25 | 50 | 95.5 | 655 | |
| | 2003.02-2009.08 | 5MT | F | R | Coupe FWD G4GC | | GDS24163 | Drive Shaft | 44T | 25 | 25 | 50 | 94.5 | 928 | |
| | 2003.02-2009.08 | AT | F | L | Coupe FWD G4GC | For European | GDS24203 | Drive Shaft | 44T | 25 | 25 | 50 | 94.5 | 652 | |
| | 2003.02-2009.08 | AT | F | R | Coupe FWD G4GC | For European | GDS24204 | Drive Shaft | 44T | 25 | 25 | 50 | 94.5 | 936 | |
| | 2003.02-2009.08 | AT | F | L/R | Coupe FWD G4GC | For European | GCO24061 | Outer Joint | 44T | 25 | 23 | 50 | 94.5 | 63.5 | M |
| | 2003.02-2009.08 | MT | F | R | Coupe FWD G4GC | For European | GDS24149 | Drive Shaft | 44T | 25 | 25 | 50 | 95.5 | 934 | |
| | 2003.02-2009.08 | MT | F | L/R | Coupe FWD G4GC | | GCI24049 | Inner Joint | | 25 | 25 | 35 | 63 | 87.5 | |
| 2.0 (115 kw) | 1999.05-2001.12 | 4AT | F | L | Coupe FWD G4GF | | GCO24006 | Outer Joint | 44T | 25 | 25 | 50 | 94.5 | 65 | M |
| | 1999.05-2001.12 | MT | F | R | Coupe FWD G4GF | | GDS24163 | Drive Shaft | 44T | 25 | 25 | 50 | 94.5 | 928 | |
| | 1999.05-2001.12 | | F | | Coupe FWD G4GF | | GCO24038 | Outer Joint | 44T | 25 | 25 | 50 | 94.5 | 65 | M |
| 2.7 (121 kw) | 2001.01-2009.08 | AT | F | L | Coupe FWD G6BA | | GDS24508 | Drive Shaft | 44T | 27 | 27 | 60 | 95 | 650 | |
| | 2001.01-2009.08 | AT | F | L | Coupe FWD G6BA | | GCI24043 | Inner Joint | | 27 | 25 | 41 | 62.8 | 92.5 | |
| | 2001.01-2009.08 | AT/MT | F | R | Coupe FWD G6BA | Date from:2004.10 | GCO24060 | Outer Joint | 44T | 27 | 26 | 60 | 95 | 69 | M |
| | 2001.01-2009.08 | MT | F | R | Coupe FWD G6BA | | GDS24543 | Drive Shaft | 44T | 27 | 26 | 60 | 95 | 582 | |
| | 2001.01-2009.08 | MT/4AT/6MT | F | R | Coupe FWD G6BA | | GCI24030 | Inner Joint | | 26 | 25 | 42 | | 108 | |
| 2.7 (123 kw) | 2002.03-2009.08 | AT | F | L | Coupe FWD G6BA | | GDS24508 | Drive Shaft | 44T | 27 | 27 | 60 | 95 | 650 | |
| | 2002.03-2009.08 | AT | F | R | Coupe FWD G6BA | | GDS24543 | Drive Shaft | 44T | 27 | 26 | 60 | 95 | 582 | |
| | 2002.03-2009.08 | AT | F | L/R | Coupe FWD G6BA | | GCO24060 | Outer Joint | 44T | 27 | 26 | 60 | 95 | 69 | M |
| | 2002.03-2009.08 | AT | F | L | Coupe FWD G6BA | | GCI24043 | Inner Joint | | 27 | 25 | 41 | 62.8 | 92.5 | |
| | 2002.03-2009.08 | MT | F | L/R | Coupe FWD G6BA | | GCI24030 | Inner Joint | | 26 | 25 | 42 | | 108 | |
| | 2002.03-2009.08 | | F | R | Coupe FWD G6BA | Date to:2004.09 | GCO24044 | Outer Joint | 29T | 25 | 25 | 50 | 94.5 | 65 | M |

| | YEAR | TRANSM. | F/R | L/R | BODY STYLE & DRIVE TYPE & ENGINE | REMARKS | G-AP Ref. | PRODUCT | ABS | Technical Specifications A | B | C | H | L | P |
|---|---|---|---|---|---|---|---|---|---|---|---|---|---|---|---|
| **HYUNDAI** | | | | | | | | | | | | | | | |
| **Creta** | | | | | | | | | | | | | | | |
| 1.6 (89 kw) | 2021.09- | 6AT | F | L | SUV 4WD G4FG | | GDS56765 | Drive Shaft | | 27 | 27 | 57.9 | 94.5 | 665 | |
| | 2021.09- | 6AT | F | L/R | SUV 4WD G4FG | | GCO82303 | Outer Joint | | 27 | 23 | 57.9 | 94.5 | 57.5 | M |
| | 2021.09- | 6AT | F | L | SUV 4WD G4FG | | GCI83368 | Inner Joint | | 27 | 22 | 30 | 67.5 | 79.5 | |
| 1.6 (90 kw) | 2016.01-2021.01 | 6AT | F | L | SUV FWD G4FG | | GDS82374 | Drive Shaft | 46T | 27 | 27 | 60 | 95 | 656 | |
| | 2016.01-2021.01 | 6AT | F | R | SUV FWD G4FG | | GDS82373 | Drive Shaft | 46T | 27 | 27 | 60 | 95 | 947 | |
| | 2016.01-2021.01 | 6AT | F | L/R | SUV FWD G4FG | | GCO24161 | Outer Joint | 46T | 27 | 23 | 60 | 95 | 57 | M |
| | 2016.01-2021.01 | 6AT | F | L/R | SUV FWD G4FG | | GCI81768 | Inner Joint | | 27 | 23 | 30 | 67.5 | 81 | |
| | 2016.01-2021.01 | 6MT | F | L | SUV FWD G4FG | | GDS83722 | Drive Shaft | 46T | 27 | 25 | 62 | 92.5 | 676 | |
| | 2016.01-2021.01 | 6MT | F | R | SUV FWD G4FG | | GDS83930 | Drive Shaft | 46T | 27 | 25 | 62 | 92.5 | 953 | |
| | 2016.01-2021.01 | 6MT | F | L/R | SUV FWD G4FG | | GCO81987 | Outer Joint | 46T | 27 | 23 | 62 | 92.5 | 57.5 | M |
| | 2016.01-2021.01 | 6MT | F | L/R | SUV FWD G4FG | | GCI24105 | Inner Joint | | 25 | 23 | 41 | 63 | 86 | |
| | 2016.08-2021.01 | 6AT | F | L | SUV 4WD G4FG | | GCO81987 | Outer Joint | 46T | 27 | 23 | 62 | 92.5 | 57.5 | M |
| | 2016.08-2021.01 | 6AT | R | L | SUV 4WD G4FG | | GDS56614 | Drive Shaft | 48T | 27 | 25 | 62 | 94.5 | 790 | |
| | 2016.08-2021.01 | 6AT | R | R | SUV 4WD G4FG | | GDS56613 | Drive Shaft | 48T | 27 | 25 | 62 | 94.5 | 819 | |
| | 2016.08-2021.01 | 6AT | R | L/R | SUV 4WD G4FG | | GCO24311 | Outer Joint | 48T | 27 | 20 | 62 | 94.5 | 53 | M |
| | 2016.08-2021.01 | 6AT | R | L/R | SUV 4WD G4FG | | GCI81391 | Inner Joint | | 25 | 20 | 35 | 55.5 | 84 | |
| | 2021.09- | 6AT | F | L | SUV FWD G4FG | | GDS56765 | Drive Shaft | | 27 | 27 | 57.9 | 94.5 | 665 | |
| | 2021.09- | 6AT | F | R | SUV FWD G4FG | | GDS56764 | Drive Shaft | | 27 | 27 | 57.9 | 94.5 | 955 | |
| | 2021.09- | 6AT | F | L/R | SUV FWD G4FG | | GCO82303 | Outer Joint | | 27 | 23 | 57.9 | 94.5 | 57.5 | M |
| | 2021.09- | 6AT | F | L/R | SUV FWD G4FG | | GCI83368 | Inner Joint | | 27 | 22 | 30 | 67.5 | 79.5 | |
| 2.0 (110 kw) | 2016.01-2021.01 | 6AT | F | L | SUV 4WD G4NA | | GDS83867 | Drive Shaft | 46T | 27 | 27 | 62 | 93 | 651 | |
| | 2016.01-2021.01 | 6AT | F | R | SUV 4WD G4NA | | GDS83868 | Drive Shaft | 46T | 27 | 28 | 62 | 93 | 565 | |
| | 2016.01-2021.01 | 6AT | F | L/R | SUV 4WD G4NA | | GCO81162 | Outer Joint | 46T | 27 | 24 | 62 | 93 | 59 | M |
| | 2016.01-2021.01 | 6AT | F | L | SUV 4WD G4NA | | GCI24107 | Inner Joint | | 27 | 24 | 30 | 68 | 77 | |
| | 2016.01-2021.01 | 6AT | F | R | SUV 4WD G4NA | | GCI24108 | Inner Joint | | 28 | 24 | 44.1 | | 107 | |
| | 2016.01-2021.01 | 6AT | F | R | SUV 4WD G4NA | | GDS81763 | Intermediate Shaft | | 28 | 27 | | | 431 | |
| | 2016.01-2021.01 | 6AT | R | L | SUV 4WD G4NA | | GDS56614 | Drive Shaft | 48T | 27 | 25 | 62 | 94.5 | 790 | |
| | 2016.01-2021.01 | 6AT | R | R | SUV 4WD G4NA | | GDS56613 | Drive Shaft | 48T | 27 | 25 | 62 | 94.5 | 819 | |
| | 2016.01-2021.01 | 6AT | R | L/R | SUV 4WD G4NA | | GCO24311 | Outer Joint | 48T | 27 | 20 | 62 | 94.5 | 53 | M |
| | 2016.01-2021.01 | 6AT | R | L/R | SUV 4WD G4NA | | GCI81391 | Inner Joint | | 25 | 20 | 35 | 55.5 | 84 | |
| | 2016.01-2021.01 | 6AT | F | L | SUV FWD G4NA | | GDS81068 | Drive Shaft | 46T | 27 | 27 | 62 | 93 | 659 | |
| | 2016.01-2021.01 | 6AT | F | R | SUV FWD G4NA | | GDS82788 | Drive Shaft | 46T | 27 | 27 | 62 | 93 | 950 | |
| | 2016.01-2021.01 | 6AT | F | L/R | SUV FWD G4NA | | GCO81162 | Outer Joint | 46T | 27 | 24 | 62 | 93 | 59 | M |
| | 2016.01-2021.01 | 6AT | F | L/R | SUV FWD G4NA | | GCI24107 | Inner Joint | | 27 | 24 | 30 | 68 | 77 | |
| | 2021.09- | 6AT | F | L | SUV FWD G4NL | | GDS56765 | Drive Shaft | | 27 | 27 | 57.9 | 94.5 | 665 | |
| | 2021.09- | 6AT | F | R | SUV FWD G4NL | | GDS56764 | Drive Shaft | | 27 | 27 | 57.9 | 94.5 | 955 | |
| | 2021.09- | 6AT | F | L/R | SUV FWD G4NL | | GCO82303 | Outer Joint | | 27 | 23 | 57.9 | 94.5 | 57.5 | M |
| | 2021.09- | 6AT | F | L/R | SUV FWD G4NL | | GCI83368 | Inner Joint | | 27 | 22 | 30 | 67.5 | 79.5 | |
| **Elantra** | | | | | | | | | | | | | | | |
| 1.6 (66 kw) | 2000.06-2006.07 | 5MT | F | L/R | Hatchback FWD G4GR | | GCO39190 | Outer Joint | 44T | 25 | 23 | 50 | 95.5 | 60.5 | M |
| | 2000.06-2006.07 | AT | F | R | Hatchback FWD G4GR | inner teeth:30 | GCO39147 | Outer Joint | | 25 | 30 | 50 | 96 | 59 | M |
| | 2000.06-2006.07 | AT | F | L | Hatchback FWD G4GR | inner teeth:30 | GCI24072 | Inner Joint | | 25 | 30 | 35 | 62.5 | 88 | |
| | 2000.06-2006.07 | AT/MT | F | L | Hatchback FWD G4GR | | GDS24364 | Drive Shaft | 44T | 25 | 25 | 50 | 95.5 | 655 | |
| | 2000.06-2006.07 | AT/MT | F | R | Hatchback FWD G4GR | | GDS24149 | Drive Shaft | 44T | 25 | 25 | 50 | 95.5 | 934 | |
| | 2000.06-2006.07 | AT/MT | F | L | Hatchback FWD G4GR | inner teeth:23 | GCI24032 | Inner Joint | | 25 | 23 | 35 | 63 | 88 | |
| | 2000.06-2006.07 | MT | F | L/R | Hatchback FWD G4GR | inner teeth:23 | GCI39041 | Inner Joint | | 25 | 23 | 35 | 63 | 92.5 | |
| | 2000.06-2006.07 | 5MT | F | L/R | Saloon FWD G4GR | | GCO39190 | Outer Joint | 44T | 25 | 23 | 50 | 95.5 | 60.5 | M |
| | 2000.06-2006.07 | AT | F | R | Saloon FWD G4GR | inner teeth:30 | GCO39147 | Outer Joint | | 25 | 30 | 50 | 96 | 59 | M |
| | 2000.06-2006.07 | AT | F | L | Saloon FWD G4GR | inner teeth:30 | GCI24072 | Inner Joint | | 25 | 30 | 35 | 62.5 | 88 | |
| | 2000.06-2006.07 | AT/MT | F | L | Saloon FWD G4GR | | GDS24364 | Drive Shaft | 44T | 25 | 25 | 50 | 95.5 | 655 | |
| | 2000.06-2006.07 | AT/MT | F | R | Saloon FWD G4GR | | GDS24149 | Drive Shaft | 44T | 25 | 25 | 50 | 95.5 | 934 | |
| | 2000.06-2006.07 | AT/MT | F | L | Saloon FWD G4GR | inner teeth:23 | GCI24032 | Inner Joint | | 25 | 23 | 35 | 63 | 88 | |
| | 2000.06-2006.07 | MT | F | L/R | Saloon FWD G4GR | inner teeth:23 | GCI39041 | Inner Joint | | 25 | 23 | 35 | 63 | 92.5 | |
| 1.6 (77 kw) | 2003.05-2006.05 | 5MT | F | L/R | Saloon FWD G4ED | | GCO39190 | Outer Joint | 44T | 25 | 23 | 50 | 95.5 | 60.5 | M |
| | 2003.05-2006.05 | AT | F | R | Saloon FWD G4ED | | GCO39147 | Outer Joint | | 25 | 30 | 50 | 96 | 59 | M |
| | 2003.05-2006.05 | AT | F | L/R | Saloon FWD G4ED | | GCO39014 | Outer Joint | | 25 | 30 | 50 | 95 | 60.5 | M |
| | 2003.05-2006.05 | AT | F | L | Saloon FWD G4ED | Date to:2005.04 | GCI24072 | Inner Joint | | 25 | 30 | 35 | 62.5 | 88 | |
| | 2003.05-2006.05 | AT/MT | F | L | Saloon FWD G4ED | | GDS24364 | Drive Shaft | 44T | 25 | 25 | 50 | 95.5 | 655 | |
| | 2003.05-2006.05 | AT/MT | F | R | Saloon FWD G4ED | | GDS24149 | Drive Shaft | 44T | 25 | 25 | 50 | 95.5 | 934 | |
| | 2003.05-2006.05 | AT/MT | F | L/R | Saloon FWD G4ED | | GCO24038 | Outer Joint | 44T | 25 | 25 | 50 | 94.5 | 65 | M |
| | 2003.05-2006.05 | AT/MT | F | L/R | Saloon FWD G4ED | | GCI24049 | Inner Joint | | 25 | 25 | 35 | 63 | 87.5 | |
| | 2003.05-2006.05 | MT | F | L/R | Saloon FWD G4ED | | GCO39245 | Outer Joint | | 25 | 23 | 50 | 96 | 59 | M |
| | 2003.05-2006.05 | MT | F | L/R | Saloon FWD G4ED | | GCO39276 | Outer Joint | | 25 | 23 | 50 | 95.5 | 60.5 | M |
| | 2003.05-2006.05 | MT | F | L/R | Saloon FWD G4ED | | GCO89002 | Outer Joint | | 25 | 23 | 50 | 94.5 | 63.5 | M |
| | 2003.05-2006.05 | MT | F | L | Saloon FWD G4ED | Date to:2005.04;DOJ | GCI24032 | Inner Joint | | 25 | 23 | 35 | 63 | 88 | |

| | YEAR | TRANSM. | F/R | L/R | BODY STYLE & DRIVE TYPE & ENGINE | REMARKS | G-AP Ref. | PRODUCT | ABS | Technical Specifications | | | | | |
|---|---|---|---|---|---|---|---|---|---|---|---|---|---|---|---|
| | | | | | | | | | | A | B | C | H | L | P |
| **HYUNDAI** **Elantra** | | | | | | | | | | | | | | | |
| 1.6 (77 kw) | 2003.05-2006.05 | MT | F | L | Saloon FWD G4ED | Date From:2005.05;DOJ | GCI68001 | Inner Joint | | 25 | 23 | 35 | 63 | 88 | |
| | 2003.05-2006.05 | MT | F | L/R | Saloon FWD G4ED | TJ | GCI39041 | Inner Joint | | 25 | 23 | 35 | 63 | 92.5 | |
| | 2003.05-2006.07 | 5MT | F | L/R | Hatchback FWD G4ED | Date to:2005.04 | GCO39190 | Outer Joint | 44T | 25 | 23 | 50 | 95.5 | 60.5 | M |
| | 2003.05-2006.07 | AT | F | R | Hatchback FWD G4ED | inner teeth:30 | GCO39147 | Outer Joint | | 25 | 30 | 50 | 96 | 59 | M |
| | 2003.05-2006.07 | AT | F | L | Hatchback FWD G4ED | Date to:2005.04 | GCI24072 | Inner Joint | | 25 | 30 | 35 | 62.5 | 88 | |
| | 2003.05-2006.07 | AT/MT | F | L | Hatchback FWD G4ED | | GDS24364 | Drive Shaft | 44T | 25 | 25 | 50 | 95.5 | 655 | |
| | 2003.05-2006.07 | AT/MT | F | R | Hatchback FWD G4ED | | GDS24149 | Drive Shaft | 44T | 25 | 25 | 50 | 95.5 | 934 | |
| | 2003.05-2006.07 | AT/MT | F | L/R | Hatchback FWD G4ED | | GCI24032 | Inner Joint | | 25 | 23 | 35 | 63 | 88 | |
| | 2003.05-2006.07 | MT | F | L | Hatchback FWD G4ED | Date From:2005.05 | GCI68001 | Inner Joint | | 25 | 23 | 35 | 63 | 88 | |
| 1.6 (79 kw) | 2000.06-2006.07 | 5MT | F | L/R | Hatchback FWD G4ED | | GCO39190 | Outer Joint | 44T | 25 | 23 | 50 | 95.5 | 60.5 | M |
| | 2000.06-2006.07 | AT | F | R | Hatchback FWD G4ED | inner teeth:30 | GCO39147 | Outer Joint | | 25 | 30 | 50 | 96 | 59 | M |
| | 2000.06-2006.07 | AT | F | L | Hatchback FWD G4ED | inner teeth:30 | GCI24072 | Inner Joint | | 25 | 30 | 35 | 62.5 | 88 | |
| | 2000.06-2006.07 | AT/MT | F | L | Hatchback FWD G4ED | | GDS24364 | Drive Shaft | 44T | 25 | 25 | 50 | 95.5 | 655 | |
| | 2000.06-2006.07 | AT/MT | F | R | Hatchback FWD G4ED | | GDS24149 | Drive Shaft | 44T | 25 | 25 | 50 | 95.5 | 934 | |
| | 2000.06-2006.07 | AT/MT | F | L | Hatchback FWD G4ED | inner teeth:23 | GCI24032 | Inner Joint | | 25 | 23 | 35 | 63 | 88 | |
| | 2000.06-2006.07 | MT | F | L/R | Hatchback FWD G4ED | inner teeth:23 | GCI39041 | Inner Joint | | 25 | 23 | 35 | 63 | 92.5 | |
| | 2000.06-2006.07 | 5MT | F | L/R | Saloon FWD G4ED | | GCO39190 | Outer Joint | 44T | 25 | 23 | 50 | 95.5 | 60.5 | M |
| | 2000.06-2006.07 | AT | F | R | Saloon FWD G4ED | inner teeth:30 | GCO39147 | Outer Joint | | 25 | 30 | 50 | 96 | 59 | M |
| | 2000.06-2006.07 | AT | F | L | Saloon FWD G4ED | inner teeth:30 | GCI24072 | Inner Joint | | 25 | 30 | 35 | 62.5 | 88 | |
| | 2000.06-2006.07 | AT/MT | F | L | Saloon FWD G4ED | | GDS24364 | Drive Shaft | 44T | 25 | 25 | 50 | 95.5 | 655 | |
| | 2000.06-2006.07 | AT/MT | F | R | Saloon FWD G4ED | | GDS24149 | Drive Shaft | 44T | 25 | 25 | 50 | 95.5 | 934 | |
| | 2000.06-2006.07 | AT/MT | F | L | Saloon FWD G4ED | inner teeth:23 | GCI24032 | Inner Joint | | 25 | 23 | 35 | 63 | 88 | |
| | 2000.06-2006.07 | MT | F | L/R | Saloon FWD G4ED | inner teeth:23 | GCI39041 | Inner Joint | | 25 | 23 | 35 | 63 | 92.5 | |
| 1.6 (82 kw) | 2003.09-2006.07 | 5MT | F | L/R | Hatchback FWD G4GA | Date to:2005.04 | GCO39190 | Outer Joint | 44T | 25 | 23 | 50 | 95.5 | 60.5 | M |
| | 2003.09-2006.07 | AT | F | R | Hatchback FWD G4GA | inner teeth:30 | GCO39147 | Outer Joint | | 25 | 30 | 50 | 96 | 59 | M |
| | 2003.09-2006.07 | AT | F | L | Hatchback FWD G4GA | Date to:2005.04 | GCI24072 | Inner Joint | | 25 | 30 | 35 | 62.5 | 88 | |
| | 2003.09-2006.07 | AT/MT | F | L | Hatchback FWD G4GA | | GDS24364 | Drive Shaft | 44T | 25 | 25 | 50 | 95.5 | 655 | |
| | 2003.09-2006.07 | AT/MT | F | R | Hatchback FWD G4GA | | GDS24149 | Drive Shaft | 44T | 25 | 25 | 50 | 95.5 | 934 | |
| | 2003.09-2006.07 | AT/MT | F | L/R | Hatchback FWD G4GA | | GCI24032 | Inner Joint | | 25 | 23 | 35 | 63 | 88 | |
| | 2003.09-2006.07 | MT | F | L | Hatchback FWD G4GA | Date From:2005.05 | GCI68001 | Inner Joint | | 25 | 23 | 35 | 63 | 88 | |
| 1.6 (85 kw) | 2005.11-2011.12 | 5MT | F | L/R | Saloon FWD D4FB | | GCO24120 | Outer Joint | 44T | 25 | 23 | 50 | 95.5 | 60.5 | M |
| | 2005.11-2011.12 | MT | F | | Saloon FWD D4FB | Date From:2006.09,Date To:2006.09 | GCI24012 | Inner Joint | | 25 | 22 | 41 | 63 | 86.5 | |
| 1.6 (90 kw) | 2006.06-2011.06 | 5MT | F | | Saloon FWD G4FC | | GCO24120 | Outer Joint | 44T | 25 | 23 | 50 | 95.5 | 60.5 | M |
| | 2006.06-2011.06 | AT/MT | F | L | Saloon FWD G4FC | Date to:2006.11;Date from:2008.07 | GDS24177 | Drive Shaft | 46T | 27 | 25 | 60 | 94.5 | 670 | |
| | 2006.06-2011.06 | AT/MT | F | L | Saloon FWD G4FC | | GDS24475 | Drive Shaft | | 27 | 25 | 60 | 94.5 | 670 | |
| | 2006.06-2011.06 | AT/MT | F | R | Saloon FWD G4FC | Date to:2006.11;Date from:2008.07 | GDS24176 | Drive Shaft | 46T | 27 | 25 | 60 | 94.5 | 943 | |
| | 2006.06-2011.06 | AT/MT | F | L | Saloon FWD G4FC | Date to:2006.11 | GCO24076 | Outer Joint | | 27 | 22 | 60 | 94.5 | 54.5 | M |
| | 2006.06-2011.06 | AT/MT | F | L | Saloon FWD G4FC | Date from:2008.07 | GCO24132 | Outer Joint | 46T | 27 | 22 | 60 | 94.5 | 54.5 | M |
| | 2006.06-2011.06 | AT/MT | F | L/R | Saloon FWD G4FC | | GCO24077 | Outer Joint | 46T | 27 | 22 | 60 | 94.5 | 54.5 | M |
| | 2006.06-2011.06 | AT/MT | F | L/R | Saloon FWD G4FC | | GCI24012 | Inner Joint | | 25 | 22 | 41 | 63 | 86.5 | |
| | 2020.03- | 6MT | F | L | Saloon FWD G4FM | | GCI81749 | Inner Joint | | 25 | 31 | 41 | 63 | 90 | |
| | 2020.03- | CVT | F | L | Saloon FWD G4FM | | GDS56635 | Drive Shaft | | 27 | 27 | 60 | 94.5 | 684 | |
| | 2020.03- | CVT | F | L | Saloon FWD G4FM | | GCO24267 | Outer Joint | | 27 | 22 | 60 | 94.5 | 54.5 | M |
| | 2020.03- | CVT | F | L/R | Saloon FWD G4FM | | GCI82142 | Inner Joint | | 27 | 30 | 30 | 67.5 | 79.5 | |
| 1.6 (94 kw) | 2011.02-2015.12 | 6MT | F | L | Saloon FWD D4FB | | GCI39052 | Inner Joint | | 25 | 22 | 41 | 63 | 86 | |
| | 2011.02-2015.12 | AT | F | L | Saloon FWD D4FB | | GDS24264 | Drive Shaft | 46T | 27 | 27 | 60 | 95 | 668 | |
| | 2011.02-2015.12 | AT | F | R | Saloon FWD D4FB | | GDS24321 | Drive Shaft | 46T | 27 | 27 | 60 | 95 | 957 | |
| | 2011.02-2015.12 | AT | F | | Saloon FWD D4FB | Date From:2012.10,Date To:2012.10 | GCO24227 | Outer Joint | 46T | 27 | 24 | 60 | 92.5 | 58 | M |
| | 2011.02-2015.12 | AT | F | R | Saloon FWD D4FB | | GCI24053 | Inner Joint | | 27 | 24 | 30 | 67.5 | 88.5 | |
| | 2011.04-2016.04 | 6MT | F | L | Saloon FWD G4FG | | GDS24510 | Drive Shaft | 46T | 27 | 25 | 60 | 94.5 | 686 | |
| | 2011.04-2016.04 | 6MT | F | R | Saloon FWD G4FG | | GDS24398 | Drive Shaft | 46T | 27 | 25 | 60 | 94.5 | 965 | |
| | 2011.04-2016.04 | 6MT | F | L | Saloon FWD G4FG | | GCO24304 | Outer Joint | 46T | 27 | 22 | 60 | 94.5 | 54.5 | M |
| | 2011.04-2016.04 | 6MT | F | R | Saloon FWD G4FG | | GCO24132 | Outer Joint | 46T | 27 | 22 | 60 | 94.5 | 54.5 | M |
| | 2011.04-2016.04 | 6MT | F | L | Saloon FWD G4FG | | GCI24137 | Inner Joint | | 25 | 22 | 41 | 62.5 | 86 | |
| | 2011.04-2016.04 | AT | F | L/R | Saloon FWD G4FG | | GCO24227 | Outer Joint | 46T | 27 | 24 | 60 | 92.5 | 58 | M |
| | 2011.04-2016.04 | MT | F | L | Saloon FWD G4FG | Date from:2011.01,Date to:2015.10 | GCI39052 | Inner Joint | | 25 | 22 | 41 | 63 | 86 | |
| | 2016.02-2020.12 | 6AT | F | L | Saloon FWD G4FG | | GDS83766 | Drive Shaft | | 27 | 27 | 60 | 95 | 668 | |
| | 2016.02-2020.12 | 6AT | F | R | Saloon FWD G4FG | | GDS83768 | Drive Shaft | | 27 | 27 | 60 | 95 | 955 | |
| | 2016.02-2020.12 | 6AT | F | L/R | Saloon FWD G4FG | | GCO82472 | Outer Joint | | 27 | 23 | 60 | 95 | 57 | M |
| | 2016.02-2020.12 | 6AT | F | L/R | Saloon FWD G4FG | | GCI82142 | Inner Joint | | 27 | 30 | 30 | 67.5 | 79.5 | |
| | 2016.02-2020.12 | 6MT | F | L | Saloon FWD G4FG | | GDS84177 | Drive Shaft | | 27 | 25 | 60 | 95 | 685 | |
| | 2016.02-2020.12 | 6MT | F | R | Saloon FWD G4FG | | GDS84175 | Drive Shaft | | 27 | 25 | 60 | 95 | 966 | |
| | 2016.02-2020.12 | 6MT | F | L/R | Saloon FWD G4FG | | GCO82724 | Outer Joint | | 27 | 23 | 60 | 95 | 58 | M |
| | 2016.02-2020.12 | 6MT | F | L/R | Saloon FWD G4FG | | GCI81749 | Inner Joint | | 25 | 31 | 41 | 63 | 90 | |
| 1.6 (96 kw) | 2011.06-2015.12 | 6AT | F | L | Saloon FWD G4FG | | GDS24264 | Drive Shaft | 46T | 27 | 27 | 60 | 95 | 668 | |

| | YEAR | TRANSM. | F/R | L/R | BODY STYLE & DRIVE TYPE & ENGINE | REMARKS | G-AP Ref. | PRODUCT | ABS | Technical Specifications | | | | | |
|---|---|---|---|---|---|---|---|---|---|---|---|---|---|---|---|
| | | | | | | | | | | A | B | C | H | L | P |
| **HYUNDAI** | | | | | | | | | | | | | | | |
| **Elantra** | | | | | | | | | | | | | | | |
| 1.6 (96 kw) | 2011.06-2015.12 | 6AT | F | R | Saloon FWD G4FG | | GDS24321 | Drive Shaft | 46T | 27 | 27 | 60 | 95 | 957 | |
| | 2011.06-2015.12 | 6AT | F | L | Saloon FWD G4FG | | GCO24137 | Outer Joint | 46T | 27 | 24 | 60 | 95 | 59 | M |
| | 2011.06-2015.12 | 6AT | F | R | Saloon FWD G4FG | | GCO24227 | Outer Joint | 46T | 27 | 24 | 60 | 92.5 | 58 | M |
| | 2011.06-2015.12 | 6AT | F | L/R | Saloon FWD G4FG | | GCI24065 | Inner Joint | | 27 | 22 | 30 | 68 | 77 | |
| | 2011.06-2015.12 | 6MT | F | L | Saloon FWD G4FG | | GDS24510 | Drive Shaft | 46T | 27 | 25 | 60 | 94.5 | 686 | |
| | 2011.06-2015.12 | 6MT | F | R | Saloon FWD G4FG | | GDS24398 | Drive Shaft | 46T | 27 | 25 | 60 | 94.5 | 965 | |
| | 2011.06-2015.12 | 6MT | F | L | Saloon FWD G4FG | | GCO24304 | Outer Joint | 46T | 27 | 22 | 60 | 94.5 | 54.5 | M |
| | 2011.06-2015.12 | 6MT | F | R | Saloon FWD G4FG | | GCO24132 | Outer Joint | 46T | 27 | 22 | 60 | 94.5 | 54.5 | M |
| | 2011.06-2015.12 | 6MT | F | L | Saloon FWD G4FG | | GCI24137 | Inner Joint | | 25 | 22 | 41 | 62.5 | 86 | |
| | 2011.06-2015.12 | 6MT | F | R | Saloon FWD G4FG | | GCI39052 | Inner Joint | | 25 | 22 | 41 | 63 | 86 | |
| 1.6 (97 kw) | 2011.06-2015.12 | 6AT/6MT | F | L | Saloon FWD G4FG | | GDS24510 | Drive Shaft | 46T | 27 | 25 | 60 | 94.5 | 686 | |
| | 2011.06-2015.12 | 6AT/6MT | F | R | Saloon FWD G4FG | | GDS24398 | Drive Shaft | 46T | 27 | 25 | 60 | 94.5 | 965 | |
| | 2011.06-2015.12 | 6AT/6MT | F | L | Saloon FWD G4FG | | GCI24137 | Inner Joint | | 25 | 22 | 41 | 62.5 | 86 | |
| | 2011.06-2015.12 | 6AT/6MT | F | R | Saloon FWD G4FG | | GCI39052 | Inner Joint | | 25 | 22 | 41 | 63 | 86 | |
| | 2011.06-2015.12 | 6MT | F | L | Saloon FWD G4FG | | GCO24304 | Outer Joint | 46T | 27 | 22 | 60 | 94.5 | 54.5 | M |
| | 2011.06-2015.12 | 6MT | F | R | Saloon FWD G4FG | | GCO24132 | Outer Joint | 46T | 27 | 22 | 60 | 94.5 | 54.5 | M |
| | 2011.06-2015.12 | AT | F | L/R | Saloon FWD G4FG | Date to:2015.11 | GCO24227 | Outer Joint | 46T | 27 | 24 | 60 | 92.5 | 58 | M |
| 1.6 (100 kw) | 2016.02-2020.12 | 7DCT | F | L | Saloon FWD D4FB | | GDS84372 | Drive Shaft | | 27 | 28 | 60 | 95 | 637 | |
| | 2016.02-2020.12 | 7DCT | F | R | Saloon FWD D4FB | | GDS84371 | Drive Shaft | | 27 | 28 | 60 | 95 | 1010 | |
| | 2016.02-2020.12 | 7DCT | F | L/R | Saloon FWD D4FB | | GCO81818 | Outer Joint | | 27 | 24 | 60 | 95 | 59 | M |
| | 2016.02-2020.12 | 7DCT | F | L/R | Saloon FWD D4FB | | GCI81867 | Inner Joint | | 28 | 32 | 41 | 61.5 | 95 | |
| 1.6 (150 kw) | 2016.02-2020.12 | 6MT | F | L | Saloon FWD G4FJ | | GCI82628 | Inner Joint | | 27 | 31 | 41 | 62 | 86 | |
| | 2016.02-2020.12 | 7DCT | F | L | Saloon FWD G4FJ | | GCI81867 | Inner Joint | | 28 | 32 | 41 | 61.5 | 95 | |
| 1.8 (79 kw) | 2000.06-2003.07 | 5MT | F | L/R | Hatchback FWD G4BB | Date from:2003.06 | GCO39190 | Outer Joint | 44T | 25 | 23 | 50 | 95.5 | 60.5 | M |
| | 2000.06-2003.07 | AT | F | L | Hatchback FWD G4BB | Date to:2001.06 | GDS24053 | Drive Shaft | 44T | 25 | 25 | 50 | 95.5 | 651 | |
| | 2000.06-2003.07 | AT | F | L | Hatchback FWD G4BB | Date from:2003.06 | GDS24364 | Drive Shaft | 44T | 25 | 25 | 50 | 95.5 | 655 | |
| | 2000.06-2003.07 | AT | F | R | Hatchback FWD G4BB | Date from:2001.07,Date to:2003.05 | GDS24501 | Drive Shaft | | 25 | 25 | 50 | 95.5 | 936 | |
| | 2000.06-2003.07 | AT | F | R | Hatchback FWD G4BB | Date from:2003.06 | GCO39147 | Outer Joint | | 25 | 30 | 50 | 96 | 59 | M |
| | 2000.06-2003.07 | AT | F | L/R | Hatchback FWD G4BB | Date From:2003.06,Type:GL | GCI24072 | Inner Joint | | 25 | 30 | 35 | 62.5 | 88 | |
| | 2000.06-2003.07 | AT/MT | F | L/R | Hatchback FWD G4BB | inner teeth:30 | GCO24036 | Outer Joint | 44T | 25 | 30 | 50 | 95.5 | 60.5 | M |
| | 2000.06-2003.07 | MT | F | L | Hatchback FWD G4BB | | GDS24364 | Drive Shaft | 44T | 25 | 25 | 50 | 95.5 | 655 | |
| | 2000.06-2003.07 | MT | F | R | Hatchback FWD G4BB | | GDS24149 | Drive Shaft | 44T | 25 | 25 | 50 | 95.5 | 934 | |
| | 2000.06-2003.07 | 5MT | F | L/R | Saloon FWD G4BB | Date from:2003.06 | GCO39190 | Outer Joint | 44T | 25 | 23 | 50 | 95.5 | 60.5 | M |
| | 2000.06-2003.07 | AT | F | L | Saloon FWD G4BB | Date to:2001.06 | GDS24053 | Drive Shaft | 44T | 25 | 25 | 50 | 95.5 | 651 | |
| | 2000.06-2003.07 | AT | F | L | Saloon FWD G4BB | Date from:2003.06 | GDS24364 | Drive Shaft | 44T | 25 | 25 | 50 | 95.5 | 655 | |
| | 2000.06-2003.07 | AT | F | R | Saloon FWD G4BB | Date from:2001.07,Date to:2003.05 | GDS24501 | Drive Shaft | | 25 | 25 | 50 | 95.5 | 936 | |
| | 2000.06-2003.07 | AT | F | R | Saloon FWD G4BB | Date from:2003.06 | GCO39147 | Outer Joint | | 25 | 30 | 50 | 96 | 59 | M |
| | 2000.06-2003.07 | AT | F | L/R | Saloon FWD G4BB | Date From:2003.06,Type:GL | GCI24072 | Inner Joint | | 25 | 30 | 35 | 62.5 | 88 | |
| | 2000.06-2003.07 | AT/MT | F | L/R | Saloon FWD G4BB | inner teeth:30 | GCO24036 | Outer Joint | 44T | 25 | 30 | 50 | 95.5 | 60.5 | M |
| | 2000.06-2003.07 | MT | F | L | Saloon FWD G4BB | | GDS24364 | Drive Shaft | 44T | 25 | 25 | 50 | 95.5 | 655 | |
| | 2000.06-2003.07 | MT | F | R | Saloon FWD G4BB | | GDS24149 | Drive Shaft | 44T | 25 | 25 | 50 | 95.5 | 934 | |
| 1.8 (97 kw) | 2000.06-2006.07 | 5MT | F | L/R | Hatchback FWD G4BB;G4GB | Date from:2003.06,Date to:2005.04 | GCO39190 | Outer Joint | 44T | 25 | 23 | 50 | 95.5 | 60.5 | M |
| | 2000.06-2006.07 | AT | F | L | Hatchback FWD G4BB;G4GB | Date to:2001.06 | GDS24053 | Drive Shaft | 44T | 25 | 25 | 50 | 95.5 | 651 | |
| | 2000.06-2006.07 | AT | F | L | Hatchback FWD G4BB;G4GB | Date From:2003.06 | GDS24364 | Drive Shaft | 44T | 25 | 25 | 50 | 95.5 | 655 | |
| | 2000.06-2006.07 | AT | F | R | Hatchback FWD G4BB;G4GB | Date From:2003.06 | GDS24149 | Drive Shaft | 44T | 25 | 25 | 50 | 95.5 | 934 | |
| | 2000.06-2006.07 | AT | F | R | Hatchback FWD G4BB;G4GB | Date From:2001.07,Date To:2003.05 | GDS24501 | Drive Shaft | | 25 | 25 | 50 | 95.5 | 936 | |
| | 2000.06-2006.07 | AT | F | L | Hatchback FWD G4BB;G4GB | Date to:2001.06 | GCO24036 | Outer Joint | 44T | 25 | 30 | 50 | 95.5 | 60.5 | M |
| | 2000.06-2006.07 | AT | F | R | Hatchback FWD G4BB;G4GB | Date From:2003.06 | GCO39147 | Outer Joint | | 25 | 30 | 50 | 96 | 59 | M |
| | 2000.06-2006.07 | AT | F | L | Hatchback FWD G4BB;G4GB | Date To:2001.06 | GCI24016 | Inner Joint | | 25 | 30 | 41 | 62.5 | 92 | |
| | 2000.06-2006.07 | AT | F | L/R | Hatchback FWD G4BB;G4GB | Date From:2003.06 | GCI24049 | Inner Joint | | 25 | 25 | 35 | 63 | 87.5 | |
| | 2000.06-2006.07 | AT | F | L/R | Hatchback FWD G4BB;G4GB | Date From:2003.06,Type:GL | GCI24072 | Inner Joint | | 25 | 30 | 35 | 62.5 | 88 | |
| | 2000.06-2006.07 | MT | F | L | Hatchback FWD G4BB;G4GB | | GDS24364 | Drive Shaft | 44T | 25 | 25 | 50 | 95.5 | 655 | |
| | 2000.06-2006.07 | MT | F | R | Hatchback FWD G4BB;G4GB | | GDS24149 | Drive Shaft | 44T | 25 | 25 | 50 | 95.5 | 934 | |
| | 2000.06-2006.07 | MT | F | L/R | Hatchback FWD G4BB;G4GB | | GCI24049 | Inner Joint | | 25 | 25 | 35 | 63 | 87.5 | |
| | 2000.06-2006.07 | 5MT | F | L/R | Saloon FWD G4BB, G4GB | For model:Elantra,Date from:2003.06,Date to:2005.04;For model:Lantra,Date from:2003.06 | GCO39190 | Outer Joint | 44T | 25 | 23 | 50 | 95.5 | 60.5 | M |
| | 2000.06-2006.07 | AT | F | L | Saloon FWD G4BB, G4GB | Date To:2001.06 | GDS24053 | Drive Shaft | 44T | 25 | 25 | 50 | 95.5 | 651 | |
| | 2000.06-2006.07 | AT | F | L | Saloon FWD G4BB, G4GB | Date From:2003.06 | GDS24364 | Drive Shaft | 44T | 25 | 25 | 50 | 95.5 | 655 | |
| | 2000.06-2006.07 | AT | F | R | Saloon FWD G4BB, G4GB | Date From:2003.06 | GDS24149 | Drive Shaft | 44T | 25 | 25 | 50 | 95.5 | 934 | |
| | 2000.06-2006.07 | AT | F | R | Saloon FWD G4BB, G4GB | Date From:2001.07,Date To:2003.05 | GDS24501 | Drive Shaft | | 25 | 25 | 50 | 95.5 | 936 | |
| | 2000.06-2006.07 | AT | F | L | Saloon FWD G4BB, G4GB | Date To:2001.06 | GCO24036 | Outer Joint | 44T | 25 | 30 | 50 | 95.5 | 60.5 | M |
| | 2000.06-2006.07 | AT | F | R | Saloon FWD G4BB, G4GB | Date From:2003.06 | GCO39147 | Outer Joint | | 25 | 30 | 50 | 96 | 59 | M |
| | 2000.06-2006.07 | AT | F | L | Saloon FWD G4BB, G4GB | Date To:2001.06 | GCI24016 | Inner Joint | | 25 | 30 | 41 | 62.5 | 92 | |
| | 2000.06-2006.07 | AT | F | L/R | Saloon FWD G4BB, G4GB | Date From:2003.06 | GCI24049 | Inner Joint | | 25 | 25 | 35 | 63 | 87.5 | |
| | 2000.06-2006.07 | AT | F | L/R | Saloon FWD G4BB, G4GB | Date From:2003.06,Type:GL | GCI24072 | Inner Joint | | 25 | 30 | 35 | 62.5 | 88 | |
| | 2000.06-2006.07 | MT | F | L | Saloon FWD G4BB, G4GB | | GDS24364 | Drive Shaft | 44T | 25 | 25 | 50 | 95.5 | 655 | |

| | YEAR | TRANSM. | F/R | L/R | BODY STYLE & DRIVE TYPE & ENGINE | REMARKS | G-AP Ref. | PRODUCT | ABS | Technical Specifications | | | | | |
|---|---|---|---|---|---|---|---|---|---|---|---|---|---|---|---|
| | | | | | | | | | | A | B | C | H | L | P |
| **HYUNDAI** | | | | | | | | | | | | | | | |
| **Elantra** | | | | | | | | | | | | | | | |
| 1.8 (97 kw) | 2000.06-2006.07 | MT | F | R | Saloon FWD G4BB, G4GB | | GDS24149 | Drive Shaft | 44T | 25 | 25 | 50 | 95.5 | 934 | |
| | 2000.06-2006.07 | MT | F | L/R | Saloon FWD G4BB, G4GB | | GCI24049 | Inner Joint | | 25 | 25 | 35 | 63 | 87.5 | |
| 1.8 (110 kw) | 2010.09-2016.12 | 6AT | F | R | Saloon FWD G4NB | | GDS24265 | Drive Shaft | | 27 | 27 | 60 | 95 | 957 | |
| | 2010.09-2016.12 | AT | F | L | Saloon FWD G4NB | | GDS24264 | Drive Shaft | 46T | 27 | 27 | 60 | 95 | 668 | |
| | 2010.09-2016.12 | AT | F | R | Saloon FWD G4NB | | GDS24321 | Drive Shaft | 46T | 27 | 27 | 60 | 95 | 957 | |
| | 2010.09-2016.12 | AT | F | | Saloon FWD G4NB | Date From:2010.10;Date To:2015.12 | GCO24305 | Outer Joint | 46T | 27 | 30 | 60 | 95.5 | 56.5 | M |
| | 2010.09-2016.12 | AT | F | L/R | Saloon FWD G4NB | | GCI24065 | Inner Joint | | 27 | 22 | 30 | 68 | 77 | |
| | 2010.09-2016.12 | MT | F | L | Saloon FWD G4NB | | GDS24248 | Drive Shaft | 46T | 27 | 27 | 60 | 94.5 | 681 | |
| | 2010.09-2016.12 | MT | F | R | Saloon FWD G4NB | | GDS24249 | Drive Shaft | 46T | 27 | 27 | 60 | 94.5 | 964 | |
| | 2010.09-2016.12 | MT | F | R | Saloon FWD G4NB | | GCI24061 | Inner Joint | | 27 | 22 | 41 | 62 | 86 | |
| 2.0 (83 kw) | 2001.04-2006.07 | 5MT | F | L | Hatchback FWD D4EA | | GDS24508 | Drive Shaft | 44T | 27 | 27 | 60 | 95 | 650 | |
| | 2001.04-2006.07 | 5MT | F | L/R | Hatchback FWD D4EA | | GCO24060 | Outer Joint | 44T | 27 | 26 | 60 | 95 | 69 | M |
| | 2001.04-2006.07 | 5MT | F | L | Hatchback FWD D4EA | | GCI24043 | Inner Joint | | 27 | 25 | 41 | 62.8 | 92.5 | |
| | 2001.04-2006.07 | 5MT | F | L/R | Hatchback FWD D4EA | Model:GL grade | GCI24072 | Inner Joint | | 25 | 30 | 35 | 62.5 | 88 | |
| | 2001.04-2006.07 | 5MT | F | L | Saloon FWD D4EA | | GDS24508 | Drive Shaft | 44T | 27 | 27 | 60 | 95 | 650 | |
| | 2001.04-2006.07 | 5MT | F | L/R | Saloon FWD D4EA | | GCO24060 | Outer Joint | 44T | 27 | 26 | 60 | 95 | 69 | M |
| | 2001.04-2006.07 | 5MT | F | L | Saloon FWD D4EA | | GCI24043 | Inner Joint | | 27 | 25 | 41 | 62.8 | 92.5 | |
| | 2001.04-2006.07 | 5MT | F | L/R | Saloon FWD D4EA | Model:GL grade | GCI24072 | Inner Joint | | 25 | 30 | 35 | 62.5 | 88 | |
| 2.0 (102 kw) | 2000.06-2006.07 | 5MT | F | L | Hatchback FWD G4GC-G | | GDS24364 | Drive Shaft | 44T | 25 | 25 | 50 | 95.5 | 655 | |
| | 2000.06-2006.07 | 5MT | F | R | Hatchback FWD G4GC-G | | GDS24149 | Drive Shaft | 44T | 25 | 25 | 50 | 95.5 | 934 | |
| | 2000.06-2006.07 | 5MT | F | L/R | Hatchback FWD G4GC-G | inner teeth:25 | GCO24038 | Outer Joint | 44T | 25 | 25 | 50 | 94.5 | 65 | M |
| | 2000.06-2006.07 | 5MT | F | L/R | Hatchback FWD G4GC-G | | GCI24049 | Inner Joint | | 25 | 25 | 35 | 63 | 87.5 | |
| | 2000.06-2006.07 | MT | F | L/R | Hatchback FWD G4GC-G | inner teeth:23 | GCO24061 | Outer Joint | 44T | 25 | 23 | 50 | 94.5 | 63.5 | M |
| | 2000.06-2006.07 | MT | F | L/R | Hatchback FWD G4GC-G | inner teeth:30 | GCO39014 | Outer Joint | | 25 | 30 | 50 | 95 | 60.5 | M |
| | 2000.06-2006.07 | 4AT/5MT | F | L/R | Saloon FWD G4GC-G | inner teeth:23 | GCO24061 | Outer Joint | 44T | 25 | 23 | 50 | 94.5 | 63.5 | M |
| | 2000.06-2006.07 | 4AT/5MT | F | L/R | Saloon FWD G4GC-G | | GCI24049 | Inner Joint | | 25 | 25 | 35 | 63 | 87.5 | |
| | 2000.06-2006.07 | 5MT | F | L | Saloon FWD G4GC-G | | GDS24364 | Drive Shaft | 44T | 25 | 25 | 50 | 95.5 | 655 | |
| | 2000.06-2006.07 | 5MT | F | R | Saloon FWD G4GC-G | | GDS24149 | Drive Shaft | 44T | 25 | 25 | 50 | 95.5 | 934 | |
| | 2000.06-2006.07 | 5MT | F | L/R | Saloon FWD G4GC-G | inner teeth:25 | GCO24038 | Outer Joint | 44T | 25 | 25 | 50 | 94.5 | 65 | M |
| | 2000.06-2006.07 | 5MT | F | L/R | Saloon FWD G4GC-G | | GCO39190 | Outer Joint | 44T | 25 | 23 | 50 | 95.5 | 60.5 | M |
| | 2000.06-2006.07 | AT | F | L/R | Saloon FWD G4GC-G | inner teeth:30 | GCO39014 | Outer Joint | | 25 | 30 | 50 | 95 | 60.5 | M |
| | 2000.06-2006.07 | AT | F | | Saloon FWD G4GC-G | | GCI24072 | Inner Joint | | 25 | 30 | 35 | 62.5 | 88 | |
| 2.0 (103 kw) | 2006.06-2010.05 | 4AT/5MT | F | R | Saloon FWD G4GC | Date from:2008.07 | GDS24076 | Drive Shaft | 46T | 27 | 27 | 60 | 94.5 | 940 | |
| | 2006.06-2010.05 | AT | F | L | Saloon FWD G4GC | | GDS24077 | Drive Shaft | 46T | 27 | 27 | 60 | 94.5 | 671 | |
| | 2006.06-2010.05 | AT | F | L/R | Saloon FWD G4GC | | GCI24015 | Inner Joint | | 27 | 30 | 41 | 62 | 90 | |
| | 2006.06-2010.05 | MT | F | L/R | Saloon FWD G4GC | Date to:2006.10 | GCO24077 | Outer Joint | 46T | 27 | 22 | 60 | 94.5 | 54.5 | M |
| | 2006.06-2010.05 | MT | F | L/R | Saloon FWD G4GC | Date to:2006.10 | GCI24012 | Inner Joint | | 25 | 22 | 41 | 63 | 86.5 | |
| | 2006.06-2010.05 | | F | L/R | Saloon FWD G4GC | Date From:2008.07 | GCO24055 | Outer Joint | 46T | 27 | 30 | 60 | 94.5 | 57 | M |
| 2.0 (104 kw) | 2000.06-2006.07 | 5MT | F | L | Hatchback FWD G4GC | | GDS24364 | Drive Shaft | 44T | 25 | 25 | 50 | 95.5 | 655 | |
| | 2000.06-2006.07 | 5MT | F | R | Hatchback FWD G4GC | | GDS24149 | Drive Shaft | 44T | 25 | 25 | 50 | 95.5 | 934 | |
| | 2000.06-2006.07 | 5MT | F | L/R | Hatchback FWD G4GC | inner teeth:25 | GCO24038 | Outer Joint | 44T | 25 | 25 | 50 | 94.5 | 65 | M |
| | 2000.06-2006.07 | 5MT | F | L/R | Hatchback FWD G4GC | | GCI24049 | Inner Joint | | 25 | 25 | 35 | 63 | 87.5 | |
| | 2000.06-2006.07 | MT | F | L/R | Hatchback FWD G4GC | inner teeth:23 | GCO24061 | Outer Joint | 44T | 25 | 23 | 50 | 94.5 | 63.5 | M |
| | 2000.06-2006.07 | MT | F | L/R | Hatchback FWD G4GC | inner teeth:30 | GCO39014 | Outer Joint | | 25 | 30 | 50 | 95 | 60.5 | M |
| | 2000.06-2006.07 | 4AT/5MT | F | L | Saloon FWD G4GC | Model:Elantra,Transmission:5MT;Model:Lantra,Transmission:4AT/5MT | GDS24364 | Drive Shaft | 44T | 25 | 25 | 50 | 95.5 | 655 | |
| | 2000.06-2006.07 | 4AT/5MT | F | R | Saloon FWD G4GC | | GDS24149 | Drive Shaft | 44T | 25 | 25 | 50 | 95.5 | 934 | |
| | 2000.06-2006.07 | 4AT/5MT | F | L/R | Saloon FWD G4GC | inner teeth:25 | GCO24038 | Outer Joint | 44T | 25 | 25 | 50 | 94.5 | 65 | M |
| | 2000.06-2006.07 | 4AT/5MT | F | L/R | Saloon FWD G4GC | inner teeth:23 | GCO24061 | Outer Joint | 44T | 25 | 23 | 50 | 94.5 | 63.5 | M |
| | 2000.06-2006.07 | 4AT/5MT | F | L/R | Saloon FWD G4GC | | GCI24049 | Inner Joint | | 25 | 25 | 35 | 63 | 87.5 | |
| | 2000.06-2006.07 | 5MT | F | L/R | Saloon FWD G4GC | | GCO39190 | Outer Joint | 44T | 25 | 23 | 50 | 95.5 | 60.5 | M |
| | 2000.06-2006.07 | AT | F | L | Saloon FWD G4GC | Date to:2005.04,Model:GLS | GDS24203 | Drive Shaft | 44T | 25 | 25 | 50 | 94.5 | 652 | |
| | 2000.06-2006.07 | AT | F | L/R | Saloon FWD G4GC | inner teeth:30 | GCO39014 | Outer Joint | | 25 | 30 | 50 | 95 | 60.5 | M |
| | 2000.06-2006.07 | AT | F | | Saloon FWD G4GC | | GCI24072 | Inner Joint | | 25 | 30 | 35 | 62.5 | 88 | |
| 2.0 (105 kw) | 2003.10-2006.07 | 4AT | F | L/R | Hatchback FWD G4GC | Model:GLS | GCO24061 | Outer Joint | 44T | 25 | 23 | 50 | 94.5 | 63.5 | M |
| | 2003.10-2006.07 | AT | F | L | Hatchback FWD G4GC | Type:GLS | GDS24203 | Drive Shaft | 44T | 25 | 25 | 50 | 94.5 | 652 | |
| | 2003.10-2006.07 | AT | F | L | Hatchback FWD G4GC | Type:GL | GDS24364 | Drive Shaft | 44T | 25 | 25 | 50 | 95.5 | 655 | |
| | 2003.10-2006.07 | AT | F | R | Hatchback FWD G4GC | Type:GL | GDS24149 | Drive Shaft | 44T | 25 | 25 | 50 | 95.5 | 934 | |
| | 2003.10-2006.07 | AT | F | R | Hatchback FWD G4GC | Type:GLS | GDS24204 | Drive Shaft | 44T | 25 | 25 | 50 | 94.5 | 936 | |
| | 2003.10-2006.07 | AT | F | R | Hatchback FWD G4GC | Type:GL,Date To:2005.04 | GCO39147 | Outer Joint | | 25 | 30 | 50 | 96 | 59 | M |
| | 2003.10-2006.07 | AT | F | L/R | Hatchback FWD G4GC | Type:GL | GCI24049 | Inner Joint | | 25 | 25 | 35 | 63 | 87.5 | |
| | 2003.10-2006.07 | AT | F | L/R | Hatchback FWD G4GC | Type:GL,Date To:2005.04 | GCI24072 | Inner Joint | | 25 | 30 | 35 | 62.5 | 88 | |
| | 2003.10-2006.07 | MT | F | L | Hatchback FWD G4GC | | GDS24364 | Drive Shaft | 44T | 25 | 25 | 50 | 95.5 | 655 | |
| | 2003.10-2006.07 | MT | F | R | Hatchback FWD G4GC | Date From:2005.05 | GDS24149 | Drive Shaft | 44T | 25 | 25 | 50 | 95.5 | 934 | |
| | 2003.10-2006.07 | MT | F | R | Hatchback FWD G4GC | Date To:2005.04 | GDS24163 | Drive Shaft | 44T | 25 | 25 | 50 | 94.5 | 928 | |
| | 2003.10-2006.07 | MT | F | L/R | Hatchback FWD G4GC | | GCO24038 | Outer Joint | 44T | 25 | 25 | 50 | 94.5 | 65 | M |

| | YEAR | TRANSM. | F/R | L/R | BODY STYLE & DRIVE TYPE & ENGINE | REMARKS | G-AP Ref. | PRODUCT | ABS | Technical Specifications A | B | C | H | L | P |
|---|---|---|---|---|---|---|---|---|---|---|---|---|---|---|---|
| **HYUNDAI** | | | | | | | | | | | | | | | |
| **Elantra** | | | | | | | | | | | | | | | |
| 2.0 (105 kw) | 2003.10-2006.07 | MT | F | L/R | Hatchback FWD G4GC | | GCI24049 | Inner Joint | | 25 | 25 | 35 | 63 | 87.5 | |
| | 2003.10-2006.07 | 4AT | F | L/R | Saloon FWD G4GC | Model:GLS | GCO24061 | Outer Joint | 44T | 25 | 23 | 50 | 94.5 | 63.5 | M |
| | 2003.10-2006.07 | 5MT | F | L/R | Saloon FWD G4GC | | GCO39190 | Outer Joint | 44T | 25 | 23 | 50 | 95.5 | 60.5 | M |
| | 2003.10-2006.07 | AT | F | L | Saloon FWD G4GC | Type:GLS | GDS24203 | Drive Shaft | 44T | 25 | 25 | 50 | 94.5 | 652 | |
| | 2003.10-2006.07 | AT | F | L | Saloon FWD G4GC | Type:GL | GDS24364 | Drive Shaft | 44T | 25 | 25 | 50 | 95.5 | 655 | |
| | 2003.10-2006.07 | AT | F | R | Saloon FWD G4GC | Type:GL | GDS24149 | Drive Shaft | 44T | 25 | 25 | 50 | 95.5 | 934 | |
| | 2003.10-2006.07 | AT | F | R | Saloon FWD G4GC | Type:GLS | GDS24204 | Drive Shaft | 44T | 25 | 25 | 50 | 94.5 | 936 | |
| | 2003.10-2006.07 | AT | F | R | Saloon FWD G4GC | Type:GL,Date To:2005.04 | GCO39147 | Outer Joint | | 25 | 30 | 50 | 96 | 59 | M |
| | 2003.10-2006.07 | AT | F | L/R | Saloon FWD G4GC | Type:GL | GCI24049 | Inner Joint | | 25 | 25 | 35 | 63 | 87.5 | |
| | 2003.10-2006.07 | AT | F | L/R | Saloon FWD G4GC | Type:GL,Date To:2005.04 | GCI24072 | Inner Joint | | 25 | 30 | 35 | 62.5 | 88 | |
| | 2003.10-2006.07 | MT | F | L | Saloon FWD G4GC | | GDS24364 | Drive Shaft | 44T | 25 | 25 | 50 | 95.5 | 655 | |
| | 2003.10-2006.07 | MT | F | R | Saloon FWD G4GC | Date From:2005.05 | GDS24149 | Drive Shaft | 44T | 25 | 25 | 50 | 95.5 | 934 | |
| | 2003.10-2006.07 | MT | F | R | Saloon FWD G4GC | Date To:2005.04 | GDS24163 | Drive Shaft | 44T | 25 | 25 | 50 | 94.5 | 928 | |
| | 2003.10-2006.07 | MT | F | L/R | Saloon FWD G4GC | | GCO24038 | Outer Joint | 44T | 25 | 25 | 50 | 94.5 | 65 | M |
| | 2003.10-2006.07 | MT | F | L/R | Saloon FWD G4GC | | GCI24049 | Inner Joint | | 25 | 25 | 35 | 63 | 87.5 | |
| | 2006.06-2011.06 | AT/MT | F | L | Saloon FWD G4GC | | GDS24077 | Drive Shaft | 46T | 27 | 27 | 60 | 94.5 | 671 | |
| | 2006.06-2011.06 | AT/MT | F | R | Saloon FWD G4GC | | GDS24076 | Drive Shaft | 46T | 27 | 27 | 60 | 94.5 | 940 | |
| | 2006.06-2011.06 | AT/MT | F | L/R | Saloon FWD G4GC | Date From:2008.06 | GCO24055 | Outer Joint | 46T | 27 | 30 | 60 | 94.5 | 57 | M |
| | 2006.06-2011.06 | AT/MT | F | L/R | Saloon FWD G4GC | | GCI24015 | Inner Joint | | 27 | 30 | 41 | 62 | 90 | |
| 2.0 (110 kw) | 2016.02-2020.12 | 6AT | F | L | Saloon FWD G4NA;G4NH | | GDS83745 | Drive Shaft | | 27 | 27 | 60 | 95 | 669 | |
| | 2016.02-2020.12 | 6AT | F | R | Saloon FWD G4NA;G4NH | | GDS83746 | Drive Shaft | | 27 | 27 | 60 | 95 | 954 | |
| | 2016.02-2020.12 | 6MT | F | L | Saloon FWD G4NA;G4NH | For Model year:2019 | GDS56133 | Drive Shaft | | 27 | 27 | 60 | 95 | 671 | |
| | 2016.02-2020.12 | 6MT | F | R | Saloon FWD G4NA;G4NH | | GDS56132 | Drive Shaft | | 27 | 27 | 60 | 95 | 972 | |
| | 2016.02-2020.12 | 6MT | F | L/R | Saloon FWD G4NA;G4NH | | GCO83165 | Outer Joint | | 27 | 30 | 60 | 95 | 58 | M |
| | 2016.02-2020.12 | 6MT | F | L/R | Saloon FWD G4NA;G4NH | | GCI24015 | Inner Joint | | 27 | 30 | 41 | 62 | 90 | |
| | 2020.09- | 6AT | F | L | Saloon FWD G4NL;G4NS | | GDS56635 | Drive Shaft | | 27 | 27 | 60 | 94.5 | 684 | |
| | 2020.09- | 6AT | F | R | Saloon FWD G4NL;G4NS | | GDS56636 | Drive Shaft | | 27 | 27 | 60 | 94.5 | 956 | |
| | 2020.09- | 6AT | F | L/R | Saloon FWD G4NL;G4NS | | GCO24267 | Outer Joint | | 27 | 22 | 60 | 94.5 | 54.5 | M |
| | 2020.09- | 6AT | F | L/R | Saloon FWD G4NL;G4NS | | GCI82142 | Inner Joint | | 27 | 30 | 30 | 67.5 | 79.5 | |
| 2.0 (112 kw) | 2015.10-2020.12 | 6AT | F | L | Saloon FWD G4NA | | GDS83745 | Drive Shaft | | 27 | 27 | 60 | 95 | 669 | |
| | 2015.10-2020.12 | 6AT | F | R | Saloon FWD G4NA | | GDS83746 | Drive Shaft | | 27 | 27 | 60 | 95 | 954 | |
| | 2015.10-2020.12 | 6AT | F | L/R | Saloon FWD G4NA | | GCO82472 | Outer Joint | | 27 | 23 | 60 | 95 | 57 | M |
| | 2015.10-2020.12 | 6AT | F | L/R | Saloon FWD G4NA | | GCI82352 | Inner Joint | | 27 | 31 | 30 | 67.5 | 81 | |
| | 2015.10-2020.12 | AT | F | L/R | Saloon FWD G4NA | Date from:2013.10,Date to:2015.11 | GCO24227 | Outer Joint | 46T | 27 | 24 | 60 | 92.5 | 58 | M |
| | 2015.10-2020.12 | | F | L | Saloon FWD G4NA | | GDS84185 | Drive Shaft | | 27 | 27 | 60 | 95 | 684 | |
| | 2015.10-2020.12 | | F | R | Saloon FWD G4NA | | GDS84184 | Drive Shaft | | 27 | 27 | 60 | 95 | 962 | |
| 2.0 (115 kw) | 2017.10-2022.09 | 6MT | F | L | Saloon FWD G4NA | | GDS84185 | Drive Shaft | | 27 | 27 | 60 | 95 | 684 | |
| | 2017.10-2022.09 | 6MT | F | R | Saloon FWD G4NA | | GDS84184 | Drive Shaft | | 27 | 27 | 60 | 95 | 962 | |
| | 2017.10-2022.09 | 6MT | F | L/R | Saloon FWD G4NA | | GCO82472 | Outer Joint | | 27 | 23 | 60 | 95 | 57 | M |
| | 2017.10-2022.09 | 6MT | F | L/R | Saloon FWD G4NA | | GCI82628 | Inner Joint | | 27 | 31 | 41 | 62 | 86 | |
| **Elantra Coupe** | | | | | | | | | | | | | | | |
| 2.0 (129 kw) | 2013.09-2015.12 | 6MT | F | R | Coupe FWD G4NA | | GDS24509 | Drive Shaft | | 27 | 27 | 60 | 95 | 967 | |
| | 2013.09-2015.12 | 6MT | F | R | Coupe FWD G4NA | | GCO24302 | Outer Joint | | 27 | 23 | 60 | 95 | 57 | M |
| | 2013.09-2015.12 | 6MT | F | R | Coupe FWD G4NA | | GCI24115 | Inner Joint | | 27 | 23 | 41 | 62.5 | 88 | |
| **Elantra Lavita** | | | | | | | | | | | | | | | |
| 1.6 (66 kw) | 2002.01-2005.12 | 5MT | F | L | MPV FWD G4ED | | GDS99057 | Drive Shaft | 44T | 25 | 25 | 50 | 95.5 | 646 | |
| | 2002.01-2005.12 | 5MT | F | R | MPV FWD G4ED | | GDS99056 | Drive Shaft | 44T | 25 | 25 | 50 | 95.5 | 939.5 | |
| | 2002.01-2005.12 | 5MT | F | L/R | MPV FWD G4ED | | GCO24036 | Outer Joint | 44T | 25 | 30 | 50 | 95.5 | 60.5 | M |
| | 2002.01-2005.12 | 5MT | F | L/R | MPV FWD G4ED | | GCI24072 | Inner Joint | | 25 | 30 | 35 | 62.5 | 88 | |
| | 2002.01-2005.12 | 5MT | F | L/R | MPV FWD G4ED | | GCI39005 | Inner Joint | | 25 | 30 | 35 | 62.8 | 92.5 | |
| **Eon** | | | | | | | | | | | | | | | |
| 0.8 (41 kw) | 2011.08- | 5MT | F | L | Hatchback FWD G3HA | inner teeth of wheel side:19 | GDS24381 | Drive Shaft | | 24 | 22 | 52.5 | 86 | 620 | |
| | 2011.08- | 5MT | F | L | Hatchback FWD G3HA | inner teeth of wheel side:18 | GDS24433 | Drive Shaft | | 24 | 22 | 52.5 | 86.5 | 615 | |
| | 2011.08- | 5MT | F | R | Hatchback FWD G3HA | inner teeth of wheel side:18 | GDS24382 | Drive Shaft | | 24 | 22 | 52.5 | 86.5 | 830 | |
| | 2011.08- | 5MT | F | R | Hatchback FWD G3HA | inner teeth of wheel side:19 | GDS24432 | Drive Shaft | | 24 | 22 | 52.5 | 86 | 832 | |
| | 2011.08- | 5MT | F | L/R | Hatchback FWD G3HA | | GCO24198 | Outer Joint | | 24 | 19 | 52.5 | 86 | 57 | M |
| | 2011.08- | 5MT | F | L/R | Hatchback FWD G3HA | | GCO24199 | Outer Joint | | 24 | 18 | 52.5 | 86.5 | 52 | M |
| | 2011.08- | 5MT | F | L/R | Hatchback FWD G3HA | | GCI24112 | Inner Joint | | 22 | 19 | 35 | 52 | 82 | |
| | 2011.08- | 5MT | F | L/R | Hatchback FWD G3HA | | GCI24113 | Inner Joint | | 22 | 18 | 35 | 51.5 | 79.5 | |
| | 2011.10-2019.01 | 5MT | F | L | Hatchback FWD B3HA | inner teeth of wheel side:19 | GDS24381 | Drive Shaft | | 24 | 22 | 52.5 | 86 | 620 | |
| | 2011.10-2019.01 | 5MT | F | L | Hatchback FWD B3HA | inner teeth of wheel side:18 | GDS24433 | Drive Shaft | | 24 | 22 | 52.5 | 86.5 | 615 | |
| | 2011.10-2019.01 | 5MT | F | R | Hatchback FWD B3HA | inner teeth of wheel side:18 | GDS24382 | Drive Shaft | | 24 | 22 | 52.5 | 86.5 | 830 | |
| | 2011.10-2019.01 | 5MT | F | R | Hatchback FWD B3HA | inner teeth of wheel side:19 | GDS24432 | Drive Shaft | | 24 | 22 | 52.5 | 86 | 832 | |
| | 2011.10-2019.01 | 5MT | F | L/R | Hatchback FWD B3HA | | GCO24198 | Outer Joint | | 24 | 19 | 52.5 | 86 | 57 | M |
| | 2011.10-2019.01 | 5MT | F | L/R | Hatchback FWD B3HA | | GCO24199 | Outer Joint | | 24 | 18 | 52.5 | 86.5 | 52 | M |

| | YEAR | TRANSM. | F/R | L/R | BODY STYLE & DRIVE TYPE & ENGINE | REMARKS | G-AP Ref. | PRODUCT | ABS | Technical Specifications A | B | C | H | L | P |
|---|---|---|---|---|---|---|---|---|---|---|---|---|---|---|---|
| **HYUNDAI** | | | | | | | | | | | | | | | |
| **Eon** | | | | | | | | | | | | | | | |
| 0.8 (41 kw) | 2011.10-2019.01 | 5MT | F | L/R | Hatchback FWD B3HA | | GCI24112 | Inner Joint | | 22 | 19 | 35 | 52 | 82 | |
| | 2011.10-2019.01 | 5MT | F | L/R | Hatchback FWD B3HA | | GCI24113 | Inner Joint | | 22 | 18 | 35 | 51.5 | 79.5 | |
| **Equus** | | | | | | | | | | | | | | | |
| 3.8 (213 kw) | 2009.03-2016.12 | 6AT/8AT | R | R | Saloon RWD G6DA | | GDS83480 | Drive Shaft | 47T | 30 | 28 | 65 | 95 | 844 | |
| | 2009.03-2016.12 | 6AT/8AT | R | R | Saloon RWD G6DA | Wheel Side | GCI82233 | Inner Joint | 47T | 30 | 28 | 65 | 95 | 61 | |
| | 2009.03-2016.12 | 6AT/8AT | R | R | Saloon RWD G6DA | | GCI82236 | Inner Joint | | 28 | 28 | 43 | 67.5 | 79 | |
| 3.8 (246 kw) | 2009.03-2016.12 | AT | R | L | Saloon RWD G6DJ | | GDS84441 | Drive Shaft | 47T | 30 | 28 | 65 | 95 | 795 | |
| | 2009.03-2016.12 | AT | R | R | Saloon RWD G6DJ | | GDS83480 | Drive Shaft | 47T | 30 | 28 | 65 | 95 | 844 | |
| **Galloper** | | | | | | | | | | | | | | | |
| 2.5 (73 kw) | 1997.11-2003.06 | 5MT | F | L/R | Terrain cab wagon closed 4WD D4BH | Date to:2003.06 | GCO39027 | Outer Joint | | 28 | 25 | 56 | 154.1 | 62 | M |
| **Genesis** | | | | | | | | | | | | | | | |
| 2.0 (204 kw) | 2012.04-2014.02 | AT | R | L | Coupe RWD G4KF | | GDS83479 | Drive Shaft | 47T | 30 | 28 | 65 | 95 | 797 | |
| | 2012.04-2014.02 | AT | R | R | Coupe RWD G4KF | | GDS83480 | Drive Shaft | 47T | 30 | 28 | 65 | 95 | 844 | |
| 3.0 (183 kw) | 2014.06-2017.07 | AT | R | L | Saloon 4WD G6DG | | GDS24393 | Drive Shaft | 47T | 30 | | 65 | 97.5 | 700 | |
| | 2014.06-2017.07 | AT | R | L | Saloon 4WD G6DG | | GCI24111 | Inner Joint | | | 28 | | | 28 | |
| | 2014.06-2017.07 | AT | R | L | Saloon 4WD G6DG | | GCI24119 | Inner Joint | 47T | 30 | 28 | 65 | 97.5 | 95.5 | |
| | 2014.06-2017.07 | AT | R | L | Saloon RWD G6DG | | GDS24393 | Drive Shaft | 47T | 30 | | 65 | 97.5 | 700 | |
| | 2014.06-2017.07 | AT | R | L | Saloon RWD G6DG | | GCI24111 | Inner Joint | | | 28 | | | 28 | |
| | 2014.06-2017.07 | AT | R | L | Saloon RWD G6DG | | GCI24119 | Inner Joint | 47T | 30 | 28 | 65 | 97.5 | 95.5 | |
| 3.0 (189 kw) | 2014.08-2017.07 | 8AT | F | R | Saloon 4WD G6DG | | GDS87109 | Intermediate Shaft | | 28 | 27 | | | 519 | |
| 3.3 (207 kw) | 2014.08-2017.07 | 8AT | F | R | Saloon 4WD G6DH | | GDS87109 | Intermediate Shaft | | 28 | 27 | | | 519 | |
| 3.8 (213 kw) | 2008.01-2014.12 | 5AT | R | L/R | Saloon RWD G6DA | | GCO24313 | Outer Joint | 47T | 30 | 25 | 65 | 96 | 69.5 | M |
| | 2008.01-2014.12 | 6AT/8AT | R | L | Saloon RWD G6DA | | GDS83479 | Drive Shaft | 47T | 30 | 28 | 65 | 95 | 797 | |
| | 2008.01-2014.12 | 6AT/8AT | R | R | Saloon RWD G6DA | | GDS83480 | Drive Shaft | 47T | 30 | 28 | 65 | 95 | 844 | |
| | 2008.01-2014.12 | 6AT/8AT | R | L | Saloon RWD G6DA | Wheel Side | GCI82232 | Inner Joint | 47T | 30 | 26 | 65 | 95 | 66 | |
| | 2008.01-2014.12 | 6AT/8AT | R | L | Saloon RWD G6DA | | GCI82235 | Inner Joint | | 28 | 26 | 43 | 67.5 | 79 | |
| | 2008.01-2014.12 | 6AT/8AT | R | R | Saloon RWD G6DA | Wheel Side | GCI82233 | Inner Joint | 47T | 30 | 28 | 65 | 95 | 61 | |
| | 2008.01-2014.12 | 6AT/8AT | R | R | Saloon RWD G6DA | | GCI82236 | Inner Joint | | 28 | 28 | 43 | 67.5 | 79 | |
| 3.8 (232 kw) | 2014.06-2017.07 | AT | R | L | Saloon 4WD G6DJ | | GDS24393 | Drive Shaft | 47T | 30 | | 65 | 97.5 | 700 | |
| | 2014.06-2017.07 | AT | R | L | Saloon 4WD G6DJ | | GCI24111 | Inner Joint | | | 28 | | | 28 | |
| | 2014.06-2017.07 | AT | R | L | Saloon 4WD G6DJ | | GCI24119 | Inner Joint | 47T | 30 | 28 | 65 | 97.5 | 95.5 | |
| | 2014.06-2017.07 | AT | R | L | Saloon RWD G6DJ | | GDS24393 | Drive Shaft | 47T | 30 | | 65 | 97.5 | 700 | |
| | 2014.06-2017.07 | AT | R | L | Saloon RWD G6DJ | | GCI24111 | Inner Joint | | | 28 | | | 28 | |
| | 2014.06-2017.07 | AT | R | L | Saloon RWD G6DJ | | GCI24119 | Inner Joint | 47T | 30 | 28 | 65 | 97.5 | 95.5 | |
| 3.8 (248 kw) | 2011.09-2014.12 | 8AT | R | L | Saloon RWD G6DJ | | GDS84441 | Drive Shaft | 47T | 30 | 28 | 65 | 95 | 795 | |
| | 2011.09-2014.12 | 8AT | R | R | Saloon RWD G6DJ | | GDS83480 | Drive Shaft | 47T | 30 | 28 | 65 | 95 | 844 | |
| **Genesis Coupe** | | | | | | | | | | | | | | | |
| 2.0 (154 kw) | 2008.06-2014.02 | AT | R | L | Coupe RWD G4KF | Date to:2011.12 | GDS24532 | Drive Shaft | 47T | 30 | 28 | 65 | 96 | 801 | |
| | 2008.06-2014.02 | AT | R | L | Coupe RWD G4KF | Date from:2012.01 | GDS83479 | Drive Shaft | 47T | 30 | 28 | 65 | 95 | 797 | |
| | 2008.06-2014.02 | AT | R | R | Coupe RWD G4KF | Date to:2011.12 | GDS24534 | Drive Shaft | 47T | 30 | 28 | 65 | 96 | 848 | |
| | 2008.06-2014.02 | AT | R | R | Coupe RWD G4KF | Date from:2012.01 | GDS83480 | Drive Shaft | 47T | 30 | 28 | 65 | 95 | 844 | |
| | 2008.06-2014.02 | AT | R | L | Coupe RWD G4KF | Date to:2011.12 | GCO24313 | Outer Joint | 47T | 30 | 25 | 65 | 96 | 69.5 | M |
| | 2008.06-2014.02 | AT | R | L | Coupe RWD G4KF | Date to:2011.12 | GCI24152 | Inner Joint | | 28 | 25 | 43 | 67.5 | 105.5 | |
| 2.0 (157 kw) | 2008.01-2012.12 | AT | R | L | Coupe RWD G4KF | | GDS24532 | Drive Shaft | 47T | 30 | 28 | 65 | 96 | 801 | |
| | 2008.01-2012.12 | AT | R | R | Coupe RWD G4KF | | GDS24534 | Drive Shaft | 47T | 30 | 28 | 65 | 96 | 848 | |
| | 2008.01-2012.12 | AT | R | L | Coupe RWD G4KF | Date to:2011.12 | GCO24313 | Outer Joint | 47T | 30 | 25 | 65 | 96 | 69.5 | M |
| | 2008.01-2012.12 | AT | R | L | Coupe RWD G4KF | Date to:2011.12 | GCI24152 | Inner Joint | | 28 | 25 | 43 | 67.5 | 105.5 | |
| 2.0 (184 kw) | 2013.02-2014.02 | AT | R | L | Coupe RWD G4KF | | GDS83479 | Drive Shaft | 47T | 30 | 28 | 65 | 95 | 797 | |
| | 2013.02-2014.02 | AT | R | R | Coupe RWD G4KF | | GDS83480 | Drive Shaft | 47T | 30 | 28 | 65 | 95 | 844 | |
| 2.0 (191 kw) | 2013.01- | AT | R | L | Coupe RWD G4KF | | GDS83479 | Drive Shaft | 47T | 30 | 28 | 65 | 95 | 797 | |
| | 2013.01- | AT | R | R | Coupe RWD G4KF | | GDS83480 | Drive Shaft | 47T | 30 | 28 | 65 | 95 | 844 | |
| 2.0 (202 kw) | 2011.11-2014.12 | AT | R | L | Coupe RWD G4KF | | GDS83479 | Drive Shaft | 47T | 30 | 28 | 65 | 95 | 797 | |
| | 2011.11-2014.12 | AT | R | R | Coupe RWD G4KF | | GDS83480 | Drive Shaft | 47T | 30 | 28 | 65 | 95 | 844 | |
| 3.8 (223 kw) | 2008.01-2014.02 | AT | R | L | Coupe RWD G6DA | | GDS24532 | Drive Shaft | 47T | 30 | 28 | 65 | 96 | 801 | |
| | 2008.01-2014.02 | AT | R | R | Coupe RWD G6DA | | GDS24534 | Drive Shaft | 47T | 30 | 28 | 65 | 96 | 848 | |
| | 2008.01-2014.02 | AT | R | L | Coupe RWD G6DA | | GCO24313 | Outer Joint | 47T | 30 | 25 | 65 | 96 | 69.5 | M |
| | 2008.01-2014.02 | AT | R | L | Coupe RWD G6DA | | GCI24152 | Inner Joint | | 28 | 25 | 43 | 67.5 | 105.5 | |
| 3.8 (255 kw) | 2011.11-2014.12 | AT | R | L | Coupe RWD G6DJ | | GDS83479 | Drive Shaft | 47T | 30 | 28 | 65 | 95 | 797 | |
| | 2011.11-2014.12 | AT | R | R | Coupe RWD G6DJ | | GDS83480 | Drive Shaft | 47T | 30 | 28 | 65 | 95 | 844 | |
| 3.8 (260 kw) | 2010.01- | 8AT | R | L | Coupe RWD G6DJ | | GDS83479 | Drive Shaft | 47T | 30 | 28 | 65 | 95 | 797 | |
| | 2010.01- | 8AT | R | R | Coupe RWD G6DJ | | GDS83480 | Drive Shaft | 47T | 30 | 28 | 65 | 95 | 844 | |
| **Genesis Prada** | | | | | | | | | | | | | | | |
| 3.8 (246 kw) | 2011.01-2014.12 | 8AT | R | L | Saloon RWD G6DJ | | GDS84441 | Drive Shaft | 47T | 30 | 28 | 65 | 95 | 795 | |
| | 2011.01-2014.12 | AT | R | R | Saloon RWD G6DJ | | GDS83480 | Drive Shaft | 47T | 30 | 28 | 65 | 95 | 844 | |

| | YEAR | TRANSM. | F/R | L/R | BODY STYLE & DRIVE TYPE & ENGINE | REMARKS | G-AP Ref. | PRODUCT | ABS | Technical Specifications | | | | | |
|---|---|---|---|---|---|---|---|---|---|---|---|---|---|---|---|
| | | | | | | | | | | A | B | C | H | L | P |
| **HYUNDAI** | | | | | | | | | | | | | | | |
| **Getz** | | | | | | | | | | | | | | | |
| 1.1 (46 kw) | 2002.09-2005.09 | 5MT | F | L | Hatchback FWD G4HD | | GDS24520 | Drive Shaft | 48T | 25 | 25 | 52.5 | 95 | 649 | |
| | 2002.09-2005.09 | 5MT | F | L/R | Hatchback FWD G4HD | | GCO24041 | Outer Joint | 48T | 25 | 19 | 52.5 | 95 | 52.5 | M |
| | 2002.09-2005.09 | 5MT | F | L/R | Hatchback FWD G4HD | | GCI24045 | Inner Joint | | 25 | 19 | 35 | 54 | 85.5 | |
| | 2002.09-2005.09 | MT | F | L/R | Hatchback FWD G4HD | | GCO24151 | Outer Joint | 48T | 25 | 20 | 52.5 | 94.5 | 63 | M |
| 1.1 (49 kw) | 2005.09-2009.06 | 5MT | F | L | Hatchback FWD G4HG | | GDS24520 | Drive Shaft | 48T | 25 | 25 | 52.5 | 95 | 649 | |
| | 2005.09-2009.06 | 5MT | F | L/R | Hatchback FWD G4HG | | GCO24041 | Outer Joint | 48T | 25 | 19 | 52.5 | 95 | 52.5 | M |
| | 2005.09-2009.06 | 5MT | F | L/R | Hatchback FWD G4HG | | GCI24045 | Inner Joint | | 25 | 19 | 35 | 54 | 85.5 | |
| | 2005.09-2009.06 | MT | F | L/R | Hatchback FWD G4HG | | GCO24151 | Outer Joint | 48T | 25 | 20 | 52.5 | 94.5 | 63 | M |
| | 2005.09-2009.06 | | F | L | Hatchback FWD G4HG | | GDS24531 | Drive Shaft | 48T | 25 | 25 | 52.5 | 95 | 625 | |
| 1.3 (60 kw) | 2002.09-2004.03 | 4AT | F | L/R | Hatchback FWD G4EA | | GCI24010 | Inner Joint | | 25 | 22 | 35 | 63 | 87 | |
| | 2002.09-2004.03 | AT | F | L | Hatchback FWD G4EA | | GDS24552 | Drive Shaft | 48T | 25 | 25 | 52.5 | 95 | 626 | |
| | 2002.09-2004.03 | AT | F | R | Hatchback FWD G4EA | Inner teeth of tranm.side:22 | GDS24235 | Drive Shaft | 48T | 25 | 25 | 52.5 | 95 | 916 | |
| | 2002.09-2004.03 | AT | F | L/R | Hatchback FWD G4EA | | GCO24025 | Outer Joint | | 25 | 22 | 52.5 | 95 | 58 | M |
| | 2002.09-2004.03 | AT/MT | F | L/R | Hatchback FWD G4EA | | GCO24046 | Outer Joint | 48T | 25 | 22 | 52.5 | 95 | 58 | M |
| | 2002.09-2004.03 | AT/MT | F | L/R | Hatchback FWD G4EA | | GCO24098 | Outer Joint | 48T | 25 | 22 | 52.5 | 95 | 58 | M |
| | 2002.09-2004.03 | MT | F | L | Hatchback FWD G4EA | | GDS24531 | Drive Shaft | 48T | 25 | 25 | 52.5 | 95 | 625 | |
| | 2002.09-2004.03 | MT | F | R | Hatchback FWD G4EA | Inner teeth of tranm.side:22 | GDS24533 | Drive Shaft | 48T | 25 | 25 | 52.5 | 95 | 913 | |
| | 2002.09-2004.03 | MT | F | L | Hatchback FWD G4EA | | GCO24112 | Outer Joint | 48T | 25 | 22 | 52.5 | 95 | 58 | I |
| | 2002.09-2004.03 | MT | F | L | Hatchback FWD G4EA | | GCI39020 | Inner Joint | | 25 | 28 | 35 | 54.5 | 87.5 | |
| | 2002.09-2004.03 | MT | F | L/R | Hatchback FWD G4EA | | GCI24009 | Inner Joint | | 25 | 22 | 35 | 54.5 | 87 | |
| 1.3 (61 kw) | 2004.09-2009.06 | AT | F | L | Hatchback FWD G4EA | For vehicles with ABS | GDS24552 | Drive Shaft | 48T | 25 | 25 | 52.5 | 95 | 626 | |
| | 2004.09-2009.06 | AT | F | R | Hatchback FWD G4EA | For Vehicles With Abs | GDS24235 | Drive Shaft | 48T | 25 | 25 | 52.5 | 95 | 916 | |
| | 2004.09-2009.06 | AT | F | L/R | Hatchback FWD G4EA | | GCO24025 | Outer Joint | | 25 | 22 | 52.5 | 95 | 58 | M |
| | 2004.09-2009.06 | AT | F | L/R | Hatchback FWD G4EA | | GCO24046 | Outer Joint | 48T | 25 | 22 | 52.5 | 95 | 58 | M |
| | 2004.09-2009.06 | AT | F | L/R | Hatchback FWD G4EA | | GCI24010 | Inner Joint | | 25 | 22 | 35 | 63 | 87 | |
| | 2004.09-2009.06 | MT | F | L/R | Hatchback FWD G4EA | | GCO24098 | Outer Joint | 48T | 25 | 22 | 52.5 | 95 | 58 | M |
| | 2004.09-2009.06 | MT | F | L/R | Hatchback FWD G4EA | | GCO39232 | Outer Joint | | 25 | 22 | 52.5 | 95 | 58 | M |
| | 2004.09-2009.06 | MT | F | L/R | Hatchback FWD G4EA | | GCI24009 | Inner Joint | | 25 | 22 | 35 | 54.5 | 87 | |
| 1.3 (63 kw) | 2003.09-2005.09 | MT | F | L | Hatchback FWD G4EA | | GDS24531 | Drive Shaft | 48T | 25 | 25 | 52.5 | 95 | 625 | |
| | 2003.09-2005.09 | MT | F | R | Hatchback FWD G4EA | | GDS24194 | Drive Shaft | 48T | 25 | 25 | 52.5 | 95 | 914 | |
| | 2003.09-2005.09 | MT | F | R | Hatchback FWD G4EA | | GDS24533 | Drive Shaft | 48T | 25 | 25 | 52.5 | 95 | 913 | |
| | 2003.09-2005.09 | MT | F | L | Hatchback FWD G4EA | GrooveType:Inner | GCO24112 | Outer Joint | 48T | 25 | 22 | 52.5 | 95 | 58 | I |
| | 2003.09-2005.09 | MT | F | R | Hatchback FWD G4EA | GrooveType:Middle | GCO24098 | Outer Joint | 48T | 25 | 22 | 52.5 | 95 | 58 | M |
| | 2003.09-2005.09 | MT | F | L/R | Hatchback FWD G4EA | | GCO24046 | Outer Joint | 48T | 25 | 22 | 52.5 | 95 | 58 | M |
| | 2003.09-2005.09 | MT | F | L | Hatchback FWD G4EA | | GCI39020 | Inner Joint | | 25 | 28 | 35 | 54.5 | 87.5 | |
| | 2003.09-2005.09 | MT | F | L/R | Hatchback FWD G4EA | | GCI24009 | Inner Joint | | 25 | 22 | 35 | 54.5 | 87 | |
| 1.4 (71 kw) | 2005.08-2010.12 | AT | F | L | Hatchback FWD G4EE | | GDS24552 | Drive Shaft | 48T | 25 | 25 | 52.5 | 95 | 626 | |
| | 2005.08-2010.12 | AT | F | R | Hatchback FWD G4EE | | GDS24235 | Drive Shaft | 48T | 25 | 25 | 52.5 | 95 | 916 | |
| | 2005.08-2010.12 | AT | F | L/R | Hatchback FWD G4EE | | GCI24010 | Inner Joint | | 25 | 22 | 35 | 63 | 87 | |
| | 2005.08-2010.12 | AT/MT | F | L/R | Hatchback FWD G4EE | | GCO24025 | Outer Joint | | 25 | 22 | 52.5 | 95 | 58 | M |
| | 2005.08-2010.12 | AT/MT | F | L/R | Hatchback FWD G4EE | GrooveType:Middle | GCO24046 | Outer Joint | 48T | 25 | 22 | 52.5 | 95 | 58 | M |
| | 2005.08-2010.12 | AT/MT | F | L/R | Hatchback FWD G4EE | GrooveType:Middle | GCO24098 | Outer Joint | 48T | 25 | 22 | 52.5 | 95 | 58 | M |
| | 2005.08-2010.12 | MT | F | L | Hatchback FWD G4EE | | GDS24531 | Drive Shaft | 48T | 25 | 25 | 52.5 | 95 | 625 | |
| | 2005.08-2010.12 | MT | F | R | Hatchback FWD G4EE | | GDS24533 | Drive Shaft | 48T | 25 | 25 | 52.5 | 95 | 913 | |
| | 2005.08-2010.12 | MT | F | L | Hatchback FWD G4EE | GrooveType:Inner | GCO24112 | Outer Joint | 48T | 25 | 22 | 52.5 | 95 | 58 | I |
| | 2005.08-2010.12 | MT | F | L | Hatchback FWD G4EE | | GCI39020 | Inner Joint | | 25 | 28 | 35 | 54.5 | 87.5 | |
| | 2005.08-2010.12 | MT | F | L/R | Hatchback FWD G4EE | | GCI24009 | Inner Joint | | 25 | 22 | 35 | 54.5 | 87 | |
| 1.5 (60 kw) | 2003.03-2005.09 | 5MT | F | L | Hatchback FWD D3EA | Date From:2005.09 | GDS24140 | Drive Shaft | 48T | 25 | 27 | 50 | 94.5 | 631 | |
| | 2003.03-2005.09 | 5MT | F | L | Hatchback FWD D3EA | Date from:2004.07,Date to:2005.08 | GDS84444 | Drive Shaft | 48T | 25 | 25 | 50 | 94.5 | 630 | |
| | 2003.03-2005.09 | 5MT | F | R | Hatchback FWD D3EA | Date From:2005.09 | GDS24141 | Drive Shaft | | 25 | 26 | 50 | 94.5 | 579 | |
| | 2003.03-2005.09 | 5MT | F | R | Hatchback FWD D3EA | Date From:2005.09 | GDS24211 | Drive Shaft | 48T | 25 | 26 | 50 | 94.5 | 579 | |
| | 2003.03-2005.09 | 5MT | F | L/R | Hatchback FWD D3EA | | GCO24047 | Outer Joint | 48T | 25 | 23 | 50 | 94.5 | 63.5 | M |
| | 2003.03-2005.09 | 5MT | F | L | Hatchback FWD D3EA | Date from:2004.07,Date to:2005.08 | GCI82762 | Inner Joint | | 25 | 23 | 35 | 62.5 | 91 | |
| | 2003.03-2005.09 | 5MT | F | L | Hatchback FWD D3EA | Date From:2005.09 | GCI99112 | Inner Joint | | 27 | 23 | 41 | 63 | 92 | |
| | 2003.03-2005.09 | 5MT | F | R | Hatchback FWD D3EA | Date From:2005.09 | GCI24031 | Inner Joint | | 26 | 23 | 42 | | 108 | |
| | 2003.03-2005.09 | AT | F | L/R | Hatchback FWD D3EA | | GCO24025 | Outer Joint | | 25 | 22 | 52.5 | 95 | 58 | M |
| 1.5 (65 kw) | 2005.08-2009.06 | 5MT | F | L | Hatchback FWD D4FA | | GDS24140 | Drive Shaft | 48T | 25 | 27 | 50 | 94.5 | 631 | |
| | 2005.08-2009.06 | 5MT | F | R | Hatchback FWD D4FA | | GDS24141 | Drive Shaft | | 25 | 26 | 50 | 94.5 | 579 | |
| | 2005.08-2009.06 | 5MT | F | R | Hatchback FWD D4FA | | GDS24211 | Drive Shaft | 48T | 25 | 26 | 50 | 94.5 | 579 | |
| | 2005.08-2009.06 | 5MT | F | L/R | Hatchback FWD D4FA | | GCO24047 | Outer Joint | 48T | 25 | 23 | 50 | 94.5 | 63.5 | M |
| | 2005.08-2009.06 | 5MT | F | L | Hatchback FWD D4FA | | GCI99112 | Inner Joint | | 27 | 23 | 41 | 63 | 92 | |
| | 2005.08-2009.06 | 5MT | F | R | Hatchback FWD D4FA | | GCI24031 | Inner Joint | | 26 | 23 | 42 | | 108 | |
| | 2005.08-2009.06 | AT | F | L/R | Hatchback FWD D4FA | | GCO24025 | Outer Joint | | 25 | 22 | 52.5 | 95 | 58 | M |
| 1.5 (75 kw) | 2004.07-2005.08 | 5MT | F | L | Hatchback FWD D4FA | | GDS84444 | Drive Shaft | 48T | 25 | 25 | 50 | 94.5 | 630 | |
| | 2004.07-2005.08 | 5MT | F | R | Hatchback FWD D4FA | | GDS24211 | Drive Shaft | 48T | 25 | 26 | 50 | 94.5 | 579 | |

| | YEAR | TRANSM. | F/R | L/R | BODY STYLE & DRIVE TYPE & ENGINE | REMARKS | G-AP Ref. | PRODUCT | ABS | Technical Specifications A | B | C | H | L | P |
|---|---|---|---|---|---|---|---|---|---|---|---|---|---|---|---|
| **HYUNDAI** | | | | | | | | | | | | | | | |
| **Getz** | | | | | | | | | | | | | | | |
| 1.5 (75 kw) | 2004.07-2005.08 | 5MT | F | R | Hatchback FWD D4FA | | GCO24047 | Outer Joint | 48T | 25 | 23 | 50 | 94.5 | 63.5 | M |
| | 2004.07-2005.08 | 5MT | F | L | Hatchback FWD D4FA | For vehicles without ABS | GCI82762 | Inner Joint | | 25 | 23 | 35 | 62.5 | 91 | |
| | 2004.07-2005.08 | 5MT | F | R | Hatchback FWD D4FA | | GCI24031 | Inner Joint | | 26 | 23 | 42 | | 108 | |
| | 2004.07-2005.08 | 5MT | F | L/R | Hatchback FWD D4FA | For vehicles with ABS | GCI99112 | Inner Joint | | 27 | 23 | 41 | 63 | 92 | |
| 1.5 (81 kw) | 2005.08-2009.06 | 5MT | F | L | Hatchback FWD D4FA | | GDS24140 | Drive Shaft | 48T | 25 | 27 | 50 | 94.5 | 631 | |
| | 2005.08-2009.06 | 5MT | F | R | Hatchback FWD D4FA | | GDS24141 | Drive Shaft | | 25 | 26 | 50 | 94.5 | 579 | |
| | 2005.08-2009.06 | 5MT | F | R | Hatchback FWD D4FA | | GDS24211 | Drive Shaft | 48T | 25 | 26 | 50 | 94.5 | 579 | |
| | 2005.08-2009.06 | 5MT | F | L/R | Hatchback FWD D4FA | | GCO24047 | Outer Joint | 48T | 25 | 23 | 50 | 94.5 | 63.5 | M |
| | 2005.08-2009.06 | 5MT | F | L | Hatchback FWD D4FA | | GCI99112 | Inner Joint | | 27 | 23 | 41 | 63 | 92 | |
| | 2005.08-2009.06 | 5MT | F | R | Hatchback FWD D4FA | | GCI24031 | Inner Joint | | 26 | 23 | 42 | | 108 | |
| | 2005.08-2009.06 | AT | F | L/R | Hatchback FWD D4FA | | GCO24025 | Outer Joint | | 25 | 22 | 52.5 | 95 | 58 | M |
| 1.6 (77 kw) | 2002.09-2005.09 | AT | F | L | Hatchback FWD G4ED | | GDS24552 | Drive Shaft | 48T | 25 | 25 | 52.5 | 95 | 626 | |
| | 2002.09-2005.09 | AT | F | R | Hatchback FWD G4ED | | GDS24235 | Drive Shaft | 48T | 25 | 25 | 52.5 | 95 | 916 | |
| | 2002.09-2005.09 | AT | F | L/R | Hatchback FWD G4ED | | GCI24010 | Inner Joint | | 25 | 22 | 35 | 63 | 87 | |
| | 2002.09-2005.09 | AT/MT | F | L/R | Hatchback FWD G4ED | | GCO24025 | Outer Joint | | 25 | 22 | 52.5 | 95 | 58 | M |
| | 2002.09-2005.09 | AT/MT | F | L/R | Hatchback FWD G4ED | | GCO24046 | Outer Joint | 48T | 25 | 22 | 52.5 | 95 | 58 | M |
| | 2002.09-2005.09 | AT/MT | F | L/R | Hatchback FWD G4ED | GrooveType:Middle | GCO24098 | Outer Joint | 48T | 25 | 22 | 52.5 | 95 | 58 | M |
| | 2002.09-2005.09 | MT | F | L | Hatchback FWD G4ED | | GDS24531 | Drive Shaft | 48T | 25 | 25 | 52.5 | 95 | 625 | |
| | 2002.09-2005.09 | MT | F | R | Hatchback FWD G4ED | | GDS24533 | Drive Shaft | 48T | 25 | 25 | 52.5 | 95 | 913 | |
| | 2002.09-2005.09 | MT | F | L | Hatchback FWD G4ED | GrooveType:Inner | GCO24112 | Outer Joint | 48T | 25 | 22 | 52.5 | 95 | 58 | I |
| | 2002.09-2005.09 | MT | F | L | Hatchback FWD G4ED | | GCI39020 | Inner Joint | | 25 | 28 | 35 | 54.5 | 87.5 | |
| | 2002.09-2005.09 | MT | F | L/R | Hatchback FWD G4ED | | GCI24009 | Inner Joint | | 25 | 22 | 35 | 54.5 | 87 | |
| 1.6 (78 kw) | 2005.06-2009.06 | AT | F | L | Hatchback FWD G4ED | | GDS24552 | Drive Shaft | 48T | 25 | 25 | 52.5 | 95 | 626 | |
| | 2005.06-2009.06 | AT | F | R | Hatchback FWD G4ED | | GDS24235 | Drive Shaft | 48T | 25 | 25 | 52.5 | 95 | 916 | |
| | 2005.06-2009.06 | AT | F | L/R | Hatchback FWD G4ED | | GCI24010 | Inner Joint | | 25 | 22 | 35 | 63 | 87 | |
| | 2005.06-2009.06 | AT/MT | F | L/R | Hatchback FWD G4ED | | GCO24025 | Outer Joint | | 25 | 22 | 52.5 | 95 | 58 | M |
| | 2005.06-2009.06 | AT/MT | F | L/R | Hatchback FWD G4ED | | GCO24046 | Outer Joint | 48T | 25 | 22 | 52.5 | 95 | 58 | M |
| | 2005.06-2009.06 | AT/MT | F | L/R | Hatchback FWD G4ED | GrooveType:Middle | GCO24098 | Outer Joint | 48T | 25 | 22 | 52.5 | 95 | 58 | M |
| | 2005.06-2009.06 | MT | F | L | Hatchback FWD G4ED | | GDS24531 | Drive Shaft | 48T | 25 | 25 | 52.5 | 95 | 625 | |
| | 2005.06-2009.06 | MT | F | R | Hatchback FWD G4ED | | GDS24533 | Drive Shaft | 48T | 25 | 25 | 52.5 | 95 | 913 | |
| | 2005.06-2009.06 | MT | F | L | Hatchback FWD G4ED | GrooveType:Inner | GCO24112 | Outer Joint | 48T | 25 | 22 | 52.5 | 95 | 58 | I |
| | 2005.06-2009.06 | MT | F | L | Hatchback FWD G4ED | | GCI39020 | Inner Joint | | 25 | 28 | 35 | 54.5 | 87.5 | |
| | 2005.06-2009.06 | MT | F | L/R | Hatchback FWD G4ED | | GCI24009 | Inner Joint | | 25 | 22 | 35 | 54.5 | 87 | |
| **Grand i10** | | | | | | | | | | | | | | | |
| 1.2 (64 kw) | 2015.08- | 4AT | F | R | Saloon FWD G4LA | | GDS24371 | Drive Shaft | 48T | 25 | 25 | 52.5 | 92.5 | 907 | |
| | 2015.08- | 4AT | F | L | Saloon FWD G4LA | | GCO39265 | Outer Joint | 48T | 25 | 21 | 52.5 | 92.5 | 56 | M |
| | 2015.08- | 4AT | F | R | Saloon FWD G4LA | | GCO39263 | Outer Joint | 48T | 25 | 22 | 52.5 | 92.5 | 60 | M |
| | 2015.08- | 4AT | F | R | Saloon FWD G4LA | | GCI24048 | Inner Joint | | 25 | 20 | 35 | 54 | 91 | |
| | 2015.08- | 4AT/5MT | F | L | Saloon FWD G4LA | | GDS24366 | Drive Shaft | 48T | 25 | 25 | 52.5 | 92.5 | 640 | |
| | 2015.08- | 5MT | F | R | Saloon FWD G4LA | | GDS24372 | Drive Shaft | 48T | 25 | 25 | 52.5 | 92.5 | 898 | |
| | 2015.08- | 5MT | F | L/R | Saloon FWD G4LA | | GCO39265 | Outer Joint | 48T | 25 | 21 | 52.5 | 92.5 | 56 | M |
| | 2015.08- | 5MT | F | L/R | Saloon FWD G4LA | | GCI57109 | Inner Joint | | 25 | 21 | 35 | 54 | 93.5 | |
| **Grand Santa Fé** | | | | | | | | | | | | | | | |
| 2.2 (145 kw) | 2013.06-2018.11 | 6AT | F | L | SUV 4WD D4HB | Date to:2015.11 | GDS57331 | Drive Shaft | 52T | 30 | 28 | 73 | 94.5 | 673 | |
| | 2013.06-2018.11 | 6AT | F | L | SUV 4WD D4HB | Date from:2015.12 | GDS57842 | Drive Shaft | 52T | 30 | 31 | 73 | 94.5 | 675 | |
| | 2013.06-2018.11 | 6AT | F | R | SUV 4WD D4HB | Date from:2015.12 | GDS58080 | Drive Shaft | 52T | 30 | 28 | 73 | 94.5 | 590 | |
| | 2013.06-2018.11 | 6AT | F | R | SUV 4WD D4HB | Date to:2015.11 | GDS84420 | Drive Shaft | 52T | 30 | 28 | 73 | 94.5 | 590 | |
| | 2013.06-2018.11 | 6AT | F | L/R | SUV 4WD D4HB | Date to:2015.11 | GCO24301 | Outer Joint | 52T | 30 | 35 | 73 | 94.5 | 67 | M |
| | 2013.06-2018.11 | 6AT | F | L/R | SUV 4WD D4HB | Date from:2015.12 | GCO81038 | Outer Joint | 52T | 30 | 36 | 73 | 94.5 | 67.5 | I |
| | 2013.06-2018.11 | 6AT | F | L | SUV 4WD D4HB | Date from:2015.12 | GCI24160 | Inner Joint | | 31 | 35 | 36 | 67 | 104.5 | |
| | 2013.06-2018.11 | AT | F | R | SUV 4WD D4HB | | GCI81068 | Inner Joint | | 28 | 35 | 42 | | 131 | |
| | 2013.06-2018.11 | AT | R | L | SUV 4WD D4HB | | GDS24555 | Drive Shaft | 52T | 30 | 25 | 57 | 93.5 | 848 | |
| | 2013.06-2018.11 | AT | R | R | SUV 4WD D4HB | | GDS24554 | Drive Shaft | 52T | 30 | 25 | 57 | 93.5 | 829 | |
| | 2013.06-2018.11 | AT | R | L/R | SUV 4WD D4HB | | GCO24321 | Outer Joint | 52T | 30 | 20 | 57 | 93.5 | 61 | M |
| | 2013.06-2018.11 | AT | R | L/R | SUV 4WD D4HB | DOJ | GCI24032 | Inner Joint | | 25 | 23 | 35 | 63 | 88 | |
| | 2013.06-2018.11 | AT | R | L/R | SUV 4WD D4HB | TJ | GCI39041 | Inner Joint | | 25 | 23 | 35 | 63 | 92.5 | |
| 2.2 (147 kw) | 2013.09-2018.11 | 6AT | F | L | SUV 4WD D4HB | Date to:2015.11 | GDS57331 | Drive Shaft | 52T | 30 | 28 | 73 | 94.5 | 673 | |
| | 2013.09-2018.11 | 6AT | F | L | SUV 4WD D4HB | Date from:2015.12 | GDS57842 | Drive Shaft | 52T | 30 | 31 | 73 | 94.5 | 675 | |
| | 2013.09-2018.11 | 6AT | F | R | SUV 4WD D4HB | Date from:2015.12 | GDS58080 | Drive Shaft | 52T | 30 | 28 | 73 | 94.5 | 590 | |
| | 2013.09-2018.11 | 6AT | F | R | SUV 4WD D4HB | Date to:2015.11 | GDS84420 | Drive Shaft | 52T | 30 | 28 | 73 | 94.5 | 590 | |
| | 2013.09-2018.11 | 6AT | F | R | SUV 4WD D4HB | Date from:2015.12 | GCO81038 | Outer Joint | 52T | 30 | 36 | 73 | 94.5 | 67.5 | I |
| | 2013.09-2018.11 | 6AT | F | L/R | SUV 4WD D4HB | Date to:2015.11 | GCO24301 | Outer Joint | 52T | 30 | 35 | 73 | 94.5 | 67 | M |
| | 2013.09-2018.11 | 6AT | F | L | SUV 4WD D4HB | | GCI24160 | Inner Joint | | 31 | 35 | 36 | 67 | 104.5 | |
| | 2013.09-2018.11 | 6AT | F | R | SUV 4WD D4HB | | GCI81068 | Inner Joint | | 28 | 35 | 42 | | 131 | |
| | 2013.09-2018.11 | 6AT | R | L | SUV 4WD D4HB | | GDS24555 | Drive Shaft | 52T | 30 | 25 | 57 | 93.5 | 848 | |

| | YEAR | TRANSM. | F/R | L/R | BODY STYLE & DRIVE TYPE & ENGINE | REMARKS | G-AP Ref. | PRODUCT | ABS | Technical Specifications A | B | C | H | L | P |
|---|---|---|---|---|---|---|---|---|---|---|---|---|---|---|---|
| **HYUNDAI** | | | | | | | | | | | | | | | |
| **Grand Santa Fé** | | | | | | | | | | | | | | | |
| 2.2 (147 kw) | 2013.09-2018.11 | 6AT | R | R | SUV 4WD D4HB | | GDS24554 | Drive Shaft | 52T | 30 | 25 | 57 | 93.5 | 829 | |
| | 2013.09-2018.11 | 6AT | R | L/R | SUV 4WD D4HB | | GCO24321 | Outer Joint | 52T | 30 | 20 | 57 | 93.5 | 61 | M |
| | 2013.09-2018.11 | AT | R | L | SUV 4WD D4HB | | GCI39041 | Inner Joint | | 25 | 23 | 35 | 63 | 92.5 | |
| | 2013.09-2018.11 | AT | R | L/R | SUV 4WD D4HB | | GCI24032 | Inner Joint | | 25 | 23 | 35 | 63 | 88 | |
| 3.0 (183 kw) | 2013.07-2018.11 | 6AT | F | L/R | SUV 4WD G6DG | | GCO81038 | Outer Joint | 52T | 30 | 36 | 73 | 94.5 | 67.5 | I |
| | 2013.07-2018.11 | 6AT | F | L | SUV 4WD G6DG | | GCI24145 | Inner Joint | | 28 | 35 | 33 | 67 | 105.5 | |
| | 2013.07-2018.11 | 6AT | F | R | SUV 4WD G6DG | | GCI81068 | Inner Joint | | 28 | 35 | 42 | | 131 | |
| | 2013.07-2018.11 | 6AT | R | L | SUV 4WD G6DG | | GDS24555 | Drive Shaft | 52T | 30 | 25 | 57 | 93.5 | 848 | |
| | 2013.07-2018.11 | 6AT | R | R | SUV 4WD G6DG | | GDS24554 | Drive Shaft | 52T | 30 | 25 | 57 | 93.5 | 829 | |
| | 2013.07-2018.11 | 6AT | R | L/R | SUV 4WD G6DG | | GCO24321 | Outer Joint | 52T | 30 | 20 | 57 | 93.5 | 61 | M |
| | 2013.07-2018.11 | 6AT | R | L/R | SUV 4WD G6DG | DOJ | GCI24032 | Inner Joint | | 25 | 23 | 35 | 63 | 88 | |
| | 2013.07-2018.11 | 6AT | R | L/R | SUV 4WD G6DG | TJ | GCI39041 | Inner Joint | | 25 | 23 | 35 | 63 | 92.5 | |
| 3.3 (183 kw) | 2014.01-2018.11 | AT | F | L | SUV 4WD G6DF | | GDS24448 | Drive Shaft | 52T | 30 | 28 | 73 | 94.5 | 664 | |
| | 2014.01-2018.11 | AT | F | R | SUV 4WD G6DF | | GDS24451 | Drive Shaft | 52T | 30 | 28 | 73 | 94.5 | 608 | |
| | 2014.01-2018.11 | AT | F | L | SUV 4WD G6DF | | GCI24145 | Inner Joint | | 28 | 35 | 33 | 67 | 105.5 | |
| | 2014.01-2018.11 | AT | F | R | SUV 4WD G6DF | | GCI81068 | Inner Joint | | 28 | 35 | 42 | | 131 | |
| | 2014.01-2018.11 | AT | R | L | SUV 4WD G6DF | | GDS24555 | Drive Shaft | 52T | 30 | 25 | 57 | 93.5 | 848 | |
| | 2014.01-2018.11 | AT | R | R | SUV 4WD G6DF | | GDS24554 | Drive Shaft | 52T | 30 | 25 | 57 | 93.5 | 829 | |
| | 2014.01-2018.11 | AT | R | L/R | SUV 4WD G6DF | | GCO24321 | Outer Joint | 52T | 30 | 20 | 57 | 93.5 | 61 | M |
| | 2014.01-2018.11 | AT | R | L/R | SUV 4WD G6DF | | GCI24032 | Inner Joint | | 25 | 23 | 35 | 63 | 88 | |
| | 2014.01-2018.11 | AT | R | L/R | SUV 4WD G6DF | | GCI39041 | Inner Joint | | 25 | 23 | 35 | 63 | 92.5 | |
| 3.3 (199 kw) | 2014.02-2018.11 | AT | F | L | SUV 4WD G6DF | | GDS24448 | Drive Shaft | 52T | 30 | 28 | 73 | 94.5 | 664 | |
| | 2014.02-2018.11 | AT | F | R | SUV 4WD G6DF | | GDS24451 | Drive Shaft | 52T | 30 | 28 | 73 | 94.5 | 608 | |
| | 2014.02-2018.11 | AT | F | L | SUV 4WD G6DF | | GCI24145 | Inner Joint | | 28 | 35 | 33 | 67 | 105.5 | |
| | 2014.02-2018.11 | AT | F | R | SUV 4WD G6DF | | GCI81068 | Inner Joint | | 28 | 35 | 42 | | 131 | |
| | 2014.02-2018.11 | AT | R | L | SUV 4WD G6DF | | GDS24555 | Drive Shaft | 52T | 30 | 25 | 57 | 93.5 | 848 | |
| | 2014.02-2018.11 | AT | R | R | SUV 4WD G6DF | | GDS24554 | Drive Shaft | 52T | 30 | 25 | 57 | 93.5 | 829 | |
| | 2014.02-2018.11 | AT | R | L/R | SUV 4WD G6DF | | GCO24321 | Outer Joint | 52T | 30 | 20 | 57 | 93.5 | 61 | M |
| | 2014.02-2018.11 | AT | R | L/R | SUV 4WD G6DF | | GCI24032 | Inner Joint | | 25 | 23 | 35 | 63 | 88 | |
| | 2014.02-2018.11 | AT | R | L/R | SUV 4WD G6DF | | GCI39041 | Inner Joint | | 25 | 23 | 35 | 63 | 92.5 | |
| **Grandeur** | | | | | | | | | | | | | | | |
| 2.4 (132 kw) | 2011.07- | AT | F | L | Saloon FWD G4KE | | GDS24262 | Drive Shaft | 48T | 27 | 27 | 62 | 92.5 | 672 | |
| | 2011.07- | AT | F | R | Saloon FWD G4KE | | GDS24261 | Drive Shaft | 48T | 27 | 27 | 62 | 92.5 | 970 | |
| | 2011.07- | AT | F | L/R | Saloon FWD G4KE | | GCO24138 | Outer Joint | 48T | 27 | 25 | 62 | 92.5 | 61 | M |
| | 2011.07- | AT | F | R | Saloon FWD G4KE | | GCI24056 | Inner Joint | | 27 | 25 | 30 | 67 | 83.5 | |
| 2.7 (141 kw) | 2006.05-2010.10 | AT | F | L | Saloon FWD G6BA, G6EA | | GDS24143 | Drive Shaft | 47T | 27 | 27 | 62 | 94.5 | 666 | |
| | 2006.05-2010.10 | AT | F | R | Saloon FWD G6BA, G6EA | | GDS24142 | Drive Shaft | 47T | 27 | 27 | 62 | 94.5 | 974 | |
| | 2006.05-2010.10 | AT | F | L/R | Saloon FWD G6BA, G6EA | | GCO24058 | Outer Joint | 47T | 27 | 26 | 62 | 94.5 | 65 | M |
| 3.0 (153 kw) | 2001.10-2005.05 | 5AT | F | L | Saloon FWD G6CT | | GDS24087 | Drive Shaft | 47T | 27 | 28 | 60 | 96.5 | 655 | |
| | 2001.10-2005.05 | 5AT | F | R | Saloon FWD G6CT | | GDS24274 | Drive Shaft | 47T | 27 | 28 | 60 | 96.5 | 610 | |
| | 2001.10-2005.05 | 5AT/5MT | F | L/R | Saloon FWD G6CT | | GCO24073 | Outer Joint | 47T | 27 | 26 | 60 | 95 | 69 | M |
| 3.0 (184 kw) | 2012.01-2016.10 | AT | F | L | Saloon FWD G6DE | | GDS24270 | Drive Shaft | 48T | 30 | 28 | 65 | 93 | 654 | |
| | 2012.01-2016.10 | AT | F | R | Saloon FWD G6DE | | GDS24320 | Drive Shaft | 48T | 30 | 28 | 65 | 93 | 982 | |
| | 2012.01-2016.10 | AT | F | L/R | Saloon FWD G6DE | | GCO24148 | Outer Joint | 48T | 30 | 36 | 65 | 93 | 67.5 | I |
| 3.0 (192 kw) | 2016.11- | 8AT | F | L | Saloon FWD G6DL | | GDS84094 | Drive Shaft | 48T | 30 | 28 | 73 | 94 | 657 | |
| | 2016.11- | 8AT | F | R | Saloon FWD G6DL | | GDS56710 | Drive Shaft | 48T | 30 | 28 | 67 | 67 | 985 | |
| | 2016.11- | 8AT | F | L/R | Saloon FWD G6DL | | GCO82596 | Outer Joint | 48T | 30 | 35 | 73 | 94 | 67 | M |
| | 2016.11- | 8AT | F | L | Saloon FWD G6DL | | GCI24140 | Inner Joint | | 28 | 33 | 33 | 67 | 105.5 | |
| | 2016.11- | 8AT | F | R | Saloon FWD G6DL | | GCI83450 | Inner Joint | | 28 | 33 | 33 | 384 | 129 | |
| 3.3 (173 kw) | 2005.04-2010.12 | 5AT | F | L | Saloon FWD G6DB | | GDS24127 | Drive Shaft | 47T | 30 | 28 | 65 | 95 | 662 | |
| | 2005.04-2010.12 | 5AT | F | R | Saloon FWD G6DB | | GDS24128 | Drive Shaft | 47T | 30 | 28 | 65 | 95 | 981.5 | |
| | 2005.04-2010.12 | AT | F | L | Saloon FWD G6DB | | GCO24063 | Outer Joint | 47T | 30 | 36 | 65 | 95 | 68 | I |
| **H-1** | | | | | | | | | | | | | | | |
| 2.4 (99 kw) | 2001.06-2004.04 | 5MT | F | L | Bus 4WD G4JS | Model:H200 | GCI82083 | Inner Joint | | 28 | 34 | 34.7 | 90.5 | 80.5 | |
| 2.5 (59 kw) | 1998.02-2004.04 | 5MT | F | L | Bus 4WD D4BF | Model:Starex | GCI82083 | Inner Joint | | 28 | 34 | 34.7 | 90.5 | 80.5 | |
| | 1998.02-2004.04 | 5MT | F | R | Bus 4WD D4BF | | GCI81769 | Inner Joint | | | 34 | | | 73 | |
| **H200** | | | | | | | | | | | | | | | |
| 2.4 (82 kw) | 1998.02-2004.04 | 5MT | F | L | Bus 4WD G4CS | Model:H200/Satellite/Starex | GCI82083 | Inner Joint | | 28 | 34 | 34.7 | 90.5 | 80.5 | |
| | 1998.02-2004.04 | 5MT | F | R | Bus 4WD G4CS | | GCI81769 | Inner Joint | | | 34 | | | 73 | |
| 2.5 (73 kw) | 2001.03-2004.04 | 5MT | F | R | Bus 4WD D4BH | | GDS82375 | Drive Shaft | | 28 | | 56 | 154 | 568 | |
| | 2001.03-2004.04 | 5MT | F | L | Bus 4WD D4BH | | GCI82083 | Inner Joint | | 28 | 34 | 34.7 | 90.5 | 80.5 | |
| | 2001.03-2004.04 | 5MT | F | R | Bus 4WD D4BH | | GCI81769 | Inner Joint | | | 34 | | | 73 | |
| 2.5 (74 kw) | 2001.11-2004.04 | 5MT | F | R | Bus 4WD D4BH | | GDS82375 | Drive Shaft | | 28 | | 56 | 154 | 568 | |
| | 2001.11-2004.04 | 5MT | F | L | Bus 4WD D4BH | | GCI82083 | Inner Joint | | 28 | 34 | 34.7 | 90.5 | 80.5 | |
| | 2001.11-2004.04 | 5MT | F | R | Bus 4WD D4BH | | GCI81769 | Inner Joint | | | 34 | | | 73 | |

| | YEAR | TRANSM. | F/R | L/R | BODY STYLE & DRIVE TYPE & ENGINE | REMARKS | G-AP Ref. | PRODUCT | ABS | Technical Specifications A | B | C | H | L | P |
|---|---|---|---|---|---|---|---|---|---|---|---|---|---|---|---|
| **HYUNDAI** | | | | | | | | | | | | | | | |
| **H200** | | | | | | | | | | | | | | | |
| 2.5 (103 kw) | 2002.12-2004.04 | 5MT | F | L | Bus 4WD D4CB | | GDS82983 | Drive Shaft | | 28 | 28 | 56 | 154 | 670 | |
| | 2002.12-2004.04 | 5MT | F | L/R | Bus 4WD D4CB | | GCO81819 | Outer Joint | | 28 | 34 | 56 | 154 | 72 | I |
| | 2002.12-2004.04 | 5MT | F | L | Bus 4WD D4CB | | GCI82083 | Inner Joint | | 28 | 34 | 34.7 | 90.5 | 80.5 | |
| | 2002.12-2004.04 | 5MT | F | R | Bus 4WD D4CB | | GCI81769 | Inner Joint | | | 34 | | | 73 | |
| **Highway Van** | | | | | | | | | | | | | | | |
| 2.0 (83 kw) | 2001.03-2004.03 | 4AT/5MT | F | L | MPV Van FWD D4EA | | GDS24158 | Drive Shaft | 47T | 27 | 27 | 60 | 95 | 660 | |
| | 2001.03-2004.03 | 4AT/5MT | F | L/R | MPV Van FWD D4EA | Date to:2001.07 | GCO24066 | Outer Joint | 47T | 27 | 26 | 60 | 95 | 69 | M |
| | 2001.03-2004.03 | 4AT/5MT | F | L/R | MPV Van FWD D4EA | | GCI24001 | Inner Joint | | 27 | 25 | 41 | 62.8 | 92.5 | |
| | 2001.03-2004.03 | | F | R | MPV Van FWD D4EA | Date From:2002.10 | GDS24058 | Drive Shaft | 47T | 27 | 27 | 60 | 95 | 976.5 | |
| 2.0 (100 kw) | 2000.04-2004.03 | 4AT/5MT | F | L/R | MPV Van FWD G4CPDOHC | | GCO24029 | Outer Joint | 47T | 27 | 25 | 60 | 95 | 63.5 | M |
| 2.0 (104 kw) | 2003.11-2004.03 | 4AT/5MT | F | L/R | MPV Van FWD G4GC | | GCO24029 | Outer Joint | 47T | 27 | 25 | 60 | 95 | 63.5 | M |
| 2.7 (127 kw) | 2000.03-2004.03 | 4AT | F | L | MPV Van FWD G6BA | Date to:2001.11;Inner teeth of wheel side:34 | GDS24094 | Drive Shaft | 47T | 27 | 27 | 60 | 96.5 | 661 | |
| | 2000.03-2004.03 | AT | F | L | MPV Van FWD G6BA | Date to:2001.11;Inner teeth of wheel side:25 | GDS24014 | Drive Shaft | 47T | 27 | 27 | 60 | 95 | 659 | |
| | 2000.03-2004.03 | AT | F | L | MPV Van FWD G6BA | Date to:2001.11 | GCO24029 | Outer Joint | 47T | 27 | 25 | 60 | 95 | 63.5 | M |
| **i10** | | | | | | | | | | | | | | | |
| 1.0 (46 kw) | 2024.03- | 5MT | F | L | Hatchback FWD G3LD | | GDS24529 | Drive Shaft | 48T | 25 | 25 | 52.5 | 92.5 | 648 | |
| 1.0 (49 kw) | 2013.08-2019.12 | 4AT | F | L | Hatchback FWD G3LA | | GDS58255 | Drive Shaft | 48T | 25 | 25 | 52.5 | 92.5 | 638 | |
| | 2013.08-2019.12 | 4AT | F | R | Hatchback FWD G3LA | | GDS58256 | Drive Shaft | 48T | 25 | 25 | 52.5 | 92.5 | 908 | |
| | 2013.08-2019.12 | 4AT | F | L/R | Hatchback FWD G3LA | | GCI81391 | Inner Joint | | 25 | 20 | 35 | 55.5 | 84 | |
| | 2013.08-2019.12 | 4AT/MT | F | L/R | Hatchback FWD G3LA | | GCO27110 | Outer Joint | 48T | 25 | 21 | 52.5 | 92.5 | 56 | M |
| | 2013.08-2019.12 | MT | F | L | Hatchback FWD G3LA | | GDS24529 | Drive Shaft | 48T | 25 | 25 | 52.5 | 92.5 | 648 | |
| | 2013.08-2019.12 | MT | F | R | Hatchback FWD G3LA | | GDS24542 | Drive Shaft | 48T | 25 | 25 | 52.5 | 92.5 | 902 | |
| | 2013.08-2019.12 | MT | F | L/R | Hatchback FWD G3LA | | GCI24050 | Inner Joint | | 25 | 21 | 35 | 54 | 83.5 | |
| | 2014.02-2019.12 | MT | F | L | Hatchback FWD B3LA | | GDS24529 | Drive Shaft | 48T | 25 | 25 | 52.5 | 92.5 | 648 | |
| | 2014.02-2019.12 | MT | F | R | Hatchback FWD B3LA | | GDS24542 | Drive Shaft | 48T | 25 | 25 | 52.5 | 92.5 | 902 | |
| | 2014.02-2019.12 | MT | F | L/R | Hatchback FWD B3LA | | GCO27110 | Outer Joint | 48T | 25 | 21 | 52.5 | 92.5 | 56 | M |
| | 2014.02-2019.12 | MT | F | L/R | Hatchback FWD B3LA | | GCI24050 | Inner Joint | | 25 | 21 | 35 | 54 | 83.5 | |
| | 2019.09- | MT | F | L | Hatchback FWD G3LD | | GDS24529 | Drive Shaft | 48T | 25 | 25 | 52.5 | 92.5 | 648 | |
| | 2019.09- | MT | F | L | Hatchback FWD G3LD | | GCO27110 | Outer Joint | 48T | 25 | 21 | 52.5 | 92.5 | 56 | M |
| | 2019.09- | MT | F | L | Hatchback FWD G3LD | | GCI24050 | Inner Joint | | 25 | 21 | 35 | 54 | 83.5 | |
| 1.0 (51 kw) | 2011.01-2013.12 | 5MT | F | L | Hatchback FWD G3LA | | GCO24129 | Outer Joint | 48T | 24 | 20 | 52.5 | 86.5 | 63 | M |
| | 2011.01-2013.12 | 5MT | F | L/R | Hatchback FWD G3LA | | GCI24048 | Inner Joint | | 25 | 20 | 35 | 54 | 91 | |
| | 2014.07-2016.08 | MT | F | L | Hatchback FWD B3LA | | GDS24529 | Drive Shaft | 48T | 25 | 25 | 52.5 | 92.5 | 648 | |
| | 2014.07-2016.08 | MT | F | R | Hatchback FWD B3LA | | GDS24542 | Drive Shaft | 48T | 25 | 25 | 52.5 | 92.5 | 902 | |
| | 2014.07-2016.08 | MT | F | L/R | Hatchback FWD B3LA | | GCO27110 | Outer Joint | 48T | 25 | 21 | 52.5 | 92.5 | 56 | M |
| | 2014.07-2016.08 | MT | F | L/R | Hatchback FWD B3LA | | GCI24050 | Inner Joint | | 25 | 21 | 35 | 54 | 83.5 | |
| 1.1 (48 kw) | 2007.12-2013.12 | 4AT | F | L | Hatchback FWD G4HG | | GDS24240 | Drive Shaft | 48T | 24 | 25 | 52.5 | 86.5 | 601 | |
| | 2007.12-2013.12 | 4AT | F | R | Hatchback FWD G4HG | | GDS24241 | Drive Shaft | 48T | 24 | 25 | 52.5 | 86.5 | 870 | |
| | 2007.12-2013.12 | 4AT/5MT | F | L/R | Hatchback FWD G4HG | | GCO24129 | Outer Joint | 48T | 24 | 20 | 52.5 | 86.5 | 63 | M |
| | 2007.12-2013.12 | 4AT/5MT | F | L/R | Hatchback FWD G4HG | | GCI24048 | Inner Joint | | 25 | 20 | 35 | 54 | 91 | |
| | 2007.12-2013.12 | 5MT | F | L | Hatchback FWD G4HG | | GDS24156 | Drive Shaft | | 24 | 25 | 52.5 | 86.5 | 624 | |
| | 2007.12-2013.12 | 5MT | F | L | Hatchback FWD G4HG | | GDS39191 | Drive Shaft | 48T | 24 | 25 | 52.5 | 86.5 | 624 | |
| | 2007.12-2013.12 | 5MT | F | R | Hatchback FWD G4HG | | GDS24157 | Drive Shaft | | 24 | 25 | 52.5 | 86.5 | 845 | |
| | 2007.12-2013.12 | 5MT | F | R | Hatchback FWD G4HG | | GDS39192 | Drive Shaft | 48T | 24 | 25 | 52.5 | 86.5 | 845 | |
| | 2007.12-2013.12 | 5MT | F | L/R | Hatchback FWD G4HG | | GCO24087 | Outer Joint | | 24 | 20 | 52.5 | 86.5 | 63 | M |
| | 2007.12-2013.12 | 5MT | F | L/R | Hatchback FWD G4HG | | GCO34146 | Outer Joint | 48T | 24 | 21 | 52.5 | 86 | 63.5 | M |
| | 2009.01-2013.12 | 4AT | F | L | Hatchback FWD G4HG | | GDS24240 | Drive Shaft | 48T | 24 | 25 | 52.5 | 86.5 | 601 | |
| | 2009.01-2013.12 | 4AT | F | R | Hatchback FWD G4HG | | GDS24241 | Drive Shaft | 48T | 24 | 25 | 52.5 | 86.5 | 870 | |
| | 2009.01-2013.12 | 4AT/5MT | F | L/R | Hatchback FWD G4HG | | GCO24129 | Outer Joint | 48T | 24 | 20 | 52.5 | 86.5 | 63 | M |
| | 2009.01-2013.12 | 4AT/5MT | F | L/R | Hatchback FWD G4HG | | GCI24048 | Inner Joint | | 25 | 20 | 35 | 54 | 91 | |
| | 2009.01-2013.12 | 5MT | F | L | Hatchback FWD G4HG | | GDS39191 | Drive Shaft | 48T | 24 | 25 | 52.5 | 86.5 | 624 | |
| | 2009.01-2013.12 | 5MT | F | R | Hatchback FWD G4HG | | GDS39192 | Drive Shaft | 48T | 24 | 25 | 52.5 | 86.5 | 845 | |
| | 2009.01-2013.12 | 5MT | F | L/R | Hatchback FWD G4HG | | GCO24087 | Outer Joint | | 24 | 20 | 52.5 | 86.5 | 63 | M |
| | 2009.01-2013.12 | 5MT | F | L/R | Hatchback FWD G4HG | | GCO34146 | Outer Joint | 48T | 24 | 21 | 52.5 | 86 | 63.5 | M |
| 1.1 (49 kw) | 2008.01-2013.12 | 4AT | F | L | Hatchback FWD G4HG | | GDS24240 | Drive Shaft | 48T | 24 | 25 | 52.5 | 86.5 | 601 | |
| | 2008.01-2013.12 | 4AT | F | R | Hatchback FWD G4HG | | GDS24241 | Drive Shaft | 48T | 24 | 25 | 52.5 | 86.5 | 870 | |
| | 2008.01-2013.12 | 4AT/5MT | F | L/R | Hatchback FWD G4HG | | GCO24129 | Outer Joint | 48T | 24 | 20 | 52.5 | 86.5 | 63 | M |
| | 2008.01-2013.12 | 4AT/5MT | F | L/R | Hatchback FWD G4HG | | GCI24048 | Inner Joint | | 25 | 20 | 35 | 54 | 91 | |
| | 2008.01-2013.12 | 5MT | F | L | Hatchback FWD G4HG | | GDS39191 | Drive Shaft | 48T | 24 | 25 | 52.5 | 86.5 | 624 | |
| | 2008.01-2013.12 | 5MT | F | R | Hatchback FWD G4HG | | GDS39192 | Drive Shaft | 48T | 24 | 25 | 52.5 | 86.5 | 845 | |
| | 2008.01-2013.12 | 5MT | F | L/R | Hatchback FWD G4HG | | GCO24087 | Outer Joint | | 24 | 20 | 52.5 | 86.5 | 63 | M |
| | 2008.01-2013.12 | 5MT | F | L/R | Hatchback FWD G4HG | | GCO34146 | Outer Joint | 48T | 24 | 21 | 52.5 | 86 | 63.5 | M |
| 1.1 (50 kw) | 2008.11-2013.12 | 4AT/5MT | F | L/R | Hatchback FWD G4HG | | GCO24129 | Outer Joint | 48T | 24 | 20 | 52.5 | 86.5 | 63 | M |
| | 2008.11-2013.12 | 4AT/5MT | F | L/R | Hatchback FWD G4HG | | GCI24048 | Inner Joint | | 25 | 20 | 35 | 54 | 91 | |
| | 2008.11-2013.12 | 5MT | F | L | Hatchback FWD G4HG | | GDS24156 | Drive Shaft | | 24 | 25 | 52.5 | 86.5 | 624 | |

| | YEAR | TRANSM. | F/R | L/R | BODY STYLE & DRIVE TYPE & ENGINE | REMARKS | G-AP Ref. | PRODUCT | ABS | Technical Specifications A | B | C | H | L | P |
|---|---|---|---|---|---|---|---|---|---|---|---|---|---|---|---|
| **HYUNDAI** | | | | | | | | | | | | | | | |
| **i10** | | | | | | | | | | | | | | | |
| 1.1 (50 kw) | 2008.11-2013.12 | 5MT | F | L | Hatchback FWD G4HG | | GDS39191 | Drive Shaft | 48T | 24 | 25 | 52.5 | 86.5 | 624 | |
| | 2008.11-2013.12 | 5MT | F | R | Hatchback FWD G4HG | | GDS24157 | Drive Shaft | | 24 | 25 | 52.5 | 86.5 | 845 | |
| | 2008.11-2013.12 | 5MT | F | R | Hatchback FWD G4HG | | GDS39192 | Drive Shaft | 48T | 24 | 25 | 52.5 | 86.5 | 845 | |
| | 2008.11-2013.12 | 5MT | F | L/R | Hatchback FWD G4HG | | GCO24087 | Outer Joint | | 24 | 20 | 52.5 | 86.5 | 63 | M |
| | 2008.11-2013.12 | 5MT | F | L/R | Hatchback FWD G4HG | | GCO34146 | Outer Joint | 48T | 24 | 21 | 52.5 | 86 | 63.5 | M |
| | 2008.11-2013.12 | AT | F | L | Hatchback FWD G4HG | | GDS24240 | Drive Shaft | 48T | 24 | 25 | 52.5 | 86.5 | 601 | |
| | 2008.11-2013.12 | AT | F | R | Hatchback FWD G4HG | | GDS24241 | Drive Shaft | 48T | 24 | 25 | 52.5 | 86.5 | 870 | |
| 1.1 (51 kw) | 2011.04-2013.12 | 4AT | F | R | Hatchback FWD G4HG | | GDS24241 | Drive Shaft | 48T | 24 | 25 | 52.5 | 86.5 | 870 | |
| | 2011.04-2013.12 | 4AT/5MT | F | L/R | Hatchback FWD G4HG | | GCO24129 | Outer Joint | 48T | 24 | 20 | 52.5 | 86.5 | 63 | M |
| | 2011.04-2013.12 | 4AT/5MT | F | L | Hatchback FWD G4HG | | GCI27019 | Inner Joint | | 25 | 22 | 41 | 62 | 93.5 | |
| | 2011.04-2013.12 | 4AT/5MT | F | R | Hatchback FWD G4HG | | GCI39052 | Inner Joint | | 25 | 22 | 41 | 63 | 86 | |
| | 2011.04-2013.12 | 4AT/5MT | F | L/R | Hatchback FWD G4HG | | GCI24048 | Inner Joint | | 25 | 20 | 35 | 54 | 91 | |
| | 2011.04-2013.12 | 5MT | F | L | Hatchback FWD G4HG | | GDS24156 | Drive Shaft | | 24 | 25 | 52.5 | 86.5 | 624 | |
| | 2011.04-2013.12 | 5MT | F | L | Hatchback FWD G4HG | | GDS39191 | Drive Shaft | 48T | 24 | 25 | 52.5 | 86.5 | 624 | |
| | 2011.04-2013.12 | 5MT | F | R | Hatchback FWD G4HG | | GDS24157 | Drive Shaft | | 24 | 25 | 52.5 | 86.5 | 845 | |
| | 2011.04-2013.12 | 5MT | F | R | Hatchback FWD G4HG | | GDS39192 | Drive Shaft | 48T | 24 | 25 | 52.5 | 86.5 | 845 | |
| | 2011.04-2013.12 | 5MT | F | L/R | Hatchback FWD G4HG | | GCO24087 | Outer Joint | | 24 | 20 | 52.5 | 86.5 | 63 | M |
| | 2011.04-2013.12 | 5MT | F | L/R | Hatchback FWD G4HG | | GCO24129 | Outer Joint | 48T | 24 | 20 | 52.5 | 86.5 | 63 | M |
| | 2011.04-2013.12 | 5MT | F | L/R | Hatchback FWD G4HG | | GCO34146 | Outer Joint | 48T | 24 | 21 | 52.5 | 86 | 63.5 | M |
| | 2011.04-2013.12 | 5MT | F | L/R | Hatchback FWD G4HG | | GCI24048 | Inner Joint | | 25 | 20 | 35 | 54 | 91 | |
| | 2011.04-2013.12 | AT | F | L | Hatchback FWD G4HG | | GDS24240 | Drive Shaft | 48T | 24 | 25 | 52.5 | 86.5 | 601 | |
| 1.2 (57 kw) | 2008.11-2011.12 | 4AT | F | L/R | Hatchback FWD G4LA | | GCI57109 | Inner Joint | | 25 | 21 | 35 | 54 | 93.5 | |
| | 2008.11-2011.12 | 4AT/5MT | F | R | Hatchback FWD G4LA | | GDS57195 | Drive Shaft | 48T | 24 | 25 | 52.5 | 86 | 871 | |
| | 2008.11-2011.12 | 5MT | F | L | Hatchback FWD G4LA | | GDS57145 | Drive Shaft | 48T | 24 | 25 | 52.5 | 86 | 597 | |
| | 2008.11-2011.12 | 5MT | F | L/R | Hatchback FWD G4LA | | GCO34146 | Outer Joint | 48T | 24 | 21 | 52.5 | 86 | 63.5 | M |
| | 2008.11-2011.12 | 5MT | F | L/R | Hatchback FWD G4LA | | GCI24048 | Inner Joint | | 25 | 20 | 35 | 54 | 91 | |
| | 2008.11-2011.12 | | F | L | Hatchback FWD G4LA | | GCO24087 | Outer Joint | | 24 | 20 | 52.5 | 86.5 | 63 | M |
| | 2010.01-2013.12 | 4AT | F | L/R | Hatchback FWD G4LA | | GCI57109 | Inner Joint | | 25 | 21 | 35 | 54 | 93.5 | |
| | 2010.01-2013.12 | 4AT/5MT | F | R | Hatchback FWD G4LA | | GDS57195 | Drive Shaft | 48T | 24 | 25 | 52.5 | 86 | 871 | |
| | 2010.01-2013.12 | 5MT | F | L | Hatchback FWD G4LA | | GDS57145 | Drive Shaft | 48T | 24 | 25 | 52.5 | 86 | 597 | |
| | 2010.01-2013.12 | 5MT | F | L/R | Hatchback FWD G4LA | | GCO34146 | Outer Joint | 48T | 24 | 21 | 52.5 | 86 | 63.5 | M |
| | 2010.01-2013.12 | 5MT | F | L/R | Hatchback FWD G4LA | | GCI24048 | Inner Joint | | 25 | 20 | 35 | 54 | 91 | |
| | 2010.01-2013.12 | | F | L | Hatchback FWD G4LA | | GCO24087 | Outer Joint | | 24 | 20 | 52.5 | 86.5 | 63 | M |
| 1.2 (63 kw) | 2011.04-2013.12 | 4AT | F | L/R | Hatchback FWD G4LA | | GCI57109 | Inner Joint | | 25 | 21 | 35 | 54 | 93.5 | |
| | 2011.04-2013.12 | 4AT/5MT | F | R | Hatchback FWD G4LA | | GDS57195 | Drive Shaft | 48T | 24 | 25 | 52.5 | 86 | 871 | |
| | 2011.04-2013.12 | 5MT | F | L | Hatchback FWD G4LA | | GDS57145 | Drive Shaft | 48T | 24 | 25 | 52.5 | 86 | 597 | |
| | 2011.04-2013.12 | 5MT | F | L/R | Hatchback FWD G4LA | | GCO34146 | Outer Joint | 48T | 24 | 21 | 52.5 | 86 | 63.5 | M |
| | 2011.04-2013.12 | 5MT | F | L/R | Hatchback FWD G4LA | | GCI24048 | Inner Joint | | 25 | 20 | 35 | 54 | 91 | |
| 1.2 (64 kw) | 2011.01-2018.05 | 4AT | F | R | Hatchback FWD G4LA | | GDS57195 | Drive Shaft | 48T | 24 | 25 | 52.5 | 86 | 871 | |
| | 2011.01-2018.05 | 4AT | F | L/R | Hatchback FWD G4LA | | GCI57109 | Inner Joint | | 25 | 21 | 35 | 54 | 93.5 | |
| | 2013.12-2019.12 | 4AT | F | L | Hatchback FWD G4LA | | GCI81391 | Inner Joint | | 25 | 20 | 35 | 55.5 | 84 | |
| | 2013.12-2019.12 | 4AT/5MT | F | L/R | Hatchback FWD G4LA | | GCO39261 | Outer Joint | 48T | 25 | 22 | 52.5 | 92.5 | 54.5 | M |
| **i20** | | | | | | | | | | | | | | | |
| 1.0 (66 kw) | 2025.10- | 6MT | F | R | Hatchback FWD G3LE | | GDS83762 | Drive Shaft | | 25 | 25 | 52.5 | 94.5 | 920 | |
| | 2025.10- | 6MT | F | R | Hatchback FWD G3LE | | GCI24137 | Inner Joint | | 25 | 22 | 41 | 62.5 | 86 | |
| | 2025.10- | 7DCT | F | R | Hatchback FWD G3LE | | GDS56554 | Drive Shaft | | 25 | 27 | 52.5 | 94.5 | 926 | |
| 1.0 (74 kw) | 2016.01-2020.08 | 5MT | F | L | Hatchback FWD G3LC | | GDS58116 | Drive Shaft | 48T | 25 | 25 | 52.5 | 92.5 | 699 | |
| | 2016.01-2020.08 | 5MT | F | R | Hatchback FWD G3LC | | GDS58117 | Drive Shaft | 48T | 25 | 25 | 52.5 | 92.5 | 897 | |
| | 2016.01-2020.08 | 5MT | F | L/R | Hatchback FWD G3LC | | GCO39261 | Outer Joint | 48T | 25 | 22 | 52.5 | 92.5 | 54.5 | M |
| | 2016.01-2020.08 | 5MT | F | L | Hatchback FWD G3LC | | GCI39052 | Inner Joint | | 25 | 22 | 41 | 63 | 86 | |
| | 2016.01-2021.09 | 5MT | F | L | Coupe FWD G3LC | | GDS58116 | Drive Shaft | 48T | 25 | 25 | 52.5 | 92.5 | 699 | |
| | 2016.01-2021.09 | 5MT | F | R | Coupe FWD G3LC | | GDS58117 | Drive Shaft | 48T | 25 | 25 | 52.5 | 92.5 | 897 | |
| | 2016.01-2021.09 | 5MT | F | L/R | Coupe FWD G3LC | | GCO39261 | Outer Joint | 48T | 25 | 22 | 52.5 | 92.5 | 54.5 | M |
| | 2016.01-2021.09 | 5MT | F | L | Coupe FWD G3LC | | GCI39052 | Inner Joint | | 25 | 22 | 41 | 63 | 86 | |
| | 2016.01-2021.09 | 5MT | F | L | Hatchback Van FWD G3LC | | GDS58116 | Drive Shaft | 48T | 25 | 25 | 52.5 | 92.5 | 699 | |
| | 2016.01-2021.09 | 5MT | F | R | Hatchback Van FWD G3LC | | GDS58117 | Drive Shaft | 48T | 25 | 25 | 52.5 | 92.5 | 897 | |
| | 2016.01-2021.09 | 5MT | F | L/R | Hatchback Van FWD G3LC | | GCO39261 | Outer Joint | 48T | 25 | 22 | 52.5 | 92.5 | 54.5 | M |
| | 2016.01-2021.09 | 5MT | F | L | Hatchback Van FWD G3LC | | GCI39052 | Inner Joint | | 25 | 22 | 41 | 63 | 86 | |
| | 2020.08- | 6MT | F | L | Hatchback FWD G3LE | | GDS58325 | Drive Shaft | | 25 | 25 | 52.5 | 94.5 | 707 | |
| | 2020.08- | 6MT | F | R | Hatchback FWD G3LE | | GDS83762 | Drive Shaft | | 25 | 25 | 52.5 | 94.5 | 920 | |
| | 2020.08- | 6MT | F | L/R | Hatchback FWD G3LE | | GCO82443 | Outer Joint | | 25 | 22 | 52.5 | 94.5 | 54 | M |
| | 2020.08- | 6MT | F | L | Hatchback FWD G3LE | | GCI84066 | Inner Joint | | 25 | 22 | 41 | 61.5 | 90.5 | |
| | 2020.08- | 6MT | F | R | Hatchback FWD G3LE | | GCI24137 | Inner Joint | | 25 | 22 | 41 | 62.5 | 86 | |
| | 2020.08- | 6MT | F | L | Hatchback FWD G3LE;G3LF | | GDS58325 | Drive Shaft | | 25 | 25 | 52.5 | 94.5 | 707 | |
| | 2020.08- | 6MT | F | R | Hatchback FWD G3LE;G3LF | | GDS83762 | Drive Shaft | | 25 | 25 | 52.5 | 94.5 | 920 | |

| | YEAR | TRANSM. | F/R | L/R | BODY STYLE & DRIVE TYPE & ENGINE | REMARKS | G-AP Ref. | PRODUCT | ABS | Technical Specifications A | B | C | H | L | P |
|---|---|---|---|---|---|---|---|---|---|---|---|---|---|---|---|
| **HYUNDAI** **i20** | | | | | | | | | | | | | | | |
| 1.0 (74 kw) | 2020.08- | 6MT | F | L/R | Hatchback FWD G3LE;G3LF | | GCO82443 | Outer Joint | | 25 | 22 | 52.5 | 94.5 | 54 | M |
| | 2020.08- | 6MT | F | L | Hatchback FWD G3LE;G3LF | | GCI84066 | Inner Joint | | 25 | 22 | 41 | 61.5 | 90.5 | |
| | 2020.08- | 6MT | F | R | Hatchback FWD G3LE;G3LF | | GCI24137 | Inner Joint | | 25 | 22 | 41 | 62.5 | 86 | |
| | 2020.08- | 7DCT | F | R | Hatchback FWD G3LE;G3LF | | GDS56554 | Drive Shaft | | 25 | 27 | 52.5 | 94.5 | 926 | |
| | 2020.08- | 7DCT | F | R | Hatchback FWD G3LE;G3LF | | GCO82726 | Outer Joint | | 25 | 22 | 52.5 | 94.5 | 54 | M |
| | 2020.08- | 7DCT | F | L/R | Hatchback FWD G3LE;G3LF | | GCI83368 | Inner Joint | | 27 | 22 | 30 | 67.5 | 79.5 | |
| 1.0 (88 kw) | 2016.01-2020.08 | 6MT | F | L | Hatchback FWD G3LC | | GCI39052 | Inner Joint | | 25 | 22 | 41 | 63 | 86 | |
| | 2016.01-2021.09 | 6MT | F | L | Coupe FWD G3LC | | GCI39052 | Inner Joint | | 25 | 22 | 41 | 63 | 86 | |
| | 2020.08- | 6MT | F | L | Hatchback FWD G3LE;G3LF | | GDS58325 | Drive Shaft | | 25 | 25 | 52.5 | 94.5 | 707 | |
| | 2020.08- | 6MT | F | R | Hatchback FWD G3LE;G3LF | | GDS83762 | Drive Shaft | | 25 | 25 | 52.5 | 94.5 | 920 | |
| | 2020.08- | 6MT | F | L/R | Hatchback FWD G3LE;G3LF | | GCO82443 | Outer Joint | | 25 | 22 | 52.5 | 94.5 | 54 | M |
| | 2020.08- | 6MT | F | L | Hatchback FWD G3LE;G3LF | | GCI84066 | Inner Joint | | 25 | 22 | 41 | 61.5 | 90.5 | |
| | 2020.08- | 6MT | F | R | Hatchback FWD G3LE;G3LF | | GCI24137 | Inner Joint | | 25 | 22 | 41 | 62.5 | 86 | |
| | 2020.08- | 7DCT | F | R | Hatchback FWD G3LE;G3LF | | GDS56554 | Drive Shaft | | 25 | 27 | 52.5 | 94.5 | 926 | |
| | 2020.08- | 7DCT | F | R | Hatchback FWD G3LE;G3LF | | GCO82726 | Outer Joint | | 25 | 22 | 52.5 | 94.5 | 54 | M |
| | 2020.08- | 7DCT | F | L/R | Hatchback FWD G3LE;G3LF | | GCI83368 | Inner Joint | | 27 | 22 | 30 | 67.5 | 79.5 | |
| 1.1 (55 kw) | 2012.03-2015.12 | 6MT | F | L | Hatchback FWD D3FA | | GDS24541 | Drive Shaft | 48T | 25 | 25 | 52.5 | 93.5 | 675 | |
| | 2012.03-2015.12 | 6MT | F | R | Hatchback FWD D3FA | | GDS24562 | Drive Shaft | 48T | 25 | 25 | 52.5 | 93.5 | 914 | |
| | 2012.03-2015.12 | 6MT | F | L/R | Hatchback FWD D3FA | | GCO39181 | Outer Joint | 48T | 25 | 22 | 52.5 | 93.5 | 59 | M |
| | 2012.03-2015.12 | 6MT | F | L/R | Hatchback FWD D3FA | | GCI39052 | Inner Joint | | 25 | 22 | 41 | 63 | 86 | |
| | 2014.11-2018.06 | MT | F | L | Hatchback FWD D3FA | | GCO39261 | Outer Joint | 48T | 25 | 22 | 52.5 | 92.5 | 54.5 | M |
| | 2014.11-2018.06 | MT | F | L | Hatchback FWD D3FA | | GCI39052 | Inner Joint | | 25 | 22 | 41 | 63 | 86 | |
| | 2015.05-2021.09 | MT | F | L | Coupe FWD D3FA | | GCO39261 | Outer Joint | 48T | 25 | 22 | 52.5 | 92.5 | 54.5 | M |
| | 2015.05-2021.09 | MT | F | L | Coupe FWD D3FA | | GCI39052 | Inner Joint | | 25 | 22 | 41 | 63 | 86 | |
| | 2015.05-2021.09 | MT | F | L | Hatchback Van FWD D3FA | | GCO39261 | Outer Joint | 48T | 25 | 22 | 52.5 | 92.5 | 54.5 | M |
| | 2015.05-2021.09 | MT | F | L | Hatchback Van FWD D3FA | | GCI39052 | Inner Joint | | 25 | 22 | 41 | 63 | 86 | |
| 1.2 (55 kw) | 2014.11-2020.03 | 5MT | F | L | Hatchback FWD G4LA | | GDS24530 | Drive Shaft | 48T | 25 | 25 | 52.5 | 92.5 | 685 | |
| | 2014.11-2020.03 | 5MT | F | R | Hatchback FWD G4LA | | GDS81765 | Drive Shaft | 48T | 25 | 25 | 52.5 | 92.5 | 912 | |
| | 2014.11-2020.03 | 5MT | F | L | Hatchback FWD G4LA | | GCO27110 | Outer Joint | 48T | 25 | 21 | 52.5 | 92.5 | 56 | M |
| | 2014.11-2020.03 | 5MT | F | L | Hatchback FWD G4LA | | GCI24151 | Inner Joint | | 25 | 21 | 35 | 55.5 | 85.5 | |
| | 2015.05-2021.09 | 5MT | F | L/R | Hatchback Van FWD G4LA | | GCO27110 | Outer Joint | 48T | 25 | 21 | 52.5 | 92.5 | 56 | M |
| | 2015.05-2021.09 | 5MT | F | L | Hatchback Van FWD G4LA | | GCI24151 | Inner Joint | | 25 | 21 | 35 | 55.5 | 85.5 | |
| | 2015.05-2021.09 | | F | L | Hatchback Van FWD G4LA | | GDS24530 | Drive Shaft | 48T | 25 | 25 | 52.5 | 92.5 | 685 | |
| | 2015.05-2021.09 | | F | R | Hatchback Van FWD G4LA | | GDS81765 | Drive Shaft | 48T | 25 | 25 | 52.5 | 92.5 | 912 | |
| | 2019.01-2020.09 | 5MT | F | L/R | Hatchback FWD G4LA | | GCO27110 | Outer Joint | 48T | 25 | 21 | 52.5 | 92.5 | 56 | M |
| | 2019.01-2020.09 | 5MT | F | L | Hatchback FWD G4LA | | GCI24151 | Inner Joint | | 25 | 21 | 35 | 55.5 | 85.5 | |
| | 2019.01-2020.09 | | F | L | Hatchback FWD G4LA | | GDS24530 | Drive Shaft | 48T | 25 | 25 | 52.5 | 92.5 | 685 | |
| | 2019.01-2020.09 | | F | R | Hatchback FWD G4LA | | GDS81765 | Drive Shaft | 48T | 25 | 25 | 52.5 | 92.5 | 912 | |
| 1.2 (56 kw) | 2008.12-2014.08 | 5MT | F | L | Hatchback FWD G4AG | | GDS24152 | Drive Shaft | 48T | 25 | 25 | 52.5 | 94.5 | 655 | |
| | 2008.12-2014.08 | 5MT | F | R | Hatchback FWD G4AG | | GDS24153 | Drive Shaft | 48T | 25 | 25 | 52.5 | 94.5 | 930 | |
| | 2008.12-2014.08 | 5MT | F | L/R | Hatchback FWD G4AG | | GCO24117 | Outer Joint | 48T | 25 | 21 | 52.5 | 94.5 | 55 | M |
| | 2008.12-2014.08 | 5MT | F | L/R | Hatchback FWD G4AG | | GCI24050 | Inner Joint | | 25 | 21 | 35 | 54 | 83.5 | |
| 1.2 (57 kw) | 2008.09-2012.12 | 5MT | F | L | Hatchback FWD G4LA | | GDS24152 | Drive Shaft | 48T | 25 | 25 | 52.5 | 94.5 | 655 | |
| | 2008.09-2012.12 | 5MT | F | R | Hatchback FWD G4LA | | GDS24153 | Drive Shaft | 48T | 25 | 25 | 52.5 | 94.5 | 930 | |
| | 2008.09-2012.12 | 5MT | F | L/R | Hatchback FWD G4LA | | GCO24117 | Outer Joint | 48T | 25 | 21 | 52.5 | 94.5 | 55 | M |
| | 2008.09-2012.12 | 5MT | F | L/R | Hatchback FWD G4LA | | GCI24050 | Inner Joint | | 25 | 21 | 35 | 54 | 83.5 | |
| 1.2 (59 kw) | 2008.08-2014.08 | | F | R | Hatchback FWD G4UG | | GDS24153 | Drive Shaft | 48T | 25 | 25 | 52.5 | 94.5 | 930 | |
| | 2008.08-2014.08 | | F | L/R | Hatchback FWD G4UG | | GCO24117 | Outer Joint | 48T | 25 | 21 | 52.5 | 94.5 | 55 | M |
| | 2008.08-2014.08 | | F | L/R | Hatchback FWD G4UG | | GCI24050 | Inner Joint | | 25 | 21 | 35 | 54 | 83.5 | |
| 1.2 (60 kw) | 2009.01-2014.08 | 5MT | F | L | Hatchback FWD G4LA | | GDS24152 | Drive Shaft | 48T | 25 | 25 | 52.5 | 94.5 | 655 | |
| | 2009.01-2014.08 | 5MT | F | R | Hatchback FWD G4LA | | GDS24153 | Drive Shaft | 48T | 25 | 25 | 52.5 | 94.5 | 930 | |
| | 2009.01-2014.08 | 5MT | F | L/R | Hatchback FWD G4LA | | GCO24117 | Outer Joint | 48T | 25 | 21 | 52.5 | 94.5 | 55 | M |
| | 2009.01-2014.08 | 5MT | F | L/R | Hatchback FWD G4LA | | GCI24050 | Inner Joint | | 25 | 21 | 35 | 54 | 83.5 | |
| 1.2 (61 kw) | 2014.11-2019.06 | 5MT | F | L | Hatchback FWD G4LA | | GDS24530 | Drive Shaft | 48T | 25 | 25 | 52.5 | 92.5 | 685 | |
| | 2014.11-2019.06 | 5MT | F | L/R | Hatchback FWD G4LA | | GCO27110 | Outer Joint | 48T | 25 | 21 | 52.5 | 92.5 | 56 | M |
| | 2014.11-2019.06 | 5MT | F | L | Hatchback FWD G4LA | | GCI24151 | Inner Joint | | 25 | 21 | 35 | 55.5 | 85.5 | |
| | 2014.11-2019.06 | | F | R | Hatchback FWD G4LA | | GDS81765 | Drive Shaft | 48T | 25 | 25 | 52.5 | 92.5 | 912 | |
| 1.2 (62 kw) | 2014.11-2020.08 | 5MT | F | L | Hatchback FWD G4LA | | GDS24530 | Drive Shaft | 48T | 25 | 25 | 52.5 | 92.5 | 685 | |
| | 2014.11-2020.08 | 5MT | F | R | Hatchback FWD G4LA | | GDS81765 | Drive Shaft | 48T | 25 | 25 | 52.5 | 92.5 | 912 | |
| | 2014.11-2020.08 | 5MT | F | L/R | Hatchback FWD G4LA | | GCO27110 | Outer Joint | 48T | 25 | 21 | 52.5 | 92.5 | 56 | M |
| | 2014.11-2020.08 | 5MT | F | L/R | Hatchback FWD G4LA | | GCI24151 | Inner Joint | | 25 | 21 | 35 | 55.5 | 85.5 | |
| | 2015.05-2021.09 | 5MT | F | L | Coupe FWD G4LA | | GDS24530 | Drive Shaft | 48T | 25 | 25 | 52.5 | 92.5 | 685 | |
| | 2015.05-2021.09 | 5MT | F | R | Coupe FWD G4LA | | GDS81765 | Drive Shaft | 48T | 25 | 25 | 52.5 | 92.5 | 912 | |
| | 2015.05-2021.09 | 5MT | F | L | Coupe FWD G4LA | | GCO27110 | Outer Joint | 48T | 25 | 21 | 52.5 | 92.5 | 56 | M |
| | 2015.05-2021.09 | 5MT | F | L | Coupe FWD G4LA | | GCI24151 | Inner Joint | | 25 | 21 | 35 | 55.5 | 85.5 | |

| | YEAR | TRANSM. | F/R | L/R | BODY STYLE & DRIVE TYPE & ENGINE | REMARKS | G-AP Ref. | PRODUCT | ABS | Technical Specifications | | | | | |
|---|---|---|---|---|---|---|---|---|---|---|---|---|---|---|---|
| | | | | | | | | | | A | B | C | H | L | P |
| **HYUNDAI** | | | | | | | | | | | | | | | |
| **i20** | | | | | | | | | | | | | | | |
| 1.2 (62 kw) | 2015.05-2021.09 | 5MT | F | L/R | Hatchback Van FWD G4LA | | GCO27110 | Outer Joint | 48T | 25 | 21 | 52.5 | 92.5 | 56 | M |
| | 2015.05-2021.09 | 5MT | F | L | Hatchback Van FWD G4LA | | GCI24151 | Inner Joint | | 25 | 21 | 35 | 55.5 | 85.5 | |
| | 2015.05-2021.09 | | F | L | Hatchback Van FWD G4LA | | GDS24530 | Drive Shaft | 48T | 25 | 25 | 52.5 | 92.5 | 685 | |
| | 2015.05-2021.09 | | F | R | Hatchback Van FWD G4LA | | GDS81765 | Drive Shaft | 48T | 25 | 25 | 52.5 | 92.5 | 912 | |
| 1.2 (63 kw) | 2012.03-2015.12 | 5MT | F | L | Hatchback FWD G4LA | | GDS24152 | Drive Shaft | 48T | 25 | 25 | 52.5 | 94.5 | 655 | |
| | 2012.03-2015.12 | 5MT | F | R | Hatchback FWD G4LA | | GDS24153 | Drive Shaft | 48T | 25 | 25 | 52.5 | 94.5 | 930 | |
| | 2012.03-2015.12 | 5MT | F | L/R | Hatchback FWD G4LA | | GCO24117 | Outer Joint | 48T | 25 | 21 | 52.5 | 94.5 | 55 | M |
| | 2012.03-2015.12 | 5MT | F | L/R | Hatchback FWD G4LA | | GCI24050 | Inner Joint | | 25 | 21 | 35 | 54 | 83.5 | |
| 1.4 (55 kw) | 2008.09-2012.12 | 5MT/6MT | F | L | Hatchback FWD D4FC | | GDS39189 | Drive Shaft | 48T | 25 | 27 | 52.6 | 94.5 | 646 | |
| | 2008.09-2012.12 | 5MT/6MT | F | R | Hatchback FWD D4FC | | GDS39190 | Drive Shaft | 48T | 25 | 27 | 52.6 | 94.5 | 938 | |
| | 2008.09-2012.12 | 5MT/6MT | F | L/R | Hatchback FWD D4FC | | GCO39192 | Outer Joint | 48T | 25 | 24 | 52.6 | 94.5 | 63.5 | M |
| 1.4 (66 kw) | 2008.08-2015.12 | 4AT/5MT/6MT | F | L | Hatchback FWD D4FC | | GDS39189 | Drive Shaft | 48T | 25 | 27 | 52.6 | 94.5 | 646 | |
| | 2008.08-2015.12 | 4AT/5MT/6MT | F | R | Hatchback FWD D4FC | | GDS39190 | Drive Shaft | 48T | 25 | 27 | 52.6 | 94.5 | 938 | |
| | 2008.08-2015.12 | 4AT/5MT/6MT | F | L/R | Hatchback FWD D4FC | | GCO39192 | Outer Joint | 48T | 25 | 24 | 52.6 | 94.5 | 63.5 | M |
| | 2014.11-2018.06 | 6MT | F | L | Hatchback FWD D4FC | | GDS82979 | Drive Shaft | | 25 | 27 | 52.6 | 92.5 | 650 | |
| | 2014.11-2018.06 | 6MT | F | R | Hatchback FWD D4FC | | GDS82980 | Drive Shaft | | 25 | 27 | 52.6 | 92.5 | 926 | |
| | 2014.11-2018.06 | 6MT | F | L/R | Hatchback FWD D4FC | | GCO82252 | Outer Joint | | 25 | 23 | 52.6 | 92.5 | 58 | M |
| | 2014.11-2018.06 | 6MT | F | L/R | Hatchback FWD D4FC | | GCI24115 | Inner Joint | | 27 | 23 | 41 | 62.5 | 88 | |
| | 2014.11-2018.06 | MT | F | L | Hatchback FWD D4FC | | GDS83651 | Drive Shaft | 48T | 25 | 27 | 52.6 | 92.5 | 660 | |
| | 2014.11-2018.06 | MT | F | R | Hatchback FWD D4FC | | GDS83641 | Drive Shaft | 48T | 25 | 27 | 52.6 | 92.5 | 937 | |
| | 2014.11-2018.06 | MT | F | L/R | Hatchback FWD D4FC | | GCO82448 | Outer Joint | 48T | 25 | 23 | 52.6 | 92.5 | 58 | M |
| | 2015.05-2021.09 | 6MT | F | L | Coupe FWD D4FC | | GDS82979 | Drive Shaft | | 25 | 27 | 52.6 | 92.5 | 650 | |
| | 2015.05-2021.09 | 6MT | F | R | Coupe FWD D4FC | | GDS82980 | Drive Shaft | | 25 | 27 | 52.6 | 92.5 | 926 | |
| | 2015.05-2021.09 | 6MT | F | L/R | Coupe FWD D4FC | | GCO82252 | Outer Joint | | 25 | 23 | 52.6 | 92.5 | 58 | M |
| | 2015.05-2021.09 | 6MT | F | L/R | Coupe FWD D4FC | | GCI24115 | Inner Joint | | 27 | 23 | 41 | 62.5 | 88 | |
| | 2015.05-2021.09 | MT | F | L | Coupe FWD D4FC | | GDS83651 | Drive Shaft | 48T | 25 | 27 | 52.6 | 92.5 | 660 | |
| | 2015.05-2021.09 | MT | F | R | Coupe FWD D4FC | | GDS83641 | Drive Shaft | 48T | 25 | 27 | 52.6 | 92.5 | 937 | |
| | 2015.05-2021.09 | MT | F | L/R | Coupe FWD D4FC | | GCO82448 | Outer Joint | 48T | 25 | 23 | 52.6 | 92.5 | 58 | M |
| | 2015.05-2021.09 | 6MT | F | L | Hatchback Van FWD D4FC | | GDS82979 | Drive Shaft | | 25 | 27 | 52.6 | 92.5 | 650 | |
| | 2015.05-2021.09 | 6MT | F | R | Hatchback Van FWD D4FC | | GDS82980 | Drive Shaft | | 25 | 27 | 52.6 | 92.5 | 926 | |
| | 2015.05-2021.09 | 6MT | F | L/R | Hatchback Van FWD D4FC | | GCO82252 | Outer Joint | | 25 | 23 | 52.6 | 92.5 | 58 | M |
| | 2015.05-2021.09 | 6MT | F | L/R | Hatchback Van FWD D4FC | | GCI24115 | Inner Joint | | 27 | 23 | 41 | 62.5 | 88 | |
| | 2015.05-2021.09 | MT | F | L | Hatchback Van FWD D4FC | | GDS83651 | Drive Shaft | 48T | 25 | 27 | 52.6 | 92.5 | 660 | |
| | 2015.05-2021.09 | MT | F | R | Hatchback Van FWD D4FC | | GDS83641 | Drive Shaft | 48T | 25 | 27 | 52.6 | 92.5 | 937 | |
| | 2015.05-2021.09 | MT | F | L/R | Hatchback Van FWD D4FC | | GCO82448 | Outer Joint | 48T | 25 | 23 | 52.6 | 92.5 | 58 | M |
| 1.4 (74 kw) | 2008.09-2015.12 | 4AT/5MT/6MT | F | L | Hatchback FWD G4FA | Date from:2014.07,Vehicle Production Country:India;Date to:2014.06,Transmission:4AT/5MT,Vehicle Production Country:Korea | GDS24304 | Drive Shaft | 48T | 25 | 25 | 52.5 | 93.5 | 656 | |
| | 2008.09-2015.12 | 4AT/6MT | F | L | Hatchback FWD G4FA | Date from:2014.07,Vehicle Production Country:India | GDS24246 | Drive Shaft | 48T | 25 | 25 | 52.5 | 93.5 | 652 | |
| | 2008.09-2015.12 | AT/MT | F | R | Hatchback FWD G4FA | | GDS39167 | Drive Shaft | 48T | 25 | 25 | 52.5 | 93.5 | 933 | |
| | 2008.09-2015.12 | AT/MT | F | L/R | Hatchback FWD G4FA | | GCO39181 | Outer Joint | 48T | 25 | 22 | 52.5 | 93.5 | 59 | M |
| | 2008.09-2015.12 | AT/MT | F | L/R | Hatchback FWD G4FA | | GCI39052 | Inner Joint | | 25 | 22 | 41 | 63 | 86 | |
| | 2014.11-2018.06 | 4AT | F | L | Hatchback FWD G4LC | | GDS84076 | Drive Shaft | 48T | 25 | 25 | 52.5 | 94.5 | 677 | |
| | 2014.11-2018.06 | 4AT | F | R | Hatchback FWD G4LC | | GDS84075 | Drive Shaft | 48T | 25 | 25 | 52.5 | 94.5 | 921 | |
| | 2014.11-2018.06 | 4AT | F | L/R | Hatchback FWD G4LC | | GCO82577 | Outer Joint | 48T | 25 | 22 | 52.5 | 94.5 | 54 | M |
| | 2014.11-2018.06 | 4AT/6MT | F | R | Hatchback FWD G4LC | | GCI39052 | Inner Joint | | 25 | 22 | 41 | 63 | 86 | |
| | 2014.11-2018.06 | 6MT | F | L | Hatchback FWD G4LC | | GDS24560 | Drive Shaft | 48T | 25 | 25 | 52.5 | 92.5 | 680 | |
| | 2014.11-2018.06 | 6MT | F | R | Hatchback FWD G4LC | | GDS24540 | Drive Shaft | 48T | 25 | 25 | 52.5 | 92.5 | 921 | |
| | 2014.11-2018.06 | 6MT | F | L/R | Hatchback FWD G4LC | | GCO39261 | Outer Joint | 48T | 25 | 22 | 52.5 | 92.5 | 54.5 | M |
| | 2015.05-2021.09 | 4AT | F | L | Coupe FWD G4LC | | GDS84076 | Drive Shaft | 48T | 25 | 25 | 52.5 | 94.5 | 677 | |
| | 2015.05-2021.09 | 4AT | F | R | Coupe FWD G4LC | | GDS84075 | Drive Shaft | 48T | 25 | 25 | 52.5 | 94.5 | 921 | |
| | 2015.05-2021.09 | 4AT | F | L/R | Coupe FWD G4LC | | GCO82577 | Outer Joint | 48T | 25 | 22 | 52.5 | 94.5 | 54 | M |
| | 2015.05-2021.09 | AT/MT | F | L/R | Coupe FWD G4LC | | GCI39052 | Inner Joint | | 25 | 22 | 41 | 63 | 86 | |
| | 2015.05-2021.09 | MT | F | L | Coupe FWD G4LC | | GDS24560 | Drive Shaft | 48T | 25 | 25 | 52.5 | 92.5 | 680 | |
| | 2015.05-2021.09 | MT | F | R | Coupe FWD G4LC | | GDS24540 | Drive Shaft | 48T | 25 | 25 | 52.5 | 92.5 | 921 | |
| | 2015.05-2021.09 | MT | F | L/R | Coupe FWD G4LC | | GCO39261 | Outer Joint | 48T | 25 | 22 | 52.5 | 92.5 | 54.5 | M |
| | 2015.05-2021.09 | 6MT | F | L | Hatchback Van FWD G4LC | | GDS24560 | Drive Shaft | 48T | 25 | 25 | 52.5 | 92.5 | 680 | |
| | 2015.05-2021.09 | 6MT | F | R | Hatchback Van FWD G4LC | | GDS24540 | Drive Shaft | 48T | 25 | 25 | 52.5 | 92.5 | 921 | |
| | 2015.05-2021.09 | 6MT | F | L/R | Hatchback Van FWD G4LC | | GCO39261 | Outer Joint | 48T | 25 | 22 | 52.5 | 92.5 | 54.5 | M |
| | 2015.05-2021.09 | 6MT | F | L/R | Hatchback Van FWD G4LC | | GCI39052 | Inner Joint | | 25 | 22 | 41 | 63 | 86 | |
| | 2021.05- | 6AT | F | L | Hatchback FWD G4LC | | GDS56555 | Drive Shaft | | 25 | 27 | 52.5 | 94.5 | 675 | |
| | 2021.05- | 6AT | F | R | Hatchback FWD G4LC | | GDS56554 | Drive Shaft | | 25 | 27 | 52.5 | 94.5 | 926 | |
| | 2021.05- | 6AT | F | L/R | Hatchback FWD G4LC | | GCO82726 | Outer Joint | | 25 | 22 | 52.5 | 94.5 | 54 | M |
| | 2021.05- | 6AT | F | L/R | Hatchback FWD G4LC | | GCI83368 | Inner Joint | | 27 | 22 | 30 | 67.5 | 79.5 | |
| 1.4 (75 kw) | 2008.12-2012.12 | 5MT | F | R | Hatchback FWD G4FA | | GDS39167 | Drive Shaft | 48T | 25 | 25 | 52.5 | 93.5 | 933 | |
| | 2008.12-2012.12 | 5MT | F | L/R | Hatchback FWD G4FA | | GCO39181 | Outer Joint | 48T | 25 | 22 | 52.5 | 93.5 | 59 | M |
| | 2008.12-2012.12 | 5MT | F | L/R | Hatchback FWD G4FA | | GCI39052 | Inner Joint | | 25 | 22 | 41 | 63 | 86 | |

| | YEAR | TRANSM. | F/R | L/R | BODY STYLE & DRIVE TYPE & ENGINE | REMARKS | G-AP Ref. | PRODUCT | ABS | Technical Specifications A | B | C | H | L | P |
|---|---|---|---|---|---|---|---|---|---|---|---|---|---|---|---|
| **HYUNDAI** | | | | | | | | | | | | | | | |
| **i20** | | | | | | | | | | | | | | | |
| 1.4 (75 kw) | 2008.12-2012.12 | | F | L | Hatchback FWD G4FA | | GDS24304 | Drive Shaft | 48T | 25 | 25 | 52.5 | 93.5 | 656 | |
| 1.6 (85 kw) | 2008.09-2012.12 | 6MT | F | L/R | Hatchback FWD D4FB | | GCO39192 | Outer Joint | 48T | 25 | 24 | 52.6 | 94.5 | 63.5 | M |
| | 2008.09-2012.12 | | F | L | Hatchback FWD D4FB | | GDS39189 | Drive Shaft | 48T | 25 | 27 | 52.6 | 94.5 | 646 | |
| | 2008.09-2012.12 | | F | R | Hatchback FWD D4FB | | GDS39190 | Drive Shaft | 48T | 25 | 27 | 52.6 | 94.5 | 938 | |
| 1.6 (93 kw) | 2008.09-2012.12 | 4AT/5MT | F | L | Hatchback FWD G4FC | | GDS24304 | Drive Shaft | 48T | 25 | 25 | 52.5 | 93.5 | 656 | |
| | 2008.09-2012.12 | 4AT/5MT | F | L/R | Hatchback FWD G4FC | | GCO39181 | Outer Joint | 48T | 25 | 22 | 52.5 | 93.5 | 59 | M |
| | 2008.09-2012.12 | 4AT/5MT | F | L/R | Hatchback FWD G4FC | | GCI39052 | Inner Joint | | 25 | 22 | 41 | 63 | 86 | |
| | 2008.09-2012.12 | AT/MT | F | R | Hatchback FWD G4FC | | GDS39167 | Drive Shaft | 48T | 25 | 25 | 52.5 | 93.5 | 933 | |
| 1.6 (94 kw) | 2009.01-2012.12 | 6MT | F | L | Hatchback FWD D4FB | | GDS39189 | Drive Shaft | 48T | 25 | 27 | 52.6 | 94.5 | 646 | |
| | 2009.01-2012.12 | 6MT | F | R | Hatchback FWD D4FB | | GDS39190 | Drive Shaft | 48T | 25 | 27 | 52.6 | 94.5 | 938 | |
| | 2009.01-2012.12 | 6MT | F | L/R | Hatchback FWD D4FB | | GCO39192 | Outer Joint | 48T | 25 | 24 | 52.6 | 94.5 | 63.5 | M |
| **i20 Active** | | | | | | | | | | | | | | | |
| 1.0 (74 kw) | 2015.09-2018.06 | 5MT | F | L | Hatchback FWD G3LC | | GDS58116 | Drive Shaft | 48T | 25 | 25 | 52.5 | 92.5 | 699 | |
| | 2015.09-2018.06 | 5MT | F | R | Hatchback FWD G3LC | | GDS58117 | Drive Shaft | 48T | 25 | 25 | 52.5 | 92.5 | 897 | |
| | 2015.09-2018.06 | 5MT | F | L/R | Hatchback FWD G3LC | | GCO39261 | Outer Joint | 48T | 25 | 22 | 52.5 | 92.5 | 54.5 | M |
| | 2015.09-2018.06 | 5MT | F | L | Hatchback FWD G3LC | | GCI39052 | Inner Joint | | 25 | 22 | 41 | 63 | 86 | |
| 1.0 (88 kw) | 2015.09-2018.06 | 6MT | F | L | Hatchback FWD G3LC | | GCI39052 | Inner Joint | | 25 | 22 | 41 | 63 | 86 | |
| 1.4 (66 kw) | 2015.09-2018.06 | 6MT | F | L | Hatchback FWD D4FC | | GDS82979 | Drive Shaft | | 25 | 27 | 52.6 | 92.5 | 650 | |
| | 2015.09-2018.06 | 6MT | F | R | Hatchback FWD D4FC | | GDS82980 | Drive Shaft | | 25 | 27 | 52.6 | 92.5 | 926 | |
| | 2015.09-2018.06 | 6MT | F | L/R | Hatchback FWD D4FC | | GCO82252 | Outer Joint | | 25 | 23 | 52.6 | 92.5 | 58 | M |
| | 2015.09-2018.06 | 6MT | F | L/R | Hatchback FWD D4FC | | GCI24115 | Inner Joint | | 27 | 23 | 41 | 62.5 | 88 | |
| | 2015.09-2018.06 | MT | F | L | Hatchback FWD D4FC | | GDS83651 | Drive Shaft | 48T | 25 | 27 | 52.6 | 92.5 | 660 | |
| | 2015.09-2018.06 | MT | F | R | Hatchback FWD D4FC | | GDS83641 | Drive Shaft | 48T | 25 | 27 | 52.6 | 92.5 | 937 | |
| | 2015.09-2018.06 | MT | F | L/R | Hatchback FWD D4FC | | GCO82448 | Outer Joint | 48T | 25 | 23 | 52.6 | 92.5 | 58 | M |
| 1.4 (74 kw) | 2015.09-2018.06 | 4AT | F | L | Hatchback FWD G4LC | | GDS84076 | Drive Shaft | 48T | 25 | 25 | 52.5 | 94.5 | 677 | |
| | 2015.09-2018.06 | 4AT | F | R | Hatchback FWD G4LC | | GDS84075 | Drive Shaft | 48T | 25 | 25 | 52.5 | 94.5 | 921 | |
| | 2015.09-2018.06 | 4AT | F | L/R | Hatchback FWD G4LC | | GCO82577 | Outer Joint | 48T | 25 | 22 | 52.5 | 94.5 | 54 | M |
| | 2015.09-2018.06 | 4AT/6MT | F | L/R | Hatchback FWD G4LC | | GCI39052 | Inner Joint | | 25 | 22 | 41 | 63 | 86 | |
| | 2015.09-2018.06 | 6MT | F | L | Hatchback FWD G4LC | | GDS24560 | Drive Shaft | 48T | 25 | 25 | 52.5 | 92.5 | 680 | |
| | 2015.09-2018.06 | 6MT | F | R | Hatchback FWD G4LC | | GDS24540 | Drive Shaft | 48T | 25 | 25 | 52.5 | 92.5 | 921 | |
| | 2015.09-2018.06 | 6MT | F | L/R | Hatchback FWD G4LC | | GCO39261 | Outer Joint | 48T | 25 | 22 | 52.5 | 92.5 | 54.5 | M |
| **i30** | | | | | | | | | | | | | | | |
| 1.0 (74 kw) | 2024.05- | 7DCT | F | L | Estate FWD G3LE | | GDS58130 | Drive Shaft | | 27 | 27 | 60 | 95 | 690 | |
| | 2024.05- | 7DCT | F | R | Estate FWD G3LE | | GDS58131 | Drive Shaft | | 27 | 27 | 60 | 95 | 939 | |
| | 2024.05- | 7DCT | F | L/R | Estate FWD G3LE | | GCO83450 | Outer Joint | | 27 | 23 | 60 | 95 | 58 | M |
| | 2024.05- | 7DCT | F | L/R | Estate FWD G3LE | | GCI82352 | Inner Joint | | 27 | 31 | 30 | 67.5 | 81 | |
| | 2024.05- | 7DCT | F | L | Hatchback FWD G3LE | | GDS58130 | Drive Shaft | | 27 | 27 | 60 | 95 | 690 | |
| | 2024.05- | 7DCT | F | R | Hatchback FWD G3LE | | GDS58131 | Drive Shaft | | 27 | 27 | 60 | 95 | 939 | |
| | 2024.05- | 7DCT | F | L/R | Hatchback FWD G3LE | | GCO83450 | Outer Joint | | 27 | 23 | 60 | 95 | 58 | M |
| | 2024.05- | 7DCT | F | L/R | Hatchback FWD G3LE | | GCI82352 | Inner Joint | | 27 | 31 | 30 | 67.5 | 81 | |
| | 2024.08- | 7DCT | F | L | Hatchback FWD G3LF | | GDS58130 | Drive Shaft | | 27 | 27 | 60 | 95 | 690 | |
| | 2024.08- | 7DCT | F | R | Hatchback FWD G3LF | | GDS58131 | Drive Shaft | | 27 | 27 | 60 | 95 | 939 | |
| | 2024.08- | 7DCT | F | L/R | Hatchback FWD G3LF | | GCO83450 | Outer Joint | | 27 | 23 | 60 | 95 | 58 | M |
| | 2024.08- | 7DCT | F | L/R | Hatchback FWD G3LF | | GCI82352 | Inner Joint | | 27 | 31 | 30 | 67.5 | 81 | |
| 1.0 (88 kw) | 2016.11- | 6MT | F | L | Hatchback FWD G3LC;G3LE | | GDS84378 | Drive Shaft | | 27 | 25 | 60 | 95 | 723 | |
| | 2016.11- | 6MT | F | R | Hatchback FWD G3LC;G3LE | | GDS84373 | Drive Shaft | | 27 | 25 | 60 | 95 | 939 | |
| | 2016.11- | 6MT | F | L/R | Hatchback FWD G3LC;G3LE | | GCO82724 | Outer Joint | | 27 | 23 | 60 | 95 | 58 | M |
| | 2016.11- | 6MT | F | L/R | Hatchback FWD G3LC;G3LE | | GCI81749 | Inner Joint | | 25 | 31 | 41 | 63 | 90 | |
| | 2016.11- | 7DCT | F | L | Hatchback FWD G3LC;G3LE | | GDS58130 | Drive Shaft | | 27 | 27 | 60 | 95 | 690 | |
| | 2016.11- | 7DCT | F | R | Hatchback FWD G3LC;G3LE | | GDS58131 | Drive Shaft | | 27 | 27 | 60 | 95 | 939 | |
| | 2016.11- | 7DCT | F | L/R | Hatchback FWD G3LC;G3LE | | GCO83450 | Outer Joint | | 27 | 23 | 60 | 95 | 58 | M |
| | 2016.11- | 7DCT | F | L/R | Hatchback FWD G3LC;G3LE | | GCI82352 | Inner Joint | | 27 | 31 | 30 | 67.5 | 81 | |
| | 2016.11- | 6MT | F | L | Hatchback Van FWD G3LC | | GDS84378 | Drive Shaft | | 27 | 25 | 60 | 95 | 723 | |
| | 2016.11- | 6MT | F | R | Hatchback Van FWD G3LC | | GDS84373 | Drive Shaft | | 27 | 25 | 60 | 95 | 939 | |
| | 2016.11- | 6MT | F | L/R | Hatchback Van FWD G3LC | | GCO82724 | Outer Joint | | 27 | 23 | 60 | 95 | 58 | M |
| | 2016.11- | 6MT | F | L/R | Hatchback Van FWD G3LC | | GCI81749 | Inner Joint | | 25 | 31 | 41 | 63 | 90 | |
| | 2017.03- | 6MT | F | L | Estate FWD G3LC;G3LE | | GDS84378 | Drive Shaft | | 27 | 25 | 60 | 95 | 723 | |
| | 2017.03- | 6MT | F | R | Estate FWD G3LC;G3LE | | GDS84373 | Drive Shaft | | 27 | 25 | 60 | 95 | 939 | |
| | 2017.03- | 6MT | F | L/R | Estate FWD G3LC;G3LE | | GCO82724 | Outer Joint | | 27 | 23 | 60 | 95 | 58 | M |
| | 2017.03- | 6MT | F | L/R | Estate FWD G3LC;G3LE | | GCI81749 | Inner Joint | | 25 | 31 | 41 | 63 | 90 | |
| | 2017.03- | 7DCT | F | L | Estate FWD G3LC;G3LE | | GDS58130 | Drive Shaft | | 27 | 27 | 60 | 95 | 690 | |
| | 2017.03- | 7DCT | F | R | Estate FWD G3LC;G3LE | | GDS58131 | Drive Shaft | | 27 | 27 | 60 | 95 | 939 | |
| | 2017.03- | 7DCT | F | L/R | Estate FWD G3LC;G3LE | | GCO83450 | Outer Joint | | 27 | 23 | 60 | 95 | 58 | M |
| | 2017.03- | 7DCT | F | L/R | Estate FWD G3LC;G3LE | | GCI82352 | Inner Joint | | 27 | 31 | 30 | 67.5 | 81 | |
| | 2017.03- | 6MT | F | L | Estate Van FWD G3LC | | GDS84378 | Drive Shaft | | 27 | 25 | 60 | 95 | 723 | |

| | YEAR | TRANSM. | F/R | L/R | BODY STYLE & DRIVE TYPE & ENGINE | REMARKS | G-AP Ref. | PRODUCT | ABS | Technical Specifications | | | | | |
|---|---|---|---|---|---|---|---|---|---|---|---|---|---|---|---|
| | | | | | | | | | | A | B | C | H | L | P |
| **HYUNDAI** **i30** | | | | | | | | | | | | | | | |
| 1.0 (88 kw) | 2017.03- | 6MT | F | R | Estate Van FWD G3LC | | GDS84373 | Drive Shaft | | 27 | 25 | 60 | 95 | 939 | |
| | 2017.03- | 6MT | F | L/R | Estate Van FWD G3LC | | GCO82724 | Outer Joint | | 27 | 23 | 60 | 95 | 58 | M |
| | 2017.03- | 6MT | F | L/R | Estate Van FWD G3LC | | GCI81749 | Inner Joint | | 25 | 31 | 41 | 63 | 90 | |
| | 2020.03- | 6MT | F | L | Estate FWD G3LF | | GDS84378 | Drive Shaft | | 27 | 25 | 60 | 95 | 723 | |
| | 2020.03- | 6MT | F | R | Estate FWD G3LF | | GDS84373 | Drive Shaft | | 27 | 25 | 60 | 95 | 939 | |
| | 2020.03- | 6MT | F | L/R | Estate FWD G3LF | | GCO82724 | Outer Joint | | 27 | 23 | 60 | 95 | 58 | M |
| | 2020.03- | 6MT | F | L/R | Estate FWD G3LF | | GCI81749 | Inner Joint | | 25 | 31 | 41 | 63 | 90 | |
| | 2020.03- | 7DCT | F | L | Estate FWD G3LF | | GDS58130 | Drive Shaft | | 27 | 27 | 60 | 95 | 690 | |
| | 2020.03- | 7DCT | F | R | Estate FWD G3LF | | GDS58131 | Drive Shaft | | 27 | 27 | 60 | 95 | 939 | |
| | 2020.03- | 7DCT | F | L/R | Estate FWD G3LF | | GCO83450 | Outer Joint | | 27 | 23 | 60 | 95 | 58 | M |
| | 2020.03- | 7DCT | F | L/R | Estate FWD G3LF | | GCI82352 | Inner Joint | | 27 | 31 | 30 | 67.5 | 81 | |
| | 2020.03- | 6MT | F | L | Hatchback FWD G3LF | | GDS84378 | Drive Shaft | | 27 | 25 | 60 | 95 | 723 | |
| | 2020.03- | 6MT | F | R | Hatchback FWD G3LF | | GDS84373 | Drive Shaft | | 27 | 25 | 60 | 95 | 939 | |
| | 2020.03- | 6MT | F | L/R | Hatchback FWD G3LF | | GCO82724 | Outer Joint | | 27 | 23 | 60 | 95 | 58 | M |
| | 2020.03- | 6MT | F | L/R | Hatchback FWD G3LF | | GCI81749 | Inner Joint | | 25 | 31 | 41 | 63 | 90 | |
| | 2020.03- | 7DCT | F | L | Hatchback FWD G3LF | | GDS58130 | Drive Shaft | | 27 | 27 | 60 | 95 | 690 | |
| | 2020.03- | 7DCT | F | R | Hatchback FWD G3LF | | GDS58131 | Drive Shaft | | 27 | 27 | 60 | 95 | 939 | |
| | 2020.03- | 7DCT | F | L/R | Hatchback FWD G3LF | | GCO83450 | Outer Joint | | 27 | 23 | 60 | 95 | 58 | M |
| | 2020.03- | 7DCT | F | L/R | Hatchback FWD G3LF | | GCI82352 | Inner Joint | | 27 | 31 | 30 | 67.5 | 81 | |
| 1.4 (66 kw) | 2011.12-2016.12 | 6MT | F | L | Hatchback FWD D4FC | Date to:2014.12 | GDS24519 | Drive Shaft | 46T | 27 | 27 | 60 | 95 | 678 | |
| | 2011.12-2016.12 | 6MT | F | R | Hatchback FWD D4FC | Date to:2014.12 | GDS24521 | Drive Shaft | 46T | 27 | 27 | 60 | 95 | 969 | |
| | 2011.12-2016.12 | 6MT | F | L | Hatchback FWD D4FC | Date to:2014.12 | GCI27044 | Inner Joint | | 27 | 24 | 41 | 62.5 | 88.5 | |
| | 2012.06-2017.05 | 6MT | F | L | Estate FWD D4FC | Date to:2014.12 | GDS24519 | Drive Shaft | 46T | 27 | 27 | 60 | 95 | 678 | |
| | 2012.06-2017.05 | 6MT | F | R | Estate FWD D4FC | Date to:2014.12 | GDS24521 | Drive Shaft | 46T | 27 | 27 | 60 | 95 | 969 | |
| | 2012.06-2017.05 | 6MT | F | L | Estate FWD D4FC | Date to:2014.12 | GCI27044 | Inner Joint | | 27 | 24 | 41 | 62.5 | 88.5 | |
| | 2013.05-2017.05 | 6MT | F | L | Coupe FWD D4FC | Date to:2014.12 | GDS24519 | Drive Shaft | 46T | 27 | 27 | 60 | 95 | 678 | |
| | 2013.05-2017.05 | 6MT | F | R | Coupe FWD D4FC | Date to:2014.12 | GDS24521 | Drive Shaft | 46T | 27 | 27 | 60 | 95 | 969 | |
| | 2013.05-2017.05 | | F | L | Coupe FWD D4FC | | GCI27044 | Inner Joint | | 27 | 24 | 41 | 62.5 | 88.5 | |
| 1.4 (73 kw) | 2011.12-2015.12 | 6MT | F | L | Hatchback FWD G4FA | | GDS24548 | Drive Shaft | 46T | 27 | 25 | 60 | 94.5 | 687 | |
| | 2011.12-2015.12 | 6MT | F | R | Hatchback FWD G4FA | | GDS24398 | Drive Shaft | 46T | 27 | 25 | 60 | 94.5 | 965 | |
| | 2011.12-2015.12 | 6MT | F | L/R | Hatchback FWD G4FA | | GCO24132 | Outer Joint | 46T | 27 | 22 | 60 | 94.5 | 54.5 | M |
| | 2011.12-2015.12 | 6MT | F | L/R | Hatchback FWD G4FA | | GCI39052 | Inner Joint | | 25 | 22 | 41 | 63 | 86 | |
| | 2012.06-2015.12 | 6MT | F | L | Estate FWD G4FA | | GDS24548 | Drive Shaft | 46T | 27 | 25 | 60 | 94.5 | 687 | |
| | 2012.06-2015.12 | 6MT | F | R | Estate FWD G4FA | | GDS24398 | Drive Shaft | 46T | 27 | 25 | 60 | 94.5 | 965 | |
| | 2012.06-2015.12 | 6MT | F | L/R | Estate FWD G4FA | | GCO24132 | Outer Joint | 46T | 27 | 22 | 60 | 94.5 | 54.5 | M |
| | 2012.06-2015.12 | 6MT | F | L | Estate FWD G4FA | | GCI39052 | Inner Joint | | 25 | 22 | 41 | 63 | 86 | |
| | 2013.01-2014.12 | MT | F | L | Hatchback FWD G4FA | | GDS24548 | Drive Shaft | 46T | 27 | 25 | 60 | 94.5 | 687 | |
| | 2013.01-2014.12 | MT | F | R | Hatchback FWD G4FA | | GDS24398 | Drive Shaft | 46T | 27 | 25 | 60 | 94.5 | 965 | |
| | 2013.01-2014.12 | MT | F | L | Hatchback FWD G4FA | | GCO24132 | Outer Joint | 46T | 27 | 22 | 60 | 94.5 | 54.5 | M |
| | 2013.01-2014.12 | MT | F | L | Hatchback FWD G4FA | | GCI39052 | Inner Joint | | 25 | 22 | 41 | 63 | 86 | |
| | 2013.05-2014.12 | 6MT | F | L | Coupe FWD G4FA | | GDS24548 | Drive Shaft | 46T | 27 | 25 | 60 | 94.5 | 687 | |
| | 2013.05-2014.12 | 6MT | F | R | Coupe FWD G4FA | | GDS24398 | Drive Shaft | 46T | 27 | 25 | 60 | 94.5 | 965 | |
| | 2013.05-2014.12 | 6MT | F | L/R | Coupe FWD G4FA | | GCO24132 | Outer Joint | 46T | 27 | 22 | 60 | 94.5 | 54.5 | M |
| | 2013.05-2014.12 | 6MT | F | L | Coupe FWD G4FA | | GCI39052 | Inner Joint | | 25 | 22 | 41 | 63 | 86 | |
| 1.4 (74 kw) | 2014.01-2017.05 | MT | F | L | Estate FWD G4LC | | GDS24548 | Drive Shaft | 46T | 27 | 25 | 60 | 94.5 | 687 | |
| | 2014.01-2017.05 | MT | F | L/R | Estate FWD G4LC | | GCO24132 | Outer Joint | 46T | 27 | 22 | 60 | 94.5 | 54.5 | M |
| | 2014.01-2017.05 | MT | F | L/R | Estate FWD G4LC | | GCI39052 | Inner Joint | | 25 | 22 | 41 | 63 | 86 | |
| | 2014.01-2017.05 | | F | R | Estate FWD G4LC | | GDS24398 | Drive Shaft | 46T | 27 | 25 | 60 | 94.5 | 965 | |
| | 2014.12- | 6MT | F | L | Coupe FWD G4LC | | GDS24548 | Drive Shaft | 46T | 27 | 25 | 60 | 94.5 | 687 | |
| | 2014.12- | 6MT | F | R | Coupe FWD G4LC | | GDS24398 | Drive Shaft | 46T | 27 | 25 | 60 | 94.5 | 965 | |
| | 2014.12- | 6MT | F | L/R | Coupe FWD G4LC | | GCO24132 | Outer Joint | 46T | 27 | 22 | 60 | 94.5 | 54.5 | M |
| | 2014.12- | 6MT | F | L | Coupe FWD G4LC | | GCI39052 | Inner Joint | | 25 | 22 | 41 | 63 | 86 | |
| | 2014.12-2016.12 | 6MT | F | L | Hatchback FWD G4LC | | GDS24548 | Drive Shaft | 46T | 27 | 25 | 60 | 94.5 | 687 | |
| | 2014.12-2016.12 | 6MT | F | R | Hatchback FWD G4LC | | GDS24398 | Drive Shaft | 46T | 27 | 25 | 60 | 94.5 | 965 | |
| | 2014.12-2016.12 | 6MT | F | L/R | Hatchback FWD G4LC | | GCO24132 | Outer Joint | 46T | 27 | 22 | 60 | 94.5 | 54.5 | M |
| | 2014.12-2016.12 | 6MT | F | L | Hatchback FWD G4LC | | GCI39052 | Inner Joint | | 25 | 22 | 41 | 63 | 86 | |
| | 2015.05-2017.05 | MT | F | L | Estate Van FWD G4LC | | GDS24548 | Drive Shaft | 46T | 27 | 25 | 60 | 94.5 | 687 | |
| | 2015.05-2017.05 | MT | F | L | Estate Van FWD G4LC | | GCO24132 | Outer Joint | 46T | 27 | 22 | 60 | 94.5 | 54.5 | M |
| | 2015.05-2017.05 | MT | F | L | Estate Van FWD G4LC | | GCI39052 | Inner Joint | | 25 | 22 | 41 | 63 | 86 | |
| | 2015.05-2017.05 | | F | R | Estate Van FWD G4LC | | GDS24398 | Drive Shaft | 46T | 27 | 25 | 60 | 94.5 | 965 | |
| | 2015.05-2017.05 | MT | F | L | Hatchback Van FWD G4LC | | GDS24548 | Drive Shaft | 46T | 27 | 25 | 60 | 94.5 | 687 | |
| | 2015.05-2017.05 | MT | F | L | Hatchback Van FWD G4LC | | GCO24132 | Outer Joint | 46T | 27 | 22 | 60 | 94.5 | 54.5 | M |
| | 2015.05-2017.05 | MT | F | L | Hatchback Van FWD G4LC | | GCI39052 | Inner Joint | | 25 | 22 | 41 | 63 | 86 | |
| | 2015.05-2017.05 | | F | R | Hatchback Van FWD G4LC | | GDS24398 | Drive Shaft | 46T | 27 | 25 | 60 | 94.5 | 965 | |
| | 2016.11-2020.12 | 6MT | F | L | Hatchback FWD G4LC | | GDS84165 | Drive Shaft | | 27 | 25 | 60 | 94.5 | 703 | |

| | YEAR | TRANSM. | F/R | L/R | BODY STYLE & DRIVE TYPE & ENGINE | REMARKS | G-AP Ref. | PRODUCT | ABS | Technical Specifications A | B | C | H | L | P |
|---|---|---|---|---|---|---|---|---|---|---|---|---|---|---|---|
| **HYUNDAI** **i30** | | | | | | | | | | | | | | | |
| 1.4 (74 kw) | 2016.11-2020.12 | 6MT | F | R | Hatchback FWD G4LC | | GDS84164 | Drive Shaft | | 27 | 25 | 60 | 94.5 | 952 | |
| | 2016.11-2020.12 | 6MT | F | L/R | Hatchback FWD G4LC | | GCO24267 | Outer Joint | | 27 | 22 | 60 | 94.5 | 54.5 | M |
| | 2016.11-2020.12 | 6MT | F | L/R | Hatchback FWD G4LC | | GCI82265 | Inner Joint | | 25 | 30 | 41 | 63 | 88 | |
| | 2016.11-2020.12 | MT | F | | Hatchback FWD G4LC | Date to:2017.05 | GCO24132 | Outer Joint | 46T | 27 | 22 | 60 | 94.5 | 54.5 | M |
| | 2016.11-2020.12 | MT | F | L | Hatchback FWD G4LC | Date to:2017.05 | GCI39052 | Inner Joint | | 25 | 22 | 41 | 63 | 86 | |
| | 2017.03-2020.12 | 6MT | F | L | Estate FWD G4LC | | GDS84165 | Drive Shaft | | 27 | 25 | 60 | 94.5 | 703 | |
| | 2017.03-2020.12 | 6MT | F | R | Estate FWD G4LC | | GDS84164 | Drive Shaft | | 27 | 25 | 60 | 94.5 | 952 | |
| | 2017.03-2020.12 | 6MT | F | L/R | Estate FWD G4LC | | GCO24267 | Outer Joint | | 27 | 22 | 60 | 94.5 | 54.5 | M |
| | 2017.03-2020.12 | 6MT | F | L/R | Estate FWD G4LC | | GCI82265 | Inner Joint | | 25 | 30 | 41 | 63 | 88 | |
| 1.4 (77 kw) | 2007.10-2011.11 | 5MT | F | L | Hatchback FWD G4FA | | GDS24283 | Drive Shaft | 46T | 27 | 25 | 60 | 94.5 | 674 | |
| | 2007.10-2011.11 | 5MT | F | R | Hatchback FWD G4FA | | GDS24282 | Drive Shaft | 46T | 27 | 25 | 60 | 94.5 | 941 | |
| | 2007.10-2011.11 | 5MT | F | L/R | Hatchback FWD G4FA | | GCO24095 | Outer Joint | 46T | 27 | 22 | 60 | 94.5 | 58.5 | M |
| | 2007.10-2011.11 | 5MT | F | L | Hatchback FWD G4FA | | GCI27019 | Inner Joint | | 25 | 22 | 41 | 62 | 93.5 | |
| | 2007.10-2011.11 | 5MT | F | R | Hatchback FWD G4FA | | GCI39052 | Inner Joint | | 25 | 22 | 41 | 63 | 86 | |
| | 2007.10-2011.11 | MT | F | | Hatchback FWD G4FA | | GCO24132 | Outer Joint | 46T | 27 | 22 | 60 | 94.5 | 54.5 | M |
| | 2007.10-2011.11 | | F | | Hatchback FWD G4FA | | GCO24077 | Outer Joint | 46T | 27 | 22 | 60 | 94.5 | 54.5 | M |
| 1.4 (80 kw) | 2007.10-2011.11 | 5MT | F | L | Hatchback FWD G4FA | | GDS24283 | Drive Shaft | 46T | 27 | 25 | 60 | 94.5 | 674 | |
| | 2007.10-2011.11 | 5MT | F | R | Hatchback FWD G4FA | | GDS24282 | Drive Shaft | 46T | 27 | 25 | 60 | 94.5 | 941 | |
| | 2007.10-2011.11 | 5MT | F | L/R | Hatchback FWD G4FA | | GCO24077 | Outer Joint | 46T | 27 | 22 | 60 | 94.5 | 54.5 | M |
| | 2007.10-2011.11 | 5MT | F | L/R | Hatchback FWD G4FA | | GCO24095 | Outer Joint | 46T | 27 | 22 | 60 | 94.5 | 58.5 | M |
| | 2007.10-2011.11 | 5MT | F | L | Hatchback FWD G4FA | | GCI27019 | Inner Joint | | 25 | 22 | 41 | 62 | 93.5 | |
| | 2007.10-2011.11 | 5MT | F | R | Hatchback FWD G4FA | | GCI39052 | Inner Joint | | 25 | 22 | 41 | 63 | 86 | |
| | 2007.10-2011.11 | AT | F | L/R | Hatchback FWD G4FA | Date from:2007.05,Date to:2012.03 | GCO24132 | Outer Joint | 46T | 27 | 22 | 60 | 94.5 | 54.5 | M |
| | 2009.01-2011.11 | 5MT | F | L | Hatchback FWD G4FA | | GCI27019 | Inner Joint | | 25 | 22 | 41 | 62 | 93.5 | |
| | 2009.01-2011.11 | 5MT | F | R | Hatchback FWD G4FA | | GCI39052 | Inner Joint | | 25 | 22 | 41 | 63 | 86 | |
| | 2009.01-2011.11 | | F | L | Hatchback FWD G4FA | | GDS24283 | Drive Shaft | 46T | 27 | 25 | 60 | 94.5 | 674 | |
| | 2009.01-2011.11 | | F | R | Hatchback FWD G4FA | | GDS24282 | Drive Shaft | 46T | 27 | 25 | 60 | 94.5 | 941 | |
| | 2009.01-2011.11 | | F | | Hatchback FWD G4FA | | GCO24077 | Outer Joint | 46T | 27 | 22 | 60 | 94.5 | 54.5 | M |
| 1.4 (103 kw) | 2016.11-2020.12 | 6MT | F | L | Hatchback FWD G4LD | | GDS84377 | Drive Shaft | | 27 | 27 | 60 | 95 | 693 | |
| | 2016.11-2020.12 | 6MT | F | R | Hatchback FWD G4LD | | GDS84376 | Drive Shaft | | 27 | 27 | 60 | 95 | 964 | |
| | 2016.11-2020.12 | 6MT | F | L/R | Hatchback FWD G4LD | | GCI82628 | Inner Joint | | 27 | 31 | 41 | 62 | 86 | |
| | 2016.11-2020.12 | 6MT/7DCT | F | L/R | Hatchback FWD G4LD | | GCO82724 | Outer Joint | | 27 | 23 | 60 | 95 | 58 | M |
| | 2016.11-2020.12 | 7DCT | F | L | Hatchback FWD G4LD | | GDS84407 | Drive Shaft | | 27 | 28 | 60 | 95 | 653 | |
| | 2016.11-2020.12 | 7DCT | F | R | Hatchback FWD G4LD | | GDS84406 | Drive Shaft | | 27 | 28 | 60 | 95 | 996 | |
| | 2016.11-2020.12 | 7DCT | F | L/R | Hatchback FWD G4LD | | GCI82746 | Inner Joint | | 28 | 31 | 41 | 61.5 | 95 | |
| | 2016.11-2020.12 | 7AT | F | L | Hatchback Van FWD G4LD | | GDS84407 | Drive Shaft | | 27 | 28 | 60 | 95 | 653 | |
| | 2016.11-2020.12 | 7AT | F | R | Hatchback Van FWD G4LD | | GDS84406 | Drive Shaft | | 27 | 28 | 60 | 95 | 996 | |
| | 2016.11-2020.12 | 7AT | F | L/R | Hatchback Van FWD G4LD | | GCO82724 | Outer Joint | | 27 | 23 | 60 | 95 | 58 | M |
| | 2016.11-2020.12 | 7AT | F | L/R | Hatchback Van FWD G4LD | | GCI82746 | Inner Joint | | 28 | 31 | 41 | 61.5 | 95 | |
| | 2017.03-2020.12 | 6MT | F | L | Estate FWD G4LD | | GDS84377 | Drive Shaft | | 27 | 27 | 60 | 95 | 693 | |
| | 2017.03-2020.12 | 6MT | F | R | Estate FWD G4LD | | GDS84376 | Drive Shaft | | 27 | 27 | 60 | 95 | 964 | |
| | 2017.03-2020.12 | 6MT | F | L/R | Estate FWD G4LD | | GCI82628 | Inner Joint | | 27 | 31 | 41 | 62 | 86 | |
| | 2017.03-2020.12 | 6MT/7DCT | F | L/R | Estate FWD G4LD | | GCO82724 | Outer Joint | | 27 | 23 | 60 | 95 | 58 | M |
| | 2017.03-2020.12 | 7DCT | F | L | Estate FWD G4LD | | GDS84407 | Drive Shaft | | 27 | 28 | 60 | 95 | 653 | |
| | 2017.03-2020.12 | 7DCT | F | R | Estate FWD G4LD | | GDS84406 | Drive Shaft | | 27 | 28 | 60 | 95 | 996 | |
| | 2017.03-2020.12 | 7DCT | F | L/R | Estate FWD G4LD | | GCI82746 | Inner Joint | | 28 | 31 | 41 | 61.5 | 95 | |
| | 2017.03-2020.12 | 6MT | F | L | Estate Van FWD G4LD | | GDS84377 | Drive Shaft | | 27 | 27 | 60 | 95 | 693 | |
| | 2017.03-2020.12 | 6MT | F | R | Estate Van FWD G4LD | | GDS84376 | Drive Shaft | | 27 | 27 | 60 | 95 | 964 | |
| | 2017.03-2020.12 | 6MT | F | L/R | Estate Van FWD G4LD | | GCI82628 | Inner Joint | | 27 | 31 | 41 | 62 | 86 | |
| | 2017.03-2020.12 | 6MT/7DCT | F | L/R | Estate Van FWD G4LD | | GCO82724 | Outer Joint | | 27 | 23 | 60 | 95 | 58 | M |
| | 2017.03-2020.12 | 7DCT | F | L | Estate Van FWD G4LD | | GDS84407 | Drive Shaft | | 27 | 28 | 60 | 95 | 653 | |
| | 2017.03-2020.12 | 7DCT | F | R | Estate Van FWD G4LD | | GDS84406 | Drive Shaft | | 27 | 28 | 60 | 95 | 996 | |
| | 2017.03-2020.12 | 7DCT | F | L/R | Estate Van FWD G4LD | | GCI82746 | Inner Joint | | 28 | 31 | 41 | 61.5 | 95 | |
| 1.5 (71 kw) | 2024.04- | 6MT | F | L | Estate FWD G4LG | | GDS84165 | Drive Shaft | | 27 | 25 | 60 | 94.5 | 703 | |
| | 2024.04- | 6MT | F | R | Estate FWD G4LG | | GDS84164 | Drive Shaft | | 27 | 25 | 60 | 94.5 | 952 | |
| | 2024.04- | 6MT | F | L | Hatchback FWD G4LG | | GDS84165 | Drive Shaft | | 27 | 25 | 60 | 94.5 | 703 | |
| | 2024.04- | 6MT | F | R | Hatchback FWD G4LG | | GDS84164 | Drive Shaft | | 27 | 25 | 60 | 94.5 | 952 | |
| 1.5 (81 kw) | 2020.06- | 6MT | F | L | Estate FWD G4LG | | GDS84165 | Drive Shaft | | 27 | 25 | 60 | 94.5 | 703 | |
| | 2020.06- | 6MT | F | R | Estate FWD G4LG | | GDS84164 | Drive Shaft | | 27 | 25 | 60 | 94.5 | 952 | |
| | 2020.06- | 6MT | F | L/R | Estate FWD G4LG | | GCO24267 | Outer Joint | | 27 | 22 | 60 | 94.5 | 54.5 | M |
| | 2020.06- | 6MT | F | L/R | Estate FWD G4LG | | GCI82265 | Inner Joint | | 25 | 30 | 41 | 63 | 88 | |
| | 2020.06- | 6MT | F | L | Hatchback FWD G4LG | | GDS84165 | Drive Shaft | | 27 | 25 | 60 | 94.5 | 703 | |
| | 2020.06- | 6MT | F | R | Hatchback FWD G4LG | | GDS84164 | Drive Shaft | | 27 | 25 | 60 | 94.5 | 952 | |
| | 2020.06- | 6MT | F | L/R | Hatchback FWD G4LG | | GCO24267 | Outer Joint | | 27 | 22 | 60 | 94.5 | 54.5 | M |
| | 2020.06- | 6MT | F | L/R | Hatchback FWD G4LG | | GCI82265 | Inner Joint | | 25 | 30 | 41 | 63 | 88 | |

| | YEAR | TRANSM. | F/R | L/R | BODY STYLE & DRIVE TYPE & ENGINE | REMARKS | G-AP Ref. | PRODUCT | ABS | Technical Specifications A | B | C | H | L | P |
|---|---|---|---|---|---|---|---|---|---|---|---|---|---|---|---|
| **HYUNDAI** **i30** | | | | | | | | | | | | | | | |
| 1.5 (103 kw) | 2024.05- | 6MT | F | L | Estate FWD G4LK | | GDS84377 | Drive Shaft | | 27 | 27 | 60 | 95 | 693 | |
| | 2024.05- | 6MT | F | R | Estate FWD G4LK | | GDS84376 | Drive Shaft | | 27 | 27 | 60 | 95 | 964 | |
| | 2024.05- | 7DCT | F | L | Estate FWD G4LK | | GDS56834 | Drive Shaft | | 27 | 28 | 60 | 95 | 645 | |
| | 2024.05- | 7DCT | F | R | Estate FWD G4LK | | GDS56835 | Drive Shaft | | 27 | 28 | 60 | 95 | 985 | |
| | 2024.05- | 7DCT | F | L/R | Estate FWD G4LK | | GCI83516 | Inner Joint | | 28 | 31 | 33 | 67.5 | 84.5 | |
| | 2024.05- | 6MT | F | L | Hatchback FWD G4LK | | GDS84377 | Drive Shaft | | 27 | 27 | 60 | 95 | 693 | |
| | 2024.05- | 6MT | F | R | Hatchback FWD G4LK | | GDS84376 | Drive Shaft | | 27 | 27 | 60 | 95 | 964 | |
| | 2024.05- | 7DCT | F | L | Hatchback FWD G4LK | | GDS56834 | Drive Shaft | | 27 | 28 | 60 | 95 | 645 | |
| | 2024.05- | 7DCT | F | R | Hatchback FWD G4LK | | GDS56835 | Drive Shaft | | 27 | 28 | 60 | 95 | 985 | |
| | 2024.05- | 7DCT | F | R | Hatchback FWD G4LK | | GCI83516 | Inner Joint | | 28 | 31 | 33 | 67.5 | 84.5 | |
| | 2024.05- | 7DCT | F | L/R | Hatchback FWD G4LK | | GCI83516 | Inner Joint | | 28 | 31 | 33 | 67.5 | 84.5 | |
| 1.5 (118 kw) | 2020.03- | 6MT | F | L | Estate FWD G4LK | | GDS84377 | Drive Shaft | | 27 | 27 | 60 | 95 | 693 | |
| | 2020.03- | 6MT | F | R | Estate FWD G4LK | | GDS84376 | Drive Shaft | | 27 | 27 | 60 | 95 | 964 | |
| | 2020.03- | 6MT | F | L/R | Estate FWD G4LK | | GCO82724 | Outer Joint | | 27 | 23 | 60 | 95 | 58 | M |
| | 2020.03- | 6MT | F | L/R | Estate FWD G4LK | | GCI82628 | Inner Joint | | 27 | 31 | 41 | 62 | 86 | |
| | 2020.03- | 7DCT | F | L | Estate FWD G4LK | | GDS56834 | Drive Shaft | | 27 | 28 | 60 | 95 | 645 | |
| | 2020.03- | 7DCT | F | R | Estate FWD G4LK | | GDS56835 | Drive Shaft | | 27 | 28 | 60 | 95 | 985 | |
| | 2020.03- | 7DCT | F | L/R | Estate FWD G4LK | | GCO83450 | Outer Joint | | 27 | 23 | 60 | 95 | 58 | M |
| | 2020.03- | 7DCT | F | L/R | Estate FWD G4LK | | GCI83516 | Inner Joint | | 28 | 31 | 33 | 67.5 | 84.5 | |
| | 2020.03- | 6MT | F | L | Hatchback FWD G4LK | | GDS84377 | Drive Shaft | | 27 | 27 | 60 | 95 | 693 | |
| | 2020.03- | 6MT | F | R | Hatchback FWD G4LK | | GDS84376 | Drive Shaft | | 27 | 27 | 60 | 95 | 964 | |
| | 2020.03- | 6MT | F | L/R | Hatchback FWD G4LK | | GCO82724 | Outer Joint | | 27 | 23 | 60 | 95 | 58 | M |
| | 2020.03- | 6MT | F | L/R | Hatchback FWD G4LK | | GCI82628 | Inner Joint | | 27 | 31 | 41 | 62 | 86 | |
| | 2020.03- | 7DCT | F | L | Hatchback FWD G4LK | | GDS56834 | Drive Shaft | | 27 | 28 | 60 | 95 | 645 | |
| | 2020.03- | 7DCT | F | R | Hatchback FWD G4LK | | GDS56835 | Drive Shaft | | 27 | 28 | 60 | 95 | 985 | |
| | 2020.03- | 7DCT | F | L/R | Hatchback FWD G4LK | | GCO83450 | Outer Joint | | 27 | 23 | 60 | 95 | 58 | M |
| | 2020.03- | 7DCT | F | L/R | Hatchback FWD G4LK | | GCI83516 | Inner Joint | | 28 | 31 | 33 | 67.5 | 84.5 | |
| 1.6 (66 kw) | 2007.10-2011.11 | 4AT | F | L | Hatchback FWD D4FB | | GCI24097 | Inner Joint | | 27 | 22 | 41 | 62.5 | 94 | |
| | 2007.10-2011.11 | 4AT | F | R | Hatchback FWD D4FB | | GCI24061 | Inner Joint | | 27 | 22 | 41 | 62 | 86 | |
| | 2007.10-2011.11 | 5MT | F | L/R | Hatchback FWD D4FB | | GCO24152 | Outer Joint | 46T | 27 | 26 | 60 | 94 | 67 | M |
| | 2007.10-2011.11 | 5MT/6MT | F | R | Hatchback FWD D4FB | | GCO24126 | Outer Joint | 46T | 27 | 25 | 60 | 95 | 63 | M |
| | 2007.10-2011.11 | 5MT/6MT | F | L/R | Hatchback FWD D4FB | | GCO24339 | Outer Joint | 46T | 27 | 25 | 60 | 95 | 64 | M |
| | 2007.10-2011.11 | 6MT | F | L/R | Hatchback FWD D4FB | | GCI24098 | Inner Joint | | 27 | 25 | 41 | 61.5 | 100.5 | |
| | 2007.10-2011.11 | AT | F | L | Hatchback FWD D4FB | | GDS24305 | Drive Shaft | 46T | 27 | 27 | 60 | 95 | 675 | |
| | 2007.10-2011.11 | AT | F | L/R | Hatchback FWD D4FB | | GCO27080 | Outer Joint | 46T | 27 | 23 | 60 | 95 | 58 | M |
| | 2007.10-2011.11 | MT | F | L | Hatchback FWD D4FB | | GDS24296 | Drive Shaft | 46T | 27 | 27 | 60 | 95 | 663 | |
| | 2007.10-2011.11 | MT | F | R | Hatchback FWD D4FB | | GDS24566 | Drive Shaft | 46T | 27 | 27 | 60 | 95 | 954 | |
| 1.6 (70 kw) | 2016.11- | 6MT | F | L | Hatchback FWD D4FB | | GDS84405 | Drive Shaft | | 27 | 27 | 60 | 95 | 674 | |
| | 2016.11- | 6MT | F | R | Hatchback FWD D4FB | | GDS84404 | Drive Shaft | | 27 | 27 | 60 | 95 | 983 | |
| | 2016.11- | 6MT | F | L/R | Hatchback FWD D4FB | | GCO81818 | Outer Joint | | 27 | 24 | 60 | 95 | 59 | M |
| | 2016.11- | 6MT | F | L/R | Hatchback FWD D4FB | | GCI82745 | Inner Joint | | 27 | 32 | 41 | 61.5 | 93.5 | |
| | 2018.08- | 6MT | F | L | Hatchback FWD D4FE | | GDS84405 | Drive Shaft | | 27 | 27 | 60 | 95 | 674 | |
| | 2018.08- | 6MT | F | R | Hatchback FWD D4FE | | GDS84404 | Drive Shaft | | 27 | 27 | 60 | 95 | 983 | |
| | 2018.08- | 6MT | F | L/R | Hatchback FWD D4FE | | GCO81818 | Outer Joint | | 27 | 24 | 60 | 95 | 59 | M |
| | 2018.08- | 6MT | F | L/R | Hatchback FWD D4FE | | GCI82745 | Inner Joint | | 27 | 32 | 41 | 61.5 | 93.5 | |
| 1.6 (81 kw) | 2007.10-2011.11 | 4AT | F | L | Hatchback FWD D4FB | | GCI24097 | Inner Joint | | 27 | 22 | 41 | 62.5 | 94 | |
| | 2007.10-2011.11 | | F | | Hatchback FWD D4FB | | GDS24305 | Drive Shaft | 46T | 27 | 27 | 60 | 95 | 675 | |
| | 2007.10-2011.11 | | F | | Hatchback FWD D4FB | | GCO24137 | Outer Joint | 46T | 27 | 24 | 60 | 95 | 59 | M |
| | 2007.10-2011.11 | | F | | Hatchback FWD D4FB | | GCI24061 | Inner Joint | | 27 | 22 | 41 | 62 | 86 | |
| | 2011.12-2016.12 | 6AT | F | L | Hatchback FWD D4FB | | GDS27219 | Drive Shaft | 46T | 27 | 27 | 60 | 95 | 666 | |
| | 2011.12-2016.12 | 6AT | F | R | Hatchback FWD D4FB | | GDS27218 | Drive Shaft | 46T | 27 | 27 | 60 | 95 | 956 | |
| | 2011.12-2016.12 | 6AT | F | L/R | Hatchback FWD D4FB | | GCI24053 | Inner Joint | | 27 | 24 | 30 | 67.5 | 88.5 | |
| | 2011.12-2016.12 | 6MT | F | L | Hatchback FWD D4FB | | GDS24519 | Drive Shaft | 46T | 27 | 27 | 60 | 95 | 678 | |
| | 2011.12-2016.12 | 6MT | F | R | Hatchback FWD D4FB | | GDS24521 | Drive Shaft | 46T | 27 | 27 | 60 | 95 | 969 | |
| | 2011.12-2016.12 | 6MT | F | L/R | Hatchback FWD D4FB | | GCO24137 | Outer Joint | 46T | 27 | 24 | 60 | 95 | 59 | M |
| | 2011.12-2016.12 | 6MT | F | L | Hatchback FWD D4FB | Date to:2014.12 | GCI27044 | Inner Joint | | 27 | 24 | 41 | 62.5 | 88.5 | |
| | 2011.12-2016.12 | 7DCT | F | R | Hatchback FWD D4FB | | GDS82244 | Drive Shaft | 46T | 27 | 28 | 60 | 95 | 1005 | |
| | 2011.12-2016.12 | 7DCT | F | R | Hatchback FWD D4FB | Date from:2014.12 | GCI81692 | Inner Joint | | 28 | 24 | 41 | 61.5 | 95 | |
| | 2011.12-2016.12 | AT | F | | Hatchback FWD D4FB | Date From:2012.10,Date To:2012.10 | GCO24227 | Outer Joint | 46T | 27 | 24 | 60 | 92.5 | 58 | M |
| | 2012.06- | 6AT | F | L | Estate FWD D4FB | | GDS27219 | Drive Shaft | 46T | 27 | 27 | 60 | 95 | 666 | |
| | 2012.06- | 6AT | F | R | Estate FWD D4FB | | GDS27218 | Drive Shaft | 46T | 27 | 27 | 60 | 95 | 956 | |
| | 2012.06- | 6AT | F | L/R | Estate FWD D4FB | | GCI24053 | Inner Joint | | 27 | 24 | 30 | 67.5 | 88.5 | |
| | 2012.06- | 6MT | F | L | Estate FWD D4FB | | GDS24519 | Drive Shaft | 46T | 27 | 27 | 60 | 95 | 678 | |
| | 2012.06- | 6MT | F | R | Estate FWD D4FB | | GDS24521 | Drive Shaft | 46T | 27 | 27 | 60 | 95 | 969 | |
| | 2012.06- | 6MT | F | L/R | Estate FWD D4FB | | GCO24137 | Outer Joint | 46T | 27 | 24 | 60 | 95 | 59 | M |

| | YEAR | TRANSM. | F/R | L/R | BODY STYLE & DRIVE TYPE & ENGINE | REMARKS | G-AP Ref. | PRODUCT | ABS | Technical Specifications A | B | C | H | L | P |
|---|---|---|---|---|---|---|---|---|---|---|---|---|---|---|---|
| **HYUNDAI** **i30** | | | | | | | | | | | | | | | |
| 1.6 (81 kw) | 2012.06- | 6MT | F | L | Estate FWD D4FB | Date to:2014.12 | GCI27044 | Inner Joint | | 27 | 24 | 41 | 62.5 | 88.5 | |
| | 2012.06- | 7DCT | F | R | Estate FWD D4FB | | GDS82244 | Drive Shaft | 46T | 27 | 28 | 60 | 95 | 1005 | |
| | 2012.06- | AT | F | | Estate FWD D4FB | Date From:2012.10,Date To:2012.10 | GCO24227 | Outer Joint | 46T | 27 | 24 | 60 | 92.5 | 58 | M |
| | 2013.05- | 6AT | F | L | Coupe FWD D4FB | | GDS27219 | Drive Shaft | 46T | 27 | 27 | 60 | 95 | 666 | |
| | 2013.05- | 6AT | F | R | Coupe FWD D4FB | | GDS27218 | Drive Shaft | 46T | 27 | 27 | 60 | 95 | 956 | |
| | 2013.05- | 6AT | F | L/R | Coupe FWD D4FB | | GCI24053 | Inner Joint | | 27 | 24 | 30 | 67.5 | 88.5 | |
| | 2013.05- | 6MT | F | L | Coupe FWD D4FB | | GDS24519 | Drive Shaft | 46T | 27 | 27 | 60 | 95 | 678 | |
| | 2013.05- | 6MT | F | R | Coupe FWD D4FB | | GDS24521 | Drive Shaft | 46T | 27 | 27 | 60 | 95 | 969 | |
| | 2013.05- | 6MT | F | L/R | Coupe FWD D4FB | | GCO24137 | Outer Joint | 46T | 27 | 24 | 60 | 95 | 59 | M |
| | 2013.05- | 6MT | F | L | Coupe FWD D4FB | Date to:2014.12 | GCI27044 | Inner Joint | | 27 | 24 | 41 | 62.5 | 88.5 | |
| | 2013.05- | 7DCT | F | R | Coupe FWD D4FB | | GDS82244 | Drive Shaft | 46T | 27 | 28 | 60 | 95 | 1005 | |
| | 2016.11- | 6MT | F | L | Hatchback FWD D4FB | | GDS84405 | Drive Shaft | | 27 | 27 | 60 | 95 | 674 | |
| | 2016.11- | 6MT | F | R | Hatchback FWD D4FB | | GDS84404 | Drive Shaft | | 27 | 27 | 60 | 95 | 983 | |
| | 2016.11- | 6MT | F | L/R | Hatchback FWD D4FB | | GCI82745 | Inner Joint | | 27 | 32 | 41 | 61.5 | 93.5 | |
| | 2016.11- | 6MT/7DCT | F | L/R | Hatchback FWD D4FB | | GCO81818 | Outer Joint | | 27 | 24 | 60 | 95 | 59 | M |
| | 2016.11- | 7DCT | F | L | Hatchback FWD D4FB | | GDS84372 | Drive Shaft | | 27 | 28 | 60 | 95 | 637 | |
| | 2016.11- | 7DCT | F | R | Hatchback FWD D4FB | | GDS84371 | Drive Shaft | | 27 | 28 | 60 | 95 | 1010 | |
| | 2016.11- | 7DCT | F | L/R | Hatchback FWD D4FB | | GCI81867 | Inner Joint | | 28 | 32 | 41 | 61.5 | 95 | |
| | 2017.03- | 6MT | F | L | Estate FWD D4FB | | GDS84405 | Drive Shaft | | 27 | 27 | 60 | 95 | 674 | |
| | 2017.03- | 6MT | F | R | Estate FWD D4FB | | GDS84404 | Drive Shaft | | 27 | 27 | 60 | 95 | 983 | |
| | 2017.03- | 6MT | F | L/R | Estate FWD D4FB | | GCI82745 | Inner Joint | | 27 | 32 | 41 | 61.5 | 93.5 | |
| | 2017.03- | 6MT/7DCT | F | L/R | Estate FWD D4FB | | GCO81818 | Outer Joint | | 27 | 24 | 60 | 95 | 59 | M |
| | 2017.03- | 7DCT | F | L | Estate FWD D4FB | | GDS84372 | Drive Shaft | | 27 | 28 | 60 | 95 | 637 | |
| | 2017.03- | 7DCT | F | R | Estate FWD D4FB | | GDS84371 | Drive Shaft | | 27 | 28 | 60 | 95 | 1010 | |
| | 2017.03- | 7DCT | F | L/R | Estate FWD D4FB | | GCI81867 | Inner Joint | | 28 | 32 | 41 | 61.5 | 95 | |
| | 2017.03- | 6MT | F | L | Estate Van FWD D4FB | | GDS84405 | Drive Shaft | | 27 | 27 | 60 | 95 | 674 | |
| | 2017.03- | 6MT | F | R | Estate Van FWD D4FB | | GDS84404 | Drive Shaft | | 27 | 27 | 60 | 95 | 983 | |
| | 2017.03- | 6MT | F | L/R | Estate Van FWD D4FB | | GCI82745 | Inner Joint | | 27 | 32 | 41 | 61.5 | 93.5 | |
| | 2017.03- | 6MT/7DCT | F | L/R | Estate Van FWD D4FB | | GCO81818 | Outer Joint | | 27 | 24 | 60 | 95 | 59 | M |
| | 2017.03- | 7DCT | F | L | Estate Van FWD D4FB | | GDS84372 | Drive Shaft | | 27 | 28 | 60 | 95 | 637 | |
| | 2017.03- | 7DCT | F | R | Estate Van FWD D4FB | | GDS84371 | Drive Shaft | | 27 | 28 | 60 | 95 | 1010 | |
| | 2017.03- | 7DCT | F | L/R | Estate Van FWD D4FB | | GCI81867 | Inner Joint | | 28 | 32 | 41 | 61.5 | 95 | |
| | 2018.08- | 6MT | F | L | Estate FWD D4FE | | GDS84405 | Drive Shaft | | 27 | 27 | 60 | 95 | 674 | |
| | 2018.08- | 6MT | F | R | Estate FWD D4FE | | GDS84404 | Drive Shaft | | 27 | 27 | 60 | 95 | 983 | |
| | 2018.08- | 6MT | F | L/R | Estate FWD D4FE | | GCO81818 | Outer Joint | | 27 | 24 | 60 | 95 | 59 | M |
| | 2018.08- | 6MT | F | L/R | Estate FWD D4FE | | GCI82745 | Inner Joint | | 27 | 32 | 41 | 61.5 | 93.5 | |
| | 2018.08- | 6MT | F | L | Hatchback FWD D4FE | | GDS84405 | Drive Shaft | | 27 | 27 | 60 | 95 | 674 | |
| | 2018.08- | 6MT | F | R | Hatchback FWD D4FE | | GDS84404 | Drive Shaft | | 27 | 27 | 60 | 95 | 983 | |
| | 2018.08- | 6MT | F | L/R | Hatchback FWD D4FE | | GCI82745 | Inner Joint | | 27 | 32 | 41 | 61.5 | 93.5 | |
| | 2018.08- | 6MT/7DCT | F | L/R | Hatchback FWD D4FE | | GCO81818 | Outer Joint | | 27 | 24 | 60 | 95 | 59 | M |
| | 2018.08- | 7DCT | F | L | Hatchback FWD D4FE | | GDS84372 | Drive Shaft | | 27 | 28 | 60 | 95 | 637 | |
| | 2018.08- | 7DCT | F | R | Hatchback FWD D4FE | | GDS84371 | Drive Shaft | | 27 | 28 | 60 | 95 | 1010 | |
| | 2018.08- | 7DCT | F | L/R | Hatchback FWD D4FE | | GCI81867 | Inner Joint | | 28 | 32 | 41 | 61.5 | 95 | |
| 1.6 (85 kw) | 2007.10-2011.11 | 4AT | F | L | Hatchback FWD D4FB | | GCI24097 | Inner Joint | | 27 | 22 | 41 | 62.5 | 94 | |
| | 2007.10-2011.11 | 5MT/6MT | F | L/R | Hatchback FWD D4FB | | GCO24339 | Outer Joint | 46T | 27 | 25 | 60 | 95 | 64 | M |
| | 2007.10-2011.11 | 6MT | F | L/R | Hatchback FWD D4FB | | GCI24098 | Inner Joint | | 27 | 25 | 41 | 61.5 | 100.5 | |
| | 2007.10-2011.11 | AT | F | L | Hatchback FWD D4FB | | GDS24305 | Drive Shaft | 46T | 27 | 27 | 60 | 95 | 675 | |
| | 2007.10-2011.11 | AT | F | L/R | Hatchback FWD D4FB | | GCO27080 | Outer Joint | 46T | 27 | 23 | 60 | 95 | 58 | M |
| | 2007.10-2011.11 | MT | F | L | Hatchback FWD D4FB | | GDS24181 | Drive Shaft | 46T | 27 | 25 | 60 | 94.5 | 679 | |
| | 2007.10-2011.11 | MT | F | L | Hatchback FWD D4FB | | GDS24296 | Drive Shaft | 46T | 27 | 27 | 60 | 95 | 663 | |
| | 2007.10-2011.11 | MT | F | R | Hatchback FWD D4FB | | GDS24566 | Drive Shaft | 46T | 27 | 27 | 60 | 95 | 954 | |
| | 2007.10-2011.11 | MT/5MT | F | L/R | Hatchback FWD D4FB | | GCO24152 | Outer Joint | 46T | 27 | 26 | 60 | 94 | 67 | M |
| | 2007.10-2011.11 | | F | | Hatchback FWD D4FB | | GCO24126 | Outer Joint | 46T | 27 | 25 | 60 | 95 | 63 | M |
| | 2007.10-2011.11 | | F | | Hatchback FWD D4FB | | GCI24061 | Inner Joint | | 27 | 22 | 41 | 62 | 86 | |
| | 2007.10-2011.11 | 4AT/5MT | F | L | Hatchback FWD G4FC | | GDS24283 | Drive Shaft | 46T | 27 | 25 | 60 | 94.5 | 674 | |
| | 2007.10-2011.11 | 4AT/5MT | F | R | Hatchback FWD G4FC | | GDS24282 | Drive Shaft | 46T | 27 | 25 | 60 | 94.5 | 941 | |
| | 2007.10-2011.11 | 5MT | F | L/R | Hatchback FWD G4FC | | GCO24095 | Outer Joint | 46T | 27 | 22 | 60 | 94.5 | 58.5 | M |
| | 2007.10-2011.11 | 5MT | F | L | Hatchback FWD G4FC | | GCI27019 | Inner Joint | | 25 | 22 | 41 | 62 | 93.5 | |
| | 2007.10-2011.11 | 5MT | F | R | Hatchback FWD G4FC | | GCI39052 | Inner Joint | | 25 | 22 | 41 | 63 | 86 | |
| | 2007.10-2011.11 | 6AT | F | | Hatchback FWD G4FC | Date From:2011.10 | GCO24227 | Outer Joint | 46T | 27 | 24 | 60 | 92.5 | 58 | M |
| | 2007.10-2011.11 | | F | | Hatchback FWD G4FC | | GCO24077 | Outer Joint | 46T | 27 | 22 | 60 | 94.5 | 54.5 | M |
| | 2018.08- | 6MT | F | L | Estate FWD D4FE | | GDS84405 | Drive Shaft | | 27 | 27 | 60 | 95 | 674 | |
| | 2018.08- | 6MT | F | R | Estate FWD D4FE | | GDS84404 | Drive Shaft | | 27 | 27 | 60 | 95 | 983 | |
| | 2018.08- | 6MT | F | L/R | Estate FWD D4FE | | GCI82745 | Inner Joint | | 27 | 32 | 41 | 61.5 | 93.5 | |
| | 2018.08- | 6MT/7DCT | F | L/R | Estate FWD D4FE | | GCO81818 | Outer Joint | | 27 | 24 | 60 | 95 | 59 | M |

| | YEAR | TRANSM. | F/R | L/R | BODY STYLE & DRIVE TYPE & ENGINE | REMARKS | G-AP Ref. | PRODUCT | ABS | Technical Specifications | | | | | |
|---|---|---|---|---|---|---|---|---|---|---|---|---|---|---|---|
| | | | | | | | | | | A | B | C | H | L | P |
| **HYUNDAI** **i30** | | | | | | | | | | | | | | | |
| 1.6 (85 kw) | 2018.08- | 7DCT | F | L | Estate FWD D4FE | | GDS84372 | Drive Shaft | | 27 | 28 | 60 | 95 | 637 | |
| | 2018.08- | 7DCT | F | R | Estate FWD D4FE | | GDS84371 | Drive Shaft | | 27 | 28 | 60 | 95 | 1010 | |
| | 2018.08- | 7DCT | F | L/R | Estate FWD D4FE | | GCI81867 | Inner Joint | | 28 | 32 | 41 | 61.5 | 95 | |
| | 2018.08- | 6MT | F | L | Hatchback FWD D4FE | | GDS84405 | Drive Shaft | | 27 | 27 | 60 | 95 | 674 | |
| | 2018.08- | 6MT | F | R | Hatchback FWD D4FE | | GDS84404 | Drive Shaft | | 27 | 27 | 60 | 95 | 983 | |
| | 2018.08- | 6MT | F | L/R | Hatchback FWD D4FE | | GCI82745 | Inner Joint | | 27 | 32 | 41 | 61.5 | 93.5 | |
| | 2018.08- | 6MT/7DCT | F | L/R | Hatchback FWD D4FE | | GCO81818 | Outer Joint | | 27 | 24 | 60 | 95 | 59 | M |
| | 2018.08- | 7DCT | F | L | Hatchback FWD D4FE | | GDS84372 | Drive Shaft | | 27 | 28 | 60 | 95 | 637 | |
| | 2018.08- | 7DCT | F | R | Hatchback FWD D4FE | | GDS84371 | Drive Shaft | | 27 | 28 | 60 | 95 | 1010 | |
| | 2018.08- | 7DCT | F | L/R | Hatchback FWD D4FE | | GCI81867 | Inner Joint | | 28 | 32 | 41 | 61.5 | 95 | |
| 1.6 (88 kw) | 2012.01-2016.12 | 6AT | F | L | Hatchback FWD G4FC;G4FG | | GDS24264 | Drive Shaft | 46T | 27 | 27 | 60 | 95 | 668 | |
| | 2012.01-2016.12 | AT | F | R | Hatchback FWD G4FC;G4FG | | GDS24265 | Drive Shaft | | 27 | 27 | 60 | 95 | 957 | |
| | 2012.01-2016.12 | AT | F | R | Hatchback FWD G4FC;G4FG | | GDS24321 | Drive Shaft | 46T | 27 | 27 | 60 | 95 | 957 | |
| | 2012.01-2016.12 | AT | F | | Hatchback FWD G4FC;G4FG | | GCO24227 | Outer Joint | 46T | 27 | 24 | 60 | 92.5 | 58 | M |
| | 2012.01-2016.12 | AT | F | L | Hatchback FWD G4FC;G4FG | | GCI24065 | Inner Joint | | 27 | 22 | 30 | 68 | 77 | |
| | 2012.01-2016.12 | MT | F | L | Hatchback FWD G4FC;G4FG | | GDS24548 | Drive Shaft | 46T | 27 | 25 | 60 | 94.5 | 687 | |
| | 2012.01-2016.12 | MT | F | R | Hatchback FWD G4FC;G4FG | | GDS24398 | Drive Shaft | 46T | 27 | 25 | 60 | 94.5 | 965 | |
| | 2012.01-2016.12 | MT | F | L/R | Hatchback FWD G4FC;G4FG | | GCO24132 | Outer Joint | 46T | 27 | 22 | 60 | 94.5 | 54.5 | M |
| | 2012.01-2016.12 | MT | F | L/R | Hatchback FWD G4FC;G4FG | | GCI39052 | Inner Joint | | 25 | 22 | 41 | 63 | 86 | |
| | 2012.06- | 6AT | F | L | Estate FWD G4FC;G4FG | | GDS24264 | Drive Shaft | 46T | 27 | 27 | 60 | 95 | 668 | |
| | 2012.06- | AT | F | R | Estate FWD G4FC;G4FG | | GDS24321 | Drive Shaft | 46T | 27 | 27 | 60 | 95 | 957 | |
| | 2012.06- | AT | F | | Estate FWD G4FC;G4FG | | GCO24227 | Outer Joint | 46T | 27 | 24 | 60 | 92.5 | 58 | M |
| | 2012.06- | AT | F | L | Estate FWD G4FC;G4FG | | GCI24065 | Inner Joint | | 27 | 22 | 30 | 68 | 77 | |
| | 2012.06- | MT | F | L | Estate FWD G4FC;G4FG | | GDS24548 | Drive Shaft | 46T | 27 | 25 | 60 | 94.5 | 687 | |
| | 2012.06- | MT | F | R | Estate FWD G4FC;G4FG | | GDS24398 | Drive Shaft | 46T | 27 | 25 | 60 | 94.5 | 965 | |
| | 2012.06- | MT | F | L/R | Estate FWD G4FC;G4FG | | GCO24132 | Outer Joint | 46T | 27 | 22 | 60 | 94.5 | 54.5 | M |
| | 2012.06- | MT | F | L/R | Estate FWD G4FC;G4FG | | GCI39052 | Inner Joint | | 25 | 22 | 41 | 63 | 86 | |
| | 2013.05- | 6AT | F | L | Coupe FWD G4FC | | GDS24264 | Drive Shaft | 46T | 27 | 27 | 60 | 95 | 668 | |
| | 2013.05- | 6AT | F | R | Coupe FWD G4FC | | GDS24321 | Drive Shaft | 46T | 27 | 27 | 60 | 95 | 957 | |
| | 2013.05- | 6AT | F | L | Coupe FWD G4FC | | GCI24065 | Inner Joint | | 27 | 22 | 30 | 68 | 77 | |
| | 2013.05- | 6MT | F | L | Coupe FWD G4FC | | GDS24548 | Drive Shaft | 46T | 27 | 25 | 60 | 94.5 | 687 | |
| | 2013.05- | 6MT | F | R | Coupe FWD G4FC | | GDS24398 | Drive Shaft | 46T | 27 | 25 | 60 | 94.5 | 965 | |
| | 2013.05- | 6MT | F | L | Coupe FWD G4FC | | GCO24132 | Outer Joint | 46T | 27 | 22 | 60 | 94.5 | 54.5 | M |
| | 2013.05- | 6MT | F | L | Coupe FWD G4FC | | GCI39052 | Inner Joint | | 25 | 22 | 41 | 63 | 86 | |
| | 2013.05- | AT | F | | Coupe FWD G4FC | | GCO24227 | Outer Joint | 46T | 27 | 24 | 60 | 92.5 | 58 | M |
| 1.6 (90 kw) | 2007.10-2011.11 | 4AT/5MT | F | L | Hatchback FWD G4FC | | GDS24283 | Drive Shaft | 46T | 27 | 25 | 60 | 94.5 | 674 | |
| | 2007.10-2011.11 | 4AT/5MT | F | R | Hatchback FWD G4FC | | GDS24282 | Drive Shaft | 46T | 27 | 25 | 60 | 94.5 | 941 | |
| | 2007.10-2011.11 | 4AT/5MT | F | L/R | Hatchback FWD G4FC | | GCO24077 | Outer Joint | 46T | 27 | 22 | 60 | 94.5 | 54.5 | M |
| | 2007.10-2011.11 | 4AT/5MT | F | L | Hatchback FWD G4FC | | GCI27019 | Inner Joint | | 25 | 22 | 41 | 62 | 93.5 | |
| | 2007.10-2011.11 | 4AT/5MT | F | R | Hatchback FWD G4FC | | GCI39052 | Inner Joint | | 25 | 22 | 41 | 63 | 86 | |
| | 2007.10-2011.11 | 5MT | F | L/R | Hatchback FWD G4FC | | GCO24095 | Outer Joint | 46T | 27 | 22 | 60 | 94.5 | 58.5 | M |
| | 2007.10-2011.11 | AT | F | L/R | Hatchback FWD G4FC | Date from:2011.01 | GCO24227 | Outer Joint | 46T | 27 | 24 | 60 | 92.5 | 58 | M |
| 1.6 (93 kw) | 2008.02-2011.11 | MT | F | L | Hatchback FWD G4FC | | GDS24283 | Drive Shaft | 46T | 27 | 25 | 60 | 94.5 | 674 | |
| | 2008.02-2011.11 | MT | F | R | Hatchback FWD G4FC | | GDS24282 | Drive Shaft | 46T | 27 | 25 | 60 | 94.5 | 941 | |
| | 2008.02-2011.11 | MT | F | L/R | Hatchback FWD G4FC | | GCO24077 | Outer Joint | 46T | 27 | 22 | 60 | 94.5 | 54.5 | M |
| | 2008.02-2011.11 | MT | F | L | Hatchback FWD G4FC | | GCI27019 | Inner Joint | | 25 | 22 | 41 | 62 | 93.5 | |
| | 2008.02-2011.11 | MT | F | R | Hatchback FWD G4FC | | GCI39052 | Inner Joint | | 25 | 22 | 41 | 63 | 86 | |
| 1.6 (94 kw) | 2010.01-2011.11 | 4AT | F | L | Hatchback FWD D4FB | | GCI24097 | Inner Joint | | 27 | 22 | 41 | 62.5 | 94 | |
| | 2010.01-2011.11 | 5MT | F | L/R | Hatchback FWD D4FB | | GCO24152 | Outer Joint | 46T | 27 | 26 | 60 | 94 | 67 | M |
| | 2010.01-2011.11 | 6MT | F | L/R | Hatchback FWD D4FB | | GCI24098 | Inner Joint | | 27 | 25 | 41 | 61.5 | 100.5 | |
| | 2010.01-2011.11 | AT | F | L | Hatchback FWD D4FB | | GDS24305 | Drive Shaft | 46T | 27 | 27 | 60 | 95 | 675 | |
| | 2010.01-2011.11 | MT | F | L | Hatchback FWD D4FB | | GDS24296 | Drive Shaft | 46T | 27 | 27 | 60 | 95 | 663 | |
| | 2010.01-2011.11 | MT | F | R | Hatchback FWD D4FB | | GDS24566 | Drive Shaft | 46T | 27 | 27 | 60 | 95 | 954 | |
| | 2010.01-2011.11 | | F | | Hatchback FWD D4FB | | GCO24077 | Outer Joint | 46T | 27 | 22 | 60 | 94.5 | 54.5 | M |
| | 2010.01-2011.11 | | F | | Hatchback FWD D4FB | | GCO24126 | Outer Joint | 46T | 27 | 25 | 60 | 95 | 63 | M |
| | 2010.01-2011.11 | | F | | Hatchback FWD D4FB | | GCI24061 | Inner Joint | | 27 | 22 | 41 | 62 | 86 | |
| | 2011.12-2015.12 | 6MT | F | L | Hatchback FWD D4FB | Date to:2014.12 | GCI27044 | Inner Joint | | 27 | 24 | 41 | 62.5 | 88.5 | |
| | 2011.12-2015.12 | AT | F | L | Hatchback FWD D4FB | | GDS27219 | Drive Shaft | 46T | 27 | 27 | 60 | 95 | 666 | |
| | 2011.12-2015.12 | AT | F | R | Hatchback FWD D4FB | | GDS27218 | Drive Shaft | 46T | 27 | 27 | 60 | 95 | 956 | |
| | 2011.12-2015.12 | AT | F | | Hatchback FWD D4FB | Date From:2012.10,Date To:2012.10 | GCO24227 | Outer Joint | 46T | 27 | 24 | 60 | 92.5 | 58 | M |
| | 2011.12-2015.12 | AT | F | L/R | Hatchback FWD D4FB | | GCI24053 | Inner Joint | | 27 | 24 | 30 | 67.5 | 88.5 | |
| | 2011.12-2015.12 | MT | F | L | Hatchback FWD D4FB | | GDS24519 | Drive Shaft | 46T | 27 | 27 | 60 | 95 | 678 | |
| | 2011.12-2015.12 | MT | F | R | Hatchback FWD D4FB | | GDS24521 | Drive Shaft | 46T | 27 | 27 | 60 | 95 | 969 | |
| | 2011.12-2015.12 | MT | F | L/R | Hatchback FWD D4FB | | GCO24137 | Outer Joint | 46T | 27 | 24 | 60 | 95 | 59 | M |
| | 2012.06-2015.12 | 6MT | F | L | Estate FWD D4FB | Date to:2014.12 | GCI27044 | Inner Joint | | 27 | 24 | 41 | 62.5 | 88.5 | |

| | YEAR | TRANSM. | F/R | L/R | BODY STYLE & DRIVE TYPE & ENGINE | REMARKS | G-AP Ref. | PRODUCT | ABS | Technical Specifications | | | | | |
|---|---|---|---|---|---|---|---|---|---|---|---|---|---|---|---|
| | | | | | | | | | | A | B | C | H | L | P |
| **HYUNDAI** **i30** | | | | | | | | | | | | | | | |
| 1.6 (94 kw) | 2012.06-2015.12 | AT | F | L | Estate FWD D4FB | | GDS27219 | Drive Shaft | 46T | 27 | 27 | 60 | 95 | 666 | |
| | 2012.06-2015.12 | AT | F | R | Estate FWD D4FB | | GDS27218 | Drive Shaft | 46T | 27 | 27 | 60 | 95 | 956 | |
| | 2012.06-2015.12 | AT | F | | Estate FWD D4FB | Date From:2012.10,Date To:2012.10 | GCO24227 | Outer Joint | 46T | 27 | 24 | 60 | 92.5 | 58 | M |
| | 2012.06-2015.12 | AT | F | L/R | Estate FWD D4FB | | GCI24053 | Inner Joint | | 27 | 24 | 30 | 67.5 | 88.5 | |
| | 2012.06-2015.12 | MT | F | L | Estate FWD D4FB | | GDS24519 | Drive Shaft | 46T | 27 | 27 | 60 | 95 | 678 | |
| | 2012.06-2015.12 | MT | F | R | Estate FWD D4FB | | GDS24521 | Drive Shaft | 46T | 27 | 27 | 60 | 95 | 969 | |
| | 2012.06-2015.12 | MT | F | L/R | Estate FWD D4FB | | GCO24137 | Outer Joint | 46T | 27 | 24 | 60 | 95 | 59 | M |
| | 2013.05- | 6AT | F | L | Coupe FWD D4FB | | GDS27219 | Drive Shaft | 46T | 27 | 27 | 60 | 95 | 666 | |
| | 2013.05- | 6AT | F | R | Coupe FWD D4FB | | GDS27218 | Drive Shaft | 46T | 27 | 27 | 60 | 95 | 956 | |
| | 2013.05- | 6AT | F | L/R | Coupe FWD D4FB | | GCI24053 | Inner Joint | | 27 | 24 | 30 | 67.5 | 88.5 | |
| | 2013.05- | 6MT | F | L | Coupe FWD D4FB | | GDS24519 | Drive Shaft | 46T | 27 | 27 | 60 | 95 | 678 | |
| | 2013.05- | 6MT | F | R | Coupe FWD D4FB | | GDS24521 | Drive Shaft | 46T | 27 | 27 | 60 | 95 | 969 | |
| | 2013.05- | 6MT | F | L/R | Coupe FWD D4FB | | GCO24137 | Outer Joint | 46T | 27 | 24 | 60 | 95 | 59 | M |
| | 2013.05- | 6MT | F | L | Coupe FWD D4FB | Date to:2014.12 | GCI27044 | Inner Joint | | 27 | 24 | 41 | 62.5 | 88.5 | |
| | 2013.05- | AT | F | | Coupe FWD D4FB | | GCO24227 | Outer Joint | 46T | 27 | 24 | 60 | 92.5 | 58 | M |
| | 2018.08- | 6MT | F | L | Estate FWD D4FB | | GDS84405 | Drive Shaft | | 27 | 27 | 60 | 95 | 674 | |
| | 2018.08- | 6MT | F | R | Estate FWD D4FB | | GDS84404 | Drive Shaft | | 27 | 27 | 60 | 95 | 983 | |
| | 2018.08- | 6MT | F | L/R | Estate FWD D4FB | | GCI82745 | Inner Joint | | 27 | 32 | 41 | 61.5 | 93.5 | |
| | 2018.08- | 6MT/7DCT | F | L/R | Estate FWD D4FB | | GCO81818 | Outer Joint | | 27 | 24 | 60 | 95 | 59 | M |
| | 2018.08- | 7DCT | F | L | Estate FWD D4FB | | GDS84372 | Drive Shaft | | 27 | 28 | 60 | 95 | 637 | |
| | 2018.08- | 7DCT | F | R | Estate FWD D4FB | | GDS84371 | Drive Shaft | | 27 | 28 | 60 | 95 | 1010 | |
| | 2018.08- | 7DCT | F | L/R | Estate FWD D4FB | | GCI81867 | Inner Joint | | 28 | 32 | 41 | 61.5 | 95 | |
| 1.6 (95 kw) | 2011.12-2015.12 | 6AT | F | L | Hatchback FWD G4FC;G4FG | | GDS24264 | Drive Shaft | 46T | 27 | 27 | 60 | 95 | 668 | |
| | 2011.12-2015.12 | AT | F | R | Hatchback FWD G4FC;G4FG | | GDS24321 | Drive Shaft | 46T | 27 | 27 | 60 | 95 | 957 | |
| | 2011.12-2015.12 | AT | F | | Hatchback FWD G4FC;G4FG | | GCO24227 | Outer Joint | 46T | 27 | 24 | 60 | 92.5 | 58 | M |
| | 2011.12-2015.12 | AT | F | L | Hatchback FWD G4FC;G4FG | | GCI24065 | Inner Joint | | 27 | 22 | 30 | 68 | 77 | |
| | 2011.12-2015.12 | MT | F | L | Hatchback FWD G4FC;G4FG | | GDS24548 | Drive Shaft | 46T | 27 | 25 | 60 | 94.5 | 687 | |
| | 2011.12-2015.12 | MT | F | R | Hatchback FWD G4FC;G4FG | | GDS24398 | Drive Shaft | 46T | 27 | 25 | 60 | 94.5 | 965 | |
| | 2011.12-2015.12 | MT | F | L/R | Hatchback FWD G4FC;G4FG | | GCO24132 | Outer Joint | 46T | 27 | 22 | 60 | 94.5 | 54.5 | M |
| | 2011.12-2015.12 | MT | F | L/R | Hatchback FWD G4FC;G4FG | | GCI39052 | Inner Joint | | 25 | 22 | 41 | 63 | 86 | |
| | 2012.06-2015.12 | 6AT | F | L | Estate FWD G4FD | | GDS24264 | Drive Shaft | 46T | 27 | 27 | 60 | 95 | 668 | |
| | 2012.06-2015.12 | AT | F | R | Estate FWD G4FD | | GDS24321 | Drive Shaft | 46T | 27 | 27 | 60 | 95 | 957 | |
| | 2012.06-2015.12 | AT | F | | Estate FWD G4FD | | GCO24227 | Outer Joint | 46T | 27 | 24 | 60 | 92.5 | 58 | M |
| | 2012.06-2015.12 | AT | F | L | Estate FWD G4FD | | GCI24065 | Inner Joint | | 27 | 22 | 30 | 68 | 77 | |
| | 2012.06-2015.12 | MT | F | L | Estate FWD G4FD | | GDS24548 | Drive Shaft | 46T | 27 | 25 | 60 | 94.5 | 687 | |
| | 2012.06-2015.12 | MT | F | R | Estate FWD G4FD | | GDS24398 | Drive Shaft | 46T | 27 | 25 | 60 | 94.5 | 965 | |
| | 2012.06-2015.12 | MT | F | L/R | Estate FWD G4FD | | GCO24132 | Outer Joint | 46T | 27 | 22 | 60 | 94.5 | 54.5 | M |
| | 2012.06-2015.12 | MT | F | L/R | Estate FWD G4FD | | GCI39052 | Inner Joint | | 25 | 22 | 41 | 63 | 86 | |
| 1.6 (96 kw) | 2014.06- | 6AT | F | L | Coupe FWD G4FC | | GDS24264 | Drive Shaft | 46T | 27 | 27 | 60 | 95 | 668 | |
| | 2014.06- | 6AT | F | R | Coupe FWD G4FC | | GDS24321 | Drive Shaft | 46T | 27 | 27 | 60 | 95 | 957 | |
| | 2014.06- | 6AT | F | R | Coupe FWD G4FC | | GCO24227 | Outer Joint | 46T | 27 | 24 | 60 | 92.5 | 58 | M |
| | 2014.06- | 6AT | F | L | Coupe FWD G4FC | | GCI24065 | Inner Joint | | 27 | 22 | 30 | 68 | 77 | |
| | 2014.06- | 6MT | F | L | Coupe FWD G4FC | | GDS24548 | Drive Shaft | 46T | 27 | 25 | 60 | 94.5 | 687 | |
| | 2014.06- | 6MT | F | R | Coupe FWD G4FC | | GDS24398 | Drive Shaft | 46T | 27 | 25 | 60 | 94.5 | 965 | |
| | 2014.06- | MT | F | L | Coupe FWD G4FC | | GCI39052 | Inner Joint | | 25 | 22 | 41 | 63 | 86 | |
| | 2014.06- | MT/6MT | F | L | Coupe FWD G4FC | | GCO24132 | Outer Joint | 46T | 27 | 22 | 60 | 94.5 | 54.5 | M |
| | 2014.06- | 6AT | F | L | Hatchback FWD G4FC | | GDS24264 | Drive Shaft | 46T | 27 | 27 | 60 | 95 | 668 | |
| | 2014.06- | 6AT | F | R | Hatchback FWD G4FC | | GCO24227 | Outer Joint | 46T | 27 | 24 | 60 | 92.5 | 58 | M |
| | 2014.06- | AT | F | R | Hatchback FWD G4FC | | GDS24321 | Drive Shaft | 46T | 27 | 27 | 60 | 95 | 957 | |
| | 2014.06- | AT | F | L | Hatchback FWD G4FC | | GCI24065 | Inner Joint | | 27 | 22 | 30 | 68 | 77 | |
| | 2014.06- | MT | F | L | Hatchback FWD G4FC | | GDS24548 | Drive Shaft | 46T | 27 | 25 | 60 | 94.5 | 687 | |
| | 2014.06- | MT | F | R | Hatchback FWD G4FC | | GDS24398 | Drive Shaft | 46T | 27 | 25 | 60 | 94.5 | 965 | |
| | 2014.06- | MT | F | L/R | Hatchback FWD G4FC | | GCO24132 | Outer Joint | 46T | 27 | 22 | 60 | 94.5 | 54.5 | M |
| | 2014.06- | MT | F | L/R | Hatchback FWD G4FC | | GCI39052 | Inner Joint | | 25 | 22 | 41 | 63 | 86 | |
| 1.6 (99 kw) | 2011.12-2016.12 | 6AT | F | L | Hatchback FWD G4FD | | GDS24264 | Drive Shaft | 46T | 27 | 27 | 60 | 95 | 668 | |
| | 2011.12-2016.12 | 6AT | F | R | Hatchback FWD G4FD | | GDS24321 | Drive Shaft | 46T | 27 | 27 | 60 | 95 | 957 | |
| | 2011.12-2016.12 | 6AT | F | L/R | Hatchback FWD G4FD | | GCI24065 | Inner Joint | | 27 | 22 | 30 | 68 | 77 | |
| | 2011.12-2016.12 | 6MT | F | L | Hatchback FWD G4FD | | GDS24548 | Drive Shaft | 46T | 27 | 25 | 60 | 94.5 | 687 | |
| | 2011.12-2016.12 | 6MT | F | R | Hatchback FWD G4FD | | GDS24398 | Drive Shaft | 46T | 27 | 25 | 60 | 94.5 | 965 | |
| | 2011.12-2016.12 | 6MT | F | L/R | Hatchback FWD G4FD | | GCO24132 | Outer Joint | 46T | 27 | 22 | 60 | 94.5 | 54.5 | M |
| | 2011.12-2016.12 | 6MT | F | L | Hatchback FWD G4FD | | GCI39052 | Inner Joint | | 25 | 22 | 41 | 63 | 86 | |
| | 2011.12-2016.12 | AT | F | L/R | Hatchback FWD G4FD | | GCO24137 | Outer Joint | 46T | 27 | 24 | 60 | 95 | 59 | M |
| | 2011.12-2016.12 | AT | F | L/R | Hatchback FWD G4FD | Date to:2015.08 | GCO24227 | Outer Joint | 46T | 27 | 24 | 60 | 92.5 | 58 | M |
| | 2012.06- | 6AT | F | L | Estate FWD G4FD | | GDS24264 | Drive Shaft | 46T | 27 | 27 | 60 | 95 | 668 | |
| | 2012.06- | AT | F | R | Estate FWD G4FD | | GDS24321 | Drive Shaft | 46T | 27 | 27 | 60 | 95 | 957 | |

| | YEAR | TRANSM. | F/R | L/R | BODY STYLE & DRIVE TYPE & ENGINE | REMARKS | G-AP Ref. | PRODUCT | ABS | Technical Specifications A | B | C | H | L | P |
|---|---|---|---|---|---|---|---|---|---|---|---|---|---|---|---|
| **HYUNDAI** **i30** | | | | | | | | | | | | | | | |
| 1.6 (99 kw) | 2012.06- | AT | F | | Estate FWD G4FD | | GCO24227 | Outer Joint | 46T | 27 | 24 | 60 | 92.5 | 58 | M |
| | 2012.06- | AT | F | L | Estate FWD G4FD | | GCI24065 | Inner Joint | | 27 | 22 | 30 | 68 | 77 | |
| | 2012.06- | MT | F | L | Estate FWD G4FD | | GDS24548 | Drive Shaft | 46T | 27 | 25 | 60 | 94.5 | 687 | |
| | 2012.06- | MT | F | R | Estate FWD G4FD | | GDS24398 | Drive Shaft | 46T | 27 | 25 | 60 | 94.5 | 965 | |
| | 2012.06- | MT | F | L/R | Estate FWD G4FD | | GCO24132 | Outer Joint | 46T | 27 | 22 | 60 | 94.5 | 54.5 | M |
| | 2012.06- | MT | F | L/R | Estate FWD G4FD | | GCI39052 | Inner Joint | | 25 | 22 | 41 | 63 | 86 | |
| | 2013.05- | 6AT | F | L | Coupe FWD G4FD | | GDS24264 | Drive Shaft | 46T | 27 | 27 | 60 | 95 | 668 | |
| | 2013.05- | 6MT | F | L | Coupe FWD G4FD | | GDS24548 | Drive Shaft | 46T | 27 | 25 | 60 | 94.5 | 687 | |
| | 2013.05- | 6MT | F | L/R | Coupe FWD G4FD | | GCO24132 | Outer Joint | 46T | 27 | 22 | 60 | 94.5 | 54.5 | M |
| | 2013.05- | 6MT | F | L/R | Coupe FWD G4FD | | GCI39052 | Inner Joint | | 25 | 22 | 41 | 63 | 86 | |
| | 2013.05- | AT | F | R | Coupe FWD G4FD | | GDS24321 | Drive Shaft | 46T | 27 | 27 | 60 | 95 | 957 | |
| | 2013.05- | AT | F | | Coupe FWD G4FD | | GCO24227 | Outer Joint | 46T | 27 | 24 | 60 | 92.5 | 58 | M |
| | 2013.05- | AT | F | L | Coupe FWD G4FD | | GCI24065 | Inner Joint | | 27 | 22 | 30 | 68 | 77 | |
| | 2013.05- | MT | F | R | Coupe FWD G4FD | | GDS24398 | Drive Shaft | 46T | 27 | 25 | 60 | 94.5 | 965 | |
| | 2015.05- | MT | F | L | Estate Van FWD G4FD | | GDS24548 | Drive Shaft | 46T | 27 | 25 | 60 | 94.5 | 687 | |
| | 2015.05- | MT | F | R | Estate Van FWD G4FD | | GDS24398 | Drive Shaft | 46T | 27 | 25 | 60 | 94.5 | 965 | |
| | 2015.05- | MT | F | L | Estate Van FWD G4FD | | GCO24132 | Outer Joint | 46T | 27 | 22 | 60 | 94.5 | 54.5 | M |
| | 2015.05- | MT | F | L/R | Estate Van FWD G4FD | | GCI39052 | Inner Joint | | 25 | 22 | 41 | 63 | 86 | |
| | 2015.05- | MT | F | L | Hatchback Van FWD G4FD | | GDS24548 | Drive Shaft | 46T | 27 | 25 | 60 | 94.5 | 687 | |
| | 2015.05- | MT | F | R | Hatchback Van FWD G4FD | | GDS24398 | Drive Shaft | 46T | 27 | 25 | 60 | 94.5 | 965 | |
| | 2015.05- | MT | F | L | Hatchback Van FWD G4FD | | GCO24132 | Outer Joint | 46T | 27 | 22 | 60 | 94.5 | 54.5 | M |
| | 2015.05- | MT | F | L/R | Hatchback Van FWD G4FD | | GCI39052 | Inner Joint | | 25 | 22 | 41 | 63 | 86 | |
| 1.6 (100 kw) | 2011.11-2016.12 | 6MT | F | L | Hatchback FWD D4FB | | GDS24519 | Drive Shaft | 46T | 27 | 27 | 60 | 95 | 678 | |
| | 2011.11-2016.12 | 6MT | F | R | Hatchback FWD D4FB | | GDS24521 | Drive Shaft | 46T | 27 | 27 | 60 | 95 | 969 | |
| | 2011.11-2016.12 | 6MT | F | L/R | Hatchback FWD D4FB | | GCO24137 | Outer Joint | 46T | 27 | 24 | 60 | 95 | 59 | M |
| | 2011.11-2016.12 | 6MT | F | L | Hatchback FWD D4FB | Date to:2014.12 | GCI27044 | Inner Joint | | 27 | 24 | 41 | 62.5 | 88.5 | |
| | 2011.11-2016.12 | 7DCT | F | R | Hatchback FWD D4FB | | GDS82244 | Drive Shaft | 46T | 27 | 28 | 60 | 95 | 1005 | |
| | 2011.11-2016.12 | AT | F | | Hatchback FWD D4FB | Date From:2012.10,Date To:2012.10 | GCO24227 | Outer Joint | 46T | 27 | 24 | 60 | 92.5 | 58 | M |
| | 2012.06- | 6MT | F | L | Estate FWD D4FB | Date to:2014.12 | GCI27044 | Inner Joint | | 27 | 24 | 41 | 62.5 | 88.5 | |
| | 2012.06- | DCT | F | R | Estate FWD D4FB | | GDS82244 | Drive Shaft | 46T | 27 | 28 | 60 | 95 | 1005 | |
| | 2012.06- | MT | F | L | Estate FWD D4FB | | GDS24519 | Drive Shaft | 46T | 27 | 27 | 60 | 95 | 678 | |
| | 2012.06- | MT | F | R | Estate FWD D4FB | | GDS24521 | Drive Shaft | 46T | 27 | 27 | 60 | 95 | 969 | |
| | 2012.06- | MT | F | L/R | Estate FWD D4FB | | GCO24137 | Outer Joint | 46T | 27 | 24 | 60 | 95 | 59 | M |
| | 2014.12- | 6AT | F | | Coupe FWD D4FB | | GCO24227 | Outer Joint | 46T | 27 | 24 | 60 | 92.5 | 58 | M |
| | 2014.12- | DCT | F | R | Coupe FWD D4FB | | GDS82244 | Drive Shaft | 46T | 27 | 28 | 60 | 95 | 1005 | |
| | 2014.12- | DCT | F | R | Coupe FWD D4FB | | GCO24137 | Outer Joint | 46T | 27 | 24 | 60 | 95 | 59 | M |
| | 2014.12- | DCT | F | R | Coupe FWD D4FB | | GCI81692 | Inner Joint | | 28 | 24 | 41 | 61.5 | 95 | |
| | 2016.11- | 6MT | F | L | Hatchback FWD D4FB | | GDS84405 | Drive Shaft | | 27 | 27 | 60 | 95 | 674 | |
| | 2016.11- | 6MT | F | R | Hatchback FWD D4FB | | GDS84404 | Drive Shaft | | 27 | 27 | 60 | 95 | 983 | |
| | 2016.11- | 6MT | F | L/R | Hatchback FWD D4FB | | GCI82745 | Inner Joint | | 27 | 32 | 41 | 61.5 | 93.5 | |
| | 2016.11- | 6MT/7DCT | F | L/R | Hatchback FWD D4FB | | GCO81818 | Outer Joint | | 27 | 24 | 60 | 95 | 59 | M |
| | 2016.11- | 7DCT | F | L | Hatchback FWD D4FB | | GDS84372 | Drive Shaft | | 27 | 28 | 60 | 95 | 637 | |
| | 2016.11- | 7DCT | F | R | Hatchback FWD D4FB | | GDS84371 | Drive Shaft | | 27 | 28 | 60 | 95 | 1010 | |
| | 2016.11- | 7DCT | F | L/R | Hatchback FWD D4FB | | GCI81867 | Inner Joint | | 28 | 32 | 41 | 61.5 | 95 | |
| | 2017.03- | 6MT | F | L | Estate FWD D4FB | | GDS84405 | Drive Shaft | | 27 | 27 | 60 | 95 | 674 | |
| | 2017.03- | 6MT | F | R | Estate FWD D4FB | | GDS84404 | Drive Shaft | | 27 | 27 | 60 | 95 | 983 | |
| | 2017.03- | 6MT | F | L/R | Estate FWD D4FB | | GCI82745 | Inner Joint | | 27 | 32 | 41 | 61.5 | 93.5 | |
| | 2017.03- | 6MT/7DCT | F | L/R | Estate FWD D4FB | | GCO81818 | Outer Joint | | 27 | 24 | 60 | 95 | 59 | M |
| | 2017.03- | 7DCT | F | L | Estate FWD D4FB | | GDS84372 | Drive Shaft | | 27 | 28 | 60 | 95 | 637 | |
| | 2017.03- | 7DCT | F | R | Estate FWD D4FB | | GDS84371 | Drive Shaft | | 27 | 28 | 60 | 95 | 1010 | |
| | 2017.03- | 7DCT | F | L/R | Estate FWD D4FB | | GCI81867 | Inner Joint | | 28 | 32 | 41 | 61.5 | 95 | |
| | 2017.03- | 6MT | F | L | Estate Van FWD D4FB | | GDS84405 | Drive Shaft | | 27 | 27 | 60 | 95 | 674 | |
| | 2017.03- | 6MT | F | R | Estate Van FWD D4FB | | GDS84404 | Drive Shaft | | 27 | 27 | 60 | 95 | 983 | |
| | 2017.03- | 6MT | F | L/R | Estate Van FWD D4FB | | GCI82745 | Inner Joint | | 27 | 32 | 41 | 61.5 | 93.5 | |
| | 2017.03- | 6MT/7DCT | F | L/R | Estate Van FWD D4FB | | GCO81818 | Outer Joint | | 27 | 24 | 60 | 95 | 59 | M |
| | 2017.03- | 7DCT | F | L | Estate Van FWD D4FB | | GDS84372 | Drive Shaft | | 27 | 28 | 60 | 95 | 637 | |
| | 2017.03- | 7DCT | F | R | Estate Van FWD D4FB | | GDS84371 | Drive Shaft | | 27 | 28 | 60 | 95 | 1010 | |
| | 2017.03- | 7DCT | F | L/R | Estate Van FWD D4FB | | GCI81867 | Inner Joint | | 28 | 32 | 41 | 61.5 | 95 | |
| | 2018.08- | 6MT | F | L | Estate FWD D4FE | | GDS84405 | Drive Shaft | | 27 | 27 | 60 | 95 | 674 | |
| | 2018.08- | 6MT | F | R | Estate FWD D4FE | | GDS84404 | Drive Shaft | | 27 | 27 | 60 | 95 | 983 | |
| | 2018.08- | 6MT | F | L/R | Estate FWD D4FE | | GCI82745 | Inner Joint | | 27 | 32 | 41 | 61.5 | 93.5 | |
| | 2018.08- | 6MT/7DCT | F | L/R | Estate FWD D4FE | | GCO81818 | Outer Joint | | 27 | 24 | 60 | 95 | 59 | M |
| | 2018.08- | 7DCT | F | L | Estate FWD D4FE | | GDS84372 | Drive Shaft | | 27 | 28 | 60 | 95 | 637 | |
| | 2018.08- | 7DCT | F | R | Estate FWD D4FE | | GDS84371 | Drive Shaft | | 27 | 28 | 60 | 95 | 1010 | |
| | 2018.08- | 7DCT | F | L/R | Estate FWD D4FE | | GCI81867 | Inner Joint | | 28 | 32 | 41 | 61.5 | 95 | |

| | YEAR | TRANSM. | F/R | L/R | BODY STYLE & DRIVE TYPE & ENGINE | REMARKS | G-AP Ref. | PRODUCT | ABS | Technical Specifications A | B | C | H | L | P |
|---|---|---|---|---|---|---|---|---|---|---|---|---|---|---|---|
| **HYUNDAI** | | | | | | | | | | | | | | | |
| **i30** | | | | | | | | | | | | | | | |
| 1.6 (100 kw) | 2018.08- | 6MT | F | L | Hatchback FWD D4FE | | GDS84405 | Drive Shaft | | 27 | 27 | 60 | 95 | 674 | |
| | 2018.08- | 6MT | F | R | Hatchback FWD D4FE | | GDS84404 | Drive Shaft | | 27 | 27 | 60 | 95 | 983 | |
| | 2018.08- | 6MT | F | L/R | Hatchback FWD D4FE | | GCI82745 | Inner Joint | | 27 | 32 | 41 | 61.5 | 93.5 | |
| | 2018.08- | 6MT/7DCT | F | L/R | Hatchback FWD D4FE | | GCO81818 | Outer Joint | | 27 | 24 | 60 | 95 | 59 | M |
| | 2018.08- | 7DCT | F | L | Hatchback FWD D4FE | | GDS84372 | Drive Shaft | | 27 | 28 | 60 | 95 | 637 | |
| | 2018.08- | 7DCT | F | R | Hatchback FWD D4FE | | GDS84371 | Drive Shaft | | 27 | 28 | 60 | 95 | 1010 | |
| | 2018.08- | 7DCT | F | L/R | Hatchback FWD D4FE | | GCI81867 | Inner Joint | | 28 | 32 | 41 | 61.5 | 95 | |
| | 2020.03- | 6MT | F | L | Estate FWD D4FE | | GDS84405 | Drive Shaft | | 27 | 27 | 60 | 95 | 674 | |
| | 2020.03- | 6MT | F | R | Estate FWD D4FE | | GDS84404 | Drive Shaft | | 27 | 27 | 60 | 95 | 983 | |
| | 2020.03- | 6MT | F | L/R | Estate FWD D4FE | | GCO81818 | Outer Joint | | 27 | 24 | 60 | 95 | 59 | M |
| | 2020.03- | 6MT | F | L/R | Estate FWD D4FE | | GCI82745 | Inner Joint | | 27 | 32 | 41 | 61.5 | 93.5 | |
| | 2020.03- | 6MT | F | L | Hatchback FWD D4FE | | GDS84405 | Drive Shaft | | 27 | 27 | 60 | 95 | 674 | |
| | 2020.03- | 6MT | F | R | Hatchback FWD D4FE | | GDS84404 | Drive Shaft | | 27 | 27 | 60 | 95 | 983 | |
| | 2020.03- | 6MT | F | L/R | Hatchback FWD D4FE | | GCO81818 | Outer Joint | | 27 | 24 | 60 | 95 | 59 | M |
| | 2020.03- | 6MT | F | L/R | Hatchback FWD D4FE | | GCI82745 | Inner Joint | | 27 | 32 | 41 | 61.5 | 93.5 | |
| 1.6 (137 kw) | 2015.01- | AT | F | | Coupe FWD G4FJ | | GCO24227 | Outer Joint | 46T | 27 | 24 | 60 | 92.5 | 58 | M |
| | 2015.01- | AT | F | | Hatchback FWD G4FJ | | GCO24227 | Outer Joint | 46T | 27 | 24 | 60 | 92.5 | 58 | M |
| | 2015.01- | MT | F | | Hatchback FWD G4FJ | | GCO24132 | Outer Joint | 46T | 27 | 22 | 60 | 94.5 | 54.5 | M |
| | 2015.01- | MT | F | L | Hatchback FWD G4FJ | | GCI39052 | Inner Joint | | 25 | 22 | 41 | 63 | 86 | |
| 2.0 (100 kw) | 2007.10-2011.11 | 4AT/5MT | F | L | Hatchback FWD D4EA | Date from:2007.12,Date to:2007.12 | GCI39052 | Inner Joint | | 25 | 22 | 41 | 63 | 86 | |
| | 2007.10-2011.11 | 6MT | F | L | Hatchback FWD D4EA | | GDS27238 | Drive Shaft | 46T | 27 | 28 | 60 | 95 | 659 | |
| | 2007.10-2011.11 | 6MT | F | R | Hatchback FWD D4EA | | GDS27239 | Drive Shaft | 46T | 27 | 28 | 60 | 95 | 955 | |
| | 2007.10-2011.11 | 6MT | F | L/R | Hatchback FWD D4EA | | GCO24126 | Outer Joint | 46T | 27 | 25 | 60 | 95 | 63 | M |
| 2.0 (103 kw) | 2007.10-2011.11 | 4AT/5MT | F | L | Hatchback FWD D4EA | Date from:2007.12,Date to:2007.12 | GCI39052 | Inner Joint | | 25 | 22 | 41 | 63 | 86 | |
| | 2007.10-2011.11 | 6MT | F | L | Hatchback FWD D4EA | | GDS27238 | Drive Shaft | 46T | 27 | 28 | 60 | 95 | 659 | |
| | 2007.10-2011.11 | 6MT | F | R | Hatchback FWD D4EA | | GDS27239 | Drive Shaft | 46T | 27 | 28 | 60 | 95 | 955 | |
| | 2007.10-2011.11 | MT/6MT | F | L/R | Hatchback FWD D4EA | | GCO24152 | Outer Joint | 46T | 27 | 26 | 60 | 94 | 67 | M |
| 2.0 (105 kw) | 2007.10-2011.11 | 4AT | F | L | Hatchback FWD G4GC | Date from:2011.11 | GDS24305 | Drive Shaft | 46T | 27 | 27 | 60 | 95 | 675 | |
| | 2007.10-2011.11 | 4AT | F | R | Hatchback FWD G4GC | Date from:2011.11 | GDS24505 | Drive Shaft | 46T | 27 | 27 | 60 | 95 | 946 | |
| | 2007.10-2011.11 | 4AT | F | L | Hatchback FWD G4GC | Date from:2011.11 | GCI24097 | Inner Joint | | 27 | 22 | 41 | 62.5 | 94 | |
| | 2007.10-2011.11 | 4AT | F | R | Hatchback FWD G4GC | Date from:2011.11 | GCI24061 | Inner Joint | | 27 | 22 | 41 | 62 | 86 | |
| | 2007.10-2011.11 | 5MT | F | R | Hatchback FWD G4GC | | GCI24061 | Inner Joint | | 27 | 22 | 41 | 62 | 86 | |
| | 2007.10-2011.11 | AT/MT | F | L | Hatchback FWD G4GC | | GDS24429 | Drive Shaft | 46T | 27 | 27 | 60 | 94.5 | 675 | |
| | 2007.10-2011.11 | AT/MT | F | R | Hatchback FWD G4GC | | GDS24440 | Drive Shaft | 46T | 27 | 27 | 60 | 94.5 | 941 | |
| | 2007.10-2011.11 | AT/MT/4AT/5MT | F | L/R | Hatchback FWD G4GC | | GCO27080 | Outer Joint | 46T | 27 | 23 | 60 | 95 | 58 | M |
| 2.0 (184 kw) | 2017.07- | 6MT | F | R | Hatchback FWD G4KH | Date to:2020.10,with electronic limited slip diff. | GDS87074 | Intermediate Shaft | | 28 | 28 | | | 459 | |
| 2.0 (202 kw) | 2017.07- | 6MT | F | R | Hatchback FWD G4KH | Date to:2020.10,with electronic limited slip diff. | GDS87074 | Intermediate Shaft | | 28 | 28 | | | 459 | |
| **i30 CW** | | | | | | | | | | | | | | | |
| 1.4 (77 kw) | 2007.10-2012.06 | 5MT | F | L | Estate FWD G4FA | | GDS24283 | Drive Shaft | 46T | 27 | 25 | 60 | 94.5 | 674 | |
| | 2007.10-2012.06 | 5MT | F | R | Estate FWD G4FA | | GDS24282 | Drive Shaft | 46T | 27 | 25 | 60 | 94.5 | 941 | |
| | 2007.10-2012.06 | 5MT | F | L | Estate FWD G4FA | | GCI27019 | Inner Joint | | 25 | 22 | 41 | 62 | 93.5 | |
| | 2007.10-2012.06 | 5MT | F | R | Estate FWD G4FA | | GCI39052 | Inner Joint | | 25 | 22 | 41 | 63 | 86 | |
| | 2007.10-2012.06 | MT | F | | Estate FWD G4FA | | GCO24132 | Outer Joint | 46T | 27 | 22 | 60 | 94.5 | 54.5 | M |
| | 2007.10-2012.06 | | F | | Estate FWD G4FA | | GCO24077 | Outer Joint | 46T | 27 | 22 | 60 | 94.5 | 54.5 | M |
| 1.4 (80 kw) | 2009.11-2012.06 | 5MT | F | L | Estate FWD G4FA | Date to:2012.01 | GDS24283 | Drive Shaft | 46T | 27 | 25 | 60 | 94.5 | 674 | |
| | 2009.11-2012.06 | 5MT | F | R | Estate FWD G4FA | Date to:2012.01 | GDS24282 | Drive Shaft | 46T | 27 | 25 | 60 | 94.5 | 941 | |
| | 2009.11-2012.06 | 5MT | F | L/R | Estate FWD G4FA | | GCO24077 | Outer Joint | 46T | 27 | 22 | 60 | 94.5 | 54.5 | M |
| | 2009.11-2012.06 | 5MT | F | L | Estate FWD G4FA | | GCI27019 | Inner Joint | | 25 | 22 | 41 | 62 | 93.5 | |
| | 2009.11-2012.06 | 5MT | F | R | Estate FWD G4FA | | GCI39052 | Inner Joint | | 25 | 22 | 41 | 63 | 86 | |
| | 2009.11-2012.06 | | F | L | Estate FWD G4FA | | GDS24283 | Drive Shaft | 46T | 27 | 25 | 60 | 94.5 | 674 | |
| | 2009.11-2012.06 | | F | R | Estate FWD G4FA | | GDS24282 | Drive Shaft | 46T | 27 | 25 | 60 | 94.5 | 941 | |
| | 2009.11-2012.06 | | F | | Estate FWD G4FA | | GCO24077 | Outer Joint | 46T | 27 | 22 | 60 | 94.5 | 54.5 | M |
| 1.6 (66 kw) | 2008.02-2012.06 | 4AT/5MT/6MT | F | L | Estate FWD D4FB | | GCI24097 | Inner Joint | | 27 | 22 | 41 | 62.5 | 94 | |
| | 2008.02-2012.06 | 4AT/5MT/6MT | F | R | Estate FWD D4FB | | GCI24061 | Inner Joint | | 27 | 22 | 41 | 62 | 86 | |
| | 2008.02-2012.06 | 4AT/5MT/6MT | F | L/R | Estate FWD D4FB | | GCI24098 | Inner Joint | | 27 | 25 | 41 | 61.5 | 100.5 | |
| | 2008.02-2012.06 | 6AT | F | | Estate FWD D4FB | Date From:2011.10 | GCO24227 | Outer Joint | 46T | 27 | 24 | 60 | 92.5 | 58 | M |
| | 2008.02-2012.06 | AT | F | L | Estate FWD D4FB | | GDS24305 | Drive Shaft | 46T | 27 | 27 | 60 | 95 | 675 | |
| | 2008.02-2012.06 | AT | F | R | Estate FWD D4FB | | GDS24505 | Drive Shaft | 46T | 27 | 27 | 60 | 95 | 946 | |
| | 2008.02-2012.06 | AT | F | L/R | Estate FWD D4FB | | GCO27080 | Outer Joint | 46T | 27 | 23 | 60 | 95 | 58 | M |
| | 2008.02-2012.06 | MT | F | L | Estate FWD D4FB | | GDS24181 | Drive Shaft | 46T | 27 | 25 | 60 | 94.5 | 679 | |
| | 2008.02-2012.06 | MT | F | L | Estate FWD D4FB | Date to:2011.10 | GDS24296 | Drive Shaft | 46T | 27 | 27 | 60 | 95 | 663 | |
| | 2008.02-2012.06 | MT | F | L | Estate FWD D4FB | Date from:2011.11 | GDS24565 | Drive Shaft | 46T | 27 | 27 | 60 | 95 | 665 | |
| | 2008.02-2012.06 | MT | F | R | Estate FWD D4FB | | GDS24566 | Drive Shaft | 46T | 27 | 27 | 60 | 95 | 954 | |
| | 2008.02-2012.06 | MT | F | L/R | Estate FWD D4FB | Date to:2011.10 | GCO24126 | Outer Joint | 46T | 27 | 25 | 60 | 95 | 63 | M |
| | 2008.02-2012.06 | MT | F | L/R | Estate FWD D4FB | Date from:2011.11 | GCO24339 | Outer Joint | 46T | 27 | 25 | 60 | 95 | 64 | M |

| | YEAR | TRANSM. | F/R | L/R | BODY STYLE & DRIVE TYPE & ENGINE | REMARKS | G-AP Ref. | PRODUCT | ABS | Technical Specifications A | B | C | H | L | P |
|---|---|---|---|---|---|---|---|---|---|---|---|---|---|---|---|
| **HYUNDAI** **i30 CW** | | | | | | | | | | | | | | | |
| 1.6 (66 kw) | 2008.02-2012.06 | MT/5MT | F | L/R | Estate FWD D4FB | | GCO24152 | Outer Joint | 46T | 27 | 26 | 60 | 94 | 67 | M |
| 1.6 (85 kw) | 2008.02-2012.06 | 4AT | F | R | Estate FWD D4FB | | GDS24505 | Drive Shaft | 46T | 27 | 27 | 60 | 95 | 946 | |
| | 2008.02-2012.06 | 6MT | F | L | Estate FWD D4FB | Date from:2012.01;Vehicle Production Country:Czech Republic | GDS24565 | Drive Shaft | 46T | 27 | 27 | 60 | 95 | 665 | |
| | 2008.02-2012.06 | 6MT | F | L/R | Estate FWD D4FB | Date from:2012.01;Vehicle Production Country:Czech Republic | GCO24339 | Outer Joint | 46T | 27 | 25 | 60 | 95 | 64 | M |
| | 2008.02-2012.06 | 6MT | F | L | Estate FWD D4FB | | GCI24098 | Inner Joint | | 27 | 25 | 41 | 61.5 | 100.5 | |
| | 2008.02-2012.06 | 6MT | F | R | Estate FWD D4FB | Vehicle Production Country:Czech Republic | GCI24098 | Inner Joint | | 27 | 25 | 41 | 61.5 | 100.5 | |
| | 2008.02-2012.06 | AT | F | L | Estate FWD D4FB | | GDS24305 | Drive Shaft | 46T | 27 | 27 | 60 | 95 | 675 | |
| | 2008.02-2012.06 | AT | F | L/R | Estate FWD D4FB | | GCO27080 | Outer Joint | 46T | 27 | 23 | 60 | 95 | 58 | M |
| | 2008.02-2012.06 | MT | F | L | Estate FWD D4FB | | GDS24181 | Drive Shaft | 46T | 27 | 25 | 60 | 94.5 | 679 | |
| | 2008.02-2012.06 | MT | F | L | Estate FWD D4FB | | GDS24296 | Drive Shaft | 46T | 27 | 27 | 60 | 95 | 663 | |
| | 2008.02-2012.06 | MT | F | R | Estate FWD D4FB | | GDS24566 | Drive Shaft | 46T | 27 | 27 | 60 | 95 | 954 | |
| | 2008.02-2012.06 | MT/5MT | F | L/R | Estate FWD D4FB | | GCO24152 | Outer Joint | 46T | 27 | 26 | 60 | 94 | 67 | M |
| | 2008.02-2012.06 | | F | | Estate FWD D4FB | | GCO24126 | Outer Joint | 46T | 27 | 25 | 60 | 95 | 63 | M |
| | 2008.02-2012.06 | | F | | Estate FWD D4FB | | GCI24061 | Inner Joint | | 27 | 22 | 41 | 62 | 86 | |
| | 2008.02-2012.06 | | F | | Estate FWD D4FB | | GCI24097 | Inner Joint | | 27 | 22 | 41 | 62.5 | 94 | |
| | 2008.02-2012.06 | 4AT/5MT | F | L | Estate FWD G4FC | | GCI27019 | Inner Joint | | 25 | 22 | 41 | 62 | 93.5 | |
| | 2008.02-2012.06 | 5MT | F | L/R | Estate FWD G4FC | | GCO24095 | Outer Joint | 46T | 27 | 22 | 60 | 94.5 | 58.5 | M |
| | 2008.02-2012.06 | 6AT | F | | Estate FWD G4FC | Date From:2011.10 | GCO24227 | Outer Joint | 46T | 27 | 24 | 60 | 92.5 | 58 | M |
| | 2008.02-2012.06 | AT/MT | F | L | Estate FWD G4FC | Date to:2011.10 | GDS24283 | Drive Shaft | 46T | 27 | 25 | 60 | 94.5 | 674 | |
| | 2008.02-2012.06 | AT/MT | F | R | Estate FWD G4FC | Date to:2011.10 | GDS24282 | Drive Shaft | 46T | 27 | 25 | 60 | 94.5 | 941 | |
| | 2008.02-2012.06 | AT/MT | F | R | Estate FWD G4FC | Date to:2011.10 | GCI39052 | Inner Joint | | 25 | 22 | 41 | 63 | 86 | |
| | 2008.02-2012.06 | | F | | Estate FWD G4FC | | GCO24077 | Outer Joint | 46T | 27 | 22 | 60 | 94.5 | 54.5 | M |
| 1.6 (90 kw) | 2008.02-2012.06 | 4AT/5MT | F | L | Estate FWD G4FC | | GCI27019 | Inner Joint | | 25 | 22 | 41 | 62 | 93.5 | |
| | 2008.02-2012.06 | 5MT | F | L/R | Estate FWD G4FC | | GCO24095 | Outer Joint | 46T | 27 | 22 | 60 | 94.5 | 58.5 | M |
| | 2008.02-2012.06 | 6AT | F | | Estate FWD G4FC | Date From:2011.10 | GCO24227 | Outer Joint | 46T | 27 | 24 | 60 | 92.5 | 58 | M |
| | 2008.02-2012.06 | AT/MT | F | L | Estate FWD G4FC | Date to:2011.10 | GDS24283 | Drive Shaft | 46T | 27 | 25 | 60 | 94.5 | 674 | |
| | 2008.02-2012.06 | AT/MT | F | R | Estate FWD G4FC | Date to:2011.10 | GDS24282 | Drive Shaft | 46T | 27 | 25 | 60 | 94.5 | 941 | |
| | 2008.02-2012.06 | AT/MT | F | R | Estate FWD G4FC | Date to:2011.10 | GCI39052 | Inner Joint | | 25 | 22 | 41 | 63 | 86 | |
| | 2008.02-2012.06 | | F | | Estate FWD G4FC | | GCO24077 | Outer Joint | 46T | 27 | 22 | 60 | 94.5 | 54.5 | M |
| 1.6 (93 kw) | 2008.02-2012.06 | 4AT/5MT | F | L | Estate FWD G4FC | | GDS24283 | Drive Shaft | 46T | 27 | 25 | 60 | 94.5 | 674 | |
| | 2008.02-2012.06 | 4AT/5MT | F | R | Estate FWD G4FC | | GDS24282 | Drive Shaft | 46T | 27 | 25 | 60 | 94.5 | 941 | |
| | 2008.02-2012.06 | 4AT/5MT | F | L/R | Estate FWD G4FC | | GCO24077 | Outer Joint | 46T | 27 | 22 | 60 | 94.5 | 54.5 | M |
| | 2008.02-2012.06 | 4AT/5MT | F | L | Estate FWD G4FC | | GCI27019 | Inner Joint | | 25 | 22 | 41 | 62 | 93.5 | |
| | 2008.02-2012.06 | 4AT/5MT | F | R | Estate FWD G4FC | | GCI39052 | Inner Joint | | 25 | 22 | 41 | 63 | 86 | |
| | 2008.02-2012.06 | 5MT | F | L/R | Estate FWD G4FC | | GCO24095 | Outer Joint | 46T | 27 | 22 | 60 | 94.5 | 58.5 | M |
| | 2008.02-2012.06 | AT | F | L/R | Estate FWD G4FC | Date from:2012.03 | GCO24227 | Outer Joint | 46T | 27 | 24 | 60 | 92.5 | 58 | M |
| 1.6 (94 kw) | 2010.01-2012.06 | 4AT | F | R | Estate FWD D4FB | | GDS24505 | Drive Shaft | 46T | 27 | 27 | 60 | 95 | 946 | |
| | 2010.01-2012.06 | 4AT/5MT | F | | Estate FWD D4FB | | GCO24132 | Outer Joint | 46T | 27 | 22 | 60 | 94.5 | 54.5 | M |
| | 2010.01-2012.06 | 4AT/5MT | F | L | Estate FWD D4FB | | GCI39052 | Inner Joint | | 25 | 22 | 41 | 63 | 86 | |
| | 2010.01-2012.06 | 5MT | F | L/R | Estate FWD D4FB | | GCO24152 | Outer Joint | 46T | 27 | 26 | 60 | 94 | 67 | M |
| | 2010.01-2012.06 | 6AT | F | | Estate FWD D4FB | Date From:2011.10 | GCO24227 | Outer Joint | 46T | 27 | 24 | 60 | 92.5 | 58 | M |
| | 2010.01-2012.06 | 6MT | F | L | Estate FWD D4FB | Date from:2012.01;Vehicle Production Country:Czech Republic | GDS24565 | Drive Shaft | 46T | 27 | 27 | 60 | 95 | 665 | |
| | 2010.01-2012.06 | 6MT | F | L/R | Estate FWD D4FB | Date from:2012.01;Vehicle Production Country:Czech Republic | GCO24339 | Outer Joint | 46T | 27 | 25 | 60 | 95 | 64 | M |
| | 2010.01-2012.06 | 6MT | F | L | Estate FWD D4FB | | GCI24098 | Inner Joint | | 27 | 25 | 41 | 61.5 | 100.5 | |
| | 2010.01-2012.06 | 6MT | F | R | Estate FWD D4FB | Vehicle Production Country:Czech Republic | GCI24098 | Inner Joint | | 27 | 25 | 41 | 61.5 | 100.5 | |
| | 2010.01-2012.06 | AT | F | L | Estate FWD D4FB | | GDS24305 | Drive Shaft | 46T | 27 | 27 | 60 | 95 | 675 | |
| | 2010.01-2012.06 | MT | F | L | Estate FWD D4FB | | GDS24181 | Drive Shaft | 46T | 27 | 25 | 60 | 94.5 | 679 | |
| | 2010.01-2012.06 | MT | F | L | Estate FWD D4FB | | GDS24296 | Drive Shaft | 46T | 27 | 27 | 60 | 95 | 663 | |
| | 2010.01-2012.06 | MT | F | R | Estate FWD D4FB | | GDS24566 | Drive Shaft | 46T | 27 | 27 | 60 | 95 | 954 | |
| | 2010.01-2012.06 | | F | | Estate FWD D4FB | | GCO24077 | Outer Joint | 46T | 27 | 22 | 60 | 94.5 | 54.5 | M |
| | 2010.01-2012.06 | | F | | Estate FWD D4FB | | GCO24126 | Outer Joint | 46T | 27 | 25 | 60 | 95 | 63 | M |
| | 2010.01-2012.06 | | F | | Estate FWD D4FB | | GCI24061 | Inner Joint | | 27 | 22 | 41 | 62 | 86 | |
| | 2010.01-2012.06 | | F | | Estate FWD D4FB | | GCI24097 | Inner Joint | | 27 | 22 | 41 | 62.5 | 94 | |
| 2.0 (100 kw) | 2008.10-2012.06 | 4AT/5MT | F | L | Estate FWD D4EA | | GCI39052 | Inner Joint | | 25 | 22 | 41 | 63 | 86 | |
| | 2008.10-2012.06 | 6MT | F | L | Estate FWD D4EA | | GDS27238 | Drive Shaft | 46T | 27 | 28 | 60 | 95 | 659 | |
| | 2008.10-2012.06 | 6MT | F | R | Estate FWD D4EA | | GDS27239 | Drive Shaft | 46T | 27 | 28 | 60 | 95 | 955 | |
| | 2008.10-2012.06 | 6MT | F | L/R | Estate FWD D4EA | | GCO24126 | Outer Joint | 46T | 27 | 25 | 60 | 95 | 63 | M |
| 2.0 (103 kw) | 2008.02-2012.06 | 4AT/5MT | F | L | Estate FWD D4EA | | GCI39052 | Inner Joint | | 25 | 22 | 41 | 63 | 86 | |
| | 2008.02-2012.06 | 6MT | F | L | Estate FWD D4EA | | GDS27238 | Drive Shaft | 46T | 27 | 28 | 60 | 95 | 659 | |
| | 2008.02-2012.06 | 6MT | F | R | Estate FWD D4EA | | GDS27239 | Drive Shaft | 46T | 27 | 28 | 60 | 95 | 955 | |
| | 2008.02-2012.06 | MT/6MT | F | L/R | Estate FWD D4EA | | GCO24152 | Outer Joint | 46T | 27 | 26 | 60 | 94 | 67 | M |
| 2.0 (105 kw) | 2008.02-2012.06 | 4AT | F | L | Estate FWD G4GC | Date from:2011.11 | GDS24305 | Drive Shaft | 46T | 27 | 27 | 60 | 95 | 675 | |
| | 2008.02-2012.06 | 4AT | F | R | Estate FWD G4GC | Date from:2011.11 | GDS24505 | Drive Shaft | 46T | 27 | 27 | 60 | 95 | 946 | |
| | 2008.02-2012.06 | 4AT | F | L | Estate FWD G4GC | Date from:2011.11 | GCI24097 | Inner Joint | | 27 | 22 | 41 | 62.5 | 94 | |
| | 2008.02-2012.06 | 4AT | F | R | Estate FWD G4GC | Date from:2011.11 | GCI24061 | Inner Joint | | 27 | 22 | 41 | 62 | 86 | |

| | YEAR | TRANSM. | F/R | L/R | BODY STYLE & DRIVE TYPE & ENGINE | REMARKS | G-AP Ref. | PRODUCT | ABS | Technical Specifications A | B | C | H | L | P |
|---|---|---|---|---|---|---|---|---|---|---|---|---|---|---|---|
| **HYUNDAI** | | | | | | | | | | | | | | | |
| **i30 CW** | | | | | | | | | | | | | | | |
| 2.0 (105 kw) | 2008.02-2012.06 | 4AT/5MT/6MT | F | L | Estate FWD G4GC | | GDS24429 | Drive Shaft | 46T | 27 | 27 | 60 | 94.5 | 675 | |
| | 2008.02-2012.06 | 4AT/5MT/6MT | F | R | Estate FWD G4GC | | GDS24440 | Drive Shaft | 46T | 27 | 27 | 60 | 94.5 | 941 | |
| | 2008.02-2012.06 | 5MT | F | R | Estate FWD G4GC | | GCI24061 | Inner Joint | | 27 | 22 | 41 | 62 | 86 | |
| | 2008.02-2012.06 | AT/MT/4AT/5MT | F | L/R | Estate FWD G4GC | | GCO27080 | Outer Joint | 46T | 27 | 23 | 60 | 95 | 58 | M |
| **i30 Fastback** | | | | | | | | | | | | | | | |
| 1.0 (88 kw) | 2017.06- | 6MT | F | L | Hatchback FWD G3LC;G3LE | | GDS84378 | Drive Shaft | | 27 | 25 | 60 | 95 | 723 | |
| | 2017.06- | 6MT | F | R | Hatchback FWD G3LC;G3LE | | GDS84373 | Drive Shaft | | 27 | 25 | 60 | 95 | 939 | |
| | 2017.06- | 6MT | F | L/R | Hatchback FWD G3LC;G3LE | | GCO82724 | Outer Joint | | 27 | 23 | 60 | 95 | 58 | M |
| | 2017.06- | 6MT | F | L/R | Hatchback FWD G3LC;G3LE | | GCI81749 | Inner Joint | | 25 | 31 | 41 | 63 | 90 | |
| | 2017.06- | 7DCT | F | L | Hatchback FWD G3LC;G3LE | | GDS58130 | Drive Shaft | | 27 | 27 | 60 | 95 | 690 | |
| | 2017.06- | 7DCT | F | R | Hatchback FWD G3LC;G3LE | | GDS58131 | Drive Shaft | | 27 | 27 | 60 | 95 | 939 | |
| | 2017.06- | 7DCT | F | L/R | Hatchback FWD G3LC;G3LE | | GCO83450 | Outer Joint | | 27 | 23 | 60 | 95 | 58 | M |
| | 2017.06- | 7DCT | F | L/R | Hatchback FWD G3LC;G3LE | | GCI82352 | Inner Joint | | 27 | 31 | 30 | 67.5 | 81 | |
| | 2020.06- | 6MT | F | L | Hatchback FWD G3LF | | GDS84378 | Drive Shaft | | 27 | 25 | 60 | 95 | 723 | |
| | 2020.06- | 6MT | F | R | Hatchback FWD G3LF | | GDS84373 | Drive Shaft | | 27 | 25 | 60 | 95 | 939 | |
| | 2020.06- | 6MT | F | L/R | Hatchback FWD G3LF | | GCI81749 | Inner Joint | | 25 | 31 | 41 | 63 | 90 | |
| | 2020.06- | 7DCT | F | L | Hatchback FWD G3LF | | GDS58130 | Drive Shaft | | 27 | 27 | 60 | 95 | 690 | |
| | 2020.06- | 7DCT | F | R | Hatchback FWD G3LF | | GDS58131 | Drive Shaft | | 27 | 27 | 60 | 95 | 939 | |
| | 2020.06- | 7DCT | F | L/R | Hatchback FWD G3LF | | GCO83450 | Outer Joint | | 27 | 23 | 60 | 95 | 58 | M |
| | 2020.06- | 7DCT | F | L/R | Hatchback FWD G3LF | | GCI82352 | Inner Joint | | 27 | 31 | 30 | 67.5 | 81 | |
| 1.4 (103 kw) | 2017.06- | 6MT | F | L | Hatchback FWD G4LD | | GDS84377 | Drive Shaft | | 27 | 27 | 60 | 95 | 693 | |
| | 2017.06- | 6MT | F | R | Hatchback FWD G4LD | | GDS84376 | Drive Shaft | | 27 | 27 | 60 | 95 | 964 | |
| | 2017.06- | 6MT | F | L/R | Hatchback FWD G4LD | | GCI82628 | Inner Joint | | 27 | 31 | 41 | 62 | 86 | |
| | 2017.06- | 6MT/7DCT | F | L/R | Hatchback FWD G4LD | | GCO82724 | Outer Joint | | 27 | 23 | 60 | 95 | 58 | M |
| | 2017.06- | 7DCT | F | L | Hatchback FWD G4LD | | GDS84407 | Drive Shaft | | 27 | 28 | 60 | 95 | 653 | |
| | 2017.06- | 7DCT | F | R | Hatchback FWD G4LD | | GDS84406 | Drive Shaft | | 27 | 28 | 60 | 95 | 996 | |
| | 2017.06- | 7DCT | F | L/R | Hatchback FWD G4LD | | GCI82746 | Inner Joint | | 28 | 31 | 41 | 61.5 | 95 | |
| 1.5 (71 kw) | 2024.04- | 6MT | F | L | Hatchback FWD G4LG | | GDS84165 | Drive Shaft | | 27 | 25 | 60 | 94.5 | 703 | |
| | 2024.04- | 6MT | F | R | Hatchback FWD G4LG | | GDS84164 | Drive Shaft | | 27 | 25 | 60 | 94.5 | 952 | |
| 1.5 (118 kw) | 2020.03- | 6MT | F | L | Hatchback FWD G4LK | | GDS84377 | Drive Shaft | | 27 | 27 | 60 | 95 | 693 | |
| | 2020.03- | 6MT | F | R | Hatchback FWD G4LK | | GDS84376 | Drive Shaft | | 27 | 27 | 60 | 95 | 964 | |
| | 2020.03- | 6MT | F | L/R | Hatchback FWD G4LK | | GCO82724 | Outer Joint | | 27 | 23 | 60 | 95 | 58 | M |
| | 2020.03- | 6MT | F | L/R | Hatchback FWD G4LK | | GCI82628 | Inner Joint | | 27 | 31 | 41 | 62 | 86 | |
| | 2020.03- | 7DCT | F | L | Hatchback FWD G4LK | | GDS56834 | Drive Shaft | | 27 | 28 | 60 | 95 | 645 | |
| | 2020.03- | 7DCT | F | R | Hatchback FWD G4LK | | GDS56835 | Drive Shaft | | 27 | 28 | 60 | 95 | 985 | |
| | 2020.03- | 7DCT | F | L/R | Hatchback FWD G4LK | | GCO83450 | Outer Joint | | 27 | 23 | 60 | 95 | 58 | M |
| | 2020.03- | 7DCT | F | L/R | Hatchback FWD G4LK | | GCI83516 | Inner Joint | | 28 | 31 | 33 | 67.5 | 84.5 | |
| 1.6 (100 kw) | 2017.12-2022.01 | 6MT | F | L | Hatchback FWD D4FB | | GDS84405 | Drive Shaft | | 27 | 27 | 60 | 95 | 674 | |
| | 2017.12-2022.01 | 6MT | F | R | Hatchback FWD D4FB | | GDS84404 | Drive Shaft | | 27 | 27 | 60 | 95 | 983 | |
| | 2017.12-2022.01 | 6MT | F | L/R | Hatchback FWD D4FB | | GCI82745 | Inner Joint | | 27 | 32 | 41 | 61.5 | 93.5 | |
| | 2017.12-2022.01 | 6MT/7DCT | F | L/R | Hatchback FWD D4FB | | GCO81818 | Outer Joint | | 27 | 24 | 60 | 95 | 59 | M |
| | 2017.12-2022.01 | 7DCT | F | L | Hatchback FWD D4FB | | GDS84372 | Drive Shaft | | 27 | 28 | 60 | 95 | 637 | |
| | 2017.12-2022.01 | 7DCT | F | R | Hatchback FWD D4FB | | GDS84371 | Drive Shaft | | 27 | 28 | 60 | 95 | 1010 | |
| | 2017.12-2022.01 | 7DCT | F | L/R | Hatchback FWD D4FB | | GCI81867 | Inner Joint | | 28 | 32 | 41 | 61.5 | 95 | |
| | 2018.09- | 6MT | F | L | Hatchback FWD D4FE | | GDS84405 | Drive Shaft | | 27 | 27 | 60 | 95 | 674 | |
| | 2018.09- | 6MT | F | R | Hatchback FWD D4FE | | GDS84404 | Drive Shaft | | 27 | 27 | 60 | 95 | 983 | |
| | 2018.09- | 6MT | F | L/R | Hatchback FWD D4FE | | GCI82745 | Inner Joint | | 27 | 32 | 41 | 61.5 | 93.5 | |
| | 2018.09- | 6MT/7DCT | F | L/R | Hatchback FWD D4FE | | GCO81818 | Outer Joint | | 27 | 24 | 60 | 95 | 59 | M |
| | 2018.09- | 7DCT | F | L | Hatchback FWD D4FE | | GDS84372 | Drive Shaft | | 27 | 28 | 60 | 95 | 637 | |
| | 2018.09- | 7DCT | F | R | Hatchback FWD D4FE | | GDS84371 | Drive Shaft | | 27 | 28 | 60 | 95 | 1010 | |
| | 2018.09- | 7DCT | F | L/R | Hatchback FWD D4FE | | GCI81867 | Inner Joint | | 28 | 32 | 41 | 61.5 | 95 | |
| | 2020.03- | 6MT | F | L | Hatchback FWD D4FE | | GDS84405 | Drive Shaft | | 27 | 27 | 60 | 95 | 674 | |
| | 2020.03- | 6MT | F | R | Hatchback FWD D4FE | | GDS84404 | Drive Shaft | | 27 | 27 | 60 | 95 | 983 | |
| | 2020.03- | 6MT | F | L/R | Hatchback FWD D4FE | | GCO81818 | Outer Joint | | 27 | 24 | 60 | 95 | 59 | M |
| | 2020.03- | 6MT | F | L/R | Hatchback FWD D4FE | | GCI82745 | Inner Joint | | 27 | 32 | 41 | 61.5 | 93.5 | |
| **i40** | | | | | | | | | | | | | | | |
| 1.6 (85 kw) | 2018.07-2019.05 | 6MT | F | L/R | Estate FWD D4FE | | GCO24299 | Outer Joint | 48T | 30 | 25 | 73 | 95 | 61.5 | M |
| | 2018.07-2019.05 | 6MT | F | L/R | Saloon FWD D4FE | | GCO24299 | Outer Joint | 48T | 30 | 25 | 73 | 95 | 61.5 | M |
| 1.7 (85 kw) | 2011.07-2019.05 | 6MT | F | L | Estate FWD D4FD | Date to:2015.01 | GDS24390 | Drive Shaft | 48T | 27 | 27 | 62 | 92.5 | 669 | |
| | 2011.07-2019.05 | 6MT | F | R | Estate FWD D4FD | Date to:2015.01 | GDS24389 | Drive Shaft | 48T | 27 | 27 | 62 | 92.5 | 983 | |
| | 2011.07-2019.05 | 6MT | F | L/R | Estate FWD D4FD | Date to:2015.01 | GCO24138 | Outer Joint | 48T | 27 | 25 | 62 | 92.5 | 61 | M |
| | 2011.07-2019.05 | 6MT | F | L/R | Estate FWD D4FD | Date from:2015.02 | GCO24299 | Outer Joint | 48T | 30 | 25 | 73 | 95 | 61.5 | M |
| | 2011.07-2019.05 | 6MT | F | L/R | Estate FWD D4FD | Date to:2015.01 | GCI24043 | Inner Joint | | 27 | 25 | 41 | 62.8 | 92.5 | |
| | 2012.03-2019.05 | 6MT | F | L | Saloon FWD D4FD | Date to:2015.01 | GDS24390 | Drive Shaft | 48T | 27 | 27 | 62 | 92.5 | 669 | |
| | 2012.03-2019.05 | 6MT | F | R | Saloon FWD D4FD | Date to:2015.01 | GDS24389 | Drive Shaft | 48T | 27 | 27 | 62 | 92.5 | 983 | |

| | YEAR | TRANSM. | F/R | L/R | BODY STYLE & DRIVE TYPE & ENGINE | REMARKS | G-AP Ref. | PRODUCT | ABS | Technical Specifications A | B | C | H | L | P |
|---|---|---|---|---|---|---|---|---|---|---|---|---|---|---|---|
| **HYUNDAI** **i40** | | | | | | | | | | | | | | | |
| 1.7 (85 kw) | 2012.03-2019.05 | 6MT | F | L/R | Saloon FWD D4FD | Date to:2015.01 | GCO24138 | Outer Joint | 48T | 27 | 25 | 62 | 92.5 | 61 | M |
| | 2012.03-2019.05 | 6MT | F | L/R | Saloon FWD D4FD | Date from:2015.02 | GCO24299 | Outer Joint | 48T | 30 | 25 | 73 | 95 | 61.5 | M |
| | 2012.03-2019.05 | 6MT | F | L/R | Saloon FWD D4FD | Date to:2015.01 | GCI24043 | Inner Joint | | 27 | 25 | 41 | 62.8 | 92.5 | |
| | 2015.05-2019.05 | 6MT | F | L/R | Estate Van FWD D4FD | | GCO24299 | Outer Joint | 48T | 30 | 25 | 73 | 95 | 61.5 | M |
| 1.7 (100 kw) | 2011.07-2019.05 | 6AT | F | L | Estate FWD D4FD | | GDS24340 | Drive Shaft | 48T | 27 | 28 | 62 | 92.5 | 672 | |
| | 2011.07-2019.05 | 6AT | F | R | Estate FWD D4FD | | GDS24563 | Drive Shaft | 48T | 27 | 28 | 62 | 92.5 | 960 | |
| | 2011.07-2019.05 | 6AT | F | L/R | Estate FWD D4FD | | GCO24138 | Outer Joint | 48T | 27 | 25 | 62 | 92.5 | 61 | M |
| | 2011.07-2019.05 | 6AT | F | R | Estate FWD D4FD | | GCI24159 | Inner Joint | | 28 | 25 | 33 | 67 | 84 | |
| | 2011.07-2019.05 | 6AT | F | L/R | Estate FWD D4FD | | GCI24056 | Inner Joint | | 27 | 25 | 30 | 67 | 83.5 | |
| | 2011.07-2019.05 | 6MT | F | L | Estate FWD D4FD | | GDS24392 | Drive Shaft | 48T | 27 | 28 | 62 | 92.5 | 664 | |
| | 2011.07-2019.05 | 6MT | F | R | Estate FWD D4FD | | GDS24347 | Drive Shaft | 48T | 27 | 28 | 62 | 92.5 | 988 | |
| | 2011.07-2019.05 | 6MT | F | L | Estate FWD D4FD | Date To:2015.01 | GCI24092 | Inner Joint | | 28 | 25 | 41 | 61.5 | 93 | |
| | 2012.03-2019.05 | 6AT | F | L | Saloon FWD D4FD | | GDS24340 | Drive Shaft | 48T | 27 | 28 | 62 | 92.5 | 672 | |
| | 2012.03-2019.05 | 6AT | F | R | Saloon FWD D4FD | | GDS24563 | Drive Shaft | 48T | 27 | 28 | 62 | 92.5 | 960 | |
| | 2012.03-2019.05 | 6AT | F | L/R | Saloon FWD D4FD | | GCO24138 | Outer Joint | 48T | 27 | 25 | 62 | 92.5 | 61 | M |
| | 2012.03-2019.05 | 6AT | F | L | Saloon FWD D4FD | | GCI24100 | Inner Joint | | 28 | 25 | 33 | 67.5 | 83.5 | |
| | 2012.03-2019.05 | 6AT | F | R | Saloon FWD D4FD | | GCI24159 | Inner Joint | | 28 | 25 | 33 | 67 | 84 | |
| | 2012.03-2019.05 | 6AT | F | L/R | Saloon FWD D4FD | | GCI24056 | Inner Joint | | 27 | 25 | 30 | 67 | 83.5 | |
| | 2012.03-2019.05 | 6MT | F | L | Saloon FWD D4FD | | GDS24392 | Drive Shaft | 48T | 27 | 28 | 62 | 92.5 | 664 | |
| | 2012.03-2019.05 | 6MT | F | R | Saloon FWD D4FD | | GDS24347 | Drive Shaft | 48T | 27 | 28 | 62 | 92.5 | 988 | |
| | 2012.03-2019.05 | 6MT | F | L | Saloon FWD D4FD | Date To:2015.01 | GCI24092 | Inner Joint | | 28 | 25 | 41 | 61.5 | 93 | |
| 2.0 (110 kw) | 2012.10-2019.05 | 6AT | F | L | Estate FWD G4NA | Date to:2015.01 | GDS24262 | Drive Shaft | 48T | 27 | 27 | 62 | 92.5 | 672 | |
| | 2012.10-2019.05 | 6AT | F | L | Estate FWD G4NA | Date from:2015.02 | GDS57508 | Drive Shaft | 48T | 30 | 27 | 73 | 95 | 657 | |
| | 2012.10-2019.05 | 6AT | F | R | Estate FWD G4NA | Date to:2015.01 | GDS24391 | Drive Shaft | 48T | 27 | 27 | 62 | 92.5 | 959 | |
| | 2012.10-2019.05 | 6AT | F | R | Estate FWD G4NA | Date from:2015.02 | GDS57509 | Drive Shaft | 48T | 30 | 27 | 73 | 95 | 948 | |
| | 2012.10-2019.05 | 6AT | F | L/R | Estate FWD G4NA | | GCI24056 | Inner Joint | | 27 | 25 | 30 | 67 | 83.5 | |
| | 2012.10-2019.05 | 6AT/6MT | F | L/R | Estate FWD G4NA | Date to:2015.01 | GCO24138 | Outer Joint | 48T | 27 | 25 | 62 | 92.5 | 61 | M |
| | 2012.10-2019.05 | 6AT/6MT | F | L/R | Estate FWD G4NA | Date from:2015.02 | GCO24299 | Outer Joint | 48T | 30 | 25 | 73 | 95 | 61.5 | M |
| | 2012.10-2019.05 | 6MT | F | L | Estate FWD G4NA | | GDS24390 | Drive Shaft | 48T | 27 | 27 | 62 | 92.5 | 669 | |
| | 2012.10-2019.05 | 6MT | F | R | Estate FWD G4NA | | GDS24389 | Drive Shaft | 48T | 27 | 27 | 62 | 92.5 | 983 | |
| | 2012.10-2019.05 | 6AT | F | L | Saloon FWD G4NA | Date to:2015.01 | GDS24262 | Drive Shaft | 48T | 27 | 27 | 62 | 92.5 | 672 | |
| | 2012.10-2019.05 | 6AT | F | L | Saloon FWD G4NA | Date from:2015.02 | GDS57508 | Drive Shaft | 48T | 30 | 27 | 73 | 95 | 657 | |
| | 2012.10-2019.05 | 6AT | F | R | Saloon FWD G4NA | Date to:2015.01 | GDS24391 | Drive Shaft | 48T | 27 | 27 | 62 | 92.5 | 959 | |
| | 2012.10-2019.05 | 6AT | F | R | Saloon FWD G4NA | Date from:2015.02 | GDS57509 | Drive Shaft | 48T | 30 | 27 | 73 | 95 | 948 | |
| | 2012.10-2019.05 | 6AT | F | L/R | Saloon FWD G4NA | | GCI24056 | Inner Joint | | 27 | 25 | 30 | 67 | 83.5 | |
| | 2012.10-2019.05 | 6AT/6MT | F | L/R | Saloon FWD G4NA | Date to:2015.01 | GCO24138 | Outer Joint | 48T | 27 | 25 | 62 | 92.5 | 61 | M |
| | 2012.10-2019.05 | 6AT/6MT | F | L/R | Saloon FWD G4NA | Date from:2015.02 | GCO24299 | Outer Joint | 48T | 30 | 25 | 73 | 95 | 61.5 | M |
| | 2012.10-2019.05 | 6MT | F | L | Saloon FWD G4NA | | GDS24390 | Drive Shaft | 48T | 27 | 27 | 62 | 92.5 | 669 | |
| | 2012.10-2019.05 | 6MT | F | R | Saloon FWD G4NA | | GDS24389 | Drive Shaft | 48T | 27 | 27 | 62 | 92.5 | 983 | |
| 2.0 (121 kw) | 2012.03-2019.05 | 6AT | F | L | Saloon FWD G4NA | Date to:2015.01 | GDS24262 | Drive Shaft | 48T | 27 | 27 | 62 | 92.5 | 672 | |
| | 2012.03-2019.05 | 6AT | F | L | Saloon FWD G4NA | Date from:2015.02 | GDS57508 | Drive Shaft | 48T | 30 | 27 | 73 | 95 | 657 | |
| | 2012.03-2019.05 | 6AT | F | R | Saloon FWD G4NA | Date to:2015.01 | GDS24391 | Drive Shaft | 48T | 27 | 27 | 62 | 92.5 | 959 | |
| | 2012.03-2019.05 | 6AT | F | R | Saloon FWD G4NA | Date from:2015.02 | GDS57509 | Drive Shaft | 48T | 30 | 27 | 73 | 95 | 948 | |
| | 2012.03-2019.05 | 6AT | F | L/R | Saloon FWD G4NA | | GCI24056 | Inner Joint | | 27 | 25 | 30 | 67 | 83.5 | |
| | 2012.03-2019.05 | 6AT/6MT | F | L/R | Saloon FWD G4NA | Date from:2015.02 | GCO24299 | Outer Joint | 48T | 30 | 25 | 73 | 95 | 61.5 | M |
| | 2012.03-2019.05 | 6MT | F | L | Saloon FWD G4NA | Date to:2015.01 | GDS24390 | Drive Shaft | 48T | 27 | 27 | 62 | 92.5 | 669 | |
| | 2012.03-2019.05 | 6MT | F | R | Saloon FWD G4NA | Date to:2015.01 | GDS24389 | Drive Shaft | 48T | 27 | 27 | 62 | 92.5 | 983 | |
| | 2012.06-2019.05 | 6AT | F | L | Estate FWD G4NA | Date to:2015.01 | GDS24262 | Drive Shaft | 48T | 27 | 27 | 62 | 92.5 | 672 | |
| | 2012.06-2019.05 | 6AT | F | L | Estate FWD G4NA | Date from:2015.02 | GDS57508 | Drive Shaft | 48T | 30 | 27 | 73 | 95 | 657 | |
| | 2012.06-2019.05 | 6AT | F | R | Estate FWD G4NA | Date to:2015.01 | GDS24391 | Drive Shaft | 48T | 27 | 27 | 62 | 92.5 | 959 | |
| | 2012.06-2019.05 | 6AT | F | R | Estate FWD G4NA | Date from:2015.02 | GDS57509 | Drive Shaft | 48T | 30 | 27 | 73 | 95 | 948 | |
| | 2012.06-2019.05 | 6AT | F | L/R | Estate FWD G4NA | | GCI24056 | Inner Joint | | 27 | 25 | 30 | 67 | 83.5 | |
| | 2012.06-2019.05 | 6AT/6MT | F | L/R | Estate FWD G4NA | Date from:2015.02 | GCO24299 | Outer Joint | 48T | 30 | 25 | 73 | 95 | 61.5 | M |
| | 2012.06-2019.05 | 6MT | F | L | Estate FWD G4NA | Date to:2015.01 | GDS24390 | Drive Shaft | 48T | 27 | 27 | 62 | 92.5 | 669 | |
| | 2012.06-2019.05 | 6MT | F | R | Estate FWD G4NA | Date to:2015.01 | GDS24389 | Drive Shaft | 48T | 27 | 27 | 62 | 92.5 | 983 | |
| | 2014.12-2019.05 | 6AT | F | L | Estate FWD G4NC | Date to:2015.01 | GDS24262 | Drive Shaft | 48T | 27 | 27 | 62 | 92.5 | 672 | |
| | 2014.12-2019.05 | 6AT | F | L | Estate FWD G4NC | Date from:2015.02 | GDS57508 | Drive Shaft | 48T | 30 | 27 | 73 | 95 | 657 | |
| | 2014.12-2019.05 | 6AT | F | R | Estate FWD G4NC | Date to:2015.01 | GDS24391 | Drive Shaft | 48T | 27 | 27 | 62 | 92.5 | 959 | |
| | 2014.12-2019.05 | 6AT | F | R | Estate FWD G4NC | Date from:2015.02 | GDS57509 | Drive Shaft | 48T | 30 | 27 | 73 | 95 | 948 | |
| | 2014.12-2019.05 | 6AT | F | L/R | Estate FWD G4NC | | GCI24056 | Inner Joint | | 27 | 25 | 30 | 67 | 83.5 | |
| | 2014.12-2019.05 | 6AT/6MT | F | L/R | Estate FWD G4NC | Date to:2015.01 | GCO24138 | Outer Joint | 48T | 27 | 25 | 62 | 92.5 | 61 | M |
| | 2014.12-2019.05 | 6AT/6MT | F | L/R | Estate FWD G4NC | Date from:2015.02 | GCO24299 | Outer Joint | 48T | 30 | 25 | 73 | 95 | 61.5 | M |
| | 2014.12-2019.05 | 6MT | F | L | Estate FWD G4NC | Date to:2015.01 | GDS24390 | Drive Shaft | 48T | 27 | 27 | 62 | 92.5 | 669 | |
| | 2014.12-2019.05 | 6MT | F | R | Estate FWD G4NC | Date to:2015.01 | GDS24389 | Drive Shaft | 48T | 27 | 27 | 62 | 92.5 | 983 | |
| | 2014.12-2019.05 | 6AT | F | L | Saloon FWD G4NC | Date to:2015.01 | GDS24262 | Drive Shaft | 48T | 27 | 27 | 62 | 92.5 | 672 | |

| | YEAR | TRANSM. | F/R | L/R | BODY STYLE & DRIVE TYPE & ENGINE | REMARKS | G-AP Ref. | PRODUCT | ABS | Technical Specifications A | B | C | H | L | P |
|---|---|---|---|---|---|---|---|---|---|---|---|---|---|---|---|
| **HYUNDAI** | | | | | | | | | | | | | | | |
| **i40** | | | | | | | | | | | | | | | |
| 2.0 (121 kw) | 2014.12-2019.05 | 6AT | F | L | Saloon FWD G4NC | Date from:2015.02 | GDS57508 | Drive Shaft | 48T | 30 | 27 | 73 | 95 | 657 | |
| | 2014.12-2019.05 | 6AT | F | R | Saloon FWD G4NC | Date to:2015.01 | GDS24391 | Drive Shaft | 48T | 27 | 27 | 62 | 92.5 | 959 | |
| | 2014.12-2019.05 | 6AT | F | R | Saloon FWD G4NC | Date from:2015.02 | GDS57509 | Drive Shaft | 48T | 30 | 27 | 73 | 95 | 948 | |
| | 2014.12-2019.05 | 6AT | F | L/R | Saloon FWD G4NC | | GCI24056 | Inner Joint | | 27 | 25 | 30 | 67 | 83.5 | |
| | 2014.12-2019.05 | 6AT/6MT | F | L/R | Saloon FWD G4NC | Date to:2015.01 | GCO24138 | Outer Joint | 48T | 27 | 25 | 62 | 92.5 | 61 | M |
| | 2014.12-2019.05 | 6AT/6MT | F | L/R | Saloon FWD G4NC | Date from:2015.02 | GCO24299 | Outer Joint | 48T | 30 | 25 | 73 | 95 | 61.5 | M |
| | 2014.12-2019.05 | 6MT | F | L | Saloon FWD G4NC | Date to:2015.01 | GDS24390 | Drive Shaft | 48T | 27 | 27 | 62 | 92.5 | 669 | |
| | 2014.12-2019.05 | 6MT | F | R | Saloon FWD G4NC | Date to:2015.01 | GDS24389 | Drive Shaft | 48T | 27 | 27 | 62 | 92.5 | 983 | |
| 2.0 (130 kw) | 2011.07-2019.05 | 6AT | F | L | Estate FWD G4NA | Date to:2015.01 | GDS24262 | Drive Shaft | 48T | 27 | 27 | 62 | 92.5 | 672 | |
| | 2011.07-2019.05 | 6AT | F | L | Estate FWD G4NA | Date from:2015.02 | GDS57508 | Drive Shaft | 48T | 30 | 27 | 73 | 95 | 657 | |
| | 2011.07-2019.05 | 6AT | F | R | Estate FWD G4NA | Date to:2015.01 | GDS24391 | Drive Shaft | 48T | 27 | 27 | 62 | 92.5 | 959 | |
| | 2011.07-2019.05 | 6AT | F | R | Estate FWD G4NA | Date from:2015.02 | GDS57509 | Drive Shaft | 48T | 30 | 27 | 73 | 95 | 948 | |
| | 2011.07-2019.05 | 6AT | F | L/R | Estate FWD G4NA | | GCI24056 | Inner Joint | | 27 | 25 | 30 | 67 | 83.5 | |
| | 2011.07-2019.05 | 6AT/6MT | F | L/R | Estate FWD G4NA | Date from:2015.02 | GCO24299 | Outer Joint | 48T | 30 | 25 | 73 | 95 | 61.5 | M |
| | 2011.07-2019.05 | 6MT | F | L | Estate FWD G4NA | Date to:2015.01 | GDS24390 | Drive Shaft | 48T | 27 | 27 | 62 | 92.5 | 669 | |
| | 2011.07-2019.05 | 6MT | F | R | Estate FWD G4NA | Date to:2015.01 | GDS24389 | Drive Shaft | 48T | 27 | 27 | 62 | 92.5 | 983 | |
| | 2011.07-2019.05 | 6AT | F | L | Estate FWD G4NC | Date to:2015.01 | GDS24262 | Drive Shaft | 48T | 27 | 27 | 62 | 92.5 | 672 | |
| | 2011.07-2019.05 | 6AT | F | L | Estate FWD G4NC | Date from:2015.02 | GDS57508 | Drive Shaft | 48T | 30 | 27 | 73 | 95 | 657 | |
| | 2011.07-2019.05 | 6AT | F | R | Estate FWD G4NC | Date to:2015.01 | GDS24391 | Drive Shaft | 48T | 27 | 27 | 62 | 92.5 | 959 | |
| | 2011.07-2019.05 | 6AT | F | R | Estate FWD G4NC | Date from:2015.02 | GDS57509 | Drive Shaft | 48T | 30 | 27 | 73 | 95 | 948 | |
| | 2011.07-2019.05 | 6AT | F | L/R | Estate FWD G4NC | | GCI24056 | Inner Joint | | 27 | 25 | 30 | 67 | 83.5 | |
| | 2011.07-2019.05 | 6AT/6MT | F | L/R | Estate FWD G4NC | Date to:2015.01 | GCO24138 | Outer Joint | 48T | 27 | 25 | 62 | 92.5 | 61 | M |
| | 2011.07-2019.05 | 6AT/6MT | F | L/R | Estate FWD G4NC | Date from:2015.02 | GCO24299 | Outer Joint | 48T | 30 | 25 | 73 | 95 | 61.5 | M |
| | 2011.07-2019.05 | 6MT | F | L | Estate FWD G4NC | Date to:2015.01 | GDS24390 | Drive Shaft | 48T | 27 | 27 | 62 | 92.5 | 669 | |
| | 2011.07-2019.05 | 6MT | F | R | Estate FWD G4NC | Date to:2015.01 | GDS24389 | Drive Shaft | 48T | 27 | 27 | 62 | 92.5 | 983 | |
| | 2012.03-2019.05 | 6AT | F | L | Saloon FWD G4NA | Date to:2015.01 | GDS24262 | Drive Shaft | 48T | 27 | 27 | 62 | 92.5 | 672 | |
| | 2012.03-2019.05 | 6AT | F | L | Saloon FWD G4NA | Date from:2015.02 | GDS57508 | Drive Shaft | 48T | 30 | 27 | 73 | 95 | 657 | |
| | 2012.03-2019.05 | 6AT | F | R | Saloon FWD G4NA | Date to:2015.01 | GDS24391 | Drive Shaft | 48T | 27 | 27 | 62 | 92.5 | 959 | |
| | 2012.03-2019.05 | 6AT | F | R | Saloon FWD G4NA | Date from:2015.02 | GDS57509 | Drive Shaft | 48T | 30 | 27 | 73 | 95 | 948 | |
| | 2012.03-2019.05 | 6AT | F | L/R | Saloon FWD G4NA | | GCI24056 | Inner Joint | | 27 | 25 | 30 | 67 | 83.5 | |
| | 2012.03-2019.05 | 6AT/6MT | F | L/R | Saloon FWD G4NA | Date from:2015.02 | GCO24299 | Outer Joint | 48T | 30 | 25 | 73 | 95 | 61.5 | M |
| | 2012.03-2019.05 | 6MT | F | L | Saloon FWD G4NA | Date to:2015.01 | GDS24390 | Drive Shaft | 48T | 27 | 27 | 62 | 92.5 | 669 | |
| | 2012.03-2019.05 | 6MT | F | R | Saloon FWD G4NA | Date to:2015.01 | GDS24389 | Drive Shaft | 48T | 27 | 27 | 62 | 92.5 | 983 | |
| | 2012.03-2019.05 | 6AT | F | L | Saloon FWD G4NC | Date to:2015.01 | GDS24262 | Drive Shaft | 48T | 27 | 27 | 62 | 92.5 | 672 | |
| | 2012.03-2019.05 | 6AT | F | L | Saloon FWD G4NC | Date from:2015.02 | GDS57508 | Drive Shaft | 48T | 30 | 27 | 73 | 95 | 657 | |
| | 2012.03-2019.05 | 6AT | F | R | Saloon FWD G4NC | Date to:2015.01 | GDS24391 | Drive Shaft | 48T | 27 | 27 | 62 | 92.5 | 959 | |
| | 2012.03-2019.05 | 6AT | F | R | Saloon FWD G4NC | Date from:2015.02 | GDS57509 | Drive Shaft | 48T | 30 | 27 | 73 | 95 | 948 | |
| | 2012.03-2019.05 | 6AT | F | L/R | Saloon FWD G4NC | | GCI24056 | Inner Joint | | 27 | 25 | 30 | 67 | 83.5 | |
| | 2012.03-2019.05 | 6AT/6MT | F | L/R | Saloon FWD G4NC | Date to:2015.01 | GCO24138 | Outer Joint | 48T | 27 | 25 | 62 | 92.5 | 61 | M |
| | 2012.03-2019.05 | 6AT/6MT | F | L/R | Saloon FWD G4NC | Date from:2015.02 | GCO24299 | Outer Joint | 48T | 30 | 25 | 73 | 95 | 61.5 | M |
| | 2012.03-2019.05 | 6MT | F | L | Saloon FWD G4NC | Date to:2015.01 | GDS24390 | Drive Shaft | 48T | 27 | 27 | 62 | 92.5 | 669 | |
| | 2012.03-2019.05 | 6MT | F | R | Saloon FWD G4NC | Date to:2015.01 | GDS24389 | Drive Shaft | 48T | 27 | 27 | 62 | 92.5 | 983 | |
| 2.0 (131 kw) | 2012.03-2019.05 | 6AT | F | L | Saloon FWD G4NC | Date to:2015.01 | GDS24262 | Drive Shaft | 48T | 27 | 27 | 62 | 92.5 | 672 | |
| | 2012.03-2019.05 | 6AT | F | L | Saloon FWD G4NC | Date from:2015.02 | GDS57508 | Drive Shaft | 48T | 30 | 27 | 73 | 95 | 657 | |
| | 2012.03-2019.05 | 6AT | F | R | Saloon FWD G4NC | Date to:2015.01 | GDS24391 | Drive Shaft | 48T | 27 | 27 | 62 | 92.5 | 959 | |
| | 2012.03-2019.05 | 6AT | F | R | Saloon FWD G4NC | Date from:2015.02 | GDS57509 | Drive Shaft | 48T | 30 | 27 | 73 | 95 | 948 | |
| | 2012.03-2019.05 | 6AT | F | L/R | Saloon FWD G4NC | | GCI24056 | Inner Joint | | 27 | 25 | 30 | 67 | 83.5 | |
| | 2012.03-2019.05 | 6AT/6MT | F | L/R | Saloon FWD G4NC | Date to:2015.01 | GCO24138 | Outer Joint | 48T | 27 | 25 | 62 | 92.5 | 61 | M |
| | 2012.03-2019.05 | 6AT/6MT | F | L/R | Saloon FWD G4NC | Date from:2015.02 | GCO24299 | Outer Joint | 48T | 30 | 25 | 73 | 95 | 61.5 | M |
| | 2012.03-2019.05 | 6MT | F | L | Saloon FWD G4NC | | GDS24390 | Drive Shaft | 48T | 27 | 27 | 62 | 92.5 | 669 | |
| | 2012.03-2019.05 | 6MT | F | R | Saloon FWD G4NC | | GDS24389 | Drive Shaft | 48T | 27 | 27 | 62 | 92.5 | 983 | |
| **i45** | | | | | | | | | | | | | | | |
| 2.0 (121 kw) | 2011.01-2014.06 | AT | F | L | Saloon FWD G4KD | | GDS24262 | Drive Shaft | 48T | 27 | 27 | 62 | 92.5 | 672 | |
| | 2011.01-2014.06 | AT | F | R | Saloon FWD G4KD | | GDS24261 | Drive Shaft | 48T | 27 | 27 | 62 | 92.5 | 970 | |
| | 2011.01-2014.06 | AT | F | L/R | Saloon FWD G4KD | Date to:2021.09 | GCO24090 | Outer Joint | 48T | 27 | 25 | 61.9 | 95 | 61 | M |
| | 2011.01-2014.06 | AT | F | L | Saloon FWD G4KD | Date to:2021.09 | GCI24056 | Inner Joint | | 27 | 25 | 30 | 67 | 83.5 | |
| | 2011.01-2014.06 | MT | F | L | Saloon FWD G4KD | | GDS56176 | Drive Shaft | 48T | 27 | 27 | 62 | 93 | 675 | |
| | 2011.01-2014.06 | MT | F | L/R | Saloon FWD G4KD | | GCO83441 | Outer Joint | 48T | 27 | 25 | 62 | 93 | 59.5 | M |
| | 2011.01-2014.06 | MT | F | L/R | Saloon FWD G4KD | | GCI82713 | Inner Joint | | 27 | 25 | 41 | 61.5 | 91.5 | |
| **Ioniq** | | | | | | | | | | | | | | | |
| 1.6 (104 kw) | 2016.03-2022.07 | 6AT | F | L | Hatchback FWD G4LE | | GDS82329 | Drive Shaft | | 27 | 28 | 60 | 95 | 587 | |
| | 2016.03-2022.07 | 6AT | F | R | Hatchback FWD G4LE | | GDS82330 | Drive Shaft | | 27 | 28 | 60 | 95 | 553 | |
| | 2016.03-2022.07 | 6AT | F | L | Hatchback FWD G4LE | | GCO81818 | Outer Joint | | 27 | 24 | 60 | 95 | 59 | M |
| | 2016.03-2022.07 | 6AT | F | L/R | Hatchback FWD G4LE | | GCO81818 | Outer Joint | | 27 | 24 | 60 | 95 | 59 | M |
| | 2016.03-2022.07 | 6AT | F | L | Hatchback FWD G4LE | | GCI81747 | Inner Joint | | 28 | 32 | 41 | 61.5 | 101 | |

| | YEAR | TRANSM. | F/R | L/R | BODY STYLE & DRIVE TYPE & ENGINE | REMARKS | G-AP Ref. | PRODUCT | ABS | Technical Specifications A | B | C | H | L | P |
|---|---|---|---|---|---|---|---|---|---|---|---|---|---|---|---|
| **HYUNDAI** | | | | | | | | | | | | | | | |
| **Ioniq** | | | | | | | | | | | | | | | |
| 1.6 (104 kw) | 2016.03-2022.07 | 6AT | F | R | Hatchback FWD G4LE | | GCI81150 | Inner Joint | | 28 | 32 | 44.1 | | 116 | |
| | 2016.03-2022.07 | 6AT | F | R | Hatchback FWD G4LE | | GDS82812 | Intermediate Shaft | | 28 | 28 | | | 539 | |
| | 2016.03-2022.07 | 6DCT | F | L | Hatchback FWD G4LE | | GDS82329 | Drive Shaft | | 27 | 28 | 60 | 95 | 587 | |
| | 2016.03-2022.07 | 6DCT | F | R | Hatchback FWD G4LE | | GDS82330 | Drive Shaft | | 27 | 28 | 60 | 95 | 553 | |
| EV (88 kw) | 2016.03-2019.08 | ET | F | L | Hatchback FWD EM09 | | GDS82376 | Drive Shaft | | 27 | 25 | 60 | 95 | 681 | |
| | 2016.03-2019.08 | ET | F | R | Hatchback FWD EM09 | | GDS56226 | Drive Shaft | | 27 | 25 | 60 | 95 | 960 | |
| | 2016.03-2019.08 | ET | F | L | Hatchback FWD EM09 | | GCO24196 | Outer Joint | | 27 | 23 | 60 | 95 | 57 | M |
| | 2016.03-2019.08 | ET | F | R | Hatchback FWD EM09 | | GCO82724 | Outer Joint | | 27 | 23 | 60 | 95 | 58 | M |
| | 2016.03-2019.08 | ET | F | L/R | Hatchback FWD EM09 | | GCI81749 | Inner Joint | | 25 | 31 | 41 | 63 | 90 | |
| **Ioniq 5** | | | | | | | | | | | | | | | |
| EV (173 kw) | 2021.05- | ET | F | L/R | Hatchback 4WD EM07;EM17 | | GDS58344 | Drive Shaft | | 30 | 28 | 73 | 95 | 750 | |
| | 2021.05- | ET | F | L/R | Hatchback 4WD EM07;EM17 | | GCO83882 | Outer Joint | | 30 | 24 | 73 | 95 | 59 | M |
| | 2021.05- | ET | F | L/R | Hatchback 4WD EM07;EM17 | | GCI84073 | Inner Joint | | 28 | 32 | 33 | 67.5 | 102.5 | |
| EV (225 kw) | 2021.05- | ET | F | L/R | Hatchback 4WD EM07 | | GDS58344 | Drive Shaft | | 30 | 28 | 73 | 95 | 750 | |
| | 2021.05- | ET | F | L/R | Hatchback 4WD EM07 | | GCO83882 | Outer Joint | | 30 | 24 | 73 | 95 | 59 | M |
| | 2021.05- | ET | F | L/R | Hatchback 4WD EM07 | | GCI84073 | Inner Joint | | 28 | 32 | 33 | 67.5 | 102.5 | |
| EV (239 kw) | 2021.05- | ET | F | L/R | Hatchback 4WD EM07 | | GDS58344 | Drive Shaft | | 30 | 28 | 73 | 95 | 750 | |
| | 2021.05- | ET | F | L/R | Hatchback 4WD EM07 | | GCO83882 | Outer Joint | | 30 | 24 | 73 | 95 | 59 | M |
| | 2021.05- | ET | F | L/R | Hatchback 4WD EM07 | | GCI84073 | Inner Joint | | 28 | 32 | 33 | 67.5 | 102.5 | |
| **Ioniq 6** | | | | | | | | | | | | | | | |
| EV (239 kw) | 2022.10- | ET | F | L/R | Hatchback 4WD EM07;EM17 | Date to:2023.09 | GDS58344 | Drive Shaft | | 30 | 28 | 73 | 95 | 750 | |
| | 2022.10- | ET | F | L/R | Hatchback 4WD EM07;EM17 | Date to:2023.09 | GCO83882 | Outer Joint | | 30 | 24 | 73 | 95 | 59 | M |
| | 2022.10- | ET | F | L/R | Hatchback 4WD EM07;EM17 | Date to:2023.09 | GCI84073 | Inner Joint | | 28 | 32 | 33 | 67.5 | 102.5 | |
| **iX20** | | | | | | | | | | | | | | | |
| 1.4 (57 kw) | 2011.06-2019.07 | 6MT | F | L | Hatchback FWD D4FC | | GDS24318 | Drive Shaft | 46T | 27 | 27 | 60 | 95 | 672 | |
| | 2011.06-2019.07 | 6MT | F | L | Hatchback FWD D4FC | | GCI27002 | Inner Joint | | 28 | 24 | 43 | | 123.6 | |
| | 2011.06-2019.07 | | F | R | Hatchback FWD D4FC | | GDS24400 | Drive Shaft | 46T | 27 | 27 | 60 | 95 | 967 | |
| | 2011.06-2019.07 | | F | R | Hatchback FWD D4FC | | GCO24137 | Outer Joint | 46T | 27 | 24 | 60 | 95 | 59 | M |
| 1.4 (66 kw) | 2010.11-2019.07 | 5MT/6MT | F | L | Hatchback FWD D4FC | | GDS24318 | Drive Shaft | 46T | 27 | 27 | 60 | 95 | 672 | |
| | 2010.11-2019.07 | 5MT/6MT | F | R | Hatchback FWD D4FC | | GDS24400 | Drive Shaft | 46T | 27 | 27 | 60 | 95 | 967 | |
| | 2010.11-2019.07 | 5MT/6MT | F | L/R | Hatchback FWD D4FC | | GCO24137 | Outer Joint | 46T | 27 | 24 | 60 | 95 | 59 | M |
| | 2010.11-2019.07 | 5MT/6MT | F | L/R | Hatchback FWD D4FC | | GCI27002 | Inner Joint | | 28 | 24 | 43 | | 123.6 | |
| | 2010.11-2019.07 | 5MT | F | L | Hatchback FWD G4FA | | GDS24548 | Drive Shaft | 46T | 27 | 25 | 60 | 94.5 | 687 | |
| | 2010.11-2019.07 | 5MT | F | R | Hatchback FWD G4FA | | GDS39237 | Drive Shaft | 46T | 27 | 25 | 60 | 94.5 | 959 | |
| | 2010.11-2019.07 | 5MT | F | L | Hatchback FWD G4FA | | GCO24132 | Outer Joint | 46T | 27 | 22 | 60 | 94.5 | 54.5 | M |
| | 2010.11-2019.07 | 5MT | F | L/R | Hatchback FWD G4FA | | GCI39052 | Inner Joint | | 25 | 22 | 41 | 63 | 86 | |
| | 2010.11-2019.07 | MT | F | L | Hatchback FWD G4FA | | GDS24548 | Drive Shaft | 46T | 27 | 25 | 60 | 94.5 | 687 | |
| | 2010.11-2019.07 | MT | F | L | Hatchback FWD G4FA | | GCO27088 | Outer Joint | 46T | 27 | 22 | 60 | 94.5 | 54.5 | M |
| | 2010.11-2019.07 | MT | F | L/R | Hatchback FWD G4FA | | GCI39052 | Inner Joint | | 25 | 22 | 41 | 63 | 86 | |
| 1.4 (74 kw) | 2010.11-2019.07 | MT | F | L | Hatchback FWD G4FA | | GDS24548 | Drive Shaft | 46T | 27 | 25 | 60 | 94.5 | 687 | |
| | 2010.11-2019.07 | MT | F | R | Hatchback FWD G4FA | | GDS39237 | Drive Shaft | 46T | 27 | 25 | 60 | 94.5 | 959 | |
| | 2010.11-2019.07 | MT | F | L | Hatchback FWD G4FA | | GCO27088 | Outer Joint | 46T | 27 | 22 | 60 | 94.5 | 54.5 | M |
| | 2010.11-2019.07 | MT | F | L/R | Hatchback FWD G4FA | | GCI39052 | Inner Joint | | 25 | 22 | 41 | 63 | 86 | |
| 1.6 (85 kw) | 2011.06-2019.07 | 6MT | F | L | Hatchback FWD D4FB | | GDS24318 | Drive Shaft | 46T | 27 | 27 | 60 | 95 | 672 | |
| | 2011.06-2019.07 | 6MT | F | R | Hatchback FWD D4FB | | GDS24400 | Drive Shaft | 46T | 27 | 27 | 60 | 95 | 967 | |
| | 2011.06-2019.07 | 6MT | F | L/R | Hatchback FWD D4FB | Inner teeth of wheel side:24 | GCO24137 | Outer Joint | 46T | 27 | 24 | 60 | 95 | 59 | M |
| | 2011.06-2019.07 | 6MT | F | L/R | Hatchback FWD D4FB | | GCI27002 | Inner Joint | | 28 | 24 | 43 | | 123.6 | |
| 1.6 (92 kw) | 2010.11-2019.07 | 4AT/6AT/6MT | F | L | Hatchback FWD G4FC | | GDS24548 | Drive Shaft | 46T | 27 | 25 | 60 | 94.5 | 687 | |
| | 2010.11-2019.07 | 4AT/6AT/6MT | F | L/R | Hatchback FWD G4FC | | GCO27088 | Outer Joint | 46T | 27 | 22 | 60 | 94.5 | 54.5 | M |
| | 2010.11-2019.07 | 4AT/6AT/6MT | F | L/R | Hatchback FWD G4FC | | GCI39052 | Inner Joint | | 25 | 22 | 41 | 63 | 86 | |
| | 2010.11-2019.07 | 6MT | F | R | Hatchback FWD G4FC | | GDS39237 | Drive Shaft | 46T | 27 | 25 | 60 | 94.5 | 959 | |
| | 2010.11-2019.07 | AT/MT | F | L | Hatchback FWD G4FC | | GCO24132 | Outer Joint | 46T | 27 | 22 | 60 | 94.5 | 54.5 | M |
| | 2010.11-2019.07 | MT | F | L | Hatchback FWD G4FC | | GDS24548 | Drive Shaft | 46T | 27 | 25 | 60 | 94.5 | 687 | |
| | 2010.11-2019.07 | MT | F | R | Hatchback FWD G4FC | | GDS39237 | Drive Shaft | 46T | 27 | 25 | 60 | 94.5 | 959 | |
| | 2010.11-2019.07 | MT | F | L | Hatchback FWD G4FC | | GCO27088 | Outer Joint | 46T | 27 | 22 | 60 | 94.5 | 54.5 | M |
| | 2010.11-2019.07 | MT | F | L/R | Hatchback FWD G4FC | | GCI39052 | Inner Joint | | 25 | 22 | 41 | 63 | 86 | |
| 1.6 (94 kw) | 2011.06-2019.07 | 6MT | F | L | Hatchback FWD D4FB | | GDS24318 | Drive Shaft | 46T | 27 | 27 | 60 | 95 | 672 | |
| | 2011.06-2019.07 | 6MT | F | L | Hatchback FWD D4FB | | GCI27002 | Inner Joint | | 28 | 24 | 43 | | 123.6 | |
| | 2011.06-2019.07 | | F | R | Hatchback FWD D4FB | | GDS24400 | Drive Shaft | 46T | 27 | 27 | 60 | 95 | 967 | |
| | 2011.06-2019.07 | | F | R | Hatchback FWD D4FB | | GCO24137 | Outer Joint | 46T | 27 | 24 | 60 | 95 | 59 | M |
| **iX35** | | | | | | | | | | | | | | | |
| 1.6 (99 kw) | 2010.11-2015.12 | 6AT | F | L | SUV FWD G4FD | | GDS81240 | Drive Shaft | 48T | 27 | 27 | 62 | 95 | 676 | |
| | 2010.11-2015.12 | 6AT | F | R | SUV FWD G4FD | | GDS81996 | Drive Shaft | 48T | 27 | 27 | 62 | 95 | 963 | |
| | 2010.11-2015.12 | 6AT | F | L | SUV FWD G4FD | | GCO81085 | Outer Joint | 48T | 27 | 24 | 62 | 95 | 59 | M |
| | 2010.11-2015.12 | 6MT | F | L | SUV FWD G4FD | Date to:2013.06 | GDS24526 | Drive Shaft | 48T | 27 | 25 | 62 | 95 | 692 | |

| | YEAR | TRANSM. | F/R | L/R | BODY STYLE & DRIVE TYPE & ENGINE | REMARKS | G-AP Ref. | PRODUCT | ABS | Technical Specifications | | | | | |
|---|---|---|---|---|---|---|---|---|---|---|---|---|---|---|---|
| | | | | | | | | | | A | B | C | H | L | P |
| **HYUNDAI** | | | | | | | | | | | | | | | |
| **iX35** | | | | | | | | | | | | | | | |
| 1.6 (99 kw) | 2010.11-2015.12 | 6MT | F | L | SUV FWD G4FD | Date from:2013.07 | GDS82257 | Drive Shaft | 48T | 27 | 25 | 62 | 95 | 698 | |
| | 2010.11-2015.12 | 6MT | F | R | SUV FWD G4FD | Date to:2013.06 | GDS24546 | Drive Shaft | 48T | 27 | 25 | 62 | 95 | 974 | |
| | 2010.11-2015.12 | 6MT | F | R | SUV FWD G4FD | Date from:2013.07 | GDS82243 | Drive Shaft | 48T | 27 | 25 | 62 | 95 | 981 | |
| | 2010.11-2015.12 | 6MT | F | L/R | SUV FWD G4FD | | GCO24284 | Outer Joint | 48T | 27 | 24 | 62 | 95 | 59 | M |
| | 2010.11-2015.12 | 6MT | F | L/R | SUV FWD G4FD | | GCI24128 | Inner Joint | | 25 | 23 | 41 | 63 | 98.5 | |
| | 2010.11-2015.12 | MT | F | L/R | SUV FWD G4FD | | GCO27067 | Outer Joint | 48T | 27 | 24 | 62.1 | 95 | 63 | M |
| | 2015.05-2015.12 | 6MT | F | L | SUV Van FWD G4FD | | GDS82257 | Drive Shaft | 48T | 27 | 25 | 62 | 95 | 698 | |
| | 2015.05-2015.12 | 6MT | F | R | SUV Van FWD G4FD | | GDS82243 | Drive Shaft | 48T | 27 | 25 | 62 | 95 | 981 | |
| | 2015.05-2015.12 | 6MT | F | L/R | SUV Van FWD G4FD | | GCO81085 | Outer Joint | 48T | 27 | 24 | 62 | 95 | 59 | M |
| | 2015.05-2015.12 | 6MT | F | L/R | SUV Van FWD G4FD | | GCI24128 | Inner Joint | | 25 | 23 | 41 | 63 | 98.5 | |
| 1.7 (85 kw) | 2010.09-2015.12 | 6MT | F | L | SUV Van FWD D4FD | | GDS24299 | Drive Shaft | 48T | 30 | 27 | 62 | 95 | 690 | |
| | 2010.09-2015.12 | 6MT | F | R | SUV Van FWD D4FD | | GDS24362 | Drive Shaft | 48T | 30 | 27 | 62 | 95 | 979 | |
| | 2010.11-2015.12 | 6MT | F | L | SUV FWD D4FD | Date to:2013.06 | GDS24299 | Drive Shaft | 48T | 30 | 27 | 62 | 95 | 690 | |
| | 2010.11-2015.12 | 6MT | F | R | SUV FWD D4FD | Date to:2013.06 | GDS24362 | Drive Shaft | 48T | 30 | 27 | 62 | 95 | 979 | |
| | 2010.11-2015.12 | 6MT | F | L/R | SUV FWD D4FD | Seal diam.:65 mm | GCO24153 | Outer Joint | 48T | 30 | 25 | 65 | 95 | 69.5 | M |
| | 2010.11-2015.12 | 6MT | F | L/R | SUV FWD D4FD | Date to:2013.06;Seal diam.:62 mm | GCO24221 | Outer Joint | 48T | 30 | 25 | 62 | 95 | 63 | M |
| | 2010.11-2015.12 | 6MT | F | L/R | SUV FWD D4FD | Date to:2013.06 | GCI27031 | Inner Joint | | 27 | 24 | 41 | 61.5 | 100 | |
| 2.0 (100 kw) | 2009.08-2015.12 | 6AT | F | L | SUV Van 4WD D4HA | | GDS24550 | Drive Shaft | 48T | 30 | 28 | 62 | 95 | 671 | |
| | 2009.08-2015.12 | 6AT | F | L/R | SUV Van 4WD D4HA | | GCO27128 | Outer Joint | 48T | 30 | 25 | 62 | 95 | 63 | M |
| | 2009.08-2015.12 | 6AT | F | R | SUV Van 4WD D4HA | | GCI81105 | Inner Joint | | 26 | 24 | 44.1 | | 115 | |
| | 2009.08-2015.12 | 6AT | F | R | SUV Van 4WD D4HA | Date from:2013.08 | GDS87091 | Intermediate Shaft | | 28 | 28 | | | 430 | |
| | 2009.08-2015.12 | 6AT | R | L | SUV Van 4WD D4HA | | GDS84062 | Drive Shaft | 48T | 27 | 25 | 62 | 95 | 834 | |
| | 2009.08-2015.12 | 6AT | R | R | SUV Van 4WD D4HA | | GDS24538 | Drive Shaft | 48T | 27 | 25 | 62 | 95 | 817 | |
| | 2009.08-2015.12 | 6AT | R | L/R | SUV Van 4WD D4HA | | GCI24154 | Inner Joint | | 25 | 20 | 35 | 62 | 78 | |
| | 2009.08-2015.12 | 6MT | F | L | SUV Van FWD D4HA | Date to:2013.07 | GDS24523 | Drive Shaft | 48T | 30 | 28 | 62 | 95 | 680 | |
| | 2009.08-2015.12 | 6MT | F | R | SUV Van FWD D4HA | Date To:2013.07 | GDS24551 | Drive Shaft | 48T | 30 | 28 | 62 | 95 | 989 | |
| | 2009.08-2015.12 | 6MT | F | R | SUV Van FWD D4HA | Date from:2013.08 | GCI81105 | Inner Joint | | 26 | 24 | 44.1 | | 115 | |
| | 2009.08-2015.12 | 6MT | F | R | SUV Van FWD D4HA | Date from:2013.08 | GDS87093 | Intermediate Shaft | | 28 | 28 | | | 442 | |
| | 2009.08-2015.12 | | F | R | SUV Van FWD D4HA | Date From:2013.08 | GCO27128 | Outer Joint | 48T | 30 | 25 | 62 | 95 | 63 | M |
| | 2010.01-2015.12 | 6AT | F | L | SUV 4WD D4HA | | GDS24550 | Drive Shaft | 48T | 30 | 28 | 62 | 95 | 671 | |
| | 2010.01-2015.12 | 6AT | F | L | SUV 4WD D4HA | Date to:2013.07 | GCI27056 | Inner Joint | | 28 | 25 | 33 | 67 | 103.5 | |
| | 2010.01-2015.12 | 6AT | F | R | SUV 4WD D4HA | Date to:2013.07 | GDS82862 | Intermediate Shaft | | 28 | 28 | | | 430 | |
| | 2010.01-2015.12 | 6AT | F | R | SUV 4WD D4HA | Date from:2013.08 | GDS87091 | Intermediate Shaft | | 28 | 28 | | | 430 | |
| | 2010.01-2015.12 | 6AT/6MT | F | R | SUV 4WD D4HA | Date to:2013.07 | GDS24522 | Drive Shaft | 48T | 30 | 28 | 62 | 95 | 585 | |
| | 2010.01-2015.12 | 6AT/6MT | F | L/R | SUV 4WD D4HA | | GCO24221 | Outer Joint | 48T | 30 | 25 | 62 | 95 | 63 | M |
| | 2010.01-2015.12 | 6AT/6MT | F | L/R | SUV 4WD D4HA | Date From:2013.08 | GCO27128 | Outer Joint | 48T | 30 | 25 | 62 | 95 | 63 | M |
| | 2010.01-2015.12 | 6AT/6MT | F | R | SUV 4WD D4HA | Date to:2013.07 | GCI24064 | Inner Joint | | 28 | 25 | 44.1 | | 120 | |
| | 2010.01-2015.12 | 6MT | F | L | SUV 4WD D4HA | Date to:2013.07 | GDS24523 | Drive Shaft | 48T | 30 | 28 | 62 | 95 | 680 | |
| | 2010.01-2015.12 | 6MT | F | L | SUV 4WD D4HA | Date to:2013.07 | GCI27057 | Inner Joint | | 28 | 25 | 41 | 61.5 | 107 | |
| | 2010.01-2015.12 | 6MT | F | R | SUV 4WD D4HA | | GDS87082 | Intermediate Shaft | | 28 | 28 | | | 440.5 | |
| | 2010.01-2015.12 | 6MT/6AT | F | R | SUV 4WD D4HA | Date from:2013.08 | GCI81105 | Inner Joint | | 26 | 24 | 44.1 | | 115 | |
| | 2010.01-2015.12 | AT/MT | F | L/R | SUV 4WD D4HA | | GCO24153 | Outer Joint | 48T | 30 | 25 | 65 | 95 | 69.5 | M |
| | 2010.01-2015.12 | 6AT | R | L/R | SUV 4WD D4HA | Date to:2013.07 | GCO24311 | Outer Joint | 48T | 27 | 20 | 62 | 94.5 | 53 | M |
| | 2010.01-2015.12 | 6AT/6MT | R | L | SUV 4WD D4HA | Date to:2013.07 | GDS24524 | Drive Shaft | 48T | 27 | 25 | 62 | 94.5 | 837 | |
| | 2010.01-2015.12 | 6AT/6MT | R | L | SUV 4WD D4HA | Date from:2013.08 | GDS84062 | Drive Shaft | 48T | 27 | 25 | 62 | 95 | 834 | |
| | 2010.01-2015.12 | 6AT/6MT | R | R | SUV 4WD D4HA | Date to:2013.07 | GDS24536 | Drive Shaft | 48T | 27 | 25 | 62 | 94.5 | 816 | |
| | 2010.01-2015.12 | 6AT/6MT | R | R | SUV 4WD D4HA | Date from:2013.08 | GDS24538 | Drive Shaft | 48T | 27 | 25 | 62 | 95 | 817 | |
| | 2010.01-2015.12 | 6AT/6MT | R | L/R | SUV 4WD D4HA | Date from:2013.08 | GCO24315 | Outer Joint | 48T | 27 | 20 | 62 | 95 | 43 | M |
| | 2010.01-2015.12 | 6AT/6MT | R | L/R | SUV 4WD D4HA | Date to:2013.07 | GCI24077 | Inner Joint | | 25 | 20 | 35 | 62 | 82 | |
| | 2010.01-2015.12 | 6AT/6MT | R | L/R | SUV 4WD D4HA | Date from:2013.08 | GCI24154 | Inner Joint | | 25 | 20 | 35 | 62 | 78 | |
| | 2010.01-2015.12 | 6MT | F | L | SUV FWD D4HA | Date to:2013.07 | GDS24523 | Drive Shaft | 48T | 30 | 28 | 62 | 95 | 680 | |
| | 2010.01-2015.12 | 6MT | F | R | SUV FWD D4HA | Date To:2013.07 | GDS24551 | Drive Shaft | 48T | 30 | 28 | 62 | 95 | 989 | |
| | 2010.01-2015.12 | 6MT | F | L | SUV FWD D4HA | Date to:2013.07 | GCO24221 | Outer Joint | 48T | 30 | 25 | 62 | 95 | 63 | M |
| | 2010.01-2015.12 | 6MT | F | R | SUV FWD D4HA | Date from:2013.08 | GCI81105 | Inner Joint | | 26 | 24 | 44.1 | | 115 | |
| | 2010.01-2015.12 | 6MT | F | R | SUV FWD D4HA | Date from:2013.08 | GDS87093 | Intermediate Shaft | | 28 | 28 | | | 442 | |
| | 2010.01-2015.12 | AT/MT | F | L/R | SUV FWD D4HA | | GCO24153 | Outer Joint | 48T | 30 | 25 | 65 | 95 | 69.5 | M |
| | 2010.01-2015.12 | MT | F | R | SUV FWD D4HA | | GDS27237 | Drive Shaft | 48T | 30 | 28 | 62 | 95 | 989 | |
| | 2010.01-2015.12 | | F | R | SUV FWD D4HA | Date From:2013.08 | GCO27128 | Outer Joint | 48T | 30 | 25 | 62 | 95 | 63 | M |
| 2.0 (110 kw) | 2009.08-2013.07 | 5MT | F | L | SUV 4WD G4KD | Vehicle Production Country:Czech-Republic/Slovakia | GDS24525 | Drive Shaft | 48T | 27 | 27 | 62 | 95 | 694 | |
| | 2009.08-2013.07 | 5MT | F | R | SUV 4WD G4KD | Vehicle Production Country:South Korea | GDS81188 | Drive Shaft | 48T | 27 | 26 | 62 | 95 | 588 | |
| | 2009.08-2013.07 | 5MT | F | L | SUV 4WD G4KD | Vehicle Production Country:South Korea;Vehicle Production Country:Czech-Republic/Slovakia | GCI27031 | Inner Joint | | 27 | 24 | 41 | 61.5 | 100 | |
| | 2009.08-2013.07 | 5MT/6AT | F | R | SUV 4WD G4KD | Vehicle Production Country:South Korea | GCI81105 | Inner Joint | | 26 | 24 | 44.1 | | 115 | |
| | 2009.08-2013.07 | 6AT | F | L | SUV 4WD G4KD | Vehicle Production Country:South Korea | GDS24231 | Drive Shaft | 48T | 27 | 27 | 62 | 95 | 676 | |
| | 2009.08-2013.07 | 6AT | F | L | SUV 4WD G4KD | Vehicle Production Country:Czech-Republic/Slovakia | GDS27217 | Drive Shaft | 48T | 27 | 27 | 62 | 95 | 678 | |
| | 2009.08-2013.07 | 6AT | F | L/R | SUV 4WD G4KD | Vehicle Production Country:South Korea | GCO24124 | Outer Joint | 48T | 27 | 24 | 62 | 95 | 58 | M |

| | YEAR | TRANSM. | F/R | L/R | BODY STYLE & DRIVE TYPE & ENGINE | REMARKS | G-AP Ref. | PRODUCT | ABS | Technical Specifications A | B | C | H | L | P |
|---|---|---|---|---|---|---|---|---|---|---|---|---|---|---|---|
| **HYUNDAI** | | | | | | | | | | | | | | | |
| **iX35** | | | | | | | | | | | | | | | |
| 2.0 (110 kw) | 2009.08-2013.07 | 6AT | F | L | SUV 4WD G4KD | Vehicle Production Country:South Korea,Vehicle Production Country:Czech Republic/Slovakia | GCI24158 | Inner Joint | | 27 | 24 | 30 | 67 | 88.5 | |
| | 2009.08-2013.07 | 6AT/5MT | F | R | SUV 4WD G4KD | Vehicle Production Country:Czech-Republic/Slovakia | GDS24568 | Drive Shaft | 48T | 27 | 26 | 62 | 95 | 590 | |
| | 2009.08-2013.07 | 6AT/5MT | F | L/R | SUV 4WD G4KD | vehicle production country:Czech Republic,Slovakia | GCO24284 | Outer Joint | 48T | 27 | 24 | 62 | 95 | 59 | M |
| | 2009.08-2013.07 | 6AT/5MT | F | R | SUV 4WD G4KD | vehicle production country:Czech Republic,Slovakia | GCI27032 | Inner Joint | | 26 | 24 | 44.1 | | 115 | |
| | 2009.08-2013.07 | 6AT | R | L/R | SUV 4WD G4KD | Vehicle Production Country:Czech Republic/Slovakia | GCO24311 | Outer Joint | 48T | 27 | 20 | 62 | 94.5 | 53 | M |
| | 2009.08-2013.07 | 6AT/5MT | R | L | SUV 4WD G4KD | Vehicle Production Country:Czech-Republic/Slovakia | GDS24524 | Drive Shaft | 48T | 27 | 25 | 62 | 94.5 | 837 | |
| | 2009.08-2013.07 | 6AT/5MT | R | R | SUV 4WD G4KD | Vehicle Production Country:Czech-Republic/Slovakia | GDS24536 | Drive Shaft | 48T | 27 | 25 | 62 | 94.5 | 816 | |
| | 2009.08-2013.07 | 6AT/5MT | R | R | SUV 4WD G4KD | vehicle production country:South Korea | GDS83118 | Drive Shaft | 48T | 27 | 25 | 62 | 95 | 816 | |
| | 2009.08-2013.07 | 6AT/5MT | R | R | SUV 4WD G4KD | vehicle production country:South Korea | GCO82286 | Outer Joint | 48T | 27 | 20 | 62 | 95 | 53 | M |
| | 2009.08-2013.07 | 6AT/5MT | R | L/R | SUV 4WD G4KD | vehicle production country:Czech Republic,Slovakia | GCI24077 | Inner Joint | | 25 | 20 | 35 | 62 | 82 | |
| | 2009.08-2013.07 | 5MT | F | L | SUV FWD G4KD | Vehicle Production Country:Czech-Republic/Slovakia | GDS24525 | Drive Shaft | 48T | 27 | 27 | 62 | 95 | 694 | |
| | 2009.08-2013.07 | 5MT | F | R | SUV FWD G4KD | Vehicle Production Country:Czech-Republic/Slovakia | GDS24535 | Drive Shaft | 48T | 27 | 27 | 62 | 95 | 966 | |
| | 2009.08-2013.07 | 5MT | F | L | SUV FWD G4KD | Vehicle Production Country:Czech Republic/Slovakia | GCI27031 | Inner Joint | | 27 | 24 | 41 | 61.5 | 100 | |
| | 2009.08-2013.07 | 6AT | F | L | SUV FWD G4KD | Vehicle Production Country:South Korea | GDS24231 | Drive Shaft | 48T | 27 | 27 | 62 | 95 | 676 | |
| | 2009.08-2013.07 | 6AT | F | L | SUV FWD G4KD | Vehicle Production Country:Czech-Republic/Slovakia | GDS27217 | Drive Shaft | 48T | 27 | 27 | 62 | 95 | 678 | |
| | 2009.08-2013.07 | 6AT | F | R | SUV FWD G4KD | Vehicle Production Country:South Korea | GDS24230 | Drive Shaft | 48T | 27 | 27 | 62 | 95 | 961 | |
| | 2009.08-2013.07 | 6AT | F | L/R | SUV FWD G4KD | Vehicle Production Country:South Korea | GCO24124 | Outer Joint | 48T | 27 | 24 | 62 | 95 | 58 | M |
| | 2009.08-2013.07 | 6AT | F | L/R | SUV FWD G4KD | vehicle production country:Czech Republic,Slovakia | GCO24284 | Outer Joint | 48T | 27 | 24 | 62 | 95 | 59 | M |
| | 2009.08-2013.07 | 6AT | F | L | SUV FWD G4KD | Vehicle Production Country:Czech Republic/Slovakia | GCI24158 | Inner Joint | | 27 | 24 | 30 | 67 | 88.5 | |
| | 2009.08-2013.07 | 6AT | F | R | SUV FWD G4KD | Vehicle Production Country:Czech Republic/Slovakia | GCI24053 | Inner Joint | | 27 | 24 | 30 | 67.5 | 88.5 | |
| | 2013.08-2015.12 | 6AT | F | L | SUV 4WD G4NA | Vehicle Production Country:Czech Republic | GDS81239 | Drive Shaft | 48T | 27 | 27 | 62 | 95 | 682 | |
| | 2013.08-2015.12 | 6AT | F | L | SUV 4WD G4NA | Vehicle Production Country:South Korea | GDS84110 | Drive Shaft | 48T | 27 | 27 | 62 | 95 | 676 | |
| | 2013.08-2015.12 | 6AT | F | R | SUV 4WD G4NA | Vehicle Production Country:South Korea | GDS81187 | Drive Shaft | 48T | 27 | 26 | 62 | 95 | 579 | |
| | 2013.08-2015.12 | 6AT | F | L | SUV 4WD G4NA | Vehicle Production Country:Czech Republic | GCO81085 | Outer Joint | 48T | 27 | 24 | 62 | 95 | 59 | M |
| | 2013.08-2015.12 | 6AT | F | L | SUV 4WD G4NA | Vehicle Production Country:Czech Republic | GCI81106 | Inner Joint | | 27 | 24 | 30 | 67.5 | 88.5 | |
| | 2013.08-2015.12 | 6MT | F | L | SUV 4WD G4NA | vehicle production country:Republic of South Korea | GDS81185 | Drive Shaft | 48T | 27 | 27 | 62 | 95 | 682 | |
| | 2013.08-2015.12 | 6MT | F | R | SUV 4WD G4NA | Vehicle Production Country:South Korea | GDS81186 | Drive Shaft | 48T | 27 | 26 | 62 | 95 | 560 | |
| | 2013.08-2015.12 | AT | F | R | SUV 4WD G4NA | vehicle production country:Czech Republic | GDS24518 | Drive Shaft | 48T | 27 | 26 | 62 | 95 | 580 | |
| | 2013.08-2015.12 | AT | F | R | SUV 4WD G4NA | Vehicle Production Country:South Korea | GCI81105 | Inner Joint | | 26 | 24 | 44.1 | | 115 | |
| | 2013.08-2015.12 | AT/MT | F | R | SUV 4WD G4NA | vehicle production country:Czech Republic | GCO24284 | Outer Joint | 48T | 27 | 24 | 62 | 95 | 59 | M |
| | 2013.08-2015.12 | MT | F | R | SUV 4WD G4NA | vehicle production country:Czech Republic | GDS24537 | Drive Shaft | 48T | 27 | 26 | 62 | 95 | 562 | |
| | 2013.08-2015.12 | 6AT | R | L/R | SUV 4WD G4NA | Vehicle Production Country:South Korea | GCO82547 | Outer Joint | 48T | 27 | 20 | 62 | 95 | 42 | M |
| | 2013.08-2015.12 | 6AT/6MT | R | L | SUV 4WD G4NA | Vehicle Production Country:South Korea | GDS83994 | Drive Shaft | 48T | 27 | 25 | 62 | 95 | 834 | |
| | 2013.08-2015.12 | 6AT/6MT | R | L | SUV 4WD G4NA | Vehicle Production Country:Czech Republic | GDS84062 | Drive Shaft | 48T | 27 | 25 | 62 | 95 | 834 | |
| | 2013.08-2015.12 | 6AT/6MT | R | R | SUV 4WD G4NA | vehicle production country:Czech Republic | GDS24538 | Drive Shaft | 48T | 27 | 25 | 62 | 95 | 817 | |
| | 2013.08-2015.12 | 6AT/6MT | R | R | SUV 4WD G4NA | Vehicle Production Country:South Korea | GDS83971 | Drive Shaft | 48T | 27 | 25 | 62 | 95 | 817 | |
| | 2013.08-2015.12 | 6AT/6MT | R | L/R | SUV 4WD G4NA | vehicle production country:Czech Republic | GCO24315 | Outer Joint | 48T | 27 | 20 | 62 | 95 | 43 | M |
| | 2013.08-2015.12 | 6AT/6MT | R | L/R | SUV 4WD G4NA | Vehicle Production Country:South Korea | GCI24154 | Inner Joint | | 25 | 20 | 35 | 62 | 78 | |
| | 2013.08-2015.12 | 6AT | F | L | SUV FWD G4NA | Vehicle Production Country:South Korea | GDS81189 | Drive Shaft | 48T | 27 | 27 | 62 | 95 | 682 | |
| | 2013.08-2015.12 | 6AT | F | L | SUV FWD G4NA | Vehicle Production Country:Czech Republic | GDS81239 | Drive Shaft | 48T | 27 | 27 | 62 | 95 | 682 | |
| | 2013.08-2015.12 | 6AT | F | L | SUV FWD G4NA | Vehicle Production Country:Czech Republic | GCO81085 | Outer Joint | 48T | 27 | 24 | 62 | 95 | 59 | M |
| | 2013.08-2015.12 | 6AT | F | L | SUV FWD G4NA | Vehicle Production Country:Czech Republic | GCI81106 | Inner Joint | | 27 | 24 | 30 | 67.5 | 88.5 | |
| | 2013.08-2015.12 | 6AT | F | R | SUV FWD G4NA | Vehicle Production Country:South Korea | GDS27229 | Intermediate Shaft | | 26 | 27 | | | 445 | |
| | 2013.08-2015.12 | 6AT/6MT | F | R | SUV FWD G4NA | Vehicle Production Country:South Korea | GDS81186 | Drive Shaft | 48T | 27 | 26 | 62 | 95 | 560 | |
| | 2013.08-2015.12 | 6MT | F | L | SUV FWD G4NA | vehicle production country:Republic of South Korea | GDS81185 | Drive Shaft | 48T | 27 | 27 | 62 | 95 | 682 | |
| | 2013.08-2015.12 | AT | F | R | SUV FWD G4NA | vehicle production country:Czech Republic | GDS24537 | Drive Shaft | 48T | 27 | 26 | 62 | 95 | 562 | |
| | 2013.08-2015.12 | AT | F | R | SUV FWD G4NA | vehicle production country:Czech Republic | GCO24284 | Outer Joint | 48T | 27 | 24 | 62 | 95 | 59 | M |
| | 2013.08-2015.12 | | F | R | SUV FWD G4NA | Vehicle Production Country:South Korea | GCI81105 | Inner Joint | | 26 | 24 | 44.1 | | 115 | |
| 2.0 (113 kw) | 2013.08-2015.12 | 6AT | F | L | SUV FWD G4NA | Vehicle Production Country:South Korea | GDS81189 | Drive Shaft | 48T | 27 | 27 | 62 | 95 | 682 | |
| | 2013.08-2015.12 | 6AT | F | L | SUV FWD G4NA | Vehicle Production Country:Czech Republic | GDS81239 | Drive Shaft | 48T | 27 | 27 | 62 | 95 | 682 | |
| | 2013.08-2015.12 | 6AT | F | L | SUV FWD G4NA | Vehicle Production Country:Czech Republic | GCO81085 | Outer Joint | 48T | 27 | 24 | 62 | 95 | 59 | M |
| | 2013.08-2015.12 | 6AT | F | L | SUV FWD G4NA | Vehicle Production Country:Czech Republic | GCI81106 | Inner Joint | | 27 | 24 | 30 | 67.5 | 88.5 | |
| | 2013.08-2015.12 | 6AT | F | R | SUV FWD G4NA | Vehicle Production Country:South Korea | GCI81105 | Inner Joint | | 26 | 24 | 44.1 | | 115 | |
| | 2013.08-2015.12 | 6AT | F | R | SUV FWD G4NA | Vehicle Production Country:South Korea | GDS27229 | Intermediate Shaft | | 26 | 27 | | | 445 | |
| | 2013.08-2015.12 | 6AT/6MT | F | R | SUV FWD G4NA | Vehicle Production Country:South Korea | GDS81186 | Drive Shaft | 48T | 27 | 26 | 62 | 95 | 560 | |
| | 2013.08-2015.12 | 6MT | F | L | SUV FWD G4NA | vehicle production country:Republic of South Korea | GDS81185 | Drive Shaft | 48T | 27 | 27 | 62 | 95 | 682 | |
| | 2013.08-2015.12 | AT | F | R | SUV FWD G4NA | vehicle production country:Czech Republic | GDS24537 | Drive Shaft | 48T | 27 | 26 | 62 | 95 | 562 | |
| | 2013.08-2015.12 | AT | F | R | SUV FWD G4NA | vehicle production country:Czech Republic | GCO24284 | Outer Joint | 48T | 27 | 24 | 62 | 95 | 59 | M |
| | 2014.09-2015.12 | 6AT | F | L | SUV 4WD G4NA | Vehicle Production Country:Czech Republic | GDS81239 | Drive Shaft | 48T | 27 | 27 | 62 | 95 | 682 | |
| | 2014.09-2015.12 | 6AT | F | L | SUV 4WD G4NA | Vehicle Production Country:South Korea | GDS84110 | Drive Shaft | 48T | 27 | 27 | 62 | 95 | 676 | |
| | 2014.09-2015.12 | 6AT | F | R | SUV 4WD G4NA | Vehicle Production Country:Czech Republic | GDS24537 | Drive Shaft | 48T | 27 | 26 | 62 | 95 | 562 | |
| | 2014.09-2015.12 | 6AT | F | R | SUV 4WD G4NA | Vehicle Production Country:South Korea | GDS81187 | Drive Shaft | 48T | 27 | 26 | 62 | 95 | 579 | |
| | 2014.09-2015.12 | 6AT | F | L/R | SUV 4WD G4NA | Vehicle Production Country:Czech Republic | GDS24518 | Drive Shaft | 48T | 27 | 26 | 62 | 95 | 580 | |
| | 2014.09-2015.12 | 6AT | F | L | SUV 4WD G4NA | Vehicle Production Country:Czech Republic | GCO81085 | Outer Joint | 48T | 27 | 24 | 62 | 95 | 59 | M |
| | 2014.09-2015.12 | 6AT | F | R | SUV 4WD G4NA | Vehicle Production Country:Czech Republic | GCO24284 | Outer Joint | 48T | 27 | 24 | 62 | 95 | 59 | M |

| | YEAR | TRANSM. | F/R | L/R | BODY STYLE & DRIVE TYPE & ENGINE | REMARKS | G-AP Ref. | PRODUCT | ABS | Technical Specifications A | B | C | H | L | P |
|---|---|---|---|---|---|---|---|---|---|---|---|---|---|---|---|
| **HYUNDAI** | | | | | | | | | | | | | | | |
| **iX35** | | | | | | | | | | | | | | | |
| 2.0 (113 kw) | 2014.09-2015.12 | 6AT | F | L | SUV 4WD G4NA | Vehicle Production Country:Czech Republic | GCI81106 | Inner Joint | | 27 | 24 | 30 | 67.5 | 88.5 | |
| | 2014.09-2015.12 | 6MT | F | L | SUV 4WD G4NA | Vehicle Production Country:Republic of South Korea | GDS81185 | Drive Shaft | 48T | 27 | 27 | 62 | 95 | 682 | |
| | 2014.09-2015.12 | 6MT | F | R | SUV 4WD G4NA | Vehicle Production Country:South Korea | GDS81186 | Drive Shaft | 48T | 27 | 26 | 62 | 95 | 560 | |
| | 2014.09-2015.12 | AT | F | R | SUV 4WD G4NA | Vehicle Production Country:South Korea | GCI81105 | Inner Joint | | 26 | 24 | 44.1 | | 115 | |
| | 2014.09-2015.12 | 6AT/6MT | R | L | SUV 4WD G4NA | Vehicle Production Country:South Korea | GDS83994 | Drive Shaft | 48T | 27 | 25 | 62 | 95 | 834 | |
| | 2014.09-2015.12 | 6AT/6MT | R | L | SUV 4WD G4NA | Vehicle Production Country:Czech Republic | GDS84062 | Drive Shaft | 48T | 27 | 25 | 62 | 95 | 834 | |
| | 2014.09-2015.12 | 6AT/6MT | R | R | SUV 4WD G4NA | Vehicle Production Country:South Korea | GDS83971 | Drive Shaft | 48T | 27 | 25 | 62 | 95 | 817 | |
| | 2014.09-2015.12 | 6AT/6MT | R | L | SUV 4WD G4NA | Vehicle Production Country:South Korea | GCO82547 | Outer Joint | 48T | 27 | 20 | 62 | 95 | 42 | M |
| | 2014.09-2015.12 | 6AT/6MT | R | L/R | SUV 4WD G4NA | Vehicle Production Country:South Korea | GCI24154 | Inner Joint | | 25 | 20 | 35 | 62 | 78 | |
| | 2014.09-2015.12 | | R | R | SUV 4WD G4NA | Vehicle Production Country:Czech Republic | GDS24538 | Drive Shaft | 48T | 27 | 25 | 62 | 95 | 817 | |
| 2.0 (114 kw) | 2013.11-2015.12 | 6AT | F | L | SUV 4WD G4NA | vehicle production country:Czech Republic | GDS81239 | Drive Shaft | 48T | 27 | 27 | 62 | 95 | 682 | |
| | 2013.11-2015.12 | 6AT | F | R | SUV 4WD G4NA | Vehicle Production Country:Czech Republic | GDS24537 | Drive Shaft | 48T | 27 | 26 | 62 | 95 | 562 | |
| | 2013.11-2015.12 | 6AT | F | R | SUV 4WD G4NA | vehicle production country:Republic of South Korea | GDS81187 | Drive Shaft | 48T | 27 | 26 | 62 | 95 | 579 | |
| | 2013.11-2015.12 | 6AT | F | L/R | SUV 4WD G4NA | Vehicle Production Country:Czech Republic | GDS24518 | Drive Shaft | 48T | 27 | 26 | 62 | 95 | 580 | |
| | 2013.11-2015.12 | 6MT | F | L | SUV 4WD G4NA | vehicle production country:Republic of South Korea | GDS81185 | Drive Shaft | 48T | 27 | 27 | 62 | 95 | 682 | |
| | 2013.11-2015.12 | 6MT | F | R | SUV 4WD G4NA | vehicle production country:Republic of South Korea | GDS81186 | Drive Shaft | 48T | 27 | 26 | 62 | 95 | 560 | |
| | 2013.11-2015.12 | 6AT/6MT | R | L | SUV 4WD G4NA | Vehicle Production Country:Czech Republic | GDS84062 | Drive Shaft | 48T | 27 | 25 | 62 | 95 | 834 | |
| | 2013.11-2015.12 | 6AT/6MT | R | R | SUV 4WD G4NA | Vehicle Production Country:Czech Republic | GDS24538 | Drive Shaft | 48T | 27 | 25 | 62 | 95 | 817 | |
| | 2013.11-2015.12 | 6AT/6MT | R | L/R | SUV 4WD G4NA | Vehicle Production Country:Republic of Korea (South Korea) | GCO82547 | Outer Joint | 48T | 27 | 20 | 62 | 95 | 42 | M |
| | 2013.11-2015.12 | 6AT/6MT | R | L/R | SUV 4WD G4NA | Vehicle Production Country:Republic of Korea (South Korea)/Czech Republic | GCI24154 | Inner Joint | | 25 | 20 | 35 | 62 | 78 | |
| | 2013.11-2015.12 | 6AT | F | L | SUV FWD G4NA | vehicle production country:Republic of South Korea | GDS81189 | Drive Shaft | 48T | 27 | 27 | 62 | 95 | 682 | |
| | 2013.11-2015.12 | 6AT | F | L | SUV FWD G4NA | vehicle production country:Czech Republic | GDS81239 | Drive Shaft | 48T | 27 | 27 | 62 | 95 | 682 | |
| | 2013.11-2015.12 | 6AT | F | R | SUV FWD G4NA | Vehicle Production Country:Czech Republic | GDS24537 | Drive Shaft | 48T | 27 | 26 | 62 | 95 | 562 | |
| | 2013.11-2015.12 | 6MT | F | L | SUV FWD G4NA | vehicle production country:Republic of South Korea | GDS81185 | Drive Shaft | 48T | 27 | 27 | 62 | 95 | 682 | |
| | 2013.11-2015.12 | 6MT/6AT | F | R | SUV FWD G4NA | vehicle production country:Republic of South Korea | GDS81186 | Drive Shaft | 48T | 27 | 26 | 62 | 95 | 560 | |
| **ix35** | | | | | | | | | | | | | | | |
| 2.0 (120 kw) | 2010.01-2013.07 | 5MT | F | L/R | SUV FWD G4KD | Vehicle Production Country:South Korea | GCI27031 | Inner Joint | | 27 | 24 | 41 | 61.5 | 100 | |
| | 2010.01-2013.07 | 6AT | F | L | SUV FWD G4KD | Vehicle Production Country:South Korea | GDS24231 | Drive Shaft | 48T | 27 | 27 | 62 | 95 | 676 | |
| | 2010.01-2013.07 | 6AT | F | R | SUV FWD G4KD | Vehicle Production Country:South Korea | GDS24230 | Drive Shaft | 48T | 27 | 27 | 62 | 95 | 961 | |
| | 2010.01-2013.07 | 6AT | F | L/R | SUV FWD G4KD | Vehicle Production Country:South Korea | GCO24124 | Outer Joint | 48T | 27 | 24 | 62 | 95 | 58 | M |
| | 2010.01-2013.07 | 6AT | F | L/R | SUV FWD G4KD | Vehicle Production Country:Czech Republic,Slovakia | GCO24284 | Outer Joint | 48T | 27 | 24 | 62 | 95 | 59 | M |
| | 2010.01-2013.07 | 6AT | F | R | SUV FWD G4KD | Vehicle Production Country:Czech Republic/Slovakia | GCI24053 | Inner Joint | | 27 | 24 | 30 | 67.5 | 88.5 | |
| | 2010.01-2013.07 | 6AT | F | L/R | SUV FWD G4KD | Vehicle Production Country:South Korea | GCI24158 | Inner Joint | | 27 | 24 | 30 | 67 | 88.5 | |
| | 2010.01-2013.07 | AT | F | L | SUV FWD G4KD | | GDS27217 | Drive Shaft | 48T | 27 | 27 | 62 | 95 | 678 | |
| | 2010.01-2013.07 | MT | F | L | SUV FWD G4KD | | GDS24525 | Drive Shaft | 48T | 27 | 27 | 62 | 95 | 694 | |
| | 2010.01-2013.07 | MT | F | R | SUV FWD G4KD | | GDS24535 | Drive Shaft | 48T | 27 | 27 | 62 | 95 | 966 | |
| **iX35** | | | | | | | | | | | | | | | |
| 2.0 (120 kw) | 2010.01-2015.12 | 5MT | F | L | SUV 4WD G4KD | Vehicle Production Country:Czech Republic/Slovakia | GDS24525 | Drive Shaft | 48T | 27 | 27 | 62 | 95 | 694 | |
| | 2010.01-2015.12 | 5MT | F | R | SUV 4WD G4KD | Vehicle Production Country:South Korea | GDS81188 | Drive Shaft | 48T | 27 | 26 | 62 | 95 | 588 | |
| | 2010.01-2015.12 | 5MT | F | L | SUV 4WD G4KD | Vehicle Production Country:South Korea/Czech Republic/Slovakia | GCI27031 | Inner Joint | | 27 | 24 | 41 | 61.5 | 100 | |
| | 2010.01-2015.12 | 5MT/6AT | F | R | SUV 4WD G4KD | Vehicle Production Country:South Korea | GCI81105 | Inner Joint | | 26 | 24 | 44.1 | | 115 | |
| | 2010.01-2015.12 | 6AT | F | L | SUV 4WD G4KD | Vehicle Production Country:South Korea | GDS24231 | Drive Shaft | 48T | 27 | 27 | 62 | 95 | 676 | |
| | 2010.01-2015.12 | 6AT | F | L | SUV 4WD G4KD | Vehicle Production Country:Czech Republic/Slovakia | GDS27217 | Drive Shaft | 48T | 27 | 27 | 62 | 95 | 678 | |
| | 2010.01-2015.12 | 6AT | F | L/R | SUV 4WD G4KD | Vehicle Production Country:South Korea | GCO24124 | Outer Joint | 48T | 27 | 24 | 62 | 95 | 58 | M |
| | 2010.01-2015.12 | 6AT | F | L | SUV 4WD G4KD | Vehicle Production Country:South Korea/Czech Republic/Slovakia | GCI24158 | Inner Joint | | 27 | 24 | 30 | 67 | 88.5 | |
| | 2010.01-2015.12 | 6AT/5MT | F | R | SUV 4WD G4KD | Vehicle Production Country:Czech-Republic/Slovakia | GDS24568 | Drive Shaft | 48T | 27 | 26 | 62 | 95 | 590 | |
| | 2010.01-2015.12 | 6AT/5MT | F | L/R | SUV 4WD G4KD | vehicle production country:Czech Republic,Slovakia | GCO24284 | Outer Joint | 48T | 27 | 24 | 62 | 95 | 59 | M |
| | 2010.01-2015.12 | 6AT/5MT | F | R | SUV 4WD G4KD | vehicle production country:Czech Republic,Slovakia | GCI27032 | Inner Joint | | 26 | 24 | 44.1 | | 115 | |
| | 2010.01-2015.12 | MT | F | R | SUV 4WD G4KD | | GDS81695 | Intermediate Shaft | | 26 | 27 | | | 422 | |
| | 2010.01-2015.12 | 6AT | R | L/R | SUV 4WD G4KD | Vehicle Production Country:Czech Republic/Slovakia | GCO24311 | Outer Joint | 48T | 27 | 20 | 62 | 94.5 | 53 | M |
| | 2010.01-2015.12 | 6AT/5MT | R | R | SUV 4WD G4KD | vehicle production country:South Korea | GDS83118 | Drive Shaft | 48T | 27 | 25 | 62 | 95 | 816 | |
| | 2010.01-2015.12 | 6AT/5MT | R | R | SUV 4WD G4KD | vehicle production country:South Korea | GCO82286 | Outer Joint | 48T | 27 | 20 | 62 | 95 | 53 | M |
| | 2010.01-2015.12 | 6AT/5MT | R | L/R | SUV 4WD G4KD | vehicle production country:Czech Republic,Slovakia | GCI24077 | Inner Joint | | 25 | 20 | 35 | 62 | 82 | |
| | 2010.01-2015.12 | | R | L | SUV 4WD G4KD | Vehicle Production Country:Czech Republic/Slovakia | GDS24524 | Drive Shaft | 48T | 27 | 25 | 62 | 94.5 | 837 | |
| | 2010.01-2015.12 | | R | R | SUV 4WD G4KD | Vehicle Production Country:Czech Republic/Slovakia | GDS24536 | Drive Shaft | 48T | 27 | 25 | 62 | 94.5 | 816 | |
| 2.0 (122 kw) | 2010.01-2015.12 | 5MT | F | L | SUV FWD G4KD | Vehicle Production Country:Czech Republic/Slovakia | GDS24525 | Drive Shaft | 48T | 27 | 27 | 62 | 95 | 694 | |
| | 2010.01-2015.12 | 5MT | F | R | SUV FWD G4KD | Vehicle Production Country:Czech Republic/Slovakia | GDS24535 | Drive Shaft | 48T | 27 | 27 | 62 | 95 | 966 | |
| | 2010.01-2015.12 | 5MT | F | L | SUV FWD G4KD | Vehicle Production Country:South Korea/Czech Republic/Slovakia | GCI27031 | Inner Joint | | 27 | 24 | 41 | 61.5 | 100 | |
| | 2010.01-2015.12 | 6AT | F | L | SUV FWD G4KD | Vehicle Production Country:South Korea | GDS24231 | Drive Shaft | 48T | 27 | 27 | 62 | 95 | 676 | |
| | 2010.01-2015.12 | 6AT | F | L | SUV FWD G4KD | Vehicle Production Country:Czech Republic/Slovakia | GDS27217 | Drive Shaft | 48T | 27 | 27 | 62 | 95 | 678 | |
| | 2010.01-2015.12 | 6AT | F | R | SUV FWD G4KD | Vehicle Production Country:South Korea | GDS24230 | Drive Shaft | 48T | 27 | 27 | 62 | 95 | 961 | |
| | 2010.01-2015.12 | 6AT | F | L/R | SUV FWD G4KD | Vehicle Production Country:South Korea | GCO24124 | Outer Joint | 48T | 27 | 24 | 62 | 95 | 58 | M |
| | 2010.01-2015.12 | 6AT | F | L/R | SUV FWD G4KD | Vehicle production country:Czech Republic,Slovakia | GCO24284 | Outer Joint | 48T | 27 | 24 | 62 | 95 | 59 | M |
| | 2010.01-2015.12 | 6AT | F | L | SUV FWD G4KD | Vehicle Production Country:South Korea/Czech Republic/Slovakia | GCI24158 | Inner Joint | | 27 | 24 | 30 | 67 | 88.5 | |
| | 2010.01-2015.12 | 6AT | F | R | SUV FWD G4KD | Vehicle Production Country:Czech Republic/Slovakia | GCI24053 | Inner Joint | | 27 | 24 | 30 | 67.5 | 88.5 | |

| | YEAR | TRANSM. | F/R | L/R | BODY STYLE & DRIVE TYPE & ENGINE | REMARKS | G-AP Ref. | PRODUCT | ABS | Technical Specifications A | B | C | H | L | P |
|---|---|---|---|---|---|---|---|---|---|---|---|---|---|---|---|
| **HYUNDAI** | | | | | | | | | | | | | | | |
| **iX35** | | | | | | | | | | | | | | | |
| 2.0 (122 kw) | 2013.08-2015.12 | 6AT | F | L | SUV 4WD G4NC | Vehicle Production Country:Czech Republic | GDS81239 | Drive Shaft | 48T | 27 | 27 | 62 | 95 | 682 | |
| | 2013.08-2015.12 | 6AT | F | L | SUV 4WD G4NC | Vehicle Production Country:South Korea | GDS84110 | Drive Shaft | 48T | 27 | 27 | 62 | 95 | 676 | |
| | 2013.08-2015.12 | 6AT | F | R | SUV 4WD G4NC | Vehicle Production Country:South Korea | GDS81187 | Drive Shaft | 48T | 27 | 26 | 62 | 95 | 579 | |
| | 2013.08-2015.12 | 6AT | F | L | SUV 4WD G4NC | vehicle production country:Czech Republic | GCO81085 | Outer Joint | 48T | 27 | 24 | 62 | 95 | 59 | M |
| | 2013.08-2015.12 | 6AT | F | R | SUV 4WD G4NC | vehicle production country:Czech Republic | GCO24284 | Outer Joint | 48T | 27 | 24 | 62 | 95 | 59 | M |
| | 2013.08-2015.12 | 6AT | F | L | SUV 4WD G4NC | Vehicle Production Country:Czech Republic | GCI81106 | Inner Joint | | 27 | 24 | 30 | 67.5 | 88.5 | |
| | 2013.08-2015.12 | 6MT | F | L | SUV 4WD G4NC | vehicle production country:Republic of South Korea | GDS81185 | Drive Shaft | 48T | 27 | 27 | 62 | 95 | 682 | |
| | 2013.08-2015.12 | 6MT | F | R | SUV 4WD G4NC | Vehicle Production Country:South Korea | GDS81186 | Drive Shaft | 48T | 27 | 26 | 62 | 95 | 560 | |
| | 2013.08-2015.12 | 6MT | F | L/R | SUV 4WD G4NC | Vehicle Production Country:South Korea | GCO24124 | Outer Joint | 48T | 27 | 24 | 62 | 95 | 58 | M |
| | 2013.08-2015.12 | AT | F | R | SUV 4WD G4NC | vehicle production country:Czech Republic | GDS24518 | Drive Shaft | 48T | 27 | 26 | 62 | 95 | 580 | |
| | 2013.08-2015.12 | AT | F | R | SUV 4WD G4NC | Veh Prd Country:Czech Republic | GCI27032 | Inner Joint | | 26 | 24 | 44.1 | | 115 | |
| | 2013.08-2015.12 | AT | F | R | SUV 4WD G4NC | Vehicle Production Country:South Korea | GCI81105 | Inner Joint | | 26 | 24 | 44.1 | | 115 | |
| | 2013.08-2015.12 | MT | F | R | SUV 4WD G4NC | vehicle production country:Czech Republic | GDS24537 | Drive Shaft | 48T | 27 | 26 | 62 | 95 | 562 | |
| | 2013.08-2015.12 | 6AT | R | L/R | SUV 4WD G4NC | Vehicle Production Country:South Korea | GCO82547 | Outer Joint | 48T | 27 | 20 | 62 | 95 | 42 | M |
| | 2013.08-2015.12 | 6AT/6MT | R | L | SUV 4WD G4NC | Vehicle Production Country:South Korea | GDS83994 | Drive Shaft | 48T | 27 | 25 | 62 | 95 | 834 | |
| | 2013.08-2015.12 | 6AT/6MT | R | L | SUV 4WD G4NC | Vehicle Production Country:Czech Republic | GDS84062 | Drive Shaft | 48T | 27 | 25 | 62 | 95 | 834 | |
| | 2013.08-2015.12 | 6AT/6MT | R | R | SUV 4WD G4NC | vehicle production country:Czech Republic | GDS24538 | Drive Shaft | 48T | 27 | 25 | 62 | 95 | 817 | |
| | 2013.08-2015.12 | 6AT/6MT | R | R | SUV 4WD G4NC | Vehicle Production Country:South Korea | GDS83971 | Drive Shaft | 48T | 27 | 25 | 62 | 95 | 817 | |
| | 2013.08-2015.12 | 6AT/6MT | R | L/R | SUV 4WD G4NC | vehicle production country:Czech Republic | GCO24315 | Outer Joint | 48T | 27 | 20 | 62 | 95 | 43 | M |
| | 2013.08-2015.12 | 6AT/6MT | R | L/R | SUV 4WD G4NC | Vehicle Production Country:South Korea | GCI24154 | Inner Joint | | 25 | 20 | 35 | 62 | 78 | |
| | 2013.08-2015.12 | 6AT | F | L | SUV FWD G4NC | Vehicle Production Country:South Korea | GDS81189 | Drive Shaft | 48T | 27 | 27 | 62 | 95 | 682 | |
| | 2013.08-2015.12 | 6AT | F | L | SUV FWD G4NC | Vehicle Production Country:Czech Republic | GDS81239 | Drive Shaft | 48T | 27 | 27 | 62 | 95 | 682 | |
| | 2013.08-2015.12 | 6AT | F | L | SUV FWD G4NC | Vehicle Production Country:Czech Republic | GCO81085 | Outer Joint | 48T | 27 | 24 | 62 | 95 | 59 | M |
| | 2013.08-2015.12 | 6AT | F | L | SUV FWD G4NC | Vehicle Production Country:Czech Republic | GCI81106 | Inner Joint | | 27 | 24 | 30 | 67.5 | 88.5 | |
| | 2013.08-2015.12 | 6AT | F | R | SUV FWD G4NC | Vehicle Production Country:South Korea | GDS27229 | Intermediate Shaft | | 26 | 27 | | | 445 | |
| | 2013.08-2015.12 | 6AT/6MT | F | R | SUV FWD G4NC | Vehicle Production Country:South Korea | GDS81186 | Drive Shaft | 48T | 27 | 26 | 62 | 95 | 560 | |
| | 2013.08-2015.12 | 6MT | F | L | SUV FWD G4NC | vehicle production country:Republic of South Korea | GDS81185 | Drive Shaft | 48T | 27 | 27 | 62 | 95 | 682 | |
| | 2013.08-2015.12 | AT | F | R | SUV FWD G4NC | vehicle production country:Czech Republic | GDS24537 | Drive Shaft | 48T | 27 | 26 | 62 | 95 | 562 | |
| | 2013.08-2015.12 | AT | F | R | SUV FWD G4NC | vehicle production country:Czech Republic | GCO24284 | Outer Joint | 48T | 27 | 24 | 62 | 95 | 59 | M |
| | 2013.08-2015.12 | | F | R | SUV FWD G4NC | Vehicle Production Country:South Korea | GCI81105 | Inner Joint | | 26 | 24 | 44.1 | | 115 | |
| **ix35** | | | | | | | | | | | | | | | |
| 2.0 (130 kw) | 2012.01-2015.12 | 6MT | F | L | SUV FWD D4HA | Vehicle Production Country:Republic of Korea (South Korea) | GDS24299 | Drive Shaft | 48T | 30 | 27 | 62 | 95 | 690 | |
| | 2012.01-2015.12 | 6MT | F | L | SUV FWD D4HA | Date to:2013.07,Vehicle Production Country:Czech Republic,Slovakia | GDS24523 | Drive Shaft | 48T | 30 | 28 | 62 | 95 | 680 | |
| | 2012.01-2015.12 | 6MT | F | R | SUV FWD D4HA | Date to:2013.07,Vehicle Production Country:Czech Republic,Slovakia | GDS24551 | Drive Shaft | 48T | 30 | 28 | 62 | 95 | 989 | |
| | 2012.01-2015.12 | 6MT | F | R | SUV FWD D4HA | Vehicle Production Country:Republic of Korea (South Korea) | GDS27237 | Drive Shaft | 48T | 30 | 28 | 62 | 95 | 989 | |
| | 2012.01-2015.12 | 6MT | F | L/R | SUV FWD D4HA | | GCO27128 | Outer Joint | 48T | 30 | 25 | 62 | 95 | 63 | M |
| | 2012.01-2015.12 | 6MT | F | L/R | SUV FWD D4HA | | GCI27057 | Inner Joint | | 28 | 25 | 41 | 61.5 | 107 | |
| **iX35** | | | | | | | | | | | | | | | |
| 2.0 (135 kw) | 2009.08-2015.12 | 6MT | F | L | SUV FWD D4HA | Date to:2013.07,Czech Republic,Slovakia | GDS24523 | Drive Shaft | 48T | 30 | 28 | 62 | 95 | 680 | |
| | 2009.08-2015.12 | 6MT | F | R | SUV FWD D4HA | Date to:2013.07,Vehicle Production Country:Czech Republic/Slovakia | GDS24551 | Drive Shaft | 48T | 30 | 28 | 62 | 95 | 989 | |
| | 2009.08-2015.12 | 6MT | F | L | SUV FWD D4HA | Date to:2013.07 | GCO24221 | Outer Joint | 48T | 30 | 25 | 62 | 95 | 63 | M |
| | 2009.08-2015.12 | 6MT | F | R | SUV FWD D4HA | Date from:2013.08,Vehicle Production Country:Czech Republic,Slovakia | GCI81105 | Inner Joint | | 26 | 24 | 44.1 | | 115 | |
| | 2009.08-2015.12 | 6MT | F | L/R | SUV FWD D4HA | Vehicle Production Country:South Korea | GCI27057 | Inner Joint | | 28 | 25 | 41 | 61.5 | 107 | |
| | 2009.08-2015.12 | 6MT | F | R | SUV FWD D4HA | Date from:2013.08 | GDS87093 | Intermediate Shaft | | 28 | 28 | | | 442 | |
| | 2009.08-2015.12 | AT/MT | F | L/R | SUV FWD D4HA | | GCO24153 | Outer Joint | 48T | 30 | 25 | 65 | 95 | 69.5 | M |
| | 2009.08-2015.12 | MT | F | L | SUV FWD D4HA | Republic of Korea (South Korea) | GDS24299 | Drive Shaft | 48T | 30 | 27 | 62 | 95 | 690 | |
| | 2009.08-2015.12 | MT | F | R | SUV FWD D4HA | | GDS27237 | Drive Shaft | 48T | 30 | 28 | 62 | 95 | 989 | |
| | 2009.08-2015.12 | | F | R | SUV FWD D4HA | Date From:2013.08,Vehicle Production Country:Czech Republic/Slovakia | GCO27128 | Outer Joint | 48T | 30 | 25 | 62 | 95 | 63 | M |
| | 2009.08-2015.12 | | F | L/R | SUV FWD D4HA | Vehicle Production Country:Republic of Korea(South Korea) | GCO27128 | Outer Joint | 48T | 30 | 25 | 62 | 95 | 63 | M |
| | 2010.01-2015.12 | 6AT | F | L | SUV 4WD D4HA | Vehicle Production Country:Czech Republic,Slovakia | GDS24550 | Drive Shaft | 48T | 30 | 28 | 62 | 95 | 671 | |
| | 2010.01-2015.12 | 6AT | F | L | SUV 4WD D4HA | Vehicle Production Country:Republic of Korea (South Korea) | GDS27233 | Drive Shaft | 48T | 30 | 28 | 62 | 95 | 672 | |
| | 2010.01-2015.12 | 6AT | F | L | SUV 4WD D4HA | Date to:2013.07 | GCI27056 | Inner Joint | | 28 | 25 | 33 | 67 | 103.5 | |
| | 2010.01-2015.12 | 6AT | F | R | SUV 4WD D4HA | Date To:2013.07,Vehicle Production Country:Czech Republic/Slovakia | GDS82862 | Intermediate Shaft | | 28 | 28 | | | 430 | |
| | 2010.01-2015.12 | 6AT | F | R | SUV 4WD D4HA | Date from:2013.08 | GDS87091 | Intermediate Shaft | | 28 | 28 | | | 430 | |
| | 2010.01-2015.12 | 6AT/6MT | F | R | SUV 4WD D4HA | Date to:2013.07,Vehicle Production Country:Czech Republic,Slovakia | GDS24522 | Drive Shaft | 48T | 30 | 28 | 62 | 95 | 585 | |
| | 2010.01-2015.12 | 6AT/6MT | F | L/R | SUV 4WD D4HA | Date to:2013.07 | GCO24221 | Outer Joint | 48T | 30 | 25 | 62 | 95 | 63 | M |
| | 2010.01-2015.12 | 6AT/6MT | F | L/R | SUV 4WD D4HA | Date From:2013.08,Vehicle Production Country:Czech Republic/Slovakia | GCO27128 | Outer Joint | 48T | 30 | 25 | 62 | 95 | 63 | M |
| | 2010.01-2015.12 | 6AT/6MT | F | R | SUV 4WD D4HA | Date to:2013.07,Vehicle Production Country:Czech Republic,Slovakia | GCI24064 | Inner Joint | | 28 | 25 | 44.1 | | 120 | |
| | 2010.01-2015.12 | 6MT | F | L | SUV 4WD D4HA | Vehicle Production Country:South Korea | GDS24299 | Drive Shaft | 48T | 30 | 27 | 62 | 95 | 690 | |
| | 2010.01-2015.12 | 6MT | F | L | SUV 4WD D4HA | Date to:2013.07,Vehicle Production Country:Czech-Republic/Slovakia | GDS24523 | Drive Shaft | 48T | 30 | 28 | 62 | 95 | 680 | |
| | 2010.01-2015.12 | 6MT | F | L | SUV 4WD D4HA | | GCI27057 | Inner Joint | | 28 | 25 | 41 | 61.5 | 107 | |
| | 2010.01-2015.12 | 6MT | F | R | SUV 4WD D4HA | Date from:2010.04,Date to:2013.08 | GDS87082 | Intermediate Shaft | | 28 | 28 | | | 440.5 | |
| | 2010.01-2015.12 | 6MT/6AT | F | R | SUV 4WD D4HA | Vehicle Production Country:Republic of Korea (South Korea) | GDS27235 | Drive Shaft | 48T | 30 | 28 | 62 | 95 | 585 | |
| | 2010.01-2015.12 | 6MT/6AT | F | R | SUV 4WD D4HA | Date from:2013.08,Vehicle Production Country:Czech Republic,Slovakia | GCI81105 | Inner Joint | | 26 | 24 | 44.1 | | 115 | |
| | 2010.01-2015.12 | AT/MT | F | L/R | SUV 4WD D4HA | | GCO24153 | Outer Joint | 48T | 30 | 25 | 65 | 95 | 69.5 | M |

| | YEAR | TRANSM. | F/R | L/R | BODY STYLE & DRIVE TYPE & ENGINE | REMARKS | G-AP Ref. | PRODUCT | ABS | Technical Specifications A | B | C | H | L | P |
|---|---|---|---|---|---|---|---|---|---|---|---|---|---|---|---|
| **HYUNDAI** | | | | | | | | | | | | | | | |
| **iX35** | | | | | | | | | | | | | | | |
| 2.0 (135 kw) | 2010.01-2015.12 | 6AT | R | L/R | SUV 4WD D4HA | Date to:2013.07,Vehicle Production Country:Czech Republic/Slovakia | GCO24311 | Outer Joint | 48T | 27 | 20 | 62 | 94.5 | 53 | M |
| | 2010.01-2015.12 | 6AT/6MT | R | L | SUV 4WD D4HA | Vehicle Production Country:Czech Republic/Slovakia;Date to:2013.07 | GDS24524 | Drive Shaft | 48T | 27 | 25 | 62 | 94.5 | 837 | |
| | 2010.01-2015.12 | 6AT/6MT | R | L | SUV 4WD D4HA | Date from:2013.09;Vehicle Production Country:South Korea | GDS83994 | Drive Shaft | 48T | 27 | 25 | 62 | 95 | 834 | |
| | 2010.01-2015.12 | 6AT/6MT | R | L | SUV 4WD D4HA | Date from:2013.08;Vehicle Production Country:Czech Republic | GDS84062 | Drive Shaft | 48T | 27 | 25 | 62 | 95 | 834 | |
| | 2010.01-2015.12 | 6AT/6MT | R | R | SUV 4WD D4HA | Vehicle Production Country:Czech Republic/Slovakia;Date to:2013.07 | GDS24536 | Drive Shaft | 48T | 27 | 25 | 62 | 94.5 | 816 | |
| | 2010.01-2015.12 | 6AT/6MT | R | R | SUV 4WD D4HA | Date from:2013.08,Vehicle Production Country:Czech-Republic/Slovakia | GDS24538 | Drive Shaft | 48T | 27 | 25 | 62 | 95 | 817 | |
| | 2010.01-2015.12 | 6AT/6MT | R | R | SUV 4WD D4HA | vehicle production country:South Korea;date to:2013.08 | GDS83118 | Drive Shaft | 48T | 27 | 25 | 62 | 95 | 816 | |
| | 2010.01-2015.12 | 6AT/6MT | R | R | SUV 4WD D4HA | Date from:2013.09,Vehicle Production Country:South Korea | GDS83971 | Drive Shaft | 48T | 27 | 25 | 62 | 95 | 817 | |
| | 2010.01-2015.12 | 6AT/6MT | R | L | SUV 4WD D4HA | Date From:2013.09;Vehicle Production Country:South Korea | GCO82547 | Outer Joint | 48T | 27 | 20 | 62 | 95 | 42 | M |
| | 2010.01-2015.12 | 6AT/6MT | R | R | SUV 4WD D4HA | vehicle production country:South Korea;date to:2013.08 | GCO82286 | Outer Joint | 48T | 27 | 20 | 62 | 95 | 53 | M |
| | 2010.01-2015.12 | 6AT/6MT | R | L/R | SUV 4WD D4HA | Vehicle Production Country:Czech Republic/Slovakia;Date To:2013.07 | GCI24077 | Inner Joint | | 25 | 20 | 35 | 62 | 82 | |
| | 2010.01-2015.12 | 6AT/6MT | R | L/R | SUV 4WD D4HA | Date From:2013.09;Vehicle Production Country:South Korea | GCI24154 | Inner Joint | | 25 | 20 | 35 | 62 | 78 | |
| **ix55** | | | | | | | | | | | | | | | |
| 3.0 (176 kw) | 2008.09-2011.12 | 6AT | F | R | SUV 4WD D6EA | | GDS24222 | Drive Shaft | 52T | 30 | 28 | 73 | 97 | 618 | |
| | 2008.09-2011.12 | 6AT | F | L/R | SUV 4WD D6EA | | GCO24072 | Outer Joint | 52T | 30 | 36 | 73 | 97 | 67.5 | I |
| | 2008.09-2011.12 | 6AT | F | L | SUV 4WD D6EA | | GCI24057 | Inner Joint | | 31 | 36 | 36.2 | 65 | 118.5 | |
| | 2008.09-2011.12 | 6AT | F | R | SUV 4WD D6EA | | GCI24058 | Inner Joint | | 28 | 36 | 42.1 | | 131.5 | |
| | 2008.09-2011.12 | 6AT | R | L/R | SUV 4WD D6EA | | GDS57581 | Drive Shaft | 52T | 30 | 27 | 60 | 98 | 848 | |
| | 2008.09-2011.12 | 6AT | R | L/R | SUV 4WD D6EA | | GCO83630 | Outer Joint | 52T | 30 | 22 | 60 | 98 | 68.5 | M |
| | 2008.09-2011.12 | 6AT | R | L/R | SUV 4WD D6EA | | GCI24097 | Inner Joint | | 27 | 22 | 41 | 62.5 | 94 | |
| **iX55** | | | | | | | | | | | | | | | |
| 3.0 (184 kw) | 2011.09-2012.12 | AT | F | L/R | SUV 4WD D6EA | | GCO24072 | Outer Joint | 52T | 30 | 36 | 73 | 97 | 67.5 | I |
| **ix55** | | | | | | | | | | | | | | | |
| 3.8 (191 kw) | 2007.01-2012.11 | 6AT | F | R | SUV 4WD G6DA | | GDS24222 | Drive Shaft | 52T | 30 | 28 | 73 | 97 | 618 | |
| | 2007.01-2012.11 | 6AT | F | L/R | SUV 4WD G6DA | | GCO24072 | Outer Joint | 52T | 30 | 36 | 73 | 97 | 67.5 | I |
| | 2007.01-2012.11 | 6AT | F | L | SUV 4WD G6DA | | GCI24057 | Inner Joint | | 31 | 36 | 36.2 | 65 | 118.5 | |
| | 2007.01-2012.11 | 6AT | F | R | SUV 4WD G6DA | | GCI24058 | Inner Joint | | 28 | 36 | 42.1 | | 131.5 | |
| | 2007.01-2012.11 | 6AT | R | L/R | SUV 4WD G6DA | | GDS57581 | Drive Shaft | 52T | 30 | 27 | 60 | 98 | 848 | |
| | 2007.01-2012.11 | 6AT | R | L/R | SUV 4WD G6DA | | GCO83630 | Outer Joint | 52T | 30 | 22 | 60 | 98 | 68.5 | M |
| | 2007.01-2012.11 | 6AT | R | L/R | SUV 4WD G6DA | | GCI24097 | Inner Joint | | 27 | 22 | 41 | 62.5 | 94 | |
| **Kona** | | | | | | | | | | | | | | | |
| 1.0 (88 kw) | 2017.07- | 6MT | F | L | SUV Van FWD G3LC | | GDS84378 | Drive Shaft | | 27 | 25 | 60 | 95 | 723 | |
| | 2017.07- | 6MT | F | R | SUV Van FWD G3LC | | GDS84373 | Drive Shaft | | 27 | 25 | 60 | 95 | 939 | |
| | 2017.07- | 6MT | F | L/R | SUV Van FWD G3LC | | GCO82724 | Outer Joint | | 27 | 23 | 60 | 95 | 58 | M |
| | 2017.07- | 6MT | F | L/R | SUV Van FWD G3LC | | GCI81749 | Inner Joint | | 25 | 31 | 41 | 63 | 90 | |
| | 2017.07-2023.04 | 6MT | F | L | SUV FWD G3LC, G3LE | | GDS84378 | Drive Shaft | | 27 | 25 | 60 | 95 | 723 | |
| | 2017.07-2023.04 | 6MT | F | R | SUV FWD G3LC, G3LE | | GDS84373 | Drive Shaft | | 27 | 25 | 60 | 95 | 939 | |
| | 2017.07-2023.04 | 6MT | F | L/R | SUV FWD G3LC, G3LE | | GCO82724 | Outer Joint | | 27 | 23 | 60 | 95 | 58 | M |
| | 2017.07-2023.04 | 6MT | F | L/R | SUV FWD G3LC, G3LE | | GCI81749 | Inner Joint | | 25 | 31 | 41 | 63 | 90 | |
| | 2017.07-2023.04 | 7DCT | F | L | SUV FWD G3LC, G3LE | | GDS57636 | Drive Shaft | | 27 | 27 | 60 | 94.5 | 690 | |
| | 2017.07-2023.04 | 7DCT | F | R | SUV FWD G3LC, G3LE | | GDS57635 | Drive Shaft | | 27 | 27 | 60 | 94.5 | 944 | |
| | 2017.07-2023.04 | 7DCT | F | R | SUV FWD G3LC, G3LE | | GCO83645 | Outer Joint | | 27 | 24 | 60 | 94.5 | 59 | M |
| | 2017.07-2023.04 | 7DCT | F | L/R | SUV FWD G3LC, G3LE | | GCI83781 | Inner Joint | | 27 | 32 | 30 | 67 | 84.5 | |
| | 2020.11-2023.04 | 6MT | F | L | SUV FWD G3LE;G3LF | | GDS84378 | Drive Shaft | | 27 | 25 | 60 | 95 | 723 | |
| | 2020.11-2023.04 | 6MT | F | R | SUV FWD G3LE;G3LF | | GDS84373 | Drive Shaft | | 27 | 25 | 60 | 95 | 939 | |
| | 2020.11-2023.04 | 6MT | F | L/R | SUV FWD G3LE;G3LF | | GCO82724 | Outer Joint | | 27 | 23 | 60 | 95 | 58 | M |
| | 2020.11-2023.04 | 6MT | F | L/R | SUV FWD G3LE;G3LF | | GCI81749 | Inner Joint | | 25 | 31 | 41 | 63 | 90 | |
| 1.6 (77 kw) | 2019.06- | 6AT | F | R | SUV FWD G4LE | | GDS82812 | Intermediate Shaft | | 28 | 28 | | | 539 | |
| | 2019.06- | 6AT | F | R | SUV Van FWD G4LE | | GDS82812 | Intermediate Shaft | | 28 | 28 | | | 539 | |
| 1.6 (100 kw) | 2018.08-2021.08 | 7AT | R | L/R | SUV 4WD D4FE | | GCI81870 | Inner Joint | | 25 | 20 | 35 | 55.5 | 96.5 | |
| | 2018.08-2021.08 | | R | L | SUV 4WD D4FE | | GDS82556 | Drive Shaft | | 27 | 25 | 60 | 94.5 | 808 | |
| | 2018.08-2021.08 | | R | R | SUV 4WD D4FE | | GDS82557 | Drive Shaft | | 27 | 25 | 60 | 94.5 | 834 | |
| | 2018.08-2021.08 | | R | L/R | SUV 4WD D4FE | | GCO82027 | Outer Joint | | 27 | 20 | 60 | 94.5 | 53 | M |
| | 2018.08-2021.08 | 7AT | F | R | SUV FWD D4FE | | GDS83402 | Drive Shaft | | 27 | 28 | 60 | 95 | 1016 | |
| | 2018.08-2021.08 | 7DCT | F | L | SUV FWD D4FE | | GDS82554 | Drive Shaft | | 27 | 28 | 60 | 95 | 643 | |
| | 2018.08-2021.08 | 7DCT | F | L/R | SUV FWD D4FE | | GCO81818 | Outer Joint | | 27 | 24 | 60 | 95 | 59 | M |
| | 2018.08-2021.08 | 7DCT | F | L/R | SUV FWD D4FE | | GCI81867 | Inner Joint | | 28 | 32 | 41 | 61.5 | 95 | |
| | 2020.11-2021.08 | 7AT | R | L | SUV 4WD D4FE | | GDS82556 | Drive Shaft | | 27 | 25 | 60 | 94.5 | 808 | |
| | 2020.11-2021.08 | 7AT | R | R | SUV 4WD D4FE | | GDS82557 | Drive Shaft | | 27 | 25 | 60 | 94.5 | 834 | |
| | 2020.11-2021.08 | 7AT | R | L/R | SUV 4WD D4FE | | GCO82027 | Outer Joint | | 27 | 20 | 60 | 94.5 | 53 | M |
| | 2020.11-2021.08 | 7AT | R | L/R | SUV 4WD D4FE | | GCI81870 | Inner Joint | | 25 | 20 | 35 | 55.5 | 96.5 | |
| 1.6 (104 kw) | 2019.06- | 6AT | F | L | SUV Van FWD G4LE | | GDS84172 | Drive Shaft | | 27 | 28 | 60 | 95 | 594 | |
| | 2019.06- | 6AT | F | R | SUV Van FWD G4LE | | GDS84171 | Drive Shaft | | 27 | 28 | 60 | 95 | 557 | |
| | 2019.06- | 6AT | F | L/R | SUV Van FWD G4LE | | GCO81818 | Outer Joint | | 27 | 24 | 60 | 95 | 59 | M |
| | 2019.06- | 6AT | F | L | SUV Van FWD G4LE | | GCI82622 | Inner Joint | | 28 | 33 | 41 | 61.5 | 107.5 | |

| | YEAR | TRANSM. | F/R | L/R | BODY STYLE & DRIVE TYPE & ENGINE | REMARKS | G-AP Ref. | PRODUCT | ABS | Technical Specifications A | B | C | H | L | P |
|---|---|---|---|---|---|---|---|---|---|---|---|---|---|---|---|
| **HYUNDAI** | | | | | | | | | | | | | | | |
| **Kona** | | | | | | | | | | | | | | | |
| 1.6 (104 kw) | 2019.06- | 6AT | F | R | SUV Van FWD G4LE | | GCI81748 | Inner Joint | | 28 | 33 | 44.1 | | 121 | |
| | 2019.09-2023.04 | 6AT | F | L | SUV FWD G4LE | | GDS84172 | Drive Shaft | | 27 | 28 | 60 | 95 | 594 | |
| | 2019.09-2023.04 | 6AT | F | R | SUV FWD G4LE | | GDS84171 | Drive Shaft | | 27 | 28 | 60 | 95 | 557 | |
| | 2019.09-2023.04 | 6AT | F | L/R | SUV FWD G4LE | | GCO81818 | Outer Joint | | 27 | 24 | 60 | 95 | 59 | M |
| | 2019.09-2023.04 | 6AT | F | L | SUV FWD G4LE | | GCI82622 | Inner Joint | | 28 | 33 | 41 | 61.5 | 107.5 | |
| | 2019.09-2023.04 | 6AT | F | R | SUV FWD G4LE | | GCI81748 | Inner Joint | | 28 | 33 | 44.1 | | 121 | |
| 1.6 (130 kw) | 2017.06-2023.03 | 7DCT | F | L | SUV 4WD G4FJ | No Facelift | GDS82555 | Drive Shaft | | 27 | 27 | 60 | 95 | 644 | |
| | 2017.06-2023.03 | 7DCT | F | R | SUV 4WD G4FJ | No Facelift | GDS82553 | Drive Shaft | | 27 | 28 | 60 | 95 | 600 | |
| | 2017.06-2023.03 | 7DCT | F | L/R | SUV 4WD G4FJ | No Facelift | GCO81818 | Outer Joint | | 27 | 24 | 60 | 95 | 59 | M |
| | 2017.06-2023.03 | 7DCT | F | L | SUV 4WD G4FJ | No Facelift | GCI81868 | Inner Joint | | 27 | 32 | 41 | 61.5 | 97 | |
| | 2017.06-2023.03 | 7DCT | F | R | SUV 4WD G4FJ | No Facelift | GCI81869 | Inner Joint | | 28 | 32 | 44.1 | | 111 | |
| | 2017.06-2023.03 | 7DCT | R | L | SUV 4WD G4FJ | | GDS82556 | Drive Shaft | | 27 | 25 | 60 | 94.5 | 808 | |
| | 2017.06-2023.03 | 7DCT | R | R | SUV 4WD G4FJ | | GDS82557 | Drive Shaft | | 27 | 25 | 60 | 94.5 | 834 | |
| | 2017.06-2023.03 | 7DCT | R | L/R | SUV 4WD G4FJ | | GCI81870 | Inner Joint | | 25 | 20 | 35 | 55.5 | 96.5 | |
| | 2017.07-2020.12 | 7DCT | F | L | SUV FWD G4FJ | | GDS82554 | Drive Shaft | | 27 | 28 | 60 | 95 | 643 | |
| | 2017.07-2020.12 | 7DCT | F | R | SUV FWD G4FJ | | GDS82553 | Drive Shaft | | 27 | 28 | 60 | 95 | 600 | |
| | 2017.07-2020.12 | 7DCT | F | L/R | SUV FWD G4FJ | | GCO81818 | Outer Joint | | 27 | 24 | 60 | 95 | 59 | M |
| | 2017.07-2020.12 | 7DCT | F | L | SUV FWD G4FJ | | GCI81867 | Inner Joint | | 28 | 32 | 41 | 61.5 | 95 | |
| | 2017.07-2020.12 | 7DCT | F | R | SUV FWD G4FJ | | GCI81869 | Inner Joint | | 28 | 32 | 44.1 | | 111 | |
| 1.6 (146 kw) | 2020.11-2023.04 | 7AT | R | L | SUV 4WD G4FP | | GDS82556 | Drive Shaft | | 27 | 25 | 60 | 94.5 | 808 | |
| | 2020.11-2023.04 | 7AT | R | R | SUV 4WD G4FP | | GDS82557 | Drive Shaft | | 27 | 25 | 60 | 94.5 | 834 | |
| | 2020.11-2023.04 | 7AT | R | L/R | SUV 4WD G4FP | | GCO82027 | Outer Joint | | 27 | 20 | 60 | 94.5 | 53 | M |
| | 2020.11-2023.04 | 7AT | R | L/R | SUV 4WD G4FP | | GCI81870 | Inner Joint | | 25 | 20 | 35 | 55.5 | 96.5 | |
| 2.0 (110 kw) | 2017.07- | 6AT | F | R | SUV 4WD G4NH | | GDS81763 | Intermediate Shaft | | 28 | 27 | | | 431 | |
| EV (100 kw) | 2018.04-2023.04 | ET | F | L | SUV FWD EM | | GDS84090 | Drive Shaft | | 30 | 27 | 60 | 95 | 678 | |
| | 2018.04-2023.04 | ET | F | R | SUV FWD EM | | GDS84089 | Drive Shaft | | 30 | 27 | 60 | 95 | 972 | |
| | 2018.04-2023.04 | ET | F | L/R | SUV FWD EM | | GCO82597 | Outer Joint | | 30 | 25 | 60 | 95 | 64 | M |
| | 2018.04-2023.04 | ET | F | L/R | SUV FWD EM | | GCI82519 | Inner Joint | | 27 | 33 | 41 | 61.5 | 105 | |
| EV (150 kw) | 2018.04- | ET | F | L | SUV Van FWD EM16 | | GDS84090 | Drive Shaft | | 30 | 27 | 60 | 95 | 678 | |
| | 2018.04- | ET | F | R | SUV Van FWD EM16 | | GDS84089 | Drive Shaft | | 30 | 27 | 60 | 95 | 972 | |
| | 2018.04- | ET | F | L/R | SUV Van FWD EM16 | | GCO82597 | Outer Joint | | 30 | 25 | 60 | 95 | 64 | M |
| | 2018.04- | ET | F | L/R | SUV Van FWD EM16 | | GCI82519 | Inner Joint | | 27 | 33 | 41 | 61.5 | 105 | |
| | 2018.04-2023.03 | ET | F | L | SUV FWD EM16 | | GDS84090 | Drive Shaft | | 30 | 27 | 60 | 95 | 678 | |
| | 2018.04-2023.03 | ET | F | R | SUV FWD EM16 | | GDS84089 | Drive Shaft | | 30 | 27 | 60 | 95 | 972 | |
| | 2018.04-2023.03 | ET | F | L/R | SUV FWD EM16 | | GCO82597 | Outer Joint | | 30 | 25 | 60 | 95 | 64 | M |
| | 2018.04-2023.03 | ET | F | L/R | SUV FWD EM16 | | GCI82519 | Inner Joint | | 27 | 33 | 41 | 61.5 | 105 | |
| **Lantra** | | | | | | | | | | | | | | | |
| 1.5 (65 kw) | 1997.02-2000.05 | 5MT | F | R | Saloon FWD G4EK | | GCO39067 | Outer Joint | 29T | 25 | 30 | 50 | 95 | 60.5 | M |
| | 1997.02-2000.05 | 5MT | F | L/R | Saloon FWD G4EK | | GCO24006 | Outer Joint | 44T | 25 | 25 | 50 | 94.5 | 65 | M |
| | 1997.02-2000.05 | MT | F | L | Saloon FWD G4EK | | GDS24113 | Drive Shaft | 44T | 25 | 30 | 50 | 95.5 | 554 | |
| | 1997.02-2000.05 | MT | F | L/R | Saloon FWD G4EK | | GCI24072 | Inner Joint | | 25 | 30 | 35 | 62.5 | 88 | |
| 1.6 (66 kw) | 1995.06-2000.05 | 4AT | F | R | Saloon FWD G4GR | | GCI24072 | Inner Joint | | 25 | 30 | 35 | 62.5 | 88 | |
| | 1995.06-2000.05 | 4AT/5MT | F | L | Saloon FWD G4GR | Date From:1998.04 | GDS24113 | Drive Shaft | 44T | 25 | 30 | 50 | 95.5 | 554 | |
| | 1995.06-2000.05 | 4AT/5MT | F | L | Saloon FWD G4GR | Date From:1998.04 | GCO24036 | Outer Joint | 44T | 25 | 30 | 50 | 95.5 | 60.5 | M |
| | 1995.06-2000.05 | 4AT/5MT | F | L/R | Saloon FWD G4GR | Date From:1998.04 | GCO24006 | Outer Joint | 44T | 25 | 25 | 50 | 94.5 | 65 | M |
| | 1995.06-2000.05 | 4AT/5MT | F | L/R | Saloon FWD G4GR | Date To:1998.03 | GCO39067 | Outer Joint | 29T | 25 | 30 | 50 | 95 | 60.5 | M |
| | 1995.06-2000.05 | 5MT | F | L/R | Saloon FWD G4GR | | GCI24072 | Inner Joint | | 25 | 30 | 35 | 62.5 | 88 | |
| | 1995.06-2000.05 | AT/MT | F | L/R | Saloon FWD G4GR | Date to:2000.05 | GCO99181 | Outer Joint | | 25 | 30 | 50 | 97 | 57 | M |
| | 1996.02-2000.10 | 5MT | F | L | Estate FWD G4GR | Date From:1998.04 | GDS24113 | Drive Shaft | 44T | 25 | 30 | 50 | 95.5 | 554 | |
| | 1996.02-2000.10 | 5MT | F | L | Estate FWD G4GR | Date From:1998.04 | GCO24036 | Outer Joint | 44T | 25 | 30 | 50 | 95.5 | 60.5 | M |
| | 1996.02-2000.10 | 5MT | F | L/R | Estate FWD G4GR | Date From:1998.04 | GCO24006 | Outer Joint | 44T | 25 | 25 | 50 | 94.5 | 65 | M |
| | 1996.02-2000.10 | 5MT | F | L/R | Estate FWD G4GR | Date To:1998.03 | GCO39067 | Outer Joint | 29T | 25 | 30 | 50 | 95 | 60.5 | M |
| | 1996.02-2000.10 | 5MT | F | L/R | Estate FWD G4GR | | GCI24072 | Inner Joint | | 25 | 30 | 35 | 62.5 | 88 | |
| | 1996.02-2000.10 | AT/MT | F | L/R | Estate FWD G4GR | Date to:2000.05 | GCO99181 | Outer Joint | | 25 | 30 | 50 | 97 | 57 | M |
| 1.6 (84 kw) | 1995.11-2000.09 | 4AT | F | R | Saloon FWD G4GR | | GCI24072 | Inner Joint | | 25 | 30 | 35 | 62.5 | 88 | |
| | 1995.11-2000.09 | 4AT/5MT | F | L | Saloon FWD G4GR | Date From:1998.04 | GDS24113 | Drive Shaft | 44T | 25 | 30 | 50 | 95.5 | 554 | |
| | 1995.11-2000.09 | 4AT/5MT | F | L | Saloon FWD G4GR | Date From:1998.04 | GCO24036 | Outer Joint | 44T | 25 | 30 | 50 | 95.5 | 60.5 | M |
| | 1995.11-2000.09 | 4AT/5MT | F | L/R | Saloon FWD G4GR | Date From:1998.04 | GCO24006 | Outer Joint | 44T | 25 | 25 | 50 | 94.5 | 65 | M |
| | 1995.11-2000.09 | 4AT/5MT | F | L/R | Saloon FWD G4GR | Date To:1998.03 | GCO39067 | Outer Joint | 29T | 25 | 30 | 50 | 95 | 60.5 | M |
| | 1995.11-2000.09 | 5MT | F | L/R | Saloon FWD G4GR | | GCI24072 | Inner Joint | | 25 | 30 | 35 | 62.5 | 88 | |
| | 1996.02-2000.10 | 4AT | F | R | Estate FWD G4GR | | GCI24072 | Inner Joint | | 25 | 30 | 35 | 62.5 | 88 | |
| | 1996.02-2000.10 | 4AT/5MT | F | L | Estate FWD G4GR | Date From:1998.04 | GDS24113 | Drive Shaft | 44T | 25 | 30 | 50 | 95.5 | 554 | |
| | 1996.02-2000.10 | 4AT/5MT | F | L | Estate FWD G4GR | Date From:1998.04 | GCO24036 | Outer Joint | 44T | 25 | 30 | 50 | 95.5 | 60.5 | M |
| | 1996.02-2000.10 | 4AT/5MT | F | L/R | Estate FWD G4GR | Date From:1998.04 | GCO24006 | Outer Joint | 44T | 25 | 25 | 50 | 94.5 | 65 | M |
| | 1996.02-2000.10 | 4AT/5MT | F | L/R | Estate FWD G4GR | Date To:1998.03 | GCO39067 | Outer Joint | 29T | 25 | 30 | 50 | 95 | 60.5 | M |

| | YEAR | TRANSM. | F/R | L/R | BODY STYLE & DRIVE TYPE & ENGINE | REMARKS | G-AP Ref. | PRODUCT | ABS | Technical Specifications A | B | C | H | L | P |
|---|---|---|---|---|---|---|---|---|---|---|---|---|---|---|---|
| **HYUNDAI** | | | | | | | | | | | | | | | |
| **Lantra** | | | | | | | | | | | | | | | |
| 1.6 (84 kw) | 1996.02-2000.10 | 5MT | F | L/R | Estate FWD G4GR | | GCI24072 | Inner Joint | | 25 | 30 | 35 | 62.5 | 88 | |
| 1.6 (87 kw) | 1995.06-2000.09 | 4AT/5MT | F | L | Saloon FWD G4GR | Date from:1998.04 | GDS24113 | Drive Shaft | 44T | 25 | 30 | 50 | 95.5 | 554 | |
| | 1995.06-2000.09 | 5MT | F | L/R | Saloon FWD G4GR | | GCI24072 | Inner Joint | | 25 | 30 | 35 | 62.5 | 88 | |
| | 1995.06-2000.09 | | F | L/R | Saloon FWD G4GR | | GCO24006 | Outer Joint | 44T | 25 | 25 | 50 | 94.5 | 65 | M |
| | 1995.06-2000.09 | | F | L/R | Saloon FWD G4GR | | GCO39067 | Outer Joint | 29T | 25 | 30 | 50 | 95 | 60.5 | M |
| 1.8 (94 kw) | 1995.11-2000.09 | MT | F | L/R | Saloon FWD G4GM | | GCO24039 | Outer Joint | 29T | 25 | 23 | 50 | 95 | 60.5 | M |
| | 1995.11-2000.09 | MT | F | L/R | Saloon FWD G4GM | | GCO39032 | Outer Joint | | 25 | 23 | 50 | 95 | 60.5 | M |
| | 1995.11-2000.09 | | F | | Saloon FWD G4GM | | GCO39033 | Outer Joint | | 25 | 25 | 50 | 95 | 65 | M |
| 1.9 (50 kw) | 1997.04-2000.05 | AT/MT | F | L/R | Saloon FWD DJY | | GCO39014 | Outer Joint | | 25 | 30 | 50 | 95 | 60.5 | M |
| | 1997.04-2000.05 | | F | L/R | Saloon FWD DJY | | GCI24072 | Inner Joint | | 25 | 30 | 35 | 62.5 | 88 | |
| 2.0 (100 kw) | 1997.04-2000.05 | AT | F | L | Saloon FWD G4JP | | GCO24006 | Outer Joint | 44T | 25 | 25 | 50 | 94.5 | 65 | M |
| | 1997.04-2000.05 | MT | F | L | Saloon FWD G4JP | Date from:1998.04 | GCO24006 | Outer Joint | 44T | 25 | 25 | 50 | 94.5 | 65 | M |
| | 1997.04-2000.05 | MT | F | R | Saloon FWD G4JP | Date from:1998.04 | GCO24038 | Outer Joint | 44T | 25 | 25 | 50 | 94.5 | 65 | M |
| 2.0 (102 kw) | 1996.08-2000.09 | AT | F | L | Saloon FWD G4GF | | GCO24006 | Outer Joint | 44T | 25 | 25 | 50 | 94.5 | 65 | M |
| | 1996.08-2000.09 | MT | F | L | Saloon FWD G4GF | Date From:1998.04 | GCO24006 | Outer Joint | 44T | 25 | 25 | 50 | 94.5 | 65 | M |
| | 1996.08-2000.09 | MT | F | R | Saloon FWD G4GF | Date From:1998.04 | GCO24038 | Outer Joint | 44T | 25 | 25 | 50 | 94.5 | 65 | M |
| **Lantra Estate/Wagon** | | | | | | | | | | | | | | | |
| 1.5 (65 kw) | 1997.02-2000.05 | 5MT | F | R | Estate FWD G4EK | | GCO39067 | Outer Joint | 29T | 25 | 30 | 50 | 95 | 60.5 | M |
| | 1997.02-2000.05 | 5MT | F | L/R | Estate FWD G4EK | | GCO24006 | Outer Joint | 44T | 25 | 25 | 50 | 94.5 | 65 | M |
| | 1997.02-2000.05 | MT | F | L | Estate FWD G4EK | | GDS24113 | Drive Shaft | 44T | 25 | 30 | 50 | 95.5 | 554 | |
| | 1997.02-2000.05 | MT | F | L/R | Estate FWD G4EK | | GCI24072 | Inner Joint | | 25 | 30 | 35 | 62.5 | 88 | |
| 1.6 (87 kw) | 1998.06-2000.05 | 4AT/5MT | F | L | Estate FWD G4GR | | GDS24113 | Drive Shaft | 44T | 25 | 30 | 50 | 95.5 | 554 | |
| | 1998.06-2000.05 | | F | L | Estate FWD G4GR | | GCO24006 | Outer Joint | 44T | 25 | 25 | 50 | 94.5 | 65 | M |
| | 1998.06-2000.05 | | F | L | Estate FWD G4GR | | GCO39067 | Outer Joint | 29T | 25 | 30 | 50 | 95 | 60.5 | M |
| | 1998.06-2000.05 | | F | L/R | Estate FWD G4GR | | GCI24072 | Inner Joint | | 25 | 30 | 35 | 62.5 | 88 | |
| 1.9 (50 kw) | 1997.04-2000.05 | AT/MT | F | L/R | Estate FWD DJY | | GCO39014 | Outer Joint | | 25 | 30 | 50 | 95 | 60.5 | M |
| | 1997.04-2000.05 | | F | L/R | Estate FWD DJY | | GCI24072 | Inner Joint | | 25 | 30 | 35 | 62.5 | 88 | |
| 2.0 (100 kw) | 1997.04-2000.05 | AT | F | L | Estate FWD G4JP | | GCO24006 | Outer Joint | 44T | 25 | 25 | 50 | 94.5 | 65 | M |
| | 1997.04-2000.05 | MT | F | L | Estate FWD G4JP | Date from:1998.04 | GCO24006 | Outer Joint | 44T | 25 | 25 | 50 | 94.5 | 65 | M |
| | 1997.04-2000.05 | MT | F | R | Estate FWD G4JP | Date from:1998.04 | GCO24038 | Outer Joint | 44T | 25 | 25 | 50 | 94.5 | 65 | M |
| 2.0 (102 kw) | 1995.11-2000.06 | AT | F | L | Estate FWD G4GF | | GCO24006 | Outer Joint | 44T | 25 | 25 | 50 | 94.5 | 65 | M |
| | 1995.11-2000.06 | MT | F | L | Estate FWD G4GF | Date from:1998.04 | GCO24006 | Outer Joint | 44T | 25 | 25 | 50 | 94.5 | 65 | M |
| | 1995.11-2000.06 | MT | F | R | Estate FWD G4GF | Date from:1998.04 | GCO24038 | Outer Joint | 44T | 25 | 25 | 50 | 94.5 | 65 | M |
| **Matrix** | | | | | | | | | | | | | | | |
| 1.5 (60 kw) | 2001.10-2010.08 | 4MT | F | L | MPV FWD D3EA | | GCI24043 | Inner Joint | | 27 | 25 | 41 | 62.8 | 92.5 | |
| | 2001.10-2010.08 | 5MT | F | L | MPV FWD D3EA | | GDS39262 | Drive Shaft | 44T | 25 | 25 | 50 | 94.5 | 657 | |
| | 2001.10-2010.08 | 5MT | F | R | MPV FWD D3EA | | GDS39249 | Drive Shaft | 44T | 25 | 26 | 50 | 94.5 | 585 | |
| | 2001.10-2010.08 | 5MT | F | L/R | MPV FWD D3EA | inner teeth:25 | GCO24038 | Outer Joint | 44T | 25 | 25 | 50 | 94.5 | 65 | M |
| | 2001.10-2010.08 | 5MT | F | L/R | MPV FWD D3EA | inner teeth:23 | GCO24061 | Outer Joint | 44T | 25 | 23 | 50 | 94.5 | 63.5 | M |
| | 2001.10-2010.08 | 5MT | F | L | MPV FWD D3EA | | GCI39041 | Inner Joint | | 25 | 23 | 35 | 63 | 92.5 | |
| | 2001.10-2010.08 | 5MT | F | R | MPV FWD D3EA | | GCI24031 | Inner Joint | | 26 | 23 | 42 | | 108 | |
| | 2001.10-2010.08 | MT | F | L/R | MPV FWD D3EA | inner teeth:23 | GCO39190 | Outer Joint | 44T | 25 | 23 | 50 | 95.5 | 60.5 | M |
| 1.5 (75 kw) | 2004.12-2010.08 | 4AT/5MT | F | L/R | MPV FWD D4FA | inner teeth:23 | GCO24061 | Outer Joint | 44T | 25 | 23 | 50 | 94.5 | 63.5 | M |
| | 2004.12-2010.08 | 5MT | F | L | MPV FWD D4FA | | GCI24043 | Inner Joint | | 27 | 25 | 41 | 62.8 | 92.5 | |
| | 2004.12-2010.08 | MT | F | L/R | MPV FWD D4FA | inner teeth:25 | GCO24038 | Outer Joint | 44T | 25 | 25 | 50 | 94.5 | 65 | M |
| | 2004.12-2010.08 | MT | F | L/R | MPV FWD D4FA | inner teeth:23 | GCO39190 | Outer Joint | 44T | 25 | 23 | 50 | 95.5 | 60.5 | M |
| 1.5 (81 kw) | 2005.08-2010.08 | 4AT | F | L | MPV FWD D4FA | | GCI24043 | Inner Joint | | 27 | 25 | 41 | 62.8 | 92.5 | |
| | 2005.08-2010.08 | 5MT | F | R | MPV FWD D4FA | | GDS39249 | Drive Shaft | 44T | 25 | 26 | 50 | 94.5 | 585 | |
| | 2005.08-2010.08 | 5MT | F | L | MPV FWD D4FA | | GCO24038 | Outer Joint | 44T | 25 | 25 | 50 | 94.5 | 65 | M |
| | 2005.08-2010.08 | MT | F | L/R | MPV FWD D4FA | without Rim protector | GCO39190 | Outer Joint | 44T | 25 | 23 | 50 | 95.5 | 60.5 | M |
| 1.6 (76 kw) | 2001.06-2010.08 | 4AT/5MT | F | L | MPV FWD G4ED | | GDS99057 | Drive Shaft | 44T | 25 | 25 | 50 | 95.5 | 646 | |
| | 2001.06-2010.08 | 4AT/5MT | F | R | MPV FWD G4ED | TJ | GDS99056 | Drive Shaft | 44T | 25 | 25 | 50 | 95.5 | 939.5 | |
| | 2001.06-2010.08 | 4AT/5MT | F | L | MPV FWD G4ED | | GCI24043 | Inner Joint | | 27 | 25 | 41 | 62.8 | 92.5 | |
| | 2001.06-2010.08 | 4AT/5MT | F | L/R | MPV FWD G4ED | | GCI24072 | Inner Joint | | 25 | 30 | 35 | 62.5 | 88 | |
| 1.8 (90 kw) | 2001.06-2010.08 | 4AT/5MT | F | L | MPV FWD G4GB | | GDS24193 | Drive Shaft | 44T | 25 | 25 | 50 | 94.5 | 639 | |
| | 2001.06-2010.08 | 4AT/5MT | F | L | MPV FWD G4GB | | GCI24043 | Inner Joint | | 27 | 25 | 41 | 62.8 | 92.5 | |
| | 2001.06-2010.08 | 5MT | F | L/R | MPV FWD G4GB | | GCO81510 | Outer Joint | 44T | 25 | 23 | 50 | 96 | 59 | M |
| | 2001.06-2010.08 | MT | F | L/R | MPV FWD G4GB | Inner teeth:23,without Rim protector | GCO39190 | Outer Joint | 44T | 25 | 23 | 50 | 95.5 | 60.5 | M |
| **Nexo** | | | | | | | | | | | | | | | |
| 0.0 (120 kw) | 2018.03- | ET | F | L | SUV FWD FM12 | | GDS56105 | Drive Shaft | 48T | 30 | 27 | 73 | 95 | 708 | |
| | 2018.03- | ET | F | R | SUV FWD FM12 | | GDS56106 | Drive Shaft | 48T | 30 | 28 | 73 | 95 | 640 | |
| | 2018.03- | ET | F | L/R | SUV FWD FM12 | | GCO81093 | Outer Joint | 48T | 30 | 25 | 73 | 95 | 64 | M |
| | 2018.03- | ET | F | L | SUV FWD FM12 | | GCI82519 | Inner Joint | | 27 | 33 | 41 | 61.5 | 105 | |
| | 2018.03- | ET | F | R | SUV FWD FM12 | | GCI82922 | Inner Joint | | 28 | 33 | 44.1 | | 121 | |

| | YEAR | TRANSM. | F/R | L/R | BODY STYLE & DRIVE TYPE & ENGINE | REMARKS | G-AP Ref. | PRODUCT | ABS | Technical Specifications A | B | C | H | L | P |
|---|---|---|---|---|---|---|---|---|---|---|---|---|---|---|---|
| **HYUNDAI** | | | | | | | | | | | | | | | |
| **NF** | | | | | | | | | | | | | | | |
| 2.4 (128 kw) | 2008.06-2010.12 | 4AT/5MT | F | L/R | Saloon FWD G4KC | Date to:2007.12 | GCI24001 | Inner Joint | | 27 | 25 | 41 | 62.8 | 92.5 | |
| | 2008.06-2010.12 | AT | F | L | Saloon FWD G4KC | | GDS24220 | Drive Shaft | 47T | 27 | 28 | 62 | 94.5 | 664 | |
| | 2008.06-2010.12 | AT | F | R | Saloon FWD G4KC | Date from:2008.01 | GDS24144 | Drive Shaft | 47T | 27 | 27 | 62.2 | 95 | 979 | |
| | 2008.06-2010.12 | AT | F | R | Saloon FWD G4KC | | GDS24545 | Drive Shaft | 47T | 27 | 28 | 62 | 94.5 | 986 | |
| | 2008.06-2010.12 | AT | F | L/R | Saloon FWD G4KC | | GCI24153 | Inner Joint | | 28 | 35 | 41 | 61.5 | 98 | |
| | 2008.06-2010.12 | AT/MT | F | L/R | Saloon FWD G4KC | Transsimion:AT;Transsimion:MT;Date to:2007.12 | GCO24062 | Outer Joint | 47T | 27 | 25 | 62.2 | 95 | 60 | M |
| **Palisade** | | | | | | | | | | | | | | | |
| 3.5 (200 kw) | 2020.09- | 8AT | F | R | SUV 4WD G6DC | Date to:2022.04 | GDS87080 | Intermediate Shaft | | 28 | 28 | | | 422 | |
| 3.5 (204 kw) | 2018.12- | 8AT | F | R | SUV 4WD G6DC | Date from:2019.07,Date to:2022.04 | GDS87080 | Intermediate Shaft | | 28 | 28 | | | 422 | |
| 3.8 (217 kw) | 2018.12- | 8AT | F | R | SUV 4WD G6DN | Date from:2020.01,Date to:2021.06 | GDS87080 | Intermediate Shaft | | 28 | 28 | | | 422 | |
| **Pony** | | | | | | | | | | | | | | | |
| 1.5 (73 kw) | 1995.10-2000.01 | 5MT | F | L | Saloon FWD G4FK | | GDS24165 | Drive Shaft | 29T | 25 | 25 | 50 | 95 | 613 | |
| | 1995.10-2000.01 | 5MT | F | L/R | Saloon FWD G4FK | | GCO24002 | Outer Joint | 29T | 25 | 22 | 50 | 95 | 58 | M |
| | 1995.10-2000.01 | 5MT | F | L/R | Saloon FWD G4FK | | GCO89004 | Outer Joint | | 25 | 22 | 50 | 95 | 58 | M |
| **Santa Fé** | | | | | | | | | | | | | | | |
| 1.6 (158 kw) | 2024.06- | 8DCT | F | R | SUV 4WD G4FT | | GCI82132 | Inner Joint | | 28 | 35 | 42 | | 131.5 | |
| | 2024.06- | | F | L | SUV 4WD G4FT | | GDS56107 | Drive Shaft | | 30 | 28 | 73 | 94.5 | 679 | |
| | 2024.06- | | F | R | SUV 4WD G4FT | | GDS56102 | Drive Shaft | | 30 | 28 | 73 | 94.5 | 590 | |
| | 2024.06- | | R | L | SUV 4WD G4FT | | GDS56177 | Drive Shaft | | 30 | 25 | 57 | 95 | 875 | |
| | 2024.06- | | R | R | SUV 4WD G4FT | | GDS56112 | Drive Shaft | | 30 | 25 | 57 | 95 | 831 | |
| | 2024.06- | 8DCT | F | R | SUV FWD G4FT | | GCI82132 | Inner Joint | | 28 | 35 | 42 | | 131.5 | |
| | 2024.06- | | F | L | SUV FWD G4FT | | GDS56107 | Drive Shaft | | 30 | 28 | 73 | 94.5 | 679 | |
| | 2024.06- | | F | R | SUV FWD G4FT | | GDS56102 | Drive Shaft | | 30 | 28 | 73 | 94.5 | 590 | |
| 1.6 (169 kw) | 2020.08- | 6AT | F | L | SUV 4WD G4FP;G4FT | | GDS56107 | Drive Shaft | | 30 | 28 | 73 | 94.5 | 679 | |
| | 2020.08- | 6AT | F | R | SUV 4WD G4FP;G4FT | | GDS56102 | Drive Shaft | | 30 | 28 | 73 | 94.5 | 590 | |
| | 2020.08- | 6AT | F | L/R | SUV 4WD G4FP;G4FT | | GCO82933 | Outer Joint | | 30 | 35 | 73 | 94.5 | 65.5 | M |
| | 2020.08- | 6AT | F | L | SUV 4WD G4FP;G4FT | | GCI82923 | Inner Joint | | 28 | 35 | 33 | 67 | 101 | |
| | 2020.08- | 8DCT | F | R | SUV 4WD G4FP;G4FT | | GCI82132 | Inner Joint | | 28 | 35 | 42 | | 131.5 | |
| | 2020.08- | 6AT | R | L | SUV 4WD G4FP;G4FT | | GDS56177 | Drive Shaft | | 30 | 25 | 57 | 95 | 875 | |
| | 2020.08- | 6AT | R | R | SUV 4WD G4FP;G4FT | | GDS56112 | Drive Shaft | | 30 | 25 | 57 | 95 | 831 | |
| | 2020.08- | 6AT | R | L/R | SUV 4WD G4FP;G4FT | | GCO82582 | Outer Joint | | 30 | 20 | 57 | 95 | 48 | |
| | 2020.08- | 6AT | R | L/R | SUV 4WD G4FP;G4FT | | GCI82201 | Inner Joint | | 25 | 20 | 35 | 62.5 | 58 | |
| | 2020.08- | 6AT | F | L | SUV FWD G4FP;G4FT | | GDS56107 | Drive Shaft | | 30 | 28 | 73 | 94.5 | 679 | |
| | 2020.08- | 6AT | F | R | SUV FWD G4FP;G4FT | | GDS56102 | Drive Shaft | | 30 | 28 | 73 | 94.5 | 590 | |
| | 2020.08- | 6AT | F | L/R | SUV FWD G4FP;G4FT | | GCO82933 | Outer Joint | | 30 | 35 | 73 | 94.5 | 65.5 | M |
| | 2020.08- | 6AT | F | L | SUV FWD G4FP;G4FT | | GCI82923 | Inner Joint | | 28 | 35 | 33 | 67 | 101 | |
| | 2020.08- | 8DCT | F | R | SUV FWD G4FP;G4FT | | GCI82132 | Inner Joint | | 28 | 35 | 42 | | 131.5 | |
| 1.6 (172 kw) | 2024.02- | | F | L | SUV 4WD G4FT | | GDS56107 | Drive Shaft | | 30 | 28 | 73 | 94.5 | 679 | |
| | 2024.02- | | F | R | SUV 4WD G4FT | | GDS56102 | Drive Shaft | | 30 | 28 | 73 | 94.5 | 590 | |
| | 2024.02- | | R | L | SUV 4WD G4FT | | GDS56177 | Drive Shaft | | 30 | 25 | 57 | 95 | 875 | |
| | 2024.02- | | R | R | SUV 4WD G4FT | | GDS56112 | Drive Shaft | | 30 | 25 | 57 | 95 | 831 | |
| | 2024.02- | | F | L | SUV FWD G4FT | | GDS56107 | Drive Shaft | | 30 | 28 | 73 | 94.5 | 679 | |
| | 2024.02- | | F | R | SUV FWD G4FT | | GDS56102 | Drive Shaft | | 30 | 28 | 73 | 94.5 | 590 | |
| 1.6 (176 kw) | 2025.08- | | F | L | SUV 4WD G4FT | | GDS56107 | Drive Shaft | | 30 | 28 | 73 | 94.5 | 679 | |
| | 2025.08- | | F | R | SUV 4WD G4FT | | GDS56102 | Drive Shaft | | 30 | 28 | 73 | 94.5 | 590 | |
| | 2025.08- | | R | L | SUV 4WD G4FT | | GDS56177 | Drive Shaft | | 30 | 25 | 57 | 95 | 875 | |
| | 2025.08- | | R | R | SUV 4WD G4FT | | GDS56112 | Drive Shaft | | 30 | 25 | 57 | 95 | 831 | |
| | 2025.08- | | F | L | SUV FWD G4FT | | GDS56107 | Drive Shaft | | 30 | 28 | 73 | 94.5 | 679 | |
| | 2025.08- | | F | R | SUV FWD G4FT | | GDS56102 | Drive Shaft | | 30 | 28 | 73 | 94.5 | 590 | |
| 1.6 (186 kw) | 2024.06- | | F | R | SUV 4WD G4FT | | GDS56102 | Drive Shaft | | 30 | 28 | 73 | 94.5 | 590 | |
| | 2024.06- | | R | L | SUV 4WD G4FT | | GDS56177 | Drive Shaft | | 30 | 25 | 57 | 95 | 875 | |
| | 2024.06- | | R | R | SUV 4WD G4FT | | GDS56112 | Drive Shaft | | 30 | 25 | 57 | 95 | 831 | |
| 1.6 (195 kw) | 2021.03- | 6AT | F | R | SUV 4WD G4FP;G4FT | | GDS56102 | Drive Shaft | | 30 | 28 | 73 | 94.5 | 590 | |
| | 2021.03- | 6AT | F | L/R | SUV 4WD G4FP;G4FT | | GCO82933 | Outer Joint | | 30 | 35 | 73 | 94.5 | 65.5 | M |
| | 2021.03- | 6AT | F | L | SUV 4WD G4FP;G4FT | | GCI82923 | Inner Joint | | 28 | 35 | 33 | 67 | 101 | |
| | 2021.03- | 8DCT | F | R | SUV 4WD G4FP;G4FT | | GCI82132 | Inner Joint | | 28 | 35 | 42 | | 131.5 | |
| | 2021.03- | 6AT | R | L | SUV 4WD G4FP;G4FT | | GDS56177 | Drive Shaft | | 30 | 25 | 57 | 95 | 875 | |
| | 2021.03- | 6AT | R | R | SUV 4WD G4FP;G4FT | | GDS56112 | Drive Shaft | | 30 | 25 | 57 | 95 | 831 | |
| | 2021.03- | 6AT | R | L/R | SUV 4WD G4FP;G4FT | | GCO82582 | Outer Joint | | 30 | 20 | 57 | 95 | 48 | |
| | 2021.03- | 6AT | R | L/R | SUV 4WD G4FP;G4FT | | GCI82201 | Inner Joint | | 25 | 20 | 35 | 62.5 | 58 | |
| 1.6 (212 kw) | 2025.10- | | F | R | SUV 4WD G4FP | | GDS56102 | Drive Shaft | | 30 | 28 | 73 | 94.5 | 590 | |
| | 2025.10- | | R | L | SUV 4WD G4FP | | GDS56177 | Drive Shaft | | 30 | 25 | 57 | 95 | 875 | |
| | 2025.10- | | R | R | SUV 4WD G4FP | | GDS56112 | Drive Shaft | | 30 | 25 | 57 | 95 | 831 | |
| 2.0 (83 kw) | 2001.04-2005.12 | 5MT | F | L | SUV Van 4WD D4EA | | GDS24358 | Drive Shaft | 52T | 27 | 27 | 60 | 95 | 663 | |
| | 2001.04-2005.12 | 5MT | F | R | SUV Van 4WD D4EA | | GDS24217 | Drive Shaft | 52T | 27 | 26 | 60 | 95 | 609 | |

| | YEAR | TRANSM. | F/R | L/R | BODY STYLE & DRIVE TYPE & ENGINE | REMARKS | G-AP Ref. | PRODUCT | ABS | Technical Specifications | | | | | |
|---|---|---|---|---|---|---|---|---|---|---|---|---|---|---|---|
| | | | | | | | | | | A | B | C | H | L | P |
| **HYUNDAI** | | | | | | | | | | | | | | | |
| **Santa Fé** | | | | | | | | | | | | | | | |
| 2.0 (83 kw) | 2001.04-2005.12 | 5MT | F | L/R | SUV Van 4WD D4EA | | GCO24091 | Outer Joint | 52T | 27 | 26 | 60 | 95 | 69 | M |
| | 2001.04-2005.12 | 5MT | R | L/R | SUV Van 4WD D4EA | | GDS24556 | Drive Shaft | 52T | 27 | 27 | 60 | 95 | 823 | |
| | 2001.04-2005.12 | 5MT | R | L/R | SUV Van 4WD D4EA | | GCO24319 | Outer Joint | 52T | 27 | 25 | 60 | 95 | 65 | M |
| | 2001.04-2005.12 | 5MT | R | L/R | SUV Van 4WD D4EA | | GCI24001 | Inner Joint | | 27 | 25 | 41 | 62.8 | 92.5 | |
| | 2001.04-2006.03 | 4AT | F | L | SUV 4WD D4EA | | GDS24218 | Drive Shaft | 52T | 27 | 27 | 60 | 95 | 648 | |
| | 2001.04-2006.03 | 4AT | F | L | SUV 4WD D4EA | | GCI24025 | Inner Joint | | 27 | 26 | 41 | 62.5 | 89 | |
| | 2001.04-2006.03 | 4AT/5MT | F | R | SUV 4WD D4EA | | GDS24217 | Drive Shaft | 52T | 27 | 26 | 60 | 95 | 609 | |
| | 2001.04-2006.03 | 4AT/5MT | F | L/R | SUV 4WD D4EA | | GCO24091 | Outer Joint | 52T | 27 | 26 | 60 | 95 | 69 | M |
| | 2001.04-2006.03 | 5MT | F | L | SUV 4WD D4EA | | GDS24358 | Drive Shaft | 52T | 27 | 27 | 60 | 95 | 663 | |
| | 2001.04-2006.03 | 4AT/5MT | R | L/R | SUV 4WD D4EA | | GDS24556 | Drive Shaft | 52T | 27 | 27 | 60 | 95 | 823 | |
| | 2001.04-2006.03 | 4AT/5MT | R | L/R | SUV 4WD D4EA | | GCO24319 | Outer Joint | 52T | 27 | 25 | 60 | 95 | 65 | M |
| | 2001.04-2006.03 | 4AT/5MT | R | L/R | SUV 4WD D4EA | | GCI24001 | Inner Joint | | 27 | 25 | 41 | 62.8 | 92.5 | |
| | 2001.04-2006.03 | 4AT/5MT | R | L/R | SUV 4WD D4EA | | GCI24044 | Inner Joint | | 27 | 25 | 41 | 62 | 87 | |
| | 2001.08-2003.07 | 4AT/5MT | F | L/R | SUV Van FWD D4EA | | GCO24091 | Outer Joint | 52T | 27 | 26 | 60 | 95 | 69 | M |
| | 2001.08-2006.03 | AT/MT | F | L | SUV FWD D4EA | | GDS24218 | Drive Shaft | 52T | 27 | 27 | 60 | 95 | 648 | |
| | 2001.08-2006.03 | AT/MT | F | R | SUV FWD D4EA | | GDS24217 | Drive Shaft | 52T | 27 | 26 | 60 | 95 | 609 | |
| | 2001.08-2006.03 | AT/MT | F | L/R | SUV FWD D4EA | | GCO24091 | Outer Joint | 52T | 27 | 26 | 60 | 95 | 69 | M |
| 2.0 (85 kw) | 2006.03-2012.12 | MT | F | L | SUV 4WD D4EA | | GDS24195 | Drive Shaft | 52T | 30 | 28 | 73 | 97 | 659 | |
| | 2006.03-2012.12 | MT | F | R | SUV 4WD D4EA | | GDS24117 | Drive Shaft | 52T | 30 | 28 | 73 | 97 | 611 | |
| | 2006.03-2012.12 | MT | F | L/R | SUV 4WD D4EA | | GCO24072 | Outer Joint | 52T | 30 | 36 | 73 | 97 | 67.5 | I |
| | 2006.03-2012.12 | MT | F | R | SUV 4WD D4EA | | GCI24022 | Inner Joint | | 28 | 35 | 42 | | 118 | |
| 2.0 (92 kw) | 2003.08-2006.03 | 4AT | F | L | SUV 4WD D4EA | | GDS24218 | Drive Shaft | 52T | 27 | 27 | 60 | 95 | 648 | |
| | 2003.08-2006.03 | 4AT | F | L | SUV 4WD D4EA | | GCI24025 | Inner Joint | | 27 | 26 | 41 | 62.5 | 89 | |
| | 2003.08-2006.03 | 4AT/5MT | F | R | SUV 4WD D4EA | | GDS24217 | Drive Shaft | 52T | 27 | 26 | 60 | 95 | 609 | |
| | 2003.08-2006.03 | 4AT/5MT | F | L/R | SUV 4WD D4EA | | GCO24091 | Outer Joint | 52T | 27 | 26 | 60 | 95 | 69 | M |
| | 2003.08-2006.03 | 5MT | F | L | SUV 4WD D4EA | | GDS24358 | Drive Shaft | 52T | 27 | 27 | 60 | 95 | 663 | |
| | 2003.08-2006.03 | 4AT/5MT | R | L/R | SUV 4WD D4EA | | GDS24556 | Drive Shaft | 52T | 27 | 27 | 60 | 95 | 823 | |
| | 2003.08-2006.03 | 4AT/5MT | R | L/R | SUV 4WD D4EA | | GCO24319 | Outer Joint | 52T | 27 | 25 | 60 | 95 | 65 | M |
| | 2003.08-2006.03 | 4AT/5MT | R | L/R | SUV 4WD D4EA | | GCI24001 | Inner Joint | | 27 | 25 | 41 | 62.8 | 92.5 | |
| | 2003.08-2006.03 | 4AT/5MT | R | L/R | SUV 4WD D4EA | | GCI24044 | Inner Joint | | 27 | 25 | 41 | 62 | 87 | |
| | 2003.08-2006.03 | 4AT | F | L | SUV Van 4WD D4EA | | GDS24218 | Drive Shaft | 52T | 27 | 27 | 60 | 95 | 648 | |
| | 2003.08-2006.03 | 4AT | F | L | SUV Van 4WD D4EA | | GCI24025 | Inner Joint | | 27 | 26 | 41 | 62.5 | 89 | |
| | 2003.08-2006.03 | 4AT/5MT | F | R | SUV Van 4WD D4EA | | GDS24217 | Drive Shaft | 52T | 27 | 26 | 60 | 95 | 609 | |
| | 2003.08-2006.03 | 4AT/5MT | F | L/R | SUV Van 4WD D4EA | | GCO24091 | Outer Joint | 52T | 27 | 26 | 60 | 95 | 69 | M |
| | 2003.08-2006.03 | 5MT | F | L | SUV Van 4WD D4EA | | GDS24358 | Drive Shaft | 52T | 27 | 27 | 60 | 95 | 663 | |
| | 2003.08-2006.03 | 4AT/5MT | R | L/R | SUV Van 4WD D4EA | | GDS24556 | Drive Shaft | 52T | 27 | 27 | 60 | 95 | 823 | |
| | 2003.08-2006.03 | 4AT/5MT | R | L/R | SUV Van 4WD D4EA | | GCO24319 | Outer Joint | 52T | 27 | 25 | 60 | 95 | 65 | M |
| | 2003.08-2006.03 | 4AT/5MT | R | L/R | SUV Van 4WD D4EA | | GCI24001 | Inner Joint | | 27 | 25 | 41 | 62.8 | 92.5 | |
| 2.0 (99 kw) | 2001.08-2006.03 | 5MT | F | L/R | SUV FWD G4JP | | GCO24091 | Outer Joint | 52T | 27 | 26 | 60 | 95 | 69 | M |
| | 2001.08-2006.03 | 5MT | F | L/R | SUV FWD G4JP | | GCI99112 | Inner Joint | | 27 | 23 | 41 | 63 | 92 | |
| 2.0 (107 kw) | 2003.11-2006.02 | 4AT | F | L | SUV 4WD D4EA | For vehicles without VTG turbocharger | GDS24218 | Drive Shaft | 52T | 27 | 27 | 60 | 95 | 648 | |
| | 2003.11-2006.02 | 4AT | F | L | SUV 4WD D4EA | | GCI24025 | Inner Joint | | 27 | 26 | 41 | 62.5 | 89 | |
| | 2003.11-2006.02 | 4AT/5MT | F | R | SUV 4WD D4EA | DOJ | GDS24217 | Drive Shaft | 52T | 27 | 26 | 60 | 95 | 609 | |
| | 2003.11-2006.02 | 4AT/5MT | F | L/R | SUV 4WD D4EA | | GCO24091 | Outer Joint | 52T | 27 | 26 | 60 | 95 | 69 | M |
| | 2003.11-2006.02 | 5MT | F | L | SUV 4WD D4EA | | GDS24358 | Drive Shaft | 52T | 27 | 27 | 60 | 95 | 663 | |
| | 2003.11-2006.02 | AT | F | L | SUV 4WD D4EA | For vehicles with VTG turbocharger | GDS24074 | Drive Shaft | 52T | 27 | 28 | 60 | 95 | 650 | |
| | 2003.11-2006.02 | MT | F | R | SUV 4WD D4EA | TJ | GDS24225 | Drive Shaft | 52T | 27 | 26 | 60 | 95 | 606 | |
| | 2003.11-2006.02 | 4AT/5MT | R | L/R | SUV 4WD D4EA | | GDS24556 | Drive Shaft | 52T | 27 | 27 | 60 | 95 | 823 | |
| | 2003.11-2006.02 | 4AT/5MT | R | L/R | SUV 4WD D4EA | | GCO24319 | Outer Joint | 52T | 27 | 25 | 60 | 95 | 65 | M |
| | 2003.11-2006.02 | 4AT/5MT | R | L/R | SUV 4WD D4EA | | GCI24001 | Inner Joint | | 27 | 25 | 41 | 62.8 | 92.5 | |
| | 2003.11-2006.02 | 4AT/5MT | R | L/R | SUV 4WD D4EA | | GCI24044 | Inner Joint | | 27 | 25 | 41 | 62 | 87 | |
| 2.0 (110 kw) | 2010.12-2012.12 | 6MT | F | L | SUV 4WD D4HA | | GDS24465 | Drive Shaft | 52T | 30 | 28 | 73 | 97 | 656 | |
| | 2010.12-2012.12 | 6MT | F | R | SUV 4WD D4HA | | GDS24561 | Drive Shaft | 52T | 30 | 28 | 73 | 97 | 590 | |
| | 2010.12-2012.12 | 6MT | F | L/R | SUV 4WD D4HA | | GCO24072 | Outer Joint | 52T | 30 | 36 | 73 | 97 | 67.5 | I |
| | 2010.12-2012.12 | 6MT | F | L | SUV 4WD D4HA | | GCI24147 | Inner Joint | | 28 | 36 | 41 | 71.5 | 119.5 | |
| | 2010.12-2012.12 | 6MT | F | R | SUV 4WD D4HA | | GCI27053 | Inner Joint | | 28 | 36 | 42 | | 131.5 | |
| | 2010.12-2012.12 | 6MT | R | L/R | SUV 4WD D4HA | | GCI24010 | Inner Joint | | 25 | 22 | 35 | 63 | 87 | |
| | 2010.12-2012.12 | 6MT | F | L | SUV FWD D4HA | | GDS24465 | Drive Shaft | 52T | 30 | 28 | 73 | 97 | 656 | |
| | 2010.12-2012.12 | 6MT | F | R | SUV FWD D4HA | | GDS24561 | Drive Shaft | 52T | 30 | 28 | 73 | 97 | 590 | |
| | 2010.12-2012.12 | 6MT | F | L/R | SUV FWD D4HA | | GCO24072 | Outer Joint | 52T | 30 | 36 | 73 | 97 | 67.5 | I |
| | 2010.12-2012.12 | 6MT | F | L | SUV FWD D4HA | | GCI24147 | Inner Joint | | 28 | 36 | 41 | 71.5 | 119.5 | |
| | 2010.12-2012.12 | 6MT | F | R | SUV FWD D4HA | | GCI27053 | Inner Joint | | 28 | 36 | 42 | | 131.5 | |
| | 2012.09-2018.08 | 6MT | F | L | SUV 4WD D4HA | Not For facelift | GDS24447 | Drive Shaft | 52T | 30 | 28 | 73 | 94.5 | 674 | |
| | 2012.09-2018.08 | 6MT | F | R | SUV 4WD D4HA | For Facelift | GDS58080 | Drive Shaft | 52T | 30 | 28 | 73 | 94.5 | 590 | |
| | 2012.09-2018.08 | 6MT | F | R | SUV 4WD D4HA | Not For Facelift | GDS84420 | Drive Shaft | 52T | 30 | 28 | 73 | 94.5 | 590 | |

| | YEAR | TRANSM. | F/R | L/R | BODY STYLE & DRIVE TYPE & ENGINE | REMARKS | G-AP Ref. | PRODUCT | ABS | Technical Specifications A | B | C | H | L | P |
|---|---|---|---|---|---|---|---|---|---|---|---|---|---|---|---|
| **HYUNDAI** **Santa Fé** | | | | | | | | | | | | | | | |
| 2.0 (110 kw) | 2012.09-2018.08 | 6MT | F | L/R | SUV 4WD D4HA | For Facelift | GCO81038 | Outer Joint | 52T | 30 | 36 | 73 | 94.5 | 67.5 | I |
| | 2012.09-2018.08 | 6MT | F | L | SUV 4WD D4HA | | GCI24145 | Inner Joint | | 28 | 35 | 33 | 67 | 105.5 | |
| | 2012.09-2018.08 | 6MT | F | R | SUV 4WD D4HA | | GCI81068 | Inner Joint | | 28 | 35 | 42 | | 131 | |
| | 2012.09-2018.08 | 6MT | F | R | SUV 4WD D4HA | | GDS81273 | Intermediate Shaft | | 28 | 28 | | | 430 | |
| | 2012.09-2018.08 | 6MT | R | L | SUV 4WD D4HA | | GDS24555 | Drive Shaft | 52T | 30 | 25 | 57 | 93.5 | 848 | |
| | 2012.09-2018.08 | 6MT | R | R | SUV 4WD D4HA | | GDS24554 | Drive Shaft | 52T | 30 | 25 | 57 | 93.5 | 829 | |
| | 2012.09-2018.08 | 6MT | R | L/R | SUV 4WD D4HA | | GCO24321 | Outer Joint | 52T | 30 | 20 | 57 | 93.5 | 61 | M |
| | 2012.09-2018.08 | 6MT | R | R | SUV 4WD D4HA | TJ | GCI39041 | Inner Joint | | 25 | 23 | 35 | 63 | 92.5 | |
| | 2012.09-2018.08 | 6MT | R | L/R | SUV 4WD D4HA | DOJ | GCI24032 | Inner Joint | | 25 | 23 | 35 | 63 | 88 | |
| | 2012.09-2018.08 | 6MT | F | L | SUV FWD D4HA | | GDS24447 | Drive Shaft | 52T | 30 | 28 | 73 | 94.5 | 674 | |
| | 2012.09-2018.08 | 6MT | F | R | SUV FWD D4HA | For Facelift | GDS58080 | Drive Shaft | 52T | 30 | 28 | 73 | 94.5 | 590 | |
| | 2012.09-2018.08 | 6MT | F | R | SUV FWD D4HA | Not For Facelift | GDS84420 | Drive Shaft | 52T | 30 | 28 | 73 | 94.5 | 590 | |
| | 2012.09-2018.08 | 6MT | F | L | SUV FWD D4HA | Not For Facelift | GCO24301 | Outer Joint | 52T | 30 | 35 | 73 | 94.5 | 67 | M |
| | 2012.09-2018.08 | 6MT | F | L/R | SUV FWD D4HA | For Facelift | GCO81038 | Outer Joint | 52T | 30 | 36 | 73 | 94.5 | 67.5 | I |
| | 2012.09-2018.08 | 6MT | F | L | SUV FWD D4HA | | GCI24144 | Inner Joint | | 28 | 35 | 41 | 61.5 | 120 | |
| | 2012.09-2018.08 | 6MT | F | R | SUV FWD D4HA | | GCI81068 | Inner Joint | | 28 | 35 | 42 | | 131 | |
| | 2018.07-2020.07 | 6MT | F | L | SUV 4WD D4HA | | GDS84169 | Drive Shaft | | 30 | 28 | 72.5 | 94.5 | 677 | |
| | 2018.07-2020.07 | 6MT | F | R | SUV 4WD D4HA | | GDS84168 | Drive Shaft | | 30 | 28 | 72.5 | 94.5 | 591 | |
| | 2018.07-2020.07 | 6MT | F | L/R | SUV 4WD D4HA | | GCO82721 | Outer Joint | | 30 | 35 | 72.5 | 94.5 | 67 | M |
| | 2018.07-2020.07 | 6MT | F | L | SUV 4WD D4HA | | GCI24144 | Inner Joint | | 28 | 35 | 41 | 61.5 | 120 | |
| | 2018.07-2020.07 | 8AT | F | L | SUV 4WD D4HA | | GDS84166 | Drive Shaft | | 30 | 31 | 72.5 | 94.5 | 675 | |
| | 2018.07-2020.07 | 8AT | F | R | SUV 4WD D4HA | | GDS84167 | Drive Shaft | | 30 | 28 | 72.5 | 94.5 | 607 | |
| | 2018.07-2020.07 | 8AT | F | R | SUV 4WD D4HA | | GCO82721 | Outer Joint | | 30 | 35 | 72.5 | 94.5 | 67 | M |
| | 2018.07-2020.07 | 8AT | F | L | SUV 4WD D4HA | | GCI24145 | Inner Joint | | 28 | 35 | 33 | 67 | 105.5 | |
| | 2018.07-2020.07 | 8AT/6MT | F | R | SUV 4WD D4HA | | GCI82132 | Inner Joint | | 28 | 35 | 42 | | 131.5 | |
| | 2018.07-2020.07 | 8AT | R | L/R | SUV 4WD D4HA | | GCO82582 | Outer Joint | | 30 | 20 | 57 | 95 | 48 | |
| | 2018.07-2020.07 | 8AT | R | L/R | SUV 4WD D4HA | | GCI82201 | Inner Joint | | 25 | 20 | 35 | 62.5 | 58 | |
| | 2018.07-2020.07 | 6MT | F | L | SUV FWD D4HA | | GDS84169 | Drive Shaft | | 30 | 28 | 72.5 | 94.5 | 677 | |
| | 2018.07-2020.07 | 6MT | F | R | SUV FWD D4HA | | GDS84168 | Drive Shaft | | 30 | 28 | 72.5 | 94.5 | 591 | |
| | 2018.07-2020.07 | 6MT | F | L/R | SUV FWD D4HA | | GCO82721 | Outer Joint | | 30 | 35 | 72.5 | 94.5 | 67 | M |
| | 2018.07-2020.07 | 6MT | F | L | SUV FWD D4HA | | GCI24144 | Inner Joint | | 28 | 35 | 41 | 61.5 | 120 | |
| | 2018.07-2020.07 | 8AT/6MT | F | R | SUV FWD D4HA | | GCI82132 | Inner Joint | | 28 | 35 | 42 | | 131.5 | |
| 2.0 (135 kw) | 2006.03-2012.12 | MT | F | L | SUV 4WD D4HA | | GDS24195 | Drive Shaft | 52T | 30 | 28 | 73 | 97 | 659 | |
| | 2006.03-2012.12 | MT | F | R | SUV 4WD D4HA | | GDS24117 | Drive Shaft | 52T | 30 | 28 | 73 | 97 | 611 | |
| | 2006.03-2012.12 | MT | F | L/R | SUV 4WD D4HA | | GCO24072 | Outer Joint | 52T | 30 | 36 | 73 | 97 | 67.5 | I |
| | 2006.03-2012.12 | MT | F | R | SUV 4WD D4HA | | GCI24022 | Inner Joint | | 28 | 35 | 42 | | 118 | |
| | 2006.03-2012.12 | | R | | SUV 4WD D4HA | Date from:2010.04,Date to:2012.04 | GCI24010 | Inner Joint | | 25 | 22 | 35 | 63 | 87 | |
| 2.0 (136 kw) | 2012.09-2018.08 | 6AT | F | L | SUV 4WD D4HA | | GDS57331 | Drive Shaft | 52T | 30 | 28 | 73 | 94.5 | 673 | |
| | 2012.09-2018.08 | 6AT | F | L/R | SUV 4WD D4HA | Not For Facelift | GCO24301 | Outer Joint | 52T | 30 | 35 | 73 | 94.5 | 67 | M |
| | 2012.09-2018.08 | 6AT/6MT | F | R | SUV 4WD D4HA | For Facelift | GDS58080 | Drive Shaft | 52T | 30 | 28 | 73 | 94.5 | 590 | |
| | 2012.09-2018.08 | 6AT/6MT | F | L/R | SUV 4WD D4HA | For Facelift | GCO81038 | Outer Joint | 52T | 30 | 36 | 73 | 94.5 | 67.5 | I |
| | 2012.09-2018.08 | 6MT | F | L | SUV 4WD D4HA | Not For facelift | GDS24447 | Drive Shaft | 52T | 30 | 28 | 73 | 94.5 | 674 | |
| | 2012.09-2018.08 | 6MT | F | R | SUV 4WD D4HA | | GDS81273 | Intermediate Shaft | | 28 | 28 | | | 430 | |
| | 2012.09-2018.08 | AT | F | R | SUV 4WD D4HA | Not For Facelift | GDS84420 | Drive Shaft | 52T | 30 | 28 | 73 | 94.5 | 590 | |
| | 2012.09-2018.08 | AT | F | L | SUV 4WD D4HA | | GCI24145 | Inner Joint | | 28 | 35 | 33 | 67 | 105.5 | |
| | 2012.09-2018.08 | AT | F | R | SUV 4WD D4HA | | GCI81068 | Inner Joint | | 28 | 35 | 42 | | 131 | |
| | 2012.09-2018.08 | AT | R | L | SUV 4WD D4HA | | GDS24555 | Drive Shaft | 52T | 30 | 25 | 57 | 93.5 | 848 | |
| | 2012.09-2018.08 | AT | R | R | SUV 4WD D4HA | | GDS24554 | Drive Shaft | 52T | 30 | 25 | 57 | 93.5 | 829 | |
| | 2012.09-2018.08 | AT | R | L/R | SUV 4WD D4HA | | GCO24321 | Outer Joint | 52T | 30 | 20 | 57 | 93.5 | 61 | M |
| | 2012.09-2018.08 | AT | R | R | SUV 4WD D4HA | | GCI39041 | Inner Joint | | 25 | 23 | 35 | 63 | 92.5 | |
| | 2012.09-2018.08 | AT | R | L/R | SUV 4WD D4HA | | GCI24032 | Inner Joint | | 25 | 23 | 35 | 63 | 88 | |
| | 2015.05-2018.08 | 6AT | F | R | SUV FWD D4HA | | GDS58080 | Drive Shaft | 52T | 30 | 28 | 73 | 94.5 | 590 | |
| | 2015.05-2018.08 | 6AT | F | L/R | SUV FWD D4HA | | GCO81038 | Outer Joint | 52T | 30 | 36 | 73 | 94.5 | 67.5 | I |
| | 2015.05-2018.08 | 6AT | F | L | SUV FWD D4HA | | GCI24145 | Inner Joint | | 28 | 35 | 33 | 67 | 105.5 | |
| | 2015.05-2018.08 | 6AT | F | R | SUV FWD D4HA | | GCI81068 | Inner Joint | | 28 | 35 | 42 | | 131 | |
| 2.0 (137 kw) | 2018.02-2020.07 | 6MT | F | L | SUV 4WD D4HA | | GDS84169 | Drive Shaft | | 30 | 28 | 72.5 | 94.5 | 677 | |
| | 2018.02-2020.07 | 6MT | F | R | SUV 4WD D4HA | | GDS84168 | Drive Shaft | | 30 | 28 | 72.5 | 94.5 | 591 | |
| | 2018.02-2020.07 | 6MT | F | L/R | SUV 4WD D4HA | | GCO82721 | Outer Joint | | 30 | 35 | 72.5 | 94.5 | 67 | M |
| | 2018.02-2020.07 | 6MT | F | L | SUV 4WD D4HA | | GCI24144 | Inner Joint | | 28 | 35 | 41 | 61.5 | 120 | |
| | 2018.02-2020.07 | 8AT | F | L | SUV 4WD D4HA | | GDS84166 | Drive Shaft | | 30 | 31 | 72.5 | 94.5 | 675 | |
| | 2018.02-2020.07 | 8AT | F | R | SUV 4WD D4HA | | GDS84167 | Drive Shaft | | 30 | 28 | 72.5 | 94.5 | 607 | |
| | 2018.02-2020.07 | 8AT | F | R | SUV 4WD D4HA | | GCO82721 | Outer Joint | | 30 | 35 | 72.5 | 94.5 | 67 | M |
| | 2018.02-2020.07 | 8AT | F | L | SUV 4WD D4HA | | GCI24145 | Inner Joint | | 28 | 35 | 33 | 67 | 105.5 | |
| | 2018.02-2020.07 | 8AT/6MT | F | R | SUV 4WD D4HA | | GCI82132 | Inner Joint | | 28 | 35 | 42 | | 131.5 | |
| | 2018.02-2020.07 | 8AT | R | L/R | SUV 4WD D4HA | | GCO82582 | Outer Joint | | 30 | 20 | 57 | 95 | 48 | |

| | YEAR | TRANSM. | F/R | L/R | BODY STYLE & DRIVE TYPE & ENGINE | REMARKS | G-AP Ref. | PRODUCT | ABS | Technical Specifications A | B | C | H | L | P |
|---|---|---|---|---|---|---|---|---|---|---|---|---|---|---|---|
| **HYUNDAI** **Santa Fé** | | | | | | | | | | | | | | | |
| 2.0 (137 kw) | 2018.02-2020.07 | 8AT | R | L/R | SUV 4WD D4HA | | GCI82201 | Inner Joint | | 25 | 20 | 35 | 62.5 | 58 | |
| | 2018.02-2020.07 | 6MT | F | L | SUV FWD D4HA | | GDS84169 | Drive Shaft | | 30 | 28 | 72.5 | 94.5 | 677 | |
| | 2018.02-2020.07 | 6MT | F | R | SUV FWD D4HA | | GDS84168 | Drive Shaft | | 30 | 28 | 72.5 | 94.5 | 591 | |
| | 2018.02-2020.07 | 6MT | F | L/R | SUV FWD D4HA | | GCO82721 | Outer Joint | | 30 | 35 | 72.5 | 94.5 | 67 | M |
| | 2018.02-2020.07 | 6MT | F | L | SUV FWD D4HA | | GCI24144 | Inner Joint | | 28 | 35 | 41 | 61.5 | 120 | |
| | 2018.02-2020.07 | 8AT/6MT | F | R | SUV FWD D4HA | | GCI82132 | Inner Joint | | 28 | 35 | 42 | | 131.5 | |
| 2.2 (102 kw) | 2006.03-2012.12 | 5AT | F | L | SUV 4WD D4EB | Original design,Bellows Material:nitrile butadiene rubber | GDS24462 | Drive Shaft | 52T | 30 | 28 | 73 | 97 | 668 | |
| | 2006.03-2012.12 | 5AT | F | L | SUV 4WD D4EB | Original design,Bellows Material:Thermoplastic polyester elastomer | GDS39247 | Drive Shaft | 52T | 30 | 28 | 73 | 97 | 670 | |
| | 2006.03-2012.12 | 5AT | F | L/R | SUV 4WD D4EB | Non-Original design,Bellows Material:nitrile butadiene rubber | GCO24072 | Outer Joint | 52T | 30 | 36 | 73 | 97 | 67.5 | I |
| | 2006.03-2012.12 | 5AT | F | L/R | SUV 4WD D4EB | Original design,Bellows Material:nitrile butadiene rubber | GCO24327 | Outer Joint | 52T | 30 | 36 | 73 | 97 | 67.5 | I |
| | 2006.03-2012.12 | 5AT | F | L | SUV 4WD D4EB | | GCI24095 | Inner Joint | | 28 | 35 | 41 | 71 | 116.5 | |
| | 2006.03-2012.12 | 5AT | F | R | SUV 4WD D4EB | TJ | GCI24022 | Inner Joint | | 28 | 35 | 42 | | 118 | |
| | 2006.03-2012.12 | 5AT/5MT | F | R | SUV 4WD D4EB | | GDS39250 | Drive Shaft | 52T | 30 | 28 | 73 | 97 | 611 | |
| | 2006.03-2012.12 | 5AT/5MT | F | R | SUV 4WD D4EB | | GCI24094 | Inner Joint | | 28 | 35 | 42 | | 129.5 | |
| | 2006.03-2012.12 | 5AT | R | L/R | SUV 4WD D4EB | | GDS24549 | Drive Shaft | 52T | 30 | 27 | 60 | 97.5 | 831 | |
| | 2006.03-2012.12 | 5AT | R | L/R | SUV 4WD D4EB | | GCO24323 | Outer Joint | 52T | 30 | 23 | 60 | 97.5 | 63.5 | M |
| | 2006.03-2012.12 | 5AT | R | L/R | SUV 4WD D4EB | | GCI24129 | Inner Joint | | 27 | 23 | 41 | 62 | 87 | |
| | 2006.03-2012.12 | 5AT | F | L | SUV FWD D4EB | Original design,Bellows Material:nitrile butadiene rubber | GDS24462 | Drive Shaft | 52T | 30 | 28 | 73 | 97 | 668 | |
| | 2006.03-2012.12 | 5AT | F | L | SUV FWD D4EB | Original design,Bellows Material:Thermoplastic polyester elastomer | GDS39247 | Drive Shaft | 52T | 30 | 28 | 73 | 97 | 670 | |
| | 2006.03-2012.12 | 5AT | F | L/R | SUV FWD D4EB | Non-Original design,Bellows Material:nitrile butadiene rubber | GCO24072 | Outer Joint | 52T | 30 | 36 | 73 | 97 | 67.5 | I |
| | 2006.03-2012.12 | 5AT | F | L/R | SUV FWD D4EB | Original design,Bellows Material:nitrile butadiene rubber | GCO24327 | Outer Joint | 52T | 30 | 36 | 73 | 97 | 67.5 | I |
| | 2006.03-2012.12 | 5AT | F | L | SUV FWD D4EB | | GCI24095 | Inner Joint | | 28 | 35 | 41 | 71 | 116.5 | |
| | 2006.03-2012.12 | 5AT | F | R | SUV FWD D4EB | TJ | GCI24022 | Inner Joint | | 28 | 35 | 42 | | 118 | |
| | 2006.03-2012.12 | 5AT/5MT | F | R | SUV FWD D4EB | | GDS39250 | Drive Shaft | 52T | 30 | 28 | 73 | 97 | 611 | |
| | 2006.03-2012.12 | 5AT/5MT | F | R | SUV FWD D4EB | | GCI24094 | Inner Joint | | 28 | 35 | 42 | | 129.5 | |
| 2.2 (110 kw) | 2005.11-2011.12 | 5AT | F | L | SUV Van 4WD D4EB | Date from:2006.09 | GCI24095 | Inner Joint | | 28 | 35 | 41 | 71 | 116.5 | |
| | 2005.11-2011.12 | 5AT/5MT | F | R | SUV Van 4WD D4EB | Date from:2008.6,Date to:2009.9 | GDS24463 | Drive Shaft | 52T | 30 | 28 | 73 | 97 | 610 | |
| | 2005.11-2011.12 | 5AT/5MT | F | R | SUV Van 4WD D4EB | Date from:2006.9,Date to:2008.5 | GDS39250 | Drive Shaft | 52T | 30 | 28 | 73 | 97 | 611 | |
| | 2005.11-2011.12 | 5AT/5MT | F | R | SUV Van 4WD D4EB | Date from:2006.9,Date to:2008.5 | GCI24094 | Inner Joint | | 28 | 35 | 42 | | 129.5 | |
| | 2005.11-2011.12 | 5AT/5MT | F | R | SUV Van 4WD D4EB | Date from:2008.6,Date to:2009.9 | GCI24146 | Inner Joint | | 28 | 35 | 42 | | 129.5 | |
| | 2005.11-2011.12 | AT | F | L | SUV Van 4WD D4EB | | GDS24462 | Drive Shaft | 52T | 30 | 28 | 73 | 97 | 668 | |
| | 2005.11-2011.12 | AT | F | L | SUV Van 4WD D4EB | | GDS39247 | Drive Shaft | 52T | 30 | 28 | 73 | 97 | 670 | |
| | 2005.11-2011.12 | AT | F | L | SUV Van 4WD D4EB | | GCO24327 | Outer Joint | 52T | 30 | 36 | 73 | 97 | 67.5 | I |
| | 2005.11-2011.12 | 5AT | R | L/R | SUV Van 4WD D4EB | | GDS24549 | Drive Shaft | 52T | 30 | 27 | 60 | 97.5 | 831 | |
| | 2005.11-2011.12 | 5AT | R | L/R | SUV Van 4WD D4EB | | GCO24323 | Outer Joint | 52T | 30 | 23 | 60 | 97.5 | 63.5 | M |
| | 2005.11-2011.12 | 5AT | R | L/R | SUV Van 4WD D4EB | | GCI24129 | Inner Joint | | 27 | 23 | 41 | 62 | 87 | |
| | 2006.03-2009.12 | 5AT/5MT | F | R | SUV 4WD D4EB | Date from:2008.6,Date to:2009.9 | GDS24463 | Drive Shaft | 52T | 30 | 28 | 73 | 97 | 610 | |
| | 2006.03-2009.12 | 5AT/5MT | F | R | SUV 4WD D4EB | Date from:2006.9,Date to:2008.5 | GDS39250 | Drive Shaft | 52T | 30 | 28 | 73 | 97 | 611 | |
| | 2006.03-2009.12 | 5AT/5MT | F | R | SUV 4WD D4EB | Date from:2006.9,Date to:2008.5 | GCI24094 | Inner Joint | | 28 | 35 | 42 | | 129.5 | |
| | 2006.03-2009.12 | 5AT/5MT | F | R | SUV 4WD D4EB | Date from:2008.6,Date to:2009.9 | GCI24146 | Inner Joint | | 28 | 35 | 42 | | 129.5 | |
| | 2006.03-2009.12 | 5MT | F | L | SUV 4WD D4EB | Date to:2005.12,For vehicles with ESP;For vehicles with 3rd seating row | GDS24459 | Drive Shaft | 52T | 30 | 28 | 65 | 95 | 657 | |
| | 2006.03-2009.12 | AT | F | L | SUV 4WD D4EB | Original design,Bellows Material:nitrile butadiene rubber | GDS24462 | Drive Shaft | 52T | 30 | 28 | 73 | 97 | 668 | |
| | 2006.03-2009.12 | AT | F | L | SUV 4WD D4EB | Original design,Bellows Material:Thermoplastic polyester elastomer | GDS39247 | Drive Shaft | 52T | 30 | 28 | 73 | 97 | 670 | |
| | 2006.03-2009.12 | AT | F | L | SUV 4WD D4EB | | GCI24095 | Inner Joint | | 28 | 35 | 41 | 71 | 116.5 | |
| | 2006.03-2009.12 | AT/MT | F | L/R | SUV 4WD D4EB | Non-Original design | GCO24072 | Outer Joint | 52T | 30 | 36 | 73 | 97 | 67.5 | I |
| | 2006.03-2009.12 | AT/MT | F | L/R | SUV 4WD D4EB | Original design,Bellows Material:nitrile butadiene rubber | GCO24327 | Outer Joint | 52T | 30 | 36 | 73 | 97 | 67.5 | I |
| | 2006.03-2009.12 | AT/MT | F | R | SUV 4WD D4EB | TJ | GCI24022 | Inner Joint | | 28 | 35 | 42 | | 118 | |
| | 2006.03-2009.12 | MT | F | L | SUV 4WD D4EB | Date from:2006.01,Date to:2008.08,For vehicles with ESP;For vehicles with 3rd seating row;Date from:2008.08 | GDS24195 | Drive Shaft | 52T | 30 | 28 | 73 | 97 | 659 | |
| | 2006.03-2009.12 | AT/MT | R | L/R | SUV 4WD D4EB | | GDS24549 | Drive Shaft | 52T | 30 | 27 | 60 | 97.5 | 831 | |
| | 2006.03-2009.12 | AT/MT | R | L/R | SUV 4WD D4EB | | GCO24323 | Outer Joint | 52T | 30 | 23 | 60 | 97.5 | 63.5 | M |
| | 2006.03-2009.12 | AT/MT | R | L/R | SUV 4WD D4EB | | GCI24129 | Inner Joint | | 27 | 23 | 41 | 62 | 87 | |
| | 2006.03-2009.12 | 5AT/5MT | F | R | SUV FWD D4EB | Date from:2008.6,Date to:2009.7 | GDS24463 | Drive Shaft | 52T | 30 | 28 | 73 | 97 | 610 | |
| | 2006.03-2009.12 | 5AT/5MT | F | R | SUV FWD D4EB | Date from:2006.9,Date to:2008.5 | GDS39250 | Drive Shaft | 52T | 30 | 28 | 73 | 97 | 611 | |
| | 2006.03-2009.12 | 5AT/5MT | F | R | SUV FWD D4EB | Date from:2006.9,Date to:2008.5 | GCI24094 | Inner Joint | | 28 | 35 | 42 | | 129.5 | |
| | 2006.03-2009.12 | 5AT/5MT | F | R | SUV FWD D4EB | Date from:2008.6,Date to:2009.7 | GCI24146 | Inner Joint | | 28 | 35 | 42 | | 129.5 | |
| | 2006.03-2009.12 | AT | F | L | SUV FWD D4EB | Original design,Bellows Material:nitrile butadiene rubber | GDS24462 | Drive Shaft | 52T | 30 | 28 | 73 | 97 | 668 | |
| | 2006.03-2009.12 | AT | F | L | SUV FWD D4EB | Original design,Bellows Material:Thermoplastic polyester elastomer | GDS39247 | Drive Shaft | 52T | 30 | 28 | 73 | 97 | 670 | |
| | 2006.03-2009.12 | AT | F | L | SUV FWD D4EB | | GCI24095 | Inner Joint | | 28 | 35 | 41 | 71 | 116.5 | |
| | 2006.03-2009.12 | AT/MT | F | L/R | SUV FWD D4EB | Non-Original design | GCO24072 | Outer Joint | 52T | 30 | 36 | 73 | 97 | 67.5 | I |
| | 2006.03-2009.12 | AT/MT | F | L/R | SUV FWD D4EB | Original design,Bellows Material:nitrile butadiene rubber | GCO24327 | Outer Joint | 52T | 30 | 36 | 73 | 97 | 67.5 | I |
| | 2006.03-2009.12 | AT/MT | F | R | SUV FWD D4EB | TJ | GCI24022 | Inner Joint | | 28 | 35 | 42 | | 118 | |
| | 2006.03-2009.12 | MT | F | L | SUV FWD D4EB | | GDS24195 | Drive Shaft | 52T | 30 | 28 | 73 | 97 | 659 | |
| 2.2 (114 kw) | 2006.03-2009.12 | 5AT/5MT | F | R | SUV 4WD D4EB | Date from:2008.6,Date to:2009.9 | GDS24463 | Drive Shaft | 52T | 30 | 28 | 73 | 97 | 610 | |
| | 2006.03-2009.12 | 5AT/5MT | F | R | SUV 4WD D4EB | Date from:2006.9,Date to:2008.5 | GDS39250 | Drive Shaft | 52T | 30 | 28 | 73 | 97 | 611 | |
| | 2006.03-2009.12 | 5AT/5MT | F | R | SUV 4WD D4EB | Date from:2006.9,Date to:2008.5 | GCI24094 | Inner Joint | | 28 | 35 | 42 | | 129.5 | |

| | YEAR | TRANSM. | F/R | L/R | BODY STYLE & DRIVE TYPE & ENGINE | REMARKS | G-AP Ref. | PRODUCT | ABS | Technical Specifications A | B | C | H | L | P |
|---|---|---|---|---|---|---|---|---|---|---|---|---|---|---|---|
| **HYUNDAI** | | | | | | | | | | | | | | | |
| **Santa Fé** | | | | | | | | | | | | | | | |
| 2.2 (114 kw) | 2006.03-2009.12 | 5AT/5MT | F | R | SUV 4WD D4EB | Date from:2008.6,Date to:2009.9 | GCI24146 | Inner Joint | | 28 | 35 | 42 | | 129.5 | |
| | 2006.03-2009.12 | AT | F | L | SUV 4WD D4EB | Original design,Bellows Material:nitrile butadiene rubber | GDS24462 | Drive Shaft | 52T | 30 | 28 | 73 | 97 | 668 | |
| | 2006.03-2009.12 | AT | F | L | SUV 4WD D4EB | Original design,Bellows Material:Thermoplastic polyester elastomer | GDS39247 | Drive Shaft | 52T | 30 | 28 | 73 | 97 | 670 | |
| | 2006.03-2009.12 | AT | F | L/R | SUV 4WD D4EB | | GCO24327 | Outer Joint | 52T | 30 | 36 | 73 | 97 | 67.5 | I |
| | 2006.03-2009.12 | AT | F | L | SUV 4WD D4EB | | GCI24095 | Inner Joint | | 28 | 35 | 41 | 71 | 116.5 | |
| | 2006.03-2009.12 | 5AT | R | L/R | SUV 4WD D4EB | | GDS24549 | Drive Shaft | 52T | 30 | 27 | 60 | 97.5 | 831 | |
| | 2006.03-2009.12 | 5AT | R | L/R | SUV 4WD D4EB | | GCO24323 | Outer Joint | 52T | 30 | 23 | 60 | 97.5 | 63.5 | M |
| | 2006.03-2009.12 | 5AT | R | L/R | SUV 4WD D4EB | | GCI24129 | Inner Joint | | 27 | 23 | 41 | 62 | 87 | |
| | 2006.03-2009.12 | 5AT/5MT | F | R | SUV FWD D4EB | Date from:2008.6,Date to:2009.7 | GDS24463 | Drive Shaft | 52T | 30 | 28 | 73 | 97 | 610 | |
| | 2006.03-2009.12 | 5AT/5MT | F | R | SUV FWD D4EB | Date from:2006.9,Date to:2008.5 | GDS39250 | Drive Shaft | 52T | 30 | 28 | 73 | 97 | 611 | |
| | 2006.03-2009.12 | 5AT/5MT | F | R | SUV FWD D4EB | Date from:2006.9,Date to:2008.5 | GCI24094 | Inner Joint | | 28 | 35 | 42 | | 129.5 | |
| | 2006.03-2009.12 | 5AT/5MT | F | R | SUV FWD D4EB | Date from:2008.6,Date to:2009.7 | GCI24146 | Inner Joint | | 28 | 35 | 42 | | 129.5 | |
| | 2006.03-2009.12 | AT | F | L | SUV FWD D4EB | Original design,Bellows Material:nitrile butadiene rubber | GDS24462 | Drive Shaft | 52T | 30 | 28 | 73 | 97 | 668 | |
| | 2006.03-2009.12 | AT | F | L | SUV FWD D4EB | Original design,Bellows Material:Thermoplastic polyester elastomer | GDS39247 | Drive Shaft | 52T | 30 | 28 | 73 | 97 | 670 | |
| | 2006.03-2009.12 | AT | F | L | SUV FWD D4EB | | GCI24095 | Inner Joint | | 28 | 35 | 41 | 71 | 116.5 | |
| | 2006.03-2009.12 | AT/MT | F | L/R | SUV FWD D4EB | Non-Original design | GCO24072 | Outer Joint | 52T | 30 | 36 | 73 | 97 | 67.5 | I |
| | 2006.03-2009.12 | AT/MT | F | L/R | SUV FWD D4EB | Original design,Bellows Material:nitrile butadiene rubber | GCO24327 | Outer Joint | 52T | 30 | 36 | 73 | 97 | 67.5 | I |
| | 2006.03-2009.12 | AT/MT | F | R | SUV FWD D4EB | TJ | GCI24022 | Inner Joint | | 28 | 35 | 42 | | 118 | |
| | 2006.03-2009.12 | MT | F | L | SUV FWD D4EB | | GDS24195 | Drive Shaft | 52T | 30 | 28 | 73 | 97 | 659 | |
| | 2006.09-2011.12 | 5AT | F | R | SUV Van 4WD D4EB | | GCO24327 | Outer Joint | 52T | 30 | 36 | 73 | 97 | 67.5 | I |
| | 2006.09-2011.12 | 5AT | F | L | SUV Van 4WD D4EB | | GCI24095 | Inner Joint | | 28 | 35 | 41 | 71 | 116.5 | |
| | 2006.09-2011.12 | 5AT/5MT | F | R | SUV Van 4WD D4EB | Date from:2008.6,Date to:2009.9 | GDS24463 | Drive Shaft | 52T | 30 | 28 | 73 | 97 | 610 | |
| | 2006.09-2011.12 | 5AT/5MT | F | R | SUV Van 4WD D4EB | Date from:2006.9,Date to:2008.5 | GDS39250 | Drive Shaft | 52T | 30 | 28 | 73 | 97 | 611 | |
| | 2006.09-2011.12 | 5AT/5MT | F | R | SUV Van 4WD D4EB | Date from:2006.9,Date to:2008.5 | GCI24094 | Inner Joint | | 28 | 35 | 42 | | 129.5 | |
| | 2006.09-2011.12 | 5AT/5MT | F | R | SUV Van 4WD D4EB | Date from:2008.6,Date to:2009.9 | GCI24146 | Inner Joint | | 28 | 35 | 42 | | 129.5 | |
| | 2006.09-2011.12 | 5AT | R | L/R | SUV Van 4WD D4EB | | GDS24549 | Drive Shaft | 52T | 30 | 27 | 60 | 97.5 | 831 | |
| | 2006.09-2011.12 | 5AT | R | L/R | SUV Van 4WD D4EB | | GCI24129 | Inner Joint | | 27 | 23 | 41 | 62 | 87 | |
| | 2006.09-2011.12 | 5AT | F | R | SUV Van FWD D4EB | | GCO24327 | Outer Joint | 52T | 30 | 36 | 73 | 97 | 67.5 | I |
| | 2006.09-2011.12 | 5AT | F | L | SUV Van FWD D4EB | | GCI24095 | Inner Joint | | 28 | 35 | 41 | 71 | 116.5 | |
| | 2006.09-2011.12 | 5AT/5MT | F | R | SUV Van FWD D4EB | Date from:2008.6,Date to:2009.7 | GDS24463 | Drive Shaft | 52T | 30 | 28 | 73 | 97 | 610 | |
| | 2006.09-2011.12 | 5AT/5MT | F | R | SUV Van FWD D4EB | Date from:2006.9,Date to:2008.5 | GDS39250 | Drive Shaft | 52T | 30 | 28 | 73 | 97 | 611 | |
| | 2006.09-2011.12 | 5AT/5MT | F | R | SUV Van FWD D4EB | Date from:2006.9,Date to:2008.5 | GCI24094 | Inner Joint | | 28 | 35 | 42 | | 129.5 | |
| | 2006.09-2011.12 | 5AT/5MT | F | R | SUV Van FWD D4EB | Date from:2008.6,Date to:2009.7 | GCI24146 | Inner Joint | | 28 | 35 | 42 | | 129.5 | |
| 2.2 (142 kw) | 2022.04- | 8DCT | F | L | SUV 4WD D4HE | | GDS56808 | Drive Shaft | | 30 | 31 | 72.5 | 94.5 | 659 | |
| | 2022.04- | 8DCT | F | R | SUV 4WD D4HE | | GDS57392 | Drive Shaft | | 30 | 28 | 72.5 | 94.5 | 605 | |
| | 2022.04- | 8DCT | F | L/R | SUV 4WD D4HE | | GCO83443 | Outer Joint | | 30 | 35 | 72.5 | 94.5 | 67 | M |
| | 2022.04- | 8DCT | F | L | SUV 4WD D4HE | | GCI83505 | Inner Joint | | 31 | 35 | 33.6 | 66.5 | 101 | |
| | 2022.04- | 8DCT | F | R | SUV 4WD D4HE | | GCI82132 | Inner Joint | | 28 | 35 | 42 | | 131.5 | |
| | 2022.04- | AT | R | L | SUV 4WD D4HE | | GDS56177 | Drive Shaft | | 30 | 25 | 57 | 95 | 875 | |
| | 2022.04- | AT | R | R | SUV 4WD D4HE | | GDS56112 | Drive Shaft | | 30 | 25 | 57 | 95 | 831 | |
| | 2022.04- | AT | R | L/R | SUV 4WD D4HE | | GCO82582 | Outer Joint | | 30 | 20 | 57 | 95 | 48 | |
| | 2022.04- | AT | R | L/R | SUV 4WD D4HE | | GCI82201 | Inner Joint | | 25 | 20 | 35 | 62.5 | 58 | |
| | 2022.04- | 8DCT | F | L | SUV FWD D4HE | | GDS56808 | Drive Shaft | | 30 | 31 | 72.5 | 94.5 | 659 | |
| | 2022.04- | 8DCT | F | R | SUV FWD D4HE | | GDS57392 | Drive Shaft | | 30 | 28 | 72.5 | 94.5 | 605 | |
| | 2022.04- | 8DCT | F | L/R | SUV FWD D4HE | | GCO83443 | Outer Joint | | 30 | 35 | 72.5 | 94.5 | 67 | M |
| | 2022.04- | 8DCT | F | L | SUV FWD D4HE | | GCI83505 | Inner Joint | | 31 | 35 | 33.6 | 66.5 | 101 | |
| | 2022.04- | 8DCT | F | R | SUV FWD D4HE | | GCI82132 | Inner Joint | | 28 | 35 | 42 | | 131.5 | |
| 2.2 (145 kw) | 2009.01-2012.12 | 6AT | F | L | SUV 4WD D4HB | | GDS24464 | Drive Shaft | 52T | 30 | 31 | 73 | 97 | 654 | |
| | 2009.01-2012.12 | 6AT | F | L | SUV 4WD D4HB | | GCI27052 | Inner Joint | | 31 | 36 | 36 | 66.5 | 106 | |
| | 2009.01-2012.12 | 6AT | F | R | SUV 4WD D4HB | Date to:2012.05 | GDS61352 | Intermediate Shaft | | 28 | 28 | | | 430 | |
| | 2009.01-2012.12 | 6MT | F | L | SUV 4WD D4HB | Date from:2010.02 | GDS24465 | Drive Shaft | 52T | 30 | 28 | 73 | 97 | 656 | |
| | 2009.01-2012.12 | 6MT | F | L | SUV 4WD D4HB | Date to:2010.01 | GDS24470 | Drive Shaft | 52T | 30 | 28 | 73 | 97 | 655 | |
| | 2009.01-2012.12 | 6MT | F | L | SUV 4WD D4HB | | GCI24147 | Inner Joint | | 28 | 36 | 41 | 71.5 | 119.5 | |
| | 2009.01-2012.12 | AT | F | L | SUV 4WD D4HB | | GDS24567 | Drive Shaft | 52T | 30 | 31 | 73 | 94.5 | 674 | |
| | 2009.01-2012.12 | AT | F | R | SUV 4WD D4HB | | GDS84420 | Drive Shaft | 52T | 30 | 28 | 73 | 94.5 | 590 | |
| | 2009.01-2012.12 | AT | F | R | SUV 4WD D4HB | Date to:2010.01 | GCI27053 | Inner Joint | | 28 | 36 | 42 | | 131.5 | |
| | 2009.01-2012.12 | AT/MT | F | L/R | SUV 4WD D4HB | Non-Original design | GCO24072 | Outer Joint | 52T | 30 | 36 | 73 | 97 | 67.5 | I |
| | 2009.01-2012.12 | AT/MT | F | L/R | SUV 4WD D4HB | Original design,Bellows Material:nitrile butadiene rubber | GCO24327 | Outer Joint | 52T | 30 | 36 | 73 | 97 | 67.5 | I |
| | 2009.01-2012.12 | MT | F | L | SUV 4WD D4HB | | GDS24447 | Drive Shaft | 52T | 30 | 28 | 73 | 94.5 | 674 | |
| | 2009.01-2012.12 | | R | L | SUV 4WD D4HB | | GDS24555 | Drive Shaft | 52T | 30 | 25 | 57 | 93.5 | 848 | |
| | 2009.01-2012.12 | 6AT | F | L | SUV FWD D4HB | | GDS24464 | Drive Shaft | 52T | 30 | 31 | 73 | 97 | 654 | |
| | 2009.01-2012.12 | 6AT | F | L | SUV FWD D4HB | | GCI27052 | Inner Joint | | 31 | 36 | 36 | 66.5 | 106 | |
| | 2009.01-2012.12 | 6AT | F | R | SUV FWD D4HB | | GDS87090 | Intermediate Shaft | | 28 | 31 | | | 430 | |
| | 2009.01-2012.12 | 6MT | F | L | SUV FWD D4HB | Date from:2010.02 | GDS24465 | Drive Shaft | 52T | 30 | 28 | 73 | 97 | 656 | |
| | 2009.01-2012.12 | 6MT | F | L | SUV FWD D4HB | Date to:2010.01 | GDS24470 | Drive Shaft | 52T | 30 | 28 | 73 | 97 | 655 | |

| | YEAR | TRANSM. | F/R | L/R | BODY STYLE & DRIVE TYPE & ENGINE | REMARKS | G-AP Ref. | PRODUCT | ABS | Technical Specifications A | B | C | H | L | P |
|---|---|---|---|---|---|---|---|---|---|---|---|---|---|---|---|
| **HYUNDAI** | | | | | | | | | | | | | | | |
| **Santa Fé** | | | | | | | | | | | | | | | |
| 2.2 (145 kw) | 2009.01-2012.12 | 6MT | F | L | SUV FWD D4HB | PTJ | GCI24147 | Inner Joint | | 28 | 36 | 41 | 71.5 | 119.5 | |
| | 2009.01-2012.12 | AT | F | L | SUV FWD D4HB | | GDS24567 | Drive Shaft | 52T | 30 | 31 | 73 | 94.5 | 674 | |
| | 2009.01-2012.12 | AT | F | R | SUV FWD D4HB | | GDS84420 | Drive Shaft | 52T | 30 | 28 | 73 | 94.5 | 590 | |
| | 2009.01-2012.12 | MT | F | L | SUV FWD D4HB | | GDS24447 | Drive Shaft | 52T | 30 | 28 | 73 | 94.5 | 674 | |
| | 2009.01-2012.12 | | R | L | SUV FWD D4HB | | GDS24555 | Drive Shaft | 52T | 30 | 25 | 57 | 93.5 | 848 | |
| | 2009.01-2012.12 | | R | R | SUV FWD D4HB | | GDS24554 | Drive Shaft | 52T | 30 | 25 | 57 | 93.5 | 829 | |
| | 2009.01-2013.05 | 6AT | F | L | SUV Van 4WD D4HB | | GCI27052 | Inner Joint | | 31 | 36 | 36 | 66.5 | 106 | |
| | 2009.01-2013.05 | 6AT | F | R | SUV Van 4WD D4HB | Date to:2012.05 | GDS61352 | Intermediate Shaft | | 28 | 28 | | | 430 | |
| | 2009.01-2013.05 | 6MT | F | L | SUV Van 4WD D4HB | PTJ | GCI24147 | Inner Joint | | 28 | 36 | 41 | 71.5 | 119.5 | |
| | 2009.01-2013.05 | AT | F | L | SUV Van 4WD D4HB | For OE No.495002W000 | GDS24567 | Drive Shaft | 52T | 30 | 31 | 73 | 94.5 | 674 | |
| | 2009.01-2013.05 | MT | F | L | SUV Van 4WD D4HB | For OE No.495002W100 | GDS24447 | Drive Shaft | 52T | 30 | 28 | 73 | 94.5 | 674 | |
| | 2009.01-2013.05 | | F | L | SUV Van 4WD D4HB | For OE No.495002B700 | GDS24464 | Drive Shaft | 52T | 30 | 31 | 73 | 97 | 654 | |
| | 2009.01-2013.05 | | F | L | SUV Van 4WD D4HB | For OE No.495002B750 | GDS24465 | Drive Shaft | 52T | 30 | 28 | 73 | 97 | 656 | |
| | 2009.01-2013.05 | | F | L | SUV Van 4WD D4HB | For OE No.495002P100 | GDS24470 | Drive Shaft | 52T | 30 | 28 | 73 | 97 | 655 | |
| | 2009.01-2013.05 | | F | R | SUV Van 4WD D4HB | For OE No.495012B700 | GDS24561 | Drive Shaft | 52T | 30 | 28 | 73 | 97 | 590 | |
| | 2009.01-2013.05 | | R | L | SUV Van 4WD D4HB | | GDS24555 | Drive Shaft | 52T | 30 | 25 | 57 | 93.5 | 848 | |
| | 2009.01-2013.05 | | R | R | SUV Van 4WD D4HB | | GDS24554 | Drive Shaft | 52T | 30 | 25 | 57 | 93.5 | 829 | |
| | 2009.01-2013.05 | 6AT | F | R | SUV Van FWD D4HB | Date to:2012.05 | GDS87090 | Intermediate Shaft | | 28 | 31 | | | 430 | |
| | 2009.01-2013.05 | 6MT | F | L/R | SUV Van FWD D4HB | Date to:2010.01 | GCO24327 | Outer Joint | 52T | 30 | 36 | 73 | 97 | 67.5 | I |
| | 2009.01-2013.05 | 6MT | F | L | SUV Van FWD D4HB | | GCI24147 | Inner Joint | | 28 | 36 | 41 | 71.5 | 119.5 | |
| | 2009.01-2013.05 | AT | F | L | SUV Van FWD D4HB | For OE No.495002W000 | GDS24567 | Drive Shaft | 52T | 30 | 31 | 73 | 94.5 | 674 | |
| | 2009.01-2013.05 | MT | F | L | SUV Van FWD D4HB | For OE No.495002W100 | GDS24447 | Drive Shaft | 52T | 30 | 28 | 73 | 94.5 | 674 | |
| | 2009.01-2013.05 | | F | L | SUV Van FWD D4HB | For OE No.495002B700 | GDS24464 | Drive Shaft | 52T | 30 | 31 | 73 | 97 | 654 | |
| | 2009.01-2013.05 | | F | L | SUV Van FWD D4HB | For OE No.495002B750 | GDS24465 | Drive Shaft | 52T | 30 | 28 | 73 | 97 | 656 | |
| | 2009.01-2013.05 | | F | L | SUV Van FWD D4HB | For OE No.495002P100 | GDS24470 | Drive Shaft | 52T | 30 | 28 | 73 | 97 | 655 | |
| | 2009.01-2013.05 | | F | R | SUV Van FWD D4HB | For OE No.495012B700 | GDS24561 | Drive Shaft | 52T | 30 | 28 | 73 | 97 | 590 | |
| | 2009.01-2013.05 | | R | L | SUV Van FWD D4HB | | GDS24555 | Drive Shaft | 52T | 30 | 25 | 57 | 93.5 | 848 | |
| | 2009.01-2013.05 | | R | R | SUV Van FWD D4HB | | GDS24554 | Drive Shaft | 52T | 30 | 25 | 57 | 93.5 | 829 | |
| | 2012.09-2018.12 | 6AT | F | L | SUV 4WD D4HB | For Facelift | GDS57842 | Drive Shaft | 52T | 30 | 31 | 73 | 94.5 | 675 | |
| | 2012.09-2018.12 | 6AT | F | R | SUV 4WD D4HB | For Facelift | GDS58080 | Drive Shaft | 52T | 30 | 28 | 73 | 94.5 | 590 | |
| | 2012.09-2018.12 | 6AT | F | L/R | SUV 4WD D4HB | For Facelift | GCO81038 | Outer Joint | 52T | 30 | 36 | 73 | 94.5 | 67.5 | I |
| | 2012.09-2018.12 | 6AT/6MT | F | R | SUV 4WD D4HB | | GCI81068 | Inner Joint | | 28 | 35 | 42 | | 131 | |
| | 2012.09-2018.12 | AT | F | L | SUV 4WD D4HB | Not For Facelift | GDS24567 | Drive Shaft | 52T | 30 | 31 | 73 | 94.5 | 674 | |
| | 2012.09-2018.12 | AT | F | L/R | SUV 4WD D4HB | Not For Facelift | GCO24301 | Outer Joint | 52T | 30 | 35 | 73 | 94.5 | 67 | M |
| | 2012.09-2018.12 | AT | F | L | SUV 4WD D4HB | | GCI24160 | Inner Joint | | 31 | 35 | 36 | 67 | 104.5 | |
| | 2012.09-2018.12 | AT/MT | F | R | SUV 4WD D4HB | Not For Facelift | GDS84420 | Drive Shaft | 52T | 30 | 28 | 73 | 94.5 | 590 | |
| | 2012.09-2018.12 | MT | F | L | SUV 4WD D4HB | | GDS24447 | Drive Shaft | 52T | 30 | 28 | 73 | 94.5 | 674 | |
| | 2012.09-2018.12 | MT | F | L | SUV 4WD D4HB | | GCI24144 | Inner Joint | | 28 | 35 | 41 | 61.5 | 120 | |
| | 2012.09-2018.12 | 6AT/6MT | R | L/R | SUV 4WD D4HB | | GCO24321 | Outer Joint | 52T | 30 | 20 | 57 | 93.5 | 61 | M |
| | 2012.09-2018.12 | 6AT/6MT | R | L/R | SUV 4WD D4HB | DOJ | GCI24032 | Inner Joint | | 25 | 23 | 35 | 63 | 88 | |
| | 2012.09-2018.12 | 6AT/6MT | R | L/R | SUV 4WD D4HB | TJ | GCI39041 | Inner Joint | | 25 | 23 | 35 | 63 | 92.5 | |
| | 2012.09-2018.12 | AT/MT/6AT/6MT | R | L | SUV 4WD D4HB | | GDS24555 | Drive Shaft | 52T | 30 | 25 | 57 | 93.5 | 848 | |
| | 2012.09-2018.12 | AT/MT/6AT/6MT | R | R | SUV 4WD D4HB | | GDS24554 | Drive Shaft | 52T | 30 | 25 | 57 | 93.5 | 829 | |
| | 2012.09-2018.12 | 6AT | F | L | SUV FWD D4HB | For Facelift | GDS57842 | Drive Shaft | 52T | 30 | 31 | 73 | 94.5 | 675 | |
| | 2012.09-2018.12 | 6AT | F | R | SUV FWD D4HB | For Facelift | GDS58080 | Drive Shaft | 52T | 30 | 28 | 73 | 94.5 | 590 | |
| | 2012.09-2018.12 | 6AT | F | L/R | SUV FWD D4HB | For Facelift | GCO81038 | Outer Joint | 52T | 30 | 36 | 73 | 94.5 | 67.5 | I |
| | 2012.09-2018.12 | 6AT/6MT | F | R | SUV FWD D4HB | | GCI81068 | Inner Joint | | 28 | 35 | 42 | | 131 | |
| | 2012.09-2018.12 | AT | F | L | SUV FWD D4HB | Not For Facelift | GDS24567 | Drive Shaft | 52T | 30 | 31 | 73 | 94.5 | 674 | |
| | 2012.09-2018.12 | AT | F | L/R | SUV FWD D4HB | Not For Facelift | GCO24301 | Outer Joint | 52T | 30 | 35 | 73 | 94.5 | 67 | M |
| | 2012.09-2018.12 | AT | F | L | SUV FWD D4HB | | GCI24160 | Inner Joint | | 31 | 35 | 36 | 67 | 104.5 | |
| | 2012.09-2018.12 | AT/MT | F | R | SUV FWD D4HB | Not For Facelift | GDS84420 | Drive Shaft | 52T | 30 | 28 | 73 | 94.5 | 590 | |
| | 2012.09-2018.12 | MT | F | L | SUV FWD D4HB | | GDS24447 | Drive Shaft | 52T | 30 | 28 | 73 | 94.5 | 674 | |
| | 2012.09-2018.12 | MT | F | L | SUV FWD D4HB | | GCI24144 | Inner Joint | | 28 | 35 | 41 | 61.5 | 120 | |
| | 2012.09-2018.12 | AT/MT | R | L | SUV FWD D4HB | | GDS24555 | Drive Shaft | 52T | 30 | 25 | 57 | 93.5 | 848 | |
| | 2012.09-2018.12 | AT/MT | R | R | SUV FWD D4HB | | GDS24554 | Drive Shaft | 52T | 30 | 25 | 57 | 93.5 | 829 | |
| | 2015.05-2018.10 | 6AT | F | L | SUV Van 4WD D4HB | | GDS57842 | Drive Shaft | 52T | 30 | 31 | 73 | 94.5 | 675 | |
| | 2015.05-2018.10 | 6AT | F | R | SUV Van 4WD D4HB | | GDS58080 | Drive Shaft | 52T | 30 | 28 | 73 | 94.5 | 590 | |
| | 2015.05-2018.10 | 6AT | F | L/R | SUV Van 4WD D4HB | | GCO81038 | Outer Joint | 52T | 30 | 36 | 73 | 94.5 | 67.5 | I |
| | 2015.05-2018.10 | 6AT/6MT | F | R | SUV Van 4WD D4HB | | GCI81068 | Inner Joint | | 28 | 35 | 42 | | 131 | |
| | 2015.05-2018.10 | AT | F | L | SUV Van 4WD D4HB | | GCI24160 | Inner Joint | | 31 | 35 | 36 | 67 | 104.5 | |
| | 2015.05-2018.10 | MT | F | L | SUV Van 4WD D4HB | | GCI24144 | Inner Joint | | 28 | 35 | 41 | 61.5 | 120 | |
| | 2015.05-2018.10 | 6AT/6MT | R | L | SUV Van 4WD D4HB | | GDS24555 | Drive Shaft | 52T | 30 | 25 | 57 | 93.5 | 848 | |
| | 2015.05-2018.10 | 6AT/6MT | R | R | SUV Van 4WD D4HB | | GDS24554 | Drive Shaft | 52T | 30 | 25 | 57 | 93.5 | 829 | |
| | 2015.05-2018.10 | AT/MT | R | L/R | SUV Van 4WD D4HB | | GCI24032 | Inner Joint | | 25 | 23 | 35 | 63 | 88 | |
| 2.2 (147 kw) | 2009.01-2010.12 | 6AT | F | R | SUV FWD D4HB | | GDS87090 | Intermediate Shaft | | 28 | 31 | | | 430 | |

| | YEAR | TRANSM. | F/R | L/R | BODY STYLE & DRIVE TYPE & ENGINE | REMARKS | G-AP Ref. | PRODUCT | ABS | Technical Specifications | | | | | |
|---|---|---|---|---|---|---|---|---|---|---|---|---|---|---|---|
| | | | | | | | | | | A | B | C | H | L | P |
| **HYUNDAI** | | | | | | | | | | | | | | | |
| **Santa Fé** | | | | | | | | | | | | | | | |
| 2.2 (147 kw) | 2009.01-2010.12 | 6AT/6MT | F | L | SUV FWD D4HB | | GDS24464 | Drive Shaft | 52T | 30 | 31 | 73 | 97 | 654 | |
| | 2009.01-2010.12 | 6AT/6MT | F | R | SUV FWD D4HB | Date from:2010.02 | GDS24561 | Drive Shaft | 52T | 30 | 28 | 73 | 97 | 590 | |
| | 2009.01-2010.12 | 6AT/6MT | F | R | SUV FWD D4HB | Date To:2010.01 | GDS24564 | Drive Shaft | 52T | 30 | 28 | 73 | 97 | 592 | |
| | 2009.01-2010.12 | 6AT/6MT | F | L | SUV FWD D4HB | | GCO24327 | Outer Joint | 52T | 30 | 36 | 73 | 97 | 67.5 | I |
| | 2009.01-2010.12 | 6AT/6MT | F | R | SUV FWD D4HB | Date from:2010.02 | GCO24072 | Outer Joint | 52T | 30 | 36 | 73 | 97 | 67.5 | I |
| | 2009.01-2010.12 | 6AT/6MT | F | R | SUV FWD D4HB | Date To:2010.01 | GCO24327 | Outer Joint | 52T | 30 | 36 | 73 | 97 | 67.5 | I |
| | 2009.01-2010.12 | 6AT/6MT | F | L | SUV FWD D4HB | | GCI27052 | Inner Joint | | 31 | 36 | 36 | 66.5 | 106 | |
| | 2009.01-2010.12 | 6AT/6MT | F | R | SUV FWD D4HB | | GCI27053 | Inner Joint | | 28 | 36 | 42 | | 131.5 | |
| | 2009.01-2012.12 | 6AT | F | R | SUV 4WD D4HB | Date from:2010.02 | GDS24561 | Drive Shaft | 52T | 30 | 28 | 73 | 97 | 590 | |
| | 2009.01-2012.12 | 6AT | F | R | SUV 4WD D4HB | Date to:2010.01 | GDS24564 | Drive Shaft | 52T | 30 | 28 | 73 | 97 | 592 | |
| | 2009.01-2012.12 | 6AT | F | L/R | SUV 4WD D4HB | Date to:2010.01 | GCO24327 | Outer Joint | 52T | 30 | 36 | 73 | 97 | 67.5 | I |
| | 2009.01-2012.12 | 6AT | F | L | SUV 4WD D4HB | | GCI27052 | Inner Joint | | 31 | 36 | 36 | 66.5 | 106 | |
| | 2009.01-2012.12 | 6AT | F | R | SUV 4WD D4HB | Date to:2010.01 | GCI27053 | Inner Joint | | 28 | 36 | 42 | | 131.5 | |
| | 2009.01-2012.12 | 6AT | F | R | SUV 4WD D4HB | Date to:2012.05 | GDS61352 | Intermediate Shaft | | 28 | 28 | | | 430 | |
| | 2015.10-2018.08 | 6AT | F | L | SUV 4WD D4HB | For Facelift | GDS57842 | Drive Shaft | 52T | 30 | 31 | 73 | 94.5 | 675 | |
| | 2015.10-2018.08 | 6AT | F | R | SUV 4WD D4HB | For Facelift | GDS58080 | Drive Shaft | 52T | 30 | 28 | 73 | 94.5 | 590 | |
| | 2015.10-2018.08 | AT | F | L | SUV 4WD D4HB | Not For Facelift | GDS24567 | Drive Shaft | 52T | 30 | 31 | 73 | 94.5 | 674 | |
| | 2015.10-2018.08 | AT | F | L/R | SUV 4WD D4HB | Date from:2015.06 | GCO24301 | Outer Joint | 52T | 30 | 35 | 73 | 94.5 | 67 | M |
| | 2015.10-2018.08 | AT | F | L | SUV 4WD D4HB | | GCI24160 | Inner Joint | | 31 | 35 | 36 | 67 | 104.5 | |
| | 2015.10-2018.08 | AT/MT | F | R | SUV 4WD D4HB | Date to:2015.05;Not For Facelift | GDS84420 | Drive Shaft | 52T | 30 | 28 | 73 | 94.5 | 590 | |
| | 2015.10-2018.08 | AT/MT | F | L/R | SUV 4WD D4HB | Date from:2015.06 | GCO81038 | Outer Joint | 52T | 30 | 36 | 73 | 94.5 | 67.5 | I |
| | 2015.10-2018.08 | AT/MT | F | R | SUV 4WD D4HB | | GCI81068 | Inner Joint | | 28 | 35 | 42 | | 131 | |
| | 2015.10-2018.08 | MT | F | L | SUV 4WD D4HB | | GDS24447 | Drive Shaft | 52T | 30 | 28 | 73 | 94.5 | 674 | |
| | 2015.10-2018.08 | MT | F | L | SUV 4WD D4HB | | GCI24144 | Inner Joint | | 28 | 35 | 41 | 61.5 | 120 | |
| | 2015.10-2018.08 | AT/MT | R | L | SUV 4WD D4HB | | GDS24555 | Drive Shaft | 52T | 30 | 25 | 57 | 93.5 | 848 | |
| | 2015.10-2018.08 | AT/MT | R | R | SUV 4WD D4HB | | GDS24554 | Drive Shaft | 52T | 30 | 25 | 57 | 93.5 | 829 | |
| | 2015.10-2018.08 | AT/MT | R | L/R | SUV 4WD D4HB | | GCO24321 | Outer Joint | 52T | 30 | 20 | 57 | 93.5 | 61 | M |
| | 2015.10-2018.08 | AT/MT | R | R | SUV 4WD D4HB | TJ | GCI39041 | Inner Joint | | 25 | 23 | 35 | 63 | 92.5 | |
| | 2015.10-2018.08 | AT/MT | R | L/R | SUV 4WD D4HB | DOJ | GCI24032 | Inner Joint | | 25 | 23 | 35 | 63 | 88 | |
| | 2015.10-2018.08 | 6AT | F | L | SUV FWD D4HB | For Facelift | GDS57842 | Drive Shaft | 52T | 30 | 31 | 73 | 94.5 | 675 | |
| | 2015.10-2018.08 | 6AT | F | R | SUV FWD D4HB | For Facelift | GDS58080 | Drive Shaft | 52T | 30 | 28 | 73 | 94.5 | 590 | |
| | 2015.10-2018.08 | AT | F | L | SUV FWD D4HB | Date to:2015.05;Not For Facelift | GDS24567 | Drive Shaft | 52T | 30 | 31 | 73 | 94.5 | 674 | |
| | 2015.10-2018.08 | AT | F | L/R | SUV FWD D4HB | | GCO24301 | Outer Joint | 52T | 30 | 35 | 73 | 94.5 | 67 | M |
| | 2015.10-2018.08 | AT | F | L | SUV FWD D4HB | | GCI24160 | Inner Joint | | 31 | 35 | 36 | 67 | 104.5 | |
| | 2015.10-2018.08 | AT/MT | F | R | SUV FWD D4HB | Date to:2015.05;Not For Facelift | GDS84420 | Drive Shaft | 52T | 30 | 28 | 73 | 94.5 | 590 | |
| | 2015.10-2018.08 | AT/MT | F | L/R | SUV FWD D4HB | Date from:2015.06 | GCO81038 | Outer Joint | 52T | 30 | 36 | 73 | 94.5 | 67.5 | I |
| | 2015.10-2018.08 | MT | F | L | SUV FWD D4HB | Date to:2015.05 | GDS24447 | Drive Shaft | 52T | 30 | 28 | 73 | 94.5 | 674 | |
| | 2015.10-2018.08 | MT | F | L | SUV FWD D4HB | | GCI24144 | Inner Joint | | 28 | 35 | 41 | 61.5 | 120 | |
| | 2015.10-2018.08 | MT | F | R | SUV FWD D4HB | | GCI81068 | Inner Joint | | 28 | 35 | 42 | | 131 | |
| | 2018.07-2020.11 | 6MT | F | L | SUV 4WD D4HB | | GDS84169 | Drive Shaft | | 30 | 28 | 72.5 | 94.5 | 677 | |
| | 2018.07-2020.11 | 6MT | F | R | SUV 4WD D4HB | | GDS84168 | Drive Shaft | | 30 | 28 | 72.5 | 94.5 | 591 | |
| | 2018.07-2020.11 | 6MT | F | L | SUV 4WD D4HB | | GCI24144 | Inner Joint | | 28 | 35 | 41 | 61.5 | 120 | |
| | 2018.07-2020.11 | 8AT | F | L | SUV 4WD D4HB | | GDS84166 | Drive Shaft | | 30 | 31 | 72.5 | 94.5 | 675 | |
| | 2018.07-2020.11 | 8AT | F | R | SUV 4WD D4HB | | GDS84167 | Drive Shaft | | 30 | 28 | 72.5 | 94.5 | 607 | |
| | 2018.07-2020.11 | 8AT | F | L | SUV 4WD D4HB | | GCI82621 | Inner Joint | | 31 | 35 | | 67 | 106.5 | |
| | 2018.07-2020.11 | 8AT/6MT | F | L/R | SUV 4WD D4HB | | GCO82721 | Outer Joint | | 30 | 35 | 72.5 | 94.5 | 67 | M |
| | 2018.07-2020.11 | 8DCT | F | L | SUV 4WD D4HB | | GDS56808 | Drive Shaft | | 30 | 31 | 72.5 | 94.5 | 659 | |
| | 2018.07-2020.11 | 8DCT | F | R | SUV 4WD D4HB | | GDS57392 | Drive Shaft | | 30 | 28 | 72.5 | 94.5 | 605 | |
| | 2018.07-2020.11 | 8DCT | F | L/R | SUV 4WD D4HB | | GCO83443 | Outer Joint | | 30 | 35 | 72.5 | 94.5 | 67 | M |
| | 2018.07-2020.11 | 8DCT | F | L | SUV 4WD D4HB | | GCI83505 | Inner Joint | | 31 | 35 | 33.6 | 66.5 | 101 | |
| | 2018.07-2020.11 | 8DCT/8AT | F | R | SUV 4WD D4HB | | GCI82132 | Inner Joint | | 28 | 35 | 42 | | 131.5 | |
| | 2018.07-2020.11 | 8AT | R | L | SUV 4WD D4HB | Facelift | GDS56177 | Drive Shaft | | 30 | 25 | 57 | 95 | 875 | |
| | 2018.07-2020.11 | 8AT | R | R | SUV 4WD D4HB | Facelift | GDS56112 | Drive Shaft | | 30 | 25 | 57 | 95 | 831 | |
| | 2018.07-2020.11 | 8AT | R | L/R | SUV 4WD D4HB | | GCO82582 | Outer Joint | | 30 | 20 | 57 | 95 | 48 | |
| | 2018.07-2020.11 | 8AT | R | L/R | SUV 4WD D4HB | | GCI82201 | Inner Joint | | 25 | 20 | 35 | 62.5 | 58 | |
| | 2018.07-2020.11 | 6MT | F | L | SUV FWD D4HB | | GDS84169 | Drive Shaft | | 30 | 28 | 72.5 | 94.5 | 677 | |
| | 2018.07-2020.11 | 6MT | F | R | SUV FWD D4HB | | GDS84168 | Drive Shaft | | 30 | 28 | 72.5 | 94.5 | 591 | |
| | 2018.07-2020.11 | 6MT | F | L | SUV FWD D4HB | | GCI24144 | Inner Joint | | 28 | 35 | 41 | 61.5 | 120 | |
| | 2018.07-2020.11 | 8AT | F | L | SUV FWD D4HB | | GDS84166 | Drive Shaft | | 30 | 31 | 72.5 | 94.5 | 675 | |
| | 2018.07-2020.11 | 8AT | F | R | SUV FWD D4HB | | GDS84167 | Drive Shaft | | 30 | 28 | 72.5 | 94.5 | 607 | |
| | 2018.07-2020.11 | 8AT | F | L | SUV FWD D4HB | | GCI82621 | Inner Joint | | 31 | 35 | | 67 | 106.5 | |
| | 2018.07-2020.11 | 8AT/6MT | F | L/R | SUV FWD D4HB | | GCO82721 | Outer Joint | | 30 | 35 | 72.5 | 94.5 | 67 | M |
| | 2018.07-2020.11 | 8DCT | F | L | SUV FWD D4HB | | GDS56808 | Drive Shaft | | 30 | 31 | 72.5 | 94.5 | 659 | |
| | 2018.07-2020.11 | 8DCT | F | R | SUV FWD D4HB | | GDS57392 | Drive Shaft | | 30 | 28 | 72.5 | 94.5 | 605 | |
| | 2018.07-2020.11 | 8DCT | F | L/R | SUV FWD D4HB | | GCO83443 | Outer Joint | | 30 | 35 | 72.5 | 94.5 | 67 | M |

| | YEAR | TRANSM. | F/R | L/R | BODY STYLE & DRIVE TYPE & ENGINE | REMARKS | G-AP Ref. | PRODUCT | ABS | Technical Specifications A | B | C | H | L | P |
|---|---|---|---|---|---|---|---|---|---|---|---|---|---|---|---|
| **HYUNDAI** | | | | | | | | | | | | | | | |
| **Santa Fé** | | | | | | | | | | | | | | | |
| 2.2 (147 kw) | 2018.07-2020.11 | 8DCT | F | L | SUV FWD D4HB | | GCI83505 | Inner Joint | | 31 | 35 | 33.6 | 66.5 | 101 | |
| | 2018.07-2020.11 | 8DCT/8AT | F | R | SUV FWD D4HB | | GCI82132 | Inner Joint | | 28 | 35 | 42 | | 131.5 | |
| | 2018.07-2020.11 | 8AT | F | L | SUV Van 4WD D4HB | | GDS84166 | Drive Shaft | | 30 | 31 | 72.5 | 94.5 | 675 | |
| | 2018.07-2020.11 | 8AT | F | R | SUV Van 4WD D4HB | | GDS84167 | Drive Shaft | | 30 | 28 | 72.5 | 94.5 | 607 | |
| | 2018.07-2020.11 | 8AT | F | L/R | SUV Van 4WD D4HB | | GCO82721 | Outer Joint | | 30 | 35 | 72.5 | 94.5 | 67 | M |
| | 2018.07-2020.11 | 8AT | F | L | SUV Van 4WD D4HB | | GCI82621 | Inner Joint | | 31 | 35 | | 67 | 106.5 | |
| | 2018.07-2020.11 | 8DCT | F | L | SUV Van 4WD D4HB | | GDS56808 | Drive Shaft | | 30 | 31 | 72.5 | 94.5 | 659 | |
| | 2018.07-2020.11 | 8DCT | F | R | SUV Van 4WD D4HB | | GDS57392 | Drive Shaft | | 30 | 28 | 72.5 | 94.5 | 605 | |
| | 2018.07-2020.11 | 8DCT | F | L/R | SUV Van 4WD D4HB | | GCO83443 | Outer Joint | | 30 | 35 | 72.5 | 94.5 | 67 | M |
| | 2018.07-2020.11 | 8DCT | F | L | SUV Van 4WD D4HB | | GCI83505 | Inner Joint | | 31 | 35 | 33.6 | 66.5 | 101 | |
| | 2018.07-2020.11 | 8DCT/8AT | F | R | SUV Van 4WD D4HB | | GCI82132 | Inner Joint | | 28 | 35 | 42 | | 131.5 | |
| | 2018.07-2020.11 | 8AT | R | L | SUV Van 4WD D4HB | Facelift | GDS56177 | Drive Shaft | | 30 | 25 | 57 | 95 | 875 | |
| | 2018.07-2020.11 | 8AT | R | R | SUV Van 4WD D4HB | Facelift | GDS56112 | Drive Shaft | | 30 | 25 | 57 | 95 | 831 | |
| | 2018.07-2020.11 | 8AT | R | L/R | SUV Van 4WD D4HB | | GCO82582 | Outer Joint | | 30 | 20 | 57 | 95 | 48 | |
| | 2018.07-2020.11 | 8AT | R | L/R | SUV Van 4WD D4HB | | GCI82201 | Inner Joint | | 25 | 20 | 35 | 62.5 | 58 | |
| | 2018.07-2020.11 | 8AT | F | L | SUV Van FWD D4HB | | GDS84166 | Drive Shaft | | 30 | 31 | 72.5 | 94.5 | 675 | |
| | 2018.07-2020.11 | 8AT | F | R | SUV Van FWD D4HB | | GDS84167 | Drive Shaft | | 30 | 28 | 72.5 | 94.5 | 607 | |
| | 2018.07-2020.11 | 8AT | F | L/R | SUV Van FWD D4HB | | GCO82721 | Outer Joint | | 30 | 35 | 72.5 | 94.5 | 67 | M |
| | 2018.07-2020.11 | 8AT | F | L | SUV Van FWD D4HB | | GCI82621 | Inner Joint | | 31 | 35 | | 67 | 106.5 | |
| | 2018.07-2020.11 | 8DCT | F | L | SUV Van FWD D4HB | | GDS56808 | Drive Shaft | | 30 | 31 | 72.5 | 94.5 | 659 | |
| | 2018.07-2020.11 | 8DCT | F | R | SUV Van FWD D4HB | | GDS57392 | Drive Shaft | | 30 | 28 | 72.5 | 94.5 | 605 | |
| | 2018.07-2020.11 | 8DCT | F | L/R | SUV Van FWD D4HB | | GCO83443 | Outer Joint | | 30 | 35 | 72.5 | 94.5 | 67 | M |
| | 2018.07-2020.11 | 8DCT | F | L | SUV Van FWD D4HB | | GCI83505 | Inner Joint | | 31 | 35 | 33.6 | 66.5 | 101 | |
| | 2018.07-2020.11 | 8DCT/8AT | F | R | SUV Van FWD D4HB | | GCI82132 | Inner Joint | | 28 | 35 | 42 | | 131.5 | |
| 2.2 (148 kw) | 2020.11- | 8DCT | F | L | SUV 4WD D4HE | | GDS56808 | Drive Shaft | | 30 | 31 | 72.5 | 94.5 | 659 | |
| | 2020.11- | 8DCT | F | R | SUV 4WD D4HE | | GDS57392 | Drive Shaft | | 30 | 28 | 72.5 | 94.5 | 605 | |
| | 2020.11- | 8DCT | F | L/R | SUV 4WD D4HE | | GCO83443 | Outer Joint | | 30 | 35 | 72.5 | 94.5 | 67 | M |
| | 2020.11- | 8DCT | F | L | SUV 4WD D4HE | | GCI83505 | Inner Joint | | 31 | 35 | 33.6 | 66.5 | 101 | |
| | 2020.11- | 8DCT | F | R | SUV 4WD D4HE | | GCI82132 | Inner Joint | | 28 | 35 | 42 | | 131.5 | |
| | 2020.11- | 8AT | R | L | SUV 4WD D4HE | | GDS56177 | Drive Shaft | | 30 | 25 | 57 | 95 | 875 | |
| | 2020.11- | 8AT | R | R | SUV 4WD D4HE | | GDS56112 | Drive Shaft | | 30 | 25 | 57 | 95 | 831 | |
| | 2020.11- | 8AT | R | L/R | SUV 4WD D4HE | | GCO82582 | Outer Joint | | 30 | 20 | 57 | 95 | 48 | |
| | 2020.11- | 8AT | R | L/R | SUV 4WD D4HE | | GCI82201 | Inner Joint | | 25 | 20 | 35 | 62.5 | 58 | |
| | 2020.11- | 8DCT | F | L | SUV FWD D4HE | | GDS56808 | Drive Shaft | | 30 | 31 | 72.5 | 94.5 | 659 | |
| | 2020.11- | 8DCT | F | R | SUV FWD D4HE | | GDS57392 | Drive Shaft | | 30 | 28 | 72.5 | 94.5 | 605 | |
| | 2020.11- | 8DCT | F | L/R | SUV FWD D4HE | | GCO83443 | Outer Joint | | 30 | 35 | 72.5 | 94.5 | 67 | M |
| | 2020.11- | 8DCT | F | L | SUV FWD D4HE | | GCI83505 | Inner Joint | | 31 | 35 | 33.6 | 66.5 | 101 | |
| | 2020.11- | 8DCT | F | R | SUV FWD D4HE | | GCI82132 | Inner Joint | | 28 | 35 | 42 | | 131.5 | |
| 2.4 (100 kw) | 2001.02-2006.03 | MT | F | L | SUV 4WD G4JS | | GDS24218 | Drive Shaft | 52T | 27 | 27 | 60 | 95 | 648 | |
| | 2001.02-2006.03 | MT | F | R | SUV 4WD G4JS | | GDS24217 | Drive Shaft | 52T | 27 | 26 | 60 | 95 | 609 | |
| | 2001.02-2006.03 | MT | F | L/R | SUV 4WD G4JS | | GCO24091 | Outer Joint | 52T | 27 | 26 | 60 | 95 | 69 | M |
| | 2001.02-2006.03 | 5MT | R | L/R | SUV 4WD G4JS | | GDS24557 | Drive Shaft | 52T | 27 | 27 | 60 | 95 | 822 | |
| | 2001.02-2006.03 | 5MT | R | L/R | SUV 4WD G4JS | | GCO24325 | Outer Joint | 52T | 27 | 23 | 60 | 95 | 65 | M |
| | 2001.02-2006.03 | 5MT | R | L/R | SUV 4WD G4JS | | GCI24129 | Inner Joint | | 27 | 23 | 41 | 62 | 87 | |
| | 2001.02-2006.03 | MT | R | L/R | SUV 4WD G4JS | | GCI24001 | Inner Joint | | 27 | 25 | 41 | 62.8 | 92.5 | |
| | 2001.02-2006.03 | 5MT | F | L | SUV FWD G4JS | | GDS24276 | Drive Shaft | 52T | 27 | 27 | 60 | 95 | 665 | |
| | 2001.02-2006.03 | 5MT | F | R | SUV FWD G4JS | | GDS24277 | Drive Shaft | 52T | 27 | 27 | 60 | 95 | 952 | |
| | 2001.02-2006.03 | 5MT | F | L/R | SUV FWD G4JS | | GCI24043 | Inner Joint | | 27 | 25 | 41 | 62.8 | 92.5 | |
| | 2001.02-2006.03 | AT | F | L | SUV FWD G4JS | | GCI24043 | Inner Joint | | 27 | 25 | 41 | 62.8 | 92.5 | |
| 2.4 (107 kw) | 2000.08-2005.12 | 5MT | F | L/R | SUV Van 4WD G4JS | | GCO24091 | Outer Joint | 52T | 27 | 26 | 60 | 95 | 69 | M |
| | 2000.08-2005.12 | 5MT | R | L/R | SUV Van 4WD G4JS | | GDS24557 | Drive Shaft | 52T | 27 | 27 | 60 | 95 | 822 | |
| | 2001.02-2006.03 | MT | F | L | SUV 4WD G4JS | | GDS24218 | Drive Shaft | 52T | 27 | 27 | 60 | 95 | 648 | |
| | 2001.02-2006.03 | MT | F | R | SUV 4WD G4JS | | GDS24217 | Drive Shaft | 52T | 27 | 26 | 60 | 95 | 609 | |
| | 2001.02-2006.03 | MT | F | L/R | SUV 4WD G4JS | | GCO24091 | Outer Joint | 52T | 27 | 26 | 60 | 95 | 69 | M |
| | 2001.02-2006.03 | 4AT/5MT | R | L/R | SUV 4WD G4JS | | GDS24557 | Drive Shaft | 52T | 27 | 27 | 60 | 95 | 822 | |
| | 2001.02-2006.03 | 4AT/5MT | R | L/R | SUV 4WD G4JS | | GCO24325 | Outer Joint | 52T | 27 | 23 | 60 | 95 | 65 | M |
| | 2001.02-2006.03 | 4AT/5MT | R | L/R | SUV 4WD G4JS | | GCI24001 | Inner Joint | | 27 | 25 | 41 | 62.8 | 92.5 | |
| | 2001.02-2006.03 | 4AT/5MT | R | L/R | SUV 4WD G4JS | | GCI24129 | Inner Joint | | 27 | 23 | 41 | 62 | 87 | |
| | 2001.02-2006.03 | 5MT | F | L | SUV FWD G4JS | | GDS24276 | Drive Shaft | 52T | 27 | 27 | 60 | 95 | 665 | |
| | 2001.02-2006.03 | 5MT | F | R | SUV FWD G4JS | | GDS24277 | Drive Shaft | 52T | 27 | 27 | 60 | 95 | 952 | |
| | 2001.02-2006.03 | 5MT | F | L/R | SUV FWD G4JS | | GCI24043 | Inner Joint | | 27 | 25 | 41 | 62.8 | 92.5 | |
| | 2001.02-2006.03 | AT | F | L | SUV FWD G4JS | | GCI24043 | Inner Joint | | 27 | 25 | 41 | 62.8 | 92.5 | |
| 2.4 (126 kw) | 2015.06-2018.10 | AT | F | L | SUV 4WD G4KE | | GDS83767 | Drive Shaft | 52T | 30 | 28 | 73 | 94.5 | 679 | |
| | 2015.06-2018.10 | AT | F | R | SUV 4WD G4KE | | GDS83769 | Drive Shaft | 52T | 30 | 28 | 73 | 94.5 | 602 | |
| | 2015.06-2018.10 | AT | F | L/R | SUV 4WD G4KE | | GCO81089 | Outer Joint | 52T | 30 | 26 | 73 | 94.5 | 65.5 | M |

| | YEAR | TRANSM. | F/R | L/R | BODY STYLE & DRIVE TYPE & ENGINE | REMARKS | G-AP Ref. | PRODUCT | ABS | Technical Specifications | | | | | |
|---|---|---|---|---|---|---|---|---|---|---|---|---|---|---|---|
| | | | | | | | | | | A | B | C | H | L | P |
| **HYUNDAI** **Santa Fé** | | | | | | | | | | | | | | | |
| 2.4 (126 kw) | 2015.06-2018.10 | AT | F | L | SUV 4WD G4KE | | GCI24140 | Inner Joint | | 28 | 33 | 33 | 67 | 105.5 | |
| | 2015.06-2018.10 | AT | F | R | SUV 4WD G4KE | | GCI81096 | Inner Joint | | 28 | 33 | 42 | | 129 | |
| | 2015.06-2018.10 | MT | F | L/R | SUV 4WD G4KE | | GCO81038 | Outer Joint | 52T | 30 | 36 | 73 | 94.5 | 67.5 | I |
| | 2015.06-2018.10 | MT | F | L | SUV 4WD G4KE | | GCI24144 | Inner Joint | | 28 | 35 | 41 | 61.5 | 120 | |
| | 2015.06-2018.10 | MT | F | R | SUV 4WD G4KE | | GCI81068 | Inner Joint | | 28 | 35 | 42 | | 131 | |
| | 2015.06-2018.10 | AT/MT | R | L | SUV 4WD G4KE | | GDS24555 | Drive Shaft | 52T | 30 | 25 | 57 | 93.5 | 848 | |
| | 2015.06-2018.10 | AT/MT | R | R | SUV 4WD G4KE | | GDS24554 | Drive Shaft | 52T | 30 | 25 | 57 | 93.5 | 829 | |
| | 2015.06-2018.10 | AT/MT | R | L/R | SUV 4WD G4KE | | GCO24321 | Outer Joint | 52T | 30 | 20 | 57 | 93.5 | 61 | M |
| | 2015.06-2018.10 | AT/MT | R | R | SUV 4WD G4KE | | GCI39041 | Inner Joint | | 25 | 23 | 35 | 63 | 92.5 | |
| | 2015.06-2018.10 | AT/MT | R | L/R | SUV 4WD G4KE | | GCI24032 | Inner Joint | | 25 | 23 | 35 | 63 | 88 | |
| | 2015.06-2018.12 | MT | F | L/R | SUV FWD G4KE | | GCO81038 | Outer Joint | 52T | 30 | 36 | 73 | 94.5 | 67.5 | I |
| | 2015.06-2018.12 | MT | F | L | SUV FWD G4KE | | GCI24144 | Inner Joint | | 28 | 35 | 41 | 61.5 | 120 | |
| | 2015.06-2018.12 | MT | F | R | SUV FWD G4KE | | GCI81068 | Inner Joint | | 28 | 35 | 42 | | 131 | |
| 2.4 (128 kw) | 2010.07-2012.12 | AT | F | L | SUV 4WD G4KE | | GDS24233 | Drive Shaft | 52T | 30 | 28 | 73 | 97 | 659 | |
| | 2010.07-2012.12 | AT | F | L | SUV 4WD G4KE | | GDS24466 | Drive Shaft | 52T | 30 | 28 | 73 | 97 | 658 | |
| | 2010.07-2012.12 | AT | F | L | SUV 4WD G4KE | | GCI24066 | Inner Joint | | 28 | 35 | 33 | 67.5 | 100 | |
| | 2010.07-2012.12 | AT | F | L | SUV 4WD G4KE | | GCI24155 | Inner Joint | | 28 | 35 | 33 | 67 | 105.5 | |
| | 2010.07-2012.12 | AT | F | R | SUV 4WD G4KE | | GDS27221 | Intermediate Shaft | | 28 | 28 | | | 420.5 | |
| | 2010.07-2012.12 | AT/MT | F | R | SUV 4WD G4KE | | GDS24477 | Drive Shaft | 52T | 30 | 28 | 73 | 97 | 599 | |
| | 2010.07-2012.12 | AT/MT | F | L/R | SUV 4WD G4KE | | GCO24072 | Outer Joint | 52T | 30 | 36 | 73 | 97 | 67.5 | I |
| | 2010.07-2012.12 | AT/MT | F | L/R | SUV 4WD G4KE | | GCO24327 | Outer Joint | 52T | 30 | 36 | 73 | 97 | 67.5 | I |
| | 2010.07-2012.12 | AT/MT | F | R | SUV 4WD G4KE | | GCI24156 | Inner Joint | | 28 | 35 | 42 | | 129.5 | |
| | 2010.07-2012.12 | MT | F | L | SUV 4WD G4KE | | GDS24467 | Drive Shaft | 52T | 30 | 28 | 73 | 97 | 667 | |
| | 2010.07-2012.12 | MT | F | L | SUV 4WD G4KE | | GCI24157 | Inner Joint | | 28 | 35 | 41 | 61.5 | 120 | |
| | 2010.07-2012.12 | AT/MT | R | L/R | SUV 4WD G4KE | | GCI24010 | Inner Joint | | 25 | 22 | 35 | 63 | 87 | |
| | 2010.11-2012.12 | 6AT/6MT | F | L | SUV FWD G4KE | | GDS24467 | Drive Shaft | 52T | 30 | 28 | 73 | 97 | 667 | |
| | 2010.11-2012.12 | 6AT/6MT | F | R | SUV FWD G4KE | | GDS24477 | Drive Shaft | 52T | 30 | 28 | 73 | 97 | 599 | |
| | 2010.11-2012.12 | 6AT/6MT | F | L | SUV FWD G4KE | | GCO24327 | Outer Joint | 52T | 30 | 36 | 73 | 97 | 67.5 | I |
| | 2010.11-2012.12 | 6AT/6MT | F | R | SUV FWD G4KE | | GCO24072 | Outer Joint | 52T | 30 | 36 | 73 | 97 | 67.5 | I |
| | 2010.11-2012.12 | 6AT/6MT | F | L | SUV FWD G4KE | | GCI24157 | Inner Joint | | 28 | 35 | 41 | 61.5 | 120 | |
| | 2010.11-2012.12 | 6AT/6MT | F | R | SUV FWD G4KE | | GCI24156 | Inner Joint | | 28 | 35 | 42 | | 129.5 | |
| 2.4 (129 kw) | 2012.09-2018.12 | 6AT | F | L | SUV 4WD G4KE | Not For facelift | GDS24449 | Drive Shaft | 52T | 30 | 28 | 73 | 94.5 | 681 | |
| | 2012.09-2018.12 | 6AT | F | L | SUV 4WD G4KE | For facelift | GDS83767 | Drive Shaft | 52T | 30 | 28 | 73 | 94.5 | 679 | |
| | 2012.09-2018.12 | 6AT | F | R | SUV 4WD G4KE | Not For facelift | GDS24479 | Drive Shaft | 52T | 30 | 28 | 73 | 94.5 | 596 | |
| | 2012.09-2018.12 | 6AT | F | R | SUV 4WD G4KE | For facelift | GDS83769 | Drive Shaft | 52T | 30 | 28 | 73 | 94.5 | 602 | |
| | 2012.09-2018.12 | AT | F | R | SUV 4WD G4KE | | GCO24296 | Outer Joint | 52T | 30 | 25 | 73 | 94.5 | 67 | M |
| | 2012.09-2018.12 | AT | F | L | SUV 4WD G4KE | | GCI24140 | Inner Joint | | 28 | 33 | 33 | 67 | 105.5 | |
| | 2012.09-2018.12 | AT | F | R | SUV 4WD G4KE | | GCI24139 | Inner Joint | | 28 | 33 | 42 | | 129.5 | |
| | 2012.09-2018.12 | AT | F | R | SUV 4WD G4KE | Date to:2016.01 | GDS27221 | Intermediate Shaft | | 28 | 28 | | | 420.5 | |
| | 2012.09-2018.12 | MT | F | L/R | SUV 4WD G4KE | | GCO24301 | Outer Joint | 52T | 30 | 35 | 73 | 94.5 | 67 | M |
| | 2012.09-2018.12 | MT | F | L | SUV 4WD G4KE | | GCI24144 | Inner Joint | | 28 | 35 | 41 | 61.5 | 120 | |
| | 2012.09-2018.12 | MT | F | R | SUV 4WD G4KE | | GCI81068 | Inner Joint | | 28 | 35 | 42 | | 131 | |
| | 2012.09-2018.12 | 6AT/6MT | R | L | SUV 4WD G4KE | | GDS24555 | Drive Shaft | 52T | 30 | 25 | 57 | 93.5 | 848 | |
| | 2012.09-2018.12 | 6AT/6MT | R | R | SUV 4WD G4KE | | GDS24554 | Drive Shaft | 52T | 30 | 25 | 57 | 93.5 | 829 | |
| | 2012.09-2018.12 | 6AT/6MT | R | L/R | SUV 4WD G4KE | | GCO24321 | Outer Joint | 52T | 30 | 20 | 57 | 93.5 | 61 | M |
| | 2012.09-2018.12 | AT/MT | R | R | SUV 4WD G4KE | | GCI39041 | Inner Joint | | 25 | 23 | 35 | 63 | 92.5 | |
| | 2012.09-2018.12 | AT/MT | R | L/R | SUV 4WD G4KE | | GCI24032 | Inner Joint | | 25 | 23 | 35 | 63 | 88 | |
| | 2012.09-2018.12 | MT | F | R | SUV FWD G4KE | | GDS24479 | Drive Shaft | 52T | 30 | 28 | 73 | 94.5 | 596 | |
| | 2012.09-2018.12 | MT | F | L/R | SUV FWD G4KE | | GCO24301 | Outer Joint | 52T | 30 | 35 | 73 | 94.5 | 67 | M |
| | 2012.09-2018.12 | MT | F | L | SUV FWD G4KE | | GCI24144 | Inner Joint | | 28 | 35 | 41 | 61.5 | 120 | |
| | 2012.09-2018.12 | MT | F | R | SUV FWD G4KE | | GCI81068 | Inner Joint | | 28 | 35 | 42 | | 131 | |
| 2.4 (130 kw) | 2009.09-2012.12 | AT | F | R | SUV 4WD G4KE | Date to:2012.08 | GDS27221 | Intermediate Shaft | | 28 | 28 | | | 420.5 | |
| | 2009.09-2012.12 | 6AT | F | R | SUV FWD G4KE | | GDS24232 | Drive Shaft | 52T | 30 | 28 | 73 | 97 | 597 | |
| | 2009.09-2012.12 | 6AT | F | R | SUV FWD G4KE | | GCO24072 | Outer Joint | 52T | 30 | 36 | 73 | 97 | 67.5 | I |
| | 2009.09-2012.12 | 6AT | F | R | SUV FWD G4KE | | GCI24054 | Inner Joint | | 28 | 35 | 42 | | 125 | |
| | 2009.09-2012.12 | 6AT | F | R | SUV FWD G4KE | | GDS24585 | Intermediate Shaft | | 28 | 28 | | | 421 | |
| 2.4 (136 kw) | 2018.07-2020.07 | 6AT | F | L | SUV 4WD G4KJ | | GDS56170 | Drive Shaft | | 30 | 27 | 72.5 | 95 | 676 | |
| | 2018.07-2020.07 | 6AT | F | R | SUV 4WD G4KJ | | GDS56171 | Drive Shaft | | 30 | 28 | 72.5 | 95 | 600 | |
| | 2018.07-2020.07 | 6AT | F | L/R | SUV 4WD G4KJ | | GCO83174 | Outer Joint | | 30 | 34 | 72.5 | 95 | 65 | M |
| | 2018.07-2020.07 | 6AT | F | L | SUV 4WD G4KJ | | GCI83117 | Inner Joint | | 27 | 33 | 30 | 67 | 103 | |
| | 2018.07-2020.07 | 6AT | F | R | SUV 4WD G4KJ | | GCI83118 | Inner Joint | | 28 | 33 | 42 | | 129 | |
| | 2018.07-2020.07 | 6AT | R | L/R | SUV 4WD G4KJ | | GCO82582 | Outer Joint | | 30 | 20 | 57 | 95 | 48 | |
| | 2018.07-2020.07 | 6AT | R | L/R | SUV 4WD G4KJ | | GCI82201 | Inner Joint | | 25 | 20 | 35 | 62.5 | 58 | |
| 2.4 (138 kw) | 2015.05-2018.08 | 6MT | F | L/R | SUV 4WD G4KJ | | GCO81038 | Outer Joint | 52T | 30 | 36 | 73 | 94.5 | 67.5 | I |
| | 2015.05-2018.08 | 6MT | F | L | SUV 4WD G4KJ | | GCI24144 | Inner Joint | | 28 | 35 | 41 | 61.5 | 120 | |

| | YEAR | TRANSM. | F/R | L/R | BODY STYLE & DRIVE TYPE & ENGINE | REMARKS | G-AP Ref. | PRODUCT | ABS | Technical Specifications | | | | | |
|---|---|---|---|---|---|---|---|---|---|---|---|---|---|---|---|
| | | | | | | | | | | A | B | C | H | L | P |
| **HYUNDAI** | | | | | | | | | | | | | | | |
| **Santa Fé** | | | | | | | | | | | | | | | |
| 2.4 (138 kw) | 2015.05-2018.08 | 6MT | F | R | SUV 4WD G4KJ | | GCI81068 | Inner Joint | | 28 | 35 | 42 | | 131 | |
| | 2015.05-2018.08 | 6AT/6MT | R | L | SUV 4WD G4KJ | | GDS24555 | Drive Shaft | 52T | 30 | 25 | 57 | 93.5 | 848 | |
| | 2015.05-2018.08 | 6AT/6MT | R | R | SUV 4WD G4KJ | | GDS24554 | Drive Shaft | 52T | 30 | 25 | 57 | 93.5 | 829 | |
| | 2015.05-2018.08 | 6AT/6MT | R | L/R | SUV 4WD G4KJ | | GCO24321 | Outer Joint | 52T | 30 | 20 | 57 | 93.5 | 61 | M |
| | 2015.05-2018.08 | AT/MT | R | R | SUV 4WD G4KJ | | GCI39041 | Inner Joint | | 25 | 23 | 35 | 63 | 92.5 | |
| | 2015.05-2018.08 | AT/MT | R | L/R | SUV 4WD G4KJ | | GCI24032 | Inner Joint | | 25 | 23 | 35 | 63 | 88 | |
| | 2015.05-2018.08 | 6MT | F | R | SUV FWD G4KJ | Not Facelift | GDS24479 | Drive Shaft | 52T | 30 | 28 | 73 | 94.5 | 596 | |
| | 2015.05-2018.08 | 6MT | F | R | SUV FWD G4KJ | Not For Facelift | GCO24296 | Outer Joint | 52T | 30 | 25 | 73 | 94.5 | 67 | M |
| | 2015.05-2018.08 | MT | F | L/R | SUV FWD G4KJ | | GCO81038 | Outer Joint | 52T | 30 | 36 | 73 | 94.5 | 67.5 | I |
| | 2015.05-2018.08 | MT | F | L | SUV FWD G4KJ | | GCI24144 | Inner Joint | | 28 | 35 | 41 | 61.5 | 120 | |
| | 2015.05-2018.08 | MT | F | R | SUV FWD G4KJ | | GCI81068 | Inner Joint | | 28 | 35 | 42 | | 131 | |
| | 2018.07-2020.07 | 6AT | F | L | SUV 4WD G4KJ | | GDS56170 | Drive Shaft | | 30 | 27 | 72.5 | 95 | 676 | |
| | 2018.07-2020.07 | 6AT | F | R | SUV 4WD G4KJ | | GDS56171 | Drive Shaft | | 30 | 28 | 72.5 | 95 | 600 | |
| | 2018.07-2020.07 | 6AT | F | L/R | SUV 4WD G4KJ | | GCO83174 | Outer Joint | | 30 | 34 | 72.5 | 95 | 65 | M |
| | 2018.07-2020.07 | 6AT | F | L | SUV 4WD G4KJ | | GCI83117 | Inner Joint | | 27 | 33 | 30 | 67 | 103 | |
| | 2018.07-2020.07 | 6AT | F | R | SUV 4WD G4KJ | | GCI83118 | Inner Joint | | 28 | 33 | 42 | | 129 | |
| | 2018.07-2020.07 | 6AT | R | L/R | SUV 4WD G4KJ | | GCO82582 | Outer Joint | | 30 | 20 | 57 | 95 | 48 | |
| | 2018.07-2020.07 | 6AT | R | L/R | SUV 4WD G4KJ | | GCI82201 | Inner Joint | | 25 | 20 | 35 | 62.5 | 58 | |
| 2.4 (141 kw) | 2012.09-2015.10 | 6AT | F | L | SUV 4WD G4KJ | Not For facelift | GDS24449 | Drive Shaft | 52T | 30 | 28 | 73 | 94.5 | 681 | |
| | 2012.09-2015.10 | 6AT | F | L | SUV 4WD G4KJ | For facelift | GDS83767 | Drive Shaft | 52T | 30 | 28 | 73 | 94.5 | 679 | |
| | 2012.09-2015.10 | 6AT | F | R | SUV 4WD G4KJ | Not For facelift | GDS24479 | Drive Shaft | 52T | 30 | 28 | 73 | 94.5 | 596 | |
| | 2012.09-2015.10 | 6AT | F | R | SUV 4WD G4KJ | For facelift | GDS83769 | Drive Shaft | 52T | 30 | 28 | 73 | 94.5 | 602 | |
| | 2012.09-2015.10 | AT | F | L | SUV 4WD G4KJ | | GCI24140 | Inner Joint | | 28 | 33 | 33 | 67 | 105.5 | |
| | 2012.09-2015.10 | AT | F | R | SUV 4WD G4KJ | | GCI24139 | Inner Joint | | 28 | 33 | 42 | | 129.5 | |
| | 2012.09-2015.10 | AT/MT | F | R | SUV 4WD G4KJ | | GCO24296 | Outer Joint | 52T | 30 | 25 | 73 | 94.5 | 67 | M |
| | 2012.09-2015.10 | MT | F | L/R | SUV 4WD G4KJ | | GCO24301 | Outer Joint | 52T | 30 | 35 | 73 | 94.5 | 67 | M |
| | 2012.09-2015.10 | MT | F | L | SUV 4WD G4KJ | | GCI24144 | Inner Joint | | 28 | 35 | 41 | 61.5 | 120 | |
| | 2012.09-2015.10 | MT | F | R | SUV 4WD G4KJ | | GCI81068 | Inner Joint | | 28 | 35 | 42 | | 131 | |
| | 2012.09-2015.10 | 6AT/6MT | R | L | SUV 4WD G4KJ | | GDS24555 | Drive Shaft | 52T | 30 | 25 | 57 | 93.5 | 848 | |
| | 2012.09-2015.10 | 6AT/6MT | R | R | SUV 4WD G4KJ | | GDS24554 | Drive Shaft | 52T | 30 | 25 | 57 | 93.5 | 829 | |
| | 2012.09-2015.10 | 6AT/6MT | R | L/R | SUV 4WD G4KJ | | GCO24321 | Outer Joint | 52T | 30 | 20 | 57 | 93.5 | 61 | M |
| | 2012.09-2015.10 | AT/MT | R | R | SUV 4WD G4KJ | TJ | GCI39041 | Inner Joint | | 25 | 23 | 35 | 63 | 92.5 | |
| | 2012.09-2015.10 | AT/MT | R | L/R | SUV 4WD G4KJ | DOJ | GCI24032 | Inner Joint | | 25 | 23 | 35 | 63 | 88 | |
| | 2012.09-2015.10 | MT | F | R | SUV FWD G4KJ | | GDS24479 | Drive Shaft | 52T | 30 | 28 | 73 | 94.5 | 596 | |
| | 2012.09-2015.10 | MT | F | L/R | SUV FWD G4KJ | | GCO24301 | Outer Joint | 52T | 30 | 35 | 73 | 94.5 | 67 | M |
| | 2012.09-2015.10 | MT | F | L | SUV FWD G4KJ | | GCI24144 | Inner Joint | | 28 | 35 | 41 | 61.5 | 120 | |
| | 2012.09-2015.10 | MT | F | R | SUV FWD G4KJ | | GCI81068 | Inner Joint | | 28 | 35 | 42 | | 131 | |
| 2.5 (132 kw) | 2021.07- | 6AT | F | L | SUV 4WD G4KM | | GDS56928 | Drive Shaft | | 30 | 27 | 72.5 | 95 | 692 | |
| | 2021.07- | 6AT | F | R | SUV 4WD G4KM | | GDS56929 | Drive Shaft | | 30 | 28 | 72.5 | 95 | 587 | |
| | 2021.07- | 6AT | F | L/R | SUV 4WD G4KM | | GCO83480 | Outer Joint | | 30 | 34 | 72.5 | 95 | 65 | M |
| | 2021.07- | 6AT | F | L | SUV 4WD G4KM | | GCI83117 | Inner Joint | | 27 | 33 | 30 | 67 | 103 | |
| | 2021.07- | 6AT | F | R | SUV 4WD G4KM | | GCI83118 | Inner Joint | | 28 | 33 | 42 | | 129 | |
| | 2021.07- | 6AT | F | R | SUV 4WD G4KM | | GDS87095 | Intermediate Shaft | | 28 | 27 | | | 439 | |
| | 2021.07- | AT | R | L | SUV 4WD G4KM | | GDS56177 | Drive Shaft | | 30 | 25 | 57 | 95 | 875 | |
| | 2021.07- | AT | R | R | SUV 4WD G4KM | | GDS56112 | Drive Shaft | | 30 | 25 | 57 | 95 | 831 | |
| | 2021.07- | AT | R | L/R | SUV 4WD G4KM | | GCO82582 | Outer Joint | | 30 | 20 | 57 | 95 | 48 | |
| | 2021.07- | AT | R | L/R | SUV 4WD G4KM | | GCI82201 | Inner Joint | | 25 | 20 | 35 | 62.5 | 58 | |
| | 2021.07- | 6AT | F | L | SUV FWD G4KM | | GDS56928 | Drive Shaft | | 30 | 27 | 72.5 | 95 | 692 | |
| | 2021.07- | 6AT | F | R | SUV FWD G4KM | | GDS56929 | Drive Shaft | | 30 | 28 | 72.5 | 95 | 587 | |
| | 2021.07- | 6AT | F | L/R | SUV FWD G4KM | | GCO83480 | Outer Joint | | 30 | 34 | 72.5 | 95 | 65 | M |
| | 2021.07- | 6AT | F | L | SUV FWD G4KM | | GCI83117 | Inner Joint | | 27 | 33 | 30 | 67 | 103 | |
| | 2021.07- | 6AT | F | R | SUV FWD G4KM | | GCI83118 | Inner Joint | | 28 | 33 | 42 | | 129 | |
| | 2021.07- | 6AT | F | R | SUV FWD G4KM | | GDS87095 | Intermediate Shaft | | 28 | 27 | | | 439 | |
| 2.7 (125 kw) | 2006.03-2012.12 | 4AT | F | L | SUV 4WD G6EA | Date to:2008.06,For vehicles with 3rd seating row | GDS24195 | Drive Shaft | 52T | 30 | 28 | 73 | 97 | 659 | |
| | 2006.03-2012.12 | 4AT | F | L | SUV 4WD G6EA | Date from:2006.09 | GCI24021 | Inner Joint | | 27 | 35 | 41 | 61.5 | 107 | |
| | 2006.03-2012.12 | 4AT | F | R | SUV 4WD G6EA | | GDS61351 | Intermediate Shaft | | 28 | 27 | | | 422.5 | |
| | 2006.03-2012.12 | 4AT/5AT/5MT | F | R | SUV 4WD G6EA | Non-Original design,Bellows Material:nitrile butadiene rubber | GDS24117 | Drive Shaft | 52T | 30 | 28 | 73 | 97 | 611 | |
| | 2006.03-2012.12 | 4AT/5AT/5MT | F | L/R | SUV 4WD G6EA | Non-Original design,Bellows Material:nitrile butadiene rubber | GCO24072 | Outer Joint | 52T | 30 | 36 | 73 | 97 | 67.5 | I |
| | 2006.03-2012.12 | 4AT/5AT/5MT | F | L/R | SUV 4WD G6EA | Original design,Bellows Material:nitrile butadiene rubber | GCO24327 | Outer Joint | 52T | 30 | 36 | 73 | 97 | 67.5 | I |
| | 2006.03-2012.12 | 4AT/5AT/5MT | F | L | SUV 4WD G6EA | | GCI24095 | Inner Joint | | 28 | 35 | 41 | 71 | 116.5 | |
| | 2006.03-2012.12 | 4AT/5AT/5MT | F | R | SUV 4WD G6EA | TJ | GCI24022 | Inner Joint | | 28 | 35 | 42 | | 118 | |
| | 2006.03-2012.12 | 5AT/5MT | F | L | SUV 4WD G6EA | | GDS24462 | Drive Shaft | 52T | 30 | 28 | 73 | 97 | 668 | |
| | 2006.03-2012.12 | 5MT | F | R | SUV 4WD G6EA | Date to:2006.08 | GDS39250 | Drive Shaft | 52T | 30 | 28 | 73 | 97 | 611 | |
| | 2006.03-2012.12 | 5MT | F | R | SUV 4WD G6EA | Date fron:2006.09,Date to:2009.06 | GDS87061 | Intermediate Shaft | | 28 | 28 | | | 423 | |
| | 2006.03-2012.12 | 4AT/5AT/5MT | R | L/R | SUV 4WD G6EA | | GDS24549 | Drive Shaft | 52T | 30 | 27 | 60 | 97.5 | 831 | |

| | YEAR | TRANSM. | F/R | L/R | BODY STYLE & DRIVE TYPE & ENGINE | REMARKS | G-AP Ref. | PRODUCT | ABS | Technical Specifications A | B | C | H | L | P |
|---|---|---|---|---|---|---|---|---|---|---|---|---|---|---|---|
| **HYUNDAI** | | | | | | | | | | | | | | | |
| **Santa Fé** | | | | | | | | | | | | | | | |
| 2.7 (125 kw) | 2006.03-2012.12 | 4AT/5AT/5MT | R | L/R | SUV 4WD G6EA | | GCO24323 | Outer Joint | 52T | 30 | 23 | 60 | 97.5 | 63.5 | M |
| | 2006.03-2012.12 | 4AT/5AT/5MT | R | L/R | SUV 4WD G6EA | | GCI24129 | Inner Joint | | 27 | 23 | 41 | 62 | 87 | |
| | 2006.03-2012.12 | 4AT | F | R | SUV FWD G6EA | | GDS82711 | Intermediate Shaft | | 28 | 27 | | | 423 | |
| | 2006.03-2012.12 | 4AT/5AT/5MT | F | R | SUV FWD G6EA | Non-Original design,Bellows Material:nitrile butadiene rubber | GDS24117 | Drive Shaft | 52T | 30 | 28 | 73 | 97 | 611 | |
| | 2006.03-2012.12 | 4AT/5AT/5MT | F | L/R | SUV FWD G6EA | Non-Original design,Bellows Material:nitrile butadiene rubber | GCO24072 | Outer Joint | 52T | 30 | 36 | 73 | 97 | 67.5 | I |
| | 2006.03-2012.12 | 4AT/5AT/5MT | F | L/R | SUV FWD G6EA | Original design,Bellows Material:nitrile butadiene rubber | GCO24327 | Outer Joint | 52T | 30 | 36 | 73 | 97 | 67.5 | I |
| | 2006.03-2012.12 | 4AT/5AT/5MT | F | L | SUV FWD G6EA | | GCI24095 | Inner Joint | | 28 | 35 | 41 | 71 | 116.5 | |
| | 2006.03-2012.12 | 4AT/5AT/5MT | F | R | SUV FWD G6EA | TJ | GCI24022 | Inner Joint | | 28 | 35 | 42 | | 118 | |
| | 2006.03-2012.12 | 5AT/5MT | F | L | SUV FWD G6EA | | GDS24462 | Drive Shaft | 52T | 30 | 28 | 73 | 97 | 668 | |
| 2.7 (127 kw) | 2001.02-2006.03 | 4AT | F | L | SUV 4WD G6BA | | GCI24025 | Inner Joint | | 27 | 26 | 41 | 62.5 | 89 | |
| | 2001.02-2006.03 | 4AT/5MT | F | L | SUV 4WD G6BA | | GDS24218 | Drive Shaft | 52T | 27 | 27 | 60 | 95 | 648 | |
| | 2001.02-2006.03 | 4AT/5MT | F | R | SUV 4WD G6BA | | GDS24217 | Drive Shaft | 52T | 27 | 26 | 60 | 95 | 609 | |
| | 2001.02-2006.03 | 4AT/5MT | F | L/R | SUV 4WD G6BA | | GCO24091 | Outer Joint | 52T | 27 | 26 | 60 | 95 | 69 | M |
| | 2001.02-2006.03 | 4AT/5MT | R | L/R | SUV 4WD G6BA | | GDS24556 | Drive Shaft | 52T | 27 | 27 | 60 | 95 | 823 | |
| | 2001.02-2006.03 | 4AT/5MT | R | L/R | SUV 4WD G6BA | | GCO24319 | Outer Joint | 52T | 27 | 25 | 60 | 95 | 65 | M |
| | 2001.02-2006.03 | 4AT/5MT | R | L/R | SUV 4WD G6BA | | GCI24001 | Inner Joint | | 27 | 25 | 41 | 62.8 | 92.5 | |
| | 2001.02-2006.03 | 4AT/5MT | R | L/R | SUV 4WD G6BA | | GCI24044 | Inner Joint | | 27 | 25 | 41 | 62 | 87 | |
| 2.7 (129 kw) | 2002.09-2004.12 | 4AT | F | L | SUV 4WD G6BA | | GDS24218 | Drive Shaft | 52T | 27 | 27 | 60 | 95 | 648 | |
| | 2002.09-2004.12 | 4AT | F | R | SUV 4WD G6BA | | GDS24217 | Drive Shaft | 52T | 27 | 26 | 60 | 95 | 609 | |
| | 2002.09-2004.12 | 4AT | F | L/R | SUV 4WD G6BA | | GCO24091 | Outer Joint | 52T | 27 | 26 | 60 | 95 | 69 | M |
| | 2002.09-2004.12 | 4AT | F | L | SUV 4WD G6BA | | GCI24025 | Inner Joint | | 27 | 26 | 41 | 62.5 | 89 | |
| | 2002.09-2004.12 | 4AT | R | L/R | SUV 4WD G6BA | | GDS24556 | Drive Shaft | 52T | 27 | 27 | 60 | 95 | 823 | |
| | 2002.09-2004.12 | 4AT | R | L/R | SUV 4WD G6BA | | GCO24319 | Outer Joint | 52T | 27 | 25 | 60 | 95 | 65 | M |
| | 2002.09-2004.12 | 4AT/5MT | R | L/R | SUV 4WD G6BA | | GCI24001 | Inner Joint | | 27 | 25 | 41 | 62.8 | 92.5 | |
| | 2002.09-2004.12 | 4AT/5MT | R | L/R | SUV 4WD G6BA | | GCI24044 | Inner Joint | | 27 | 25 | 41 | 62 | 87 | |
| | 2004.08-2006.03 | AT | F | R | SUV FWD G6BA | | GDS24117 | Drive Shaft | 52T | 30 | 28 | 73 | 97 | 611 | |
| | 2004.08-2006.03 | AT | F | R | SUV FWD G6BA | | GCI24022 | Inner Joint | | 28 | 35 | 42 | | 118 | |
| 2.7 (132 kw) | 2001.03-2005.12 | AT | F | R | SUV 4WD G6EA | | GDS24217 | Drive Shaft | 52T | 27 | 26 | 60 | 95 | 609 | |
| | 2001.03-2005.12 | AT | F | L/R | SUV 4WD G6EA | | GCO24091 | Outer Joint | 52T | 27 | 26 | 60 | 95 | 69 | M |
| | 2001.03-2005.12 | AT | R | L/R | SUV 4WD G6EA | | GCO24319 | Outer Joint | 52T | 27 | 25 | 60 | 95 | 65 | M |
| | 2001.03-2005.12 | AT | R | L/R | SUV 4WD G6EA | | GCI24001 | Inner Joint | | 27 | 25 | 41 | 62.8 | 92.5 | |
| 2.7 (139 kw) | 2006.03-2009.12 | 4AT | F | L | SUV 4WD G6EA | Date from:2006.01,Date to:2008.06 | GDS24195 | Drive Shaft | 52T | 30 | 28 | 73 | 97 | 659 | |
| | 2006.03-2009.12 | 4AT | F | L | SUV 4WD G6EA | Date from:2006.09 | GCI24021 | Inner Joint | | 27 | 35 | 41 | 61.5 | 107 | |
| | 2006.03-2009.12 | 4AT | F | R | SUV 4WD G6EA | | GDS61351 | Intermediate Shaft | | 28 | 27 | | | 422.5 | |
| | 2006.03-2009.12 | 4AT/5MT | F | L | SUV 4WD G6EA | Transmission:6MT,Date to:2008.12,For vehicles with 3rd sealing ring,Transmission:6MT,Date to:2008.12 | GDS24459 | Drive Shaft | 52T | 30 | 28 | 65 | 95 | 657 | |
| | 2006.03-2009.12 | 4AT/5MT | F | R | SUV 4WD G6EA | Non-Original design,Bellows Material:nitrile butadiene rubber | GDS24117 | Drive Shaft | 52T | 30 | 28 | 73 | 97 | 611 | |
| | 2006.03-2009.12 | 4AT/5MT | F | R | SUV 4WD G6EA | Date from:2006.01,Date to:2006.08 | GDS39250 | Drive Shaft | 52T | 30 | 28 | 73 | 97 | 611 | |
| | 2006.03-2009.12 | 4AT/5MT | F | L/R | SUV 4WD G6EA | Non-Original design,Bellows Material:nitrile butadiene rubber | GCO24072 | Outer Joint | 52T | 30 | 36 | 73 | 97 | 67.5 | I |
| | 2006.03-2009.12 | 4AT/5MT | F | L/R | SUV 4WD G6EA | Original design,Bellows Material:nitrile butadiene rubber | GCO24327 | Outer Joint | 52T | 30 | 36 | 73 | 97 | 67.5 | I |
| | 2006.03-2009.12 | 4AT/5MT | F | L | SUV 4WD G6EA | | GCI24095 | Inner Joint | | 28 | 35 | 41 | 71 | 116.5 | |
| | 2006.03-2009.12 | 4AT/5MT | F | R | SUV 4WD G6EA | TJ | GCI24022 | Inner Joint | | 28 | 35 | 42 | | 118 | |
| | 2006.03-2009.12 | 5MT | F | L | SUV 4WD G6EA | | GDS24462 | Drive Shaft | 52T | 30 | 28 | 73 | 97 | 668 | |
| | 2006.03-2009.12 | 5MT | F | R | SUV 4WD G6EA | Date from:2006.09,Date to:2009.06 | GDS87061 | Intermediate Shaft | | 28 | 28 | | | 423 | |
| | 2006.03-2009.12 | 4AT/5MT | R | L/R | SUV 4WD G6EA | | GDS24549 | Drive Shaft | 52T | 30 | 27 | 60 | 97.5 | 831 | |
| | 2006.03-2009.12 | 4AT/5MT | R | L/R | SUV 4WD G6EA | | GCO24323 | Outer Joint | 52T | 30 | 23 | 60 | 97.5 | 63.5 | M |
| | 2006.03-2009.12 | 4AT/5MT | R | L/R | SUV 4WD G6EA | | GCI24129 | Inner Joint | | 27 | 23 | 41 | 62 | 87 | |
| | 2006.03-2009.12 | 4AT | F | R | SUV FWD G6EA | | GDS82711 | Intermediate Shaft | | 28 | 27 | | | 423 | |
| | 2006.03-2009.12 | AT | F | L | SUV FWD G6EA | TJ,Bellows Material:nitrile butadiene rubber | GDS24116 | Drive Shaft | 52T | 30 | 27 | 73 | 97 | 667 | |
| | 2006.03-2009.12 | AT/MT | F | R | SUV FWD G6EA | TJ,Bellows Material:nitrile butadiene rubber | GDS24117 | Drive Shaft | 52T | 30 | 28 | 73 | 97 | 611 | |
| | 2006.03-2009.12 | AT/MT | F | L/R | SUV FWD G6EA | Non-Original design,Bellows Material:nitrile butadiene rubber | GCO24072 | Outer Joint | 52T | 30 | 36 | 73 | 97 | 67.5 | I |
| | 2006.03-2009.12 | AT/MT | F | L/R | SUV FWD G6EA | Original design,Bellows Material:nitrile butadiene rubber | GCO24327 | Outer Joint | 52T | 30 | 36 | 73 | 97 | 67.5 | I |
| | 2006.03-2009.12 | AT/MT | F | R | SUV FWD G6EA | TJ | GCI24022 | Inner Joint | | 28 | 35 | 42 | | 118 | |
| | 2006.03-2009.12 | MT | F | L | SUV FWD G6EA | PTJ,Bellows Material:nitrile butadiene rubber | GDS24462 | Drive Shaft | 52T | 30 | 28 | 73 | 97 | 668 | |
| | 2006.03-2009.12 | MT | F | L | SUV FWD G6EA | PTJ | GCI24095 | Inner Joint | | 28 | 35 | 41 | 71 | 116.5 | |
| 2.7 (147 kw) | 2007.01-2012.12 | 4AT | F | L | SUV 4WD G6EA | | GDS24116 | Drive Shaft | 52T | 30 | 27 | 73 | 97 | 667 | |
| | 2007.01-2012.12 | 4AT | F | R | SUV 4WD G6EA | | GDS24117 | Drive Shaft | 52T | 30 | 28 | 73 | 97 | 611 | |
| | 2007.01-2012.12 | 4AT | F | L | SUV 4WD G6EA | | GCI24021 | Inner Joint | | 27 | 35 | 41 | 61.5 | 107 | |
| | 2007.01-2012.12 | 4AT | F | R | SUV 4WD G6EA | | GDS61351 | Intermediate Shaft | | 28 | 27 | | | 422.5 | |
| | 2007.01-2012.12 | 5MT | F | R | SUV 4WD G6EA | Date to:2009.05 | GDS87061 | Intermediate Shaft | | 28 | 28 | | | 423 | |
| | 2007.01-2012.12 | 4AT | R | L/R | SUV 4WD G6EA | | GDS24549 | Drive Shaft | 52T | 30 | 27 | 60 | 97.5 | 831 | |
| 3.5 (183 kw) | 2019.07-2020.07 | 8AT | F | R | SUV 4WD G6DC | | GCO82721 | Outer Joint | | 30 | 35 | 72.5 | 94.5 | 67 | M |
| | 2019.07-2020.07 | 8AT | F | L | SUV 4WD G6DC | Not For facelift | GCI24145 | Inner Joint | | 28 | 35 | 33 | 67 | 105.5 | |
| | 2019.07-2020.07 | 8AT | F | L | SUV 4WD G6DC | For facelift | GCI82923 | Inner Joint | | 28 | 35 | 33 | 67 | 101 | |
| | 2019.07-2020.07 | 8AT | F | R | SUV 4WD G6DC | | GDS87080 | Intermediate Shaft | | 28 | 28 | | | 422 | |
| | 2019.07-2020.07 | 8DCT | F | L/R | SUV 4WD G6DC | Facelift | GCO83443 | Outer Joint | | 30 | 35 | 72.5 | 94.5 | 67 | M |

| | YEAR | TRANSM. | F/R | L/R | BODY STYLE & DRIVE TYPE & ENGINE | REMARKS | G-AP Ref. | PRODUCT | ABS | Technical Specifications A | B | C | H | L | P |
|---|---|---|---|---|---|---|---|---|---|---|---|---|---|---|---|
| **HYUNDAI** | | | | | | | | | | | | | | | |
| **Santa Fé** | | | | | | | | | | | | | | | |
| 3.5 (183 kw) | 2019.07-2020.07 | 8DCT/8AT | F | R | SUV 4WD G6DC | | GCI82132 | Inner Joint | | 28 | 35 | 42 | | 131.5 | |
| | 2019.07-2020.07 | 8AT | R | L | SUV 4WD G6DC | Facelift | GDS56177 | Drive Shaft | | 30 | 25 | 57 | 95 | 875 | |
| | 2019.07-2020.07 | 8AT | R | R | SUV 4WD G6DC | Facelift | GDS56112 | Drive Shaft | | 30 | 25 | 57 | 95 | 831 | |
| | 2019.07-2020.07 | 8AT | R | L/R | SUV 4WD G6DC | | GCO82582 | Outer Joint | | 30 | 20 | 57 | 95 | 48 | |
| | 2019.07-2020.07 | 8AT | R | L/R | SUV 4WD G6DC | | GCI82201 | Inner Joint | | 25 | 20 | 35 | 62.5 | 58 | |
| 3.5 (203 kw) | 2011.08-2012.12 | 6AT | F | L | SUV 4WD G6DC | | GDS24233 | Drive Shaft | 52T | 30 | 28 | 73 | 97 | 659 | |
| | 2011.08-2012.12 | 6AT | F | R | SUV 4WD G6DC | | GDS24477 | Drive Shaft | 52T | 30 | 28 | 73 | 97 | 599 | |
| | 2011.08-2012.12 | 6AT | F | R | SUV 4WD G6DC | | GCO24072 | Outer Joint | 52T | 30 | 36 | 73 | 97 | 67.5 | I |
| | 2011.08-2012.12 | 6AT | F | L | SUV 4WD G6DC | | GCI24066 | Inner Joint | | 28 | 35 | 33 | 67.5 | 100 | |
| | 2011.08-2012.12 | 6AT | F | R | SUV 4WD G6DC | | GCI24156 | Inner Joint | | 28 | 35 | 42 | | 129.5 | |
| | 2011.08-2012.12 | 6AT | R | L/R | SUV 4WD G6DC | | GCI24010 | Inner Joint | | 25 | 22 | 35 | 63 | 87 | |
| 3.5 (204 kw) | 2011.08-2012.12 | 6AT | F | L | SUV 4WD G6DC | | GDS24233 | Drive Shaft | 52T | 30 | 28 | 73 | 97 | 659 | |
| | 2011.08-2012.12 | 6AT | F | R | SUV 4WD G6DC | | GDS24477 | Drive Shaft | 52T | 30 | 28 | 73 | 97 | 599 | |
| | 2011.08-2012.12 | 6AT | F | R | SUV 4WD G6DC | | GCO24072 | Outer Joint | 52T | 30 | 36 | 73 | 97 | 67.5 | I |
| | 2011.08-2012.12 | 6AT | F | L | SUV 4WD G6DC | | GCI24066 | Inner Joint | | 28 | 35 | 33 | 67.5 | 100 | |
| | 2011.08-2012.12 | 6AT | F | R | SUV 4WD G6DC | | GCI24156 | Inner Joint | | 28 | 35 | 42 | | 129.5 | |
| | 2011.08-2012.12 | 6AT | R | L/R | SUV 4WD G6DC | | GCI24010 | Inner Joint | | 25 | 22 | 35 | 63 | 87 | |
| 3.5 (206 kw) | 2018.07- | 8AT | F | R | SUV 4WD G6DC | Date to:2020.04 | GDS87080 | Intermediate Shaft | | 28 | 28 | | | 422 | |
| **Santamo** | | | | | | | | | | | | | | | |
| 2.0 (102 kw) | 1999.05-2002.10 | 4AT/5MT | F | R | MPV 4WD G4CPDOHC | | GCO39009 | Outer Joint | | 25 | 30 | 54 | 95 | 60.5 | M |
| | 1999.05-2002.10 | 4AT/5MT | F | R | MPV 4WD G4CPDOHC | | GCI39005 | Inner Joint | | 25 | 30 | 35 | 62.8 | 92.5 | |
| **Scoupe** | | | | | | | | | | | | | | | |
| 1.5 (65 kw) | 1992.07-1996.04 | AT/MT | F | L | Coupe FWD G4EK | Date from:1992.11 | GCO39032 | Outer Joint | | 25 | 23 | 50 | 95 | 60.5 | M |
| | 1992.07-1996.04 | AT/MT | F | L | Coupe FWD G4EK | Date from:1992.11 | GCO39054 | Outer Joint | | 25 | 23 | 50 | 96 | 59 | M |
| | 1992.07-1996.04 | AT/MT | F | R | Coupe FWD G4EK | Date from:1992.11 | GCO39033 | Outer Joint | | 25 | 25 | 50 | 95 | 65 | M |
| | 1992.07-1996.04 | AT/MT | F | R | Coupe FWD G4EK | Date from:1992.11 | GCO89003 | Outer Joint | | 25 | 25 | 50 | 95 | 64.5 | M |
| | 1992.07-1996.04 | AT/MT | F | L/R | Coupe FWD G4EK | Date from:1992.07,Date to:1992.11 | GCO89004 | Outer Joint | | 25 | 22 | 50 | 95 | 58 | M |
| 1.5 (85 kw) | 1992.08-1996.04 | AT/MT | F | L | Coupe FWD G4EKT | Date from:1992.11 | GCO39032 | Outer Joint | | 25 | 23 | 50 | 95 | 60.5 | M |
| | 1992.08-1996.04 | AT/MT | F | L | Coupe FWD G4EKT | Date from:1992.11 | GCO39054 | Outer Joint | | 25 | 23 | 50 | 96 | 59 | M |
| | 1992.08-1996.04 | AT/MT | F | R | Coupe FWD G4EKT | | GCO39033 | Outer Joint | | 25 | 25 | 50 | 95 | 65 | M |
| | 1992.08-1996.04 | AT/MT | F | R | Coupe FWD G4EKT | | GCO39034 | Outer Joint | | 25 | 25 | 50 | 94.5 | 65 | M |
| | 1992.08-1996.04 | AT/MT | F | R | Coupe FWD G4EKT | Date from:1992.11 | GCO89003 | Outer Joint | | 25 | 25 | 50 | 95 | 64.5 | M |
| | 1992.08-1996.04 | AT/MT | F | L/R | Coupe FWD G4EKT | Date from:1992.08,Date to:1992.11 | GCO89004 | Outer Joint | | 25 | 22 | 50 | 95 | 58 | M |
| **Solaris** | | | | | | | | | | | | | | | |
| 1.4 (74 kw) | 2017.01- | 4AT/5MT | F | L/R | Saloon FWD G4LC | | GCO24131 | Outer Joint | 48T | 25 | 22 | 52.5 | 93.5 | 59.5 | M |
| | 2017.01- | 6AT | F | L | Saloon FWD G4LC | Date from:2017.11 | GDS84072 | Drive Shaft | | 25 | 27 | 52.5 | 94.5 | 656 | |
| | 2017.01- | 6AT | F | R | Saloon FWD G4LC | Date from:2017.11 | GDS84073 | Drive Shaft | | 25 | 27 | 52.5 | 94.5 | 916 | |
| | 2017.01- | 6AT | F | L/R | Saloon FWD G4LC | | GCI24065 | Inner Joint | | 27 | 22 | 30 | 68 | 77 | |
| | 2017.01- | 6AT/6MT | F | L/R | Saloon FWD G4LC | Date From:2017.11 | GCO82443 | Outer Joint | | 25 | 22 | 52.5 | 94.5 | 54 | M |
| | 2017.01- | 6MT | F | L | Saloon FWD G4LC | Date From:2017.11 | GDS83763 | Drive Shaft | | 25 | 25 | 52.5 | 94.5 | 675 | |
| | 2017.01- | 6MT | F | R | Saloon FWD G4LC | Date From:2017.11 | GDS83762 | Drive Shaft | | 25 | 25 | 52.5 | 94.5 | 920 | |
| | 2017.01- | 6MT | F | L/R | Saloon FWD G4LC | | GCI24137 | Inner Joint | | 25 | 22 | 41 | 62.5 | 86 | |
| 1.6 (90 kw) | 2010.12-2017.12 | 4AT/6AT/5MT/6MT | F | L | Hatchback FWD G4FC | with ABS | GDS24246 | Drive Shaft | 48T | 25 | 25 | 52.5 | 93.5 | 652 | |
| | 2010.12-2017.12 | 4AT/6AT/5MT/6MT | F | R | Hatchback FWD G4FC | with ABS | GDS24247 | Drive Shaft | 48T | 25 | 25 | 52.5 | 93.5 | 927 | |
| | 2010.12-2017.12 | 4AT/6AT/5MT/6MT | F | L/R | Hatchback FWD G4FC | with ABS | GCO24131 | Outer Joint | 48T | 25 | 22 | 52.5 | 93.5 | 59.5 | M |
| | 2010.12-2017.12 | 4AT/6AT/5MT/6MT | F | L/R | Hatchback FWD G4FC | | GCI39052 | Inner Joint | | 25 | 22 | 41 | 63 | 86 | |
| | 2010.12-2017.12 | 6MT | F | L | Hatchback FWD G4FC | without ABS | GDS24260 | Drive Shaft | | 25 | 25 | 52.5 | 93.5 | 652 | |
| | 2010.12-2017.12 | 6MT | F | R | Hatchback FWD G4FC | without ABS | GDS24259 | Drive Shaft | | 25 | 25 | 52.5 | 93.5 | 927 | |
| | 2010.12-2017.12 | 6MT | F | L/R | Hatchback FWD G4FC | without ABS | GCO24136 | Outer Joint | | 25 | 22 | 52.5 | 93.5 | 59.5 | M |
| | 2017.01- | 6AT | F | L | Saloon FWD G4FG | Date from:2017.11 | GDS83963 | Drive Shaft | | 25 | 27 | 52.5 | 94.5 | 641 | |
| | 2017.01- | 6AT | F | L | Saloon FWD G4FG | Date to:2017.10 | GDS83966 | Drive Shaft | 48T | 25 | 27 | 52.5 | 92.5 | 640 | |
| | 2017.01- | 6AT | F | R | Saloon FWD G4FG | Date from:2017.11 | GDS83965 | Drive Shaft | | 25 | 27 | 52.5 | 94.5 | 930 | |
| | 2017.01- | 6AT | F | R | Saloon FWD G4FG | Date to:2017.10 | GDS83967 | Drive Shaft | 48T | 25 | 27 | 52.5 | 92.5 | 930 | |
| | 2017.01- | 6AT | F | L/R | Saloon FWD G4FG | Date to:2017.10 | GCO39261 | Outer Joint | 48T | 25 | 22 | 52.5 | 92.5 | 54.5 | M |
| | 2017.01- | 6AT | F | L/R | Saloon FWD G4FG | Date from:2017.11 | GCO82443 | Outer Joint | | 25 | 22 | 52.5 | 94.5 | 54 | M |
| | 2017.01- | 6AT | F | L/R | Saloon FWD G4FG | | GCI24065 | Inner Joint | | 27 | 22 | 30 | 68 | 77 | |
| | 2017.01- | 6MT | F | L | Saloon FWD G4FG | Date to:2017.09 | GDS83961 | Drive Shaft | 48T | 25 | 25 | 52.5 | 94.5 | 660 | |
| | 2017.01- | 6MT | F | L | Saloon FWD G4FG | Date from:2017.10 | GDS83962 | Drive Shaft | | 25 | 25 | 52.5 | 94.5 | 660 | |
| | 2017.01- | 6MT | F | R | Saloon FWD G4FG | Date to:2017.09 | GDS83873 | Drive Shaft | 48T | 25 | 25 | 52.5 | 92.5 | 934 | |
| | 2017.01- | 6MT | F | R | Saloon FWD G4FG | Date from:2017.10 | GDS83964 | Drive Shaft | | 25 | 25 | 52.5 | 94.5 | 935 | |
| | 2017.01- | 6MT | F | L | Saloon FWD G4FG | Date to:2017.09 | GCO24131 | Outer Joint | 48T | 25 | 22 | 52.5 | 93.5 | 59.5 | M |
| | 2017.01- | 6MT | F | R | Saloon FWD G4FG | Date from:2017.10 | GCO39261 | Outer Joint | 48T | 25 | 22 | 52.5 | 92.5 | 54.5 | M |
| | 2017.01- | 6MT | F | L/R | Saloon FWD G4FG | Date from:2017.10 | GCO82443 | Outer Joint | | 25 | 22 | 52.5 | 94.5 | 54 | M |
| | 2017.01- | 6MT | F | L/R | Saloon FWD G4FG | | GCI24137 | Inner Joint | | 25 | 22 | 41 | 62.5 | 86 | |
| 1.6 (91 kw) | 2010.11-2017.12 | AT | F | L | Saloon FWD G4FC | | GDS24246 | Drive Shaft | 48T | 25 | 25 | 52.5 | 93.5 | 652 | |

| | YEAR | TRANSM. | F/R | L/R | BODY STYLE & DRIVE TYPE & ENGINE | REMARKS | G-AP Ref. | PRODUCT | ABS | Technical Specifications A | B | C | H | L | P |
|---|---|---|---|---|---|---|---|---|---|---|---|---|---|---|---|
| **HYUNDAI** | | | | | | | | | | | | | | | |
| **Solaris** | | | | | | | | | | | | | | | |
| 1.6 (91 kw) | 2010.11-2017.12 | AT/MT | F | R | Saloon FWD G4FC | | GDS24247 | Drive Shaft | 48T | 25 | 25 | 52.5 | 93.5 | 927 | |
| | 2010.11-2017.12 | AT/MT | F | L/R | Saloon FWD G4FC | | GCO24131 | Outer Joint | 48T | 25 | 22 | 52.5 | 93.5 | 59.5 | M |
| | 2010.11-2017.12 | AT/MT | F | L/R | Saloon FWD G4FC | | GCI39052 | Inner Joint | | 25 | 22 | 41 | 63 | 86 | |
| | 2010.11-2017.12 | MT | F | L | Saloon FWD G4FC | | GDS24260 | Drive Shaft | | 25 | 25 | 52.5 | 93.5 | 652 | |
| | 2010.11-2017.12 | MT | F | L/R | Saloon FWD G4FC | | GCO24136 | Outer Joint | | 25 | 22 | 52.5 | 93.5 | 59.5 | M |
| **Sonata** | | | | | | | | | | | | | | | |
| 1.8 (72 kw) | 1993.06-1998.06 | | F | R | Saloon FWD G4CM | | GCO39034 | Outer Joint | | 25 | 25 | 50 | 94.5 | 65 | M |
| | 1993.06-1998.06 | | F | R | Saloon FWD G4CM | | GCO99038 | Outer Joint | 47T | 25 | 25 | 50 | 94.5 | 65 | M |
| 2.0 (70 kw) | 1996.07-1998.05 | | F | R | Saloon FWD G4EP | | GCO39033 | Outer Joint | | 25 | 25 | 50 | 95 | 65 | M |
| | 1996.07-1998.05 | | F | R | Saloon FWD G4EP | | GCO39034 | Outer Joint | | 25 | 25 | 50 | 94.5 | 65 | M |
| | 1996.07-1998.05 | | F | R | Saloon FWD G4EP | | GCO99038 | Outer Joint | 47T | 25 | 25 | 50 | 94.5 | 65 | M |
| | 1996.07-1998.05 | | F | | Saloon FWD G4EP | | GCO39032 | Outer Joint | | 25 | 23 | 50 | 95 | 60.5 | M |
| 2.0 (77 kw) | 1993.06-1996.06 | | F | R | Saloon FWD G4CP | | GCO39033 | Outer Joint | | 25 | 25 | 50 | 95 | 65 | M |
| | 1993.06-1996.06 | | F | R | Saloon FWD G4CP | | GCO39034 | Outer Joint | | 25 | 25 | 50 | 94.5 | 65 | M |
| | 1993.06-1996.06 | | F | R | Saloon FWD G4CP | | GCO99038 | Outer Joint | 47T | 25 | 25 | 50 | 94.5 | 65 | M |
| | 1993.06-1996.06 | | F | | Saloon FWD G4CP | | GCO39032 | Outer Joint | | 25 | 23 | 50 | 95 | 60.5 | M |
| 2.0 (92 kw) | 1996.06-1998.06 | AT | F | R | Saloon FWD G4CP-DM | | GCO39033 | Outer Joint | | 25 | 25 | 50 | 95 | 65 | M |
| | 1996.06-1998.06 | AT/MT | F | | Saloon FWD G4CP-DM | | GCO39032 | Outer Joint | | 25 | 23 | 50 | 95 | 60.5 | M |
| | 1996.06-1998.06 | | F | R | Saloon FWD G4CP-DM | | GCO99038 | Outer Joint | 47T | 25 | 25 | 50 | 94.5 | 65 | M |
| 2.0 (96 kw) | 2001.10-2004.11 | AT | F | L | Saloon FWD G4JP | | GDS24124 | Drive Shaft | | 27 | 25 | 60 | 95 | 661 | |
| | 2001.10-2004.11 | AT | F | L | Saloon FWD G4JP | | GDS27015 | Drive Shaft | 47T | 27 | 25 | 60 | 95 | 661 | |
| | 2001.10-2004.11 | AT | F | R | Saloon FWD G4JP | | GDS24123 | Drive Shaft | | 27 | 25 | 60 | 95 | 974 | |
| | 2001.10-2004.11 | AT | F | R | Saloon FWD G4JP | | GDS27016 | Drive Shaft | 47T | 27 | 25 | 60 | 95 | 974 | |
| | 2001.10-2004.11 | AT | F | L/R | Saloon FWD G4JP | | GCO24027 | Outer Joint | 47T | 27 | 23 | 60 | 95 | 63.5 | M |
| | 2001.10-2004.11 | AT | F | L/R | Saloon FWD G4JP | | GCO27008 | Outer Joint | | 27 | 23 | 60 | 95 | 63.5 | M |
| | 2001.10-2004.11 | AT | F | L/R | Saloon FWD G4JP | | GCI24008 | Inner Joint | | 25 | 23 | 41 | 63 | 92.5 | |
| | 2001.10-2004.11 | MT | F | L | Saloon FWD G4JP | Date To:2003.07 | GDS24014 | Drive Shaft | 47T | 27 | 27 | 60 | 95 | 659 | |
| | 2001.10-2004.11 | MT | F | R | Saloon FWD G4JP | Date To:2003.07 | GDS24015 | Drive Shaft | 47T | 27 | 27 | 60 | 95 | 974 | |
| | 2001.10-2004.11 | MT | F | R | Saloon FWD G4JP | Date To:2003.07 | GDS27002 | Drive Shaft | | 27 | 27 | 60 | 95 | 974 | |
| | 2001.10-2004.11 | MT | F | R | Saloon FWD G4JP | GrooveType:Middle | GCO27009 | Outer Joint | | 27 | 25 | 60 | 95 | 63.5 | M |
| | 2001.10-2004.11 | MT | F | L/R | Saloon FWD G4JP | | GCO24029 | Outer Joint | 47T | 27 | 25 | 60 | 95 | 63.5 | M |
| | 2001.10-2004.11 | MT | F | L/R | Saloon FWD G4JP | GrooveType:Inner | GCO39104 | Outer Joint | | 27 | 25 | 60 | 97 | 63.5 | I |
| | 2001.10-2004.11 | MT | F | R | Saloon FWD G4JP | Date To:2003.07 | GCI27001 | Inner Joint | | 27 | 25 | 41 | 62.5 | 93 | |
| | 2001.10-2004.11 | MT | F | L/R | Saloon FWD G4JP | for OE No.:4950538E00 | GCI24001 | Inner Joint | | 27 | 25 | 41 | 62.8 | 92.5 | |
| 2.0 (100 kw) | 1998.06-2001.10 | AT | F | L | Saloon FWD G4JP | | GDS24124 | Drive Shaft | | 27 | 25 | 60 | 95 | 661 | |
| | 1998.06-2001.10 | AT | F | L | Saloon FWD G4JP | | GDS27015 | Drive Shaft | 47T | 27 | 25 | 60 | 95 | 661 | |
| | 1998.06-2001.10 | AT | F | R | Saloon FWD G4JP | | GDS24123 | Drive Shaft | | 27 | 25 | 60 | 95 | 974 | |
| | 1998.06-2001.10 | AT | F | R | Saloon FWD G4JP | | GDS27016 | Drive Shaft | 47T | 27 | 25 | 60 | 95 | 974 | |
| | 1998.06-2001.10 | AT | F | L/R | Saloon FWD G4JP | | GCO24027 | Outer Joint | 47T | 27 | 23 | 60 | 95 | 63.5 | M |
| | 1998.06-2001.10 | AT | F | L/R | Saloon FWD G4JP | | GCO27008 | Outer Joint | | 27 | 23 | 60 | 95 | 63.5 | M |
| | 1998.06-2001.10 | AT | F | L/R | Saloon FWD G4JP | | GCI24008 | Inner Joint | | 25 | 23 | 41 | 63 | 92.5 | |
| | 1998.06-2001.10 | MT | F | L | Saloon FWD G4JP | Date From:1999.11 | GDS24014 | Drive Shaft | 47T | 27 | 27 | 60 | 95 | 659 | |
| | 1998.06-2001.10 | MT | F | R | Saloon FWD G4JP | Date from:1999.11 | GDS24015 | Drive Shaft | 47T | 27 | 27 | 60 | 95 | 974 | |
| | 1998.06-2001.10 | MT | F | R | Saloon FWD G4JP | Date From:1999.11 | GDS27002 | Drive Shaft | | 27 | 27 | 60 | 95 | 974 | |
| | 1998.06-2001.10 | MT | F | R | Saloon FWD G4JP | GrooveType:Middle | GCO27009 | Outer Joint | | 27 | 25 | 60 | 95 | 63.5 | M |
| | 1998.06-2001.10 | MT | F | L/R | Saloon FWD G4JP | Date From:1999.11 | GCO24029 | Outer Joint | 47T | 27 | 25 | 60 | 95 | 63.5 | M |
| | 1998.06-2001.10 | MT | F | L/R | Saloon FWD G4JP | GrooveType:Inner | GCO39104 | Outer Joint | | 27 | 25 | 60 | 97 | 63.5 | I |
| | 1998.06-2001.10 | MT | F | R | Saloon FWD G4JP | Date From:1999.11 | GCI27001 | Inner Joint | | 27 | 25 | 41 | 62.5 | 93 | |
| | 1998.06-2001.10 | MT | F | L/R | Saloon FWD G4JP | | GCI24001 | Inner Joint | | 27 | 25 | 41 | 62.8 | 92.5 | |
| | 2006.02-2010.12 | AT | F | L | Saloon FWD D4EA | | GDS56447 | Drive Shaft | 47T | 27 | 28 | 62.2 | 95 | 663 | |
| | 2006.02-2010.12 | AT | F | R | Saloon FWD D4EA | Date to:2007.12 | GDS56446 | Drive Shaft | 47T | 27 | 28 | 62.2 | 95 | 984 | |
| | 2006.02-2010.12 | AT | F | L/R | Saloon FWD D4EA | | GCO24062 | Outer Joint | 47T | 27 | 25 | 62.2 | 95 | 60 | M |
| | 2006.02-2010.12 | AT | F | L/R | Saloon FWD D4EA | | GCI24092 | Inner Joint | | 28 | 25 | 41 | 61.5 | 93 | |
| | 2006.02-2010.12 | MT | F | L | Saloon FWD D4EA | | GDS24220 | Drive Shaft | 47T | 27 | 28 | 62 | 94.5 | 664 | |
| | 2006.02-2010.12 | MT | F | R | Saloon FWD D4EA | | GDS24545 | Drive Shaft | 47T | 27 | 28 | 62 | 94.5 | 986 | |
| | 2006.02-2010.12 | MT | F | L/R | Saloon FWD D4EA | | GCO24058 | Outer Joint | 47T | 27 | 26 | 62 | 94.5 | 65 | M |
| | 2006.02-2010.12 | MT | F | L/R | Saloon FWD D4EA | | GCI24153 | Inner Joint | | 28 | 35 | 41 | 61.5 | 98 | |
| 2.0 (102 kw) | 1993.05-1998.06 | | F | R | Saloon FWD G4CP-D | | GCO39033 | Outer Joint | | 25 | 25 | 50 | 95 | 65 | M |
| | 1993.05-1998.06 | | F | R | Saloon FWD G4CP-D | | GCO39034 | Outer Joint | | 25 | 25 | 50 | 94.5 | 65 | M |
| | 1993.05-1998.06 | | F | R | Saloon FWD G4CP-D | | GCO99038 | Outer Joint | 47T | 25 | 25 | 50 | 94.5 | 65 | M |
| | 1993.05-1998.06 | | F | | Saloon FWD G4CP-D | | GCO39032 | Outer Joint | | 25 | 23 | 50 | 95 | 60.5 | M |
| 2.0 (103 kw) | 2006.02-2010.12 | AT | F | L | Saloon FWD D4EA | | GDS56447 | Drive Shaft | 47T | 27 | 28 | 62.2 | 95 | 663 | |
| | 2006.02-2010.12 | AT | F | R | Saloon FWD D4EA | Date to:2007.12 | GDS56446 | Drive Shaft | 47T | 27 | 28 | 62.2 | 95 | 984 | |
| | 2006.02-2010.12 | AT | F | L/R | Saloon FWD D4EA | | GCO24062 | Outer Joint | 47T | 27 | 25 | 62.2 | 95 | 60 | M |
| | 2006.02-2010.12 | AT | F | L/R | Saloon FWD D4EA | | GCI24092 | Inner Joint | | 28 | 25 | 41 | 61.5 | 93 | |

| | YEAR | TRANSM. | F/R | L/R | BODY STYLE & DRIVE TYPE & ENGINE | REMARKS | G-AP Ref. | PRODUCT | ABS | Technical Specifications A | B | C | H | L | P |
|---|---|---|---|---|---|---|---|---|---|---|---|---|---|---|---|
| **HYUNDAI** **Sonata** | | | | | | | | | | | | | | | |
| 2.0 (103 kw) | 2006.02-2010.12 | MT | F | L | Saloon FWD D4EA | | GDS24220 | Drive Shaft | 47T | 27 | 28 | 62 | 94.5 | 664 | |
| | 2006.02-2010.12 | MT | F | R | Saloon FWD D4EA | | GDS24545 | Drive Shaft | 47T | 27 | 28 | 62 | 94.5 | 986 | |
| | 2006.02-2010.12 | MT | F | L/R | Saloon FWD D4EA | | GCO24058 | Outer Joint | 47T | 27 | 26 | 62 | 94.5 | 65 | M |
| | 2006.02-2010.12 | MT | F | L/R | Saloon FWD D4EA | | GCI24153 | Inner Joint | | 28 | 35 | 41 | 61.5 | 98 | |
| 2.0 (106 kw) | 2001.06-2005.04 | MT | F | L | Saloon FWD GCBPE | Date To:2002.03 | GDS24014 | Drive Shaft | 47T | 27 | 27 | 60 | 95 | 659 | |
| | 2001.06-2005.04 | MT | F | L | Saloon FWD GCBPE | Date From:2002.04,Date To:2003.07 | GDS24014 | Drive Shaft | 47T | 27 | 27 | 60 | 95 | 659 | |
| | 2001.06-2005.04 | MT | F | R | Saloon FWD GCBPE | Date to:2003.07 | GDS24015 | Drive Shaft | 47T | 27 | 27 | 60 | 95 | 974 | |
| | 2001.06-2005.04 | MT | F | R | Saloon FWD GCBPE | Date to:2003.07 | GDS27002 | Drive Shaft | | 27 | 27 | 60 | 95 | 974 | |
| | 2001.06-2005.04 | MT | F | R | Saloon FWD GCBPE | GrooveType:Middle | GCO27009 | Outer Joint | | 27 | 25 | 60 | 95 | 63.5 | M |
| | 2001.06-2005.04 | MT | F | L/R | Saloon FWD GCBPE | | GCO24029 | Outer Joint | 47T | 27 | 25 | 60 | 95 | 63.5 | M |
| | 2001.06-2005.04 | MT | F | L/R | Saloon FWD GCBPE | GrooveType:Inner | GCO39104 | Outer Joint | | 27 | 25 | 60 | 97 | 63.5 | I |
| | 2001.06-2005.04 | MT | F | R | Saloon FWD GCBPE | Date to:2003.07 | GCI27001 | Inner Joint | | 27 | 25 | 41 | 62.5 | 93 | |
| | 2001.06-2005.04 | MT | F | L/R | Saloon FWD GCBPE | | GCI24001 | Inner Joint | | 27 | 25 | 41 | 62.8 | 92.5 | |
| | 2005.05-2010.12 | AT | F | L/R | Saloon FWD G4KA | | GCO24062 | Outer Joint | 47T | 27 | 25 | 62.2 | 95 | 60 | M |
| | 2005.05-2010.12 | MT | F | L | Saloon FWD G4KA | Date to:2006.01,for model code:D2 | GCI24001 | Inner Joint | | 27 | 25 | 41 | 62.8 | 92.5 | |
| 2.0 (110 kw) | 2009.03-2010.12 | 4AT/5MT | F | | Saloon FWD D4EA | | GCO24062 | Outer Joint | 47T | 27 | 25 | 62.2 | 95 | 60 | M |
| | 2009.03-2010.12 | AT/MT | F | L/R | Saloon FWD D4EA | | GCO24058 | Outer Joint | 47T | 27 | 26 | 62 | 94.5 | 65 | M |
| | 2009.03-2010.12 | MT | F | L | Saloon FWD D4EA | | GDS24220 | Drive Shaft | 47T | 27 | 28 | 62 | 94.5 | 664 | |
| | 2009.03-2010.12 | MT | F | L | Saloon FWD D4EA | | GCI24153 | Inner Joint | | 28 | 35 | 41 | 61.5 | 98 | |
| | 2009.03-2010.12 | | F | R | Saloon FWD D4EA | | GDS24545 | Drive Shaft | 47T | 27 | 28 | 62 | 94.5 | 986 | |
| | 2009.06-2014.06 | 6AT | F | L | Saloon FWD G4KD | | GDS24229 | Drive Shaft | | 27 | 27 | 62 | 94.5 | 674 | |
| | 2009.06-2014.06 | 6AT | F | R | Saloon FWD G4KD | | GDS24228 | Drive Shaft | | 27 | 27 | 62 | 94.5 | 972 | |
| | 2009.06-2014.06 | AT | F | L | Saloon FWD G4KD | | GDS24262 | Drive Shaft | 48T | 27 | 27 | 62 | 92.5 | 672 | |
| | 2009.06-2014.06 | AT | F | R | Saloon FWD G4KD | | GDS24261 | Drive Shaft | 48T | 27 | 27 | 62 | 92.5 | 970 | |
| | 2009.06-2014.06 | AT | F | L | Saloon FWD G4KD | | GCO24138 | Outer Joint | 48T | 27 | 25 | 62 | 92.5 | 61 | M |
| | 2009.06-2014.06 | AT | F | L/R | Saloon FWD G4KD | | GCI24056 | Inner Joint | | 27 | 25 | 30 | 67 | 83.5 | |
| | 2009.06-2014.06 | MT | F | L | Saloon FWD G4KD | | GDS56176 | Drive Shaft | 48T | 27 | 27 | 62 | 93 | 675 | |
| | 2009.06-2014.06 | MT | F | L/R | Saloon FWD G4KD | | GCO83441 | Outer Joint | 48T | 27 | 25 | 62 | 93 | 59.5 | M |
| | 2009.06-2014.06 | MT | F | L/R | Saloon FWD G4KD | | GCI82713 | Inner Joint | | 27 | 25 | 41 | 61.5 | 91.5 | |
| | 2011.01-2014.06 | 6AT | F | L | Saloon FWD G4NA | | GDS84319 | Drive Shaft | 48T | 30 | 28 | 73 | 95 | 641 | |
| | 2011.01-2014.06 | 6AT | F | R | Saloon FWD G4NA | | GDS84318 | Drive Shaft | 48T | 30 | 28 | 73 | 95 | 1005 | |
| | 2014.11-2019.12 | 6AT | F | L | Saloon FWD G4NA | | GDS81174 | Drive Shaft | 48T | 30 | 27 | 73 | 95 | 690 | |
| | 2014.11-2019.12 | 6AT | F | R | Saloon FWD G4NA | | GDS81175 | Drive Shaft | 48T | 30 | 27 | 73 | 95 | 955 | |
| | 2014.11-2019.12 | 6AT | F | R | Saloon FWD G4NA | | GCI24141 | Inner Joint | | 27 | 33 | 30 | 67 | 95.5 | |
| | 2014.11-2019.12 | 6AT/6MT | F | L/R | Saloon FWD G4NA | | GCO24299 | Outer Joint | 48T | 30 | 25 | 73 | 95 | 61.5 | M |
| | 2020.01- | 6AT | F | L/R | Saloon FWD | | GCO82920 | Outer Joint | | 30 | 25 | 73 | 94.5 | 60.5 | M |
| | 2020.01- | 6AT | F | L/R | Saloon FWD | | GCI24141 | Inner Joint | | 27 | 33 | 30 | 67 | 95.5 | |
| 2.0 (119 kw) | 2008.07-2010.12 | 5MT | F | L/R | Saloon FWD G4KD | | GCO24062 | Outer Joint | 47T | 27 | 25 | 62.2 | 95 | 60 | M |
| | 2008.07-2010.12 | AT | F | L | Saloon FWD G4KD | Date from:2010.06 | GCI24056 | Inner Joint | | 27 | 25 | 30 | 67 | 83.5 | |
| 2.0 (120 kw) | 2012.09-2014.06 | AT | F | L | Saloon FWD G4KD | | GDS24262 | Drive Shaft | 48T | 27 | 27 | 62 | 92.5 | 672 | |
| | 2012.09-2014.06 | AT | F | R | Saloon FWD G4KD | | GDS24261 | Drive Shaft | 48T | 27 | 27 | 62 | 92.5 | 970 | |
| | 2012.09-2014.06 | AT | F | L | Saloon FWD G4KD | | GCO24138 | Outer Joint | 48T | 27 | 25 | 62 | 92.5 | 61 | M |
| | 2012.09-2014.06 | AT | F | L/R | Saloon FWD G4KD | | GCI24056 | Inner Joint | | 27 | 25 | 30 | 67 | 83.5 | |
| | 2012.09-2014.06 | MT | F | L | Saloon FWD G4KD | | GDS56176 | Drive Shaft | 48T | 27 | 27 | 62 | 93 | 675 | |
| | 2012.09-2014.06 | MT | F | L/R | Saloon FWD G4KD | | GCO83441 | Outer Joint | 48T | 27 | 25 | 62 | 93 | 59.5 | M |
| | 2012.09-2014.06 | MT | F | L/R | Saloon FWD G4KD | | GCI82713 | Inner Joint | | 27 | 25 | 41 | 61.5 | 91.5 | |
| 2.0 (121 kw) | 2008.01-2010.12 | AT | F | L/R | Saloon FWD G4KD | | GCO24062 | Outer Joint | 47T | 27 | 25 | 62.2 | 95 | 60 | M |
| | 2008.01-2010.12 | MT | F | L | Saloon FWD G4KD | | GCI24001 | Inner Joint | | 27 | 25 | 41 | 62.8 | 92.5 | |
| | 2009.06-2014.06 | 6AT | F | L | Saloon FWD G4KD | | GDS24229 | Drive Shaft | | 27 | 27 | 62 | 94.5 | 674 | |
| | 2009.06-2014.06 | 6AT | F | R | Saloon FWD G4KD | | GDS24228 | Drive Shaft | | 27 | 27 | 62 | 94.5 | 972 | |
| | 2009.06-2014.06 | 6AT | F | L/R | Saloon FWD G4KD | | GCI24056 | Inner Joint | | 27 | 25 | 30 | 67 | 83.5 | |
| 2.4 (105 kw) | 1998.06-2001.05 | 4AT/5MT | F | R | Saloon FWD G4BS | | GDS24015 | Drive Shaft | 47T | 27 | 27 | 60 | 95 | 974 | |
| | 1998.06-2001.05 | AT | F | L | Saloon FWD G4BS | | GDS24014 | Drive Shaft | 47T | 27 | 27 | 60 | 95 | 659 | |
| | 1998.06-2001.05 | AT | F | L/R | Saloon FWD G4BS | | GCO24029 | Outer Joint | 47T | 27 | 25 | 60 | 95 | 63.5 | M |
| | 1998.06-2001.05 | AT | F | L/R | Saloon FWD G4BS | GrooveType:Inner | GCO39104 | Outer Joint | | 27 | 25 | 60 | 97 | 63.5 | I |
| | 1998.06-2001.05 | AT | F | L/R | Saloon FWD G4BS | | GCI24001 | Inner Joint | | 27 | 25 | 41 | 62.8 | 92.5 | |
| | 1998.06-2001.05 | AT/MT | F | R | Saloon FWD G4BS | | GDS27002 | Drive Shaft | | 27 | 27 | 60 | 95 | 974 | |
| | 1998.06-2001.05 | AT/MT | F | R | Saloon FWD G4BS | GrooveType:Middle | GCO27009 | Outer Joint | | 27 | 25 | 60 | 95 | 63.5 | M |
| | 1998.06-2001.05 | AT/MT | F | R | Saloon FWD G4BS | | GCI27001 | Inner Joint | | 27 | 25 | 41 | 62.5 | 93 | |
| 2.4 (119 kw) | 2005.01-2010.12 | 4AT/5MT/6MT | F | L/R | Saloon FWD G4KC | Date to:2007.12 | GCI24001 | Inner Joint | | 27 | 25 | 41 | 62.8 | 92.5 | |
| | 2005.01-2010.12 | AT | F | L | Saloon FWD G4KC | | GDS24220 | Drive Shaft | 47T | 27 | 28 | 62 | 94.5 | 664 | |
| | 2005.01-2010.12 | AT | F | R | Saloon FWD G4KC | | GDS24144 | Drive Shaft | 47T | 27 | 27 | 62.2 | 95 | 979 | |
| | 2005.01-2010.12 | AT | F | R | Saloon FWD G4KC | | GDS24545 | Drive Shaft | 47T | 27 | 28 | 62 | 94.5 | 986 | |
| | 2005.01-2010.12 | AT | F | L/R | Saloon FWD G4KC | | GCI24153 | Inner Joint | | 28 | 35 | 41 | 61.5 | 98 | |
| | 2005.01-2010.12 | AT/MT | F | L/R | Saloon FWD G4KC | Transsimion:AT;Transsimion:MT,Date to:2007.12 | GCO24062 | Outer Joint | 47T | 27 | 25 | 62.2 | 95 | 60 | M |

| | YEAR | TRANSM. | F/R | L/R | BODY STYLE & DRIVE TYPE & ENGINE | REMARKS | G-AP Ref. | PRODUCT | ABS | Technical Specifications | | | | | |
|---|---|---|---|---|---|---|---|---|---|---|---|---|---|---|---|
| | | | | | | | | | | A | B | C | H | L | P |
| **HYUNDAI** **Sonata** | | | | | | | | | | | | | | | |
| 2.4 (128 kw) | 2009.06-2010.11 | AT | F | L/R | Saloon FWD G4KC | | GCI24001 | Inner Joint | | 27 | 25 | 41 | 62.8 | 92.5 | |
| 2.4 (130 kw) | 2010.01-2015.12 | 6AT/6MT | F | L/R | Saloon FWD G4KC | | GCI24056 | Inner Joint | | 27 | 25 | 30 | 67 | 83.5 | |
| 2.4 (131 kw) | 2010.11-2015.12 | 6AT | F | L/R | Saloon FWD G4KE | | GCI24056 | Inner Joint | | 27 | 25 | 30 | 67 | 83.5 | |
| | 2010.11-2015.12 | 6MT | F | R | Saloon FWD G4KE | | GDS57490 | Drive Shaft | 48T | 27 | 27 | 62 | 93 | 987 | |
| | 2010.11-2015.12 | AT | F | L | Saloon FWD G4KE | | GDS24262 | Drive Shaft | 48T | 27 | 27 | 62 | 92.5 | 672 | |
| | 2010.11-2015.12 | AT | F | R | Saloon FWD G4KE | | GDS24261 | Drive Shaft | 48T | 27 | 27 | 62 | 92.5 | 970 | |
| | 2010.11-2015.12 | MT | F | L | Saloon FWD G4KE | | GDS56176 | Drive Shaft | 48T | 27 | 27 | 62 | 93 | 675 | |
| | 2010.11-2015.12 | MT | F | L/R | Saloon FWD G4KE | | GCO83441 | Outer Joint | 48T | 27 | 25 | 62 | 93 | 59.5 | M |
| | 2010.11-2015.12 | MT | F | L/R | Saloon FWD G4KE | Date to:2012.03 | GCI82713 | Inner Joint | | 27 | 25 | 41 | 61.5 | 91.5 | |
| 2.4 (138 kw) | 2014.09-2019.12 | 6AT | F | L | Saloon FWD G4KJ | | GDS24497 | Drive Shaft | 48T | 30 | 27 | 73 | 95 | 672 | |
| | 2014.09-2019.12 | 6AT | F | R | Saloon FWD G4KJ | | GDS24496 | Drive Shaft | 48T | 30 | 27 | 73 | 95 | 976 | |
| | 2014.09-2019.12 | 6AT | F | L/R | Saloon FWD G4KJ | | GCO24299 | Outer Joint | 48T | 30 | 25 | 73 | 95 | 61.5 | M |
| | 2014.09-2019.12 | 6AT | F | L/R | Saloon FWD G4KJ | | GCI24141 | Inner Joint | | 27 | 33 | 30 | 67 | 95.5 | |
| 2.4 (148 kw) | 2009.06-2014.06 | 6AT | F | L | Saloon FWD G4KC, G4KJ | | GDS24229 | Drive Shaft | | 27 | 27 | 62 | 94.5 | 674 | |
| | 2009.06-2014.06 | 6AT | F | R | Saloon FWD G4KC, G4KJ | | GDS24228 | Drive Shaft | | 27 | 27 | 62 | 94.5 | 972 | |
| | 2009.06-2014.06 | 6AT | F | L/R | Saloon FWD G4KC, G4KJ | | GCI24056 | Inner Joint | | 27 | 25 | 30 | 67 | 83.5 | |
| 2.5 (118 kw) | 1998.06-2001.10 | AT | F | L | Saloon FWD G6BV | Date From:1998.11 | GDS24014 | Drive Shaft | 47T | 27 | 27 | 60 | 95 | 659 | |
| | 1998.06-2001.10 | AT | F | L/R | Saloon FWD G6BV | | GCO24027 | Outer Joint | 47T | 27 | 23 | 60 | 95 | 63.5 | M |
| | 1998.06-2001.10 | MT | F | L | Saloon FWD G6BV | | GDS24126 | Drive Shaft | 47T | 27 | 27 | 60 | 95 | 662 | |
| | 1998.06-2001.10 | MT | F | R | Saloon FWD G6BV | | GDS24125 | Drive Shaft | 47T | 27 | 26 | 60 | 95 | 619 | |
| | 1998.06-2001.10 | MT | F | L/R | Saloon FWD G6BV | | GCO24073 | Outer Joint | 47T | 27 | 26 | 60 | 95 | 69 | M |
| | 1998.06-2001.10 | | F | L | Saloon FWD G6BV | | GCI27020 | Inner Joint | | 27 | 25 | 41 | 62 | 100.5 | |
| 2.5 (132 kw) | 2020.01- | 6AT | F | L | Saloon FWD G4KM | | GDS56092 | Drive Shaft | | 30 | 27 | 73 | 94.5 | 683 | |
| | 2020.01- | 6AT | F | R | Saloon FWD G4KM | | GDS56091 | Drive Shaft | | 30 | 27 | 73 | 94.5 | 975 | |
| | 2020.01- | 6AT | F | L/R | Saloon FWD G4KM | | GCO82920 | Outer Joint | | 30 | 25 | 73 | 94.5 | 60.5 | M |
| | 2020.01- | 6AT | F | L/R | Saloon FWD G4KM | | GCI24141 | Inner Joint | | 27 | 33 | 30 | 67 | 95.5 | |
| 2.7 (127 kw) | 2001.10-2004.11 | 4AT | F | L | Saloon FWD G6BA | Model:Sonica,Date from:2003.12 | GCI27020 | Inner Joint | | 27 | 25 | 41 | 62 | 100.5 | |
| | 2001.10-2004.11 | 4AT | F | L/R | Saloon FWD G6BA | Model:Sonata | GCI24008 | Inner Joint | | 25 | 23 | 41 | 63 | 92.5 | |
| | 2001.10-2004.11 | AT | F | L | Saloon FWD G6BA | Model:Sonata,Type:GLS,Inner teeth of wheel side:25 | GDS24014 | Drive Shaft | 47T | 27 | 27 | 60 | 95 | 659 | |
| | 2001.10-2004.11 | AT | F | L | Saloon FWD G6BA | Model:Sonata,Type:GLS,Inner teeth of wheel side:34 | GDS24094 | Drive Shaft | 47T | 27 | 27 | 60 | 96.5 | 661 | |
| | 2001.10-2004.11 | AT | F | L | Saloon FWD G6BA | Model:Sonata,Type:GL,Date from:2002.04 | GDS24124 | Drive Shaft | | 27 | 25 | 60 | 95 | 661 | |
| | 2001.10-2004.11 | AT | F | L | Saloon FWD G6BA | Model:Sonata,Type:GL,Date to:2002.03 | GDS27015 | Drive Shaft | 47T | 27 | 25 | 60 | 95 | 661 | |
| | 2001.10-2004.11 | AT | F | R | Saloon FWD G6BA | | GDS24123 | Drive Shaft | | 27 | 25 | 60 | 95 | 974 | |
| | 2001.10-2004.11 | AT | F | R | Saloon FWD G6BA | | GDS27016 | Drive Shaft | 47T | 27 | 25 | 60 | 95 | 974 | |
| | 2001.10-2004.11 | AT | F | R | Saloon FWD G6BA | | GCO24037 | Outer Joint | 47T | 27 | 34 | 60 | 96.5 | 71 | I |
| | 2001.10-2004.11 | AT | F | L/R | Saloon FWD G6BA | | GCO24027 | Outer Joint | 47T | 27 | 23 | 60 | 95 | 63.5 | M |
| | 2001.10-2004.11 | AT | F | L/R | Saloon FWD G6BA | | GCO27008 | Outer Joint | | 27 | 23 | 60 | 95 | 63.5 | M |
| | 2001.10-2004.11 | AT/MT | F | L | Saloon FWD G6BA | Model:Sonica,Date to:2002.03 | GDS27015 | Drive Shaft | 47T | 27 | 25 | 60 | 95 | 661 | |
| | 2001.10-2004.11 | AT/MT | F | R | Saloon FWD G6BA | Model:Sonica | GDS27016 | Drive Shaft | 47T | 27 | 25 | 60 | 95 | 974 | |
| | 2001.10-2004.11 | MT | F | L | Saloon FWD G6BA | Date To:2002.03,Type:GL | GDS24014 | Drive Shaft | 47T | 27 | 27 | 60 | 95 | 659 | |
| | 2001.10-2004.11 | MT | F | L | Saloon FWD G6BA | Date From:2002.04,Date To:2003.07,Type:GL | GDS24014 | Drive Shaft | 47T | 27 | 27 | 60 | 95 | 659 | |
| | 2001.10-2004.11 | MT | F | L | Saloon FWD G6BA | | GDS24126 | Drive Shaft | 47T | 27 | 27 | 60 | 95 | 662 | |
| | 2001.10-2004.11 | MT | F | R | Saloon FWD G6BA | | GDS24015 | Drive Shaft | 47T | 27 | 27 | 60 | 95 | 974 | |
| | 2001.10-2004.11 | MT | F | R | Saloon FWD G6BA | | GDS24125 | Drive Shaft | 47T | 27 | 26 | 60 | 95 | 619 | |
| | 2001.10-2004.11 | MT | F | R | Saloon FWD G6BA | | GDS27002 | Drive Shaft | | 27 | 27 | 60 | 95 | 974 | |
| | 2001.10-2004.11 | MT | F | R | Saloon FWD G6BA | | GCO24029 | Outer Joint | 47T | 27 | 25 | 60 | 95 | 63.5 | M |
| | 2001.10-2004.11 | MT | F | R | Saloon FWD G6BA | | GCO27009 | Outer Joint | | 27 | 25 | 60 | 95 | 63.5 | M |
| | 2001.10-2004.11 | MT | F | L/R | Saloon FWD G6BA | | GCO24073 | Outer Joint | 47T | 27 | 26 | 60 | 95 | 69 | M |
| | 2001.10-2004.11 | MT | F | L/R | Saloon FWD G6BA | | GCO39104 | Outer Joint | | 27 | 25 | 60 | 97 | 63.5 | I |
| | 2001.10-2004.11 | MT | F | L | Saloon FWD G6BA | Model:Sonata,Type:GLS,Date to:2002.03 | GCI24025 | Inner Joint | | 27 | 26 | 41 | 62.5 | 89 | |
| | 2001.10-2004.11 | MT | F | R | Saloon FWD G6BA | | GCI27001 | Inner Joint | | 27 | 25 | 41 | 62.5 | 93 | |
| 2.7 (129 kw) | 2002.11-2005.12 | AT | F | L | Saloon FWD G6BA | Model:Sonata,Type:GLS,Inner teeth of wheel side:25 | GDS24014 | Drive Shaft | 47T | 27 | 27 | 60 | 95 | 659 | |
| | 2002.11-2005.12 | AT | F | L | Saloon FWD G6BA | Model:Sonata,Type:GLS,Inner teeth of wheel side:34 | GDS24094 | Drive Shaft | 47T | 27 | 27 | 60 | 96.5 | 661 | |
| | 2002.11-2005.12 | AT | F | R | Saloon FWD G6BA | | GDS24123 | Drive Shaft | | 27 | 25 | 60 | 95 | 974 | |
| | 2002.11-2005.12 | AT | F | L/R | Saloon FWD G6BA | | GCO24027 | Outer Joint | 47T | 27 | 23 | 60 | 95 | 63.5 | M |
| | 2002.11-2005.12 | AT | F | L | Saloon FWD G6BA | | GCI27020 | Inner Joint | | 27 | 25 | 41 | 62 | 100.5 | |
| | 2002.11-2005.12 | MT | F | L/R | Saloon FWD G6BA | | GCO24073 | Outer Joint | 47T | 27 | 26 | 60 | 95 | 69 | M |
| 2.7 (132 kw) | 2001.10-2003.12 | AT | F | L | Saloon FWD G6BAY | Model:Sonata,Type:GLS,Inner teeth of wheel side:25 | GDS24014 | Drive Shaft | 47T | 27 | 27 | 60 | 95 | 659 | |
| | 2001.10-2003.12 | AT | F | L | Saloon FWD G6BAY | Model:Sonata,Type:GLS,Inner teeth of wheel side:34 | GDS24094 | Drive Shaft | 47T | 27 | 27 | 60 | 96.5 | 661 | |
| | 2001.10-2003.12 | AT | F | R | Saloon FWD G6BAY | Model:Sonata,Type:GL,Date to:2002.03 | GDS27016 | Drive Shaft | 47T | 27 | 25 | 60 | 95 | 974 | |
| | 2001.10-2003.12 | AT | F | L/R | Saloon FWD G6BAY | | GCO24027 | Outer Joint | 47T | 27 | 23 | 60 | 95 | 63.5 | M |
| | 2001.10-2003.12 | AT | F | L | Saloon FWD G6BAY | | GCI27020 | Inner Joint | | 27 | 25 | 41 | 62 | 100.5 | |
| | 2001.10-2003.12 | MT | F | L | Saloon FWD G6BAY | Date To:2002.03,Type:GL | GDS24014 | Drive Shaft | 47T | 27 | 27 | 60 | 95 | 659 | |
| | 2001.10-2003.12 | MT | F | L | Saloon FWD G6BAY | Date From:2002.04,Date To:2003.07,Type:GL | GDS24014 | Drive Shaft | 47T | 27 | 27 | 60 | 95 | 659 | |
| | 2001.10-2003.12 | MT | F | L | Saloon FWD G6BAY | Date to:2002.03,Model:For GLS | GDS24126 | Drive Shaft | 47T | 27 | 27 | 60 | 95 | 662 | |

| | YEAR | TRANSM. | F/R | L/R | BODY STYLE & DRIVE TYPE & ENGINE | REMARKS | G-AP Ref. | PRODUCT | ABS | Technical Specifications A | B | C | H | L | P |
|---|---|---|---|---|---|---|---|---|---|---|---|---|---|---|---|
| **HYUNDAI** | | | | | | | | | | | | | | | |
| **Sonata** | | | | | | | | | | | | | | | |
| 2.7 (132 kw) | 2001.10-2003.12 | MT | F | R | Saloon FWD G6BAY | Model:For GL | GDS24015 | Drive Shaft | 47T | 27 | 27 | 60 | 95 | 974 | |
| | 2001.10-2003.12 | MT | F | L/R | Saloon FWD G6BAY | | GCO24029 | Outer Joint | 47T | 27 | 25 | 60 | 95 | 63.5 | M |
| | 2001.10-2003.12 | MT | F | L/R | Saloon FWD G6BAY | | GCO24073 | Outer Joint | 47T | 27 | 26 | 60 | 95 | 69 | M |
| | 2001.10-2003.12 | MT | F | L/R | Saloon FWD G6BAY | | GCO39104 | Outer Joint | | 27 | 25 | 60 | 97 | 63.5 | I |
| 3.0 (107 kw) | 1993.10-1998.12 | AT | F | L/R | Saloon FWD G6AT/G6DT | | GCO39045 | Outer Joint | | 25 | 26 | 54 | 95 | 69 | I |
| | 1993.10-1998.12 | | F | R | Saloon FWD G6AT/G6DT | | GCO39034 | Outer Joint | | 25 | 25 | 50 | 94.5 | 65 | M |
| 3.3 (171 kw) | 2005.01-2010.12 | 5AT | F | L | Saloon FWD G6DB | | GDS24127 | Drive Shaft | 47T | 30 | 28 | 65 | 95 | 662 | |
| | 2005.01-2010.12 | 5AT | F | R | Saloon FWD G6DB | | GDS24128 | Drive Shaft | 47T | 30 | 28 | 65 | 95 | 981.5 | |
| | 2005.01-2010.12 | 5AT | F | L/R | Saloon FWD G6DB | | GCO24063 | Outer Joint | 47T | 30 | 36 | 65 | 95 | 68 | I |
| | 2005.01-2010.12 | AT/MT | F | L/R | Saloon FWD G6DB | | GCO24062 | Outer Joint | 47T | 27 | 25 | 62.2 | 95 | 60 | M |
| 3.3 (173 kw) | 2005.06-2010.12 | 5AT | F | L | Saloon FWD G6DB | | GDS24127 | Drive Shaft | 47T | 30 | 28 | 65 | 95 | 662 | |
| | 2005.06-2010.12 | 5AT | F | R | Saloon FWD G6DB | | GDS24128 | Drive Shaft | 47T | 30 | 28 | 65 | 95 | 981.5 | |
| | 2005.06-2010.12 | AT/MT | F | L/R | Saloon FWD G6DB | | GCO24062 | Outer Joint | 47T | 27 | 25 | 62.2 | 95 | 60 | M |
| | 2005.06-2010.12 | | F | L/R | Saloon FWD G6DB | | GCO24063 | Outer Joint | 47T | 30 | 36 | 65 | 95 | 68 | I |
| 3.3 (184 kw) | 2008.01-2010.12 | AT | F | L | Saloon FWD G6DB | | GDS24127 | Drive Shaft | 47T | 30 | 28 | 65 | 95 | 662 | |
| | 2008.01-2010.12 | AT | F | R | Saloon FWD G6DB | | GDS24128 | Drive Shaft | 47T | 30 | 28 | 65 | 95 | 981.5 | |
| | 2008.01-2010.12 | AT/MT | F | L/R | Saloon FWD G6DB | | GCO24062 | Outer Joint | 47T | 27 | 25 | 62.2 | 95 | 60 | M |
| | 2008.01-2010.12 | | F | L/R | Saloon FWD G6DB | | GCO24063 | Outer Joint | 47T | 30 | 36 | 65 | 95 | 68 | I |
| 3.3 (186 kw) | 2007.09-2008.12 | | F | L | Saloon FWD G6DB | | GDS24127 | Drive Shaft | 47T | 30 | 28 | 65 | 95 | 662 | |
| | 2007.09-2008.12 | | F | R | Saloon FWD G6DB | | GDS24128 | Drive Shaft | 47T | 30 | 28 | 65 | 95 | 981.5 | |
| | 2007.09-2008.12 | | F | L | Saloon FWD G6DB | | GCO24063 | Outer Joint | 47T | 30 | 36 | 65 | 95 | 68 | I |
| **Terracan** | | | | | | | | | | | | | | | |
| 2.9 (110 kw) | 2001.12-2006.12 | 4AT/5MT | F | L | SUV 4WD J3(CRDi) | | GDS24339 | Drive Shaft | | 28 | 28 | 56 | 154 | 648 | |
| | 2001.12-2006.12 | 4AT/5MT | F | R | SUV 4WD J3(CRDi) | | GDS82354 | Drive Shaft | | 28 | | 56 | 152 | 567 | |
| | 2001.12-2006.12 | 4AT/5MT | F | L/R | SUV 4WD J3(CRDi) | Bellows Material:Thermoplastic | GCO24173 | Outer Joint | | 28 | 34 | 56 | 152 | 68 | I |
| | 2001.12-2006.12 | 4AT/5MT | F | L | SUV 4WD J3(CRDi) | | GCI82083 | Inner Joint | | 28 | 34 | 34.7 | 90.5 | 80.5 | |
| | 2001.12-2006.12 | 4AT/5MT | F | R | SUV 4WD J3(CRDi) | | GCI81770 | Inner Joint | | | 34 | | | 73 | |
| 2.9 (120 kw) | 2003.11-2006.12 | 4AT | F | L | SUV 4WD J3(CRDi) | | GDS24339 | Drive Shaft | | 28 | 28 | 56 | 154 | 648 | |
| | 2003.11-2006.12 | 4AT | F | R | SUV 4WD J3(CRDi) | | GDS82354 | Drive Shaft | | 28 | | 56 | 152 | 567 | |
| | 2003.11-2006.12 | 4AT | F | L/R | SUV 4WD J3(CRDi) | Bellows Material:Thermoplastic | GCO24173 | Outer Joint | | 28 | 34 | 56 | 152 | 68 | I |
| | 2003.11-2006.12 | 4AT | F | L | SUV 4WD J3(CRDi) | | GCI82083 | Inner Joint | | 28 | 34 | 34.7 | 90.5 | 80.5 | |
| | 2003.11-2006.12 | 4AT | F | R | SUV 4WD J3(CRDi) | | GCI81770 | Inner Joint | | | 34 | | | 73 | |
| 3.5 (143 kw) | 2001.12-2006.12 | 4AT/5MT | F | L/R | SUV 4WD G6CU | | GCO24173 | Outer Joint | | 28 | 34 | 56 | 152 | 68 | I |
| | 2001.12-2006.12 | AT | F | R | SUV 4WD G6CU | | GDS82354 | Drive Shaft | | 28 | | 56 | 152 | 567 | |
| | 2001.12-2006.12 | AT | F | R | SUV 4WD G6CU | | GCI81770 | Inner Joint | | | 34 | | | 73 | |
| | 2001.12-2006.12 | | F | L | SUV 4WD G6CU | | GDS24339 | Drive Shaft | | 28 | 28 | 56 | 154 | 648 | |
| 3.5 (147 kw) | 2001.12-2006.12 | 4AT/5MT | F | L | SUV 4WD G6CU | Manufacturer:GKN | GDS24339 | Drive Shaft | | 28 | 28 | 56 | 154 | 648 | |
| | 2001.12-2006.12 | 4AT/5MT | F | R | SUV 4WD G6CU | | GDS82354 | Drive Shaft | | 28 | | 56 | 152 | 567 | |
| | 2001.12-2006.12 | 4AT/5MT | F | L/R | SUV 4WD G6CU | | GCO24173 | Outer Joint | | 28 | 34 | 56 | 152 | 68 | I |
| | 2001.12-2006.12 | 4AT/5MT | F | R | SUV 4WD G6CU | | GCI81770 | Inner Joint | | | 34 | | | 73 | |
| **Terracan Van** | | | | | | | | | | | | | | | |
| 2.9 (110 kw) | 2001.11-2006.12 | 5MT | F | L | SUV Van 4WD J3(CRDi) | | GDS24339 | Drive Shaft | | 28 | 28 | 56 | 154 | 648 | |
| | 2001.11-2006.12 | 5MT | F | R | SUV Van 4WD J3(CRDi) | | GDS82354 | Drive Shaft | | 28 | | 56 | 152 | 567 | |
| | 2001.11-2006.12 | 5MT | F | L/R | SUV Van 4WD J3(CRDi) | | GCO24173 | Outer Joint | | 28 | 34 | 56 | 152 | 68 | I |
| | 2001.11-2006.12 | 5MT | F | R | SUV Van 4WD J3(CRDi) | | GCI81770 | Inner Joint | | | 34 | | | 73 | |
| 2.9 (120 kw) | 2003.11-2006.12 | 4AT | F | L | SUV Van 4WD J3(CRDi) | Manufacturer:GKN | GDS24339 | Drive Shaft | | 28 | 28 | 56 | 154 | 648 | |
| | 2003.11-2006.12 | 4AT | F | R | SUV Van 4WD J3(CRDi) | | GDS82354 | Drive Shaft | | 28 | | 56 | 152 | 567 | |
| | 2003.11-2006.12 | 4AT | F | L/R | SUV Van 4WD J3(CRDi) | | GCO24173 | Outer Joint | | 28 | 34 | 56 | 152 | 68 | I |
| | 2003.11-2006.12 | 4AT | F | R | SUV Van 4WD J3(CRDi) | | GCI81770 | Inner Joint | | | 34 | | | 73 | |
| **Tiburon** | | | | | | | | | | | | | | | |
| 2.0 (105 kw) | 2006.10-2008.12 | AT | F | L | Coupe FWD G4GC | | GDS24203 | Drive Shaft | 44T | 25 | 25 | 50 | 94.5 | 652 | |
| | 2006.10-2008.12 | AT/MT | F | R | Coupe FWD G4GC | | GDS24149 | Drive Shaft | 44T | 25 | 25 | 50 | 95.5 | 934 | |
| 2.7 (123 kw) | 2006.01-2008.12 | MT | F | L | Coupe FWD G6BA | | GCO24060 | Outer Joint | 44T | 27 | 26 | 60 | 95 | 69 | M |
| | 2006.01-2008.12 | | F | R | Coupe FWD G6BA | Date From:2004.10 | GDS24543 | Drive Shaft | 44T | 27 | 26 | 60 | 95 | 582 | |
| | 2006.01-2008.12 | | F | R | Coupe FWD G6BA | Date to:2004.09 | GCO24044 | Outer Joint | 29T | 25 | 25 | 50 | 94.5 | 65 | M |
| | 2006.01-2008.12 | | F | L/R | Coupe FWD G6BA | | GCI24030 | Inner Joint | | 26 | 25 | 42 | | 108 | |
| **Trajet** | | | | | | | | | | | | | | | |
| 2.0 (83 kw) | 2001.03-2008.07 | 4AT/5MT | F | L | MPV FWD D4EA | Date from:2002.10,Date to:2003.08 | GDS24158 | Drive Shaft | 47T | 27 | 27 | 60 | 95 | 660 | |
| | 2001.03-2008.07 | 4AT/5MT | F | R | MPV FWD D4EA | Date from:2002.10,Date to:2004.02 | GDS24058 | Drive Shaft | 47T | 27 | 27 | 60 | 95 | 976.5 | |
| | 2001.03-2008.07 | 4AT/5MT | F | L/R | MPV FWD D4EA | Date from:2002.10,Date to:2003.08 | GCO24028 | Outer Joint | 47T | 27 | 26 | 60 | 95 | 69 | M |
| | 2001.03-2008.07 | 4AT/5MT | F | L/R | MPV FWD D4EA | Date from:2002.10,Date to:2004.02 | GCO24066 | Outer Joint | 47T | 27 | 26 | 60 | 95 | 69 | M |
| | 2001.03-2008.07 | AT | F | L | MPV FWD D4EA | Date from:2003.09,Date to:2004.10;Inner teeth of wheel side:35 | GDS24014 | Drive Shaft | 47T | 27 | 27 | 60 | 95 | 659 | |
| | 2001.03-2008.07 | AT | F | L | MPV FWD D4EA | Date from:2003.09,Date to:2004.10;Inner teeth of wheel side:34 | GDS24094 | Drive Shaft | 47T | 27 | 27 | 60 | 96.5 | 661 | |
| | 2001.03-2008.07 | AT/MT | F | L/R | MPV FWD D4EA | Date to:2004.02,for model code:EC | GCI24001 | Inner Joint | | 27 | 25 | 41 | 62.8 | 92.5 | |
| 2.0 (100 kw) | 1999.09-2008.07 | AT | F | L/R | MPV FWD G4JP | | GCO24027 | Outer Joint | 47T | 27 | 23 | 60 | 95 | 63.5 | M |

| | YEAR | TRANSM. | F/R | L/R | BODY STYLE & DRIVE TYPE & ENGINE | REMARKS | G-AP Ref. | PRODUCT | ABS | Technical Specifications A | B | C | H | L | P |
|---|---|---|---|---|---|---|---|---|---|---|---|---|---|---|---|
| **HYUNDAI** | | | | | | | | | | | | | | | |
| **Trajet** | | | | | | | | | | | | | | | |
| 2.0 (100 kw) | 1999.09-2008.07 | AT/MT | F | L/R | MPV FWD G4JP | | GCO24029 | Outer Joint | 47T | 27 | 25 | 60 | 95 | 63.5 | M |
| | 1999.09-2008.07 | AT/MT | F | L/R | MPV FWD G4JP | Date From:2004.02 | GCO24130 | Outer Joint | 47T | 27 | 25 | 60 | 95 | 65 | M |
| | 1999.09-2008.07 | AT/MT | F | L/R | MPV FWD G4JP | | GCO27009 | Outer Joint | | 27 | 25 | 60 | 95 | 63.5 | M |
| | 1999.09-2008.07 | MT | F | L | MPV FWD G4JP | | GDS24158 | Drive Shaft | 47T | 27 | 27 | 60 | 95 | 660 | |
| | 1999.09-2008.07 | MT | F | R | MPV FWD G4JP | | GDS24058 | Drive Shaft | 47T | 27 | 27 | 60 | 95 | 976.5 | |
| | 1999.09-2008.07 | MT | F | L/R | MPV FWD G4JP | | GCO24028 | Outer Joint | 47T | 27 | 26 | 60 | 95 | 69 | M |
| | 1999.09-2008.07 | MT | F | L/R | MPV FWD G4JP | | GCI24001 | Inner Joint | | 27 | 25 | 41 | 62.8 | 92.5 | |
| 2.0 (103 kw) | 2001.03-2003.10 | 4AT/5MT | F | L/R | MPV FWD G4CPDOHC | | GCO24029 | Outer Joint | 47T | 27 | 25 | 60 | 95 | 63.5 | M |
| | 2001.03-2003.10 | 4AT/5MT | F | L/R | MPV FWD G4CPDOHC | | GCO27009 | Outer Joint | | 27 | 25 | 60 | 95 | 63.5 | M |
| | 2003.11-2008.07 | 4AT/5MT | F | L/R | MPV FWD G4GC | | GCI24135 | Inner Joint | | 27 | 25 | 41 | 62 | 90.5 | |
| | 2003.11-2008.07 | AT/MT | F | L/R | MPV FWD G4GC | | GCO24029 | Outer Joint | 47T | 27 | 25 | 60 | 95 | 63.5 | M |
| | 2003.11-2008.07 | AT/MT | F | L/R | MPV FWD G4GC | Date From:2004.02 | GCO24130 | Outer Joint | 47T | 27 | 25 | 60 | 95 | 65 | M |
| | 2003.11-2008.07 | AT/MT | F | L/R | MPV FWD G4GC | | GCO27009 | Outer Joint | | 27 | 25 | 60 | 95 | 63.5 | M |
| | 2003.11-2008.07 | MT | F | L | MPV FWD G4GC | | GDS24158 | Drive Shaft | 47T | 27 | 27 | 60 | 95 | 660 | |
| | 2003.11-2008.07 | MT | F | L/R | MPV FWD G4GC | For Modelcode:EC | GCI24001 | Inner Joint | | 27 | 25 | 41 | 62.8 | 92.5 | |
| | 2004.01-2008.07 | 4AT/5MT | F | L/R | MPV Van FWD G4GC | | GCI24135 | Inner Joint | | 27 | 25 | 41 | 62 | 90.5 | |
| 2.0 (104 kw) | 2003.11-2008.07 | AT/MT | F | L/R | MPV FWD G4GC | | GCO24029 | Outer Joint | 47T | 27 | 25 | 60 | 95 | 63.5 | M |
| | 2003.11-2008.07 | AT/MT | F | L/R | MPV FWD G4GC | Date From:2004.02 | GCO24130 | Outer Joint | 47T | 27 | 25 | 60 | 95 | 65 | M |
| | 2003.11-2008.07 | AT/MT | F | L/R | MPV FWD G4GC | | GCO27009 | Outer Joint | | 27 | 25 | 60 | 95 | 63.5 | M |
| | 2003.11-2008.07 | MT | F | L/R | MPV FWD G4GC | | GCI24135 | Inner Joint | | 27 | 25 | 41 | 62 | 90.5 | |
| 2.7 (127 kw) | 2000.02-2008.07 | 4AT | F | L | MPV FWD G6BA | Date To:2001.11;Inner teeth of wheel side:25 | GDS24014 | Drive Shaft | 47T | 27 | 27 | 60 | 95 | 659 | |
| | 2000.02-2008.07 | 4AT | F | L | MPV FWD G6BA | Date to:2001.11;Inner teeth of wheel side:34 | GDS24094 | Drive Shaft | 47T | 27 | 27 | 60 | 96.5 | 661 | |
| | 2000.02-2008.07 | AT | F | R | MPV FWD G6BA | | GDS24058 | Drive Shaft | 47T | 27 | 27 | 60 | 95 | 976.5 | |
| | 2000.02-2008.07 | AT | F | R | MPV FWD G6BA | | GDS61353 | Intermediate Shaft | | 26 | 27 | | | 408 | |
| | 2000.02-2008.07 | MT | F | L/R | MPV FWD G6BA | | GCO24066 | Outer Joint | 47T | 27 | 26 | 60 | 95 | 69 | M |
| | 2000.02-2008.07 | | F | L | MPV FWD G6BA | | GCI27020 | Inner Joint | | 27 | 25 | 41 | 62 | 100.5 | |
| **Tucson** | | | | | | | | | | | | | | | |
| 1.6 (85 kw) | 2018.08-2020.09 | 6MT | F | L | SUV 4WD D4FE | | GDS58252 | Drive Shaft | 48T | 30 | 28 | 73 | 95 | 674 | |
| | 2018.08-2020.09 | 6MT | F | R | SUV 4WD D4FE | | GDS58251 | Drive Shaft | 48T | 30 | 28 | 73 | 95 | 655 | |
| | 2018.08-2020.09 | 6MT | F | L | SUV 4WD D4FE | | GCI81747 | Inner Joint | | 28 | 32 | 41 | 61.5 | 101 | |
| | 2018.08-2020.09 | 6MT | F | R | SUV 4WD D4FE | | GCI81150 | Inner Joint | | 28 | 32 | 44.1 | | 116 | |
| | 2018.08-2020.09 | 6MT | R | L/R | SUV 4WD D4FE | | GDS83156 | Drive Shaft | 48T | 27 | 25 | 62 | 98.5 | 838 | |
| | 2018.08-2020.09 | 6MT | R | L/R | SUV 4WD D4FE | | GCO82315 | Outer Joint | 48T | 27 | 20 | 62 | 98.5 | 43 | M |
| | 2018.08-2020.09 | 6MT | R | L/R | SUV 4WD D4FE | | GCI24154 | Inner Joint | | 25 | 20 | 35 | 62 | 78 | |
| | 2020.11- | 6MT | F | L | SUV FWD D4FE | | GDS57522 | Drive Shaft | | 30 | 27 | 73 | 95 | 681 | |
| | 2020.11- | 6MT | F | R | SUV FWD D4FE | | GDS57523 | Drive Shaft | | 30 | 27 | 73 | 95 | 982 | |
| | 2020.11- | 6MT | F | L | SUV FWD D4FE | | GCO81090 | Outer Joint | | 30 | 24 | 73 | 95 | 59 | M |
| | 2020.11- | 6MT | F | R | SUV FWD D4FE | | GCO83587 | Outer Joint | | 30 | 24 | 73 | 95 | 59 | M |
| | 2020.11- | 6MT | F | L | SUV FWD D4FE | | GCI83724 | Inner Joint | | 27 | 32 | 41 | 61.5 | 107.5 | |
| | 2020.11- | 6MT | F | R | SUV FWD D4FE | | GCI83725 | Inner Joint | | 27 | 32 | 41 | 61.5 | 107.5 | |
| 1.6 (97 kw) | 2015.06-2020.09 | 6AT | F | L | SUV FWD G4FD | | GDS81245 | Drive Shaft | 48T | 30 | 27 | 73 | 95 | 683 | |
| | 2015.06-2020.09 | 6AT | F | R | SUV FWD G4FD | | GDS81254 | Drive Shaft | 48T | 30 | 27 | 73 | 95 | 967 | |
| | 2015.06-2020.09 | 6AT | F | L/R | SUV FWD G4FD | | GCI24126 | Inner Joint | | 27 | 32 | 30 | 67 | 89.5 | |
| | 2015.06-2020.09 | 6AT/6MT | F | L/R | SUV FWD G4FD | | GCO81091 | Outer Joint | 48T | 30 | 24 | 73 | 95 | 59 | M |
| | 2015.06-2020.09 | 6MT | F | L | SUV FWD G4FD | | GDS82331 | Drive Shaft | 48T | 30 | 25 | 73 | 95 | 702 | |
| | 2015.06-2020.09 | 6MT | F | R | SUV FWD G4FD | | GDS82332 | Drive Shaft | 48T | 30 | 25 | 73 | 95 | 976 | |
| | 2015.06-2020.09 | 6MT | F | L/R | SUV FWD G4FD | | GCI81781 | Inner Joint | | 25 | 32 | 41 | 63 | 100.5 | |
| 1.6 (100 kw) | 2018.08-2020.12 | 6MT | F | L | SUV 4WD D4FE | | GDS58252 | Drive Shaft | 48T | 30 | 28 | 73 | 95 | 674 | |
| | 2018.08-2020.12 | 6MT | F | L | SUV 4WD D4FE | | GCI81747 | Inner Joint | | 28 | 32 | 41 | 61.5 | 101 | |
| | 2018.08-2020.12 | 7AT/6MT | F | R | SUV 4WD D4FE | | GDS58251 | Drive Shaft | 48T | 30 | 28 | 73 | 95 | 655 | |
| | 2018.08-2020.12 | 7AT/6MT | F | R | SUV 4WD D4FE | | GCI81150 | Inner Joint | | 28 | 32 | 44.1 | | 116 | |
| | 2018.08-2020.12 | 7AT/6MT | R | L/R | SUV 4WD D4FE | | GDS83156 | Drive Shaft | 48T | 27 | 25 | 62 | 98.5 | 838 | |
| | 2018.08-2020.12 | 7AT/6MT | R | L/R | SUV 4WD D4FE | | GCO82315 | Outer Joint | 48T | 27 | 20 | 62 | 98.5 | 43 | M |
| | 2018.08-2020.12 | 7AT/6MT | R | L/R | SUV 4WD D4FE | | GCI24154 | Inner Joint | | 25 | 20 | 35 | 62 | 78 | |
| | 2018.08-2020.12 | 6MT | F | L | SUV FWD D4FE | | GDS58252 | Drive Shaft | 48T | 30 | 28 | 73 | 95 | 674 | |
| | 2018.08-2020.12 | 6MT | F | R | SUV FWD D4FE | | GDS58251 | Drive Shaft | 48T | 30 | 28 | 73 | 95 | 655 | |
| | 2018.08-2020.12 | 6MT | F | L | SUV FWD D4FE | | GCI81747 | Inner Joint | | 28 | 32 | 41 | 61.5 | 101 | |
| | 2018.08-2020.12 | 6MT | F | R | SUV FWD D4FE | | GCI81150 | Inner Joint | | 28 | 32 | 44.1 | | 116 | |
| | 2018.08-2020.12 | 7DCT | F | L | SUV FWD D4FE | | GDS82335 | Drive Shaft | 48T | 30 | 28 | 73 | 95 | 655 | |
| | 2018.08-2020.12 | 7DCT | F | R | SUV FWD D4FE | | GDS82336 | Drive Shaft | 48T | 30 | 28 | 73 | 95 | 1020 | |
| | 2018.08-2020.12 | 7DCT | F | L/R | SUV FWD D4FE | | GCI81747 | Inner Joint | | 28 | 32 | 41 | 61.5 | 101 | |
| | 2018.08-2020.12 | 7DCT/6MT | F | L/R | SUV FWD D4FE | | GCO81091 | Outer Joint | 48T | 30 | 24 | 73 | 95 | 59 | M |
| | 2018.08-2020.12 | 7DCT | F | L | SUV Van FWD D4FE | | GDS82335 | Drive Shaft | 48T | 30 | 28 | 73 | 95 | 655 | |
| | 2018.08-2020.12 | 7DCT | F | R | SUV Van FWD D4FE | | GDS82336 | Drive Shaft | 48T | 30 | 28 | 73 | 95 | 1020 | |
| | 2018.08-2020.12 | 7DCT | F | L/R | SUV Van FWD D4FE | | GCO81091 | Outer Joint | 48T | 30 | 24 | 73 | 95 | 59 | M |

| | YEAR | TRANSM. | F/R | L/R | BODY STYLE & DRIVE TYPE & ENGINE | REMARKS | G-AP Ref. | PRODUCT | ABS | Technical Specifications | | | | | |
|---|---|---|---|---|---|---|---|---|---|---|---|---|---|---|---|
| | | | | | | | | | | A | B | C | H | L | P |
| **HYUNDAI** | | | | | | | | | | | | | | | |
| **Tucson** | | | | | | | | | | | | | | | |
| 1.6 (100 kw) | 2018.08-2020.12 | 7DCT | F | L/R | SUV Van FWD D4FE | | GCI81747 | Inner Joint | | 28 | 32 | 41 | 61.5 | 101 | |
| | 2019.03-2020.12 | 6MT | F | L | SUV 4WD D4FE | | GDS58252 | Drive Shaft | 48T | 30 | 28 | 73 | 95 | 674 | |
| | 2019.03-2020.12 | 6MT | F | L | SUV 4WD D4FE | | GCI81747 | Inner Joint | | 28 | 32 | 41 | 61.5 | 101 | |
| | 2019.03-2020.12 | 7DCT/6MT | F | R | SUV 4WD D4FE | | GDS58251 | Drive Shaft | 48T | 30 | 28 | 73 | 95 | 655 | |
| | 2019.03-2020.12 | 7DCT/6MT | F | L/R | SUV 4WD D4FE | | GCO81091 | Outer Joint | 48T | 30 | 24 | 73 | 95 | 59 | M |
| | 2019.03-2020.12 | 7DCT/6MT | F | R | SUV 4WD D4FE | | GCI81150 | Inner Joint | | 28 | 32 | 44.1 | | 116 | |
| | 2019.03-2020.12 | 7AT/6MT | R | L/R | SUV 4WD D4FE | | GDS83156 | Drive Shaft | 48T | 27 | 25 | 62 | 98.5 | 838 | |
| | 2019.03-2020.12 | 7AT/6MT | R | L/R | SUV 4WD D4FE | | GCO82315 | Outer Joint | 48T | 27 | 20 | 62 | 98.5 | 43 | M |
| | 2019.03-2020.12 | 7AT/6MT | R | L/R | SUV 4WD D4FE | | GCI24154 | Inner Joint | | 25 | 20 | 35 | 62 | 78 | |
| | 2019.03-2020.12 | 6MT | F | L | SUV FWD D4FE | | GDS58252 | Drive Shaft | 48T | 30 | 28 | 73 | 95 | 674 | |
| | 2019.03-2020.12 | 6MT | F | R | SUV FWD D4FE | | GDS58251 | Drive Shaft | 48T | 30 | 28 | 73 | 95 | 655 | |
| | 2019.03-2020.12 | 6MT | F | L | SUV FWD D4FE | | GCI81747 | Inner Joint | | 28 | 32 | 41 | 61.5 | 101 | |
| | 2019.03-2020.12 | 6MT | F | R | SUV FWD D4FE | | GCI81150 | Inner Joint | | 28 | 32 | 44.1 | | 116 | |
| | 2019.03-2020.12 | 7DCT | F | L | SUV FWD D4FE | | GDS82335 | Drive Shaft | 48T | 30 | 28 | 73 | 95 | 655 | |
| | 2019.03-2020.12 | 7DCT | F | R | SUV FWD D4FE | | GDS82336 | Drive Shaft | 48T | 30 | 28 | 73 | 95 | 1020 | |
| | 2019.03-2020.12 | 7DCT | F | L/R | SUV FWD D4FE | | GCI81747 | Inner Joint | | 28 | 32 | 41 | 61.5 | 101 | |
| | 2019.03-2020.12 | 7DCT/6MT | F | L/R | SUV FWD D4FE | | GCO81091 | Outer Joint | 48T | 30 | 24 | 73 | 95 | 59 | M |
| | 2020.11- | 7DCT | F | L | SUV 4WD D4FE | | GDS56750 | Drive Shaft | | 30 | 28 | 73 | 95 | 644 | |
| | 2020.11- | 7DCT | F | R | SUV 4WD D4FE | | GDS56751 | Drive Shaft | | 30 | 28 | 73 | 95 | 651 | |
| | 2020.11- | 7DCT | F | L/R | SUV 4WD D4FE | | GCO81090 | Outer Joint | | 30 | 24 | 73 | 95 | 59 | M |
| | 2020.11- | 7DCT | F | L | SUV 4WD D4FE | | GCI83472 | Inner Joint | | 28 | 32 | 33 | 67 | 95.5 | |
| | 2020.11- | 7DCT | F | R | SUV 4WD D4FE | | GCI83473 | Inner Joint | | 28 | 32 | 44 | | 123 | |
| | 2020.11- | AT | F | L | SUV 4WD D4FE | | GDS56750 | Drive Shaft | | 30 | 28 | 73 | 95 | 644 | |
| | 2020.11- | AT | F | R | SUV 4WD D4FE | | GDS56751 | Drive Shaft | | 30 | 28 | 73 | 95 | 651 | |
| | 2020.11- | AT | F | L | SUV 4WD D4FE | | GCI83472 | Inner Joint | | 28 | 32 | 33 | 67 | 95.5 | |
| | 2020.11- | AT | F | R | SUV 4WD D4FE | | GCI83473 | Inner Joint | | 28 | 32 | 44 | | 123 | |
| | 2020.11- | 7AT | F | L | SUV FWD D4FE | | GDS56750 | Drive Shaft | | 30 | 28 | 73 | 95 | 644 | |
| | 2020.11- | 7AT | F | R | SUV FWD D4FE | | GDS56751 | Drive Shaft | | 30 | 28 | 73 | 95 | 651 | |
| | 2020.11- | 7AT | F | L | SUV FWD D4FE | | GCI83472 | Inner Joint | | 28 | 32 | 33 | 67 | 95.5 | |
| | 2020.11- | 7DCT | F | L/R | SUV FWD D4FE | | GCO81090 | Outer Joint | | 30 | 24 | 73 | 95 | 59 | M |
| | 2020.11- | AT | F | L | SUV FWD D4FE | | GDS56750 | Drive Shaft | | 30 | 28 | 73 | 95 | 644 | |
| | 2020.11- | AT | F | R | SUV FWD D4FE | | GDS56751 | Drive Shaft | | 30 | 28 | 73 | 95 | 651 | |
| | 2020.11- | AT | F | L | SUV FWD D4FE | | GCI83472 | Inner Joint | | 28 | 32 | 33 | 67 | 95.5 | |
| 1.6 (110 kw) | 2020.11- | 7DCT | F | L | SUV FWD G4FU | | GDS56762 | Drive Shaft | | 30 | 28 | 73 | 95 | 663 | |
| | 2020.11- | 7DCT | F | R | SUV FWD G4FU | | GDS56763 | Drive Shaft | | 30 | 28 | 73 | 95 | 590 | |
| | 2020.11- | 7DCT | F | L/R | SUV FWD G4FU | | GCO81092 | Outer Joint | | 30 | 25 | 73 | 95 | 64 | M |
| | 2020.11- | 7DCT | F | L | SUV FWD G4FU | | GCI82295 | Inner Joint | | 28 | 33 | 33 | 67 | 94.5 | |
| | 2020.11- | 7DCT | F | R | SUV FWD G4FU | | GCI82294 | Inner Joint | | 28 | 33 | 44.1 | | 121 | |
| | 2022.01- | AT | F | R | SUV 4WD G4FP | | GDS56763 | Drive Shaft | | 30 | 28 | 73 | 95 | 590 | |
| | 2022.01- | AT | F | L/R | SUV 4WD G4FP | | GCO81092 | Outer Joint | | 30 | 25 | 73 | 95 | 64 | M |
| | 2022.01- | AT | F | R | SUV 4WD G4FP | | GCI82294 | Inner Joint | | 28 | 33 | 44.1 | | 121 | |
| 1.6 (118 kw) | 2024.06- | 7DCT | F | L | SUV 4WD G4FU | | GDS56762 | Drive Shaft | | 30 | 28 | 73 | 95 | 663 | |
| | 2024.06- | 7DCT | F | R | SUV 4WD G4FU | | GDS56763 | Drive Shaft | | 30 | 28 | 73 | 95 | 590 | |
| | 2024.06- | 7DCT | F | L/R | SUV 4WD G4FU | | GCO81092 | Outer Joint | | 30 | 25 | 73 | 95 | 64 | M |
| | 2024.06- | 7DCT | F | L | SUV 4WD G4FU | | GCI82295 | Inner Joint | | 28 | 33 | 33 | 67 | 94.5 | |
| | 2024.06- | 7DCT | F | R | SUV 4WD G4FU | | GCI82294 | Inner Joint | | 28 | 33 | 44.1 | | 121 | |
| 1.6 (130 kw) | 2015.06-2020.09 | 6MT | F | L | SUV 4WD G4FJ | Vehicle Production Country:Czech Republic;For Modelcode:TLE | GDS58114 | Drive Shaft | 48T | 30 | 27 | 73 | 95 | 683 | |
| | 2015.06-2020.09 | 6MT | F | R | SUV 4WD G4FJ | Vehicle Production Country:Czech Republic;For Modelcode:TLE | GDS58115 | Drive Shaft | 48T | 30 | 28 | 73 | 95 | 586 | |
| | 2015.06-2020.09 | 6MT | F | L/R | SUV 4WD G4FJ | Vehicle Production Country:Czech Republic;For Modelcode:TLE | GCO83620 | Outer Joint | 48T | 30 | 26 | 73 | 95 | 67.5 | M |
| | 2015.06-2020.09 | 6MT | F | L | SUV 4WD G4FJ | For Modelcode:TLE;Vehicle Production Country:Czech Republic | GCI81149 | Inner Joint | | 27 | 33 | 41 | 61.5 | 105 | |
| | 2015.06-2020.09 | 7AT/7DCT | F | R | SUV 4WD G4FJ | [illegible] | GCI81748 | Inner Joint | | 28 | 33 | 44.1 | | 121 | |
| | 2015.06-2020.09 | 7DCT | F | L | SUV 4WD G4FJ | Model code:TLE;vehicle production country:Czech Republic | GDS82334 | Drive Shaft | 48T | 30 | 27 | 73 | 95 | 654 | |
| | 2015.06-2020.09 | 7DCT | F | R | SUV 4WD G4FJ | For Modelcode:TLE;Vehicle Production Country:Czech Republic;For Modelcode:TL;Vehicle Production Country:South Korea | GDS83786 | Drive Shaft | 48T | 30 | 28 | 73 | 95 | 586 | |
| | 2015.06-2020.09 | 7DCT | F | L/R | SUV 4WD G4FJ | For Modelcode:TLE;Vehicle Production Country:Czech Republic;For Modelcode:TL;Vehicle Production Country:South Korea | GCO81095 | Outer Joint | 48T | 30 | 25 | 73 | 95 | 65 | M |
| | 2015.06-2020.09 | 7AT/6MT | R | L/R | SUV 4WD G4FJ | For Modelcode:TLE;Vehicle Production Country:Czech Republic | GDS83156 | Drive Shaft | 48T | 27 | 25 | 62 | 98.5 | 838 | |
| | 2015.06-2020.09 | 7AT/6MT | R | L/R | SUV 4WD G4FJ | Vehicle Production Country:Czech Republic;For Modelcode:TLE | GCO82315 | Outer Joint | 48T | 27 | 20 | 62 | 98.5 | 43 | M |
| | 2015.06-2020.09 | 7AT/6MT | R | L/R | SUV 4WD G4FJ | | GCI24154 | Inner Joint | | 25 | 20 | 35 | 62 | 78 | |
| | 2015.06-2020.12 | 7DCT | F | L | SUV Van FWD G4FJ | Vehicle Production Country:Czech Republic | GDS56643 | Drive Shaft | 48T | 30 | 28 | 73 | 95 | 656 | |
| | 2015.06-2020.12 | 7DCT | F | R | SUV Van FWD G4FJ | Vehicle Production Country:Czech Republic | GDS83786 | Drive Shaft | 48T | 30 | 28 | 73 | 95 | 586 | |
| | 2015.06-2020.12 | 7DCT | F | L/R | SUV Van FWD G4FJ | Vehicle Production Country:Czech Republic | GCO81095 | Outer Joint | 48T | 30 | 25 | 73 | 95 | 65 | M |
| | 2015.06-2020.12 | 7DCT | F | L | SUV Van FWD G4FJ | Vehicle Production Country:Czech Republic | GCI82622 | Inner Joint | | 28 | 33 | 41 | 61.5 | 107.5 | |
| | 2015.06-2020.12 | 7DCT | F | R | SUV Van FWD G4FJ | Vehicle Production Country:Czech Republic | GCI81748 | Inner Joint | | 28 | 33 | 44.1 | | 121 | |
| | 2015.06-2020.12 | 7DCT | F | R | SUV Van FWD G4FJ | Date from:2016.03,Date to:2017.08;Vehicle Production Country:Czech Republic | GDS82857 | Intermediate Shaft | | 28 | 28 | | | 469 | |
| | 2015.06-2023.05 | 6AT | F | L | SUV FWD G4FJ | | GDS81245 | Drive Shaft | 48T | 30 | 27 | 73 | 95 | 683 | |
| | 2015.06-2023.05 | 6AT | F | R | SUV FWD G4FJ | | GDS81254 | Drive Shaft | 48T | 30 | 27 | 73 | 95 | 967 | |

| | YEAR | TRANSM. | F/R | L/R | BODY STYLE & DRIVE TYPE & ENGINE | REMARKS | G-AP Ref. | PRODUCT | ABS | Technical Specifications A | B | C | H | L | P |
|---|---|---|---|---|---|---|---|---|---|---|---|---|---|---|---|
| **HYUNDAI** **Tucson** | | | | | | | | | | | | | | | |
| 1.6 (130 kw) | 2015.06-2023.05 | 6AT | F | L/R | SUV FWD G4FJ | | GCO81091 | Outer Joint | 48T | 30 | 24 | 73 | 95 | 59 | M |
| | 2015.06-2023.05 | 6AT | F | L/R | SUV FWD G4FJ | | GCI24126 | Inner Joint | | 27 | 32 | 30 | 67 | 89.5 | |
| | 2015.06-2023.05 | 6MT | F | L | SUV FWD G4FJ | Vehicle Production Country:Czech Republic;For Modelcode:TLE | GDS58114 | Drive Shaft | 48T | 30 | 27 | 73 | 95 | 683 | |
| | 2015.06-2023.05 | 6MT | F | R | SUV FWD G4FJ | Vehicle Production Country:Czech Republic;For Modelcode:TLE | GDS58115 | Drive Shaft | 48T | 30 | 28 | 73 | 95 | 586 | |
| | 2015.06-2023.05 | 6MT | F | L/R | SUV FWD G4FJ | Vehicle Production Country:Czech Republic;For Modelcode:TLE | GCO83620 | Outer Joint | 48T | 30 | 26 | 73 | 95 | 67.5 | M |
| | 2015.06-2023.05 | 6MT | F | L | SUV FWD G4FJ | For Modelcode:TLE;Vehicle Production Country:Czech Republic | GCI81149 | Inner Joint | | 27 | 33 | 41 | 61.5 | 105 | |
| | 2015.06-2023.05 | 6MT/7DCT | F | R | SUV FWD G4FJ | For Modelcode:TL;Vehicle Production Country:Czech Republic;For Modelcode:TLE;Vehicle Production Country:Czech Republic | GCI81748 | Inner Joint | | 28 | 33 | 44.1 | | 121 | |
| | 2015.06-2023.05 | 7DCT | F | L | SUV FWD G4FJ | For Modelcode:TL;Vehicle Production Country:South Korea;For Modelcode:TLE;Vehicle Production Country:Czech Republic | GDS56643 | Drive Shaft | 48T | 30 | 28 | 73 | 95 | 656 | |
| | 2015.06-2023.05 | 7DCT | F | R | SUV FWD G4FJ | For Modelcode:TLE;Vehicle Production Country:Czech Republic;For Modelcode:TL;Vehicle Production Country:South Korea | GDS83786 | Drive Shaft | 48T | 30 | 28 | 73 | 95 | 586 | |
| | 2015.06-2023.05 | 7DCT | F | L/R | SUV FWD G4FJ | For Modelcode:TLE;Vehicle Production Country:Czech Republic;For Modelcode:TL;Vehicle Production Country:South Korea | GCO81095 | Outer Joint | 48T | 30 | 25 | 73 | 95 | 65 | M |
| | 2015.06-2023.05 | 7DCT | F | L | SUV FWD G4FJ | For Modelcode:TL;Vehicle Production Country:South Korea | GCI82622 | Inner Joint | | 28 | 33 | 41 | 61.5 | 107.5 | |
| | 2015.06-2023.05 | 7DCT | F | R | SUV FWD G4FJ | For Modelcode:TL;Vehicle Production Country:South Korea;For Modelcode:TLE;Vehicle Production Country:Czech Republic | GDS82857 | Intermediate Shaft | | 28 | 28 | | | 469 | |
| 1.6 (132 kw) | 2020.11- | AT | F | L | SUV 4WD G4FU | | GDS56762 | Drive Shaft | | 30 | 28 | 73 | 95 | 663 | |
| | 2020.11- | AT | F | R | SUV 4WD G4FU | | GDS56763 | Drive Shaft | | 30 | 28 | 73 | 95 | 590 | |
| | 2020.11- | AT | F | L/R | SUV 4WD G4FU | | GCO81092 | Outer Joint | | 30 | 25 | 73 | 95 | 64 | M |
| | 2020.11- | AT | F | L | SUV 4WD G4FU | | GCI82295 | Inner Joint | | 28 | 33 | 33 | 67 | 94.5 | |
| | 2020.11- | AT | F | R | SUV 4WD G4FU | | GCI82294 | Inner Joint | | 28 | 33 | 44.1 | | 121 | |
| | 2021.01- | 7DCT | F | L | SUV 4WD G4FP | | GDS56762 | Drive Shaft | | 30 | 28 | 73 | 95 | 663 | |
| | 2021.01- | 7DCT | F | R | SUV 4WD G4FP | | GDS56763 | Drive Shaft | | 30 | 28 | 73 | 95 | 590 | |
| | 2021.01- | 7DCT | F | L/R | SUV 4WD G4FP | | GCO81092 | Outer Joint | | 30 | 25 | 73 | 95 | 64 | M |
| | 2021.01- | 7DCT | F | L | SUV 4WD G4FP | | GCI82295 | Inner Joint | | 28 | 33 | 33 | 67 | 94.5 | |
| | 2021.01- | 7DCT | F | R | SUV 4WD G4FP | | GCI82294 | Inner Joint | | 28 | 33 | 44.1 | | 121 | |
| | 2021.07- | 7DCT | F | L | SUV FWD G4FP | | GDS56762 | Drive Shaft | | 30 | 28 | 73 | 95 | 663 | |
| | 2021.07- | 7DCT | F | R | SUV FWD G4FP | | GDS56763 | Drive Shaft | | 30 | 28 | 73 | 95 | 590 | |
| | 2021.07- | 7DCT | F | L/R | SUV FWD G4FP | | GCO81092 | Outer Joint | | 30 | 25 | 73 | 95 | 64 | M |
| | 2021.07- | 7DCT | F | L | SUV FWD G4FP | | GCI82295 | Inner Joint | | 28 | 33 | 33 | 67 | 94.5 | |
| | 2021.07- | 7DCT | F | R | SUV FWD G4FP | | GCI82294 | Inner Joint | | 28 | 33 | 44.1 | | 121 | |
| 1.6 (158 kw) | 2024.06- | 6AT | F | R | SUV 4WD G4FP | | GDS56763 | Drive Shaft | | 30 | 28 | 73 | 95 | 590 | |
| | 2024.06- | AT | F | R | SUV 4WD G4FP | | GCI82294 | Inner Joint | | 28 | 33 | 44.1 | | 121 | |
| | 2024.06- | 6AT | F | R | SUV FWD G4FP | | GDS56763 | Drive Shaft | | 30 | 28 | 73 | 95 | 590 | |
| | 2024.06- | AT | F | R | SUV FWD G4FP | | GCI82294 | Inner Joint | | 28 | 33 | 44.1 | | 121 | |
| 1.6 (169 kw) | 2020.11- | 6AT | F | R | SUV 4WD G4FT | | GDS56763 | Drive Shaft | | 30 | 28 | 73 | 95 | 590 | |
| | 2020.11- | 6AT | F | R | SUV 4WD G4FT | | GCI82294 | Inner Joint | | 28 | 33 | 44.1 | | 121 | |
| | 2020.11- | AT | F | L | SUV 4WD G4FT | | GCI82295 | Inner Joint | | 28 | 33 | 33 | 67 | 94.5 | |
| | 2020.11- | 6AT | F | R | SUV FWD G4FT | | GDS56763 | Drive Shaft | | 30 | 28 | 73 | 95 | 590 | |
| | 2020.11- | 6AT | F | R | SUV FWD G4FT | | GCI82294 | Inner Joint | | 28 | 33 | 44.1 | | 121 | |
| | 2020.11- | AT | F | L | SUV FWD G4FT | | GCI82295 | Inner Joint | | 28 | 33 | 33 | 67 | 94.5 | |
| 1.6 (176 kw) | 2025.07- | 6AT | F | R | SUV 4WD G4FP | | GDS56763 | Drive Shaft | | 30 | 28 | 73 | 95 | 590 | |
| | 2025.07- | AT | F | R | SUV 4WD G4FP | | GCI82294 | Inner Joint | | 28 | 33 | 44.1 | | 121 | |
| | 2025.07- | 6AT | F | R | SUV FWD G4FP | | GDS56763 | Drive Shaft | | 30 | 28 | 73 | 95 | 590 | |
| | 2025.07- | AT | F | R | SUV FWD G4FP | | GCI82294 | Inner Joint | | 28 | 33 | 44.1 | | 121 | |
| 1.6 (185 kw) | 2024.06- | 6AT | F | L | SUV 4WD G4FT | | GDS57679 | Drive Shaft | | 30 | 28 | 73 | 95 | 645 | |
| | 2024.06- | 6AT | F | R | SUV 4WD G4FT | | GDS56763 | Drive Shaft | | 30 | 28 | 73 | 95 | 590 | |
| | 2024.06- | 6AT | F | L/R | SUV 4WD G4FT | | GCO81092 | Outer Joint | | 30 | 25 | 73 | 95 | 64 | M |
| | 2024.06- | 6AT | F | L | SUV 4WD G4FT | | GCI82295 | Inner Joint | | 28 | 33 | 33 | 67 | 94.5 | |
| | 2024.06- | AT | F | R | SUV 4WD G4FT | | GCI82294 | Inner Joint | | 28 | 33 | 44.1 | | 121 | |
| | 2024.06- | 6AT | F | L | SUV FWD G4FT | | GDS57679 | Drive Shaft | | 30 | 28 | 73 | 95 | 645 | |
| | 2024.06- | 6AT | F | R | SUV FWD G4FT | | GDS56763 | Drive Shaft | | 30 | 28 | 73 | 95 | 590 | |
| | 2024.06- | AT | F | R | SUV FWD G4FT | | GCI82294 | Inner Joint | | 28 | 33 | 44.1 | | 121 | |
| 1.6 (195 kw) | 2021.05- | 6AT | F | L | SUV 4WD G4FP;G4FT | | GDS57679 | Drive Shaft | | 30 | 28 | 73 | 95 | 645 | |
| | 2021.05- | 6AT | F | R | SUV 4WD G4FP;G4FT | | GDS56763 | Drive Shaft | | 30 | 28 | 73 | 95 | 590 | |
| | 2021.05- | 6AT | F | L/R | SUV 4WD G4FP;G4FT | | GCO81092 | Outer Joint | | 30 | 25 | 73 | 95 | 64 | M |
| | 2021.05- | 6AT | F | L | SUV 4WD G4FP;G4FT | | GCI82295 | Inner Joint | | 28 | 33 | 33 | 67 | 94.5 | |
| | 2021.05- | 6AT | F | R | SUV 4WD G4FP;G4FT | | GCI82294 | Inner Joint | | 28 | 33 | 44.1 | | 121 | |
| 1.6 (212 kw) | 2025.11- | 6AT | F | R | SUV FWD G4FZ | | GDS56763 | Drive Shaft | | 30 | 28 | 73 | 95 | 590 | |
| | 2025.11- | AT | F | R | SUV FWD G4FZ | | GCI82294 | Inner Joint | | 28 | 33 | 44.1 | | 121 | |
| 1.7 (85 kw) | 2015.06-2020.09 | 6MT | F | L | SUV FWD D4FD | | GDS83623 | Drive Shaft | 48T | 30 | 27 | 73 | 95 | 684 | |
| | 2015.06-2020.09 | 6MT | F | R | SUV FWD D4FD | | GDS82245 | Drive Shaft | 48T | 30 | 27 | 73 | 95 | 991 | |
| | 2015.06-2020.09 | 6MT | F | L/R | SUV FWD D4FD | | GCO81091 | Outer Joint | 48T | 30 | 24 | 73 | 95 | 59 | M |
| | 2015.06-2020.09 | 6MT | F | L/R | SUV FWD D4FD | | GCI81693 | Inner Joint | | 27 | 32 | 41 | 61.5 | 100.5 | |
| 1.7 (104 kw) | 2015.06-2020.09 | 6MT | F | L | SUV FWD D4FD | | GDS83623 | Drive Shaft | 48T | 30 | 27 | 73 | 95 | 684 | |
| | 2015.06-2020.09 | 6MT | F | R | SUV FWD D4FD | | GDS82245 | Drive Shaft | 48T | 30 | 27 | 73 | 95 | 991 | |
| | 2015.06-2020.09 | 6MT | F | L/R | SUV FWD D4FD | | GCI81693 | Inner Joint | | 27 | 32 | 41 | 61.5 | 100.5 | |
| | 2015.06-2020.09 | 6MT/7DCT | F | L/R | SUV FWD D4FD | | GCO81091 | Outer Joint | 48T | 30 | 24 | 73 | 95 | 59 | M |
| | 2015.06-2020.09 | 7DCT | F | L | SUV FWD D4FD | | GDS82335 | Drive Shaft | 48T | 30 | 28 | 73 | 95 | 655 | |

| | YEAR | TRANSM. | F/R | L/R | BODY STYLE & DRIVE TYPE & ENGINE | REMARKS | G-AP Ref. | PRODUCT | ABS | Technical Specifications A | B | C | H | L | P |
|---|---|---|---|---|---|---|---|---|---|---|---|---|---|---|---|
| **HYUNDAI** **Tucson** | | | | | | | | | | | | | | | |
| 1.7 (104 kw) | 2015.06-2020.09 | 7DCT | F | R | SUV FWD D4FD | | GDS82336 | Drive Shaft | 48T | 30 | 28 | 73 | 95 | 1020 | |
| | 2015.06-2020.09 | 7DCT | F | L/R | SUV FWD D4FD | | GCI81747 | Inner Joint | | 28 | 32 | 41 | 61.5 | 101 | |
| 2.0 (83 kw) | 2004.08-2010.03 | 5MT | F | L | SUV 4WD D4EA | ABS ring thickness 15.5mm | GCO27067 | Outer Joint | 48T | 27 | 24 | 62.1 | 95 | 63 | M |
| | 2004.08-2010.03 | 5MT | F | L/R | SUV 4WD D4EA | ABS ring thickness 15.5mm | GCO24048 | Outer Joint | 48T | 27 | 23 | 62.2 | 95 | 60 | M |
| | 2004.08-2010.03 | 5MT | F | L/R | SUV 4WD D4EA | ABS ring thickness 13.5mm | GCO24094 | Outer Joint | 48T | 27 | 26 | 62 | 94.5 | 65 | M |
| | 2004.08-2010.03 | 5MT | F | L | SUV 4WD D4EA | | GCI24013 | Inner Joint | | 27 | 33 | 41 | 61.5 | 107 | |
| | 2004.08-2010.03 | 5MT | F | L | SUV 4WD D4EA | | GCI27031 | Inner Joint | | 27 | 24 | 41 | 61.5 | 100 | |
| | 2004.08-2010.03 | 5MT | F | R | SUV 4WD D4EA | Date from:2006.03 | GCI27024 | Inner Joint | | 26 | 24 | 42 | | 115 | |
| | 2004.08-2010.03 | AT | F | R | SUV 4WD D4EA | | GDS24173 | Drive Shaft | 48T | 27 | 26 | 62.2 | 95 | 609 | |
| | 2004.08-2010.03 | AT | F | L | SUV 4WD D4EA | | GCO27067 | Outer Joint | 48T | 27 | 24 | 62.1 | 95 | 63 | M |
| | 2004.08-2010.03 | AT | F | L/R | SUV 4WD D4EA | ABS ring thickness 15.5mm | GCO24049 | Outer Joint | 48T | 27 | 25 | 62.2 | 95 | 60 | M |
| | 2004.08-2010.03 | AT | F | L/R | SUV 4WD D4EA | ABS ring thickness 13.5mm | GCO24090 | Outer Joint | 48T | 27 | 25 | 61.9 | 95 | 61 | M |
| | 2004.08-2010.03 | AT | F | R | SUV 4WD D4EA | | GCI24030 | Inner Joint | | 26 | 25 | 42 | | 108 | |
| | 2004.08-2010.03 | AT | F | R | SUV 4WD D4EA | | GCI39063 | Inner Joint | | 26 | 25 | 42 | | 108 | |
| | 2004.08-2010.03 | AT/5MT | F | L | SUV 4WD D4EA | | GDS27232 | Drive Shaft | 48T | 27 | 27 | 62.1 | 95 | 670 | |
| | 2004.08-2010.03 | | F | R | SUV 4WD D4EA | | GDS27105 | Drive Shaft | 48T | 27 | 26 | 62.1 | 95 | 608 | |
| | 2004.08-2010.03 | 4AT/5MT | R | L/R | SUV 4WD D4EA | Date to:2008.07 | GDS24324 | Drive Shaft | 48T | 27 | 25 | 60 | 94 | 802 | |
| | 2004.08-2010.03 | 4AT/5MT | R | L/R | SUV 4WD D4EA | Date to:2008.07 | GCO24178 | Outer Joint | 48T | 27 | 23 | 60 | 94 | 60 | M |
| | 2004.08-2010.03 | 4AT/5MT | R | L/R | SUV 4WD D4EA | Date to:2008.07 | GCI24032 | Inner Joint | | 25 | 23 | 35 | 63 | 88 | |
| | 2004.08-2010.03 | 5MT | F | L | SUV FWD D4EA | | GDS27232 | Drive Shaft | 48T | 27 | 27 | 62.1 | 95 | 670 | |
| | 2004.08-2010.03 | 5MT | F | L | SUV FWD D4EA | ABS ring thickness 13.5mm | GCO24090 | Outer Joint | 48T | 27 | 25 | 61.9 | 95 | 61 | M |
| | 2004.08-2010.03 | 5MT | F | L/R | SUV FWD D4EA | | GCO24094 | Outer Joint | 48T | 27 | 26 | 62 | 94.5 | 65 | M |
| | 2004.08-2010.03 | 5MT | F | L | SUV FWD D4EA | | GCI27031 | Inner Joint | | 27 | 24 | 41 | 61.5 | 100 | |
| | 2004.08-2010.03 | 5MT | F | L/R | SUV FWD D4EA | | GCI24013 | Inner Joint | | 27 | 33 | 41 | 61.5 | 107 | |
| | 2004.08-2010.03 | AT | F | | SUV FWD D4EA | GrooveType:Inner | GCO24103 | Outer Joint | 48T | 27 | 23 | 62.2 | 95 | 60 | I |
| | 2004.08-2010.03 | | F | R | SUV FWD D4EA | | GDS27105 | Drive Shaft | 48T | 27 | 26 | 62.1 | 95 | 608 | |
| | 2004.08-2010.03 | | F | | SUV FWD D4EA | ABS ring thickness 15.5mm | GCO24049 | Outer Joint | 48T | 27 | 25 | 62.2 | 95 | 60 | M |
| 2.0 (88 kw) | 2007.01-2010.03 | 5MT | F | L | SUV 4WD D4EA | | GCO24094 | Outer Joint | 48T | 27 | 26 | 62 | 94.5 | 65 | M |
| | 2007.01-2010.03 | 5MT | F | L | SUV 4WD D4EA | | GCI24013 | Inner Joint | | 27 | 33 | 41 | 61.5 | 107 | |
| | 2007.01-2010.03 | 5MT | F | L | SUV 4WD D4EA | | GCI27031 | Inner Joint | | 27 | 24 | 41 | 61.5 | 100 | |
| | 2007.01-2010.03 | 5MT | F | R | SUV 4WD D4EA | | GCI27024 | Inner Joint | | 26 | 24 | 42 | | 115 | |
| | 2007.01-2010.03 | 6MT | F | L/R | SUV 4WD D4EA | | GCO24148 | Outer Joint | 48T | 30 | 36 | 65 | 93 | 67.5 | I |
| | 2007.01-2010.03 | AT | F | R | SUV 4WD D4EA | | GDS24173 | Drive Shaft | 48T | 27 | 26 | 62.2 | 95 | 609 | |
| | 2007.01-2010.03 | AT | F | L | SUV 4WD D4EA | | GCO27067 | Outer Joint | 48T | 27 | 24 | 62.1 | 95 | 63 | M |
| | 2007.01-2010.03 | AT | F | L/R | SUV 4WD D4EA | | GCO24049 | Outer Joint | 48T | 27 | 25 | 62.2 | 95 | 60 | M |
| | 2007.01-2010.03 | AT | F | L/R | SUV 4WD D4EA | | GCO24090 | Outer Joint | 48T | 27 | 25 | 61.9 | 95 | 61 | M |
| | 2007.01-2010.03 | AT | F | R | SUV 4WD D4EA | Original design | GCI24030 | Inner Joint | | 26 | 25 | 42 | | 108 | |
| | 2007.01-2010.03 | AT | F | R | SUV 4WD D4EA | Non-Original design | GCI39063 | Inner Joint | | 26 | 25 | 42 | | 108 | |
| | 2007.01-2010.03 | AT/5MT | F | L | SUV 4WD D4EA | | GDS27232 | Drive Shaft | 48T | 27 | 27 | 62.1 | 95 | 670 | |
| | 2007.01-2010.03 | 4AT/5MT | R | L/R | SUV 4WD D4EA | | GDS24324 | Drive Shaft | 48T | 27 | 25 | 60 | 94 | 802 | |
| | 2007.01-2010.03 | 4AT/5MT | R | L/R | SUV 4WD D4EA | | GCI24032 | Inner Joint | | 25 | 23 | 35 | 63 | 88 | |
| | 2007.01-2010.03 | 4AT/5MT/6MT | R | L/R | SUV 4WD D4EA | | GCO24178 | Outer Joint | 48T | 27 | 23 | 60 | 94 | 60 | M |
| | 2007.01-2010.03 | 5MT | F | L | SUV FWD D4EA | | GDS27232 | Drive Shaft | 48T | 27 | 27 | 62.1 | 95 | 670 | |
| | 2007.01-2010.03 | 5MT | F | L | SUV FWD D4EA | ABS ring thickness 13.5mm | GCO24090 | Outer Joint | 48T | 27 | 25 | 61.9 | 95 | 61 | M |
| | 2007.01-2010.03 | 5MT | F | L | SUV FWD D4EA | ABS ring thickness 15.5mm | GCO27067 | Outer Joint | 48T | 27 | 24 | 62.1 | 95 | 63 | M |
| | 2007.01-2010.03 | 5MT | F | L/R | SUV FWD D4EA | ABS ring thickness 13.5mm | GCO24094 | Outer Joint | 48T | 27 | 26 | 62 | 94.5 | 65 | M |
| | 2007.01-2010.03 | 5MT | F | L | SUV FWD D4EA | | GCI27031 | Inner Joint | | 27 | 24 | 41 | 61.5 | 100 | |
| | 2007.01-2010.03 | 5MT | F | L/R | SUV FWD D4EA | | GCI24013 | Inner Joint | | 27 | 33 | 41 | 61.5 | 107 | |
| | 2007.01-2010.03 | 6MT | F | L/R | SUV FWD D4EA | | GCO24148 | Outer Joint | 48T | 30 | 36 | 65 | 93 | 67.5 | I |
| 2.0 (100 kw) | 2006.01-2010.03 | 5MT | F | L | SUV 4WD D4EA | | GDS27232 | Drive Shaft | 48T | 27 | 27 | 62.1 | 95 | 670 | |
| | 2006.01-2010.03 | 5MT | F | R | SUV 4WD D4EA | Date from:2006.03 | GDS24173 | Drive Shaft | 48T | 27 | 26 | 62.2 | 95 | 609 | |
| | 2006.01-2010.03 | 5MT | F | L | SUV 4WD D4EA | ABS ring thickness 13.5mm | GCO24090 | Outer Joint | 48T | 27 | 25 | 61.9 | 95 | 61 | M |
| | 2006.01-2010.03 | 5MT | F | L | SUV 4WD D4EA | | GCO27067 | Outer Joint | 48T | 27 | 24 | 62.1 | 95 | 63 | M |
| | 2006.01-2010.03 | 5MT | F | L/R | SUV 4WD D4EA | | GCO24048 | Outer Joint | 48T | 27 | 23 | 62.2 | 95 | 60 | M |
| | 2006.01-2010.03 | 5MT | F | L/R | SUV 4WD D4EA | ABS ring thickness 15.5mm | GCO24049 | Outer Joint | 48T | 27 | 25 | 62.2 | 95 | 60 | M |
| | 2006.01-2010.03 | 5MT | F | L/R | SUV 4WD D4EA | | GCO24094 | Outer Joint | 48T | 27 | 26 | 62 | 94.5 | 65 | M |
| | 2006.01-2010.03 | 5MT | F | L | SUV 4WD D4EA | | GCI24013 | Inner Joint | | 27 | 33 | 41 | 61.5 | 107 | |
| | 2006.01-2010.03 | 5MT | F | L | SUV 4WD D4EA | | GCI27031 | Inner Joint | | 27 | 24 | 41 | 61.5 | 100 | |
| | 2006.01-2010.03 | 5MT | F | R | SUV 4WD D4EA | Date from:2006.03 | GCI27024 | Inner Joint | | 26 | 24 | 42 | | 115 | |
| | 2006.01-2010.03 | 6MT | F | L/R | SUV 4WD D4EA | | GCO24148 | Outer Joint | 48T | 30 | 36 | 65 | 93 | 67.5 | I |
| | 2006.01-2010.03 | 5MT/6MT | R | L/R | SUV 4WD D4EA | Date to:2008.07 | GDS24324 | Drive Shaft | 48T | 27 | 25 | 60 | 94 | 802 | |
| | 2006.01-2010.03 | 5MT/6MT | R | L/R | SUV 4WD D4EA | | GCO24178 | Outer Joint | 48T | 27 | 23 | 60 | 94 | 60 | M |
| | 2006.01-2010.03 | 5MT/6MT | R | L/R | SUV 4WD D4EA | Date to:2008.07 | GCI24032 | Inner Joint | | 25 | 23 | 35 | 63 | 88 | |
| | 2006.01-2010.03 | 5MT | F | L | SUV FWD D4EA | | GDS27232 | Drive Shaft | 48T | 27 | 27 | 62.1 | 95 | 670 | |
| | 2006.01-2010.03 | 5MT | F | L | SUV FWD D4EA | ABS ring thickness 13.5mm | GCO24090 | Outer Joint | 48T | 27 | 25 | 61.9 | 95 | 61 | M |

| | YEAR | TRANSM. | F/R | L/R | BODY STYLE & DRIVE TYPE & ENGINE | REMARKS | G-AP Ref. | PRODUCT | ABS | Technical Specifications | | | | | |
|---|---|---|---|---|---|---|---|---|---|---|---|---|---|---|---|
| | | | | | | | | | | A | B | C | H | L | P |
| **HYUNDAI** | | | | | | | | | | | | | | | |
| **Tucson** | | | | | | | | | | | | | | | |
| 2.0 (100 kw) | 2006.01-2010.03 | 5MT | F | L/R | SUV FWD D4EA | | GCO24094 | Outer Joint | 48T | 27 | 26 | 62 | 94.5 | 65 | M |
| | 2006.01-2010.03 | 5MT | F | L | SUV FWD D4EA | | GCI24013 | Inner Joint | | 27 | 33 | 41 | 61.5 | 107 | |
| | 2006.01-2010.03 | 5MT | F | L | SUV FWD D4EA | | GCI24044 | Inner Joint | | 27 | 25 | 41 | 62 | 87 | |
| | 2006.01-2010.03 | 5MT | F | L | SUV FWD D4EA | | GCI27031 | Inner Joint | | 27 | 24 | 41 | 61.5 | 100 | |
| | 2006.01-2010.03 | 5MT | F | R | SUV FWD D4EA | | GCI24030 | Inner Joint | | 26 | 25 | 42 | | 108 | |
| | 2006.01-2010.03 | AT | F | | SUV FWD D4EA | GrooveType:Inner | GCO24103 | Outer Joint | 48T | 27 | 23 | 62.2 | 95 | 60 | I |
| | 2006.01-2010.03 | | F | | SUV FWD D4EA | ABS ring thickness 15.5mm | GCO24049 | Outer Joint | 48T | 27 | 25 | 62.2 | 95 | 60 | M |
| | 2015.06-2020.09 | 6AT | F | L/R | SUV 4WD D4HA | | GCO81093 | Outer Joint | 48T | 30 | 25 | 73 | 95 | 64 | M |
| | 2015.06-2020.09 | 6MT | F | L | SUV 4WD D4HA | | GDS56718 | Drive Shaft | 48T | 30 | 28 | 73 | 95 | 682 | |
| | 2015.06-2020.09 | 6MT | F | R | SUV 4WD D4HA | | GDS83786 | Drive Shaft | 48T | 30 | 28 | 73 | 95 | 586 | |
| | 2015.06-2020.09 | 6MT | F | L/R | SUV 4WD D4HA | | GCO81095 | Outer Joint | 48T | 30 | 25 | 73 | 95 | 65 | M |
| | 2015.06-2020.09 | 6MT | F | L | SUV 4WD D4HA | | GCI82622 | Inner Joint | | 28 | 33 | 41 | 61.5 | 107.5 | |
| | 2015.06-2020.09 | 6MT/6AT | F | R | SUV 4WD D4HA | | GCI81748 | Inner Joint | | 28 | 33 | 44.1 | | 121 | |
| | 2015.06-2020.09 | AT | F | L | SUV 4WD D4HA | | GDS82221 | Drive Shaft | 48T | 30 | 28 | 73 | 95 | 671 | |
| | 2015.06-2020.09 | AT | F | R | SUV 4WD D4HA | | GDS82337 | Drive Shaft | 48T | 30 | 28 | 73 | 95 | 583 | |
| | 2015.06-2020.09 | AT | F | L | SUV 4WD D4HA | | GCI81676 | Inner Joint | | 28 | 33 | 33 | 67 | 94.5 | |
| | 2015.06-2020.09 | 6AT/6MT | R | L/R | SUV 4WD D4HA | For Modelcode:TLE;Vehicle Production Country:Czech Republic | GDS83156 | Drive Shaft | 48T | 27 | 25 | 62 | 98.5 | 838 | |
| | 2015.06-2020.09 | 6AT/6MT | R | L/R | SUV 4WD D4HA | | GCO82315 | Outer Joint | 48T | 27 | 20 | 62 | 98.5 | 43 | M |
| | 2015.06-2020.09 | 6AT/6MT | R | L/R | SUV 4WD D4HA | | GCI24154 | Inner Joint | | 25 | 20 | 35 | 62 | 78 | |
| | 2015.06-2020.09 | 6MT | F | L | SUV FWD D4HA | | GDS56718 | Drive Shaft | 48T | 30 | 28 | 73 | 95 | 682 | |
| | 2015.06-2020.09 | 6MT | F | R | SUV FWD D4HA | | GDS83786 | Drive Shaft | 48T | 30 | 28 | 73 | 95 | 586 | |
| | 2015.06-2020.09 | 6MT | F | L/R | SUV FWD D4HA | | GCO81095 | Outer Joint | 48T | 30 | 25 | 73 | 95 | 65 | M |
| | 2015.06-2020.09 | 6MT | F | L | SUV FWD D4HA | | GCI82622 | Inner Joint | | 28 | 33 | 41 | 61.5 | 107.5 | |
| | 2015.06-2020.09 | 6MT | F | R | SUV FWD D4HA | | GCI81748 | Inner Joint | | 28 | 33 | 44.1 | | 121 | |
| 2.0 (103 kw) | 2006.01-2010.03 | 5MT | F | L | SUV 4WD D4EA | | GDS27232 | Drive Shaft | 48T | 27 | 27 | 62.1 | 95 | 670 | |
| | 2006.01-2010.03 | 5MT | F | R | SUV 4WD D4EA | Date from:2006.03 | GDS24173 | Drive Shaft | 48T | 27 | 26 | 62.2 | 95 | 609 | |
| | 2006.01-2010.03 | 5MT | F | L | SUV 4WD D4EA | ABS ring thickness 13.5mm | GCO24090 | Outer Joint | 48T | 27 | 25 | 61.9 | 95 | 61 | M |
| | 2006.01-2010.03 | 5MT | F | L | SUV 4WD D4EA | | GCO27067 | Outer Joint | 48T | 27 | 24 | 62.1 | 95 | 63 | M |
| | 2006.01-2010.03 | 5MT | F | L/R | SUV 4WD D4EA | | GCO24048 | Outer Joint | 48T | 27 | 23 | 62.2 | 95 | 60 | M |
| | 2006.01-2010.03 | 5MT | F | L/R | SUV 4WD D4EA | ABS ring thickness 15.5mm | GCO24049 | Outer Joint | 48T | 27 | 25 | 62.2 | 95 | 60 | M |
| | 2006.01-2010.03 | 5MT | F | L/R | SUV 4WD D4EA | | GCO24094 | Outer Joint | 48T | 27 | 26 | 62 | 94.5 | 65 | M |
| | 2006.01-2010.03 | 5MT | F | L | SUV 4WD D4EA | | GCI24013 | Inner Joint | | 27 | 33 | 41 | 61.5 | 107 | |
| | 2006.01-2010.03 | 5MT | F | L | SUV 4WD D4EA | | GCI27031 | Inner Joint | | 27 | 24 | 41 | 61.5 | 100 | |
| | 2006.01-2010.03 | 5MT | F | R | SUV 4WD D4EA | Date from:2006.03 | GCI27024 | Inner Joint | | 26 | 24 | 42 | | 115 | |
| | 2006.01-2010.03 | 6MT | F | L/R | SUV 4WD D4EA | | GCO24148 | Outer Joint | 48T | 30 | 36 | 65 | 93 | 67.5 | I |
| | 2006.01-2010.03 | 5MT | R | L/R | SUV 4WD D4EA | | GDS24324 | Drive Shaft | 48T | 27 | 25 | 60 | 94 | 802 | |
| | 2006.01-2010.03 | 5MT | R | L/R | SUV 4WD D4EA | | GCO24178 | Outer Joint | 48T | 27 | 23 | 60 | 94 | 60 | M |
| | 2006.01-2010.03 | 5MT | R | L/R | SUV 4WD D4EA | | GCI24032 | Inner Joint | | 25 | 23 | 35 | 63 | 88 | |
| | 2006.01-2010.03 | 5MT | F | L/R | SUV FWD D4EA | | GCO24094 | Outer Joint | 48T | 27 | 26 | 62 | 94.5 | 65 | M |
| | 2006.01-2010.03 | 6MT | F | L/R | SUV FWD D4EA | | GCO24148 | Outer Joint | 48T | 30 | 36 | 65 | 93 | 67.5 | I |
| | 2006.01-2010.03 | AT | F | R | SUV FWD D4EA | | GDS24111 | Drive Shaft | 48T | 27 | 27 | 62.2 | 95 | 956 | |
| | 2006.01-2010.03 | AT | F | L/R | SUV FWD D4EA | Original design | GCO24049 | Outer Joint | 48T | 27 | 25 | 62.2 | 95 | 60 | M |
| | 2006.01-2010.03 | AT | F | L/R | SUV FWD D4EA | Non-Original design | GCO24090 | Outer Joint | 48T | 27 | 25 | 61.9 | 95 | 61 | M |
| | 2006.01-2010.03 | AT | F | L/R | SUV FWD D4EA | Non-Original design,GrooveType:Inner | GCO24103 | Outer Joint | 48T | 27 | 23 | 62.2 | 95 | 60 | I |
| | 2006.01-2010.03 | AT | F | R | SUV FWD D4EA | | GCI24001 | Inner Joint | | 27 | 25 | 41 | 62.8 | 92.5 | |
| | 2006.01-2010.03 | AT | F | R | SUV FWD D4EA | | GCI24135 | Inner Joint | | 27 | 25 | 41 | 62 | 90.5 | |
| | 2006.01-2010.03 | AT/5MT | F | L | SUV FWD D4EA | | GDS27232 | Drive Shaft | 48T | 27 | 27 | 62.1 | 95 | 670 | |
| | 2006.01-2010.03 | AT/5MT | F | L | SUV FWD D4EA | | GCI24013 | Inner Joint | | 27 | 33 | 41 | 61.5 | 107 | |
| | 2006.01-2010.03 | AT/5MT | F | L | SUV FWD D4EA | | GCI27031 | Inner Joint | | 27 | 24 | 41 | 61.5 | 100 | |
| | 2006.01-2010.03 | MT | F | L/R | SUV FWD D4EA | | GCI24030 | Inner Joint | | 26 | 25 | 42 | | 108 | |
| | 2006.01-2010.03 | 5MT | F | L | SUV Van FWD D4EA | | GDS27232 | Drive Shaft | 48T | 27 | 27 | 62.1 | 95 | 670 | |
| | 2006.01-2010.03 | 5MT | F | L/R | SUV Van FWD D4EA | | GCO24094 | Outer Joint | 48T | 27 | 26 | 62 | 94.5 | 65 | M |
| | 2006.01-2010.03 | 5MT | F | L | SUV Van FWD D4EA | | GCI24013 | Inner Joint | | 27 | 33 | 41 | 61.5 | 107 | |
| 2.0 (104 kw) | 2004.06-2010.03 | 5MT | F | L | SUV FWD G4GC | | GDS24216 | Drive Shaft | 48T | 27 | 27 | 62.2 | 95 | 673 | |
| | 2004.06-2010.03 | 5MT | F | R | SUV FWD G4GC | | GDS24111 | Drive Shaft | 48T | 27 | 27 | 62.2 | 95 | 956 | |
| | 2004.06-2010.03 | 5MT | F | L/R | SUV FWD G4GC | ABS ring thickness 15.5mm | GCO24049 | Outer Joint | 48T | 27 | 25 | 62.2 | 95 | 60 | M |
| | 2004.06-2010.03 | 5MT | F | L/R | SUV FWD G4GC | ABS ring thickness 13.5mm | GCO24090 | Outer Joint | 48T | 27 | 25 | 61.9 | 95 | 61 | M |
| | 2004.06-2010.03 | 5MT | F | L | SUV FWD G4GC | | GCI24044 | Inner Joint | | 27 | 25 | 41 | 62 | 87 | |
| | 2004.06-2010.03 | 5MT | F | L/R | SUV FWD G4GC | | GCI24030 | Inner Joint | | 26 | 25 | 42 | | 108 | |
| | 2004.06-2010.03 | MT | F | L | SUV Van FWD G4GC | | GDS24216 | Drive Shaft | 48T | 27 | 27 | 62.2 | 95 | 673 | |
| | 2004.06-2010.03 | MT | F | R | SUV Van FWD G4GC | | GDS24111 | Drive Shaft | 48T | 27 | 27 | 62.2 | 95 | 956 | |
| | 2004.06-2010.03 | MT | F | L | SUV Van FWD G4GC | | GCO24090 | Outer Joint | 48T | 27 | 25 | 61.9 | 95 | 61 | M |
| | 2004.06-2010.03 | MT | F | L | SUV Van FWD G4GC | | GCI24044 | Inner Joint | | 27 | 25 | 41 | 62 | 87 | |
| | 2004.08-2010.03 | AT | F | L | SUV 4WD G4GC | Date to:2006.10 | GDS27232 | Drive Shaft | 48T | 27 | 27 | 62.1 | 95 | 670 | |
| | 2004.08-2010.03 | AT | F | L | SUV 4WD G4GC | ABS ring thickness 15.5mm | GCO24049 | Outer Joint | 48T | 27 | 25 | 62.2 | 95 | 60 | M |

| | YEAR | TRANSM. | F/R | L/R | BODY STYLE & DRIVE TYPE & ENGINE | REMARKS | G-AP Ref. | PRODUCT | ABS | Technical Specifications A | B | C | H | L | P |
|---|---|---|---|---|---|---|---|---|---|---|---|---|---|---|---|
| **HYUNDAI** **Tucson** | | | | | | | | | | | | | | | |
| 2.0 (104 kw) | 2004.08-2010.03 | AT | F | L | SUV 4WD G4GC | Date to:2006.10 | GCO27067 | Outer Joint | 48T | 27 | 24 | 62.1 | 95 | 63 | M |
| | 2004.08-2010.03 | AT | F | R | SUV 4WD G4GC | | GCO24103 | Outer Joint | 48T | 27 | 23 | 62.2 | 95 | 60 | I |
| | 2004.08-2010.03 | AT | F | L | SUV 4WD G4GC | | GCI24013 | Inner Joint | | 27 | 33 | 41 | 61.5 | 107 | |
| | 2004.08-2010.03 | AT | F | R | SUV 4WD G4GC | | GCI24031 | Inner Joint | | 26 | 23 | 42 | | 108 | |
| | 2004.08-2010.03 | AT/MT | F | L/R | SUV 4WD G4GC | ABS ring thickness 13.5mm | GCO24090 | Outer Joint | 48T | 27 | 25 | 61.9 | 95 | 61 | M |
| | 2004.08-2010.03 | MT | F | L | SUV 4WD G4GC | | GDS24216 | Drive Shaft | 48T | 27 | 27 | 62.2 | 95 | 673 | |
| | 2004.08-2010.03 | MT | F | L | SUV 4WD G4GC | | GDS24429 | Drive Shaft | 46T | 27 | 27 | 60 | 94.5 | 675 | |
| | 2004.08-2010.03 | MT | F | R | SUV 4WD G4GC | | GDS24173 | Drive Shaft | 48T | 27 | 26 | 62.2 | 95 | 609 | |
| | 2004.08-2010.03 | MT | F | R | SUV 4WD G4GC | | GDS24440 | Drive Shaft | 46T | 27 | 27 | 60 | 94.5 | 941 | |
| | 2004.08-2010.03 | MT | F | L/R | SUV 4WD G4GC | ABS ring thickness 15.5mm | GCO24049 | Outer Joint | 48T | 27 | 25 | 62.2 | 95 | 60 | M |
| | 2004.08-2010.03 | MT | F | L | SUV 4WD G4GC | | GCI24044 | Inner Joint | | 27 | 25 | 41 | 62 | 87 | |
| | 2004.08-2010.03 | MT | F | R | SUV 4WD G4GC | Original design | GCI24030 | Inner Joint | | 26 | 25 | 42 | | 108 | |
| | 2004.08-2010.03 | MT | F | R | SUV 4WD G4GC | Non-Original design | GCI39063 | Inner Joint | | 26 | 25 | 42 | | 108 | |
| | 2004.08-2010.03 | 4AT/5MT | R | L/R | SUV 4WD G4GC | | GDS24324 | Drive Shaft | 48T | 27 | 25 | 60 | 94 | 802 | |
| | 2004.08-2010.03 | 4AT/5MT | R | L/R | SUV 4WD G4GC | | GCO24178 | Outer Joint | 48T | 27 | 23 | 60 | 94 | 60 | M |
| | 2004.08-2010.03 | 4AT/5MT | R | L/R | SUV 4WD G4GC | | GCI24032 | Inner Joint | | 25 | 23 | 35 | 63 | 88 | |
| | 2004.08-2010.12 | AT | F | L | SUV FWD G4GC | Date to:2006.10 | GDS27232 | Drive Shaft | 48T | 27 | 27 | 62.1 | 95 | 670 | |
| | 2004.08-2010.12 | AT | F | L | SUV FWD G4GC | Date From:2006.11 | GDS99053 | Drive Shaft | 48T | 27 | 27 | 62.2 | 95 | 668 | |
| | 2004.08-2010.12 | AT | F | R | SUV FWD G4GC | | GDS24112 | Drive Shaft | 48T | 27 | 27 | 62.2 | 95 | 955 | |
| | 2004.08-2010.12 | AT | F | L | SUV FWD G4GC | Date to:2006.10 | GCO27067 | Outer Joint | 48T | 27 | 24 | 62.1 | 95 | 63 | M |
| | 2004.08-2010.12 | AT | F | L/R | SUV FWD G4GC | GrooveType:Middle | GCO24048 | Outer Joint | 48T | 27 | 23 | 62.2 | 95 | 60 | M |
| | 2004.08-2010.12 | AT | F | L/R | SUV FWD G4GC | GrooveType:Inner;Date from:2006.11 | GCO24103 | Outer Joint | 48T | 27 | 23 | 62.2 | 95 | 60 | I |
| | 2004.08-2010.12 | AT | F | L | SUV FWD G4GC | | GCI24013 | Inner Joint | | 27 | 33 | 41 | 61.5 | 107 | |
| | 2004.08-2010.12 | AT | F | L/R | SUV FWD G4GC | Date From:2006.11 | GCI99112 | Inner Joint | | 27 | 23 | 41 | 63 | 92 | |
| | 2004.08-2010.12 | AT/MT | F | L/R | SUV FWD G4GC | Date to:2006.10 | GCI24030 | Inner Joint | | 26 | 25 | 42 | | 108 | |
| | 2004.08-2010.12 | MT | F | L | SUV FWD G4GC | | GDS24216 | Drive Shaft | 48T | 27 | 27 | 62.2 | 95 | 673 | |
| | 2004.08-2010.12 | MT | F | R | SUV FWD G4GC | | GDS24111 | Drive Shaft | 48T | 27 | 27 | 62.2 | 95 | 956 | |
| | 2004.08-2010.12 | MT | F | L/R | SUV FWD G4GC | ABS ring thickness 15.5mm | GCO24049 | Outer Joint | 48T | 27 | 25 | 62.2 | 95 | 60 | M |
| | 2004.08-2010.12 | MT | F | L/R | SUV FWD G4GC | ABS ring thickness 13.5mm | GCO24090 | Outer Joint | 48T | 27 | 25 | 61.9 | 95 | 61 | M |
| | 2004.08-2010.12 | MT | F | L | SUV FWD G4GC | | GCI24044 | Inner Joint | | 27 | 25 | 41 | 62 | 87 | |
| | 2004.08-2010.12 | MT | F | R | SUV FWD G4GC | | GCI24001 | Inner Joint | | 27 | 25 | 41 | 62.8 | 92.5 | |
| | 2009.06-2010.03 | 5MT | F | L | SUV 4WD G4GC | | GDS24216 | Drive Shaft | 48T | 27 | 27 | 62.2 | 95 | 673 | |
| | 2009.06-2010.03 | 5MT | F | R | SUV 4WD G4GC | | GDS24173 | Drive Shaft | 48T | 27 | 26 | 62.2 | 95 | 609 | |
| | 2009.06-2010.03 | 5MT | F | L/R | SUV 4WD G4GC | | GCO24090 | Outer Joint | 48T | 27 | 25 | 61.9 | 95 | 61 | M |
| | 2009.06-2010.03 | 5MT | F | L | SUV 4WD G4GC | | GCI24044 | Inner Joint | | 27 | 25 | 41 | 62 | 87 | |
| | 2009.06-2010.03 | 5MT | F | R | SUV 4WD G4GC | | GCI24030 | Inner Joint | | 26 | 25 | 42 | | 108 | |
| | 2009.06-2010.03 | 5MT | R | L/R | SUV 4WD G4GC | | GDS24324 | Drive Shaft | 48T | 27 | 25 | 60 | 94 | 802 | |
| | 2009.06-2010.03 | 5MT | R | L/R | SUV 4WD G4GC | | GCO24178 | Outer Joint | 48T | 27 | 23 | 60 | 94 | 60 | M |
| | 2009.06-2010.03 | 5MT | R | L/R | SUV 4WD G4GC | | GCI24032 | Inner Joint | | 25 | 23 | 35 | 63 | 88 | |
| 2.0 (105 kw) | 2005.07-2010.11 | AT | F | L | SUV 4WD G4GC | | GDS27232 | Drive Shaft | 48T | 27 | 27 | 62.1 | 95 | 670 | |
| | 2005.07-2010.11 | AT | F | L/R | SUV 4WD G4GC | | GCO24103 | Outer Joint | 48T | 27 | 23 | 62.2 | 95 | 60 | I |
| | 2005.07-2010.11 | AT | F | L | SUV 4WD G4GC | | GCI24013 | Inner Joint | | 27 | 33 | 41 | 61.5 | 107 | |
| | 2005.07-2010.11 | AT | F | R | SUV 4WD G4GC | | GCI24031 | Inner Joint | | 26 | 23 | 42 | | 108 | |
| | 2005.07-2010.11 | MT | F | L | SUV 4WD G4GC | | GDS24216 | Drive Shaft | 48T | 27 | 27 | 62.2 | 95 | 673 | |
| | 2005.07-2010.11 | MT | F | R | SUV 4WD G4GC | | GDS24173 | Drive Shaft | 48T | 27 | 26 | 62.2 | 95 | 609 | |
| | 2005.07-2010.11 | MT | F | L/R | SUV 4WD G4GC | ABS ring thickness 15.5mm | GCO24049 | Outer Joint | 48T | 27 | 25 | 62.2 | 95 | 60 | M |
| | 2005.07-2010.11 | MT | F | L/R | SUV 4WD G4GC | ABS ring thickness 13.5mm | GCO24090 | Outer Joint | 48T | 27 | 25 | 61.9 | 95 | 61 | M |
| | 2005.07-2010.11 | MT | F | L | SUV 4WD G4GC | | GCI24001 | Inner Joint | | 27 | 25 | 41 | 62.8 | 92.5 | |
| | 2005.07-2010.11 | MT | F | L | SUV 4WD G4GC | | GCI27031 | Inner Joint | | 27 | 24 | 41 | 61.5 | 100 | |
| | 2005.07-2010.11 | MT | F | R | SUV 4WD G4GC | | GCI27032 | Inner Joint | | 26 | 24 | 44.1 | | 115 | |
| | 2005.07-2010.11 | MT | F | R | SUV 4WD G4GC | | GCI39063 | Inner Joint | | 26 | 25 | 42 | | 108 | |
| | 2005.07-2010.11 | MT | R | L/R | SUV 4WD G4GC | | GDS24324 | Drive Shaft | 48T | 27 | 25 | 60 | 94 | 802 | |
| | 2005.07-2010.11 | MT | R | L/R | SUV 4WD G4GC | | GCI24032 | Inner Joint | | 25 | 23 | 35 | 63 | 88 | |
| | 2005.07-2010.11 | | R | | SUV 4WD G4GC | date to:2010.03 | GCO24178 | Outer Joint | 48T | 27 | 23 | 60 | 94 | 60 | M |
| 2.0 (110 kw) | 2009.01-2010.03 | 6MT | F | L | SUV 4WD D4EA | | GCO24148 | Outer Joint | 48T | 30 | 36 | 65 | 93 | 67.5 | I |
| | 2009.01-2010.03 | AT | F | L | SUV FWD D4EA | | GDS83754 | Drive Shaft | 48T | 27 | 28 | 62 | 94.5 | 648 | |
| | 2009.01-2010.03 | AT | F | R | SUV FWD D4EA | | GDS83753 | Drive Shaft | 48T | 27 | 28 | 62 | 94.5 | 964 | |
| | 2009.01-2010.03 | AT | F | L/R | SUV FWD D4EA | Without Engine Package - Vgt Regular Eng | GCO24090 | Outer Joint | 48T | 27 | 25 | 61.9 | 95 | 61 | M |
| | 2009.01-2010.03 | AT | F | L/R | SUV FWD D4EA | With Engine Package - Vgt Regular Eng | GCO82188 | Outer Joint | 48T | 27 | 26 | 62 | 94.5 | 65 | M |
| | 2009.01-2010.03 | AT | F | L | SUV FWD D4EA | | GCI24013 | Inner Joint | | 27 | 33 | 41 | 61.5 | 107 | |
| | 2009.01-2010.03 | MT | F | L/R | SUV FWD D4EA | | GCO24148 | Outer Joint | 48T | 30 | 36 | 65 | 93 | 67.5 | I |
| | 2015.06-2020.09 | 6AT | F | L | SUV 4WD G4NA | | GDS81245 | Drive Shaft | 48T | 30 | 27 | 73 | 95 | 683 | |
| | 2015.06-2020.09 | 6AT | F | R | SUV 4WD G4NA | | GDS81252 | Drive Shaft | 48T | 30 | 28 | 73 | 95 | 571 | |
| | 2015.06-2020.09 | 6AT | F | L | SUV 4WD G4NA | | GCI24126 | Inner Joint | | 27 | 32 | 30 | 67 | 89.5 | |
| | 2015.06-2020.09 | 6AT | F | R | SUV 4WD G4NA | | GCI81150 | Inner Joint | | 28 | 32 | 44.1 | | 116 | |

| | YEAR | TRANSM. | F/R | L/R | BODY STYLE & DRIVE TYPE & ENGINE | REMARKS | G-AP Ref. | PRODUCT | ABS | Technical Specifications A | B | C | H | L | P |
|---|---|---|---|---|---|---|---|---|---|---|---|---|---|---|---|
| **HYUNDAI** **Tucson** | | | | | | | | | | | | | | | |
| 2.0 (110 kw) | 2015.06-2020.09 | 6MT | F | L | SUV 4WD G4NA | | GDS81247 | Drive Shaft | 48T | 30 | 27 | 73 | 95 | 695 | |
| | 2015.06-2020.09 | 6MT | F | L | SUV 4WD G4NA | | GCI81149 | Inner Joint | | 27 | 33 | 41 | 61.5 | 105 | |
| | 2015.06-2020.09 | 6MT | F | R | SUV 4WD G4NA | | GCI81748 | Inner Joint | | 28 | 33 | 44.1 | | 121 | |
| | 2015.06-2020.09 | 6AT/6MT | R | L/R | SUV 4WD G4NA | | GDS83156 | Drive Shaft | 48T | 27 | 25 | 62 | 98.5 | 838 | |
| | 2015.06-2020.09 | 6AT/6MT | R | L/R | SUV 4WD G4NA | | GCO82315 | Outer Joint | 48T | 27 | 20 | 62 | 98.5 | 43 | M |
| | 2015.06-2020.09 | 6AT/6MT | R | L/R | SUV 4WD G4NA | | GCI24154 | Inner Joint | | 25 | 20 | 35 | 62 | 78 | |
| | 2015.06-2020.09 | 6AT | F | L | SUV FWD G4NA | | GDS81244 | Drive Shaft | 48T | 30 | 27 | 73 | 95 | 693 | |
| | 2015.06-2020.09 | 6AT | F | R | SUV FWD G4NA | | GDS81641 | Drive Shaft | 48T | 30 | 27 | 73 | 95 | 957 | |
| | 2015.06-2020.09 | 6AT | F | L | SUV FWD G4NA | | GCO81091 | Outer Joint | 48T | 30 | 24 | 73 | 95 | 59 | M |
| | 2015.06-2020.09 | 6AT | F | L/R | SUV FWD G4NA | | GCI24126 | Inner Joint | | 27 | 32 | 30 | 67 | 89.5 | |
| | 2015.06-2020.09 | 6MT | F | L | SUV FWD G4NA | | GDS81246 | Drive Shaft | 48T | 30 | 27 | 73 | 95 | 692 | |
| | 2015.06-2020.09 | 6MT | F | R | SUV FWD G4NA | For Modelcode:TLE;Vehicle Production Country:Czech Republic | GDS81253 | Drive Shaft | 48T | 30 | 27 | 73 | 95 | 982 | |
| | 2015.06-2020.09 | 6MT | F | L/R | SUV FWD G4NA | | GCO81093 | Outer Joint | 48T | 30 | 25 | 73 | 95 | 64 | M |
| | 2015.06-2020.09 | 6MT | F | L | SUV FWD G4NA | | GCI81149 | Inner Joint | | 27 | 33 | 41 | 61.5 | 105 | |
| | 2015.06-2020.09 | 6MT | F | R | SUV FWD G4NA | For Modelcode:TLE;Vehicle Production Country:Czech Republic | GCI81149 | Inner Joint | | 27 | 33 | 41 | 61.5 | 105 | |
| | 2021.01- | 6AT | F | L | SUV 4WD G4NJ | | GDS57526 | Drive Shaft | | 30 | 27 | 73 | 95 | 692 | |
| | 2021.01- | 6AT | F | R | SUV 4WD G4NJ | | GDS57639 | Drive Shaft | | 30 | 28 | 73 | 95 | 552 | |
| | 2021.01- | 6AT | F | L | SUV 4WD G4NJ | | GCO81090 | Outer Joint | | 30 | 24 | 73 | 95 | 59 | M |
| | 2021.01- | 6AT | F | L | SUV 4WD G4NJ | | GCI83728 | Inner Joint | | 27 | 32 | 30 | 67 | 96.5 | |
| | 2021.01- | 6AT | F | R | SUV 4WD G4NJ | | GCI83473 | Inner Joint | | 28 | 32 | 44 | | 123 | |
| | 2021.01- | 6MT | F | L | SUV FWD G4NJ | | GDS57618 | Drive Shaft | | 30 | 27 | 73 | 95 | 698 | |
| | 2021.01- | 6MT | F | R | SUV FWD G4NJ | | GDS57615 | Drive Shaft | | 30 | 27 | 73 | 95 | 973 | |
| | 2021.01- | 6MT | F | L | SUV FWD G4NJ | | GCO81090 | Outer Joint | | 30 | 24 | 73 | 95 | 59 | M |
| | 2021.01- | 6MT | F | R | SUV FWD G4NJ | | GCO83587 | Outer Joint | | 30 | 24 | 73 | 95 | 59 | M |
| | 2021.01- | 6MT | F | L | SUV FWD G4NJ | | GCI83724 | Inner Joint | | 27 | 32 | 41 | 61.5 | 107.5 | |
| | 2021.01- | 6MT | F | R | SUV FWD G4NJ | | GCI83725 | Inner Joint | | 27 | 32 | 41 | 61.5 | 107.5 | |
| 2.0 (114 kw) | 2015.06-2020.09 | 6AT/6MT | F | L | SUV 4WD G4NA | | GDS81245 | Drive Shaft | 48T | 30 | 27 | 73 | 95 | 683 | |
| | 2015.06-2020.09 | 6AT/6MT | F | R | SUV 4WD G4NA | | GDS81252 | Drive Shaft | 48T | 30 | 28 | 73 | 95 | 571 | |
| | 2015.06-2020.09 | 6AT/6MT | R | L/R | SUV 4WD G4NA | | GCI24154 | Inner Joint | | 25 | 20 | 35 | 62 | 78 | |
| | 2015.06-2020.09 | 6AT | F | L | SUV FWD G4NA | | GDS81244 | Drive Shaft | 48T | 30 | 27 | 73 | 95 | 693 | |
| | 2015.06-2020.09 | 6AT | F | R | SUV FWD G4NA | | GDS81641 | Drive Shaft | 48T | 30 | 27 | 73 | 95 | 957 | |
| | 2015.06-2020.09 | 6AT | F | L | SUV FWD G4NA | | GCO81091 | Outer Joint | 48T | 30 | 24 | 73 | 95 | 59 | M |
| | 2015.06-2020.09 | 6AT | F | L | SUV FWD G4NA | | GCI24126 | Inner Joint | | 27 | 32 | 30 | 67 | 89.5 | |
| | 2015.06-2020.09 | 6AT | F | R | SUV FWD G4NA | For Modelcode:TLE;Vehicle Production Country:Czech Republic | GCI24126 | Inner Joint | | 27 | 32 | 30 | 67 | 89.5 | |
| | 2015.06-2020.09 | 6MT | F | L | SUV FWD G4NA | | GDS81246 | Drive Shaft | 48T | 30 | 27 | 73 | 95 | 692 | |
| | 2015.06-2020.09 | 6MT | F | R | SUV FWD G4NA | For Modelcode:TLE;Vehicle Production Country:Czech Republic | GDS81253 | Drive Shaft | 48T | 30 | 27 | 73 | 95 | 982 | |
| | 2015.06-2020.09 | 6MT | F | L/R | SUV FWD G4NA | | GCO81093 | Outer Joint | 48T | 30 | 25 | 73 | 95 | 64 | M |
| | 2015.06-2020.09 | 6MT | F | L | SUV FWD G4NA | | GCI81149 | Inner Joint | | 27 | 33 | 41 | 61.5 | 105 | |
| | 2015.06-2020.09 | 6MT | F | R | SUV FWD G4NA | For Modelcode:TLE;Vehicle Production Country:Czech Republic | GCI81149 | Inner Joint | | 27 | 33 | 41 | 61.5 | 105 | |
| 2.0 (116 kw) | 2014.09-2015.06 | 6AT | F | L | SUV 4WD G4NA | Vehicle Production Country:Czech Republic | GDS81239 | Drive Shaft | 48T | 27 | 27 | 62 | 95 | 682 | |
| | 2014.09-2015.06 | 6AT | F | L | SUV 4WD G4NA | Vehicle Production Country:South Korea;Vehicle Production Country:CZ, SK | GDS84110 | Drive Shaft | 48T | 27 | 27 | 62 | 95 | 676 | |
| | 2014.09-2015.06 | 6AT | F | R | SUV 4WD G4NA | vehicle production country:Czech Republic | GDS24518 | Drive Shaft | 48T | 27 | 26 | 62 | 95 | 580 | |
| | 2014.09-2015.06 | 6AT | F | R | SUV 4WD G4NA | Vehicle Production Country:South Korea | GDS81187 | Drive Shaft | 48T | 27 | 26 | 62 | 95 | 579 | |
| | 2014.09-2015.06 | 6AT | F | L | SUV 4WD G4NA | Vehicle Production Country:Czech Republic | GCO81085 | Outer Joint | 48T | 27 | 24 | 62 | 95 | 59 | M |
| | 2014.09-2015.06 | 6AT | F | L | SUV 4WD G4NA | Vehicle Production Country:Czech Republic | GCI81106 | Inner Joint | | 27 | 24 | 30 | 67.5 | 88.5 | |
| | 2014.09-2015.06 | 6AT/6MT | F | R | SUV 4WD G4NA | vehicle production country:Czech Republic | GCO24284 | Outer Joint | 48T | 27 | 24 | 62 | 95 | 59 | M |
| | 2014.09-2015.06 | 6MT | F | L | SUV 4WD G4NA | vehicle production country:Republic of South Korea | GDS81185 | Drive Shaft | 48T | 27 | 27 | 62 | 95 | 682 | |
| | 2014.09-2015.06 | 6MT | F | R | SUV 4WD G4NA | vehicle production country:Czech Republic | GDS24537 | Drive Shaft | 48T | 27 | 26 | 62 | 95 | 562 | |
| | 2014.09-2015.06 | 6MT | F | R | SUV 4WD G4NA | Vehicle Production Country:South Korea | GDS81186 | Drive Shaft | 48T | 27 | 26 | 62 | 95 | 560 | |
| | 2014.09-2015.06 | AT | F | R | SUV 4WD G4NA | Vehicle Production Country:Czech Republic | GCI24158 | Inner Joint | | 27 | 24 | 30 | 67 | 88.5 | |
| | 2014.09-2015.06 | AT | F | R | SUV 4WD G4NA | Vehicle Production Country:Czech Republic | GCI27032 | Inner Joint | | 26 | 24 | 44.1 | | 115 | |
| | 2014.09-2015.06 | AT | F | R | SUV 4WD G4NA | Vehicle Production Country:South Korea | GCI81105 | Inner Joint | | 26 | 24 | 44.1 | | 115 | |
| | 2014.09-2015.06 | MT | F | L | SUV 4WD G4NA | | GCI27031 | Inner Joint | | 27 | 24 | 41 | 61.5 | 100 | |
| | 2014.09-2015.06 | | F | L/R | SUV 4WD G4NA | | GCO24124 | Outer Joint | 48T | 27 | 24 | 62 | 95 | 58 | M |
| | 2014.09-2015.06 | 6AT/6MT | R | L | SUV 4WD G4NA | Vehicle Production Country:South Korea | GDS83994 | Drive Shaft | 48T | 27 | 25 | 62 | 95 | 834 | |
| | 2014.09-2015.06 | 6AT/6MT | R | L | SUV 4WD G4NA | Vehicle Production Country:Czech Republic | GDS84062 | Drive Shaft | 48T | 27 | 25 | 62 | 95 | 834 | |
| | 2014.09-2015.06 | 6AT/6MT | R | R | SUV 4WD G4NA | vehicle production country:Czech Republic | GDS24538 | Drive Shaft | 48T | 27 | 25 | 62 | 95 | 817 | |
| | 2014.09-2015.06 | 6AT/6MT | R | R | SUV 4WD G4NA | Vehicle Production Country:South Korea | GDS83971 | Drive Shaft | 48T | 27 | 25 | 62 | 95 | 817 | |
| | 2014.09-2015.06 | 6AT/6MT | R | L/R | SUV 4WD G4NA | vehicle production country:Czech Republic | GCO24315 | Outer Joint | 48T | 27 | 20 | 62 | 95 | 43 | M |
| | 2014.09-2015.06 | 6AT/6MT | R | L/R | SUV 4WD G4NA | Vehicle Production Country:South Korea | GCO82547 | Outer Joint | 48T | 27 | 20 | 62 | 95 | 42 | M |
| | 2014.09-2015.06 | 6AT/6MT | R | L/R | SUV 4WD G4NA | Vehicle Production Country:South Korea | GCI24154 | Inner Joint | | 25 | 20 | 35 | 62 | 78 | |
| 2.0 (136 kw) | 2015.06-2020.09 | 6AT | F | L | SUV 4WD D4HA | For Modelcode:TLE;Vehicle Production Country:Czech Republic | GDS82221 | Drive Shaft | 48T | 30 | 28 | 73 | 95 | 671 | |
| | 2015.06-2020.09 | 6AT | F | R | SUV 4WD D4HA | For Modelcode:TLE;Vehicle Production Country:Czech Republic | GDS82337 | Drive Shaft | 48T | 30 | 28 | 73 | 95 | 583 | |
| | 2015.06-2020.09 | 6AT | F | L/R | SUV 4WD D4HA | For Modelcode:TLE;Vehicle Production Country:Czech Republic | GCO81093 | Outer Joint | 48T | 30 | 25 | 73 | 95 | 64 | M |
| | 2015.06-2020.09 | 6AT | F | R | SUV 4WD D4HA | | GDS82811 | Intermediate Shaft | | 28 | 28 | | | 430 | |

| | YEAR | TRANSM. | F/R | L/R | BODY STYLE & DRIVE TYPE & ENGINE | REMARKS | G-AP Ref. | PRODUCT | ABS | Technical Specifications | | | | | |
|---|---|---|---|---|---|---|---|---|---|---|---|---|---|---|---|
| | | | | | | | | | | A | B | C | H | L | P |
| **HYUNDAI** | | | | | | | | | | | | | | | |
| **Tucson** | | | | | | | | | | | | | | | |
| 2.0 (136 kw) | 2015.06-2020.09 | 6AT/6MT | F | R | SUV 4WD D4HA | ---------- | GDS83786 | Drive Shaft | 48T | 30 | 28 | 73 | 95 | 586 | |
| | 2015.06-2020.09 | 6AT/8AT | F | L | SUV 4WD D4HA | For Modelcode:TLE,Vehicle Production Country:Czech Republic | GCI81676 | Inner Joint | | 28 | 33 | 33 | 67 | 94.5 | |
| | 2015.06-2020.09 | 6MT | F | L | SUV 4WD D4HA | For Modelcode:TLE,Vehicle Production Country:Czech Republic | GDS56718 | Drive Shaft | 48T | 30 | 28 | 73 | 95 | 682 | |
| | 2015.06-2020.09 | 6MT | F | L/R | SUV 4WD D4HA | For Modelcode:TLE,Vehicle Production Country:Czech Republic | GCO81095 | Outer Joint | 48T | 30 | 25 | 73 | 95 | 65 | M |
| | 2015.06-2020.09 | 6MT | F | L | SUV 4WD D4HA | For Modelcode:TLE,Vehicle Production Country:Czech Republic | GCI82622 | Inner Joint | | 28 | 33 | 41 | 61.5 | 107.5 | |
| | 2015.06-2020.09 | 6MT/6AT | F | R | SUV 4WD D4HA | ---------- | GCI81748 | Inner Joint | | 28 | 33 | 44.1 | | 121 | |
| | 2015.06-2020.09 | 6AT/6MT | R | L/R | SUV 4WD D4HA | | GCI24154 | Inner Joint | | 25 | 20 | 35 | 62 | 78 | |
| | 2015.06-2020.09 | 6AT/8AT/6MT | R | L/R | SUV 4WD D4HA | Vehicle Production Country:Czech Republic;For Modelcode:TLE | GCO82315 | Outer Joint | 48T | 27 | 20 | 62 | 98.5 | 43 | M |
| | 2015.06-2020.09 | AT/MT | R | L/R | SUV 4WD D4HA | For Modelcode:TLE,Vehicle Production Country:Czech Republic | GDS83156 | Drive Shaft | 48T | 27 | 25 | 62 | 98.5 | 838 | |
| | 2015.06-2020.09 | 6MT | F | R | SUV FWD D4HA | | GDS83786 | Drive Shaft | 48T | 30 | 28 | 73 | 95 | 586 | |
| | 2015.06-2020.09 | 6MT | F | L/R | SUV FWD D4HA | | GCO81095 | Outer Joint | 48T | 30 | 25 | 73 | 95 | 65 | M |
| | 2015.06-2020.09 | 6MT | F | L | SUV FWD D4HA | | GCI82622 | Inner Joint | | 28 | 33 | 41 | 61.5 | 107.5 | |
| | 2015.06-2020.09 | 6MT | F | R | SUV FWD D4HA | | GCI81748 | Inner Joint | | 28 | 33 | 44.1 | | 121 | |
| | 2015.06-2020.09 | | F | L | SUV FWD D4HA | | GDS82221 | Drive Shaft | 48T | 30 | 28 | 73 | 95 | 671 | |
| | 2018.10-2020.12 | 6MT | F | L | SUV 4WD D4HA | | GDS56718 | Drive Shaft | 48T | 30 | 28 | 73 | 95 | 682 | |
| | 2018.10-2020.12 | 6MT | F | R | SUV 4WD D4HA | | GDS83786 | Drive Shaft | 48T | 30 | 28 | 73 | 95 | 586 | |
| | 2018.10-2020.12 | 6MT | F | L/R | SUV 4WD D4HA | | GCO81095 | Outer Joint | 48T | 30 | 25 | 73 | 95 | 65 | M |
| | 2018.10-2020.12 | 6MT | F | L | SUV 4WD D4HA | | GCI82622 | Inner Joint | | 28 | 33 | 41 | 61.5 | 107.5 | |
| | 2018.10-2020.12 | 6MT | F | R | SUV 4WD D4HA | | GCI81748 | Inner Joint | | 28 | 33 | 44.1 | | 121 | |
| | 2018.10-2020.12 | 8AT | F | L | SUV 4WD D4HA | | GDS82221 | Drive Shaft | 48T | 30 | 28 | 73 | 95 | 671 | |
| | 2018.10-2020.12 | 8AT | F | L | SUV 4WD D4HA | | GCO81093 | Outer Joint | 48T | 30 | 25 | 73 | 95 | 64 | M |
| | 2018.10-2020.12 | 8AT | F | L | SUV 4WD D4HA | | GCI81676 | Inner Joint | | 28 | 33 | 33 | 67 | 94.5 | |
| | 2018.10-2020.12 | 8AT/6MT | R | L/R | SUV 4WD D4HA | | GDS83156 | Drive Shaft | 48T | 27 | 25 | 62 | 98.5 | 838 | |
| | 2018.10-2020.12 | 8AT/6MT | R | L/R | SUV 4WD D4HA | | GCO82315 | Outer Joint | 48T | 27 | 20 | 62 | 98.5 | 43 | M |
| | 2018.10-2020.12 | 8AT/6MT | R | L/R | SUV 4WD D4HA | | GCI24154 | Inner Joint | | 25 | 20 | 35 | 62 | 78 | |
| 2.4 (129 kw) | 2012.09-2013.12 | 6AT | F | L | SUV 4WD G4KE | Date from:2013.09 | GDS84110 | Drive Shaft | 48T | 27 | 27 | 62 | 95 | 676 | |
| | 2012.09-2013.12 | 6AT | F | L/R | SUV 4WD G4KE | | GCO24124 | Outer Joint | 48T | 27 | 24 | 62 | 95 | 58 | M |
| | 2012.09-2013.12 | 6AT | F | L | SUV 4WD G4KE | Date from:2013.09 | GCI81106 | Inner Joint | | 27 | 24 | 30 | 67.5 | 88.5 | |
| | 2012.09-2013.12 | 6AT | F | R | SUV 4WD G4KE | | GCI81105 | Inner Joint | | 26 | 24 | 44.1 | | 115 | |
| | 2012.09-2013.12 | 6AT/6MT | F | L | SUV 4WD G4KE | Date To:2013.08 | GDS24231 | Drive Shaft | 48T | 27 | 27 | 62 | 95 | 676 | |
| | 2012.09-2013.12 | 6AT/6MT | F | R | SUV 4WD G4KE | | GDS81188 | Drive Shaft | 48T | 27 | 26 | 62 | 95 | 588 | |
| | 2012.09-2013.12 | 6AT/6MT | F | L | SUV 4WD G4KE | Date To:2013.08 | GCI24053 | Inner Joint | | 27 | 24 | 30 | 67.5 | 88.5 | |
| | 2012.09-2013.12 | 6AT/6MT | F | L | SUV 4WD G4KE | Date To:2013.08 | GCI24158 | Inner Joint | | 27 | 24 | 30 | 67 | 88.5 | |
| | 2012.09-2013.12 | 6AT | R | L | SUV 4WD G4KE | Date From:2013.09 | GDS83994 | Drive Shaft | 48T | 27 | 25 | 62 | 95 | 834 | |
| | 2012.09-2013.12 | 6AT | R | R | SUV 4WD G4KE | Date to:2013.08 | GDS83118 | Drive Shaft | 48T | 27 | 25 | 62 | 95 | 816 | |
| | 2012.09-2013.12 | 6AT | R | R | SUV 4WD G4KE | Date from:2013.09 | GDS83971 | Drive Shaft | 48T | 27 | 25 | 62 | 95 | 817 | |
| | 2012.09-2013.12 | 6AT | R | R | SUV 4WD G4KE | Date to:2013.08 | GCO82286 | Outer Joint | 48T | 27 | 20 | 62 | 95 | 53 | M |
| | 2012.09-2013.12 | 6AT | R | L/R | SUV 4WD G4KE | Date From:2013.09 | GCO82547 | Outer Joint | 48T | 27 | 20 | 62 | 95 | 42 | M |
| | 2012.09-2013.12 | 6AT | R | R | SUV 4WD G4KE | Date to:2013.08 | GCI24077 | Inner Joint | | 25 | 20 | 35 | 62 | 82 | |
| | 2012.09-2013.12 | 6AT | R | L/R | SUV 4WD G4KE | Date From:2013.09 | GCI24154 | Inner Joint | | 25 | 20 | 35 | 62 | 78 | |
| 2.4 (131 kw) | 2009.09-2010.03 | 6AT | F | L/R | SUV FWD G4KE | Date to:2013.08 | GCO24124 | Outer Joint | 48T | 27 | 24 | 62 | 95 | 58 | M |
| | 2009.09-2010.03 | 6AT | F | R | SUV FWD G4KE | Date to:2013.08 | GCI81106 | Inner Joint | | 27 | 24 | 30 | 67.5 | 88.5 | |
| 2.4 (135 kw) | 2019.07-2020.09 | 6AT | F | L | SUV 4WD G4KJ | | GDS81248 | Drive Shaft | 48T | 30 | 27 | 73 | 95 | 674 | |
| | 2019.07-2020.09 | 6AT | F | R | SUV 4WD G4KJ | | GDS81255 | Drive Shaft | 48T | 30 | 28 | 73 | 95 | 577 | |
| | 2019.07-2020.09 | 6AT | F | L | SUV 4WD G4KJ | | GCI24126 | Inner Joint | | 27 | 32 | 30 | 67 | 89.5 | |
| | 2019.07-2020.09 | 6AT | F | R | SUV 4WD G4KJ | | GCI81150 | Inner Joint | | 28 | 32 | 44.1 | | 116 | |
| | 2019.07-2020.09 | 6AT | R | L/R | SUV 4WD G4KJ | | GDS83156 | Drive Shaft | 48T | 27 | 25 | 62 | 98.5 | 838 | |
| | 2019.07-2020.09 | 6AT | R | L/R | SUV 4WD G4KJ | | GCO82315 | Outer Joint | 48T | 27 | 20 | 62 | 98.5 | 43 | M |
| | 2019.07-2020.09 | 6AT | R | L/R | SUV 4WD G4KJ | | GCI24154 | Inner Joint | | 25 | 20 | 35 | 62 | 78 | |
| 2.5 (140 kw) | 2021.01- | 8AT | F | L | SUV 4WD G4KN | | GDS57619 | Drive Shaft | | 30 | 27 | 73 | 95 | 676 | |
| | 2021.01- | 8AT | F | R | SUV 4WD G4KN | | GDS57962 | Drive Shaft | | 30 | 28 | 73 | 95 | 575 | |
| | 2021.01- | 8AT | F | L/R | SUV 4WD G4KN | | GCO81090 | Outer Joint | | 30 | 24 | 73 | 95 | 59 | M |
| | 2021.01- | AT | F | L | SUV 4WD G4KN | | GCI83728 | Inner Joint | | 27 | 32 | 30 | 67 | 96.5 | |
| | 2021.01- | AT | F | R | SUV 4WD G4KN | | GCI83473 | Inner Joint | | 28 | 32 | 44 | | 123 | |
| 2.7 (129 kw) | 2004.08-2010.11 | 4AT | F | L | SUV 4WD G6BA | | GDS27232 | Drive Shaft | 48T | 27 | 27 | 62.1 | 95 | 670 | |
| | 2004.08-2010.11 | 4AT | F | R | SUV 4WD G6BA | | GDS24173 | Drive Shaft | 48T | 27 | 26 | 62.2 | 95 | 609 | |
| | 2004.08-2010.11 | 4AT | F | L | SUV 4WD G6BA | ABS ring thickness 13.5mm | GCO24090 | Outer Joint | 48T | 27 | 25 | 61.9 | 95 | 61 | M |
| | 2004.08-2010.11 | 4AT | F | L | SUV 4WD G6BA | | GCO27067 | Outer Joint | 48T | 27 | 24 | 62.1 | 95 | 63 | M |
| | 2004.08-2010.11 | 4AT | F | L/R | SUV 4WD G6BA | ABS ring thickness 15.5mm | GCO24049 | Outer Joint | 48T | 27 | 25 | 62.2 | 95 | 60 | M |
| | 2004.08-2010.11 | 4AT | F | L | SUV 4WD G6BA | | GCI24013 | Inner Joint | | 27 | 33 | 41 | 61.5 | 107 | |
| | 2004.08-2010.11 | 4AT | F | R | SUV 4WD G6BA | | GCI24014 | Inner Joint | | 26 | 33 | 42 | | 124 | |
| | 2004.08-2010.11 | 4AT | F | R | SUV 4WD G6BA | | GCI24030 | Inner Joint | | 26 | 25 | 42 | | 108 | |
| | 2004.08-2010.11 | 4AT | R | L/R | SUV 4WD G6BA | | GDS24324 | Drive Shaft | 48T | 27 | 25 | 60 | 94 | 802 | |
| | 2004.08-2010.11 | 4AT | R | L/R | SUV 4WD G6BA | | GCO24178 | Outer Joint | 48T | 27 | 23 | 60 | 94 | 60 | M |
| | 2004.08-2010.11 | 4AT | R | L/R | SUV 4WD G6BA | | GCI24032 | Inner Joint | | 25 | 23 | 35 | 63 | 88 | |

| | YEAR | TRANSM. | F/R | L/R | BODY STYLE & DRIVE TYPE & ENGINE | REMARKS | G-AP Ref. | PRODUCT | ABS | Technical Specifications A | B | C | H | L | P |
|---|---|---|---|---|---|---|---|---|---|---|---|---|---|---|---|
| **HYUNDAI** | | | | | | | | | | | | | | | |
| **Tucson ix** | | | | | | | | | | | | | | | |
| 2.0 (122 kw) | 2009.08-2015.12 | 5MT | F | L | SUV 4WD G4KD | Vehicle Production Country:Czech Republic,Slovakia | GDS24525 | Drive Shaft | 48T | 27 | 27 | 62 | 95 | 694 | |
| | 2009.08-2015.12 | 5MT/6AT | F | R | SUV 4WD G4KD | vehicle production country:Republic of South Korea | GDS81188 | Drive Shaft | 48T | 27 | 26 | 62 | 95 | 588 | |
| | 2009.08-2015.12 | 6AT | F | L | SUV 4WD G4KD | Vehicle Production Country:Republic of Korea (South Korea) | GDS24231 | Drive Shaft | 48T | 27 | 27 | 62 | 95 | 676 | |
| | 2009.08-2015.12 | 6AT | F | L | SUV 4WD G4KD | Vehicle Production Country:Czech Republic,Slovakia | GDS27217 | Drive Shaft | 48T | 27 | 27 | 62 | 95 | 678 | |
| | 2009.08-2015.12 | MT | F | R | SUV 4WD G4KD | Date from:2009.11,Date to:2013.08 | GDS81695 | Intermediate Shaft | | 26 | 27 | | | 422 | |
| | 2009.08-2015.12 | 6AT/6MT | R | R | SUV 4WD G4KD | Vehicle Production Country:Republic of Korea | GDS83118 | Drive Shaft | 48T | 27 | 25 | 62 | 95 | 816 | |
| **Tucson iX35** | | | | | | | | | | | | | | | |
| 2.4 (128 kw) | 2010.07-2013.12 | 6AT | F | L | SUV 4WD G4KE | Date To:2013.08 | GDS24231 | Drive Shaft | 48T | 27 | 27 | 62 | 95 | 676 | |
| | 2010.07-2013.12 | 6AT | F | L | SUV 4WD G4KE | Date from:2013.09 | GDS84110 | Drive Shaft | 48T | 27 | 27 | 62 | 95 | 676 | |
| | 2010.07-2013.12 | 6AT | F | R | SUV 4WD G4KE | | GDS81188 | Drive Shaft | 48T | 27 | 26 | 62 | 95 | 588 | |
| | 2010.07-2013.12 | 6AT | F | L/R | SUV 4WD G4KE | | GCO24124 | Outer Joint | 48T | 27 | 24 | 62 | 95 | 58 | M |
| | 2010.07-2013.12 | 6AT | F | L | SUV 4WD G4KE | Date To:2013.08 | GCI24053 | Inner Joint | | 27 | 24 | 30 | 67.5 | 88.5 | |
| | 2010.07-2013.12 | 6AT | F | L | SUV 4WD G4KE | Date To:2013.08 | GCI24158 | Inner Joint | | 27 | 24 | 30 | 67 | 88.5 | |
| | 2010.07-2013.12 | 6AT | F | R | SUV 4WD G4KE | Date To:2013.08 | GCI27032 | Inner Joint | | 26 | 24 | 44.1 | | 115 | |
| | 2010.07-2013.12 | 6AT | F | R | SUV 4WD G4KE | | GCI81105 | Inner Joint | | 26 | 24 | 44.1 | | 115 | |
| | 2010.07-2013.12 | | F | L | SUV 4WD G4KE | Date from:2013.09 | GCI81106 | Inner Joint | | 27 | 24 | 30 | 67.5 | 88.5 | |
| | 2010.07-2013.12 | 6AT | R | L | SUV 4WD G4KE | Date From:2013.09 | GDS83994 | Drive Shaft | 48T | 27 | 25 | 62 | 95 | 834 | |
| | 2010.07-2013.12 | 6AT | R | R | SUV 4WD G4KE | Date to:2013.08 | GDS83118 | Drive Shaft | 48T | 27 | 25 | 62 | 95 | 816 | |
| | 2010.07-2013.12 | 6AT | R | R | SUV 4WD G4KE | Date from:2013.09 | GDS83971 | Drive Shaft | 48T | 27 | 25 | 62 | 95 | 817 | |
| | 2010.07-2013.12 | 6AT | R | R | SUV 4WD G4KE | Date to:2013.08 | GCO82286 | Outer Joint | 48T | 27 | 20 | 62 | 95 | 53 | M |
| | 2010.07-2013.12 | 6AT | R | L/R | SUV 4WD G4KE | Date From:2013.09 | GCO82547 | Outer Joint | 48T | 27 | 20 | 62 | 95 | 42 | M |
| | 2010.07-2013.12 | 6AT | R | R | SUV 4WD G4KE | Date to:2013.08 | GCI24077 | Inner Joint | | 25 | 20 | 35 | 62 | 82 | |
| | 2010.07-2013.12 | 6AT | R | L/R | SUV 4WD G4KE | Date From:2013.09 | GCI24154 | Inner Joint | | 25 | 20 | 35 | 62 | 78 | |
| **Veloster** | | | | | | | | | | | | | | | |
| 1.6 (95 kw) | 2011.10-2017.12 | 6DCT | F | L | Coupe FWD G4FD | | GDS82241 | Drive Shaft | 46T | 27 | 27 | 60 | 94.5 | 635 | |
| | 2011.10-2017.12 | AT | F | R | Coupe FWD G4FD | | GDS83466 | Drive Shaft | 46T | 27 | 27 | 60 | 94.5 | 1018 | |
| | 2011.10-2017.12 | AT | F | R | Coupe FWD G4FD | | GCO24304 | Outer Joint | 46T | 27 | 22 | 60 | 94.5 | 54.5 | M |
| | 2011.10-2017.12 | AT | F | R | Coupe FWD G4FD | | GCI81569 | Inner Joint | | 27 | 22 | 41 | 61 | 92.5 | |
| | 2011.10-2017.12 | MT | F | L | Coupe FWD G4FD | | GDS24548 | Drive Shaft | 46T | 27 | 25 | 60 | 94.5 | 687 | |
| | 2011.10-2017.12 | MT | F | R | Coupe FWD G4FD | | GDS24398 | Drive Shaft | 46T | 27 | 25 | 60 | 94.5 | 965 | |
| | 2011.10-2017.12 | MT | F | L/R | Coupe FWD G4FD | | GCO24132 | Outer Joint | 46T | 27 | 22 | 60 | 94.5 | 54.5 | M |
| | 2011.10-2017.12 | MT | F | L/R | Coupe FWD G4FD | | GCI39052 | Inner Joint | | 25 | 22 | 41 | 63 | 86 | |
| 1.6 (97 kw) | 2011.04-2017.12 | AT | F | L | Coupe FWD G4FC;G4FG | | GDS24288 | Drive Shaft | 46T | 27 | 27 | 60 | 95 | 669 | |
| | 2011.04-2017.12 | AT | F | R | Coupe FWD G4FC;G4FG | | GDS24289 | Drive Shaft | 46T | 27 | 27 | 60 | 95 | 956 | |
| | 2011.04-2017.12 | AT | F | R | Coupe FWD G4FC;G4FG | | GCO24161 | Outer Joint | 46T | 27 | 23 | 60 | 95 | 57 | M |
| | 2011.04-2017.12 | AT | F | L/R | Coupe FWD G4FC;G4FG | | GCI24065 | Inner Joint | | 27 | 22 | 30 | 68 | 77 | |
| | 2011.04-2017.12 | MT | F | L | Coupe FWD G4FC;G4FG | | GDS24548 | Drive Shaft | 46T | 27 | 25 | 60 | 94.5 | 687 | |
| | 2011.04-2017.12 | MT | F | R | Coupe FWD G4FC;G4FG | | GDS24398 | Drive Shaft | 46T | 27 | 25 | 60 | 94.5 | 965 | |
| | 2011.04-2017.12 | MT | F | L/R | Coupe FWD G4FC;G4FG | | GCI39052 | Inner Joint | | 25 | 22 | 41 | 63 | 86 | |
| 1.6 (103 kw) | 2011.03-2017.12 | 6DCT | F | L | Coupe FWD G4FD | | GDS82241 | Drive Shaft | 46T | 27 | 27 | 60 | 94.5 | 635 | |
| | 2011.03-2017.12 | AT | F | R | Coupe FWD G4FD | | GDS83466 | Drive Shaft | 46T | 27 | 27 | 60 | 94.5 | 1018 | |
| | 2011.03-2017.12 | AT | F | R | Coupe FWD G4FD | | GCO24304 | Outer Joint | 46T | 27 | 22 | 60 | 94.5 | 54.5 | M |
| | 2011.03-2017.12 | AT | F | R | Coupe FWD G4FD | | GCI81569 | Inner Joint | | 27 | 22 | 41 | 61 | 92.5 | |
| | 2011.03-2017.12 | MT | F | L | Coupe FWD G4FD | | GDS24548 | Drive Shaft | 46T | 27 | 25 | 60 | 94.5 | 687 | |
| | 2011.03-2017.12 | MT | F | R | Coupe FWD G4FD | | GDS24398 | Drive Shaft | 46T | 27 | 25 | 60 | 94.5 | 965 | |
| | 2011.03-2017.12 | MT | F | L/R | Coupe FWD G4FD | | GCO24132 | Outer Joint | 46T | 27 | 22 | 60 | 94.5 | 54.5 | M |
| | 2011.03-2017.12 | MT | F | L/R | Coupe FWD G4FD | | GCI39052 | Inner Joint | | 25 | 22 | 41 | 63 | 86 | |
| 1.6 (137 kw) | 2012.10-2017.12 | MT | F | R | Coupe FWD G4FJ | | GDS83654 | Drive Shaft | 46T | 27 | 26 | 60 | 95 | 594 | |
| | 2012.10-2017.12 | MT | F | R | Coupe FWD G4FJ | | GCI82317 | Inner Joint | | 26 | 23 | 44.1 | | 106 | |
| 2.0 (110 kw) | 2018.12- | 6MT | F | L | Coupe FWD G4NH | | GDS84185 | Drive Shaft | | 27 | 27 | 60 | 95 | 684 | |
| | 2018.12- | 6MT | F | R | Coupe FWD G4NH | | GDS84184 | Drive Shaft | | 27 | 27 | 60 | 95 | 962 | |
| | 2018.12- | 6MT | F | L/R | Coupe FWD G4NH | | GCO82472 | Outer Joint | | 27 | 23 | 60 | 95 | 57 | M |
| | 2018.12- | 6MT | F | L/R | Coupe FWD G4NH | | GCI82628 | Inner Joint | | 27 | 31 | 41 | 62 | 86 | |
| **Veracruz** | | | | | | | | | | | | | | | |
| 3.0 (180 kw) | 2008.11-2012.11 | 6AT | F | R | SUV 4WD D6EA | | GDS24222 | Drive Shaft | 52T | 30 | 28 | 73 | 97 | 618 | |
| | 2008.11-2012.11 | 6AT | F | L/R | SUV 4WD D6EA | | GCO24072 | Outer Joint | 52T | 30 | 36 | 73 | 97 | 67.5 | I |
| | 2008.11-2012.11 | 6AT | F | L | SUV 4WD D6EA | | GCI24057 | Inner Joint | | 31 | 36 | 36.2 | 65 | 118.5 | |
| | 2008.11-2012.11 | 6AT | F | R | SUV 4WD D6EA | | GCI24058 | Inner Joint | | 28 | 36 | 42.1 | | 131.5 | |
| | 2008.11-2012.11 | 6AT | R | L/R | SUV 4WD D6EA | | GDS57581 | Drive Shaft | 52T | 30 | 27 | 60 | 98 | 848 | |
| | 2008.11-2012.11 | 6AT | R | L/R | SUV 4WD D6EA | | GCO83630 | Outer Joint | 52T | 30 | 22 | 60 | 98 | 68.5 | M |
| | 2008.11-2012.11 | 6AT | R | L/R | SUV 4WD D6EA | | GCI24097 | Inner Joint | | 27 | 22 | 41 | 62.5 | 94 | |
| 3.8 (194 kw) | 2007.01-2012.11 | | F | L | SUV FWD G6DA | | GCI24057 | Inner Joint | | 31 | 36 | 36.2 | 65 | 118.5 | |
| | 2011.01-2012.11 | AT | F | R | SUV 4WD G6DA | | GDS24222 | Drive Shaft | 52T | 30 | 28 | 73 | 97 | 618 | |
| | 2011.01-2012.11 | AT | F | L/R | SUV 4WD G6DA | | GCO24072 | Outer Joint | 52T | 30 | 36 | 73 | 97 | 67.5 | I |
| | 2011.01-2012.11 | AT | F | L | SUV 4WD G6DA | | GCI24057 | Inner Joint | | 31 | 36 | 36.2 | 65 | 118.5 | |

| | YEAR | TRANSM. | F/R | L/R | BODY STYLE & DRIVE TYPE & ENGINE | REMARKS | G-AP Ref. | PRODUCT | ABS | Technical Specifications A | B | C | H | L | P |
|---|---|---|---|---|---|---|---|---|---|---|---|---|---|---|---|
| **HYUNDAI** | | | | | | | | | | | | | | | |
| **Veracruz** | | | | | | | | | | | | | | | |
| 3.8 (194 kw) | 2011.01-2012.11 | AT | F | R | SUV 4WD G6DA | | GCI24058 | Inner Joint | | 28 | 36 | 42.1 | | 131.5 | |
| | 2011.01-2012.11 | 6AT | R | L/R | SUV 4WD G6DA | | GDS57581 | Drive Shaft | 52T | 30 | 27 | 60 | 98 | 848 | |
| | 2011.01-2012.11 | 6AT | R | L/R | SUV 4WD G6DA | | GCO83630 | Outer Joint | 52T | 30 | 22 | 60 | 98 | 68.5 | M |
| | 2011.01-2012.11 | 6AT | R | L/R | SUV 4WD G6DA | | GCI24097 | Inner Joint | | 27 | 22 | 41 | 62.5 | 94 | |
| 3.8 (199 kw) | 2008.01-2012.11 | AT | F | R | SUV 4WD G6DA | | GDS24222 | Drive Shaft | 52T | 30 | 28 | 73 | 97 | 618 | |
| | 2008.01-2012.11 | AT | F | L/R | SUV 4WD G6DA | | GCO24072 | Outer Joint | 52T | 30 | 36 | 73 | 97 | 67.5 | I |
| | 2008.01-2012.11 | AT | F | L | SUV 4WD G6DA | | GCI24057 | Inner Joint | | 31 | 36 | 36.2 | 65 | 118.5 | |
| | 2008.01-2012.11 | AT | F | R | SUV 4WD G6DA | | GCI24058 | Inner Joint | | 28 | 36 | 42.1 | | 131.5 | |
| | 2008.01-2012.11 | 6AT | R | L/R | SUV 4WD G6DA | | GDS57581 | Drive Shaft | 52T | 30 | 27 | 60 | 98 | 848 | |
| | 2008.01-2012.11 | 6AT | R | L/R | SUV 4WD G6DA | | GCO83630 | Outer Joint | 52T | 30 | 22 | 60 | 98 | 68.5 | M |
| | 2008.01-2012.11 | 6AT | R | L/R | SUV 4WD G6DA | | GCI24097 | Inner Joint | | 27 | 22 | 41 | 62.5 | 94 | |
| **XG** | | | | | | | | | | | | | | | |
| 2.5 (120 kw) | 1998.12-2005.12 | AT | F | L | Saloon FWD G6BV | Inner teeth of wheel side:25 | GDS24014 | Drive Shaft | 47T | 27 | 27 | 60 | 95 | 659 | |
| | 1998.12-2005.12 | AT | F | L | Saloon FWD G6BV | Inner teeth of wheel side:34 | GDS24094 | Drive Shaft | 47T | 27 | 27 | 60 | 96.5 | 661 | |
| | 1998.12-2005.12 | AT | F | L | Saloon FWD G6BV | | GCI27020 | Inner Joint | | 27 | 25 | 41 | 62 | 100.5 | |
| | 1998.12-2005.12 | AT/MT | F | L/R | Saloon FWD G6BV | | GCO24073 | Outer Joint | 47T | 27 | 26 | 60 | 95 | 69 | M |
| | 1998.12-2005.12 | MT | F | L | Saloon FWD G6BV | | GDS24126 | Drive Shaft | 47T | 27 | 27 | 60 | 95 | 662 | |
| | 1998.12-2005.12 | MT | F | R | Saloon FWD G6BV | | GDS24125 | Drive Shaft | 47T | 27 | 26 | 60 | 95 | 619 | |
| 3.0 (138 kw) | 1998.12-2005.12 | 5AT/5MT | F | L | Saloon FWD G6CT | | GDS24087 | Drive Shaft | 47T | 27 | 28 | 60 | 96.5 | 655 | |
| | 1998.12-2005.12 | 5AT/5MT | F | R | Saloon FWD G6CT | | GDS24274 | Drive Shaft | 47T | 27 | 28 | 60 | 96.5 | 610 | |
| | 1998.12-2005.12 | 5AT/5MT | F | L/R | Saloon FWD G6CT | | GCO24073 | Outer Joint | 47T | 27 | 26 | 60 | 95 | 69 | M |
| **XG250** | | | | | | | | | | | | | | | |
| 2.5 (123 kw) | 2003.10-2005.09 | AT | F | L | Saloon FWD G6AV | Inner teeth of wheel side:25 | GDS24014 | Drive Shaft | 47T | 27 | 27 | 60 | 95 | 659 | |
| | 2003.10-2005.09 | AT | F | L | Saloon FWD G6AV | Inner teeth of wheel side:34 | GDS24094 | Drive Shaft | 47T | 27 | 27 | 60 | 96.5 | 661 | |
| | 2003.10-2005.09 | AT | F | L | Saloon FWD G6AV | Date from:2004.01 | GCI27020 | Inner Joint | | 27 | 25 | 41 | 62 | 100.5 | |
| | 2003.10-2005.09 | AT/MT | F | L/R | Saloon FWD G6AV | | GCO24073 | Outer Joint | 47T | 27 | 26 | 60 | 95 | 69 | M |
| | 2003.10-2005.09 | MT | F | R | Saloon FWD G6AV | | GDS24125 | Drive Shaft | 47T | 27 | 26 | 60 | 95 | 619 | |
| **XG300** | | | | | | | | | | | | | | | |
| 3.0 (143 kw) | 2001.01-2005.09 | 5AT | F | L | Saloon FWD G6CT | | GDS24087 | Drive Shaft | 47T | 27 | 28 | 60 | 96.5 | 655 | |
| | 2001.01-2005.09 | 5AT | F | R | Saloon FWD G6CT | | GDS24274 | Drive Shaft | 47T | 27 | 28 | 60 | 96.5 | 610 | |
| | 2001.01-2005.09 | 5AT | F | L/R | Saloon FWD G6CT | | GCO24073 | Outer Joint | 47T | 27 | 26 | 60 | 95 | 69 | M |
| 3.0 (145 kw) | 1999.09-2003.09 | 5AT | F | L | Saloon FWD G6CT | | GDS24087 | Drive Shaft | 47T | 27 | 28 | 60 | 96.5 | 655 | |
| | 1999.09-2003.09 | 5AT | F | R | Saloon FWD G6CT | | GDS24274 | Drive Shaft | 47T | 27 | 28 | 60 | 96.5 | 610 | |
| | 1999.09-2003.09 | 5AT | F | L/R | Saloon FWD G6CT | | GCO24073 | Outer Joint | 47T | 27 | 26 | 60 | 95 | 69 | M |
| **XG350** | | | | | | | | | | | | | | | |
| 3.5 (145 kw) | 2002.10-2005.12 | 5AT | F | L | Saloon FWD G6CU | | GDS24087 | Drive Shaft | 47T | 27 | 28 | 60 | 96.5 | 655 | |
| | 2002.10-2005.12 | 5AT | F | R | Saloon FWD G6CU | | GDS24274 | Drive Shaft | 47T | 27 | 28 | 60 | 96.5 | 610 | |
| | 2002.10-2005.12 | 5AT | F | L/R | Saloon FWD G6CU | | GCO24073 | Outer Joint | 47T | 27 | 26 | 60 | 95 | 69 | M |
| **HYUNDAI (BEIJING)** | | | | | | | | | | | | | | | |
| **Elantra Lingdong** | | | | | | | | | | | | | | | |
| 1.5 (85 kw) | 2019.07- | 6MT | F | L | Saloon FWD G4FL | Date to:2020.08 | GDS56217 | Drive Shaft | | 27 | 25 | 60 | 94.5 | 668 | |
| | 2019.07- | 6MT | F | R | Saloon FWD G4FL | Date to:2020.08 | GDS56218 | Drive Shaft | | 27 | 25 | 60 | 94.5 | 967 | |
| **Elantra Yuedong** | | | | | | | | | | | | | | | |
| EV (81 kw) | 2017.08- | ET | F | L | Saloon FWD PMSM81 | for model year:2017 | GDS84464 | Drive Shaft | 46T | 27 | 27 | 60 | 94.5 | 668 | |
| | 2017.08- | ET | F | R | Saloon FWD PMSM81 | for model year:2017 | GDS84463 | Drive Shaft | 46T | 27 | 27 | 60 | 94.5 | 927 | |
| | 2017.08- | ET | F | L/R | Saloon FWD PMSM81 | for model year:2017 | GCI82770 | Inner Joint | | 27 | 24 | 30 | 67.5 | 80 | |
| **Encino** | | | | | | | | | | | | | | | |
| EV (150 kw) | 2019.11- | ET | F | R | SUV FWD EM15 | | GCI83118 | Inner Joint | | 28 | 33 | 42 | | 129 | |
| **MISTRA** | | | | | | | | | | | | | | | |
| EV (135 kw) | 2021.03- | ET | F | R | Saloon FWD EM13 | | GCI83118 | Inner Joint | | 28 | 33 | 42 | | 129 | |
| **Mufasa** | | | | | | | | | | | | | | | |
| 2.0 (118 kw) | 2023.06- | 6AT | F | L | SUV FWD G4NJ | | GDS56223 | Drive Shaft | | 30 | 27 | 73 | 95 | 695 | |
| | 2023.06- | 6AT | F | R | SUV FWD G4NJ | | GDS56224 | Drive Shaft | | 30 | 27 | 73 | 95 | 955 | |
| | 2023.06- | 6AT | F | L/R | SUV FWD G4NJ | | GCO83210 | Outer Joint | | 30 | 25 | 73 | 95 | 64 | M |
| | 2023.06- | 6AT | F | L/R | SUV FWD G4NJ | | GCI83202 | Inner Joint | | 27 | 24 | 30 | 67 | 94 | |
| **Santa Fé** | | | | | | | | | | | | | | | |
| 2.0 (169 kw) | 2019.04- | 8AT | F | L | SUV 4WD G4KH | Model year to:2020 | GCI24145 | Inner Joint | | 28 | 35 | 33 | 67 | 105.5 | |
| | 2019.04- | 8AT | F | R | SUV 4WD G4KH | Model year to:2020 | GCI82132 | Inner Joint | | 28 | 35 | 42 | | 131.5 | |
| | 2019.04- | 8AT | F | L | SUV FWD G4KH | Model year to:2020 | GCI24145 | Inner Joint | | 28 | 35 | 33 | 67 | 105.5 | |
| | 2019.04- | 8AT | F | R | SUV FWD G4KH | Model year to:2020 | GCI82132 | Inner Joint | | 28 | 35 | 42 | | 131.5 | |
| 2.0 (177 kw) | 2019.04- | 8AT | F | L | SUV 4WD G4KH | for model year:2019 | GCI24145 | Inner Joint | | 28 | 35 | 33 | 67 | 105.5 | |
| | 2019.04- | 8AT | F | R | SUV 4WD G4KH | for model year:2019 | GCI82132 | Inner Joint | | 28 | 35 | 42 | | 131.5 | |
| | 2019.04- | 8AT | F | L | SUV FWD G4KH | for model year:2019 | GCI24145 | Inner Joint | | 28 | 35 | 33 | 67 | 105.5 | |
| | 2019.04- | 8AT | F | R | SUV FWD G4KH | for model year:2019 | GCI82132 | Inner Joint | | 28 | 35 | 42 | | 131.5 | |
| 2.0 (180 kw) | 2012.12- | 6AT | F | L | SUV 4WD G4KH | Model year to:2016 | GCI24066 | Inner Joint | | 28 | 35 | 33 | 67.5 | 100 | |

| | YEAR | TRANSM. | F/R | L/R | BODY STYLE & DRIVE TYPE & ENGINE | REMARKS | G-AP Ref. | PRODUCT | ABS | Technical Specifications A | B | C | H | L | P |
|---|---|---|---|---|---|---|---|---|---|---|---|---|---|---|---|
| **HYUNDAI (BEIJING)** | | | | | | | | | | | | | | | |
| **Santa Fé** | | | | | | | | | | | | | | | |
| 2.0 (180 kw) | 2012.12- | 6AT | F | L | SUV FWD G4KH | Model year from:2013,Model year to:2016 | GCI24066 | Inner Joint | | 28 | 35 | 33 | 67.5 | 100 | |
| 2.4 (139 kw) | 2012.12- | 6AT | F | L | SUV 4WD G4KJ | Model year to:2016 | GCI24066 | Inner Joint | | 28 | 35 | 33 | 67.5 | 100 | |
| | 2012.12- | 6MT/6AT | F | L | SUV FWD G4KJ | Model year to:2015 | GCI24066 | Inner Joint | | 28 | 35 | 33 | 67.5 | 100 | |
| **Sonata** | | | | | | | | | | | | | | | |
| 2.0 (101 kw) | 2002.12-2010.12 | 5MT/4AT | F | R | Saloon FWD G4GC | Model year from:2003,Model year to:2009 | GDS24058 | Drive Shaft | 47T | 27 | 27 | 60 | 95 | 976.5 | |
| | 2002.12-2010.12 | 5MT/4AT | F | L/R | Saloon FWD G4GC | Model year from:2003,Model year to:2009 | GCO24028 | Outer Joint | 47T | 27 | 26 | 60 | 95 | 69 | M |
| | 2002.12-2010.12 | 5MT/4AT | F | L/R | Saloon FWD G4GC | Model year from:2003,Model year to:2009 | GCI24001 | Inner Joint | | 27 | 25 | 41 | 62.8 | 92.5 | |
| 2.0 (119 kw) | 2012.12-2015.02 | 6AT | F | L/R | Saloon FWD G4NA | | GCO24049 | Outer Joint | 48T | 27 | 25 | 62.2 | 95 | 60 | M |
| 2.0 (121 kw) | 2011.04-2015.02 | 6AT | F | L/R | Saloon FWD G4KD | Model year to:2012 | GCO24049 | Outer Joint | 48T | 27 | 25 | 62.2 | 95 | 60 | M |
| 2.0 (177 kw) | 2020.07- | 8AT | F | L | Saloon FWD G4NN | | GCI82294 | Inner Joint | | 28 | 33 | 44.1 | | 121 | |
| | 2020.07- | 8AT | F | R | Saloon FWD G4NN | | GCI82295 | Inner Joint | | 28 | 33 | 33 | 67 | 94.5 | |
| 2.4 (127 kw) | 2011.04-2015.02 | 6AT | F | L/R | Saloon FWD G4KE | Model year from:2014 | GCI24053 | Inner Joint | | 27 | 24 | 30 | 67.5 | 88.5 | |
| 2.4 (132 kw) | 2011.04-2015.02 | 6AT | F | L/R | Saloon FWD G4KE | | GCI24053 | Inner Joint | | 27 | 24 | 30 | 67.5 | 88.5 | |
| 2.7 (131 kw) | 2002.12-2007.07 | 4AT | F | L/R | Saloon FWD G6BA | Model year from:2004,Model year to:2005 | GCO24029 | Outer Joint | 47T | 27 | 25 | 60 | 95 | 63.5 | M |
| **Sonata Lingxiang** | | | | | | | | | | | | | | | |
| 2.0 (121 kw) | 2008.12-2012.12 | 5MT/4AT | F | L/R | Saloon FWD G4KD | Model year to:2011 | GCO24062 | Outer Joint | 47T | 27 | 25 | 62.2 | 95 | 60 | M |
| **Sonata Yuxiang** | | | | | | | | | | | | | | | |
| 2.0 (106 kw) | 2005.09-2010.12 | 5MT | F | L/R | Saloon FWD G4KA | | GCI82713 | Inner Joint | | 27 | 25 | 41 | 61.5 | 91.5 | |
| 2.4 (121 kw) | 2005.09-2010.12 | 4AT | F | L/R | Saloon FWD G4KC | | GCO24062 | Outer Joint | 47T | 27 | 25 | 62.2 | 95 | 60 | M |
| **Tucson L** | | | | | | | | | | | | | | | |
| 1.5 (147 kw) | 2021.04- | 8AMT | F | L | SUV FWD G4FS | Model year from:2022 | GDS56278 | Drive Shaft | | 30 | 27 | 73 | 95 | 699 | |
| | 2021.04- | 8AMT | F | L | SUV FWD G4FS | Model year from:2022 | GCI83223 | Inner Joint | | 27 | 33 | 30 | 67 | 95 | |
| | 2021.04- | 8AMT | F | R | SUV FWD G4FS | Model year from:2022 | GCI82294 | Inner Joint | | 28 | 33 | 44.1 | | 121 | |
| | 2022.11- | 7DCT | F | R | SUV 4WD G4FS | | GCI82294 | Inner Joint | | 28 | 33 | 44.1 | | 121 | |
| **HYUNDAI (HUATAI)** | | | | | | | | | | | | | | | |
| **Terracan** | | | | | | | | | | | | | | | |
| 2.5 (74 kw) | 2003.03-2008.12 | 4AT/5MT | F | L | Closed Off-Road Vehicle 4WD D4BH | Transmission:4AT,Model year from:2004;Transmission:5MT,Model year to:2006 | GDS24339 | Drive Shaft | | 28 | 28 | 56 | 154 | 648 | |
| 3.5 (147 kw) | 2003.03-2008.12 | 4AT | F | L | SUV 4WD G6CU | | GDS24339 | Drive Shaft | | 28 | 28 | 56 | 154 | 648 | |
| **INFINITI** | | | | | | | | | | | | | | | |
| **EX25** | | | | | | | | | | | | | | | |
| 2.5 (163 kw) | 2007.09- | 7AT | F | L | SUV 4WD VQ25HR | | GDS56681 | Drive Shaft | | 27 | | 59 | 102.5 | 636 | |
| | 2007.09- | 7AT | F | R | SUV 4WD VQ25HR | | GDS56960 | Drive Shaft | | 27 | 25 | 59 | 102.5 | 602 | |
| | 2007.09- | 7AT | F | L/R | SUV 4WD VQ25HR | | GCO83273 | Outer Joint | | 27 | 22 | 59 | 102.5 | 59 | M |
| | 2007.09- | 7AT | F | L | SUV 4WD VQ25HR | | GCI81178 | Inner Joint | | | 27 | | | 78 | |
| | 2007.09- | 7AT | F | R | SUV 4WD VQ25HR | | GCI82256 | Inner Joint | | 25 | 22 | 32 | 90 | 83 | |
| | 2007.09- | 7AT | R | L | SUV 4WD VQ25HR | | GDS83557 | Drive Shaft | | 32 | | 65.5 | 110 | 631 | |
| | 2007.09- | 7AT | R | R | SUV 4WD VQ25HR | | GDS83556 | Drive Shaft | | 32 | | 65.5 | 110 | 681 | |
| | 2007.09- | 7AT | R | L/R | SUV 4WD VQ25HR | | GCO82420 | Outer Joint | | 32 | 35 | 65.5 | 110 | 59 | I |
| | 2007.09- | 7AT | R | L/R | SUV 4WD VQ25HR | | GCI82276 | Inner Joint | | | 35 | | | 68 | |
| **EX30d** | | | | | | | | | | | | | | | |
| 3.0 (175 kw) | 2010.04- | 7AT | F | R | SUV 4WD V9X | | GDS56960 | Drive Shaft | | 27 | 25 | 59 | 102.5 | 602 | |
| | 2010.04- | 7AT | F | L/R | SUV 4WD V9X | | GCO83273 | Outer Joint | | 27 | 22 | 59 | 102.5 | 59 | M |
| | 2010.04- | 7AT | F | R | SUV 4WD V9X | | GCI82256 | Inner Joint | | 25 | 22 | 32 | 90 | 83 | |
| | 2010.04- | AT | F | L | SUV 4WD V9X | | GCI81497 | Inner Joint | | | 27 | | | 75 | |
| **EX35** | | | | | | | | | | | | | | | |
| 3.5 (221 kw) | 2008.10- | 5AT | F | L | SUV 4WD VQ35HR | | GDS56681 | Drive Shaft | | 27 | | 59 | 102.5 | 636 | |
| | 2008.10- | 5AT | F | R | SUV 4WD VQ35HR | | GDS56960 | Drive Shaft | | 27 | 25 | 59 | 102.5 | 602 | |
| | 2008.10- | 5AT | F | L/R | SUV 4WD VQ35HR | | GCO83273 | Outer Joint | | 27 | 22 | 59 | 102.5 | 59 | M |
| | 2008.10- | 5AT | F | L | SUV 4WD VQ35HR | | GCI81178 | Inner Joint | | | 27 | | | 78 | |
| | 2008.10- | 5AT | F | R | SUV 4WD VQ35HR | | GCI82256 | Inner Joint | | 25 | 22 | 32 | 90 | 83 | |
| | 2008.10- | 5AT | R | L | SUV 4WD VQ35HR | | GDS83557 | Drive Shaft | | 32 | | 65.5 | 110 | 631 | |
| | 2008.10- | 5AT | R | R | SUV 4WD VQ35HR | | GDS83556 | Drive Shaft | | 32 | | 65.5 | 110 | 681 | |
| | 2008.10- | 5AT | R | L/R | SUV 4WD VQ35HR | | GCO82420 | Outer Joint | | 32 | 35 | 65.5 | 110 | 59 | I |
| **EX37** | | | | | | | | | | | | | | | |
| 3.7 (228 kw) | 2008.10- | 7AT | F | L | SUV 4WD VQ37VHR | | GDS56681 | Drive Shaft | | 27 | | 59 | 102.5 | 636 | |
| | 2008.10- | 7AT | F | R | SUV 4WD VQ37VHR | | GDS56960 | Drive Shaft | | 27 | 25 | 59 | 102.5 | 602 | |
| | 2008.10- | 7AT | F | L/R | SUV 4WD VQ37VHR | | GCO83273 | Outer Joint | | 27 | 22 | 59 | 102.5 | 59 | M |
| | 2008.10- | 7AT | F | L | SUV 4WD VQ37VHR | | GCI81178 | Inner Joint | | | 27 | | | 78 | |
| | 2008.10- | 7AT | F | R | SUV 4WD VQ37VHR | | GCI82256 | Inner Joint | | 25 | 22 | 32 | 90 | 83 | |
| | 2008.10- | 7AT | R | L | SUV 4WD VQ37VHR | Date from:2010.10 | GDS83557 | Drive Shaft | | 32 | | 65.5 | 110 | 631 | |
| | 2008.10- | 7AT | R | R | SUV 4WD VQ37VHR | Date from:2010.10 | GDS83556 | Drive Shaft | | 32 | | 65.5 | 110 | 681 | |
| | 2008.10- | 7AT | R | L/R | SUV 4WD VQ37VHR | | GCO82420 | Outer Joint | | 32 | 35 | 65.5 | 110 | 59 | I |
| | 2008.10- | 7AT | R | L/R | SUV 4WD VQ37VHR | Date from:2010.10 | GCI82276 | Inner Joint | | | 35 | | | 68 | |
| 3.7 (235 kw) | 2010.09- | 5AT/7AT | F | L | SUV 4WD VQ37VHR | | GDS56681 | Drive Shaft | | 27 | | 59 | 102.5 | 636 | |
| | 2010.09- | 5AT/7AT | F | R | SUV 4WD VQ37VHR | | GDS56960 | Drive Shaft | | 27 | 25 | 59 | 102.5 | 602 | |

| | YEAR | TRANSM. | F/R | L/R | BODY STYLE & DRIVE TYPE & ENGINE | REMARKS | G-AP Ref. | PRODUCT | ABS | Technical Specifications A | B | C | H | L | P |
|---|---|---|---|---|---|---|---|---|---|---|---|---|---|---|---|
| **INFINITI** | | | | | | | | | | | | | | | |
| **EX37** | | | | | | | | | | | | | | | |
| 3.7 (235 kw) | 2010.09- | 5AT/7AT | F | L | SUV 4WD VQ37VHR | | GCI81178 | Inner Joint | | | 27 | | | 78 | |
| | 2010.09- | 5AT/7AT | F | R | SUV 4WD VQ37VHR | | GCI82256 | Inner Joint | | 25 | 22 | 32 | 90 | 83 | |
| | 2010.09- | 7AT | F | L/R | SUV 4WD VQ37VHR | | GCO83273 | Outer Joint | | 27 | 22 | 59 | 102.5 | 59 | M |
| | 2010.09- | 5AT/7AT | R | L | SUV 4WD VQ37VHR | Date from:2010.10 | GDS83557 | Drive Shaft | | 32 | | 65.5 | 110 | 631 | |
| | 2010.09- | 5AT/7AT | R | R | SUV 4WD VQ37VHR | Date from:2010.10 | GDS83556 | Drive Shaft | | 32 | | 65.5 | 110 | 681 | |
| | 2010.09- | 5AT/7AT | R | L/R | SUV 4WD VQ37VHR | | GCO82420 | Outer Joint | | 32 | 35 | 65.5 | 110 | 59 | I |
| | 2010.09- | 5AT/7AT | R | L/R | SUV 4WD VQ37VHR | Date from:2010.10 | GCI82276 | Inner Joint | | | 35 | | | 68 | |
| **FX30d** | | | | | | | | | | | | | | | |
| 3.0 (175 kw) | 2010.04- | 7AT | F | L | SUV 4WD V9X | | GDS83995 | Drive Shaft | | 27 | | 59 | 102.5 | 690 | |
| | 2010.04- | 7AT | F | R | SUV 4WD V9X | | GDS84014 | Drive Shaft | | 27 | 25 | 59 | 102.5 | 652 | |
| | 2010.04- | 7AT | F | L/R | SUV 4WD V9X | | GCO83273 | Outer Joint | | 27 | 22 | 59 | 102.5 | 59 | M |
| | 2010.04- | 7AT | F | L | SUV 4WD V9X | | GCI81497 | Inner Joint | | | 27 | | | 75 | |
| | 2010.04- | 7AT | F | R | SUV 4WD V9X | | GCI82256 | Inner Joint | | 25 | 22 | 32 | 90 | 83 | |
| **FX35** | | | | | | | | | | | | | | | |
| 3.5 (205 kw) | 2008.07-2009.05 | 7AT | F | R | SUV 4WD VQ35HR | | GDS84014 | Drive Shaft | | 27 | 25 | 59 | 102.5 | 652 | |
| | 2008.07-2009.05 | 7AT | F | L/R | SUV 4WD VQ35HR | | GCO83273 | Outer Joint | | 27 | 22 | 59 | 102.5 | 59 | M |
| | 2008.07-2009.05 | 7AT | F | L | SUV 4WD VQ35HR | | GCI81178 | Inner Joint | | | 27 | | | 78 | |
| | 2008.07-2009.05 | 7AT | F | R | SUV 4WD VQ35HR | | GCI82256 | Inner Joint | | 25 | 22 | 32 | 90 | 83 | |
| 3.5 (206 kw) | 2003.01-2008.12 | AT | F | L/R | SUV 4WD VQ35DE | | GCO83273 | Outer Joint | | 27 | 22 | 59 | 102.5 | 59 | M |
| | 2003.01-2008.12 | AT | F | L | SUV 4WD VQ35DE | | GCI81178 | Inner Joint | | | 27 | | | 78 | |
| | 2003.01-2008.12 | AT | F | R | SUV 4WD VQ35DE | | GCI82256 | Inner Joint | | 25 | 22 | 32 | 90 | 83 | |
| | 2003.01-2008.12 | AT | R | L/R | SUV 4WD VQ35DE | | GCI83227 | Inner Joint | | | 27 | | | 79.5 | |
| | 2003.02-2008.12 | AT | R | L/R | SUV RWD VQ35DE | | GCI83227 | Inner Joint | | | 27 | | | 79.5 | |
| 3.5 (226 kw) | 2009.02-2010.12 | 7AT | F | R | SUV 4WD VQ35HR | | GDS84014 | Drive Shaft | | 27 | 25 | 59 | 102.5 | 652 | |
| | 2009.02-2010.12 | 7AT | F | L/R | SUV 4WD VQ35HR | | GCO83273 | Outer Joint | | 27 | 22 | 59 | 102.5 | 59 | M |
| | 2009.02-2010.12 | 7AT | F | L | SUV 4WD VQ35HR | | GCI81178 | Inner Joint | | | 27 | | | 78 | |
| | 2009.02-2010.12 | 7AT | F | R | SUV 4WD VQ35HR | | GCI82256 | Inner Joint | | 25 | 22 | 32 | 90 | 83 | |
| **FX37** | | | | | | | | | | | | | | | |
| 3.7 (235 kw) | 2008.10- | 7AT | F | R | SUV 4WD VQ37VHR | | GDS84014 | Drive Shaft | | 27 | 25 | 59 | 102.5 | 652 | |
| | 2008.10- | 7AT | F | L/R | SUV 4WD VQ37VHR | | GCO83273 | Outer Joint | | 27 | 22 | 59 | 102.5 | 59 | M |
| | 2008.10- | 7AT | F | L | SUV 4WD VQ37VHR | | GCI81178 | Inner Joint | | | 27 | | | 78 | |
| | 2008.10- | 7AT | F | R | SUV 4WD VQ37VHR | | GCI82256 | Inner Joint | | 25 | 22 | 32 | 90 | 83 | |
| 3.7 (242 kw) | 2012.09- | 7AT | F | R | SUV 4WD VQ37VHR | | GDS84014 | Drive Shaft | | 27 | 25 | 59 | 102.5 | 652 | |
| | 2012.09- | 7AT | F | L | SUV 4WD VQ37VHR | | GCI81178 | Inner Joint | | | 27 | | | 78 | |
| 3.7 (245 kw) | 2008.07-2013.07 | 7AT | F | R | SUV 4WD VQ37VHR | | GDS84014 | Drive Shaft | | 27 | 25 | 59 | 102.5 | 652 | |
| | 2008.07-2013.07 | 7AT | F | L/R | SUV 4WD VQ37VHR | | GCO83273 | Outer Joint | | 27 | 22 | 59 | 102.5 | 59 | M |
| | 2008.07-2013.07 | 7AT | F | L | SUV 4WD VQ37VHR | | GCI81178 | Inner Joint | | | 27 | | | 78 | |
| | 2008.07-2013.07 | 7AT | F | R | SUV 4WD VQ37VHR | | GCI82256 | Inner Joint | | 25 | 22 | 32 | 90 | 83 | |
| **FX45** | | | | | | | | | | | | | | | |
| 4.5 (232 kw) | 2003.01-2008.12 | AT | F | L/R | SUV 4WD VK45DE | | GCO83273 | Outer Joint | | 27 | 22 | 59 | 102.5 | 59 | M |
| | 2003.01-2008.12 | AT | F | L | SUV 4WD VK45DE | | GCI81497 | Inner Joint | | | 27 | | | 75 | |
| | 2003.01-2008.12 | AT | F | R | SUV 4WD VK45DE | | GCI82256 | Inner Joint | | 25 | 22 | 32 | 90 | 83 | |
| 4.5 (241 kw) | 2008.10- | AT | F | L/R | SUV 4WD VK45DE | | GCO83273 | Outer Joint | | 27 | 22 | 59 | 102.5 | 59 | M |
| | 2008.10- | AT | F | L | SUV 4WD VK45DE | | GCI81497 | Inner Joint | | | 27 | | | 75 | |
| | 2008.10- | AT | F | R | SUV 4WD VK45DE | | GCI82256 | Inner Joint | | 25 | 22 | 32 | 90 | 83 | |
| **FX50** | | | | | | | | | | | | | | | |
| 5.0 (287 kw) | 2008.10- | 7AT | F | L | SUV 4WD VK50VE | | GDS83995 | Drive Shaft | | 27 | | 59 | 102.5 | 690 | |
| | 2008.10- | 7AT | F | R | SUV 4WD VK50VE | | GDS84014 | Drive Shaft | | 27 | 25 | 59 | 102.5 | 652 | |
| | 2008.10- | 7AT | F | L/R | SUV 4WD VK50VE | | GCO83273 | Outer Joint | | 27 | 22 | 59 | 102.5 | 59 | M |
| | 2008.10- | 7AT | F | L | SUV 4WD VK50VE | | GCI81497 | Inner Joint | | | 27 | | | 75 | |
| | 2008.10- | 7AT | F | R | SUV 4WD VK50VE | | GCI82256 | Inner Joint | | 25 | 22 | 32 | 90 | 83 | |
| 5.0 (291 kw) | 2008.10- | 7AT | F | L | SUV 4WD VK50VE | | GDS83995 | Drive Shaft | | 27 | | 59 | 102.5 | 690 | |
| | 2008.10- | 7AT | F | R | SUV 4WD VK50VE | | GDS84014 | Drive Shaft | | 27 | 25 | 59 | 102.5 | 652 | |
| | 2008.10- | 7AT | F | L/R | SUV 4WD VK50VE | | GCO83273 | Outer Joint | | 27 | 22 | 59 | 102.5 | 59 | M |
| | 2008.10- | 7AT | F | L | SUV 4WD VK50VE | | GCI81497 | Inner Joint | | | 27 | | | 75 | |
| | 2008.10- | 7AT | F | R | SUV 4WD VK50VE | | GCI82256 | Inner Joint | | 25 | 22 | 32 | 90 | 83 | |
| 5.0 (309 kw) | 2013.06-2013.07 | AT | F | L | SUV 4WD VK50VE | | GDS83995 | Drive Shaft | | 27 | | 59 | 102.5 | 690 | |
| | 2013.06-2013.07 | AT | F | R | SUV 4WD VK50VE | | GDS84014 | Drive Shaft | | 27 | 25 | 59 | 102.5 | 652 | |
| | 2013.06-2013.07 | AT | F | L/R | SUV 4WD VK50VE | | GCO83273 | Outer Joint | | 27 | 22 | 59 | 102.5 | 59 | M |
| | 2013.06-2013.07 | AT | F | L | SUV 4WD VK50VE | | GCI81497 | Inner Joint | | | 27 | | | 75 | |
| | 2013.06-2013.07 | AT | F | R | SUV 4WD VK50VE | | GCI82256 | Inner Joint | | 25 | 22 | 32 | 90 | 83 | |
| **G20** | | | | | | | | | | | | | | | |
| 2.0 (85 kw) | 1990.01-1997.12 | | F | L | Saloon FWD SR20DE | | GCI50065 | Inner Joint | | 25 | 25 | 40 | 63 | 101 | |

| | YEAR | TRANSM. | F/R | L/R | BODY STYLE & DRIVE TYPE & ENGINE | REMARKS | G-AP Ref. | PRODUCT | ABS | Technical Specifications A | B | C | H | L | P |
|---|---|---|---|---|---|---|---|---|---|---|---|---|---|---|---|
| **INFINITI** | | | | | | | | | | | | | | | |
| **G25** | | | | | | | | | | | | | | | |
| 2.5 (163 kw) | 2011.01- | AT/7AT | R | L/R | Saloon RWD VQ25HR | | GCI83227 | Inner Joint | | | 27 | | | 79.5 | |
| **G35** | | | | | | | | | | | | | | | |
| 3.5 (228 kw) | 2007.01-2008.12 | 5AT | F | L/R | Saloon 4WD VQ35HR | | GCO83273 | Outer Joint | | 27 | 22 | 59 | 102.5 | 59 | M |
| | 2007.01-2008.12 | 5AT | F | L | Saloon 4WD VQ35HR | | GCI81178 | Inner Joint | | | 27 | | | 78 | |
| | 2007.01-2008.12 | 5AT | F | R | Saloon 4WD VQ35HR | | GCI82256 | Inner Joint | | 25 | 22 | 32 | 90 | 83 | |
| **G37** | | | | | | | | | | | | | | | |
| 3.7 (235 kw) | 2008.10- | AT | F | L/R | Saloon 4WD VQ37VHR | | GCO83273 | Outer Joint | | 27 | 22 | 59 | 102.5 | 59 | M |
| | 2008.10- | AT | F | L | Saloon 4WD VQ37VHR | | GCI81178 | Inner Joint | | | 27 | | | 78 | |
| | 2008.10- | AT | F | R | Saloon 4WD VQ37VHR | | GCI82256 | Inner Joint | | 25 | 22 | 32 | 90 | 83 | |
| | 2008.10- | AT | R | L/R | Saloon 4WD VQ37VHR | Type:SPORT (+) | GCI82276 | Inner Joint | | | 35 | | | 68 | |
| | 2008.10- | AT | R | L/R | Saloon RWD VQ37VHR | | GCO82420 | Outer Joint | | 32 | 35 | 65.5 | 110 | 59 | I |
| | 2008.10- | AT | R | L | Saloon RWD VQ37VHR | | GCI82276 | Inner Joint | | | 35 | | | 68 | |
| | 2008.10- | AT | R | R | Saloon RWD VQ37VHR | Type:SPORT (+) | GCI82276 | Inner Joint | | | 35 | | | 68 | |
| | 2008.10- | MT | R | L/R | Saloon RWD VQ37VHR | | GCI83227 | Inner Joint | | | 27 | | | 79.5 | |
| | 2010.09- | AT/MT | R | L | Convertible RWD VQ37VHR | Date from:2010.11 | GDS83557 | Drive Shaft | | 32 | | 65.5 | 110 | 631 | |
| | 2010.09- | AT/MT | R | R | Convertible RWD VQ37VHR | Date from:2010.11 | GDS83556 | Drive Shaft | | 32 | | 65.5 | 110 | 681 | |
| | 2010.09- | AT/MT | R | L/R | Convertible RWD VQ37VHR | | GCO82420 | Outer Joint | | 32 | 35 | 65.5 | 110 | 59 | I |
| | 2010.09- | AT/MT | R | L/R | Convertible RWD VQ37VHR | Date from:2010.11 | GCI82276 | Inner Joint | | | 35 | | | 68 | |
| | 2010.09- | AT | R | L | Coupe RWD VQ37VHR | | GDS83557 | Drive Shaft | | 32 | | 65.5 | 110 | 631 | |
| | 2010.09- | AT | R | R | Coupe RWD VQ37VHR | | GDS83556 | Drive Shaft | | 32 | | 65.5 | 110 | 681 | |
| | 2010.09- | AT | R | L/R | Coupe RWD VQ37VHR | | GCO82420 | Outer Joint | | 32 | 35 | 65.5 | 110 | 59 | I |
| | 2010.09- | AT | R | L/R | Coupe RWD VQ37VHR | | GCI82276 | Inner Joint | | | 35 | | | 68 | |
| | 2010.09- | MT | R | L/R | Coupe RWD VQ37VHR | | GCI83227 | Inner Joint | | | 27 | | | 79.5 | |
| 3.7 (242 kw) | 2010.09- | AT/MT | R | L | Convertible RWD VQ37VHR | Date from:2010.11 | GDS83557 | Drive Shaft | | 32 | | 65.5 | 110 | 631 | |
| | 2010.09- | AT/MT | R | R | Convertible RWD VQ37VHR | Date from:2010.11 | GDS83556 | Drive Shaft | | 32 | | 65.5 | 110 | 681 | |
| | 2010.09- | AT/MT | R | L/R | Convertible RWD VQ37VHR | | GCO82420 | Outer Joint | | 32 | 35 | 65.5 | 110 | 59 | I |
| | 2010.09- | AT/MT | R | L/R | Convertible RWD VQ37VHR | Date from:2010.11 | GCI82276 | Inner Joint | | | 35 | | | 68 | |
| 3.7 (243 kw) | 2007.09- | AT | R | L | Coupe RWD VQ37VHR | | GDS83557 | Drive Shaft | | 32 | | 65.5 | 110 | 631 | |
| | 2007.09- | AT | R | R | Coupe RWD VQ37VHR | | GDS83556 | Drive Shaft | | 32 | | 65.5 | 110 | 681 | |
| | 2007.09- | AT | R | L/R | Coupe RWD VQ37VHR | | GCO82420 | Outer Joint | | 32 | 35 | 65.5 | 110 | 59 | I |
| | 2007.09- | AT | R | L/R | Coupe RWD VQ37VHR | | GCI82276 | Inner Joint | | | 35 | | | 68 | |
| | 2007.09- | MT | R | L/R | Coupe RWD VQ37VHR | | GCI83227 | Inner Joint | | | 27 | | | 79.5 | |
| | 2008.10- | AT | R | L/R | Saloon RWD VQ37VHR | | GCO82420 | Outer Joint | | 32 | 35 | 65.5 | 110 | 59 | I |
| | 2008.10- | AT | R | L | Saloon RWD VQ37VHR | | GCI82276 | Inner Joint | | | 35 | | | 68 | |
| | 2008.10- | AT | R | R | Saloon RWD VQ37VHR | Type:SPORT (+) | GCI82276 | Inner Joint | | | 35 | | | 68 | |
| | 2008.10- | MT | R | L/R | Saloon RWD VQ37VHR | | GCI83227 | Inner Joint | | | 27 | | | 79.5 | |
| 3.7 (245 kw) | 2008.09-2012.12 | 7AT | R | L | Coupe RWD VQ37VHR | Date from:2010.10 | GDS83557 | Drive Shaft | | 32 | | 65.5 | 110 | 631 | |
| | 2008.09-2012.12 | 7AT | R | R | Coupe RWD VQ37VHR | Date from:2010.10 | GDS83556 | Drive Shaft | | 32 | | 65.5 | 110 | 681 | |
| | 2008.09-2012.12 | 7AT | R | L/R | Coupe RWD VQ37VHR | | GCO82420 | Outer Joint | | 32 | 35 | 65.5 | 110 | 59 | I |
| | 2008.09-2012.12 | 7AT | R | L/R | Coupe RWD VQ37VHR | Date from:2010.10 | GCI82276 | Inner Joint | | | 35 | | | 68 | |
| | 2008.09-2013.12 | AT | F | L/R | Saloon 4WD VQ37VHR | | GCO83273 | Outer Joint | | 27 | 22 | 59 | 102.5 | 59 | M |
| | 2008.09-2013.12 | AT | F | L | Saloon 4WD VQ37VHR | | GCI81178 | Inner Joint | | | 27 | | | 78 | |
| | 2008.09-2013.12 | AT | F | R | Saloon 4WD VQ37VHR | | GCI82256 | Inner Joint | | 25 | 22 | 32 | 90 | 83 | |
| | 2008.09-2013.12 | AT | R | L/R | Saloon 4WD VQ37VHR | Type:SPORT (+) | GCI82276 | Inner Joint | | | 35 | | | 68 | |
| | 2010.09- | AT | R | L | Convertible RWD VQ37VHR | | GDS83557 | Drive Shaft | | 32 | | 65.5 | 110 | 631 | |
| | 2010.09- | AT | R | R | Convertible RWD VQ37VHR | | GDS83556 | Drive Shaft | | 32 | | 65.5 | 110 | 681 | |
| | 2010.09- | AT | R | L/R | Convertible RWD VQ37VHR | | GCO82420 | Outer Joint | | 32 | 35 | 65.5 | 110 | 59 | I |
| | 2010.09- | AT | R | L/R | Convertible RWD VQ37VHR | | GCI82276 | Inner Joint | | | 35 | | | 68 | |
| **I30** | | | | | | | | | | | | | | | |
| 3.0 (142 kw) | 1996.01-2001.12 | AT | F | | Saloon FWD VQ30DE | Date From:2000.06,Date To:2000.06 | GCO41185 | Outer Joint | 44T | 29 | 25 | 56 | 101 | 68 | M |
| | 1996.01-2001.12 | AT | F | | Saloon FWD VQ30DE | Date From:1999.07,Date To:1999.07 | GCO41314 | Outer Joint | 46T | 29 | 27 | 56 | 101 | 68 | M |
| | 1996.01-2001.12 | AT | F | L | Saloon FWD VQ30DE | Date from:1999.07,Date to:1999.07 | GCI41062 | Inner Joint | | 29 | 27 | 39 | 65.5 | 114.5 | |
| | 1996.01-2001.12 | AT | F | R | Saloon FWD VQ30DE | Date from:1999.07,Date to:1999.07 | GCI41104 | Inner Joint | | 29 | 27 | 33 | 436 | 99 | |
| | 1996.01-2001.12 | | F | R | Saloon FWD VQ30DE | | GCI41019 | Inner Joint | | 29 | 27 | 33 | 437.5 | 101 | |
| **M35** | | | | | | | | | | | | | | | |
| 3.5 (206 kw) | 2005.01- | AT | F | R | Saloon 4WD VQ35DE | | GDS56385 | Drive Shaft | | 27 | 25 | 59 | 102.5 | 609 | |
| | 2005.01- | AT | F | L/R | Saloon 4WD VQ35DE | | GCO83273 | Outer Joint | | 27 | 22 | 59 | 102.5 | 59 | M |
| | 2005.01- | AT | F | L | Saloon 4WD VQ35DE | | GCI81178 | Inner Joint | | | 27 | | | 78 | |
| | 2005.01- | AT | F | R | Saloon 4WD VQ35DE | | GCI82256 | Inner Joint | | 25 | 22 | 32 | 90 | 83 | |
| | 2005.01- | 5AT | R | L | Saloon 4WD VQ35DE | | GDS83557 | Drive Shaft | | 32 | | 65.5 | 110 | 631 | |
| | 2005.01- | 5AT | R | R | Saloon 4WD VQ35DE | | GDS83556 | Drive Shaft | | 32 | | 65.5 | 110 | 681 | |
| | 2005.01- | AT | R | L/R | Saloon 4WD VQ35DE | Date from:2007.03 | GCO82420 | Outer Joint | | 32 | 35 | 65.5 | 110 | 59 | I |
| | 2005.01- | 5AT | R | L | Saloon RWD VQ35DE | | GDS83557 | Drive Shaft | | 32 | | 65.5 | 110 | 631 | |
| | 2005.01- | 5AT | R | R | Saloon RWD VQ35DE | | GDS83556 | Drive Shaft | | 32 | | 65.5 | 110 | 681 | |
| | 2005.01- | AT | R | L/R | Saloon RWD VQ35DE | Date from:2007.03 | GCO82420 | Outer Joint | | 32 | 35 | 65.5 | 110 | 59 | I |

| | YEAR | TRANSM. | F/R | L/R | BODY STYLE & DRIVE TYPE & ENGINE | REMARKS | G-AP Ref. | PRODUCT | ABS | Technical Specifications A | B | C | H | L | P |
|---|---|---|---|---|---|---|---|---|---|---|---|---|---|---|---|
| **INFINITI** | | | | | | | | | | | | | | | |
| **M35** | | | | | | | | | | | | | | | |
| 3.5 (226 kw) | 2008.09-2010.12 | 5AT | F | R | Saloon 4WD VQ35HR | | GDS56960 | Drive Shaft | | 27 | 25 | 59 | 102.5 | 602 | |
| | 2008.09-2010.12 | AT | F | L | Saloon 4WD VQ35HR | | GDS56681 | Drive Shaft | | 27 | | 59 | 102.5 | 636 | |
| | 2008.09-2010.12 | AT | F | L/R | Saloon 4WD VQ35HR | | GCO83273 | Outer Joint | | 27 | 22 | 59 | 102.5 | 59 | M |
| | 2008.09-2010.12 | AT | F | L | Saloon 4WD VQ35HR | | GCI81178 | Inner Joint | | | 27 | | | 78 | |
| | 2008.09-2010.12 | AT | F | R | Saloon 4WD VQ35HR | | GCI82256 | Inner Joint | | 25 | 22 | 32 | 90 | 83 | |
| | 2008.09-2010.12 | 5AT | R | L | Saloon 4WD VQ35HR | | GDS83557 | Drive Shaft | | 32 | | 65.5 | 110 | 631 | |
| | 2008.09-2010.12 | 5AT | R | R | Saloon 4WD VQ35HR | | GDS83556 | Drive Shaft | | 32 | | 65.5 | 110 | 681 | |
| | 2008.09-2010.12 | AT | R | L/R | Saloon 4WD VQ35HR | | GCO82420 | Outer Joint | | 32 | 35 | 65.5 | 110 | 59 | I |
| | 2008.09-2010.12 | 7AT | R | L | Saloon RWD VQ35HR | | GDS83557 | Drive Shaft | | 32 | | 65.5 | 110 | 631 | |
| | 2008.09-2010.12 | 7AT | R | R | Saloon RWD VQ35HR | | GDS83556 | Drive Shaft | | 32 | | 65.5 | 110 | 681 | |
| | 2008.09-2010.12 | AT | R | L/R | Saloon RWD VQ35HR | | GCO82420 | Outer Joint | | 32 | 35 | 65.5 | 110 | 59 | I |
| **M35h** | | | | | | | | | | | | | | | |
| 3.5 (268 kw) | 2011.04- | 7AT | R | L | Saloon RWD VQ35HR | | GDS83586 | Drive Shaft | 48T | 32 | 30 | 64 | 110 | 797 | |
| | 2011.04- | 7AT | R | L/R | Saloon RWD VQ35HR | | GCI82272 | Inner Joint | 48T | 30 | 27 | 43 | 79 | 124 | |
| **M37** | | | | | | | | | | | | | | | |
| 3.7 (235 kw) | 2010.03- | 7AT | R | L | Saloon RWD VQ37VHR | Date from:2017.07 | GDS83586 | Drive Shaft | 48T | 32 | 30 | 64 | 110 | 797 | |
| | 2010.03- | 7AT | R | R | Saloon RWD VQ37VHR | Date from:2017.07 | GDS83550 | Drive Shaft | 48T | 32 | 30 | 64 | 110 | 830 | |
| | 2010.03- | 7AT | R | L/R | Saloon RWD VQ37VHR | Date from:2017.07 | GCO82415 | Outer Joint | | 32 | 26 | 64 | 110 | 65 | I |
| | 2010.03- | 7AT | R | L/R | Saloon RWD VQ37VHR | Date from:2017.07 | GCI82272 | Inner Joint | 48T | 30 | 27 | 43 | 79 | 124 | |
| 3.7 (243 kw) | 2010.01- | 7AT | R | L | Saloon RWD VQ37VHR | Date from:2017.07 | GDS83586 | Drive Shaft | 48T | 32 | 30 | 64 | 110 | 797 | |
| | 2010.01- | 7AT | R | R | Saloon RWD VQ37VHR | Date from:2017.07 | GDS83550 | Drive Shaft | 48T | 32 | 30 | 64 | 110 | 830 | |
| | 2010.01- | 7AT | R | L/R | Saloon RWD VQ37VHR | Date from:2017.07 | GCO82415 | Outer Joint | | 32 | 26 | 64 | 110 | 65 | I |
| | 2010.01- | 7AT | R | L/R | Saloon RWD VQ37VHR | Date from:2017.07 | GCI82272 | Inner Joint | 48T | 30 | 27 | 43 | 79 | 124 | |
| 3.7 (246 kw) | 2010.01- | 7AT | R | L | Saloon RWD VQ37VHR | Date from:2017.07 | GDS83586 | Drive Shaft | 48T | 32 | 30 | 64 | 110 | 797 | |
| | 2010.01- | 7AT | R | R | Saloon RWD VQ37VHR | Date from:2017.07 | GDS83550 | Drive Shaft | 48T | 32 | 30 | 64 | 110 | 830 | |
| | 2010.01- | 7AT | R | L/R | Saloon RWD VQ37VHR | Date from:2017.07 | GCI82272 | Inner Joint | 48T | 30 | 27 | 43 | 79 | 124 | |
| | 2010.09- | 7AT | F | L | Saloon 4WD VQ37VHR | Date from:2013.03 | GDS56549 | Drive Shaft | | 27 | | 59 | 102.5 | 649 | |
| | 2010.09- | 7AT | F | R | Saloon 4WD VQ37VHR | Date from:2013.03 | GDS57787 | Drive Shaft | | 27 | 25 | 59 | 102.5 | 614 | |
| | 2010.09- | 7AT | F | L/R | Saloon 4WD VQ37VHR | Date from:2013.03 | GCO82402 | Outer Joint | | 27 | 22 | 59 | 102.5 | 59 | M |
| | 2010.09- | 7AT | F | L/R | Saloon 4WD VQ37VHR | Date to:2013.02 | GCO83273 | Outer Joint | | 27 | 22 | 59 | 102.5 | 59 | M |
| | 2010.09- | 7AT | F | L | Saloon 4WD VQ37VHR | Date from:2013.03 | GCI81178 | Inner Joint | | | 27 | | | 78 | |
| | 2010.09- | 7AT | F | R | Saloon 4WD VQ37VHR | | GCI82256 | Inner Joint | | 25 | 22 | 32 | 90 | 83 | |
| | 2010.09- | 7AT | R | L | Saloon 4WD VQ37VHR | Date from:2017.07 | GDS83586 | Drive Shaft | 48T | 32 | 30 | 64 | 110 | 797 | |
| | 2010.09- | 7AT | R | R | Saloon 4WD VQ37VHR | Date from:2017.07 | GDS83550 | Drive Shaft | 48T | 32 | 30 | 64 | 110 | 830 | |
| | 2010.09- | 7AT | R | L/R | Saloon 4WD VQ37VHR | Date from:2017.07 | GCI82272 | Inner Joint | 48T | 30 | 27 | 43 | 79 | 124 | |
| | 2011.01- | 7AT | F | L | Saloon 4WD VQ37VHR | Date from:2013.03 | GDS56549 | Drive Shaft | | 27 | | 59 | 102.5 | 649 | |
| | 2011.01- | 7AT | F | R | Saloon 4WD VQ37VHR | Date from:2013.03 | GDS57787 | Drive Shaft | | 27 | 25 | 59 | 102.5 | 614 | |
| | 2011.01- | 7AT | F | L/R | Saloon 4WD VQ37VHR | Date from:2013.03 | GCO82402 | Outer Joint | | 27 | 22 | 59 | 102.5 | 59 | M |
| | 2011.01- | 7AT | F | L/R | Saloon 4WD VQ37VHR | Date to:2013.02 | GCO83273 | Outer Joint | | 27 | 22 | 59 | 102.5 | 59 | M |
| | 2011.01- | 7AT | F | L | Saloon 4WD VQ37VHR | | GCI81178 | Inner Joint | | | 27 | | | 78 | |
| | 2011.01- | 7AT | F | R | Saloon 4WD VQ37VHR | | GCI82256 | Inner Joint | | 25 | 22 | 32 | 90 | 83 | |
| | 2011.01- | 7AT | R | L | Saloon 4WD VQ37VHR | Date from:2017.07 | GDS83586 | Drive Shaft | 48T | 32 | 30 | 64 | 110 | 797 | |
| | 2011.01- | 7AT | R | R | Saloon 4WD VQ37VHR | Date from:2017.07 | GDS83550 | Drive Shaft | 48T | 32 | 30 | 64 | 110 | 830 | |
| | 2011.01- | 7AT | R | L/R | Saloon 4WD VQ37VHR | Date from:2017.07 | GCO82415 | Outer Joint | | 32 | 26 | 64 | 110 | 65 | I |
| | 2011.01- | 7AT | R | L/R | Saloon 4WD VQ37VHR | Date from:2017.07 | GCI82272 | Inner Joint | 48T | 30 | 27 | 43 | 79 | 124 | |
| | 2011.01- | 7AT | R | L | Saloon RWD VQ37VHR | Date from:2017.07 | GDS83586 | Drive Shaft | 48T | 32 | 30 | 64 | 110 | 797 | |
| | 2011.01- | 7AT | R | R | Saloon RWD VQ37VHR | Date from:2017.07 | GDS83550 | Drive Shaft | 48T | 32 | 30 | 64 | 110 | 830 | |
| | 2011.01- | 7AT | R | L/R | Saloon RWD VQ37VHR | Date from:2017.07 | GCI82272 | Inner Joint | 48T | 30 | 27 | 43 | 79 | 124 | |
| **M56** | | | | | | | | | | | | | | | |
| 5.6 (300 kw) | 2010.03- | 7AT | F | L/R | Saloon 4WD VK56VD | Date from:2013.03 | GCO82402 | Outer Joint | | 27 | 22 | 59 | 102.5 | 59 | M |
| | 2010.03- | 7AT | F | L/R | Saloon 4WD VK56VD | Date to:2013.02 | GCO83273 | Outer Joint | | 27 | 22 | 59 | 102.5 | 59 | M |
| | 2010.03- | 7AT | F | L | Saloon 4WD VK56VD | | GCI81497 | Inner Joint | | | 27 | | | 75 | |
| | 2010.03- | 7AT | F | R | Saloon 4WD VK56VD | | GCI82256 | Inner Joint | | 25 | 22 | 32 | 90 | 83 | |
| **Q50** | | | | | | | | | | | | | | | |
| 2.0 (155 kw) | 2014.04- | 7AT | R | L | Saloon RWD M 274 | | GDS83586 | Drive Shaft | 48T | 32 | 30 | 64 | 110 | 797 | |
| | 2014.04- | 7AT | R | R | Saloon RWD M 274 | | GDS83550 | Drive Shaft | 48T | 32 | 30 | 64 | 110 | 830 | |
| | 2014.04- | 7AT | R | L/R | Saloon RWD M 274 | | GCO82415 | Outer Joint | | 32 | 26 | 64 | 110 | 65 | I |
| | 2014.04- | 7AT | R | L/R | Saloon RWD M 274 | | GCI82272 | Inner Joint | 48T | 30 | 27 | 43 | 79 | 124 | |
| 2.2 (125 kw) | 2013.04- | 7AT/6MT | R | L | Saloon RWD 651.930 | | GDS83586 | Drive Shaft | 48T | 32 | 30 | 64 | 110 | 797 | |
| | 2013.04- | 7AT/6MT | R | R | Saloon RWD 651.930 | | GDS83550 | Drive Shaft | 48T | 32 | 30 | 64 | 110 | 830 | |
| | 2013.04- | 7AT/6MT | R | L/R | Saloon RWD 651.930 | | GCO82415 | Outer Joint | | 32 | 26 | 64 | 110 | 65 | I |
| | 2013.04- | 7AT/6MT | R | L/R | Saloon RWD 651.930 | | GCI82272 | Inner Joint | 48T | 30 | 27 | 43 | 79 | 124 | |
| 3.0 (298 kw) | 2015.09- | 7AT | F | L | Saloon 4WD VR30DDTT | | GDS84242 | Drive Shaft | | 27 | | 59 | 102.5 | 636 | |
| | 2015.09- | 7AT | F | R | Saloon 4WD VR30DDTT | | GDS83519 | Drive Shaft | | 27 | 25 | 59 | 102.5 | 602 | |
| | 2015.09- | 7AT | F | L/R | Saloon 4WD VR30DDTT | | GCO82402 | Outer Joint | | 27 | 22 | 59 | 102.5 | 59 | M |

| | YEAR | TRANSM. | F/R | L/R | BODY STYLE & DRIVE TYPE & ENGINE | REMARKS | G-AP Ref. | PRODUCT | ABS | Technical Specifications A | B | C | H | L | P |
|---|---|---|---|---|---|---|---|---|---|---|---|---|---|---|---|
| **INFINITI** | | | | | | | | | | | | | | | |
| **Q50** | | | | | | | | | | | | | | | |
| 3.0 (298 kw) | 2015.09- | 7AT | F | L | Saloon 4WD VR30DDTT | | GCI81178 | Inner Joint | | | 27 | | | 78 | |
| | 2015.09- | 7AT | F | R | Saloon 4WD VR30DDTT | | GCI82256 | Inner Joint | | 25 | 22 | 32 | 90 | 83 | |
| | 2015.09- | 7AT | R | L | Saloon 4WD VR30DDTT | | GDS83586 | Drive Shaft | 48T | 32 | 30 | 64 | 110 | 797 | |
| | 2015.09- | 7AT | R | R | Saloon 4WD VR30DDTT | | GDS83550 | Drive Shaft | 48T | 32 | 30 | 64 | 110 | 830 | |
| | 2015.09- | 7AT | R | L/R | Saloon 4WD VR30DDTT | | GCO82415 | Outer Joint | | 32 | 26 | 64 | 110 | 65 | I |
| | 2015.09- | 7AT | R | L/R | Saloon 4WD VR30DDTT | | GCI82272 | Inner Joint | 48T | 30 | 27 | 43 | 79 | 124 | |
| | 2015.09- | 7AT | R | L | Saloon RWD VR30DDTT | | GDS83586 | Drive Shaft | 48T | 32 | 30 | 64 | 110 | 797 | |
| | 2015.09- | 7AT | R | R | Saloon RWD VR30DDTT | | GDS83550 | Drive Shaft | 48T | 32 | 30 | 64 | 110 | 830 | |
| | 2015.09- | 7AT | R | L/R | Saloon RWD VR30DDTT | | GCO82415 | Outer Joint | | 32 | 26 | 64 | 110 | 65 | I |
| | 2015.09- | 7AT | R | L/R | Saloon RWD VR30DDTT | | GCI82272 | Inner Joint | 48T | 30 | 27 | 43 | 79 | 124 | |
| 3.5 (261 kw) | 2013.06- | 7AT | F | L | Saloon 4WD VQ35HR | | GDS84242 | Drive Shaft | | 27 | | 59 | 102.5 | 636 | |
| | 2013.06- | 7AT | F | R | Saloon 4WD VQ35HR | | GDS83519 | Drive Shaft | | 27 | 25 | 59 | 102.5 | 602 | |
| | 2013.06- | 7AT | F | L/R | Saloon 4WD VQ35HR | | GCO82402 | Outer Joint | | 27 | 22 | 59 | 102.5 | 59 | M |
| | 2013.06- | 7AT | F | L | Saloon 4WD VQ35HR | | GCI81178 | Inner Joint | | | 27 | | | 78 | |
| | 2013.06- | 7AT | F | R | Saloon 4WD VQ35HR | | GCI82256 | Inner Joint | | 25 | 22 | 32 | 90 | 83 | |
| | 2013.06- | 7AT | R | L | Saloon 4WD VQ35HR | | GDS83586 | Drive Shaft | 48T | 32 | 30 | 64 | 110 | 797 | |
| | 2013.06- | 7AT | R | L/R | Saloon 4WD VQ35HR | | GCO82415 | Outer Joint | | 32 | 26 | 64 | 110 | 65 | I |
| | 2013.06- | 7AT | R | L/R | Saloon 4WD VQ35HR | | GCI82272 | Inner Joint | 48T | 30 | 27 | 43 | 79 | 124 | |
| | 2013.06- | 7AT | R | L | Saloon RWD VQ35HR | | GDS83586 | Drive Shaft | 48T | 32 | 30 | 64 | 110 | 797 | |
| | 2013.06- | 7AT | R | L/R | Saloon RWD VQ35HR | | GCO82415 | Outer Joint | | 32 | 26 | 64 | 110 | 65 | I |
| | 2013.06- | 7AT | R | L/R | Saloon RWD VQ35HR | | GCI82272 | Inner Joint | 48T | 30 | 27 | 43 | 79 | 124 | |
| 3.5 (268 kw) | 2013.04- | 7AT | F | L | Saloon 4WD VQ35HR | | GCI81178 | Inner Joint | | | 27 | | | 78 | |
| | 2013.04- | 7AT | R | L | Saloon 4WD VQ35HR | | GDS83586 | Drive Shaft | 48T | 32 | 30 | 64 | 110 | 797 | |
| | 2013.04- | 7AT | R | L/R | Saloon 4WD VQ35HR | | GCO82415 | Outer Joint | | 32 | 26 | 64 | 110 | 65 | I |
| | 2013.04- | 7AT | R | L/R | Saloon 4WD VQ35HR | | GCI82272 | Inner Joint | 48T | 30 | 27 | 43 | 79 | 124 | |
| | 2013.04- | 7AT | R | L | Saloon RWD VQ35HR | | GDS83586 | Drive Shaft | 48T | 32 | 30 | 64 | 110 | 797 | |
| | 2013.04- | 7AT | R | L/R | Saloon RWD VQ35HR | | GCO82415 | Outer Joint | | 32 | 26 | 64 | 110 | 65 | I |
| | 2013.04- | 7AT | R | L/R | Saloon RWD VQ35HR | | GCI82272 | Inner Joint | 48T | 30 | 27 | 43 | 79 | 124 | |
| **Q60** | | | | | | | | | | | | | | | |
| 2.0 (155 kw) | 2016.09- | 7AT | R | L | Coupe RWD M 274 | | GDS83586 | Drive Shaft | 48T | 32 | 30 | 64 | 110 | 797 | |
| | 2016.09- | 7AT | R | R | Coupe RWD M 274 | | GDS83550 | Drive Shaft | 48T | 32 | 30 | 64 | 110 | 830 | |
| | 2016.09- | 7AT | R | L/R | Coupe RWD M 274 | | GCO82415 | Outer Joint | | 32 | 26 | 64 | 110 | 65 | I |
| | 2016.09- | 7AT | R | L/R | Coupe RWD M 274 | | GCI82272 | Inner Joint | 48T | 30 | 27 | 43 | 79 | 124 | |
| 3.0 (298 kw) | 2016.09- | 7AT | F | L | Coupe 4WD VR30DDTT | | GDS84242 | Drive Shaft | | 27 | | 59 | 102.5 | 636 | |
| | 2016.09- | 7AT | F | R | Coupe 4WD VR30DDTT | | GDS83519 | Drive Shaft | | 27 | 25 | 59 | 102.5 | 602 | |
| | 2016.09- | 7AT | F | L/R | Coupe 4WD VR30DDTT | | GCO82402 | Outer Joint | | 27 | 22 | 59 | 102.5 | 59 | M |
| | 2016.09- | 7AT | F | L | Coupe 4WD VR30DDTT | | GCI81178 | Inner Joint | | | 27 | | | 78 | |
| | 2016.09- | 7AT | F | R | Coupe 4WD VR30DDTT | | GCI82256 | Inner Joint | | 25 | 22 | 32 | 90 | 83 | |
| | 2016.09- | 7AT | R | L | Coupe 4WD VR30DDTT | | GDS83586 | Drive Shaft | 48T | 32 | 30 | 64 | 110 | 797 | |
| | 2016.09- | 7AT | R | R | Coupe 4WD VR30DDTT | | GDS83550 | Drive Shaft | 48T | 32 | 30 | 64 | 110 | 830 | |
| | 2016.09- | 7AT | R | L/R | Coupe 4WD VR30DDTT | | GCO82415 | Outer Joint | | 32 | 26 | 64 | 110 | 65 | I |
| | 2016.09- | 7AT | R | L/R | Coupe 4WD VR30DDTT | | GCI82272 | Inner Joint | 48T | 30 | 27 | 43 | 79 | 124 | |
| 3.7 (235 kw) | 2013.10- | AT | R | L | Convertible RWD VQ37VHR | | GDS83557 | Drive Shaft | | 32 | | 65.5 | 110 | 631 | |
| | 2013.10- | AT | R | R | Convertible RWD VQ37VHR | | GDS83556 | Drive Shaft | | 32 | | 65.5 | 110 | 681 | |
| | 2013.10- | AT | R | L/R | Convertible RWD VQ37VHR | | GCO82420 | Outer Joint | | 32 | 35 | 65.5 | 110 | 59 | I |
| | 2013.10- | AT | R | L/R | Convertible RWD VQ37VHR | | GCI82276 | Inner Joint | | | 35 | | | 68 | |
| | 2013.10- | AT | R | L | Coupe RWD VQ37VHR | | GDS83557 | Drive Shaft | | 32 | | 65.5 | 110 | 631 | |
| | 2013.10- | AT | R | R | Coupe RWD VQ37VHR | | GDS83556 | Drive Shaft | | 32 | | 65.5 | 110 | 681 | |
| | 2013.10- | AT | R | L/R | Coupe RWD VQ37VHR | | GCO82420 | Outer Joint | | 32 | 35 | 65.5 | 110 | 59 | I |
| | 2013.10- | AT | R | L/R | Coupe RWD VQ37VHR | | GCI82276 | Inner Joint | | | 35 | | | 68 | |
| 3.7 (245 kw) | 2013.10- | AT | R | L | Convertible RWD VQ37VHR | | GDS83557 | Drive Shaft | | 32 | | 65.5 | 110 | 631 | |
| | 2013.10- | AT | R | R | Convertible RWD VQ37VHR | | GDS83556 | Drive Shaft | | 32 | | 65.5 | 110 | 681 | |
| | 2013.10- | AT | R | L/R | Convertible RWD VQ37VHR | | GCO82420 | Outer Joint | | 32 | 35 | 65.5 | 110 | 59 | I |
| | 2013.10- | AT | R | L/R | Convertible RWD VQ37VHR | | GCI82276 | Inner Joint | | | 35 | | | 68 | |
| | 2013.10- | 7AT | R | L | Coupe RWD VQ37VHR | | GDS83557 | Drive Shaft | | 32 | | 65.5 | 110 | 631 | |
| | 2013.10- | 7AT | R | R | Coupe RWD VQ37VHR | | GDS83556 | Drive Shaft | | 32 | | 65.5 | 110 | 681 | |
| | 2013.10- | 7AT | R | L/R | Coupe RWD VQ37VHR | | GCO82420 | Outer Joint | | 32 | 35 | 65.5 | 110 | 59 | I |
| | 2013.10- | AT | R | L/R | Coupe RWD VQ37VHR | | GCI83227 | Inner Joint | | | 27 | | | 79.5 | |
| **Q70** | | | | | | | | | | | | | | | |
| 2.2 (125 kw) | 2014.10- | AT | R | L | Saloon RWD 651.930 | | GDS83586 | Drive Shaft | 48T | 32 | 30 | 64 | 110 | 797 | |
| | 2014.10- | AT | R | R | Saloon RWD 651.930 | | GDS83550 | Drive Shaft | 48T | 32 | 30 | 64 | 110 | 830 | |
| | 2014.10- | AT | R | L/R | Saloon RWD 651.930 | | GCO82415 | Outer Joint | | 32 | 26 | 64 | 110 | 65 | I |
| | 2014.10- | AT | R | L/R | Saloon RWD 651.930 | | GCI82272 | Inner Joint | 48T | 30 | 27 | 43 | 79 | 124 | |
| 3.5 (268 kw) | 2013.03- | 7AT | R | L | Saloon RWD VQ35HR | | GDS83586 | Drive Shaft | 48T | 32 | 30 | 64 | 110 | 797 | |
| | 2013.03- | 7AT | R | L/R | Saloon RWD VQ35HR | | GCI82272 | Inner Joint | 48T | 30 | 27 | 43 | 79 | 124 | |

| | YEAR | TRANSM. | F/R | L/R | BODY STYLE & DRIVE TYPE & ENGINE | REMARKS | G-AP Ref. | PRODUCT | ABS | Technical Specifications A | B | C | H | L | P |
|---|---|---|---|---|---|---|---|---|---|---|---|---|---|---|---|
| **INFINITI** | | | | | | | | | | | | | | | |
| **Q70** | | | | | | | | | | | | | | | |
| 3.7 (235 kw) | 2013.03- | 7AT | R | L | Saloon RWD VQ37VHR | Date from:2017.07 | GDS83586 | Drive Shaft | 48T | 32 | 30 | 64 | 110 | 797 | |
| | 2013.03- | 7AT | R | R | Saloon RWD VQ37VHR | Date from:2017.07 | GDS83550 | Drive Shaft | 48T | 32 | 30 | 64 | 110 | 830 | |
| | 2013.03- | 7AT | R | L/R | Saloon RWD VQ37VHR | Date from:2017.07 | GCI82272 | Inner Joint | 48T | 30 | 27 | 43 | 79 | 124 | |
| 3.7 (245 kw) | 2014.01- | 7AT | F | L | Saloon 4WD VQ37VHR | | GDS56549 | Drive Shaft | | 27 | | 59 | 102.5 | 649 | |
| | 2014.01- | 7AT | F | R | Saloon 4WD VQ37VHR | | GDS57787 | Drive Shaft | | 27 | 25 | 59 | 102.5 | 614 | |
| | 2014.01- | 7AT | F | L | Saloon 4WD VQ37VHR | | GCI81178 | Inner Joint | | | 27 | | | 78 | |
| | 2014.01- | 7AT | F | R | Saloon 4WD VQ37VHR | | GCI82256 | Inner Joint | | 25 | 22 | 32 | 90 | 83 | |
| | 2014.01- | AT | F | L/R | Saloon 4WD VQ37VHR | | GCO82402 | Outer Joint | | 27 | 22 | 59 | 102.5 | 59 | M |
| 5.6 (300 kw) | 2015.01- | AT | F | L/R | Saloon 4WD VK56VD | | GCO82402 | Outer Joint | | 27 | 22 | 59 | 102.5 | 59 | M |
| | 2015.01- | AT | F | L | Saloon 4WD VK56VD | | GCI81497 | Inner Joint | | | 27 | | | 75 | |
| | 2015.01- | AT | F | R | Saloon 4WD VK56VD | | GCI82256 | Inner Joint | | 25 | 22 | 32 | 90 | 83 | |
| **QX4** | | | | | | | | | | | | | | | |
| 3.3 (125 kw) | 1996.09-2002.10 | AT | F | | Terrain cab wagon closed 4WD VG33E | | GCO41016 | Outer Joint | | 28 | 27 | 50 | 150 | 71 | I |
| **QX50** | | | | | | | | | | | | | | | |
| 2.5 (163 kw) | 2014.02- | AT | F | L | SUV 4WD VQ25HR | | GDS84242 | Drive Shaft | | 27 | | 59 | 102.5 | 636 | |
| | 2014.02- | AT | F | R | SUV 4WD VQ25HR | | GDS83519 | Drive Shaft | | 27 | 25 | 59 | 102.5 | 602 | |
| | 2014.02- | AT | F | L/R | SUV 4WD VQ25HR | | GCO82402 | Outer Joint | | 27 | 22 | 59 | 102.5 | 59 | M |
| | 2014.02- | AT | F | L | SUV 4WD VQ25HR | | GCI81178 | Inner Joint | | | 27 | | | 78 | |
| | 2014.02- | AT | F | R | SUV 4WD VQ25HR | | GCI82256 | Inner Joint | | 25 | 22 | 32 | 90 | 83 | |
| | 2014.02- | AT | R | L | SUV 4WD VQ25HR | | GDS83557 | Drive Shaft | | 32 | | 65.5 | 110 | 631 | |
| | 2014.02- | AT | R | R | SUV 4WD VQ25HR | | GDS83556 | Drive Shaft | | 32 | | 65.5 | 110 | 681 | |
| | 2014.02- | AT | R | L/R | SUV 4WD VQ25HR | | GCO82420 | Outer Joint | | 32 | 35 | 65.5 | 110 | 59 | I |
| | 2014.02- | AT | R | L/R | SUV 4WD VQ25HR | | GCI82276 | Inner Joint | | | 35 | | | 68 | |
| 3.0 (175 kw) | 2013.08- | AT | F | L/R | SUV 4WD V9X | | GDS83519 | Drive Shaft | | 27 | 25 | 59 | 102.5 | 602 | |
| | 2013.08- | AT | F | L/R | SUV 4WD V9X | | GCO82402 | Outer Joint | | 27 | 22 | 59 | 102.5 | 59 | M |
| | 2013.08- | AT | F | L | SUV 4WD V9X | | GCI81497 | Inner Joint | | | 27 | | | 75 | |
| | 2013.08- | AT | F | R | SUV 4WD V9X | | GCI82256 | Inner Joint | | 25 | 22 | 32 | 90 | 83 | |
| 3.7 (235 kw) | 2013.08- | AT | F | L | SUV 4WD VQ37VHR | | GDS84242 | Drive Shaft | | 27 | | 59 | 102.5 | 636 | |
| | 2013.08- | AT | F | R | SUV 4WD VQ37VHR | | GDS83519 | Drive Shaft | | 27 | 25 | 59 | 102.5 | 602 | |
| | 2013.08- | AT | F | L/R | SUV 4WD VQ37VHR | | GCO41227 | Outer Joint | | 27 | 22 | 59 | 107 | 61.5 | M |
| | 2013.08- | AT | F | L/R | SUV 4WD VQ37VHR | | GCO82402 | Outer Joint | | 27 | 22 | 59 | 102.5 | 59 | M |
| | 2013.08- | AT | F | L | SUV 4WD VQ37VHR | | GCI81178 | Inner Joint | | | 27 | | | 78 | |
| | 2013.08- | AT | F | R | SUV 4WD VQ37VHR | | GCI82256 | Inner Joint | | 25 | 22 | 32 | 90 | 83 | |
| | 2013.08- | AT | R | L | SUV 4WD VQ37VHR | | GDS83557 | Drive Shaft | | 32 | | 65.5 | 110 | 631 | |
| | 2013.08- | AT | R | R | SUV 4WD VQ37VHR | | GDS83556 | Drive Shaft | | 32 | | 65.5 | 110 | 681 | |
| | 2013.08- | AT | R | L/R | SUV 4WD VQ37VHR | | GCO82420 | Outer Joint | | 32 | 35 | 65.5 | 110 | 59 | I |
| | 2013.08- | AT | R | L/R | SUV 4WD VQ37VHR | | GCI82276 | Inner Joint | | | 35 | | | 68 | |
| 3.7 (242 kw) | 2013.08- | 7AT | F | R | SUV 4WD VQ37VHR | | GDS56960 | Drive Shaft | | 27 | 25 | 59 | 102.5 | 602 | |
| | 2013.08- | AT | F | L | SUV 4WD VQ37VHR | | GDS56681 | Drive Shaft | | 27 | | 59 | 102.5 | 636 | |
| | 2013.08- | AT | F | L/R | SUV 4WD VQ37VHR | | GCO83273 | Outer Joint | | 27 | 22 | 59 | 102.5 | 59 | M |
| | 2013.08- | AT | F | L | SUV 4WD VQ37VHR | | GCI81178 | Inner Joint | | | 27 | | | 78 | |
| | 2013.08- | AT | F | R | SUV 4WD VQ37VHR | | GCI82256 | Inner Joint | | 25 | 22 | 32 | 90 | 83 | |
| | 2013.08- | AT | R | L | SUV 4WD VQ37VHR | | GDS83557 | Drive Shaft | | 32 | | 65.5 | 110 | 631 | |
| | 2013.08- | AT | R | R | SUV 4WD VQ37VHR | | GDS83556 | Drive Shaft | | 32 | | 65.5 | 110 | 681 | |
| | 2013.08- | AT | R | L/R | SUV 4WD VQ37VHR | | GCO82420 | Outer Joint | | 32 | 35 | 65.5 | 110 | 59 | I |
| | 2013.08- | AT | R | L/R | SUV 4WD VQ37VHR | | GCI82276 | Inner Joint | | | 35 | | | 68 | |
| **QX56** | | | | | | | | | | | | | | | |
| 5.6 (239 kw) | 2003.09-2009.12 | 5AT | F | L/R | SUV 4WD VK56DE | | GDS41541 | Drive Shaft | | 29 | | 67.3 | 117 | 579 | |
| | 2003.09-2009.12 | 5AT | F | L/R | SUV 4WD VK56DE | | GCO41403 | Outer Joint | | 29 | 36 | 67.3 | 117 | 69 | I |
| | 2003.09-2009.12 | 5AT | F | L/R | SUV 4WD VK56DE | | GCI41207 | Inner Joint | | | 36 | | | 79.5 | |
| **QX70** | | | | | | | | | | | | | | | |
| 3.0 (175 kw) | 2013.08- | AT | F | L | SUV 4WD V9X | | GDS83995 | Drive Shaft | | 27 | | 59 | 102.5 | 690 | |
| | 2013.08- | AT | F | R | SUV 4WD V9X | | GDS84014 | Drive Shaft | | 27 | 25 | 59 | 102.5 | 652 | |
| | 2013.08- | AT | F | L/R | SUV 4WD V9X | | GCO83273 | Outer Joint | | 27 | 22 | 59 | 102.5 | 59 | M |
| | 2013.08- | AT | F | L | SUV 4WD V9X | | GCI81497 | Inner Joint | | | 27 | | | 75 | |
| | 2013.08- | AT | F | R | SUV 4WD V9X | | GCI82256 | Inner Joint | | 25 | 22 | 32 | 90 | 83 | |
| 3.7 (235 kw) | 2013.08- | AT | F | R | SUV 4WD VQ37VHR | | GDS84014 | Drive Shaft | | 27 | 25 | 59 | 102.5 | 652 | |
| | 2013.08- | AT | F | L/R | SUV 4WD VQ37VHR | | GCO83273 | Outer Joint | | 27 | 22 | 59 | 102.5 | 59 | M |
| | 2013.08- | AT | F | L | SUV 4WD VQ37VHR | | GCI81178 | Inner Joint | | | 27 | | | 78 | |
| | 2013.08- | AT | F | R | SUV 4WD VQ37VHR | | GCI82256 | Inner Joint | | 25 | 22 | 32 | 90 | 83 | |
| 3.7 (245 kw) | 2014.02- | 7AT | F | L | SUV 4WD VQ37VHR | | GCI81178 | Inner Joint | | | 27 | | | 78 | |
| | 2014.02- | 7AT | F | R | SUV 4WD VQ37VHR | | GCI82256 | Inner Joint | | 25 | 22 | 32 | 90 | 83 | |
| | 2014.02- | AT | F | L | SUV 4WD VQ37VHR | | GDS83995 | Drive Shaft | | 27 | | 59 | 102.5 | 690 | |
| | 2014.02- | AT | F | R | SUV 4WD VQ37VHR | | GDS84014 | Drive Shaft | | 27 | 25 | 59 | 102.5 | 652 | |
| | 2014.02- | AT | F | L/R | SUV 4WD VQ37VHR | | GCO83273 | Outer Joint | | 27 | 22 | 59 | 102.5 | 59 | M |

| | YEAR | TRANSM. | F/R | L/R | BODY STYLE & DRIVE TYPE & ENGINE | REMARKS | G-AP Ref. | PRODUCT | ABS | Technical Specifications A | B | C | H | L | P |
|---|---|---|---|---|---|---|---|---|---|---|---|---|---|---|---|
| **INFINITI** | | | | | | | | | | | | | | | |
| **QX70** | | | | | | | | | | | | | | | |
| 5.0 (287 kw) | 2013.08- | AT | F | L | SUV 4WD VK50VE | | GDS83995 | Drive Shaft | | 27 | | 59 | 102.5 | 690 | |
| | 2013.08- | AT | F | R | SUV 4WD VK50VE | | GDS84014 | Drive Shaft | | 27 | 25 | 59 | 102.5 | 652 | |
| | 2013.08- | AT | F | L/R | SUV 4WD VK50VE | | GCO83273 | Outer Joint | | 27 | 22 | 59 | 102.5 | 59 | M |
| | 2013.08- | AT | F | L | SUV 4WD VK50VE | | GCI81497 | Inner Joint | | | 27 | | | 75 | |
| | 2013.08- | AT | F | R | SUV 4WD VK50VE | | GCI82256 | Inner Joint | | 25 | 22 | 32 | 90 | 83 | |
| 5.0 (294 kw) | 2013.08- | AT | F | L | SUV 4WD VK50VE | | GDS83995 | Drive Shaft | | 27 | | 59 | 102.5 | 690 | |
| | 2013.08- | AT | F | R | SUV 4WD VK50VE | | GDS84014 | Drive Shaft | | 27 | 25 | 59 | 102.5 | 652 | |
| | 2013.08- | AT | F | L/R | SUV 4WD VK50VE | | GCO82402 | Outer Joint | | 27 | 22 | 59 | 102.5 | 59 | M |
| | 2013.08- | AT | F | L | SUV 4WD VK50VE | | GCI81497 | Inner Joint | | | 27 | | | 75 | |
| | 2013.08- | AT | F | R | SUV 4WD VK50VE | | GCI82256 | Inner Joint | | 25 | 22 | 32 | 90 | 83 | |
| **ISUZU** | | | | | | | | | | | | | | | |
| **D-Max** | | | | | | | | | | | | | | | |
| 1.9 (120 kw) | 2017.03-2022.12 | 6AT/6MT | F | L/R | Pickup 4WD RZ4E-TC | | GDS84591 | Drive Shaft | | 17 | 17 | 53 | 136.5 | 631 | |
| | 2019.11- | 6AT/6MT | F | L/R | Pickup 4WD RZ4E-TCX | | GDS83898 | Drive Shaft | | 29 | 29 | 65 | 100 | 605 | |
| | 2019.11- | 6AT/6MT | F | L/R | Pickup 4WD RZ4E-TCX | | GCO83288 | Outer Joint | | 29 | 36 | 65 | 100 | 78 | I |
| | 2019.11- | 6AT/6MT | F | L/R | Pickup 4WD RZ4E-TCX | | GCI83783 | Inner Joint | | 29 | 26 | 36 | 85 | 96.5 | |
| | 2023.06- | | F | L/R | Platform/Chassis 4WD RZ4E-TCX | | GDS83898 | Drive Shaft | | 29 | 29 | 65 | 100 | 605 | |
| | 2023.06- | | F | L/R | Platform/Chassis 4WD RZ4E-TCX | | GCI83783 | Inner Joint | | 29 | 26 | 36 | 85 | 96.5 | |
| 2.5 (85 kw) | 2006.10-2012.06 | 5MT | F | L/R | Pickup 4WD 4JK1-TC | | GDS26017 | Drive Shaft | | 17 | 17 | 53 | 136.5 | 611 | |
| | 2006.10-2012.06 | 5MT | F | L/R | Pickup 4WD 4JK1-TC | | GCO26004 | Outer Joint | | 17 | 33 | 53 | 144 | 69.5 | I |
| 2.5 (100 kw) | 2006.10-2012.10 | | F | R | Platform/Chassis 4WD 4JK1-TC | Drive Type:Permanent All Wheel Drive | GDS26017 | Drive Shaft | | 17 | 17 | 53 | 136.5 | 611 | |
| | 2006.10-2012.10 | | F | L/R | Platform/Chassis 4WD 4JK1-TC | | GCO26004 | Outer Joint | | 17 | 33 | 53 | 144 | 69.5 | I |
| | 2007.01-2012.06 | 5MT | F | L/R | Pickup 4WD 4JK1-TC | | GDS26017 | Drive Shaft | | 17 | 17 | 53 | 136.5 | 611 | |
| | 2007.01-2012.06 | AT/MT | F | L/R | Pickup 4WD 4JK1-TC | | GCO26004 | Outer Joint | | 17 | 33 | 53 | 144 | 69.5 | I |
| 2.5 (120 kw) | 2012.04-2018.12 | 5AT/6MT | F | L/R | Pickup 4WD 4JK1-E5S-L;4JK-1E5-TC | | GDS84591 | Drive Shaft | | 17 | 17 | 53 | 136.5 | 631 | |
| | 2012.04-2018.12 | AT/MT | F | L/R | Pickup 4WD 4JK1-E5S-L;4JK-1E5-TC | | GCO26004 | Outer Joint | | 17 | 33 | 53 | 144 | 69.5 | I |
| | 2012.06- | 6MT | F | L/R | Platform/Chassis 4WD 4JK1-TCY | | GDS84591 | Drive Shaft | | 17 | 17 | 53 | 136.5 | 631 | |
| 3.0 (96 kw) | 2002.05-2012.06 | 4AT/5MT | F | L/R | Pickup 4WD 4JH1-TC | | GCO26004 | Outer Joint | | 17 | 33 | 53 | 144 | 69.5 | I |
| | 2002.05-2012.06 | | F | L/R | Pickup 4WD 4JH1-TC | Date from:2005.09 | GDS26017 | Drive Shaft | | 17 | 17 | 53 | 136.5 | 611 | |
| 3.0 (100 kw) | 2003.06-2012.12 | 4AT/5MT | F | L/R | Pickup 4WD 4JH1-TC | | GDS26017 | Drive Shaft | | 17 | 17 | 53 | 136.5 | 611 | |
| | 2003.06-2012.12 | 4AT/5MT | F | L/R | Pickup 4WD 4JH1-TC | | GCO26004 | Outer Joint | | 17 | 33 | 53 | 144 | 69.5 | I |
| 3.0 (120 kw) | 2007.01-2012.06 | 4AT/5MT | F | L/R | Pickup 4WD 4JJ1-TC, 4JJ1E4C-L | | GDS26017 | Drive Shaft | | 17 | 17 | 53 | 136.5 | 611 | |
| | 2007.01-2012.06 | AT/MT | F | L/R | Pickup 4WD 4JJ1-TC, 4JJ1E4C-L | | GCO26004 | Outer Joint | | 17 | 33 | 53 | 144 | 69.5 | I |
| | 2007.01-2012.06 | 5MT | F | L/R | Platform/Chassis 4WD 4JJ1-TC | | GDS26017 | Drive Shaft | | 17 | 17 | 53 | 136.5 | 611 | |
| | 2007.01-2012.06 | | F | L/R | Platform/Chassis 4WD 4JJ1-TC | | GCO26004 | Outer Joint | | 17 | 33 | 53 | 144 | 69.5 | I |
| **KB** | | | | | | | | | | | | | | | |
| 3.0 (120 kw) | 2010.08- | 4AT/5MT | F | L/R | Pickup 4WD 4JJ1-TC;4JJ1-TCX | | GDS26017 | Drive Shaft | | 17 | 17 | 53 | 136.5 | 611 | |
| **MU-7** | | | | | | | | | | | | | | | |
| 3.0 (107 kw) | 2004.11-2013.10 | AT/MT | F | L/R | SUV 4WD 4JJ1TCX | Date from:2005.09 | GDS26017 | Drive Shaft | | 17 | 17 | 53 | 136.5 | 611 | |
| **Rodeo** | | | | | | | | | | | | | | | |
| 2.5 (74 kw) | 2002.05-2012.06 | 5MT | F | L | Pickup 4WD 4JA1-TC | Date From:2003.01,Date To:2003.05,Option Code:6PL | GDS84256 | Drive Shaft | | 17 | 23 | 53 | 144 | 955 | |
| | 2002.05-2012.06 | 5MT | F | R | Pickup 4WD 4JA1-TC | Date From:2003.01,Date To:2003.05,Option Code:6PL | GDS84350 | Drive Shaft | | 17 | 23 | 53 | 144 | 566 | |
| | 2002.05-2012.06 | 5MT | F | L/R | Pickup 4WD 4JA1-TC | Date From:2005.09 | GDS26017 | Drive Shaft | | 17 | 17 | 53 | 136.5 | 611 | |
| | 2002.05-2012.06 | 5MT | F | L/R | Pickup 4WD 4JA1-TC | Date To:2002.12,Option Code:6PL | GCO26002 | Outer Joint | | 17 | 23 | 53 | 144 | 62.5 | M |
| | 2002.05-2012.06 | 5MT | F | L/R | Pickup 4WD 4JA1-TC | | GCO26004 | Outer Joint | | 17 | 33 | 53 | 144 | 69.5 | I |
| | 2002.05-2012.06 | 5MT | F | L | Pickup 4WD 4JA1-TC | Date From:2003.01,Date To:2003.05,Option Code:6PL | GCI82662 | Inner Joint | | 23 | 23 | 43 | 487 | 91 | |
| | 2002.05-2012.06 | 5MT | F | R | Pickup 4WD 4JA1-TC | Date From:2003.01,Date To:2003.05,Option Code:6PL | GCI82722 | Inner Joint | | 23 | 23 | | 97 | 91 | |
| **Trooper** | | | | | | | | | | | | | | | |
| 3.0 (118 kw) | 2000.04-2004.08 | | F | | Terrain cab open 4WD 4JX1T | | GCO26004 | Outer Joint | | 17 | 33 | 53 | 144 | 69.5 | I |
| 3.1 (84 kw) | 1991.08-1998.07 | AT/MT | F | L/R | Closed Off-Road Vehicle 4WD 4JG2 T | Drive Type:Selectable All-wheel Drive | GDS81049 | Drive Shaft | | 17 | 17 | 53 | 144 | 619 | |
| | 1991.08-1998.07 | AT/MT | F | L/R | Closed Off-Road Vehicle 4WD 4JG2 T | Date to:1995.12 | GCO26003 | Outer Joint | | 17 | 26 | 53 | 144 | 70.5 | M |
| | 1991.08-1998.07 | AT/MT | F | L/R | Closed Off-Road Vehicle 4WD 4JG2 T | | GCO26007 | Outer Joint | | 17 | 25 | 53 | 144 | 70.5 | M |
| | 1991.08-1998.07 | | F | | Closed Off-Road Vehicle 4WD 4JG2 T | | GCO26004 | Outer Joint | | 17 | 33 | 53 | 144 | 69.5 | I |
| | 1991.08-1998.07 | | F | | Terrain cab open 4WD 4JG2 | | GCO26004 | Outer Joint | | 17 | 33 | 53 | 144 | 69.5 | I |
| 3.2 (130 kw) | 1991.08-1998.07 | AT/MT | F | L/R | Terrain cab open 4WD 6VD1(SOHC) | Drive Type:Selectable All-wheel Drive | GDS81049 | Drive Shaft | | 17 | 17 | 53 | 144 | 619 | |
| | 1991.08-1998.07 | AT | F | L/R | Terrain cab wagon closed 4WD 6VD1(SOHC) | | GCO26007 | Outer Joint | | 17 | 25 | 53 | 144 | 70.5 | M |
| | 1991.08-1998.07 | AT/MT | F | L/R | Terrain cab wagon closed 4WD 6VD1(SOHC) | Drive Type:Selectable All-wheel Drive | GDS81049 | Drive Shaft | | 17 | 17 | 53 | 144 | 619 | |
| | 1991.08-1998.07 | AT/MT | F | L/R | Terrain cab wagon closed 4WD 6VD1(SOHC) | Date to:1995.12 | GCO26003 | Outer Joint | | 17 | 26 | 53 | 144 | 70.5 | M |
| 3.5 (158 kw) | 1998.08-2004.08 | 4AT/5MT | F | L/R | Terrain cab open 4WD 6VE1 | Date to:1999.10 | GCO26003 | Outer Joint | | 17 | 26 | 53 | 144 | 70.5 | M |
| | 1998.08-2004.08 | | F | | Terrain cab open 4WD 6VE1 | | GCO26004 | Outer Joint | | 17 | 33 | 53 | 144 | 69.5 | I |
| | 2000.04-2004.08 | 4AT/5MT | F | L/R | Closed Off-Road Vehicle 4WD 6VE1 | Date to:1999.10 | GCO26003 | Outer Joint | | 17 | 26 | 53 | 144 | 70.5 | M |
| | 2000.04-2004.08 | AT/MT | F | L/R | Closed Off-Road Vehicle 4WD 6VE1 | | GCO26004 | Outer Joint | | 17 | 33 | 53 | 144 | 69.5 | I |
| | 2000.04-2004.08 | | F | | Closed Off-Road Vehicle 4WD 6VE1 | | GCO26007 | Outer Joint | | 17 | 25 | 53 | 144 | 70.5 | M |

| | YEAR | TRANSM. | F/R | L/R | BODY STYLE & DRIVE TYPE & ENGINE | REMARKS | G-AP Ref. | PRODUCT | ABS | Technical Specifications A | B | C | H | L | P |
|---|---|---|---|---|---|---|---|---|---|---|---|---|---|---|---|
| **ISUZU** | | | | | | | | | | | | | | | |
| **Trooper/Bighorn** | | | | | | | | | | | | | | | |
| 3.0 (117 kw) | 1998.05-2004.08 | 4AT/5MT | F | L/R | Closed Off-Road Vehicle 4WD 4JX1 | Date to:1999.10 | GCO26003 | Outer Joint | | 17 | 26 | 53 | 144 | 70.5 | M |
| | 1998.05-2004.08 | AT/MT | F | L/R | Closed Off-Road Vehicle 4WD 4JX1 | | GCO26004 | Outer Joint | | 17 | 33 | 53 | 144 | 69.5 | I |
| | 2000.10-2002.06 | 4AT/5MT | F | L/R | Closed Off-Road Vehicle 4WD 4JX1 | Date to:1999.10 | GCO26003 | Outer Joint | | 17 | 26 | 53 | 144 | 70.5 | M |
| | 2000.10-2002.06 | AT/MT | F | L/R | Closed Off-Road Vehicle 4WD 4JX1 | | GCO26004 | Outer Joint | | 17 | 33 | 53 | 144 | 69.5 | I |
| **IVECO** | | | | | | | | | | | | | | | |
| **Daily** | | | | | | | | | | | | | | | |
| 2.8 (78 kw) | 1999.05-2007.07 | MT | R | L/R | Van RWD 8149.03 | | GDS98002 | Drive Shaft | | | 18 | | | 811.5 | |
| **Daily 35C10/35S10** | | | | | | | | | | | | | | | |
| 2.3 (70 kw) | 2006.05-2011.08 | 6AT/5MT | R | L/R | Van RWD F1AE0481F | | GDS82920 | Drive Shaft | | | 26 | | | 812 | |
| **JAC** | | | | | | | | | | | | | | | |
| **He Yue (B Class)** | | | | | | | | | | | | | | | |
| 1.5 (76 kw) | 2009.10-2012.12 | 5MT | F | L | Saloon FWD 4G15S | Model year from:2010,Model year to:2011 | GDS74003 | Drive Shaft | 52T | 27 | 25 | 60 | 95 | 643 | |
| | 2009.10-2012.12 | 5MT | F | R | Saloon FWD 4G15S | Model year from:2010,Model year to:2011 | GDS74004 | Drive Shaft | 52T | 27 | 25 | 60 | 95 | 931 | |
| 1.5 (83 kw) | 2010.09- | 5MT | F | L | Saloon FWD HFC4GB23C | Model year to:2016 | GCI24110 | Inner Joint | | 25 | 29 | 35 | 62.5 | 95 | |
| | 2010.09- | 5MT | F | R | Saloon FWD HFC4GB23C | | GCI34022 | Inner Joint | | 28 | 29 | 43 | | 115 | |
| 1.8 (105 kw) | 2011.09- | MT | F | L | Saloon FWD 4G93D | Model year to:2012 | GDS74003 | Drive Shaft | 52T | 27 | 25 | 60 | 95 | 643 | |
| | 2011.09- | MT | F | R | Saloon FWD 4G93D | Model year to:2012 | GDS74004 | Drive Shaft | 52T | 27 | 25 | 60 | 95 | 931 | |
| **Heyue RS** | | | | | | | | | | | | | | | |
| 1.5 (83 kw) | 2011.03-2015.01 | 5MT | F | L | MPV FWD HFC4GB2.3C | Model year to:2014 | GCI24110 | Inner Joint | | 25 | 29 | 35 | 62.5 | 95 | |
| 1.8 (105 kw) | 2009.10-2015.01 | 4AT/5MT | F | L | MPV FWD 4G93D | Model year from:2011,Model year to:2014 | GDS74003 | Drive Shaft | 52T | 27 | 25 | 60 | 95 | 643 | |
| | 2009.10-2015.01 | 4AT/5MT | F | R | MPV FWD 4G93D | Model year from:2011,Model year to:2014 | GDS74004 | Drive Shaft | 52T | 27 | 25 | 60 | 95 | 931 | |
| **JS4** | | | | | | | | | | | | | | | |
| 1.5 (110 kw) | 2021.04- | CVT | F | L | SUV FWD HFC4GB2.4E | | GDS57686 | Drive Shaft | 48T | 27 | 23 | 60 | 95 | 667 | |
| | 2021.04- | CVT | F | R | SUV FWD HFC4GB2.4E | | GDS58265 | Drive Shaft | 48T | 27 | 23 | 60 | 95 | 911 | |
| | 2021.04- | CVT | F | L/R | SUV FWD HFC4GB2.4E | | GCO83750 | Outer Joint | 48T | 27 | 24 | 60 | 95 | 63.5 | M |
| | 2021.04- | CVT | F | L | SUV FWD HFC4GB2.4E | | GCI83805 | Inner Joint | | 23 | 23 | 38 | 64.5 | 102 | |
| | 2021.04- | CVT | F | R | SUV FWD HFC4GB2.4E | | GCI84051 | Inner Joint | | 23 | 23 | 38 | 317 | 93.5 | |
| **Refine S3** | | | | | | | | | | | | | | | |
| 1.5 (83 kw) | 2014.08-2018.12 | 6MT | F | L | SUV FWD HFC4GB23D | | GDS82564 | Drive Shaft | 48T | 25 | 25 | 52.5 | 91.5 | 632 | |
| | 2014.08-2018.12 | 6MT | F | R | SUV FWD HFC4GB23D | | GDS82563 | Drive Shaft | 48T | 25 | 25 | 52.5 | 91.5 | 905 | |
| | 2014.08-2018.12 | 6MT | F | L/R | SUV FWD HFC4GB23D | | GCO81994 | Outer Joint | 48T | 25 | 22 | 52.5 | 91.5 | 61.5 | M |
| | 2014.08-2018.12 | 6MT | F | L/R | SUV FWD HFC4GB23D | | GCI81874 | Inner Joint | | 25 | 22 | 35 | 62 | 103 | |
| 1.6 (88 kw) | 2016.09- | 6MT | F | L | SUV FWD HFC4GB3-3D | Model year to:2018 | GDS82564 | Drive Shaft | 48T | 25 | 25 | 52.5 | 91.5 | 632 | |
| | 2016.09- | 6MT | F | R | SUV FWD HFC4GB3-3D | Model year to:2018 | GDS82563 | Drive Shaft | 48T | 25 | 25 | 52.5 | 91.5 | 905 | |
| | 2016.09- | 6MT | F | L/R | SUV FWD HFC4GB3-3D | Model year to:2018 | GCO81994 | Outer Joint | 48T | 25 | 22 | 52.5 | 91.5 | 61.5 | M |
| | 2016.09- | 6MT | F | L/R | SUV FWD HFC4GB3-3D | Model year to:2018 | GCI81874 | Inner Joint | | 25 | 22 | 35 | 62 | 103 | |
| **Shuailing T6** | | | | | | | | | | | | | | | |
| 2.0 (140 kw) | 2018.06- | 6MT | F | L | Pickup 4WD HFC4GA3-4D | | GDS57794 | Drive Shaft | | 30 | 27 | 72.7 | 108.5 | 614 | |
| | 2018.06- | 6MT | F | R | Pickup 4WD HFC4GA3-4D | | GDS57793 | Drive Shaft | | 30 | 27 | 72.7 | 108.5 | 704 | |
| | 2018.06- | 6MT | F | L/R | Pickup 4WD HFC4GA3-4D | | GCO83708 | Outer Joint | | 30 | 25 | 72.7 | 108.5 | 63 | M |
| | 2018.06- | 6MT | F | L/R | Pickup 4WD HFC4GA3-4D | | GCI83859 | Inner Joint | | 27 | 25 | 47 | 67 | 111.5 | |
| **Shuailing T8** | | | | | | | | | | | | | | | |
| 2.0 (102 kw) | 2018.08- | 5MT | F | L | Pickup 4WD HFC4DB2-1D1 | | GDS57794 | Drive Shaft | | 30 | 27 | 72.7 | 108.5 | 614 | |
| | 2018.08- | 5MT | F | R | Pickup 4WD HFC4DB2-1D1 | | GDS57793 | Drive Shaft | | 30 | 27 | 72.7 | 108.5 | 704 | |
| | 2018.08- | 5MT | F | L/R | Pickup 4WD HFC4DB2-1D1 | | GCO83708 | Outer Joint | | 30 | 25 | 72.7 | 108.5 | 63 | M |
| | 2018.08- | 5MT | F | L/R | Pickup 4WD HFC4DB2-1D1 | | GCI83859 | Inner Joint | | 27 | 25 | 47 | 67 | 111.5 | |
| 2.0 (140 kw) | 2019.04- | 6MT | F | L | Pickup 4WD HFC4GA3-4D | | GDS57794 | Drive Shaft | | 30 | 27 | 72.7 | 108.5 | 614 | |
| | 2019.04- | 6MT | F | R | Pickup 4WD HFC4GA3-4D | | GDS57793 | Drive Shaft | | 30 | 27 | 72.7 | 108.5 | 704 | |
| | 2019.04- | 6MT | F | L/R | Pickup 4WD HFC4GA3-4D | | GCO83708 | Outer Joint | | 30 | 25 | 72.7 | 108.5 | 63 | M |
| | 2019.04- | 6MT | F | L/R | Pickup 4WD HFC4GA3-4D | | GCI83859 | Inner Joint | | 27 | 25 | 47 | 67 | 111.5 | |
| **Tong Yue (Tojoy)** | | | | | | | | | | | | | | | |
| 1.3 (69 kw) | 2008.11-2014.12 | 5MT | F | L | Saloon FWD 4G13 | Model year to:2013 | GDS74005 | Drive Shaft | 44T | 25 | 23 | 52.5 | 95 | 605.5 | |
| | 2008.11-2014.12 | 5MT | F | R | Saloon FWD 4G13 | Model year to:2013 | GDS74006 | Drive Shaft | 44T | 25 | 23 | 52.5 | 95 | 916 | |
| 1.3 (73 kw) | 2010.03-2014.12 | MT | F | L | Saloon FWD HFC4GB13C | Trans. code:4G13 | GDS74005 | Drive Shaft | 44T | 25 | 23 | 52.5 | 95 | 605.5 | |
| | 2010.03-2014.12 | MT | F | L | Saloon FWD HFC4GB13C | Trans. code:VVT,Model year from:2011 | GDS74007 | Drive Shaft | 44T | 25 | 25 | 52.5 | 95 | 615.5 | |
| | 2010.03-2014.12 | MT | F | L | Saloon FWD HFC4GB13C | Model year from:2011 | GDS74009 | Drive Shaft | 44T | 25 | 25 | 52.5 | 94.5 | 607 | |
| | 2010.03-2014.12 | MT | F | R | Saloon FWD HFC4GB13C | Trans. code:4G13 | GDS74006 | Drive Shaft | 44T | 25 | 23 | 52.5 | 95 | 916 | |
| | 2010.03-2014.12 | MT | F | R | Saloon FWD HFC4GB13C | Trans. code:VVT,Model year from:2011 | GDS74008 | Drive Shaft | 44T | 25 | 28 | 52.5 | 95 | 556 | |
| | 2010.03-2014.12 | MT | F | R | Saloon FWD HFC4GB13C | Model year from:2011 | GDS74010 | Drive Shaft | 44T | 25 | 28 | 52.5 | 94.5 | 551 | |
| 1.5 (76 kw) | 2008.11-2010.12 | MT | F | L | Saloon FWD 4G15 | for model year:2010 | GDS74009 | Drive Shaft | 44T | 25 | 25 | 52.5 | 94.5 | 607 | |
| | 2008.11-2010.12 | MT | F | R | Saloon FWD 4G15 | for model year:2010 | GDS74010 | Drive Shaft | 44T | 25 | 28 | 52.5 | 94.5 | 551 | |

| | YEAR | TRANSM. | F/R | L/R | BODY STYLE & DRIVE TYPE & ENGINE | REMARKS | G-AP Ref. | PRODUCT | ABS | Technical Specifications A | B | C | H | L | P |
|---|---|---|---|---|---|---|---|---|---|---|---|---|---|---|---|
| **JAECOO** | | | | | | | | | | | | | | | |
| **J7** | | | | | | | | | | | | | | | |
| 1.6 (145 kw) | 2024.04- | 7DCT | F | L/R | SUV 4WD SQRF4J16C | | GCO83164 | Outer Joint | 48T | 28 | 26 | 58 | 100 | 64.5 | M |
| | 2024.04- | 7DCT | F | L | SUV 4WD SQRF4J16C | | GCI83820 | Inner Joint | | 27 | 34 | 40 | 56 | 115 | |
| | 2024.04- | 7DCT | R | L | SUV 4WD SQRF4J16C | | GDS58308 | Drive Shaft | | 28 | 23 | 58 | 100.5 | 815 | |
| | 2024.04- | 7DCT | R | R | SUV 4WD SQRF4J16C | | GDS58307 | Drive Shaft | | 28 | 23 | 58 | 100.5 | 839 | |
| | 2024.04- | 7DCT | R | L/R | SUV 4WD SQRF4J16C | | GCO83876 | Outer Joint | | 28 | 32 | 58 | 100.5 | 61.5 | M |
| | 2024.04- | 7DCT | R | L/R | SUV 4WD SQRF4J16C | | GCI84060 | Inner Joint | | 23 | 30 | 35.6 | 61.5 | 106 | |
| | 2024.07- | 7DCT | F | L/R | SUV FWD SQRF4J16C | | GCO83164 | Outer Joint | 48T | 28 | 26 | 58 | 100 | 64.5 | M |
| | 2024.07- | 7DCT | F | L | SUV FWD SQRF4J16C | | GCI83820 | Inner Joint | | 27 | 34 | 40 | 56 | 115 | |
| **JAGUAR** | | | | | | | | | | | | | | | |
| **E-Pace** | | | | | | | | | | | | | | | |
| 1.5 (118 kw) | 2020.11- | 8AT | F | L | SUV FWD PT153(AJ20P3) | | GDS84193 | Drive Shaft | | 31 | 31 | 68.5 | 97 | 600 | |
| | 2020.11- | 8AT | F | L/R | SUV FWD PT153(AJ20P3) | | GCO81975 | Outer Joint | | 31 | 27 | 68.5 | 97 | 61 | I |
| 1.5 (198 kw) | 2024.04- | | F | L | SUV 4WD | | GDS84193 | Drive Shaft | | 31 | 31 | 68.5 | 97 | 600 | |
| 1.5 (227 kw) | 2020.11- | 8AT | F | L | SUV 4WD PT153(AJ20P3) | | GDS84193 | Drive Shaft | | 31 | 31 | 68.5 | 97 | 600 | |
| | 2020.11- | 8AT | F | L/R | SUV 4WD PT153(AJ20P3) | | GCO81975 | Outer Joint | | 31 | 27 | 68.5 | 97 | 61 | I |
| 2.0 (110 kw) | 2017.09- | 6MT | F | L | SUV 4WD 204DTD(AJ20D4);204DTF(AJ20D4) | Chassis no. from:K1Z56187,Chassis no. to:L1Z99999 | GDS56503 | Drive Shaft | | 31 | 31 | 68.5 | 97 | 600 | |
| | 2017.09- | 6MT | F | L | SUV 4WD 204DTD(AJ20D4);204DTF(AJ20D4) | Chassis no.to:K1Z56186 | GDS84194 | Drive Shaft | | 31 | 31 | 68.5 | 97 | 602 | |
| | 2017.09- | 6MT | F | R | SUV 4WD 204DTD(AJ20D4);204DTF(AJ20D4) | | GDS83888 | Drive Shaft | | 31 | 28 | 68.5 | 97 | 1068 | |
| | 2017.09- | 6MT | F | L | SUV 4WD 204DTD(AJ20D4);204DTF(AJ20D4) | Chassis no. from:K1Z56187,Chassis no. to:L1Z99999;Chassis no. from:M1000001,Chassis no. to:K1Z56186 | GCI82631 | Inner Joint | | 31 | 27 | 44 | 65 | 112 | |
| | 2017.09- | 6MT | F | R | SUV 4WD 204DTD(AJ20D4);204DTF(AJ20D4) | | GCI82401 | Inner Joint | | 28 | 27 | 30 | 548.5 | 95.5 | |
| | 2017.09- | 9AT | F | L | SUV 4WD 204DTD(AJ20D4);204DTF(AJ20D4) | | GDS84193 | Drive Shaft | | 31 | 31 | 68.5 | 97 | 600 | |
| | 2017.09- | 9AT | F | R | SUV 4WD 204DTD(AJ20D4);204DTF(AJ20D4) | Chassis no. to:L1Z99999 | GDS56284 | Drive Shaft | | 31 | 28 | 68.5 | 97 | 1042 | |
| | 2017.09- | 9AT | F | R | SUV 4WD 204DTD(AJ20D4);204DTF(AJ20D4) | Chassis no. from:M1000001 | GDS84191 | Drive Shaft | | 31 | 28 | 68.5 | 97 | 1042 | |
| | 2017.09- | 9AT | F | L | SUV 4WD 204DTD(AJ20D4);204DTF(AJ20D4) | | GCI85049 | Inner Joint | | 31 | 27 | 36.2 | 68 | 95 | |
| | 2017.09- | 9AT | F | R | SUV 4WD 204DTD(AJ20D4);204DTF(AJ20D4) | Chassis no. from:M1000001 | GCI82629 | Inner Joint | | 28 | 27 | 30 | 520 | 95 | |
| | 2017.09- | 9AT/6MT | F | L/R | SUV 4WD 204DTD(AJ20D4);204DTF(AJ20D4) | Transmission:6MT,Chassis no. from:K1Z73623 | GCO81975 | Outer Joint | | 31 | 27 | 68.5 | 97 | 61 | I |
| | 2017.09- | 9AT/6MT | R | L/R | SUV 4WD 204DTD(AJ20D4);204DTF(AJ20D4) | Chassis no. to:L1Z99999;For vehicles with efficient driveline | GDS56790 | Drive Shaft | | 31 | 26 | 65.3 | 95.5 | 830 | |
| | 2017.09- | 9AT/6MT | R | L/R | SUV 4WD 204DTD(AJ20D4);204DTF(AJ20D4) | Chassis no. from:M1000001,Chassis no. to:L1Z99999;For vehicles with active driveline | GDS58309 | Drive Shaft | | 31 | 26 | 65.3 | 95.5 | 723 | |
| | 2017.09- | 9AT/6MT | R | L/R | SUV 4WD 204DTD(AJ20D4);204DTF(AJ20D4) | Chassis no. from:M1000001,Chassis no. to:L1Z99999;For vehicles with active driveline | GCO83861 | Outer Joint | | 31 | 29 | 65.3 | 95.5 | 49 | I |
| | 2017.09- | 9AT/6MT | R | R | SUV 4WD 204DTD(AJ20D4);204DTF(AJ20D4) | Chassis to:L1Z99999;For vehicles with active driveline | GCI82281 | Inner Joint | | 26 | 29 | 34.95 | 67.5 | 106.5 | |
| | 2017.09- | 9AT/6MT | R | L/R | SUV 4WD 204DTD(AJ20D4);204DTF(AJ20D4) | Chassis no. from:M1000001,Chassis no. to:L1Z99999;For vehicles with active driveline | GCI84035 | Inner Joint | | 26 | 29 | 35 | 56 | 109 | |
| | 2017.09- | 6MT | F | L | SUV FWD 204DTD(AJ20D4);204DTF(AJ20D4) | Chassis no. from:K1Z56187 | GDS56503 | Drive Shaft | | 31 | 31 | 68.5 | 97 | 600 | |
| | 2017.09- | 6MT | F | L | SUV FWD 204DTD(AJ20D4);204DTF(AJ20D4) | Chassis no.to:K1Z56186 | GDS84194 | Drive Shaft | | 31 | 31 | 68.5 | 97 | 602 | |
| | 2017.09- | 6MT | F | R | SUV FWD 204DTD(AJ20D4);204DTF(AJ20D4) | | GDS84192 | Drive Shaft | | 31 | 28 | 68.5 | 97 | 1068 | |
| | 2017.09- | 6MT | F | L/R | SUV FWD 204DTD(AJ20D4);204DTF(AJ20D4) | | GCO81975 | Outer Joint | | 31 | 27 | 68.5 | 97 | 61 | I |
| | 2017.09- | 6MT | F | L | SUV FWD 204DTD(AJ20D4);204DTF(AJ20D4) | Chassis no. from:K1Z56187,Chassis no. to:L1Z99999;Chassis no. from:M1000001,Chassis no. to:K1Z56186 | GCI82631 | Inner Joint | | 31 | 27 | 44 | 65 | 112 | |
| | 2017.09- | 6MT | F | R | SUV FWD 204DTD(AJ20D4);204DTF(AJ20D4) | | GCI82630 | Inner Joint | | 28 | 27 | 40 | 548.5 | 95.5 | |
| 2.0 (120 kw) | 2020.11- | 9AT | F | L | SUV 4WD 204DTY(AJ21D4) | | GDS84193 | Drive Shaft | | 31 | 31 | 68.5 | 97 | 600 | |
| | 2020.11- | 9AT | F | R | SUV 4WD 204DTY(AJ21D4) | Chassis no. to:L1Z99999 | GDS56284 | Drive Shaft | | 31 | 28 | 68.5 | 97 | 1042 | |
| | 2020.11- | 9AT | F | R | SUV 4WD 204DTY(AJ21D4) | Chassis no. from:M1000001 | GDS84191 | Drive Shaft | | 31 | 28 | 68.5 | 97 | 1042 | |
| | 2020.11- | 9AT | F | L/R | SUV 4WD 204DTY(AJ21D4) | | GCO81975 | Outer Joint | | 31 | 27 | 68.5 | 97 | 61 | I |
| | 2020.11- | 9AT | F | L | SUV 4WD 204DTY(AJ21D4) | | GCI85049 | Inner Joint | | 31 | 27 | 36.2 | 68 | 95 | |
| | 2020.11- | 9AT | F | R | SUV 4WD 204DTY(AJ21D4) | | GCI82629 | Inner Joint | | 28 | 27 | 30 | 520 | 95 | |
| | 2020.11- | 9AT | R | L/R | SUV 4WD 204DTY(AJ21D4) | Chassis no. to:L1Z99999;For vehicles with efficient driveline | GDS56790 | Drive Shaft | | 31 | 26 | 65.3 | 95.5 | 830 | |
| | 2020.11- | 9AT | R | L/R | SUV 4WD 204DTY(AJ21D4) | Chassis no. from:M1000001,Chassis no. to:L1Z99999;For vehicles with active driveline | GDS58309 | Drive Shaft | | 31 | 26 | 65.3 | 95.5 | 723 | |
| | 2020.11- | 9AT | R | L/R | SUV 4WD 204DTY(AJ21D4) | Chassis no. from:M1000001,Chassis no. to:L1Z99999;For vehicles with active driveline | GCO83861 | Outer Joint | | 31 | 29 | 65.3 | 95.5 | 49 | I |
| | 2020.11- | 9AT | R | R | SUV 4WD 204DTY(AJ21D4) | Chassis to:L1Z99999;For vehicles with active driveline | GCI82281 | Inner Joint | | 26 | 29 | 34.95 | 67.5 | 106.5 | |
| | 2020.11- | 9AT | R | L/R | SUV 4WD 204DTY(AJ21D4) | Chassis no. from:M1000001,Chassis no. to:L1Z99999;For vehicles with active driveline | GCI84035 | Inner Joint | | 26 | 29 | 35 | 56 | 109 | |
| | 2020.11- | 6MT | F | L | SUV FWD 204DTY(AJ20D4) | | GDS56503 | Drive Shaft | | 31 | 31 | 68.5 | 97 | 600 | |
| | 2020.11- | 6MT | F | R | SUV FWD 204DTY(AJ20D4) | | GDS84192 | Drive Shaft | | 31 | 28 | 68.5 | 97 | 1068 | |
| | 2020.11- | 6MT | F | L/R | SUV FWD 204DTY(AJ20D4) | | GCO81975 | Outer Joint | | 31 | 27 | 68.5 | 97 | 61 | I |
| | 2020.11- | 6MT | F | L | SUV FWD 204DTY(AJ20D4) | | GCI82631 | Inner Joint | | 31 | 27 | 44 | 65 | 112 | |
| | 2020.11- | 6MT | F | R | SUV FWD 204DTY(AJ20D4) | | GCI82630 | Inner Joint | | 28 | 27 | 40 | 548.5 | 95.5 | |
| 2.0 (132 kw) | 2017.09- | 6MT | F | L | SUV 4WD 204DTD(AJ20D4);204DTF(AJ20D4) | Chassis no. from:K1Z56187,Chassis no. to:L1Z99999 | GDS56503 | Drive Shaft | | 31 | 31 | 68.5 | 97 | 600 | |
| | 2017.09- | 6MT | F | L | SUV 4WD 204DTD(AJ20D4);204DTF(AJ20D4) | Chassis no.to:K1Z56186 | GDS84194 | Drive Shaft | | 31 | 31 | 68.5 | 97 | 602 | |
| | 2017.09- | 6MT | F | R | SUV 4WD 204DTD(AJ20D4);204DTF(AJ20D4) | | GDS83888 | Drive Shaft | | 31 | 28 | 68.5 | 97 | 1068 | |
| | 2017.09- | 6MT | F | L | SUV 4WD 204DTD(AJ20D4);204DTF(AJ20D4) | Chassis no. from:K1Z56187,Chassis no. to:L1Z99999;Chassis no. from:M1000001,Chassis no. to:K1Z56186 | GCI82631 | Inner Joint | | 31 | 27 | 44 | 65 | 112 | |
| | 2017.09- | 6MT | F | R | SUV 4WD 204DTD(AJ20D4);204DTF(AJ20D4) | | GCI82401 | Inner Joint | | 28 | 27 | 30 | 548.5 | 95.5 | |
| | 2017.09- | 9AT | F | L | SUV 4WD 204DTD(AJ20D4);204DTF(AJ20D4) | | GDS84193 | Drive Shaft | | 31 | 31 | 68.5 | 97 | 600 | |
| | 2017.09- | 9AT | F | R | SUV 4WD 204DTD(AJ20D4);204DTF(AJ20D4) | Chassis no. to:L1Z99999 | GDS56284 | Drive Shaft | | 31 | 28 | 68.5 | 97 | 1042 | |
| | 2017.09- | 9AT | F | R | SUV 4WD 204DTD(AJ20D4);204DTF(AJ20D4) | Chassis no. from:M1000001 | GDS84191 | Drive Shaft | | 31 | 28 | 68.5 | 97 | 1042 | |
| | 2017.09- | 9AT | F | L | SUV 4WD 204DTD(AJ20D4);204DTF(AJ20D4) | | GCI85049 | Inner Joint | | 31 | 27 | 36.2 | 68 | 95 | |
| | 2017.09- | 9AT | F | R | SUV 4WD 204DTD(AJ20D4);204DTF(AJ20D4) | Chassis no. from:M1000001 | GCI82629 | Inner Joint | | 28 | 27 | 30 | 520 | 95 | |
| | 2017.09- | 9AT/6MT | F | L/R | SUV 4WD 204DTD(AJ20D4);204DTF(AJ20D4) | Transmission:6MT,Chassis no. from:K1Z73623 | GCO81975 | Outer Joint | | 31 | 27 | 68.5 | 97 | 61 | I |
| | 2017.09- | 9AT/6MT | R | L/R | SUV 4WD 204DTD(AJ20D4);204DTF(AJ20D4) | Chassis no. to:L1Z99999;For vehicles with efficient driveline | GDS56790 | Drive Shaft | | 31 | 26 | 65.3 | 95.5 | 830 | |

| | YEAR | TRANSM. | F/R | L/R | BODY STYLE & DRIVE TYPE & ENGINE | REMARKS | G-AP Ref. | PRODUCT | ABS | Technical Specifications A | B | C | H | L | P |
|---|---|---|---|---|---|---|---|---|---|---|---|---|---|---|---|
| **JAGUAR** | | | | | | | | | | | | | | | |
| **E-Pace** | | | | | | | | | | | | | | | |
| 2.0 (132 kw) | 2017.09- | 9AT/6MT | R | L/R | SUV 4WD 204DTD(AJ20D4);204DTF(AJ20D4) | ---------- | GDS58309 | Drive Shaft | | 31 | 26 | 65.3 | 95.5 | 723 | |
| | 2017.09- | 9AT/6MT | R | L/R | SUV 4WD 204DTD(AJ20D4);204DTF(AJ20D4) | ---------- | GCO83861 | Outer Joint | | 31 | 29 | 65.3 | 95.5 | 49 | I |
| | 2017.09- | 9AT/6MT | R | R | SUV 4WD 204DTD(AJ20D4);204DTF(AJ20D4) | Chassis to:L1Z99999;For vehicles with active driveline | GCI82281 | Inner Joint | | 26 | 29 | 34.95 | 67.5 | 106.5 | |
| | 2017.09- | 9AT/6MT | R | L/R | SUV 4WD 204DTD(AJ20D4);204DTF(AJ20D4) | ---------- | GCI84035 | Inner Joint | | 26 | 29 | 35 | 56 | 109 | |
| 2.0 (147 kw) | 2018.08- | 9AT | F | L | SUV 4WD PT204(AJ20P4) | | GDS84193 | Drive Shaft | | 31 | 31 | 68.5 | 97 | 600 | |
| | 2018.08- | 9AT | F | R | SUV 4WD PT204(AJ20P4) | Chassis no. to:L1Z99999 | GDS56284 | Drive Shaft | | 31 | 28 | 68.5 | 97 | 1042 | |
| | 2018.08- | 9AT | F | R | SUV 4WD PT204(AJ20P4) | Chassis no. from:M1000001 | GDS84191 | Drive Shaft | | 31 | 28 | 68.5 | 97 | 1042 | |
| | 2018.08- | 9AT | F | L/R | SUV 4WD PT204(AJ20P4) | Chassis no. from:K1Z73623 | GCO81975 | Outer Joint | | 31 | 27 | 68.5 | 97 | 61 | I |
| | 2018.08- | 9AT | F | L | SUV 4WD PT204(AJ20P4) | | GCI85049 | Inner Joint | | 31 | 27 | 36.2 | 68 | 95 | |
| | 2018.08- | 9AT | F | R | SUV 4WD PT204(AJ20P4) | Chassis no. from:M1000001 | GCI82629 | Inner Joint | | 28 | 27 | 30 | 520 | 95 | |
| | 2018.08- | 9AT | R | L/R | SUV 4WD PT204(AJ20P4) | Chassis no. to:L1Z99999;For vehicles with efficient driveline | GDS56790 | Drive Shaft | | 31 | 26 | 65.3 | 95.5 | 830 | |
| | 2018.08- | 9AT | R | L/R | SUV 4WD PT204(AJ20P4) | ---------- | GDS58309 | Drive Shaft | | 31 | 26 | 65.3 | 95.5 | 723 | |
| | 2018.08- | 9AT | R | L/R | SUV 4WD PT204(AJ20P4) | ---------- | GCO83861 | Outer Joint | | 31 | 29 | 65.3 | 95.5 | 49 | I |
| | 2018.08- | 9AT | R | R | SUV 4WD PT204(AJ20P4) | Chassis to:L1Z99999;For vehicles with active driveline | GCI82281 | Inner Joint | | 26 | 29 | 34.95 | 67.5 | 106.5 | |
| | 2018.08- | 9AT | R | L/R | SUV 4WD PT204(AJ20P4) | ---------- | GCI84035 | Inner Joint | | 26 | 29 | 35 | 56 | 109 | |
| | 2020.11- | 8AT/9AT | F | L | SUV 4WD PT204(AJ20P4) | | GDS84193 | Drive Shaft | | 31 | 31 | 68.5 | 97 | 600 | |
| | 2020.11- | 8AT/9AT | F | L/R | SUV 4WD PT204(AJ20P4) | | GCO81975 | Outer Joint | | 31 | 27 | 68.5 | 97 | 61 | I |
| | 2020.11- | 9AT | F | L | SUV 4WD PT204(AJ20P4) | | GDS84193 | Drive Shaft | | 31 | 31 | 68.5 | 97 | 600 | |
| | 2020.11- | 9AT | F | R | SUV 4WD PT204(AJ20P4) | Chassis no. to:L1Z99999 | GDS56284 | Drive Shaft | | 31 | 28 | 68.5 | 97 | 1042 | |
| | 2020.11- | 9AT | F | R | SUV 4WD PT204(AJ20P4) | Chassis no. from:M1000001 | GDS84191 | Drive Shaft | | 31 | 28 | 68.5 | 97 | 1042 | |
| | 2020.11- | 9AT | F | L/R | SUV 4WD PT204(AJ20P4) | | GCO81975 | Outer Joint | | 31 | 27 | 68.5 | 97 | 61 | I |
| | 2020.11- | 9AT | F | L | SUV 4WD PT204(AJ20P4) | | GCI85049 | Inner Joint | | 31 | 27 | 36.2 | 68 | 95 | |
| | 2020.11- | 9AT | F | R | SUV 4WD PT204(AJ20P4) | | GCI82629 | Inner Joint | | 28 | 27 | 30 | 520 | 95 | |
| | 2020.11- | 9AT | R | L/R | SUV 4WD PT204(AJ20P4) | Chassis no. to:L1Z99999;For vehicles with efficient driveline | GDS56790 | Drive Shaft | | 31 | 26 | 65.3 | 95.5 | 830 | |
| | 2020.11- | 9AT | R | L/R | SUV 4WD PT204(AJ20P4) | ---------- | GDS58309 | Drive Shaft | | 31 | 26 | 65.3 | 95.5 | 723 | |
| | 2020.11- | 9AT | R | L/R | SUV 4WD PT204(AJ20P4) | ---------- | GCO83861 | Outer Joint | | 31 | 29 | 65.3 | 95.5 | 49 | I |
| | 2020.11- | 9AT | R | R | SUV 4WD PT204(AJ20P4) | Chassis to:L1Z99999;For vehicles with active driveline | GCI82281 | Inner Joint | | 26 | 29 | 34.95 | 67.5 | 106.5 | |
| | 2020.11- | 9AT | R | L/R | SUV 4WD PT204(AJ20P4) | ---------- | GCI84035 | Inner Joint | | 26 | 29 | 35 | 56 | 109 | |
| | 2020.11- | AT | R | L/R | SUV 4WD PT204(AJ20P4) | ---------- | GDS58309 | Drive Shaft | | 31 | 26 | 65.3 | 95.5 | 723 | |
| | 2020.11- | AT | R | L/R | SUV 4WD PT204(AJ20P4) | ---------- | GCO83861 | Outer Joint | | 31 | 29 | 65.3 | 95.5 | 49 | I |
| | 2020.11- | AT | R | L/R | SUV 4WD PT204(AJ20P4) | ---------- | GCI84035 | Inner Joint | | 26 | 29 | 35 | 56 | 109 | |
| | 2020.11- | AT/MT | R | L/R | SUV 4WD PT204(AJ20P4) | Chassis no. to:L1Z99999;For vehicles with efficient driveline | GDS56790 | Drive Shaft | | 31 | 26 | 65.3 | 95.5 | 830 | |
| | 2020.11- | AT/MT | R | R | SUV 4WD PT204(AJ20P4) | Chassis to:L1Z99999;For vehicles with active driveline | GCI82281 | Inner Joint | | 26 | 29 | 34.95 | 67.5 | 106.5 | |
| 2.0 (150 kw) | 2020.11- | 9AT | F | L | SUV 4WD 204DTY(AJ21D4) | | GDS84193 | Drive Shaft | | 31 | 31 | 68.5 | 97 | 600 | |
| | 2020.11- | 9AT | F | R | SUV 4WD 204DTY(AJ21D4) | Chassis no. to:L1Z99999 | GDS56284 | Drive Shaft | | 31 | 28 | 68.5 | 97 | 1042 | |
| | 2020.11- | 9AT | F | R | SUV 4WD 204DTY(AJ21D4) | Chassis no. from:M1000001 | GDS84191 | Drive Shaft | | 31 | 28 | 68.5 | 97 | 1042 | |
| | 2020.11- | 9AT | F | L/R | SUV 4WD 204DTY(AJ21D4) | | GCO81975 | Outer Joint | | 31 | 27 | 68.5 | 97 | 61 | I |
| | 2020.11- | 9AT | F | L | SUV 4WD 204DTY(AJ21D4) | | GCI85049 | Inner Joint | | 31 | 27 | 36.2 | 68 | 95 | |
| | 2020.11- | 9AT | F | R | SUV 4WD 204DTY(AJ21D4) | | GCI82629 | Inner Joint | | 28 | 27 | 30 | 520 | 95 | |
| | 2020.11- | 9AT | R | L/R | SUV 4WD 204DTY(AJ21D4) | Chassis no. to:L1Z99999;For vehicles with efficient driveline | GDS56790 | Drive Shaft | | 31 | 26 | 65.3 | 95.5 | 830 | |
| | 2020.11- | 9AT | R | L/R | SUV 4WD 204DTY(AJ21D4) | ---------- | GDS58309 | Drive Shaft | | 31 | 26 | 65.3 | 95.5 | 723 | |
| | 2020.11- | 9AT | R | L/R | SUV 4WD 204DTY(AJ21D4) | ---------- | GCO83861 | Outer Joint | | 31 | 29 | 65.3 | 95.5 | 49 | I |
| | 2020.11- | 9AT | R | R | SUV 4WD 204DTY(AJ21D4) | Chassis to:L1Z99999;For vehicles with active driveline | GCI82281 | Inner Joint | | 26 | 29 | 34.95 | 67.5 | 106.5 | |
| | 2020.11- | 9AT | R | L/R | SUV 4WD 204DTY(AJ21D4) | ---------- | GCI84035 | Inner Joint | | 26 | 29 | 35 | 56 | 109 | |
| 2.0 (177 kw) | 2017.09- | 9AT | F | L | SUV 4WD 204DTA(AJ20D4) | | GDS84193 | Drive Shaft | | 31 | 31 | 68.5 | 97 | 600 | |
| | 2017.09- | 9AT | F | R | SUV 4WD 204DTA(AJ20D4) | Chassis no. to:L1Z99999 | GDS56284 | Drive Shaft | | 31 | 28 | 68.5 | 97 | 1042 | |
| | 2017.09- | 9AT | F | R | SUV 4WD 204DTA(AJ20D4) | Chassis no. from:M1000001 | GDS84191 | Drive Shaft | | 31 | 28 | 68.5 | 97 | 1042 | |
| | 2017.09- | 9AT | F | L/R | SUV 4WD 204DTA(AJ20D4) | | GCO81975 | Outer Joint | | 31 | 27 | 68.5 | 97 | 61 | I |
| | 2017.09- | 9AT | F | L | SUV 4WD 204DTA(AJ20D4) | | GCI85049 | Inner Joint | | 31 | 27 | 36.2 | 68 | 95 | |
| | 2017.09- | 9AT | F | R | SUV 4WD 204DTA(AJ20D4) | Chassis no. from:M1000001 | GCI82629 | Inner Joint | | 28 | 27 | 30 | 520 | 95 | |
| | 2017.09- | 9AT | R | L/R | SUV 4WD 204DTA(AJ20D4) | Chassis no. to:L1Z99999;For vehicles with efficient driveline | GDS56790 | Drive Shaft | | 31 | 26 | 65.3 | 95.5 | 830 | |
| | 2017.09- | 9AT | R | L/R | SUV 4WD 204DTA(AJ20D4) | ---------- | GDS58309 | Drive Shaft | | 31 | 26 | 65.3 | 95.5 | 723 | |
| | 2017.09- | 9AT | R | L/R | SUV 4WD 204DTA(AJ20D4) | ---------- | GCO83861 | Outer Joint | | 31 | 29 | 65.3 | 95.5 | 49 | I |
| | 2017.09- | 9AT | R | R | SUV 4WD 204DTA(AJ20D4) | Chassis to:L1Z99999;For vehicles with active driveline | GCI82281 | Inner Joint | | 26 | 29 | 34.95 | 67.5 | 106.5 | |
| | 2017.09- | 9AT | R | L/R | SUV 4WD 204DTA(AJ20D4) | ---------- | GCI84035 | Inner Joint | | 26 | 29 | 35 | 56 | 109 | |
| 2.0 (183 kw) | 2017.09- | 9AT | F | L | SUV 4WD PT204(AJ20P4) | | GDS84193 | Drive Shaft | | 31 | 31 | 68.5 | 97 | 600 | |
| | 2017.09- | 9AT | F | R | SUV 4WD PT204(AJ20P4) | Chassis no. to:L1Z99999 | GDS56284 | Drive Shaft | | 31 | 28 | 68.5 | 97 | 1042 | |
| | 2017.09- | 9AT | F | R | SUV 4WD PT204(AJ20P4) | Chassis no. from:M1000001 | GDS84191 | Drive Shaft | | 31 | 28 | 68.5 | 97 | 1042 | |
| | 2017.09- | 9AT | F | L/R | SUV 4WD PT204(AJ20P4) | Chassis no. from:K1Z73623 | GCO81975 | Outer Joint | | 31 | 27 | 68.5 | 97 | 61 | I |
| | 2017.09- | 9AT | F | L | SUV 4WD PT204(AJ20P4) | | GCI85049 | Inner Joint | | 31 | 27 | 36.2 | 68 | 95 | |
| | 2017.09- | 9AT | F | R | SUV 4WD PT204(AJ20P4) | Chassis no. from:M1000001 | GCI82629 | Inner Joint | | 28 | 27 | 30 | 520 | 95 | |
| | 2017.09- | 9AT | R | L/R | SUV 4WD PT204(AJ20P4) | Chassis no. to:L1Z99999;For vehicles with efficient driveline | GDS56790 | Drive Shaft | | 31 | 26 | 65.3 | 95.5 | 830 | |
| | 2017.09- | 9AT | R | L/R | SUV 4WD PT204(AJ20P4) | ---------- | GDS58309 | Drive Shaft | | 31 | 26 | 65.3 | 95.5 | 723 | |
| | 2017.09- | 9AT | R | L/R | SUV 4WD PT204(AJ20P4) | ---------- | GCO83861 | Outer Joint | | 31 | 29 | 65.3 | 95.5 | 49 | I |
| | 2017.09- | 9AT | R | R | SUV 4WD PT204(AJ20P4) | Chassis to:L1Z99999;For vehicles with active driveline | GCI82281 | Inner Joint | | 26 | 29 | 34.95 | 67.5 | 106.5 | |

| | YEAR | TRANSM. | F/R | L/R | BODY STYLE & DRIVE TYPE & ENGINE | REMARKS | G-AP Ref. | PRODUCT | ABS | Technical Specifications A | B | C | H | L | P |
|---|---|---|---|---|---|---|---|---|---|---|---|---|---|---|---|
| **JAGUAR** | | | | | | | | | | | | | | | |
| **E-Pace** | | | | | | | | | | | | | | | |
| 2.0 (183 kw) | 2017.09- | 9AT | R | L/R | SUV 4WD PT204(AJ20P4) | ---------- | GCI84035 | Inner Joint | | 26 | 29 | 35 | 56 | 109 | |
| 2.0 (184 kw) | 2020.11- | 8AT | F | R | SUV 4WD PT204(AJ20P4) | Chassis no. to:L1Z99999 | GDS56284 | Drive Shaft | | 31 | 28 | 68.5 | 97 | 1042 | |
| | 2020.11- | 9AT | F | L | SUV 4WD PT204(AJ20P4) | | GDS84193 | Drive Shaft | | 31 | 31 | 68.5 | 97 | 600 | |
| | 2020.11- | 9AT | F | R | SUV 4WD PT204(AJ20P4) | Chassis no. from:M1000001 | GDS84191 | Drive Shaft | | 31 | 28 | 68.5 | 97 | 1042 | |
| | 2020.11- | 9AT | F | L/R | SUV 4WD PT204(AJ20P4) | | GCO81975 | Outer Joint | | 31 | 27 | 68.5 | 97 | 61 | I |
| | 2020.11- | 9AT | F | L | SUV 4WD PT204(AJ20P4) | | GCI85049 | Inner Joint | | 31 | 27 | 36.2 | 68 | 95 | |
| | 2020.11- | 9AT | F | R | SUV 4WD PT204(AJ20P4) | | GCI82629 | Inner Joint | | 28 | 27 | 30 | 520 | 95 | |
| | 2020.11- | 9AT | R | L/R | SUV 4WD PT204(AJ20P4) | Chassis no. to:L1Z99999;For vehicles with efficient driveline | GDS56790 | Drive Shaft | | 31 | 26 | 65.3 | 95.5 | 830 | |
| | 2020.11- | 9AT | R | L/R | SUV 4WD PT204(AJ20P4) | ---------- | GDS58309 | Drive Shaft | | 31 | 26 | 65.3 | 95.5 | 723 | |
| | 2020.11- | 9AT | R | L/R | SUV 4WD PT204(AJ20P4) | ---------- | GCO83861 | Outer Joint | | 31 | 29 | 65.3 | 95.5 | 49 | I |
| | 2020.11- | 9AT | R | R | SUV 4WD PT204(AJ20P4) | Chassis to:L1Z99999;For vehicles with active driveline | GCI82281 | Inner Joint | | 26 | 29 | 34.95 | 67.5 | 106.5 | |
| | 2020.11- | 9AT | R | L/R | SUV 4WD PT204(AJ20P4) | ---------- | GCI84035 | Inner Joint | | 26 | 29 | 35 | 56 | 109 | |
| 2.0 (221 kw) | 2017.09- | 9AT | F | L | SUV 4WD PT204(AJ20P4) | | GDS84193 | Drive Shaft | | 31 | 31 | 68.5 | 97 | 600 | |
| | 2017.09- | 9AT | F | R | SUV 4WD PT204(AJ20P4) | Chassis no. to:L1Z99999 | GDS56284 | Drive Shaft | | 31 | 28 | 68.5 | 97 | 1042 | |
| | 2017.09- | 9AT | F | R | SUV 4WD PT204(AJ20P4) | Chassis no. from:M1000001 | GDS84191 | Drive Shaft | | 31 | 28 | 68.5 | 97 | 1042 | |
| | 2017.09- | 9AT | F | L/R | SUV 4WD PT204(AJ20P4) | Chassis no. from:K1Z73623 | GCO81975 | Outer Joint | | 31 | 27 | 68.5 | 97 | 61 | I |
| | 2017.09- | 9AT | F | L | SUV 4WD PT204(AJ20P4) | | GCI85049 | Inner Joint | | 31 | 27 | 36.2 | 68 | 95 | |
| | 2017.09- | 9AT | F | R | SUV 4WD PT204(AJ20P4) | Chassis no. from:M1000001 | GCI82629 | Inner Joint | | 28 | 27 | 30 | 520 | 95 | |
| | 2017.09- | 9AT | R | L/R | SUV 4WD PT204(AJ20P4) | Chassis no. to:L1Z99999;For vehicles with efficient driveline | GDS56790 | Drive Shaft | | 31 | 26 | 65.3 | 95.5 | 830 | |
| | 2017.09- | 9AT | R | L/R | SUV 4WD PT204(AJ20P4) | ---------- | GDS58309 | Drive Shaft | | 31 | 26 | 65.3 | 95.5 | 723 | |
| | 2017.09- | 9AT | R | L/R | SUV 4WD PT204(AJ20P4) | ---------- | GCO83861 | Outer Joint | | 31 | 29 | 65.3 | 95.5 | 49 | I |
| | 2017.09- | 9AT | R | R | SUV 4WD PT204(AJ20P4) | Chassis to:L1Z99999;For vehicles with active driveline | GCI82281 | Inner Joint | | 26 | 29 | 34.95 | 67.5 | 106.5 | |
| | 2017.09- | 9AT | R | L/R | SUV 4WD PT204(AJ20P4) | ---------- | GCI84035 | Inner Joint | | 26 | 29 | 35 | 56 | 109 | |
| | 2020.11- | 9AT | F | L | SUV 4WD PT204(AJ20P4) | | GDS84193 | Drive Shaft | | 31 | 31 | 68.5 | 97 | 600 | |
| | 2020.11- | 9AT | F | R | SUV 4WD PT204(AJ20P4) | Chassis no. to:L1Z99999 | GDS56284 | Drive Shaft | | 31 | 28 | 68.5 | 97 | 1042 | |
| | 2020.11- | 9AT | F | R | SUV 4WD PT204(AJ20P4) | Chassis no. from:M1000001 | GDS84191 | Drive Shaft | | 31 | 28 | 68.5 | 97 | 1042 | |
| | 2020.11- | 9AT | F | L/R | SUV 4WD PT204(AJ20P4) | | GCO81975 | Outer Joint | | 31 | 27 | 68.5 | 97 | 61 | I |
| | 2020.11- | 9AT | F | L | SUV 4WD PT204(AJ20P4) | | GCI85049 | Inner Joint | | 31 | 27 | 36.2 | 68 | 95 | |
| | 2020.11- | 9AT | F | R | SUV 4WD PT204(AJ20P4) | | GCI82629 | Inner Joint | | 28 | 27 | 30 | 520 | 95 | |
| | 2020.11- | 9AT | R | L/R | SUV 4WD PT204(AJ20P4) | Chassis no. to:L1Z99999;For vehicles with efficient driveline | GDS56790 | Drive Shaft | | 31 | 26 | 65.3 | 95.5 | 830 | |
| | 2020.11- | 9AT | R | L/R | SUV 4WD PT204(AJ20P4) | ---------- | GDS58309 | Drive Shaft | | 31 | 26 | 65.3 | 95.5 | 723 | |
| | 2020.11- | 9AT | R | L/R | SUV 4WD PT204(AJ20P4) | ---------- | GCO83861 | Outer Joint | | 31 | 29 | 65.3 | 95.5 | 49 | I |
| | 2020.11- | 9AT | R | R | SUV 4WD PT204(AJ20P4) | Chassis to:L1Z99999;For vehicles with active driveline | GCI82281 | Inner Joint | | 26 | 29 | 34.95 | 67.5 | 106.5 | |
| | 2020.11- | 9AT | R | L/R | SUV 4WD PT204(AJ20P4) | ---------- | GCI84035 | Inner Joint | | 26 | 29 | 35 | 56 | 109 | |
| **F-Pace** | | | | | | | | | | | | | | | |
| 2.0 (120 kw) | 2020.10- | 8AT | F | L | SUV 4WD 204DTY(AJ21D4) | | GDS56109 | Drive Shaft | | 31 | 28 | 65 | 97 | 673 | |
| | 2020.10- | 8AT | F | R | SUV 4WD 204DTY(AJ21D4) | | GDS56110 | Drive Shaft | | 31 | 28 | 65 | 97 | 1035 | |
| | 2020.10- | 8AT | F | L/R | SUV 4WD 204DTY(AJ21D4) | | GCO83156 | Outer Joint | | 31 | 24 | 65 | 97 | 58 | I |
| | 2020.10- | 8AT | F | L | SUV 4WD 204DTY(AJ21D4) | | GCI83083 | Inner Joint | | 28 | 23 | 39 | 69.5 | 107.5 | |
| | 2020.10- | 8AT | F | R | SUV 4WD 204DTY(AJ21D4) | | GCI83084 | Inner Joint | | 28 | 23 | 30 | 428 | 111 | |
| | 2020.10- | 8AT | R | L | SUV 4WD 204DTY(AJ21D4) | | GDS56184 | Drive Shaft | | 31 | 31 | 65 | 97 | 801 | |
| | 2020.10- | 8AT | R | R | SUV 4WD 204DTY(AJ21D4) | | GDS56185 | Drive Shaft | | 31 | 31 | 65 | 97 | 873 | |
| | 2020.10- | 8AT | R | L/R | SUV 4WD 204DTY(AJ21D4) | | GCO83197 | Outer Joint | | 31 | 25 | 65 | 97 | 55 | I |
| | 2020.10- | 8AT | R | L/R | SUV 4WD 204DTY(AJ21D4) | | GCI83188 | Inner Joint | | 31 | 26 | 44 | 86 | 83 | |
| 2.0 (132 kw) | 2015.09- | 8AT | F | L | SUV 4WD 204DTD(AJ20D4);204DTH(AJ20D4) | | GDS56109 | Drive Shaft | | 31 | 28 | 65 | 97 | 673 | |
| | 2015.09- | 8AT | F | R | SUV 4WD 204DTD(AJ20D4);204DTH(AJ20D4) | | GDS56110 | Drive Shaft | | 31 | 28 | 65 | 97 | 1035 | |
| | 2015.09- | 8AT | F | L/R | SUV 4WD 204DTD(AJ20D4);204DTH(AJ20D4) | | GCO83156 | Outer Joint | | 31 | 24 | 65 | 97 | 58 | I |
| | 2015.09- | 8AT | F | L | SUV 4WD 204DTD(AJ20D4);204DTH(AJ20D4) | | GCI83083 | Inner Joint | | 28 | 23 | 39 | 69.5 | 107.5 | |
| | 2015.09- | 8AT | F | R | SUV 4WD 204DTD(AJ20D4);204DTH(AJ20D4) | | GCI83084 | Inner Joint | | 28 | 23 | 30 | 428 | 111 | |
| | 2015.09- | 8AT | R | L | SUV 4WD 204DTD(AJ20D4);204DTH(AJ20D4) | | GDS56184 | Drive Shaft | | 31 | 31 | 65 | 97 | 801 | |
| | 2015.09- | 8AT | R | R | SUV 4WD 204DTD(AJ20D4);204DTH(AJ20D4) | | GDS56185 | Drive Shaft | | 31 | 31 | 65 | 97 | 873 | |
| | 2015.09- | 8AT | R | L/R | SUV 4WD 204DTD(AJ20D4);204DTH(AJ20D4) | | GCO83197 | Outer Joint | | 31 | 25 | 65 | 97 | 55 | I |
| | 2015.09- | 8AT | R | L/R | SUV 4WD 204DTD(AJ20D4);204DTH(AJ20D4) | | GCI83188 | Inner Joint | | 31 | 26 | 44 | 86 | 83 | |
| | 2015.09- | 8AT | R | L | SUV RWD 204DTD(AJ20D4);204DTH(AJ20D4) | | GDS56184 | Drive Shaft | | 31 | 31 | 65 | 97 | 801 | |
| | 2015.09- | 8AT | R | R | SUV RWD 204DTD(AJ20D4);204DTH(AJ20D4) | | GDS56185 | Drive Shaft | | 31 | 31 | 65 | 97 | 873 | |
| | 2015.09- | 8AT | R | L/R | SUV RWD 204DTD(AJ20D4);204DTH(AJ20D4) | | GCO83197 | Outer Joint | | 31 | 25 | 65 | 97 | 55 | I |
| | 2015.09- | 8AT | R | L/R | SUV RWD 204DTD(AJ20D4);204DTH(AJ20D4) | | GCI83188 | Inner Joint | | 31 | 26 | 44 | 86 | 83 | |
| 2.0 (150 kw) | 2020.10- | 8AT | F | L | SUV 4WD 204DTY(AJ21D4) | | GDS56109 | Drive Shaft | | 31 | 28 | 65 | 97 | 673 | |
| | 2020.10- | 8AT | F | R | SUV 4WD 204DTY(AJ21D4) | | GDS56110 | Drive Shaft | | 31 | 28 | 65 | 97 | 1035 | |
| | 2020.10- | 8AT | F | L/R | SUV 4WD 204DTY(AJ21D4) | | GCO83156 | Outer Joint | | 31 | 24 | 65 | 97 | 58 | I |
| | 2020.10- | 8AT | F | L | SUV 4WD 204DTY(AJ21D4) | | GCI83083 | Inner Joint | | 28 | 23 | 39 | 69.5 | 107.5 | |
| | 2020.10- | 8AT | F | R | SUV 4WD 204DTY(AJ21D4) | | GCI83084 | Inner Joint | | 28 | 23 | 30 | 428 | 111 | |
| | 2020.10- | 8AT | R | L | SUV 4WD 204DTY(AJ21D4) | | GDS56184 | Drive Shaft | | 31 | 31 | 65 | 97 | 801 | |
| | 2020.10- | 8AT | R | R | SUV 4WD 204DTY(AJ21D4) | | GDS56185 | Drive Shaft | | 31 | 31 | 65 | 97 | 873 | |
| | 2020.10- | 8AT | R | L/R | SUV 4WD 204DTY(AJ21D4) | | GCO83197 | Outer Joint | | 31 | 25 | 65 | 97 | 55 | I |

| | YEAR | TRANSM. | F/R | L/R | BODY STYLE & DRIVE TYPE & ENGINE | REMARKS | G-AP Ref. | PRODUCT | ABS | Technical Specifications | | | | | |
|---|---|---|---|---|---|---|---|---|---|---|---|---|---|---|---|
| | | | | | | | | | | A | B | C | H | L | P |
| **JAGUAR** **F-Pace** | | | | | | | | | | | | | | | |
| 2.0 (150 kw) | 2020.10- | 8AT | R | L/R | SUV 4WD 204DTY(AJ21D4) | | GCI83188 | Inner Joint | | 31 | 26 | 44 | 86 | 83 | |
| 2.0 (177 kw) | 2017.02- | 8AT | F | L | SUV 4WD 204DTA(AJ20D4) | | GDS56109 | Drive Shaft | | 31 | 28 | 65 | 97 | 673 | |
| | 2017.02- | 8AT | F | R | SUV 4WD 204DTA(AJ20D4) | | GDS56110 | Drive Shaft | | 31 | 28 | 65 | 97 | 1035 | |
| | 2017.02- | 8AT | F | L/R | SUV 4WD 204DTA(AJ20D4) | | GCO83156 | Outer Joint | | 31 | 24 | 65 | 97 | 58 | I |
| | 2017.02- | 8AT | F | L | SUV 4WD 204DTA(AJ20D4) | | GCI83083 | Inner Joint | | 28 | 23 | 39 | 69.5 | 107.5 | |
| | 2017.02- | 8AT | F | R | SUV 4WD 204DTA(AJ20D4) | | GCI83084 | Inner Joint | | 28 | 23 | 30 | 428 | 111 | |
| | 2017.02- | 8AT | R | L | SUV 4WD 204DTA(AJ20D4) | | GDS56184 | Drive Shaft | | 31 | 31 | 65 | 97 | 801 | |
| | 2017.02- | 8AT | R | R | SUV 4WD 204DTA(AJ20D4) | | GDS56185 | Drive Shaft | | 31 | 31 | 65 | 97 | 873 | |
| | 2017.02- | 8AT | R | L/R | SUV 4WD 204DTA(AJ20D4) | | GCO83197 | Outer Joint | | 31 | 25 | 65 | 97 | 55 | I |
| | 2017.02- | 8AT | R | L/R | SUV 4WD 204DTA(AJ20D4) | | GCI83188 | Inner Joint | | 31 | 26 | 44 | 86 | 83 | |
| 2.0 (184 kw) | 2017.02- | 8AT | F | L | SUV 4WD PT204(AJ20P4) | | GDS56109 | Drive Shaft | | 31 | 28 | 65 | 97 | 673 | |
| | 2017.02- | 8AT | F | R | SUV 4WD PT204(AJ20P4) | | GDS56110 | Drive Shaft | | 31 | 28 | 65 | 97 | 1035 | |
| | 2017.02- | 8AT | F | L/R | SUV 4WD PT204(AJ20P4) | | GCO83156 | Outer Joint | | 31 | 24 | 65 | 97 | 58 | I |
| | 2017.02- | 8AT | F | L | SUV 4WD PT204(AJ20P4) | | GCI83083 | Inner Joint | | 28 | 23 | 39 | 69.5 | 107.5 | |
| | 2017.02- | 8AT | F | R | SUV 4WD PT204(AJ20P4) | | GCI83084 | Inner Joint | | 28 | 23 | 30 | 428 | 111 | |
| | 2017.02- | 8AT | R | L | SUV 4WD PT204(AJ20P4) | | GDS56184 | Drive Shaft | | 31 | 31 | 65 | 97 | 801 | |
| | 2017.02- | 8AT | R | R | SUV 4WD PT204(AJ20P4) | | GDS56185 | Drive Shaft | | 31 | 31 | 65 | 97 | 873 | |
| | 2017.02- | 8AT | R | L/R | SUV 4WD PT204(AJ20P4) | | GCO83197 | Outer Joint | | 31 | 25 | 65 | 97 | 55 | I |
| | 2017.02- | 8AT | R | L/R | SUV 4WD PT204(AJ20P4) | | GCI83188 | Inner Joint | | 31 | 26 | 44 | 86 | 83 | |
| | 2017.09- | 8AT | R | L | SUV RWD PT204(AJ20P4) | | GDS56184 | Drive Shaft | | 31 | 31 | 65 | 97 | 801 | |
| | 2017.09- | 8AT | R | R | SUV RWD PT204(AJ20P4) | | GDS56185 | Drive Shaft | | 31 | 31 | 65 | 97 | 873 | |
| | 2017.09- | 8AT | R | L/R | SUV RWD PT204(AJ20P4) | | GCO83197 | Outer Joint | | 31 | 25 | 65 | 97 | 55 | I |
| | 2017.09- | 8AT | R | L/R | SUV RWD PT204(AJ20P4) | | GCI83188 | Inner Joint | | 31 | 26 | 44 | 86 | 83 | |
| 2.0 (221 kw) | 2017.06- | 8AT | F | L | SUV 4WD PT204(AJ20P4) | | GDS56109 | Drive Shaft | | 31 | 28 | 65 | 97 | 673 | |
| | 2017.06- | 8AT | F | R | SUV 4WD PT204(AJ20P4) | | GDS56110 | Drive Shaft | | 31 | 28 | 65 | 97 | 1035 | |
| | 2017.06- | 8AT | F | L/R | SUV 4WD PT204(AJ20P4) | | GCO83156 | Outer Joint | | 31 | 24 | 65 | 97 | 58 | I |
| | 2017.06- | 8AT | F | L | SUV 4WD PT204(AJ20P4) | | GCI83083 | Inner Joint | | 28 | 23 | 39 | 69.5 | 107.5 | |
| | 2017.06- | 8AT | F | R | SUV 4WD PT204(AJ20P4) | | GCI83084 | Inner Joint | | 28 | 23 | 30 | 428 | 111 | |
| | 2017.06- | 8AT | R | L | SUV 4WD PT204(AJ20P4) | | GDS56184 | Drive Shaft | | 31 | 31 | 65 | 97 | 801 | |
| | 2017.06- | 8AT | R | R | SUV 4WD PT204(AJ20P4) | | GDS56185 | Drive Shaft | | 31 | 31 | 65 | 97 | 873 | |
| | 2017.06- | 8AT | R | L/R | SUV 4WD PT204(AJ20P4) | | GCO83197 | Outer Joint | | 31 | 25 | 65 | 97 | 55 | I |
| | 2017.06- | 8AT | R | L/R | SUV 4WD PT204(AJ20P4) | | GCI83188 | Inner Joint | | 31 | 26 | 44 | 86 | 83 | |
| 2.0 (297 kw) | 2020.10- | 8AT | F | L | SUV 4WD PT204(AJ20P4) | | GDS56109 | Drive Shaft | | 31 | 28 | 65 | 97 | 673 | |
| | 2020.10- | 8AT | F | R | SUV 4WD PT204(AJ20P4) | | GDS56110 | Drive Shaft | | 31 | 28 | 65 | 97 | 1035 | |
| | 2020.10- | 8AT | F | L/R | SUV 4WD PT204(AJ20P4) | | GCO83156 | Outer Joint | | 31 | 24 | 65 | 97 | 58 | I |
| | 2020.10- | 8AT | F | L | SUV 4WD PT204(AJ20P4) | | GCI83083 | Inner Joint | | 28 | 23 | 39 | 69.5 | 107.5 | |
| | 2020.10- | 8AT | F | R | SUV 4WD PT204(AJ20P4) | | GCI83084 | Inner Joint | | 28 | 23 | 30 | 428 | 111 | |
| | 2020.10- | 8AT | R | L | SUV 4WD PT204(AJ20P4) | | GDS56184 | Drive Shaft | | 31 | 31 | 65 | 97 | 801 | |
| | 2020.10- | 8AT | R | R | SUV 4WD PT204(AJ20P4) | | GDS56185 | Drive Shaft | | 31 | 31 | 65 | 97 | 873 | |
| | 2020.10- | 8AT | R | L/R | SUV 4WD PT204(AJ20P4) | | GCO83197 | Outer Joint | | 31 | 25 | 65 | 97 | 55 | I |
| | 2020.10- | 8AT | R | L/R | SUV 4WD PT204(AJ20P4) | | GCI83188 | Inner Joint | | 31 | 26 | 44 | 86 | 83 | |
| 3.0 (221 kw) | 2015.09- | 8AT | F | L | SUV 4WD 306DT(AJTDV6) | | GDS56109 | Drive Shaft | | 31 | 28 | 65 | 97 | 673 | |
| | 2015.09- | 8AT | F | R | SUV 4WD 306DT(AJTDV6) | | GDS56110 | Drive Shaft | | 31 | 28 | 65 | 97 | 1035 | |
| | 2015.09- | 8AT | F | L/R | SUV 4WD 306DT(AJTDV6) | | GCO83156 | Outer Joint | | 31 | 24 | 65 | 97 | 58 | I |
| | 2015.09- | 8AT | F | L | SUV 4WD 306DT(AJTDV6) | | GCI83083 | Inner Joint | | 28 | 23 | 39 | 69.5 | 107.5 | |
| | 2015.09- | 8AT | F | R | SUV 4WD 306DT(AJTDV6) | | GCI83084 | Inner Joint | | 28 | 23 | 30 | 428 | 111 | |
| | 2015.09- | 8AT | R | L | SUV 4WD 306DT(AJTDV6) | | GDS56184 | Drive Shaft | | 31 | 31 | 65 | 97 | 801 | |
| | 2015.09- | 8AT | R | R | SUV 4WD 306DT(AJTDV6) | | GDS56185 | Drive Shaft | | 31 | 31 | 65 | 97 | 873 | |
| | 2015.09- | 8AT | R | L/R | SUV 4WD 306DT(AJTDV6) | | GCO83197 | Outer Joint | | 31 | 25 | 65 | 97 | 55 | I |
| | 2015.09- | 8AT | R | L/R | SUV 4WD 306DT(AJTDV6) | | GCI83188 | Inner Joint | | 31 | 26 | 44 | 86 | 83 | |
| | 2020.10- | 8AT | F | L | SUV 4WD DT306(AJ20D6) | | GDS56109 | Drive Shaft | | 31 | 28 | 65 | 97 | 673 | |
| | 2020.10- | 8AT | F | R | SUV 4WD DT306(AJ20D6) | | GDS56110 | Drive Shaft | | 31 | 28 | 65 | 97 | 1035 | |
| | 2020.10- | 8AT | F | L/R | SUV 4WD DT306(AJ20D6) | | GCO83156 | Outer Joint | | 31 | 24 | 65 | 97 | 58 | I |
| | 2020.10- | 8AT | F | L | SUV 4WD DT306(AJ20D6) | | GCI83083 | Inner Joint | | 28 | 23 | 39 | 69.5 | 107.5 | |
| | 2020.10- | 8AT | F | R | SUV 4WD DT306(AJ20D6) | | GCI83084 | Inner Joint | | 28 | 23 | 30 | 428 | 111 | |
| | 2020.10- | 8AT | R | L | SUV 4WD DT306(AJ20D6) | | GDS56184 | Drive Shaft | | 31 | 31 | 65 | 97 | 801 | |
| | 2020.10- | 8AT | R | R | SUV 4WD DT306(AJ20D6) | | GDS56185 | Drive Shaft | | 31 | 31 | 65 | 97 | 873 | |
| | 2020.10- | 8AT | R | L/R | SUV 4WD DT306(AJ20D6) | | GCO83197 | Outer Joint | | 31 | 25 | 65 | 97 | 55 | I |
| | 2020.10- | 8AT | R | L/R | SUV 4WD DT306(AJ20D6) | | GCI83188 | Inner Joint | | 31 | 26 | 44 | 86 | 83 | |
| 3.0 (250 kw) | 2015.09- | 8AT | F | L | SUV 4WD 306PS(AJ126) | | GDS56109 | Drive Shaft | | 31 | 28 | 65 | 97 | 673 | |
| | 2015.09- | 8AT | F | R | SUV 4WD 306PS(AJ126) | | GDS56110 | Drive Shaft | | 31 | 28 | 65 | 97 | 1035 | |
| | 2015.09- | 8AT | F | L/R | SUV 4WD 306PS(AJ126) | | GCO83156 | Outer Joint | | 31 | 24 | 65 | 97 | 58 | I |
| | 2015.09- | 8AT | F | L | SUV 4WD 306PS(AJ126) | | GCI83083 | Inner Joint | | 28 | 23 | 39 | 69.5 | 107.5 | |
| | 2015.09- | 8AT | F | R | SUV 4WD 306PS(AJ126) | | GCI83084 | Inner Joint | | 28 | 23 | 30 | 428 | 111 | |
| | 2015.09- | 8AT | R | L | SUV 4WD 306PS(AJ126) | | GDS56184 | Drive Shaft | | 31 | 31 | 65 | 97 | 801 | |

| | YEAR | TRANSM. | F/R | L/R | BODY STYLE & DRIVE TYPE & ENGINE | REMARKS | G-AP Ref. | PRODUCT | ABS | Technical Specifications A | B | C | H | L | P |
|---|---|---|---|---|---|---|---|---|---|---|---|---|---|---|---|
| **JAGUAR** | | | | | | | | | | | | | | | |
| **F-Pace** | | | | | | | | | | | | | | | |
| 3.0 (250 kw) | 2015.09- | 8AT | R | R | SUV 4WD 306PS(AJ126) | | GDS56185 | Drive Shaft | | 31 | 31 | 65 | 97 | 873 | |
| | 2015.09- | 8AT | R | L/R | SUV 4WD 306PS(AJ126) | | GCO83197 | Outer Joint | | 31 | 25 | 65 | 97 | 55 | I |
| | 2015.09- | 8AT | R | L/R | SUV 4WD 306PS(AJ126) | | GCI83188 | Inner Joint | | 31 | 26 | 44 | 86 | 83 | |
| 3.0 (280 kw) | 2015.09- | 8AT | F | L | SUV 4WD 306PS(AJ126) | | GDS56109 | Drive Shaft | | 31 | 28 | 65 | 97 | 673 | |
| | 2015.09- | 8AT | F | R | SUV 4WD 306PS(AJ126) | | GDS56110 | Drive Shaft | | 31 | 28 | 65 | 97 | 1035 | |
| | 2015.09- | 8AT | F | L/R | SUV 4WD 306PS(AJ126) | | GCO83156 | Outer Joint | | 31 | 24 | 65 | 97 | 58 | I |
| | 2015.09- | 8AT | F | L | SUV 4WD 306PS(AJ126) | | GCI83083 | Inner Joint | | 28 | 23 | 39 | 69.5 | 107.5 | |
| | 2015.09- | 8AT | F | R | SUV 4WD 306PS(AJ126) | | GCI83084 | Inner Joint | | 28 | 23 | 30 | 428 | 111 | |
| | 2015.09- | 8AT | R | L | SUV 4WD 306PS(AJ126) | | GDS56184 | Drive Shaft | | 31 | 31 | 65 | 97 | 801 | |
| | 2015.09- | 8AT | R | R | SUV 4WD 306PS(AJ126) | | GDS56185 | Drive Shaft | | 31 | 31 | 65 | 97 | 873 | |
| | 2015.09- | 8AT | R | L/R | SUV 4WD 306PS(AJ126) | | GCO83197 | Outer Joint | | 31 | 25 | 65 | 97 | 55 | I |
| | 2015.09- | 8AT | R | L/R | SUV 4WD 306PS(AJ126) | | GCI83188 | Inner Joint | | 31 | 26 | 44 | 86 | 83 | |
| 3.0 (294 kw) | 2020.10- | 8AT | F | L | SUV 4WD PT306(AJ20P6) | | GDS56109 | Drive Shaft | | 31 | 28 | 65 | 97 | 673 | |
| | 2020.10- | 8AT | F | R | SUV 4WD PT306(AJ20P6) | | GDS56110 | Drive Shaft | | 31 | 28 | 65 | 97 | 1035 | |
| | 2020.10- | 8AT | F | L/R | SUV 4WD PT306(AJ20P6) | | GCO83156 | Outer Joint | | 31 | 24 | 65 | 97 | 58 | I |
| | 2020.10- | 8AT | F | L | SUV 4WD PT306(AJ20P6) | | GCI83083 | Inner Joint | | 28 | 23 | 39 | 69.5 | 107.5 | |
| | 2020.10- | 8AT | F | R | SUV 4WD PT306(AJ20P6) | | GCI83084 | Inner Joint | | 28 | 23 | 30 | 428 | 111 | |
| | 2020.10- | 8AT | R | L | SUV 4WD PT306(AJ20P6) | | GDS56184 | Drive Shaft | | 31 | 31 | 65 | 97 | 801 | |
| | 2020.10- | 8AT | R | R | SUV 4WD PT306(AJ20P6) | | GDS56185 | Drive Shaft | | 31 | 31 | 65 | 97 | 873 | |
| | 2020.10- | 8AT | R | L/R | SUV 4WD PT306(AJ20P6) | | GCO83197 | Outer Joint | | 31 | 25 | 65 | 97 | 55 | I |
| | 2020.10- | 8AT | R | L/R | SUV 4WD PT306(AJ20P6) | | GCI83188 | Inner Joint | | 31 | 26 | 44 | 86 | 83 | |
| 5.0 (405 kw) | 2018.08- | 8AT | F | L | SUV 4WD 508PS(AJ133) | | GDS56109 | Drive Shaft | | 31 | 28 | 65 | 97 | 673 | |
| | 2018.08- | 8AT | F | R | SUV 4WD 508PS(AJ133) | | GDS56110 | Drive Shaft | | 31 | 28 | 65 | 97 | 1035 | |
| | 2018.08- | 8AT | F | L/R | SUV 4WD 508PS(AJ133) | | GCO83156 | Outer Joint | | 31 | 24 | 65 | 97 | 58 | I |
| | 2018.08- | 8AT | F | L | SUV 4WD 508PS(AJ133) | | GCI83083 | Inner Joint | | 28 | 23 | 39 | 69.5 | 107.5 | |
| | 2018.08- | 8AT | F | R | SUV 4WD 508PS(AJ133) | | GCI83084 | Inner Joint | | 28 | 23 | 30 | 428 | 111 | |
| | 2018.08- | 8AT | R | R | SUV 4WD 508PS(AJ133) | | GDS56185 | Drive Shaft | | 31 | 31 | 65 | 97 | 873 | |
| | 2018.08- | 8AT | R | R | SUV 4WD 508PS(AJ133) | | GCI83188 | Inner Joint | | 31 | 26 | 44 | 86 | 83 | |
| | 2020.10- | 8AT | F | L | SUV 4WD 508PS(AJ133) | | GDS56109 | Drive Shaft | | 31 | 28 | 65 | 97 | 673 | |
| | 2020.10- | 8AT | F | R | SUV 4WD 508PS(AJ133) | | GDS56110 | Drive Shaft | | 31 | 28 | 65 | 97 | 1035 | |
| | 2020.10- | 8AT | F | L/R | SUV 4WD 508PS(AJ133) | | GCO83156 | Outer Joint | | 31 | 24 | 65 | 97 | 58 | I |
| | 2020.10- | 8AT | F | L | SUV 4WD 508PS(AJ133) | | GCI83083 | Inner Joint | | 28 | 23 | 39 | 69.5 | 107.5 | |
| | 2020.10- | 8AT | F | R | SUV 4WD 508PS(AJ133) | | GCI83084 | Inner Joint | | 28 | 23 | 30 | 428 | 111 | |
| | 2020.10- | 8AT | R | R | SUV 4WD 508PS(AJ133) | | GDS56185 | Drive Shaft | | 31 | 31 | 65 | 97 | 873 | |
| | 2020.10- | 8AT | R | R | SUV 4WD 508PS(AJ133) | | GCI83188 | Inner Joint | | 31 | 26 | 44 | 86 | 83 | |
| 5.0 (423 kw) | 2023.02- | | F | L | SUV 4WD 508PS(AJ133) | | GDS56109 | Drive Shaft | | 31 | 28 | 65 | 97 | 673 | |
| | 2023.02- | | F | R | SUV 4WD 508PS(AJ133) | | GDS56110 | Drive Shaft | | 31 | 28 | 65 | 97 | 1035 | |
| | 2023.02- | | R | R | SUV 4WD 508PS(AJ133) | | GDS56185 | Drive Shaft | | 31 | 31 | 65 | 97 | 873 | |
| **I-Pace** | | | | | | | | | | | | | | | |
| EV (236 kw) | 2020.10- | ET | F | L/R | SUV 4WD QG | Trim Level:2 | GDS56261 | Drive Shaft | | 31 | 28 | 68.5 | 97 | 705 | |
| | 2020.10- | ET | F | L/R | SUV 4WD QG | Chassis no. from:K1F67782 | GCO81975 | Outer Joint | | 31 | 27 | 68.5 | 97 | 61 | I |
| | 2020.10- | ET | F | L/R | SUV 4WD QG | Trim Level:2 | GCI83219 | Inner Joint | | 28 | 28 | 39 | 77.5 | 102 | |
| | 2020.10- | ET | R | L/R | SUV 4WD QG | Trim Level:2 | GDS56233 | Drive Shaft | | 31 | 28 | 65 | 97 | 685 | |
| | 2020.10- | ET | R | L/R | SUV 4WD QG | | GCO83197 | Outer Joint | | 31 | 25 | 65 | 97 | 55 | I |
| | 2020.10- | ET | R | L/R | SUV 4WD QG | Trim Level:2 | GCI83204 | Inner Joint | | 28 | 26 | 39 | 69 | 110 | |
| EV (294 kw) | 2018.02- | ET | F | L/R | SUV 4WD QG | Trim Level:2 | GDS56261 | Drive Shaft | | 31 | 28 | 68.5 | 97 | 705 | |
| | 2018.02- | ET | F | L/R | SUV 4WD QG | Chassis no. from:K1F67782 | GCO81975 | Outer Joint | | 31 | 27 | 68.5 | 97 | 61 | I |
| | 2018.02- | ET | F | L/R | SUV 4WD QG | Trim Level:2 | GCI83219 | Inner Joint | | 28 | 28 | 39 | 77.5 | 102 | |
| | 2018.02- | ET | R | L/R | SUV 4WD QG | Trim Level:2 | GDS56233 | Drive Shaft | | 31 | 28 | 65 | 97 | 685 | |
| | 2018.02- | ET | R | L/R | SUV 4WD QG | | GCO83197 | Outer Joint | | 31 | 25 | 65 | 97 | 55 | I |
| | 2018.02- | ET | R | L/R | SUV 4WD QG | Trim Level:2 | GCI83204 | Inner Joint | | 28 | 26 | 39 | 69 | 110 | |
| **S-Type** | | | | | | | | | | | | | | | |
| 2.5 (147 kw) | 2001.11-2008.07 | 6AT/5MT | R | L | Saloon RWD AJ6 | | GDS82181 | Drive Shaft | 46T | 28 | 28 | 54.9 | 105.5 | 775 | |
| | 2001.11-2008.07 | 6AT/5MT | R | R | Saloon RWD AJ6 | | GDS82180 | Drive Shaft | 46T | 28 | 28 | 54.9 | 105.5 | 830 | |
| | 2001.11-2008.07 | MT | R | R | Saloon RWD AJ6 | | GCI18179 | Inner Joint | | 28 | 28 | 46 | 101 | 78.5 | |
| | 2001.11-2008.07 | | R | R | Saloon RWD AJ6 | | GDS18342 | Drive Shaft | 46W | 28 | 28 | 54.9 | 105.5 | 830 | |
| 2.7 (152 kw) | 2004.03-2008.07 | 6AT/6MT | R | L | Saloon RWD AJD | | GDS82181 | Drive Shaft | 46T | 28 | 28 | 54.9 | 105.5 | 775 | |
| | 2004.03-2008.07 | 6AT/6MT | R | R | Saloon RWD AJD | | GDS82180 | Drive Shaft | 46T | 28 | 28 | 54.9 | 105.5 | 830 | |
| | 2004.03-2008.07 | 6AT/6MT | R | L/R | Saloon RWD AJD | | GCO18246 | Outer Joint | 46T | 28 | 26 | 54.9 | 105.5 | 61 | M |
| | 2004.03-2008.07 | 6AT/6MT | R | R | Saloon RWD AJD | | GCI18179 | Inner Joint | | 28 | 28 | 46 | 101 | 78.5 | |
| | 2004.03-2008.07 | | R | R | Saloon RWD AJD | | GDS18342 | Drive Shaft | 46W | 28 | 28 | 54.9 | 105.5 | 830 | |
| 3.0 (175 kw) | 1998.10-2008.07 | 5AT/6AT/5MT | R | L | Saloon RWD XR8 | Chassis no. from:N41581;length 2:101mm | GDS82181 | Drive Shaft | 46T | 28 | 28 | 54.9 | 105.5 | 775 | |
| | 1998.10-2008.07 | 5AT/6AT/5MT | R | L | Saloon RWD XR8 | Chassis no. to:M45254;length 2:137mm | GDS83773 | Drive Shaft | 46T | 28 | 28 | 56 | 122.5 | 804 | |
| | 1998.10-2008.07 | 5AT/6AT/5MT | R | R | Saloon RWD XR8 | Chassis no. from:N41581;length 2:101mm | GDS82180 | Drive Shaft | 46T | 28 | 28 | 54.9 | 105.5 | 830 | |
| | 1998.10-2008.07 | 5AT/6AT/5MT | R | R | Saloon RWD XR8 | Chassis no. to:M45254;length 2:137mm | GDS83772 | Drive Shaft | 46T | 28 | 28 | 56 | 122.5 | 834 | |

| | YEAR | TRANSM. | F/R | L/R | BODY STYLE & DRIVE TYPE & ENGINE | REMARKS | G-AP Ref. | PRODUCT | ABS | Technical Specifications A | B | C | H | L | P |
|---|---|---|---|---|---|---|---|---|---|---|---|---|---|---|---|
| **JAGUAR** | | | | | | | | | | | | | | | |
| **S-Type** | | | | | | | | | | | | | | | |
| 3.0 (175 kw) | 1998.10-2008.07 | 5AT/6AT/5MT | R | L/R | Saloon RWD XR8 | Chassis no. from:N41581 | GCO18246 | Outer Joint | 46T | 28 | 26 | 54.9 | 105.5 | 61 | M |
| | 1998.10-2008.07 | 5AT/6AT/5MT | R | L/R | Saloon RWD XR8 | Chassis no. to:M45254 | GCO82487 | Outer Joint | 46T | 28 | 35 | 56 | 122.5 | 60.5 | I |
| | 1998.10-2008.07 | 5MT | R | L/R | Saloon RWD XR8 | Chassis no. to:M45254 | GCI82370 | Inner Joint | | 28 | 35 | 39.95 | 137 | 81 | |
| 4.0 (203 kw) | 1999.01-2002.04 | 5AT | R | L | Saloon RWD AJ8 | | GDS82181 | Drive Shaft | 46T | 28 | 28 | 54.9 | 105.5 | 775 | |
| | 1999.01-2002.04 | 5AT | R | R | Saloon RWD AJ8 | | GDS82180 | Drive Shaft | 46T | 28 | 28 | 54.9 | 105.5 | 830 | |
| | 1999.01-2002.04 | 5AT | R | L/R | Saloon RWD AJ8 | | GCO18246 | Outer Joint | 46T | 28 | 26 | 54.9 | 105.5 | 61 | M |
| | 1999.01-2002.04 | 5AT | R | L/R | Saloon RWD AJ8 | | GCI18179 | Inner Joint | | 28 | 28 | 46 | 101 | 78.5 | |
| 4.2 (219 kw) | 2001.11-2008.07 | 6AT | R | L | Saloon RWD AJ8FR | | GDS82181 | Drive Shaft | 46T | 28 | 28 | 54.9 | 105.5 | 775 | |
| | 2001.11-2008.07 | 6AT | R | R | Saloon RWD AJ8FR | | GDS82180 | Drive Shaft | 46T | 28 | 28 | 54.9 | 105.5 | 830 | |
| | 2001.11-2008.07 | 6AT | R | L/R | Saloon RWD AJ8FR | | GCO18246 | Outer Joint | 46T | 28 | 26 | 54.9 | 105.5 | 61 | M |
| | 2001.11-2008.07 | 6AT | R | R | Saloon RWD AJ8FR | | GCI18179 | Inner Joint | | 28 | 28 | 46 | 101 | 78.5 | |
| | 2001.11-2008.07 | | R | R | Saloon RWD AJ8FR | | GDS18342 | Drive Shaft | 46W | 28 | 28 | 54.9 | 105.5 | 830 | |
| 4.2 (291 kw) | 2001.11-2008.12 | 6AT | R | L | Saloon RWD AJ8FT | | GDS82181 | Drive Shaft | 46T | 28 | 28 | 54.9 | 105.5 | 775 | |
| | 2001.11-2008.12 | 6AT | R | R | Saloon RWD AJ8FT | | GDS82180 | Drive Shaft | 46T | 28 | 28 | 54.9 | 105.5 | 830 | |
| | 2001.11-2008.12 | 6AT | R | L/R | Saloon RWD AJ8FT | | GCO18246 | Outer Joint | 46T | 28 | 26 | 54.9 | 105.5 | 61 | M |
| | 2001.11-2008.12 | 6AT | R | R | Saloon RWD AJ8FT | | GCI18179 | Inner Joint | | 28 | 28 | 46 | 101 | 78.5 | |
| | 2001.11-2008.12 | | R | R | Saloon RWD AJ8FT | | GDS18342 | Drive Shaft | 46W | 28 | 28 | 54.9 | 105.5 | 830 | |
| 4.2 (298 kw) | 2001.11-2008.12 | 6AT | R | L | Saloon RWD AJ8FT | | GDS82181 | Drive Shaft | 46T | 28 | 28 | 54.9 | 105.5 | 775 | |
| | 2001.11-2008.12 | 6AT | R | R | Saloon RWD AJ8FT | | GDS82180 | Drive Shaft | 46T | 28 | 28 | 54.9 | 105.5 | 830 | |
| | 2001.11-2008.12 | 6AT | R | L/R | Saloon RWD AJ8FT | | GCO18246 | Outer Joint | 46T | 28 | 26 | 54.9 | 105.5 | 61 | M |
| | 2001.11-2008.12 | 6AT | R | L/R | Saloon RWD AJ8FT | | GCI18179 | Inner Joint | | 28 | 28 | 46 | 101 | 78.5 | |
| **X-Type** | | | | | | | | | | | | | | | |
| 2.0 (96 kw) | 2003.07-2009.11 | AT/MT | F | L | Saloon FWD FMBA;FMBB | | GDS99177 | Drive Shaft | | 27 | 26 | 56.1 | 91.5 | 624 | |
| | 2003.07-2009.11 | AT/MT | F | L/R | Saloon FWD FMBA;FMBB | | GCO18216 | Outer Joint | | 27 | 24 | 56.1 | 91.5 | 59 | M |
| | 2003.07-2009.11 | MT | F | R | Saloon FWD FMBA;FMBB | | GDS99176 | Drive Shaft | | 27 | 26 | 56.1 | 91.5 | 956 | |
| | 2003.07-2009.11 | MT | F | L | Saloon FWD FMBA;FMBB | | GCI99147 | Inner Joint | | 26 | 24 | 40 | 68.5 | 159.5 | |
| | 2003.07-2009.11 | MT | F | R | Saloon FWD FMBA;FMBB | | GCI99146 | Inner Joint | | 26 | 24 | 40 | 469 | 91 | |
| | 2004.02-2009.12 | AT/MT | F | L | Estate FWD FMBA;FMBB | | GDS99177 | Drive Shaft | | 27 | 26 | 56.1 | 91.5 | 624 | |
| | 2004.02-2009.12 | AT/MT | F | L/R | Estate FWD FMBA;FMBB | | GCO18216 | Outer Joint | | 27 | 24 | 56.1 | 91.5 | 59 | M |
| | 2004.02-2009.12 | MT | F | R | Estate FWD FMBA;FMBB | | GDS99176 | Drive Shaft | | 27 | 26 | 56.1 | 91.5 | 956 | |
| | 2004.02-2009.12 | MT | F | L | Estate FWD FMBA;FMBB | | GCI99147 | Inner Joint | | 26 | 24 | 40 | 68.5 | 159.5 | |
| | 2004.02-2009.12 | MT | F | R | Estate FWD FMBA;FMBB | | GCI99146 | Inner Joint | | 26 | 24 | 40 | 469 | 91 | |
| 2.0 (115 kw) | 2002.03-2009.11 | AT/MT | F | L | Saloon FWD YB(AJ-V6) | | GDS99177 | Drive Shaft | | 27 | 26 | 56.1 | 91.5 | 624 | |
| | 2002.03-2009.11 | AT/MT | F | R | Saloon FWD YB(AJ-V6) | | GDS99176 | Drive Shaft | | 27 | 26 | 56.1 | 91.5 | 956 | |
| | 2002.03-2009.11 | AT/MT | F | L/R | Saloon FWD YB(AJ-V6) | | GCO18216 | Outer Joint | | 27 | 24 | 56.1 | 91.5 | 59 | M |
| | 2002.03-2009.11 | AT/MT | F | L | Saloon FWD YB(AJ-V6) | | GCI99147 | Inner Joint | | 26 | 24 | 40 | 68.5 | 159.5 | |
| | 2002.03-2009.11 | AT/MT | F | R | Saloon FWD YB(AJ-V6) | | GCI99146 | Inner Joint | | 26 | 24 | 40 | 469 | 91 | |
| | 2003.11-2009.03 | AT/MT | F | L | Estate FWD YB(AJ-V6) | | GDS99177 | Drive Shaft | | 27 | 26 | 56.1 | 91.5 | 624 | |
| | 2003.11-2009.03 | AT/MT | F | R | Estate FWD YB(AJ-V6) | | GDS99176 | Drive Shaft | | 27 | 26 | 56.1 | 91.5 | 956 | |
| | 2003.11-2009.03 | AT/MT | F | L/R | Estate FWD YB(AJ-V6) | | GCO18216 | Outer Joint | | 27 | 24 | 56.1 | 91.5 | 59 | M |
| | 2003.11-2009.03 | AT/MT | F | L | Estate FWD YB(AJ-V6) | | GCI99147 | Inner Joint | | 26 | 24 | 40 | 68.5 | 159.5 | |
| | 2003.11-2009.03 | AT/MT | F | R | Estate FWD YB(AJ-V6) | | GCI99146 | Inner Joint | | 26 | 24 | 40 | 469 | 91 | |
| 2.2 (107 kw) | 2007.01-2009.11 | 6AT | F | L | Saloon FWD QJBA | | GDS57519 | Drive Shaft | | 27 | 31 | 56 | 91 | 596 | |
| | 2007.01-2009.11 | 6AT | F | R | Saloon FWD QJBA | | GDS56393 | Drive Shaft | | 27 | 28 | 56 | 91 | 959 | |
| | 2007.01-2009.11 | 6AT | F | L/R | Saloon FWD QJBA | | GCO18002 | Outer Joint | | 27 | 26 | 56 | 91 | 64 | M |
| | 2007.01-2009.11 | 6AT | F | L | Saloon FWD QJBA | | GCI83722 | Inner Joint | | 31 | 26 | 36.2 | 65 | 135 | |
| | 2007.01-2009.11 | 6AT | F | R | Saloon FWD QJBA | | GCI83286 | Inner Joint | | 28 | 26 | 33 | 473 | 90 | |
| | 2007.01-2009.11 | MT | F | L | Saloon FWD QJBA | | GDS99177 | Drive Shaft | | 27 | 26 | 56.1 | 91.5 | 624 | |
| | 2007.01-2009.11 | MT | F | R | Saloon FWD QJBA | | GDS99176 | Drive Shaft | | 27 | 26 | 56.1 | 91.5 | 956 | |
| | 2007.01-2009.11 | MT | F | L/R | Saloon FWD QJBA | | GCO18216 | Outer Joint | | 27 | 24 | 56.1 | 91.5 | 59 | M |
| | 2007.01-2009.11 | MT | F | L | Saloon FWD QJBA | | GCI99147 | Inner Joint | | 26 | 24 | 40 | 68.5 | 159.5 | |
| | 2007.01-2009.12 | 6AT | F | L | Estate FWD QJBA | | GDS57519 | Drive Shaft | | 27 | 31 | 56 | 91 | 596 | |
| | 2007.01-2009.12 | 6AT | F | R | Estate FWD QJBA | | GDS56393 | Drive Shaft | | 27 | 28 | 56 | 91 | 959 | |
| | 2007.01-2009.12 | 6AT | F | L/R | Estate FWD QJBA | | GCO18002 | Outer Joint | | 27 | 26 | 56 | 91 | 64 | M |
| | 2007.01-2009.12 | 6AT | F | L | Estate FWD QJBA | | GCI83722 | Inner Joint | | 31 | 26 | 36.2 | 65 | 135 | |
| | 2007.01-2009.12 | 6AT | F | R | Estate FWD QJBA | | GCI83286 | Inner Joint | | 28 | 26 | 33 | 473 | 90 | |
| | 2007.01-2009.12 | MT | F | L | Estate FWD QJBA | | GDS99177 | Drive Shaft | | 27 | 26 | 56.1 | 91.5 | 624 | |
| | 2007.01-2009.12 | MT | F | R | Estate FWD QJBA | | GDS99176 | Drive Shaft | | 27 | 26 | 56.1 | 91.5 | 956 | |
| | 2007.01-2009.12 | MT | F | L/R | Estate FWD QJBA | | GCO18216 | Outer Joint | | 27 | 24 | 56.1 | 91.5 | 59 | M |
| | 2007.01-2009.12 | MT | F | L | Estate FWD QJBA | | GCI99147 | Inner Joint | | 26 | 24 | 40 | 68.5 | 159.5 | |
| 2.2 (110 kw) | 2005.10-2009.11 | 6AT | F | L | Saloon FWD QJBA | | GDS57519 | Drive Shaft | | 27 | 31 | 56 | 91 | 596 | |
| | 2005.10-2009.11 | 6AT | F | R | Saloon FWD QJBA | | GDS56393 | Drive Shaft | | 27 | 28 | 56 | 91 | 959 | |
| | 2005.10-2009.11 | 6AT | F | L/R | Saloon FWD QJBA | | GCO18002 | Outer Joint | | 27 | 26 | 56 | 91 | 64 | M |
| | 2005.10-2009.11 | 6AT | F | L | Saloon FWD QJBA | | GCI83722 | Inner Joint | | 31 | 26 | 36.2 | 65 | 135 | |
| | 2005.10-2009.11 | 6AT | F | R | Saloon FWD QJBA | | GCI83286 | Inner Joint | | 28 | 26 | 33 | 473 | 90 | |

| | YEAR | TRANSM. | F/R | L/R | BODY STYLE & DRIVE TYPE & ENGINE | REMARKS | G-AP Ref. | PRODUCT | ABS | Technical Specifications A | B | C | H | L | P |
|---|---|---|---|---|---|---|---|---|---|---|---|---|---|---|---|
| **JAGUAR** | | | | | | | | | | | | | | | |
| **X-Type** | | | | | | | | | | | | | | | |
| 2.2 (110 kw) | 2005.10-2009.11 | MT | F | L | Saloon FWD QJBA | | GDS99177 | Drive Shaft | | 27 | 26 | 56.1 | 91.5 | 624 | |
| | 2005.10-2009.11 | MT | F | R | Saloon FWD QJBA | | GDS99176 | Drive Shaft | | 27 | 26 | 56.1 | 91.5 | 956 | |
| | 2005.10-2009.11 | MT | F | L/R | Saloon FWD QJBA | | GCO18216 | Outer Joint | | 27 | 24 | 56.1 | 91.5 | 59 | M |
| | 2005.10-2009.11 | MT | F | L | Saloon FWD QJBA | | GCI99147 | Inner Joint | | 26 | 24 | 40 | 68.5 | 159.5 | |
| | 2005.10-2009.11 | MT | F | R | Saloon FWD QJBA | | GCI99146 | Inner Joint | | 26 | 24 | 40 | 469 | 91 | |
| | 2005.10-2009.12 | 6AT | F | L | Estate FWD QJBA | | GDS57519 | Drive Shaft | | 27 | 31 | 56 | 91 | 596 | |
| | 2005.10-2009.12 | 6AT | F | R | Estate FWD QJBA | | GDS56393 | Drive Shaft | | 27 | 28 | 56 | 91 | 959 | |
| | 2005.10-2009.12 | 6AT | F | L/R | Estate FWD QJBA | | GCO18002 | Outer Joint | | 27 | 26 | 56 | 91 | 64 | M |
| | 2005.10-2009.12 | 6AT | F | L | Estate FWD QJBA | | GCI83722 | Inner Joint | | 31 | 26 | 36.2 | 65 | 135 | |
| | 2005.10-2009.12 | 6AT | F | R | Estate FWD QJBA | | GCI83286 | Inner Joint | | 28 | 26 | 33 | 473 | 90 | |
| | 2005.10-2009.12 | MT | F | L | Estate FWD QJBA | | GDS99177 | Drive Shaft | | 27 | 26 | 56.1 | 91.5 | 624 | |
| | 2005.10-2009.12 | MT | F | R | Estate FWD QJBA | | GDS99176 | Drive Shaft | | 27 | 26 | 56.1 | 91.5 | 956 | |
| | 2005.10-2009.12 | MT | F | L/R | Estate FWD QJBA | | GCO18216 | Outer Joint | | 27 | 24 | 56.1 | 91.5 | 59 | M |
| | 2005.10-2009.12 | MT | F | L | Estate FWD QJBA | | GCI99147 | Inner Joint | | 26 | 24 | 40 | 68.5 | 159.5 | |
| | 2005.10-2009.12 | MT | F | R | Estate FWD QJBA | | GCI99146 | Inner Joint | | 26 | 24 | 40 | 469 | 91 | |
| 2.2 (114 kw) | 2005.10-2009.11 | AT/MT | F | L/R | Saloon FWD QJBA | | GCO18216 | Outer Joint | | 27 | 24 | 56.1 | 91.5 | 59 | M |
| | 2005.10-2009.11 | MT | F | L | Saloon FWD QJBA | | GDS99177 | Drive Shaft | | 27 | 26 | 56.1 | 91.5 | 624 | |
| | 2005.10-2009.11 | MT | F | R | Saloon FWD QJBA | | GDS99176 | Drive Shaft | | 27 | 26 | 56.1 | 91.5 | 956 | |
| | 2005.10-2009.11 | MT | F | L | Saloon FWD QJBA | | GCI99147 | Inner Joint | | 26 | 24 | 40 | 68.5 | 159.5 | |
| | 2005.10-2009.11 | MT | F | R | Saloon FWD QJBA | | GCI99146 | Inner Joint | | 26 | 24 | 40 | 469 | 91 | |
| | 2005.10-2009.12 | AT/MT | F | L/R | Estate FWD QJBA | | GCO18216 | Outer Joint | | 27 | 24 | 56.1 | 91.5 | 59 | M |
| | 2005.10-2009.12 | MT | F | L | Estate FWD QJBA | | GDS99177 | Drive Shaft | | 27 | 26 | 56.1 | 91.5 | 624 | |
| | 2005.10-2009.12 | MT | F | R | Estate FWD QJBA | | GDS99176 | Drive Shaft | | 27 | 26 | 56.1 | 91.5 | 956 | |
| | 2005.10-2009.12 | MT | F | L | Estate FWD QJBA | | GCI99147 | Inner Joint | | 26 | 24 | 40 | 68.5 | 159.5 | |
| | 2005.10-2009.12 | MT | F | R | Estate FWD QJBA | | GCI99146 | Inner Joint | | 26 | 24 | 40 | 469 | 91 | |
| 2.5 (144 kw) | 2001.06-2009.11 | 5AT/5MT | F | R | Saloon 4WD XB (AJ-V6) | | GDS18240 | Drive Shaft | | 27 | 23 | 56.1 | 91.5 | 970 | |
| | 2001.06-2009.11 | AT/MT | F | L | Saloon 4WD XB (AJ-V6) | | GDS18027 | Drive Shaft | | 27 | 26 | 57 | 91 | 627.5 | |
| | 2001.06-2009.11 | AT/MT | F | L/R | Saloon 4WD XB (AJ-V6) | | GCO18216 | Outer Joint | | 27 | 24 | 56.1 | 91.5 | 59 | M |
| | 2001.06-2009.11 | AT/MT | R | L | Saloon 4WD XB (AJ-V6) | | GDS35030 | Drive Shaft | 32W | 26 | 28 | 58 | 83 | 791 | |
| | 2001.06-2009.11 | AT/MT | R | R | Saloon 4WD XB (AJ-V6) | | GDS35029 | Drive Shaft | 32W | 26 | 28 | 58 | 83 | 826 | |
| | 2001.06-2009.11 | AT/MT | R | L/R | Saloon 4WD XB (AJ-V6) | | GCI35007 | Inner Joint | 32W | 26 | 24 | 58 | 83 | 112.5 | |
| | 2004.02-2009.12 | 5AT/5MT | F | R | Estate 4WD XB (AJ-V6) | | GDS18240 | Drive Shaft | | 27 | 23 | 56.1 | 91.5 | 970 | |
| | 2004.02-2009.12 | AT/MT | F | L | Estate 4WD XB (AJ-V6) | | GDS18027 | Drive Shaft | | 27 | 26 | 57 | 91 | 627.5 | |
| | 2004.02-2009.12 | AT/MT | F | L/R | Estate 4WD XB (AJ-V6) | | GCO18216 | Outer Joint | | 27 | 24 | 56.1 | 91.5 | 59 | M |
| | 2004.02-2009.12 | AT/MT | R | L | Estate 4WD XB (AJ-V6) | | GDS35030 | Drive Shaft | 32W | 26 | 28 | 58 | 83 | 791 | |
| | 2004.02-2009.12 | AT/MT | R | R | Estate 4WD XB (AJ-V6) | | GDS35029 | Drive Shaft | 32W | 26 | 28 | 58 | 83 | 826 | |
| | 2004.02-2009.12 | AT/MT | R | L/R | Estate 4WD XB (AJ-V6) | | GCI35007 | Inner Joint | 32W | 26 | 24 | 58 | 83 | 112.5 | |
| 3.0 (169 kw) | 2001.06-2008.12 | 5AT/5MT | F | R | Saloon 4WD WB(AJV6) | | GDS18240 | Drive Shaft | | 27 | 23 | 56.1 | 91.5 | 970 | |
| | 2001.06-2008.12 | AT/MT | F | L | Saloon 4WD WB(AJV6) | | GDS18027 | Drive Shaft | | 27 | 26 | 57 | 91 | 627.5 | |
| | 2001.06-2008.12 | AT/MT | F | L/R | Saloon 4WD WB(AJV6) | | GCO18216 | Outer Joint | | 27 | 24 | 56.1 | 91.5 | 59 | M |
| | 2001.06-2008.12 | AT/MT | R | L | Saloon 4WD WB(AJV6) | | GDS35030 | Drive Shaft | 32W | 26 | 28 | 58 | 83 | 791 | |
| | 2001.06-2008.12 | AT/MT | R | R | Saloon 4WD WB(AJV6) | | GDS35029 | Drive Shaft | 32W | 26 | 28 | 58 | 83 | 826 | |
| | 2001.06-2008.12 | AT/MT | R | L/R | Saloon 4WD WB(AJV6) | | GCI35007 | Inner Joint | 32W | 26 | 24 | 58 | 83 | 112.5 | |
| | 2004.02-2009.12 | 5AT/5MT | F | R | Estate 4WD WB(AJV6) | | GDS18240 | Drive Shaft | | 27 | 23 | 56.1 | 91.5 | 970 | |
| | 2004.02-2009.12 | AT/MT | F | L | Estate 4WD WB(AJV6) | | GDS18027 | Drive Shaft | | 27 | 26 | 57 | 91 | 627.5 | |
| | 2004.02-2009.12 | AT/MT | F | L/R | Estate 4WD WB(AJV6) | | GCO18216 | Outer Joint | | 27 | 24 | 56.1 | 91.5 | 59 | M |
| | 2004.02-2009.12 | AT/MT | R | L | Estate 4WD WB(AJV6) | | GDS35030 | Drive Shaft | 32W | 26 | 28 | 58 | 83 | 791 | |
| | 2004.02-2009.12 | AT/MT | R | R | Estate 4WD WB(AJV6) | | GDS35029 | Drive Shaft | 32W | 26 | 28 | 58 | 83 | 826 | |
| | 2004.02-2009.12 | AT/MT | R | L/R | Estate 4WD WB(AJV6) | | GCI35007 | Inner Joint | 32W | 26 | 24 | 58 | 83 | 112.5 | |
| **XE** | | | | | | | | | | | | | | | |
| 2.0 (120 kw) | 2015.03- | 8AT | R | L | Saloon RWD 204DTD(AJ20D4);204DTH(AJ20D4) | For vehicles with standard suspension | GDS58111 | Drive Shaft | | 31 | 31 | 65 | 97 | 784 | |
| | 2015.03- | 8AT | R | L | Saloon RWD 204DTD(AJ20D4);204DTH(AJ20D4) | | GDS58113 | Drive Shaft | | 31 | 31 | 65 | 97 | 776 | |
| | 2015.03- | 8AT | R | R | Saloon RWD 204DTD(AJ20D4);204DTH(AJ20D4) | For vehicles with comfort/sports suspension | GDS57341 | Drive Shaft | | 31 | 31 | 65 | 97 | 843 | |
| | 2015.03- | 8AT | R | R | Saloon RWD 204DTD(AJ20D4);204DTH(AJ20D4) | For vehicles with standard suspension;Chassis no. to:RCP71245 | GDS58112 | Drive Shaft | | 31 | 31 | 65 | 97 | 856 | |
| | 2015.03- | 8AT | R | L/R | Saloon RWD 204DTD(AJ20D4);204DTH(AJ20D4) | For vehicles with standard suspension | GCO83508 | Outer Joint | | 31 | 24 | 65 | 97 | 58 | I |
| | 2015.03- | 8AT | R | L/R | Saloon RWD 204DTD(AJ20D4);204DTH(AJ20D4) | For vehicles with standard suspension;Chassis no. to:RCP71245 | GCI83188 | Inner Joint | | 31 | 26 | 44 | 86 | 83 | |
| 2.0 (132 kw) | 2015.03- | 8AT | R | L | Saloon RWD 204DTD(AJ20D4);204DTH(AJ20D4) | For vehicles with standard suspension | GDS58111 | Drive Shaft | | 31 | 31 | 65 | 97 | 784 | |
| | 2015.03- | 8AT | R | L | Saloon RWD 204DTD(AJ20D4);204DTH(AJ20D4) | | GDS58113 | Drive Shaft | | 31 | 31 | 65 | 97 | 776 | |
| | 2015.03- | 8AT | R | R | Saloon RWD 204DTD(AJ20D4);204DTH(AJ20D4) | For vehicles with comfort/sports suspension | GDS57341 | Drive Shaft | | 31 | 31 | 65 | 97 | 843 | |
| | 2015.03- | 8AT | R | R | Saloon RWD 204DTD(AJ20D4);204DTH(AJ20D4) | For vehicles with standard suspension;Chassis no. to:RCP71245 | GDS58112 | Drive Shaft | | 31 | 31 | 65 | 97 | 856 | |
| | 2015.03- | 8AT | R | L/R | Saloon RWD 204DTD(AJ20D4);204DTH(AJ20D4) | For vehicles with standard suspension | GCO83508 | Outer Joint | | 31 | 24 | 65 | 97 | 58 | I |
| | 2015.03- | 8AT | R | L/R | Saloon RWD 204DTD(AJ20D4);204DTH(AJ20D4) | For vehicles with standard suspension;Chassis no. to:RCP71245 | GCI83188 | Inner Joint | | 31 | 26 | 44 | 86 | 83 | |
| | 2015.10- | 8AT | F | L | Saloon 4WD 204DTD(AJ20D4);204DTH(AJ20D4) | | GDS57876 | Drive Shaft | | 31 | 23 | 65.3 | 97 | 647 | |
| | 2015.10- | 8AT | F | R | Saloon 4WD 204DTD(AJ20D4);204DTH(AJ20D4) | | GDS57875 | Drive Shaft | | 31 | 23 | 65.3 | 97 | 1022 | |
| | 2015.10- | 8AT | F | L/R | Saloon 4WD 204DTD(AJ20D4);204DTH(AJ20D4) | | GCO83766 | Outer Joint | | 31 | 21 | 65.3 | 97 | 50.5 | M |

| | YEAR | TRANSM. | F/R | L/R | BODY STYLE & DRIVE TYPE & ENGINE | REMARKS | G-AP Ref. | PRODUCT | ABS | Technical Specifications A | B | C | H | L | P |
|---|---|---|---|---|---|---|---|---|---|---|---|---|---|---|---|
| **JAGUAR** | | | | | | | | | | | | | | | |
| **XE** | | | | | | | | | | | | | | | |
| 2.0 (132 kw) | 2015.10- | 8AT | F | L | Saloon 4WD 204DTD(AJ20D4);204DTH(AJ20D4) | | GCI83905 | Inner Joint | | 23 | 21 | 35.67 | 60 | 103 | |
| | 2015.10- | 8AT | F | R | Saloon 4WD 204DTD(AJ20D4);204DTH(AJ20D4) | | GCI83904 | Inner Joint | | 23 | 21 | | 435.5 | 103 | |
| | 2015.10- | 8AT | R | L | Saloon 4WD 204DTD(AJ20D4);204DTH(AJ20D4) | For vehicles with standard suspension | GDS58111 | Drive Shaft | | 31 | 31 | 65 | 97 | 784 | |
| | 2015.10- | 8AT | R | L | Saloon 4WD 204DTD(AJ20D4);204DTH(AJ20D4) | | GDS58113 | Drive Shaft | | 31 | 31 | 65 | 97 | 776 | |
| | 2015.10- | 8AT | R | R | Saloon 4WD 204DTD(AJ20D4);204DTH(AJ20D4) | For vehicles with comfort/sports suspension | GDS57341 | Drive Shaft | | 31 | 31 | 65 | 97 | 843 | |
| | 2015.10- | 8AT | R | R | Saloon 4WD 204DTD(AJ20D4);204DTH(AJ20D4) | For vehicles with standard suspension;Chassis no. to:RCP71245 | GDS58112 | Drive Shaft | | 31 | 31 | 65 | 97 | 856 | |
| | 2015.10- | 8AT | R | L/R | Saloon 4WD 204DTD(AJ20D4);204DTH(AJ20D4) | For vehicles with standard suspension | GCO83508 | Outer Joint | | 31 | 24 | 65 | 97 | 58 | I |
| | 2015.10- | 8AT | R | L/R | Saloon 4WD 204DTD(AJ20D4);204DTH(AJ20D4) | For vehicles with standard suspension;Chassis no. to:RCP71245 | GCI83188 | Inner Joint | | 31 | 26 | 44 | 86 | 83 | |
| 2.0 (147 kw) | 2015.03- | 8AT | R | L | Saloon RWD 204PT(GTDI) | For vehicles with standard suspension | GDS58111 | Drive Shaft | | 31 | 31 | 65 | 97 | 784 | |
| | 2015.03- | 8AT | R | L | Saloon RWD 204PT(GTDI) | | GDS58113 | Drive Shaft | | 31 | 31 | 65 | 97 | 776 | |
| | 2015.03- | 8AT | R | R | Saloon RWD 204PT(GTDI) | For vehicles with comfort/sports suspension | GDS57341 | Drive Shaft | | 31 | 31 | 65 | 97 | 843 | |
| | 2015.03- | 8AT | R | R | Saloon RWD 204PT(GTDI) | For vehicles with standard suspension;Chassis no. to:RCP71245 | GDS58112 | Drive Shaft | | 31 | 31 | 65 | 97 | 856 | |
| | 2015.03- | 8AT | R | L/R | Saloon RWD 204PT(GTDI) | For vehicles with standard suspension | GCO83508 | Outer Joint | | 31 | 24 | 65 | 97 | 58 | I |
| | 2015.03- | 8AT | R | L/R | Saloon RWD 204PT(GTDI) | For vehicles with standard suspension;Chassis no. to:RCP71245 | GCI83188 | Inner Joint | | 31 | 26 | 44 | 86 | 83 | |
| | 2017.02- | 8AT | R | L | Saloon RWD PT204(AJ20P4) | For vehicles with standard suspension | GDS58111 | Drive Shaft | | 31 | 31 | 65 | 97 | 784 | |
| | 2017.02- | 8AT | R | L | Saloon RWD PT204(AJ20P4) | | GDS58113 | Drive Shaft | | 31 | 31 | 65 | 97 | 776 | |
| | 2017.02- | 8AT | R | R | Saloon RWD PT204(AJ20P4) | For vehicles with comfort/sports suspension | GDS57341 | Drive Shaft | | 31 | 31 | 65 | 97 | 843 | |
| | 2017.02- | 8AT | R | R | Saloon RWD PT204(AJ20P4) | For vehicles with standard suspension;Chassis no. to:RCP71245 | GDS58112 | Drive Shaft | | 31 | 31 | 65 | 97 | 856 | |
| | 2017.02- | 8AT | R | L/R | Saloon RWD PT204(AJ20P4) | For vehicles with standard suspension | GCO83508 | Outer Joint | | 31 | 24 | 65 | 97 | 58 | I |
| | 2017.02- | 8AT | R | L/R | Saloon RWD PT204(AJ20P4) | For vehicles with standard suspension;Chassis no. to:RCP71245 | GCI83188 | Inner Joint | | 31 | 26 | 44 | 86 | 83 | |
| 2.0 (150 kw) | 2020.11- | 8AT | F | L | Saloon 4WD 204DTY(AJ21D4) | | GDS57876 | Drive Shaft | | 31 | 23 | 65.3 | 97 | 647 | |
| | 2020.11- | 8AT | F | R | Saloon 4WD 204DTY(AJ21D4) | | GDS57875 | Drive Shaft | | 31 | 23 | 65.3 | 97 | 1022 | |
| | 2020.11- | 8AT | F | L/R | Saloon 4WD 204DTY(AJ21D4) | | GCO83766 | Outer Joint | | 31 | 21 | 65.3 | 97 | 50.5 | M |
| | 2020.11- | 8AT | F | L | Saloon 4WD 204DTY(AJ21D4) | | GCI83905 | Inner Joint | | 23 | 21 | 35.67 | 60 | 103 | |
| | 2020.11- | 8AT | F | R | Saloon 4WD 204DTY(AJ21D4) | | GCI83904 | Inner Joint | | 23 | 21 | | 435.5 | 103 | |
| | 2020.11- | 8AT | R | L | Saloon 4WD 204DTY(AJ21D4) | For vehicles with standard suspension | GDS58111 | Drive Shaft | | 31 | 31 | 65 | 97 | 784 | |
| | 2020.11- | 8AT | R | L | Saloon 4WD 204DTY(AJ21D4) | | GDS58113 | Drive Shaft | | 31 | 31 | 65 | 97 | 776 | |
| | 2020.11- | 8AT | R | R | Saloon 4WD 204DTY(AJ21D4) | For vehicles with comfort/sports suspension | GDS57341 | Drive Shaft | | 31 | 31 | 65 | 97 | 843 | |
| | 2020.11- | 8AT | R | R | Saloon 4WD 204DTY(AJ21D4) | For vehicles with standard suspension;Chassis no. to:RCP71245 | GDS58112 | Drive Shaft | | 31 | 31 | 65 | 97 | 856 | |
| | 2020.11- | 8AT | R | L/R | Saloon 4WD 204DTY(AJ21D4) | For vehicles with standard suspension | GCO83508 | Outer Joint | | 31 | 24 | 65 | 97 | 58 | I |
| | 2020.11- | 8AT | R | L/R | Saloon 4WD 204DTY(AJ21D4) | For vehicles with standard suspension;Chassis no. to:RCP71245 | GCI83188 | Inner Joint | | 31 | 26 | 44 | 86 | 83 | |
| | 2020.11- | 8AT | R | L | Saloon RWD 204DTY(AJ21D4) | For vehicles with standard suspension | GDS58111 | Drive Shaft | | 31 | 31 | 65 | 97 | 784 | |
| | 2020.11- | 8AT | R | L | Saloon RWD 204DTY(AJ21D4) | | GDS58113 | Drive Shaft | | 31 | 31 | 65 | 97 | 776 | |
| | 2020.11- | 8AT | R | R | Saloon RWD 204DTY(AJ21D4) | For vehicles with comfort/sports suspension | GDS57341 | Drive Shaft | | 31 | 31 | 65 | 97 | 843 | |
| | 2020.11- | 8AT | R | R | Saloon RWD 204DTY(AJ21D4) | For vehicles with standard suspension;Chassis no. to:RCP71245 | GDS58112 | Drive Shaft | | 31 | 31 | 65 | 97 | 856 | |
| | 2020.11- | 8AT | R | L/R | Saloon RWD 204DTY(AJ21D4) | For vehicles with standard suspension | GCO83508 | Outer Joint | | 31 | 24 | 65 | 97 | 58 | I |
| | 2020.11- | 8AT | R | L/R | Saloon RWD 204DTY(AJ21D4) | For vehicles with standard suspension;Chassis no. to:RCP71245 | GCI83188 | Inner Joint | | 31 | 26 | 44 | 86 | 83 | |
| 2.0 (177 kw) | 2015.03- | 8AT | R | L | Saloon RWD 204PT(GTDI) | For vehicles with standard suspension | GDS58111 | Drive Shaft | | 31 | 31 | 65 | 97 | 784 | |
| | 2015.03- | 8AT | R | L | Saloon RWD 204PT(GTDI) | | GDS58113 | Drive Shaft | | 31 | 31 | 65 | 97 | 776 | |
| | 2015.03- | 8AT | R | R | Saloon RWD 204PT(GTDI) | For vehicles with comfort/sports suspension | GDS57341 | Drive Shaft | | 31 | 31 | 65 | 97 | 843 | |
| | 2015.03- | 8AT | R | R | Saloon RWD 204PT(GTDI) | For vehicles with standard suspension;Chassis no. to:RCP71245 | GDS58112 | Drive Shaft | | 31 | 31 | 65 | 97 | 856 | |
| | 2015.03- | 8AT | R | L/R | Saloon RWD 204PT(GTDI) | For vehicles with standard suspension | GCO83508 | Outer Joint | | 31 | 24 | 65 | 97 | 58 | I |
| | 2015.03- | 8AT | R | L/R | Saloon RWD 204PT(GTDI) | For vehicles with standard suspension;Chassis no. to:RCP71245 | GCI83188 | Inner Joint | | 31 | 26 | 44 | 86 | 83 | |
| | 2017.02- | 8AT | F | L | Saloon 4WD 204DTA(AJ20D4) | | GDS57876 | Drive Shaft | | 31 | 23 | 65.3 | 97 | 647 | |
| | 2017.02- | 8AT | F | R | Saloon 4WD 204DTA(AJ20D4) | | GDS57875 | Drive Shaft | | 31 | 23 | 65.3 | 97 | 1022 | |
| | 2017.02- | 8AT | F | L/R | Saloon 4WD 204DTA(AJ20D4) | | GCO83766 | Outer Joint | | 31 | 21 | 65.3 | 97 | 50.5 | M |
| | 2017.02- | 8AT | F | L | Saloon 4WD 204DTA(AJ20D4) | | GCI83905 | Inner Joint | | 23 | 21 | 35.67 | 60 | 103 | |
| | 2017.02- | 8AT | F | R | Saloon 4WD 204DTA(AJ20D4) | | GCI83904 | Inner Joint | | 23 | 21 | | 435.5 | 103 | |
| | 2017.02- | 8AT | R | L | Saloon 4WD 204DTA(AJ20D4) | For vehicles with standard suspension | GDS58111 | Drive Shaft | | 31 | 31 | 65 | 97 | 784 | |
| | 2017.02- | 8AT | R | L | Saloon 4WD 204DTA(AJ20D4) | | GDS58113 | Drive Shaft | | 31 | 31 | 65 | 97 | 776 | |
| | 2017.02- | 8AT | R | R | Saloon 4WD 204DTA(AJ20D4) | For vehicles with comfort/sports suspension | GDS57341 | Drive Shaft | | 31 | 31 | 65 | 97 | 843 | |
| | 2017.02- | 8AT | R | R | Saloon 4WD 204DTA(AJ20D4) | For vehicles with standard suspension;Chassis no. to:RCP71245 | GDS58112 | Drive Shaft | | 31 | 31 | 65 | 97 | 856 | |
| | 2017.02- | 8AT | R | L/R | Saloon 4WD 204DTA(AJ20D4) | For vehicles with standard suspension | GCO83508 | Outer Joint | | 31 | 24 | 65 | 97 | 58 | I |
| | 2017.02- | 8AT | R | L/R | Saloon 4WD 204DTA(AJ20D4) | For vehicles with standard suspension;Chassis no. to:RCP71245 | GCI83188 | Inner Joint | | 31 | 26 | 44 | 86 | 83 | |
| 2.0 (184 kw) | 2017.02- | 8AT | F | L | Saloon 4WD PT204(AJ20P4) | | GDS57876 | Drive Shaft | | 31 | 23 | 65.3 | 97 | 647 | |
| | 2017.02- | 8AT | F | R | Saloon 4WD PT204(AJ20P4) | | GDS57875 | Drive Shaft | | 31 | 23 | 65.3 | 97 | 1022 | |
| | 2017.02- | 8AT | F | L/R | Saloon 4WD PT204(AJ20P4) | | GCO83766 | Outer Joint | | 31 | 21 | 65.3 | 97 | 50.5 | M |
| | 2017.02- | 8AT | F | L | Saloon 4WD PT204(AJ20P4) | | GCI83905 | Inner Joint | | 23 | 21 | 35.67 | 60 | 103 | |
| | 2017.02- | 8AT | F | R | Saloon 4WD PT204(AJ20P4) | | GCI83904 | Inner Joint | | 23 | 21 | | 435.5 | 103 | |
| | 2017.02- | 8AT | R | L | Saloon 4WD PT204(AJ20P4) | For vehicles with standard suspension | GDS58111 | Drive Shaft | | 31 | 31 | 65 | 97 | 784 | |
| | 2017.02- | 8AT | R | L | Saloon 4WD PT204(AJ20P4) | | GDS58113 | Drive Shaft | | 31 | 31 | 65 | 97 | 776 | |
| | 2017.02- | 8AT | R | R | Saloon 4WD PT204(AJ20P4) | For vehicles with comfort/sports suspension | GDS57341 | Drive Shaft | | 31 | 31 | 65 | 97 | 843 | |
| | 2017.02- | 8AT | R | R | Saloon 4WD PT204(AJ20P4) | For vehicles with standard suspension;Chassis no. to:RCP71245 | GDS58112 | Drive Shaft | | 31 | 31 | 65 | 97 | 856 | |
| | 2017.02- | 8AT | R | L/R | Saloon 4WD PT204(AJ20P4) | For vehicles with standard suspension | GCO83508 | Outer Joint | | 31 | 24 | 65 | 97 | 58 | I |
| | 2017.02- | 8AT | R | L/R | Saloon 4WD PT204(AJ20P4) | For vehicles with standard suspension;Chassis no. to:RCP71245 | GCI83188 | Inner Joint | | 31 | 26 | 44 | 86 | 83 | |

| | YEAR | TRANSM. | F/R | L/R | BODY STYLE & DRIVE TYPE & ENGINE | REMARKS | G-AP Ref. | PRODUCT | ABS | Technical Specifications A | B | C | H | L | P |
|---|---|---|---|---|---|---|---|---|---|---|---|---|---|---|---|
| **JAGUAR** | | | | | | | | | | | | | | | |
| **XE** | | | | | | | | | | | | | | | |
| 2.0 (184 kw) | 2017.02- | 8AT | R | L | Saloon RWD PT204(AJ20P4) | For vehicles with standard suspension | GDS58111 | Drive Shaft | | 31 | 31 | 65 | 97 | 784 | |
| | 2017.02- | 8AT | R | L | Saloon RWD PT204(AJ20P4) | | GDS58113 | Drive Shaft | | 31 | 31 | 65 | 97 | 776 | |
| | 2017.02- | 8AT | R | R | Saloon RWD PT204(AJ20P4) | For vehicles with comfort/sports suspension | GDS57341 | Drive Shaft | | 31 | 31 | 65 | 97 | 843 | |
| | 2017.02- | 8AT | R | R | Saloon RWD PT204(AJ20P4) | For vehicles with standard suspension;Chassis no. to:RCP71245 | GDS58112 | Drive Shaft | | 31 | 31 | 65 | 97 | 856 | |
| | 2017.02- | 8AT | R | L/R | Saloon RWD PT204(AJ20P4) | For vehicles with standard suspension | GCO83508 | Outer Joint | | 31 | 24 | 65 | 97 | 58 | I |
| | 2017.02- | 8AT | R | L/R | Saloon RWD PT204(AJ20P4) | For vehicles with standard suspension;Chassis no. to:RCP71245 | GCI83188 | Inner Joint | | 31 | 26 | 44 | 86 | 83 | |
| | 2022.09- | 8AT | R | L | Saloon RWD 204PT(GTDI) | For vehicles with standard suspension | GDS58111 | Drive Shaft | | 31 | 31 | 65 | 97 | 784 | |
| | 2022.09- | 8AT | R | L | Saloon RWD 204PT(GTDI) | | GDS58113 | Drive Shaft | | 31 | 31 | 65 | 97 | 776 | |
| | 2022.09- | 8AT | R | R | Saloon RWD 204PT(GTDI) | For vehicles with comfort/sports suspension | GDS57341 | Drive Shaft | | 31 | 31 | 65 | 97 | 843 | |
| | 2022.09- | 8AT | R | R | Saloon RWD 204PT(GTDI) | For vehicles with standard suspension;Chassis no. to:RCP71245 | GDS58112 | Drive Shaft | | 31 | 31 | 65 | 97 | 856 | |
| | 2022.09- | 8AT | R | L/R | Saloon RWD 204PT(GTDI) | For vehicles with standard suspension | GCO83508 | Outer Joint | | 31 | 24 | 65 | 97 | 58 | I |
| | 2022.09- | 8AT | R | L/R | Saloon RWD 204PT(GTDI) | For vehicles with standard suspension;Chassis no. to:RCP71245 | GCI83188 | Inner Joint | | 31 | 26 | 44 | 86 | 83 | |
| 2.0 (221 kw) | 2017.06- | 8AT | F | L | Saloon 4WD PT204(AJ20P4) | | GDS57876 | Drive Shaft | | 31 | 23 | 65.3 | 97 | 647 | |
| | 2017.06- | 8AT | F | R | Saloon 4WD PT204(AJ20P4) | | GDS57875 | Drive Shaft | | 31 | 23 | 65.3 | 97 | 1022 | |
| | 2017.06- | 8AT | F | L/R | Saloon 4WD PT204(AJ20P4) | | GCO83766 | Outer Joint | | 31 | 21 | 65.3 | 97 | 50.5 | M |
| | 2017.06- | 8AT | F | L | Saloon 4WD PT204(AJ20P4) | | GCI83905 | Inner Joint | | 23 | 21 | 35.67 | 60 | 103 | |
| | 2017.06- | 8AT | F | R | Saloon 4WD PT204(AJ20P4) | | GCI83904 | Inner Joint | | 23 | 21 | | 435.5 | 103 | |
| | 2017.06- | 8AT | R | L | Saloon 4WD PT204(AJ20P4) | For vehicles with standard suspension | GDS58111 | Drive Shaft | | 31 | 31 | 65 | 97 | 784 | |
| | 2017.06- | 8AT | R | L | Saloon 4WD PT204(AJ20P4) | | GDS58113 | Drive Shaft | | 31 | 31 | 65 | 97 | 776 | |
| | 2017.06- | 8AT | R | R | Saloon 4WD PT204(AJ20P4) | For vehicles with comfort/sports suspension | GDS57341 | Drive Shaft | | 31 | 31 | 65 | 97 | 843 | |
| | 2017.06- | 8AT | R | R | Saloon 4WD PT204(AJ20P4) | For vehicles with standard suspension;Chassis no. to:RCP71245 | GDS58112 | Drive Shaft | | 31 | 31 | 65 | 97 | 856 | |
| | 2017.06- | 8AT | R | L/R | Saloon 4WD PT204(AJ20P4) | For vehicles with standard suspension | GCO83508 | Outer Joint | | 31 | 24 | 65 | 97 | 58 | I |
| | 2017.06- | 8AT | R | L/R | Saloon 4WD PT204(AJ20P4) | For vehicles with standard suspension;Chassis no. to:RCP71245 | GCI83188 | Inner Joint | | 31 | 26 | 44 | 86 | 83 | |
| | 2017.06- | 8AT | R | L | Saloon RWD PT204(AJ20P4) | For vehicles with standard suspension | GDS58111 | Drive Shaft | | 31 | 31 | 65 | 97 | 784 | |
| | 2017.06- | 8AT | R | L | Saloon RWD PT204(AJ20P4) | | GDS58113 | Drive Shaft | | 31 | 31 | 65 | 97 | 776 | |
| | 2017.06- | 8AT | R | R | Saloon RWD PT204(AJ20P4) | For vehicles with comfort/sports suspension | GDS57341 | Drive Shaft | | 31 | 31 | 65 | 97 | 843 | |
| | 2017.06- | 8AT | R | R | Saloon RWD PT204(AJ20P4) | For vehicles with standard suspension;Chassis no. to:RCP71245 | GDS58112 | Drive Shaft | | 31 | 31 | 65 | 97 | 856 | |
| | 2017.06- | 8AT | R | L/R | Saloon RWD PT204(AJ20P4) | For vehicles with standard suspension | GCO83508 | Outer Joint | | 31 | 24 | 65 | 97 | 58 | I |
| | 2017.06- | 8AT | R | L/R | Saloon RWD PT204(AJ20P4) | For vehicles with standard suspension;Chassis no. to:RCP71245 | GCI83188 | Inner Joint | | 31 | 26 | 44 | 86 | 83 | |
| 3.0 (250 kw) | 2015.03- | 8AT | R | L | Saloon RWD 306PS(AJ126) | For vehicles with standard suspension | GDS58111 | Drive Shaft | | 31 | 31 | 65 | 97 | 784 | |
| | 2015.03- | 8AT | R | L | Saloon RWD 306PS(AJ126) | | GDS58113 | Drive Shaft | | 31 | 31 | 65 | 97 | 776 | |
| | 2015.03- | 8AT | R | R | Saloon RWD 306PS(AJ126) | For vehicles with comfort/sports suspension | GDS57341 | Drive Shaft | | 31 | 31 | 65 | 97 | 843 | |
| | 2015.03- | 8AT | R | R | Saloon RWD 306PS(AJ126) | For vehicles with standard suspension;Chassis no. to:RCP71245 | GDS58112 | Drive Shaft | | 31 | 31 | 65 | 97 | 856 | |
| | 2015.03- | 8AT | R | L/R | Saloon RWD 306PS(AJ126) | For vehicles with standard suspension | GCO83508 | Outer Joint | | 31 | 24 | 65 | 97 | 58 | I |
| | 2015.03- | 8AT | R | L/R | Saloon RWD 306PS(AJ126) | For vehicles with standard suspension;Chassis no. to:RCP71245 | GCI83188 | Inner Joint | | 31 | 26 | 44 | 86 | 83 | |
| 3.0 (280 kw) | 2017.02- | 8AT | R | L | Saloon RWD 306PS(AJ126) | For vehicles with standard suspension | GDS58111 | Drive Shaft | | 31 | 31 | 65 | 97 | 784 | |
| | 2017.02- | 8AT | R | L | Saloon RWD 306PS(AJ126) | | GDS58113 | Drive Shaft | | 31 | 31 | 65 | 97 | 776 | |
| | 2017.02- | 8AT | R | R | Saloon RWD 306PS(AJ126) | For vehicles with comfort/sports suspension | GDS57341 | Drive Shaft | | 31 | 31 | 65 | 97 | 843 | |
| | 2017.02- | 8AT | R | R | Saloon RWD 306PS(AJ126) | For vehicles with standard suspension;Chassis no. to:RCP71245 | GDS58112 | Drive Shaft | | 31 | 31 | 65 | 97 | 856 | |
| | 2017.02- | 8AT | R | L/R | Saloon RWD 306PS(AJ126) | For vehicles with standard suspension | GCO83508 | Outer Joint | | 31 | 24 | 65 | 97 | 58 | I |
| | 2017.02- | 8AT | R | L/R | Saloon RWD 306PS(AJ126) | For vehicles with standard suspension;Chassis no. to:RCP71245 | GCI83188 | Inner Joint | | 31 | 26 | 44 | 86 | 83 | |
| **XF** | | | | | | | | | | | | | | | |
| 2.0 (120 kw) | 2015.05- | 8AT | R | L | Saloon RWD 204DTD(AJ20D4);204DTH(AJ20D4) | | GDS58113 | Drive Shaft | | 31 | 31 | 65 | 97 | 776 | |
| | 2015.05- | 8AT | R | R | Saloon RWD 204DTD(AJ20D4);204DTH(AJ20D4) | | GDS57341 | Drive Shaft | | 31 | 31 | 65 | 97 | 843 | |
| | 2015.05- | 8AT | R | L/R | Saloon RWD 204DTD(AJ20D4);204DTH(AJ20D4) | | GCO83508 | Outer Joint | | 31 | 24 | 65 | 97 | 58 | I |
| | 2015.05- | 8AT | R | L/R | Saloon RWD 204DTD(AJ20D4);204DTH(AJ20D4) | | GCI83188 | Inner Joint | | 31 | 26 | 44 | 86 | 83 | |
| 2.0 (132 kw) | 2015.05- | 8AT | R | L | Saloon RWD 204DTD(AJ20D4);204DTH(AJ20D4) | | GDS58113 | Drive Shaft | | 31 | 31 | 65 | 97 | 776 | |
| | 2015.05- | 8AT | R | R | Saloon RWD 204DTD(AJ20D4);204DTH(AJ20D4) | | GDS57341 | Drive Shaft | | 31 | 31 | 65 | 97 | 843 | |
| | 2015.05- | 8AT | R | L/R | Saloon RWD 204DTD(AJ20D4);204DTH(AJ20D4) | | GCO83508 | Outer Joint | | 31 | 24 | 65 | 97 | 58 | I |
| | 2015.05- | 8AT | R | L/R | Saloon RWD 204DTD(AJ20D4);204DTH(AJ20D4) | | GCI83188 | Inner Joint | | 31 | 26 | 44 | 86 | 83 | |
| | 2016.03- | 8AT | F | L | Saloon 4WD 204DTD(AJ20D4);204DTH(AJ20D4) | | GDS57876 | Drive Shaft | | 31 | 23 | 65.3 | 97 | 647 | |
| | 2016.03- | 8AT | F | R | Saloon 4WD 204DTD(AJ20D4);204DTH(AJ20D4) | | GDS57875 | Drive Shaft | | 31 | 23 | 65.3 | 97 | 1022 | |
| | 2016.03- | 8AT | F | L/R | Saloon 4WD 204DTD(AJ20D4);204DTH(AJ20D4) | | GCO83766 | Outer Joint | | 31 | 21 | 65.3 | 97 | 50.5 | M |
| | 2016.03- | 8AT | F | L | Saloon 4WD 204DTD(AJ20D4);204DTH(AJ20D4) | | GCI83905 | Inner Joint | | 23 | 21 | 35.67 | 60 | 103 | |
| | 2016.03- | 8AT | F | R | Saloon 4WD 204DTD(AJ20D4);204DTH(AJ20D4) | | GCI83904 | Inner Joint | | 23 | 21 | | 435.5 | 103 | |
| | 2016.03- | 8AT | R | L | Saloon 4WD 204DTD(AJ20D4);204DTH(AJ20D4) | | GDS58113 | Drive Shaft | | 31 | 31 | 65 | 97 | 776 | |
| | 2016.03- | 8AT | R | R | Saloon 4WD 204DTD(AJ20D4);204DTH(AJ20D4) | | GDS57341 | Drive Shaft | | 31 | 31 | 65 | 97 | 843 | |
| | 2016.03- | 8AT | R | L/R | Saloon 4WD 204DTD(AJ20D4);204DTH(AJ20D4) | | GCO83508 | Outer Joint | | 31 | 24 | 65 | 97 | 58 | I |
| | 2016.03- | 8AT | R | L/R | Saloon 4WD 204DTD(AJ20D4);204DTH(AJ20D4) | | GCI83188 | Inner Joint | | 31 | 26 | 44 | 86 | 83 | |
| 2.0 (147 kw) | 2017.03- | 8AT | R | L | Saloon RWD PT204(AJ20P4) | | GDS58113 | Drive Shaft | | 31 | 31 | 65 | 97 | 776 | |
| | 2017.03- | 8AT | R | R | Saloon RWD PT204(AJ20P4) | | GDS57341 | Drive Shaft | | 31 | 31 | 65 | 97 | 843 | |
| | 2017.03- | 8AT | R | L/R | Saloon RWD PT204(AJ20P4) | | GCO83508 | Outer Joint | | 31 | 24 | 65 | 97 | 58 | I |
| | 2017.03- | 8AT | R | L/R | Saloon RWD PT204(AJ20P4) | | GCI83188 | Inner Joint | | 31 | 26 | 44 | 86 | 83 | |
| 2.0 (150 kw) | 2020.11- | 8AT | F | L | Saloon 4WD 204DTY(AJ21D4) | | GDS57876 | Drive Shaft | | 31 | 23 | 65.3 | 97 | 647 | |
| | 2020.11- | 8AT | F | R | Saloon 4WD 204DTY(AJ21D4) | | GDS57875 | Drive Shaft | | 31 | 23 | 65.3 | 97 | 1022 | |

| | YEAR | TRANSM. | F/R | L/R | BODY STYLE & DRIVE TYPE & ENGINE | REMARKS | G-AP Ref. | PRODUCT | ABS | Technical Specifications A | B | C | H | L | P |
|---|---|---|---|---|---|---|---|---|---|---|---|---|---|---|---|
| **JAGUAR** | | | | | | | | | | | | | | | |
| **XF** | | | | | | | | | | | | | | | |
| 2.0 (150 kw) | 2020.11- | 8AT | F | L/R | Saloon 4WD 204DTY(AJ21D4) | | GCO83766 | Outer Joint | | 31 | 21 | 65.3 | 97 | 50.5 | M |
| | 2020.11- | 8AT | F | L | Saloon 4WD 204DTY(AJ21D4) | | GCI83905 | Inner Joint | | 23 | 21 | 35.67 | 60 | 103 | |
| | 2020.11- | 8AT | F | R | Saloon 4WD 204DTY(AJ21D4) | | GCI83904 | Inner Joint | | 23 | 21 | | 435.5 | 103 | |
| | 2020.11- | 8AT | R | L | Saloon 4WD 204DTY(AJ21D4) | | GDS58113 | Drive Shaft | | 31 | 31 | 65 | 97 | 776 | |
| | 2020.11- | 8AT | R | R | Saloon 4WD 204DTY(AJ21D4) | | GDS57341 | Drive Shaft | | 31 | 31 | 65 | 97 | 843 | |
| | 2020.11- | 8AT | R | L/R | Saloon 4WD 204DTY(AJ21D4) | | GCO83508 | Outer Joint | | 31 | 24 | 65 | 97 | 58 | I |
| | 2020.11- | 8AT | R | L/R | Saloon 4WD 204DTY(AJ21D4) | | GCI83188 | Inner Joint | | 31 | 26 | 44 | 86 | 83 | |
| | 2020.11- | 8AT | R | L | Saloon RWD 204DTY(AJ21D4) | | GDS58113 | Drive Shaft | | 31 | 31 | 65 | 97 | 776 | |
| | 2020.11- | 8AT | R | R | Saloon RWD 204DTY(AJ21D4) | | GDS57341 | Drive Shaft | | 31 | 31 | 65 | 97 | 843 | |
| | 2020.11- | 8AT | R | L/R | Saloon RWD 204DTY(AJ21D4) | | GCO83508 | Outer Joint | | 31 | 24 | 65 | 97 | 58 | I |
| | 2020.11- | 8AT | R | L/R | Saloon RWD 204DTY(AJ21D4) | | GCI83188 | Inner Joint | | 31 | 26 | 44 | 86 | 83 | |
| 2.0 (177 kw) | 2012.06-2015.04 | 8AT | R | L | Saloon RWD 204PT(GTDI) | Chassis no. from:R47154 | GDS56184 | Drive Shaft | | 31 | 31 | 65 | 97 | 801 | |
| | 2012.06-2015.04 | 8AT | R | R | Saloon RWD 204PT(GTDI) | Chassis no. from:R47154 | GDS57341 | Drive Shaft | | 31 | 31 | 65 | 97 | 843 | |
| | 2012.06-2015.04 | 8AT | R | L/R | Saloon RWD 204PT(GTDI) | Chassis no. from:R47154 | GCO83508 | Outer Joint | | 31 | 24 | 65 | 97 | 58 | I |
| | 2012.06-2015.04 | 8AT | R | R | Saloon RWD 204PT(GTDI) | Chassis no. from:R47154 | GCI83188 | Inner Joint | | 31 | 26 | 44 | 86 | 83 | |
| | 2015.05- | 8AT | R | L | Saloon RWD 204PT(GTDI) | | GDS58113 | Drive Shaft | | 31 | 31 | 65 | 97 | 776 | |
| | 2015.05- | 8AT | R | R | Saloon RWD 204PT(GTDI) | | GDS57341 | Drive Shaft | | 31 | 31 | 65 | 97 | 843 | |
| | 2015.05- | 8AT | R | L/R | Saloon RWD 204PT(GTDI) | | GCO83508 | Outer Joint | | 31 | 24 | 65 | 97 | 58 | I |
| | 2015.05- | 8AT | R | L/R | Saloon RWD 204PT(GTDI) | | GCI83188 | Inner Joint | | 31 | 26 | 44 | 86 | 83 | |
| | 2017.03- | 8AT | F | L | Saloon 4WD 204DTA(AJ20D4) | | GDS57876 | Drive Shaft | | 31 | 23 | 65.3 | 97 | 647 | |
| | 2017.03- | 8AT | F | R | Saloon 4WD 204DTA(AJ20D4) | | GDS57875 | Drive Shaft | | 31 | 23 | 65.3 | 97 | 1022 | |
| | 2017.03- | 8AT | F | L/R | Saloon 4WD 204DTA(AJ20D4) | | GCO83766 | Outer Joint | | 31 | 21 | 65.3 | 97 | 50.5 | M |
| | 2017.03- | 8AT | F | L | Saloon 4WD 204DTA(AJ20D4) | | GCI83905 | Inner Joint | | 23 | 21 | 35.67 | 60 | 103 | |
| | 2017.03- | 8AT | F | R | Saloon 4WD 204DTA(AJ20D4) | | GCI83904 | Inner Joint | | 23 | 21 | | 435.5 | 103 | |
| | 2017.03- | 8AT | R | L | Saloon 4WD 204DTA(AJ20D4) | | GDS58113 | Drive Shaft | | 31 | 31 | 65 | 97 | 776 | |
| | 2017.03- | 8AT | R | R | Saloon 4WD 204DTA(AJ20D4) | | GDS57341 | Drive Shaft | | 31 | 31 | 65 | 97 | 843 | |
| | 2017.03- | 8AT | R | L/R | Saloon 4WD 204DTA(AJ20D4) | | GCO83508 | Outer Joint | | 31 | 24 | 65 | 97 | 58 | I |
| | 2017.03- | 8AT | R | L/R | Saloon 4WD 204DTA(AJ20D4) | | GCI83188 | Inner Joint | | 31 | 26 | 44 | 86 | 83 | |
| | 2017.03- | 8AT | R | L | Saloon RWD 204DTA(AJ20D4) | | GDS58113 | Drive Shaft | | 31 | 31 | 65 | 97 | 776 | |
| | 2017.03- | 8AT | R | R | Saloon RWD 204DTA(AJ20D4) | | GDS57341 | Drive Shaft | | 31 | 31 | 65 | 97 | 843 | |
| | 2017.03- | 8AT | R | L/R | Saloon RWD 204DTA(AJ20D4) | | GCO83508 | Outer Joint | | 31 | 24 | 65 | 97 | 58 | I |
| | 2017.03- | 8AT | R | L/R | Saloon RWD 204DTA(AJ20D4) | | GCI83188 | Inner Joint | | 31 | 26 | 44 | 86 | 83 | |
| 2.0 (184 kw) | 2017.03- | 8AT | F | L | Saloon 4WD PT204(AJ20P4) | | GDS57876 | Drive Shaft | | 31 | 23 | 65.3 | 97 | 647 | |
| | 2017.03- | 8AT | F | R | Saloon 4WD PT204(AJ20P4) | | GDS57875 | Drive Shaft | | 31 | 23 | 65.3 | 97 | 1022 | |
| | 2017.03- | 8AT | F | L/R | Saloon 4WD PT204(AJ20P4) | | GCO83766 | Outer Joint | | 31 | 21 | 65.3 | 97 | 50.5 | M |
| | 2017.03- | 8AT | F | L | Saloon 4WD PT204(AJ20P4) | | GCI83905 | Inner Joint | | 23 | 21 | 35.67 | 60 | 103 | |
| | 2017.03- | 8AT | F | R | Saloon 4WD PT204(AJ20P4) | | GCI83904 | Inner Joint | | 23 | 21 | | 435.5 | 103 | |
| | 2017.03- | 8AT | R | L | Saloon 4WD PT204(AJ20P4) | | GDS58113 | Drive Shaft | | 31 | 31 | 65 | 97 | 776 | |
| | 2017.03- | 8AT | R | R | Saloon 4WD PT204(AJ20P4) | | GDS57341 | Drive Shaft | | 31 | 31 | 65 | 97 | 843 | |
| | 2017.03- | 8AT | R | L/R | Saloon 4WD PT204(AJ20P4) | | GCO83508 | Outer Joint | | 31 | 24 | 65 | 97 | 58 | I |
| | 2017.03- | 8AT | R | L/R | Saloon 4WD PT204(AJ20P4) | | GCI83188 | Inner Joint | | 31 | 26 | 44 | 86 | 83 | |
| | 2017.03- | 8AT | R | L | Saloon RWD PT204(AJ20P4) | | GDS58113 | Drive Shaft | | 31 | 31 | 65 | 97 | 776 | |
| | 2017.03- | 8AT | R | R | Saloon RWD PT204(AJ20P4) | | GDS57341 | Drive Shaft | | 31 | 31 | 65 | 97 | 843 | |
| | 2017.03- | 8AT | R | L/R | Saloon RWD PT204(AJ20P4) | | GCO83508 | Outer Joint | | 31 | 24 | 65 | 97 | 58 | I |
| | 2017.03- | 8AT | R | L/R | Saloon RWD PT204(AJ20P4) | | GCI83188 | Inner Joint | | 31 | 26 | 44 | 86 | 83 | |
| 2.0 (221 kw) | 2017.06- | 8AT | R | L | Saloon RWD PT204(AJ20P4) | | GDS58113 | Drive Shaft | | 31 | 31 | 65 | 97 | 776 | |
| | 2017.06- | 8AT | R | R | Saloon RWD PT204(AJ20P4) | | GDS57341 | Drive Shaft | | 31 | 31 | 65 | 97 | 843 | |
| | 2017.06- | 8AT | R | L/R | Saloon RWD PT204(AJ20P4) | | GCO83508 | Outer Joint | | 31 | 24 | 65 | 97 | 58 | I |
| | 2017.06- | 8AT | R | L/R | Saloon RWD PT204(AJ20P4) | | GCI83188 | Inner Joint | | 31 | 26 | 44 | 86 | 83 | |
| | 2017.09- | 8AT | F | L | Saloon 4WD PT204(AJ20P4) | | GDS57876 | Drive Shaft | | 31 | 23 | 65.3 | 97 | 647 | |
| | 2017.09- | 8AT | F | R | Saloon 4WD PT204(AJ20P4) | | GDS57875 | Drive Shaft | | 31 | 23 | 65.3 | 97 | 1022 | |
| | 2017.09- | 8AT | F | L/R | Saloon 4WD PT204(AJ20P4) | | GCO83766 | Outer Joint | | 31 | 21 | 65.3 | 97 | 50.5 | M |
| | 2017.09- | 8AT | F | L | Saloon 4WD PT204(AJ20P4) | | GCI83905 | Inner Joint | | 23 | 21 | 35.67 | 60 | 103 | |
| | 2017.09- | 8AT | F | R | Saloon 4WD PT204(AJ20P4) | | GCI83904 | Inner Joint | | 23 | 21 | | 435.5 | 103 | |
| | 2017.09- | 8AT | R | L | Saloon 4WD PT204(AJ20P4) | | GDS58113 | Drive Shaft | | 31 | 31 | 65 | 97 | 776 | |
| | 2017.09- | 8AT | R | R | Saloon 4WD PT204(AJ20P4) | | GDS57341 | Drive Shaft | | 31 | 31 | 65 | 97 | 843 | |
| | 2017.09- | 8AT | R | L/R | Saloon 4WD PT204(AJ20P4) | | GCO83508 | Outer Joint | | 31 | 24 | 65 | 97 | 58 | I |
| | 2017.09- | 8AT | R | L/R | Saloon 4WD PT204(AJ20P4) | | GCI83188 | Inner Joint | | 31 | 26 | 44 | 86 | 83 | |
| 2.2 (120 kw) | 2011.04-2015.04 | 8AT | R | L | Saloon RWD 224DT(DW12C) | Chassis no. from:R47154 | GDS56184 | Drive Shaft | | 31 | 31 | 65 | 97 | 801 | |
| | 2011.04-2015.04 | 8AT | R | R | Saloon RWD 224DT(DW12C) | Chassis no. from:R47154 | GDS57341 | Drive Shaft | | 31 | 31 | 65 | 97 | 843 | |
| | 2011.04-2015.04 | 8AT | R | L/R | Saloon RWD 224DT(DW12C) | Chassis no. from:R47154 | GCO83508 | Outer Joint | | 31 | 24 | 65 | 97 | 58 | I |
| | 2011.04-2015.04 | 8AT | R | R | Saloon RWD 224DT(DW12C) | Chassis no. from:R47154 | GCI83188 | Inner Joint | | 31 | 26 | 44 | 86 | 83 | |
| 2.2 (140 kw) | 2011.05-2015.04 | 8AT | R | L | Saloon RWD 224DT(DW12C) | Chassis no. from:R47154 | GDS56184 | Drive Shaft | | 31 | 31 | 65 | 97 | 801 | |
| | 2011.05-2015.04 | 8AT | R | R | Saloon RWD 224DT(DW12C) | Chassis no. from:R47154 | GDS57341 | Drive Shaft | | 31 | 31 | 65 | 97 | 843 | |
| | 2011.05-2015.04 | 8AT | R | L/R | Saloon RWD 224DT(DW12C) | Chassis no. from:R47154 | GCO83508 | Outer Joint | | 31 | 24 | 65 | 97 | 58 | I |

| | YEAR | TRANSM. | F/R | L/R | BODY STYLE & DRIVE TYPE & ENGINE | REMARKS | G-AP Ref. | PRODUCT | ABS | Technical Specifications | | | | | |
|---|---|---|---|---|---|---|---|---|---|---|---|---|---|---|---|
| | | | | | | | | | | A | B | C | H | L | P |
| **JAGUAR** | | | | | | | | | | | | | | | |
| **XF** | | | | | | | | | | | | | | | |
| 2.2 (140 kw) | 2011.05-2015.04 | 8AT | R | R | Saloon RWD 224DT(DW12C) | Chassis no. from:R47154 | GCI83188 | Inner Joint | | 31 | 26 | 44 | 86 | 83 | |
| 2.2 (147 kw) | 2012.03-2015.04 | 8AT | R | L | Saloon RWD 224DT(DW12C) | Chassis no. from:R47154 | GDS56184 | Drive Shaft | | 31 | 31 | 65 | 97 | 801 | |
| | 2012.03-2015.04 | 8AT | R | R | Saloon RWD 224DT(DW12C) | Chassis no. from:R47154 | GDS57341 | Drive Shaft | | 31 | 31 | 65 | 97 | 843 | |
| | 2012.03-2015.04 | 8AT | R | L/R | Saloon RWD 224DT(DW12C) | Chassis no. from:R47154 | GCO83508 | Outer Joint | | 31 | 24 | 65 | 97 | 58 | I |
| | 2012.03-2015.04 | 8AT | R | R | Saloon RWD 224DT(DW12C) | Chassis no. from:R47154 | GCI83188 | Inner Joint | | 31 | 26 | 44 | 86 | 83 | |
| 2.7 (152 kw) | 2008.03-2015.04 | 6AT | R | R | Saloon RWD 7G(AJTDV6) | Chassis no. from:R47154 | GDS57341 | Drive Shaft | | 31 | 31 | 65 | 97 | 843 | |
| | 2008.03-2015.04 | 6AT | R | L/R | Saloon RWD 7G(AJTDV6) | Chassis no. from:R47154 | GCO83508 | Outer Joint | | 31 | 24 | 65 | 97 | 58 | I |
| | 2008.03-2015.04 | 8AT | R | R | Saloon RWD 7G(AJTDV6) | Chassis no. from:R47154 | GCI83188 | Inner Joint | | 31 | 26 | 44 | 86 | 83 | |
| 3.0 (155 kw) | 2009.03-2015.04 | 6AT | R | R | Saloon RWD 306DT(AJTDV6) | Chassis no. from:R47154 | GDS57341 | Drive Shaft | | 31 | 31 | 65 | 97 | 843 | |
| | 2009.03-2015.04 | 6AT | R | L/R | Saloon RWD 306DT(AJTDV6) | Chassis no. from:R47154 | GCO83508 | Outer Joint | | 31 | 24 | 65 | 97 | 58 | I |
| | 2009.03-2015.04 | 6AT/8AT | R | L | Saloon RWD 306DT(AJTDV6) | Chassis no. from:R47154 | GDS56184 | Drive Shaft | | 31 | 31 | 65 | 97 | 801 | |
| | 2009.03-2015.04 | 8AT | R | R | Saloon RWD 306DT(AJTDV6) | Chassis no. from:R47154 | GCI83188 | Inner Joint | | 31 | 26 | 44 | 86 | 83 | |
| 3.0 (175 kw) | 2008.03-2015.04 | 6AT | R | R | Saloon RWD FG(AJV6) | Chassis no. from:R47154 | GDS57341 | Drive Shaft | | 31 | 31 | 65 | 97 | 843 | |
| | 2008.03-2015.04 | 6AT | R | L/R | Saloon RWD FG(AJV6) | Chassis no. from:R47154 | GCO83508 | Outer Joint | | 31 | 24 | 65 | 97 | 58 | I |
| | 2008.03-2015.04 | 6AT/8AT | R | L | Saloon RWD FG(AJV6) | Chassis no. from:R47154 | GDS56184 | Drive Shaft | | 31 | 31 | 65 | 97 | 801 | |
| | 2008.03-2015.04 | 8AT | R | R | Saloon RWD FG(AJV6) | Chassis no. from:R47154 | GCI83188 | Inner Joint | | 31 | 26 | 44 | 86 | 83 | |
| 3.0 (177 kw) | 2009.03-2015.04 | 6AT/8AT | R | L | Saloon RWD 306DT(AJTDV6) | Chassis no. from:R47154 | GDS56184 | Drive Shaft | | 31 | 31 | 65 | 97 | 801 | |
| | 2009.03-2015.04 | 6AT/8AT | R | R | Saloon RWD 306DT(AJTDV6) | Chassis no. from:R47154 | GDS57341 | Drive Shaft | | 31 | 31 | 65 | 97 | 843 | |
| | 2009.03-2015.04 | 6AT/8AT | R | L/R | Saloon RWD 306DT(AJTDV6) | Chassis no. from:R47154 | GCO83508 | Outer Joint | | 31 | 24 | 65 | 97 | 58 | I |
| | 2009.03-2015.04 | 8AT | R | R | Saloon RWD 306DT(AJTDV6) | Chassis no. from:R47154 | GCI83188 | Inner Joint | | 31 | 26 | 44 | 86 | 83 | |
| 3.0 (202 kw) | 2009.03-2015.04 | 6AT/8AT | R | L | Saloon RWD 306DT(AJTDV6) | Chassis no. from:R47154 | GDS56184 | Drive Shaft | | 31 | 31 | 65 | 97 | 801 | |
| | 2009.03-2015.04 | 6AT/8AT | R | R | Saloon RWD 306DT(AJTDV6) | Chassis no. from:R47154 | GDS57341 | Drive Shaft | | 31 | 31 | 65 | 97 | 843 | |
| | 2009.03-2015.04 | 6AT/8AT | R | L/R | Saloon RWD 306DT(AJTDV6) | Chassis no. from:R47154 | GCO83508 | Outer Joint | | 31 | 24 | 65 | 97 | 58 | I |
| | 2009.03-2015.04 | 8AT | R | R | Saloon RWD 306DT(AJTDV6) | Chassis no. from:R47154 | GCI83188 | Inner Joint | | 31 | 26 | 44 | 86 | 83 | |
| 3.0 (221 kw) | 2015.05- | 8AT | R | L | Saloon RWD 306DT(AJTDV6) | | GDS58113 | Drive Shaft | | 31 | 31 | 65 | 97 | 776 | |
| | 2015.05- | 8AT | R | R | Saloon RWD 306DT(AJTDV6) | | GDS57341 | Drive Shaft | | 31 | 31 | 65 | 97 | 843 | |
| | 2015.05- | 8AT | R | L/R | Saloon RWD 306DT(AJTDV6) | | GCO83508 | Outer Joint | | 31 | 24 | 65 | 97 | 58 | I |
| | 2015.05- | 8AT | R | L/R | Saloon RWD 306DT(AJTDV6) | | GCI83188 | Inner Joint | | 31 | 26 | 44 | 86 | 83 | |
| 3.0 (250 kw) | 2012.03-2015.04 | 8AT | R | L | Saloon RWD 306PS(AJ126) | Chassis no. from:R47154 | GDS56184 | Drive Shaft | | 31 | 31 | 65 | 97 | 801 | |
| | 2012.03-2015.04 | 8AT | R | R | Saloon RWD 306PS(AJ126) | Chassis no. from:R47154 | GDS57341 | Drive Shaft | | 31 | 31 | 65 | 97 | 843 | |
| | 2012.03-2015.04 | 8AT | R | L/R | Saloon RWD 306PS(AJ126) | Chassis no. from:R47154 | GCO83508 | Outer Joint | | 31 | 24 | 65 | 97 | 58 | I |
| | 2012.03-2015.04 | 8AT | R | R | Saloon RWD 306PS(AJ126) | Chassis no. from:R47154 | GCI83188 | Inner Joint | | 31 | 26 | 44 | 86 | 83 | |
| | 2012.10-2015.04 | 8AT | R | L | Saloon 4WD 306PS(AJ126) | Chassis no. from:R47154 | GDS56184 | Drive Shaft | | 31 | 31 | 65 | 97 | 801 | |
| | 2012.10-2015.04 | 8AT | R | R | Saloon 4WD 306PS(AJ126) | Chassis no. from:R47154 | GDS57341 | Drive Shaft | | 31 | 31 | 65 | 97 | 843 | |
| | 2012.10-2015.04 | 8AT | R | L/R | Saloon 4WD 306PS(AJ126) | Chassis no. from:R47154 | GCO83508 | Outer Joint | | 31 | 24 | 65 | 97 | 58 | I |
| | 2012.10-2015.04 | 8AT | R | R | Saloon 4WD 306PS(AJ126) | Chassis no. from:R47154 | GCI83188 | Inner Joint | | 31 | 26 | 44 | 86 | 83 | |
| | 2015.05- | 8AT | R | L | Saloon RWD 306PS(AJ126) | | GDS58113 | Drive Shaft | | 31 | 31 | 65 | 97 | 776 | |
| | 2015.05- | 8AT | R | R | Saloon RWD 306PS(AJ126) | | GDS57341 | Drive Shaft | | 31 | 31 | 65 | 97 | 843 | |
| | 2015.05- | 8AT | R | L/R | Saloon RWD 306PS(AJ126) | | GCO83508 | Outer Joint | | 31 | 24 | 65 | 97 | 58 | I |
| | 2015.05- | 8AT | R | L/R | Saloon RWD 306PS(AJ126) | | GCI83188 | Inner Joint | | 31 | 26 | 44 | 86 | 83 | |
| | 2015.07- | 8AT | F | L | Saloon 4WD 306PS(AJ126) | | GDS57876 | Drive Shaft | | 31 | 23 | 65.3 | 97 | 647 | |
| | 2015.07- | 8AT | F | R | Saloon 4WD 306PS(AJ126) | | GDS57875 | Drive Shaft | | 31 | 23 | 65.3 | 97 | 1022 | |
| | 2015.07- | 8AT | F | L/R | Saloon 4WD 306PS(AJ126) | | GCO83766 | Outer Joint | | 31 | 21 | 65.3 | 97 | 50.5 | M |
| | 2015.07- | 8AT | F | L | Saloon 4WD 306PS(AJ126) | | GCI83905 | Inner Joint | | 23 | 21 | 35.67 | 60 | 103 | |
| | 2015.07- | 8AT | F | R | Saloon 4WD 306PS(AJ126) | | GCI83904 | Inner Joint | | 23 | 21 | | 435.5 | 103 | |
| | 2015.07- | 8AT | R | L | Saloon 4WD 306PS(AJ126) | | GDS58113 | Drive Shaft | | 31 | 31 | 65 | 97 | 776 | |
| | 2015.07- | 8AT | R | R | Saloon 4WD 306PS(AJ126) | | GDS57341 | Drive Shaft | | 31 | 31 | 65 | 97 | 843 | |
| | 2015.07- | 8AT | R | L/R | Saloon 4WD 306PS(AJ126) | | GCO83508 | Outer Joint | | 31 | 24 | 65 | 97 | 58 | I |
| | 2015.07- | 8AT | R | L/R | Saloon 4WD 306PS(AJ126) | | GCI83188 | Inner Joint | | 31 | 26 | 44 | 86 | 83 | |
| 3.0 (280 kw) | 2015.05- | 8AT | R | L | Saloon RWD 306PS(AJ126) | | GDS58113 | Drive Shaft | | 31 | 31 | 65 | 97 | 776 | |
| | 2015.05- | 8AT | R | R | Saloon RWD 306PS(AJ126) | | GDS57341 | Drive Shaft | | 31 | 31 | 65 | 97 | 843 | |
| | 2015.05- | 8AT | R | L/R | Saloon RWD 306PS(AJ126) | | GCO83508 | Outer Joint | | 31 | 24 | 65 | 97 | 58 | I |
| | 2015.05- | 8AT | R | L/R | Saloon RWD 306PS(AJ126) | | GCI83188 | Inner Joint | | 31 | 26 | 44 | 86 | 83 | |
| | 2015.07- | 8AT | F | L | Saloon 4WD 306PS(AJ126) | | GDS57876 | Drive Shaft | | 31 | 23 | 65.3 | 97 | 647 | |
| | 2015.07- | 8AT | F | R | Saloon 4WD 306PS(AJ126) | | GDS57875 | Drive Shaft | | 31 | 23 | 65.3 | 97 | 1022 | |
| | 2015.07- | 8AT | F | L/R | Saloon 4WD 306PS(AJ126) | | GCO83766 | Outer Joint | | 31 | 21 | 65.3 | 97 | 50.5 | M |
| | 2015.07- | 8AT | F | L | Saloon 4WD 306PS(AJ126) | | GCI83905 | Inner Joint | | 23 | 21 | 35.67 | 60 | 103 | |
| | 2015.07- | 8AT | F | R | Saloon 4WD 306PS(AJ126) | | GCI83904 | Inner Joint | | 23 | 21 | | 435.5 | 103 | |
| | 2015.07- | 8AT | R | L | Saloon 4WD 306PS(AJ126) | | GDS58113 | Drive Shaft | | 31 | 31 | 65 | 97 | 776 | |
| | 2015.07- | 8AT | R | R | Saloon 4WD 306PS(AJ126) | | GDS57341 | Drive Shaft | | 31 | 31 | 65 | 97 | 843 | |
| | 2015.07- | 8AT | R | L/R | Saloon 4WD 306PS(AJ126) | | GCO83508 | Outer Joint | | 31 | 24 | 65 | 97 | 58 | I |
| | 2015.07- | 8AT | R | L/R | Saloon 4WD 306PS(AJ126) | | GCI83188 | Inner Joint | | 31 | 26 | 44 | 86 | 83 | |
| 4.2 (219 kw) | 2008.03-2015.04 | 6AT | R | L | Saloon RWD SV82G | Chassis no. from:R47154 | GDS56184 | Drive Shaft | | 31 | 31 | 65 | 97 | 801 | |
| | 2008.03-2015.04 | 6AT | R | R | Saloon RWD SV82G | Chassis no. from:R47154 | GDS57341 | Drive Shaft | | 31 | 31 | 65 | 97 | 843 | |
| | 2008.03-2015.04 | 6AT | R | L/R | Saloon RWD SV82G | Chassis no. from:R47154 | GCO83508 | Outer Joint | | 31 | 24 | 65 | 97 | 58 | I |

| | YEAR | TRANSM. | F/R | L/R | BODY STYLE & DRIVE TYPE & ENGINE | REMARKS | G-AP Ref. | PRODUCT | ABS | Technical Specifications A | B | C | H | L | P |
|---|---|---|---|---|---|---|---|---|---|---|---|---|---|---|---|
| **JAGUAR** | | | | | | | | | | | | | | | |
| **XF** | | | | | | | | | | | | | | | |
| 4.2 (219 kw) | 2008.03-2015.04 | 8AT | R | R | Saloon RWD SV82G | Chassis no. from:R47154 | GCI83188 | Inner Joint | | 31 | 26 | 44 | 86 | 83 | |
| 4.2 (306 kw) | 2008.03-2015.04 | 6AT | R | R | Saloon RWD SV8TS | Chassis no. from:R47154 | GDS57341 | Drive Shaft | | 31 | 31 | 65 | 97 | 843 | |
| | 2008.03-2015.04 | 6AT | R | L/R | Saloon RWD SV8TS | Chassis no. from:R47154 | GCO83508 | Outer Joint | | 31 | 24 | 65 | 97 | 58 | I |
| | 2008.03-2015.04 | 8AT | R | R | Saloon RWD SV8TS | Chassis no. from:R47154 | GCI83188 | Inner Joint | | 31 | 26 | 44 | 86 | 83 | |
| 4.2 (313 kw) | 2008.03-2009.12 | AT | R | R | Saloon RWD SV8TS | Chassis no. from:R47154 | GDS57341 | Drive Shaft | | 31 | 31 | 65 | 97 | 843 | |
| 5.0 (283 kw) | 2009.03-2015.04 | 6AT | R | R | Saloon RWD 508PN(AJ133) | Chassis no. from:R47154 | GDS57341 | Drive Shaft | | 31 | 31 | 65 | 97 | 843 | |
| | 2009.03-2015.04 | 6AT | R | L/R | Saloon RWD 508PN(AJ133) | Chassis no. from:R47154 | GCO83508 | Outer Joint | | 31 | 24 | 65 | 97 | 58 | I |
| | 2009.03-2015.04 | 8AT | R | R | Saloon RWD 508PN(AJ133) | Chassis no. from:R47154 | GCI83188 | Inner Joint | | 31 | 26 | 44 | 86 | 83 | |
| **XF Sportbrake** | | | | | | | | | | | | | | | |
| 2.0 (120 kw) | 2017.07- | 8AT | R | L | Estate RWD 204DTD(AJ20D4);204DTH(AJ20D4) | | GDS58113 | Drive Shaft | | 31 | 31 | 65 | 97 | 776 | |
| | 2017.07- | 8AT | R | R | Estate RWD 204DTD(AJ20D4);204DTH(AJ20D4) | | GDS57341 | Drive Shaft | | 31 | 31 | 65 | 97 | 843 | |
| | 2017.07- | 8AT | R | L/R | Estate RWD 204DTD(AJ20D4);204DTH(AJ20D4) | | GCO83508 | Outer Joint | | 31 | 24 | 65 | 97 | 58 | I |
| | 2017.07- | 8AT | R | L/R | Estate RWD 204DTD(AJ20D4);204DTH(AJ20D4) | | GCI83188 | Inner Joint | | 31 | 26 | 44 | 86 | 83 | |
| 2.0 (132 kw) | 2017.07- | 8AT | F | L | Estate 4WD 204DTD(AJ20D4);204DTH(AJ20D4) | | GDS57876 | Drive Shaft | | 31 | 23 | 65.3 | 97 | 647 | |
| | 2017.07- | 8AT | F | R | Estate 4WD 204DTD(AJ20D4);204DTH(AJ20D4) | | GDS57875 | Drive Shaft | | 31 | 23 | 65.3 | 97 | 1022 | |
| | 2017.07- | 8AT | F | L/R | Estate 4WD 204DTD(AJ20D4);204DTH(AJ20D4) | | GCO83766 | Outer Joint | | 31 | 21 | 65.3 | 97 | 50.5 | M |
| | 2017.07- | 8AT | F | L | Estate 4WD 204DTD(AJ20D4);204DTH(AJ20D4) | | GCI83905 | Inner Joint | | 23 | 21 | 35.67 | 60 | 103 | |
| | 2017.07- | 8AT | F | R | Estate 4WD 204DTD(AJ20D4);204DTH(AJ20D4) | | GCI83904 | Inner Joint | | 23 | 21 | | 435.5 | 103 | |
| | 2017.07- | 8AT | R | L | Estate 4WD 204DTD(AJ20D4);204DTH(AJ20D4) | | GDS58113 | Drive Shaft | | 31 | 31 | 65 | 97 | 776 | |
| | 2017.07- | 8AT | R | R | Estate 4WD 204DTD(AJ20D4);204DTH(AJ20D4) | | GDS57341 | Drive Shaft | | 31 | 31 | 65 | 97 | 843 | |
| | 2017.07- | 8AT | R | L/R | Estate 4WD 204DTD(AJ20D4);204DTH(AJ20D4) | | GCO83508 | Outer Joint | | 31 | 24 | 65 | 97 | 58 | I |
| | 2017.07- | 8AT | R | L/R | Estate 4WD 204DTD(AJ20D4);204DTH(AJ20D4) | | GCI83188 | Inner Joint | | 31 | 26 | 44 | 86 | 83 | |
| | 2017.07- | 8AT | R | L | Estate RWD 204DTD(AJ20D4);204DTH(AJ20D4) | | GDS58113 | Drive Shaft | | 31 | 31 | 65 | 97 | 776 | |
| | 2017.07- | 8AT | R | R | Estate RWD 204DTD(AJ20D4);204DTH(AJ20D4) | | GDS57341 | Drive Shaft | | 31 | 31 | 65 | 97 | 843 | |
| | 2017.07- | 8AT | R | L/R | Estate RWD 204DTD(AJ20D4);204DTH(AJ20D4) | | GCO83508 | Outer Joint | | 31 | 24 | 65 | 97 | 58 | I |
| | 2017.07- | 8AT | R | L/R | Estate RWD 204DTD(AJ20D4);204DTH(AJ20D4) | | GCI83188 | Inner Joint | | 31 | 26 | 44 | 86 | 83 | |
| 2.0 (147 kw) | 2017.07- | 8AT | R | L | Estate RWD PT204(AJ20P4) | | GDS58113 | Drive Shaft | | 31 | 31 | 65 | 97 | 776 | |
| | 2017.07- | 8AT | R | R | Estate RWD PT204(AJ20P4) | | GDS57341 | Drive Shaft | | 31 | 31 | 65 | 97 | 843 | |
| | 2017.07- | 8AT | R | L/R | Estate RWD PT204(AJ20P4) | | GCO83508 | Outer Joint | | 31 | 24 | 65 | 97 | 58 | I |
| | 2017.07- | 8AT | R | L/R | Estate RWD PT204(AJ20P4) | | GCI83188 | Inner Joint | | 31 | 26 | 44 | 86 | 83 | |
| 2.0 (150 kw) | 2020.11- | 8AT | F | L | Estate 4WD 204DTY(AJ21D4) | | GDS57876 | Drive Shaft | | 31 | 23 | 65.3 | 97 | 647 | |
| | 2020.11- | 8AT | F | R | Estate 4WD 204DTY(AJ21D4) | | GDS57875 | Drive Shaft | | 31 | 23 | 65.3 | 97 | 1022 | |
| | 2020.11- | 8AT | F | L/R | Estate 4WD 204DTY(AJ21D4) | | GCO83766 | Outer Joint | | 31 | 21 | 65.3 | 97 | 50.5 | M |
| | 2020.11- | 8AT | F | L | Estate 4WD 204DTY(AJ21D4) | | GCI83905 | Inner Joint | | 23 | 21 | 35.67 | 60 | 103 | |
| | 2020.11- | 8AT | F | R | Estate 4WD 204DTY(AJ21D4) | | GCI83904 | Inner Joint | | 23 | 21 | | 435.5 | 103 | |
| | 2020.11- | 8AT | R | L | Estate 4WD 204DTY(AJ21D4) | | GDS58113 | Drive Shaft | | 31 | 31 | 65 | 97 | 776 | |
| | 2020.11- | 8AT | R | R | Estate 4WD 204DTY(AJ21D4) | | GDS57341 | Drive Shaft | | 31 | 31 | 65 | 97 | 843 | |
| | 2020.11- | 8AT | R | L/R | Estate 4WD 204DTY(AJ21D4) | | GCO83508 | Outer Joint | | 31 | 24 | 65 | 97 | 58 | I |
| | 2020.11- | 8AT | R | L/R | Estate 4WD 204DTY(AJ21D4) | | GCI83188 | Inner Joint | | 31 | 26 | 44 | 86 | 83 | |
| | 2020.11- | 8AT | R | L | Estate RWD 204DTY(AJ21D4) | | GDS58113 | Drive Shaft | | 31 | 31 | 65 | 97 | 776 | |
| | 2020.11- | 8AT | R | R | Estate RWD 204DTY(AJ21D4) | | GDS57341 | Drive Shaft | | 31 | 31 | 65 | 97 | 843 | |
| | 2020.11- | 8AT | R | L/R | Estate RWD 204DTY(AJ21D4) | | GCO83508 | Outer Joint | | 31 | 24 | 65 | 97 | 58 | I |
| | 2020.11- | 8AT | R | L/R | Estate RWD 204DTY(AJ21D4) | | GCI83188 | Inner Joint | | 31 | 26 | 44 | 86 | 83 | |
| 2.0 (177 kw) | 2013.08-2015.12 | 8AT | R | L | Estate RWD 204PT(GTDI) | Chassis no. from:R47154 | GDS56184 | Drive Shaft | | 31 | 31 | 65 | 97 | 801 | |
| | 2013.08-2015.12 | 8AT | R | R | Estate RWD 204PT(GTDI) | Chassis no. from:R47154 | GDS57341 | Drive Shaft | | 31 | 31 | 65 | 97 | 843 | |
| | 2013.08-2015.12 | 8AT | R | L/R | Estate RWD 204PT(GTDI) | Chassis no. from:R47154 | GCO83508 | Outer Joint | | 31 | 24 | 65 | 97 | 58 | I |
| | 2013.08-2015.12 | 8AT | R | R | Estate RWD 204PT(GTDI) | Chassis no. from:R47154 | GCI83188 | Inner Joint | | 31 | 26 | 44 | 86 | 83 | |
| | 2017.07- | 8AT | F | L | Estate 4WD 204DTA(AJ20D4) | | GDS57876 | Drive Shaft | | 31 | 23 | 65.3 | 97 | 647 | |
| | 2017.07- | 8AT | F | R | Estate 4WD 204DTA(AJ20D4) | | GDS57875 | Drive Shaft | | 31 | 23 | 65.3 | 97 | 1022 | |
| | 2017.07- | 8AT | F | L/R | Estate 4WD 204DTA(AJ20D4) | | GCO83766 | Outer Joint | | 31 | 21 | 65.3 | 97 | 50.5 | M |
| | 2017.07- | 8AT | F | L | Estate 4WD 204DTA(AJ20D4) | | GCI83905 | Inner Joint | | 23 | 21 | 35.67 | 60 | 103 | |
| | 2017.07- | 8AT | F | R | Estate 4WD 204DTA(AJ20D4) | | GCI83904 | Inner Joint | | 23 | 21 | | 435.5 | 103 | |
| | 2017.07- | 8AT | R | L | Estate 4WD 204DTA(AJ20D4) | | GDS58113 | Drive Shaft | | 31 | 31 | 65 | 97 | 776 | |
| | 2017.07- | 8AT | R | R | Estate 4WD 204DTA(AJ20D4) | | GDS57341 | Drive Shaft | | 31 | 31 | 65 | 97 | 843 | |
| | 2017.07- | 8AT | R | L/R | Estate 4WD 204DTA(AJ20D4) | | GCO83508 | Outer Joint | | 31 | 24 | 65 | 97 | 58 | I |
| | 2017.07- | 8AT | R | L/R | Estate 4WD 204DTA(AJ20D4) | | GCI83188 | Inner Joint | | 31 | 26 | 44 | 86 | 83 | |
| 2.0 (184 kw) | 2017.07- | 8AT | R | L | Estate RWD PT204(AJ20P4) | | GDS58113 | Drive Shaft | | 31 | 31 | 65 | 97 | 776 | |
| | 2017.07- | 8AT | R | R | Estate RWD PT204(AJ20P4) | | GDS57341 | Drive Shaft | | 31 | 31 | 65 | 97 | 843 | |
| | 2017.07- | 8AT | R | L/R | Estate RWD PT204(AJ20P4) | | GCO83508 | Outer Joint | | 31 | 24 | 65 | 97 | 58 | I |
| | 2017.07- | 8AT | R | L/R | Estate RWD PT204(AJ20P4) | | GCI83188 | Inner Joint | | 31 | 26 | 44 | 86 | 83 | |
| | 2020.11- | 8AT | F | L | Estate 4WD PT204(AJ20P4) | | GDS57876 | Drive Shaft | | 31 | 23 | 65.3 | 97 | 647 | |
| | 2020.11- | 8AT | F | R | Estate 4WD PT204(AJ20P4) | | GDS57875 | Drive Shaft | | 31 | 23 | 65.3 | 97 | 1022 | |
| | 2020.11- | 8AT | F | L/R | Estate 4WD PT204(AJ20P4) | | GCO83766 | Outer Joint | | 31 | 21 | 65.3 | 97 | 50.5 | M |
| | 2020.11- | 8AT | F | L | Estate 4WD PT204(AJ20P4) | | GCI83905 | Inner Joint | | 23 | 21 | 35.67 | 60 | 103 | |
| | 2020.11- | 8AT | F | R | Estate 4WD PT204(AJ20P4) | | GCI83904 | Inner Joint | | 23 | 21 | | 435.5 | 103 | |

| | YEAR | TRANSM. | F/R | L/R | BODY STYLE & DRIVE TYPE & ENGINE | REMARKS | G-AP Ref. | PRODUCT | ABS | Technical Specifications A | B | C | H | L | P |
|---|---|---|---|---|---|---|---|---|---|---|---|---|---|---|---|
| **JAGUAR** | | | | | | | | | | | | | | | |
| **XF Sportbrake** | | | | | | | | | | | | | | | |
| 2.0 (184 kw) | 2020.11- | 8AT | R | L | Estate 4WD PT204(AJ20P4) | | GDS58113 | Drive Shaft | | 31 | 31 | 65 | 97 | 776 | |
| | 2020.11- | 8AT | R | R | Estate 4WD PT204(AJ20P4) | | GDS57341 | Drive Shaft | | 31 | 31 | 65 | 97 | 843 | |
| | 2020.11- | 8AT | R | L/R | Estate 4WD PT204(AJ20P4) | | GCO83508 | Outer Joint | | 31 | 24 | 65 | 97 | 58 | I |
| | 2020.11- | 8AT | R | L/R | Estate 4WD PT204(AJ20P4) | | GCI83188 | Inner Joint | | 31 | 26 | 44 | 86 | 83 | |
| 2.0 (221 kw) | 2018.08- | 8AT | F | L | Estate 4WD PT204(AJ20P4) | | GDS57876 | Drive Shaft | | 31 | 23 | 65.3 | 97 | 647 | |
| | 2018.08- | 8AT | F | R | Estate 4WD PT204(AJ20P4) | | GDS57875 | Drive Shaft | | 31 | 23 | 65.3 | 97 | 1022 | |
| | 2018.08- | 8AT | F | L/R | Estate 4WD PT204(AJ20P4) | | GCO83766 | Outer Joint | | 31 | 21 | 65.3 | 97 | 50.5 | M |
| | 2018.08- | 8AT | F | L | Estate 4WD PT204(AJ20P4) | | GCI83905 | Inner Joint | | 23 | 21 | 35.67 | 60 | 103 | |
| | 2018.08- | 8AT | F | R | Estate 4WD PT204(AJ20P4) | | GCI83904 | Inner Joint | | 23 | 21 | | 435.5 | 103 | |
| | 2018.08- | 8AT | R | L | Estate 4WD PT204(AJ20P4) | | GDS58113 | Drive Shaft | | 31 | 31 | 65 | 97 | 776 | |
| | 2018.08- | 8AT | R | R | Estate 4WD PT204(AJ20P4) | | GDS57341 | Drive Shaft | | 31 | 31 | 65 | 97 | 843 | |
| | 2018.08- | 8AT | R | L/R | Estate 4WD PT204(AJ20P4) | | GCO83508 | Outer Joint | | 31 | 24 | 65 | 97 | 58 | I |
| | 2018.08- | 8AT | R | L/R | Estate 4WD PT204(AJ20P4) | | GCI83188 | Inner Joint | | 31 | 26 | 44 | 86 | 83 | |
| 2.2 (120 kw) | 2012.09-2014.04 | 8AT | R | L | Estate RWD 224DT(DW12C) | Chassis no. from:R47154 | GDS56184 | Drive Shaft | | 31 | 31 | 65 | 97 | 801 | |
| | 2012.09-2014.04 | 8AT | R | R | Estate RWD 224DT(DW12C) | Chassis no. from:R47154 | GDS57341 | Drive Shaft | | 31 | 31 | 65 | 97 | 843 | |
| | 2012.09-2014.04 | 8AT | R | L/R | Estate RWD 224DT(DW12C) | Chassis no. from:R47154 | GCO83508 | Outer Joint | | 31 | 24 | 65 | 97 | 58 | I |
| | 2012.09-2014.04 | 8AT | R | R | Estate RWD 224DT(DW12C) | Chassis no. from:R47154 | GCI83188 | Inner Joint | | 31 | 26 | 44 | 86 | 83 | |
| 2.2 (147 kw) | 2012.09-2014.04 | 8AT | R | L | Estate RWD 224DT(DW12C) | Chassis no. from:R47154 | GDS56184 | Drive Shaft | | 31 | 31 | 65 | 97 | 801 | |
| | 2012.09-2014.04 | 8AT | R | R | Estate RWD 224DT(DW12C) | Chassis no. from:R47154 | GDS57341 | Drive Shaft | | 31 | 31 | 65 | 97 | 843 | |
| | 2012.09-2014.04 | 8AT | R | L/R | Estate RWD 224DT(DW12C) | Chassis no. from:R47154 | GCO83508 | Outer Joint | | 31 | 24 | 65 | 97 | 58 | I |
| | 2012.09-2014.04 | 8AT | R | R | Estate RWD 224DT(DW12C) | Chassis no. from:R47154 | GCI83188 | Inner Joint | | 31 | 26 | 44 | 86 | 83 | |
| 3.0 (177 kw) | 2012.09-2014.04 | 8AT | R | L | Estate RWD 306DT(AJTDV6) | Chassis no. from:R47154 | GDS56184 | Drive Shaft | | 31 | 31 | 65 | 97 | 801 | |
| | 2012.09-2014.04 | 8AT | R | R | Estate RWD 306DT(AJTDV6) | Chassis no. from:R47154 | GDS57341 | Drive Shaft | | 31 | 31 | 65 | 97 | 843 | |
| | 2012.09-2014.04 | 8AT | R | L/R | Estate RWD 306DT(AJTDV6) | Chassis no. from:R47154 | GCO83508 | Outer Joint | | 31 | 24 | 65 | 97 | 58 | I |
| | 2012.09-2014.04 | 8AT | R | R | Estate RWD 306DT(AJTDV6) | Chassis no. from:R47154 | GCI83188 | Inner Joint | | 31 | 26 | 44 | 86 | 83 | |
| 3.0 (202 kw) | 2012.09-2014.04 | 8AT | R | L | Estate RWD 306DT(AJTDV6) | Chassis no. from:R47154 | GDS56184 | Drive Shaft | | 31 | 31 | 65 | 97 | 801 | |
| | 2012.09-2014.04 | 8AT | R | R | Estate RWD 306DT(AJTDV6) | Chassis no. from:R47154 | GDS57341 | Drive Shaft | | 31 | 31 | 65 | 97 | 843 | |
| | 2012.09-2014.04 | 8AT | R | L/R | Estate RWD 306DT(AJTDV6) | Chassis no. from:R47154 | GCO83508 | Outer Joint | | 31 | 24 | 65 | 97 | 58 | I |
| | 2012.09-2014.04 | 8AT | R | R | Estate RWD 306DT(AJTDV6) | Chassis no. from:R47154 | GCI83188 | Inner Joint | | 31 | 26 | 44 | 86 | 83 | |
| 3.0 (221 kw) | 2017.07- | 8AT | R | L | Estate RWD 306DT(AJTDV6) | | GDS58113 | Drive Shaft | | 31 | 31 | 65 | 97 | 776 | |
| | 2017.07- | 8AT | R | R | Estate RWD 306DT(AJTDV6) | | GDS57341 | Drive Shaft | | 31 | 31 | 65 | 97 | 843 | |
| | 2017.07- | 8AT | R | L/R | Estate RWD 306DT(AJTDV6) | | GCO83508 | Outer Joint | | 31 | 24 | 65 | 97 | 58 | I |
| | 2017.07- | 8AT | R | L/R | Estate RWD 306DT(AJTDV6) | | GCI83188 | Inner Joint | | 31 | 26 | 44 | 86 | 83 | |
| 3.0 (280 kw) | 2017.07- | 8AT | F | L | Estate 4WD 306PS(AJ126) | | GDS57876 | Drive Shaft | | 31 | 23 | 65.3 | 97 | 647 | |
| | 2017.07- | 8AT | F | R | Estate 4WD 306PS(AJ126) | | GDS57875 | Drive Shaft | | 31 | 23 | 65.3 | 97 | 1022 | |
| | 2017.07- | 8AT | F | L/R | Estate 4WD 306PS(AJ126) | | GCO83766 | Outer Joint | | 31 | 21 | 65.3 | 97 | 50.5 | M |
| | 2017.07- | 8AT | F | L | Estate 4WD 306PS(AJ126) | | GCI83905 | Inner Joint | | 23 | 21 | 35.67 | 60 | 103 | |
| | 2017.07- | 8AT | F | R | Estate 4WD 306PS(AJ126) | | GCI83904 | Inner Joint | | 23 | 21 | | 435.5 | 103 | |
| | 2017.07- | 8AT | R | L | Estate 4WD 306PS(AJ126) | | GDS58113 | Drive Shaft | | 31 | 31 | 65 | 97 | 776 | |
| | 2017.07- | 8AT | R | R | Estate 4WD 306PS(AJ126) | | GDS57341 | Drive Shaft | | 31 | 31 | 65 | 97 | 843 | |
| | 2017.07- | 8AT | R | L/R | Estate 4WD 306PS(AJ126) | | GCO83508 | Outer Joint | | 31 | 24 | 65 | 97 | 58 | I |
| | 2017.07- | 8AT | R | L/R | Estate 4WD 306PS(AJ126) | | GCI83188 | Inner Joint | | 31 | 26 | 44 | 86 | 83 | |
| | 2017.07- | 8AT | R | L | Estate RWD 306PS(AJ126) | | GDS58113 | Drive Shaft | | 31 | 31 | 65 | 97 | 776 | |
| | 2017.07- | 8AT | R | R | Estate RWD 306PS(AJ126) | | GDS57341 | Drive Shaft | | 31 | 31 | 65 | 97 | 843 | |
| | 2017.07- | 8AT | R | L/R | Estate RWD 306PS(AJ126) | | GCO83508 | Outer Joint | | 31 | 24 | 65 | 97 | 58 | I |
| | 2017.07- | 8AT | R | L/R | Estate RWD 306PS(AJ126) | | GCI83188 | Inner Joint | | 31 | 26 | 44 | 86 | 83 | |
| **XJ** | | | | | | | | | | | | | | | |
| 2.0 (177 kw) | 2012.05-2019.12 | 8AT | R | L | Saloon RWD 204PT(GTDI) | | GDS56184 | Drive Shaft | | 31 | 31 | 65 | 97 | 801 | |
| | 2012.05-2019.12 | 8AT | R | R | Saloon RWD 204PT(GTDI) | | GDS57341 | Drive Shaft | | 31 | 31 | 65 | 97 | 843 | |
| | 2012.05-2019.12 | 8AT | R | L/R | Saloon RWD 204PT(GTDI) | | GCO83508 | Outer Joint | | 31 | 24 | 65 | 97 | 58 | I |
| | 2012.05-2019.12 | 8AT | R | L | Saloon RWD 204PT(GTDI) | | GCI83188 | Inner Joint | | 31 | 26 | 44 | 86 | 83 | |
| 3.0 (175 kw) | 2011.01-2019.12 | 6AT | R | L | Saloon RWD AJV6(3.0 Liter) | | GDS56184 | Drive Shaft | | 31 | 31 | 65 | 97 | 801 | |
| | 2011.01-2019.12 | 6AT | R | R | Saloon RWD AJV6(3.0 Liter) | | GDS57341 | Drive Shaft | | 31 | 31 | 65 | 97 | 843 | |
| | 2011.01-2019.12 | 6AT | R | L/R | Saloon RWD AJV6(3.0 Liter) | | GCO83508 | Outer Joint | | 31 | 24 | 65 | 97 | 58 | I |
| | 2011.01-2019.12 | 6AT | R | L | Saloon RWD AJV6(3.0 Liter) | | GCI83188 | Inner Joint | | 31 | 26 | 44 | 86 | 83 | |
| 3.0 (202 kw) | 2009.10-2016.04 | 6AT/8AT | R | L | Saloon RWD 306DT(AJTDV6) | | GDS56184 | Drive Shaft | | 31 | 31 | 65 | 97 | 801 | |
| | 2009.10-2016.04 | 6AT/8AT | R | R | Saloon RWD 306DT(AJTDV6) | | GDS57341 | Drive Shaft | | 31 | 31 | 65 | 97 | 843 | |
| | 2009.10-2016.04 | 6AT/8AT | R | L/R | Saloon RWD 306DT(AJTDV6) | | GCO83508 | Outer Joint | | 31 | 24 | 65 | 97 | 58 | I |
| | 2009.10-2016.04 | 6AT/8AT | R | L | Saloon RWD 306DT(AJTDV6) | | GCI83188 | Inner Joint | | 31 | 26 | 44 | 86 | 83 | |
| 3.0 (221 kw) | 2015.04-2019.12 | 8AT | R | L | Saloon RWD 306DT(AJTDV6) | | GDS56184 | Drive Shaft | | 31 | 31 | 65 | 97 | 801 | |
| | 2015.04-2019.12 | 8AT | R | R | Saloon RWD 306DT(AJTDV6) | | GDS57341 | Drive Shaft | | 31 | 31 | 65 | 97 | 843 | |
| | 2015.04-2019.12 | 8AT | R | L/R | Saloon RWD 306DT(AJTDV6) | | GCO83508 | Outer Joint | | 31 | 24 | 65 | 97 | 58 | I |
| | 2015.04-2019.12 | 8AT | R | L | Saloon RWD 306DT(AJTDV6) | | GCI83188 | Inner Joint | | 31 | 26 | 44 | 86 | 83 | |
| 3.0 (250 kw) | 2012.03-2019.12 | 8AT | R | L | Saloon RWD 306PS(AJ126) | | GDS56184 | Drive Shaft | | 31 | 31 | 65 | 97 | 801 | |
| | 2012.03-2019.12 | 8AT | R | R | Saloon RWD 306PS(AJ126) | | GDS57341 | Drive Shaft | | 31 | 31 | 65 | 97 | 843 | |

| | YEAR | TRANSM. | F/R | L/R | BODY STYLE & DRIVE TYPE & ENGINE | REMARKS | G-AP Ref. | PRODUCT | ABS | Technical Specifications A | B | C | H | L | P |
|---|---|---|---|---|---|---|---|---|---|---|---|---|---|---|---|
| **JAGUAR** | | | | | | | | | | | | | | | |
| **XJ** | | | | | | | | | | | | | | | |
| 3.0 (250 kw) | 2012.03-2019.12 | 8AT | R | L/R | Saloon RWD 306PS(AJ126) | | GCO83508 | Outer Joint | | 31 | 24 | 65 | 97 | 58 | I |
| | 2012.03-2019.12 | 8AT | R | L | Saloon RWD 306PS(AJ126) | | GCI83188 | Inner Joint | | 31 | 26 | 44 | 86 | 83 | |
| | 2012.10-2019.12 | 8AT | F | L | Saloon 4WD 306PS(AJ126) | | GDS57876 | Drive Shaft | | 31 | 23 | 65.3 | 97 | 647 | |
| | 2012.10-2019.12 | 8AT | F | R | Saloon 4WD 306PS(AJ126) | | GDS57875 | Drive Shaft | | 31 | 23 | 65.3 | 97 | 1022 | |
| | 2012.10-2019.12 | 8AT | F | L/R | Saloon 4WD 306PS(AJ126) | | GCO83766 | Outer Joint | | 31 | 21 | 65.3 | 97 | 50.5 | M |
| | 2012.10-2019.12 | 8AT | F | L | Saloon 4WD 306PS(AJ126) | | GCI83905 | Inner Joint | | 23 | 21 | 35.67 | 60 | 103 | |
| | 2012.10-2019.12 | 8AT | F | R | Saloon 4WD 306PS(AJ126) | | GCI83904 | Inner Joint | | 23 | 21 | | 435.5 | 103 | |
| | 2012.10-2019.12 | 8AT | R | L | Saloon 4WD 306PS(AJ126) | | GDS56184 | Drive Shaft | | 31 | 31 | 65 | 97 | 801 | |
| | 2012.10-2019.12 | 8AT | R | R | Saloon 4WD 306PS(AJ126) | | GDS57341 | Drive Shaft | | 31 | 31 | 65 | 97 | 843 | |
| | 2012.10-2019.12 | 8AT | R | L/R | Saloon 4WD 306PS(AJ126) | | GCO83508 | Outer Joint | | 31 | 24 | 65 | 97 | 58 | I |
| | 2012.10-2019.12 | 8AT | R | R | Saloon 4WD 306PS(AJ126) | | GCI83188 | Inner Joint | | 31 | 26 | 44 | 86 | 83 | |
| 5.0 (283 kw) | 2009.10-2019.12 | 6AT | R | L | Saloon RWD 508PN(AJ133) | | GDS56184 | Drive Shaft | | 31 | 31 | 65 | 97 | 801 | |
| | 2009.10-2019.12 | 6AT | R | R | Saloon RWD 508PN(AJ133) | | GDS57341 | Drive Shaft | | 31 | 31 | 65 | 97 | 843 | |
| | 2009.10-2019.12 | 6AT | R | L/R | Saloon RWD 508PN(AJ133) | | GCO83508 | Outer Joint | | 31 | 24 | 65 | 97 | 58 | I |
| | 2009.10-2019.12 | 6AT | R | L | Saloon RWD 508PN(AJ133) | | GCI83188 | Inner Joint | | 31 | 26 | 44 | 86 | 83 | |
| 5.0 (346 kw) | 2009.10-2019.12 | 6AT | R | R | Saloon RWD 508PS(AJ133) | Chassis no. to:V39426 | GDS57341 | Drive Shaft | | 31 | 31 | 65 | 97 | 843 | |
| | 2009.10-2019.12 | 6AT | R | L/R | Saloon RWD 508PS(AJ133) | Chassis no. to:V39426 | GCO83508 | Outer Joint | | 31 | 24 | 65 | 97 | 58 | I |
| | 2009.10-2019.12 | 6AT | R | R | Saloon RWD 508PS(AJ133) | Chassis no. to:V39426 | GCI83188 | Inner Joint | | 31 | 26 | 44 | 86 | 83 | |
| 5.0 (375 kw) | 2009.10-2019.12 | 6AT/8AT | R | R | Saloon RWD 508PS(AJ133) | Chassis no. to:V39426 | GDS57341 | Drive Shaft | | 31 | 31 | 65 | 97 | 843 | |
| | 2009.10-2019.12 | 6AT/8AT | R | L/R | Saloon RWD 508PS(AJ133) | Chassis no. to:V39426 | GCO83508 | Outer Joint | | 31 | 24 | 65 | 97 | 58 | I |
| | 2009.10-2019.12 | 8AT | R | R | Saloon RWD 508PS(AJ133) | Chassis no. to:V39426 | GCI83188 | Inner Joint | | 31 | 26 | 44 | 86 | 83 | |
| 5.0 (405 kw) | 2013.06-2019.12 | 8AT | R | R | Saloon RWD 508PS(AJ133) | Chassis no. to:V39426 | GDS57341 | Drive Shaft | | 31 | 31 | 65 | 97 | 843 | |
| | 2013.06-2019.12 | 8AT | R | L/R | Saloon RWD 508PS(AJ133) | Chassis no. to:V39426 | GCO83508 | Outer Joint | | 31 | 24 | 65 | 97 | 58 | I |
| | 2013.06-2019.12 | 8AT | R | R | Saloon RWD 508PS(AJ133) | Chassis no. to:V39426 | GCI83188 | Inner Joint | | 31 | 26 | 44 | 86 | 83 | |
| 5.0 (423 kw) | 2017.06-2019.12 | 8AT | R | R | Saloon RWD 508PS(AJ133) | Chassis no. to:V39426 | GDS57341 | Drive Shaft | | 31 | 31 | 65 | 97 | 843 | |
| | 2017.06-2019.12 | 8AT | R | L/R | Saloon RWD 508PS(AJ133) | Chassis no. to:V39426 | GCO83508 | Outer Joint | | 31 | 24 | 65 | 97 | 58 | I |
| | 2017.06-2019.12 | 8AT | R | R | Saloon RWD 508PS(AJ133) | Chassis no. to:V39426 | GCI83188 | Inner Joint | | 31 | 26 | 44 | 86 | 83 | |
| **XJ6** | | | | | | | | | | | | | | | |
| 2.7 (152 kw) | 2005.10-2009.03 | 6AT | R | L | Saloon RWD 7G(AJTDV6) | | GDS82181 | Drive Shaft | 46T | 28 | 28 | 54.9 | 105.5 | 775 | |
| | 2005.10-2009.03 | 6AT | R | R | Saloon RWD 7G(AJTDV6) | Chassis no. to:G41511 | GDS18342 | Drive Shaft | 46W | 28 | 28 | 54.9 | 105.5 | 830 | |
| | 2005.10-2009.03 | 6AT | R | R | Saloon RWD 7G(AJTDV6) | Chassis no. from:G41512,Chassis no. to:H31470 | GDS82180 | Drive Shaft | 46T | 28 | 28 | 54.9 | 105.5 | 830 | |
| | 2005.10-2009.03 | 6AT | R | L/R | Saloon RWD 7G(AJTDV6) | | GCO18246 | Outer Joint | 46T | 28 | 26 | 54.9 | 105.5 | 61 | M |
| | 2005.10-2009.03 | 6AT | R | L/R | Saloon RWD 7G(AJTDV6) | | GCI18179 | Inner Joint | | 28 | 28 | 46 | 101 | 78.5 | |
| 3.0 (175 kw) | 2003.05-2009.03 | 6AT | R | R | Saloon RWD VB(AJV6);VG(AJV6) | Chassis no. to:G41511 | GDS18342 | Drive Shaft | 46W | 28 | 28 | 54.9 | 105.5 | 830 | |
| | 2003.05-2009.03 | 6AT | R | R | Saloon RWD VB(AJV6);VG(AJV6) | Chassis no. from:G41512,Chassis no. to:H31470 | GDS82180 | Drive Shaft | 46T | 28 | 28 | 54.9 | 105.5 | 830 | |
| | 2003.05-2009.03 | AT | R | L | Saloon RWD VB(AJV6);VG(AJV6) | | GDS82181 | Drive Shaft | 46T | 28 | 28 | 54.9 | 105.5 | 775 | |
| | 2003.05-2009.03 | AT | R | L/R | Saloon RWD VB(AJV6);VG(AJV6) | | GCO18246 | Outer Joint | 46T | 28 | 26 | 54.9 | 105.5 | 61 | M |
| | 2003.05-2009.03 | AT | R | L/R | Saloon RWD VB(AJV6);VG(AJV6) | | GCI18179 | Inner Joint | | 28 | 28 | 46 | 101 | 78.5 | |
| 3.0 (179 kw) | 2004.04-2007.01 | 6AT | R | R | Saloon RWD AJV6(3.0 Liter) | Chassis no. to:G41511 | GDS18342 | Drive Shaft | 46W | 28 | 28 | 54.9 | 105.5 | 830 | |
| | 2004.04-2007.01 | 6AT | R | R | Saloon RWD AJV6(3.0 Liter) | Chassis no. from:G41512,Chassis no. to:H31470 | GDS82180 | Drive Shaft | 46T | 28 | 28 | 54.9 | 105.5 | 830 | |
| | 2004.04-2007.01 | AT | R | L | Saloon RWD AJV6(3.0 Liter) | | GDS82181 | Drive Shaft | 46T | 28 | 28 | 54.9 | 105.5 | 775 | |
| | 2004.04-2007.01 | AT | R | L/R | Saloon RWD AJV6(3.0 Liter) | | GCO18246 | Outer Joint | 46T | 28 | 26 | 54.9 | 105.5 | 61 | M |
| | 2004.04-2007.01 | AT | R | L/R | Saloon RWD AJV6(3.0 Liter) | | GCI18179 | Inner Joint | | 28 | 28 | 46 | 101 | 78.5 | |
| **XJ8** | | | | | | | | | | | | | | | |
| 3.5 (190 kw) | 2003.05-2009.03 | 6AT | R | L | Saloon RWD RG(AJV8) | | GDS82181 | Drive Shaft | 46T | 28 | 28 | 54.9 | 105.5 | 775 | |
| | 2003.05-2009.03 | 6AT | R | R | Saloon RWD RG(AJV8) | Chassis no. to:G41511 | GDS18342 | Drive Shaft | 46W | 28 | 28 | 54.9 | 105.5 | 830 | |
| | 2003.05-2009.03 | 6AT | R | R | Saloon RWD RG(AJV8) | Chassis no. from:G41512,Chassis no. to:H31470 | GDS82180 | Drive Shaft | 46T | 28 | 28 | 54.9 | 105.5 | 830 | |
| | 2003.05-2009.03 | 6AT | R | L/R | Saloon RWD RG(AJV8) | | GCO18246 | Outer Joint | 46T | 28 | 26 | 54.9 | 105.5 | 61 | M |
| | 2003.05-2009.03 | 6AT | R | L/R | Saloon RWD RG(AJV8) | | GCI18179 | Inner Joint | | 28 | 28 | 46 | 101 | 78.5 | |
| 4.2 (219 kw) | 2003.05-2009.03 | 6AT | R | R | Saloon RWD SB(AJ33);SG(AJ34) | Chassis no. to:G41511 | GDS18342 | Drive Shaft | 46W | 28 | 28 | 54.9 | 105.5 | 830 | |
| | 2003.05-2009.03 | 6AT | R | R | Saloon RWD SB(AJ33);SG(AJ34) | Chassis no. from:G41512,Chassis no. to:H31470 | GDS82180 | Drive Shaft | 46T | 28 | 28 | 54.9 | 105.5 | 830 | |
| | 2003.05-2009.03 | AT | R | L | Saloon RWD SB(AJ33);SG(AJ34) | | GDS82181 | Drive Shaft | 46T | 28 | 28 | 54.9 | 105.5 | 775 | |
| | 2003.05-2009.03 | AT | R | L/R | Saloon RWD SB(AJ33);SG(AJ34) | | GCO18246 | Outer Joint | 46T | 28 | 26 | 54.9 | 105.5 | 61 | M |
| | 2003.05-2009.03 | AT | R | L/R | Saloon RWD SB(AJ33);SG(AJ34) | | GCI18179 | Inner Joint | | 28 | 28 | 46 | 101 | 78.5 | |
| 4.2 (224 kw) | 2007.05-2009.03 | 6AT | R | R | Saloon RWD SG(AJ34) | Chassis no. to:G41511 | GDS18342 | Drive Shaft | 46W | 28 | 28 | 54.9 | 105.5 | 830 | |
| | 2007.05-2009.03 | 6AT | R | R | Saloon RWD SG(AJ34) | Chassis no. from:G41512,Chassis no. to:H31470 | GDS82180 | Drive Shaft | 46T | 28 | 28 | 54.9 | 105.5 | 830 | |
| | 2007.05-2009.03 | AT | R | L | Saloon RWD SG(AJ34) | | GDS82181 | Drive Shaft | 46T | 28 | 28 | 54.9 | 105.5 | 775 | |
| | 2007.05-2009.03 | AT | R | L/R | Saloon RWD SG(AJ34) | | GCO18246 | Outer Joint | 46T | 28 | 26 | 54.9 | 105.5 | 61 | M |
| | 2007.05-2009.03 | AT | R | L/R | Saloon RWD SG(AJ34) | | GCI18179 | Inner Joint | | 28 | 28 | 46 | 101 | 78.5 | |
| **XJR** | | | | | | | | | | | | | | | |
| 4.2 (291 kw) | 2003.03-2009.03 | 6AT | R | L | Saloon RWD TB(AJ33SC), TG(AJ34SC) | | GDS82181 | Drive Shaft | 46T | 28 | 28 | 54.9 | 105.5 | 775 | |
| | 2003.03-2009.03 | 6AT | R | R | Saloon RWD TB(AJ33SC), TG(AJ34SC) | | GDS82180 | Drive Shaft | 46T | 28 | 28 | 54.9 | 105.5 | 830 | |
| | 2003.03-2009.03 | 6AT | R | L/R | Saloon RWD TB(AJ33SC), TG(AJ34SC) | | GCO18246 | Outer Joint | 46T | 28 | 26 | 54.9 | 105.5 | 61 | M |
| | 2003.03-2009.03 | 6AT | R | L/R | Saloon RWD TB(AJ33SC), TG(AJ34SC) | | GCI18179 | Inner Joint | | 28 | 28 | 46 | 101 | 78.5 | |

| | YEAR | TRANSM. | F/R | L/R | BODY STYLE & DRIVE TYPE & ENGINE | REMARKS | G-AP Ref. | PRODUCT | ABS | Technical Specifications A | B | C | H | L | P |
|---|---|---|---|---|---|---|---|---|---|---|---|---|---|---|---|
| **JAGUAR** | | | | | | | | | | | | | | | |
| **XK** | | | | | | | | | | | | | | | |
| 3.5 (190 kw) | 2007.07-2014.07 | 6AT | R | L | Coupe RWD 4G(AJV8) | | GDS82181 | Drive Shaft | 46T | 28 | 28 | 54.9 | 105.5 | 775 | |
| | 2007.07-2014.07 | 6AT | R | R | Coupe RWD 4G(AJV8) | | GDS82180 | Drive Shaft | 46T | 28 | 28 | 54.9 | 105.5 | 830 | |
| | 2007.07-2014.07 | 6AT | R | L/R | Coupe RWD 4G(AJV8) | | GCO18246 | Outer Joint | 46T | 28 | 26 | 54.9 | 105.5 | 61 | M |
| | 2007.07-2014.07 | 6AT | R | L/R | Coupe RWD 4G(AJV8) | | GCI18179 | Inner Joint | | 28 | 28 | 46 | 101 | 78.5 | |
| | 2007.10-2014.07 | 6AT | R | L | Convertible RWD 4G(AJV8) | | GDS82181 | Drive Shaft | 46T | 28 | 28 | 54.9 | 105.5 | 775 | |
| | 2007.10-2014.07 | 6AT | R | R | Convertible RWD 4G(AJV8) | | GDS82180 | Drive Shaft | 46T | 28 | 28 | 54.9 | 105.5 | 830 | |
| | 2007.10-2014.07 | 6AT | R | L/R | Convertible RWD 4G(AJV8) | | GCO18246 | Outer Joint | 46T | 28 | 26 | 54.9 | 105.5 | 61 | M |
| | 2007.10-2014.07 | 6AT | R | L/R | Convertible RWD 4G(AJV8) | | GCI18179 | Inner Joint | | 28 | 28 | 46 | 101 | 78.5 | |
| 4.2 (219 kw) | 2006.03-2014.07 | 6AT | R | L | Convertible RWD SG(AJ34) | | GDS82181 | Drive Shaft | 46T | 28 | 28 | 54.9 | 105.5 | 775 | |
| | 2006.03-2014.07 | 6AT | R | R | Convertible RWD SG(AJ34) | | GDS82180 | Drive Shaft | 46T | 28 | 28 | 54.9 | 105.5 | 830 | |
| | 2006.03-2014.07 | 6AT | R | L/R | Convertible RWD SG(AJ34) | | GCO18246 | Outer Joint | 46T | 28 | 26 | 54.9 | 105.5 | 61 | M |
| | 2006.03-2014.07 | 6AT | R | L/R | Convertible RWD SG(AJ34) | | GCI18179 | Inner Joint | | 28 | 28 | 46 | 101 | 78.5 | |
| | 2006.03-2014.07 | 6AT | R | L | Coupe RWD SG(AJ34) | | GDS82181 | Drive Shaft | 46T | 28 | 28 | 54.9 | 105.5 | 775 | |
| | 2006.03-2014.07 | 6AT | R | R | Coupe RWD SG(AJ34) | | GDS82180 | Drive Shaft | 46T | 28 | 28 | 54.9 | 105.5 | 830 | |
| | 2006.03-2014.07 | 6AT | R | L/R | Coupe RWD SG(AJ34) | | GCO18246 | Outer Joint | 46T | 28 | 26 | 54.9 | 105.5 | 61 | M |
| | 2006.03-2014.07 | 6AT | R | L/R | Coupe RWD SG(AJ34) | | GCI18179 | Inner Joint | | 28 | 28 | 46 | 101 | 78.5 | |
| 4.2 (224 kw) | 2008.02-2014.07 | 6AT | R | L | Convertible RWD AJ34 | | GDS82181 | Drive Shaft | 46T | 28 | 28 | 54.9 | 105.5 | 775 | |
| | 2008.02-2014.07 | 6AT | R | R | Convertible RWD AJ34 | | GDS82180 | Drive Shaft | 46T | 28 | 28 | 54.9 | 105.5 | 830 | |
| | 2008.02-2014.07 | 6AT | R | L/R | Convertible RWD AJ34 | | GCO18246 | Outer Joint | 46T | 28 | 26 | 54.9 | 105.5 | 61 | M |
| | 2008.02-2014.07 | 6AT | R | L/R | Convertible RWD AJ34 | | GCI18179 | Inner Joint | | 28 | 28 | 46 | 101 | 78.5 | |
| | 2008.02-2014.07 | 6AT | R | L | Coupe RWD AJ34 | | GDS82181 | Drive Shaft | 46T | 28 | 28 | 54.9 | 105.5 | 775 | |
| | 2008.02-2014.07 | 6AT | R | R | Coupe RWD AJ34 | | GDS82180 | Drive Shaft | 46T | 28 | 28 | 54.9 | 105.5 | 830 | |
| | 2008.02-2014.07 | 6AT | R | L/R | Coupe RWD AJ34 | | GCO18246 | Outer Joint | 46T | 28 | 26 | 54.9 | 105.5 | 61 | M |
| | 2008.02-2014.07 | 6AT | R | L/R | Coupe RWD AJ34 | | GCI18179 | Inner Joint | | 28 | 28 | 46 | 101 | 78.5 | |
| 5.0 (283 kw) | 2009.01-2014.07 | 6AT | R | L | Convertible RWD 508PN(AJ133) | Chassis no. from:B32753 | GDS56184 | Drive Shaft | | 31 | 31 | 65 | 97 | 801 | |
| | 2009.01-2014.07 | 6AT | R | L | Convertible RWD 508PN(AJ133) | Chassis no. to:B32752 | GDS82181 | Drive Shaft | 46T | 28 | 28 | 54.9 | 105.5 | 775 | |
| | 2009.01-2014.07 | 6AT | R | R | Convertible RWD 508PN(AJ133) | Chassis no. from:B32753 | GDS57341 | Drive Shaft | | 31 | 31 | 65 | 97 | 843 | |
| | 2009.01-2014.07 | 6AT | R | R | Convertible RWD 508PN(AJ133) | Chassis no. to:B32752 | GDS82180 | Drive Shaft | 46T | 28 | 28 | 54.9 | 105.5 | 830 | |
| | 2009.01-2014.07 | 6AT | R | L/R | Convertible RWD 508PN(AJ133) | Chassis no. to:B32752 | GCO18246 | Outer Joint | 46T | 28 | 26 | 54.9 | 105.5 | 61 | M |
| | 2009.01-2014.07 | 6AT | R | L/R | Convertible RWD 508PN(AJ133) | Chassis no. from:B32753 | GCO83508 | Outer Joint | | 31 | 24 | 65 | 97 | 58 | I |
| | 2009.01-2014.07 | 6AT | R | L/R | Convertible RWD 508PN(AJ133) | Chassis no. to:B32752 | GCI18179 | Inner Joint | | 28 | 28 | 46 | 101 | 78.5 | |
| | 2009.01-2014.07 | 8AT | R | R | Convertible RWD 508PN(AJ133) | Chassis no. from:B32753 | GCI83188 | Inner Joint | | 31 | 26 | 44 | 86 | 83 | |
| | 2009.01-2014.07 | 6AT | R | L | Coupe RWD 508PN(AJ133) | Chassis no. from:B32753 | GDS56184 | Drive Shaft | | 31 | 31 | 65 | 97 | 801 | |
| | 2009.01-2014.07 | 6AT | R | L | Coupe RWD 508PN(AJ133) | Chassis no. to:B32752 | GDS82181 | Drive Shaft | 46T | 28 | 28 | 54.9 | 105.5 | 775 | |
| | 2009.01-2014.07 | 6AT | R | R | Coupe RWD 508PN(AJ133) | Chassis no. from:B32753 | GDS57341 | Drive Shaft | | 31 | 31 | 65 | 97 | 843 | |
| | 2009.01-2014.07 | 6AT | R | R | Coupe RWD 508PN(AJ133) | Chassis no. to:B32752 | GDS82180 | Drive Shaft | 46T | 28 | 28 | 54.9 | 105.5 | 830 | |
| | 2009.01-2014.07 | 6AT | R | L/R | Coupe RWD 508PN(AJ133) | Chassis no. to:B32752 | GCO18246 | Outer Joint | 46T | 28 | 26 | 54.9 | 105.5 | 61 | M |
| | 2009.01-2014.07 | 6AT | R | L/R | Coupe RWD 508PN(AJ133) | Chassis no. from:B32753 | GCO83508 | Outer Joint | | 31 | 24 | 65 | 97 | 58 | I |
| | 2009.01-2014.07 | 6AT | R | L/R | Coupe RWD 508PN(AJ133) | Chassis no. to:B32752 | GCI18179 | Inner Joint | | 28 | 28 | 46 | 101 | 78.5 | |
| | 2009.01-2014.07 | 8AT | R | R | Coupe RWD 508PN(AJ133) | Chassis no. from:B32753 | GCI83188 | Inner Joint | | 31 | 26 | 44 | 86 | 83 | |
| **XKR** | | | | | | | | | | | | | | | |
| 4.2 (291 kw) | 2006.03-2014.07 | 6AT | R | L | Coupe RWD AJ36 | | GDS82181 | Drive Shaft | 46T | 28 | 28 | 54.9 | 105.5 | 775 | |
| | 2006.03-2014.07 | 6AT | R | R | Coupe RWD AJ36 | | GDS82180 | Drive Shaft | 46T | 28 | 28 | 54.9 | 105.5 | 830 | |
| | 2006.03-2014.07 | 6AT | R | L/R | Coupe RWD AJ36 | | GCO18246 | Outer Joint | 46T | 28 | 26 | 54.9 | 105.5 | 61 | M |
| | 2006.03-2014.07 | 6AT | R | L/R | Coupe RWD AJ36 | | GCI18179 | Inner Joint | | 28 | 28 | 46 | 101 | 78.5 | |
| | 2007.09-2009.12 | 6AT | R | L | Convertible RWD AJ36 | | GDS82181 | Drive Shaft | 46T | 28 | 28 | 54.9 | 105.5 | 775 | |
| | 2007.09-2009.12 | 6AT | R | R | Convertible RWD AJ36 | | GDS82180 | Drive Shaft | 46T | 28 | 28 | 54.9 | 105.5 | 830 | |
| | 2007.09-2009.12 | 6AT | R | L/R | Convertible RWD AJ36 | | GCO18246 | Outer Joint | 46T | 28 | 26 | 54.9 | 105.5 | 61 | M |
| | 2007.09-2009.12 | 6AT | R | L/R | Convertible RWD AJ36 | | GCI18179 | Inner Joint | | 28 | 28 | 46 | 101 | 78.5 | |
| 4.2 (306 kw) | 2006.03-2014.07 | 6AT | R | L | Convertible RWD SV8TS | | GDS82181 | Drive Shaft | 46T | 28 | 28 | 54.9 | 105.5 | 775 | |
| | 2006.03-2014.07 | 6AT | R | R | Convertible RWD SV8TS | | GDS82180 | Drive Shaft | 46T | 28 | 28 | 54.9 | 105.5 | 830 | |
| | 2006.03-2014.07 | 6AT | R | L/R | Convertible RWD SV8TS | | GCO18246 | Outer Joint | 46T | 28 | 26 | 54.9 | 105.5 | 61 | M |
| | 2006.03-2014.07 | 6AT | R | L/R | Convertible RWD SV8TS | | GCI18179 | Inner Joint | | 28 | 28 | 46 | 101 | 78.5 | |
| | 2006.03-2014.07 | 6AT | R | L | Coupe RWD SV8TS | | GDS82181 | Drive Shaft | 46T | 28 | 28 | 54.9 | 105.5 | 775 | |
| | 2006.03-2014.07 | 6AT | R | R | Coupe RWD SV8TS | | GDS82180 | Drive Shaft | 46T | 28 | 28 | 54.9 | 105.5 | 830 | |
| | 2006.03-2014.07 | 6AT | R | L/R | Coupe RWD SV8TS | | GCO18246 | Outer Joint | 46T | 28 | 26 | 54.9 | 105.5 | 61 | M |
| | 2006.03-2014.07 | 6AT | R | L/R | Coupe RWD SV8TS | | GCI18179 | Inner Joint | | 28 | 28 | 46 | 101 | 78.5 | |
| 4.2 (313 kw) | 2006.08-2014.07 | 6AT | R | L | Convertible RWD SV8TS | | GDS82181 | Drive Shaft | 46T | 28 | 28 | 54.9 | 105.5 | 775 | |
| | 2006.08-2014.07 | 6AT | R | R | Convertible RWD SV8TS | | GDS82180 | Drive Shaft | 46T | 28 | 28 | 54.9 | 105.5 | 830 | |
| | 2006.08-2014.07 | 6AT | R | R | Convertible RWD SV8TS | Chassis no. to::B32752 | GCO18246 | Outer Joint | 46T | 28 | 26 | 54.9 | 105.5 | 61 | M |
| | 2006.08-2014.07 | 6AT | R | R | Convertible RWD SV8TS | Chassis no. to::B32752 | GCI18179 | Inner Joint | | 28 | 28 | 46 | 101 | 78.5 | |
| | 2006.08-2014.07 | 6AT | R | L | Coupe RWD SV8TS | | GDS82181 | Drive Shaft | 46T | 28 | 28 | 54.9 | 105.5 | 775 | |
| | 2006.08-2014.07 | 6AT | R | R | Coupe RWD SV8TS | | GDS82180 | Drive Shaft | 46T | 28 | 28 | 54.9 | 105.5 | 830 | |
| | 2006.08-2014.07 | 6AT | R | R | Coupe RWD SV8TS | Chassis no. to::B32752 | GCO18246 | Outer Joint | 46T | 28 | 26 | 54.9 | 105.5 | 61 | M |
| | 2006.08-2014.07 | 6AT | R | R | Coupe RWD SV8TS | Chassis no. to::B32752 | GCI18179 | Inner Joint | | 28 | 28 | 46 | 101 | 78.5 | |

| | YEAR | TRANSM. | F/R | L/R | BODY STYLE & DRIVE TYPE & ENGINE | REMARKS | G-AP Ref. | PRODUCT | ABS | Technical Specifications A | B | C | H | L | P |
|---|---|---|---|---|---|---|---|---|---|---|---|---|---|---|---|
| **JAGUAR** | | | | | | | | | | | | | | | |
| **XKR** | | | | | | | | | | | | | | | |
| 5.0 (375 kw) | 2009.01-2014.07 | 6AT | R | L/R | Convertible RWD 508PS(AJ133) | Chassis no. to:B32752 | GCI18179 | Inner Joint | | 28 | 28 | 46 | 101 | 78.5 | |
| | 2009.01-2014.07 | | R | L | Convertible RWD 508PS(AJ133) | Chassis no. to:B32752 | GDS82181 | Drive Shaft | 46T | 28 | 28 | 54.9 | 105.5 | 775 | |
| | 2009.01-2014.07 | | R | R | Convertible RWD 508PS(AJ133) | Chassis no. to:B32752 | GDS82180 | Drive Shaft | 46T | 28 | 28 | 54.9 | 105.5 | 830 | |
| | 2009.01-2014.07 | | R | L/R | Convertible RWD 508PS(AJ133) | Chassis no. to:B32752 | GCO18246 | Outer Joint | 46T | 28 | 26 | 54.9 | 105.5 | 61 | M |
| | 2009.01-2014.07 | 6AT | R | L | Coupe RWD 508PS(AJ133) | Chassis no. to:B32752 | GDS82181 | Drive Shaft | 46T | 28 | 28 | 54.9 | 105.5 | 775 | |
| | 2009.01-2014.07 | 6AT | R | R | Coupe RWD 508PS(AJ133) | Chassis no. to::B32752 | GDS82180 | Drive Shaft | 46T | 28 | 28 | 54.9 | 105.5 | 830 | |
| | 2009.01-2014.07 | 6AT | R | R | Coupe RWD 508PS(AJ133) | Chassis no. to::B32752 | GCO18246 | Outer Joint | 46T | 28 | 26 | 54.9 | 105.5 | 61 | M |
| | 2009.01-2014.07 | 6AT | R | R | Coupe RWD 508PS(AJ133) | Chassis no. to::B32752 | GCI18179 | Inner Joint | | 28 | 28 | 46 | 101 | 78.5 | |
| 5.0 (390 kw) | 2010.09-2014.07 | 6AT | R | L | Coupe RWD 508PS(AJ133) | Chassis no. to:B32752 | GDS82181 | Drive Shaft | 46T | 28 | 28 | 54.9 | 105.5 | 775 | |
| | 2010.09-2014.07 | 6AT | R | R | Coupe RWD 508PS(AJ133) | Chassis no. to:B32752 | GDS82180 | Drive Shaft | 46T | 28 | 28 | 54.9 | 105.5 | 830 | |
| | 2010.09-2014.07 | 6AT | R | L/R | Coupe RWD 508PS(AJ133) | | GCO18246 | Outer Joint | 46T | 28 | 26 | 54.9 | 105.5 | 61 | M |
| | 2010.09-2014.07 | 6AT | R | L/R | Coupe RWD 508PS(AJ133) | | GCI18179 | Inner Joint | | 28 | 28 | 46 | 101 | 78.5 | |
| **XKRS** | | | | | | | | | | | | | | | |
| 5.0 (405 kw) | 2011.01-2014.07 | 6AT | R | L | Convertible RWD 508PS(AJ133) | Chassis no. to:B32752 | GDS82181 | Drive Shaft | 46T | 28 | 28 | 54.9 | 105.5 | 775 | |
| | 2011.01-2014.07 | 6AT | R | R | Convertible RWD 508PS(AJ133) | Chassis no. to:B32752 | GDS82180 | Drive Shaft | 46T | 28 | 28 | 54.9 | 105.5 | 830 | |
| | 2011.01-2014.07 | 6AT | R | L/R | Convertible RWD 508PS(AJ133) | Chassis no. to:B32752 | GCO18246 | Outer Joint | 46T | 28 | 26 | 54.9 | 105.5 | 61 | M |
| | 2011.01-2014.07 | 6AT | R | L | Coupe RWD 508PS(AJ133) | Chassis no. to:B32752 | GDS82181 | Drive Shaft | 46T | 28 | 28 | 54.9 | 105.5 | 775 | |
| | 2011.01-2014.07 | 6AT | R | R | Coupe RWD 508PS(AJ133) | Chassis no. to:B32752 | GDS82180 | Drive Shaft | 46T | 28 | 28 | 54.9 | 105.5 | 830 | |
| | 2011.01-2014.07 | 6AT | R | L/R | Coupe RWD 508PS(AJ133) | Chassis no. to:B32752 | GCO18246 | Outer Joint | 46T | 28 | 26 | 54.9 | 105.5 | 61 | M |
| **JEEP** | | | | | | | | | | | | | | | |
| **Cherokee** | | | | | | | | | | | | | | | |
| 2.0 (103 kw) | 2014.04-2018.08 | 6MT | F | R | SUV 4WD EBT;EBS | | GDS56833 | Drive Shaft | | 27 | 30 | 58 | 84.5 | 623 | |
| | 2014.04-2018.08 | 6MT | F | L/R | SUV 4WD EBT;EBS | | GCO82412 | Outer Joint | | 27 | 36 | 58 | 84.5 | 67 | M |
| | 2014.04-2018.08 | 6MT | F | R | SUV 4WD EBT;EBS | | GCI83515 | Inner Joint | | 30 | 36 | 34.75 | 69 | 109 | |
| | 2014.04-2018.08 | 9AT | F | L | SUV 4WD EBT;EBS | For vehicles without bad road version | GDS83991 | Drive Shaft | | 27 | 30 | 59 | 84.5 | 610 | |
| | 2014.04-2018.08 | 9AT | F | R | SUV 4WD EBT;EBS | For vehicles without bad road version | GDS82738 | Drive Shaft | | 27 | 30 | 58 | 85 | 616 | |
| | 2014.04-2018.08 | 9AT | F | L/R | SUV 4WD EBT;EBS | For vehicles with bad road version | GDS84015 | Drive Shaft | | 32 | 30 | 57 | 96.5 | 617 | |
| | 2014.04-2018.08 | 9AT | F | L/R | SUV 4WD EBT;EBS | For vehicles with bad road version | GCO82553 | Outer Joint | | 32 | 28 | 57 | 96.5 | 63 | I |
| | 2014.04-2018.08 | 9AT | F | L/R | SUV 4WD EBT;EBS | For vehicles without bad road version,Model year from:2017 | GCO82565 | Outer Joint | | 27 | 27 | 59 | 84.5 | 64 | M |
| | 2014.04-2018.08 | 9AT | F | L/R | SUV 4WD EBT;EBS | For vehicles with bad road version | GCI82481 | Inner Joint | | 30 | 30 | 42.5 | 68.5 | 75 | |
| | 2014.04-2018.08 | 6MT | R | L | SUV 4WD EBT;EBS | Date to:2015.02 | GDS86113 | Stub Axle,differential | | 30 | 34 | | | 144 | |
| | 2014.04-2018.08 | 9AT/6MT | R | L | SUV 4WD EBT;EBS | Transmission:9AT,Date From:2015.03 | GDS56290 | Drive Shaft | | 32 | 34 | 53.9 | 101.5 | 692 | |
| | 2014.04-2018.08 | 9AT/6MT | R | L | SUV 4WD EBT;EBS | Transmission:9AT,Date From:2015.03 | GDS83667 | Drive Shaft | | 32 | 30 | 53.9 | 101.5 | 600 | |
| | 2014.04-2018.08 | 9AT/6MT | R | R | SUV 4WD EBT;EBS | Transmission:9AT,Date From:2015.03;Transmission:6MT,Model year From:2015 | GDS56289 | Drive Shaft | | 32 | 34 | 53.9 | 101.5 | 949 | |
| | 2014.04-2018.08 | 9AT/6MT | R | L/R | SUV 4WD EBT;EBS | Date from:2015.03 | GCO82318 | Outer Joint | | 32 | 36 | 53.9 | 101.5 | 66 | M |
| | 2014.04-2018.08 | 9AT/6MT | R | L | SUV 4WD EBT;EBS | Date from:2015.03 | GCI83229 | Inner Joint | | 34 | 36 | 43 | 90 | 166 | |
| | 2014.04-2018.08 | 9AT/6MT | R | R | SUV 4WD EBT;EBS | Date from:2015.03 | GCI83228 | Inner Joint | | 34 | 36 | 43 | 312 | 166 | |
| | 2014.04-2018.08 | 9AT/6MT | R | L/R | SUV 4WD EBT;EBS | Transmission:9AT,Date From:2015.03;Transmission:6MT,Model year From:2015 | GCI82156 | Inner Joint | | 30 | 36 | 45 | | 166 | |
| 2.0 (125 kw) | 2014.04-2018.08 | 9AT | F | L | SUV 4WD EBT;EBS | For vehicles without bad road version | GDS83991 | Drive Shaft | | 27 | 30 | 59 | 84.5 | 610 | |
| | 2014.04-2018.08 | 9AT | F | R | SUV 4WD EBT;EBS | For vehicles without bad road version | GDS82738 | Drive Shaft | | 27 | 30 | 58 | 85 | 616 | |
| | 2014.04-2018.08 | 9AT | F | L/R | SUV 4WD EBT;EBS | For vehicles with bad road version | GDS84015 | Drive Shaft | | 32 | 30 | 57 | 96.5 | 617 | |
| | 2014.04-2018.08 | 9AT | F | L/R | SUV 4WD EBT;EBS | For vehicles with bad road version | GCO82553 | Outer Joint | | 32 | 28 | 57 | 96.5 | 63 | I |
| | 2014.04-2018.08 | 9AT | F | L/R | SUV 4WD EBT;EBS | For vehicles without bad road version,Model year from:2017 | GCO82565 | Outer Joint | | 27 | 27 | 59 | 84.5 | 64 | M |
| | 2014.04-2018.08 | 9AT | F | L/R | SUV 4WD EBT;EBS | For vehicles with bad road version | GCI82481 | Inner Joint | | 30 | 30 | 42.5 | 68.5 | 75 | |
| | 2014.04-2018.08 | 6MT | R | L | SUV 4WD EBT;EBS | Date to:2015.02 | GDS86113 | Stub Axle,differential | | 30 | 34 | | | 144 | |
| | 2014.04-2018.08 | 9AT | R | L | SUV 4WD EBT;EBS | Date from:2015.03 | GDS56290 | Drive Shaft | | 32 | 34 | 53.9 | 101.5 | 692 | |
| | 2014.04-2018.08 | 9AT | R | L | SUV 4WD EBT;EBS | Date from:2015.03 | GDS83667 | Drive Shaft | | 32 | 30 | 53.9 | 101.5 | 600 | |
| | 2014.04-2018.08 | 9AT | R | R | SUV 4WD EBT;EBS | Date from:2015.03 | GDS56289 | Drive Shaft | | 32 | 34 | 53.9 | 101.5 | 949 | |
| | 2014.04-2018.08 | 9AT | R | L/R | SUV 4WD EBT;EBS | Date from:2015.03 | GCO82318 | Outer Joint | | 32 | 36 | 53.9 | 101.5 | 66 | M |
| | 2014.04-2018.08 | 9AT | R | L | SUV 4WD EBT;EBS | Date from:2015.03 | GCI83229 | Inner Joint | | 34 | 36 | 43 | 90 | 166 | |
| | 2014.04-2018.08 | 9AT | R | R | SUV 4WD EBT;EBS | Date from:2015.03 | GCI83228 | Inner Joint | | 34 | 36 | 43 | 312 | 166 | |
| | 2014.04-2018.08 | 9AT | R | L/R | SUV 4WD EBT;EBS | Date from:2015.03 | GCI82156 | Inner Joint | | 30 | 36 | 45 | | 166 | |
| 2.0 (200 kw) | 2018.09- | 9AT | R | L | SUV 4WD EC1 | Date to:2022.12 | GDS56242 | Drive Shaft | | 32 | 30 | 54 | 104.5 | 763 | |
| | 2018.09- | 9AT | R | R | SUV 4WD EC1 | Date to:2022.12 | GDS56243 | Drive Shaft | | 32 | 30 | 54 | 104.5 | 660 | |
| | 2018.09- | 9AT | R | L/R | SUV 4WD EC1 | | GCO83216 | Outer Joint | | 32 | 28 | 54 | 104.5 | 62.5 | M |
| | 2018.09- | 9AT | R | L/R | SUV 4WD EC1 | | GCI83209 | Inner Joint | | 30 | 28 | 45 | | 166 | |
| 2.2 (110 kw) | 2018.09- | 6MT | F | L | SUV FWD EBV | | GDS82738 | Drive Shaft | | 27 | 30 | 58 | 85 | 616 | |
| 2.2 (136 kw) | 2015.08-2018.08 | 9AT | F | L | SUV 4WD LAU 61;EBV;EBU | For vehicles without bad road version | GDS82738 | Drive Shaft | | 27 | 30 | 58 | 85 | 616 | |
| | 2015.08-2018.08 | 9AT | F | L/R | SUV 4WD LAU 61;EBV;EBU | For vehicles with bad road version | GCO82553 | Outer Joint | | 32 | 28 | 57 | 96.5 | 63 | I |
| | 2015.08-2018.08 | 9AT | F | L/R | SUV 4WD LAU 61;EBV;EBU | For vehicles with bad road version | GCI82481 | Inner Joint | | 30 | 30 | 42.5 | 68.5 | 75 | |
| | 2015.08-2018.08 | AT | F | L/R | SUV 4WD LAU 61;EBV;EBU | For vehicles with bad road version | GDS84015 | Drive Shaft | | 32 | 30 | 57 | 96.5 | 617 | |
| | 2015.08-2018.08 | AT | R | L | SUV 4WD LAU 61;EBV;EBU | | GDS56290 | Drive Shaft | | 32 | 34 | 53.9 | 101.5 | 692 | |
| | 2015.08-2018.08 | AT | R | L | SUV 4WD LAU 61;EBV;EBU | | GDS83667 | Drive Shaft | | 32 | 30 | 53.9 | 101.5 | 600 | |
| | 2015.08-2018.08 | AT | R | R | SUV 4WD LAU 61;EBV;EBU | | GDS56289 | Drive Shaft | | 32 | 34 | 53.9 | 101.5 | 949 | |
| | 2015.08-2018.08 | AT | R | L/R | SUV 4WD LAU 61;EBV;EBU | | GCO82318 | Outer Joint | | 32 | 36 | 53.9 | 101.5 | 66 | M |

| | YEAR | TRANSM. | F/R | L/R | BODY STYLE & DRIVE TYPE & ENGINE | REMARKS | G-AP Ref. | PRODUCT | ABS | Technical Specifications | | | | | |
|---|---|---|---|---|---|---|---|---|---|---|---|---|---|---|---|
| | | | | | | | | | | A | B | C | H | L | P |
| **JEEP** | | | | | | | | | | | | | | | |
| **Cherokee** | | | | | | | | | | | | | | | |
| 2.2 (136 kw) | 2015.08-2018.08 | AT | R | L | SUV 4WD LAU 61;EBV;EBU | | GCI83229 | Inner Joint | | 34 | 36 | 43 | 90 | 166 | |
| | 2015.08-2018.08 | AT | R | R | SUV 4WD LAU 61;EBV;EBU | | GCI83228 | Inner Joint | | 34 | 36 | 43 | 312 | 166 | |
| | 2015.08-2018.08 | AT | R | L/R | SUV 4WD LAU 61;EBV;EBU | | GCI82156 | Inner Joint | | 30 | 36 | 45 | | 166 | |
| | 2015.08-2018.08 | 9AT | F | L | SUV Van 4WD EBV;EBU | For vehicles without bad road version | GDS82738 | Drive Shaft | | 27 | 30 | 58 | 85 | 616 | |
| | 2015.08-2018.08 | 9AT | F | L/R | SUV Van 4WD EBV;EBU | For vehicles with bad road version | GCO82553 | Outer Joint | | 32 | 28 | 57 | 96.5 | 63 | I |
| | 2015.08-2018.08 | 9AT | F | L/R | SUV Van 4WD EBV;EBU | For vehicles with bad road version | GCI82481 | Inner Joint | | 30 | 30 | 42.5 | 68.5 | 75 | |
| | 2015.08-2018.08 | AT | F | L/R | SUV Van 4WD EBV;EBU | For vehicles with bad road version | GDS84015 | Drive Shaft | | 32 | 30 | 57 | 96.5 | 617 | |
| | 2015.08-2018.08 | AT | R | L | SUV Van 4WD EBV;EBU | | GDS56290 | Drive Shaft | | 32 | 34 | 53.9 | 101.5 | 692 | |
| | 2015.08-2018.08 | AT | R | L | SUV Van 4WD EBV;EBU | | GDS83667 | Drive Shaft | | 32 | 30 | 53.9 | 101.5 | 600 | |
| | 2015.08-2018.08 | AT | R | R | SUV Van 4WD EBV;EBU | | GDS56289 | Drive Shaft | | 32 | 34 | 53.9 | 101.5 | 949 | |
| | 2015.08-2018.08 | AT | R | L/R | SUV Van 4WD EBV;EBU | | GCO82318 | Outer Joint | | 32 | 36 | 53.9 | 101.5 | 66 | M |
| | 2015.08-2018.08 | AT | R | L | SUV Van 4WD EBV;EBU | | GCI83229 | Inner Joint | | 34 | 36 | 43 | 90 | 166 | |
| | 2015.08-2018.08 | AT | R | R | SUV Van 4WD EBV;EBU | | GCI83228 | Inner Joint | | 34 | 36 | 43 | 312 | 166 | |
| | 2015.08-2018.08 | AT | R | L/R | SUV Van 4WD EBV;EBU | | GCI82156 | Inner Joint | | 30 | 36 | 45 | | 166 | |
| 2.2 (143 kw) | 2018.09- | 9AT | F | L | SUV 4WD EBV | For Salescode:DK2/DFH/DF5 | GDS56599 | Drive Shaft | | 27 | 30 | 59 | 84.5 | 620 | |
| | 2018.09- | 9AT | F | R | SUV 4WD EBV | For Salescode:DK2/DFH/DF5 | GDS83990 | Drive Shaft | | 27 | 30 | 59 | 84.5 | 626 | |
| | 2018.09- | 9AT | F | L/R | SUV 4WD EBV | Equipment code:DK2/DFH | GCO82565 | Outer Joint | | 27 | 27 | 59 | 84.5 | 64 | M |
| | 2018.09- | 9AT | F | L/R | SUV 4WD EBV | Equipment code:DK2/DFH | GCI82481 | Inner Joint | | 30 | 30 | 42.5 | 68.5 | 75 | |
| | 2018.09- | 9AT | R | L | SUV 4WD EBV | Date to:2022.12 | GDS56242 | Drive Shaft | | 32 | 30 | 54 | 104.5 | 763 | |
| | 2018.09- | 9AT | R | R | SUV 4WD EBV | Date to:2022.12 | GDS56243 | Drive Shaft | | 32 | 30 | 54 | 104.5 | 660 | |
| | 2018.09- | 9AT | R | L/R | SUV 4WD EBV | | GCO83216 | Outer Joint | | 32 | 28 | 54 | 104.5 | 62.5 | M |
| | 2018.09- | 9AT | R | L/R | SUV 4WD EBV | | GCI83209 | Inner Joint | | 30 | 28 | 45 | | 166 | |
| | 2018.09- | 9AT | F | L | SUV FWD EBV | | GDS82738 | Drive Shaft | | 27 | 30 | 58 | 85 | 616 | |
| 2.2 (147 kw) | 2015.08-2018.08 | 9AT | F | L | SUV 4WD LAU 61;EBV;EBU | For vehicles without bad road version | GDS82738 | Drive Shaft | | 27 | 30 | 58 | 85 | 616 | |
| | 2015.08-2018.08 | 9AT | F | L/R | SUV 4WD LAU 61;EBV;EBU | For vehicles with bad road version | GCO82553 | Outer Joint | | 32 | 28 | 57 | 96.5 | 63 | I |
| | 2015.08-2018.08 | 9AT | F | L/R | SUV 4WD LAU 61;EBV;EBU | For vehicles with bad road version | GCI82481 | Inner Joint | | 30 | 30 | 42.5 | 68.5 | 75 | |
| | 2015.08-2018.08 | AT | F | L/R | SUV 4WD LAU 61;EBV;EBU | For vehicles with bad road version | GDS84015 | Drive Shaft | | 32 | 30 | 57 | 96.5 | 617 | |
| | 2015.08-2018.08 | AT | R | L | SUV 4WD LAU 61;EBV;EBU | | GDS56290 | Drive Shaft | | 32 | 34 | 53.9 | 101.5 | 692 | |
| | 2015.08-2018.08 | AT | R | L | SUV 4WD LAU 61;EBV;EBU | | GDS83667 | Drive Shaft | | 32 | 30 | 53.9 | 101.5 | 600 | |
| | 2015.08-2018.08 | AT | R | R | SUV 4WD LAU 61;EBV;EBU | | GDS56289 | Drive Shaft | | 32 | 34 | 53.9 | 101.5 | 949 | |
| | 2015.08-2018.08 | AT | R | L/R | SUV 4WD LAU 61;EBV;EBU | | GCO82318 | Outer Joint | | 32 | 36 | 53.9 | 101.5 | 66 | M |
| | 2015.08-2018.08 | AT | R | L | SUV 4WD LAU 61;EBV;EBU | | GCI83229 | Inner Joint | | 34 | 36 | 43 | 90 | 166 | |
| | 2015.08-2018.08 | AT | R | R | SUV 4WD LAU 61;EBV;EBU | | GCI83228 | Inner Joint | | 34 | 36 | 43 | 312 | 166 | |
| | 2015.08-2018.08 | AT | R | L/R | SUV 4WD LAU 61;EBV;EBU | | GCI82156 | Inner Joint | | 30 | 36 | 45 | | 166 | |
| | 2015.08-2018.08 | 9AT | F | L | SUV Van 4WD EBV;EBU | For vehicles without bad road version | GDS82738 | Drive Shaft | | 27 | 30 | 58 | 85 | 616 | |
| | 2015.08-2018.08 | 9AT | F | L/R | SUV Van 4WD EBV;EBU | For vehicles with bad road version | GCO82553 | Outer Joint | | 32 | 28 | 57 | 96.5 | 63 | I |
| | 2015.08-2018.08 | 9AT | F | L/R | SUV Van 4WD EBV;EBU | For vehicles with bad road version | GCI82481 | Inner Joint | | 30 | 30 | 42.5 | 68.5 | 75 | |
| | 2015.08-2018.08 | AT | F | L/R | SUV Van 4WD EBV;EBU | For vehicles with bad road version | GDS84015 | Drive Shaft | | 32 | 30 | 57 | 96.5 | 617 | |
| | 2015.08-2018.08 | AT | R | L | SUV Van 4WD EBV;EBU | | GDS56290 | Drive Shaft | | 32 | 34 | 53.9 | 101.5 | 692 | |
| | 2015.08-2018.08 | AT | R | L | SUV Van 4WD EBV;EBU | | GDS83667 | Drive Shaft | | 32 | 30 | 53.9 | 101.5 | 600 | |
| | 2015.08-2018.08 | AT | R | R | SUV Van 4WD EBV;EBU | | GDS56289 | Drive Shaft | | 32 | 34 | 53.9 | 101.5 | 949 | |
| | 2015.08-2018.08 | AT | R | L/R | SUV Van 4WD EBV;EBU | | GCO82318 | Outer Joint | | 32 | 36 | 53.9 | 101.5 | 66 | M |
| | 2015.08-2018.08 | AT | R | L | SUV Van 4WD EBV;EBU | | GCI83229 | Inner Joint | | 34 | 36 | 43 | 90 | 166 | |
| | 2015.08-2018.08 | AT | R | R | SUV Van 4WD EBV;EBU | | GCI83228 | Inner Joint | | 34 | 36 | 43 | 312 | 166 | |
| | 2015.08-2018.08 | AT | R | L/R | SUV Van 4WD EBV;EBU | | GCI82156 | Inner Joint | | 30 | 36 | 45 | | 166 | |
| 2.4 (108 kw) | 2001.09-2008.01 | 5MT | F | L | Closed Off-Road Vehicle 4WD ED1 | | GDS16010 | Drive Shaft | | 27 | 27 | 60 | 126 | 605 | |
| | 2001.09-2008.01 | 5MT | F | R | Closed Off-Road Vehicle 4WD ED1 | | GDS16011 | Drive Shaft | | 27 | 29 | 60 | 126 | 602 | |
| | 2001.09-2008.01 | 5MT | F | L | Closed Off-Road Vehicle 4WD ED1 | | GCI16004 | Inner Joint | | 27 | 35 | 34.9 | 114 | 113 | |
| | 2001.09-2008.01 | 5MT | F | R | Closed Off-Road Vehicle 4WD ED1 | | GCI16003 | Inner Joint | | 29 | 35 | 45 | | 156.5 | |
| | 2001.09-2008.01 | | F | | Closed Off-Road Vehicle 4WD ED1 | | GCO89049 | Outer Joint | | 27 | 35 | 60 | 126 | 64 | O |
| 2.4 (130 kw) | 2013.11- | 9AT | F | L | SUV 4WD ED6;EDD | For vehicles without bad road version,Model year from:2017 | GDS83991 | Drive Shaft | | 27 | 30 | 59 | 84.5 | 610 | |
| | 2013.11- | 9AT | F | L/R | SUV 4WD ED6;EDD | Passion Left,Model year to:2016;For vehicles with bad road version;For vehicles with bad road version | GDS82738 | Drive Shaft | | 27 | 30 | 58 | 85 | 616 | |
| | 2013.11- | 9AT | F | L/R | SUV 4WD ED6;EDD | For vehicles with bad road version | GDS84015 | Drive Shaft | | 32 | 30 | 57 | 96.5 | 617 | |
| | 2013.11- | 9AT | F | L/R | SUV 4WD ED6;EDD | For vehicles with bad road version | GCO82553 | Outer Joint | | 32 | 28 | 57 | 96.5 | 63 | I |
| | 2013.11- | 9AT | F | L/R | SUV 4WD ED6;EDD | For vehicles without bad road version,Model year from:2017 | GCO82565 | Outer Joint | | 27 | 27 | 59 | 84.5 | 64 | M |
| | 2013.11- | 9AT | F | L/R | SUV 4WD ED6;EDD | For vehicles with bad road version | GCI82481 | Inner Joint | | 30 | 30 | 42.5 | 68.5 | 75 | |
| | 2013.11- | 9AT | R | L | SUV 4WD ED6;EDD | Model year to:2014 | GDS56290 | Drive Shaft | | 32 | 34 | 53.9 | 101.5 | 692 | |
| | 2013.11- | 9AT | R | L | SUV 4WD ED6;EDD | | GDS83667 | Drive Shaft | | 32 | 30 | 53.9 | 101.5 | 600 | |
| | 2013.11- | 9AT | R | R | SUV 4WD ED6;EDD | Model year to:2014 | GDS56289 | Drive Shaft | | 32 | 34 | 53.9 | 101.5 | 949 | |
| | 2013.11- | 9AT | R | L/R | SUV 4WD ED6;EDD | Model year to:2014 | GCO82318 | Outer Joint | | 32 | 36 | 53.9 | 101.5 | 66 | M |
| | 2013.11- | 9AT | R | L | SUV 4WD ED6;EDD | Model year to:2014 | GCI83229 | Inner Joint | | 34 | 36 | 43 | 90 | 166 | |
| | 2013.11- | 9AT | R | R | SUV 4WD ED6;EDD | Model year to:2014 | GCI83228 | Inner Joint | | 34 | 36 | 43 | 312 | 166 | |
| | 2013.11- | 9AT | R | L/R | SUV 4WD ED6;EDD | | GCI82156 | Inner Joint | | 30 | 36 | 45 | | 166 | |
| | 2013.11- | 9AT | F | L | SUV FWD ED6;EDD | | GDS82738 | Drive Shaft | | 27 | 30 | 58 | 85 | 616 | |
| | 2013.11- | 9AT | F | R | SUV FWD ED6;EDD | Date to:2016.12 | GDS56625 | Drive Shaft | | 27 | 30 | 58 | 85 | 977 | |

| | YEAR | TRANSM. | F/R | L/R | BODY STYLE & DRIVE TYPE & ENGINE | REMARKS | G-AP Ref. | PRODUCT | ABS | Technical Specifications A | B | C | H | L | P |
|---|---|---|---|---|---|---|---|---|---|---|---|---|---|---|---|
| **JEEP** | | | | | | | | | | | | | | | |
| **Cherokee** | | | | | | | | | | | | | | | |
| 2.4 (130 kw) | 2013.11- | 9AT | F | L/R | SUV FWD ED6;EDD | | GCO82143 | Outer Joint | | 27 | 34 | 58 | 85 | 61 | M |
| | 2013.11- | 9AT | F | R | SUV FWD ED6;EDD | Date to:2015.12 | GCI81975 | Inner Joint | | 30 | 34 | 34.8 | 68.5 | 101 | |
| | 2013.11- | 9AT | F | R | SUV FWD ED6;EDD | Date to:2016.12 | GCI82531 | Inner Joint | | 30 | 34 | 34.85 | 454 | 116.5 | |
| 2.4 (137 kw) | 2013.11- | 9AT | F | L | SUV 4WD ED6;ED8 | For vehicles without bad road version,Model year from:2017 | GDS83991 | Drive Shaft | | 27 | 30 | 59 | 84.5 | 610 | |
| | 2013.11- | 9AT | F | L/R | SUV 4WD ED6;ED8 | Passion Left,Model year to:2016,For vehicles with bad road version,For vehicles with bad road version | GDS82738 | Drive Shaft | | 27 | 30 | 58 | 85 | 616 | |
| | 2013.11- | 9AT | F | L/R | SUV 4WD ED6;ED8 | For vehicles with bad road version | GDS84015 | Drive Shaft | | 32 | 30 | 57 | 96.5 | 617 | |
| | 2013.11- | 9AT | F | L/R | SUV 4WD ED6;ED8 | For vehicles with bad road version | GCO82553 | Outer Joint | | 32 | 28 | 57 | 96.5 | 63 | I |
| | 2013.11- | 9AT | F | L/R | SUV 4WD ED6;ED8 | For vehicles without bad road version,Model year from:2017 | GCO82565 | Outer Joint | | 27 | 27 | 59 | 84.5 | 64 | M |
| | 2013.11- | 9AT | F | L/R | SUV 4WD ED6;ED8 | For vehicles with bad road version | GCI82481 | Inner Joint | | 30 | 30 | 42.5 | 68.5 | 75 | |
| | 2013.11- | 9AT | R | L | SUV 4WD ED6;ED8 | Model year to:2014 | GDS56290 | Drive Shaft | | 32 | 34 | 53.9 | 101.5 | 692 | |
| | 2013.11- | 9AT | R | L | SUV 4WD ED6;ED8 | | GDS83667 | Drive Shaft | | 32 | 30 | 53.9 | 101.5 | 600 | |
| | 2013.11- | 9AT | R | R | SUV 4WD ED6;ED8 | Model year to:2014 | GDS56289 | Drive Shaft | | 32 | 34 | 53.9 | 101.5 | 949 | |
| | 2013.11- | 9AT | R | L/R | SUV 4WD ED6;ED8 | Model year to:2014 | GCO82318 | Outer Joint | | 32 | 36 | 53.9 | 101.5 | 66 | M |
| | 2013.11- | 9AT | R | L | SUV 4WD ED6;ED8 | Model year to:2014 | GCI83229 | Inner Joint | | 34 | 36 | 43 | 90 | 166 | |
| | 2013.11- | 9AT | R | R | SUV 4WD ED6;ED8 | Model year to:2014 | GCI83228 | Inner Joint | | 34 | 36 | 43 | 312 | 166 | |
| | 2013.11- | 9AT | R | L/R | SUV 4WD ED6;ED8 | | GCI82156 | Inner Joint | | 30 | 36 | 45 | | 166 | |
| 2.5 (85 kw) | 1988.01-2001.09 | 5MT | F | L | Closed Off-Road Vehicle 4WD ENC | | GDS16003 | Drive Shaft | 54T | 27 | | 60 | 102.5 | 576 | |
| | 1988.01-2001.09 | 5MT | F | R | Closed Off-Road Vehicle 4WD ENC | | GDS16004 | Drive Shaft | 54T | 27 | | 60 | 102.5 | 975.5 | |
| | 1988.01-2001.09 | 5MT | F | L/R | Closed Off-Road Vehicle 4WD ENC | | GCO16004 | Outer Joint | 54T | 27 | 32 | 60 | 102.5 | 77.5 | I |
| | 1996.10-2001.09 | 5MT | F | L | Closed Off-Road Vehicle 4WD ENC | | GDS16003 | Drive Shaft | 54T | 27 | | 60 | 102.5 | 576 | |
| | 1996.10-2001.09 | 5MT | F | R | Closed Off-Road Vehicle 4WD ENC | | GDS16004 | Drive Shaft | 54T | 27 | | 60 | 102.5 | 975.5 | |
| | 1996.10-2001.09 | 5MT | F | L/R | Closed Off-Road Vehicle 4WD ENC | | GCO16004 | Outer Joint | 54T | 27 | 32 | 60 | 102.5 | 77.5 | I |
| 2.5 (87 kw) | 1984.10-2001.09 | AT/MT | F | L/R | Closed Off-Road Vehicle 4WD EPE | | GCO16001 | Outer Joint | | 27 | 32 | 60 | 102.5 | 77.5 | I |
| | 1984.10-2001.09 | MT | F | L | Closed Off-Road Vehicle 4WD EPE | | GDS16012 | Drive Shaft | | 27 | | 60 | 102.5 | 576 | |
| | 1984.10-2001.09 | MT | F | R | Closed Off-Road Vehicle 4WD EPE | | GDS16013 | Drive Shaft | | 27 | | 60 | 102.5 | 975.5 | |
| | 1984.10-2001.09 | | F | L | Closed Off-Road Vehicle 4WD EPE | | GDS16003 | Drive Shaft | 54T | 27 | | 60 | 102.5 | 576 | |
| | 1984.10-2001.09 | | F | R | Closed Off-Road Vehicle 4WD EPE | | GDS16004 | Drive Shaft | 54T | 27 | | 60 | 102.5 | 975.5 | |
| | 1984.10-2001.09 | | F | L/R | Closed Off-Road Vehicle 4WD EPE | | GCO16004 | Outer Joint | 54T | 27 | 32 | 60 | 102.5 | 77.5 | I |
| 2.5 (89 kw) | 1990.10-1996.09 | MT | F | L | Closed Off-Road Vehicle 4WD EPE | | GDS16003 | Drive Shaft | 54T | 27 | | 60 | 102.5 | 576 | |
| | 1990.10-1996.09 | MT | F | L | Closed Off-Road Vehicle 4WD EPE | | GDS16012 | Drive Shaft | | 27 | | 60 | 102.5 | 576 | |
| | 1990.10-1996.09 | MT | F | R | Closed Off-Road Vehicle 4WD EPE | | GDS16004 | Drive Shaft | 54T | 27 | | 60 | 102.5 | 975.5 | |
| | 1990.10-1996.09 | MT | F | R | Closed Off-Road Vehicle 4WD EPE | | GDS16013 | Drive Shaft | | 27 | | 60 | 102.5 | 975.5 | |
| | 1990.10-1996.09 | | F | | Closed Off-Road Vehicle 4WD EPE | | GCO16001 | Outer Joint | | 27 | 32 | 60 | 102.5 | 77.5 | I |
| | 1990.10-1996.09 | | F | | Closed Off-Road Vehicle 4WD EPE | | GCO16004 | Outer Joint | 54T | 27 | 32 | 60 | 102.5 | 77.5 | I |
| | 1995.10-2001.09 | MT | F | L | Closed Off-Road Vehicle 4WD EPE | | GDS16003 | Drive Shaft | 54T | 27 | | 60 | 102.5 | 576 | |
| | 1995.10-2001.09 | MT | F | L | Closed Off-Road Vehicle 4WD EPE | | GDS16012 | Drive Shaft | | 27 | | 60 | 102.5 | 576 | |
| | 1995.10-2001.09 | MT | F | R | Closed Off-Road Vehicle 4WD EPE | | GDS16004 | Drive Shaft | 54T | 27 | | 60 | 102.5 | 975.5 | |
| | 1995.10-2001.09 | MT | F | R | Closed Off-Road Vehicle 4WD EPE | | GDS16013 | Drive Shaft | | 27 | | 60 | 102.5 | 975.5 | |
| | 1995.10-2001.09 | | F | | Closed Off-Road Vehicle 4WD EPE | | GCO16001 | Outer Joint | | 27 | 32 | 60 | 102.5 | 77.5 | I |
| | 1995.10-2001.09 | | F | | Closed Off-Road Vehicle 4WD EPE | | GCO16004 | Outer Joint | 54T | 27 | 32 | 60 | 102.5 | 77.5 | I |
| 2.5 (90 kw) | 1991.12-2001.09 | AT/MT | F | L/R | Closed Off-Road Vehicle 4WD EPE, HX | Date to:1997.12 | GCO16001 | Outer Joint | | 27 | 32 | 60 | 102.5 | 77.5 | I |
| | 1991.12-2001.09 | AT/MT | F | L/R | Closed Off-Road Vehicle 4WD EPE, HX | Date to:1997.12 | GCO16004 | Outer Joint | 54T | 27 | 32 | 60 | 102.5 | 77.5 | I |
| | 1991.12-2001.09 | MT | F | L | Closed Off-Road Vehicle 4WD EPE, HX | | GDS16003 | Drive Shaft | 54T | 27 | | 60 | 102.5 | 576 | |
| | 1991.12-2001.09 | MT | F | L | Closed Off-Road Vehicle 4WD EPE, HX | | GDS16012 | Drive Shaft | | 27 | | 60 | 102.5 | 576 | |
| | 1991.12-2001.09 | MT | F | R | Closed Off-Road Vehicle 4WD EPE, HX | | GDS16004 | Drive Shaft | 54T | 27 | | 60 | 102.5 | 975.5 | |
| | 1991.12-2001.09 | MT | F | R | Closed Off-Road Vehicle 4WD EPE, HX | | GDS16013 | Drive Shaft | | 27 | | 60 | 102.5 | 975.5 | |
| 2.5 (105 kw) | 2001.09-2008.01 | 5MT | F | L | Closed Off-Road Vehicle 4WD R 425 DOHC;ENJ | | GDS16010 | Drive Shaft | | 27 | 27 | 60 | 126 | 605 | |
| | 2001.09-2008.01 | 5MT | F | R | Closed Off-Road Vehicle 4WD R 425 DOHC;ENJ | | GDS16011 | Drive Shaft | | 27 | 29 | 60 | 126 | 602 | |
| | 2001.09-2008.01 | 5MT | F | L/R | Closed Off-Road Vehicle 4WD R 425 DOHC;ENJ | | GCO89049 | Outer Joint | | 27 | 35 | 60 | 126 | 64 | O |
| | 2001.09-2008.01 | 5MT | F | L | Closed Off-Road Vehicle 4WD R 425 DOHC;ENJ | | GCI16004 | Inner Joint | | 27 | 35 | 34.9 | 114 | 113 | |
| | 2001.09-2008.01 | 5MT | F | R | Closed Off-Road Vehicle 4WD R 425 DOHC;ENJ | | GCI16003 | Inner Joint | | 29 | 35 | 45 | | 156.5 | |
| 2.8 (110 kw) | 2002.11-2008.01 | AT | F | L | Closed Off-Road Vehicle 4WD ENR | | GDS16010 | Drive Shaft | | 27 | 27 | 60 | 126 | 605 | |
| | 2002.11-2008.01 | AT | F | R | Closed Off-Road Vehicle 4WD ENR | | GDS16011 | Drive Shaft | | 27 | 29 | 60 | 126 | 602 | |
| | 2002.11-2008.01 | AT | F | L/R | Closed Off-Road Vehicle 4WD ENR | | GCO89049 | Outer Joint | | 27 | 35 | 60 | 126 | 64 | O |
| | 2002.11-2008.01 | AT | F | L | Closed Off-Road Vehicle 4WD ENR | | GCI16004 | Inner Joint | | 27 | 35 | 34.9 | 114 | 113 | |
| | 2002.11-2008.01 | AT | F | R | Closed Off-Road Vehicle 4WD ENR | | GCI16003 | Inner Joint | | 29 | 35 | 45 | | 156.5 | |
| 2.8 (120 kw) | 2004.11-2008.01 | AT | F | L | Closed Off-Road Vehicle 4WD ENR | | GDS16010 | Drive Shaft | | 27 | 27 | 60 | 126 | 605 | |
| | 2004.11-2008.01 | AT | F | R | Closed Off-Road Vehicle 4WD ENR | | GDS16011 | Drive Shaft | | 27 | 29 | 60 | 126 | 602 | |
| | 2004.11-2008.01 | AT | F | L/R | Closed Off-Road Vehicle 4WD ENR | | GCO89049 | Outer Joint | | 27 | 35 | 60 | 126 | 64 | O |
| | 2004.11-2008.01 | AT | F | L | Closed Off-Road Vehicle 4WD ENR | | GCI16004 | Inner Joint | | 27 | 35 | 34.9 | 114 | 113 | |
| | 2004.11-2008.01 | AT | F | R | Closed Off-Road Vehicle 4WD ENR | | GCI16003 | Inner Joint | | 29 | 35 | 45 | | 156.5 | |
| 2.8 (130 kw) | 2008.05- | AT/MT | F | L | Closed Off-Road Vehicle 4WD ENS | | GDS83214 | Drive Shaft | | 32 | 27 | 57 | 105 | 613 | |
| | 2008.05- | AT/MT | F | R | Closed Off-Road Vehicle 4WD ENS | | GDS83215 | Drive Shaft | | 32 | 29 | 57 | 105 | 545 | |
| | 2008.05- | AT/MT | F | L/R | Closed Off-Road Vehicle 4WD ENS | | GCO82260 | Outer Joint | | 32 | 35 | 57 | 105 | 74 | O |
| | 2008.05- | AT/MT | F | L | Closed Off-Road Vehicle 4WD ENS | | GCI16004 | Inner Joint | | 27 | 35 | 34.9 | 114 | 113 | |

| | YEAR | TRANSM. | F/R | L/R | BODY STYLE & DRIVE TYPE & ENGINE | REMARKS | G-AP Ref. | PRODUCT | ABS | Technical Specifications A | B | C | H | L | P |
|---|---|---|---|---|---|---|---|---|---|---|---|---|---|---|---|
| **JEEP** | | | | | | | | | | | | | | | |
| **Cherokee** | | | | | | | | | | | | | | | |
| 2.8 (130 kw) | 2008.05- | AT/MT | F | R | Closed Off-Road Vehicle 4WD ENS | | GCI16003 | Inner Joint | | 29 | 35 | 45 | | 156.5 | |
| 2.8 (147 kw) | 2010.01- | 5AT/6MT | F | L | Closed Off-Road Vehicle 4WD ENS | | GDS83214 | Drive Shaft | | 32 | 27 | 57 | 105 | 613 | |
| | 2010.01- | 5AT/6MT | F | R | Closed Off-Road Vehicle 4WD ENS | | GDS83215 | Drive Shaft | | 32 | 29 | 57 | 105 | 545 | |
| | 2010.01- | 5AT/6MT | F | L/R | Closed Off-Road Vehicle 4WD ENS | | GCO82260 | Outer Joint | | 32 | 35 | 57 | 105 | 74 | O |
| | 2010.01- | 5AT/6MT | F | L | Closed Off-Road Vehicle 4WD ENS | | GCI16004 | Inner Joint | | 27 | 35 | 34.9 | 114 | 113 | |
| | 2010.01- | 5AT/6MT | F | R | Closed Off-Road Vehicle 4WD ENS | | GCI16003 | Inner Joint | | 29 | 35 | 45 | | 156.5 | |
| 3.2 (200 kw) | 2013.11- | AT | F | R | SUV 4WD EHB;EHK | | GDS56833 | Drive Shaft | | 27 | 30 | 58 | 84.5 | 623 | |
| | 2013.11- | AT | F | L/R | SUV 4WD EHB;EHK | | GCO82412 | Outer Joint | | 27 | 36 | 58 | 84.5 | 67 | M |
| | 2013.11- | AT | F | R | SUV 4WD EHB;EHK | | GCI83515 | Inner Joint | | 30 | 36 | 34.75 | 69 | 109 | |
| | 2013.11- | AT | R | L | SUV 4WD EHB;EHK | | GDS56290 | Drive Shaft | | 32 | 34 | 53.9 | 101.5 | 692 | |
| | 2013.11- | AT | R | L | SUV 4WD EHB;EHK | | GDS83667 | Drive Shaft | | 32 | 30 | 53.9 | 101.5 | 600 | |
| | 2013.11- | AT | R | R | SUV 4WD EHB;EHK | | GDS56289 | Drive Shaft | | 32 | 34 | 53.9 | 101.5 | 949 | |
| | 2013.11- | AT | R | L/R | SUV 4WD EHB;EHK | | GCO82318 | Outer Joint | | 32 | 36 | 53.9 | 101.5 | 66 | M |
| | 2013.11- | AT | R | L | SUV 4WD EHB;EHK | | GCI83229 | Inner Joint | | 34 | 36 | 43 | 90 | 166 | |
| | 2013.11- | AT | R | R | SUV 4WD EHB;EHK | | GCI83228 | Inner Joint | | 34 | 36 | 43 | 312 | 166 | |
| | 2013.11- | AT | R | L/R | SUV 4WD EHB;EHK | | GCI82156 | Inner Joint | | 30 | 36 | 45 | | 166 | |
| | 2013.11- | 9AT | F | R | SUV FWD EHB;EHK | Model year from:2017,Model year to:2018 | GCO82412 | Outer Joint | | 27 | 36 | 58 | 84.5 | 67 | M |
| | 2015.08- | AT | F | R | SUV Van 4WD EHB | | GDS56833 | Drive Shaft | | 27 | 30 | 58 | 84.5 | 623 | |
| | 2015.08- | AT | F | L/R | SUV Van 4WD EHB | | GCO82412 | Outer Joint | | 27 | 36 | 58 | 84.5 | 67 | M |
| | 2015.08- | AT | F | R | SUV Van 4WD EHB | | GCI83515 | Inner Joint | | 30 | 36 | 34.75 | 69 | 109 | |
| | 2015.08- | AT | R | L | SUV Van 4WD EHB | | GDS56290 | Drive Shaft | | 32 | 34 | 53.9 | 101.5 | 692 | |
| | 2015.08- | AT | R | L | SUV Van 4WD EHB | | GDS83667 | Drive Shaft | | 32 | 30 | 53.9 | 101.5 | 600 | |
| | 2015.08- | AT | R | R | SUV Van 4WD EHB | | GDS56289 | Drive Shaft | | 32 | 34 | 53.9 | 101.5 | 949 | |
| | 2015.08- | AT | R | L/R | SUV Van 4WD EHB | | GCO82318 | Outer Joint | | 32 | 36 | 53.9 | 101.5 | 66 | M |
| | 2015.08- | AT | R | L | SUV Van 4WD EHB | | GCI83229 | Inner Joint | | 34 | 36 | 43 | 90 | 166 | |
| | 2015.08- | AT | R | R | SUV Van 4WD EHB | | GCI83228 | Inner Joint | | 34 | 36 | 43 | 312 | 166 | |
| | 2015.08- | AT | R | L/R | SUV Van 4WD EHB | | GCI82156 | Inner Joint | | 30 | 36 | 45 | | 166 | |
| 3.2 (202 kw) | 2014.01- | AT | F | R | SUV 4WD EHB;EHK | | GDS56833 | Drive Shaft | | 27 | 30 | 58 | 84.5 | 623 | |
| | 2014.01- | AT | F | L/R | SUV 4WD EHB;EHK | | GCO82412 | Outer Joint | | 27 | 36 | 58 | 84.5 | 67 | M |
| | 2014.01- | AT | F | R | SUV 4WD EHB;EHK | | GCI83515 | Inner Joint | | 30 | 36 | 34.75 | 69 | 109 | |
| | 2014.01- | AT | R | L | SUV 4WD EHB;EHK | | GDS56290 | Drive Shaft | | 32 | 34 | 53.9 | 101.5 | 692 | |
| | 2014.01- | AT | R | L | SUV 4WD EHB;EHK | | GDS83667 | Drive Shaft | | 32 | 30 | 53.9 | 101.5 | 600 | |
| | 2014.01- | AT | R | R | SUV 4WD EHB;EHK | | GDS56289 | Drive Shaft | | 32 | 34 | 53.9 | 101.5 | 949 | |
| | 2014.01- | AT | R | L/R | SUV 4WD EHB;EHK | | GCO82318 | Outer Joint | | 32 | 36 | 53.9 | 101.5 | 66 | M |
| | 2014.01- | AT | R | L | SUV 4WD EHB;EHK | | GCI83229 | Inner Joint | | 34 | 36 | 43 | 90 | 166 | |
| | 2014.01- | AT | R | R | SUV 4WD EHB;EHK | | GCI83228 | Inner Joint | | 34 | 36 | 43 | 312 | 166 | |
| | 2014.01- | AT | R | L/R | SUV 4WD EHB;EHK | | GCI82156 | Inner Joint | | 30 | 36 | 45 | | 166 | |
| 3.7 (150 kw) | 2003.08-2008.01 | 4AT/5AT/6MT | F | L | Closed Off-Road Vehicle 4WD EKG | | GDS15019 | Drive Shaft | | 27 | 27 | 60 | 126 | 628 | |
| | 2003.08-2008.01 | 4AT/5AT/6MT | F | L | Closed Off-Road Vehicle 4WD EKG | | GCI16004 | Inner Joint | | 27 | 35 | 34.9 | 114 | 113 | |
| | 2003.08-2008.01 | 5AT | F | R | Closed Off-Road Vehicle 4WD EKG | Date from:2001.10 to 2008.01 | GDS89018 | Drive Shaft | | 27 | 29 | 60 | 126 | 582.5 | |
| | 2003.08-2008.01 | 5AT | F | R | Closed Off-Road Vehicle 4WD EKG | Date from:2001.10 to 2008.01 | GCI16003 | Inner Joint | | 29 | 35 | 45 | | 156.5 | |
| | 2003.08-2008.01 | | F | | Closed Off-Road Vehicle 4WD EKG | | GCO89049 | Outer Joint | | 27 | 35 | 60 | 126 | 64 | O |
| 3.7 (151 kw) | 2008.01- | 4AT/5AT | F | L | Closed Off-Road Vehicle 4WD EKG | | GDS83214 | Drive Shaft | | 32 | 27 | 57 | 105 | 613 | |
| | 2008.01- | 4AT/5AT | F | R | Closed Off-Road Vehicle 4WD EKG | | GDS83215 | Drive Shaft | | 32 | 29 | 57 | 105 | 545 | |
| | 2008.01- | 4AT/5AT | F | L/R | Closed Off-Road Vehicle 4WD EKG | | GCO82260 | Outer Joint | | 32 | 35 | 57 | 105 | 74 | O |
| | 2008.01- | 4AT/5AT | F | L | Closed Off-Road Vehicle 4WD EKG | | GCI16004 | Inner Joint | | 27 | 35 | 34.9 | 114 | 113 | |
| | 2008.01- | 4AT/5AT | F | R | Closed Off-Road Vehicle 4WD EKG | | GCI16003 | Inner Joint | | 29 | 35 | 45 | | 156.5 | |
| 3.7 (155 kw) | 2001.09-2008.01 | 5AT | F | L | Closed Off-Road Vehicle 4WD EKG | | GDS15019 | Drive Shaft | | 27 | 27 | 60 | 126 | 628 | |
| | 2001.09-2008.01 | 5AT | F | L | Closed Off-Road Vehicle 4WD EKG | | GCI16004 | Inner Joint | | 27 | 35 | 34.9 | 114 | 113 | |
| | 2001.09-2008.01 | 5AT/5MT | F | R | Closed Off-Road Vehicle 4WD EKG | | GDS89018 | Drive Shaft | | 27 | 29 | 60 | 126 | 582.5 | |
| | 2001.09-2008.01 | 5AT/5MT | F | R | Closed Off-Road Vehicle 4WD EKG | | GCI16003 | Inner Joint | | 29 | 35 | 45 | | 156.5 | |
| | 2001.09-2008.01 | | F | | Closed Off-Road Vehicle 4WD EKG | | GCO89049 | Outer Joint | | 27 | 35 | 60 | 126 | 64 | O |
| 3.7 (157 kw) | 2001.09-2007.10 | 4AT/6MT | F | L | Closed Off-Road Vehicle 4WD EKG | | GDS15019 | Drive Shaft | | 27 | 27 | 60 | 126 | 628 | |
| | 2001.09-2007.10 | 4AT/6MT | F | R | Closed Off-Road Vehicle 4WD EKG | | GDS89018 | Drive Shaft | | 27 | 29 | 60 | 126 | 582.5 | |
| | 2001.09-2007.10 | 4AT/6MT | F | L/R | Closed Off-Road Vehicle 4WD EKG | | GCO89049 | Outer Joint | | 27 | 35 | 60 | 126 | 64 | O |
| | 2001.09-2007.10 | 4AT/6MT | F | L | Closed Off-Road Vehicle 4WD EKG | | GCI16004 | Inner Joint | | 27 | 35 | 34.9 | 114 | 113 | |
| | 2001.09-2007.10 | 4AT/6MT | F | R | Closed Off-Road Vehicle 4WD EKG | | GCI16003 | Inner Joint | | 29 | 35 | 45 | | 156.5 | |
| | 2008.01-2012.08 | 4AT | F | L | Closed Off-Road Vehicle 4WD EKG | | GDS83214 | Drive Shaft | | 32 | 27 | 57 | 105 | 613 | |
| | 2008.01-2012.08 | 4AT | F | R | Closed Off-Road Vehicle 4WD EKG | | GDS83215 | Drive Shaft | | 32 | 29 | 57 | 105 | 545 | |
| | 2008.01-2012.08 | 4AT | F | L/R | Closed Off-Road Vehicle 4WD EKG | | GCO82260 | Outer Joint | | 32 | 35 | 57 | 105 | 74 | O |
| | 2008.01-2012.08 | 4AT | F | L | Closed Off-Road Vehicle 4WD EKG | | GCI16004 | Inner Joint | | 27 | 35 | 34.9 | 114 | 113 | |
| | 2008.01-2012.08 | 4AT | F | R | Closed Off-Road Vehicle 4WD EKG | | GCI16003 | Inner Joint | | 29 | 35 | 45 | | 156.5 | |
| 4.0 (127 kw) | 1993.09-2001.09 | AT/MT | F | L | Terrain cab wagon closed 4WD MX400L | | GDS16003 | Drive Shaft | 54T | 27 | | 60 | 102.5 | 576 | |
| | 1993.09-2001.09 | AT/MT | F | R | Terrain cab wagon closed 4WD MX400L | | GDS16004 | Drive Shaft | 54T | 27 | | 60 | 102.5 | 975.5 | |
| | 1993.09-2001.09 | AT/MT | F | L/R | Terrain cab wagon closed 4WD MX400L | | GCO16004 | Outer Joint | 54T | 27 | 32 | 60 | 102.5 | 77.5 | I |

| | YEAR | TRANSM. | F/R | L/R | BODY STYLE & DRIVE TYPE & ENGINE | REMARKS | G-AP Ref. | PRODUCT | ABS | Technical Specifications A | B | C | H | L | P |
|---|---|---|---|---|---|---|---|---|---|---|---|---|---|---|---|
| **JEEP** | | | | | | | | | | | | | | | |
| **Cherokee** | | | | | | | | | | | | | | | |
| 4.0 (127 kw) | 1993.09-2001.09 | MT | F | L | Terrain cab wagon closed 4WD MX400L | | GDS16012 | Drive Shaft | | 27 | | 60 | 102.5 | 576 | |
| | 1993.09-2001.09 | MT | F | R | Terrain cab wagon closed 4WD MX400L | | GDS16013 | Drive Shaft | | 27 | | 60 | 102.5 | 975.5 | |
| | 1993.09-2001.09 | | F | | Terrain cab wagon closed 4WD MX400L | | GCO16001 | Outer Joint | | 27 | 32 | 60 | 102.5 | 77.5 | I |
| 4.0 (131 kw) | 1995.01-2001.09 | 3AT/5MT | F | L | Closed Off-Road Vehicle 4WD ERH | | GDS16003 | Drive Shaft | 54T | 27 | | 60 | 102.5 | 576 | |
| | 1995.01-2001.09 | 3AT/5MT | F | L | Closed Off-Road Vehicle 4WD ERH | | GDS16012 | Drive Shaft | | 27 | | 60 | 102.5 | 576 | |
| | 1995.01-2001.09 | 3AT/5MT | F | R | Closed Off-Road Vehicle 4WD ERH | | GDS16004 | Drive Shaft | 54T | 27 | | 60 | 102.5 | 975.5 | |
| | 1995.01-2001.09 | 3AT/5MT | F | R | Closed Off-Road Vehicle 4WD ERH | | GDS16013 | Drive Shaft | | 27 | | 60 | 102.5 | 975.5 | |
| | 1995.01-2001.09 | 3AT/5MT | F | L/R | Closed Off-Road Vehicle 4WD ERH | | GCO16001 | Outer Joint | | 27 | 32 | 60 | 102.5 | 77.5 | I |
| | 1995.01-2001.09 | 3AT/5MT | F | L/R | Closed Off-Road Vehicle 4WD ERH | | GCO16004 | Outer Joint | 54T | 27 | 32 | 60 | 102.5 | 77.5 | I |
| 4.0 (135 kw) | 1999.02-2001.09 | 4AT | F | L | Terrain cab wagon closed 4WD MX400L | | GDS16003 | Drive Shaft | 54T | 27 | | 60 | 102.5 | 576 | |
| | 1999.02-2001.09 | 4AT | F | L | Terrain cab wagon closed 4WD MX400L | | GDS16012 | Drive Shaft | | 27 | | 60 | 102.5 | 576 | |
| | 1999.02-2001.09 | 4AT | F | R | Terrain cab wagon closed 4WD MX400L | | GDS16004 | Drive Shaft | 54T | 27 | | 60 | 102.5 | 975.5 | |
| | 1999.02-2001.09 | 4AT | F | R | Terrain cab wagon closed 4WD MX400L | | GDS16013 | Drive Shaft | | 27 | | 60 | 102.5 | 975.5 | |
| | 1999.02-2001.09 | 4AT | F | L/R | Terrain cab wagon closed 4WD MX400L | | GCO16001 | Outer Joint | | 27 | 32 | 60 | 102.5 | 77.5 | I |
| | 1999.02-2001.09 | 4AT | F | L/R | Terrain cab wagon closed 4WD MX400L | | GCO16004 | Outer Joint | 54T | 27 | 32 | 60 | 102.5 | 77.5 | I |
| 4.0 (136 kw) | 1988.01-2001.09 | 3AT | F | L | Terrain cab wagon closed 4WD ERH | | GDS16003 | Drive Shaft | 54T | 27 | | 60 | 102.5 | 576 | |
| | 1988.01-2001.09 | 3AT | F | L | Terrain cab wagon closed 4WD ERH | | GDS16012 | Drive Shaft | | 27 | | 60 | 102.5 | 576 | |
| | 1988.01-2001.09 | 3AT | F | R | Terrain cab wagon closed 4WD ERH | | GDS16004 | Drive Shaft | 54T | 27 | | 60 | 102.5 | 975.5 | |
| | 1988.01-2001.09 | 3AT | F | R | Terrain cab wagon closed 4WD ERH | | GDS16013 | Drive Shaft | | 27 | | 60 | 102.5 | 975.5 | |
| | 1988.01-2001.09 | 3AT | F | L/R | Terrain cab wagon closed 4WD ERH | | GCO16001 | Outer Joint | | 27 | 32 | 60 | 102.5 | 77.5 | I |
| | 1988.01-2001.09 | 3AT | F | L/R | Terrain cab wagon closed 4WD ERH | | GCO16004 | Outer Joint | 54T | 27 | 32 | 60 | 102.5 | 77.5 | I |
| **Commander** | | | | | | | | | | | | | | | |
| 3.0 (155 kw) | 2005.09-2010.12 | AT | F | L | SUV 4WD EXL | | GDS16014 | Drive Shaft | | 29 | 29 | 70 | 113 | 650 | |
| | 2005.09-2010.12 | AT | F | L | SUV 4WD EXL | Without differential lock | GDS16015 | Drive Shaft | | 29 | 29 | 70 | 113 | 672 | |
| | 2005.09-2010.12 | AT | F | R | SUV 4WD EXL | | GDS16016 | Drive Shaft | | 29 | 29 | 70 | 113 | 604 | |
| | 2005.09-2010.12 | AT | F | L | SUV 4WD EXL | Differential:With differential lock | GCO89056 | Outer Joint | | 29 | 36 | 70 | 112 | 59.5 | I |
| | 2005.09-2010.12 | AT | F | R | SUV 4WD EXL | | GCO89056 | Outer Joint | | 29 | 36 | 70 | 112 | 59.5 | I |
| | 2005.09-2010.12 | AT | F | R | SUV 4WD EXL | | GCI16008 | Inner Joint | | 29 | 36 | 46 | | 135 | |
| 3.0 (160 kw) | 2005.09-2010.12 | AT | F | L | SUV Van 4WD EXL | With differential lock | GDS16014 | Drive Shaft | | 29 | 29 | 70 | 113 | 650 | |
| | 2005.09-2010.12 | AT | F | L | SUV Van 4WD EXL | Without differential lock | GDS16015 | Drive Shaft | | 29 | 29 | 70 | 113 | 672 | |
| | 2005.09-2010.12 | AT | F | R | SUV Van 4WD EXL | | GDS16016 | Drive Shaft | | 29 | 29 | 70 | 113 | 604 | |
| | 2006.04-2010.12 | AT | F | L | SUV 4WD EXL | | GDS16014 | Drive Shaft | | 29 | 29 | 70 | 113 | 650 | |
| | 2006.04-2010.12 | AT | F | L | SUV 4WD EXL | Without differential lock | GDS16015 | Drive Shaft | | 29 | 29 | 70 | 113 | 672 | |
| | 2006.04-2010.12 | AT | F | R | SUV 4WD EXL | | GDS16016 | Drive Shaft | | 29 | 29 | 70 | 113 | 604 | |
| | 2006.04-2010.12 | AT | F | L | SUV 4WD EXL | Differential:With differential lock | GCO89056 | Outer Joint | | 29 | 36 | 70 | 112 | 59.5 | I |
| | 2006.04-2010.12 | AT | F | R | SUV 4WD EXL | | GCO89056 | Outer Joint | | 29 | 36 | 70 | 112 | 59.5 | I |
| | 2006.04-2010.12 | AT | F | R | SUV 4WD EXL | | GCI16008 | Inner Joint | | 29 | 36 | 46 | | 135 | |
| 3.7 (157 kw) | 2005.09-2010.12 | 5AT | F | L | SUV 4WD EKG | | GDS16014 | Drive Shaft | | 29 | 29 | 70 | 113 | 650 | |
| | 2005.09-2010.12 | 5AT | F | R | SUV 4WD EKG | | GDS16016 | Drive Shaft | | 29 | 29 | 70 | 113 | 604 | |
| | 2005.09-2010.12 | 5AT | F | R | SUV 4WD EKG | | GCO89056 | Outer Joint | | 29 | 36 | 70 | 112 | 59.5 | I |
| | 2005.09-2010.12 | 5AT | F | R | SUV 4WD EKG | | GCI16008 | Inner Joint | | 29 | 36 | 46 | | 135 | |
| | 2005.09-2010.12 | | F | L | SUV 4WD EKG | With differential lock | GDS16015 | Drive Shaft | | 29 | 29 | 70 | 113 | 672 | |
| 4.7 (170 kw) | 2005.09-2010.12 | 5AT | F | L | SUV 4WD EVA | | GDS16014 | Drive Shaft | | 29 | 29 | 70 | 113 | 650 | |
| | 2005.09-2010.12 | 5AT | F | R | SUV 4WD EVA | | GDS16016 | Drive Shaft | | 29 | 29 | 70 | 113 | 604 | |
| | 2005.09-2010.12 | 5AT | F | R | SUV 4WD EVA | | GCI16008 | Inner Joint | | 29 | 36 | 46 | | 135 | |
| | 2005.09-2010.12 | AT | F | L | SUV 4WD EVA | Differential:With differential lock | GCO89056 | Outer Joint | | 29 | 36 | 70 | 112 | 59.5 | I |
| | 2005.09-2010.12 | AT | F | R | SUV 4WD EVA | | GCO89056 | Outer Joint | | 29 | 36 | 70 | 112 | 59.5 | I |
| | 2005.09-2010.12 | | F | L | SUV 4WD EVA | With differential lock | GDS16015 | Drive Shaft | | 29 | 29 | 70 | 113 | 672 | |
| 4.7 (223 kw) | 2008.01-2009.12 | AT | F | L | SUV 4WD EVE | | GDS16014 | Drive Shaft | | 29 | 29 | 70 | 113 | 650 | |
| | 2008.01-2009.12 | AT | F | L | SUV 4WD EVE | Without differential lock | GDS16015 | Drive Shaft | | 29 | 29 | 70 | 113 | 672 | |
| | 2008.01-2009.12 | AT | F | R | SUV 4WD EVE | | GDS16016 | Drive Shaft | | 29 | 29 | 70 | 113 | 604 | |
| | 2008.01-2009.12 | AT | F | L | SUV 4WD EVE | Differential:With differential lock | GCO89056 | Outer Joint | | 29 | 36 | 70 | 112 | 59.5 | I |
| | 2008.01-2009.12 | AT | F | R | SUV 4WD EVE | | GCO89056 | Outer Joint | | 29 | 36 | 70 | 112 | 59.5 | I |
| | 2008.01-2009.12 | AT | F | R | SUV 4WD EVE | | GCI16008 | Inner Joint | | 29 | 36 | 46 | | 135 | |
| 5.7 (240 kw) | 2005.09-2010.12 | 5AT | F | L | SUV 4WD EZB | | GDS16014 | Drive Shaft | | 29 | 29 | 70 | 113 | 650 | |
| | 2005.09-2010.12 | 5AT | F | R | SUV 4WD EZB | | GDS16016 | Drive Shaft | | 29 | 29 | 70 | 113 | 604 | |
| | 2005.09-2010.12 | 5AT | F | R | SUV 4WD EZB | | GCO89056 | Outer Joint | | 29 | 36 | 70 | 112 | 59.5 | I |
| | 2005.09-2010.12 | 5AT | F | R | SUV 4WD EZB | | GCI16008 | Inner Joint | | 29 | 36 | 46 | | 135 | |
| | 2005.09-2010.12 | | F | L | SUV 4WD EZB | With differential lock | GDS16015 | Drive Shaft | | 29 | 29 | 70 | 113 | 672 | |
| | 2005.09-2010.12 | | F | L | SUV Van 4WD EZB | With differential lock | GDS16015 | Drive Shaft | | 29 | 29 | 70 | 113 | 672 | |
| 5.7 (255 kw) | 2009.06-2010.12 | AT | F | L | SUV 4WD EZH | | GDS16014 | Drive Shaft | | 29 | 29 | 70 | 113 | 650 | |
| | 2009.06-2010.12 | AT | F | L | SUV 4WD EZH | Without differential lock | GDS16015 | Drive Shaft | | 29 | 29 | 70 | 113 | 672 | |
| | 2009.06-2010.12 | AT | F | R | SUV 4WD EZH | | GDS16016 | Drive Shaft | | 29 | 29 | 70 | 113 | 604 | |
| | 2009.06-2010.12 | AT | F | R | SUV 4WD EZH | | GCO89056 | Outer Joint | | 29 | 36 | 70 | 112 | 59.5 | I |
| | 2009.06-2010.12 | AT | F | R | SUV 4WD EZH | | GCI16008 | Inner Joint | | 29 | 36 | 46 | | 135 | |

| | YEAR | TRANSM. | F/R | L/R | BODY STYLE & DRIVE TYPE & ENGINE | REMARKS | G-AP Ref. | PRODUCT | ABS | Technical Specifications A | B | C | H | L | P |
|---|---|---|---|---|---|---|---|---|---|---|---|---|---|---|---|
| **JEEP** **Compass** | | | | | | | | | | | | | | | |
| 1.3 (96 kw) | 2020.08- | 6MT | F | L/R | SUV FWD 552 82 328 | | GCO82524 | Outer Joint | | 27 | 35 | 59 | 84.5 | 61 | I |
| 1.3 (110 kw) | 2020.08- | 6AT | F | L/R | SUV FWD 552 82 328 | | GCO82524 | Outer Joint | | 27 | 35 | 59 | 84.5 | 61 | I |
| 1.3 (140 kw) | 2021.04- | 6AT | F | L | SUV 4WD 46337540 | | GDS56098 | Drive Shaft | | 27 | 26 | 59 | 84.5 | 623 | |
| | 2021.04- | 6AT | F | R | SUV 4WD 46337540 | | GDS56099 | Drive Shaft | | 27 | 26 | 59 | 84.5 | 957 | |
| | 2021.04- | 6AT | F | L/R | SUV 4WD 46337540 | | GCO82524 | Outer Joint | | 27 | 35 | 59 | 84.5 | 61 | I |
| | 2021.04- | 6AT | F | L | SUV 4WD 46337540 | | GCI82842 | Inner Joint | | 26 | 35 | 31 | 52.5 | 111.5 | |
| | 2021.04- | 6AT | F | R | SUV 4WD 46337540 | | GCI82843 | Inner Joint | | 26 | 35 | 31 | 369.5 | 113.5 | |
| 1.3 (177 kw) | 2020.04- | AT | F | L | SUV 4WD 46337540 | | GDS56098 | Drive Shaft | | 27 | 26 | 59 | 84.5 | 623 | |
| | 2020.04- | AT | F | R | SUV 4WD 46337540 | | GDS56099 | Drive Shaft | | 27 | 26 | 59 | 84.5 | 957 | |
| | 2020.04- | AT | F | L/R | SUV 4WD 46337540 | | GCO82524 | Outer Joint | | 27 | 35 | 59 | 84.5 | 61 | I |
| | 2020.04- | AT | F | L | SUV 4WD 46337540 | | GCI82842 | Inner Joint | | 26 | 35 | 31 | 52.5 | 111.5 | |
| | 2020.04- | AT | F | R | SUV 4WD 46337540 | | GCI82843 | Inner Joint | | 26 | 35 | 31 | 369.5 | 113.5 | |
| 1.6 (88 kw) | 2017.03- | 6MT | F | L | SUV FWD 552 60 384;EJJ | Model year from:2020,For left-hand drive vehicles | GDS58040 | Drive Shaft | | 27 | 25 | 59 | 84.5 | 604 | |
| | 2017.03- | 6MT | F | L | SUV FWD 552 60 384;EJJ | Model year to:2019,For left-hand drive vehicles;For right-hand drive vehicles | GDS82613 | Drive Shaft | | 27 | 25 | 59 | 84.5 | 602 | |
| | 2017.03- | 6MT | F | R | SUV FWD 552 60 384;EJJ | Model year from:2020,For left-hand drive vehicles | GDS57500 | Drive Shaft | | 27 | 25 | 59 | 84.5 | 1003 | |
| | 2017.03- | 6MT | F | L/R | SUV FWD 552 60 384;EJJ | Model year from:2020 | GCO82524 | Outer Joint | | 27 | 35 | 59 | 84.5 | 61 | I |
| | 2017.03- | 6MT | F | L | SUV FWD 552 60 384;EJJ | Model year from:2020 | GCI17118 | Inner Joint | | 25 | 35 | 32 | 75 | 96 | |
| | 2017.03- | 6MT | F | L | SUV FWD 552 60 384;EJJ | Model year to:2019,For left-hand drive vehicles;For right-hand drive vehicles | GCI17126 | Inner Joint | | 25 | 26 | 32 | 59 | 110.5 | |
| | 2017.03- | 6MT | F | R | SUV FWD 552 60 384;EJJ | Model year from:2020 | GCI83713 | Inner Joint | | 25 | 35 | 29.75 | 424 | 110 | |
| 1.6 (96 kw) | 2021.04- | 6MT | F | L | SUV FWD 46346020 | | GDS58040 | Drive Shaft | | 27 | 25 | 59 | 84.5 | 604 | |
| | 2021.04- | 6MT | F | R | SUV FWD 46346020 | | GDS57500 | Drive Shaft | | 27 | 25 | 59 | 84.5 | 1003 | |
| | 2021.04- | 6MT | F | L/R | SUV FWD 46346020 | | GCO82524 | Outer Joint | | 27 | 35 | 59 | 84.5 | 61 | I |
| | 2021.04- | 6MT | F | L | SUV FWD 46346020 | | GCI17118 | Inner Joint | | 25 | 35 | 32 | 75 | 96 | |
| | 2021.04- | 6MT | F | R | SUV FWD 46346020 | | GCI83713 | Inner Joint | | 25 | 35 | 29.75 | 424 | 110 | |
| 2.0 (88 kw) | 2007.02- | 6MT | F | R | SUV 4WD ECD | | GDS51045 | Drive Shaft | | 28 | 27 | 59.5 | 95 | 962 | |
| | 2007.02- | 6MT | F | R | SUV 4WD ECD | | GCO39113 | Outer Joint | | 28 | 33 | 59.5 | 95 | 61.5 | I |
| | 2007.02- | MT | F | L | SUV 4WD ECD | | GDS15054 | Drive Shaft | | 28 | 24 | 59.5 | 95 | 622 | |
| | 2007.02- | 6MT | R | L | SUV 4WD ECD | | GDS51055 | Drive Shaft | | 25 | 23 | 48 | 106.5 | 743 | |
| | 2007.02- | 6MT | R | R | SUV 4WD ECD | | GDS51056 | Drive Shaft | | 25 | 23 | 48 | 106.5 | 822 | |
| | 2007.02- | 6MT | R | R | SUV 4WD ECD | | GCO51033 | Outer Joint | | 25 | 26 | 48 | 106.5 | 49 | I |
| | 2007.02- | 6MT | R | L/R | SUV 4WD ECD | | GCI39050 | Inner Joint | | 23 | 26 | 35 | 64 | 96 | |
| 2.0 (103 kw) | 2006.08- | MT | F | L | SUV FWD ECD;ECE | | GDS15054 | Drive Shaft | | 28 | 24 | 59.5 | 95 | 622 | |
| | 2006.08- | MT | F | R | SUV FWD ECD;ECE | | GDS51041 | Drive Shaft | | 28 | 24 | 59.5 | 95 | 977 | |
| | 2006.08- | | F | | SUV FWD ECD;ECE | | GCO15010 | Outer Joint | | 28 | 36 | 59.5 | 95 | 68 | I |
| | 2006.09- | MT | F | L | SUV 4WD ECE | | GDS15054 | Drive Shaft | | 28 | 24 | 59.5 | 95 | 622 | |
| | 2006.09- | MT | F | R | SUV 4WD ECE | | GDS51041 | Drive Shaft | | 28 | 24 | 59.5 | 95 | 977 | |
| | 2006.09- | MT | F | R | SUV 4WD ECE | | GDS51045 | Drive Shaft | | 28 | 27 | 59.5 | 95 | 962 | |
| | 2006.09- | | F | | SUV 4WD ECE | | GCO15010 | Outer Joint | | 28 | 36 | 59.5 | 95 | 68 | I |
| | 2006.09- | 6MT | R | L | SUV 4WD ECE | | GDS51055 | Drive Shaft | | 25 | 23 | 48 | 106.5 | 743 | |
| | 2006.09- | 6MT | R | R | SUV 4WD ECE | | GDS51056 | Drive Shaft | | 25 | 23 | 48 | 106.5 | 822 | |
| | 2006.09- | 6MT | R | L/R | SUV 4WD ECE | | GCO51033 | Outer Joint | | 25 | 26 | 48 | 106.5 | 49 | I |
| | 2006.09- | 6MT | R | L/R | SUV 4WD ECE | | GCI39050 | Inner Joint | | 23 | 26 | 35 | 64 | 96 | |
| | 2017.03- | 9AT | F | L/R | SUV 4WD EBT;552 63 088,EBS;552 63 087;552 83 099;552 84 064 | | GDS84182 | Drive Shaft | | 27 | 30 | 59 | 84 | 600 | |
| 2.0 (115 kw) | 2011.05- | 5MT | F | R | SUV FWD ECN | | GDS15051 | Drive Shaft | | 28 | 28 | 59.5 | 95 | 586 | |
| | 2011.05- | AT | F | R | SUV FWD ECN | | GDS51045 | Drive Shaft | | 28 | 27 | 59.5 | 95 | 962 | |
| | 2011.05- | AT/MT | F | L | SUV FWD ECN | Date to:2018.12 | GDS15053 | Drive Shaft | | 28 | 27 | 59.5 | 95 | 638 | |
| | 2011.05- | CVT | F | R | SUV FWD ECN | | GDS51067 | Drive Shaft | | 28 | 27 | 59.5 | 95 | 958 | |
| | 2011.05- | CVT | F | R | SUV FWD ECN | | GCI41056 | Inner Joint | | 27 | 33 | 40 | 62 | 112 | |
| | 2011.05- | | F | L | SUV FWD ECN | | GCO39113 | Outer Joint | | 28 | 33 | 59.5 | 95 | 61.5 | I |
| 2.0 (118 kw) | 2006.08- | 5MT | F | R | SUV FWD ECN | | GDS15051 | Drive Shaft | | 28 | 28 | 59.5 | 95 | 586 | |
| | 2006.08- | 6AT/9AT/CVT/5MT | F | L | SUV FWD ECN | | GDS15053 | Drive Shaft | | 28 | 27 | 59.5 | 95 | 638 | |
| | 2006.08- | CVT | F | R | SUV FWD ECN | | GDS51067 | Drive Shaft | | 28 | 27 | 59.5 | 95 | 958 | |
| | 2006.08- | CVT | F | R | SUV FWD ECN | | GCO39113 | Outer Joint | | 28 | 33 | 59.5 | 95 | 61.5 | I |
| | 2006.08- | CVT | F | R | SUV FWD ECN | | GCI41056 | Inner Joint | | 27 | 33 | 40 | 62 | 112 | |
| 2.0 (125 kw) | 2016.12- | 9AT | F | L/R | SUV 4WD 552 63 088;EBS;552 83 099 | | GDS84182 | Drive Shaft | | 27 | 30 | 59 | 84 | 600 | |
| | 2016.12- | 9AT | F | L/R | SUV 4WD 552 63 088;EBS;552 83 099 | | GCI83189 | Inner Joint | | 30 | 28 | | 68.5 | 98 | |
| | 2016.12- | 9AT | R | L/R | SUV 4WD 552 63 088;EBS;552 83 099 | | GDS84019 | Drive Shaft | | 27 | 22 | 59 | 84.5 | 679 | |
| | 2016.12- | 9AT | R | L/R | SUV 4WD 552 63 088;EBS;552 83 099 | | GCO82554 | Outer Joint | | 27 | 21 | 59 | 84.5 | 54 | M |
| | 2016.12- | 9AT | R | L/R | SUV 4WD 552 63 088;EBS;552 83 099 | | GCI83205 | Inner Joint | | 22 | 21 | 38.5 | | 134 | |
| 2.2 (100 kw) | 2011.05- | 6MT | F | R | SUV 4WD ENE | | GDS51045 | Drive Shaft | | 28 | 27 | 59.5 | 95 | 962 | |
| | 2011.05- | 6MT | F | R | SUV 4WD ENE | | GCI15012 | Inner Joint | | 28 | 36 | 42 | | 122 | |
| | 2011.05- | MT | F | L | SUV 4WD ENE | | GDS15054 | Drive Shaft | | 28 | 24 | 59.5 | 95 | 622 | |
| | 2011.05- | | F | R | SUV 4WD ENE | | GCO15010 | Outer Joint | | 28 | 36 | 59.5 | 95 | 68 | I |
| | 2011.05- | 6MT | R | L | SUV 4WD ENE | Model year to:2013 | GDS51055 | Drive Shaft | | 25 | 23 | 48 | 106.5 | 743 | |
| | 2011.05- | 6MT | R | R | SUV 4WD ENE | Model year to:2013 | GDS51056 | Drive Shaft | | 25 | 23 | 48 | 106.5 | 822 | |

| | YEAR | TRANSM. | F/R | L/R | BODY STYLE & DRIVE TYPE & ENGINE | REMARKS | G-AP Ref. | PRODUCT | ABS | Technical Specifications A | B | C | H | L | P |
|---|---|---|---|---|---|---|---|---|---|---|---|---|---|---|---|
| **JEEP** | | | | | | | | | | | | | | | |
| **Compass** | | | | | | | | | | | | | | | |
| 2.2 (100 kw) | 2011.05- | 6MT | R | L/R | SUV 4WD ENE | Model year to:2013 | GCO51033 | Outer Joint | | 25 | 26 | 48 | 106.5 | 49 | I |
| | 2011.05- | 6MT | R | L/R | SUV 4WD ENE | Model year to:2013 | GCI39050 | Inner Joint | | 23 | 26 | 35 | 64 | 96 | |
| | 2011.05- | 6MT | F | R | SUV FWD ENE | | GCI15012 | Inner Joint | | 28 | 36 | 42 | | 122 | |
| | 2011.05- | MT | F | L | SUV FWD ENE | | GDS15054 | Drive Shaft | | 28 | 24 | 59.5 | 95 | 622 | |
| | 2011.05- | | F | R | SUV FWD ENE | | GDS15052 | Drive Shaft | | 28 | 28 | 59.5 | 95 | 613 | |
| | 2011.05- | | F | R | SUV FWD ENE | | GCO15010 | Outer Joint | | 28 | 36 | 59.5 | 95 | 68 | I |
| 2.2 (120 kw) | 2010.12- | 6MT | F | L | SUV 4WD OM 651.925 | | GDS15054 | Drive Shaft | | 28 | 24 | 59.5 | 95 | 622 | |
| | 2010.12- | 6MT | F | R | SUV 4WD OM 651.925 | | GDS51045 | Drive Shaft | | 28 | 27 | 59.5 | 95 | 962 | |
| | 2010.12- | 6MT | F | L/R | SUV 4WD OM 651.925 | | GCO39137 | Outer Joint | | 28 | 37 | 59.5 | 94.5 | 71.5 | I |
| | 2010.12- | 6MT | F | L | SUV 4WD OM 651.925 | | GCI59140 | Inner Joint | | 24 | 36 | 50 | 67 | 116 | |
| | 2010.12- | 6MT | R | L | SUV 4WD OM 651.925 | Model year to:2013 | GDS51055 | Drive Shaft | | 25 | 23 | 48 | 106.5 | 743 | |
| | 2010.12- | 6MT | R | R | SUV 4WD OM 651.925 | Model year to:2013 | GDS51056 | Drive Shaft | | 25 | 23 | 48 | 106.5 | 822 | |
| | 2010.12- | 6MT | R | L/R | SUV 4WD OM 651.925 | Model year to:2013 | GCO51033 | Outer Joint | | 25 | 26 | 48 | 106.5 | 49 | I |
| | 2010.12- | 6MT | R | L/R | SUV 4WD OM 651.925 | Model year to:2013 | GCI39050 | Inner Joint | | 23 | 26 | 35 | 64 | 96 | |
| 2.4 (125 kw) | 2006.08- | AT | F | L | SUV FWD ERZ;EDG;ED3 | | GDS83401 | Drive Shaft | | 28 | 27 | 59.5 | 94.5 | 637 | |
| | 2006.08- | AT | F | R | SUV FWD ERZ;EDG;ED3 | | GDS51041 | Drive Shaft | | 28 | 24 | 59.5 | 95 | 977 | |
| | 2006.08- | AT | F | L | SUV FWD ERZ;EDG;ED3 | | GCO81568 | Outer Joint | | 28 | 33 | 59.5 | 94.5 | 61.5 | I |
| | 2006.08- | AT | F | L | SUV FWD ERZ;EDG;ED3 | | GCI81252 | Inner Joint | | 27 | 33 | 40 | 62 | 110 | |
| | 2006.08- | CVT | F | L | SUV FWD ERZ;EDG;ED3 | | GDS15053 | Drive Shaft | | 28 | 27 | 59.5 | 95 | 638 | |
| | 2006.08- | MT | F | R | SUV FWD ERZ;EDG;ED3 | | GDS15051 | Drive Shaft | | 28 | 28 | 59.5 | 95 | 586 | |
| | 2006.08- | MT | F | L | SUV FWD ERZ;EDG;ED3 | | GCO15010 | Outer Joint | | 28 | 36 | 59.5 | 95 | 68 | I |
| | 2006.08- | MT | F | R | SUV FWD ERZ;EDG;ED3 | | GCO39113 | Outer Joint | | 28 | 33 | 59.5 | 95 | 61.5 | I |
| | 2006.08- | MT | F | L | SUV FWD ERZ;EDG;ED3 | | GCI59140 | Inner Joint | | 24 | 36 | 50 | 67 | 116 | |
| | 2006.09- | AT | F | L | SUV 4WD ERZ;ED3 | | GDS83401 | Drive Shaft | | 28 | 27 | 59.5 | 94.5 | 637 | |
| | 2006.09- | AT | F | R | SUV 4WD ERZ;ED3 | | GDS51041 | Drive Shaft | | 28 | 24 | 59.5 | 95 | 977 | |
| | 2006.09- | AT | F | L | SUV 4WD ERZ;ED3 | | GCO81568 | Outer Joint | | 28 | 33 | 59.5 | 94.5 | 61.5 | I |
| | 2006.09- | AT | F | L | SUV 4WD ERZ;ED3 | | GCI81252 | Inner Joint | | 27 | 33 | 40 | 62 | 110 | |
| | 2006.09- | AT/MT | F | R | SUV 4WD ERZ;ED3 | | GDS51045 | Drive Shaft | | 28 | 27 | 59.5 | 95 | 962 | |
| | 2006.09- | CVT | F | L | SUV 4WD ERZ;ED3 | | GDS15053 | Drive Shaft | | 28 | 27 | 59.5 | 95 | 638 | |
| | 2006.09- | MT | F | L | SUV 4WD ERZ;ED3 | | GCO15010 | Outer Joint | | 28 | 36 | 59.5 | 95 | 68 | I |
| | 2006.09- | MT | F | L | SUV 4WD ERZ;ED3 | | GCI59140 | Inner Joint | | 24 | 36 | 50 | 67 | 116 | |
| | 2006.09- | 6AT/5MT | R | R | SUV 4WD ERZ;ED3 | Model year to:2013 | GDS51056 | Drive Shaft | | 25 | 23 | 48 | 106.5 | 822 | |
| | 2006.09- | 6AT/5MT | R | L/R | SUV 4WD ERZ;ED3 | Model year to:2013 | GCO51033 | Outer Joint | | 25 | 26 | 48 | 106.5 | 49 | I |
| | 2006.09- | 6AT/5MT | R | L/R | SUV 4WD ERZ;ED3 | Model year to:2013 | GCI39050 | Inner Joint | | 23 | 26 | 35 | 64 | 96 | |
| | 2006.09- | 6AT/SAT/5MT | R | L | SUV 4WD ERZ;ED3 | Model year to:2013 | GDS51055 | Drive Shaft | | 25 | 23 | 48 | 106.5 | 743 | |
| **Grand Cherokee** | | | | | | | | | | | | | | | |
| 2.5 (85 kw) | 1995.10-1998.09 | 5MT | F | L | Terrain cab wagon closed 4WD ENC | | GDS16012 | Drive Shaft | | 27 | | 60 | 102.5 | 576 | |
| | 1995.10-1998.09 | 5MT | F | R | Terrain cab wagon closed 4WD ENC | | GDS16013 | Drive Shaft | | 27 | | 60 | 102.5 | 975.5 | |
| | 1995.10-1998.09 | 5MT | F | L/R | Terrain cab wagon closed 4WD ENC | | GCO16001 | Outer Joint | | 27 | 32 | 60 | 102.5 | 77.5 | I |
| | 1995.10-1998.09 | 5MT | F | L/R | Terrain cab wagon closed 4WD ENC | | GCO16004 | Outer Joint | 54T | 27 | 32 | 60 | 102.5 | 77.5 | I |
| | 1995.10-1998.09 | AT/MT | F | L | Terrain cab wagon closed 4WD ENC | | GDS16003 | Drive Shaft | 54T | 27 | | 60 | 102.5 | 576 | |
| | 1995.10-1998.09 | AT/MT | F | R | Terrain cab wagon closed 4WD ENC | | GDS16004 | Drive Shaft | 54T | 27 | | 60 | 102.5 | 975.5 | |
| 2.7 (120 kw) | 2001.09-2004.09 | 5AT | F | L/R | Terrain cab wagon closed 4WD ENF | | GCO16005 | Outer Joint | 48T | 27 | 32 | 65.4 | 108 | 70 | I |
| | 2001.09-2004.09 | AT | F | L | Terrain cab wagon closed 4WD ENF | | GDS16009 | Drive Shaft | 48T | 27 | | 65.4 | 108 | 589 | |
| | 2001.09-2004.09 | AT | F | R | Terrain cab wagon closed 4WD ENF | | GDS16006 | Drive Shaft | 48T | 27 | | 65.4 | 108 | 1045 | |
| | 2001.10-2005.09 | AT/MT | F | L | Terrain cab wagon closed 4WD DDAB | | GDS16009 | Drive Shaft | 48T | 27 | | 65.4 | 108 | 589 | |
| | 2001.10-2005.09 | AT/MT | F | L | Terrain cab wagon closed 4WD DDAB | | GDS89016 | Drive Shaft | 48T | 27 | | 65.4 | 108 | 620 | |
| | 2001.10-2005.09 | AT/MT | F | R | Terrain cab wagon closed 4WD DDAB | | GDS15020 | Drive Shaft | 48T | 27 | | 65.4 | 108 | 1017.5 | |
| | 2001.10-2005.09 | AT/MT | F | R | Terrain cab wagon closed 4WD DDAB | | GDS16006 | Drive Shaft | 48T | 27 | | 65.4 | 108 | 1045 | |
| 3.0 (132 kw) | 2006.05-2010.12 | 5AT | F | L | Closed Off-Road Vehicle 4WD EXL | | GDS16014 | Drive Shaft | | 29 | 29 | 70 | 113 | 650 | |
| | 2006.05-2010.12 | 5AT | F | R | Closed Off-Road Vehicle 4WD EXL | | GDS16016 | Drive Shaft | | 29 | 29 | 70 | 113 | 604 | |
| | 2006.05-2010.12 | 5AT | F | R | Closed Off-Road Vehicle 4WD EXL | | GCO89056 | Outer Joint | | 29 | 36 | 70 | 112 | 59.5 | I |
| | 2006.05-2010.12 | 5AT | F | R | Closed Off-Road Vehicle 4WD EXL | | GCI16008 | Inner Joint | | 29 | 36 | 46 | | 135 | |
| | 2006.05-2010.12 | | F | L | Closed Off-Road Vehicle 4WD EXL | Without differential lock | GDS16015 | Drive Shaft | | 29 | 29 | 70 | 113 | 672 | |
| 3.0 (140 kw) | 2011.02- | AT | F | L | SUV 4WD EXF;EXN | Single speed transfer case | GDS84021 | Drive Shaft | | 32 | 37 | 72 | 115 | 663 | |
| | 2011.02- | AT | F | R | SUV 4WD EXF;EXN | Single speed transfer case | GDS84059 | Drive Shaft | | 32 | 37 | 72 | 115 | 1031 | |
| | 2011.02- | AT | F | L/R | SUV 4WD EXF;EXN | Single speed transfer case | GCO82555 | Outer Joint | | 32 | 26 | 72 | 115 | 61.5 | M |
| | 2011.02- | AT | F | L | SUV 4WD EXF;EXN | Single speed transfer case | GCI82457 | Inner Joint | | 37 | 24 | 44.97 | 80 | 118 | |
| | 2011.02- | AT | F | R | SUV 4WD EXF;EXN | Single speed transfer case | GCI82502 | Inner Joint | | 37 | 24 | 45 | 263 | 138 | |
| | 2011.02- | AT | R | L/R | SUV 4WD EXF;EXN | Transmission:AT;Differential:200mm;Transmission:Dual speed transfer case;Differential:215mm | GDS56324 | Drive Shaft | | 32 | 32 | 72 | 115 | 859 | |
| | 2011.02- | AT | R | L/R | SUV 4WD EXF;EXN | Dual speed transfer case;Differential:195mm | GDS57910 | Drive Shaft | | 32 | 37 | 72 | 115 | 859 | |
| | 2011.02- | AT | R | L/R | SUV 4WD EXF;EXN | Single speed transfer case;Differential:195mm | GDS58125 | Drive Shaft | | 32 | 37 | 72 | 115 | 853 | |
| | 2011.02- | AT | R | L/R | SUV 4WD EXF;EXN | Dual speed transfer case;Differential:225mm | GDS58126 | Drive Shaft | | 32 | 34 | 72 | 115 | 856 | |
| | 2011.02- | AT | R | L/R | SUV 4WD EXF;EXN | Transmission:AT;Differential:200mm;Transmission:Dual speed transfer case;Differential:215mm | GCO83253 | Outer Joint | | 32 | 27 | 72 | 115 | 72 | M |
| | 2011.02- | AT | R | L/R | SUV 4WD EXF;EXN | Single speed transfer case | GCO83853 | Outer Joint | | 32 | 26 | 72 | 115 | 61.5 | M |

| | YEAR | TRANSM. | F/R | L/R | BODY STYLE & DRIVE TYPE & ENGINE | REMARKS | G-AP Ref. | PRODUCT | ABS | Technical Specifications | | | | | |
|---|---|---|---|---|---|---|---|---|---|---|---|---|---|---|---|
| | | | | | | | | | | A | B | C | H | L | P |
| **JEEP**<br>**Grand Cherokee** | | | | | | | | | | | | | | | |
| 3.0 (140 kw) | 2011.02- | AT | R | L/R | SUV 4WD EXF;EXN | Transmission:AT,Differential:230mm;Transmission:Dual speed transfer case,Differential:215mm | GCI83241 | Inner Joint | | 32 | 28 | 49.9 | 94 | 122.5 | |
| | 2011.02- | AT | R | L/R | SUV 4WD EXF;EXN | Dual speed transfer case;Differential:195mm | GCI83916 | Inner Joint | | 37 | 28 | 44.95 | 80 | 120 | |
| | 2011.02- | AT | R | L/R | SUV 4WD EXF;EXN | Single speed transfer case;Differential:195mm | GCI84017 | Inner Joint | | 37 | 25 | 44.95 | 80 | 112 | |
| | 2011.02- | AT | R | L/R | SUV 4WD EXF;EXN | Dual speed transfer case;Differential:225mm | GCI84018 | Inner Joint | | 34 | 28 | 51 | 91 | 118.5 | |
| | 2017.01- | AT | F | L | SUV Van 4WD EXF | Single speed transfer case | GDS84021 | Drive Shaft | | 32 | 37 | 72 | 115 | 663 | |
| | 2017.01- | AT | F | R | SUV Van 4WD EXF | Single speed transfer case | GDS84059 | Drive Shaft | | 32 | 37 | 72 | 115 | 1031 | |
| | 2017.01- | AT | F | L/R | SUV Van 4WD EXF | Single speed transfer case | GCO82555 | Outer Joint | | 32 | 26 | 72 | 115 | 61.5 | M |
| | 2017.01- | AT | F | L | SUV Van 4WD EXF | Single speed transfer case | GCI82457 | Inner Joint | | 37 | 24 | 44.97 | 80 | 118 | |
| | 2017.01- | AT | F | R | SUV Van 4WD EXF | Single speed transfer case | GCI82502 | Inner Joint | | 37 | 24 | 45 | 263 | 138 | |
| | 2017.01- | AT | R | L/R | SUV Van 4WD EXF | Transmission:AT,Differential:230mm;Transmission:Dual speed transfer case,Differential:215mm | GDS56324 | Drive Shaft | | 32 | 32 | 72 | 115 | 859 | |
| | 2017.01- | AT | R | L/R | SUV Van 4WD EXF | Dual speed transfer case;Differential:195mm | GDS57910 | Drive Shaft | | 32 | 37 | 72 | 115 | 859 | |
| | 2017.01- | AT | R | L/R | SUV Van 4WD EXF | Single speed transfer case;Differential:195mm | GDS58125 | Drive Shaft | | 32 | 37 | 72 | 115 | 853 | |
| | 2017.01- | AT | R | L/R | SUV Van 4WD EXF | Dual speed transfer case;Differential:225mm | GDS58126 | Drive Shaft | | 32 | 34 | 72 | 115 | 856 | |
| | 2017.01- | AT | R | L/R | SUV Van 4WD EXF | Transmission:AT,Differential:230mm;Transmission:Dual speed transfer case,Differential:215mm | GCO83253 | Outer Joint | | 32 | 27 | 72 | 115 | 72 | M |
| | 2017.01- | AT | R | L/R | SUV Van 4WD EXF | Single speed transfer case | GCO83853 | Outer Joint | | 32 | 26 | 72 | 115 | 61.5 | M |
| | 2017.01- | AT | R | L/R | SUV Van 4WD EXF | Transmission:AT,Differential:230mm;Transmission:Dual speed transfer case,Differential:215mm | GCI83241 | Inner Joint | | 32 | 28 | 49.9 | 94 | 122.5 | |
| | 2017.01- | AT | R | L/R | SUV Van 4WD EXF | Dual speed transfer case;Differential:195mm | GCI83916 | Inner Joint | | 37 | 28 | 44.95 | 80 | 120 | |
| | 2017.01- | AT | R | L/R | SUV Van 4WD EXF | Single speed transfer case;Differential:195mm | GCI84017 | Inner Joint | | 37 | 25 | 44.95 | 80 | 112 | |
| | 2017.01- | AT | R | L/R | SUV Van 4WD EXF | Dual speed transfer case;Differential:225mm | GCI84018 | Inner Joint | | 34 | 28 | 51 | 91 | 118.5 | |
| 3.0 (155 kw) | 2006.05-2010.12 | 5AT | F | L | Closed Off-Road Vehicle 4WD EXL | | GDS16014 | Drive Shaft | | 29 | 29 | 70 | 113 | 650 | |
| | 2006.05-2010.12 | 5AT | F | R | Closed Off-Road Vehicle 4WD EXL | | GDS16016 | Drive Shaft | | 29 | 29 | 70 | 113 | 604 | |
| | 2006.05-2010.12 | 5AT | F | R | Closed Off-Road Vehicle 4WD EXL | | GCO89056 | Outer Joint | | 29 | 36 | 70 | 112 | 59.5 | I |
| | 2006.05-2010.12 | 5AT | F | R | Closed Off-Road Vehicle 4WD EXL | | GCI16008 | Inner Joint | | 29 | 36 | 46 | | 135 | |
| | 2006.05-2010.12 | | F | L | Closed Off-Road Vehicle 4WD EXL | | GDS16015 | Drive Shaft | | 29 | 29 | 70 | 113 | 672 | |
| 3.0 (160 kw) | 2005.06-2010.12 | 5AT | F | L | Closed Off-Road Vehicle 4WD EXL | With differential lock | GDS16014 | Drive Shaft | | 29 | 29 | 70 | 113 | 650 | |
| | 2005.06-2010.12 | 5AT | F | L | Closed Off-Road Vehicle 4WD EXL | Without differential lock | GDS16015 | Drive Shaft | | 29 | 29 | 70 | 113 | 672 | |
| | 2005.06-2010.12 | 5AT | F | R | Closed Off-Road Vehicle 4WD EXL | | GDS16016 | Drive Shaft | | 29 | 29 | 70 | 113 | 604 | |
| | 2005.06-2010.12 | 5AT | F | L/R | Closed Off-Road Vehicle 4WD EXL | | GCO89056 | Outer Joint | | 29 | 36 | 70 | 112 | 59.5 | I |
| | 2005.06-2010.12 | 5AT | F | R | Closed Off-Road Vehicle 4WD EXL | | GCI16008 | Inner Joint | | 29 | 36 | 46 | | 135 | |
| | 2011.01- | AT | F | L | SUV 4WD EXF;EXN | Single speed transfer case,Type:DHY | GDS84021 | Drive Shaft | | 32 | 37 | 72 | 115 | 663 | |
| | 2011.01- | AT | F | R | SUV 4WD EXF;EXN | Type:DHY,Single speed transfer case | GDS84059 | Drive Shaft | | 32 | 37 | 72 | 115 | 1031 | |
| | 2011.01- | AT | F | L/R | SUV 4WD EXF;EXN | Single speed transfer case,Type:DHY | GCO82555 | Outer Joint | | 32 | 26 | 72 | 115 | 61.5 | M |
| | 2011.01- | AT | F | L | SUV 4WD EXF;EXN | Single speed transfer case,Type:DHY | GCI82457 | Inner Joint | | 37 | 24 | 44.97 | 80 | 118 | |
| | 2011.01- | AT | F | R | SUV 4WD EXF;EXN | Type:DHY,Single speed transfer case | GCI82502 | Inner Joint | | 37 | 24 | 45 | 263 | 138 | |
| | 2011.01- | AT | R | L/R | SUV 4WD EXF;EXN | Transmission:AT,Differential:230mm;Transmission:Dual speed transfer case,Trim Level:DKA,Differential:215mm | GDS56324 | Drive Shaft | | 32 | 32 | 72 | 115 | 859 | |
| | 2011.01- | AT | R | L/R | SUV 4WD EXF;EXN | Dual speed transfer case;Differential:195mm | GDS57910 | Drive Shaft | | 32 | 37 | 72 | 115 | 859 | |
| | 2011.01- | AT | R | L/R | SUV 4WD EXF;EXN | Single speed transfer case;Trim Level:DHY,Differential:195mm | GDS58125 | Drive Shaft | | 32 | 37 | 72 | 115 | 853 | |
| | 2011.01- | AT | R | L/R | SUV 4WD EXF;EXN | Dual speed transfer case;Trim Level:DKA,Differential:225mm | GDS58126 | Drive Shaft | | 32 | 34 | 72 | 115 | 856 | |
| | 2011.01- | AT | R | L/R | SUV 4WD EXF;EXN | Transmission:AT,Differential:230mm;Transmission:Dual speed transfer case,Trim Level:DKA,Differential:215mm | GCO83253 | Outer Joint | | 32 | 27 | 72 | 115 | 72 | M |
| | 2011.01- | AT | R | L/R | SUV 4WD EXF;EXN | Single speed transfer case;Trim Level:DHY | GCO83853 | Outer Joint | | 32 | 26 | 72 | 115 | 61.5 | M |
| | 2011.01- | AT | R | L/R | SUV 4WD EXF;EXN | Transmission:AT,Differential:230mm;Transmission:Dual speed transfer case,Trim Level:DKA,Differential:215mm | GCI83241 | Inner Joint | | 32 | 28 | 49.9 | 94 | 122.5 | |
| | 2011.01- | AT | R | L/R | SUV 4WD EXF;EXN | Dual speed transfer case;Differential:195mm | GCI83916 | Inner Joint | | 37 | 28 | 44.95 | 80 | 120 | |
| | 2011.01- | AT | R | L/R | SUV 4WD EXF;EXN | Single speed transfer case;Trim Level:DHY,Differential:195mm | GCI84017 | Inner Joint | | 37 | 25 | 44.95 | 80 | 112 | |
| | 2011.01- | AT | R | L/R | SUV 4WD EXF;EXN | Dual speed transfer case;Trim Level:DKA,Differential:225mm | GCI84018 | Inner Joint | | 34 | 28 | 51 | 91 | 118.5 | |
| 3.0 (175 kw) | 2014.09- | AT | F | L | SUV 4WD EHD;EHW | Single speed transfer case | GDS84021 | Drive Shaft | | 32 | 37 | 72 | 115 | 663 | |
| | 2014.09- | AT | F | R | SUV 4WD EHD;EHW | Single speed transfer case | GDS84059 | Drive Shaft | | 32 | 37 | 72 | 115 | 1031 | |
| | 2014.09- | AT | F | L/R | SUV 4WD EHD;EHW | Single speed transfer case | GCO82555 | Outer Joint | | 32 | 26 | 72 | 115 | 61.5 | M |
| | 2014.09- | AT | F | L | SUV 4WD EHD;EHW | Single speed transfer case | GCI82457 | Inner Joint | | 37 | 24 | 44.97 | 80 | 118 | |
| | 2014.09- | AT | F | R | SUV 4WD EHD;EHW | Single speed transfer case | GCI82502 | Inner Joint | | 37 | 24 | 45 | 263 | 138 | |
| | 2014.09- | AT | R | L/R | SUV 4WD EHD;EHW | Single speed transfer case;Differential:195mm | GDS58125 | Drive Shaft | | 32 | 37 | 72 | 115 | 853 | |
| | 2014.09- | AT | R | L/R | SUV 4WD EHD;EHW | Single speed transfer case | GCO83853 | Outer Joint | | 32 | 26 | 72 | 115 | 61.5 | M |
| | 2014.09- | AT | R | L/R | SUV 4WD EHD;EHW | Single speed transfer case;Differential:195mm | GCI84017 | Inner Joint | | 37 | 25 | 44.95 | 80 | 112 | |
| 3.0 (177 kw) | 2011.02- | AT | F | L | SUV 4WD EXF;EXN | Single speed transfer case | GDS84021 | Drive Shaft | | 32 | 37 | 72 | 115 | 663 | |
| | 2011.02- | AT | F | R | SUV 4WD EXF;EXN | Single speed transfer case | GDS84059 | Drive Shaft | | 32 | 37 | 72 | 115 | 1031 | |
| | 2011.02- | AT | F | L/R | SUV 4WD EXF;EXN | Single speed transfer case | GCO82555 | Outer Joint | | 32 | 26 | 72 | 115 | 61.5 | M |
| | 2011.02- | AT | F | L | SUV 4WD EXF;EXN | Single speed transfer case | GCI82457 | Inner Joint | | 37 | 24 | 44.97 | 80 | 118 | |
| | 2011.02- | AT | F | R | SUV 4WD EXF;EXN | Single speed transfer case | GCI82502 | Inner Joint | | 37 | 24 | 45 | 263 | 138 | |
| | 2011.02- | 5AT | R | L/R | SUV 4WD EXF;EXN | With electronic ltd slip differential;Differential:230mm | GDS81133 | Drive Shaft | | 32 | 32 | 72 | 114.5 | 876 | |
| | 2011.02- | 5AT | R | L/R | SUV 4WD EXF;EXN | with electronic ltd slip differential | GCO81031 | Outer Joint | | 32 | 29 | 72 | 114.5 | 77 | M |
| | 2011.02- | 5AT | R | L/R | SUV 4WD EXF;EXN | With electronic ltd slip differential;Differential:230mm | GCI81063 | Inner Joint | | 32 | 30 | 79.9 | 137 | 119.5 | |
| | 2011.02- | AT | R | L/R | SUV 4WD EXF;EXN | Transmission:AT,Differential:230mm;Transmission:Dual speed transfer case,Differential:215mm | GDS56324 | Drive Shaft | | 32 | 32 | 72 | 115 | 859 | |
| | 2011.02- | AT | R | L/R | SUV 4WD EXF;EXN | Dual speed transfer case;Differential:195mm | GDS57910 | Drive Shaft | | 32 | 37 | 72 | 115 | 859 | |
| | 2011.02- | AT | R | L/R | SUV 4WD EXF;EXN | Single speed transfer case;Differential:195mm | GDS58125 | Drive Shaft | | 32 | 37 | 72 | 115 | 853 | |
| | 2011.02- | AT | R | L/R | SUV 4WD EXF;EXN | Dual speed transfer case;Differential:225mm | GDS58126 | Drive Shaft | | 32 | 34 | 72 | 115 | 856 | |
| | 2011.02- | AT | R | L/R | SUV 4WD EXF;EXN | Transmission:AT,Differential:230mm;Transmission:Dual speed transfer case,Differential:215mm | GCO83253 | Outer Joint | | 32 | 27 | 72 | 115 | 72 | M |

| | YEAR | TRANSM. | F/R | L/R | BODY STYLE & DRIVE TYPE & ENGINE | REMARKS | G-AP Ref. | PRODUCT | ABS | Technical Specifications A | B | C | H | L | P |
|---|---|---|---|---|---|---|---|---|---|---|---|---|---|---|---|
| **JEEP** **Grand Cherokee** | | | | | | | | | | | | | | | |
| 3.0 (177 kw) | 2011.02- | AT | R | L/R | SUV 4WD EXF;EXN | Single speed transfer case | GCO83853 | Outer Joint | | 32 | 26 | 72 | 115 | 61.5 | M |
| | 2011.02- | AT | R | L/R | SUV 4WD EXF;EXN | Transmission:AT;Differential:230mm;Transmission:Dual speed transfer case;Differential:215mm | GCI83241 | Inner Joint | | 32 | 28 | 49.9 | 94 | 122.5 | |
| | 2011.02- | AT | R | L/R | SUV 4WD EXF;EXN | Dual speed transfer case;Differential:195mm | GCI83916 | Inner Joint | | 37 | 28 | 44.95 | 80 | 120 | |
| | 2011.02- | AT | R | L/R | SUV 4WD EXF;EXN | Single speed transfer case;Differential:195mm | GCI84017 | Inner Joint | | 37 | 25 | 44.95 | 80 | 112 | |
| | 2011.02- | AT | R | L/R | SUV 4WD EXF;EXN | Dual speed transfer case;Differential:225mm | GCI84018 | Inner Joint | | 34 | 28 | 51 | 91 | 118.5 | |
| 3.0 (184 kw) | 2013.07- | AT | F | L | SUV 4WD EXF;EXN | Single speed transfer case,Type:DHY | GDS84021 | Drive Shaft | | 32 | 37 | 72 | 115 | 663 | |
| | 2013.07- | AT | F | R | SUV 4WD EXF;EXN | Type:DHY,Single speed transfer case | GDS84059 | Drive Shaft | | 32 | 37 | 72 | 115 | 1031 | |
| | 2013.07- | AT | F | L/R | SUV 4WD EXF;EXN | Single speed transfer case,Type:DHY | GCO82555 | Outer Joint | | 32 | 26 | 72 | 115 | 61.5 | M |
| | 2013.07- | AT | F | L | SUV 4WD EXF;EXN | Single speed transfer case,Type:DHY | GCI82457 | Inner Joint | | 37 | 24 | 44.97 | 80 | 118 | |
| | 2013.07- | AT | F | R | SUV 4WD EXF;EXN | Type:DHY,Single speed transfer case | GCI82502 | Inner Joint | | 37 | 24 | 45 | 263 | 138 | |
| | 2013.07- | AT | R | L/R | SUV 4WD EXF;EXN | Transmission:AT;Differential:230mm;Transmission:Dual speed transfer case;Trim Level:DKA;Differential:215mm | GDS56324 | Drive Shaft | | 32 | 32 | 72 | 115 | 859 | |
| | 2013.07- | AT | R | L/R | SUV 4WD EXF;EXN | Dual speed transfer case;Differential:195mm | GDS57910 | Drive Shaft | | 32 | 37 | 72 | 115 | 859 | |
| | 2013.07- | AT | R | L/R | SUV 4WD EXF;EXN | Single speed transfer case;Trim Level:DHY;Differential:195mm | GDS58125 | Drive Shaft | | 32 | 37 | 72 | 115 | 853 | |
| | 2013.07- | AT | R | L/R | SUV 4WD EXF;EXN | Dual speed transfer case;Trim Level:DKA;Differential:225mm | GDS58126 | Drive Shaft | | 32 | 34 | 72 | 115 | 856 | |
| | 2013.07- | AT | R | L/R | SUV 4WD EXF;EXN | Transmission:AT;Differential:230mm;Transmission:Dual speed transfer case;Trim Level:DKA;Differential:215mm | GCO83253 | Outer Joint | | 32 | 27 | 72 | 115 | 72 | M |
| | 2013.07- | AT | R | L/R | SUV 4WD EXF;EXN | Single speed transfer case;Trim Level:DHY | GCO83853 | Outer Joint | | 32 | 26 | 72 | 115 | 61.5 | M |
| | 2013.07- | AT | R | L/R | SUV 4WD EXF;EXN | Transmission:AT;Differential:230mm;Transmission:Dual speed transfer case;Trim Level:DKA;Differential:215mm | GCI83241 | Inner Joint | | 32 | 28 | 49.9 | 94 | 122.5 | |
| | 2013.07- | AT | R | L/R | SUV 4WD EXF;EXN | Dual speed transfer case;Differential:195mm | GCI83916 | Inner Joint | | 37 | 28 | 44.95 | 80 | 120 | |
| | 2013.07- | AT | R | L/R | SUV 4WD EXF;EXN | Single speed transfer case;Trim Level:DHY;Differential:195mm | GCI84017 | Inner Joint | | 37 | 25 | 44.95 | 80 | 112 | |
| | 2013.07- | AT | R | L/R | SUV 4WD EXF;EXN | Dual speed transfer case;Trim Level:DKA;Differential:225mm | GCI84018 | Inner Joint | | 34 | 28 | 51 | 91 | 118.5 | |
| | 2013.07- | AT | F | L | SUV Van 4WD EXF | Single speed transfer case,Type:DHY | GDS84021 | Drive Shaft | | 32 | 37 | 72 | 115 | 663 | |
| | 2013.07- | AT | F | R | SUV Van 4WD EXF | Type:DHY,Single speed transfer case | GDS84059 | Drive Shaft | | 32 | 37 | 72 | 115 | 1031 | |
| | 2013.07- | AT | F | L/R | SUV Van 4WD EXF | Single speed transfer case,Type:DHY | GCO82555 | Outer Joint | | 32 | 26 | 72 | 115 | 61.5 | M |
| | 2013.07- | AT | F | L | SUV Van 4WD EXF | Single speed transfer case,Type:DHY | GCI82457 | Inner Joint | | 37 | 24 | 44.97 | 80 | 118 | |
| | 2013.07- | AT | F | R | SUV Van 4WD EXF | Type:DHY,Single speed transfer case | GCI82502 | Inner Joint | | 37 | 24 | 45 | 263 | 138 | |
| | 2013.07- | AT | R | L/R | SUV Van 4WD EXF | Transmission:AT;Differential:230mm;Transmission:Dual speed transfer case;Trim Level:DKA;Differential:215mm | GDS56324 | Drive Shaft | | 32 | 32 | 72 | 115 | 859 | |
| | 2013.07- | AT | R | L/R | SUV Van 4WD EXF | Dual speed transfer case;Differential:195mm | GDS57910 | Drive Shaft | | 32 | 37 | 72 | 115 | 859 | |
| | 2013.07- | AT | R | L/R | SUV Van 4WD EXF | Single speed transfer case;Trim Level:DHY;Differential:195mm | GDS58125 | Drive Shaft | | 32 | 37 | 72 | 115 | 853 | |
| | 2013.07- | AT | R | L/R | SUV Van 4WD EXF | Dual speed transfer case;Trim Level:DKA;Differential:225mm | GDS58126 | Drive Shaft | | 32 | 34 | 72 | 115 | 856 | |
| | 2013.07- | AT | R | L/R | SUV Van 4WD EXF | Transmission:AT;Differential:230mm;Transmission:Dual speed transfer case;Trim Level:DKA;Differential:215mm | GCO83253 | Outer Joint | | 32 | 27 | 72 | 115 | 72 | M |
| | 2013.07- | AT | R | L/R | SUV Van 4WD EXF | Single speed transfer case;Trim Level:DHY | GCO83853 | Outer Joint | | 32 | 26 | 72 | 115 | 61.5 | M |
| | 2013.07- | AT | R | L/R | SUV Van 4WD EXF | Transmission:AT;Differential:230mm;Transmission:Dual speed transfer case;Trim Level:DKA;Differential:215mm | GCI83241 | Inner Joint | | 32 | 28 | 49.9 | 94 | 122.5 | |
| | 2013.07- | AT | R | L/R | SUV Van 4WD EXF | Dual speed transfer case;Differential:195mm | GCI83916 | Inner Joint | | 37 | 28 | 44.95 | 80 | 120 | |
| | 2013.07- | AT | R | L/R | SUV Van 4WD EXF | Single speed transfer case;Trim Level:DHY;Differential:195mm | GCI84017 | Inner Joint | | 37 | 25 | 44.95 | 80 | 112 | |
| | 2013.07- | AT | R | L/R | SUV Van 4WD EXF | Dual speed transfer case;Trim Level:DKA;Differential:225mm | GCI84018 | Inner Joint | | 34 | 28 | 51 | 91 | 118.5 | |
| 3.1 (103 kw) | 1998.10-2002.03 | AT/MT | F | L/R | Terrain cab wagon closed 4WD EXA | | GCO16005 | Outer Joint | 48T | 27 | 32 | 65.4 | 108 | 70 | I |
| | 1998.10-2002.03 | MT | F | L | Terrain cab wagon closed 4WD EXA | | GDS16009 | Drive Shaft | 48T | 27 | | 65.4 | 108 | 589 | |
| | 1998.10-2002.03 | MT | F | R | Terrain cab wagon closed 4WD EXA | | GDS16006 | Drive Shaft | 48T | 27 | | 65.4 | 108 | 1045 | |
| 3.6 (207 kw) | 2010.11- | 8AT | F | L | SUV 4WD ERB | For Salescode:DHY | GDS84021 | Drive Shaft | | 32 | 37 | 72 | 115 | 663 | |
| | 2010.11- | 8AT | F | R | SUV 4WD ERB | For Salescode:DHY | GDS84059 | Drive Shaft | | 32 | 37 | 72 | 115 | 1031 | |
| | 2010.11- | 8AT | F | L/R | SUV 4WD ERB | For Salescode:DHY | GCO82555 | Outer Joint | | 32 | 26 | 72 | 115 | 61.5 | M |
| | 2010.11- | 8AT | F | L | SUV 4WD ERB | For Salescode:DHY | GCI82457 | Inner Joint | | 37 | 24 | 44.97 | 80 | 118 | |
| | 2010.11- | 8AT | F | R | SUV 4WD ERB | For Salescode:DHY | GCI82502 | Inner Joint | | 37 | 24 | 45 | 263 | 138 | |
| | 2010.11- | 8AT | R | R | SUV 4WD ERB | Equipment code:DSF | GDS56993 | Drive Shaft | | 32 | 32 | 72 | 114.5 | 833 | |
| | 2010.11- | 8AT | R | L/R | SUV 4WD ERB | Equipment code:DHY;Differential:195mm | GDS58125 | Drive Shaft | | 32 | 37 | 72 | 115 | 853 | |
| | 2010.11- | 8AT | R | L/R | SUV 4WD ERB | Equipment code:DSF | GCO83495 | Outer Joint | | 32 | 29 | 72 | 114.5 | 77 | M |
| | 2010.11- | 8AT | R | L/R | SUV 4WD ERB | Equipment code:DHY | GCO83853 | Outer Joint | | 32 | 26 | 72 | 115 | 61.5 | M |
| | 2010.11- | 8AT | R | L/R | SUV 4WD ERB | Equipment code:DSF | GCI83586 | Inner Joint | | 32 | 30 | 49.95 | 73.5 | 140 | |
| | 2010.11- | 8AT | R | L/R | SUV 4WD ERB | Equipment code:DHY;Differential:195mm | GCI84017 | Inner Joint | | 37 | 25 | 44.95 | 80 | 112 | |
| 3.6 (209 kw) | 2010.11- | AT | R | L/R | SUV RWD ERB | Transmission:AT;Differential:230mm;Transmission:Dual speed transfer case;Differential:215mm | GDS56324 | Drive Shaft | | 32 | 32 | 72 | 115 | 859 | |
| | 2010.11- | AT | R | L/R | SUV RWD ERB | Transmission:AT;Differential:230mm;Transmission:Dual speed transfer case;Differential:215mm | GCO83253 | Outer Joint | | 32 | 27 | 72 | 115 | 72 | M |
| | 2010.11- | AT | R | L/R | SUV RWD ERB | Transmission:AT;Differential:230mm;Transmission:Dual speed transfer case;Differential:215mm | GCI83241 | Inner Joint | | 32 | 28 | 49.9 | 94 | 122.5 | |
| 3.6 (210 kw) | 2010.11- | AT | F | L | SUV 4WD ERB | Single speed transfer case | GDS84021 | Drive Shaft | | 32 | 37 | 72 | 115 | 663 | |
| | 2010.11- | AT | F | R | SUV 4WD ERB | Single speed transfer case | GDS84059 | Drive Shaft | | 32 | 37 | 72 | 115 | 1031 | |
| | 2010.11- | AT | F | L/R | SUV 4WD ERB | Single speed transfer case | GCO82555 | Outer Joint | | 32 | 26 | 72 | 115 | 61.5 | M |
| | 2010.11- | AT | F | L | SUV 4WD ERB | Single speed transfer case | GCI82457 | Inner Joint | | 37 | 24 | 44.97 | 80 | 118 | |
| | 2010.11- | AT | F | R | SUV 4WD ERB | Single speed transfer case | GCI82502 | Inner Joint | | 37 | 24 | 45 | 263 | 138 | |
| | 2010.11- | 5AT | R | L/R | SUV 4WD ERB | Differential:230mm | GDS56324 | Drive Shaft | | 32 | 32 | 72 | 115 | 859 | |
| | 2010.11- | 5AT | R | L/R | SUV 4WD ERB | | GCO83253 | Outer Joint | | 32 | 27 | 72 | 115 | 72 | M |
| | 2010.11- | 5AT | R | L/R | SUV 4WD ERB | Differential:230mm | GCI83241 | Inner Joint | | 32 | 28 | 49.9 | 94 | 122.5 | |
| | 2010.11- | AT | R | L/R | SUV 4WD ERB | Dual speed transfer case;Differential:195mm | GDS57910 | Drive Shaft | | 32 | 37 | 72 | 115 | 859 | |
| | 2010.11- | AT | R | L/R | SUV 4WD ERB | Dual speed transfer case | GDS57910 | Drive Shaft | | 32 | 37 | 72 | 115 | 859 | |
| | 2010.11- | AT | R | L/R | SUV 4WD ERB | Single speed transfer case;Differential:195mm | GDS58125 | Drive Shaft | | 32 | 37 | 72 | 115 | 853 | |
| | 2010.11- | AT | R | L/R | SUV 4WD ERB | Dual speed transfer case | GCO83253 | Outer Joint | | 32 | 27 | 72 | 115 | 72 | M |
| | 2010.11- | AT | R | L/R | SUV 4WD ERB | Single speed transfer case | GCO83853 | Outer Joint | | 32 | 26 | 72 | 115 | 61.5 | M |

| | YEAR | TRANSM. | F/R | L/R | BODY STYLE & DRIVE TYPE & ENGINE | REMARKS | G-AP Ref. | PRODUCT | ABS | Technical Specifications | | | | | |
|---|---|---|---|---|---|---|---|---|---|---|---|---|---|---|---|
| | | | | | | | | | | A | B | C | H | L | P |
| **JEEP** **Grand Cherokee** | | | | | | | | | | | | | | | |
| 3.6 (210 kw) | 2010.11- | AT | R | L/R | SUV 4WD ERB | Dual speed transfer case;Differential:195mm | GCI83916 | Inner Joint | | 37 | 28 | 44.95 | 80 | 120 | |
| | 2010.11- | AT | R | L/R | SUV 4WD ERB | Dual speed transfer case | GCI83916 | Inner Joint | | 37 | 28 | 44.95 | 80 | 120 | |
| | 2010.11- | AT | R | L/R | SUV 4WD ERB | Single speed transfer case;Differential:195mm | GCI84017 | Inner Joint | | 37 | 25 | 44.95 | 80 | 112 | |
| | 2013.07- | AT | F | L | SUV Van 4WD ERB;ERC | Single speed transfer case | GDS84021 | Drive Shaft | | 32 | 37 | 72 | 115 | 663 | |
| | 2013.07- | AT | F | R | SUV Van 4WD ERB;ERC | Single speed transfer case | GDS84059 | Drive Shaft | | 32 | 37 | 72 | 115 | 1031 | |
| | 2013.07- | AT | F | L/R | SUV Van 4WD ERB;ERC | Single speed transfer case | GCO82555 | Outer Joint | | 32 | 26 | 72 | 115 | 61.5 | M |
| | 2013.07- | AT | F | L | SUV Van 4WD ERB;ERC | Single speed transfer case | GCI82457 | Inner Joint | | 37 | 24 | 44.97 | 80 | 118 | |
| | 2013.07- | AT | F | R | SUV Van 4WD ERB;ERC | Single speed transfer case | GCI82502 | Inner Joint | | 37 | 24 | 45 | 263 | 138 | |
| | 2013.07- | AT | R | L/R | SUV Van 4WD ERB;ERC | Dual speed transfer case;Differential:195mm | GDS57910 | Drive Shaft | | 32 | 37 | 72 | 115 | 859 | |
| | 2013.07- | AT | R | L/R | SUV Van 4WD ERB;ERC | Single speed transfer case;Differential:195mm | GDS58125 | Drive Shaft | | 32 | 37 | 72 | 115 | 853 | |
| | 2013.07- | AT | R | L/R | SUV Van 4WD ERB;ERC | Dual speed transfer case | GCO83253 | Outer Joint | | 32 | 27 | 72 | 115 | 72 | M |
| | 2013.07- | AT | R | L/R | SUV Van 4WD ERB;ERC | Single speed transfer case | GCO83853 | Outer Joint | | 32 | 26 | 72 | 115 | 61.5 | M |
| | 2013.07- | AT | R | L/R | SUV Van 4WD ERB;ERC | Dual speed transfer case;Differential:195mm | GCI83916 | Inner Joint | | 37 | 28 | 44.95 | 80 | 120 | |
| | 2013.07- | AT | R | L/R | SUV Van 4WD ERB;ERC | Single speed transfer case;Differential:195mm | GCI84017 | Inner Joint | | 37 | 25 | 44.95 | 80 | 112 | |
| 3.6 (213 kw) | 2016.04- | 8AT | F | L | SUV 4WD ERB;ERC | For Salescode:DHY | GDS84021 | Drive Shaft | | 32 | 37 | 72 | 115 | 663 | |
| | 2016.04- | 8AT | F | R | SUV 4WD ERB;ERC | For Salescode:DHY | GDS84059 | Drive Shaft | | 32 | 37 | 72 | 115 | 1031 | |
| | 2016.04- | 8AT | F | L/R | SUV 4WD ERB;ERC | For Salescode:DHY | GCO82555 | Outer Joint | | 32 | 26 | 72 | 115 | 61.5 | M |
| | 2016.04- | 8AT | F | L | SUV 4WD ERB;ERC | For Salescode:DHY | GCI82457 | Inner Joint | | 37 | 24 | 44.97 | 80 | 118 | |
| | 2016.04- | 8AT | F | R | SUV 4WD ERB;ERC | For Salescode:DHY | GCI82502 | Inner Joint | | 37 | 24 | 45 | 263 | 138 | |
| | 2016.04- | 8AT | R | L/R | SUV 4WD ERB;ERC | Equipment code:DKA;Differential:195mm | GDS57910 | Drive Shaft | | 32 | 37 | 72 | 115 | 859 | |
| | 2016.04- | 8AT | R | L/R | SUV 4WD ERB;ERC | Equipment code:DHY;Differential:195mm | GDS58125 | Drive Shaft | | 32 | 37 | 72 | 115 | 853 | |
| | 2016.04- | 8AT | R | L/R | SUV 4WD ERB;ERC | Equipment code:DKA | GCO83253 | Outer Joint | | 32 | 27 | 72 | 115 | 72 | M |
| | 2016.04- | 8AT | R | L/R | SUV 4WD ERB;ERC | Equipment code:DHY | GCO83853 | Outer Joint | | 32 | 26 | 72 | 115 | 61.5 | M |
| | 2016.04- | 8AT | R | L/R | SUV 4WD ERB;ERC | Equipment code:DKA;Differential:195mm | GCI83916 | Inner Joint | | 37 | 28 | 44.95 | 80 | 120 | |
| | 2016.04- | 8AT | R | L/R | SUV 4WD ERB;ERC | Equipment code:DHY;Differential:195mm | GCI84017 | Inner Joint | | 37 | 25 | 44.95 | 80 | 112 | |
| 3.7 (148 kw) | 2008.01-2010.12 | AT | F | L | Closed Off-Road Vehicle 4WD EKG | | GDS16014 | Drive Shaft | | 29 | 29 | 70 | 113 | 650 | |
| | 2008.01-2010.12 | AT | F | L | Closed Off-Road Vehicle 4WD EKG | Without differential lock | GDS16015 | Drive Shaft | | 29 | 29 | 70 | 113 | 672 | |
| | 2008.01-2010.12 | AT | F | R | Closed Off-Road Vehicle 4WD EKG | | GDS16016 | Drive Shaft | | 29 | 29 | 70 | 113 | 604 | |
| | 2008.01-2010.12 | AT | F | L | Closed Off-Road Vehicle 4WD EKG | Differential:With differential lock | GCO89056 | Outer Joint | | 29 | 36 | 70 | 112 | 59.5 | I |
| | 2008.01-2010.12 | AT | F | R | Closed Off-Road Vehicle 4WD EKG | | GCO89056 | Outer Joint | | 29 | 36 | 70 | 112 | 59.5 | I |
| | 2008.01-2010.12 | AT | F | R | Closed Off-Road Vehicle 4WD EKG | | GCI16008 | Inner Joint | | 29 | 36 | 46 | | 135 | |
| 3.7 (157 kw) | 2004.10-2010.12 | 5AT | F | L | Closed Off-Road Vehicle 4WD EKG | | GDS16014 | Drive Shaft | | 29 | 29 | 70 | 113 | 650 | |
| | 2004.10-2010.12 | 5AT | F | R | Closed Off-Road Vehicle 4WD EKG | | GDS16016 | Drive Shaft | | 29 | 29 | 70 | 113 | 604 | |
| | 2004.10-2010.12 | 5AT | F | R | Closed Off-Road Vehicle 4WD EKG | | GCI16008 | Inner Joint | | 29 | 36 | 46 | | 135 | |
| | 2004.10-2010.12 | AT | F | L | Closed Off-Road Vehicle 4WD EKG | Differential:With differential lock | GCO89056 | Outer Joint | | 29 | 36 | 70 | 112 | 59.5 | I |
| | 2004.10-2010.12 | AT | F | R | Closed Off-Road Vehicle 4WD EKG | | GCO89056 | Outer Joint | | 29 | 36 | 70 | 112 | 59.5 | I |
| | 2004.10-2010.12 | | F | L | Closed Off-Road Vehicle 4WD EKG | Without differential lock | GDS16015 | Drive Shaft | | 29 | 29 | 70 | 113 | 672 | |
| 4.0 (130 kw) | 1993.01-1998.09 | MT | F | L | Terrain cab wagon closed 4WD ERH | | GDS16003 | Drive Shaft | 54T | 27 | | 60 | 102.5 | 576 | |
| | 1993.01-1998.09 | MT | F | L | Terrain cab wagon closed 4WD ERH | | GDS16012 | Drive Shaft | | 27 | | 60 | 102.5 | 576 | |
| | 1993.01-1998.09 | MT | F | R | Terrain cab wagon closed 4WD ERH | | GDS16004 | Drive Shaft | 54T | 27 | | 60 | 102.5 | 975.5 | |
| | 1993.01-1998.09 | MT | F | R | Terrain cab wagon closed 4WD ERH | | GDS16013 | Drive Shaft | | 27 | | 60 | 102.5 | 975.5 | |
| | 1993.01-1998.09 | | F | | Terrain cab wagon closed 4WD ERH | | GCO16001 | Outer Joint | | 27 | 32 | 60 | 102.5 | 77.5 | I |
| | 1993.01-1998.09 | | F | | Terrain cab wagon closed 4WD ERH | | GCO16004 | Outer Joint | 54T | 27 | 32 | 60 | 102.5 | 77.5 | I |
| 4.0 (132 kw) | 1993.01-1998.09 | MT | F | L | Terrain cab wagon closed 4WD ERH | | GDS16003 | Drive Shaft | 54T | 27 | | 60 | 102.5 | 576 | |
| | 1993.01-1998.09 | MT | F | L | Terrain cab wagon closed 4WD ERH | | GDS16012 | Drive Shaft | | 27 | | 60 | 102.5 | 576 | |
| | 1993.01-1998.09 | MT | F | R | Terrain cab wagon closed 4WD ERH | | GDS16004 | Drive Shaft | 54T | 27 | | 60 | 102.5 | 975.5 | |
| | 1993.01-1998.09 | MT | F | R | Terrain cab wagon closed 4WD ERH | | GDS16013 | Drive Shaft | | 27 | | 60 | 102.5 | 975.5 | |
| | 1993.01-1998.09 | | F | | Terrain cab wagon closed 4WD ERH | | GCO16001 | Outer Joint | | 27 | 32 | 60 | 102.5 | 77.5 | I |
| | 1993.01-1998.09 | | F | | Terrain cab wagon closed 4WD ERH | | GCO16004 | Outer Joint | 54T | 27 | 32 | 60 | 102.5 | 77.5 | I |
| 4.0 (135 kw) | 1992.06-1999.04 | MT | F | L | Terrain cab wagon closed 4WD ERH | | GDS16003 | Drive Shaft | 54T | 27 | | 60 | 102.5 | 576 | |
| | 1992.06-1999.04 | MT | F | L | Terrain cab wagon closed 4WD ERH | | GDS16012 | Drive Shaft | | 27 | | 60 | 102.5 | 576 | |
| | 1992.06-1999.04 | MT | F | R | Terrain cab wagon closed 4WD ERH | | GDS16004 | Drive Shaft | 54T | 27 | | 60 | 102.5 | 975.5 | |
| | 1992.06-1999.04 | MT | F | R | Terrain cab wagon closed 4WD ERH | | GDS16013 | Drive Shaft | | 27 | | 60 | 102.5 | 975.5 | |
| | 1992.06-1999.04 | | F | | Terrain cab wagon closed 4WD ERH | | GCO16001 | Outer Joint | | 27 | 32 | 60 | 102.5 | 77.5 | I |
| | 1992.06-1999.04 | | F | | Terrain cab wagon closed 4WD ERH | | GCO16004 | Outer Joint | 54T | 27 | 32 | 60 | 102.5 | 77.5 | I |
| 4.7 (162 kw) | 1999.02-2001.08 | AT/MT | F | L | Terrain cab wagon closed 4WD EVA | Length:589mm | GDS16009 | Drive Shaft | 48T | 27 | | 65.4 | 108 | 589 | |
| | 1999.02-2001.08 | AT/MT | F | L | Terrain cab wagon closed 4WD EVA | Length:620mm | GDS89016 | Drive Shaft | 48T | 27 | | 65.4 | 108 | 620 | |
| | 1999.02-2001.08 | AT/MT | F | R | Terrain cab wagon closed 4WD EVA | Length:1017.5mm | GDS15020 | Drive Shaft | 48T | 27 | | 65.4 | 108 | 1017.5 | |
| | 1999.02-2001.08 | AT/MT | F | R | Terrain cab wagon closed 4WD EVA | Length:1045mm | GDS16006 | Drive Shaft | 48T | 27 | | 65.4 | 108 | 1045 | |
| 4.7 (164 kw) | 1999.04-2004.09 | 4AT | F | L/R | Terrain cab wagon closed 4WD EVA | | GCO16005 | Outer Joint | 48T | 27 | 32 | 65.4 | 108 | 70 | I |
| | 1999.04-2004.09 | AT | F | L | Terrain cab wagon closed 4WD EVA | | GDS16009 | Drive Shaft | 48T | 27 | | 65.4 | 108 | 589 | |
| | 1999.04-2004.09 | AT | F | R | Terrain cab wagon closed 4WD EVA | | GDS16006 | Drive Shaft | 48T | 27 | | 65.4 | 108 | 1045 | |
| | 2005.06-2010.12 | 5AT | F | L | Closed Off-Road Vehicle 4WD EVA | | GDS16014 | Drive Shaft | | 29 | 29 | 70 | 113 | 650 | |
| | 2005.06-2010.12 | 5AT | F | R | Closed Off-Road Vehicle 4WD EVA | | GDS16016 | Drive Shaft | | 29 | 29 | 70 | 113 | 604 | |
| | 2005.06-2010.12 | 5AT | F | R | Closed Off-Road Vehicle 4WD EVA | | GCO89056 | Outer Joint | | 29 | 36 | 70 | 112 | 59.5 | I |

| | YEAR | TRANSM. | F/R | L/R | BODY STYLE & DRIVE TYPE & ENGINE | REMARKS | G-AP Ref. | PRODUCT | ABS | Technical Specifications A | B | C | H | L | P |
|---|---|---|---|---|---|---|---|---|---|---|---|---|---|---|---|
| **JEEP** **Grand Cherokee** | | | | | | | | | | | | | | | |
| 4.7 (164 kw) | 2005.06-2010.12 | 5AT | F | R | Closed Off-Road Vehicle 4WD EVA | | GCI16008 | Inner Joint | | 29 | 36 | 46 | | 135 | |
| | 2005.06-2010.12 | | F | L | Closed Off-Road Vehicle 4WD EVA | Without differential lock | GDS16015 | Drive Shaft | | 29 | 29 | 70 | 113 | 672 | |
| 4.7 (167 kw) | 2003.06-2004.09 | AT | F | L | Terrain cab wagon closed 4WD EVA | | GDS16009 | Drive Shaft | 48T | 27 | | 65.4 | 108 | 589 | |
| | 2003.06-2004.09 | AT | F | R | Terrain cab wagon closed 4WD EVA | | GDS16006 | Drive Shaft | 48T | 27 | | 65.4 | 108 | 1045 | |
| | 2003.06-2004.09 | | F | | Terrain cab wagon closed 4WD EVA | | GCO16005 | Outer Joint | 48T | 27 | 32 | 65.4 | 108 | 70 | I |
| | 2007.10-2010.05 | 5AT | F | L | Closed Off-Road Vehicle 4WD EVE | | GDS16014 | Drive Shaft | | 29 | 29 | 70 | 113 | 650 | |
| | 2007.10-2010.05 | 5AT | F | R | Closed Off-Road Vehicle 4WD EVE | | GDS16016 | Drive Shaft | | 29 | 29 | 70 | 113 | 604 | |
| | 2007.10-2010.05 | 5AT | F | R | Closed Off-Road Vehicle 4WD EVE | | GCO89056 | Outer Joint | | 29 | 36 | 70 | 112 | 59.5 | I |
| | 2007.10-2010.05 | 5AT | F | R | Closed Off-Road Vehicle 4WD EVE | | GCI16008 | Inner Joint | | 29 | 36 | 46 | | 135 | |
| | 2007.10-2010.05 | | F | L | Closed Off-Road Vehicle 4WD EVE | Without differential lock | GDS16015 | Drive Shaft | | 29 | 29 | 70 | 113 | 672 | |
| 4.7 (170 kw) | 2005.06-2010.12 | 5AT | F | L | Closed Off-Road Vehicle 4WD EVA | | GDS16014 | Drive Shaft | | 29 | 29 | 70 | 113 | 650 | |
| | 2005.06-2010.12 | 5AT | F | R | Closed Off-Road Vehicle 4WD EVA | | GDS16016 | Drive Shaft | | 29 | 29 | 70 | 113 | 604 | |
| | 2005.06-2010.12 | 5AT | F | R | Closed Off-Road Vehicle 4WD EVA | | GCO89056 | Outer Joint | | 29 | 36 | 70 | 112 | 59.5 | I |
| | 2005.06-2010.12 | 5AT | F | R | Closed Off-Road Vehicle 4WD EVA | | GCI16008 | Inner Joint | | 29 | 36 | 46 | | 135 | |
| | 2005.06-2010.12 | | F | L | Closed Off-Road Vehicle 4WD EVA | Without differential lock | GDS16015 | Drive Shaft | | 29 | 29 | 70 | 113 | 672 | |
| 4.7 (172 kw) | 2004.10-2010.12 | | F | L | Closed Off-Road Vehicle 4WD EVA | For vehicles with electronic limited slip diff. | GDS16014 | Drive Shaft | | 29 | 29 | 70 | 113 | 650 | |
| | 2004.10-2010.12 | | F | R | Closed Off-Road Vehicle 4WD EVA | | GDS16016 | Drive Shaft | | 29 | 29 | 70 | 113 | 604 | |
| 4.7 (190 kw) | 2001.09-2004.09 | AT/MT | F | L | Terrain cab wagon closed 4WD EVC | | GDS16009 | Drive Shaft | 48T | 27 | | 65.4 | 108 | 589 | |
| | 2001.09-2004.09 | AT/MT | F | L | Terrain cab wagon closed 4WD EVC | | GDS89016 | Drive Shaft | 48T | 27 | | 65.4 | 108 | 620 | |
| | 2001.09-2004.09 | AT/MT | F | R | Terrain cab wagon closed 4WD EVC | | GDS15020 | Drive Shaft | 48T | 27 | | 65.4 | 108 | 1017.5 | |
| | 2001.09-2004.09 | AT/MT | F | R | Terrain cab wagon closed 4WD EVC | | GDS16006 | Drive Shaft | 48T | 27 | | 65.4 | 108 | 1045 | |
| | 2001.09-2004.09 | AT/MT | F | L/R | Terrain cab wagon closed 4WD EVC | | GCO16005 | Outer Joint | 48T | 27 | 32 | 65.4 | 108 | 70 | I |
| 4.7 (223 kw) | 2007.09-2010.02 | 5AT | F | L | Closed Off-Road Vehicle 4WD EVA;EVE | | GDS16014 | Drive Shaft | | 29 | 29 | 70 | 113 | 650 | |
| | 2007.09-2010.02 | 5AT | F | R | Closed Off-Road Vehicle 4WD EVA;EVE | | GDS16016 | Drive Shaft | | 29 | 29 | 70 | 113 | 604 | |
| | 2007.09-2010.02 | 5AT | F | R | Closed Off-Road Vehicle 4WD EVA;EVE | | GCO89056 | Outer Joint | | 29 | 36 | 70 | 112 | 59.5 | I |
| | 2007.09-2010.02 | 5AT | F | R | Closed Off-Road Vehicle 4WD EVA;EVE | | GCI16008 | Inner Joint | | 29 | 36 | 46 | | 135 | |
| | 2007.09-2010.02 | | F | L | Closed Off-Road Vehicle 4WD EVA;EVE | | GDS16015 | Drive Shaft | | 29 | 29 | 70 | 113 | 672 | |
| 5.2 (136 kw) | 1996.10-1998.09 | AT/MT | F | L/R | Terrain cab wagon closed 4WD ELF | | GCO16004 | Outer Joint | 54T | 27 | 32 | 60 | 102.5 | 77.5 | I |
| | 1996.10-1998.09 | MT | F | L | Terrain cab wagon closed 4WD ELF | | GDS16003 | Drive Shaft | 54T | 27 | | 60 | 102.5 | 576 | |
| | 1996.10-1998.09 | MT | F | R | Terrain cab wagon closed 4WD ELF | | GDS16004 | Drive Shaft | 54T | 27 | | 60 | 102.5 | 975.5 | |
| 5.2 (155 kw) | 1992.09-1998.09 | MT | F | L | Terrain cab wagon closed 4WD ELF | | GDS16003 | Drive Shaft | 54T | 27 | | 60 | 102.5 | 576 | |
| | 1992.09-1998.09 | MT | F | R | Terrain cab wagon closed 4WD ELF | | GDS16004 | Drive Shaft | 54T | 27 | | 60 | 102.5 | 975.5 | |
| | 1992.09-1998.09 | | F | | Terrain cab wagon closed 4WD ELF | | GCO16004 | Outer Joint | 54T | 27 | 32 | 60 | 102.5 | 77.5 | I |
| 5.2 (156 kw) | 1995.10-1998.09 | MT | F | L | Terrain cab wagon closed 4WD ELF | | GDS16003 | Drive Shaft | 54T | 27 | | 60 | 102.5 | 576 | |
| | 1995.10-1998.09 | MT | F | R | Terrain cab wagon closed 4WD ELF | | GDS16004 | Drive Shaft | 54T | 27 | | 60 | 102.5 | 975.5 | |
| | 1995.10-1998.09 | | F | | Terrain cab wagon closed 4WD ELF | | GCO16004 | Outer Joint | 54T | 27 | 32 | 60 | 102.5 | 77.5 | I |
| 5.2 (158 kw) | 1992.09-1998.09 | AT/MT | F | L/R | Terrain cab wagon closed 4WD ELF | for manufacturer:European Production | GCO16004 | Outer Joint | 54T | 27 | 32 | 60 | 102.5 | 77.5 | I |
| | 1992.09-1998.09 | MT | F | L | Terrain cab wagon closed 4WD ELF | | GDS16003 | Drive Shaft | 54T | 27 | | 60 | 102.5 | 576 | |
| | 1992.09-1998.09 | MT | F | R | Terrain cab wagon closed 4WD ELF | | GDS16004 | Drive Shaft | 54T | 27 | | 60 | 102.5 | 975.5 | |
| 5.2 (164 kw) | 1992.09-1998.12 | AT/MT | F | L/R | Terrain cab wagon closed 4WD ELF | | GCO16004 | Outer Joint | 54T | 27 | 32 | 60 | 102.5 | 77.5 | I |
| | 1992.09-1998.12 | MT | F | L | Terrain cab wagon closed 4WD ELF | | GDS16003 | Drive Shaft | 54T | 27 | | 60 | 102.5 | 576 | |
| | 1992.09-1998.12 | MT | F | R | Terrain cab wagon closed 4WD ELF | | GDS16004 | Drive Shaft | 54T | 27 | | 60 | 102.5 | 975.5 | |
| 5.7 (240 kw) | 2005.06-2010.12 | 5AT | F | L | Closed Off-Road Vehicle 4WD EZB | | GDS16014 | Drive Shaft | | 29 | 29 | 70 | 113 | 650 | |
| | 2005.06-2010.12 | 5AT | F | R | Closed Off-Road Vehicle 4WD EZB | | GDS16016 | Drive Shaft | | 29 | 29 | 70 | 113 | 604 | |
| | 2005.06-2010.12 | 5AT | F | R | Closed Off-Road Vehicle 4WD EZB | | GCO89056 | Outer Joint | | 29 | 36 | 70 | 112 | 59.5 | I |
| | 2005.06-2010.12 | 5AT | F | R | Closed Off-Road Vehicle 4WD EZB | | GCI16008 | Inner Joint | | 29 | 36 | 46 | | 135 | |
| | 2005.06-2010.12 | | F | L | Closed Off-Road Vehicle 4WD EZB | Without differential lock | GDS16015 | Drive Shaft | | 29 | 29 | 70 | 113 | 672 | |
| 5.7 (259 kw) | 2009.01-2010.12 | 5AT | F | L | Closed Off-Road Vehicle 4WD EZH;EZD | | GDS16014 | Drive Shaft | | 29 | 29 | 70 | 113 | 650 | |
| | 2009.01-2010.12 | 5AT | F | R | Closed Off-Road Vehicle 4WD EZH;EZD | | GDS16016 | Drive Shaft | | 29 | 29 | 70 | 113 | 604 | |
| | 2009.01-2010.12 | 5AT | F | R | Closed Off-Road Vehicle 4WD EZH;EZD | | GCO89056 | Outer Joint | | 29 | 36 | 70 | 112 | 59.5 | I |
| | 2009.01-2010.12 | 5AT | F | R | Closed Off-Road Vehicle 4WD EZH;EZD | | GCI16008 | Inner Joint | | 29 | 36 | 46 | | 135 | |
| | 2009.01-2010.12 | | F | L | Closed Off-Road Vehicle 4WD EZH;EZD | Type:LIM.DIF.SLIP.(+) | GDS16015 | Drive Shaft | | 29 | 29 | 70 | 113 | 672 | |
| | 2010.11- | AT | F | L | SUV 4WD EZH | Single speed transfer case | GDS84021 | Drive Shaft | | 32 | 37 | 72 | 115 | 663 | |
| | 2010.11- | AT | F | R | SUV 4WD EZH | Single speed transfer case | GDS84059 | Drive Shaft | | 32 | 37 | 72 | 115 | 1031 | |
| | 2010.11- | AT | F | L/R | SUV 4WD EZH | Single speed transfer case | GCO82555 | Outer Joint | | 32 | 26 | 72 | 115 | 61.5 | M |
| | 2010.11- | AT | F | L | SUV 4WD EZH | Single speed transfer case | GCI82457 | Inner Joint | | 37 | 24 | 44.97 | 80 | 118 | |
| | 2010.11- | AT | F | R | SUV 4WD EZH | Single speed transfer case | GCI82502 | Inner Joint | | 37 | 24 | 45 | 263 | 138 | |
| | 2010.11- | | F | | SUV 4WD EZH | Model year to:2010 | GCO89056 | Outer Joint | | 29 | 36 | 70 | 112 | 59.5 | I |
| | 2010.11- | AT | R | L/R | SUV 4WD EZH | Transmission:AT;Differential:230mm;Transmission:Dual speed transfer case;Differential:215mm | GDS56324 | Drive Shaft | | 32 | 32 | 72 | 115 | 859 | |
| | 2010.11- | AT | R | L/R | SUV 4WD EZH | Dual speed transfer case;Differential:195mm | GDS57910 | Drive Shaft | | 32 | 37 | 72 | 115 | 859 | |
| | 2010.11- | AT | R | L/R | SUV 4WD EZH | Single speed transfer case;Differential:195mm | GDS58125 | Drive Shaft | | 32 | 37 | 72 | 115 | 853 | |
| | 2010.11- | AT | R | L/R | SUV 4WD EZH | Dual speed transfer case;Differential:225mm | GDS58126 | Drive Shaft | | 32 | 34 | 72 | 115 | 856 | |
| | 2010.11- | AT | R | L/R | SUV 4WD EZH | Transmission:AT;Differential:230mm;Transmission:Dual speed transfer case;Differential:215mm | GCO83253 | Outer Joint | | 32 | 27 | 72 | 115 | 72 | M |
| | 2010.11- | AT | R | L/R | SUV 4WD EZH | Single speed transfer case | GCO83853 | Outer Joint | | 32 | 26 | 72 | 115 | 61.5 | M |
| | 2010.11- | AT | R | L/R | SUV 4WD EZH | Transmission:AT;Differential:230mm;Transmission:Dual speed transfer case;Differential:215mm | GCI83241 | Inner Joint | | 32 | 28 | 49.9 | 94 | 122.5 | |

| | YEAR | TRANSM. | F/R | L/R | BODY STYLE & DRIVE TYPE & ENGINE | REMARKS | G-AP Ref. | PRODUCT | ABS | Technical Specifications A | B | C | H | L | P |
|---|---|---|---|---|---|---|---|---|---|---|---|---|---|---|---|
| **JEEP** **Grand Cherokee** | | | | | | | | | | | | | | | |
| 5.7 (259 kw) | 2010.11- | AT | R | L/R | SUV 4WD EZH | Dual speed transfer case;Differential:195mm | GCI83916 | Inner Joint | | 37 | 28 | 44.95 | 80 | 120 | |
| | 2010.11- | AT | R | L/R | SUV 4WD EZH | Single speed transfer case;Differential:195mm | GCI84017 | Inner Joint | | 37 | 25 | 44.95 | 80 | 112 | |
| | 2010.11- | AT | R | L/R | SUV 4WD EZH | Dual speed transfer case;Differential:225mm | GCI84018 | Inner Joint | | 34 | 28 | 51 | 91 | 118.5 | |
| | 2013.07- | AT | F | L | SUV Van 4WD EZH | Single speed transfer case | GDS84021 | Drive Shaft | | 32 | 37 | 72 | 115 | 663 | |
| | 2013.07- | AT | F | R | SUV Van 4WD EZH | Single speed transfer case | GDS84059 | Drive Shaft | | 32 | 37 | 72 | 115 | 1031 | |
| | 2013.07- | AT | F | L/R | SUV Van 4WD EZH | Single speed transfer case | GCO82555 | Outer Joint | | 32 | 26 | 72 | 115 | 61.5 | M |
| | 2013.07- | AT | F | L | SUV Van 4WD EZH | Single speed transfer case | GCI82457 | Inner Joint | | 37 | 24 | 44.97 | 80 | 118 | |
| | 2013.07- | AT | F | R | SUV Van 4WD EZH | Single speed transfer case | GCI82502 | Inner Joint | | 37 | 24 | 45 | 263 | 138 | |
| | 2013.07- | AT | R | L/R | SUV Van 4WD EZH | Transmission:AT,Differential:230mm;Transmission:Dual speed transfer case,Differential:215mm | GDS56324 | Drive Shaft | | 32 | 32 | 72 | 115 | 859 | |
| | 2013.07- | AT | R | L/R | SUV Van 4WD EZH | Dual speed transfer case;Differential:195mm | GDS57910 | Drive Shaft | | 32 | 37 | 72 | 115 | 859 | |
| | 2013.07- | AT | R | L/R | SUV Van 4WD EZH | Single speed transfer case;Differential:195mm | GDS58125 | Drive Shaft | | 32 | 37 | 72 | 115 | 853 | |
| | 2013.07- | AT | R | L/R | SUV Van 4WD EZH | Dual speed transfer case;Differential:225mm | GDS58126 | Drive Shaft | | 32 | 34 | 72 | 115 | 856 | |
| | 2013.07- | AT | R | L/R | SUV Van 4WD EZH | Transmission:AT,Differential:230mm;Transmission:Dual speed transfer case,Differential:215mm | GCO83253 | Outer Joint | | 32 | 27 | 72 | 115 | 72 | M |
| | 2013.07- | AT | R | L/R | SUV Van 4WD EZH | Single speed transfer case | GCO83853 | Outer Joint | | 32 | 26 | 72 | 115 | 61.5 | M |
| | 2013.07- | AT | R | L/R | SUV Van 4WD EZH | Transmission:AT,Differential:230mm;Transmission:Dual speed transfer case,Differential:215mm | GCI83241 | Inner Joint | | 32 | 28 | 49.9 | 94 | 122.5 | |
| | 2013.07- | AT | R | L/R | SUV Van 4WD EZH | Dual speed transfer case;Differential:195mm | GCI83916 | Inner Joint | | 37 | 28 | 44.95 | 80 | 120 | |
| | 2013.07- | AT | R | L/R | SUV Van 4WD EZH | Single speed transfer case;Differential:195mm | GCI84017 | Inner Joint | | 37 | 25 | 44.95 | 80 | 112 | |
| | 2013.07- | AT | R | L/R | SUV Van 4WD EZH | Dual speed transfer case;Differential:225mm | GCI84018 | Inner Joint | | 34 | 28 | 51 | 91 | 118.5 | |
| 5.7 (265 kw) | 2009.01-2010.12 | | F | L | Closed Off-Road Vehicle 4WD EZD | For vehicles with lectronic ltd slip differential | GDS16014 | Drive Shaft | | 29 | 29 | 70 | 113 | 650 | |
| | 2009.01-2010.12 | | F | L | Closed Off-Road Vehicle 4WD EZD | | GDS16015 | Drive Shaft | | 29 | 29 | 70 | 113 | 672 | |
| | 2009.01-2010.12 | | F | L | Closed Off-Road Vehicle 4WD EZD | Veh Equip:For vehicles with lectronic ltd slip differential | GCO89056 | Outer Joint | | 29 | 36 | 70 | 112 | 59.5 | I |
| | 2013.05- | AT | F | L | SUV 4WD EZH | Single speed transfer case | GDS84021 | Drive Shaft | | 32 | 37 | 72 | 115 | 663 | |
| | 2013.05- | AT | F | R | SUV 4WD EZH | Single speed transfer case | GDS84059 | Drive Shaft | | 32 | 37 | 72 | 115 | 1031 | |
| | 2013.05- | AT | F | L/R | SUV 4WD EZH | Single speed transfer case | GCO82555 | Outer Joint | | 32 | 26 | 72 | 115 | 61.5 | M |
| | 2013.05- | AT | F | L | SUV 4WD EZH | Single speed transfer case | GCI82457 | Inner Joint | | 37 | 24 | 44.97 | 80 | 118 | |
| | 2013.05- | AT | F | R | SUV 4WD EZH | Single speed transfer case | GCI82502 | Inner Joint | | 37 | 24 | 45 | 263 | 138 | |
| 5.7 (268 kw) | 2011.01- | AT | F | L | SUV 4WD EZH | Single speed transfer case | GDS84021 | Drive Shaft | | 32 | 37 | 72 | 115 | 663 | |
| | 2011.01- | AT | F | R | SUV 4WD EZH | Single speed transfer case | GDS84059 | Drive Shaft | | 32 | 37 | 72 | 115 | 1031 | |
| | 2011.01- | AT | F | L/R | SUV 4WD EZH | Single speed transfer case | GCO82555 | Outer Joint | | 32 | 26 | 72 | 115 | 61.5 | M |
| | 2011.01- | AT | F | L | SUV 4WD EZH | Single speed transfer case | GCI82457 | Inner Joint | | 37 | 24 | 44.97 | 80 | 118 | |
| | 2011.01- | AT | F | R | SUV 4WD EZH | Single speed transfer case | GCI82502 | Inner Joint | | 37 | 24 | 45 | 263 | 138 | |
| 5.9 (177 kw) | 1997.08-1999.04 | AT/MT | F | L | Terrain cab wagon closed 4WD EML | | GDS16003 | Drive Shaft | 54T | 27 | | 60 | 102.5 | 576 | |
| | 1997.08-1999.04 | AT/MT | F | R | Terrain cab wagon closed 4WD EML | | GDS16004 | Drive Shaft | 54T | 27 | | 60 | 102.5 | 975.5 | |
| | 1997.08-1999.04 | AT/MT | F | L/R | Terrain cab wagon closed 4WD EML | | GCO16004 | Outer Joint | 54T | 27 | 32 | 60 | 102.5 | 77.5 | I |
| 6.1 (313 kw) | 2006.03-2010.12 | 5AT | F | L | Closed Off-Road Vehicle 4WD ESF | | GDS16014 | Drive Shaft | | 29 | 29 | 70 | 113 | 650 | |
| | 2006.03-2010.12 | 5AT | F | R | Closed Off-Road Vehicle 4WD ESF | | GDS16016 | Drive Shaft | | 29 | 29 | 70 | 113 | 604 | |
| | 2006.03-2010.12 | 5AT | F | R | Closed Off-Road Vehicle 4WD ESF | | GCO89056 | Outer Joint | | 29 | 36 | 70 | 112 | 59.5 | I |
| | 2006.03-2010.12 | 5AT | F | R | Closed Off-Road Vehicle 4WD ESF | | GCI16008 | Inner Joint | | 29 | 36 | 46 | | 135 | |
| | 2006.03-2010.12 | | F | L | Closed Off-Road Vehicle 4WD ESF | Without differential lock | GDS16015 | Drive Shaft | | 29 | 29 | 70 | 113 | 672 | |
| 6.4 (344 kw) | 2011.03- | AT | F | L | SUV 4WD ESG | Single speed transfer case | GDS84021 | Drive Shaft | | 32 | 37 | 72 | 115 | 663 | |
| | 2011.03- | AT | F | R | SUV 4WD ESG | Single speed transfer case | GDS84059 | Drive Shaft | | 32 | 37 | 72 | 115 | 1031 | |
| | 2011.03- | AT | F | L/R | SUV 4WD ESG | Single speed transfer case | GCO82555 | Outer Joint | | 32 | 26 | 72 | 115 | 61.5 | M |
| | 2011.03- | AT | F | L | SUV 4WD ESG | Single speed transfer case | GCI82457 | Inner Joint | | 37 | 24 | 44.97 | 80 | 118 | |
| | 2011.03- | AT | F | R | SUV 4WD ESG | Single speed transfer case | GCI82502 | Inner Joint | | 37 | 24 | 45 | 263 | 138 | |
| | 2011.03- | 5AT/8AT | R | R | SUV 4WD ESG | Model year from:2014;For vehicles with electronic ltd slip differential | GDS56993 | Drive Shaft | | 32 | 32 | 72 | 114.5 | 833 | |
| | 2011.03- | 5AT/8AT | R | L/R | SUV 4WD ESG | Model year from:2014;For vehicles with electronic ltd slip differential | GCO83495 | Outer Joint | | 32 | 29 | 72 | 114.5 | 77 | M |
| | 2011.03- | 5AT/8AT | R | L/R | SUV 4WD ESG | Model year from:2014;For vehicles with electronic ltd slip differential | GCI83586 | Inner Joint | | 32 | 30 | 49.95 | 73.5 | 140 | |
| | 2011.03- | AT | R | L/R | SUV 4WD ESG | Dual speed transfer case | GDS57910 | Drive Shaft | | 32 | 37 | 72 | 115 | 859 | |
| | 2011.03- | AT | R | L/R | SUV 4WD ESG | Single speed transfer case;Differential:195mm | GDS58125 | Drive Shaft | | 32 | 37 | 72 | 115 | 853 | |
| | 2011.03- | AT | R | L/R | SUV 4WD ESG | Dual speed transfer case | GCO83253 | Outer Joint | | 32 | 27 | 72 | 115 | 72 | M |
| | 2011.03- | AT | R | L/R | SUV 4WD ESG | Single speed transfer case | GCO83853 | Outer Joint | | 32 | 26 | 72 | 115 | 61.5 | M |
| | 2011.03- | AT | R | L/R | SUV 4WD ESG | Dual speed transfer case | GCI83916 | Inner Joint | | 37 | 28 | 44.95 | 80 | 120 | |
| | 2011.03- | AT | R | L/R | SUV 4WD ESG | Single speed transfer case;Differential:195mm | GCI84017 | Inner Joint | | 37 | 25 | 44.95 | 80 | 112 | |
| | 2013.07- | AT | F | L | SUV Van 4WD ESG | Single speed transfer case | GDS84021 | Drive Shaft | | 32 | 37 | 72 | 115 | 663 | |
| | 2013.07- | AT | F | R | SUV Van 4WD ESG | Single speed transfer case | GDS84059 | Drive Shaft | | 32 | 37 | 72 | 115 | 1031 | |
| | 2013.07- | AT | F | L/R | SUV Van 4WD ESG | Single speed transfer case | GCO82555 | Outer Joint | | 32 | 26 | 72 | 115 | 61.5 | M |
| | 2013.07- | AT | F | L | SUV Van 4WD ESG | Single speed transfer case | GCI82457 | Inner Joint | | 37 | 24 | 44.97 | 80 | 118 | |
| | 2013.07- | AT | F | R | SUV Van 4WD ESG | Single speed transfer case | GCI82502 | Inner Joint | | 37 | 24 | 45 | 263 | 138 | |
| | 2013.07- | 8AT | R | R | SUV Van 4WD ESG | Model year from:2014;For vehicles with electronic ltd slip differential | GDS56993 | Drive Shaft | | 32 | 32 | 72 | 114.5 | 833 | |
| | 2013.07- | 8AT | R | L/R | SUV Van 4WD ESG | Model year from:2014;For vehicles with electronic ltd slip differential | GCO83495 | Outer Joint | | 32 | 29 | 72 | 114.5 | 77 | M |
| | 2013.07- | 8AT | R | L/R | SUV Van 4WD ESG | Model year from:2014;For vehicles with electronic ltd slip differential | GCI83586 | Inner Joint | | 32 | 30 | 49.95 | 73.5 | 140 | |
| | 2013.07- | AT | R | L/R | SUV Van 4WD ESG | Dual speed transfer case | GDS57910 | Drive Shaft | | 32 | 37 | 72 | 115 | 859 | |
| | 2013.07- | AT | R | L/R | SUV Van 4WD ESG | Single speed transfer case;Differential:195mm | GDS58125 | Drive Shaft | | 32 | 37 | 72 | 115 | 853 | |
| | 2013.07- | AT | R | L/R | SUV Van 4WD ESG | Dual speed transfer case | GCO83253 | Outer Joint | | 32 | 27 | 72 | 115 | 72 | M |
| | 2013.07- | AT | R | L/R | SUV Van 4WD ESG | Single speed transfer case | GCO83853 | Outer Joint | | 32 | 26 | 72 | 115 | 61.5 | M |

| | YEAR | TRANSM. | F/R | L/R | BODY STYLE & DRIVE TYPE & ENGINE | REMARKS | G-AP Ref. | PRODUCT | ABS | Technical Specifications A | B | C | H | L | P |
|---|---|---|---|---|---|---|---|---|---|---|---|---|---|---|---|
| **JEEP** | | | | | | | | | | | | | | | |
| **Grand Cherokee** | | | | | | | | | | | | | | | |
| 6.4 (344 kw) | 2013.07- | AT | R | L/R | SUV Van 4WD ESG | Dual speed transfer case | GCI83916 | Inner Joint | | 37 | 28 | 44.95 | 80 | 120 | |
| | 2013.07- | AT | R | L/R | SUV Van 4WD ESG | Single speed transfer case;Differential:195mm | GCI84017 | Inner Joint | | 37 | 25 | 44.95 | 80 | 112 | |
| 6.4 (347 kw) | 2011.06- | AT | F | L | SUV 4WD ESG | Single speed transfer case | GDS84021 | Drive Shaft | | 32 | 37 | 72 | 115 | 663 | |
| | 2011.06- | AT | F | R | SUV 4WD ESG | Single speed transfer case | GDS84059 | Drive Shaft | | 32 | 37 | 72 | 115 | 1031 | |
| | 2011.06- | AT | F | L/R | SUV 4WD ESG | Single speed transfer case | GCO82555 | Outer Joint | | 32 | 26 | 72 | 115 | 61.5 | M |
| | 2011.06- | AT | F | L | SUV 4WD ESG | Single speed transfer case | GCI82457 | Inner Joint | | 37 | 24 | 44.97 | 80 | 118 | |
| | 2011.06- | AT | F | R | SUV 4WD ESG | Single speed transfer case | GCI82502 | Inner Joint | | 37 | 24 | 45 | 263 | 138 | |
| | 2011.06- | 8AT | R | R | SUV 4WD ESG | Model year from:2014;For vehicles with electronic ltd slip differential | GDS56993 | Drive Shaft | | 32 | 32 | 72 | 114.5 | 833 | |
| | 2011.06- | 8AT | R | L/R | SUV 4WD ESG | Model year from:2014;For vehicles with electronic ltd slip differential | GCO83495 | Outer Joint | | 32 | 29 | 72 | 114.5 | 77 | M |
| | 2011.06- | 8AT | R | L/R | SUV 4WD ESG | Model year from:2014;For vehicles with electronic ltd slip differential | GCI83586 | Inner Joint | | 32 | 30 | 49.95 | 73.5 | 140 | |
| | 2011.06- | AT | R | L/R | SUV 4WD ESG | Dual speed transfer case | GDS57910 | Drive Shaft | | 32 | 37 | 72 | 115 | 859 | |
| | 2011.06- | AT | R | L/R | SUV 4WD ESG | Single speed transfer case;Differential:195mm | GDS58125 | Drive Shaft | | 32 | 37 | 72 | 115 | 853 | |
| | 2011.06- | AT | R | L/R | SUV 4WD ESG | Dual speed transfer case | GCO83253 | Outer Joint | | 32 | 27 | 72 | 115 | 72 | M |
| | 2011.06- | AT | R | L/R | SUV 4WD ESG | Single speed transfer case | GCO83853 | Outer Joint | | 32 | 26 | 72 | 115 | 61.5 | M |
| | 2011.06- | AT | R | L/R | SUV 4WD ESG | Dual speed transfer case | GCI83916 | Inner Joint | | 37 | 28 | 44.95 | 80 | 120 | |
| | 2011.06- | AT | R | L/R | SUV 4WD ESG | Single speed transfer case;Differential:195mm | GCI84017 | Inner Joint | | 37 | 25 | 44.95 | 80 | 112 | |
| 6.4 (351 kw) | 2014.01- | AT | F | L | SUV 4WD ESG | Single speed transfer case | GDS84021 | Drive Shaft | | 32 | 37 | 72 | 115 | 663 | |
| | 2014.01- | AT | F | R | SUV 4WD ESG | Single speed transfer case | GDS84059 | Drive Shaft | | 32 | 37 | 72 | 115 | 1031 | |
| | 2014.01- | AT | F | L/R | SUV 4WD ESG | Single speed transfer case | GCO82555 | Outer Joint | | 32 | 26 | 72 | 115 | 61.5 | M |
| | 2014.01- | AT | F | L | SUV 4WD ESG | Single speed transfer case | GCI82457 | Inner Joint | | 37 | 24 | 44.97 | 80 | 118 | |
| | 2014.01- | AT | F | R | SUV 4WD ESG | Single speed transfer case | GCI82502 | Inner Joint | | 37 | 24 | 45 | 263 | 138 | |
| | 2014.01- | 8AT | R | R | SUV 4WD ESG | Model year from:2014;For vehicles with electronic ltd slip differential | GDS56993 | Drive Shaft | | 32 | 32 | 72 | 114.5 | 833 | |
| | 2014.01- | 8AT | R | L/R | SUV 4WD ESG | Model year from:2014;For vehicles with electronic ltd slip differential | GCO83495 | Outer Joint | | 32 | 29 | 72 | 114.5 | 77 | M |
| | 2014.01- | 8AT | R | L/R | SUV 4WD ESG | Model year from:2014;For vehicles with electronic ltd slip differential | GCI83586 | Inner Joint | | 32 | 30 | 49.95 | 73.5 | 140 | |
| | 2014.01- | AT | R | L/R | SUV 4WD ESG | Dual speed transfer case | GDS57910 | Drive Shaft | | 32 | 37 | 72 | 115 | 859 | |
| | 2014.01- | AT | R | L/R | SUV 4WD ESG | Single speed transfer case;Differential:195mm | GDS58125 | Drive Shaft | | 32 | 37 | 72 | 115 | 853 | |
| | 2014.01- | AT | R | L/R | SUV 4WD ESG | Dual speed transfer case | GCO83253 | Outer Joint | | 32 | 27 | 72 | 115 | 72 | M |
| | 2014.01- | AT | R | L/R | SUV 4WD ESG | Single speed transfer case | GCO83853 | Outer Joint | | 32 | 26 | 72 | 115 | 61.5 | M |
| | 2014.01- | AT | R | L/R | SUV 4WD ESG | Dual speed transfer case | GCI83916 | Inner Joint | | 37 | 28 | 44.95 | 80 | 120 | |
| | 2014.01- | AT | R | L/R | SUV 4WD ESG | Single speed transfer case;Differential:195mm | GCI84017 | Inner Joint | | 37 | 25 | 44.95 | 80 | 112 | |
| **Patriot** | | | | | | | | | | | | | | | |
| 2.0 (88 kw) | 2007.02-2017.12 | MT | F | L | Closed Off-Road Vehicle 4WD ECD | | GDS15054 | Drive Shaft | | 28 | 24 | 59.5 | 95 | 622 | |
| | 2007.02-2017.12 | MT | F | R | Closed Off-Road Vehicle 4WD ECD | | GDS51045 | Drive Shaft | | 28 | 27 | 59.5 | 95 | 962 | |
| | 2007.02-2017.12 | MT | F | R | Closed Off-Road Vehicle 4WD ECD | | GCO39113 | Outer Joint | | 28 | 33 | 59.5 | 95 | 61.5 | I |
| | 2007.02-2017.12 | 6MT | R | L | Closed Off-Road Vehicle 4WD ECD | | GDS51055 | Drive Shaft | | 25 | 23 | 48 | 106.5 | 743 | |
| | 2007.02-2017.12 | 6MT | R | R | Closed Off-Road Vehicle 4WD ECD | | GDS51056 | Drive Shaft | | 25 | 23 | 48 | 106.5 | 822 | |
| | 2007.02-2017.12 | 6MT | R | R | Closed Off-Road Vehicle 4WD ECD | | GCO51033 | Outer Joint | | 25 | 26 | 48 | 106.5 | 49 | I |
| | 2007.02-2017.12 | 6MT | R | L/R | Closed Off-Road Vehicle 4WD ECD | | GCI39050 | Inner Joint | | 23 | 26 | 35 | 64 | 96 | |
| 2.0 (103 kw) | 2007.02-2017.12 | MT | F | L | Closed Off-Road Vehicle 4WD ECD;ECE | | GDS15054 | Drive Shaft | | 28 | 24 | 59.5 | 95 | 622 | |
| | 2007.02-2017.12 | MT | F | R | Closed Off-Road Vehicle 4WD ECD;ECE | | GDS51045 | Drive Shaft | | 28 | 27 | 59.5 | 95 | 962 | |
| | 2007.02-2017.12 | | F | | Closed Off-Road Vehicle 4WD ECD;ECE | | GCO15010 | Outer Joint | | 28 | 36 | 59.5 | 95 | 68 | I |
| | 2007.02-2017.12 | 5MT/6MT/CVT | R | L | Closed Off-Road Vehicle 4WD ECD;ECE | | GDS51055 | Drive Shaft | | 25 | 23 | 48 | 106.5 | 743 | |
| | 2007.02-2017.12 | CVT/5MT/6MT | R | R | Closed Off-Road Vehicle 4WD ECD;ECE | | GDS51056 | Drive Shaft | | 25 | 23 | 48 | 106.5 | 822 | |
| | 2007.02-2017.12 | CVT/5MT/6MT | R | L/R | Closed Off-Road Vehicle 4WD ECD;ECE | | GCO51033 | Outer Joint | | 25 | 26 | 48 | 106.5 | 49 | I |
| | 2007.02-2017.12 | CVT/5MT/6MT | R | L/R | Closed Off-Road Vehicle 4WD ECD;ECE | | GCI39050 | Inner Joint | | 23 | 26 | 35 | 64 | 96 | |
| | 2007.02-2017.12 | MT | F | L | Closed Off-Road Vehicle FWD ECD;ECE | | GDS15054 | Drive Shaft | | 28 | 24 | 59.5 | 95 | 622 | |
| | 2007.02-2017.12 | | F | R | Closed Off-Road Vehicle FWD ECD;ECE | | GCO39113 | Outer Joint | | 28 | 33 | 59.5 | 95 | 61.5 | I |
| 2.0 (115 kw) | 2007.02-2017.12 | CVT/5MT | F | L | Closed Off-Road Vehicle 4WD ECN | | GDS15053 | Drive Shaft | | 28 | 27 | 59.5 | 95 | 638 | |
| | 2007.02-2017.12 | CVT/5MT | F | L/R | Closed Off-Road Vehicle 4WD ECN | | GCO39113 | Outer Joint | | 28 | 33 | 59.5 | 95 | 61.5 | I |
| | 2007.02-2017.12 | CVT/5MT | F | L | Closed Off-Road Vehicle 4WD ECN | | GCI41056 | Inner Joint | | 27 | 33 | 40 | 62 | 112 | |
| | 2007.02-2017.12 | 5MT/CVT | R | L | Closed Off-Road Vehicle 4WD ECN | | GDS51055 | Drive Shaft | | 25 | 23 | 48 | 106.5 | 743 | |
| | 2007.02-2017.12 | CVT/5MT | R | R | Closed Off-Road Vehicle 4WD ECN | | GDS51056 | Drive Shaft | | 25 | 23 | 48 | 106.5 | 822 | |
| | 2007.02-2017.12 | CVT/5MT | R | L/R | Closed Off-Road Vehicle 4WD ECN | | GCO51033 | Outer Joint | | 25 | 26 | 48 | 106.5 | 49 | I |
| | 2007.02-2017.12 | CVT/5MT | R | L/R | Closed Off-Road Vehicle 4WD ECN | | GCI39050 | Inner Joint | | 23 | 26 | 35 | 64 | 96 | |
| | 2011.01-2017.12 | 5MT | F | R | Closed Off-Road Vehicle FWD ECN | | GDS15051 | Drive Shaft | | 28 | 28 | 59.5 | 95 | 586 | |
| | 2011.01-2017.12 | AT/MT | F | L | Closed Off-Road Vehicle FWD ECN | | GDS15053 | Drive Shaft | | 28 | 27 | 59.5 | 95 | 638 | |
| | 2011.01-2017.12 | CVT | F | R | Closed Off-Road Vehicle FWD ECN | | GDS51067 | Drive Shaft | | 28 | 27 | 59.5 | 95 | 958 | |
| | 2011.01-2017.12 | CVT | F | R | Closed Off-Road Vehicle FWD ECN | | GCO39113 | Outer Joint | | 28 | 33 | 59.5 | 95 | 61.5 | I |
| | 2011.01-2017.12 | CVT | F | R | Closed Off-Road Vehicle FWD ECN | | GCI41056 | Inner Joint | | 27 | 33 | 40 | 62 | 112 | |
| 2.2 (100 kw) | 2011.01-2017.12 | 6MT | F | L | Closed Off-Road Vehicle 4WD ENE | Date to:2012.12 | GDS15054 | Drive Shaft | | 28 | 24 | 59.5 | 95 | 622 | |
| | 2011.01-2017.12 | 6MT | F | R | Closed Off-Road Vehicle 4WD ENE | | GDS51045 | Drive Shaft | | 28 | 27 | 59.5 | 95 | 962 | |
| | 2011.01-2017.12 | 6MT | F | L | Closed Off-Road Vehicle 4WD ENE | Date to:2012.12 | GCO15010 | Outer Joint | | 28 | 36 | 59.5 | 95 | 68 | I |
| | 2011.01-2017.12 | 6MT | F | R | Closed Off-Road Vehicle 4WD ENE | | GCO39113 | Outer Joint | | 28 | 33 | 59.5 | 95 | 61.5 | I |
| | 2011.01-2017.12 | 6MT | F | L | Closed Off-Road Vehicle 4WD ENE | Date to:2012.12 | GCI59140 | Inner Joint | | 24 | 36 | 50 | 67 | 116 | |
| | 2011.01-2017.12 | 6MT | R | L | Closed Off-Road Vehicle 4WD ENE | Model year to:2013 | GDS51055 | Drive Shaft | | 25 | 23 | 48 | 106.5 | 743 | |

| | YEAR | TRANSM. | F/R | L/R | BODY STYLE & DRIVE TYPE & ENGINE | REMARKS | G-AP Ref. | PRODUCT | ABS | Technical Specifications A | B | C | H | L | P |
|---|---|---|---|---|---|---|---|---|---|---|---|---|---|---|---|
| **JEEP** | | | | | | | | | | | | | | | |
| **Patriot** | | | | | | | | | | | | | | | |
| 2.2 (100 kw) | 2011.01-2017.12 | 6MT | R | R | Closed Off-Road Vehicle 4WD ENE | Model year to:2013 | GDS51056 | Drive Shaft | | 25 | 23 | 48 | 106.5 | 822 | |
| | 2011.01-2017.12 | 6MT | R | L/R | Closed Off-Road Vehicle 4WD ENE | Model year to:2013 | GCO51033 | Outer Joint | | 25 | 26 | 48 | 106.5 | 49 | I |
| | 2011.01-2017.12 | 6MT | R | L/R | Closed Off-Road Vehicle 4WD ENE | Model year to:2013 | GCI39050 | Inner Joint | | 23 | 26 | 35 | 64 | 96 | |
| | 2011.01-2017.12 | 6MT | F | L | Closed Off-Road Vehicle FWD ENE | Date to:2012.12 | GDS15054 | Drive Shaft | | 28 | 24 | 59.5 | 95 | 622 | |
| | 2011.01-2017.12 | 6MT | F | R | Closed Off-Road Vehicle FWD ENE | Date to:2012.12 | GDS15052 | Drive Shaft | | 28 | 28 | 59.5 | 95 | 613 | |
| | 2011.01-2017.12 | 6MT | F | L/R | Closed Off-Road Vehicle FWD ENE | Date to:2012.12 | GCO15010 | Outer Joint | | 28 | 36 | 59.5 | 95 | 68 | I |
| | 2011.01-2017.12 | 6MT | F | L | Closed Off-Road Vehicle FWD ENE | Date to:2012.12 | GCI59140 | Inner Joint | | 24 | 36 | 50 | 67 | 116 | |
| | 2011.01-2017.12 | 6MT | F | R | Closed Off-Road Vehicle FWD ENE | Date to:2012.12 | GCI15012 | Inner Joint | | 28 | 36 | 42 | | 122 | |
| 2.2 (120 kw) | 2011.01-2017.12 | 6MT | F | L | Closed Off-Road Vehicle 4WD ENE | Date to:2012.12 | GDS15054 | Drive Shaft | | 28 | 24 | 59.5 | 95 | 622 | |
| | 2011.01-2017.12 | 6MT | F | R | Closed Off-Road Vehicle 4WD ENE | | GDS51045 | Drive Shaft | | 28 | 27 | 59.5 | 95 | 962 | |
| | 2011.01-2017.12 | 6MT | F | L | Closed Off-Road Vehicle 4WD ENE | Date to:2012.12 | GCO15010 | Outer Joint | | 28 | 36 | 59.5 | 95 | 68 | I |
| | 2011.01-2017.12 | 6MT | F | R | Closed Off-Road Vehicle 4WD ENE | | GCO39113 | Outer Joint | | 28 | 33 | 59.5 | 95 | 61.5 | I |
| | 2011.01-2017.12 | 6MT | F | L | Closed Off-Road Vehicle 4WD ENE | Date to:2012.12 | GCI59140 | Inner Joint | | 24 | 36 | 50 | 67 | 116 | |
| | 2011.01-2017.12 | 6MT | R | L | Closed Off-Road Vehicle 4WD ENE | Model year to:2013 | GDS51055 | Drive Shaft | | 25 | 23 | 48 | 106.5 | 743 | |
| | 2011.01-2017.12 | 6MT | R | R | Closed Off-Road Vehicle 4WD ENE | Model year to:2013 | GDS51056 | Drive Shaft | | 25 | 23 | 48 | 106.5 | 822 | |
| | 2011.01-2017.12 | 6MT | R | L/R | Closed Off-Road Vehicle 4WD ENE | Model year to:2013 | GCO51033 | Outer Joint | | 25 | 26 | 48 | 106.5 | 49 | I |
| | 2011.01-2017.12 | 6MT | R | L/R | Closed Off-Road Vehicle 4WD ENE | Model year to:2013 | GCI39050 | Inner Joint | | 23 | 26 | 35 | 64 | 96 | |
| 2.4 (125 kw) | 2008.01-2017.12 | AT | F | L | Closed Off-Road Vehicle 4WD EDG;ED3 | 8 balls | GDS83401 | Drive Shaft | | 28 | 27 | 59.5 | 94.5 | 637 | |
| | 2008.01-2017.12 | CVT | F | L | Closed Off-Road Vehicle 4WD EDG;ED3 | 6 balls | GDS15053 | Drive Shaft | | 28 | 27 | 59.5 | 95 | 638 | |
| | 2008.01-2017.12 | CVT | F | R | Closed Off-Road Vehicle 4WD EDG;ED3 | | GDS51041 | Drive Shaft | | 28 | 24 | 59.5 | 95 | 977 | |
| | 2008.01-2017.12 | CVT/5MT | F | R | Closed Off-Road Vehicle 4WD EDG;ED3 | Date to:2012.12 | GDS51045 | Drive Shaft | | 28 | 27 | 59.5 | 95 | 962 | |
| | 2008.01-2017.12 | CVT/5MT | F | L | Closed Off-Road Vehicle 4WD EDG;ED3 | | GCO81568 | Outer Joint | | 28 | 33 | 59.5 | 94.5 | 61.5 | I |
| | 2008.01-2017.12 | CVT/5MT | F | L | Closed Off-Road Vehicle 4WD EDG;ED3 | | GCI81252 | Inner Joint | | 27 | 33 | 40 | 62 | 110 | |
| | 2008.01-2017.12 | | F | | Closed Off-Road Vehicle 4WD EDG;ED3 | | GCO39113 | Outer Joint | | 28 | 33 | 59.5 | 95 | 61.5 | I |
| | 2008.01-2017.12 | CVT/5MT | R | L | Closed Off-Road Vehicle 4WD EDG;ED3 | Model year to:2013 | GDS51055 | Drive Shaft | | 25 | 23 | 48 | 106.5 | 743 | |
| | 2008.01-2017.12 | CVT/5MT | R | R | Closed Off-Road Vehicle 4WD EDG;ED3 | Model year to:2013 | GDS51056 | Drive Shaft | | 25 | 23 | 48 | 106.5 | 822 | |
| | 2008.01-2017.12 | CVT/5MT | R | L/R | Closed Off-Road Vehicle 4WD EDG;ED3 | Model year to:2013 | GCO51033 | Outer Joint | | 25 | 26 | 48 | 106.5 | 49 | I |
| | 2008.01-2017.12 | CVT/5MT | R | L/R | Closed Off-Road Vehicle 4WD EDG;ED3 | Model year to:2013 | GCI39050 | Inner Joint | | 23 | 26 | 35 | 64 | 96 | |
| | 2008.07-2017.12 | AT | F | L | Closed Off-Road Vehicle 4WD ED3 | 6 balls | GDS15053 | Drive Shaft | | 28 | 27 | 59.5 | 95 | 638 | |
| | 2008.07-2017.12 | AT | F | L | Closed Off-Road Vehicle 4WD ED3 | 8 balls | GDS83401 | Drive Shaft | | 28 | 27 | 59.5 | 94.5 | 637 | |
| | 2008.07-2017.12 | AT | F | R | Closed Off-Road Vehicle 4WD ED3 | | GDS51041 | Drive Shaft | | 28 | 24 | 59.5 | 95 | 977 | |
| | 2008.07-2017.12 | CVT/5MT | F | R | Closed Off-Road Vehicle 4WD ED3 | Date to:2012.12 | GDS51045 | Drive Shaft | | 28 | 27 | 59.5 | 95 | 962 | |
| | 2008.07-2017.12 | CVT/5MT | F | L | Closed Off-Road Vehicle 4WD ED3 | Date to:2012.12 | GCO39113 | Outer Joint | | 28 | 33 | 59.5 | 95 | 61.5 | I |
| | 2008.07-2017.12 | CVT/5MT | F | L | Closed Off-Road Vehicle 4WD ED3 | | GCO81568 | Outer Joint | | 28 | 33 | 59.5 | 94.5 | 61.5 | I |
| | 2008.07-2017.12 | CVT/5MT | F | L | Closed Off-Road Vehicle 4WD ED3 | | GCI81252 | Inner Joint | | 27 | 33 | 40 | 62 | 110 | |
| | 2008.07-2017.12 | MT | R | L | Closed Off-Road Vehicle 4WD ED3 | Model year to:2013 | GDS51055 | Drive Shaft | | 25 | 23 | 48 | 106.5 | 743 | |
| | 2008.07-2017.12 | MT | R | R | Closed Off-Road Vehicle 4WD ED3 | Model year to:2013 | GDS51056 | Drive Shaft | | 25 | 23 | 48 | 106.5 | 822 | |
| | 2008.07-2017.12 | MT | R | L/R | Closed Off-Road Vehicle 4WD ED3 | Model year to:2013 | GCO51033 | Outer Joint | | 25 | 26 | 48 | 106.5 | 49 | I |
| | 2008.07-2017.12 | MT | R | L/R | Closed Off-Road Vehicle 4WD ED3 | Model year to:2013 | GCI39050 | Inner Joint | | 23 | 26 | 35 | 64 | 96 | |
| | 2009.06-2017.12 | AT | F | L | Closed Off-Road Vehicle FWD EDG;ED3 | | GDS83401 | Drive Shaft | | 28 | 27 | 59.5 | 94.5 | 637 | |
| | 2009.06-2017.12 | AT | F | L | Closed Off-Road Vehicle FWD EDG;ED3 | | GCI81252 | Inner Joint | | 27 | 33 | 40 | 62 | 110 | |
| | 2009.06-2017.12 | MT | F | L | Closed Off-Road Vehicle FWD EDG;ED3 | | GDS15053 | Drive Shaft | | 28 | 27 | 59.5 | 95 | 638 | |
| | 2009.06-2017.12 | MT | F | R | Closed Off-Road Vehicle FWD EDG;ED3 | | GDS15051 | Drive Shaft | | 28 | 28 | 59.5 | 95 | 586 | |
| | 2009.06-2017.12 | MT | F | L/R | Closed Off-Road Vehicle FWD EDG;ED3 | | GCO39113 | Outer Joint | | 28 | 33 | 59.5 | 95 | 61.5 | I |
| | 2009.06-2017.12 | MT | F | L | Closed Off-Road Vehicle FWD EDG;ED3 | | GCI59140 | Inner Joint | | 24 | 36 | 50 | 67 | 116 | |
| 2.4 (128 kw) | 2007.02-2017.12 | 5MT | F | L | Closed Off-Road Vehicle 4WD ED3 | | GDS15053 | Drive Shaft | | 28 | 27 | 59.5 | 95 | 638 | |
| | 2007.02-2017.12 | 5MT | F | R | Closed Off-Road Vehicle 4WD ED3 | | GDS51045 | Drive Shaft | | 28 | 27 | 59.5 | 95 | 962 | |
| | 2007.02-2017.12 | 5MT | F | L | Closed Off-Road Vehicle 4WD ED3 | | GCO39113 | Outer Joint | | 28 | 33 | 59.5 | 95 | 61.5 | I |
| | 2007.02-2017.12 | 5MT | F | L | Closed Off-Road Vehicle 4WD ED3 | | GCI41056 | Inner Joint | | 27 | 33 | 40 | 62 | 112 | |
| | 2007.02-2017.12 | AT | F | L | Closed Off-Road Vehicle 4WD ED3 | | GDS83401 | Drive Shaft | | 28 | 27 | 59.5 | 94.5 | 637 | |
| | 2007.02-2017.12 | AT | F | L | Closed Off-Road Vehicle 4WD ED3 | | GCO81568 | Outer Joint | | 28 | 33 | 59.5 | 94.5 | 61.5 | I |
| | 2007.02-2017.12 | AT | F | L | Closed Off-Road Vehicle 4WD ED3 | | GCI81252 | Inner Joint | | 27 | 33 | 40 | 62 | 110 | |
| | 2007.02-2017.12 | MT | R | L | Closed Off-Road Vehicle 4WD ED3 | Model year to:2013 | GDS51055 | Drive Shaft | | 25 | 23 | 48 | 106.5 | 743 | |
| | 2007.02-2017.12 | MT | R | R | Closed Off-Road Vehicle 4WD ED3 | Model year to:2013 | GDS51056 | Drive Shaft | | 25 | 23 | 48 | 106.5 | 822 | |
| | 2007.02-2017.12 | MT | R | L/R | Closed Off-Road Vehicle 4WD ED3 | Model year to:2013 | GCO51033 | Outer Joint | | 25 | 26 | 48 | 106.5 | 49 | I |
| | 2007.02-2017.12 | MT | R | L/R | Closed Off-Road Vehicle 4WD ED3 | Model year to:2013 | GCI39050 | Inner Joint | | 23 | 26 | 35 | 64 | 96 | |
| **Renegade** | | | | | | | | | | | | | | | |
| 1.0 (84 kw) | 2021.08- | 6MT | F | L | SUV FWD 552 82 151 | | GDS58315 | Drive Shaft | | 27 | 25 | 59 | 84 | 634 | |
| | 2021.08- | 6MT | F | R | SUV FWD 552 82 151 | | GDS58246 | Drive Shaft | | 27 | 25 | 59 | 84 | 970 | |
| | 2021.08- | 6MT | F | L/R | SUV FWD 552 82 151 | | GCO99348 | Outer Joint | | 27 | 25 | 59 | 84 | 61.5 | M |
| | 2021.08- | 6MT | F | L | SUV FWD 552 82 151 | | GCI17126 | Inner Joint | | 25 | 26 | 32 | 59 | 110.5 | |
| | 2021.08- | 6MT | F | R | SUV FWD 552 82 151 | | GCI84043 | Inner Joint | | 25 | 26 | 29.75 | 397 | 108.5 | |
| 1.0 (88 kw) | 2018.08- | 6MT | F | L | SUV FWD 552 82 151;EKA | | GDS58315 | Drive Shaft | | 27 | 25 | 59 | 84 | 634 | |
| | 2018.08- | 6MT | F | R | SUV FWD 552 82 151;EKA | | GDS58246 | Drive Shaft | | 27 | 25 | 59 | 84 | 970 | |
| | 2018.08- | 6MT | F | L/R | SUV FWD 552 82 151;EKA | | GCO99348 | Outer Joint | | 27 | 25 | 59 | 84 | 61.5 | M |

| | YEAR | TRANSM. | F/R | L/R | BODY STYLE & DRIVE TYPE & ENGINE | REMARKS | G-AP Ref. | PRODUCT | ABS | Technical Specifications A | B | C | H | L | P |
|---|---|---|---|---|---|---|---|---|---|---|---|---|---|---|---|
| **JEEP** **Renegade** | | | | | | | | | | | | | | | |
| 1.0 (88 kw) | 2018.08- | 6MT | F | L | SUV FWD 552 82 151;EKA | | GCI17126 | Inner Joint | | 25 | 26 | 32 | 59 | 110.5 | |
| | 2018.08- | 6MT | F | R | SUV FWD 552 82 151;EKA | | GCI84043 | Inner Joint | | 25 | 26 | 29.75 | 397 | 108.5 | |
| 1.3 (110 kw) | 2018.08- | 6AT | F | L/R | SUV FWD 552 82 328;46351268 | | GCO82930 | Outer Joint | | 27 | 26 | 59 | 84.5 | 62.5 | I |
| | 2018.08- | 6AT | F | L | SUV FWD 552 82 328;46351268 | | GCI82440 | Inner Joint | | 25 | 27 | 32 | 59 | 112.5 | |
| 1.3 (132 kw) | 2018.08- | 9AT | F | L/R | SUV 4WD 552 82 328;EYF | | GDS56984 | Drive Shaft | | 27 | 30 | 59 | 84.5 | 600 | |
| | 2018.08- | 9AT | F | L/R | SUV 4WD 552 82 328;EYF | | GCO82930 | Outer Joint | | 27 | 26 | 59 | 84.5 | 62.5 | I |
| | 2018.08- | 9AT | F | L/R | SUV 4WD 552 82 328;EYF | | GCI83584 | Inner Joint | | 30 | 27 | | 68.5 | 98 | |
| | 2018.08- | 9AT | R | L/R | SUV 4WD 552 82 328;EYF | | GDS84019 | Drive Shaft | | 27 | 22 | 59 | 84.5 | 679 | |
| | 2018.08- | 9AT | R | L/R | SUV 4WD 552 82 328;EYF | | GCO82554 | Outer Joint | | 27 | 21 | 59 | 84.5 | 54 | M |
| | 2018.08- | 9AT | R | L/R | SUV 4WD 552 82 328;EYF | | GCI83205 | Inner Joint | | 22 | 21 | 38.5 | | 134 | |
| 1.3 (140 kw) | 2020.08- | AT | F | L | SUV 4WD 46337540 | | GDS56098 | Drive Shaft | | 27 | 26 | 59 | 84.5 | 623 | |
| | 2020.08- | AT | F | R | SUV 4WD 46337540 | | GDS56099 | Drive Shaft | | 27 | 26 | 59 | 84.5 | 957 | |
| | 2020.08- | AT | F | L/R | SUV 4WD 46337540 | | GCO82524 | Outer Joint | | 27 | 35 | 59 | 84.5 | 61 | I |
| | 2020.08- | AT | F | L | SUV 4WD 46337540 | | GCI82842 | Inner Joint | | 26 | 35 | 31 | 52.5 | 111.5 | |
| | 2020.08- | AT | F | R | SUV 4WD 46337540 | | GCI82843 | Inner Joint | | 26 | 35 | 31 | 369.5 | 113.5 | |
| 1.3 (177 kw) | 2020.08- | 9AT | F | L | SUV 4WD 46337540 | | GDS56098 | Drive Shaft | | 27 | 26 | 59 | 84.5 | 623 | |
| | 2020.08- | 9AT | F | R | SUV 4WD 46337540 | | GDS56099 | Drive Shaft | | 27 | 26 | 59 | 84.5 | 957 | |
| | 2020.08- | 9AT | F | L | SUV 4WD 46337540 | | GCI82842 | Inner Joint | | 26 | 35 | 31 | 52.5 | 111.5 | |
| | 2020.08- | 9AT | F | R | SUV 4WD 46337540 | | GCI82843 | Inner Joint | | 26 | 35 | 31 | 369.5 | 113.5 | |
| | 2020.08- | AT/9AT | F | L/R | SUV 4WD 46337540 | | GCO82524 | Outer Joint | | 27 | 35 | 59 | 84.5 | 61 | I |
| 1.4 (88 kw) | 2016.01- | MT | F | L/R | SUV FWD 552 77 701 | | GCO99298 | Outer Joint | | 27 | 26 | 59 | 84.5 | 63 | M |
| | 2016.01- | | F | L | SUV FWD 552 77 701 | | GDS83864 | Drive Shaft | | 27 | 25 | 59 | 84.5 | 630 | |
| 1.4 (100 kw) | 2016.01- | 6AT | F | L | SUV FWD 552 63 624 | | GDS83864 | Drive Shaft | | 27 | 25 | 59 | 84.5 | 630 | |
| | 2016.01- | 6AT | F | R | SUV FWD 552 63 624 | | GDS83863 | Drive Shaft | | 27 | 25 | 59 | 84.5 | 975 | |
| | 2016.01- | 6AT | F | L | SUV FWD 552 63 624 | | GCI17118 | Inner Joint | | 25 | 35 | 32 | 75 | 96 | |
| | 2016.01- | 6AT | F | R | SUV FWD 552 63 624 | | GCI17113 | Inner Joint | | 25 | 35 | 29.7 | 432.5 | 108.5 | |
| | 2016.01- | 6DCT | F | L/R | SUV FWD 552 63 624 | | GCO82524 | Outer Joint | | 27 | 35 | 59 | 84.5 | 61 | I |
| 1.4 (103 kw) | 2014.07- | 6DCT | F | L | SUV Van FWD 552 63 624 | | GDS83864 | Drive Shaft | | 27 | 25 | 59 | 84.5 | 630 | |
| | 2014.07- | 6DCT | F | R | SUV Van FWD 552 63 624 | | GDS83863 | Drive Shaft | | 27 | 25 | 59 | 84.5 | 975 | |
| | 2014.07- | 6DCT | F | L/R | SUV Van FWD 552 63 624 | | GCO82524 | Outer Joint | | 27 | 35 | 59 | 84.5 | 61 | I |
| | 2014.07- | 6DCT | F | L | SUV Van FWD 552 63 624 | | GCI17118 | Inner Joint | | 25 | 35 | 32 | 75 | 96 | |
| | 2014.07- | 6DCT | F | R | SUV Van FWD 552 63 624 | | GCI17113 | Inner Joint | | 25 | 35 | 29.7 | 432.5 | 108.5 | |
| | 2014.07- | 6MT | F | L | SUV Van FWD 552 63 624 | Date to:2017.08 | GDS83864 | Drive Shaft | | 27 | 25 | 59 | 84.5 | 630 | |
| | 2014.07- | 6MT | F | L | SUV Van FWD 552 63 624 | Date to:2017.08 | GCI17118 | Inner Joint | | 25 | 35 | 32 | 75 | 96 | |
| | 2014.07- | MT | F | L/R | SUV Van FWD 552 63 624 | | GCO99298 | Outer Joint | | 27 | 26 | 59 | 84.5 | 63 | M |
| | 2014.07-2018.12 | 6DCT | F | L | SUV FWD EAM;552 63 624 | | GDS83864 | Drive Shaft | | 27 | 25 | 59 | 84.5 | 630 | |
| | 2014.07-2018.12 | 6DCT | F | R | SUV FWD EAM;552 63 624 | | GDS83863 | Drive Shaft | | 27 | 25 | 59 | 84.5 | 975 | |
| | 2014.07-2018.12 | 6DCT | F | L/R | SUV FWD EAM;552 63 624 | | GCO82524 | Outer Joint | | 27 | 35 | 59 | 84.5 | 61 | I |
| | 2014.07-2018.12 | 6DCT | F | L | SUV FWD EAM;552 63 624 | | GCI17118 | Inner Joint | | 25 | 35 | 32 | 75 | 96 | |
| | 2014.07-2018.12 | 6DCT | F | R | SUV FWD EAM;552 63 624 | | GCI17113 | Inner Joint | | 25 | 35 | 29.7 | 432.5 | 108.5 | |
| | 2014.07-2018.12 | 6MT | F | L | SUV FWD EAM;552 63 624 | Date to:2017.08 | GDS83864 | Drive Shaft | | 27 | 25 | 59 | 84.5 | 630 | |
| | 2014.07-2018.12 | 6MT | F | L/R | SUV FWD EAM;552 63 624 | | GCO99298 | Outer Joint | | 27 | 26 | 59 | 84.5 | 63 | M |
| | 2014.07-2018.12 | 6MT | F | L | SUV FWD EAM;552 63 624 | Date to:2017.08 | GCI17118 | Inner Joint | | 25 | 35 | 32 | 75 | 96 | |
| 1.4 (125 kw) | 2014.07- | 9AT | F | L/R | SUV Van 4WD 552 63 623 | | GDS56984 | Drive Shaft | | 27 | 30 | 59 | 84.5 | 600 | |
| | 2014.07- | 9AT | F | L/R | SUV Van 4WD 552 63 623 | | GCO82930 | Outer Joint | | 27 | 26 | 59 | 84.5 | 62.5 | I |
| | 2014.07- | 9AT | F | L/R | SUV Van 4WD 552 63 623 | | GCI83584 | Inner Joint | | 30 | 27 | | 68.5 | 98 | |
| | 2014.07- | 9AT | R | L/R | SUV Van 4WD 552 63 623 | | GDS84019 | Drive Shaft | | 27 | 22 | 59 | 84.5 | 679 | |
| | 2014.07- | 9AT | R | L/R | SUV Van 4WD 552 63 623 | | GCO82554 | Outer Joint | | 27 | 21 | 59 | 84.5 | 54 | M |
| | 2014.07- | 9AT | R | L/R | SUV Van 4WD 552 63 623 | | GCI83205 | Inner Joint | | 22 | 21 | 38.5 | | 134 | |
| | 2014.07-2018.12 | 9AT | F | L/R | SUV 4WD EAM;552 63 623 | | GDS56984 | Drive Shaft | | 27 | 30 | 59 | 84.5 | 600 | |
| | 2014.07-2018.12 | 9AT | F | L/R | SUV 4WD EAM;552 63 623 | | GCO82930 | Outer Joint | | 27 | 26 | 59 | 84.5 | 62.5 | I |
| | 2014.07-2018.12 | 9AT | F | L/R | SUV 4WD EAM;552 63 623 | | GCI83584 | Inner Joint | | 30 | 27 | | 68.5 | 98 | |
| | 2014.07-2018.12 | 9AT | R | L/R | SUV 4WD EAM;552 63 623 | | GDS84019 | Drive Shaft | | 27 | 22 | 59 | 84.5 | 679 | |
| | 2014.07-2018.12 | 9AT | R | L/R | SUV 4WD EAM;552 63 623 | | GCO82554 | Outer Joint | | 27 | 21 | 59 | 84.5 | 54 | M |
| | 2014.07-2018.12 | 9AT | R | L/R | SUV 4WD EAM;552 63 623 | | GCI83205 | Inner Joint | | 22 | 21 | 38.5 | | 134 | |
| 1.6 (70 kw) | 2016.11- | 6MT | F | L | SUV FWD 552 60 384;EJJ | | GDS82613 | Drive Shaft | | 27 | 25 | 59 | 84.5 | 602 | |
| | 2016.11- | 6MT | F | R | SUV FWD 552 60 384;EJJ | | GDS84198 | Drive Shaft | | 27 | 25 | 59 | 84.5 | 996 | |
| | 2016.11- | 6MT | F | L/R | SUV FWD 552 60 384;EJJ | | GCO99298 | Outer Joint | | 27 | 26 | 59 | 84.5 | 63 | M |
| | 2016.11- | 6MT | F | L | SUV FWD 552 60 384;EJJ | | GCI17126 | Inner Joint | | 25 | 26 | 32 | 59 | 110.5 | |
| | 2016.11- | 6MT | F | R | SUV FWD 552 60 384;EJJ | | GCI82637 | Inner Joint | | 25 | 26 | 29.75 | 423 | 107.5 | |
| 1.6 (77 kw) | 2017.06- | 6MT | F | L | SUV FWD 552 60 384, EJJ | | GDS82613 | Drive Shaft | | 27 | 25 | 59 | 84.5 | 602 | |
| | 2017.06- | 6MT | F | L/R | SUV FWD 552 60 384, EJJ | | GCO99298 | Outer Joint | | 27 | 26 | 59 | 84.5 | 63 | M |
| | 2017.06- | MT | F | R | SUV FWD 552 60 384, EJJ | | GDS84198 | Drive Shaft | | 27 | 25 | 59 | 84.5 | 996 | |
| 1.6 (84 kw) | 2022.08- | 6MT | F | L | SUV FWD 552 60 384;552 80 444;46346020 | Equipment code:1YH | GDS82613 | Drive Shaft | | 27 | 25 | 59 | 84.5 | 602 | |
| | 2022.08- | 6MT | F | R | SUV FWD 552 60 384;552 80 444;46346020 | Equipment code:1YH | GDS84198 | Drive Shaft | | 27 | 25 | 59 | 84.5 | 996 | |

| | YEAR | TRANSM. | F/R | L/R | BODY STYLE & DRIVE TYPE & ENGINE | REMARKS | G-AP Ref. | PRODUCT | ABS | Technical Specifications A | B | C | H | L | P |
|---|---|---|---|---|---|---|---|---|---|---|---|---|---|---|---|
| **JEEP** | | | | | | | | | | | | | | | |
| **Renegade** | | | | | | | | | | | | | | | |
| 1.6 (84 kw) | 2022.08- | 6MT | F | L/R | SUV FWD 552 60 384;552 80 444;46346020 | | GCO99298 | Outer Joint | | 27 | 26 | 59 | 84.5 | 63 | M |
| | 2022.08- | 6MT | F | L | SUV FWD 552 60 384;552 80 444;46346020 | Equipment code:1YH | GCI17126 | Inner Joint | | 25 | 26 | 32 | 59 | 110.5 | |
| 1.6 (88 kw) | 2014.07- | 6DCT | F | R | SUV FWD EJK;552 60 384;552 63 113;552 80 444 | | GDS84202 | Drive Shaft | | 27 | 25 | 59 | 84.5 | 1000 | |
| | 2014.07- | 6DCT | F | R | SUV FWD EJK;552 60 384;552 63 113;552 80 444 | | GCI82150 | Inner Joint | | 25 | 26 | 29.75 | 432 | 108 | |
| | 2014.07- | 6MT | F | L | SUV FWD EJK;552 60 384;552 63 113;552 80 444 | Date to:2019.08;Date from:2019.09,Equipment code:1YH | GDS82613 | Drive Shaft | | 27 | 25 | 59 | 84.5 | 602 | |
| | 2014.07- | 6MT | F | R | SUV FWD EJK;552 60 384;552 63 113;552 80 444 | | GDS84198 | Drive Shaft | | 27 | 25 | 59 | 84.5 | 996 | |
| | 2014.07- | 6MT | F | L | SUV FWD EJK;552 60 384;552 63 113;552 80 444 | Date to:2019.08;Date from:2019.09,Equipment code:1YH | GCI17126 | Inner Joint | | 25 | 26 | 32 | 59 | 110.5 | |
| | 2014.07- | 6MT | F | R | SUV FWD EJK;552 60 384;552 63 113;552 80 444 | | GCI82637 | Inner Joint | | 25 | 26 | 29.75 | 423 | 107.5 | |
| | 2014.07- | 6MT/6DCT | F | L/R | SUV FWD EJK;552 60 384;552 63 113;552 80 444 | Date to:2019.08;Date from:2019.09,Equipment code:1YH | GCO99298 | Outer Joint | | 27 | 26 | 59 | 84.5 | 63 | M |
| | 2014.07- | 6DCT | F | R | SUV Van FWD 552 63 113;552 80 444 | | GDS84202 | Drive Shaft | | 27 | 25 | 59 | 84.5 | 1000 | |
| | 2014.07- | 6DCT | F | R | SUV Van FWD 552 63 113;552 80 444 | | GCI82150 | Inner Joint | | 25 | 26 | 29.75 | 432 | 108 | |
| | 2014.07- | 6MT | F | L | SUV Van FWD 552 63 113;552 80 444 | Date to:2019.08;Date from:2019.09,Equipment code:1YH | GDS82613 | Drive Shaft | | 27 | 25 | 59 | 84.5 | 602 | |
| | 2014.07- | 6MT | F | R | SUV Van FWD 552 63 113;552 80 444 | | GDS84198 | Drive Shaft | | 27 | 25 | 59 | 84.5 | 996 | |
| | 2014.07- | 6MT | F | L | SUV Van FWD 552 63 113;552 80 444 | Date to:2019.08;Date from:2019.09,Equipment code:1YH | GCI17126 | Inner Joint | | 25 | 26 | 32 | 59 | 110.5 | |
| | 2014.07- | 6MT | F | R | SUV Van FWD 552 63 113;552 80 444 | | GCI82637 | Inner Joint | | 25 | 26 | 29.75 | 423 | 107.5 | |
| | 2014.07- | 6MT/6DCT | F | L/R | SUV Van FWD 552 63 113;552 80 444 | Date to:2019.08;Date from:2019.09,Equipment code:1YH | GCO99298 | Outer Joint | | 27 | 26 | 59 | 84.5 | 63 | M |
| 1.6 (96 kw) | 2020.02- | 6MT | F | L | SUV FWD 46346020 | Equipment code:1YH | GDS82613 | Drive Shaft | | 27 | 25 | 59 | 84.5 | 602 | |
| | 2020.02- | 6MT | F | R | SUV FWD 46346020 | Equipment code:1YH | GDS84198 | Drive Shaft | | 27 | 25 | 59 | 84.5 | 996 | |
| | 2020.02- | 6MT | F | L/R | SUV FWD 46346020 | Equipment code:1YH | GCO99298 | Outer Joint | | 27 | 26 | 59 | 84.5 | 63 | M |
| | 2020.02- | 6MT | F | L | SUV FWD 46346020 | Equipment code:1YH | GCI17126 | Inner Joint | | 25 | 26 | 32 | 59 | 110.5 | |
| 2.0 (88 kw) | 2014.07- | 6MT | F | L | SUV 4WD EBT;552 63 087 | | GDS56094 | Drive Shaft | | 27 | 25 | 59 | 84.5 | 606 | |
| | 2014.07- | 6MT | F | R | SUV 4WD EBT;552 63 087 | | GDS56984 | Drive Shaft | | 27 | 30 | 59 | 84.5 | 600 | |
| | 2014.07- | 6MT | F | L/R | SUV 4WD EBT;552 63 087 | | GCO82930 | Outer Joint | | 27 | 26 | 59 | 84.5 | 62.5 | I |
| | 2014.07- | 6MT | F | L | SUV 4WD EBT;552 63 087 | | GCI82440 | Inner Joint | | 25 | 27 | 32 | 59 | 112.5 | |
| | 2014.07- | 6MT | F | R | SUV 4WD EBT;552 63 087 | | GCI83584 | Inner Joint | | 30 | 27 | | 68.5 | 98 | |
| | 2014.07- | 9AT | R | L/R | SUV 4WD EBT;552 63 087 | | GDS84019 | Drive Shaft | | 27 | 22 | 59 | 84.5 | 679 | |
| | 2014.07- | 9AT | R | L/R | SUV 4WD EBT;552 63 087 | | GCO82554 | Outer Joint | | 27 | 21 | 59 | 84.5 | 54 | M |
| | 2014.07- | 9AT | R | L/R | SUV 4WD EBT;552 63 087 | | GCI83205 | Inner Joint | | 22 | 21 | 38.5 | | 134 | |
| 2.0 (103 kw) | 2014.07- | 6MT | F | L | SUV 4WD EBT;552 63 088;552 63 087;552 83 099;552 84 064 | | GDS56094 | Drive Shaft | | 27 | 25 | 59 | 84.5 | 606 | |
| | 2014.07- | 6MT | F | R | SUV 4WD EBT;552 63 088;552 63 087;552 83 099;552 84 064 | | GDS56984 | Drive Shaft | | 27 | 30 | 59 | 84.5 | 600 | |
| | 2014.07- | 6MT | F | L/R | SUV 4WD EBT;552 63 088;552 63 087;552 83 099;552 84 064 | | GCO82930 | Outer Joint | | 27 | 26 | 59 | 84.5 | 62.5 | I |
| | 2014.07- | 6MT | F | L | SUV 4WD EBT;552 63 088;552 63 087;552 83 099;552 84 064 | | GCI82440 | Inner Joint | | 25 | 27 | 32 | 59 | 112.5 | |
| | 2014.07- | 6MT | F | R | SUV 4WD EBT;552 63 088;552 63 087;552 83 099;552 84 064 | | GCI83584 | Inner Joint | | 30 | 27 | | 68.5 | 98 | |
| | 2014.07- | 9AT | F | L/R | SUV 4WD EBT;552 63 088;552 63 087;552 83 099;552 84 064 | | GDS56985 | Drive Shaft | | 27 | 30 | 59 | 84.5 | 600 | |
| | 2014.07- | 9AT | F | L/R | SUV 4WD EBT;552 63 088;552 63 087;552 83 099;552 84 064 | | GCO83422 | Outer Joint | | 27 | 27 | 59 | 84.5 | 64 | I |
| | 2014.07- | 9AT | F | L/R | SUV 4WD EBT;552 63 088;552 63 087;552 83 099;552 84 064 | | GCI83585 | Inner Joint | | 30 | 29 | | 68.5 | 98 | |
| | 2014.07- | 9AT | R | L/R | SUV 4WD EBT;552 63 088;552 63 087;552 83 099;552 84 064 | | GDS84019 | Drive Shaft | | 27 | 22 | 59 | 84.5 | 679 | |
| | 2014.07- | 9AT | R | L/R | SUV 4WD EBT;552 63 088;552 63 087;552 83 099;552 84 064 | | GCO82554 | Outer Joint | | 27 | 21 | 59 | 84.5 | 54 | M |
| | 2014.07- | 9AT | R | L/R | SUV 4WD EBT;552 63 088;552 63 087;552 83 099;552 84 064 | | GCI83205 | Inner Joint | | 22 | 21 | 38.5 | | 134 | |
| | 2014.07- | 6MT | F | L | SUV Van 4WD 552 63 088;552 63 087;552 83 099;552 84 064 | | GDS56094 | Drive Shaft | | 27 | 25 | 59 | 84.5 | 606 | |
| | 2014.07- | 6MT | F | R | SUV Van 4WD 552 63 088;552 63 087;552 83 099;552 84 064 | | GDS56984 | Drive Shaft | | 27 | 30 | 59 | 84.5 | 600 | |
| | 2014.07- | 6MT | F | L/R | SUV Van 4WD 552 63 088;552 63 087;552 83 099;552 84 064 | | GCO82930 | Outer Joint | | 27 | 26 | 59 | 84.5 | 62.5 | I |
| | 2014.07- | 6MT | F | L | SUV Van 4WD 552 63 088;552 63 087;552 83 099;552 84 064 | | GCI82440 | Inner Joint | | 25 | 27 | 32 | 59 | 112.5 | |
| | 2014.07- | 6MT | F | R | SUV Van 4WD 552 63 088;552 63 087;552 83 099;552 84 064 | | GCI83584 | Inner Joint | | 30 | 27 | | 68.5 | 98 | |
| | 2014.07- | 9AT | F | L/R | SUV Van 4WD 552 63 088;552 63 087;552 83 099;552 84 064 | | GDS56985 | Drive Shaft | | 27 | 30 | 59 | 84.5 | 600 | |
| | 2014.07- | 9AT | F | L/R | SUV Van 4WD 552 63 088;552 63 087;552 83 099;552 84 064 | | GCO83422 | Outer Joint | | 27 | 27 | 59 | 84.5 | 64 | I |
| | 2014.07- | 9AT | F | L/R | SUV Van 4WD 552 63 088;552 63 087;552 83 099;552 84 064 | | GCI83585 | Inner Joint | | 30 | 29 | | 68.5 | 98 | |
| | 2014.07- | 9AT | R | L/R | SUV Van 4WD 552 63 088;552 63 087;552 83 099;552 84 064 | | GDS84019 | Drive Shaft | | 27 | 22 | 59 | 84.5 | 679 | |
| | 2014.07- | 9AT | R | L/R | SUV Van 4WD 552 63 088;552 63 087;552 83 099;552 84 064 | | GCO82554 | Outer Joint | | 27 | 21 | 59 | 84.5 | 54 | M |
| | 2014.07- | 9AT | R | L/R | SUV Van 4WD 552 63 088;552 63 087;552 83 099;552 84 064 | | GCI83205 | Inner Joint | | 22 | 21 | 38.5 | | 134 | |
| 2.0 (125 kw) | 2014.07- | 9AT | F | L/R | SUV 4WD EBT;552 63 088;552 83 099 | | GDS56985 | Drive Shaft | | 27 | 30 | 59 | 84.5 | 600 | |
| | 2014.07- | 9AT | F | L/R | SUV 4WD EBT;552 63 088;552 83 099 | | GCO83422 | Outer Joint | | 27 | 27 | 59 | 84.5 | 64 | I |
| | 2014.07- | 9AT | F | L/R | SUV 4WD EBT;552 63 088;552 83 099 | | GCI83585 | Inner Joint | | 30 | 29 | | 68.5 | 98 | |
| | 2014.07- | 9AT | R | L/R | SUV 4WD EBT;552 63 088;552 83 099 | | GDS84019 | Drive Shaft | | 27 | 22 | 59 | 84.5 | 679 | |
| | 2014.07- | 9AT | R | L/R | SUV 4WD EBT;552 63 088;552 83 099 | | GCO82554 | Outer Joint | | 27 | 21 | 59 | 84.5 | 54 | M |
| | 2014.07- | 9AT | R | L/R | SUV 4WD EBT;552 63 088;552 83 099 | | GCI83205 | Inner Joint | | 22 | 21 | 38.5 | | 134 | |
| | 2014.07- | 9AT | F | L/R | SUV Van 4WD 552 63 088;552 83 099 | | GDS56985 | Drive Shaft | | 27 | 30 | 59 | 84.5 | 600 | |
| | 2014.07- | 9AT | F | L/R | SUV Van 4WD 552 63 088;552 83 099 | | GCO83422 | Outer Joint | | 27 | 27 | 59 | 84.5 | 64 | I |
| | 2014.07- | 9AT | F | L/R | SUV Van 4WD 552 63 088;552 83 099 | | GCI83585 | Inner Joint | | 30 | 29 | | 68.5 | 98 | |
| | 2014.07- | 9AT | R | L/R | SUV Van 4WD 552 63 088;552 83 099 | | GDS84019 | Drive Shaft | | 27 | 22 | 59 | 84.5 | 679 | |
| | 2014.07- | 9AT | R | L/R | SUV Van 4WD 552 63 088;552 83 099 | | GCO82554 | Outer Joint | | 27 | 21 | 59 | 84.5 | 54 | M |
| | 2014.07- | 9AT | R | L/R | SUV Van 4WD 552 63 088;552 83 099 | | GCI83205 | Inner Joint | | 22 | 21 | 38.5 | | 134 | |
| 2.4 (129 kw) | 2015.09- | 9AT | F | L/R | SUV 4WD ED6 | | GDS84182 | Drive Shaft | | 27 | 30 | 59 | 84 | 600 | |
| | 2015.09- | 9AT | F | L/R | SUV 4WD ED6 | | GCO99348 | Outer Joint | | 27 | 25 | 59 | 84 | 61.5 | M |
| | 2015.09- | 9AT | F | L/R | SUV 4WD ED6 | | GCI17111 | Inner Joint | | 30 | 26 | 34.85 | 68.5 | 91 | |

| | YEAR | TRANSM. | F/R | L/R | BODY STYLE & DRIVE TYPE & ENGINE | REMARKS | G-AP Ref. | PRODUCT | ABS | Technical Specifications A | B | C | H | L | P |
|---|---|---|---|---|---|---|---|---|---|---|---|---|---|---|---|
| **JEEP** | | | | | | | | | | | | | | | |
| **Renegade** | | | | | | | | | | | | | | | |
| 2.4 (129 kw) | 2015.09- | 9AT | F | L/R | SUV FWD ED6, ED8 | | GDS84182 | Drive Shaft | | 27 | 30 | 59 | 84 | 600 | |
| | 2015.09- | 9AT | F | L/R | SUV FWD ED6, ED8 | | GCO99348 | Outer Joint | | 27 | 25 | 59 | 84 | 61.5 | M |
| | 2015.09- | 9AT | F | L/R | SUV FWD ED6, ED8 | | GCI17111 | Inner Joint | | 30 | 26 | 34.85 | 68.5 | 91 | |
| 2.4 (132 kw) | 2015.09- | 5AT/9AT | F | L/R | SUV 4WD 500 52 375, ED6 | | GDS84182 | Drive Shaft | | 27 | 30 | 59 | 84 | 600 | |
| | 2015.09- | 5AT/9AT | F | L/R | SUV 4WD 500 52 375, ED6 | | GCO99348 | Outer Joint | | 27 | 25 | 59 | 84 | 61.5 | M |
| | 2015.09- | 5AT/9AT | F | L/R | SUV 4WD 500 52 375, ED6 | | GCI17111 | Inner Joint | | 30 | 26 | 34.85 | 68.5 | 91 | |
| | 2015.09- | 9AT | F | L/R | SUV FWD 500 52 375, ED6 | | GDS84182 | Drive Shaft | | 27 | 30 | 59 | 84 | 600 | |
| | 2015.09- | 9AT | F | L/R | SUV FWD 500 52 375, ED6 | | GCO99348 | Outer Joint | | 27 | 25 | 59 | 84 | 61.5 | M |
| | 2015.09- | 9AT | F | L/R | SUV FWD 500 52 375, ED6 | | GCI17111 | Inner Joint | | 30 | 26 | 34.85 | 68.5 | 91 | |
| 2.4 (134 kw) | 2016.06- | 9AT | F | L/R | SUV 4WD ED6 | | GDS84182 | Drive Shaft | | 27 | 30 | 59 | 84 | 600 | |
| | 2016.06- | 9AT | F | L/R | SUV 4WD ED6 | | GCO99348 | Outer Joint | | 27 | 25 | 59 | 84 | 61.5 | M |
| | 2016.06- | 9AT | F | L/R | SUV 4WD ED6 | | GCI17111 | Inner Joint | | 30 | 26 | 34.85 | 68.5 | 91 | |
| 2.4 (137 kw) | 2014.07- | 6MT/9AT | F | L/R | SUV 4WD ED6 | | GDS84182 | Drive Shaft | | 27 | 30 | 59 | 84 | 600 | |
| | 2014.07- | 6MT/9AT | F | L/R | SUV 4WD ED6 | | GCO99348 | Outer Joint | | 27 | 25 | 59 | 84 | 61.5 | M |
| | 2014.07- | 6MT/9AT | F | L/R | SUV 4WD ED6 | | GCI17111 | Inner Joint | | 30 | 26 | 34.85 | 68.5 | 91 | |
| **Wrangler** | | | | | | | | | | | | | | | |
| 2.5 (87 kw) | 1996.08-2002.09 | 5MT | F | L | Terrain cab open 4WD EPE | | GDS16012 | Drive Shaft | | 27 | | 60 | 102.5 | 576 | |
| | 1996.08-2002.09 | 5MT | F | R | Terrain cab open 4WD EPE | | GDS16013 | Drive Shaft | | 27 | | 60 | 102.5 | 975.5 | |
| | 1996.08-2002.09 | 5MT | F | L/R | Terrain cab open 4WD EPE | | GCO16001 | Outer Joint | | 27 | 32 | 60 | 102.5 | 77.5 | I |
| | 1996.08-2002.09 | AT/MT | F | L | Terrain cab open 4WD EPE | Date to:2006.12 | GDS16003 | Drive Shaft | 54T | 27 | | 60 | 102.5 | 576 | |
| | 1996.08-2002.09 | AT/MT | F | R | Terrain cab open 4WD EPE | Date to:2006.12 | GDS16004 | Drive Shaft | 54T | 27 | | 60 | 102.5 | 975.5 | |
| | 1996.08-2002.09 | AT/MT | F | L/R | Terrain cab open 4WD EPE | Date to:2006.12 | GCO16004 | Outer Joint | 54T | 27 | 32 | 60 | 102.5 | 77.5 | I |
| 2.5 (89 kw) | 1990.10-1996.08 | 5MT | F | L | Terrain cab open 4WD EPE | | GDS16012 | Drive Shaft | | 27 | | 60 | 102.5 | 576 | |
| | 1990.10-1996.08 | 5MT | F | R | Terrain cab open 4WD EPE | | GDS16013 | Drive Shaft | | 27 | | 60 | 102.5 | 975.5 | |
| | 1990.10-1996.08 | 5MT | F | L/R | Terrain cab open 4WD EPE | | GCO16001 | Outer Joint | | 27 | 32 | 60 | 102.5 | 77.5 | I |
| | 1990.10-1996.08 | MT | F | L | Terrain cab open 4WD EPE | | GDS16003 | Drive Shaft | 54T | 27 | | 60 | 102.5 | 576 | |
| | 1990.10-1996.08 | MT | F | R | Terrain cab open 4WD EPE | | GDS16004 | Drive Shaft | 54T | 27 | | 60 | 102.5 | 975.5 | |
| 4.0 (124 kw) | 1998.06-2007.04 | AT/MT | F | L | Terrain cab open 4WD ERH | | GDS16003 | Drive Shaft | 54T | 27 | | 60 | 102.5 | 576 | |
| | 1998.06-2007.04 | AT/MT | F | R | Terrain cab open 4WD ERH | | GDS16004 | Drive Shaft | 54T | 27 | | 60 | 102.5 | 975.5 | |
| | 1998.06-2007.04 | AT/MT | F | L/R | Terrain cab open 4WD ERH | Date to:2006.12 | GCO16004 | Outer Joint | 54T | 27 | 32 | 60 | 102.5 | 77.5 | I |
| | 1998.06-2007.04 | MT | F | L | Terrain cab open 4WD ERH | | GDS16012 | Drive Shaft | | 27 | | 60 | 102.5 | 576 | |
| | 1998.06-2007.04 | MT | F | R | Terrain cab open 4WD ERH | | GDS16013 | Drive Shaft | | 27 | | 60 | 102.5 | 975.5 | |
| | 1998.06-2007.04 | | F | | Terrain cab open 4WD ERH | | GCO16001 | Outer Joint | | 27 | 32 | 60 | 102.5 | 77.5 | I |
| 4.0 (128 kw) | 1996.08-2007.01 | AT/MT | F | L/R | Terrain cab open 4WD ERH | | GCO16004 | Outer Joint | 54T | 27 | 32 | 60 | 102.5 | 77.5 | I |
| | 1996.08-2007.01 | MT | F | L | Terrain cab open 4WD ERH | | GDS16003 | Drive Shaft | 54T | 27 | | 60 | 102.5 | 576 | |
| | 1996.08-2007.01 | MT | F | R | Terrain cab open 4WD ERH | | GDS16004 | Drive Shaft | 54T | 27 | | 60 | 102.5 | 975.5 | |
| 4.0 (130 kw) | 1996.08-2007.04 | AT/MT | F | L | Terrain cab open 4WD ERH | | GDS16003 | Drive Shaft | 54T | 27 | | 60 | 102.5 | 576 | |
| | 1996.08-2007.04 | AT/MT | F | L | Terrain cab open 4WD ERH | | GDS16012 | Drive Shaft | | 27 | | 60 | 102.5 | 576 | |
| | 1996.08-2007.04 | AT/MT | F | R | Terrain cab open 4WD ERH | | GDS16004 | Drive Shaft | 54T | 27 | | 60 | 102.5 | 975.5 | |
| | 1996.08-2007.04 | AT/MT | F | R | Terrain cab open 4WD ERH | | GDS16013 | Drive Shaft | | 27 | | 60 | 102.5 | 975.5 | |
| 4.0 (131 kw) | 1991.12-1996.08 | MT | F | L | Terrain cab open 4WD ERH | | GDS16003 | Drive Shaft | 54T | 27 | | 60 | 102.5 | 576 | |
| | 1991.12-1996.08 | MT | F | L | Terrain cab open 4WD ERH | | GDS16012 | Drive Shaft | | 27 | | 60 | 102.5 | 576 | |
| | 1991.12-1996.08 | MT | F | R | Terrain cab open 4WD ERH | | GDS16004 | Drive Shaft | 54T | 27 | | 60 | 102.5 | 975.5 | |
| | 1991.12-1996.08 | MT | F | R | Terrain cab open 4WD ERH | | GDS16013 | Drive Shaft | | 27 | | 60 | 102.5 | 975.5 | |
| | 1991.12-1996.08 | | F | | Terrain cab open 4WD ERH | | GCO16001 | Outer Joint | | 27 | 32 | 60 | 102.5 | 77.5 | I |
| | 1991.12-1996.08 | | F | | Terrain cab open 4WD ERH | | GCO16004 | Outer Joint | 54T | 27 | 32 | 60 | 102.5 | 77.5 | I |
| **JINBEI** | | | | | | | | | | | | | | | |
| **750** | | | | | | | | | | | | | | | |
| 1.5 (82 kw) | 2015.12- | 5MT | F | L | MPV FWD DLDG15 | Model year to:2018 | GCI18265 | Inner Joint | | 23 | 22 | 40 | 61 | 91 | |
| **Granse** | | | | | | | | | | | | | | | |
| 2.4 (90 kw) | 2005.05-2008.12 | 5MT | R | L/R | Bus RWD 4RB1 | | GCO75002 | Outer Joint | 48T | 30 | 24 | 63 | 108.5 | 74 | I |
| 2.4 (102 kw) | 2004.02- | 5MT/4AT | R | L/R | Bus RWD 4RB2 | Transmission:5MT,Model year from:2003,Model year to:2010,Transmission:4AT,Model year from:2007,Model year to:2010 | GCO75002 | Outer Joint | 48T | 30 | 24 | 63 | 108.5 | 74 | I |
| **KIA** | | | | | | | | | | | | | | | |
| **Avella** | | | | | | | | | | | | | | | |
| 1.5 (55 kw) | 1997.02-2001.12 | 5MT | F | L | Saloon FWD B535 | | GDS27025 | Drive Shaft | 44T | 24 | 26 | 52 | 86 | 605 | |
| | 1997.02-2001.12 | 5MT | F | L | Saloon FWD B535 | | GDS27106 | Drive Shaft | | 24 | 26 | 52 | 86 | 606 | |
| | 1997.02-2001.12 | 5MT | F | R | Saloon FWD B535 | | GDS27027 | Drive Shaft | 44T | 24 | 26 | 52 | 86 | 888 | |
| | 1997.02-2001.12 | 5MT | F | R | Saloon FWD B535 | | GDS27107 | Drive Shaft | | 24 | 26 | 52 | 86 | 888 | |
| | 1997.02-2001.12 | 5MT | F | L/R | Saloon FWD B535 | | GCO27033 | Outer Joint | 44T | 24 | 22 | 52 | 86 | 58.5 | M |
| **Bongo** | | | | | | | | | | | | | | | |
| 2.7 (61 kw) | 2003.10-2012.12 | 5MT | F | L | Van 4WD J2 | | GDS82995 | Drive Shaft | | 26 | 26 | 65 | 137 | 503 | |
| | 2003.10-2012.12 | 5MT | F | R | Van 4WD J2 | | GDS82994 | Drive Shaft | | 26 | 26 | 65 | 137 | 574 | |
| | 2003.10-2012.12 | 5MT | F | L/R | Van 4WD J2 | | GCO82275 | Outer Joint | | 26 | 26 | 65 | 137 | 64.5 | M |
| | 2003.10-2012.12 | 5MT | F | L | Van 4WD J2 | | GCI14035 | Inner Joint | | 26 | 25 | 40 | | 116 | |
| | 2003.10-2012.12 | 5MT | F | R | Van 4WD J2 | | GCI14034 | Inner Joint | | 26 | 25 | 35 | 82.5 | 100.5 | |

| | YEAR | TRANSM. | F/R | L/R | BODY STYLE & DRIVE TYPE & ENGINE | REMARKS | G-AP Ref. | PRODUCT | ABS | Technical Specifications A | B | C | H | L | P |
|---|---|---|---|---|---|---|---|---|---|---|---|---|---|---|---|
| **KIA** | | | | | | | | | | | | | | | |
| **Bongo/K-Series** | | | | | | | | | | | | | | | |
| 2.7 (61 kw) | 2003.10- | 5MT | F | L | Platform/Chassis 4WD J2 | | GDS82995 | Drive Shaft | | 26 | 26 | 65 | 137 | 503 | |
| | 2003.10- | 5MT | F | R | Platform/Chassis 4WD J2 | | GDS82994 | Drive Shaft | | 26 | 26 | 65 | 137 | 574 | |
| | 2003.10- | 5MT | F | L/R | Platform/Chassis 4WD J2 | | GCO82275 | Outer Joint | | 26 | 26 | 65 | 137 | 64.5 | M |
| | 2003.10- | 5MT | F | L | Platform/Chassis 4WD J2 | | GCI14035 | Inner Joint | | 26 | 25 | 40 | | 116 | |
| | 2003.10- | 5MT | F | R | Platform/Chassis 4WD J2 | | GCI14034 | Inner Joint | | 26 | 25 | 35 | 82.5 | 100.5 | |
| **Carens** | | | | | | | | | | | | | | | |
| 1.6 (77 kw) | 2003.12-2006.08 | AT/MT | F | L/R | MPV FWD GA6D | Date to:2011.12 | GCO27032 | Outer Joint | 46T | 28 | 22 | 56 | 89.7 | 55.5 | M |
| | 2003.12-2006.08 | | F | L/R | MPV FWD GA6D | | GCI27004 | Inner Joint | | 28 | 22 | 43 | | 107 | |
| 1.6 (93 kw) | 2009.06-2013.03 | 5MT | F | L | MPV FWD G4FC | | GDS56810 | Drive Shaft | 48T | 27 | 28 | 62 | 94.5 | 671 | |
| | 2009.06-2013.03 | 5MT | F | R | MPV FWD G4FC | | GDS24417 | Drive Shaft | 48T | 27 | 28 | 62 | 94.5 | 975 | |
| | 2009.06-2013.03 | 5MT | F | L/R | MPV FWD G4FC | | GCO24156 | Outer Joint | 48T | 27 | 25 | 62 | 94.5 | 70 | M |
| | 2009.06-2013.03 | 5MT | F | L | MPV FWD G4FC | | GCI27057 | Inner Joint | | 28 | 25 | 41 | 61.5 | 107 | |
| 1.6 (97 kw) | 2009.08-2013.03 | 5MT | F | L | MPV FWD G4FC | | GDS56810 | Drive Shaft | 48T | 27 | 28 | 62 | 94.5 | 671 | |
| | 2009.08-2013.03 | 5MT | F | R | MPV FWD G4FC | | GDS24417 | Drive Shaft | 48T | 27 | 28 | 62 | 94.5 | 975 | |
| | 2009.08-2013.03 | 5MT | F | L/R | MPV FWD G4FC | | GCO24156 | Outer Joint | 48T | 27 | 25 | 62 | 94.5 | 70 | M |
| | 2009.08-2013.03 | 5MT | F | L | MPV FWD G4FC | | GCI27057 | Inner Joint | | 28 | 25 | 41 | 61.5 | 107 | |
| 1.6 (99 kw) | 2013.03-2016.08 | 6AT | F | L | MPV FWD G4FD | | GDS81206 | Drive Shaft | 48T | 27 | 27 | 62 | 92.5 | 668 | |
| | 2013.03-2016.08 | 6AT | F | R | MPV FWD G4FD | | GDS81209 | Drive Shaft | 48T | 27 | 27 | 62 | 92.5 | 956 | |
| | 2013.03-2016.08 | 6MT | F | L | MPV FWD G4FD | | GDS81210 | Drive Shaft | 48T | 27 | 27 | 62 | 92.5 | 682 | |
| | 2013.03-2016.08 | MT | F | L | MPV FWD G4FD | | GCO81069 | Outer Joint | 48T | 27 | 23 | 62 | 92.5 | 59.5 | M |
| | 2013.03-2016.08 | MT | F | L | MPV FWD G4FD | | GCI81112 | Inner Joint | | 27 | 23 | 30 | 67 | 84 | |
| 1.7 (85 kw) | 2013.03-2018.08 | 6AT/6MT | F | R | MPV FWD D4FD | | GDS81208 | Drive Shaft | 48T | 27 | 28 | 62 | 92.5 | 956 | |
| | 2013.03-2018.08 | 6AT/6MT | F | R | MPV FWD D4FD | | GCO24138 | Outer Joint | 48T | 27 | 25 | 62 | 92.5 | 61 | M |
| | 2013.03-2018.08 | 6AT/6MT | F | R | MPV FWD D4FD | | GCI24159 | Inner Joint | | 28 | 25 | 33 | 67 | 84 | |
| 1.7 (100 kw) | 2013.03-2016.08 | 6AT | F | L | MPV FWD D4FD | | GDS24340 | Drive Shaft | 48T | 27 | 28 | 62 | 92.5 | 672 | |
| | 2013.03-2016.08 | 6AT | F | R | MPV FWD D4FD | | GDS81208 | Drive Shaft | 48T | 27 | 28 | 62 | 92.5 | 956 | |
| | 2013.03-2016.08 | 6AT | F | L/R | MPV FWD D4FD | | GCO24138 | Outer Joint | 48T | 27 | 25 | 62 | 92.5 | 61 | M |
| | 2013.03-2016.08 | 6AT | F | R | MPV FWD D4FD | | GCI24159 | Inner Joint | | 28 | 25 | 33 | 67 | 84 | |
| | 2015.04-2016.08 | 6AT | F | L | Box Body/MPV FWD D4FD | | GDS24340 | Drive Shaft | 48T | 27 | 28 | 62 | 92.5 | 672 | |
| | 2015.04-2016.08 | 6AT | F | R | Box Body/MPV FWD D4FD | | GDS81208 | Drive Shaft | 48T | 27 | 28 | 62 | 92.5 | 956 | |
| | 2015.04-2016.08 | 6AT | F | R | Box Body/MPV FWD D4FD | | GCO24138 | Outer Joint | 48T | 27 | 25 | 62 | 92.5 | 61 | M |
| | 2015.04-2016.08 | 6AT | F | R | Box Body/MPV FWD D4FD | | GCI24159 | Inner Joint | | 28 | 25 | 33 | 67 | 84 | |
| 1.8 (81 kw) | 2000.03-2002.10 | 5MT | F | L | MPV FWD T8D | | GDS27071 | Drive Shaft | 46T | 28 | 24 | 56 | 90 | 624 | |
| | 2000.03-2002.10 | 5MT | F | R | MPV FWD T8D | | GDS27070 | Drive Shaft | 46T | 28 | 28 | 56 | 90 | 618.5 | |
| | 2000.03-2002.10 | 5MT | F | R | MPV FWD T8D | | GCI27002 | Inner Joint | | 28 | 24 | 43 | | 123.6 | |
| | 2000.03-2002.10 | | F | R | MPV FWD T8D | | GCO27010 | Outer Joint | | 28 | 24 | 56 | 90 | 60 | M |
| | 2000.03-2002.10 | | F | | MPV FWD T8D | | GCO27029 | Outer Joint | 46T | 28 | 24 | 56 | 90 | 60 | M |
| 2.0 (83 kw) | 2002.07-2006.04 | MT | F | L | MPV FWD D4EA | | GDS27071 | Drive Shaft | 46T | 28 | 24 | 56 | 90 | 624 | |
| | 2002.07-2006.04 | MT | F | R | MPV FWD D4EA | | GDS27098 | Drive Shaft | 46T | 28 | 27 | 56 | 90 | 908 | |
| | 2002.07-2006.04 | MT | F | L/R | MPV FWD D4EA | | GCO27010 | Outer Joint | | 28 | 24 | 56 | 90 | 60 | M |
| | 2002.07-2006.04 | MT | F | L/R | MPV FWD D4EA | | GCO27029 | Outer Joint | 46T | 28 | 24 | 56 | 90 | 60 | M |
| 2.0 (85 kw) | 2007.05-2013.03 | 5MT | F | L | MPV FWD D4EA | Date to:2007.11,For right-hand drive vehicles | GDS56810 | Drive Shaft | 48T | 27 | 28 | 62 | 94.5 | 671 | |
| | 2007.05-2013.03 | 5MT | F | L/R | MPV FWD D4EA | | GCO24156 | Outer Joint | 48T | 27 | 25 | 62 | 94.5 | 70 | M |
| | 2007.05-2013.03 | 5MT | F | L | MPV FWD D4EA | Date to:2007.11,For right-hand drive vehicles | GCI27057 | Inner Joint | | 28 | 25 | 41 | 61.5 | 107 | |
| 2.0 (100 kw) | 2006.09-2008.12 | 4AT/5MT | F | L | MPV FWD G4KA | Date to:2007.11 | GDS27111 | Drive Shaft | 48T | 27 | 27 | 62.1 | 95 | 688 | |
| | 2006.09-2008.12 | 4AT/5MT | F | R | MPV FWD G4KA | | GDS27102 | Drive Shaft | 48T | 27 | 27 | 62.1 | 95 | 957 | |
| | 2009.08-2013.03 | 4AT/6MT | F | L | MPV FWD D4EA | Date to:2007.11 | GDS27111 | Drive Shaft | 48T | 27 | 27 | 62.1 | 95 | 688 | |
| | 2009.08-2013.03 | 4AT/6MT | F | R | MPV FWD D4EA | | GDS27102 | Drive Shaft | 48T | 27 | 27 | 62.1 | 95 | 957 | |
| | 2009.08-2013.03 | | F | R | MPV FWD D4EA | Date From:2007.12 | GCO27067 | Outer Joint | 48T | 27 | 24 | 62.1 | 95 | 63 | M |
| 2.0 (102 kw) | 2003.05-2007.05 | MT | F | R | MPV FWD G4GC | | GDS27070 | Drive Shaft | 46T | 28 | 28 | 56 | 90 | 618.5 | |
| | 2003.05-2007.05 | MT | F | R | MPV FWD G4GC | | GDS27098 | Drive Shaft | 46T | 28 | 27 | 56 | 90 | 908 | |
| | 2003.05-2007.05 | MT | F | L/R | MPV FWD G4GC | | GCO27010 | Outer Joint | | 28 | 24 | 56 | 90 | 60 | M |
| | 2003.05-2007.05 | | F | | MPV FWD G4GC | | GCO27029 | Outer Joint | 46T | 28 | 24 | 56 | 90 | 60 | M |
| 2.0 (103 kw) | 2005.11-2006.04 | 4AT/6MT | F | L/R | MPV FWD D4EA | | GCO27010 | Outer Joint | | 28 | 24 | 56 | 90 | 60 | M |
| | 2006.09-2013.03 | 4AT/6MT | F | L | MPV FWD D4EA | Date to:2008.02 | GDS27111 | Drive Shaft | 48T | 27 | 27 | 62.1 | 95 | 688 | |
| | 2006.09-2013.03 | 4AT/6MT | F | R | MPV FWD D4EA | | GDS27102 | Drive Shaft | 48T | 27 | 27 | 62.1 | 95 | 957 | |
| | 2006.09-2013.03 | 4AT/6MT | F | L/R | MPV FWD D4EA | | GCO27067 | Outer Joint | 48T | 27 | 24 | 62.1 | 95 | 63 | M |
| | 2006.09-2013.03 | AT/MT | F | L/R | MPV FWD D4EA | | GCO24090 | Outer Joint | 48T | 27 | 25 | 61.9 | 95 | 61 | M |
| 2.0 (104 kw) | 2009.01-2013.03 | 4AT/5MT | F | R | MPV FWD G4KA | | GDS27102 | Drive Shaft | 48T | 27 | 27 | 62.1 | 95 | 957 | |
| 2.0 (106 kw) | 2006.09-2013.06 | 5MT | F | L | MPV FWD G4KA | Date to:2007.11 | GDS27111 | Drive Shaft | 48T | 27 | 27 | 62.1 | 95 | 688 | |
| | 2006.09-2013.06 | 5MT | F | R | MPV FWD G4KA | | GDS27102 | Drive Shaft | 48T | 27 | 27 | 62.1 | 95 | 957 | |
| | 2006.09-2013.06 | AT/MT | F | L/R | MPV FWD G4KA | | GCO27067 | Outer Joint | 48T | 27 | 24 | 62.1 | 95 | 63 | M |
| | 2006.09-2013.06 | MT | F | L/R | MPV FWD G4KA | | GCI27031 | Inner Joint | | 27 | 24 | 41 | 61.5 | 100 | |
| 2.0 (110 kw) | 2013.03-2016.08 | 6AT | F | L | MPV FWD | | GDS24262 | Drive Shaft | 48T | 27 | 27 | 62 | 92.5 | 672 | |
| | 2013.03-2016.08 | 6AT | F | R | MPV FWD | | GDS24391 | Drive Shaft | 48T | 27 | 27 | 62 | 92.5 | 959 | |

| | YEAR | TRANSM. | F/R | L/R | BODY STYLE & DRIVE TYPE & ENGINE | REMARKS | G-AP Ref. | PRODUCT | ABS | Technical Specifications A | B | C | H | L | P |
|---|---|---|---|---|---|---|---|---|---|---|---|---|---|---|---|
| **KIA** | | | | | | | | | | | | | | | |
| **Carens** | | | | | | | | | | | | | | | |
| 2.0 (110 kw) | 2013.03-2016.08 | MT | F | L | MPV FWD | | GDS81210 | Drive Shaft | 48T | 27 | 27 | 62 | 92.5 | 682 | |
| | 2013.03-2016.08 | MT | F | R | MPV FWD | | GDS81207 | Drive Shaft | 48T | 27 | 27 | 62 | 92.5 | 968 | |
| | 2013.03-2016.08 | MT | F | R | MPV FWD | | GCO24138 | Outer Joint | 48T | 27 | 25 | 62 | 92.5 | 61 | M |
| | 2013.03-2016.08 | MT | F | L/R | MPV FWD | | GCI81103 | Inner Joint | | 27 | 25 | 41 | 61.5 | 91.5 | |
| 2.0 (121 kw) | 2016.06-2016.08 | 6AT | F | L | MPV FWD G4NC | | GDS24262 | Drive Shaft | 48T | 27 | 27 | 62 | 92.5 | 672 | |
| | 2016.06-2016.08 | 6AT | F | R | MPV FWD G4NC | | GDS24391 | Drive Shaft | 48T | 27 | 27 | 62 | 92.5 | 959 | |
| 2.0 (122 kw) | 2013.03-2016.08 | 6AT | F | L | MPV FWD G4NC | | GDS24262 | Drive Shaft | 48T | 27 | 27 | 62 | 92.5 | 672 | |
| | 2013.03-2016.08 | 6AT | F | R | MPV FWD G4NC | | GDS24391 | Drive Shaft | 48T | 27 | 27 | 62 | 92.5 | 959 | |
| | 2013.03-2016.08 | MT | F | L | MPV FWD G4NC | | GDS81210 | Drive Shaft | 48T | 27 | 27 | 62 | 92.5 | 682 | |
| | 2013.03-2016.08 | MT | F | R | MPV FWD G4NC | | GDS81207 | Drive Shaft | 48T | 27 | 27 | 62 | 92.5 | 968 | |
| | 2013.03-2016.08 | MT | F | L/R | MPV FWD G4NC | | GCO24138 | Outer Joint | 48T | 27 | 25 | 62 | 92.5 | 61 | M |
| | 2013.03-2016.08 | MT | F | L/R | MPV FWD G4NC | | GCI81103 | Inner Joint | | 27 | 25 | 41 | 61.5 | 91.5 | |
| **Carnival** | | | | | | | | | | | | | | | |
| 2.2 (110 kw) | 2010.01-2015.06 | AT | F | L | MPV FWD D4HB | | GDS83201 | Drive Shaft | 54T | 31 | 31 | 56 | 102 | 703 | |
| | 2010.01-2015.06 | AT | F | R | MPV FWD D4HB | | GDS83203 | Drive Shaft | 54T | 31 | 28 | 56 | 102 | 645 | |
| | 2010.01-2015.06 | AT | F | L | MPV FWD D4HB | | GCI81443 | Inner Joint | | 31 | 26 | 36 | 66.5 | 99.5 | |
| | 2010.01-2015.06 | AT | F | R | MPV FWD D4HB | | GCI81646 | Inner Joint | | 28 | 26 | 44 | | 122.5 | |
| | 2010.01-2015.06 | AT/MT | F | L/R | MPV FWD D4HB | | GCO27075 | Outer Joint | 54T | 31 | 26 | 56 | 102 | 66 | M |
| | 2010.01-2015.06 | MT | F | L | MPV FWD D4HB | | GDS81759 | Drive Shaft | 54T | 31 | 28 | 56 | 102 | 705 | |
| 2.5 (110 kw) | 2001.10-2006.06 | AT | F | L | MPV FWD K5 | | GDS27020 | Drive Shaft | | 28 | 27 | 56 | 102 | 715 | |
| | 2001.10-2006.06 | AT | F | L | MPV FWD K5 | | GDS27037 | Drive Shaft | 54T | 28 | 34 | 56 | 102 | 732 | |
| | 2001.10-2006.06 | AT | F | R | MPV FWD K5 | | GDS27018 | Drive Shaft | | 28 | 28 | 56 | 102 | 657 | |
| | 2001.10-2006.06 | AT | F | R | MPV FWD K5 | | GDS27019 | Drive Shaft | 54T | 28 | 28 | 56 | 102 | 657 | |
| | 2001.10-2006.06 | AT | F | L | MPV FWD K5 | Trans. code:HMC | GCO27062 | Outer Joint | 54T | 28 | 24 | 56 | 102 | 60 | M |
| | 2001.10-2006.06 | AT | F | R | MPV FWD K5 | Trans. code:KMC | GCO27031 | Outer Joint | 54T | 28 | 24 | 56 | 102 | 60 | M |
| | 2001.10-2006.06 | MT | F | L | MPV FWD K5 | | GDS27079 | Drive Shaft | | 28 | 28 | 56 | 102.5 | 722 | |
| | 2001.10-2006.06 | MT | F | L | MPV FWD K5 | | GDS27138 | Drive Shaft | 54T | 28 | 28 | 56 | 102.5 | 722 | |
| | 2001.10-2006.06 | MT | F | R | MPV FWD K5 | | GDS27078 | Drive Shaft | | 28 | 28 | 56 | 102.5 | 668 | |
| | 2001.10-2006.06 | MT | F | L/R | MPV FWD K5 | | GCO27053 | Outer Joint | | 28 | 26 | 56 | 102.5 | 66 | M |
| | 2001.10-2006.06 | MT | F | L/R | MPV FWD K5 | | GCO27059 | Outer Joint | 54T | 28 | 26 | 56 | 102.5 | 66 | M |
| | 2001.10-2006.06 | MT | F | L | MPV FWD K5 | | GCI82287 | Inner Joint | | 28 | 26 | 35 | 68 | 102 | |
| | 2001.10-2006.06 | MT | F | R | MPV FWD K5 | | GCI27013 | Inner Joint | | 28 | 26 | 43 | | 116 | |
| 2.5 (121 kw) | 1999.08-2001.10 | AT | F | L | MPV FWD KV6 | | GDS27020 | Drive Shaft | | 28 | 27 | 56 | 102 | 715 | |
| | 1999.08-2001.10 | AT | F | L | MPV FWD KV6 | | GDS27037 | Drive Shaft | 54T | 28 | 34 | 56 | 102 | 732 | |
| | 1999.08-2001.10 | AT | F | R | MPV FWD KV6 | | GDS27018 | Drive Shaft | | 28 | 28 | 56 | 102 | 657 | |
| | 1999.08-2001.10 | AT | F | R | MPV FWD KV6 | | GDS27019 | Drive Shaft | 54T | 28 | 28 | 56 | 102 | 657 | |
| | 1999.08-2001.10 | AT | F | L | MPV FWD KV6 | Trans. code:HMC | GCO27062 | Outer Joint | 54T | 28 | 24 | 56 | 102 | 60 | M |
| | 1999.08-2001.10 | AT | F | R | MPV FWD KV6 | Trans. code:HMC | GCO27031 | Outer Joint | 54T | 28 | 24 | 56 | 102 | 60 | M |
| | 1999.08-2001.10 | AT | F | L/R | MPV FWD KV6 | Trans. code:KMC | GCO27031 | Outer Joint | 54T | 28 | 24 | 56 | 102 | 60 | M |
| | 1999.08-2001.10 | MT | F | L | MPV FWD KV6 | | GDS27079 | Drive Shaft | | 28 | 28 | 56 | 102.5 | 722 | |
| | 1999.08-2001.10 | MT | F | L | MPV FWD KV6 | | GDS27138 | Drive Shaft | 54T | 28 | 28 | 56 | 102.5 | 722 | |
| | 1999.08-2001.10 | MT | F | R | MPV FWD KV6 | | GDS27078 | Drive Shaft | | 28 | 28 | 56 | 102.5 | 668 | |
| | 1999.08-2001.10 | MT | F | L/R | MPV FWD KV6 | | GCO27053 | Outer Joint | | 28 | 26 | 56 | 102.5 | 66 | M |
| | 1999.08-2001.10 | MT | F | L/R | MPV FWD KV6 | | GCO27059 | Outer Joint | 54T | 28 | 26 | 56 | 102.5 | 66 | M |
| | 1999.08-2001.10 | MT | F | L | MPV FWD KV6 | | GCI82287 | Inner Joint | | 28 | 26 | 35 | 68 | 102 | |
| | 1999.08-2001.10 | MT | F | R | MPV FWD KV6 | | GCI27013 | Inner Joint | | 28 | 26 | 43 | | 116 | |
| 2.9 (93 kw) | 1999.01-2001.10 | 4AT/5MT | F | L/R | MPV FWD J3 | | GCO27053 | Outer Joint | | 28 | 26 | 56 | 102.5 | 66 | M |
| | 1999.01-2001.10 | AT | F | L | MPV FWD J3 | Date to:2004.05 | GDS27099 | Drive Shaft | 54T | 28 | 28 | 56 | 102.5 | 624 | |
| | 1999.01-2001.10 | AT | F | R | MPV FWD J3 | | GDS27096 | Drive Shaft | 54T | 28 | 28 | 56 | 102.5 | 549 | |
| | 1999.01-2001.10 | AT/MT | F | L/R | MPV FWD J3 | | GCO27059 | Outer Joint | 54T | 28 | 26 | 56 | 102.5 | 66 | M |
| | 1999.01-2001.10 | MT | F | L | MPV FWD J3 | | GDS27097 | Drive Shaft | 54T | 28 | 28 | 56 | 102.5 | 650 | |
| | 1999.01-2001.10 | MT | F | R | MPV FWD J3 | | GDS34166 | Drive Shaft | 54T | 28 | 28 | 56 | 102.5 | 596 | |
| | 1999.01-2001.10 | MT | F | L/R | MPV FWD J3 | | GCO27030 | Outer Joint | 54T | 28 | 26 | 56 | 102.5 | 66 | M |
| | 1999.01-2001.10 | MT | F | L | MPV FWD J3 | | GCI82287 | Inner Joint | | 28 | 26 | 35 | 68 | 102 | |
| | 1999.01-2001.10 | MT | F | R | MPV FWD J3 | | GCI27013 | Inner Joint | | 28 | 26 | 43 | | 116 | |
| 2.9 (106 kw) | 2001.10-2006.06 | AT | F | L | MPV FWD J3(CRDi) | Date to:2004.05 | GDS27099 | Drive Shaft | 54T | 28 | 28 | 56 | 102.5 | 624 | |
| | 2001.10-2006.06 | AT | F | R | MPV FWD J3(CRDi) | | GDS27096 | Drive Shaft | 54T | 28 | 28 | 56 | 102.5 | 549 | |
| | 2001.10-2006.06 | AT | F | L | MPV FWD J3(CRDi) | | GCO27053 | Outer Joint | | 28 | 26 | 56 | 102.5 | 66 | M |
| | 2001.10-2006.06 | AT/MT | F | L/R | MPV FWD J3(CRDi) | | GCO27059 | Outer Joint | 54T | 28 | 26 | 56 | 102.5 | 66 | M |
| | 2001.10-2006.06 | MT | F | L | MPV FWD J3(CRDi) | | GDS27097 | Drive Shaft | 54T | 28 | 28 | 56 | 102.5 | 650 | |
| | 2001.10-2006.06 | MT | F | R | MPV FWD J3(CRDi) | | GDS34166 | Drive Shaft | 54T | 28 | 28 | 56 | 102.5 | 596 | |
| | 2001.10-2006.06 | MT | F | L/R | MPV FWD J3(CRDi) | | GCO27030 | Outer Joint | 54T | 28 | 26 | 56 | 102.5 | 66 | M |
| | 2001.10-2006.06 | MT | F | L | MPV FWD J3(CRDi) | | GCI82287 | Inner Joint | | 28 | 26 | 35 | 68 | 102 | |
| | 2001.10-2006.06 | MT | F | R | MPV FWD J3(CRDi) | | GCI27013 | Inner Joint | | 28 | 26 | 43 | | 116 | |
| 2.9 (141 kw) | 2006.09-2015.06 | 5AT | F | L | MPV FWD J3(CRDi) | | GDS84348 | Drive Shaft | 54T | 31 | 28 | 56 | 102 | 661 | |

| | YEAR | TRANSM. | F/R | L/R | BODY STYLE & DRIVE TYPE & ENGINE | REMARKS | G-AP Ref. | PRODUCT | ABS | Technical Specifications A | B | C | H | L | P |
|---|---|---|---|---|---|---|---|---|---|---|---|---|---|---|---|
| **KIA** | | | | | | | | | | | | | | | |
| **Carnival** | | | | | | | | | | | | | | | |
| 2.9 (141 kw) | 2006.09-2015.06 | 5AT | F | R | MPV FWD J3(CRDi) | | GDS84349 | Drive Shaft | 54T | 31 | 28 | 56 | 102 | 550 | |
| | 2006.09-2015.06 | 5AT | F | L/R | MPV FWD J3(CRDi) | | GCO82792 | Outer Joint | 54T | 31 | 26 | 56 | 102 | 66 | M |
| | 2006.09-2015.06 | 5AT | F | L | MPV FWD J3(CRDi) | | GCI82721 | Inner Joint | | 28 | 25 | 41 | 72 | 104 | |
| | 2006.09-2015.06 | 5AT | F | R | MPV FWD J3(CRDi) | | GCI81891 | Inner Joint | | 28 | 25 | 42 | | 121 | |
| | 2006.09-2015.06 | MT | F | L/R | MPV FWD J3(CRDi) | | GCO34128 | Outer Joint | 54T | 31 | 28 | 56 | 102 | 69.5 | M |
| 3.5 (143 kw) | 2002.07-2006.04 | AT/MT | F | L/R | MPV FWD G6CU | | GCO27059 | Outer Joint | 54T | 28 | 26 | 56 | 102.5 | 66 | M |
| 3.8 (195 kw) | 2005.09-2015.06 | 5AT | F | L/R | MPV FWD G6DA | Model year from:2005,Model year to:2006 | GCO27075 | Outer Joint | 54T | 31 | 26 | 56 | 102 | 66 | M |
| **Carnival/Grand Carnival** | | | | | | | | | | | | | | | |
| 2.2 (143 kw) | 2010.01-2015.06 | AT | F | L | MPV FWD D4HB | | GDS83201 | Drive Shaft | 54T | 31 | 31 | 56 | 102 | 703 | |
| | 2010.01-2015.06 | AT | F | R | MPV FWD D4HB | | GDS83203 | Drive Shaft | 54T | 31 | 28 | 56 | 102 | 645 | |
| | 2010.01-2015.06 | AT | F | L | MPV FWD D4HB | | GCI81443 | Inner Joint | | 31 | 26 | 36 | 66.5 | 99.5 | |
| | 2010.01-2015.06 | AT | F | R | MPV FWD D4HB | | GCI81646 | Inner Joint | | 28 | 26 | 44 | | 122.5 | |
| | 2010.01-2015.06 | AT/MT | F | L/R | MPV FWD D4HB | | GCO27075 | Outer Joint | 54T | 31 | 26 | 56 | 102 | 66 | M |
| | 2010.01-2015.06 | MT | F | L | MPV FWD D4HB | | GDS81759 | Drive Shaft | 54T | 31 | 28 | 56 | 102 | 705 | |
| 2.7 (139 kw) | 2006.06-2015.06 | 4AT | F | L | MPV FWD G6EA | | GCI27020 | Inner Joint | | 27 | 25 | 41 | 62 | 100.5 | |
| | 2006.06-2015.06 | 4AT | F | R | MPV FWD G6EA | | GCI81891 | Inner Joint | | 28 | 25 | 42 | | 121 | |
| | 2006.06-2015.06 | AT | F | L | MPV FWD G6EA | | GDS27114 | Drive Shaft | 54T | 31 | 27 | 56 | 102 | 720 | |
| | 2006.06-2015.06 | AT | F | R | MPV FWD G6EA | | GDS27115 | Drive Shaft | 54T | 31 | 28 | 56 | 102 | 663 | |
| | 2006.06-2015.06 | AT | F | L/R | MPV FWD G6EA | | GCO27075 | Outer Joint | 54T | 31 | 26 | 56 | 102 | 66 | M |
| | 2006.06-2015.06 | MT | F | R | MPV FWD G6EA | | GDS99278 | Drive Shaft | 54T | 31 | 28 | 56 | 102 | 554 | |
| | 2006.06-2015.06 | MT | F | L/R | MPV FWD G6EA | | GCO34128 | Outer Joint | 54T | 31 | 28 | 56 | 102 | 69.5 | M |
| 2.9 (136 kw) | 2006.04-2015.06 | AT | F | L/R | MPV FWD J3(CRDi) | | GCO27075 | Outer Joint | 54T | 31 | 26 | 56 | 102 | 66 | M |
| | 2006.04-2015.06 | AT/MT | F | L | MPV FWD J3(CRDi) | | GDS34210 | Drive Shaft | 54T | 31 | 28 | 56 | 102 | 661 | |
| | 2006.04-2015.06 | MT | F | R | MPV FWD J3(CRDi) | | GDS99278 | Drive Shaft | 54T | 31 | 28 | 56 | 102 | 554 | |
| | 2006.04-2015.06 | MT | F | L/R | MPV FWD J3(CRDi) | | GCO34128 | Outer Joint | 54T | 31 | 28 | 56 | 102 | 69.5 | M |
| **Ceed** | | | | | | | | | | | | | | | |
| 1.0 (74 kw) | 2019.09- | 6MT | F | L | Estate FWD G3LC;G3LE | | GDS84378 | Drive Shaft | | 27 | 25 | 60 | 95 | 723 | |
| | 2019.09- | 6MT | F | R | Estate FWD G3LC;G3LE | | GDS84373 | Drive Shaft | | 27 | 25 | 60 | 95 | 939 | |
| | 2019.09- | 6MT | F | L/R | Estate FWD G3LC;G3LE | | GCO82724 | Outer Joint | | 27 | 23 | 60 | 95 | 58 | M |
| | 2019.09- | 6MT | F | L/R | Estate FWD G3LC;G3LE | | GCI81749 | Inner Joint | | 25 | 31 | 41 | 63 | 90 | |
| | 2019.09- | 6MT | F | L | Hatchback FWD G3LC;G3LE | | GDS84378 | Drive Shaft | | 27 | 25 | 60 | 95 | 723 | |
| | 2019.09- | 6MT | F | R | Hatchback FWD G3LC;G3LE | | GDS84373 | Drive Shaft | | 27 | 25 | 60 | 95 | 939 | |
| | 2019.09- | 6MT | F | L/R | Hatchback FWD G3LC;G3LE | | GCO82724 | Outer Joint | | 27 | 23 | 60 | 95 | 58 | M |
| | 2019.09- | 6MT | F | L/R | Hatchback FWD G3LC;G3LE | | GCI81749 | Inner Joint | | 25 | 31 | 41 | 63 | 90 | |
| | 2021.01- | 6MT | F | L | Hatchback FWD G3LF | | GDS84378 | Drive Shaft | | 27 | 25 | 60 | 95 | 723 | |
| | 2021.01- | 6MT | F | R | Hatchback FWD G3LF | | GDS84373 | Drive Shaft | | 27 | 25 | 60 | 95 | 939 | |
| | 2021.01- | 6MT | F | L/R | Hatchback FWD G3LF | | GCI81749 | Inner Joint | | 25 | 31 | 41 | 63 | 90 | |
| | 2021.01- | 7DCT | F | L | Hatchback FWD G3LF | | GDS58130 | Drive Shaft | | 27 | 27 | 60 | 95 | 690 | |
| | 2021.01- | 7DCT | F | R | Hatchback FWD G3LF | | GDS58131 | Drive Shaft | | 27 | 27 | 60 | 95 | 939 | |
| | 2021.01- | 7DCT | F | L/R | Hatchback FWD G3LF | | GCO83450 | Outer Joint | | 27 | 23 | 60 | 95 | 58 | M |
| | 2021.01- | 7DCT | F | L/R | Hatchback FWD G3LF | | GCI82352 | Inner Joint | | 27 | 31 | 30 | 67.5 | 81 | |
| | 2022.04- | 6MT | F | L | Estate FWD G3LF | | GDS84378 | Drive Shaft | | 27 | 25 | 60 | 95 | 723 | |
| | 2022.04- | 6MT | F | R | Estate FWD G3LF | | GDS84373 | Drive Shaft | | 27 | 25 | 60 | 95 | 939 | |
| | 2022.04- | 6MT | F | L/R | Estate FWD G3LF | | GCI81749 | Inner Joint | | 25 | 31 | 41 | 63 | 90 | |
| | 2022.04- | 7DCT | F | L | Estate FWD G3LF | | GDS58130 | Drive Shaft | | 27 | 27 | 60 | 95 | 690 | |
| | 2022.04- | 7DCT | F | R | Estate FWD G3LF | | GDS58131 | Drive Shaft | | 27 | 27 | 60 | 95 | 939 | |
| | 2022.04- | 7DCT | F | L/R | Estate FWD G3LF | | GCO83450 | Outer Joint | | 27 | 23 | 60 | 95 | 58 | M |
| | 2022.04- | 7DCT | F | L/R | Estate FWD G3LF | | GCI82352 | Inner Joint | | 27 | 31 | 30 | 67.5 | 81 | |
| 1.0 (88 kw) | 2018.03- | 6MT | F | L | Hatchback FWD G3LC;G3LE | | GDS84378 | Drive Shaft | | 27 | 25 | 60 | 95 | 723 | |
| | 2018.03- | 6MT | F | R | Hatchback FWD G3LC;G3LE | | GDS84373 | Drive Shaft | | 27 | 25 | 60 | 95 | 939 | |
| | 2018.03- | 6MT | F | L/R | Hatchback FWD G3LC;G3LE | | GCO82724 | Outer Joint | | 27 | 23 | 60 | 95 | 58 | M |
| | 2018.03- | 6MT | F | L/R | Hatchback FWD G3LC;G3LE | | GCI81749 | Inner Joint | | 25 | 31 | 41 | 63 | 90 | |
| | 2018.03- | 6MT | F | L | Hatchback Van FWD G3LC | | GDS84378 | Drive Shaft | | 27 | 25 | 60 | 95 | 723 | |
| | 2018.03- | 6MT | F | R | Hatchback Van FWD G3LC | | GDS84373 | Drive Shaft | | 27 | 25 | 60 | 95 | 939 | |
| | 2018.03- | 6MT | F | L/R | Hatchback Van FWD G3LC | | GCO82724 | Outer Joint | | 27 | 23 | 60 | 95 | 58 | M |
| | 2018.03- | 6MT | F | L/R | Hatchback Van FWD G3LC | | GCI81749 | Inner Joint | | 25 | 31 | 41 | 63 | 90 | |
| | 2018.05- | 6MT | F | L | Estate FWD G3LC;G3LE | | GDS84378 | Drive Shaft | | 27 | 25 | 60 | 95 | 723 | |
| | 2018.05- | 6MT | F | R | Estate FWD G3LC;G3LE | | GDS84373 | Drive Shaft | | 27 | 25 | 60 | 95 | 939 | |
| | 2018.05- | 6MT | F | L/R | Estate FWD G3LC;G3LE | | GCO82724 | Outer Joint | | 27 | 23 | 60 | 95 | 58 | M |
| | 2018.05- | 6MT | F | L/R | Estate FWD G3LC;G3LE | | GCI81749 | Inner Joint | | 25 | 31 | 41 | 63 | 90 | |
| | 2018.05- | 6MT | F | L | Estate Van FWD G3LC | | GDS84378 | Drive Shaft | | 27 | 25 | 60 | 95 | 723 | |
| | 2018.05- | 6MT | F | R | Estate Van FWD G3LC | | GDS84373 | Drive Shaft | | 27 | 25 | 60 | 95 | 939 | |
| | 2018.05- | 6MT | F | L/R | Estate Van FWD G3LC | | GCO82724 | Outer Joint | | 27 | 23 | 60 | 95 | 58 | M |
| | 2018.05- | 6MT | F | L/R | Estate Van FWD G3LC | | GCI81749 | Inner Joint | | 25 | 31 | 41 | 63 | 90 | |
| | 2021.07- | 6MT | F | L | Estate FWD G3LF | | GDS84378 | Drive Shaft | | 27 | 25 | 60 | 95 | 723 | |

| | YEAR | TRANSM. | F/R | L/R | BODY STYLE & DRIVE TYPE & ENGINE | REMARKS | G-AP Ref. | PRODUCT | ABS | Technical Specifications | | | | | |
|---|---|---|---|---|---|---|---|---|---|---|---|---|---|---|---|
| | | | | | | | | | | A | B | C | H | L | P |
| **KIA** **Ceed** | | | | | | | | | | | | | | | |
| 1.0 (88 kw) | 2021.07- | 6MT | F | R | Estate FWD G3LF | | GDS84373 | Drive Shaft | | 27 | 25 | 60 | 95 | 939 | |
| | 2021.07- | 6MT | F | L/R | Estate FWD G3LF | | GCI81749 | Inner Joint | | 25 | 31 | 41 | 63 | 90 | |
| | 2021.07- | 7DCT | F | L | Estate FWD G3LF | | GDS58130 | Drive Shaft | | 27 | 27 | 60 | 95 | 690 | |
| | 2021.07- | 7DCT | F | R | Estate FWD G3LF | | GDS58131 | Drive Shaft | | 27 | 27 | 60 | 95 | 939 | |
| | 2021.07- | 7DCT | F | L/R | Estate FWD G3LF | | GCO83450 | Outer Joint | | 27 | 23 | 60 | 95 | 58 | M |
| | 2021.07- | 7DCT | F | L/R | Estate FWD G3LF | | GCI82352 | Inner Joint | | 27 | 31 | 30 | 67.5 | 81 | |
| | 2021.10- | 6MT | F | L | Hatchback FWD G3LE | | GDS84378 | Drive Shaft | | 27 | 25 | 60 | 95 | 723 | |
| | 2021.10- | 6MT | F | R | Hatchback FWD G3LE | | GDS84373 | Drive Shaft | | 27 | 25 | 60 | 95 | 939 | |
| | 2021.10- | 6MT | F | L/R | Hatchback FWD G3LE | | GCI81749 | Inner Joint | | 25 | 31 | 41 | 63 | 90 | |
| | 2021.10- | 7DCT | F | L | Hatchback FWD G3LE | | GDS58130 | Drive Shaft | | 27 | 27 | 60 | 95 | 690 | |
| | 2021.10- | 7DCT | F | R | Hatchback FWD G3LE | | GDS58131 | Drive Shaft | | 27 | 27 | 60 | 95 | 939 | |
| | 2021.10- | 7DCT | F | L/R | Hatchback FWD G3LE | | GCO83450 | Outer Joint | | 27 | 23 | 60 | 95 | 58 | M |
| | 2021.10- | 7DCT | F | L/R | Hatchback FWD G3LE | | GCI82352 | Inner Joint | | 27 | 31 | 30 | 67.5 | 81 | |
| 1.4 (64 kw) | 2011.06-2012.04 | | F | L | Estate FWD G4FA | Date From:2010.03 | GCO24095 | Outer Joint | 46T | 27 | 22 | 60 | 94.5 | 58.5 | M |
| | 2011.06-2012.04 | | F | L/R | Estate FWD G4FA | | GCI24039 | Inner Joint | | 25 | 22 | 41 | 61 | 100 | |
| | 2011.06-2012.04 | | F | L | Hatchback FWD G4FA | Date From:2010.03 | GCO24095 | Outer Joint | 46T | 27 | 22 | 60 | 94.5 | 58.5 | M |
| | 2011.06-2012.04 | | F | L/R | Hatchback FWD G4FA | | GCI24039 | Inner Joint | | 25 | 22 | 41 | 61 | 100 | |
| 1.4 (66 kw) | 2009.07-2012.12 | 5MT | F | R | Estate FWD G4FA | | GDS24399 | Drive Shaft | 46T | 27 | 25 | 60 | 94.5 | 939 | |
| | 2009.07-2012.12 | 5MT | F | L/R | Estate FWD G4FA | | GCO24077 | Outer Joint | 46T | 27 | 22 | 60 | 94.5 | 54.5 | M |
| | 2009.07-2012.12 | 5MT | F | L/R | Estate FWD G4FA | Date to:2010.02 | GCO24095 | Outer Joint | 46T | 27 | 22 | 60 | 94.5 | 58.5 | M |
| | 2009.07-2012.12 | 5MT | F | L/R | Estate FWD G4FA | | GCI24039 | Inner Joint | | 25 | 22 | 41 | 61 | 100 | |
| | 2009.08-2012.12 | 5MT | F | R | Hatchback FWD G4FA | Date to:2010.02 | GDS24399 | Drive Shaft | 46T | 27 | 25 | 60 | 94.5 | 939 | |
| | 2009.08-2012.12 | 5MT | F | L/R | Hatchback FWD G4FA | | GCO24095 | Outer Joint | 46T | 27 | 22 | 60 | 94.5 | 58.5 | M |
| | 2009.08-2012.12 | 5MT | F | L/R | Hatchback FWD G4FA | | GCI24039 | Inner Joint | | 25 | 22 | 41 | 61 | 100 | |
| | 2012.05-2018.07 | 6MT | F | L | Hatchback FWD D4FC | Not For facelift | GDS24519 | Drive Shaft | 46T | 27 | 27 | 60 | 95 | 678 | |
| | 2012.05-2018.07 | 6MT | F | R | Hatchback FWD D4FC | Not For facelift | GDS24521 | Drive Shaft | 46T | 27 | 27 | 60 | 95 | 969 | |
| | 2012.05-2018.07 | 6MT | F | L | Hatchback FWD D4FC | | GCI27044 | Inner Joint | | 27 | 24 | 41 | 62.5 | 88.5 | |
| | 2012.05-2018.07 | MT | F | L | Hatchback FWD G4FA | | GDS24548 | Drive Shaft | 46T | 27 | 25 | 60 | 94.5 | 687 | |
| | 2012.05-2018.07 | MT | F | R | Hatchback FWD G4FA | | GDS24398 | Drive Shaft | 46T | 27 | 25 | 60 | 94.5 | 965 | |
| | 2012.05-2018.07 | MT | F | L | Hatchback FWD G4FA | | GCO24132 | Outer Joint | 46T | 27 | 22 | 60 | 94.5 | 54.5 | M |
| | 2012.05-2018.07 | MT | F | L | Hatchback FWD G4FA | | GCI39052 | Inner Joint | | 25 | 22 | 41 | 63 | 86 | |
| | 2012.05-2018.07 | | F | | Hatchback FWD G4FA | | GCO24077 | Outer Joint | 46T | 27 | 22 | 60 | 94.5 | 54.5 | M |
| | 2012.09-2018.07 | 6MT | F | L | Estate FWD D4FC | Not For facelift | GDS24519 | Drive Shaft | 46T | 27 | 27 | 60 | 95 | 678 | |
| | 2012.09-2018.07 | 6MT | F | R | Estate FWD D4FC | Not For facelift | GDS24521 | Drive Shaft | 46T | 27 | 27 | 60 | 95 | 969 | |
| | 2012.09-2018.07 | MT | F | L | Estate FWD D4FC | | GCI27044 | Inner Joint | | 27 | 24 | 41 | 62.5 | 88.5 | |
| | 2015.04-2018.07 | 6MT | F | L | Estate Van FWD D4FC | Not For facelift | GDS24519 | Drive Shaft | 46T | 27 | 27 | 60 | 95 | 678 | |
| | 2015.04-2018.07 | 6MT | F | R | Estate Van FWD D4FC | Not For facelift | GDS24521 | Drive Shaft | 46T | 27 | 27 | 60 | 95 | 969 | |
| | 2015.04-2018.07 | MT | F | L | Estate Van FWD D4FC | | GCI27044 | Inner Joint | | 27 | 24 | 41 | 62.5 | 88.5 | |
| 1.4 (71 kw) | 2018.12-2020.12 | 6MT | F | L | Estate FWD G4LC | | GDS84165 | Drive Shaft | | 27 | 25 | 60 | 94.5 | 703 | |
| | 2018.12-2020.12 | 6MT | F | R | Estate FWD G4LC | | GDS84164 | Drive Shaft | | 27 | 25 | 60 | 94.5 | 952 | |
| | 2018.12-2020.12 | 6MT | F | L/R | Estate FWD G4LC | | GCO24267 | Outer Joint | | 27 | 22 | 60 | 94.5 | 54.5 | M |
| | 2018.12-2020.12 | 6MT | F | L/R | Estate FWD G4LC | | GCI82265 | Inner Joint | | 25 | 30 | 41 | 63 | 88 | |
| | 2018.12-2020.12 | 6MT | F | L | Hatchback FWD G4LC | | GDS84165 | Drive Shaft | | 27 | 25 | 60 | 94.5 | 703 | |
| | 2018.12-2020.12 | 6MT | F | R | Hatchback FWD G4LC | | GDS84164 | Drive Shaft | | 27 | 25 | 60 | 94.5 | 952 | |
| | 2018.12-2020.12 | 6MT | F | L/R | Hatchback FWD G4LC | | GCO24267 | Outer Joint | | 27 | 22 | 60 | 94.5 | 54.5 | M |
| | 2018.12-2020.12 | 6MT | F | L/R | Hatchback FWD G4LC | | GCI82265 | Inner Joint | | 25 | 30 | 41 | 63 | 88 | |
| 1.4 (72 kw) | 2012.05-2018.07 | MT | F | L | Hatchback FWD G4FA | | GDS24548 | Drive Shaft | 46T | 27 | 25 | 60 | 94.5 | 687 | |
| | 2012.05-2018.07 | MT | F | R | Hatchback FWD G4FA | | GDS24398 | Drive Shaft | 46T | 27 | 25 | 60 | 94.5 | 965 | |
| | 2012.05-2018.07 | MT | F | L | Hatchback FWD G4FA | | GCO24132 | Outer Joint | 46T | 27 | 22 | 60 | 94.5 | 54.5 | M |
| | 2012.05-2018.07 | MT | F | L | Hatchback FWD G4FA | | GCI39052 | Inner Joint | | 25 | 22 | 41 | 63 | 86 | |
| | 2013.01-2018.07 | 6MT | F | L | Estate FWD G4FA | | GDS24548 | Drive Shaft | 46T | 27 | 25 | 60 | 94.5 | 687 | |
| | 2013.01-2018.07 | 6MT | F | R | Estate FWD G4FA | | GDS24398 | Drive Shaft | 46T | 27 | 25 | 60 | 94.5 | 965 | |
| | 2013.01-2018.07 | 6MT | F | L | Estate FWD G4FA | | GCO24132 | Outer Joint | 46T | 27 | 22 | 60 | 94.5 | 54.5 | M |
| | 2013.01-2018.07 | 6MT | F | L | Estate FWD G4FA | | GCI39052 | Inner Joint | | 25 | 22 | 41 | 63 | 86 | |
| 1.4 (73 kw) | 2012.05-2018.07 | 6MT | F | L | Hatchback FWD G4FA | | GDS24548 | Drive Shaft | 46T | 27 | 25 | 60 | 94.5 | 687 | |
| | 2012.05-2018.07 | 6MT | F | R | Hatchback FWD G4FA | | GDS24398 | Drive Shaft | 46T | 27 | 25 | 60 | 94.5 | 965 | |
| | 2012.05-2018.07 | 6MT | F | L | Hatchback FWD G4FA | | GCO24132 | Outer Joint | 46T | 27 | 22 | 60 | 94.5 | 54.5 | M |
| | 2012.05-2018.07 | 6MT | F | L/R | Hatchback FWD G4FA | | GCO24077 | Outer Joint | 46T | 27 | 22 | 60 | 94.5 | 54.5 | M |
| | 2012.05-2018.07 | 6MT | F | L | Hatchback FWD G4FA | | GCI39052 | Inner Joint | | 25 | 22 | 41 | 63 | 86 | |
| | 2012.09-2015.07 | 6MT | F | L | Estate FWD G4FA | | GDS24548 | Drive Shaft | 46T | 27 | 25 | 60 | 94.5 | 687 | |
| | 2012.09-2015.07 | 6MT | F | R | Estate FWD G4FA | | GDS24398 | Drive Shaft | 46T | 27 | 25 | 60 | 94.5 | 965 | |
| | 2012.09-2015.07 | 6MT | F | L | Estate FWD G4FA | | GCO24132 | Outer Joint | 46T | 27 | 22 | 60 | 94.5 | 54.5 | M |
| | 2012.09-2015.07 | 6MT | F | L/R | Estate FWD G4FA | | GCO24077 | Outer Joint | 46T | 27 | 22 | 60 | 94.5 | 54.5 | M |
| | 2012.09-2015.07 | 6MT | F | L | Estate FWD G4FA | | GCI39052 | Inner Joint | | 25 | 22 | 41 | 63 | 86 | |
| | 2015.04-2018.07 | MT | F | L | Estate Van FWD G4FA | | GDS24548 | Drive Shaft | 46T | 27 | 25 | 60 | 94.5 | 687 | |

| | YEAR | TRANSM. | F/R | L/R | BODY STYLE & DRIVE TYPE & ENGINE | REMARKS | G-AP Ref. | PRODUCT | ABS | Technical Specifications | | | | | |
|---|---|---|---|---|---|---|---|---|---|---|---|---|---|---|---|
| | | | | | | | | | | A | B | C | H | L | P |
| **KIA** **Ceed** | | | | | | | | | | | | | | | |
| 1.4 (73 kw) | 2015.04-2018.07 | MT | F | R | Estate Van FWD G4FA | | GDS24398 | Drive Shaft | 46T | 27 | 25 | 60 | 94.5 | 965 | |
| | 2015.04-2018.07 | MT | F | L | Estate Van FWD G4FA | | GCO24132 | Outer Joint | 46T | 27 | 22 | 60 | 94.5 | 54.5 | M |
| | 2015.04-2018.07 | MT | F | L | Estate Van FWD G4FA | | GCI39052 | Inner Joint | | 25 | 22 | 41 | 63 | 86 | |
| | 2018.03-2020.12 | 6MT | F | L | Hatchback FWD G4LC | | GDS84165 | Drive Shaft | | 27 | 25 | 60 | 94.5 | 703 | |
| | 2018.03-2020.12 | 6MT | F | R | Hatchback FWD G4LC | | GDS84164 | Drive Shaft | | 27 | 25 | 60 | 94.5 | 952 | |
| | 2018.03-2020.12 | 6MT | F | L/R | Hatchback FWD G4LC | | GCO24267 | Outer Joint | | 27 | 22 | 60 | 94.5 | 54.5 | M |
| | 2018.03-2020.12 | 6MT | F | L/R | Hatchback FWD G4LC | | GCI82265 | Inner Joint | | 25 | 30 | 41 | 63 | 88 | |
| | 2018.04-2020.12 | 6MT | F | L | Estate FWD G4LC | | GDS84165 | Drive Shaft | | 27 | 25 | 60 | 94.5 | 703 | |
| | 2018.04-2020.12 | 6MT | F | R | Estate FWD G4LC | | GDS84164 | Drive Shaft | | 27 | 25 | 60 | 94.5 | 952 | |
| | 2018.04-2020.12 | 6MT | F | L/R | Estate FWD G4LC | | GCO24267 | Outer Joint | | 27 | 22 | 60 | 94.5 | 54.5 | M |
| | 2018.04-2020.12 | 6MT | F | L/R | Estate FWD G4LC | | GCI82265 | Inner Joint | | 25 | 30 | 41 | 63 | 88 | |
| 1.4 (74 kw) | 2015.04-2018.07 | MT | F | L | Estate FWD G4LC | | GDS24548 | Drive Shaft | 46T | 27 | 25 | 60 | 94.5 | 687 | |
| | 2015.04-2018.07 | MT | F | R | Estate FWD G4LC | | GDS24398 | Drive Shaft | 46T | 27 | 25 | 60 | 94.5 | 965 | |
| | 2015.04-2018.07 | MT | F | L | Estate FWD G4LC | | GCO24132 | Outer Joint | 46T | 27 | 22 | 60 | 94.5 | 54.5 | M |
| | 2015.04-2018.07 | MT | F | L | Estate FWD G4LC | | GCI39052 | Inner Joint | | 25 | 22 | 41 | 63 | 86 | |
| | 2015.04-2018.07 | | F | | Estate FWD G4LC | | GCO24077 | Outer Joint | 46T | 27 | 22 | 60 | 94.5 | 54.5 | M |
| | 2015.04-2018.07 | 6MT | F | L | Hatchback FWD G4LC | | GDS24548 | Drive Shaft | 46T | 27 | 25 | 60 | 94.5 | 687 | |
| | 2015.04-2018.07 | 6MT | F | R | Hatchback FWD G4LC | | GDS24398 | Drive Shaft | 46T | 27 | 25 | 60 | 94.5 | 965 | |
| | 2015.04-2018.07 | 6MT | F | L | Hatchback FWD G4LC | | GCO24132 | Outer Joint | 46T | 27 | 22 | 60 | 94.5 | 54.5 | M |
| | 2015.04-2018.07 | 6MT | F | L/R | Hatchback FWD G4LC | | GCO24077 | Outer Joint | 46T | 27 | 22 | 60 | 94.5 | 54.5 | M |
| | 2015.04-2018.07 | 6MT | F | L | Hatchback FWD G4LC | | GCI39052 | Inner Joint | | 25 | 22 | 41 | 63 | 86 | |
| 1.4 (77 kw) | 2006.12-2012.12 | 5MT | F | R | Hatchback FWD G4FA | Date to:2010.02 | GDS24399 | Drive Shaft | 46T | 27 | 25 | 60 | 94.5 | 939 | |
| | 2006.12-2012.12 | 5MT | F | L/R | Hatchback FWD G4FA | | GCI24039 | Inner Joint | | 25 | 22 | 41 | 61 | 100 | |
| | 2006.12-2012.12 | MT | F | L/R | Hatchback FWD G4FA | Date to:2010.02 | GCO24095 | Outer Joint | 46T | 27 | 22 | 60 | 94.5 | 58.5 | M |
| | 2006.12-2012.12 | | F | L/R | Hatchback FWD G4FA | | GCO24077 | Outer Joint | 46T | 27 | 22 | 60 | 94.5 | 54.5 | M |
| | 2010.10-2012.12 | MT | F | R | Estate FWD G4FA | | GDS24399 | Drive Shaft | 46T | 27 | 25 | 60 | 94.5 | 939 | |
| | 2010.10-2012.12 | MT | F | R | Estate FWD G4FA | | GCO24095 | Outer Joint | 46T | 27 | 22 | 60 | 94.5 | 58.5 | M |
| | 2010.10-2012.12 | MT | F | L | Estate FWD G4FA | | GCI24039 | Inner Joint | | 25 | 22 | 41 | 61 | 100 | |
| | 2010.10-2012.12 | | F | | Estate FWD G4FA | | GCO24077 | Outer Joint | 46T | 27 | 22 | 60 | 94.5 | 54.5 | M |
| 1.4 (80 kw) | 2006.12-2012.12 | 5MT | F | R | Hatchback FWD G4FA | Date to:2010.02 | GDS24399 | Drive Shaft | 46T | 27 | 25 | 60 | 94.5 | 939 | |
| | 2006.12-2012.12 | 5MT | F | L/R | Hatchback FWD G4FA | | GCO24095 | Outer Joint | 46T | 27 | 22 | 60 | 94.5 | 58.5 | M |
| | 2006.12-2012.12 | 5MT | F | L/R | Hatchback FWD G4FA | | GCI24039 | Inner Joint | | 25 | 22 | 41 | 61 | 100 | |
| | 2006.12-2012.12 | | F | | Hatchback FWD G4FA | | GCO24077 | Outer Joint | 46T | 27 | 22 | 60 | 94.5 | 54.5 | M |
| | 2007.09-2012.12 | 5MT | F | R | Estate FWD G4FA | Date to:2010.02 | GDS24399 | Drive Shaft | 46T | 27 | 25 | 60 | 94.5 | 939 | |
| | 2007.09-2012.12 | 5MT | F | L/R | Estate FWD G4FA | | GCO24077 | Outer Joint | 46T | 27 | 22 | 60 | 94.5 | 54.5 | M |
| | 2007.09-2012.12 | 5MT | F | L/R | Estate FWD G4FA | | GCO24095 | Outer Joint | 46T | 27 | 22 | 60 | 94.5 | 58.5 | M |
| | 2007.09-2012.12 | 5MT | F | L/R | Estate FWD G4FA | | GCI24039 | Inner Joint | | 25 | 22 | 41 | 61 | 100 | |
| | 2009.01-2010.12 | 5MT | F | L/R | Estate FWD G4FA | Date to:2010.02 | GCO24095 | Outer Joint | 46T | 27 | 22 | 60 | 94.5 | 58.5 | M |
| | 2009.01-2010.12 | | F | R | Estate FWD G4FA | Date To:2010.02 | GDS24399 | Drive Shaft | 46T | 27 | 25 | 60 | 94.5 | 939 | |
| | 2009.01-2010.12 | | F | L/R | Estate FWD G4FA | | GCI24039 | Inner Joint | | 25 | 22 | 41 | 61 | 100 | |
| | 2009.01-2010.12 | 5MT | F | L/R | Hatchback FWD G4FA | Date to:2010.02 | GCO24095 | Outer Joint | 46T | 27 | 22 | 60 | 94.5 | 58.5 | M |
| | 2009.01-2010.12 | | F | R | Hatchback FWD G4FA | Date To:2010.02 | GDS24399 | Drive Shaft | 46T | 27 | 25 | 60 | 94.5 | 939 | |
| | 2009.01-2010.12 | | F | L/R | Hatchback FWD G4FA | | GCI24039 | Inner Joint | | 25 | 22 | 41 | 61 | 100 | |
| 1.4 (103 kw) | 2018.03-2020.12 | 6MT | F | L | Hatchback FWD G4LD | | GDS84377 | Drive Shaft | | 27 | 27 | 60 | 95 | 693 | |
| | 2018.03-2020.12 | 6MT | F | R | Hatchback FWD G4LD | | GDS84376 | Drive Shaft | | 27 | 27 | 60 | 95 | 964 | |
| | 2018.03-2020.12 | 6MT | F | L/R | Hatchback FWD G4LD | | GCI82628 | Inner Joint | | 27 | 31 | 41 | 62 | 86 | |
| | 2018.03-2020.12 | 6MT/7DCT | F | L/R | Hatchback FWD G4LD | | GCO82724 | Outer Joint | | 27 | 23 | 60 | 95 | 58 | M |
| | 2018.03-2020.12 | 7DCT | F | L | Hatchback FWD G4LD | | GDS84407 | Drive Shaft | | 27 | 28 | 60 | 95 | 653 | |
| | 2018.03-2020.12 | 7DCT | F | R | Hatchback FWD G4LD | | GDS84406 | Drive Shaft | | 27 | 28 | 60 | 95 | 996 | |
| | 2018.03-2020.12 | 7DCT | F | L/R | Hatchback FWD G4LD | | GCI82746 | Inner Joint | | 28 | 31 | 41 | 61.5 | 95 | |
| | 2018.03-2020.12 | 6MT | F | L | Hatchback Van FWD G4LD | | GDS84377 | Drive Shaft | | 27 | 27 | 60 | 95 | 693 | |
| | 2018.03-2020.12 | 6MT | F | R | Hatchback Van FWD G4LD | | GDS84376 | Drive Shaft | | 27 | 27 | 60 | 95 | 964 | |
| | 2018.03-2020.12 | 6MT | F | L/R | Hatchback Van FWD G4LD | | GCI82628 | Inner Joint | | 27 | 31 | 41 | 62 | 86 | |
| | 2018.03-2020.12 | 6MT/7DCT | F | L/R | Hatchback Van FWD G4LD | | GCO82724 | Outer Joint | | 27 | 23 | 60 | 95 | 58 | M |
| | 2018.03-2020.12 | 7DCT | F | L | Hatchback Van FWD G4LD | | GDS84407 | Drive Shaft | | 27 | 28 | 60 | 95 | 653 | |
| | 2018.03-2020.12 | 7DCT | F | R | Hatchback Van FWD G4LD | | GDS84406 | Drive Shaft | | 27 | 28 | 60 | 95 | 996 | |
| | 2018.03-2020.12 | 7DCT | F | L/R | Hatchback Van FWD G4LD | | GCI82746 | Inner Joint | | 28 | 31 | 41 | 61.5 | 95 | |
| | 2018.04-2020.12 | 6MT | F | L | Estate FWD G4LD | | GDS84377 | Drive Shaft | | 27 | 27 | 60 | 95 | 693 | |
| | 2018.04-2020.12 | 6MT | F | R | Estate FWD G4LD | | GDS84376 | Drive Shaft | | 27 | 27 | 60 | 95 | 964 | |
| | 2018.04-2020.12 | 6MT | F | L/R | Estate FWD G4LD | | GCI82628 | Inner Joint | | 27 | 31 | 41 | 62 | 86 | |
| | 2018.04-2020.12 | 6MT/7DCT | F | L/R | Estate FWD G4LD | | GCO82724 | Outer Joint | | 27 | 23 | 60 | 95 | 58 | M |
| | 2018.04-2020.12 | 7DCT | F | L | Estate FWD G4LD | | GDS84407 | Drive Shaft | | 27 | 28 | 60 | 95 | 653 | |
| | 2018.04-2020.12 | 7DCT | F | R | Estate FWD G4LD | | GDS84406 | Drive Shaft | | 27 | 28 | 60 | 95 | 996 | |
| | 2018.04-2020.12 | 7DCT | F | L/R | Estate FWD G4LD | | GCI82746 | Inner Joint | | 28 | 31 | 41 | 61.5 | 95 | |
| | 2018.04-2020.12 | 6MT | F | L | Estate Van FWD G4LD | | GDS84377 | Drive Shaft | | 27 | 27 | 60 | 95 | 693 | |

| | YEAR | TRANSM. | F/R | L/R | BODY STYLE & DRIVE TYPE & ENGINE | REMARKS | G-AP Ref. | PRODUCT | ABS | Technical Specifications | | | | | |
|---|---|---|---|---|---|---|---|---|---|---|---|---|---|---|---|
| | | | | | | | | | | A | B | C | H | L | P |
| **KIA** **Ceed** | | | | | | | | | | | | | | | |
| 1.4 (103 kw) | 2018.04-2020.12 | 6MT | F | R | Estate Van FWD G4LD | | GDS84376 | Drive Shaft | | 27 | 27 | 60 | 95 | 964 | |
| | 2018.04-2020.12 | 6MT | F | L/R | Estate Van FWD G4LD | | GCI82628 | Inner Joint | | 27 | 31 | 41 | 62 | 86 | |
| | 2018.04-2020.12 | 6MT/7DCT | F | L/R | Estate Van FWD G4LD | | GCO82724 | Outer Joint | | 27 | 23 | 60 | 95 | 58 | M |
| | 2018.04-2020.12 | 7DCT | F | L | Estate Van FWD G4LD | | GDS84407 | Drive Shaft | | 27 | 28 | 60 | 95 | 653 | |
| | 2018.04-2020.12 | 7DCT | F | R | Estate Van FWD G4LD | | GDS84406 | Drive Shaft | | 27 | 28 | 60 | 95 | 996 | |
| | 2018.04-2020.12 | 7DCT | F | L/R | Estate Van FWD G4LD | | GCI82746 | Inner Joint | | 28 | 31 | 41 | 61.5 | 95 | |
| 1.5 (103 kw) | 2024.02- | 6MT | F | L | Estate FWD G4LH | | GDS84377 | Drive Shaft | | 27 | 27 | 60 | 95 | 693 | |
| | 2024.02- | 6MT | F | R | Estate FWD G4LH | | GDS84376 | Drive Shaft | | 27 | 27 | 60 | 95 | 964 | |
| | 2024.02- | 7DCT | F | L | Estate FWD G4LH | | GDS56834 | Drive Shaft | | 27 | 28 | 60 | 95 | 645 | |
| | 2024.02- | 7DCT | F | R | Estate FWD G4LH | | GDS56835 | Drive Shaft | | 27 | 28 | 60 | 95 | 985 | |
| | 2024.02- | 7DCT | F | L/R | Estate FWD G4LH | | GCI83516 | Inner Joint | | 28 | 31 | 33 | 67.5 | 84.5 | |
| | 2024.02- | 7DCT | F | L | Estate FWD G4LH, G4LK | | GDS56834 | Drive Shaft | | 27 | 28 | 60 | 95 | 645 | |
| | 2024.02- | 7DCT | F | R | Estate FWD G4LH, G4LK | | GDS56835 | Drive Shaft | | 27 | 28 | 60 | 95 | 985 | |
| | 2024.02- | 7DCT | F | L | Estate FWD G4LH, G4LK | | GCI83516 | Inner Joint | | 28 | 31 | 33 | 67.5 | 84.5 | |
| | 2024.02- | 6MT | F | L | Hatchback FWD G4LH | | GDS84377 | Drive Shaft | | 27 | 27 | 60 | 95 | 693 | |
| | 2024.02- | 6MT | F | R | Hatchback FWD G4LH | | GDS84376 | Drive Shaft | | 27 | 27 | 60 | 95 | 964 | |
| | 2024.02- | 7DCT | F | L | Hatchback FWD G4LH | | GDS56834 | Drive Shaft | | 27 | 28 | 60 | 95 | 645 | |
| | 2024.02- | 7DCT | F | R | Hatchback FWD G4LH | | GDS56835 | Drive Shaft | | 27 | 28 | 60 | 95 | 985 | |
| | 2024.02- | 7DCT | F | L/R | Hatchback FWD G4LH | | GCI83516 | Inner Joint | | 28 | 31 | 33 | 67.5 | 84.5 | |
| | 2024.02- | 7DCT | F | L | Hatchback FWD G4LH, G4LK | | GDS56834 | Drive Shaft | | 27 | 28 | 60 | 95 | 645 | |
| | 2024.02- | 7DCT | F | R | Hatchback FWD G4LH, G4LK | | GDS56835 | Drive Shaft | | 27 | 28 | 60 | 95 | 985 | |
| | 2024.02- | 7DCT | F | R | Hatchback FWD G4LH, G4LK | | GCI83516 | Inner Joint | | 28 | 31 | 33 | 67.5 | 84.5 | |
| 1.5 (118 kw) | 2021.01- | 6MT | F | L | Estate FWD G4LH | | GDS84377 | Drive Shaft | | 27 | 27 | 60 | 95 | 693 | |
| | 2021.01- | 6MT | F | R | Estate FWD G4LH | | GDS84376 | Drive Shaft | | 27 | 27 | 60 | 95 | 964 | |
| | 2021.01- | 6MT | F | L/R | Estate FWD G4LH | | GCO82724 | Outer Joint | | 27 | 23 | 60 | 95 | 58 | M |
| | 2021.01- | 6MT | F | L/R | Estate FWD G4LH | | GCI82628 | Inner Joint | | 27 | 31 | 41 | 62 | 86 | |
| | 2021.01- | 7DCT | F | L | Estate FWD G4LH | | GDS56834 | Drive Shaft | | 27 | 28 | 60 | 95 | 645 | |
| | 2021.01- | 7DCT | F | R | Estate FWD G4LH | | GDS56835 | Drive Shaft | | 27 | 28 | 60 | 95 | 985 | |
| | 2021.01- | 7DCT | F | L/R | Estate FWD G4LH | | GCO83450 | Outer Joint | | 27 | 23 | 60 | 95 | 58 | M |
| | 2021.01- | 7DCT | F | L/R | Estate FWD G4LH | | GCI83516 | Inner Joint | | 28 | 31 | 33 | 67.5 | 84.5 | |
| | 2021.01- | 6MT | F | L | Estate FWD G4LH;G4LK | | GDS84377 | Drive Shaft | | 27 | 27 | 60 | 95 | 693 | |
| | 2021.01- | 6MT | F | R | Estate FWD G4LH;G4LK | | GDS84376 | Drive Shaft | | 27 | 27 | 60 | 95 | 964 | |
| | 2021.01- | 6MT | F | L/R | Estate FWD G4LH;G4LK | | GCO82724 | Outer Joint | | 27 | 23 | 60 | 95 | 58 | M |
| | 2021.01- | 6MT | F | L/R | Estate FWD G4LH;G4LK | | GCI82628 | Inner Joint | | 27 | 31 | 41 | 62 | 86 | |
| | 2021.01- | 7DCT | F | L | Estate FWD G4LH;G4LK | | GDS56834 | Drive Shaft | | 27 | 28 | 60 | 95 | 645 | |
| | 2021.01- | 7DCT | F | R | Estate FWD G4LH;G4LK | | GDS56835 | Drive Shaft | | 27 | 28 | 60 | 95 | 985 | |
| | 2021.01- | 7DCT | F | L/R | Estate FWD G4LH;G4LK | | GCO83450 | Outer Joint | | 27 | 23 | 60 | 95 | 58 | M |
| | 2021.01- | 7DCT | F | L/R | Estate FWD G4LH;G4LK | | GCI83516 | Inner Joint | | 28 | 31 | 33 | 67.5 | 84.5 | |
| | 2021.01- | 6MT | F | L | Hatchback FWD G4LH | | GDS84377 | Drive Shaft | | 27 | 27 | 60 | 95 | 693 | |
| | 2021.01- | 6MT | F | R | Hatchback FWD G4LH | | GDS84376 | Drive Shaft | | 27 | 27 | 60 | 95 | 964 | |
| | 2021.01- | 6MT | F | L/R | Hatchback FWD G4LH | | GCO82724 | Outer Joint | | 27 | 23 | 60 | 95 | 58 | M |
| | 2021.01- | 6MT | F | L/R | Hatchback FWD G4LH | | GCI82628 | Inner Joint | | 27 | 31 | 41 | 62 | 86 | |
| | 2021.01- | 7DCT | F | L | Hatchback FWD G4LH | | GDS56834 | Drive Shaft | | 27 | 28 | 60 | 95 | 645 | |
| | 2021.01- | 7DCT | F | R | Hatchback FWD G4LH | | GDS56835 | Drive Shaft | | 27 | 28 | 60 | 95 | 985 | |
| | 2021.01- | 7DCT | F | L/R | Hatchback FWD G4LH | | GCO83450 | Outer Joint | | 27 | 23 | 60 | 95 | 58 | M |
| | 2021.01- | 7DCT | F | L/R | Hatchback FWD G4LH | | GCI83516 | Inner Joint | | 28 | 31 | 33 | 67.5 | 84.5 | |
| | 2021.01- | 6MT | F | L | Hatchback FWD G4LH;G4LK | | GDS84377 | Drive Shaft | | 27 | 27 | 60 | 95 | 693 | |
| | 2021.01- | 6MT | F | R | Hatchback FWD G4LH;G4LK | | GDS84376 | Drive Shaft | | 27 | 27 | 60 | 95 | 964 | |
| | 2021.01- | 6MT | F | L/R | Hatchback FWD G4LH;G4LK | | GCO82724 | Outer Joint | | 27 | 23 | 60 | 95 | 58 | M |
| | 2021.01- | 6MT | F | L/R | Hatchback FWD G4LH;G4LK | | GCI82628 | Inner Joint | | 27 | 31 | 41 | 62 | 86 | |
| | 2021.01- | 7DCT | F | L | Hatchback FWD G4LH;G4LK | | GDS56834 | Drive Shaft | | 27 | 28 | 60 | 95 | 645 | |
| | 2021.01- | 7DCT | F | R | Hatchback FWD G4LH;G4LK | | GDS56835 | Drive Shaft | | 27 | 28 | 60 | 95 | 985 | |
| | 2021.01- | 7DCT | F | L/R | Hatchback FWD G4LH;G4LK | | GCO83450 | Outer Joint | | 27 | 23 | 60 | 95 | 58 | M |
| | 2021.01- | 7DCT | F | L/R | Hatchback FWD G4LH;G4LK | | GCI83516 | Inner Joint | | 28 | 31 | 33 | 67.5 | 84.5 | |
| 1.6 (66 kw) | 2006.12-2012.12 | 4AT | F | L | Hatchback FWD D4FB | | GDS83822 | Drive Shaft | 46T | 27 | 27 | 60 | 93.5 | 667 | |
| | 2006.12-2012.12 | 4AT | F | R | Hatchback FWD D4FB | Date to:2010.02 | GDS83821 | Drive Shaft | 46T | 27 | 27 | 60 | 95 | 939 | |
| | 2006.12-2012.12 | 4AT | F | R | Hatchback FWD D4FB | Date from:2010.03 | GDS84211 | Drive Shaft | 46T | 27 | 27 | 60 | 93.5 | 937 | |
| | 2006.12-2012.12 | 4AT | F | L/R | Hatchback FWD D4FB | Date to:2010.02 | GCO27080 | Outer Joint | 46T | 27 | 23 | 60 | 95 | 58 | M |
| | 2006.12-2012.12 | 4AT | F | L/R | Hatchback FWD D4FB | Date from:2010.03 | GCO81872 | Outer Joint | 46T | 27 | 23 | 60 | 93.5 | 58.5 | M |
| | 2006.12-2012.12 | 4AT | F | L/R | Hatchback FWD D4FB | | GCI82380 | Inner Joint | | 27 | 23 | 41 | 61.5 | 99.5 | |
| | 2006.12-2012.12 | AT | F | L/R | Hatchback FWD D4FB | Date From:2010.08,Date To:2010.08 | GCO24132 | Outer Joint | 46T | 27 | 22 | 60 | 94.5 | 54.5 | M |
| | 2006.12-2012.12 | AT | F | L | Hatchback FWD D4FB | Date from:2010.08,Date to:2010.08 | GCI39052 | Inner Joint | | 25 | 22 | 41 | 63 | 86 | |
| | 2006.12-2012.12 | MT | F | L | Hatchback FWD D4FB | | GDS39263 | Drive Shaft | 46T | 27 | 27 | 60 | 94 | 658 | |
| | 2006.12-2012.12 | MT | F | R | Hatchback FWD D4FB | Date to:2010.04 | GDS39210 | Drive Shaft | 46T | 27 | 27 | 60 | 94 | 945 | |
| | 2006.12-2012.12 | MT | F | L/R | Hatchback FWD D4FB | Date to:2010.04 | GCO24152 | Outer Joint | 46T | 27 | 26 | 60 | 94 | 67 | M |

| | YEAR | TRANSM. | F/R | L/R | BODY STYLE & DRIVE TYPE & ENGINE | REMARKS | G-AP Ref. | PRODUCT | ABS | Technical Specifications | | | | | |
|---|---|---|---|---|---|---|---|---|---|---|---|---|---|---|---|
| | | | | | | | | | | A | B | C | H | L | P |
| **KIA** | | | | | | | | | | | | | | | |
| **Ceed** | | | | | | | | | | | | | | | |
| 1.6 (66 kw) | 2007.09-2012.12 | 4AT | F | L | Estate FWD D4FB | | GDS83822 | Drive Shaft | 46T | 27 | 27 | 60 | 93.5 | 667 | |
| | 2007.09-2012.12 | 4AT | F | R | Estate FWD D4FB | Date to:2010.02 | GDS83821 | Drive Shaft | 46T | 27 | 27 | 60 | 95 | 939 | |
| | 2007.09-2012.12 | 4AT | F | R | Estate FWD D4FB | Date from:2010.03 | GDS84211 | Drive Shaft | 46T | 27 | 27 | 60 | 93.5 | 937 | |
| | 2007.09-2012.12 | 4AT | F | L/R | Estate FWD D4FB | Date to:2010.02 | GCO27080 | Outer Joint | 46T | 27 | 23 | 60 | 95 | 58 | M |
| | 2007.09-2012.12 | 4AT | F | L/R | Estate FWD D4FB | Date from:2010.03 | GCO81872 | Outer Joint | 46T | 27 | 23 | 60 | 93.5 | 58.5 | M |
| | 2007.09-2012.12 | 4AT | F | L/R | Estate FWD D4FB | | GCI82380 | Inner Joint | | 27 | 23 | 41 | 61.5 | 99.5 | |
| | 2007.09-2012.12 | AT | F | L/R | Estate FWD D4FB | Date From:2010.08,Date To:2010.08 | GCO24132 | Outer Joint | 46T | 27 | 22 | 60 | 94.5 | 54.5 | M |
| | 2007.09-2012.12 | AT | F | L | Estate FWD D4FB | Date from:2010.08,Date to:2010.08 | GCI39052 | Inner Joint | | 25 | 22 | 41 | 63 | 86 | |
| | 2007.09-2012.12 | MT | F | L | Estate FWD D4FB | | GDS39263 | Drive Shaft | 46T | 27 | 27 | 60 | 94 | 658 | |
| | 2007.09-2012.12 | MT | F | R | Estate FWD D4FB | Date to:2010.04 | GDS39210 | Drive Shaft | 46T | 27 | 27 | 60 | 94 | 945 | |
| | 2007.09-2012.12 | MT | F | L/R | Estate FWD D4FB | Date to:2010.04 | GCO24152 | Outer Joint | 46T | 27 | 26 | 60 | 94 | 67 | M |
| 1.6 (81 kw) | 2012.05-2018.07 | 6AT | F | L | Hatchback FWD D4FB | | GDS27219 | Drive Shaft | 46T | 27 | 27 | 60 | 95 | 666 | |
| | 2012.05-2018.07 | 6AT | F | R | Hatchback FWD D4FB | | GDS27218 | Drive Shaft | 46T | 27 | 27 | 60 | 95 | 956 | |
| | 2012.05-2018.07 | AT | F | L/R | Hatchback FWD D4FB | | GCI24053 | Inner Joint | | 27 | 24 | 30 | 67.5 | 88.5 | |
| | 2012.05-2018.07 | MT | F | L | Hatchback FWD D4FB | | GDS24519 | Drive Shaft | 46T | 27 | 27 | 60 | 95 | 678 | |
| | 2012.05-2018.07 | MT | F | R | Hatchback FWD D4FB | | GDS24521 | Drive Shaft | 46T | 27 | 27 | 60 | 95 | 969 | |
| | 2012.05-2018.07 | MT | F | L | Hatchback FWD D4FB | | GCO24137 | Outer Joint | 46T | 27 | 24 | 60 | 95 | 59 | M |
| | 2012.05-2018.07 | MT | F | L | Hatchback FWD D4FB | | GCI27044 | Inner Joint | | 27 | 24 | 41 | 62.5 | 88.5 | |
| | 2013.03-2018.07 | AT | F | L | Estate FWD D4FB | | GDS27219 | Drive Shaft | 46T | 27 | 27 | 60 | 95 | 666 | |
| | 2013.03-2018.07 | AT | F | R | Estate FWD D4FB | | GDS27218 | Drive Shaft | 46T | 27 | 27 | 60 | 95 | 956 | |
| | 2013.03-2018.07 | AT | F | L/R | Estate FWD D4FB | | GCI24053 | Inner Joint | | 27 | 24 | 30 | 67.5 | 88.5 | |
| | 2013.03-2018.07 | MT | F | L | Estate FWD D4FB | | GDS24519 | Drive Shaft | 46T | 27 | 27 | 60 | 95 | 678 | |
| | 2013.03-2018.07 | MT | F | R | Estate FWD D4FB | | GDS24521 | Drive Shaft | 46T | 27 | 27 | 60 | 95 | 969 | |
| | 2013.03-2018.07 | MT | F | L | Estate FWD D4FB | | GCO24137 | Outer Joint | 46T | 27 | 24 | 60 | 95 | 59 | M |
| | 2013.03-2018.07 | MT | F | L | Estate FWD D4FB | | GCI27044 | Inner Joint | | 27 | 24 | 41 | 62.5 | 88.5 | |
| 1.6 (85 kw) | 2006.12-2012.12 | 4AT | F | L | Hatchback FWD D4FB | | GDS83822 | Drive Shaft | 46T | 27 | 27 | 60 | 93.5 | 667 | |
| | 2006.12-2012.12 | 4AT | F | R | Hatchback FWD D4FB | Date to:2010.02 | GDS83821 | Drive Shaft | 46T | 27 | 27 | 60 | 95 | 939 | |
| | 2006.12-2012.12 | 4AT | F | R | Hatchback FWD D4FB | Date from:2010.03 | GDS84211 | Drive Shaft | 46T | 27 | 27 | 60 | 93.5 | 937 | |
| | 2006.12-2012.12 | 4AT | F | L/R | Hatchback FWD D4FB | Date to:2010.02 | GCO27080 | Outer Joint | 46T | 27 | 23 | 60 | 95 | 58 | M |
| | 2006.12-2012.12 | 4AT | F | L/R | Hatchback FWD D4FB | Date from:2010.03 | GCO81872 | Outer Joint | 46T | 27 | 23 | 60 | 93.5 | 58.5 | M |
| | 2006.12-2012.12 | 4AT | F | L/R | Hatchback FWD D4FB | | GCI82380 | Inner Joint | | 27 | 23 | 41 | 61.5 | 99.5 | |
| | 2006.12-2012.12 | AT | F | L/R | Hatchback FWD D4FB | Date From:2010.08,Date To:2010.08 | GCO24132 | Outer Joint | 46T | 27 | 22 | 60 | 94.5 | 54.5 | M |
| | 2006.12-2012.12 | AT | F | L | Hatchback FWD D4FB | Date from:2010.08,Date to:2010.08 | GCI39052 | Inner Joint | | 25 | 22 | 41 | 63 | 86 | |
| | 2006.12-2012.12 | MT | F | L | Hatchback FWD D4FB | | GDS39263 | Drive Shaft | 46T | 27 | 27 | 60 | 94 | 658 | |
| | 2006.12-2012.12 | MT | F | R | Hatchback FWD D4FB | Date to:2010.04 | GDS39210 | Drive Shaft | 46T | 27 | 27 | 60 | 94 | 945 | |
| | 2006.12-2012.12 | MT | F | L/R | Hatchback FWD D4FB | Date to:2010.04 | GCO24152 | Outer Joint | 46T | 27 | 26 | 60 | 94 | 67 | M |
| | 2007.09-2012.11 | AT/MT | F | L/R | Estate FWD G4FC | Date to:2010.04 | GCO24095 | Outer Joint | 46T | 27 | 22 | 60 | 94.5 | 58.5 | M |
| | 2007.09-2012.11 | MT | F | R | Estate FWD G4FC | | GDS24399 | Drive Shaft | 46T | 27 | 25 | 60 | 94.5 | 939 | |
| | 2007.09-2012.11 | MT | F | R | Estate FWD G4FC | | GCI24039 | Inner Joint | | 25 | 22 | 41 | 61 | 100 | |
| | 2007.09-2012.11 | | F | | Estate FWD G4FC | | GCO24077 | Outer Joint | 46T | 27 | 22 | 60 | 94.5 | 54.5 | M |
| | 2007.09-2012.12 | 4AT | F | L | Estate FWD D4FB | | GDS83822 | Drive Shaft | 46T | 27 | 27 | 60 | 93.5 | 667 | |
| | 2007.09-2012.12 | 4AT | F | R | Estate FWD D4FB | Date to:2010.02 | GDS83821 | Drive Shaft | 46T | 27 | 27 | 60 | 95 | 939 | |
| | 2007.09-2012.12 | 4AT | F | R | Estate FWD D4FB | Date from:2010.03 | GDS84211 | Drive Shaft | 46T | 27 | 27 | 60 | 93.5 | 937 | |
| | 2007.09-2012.12 | 4AT | F | L/R | Estate FWD D4FB | Date to:2010.02 | GCO27080 | Outer Joint | 46T | 27 | 23 | 60 | 95 | 58 | M |
| | 2007.09-2012.12 | 4AT | F | L/R | Estate FWD D4FB | Date from:2010.03 | GCO81872 | Outer Joint | 46T | 27 | 23 | 60 | 93.5 | 58.5 | M |
| | 2007.09-2012.12 | 4AT | F | L/R | Estate FWD D4FB | | GCI82380 | Inner Joint | | 27 | 23 | 41 | 61.5 | 99.5 | |
| | 2007.09-2012.12 | AT | F | L/R | Estate FWD D4FB | Date from:2010.08 to 2012.07 | GCI39052 | Inner Joint | | 25 | 22 | 41 | 63 | 86 | |
| | 2007.09-2012.12 | MT | F | L | Estate FWD D4FB | | GDS39263 | Drive Shaft | 46T | 27 | 27 | 60 | 94 | 658 | |
| | 2007.09-2012.12 | MT | F | R | Estate FWD D4FB | | GDS39210 | Drive Shaft | 46T | 27 | 27 | 60 | 94 | 945 | |
| | 2007.09-2012.12 | MT | F | L/R | Estate FWD D4FB | | GCO24152 | Outer Joint | 46T | 27 | 26 | 60 | 94 | 67 | M |
| | 2007.09-2012.12 | AT/MT | F | L/R | Hatchback FWD G4FC | | GCO24095 | Outer Joint | 46T | 27 | 22 | 60 | 94.5 | 58.5 | M |
| | 2007.09-2012.12 | MT | F | R | Hatchback FWD G4FC | | GDS24399 | Drive Shaft | 46T | 27 | 25 | 60 | 94.5 | 939 | |
| | 2007.09-2012.12 | MT | F | R | Hatchback FWD G4FC | | GCI24039 | Inner Joint | | 25 | 22 | 41 | 61 | 100 | |
| | 2007.09-2012.12 | | F | | Hatchback FWD G4FC | | GCO24077 | Outer Joint | 46T | 27 | 22 | 60 | 94.5 | 54.5 | M |
| | 2018.03- | 6MT | F | L | Hatchback FWD D4FE | | GDS84405 | Drive Shaft | | 27 | 27 | 60 | 95 | 674 | |
| | 2018.03- | 6MT | F | R | Hatchback FWD D4FE | | GDS84404 | Drive Shaft | | 27 | 27 | 60 | 95 | 983 | |
| | 2018.03- | 6MT | F | L/R | Hatchback FWD D4FE | | GCI82745 | Inner Joint | | 27 | 32 | 41 | 61.5 | 93.5 | |
| | 2018.03- | 6MT/7DCT | F | L/R | Hatchback FWD D4FE | | GCO81818 | Outer Joint | | 27 | 24 | 60 | 95 | 59 | M |
| | 2018.03- | 7DCT | F | L | Hatchback FWD D4FE | Model year to:2020 | GDS84372 | Drive Shaft | | 27 | 28 | 60 | 95 | 637 | |
| | 2018.03- | 7DCT | F | R | Hatchback FWD D4FE | Model year to:2020 | GDS84371 | Drive Shaft | | 27 | 28 | 60 | 95 | 1010 | |
| | 2018.03- | 7DCT | F | L/R | Hatchback FWD D4FE | | GCI81867 | Inner Joint | | 28 | 32 | 41 | 61.5 | 95 | |
| | 2018.03- | 6MT | F | L | Hatchback Van FWD D4FE | | GDS84405 | Drive Shaft | | 27 | 27 | 60 | 95 | 674 | |
| | 2018.03- | 6MT | F | R | Hatchback Van FWD D4FE | | GDS84404 | Drive Shaft | | 27 | 27 | 60 | 95 | 983 | |
| | 2018.03- | 6MT | F | L/R | Hatchback Van FWD D4FE | | GCI82745 | Inner Joint | | 27 | 32 | 41 | 61.5 | 93.5 | |
| | 2018.03- | 6MT/7DCT | F | L/R | Hatchback Van FWD D4FE | | GCO81818 | Outer Joint | | 27 | 24 | 60 | 95 | 59 | M |

| | YEAR | TRANSM. | F/R | L/R | BODY STYLE & DRIVE TYPE & ENGINE | REMARKS | G-AP Ref. | PRODUCT | ABS | Technical Specifications | | | | | |
|---|---|---|---|---|---|---|---|---|---|---|---|---|---|---|---|
| | | | | | | | | | | A | B | C | H | L | P |
| **KIA** **Ceed** | | | | | | | | | | | | | | | |
| 1.6 (85 kw) | 2018.03- | 7DCT | F | L | Hatchback Van FWD D4FE | Model year to:2020 | GDS84372 | Drive Shaft | | 27 | 28 | 60 | 95 | 637 | |
| | 2018.03- | 7DCT | F | R | Hatchback Van FWD D4FE | Model year to:2020 | GDS84371 | Drive Shaft | | 27 | 28 | 60 | 95 | 1010 | |
| | 2018.03- | 7DCT | F | L/R | Hatchback Van FWD D4FE | | GCI81867 | Inner Joint | | 28 | 32 | 41 | 61.5 | 95 | |
| | 2018.05- | 6MT | F | L | Estate FWD D4FE | | GDS84405 | Drive Shaft | | 27 | 27 | 60 | 95 | 674 | |
| | 2018.05- | 6MT | F | R | Estate FWD D4FE | | GDS84404 | Drive Shaft | | 27 | 27 | 60 | 95 | 983 | |
| | 2018.05- | 6MT | F | L/R | Estate FWD D4FE | | GCI82745 | Inner Joint | | 27 | 32 | 41 | 61.5 | 93.5 | |
| | 2018.05- | 6MT/7DCT | F | L/R | Estate FWD D4FE | | GCO81818 | Outer Joint | | 27 | 24 | 60 | 95 | 59 | M |
| | 2018.05- | 7DCT | F | L | Estate FWD D4FE | Model year to:2020 | GDS84372 | Drive Shaft | | 27 | 28 | 60 | 95 | 637 | |
| | 2018.05- | 7DCT | F | R | Estate FWD D4FE | Model year to:2020 | GDS84371 | Drive Shaft | | 27 | 28 | 60 | 95 | 1010 | |
| | 2018.05- | 7DCT | F | L/R | Estate FWD D4FE | | GCI81867 | Inner Joint | | 28 | 32 | 41 | 61.5 | 95 | |
| | 2018.05- | 6MT | F | L | Estate Van FWD D4FE | | GDS84405 | Drive Shaft | | 27 | 27 | 60 | 95 | 674 | |
| | 2018.05- | 6MT | F | R | Estate Van FWD D4FE | | GDS84404 | Drive Shaft | | 27 | 27 | 60 | 95 | 983 | |
| | 2018.05- | 6MT | F | L/R | Estate Van FWD D4FE | | GCO81818 | Outer Joint | | 27 | 24 | 60 | 95 | 59 | M |
| | 2018.05- | 6MT | F | L/R | Estate Van FWD D4FE | | GCI82745 | Inner Joint | | 27 | 32 | 41 | 61.5 | 93.5 | |
| | 2019.12- | 6MT | F | L | Estate FWD D4FE | | GDS84405 | Drive Shaft | | 27 | 27 | 60 | 95 | 674 | |
| | 2019.12- | 6MT | F | R | Estate FWD D4FE | | GDS84404 | Drive Shaft | | 27 | 27 | 60 | 95 | 983 | |
| | 2019.12- | 6MT | F | L/R | Estate FWD D4FE | | GCO81818 | Outer Joint | | 27 | 24 | 60 | 95 | 59 | M |
| | 2019.12- | 6MT | F | L/R | Estate FWD D4FE | | GCI82745 | Inner Joint | | 27 | 32 | 41 | 61.5 | 93.5 | |
| | 2019.12- | 6MT | F | L | Hatchback FWD D4FE | | GDS84405 | Drive Shaft | | 27 | 27 | 60 | 95 | 674 | |
| | 2019.12- | 6MT | F | R | Hatchback FWD D4FE | | GDS84404 | Drive Shaft | | 27 | 27 | 60 | 95 | 983 | |
| | 2019.12- | 6MT | F | L/R | Hatchback FWD D4FE | | GCO81818 | Outer Joint | | 27 | 24 | 60 | 95 | 59 | M |
| | 2019.12- | 6MT | F | L/R | Hatchback FWD D4FE | | GCI82745 | Inner Joint | | 27 | 32 | 41 | 61.5 | 93.5 | |
| 1.6 (87 kw) | 2011.06-2011.12 | | F | L | Hatchback FWD G4FC | Date From:2010.03 | GCO24095 | Outer Joint | 46T | 27 | 22 | 60 | 94.5 | 58.5 | M |
| | 2011.06-2011.12 | | F | L/R | Hatchback FWD G4FC | | GCI24039 | Inner Joint | | 25 | 22 | 41 | 61 | 100 | |
| 1.6 (90 kw) | 2006.12-2012.12 | 4AT/5MT | F | R | Hatchback FWD G4FC | Date to:2010.02 | GDS24399 | Drive Shaft | 46T | 27 | 25 | 60 | 94.5 | 939 | |
| | 2006.12-2012.12 | 4AT/5MT | F | L/R | Hatchback FWD G4FC | | GCO24077 | Outer Joint | 46T | 27 | 22 | 60 | 94.5 | 54.5 | M |
| | 2006.12-2012.12 | 4AT/5MT | F | L/R | Hatchback FWD G4FC | Date to:2010.02 | GCO24095 | Outer Joint | 46T | 27 | 22 | 60 | 94.5 | 58.5 | M |
| | 2006.12-2012.12 | 4AT/5MT | F | L/R | Hatchback FWD G4FC | | GCI24039 | Inner Joint | | 25 | 22 | 41 | 61 | 100 | |
| | 2007.09-2012.12 | 4AT/5MT | F | R | Estate FWD G4FC | Date to:2010.02 | GDS24399 | Drive Shaft | 46T | 27 | 25 | 60 | 94.5 | 939 | |
| | 2007.09-2012.12 | 4AT/5MT | F | L/R | Estate FWD G4FC | | GCO24077 | Outer Joint | 46T | 27 | 22 | 60 | 94.5 | 54.5 | M |
| | 2007.09-2012.12 | 4AT/5MT | F | L/R | Estate FWD G4FC | | GCI24039 | Inner Joint | | 25 | 22 | 41 | 61 | 100 | |
| | 2007.09-2012.12 | AT/MT | F | L/R | Estate FWD G4FC | Date to:2010.02 | GCO24095 | Outer Joint | 46T | 27 | 22 | 60 | 94.5 | 58.5 | M |
| 1.6 (91 kw) | 2007.06-2011.12 | 5MT | F | L/R | Hatchback FWD G4FC | Date to:2010.02 | GCO24095 | Outer Joint | 46T | 27 | 22 | 60 | 94.5 | 58.5 | M |
| | 2007.06-2011.12 | | F | R | Hatchback FWD G4FC | Date To:2010.02 | GDS24399 | Drive Shaft | 46T | 27 | 25 | 60 | 94.5 | 939 | |
| | 2007.06-2011.12 | | F | L/R | Hatchback FWD G4FC | | GCI24039 | Inner Joint | | 25 | 22 | 41 | 61 | 100 | |
| | 2008.01-2012.09 | AT/MT | F | L/R | Estate FWD G4FC | | GCO24095 | Outer Joint | 46T | 27 | 22 | 60 | 94.5 | 58.5 | M |
| | 2008.01-2012.09 | MT | F | R | Estate FWD G4FC | | GDS24399 | Drive Shaft | 46T | 27 | 25 | 60 | 94.5 | 939 | |
| | 2008.01-2012.09 | MT | F | R | Estate FWD G4FC | | GCI24039 | Inner Joint | | 25 | 22 | 41 | 61 | 100 | |
| 1.6 (92 kw) | 2009.06-2012.12 | 6MT | F | L/R | Estate FWD G4FC | | GCO24077 | Outer Joint | 46T | 27 | 22 | 60 | 94.5 | 54.5 | M |
| | 2009.06-2012.12 | AT/MT | F | R | Estate FWD G4FC | | GDS24399 | Drive Shaft | 46T | 27 | 25 | 60 | 94.5 | 939 | |
| | 2009.06-2012.12 | AT/MT | F | L/R | Estate FWD G4FC | Date to:2010.02 | GCO24095 | Outer Joint | 46T | 27 | 22 | 60 | 94.5 | 58.5 | M |
| | 2009.06-2012.12 | AT/MT | F | R | Estate FWD G4FC | | GCI24039 | Inner Joint | | 25 | 22 | 41 | 61 | 100 | |
| | 2010.10-2012.12 | 4AT/6MT | F | L | Hatchback FWD G4FC | | GCO24095 | Outer Joint | 46T | 27 | 22 | 60 | 94.5 | 58.5 | M |
| | 2010.10-2012.12 | 4AT/6MT | F | L/R | Hatchback FWD G4FC | | GCO24077 | Outer Joint | 46T | 27 | 22 | 60 | 94.5 | 54.5 | M |
| | 2010.10-2012.12 | 4AT/6MT | F | L/R | Hatchback FWD G4FC | | GCI24039 | Inner Joint | | 25 | 22 | 41 | 61 | 100 | |
| | 2010.10-2012.12 | AT/MT | F | R | Hatchback FWD G4FC | | GDS24399 | Drive Shaft | 46T | 27 | 25 | 60 | 94.5 | 939 | |
| 1.6 (93 kw) | 2007.09-2012.12 | AT/MT | F | L/R | Estate FWD G4FC | | GCO24095 | Outer Joint | 46T | 27 | 22 | 60 | 94.5 | 58.5 | M |
| | 2007.09-2012.12 | MT | F | R | Estate FWD G4FC | | GDS24399 | Drive Shaft | 46T | 27 | 25 | 60 | 94.5 | 939 | |
| | 2007.09-2012.12 | MT | F | R | Estate FWD G4FC | | GCI24039 | Inner Joint | | 25 | 22 | 41 | 61 | 100 | |
| | 2007.09-2012.12 | | F | | Estate FWD G4FC | | GCO24077 | Outer Joint | 46T | 27 | 22 | 60 | 94.5 | 54.5 | M |
| | 2008.02-2012.12 | AT/MT | F | L/R | Hatchback FWD G4FC | | GCO24095 | Outer Joint | 46T | 27 | 22 | 60 | 94.5 | 58.5 | M |
| | 2008.02-2012.12 | MT | F | R | Hatchback FWD G4FC | | GDS24399 | Drive Shaft | 46T | 27 | 25 | 60 | 94.5 | 939 | |
| | 2008.02-2012.12 | MT | F | R | Hatchback FWD G4FC | | GCI24039 | Inner Joint | | 25 | 22 | 41 | 61 | 100 | |
| | 2008.02-2012.12 | | F | | Hatchback FWD G4FC | | GCO24077 | Outer Joint | 46T | 27 | 22 | 60 | 94.5 | 54.5 | M |
| 1.6 (94 kw) | 2010.10-2012.12 | 4AT | F | L | Estate FWD D4FB | | GDS83822 | Drive Shaft | 46T | 27 | 27 | 60 | 93.5 | 667 | |
| | 2010.10-2012.12 | 4AT | F | R | Estate FWD D4FB | | GDS84211 | Drive Shaft | 46T | 27 | 27 | 60 | 93.5 | 937 | |
| | 2010.10-2012.12 | 4AT | F | L/R | Estate FWD D4FB | | GCO81872 | Outer Joint | 46T | 27 | 23 | 60 | 93.5 | 58.5 | M |
| | 2010.10-2012.12 | 4AT | F | L/R | Estate FWD D4FB | | GCI82380 | Inner Joint | | 27 | 23 | 41 | 61.5 | 99.5 | |
| | 2010.10-2012.12 | AT | F | L/R | Estate FWD D4FB | | GCO27080 | Outer Joint | 46T | 27 | 23 | 60 | 95 | 58 | M |
| | 2010.10-2012.12 | AT | F | | Estate FWD D4FB | | GCO24132 | Outer Joint | 46T | 27 | 22 | 60 | 94.5 | 54.5 | M |
| | 2010.10-2012.12 | AT | F | L | Estate FWD D4FB | | GCI39052 | Inner Joint | | 25 | 22 | 41 | 63 | 86 | |
| | 2010.10-2012.12 | MT | F | L | Estate FWD D4FB | | GDS39263 | Drive Shaft | 46T | 27 | 27 | 60 | 94 | 658 | |
| | 2010.10-2012.12 | MT | F | R | Estate FWD D4FB | | GDS39210 | Drive Shaft | 46T | 27 | 27 | 60 | 94 | 945 | |
| | 2010.10-2012.12 | MT | F | L/R | Estate FWD D4FB | | GCO24152 | Outer Joint | 46T | 27 | 26 | 60 | 94 | 67 | M |
| | 2010.10-2012.12 | 4AT | F | L | Hatchback FWD D4FB | | GDS83822 | Drive Shaft | 46T | 27 | 27 | 60 | 93.5 | 667 | |

| | YEAR | TRANSM. | F/R | L/R | BODY STYLE & DRIVE TYPE & ENGINE | REMARKS | G-AP Ref. | PRODUCT | ABS | Technical Specifications | | | | | |
|---|---|---|---|---|---|---|---|---|---|---|---|---|---|---|---|
| | | | | | | | | | | A | B | C | H | L | P |
| **KIA** **Ceed** | | | | | | | | | | | | | | | |
| 1.6 (94 kw) | 2010.10-2012.12 | 4AT | F | R | Hatchback FWD D4FB | | GDS84211 | Drive Shaft | 46T | 27 | 27 | 60 | 93.5 | 937 | |
| | 2010.10-2012.12 | 4AT | F | L/R | Hatchback FWD D4FB | | GCO81872 | Outer Joint | 46T | 27 | 23 | 60 | 93.5 | 58.5 | M |
| | 2010.10-2012.12 | AT | F | L/R | Hatchback FWD D4FB | | GCO27080 | Outer Joint | 46T | 27 | 23 | 60 | 95 | 58 | M |
| | 2010.10-2012.12 | AT | F | | Hatchback FWD D4FB | | GCO24132 | Outer Joint | 46T | 27 | 22 | 60 | 94.5 | 54.5 | M |
| | 2010.10-2012.12 | AT | F | L | Hatchback FWD D4FB | | GCI39052 | Inner Joint | | 25 | 22 | 41 | 63 | 86 | |
| | 2010.10-2012.12 | AT | F | L/R | Hatchback FWD D4FB | | GCI82380 | Inner Joint | | 27 | 23 | 41 | 61.5 | 99.5 | |
| | 2010.10-2012.12 | MT | F | L | Hatchback FWD D4FB | | GDS39263 | Drive Shaft | 46T | 27 | 27 | 60 | 94 | 658 | |
| | 2010.10-2012.12 | MT | F | R | Hatchback FWD D4FB | | GDS39210 | Drive Shaft | 46T | 27 | 27 | 60 | 94 | 945 | |
| | 2010.10-2012.12 | MT | F | L/R | Hatchback FWD D4FB | | GCO24152 | Outer Joint | 46T | 27 | 26 | 60 | 94 | 67 | M |
| | 2012.05-2018.07 | 6AT | F | L | Hatchback FWD D4FB | | GDS27219 | Drive Shaft | 46T | 27 | 27 | 60 | 95 | 666 | |
| | 2012.05-2018.07 | 6AT | F | R | Hatchback FWD D4FB | | GDS27218 | Drive Shaft | 46T | 27 | 27 | 60 | 95 | 956 | |
| | 2012.05-2018.07 | AT | F | L/R | Hatchback FWD D4FB | | GCI24053 | Inner Joint | | 27 | 24 | 30 | 67.5 | 88.5 | |
| | 2012.05-2018.07 | MT | F | L | Hatchback FWD D4FB | | GDS24519 | Drive Shaft | 46T | 27 | 27 | 60 | 95 | 678 | |
| | 2012.05-2018.07 | MT | F | R | Hatchback FWD D4FB | | GDS24521 | Drive Shaft | 46T | 27 | 27 | 60 | 95 | 969 | |
| | 2012.05-2018.07 | MT | F | L | Hatchback FWD D4FB | | GCO24137 | Outer Joint | 46T | 27 | 24 | 60 | 95 | 59 | M |
| | 2012.05-2018.07 | MT | F | L | Hatchback FWD D4FB | | GCI27044 | Inner Joint | | 27 | 24 | 41 | 62.5 | 88.5 | |
| | 2012.07-2018.07 | 6AT | F | L | Estate Van FWD D4FB | | GDS27219 | Drive Shaft | 46T | 27 | 27 | 60 | 95 | 666 | |
| | 2012.07-2018.07 | 6AT | F | R | Estate Van FWD D4FB | | GDS27218 | Drive Shaft | 46T | 27 | 27 | 60 | 95 | 956 | |
| | 2012.07-2018.07 | AT | F | L/R | Estate Van FWD D4FB | | GCI24053 | Inner Joint | | 27 | 24 | 30 | 67.5 | 88.5 | |
| | 2012.07-2018.07 | MT | F | L | Estate Van FWD D4FB | | GDS24519 | Drive Shaft | 46T | 27 | 27 | 60 | 95 | 678 | |
| | 2012.07-2018.07 | MT | F | R | Estate Van FWD D4FB | | GDS24521 | Drive Shaft | 46T | 27 | 27 | 60 | 95 | 969 | |
| | 2012.07-2018.07 | MT | F | L | Estate Van FWD D4FB | | GCO24137 | Outer Joint | 46T | 27 | 24 | 60 | 95 | 59 | M |
| | 2012.07-2018.07 | MT | F | L | Estate Van FWD D4FB | | GCI27044 | Inner Joint | | 27 | 24 | 41 | 62.5 | 88.5 | |
| | 2012.09-2015.07 | 6AT | F | L | Estate FWD D4FB | | GDS27219 | Drive Shaft | 46T | 27 | 27 | 60 | 95 | 666 | |
| | 2012.09-2015.07 | 6AT | F | R | Estate FWD D4FB | | GDS27218 | Drive Shaft | 46T | 27 | 27 | 60 | 95 | 956 | |
| | 2012.09-2015.07 | 6MT | F | L | Estate FWD D4FB | TPE | GCO24227 | Outer Joint | 46T | 27 | 24 | 60 | 92.5 | 58 | M |
| | 2012.09-2015.07 | AT | F | L/R | Estate FWD D4FB | | GCI24053 | Inner Joint | | 27 | 24 | 30 | 67.5 | 88.5 | |
| | 2012.09-2015.07 | MT | F | L | Estate FWD D4FB | | GDS24519 | Drive Shaft | 46T | 27 | 27 | 60 | 95 | 678 | |
| | 2012.09-2015.07 | MT | F | R | Estate FWD D4FB | | GDS24521 | Drive Shaft | 46T | 27 | 27 | 60 | 95 | 969 | |
| | 2012.09-2015.07 | MT | F | L/R | Estate FWD D4FB | Neoprene | GCO24137 | Outer Joint | 46T | 27 | 24 | 60 | 95 | 59 | M |
| | 2012.09-2015.07 | MT | F | L | Estate FWD D4FB | | GCI27044 | Inner Joint | | 27 | 24 | 41 | 62.5 | 88.5 | |
| | 2018.03- | 6AT | F | L | Hatchback FWD G4FG | | GDS84176 | Drive Shaft | | 27 | 27 | 60 | 95 | 667 | |
| | 2018.03- | 6AT | F | R | Hatchback FWD G4FG | | GDS84178 | Drive Shaft | | 27 | 27 | 60 | 95 | 958 | |
| | 2018.03- | 6AT | F | L/R | Hatchback FWD G4FG | | GCI82142 | Inner Joint | | 27 | 30 | 30 | 67.5 | 79.5 | |
| | 2018.03- | 6AT/6MT | F | L/R | Hatchback FWD G4FG | | GCO82724 | Outer Joint | | 27 | 23 | 60 | 95 | 58 | M |
| | 2018.03- | 6MT | F | L | Hatchback FWD G4FG | | GDS84177 | Drive Shaft | | 27 | 25 | 60 | 95 | 685 | |
| | 2018.03- | 6MT | F | R | Hatchback FWD G4FG | | GDS84175 | Drive Shaft | | 27 | 25 | 60 | 95 | 966 | |
| | 2018.03- | 6MT | F | L/R | Hatchback FWD G4FG | | GCI81749 | Inner Joint | | 25 | 31 | 41 | 63 | 90 | |
| | 2018.05- | 6AT | F | L | Estate FWD G4FG | | GDS84176 | Drive Shaft | | 27 | 27 | 60 | 95 | 667 | |
| | 2018.05- | 6AT | F | R | Estate FWD G4FG | | GDS84178 | Drive Shaft | | 27 | 27 | 60 | 95 | 958 | |
| | 2018.05- | 6AT | F | L/R | Estate FWD G4FG | | GCI82142 | Inner Joint | | 27 | 30 | 30 | 67.5 | 79.5 | |
| | 2018.05- | 6AT/6MT | F | L/R | Estate FWD G4FG | | GCO82724 | Outer Joint | | 27 | 23 | 60 | 95 | 58 | M |
| | 2018.05- | 6MT | F | L | Estate FWD G4FG | | GDS84177 | Drive Shaft | | 27 | 25 | 60 | 95 | 685 | |
| | 2018.05- | 6MT | F | R | Estate FWD G4FG | | GDS84175 | Drive Shaft | | 27 | 25 | 60 | 95 | 966 | |
| | 2018.05- | 6MT | F | L/R | Estate FWD G4FG | | GCI81749 | Inner Joint | | 25 | 31 | 41 | 63 | 90 | |
| 1.6 (95 kw) | 2013.01-2018.07 | 6AT | F | L | Hatchback FWD G4FC | | GDS24264 | Drive Shaft | 46T | 27 | 27 | 60 | 95 | 668 | |
| | 2013.01-2018.07 | 6AT | F | R | Hatchback FWD G4FC | | GCO24227 | Outer Joint | 46T | 27 | 24 | 60 | 92.5 | 58 | M |
| | 2013.01-2018.07 | AT | F | R | Hatchback FWD G4FC | | GDS24321 | Drive Shaft | 46T | 27 | 27 | 60 | 95 | 957 | |
| | 2013.01-2018.07 | AT | F | L | Hatchback FWD G4FC | | GCI24065 | Inner Joint | | 27 | 22 | 30 | 68 | 77 | |
| | 2013.01-2018.07 | MT | F | L | Hatchback FWD G4FC | | GDS24548 | Drive Shaft | 46T | 27 | 25 | 60 | 94.5 | 687 | |
| | 2013.01-2018.07 | MT | F | R | Hatchback FWD G4FC | | GDS24398 | Drive Shaft | 46T | 27 | 25 | 60 | 94.5 | 965 | |
| | 2013.01-2018.07 | MT | F | L | Hatchback FWD G4FC | | GCO24132 | Outer Joint | 46T | 27 | 22 | 60 | 94.5 | 54.5 | M |
| | 2013.01-2018.07 | MT | F | L | Hatchback FWD G4FC | | GCI39052 | Inner Joint | | 25 | 22 | 41 | 63 | 86 | |
| | 2014.11-2018.07 | 6AT | F | L | Estate FWD G4FC | | GDS24264 | Drive Shaft | 46T | 27 | 27 | 60 | 95 | 668 | |
| | 2014.11-2018.07 | 6AT | F | R | Estate FWD G4FC | | GCO24227 | Outer Joint | 46T | 27 | 24 | 60 | 92.5 | 58 | M |
| | 2014.11-2018.07 | AT | F | R | Estate FWD G4FC | | GDS24321 | Drive Shaft | 46T | 27 | 27 | 60 | 95 | 957 | |
| | 2014.11-2018.07 | AT | F | L | Estate FWD G4FC | | GCI24065 | Inner Joint | | 27 | 22 | 30 | 68 | 77 | |
| | 2014.11-2018.07 | MT | F | L | Estate FWD G4FC | | GDS24548 | Drive Shaft | 46T | 27 | 25 | 60 | 94.5 | 687 | |
| | 2014.11-2018.07 | MT | F | R | Estate FWD G4FC | | GDS24398 | Drive Shaft | 46T | 27 | 25 | 60 | 94.5 | 965 | |
| | 2014.11-2018.07 | MT | F | L | Estate FWD G4FC | | GCO24132 | Outer Joint | 46T | 27 | 22 | 60 | 94.5 | 54.5 | M |
| | 2014.11-2018.07 | MT | F | L | Estate FWD G4FC | | GCI39052 | Inner Joint | | 25 | 22 | 41 | 63 | 86 | |
| 1.6 (96 kw) | 2014.11-2018.07 | 6AT | F | L | Estate FWD G4FC | | GDS24264 | Drive Shaft | 46T | 27 | 27 | 60 | 95 | 668 | |
| | 2014.11-2018.07 | 6AT | F | R | Estate FWD G4FC | | GCO24227 | Outer Joint | 46T | 27 | 24 | 60 | 92.5 | 58 | M |
| | 2014.11-2018.07 | AT | F | R | Estate FWD G4FC | | GDS24321 | Drive Shaft | 46T | 27 | 27 | 60 | 95 | 957 | |
| | 2014.11-2018.07 | AT | F | L | Estate FWD G4FC | | GCI24065 | Inner Joint | | 27 | 22 | 30 | 68 | 77 | |

| | YEAR | TRANSM. | F/R | L/R | BODY STYLE & DRIVE TYPE & ENGINE | REMARKS | G-AP Ref. | PRODUCT | ABS | Technical Specifications | | | | | |
|---|---|---|---|---|---|---|---|---|---|---|---|---|---|---|---|
| | | | | | | | | | | A | B | C | H | L | P |
| **KIA** | | | | | | | | | | | | | | | |
| **Ceed** | | | | | | | | | | | | | | | |
| 1.6 (96 kw) | 2014.11-2018.07 | MT | F | L | Estate FWD G4FC | | GDS24548 | Drive Shaft | 46T | 27 | 25 | 60 | 94.5 | 687 | |
| | 2014.11-2018.07 | MT | F | R | Estate FWD G4FC | | GDS24398 | Drive Shaft | 46T | 27 | 25 | 60 | 94.5 | 965 | |
| | 2014.11-2018.07 | MT | F | L | Estate FWD G4FC | | GCO24132 | Outer Joint | 46T | 27 | 22 | 60 | 94.5 | 54.5 | M |
| | 2014.11-2018.07 | MT | F | L | Estate FWD G4FC | | GCI39052 | Inner Joint | | 25 | 22 | 41 | 63 | 86 | |
| | 2014.11-2018.07 | 6AT | F | L | Hatchback FWD G4FC | | GDS24264 | Drive Shaft | 46T | 27 | 27 | 60 | 95 | 668 | |
| | 2014.11-2018.07 | 6AT | F | R | Hatchback FWD G4FC | | GCO24227 | Outer Joint | 46T | 27 | 24 | 60 | 92.5 | 58 | M |
| | 2014.11-2018.07 | AT | F | R | Hatchback FWD G4FC | | GDS24321 | Drive Shaft | 46T | 27 | 27 | 60 | 95 | 957 | |
| | 2014.11-2018.07 | AT | F | L | Hatchback FWD G4FC | | GCI24065 | Inner Joint | | 27 | 22 | 30 | 68 | 77 | |
| | 2014.11-2018.07 | MT | F | L | Hatchback FWD G4FC | | GDS24548 | Drive Shaft | 46T | 27 | 25 | 60 | 94.5 | 687 | |
| | 2014.11-2018.07 | MT | F | R | Hatchback FWD G4FC | | GDS24398 | Drive Shaft | 46T | 27 | 25 | 60 | 94.5 | 965 | |
| | 2014.11-2018.07 | MT | F | L | Hatchback FWD G4FC | | GCO24132 | Outer Joint | 46T | 27 | 22 | 60 | 94.5 | 54.5 | M |
| | 2014.11-2018.07 | MT | F | L | Hatchback FWD G4FC | | GCI39052 | Inner Joint | | 25 | 22 | 41 | 63 | 86 | |
| 1.6 (99 kw) | 2012.05-2018.07 | 6DCT | F | L | Hatchback FWD G4FD | | GDS82241 | Drive Shaft | 46T | 27 | 27 | 60 | 94.5 | 635 | |
| | 2012.05-2018.07 | 6DCT | F | R | Hatchback FWD G4FD | | GDS82242 | Drive Shaft | 46T | 27 | 27 | 60 | 94.5 | 1018 | |
| | 2012.05-2018.07 | 6DCT | F | L/R | Hatchback FWD G4FD | | GCI81569 | Inner Joint | | 27 | 22 | 41 | 61 | 92.5 | |
| | 2012.05-2018.07 | 6MT | F | L | Hatchback FWD G4FD | | GDS24548 | Drive Shaft | 46T | 27 | 25 | 60 | 94.5 | 687 | |
| | 2012.05-2018.07 | 6MT | F | R | Hatchback FWD G4FD | | GDS24398 | Drive Shaft | 46T | 27 | 25 | 60 | 94.5 | 965 | |
| | 2012.05-2018.07 | 6MT | F | L/R | Hatchback FWD G4FD | | GCO24132 | Outer Joint | 46T | 27 | 22 | 60 | 94.5 | 54.5 | M |
| | 2012.05-2018.07 | 6MT | F | L | Hatchback FWD G4FD | | GCI39052 | Inner Joint | | 25 | 22 | 41 | 63 | 86 | |
| | 2012.09-2018.07 | 6DCT | F | L | Estate FWD G4FD | | GDS82241 | Drive Shaft | 46T | 27 | 27 | 60 | 94.5 | 635 | |
| | 2012.09-2018.07 | 6DCT | F | R | Estate FWD G4FD | | GDS82242 | Drive Shaft | 46T | 27 | 27 | 60 | 94.5 | 1018 | |
| | 2012.09-2018.07 | 6DCT | F | L/R | Estate FWD G4FD | | GCI81569 | Inner Joint | | 27 | 22 | 41 | 61 | 92.5 | |
| | 2012.09-2018.07 | 6MT | F | L | Estate FWD G4FD | | GDS24548 | Drive Shaft | 46T | 27 | 25 | 60 | 94.5 | 687 | |
| | 2012.09-2018.07 | 6MT | F | R | Estate FWD G4FD | | GDS24398 | Drive Shaft | 46T | 27 | 25 | 60 | 94.5 | 965 | |
| | 2012.09-2018.07 | 6MT | F | L | Estate FWD G4FD | | GCO24132 | Outer Joint | 46T | 27 | 22 | 60 | 94.5 | 54.5 | M |
| | 2012.09-2018.07 | 6MT | F | L | Estate FWD G4FD | | GCI39052 | Inner Joint | | 25 | 22 | 41 | 63 | 86 | |
| | 2015.04-2018.07 | 6DCT | F | L | Estate Van FWD G4FD | | GDS82241 | Drive Shaft | 46T | 27 | 27 | 60 | 94.5 | 635 | |
| | 2015.04-2018.07 | 6DCT | F | L/R | Estate Van FWD G4FD | | GCI81569 | Inner Joint | | 27 | 22 | 41 | 61 | 92.5 | |
| | 2015.04-2018.07 | DCT | F | R | Estate Van FWD G4FD | | GDS82242 | Drive Shaft | 46T | 27 | 27 | 60 | 94.5 | 1018 | |
| | 2015.04-2018.07 | MT | F | L | Estate Van FWD G4FD | | GDS24548 | Drive Shaft | 46T | 27 | 25 | 60 | 94.5 | 687 | |
| | 2015.04-2018.07 | MT | F | R | Estate Van FWD G4FD | | GDS24398 | Drive Shaft | 46T | 27 | 25 | 60 | 94.5 | 965 | |
| | 2015.04-2018.07 | MT | F | L | Estate Van FWD G4FD | | GCO24132 | Outer Joint | 46T | 27 | 22 | 60 | 94.5 | 54.5 | M |
| | 2015.04-2018.07 | MT | F | L | Estate Van FWD G4FD | | GCI39052 | Inner Joint | | 25 | 22 | 41 | 63 | 86 | |
| 1.6 (100 kw) | 2015.07-2018.07 | 7DCT | F | R | Estate FWD D4FB | | GDS82244 | Drive Shaft | 46T | 27 | 28 | 60 | 95 | 1005 | |
| | 2015.07-2018.07 | 7DCT | F | R | Estate FWD D4FB | | GCO24137 | Outer Joint | 46T | 27 | 24 | 60 | 95 | 59 | M |
| | 2015.07-2018.07 | 7DCT | F | R | Estate FWD D4FB | | GCI81692 | Inner Joint | | 28 | 24 | 41 | 61.5 | 95 | |
| | 2015.07-2018.07 | 7DCT | F | R | Hatchback FWD D4FB | | GDS82244 | Drive Shaft | 46T | 27 | 28 | 60 | 95 | 1005 | |
| | 2015.07-2018.07 | 7DCT | F | R | Hatchback FWD D4FB | | GCO24137 | Outer Joint | 46T | 27 | 24 | 60 | 95 | 59 | M |
| | 2015.07-2018.07 | 7DCT | F | R | Hatchback FWD D4FB | | GCI81692 | Inner Joint | | 28 | 24 | 41 | 61.5 | 95 | |
| | 2018.03- | 6MT | F | L | Hatchback FWD D4FE | | GDS84405 | Drive Shaft | | 27 | 27 | 60 | 95 | 674 | |
| | 2018.03- | 6MT | F | R | Hatchback FWD D4FE | | GDS84404 | Drive Shaft | | 27 | 27 | 60 | 95 | 983 | |
| | 2018.03- | 6MT | F | L/R | Hatchback FWD D4FE | | GCI82745 | Inner Joint | | 27 | 32 | 41 | 61.5 | 93.5 | |
| | 2018.03- | 6MT/7DCT | F | L/R | Hatchback FWD D4FE | | GCO81818 | Outer Joint | | 27 | 24 | 60 | 95 | 59 | M |
| | 2018.03- | 7DCT | F | L | Hatchback FWD D4FE | Model year to:2020 | GDS84372 | Drive Shaft | | 27 | 28 | 60 | 95 | 637 | |
| | 2018.03- | 7DCT | F | R | Hatchback FWD D4FE | Model year to:2020 | GDS84371 | Drive Shaft | | 27 | 28 | 60 | 95 | 1010 | |
| | 2018.03- | 7DCT | F | L/R | Hatchback FWD D4FE | | GCI81867 | Inner Joint | | 28 | 32 | 41 | 61.5 | 95 | |
| | 2018.03- | 6MT | F | L | Hatchback Van FWD D4FE | | GDS84405 | Drive Shaft | | 27 | 27 | 60 | 95 | 674 | |
| | 2018.03- | 6MT | F | R | Hatchback Van FWD D4FE | | GDS84404 | Drive Shaft | | 27 | 27 | 60 | 95 | 983 | |
| | 2018.03- | 6MT | F | L/R | Hatchback Van FWD D4FE | | GCI82745 | Inner Joint | | 27 | 32 | 41 | 61.5 | 93.5 | |
| | 2018.03- | 6MT/7DCT | F | L/R | Hatchback Van FWD D4FE | | GCO81818 | Outer Joint | | 27 | 24 | 60 | 95 | 59 | M |
| | 2018.03- | 7DCT | F | L | Hatchback Van FWD D4FE | Model year to:2020 | GDS84372 | Drive Shaft | | 27 | 28 | 60 | 95 | 637 | |
| | 2018.03- | 7DCT | F | R | Hatchback Van FWD D4FE | Model year to:2020 | GDS84371 | Drive Shaft | | 27 | 28 | 60 | 95 | 1010 | |
| | 2018.03- | 7DCT | F | L/R | Hatchback Van FWD D4FE | | GCI81867 | Inner Joint | | 28 | 32 | 41 | 61.5 | 95 | |
| | 2018.05- | 6MT | F | L | Estate FWD D4FE | | GDS84405 | Drive Shaft | | 27 | 27 | 60 | 95 | 674 | |
| | 2018.05- | 6MT | F | R | Estate FWD D4FE | | GDS84404 | Drive Shaft | | 27 | 27 | 60 | 95 | 983 | |
| | 2018.05- | 6MT | F | L/R | Estate FWD D4FE | | GCI82745 | Inner Joint | | 27 | 32 | 41 | 61.5 | 93.5 | |
| | 2018.05- | 6MT/7DCT | F | L/R | Estate FWD D4FE | | GCO81818 | Outer Joint | | 27 | 24 | 60 | 95 | 59 | M |
| | 2018.05- | 7DCT | F | L | Estate FWD D4FE | Model year to:2020 | GDS84372 | Drive Shaft | | 27 | 28 | 60 | 95 | 637 | |
| | 2018.05- | 7DCT | F | R | Estate FWD D4FE | Model year to:2020 | GDS84371 | Drive Shaft | | 27 | 28 | 60 | 95 | 1010 | |
| | 2018.05- | 7DCT | F | L/R | Estate FWD D4FE | | GCI81867 | Inner Joint | | 28 | 32 | 41 | 61.5 | 95 | |
| | 2018.05- | 6MT | F | L | Estate Van FWD D4FE | | GDS84405 | Drive Shaft | | 27 | 27 | 60 | 95 | 674 | |
| | 2018.05- | 6MT | F | R | Estate Van FWD D4FE | | GDS84404 | Drive Shaft | | 27 | 27 | 60 | 95 | 983 | |
| | 2018.05- | 6MT | F | L/R | Estate Van FWD D4FE | | GCI82745 | Inner Joint | | 27 | 32 | 41 | 61.5 | 93.5 | |
| | 2018.05- | 6MT/7DCT | F | L/R | Estate Van FWD D4FE | | GCO81818 | Outer Joint | | 27 | 24 | 60 | 95 | 59 | M |
| | 2018.05- | 7DCT | F | L | Estate Van FWD D4FE | Model year to:2020 | GDS84372 | Drive Shaft | | 27 | 28 | 60 | 95 | 637 | |

| | YEAR | TRANSM. | F/R | L/R | BODY STYLE & DRIVE TYPE & ENGINE | REMARKS | G-AP Ref. | PRODUCT | ABS | Technical Specifications A | B | C | H | L | P |
|---|---|---|---|---|---|---|---|---|---|---|---|---|---|---|---|
| **KIA** | | | | | | | | | | | | | | | |
| **Ceed** | | | | | | | | | | | | | | | |
| 1.6 (100 kw) | 2018.05- | 7DCT | F | R | Estate Van FWD D4FE | Model year to:2020 | GDS84371 | Drive Shaft | | 27 | 28 | 60 | 95 | 1010 | |
| | 2018.05- | 7DCT | F | L/R | Estate Van FWD D4FE | | GCI81867 | Inner Joint | | 28 | 32 | 41 | 61.5 | 95 | |
| | 2019.12- | 6MT | F | L | Estate FWD D4FE | | GDS84405 | Drive Shaft | | 27 | 27 | 60 | 95 | 674 | |
| | 2019.12- | 6MT | F | R | Estate FWD D4FE | | GDS84404 | Drive Shaft | | 27 | 27 | 60 | 95 | 983 | |
| | 2019.12- | 6MT | F | L/R | Estate FWD D4FE | | GCO81818 | Outer Joint | | 27 | 24 | 60 | 95 | 59 | M |
| | 2019.12- | 6MT | F | L/R | Estate FWD D4FE | | GCI82745 | Inner Joint | | 27 | 32 | 41 | 61.5 | 93.5 | |
| | 2019.12- | 6MT | F | L | Hatchback FWD D4FE | | GDS84405 | Drive Shaft | | 27 | 27 | 60 | 95 | 674 | |
| | 2019.12- | 6MT | F | R | Hatchback FWD D4FE | | GDS84404 | Drive Shaft | | 27 | 27 | 60 | 95 | 983 | |
| | 2019.12- | 6MT | F | L/R | Hatchback FWD D4FE | | GCO81818 | Outer Joint | | 27 | 24 | 60 | 95 | 59 | M |
| | 2019.12- | 6MT | F | L/R | Hatchback FWD D4FE | | GCI82745 | Inner Joint | | 27 | 32 | 41 | 61.5 | 93.5 | |
| 2.0 (100 kw) | 2007.06-2012.12 | 6MT | F | L/R | Hatchback FWD D4EA | | GCI81914 | Inner Joint | | 28 | 26 | 41 | 61 | 105 | |
| | 2007.06-2012.12 | MT | F | L/R | Hatchback FWD D4EA | | GCO24152 | Outer Joint | 46T | 27 | 26 | 60 | 94 | 67 | M |
| | 2007.07-2012.12 | 6MT | F | L/R | Estate FWD D4EA | | GCI81914 | Inner Joint | | 28 | 26 | 41 | 61 | 105 | |
| | 2007.07-2012.12 | MT | F | L/R | Estate FWD D4EA | | GCO24152 | Outer Joint | 46T | 27 | 26 | 60 | 94 | 67 | M |
| 2.0 (103 kw) | 2007.07-2012.12 | 6MT | F | L/R | Estate FWD D4EA | Date to:2010.04 | GCO24152 | Outer Joint | 46T | 27 | 26 | 60 | 94 | 67 | M |
| | 2007.07-2012.12 | 6MT | F | L/R | Estate FWD D4EA | | GCI81914 | Inner Joint | | 28 | 26 | 41 | 61 | 105 | |
| | 2007.09-2012.12 | 6MT | F | L/R | Hatchback FWD D4EA | Date to:2010.04 | GCO24152 | Outer Joint | 46T | 27 | 26 | 60 | 94 | 67 | M |
| | 2007.09-2012.12 | 6MT | F | L/R | Hatchback FWD D4EA | | GCI81914 | Inner Joint | | 28 | 26 | 41 | 61 | 105 | |
| 2.0 (105 kw) | 2006.12-2012.12 | 4AT | F | L | Hatchback FWD G4GC | | GDS83822 | Drive Shaft | 46T | 27 | 27 | 60 | 93.5 | 667 | |
| | 2006.12-2012.12 | 4AT | F | R | Hatchback FWD G4GC | Date to:2010.02 | GDS83821 | Drive Shaft | 46T | 27 | 27 | 60 | 95 | 939 | |
| | 2006.12-2012.12 | 4AT | F | R | Hatchback FWD G4GC | Date from:2010.03 | GDS84211 | Drive Shaft | 46T | 27 | 27 | 60 | 93.5 | 937 | |
| | 2006.12-2012.12 | 4AT | F | L/R | Hatchback FWD G4GC | Date to:2010.02 | GCO27080 | Outer Joint | 46T | 27 | 23 | 60 | 95 | 58 | M |
| | 2006.12-2012.12 | 4AT | F | L/R | Hatchback FWD G4GC | Date from:2010.03 | GCO81872 | Outer Joint | 46T | 27 | 23 | 60 | 93.5 | 58.5 | M |
| | 2006.12-2012.12 | 4AT | F | L/R | Hatchback FWD G4GC | | GCI82380 | Inner Joint | | 27 | 23 | 41 | 61.5 | 99.5 | |
| | 2006.12-2012.12 | MT | F | L | Hatchback FWD G4GC | | GDS39263 | Drive Shaft | 46T | 27 | 27 | 60 | 94 | 658 | |
| | 2006.12-2012.12 | MT | F | R | Hatchback FWD G4GC | | GDS39210 | Drive Shaft | 46T | 27 | 27 | 60 | 94 | 945 | |
| | 2006.12-2012.12 | MT | F | L/R | Hatchback FWD G4GC | | GCI24047 | Inner Joint | | 27 | 26 | 41 | 61.5 | 103 | |
| | 2006.12-2012.12 | | F | L/R | Hatchback FWD G4GC | Date from:2010.08,Date to:2012.03 | GCO24132 | Outer Joint | 46T | 27 | 22 | 60 | 94.5 | 54.5 | M |
| | 2006.12-2012.12 | | F | L | Hatchback FWD G4GC | Date from:2010.08,Date to:2012.03 | GCI39052 | Inner Joint | | 25 | 22 | 41 | 63 | 86 | |
| | 2007.09-2012.12 | 4AT | F | L | Estate FWD G4GC | | GDS83822 | Drive Shaft | 46T | 27 | 27 | 60 | 93.5 | 667 | |
| | 2007.09-2012.12 | 4AT | F | R | Estate FWD G4GC | Date to:2010.02 | GDS83821 | Drive Shaft | 46T | 27 | 27 | 60 | 95 | 939 | |
| | 2007.09-2012.12 | 4AT | F | R | Estate FWD G4GC | Date from:2010.03 | GDS84211 | Drive Shaft | 46T | 27 | 27 | 60 | 93.5 | 937 | |
| | 2007.09-2012.12 | 4AT | F | L/R | Estate FWD G4GC | Date to:2010.02 | GCO27080 | Outer Joint | 46T | 27 | 23 | 60 | 95 | 58 | M |
| | 2007.09-2012.12 | 4AT | F | L/R | Estate FWD G4GC | Date from:2010.03 | GCO81872 | Outer Joint | 46T | 27 | 23 | 60 | 93.5 | 58.5 | M |
| | 2007.09-2012.12 | 4AT | F | L/R | Estate FWD G4GC | | GCI82380 | Inner Joint | | 27 | 23 | 41 | 61.5 | 99.5 | |
| | 2007.09-2012.12 | | F | L/R | Estate FWD G4GC | Date from:2010.08,Date to:2012.03 | GCO24132 | Outer Joint | 46T | 27 | 22 | 60 | 94.5 | 54.5 | M |
| | 2007.09-2012.12 | | F | L | Estate FWD G4GC | Date from:2010.08,Date to:2012.03 | GCI39052 | Inner Joint | | 25 | 22 | 41 | 63 | 86 | |
| **Cerato** | | | | | | | | | | | | | | | |
| 1.5 (54 kw) | 2005.07-2006.08 | 5MT | F | L/R | Hatchback FWD D4FA | | GCI27018 | Inner Joint | | 27 | 24 | 41 | 61.5 | 100.5 | |
| | 2005.07-2006.08 | | F | R | Hatchback FWD D4FA | | GCO24139 | Outer Joint | 44T | 27 | 24 | 60 | 90 | 63 | M |
| | 2005.07-2006.08 | 5MT | F | L/R | Saloon FWD D4FA | | GCI27018 | Inner Joint | | 27 | 24 | 41 | 61.5 | 100.5 | |
| | 2005.07-2006.08 | | F | R | Saloon FWD D4FA | | GCO24139 | Outer Joint | 44T | 27 | 24 | 60 | 90 | 63 | M |
| 1.5 (66 kw) | 2005.07-2006.08 | 5MT | F | L/R | Hatchback FWD D4FA | | GCI27018 | Inner Joint | | 27 | 24 | 41 | 61.5 | 100.5 | |
| | 2005.07-2006.08 | MT | F | L/R | Hatchback FWD D4FA | | GCO24139 | Outer Joint | 44T | 27 | 24 | 60 | 90 | 63 | M |
| | 2005.07-2009.12 | 5MT | F | L/R | Saloon FWD D4FA | | GCI27018 | Inner Joint | | 27 | 24 | 41 | 61.5 | 100.5 | |
| | 2005.07-2009.12 | MT | F | L/R | Saloon FWD D4FA | | GCO24139 | Outer Joint | 44T | 27 | 24 | 60 | 90 | 63 | M |
| 1.5 (75 kw) | 2005.07-2006.08 | MT | F | L/R | Hatchback FWD D4FA | | GCO24139 | Outer Joint | 44T | 27 | 24 | 60 | 90 | 63 | M |
| | 2005.07-2006.08 | MT | F | L | Hatchback FWD D4FA | | GCI27018 | Inner Joint | | 27 | 24 | 41 | 61.5 | 100.5 | |
| | 2005.07-2006.08 | MT | F | L/R | Saloon FWD D4FA | | GCO24139 | Outer Joint | 44T | 27 | 24 | 60 | 90 | 63 | M |
| | 2005.07-2006.08 | MT | F | L | Saloon FWD D4FA | | GCI27018 | Inner Joint | | 27 | 24 | 41 | 61.5 | 100.5 | |
| 1.6 (77 kw) | 2004.04-2009.12 | 4AT | F | L | Saloon FWD G4ED | Date from:2006.09 | GCI27018 | Inner Joint | | 27 | 24 | 41 | 61.5 | 100.5 | |
| | 2004.04-2009.12 | AT | F | L | Saloon FWD G4ED | | GDS27168 | Drive Shaft | 44T | 25 | 25 | 50 | 90 | 645 | |
| | 2004.04-2009.12 | AT | F | R | Saloon FWD G4ED | | GDS27169 | Drive Shaft | 44T | 25 | 25 | 50 | 90 | 931 | |
| | 2004.04-2009.12 | AT | F | L/R | Saloon FWD G4ED | | GCO27066 | Outer Joint | 44T | 25 | 22 | 50 | 90 | 60 | M |
| | 2004.04-2009.12 | AT | F | L/R | Saloon FWD G4ED | | GCI27042 | Inner Joint | | 25 | 22 | 35 | 62.5 | 95 | |
| | 2004.04-2009.12 | MT | F | L/R | Saloon FWD G4ED | | GCO27063 | Outer Joint | | 25 | 22 | 50 | 90 | 60 | M |
| | 2004.04-2009.12 | MT | F | L/R | Saloon FWD G4ED | | GCO99294 | Outer Joint | 44T | 25 | 22 | 50 | 90 | 60 | M |
| | 2004.04-2009.12 | MT | F | L/R | Saloon FWD G4ED | | GCI27025 | Inner Joint | | 25 | 24 | 35 | 62 | 100 | |
| | 2004.07-2007.01 | 4AT | F | L | Hatchback FWD G4ED | Date from:2006.09 | GCI27018 | Inner Joint | | 27 | 24 | 41 | 61.5 | 100.5 | |
| | 2004.07-2007.01 | AT | F | L | Hatchback FWD G4ED | | GDS27168 | Drive Shaft | 44T | 25 | 25 | 50 | 90 | 645 | |
| | 2004.07-2007.01 | AT | F | R | Hatchback FWD G4ED | | GDS27169 | Drive Shaft | 44T | 25 | 25 | 50 | 90 | 931 | |
| | 2004.07-2007.01 | AT | F | L/R | Hatchback FWD G4ED | | GCO27066 | Outer Joint | 44T | 25 | 22 | 50 | 90 | 60 | M |
| | 2004.07-2007.01 | AT | F | L/R | Hatchback FWD G4ED | | GCI27042 | Inner Joint | | 25 | 22 | 35 | 62.5 | 95 | |
| | 2004.07-2007.01 | MT | F | L/R | Hatchback FWD G4ED | | GCO27063 | Outer Joint | | 25 | 22 | 50 | 90 | 60 | M |
| | 2004.07-2007.01 | MT | F | L/R | Hatchback FWD G4ED | | GCO99294 | Outer Joint | 44T | 25 | 22 | 50 | 90 | 60 | M |

| | YEAR | TRANSM. | F/R | L/R | BODY STYLE & DRIVE TYPE & ENGINE | REMARKS | G-AP Ref. | PRODUCT | ABS | Technical Specifications A | B | C | H | L | P |
|---|---|---|---|---|---|---|---|---|---|---|---|---|---|---|---|
| **KIA** **Cerato** | | | | | | | | | | | | | | | |
| 1.6 (77 kw) | 2004.07-2007.01 | MT | F | L/R | Hatchback FWD G4ED | | GCI27025 | Inner Joint | | 25 | 24 | 35 | 62 | 100 | |
| 1.6 (85 kw) | 2005.06-2008.06 | 4AT | F | L | Hatchback FWD D4FB | Date from:2006.09 | GCI27018 | Inner Joint | | 27 | 24 | 41 | 61.5 | 100.5 | |
| | 2005.06-2008.06 | 5MT | F | L | Hatchback FWD D4FB | | GDS24498 | Drive Shaft | 44T | 27 | 27 | 60 | 90 | 649 | |
| | 2005.06-2008.06 | 5MT | F | R | Hatchback FWD D4FB | | GDS24499 | Drive Shaft | 44T | 27 | 26 | 60 | 90 | 588 | |
| | 2005.06-2008.06 | 5MT | F | L | Hatchback FWD D4FB | | GCI27031 | Inner Joint | | 27 | 24 | 41 | 61.5 | 100 | |
| | 2005.06-2008.06 | 5MT | F | R | Hatchback FWD D4FB | | GCI27024 | Inner Joint | | 26 | 24 | 42 | | 115 | |
| | 2005.06-2008.06 | | F | | Hatchback FWD D4FB | | GCO24139 | Outer Joint | 44T | 27 | 24 | 60 | 90 | 63 | M |
| | 2005.06-2008.06 | | F | | Hatchback FWD D4FB | Date From:2006.09 | GCO27066 | Outer Joint | 44T | 25 | 22 | 50 | 90 | 60 | M |
| | 2005.06-2009.12 | 4AT | F | L | Saloon FWD D4FB | Date from:2006.09 | GCI27018 | Inner Joint | | 27 | 24 | 41 | 61.5 | 100.5 | |
| | 2005.06-2009.12 | 5MT | F | L | Saloon FWD D4FB | | GDS24498 | Drive Shaft | 44T | 27 | 27 | 60 | 90 | 649 | |
| | 2005.06-2009.12 | 5MT | F | R | Saloon FWD D4FB | | GDS24499 | Drive Shaft | 44T | 27 | 26 | 60 | 90 | 588 | |
| | 2005.06-2009.12 | 5MT | F | L | Saloon FWD D4FB | | GCI27031 | Inner Joint | | 27 | 24 | 41 | 61.5 | 100 | |
| | 2005.06-2009.12 | 5MT | F | R | Saloon FWD D4FB | | GCI27024 | Inner Joint | | 26 | 24 | 42 | | 115 | |
| | 2005.06-2009.12 | | F | | Saloon FWD D4FB | | GCO24139 | Outer Joint | 44T | 27 | 24 | 60 | 90 | 63 | M |
| | 2005.06-2009.12 | | F | | Saloon FWD D4FB | Date From:2006.09 | GCO27066 | Outer Joint | 44T | 25 | 22 | 50 | 90 | 60 | M |
| 1.6 (90 kw) | 2004.04-2007.01 | AT | F | L | Saloon FWD G4GR | | GDS27168 | Drive Shaft | 44T | 25 | 25 | 50 | 90 | 645 | |
| | 2004.04-2007.01 | AT | F | R | Saloon FWD G4GR | | GDS27169 | Drive Shaft | 44T | 25 | 25 | 50 | 90 | 931 | |
| | 2004.04-2007.01 | AT | F | L/R | Saloon FWD G4GR | | GCO27066 | Outer Joint | 44T | 25 | 22 | 50 | 90 | 60 | M |
| | 2004.04-2007.01 | AT | F | L/R | Saloon FWD G4GR | | GCI27042 | Inner Joint | | 25 | 22 | 35 | 62.5 | 95 | |
| | 2004.04-2007.01 | MT | F | L/R | Saloon FWD G4GR | | GCO99294 | Outer Joint | 44T | 25 | 22 | 50 | 90 | 60 | M |
| | 2004.04-2007.01 | MT | F | L/R | Saloon FWD G4GR | | GCI27025 | Inner Joint | | 25 | 24 | 35 | 62 | 100 | |
| | 2006.05-2009.06 | 4AT/5MT | F | L | Hatchback FWD G4FC | Date from:2006.09,Date to:2008.10 | GDS56416 | Drive Shaft | 44T | 25 | 25 | 50 | 90 | 649 | |
| | 2006.05-2009.06 | 4AT/5MT | F | R | Hatchback FWD G4FC | Date from:2006.09,Date to:2008.10 | GDS56415 | Drive Shaft | 44T | 25 | 25 | 50 | 90 | 924 | |
| | 2006.05-2009.06 | 4AT/5MT | F | L/R | Hatchback FWD G4FC | Date from:2006.09,Date to:2008.10 | GCO83285 | Outer Joint | 44T | 25 | 22 | 50 | 90 | 60 | M |
| | 2006.05-2009.06 | 4AT/5MT | F | L/R | Hatchback FWD G4FC | Date from:2006.09,Date to:2008.10 | GCI83296 | Inner Joint | | 25 | 22 | 41 | 62 | 93.5 | |
| | 2006.05-2009.06 | MT | F | L/R | Hatchback FWD G4FC | | GCI27025 | Inner Joint | | 25 | 24 | 35 | 62 | 100 | |
| | 2006.05-2009.12 | 4AT/5MT | F | L | Saloon FWD G4FC | Date from:2006.09,Date to:2008.10 | GDS56416 | Drive Shaft | 44T | 25 | 25 | 50 | 90 | 649 | |
| | 2006.05-2009.12 | 4AT/5MT | F | R | Saloon FWD G4FC | Date from:2006.09,Date to:2008.10 | GDS56415 | Drive Shaft | 44T | 25 | 25 | 50 | 90 | 924 | |
| | 2006.05-2009.12 | 4AT/5MT | F | L/R | Saloon FWD G4FC | Date from:2006.09,Date to:2008.10 | GCO83285 | Outer Joint | 44T | 25 | 22 | 50 | 90 | 60 | M |
| | 2006.05-2009.12 | 4AT/5MT | F | L/R | Saloon FWD G4FC | Date from:2006.09,Date to:2008.10 | GCI83296 | Inner Joint | | 25 | 22 | 41 | 62 | 93.5 | |
| | 2010.01-2014.02 | AT/MT | F | L | Saloon FWD G4FC | Date to:2010.08 | GCO24132 | Outer Joint | 46T | 27 | 22 | 60 | 94.5 | 54.5 | M |
| | 2010.01-2014.02 | MT | F | L | Saloon FWD G4FC | | GDS27143 | Drive Shaft | 46T | 27 | 25 | 60 | 94.5 | 671 | |
| | 2010.01-2014.02 | MT | F | R | Saloon FWD G4FC | | GDS27142 | Drive Shaft | 46T | 27 | 25 | 60 | 94.5 | 943 | |
| | 2010.01-2014.02 | MT | F | L | Saloon FWD G4FC | | GCI39052 | Inner Joint | | 25 | 22 | 41 | 63 | 86 | |
| 1.6 (91 kw) | 2009.02-2013.06 | AT | F | L | Saloon FWD G4FC | Date from:2010.09 | GDS27158 | Drive Shaft | 46T | 27 | 27 | 60 | 95 | 655 | |
| | 2009.02-2013.06 | AT | F | R | Saloon FWD G4FC | Date from:2010.09 | GDS27157 | Drive Shaft | 46T | 27 | 27 | 60 | 95 | 940 | |
| | 2009.02-2013.06 | AT | F | L/R | Saloon FWD G4FC | Date from:2010.09 | GCO24137 | Outer Joint | 46T | 27 | 24 | 60 | 95 | 59 | M |
| | 2009.02-2013.06 | AT | F | R | Saloon FWD G4FC | | GCI39052 | Inner Joint | | 25 | 22 | 41 | 63 | 86 | |
| | 2009.02-2013.06 | AT/MT | F | L | Saloon FWD G4FC | Date to:2010.08 | GDS27143 | Drive Shaft | 46T | 27 | 25 | 60 | 94.5 | 671 | |
| | 2009.02-2013.06 | AT/MT | F | R | Saloon FWD G4FC | Date to:2010.08 | GDS27142 | Drive Shaft | 46T | 27 | 25 | 60 | 94.5 | 943 | |
| | 2009.02-2013.06 | AT/MT | F | L | Saloon FWD G4FC | Date to:2010.08 | GCO24132 | Outer Joint | 46T | 27 | 22 | 60 | 94.5 | 54.5 | M |
| | 2009.02-2013.06 | MT | F | L | Saloon FWD G4FC | | GCI39052 | Inner Joint | | 25 | 22 | 41 | 63 | 86 | |
| 1.6 (93 kw) | 2010.01-2013.06 | 6AT/6MT | F | L | Saloon FWD G4FC | | GDS27143 | Drive Shaft | 46T | 27 | 25 | 60 | 94.5 | 671 | |
| | 2010.01-2013.06 | 6AT/6MT | F | R | Saloon FWD G4FC | | GDS27142 | Drive Shaft | 46T | 27 | 25 | 60 | 94.5 | 943 | |
| | 2010.01-2013.06 | 6AT/6MT | F | L/R | Saloon FWD G4FC | Date to:2010.08 | GCO24132 | Outer Joint | 46T | 27 | 22 | 60 | 94.5 | 54.5 | M |
| | 2010.01-2013.06 | 6AT/6MT | F | L/R | Saloon FWD G4FC | | GCI39052 | Inner Joint | | 25 | 22 | 41 | 63 | 86 | |
| 1.6 (95 kw) | 2016.07-2018.06 | AT | F | L | Saloon FWD G4FC | | GDS24264 | Drive Shaft | 46T | 27 | 27 | 60 | 95 | 668 | |
| | 2016.07-2018.06 | AT | F | R | Saloon FWD G4FC | | GDS24321 | Drive Shaft | 46T | 27 | 27 | 60 | 95 | 957 | |
| | 2016.07-2018.06 | AT | F | L/R | Saloon FWD G4FC | | GCO24137 | Outer Joint | 46T | 27 | 24 | 60 | 95 | 59 | M |
| | 2016.07-2018.06 | AT | F | L/R | Saloon FWD G4FC | | GCI24065 | Inner Joint | | 27 | 22 | 30 | 68 | 77 | |
| | 2016.07-2018.06 | MT | F | L | Saloon FWD G4FC | | GDS24548 | Drive Shaft | 46T | 27 | 25 | 60 | 94.5 | 687 | |
| | 2016.07-2018.06 | MT | F | R | Saloon FWD G4FC | | GDS24398 | Drive Shaft | 46T | 27 | 25 | 60 | 94.5 | 965 | |
| | 2016.07-2018.06 | MT | F | L | Saloon FWD G4FC | | GCI39052 | Inner Joint | | 25 | 22 | 41 | 63 | 86 | |
| 1.6 (96 kw) | 2013.06-2017.05 | 6MT | F | L | Saloon FWD G4FG | Model year to:2016 | GDS24559 | Drive Shaft | | 27 | 25 | 60 | 94.5 | 689 | |
| | 2013.06-2017.05 | 6MT | F | R | Saloon FWD G4FG | Model year to:2016 | GDS81757 | Drive Shaft | | 27 | 25 | 60 | 94.5 | 965 | |
| | 2013.06-2017.05 | 6MT | F | L/R | Saloon FWD G4FG | Model year to:2016 | GCO24332 | Outer Joint | | 27 | 22 | 60 | 94.5 | 54.5 | M |
| | 2013.06-2017.05 | 6MT | F | L/R | Saloon FWD G4FG | Model year to:2016 | GCI24137 | Inner Joint | | 25 | 22 | 41 | 62.5 | 86 | |
| | 2013.06-2017.05 | AT | F | L | Saloon FWD G4FG | | GDS24264 | Drive Shaft | 46T | 27 | 27 | 60 | 95 | 668 | |
| | 2013.06-2017.05 | AT | F | R | Saloon FWD G4FG | | GDS24321 | Drive Shaft | 46T | 27 | 27 | 60 | 95 | 957 | |
| | 2013.06-2017.05 | AT | F | L/R | Saloon FWD G4FG | | GCO24137 | Outer Joint | 46T | 27 | 24 | 60 | 95 | 59 | M |
| | 2013.06-2017.05 | AT | F | L/R | Saloon FWD G4FG | | GCI24065 | Inner Joint | | 27 | 22 | 30 | 68 | 77 | |
| | 2013.06-2017.05 | MT | F | L | Saloon FWD G4FG | | GDS24548 | Drive Shaft | 46T | 27 | 25 | 60 | 94.5 | 687 | |
| | 2013.06-2017.05 | MT | F | R | Saloon FWD G4FG | | GDS24398 | Drive Shaft | 46T | 27 | 25 | 60 | 94.5 | 965 | |
| | 2013.06-2017.05 | MT | F | L | Saloon FWD G4FG | | GCI39052 | Inner Joint | | 25 | 22 | 41 | 63 | 86 | |
| 2.0 (83 kw) | 2004.04-2006.05 | 4AT | F | L | Hatchback FWD D4EA | Date from:2006.09 | GCI27018 | Inner Joint | | 27 | 24 | 41 | 61.5 | 100.5 | |

| | YEAR | TRANSM. | F/R | L/R | BODY STYLE & DRIVE TYPE & ENGINE | REMARKS | G-AP Ref. | PRODUCT | ABS | Technical Specifications A | B | C | H | L | P |
|---|---|---|---|---|---|---|---|---|---|---|---|---|---|---|---|
| **KIA** | | | | | | | | | | | | | | | |
| **Cerato** | | | | | | | | | | | | | | | |
| 2.0 (83 kw) | 2004.04-2006.05 | 4AT | F | L | Saloon FWD D4EA | Date from:2006.09 | GCI27018 | Inner Joint | | 27 | 24 | 41 | 61.5 | 100.5 | |
| 2.0 (105 kw) | 2004.03-2007.05 | AT | F | R | Hatchback FWD G4GC | | GDS24204 | Drive Shaft | 44T | 25 | 25 | 50 | 94.5 | 936 | |
| | 2004.03-2007.05 | AT | F | R | Hatchback FWD G4GC | | GCO27073 | Outer Joint | 44T | 25 | 24 | 50 | 90 | 63 | M |
| | 2004.03-2007.05 | AT | F | L | Hatchback FWD G4GC | Date from:2006.09,Date to:2006.09 | GCI27018 | Inner Joint | | 27 | 24 | 41 | 61.5 | 100.5 | |
| | 2004.03-2007.05 | MT | F | L | Hatchback FWD G4GC | | GDS27131 | Drive Shaft | 44T | 25 | 25 | 50 | 90 | 647 | |
| | 2004.03-2007.05 | MT | F | R | Hatchback FWD G4GC | | GDS27130 | Drive Shaft | 44T | 25 | 25 | 50 | 90 | 928 | |
| | 2004.03-2007.05 | MT | F | L/R | Hatchback FWD G4GC | | GCI27025 | Inner Joint | | 25 | 24 | 35 | 62 | 100 | |
| | 2004.04-2007.01 | AT | F | R | Saloon FWD G4GC | | GDS24204 | Drive Shaft | 44T | 25 | 25 | 50 | 94.5 | 936 | |
| | 2004.04-2007.01 | AT | F | R | Saloon FWD G4GC | | GCO27073 | Outer Joint | 44T | 25 | 24 | 50 | 90 | 63 | M |
| | 2004.04-2007.01 | AT | F | L | Saloon FWD G4GC | Date from:2006.09,Date to:2006.09 | GCI27018 | Inner Joint | | 27 | 24 | 41 | 61.5 | 100.5 | |
| | 2004.04-2007.01 | MT | F | L | Saloon FWD G4GC | | GDS27131 | Drive Shaft | 44T | 25 | 25 | 50 | 90 | 647 | |
| | 2004.04-2007.01 | MT | F | R | Saloon FWD G4GC | | GDS27130 | Drive Shaft | 44T | 25 | 25 | 50 | 90 | 928 | |
| | 2004.04-2007.01 | MT | F | L/R | Saloon FWD G4GC | | GCI27025 | Inner Joint | | 25 | 24 | 35 | 62 | 100 | |
| 2.0 (110 kw) | 2009.07-2013.06 | 6AT | F | L | Saloon FWD G4KD | | GDS82172 | Drive Shaft | 46T | 27 | 27 | 60 | 94.5 | 674 | |
| | 2009.07-2013.06 | 6AT | F | R | Saloon FWD G4KD | For vehicles without ESP | GDS82171 | Drive Shaft | 46T | 27 | 27 | 60 | 94.5 | 941 | |
| | 2009.07-2013.06 | 6AT | F | L/R | Saloon FWD G4KD | For vehicles without ESP | GCO24304 | Outer Joint | 46T | 27 | 22 | 60 | 94.5 | 54.5 | M |
| | 2009.07-2013.06 | 6AT | F | L | Saloon FWD G4KD | For vehicles without ESP | GCI24097 | Inner Joint | | 27 | 22 | 41 | 62.5 | 94 | |
| | 2009.07-2013.06 | 6AT | F | R | Saloon FWD G4KD | For vehicles without ESP | GCI24061 | Inner Joint | | 27 | 22 | 41 | 62 | 86 | |
| | 2009.07-2013.06 | | F | R | Saloon FWD G4KD | For vehicles with ESP | GCI24061 | Inner Joint | | 27 | 22 | 41 | 62 | 86 | |
| | 2013.06-2016.12 | AT | F | R | Saloon FWD G4KD | | GDS24321 | Drive Shaft | 46T | 27 | 27 | 60 | 95 | 957 | |
| | 2013.06-2016.12 | AT | F | L/R | Saloon FWD G4KD | | GCO24137 | Outer Joint | 46T | 27 | 24 | 60 | 95 | 59 | M |
| | 2013.06-2016.12 | AT | F | L/R | Saloon FWD G4KD | | GCI24065 | Inner Joint | | 27 | 22 | 30 | 68 | 77 | |
| | 2013.06-2016.12 | MT | F | R | Saloon FWD G4KD | | GDS24387 | Drive Shaft | 46T | 27 | 27 | 60 | 95 | 966 | |
| 2.0 (112 kw) | 2016.03-2018.06 | 6AT | F | L | Saloon FWD G4NA | | GDS24264 | Drive Shaft | 46T | 27 | 27 | 60 | 95 | 668 | |
| | 2016.03-2018.06 | 6AT | F | L/R | Saloon FWD G4NA | | GCO24137 | Outer Joint | 46T | 27 | 24 | 60 | 95 | 59 | M |
| | 2016.03-2018.06 | 6AT | F | L/R | Saloon FWD G4NA | | GCI24065 | Inner Joint | | 27 | 22 | 30 | 68 | 77 | |
| | 2016.03-2018.06 | 6MT | F | L | Saloon FWD G4NA | | GDS24388 | Drive Shaft | 46T | 27 | 27 | 60 | 95 | 681 | |
| | 2016.03-2018.06 | 6MT | F | R | Saloon FWD G4NA | | GDS24387 | Drive Shaft | 46T | 27 | 27 | 60 | 95 | 966 | |
| | 2016.03-2018.06 | 6MT | F | L | Saloon FWD G4NA | | GCI24115 | Inner Joint | | 27 | 23 | 41 | 62.5 | 88 | |
| | 2016.03-2018.06 | AT | F | R | Saloon FWD G4NA | | GDS24321 | Drive Shaft | 46T | 27 | 27 | 60 | 95 | 957 | |
| 2.0 (115 kw) | 2009.01-2013.06 | 6AT | F | L | Saloon FWD G4KD | | GDS82172 | Drive Shaft | 46T | 27 | 27 | 60 | 94.5 | 674 | |
| | 2009.01-2013.06 | 6AT/6MT | F | L | Saloon FWD G4KD | | GCI24097 | Inner Joint | | 27 | 22 | 41 | 62.5 | 94 | |
| | 2009.01-2013.06 | AT/MT | F | R | Saloon FWD G4KD | Transmission:AT,For vehicles with ESP;Transmission:MT | GCI24061 | Inner Joint | | 27 | 22 | 41 | 62 | 86 | |
| **Cerato Koup** | | | | | | | | | | | | | | | |
| 1.6 (93 kw) | 2010.01-2013.06 | 6AT/6MT | F | L | Coupe FWD G4FC | | GDS27143 | Drive Shaft | 46T | 27 | 25 | 60 | 94.5 | 671 | |
| | 2010.01-2013.06 | 6AT/6MT | F | R | Coupe FWD G4FC | | GDS27142 | Drive Shaft | 46T | 27 | 25 | 60 | 94.5 | 943 | |
| | 2010.01-2013.06 | 6AT/6MT | F | L/R | Coupe FWD G4FC | | GCO24132 | Outer Joint | 46T | 27 | 22 | 60 | 94.5 | 54.5 | M |
| | 2010.01-2013.06 | 6AT/6MT | F | L/R | Coupe FWD G4FC | | GCI39052 | Inner Joint | | 25 | 22 | 41 | 63 | 86 | |
| 1.6 (150 kw) | 2013.12- | AT | F | L | Coupe FWD G4FJ | | GDS81148 | Drive Shaft | 46T | 27 | 28 | 60 | 95 | 666 | |
| | 2013.12- | AT | F | R | Coupe FWD G4FJ | | GDS81152 | Drive Shaft | 46T | 27 | 28 | 60 | 95 | 616 | |
| | 2013.12- | AT | F | L/R | Coupe FWD G4FJ | | GCO24137 | Outer Joint | 46T | 27 | 24 | 60 | 95 | 59 | M |
| | 2013.12- | AT | F | L | Coupe FWD G4FJ | | GCI81069 | Inner Joint | | 28 | 24 | 33 | 67.5 | 84.5 | |
| | 2013.12- | AT | F | R | Coupe FWD G4FJ | | GCI81071 | Inner Joint | | 28 | 24 | 44.1 | | 111 | |
| 2.0 (115 kw) | 2009.01-2013.06 | 4AT/6AT/5MT/6MT | F | L | Coupe FWD G4KD | | GCI24097 | Inner Joint | | 27 | 22 | 41 | 62.5 | 94 | |
| | 2009.01-2013.06 | 4AT/6AT/5MT/6MT | F | R | Coupe FWD G4KD | | GCI24061 | Inner Joint | | 27 | 22 | 41 | 62 | 86 | |
| | 2009.01-2013.06 | AT | F | L | Coupe FWD G4KD | | GDS82172 | Drive Shaft | 46T | 27 | 27 | 60 | 94.5 | 674 | |
| 2.0 (118 kw) | 2014.09- | 6AT | F | L | Coupe FWD G4NC | | GDS24264 | Drive Shaft | 46T | 27 | 27 | 60 | 95 | 668 | |
| | 2014.09- | 6AT | F | R | Coupe FWD G4NC | | GDS24321 | Drive Shaft | 46T | 27 | 27 | 60 | 95 | 957 | |
| | 2014.09- | 6AT | F | L | Coupe FWD G4NC | | GCI24065 | Inner Joint | | 27 | 22 | 30 | 68 | 77 | |
| **Cerato Koup/Forte5/Forte Koup** | | | | | | | | | | | | | | | |
| 1.6 (150 kw) | 2013.09- | AT | F | L/R | Coupe FWD G4FJ | | GCO24227 | Outer Joint | 46T | 27 | 24 | 60 | 92.5 | 58 | M |
| | 2013.09- | MT | F | L | Coupe FWD G4FJ | | GCI39052 | Inner Joint | | 25 | 22 | 41 | 63 | 86 | |
| **Cerato Koup/K3 Koup** | | | | | | | | | | | | | | | |
| 2.0 (118 kw) | 2016.03- | 6AT | F | L | Coupe FWD G4NA | | GDS24264 | Drive Shaft | 46T | 27 | 27 | 60 | 95 | 668 | |
| | 2016.03- | 6AT | F | R | Coupe FWD G4NA | | GDS24321 | Drive Shaft | 46T | 27 | 27 | 60 | 95 | 957 | |
| | 2016.03- | 6AT | F | L | Coupe FWD G4NA | | GCI24065 | Inner Joint | | 27 | 22 | 30 | 68 | 77 | |
| **Clarus** | | | | | | | | | | | | | | | |
| 1.8 (85 kw) | 1996.07-2001.08 | 4AT/5MT | F | L/R | Saloon FWD T8 | | GCO27010 | Outer Joint | | 28 | 24 | 56 | 90 | 60 | M |
| | 1996.07-2001.08 | AT | F | L/R | Saloon FWD T8 | | GCO34075 | Outer Joint | 44T | 26 | 24 | 56 | 92 | 60 | M |
| | 1996.07-2001.08 | MT | F | L/R | Saloon FWD T8 | | GCO27029 | Outer Joint | 46T | 28 | 24 | 56 | 90 | 60 | M |
| | 1999.03-2000.10 | 4AT/5MT | F | L/R | Estate FWD T8 | | GCO27010 | Outer Joint | | 28 | 24 | 56 | 90 | 60 | M |
| | 1999.03-2000.10 | AT | F | L/R | Estate FWD T8 | Date to:2002.12 | GCO34075 | Outer Joint | 44T | 26 | 24 | 56 | 92 | 60 | M |
| | 1999.03-2000.10 | MT | F | L | Estate FWD T8 | | GDS27071 | Drive Shaft | 46T | 28 | 24 | 56 | 90 | 624 | |
| | 1999.03-2000.10 | MT | F | R | Estate FWD T8 | | GDS27070 | Drive Shaft | 46T | 28 | 28 | 56 | 90 | 618.5 | |
| | 1999.03-2000.10 | MT | F | L/R | Estate FWD T8 | | GCO27029 | Outer Joint | 46T | 28 | 24 | 56 | 90 | 60 | M |

| | YEAR | TRANSM. | F/R | L/R | BODY STYLE & DRIVE TYPE & ENGINE | REMARKS | G-AP Ref. | PRODUCT | ABS | Technical Specifications A | B | C | H | L | P |
|---|---|---|---|---|---|---|---|---|---|---|---|---|---|---|---|
| **KIA** | | | | | | | | | | | | | | | |
| **Clarus** | | | | | | | | | | | | | | | |
| 2.0 (98 kw) | 1996.07-2001.11 | 4AT/5MT | F | L/R | Saloon FWD FE (16V) | | GCO27010 | Outer Joint | | 28 | 24 | 56 | 90 | 60 | M |
| | 1996.07-2001.11 | MT | F | L | Saloon FWD FE (16V) | | GCO27029 | Outer Joint | 46T | 28 | 24 | 56 | 90 | 60 | M |
| | 1999.03-2000.10 | 4AT/5MT | F | L/R | Estate FWD FE(16V) | | GCO27010 | Outer Joint | | 28 | 24 | 56 | 90 | 60 | M |
| | 1999.03-2000.10 | MT | F | L/R | Estate FWD FE(16V) | | GCO27029 | Outer Joint | 46T | 28 | 24 | 56 | 90 | 60 | M |
| | 1999.03-2000.10 | | F | L | Estate FWD FE(16V) | | GDS27071 | Drive Shaft | 46T | 28 | 24 | 56 | 90 | 624 | |
| | 1999.03-2000.10 | | F | R | Estate FWD FE(16V) | | GDS27070 | Drive Shaft | 46T | 28 | 28 | 56 | 90 | 618.5 | |
| **e-Soul** | | | | | | | | | | | | | | | |
| EV (81 kw) | 2014.09-2018.11 | 6AT | F | L | Hatchback FWD ZD | | GDS81242 | Drive Shaft | 46T | 27 | 27 | 60 | 92.5 | 670 | |
| | 2014.09-2018.11 | 6AT | F | R | Hatchback FWD ZD | | GDS81249 | Drive Shaft | 46T | 27 | 27 | 60 | 92.5 | 958 | |
| | 2014.09-2018.11 | 6AT | F | L/R | Hatchback FWD ZD | | GCI81112 | Inner Joint | | 27 | 23 | 30 | 67 | 84 | |
| | 2014.09-2018.11 | 6AT/6MT | F | L/R | Hatchback FWD ZD | | GCO81087 | Outer Joint | 46T | 27 | 23 | 60 | 92.5 | 59.5 | M |
| | 2014.09-2018.11 | 6MT | F | L | Hatchback FWD ZD | | GDS81241 | Drive Shaft | 46T | 27 | 27 | 60 | 92.5 | 686 | |
| | 2014.09-2018.11 | 6MT | F | R | Hatchback FWD ZD | | GDS81250 | Drive Shaft | 46T | 27 | 27 | 60 | 92.5 | 967 | |
| | 2014.09-2018.11 | 6MT | F | L/R | Hatchback FWD ZD | | GCI81148 | Inner Joint | | 27 | 23 | 41 | 61.5 | 91 | |
| EV (100 kw) | 2019.01- | ET | F | L | Hatchback FWD EM | | GDS84090 | Drive Shaft | | 30 | 27 | 60 | 95 | 678 | |
| | 2019.01- | ET | F | R | Hatchback FWD EM | | GDS84089 | Drive Shaft | | 30 | 27 | 60 | 95 | 972 | |
| | 2019.01- | ET | F | L/R | Hatchback FWD EM | | GCO82597 | Outer Joint | | 30 | 25 | 60 | 95 | 64 | M |
| | 2019.01- | ET | F | L/R | Hatchback FWD EM | | GCI82519 | Inner Joint | | 27 | 33 | 41 | 61.5 | 105 | |
| EV (150 kw) | 2019.01- | ET | F | L | Hatchback FWD EM16 | | GDS84090 | Drive Shaft | | 30 | 27 | 60 | 95 | 678 | |
| | 2019.01- | ET | F | R | Hatchback FWD EM16 | | GDS84089 | Drive Shaft | | 30 | 27 | 60 | 95 | 972 | |
| | 2019.01- | ET | F | L/R | Hatchback FWD EM16 | | GCO82597 | Outer Joint | | 30 | 25 | 60 | 95 | 64 | M |
| | 2019.01- | ET | F | L/R | Hatchback FWD EM16 | | GCI82519 | Inner Joint | | 27 | 33 | 41 | 61.5 | 105 | |
| **e-Soul Cargo** | | | | | | | | | | | | | | | |
| EV (100 kw) | 2020.06- | ET | F | L | Hatchback Van FWD EM | | GDS84090 | Drive Shaft | | 30 | 27 | 60 | 95 | 678 | |
| | 2020.06- | ET | F | R | Hatchback Van FWD EM | | GDS84089 | Drive Shaft | | 30 | 27 | 60 | 95 | 972 | |
| | 2020.06- | ET | F | L/R | Hatchback Van FWD EM | | GCO82597 | Outer Joint | | 30 | 25 | 60 | 95 | 64 | M |
| | 2020.06- | ET | F | L/R | Hatchback Van FWD EM | | GCI82519 | Inner Joint | | 27 | 33 | 41 | 61.5 | 105 | |
| EV (150 kw) | 2020.06- | ET | F | L | Hatchback Van FWD EM16 | | GDS84090 | Drive Shaft | | 30 | 27 | 60 | 95 | 678 | |
| | 2020.06- | ET | F | R | Hatchback Van FWD EM16 | | GDS84089 | Drive Shaft | | 30 | 27 | 60 | 95 | 972 | |
| | 2020.06- | ET | F | L/R | Hatchback Van FWD EM16 | | GCO82597 | Outer Joint | | 30 | 25 | 60 | 95 | 64 | M |
| | 2020.06- | ET | F | L/R | Hatchback Van FWD EM16 | | GCI82519 | Inner Joint | | 27 | 33 | 41 | 61.5 | 105 | |
| **Forte** | | | | | | | | | | | | | | | |
| 1.6 (103 kw) | 2012.09- | 6MT | F | L | Hatchback FWD G4FD | | GDS24559 | Drive Shaft | | 27 | 25 | 60 | 94.5 | 689 | |
| | 2012.09- | 6MT | F | L | Hatchback FWD G4FD | | GCO24332 | Outer Joint | | 27 | 22 | 60 | 94.5 | 54.5 | M |
| | 2012.09- | 6MT | F | L | Hatchback FWD G4FD | | GCI24137 | Inner Joint | | 25 | 22 | 41 | 62.5 | 86 | |
| 2.0 (116 kw) | 2010.07-2013.06 | | F | L | Saloon FWD G4KD | | GDS82172 | Drive Shaft | 46T | 27 | 27 | 60 | 94.5 | 674 | |
| | 2010.07-2013.06 | | F | R | Saloon FWD G4KD | | GDS82171 | Drive Shaft | 46T | 27 | 27 | 60 | 94.5 | 941 | |
| | 2010.07-2013.06 | | F | L | Saloon FWD G4KD | | GCI24097 | Inner Joint | | 27 | 22 | 41 | 62.5 | 94 | |
| | 2010.07-2013.06 | | F | R | Saloon FWD G4KD | | GCI24061 | Inner Joint | | 27 | 22 | 41 | 62 | 86 | |
| **K3 Koup** | | | | | | | | | | | | | | | |
| 1.6 (103 kw) | 2013.12- | 6AT | F | L | Coupe FWD G4FD | | GDS81148 | Drive Shaft | 46T | 27 | 28 | 60 | 95 | 666 | |
| | 2013.12- | 6AT | F | R | Coupe FWD G4FD | | GDS81152 | Drive Shaft | 46T | 27 | 28 | 60 | 95 | 616 | |
| | 2013.12- | 6AT | F | L/R | Coupe FWD G4FD | | GCO24137 | Outer Joint | 46T | 27 | 24 | 60 | 95 | 59 | M |
| | 2013.12- | 6AT | F | L | Coupe FWD G4FD | | GCI81069 | Inner Joint | | 28 | 24 | 33 | 67.5 | 84.5 | |
| | 2013.12- | 6AT | F | R | Coupe FWD G4FD | | GCI81071 | Inner Joint | | 28 | 24 | 44.1 | | 111 | |
| | 2013.12- | 6MT | F | L | Coupe FWD G4FD | | GDS24559 | Drive Shaft | | 27 | 25 | 60 | 94.5 | 689 | |
| | 2013.12- | 6MT | F | L | Coupe FWD G4FD | | GCO24332 | Outer Joint | | 27 | 22 | 60 | 94.5 | 54.5 | M |
| | 2013.12- | 6MT | F | L | Coupe FWD G4FD | | GCI24137 | Inner Joint | | 25 | 22 | 41 | 62.5 | 86 | |
| **K5** | | | | | | | | | | | | | | | |
| 2.0 (106 kw) | 2010.04-2015.12 | 6AT | F | L | Saloon FWD G4KD | | GDS81172 | Drive Shaft | 48T | 30 | 28 | 65 | 93 | 663 | |
| | 2010.04-2015.12 | 6AT | F | R | Saloon FWD G4KD | | GDS81171 | Drive Shaft | 48T | 30 | 28 | 65 | 93 | 588 | |
| | 2010.04-2015.12 | 6AT | F | L/R | Saloon FWD G4KD | | GCO24148 | Outer Joint | 48T | 30 | 36 | 65 | 93 | 67.5 | I |
| | 2010.04-2015.12 | 6AT | F | L | Saloon FWD G4KD | | GCI81110 | Inner Joint | | 28 | 35 | 33 | 67 | 86 | |
| | 2010.04-2015.12 | 6AT | F | R | Saloon FWD G4KD | | GCI81109 | Inner Joint | | 28 | 35 | 42 | | 111 | |
| 2.0 (115 kw) | 2015.09- | | F | L | Saloon FWD G4NG | | GDS81167 | Drive Shaft | 48T | 30 | 28 | 73 | 94.5 | 656 | |
| | 2015.09- | | F | L | Saloon FWD G4NG | | GCO81064 | Outer Joint | 48T | 30 | 36 | 73 | 94.5 | 67.5 | I |
| **Magentis** | | | | | | | | | | | | | | | |
| 2.0 (100 kw) | 2001.05-2005.09 | AT | F | L | Saloon FWD G4JP | | GDS24124 | Drive Shaft | | 27 | 25 | 60 | 95 | 661 | |
| | 2001.05-2005.09 | AT | F | L | Saloon FWD G4JP | | GDS27015 | Drive Shaft | 47T | 27 | 25 | 60 | 95 | 661 | |
| | 2001.05-2005.09 | AT | F | R | Saloon FWD G4JP | | GDS24123 | Drive Shaft | | 27 | 25 | 60 | 95 | 974 | |
| | 2001.05-2005.09 | AT | F | R | Saloon FWD G4JP | | GDS27016 | Drive Shaft | 47T | 27 | 25 | 60 | 95 | 974 | |
| | 2001.05-2005.09 | AT | F | L/R | Saloon FWD G4JP | | GCO24027 | Outer Joint | 47T | 27 | 23 | 60 | 95 | 63.5 | M |
| | 2001.05-2005.09 | AT | F | L/R | Saloon FWD G4JP | | GCO27008 | Outer Joint | | 27 | 23 | 60 | 95 | 63.5 | M |
| | 2001.05-2005.09 | AT | F | L/R | Saloon FWD G4JP | | GCI24008 | Inner Joint | | 25 | 23 | 41 | 63 | 92.5 | |
| | 2001.05-2005.09 | MT | F | L | Saloon FWD G4JP | Date To:2001.12 | GDS24014 | Drive Shaft | 47T | 27 | 27 | 60 | 95 | 659 | |

| | YEAR | TRANSM. | F/R | L/R | BODY STYLE & DRIVE TYPE & ENGINE | REMARKS | G-AP Ref. | PRODUCT | ABS | Technical Specifications A | B | C | H | L | P |
|---|---|---|---|---|---|---|---|---|---|---|---|---|---|---|---|
| **KIA** | | | | | | | | | | | | | | | |
| **Magentis** | | | | | | | | | | | | | | | |
| 2.0 (100 kw) | 2001.05-2005.09 | MT | F | L | Saloon FWD G4JP | Date From:2002.01,Date To:2003.07 | GDS24014 | Drive Shaft | 47T | 27 | 27 | 60 | 95 | 659 | |
| | 2001.05-2005.09 | MT | F | R | Saloon FWD G4JP | Date To:2003.07 | GDS24015 | Drive Shaft | 47T | 27 | 27 | 60 | 95 | 974 | |
| | 2001.05-2005.09 | MT | F | R | Saloon FWD G4JP | Date To:2003.07 | GDS27002 | Drive Shaft | | 27 | 27 | 60 | 95 | 974 | |
| | 2001.05-2005.09 | MT | F | R | Saloon FWD G4JP | GrooveType:Middle | GCO27009 | Outer Joint | | 27 | 25 | 60 | 95 | 63.5 | M |
| | 2001.05-2005.09 | MT | F | L/R | Saloon FWD G4JP | | GCO24029 | Outer Joint | 47T | 27 | 25 | 60 | 95 | 63.5 | M |
| | 2001.05-2005.09 | MT | F | L/R | Saloon FWD G4JP | GrooveType:Inner | GCO39104 | Outer Joint | | 27 | 25 | 60 | 97 | 63.5 | I |
| | 2001.05-2005.09 | MT | F | R | Saloon FWD G4JP | Date To:2003.07 | GCI27001 | Inner Joint | | 27 | 25 | 41 | 62.5 | 93 | |
| | 2001.05-2005.09 | MT | F | L/R | Saloon FWD G4JP | | GCI24001 | Inner Joint | | 27 | 25 | 41 | 62.8 | 92.5 | |
| | 2005.11-2008.12 | 4AT/5MT | F | L/R | Saloon FWD D4EA | | GCO24049 | Outer Joint | 48T | 27 | 25 | 62.2 | 95 | 60 | M |
| | 2005.11-2008.12 | 4AT/5MT | F | L/R | Saloon FWD D4EA | | GCO27067 | Outer Joint | 48T | 27 | 24 | 62.1 | 95 | 63 | M |
| 2.0 (103 kw) | 2006.04-2010.12 | 6MT | F | L/R | Saloon FWD D4EA | | GCO24049 | Outer Joint | 48T | 27 | 25 | 62.2 | 95 | 60 | M |
| | 2006.04-2010.12 | 6MT | F | L/R | Saloon FWD D4EA | | GCO27067 | Outer Joint | 48T | 27 | 24 | 62.1 | 95 | 63 | M |
| 2.0 (106 kw) | 2005.11-2010.12 | 4AT/5MT | F | L/R | Saloon FWD G4KA | | GCO24049 | Outer Joint | 48T | 27 | 25 | 62.2 | 95 | 60 | M |
| | 2005.11-2010.12 | 4AT/5MT | F | L/R | Saloon FWD G4KA | | GCO24206 | Outer Joint | 48T | 27 | 24 | 62 | 90.5 | 64 | M |
| | 2005.11-2010.12 | 4AT/5MT | F | L/R | Saloon FWD G4KA | Date to:2008.08 | GCO27067 | Outer Joint | 48T | 27 | 24 | 62.1 | 95 | 63 | M |
| 2.0 (110 kw) | 2006.04-2010.12 | 4AT | F | L/R | Saloon FWD D4EA | | GCO24049 | Outer Joint | 48T | 27 | 25 | 62.2 | 95 | 60 | M |
| | 2006.04-2010.12 | 4AT | F | L/R | Saloon FWD D4EA | | GCO27067 | Outer Joint | 48T | 27 | 24 | 62.1 | 95 | 63 | M |
| 2.0 (121 kw) | 2009.09-2010.12 | 4AT/5MT | F | L/R | Saloon FWD G4KD | | GCO24206 | Outer Joint | 48T | 27 | 24 | 62 | 90.5 | 64 | M |
| | 2009.09-2010.12 | 4AT/5MT | F | L/R | Saloon FWD G4KD | Date to:2010.04 | GCO27067 | Outer Joint | 48T | 27 | 24 | 62.1 | 95 | 63 | M |
| 2.5 (124 kw) | 2001.05-2005.09 | AT | F | L | Saloon FWD G6BV | Date from:2003.07 | GDS24094 | Drive Shaft | 47T | 27 | 27 | 60 | 96.5 | 661 | |
| | 2001.05-2005.09 | AT | F | R | Saloon FWD G6BV | Date to:2002.02;DOJ | GDS24125 | Drive Shaft | 47T | 27 | 26 | 60 | 95 | 619 | |
| | 2001.05-2005.09 | AT | F | L/R | Saloon FWD G6BV | | GCO24037 | Outer Joint | 47T | 27 | 34 | 60 | 96.5 | 71 | I |
| | 2001.05-2005.09 | MT | F | L | Saloon FWD G6BV | Date to:2002.02,For vehicles with ABS | GDS24126 | Drive Shaft | 47T | 27 | 27 | 60 | 95 | 662 | |
| | 2001.05-2005.09 | MT | F | L/R | Saloon FWD G6BV | | GCO24073 | Outer Joint | 47T | 27 | 26 | 60 | 95 | 69 | M |
| | 2001.05-2005.09 | | F | L | Saloon FWD G6BV | | GCI27020 | Inner Joint | | 27 | 25 | 41 | 62 | 100.5 | |
| 2.7 (138 kw) | 2005.11-2010.12 | 5AT | F | L | Saloon FWD G6EA | | GDS27162 | Drive Shaft | 48T | 27 | 27 | 62 | 90.5 | 673 | |
| | 2005.11-2010.12 | 5AT | F | R | Saloon FWD G6EA | | GDS27161 | Drive Shaft | 48T | 27 | 28 | 62 | 90.5 | 596 | |
| | 2005.11-2010.12 | 5AT | F | R | Saloon FWD G6EA | Date from:2009.09,Date to:2010.04 | GDS57492 | Drive Shaft | 48T | 27 | 28 | 62 | 90.5 | 597 | |
| | 2005.11-2010.12 | 5AT | F | L/R | Saloon FWD G6EA | Date to:2008.05 | GCO24156 | Outer Joint | 48T | 27 | 25 | 62 | 94.5 | 70 | M |
| | 2005.11-2010.12 | 5AT | F | L/R | Saloon FWD G6EA | Date from:2009.09,Date to:2010.04 | GCO27099 | Outer Joint | 48T | 27 | 25 | 62 | 90.5 | 69.5 | M |
| | 2005.11-2010.12 | 5AT | F | R | Saloon FWD G6EA | Date to:2008.05 | GCI24041 | Inner Joint | | 28 | 25 | 42 | | 118 | |
| | 2005.11-2010.12 | 5AT | F | R | Saloon FWD G6EA | Date from:2009.09,Date to:2010.04 | GCI24064 | Inner Joint | | 28 | 25 | 44.1 | | 120 | |
| 2.7 (142 kw) | 2009.07-2010.12 | 5AT | F | L | Saloon FWD G6EA | | GDS27162 | Drive Shaft | 48T | 27 | 27 | 62 | 90.5 | 673 | |
| | 2009.07-2010.12 | 5AT | F | R | Saloon FWD G6EA | Date from:2009.09,Date to:2010.04 | GDS57492 | Drive Shaft | 48T | 27 | 28 | 62 | 90.5 | 597 | |
| | 2009.07-2010.12 | 5AT | F | L/R | Saloon FWD G6EA | | GCO24156 | Outer Joint | 48T | 27 | 25 | 62 | 94.5 | 70 | M |
| | 2009.07-2010.12 | 5AT | F | L/R | Saloon FWD G6EA | Date from:2009.09,Date to:2010.04 | GCO27099 | Outer Joint | 48T | 27 | 25 | 62 | 90.5 | 69.5 | M |
| | 2009.07-2010.12 | 5AT | F | R | Saloon FWD G6EA | Date from:2009.09,Date to:2010.04 | GCI24064 | Inner Joint | | 28 | 25 | 44.1 | | 120 | |
| **Mohave** | | | | | | | | | | | | | | | |
| 3.0 (184 kw) | 2007.11- | 6AT/8AT | F | L | SUV 4WD D6EA;D6EB | Country Version:Russia | GDS83760 | Drive Shaft | 48T | 31 | 30 | 73 | 102 | 648 | |
| | 2007.11- | 6AT/8AT | F | L | SUV 4WD D6EA;D6EB | | GDS83899 | Drive Shaft | | 28 | 30 | 56 | 102 | 653 | |
| | 2007.11- | 6AT/8AT | F | R | SUV 4WD D6EA;D6EB | | GDS83723 | Drive Shaft | | 28 | 28 | 56 | 102 | 587 | |
| | 2007.11- | 6AT/8AT | F | R | SUV 4WD D6EA;D6EB | Country Version:Russia | GDS83759 | Drive Shaft | 48T | 31 | 28 | 73 | 102 | 580 | |
| | 2007.11- | 6AT/8AT | F | L/R | SUV 4WD D6EA;D6EB | | GCO82478 | Outer Joint | | 28 | 25 | 56 | 102 | 63 | M |
| | 2007.11- | 6AT/8AT | F | L | SUV 4WD D6EA;D6EB | | GCI81905 | Inner Joint | | 30 | 25 | 38 | 77.5 | 107 | |
| | 2007.11- | 6AT/8AT | F | R | SUV 4WD D6EA;D6EB | | GCI81906 | Inner Joint | | 28 | 25 | 42 | | 118.5 | |
| | 2007.11- | 6AT/8AT | R | L | SUV 4WD D6EA;D6EB | | GDS83483 | Drive Shaft | 48T | 30 | 32 | 61.4 | 96 | 849 | |
| | 2007.11- | 6AT/8AT | R | R | SUV 4WD D6EA;D6EB | | GDS84390 | Drive Shaft | 48T | 30 | 32 | 61.4 | 96 | 819 | |
| | 2007.11- | 6AT/8AT | R | L | SUV 4WD D6EA;D6EB | With differential lock | GCO82387 | Outer Joint | 48T | 30 | 28 | 61.4 | 96 | 73 | M |
| | 2007.11- | 6AT/8AT | R | L | SUV 4WD D6EA;D6EB | | GCI82238 | Inner Joint | | 32 | 26 | 46 | 95 | 109.5 | |
| | 2007.11- | 6AT/8AT | R | R | SUV 4WD D6EA;D6EB | | GCI82737 | Inner Joint | | 32 | 26 | 46 | 65 | 109.5 | |
| 3.8 (202 kw) | 2008.06- | 5AT | F | L | SUV 4WD G6DA | Country Version:Russia | GDS83760 | Drive Shaft | 48T | 31 | 30 | 73 | 102 | 648 | |
| | 2008.06- | 5AT | F | R | SUV 4WD G6DA | Country Version:Russia | GDS83759 | Drive Shaft | 48T | 31 | 28 | 73 | 102 | 580 | |
| | 2008.06- | AT | F | L | SUV 4WD G6DA | | GDS83899 | Drive Shaft | | 28 | 30 | 56 | 102 | 653 | |
| | 2008.06- | AT | F | R | SUV 4WD G6DA | | GDS83723 | Drive Shaft | | 28 | 28 | 56 | 102 | 587 | |
| | 2008.06- | AT | F | L/R | SUV 4WD G6DA | | GCO82478 | Outer Joint | | 28 | 25 | 56 | 102 | 63 | M |
| | 2008.06- | AT | F | L | SUV 4WD G6DA | | GCI81905 | Inner Joint | | 30 | 25 | 38 | 77.5 | 107 | |
| | 2008.06- | AT | F | R | SUV 4WD G6DA | | GCI81906 | Inner Joint | | 28 | 25 | 42 | | 118.5 | |
| | 2008.06- | 5AT | R | L | SUV 4WD G6DA | | GDS83483 | Drive Shaft | 48T | 30 | 32 | 61.4 | 96 | 849 | |
| | 2008.06- | 5AT | R | R | SUV 4WD G6DA | | GDS84390 | Drive Shaft | 48T | 30 | 32 | 61.4 | 96 | 819 | |
| | 2008.06- | 5AT | R | L | SUV 4WD G6DA | With differential lock | GCO82387 | Outer Joint | 48T | 30 | 28 | 61.4 | 96 | 73 | M |
| | 2008.06- | 5AT | R | L | SUV 4WD G6DA | | GCI82238 | Inner Joint | | 32 | 26 | 46 | 95 | 109.5 | |
| | 2008.06- | 5AT | R | R | SUV 4WD G6DA | | GCI82737 | Inner Joint | | 32 | 26 | 46 | 65 | 109.5 | |
| 4.6 (250 kw) | 2008.06- | 6AT | F | L | SUV 4WD G8BA | | GDS83899 | Drive Shaft | | 28 | 30 | 56 | 102 | 653 | |
| | 2008.06- | 6AT | F | R | SUV 4WD G8BA | | GDS83723 | Drive Shaft | | 28 | 28 | 56 | 102 | 587 | |
| | 2008.06- | 6AT | F | L/R | SUV 4WD G8BA | | GCO82478 | Outer Joint | | 28 | 25 | 56 | 102 | 63 | M |

| | YEAR | TRANSM. | F/R | L/R | BODY STYLE & DRIVE TYPE & ENGINE | REMARKS | G-AP Ref. | PRODUCT | ABS | Technical Specifications A | B | C | H | L | P |
|---|---|---|---|---|---|---|---|---|---|---|---|---|---|---|---|
| **KIA** | | | | | | | | | | | | | | | |
| **Mohave** | | | | | | | | | | | | | | | |
| 4.6 (250 kw) | 2008.06- | 6AT | F | L | SUV 4WD G8BA | | GCI81905 | Inner Joint | | 30 | 25 | 38 | 77.5 | 107 | |
| | 2008.06- | 6AT | F | R | SUV 4WD G8BA | | GCI81906 | Inner Joint | | 28 | 25 | 42 | | 118.5 | |
| **Morning** | | | | | | | | | | | | | | | |
| 1.0 (53 kw) | 2004.04-2011.04 | MT | F | L/R | Hatchback FWD G4HC | | GCO27077 | Outer Joint | | 24 | 20 | 52.5 | 85.5 | 51 | M |
| **Niro** | | | | | | | | | | | | | | | |
| 1.6 (77 kw) | 2016.09- | 6DCT | F | L | SUV Van FWD G4LE | | GDS82329 | Drive Shaft | | 27 | 28 | 60 | 95 | 587 | |
| | 2016.09- | 6DCT | F | R | SUV Van FWD G4LE | | GDS82330 | Drive Shaft | | 27 | 28 | 60 | 95 | 553 | |
| | 2016.09- | 6DCT | F | L/R | SUV Van FWD G4LE | | GCO81818 | Outer Joint | | 27 | 24 | 60 | 95 | 59 | M |
| | 2016.09- | 6DCT | F | L | SUV Van FWD G4LE | | GCI81747 | Inner Joint | | 28 | 32 | 41 | 61.5 | 101 | |
| | 2016.09- | 6DCT | F | R | SUV Van FWD G4LE | | GCI81150 | Inner Joint | | 28 | 32 | 44.1 | | 116 | |
| 1.6 (104 kw) | 2016.09- | 6AT | F | L | SUV Van FWD G4LE | | GDS82329 | Drive Shaft | | 27 | 28 | 60 | 95 | 587 | |
| | 2016.09- | 6AT | F | L | SUV Van FWD G4LE | | GCO81818 | Outer Joint | | 27 | 24 | 60 | 95 | 59 | M |
| | 2016.09- | 6AT | F | L | SUV Van FWD G4LE | | GCI81747 | Inner Joint | | 28 | 32 | 41 | 61.5 | 101 | |
| | 2016.09- | 6AT | F | R | SUV Van FWD G4LE | | GCI81150 | Inner Joint | | 28 | 32 | 44.1 | | 116 | |
| | 2016.09-2022.08 | 6AT | F | R | SUV FWD G4LE | | GDS82812 | Intermediate Shaft | | 28 | 28 | | | 539 | |
| | 2016.09-2022.08 | 6DCT | F | L | SUV FWD G4LE | | GDS82329 | Drive Shaft | | 27 | 28 | 60 | 95 | 587 | |
| | 2016.09-2022.08 | 6DCT | F | R | SUV FWD G4LE | | GDS82330 | Drive Shaft | | 27 | 28 | 60 | 95 | 553 | |
| | 2016.09-2022.08 | 6DCT | F | L/R | SUV FWD G4LE | | GCO81818 | Outer Joint | | 27 | 24 | 60 | 95 | 59 | M |
| | 2016.09-2022.08 | 6DCT | F | L | SUV FWD G4LE | | GCI81747 | Inner Joint | | 28 | 32 | 41 | 61.5 | 101 | |
| | 2016.09-2022.08 | 6DCT | F | R | SUV FWD G4LE | | GCI81150 | Inner Joint | | 28 | 32 | 44.1 | | 116 | |
| EV (100 kw) | 2018.08-2022.08 | ET | F | L | SUV FWD EM16 | | GDS84090 | Drive Shaft | | 30 | 27 | 60 | 95 | 678 | |
| | 2018.08-2022.08 | ET | F | R | SUV FWD EM16 | | GDS84089 | Drive Shaft | | 30 | 27 | 60 | 95 | 972 | |
| | 2018.08-2022.08 | ET | F | L/R | SUV FWD EM16 | | GCO82597 | Outer Joint | | 30 | 25 | 60 | 95 | 64 | M |
| | 2018.08-2022.08 | ET | F | L/R | SUV FWD EM16 | | GCI82519 | Inner Joint | | 27 | 33 | 41 | 61.5 | 105 | |
| EV (150 kw) | 2018.08-2022.08 | ET | F | L | SUV FWD EM16 | | GDS84090 | Drive Shaft | | 30 | 27 | 60 | 95 | 678 | |
| | 2018.08-2022.08 | ET | F | R | SUV FWD EM16 | | GDS84089 | Drive Shaft | | 30 | 27 | 60 | 95 | 972 | |
| | 2018.08-2022.08 | ET | F | L/R | SUV FWD EM16 | | GCO82597 | Outer Joint | | 30 | 25 | 60 | 95 | 64 | M |
| | 2018.08-2022.08 | ET | F | L/R | SUV FWD EM16 | | GCI82519 | Inner Joint | | 27 | 33 | 41 | 61.5 | 105 | |
| **Opirus** | | | | | | | | | | | | | | | |
| 3.0 (138 kw) | 2003.09-2006.09 | 5AT | F | L | Saloon FWD G6CT | TJ | GDS27074 | Drive Shaft | 47T | 27 | 28 | 60 | 97 | 652 | |
| | 2003.09-2006.09 | 5AT | F | L | Saloon FWD G6CT | AAR | GDS82606 | Drive Shaft | 47T | 27 | 28 | 60 | 97 | 657 | |
| | 2003.09-2006.09 | 5AT | F | R | Saloon FWD G6CT | TJ | GDS27136 | Drive Shaft | 47T | 27 | 28 | 60 | 97 | 609 | |
| | 2003.09-2006.09 | 5AT | F | R | Saloon FWD G6CT | AAR | GDS82709 | Drive Shaft | 47T | 27 | 28 | 60 | 97 | 614 | |
| | 2003.09-2006.09 | 5AT | F | L/R | Saloon FWD G6CT | | GCO82073 | Outer Joint | 47T | 27 | 26 | 60 | 97 | 69 | M |
| | 2003.09-2006.09 | 5AT | F | L | Saloon FWD G6CT | | GCI81914 | Inner Joint | | 28 | 26 | 41 | 61 | 105 | |
| | 2003.09-2006.09 | 5AT | F | R | Saloon FWD G6CT | AAR | GCI81963 | Inner Joint | | 28 | 26 | 42 | | 123 | |
| 3.5 (149 kw) | 2003.09-2006.12 | 5AT | F | L | Saloon FWD G6CU | | GCI81914 | Inner Joint | | 28 | 26 | 41 | 61 | 105 | |
| | 2003.09-2006.12 | AT | F | L | Saloon FWD G6CU | | GDS27074 | Drive Shaft | 47T | 27 | 28 | 60 | 97 | 652 | |
| | 2003.09-2006.12 | AT | F | R | Saloon FWD G6CU | | GDS27136 | Drive Shaft | 47T | 27 | 28 | 60 | 97 | 609 | |
| | 2003.09-2006.12 | AT | F | L/R | Saloon FWD G6CU | | GCO27056 | Outer Joint | 47T | 27 | 26 | 60 | 97 | 69 | M |
| | 2003.09-2006.12 | | F | L | Saloon FWD G6CU | | GDS82606 | Drive Shaft | 47T | 27 | 28 | 60 | 97 | 657 | |
| | 2003.09-2006.12 | | F | L | Saloon FWD G6CU | | GCO24185 | Outer Joint | 47T | 27 | 26 | 60 | 96.5 | 68.5 | M |
| 3.8 (196 kw) | 2006.10-2012.10 | 5AT | F | L | Saloon FWD G6DA | | GDS27203 | Drive Shaft | 47T | 30 | 28 | 65 | 94.5 | 655 | |
| | 2006.10-2012.10 | 5AT | F | R | Saloon FWD G6DA | | GDS27204 | Drive Shaft | 47T | 30 | 28 | 65 | 94.5 | 595 | |
| | 2006.10-2012.10 | 5AT | F | L/R | Saloon FWD G6DA | | GCO27098 | Outer Joint | 47T | 30 | 27 | 65 | 94.5 | 71 | M |
| | 2006.10-2012.10 | 5AT | F | L | Saloon FWD G6DA | | GCI27055 | Inner Joint | | 28 | 27 | 41 | 71.5 | 111 | |
| | 2006.10-2012.10 | 5AT | F | R | Saloon FWD G6DA | | GCI27041 | Inner Joint | | 28 | 27 | 42 | | 123.5 | |
| **Optima** | | | | | | | | | | | | | | | |
| 1.6 (100 kw) | 2018.01-2019.12 | 7DCT/6MT | F | L/R | Estate FWD D4FE | | GCO24299 | Outer Joint | 48T | 30 | 25 | 73 | 95 | 61.5 | M |
| | 2018.06-2019.12 | 7DCT/6MT | F | L/R | Saloon FWD D4FE | | GCO24299 | Outer Joint | 48T | 30 | 25 | 73 | 95 | 61.5 | M |
| 1.6 (132 kw) | 2018.01-2019.12 | 7AT | F | L | Estate FWD G4FJ | | GDS84106 | Drive Shaft | 48T | 30 | 28 | 73 | 94.5 | 650 | |
| | 2018.01-2019.12 | 7AT | F | R | Estate FWD G4FJ | | GDS84105 | Drive Shaft | 48T | 30 | 28 | 73 | 94.5 | 580 | |
| | 2018.01-2019.12 | 7AT | F | L/R | Estate FWD G4FJ | | GCO82590 | Outer Joint | 48T | 30 | 25 | 73 | 94.5 | 64 | M |
| | 2018.01-2019.12 | 7AT | F | L | Estate FWD G4FJ | | GCI82512 | Inner Joint | | 28 | 33 | 41 | 61.5 | 116 | |
| | 2018.01-2019.12 | 7AT | F | R | Estate FWD G4FJ | | GCI81096 | Inner Joint | | 28 | 33 | 42 | | 129 | |
| | 2018.09-2019.12 | 7AT | F | L | Saloon FWD G4FJ | | GDS84106 | Drive Shaft | 48T | 30 | 28 | 73 | 94.5 | 650 | |
| | 2018.09-2019.12 | 7AT | F | R | Saloon FWD G4FJ | | GDS84105 | Drive Shaft | 48T | 30 | 28 | 73 | 94.5 | 580 | |
| | 2018.09-2019.12 | 7AT | F | L/R | Saloon FWD G4FJ | | GCO82590 | Outer Joint | 48T | 30 | 25 | 73 | 94.5 | 64 | M |
| | 2018.09-2019.12 | 7AT | F | L | Saloon FWD G4FJ | | GCI82512 | Inner Joint | | 28 | 33 | 41 | 61.5 | 116 | |
| | 2018.09-2019.12 | 7AT | F | R | Saloon FWD G4FJ | | GCI81096 | Inner Joint | | 28 | 33 | 42 | | 129 | |
| 1.7 (99 kw) | 2016.09-2018.04 | 7DCT/6MT | F | L/R | Estate FWD D4FD | | GCO24299 | Outer Joint | 48T | 30 | 25 | 73 | 95 | 61.5 | M |
| | 2016.09-2018.04 | 7DCT/6MT | F | L/R | Saloon FWD D4FD | | GCO24299 | Outer Joint | 48T | 30 | 25 | 73 | 95 | 61.5 | M |
| 1.7 (100 kw) | 2012.03-2015.12 | AT | F | L/R | Saloon FWD D4FD | | GCI24100 | Inner Joint | | 28 | 25 | 33 | 67.5 | 83.5 | |
| 1.7 (104 kw) | 2015.11-2018.04 | 7DCT/6MT | F | L/R | Saloon FWD D4FD | | GCO24299 | Outer Joint | 48T | 30 | 25 | 73 | 95 | 61.5 | M |
| | 2016.09-2018.04 | 7DCT/6MT | F | L/R | Estate FWD D4FD | | GCO24299 | Outer Joint | 48T | 30 | 25 | 73 | 95 | 61.5 | M |

| | YEAR | TRANSM. | F/R | L/R | BODY STYLE & DRIVE TYPE & ENGINE | REMARKS | G-AP Ref. | PRODUCT | ABS | Technical Specifications | | | | | |
|---|---|---|---|---|---|---|---|---|---|---|---|---|---|---|---|
| | | | | | | | | | | A | B | C | H | L | P |
| **KIA** **Optima** | | | | | | | | | | | | | | | |
| 2.0 (110 kw) | 2011.01-2015.12 | AT | F | L | Saloon FWD G4KD | | GDS24262 | Drive Shaft | 48T | 27 | 27 | 62 | 92.5 | 672 | |
| | 2011.01-2015.12 | AT | F | L | Saloon FWD G4KD | | GCO24138 | Outer Joint | 48T | 27 | 25 | 62 | 92.5 | 61 | M |
| | 2011.01-2015.12 | AT | F | L/R | Saloon FWD G4KD | | GCI24056 | Inner Joint | | 27 | 25 | 30 | 67 | 83.5 | |
| | 2011.01-2015.12 | MT | F | L | Saloon FWD G4KD | | GDS81176 | Drive Shaft | 48T | 27 | 27 | 62 | 92.5 | 690 | |
| | 2015.09-2019.12 | 6AT | F | L | Saloon FWD G4ND | | GDS81174 | Drive Shaft | 48T | 30 | 27 | 73 | 95 | 690 | |
| | 2015.09-2019.12 | 6AT | F | R | Saloon FWD G4ND | | GDS81175 | Drive Shaft | 48T | 30 | 27 | 73 | 95 | 955 | |
| | 2015.09-2019.12 | 6AT | F | R | Saloon FWD G4ND | | GCI24141 | Inner Joint | | 27 | 33 | 30 | 67 | 95.5 | |
| | 2015.09-2019.12 | 6AT/6MT | F | L/R | Saloon FWD G4ND | | GCO24299 | Outer Joint | 48T | 30 | 25 | 73 | 95 | 61.5 | M |
| 2.0 (113 kw) | 2015.09- | 6AT | F | L | Saloon FWD G4ND | | GDS81174 | Drive Shaft | 48T | 30 | 27 | 73 | 95 | 690 | |
| | 2015.09- | 6AT | F | R | Saloon FWD G4ND | | GDS81175 | Drive Shaft | 48T | 30 | 27 | 73 | 95 | 955 | |
| | 2015.09- | 6AT | F | L | Saloon FWD G4ND | | GCI24141 | Inner Joint | | 27 | 33 | 30 | 67 | 95.5 | |
| | 2015.09- | 6AT/6MT | F | L/R | Saloon FWD G4ND | | GCO24299 | Outer Joint | 48T | 30 | 25 | 73 | 95 | 61.5 | M |
| 2.0 (120 kw) | 2015.09-2019.12 | 6AT | F | L | Saloon FWD G4ND | | GDS81174 | Drive Shaft | 48T | 30 | 27 | 73 | 95 | 690 | |
| | 2015.09-2019.12 | 6AT | F | R | Saloon FWD G4ND | | GDS81175 | Drive Shaft | 48T | 30 | 27 | 73 | 95 | 955 | |
| | 2015.09-2019.12 | 6AT | F | R | Saloon FWD G4ND | | GCI24141 | Inner Joint | | 27 | 33 | 30 | 67 | 95.5 | |
| | 2015.09-2019.12 | 6AT/6MT | F | L/R | Saloon FWD G4ND | | GCO24299 | Outer Joint | 48T | 30 | 25 | 73 | 95 | 61.5 | M |
| | 2016.09-2019.12 | 6AT | F | L | Estate FWD G4ND | | GDS81174 | Drive Shaft | 48T | 30 | 27 | 73 | 95 | 690 | |
| | 2016.09-2019.12 | 6AT | F | R | Estate FWD G4ND | | GDS81175 | Drive Shaft | 48T | 30 | 27 | 73 | 95 | 955 | |
| | 2016.09-2019.12 | 6AT | F | R | Estate FWD G4ND | | GCI24141 | Inner Joint | | 27 | 33 | 30 | 67 | 95.5 | |
| | 2016.09-2019.12 | 6AT/6MT | F | L/R | Estate FWD G4ND | | GCO24299 | Outer Joint | 48T | 30 | 25 | 73 | 95 | 61.5 | M |
| 2.0 (121 kw) | 2012.03-2015.12 | AT | F | L | Saloon FWD G4KD | | GDS24262 | Drive Shaft | 48T | 27 | 27 | 62 | 92.5 | 672 | |
| | 2012.03-2015.12 | AT | F | L/R | Saloon FWD G4KD | Date to:2013.07 | GCO24090 | Outer Joint | 48T | 27 | 25 | 61.9 | 95 | 61 | M |
| | 2012.03-2015.12 | AT | F | L/R | Saloon FWD G4KD | | GCI24056 | Inner Joint | | 27 | 25 | 30 | 67 | 83.5 | |
| | 2012.03-2015.12 | AT/MT | F | L | Saloon FWD G4KD | | GCO24138 | Outer Joint | 48T | 27 | 25 | 62 | 92.5 | 61 | M |
| | 2012.03-2015.12 | MT | F | L | Saloon FWD G4KD | | GDS81176 | Drive Shaft | 48T | 27 | 27 | 62 | 92.5 | 690 | |
| | 2012.03-2015.12 | MT | F | L | Saloon FWD G4KD | | GCI24043 | Inner Joint | | 27 | 25 | 41 | 62.8 | 92.5 | |
| | 2013.03-2015.12 | AT | F | L | Saloon FWD G4NA;G4ND | | GDS24262 | Drive Shaft | 48T | 27 | 27 | 62 | 92.5 | 672 | |
| | 2013.03-2015.12 | AT | F | L | Saloon FWD G4NA;G4ND | | GCO24138 | Outer Joint | 48T | 27 | 25 | 62 | 92.5 | 61 | M |
| | 2013.03-2015.12 | AT | F | L/R | Saloon FWD G4NA;G4ND | | GCI24056 | Inner Joint | | 27 | 25 | 30 | 67 | 83.5 | |
| | 2013.03-2015.12 | MT | F | L | Saloon FWD G4NA;G4ND | | GDS81176 | Drive Shaft | 48T | 27 | 27 | 62 | 92.5 | 690 | |
| 2.0 (125 kw) | 2012.03-2015.12 | AT | F | L | Saloon FWD G4KD | | GDS24262 | Drive Shaft | 48T | 27 | 27 | 62 | 92.5 | 672 | |
| | 2012.03-2015.12 | AT | F | L/R | Saloon FWD G4KD | ABS ring thickness 13.5mm | GCO24090 | Outer Joint | 48T | 27 | 25 | 61.9 | 95 | 61 | M |
| | 2012.03-2015.12 | AT | F | L | Saloon FWD G4KD | | GCI24056 | Inner Joint | | 27 | 25 | 30 | 67 | 83.5 | |
| | 2012.03-2015.12 | AT/MT | F | L | Saloon FWD G4KD | ABS ring thickness 15.5mm | GCO24138 | Outer Joint | 48T | 27 | 25 | 62 | 92.5 | 61 | M |
| | 2012.03-2015.12 | MT | F | L | Saloon FWD G4KD | | GDS81176 | Drive Shaft | 48T | 27 | 27 | 62 | 92.5 | 690 | |
| | 2012.03-2015.12 | MT | F | L | Saloon FWD G4KD | | GCI24043 | Inner Joint | | 27 | 25 | 41 | 62.8 | 92.5 | |
| 2.0 (140 kw) | 2012.12-2015.12 | 6AT | F | L | Saloon FWD G4NE | | GDS81173 | Drive Shaft | 48T | 27 | 28 | 62 | 92.5 | 639 | |
| | 2012.12-2015.12 | 6AT | F | R | Saloon FWD G4NE | | GDS84360 | Drive Shaft | 48T | 27 | 28 | 62 | 92.5 | 1003 | |
| | 2012.12-2015.12 | 6AT | F | L/R | Saloon FWD G4NE | | GCO24138 | Outer Joint | 48T | 27 | 25 | 62 | 92.5 | 61 | M |
| | 2012.12-2015.12 | 6AT | F | L/R | Saloon FWD G4NE | | GCI24100 | Inner Joint | | 28 | 25 | 33 | 67.5 | 83.5 | |
| 2.0 (151 kw) | 2016.09-2019.12 | 6AT | F | L | Saloon FWD G4NG | | GDS84319 | Drive Shaft | 48T | 30 | 28 | 73 | 95 | 641 | |
| | 2016.09-2019.12 | 6AT | F | R | Saloon FWD G4NG | | GDS84318 | Drive Shaft | 48T | 30 | 28 | 73 | 95 | 1005 | |
| | 2016.09-2019.12 | 6AT | F | L | Saloon FWD G4NG | | GCO24299 | Outer Joint | 48T | 30 | 25 | 73 | 95 | 61.5 | M |
| | 2016.09-2019.12 | 6AT | F | R | Saloon FWD G4NG | | GCO82789 | Outer Joint | 48T | 30 | 25 | 73 | 95 | 61.5 | M |
| | 2016.09-2019.12 | 6AT | F | L | Saloon FWD G4NG | | GCI24100 | Inner Joint | | 28 | 25 | 33 | 67.5 | 83.5 | |
| | 2016.09-2019.12 | 6AT | F | R | Saloon FWD G4NG | | GCI82715 | Inner Joint | | 28 | 25 | 33 | 67.5 | 83.5 | |
| | 2017.04-2019.12 | 6AT | F | L | Estate FWD G4NG | | GDS84319 | Drive Shaft | 48T | 30 | 28 | 73 | 95 | 641 | |
| | 2017.04-2019.12 | 6AT | F | R | Estate FWD G4NG | | GCO82789 | Outer Joint | 48T | 30 | 25 | 73 | 95 | 61.5 | M |
| | 2017.04-2019.12 | 6AT | F | L/R | Estate FWD G4NG | | GCO24299 | Outer Joint | 48T | 30 | 25 | 73 | 95 | 61.5 | M |
| | 2017.04-2019.12 | 6AT | F | L | Estate FWD G4NG | | GCI24100 | Inner Joint | | 28 | 25 | 33 | 67.5 | 83.5 | |
| 2.0 (175 kw) | 2018.01-2019.12 | 6AT | F | L | Estate FWD G4KH | | GDS81167 | Drive Shaft | 48T | 30 | 28 | 73 | 94.5 | 656 | |
| | 2018.01-2019.12 | 6AT | F | R | Estate FWD G4KH | | GDS81168 | Drive Shaft | 48T | 30 | 28 | 73 | 94.5 | 594 | |
| | 2018.01-2019.12 | 6AT | F | L/R | Estate FWD G4KH | | GCO81064 | Outer Joint | 48T | 30 | 36 | 73 | 94.5 | 67.5 | I |
| | 2018.01-2019.12 | 6AT | F | L | Estate FWD G4KH | | GCI24140 | Inner Joint | | 28 | 33 | 33 | 67 | 105.5 | |
| | 2018.01-2019.12 | 6AT | F | R | Estate FWD G4KH | | GCI81096 | Inner Joint | | 28 | 33 | 42 | | 129 | |
| | 2018.06-2019.12 | 6AT | F | L/R | Saloon FWD G4KH | | GCO81064 | Outer Joint | 48T | 30 | 36 | 73 | 94.5 | 67.5 | I |
| | 2018.06-2019.12 | 6AT | F | L | Saloon FWD G4KH | | GCI24140 | Inner Joint | | 28 | 33 | 33 | 67 | 105.5 | |
| | 2018.06-2019.12 | 6AT | F | R | Saloon FWD G4KH | | GCI81096 | Inner Joint | | 28 | 33 | 42 | | 129 | |
| | 2018.06-2019.12 | | F | L | Saloon FWD G4KH | | GDS81167 | Drive Shaft | 48T | 30 | 28 | 73 | 94.5 | 656 | |
| | 2018.06-2019.12 | | F | R | Saloon FWD G4KH | | GDS81168 | Drive Shaft | 48T | 30 | 28 | 73 | 94.5 | 594 | |
| 2.0 (180 kw) | 2015.09-2019.12 | 6AT | F | L | Saloon FWD G4KH | | GDS81167 | Drive Shaft | 48T | 30 | 28 | 73 | 94.5 | 656 | |
| | 2015.09-2019.12 | 6AT | F | R | Saloon FWD G4KH | | GDS81168 | Drive Shaft | 48T | 30 | 28 | 73 | 94.5 | 594 | |
| | 2015.09-2019.12 | 6AT | F | L/R | Saloon FWD G4KH | | GCO81064 | Outer Joint | 48T | 30 | 36 | 73 | 94.5 | 67.5 | I |
| | 2015.09-2019.12 | 6AT | F | L | Saloon FWD G4KH | | GCI24140 | Inner Joint | | 28 | 33 | 33 | 67 | 105.5 | |
| | 2015.09-2019.12 | 6AT | F | R | Saloon FWD G4KH | | GCI81096 | Inner Joint | | 28 | 33 | 42 | | 129 | |

| | YEAR | TRANSM. | F/R | L/R | BODY STYLE & DRIVE TYPE & ENGINE | REMARKS | G-AP Ref. | PRODUCT | ABS | Technical Specifications A | B | C | H | L | P |
|---|---|---|---|---|---|---|---|---|---|---|---|---|---|---|---|
| **KIA** | | | | | | | | | | | | | | | |
| **Optima** | | | | | | | | | | | | | | | |
| 2.0 (180 kw) | 2016.09-2019.12 | 6AT | F | L | Estate FWD G4KH | | GDS81167 | Drive Shaft | 48T | 30 | 28 | 73 | 94.5 | 656 | |
| | 2016.09-2019.12 | 6AT | F | R | Estate FWD G4KH | | GDS81168 | Drive Shaft | 48T | 30 | 28 | 73 | 94.5 | 594 | |
| | 2016.09-2019.12 | 6AT | F | L/R | Estate FWD G4KH | | GCO81064 | Outer Joint | 48T | 30 | 36 | 73 | 94.5 | 67.5 | I |
| | 2016.09-2019.12 | 6AT | F | L | Estate FWD G4KH | | GCI24140 | Inner Joint | | 28 | 33 | 33 | 67 | 105.5 | |
| | 2016.09-2019.12 | 6AT | F | R | Estate FWD G4KH | | GCI81096 | Inner Joint | | 28 | 33 | 42 | | 129 | |
| 2.0 (204 kw) | 2011.01-2015.12 | 6AT | F | L/R | Saloon FWD G4KH | | GCI24056 | Inner Joint | | 27 | 25 | 30 | 67 | 83.5 | |
| 2.4 (126 kw) | 2015.09-2019.12 | 6AT | F | L | Saloon FWD G4KE | | GDS24497 | Drive Shaft | 48T | 30 | 27 | 73 | 95 | 672 | |
| | 2015.09-2019.12 | 6AT | F | R | Saloon FWD G4KE | | GDS24496 | Drive Shaft | 48T | 30 | 27 | 73 | 95 | 976 | |
| | 2015.09-2019.12 | 6AT | F | L/R | Saloon FWD G4KE | | GCO24299 | Outer Joint | 48T | 30 | 25 | 73 | 95 | 61.5 | M |
| 2.4 (129 kw) | 2010.06-2015.12 | AT | F | R | Saloon FWD G4KC | | GDS24261 | Drive Shaft | 48T | 27 | 27 | 62 | 92.5 | 970 | |
| | 2010.06-2015.12 | AT | F | L/R | Saloon FWD G4KC | | GCI24056 | Inner Joint | | 27 | 25 | 30 | 67 | 83.5 | |
| | 2010.06-2015.12 | MT | F | L | Saloon FWD G4KC | | GDS56176 | Drive Shaft | 48T | 27 | 27 | 62 | 93 | 675 | |
| | 2010.06-2015.12 | MT | F | R | Saloon FWD G4KC | | GDS57490 | Drive Shaft | 48T | 27 | 27 | 62 | 93 | 987 | |
| | 2010.06-2015.12 | MT | F | L/R | Saloon FWD G4KC | | GCO83441 | Outer Joint | 48T | 27 | 25 | 62 | 93 | 59.5 | M |
| | 2010.06-2015.12 | MT | F | L/R | Saloon FWD G4KC | | GCI82713 | Inner Joint | | 27 | 25 | 41 | 61.5 | 91.5 | |
| 2.4 (132 kw) | 2012.01-2015.12 | AT | F | R | Saloon FWD G4KE | | GDS24261 | Drive Shaft | 48T | 27 | 27 | 62 | 92.5 | 970 | |
| | 2012.01-2015.12 | AT | F | L/R | Saloon FWD G4KE | | GCI24056 | Inner Joint | | 27 | 25 | 30 | 67 | 83.5 | |
| | 2012.03-2015.12 | AT | F | R | Saloon FWD G4KJ | | GDS24261 | Drive Shaft | 48T | 27 | 27 | 62 | 92.5 | 970 | |
| | 2012.03-2015.12 | AT | F | L/R | Saloon FWD G4KJ | | GCI24056 | Inner Joint | | 27 | 25 | 30 | 67 | 83.5 | |
| 2.4 (138 kw) | 2015.09-2019.12 | 6AT | F | L | Saloon FWD G4KJ | | GDS24497 | Drive Shaft | 48T | 30 | 27 | 73 | 95 | 672 | |
| | 2015.09-2019.12 | 6AT | F | R | Saloon FWD G4KJ | | GDS24496 | Drive Shaft | 48T | 30 | 27 | 73 | 95 | 976 | |
| | 2015.09-2019.12 | 6AT | F | L/R | Saloon FWD G4KJ | | GCO24299 | Outer Joint | 48T | 30 | 25 | 73 | 95 | 61.5 | M |
| | 2015.09-2019.12 | 6AT | F | R | Saloon FWD G4KJ | | GCI24141 | Inner Joint | | 27 | 33 | 30 | 67 | 95.5 | |
| 2.4 (149 kw) | 2010.09-2015.12 | AT | F | R | Saloon FWD G4KJ | | GDS24261 | Drive Shaft | 48T | 27 | 27 | 62 | 92.5 | 970 | |
| | 2010.09-2015.12 | AT | F | R | Saloon FWD G4KJ | | GCO24138 | Outer Joint | 48T | 27 | 25 | 62 | 92.5 | 61 | M |
| | 2010.09-2015.12 | AT | F | L/R | Saloon FWD G4KJ | | GCI24056 | Inner Joint | | 27 | 25 | 30 | 67 | 83.5 | |
| 2.4 (154 kw) | 2011.09-2015.12 | | F | L | Saloon FWD G4KC | | GDS81173 | Drive Shaft | 48T | 27 | 28 | 62 | 92.5 | 639 | |
| | 2011.09-2015.12 | | F | L | Saloon FWD G4KC | | GCI24100 | Inner Joint | | 28 | 25 | 33 | 67.5 | 83.5 | |
| **Picanto** | | | | | | | | | | | | | | | |
| 1.0 (45 kw) | 2004.04-2011.04 | AT | F | L | Hatchback FWD G4HE | | GDS27207 | Drive Shaft | 48T | 24 | 25 | 52.5 | 86.5 | 606 | |
| | 2004.04-2011.04 | AT | F | R | Hatchback FWD G4HE | | GDS27206 | Drive Shaft | 48T | 24 | 25 | 52.5 | 86.5 | 876 | |
| | 2004.04-2011.04 | AT/MT | F | L/R | Hatchback FWD G4HE | | GCO27077 | Outer Joint | | 24 | 20 | 52.5 | 85.5 | 51 | M |
| | 2004.04-2011.04 | AT/MT | F | L/R | Hatchback FWD G4HE | | GCO34156 | Outer Joint | 48T | 24 | 20 | 52.5 | 86.5 | 52 | M |
| | 2004.04-2011.04 | AT/MT | F | L/R | Hatchback FWD G4HE | | GCO99300 | Outer Joint | 48T | 24 | 20 | 52.5 | 86.5 | 52 | M |
| | 2004.04-2011.04 | AT/MT | F | L/R | Hatchback FWD G4HE | | GCI24019 | Inner Joint | | 25 | 20 | 35 | 54.5 | 82.5 | |
| | 2004.04-2011.04 | MT | F | L | Hatchback FWD G4HE | | GDS27132 | Drive Shaft | 48T | 24 | 25 | 52.5 | 86.5 | 631 | |
| | 2004.04-2011.04 | MT | F | R | Hatchback FWD G4HE | | GDS99216 | Drive Shaft | 48T | 24 | 25 | 52.5 | 86.5 | 853 | |
| | 2004.04-2011.04 | MT | F | L/R | Hatchback FWD G4HE | | GCO27072 | Outer Joint | 48T | 24 | 20 | 52.5 | 85.5 | 51 | M |
| | 2009.01-2011.04 | 5MT | F | L | Hatchback FWD G4HE | | GDS27132 | Drive Shaft | 48T | 24 | 25 | 52.5 | 86.5 | 631 | |
| | 2009.01-2011.04 | 5MT | F | R | Hatchback FWD G4HE | | GDS99216 | Drive Shaft | 48T | 24 | 25 | 52.5 | 86.5 | 853 | |
| | 2009.01-2011.04 | 5MT | F | L/R | Hatchback FWD G4HE | | GCO27072 | Outer Joint | 48T | 24 | 20 | 52.5 | 85.5 | 51 | M |
| | 2009.01-2011.04 | 5MT | F | L/R | Hatchback FWD G4HE | | GCO34156 | Outer Joint | 48T | 24 | 20 | 52.5 | 86.5 | 52 | M |
| | 2009.01-2011.04 | 5MT | F | L/R | Hatchback FWD G4HE | | GCO99300 | Outer Joint | 48T | 24 | 20 | 52.5 | 86.5 | 52 | M |
| | 2009.01-2011.04 | 5MT | F | L/R | Hatchback FWD G4HE | | GCI24019 | Inner Joint | | 25 | 20 | 35 | 54.5 | 82.5 | |
| | 2009.01-2011.04 | | F | R | Hatchback FWD G4HE | | GCO27077 | Outer Joint | | 24 | 20 | 52.5 | 85.5 | 51 | M |
| 1.0 (46 kw) | 2007.09-2011.04 | AT | F | L | Hatchback FWD G4HE | | GDS27207 | Drive Shaft | 48T | 24 | 25 | 52.5 | 86.5 | 606 | |
| | 2007.09-2011.04 | AT | F | R | Hatchback FWD G4HE | | GDS27206 | Drive Shaft | 48T | 24 | 25 | 52.5 | 86.5 | 876 | |
| | 2007.09-2011.04 | AT/MT | F | L/R | Hatchback FWD G4HE | | GCO27077 | Outer Joint | | 24 | 20 | 52.5 | 85.5 | 51 | M |
| | 2007.09-2011.04 | AT/MT | F | L/R | Hatchback FWD G4HE | | GCO34156 | Outer Joint | 48T | 24 | 20 | 52.5 | 86.5 | 52 | M |
| | 2007.09-2011.04 | AT/MT | F | L/R | Hatchback FWD G4HE | | GCO99300 | Outer Joint | 48T | 24 | 20 | 52.5 | 86.5 | 52 | M |
| | 2007.09-2011.04 | AT/MT | F | L/R | Hatchback FWD G4HE | | GCI24019 | Inner Joint | | 25 | 20 | 35 | 54.5 | 82.5 | |
| | 2007.09-2011.04 | MT | F | L | Hatchback FWD G4HE | | GDS27132 | Drive Shaft | 48T | 24 | 25 | 52.5 | 86.5 | 631 | |
| | 2007.09-2011.04 | MT | F | R | Hatchback FWD G4HE | | GDS99216 | Drive Shaft | 48T | 24 | 25 | 52.5 | 86.5 | 853 | |
| | 2007.09-2011.04 | MT | F | L/R | Hatchback FWD G4HE | | GCO27072 | Outer Joint | 48T | 24 | 20 | 52.5 | 85.5 | 51 | M |
| 1.0 (48 kw) | 2018.11- | 4AT | F | L/R | Hatchback FWD G3LD, G3LA | | GCI81391 | Inner Joint | | 25 | 20 | 35 | 55.5 | 84 | |
| | 2018.11- | 5MT | F | L | Hatchback FWD G3LD, G3LA | | GDS83724 | Drive Shaft | | 25 | 25 | 52.5 | 94.5 | 649 | |
| | 2018.11- | 5MT | F | R | Hatchback FWD G3LD, G3LA | | GDS83725 | Drive Shaft | | 25 | 25 | 52.5 | 94.5 | 835 | |
| | 2018.11- | 5MT | F | L/R | Hatchback FWD G3LD, G3LA | | GCO82287 | Outer Joint | | 25 | 21 | 52.5 | 94.5 | 55.5 | M |
| 1.0 (49 kw) | 2011.05-2017.03 | 5MT | F | L | Hatchback FWD G3LA | | GDS34257 | Drive Shaft | 48T | 24 | 25 | 52.5 | 86.5 | 609 | |
| | 2011.05-2017.03 | 5MT | F | R | Hatchback FWD G3LA | | GDS34171 | Drive Shaft | 48T | 24 | 25 | 52.5 | 86.5 | 882 | |
| | 2011.05-2017.03 | 5MT | F | L/R | Hatchback FWD G3LA | | GCO34156 | Outer Joint | 48T | 24 | 20 | 52.5 | 86.5 | 52 | M |
| | 2011.05-2017.03 | 5MT | F | L/R | Hatchback FWD G3LA | | GCO34157 | Outer Joint | | 24 | 20 | 52.5 | 86.5 | 52 | M |
| | 2011.05-2017.03 | 5MT | F | L/R | Hatchback FWD G3LA | | GCI24019 | Inner Joint | | 25 | 20 | 35 | 54.5 | 82.5 | |
| | 2013.08-2017.03 | MT | F | L | Hatchback FWD B3LA | | GDS34257 | Drive Shaft | 48T | 24 | 25 | 52.5 | 86.5 | 609 | |
| | 2013.08-2017.03 | MT | F | R | Hatchback FWD B3LA | | GDS34171 | Drive Shaft | 48T | 24 | 25 | 52.5 | 86.5 | 882 | |

| | YEAR | TRANSM. | F/R | L/R | BODY STYLE & DRIVE TYPE & ENGINE | REMARKS | G-AP Ref. | PRODUCT | ABS | Technical Specifications | | | | | |
|---|---|---|---|---|---|---|---|---|---|---|---|---|---|---|---|
| | | | | | | | | | | A | B | C | H | L | P |
| **KIA** **Picanto** | | | | | | | | | | | | | | | |
| 1.0 (49 kw) | 2013.08-2017.03 | MT | F | L/R | Hatchback FWD B3LA | | GCO34156 | Outer Joint | 48T | 24 | 20 | 52.5 | 86.5 | 52 | M |
| | 2013.08-2017.03 | MT | F | L/R | Hatchback FWD B3LA | | GCI24019 | Inner Joint | | 25 | 20 | 35 | 54.5 | 82.5 | |
| | 2017.03- | 4AT | F | L | Hatchback FWD G3LA;G3LD | | GDS57380 | Drive Shaft | | 25 | 25 | 52.5 | 94.5 | 640 | |
| | 2017.03- | 4AT | F | R | Hatchback FWD G3LA;G3LD | | GDS57379 | Drive Shaft | | 25 | 25 | 52.5 | 94.5 | 842 | |
| | 2017.03- | 4AT | F | L/R | Hatchback FWD G3LA;G3LD | | GCO83520 | Outer Joint | | 25 | 20 | 52.5 | 94.5 | 53 | M |
| | 2017.03- | 4AT | F | L/R | Hatchback FWD G3LA;G3LD | | GCI81391 | Inner Joint | | 25 | 20 | 35 | 55.5 | 84 | |
| | 2017.03- | 5MT | F | L | Hatchback FWD G3LA;G3LD | | GDS83724 | Drive Shaft | | 25 | 25 | 52.5 | 94.5 | 649 | |
| | 2017.03- | 5MT | F | R | Hatchback FWD G3LA;G3LD | | GDS83725 | Drive Shaft | | 25 | 25 | 52.5 | 94.5 | 835 | |
| | 2017.03- | 5MT | F | L/R | Hatchback FWD G3LA;G3LD | | GCO82287 | Outer Joint | | 25 | 21 | 52.5 | 94.5 | 55.5 | M |
| 1.0 (50 kw) | 2025.07- | 5MT/5AMT | F | L | Hatchback FWD G3LG | | GDS83724 | Drive Shaft | | 25 | 25 | 52.5 | 94.5 | 649 | |
| | 2025.07- | 5MT/5AMT | F | R | Hatchback FWD G3LG | | GDS83725 | Drive Shaft | | 25 | 25 | 52.5 | 94.5 | 835 | |
| 1.0 (51 kw) | 2011.05-2017.03 | 5MT | F | L | Hatchback FWD G3LA | | GDS34257 | Drive Shaft | 48T | 24 | 25 | 52.5 | 86.5 | 609 | |
| | 2011.05-2017.03 | 5MT | F | R | Hatchback FWD G3LA | | GDS34171 | Drive Shaft | 48T | 24 | 25 | 52.5 | 86.5 | 882 | |
| | 2011.05-2017.03 | 5MT | F | L/R | Hatchback FWD G3LA | | GCO34156 | Outer Joint | 48T | 24 | 20 | 52.5 | 86.5 | 52 | M |
| | 2011.05-2017.03 | 5MT | F | L/R | Hatchback FWD G3LA | | GCO34157 | Outer Joint | | 24 | 20 | 52.5 | 86.5 | 52 | M |
| | 2011.05-2017.03 | 5MT | F | L | Hatchback FWD G3LA | | GCI24019 | Inner Joint | | 25 | 20 | 35 | 54.5 | 82.5 | |
| | 2017.03- | 4AT | F | L | Hatchback FWD G3LA | | GDS83724 | Drive Shaft | | 25 | 25 | 52.5 | 94.5 | 649 | |
| | 2017.03- | 4AT | F | R | Hatchback FWD G3LA | | GDS83725 | Drive Shaft | | 25 | 25 | 52.5 | 94.5 | 835 | |
| | 2017.03- | 4AT | F | L/R | Hatchback FWD G3LA | | GCO82287 | Outer Joint | | 25 | 21 | 52.5 | 94.5 | 55.5 | M |
| | 2017.03- | 4AT | F | L/R | Hatchback FWD G3LA | | GCI81391 | Inner Joint | | 25 | 20 | 35 | 55.5 | 84 | |
| 1.0 (60 kw) | 2011.05-2014.10 | 5MT | F | L | Hatchback FWD B3LA | | GDS34257 | Drive Shaft | 48T | 24 | 25 | 52.5 | 86.5 | 609 | |
| | 2011.05-2014.10 | 5MT | F | R | Hatchback FWD B3LA | | GDS34171 | Drive Shaft | 48T | 24 | 25 | 52.5 | 86.5 | 882 | |
| | 2011.05-2014.10 | 5MT | F | L | Hatchback FWD B3LA | | GCI24019 | Inner Joint | | 25 | 20 | 35 | 54.5 | 82.5 | |
| | 2011.05-2014.10 | | F | L/R | Hatchback FWD B3LA | | GCO34157 | Outer Joint | | 24 | 20 | 52.5 | 86.5 | 52 | M |
| 1.1 (48 kw) | 2004.04-2011.09 | AT | F | L | Hatchback FWD G4HG | | GDS27207 | Drive Shaft | 48T | 24 | 25 | 52.5 | 86.5 | 606 | |
| | 2004.04-2011.09 | AT | F | R | Hatchback FWD G4HG | | GDS27206 | Drive Shaft | 48T | 24 | 25 | 52.5 | 86.5 | 876 | |
| | 2004.04-2011.09 | AT/MT | F | L/R | Hatchback FWD G4HG | | GCO27077 | Outer Joint | | 24 | 20 | 52.5 | 85.5 | 51 | M |
| | 2004.04-2011.09 | AT/MT | F | L/R | Hatchback FWD G4HG | | GCO34156 | Outer Joint | 48T | 24 | 20 | 52.5 | 86.5 | 52 | M |
| | 2004.04-2011.09 | AT/MT | F | L/R | Hatchback FWD G4HG | | GCO99300 | Outer Joint | 48T | 24 | 20 | 52.5 | 86.5 | 52 | M |
| | 2004.04-2011.09 | AT/MT | F | L/R | Hatchback FWD G4HG | | GCI24019 | Inner Joint | | 25 | 20 | 35 | 54.5 | 82.5 | |
| | 2004.04-2011.09 | MT | F | L | Hatchback FWD G4HG | | GDS27132 | Drive Shaft | 48T | 24 | 25 | 52.5 | 86.5 | 631 | |
| | 2004.04-2011.09 | MT | F | R | Hatchback FWD G4HG | | GDS99216 | Drive Shaft | 48T | 24 | 25 | 52.5 | 86.5 | 853 | |
| | 2004.04-2011.09 | MT | F | L/R | Hatchback FWD G4HG | | GCO27072 | Outer Joint | 48T | 24 | 20 | 52.5 | 85.5 | 51 | M |
| | 2009.01-2011.04 | AT | F | L | Hatchback FWD G4HG | | GDS27207 | Drive Shaft | 48T | 24 | 25 | 52.5 | 86.5 | 606 | |
| | 2009.01-2011.04 | AT | F | R | Hatchback FWD G4HG | | GDS27206 | Drive Shaft | 48T | 24 | 25 | 52.5 | 86.5 | 876 | |
| | 2009.01-2011.04 | AT/MT | F | L/R | Hatchback FWD G4HG | | GCO34156 | Outer Joint | 48T | 24 | 20 | 52.5 | 86.5 | 52 | M |
| | 2009.01-2011.04 | AT/MT | F | L/R | Hatchback FWD G4HG | | GCO99300 | Outer Joint | 48T | 24 | 20 | 52.5 | 86.5 | 52 | M |
| | 2009.01-2011.04 | AT/MT | F | L/R | Hatchback FWD G4HG | | GCI24019 | Inner Joint | | 25 | 20 | 35 | 54.5 | 82.5 | |
| | 2009.01-2011.04 | MT | F | L | Hatchback FWD G4HG | | GDS27132 | Drive Shaft | 48T | 24 | 25 | 52.5 | 86.5 | 631 | |
| | 2009.01-2011.04 | MT | F | R | Hatchback FWD G4HG | | GDS99216 | Drive Shaft | 48T | 24 | 25 | 52.5 | 86.5 | 853 | |
| | 2009.01-2011.04 | MT | F | L/R | Hatchback FWD G4HG | | GCO27072 | Outer Joint | 48T | 24 | 20 | 52.5 | 85.5 | 51 | M |
| | 2009.01-2011.04 | | F | R | Hatchback FWD G4HG | | GCO27077 | Outer Joint | | 24 | 20 | 52.5 | 85.5 | 51 | M |
| 1.1 (55 kw) | 2005.10-2011.04 | 5MT | F | L/R | Hatchback FWD D3FA | | GCO27077 | Outer Joint | | 24 | 20 | 52.5 | 85.5 | 51 | M |
| | 2005.10-2011.04 | 5MT | F | L/R | Hatchback FWD D3FA | | GCO34094 | Outer Joint | 48T | 24 | 21 | 52.5 | 86.5 | 54.5 | M |
| | 2005.10-2011.04 | 5MT | F | L/R | Hatchback FWD D3FA | | GCO34146 | Outer Joint | 48T | 24 | 21 | 52.5 | 86 | 63.5 | M |
| 1.2 (62 kw) | 2017.03- | 4AT | F | L | Hatchback FWD G4LA | | GDS83625 | Drive Shaft | | 25 | 25 | 52.5 | 94.5 | 598 | |
| | 2017.03- | 4AT | F | R | Hatchback FWD G4LA | | GDS83626 | Drive Shaft | | 25 | 25 | 52.5 | 94.5 | 887 | |
| | 2017.03- | 4AT | F | L/R | Hatchback FWD G4LA | | GCO82443 | Outer Joint | | 25 | 22 | 52.5 | 94.5 | 54 | M |
| | 2017.03- | 4AT | F | L/R | Hatchback FWD G4LA | | GCI81391 | Inner Joint | | 25 | 20 | 35 | 55.5 | 84 | |
| | 2017.03- | 5MT | F | L | Hatchback FWD G4LA | | GDS83133 | Drive Shaft | | 25 | 25 | 52.5 | 94.5 | 605 | |
| | 2017.03- | 5MT | F | R | Hatchback FWD G4LA | | GDS83132 | Drive Shaft | | 25 | 25 | 52.5 | 94.5 | 881 | |
| | 2017.03- | 5MT | F | L/R | Hatchback FWD G4LA | | GCO82287 | Outer Joint | | 25 | 21 | 52.5 | 94.5 | 55.5 | M |
| | 2017.03- | 5MT | F | L/R | Hatchback FWD G4LA | | GCI24050 | Inner Joint | | 25 | 21 | 35 | 54 | 83.5 | |
| | 2020.07- | 5AT/5MT | F | L | Hatchback FWD G4LF | | GDS83133 | Drive Shaft | | 25 | 25 | 52.5 | 94.5 | 605 | |
| | 2020.07- | 5AT/5MT | F | R | Hatchback FWD G4LF | | GDS83132 | Drive Shaft | | 25 | 25 | 52.5 | 94.5 | 881 | |
| | 2020.07- | 5AT/5MT | F | L/R | Hatchback FWD G4LF | | GCO82287 | Outer Joint | | 25 | 21 | 52.5 | 94.5 | 55.5 | M |
| | 2020.07- | 5AT/5MT | F | L/R | Hatchback FWD G4LF | | GCI24050 | Inner Joint | | 25 | 21 | 35 | 54 | 83.5 | |
| 1.2 (63 kw) | 2011.09-2017.03 | 4AT | F | L | Hatchback FWD G4LA | Date from:2015.01 | GDS27226 | Drive Shaft | 48T | 24 | 25 | 52.5 | 86 | 602 | |
| | 2011.09-2017.03 | 4AT | F | L | Hatchback FWD G4LA | Date to:2014.12 | GDS34257 | Drive Shaft | 48T | 24 | 25 | 52.5 | 86.5 | 609 | |
| | 2011.09-2017.03 | 4AT | F | R | Hatchback FWD G4LA | Date to:2014.12 | GDS27191 | Drive Shaft | 48T | 24 | 25 | 52.5 | 86.5 | 893 | |
| | 2011.09-2017.03 | 4AT | F | R | Hatchback FWD G4LA | Date from:2015.01 | GDS27224 | Drive Shaft | 48T | 24 | 25 | 52.5 | 86 | 890 | |
| | 2011.09-2017.03 | 4AT | F | L/R | Hatchback FWD G4LA | Date from:2015.01 | GCO27126 | Outer Joint | 48T | 24 | 21 | 52.5 | 86 | 56 | M |
| | 2011.09-2017.03 | 4AT | F | L/R | Hatchback FWD G4LA | | GCO34157 | Outer Joint | | 24 | 20 | 52.5 | 86.5 | 52 | M |
| | 2011.09-2017.03 | 4AT | F | L/R | Hatchback FWD G4LA | Date to:2004.12 | GCI24050 | Inner Joint | | 25 | 21 | 35 | 54 | 83.5 | |
| | 2011.09-2017.03 | 5MT | F | L | Hatchback FWD G4LA | | GDS34257 | Drive Shaft | 48T | 24 | 25 | 52.5 | 86.5 | 609 | |

| | YEAR | TRANSM. | F/R | L/R | BODY STYLE & DRIVE TYPE & ENGINE | REMARKS | G-AP Ref. | PRODUCT | ABS | Technical Specifications A | B | C | H | L | P |
|---|---|---|---|---|---|---|---|---|---|---|---|---|---|---|---|
| **KIA** | | | | | | | | | | | | | | | |
| **Picanto** | | | | | | | | | | | | | | | |
| 1.2 (63 kw) | 2011.09-2017.03 | 5MT | F | R | Hatchback FWD G4LA | | GDS34171 | Drive Shaft | 48T | 24 | 25 | 52.5 | 86.5 | 882 | |
| | 2011.09-2017.03 | 5MT | F | L | Hatchback FWD G4LA | Date to:2014.12 | GCI24019 | Inner Joint | | 25 | 20 | 35 | 54.5 | 82.5 | |
| 1.2 (64 kw) | 2011.09-2017.02 | 4AT | F | L | Hatchback FWD G4LA | Date from:2015.01 | GDS27226 | Drive Shaft | 48T | 24 | 25 | 52.5 | 86 | 602 | |
| | 2011.09-2017.02 | 4AT | F | L | Hatchback FWD G4LA | Date to:2014.12 | GDS34257 | Drive Shaft | 48T | 24 | 25 | 52.5 | 86.5 | 609 | |
| | 2011.09-2017.02 | 4AT | F | R | Hatchback FWD G4LA | Date to:2014.12 | GDS27191 | Drive Shaft | 48T | 24 | 25 | 52.5 | 86.5 | 893 | |
| | 2011.09-2017.02 | 4AT | F | R | Hatchback FWD G4LA | Date from:2015.01 | GDS27224 | Drive Shaft | 48T | 24 | 25 | 52.5 | 86 | 890 | |
| | 2011.09-2017.02 | 4AT | F | L/R | Hatchback FWD G4LA | Date from:2015.01 | GCO27126 | Outer Joint | 48T | 24 | 21 | 52.5 | 86 | 56 | M |
| | 2011.09-2017.02 | 4AT | F | L/R | Hatchback FWD G4LA | Date to:2014.12 | GCI24050 | Inner Joint | | 25 | 21 | 35 | 54 | 83.5 | |
| | 2011.09-2017.02 | 5MT | F | L | Hatchback FWD G4LA | | GDS34257 | Drive Shaft | 48T | 24 | 25 | 52.5 | 86.5 | 609 | |
| | 2011.09-2017.02 | 5MT | F | R | Hatchback FWD G4LA | | GDS34171 | Drive Shaft | 48T | 24 | 25 | 52.5 | 86.5 | 882 | |
| | 2011.09-2017.02 | 5MT | F | L | Hatchback FWD G4LA | Date to:2014.12 | GCI24019 | Inner Joint | | 25 | 20 | 35 | 54.5 | 82.5 | |
| **Picanto/Morning** | | | | | | | | | | | | | | | |
| 1.0 (46 kw) | 2024.05- | 5MT/5AMT | F | L | Hatchback FWD G3LD | | GDS83724 | Drive Shaft | | 25 | 25 | 52.5 | 94.5 | 649 | |
| | 2024.05- | 5MT/5AMT | F | R | Hatchback FWD G3LD | | GDS83725 | Drive Shaft | | 25 | 25 | 52.5 | 94.5 | 835 | |
| 1.2 (58 kw) | 2024.05- | 5MT | F | L | Hatchback FWD G4LF | | GDS83133 | Drive Shaft | | 25 | 25 | 52.5 | 94.5 | 605 | |
| | 2024.05- | 5MT | F | R | Hatchback FWD G4LF | | GDS83132 | Drive Shaft | | 25 | 25 | 52.5 | 94.5 | 881 | |
| **Pride** | | | | | | | | | | | | | | | |
| 1.1 (38 kw) | 1991.01-2000.10 | MT | F | L | Hatchback FWD B1 | | GDS27040 | Drive Shaft | | 24 | 22 | 52 | 86 | 605.4 | |
| | 1991.01-2000.10 | MT | F | R | Hatchback FWD B1 | | GDS27042 | Drive Shaft | | 24 | 22 | 52 | 86 | 880 | |
| | 1991.01-2000.10 | MT | F | L/R | Hatchback FWD B1 | | GCO18030 | Outer Joint | | 24 | 19 | 52 | 86 | 50.5 | M |
| | 1991.01-2000.10 | MT | F | L/R | Hatchback FWD B1 | Vehicle Production Country:Iran | GCO27005 | Outer Joint | | 24 | 19 | 52 | 86 | 50.5 | O |
| | 1991.01-2000.10 | MT | F | L | Hatchback FWD B1 | | GCI18007 | Inner Joint | | 22 | 20 | 35 | 59 | 82 | |
| | 1991.01-2000.10 | | F | | Hatchback FWD B1 | | GCO18036 | Outer Joint | | 24 | 19 | 52 | 86 | 50 | M |
| | 1991.01-2000.10 | | F | | Hatchback FWD B1 | | GCO34018 | Outer Joint | | 24 | 21 | 52 | 86 | 50 | M |
| 1.3 (44 kw) | 1990.01-2000.10 | AT/MT | F | L/R | Hatchback FWD B3A6 | Date from:1991.01;Date to:1995.12 | GCO18036 | Outer Joint | | 24 | 19 | 52 | 86 | 50 | M |
| | 1990.01-2000.10 | MT | F | L | Hatchback FWD B3A6 | | GDS27040 | Drive Shaft | | 24 | 22 | 52 | 86 | 605.4 | |
| | 1990.01-2000.10 | MT | F | R | Hatchback FWD B3A6 | | GDS27042 | Drive Shaft | | 24 | 22 | 52 | 86 | 880 | |
| | 1990.01-2000.10 | MT | F | L/R | Hatchback FWD B3A6 | | GCO18030 | Outer Joint | | 24 | 19 | 52 | 86 | 50.5 | M |
| | 1990.01-2000.10 | MT | F | L/R | Hatchback FWD B3A6 | | GCO18033 | Outer Joint | | 24 | 20 | 52 | 86 | 50.5 | M |
| | 1990.01-2000.10 | MT | F | L/R | Hatchback FWD B3A6 | | GCO27003 | Outer Joint | | 24 | 21 | 52 | 86 | 54.5 | I |
| | 1990.01-2000.10 | MT | F | L/R | Hatchback FWD B3A6 | Vehicle Production Country:Iran | GCO27005 | Outer Joint | | 24 | 19 | 52 | 86 | 50.5 | O |
| | 1990.01-2000.10 | MT | F | L/R | Hatchback FWD B3A6 | | GCO34018 | Outer Joint | | 24 | 21 | 52 | 86 | 50 | M |
| | 1990.01-2000.10 | MT | F | L | Hatchback FWD B3A6 | | GCI18007 | Inner Joint | | 22 | 20 | 35 | 59 | 82 | |
| | 1992.04-1996.10 | MT | F | L | Hatchback Van FWD B3A6 | | GDS27040 | Drive Shaft | | 24 | 22 | 52 | 86 | 605.4 | |
| | 1992.04-1996.10 | MT | F | R | Hatchback Van FWD B3A6 | | GDS27042 | Drive Shaft | | 24 | 22 | 52 | 86 | 880 | |
| | 1992.04-1996.10 | MT | F | L/R | Hatchback Van FWD B3A6 | | GCO18030 | Outer Joint | | 24 | 19 | 52 | 86 | 50.5 | M |
| | 1992.04-1996.10 | MT | F | L | Hatchback Van FWD B3A6 | | GCI18007 | Inner Joint | | 22 | 20 | 35 | 59 | 82 | |
| | 1992.04-1996.10 | | F | | Hatchback Van FWD B3A6 | | GCO18033 | Outer Joint | | 24 | 20 | 52 | 86 | 50.5 | M |
| 1.3 (47 kw) | 1995.02-2001.05 | MT | F | L | Hatchback FWD B3A5 | | GDS27040 | Drive Shaft | | 24 | 22 | 52 | 86 | 605.4 | |
| | 1995.02-2001.05 | MT | F | R | Hatchback FWD B3A5 | | GDS27042 | Drive Shaft | | 24 | 22 | 52 | 86 | 880 | |
| | 1995.02-2001.05 | MT | F | L/R | Hatchback FWD B3A5 | | GCO18030 | Outer Joint | | 24 | 19 | 52 | 86 | 50.5 | M |
| | 1995.02-2001.05 | MT | F | L/R | Hatchback FWD B3A5 | | GCO27003 | Outer Joint | | 24 | 21 | 52 | 86 | 54.5 | I |
| | 1995.02-2001.05 | MT | F | L/R | Hatchback FWD B3A5 | Vehicle Production Country:Iran | GCO27005 | Outer Joint | | 24 | 19 | 52 | 86 | 50.5 | O |
| | 1995.02-2001.05 | MT | F | L | Hatchback FWD B3A5 | | GCI18007 | Inner Joint | | 22 | 20 | 35 | 59 | 82 | |
| | 1995.02-2001.05 | | F | L/R | Hatchback FWD B3A5 | | GCO18033 | Outer Joint | | 24 | 20 | 52 | 86 | 50.5 | M |
| | 1995.02-2001.05 | | F | | Hatchback FWD B3A5 | | GCO18036 | Outer Joint | | 24 | 19 | 52 | 86 | 50 | M |
| | 1995.02-2001.05 | | F | | Hatchback FWD B3A5 | | GCO34018 | Outer Joint | | 24 | 21 | 52 | 86 | 50 | M |
| | 1996.10-1999.06 | MT | F | L | Hatchback Van FWD B3A5 | | GDS27040 | Drive Shaft | | 24 | 22 | 52 | 86 | 605.4 | |
| | 1996.10-1999.06 | MT | F | R | Hatchback Van FWD B3A5 | | GDS27042 | Drive Shaft | | 24 | 22 | 52 | 86 | 880 | |
| | 1996.10-1999.06 | MT | F | L | Hatchback Van FWD B3A5 | | GCI18007 | Inner Joint | | 22 | 20 | 35 | 59 | 82 | |
| 1.3 (51 kw) | 1990.01-1997.05 | AT/MT | F | L/R | Hatchback FWD B3A7 | Date from:1991.01;Date to:1995.12 | GCO18036 | Outer Joint | | 24 | 19 | 52 | 86 | 50 | M |
| | 1990.01-1997.05 | MT | F | L | Hatchback FWD B3A7 | | GDS27040 | Drive Shaft | | 24 | 22 | 52 | 86 | 605.4 | |
| | 1990.01-1997.05 | MT | F | R | Hatchback FWD B3A7 | | GDS27042 | Drive Shaft | | 24 | 22 | 52 | 86 | 880 | |
| | 1990.01-1997.05 | MT | F | L/R | Hatchback FWD B3A7 | | GCO18030 | Outer Joint | | 24 | 19 | 52 | 86 | 50.5 | M |
| | 1990.01-1997.05 | MT | F | L/R | Hatchback FWD B3A7 | Date from:1995.01 | GCO18033 | Outer Joint | | 24 | 20 | 52 | 86 | 50.5 | M |
| | 1990.01-1997.05 | MT | F | | Hatchback FWD B3A7 | | GCO27005 | Outer Joint | | 24 | 19 | 52 | 86 | 50.5 | O |
| | 1990.01-1997.05 | MT | F | L | Hatchback FWD B3A7 | | GCI18007 | Inner Joint | | 22 | 20 | 35 | 59 | 82 | |
| | 1990.01-1997.05 | | F | | Hatchback FWD B3A7 | | GCO27003 | Outer Joint | | 24 | 21 | 52 | 86 | 54.5 | I |
| | 1990.01-1997.05 | | F | | Hatchback FWD B3A7 | | GCO34018 | Outer Joint | | 24 | 21 | 52 | 86 | 50 | M |
| 1.3 (53 kw) | 1990.06-2001.09 | AT/MT | F | L/R | Hatchback FWD B3A7 | Date from:1991.01;Date to:1995.12 | GCO18036 | Outer Joint | | 24 | 19 | 52 | 86 | 50 | M |
| | 1990.06-2001.09 | MT | F | L | Hatchback FWD B3A7 | | GDS27040 | Drive Shaft | | 24 | 22 | 52 | 86 | 605.4 | |
| | 1990.06-2001.09 | MT | F | R | Hatchback FWD B3A7 | | GDS27042 | Drive Shaft | | 24 | 22 | 52 | 86 | 880 | |
| | 1990.06-2001.09 | MT | F | L/R | Hatchback FWD B3A7 | | GCO18030 | Outer Joint | | 24 | 19 | 52 | 86 | 50.5 | M |
| | 1990.06-2001.09 | MT | F | L/R | Hatchback FWD B3A7 | Date from:1995.12 | GCO27003 | Outer Joint | | 24 | 21 | 52 | 86 | 54.5 | I |
| | 1990.06-2001.09 | MT | F | L/R | Hatchback FWD B3A7 | Date from:1990.06;Vehicle Production Country:Iran | GCO27005 | Outer Joint | | 24 | 19 | 52 | 86 | 50.5 | O |

| | YEAR | TRANSM. | F/R | L/R | BODY STYLE & DRIVE TYPE & ENGINE | REMARKS | G-AP Ref. | PRODUCT | ABS | Technical Specifications A | B | C | H | L | P |
|---|---|---|---|---|---|---|---|---|---|---|---|---|---|---|---|
| **KIA** | | | | | | | | | | | | | | | |
| **Pride** | | | | | | | | | | | | | | | |
| 1.3 (53 kw) | 1990.06-2001.09 | MT | F | L | Hatchback FWD B3A7 | | GCI18007 | Inner Joint | | 22 | 20 | 35 | 59 | 82 | |
| | 1990.06-2001.09 | | F | | Hatchback FWD B3A7 | | GCO18033 | Outer Joint | | 24 | 20 | 52 | 86 | 50.5 | M |
| | 1990.06-2001.09 | | F | | Hatchback FWD B3A7 | | GCO34018 | Outer Joint | | 24 | 21 | 52 | 86 | 50 | M |
| 1.3 (54 kw) | 1994.05-1997.05 | | F | | Hatchback FWD B3A5 | | GCO18036 | Outer Joint | | 24 | 19 | 52 | 86 | 50 | M |
| | 1994.05-1997.05 | | F | | Hatchback FWD B3A5 | | GCO27003 | Outer Joint | | 24 | 21 | 52 | 86 | 54.5 | I |
| | 1994.05-1997.05 | | F | | Hatchback FWD B3A5 | | GCO34018 | Outer Joint | | 24 | 21 | 52 | 86 | 50 | M |
| 1.6 (103 kw) | 2011.06-2017.12 | MT | F | | Saloon FWD G4FD | | GCO39198 | Outer Joint | 48T | 25 | 22 | 52.5 | 94.5 | 54 | M |
| | 2011.06-2017.12 | MT | F | | Saloon FWD G4FD | | GCI39055 | Inner Joint | | 25 | 30 | 41 | 63 | 86.5 | |
| | 2011.06-2017.12 | | F | L | Saloon FWD G4FD | Date From:2011.07 | GDS24246 | Drive Shaft | 48T | 25 | 25 | 52.5 | 93.5 | 652 | |
| | 2011.06-2017.12 | | F | R | Saloon FWD G4FD | Date From:2011.07,Date To:2014.06 | GDS24247 | Drive Shaft | 48T | 25 | 25 | 52.5 | 93.5 | 927 | |
| | 2012.09-2017.12 | MT | F | | Hatchback FWD G4FD | | GCO39198 | Outer Joint | 48T | 25 | 22 | 52.5 | 94.5 | 54 | M |
| | 2012.09-2017.12 | MT | F | | Hatchback FWD G4FD | | GCI39055 | Inner Joint | | 25 | 30 | 41 | 63 | 86.5 | |
| | 2012.09-2017.12 | | F | L | Hatchback FWD G4FD | | GDS24246 | Drive Shaft | 48T | 25 | 25 | 52.5 | 93.5 | 652 | |
| | 2012.09-2017.12 | | F | R | Hatchback FWD G4FD | Date To:2014.06 | GDS24247 | Drive Shaft | 48T | 25 | 25 | 52.5 | 93.5 | 927 | |
| **Pride Wagon** | | | | | | | | | | | | | | | |
| 1.3 (47 kw) | 1999.08-2001.05 | MT | F | L | Estate FWD B3A5 | | GDS27040 | Drive Shaft | | 24 | 22 | 52 | 86 | 605.4 | |
| | 1999.08-2001.05 | MT | F | R | Estate FWD B3A5 | | GDS27042 | Drive Shaft | | 24 | 22 | 52 | 86 | 880 | |
| | 1999.08-2001.05 | MT | F | L/R | Estate FWD B3A5 | | GCO18030 | Outer Joint | | 24 | 19 | 52 | 86 | 50.5 | M |
| | 1999.08-2001.05 | MT | F | L/R | Estate FWD B3A5 | | GCO27005 | Outer Joint | | 24 | 19 | 52 | 86 | 50.5 | O |
| | 1999.08-2001.05 | MT | F | L | Estate FWD B3A5 | | GCI18007 | Inner Joint | | 22 | 20 | 35 | 59 | 82 | |
| | 1999.08-2001.05 | | F | L/R | Estate FWD B3A5 | | GCO18033 | Outer Joint | | 24 | 20 | 52 | 86 | 50.5 | M |
| | 1999.08-2001.05 | | F | | Estate FWD B3A5 | | GCO18036 | Outer Joint | | 24 | 19 | 52 | 86 | 50 | M |
| | 1999.08-2001.05 | | F | | Estate FWD B3A5 | | GCO34018 | Outer Joint | | 24 | 21 | 52 | 86 | 50 | M |
| **Proceed** | | | | | | | | | | | | | | | |
| 1.0 (73 kw) | 2018.10- | 6MT | F | L | Estate FWD G3LE | | GDS84378 | Drive Shaft | | 27 | 25 | 60 | 95 | 723 | |
| | 2018.10- | 6MT | F | R | Estate FWD G3LE | | GDS84373 | Drive Shaft | | 27 | 25 | 60 | 95 | 939 | |
| 1.0 (88 kw) | 2018.10- | 6MT | F | L | Estate FWD G3LC;G3LE | | GDS84378 | Drive Shaft | | 27 | 25 | 60 | 95 | 723 | |
| | 2018.10- | 6MT | F | R | Estate FWD G3LC;G3LE | | GDS84373 | Drive Shaft | | 27 | 25 | 60 | 95 | 939 | |
| | 2018.10- | 6MT | F | L/R | Estate FWD G3LC;G3LE | | GCO82724 | Outer Joint | | 27 | 23 | 60 | 95 | 58 | M |
| | 2018.10- | 6MT | F | L/R | Estate FWD G3LC;G3LE | | GCI81749 | Inner Joint | | 25 | 31 | 41 | 63 | 90 | |
| 1.4 (66 kw) | 2010.06-2012.09 | MT | F | R | Hatchback FWD G4FA | | GDS24399 | Drive Shaft | 46T | 27 | 25 | 60 | 94.5 | 939 | |
| | 2010.06-2012.09 | MT | F | L/R | Hatchback FWD G4FA | | GCO24095 | Outer Joint | 46T | 27 | 22 | 60 | 94.5 | 58.5 | M |
| | 2010.06-2012.09 | MT | F | R | Hatchback FWD G4FA | | GCI24039 | Inner Joint | | 25 | 22 | 41 | 61 | 100 | |
| | 2010.06-2012.09 | | F | | Hatchback FWD G4FA | | GCO24077 | Outer Joint | 46T | 27 | 22 | 60 | 94.5 | 54.5 | M |
| | 2013.03-2018.07 | 6MT | F | L | Hatchback FWD D4FC | Not For facelift | GDS24519 | Drive Shaft | 46T | 27 | 27 | 60 | 95 | 678 | |
| | 2013.03-2018.07 | 6MT | F | R | Hatchback FWD D4FC | Not For facelift | GDS24521 | Drive Shaft | 46T | 27 | 27 | 60 | 95 | 969 | |
| | 2013.03-2018.07 | MT | F | L | Hatchback FWD D4FC | | GCI27044 | Inner Joint | | 27 | 24 | 41 | 62.5 | 88.5 | |
| | 2015.05-2018.07 | MT | F | L | Hatchback Van FWD D4FC | Not For facelift | GDS24519 | Drive Shaft | 46T | 27 | 27 | 60 | 95 | 678 | |
| | 2015.05-2018.07 | MT | F | R | Hatchback Van FWD D4FC | Not For facelift | GDS24521 | Drive Shaft | 46T | 27 | 27 | 60 | 95 | 969 | |
| | 2015.05-2018.07 | MT | F | L | Hatchback Van FWD D4FC | | GCI27044 | Inner Joint | | 27 | 24 | 41 | 62.5 | 88.5 | |
| 1.4 (73 kw) | 2012.05-2018.07 | MT | F | L | Hatchback Van FWD G4FA | | GDS24548 | Drive Shaft | 46T | 27 | 25 | 60 | 94.5 | 687 | |
| | 2012.05-2018.07 | MT | F | R | Hatchback Van FWD G4FA | | GDS24398 | Drive Shaft | 46T | 27 | 25 | 60 | 94.5 | 965 | |
| | 2012.05-2018.07 | MT | F | L | Hatchback Van FWD G4FA | | GCI39052 | Inner Joint | | 25 | 22 | 41 | 63 | 86 | |
| | 2012.05-2018.07 | MT/6MT | F | L | Hatchback Van FWD G4FA | | GCO24132 | Outer Joint | 46T | 27 | 22 | 60 | 94.5 | 54.5 | M |
| | 2013.03-2015.07 | MT | F | L | Hatchback FWD G4FA | | GDS24548 | Drive Shaft | 46T | 27 | 25 | 60 | 94.5 | 687 | |
| | 2013.03-2015.07 | MT | F | R | Hatchback FWD G4FA | | GDS24398 | Drive Shaft | 46T | 27 | 25 | 60 | 94.5 | 965 | |
| | 2013.03-2015.07 | MT | F | L | Hatchback FWD G4FA | | GCI39052 | Inner Joint | | 25 | 22 | 41 | 63 | 86 | |
| | 2013.03-2015.07 | MT/6MT | F | L | Hatchback FWD G4FA | | GCO24132 | Outer Joint | 46T | 27 | 22 | 60 | 94.5 | 54.5 | M |
| | 2013.03-2015.07 | | F | | Hatchback FWD G4FA | | GCO24077 | Outer Joint | 46T | 27 | 22 | 60 | 94.5 | 54.5 | M |
| | 2013.07-2018.07 | MT | F | L | Hatchback FWD G4LC | | GDS24548 | Drive Shaft | 46T | 27 | 25 | 60 | 94.5 | 687 | |
| | 2013.07-2018.07 | MT | F | R | Hatchback FWD G4LC | | GDS24398 | Drive Shaft | 46T | 27 | 25 | 60 | 94.5 | 965 | |
| | 2013.07-2018.07 | MT | F | L | Hatchback FWD G4LC | | GCI39052 | Inner Joint | | 25 | 22 | 41 | 63 | 86 | |
| | 2013.07-2018.07 | MT/6MT | F | L | Hatchback FWD G4LC | | GCO24132 | Outer Joint | 46T | 27 | 22 | 60 | 94.5 | 54.5 | M |
| | 2013.07-2018.07 | | F | | Hatchback FWD G4LC | | GCO24077 | Outer Joint | 46T | 27 | 22 | 60 | 94.5 | 54.5 | M |
| 1.4 (74 kw) | 2013.07-2018.07 | MT | F | L | Hatchback FWD G4FA | | GDS24548 | Drive Shaft | 46T | 27 | 25 | 60 | 94.5 | 687 | |
| | 2013.07-2018.07 | MT | F | R | Hatchback FWD G4FA | | GDS24398 | Drive Shaft | 46T | 27 | 25 | 60 | 94.5 | 965 | |
| | 2013.07-2018.07 | MT | F | L | Hatchback FWD G4FA | | GCO24132 | Outer Joint | 46T | 27 | 22 | 60 | 94.5 | 54.5 | M |
| | 2013.07-2018.07 | MT | F | L | Hatchback FWD G4FA | | GCI39052 | Inner Joint | | 25 | 22 | 41 | 63 | 86 | |
| | 2015.04-2018.07 | MT | F | L | Hatchback FWD G4LC | | GDS24548 | Drive Shaft | 46T | 27 | 25 | 60 | 94.5 | 687 | |
| | 2015.04-2018.07 | MT | F | R | Hatchback FWD G4LC | | GDS24398 | Drive Shaft | 46T | 27 | 25 | 60 | 94.5 | 965 | |
| | 2015.04-2018.07 | MT | F | L | Hatchback FWD G4LC | | GCI39052 | Inner Joint | | 25 | 22 | 41 | 63 | 86 | |
| | 2015.04-2018.07 | MT/6MT | F | L | Hatchback FWD G4LC | | GCO24132 | Outer Joint | 46T | 27 | 22 | 60 | 94.5 | 54.5 | M |
| | 2015.04-2018.07 | | F | | Hatchback FWD G4LC | | GCO24077 | Outer Joint | 46T | 27 | 22 | 60 | 94.5 | 54.5 | M |
| | 2015.05-2018.07 | 6MT | F | L | Hatchback Van FWD G4LC | | GDS24548 | Drive Shaft | 46T | 27 | 25 | 60 | 94.5 | 687 | |
| | 2015.05-2018.07 | 6MT | F | R | Hatchback Van FWD G4LC | | GDS24398 | Drive Shaft | 46T | 27 | 25 | 60 | 94.5 | 965 | |

| | YEAR | TRANSM. | F/R | L/R | BODY STYLE & DRIVE TYPE & ENGINE | REMARKS | G-AP Ref. | PRODUCT | ABS | Technical Specifications A | B | C | H | L | P |
|---|---|---|---|---|---|---|---|---|---|---|---|---|---|---|---|
| **KIA** **Proceed** | | | | | | | | | | | | | | | |
| 1.4 (77 kw) | 2008.02-2012.09 | MT | F | R | Hatchback FWD G4FA | | GDS24399 | Drive Shaft | 46T | 27 | 25 | 60 | 94.5 | 939 | |
| | 2008.02-2012.09 | MT | F | L/R | Hatchback FWD G4FA | | GCO24095 | Outer Joint | 46T | 27 | 22 | 60 | 94.5 | 58.5 | M |
| | 2008.02-2012.09 | MT | F | R | Hatchback FWD G4FA | | GCI24039 | Inner Joint | | 25 | 22 | 41 | 61 | 100 | |
| | 2008.02-2012.09 | | F | | Hatchback FWD G4FA | | GCO24077 | Outer Joint | 46T | 27 | 22 | 60 | 94.5 | 54.5 | M |
| 1.4 (80 kw) | 2008.02-2012.09 | MT | F | R | Hatchback FWD G4FA | | GDS24399 | Drive Shaft | 46T | 27 | 25 | 60 | 94.5 | 939 | |
| | 2008.02-2012.09 | MT | F | L/R | Hatchback FWD G4FA | | GCO24095 | Outer Joint | 46T | 27 | 22 | 60 | 94.5 | 58.5 | M |
| | 2008.02-2012.09 | MT | F | R | Hatchback FWD G4FA | | GCI24039 | Inner Joint | | 25 | 22 | 41 | 61 | 100 | |
| | 2008.02-2012.09 | | F | | Hatchback FWD G4FA | | GCO24077 | Outer Joint | 46T | 27 | 22 | 60 | 94.5 | 54.5 | M |
| 1.4 (103 kw) | 2018.10-2020.12 | 6MT | F | L | Estate FWD G4LD | | GDS84377 | Drive Shaft | | 27 | 27 | 60 | 95 | 693 | |
| | 2018.10-2020.12 | 6MT | F | R | Estate FWD G4LD | | GDS84376 | Drive Shaft | | 27 | 27 | 60 | 95 | 964 | |
| | 2018.10-2020.12 | 6MT | F | L/R | Estate FWD G4LD | | GCI82628 | Inner Joint | | 27 | 31 | 41 | 62 | 86 | |
| | 2018.10-2020.12 | 6MT/7DCT | F | L/R | Estate FWD G4LD | | GCO82724 | Outer Joint | | 27 | 23 | 60 | 95 | 58 | M |
| | 2018.10-2020.12 | 7DCT | F | L | Estate FWD G4LD | | GDS84407 | Drive Shaft | | 27 | 28 | 60 | 95 | 653 | |
| | 2018.10-2020.12 | 7DCT | F | R | Estate FWD G4LD | | GDS84406 | Drive Shaft | | 27 | 28 | 60 | 95 | 996 | |
| | 2018.10-2020.12 | 7DCT | F | L/R | Estate FWD G4LD | | GCI82746 | Inner Joint | | 28 | 31 | 41 | 61.5 | 95 | |
| | 2018.10-2020.12 | 7DCT | F | L | Estate Van FWD G4LD | | GDS84407 | Drive Shaft | | 27 | 28 | 60 | 95 | 653 | |
| | 2018.10-2020.12 | 7DCT | F | R | Estate Van FWD G4LD | | GDS84406 | Drive Shaft | | 27 | 28 | 60 | 95 | 996 | |
| | 2018.10-2020.12 | 7DCT | F | L/R | Estate Van FWD G4LD | | GCO82724 | Outer Joint | | 27 | 23 | 60 | 95 | 58 | M |
| | 2018.10-2020.12 | 7DCT | F | L/R | Estate Van FWD G4LD | | GCI82746 | Inner Joint | | 28 | 31 | 41 | 61.5 | 95 | |
| 1.5 (103 kw) | 2024.02- | 6MT | F | L | Estate FWD G4LH | | GDS84377 | Drive Shaft | | 27 | 27 | 60 | 95 | 693 | |
| | 2024.02- | 6MT | F | R | Estate FWD G4LH | | GDS84376 | Drive Shaft | | 27 | 27 | 60 | 95 | 964 | |
| | 2024.02- | 7DCT | F | L | Estate FWD G4LH | | GDS56834 | Drive Shaft | | 27 | 28 | 60 | 95 | 645 | |
| | 2024.02- | 7DCT | F | R | Estate FWD G4LH | | GDS56835 | Drive Shaft | | 27 | 28 | 60 | 95 | 985 | |
| | 2024.02- | 7DCT | F | L/R | Estate FWD G4LH | | GCI83516 | Inner Joint | | 28 | 31 | 33 | 67.5 | 84.5 | |
| 1.5 (118 kw) | 2021.01- | 6MT | F | L | Estate FWD G4LH | | GDS84377 | Drive Shaft | | 27 | 27 | 60 | 95 | 693 | |
| | 2021.01- | 6MT | F | R | Estate FWD G4LH | | GDS84376 | Drive Shaft | | 27 | 27 | 60 | 95 | 964 | |
| | 2021.01- | 6MT | F | L/R | Estate FWD G4LH | | GCO82724 | Outer Joint | | 27 | 23 | 60 | 95 | 58 | M |
| | 2021.01- | 6MT | F | L/R | Estate FWD G4LH | | GCI82628 | Inner Joint | | 27 | 31 | 41 | 62 | 86 | |
| | 2021.01- | 7DCT | F | L | Estate FWD G4LH | | GDS56834 | Drive Shaft | | 27 | 28 | 60 | 95 | 645 | |
| | 2021.01- | 7DCT | F | R | Estate FWD G4LH | | GDS56835 | Drive Shaft | | 27 | 28 | 60 | 95 | 985 | |
| | 2021.01- | 7DCT | F | L/R | Estate FWD G4LH | | GCO83450 | Outer Joint | | 27 | 23 | 60 | 95 | 58 | M |
| | 2021.01- | 7DCT | F | L/R | Estate FWD G4LH | | GCI83516 | Inner Joint | | 28 | 31 | 33 | 67.5 | 84.5 | |
| | 2021.01- | 6MT | F | L | Estate FWD G4LH;G4LK | | GDS84377 | Drive Shaft | | 27 | 27 | 60 | 95 | 693 | |
| | 2021.01- | 6MT | F | R | Estate FWD G4LH;G4LK | | GDS84376 | Drive Shaft | | 27 | 27 | 60 | 95 | 964 | |
| | 2021.01- | 6MT | F | L/R | Estate FWD G4LH;G4LK | | GCO82724 | Outer Joint | | 27 | 23 | 60 | 95 | 58 | M |
| | 2021.01- | 6MT | F | L/R | Estate FWD G4LH;G4LK | | GCI82628 | Inner Joint | | 27 | 31 | 41 | 62 | 86 | |
| 1.6 (66 kw) | 2008.02-2012.09 | 4AT | F | L | Hatchback FWD D4FB | | GDS83822 | Drive Shaft | 46T | 27 | 27 | 60 | 93.5 | 667 | |
| | 2008.02-2012.09 | 4AT | F | R | Hatchback FWD D4FB | Date to:2010.02 | GDS83821 | Drive Shaft | 46T | 27 | 27 | 60 | 95 | 939 | |
| | 2008.02-2012.09 | 4AT | F | R | Hatchback FWD D4FB | Date from:2010.03 | GDS84211 | Drive Shaft | 46T | 27 | 27 | 60 | 93.5 | 937 | |
| | 2008.02-2012.09 | 4AT | F | L/R | Hatchback FWD D4FB | Date to:2010.02 | GCO27080 | Outer Joint | 46T | 27 | 23 | 60 | 95 | 58 | M |
| | 2008.02-2012.09 | 4AT | F | L/R | Hatchback FWD D4FB | Date from:2010.03 | GCO81872 | Outer Joint | 46T | 27 | 23 | 60 | 93.5 | 58.5 | M |
| | 2008.02-2012.09 | 4AT | F | L/R | Hatchback FWD D4FB | | GCI82380 | Inner Joint | | 27 | 23 | 41 | 61.5 | 99.5 | |
| | 2008.02-2012.09 | MT | F | L | Hatchback FWD D4FB | | GDS39263 | Drive Shaft | 46T | 27 | 27 | 60 | 94 | 658 | |
| | 2008.02-2012.09 | MT | F | R | Hatchback FWD D4FB | Date to:2010.04 | GDS39210 | Drive Shaft | 46T | 27 | 27 | 60 | 94 | 945 | |
| | 2008.02-2012.09 | MT | F | L/R | Hatchback FWD D4FB | Date to:2010.04 | GCO24152 | Outer Joint | 46T | 27 | 26 | 60 | 94 | 67 | M |
| | 2008.02-2012.09 | MT | F | L | Hatchback FWD D4FB | | GCI24047 | Inner Joint | | 27 | 26 | 41 | 61.5 | 103 | |
| 1.6 (81 kw) | 2013.03-2018.07 | 6AT | F | L | Hatchback FWD D4FB | | GDS27219 | Drive Shaft | 46T | 27 | 27 | 60 | 95 | 666 | |
| | 2013.03-2018.07 | 6AT | F | R | Hatchback FWD D4FB | | GDS27218 | Drive Shaft | 46T | 27 | 27 | 60 | 95 | 956 | |
| | 2013.03-2018.07 | 6AT | F | L/R | Hatchback FWD D4FB | | GCI24053 | Inner Joint | | 27 | 24 | 30 | 67.5 | 88.5 | |
| | 2013.03-2018.07 | 6MT | F | L | Hatchback FWD D4FB | | GDS24519 | Drive Shaft | 46T | 27 | 27 | 60 | 95 | 678 | |
| | 2013.03-2018.07 | 6MT | F | R | Hatchback FWD D4FB | | GDS24521 | Drive Shaft | 46T | 27 | 27 | 60 | 95 | 969 | |
| | 2013.03-2018.07 | 6MT | F | L | Hatchback FWD D4FB | | GCI27044 | Inner Joint | | 27 | 24 | 41 | 62.5 | 88.5 | |
| | 2013.03-2018.07 | MT | F | L | Hatchback FWD D4FB | | GCO24137 | Outer Joint | 46T | 27 | 24 | 60 | 95 | 59 | M |
| 1.6 (85 kw) | 2008.02-2012.09 | 4AT | F | L | Hatchback FWD D4FB | | GDS83822 | Drive Shaft | 46T | 27 | 27 | 60 | 93.5 | 667 | |
| | 2008.02-2012.09 | 4AT | F | R | Hatchback FWD D4FB | Date to:2010.02 | GDS83821 | Drive Shaft | 46T | 27 | 27 | 60 | 95 | 939 | |
| | 2008.02-2012.09 | 4AT | F | R | Hatchback FWD D4FB | Date from:2010.03 | GDS84211 | Drive Shaft | 46T | 27 | 27 | 60 | 93.5 | 937 | |
| | 2008.02-2012.09 | 4AT | F | L | Hatchback FWD D4FB | Date from:2010.03 | GCO81872 | Outer Joint | 46T | 27 | 23 | 60 | 93.5 | 58.5 | M |
| | 2008.02-2012.09 | 4AT | F | L/R | Hatchback FWD D4FB | Date to:2010.02 | GCO27080 | Outer Joint | 46T | 27 | 23 | 60 | 95 | 58 | M |
| | 2008.02-2012.09 | 4AT | F | L/R | Hatchback FWD D4FB | | GCI82380 | Inner Joint | | 27 | 23 | 41 | 61.5 | 99.5 | |
| | 2008.02-2012.09 | MT | F | L | Hatchback FWD D4FB | | GDS39263 | Drive Shaft | 46T | 27 | 27 | 60 | 94 | 658 | |
| | 2008.02-2012.09 | MT | F | R | Hatchback FWD D4FB | | GDS39210 | Drive Shaft | 46T | 27 | 27 | 60 | 94 | 945 | |
| | 2008.02-2012.09 | MT | F | L/R | Hatchback FWD D4FB | | GCO24152 | Outer Joint | 46T | 27 | 26 | 60 | 94 | 67 | M |
| | 2008.02-2012.09 | MT | F | L/R | Hatchback FWD D4FB | | GCI24047 | Inner Joint | | 27 | 26 | 41 | 61.5 | 103 | |
| | 2008.02-2012.09 | 5MT | F | L/R | Hatchback FWD G4FC | Date to:2010.04 | GCO24095 | Outer Joint | 46T | 27 | 22 | 60 | 94.5 | 58.5 | M |
| | 2008.02-2012.09 | | F | R | Hatchback FWD G4FC | Date To:2010.04 | GDS24399 | Drive Shaft | 46T | 27 | 25 | 60 | 94.5 | 939 | |

| | YEAR | TRANSM. | F/R | L/R | BODY STYLE & DRIVE TYPE & ENGINE | REMARKS | G-AP Ref. | PRODUCT | ABS | Technical Specifications | | | | | |
|---|---|---|---|---|---|---|---|---|---|---|---|---|---|---|---|
| | | | | | | | | | | A | B | C | H | L | P |
| **KIA** **Proceed** | | | | | | | | | | | | | | | |
| 1.6 (85 kw) | 2008.02-2012.09 | | F | R | Hatchback FWD G4FC | | GCI24039 | Inner Joint | | 25 | 22 | 41 | 61 | 100 | |
| 1.6 (90 kw) | 2008.02-2012.09 | AT/MT | F | L/R | Hatchback FWD G4FC | | GCO24095 | Outer Joint | 46T | 27 | 22 | 60 | 94.5 | 58.5 | M |
| | 2008.02-2012.09 | MT | F | R | Hatchback FWD G4FC | | GDS24399 | Drive Shaft | 46T | 27 | 25 | 60 | 94.5 | 939 | |
| | 2008.02-2012.09 | MT | F | R | Hatchback FWD G4FC | | GCI24039 | Inner Joint | | 25 | 22 | 41 | 61 | 100 | |
| | 2008.02-2012.09 | | F | | Hatchback FWD G4FC | | GCO24077 | Outer Joint | 46T | 27 | 22 | 60 | 94.5 | 54.5 | M |
| 1.6 (92 kw) | 2010.10-2013.02 | 4AT/6MT | F | L/R | Hatchback FWD G4FC | | GCI24039 | Inner Joint | | 25 | 22 | 41 | 61 | 100 | |
| | 2010.10-2013.02 | AT/MT | F | L | Hatchback FWD G4FC | | GCO24095 | Outer Joint | 46T | 27 | 22 | 60 | 94.5 | 58.5 | M |
| | 2010.10-2013.02 | MT | F | R | Hatchback FWD G4FC | | GDS24399 | Drive Shaft | 46T | 27 | 25 | 60 | 94.5 | 939 | |
| | 2010.10-2013.02 | | F | | Hatchback FWD G4FC | | GCO24077 | Outer Joint | 46T | 27 | 22 | 60 | 94.5 | 54.5 | M |
| 1.6 (93 kw) | 2008.02-2012.09 | AT/MT | F | L/R | Hatchback FWD G4FC | | GCO24095 | Outer Joint | 46T | 27 | 22 | 60 | 94.5 | 58.5 | M |
| | 2008.02-2012.09 | MT | F | R | Hatchback FWD G4FC | | GDS24399 | Drive Shaft | 46T | 27 | 25 | 60 | 94.5 | 939 | |
| | 2008.02-2012.09 | MT | F | R | Hatchback FWD G4FC | | GCI24039 | Inner Joint | | 25 | 22 | 41 | 61 | 100 | |
| | 2008.02-2012.09 | | F | | Hatchback FWD G4FC | | GCO24077 | Outer Joint | 46T | 27 | 22 | 60 | 94.5 | 54.5 | M |
| 1.6 (94 kw) | 2010.10-2012.09 | 4AT | F | L | Hatchback FWD D4FB | | GDS83822 | Drive Shaft | 46T | 27 | 27 | 60 | 93.5 | 667 | |
| | 2010.10-2012.09 | 4AT | F | R | Hatchback FWD D4FB | | GDS84211 | Drive Shaft | 46T | 27 | 27 | 60 | 93.5 | 937 | |
| | 2010.10-2012.09 | 4AT | F | L/R | Hatchback FWD D4FB | | GCO81872 | Outer Joint | 46T | 27 | 23 | 60 | 93.5 | 58.5 | M |
| | 2010.10-2012.09 | 4AT | F | L/R | Hatchback FWD D4FB | | GCI82380 | Inner Joint | | 27 | 23 | 41 | 61.5 | 99.5 | |
| | 2010.10-2012.09 | AT | F | L/R | Hatchback FWD D4FB | | GCO27080 | Outer Joint | 46T | 27 | 23 | 60 | 95 | 58 | M |
| | 2010.10-2012.09 | MT | F | L | Hatchback FWD D4FB | | GDS39263 | Drive Shaft | 46T | 27 | 27 | 60 | 94 | 658 | |
| | 2010.10-2012.09 | MT | F | R | Hatchback FWD D4FB | | GDS39210 | Drive Shaft | 46T | 27 | 27 | 60 | 94 | 945 | |
| | 2010.10-2012.09 | MT | F | L/R | Hatchback FWD D4FB | | GCO24152 | Outer Joint | 46T | 27 | 26 | 60 | 94 | 67 | M |
| | 2010.10-2012.09 | MT | F | L | Hatchback FWD D4FB | | GCI24047 | Inner Joint | | 27 | 26 | 41 | 61.5 | 103 | |
| | 2012.10-2018.07 | AT | F | L | Hatchback Van FWD D4FB | | GDS27219 | Drive Shaft | 46T | 27 | 27 | 60 | 95 | 666 | |
| | 2012.10-2018.07 | AT | F | R | Hatchback Van FWD D4FB | | GDS27218 | Drive Shaft | 46T | 27 | 27 | 60 | 95 | 956 | |
| | 2012.10-2018.07 | AT | F | L/R | Hatchback Van FWD D4FB | | GCI24053 | Inner Joint | | 27 | 24 | 30 | 67.5 | 88.5 | |
| | 2012.10-2018.07 | MT | F | L | Hatchback Van FWD D4FB | | GDS24519 | Drive Shaft | 46T | 27 | 27 | 60 | 95 | 678 | |
| | 2012.10-2018.07 | MT | F | R | Hatchback Van FWD D4FB | | GDS24521 | Drive Shaft | 46T | 27 | 27 | 60 | 95 | 969 | |
| | 2012.10-2018.07 | MT | F | L | Hatchback Van FWD D4FB | | GCO24137 | Outer Joint | 46T | 27 | 24 | 60 | 95 | 59 | M |
| | 2012.10-2018.07 | MT | F | L | Hatchback Van FWD D4FB | | GCI27044 | Inner Joint | | 27 | 24 | 41 | 62.5 | 88.5 | |
| | 2013.03-2015.07 | 6MT | F | L | Hatchback FWD D4FB | | GCO24227 | Outer Joint | 46T | 27 | 24 | 60 | 92.5 | 58 | M |
| | 2013.03-2015.07 | AT | F | L | Hatchback FWD D4FB | | GDS27219 | Drive Shaft | 46T | 27 | 27 | 60 | 95 | 666 | |
| | 2013.03-2015.07 | AT | F | R | Hatchback FWD D4FB | | GDS27218 | Drive Shaft | 46T | 27 | 27 | 60 | 95 | 956 | |
| | 2013.03-2015.07 | AT | F | L/R | Hatchback FWD D4FB | | GCI24053 | Inner Joint | | 27 | 24 | 30 | 67.5 | 88.5 | |
| | 2013.03-2015.07 | MT | F | L | Hatchback FWD D4FB | | GDS24519 | Drive Shaft | 46T | 27 | 27 | 60 | 95 | 678 | |
| | 2013.03-2015.07 | MT | F | R | Hatchback FWD D4FB | | GDS24521 | Drive Shaft | 46T | 27 | 27 | 60 | 95 | 969 | |
| | 2013.03-2015.07 | MT | F | L/R | Hatchback FWD D4FB | | GCO24137 | Outer Joint | 46T | 27 | 24 | 60 | 95 | 59 | M |
| | 2013.03-2015.07 | MT | F | L | Hatchback FWD D4FB | | GCI27044 | Inner Joint | | 27 | 24 | 41 | 62.5 | 88.5 | |
| 1.6 (95 kw) | 2013.03-2018.07 | AT | F | L | Hatchback FWD G4FC | | GDS24264 | Drive Shaft | 46T | 27 | 27 | 60 | 95 | 668 | |
| | 2013.03-2018.07 | AT | F | R | Hatchback FWD G4FC | | GDS24321 | Drive Shaft | 46T | 27 | 27 | 60 | 95 | 957 | |
| | 2013.03-2018.07 | AT | F | L | Hatchback FWD G4FC | | GCI24065 | Inner Joint | | 27 | 22 | 30 | 68 | 77 | |
| | 2013.03-2018.07 | MT | F | L | Hatchback FWD G4FC | | GDS24548 | Drive Shaft | 46T | 27 | 25 | 60 | 94.5 | 687 | |
| | 2013.03-2018.07 | MT | F | R | Hatchback FWD G4FC | | GDS24398 | Drive Shaft | 46T | 27 | 25 | 60 | 94.5 | 965 | |
| | 2013.03-2018.07 | MT | F | L | Hatchback FWD G4FC | | GCO24132 | Outer Joint | 46T | 27 | 22 | 60 | 94.5 | 54.5 | M |
| | 2013.03-2018.07 | MT | F | L | Hatchback FWD G4FC | | GCI39052 | Inner Joint | | 25 | 22 | 41 | 63 | 86 | |
| 1.6 (99 kw) | 2013.03-2018.07 | 6DCT | F | L | Hatchback FWD G4FD | | GDS82241 | Drive Shaft | 46T | 27 | 27 | 60 | 94.5 | 635 | |
| | 2013.03-2018.07 | 6DCT | F | L/R | Hatchback FWD G4FD | | GCI81569 | Inner Joint | | 27 | 22 | 41 | 61 | 92.5 | |
| | 2013.03-2018.07 | AT | F | R | Hatchback FWD G4FD | | GDS82242 | Drive Shaft | 46T | 27 | 27 | 60 | 94.5 | 1018 | |
| | 2013.03-2018.07 | MT | F | L | Hatchback FWD G4FD | | GDS24548 | Drive Shaft | 46T | 27 | 25 | 60 | 94.5 | 687 | |
| | 2013.03-2018.07 | MT | F | R | Hatchback FWD G4FD | | GDS24398 | Drive Shaft | 46T | 27 | 25 | 60 | 94.5 | 965 | |
| | 2013.03-2018.07 | MT | F | L | Hatchback FWD G4FD | | GCO24132 | Outer Joint | 46T | 27 | 22 | 60 | 94.5 | 54.5 | M |
| | 2013.03-2018.07 | MT | F | L | Hatchback FWD G4FD | | GCI39052 | Inner Joint | | 25 | 22 | 41 | 63 | 86 | |
| | 2015.04-2018.07 | 6DCT | F | L/R | Hatchback Van FWD G4FD | | GCI81569 | Inner Joint | | 27 | 22 | 41 | 61 | 92.5 | |
| | 2015.04-2018.07 | DCT | F | L | Hatchback Van FWD G4FD | | GDS82241 | Drive Shaft | 46T | 27 | 27 | 60 | 94.5 | 635 | |
| | 2015.04-2018.07 | DCT | F | R | Hatchback Van FWD G4FD | | GDS82242 | Drive Shaft | 46T | 27 | 27 | 60 | 94.5 | 1018 | |
| | 2015.04-2018.07 | MT | F | L | Hatchback Van FWD G4FD | | GDS24548 | Drive Shaft | 46T | 27 | 25 | 60 | 94.5 | 687 | |
| | 2015.04-2018.07 | MT | F | R | Hatchback Van FWD G4FD | | GDS24398 | Drive Shaft | 46T | 27 | 25 | 60 | 94.5 | 965 | |
| | 2015.04-2018.07 | MT | F | L | Hatchback Van FWD G4FD | | GCO24132 | Outer Joint | 46T | 27 | 22 | 60 | 94.5 | 54.5 | M |
| | 2015.04-2018.07 | MT | F | L | Hatchback Van FWD G4FD | | GCI39052 | Inner Joint | | 25 | 22 | 41 | 63 | 86 | |
| 1.6 (100 kw) | 2015.05-2018.07 | 7DCT | F | R | Hatchback Van FWD D4FB | | GDS82244 | Drive Shaft | 46T | 27 | 28 | 60 | 95 | 1005 | |
| | 2015.07-2018.07 | 7DCT | F | R | Hatchback FWD D4FB | | GDS82244 | Drive Shaft | 46T | 27 | 28 | 60 | 95 | 1005 | |
| | 2015.07-2018.07 | 7DCT | F | R | Hatchback FWD D4FB | | GCO24137 | Outer Joint | 46T | 27 | 24 | 60 | 95 | 59 | M |
| | 2015.07-2018.07 | 7DCT | F | R | Hatchback FWD D4FB | | GCI81692 | Inner Joint | | 28 | 24 | 41 | 61.5 | 95 | |
| | 2018.10- | 6MT | F | L | Estate FWD D4FE | | GDS84405 | Drive Shaft | | 27 | 27 | 60 | 95 | 674 | |
| | 2018.10- | 6MT | F | R | Estate FWD D4FE | | GDS84404 | Drive Shaft | | 27 | 27 | 60 | 95 | 983 | |
| | 2018.10- | 6MT | F | L/R | Estate FWD D4FE | | GCI82745 | Inner Joint | | 27 | 32 | 41 | 61.5 | 93.5 | |

| | YEAR | TRANSM. | F/R | L/R | BODY STYLE & DRIVE TYPE & ENGINE | REMARKS | G-AP Ref. | PRODUCT | ABS | Technical Specifications A | B | C | H | L | P |
|---|---|---|---|---|---|---|---|---|---|---|---|---|---|---|---|
| **KIA** | | | | | | | | | | | | | | | |
| **Proceed** | | | | | | | | | | | | | | | |
| 1.6 (100 kw) | 2018.10- | 6MT/7DCT | F | L/R | Estate FWD D4FE | | GCO81818 | Outer Joint | | 27 | 24 | 60 | 95 | 59 | M |
| | 2018.10- | 7DCT | F | L | Estate FWD D4FE | Model year to:2020 | GDS84372 | Drive Shaft | | 27 | 28 | 60 | 95 | 637 | |
| | 2018.10- | 7DCT | F | R | Estate FWD D4FE | Model year to:2020 | GDS84371 | Drive Shaft | | 27 | 28 | 60 | 95 | 1010 | |
| | 2018.10- | 7DCT | F | L/R | Estate FWD D4FE | | GCI81867 | Inner Joint | | 28 | 32 | 41 | 61.5 | 95 | |
| | 2018.10- | 7DCT | F | L | Estate Van FWD D4FE | Model year to:2020 | GDS84372 | Drive Shaft | | 27 | 28 | 60 | 95 | 637 | |
| | 2018.10- | 7DCT | F | R | Estate Van FWD D4FE | Model year to:2020 | GDS84371 | Drive Shaft | | 27 | 28 | 60 | 95 | 1010 | |
| | 2018.10- | 7DCT | F | L/R | Estate Van FWD D4FE | | GCO81818 | Outer Joint | | 27 | 24 | 60 | 95 | 59 | M |
| | 2018.10- | 7DCT | F | L/R | Estate Van FWD D4FE | | GCI81867 | Inner Joint | | 28 | 32 | 41 | 61.5 | 95 | |
| | 2019.12- | 6MT | F | L | Estate FWD D4FE | | GDS84405 | Drive Shaft | | 27 | 27 | 60 | 95 | 674 | |
| | 2019.12- | 6MT | F | R | Estate FWD D4FE | | GDS84404 | Drive Shaft | | 27 | 27 | 60 | 95 | 983 | |
| | 2019.12- | 6MT | F | L/R | Estate FWD D4FE | | GCO81818 | Outer Joint | | 27 | 24 | 60 | 95 | 59 | M |
| | 2019.12- | 6MT | F | L/R | Estate FWD D4FE | | GCI82745 | Inner Joint | | 27 | 32 | 41 | 61.5 | 93.5 | |
| 2.0 (103 kw) | 2008.02-2012.09 | 6MT | F | L/R | Hatchback FWD D4EA | | GCI81914 | Inner Joint | | 28 | 26 | 41 | 61 | 105 | |
| | 2008.02-2012.09 | MT | F | L/R | Hatchback FWD D4EA | Date to:2010.04 | GCO24152 | Outer Joint | 46T | 27 | 26 | 60 | 94 | 67 | M |
| 2.0 (105 kw) | 2008.02-2012.09 | 4AT | F | L | Hatchback FWD G4GC | | GDS83822 | Drive Shaft | 46T | 27 | 27 | 60 | 93.5 | 667 | |
| | 2008.02-2012.09 | 4AT | F | R | Hatchback FWD G4GC | | GDS83821 | Drive Shaft | 46T | 27 | 27 | 60 | 95 | 939 | |
| | 2008.02-2012.09 | 4AT | F | R | Hatchback FWD G4GC | Date from:2010.03 | GDS84211 | Drive Shaft | 46T | 27 | 27 | 60 | 93.5 | 937 | |
| | 2008.02-2012.09 | 4AT | F | L/R | Hatchback FWD G4GC | Date to:2010.04 | GCO27080 | Outer Joint | 46T | 27 | 23 | 60 | 95 | 58 | M |
| | 2008.02-2012.09 | 4AT | F | L/R | Hatchback FWD G4GC | Date from:2010.03 | GCO81872 | Outer Joint | 46T | 27 | 23 | 60 | 93.5 | 58.5 | M |
| | 2008.02-2012.09 | 4AT | F | L/R | Hatchback FWD G4GC | | GCI82380 | Inner Joint | | 27 | 23 | 41 | 61.5 | 99.5 | |
| | 2009.01-2009.12 | 4AT | F | L | Hatchback FWD G4GC | | GDS83822 | Drive Shaft | 46T | 27 | 27 | 60 | 93.5 | 667 | |
| | 2009.01-2009.12 | 4AT | F | R | Hatchback FWD G4GC | | GDS83821 | Drive Shaft | 46T | 27 | 27 | 60 | 95 | 939 | |
| | 2009.01-2009.12 | 4AT | F | L/R | Hatchback FWD G4GC | | GCO27080 | Outer Joint | 46T | 27 | 23 | 60 | 95 | 58 | M |
| | 2009.01-2009.12 | 4AT | F | L/R | Hatchback FWD G4GC | | GCI82380 | Inner Joint | | 27 | 23 | 41 | 61.5 | 99.5 | |
| **Quoris** | | | | | | | | | | | | | | | |
| 5.0 (312 kw) | 2015.05- | AT | R | L | Saloon RWD G8BE | | GDS81179 | Drive Shaft | 47T | 30 | 30 | 65 | 96 | 798 | |
| | 2015.05- | AT | R | R | Saloon RWD G8BE | | GDS81180 | Drive Shaft | 47T | 30 | 30 | 65 | 96 | 844 | |
| | 2015.05- | AT | R | L/R | Saloon RWD G8BE | | GCI81099 | Outer Joint | 47T | 30 | 28 | 65 | 96 | 98.7 | |
| | 2015.05- | AT | R | L/R | Saloon RWD G8BE | | GCI81098 | Inner Joint | | 30 | 28 | 43 | 73 | 114.2 | |
| **Retona** | | | | | | | | | | | | | | | |
| 2.0 (61 kw) | 1999.06-2001.12 | 4AT/5MT | F | R | Terrain cab wagon closed 4WD RF | | GDS27067 | Drive Shaft | | 26 | 26 | 65 | 122 | 577.5 | |
| | 1999.06-2001.12 | 4AT/5MT | F | L/R | Terrain cab wagon closed 4WD RF | Date to:2000.03 | GCO99053 | Outer Joint | | 26 | 25 | 65 | 122 | 63 | M |
| | 1999.06-2001.12 | AT/MT | F | L/R | Terrain cab wagon closed 4WD RF | | GCO27002 | Outer Joint | | 26 | 24 | 65 | 122 | 62 | M |
| 2.0 (94 kw) | 1999.10-2001.12 | 5MT | F | R | Terrain cab wagon closed 4WD FE(16V) | | GDS27067 | Drive Shaft | | 26 | 26 | 65 | 122 | 577.5 | |
| | 1999.10-2001.12 | 5MT | F | L/R | Terrain cab wagon closed 4WD FE(16V) | Date to:2000.03 | GCO99053 | Outer Joint | | 26 | 25 | 65 | 122 | 63 | M |
| | 1999.10-2001.12 | AT/MT | F | L/R | Terrain cab wagon closed 4WD FE(16V) | | GCO27002 | Outer Joint | | 26 | 24 | 65 | 122 | 62 | M |
| **Rio** | | | | | | | | | | | | | | | |
| 1.0 (74 kw) | 2017.01- | 6MT | F | L/R | Hatchback FWD G3LC;G3LE | | GCI82316 | Inner Joint | | 25 | 29 | 41 | 63 | 86.5 | |
| | 2017.01- | 7AT/5MT/6MT | F | L/R | Hatchback FWD G3LC;G3LE | | GCO82442 | Outer Joint | | 25 | 22 | 52.5 | 94.5 | 54 | M |
| | 2017.01- | 5MT | F | L/R | Hatchback Van FWD G3LC | | GCO82442 | Outer Joint | | 25 | 22 | 52.5 | 94.5 | 54 | M |
| | 2017.01- | 6MT | F | L/R | Hatchback Van FWD G3LC | | GCI82316 | Inner Joint | | 25 | 29 | 41 | 63 | 86.5 | |
| 1.0 (88 kw) | 2017.01- | 6MT | F | L/R | Hatchback FWD G3LC | | GCO82442 | Outer Joint | | 25 | 22 | 52.5 | 94.5 | 54 | M |
| | 2017.01- | 6MT | F | L/R | Hatchback FWD G3LC | | GCI82316 | Inner Joint | | 25 | 29 | 41 | 63 | 86.5 | |
| | 2017.01- | 7DCT | F | L/R | Hatchback FWD G3LC | | GCO82732 | Outer Joint | | 25 | 30 | 52.6 | 95 | 57 | M |
| | 2017.01- | 7DCT | F | L/R | Hatchback FWD G3LC | | GCI24015 | Inner Joint | | 27 | 30 | 41 | 62 | 90 | |
| | 2017.01- | 6MT | F | L/R | Hatchback Van FWD G3LC | | GCO82442 | Outer Joint | | 25 | 22 | 52.5 | 94.5 | 54 | M |
| | 2017.01- | 6MT | F | L/R | Hatchback Van FWD G3LC | | GCI82316 | Inner Joint | | 25 | 29 | 41 | 63 | 86.5 | |
| | 2017.01- | 7DCT | F | L/R | Hatchback Van FWD G3LC | | GCO82732 | Outer Joint | | 25 | 30 | 52.6 | 95 | 57 | M |
| | 2017.01- | 7DCT | F | L/R | Hatchback Van FWD G3LC | | GCI24015 | Inner Joint | | 27 | 30 | 41 | 62 | 90 | |
| 1.1 (55 kw) | 2011.09- | 6MT | F | L | Hatchback Van FWD D3FA | | GDS82852 | Drive Shaft | 48T | 25 | 25 | 52.5 | 94.5 | 682 | |
| | 2011.09- | 6MT | F | L | Hatchback Van FWD D3FA | | GCO39198 | Outer Joint | 48T | 25 | 22 | 52.5 | 94.5 | 54 | M |
| | 2011.09- | | F | L/R | Hatchback Van FWD D3FA | | GCI39055 | Inner Joint | | 25 | 30 | 41 | 63 | 86.5 | |
| | 2011.09-2017.12 | 6MT | F | L | Hatchback FWD D3FA | | GDS82852 | Drive Shaft | 48T | 25 | 25 | 52.5 | 94.5 | 682 | |
| | 2011.09-2017.12 | MT | F | L/R | Hatchback FWD D3FA | Date to:2017.01 | GCO39198 | Outer Joint | 48T | 25 | 22 | 52.5 | 94.5 | 54 | M |
| | 2011.09-2017.12 | MT | F | L/R | Hatchback FWD D3FA | Date to:2017.01 | GCI39055 | Inner Joint | | 25 | 30 | 41 | 63 | 86.5 | |
| 1.2 (51 kw) | 2011.09-2017.12 | 5MT | F | L | Hatchback FWD G4LA | | GDS81565 | Drive Shaft | 48T | 25 | 25 | 52.6 | 94.5 | 654 | |
| | 2011.09-2017.12 | 5MT | F | R | Hatchback FWD G4LA | | GDS81566 | Drive Shaft | 48T | 25 | 25 | 52.6 | 94.5 | 931 | |
| | 2011.09-2017.12 | 5MT | F | L/R | Hatchback FWD G4LA | | GCO27115 | Outer Joint | 48T | 25 | 20 | 52.6 | 94.5 | 51 | M |
| | 2011.09-2017.12 | 5MT | F | L/R | Hatchback FWD G4LA | | GCI81412 | Inner Joint | | 25 | 20 | 35 | 54 | 86 | |
| 1.2 (60 kw) | 2019.05- | 5MT | F | L | Hatchback FWD G4LA | | GDS82327 | Drive Shaft | | 25 | 25 | 52.6 | 94.5 | 682 | |
| | 2019.05- | 5MT | F | R | Hatchback FWD G4LA | | GDS82328 | Drive Shaft | | 25 | 25 | 52.6 | 94.5 | 912 | |
| | 2020.05- | 5MT | F | L | Hatchback FWD G4LF | | GDS82327 | Drive Shaft | | 25 | 25 | 52.6 | 94.5 | 682 | |
| | 2020.05- | 5MT | F | R | Hatchback FWD G4LF | | GDS82328 | Drive Shaft | | 25 | 25 | 52.6 | 94.5 | 912 | |
| | 2020.05- | 5MT | F | L/R | Hatchback FWD G4LF | | GCO81807 | Outer Joint | | 25 | 20 | 52.6 | 94.5 | 51 | M |
| | 2020.05- | 5MT | F | L/R | Hatchback FWD G4LF | | GCI81412 | Inner Joint | | 25 | 20 | 35 | 54 | 86 | |

| | YEAR | TRANSM. | F/R | L/R | BODY STYLE & DRIVE TYPE & ENGINE | REMARKS | G-AP Ref. | PRODUCT | ABS | Technical Specifications A | B | C | H | L | P |
|---|---|---|---|---|---|---|---|---|---|---|---|---|---|---|---|
| **KIA** **Rio** | | | | | | | | | | | | | | | |
| 1.2 (62 kw) | 2011.09-2017.12 | 4AT/5MT | F | L | Hatchback FWD G4LA | | GDS81565 | Drive Shaft | 48T | 25 | 25 | 52.6 | 94.5 | 654 | |
| | 2011.09-2017.12 | 4AT/5MT | F | R | Hatchback FWD G4LA | | GDS81566 | Drive Shaft | 48T | 25 | 25 | 52.6 | 94.5 | 931 | |
| | 2011.09-2017.12 | 4AT/5MT | F | L | Hatchback FWD G4LA | | GCO27115 | Outer Joint | 48T | 25 | 20 | 52.6 | 94.5 | 51 | M |
| | 2011.09-2017.12 | 4AT/5MT | F | L | Hatchback FWD G4LA | | GCI81412 | Inner Joint | | 25 | 20 | 35 | 54 | 86 | |
| | 2017.01- | 5MT | F | L | Hatchback FWD G4LA;G4LB | | GDS82327 | Drive Shaft | | 25 | 25 | 52.6 | 94.5 | 682 | |
| | 2017.01- | 5MT | F | R | Hatchback FWD G4LA;G4LB | | GDS82328 | Drive Shaft | | 25 | 25 | 52.6 | 94.5 | 912 | |
| | 2017.01- | 5MT | F | L/R | Hatchback FWD G4LA;G4LB | | GCO81807 | Outer Joint | | 25 | 20 | 52.6 | 94.5 | 51 | M |
| | 2017.01- | 5MT | F | L/R | Hatchback FWD G4LA;G4LB | | GCI81412 | Inner Joint | | 25 | 20 | 35 | 54 | 86 | |
| | 2020.05- | 5MT | F | L | Hatchback FWD G4LF | | GDS82327 | Drive Shaft | | 25 | 25 | 52.6 | 94.5 | 682 | |
| | 2020.05- | 5MT | F | R | Hatchback FWD G4LF | | GDS82328 | Drive Shaft | | 25 | 25 | 52.6 | 94.5 | 912 | |
| | 2020.05- | 5MT | F | L/R | Hatchback FWD G4LF | | GCO81807 | Outer Joint | | 25 | 20 | 52.6 | 94.5 | 51 | M |
| | 2020.05- | 5MT | F | L/R | Hatchback FWD G4LF | | GCI81412 | Inner Joint | | 25 | 20 | 35 | 54 | 86 | |
| 1.2 (63 kw) | 2011.09-2017.12 | 5MT | F | L | Hatchback FWD G4LA | | GDS81565 | Drive Shaft | 48T | 25 | 25 | 52.6 | 94.5 | 654 | |
| | 2011.09-2017.12 | 5MT | F | R | Hatchback FWD G4LA | | GDS81566 | Drive Shaft | 48T | 25 | 25 | 52.6 | 94.5 | 931 | |
| | 2011.09-2017.12 | 5MT | F | L/R | Hatchback FWD G4LA | | GCO27115 | Outer Joint | 48T | 25 | 20 | 52.6 | 94.5 | 51 | M |
| | 2011.09-2017.12 | 5MT | F | L/R | Hatchback FWD G4LA | | GCI81412 | Inner Joint | | 25 | 20 | 35 | 54 | 86 | |
| | 2011.10-2017.12 | 5MT | F | L | Saloon FWD G4LA | | GDS81565 | Drive Shaft | 48T | 25 | 25 | 52.6 | 94.5 | 654 | |
| | 2011.10-2017.12 | 5MT | F | R | Saloon FWD G4LA | | GDS81566 | Drive Shaft | 48T | 25 | 25 | 52.6 | 94.5 | 931 | |
| | 2011.10-2017.12 | 5MT | F | L/R | Saloon FWD G4LA | | GCO27115 | Outer Joint | 48T | 25 | 20 | 52.6 | 94.5 | 51 | M |
| | 2011.10-2017.12 | 5MT | F | L/R | Saloon FWD G4LA | | GCI81412 | Inner Joint | | 25 | 20 | 35 | 54 | 86 | |
| | 2015.04-2017.12 | 5MT | F | L | Hatchback Van FWD G4LA | | GDS81565 | Drive Shaft | 48T | 25 | 25 | 52.6 | 94.5 | 654 | |
| | 2015.04-2017.12 | 5MT | F | R | Hatchback Van FWD G4LA | | GDS81566 | Drive Shaft | 48T | 25 | 25 | 52.6 | 94.5 | 931 | |
| | 2015.04-2017.12 | 5MT | F | L/R | Hatchback Van FWD G4LA | | GCO27115 | Outer Joint | 48T | 25 | 20 | 52.6 | 94.5 | 51 | M |
| | 2015.04-2017.12 | 5MT | F | L/R | Hatchback Van FWD G4LA | | GCI81412 | Inner Joint | | 25 | 20 | 35 | 54 | 86 | |
| 1.2 (64 kw) | 2014.11-2017.12 | 5MT | F | L | Hatchback FWD G4LA | | GDS81565 | Drive Shaft | 48T | 25 | 25 | 52.6 | 94.5 | 654 | |
| | 2014.11-2017.12 | 5MT | F | R | Hatchback FWD G4LA | | GDS81566 | Drive Shaft | 48T | 25 | 25 | 52.6 | 94.5 | 931 | |
| | 2014.11-2017.12 | 5MT | F | L/R | Hatchback FWD G4LA | | GCO27115 | Outer Joint | 48T | 25 | 20 | 52.6 | 94.5 | 51 | M |
| | 2014.11-2017.12 | 4AT/6AT/5MT | F | L | Saloon FWD G4LA | | GDS81565 | Drive Shaft | 48T | 25 | 25 | 52.6 | 94.5 | 654 | |
| | 2014.11-2017.12 | 4AT/6AT/5MT | F | R | Saloon FWD G4LA | | GDS81566 | Drive Shaft | 48T | 25 | 25 | 52.6 | 94.5 | 931 | |
| | 2014.11-2017.12 | 4AT/6AT/5MT | F | L/R | Saloon FWD G4LA | | GCO27115 | Outer Joint | 48T | 25 | 20 | 52.6 | 94.5 | 51 | M |
| | 2014.11-2017.12 | 4AT/6AT/5MT | F | L/R | Saloon FWD G4LA | | GCI81412 | Inner Joint | | 25 | 20 | 35 | 54 | 86 | |
| 1.2 (65 kw) | 2011.06-2017.12 | 5MT | F | L/R | Saloon FWD G4LA | | GCI81412 | Inner Joint | | 25 | 20 | 35 | 54 | 86 | |
| | 2011.06-2017.12 | | F | L | Saloon FWD G4LA | | GDS81565 | Drive Shaft | 48T | 25 | 25 | 52.6 | 94.5 | 654 | |
| | 2011.06-2017.12 | | F | R | Saloon FWD G4LA | | GDS81566 | Drive Shaft | 48T | 25 | 25 | 52.6 | 94.5 | 931 | |
| | 2011.06-2017.12 | | F | L | Saloon FWD G4LA | | GCO27115 | Outer Joint | 48T | 25 | 20 | 52.6 | 94.5 | 51 | M |
| 1.3 (55 kw) | 2000.08-2005.02 | 4AT/5MT | F | L/R | Hatchback FWD A3E | | GCO27070 | Outer Joint | | 24 | 21 | 52 | 86 | 55 | M |
| | 2000.08-2005.02 | AT | F | R | Hatchback FWD A3E | | GDS27199 | Drive Shaft | 44T | 24 | 24 | 52 | 86.5 | 881 | |
| | 2000.08-2005.02 | AT/MT | F | L/R | Hatchback FWD A3E | | GCO18074 | Outer Joint | | 24 | 21 | 52 | 86.5 | 53 | I |
| | 2000.08-2005.02 | AT/MT | F | L/R | Hatchback FWD A3E | | GCO99232 | Outer Joint | 44T | 24 | 21 | 52 | 86.5 | 53 | I |
| | 2000.08-2005.02 | MT | F | L | Hatchback FWD A3E | | GDS27025 | Drive Shaft | 44T | 24 | 26 | 52 | 86 | 605 | |
| | 2000.08-2005.02 | MT | F | L | Hatchback FWD A3E | | GDS27106 | Drive Shaft | | 24 | 26 | 52 | 86 | 606 | |
| | 2000.08-2005.02 | MT | F | R | Hatchback FWD A3E | | GDS27026 | Drive Shaft | | 24 | 26 | 52 | 86 | 888 | |
| | 2000.08-2005.02 | MT | F | R | Hatchback FWD A3E | | GDS27027 | Drive Shaft | 44T | 24 | 26 | 52 | 86 | 888 | |
| | 2000.08-2005.02 | MT | F | L/R | Hatchback FWD A3E | | GCO27078 | Outer Joint | 44T | 24 | 21 | 52 | 86 | 55 | M |
| | 2000.08-2005.02 | MT | F | L | Hatchback FWD A3E | | GCI34008 | Inner Joint | | 26 | 22 | 35 | 66.7 | 92 | |
| | 2000.09-2005.02 | 4AT/5MT | F | L/R | Saloon FWD A3E | | GCO27070 | Outer Joint | | 24 | 21 | 52 | 86 | 55 | M |
| | 2000.09-2005.02 | AT | F | R | Saloon FWD A3E | | GDS27199 | Drive Shaft | 44T | 24 | 24 | 52 | 86.5 | 881 | |
| | 2000.09-2005.02 | AT/MT | F | L/R | Saloon FWD A3E | | GCO18074 | Outer Joint | | 24 | 21 | 52 | 86.5 | 53 | I |
| | 2000.09-2005.02 | AT/MT | F | L/R | Saloon FWD A3E | | GCO99232 | Outer Joint | 44T | 24 | 21 | 52 | 86.5 | 53 | I |
| | 2000.09-2005.02 | MT | F | L | Saloon FWD A3E | | GDS27025 | Drive Shaft | 44T | 24 | 26 | 52 | 86 | 605 | |
| | 2000.09-2005.02 | MT | F | L | Saloon FWD A3E | | GDS27106 | Drive Shaft | | 24 | 26 | 52 | 86 | 606 | |
| | 2000.09-2005.02 | MT | F | R | Saloon FWD A3E | | GDS27026 | Drive Shaft | | 24 | 26 | 52 | 86 | 888 | |
| | 2000.09-2005.02 | MT | F | R | Saloon FWD A3E | | GDS27027 | Drive Shaft | 44T | 24 | 26 | 52 | 86 | 888 | |
| | 2000.09-2005.02 | MT | F | L/R | Saloon FWD A3E | | GCO27078 | Outer Joint | 44T | 24 | 21 | 52 | 86 | 55 | M |
| | 2000.09-2005.02 | MT | F | L | Saloon FWD A3E | | GCI34008 | Inner Joint | | 26 | 22 | 35 | 66.7 | 92 | |
| 1.3 (60 kw) | 2000.08-2005.02 | 4AT/5MT | F | L/R | Hatchback FWD A3E | | GCO27070 | Outer Joint | | 24 | 21 | 52 | 86 | 55 | M |
| | 2000.08-2005.02 | AT | F | R | Hatchback FWD A3E | | GDS27199 | Drive Shaft | 44T | 24 | 24 | 52 | 86.5 | 881 | |
| | 2000.08-2005.02 | AT/MT | F | L/R | Hatchback FWD A3E | | GCO18074 | Outer Joint | | 24 | 21 | 52 | 86.5 | 53 | I |
| | 2000.08-2005.02 | AT/MT | F | L/R | Hatchback FWD A3E | | GCO99232 | Outer Joint | 44T | 24 | 21 | 52 | 86.5 | 53 | I |
| | 2000.08-2005.02 | MT | F | L | Hatchback FWD A3E | | GDS27025 | Drive Shaft | 44T | 24 | 26 | 52 | 86 | 605 | |
| | 2000.08-2005.02 | MT | F | L | Hatchback FWD A3E | | GDS27106 | Drive Shaft | | 24 | 26 | 52 | 86 | 606 | |
| | 2000.08-2005.02 | MT | F | R | Hatchback FWD A3E | | GDS27026 | Drive Shaft | | 24 | 26 | 52 | 86 | 888 | |
| | 2000.08-2005.02 | MT | F | R | Hatchback FWD A3E | | GDS27027 | Drive Shaft | 44T | 24 | 26 | 52 | 86 | 888 | |
| | 2000.08-2005.02 | MT | F | L/R | Hatchback FWD A3E | | GCO27078 | Outer Joint | 44T | 24 | 21 | 52 | 86 | 55 | M |
| | 2000.08-2005.02 | MT | F | L | Hatchback FWD A3E | | GCI34008 | Inner Joint | | 26 | 22 | 35 | 66.7 | 92 | |

| | YEAR | TRANSM. | F/R | L/R | BODY STYLE & DRIVE TYPE & ENGINE | REMARKS | G-AP Ref. | PRODUCT | ABS | Technical Specifications | | | | | |
|---|---|---|---|---|---|---|---|---|---|---|---|---|---|---|---|
| | | | | | | | | | | A | B | C | H | L | P |
| **KIA** | | | | | | | | | | | | | | | |
| **Rio** | | | | | | | | | | | | | | | |
| 1.3 (60 kw) | 2002.08-2005.02 | 5MT | F | L/R | Saloon FWD A3E | | GCO27070 | Outer Joint | | 24 | 21 | 52 | 86 | 55 | M |
| | 2002.08-2005.02 | AT/MT | F | L/R | Saloon FWD A3E | | GCO18074 | Outer Joint | | 24 | 21 | 52 | 86.5 | 53 | I |
| | 2002.08-2005.02 | AT/MT | F | L/R | Saloon FWD A3E | | GCO99232 | Outer Joint | 44T | 24 | 21 | 52 | 86.5 | 53 | I |
| | 2002.08-2005.02 | MT | F | L | Saloon FWD A3E | | GDS27025 | Drive Shaft | 44T | 24 | 26 | 52 | 86 | 605 | |
| | 2002.08-2005.02 | MT | F | L | Saloon FWD A3E | | GDS27106 | Drive Shaft | | 24 | 26 | 52 | 86 | 606 | |
| | 2002.08-2005.02 | MT | F | R | Saloon FWD A3E | | GDS27026 | Drive Shaft | | 24 | 26 | 52 | 86 | 888 | |
| | 2002.08-2005.02 | MT | F | R | Saloon FWD A3E | | GDS27027 | Drive Shaft | 44T | 24 | 26 | 52 | 86 | 888 | |
| | 2002.08-2005.02 | MT | F | L/R | Saloon FWD A3E | | GCO27078 | Outer Joint | 44T | 24 | 21 | 52 | 86 | 55 | M |
| | 2002.08-2005.02 | MT | F | L | Saloon FWD A3E | | GCI34008 | Inner Joint | | 26 | 22 | 35 | 66.7 | 92 | |
| 1.4 (55 kw) | 2010.01-2011.12 | 5MT | F | L | Hatchback FWD G4EE | | GDS27155 | Drive Shaft | 48T | 25 | 25 | 52.5 | 93.5 | 637 | |
| | 2010.01-2011.12 | 5MT | F | R | Hatchback FWD G4EE | | GDS27156 | Drive Shaft | 48T | 25 | 25 | 52.5 | 93.5 | 925 | |
| | 2010.01-2011.12 | 5MT | F | L | Hatchback FWD G4EE | | GCI27019 | Inner Joint | | 25 | 22 | 41 | 62 | 93.5 | |
| | 2010.01-2011.12 | MT | F | L | Hatchback FWD G4EE | | GCO27097 | Outer Joint | 48T | 25 | 22 | 52.5 | 93.5 | 59.5 | M |
| 1.4 (57 kw) | 2017.01- | 6MT | F | L/R | Hatchback FWD D4FC | | GCO82732 | Outer Joint | | 25 | 30 | 52.6 | 95 | 57 | M |
| | 2017.01- | 6MT | F | L/R | Hatchback FWD D4FC | | GCI24015 | Inner Joint | | 27 | 30 | 41 | 62 | 90 | |
| 1.4 (66 kw) | 2017.01- | 6MT | F | L/R | Hatchback FWD D4FC | | GCO82732 | Outer Joint | | 25 | 30 | 52.6 | 95 | 57 | M |
| | 2017.01- | 6MT | F | L/R | Hatchback FWD D4FC | | GCI24015 | Inner Joint | | 27 | 30 | 41 | 62 | 90 | |
| 1.4 (71 kw) | 2005.03-2011.12 | AT | F | L | Hatchback FWD G4EE | | GDS27186 | Drive Shaft | 48T | 25 | 25 | 52.5 | 95 | 638 | |
| | 2005.03-2011.12 | AT | F | R | Hatchback FWD G4EE | | GDS27185 | Drive Shaft | 48T | 25 | 25 | 52.5 | 95 | 926 | |
| | 2005.03-2011.12 | AT | F | L/R | Hatchback FWD G4EE | Date from:2007.11 | GCO24046 | Outer Joint | 48T | 25 | 22 | 52.5 | 95 | 58 | M |
| | 2005.03-2011.12 | MT | F | L | Hatchback FWD G4EE | | GDS27155 | Drive Shaft | 48T | 25 | 25 | 52.5 | 93.5 | 637 | |
| | 2005.03-2011.12 | MT | F | R | Hatchback FWD G4EE | Date to:2007.10 | GDS24044 | Drive Shaft | 48T | 25 | 25 | 52.5 | 95 | 924 | |
| | 2005.03-2011.12 | MT | F | R | Hatchback FWD G4EE | Date from:2007.11 | GDS27156 | Drive Shaft | 48T | 25 | 25 | 52.5 | 93.5 | 925 | |
| | 2005.03-2011.12 | MT | F | R | Hatchback FWD G4EE | Date To:2007.10 | GCO24101 | Outer Joint | 48T | 25 | 22 | 52.5 | 95 | 58 | M |
| | 2005.03-2011.12 | MT | F | L/R | Hatchback FWD G4EE | Date from:2007.11 | GCO27097 | Outer Joint | 48T | 25 | 22 | 52.5 | 93.5 | 59.5 | M |
| | 2005.03-2011.12 | MT | F | L/R | Hatchback FWD G4EE | | GCI27019 | Inner Joint | | 25 | 22 | 41 | 62 | 93.5 | |
| | 2005.03-2011.12 | AT | F | L | Saloon FWD G4EE | | GDS27186 | Drive Shaft | 48T | 25 | 25 | 52.5 | 95 | 638 | |
| | 2005.03-2011.12 | AT | F | R | Saloon FWD G4EE | | GDS27185 | Drive Shaft | 48T | 25 | 25 | 52.5 | 95 | 926 | |
| | 2005.03-2011.12 | AT | F | L/R | Saloon FWD G4EE | Date from:2007.11 | GCO24046 | Outer Joint | 48T | 25 | 22 | 52.5 | 95 | 58 | M |
| | 2005.03-2011.12 | MT | F | L | Saloon FWD G4EE | | GDS27155 | Drive Shaft | 48T | 25 | 25 | 52.5 | 93.5 | 637 | |
| | 2005.03-2011.12 | MT | F | R | Saloon FWD G4EE | Date to:2007.10 | GDS24044 | Drive Shaft | 48T | 25 | 25 | 52.5 | 95 | 924 | |
| | 2005.03-2011.12 | MT | F | R | Saloon FWD G4EE | Date from:2007.11 | GDS27156 | Drive Shaft | 48T | 25 | 25 | 52.5 | 93.5 | 925 | |
| | 2005.03-2011.12 | MT | F | R | Saloon FWD G4EE | Date To:2007.10 | GCO24101 | Outer Joint | 48T | 25 | 22 | 52.5 | 95 | 58 | M |
| | 2005.03-2011.12 | MT | F | L/R | Saloon FWD G4EE | Date from:2007.11 | GCO27097 | Outer Joint | 48T | 25 | 22 | 52.5 | 93.5 | 59.5 | M |
| | 2005.03-2011.12 | MT | F | L/R | Saloon FWD G4EE | | GCI27019 | Inner Joint | | 25 | 22 | 41 | 62 | 93.5 | |
| 1.4 (73 kw) | 2017.01- | 4AT/6MT | F | L | Hatchback FWD G4LC | | GDS83624 | Drive Shaft | | 25 | 25 | 52.5 | 94.5 | 676 | |
| | 2017.01- | 4AT/6MT | F | R | Hatchback FWD G4LC | | GDS83823 | Drive Shaft | | 25 | 25 | 52.5 | 94.5 | 920 | |
| | 2017.01- | 4AT/6MT | F | L/R | Hatchback FWD G4LC | | GCO82442 | Outer Joint | | 25 | 22 | 52.5 | 94.5 | 54 | M |
| | 2017.01- | 4AT/6MT | F | L/R | Hatchback FWD G4LC | | GCI82316 | Inner Joint | | 25 | 29 | 41 | 63 | 86.5 | |
| | 2017.01- | 6AT | F | L/R | Hatchback FWD G4LC | | GCO82726 | Outer Joint | | 25 | 22 | 52.5 | 94.5 | 54 | M |
| | 2017.01- | 6AT | F | R | Hatchback FWD G4LC | | GCI82296 | Inner Joint | | 27 | 29 | 30 | 67.5 | 81 | |
| | 2017.07- | 6AT | F | L | Saloon FWD G4LC | Date from:2017.08 | GDS84072 | Drive Shaft | | 25 | 27 | 52.5 | 94.5 | 656 | |
| | 2017.07- | 6AT | F | R | Saloon FWD G4LC | Date from:2017.08 | GDS84073 | Drive Shaft | | 25 | 27 | 52.5 | 94.5 | 916 | |
| | 2017.07- | 6AT | F | L/R | Saloon FWD G4LC | Date from:2017.08,With Shaft | GCO82443 | Outer Joint | | 25 | 22 | 52.5 | 94.5 | 54 | M |
| | 2017.07- | 6AT | F | L/R | Saloon FWD G4LC | | GCI24065 | Inner Joint | | 27 | 22 | 30 | 68 | 77 | |
| 1.4 (74 kw) | 2017.01- | 6AT | F | L/R | Hatchback FWD G4LC | | GCO82726 | Outer Joint | | 25 | 22 | 52.5 | 94.5 | 54 | M |
| | 2017.01- | 6AT | F | R | Hatchback FWD G4LC | | GCI82296 | Inner Joint | | 27 | 29 | 30 | 67.5 | 81 | |
| | 2017.01- | 6AT | F | L/R | Hatchback FWD G4LC | | GCI24065 | Inner Joint | | 27 | 22 | 30 | 68 | 77 | |
| | 2017.01- | 6MT | F | L/R | Hatchback FWD G4LC | | GCO82443 | Outer Joint | | 25 | 22 | 52.5 | 94.5 | 54 | M |
| | 2017.01- | 6MT | F | L/R | Hatchback FWD G4LC | | GCI24137 | Inner Joint | | 25 | 22 | 41 | 62.5 | 86 | |
| | 2017.01- | | F | L | Hatchback FWD G4LC | | GDS83624 | Drive Shaft | | 25 | 25 | 52.5 | 94.5 | 676 | |
| | 2017.01- | | F | R | Hatchback FWD G4LC | | GDS83823 | Drive Shaft | | 25 | 25 | 52.5 | 94.5 | 920 | |
| | 2017.07- | 6AT | F | L | Saloon FWD G4LC | Date from:2017.08 | GDS84072 | Drive Shaft | | 25 | 27 | 52.5 | 94.5 | 656 | |
| | 2017.07- | 6AT | F | R | Saloon FWD G4LC | Date from:2017.08 | GDS84073 | Drive Shaft | | 25 | 27 | 52.5 | 94.5 | 916 | |
| | 2017.07- | 6AT | F | L/R | Saloon FWD G4LC | Date from:2017.08,With Shaft | GCO82443 | Outer Joint | | 25 | 22 | 52.5 | 94.5 | 54 | M |
| | 2017.07- | 6AT | F | L/R | Saloon FWD G4LC | | GCI24065 | Inner Joint | | 27 | 22 | 30 | 68 | 77 | |
| | 2017.07- | 6MT | F | L | Saloon FWD G4LC | Date from:2017.08 | GDS83763 | Drive Shaft | | 25 | 25 | 52.5 | 94.5 | 675 | |
| | 2017.07- | 6MT | F | R | Saloon FWD G4LC | Date from:2017.08 | GDS83762 | Drive Shaft | | 25 | 25 | 52.5 | 94.5 | 920 | |
| | 2017.07- | 6MT | F | L/R | Saloon FWD G4LC | Date from:2017.08 | GCO82443 | Outer Joint | | 25 | 22 | 52.5 | 94.5 | 54 | M |
| | 2017.07- | 6MT | F | L/R | Saloon FWD G4LC | | GCI24137 | Inner Joint | | 25 | 22 | 41 | 62.5 | 86 | |
| 1.4 (79 kw) | 2011.06-2017.12 | 4AT | F | L | Saloon FWD G4FA | Model code:UB | GDS39177 | Drive Shaft | 48T | 25 | 25 | 52.5 | 94.5 | 653 | |
| | 2011.06-2017.12 | 4AT | F | R | Saloon FWD G4FA | Model code:UB | GDS39178 | Drive Shaft | 48T | 25 | 25 | 52.5 | 94.5 | 932 | |
| | 2011.06-2017.12 | 4AT | F | L/R | Saloon FWD G4FA | Model code:UB | GCO39198 | Outer Joint | 48T | 25 | 22 | 52.5 | 94.5 | 54 | M |
| | 2011.06-2017.12 | 4AT | F | L/R | Saloon FWD G4FA | Model code:UB | GCI39055 | Inner Joint | | 25 | 30 | 41 | 63 | 86.5 | |
| | 2011.06-2017.12 | 4AT/5MT | F | L | Saloon FWD G4FA | Model code:QBR | GDS24246 | Drive Shaft | 48T | 25 | 25 | 52.5 | 93.5 | 652 | |

| | YEAR | TRANSM. | F/R | L/R | BODY STYLE & DRIVE TYPE & ENGINE | REMARKS | G-AP Ref. | PRODUCT | ABS | Technical Specifications A | B | C | H | L | P |
|---|---|---|---|---|---|---|---|---|---|---|---|---|---|---|---|
| **KIA** **Rio** | | | | | | | | | | | | | | | |
| 1.4 (79 kw) | 2011.06-2017.12 | 4AT/5MT | F | L | Saloon FWD G4FA | Model code:QBR | GDS24260 | Drive Shaft | | 25 | 25 | 52.5 | 93.5 | 652 | |
| | 2011.06-2017.12 | 4AT/5MT | F | R | Saloon FWD G4FA | Model code:QBR | GDS24247 | Drive Shaft | 48T | 25 | 25 | 52.5 | 93.5 | 927 | |
| | 2011.06-2017.12 | 4AT/5MT | F | L/R | Saloon FWD G4FA | Model code:QBR | GCO24131 | Outer Joint | 48T | 25 | 22 | 52.5 | 93.5 | 59.5 | M |
| | 2011.06-2017.12 | 4AT/5MT | F | L/R | Saloon FWD G4FA | Model code:QBR | GCI39052 | Inner Joint | | 25 | 22 | 41 | 63 | 86 | |
| | 2011.06-2017.12 | 5MT | F | L | Saloon FWD G4FA | Model code:QBR | GCO24136 | Outer Joint | | 25 | 22 | 52.5 | 93.5 | 59.5 | M |
| | 2011.09-2017.12 | 4AT | F | L/R | Hatchback FWD G4FA | For Modelcode:UB | GCO39198 | Outer Joint | 48T | 25 | 22 | 52.5 | 94.5 | 54 | M |
| | 2011.09-2017.12 | 4AT | F | L/R | Hatchback FWD G4FA | For Modelcode:UB | GCI39055 | Inner Joint | | 25 | 30 | 41 | 63 | 86.5 | |
| | 2011.09-2017.12 | 4AT/6MT | F | L | Hatchback FWD G4FA | Inner teeth of tranm.side:30 | GDS39177 | Drive Shaft | 48T | 25 | 25 | 52.5 | 94.5 | 653 | |
| | 2011.09-2017.12 | 4AT/6MT | F | R | Hatchback FWD G4FA | | GDS27164 | Drive Shaft | | 25 | 25 | 52.5 | 94.5 | 932 | |
| | 2011.09-2017.12 | 4AT/6MT | F | R | Hatchback FWD G4FA | Inner teeth of tranm.side:30 | GDS39178 | Drive Shaft | 48T | 25 | 25 | 52.5 | 94.5 | 932 | |
| | 2011.09-2017.12 | AT/MT | F | R | Hatchback FWD G4FA | Date from:2012.01;Inner teeth of tranm.side:22 | GDS39167 | Drive Shaft | 48T | 25 | 25 | 52.5 | 93.5 | 933 | |
| | 2011.09-2017.12 | | F | L | Hatchback FWD G4FA | Inner teeth of tranm.side:22 | GDS24246 | Drive Shaft | 48T | 25 | 25 | 52.5 | 93.5 | 652 | |
| | 2011.09-2017.12 | | F | R | Hatchback FWD G4FA | Inner teeth of tranm.side:22 | GDS24247 | Drive Shaft | 48T | 25 | 25 | 52.5 | 93.5 | 927 | |
| 1.4 (80 kw) | 2011.09-2017.12 | 4AT/6MT | F | L | Hatchback FWD G4FA | | GDS39177 | Drive Shaft | 48T | 25 | 25 | 52.5 | 94.5 | 653 | |
| | 2011.09-2017.12 | 4AT/6MT | F | R | Hatchback FWD G4FA | | GDS27164 | Drive Shaft | | 25 | 25 | 52.5 | 94.5 | 932 | |
| | 2011.09-2017.12 | 4AT/6MT | F | R | Hatchback FWD G4FA | | GDS39178 | Drive Shaft | 48T | 25 | 25 | 52.5 | 94.5 | 932 | |
| | 2011.09-2017.12 | 4AT/6MT | F | L/R | Hatchback FWD G4FA | | GCO39198 | Outer Joint | 48T | 25 | 22 | 52.5 | 94.5 | 54 | M |
| | 2011.09-2017.12 | 4AT/6MT | F | L/R | Hatchback FWD G4FA | | GCI39055 | Inner Joint | | 25 | 30 | 41 | 63 | 86.5 | |
| | 2011.10-2017.12 | 4AT/5MT | F | L | Saloon FWD G4FA | Model code:QBR | GDS24246 | Drive Shaft | 48T | 25 | 25 | 52.5 | 93.5 | 652 | |
| | 2011.10-2017.12 | 4AT/5MT | F | L | Saloon FWD G4FA | Model code:QBR | GDS24260 | Drive Shaft | | 25 | 25 | 52.5 | 93.5 | 652 | |
| | 2011.10-2017.12 | 4AT/5MT | F | R | Saloon FWD G4FA | Model code:QBR | GDS24247 | Drive Shaft | 48T | 25 | 25 | 52.5 | 93.5 | 927 | |
| | 2011.10-2017.12 | 4AT/5MT | F | L/R | Saloon FWD G4FA | Model code:QBR | GCO24131 | Outer Joint | 48T | 25 | 22 | 52.5 | 93.5 | 59.5 | M |
| | 2011.10-2017.12 | 4AT/5MT | F | L/R | Saloon FWD G4FA | Model code:QBR | GCI39052 | Inner Joint | | 25 | 22 | 41 | 63 | 86 | |
| | 2011.10-2017.12 | 4AT/6MT | F | L | Saloon FWD G4FA | Model code:UB | GDS39177 | Drive Shaft | 48T | 25 | 25 | 52.5 | 94.5 | 653 | |
| | 2011.10-2017.12 | 4AT/6MT | F | R | Saloon FWD G4FA | Model code:UB | GDS39178 | Drive Shaft | 48T | 25 | 25 | 52.5 | 94.5 | 932 | |
| | 2011.10-2017.12 | 4AT/6MT | F | L/R | Saloon FWD G4FA | Model code:UB | GCO39198 | Outer Joint | 48T | 25 | 22 | 52.5 | 94.5 | 54 | M |
| | 2011.10-2017.12 | 4AT/6MT | F | L/R | Saloon FWD G4FA | Model code:UB | GCI39055 | Inner Joint | | 25 | 30 | 41 | 63 | 86.5 | |
| | 2011.10-2017.12 | 5MT | F | L | Saloon FWD G4FA | Model code:QBR | GCO24136 | Outer Joint | | 25 | 22 | 52.5 | 93.5 | 59.5 | M |
| | 2015.04- | 4AT | F | L/R | Hatchback Van FWD G4FA | For Modelcode:UB | GCO39198 | Outer Joint | 48T | 25 | 22 | 52.5 | 94.5 | 54 | M |
| | 2015.04- | 4AT | F | L/R | Hatchback Van FWD G4FA | For Modelcode:UB | GCI39055 | Inner Joint | | 25 | 30 | 41 | 63 | 86.5 | |
| | 2015.04- | 4AT/6MT | F | L | Hatchback Van FWD G4FA | | GDS39177 | Drive Shaft | 48T | 25 | 25 | 52.5 | 94.5 | 653 | |
| | 2015.04- | 4AT/6MT | F | R | Hatchback Van FWD G4FA | | GDS27164 | Drive Shaft | | 25 | 25 | 52.5 | 94.5 | 932 | |
| | 2015.04- | 4AT/6MT | F | R | Hatchback Van FWD G4FA | | GDS39178 | Drive Shaft | 48T | 25 | 25 | 52.5 | 94.5 | 932 | |
| | 2015.04- | AT/MT | F | R | Hatchback Van FWD G4FA | | GDS39167 | Drive Shaft | 48T | 25 | 25 | 52.5 | 93.5 | 933 | |
| 1.5 (65 kw) | 2008.06-2011.12 | MT | F | R | Hatchback FWD D4FA | | GDS39323 | Drive Shaft | 48T | 25 | 26 | 50 | 93.5 | 592 | |
| | 2008.06-2011.12 | MT | F | L/R | Hatchback FWD D4FA | | GCO27068 | Outer Joint | 48T | 25 | 24 | 50 | 94.5 | 63.5 | M |
| | 2008.06-2011.12 | 5MT | F | R | Saloon FWD D4FA | | GDS39323 | Drive Shaft | 48T | 25 | 26 | 50 | 93.5 | 592 | |
| | 2008.06-2011.12 | 5MT | F | L/R | Saloon FWD D4FA | | GCO27068 | Outer Joint | 48T | 25 | 24 | 50 | 94.5 | 63.5 | M |
| 1.5 (70 kw) | 2002.09-2005.02 | AT | F | L | Saloon FWD A5D | | GDS27088 | Drive Shaft | 44T | 24 | 24 | 52 | 86 | 609.5 | |
| | 2002.09-2005.02 | AT | F | R | Saloon FWD A5D | | GDS27199 | Drive Shaft | 44T | 24 | 24 | 52 | 86.5 | 881 | |
| | 2002.09-2005.02 | MT | F | L | Saloon FWD A5D | | GDS27106 | Drive Shaft | | 24 | 26 | 52 | 86 | 606 | |
| | 2002.09-2005.02 | MT | F | R | Saloon FWD A5D | | GDS27107 | Drive Shaft | | 24 | 26 | 52 | 86 | 888 | |
| | 2002.09-2005.02 | MT | F | L/R | Saloon FWD A5D | | GCO27016 | Outer Joint | | 24 | 22 | 52 | 86 | 58.5 | M |
| | 2002.09-2005.02 | MT | F | L | Saloon FWD A5D | | GCI34008 | Inner Joint | | 26 | 22 | 35 | 66.7 | 92 | |
| | 2002.09-2005.02 | | F | R | Saloon FWD A5D | | GCO27070 | Outer Joint | | 24 | 21 | 52 | 86 | 55 | M |
| 1.5 (71 kw) | 2002.09-2005.02 | AT | F | R | Hatchback FWD A5D | | GDS27199 | Drive Shaft | 44T | 24 | 24 | 52 | 86.5 | 881 | |
| | 2002.09-2005.02 | AT | F | L/R | Hatchback FWD A5D | Date from:2001.06 | GCO27070 | Outer Joint | | 24 | 21 | 52 | 86 | 55 | M |
| | 2002.09-2005.02 | AT | F | L/R | Hatchback FWD A5D | | GCO99232 | Outer Joint | 44T | 24 | 21 | 52 | 86.5 | 53 | I |
| | 2002.09-2005.02 | AT/MT | F | L/R | Hatchback FWD A5D | | GCO27033 | Outer Joint | 44T | 24 | 22 | 52 | 86 | 58.5 | M |
| | 2002.09-2005.02 | MT | F | | Hatchback FWD A5D | | GCO18027 | Outer Joint | | 24 | 22 | 52 | 86.5 | 55 | M |
| | 2002.09-2005.02 | MT | F | L | Hatchback FWD A5D | | GCI34008 | Inner Joint | | 26 | 22 | 35 | 66.7 | 92 | |
| | 2002.09-2005.02 | AT | F | L/R | Saloon FWD A5D | Number of splines on input shaft:21 | GCO99232 | Outer Joint | 44T | 24 | 21 | 52 | 86.5 | 53 | I |
| | 2002.09-2005.02 | AT/MT | F | L/R | Saloon FWD A5D | Number of splines on input shaft:22 | GCO27033 | Outer Joint | 44T | 24 | 22 | 52 | 86 | 58.5 | M |
| | 2002.09-2005.02 | MT | F | L | Saloon FWD A5D | | GDS27025 | Drive Shaft | 44T | 24 | 26 | 52 | 86 | 605 | |
| | 2002.09-2005.02 | MT | F | R | Saloon FWD A5D | | GDS27027 | Drive Shaft | 44T | 24 | 26 | 52 | 86 | 888 | |
| | 2002.09-2005.02 | MT | F | | Saloon FWD A5D | | GCO18027 | Outer Joint | | 24 | 22 | 52 | 86.5 | 55 | M |
| | 2002.09-2005.02 | MT | F | L | Saloon FWD A5D | | GCI34008 | Inner Joint | | 26 | 22 | 35 | 66.7 | 92 | |
| 1.5 (72 kw) | 2000.08-2005.02 | AT | F | R | Hatchback FWD A5D | | GDS27199 | Drive Shaft | 44T | 24 | 24 | 52 | 86.5 | 881 | |
| | 2000.08-2005.02 | AT | F | L/R | Hatchback FWD A5D | | GCO18074 | Outer Joint | | 24 | 21 | 52 | 86.5 | 53 | I |
| | 2000.08-2005.02 | AT | F | L/R | Hatchback FWD A5D | | GCO27070 | Outer Joint | | 24 | 21 | 52 | 86 | 55 | M |
| | 2000.08-2005.02 | AT | F | L/R | Hatchback FWD A5D | | GCO99232 | Outer Joint | 44T | 24 | 21 | 52 | 86.5 | 53 | I |
| | 2000.08-2005.02 | AT/MT | F | L/R | Hatchback FWD A5D | | GCO27033 | Outer Joint | 44T | 24 | 22 | 52 | 86 | 58.5 | M |
| | 2000.08-2005.02 | MT | F | L | Hatchback FWD A5D | | GDS27025 | Drive Shaft | 44T | 24 | 26 | 52 | 86 | 605 | |
| | 2000.08-2005.02 | MT | F | L | Hatchback FWD A5D | | GDS27106 | Drive Shaft | | 24 | 26 | 52 | 86 | 606 | |
| | 2000.08-2005.02 | MT | F | R | Hatchback FWD A5D | | GDS27107 | Drive Shaft | | 24 | 26 | 52 | 86 | 888 | |

| | YEAR | TRANSM. | F/R | L/R | BODY STYLE & DRIVE TYPE & ENGINE | REMARKS | G-AP Ref. | PRODUCT | ABS | Technical Specifications A | B | C | H | L | P |
|---|---|---|---|---|---|---|---|---|---|---|---|---|---|---|---|
| **KIA** **Rio** | | | | | | | | | | | | | | | |
| 1.5 (72 kw) | 2000.08-2005.02 | MT | F | L/R | Hatchback FWD A5D | | GCO27016 | Outer Joint | | 24 | 22 | 52 | 86 | 58.5 | M |
| | 2000.08-2005.02 | MT | F | | Hatchback FWD A5D | | GCO18027 | Outer Joint | | 24 | 22 | 52 | 86.5 | 55 | M |
| | 2000.08-2005.02 | MT | F | L | Hatchback FWD A5D | | GCI34008 | Inner Joint | | 26 | 22 | 35 | 66.7 | 92 | |
| | 2000.09-2005.02 | AT | F | L/R | Saloon FWD A5D | | GCO27070 | Outer Joint | | 24 | 21 | 52 | 86 | 55 | M |
| | 2000.09-2005.02 | AT | F | L/R | Saloon FWD A5D | | GCO99232 | Outer Joint | 44T | 24 | 21 | 52 | 86.5 | 53 | I |
| | 2000.09-2005.02 | AT/MT | F | L/R | Saloon FWD A5D | | GCO27033 | Outer Joint | 44T | 24 | 22 | 52 | 86 | 58.5 | M |
| | 2000.09-2005.02 | MT | F | L | Saloon FWD A5D | | GDS27025 | Drive Shaft | 44T | 24 | 26 | 52 | 86 | 605 | |
| | 2000.09-2005.02 | MT | F | L | Saloon FWD A5D | | GDS27106 | Drive Shaft | | 24 | 26 | 52 | 86 | 606 | |
| | 2000.09-2005.02 | MT | F | R | Saloon FWD A5D | | GDS27107 | Drive Shaft | | 24 | 26 | 52 | 86 | 888 | |
| | 2000.09-2005.02 | MT | F | L/R | Saloon FWD A5D | | GCO27016 | Outer Joint | | 24 | 22 | 52 | 86 | 58.5 | M |
| | 2000.09-2005.02 | MT | F | L | Saloon FWD A5D | | GCI34008 | Inner Joint | | 26 | 22 | 35 | 66.7 | 92 | |
| 1.5 (81 kw) | 2005.03-2011.12 | 5MT | F | L/R | Hatchback FWD D4FA | | GCO27068 | Outer Joint | 48T | 25 | 24 | 50 | 94.5 | 63.5 | M |
| | 2005.03-2011.12 | MT | F | L | Hatchback FWD D4FA | | GDS24401 | Drive Shaft | 48T | 25 | 27 | 50 | 93.5 | 637 | |
| | 2005.03-2011.12 | MT | F | R | Hatchback FWD D4FA | Date to:2007.10 | GDS39323 | Drive Shaft | 48T | 25 | 26 | 50 | 93.5 | 592 | |
| | 2005.03-2011.12 | MT | F | L | Hatchback FWD D4FA | | GCI27031 | Inner Joint | | 27 | 24 | 41 | 61.5 | 100 | |
| | 2005.03-2011.12 | 5MT | F | L | Saloon FWD D4FA | | GDS27186 | Drive Shaft | 48T | 25 | 25 | 52.5 | 95 | 638 | |
| | 2005.03-2011.12 | 5MT | F | R | Saloon FWD D4FA | | GDS39323 | Drive Shaft | 48T | 25 | 26 | 50 | 93.5 | 592 | |
| | 2005.03-2011.12 | 5MT | F | L/R | Saloon FWD D4FA | | GCO27068 | Outer Joint | 48T | 25 | 24 | 50 | 94.5 | 63.5 | M |
| | 2005.03-2011.12 | MT | F | L | Saloon FWD D4FA | | GDS24401 | Drive Shaft | 48T | 25 | 27 | 50 | 93.5 | 637 | |
| | 2005.03-2011.12 | MT | F | L | Saloon FWD D4FA | | GCI27031 | Inner Joint | | 27 | 24 | 41 | 61.5 | 100 | |
| 1.6 (82 kw) | 2005.03-2011.12 | AT | F | L | Hatchback FWD G4ED | | GDS27186 | Drive Shaft | 48T | 25 | 25 | 52.5 | 95 | 638 | |
| | 2005.03-2011.12 | AT | F | R | Hatchback FWD G4ED | | GDS27185 | Drive Shaft | 48T | 25 | 25 | 52.5 | 95 | 926 | |
| | 2005.03-2011.12 | AT | F | L/R | Hatchback FWD G4ED | Date from:2007.11 | GCO24046 | Outer Joint | 48T | 25 | 22 | 52.5 | 95 | 58 | M |
| | 2005.03-2011.12 | MT | F | L | Hatchback FWD G4ED | | GDS27155 | Drive Shaft | 48T | 25 | 25 | 52.5 | 93.5 | 637 | |
| | 2005.03-2011.12 | MT | F | R | Hatchback FWD G4ED | | GDS24044 | Drive Shaft | 48T | 25 | 25 | 52.5 | 95 | 924 | |
| | 2005.03-2011.12 | MT | F | R | Hatchback FWD G4ED | Date from:2007.11 | GDS27156 | Drive Shaft | 48T | 25 | 25 | 52.5 | 93.5 | 925 | |
| | 2005.03-2011.12 | MT | F | R | Hatchback FWD G4ED | Date To:2007.10 | GCO24101 | Outer Joint | 48T | 25 | 22 | 52.5 | 95 | 58 | M |
| | 2005.03-2011.12 | MT | F | L/R | Hatchback FWD G4ED | | GCO27097 | Outer Joint | 48T | 25 | 22 | 52.5 | 93.5 | 59.5 | M |
| | 2005.03-2011.12 | MT | F | L/R | Hatchback FWD G4ED | | GCI27019 | Inner Joint | | 25 | 22 | 41 | 62 | 93.5 | |
| | 2005.03-2011.12 | AT | F | L | Saloon FWD G4ED | | GDS27186 | Drive Shaft | 48T | 25 | 25 | 52.5 | 95 | 638 | |
| | 2005.03-2011.12 | AT | F | R | Saloon FWD G4ED | | GDS27185 | Drive Shaft | 48T | 25 | 25 | 52.5 | 95 | 926 | |
| | 2005.03-2011.12 | AT | F | L/R | Saloon FWD G4ED | Date from:2007.11 | GCO24046 | Outer Joint | 48T | 25 | 22 | 52.5 | 95 | 58 | M |
| | 2005.03-2011.12 | MT | F | L | Saloon FWD G4ED | | GDS27155 | Drive Shaft | 48T | 25 | 25 | 52.5 | 93.5 | 637 | |
| | 2005.03-2011.12 | MT | F | R | Saloon FWD G4ED | | GDS24044 | Drive Shaft | 48T | 25 | 25 | 52.5 | 95 | 924 | |
| | 2005.03-2011.12 | MT | F | R | Saloon FWD G4ED | Date from:2007.11 | GDS27156 | Drive Shaft | 48T | 25 | 25 | 52.5 | 93.5 | 925 | |
| | 2005.03-2011.12 | MT | F | R | Saloon FWD G4ED | Date To:2007.10 | GCO24101 | Outer Joint | 48T | 25 | 22 | 52.5 | 95 | 58 | M |
| | 2005.03-2011.12 | MT | F | L/R | Saloon FWD G4ED | | GCO27097 | Outer Joint | 48T | 25 | 22 | 52.5 | 93.5 | 59.5 | M |
| | 2005.03-2011.12 | MT | F | L/R | Saloon FWD G4ED | | GCI27019 | Inner Joint | | 25 | 22 | 41 | 62 | 93.5 | |
| 1.6 (90 kw) | 2012.06-2017.12 | 4AT/5MT | F | L | Hatchback FWD G4FC | | GDS24260 | Drive Shaft | | 25 | 25 | 52.5 | 93.5 | 652 | |
| | 2012.06-2017.12 | 4AT/5MT | F | L/R | Hatchback FWD G4FC | | GCO24136 | Outer Joint | | 25 | 22 | 52.5 | 93.5 | 59.5 | M |
| | 2012.06-2017.12 | 4AT/5MT/6MT | F | L | Hatchback FWD G4FC | | GDS24246 | Drive Shaft | 48T | 25 | 25 | 52.5 | 93.5 | 652 | |
| | 2012.06-2017.12 | 4AT/5MT/6MT | F | R | Hatchback FWD G4FC | | GDS24247 | Drive Shaft | 48T | 25 | 25 | 52.5 | 93.5 | 927 | |
| | 2012.06-2017.12 | 4AT/5MT/6MT | F | L/R | Hatchback FWD G4FC | | GCI39052 | Inner Joint | | 25 | 22 | 41 | 63 | 86 | |
| | 2012.06-2017.12 | 4AT/6AT/5MT/6MT | F | L/R | Hatchback FWD G4FC | | GCO24131 | Outer Joint | 48T | 25 | 22 | 52.5 | 93.5 | 59.5 | M |
| | 2012.06-2017.12 | 6AT | F | L | Hatchback FWD G4FC | | GDS24409 | Drive Shaft | 48T | 25 | 27 | 52.5 | 93.5 | 634 | |
| | 2012.06-2017.12 | 6AT | F | R | Hatchback FWD G4FC | | GDS24408 | Drive Shaft | 48T | 25 | 27 | 52.5 | 93.5 | 923 | |
| | 2012.06-2017.12 | 6AT | F | L/R | Hatchback FWD G4FC | | GCI24065 | Inner Joint | | 27 | 22 | 30 | 68 | 77 | |
| | 2012.06-2017.12 | 4AT/5MT | F | L | Saloon FWD G4FC | | GDS24260 | Drive Shaft | | 25 | 25 | 52.5 | 93.5 | 652 | |
| | 2012.06-2017.12 | 4AT/5MT | F | L/R | Saloon FWD G4FC | | GCO24136 | Outer Joint | | 25 | 22 | 52.5 | 93.5 | 59.5 | M |
| | 2012.06-2017.12 | 4AT/5MT/6MT | F | L | Saloon FWD G4FC | | GDS24246 | Drive Shaft | 48T | 25 | 25 | 52.5 | 93.5 | 652 | |
| | 2012.06-2017.12 | 4AT/5MT/6MT | F | R | Saloon FWD G4FC | | GDS24247 | Drive Shaft | 48T | 25 | 25 | 52.5 | 93.5 | 927 | |
| | 2012.06-2017.12 | 4AT/5MT/6MT | F | L/R | Saloon FWD G4FC | | GCI39052 | Inner Joint | | 25 | 22 | 41 | 63 | 86 | |
| | 2012.06-2017.12 | 4AT/6AT/5MT/6MT | F | L/R | Saloon FWD G4FC | | GCO24131 | Outer Joint | 48T | 25 | 22 | 52.5 | 93.5 | 59.5 | M |
| | 2012.06-2017.12 | 6AT | F | L | Saloon FWD G4FC | | GDS24409 | Drive Shaft | 48T | 25 | 27 | 52.5 | 93.5 | 634 | |
| | 2012.06-2017.12 | 6AT | F | R | Saloon FWD G4FC | | GDS24408 | Drive Shaft | 48T | 25 | 27 | 52.5 | 93.5 | 923 | |
| | 2012.06-2017.12 | 6AT | F | L/R | Saloon FWD G4FC | | GCI24065 | Inner Joint | | 27 | 22 | 30 | 68 | 77 | |
| | 2017.07- | 6AT | F | L | Saloon FWD G4FG | Date from:2017.11 | GDS83963 | Drive Shaft | | 25 | 27 | 52.5 | 94.5 | 641 | |
| | 2017.07- | 6AT | F | L | Saloon FWD G4FG | Date to:2017.10 | GDS83966 | Drive Shaft | 48T | 25 | 27 | 52.5 | 92.5 | 640 | |
| | 2017.07- | 6AT | F | R | Saloon FWD G4FG | Date from:2017.11 | GDS83965 | Drive Shaft | | 25 | 27 | 52.5 | 94.5 | 930 | |
| | 2017.07- | 6AT | F | R | Saloon FWD G4FG | Date to:2017.10 | GDS83967 | Drive Shaft | 48T | 25 | 27 | 52.5 | 92.5 | 930 | |
| | 2017.07- | 6AT | F | L/R | Saloon FWD G4FG | Date to:2017.10 | GCO39261 | Outer Joint | 48T | 25 | 22 | 52.5 | 92.5 | 54.5 | M |
| | 2017.07- | 6AT | F | L/R | Saloon FWD G4FG | Date from:2017.11 | GCO82443 | Outer Joint | | 25 | 22 | 52.5 | 94.5 | 54 | M |
| | 2017.07- | 6AT | F | L/R | Saloon FWD G4FG | | GCI24065 | Inner Joint | | 27 | 22 | 30 | 68 | 77 | |
| | 2017.07- | 6MT | F | L | Saloon FWD G4FG | Date to:2017.09 | GDS83961 | Drive Shaft | 48T | 25 | 25 | 52.5 | 94.5 | 660 | |
| | 2017.07- | 6MT | F | L | Saloon FWD G4FG | Date from:2017.10 | GDS83962 | Drive Shaft | | 25 | 25 | 52.5 | 94.5 | 660 | |

| | YEAR | TRANSM. | F/R | L/R | BODY STYLE & DRIVE TYPE & ENGINE | REMARKS | G-AP Ref. | PRODUCT | ABS | Technical Specifications A | B | C | H | L | P |
|---|---|---|---|---|---|---|---|---|---|---|---|---|---|---|---|
| **KIA** | | | | | | | | | | | | | | | |
| **Rio** | | | | | | | | | | | | | | | |
| 1.6 (90 kw) | 2017.07- | 6MT | F | R | Saloon FWD G4FG | Date to:2017.09 | GDS83873 | Drive Shaft | 48T | 25 | 25 | 52.5 | 92.5 | 934 | |
| | 2017.07- | 6MT | F | R | Saloon FWD G4FG | Date from:2017.10 | GDS83964 | Drive Shaft | | 25 | 25 | 52.5 | 94.5 | 935 | |
| | 2017.07- | 6MT | F | R | Saloon FWD G4FG | Date from:2017.10 | GCO39261 | Outer Joint | 48T | 25 | 22 | 52.5 | 92.5 | 54.5 | M |
| | 2017.07- | 6MT | F | L/R | Saloon FWD G4FG | Date from:2017.10 | GCO82443 | Outer Joint | | 25 | 22 | 52.5 | 94.5 | 54 | M |
| | 2017.07- | 6MT | F | L/R | Saloon FWD G4FG | | GCI24137 | Inner Joint | | 25 | 22 | 41 | 62.5 | 86 | |
| | 2017.07- | 6MT | F | L/R | Saloon FWD G4FG | | GCI39052 | Inner Joint | | 25 | 22 | 41 | 63 | 86 | |
| **Rio X-Line** | | | | | | | | | | | | | | | |
| 1.6 (90 kw) | 2017.01- | 6AT | F | L/R | Hatchback FWD G4FG | | GCI24065 | Inner Joint | | 27 | 22 | 30 | 68 | 77 | |
| | 2017.01- | 6MT | F | L | Hatchback FWD G4FG | | GCO82443 | Outer Joint | | 25 | 22 | 52.5 | 94.5 | 54 | M |
| | 2017.01- | 6MT | F | R | Hatchback FWD G4FG | | GCO39261 | Outer Joint | 48T | 25 | 22 | 52.5 | 92.5 | 54.5 | M |
| | 2017.01- | 6MT | F | L/R | Hatchback FWD G4FG | | GCI24137 | Inner Joint | | 25 | 22 | 41 | 62.5 | 86 | |
| **Sedona** | | | | | | | | | | | | | | | |
| 2.9 (93 kw) | 1999.08-2004.08 | AT | F | L | MPV FWD HJ3 | Date to:2004.05 | GDS27099 | Drive Shaft | 54T | 28 | 28 | 56 | 102.5 | 624 | |
| | 1999.08-2004.08 | AT | F | R | MPV FWD HJ3 | | GDS27096 | Drive Shaft | 54T | 28 | 28 | 56 | 102.5 | 549 | |
| | 1999.08-2004.08 | AT | F | L/R | MPV FWD HJ3 | | GCO27053 | Outer Joint | | 28 | 26 | 56 | 102.5 | 66 | M |
| | 1999.08-2004.08 | MT | F | L | MPV FWD HJ3 | | GDS27097 | Drive Shaft | 54T | 28 | 28 | 56 | 102.5 | 650 | |
| | 1999.08-2004.08 | MT | F | R | MPV FWD HJ3 | | GDS34166 | Drive Shaft | 54T | 28 | 28 | 56 | 102.5 | 596 | |
| | 1999.08-2004.08 | MT | F | R | MPV FWD HJ3 | | GCO27059 | Outer Joint | 54T | 28 | 26 | 56 | 102.5 | 66 | M |
| | 1999.08-2004.08 | MT | F | L/R | MPV FWD HJ3 | | GCO27030 | Outer Joint | 54T | 28 | 26 | 56 | 102.5 | 66 | M |
| | 1999.08-2004.08 | MT | F | L | MPV FWD HJ3 | | GCI82287 | Inner Joint | | 28 | 26 | 35 | 68 | 102 | |
| | 1999.08-2004.08 | MT | F | R | MPV FWD HJ3 | | GCI27013 | Inner Joint | | 28 | 26 | 43 | | 116 | |
| **Seltos** | | | | | | | | | | | | | | | |
| 1.6 (90 kw) | 2019.09- | 6AT | F | L | SUV FWD G4FG | | GDS56765 | Drive Shaft | | 27 | 27 | 57.9 | 94.5 | 665 | |
| | 2019.09- | 6AT | F | R | SUV FWD G4FG | | GDS56764 | Drive Shaft | | 27 | 27 | 57.9 | 94.5 | 955 | |
| | 2019.09- | 6AT | F | L/R | SUV FWD G4FG | | GCO82303 | Outer Joint | | 27 | 23 | 57.9 | 94.5 | 57.5 | M |
| | 2019.09- | 6AT | F | L/R | SUV FWD G4FG | | GCI83368 | Inner Joint | | 27 | 22 | 30 | 67.5 | 79.5 | |
| **Sephia** | | | | | | | | | | | | | | | |
| 1.5 (59 kw) | 1996.02-1997.10 | AT/MT | F | L/R | Hatchback FWD B5 | | GCO27004 | Outer Joint | | 28 | 22 | 56 | 90 | 55.5 | M |
| | 1996.02-1997.10 | MT | F | R | Hatchback FWD B5 | | GDS50227 | Drive Shaft | | 23 | 37 | 56 | 84 | 619 | |
| | 1996.02-1997.10 | MT | F | L/R | Hatchback FWD B5 | | GCO27001 | Outer Joint | | 26 | 22 | 56 | 93.5 | 55.5 | M |
| 1.6 (59 kw) | 1993.09-1997.10 | AT/MT | F | R | Saloon FWD B6 | | GDS50227 | Drive Shaft | | 23 | 37 | 56 | 84 | 619 | |
| | 1993.09-1997.10 | MT | F | L/R | Saloon FWD B6 | | GCO27001 | Outer Joint | | 26 | 22 | 56 | 93.5 | 55.5 | M |
| | 1993.09-1997.10 | | F | | Saloon FWD B6 | | GCO27004 | Outer Joint | | 28 | 22 | 56 | 90 | 55.5 | M |
| | 1993.09-1997.10 | | F | | Saloon FWD B6 | | GCO27006 | Outer Joint | | 26 | 22 | 56 | 93 | 55 | M |
| | 1995.01-1997.10 | AT/MT | F | R | Hatchback FWD B6 | | GDS50227 | Drive Shaft | | 23 | 37 | 56 | 84 | 619 | |
| | 1995.01-1997.10 | AT/MT | F | L/R | Hatchback FWD B6 | | GCO27001 | Outer Joint | | 26 | 22 | 56 | 93.5 | 55.5 | M |
| | 1995.01-1997.10 | | F | | Hatchback FWD B6 | | GCO27004 | Outer Joint | | 28 | 22 | 56 | 90 | 55.5 | M |
| 1.8 (82 kw) | 1995.01-1997.10 | MT | F | L/R | Hatchback FWD TP | | GCO27001 | Outer Joint | | 26 | 22 | 56 | 93.5 | 55.5 | M |
| | 1995.01-1997.10 | MT | F | L/R | Hatchback FWD TP | | GCO27006 | Outer Joint | | 26 | 22 | 56 | 93 | 55 | M |
| | 1995.01-1997.10 | | F | | Hatchback FWD TP | | GCO27004 | Outer Joint | | 28 | 22 | 56 | 90 | 55.5 | M |
| | 1995.01-1997.10 | 4AT/5MT | F | L/R | Saloon FWD TP | | GCO27004 | Outer Joint | | 28 | 22 | 56 | 90 | 55.5 | M |
| | 1995.01-1997.10 | MT | F | L/R | Saloon FWD TP | | GCO27001 | Outer Joint | | 26 | 22 | 56 | 93.5 | 55.5 | M |
| **Sephia/Mentor** | | | | | | | | | | | | | | | |
| 1.5 (59 kw) | 1996.02-1997.10 | MT | F | R | Saloon FWD B5 | | GDS50227 | Drive Shaft | | 23 | 37 | 56 | 84 | 619 | |
| | 1996.02-1997.10 | MT | F | L/R | Saloon FWD B5 | | GCO27001 | Outer Joint | | 26 | 22 | 56 | 93.5 | 55.5 | M |
| | 1996.02-1997.10 | MT | F | L/R | Saloon FWD B5 | | GCO27006 | Outer Joint | | 26 | 22 | 56 | 93 | 55 | M |
| | 1996.02-1997.10 | | F | | Saloon FWD B5 | | GCO27004 | Outer Joint | | 28 | 22 | 56 | 90 | 55.5 | M |
| **Shuma** | | | | | | | | | | | | | | | |
| 1.5 (65 kw) | 1997.10-2001.03 | 4AT/5MT | F | L | Hatchback FWD BFD | | GCO27001 | Outer Joint | | 26 | 22 | 56 | 93.5 | 55.5 | M |
| | 1997.10-2001.03 | AT | F | L | Hatchback FWD BFD | | GCO27006 | Outer Joint | | 26 | 22 | 56 | 93 | 55 | M |
| | 1997.10-2001.03 | MT | F | L/R | Hatchback FWD BFD | | GCO27006 | Outer Joint | | 26 | 22 | 56 | 93 | 55 | M |
| | 1997.10-2001.03 | | F | | Hatchback FWD BFD | | GCO27004 | Outer Joint | | 28 | 22 | 56 | 90 | 55.5 | M |
| | 1997.10-2001.03 | | F | | Hatchback FWD BFD | | GCO34022 | Outer Joint | 44T | 26 | 22 | 56 | 94 | 59 | I |
| | 1997.10-2001.10 | 4AT/5MT | F | L/R | Saloon FWD BFD | | GCO27001 | Outer Joint | | 26 | 22 | 56 | 93.5 | 55.5 | M |
| | 1997.10-2001.10 | AT | F | L | Saloon FWD BFD | | GCO27006 | Outer Joint | | 26 | 22 | 56 | 93 | 55 | M |
| | 1997.10-2001.10 | MT | F | L/R | Saloon FWD BFD | | GCO27006 | Outer Joint | | 26 | 22 | 56 | 93 | 55 | M |
| | 1997.10-2001.10 | | F | L/R | Saloon FWD BFD | | GCO34022 | Outer Joint | 44T | 26 | 22 | 56 | 94 | 59 | I |
| | 1997.10-2001.10 | | F | | Saloon FWD BFD | | GCO27004 | Outer Joint | | 28 | 22 | 56 | 90 | 55.5 | M |
| 1.6 (75 kw) | 2001.05-2004.05 | AT | F | L | Saloon FWD GA6D | | GDS27011 | Drive Shaft | 46T | 28 | 24 | 56 | 89.7 | 635 | |
| | 2001.05-2004.05 | AT | F | L | Saloon FWD GA6D | | GCI27005 | Inner Joint | | 24 | 22 | 35 | 64 | 91 | |
| | 2001.05-2004.05 | AT/MT | F | R | Saloon FWD GA6D | | GDS27030 | Drive Shaft | 46T | 28 | 28 | 56 | 89.7 | 574 | |
| | 2001.05-2004.05 | AT/MT | F | L/R | Saloon FWD GA6D | | GCO27032 | Outer Joint | 46T | 28 | 22 | 56 | 89.7 | 55.5 | M |
| | 2001.05-2004.05 | AT/MT | F | R | Saloon FWD GA6D | | GCI27004 | Inner Joint | | 28 | 22 | 43 | | 107 | |
| | 2001.05-2004.05 | MT | F | R | Saloon FWD GA6D | | GDS18050 | Drive Shaft | | 28 | 28 | 56 | 90 | 575 | |
| | 2001.05-2004.05 | MT | F | R | Saloon FWD GA6D | | GDS18085 | Drive Shaft | 44T | 28 | 28 | 56 | 89 | 575.5 | |

| | YEAR | TRANSM. | F/R | L/R | BODY STYLE & DRIVE TYPE & ENGINE | REMARKS | G-AP Ref. | PRODUCT | ABS | Technical Specifications A | B | C | H | L | P |
|---|---|---|---|---|---|---|---|---|---|---|---|---|---|---|---|
| **KIA** | | | | | | | | | | | | | | | |
| **Shuma** | | | | | | | | | | | | | | | |
| 1.6 (75 kw) | 2001.05-2004.05 | MT | F | L/R | Saloon FWD GA6D | | GCO34032 | Outer Joint | | 28 | 22 | 56 | 89.7 | 55.5 | M |
| | 2001.05-2004.05 | MT | F | L | Saloon FWD GA6D | | GCI34008 | Inner Joint | | 26 | 22 | 35 | 66.7 | 92 | |
| | 2001.05-2004.05 | MT | F | R | Saloon FWD GA6D | | GCI18015 | Inner Joint | | 28 | 23 | 43 | | 118.5 | |
| | 2001.05-2004.05 | | F | L/R | Saloon FWD GA6D | | GCO27004 | Outer Joint | | 28 | 22 | 56 | 90 | 55.5 | M |
| | 2001.05-2004.05 | | F | | Saloon FWD GA6D | | GCO34120 | Outer Joint | 44T | 28 | 22 | 56 | 89.1 | 59.5 | M |
| 1.8 (81 kw) | 1997.10-2001.03 | 5MT | F | R | Hatchback FWD T8, TED | | GDS27089 | Drive Shaft | 44T | 26 | 28 | 56 | 93 | 625.5 | |
| | 1997.10-2001.03 | AT | F | L | Hatchback FWD T8, TED | | GDS18088 | Drive Shaft | 44T | 26 | 24 | 56 | 93 | 626.5 | |
| | 1997.10-2001.03 | AT | F | L | Hatchback FWD T8, TED | Date from:2000.06 | GCI27005 | Inner Joint | | 24 | 22 | 35 | 64 | 91 | |
| | 1997.10-2001.03 | MT | F | L/R | Hatchback FWD T8, TED | | GCO34075 | Outer Joint | 44T | 26 | 24 | 56 | 92 | 60 | M |
| | 1997.10-2001.03 | MT | F | L | Hatchback FWD T8, TED | Date from:2000.06 | GCI34008 | Inner Joint | | 26 | 22 | 35 | 66.7 | 92 | |
| | 1997.10-2001.03 | | F | | Hatchback FWD T8, TED | | GCO27004 | Outer Joint | | 28 | 22 | 56 | 90 | 55.5 | M |
| | 1997.10-2001.03 | | F | | Hatchback FWD T8, TED | | GCO27032 | Outer Joint | 46T | 28 | 22 | 56 | 89.7 | 55.5 | M |
| | 1997.10-2001.03 | | F | | Hatchback FWD T8, TED | Date From:2000.06 | GCO34120 | Outer Joint | 44T | 28 | 22 | 56 | 89.1 | 59.5 | M |
| **Shuma II** | | | | | | | | | | | | | | | |
| 1.6 (75 kw) | 2001.05-2004.08 | AT | F | L | Hatchback FWD GA6D | | GDS27011 | Drive Shaft | 46T | 28 | 24 | 56 | 89.7 | 635 | |
| | 2001.05-2004.08 | AT | F | L | Hatchback FWD GA6D | | GCI27005 | Inner Joint | | 24 | 22 | 35 | 64 | 91 | |
| | 2001.05-2004.08 | AT/MT | F | R | Hatchback FWD GA6D | | GDS27030 | Drive Shaft | 46T | 28 | 28 | 56 | 89.7 | 574 | |
| | 2001.05-2004.08 | AT/MT | F | L/R | Hatchback FWD GA6D | | GCO27032 | Outer Joint | 46T | 28 | 22 | 56 | 89.7 | 55.5 | M |
| | 2001.05-2004.08 | AT/MT | F | R | Hatchback FWD GA6D | | GCI27004 | Inner Joint | | 28 | 22 | 43 | | 107 | |
| | 2001.05-2004.08 | MT | F | R | Hatchback FWD GA6D | | GDS18085 | Drive Shaft | 44T | 28 | 28 | 56 | 89 | 575.5 | |
| | 2001.05-2004.08 | MT | F | L/R | Hatchback FWD GA6D | | GCO34032 | Outer Joint | | 28 | 22 | 56 | 89.7 | 55.5 | M |
| | 2001.05-2004.08 | MT | F | L | Hatchback FWD GA6D | | GCI34008 | Inner Joint | | 26 | 22 | 35 | 66.7 | 92 | |
| | 2001.05-2004.08 | | F | L/R | Hatchback FWD GA6D | | GCO27004 | Outer Joint | | 28 | 22 | 56 | 90 | 55.5 | M |
| | 2001.05-2004.08 | | F | | Hatchback FWD GA6D | Date to:2004.02 | GCO34120 | Outer Joint | 44T | 28 | 22 | 56 | 89.1 | 59.5 | M |
| 1.8 (84 kw) | 2003.04-2004.08 | 4AT/5MT | F | R | Hatchback FWD T8 | | GCI27002 | Inner Joint | | 28 | 24 | 43 | | 123.6 | |
| | 2003.04-2004.08 | AT/MT | F | L/R | Hatchback FWD T8 | | GCO27032 | Outer Joint | 46T | 28 | 22 | 56 | 89.7 | 55.5 | M |
| | 2003.04-2004.08 | MT | F | L | Hatchback FWD T8 | | GDS27071 | Drive Shaft | 46T | 28 | 24 | 56 | 90 | 624 | |
| | 2003.04-2004.08 | | F | R | Hatchback FWD T8 | | GDS27070 | Drive Shaft | 46T | 28 | 28 | 56 | 90 | 618.5 | |
| | 2003.04-2004.08 | | F | R | Hatchback FWD T8 | | GCO27010 | Outer Joint | | 28 | 24 | 56 | 90 | 60 | M |
| | 2003.04-2004.08 | | F | | Hatchback FWD T8 | | GCO27004 | Outer Joint | | 28 | 22 | 56 | 90 | 55.5 | M |
| | 2003.04-2004.08 | | F | | Hatchback FWD T8 | | GCO27029 | Outer Joint | 46T | 28 | 24 | 56 | 90 | 60 | M |
| | 2003.04-2004.08 | | F | | Hatchback FWD T8 | | GCO34120 | Outer Joint | 44T | 28 | 22 | 56 | 89.1 | 59.5 | M |
| **Shuma/Sephia** | | | | | | | | | | | | | | | |
| 1.5 (59 kw) | 1996.03-1998.12 | MT | F | R | Saloon FWD B5 | | GDS50227 | Drive Shaft | | 23 | 37 | 56 | 84 | 619 | |
| | 1996.03-1998.12 | MT | F | L/R | Saloon FWD B5 | Date To:1997.10;Type:Sephia | GCO27001 | Outer Joint | | 26 | 22 | 56 | 93.5 | 55.5 | M |
| | 1996.03-1998.12 | | F | | Saloon FWD B5 | | GCO27004 | Outer Joint | | 28 | 22 | 56 | 90 | 55.5 | M |
| | 1996.03-1998.12 | | F | | Saloon FWD B5 | | GCO27006 | Outer Joint | | 26 | 22 | 56 | 93 | 55 | M |
| | 1996.03-1998.12 | | F | | Saloon FWD B5 | | GCO34022 | Outer Joint | 44T | 26 | 22 | 56 | 94 | 59 | I |
| 1.6 (75 kw) | 2001.01-2001.12 | MT | F | R | Hatchback FWD GA6D | | GCI18015 | Inner Joint | | 28 | 23 | 43 | | 118.5 | |
| **Sorento** | | | | | | | | | | | | | | | |
| 1.6 (158 kw) | 2024.02- | 8DCT | F | R | SUV 4WD G4FT | | GCI82132 | Inner Joint | | 28 | 35 | 42 | | 131.5 | |
| | 2024.02- | | F | R | SUV 4WD G4FT | | GDS56102 | Drive Shaft | | 30 | 28 | 73 | 94.5 | 590 | |
| | 2024.02- | | R | L | SUV 4WD G4FT | | GDS56177 | Drive Shaft | | 30 | 25 | 57 | 95 | 875 | |
| | 2024.02- | | R | R | SUV 4WD G4FT | | GDS56112 | Drive Shaft | | 30 | 25 | 57 | 95 | 831 | |
| | 2024.02- | 8DCT | F | R | SUV FWD G4FT | | GCI82132 | Inner Joint | | 28 | 35 | 42 | | 131.5 | |
| | 2024.02- | | F | R | SUV FWD G4FT | | GDS56102 | Drive Shaft | | 30 | 28 | 73 | 94.5 | 590 | |
| 1.6 (169 kw) | 2020.06- | 6AT | F | R | SUV 4WD G4FE;G4FT | | GDS56102 | Drive Shaft | | 30 | 28 | 73 | 94.5 | 590 | |
| | 2020.06- | 6AT | F | L/R | SUV 4WD G4FE;G4FT | | GCO82933 | Outer Joint | | 30 | 35 | 73 | 94.5 | 65.5 | M |
| | 2020.06- | 6AT | F | L | SUV 4WD G4FE;G4FT | | GCI82923 | Inner Joint | | 28 | 35 | 33 | 67 | 101 | |
| | 2020.06- | 8DCT | F | R | SUV 4WD G4FE;G4FT | | GCI82132 | Inner Joint | | 28 | 35 | 42 | | 131.5 | |
| | 2020.06- | 6AT | R | L/R | SUV 4WD G4FE;G4FT | | GCO82582 | Outer Joint | | 30 | 20 | 57 | 95 | 48 | |
| | 2020.06- | 6AT | R | L/R | SUV 4WD G4FE;G4FT | | GCI82201 | Inner Joint | | 25 | 20 | 35 | 62.5 | 58 | |
| | 2020.06- | AT | R | L | SUV 4WD G4FE;G4FT | | GDS56177 | Drive Shaft | | 30 | 25 | 57 | 95 | 875 | |
| | 2020.06- | AT | R | R | SUV 4WD G4FE;G4FT | | GDS56112 | Drive Shaft | | 30 | 25 | 57 | 95 | 831 | |
| | 2020.06- | 6AT | F | R | SUV FWD G4FT | | GDS56102 | Drive Shaft | | 30 | 28 | 73 | 94.5 | 590 | |
| | 2020.06- | 6AT | F | L/R | SUV FWD G4FT | | GCO82933 | Outer Joint | | 30 | 35 | 73 | 94.5 | 65.5 | M |
| | 2020.06- | 6AT | F | L | SUV FWD G4FT | | GCI82923 | Inner Joint | | 28 | 35 | 33 | 67 | 101 | |
| | 2020.06- | 8DCT | F | R | SUV FWD G4FT | | GCI82132 | Inner Joint | | 28 | 35 | 42 | | 131.5 | |
| 1.6 (176 kw) | 2025.08- | | F | R | SUV 4WD G4FT | | GDS56102 | Drive Shaft | | 30 | 28 | 73 | 94.5 | 590 | |
| | 2025.08- | | R | L | SUV 4WD G4FT | | GDS56177 | Drive Shaft | | 30 | 25 | 57 | 95 | 875 | |
| | 2025.08- | | R | R | SUV 4WD G4FT | | GDS56112 | Drive Shaft | | 30 | 25 | 57 | 95 | 831 | |
| | 2025.08- | | F | R | SUV FWD G4FT | | GDS56102 | Drive Shaft | | 30 | 28 | 73 | 94.5 | 590 | |
| 1.6 (185 kw) | 2024.02- | 8DCT | F | R | SUV 4WD G4FT | | GCI82132 | Inner Joint | | 28 | 35 | 42 | | 131.5 | |
| | 2024.02- | | F | R | SUV 4WD G4FT | | GDS56102 | Drive Shaft | | 30 | 28 | 73 | 94.5 | 590 | |
| | 2024.02- | | R | L | SUV 4WD G4FT | | GDS56177 | Drive Shaft | | 30 | 25 | 57 | 95 | 875 | |

| | YEAR | TRANSM. | F/R | L/R | BODY STYLE & DRIVE TYPE & ENGINE | REMARKS | G-AP Ref. | PRODUCT | ABS | Technical Specifications | | | | | |
|---|---|---|---|---|---|---|---|---|---|---|---|---|---|---|---|
| | | | | | | | | | | A | B | C | H | L | P |
| **KIA** **Sorento** | | | | | | | | | | | | | | | |
| 1.6 (185 kw) | 2024.02- | | R | R | SUV 4WD G4FT | | GDS56112 | Drive Shaft | | 30 | 25 | 57 | 95 | 831 | |
| 1.6 (195 kw) | 2020.11- | 6AT | F | R | SUV 4WD G4FT | | GDS56102 | Drive Shaft | | 30 | 28 | 73 | 94.5 | 590 | |
| | 2020.11- | 6AT | F | L/R | SUV 4WD G4FT | | GCO82933 | Outer Joint | | 30 | 35 | 73 | 94.5 | 65.5 | M |
| | 2020.11- | 6AT | F | L | SUV 4WD G4FT | | GCI82923 | Inner Joint | | 28 | 35 | 33 | 67 | 101 | |
| | 2020.11- | 8DCT | F | R | SUV 4WD G4FT | | GCI82132 | Inner Joint | | 28 | 35 | 42 | | 131.5 | |
| | 2020.11- | 6AT | R | L | SUV 4WD G4FT | | GDS56177 | Drive Shaft | | 30 | 25 | 57 | 95 | 875 | |
| | 2020.11- | 6AT | R | R | SUV 4WD G4FT | | GDS56112 | Drive Shaft | | 30 | 25 | 57 | 95 | 831 | |
| | 2020.11- | 6AT | R | L/R | SUV 4WD G4FT | | GCO82582 | Outer Joint | | 30 | 20 | 57 | 95 | 48 | |
| | 2020.11- | 6AT | R | L/R | SUV 4WD G4FT | | GCI82201 | Inner Joint | | 25 | 20 | 35 | 62.5 | 58 | |
| 2.0 (110 kw) | 2010.11-2015.12 | 6MT | F | L | SUV 4WD D4HA | Date from:2012.07;For facelift | GDS24447 | Drive Shaft | 52T | 30 | 28 | 73 | 94.5 | 674 | |
| | 2010.11-2015.12 | 6MT | F | L | SUV 4WD D4HA | Date to:2011.02 | GDS24470 | Drive Shaft | 52T | 30 | 28 | 73 | 97 | 655 | |
| | 2010.11-2015.12 | 6MT | F | R | SUV 4WD D4HA | Date to:2011.02,not for facelift | GDS24564 | Drive Shaft | 52T | 30 | 28 | 73 | 97 | 592 | |
| | 2010.11-2015.12 | 6MT | F | R | SUV 4WD D4HA | Facelift | GDS84420 | Drive Shaft | 52T | 30 | 28 | 73 | 94.5 | 590 | |
| | 2010.11-2015.12 | 6MT | F | L/R | SUV 4WD D4HA | | GCO24327 | Outer Joint | 52T | 30 | 36 | 73 | 97 | 67.5 | I |
| | 2010.11-2015.12 | 6MT | F | L | SUV 4WD D4HA | | GCI24147 | Inner Joint | | 28 | 36 | 41 | 71.5 | 119.5 | |
| | 2010.11-2015.12 | 6MT | F | R | SUV 4WD D4HA | not for facelift | GCI27053 | Inner Joint | | 28 | 36 | 42 | | 131.5 | |
| | 2010.11-2015.12 | 6MT | F | R | SUV 4WD D4HA | Facelift | GCI81068 | Inner Joint | | 28 | 35 | 42 | | 131 | |
| | 2010.11-2015.12 | 6MT | R | L | SUV 4WD D4HA | | GDS24555 | Drive Shaft | 52T | 30 | 25 | 57 | 93.5 | 848 | |
| | 2010.11-2015.12 | 6MT | R | R | SUV 4WD D4HA | | GDS24554 | Drive Shaft | 52T | 30 | 25 | 57 | 93.5 | 829 | |
| | 2010.11-2015.12 | 6MT | R | L/R | SUV 4WD D4HA | Date to:2011.02 | GCI24010 | Inner Joint | | 25 | 22 | 35 | 63 | 87 | |
| | 2010.11-2015.12 | 6MT | F | L | SUV FWD D4HA | Date from:2012.07;For facelift | GDS24447 | Drive Shaft | 52T | 30 | 28 | 73 | 94.5 | 674 | |
| | 2010.11-2015.12 | 6MT | F | L | SUV FWD D4HA | Date to:2011.02 | GDS24470 | Drive Shaft | 52T | 30 | 28 | 73 | 97 | 655 | |
| | 2010.11-2015.12 | 6MT | F | R | SUV FWD D4HA | Date to:2011.02,not for facelift | GDS24564 | Drive Shaft | 52T | 30 | 28 | 73 | 97 | 592 | |
| | 2010.11-2015.12 | 6MT | F | R | SUV FWD D4HA | Facelift | GDS84420 | Drive Shaft | 52T | 30 | 28 | 73 | 94.5 | 590 | |
| | 2010.11-2015.12 | 6MT | F | L/R | SUV FWD D4HA | | GCO24327 | Outer Joint | 52T | 30 | 36 | 73 | 97 | 67.5 | I |
| | 2010.11-2015.12 | 6MT | F | L | SUV FWD D4HA | | GCI24147 | Inner Joint | | 28 | 36 | 41 | 71.5 | 119.5 | |
| | 2010.11-2015.12 | 6MT | F | R | SUV FWD D4HA | not for facelift | GCI27053 | Inner Joint | | 28 | 36 | 42 | | 131.5 | |
| | 2010.11-2015.12 | 6MT | F | R | SUV FWD D4HA | Facelift | GCI81068 | Inner Joint | | 28 | 35 | 42 | | 131 | |
| 2.0 (136 kw) | 2015.07-2020.12 | 6AT | F | L/R | SUV 4WD D4HA | | GCO81038 | Outer Joint | 52T | 30 | 36 | 73 | 94.5 | 67.5 | I |
| | 2015.07-2020.12 | 6AT | F | R | SUV 4WD D4HA | | GCI81068 | Inner Joint | | 28 | 35 | 42 | | 131 | |
| | 2015.07-2020.12 | 8AT | F | R | SUV 4WD D4HA | | GDS58202 | Drive Shaft | 52T | 30 | 28 | 73 | 94.5 | 607 | |
| | 2015.07-2020.12 | 8AT | F | L/R | SUV 4WD D4HA | | GCO83863 | Outer Joint | 52T | 30 | 35 | 73 | 94.5 | 67 | M |
| | 2015.07-2020.12 | 8AT | F | L | SUV 4WD D4HA | | GCI24145 | Inner Joint | | 28 | 35 | 33 | 67 | 105.5 | |
| | 2015.07-2020.12 | 8AT | F | R | SUV 4WD D4HA | | GCI82132 | Inner Joint | | 28 | 35 | 42 | | 131.5 | |
| | 2015.07-2020.12 | 6AT/8AT | R | L | SUV 4WD D4HA | Date to:2017.06 | GDS83403 | Drive Shaft | 52T | 30 | 25 | 57 | 95 | 844 | |
| | 2015.07-2020.12 | 6AT/8AT | R | R | SUV 4WD D4HA | Date to:2017.06 | GDS83404 | Drive Shaft | 52T | 30 | 25 | 57 | 95 | 858 | |
| | 2015.07-2020.12 | 6AT/8AT | R | L/R | SUV 4WD D4HA | | GCI82200 | Outer Joint | 52T | 30 | 20 | 57 | 95 | 48 | |
| | 2015.07-2020.12 | 6AT/8AT | R | L/R | SUV 4WD D4HA | | GCI82201 | Inner Joint | | 25 | 20 | 35 | 62.5 | 58 | |
| 2.2 (142 kw) | 2022.01- | 8AT | F | R | SUV 4WD D4HE | | GCO82933 | Outer Joint | | 30 | 35 | 73 | 94.5 | 65.5 | M |
| | 2022.01- | 8DCT | F | R | SUV 4WD D4HE | | GCI82132 | Inner Joint | | 28 | 35 | 42 | | 131.5 | |
| | 2022.01- | AT | R | L | SUV 4WD D4HE | | GDS56177 | Drive Shaft | | 30 | 25 | 57 | 95 | 875 | |
| | 2022.01- | AT | R | R | SUV 4WD D4HE | | GDS56112 | Drive Shaft | | 30 | 25 | 57 | 95 | 831 | |
| | 2022.01- | AT | R | L/R | SUV 4WD D4HE | | GCO82582 | Outer Joint | | 30 | 20 | 57 | 95 | 48 | |
| | 2022.01- | AT | R | L/R | SUV 4WD D4HE | | GCI82201 | Inner Joint | | 25 | 20 | 35 | 62.5 | 58 | |
| | 2022.01- | 8AT | F | R | SUV FWD D4HE | | GCO82933 | Outer Joint | | 30 | 35 | 73 | 94.5 | 65.5 | M |
| | 2022.01- | 8DCT | F | R | SUV FWD D4HE | | GCI82132 | Inner Joint | | 28 | 35 | 42 | | 131.5 | |
| 2.2 (145 kw) | 2009.11-2015.12 | 6AT | F | L | SUV 4WD D4HB | Date from:2011.03,Facelift | GDS24567 | Drive Shaft | 52T | 30 | 31 | 73 | 94.5 | 674 | |
| | 2009.11-2015.12 | 6AT | F | L/R | SUV 4WD D4HB | Facelift | GCO24301 | Outer Joint | 52T | 30 | 35 | 73 | 94.5 | 67 | M |
| | 2009.11-2015.12 | 6AT | F | L | SUV 4WD D4HB | For Facelift | GCI24160 | Inner Joint | | 31 | 35 | 36 | 67 | 104.5 | |
| | 2009.11-2015.12 | 6AT | F | L | SUV 4WD D4HB | Not for Facelift | GCI27052 | Inner Joint | | 31 | 36 | 36 | 66.5 | 106 | |
| | 2009.11-2015.12 | 6AT | F | R | SUV 4WD D4HB | Date to:2012.07 | GDS61352 | Intermediate Shaft | | 28 | 28 | | | 430 | |
| | 2009.11-2015.12 | 6AT/6MT | F | R | SUV 4WD D4HB | Facelift | GDS84420 | Drive Shaft | 52T | 30 | 28 | 73 | 94.5 | 590 | |
| | 2009.11-2015.12 | 6AT/6MT | F | R | SUV 4WD D4HB | Facelift | GCI81068 | Inner Joint | | 28 | 35 | 42 | | 131 | |
| | 2009.11-2015.12 | 6MT | F | L | SUV 4WD D4HB | Date from:2012.07;For facelift | GDS24447 | Drive Shaft | 52T | 30 | 28 | 73 | 94.5 | 674 | |
| | 2009.11-2015.12 | 6MT | F | L | SUV 4WD D4HB | Date to:2011.02 | GDS24470 | Drive Shaft | 52T | 30 | 28 | 73 | 97 | 655 | |
| | 2009.11-2015.12 | 6MT | F | L | SUV 4WD D4HB | For Facelift | GCI24144 | Inner Joint | | 28 | 35 | 41 | 61.5 | 120 | |
| | 2009.11-2015.12 | 6MT | F | L | SUV 4WD D4HB | Not for Facelift | GCI24147 | Inner Joint | | 28 | 36 | 41 | 71.5 | 119.5 | |
| | 2009.11-2015.12 | AT | F | L | SUV 4WD D4HB | Date to:2011.02,Not Facelift | GDS24464 | Drive Shaft | 52T | 30 | 31 | 73 | 97 | 654 | |
| | 2009.11-2015.12 | AT/MT | F | R | SUV 4WD D4HB | Date to:2011.02,not for facelift | GDS24564 | Drive Shaft | 52T | 30 | 28 | 73 | 97 | 592 | |
| | 2009.11-2015.12 | AT/MT | F | L/R | SUV 4WD D4HB | not for facelift | GCO24327 | Outer Joint | 52T | 30 | 36 | 73 | 97 | 67.5 | I |
| | 2009.11-2015.12 | AT/MT | F | R | SUV 4WD D4HB | not for facelift | GCI27053 | Inner Joint | | 28 | 36 | 42 | | 131.5 | |
| | 2009.11-2015.12 | 6AT/6MT | R | L | SUV 4WD D4HB | | GDS24555 | Drive Shaft | 52T | 30 | 25 | 57 | 93.5 | 848 | |
| | 2009.11-2015.12 | 6AT/6MT | R | R | SUV 4WD D4HB | | GDS24554 | Drive Shaft | 52T | 30 | 25 | 57 | 93.5 | 829 | |
| | 2009.11-2015.12 | 6AT/6MT | R | L/R | SUV 4WD D4HB | Date to:2011.02 | GCI24010 | Inner Joint | | 25 | 22 | 35 | 63 | 87 | |
| | 2009.11-2015.12 | 6AT | F | L | SUV FWD D4HB | Date from:2012.07 | GDS24567 | Drive Shaft | 52T | 30 | 31 | 73 | 94.5 | 674 | |

| | YEAR | TRANSM. | F/R | L/R | BODY STYLE & DRIVE TYPE & ENGINE | REMARKS | G-AP Ref. | PRODUCT | ABS | Technical Specifications A | B | C | H | L | P |
|---|---|---|---|---|---|---|---|---|---|---|---|---|---|---|---|
| **KIA** **Sorento** | | | | | | | | | | | | | | | |
| 2.2 (145 kw) | 2009.11-2015.12 | 6AT | F | L/R | SUV FWD D4HB | Facelift | GCO24301 | Outer Joint | 52T | 30 | 35 | 73 | 94.5 | 67 | M |
| | 2009.11-2015.12 | 6AT | F | L | SUV FWD D4HB | For Facelift | GCI24160 | Inner Joint | | 31 | 35 | 36 | 67 | 104.5 | |
| | 2009.11-2015.12 | 6AT | F | L | SUV FWD D4HB | Not for Facelift | GCI27052 | Inner Joint | | 31 | 36 | 36 | 66.5 | 106 | |
| | 2009.11-2015.12 | 6AT | F | R | SUV FWD D4HB | Date to:2012.06 | GDS87090 | Intermediate Shaft | | 28 | 31 | | | 430 | |
| | 2009.11-2015.12 | 6AT/6MT | F | R | SUV FWD D4HB | Facelift | GDS84420 | Drive Shaft | 52T | 30 | 28 | 73 | 94.5 | 590 | |
| | 2009.11-2015.12 | 6AT/6MT | F | R | SUV FWD D4HB | Facelift | GCI81068 | Inner Joint | | 28 | 35 | 42 | | 131 | |
| | 2009.11-2015.12 | 6MT | F | L | SUV FWD D4HB | Date from:2012.07 | GDS24447 | Drive Shaft | 52T | 30 | 28 | 73 | 94.5 | 674 | |
| | 2009.11-2015.12 | 6MT | F | L | SUV FWD D4HB | For Facelift | GCI24144 | Inner Joint | | 28 | 35 | 41 | 61.5 | 120 | |
| | 2009.11-2015.12 | 6MT | F | L | SUV FWD D4HB | Not for Facelift | GCI24147 | Inner Joint | | 28 | 36 | 41 | 71.5 | 119.5 | |
| | 2009.11-2015.12 | AT | F | L | SUV FWD D4HB | | GDS24464 | Drive Shaft | 52T | 30 | 31 | 73 | 97 | 654 | |
| | 2009.11-2015.12 | AT/MT | F | R | SUV FWD D4HB | Date to:2011.02,not for facelift | GDS24564 | Drive Shaft | 52T | 30 | 28 | 73 | 97 | 592 | |
| | 2009.11-2015.12 | AT/MT | F | L/R | SUV FWD D4HB | not for facelift | GCO24072 | Outer Joint | 52T | 30 | 36 | 73 | 97 | 67.5 | I |
| | 2009.11-2015.12 | AT/MT | F | R | SUV FWD D4HB | not for facelift | GCI27053 | Inner Joint | | 28 | 36 | 42 | | 131.5 | |
| | 2009.11-2015.12 | MT | F | L | SUV FWD D4HB | | GDS24470 | Drive Shaft | 52T | 30 | 28 | 73 | 97 | 655 | |
| | 2009.11-2015.12 | 6AT | F | L | SUV Van 4WD D4HB | Date from:2011.03,Facelift | GDS24567 | Drive Shaft | 52T | 30 | 31 | 73 | 94.5 | 674 | |
| | 2009.11-2015.12 | 6AT | F | L/R | SUV Van 4WD D4HB | Facelift | GCO24301 | Outer Joint | 52T | 30 | 35 | 73 | 94.5 | 67 | M |
| | 2009.11-2015.12 | 6AT | F | L | SUV Van 4WD D4HB | Facelift | GCI24160 | Inner Joint | | 31 | 35 | 36 | 67 | 104.5 | |
| | 2009.11-2015.12 | 6AT | F | R | SUV Van 4WD D4HB | Date to:2012.07 | GDS61352 | Intermediate Shaft | | 28 | 28 | | | 430 | |
| | 2009.11-2015.12 | 6AT/6MT | F | R | SUV Van 4WD D4HB | Facelift | GDS84420 | Drive Shaft | 52T | 30 | 28 | 73 | 94.5 | 590 | |
| | 2009.11-2015.12 | 6AT/6MT | F | R | SUV Van 4WD D4HB | Facelift | GCI81068 | Inner Joint | | 28 | 35 | 42 | | 131 | |
| | 2009.11-2015.12 | 6MT | F | L | SUV Van 4WD D4HB | Date from:2012.07;For facelift | GDS24447 | Drive Shaft | 52T | 30 | 28 | 73 | 94.5 | 674 | |
| | 2009.11-2015.12 | 6MT | F | L | SUV Van 4WD D4HB | Date to:2011.02 | GDS24470 | Drive Shaft | 52T | 30 | 28 | 73 | 97 | 655 | |
| | 2009.11-2015.12 | 6MT | F | L | SUV Van 4WD D4HB | Facelift | GCI24144 | Inner Joint | | 28 | 35 | 41 | 61.5 | 120 | |
| | 2009.11-2015.12 | AT | F | L | SUV Van 4WD D4HB | Date to:2011.02,Not Facelift | GDS24464 | Drive Shaft | 52T | 30 | 31 | 73 | 97 | 654 | |
| | 2009.11-2015.12 | AT | F | L | SUV Van 4WD D4HB | not facelift | GCI27052 | Inner Joint | | 31 | 36 | 36 | 66.5 | 106 | |
| | 2009.11-2015.12 | AT/MT | F | R | SUV Van 4WD D4HB | Date to:2011.02,not for facelift | GDS24564 | Drive Shaft | 52T | 30 | 28 | 73 | 97 | 592 | |
| | 2009.11-2015.12 | AT/MT | F | L/R | SUV Van 4WD D4HB | Date to:2011.02,not for facelift | GCO24327 | Outer Joint | 52T | 30 | 36 | 73 | 97 | 67.5 | I |
| | 2009.11-2015.12 | AT/MT | F | R | SUV Van 4WD D4HB | Date to:2011.02,not for facelift | GCI27053 | Inner Joint | | 28 | 36 | 42 | | 131.5 | |
| | 2009.11-2015.12 | MT | F | L | SUV Van 4WD D4HB | not facelift | GCI24147 | Inner Joint | | 28 | 36 | 41 | 71.5 | 119.5 | |
| | 2009.11-2015.12 | 6AT/6MT | R | L | SUV Van 4WD D4HB | | GDS24555 | Drive Shaft | 52T | 30 | 25 | 57 | 93.5 | 848 | |
| | 2009.11-2015.12 | 6AT/6MT | R | R | SUV Van 4WD D4HB | | GDS24554 | Drive Shaft | 52T | 30 | 25 | 57 | 93.5 | 829 | |
| | 2009.11-2015.12 | 6AT/6MT | R | L/R | SUV Van 4WD D4HB | Date to:2011.02 | GCI24010 | Inner Joint | | 25 | 22 | 35 | 63 | 87 | |
| | 2009.11-2015.12 | 6AT | F | L | SUV Van FWD D4HB | Date from:2011.03,Facelift | GDS24567 | Drive Shaft | 52T | 30 | 31 | 73 | 94.5 | 674 | |
| | 2009.11-2015.12 | 6AT | F | L/R | SUV Van FWD D4HB | Facelift | GCO24301 | Outer Joint | 52T | 30 | 35 | 73 | 94.5 | 67 | M |
| | 2009.11-2015.12 | 6AT | F | L | SUV Van FWD D4HB | Facelift | GCI24160 | Inner Joint | | 31 | 35 | 36 | 67 | 104.5 | |
| | 2009.11-2015.12 | 6AT | F | R | SUV Van FWD D4HB | Date to:2012.06 | GDS87090 | Intermediate Shaft | | 28 | 31 | | | 430 | |
| | 2009.11-2015.12 | 6AT/6MT | F | R | SUV Van FWD D4HB | Facelift | GDS84420 | Drive Shaft | 52T | 30 | 28 | 73 | 94.5 | 590 | |
| | 2009.11-2015.12 | 6AT/6MT | F | R | SUV Van FWD D4HB | Facelift | GCI81068 | Inner Joint | | 28 | 35 | 42 | | 131 | |
| | 2009.11-2015.12 | 6MT | F | L | SUV Van FWD D4HB | Date from:2012.07;For facelift | GDS24447 | Drive Shaft | 52T | 30 | 28 | 73 | 94.5 | 674 | |
| | 2009.11-2015.12 | 6MT | F | L | SUV Van FWD D4HB | Date to:2011.02 | GDS24470 | Drive Shaft | 52T | 30 | 28 | 73 | 97 | 655 | |
| | 2009.11-2015.12 | 6MT | F | L | SUV Van FWD D4HB | Facelift | GCI24144 | Inner Joint | | 28 | 35 | 41 | 61.5 | 120 | |
| | 2009.11-2015.12 | AT | F | L | SUV Van FWD D4HB | Date to:2011.02,Not Facelift | GDS24464 | Drive Shaft | 52T | 30 | 31 | 73 | 97 | 654 | |
| | 2009.11-2015.12 | AT | F | L | SUV Van FWD D4HB | not facelift | GCI27052 | Inner Joint | | 31 | 36 | 36 | 66.5 | 106 | |
| | 2009.11-2015.12 | AT/MT | F | R | SUV Van FWD D4HB | Date to:2011.02,not for facelift | GDS24564 | Drive Shaft | 52T | 30 | 28 | 73 | 97 | 592 | |
| | 2009.11-2015.12 | AT/MT | F | L/R | SUV Van FWD D4HB | Date to:2011.02,not for facelift | GCO24072 | Outer Joint | 52T | 30 | 36 | 73 | 97 | 67.5 | I |
| | 2009.11-2015.12 | AT/MT | F | R | SUV Van FWD D4HB | Date to:2011.02,not for facelift | GCI27053 | Inner Joint | | 28 | 36 | 42 | | 131.5 | |
| | 2009.11-2015.12 | MT | F | L | SUV Van FWD D4HB | not facelift | GCI24147 | Inner Joint | | 28 | 36 | 41 | 71.5 | 119.5 | |
| | 2016.11-2020.12 | 6AT | F | L/R | SUV 4WD D4HB | | GCO24301 | Outer Joint | 52T | 30 | 35 | 73 | 94.5 | 67 | M |
| | 2016.11-2020.12 | 6AT/6MT | F | R | SUV 4WD D4HB | Date to:2017.06 | GCI81068 | Inner Joint | | 28 | 35 | 42 | | 131 | |
| | 2016.11-2020.12 | 6MT | F | L | SUV 4WD D4HB | Date to:2017.06 | GDS81153 | Drive Shaft | 52T | 30 | 28 | 73 | 94.5 | 683 | |
| | 2016.11-2020.12 | 6MT | F | L/R | SUV 4WD D4HB | Date to:2017.06 | GCO81038 | Outer Joint | 52T | 30 | 36 | 73 | 94.5 | 67.5 | I |
| | 2016.11-2020.12 | 6MT | F | L/R | SUV 4WD D4HB | Date from:2017.07 | GCO83863 | Outer Joint | 52T | 30 | 35 | 73 | 94.5 | 67 | M |
| | 2016.11-2020.12 | 6MT | F | L | SUV 4WD D4HB | Date to:2017.06 | GCI24144 | Inner Joint | | 28 | 35 | 41 | 61.5 | 120 | |
| | 2016.11-2020.12 | 8AT/6MT | F | R | SUV 4WD D4HB | Date from:2017.07 | GCI82132 | Inner Joint | | 28 | 35 | 42 | | 131.5 | |
| | 2016.11-2020.12 | 6AT | R | L/R | SUV 4WD D4HB | | GCI82201 | Inner Joint | | 25 | 20 | 35 | 62.5 | 58 | |
| | 2016.11-2020.12 | 6AT/6MT | R | L | SUV 4WD D4HB | Date to:2017.06 | GDS83403 | Drive Shaft | 52T | 30 | 25 | 57 | 95 | 844 | |
| | 2016.11-2020.12 | 6AT/6MT | R | R | SUV 4WD D4HB | Date to:2017.06 | GDS83404 | Drive Shaft | 52T | 30 | 25 | 57 | 95 | 858 | |
| | 2016.11-2020.12 | 6AT/6MT | R | L/R | SUV 4WD D4HB | | GCI82200 | Outer Joint | 52T | 30 | 20 | 57 | 95 | 48 | |
| 2.2 (147 kw) | 2009.11-2015.12 | 6AT | F | L/R | SUV 4WD D4HB | Facelift | GCO24301 | Outer Joint | 52T | 30 | 35 | 73 | 94.5 | 67 | M |
| | 2009.11-2015.12 | 6AT | F | R | SUV 4WD D4HB | Date to:2012.07 | GDS61352 | Intermediate Shaft | | 28 | 28 | | | 430 | |
| | 2009.11-2015.12 | 6AT/6MT | F | R | SUV 4WD D4HB | Facelift | GCI81068 | Inner Joint | | 28 | 35 | 42 | | 131 | |
| | 2009.11-2015.12 | AT | F | L | SUV 4WD D4HB | Date To:2012.07 | GDS24464 | Drive Shaft | 52T | 30 | 31 | 73 | 97 | 654 | |
| | 2009.11-2015.12 | AT | F | L | SUV 4WD D4HB | Date from:2012.08 | GDS24567 | Drive Shaft | 52T | 30 | 31 | 73 | 94.5 | 674 | |
| | 2009.11-2015.12 | AT | F | L | SUV 4WD D4HB | Date from:2012.08 | GCI24160 | Inner Joint | | 31 | 35 | 36 | 67 | 104.5 | |
| | 2009.11-2015.12 | AT | F | L | SUV 4WD D4HB | Date To:2012.07 | GCI27052 | Inner Joint | | 31 | 36 | 36 | 66.5 | 106 | |

| | YEAR | TRANSM. | F/R | L/R | BODY STYLE & DRIVE TYPE & ENGINE | REMARKS | G-AP Ref. | PRODUCT | ABS | Technical Specifications A | B | C | H | L | P |
|---|---|---|---|---|---|---|---|---|---|---|---|---|---|---|---|
| **KIA** **Sorento** | | | | | | | | | | | | | | | |
| 2.2 (147 kw) | 2009.11-2015.12 | AT/MT | F | R | SUV 4WD D4HB | Date to:2011.02,not for facelift | GDS24564 | Drive Shaft | 52T | 30 | 28 | 73 | 97 | 592 | |
| | 2009.11-2015.12 | AT/MT | F | R | SUV 4WD D4HB | For Facelift | GDS84420 | Drive Shaft | 52T | 30 | 28 | 73 | 94.5 | 590 | |
| | 2009.11-2015.12 | AT/MT | F | L/R | SUV 4WD D4HB | Date To:2012.07 | GCO24327 | Outer Joint | 52T | 30 | 36 | 73 | 97 | 67.5 | I |
| | 2009.11-2015.12 | AT/MT | F | R | SUV 4WD D4HB | Date to:2011.02,not for facelift | GCI27053 | Inner Joint | | 28 | 36 | 42 | | 131.5 | |
| | 2009.11-2015.12 | MT | F | L | SUV 4WD D4HB | Date from:2012.08 | GDS24447 | Drive Shaft | 52T | 30 | 28 | 73 | 94.5 | 674 | |
| | 2009.11-2015.12 | MT | F | L | SUV 4WD D4HB | Date To:2012.07 | GDS24470 | Drive Shaft | 52T | 30 | 28 | 73 | 97 | 655 | |
| | 2009.11-2015.12 | MT | F | L | SUV 4WD D4HB | Date from:2012.08 | GCI24144 | Inner Joint | | 28 | 35 | 41 | 61.5 | 120 | |
| | 2009.11-2015.12 | MT | F | L | SUV 4WD D4HB | Date To:2012.07 | GCI24147 | Inner Joint | | 28 | 36 | 41 | 71.5 | 119.5 | |
| | 2009.11-2015.12 | 6AT/6MT | R | L/R | SUV 4WD D4HB | Date to:2011.02 | GCI24010 | Inner Joint | | 25 | 22 | 35 | 63 | 87 | |
| | 2009.11-2015.12 | AT/MT | R | L | SUV 4WD D4HB | Date from:2012.08 | GDS24555 | Drive Shaft | 52T | 30 | 25 | 57 | 93.5 | 848 | |
| | 2009.11-2015.12 | AT/MT | R | R | SUV 4WD D4HB | Date from:2012.08 | GDS24554 | Drive Shaft | 52T | 30 | 25 | 57 | 93.5 | 829 | |
| | 2009.11-2015.12 | AT/MT | R | L/R | SUV 4WD D4HB | Date from:2012.08 | GCO24321 | Outer Joint | 52T | 30 | 20 | 57 | 93.5 | 61 | M |
| | 2009.11-2015.12 | AT/MT | R | L/R | SUV 4WD D4HB | Date from:2012.08 | GCI24032 | Inner Joint | | 25 | 23 | 35 | 63 | 88 | |
| | 2009.11-2015.12 | 6AT | F | L | SUV FWD D4HB | Date from:2011.03,Facelift | GDS24567 | Drive Shaft | 52T | 30 | 31 | 73 | 94.5 | 674 | |
| | 2009.11-2015.12 | 6AT | F | L/R | SUV FWD D4HB | Facelift | GCO24301 | Outer Joint | 52T | 30 | 35 | 73 | 94.5 | 67 | M |
| | 2009.11-2015.12 | 6AT | F | L | SUV FWD D4HB | Facelift | GCI24160 | Inner Joint | | 31 | 35 | 36 | 67 | 104.5 | |
| | 2009.11-2015.12 | 6AT | F | R | SUV FWD D4HB | Date to:2012.06 | GDS87090 | Intermediate Shaft | | 28 | 31 | | | 430 | |
| | 2009.11-2015.12 | 6AT/6MT | F | R | SUV FWD D4HB | Facelift | GDS84420 | Drive Shaft | 52T | 30 | 28 | 73 | 94.5 | 590 | |
| | 2009.11-2015.12 | 6AT/6MT | F | R | SUV FWD D4HB | Facelift | GCI81068 | Inner Joint | | 28 | 35 | 42 | | 131 | |
| | 2009.11-2015.12 | 6MT | F | L | SUV FWD D4HB | Date from:2012.07;For facelift | GDS24447 | Drive Shaft | 52T | 30 | 28 | 73 | 94.5 | 674 | |
| | 2009.11-2015.12 | 6MT | F | L | SUV FWD D4HB | Date to:2011.02 | GDS24470 | Drive Shaft | 52T | 30 | 28 | 73 | 97 | 655 | |
| | 2009.11-2015.12 | 6MT | F | L/R | SUV FWD D4HB | Date to:2011.02 | GCO24072 | Outer Joint | 52T | 30 | 36 | 73 | 97 | 67.5 | I |
| | 2009.11-2015.12 | 6MT | F | L | SUV FWD D4HB | Facelift | GCI24144 | Inner Joint | | 28 | 35 | 41 | 61.5 | 120 | |
| | 2009.11-2015.12 | AT | F | L | SUV FWD D4HB | Date to:2011.02,Not Facelift | GDS24464 | Drive Shaft | 52T | 30 | 31 | 73 | 97 | 654 | |
| | 2009.11-2015.12 | AT | F | L | SUV FWD D4HB | not facelift | GCI27052 | Inner Joint | | 31 | 36 | 36 | 66.5 | 106 | |
| | 2009.11-2015.12 | AT/MT | F | R | SUV FWD D4HB | Date to:2011.02,not for facelift | GDS24564 | Drive Shaft | 52T | 30 | 28 | 73 | 97 | 592 | |
| | 2009.11-2015.12 | AT/MT | F | R | SUV FWD D4HB | not for facelift | GCI27053 | Inner Joint | | 28 | 36 | 42 | | 131.5 | |
| | 2009.11-2015.12 | MT | F | L | SUV FWD D4HB | not facelift | GCI24147 | Inner Joint | | 28 | 36 | 41 | 71.5 | 119.5 | |
| | 2015.01-2020.08 | 6AT | F | L/R | SUV 4WD D4HB | | GCO24301 | Outer Joint | 52T | 30 | 35 | 73 | 94.5 | 67 | M |
| | 2015.01-2020.08 | 6MT | F | L | SUV 4WD D4HB | Date to:2017.06 | GDS81153 | Drive Shaft | 52T | 30 | 28 | 73 | 94.5 | 683 | |
| | 2015.01-2020.08 | 6MT | F | L/R | SUV 4WD D4HB | Date to:2017.06 | GCO81038 | Outer Joint | 52T | 30 | 36 | 73 | 94.5 | 67.5 | I |
| | 2015.01-2020.08 | 6MT | F | L/R | SUV 4WD D4HB | Date from:2017.07 | GCO83863 | Outer Joint | 52T | 30 | 35 | 73 | 94.5 | 67 | M |
| | 2015.01-2020.08 | 6MT | F | L | SUV 4WD D4HB | Date to:2017.06 | GCI24144 | Inner Joint | | 28 | 35 | 41 | 61.5 | 120 | |
| | 2015.01-2020.08 | 6MT | F | R | SUV 4WD D4HB | Date to:2017.06 | GCI81068 | Inner Joint | | 28 | 35 | 42 | | 131 | |
| | 2015.01-2020.08 | 8AT | F | L | SUV 4WD D4HB | | GDS58203 | Drive Shaft | 52T | 30 | 31 | 73 | 94.5 | 676 | |
| | 2015.01-2020.08 | 8AT | F | R | SUV 4WD D4HB | | GDS58202 | Drive Shaft | 52T | 30 | 28 | 73 | 94.5 | 607 | |
| | 2015.01-2020.08 | 8AT | F | L/R | SUV 4WD D4HB | | GCO83863 | Outer Joint | 52T | 30 | 35 | 73 | 94.5 | 67 | M |
| | 2015.01-2020.08 | 8AT | F | L | SUV 4WD D4HB | | GCI82621 | Inner Joint | | 31 | 35 | | 67 | 106.5 | |
| | 2015.01-2020.08 | 8AT/6MT | F | R | SUV 4WD D4HB | Date from:2017.07 | GCI82132 | Inner Joint | | 28 | 35 | 42 | | 131.5 | |
| | 2015.01-2020.08 | 6AT/8AT | R | L/R | SUV 4WD D4HB | | GCI82201 | Inner Joint | | 25 | 20 | 35 | 62.5 | 58 | |
| | 2015.01-2020.08 | 6AT/8AT/6MT | R | L | SUV 4WD D4HB | Date to:2017.06 | GDS83403 | Drive Shaft | 52T | 30 | 25 | 57 | 95 | 844 | |
| | 2015.01-2020.08 | 6AT/8AT/6MT | R | R | SUV 4WD D4HB | Date to:2017.06 | GDS83404 | Drive Shaft | 52T | 30 | 25 | 57 | 95 | 858 | |
| | 2015.01-2020.08 | 6AT/8AT/6MT | R | L/R | SUV 4WD D4HB | | GCI82200 | Outer Joint | 52T | 30 | 20 | 57 | 95 | 48 | |
| | 2015.01-2020.08 | 6AT | F | L/R | SUV FWD D4HB | | GCO24301 | Outer Joint | 52T | 30 | 35 | 73 | 94.5 | 67 | M |
| | 2015.01-2020.08 | 6MT | F | L | SUV FWD D4HB | Date to:2017.06 | GDS81153 | Drive Shaft | 52T | 30 | 28 | 73 | 94.5 | 683 | |
| | 2015.01-2020.08 | 6MT | F | L/R | SUV FWD D4HB | Date to:2017.06 | GCO81038 | Outer Joint | 52T | 30 | 36 | 73 | 94.5 | 67.5 | I |
| | 2015.01-2020.08 | 6MT | F | L/R | SUV FWD D4HB | Date from:2017.07 | GCO83863 | Outer Joint | 52T | 30 | 35 | 73 | 94.5 | 67 | M |
| | 2015.01-2020.08 | 6MT | F | L | SUV FWD D4HB | Date to:2017.06 | GCI24144 | Inner Joint | | 28 | 35 | 41 | 61.5 | 120 | |
| | 2015.01-2020.08 | 6MT | F | R | SUV FWD D4HB | Date to:2017.06 | GCI81068 | Inner Joint | | 28 | 35 | 42 | | 131 | |
| | 2015.01-2020.08 | 8AT | F | L | SUV FWD D4HB | | GDS58203 | Drive Shaft | 52T | 30 | 31 | 73 | 94.5 | 676 | |
| | 2015.01-2020.08 | 8AT | F | R | SUV FWD D4HB | | GDS58202 | Drive Shaft | 52T | 30 | 28 | 73 | 94.5 | 607 | |
| | 2015.01-2020.08 | 8AT | F | L/R | SUV FWD D4HB | | GCO83863 | Outer Joint | 52T | 30 | 35 | 73 | 94.5 | 67 | M |
| | 2015.01-2020.08 | 8AT | F | L | SUV FWD D4HB | | GCI82621 | Inner Joint | | 31 | 35 | | 67 | 106.5 | |
| | 2015.01-2020.08 | 8AT/6MT | F | R | SUV FWD D4HB | Date from:2017.07 | GCI82132 | Inner Joint | | 28 | 35 | 42 | | 131.5 | |
| 2.2 (148 kw) | 2020.03- | 8AT | F | L/R | SUV 4WD D4HE | | GCO82933 | Outer Joint | | 30 | 35 | 73 | 94.5 | 65.5 | M |
| | 2020.03- | 8DCT | F | R | SUV 4WD D4HE | | GCI82132 | Inner Joint | | 28 | 35 | 42 | | 131.5 | |
| | 2020.03- | 8AT | R | L | SUV 4WD D4HE | | GDS56177 | Drive Shaft | | 30 | 25 | 57 | 95 | 875 | |
| | 2020.03- | 8AT | R | R | SUV 4WD D4HE | | GDS56112 | Drive Shaft | | 30 | 25 | 57 | 95 | 831 | |
| | 2020.03- | 8AT | R | L/R | SUV 4WD D4HE | | GCO82582 | Outer Joint | | 30 | 20 | 57 | 95 | 48 | |
| | 2020.03- | 8AT | R | L/R | SUV 4WD D4HE | | GCI82201 | Inner Joint | | 25 | 20 | 35 | 62.5 | 58 | |
| | 2020.03- | 8AT | F | L/R | SUV FWD D4HE | | GCO82933 | Outer Joint | | 30 | 35 | 73 | 94.5 | 65.5 | M |
| | 2020.03- | 8DCT | F | R | SUV FWD D4HE | | GCI82132 | Inner Joint | | 28 | 35 | 42 | | 131.5 | |
| 2.2 (149 kw) | 2015.01-2020.12 | 8AT | F | L | SUV 4WD D4HB | | GDS58203 | Drive Shaft | 52T | 30 | 31 | 73 | 94.5 | 676 | |
| | 2015.01-2020.12 | 8AT | F | R | SUV 4WD D4HB | | GDS58202 | Drive Shaft | 52T | 30 | 28 | 73 | 94.5 | 607 | |
| | 2015.01-2020.12 | 8AT | F | L/R | SUV 4WD D4HB | | GCO83863 | Outer Joint | 52T | 30 | 35 | 73 | 94.5 | 67 | M |

| | YEAR | TRANSM. | F/R | L/R | BODY STYLE & DRIVE TYPE & ENGINE | REMARKS | G-AP Ref. | PRODUCT | ABS | Technical Specifications A | B | C | H | L | P |
|---|---|---|---|---|---|---|---|---|---|---|---|---|---|---|---|
| **KIA** **Sorento** | | | | | | | | | | | | | | | |
| 2.2 (149 kw) | 2015.01-2020.12 | 8AT | F | L | SUV 4WD D4HB | | GCI82621 | Inner Joint | | 31 | 35 | | 67 | 106.5 | |
| | 2015.01-2020.12 | 8AT/6MT | F | R | SUV 4WD D4HB | | GCI82132 | Inner Joint | | 28 | 35 | 42 | | 131.5 | |
| | 2015.01-2020.12 | 6AT/8AT | R | L/R | SUV 4WD D4HB | | GCI82200 | Outer Joint | 52T | 30 | 20 | 57 | 95 | 48 | |
| | 2015.01-2020.12 | 6AT/8AT | R | L/R | SUV 4WD D4HB | | GCI82201 | Inner Joint | | 25 | 20 | 35 | 62.5 | 58 | |
| 2.4 (102 kw) | 2002.08-2009.06 | 5MT | F | L | SUV 4WD G4JS | | GDS27065 | Drive Shaft | | 28 | 30 | 56 | 102 | 635 | |
| | 2002.08-2009.06 | 5MT | F | R | SUV 4WD G4JS | | GDS27064 | Drive Shaft | | 28 | 28 | 56 | 102 | 567 | |
| | 2002.08-2009.06 | 5MT | F | L/R | SUV 4WD G4JS | | GCO27014 | Outer Joint | | 28 | 25 | 56 | 102 | 63 | M |
| | 2002.08-2009.06 | 5MT | F | L | SUV 4WD G4JS | | GCI34079 | Inner Joint | | 30 | 25 | 38 | 77.5 | 108 | |
| | 2002.08-2009.06 | 5MT | F | R | SUV 4WD G4JS | | GCI34078 | Inner Joint | | 28 | 25 | 43 | | 119 | |
| 2.4 (126 kw) | 2010.04-2015.12 | 6MT | F | L | SUV 4WD G4KE | Not Facelift | GDS24467 | Drive Shaft | 52T | 30 | 28 | 73 | 97 | 667 | |
| | 2010.04-2015.12 | 6MT | F | R | SUV 4WD G4KE | Not Facelift | GDS24477 | Drive Shaft | 52T | 30 | 28 | 73 | 97 | 599 | |
| | 2010.04-2015.12 | 6MT | F | R | SUV 4WD G4KE | For Facelift | GDS24479 | Drive Shaft | 52T | 30 | 28 | 73 | 94.5 | 596 | |
| | 2010.04-2015.12 | 6MT | F | R | SUV 4WD G4KE | Facelift:Yes,Inner teeth of wheel side:25 | GCO24296 | Outer Joint | 52T | 30 | 25 | 73 | 94.5 | 67 | M |
| | 2010.04-2015.12 | 6MT | F | L/R | SUV 4WD G4KE | Facelift:Yes,Inner teeth of wheel side:35 | GCO24301 | Outer Joint | 52T | 30 | 35 | 73 | 94.5 | 67 | M |
| | 2010.04-2015.12 | 6MT | F | L | SUV 4WD G4KE | | GCI24157 | Inner Joint | | 28 | 35 | 41 | 61.5 | 120 | |
| | 2010.04-2015.12 | 6MT | F | R | SUV 4WD G4KE | not for facelift | GCI24156 | Inner Joint | | 28 | 35 | 42 | | 129.5 | |
| | 2010.04-2015.12 | 6MT | F | R | SUV 4WD G4KE | Facelift | GCI81068 | Inner Joint | | 28 | 35 | 42 | | 131 | |
| | 2010.04-2015.12 | 6MT | R | L | SUV 4WD G4KE | For Facelift | GDS24555 | Drive Shaft | 52T | 30 | 25 | 57 | 93.5 | 848 | |
| | 2010.04-2015.12 | 6MT | R | R | SUV 4WD G4KE | For Facelift | GDS24554 | Drive Shaft | 52T | 30 | 25 | 57 | 93.5 | 829 | |
| | 2010.04-2015.12 | 6MT | R | L/R | SUV 4WD G4KE | Date to:2011.02 | GCI24010 | Inner Joint | | 25 | 22 | 35 | 63 | 87 | |
| | 2010.04-2015.12 | 6MT | F | L | SUV FWD G4KE | Not Facelift | GDS24467 | Drive Shaft | 52T | 30 | 28 | 73 | 97 | 667 | |
| | 2010.04-2015.12 | 6MT | F | R | SUV FWD G4KE | Not Facelift | GDS24477 | Drive Shaft | 52T | 30 | 28 | 73 | 97 | 599 | |
| | 2010.04-2015.12 | 6MT | F | R | SUV FWD G4KE | For Facelift | GDS24479 | Drive Shaft | 52T | 30 | 28 | 73 | 94.5 | 596 | |
| | 2010.04-2015.12 | 6MT | F | R | SUV FWD G4KE | Facelift:Yes,Inner teeth of wheel side:25 | GCO24296 | Outer Joint | 52T | 30 | 25 | 73 | 94.5 | 67 | M |
| | 2010.04-2015.12 | 6MT | F | L/R | SUV FWD G4KE | Facelift:Yes,Inner teeth of wheel side:35 | GCO24301 | Outer Joint | 52T | 30 | 35 | 73 | 94.5 | 67 | M |
| | 2010.04-2015.12 | 6MT | F | L | SUV FWD G4KE | | GCI24157 | Inner Joint | | 28 | 35 | 41 | 61.5 | 120 | |
| | 2010.04-2015.12 | 6MT | F | R | SUV FWD G4KE | not for facelift | GCI24156 | Inner Joint | | 28 | 35 | 42 | | 129.5 | |
| | 2010.04-2015.12 | 6MT | F | R | SUV FWD G4KE | Facelift | GCI81068 | Inner Joint | | 28 | 35 | 42 | | 131 | |
| | 2015.01-2020.02 | 6AT | F | L | SUV FWD G4KE | | GDS81243 | Drive Shaft | 52T | 30 | 28 | 73 | 94.5 | 679 | |
| | 2015.01-2020.02 | 6AT | F | R | SUV FWD G4KE | | GDS81251 | Drive Shaft | 52T | 30 | 28 | 73 | 94.5 | 602 | |
| | 2015.01-2020.02 | 6AT | F | R | SUV FWD G4KE | | GCI81096 | Inner Joint | | 28 | 33 | 42 | | 129 | |
| | 2015.01-2020.10 | 6AT | F | L | SUV 4WD G4KE | | GDS81243 | Drive Shaft | 52T | 30 | 28 | 73 | 94.5 | 679 | |
| | 2015.01-2020.10 | 6AT | F | R | SUV 4WD G4KE | | GDS81251 | Drive Shaft | 52T | 30 | 28 | 73 | 94.5 | 602 | |
| | 2015.01-2020.10 | 6AT | F | R | SUV 4WD G4KE | | GCI81096 | Inner Joint | | 28 | 33 | 42 | | 129 | |
| | 2015.01-2020.10 | AT | F | R | SUV 4WD G4KE | | GDS27221 | Intermediate Shaft | | 28 | 28 | | | 420.5 | |
| 2.4 (128 kw) | 2009.06-2015.12 | 6AT | F | L | SUV Van 4WD G4KE | Facelift | GDS24449 | Drive Shaft | 52T | 30 | 28 | 73 | 94.5 | 681 | |
| | 2009.06-2015.12 | 6AT | F | R | SUV Van 4WD G4KE | Facelift | GDS24479 | Drive Shaft | 52T | 30 | 28 | 73 | 94.5 | 596 | |
| | 2009.06-2015.12 | 6AT | F | L | SUV Van 4WD G4KE | | GCI24140 | Inner Joint | | 28 | 33 | 33 | 67 | 105.5 | |
| | 2009.06-2015.12 | 6AT | F | R | SUV Van 4WD G4KE | Facelift | GCI24139 | Inner Joint | | 28 | 33 | 42 | | 129.5 | |
| | 2009.06-2015.12 | 6AT/6MT | F | R | SUV Van 4WD G4KE | Facelift:Yes,Inner teeth of wheel side:25 | GCO24296 | Outer Joint | 52T | 30 | 25 | 73 | 94.5 | 67 | M |
| | 2009.06-2015.12 | 6MT | F | L/R | SUV Van 4WD G4KE | Facelift:Yes,Inner teeth of wheel side:35 | GCO24301 | Outer Joint | 52T | 30 | 35 | 73 | 94.5 | 67 | M |
| | 2009.06-2015.12 | 6MT | F | L | SUV Van 4WD G4KE | Facelift | GCI24144 | Inner Joint | | 28 | 35 | 41 | 61.5 | 120 | |
| | 2009.06-2015.12 | 6MT | F | R | SUV Van 4WD G4KE | Facelift | GCI81068 | Inner Joint | | 28 | 35 | 42 | | 131 | |
| | 2009.06-2015.12 | AT | F | L | SUV Van 4WD G4KE | Not Facelift | GDS24233 | Drive Shaft | 52T | 30 | 28 | 73 | 97 | 659 | |
| | 2009.06-2015.12 | AT | F | L | SUV Van 4WD G4KE | | GCI24066 | Inner Joint | | 28 | 35 | 33 | 67.5 | 100 | |
| | 2009.06-2015.12 | AT/MT | F | R | SUV Van 4WD G4KE | | GDS24477 | Drive Shaft | 52T | 30 | 28 | 73 | 97 | 599 | |
| | 2009.06-2015.12 | AT/MT | F | L/R | SUV Van 4WD G4KE | not for facelift | GCO24072 | Outer Joint | 52T | 30 | 36 | 73 | 97 | 67.5 | I |
| | 2009.06-2015.12 | AT/MT | F | R | SUV Van 4WD G4KE | not for facelift | GCI24156 | Inner Joint | | 28 | 35 | 42 | | 129.5 | |
| | 2009.06-2015.12 | MT | F | L | SUV Van 4WD G4KE | | GDS24467 | Drive Shaft | 52T | 30 | 28 | 73 | 97 | 667 | |
| | 2009.06-2015.12 | MT | F | L | SUV Van 4WD G4KE | not facelift | GCI24157 | Inner Joint | | 28 | 35 | 41 | 61.5 | 120 | |
| | 2009.06-2015.12 | 6AT/6MT | R | L | SUV Van 4WD G4KE | | GDS24555 | Drive Shaft | 52T | 30 | 25 | 57 | 93.5 | 848 | |
| | 2009.06-2015.12 | 6AT/6MT | R | R | SUV Van 4WD G4KE | | GDS24554 | Drive Shaft | 52T | 30 | 25 | 57 | 93.5 | 829 | |
| | 2009.06-2015.12 | MT | R | L/R | SUV Van 4WD G4KE | Date to:2011.02 | GCI24010 | Inner Joint | | 25 | 22 | 35 | 63 | 87 | |
| | 2009.06-2015.12 | 6AT | F | L | SUV Van FWD G4KE | Facelift | GDS24449 | Drive Shaft | 52T | 30 | 28 | 73 | 94.5 | 681 | |
| | 2009.06-2015.12 | 6AT | F | R | SUV Van FWD G4KE | Facelift | GDS24479 | Drive Shaft | 52T | 30 | 28 | 73 | 94.5 | 596 | |
| | 2009.06-2015.12 | 6AT | F | L | SUV Van FWD G4KE | | GCI24140 | Inner Joint | | 28 | 33 | 33 | 67 | 105.5 | |
| | 2009.06-2015.12 | 6AT/6MT | F | R | SUV Van FWD G4KE | Facelift:Yes,Inner teeth of wheel side:25 | GCO24296 | Outer Joint | 52T | 30 | 25 | 73 | 94.5 | 67 | M |
| | 2009.06-2015.12 | 6MT | F | L/R | SUV Van FWD G4KE | Facelift:Yes,Inner teeth of wheel side:35 | GCO24301 | Outer Joint | 52T | 30 | 35 | 73 | 94.5 | 67 | M |
| | 2009.06-2015.12 | 6MT | F | L | SUV Van FWD G4KE | Facelift | GCI24144 | Inner Joint | | 28 | 35 | 41 | 61.5 | 120 | |
| | 2009.06-2015.12 | 6MT | F | R | SUV Van FWD G4KE | Facelift | GCI81068 | Inner Joint | | 28 | 35 | 42 | | 131 | |
| | 2009.06-2015.12 | AT | F | L | SUV Van FWD G4KE | Not Facelift | GDS24233 | Drive Shaft | 52T | 30 | 28 | 73 | 97 | 659 | |
| | 2009.06-2015.12 | AT | F | R | SUV Van FWD G4KE | Not Facelift | GDS24232 | Drive Shaft | 52T | 30 | 28 | 73 | 97 | 597 | |
| | 2009.06-2015.12 | AT | F | L/R | SUV Van FWD G4KE | | GCO24072 | Outer Joint | 52T | 30 | 36 | 73 | 97 | 67.5 | I |
| | 2009.06-2015.12 | AT | F | L | SUV Van FWD G4KE | | GCI24066 | Inner Joint | | 28 | 35 | 33 | 67.5 | 100 | |
| | 2009.06-2015.12 | AT | F | R | SUV Van FWD G4KE | | GCI24054 | Inner Joint | | 28 | 35 | 42 | | 125 | |

| | YEAR | TRANSM. | F/R | L/R | BODY STYLE & DRIVE TYPE & ENGINE | REMARKS | G-AP Ref. | PRODUCT | ABS | Technical Specifications A | B | C | H | L | P |
|---|---|---|---|---|---|---|---|---|---|---|---|---|---|---|---|
| **KIA** **Sorento** | | | | | | | | | | | | | | | |
| 2.4 (128 kw) | 2009.06-2015.12 | AT | F | R | SUV Van FWD G4KE | | GDS24585 | Intermediate Shaft | | 28 | 28 | | | 421 | |
| | 2009.06-2015.12 | MT | F | L | SUV Van FWD G4KE | | GDS24467 | Drive Shaft | 52T | 30 | 28 | 73 | 97 | 667 | |
| | 2009.06-2015.12 | MT | F | R | SUV Van FWD G4KE | | GDS24477 | Drive Shaft | 52T | 30 | 28 | 73 | 97 | 599 | |
| | 2009.06-2015.12 | MT | F | L | SUV Van FWD G4KE | not for facelift | GCO24327 | Outer Joint | 52T | 30 | 36 | 73 | 97 | 67.5 | I |
| | 2009.06-2015.12 | MT | F | R | SUV Van FWD G4KE | not for facelift | GCO24072 | Outer Joint | 52T | 30 | 36 | 73 | 97 | 67.5 | I |
| | 2009.06-2015.12 | MT | F | L | SUV Van FWD G4KE | not facelift | GCI24157 | Inner Joint | | 28 | 35 | 41 | 61.5 | 120 | |
| | 2009.06-2015.12 | MT | F | R | SUV Van FWD G4KE | not for facelift | GCI24156 | Inner Joint | | 28 | 35 | 42 | | 129.5 | |
| | 2009.11-2015.12 | 6AT | F | L | SUV 4WD G4KE | not for facelift | GDS24233 | Drive Shaft | 52T | 30 | 28 | 73 | 97 | 659 | |
| | 2009.11-2015.12 | 6AT | F | L | SUV 4WD G4KE | for facelift | GDS24449 | Drive Shaft | 52T | 30 | 28 | 73 | 94.5 | 681 | |
| | 2009.11-2015.12 | 6AT | F | L | SUV 4WD G4KE | not for facelift | GCI24066 | Inner Joint | | 28 | 35 | 33 | 67.5 | 100 | |
| | 2009.11-2015.12 | 6AT | F | L | SUV 4WD G4KE | for facelift | GCI24140 | Inner Joint | | 28 | 33 | 33 | 67 | 105.5 | |
| | 2009.11-2015.12 | 6AT | F | R | SUV 4WD G4KE | not for facelift | GCI24156 | Inner Joint | | 28 | 35 | 42 | | 129.5 | |
| | 2009.11-2015.12 | 6AT/6MT | F | R | SUV 4WD G4KE | for facelift | GDS24479 | Drive Shaft | 52T | 30 | 28 | 73 | 94.5 | 596 | |
| | 2009.11-2015.12 | 6AT/6MT | F | R | SUV 4WD G4KE | Facelift:Yes,Inner teeth of wheel side:25 | GCO24296 | Outer Joint | 52T | 30 | 25 | 73 | 94.5 | 67 | M |
| | 2009.11-2015.12 | 6MT | F | L | SUV 4WD G4KE | not for facelift | GDS24467 | Drive Shaft | 52T | 30 | 28 | 73 | 97 | 667 | |
| | 2009.11-2015.12 | 6MT | F | L/R | SUV 4WD G4KE | Facelift:Yes,Inner teeth of wheel side:35 | GCO24301 | Outer Joint | 52T | 30 | 35 | 73 | 94.5 | 67 | M |
| | 2009.11-2015.12 | 6MT | F | L | SUV 4WD G4KE | for facelift | GCI24144 | Inner Joint | | 28 | 35 | 41 | 61.5 | 120 | |
| | 2009.11-2015.12 | 6MT | F | R | SUV 4WD G4KE | Facelift | GCI81068 | Inner Joint | | 28 | 35 | 42 | | 131 | |
| | 2009.11-2015.12 | AT/MT | F | R | SUV 4WD G4KE | not for facelift | GDS24477 | Drive Shaft | 52T | 30 | 28 | 73 | 97 | 599 | |
| | 2009.11-2015.12 | AT/MT | F | L/R | SUV 4WD G4KE | not for facelift | GCO24072 | Outer Joint | 52T | 30 | 36 | 73 | 97 | 67.5 | I |
| | 2009.11-2015.12 | MT | F | L | SUV 4WD G4KE | not for facelift | GCI24157 | Inner Joint | | 28 | 35 | 41 | 61.5 | 120 | |
| | 2009.11-2015.12 | 6AT/6MT | R | L | SUV 4WD G4KE | | GDS24555 | Drive Shaft | 52T | 30 | 25 | 57 | 93.5 | 848 | |
| | 2009.11-2015.12 | 6AT/6MT | R | R | SUV 4WD G4KE | | GDS24554 | Drive Shaft | 52T | 30 | 25 | 57 | 93.5 | 829 | |
| | 2009.11-2015.12 | 6AT/6MT | R | L/R | SUV 4WD G4KE | Date to:2011.02 | GCI24010 | Inner Joint | | 25 | 22 | 35 | 63 | 87 | |
| | 2009.11-2015.12 | 6AT | F | L | SUV FWD G4KE | not for facelift | GDS24233 | Drive Shaft | 52T | 30 | 28 | 73 | 97 | 659 | |
| | 2009.11-2015.12 | 6AT | F | L | SUV FWD G4KE | for facelift | GDS24449 | Drive Shaft | 52T | 30 | 28 | 73 | 94.5 | 681 | |
| | 2009.11-2015.12 | 6AT | F | L | SUV FWD G4KE | not for facelift | GCI24066 | Inner Joint | | 28 | 35 | 33 | 67.5 | 100 | |
| | 2009.11-2015.12 | 6AT | F | L | SUV FWD G4KE | for facelift | GCI24140 | Inner Joint | | 28 | 33 | 33 | 67 | 105.5 | |
| | 2009.11-2015.12 | 6AT/6MT | F | R | SUV FWD G4KE | for facelift | GDS24479 | Drive Shaft | 52T | 30 | 28 | 73 | 94.5 | 596 | |
| | 2009.11-2015.12 | 6AT/6MT | F | R | SUV FWD G4KE | Facelift:Yes,Inner teeth of wheel side:25 | GCO24296 | Outer Joint | 52T | 30 | 25 | 73 | 94.5 | 67 | M |
| | 2009.11-2015.12 | 6MT | F | L | SUV FWD G4KE | not for facelift | GDS24467 | Drive Shaft | 52T | 30 | 28 | 73 | 97 | 667 | |
| | 2009.11-2015.12 | 6MT | F | L | SUV FWD G4KE | not for facelift | GCO24327 | Outer Joint | 52T | 30 | 36 | 73 | 97 | 67.5 | I |
| | 2009.11-2015.12 | 6MT | F | L/R | SUV FWD G4KE | Facelift:Yes,Inner teeth of wheel side:35 | GCO24301 | Outer Joint | 52T | 30 | 35 | 73 | 94.5 | 67 | M |
| | 2009.11-2015.12 | 6MT | F | L | SUV FWD G4KE | for facelift | GCI24144 | Inner Joint | | 28 | 35 | 41 | 61.5 | 120 | |
| | 2009.11-2015.12 | 6MT | F | R | SUV FWD G4KE | Facelift | GCI81068 | Inner Joint | | 28 | 35 | 42 | | 131 | |
| | 2009.11-2015.12 | AT | F | R | SUV FWD G4KE | not for facelift | GDS24232 | Drive Shaft | 52T | 30 | 28 | 73 | 97 | 597 | |
| | 2009.11-2015.12 | AT | F | L/R | SUV FWD G4KE | not for facelift | GCO24072 | Outer Joint | 52T | 30 | 36 | 73 | 97 | 67.5 | I |
| | 2009.11-2015.12 | AT | F | R | SUV FWD G4KE | not for facelift | GCI24054 | Inner Joint | | 28 | 35 | 42 | | 125 | |
| | 2009.11-2015.12 | AT | F | R | SUV FWD G4KE | | GDS24585 | Intermediate Shaft | | 28 | 28 | | | 421 | |
| | 2009.11-2015.12 | MT | F | R | SUV FWD G4KE | not for facelift | GDS24477 | Drive Shaft | 52T | 30 | 28 | 73 | 97 | 599 | |
| | 2009.11-2015.12 | MT | F | R | SUV FWD G4KE | not for facelift | GCO24072 | Outer Joint | 52T | 30 | 36 | 73 | 97 | 67.5 | I |
| | 2009.11-2015.12 | MT | F | L | SUV FWD G4KE | not for facelift | GCI24157 | Inner Joint | | 28 | 35 | 41 | 61.5 | 120 | |
| | 2009.11-2015.12 | MT | F | R | SUV FWD G4KE | not for facelift | GCI24156 | Inner Joint | | 28 | 35 | 42 | | 129.5 | |
| 2.4 (129 kw) | 2015.01-2020.12 | 6AT | F | L | SUV 4WD G4KE | Date to:2017.06 | GDS81243 | Drive Shaft | 52T | 30 | 28 | 73 | 94.5 | 679 | |
| | 2015.01-2020.12 | 6AT | F | R | SUV 4WD G4KE | Date to:2017.06 | GDS81251 | Drive Shaft | 52T | 30 | 28 | 73 | 94.5 | 602 | |
| | 2015.01-2020.12 | 6AT | F | L/R | SUV 4WD G4KE | Date to:2017.06 | GCO81089 | Outer Joint | 52T | 30 | 26 | 73 | 94.5 | 65.5 | M |
| | 2015.01-2020.12 | 6AT | F | L | SUV 4WD G4KE | Date to:2017.06 | GCI24140 | Inner Joint | | 28 | 33 | 33 | 67 | 105.5 | |
| | 2015.01-2020.12 | 6AT | F | R | SUV 4WD G4KE | Date to:2017.06 | GCI81096 | Inner Joint | | 28 | 33 | 42 | | 129 | |
| | 2015.01-2020.12 | 6AT | F | R | SUV 4WD G4KE | Date from:2017.07 | GCI83118 | Inner Joint | | 28 | 33 | 42 | | 129 | |
| | 2015.01-2020.12 | 6MT | F | L | SUV 4WD G4KE | | GDS81153 | Drive Shaft | 52T | 30 | 28 | 73 | 94.5 | 683 | |
| | 2015.01-2020.12 | 6MT | F | L/R | SUV 4WD G4KE | | GCO81038 | Outer Joint | 52T | 30 | 36 | 73 | 94.5 | 67.5 | I |
| | 2015.01-2020.12 | 6MT | F | R | SUV 4WD G4KE | | GCI81068 | Inner Joint | | 28 | 35 | 42 | | 131 | |
| | 2015.01-2020.12 | AT | F | R | SUV 4WD G4KE | | GDS27221 | Intermediate Shaft | | 28 | 28 | | | 420.5 | |
| | 2015.01-2020.12 | 6AT | R | L/R | SUV 4WD G4KE | | GCI82201 | Inner Joint | | 25 | 20 | 35 | 62.5 | 58 | |
| | 2015.01-2020.12 | 6AT/6MT | R | L | SUV 4WD G4KE | Date to:2017.06 | GDS83403 | Drive Shaft | 52T | 30 | 25 | 57 | 95 | 844 | |
| | 2015.01-2020.12 | 6AT/6MT | R | R | SUV 4WD G4KE | Date to:2017.06 | GDS83404 | Drive Shaft | 52T | 30 | 25 | 57 | 95 | 858 | |
| | 2015.01-2020.12 | 6AT/6MT | R | L/R | SUV 4WD G4KE | | GCI82200 | Outer Joint | 52T | 30 | 20 | 57 | 95 | 48 | |
| | 2015.01-2020.12 | 6AT | F | L | SUV FWD G4KE | | GDS81243 | Drive Shaft | 52T | 30 | 28 | 73 | 94.5 | 679 | |
| | 2015.01-2020.12 | 6AT | F | R | SUV FWD G4KE | Date to:2017.06 | GDS81251 | Drive Shaft | 52T | 30 | 28 | 73 | 94.5 | 602 | |
| | 2015.01-2020.12 | 6AT | F | L/R | SUV FWD G4KE | Date to:2017.06 | GCO81089 | Outer Joint | 52T | 30 | 26 | 73 | 94.5 | 65.5 | M |
| | 2015.01-2020.12 | 6AT | F | L | SUV FWD G4KE | Date to:2017.06 | GCI24140 | Inner Joint | | 28 | 33 | 33 | 67 | 105.5 | |
| | 2015.01-2020.12 | 6AT | F | R | SUV FWD G4KE | Date to:2017.06 | GCI81096 | Inner Joint | | 28 | 33 | 42 | | 129 | |
| | 2015.01-2020.12 | 6AT | F | R | SUV FWD G4KE | Date from:2017.07 | GCI83118 | Inner Joint | | 28 | 33 | 42 | | 129 | |
| 2.4 (130 kw) | 2010.09-2012.12 | AT | F | R | SUV 4WD G4KE | | GDS27221 | Intermediate Shaft | | 28 | 28 | | | 420.5 | |
| 2.4 (138 kw) | 2015.01-2018.10 | 6AT | F | L | SUV 4WD G4KJ | Date to:2017.06 | GDS81243 | Drive Shaft | 52T | 30 | 28 | 73 | 94.5 | 679 | |

| | YEAR | TRANSM. | F/R | L/R | BODY STYLE & DRIVE TYPE & ENGINE | REMARKS | G-AP Ref. | PRODUCT | ABS | Technical Specifications | | | | | |
|---|---|---|---|---|---|---|---|---|---|---|---|---|---|---|---|
| | | | | | | | | | | A | B | C | H | L | P |
| **KIA** **Sorento** | | | | | | | | | | | | | | | |
| 2.4 (138 kw) | 2015.01-2018.10 | 6AT | F | R | SUV 4WD G4KJ | Date to:2017.06 | GDS81251 | Drive Shaft | 52T | 30 | 28 | 73 | 94.5 | 602 | |
| | 2015.01-2018.10 | 6AT | F | L/R | SUV 4WD G4KJ | Date to:2017.06 | GCO81089 | Outer Joint | 52T | 30 | 26 | 73 | 94.5 | 65.5 | M |
| | 2015.01-2018.10 | 6AT | F | L | SUV 4WD G4KJ | Date to:2017.06 | GCI24140 | Inner Joint | | 28 | 33 | 33 | 67 | 105.5 | |
| | 2015.01-2018.10 | 6AT | F | L | SUV 4WD G4KJ | Date from:2017.07 | GCI83117 | Inner Joint | | 27 | 33 | 30 | 67 | 103 | |
| | 2015.01-2018.10 | 6AT | F | R | SUV 4WD G4KJ | Date to:2017.06 | GCI81096 | Inner Joint | | 28 | 33 | 42 | | 129 | |
| | 2015.01-2018.10 | 6AT | F | R | SUV 4WD G4KJ | Date from:2017.07 | GCI83118 | Inner Joint | | 28 | 33 | 42 | | 129 | |
| | 2015.01-2018.10 | 6MT | F | L | SUV 4WD G4KJ | | GDS81153 | Drive Shaft | 52T | 30 | 28 | 73 | 94.5 | 683 | |
| | 2015.01-2018.10 | 6MT | F | L/R | SUV 4WD G4KJ | | GCO81038 | Outer Joint | 52T | 30 | 36 | 73 | 94.5 | 67.5 | I |
| | 2015.01-2018.10 | 6MT | F | R | SUV 4WD G4KJ | | GCI81068 | Inner Joint | | 28 | 35 | 42 | | 131 | |
| | 2015.01-2018.10 | 6AT | R | L/R | SUV 4WD G4KJ | | GCI82201 | Inner Joint | | 25 | 20 | 35 | 62.5 | 58 | |
| | 2015.01-2018.10 | 6AT/6MT | R | L | SUV 4WD G4KJ | Date to:2017.06 | GDS83403 | Drive Shaft | 52T | 30 | 25 | 57 | 95 | 844 | |
| | 2015.01-2018.10 | 6AT/6MT | R | R | SUV 4WD G4KJ | Date to:2017.06 | GDS83404 | Drive Shaft | 52T | 30 | 25 | 57 | 95 | 858 | |
| | 2015.01-2018.10 | 6AT/6MT | R | L/R | SUV 4WD G4KJ | | GCI82200 | Outer Joint | 52T | 30 | 20 | 57 | 95 | 48 | |
| | 2015.01-2018.10 | 6AT | F | L | SUV FWD G4KJ | Date to:2017.06 | GDS81243 | Drive Shaft | 52T | 30 | 28 | 73 | 94.5 | 679 | |
| | 2015.01-2018.10 | 6AT | F | R | SUV FWD G4KJ | Date to:2017.06 | GDS81251 | Drive Shaft | 52T | 30 | 28 | 73 | 94.5 | 602 | |
| | 2015.01-2018.10 | 6AT | F | L/R | SUV FWD G4KJ | Date to:2017.06 | GCO81089 | Outer Joint | 52T | 30 | 26 | 73 | 94.5 | 65.5 | M |
| | 2015.01-2018.10 | 6AT | F | L | SUV FWD G4KJ | Date to:2017.06 | GCI24140 | Inner Joint | | 28 | 33 | 33 | 67 | 105.5 | |
| | 2015.01-2018.10 | 6AT | F | L | SUV FWD G4KJ | Date from:2017.07 | GCI83117 | Inner Joint | | 27 | 33 | 30 | 67 | 103 | |
| | 2015.01-2018.10 | 6AT | F | R | SUV FWD G4KJ | Date to:2017.06 | GCI81096 | Inner Joint | | 28 | 33 | 42 | | 129 | |
| | 2015.01-2018.10 | 6AT | F | R | SUV FWD G4KJ | Date from:2017.07 | GCI83118 | Inner Joint | | 28 | 33 | 42 | | 129 | |
| | 2015.01-2018.10 | 6MT | F | L | SUV FWD G4KJ | | GDS81153 | Drive Shaft | 52T | 30 | 28 | 73 | 94.5 | 683 | |
| | 2015.01-2018.10 | 6MT | F | L/R | SUV FWD G4KJ | | GCO81038 | Outer Joint | 52T | 30 | 36 | 73 | 94.5 | 67.5 | I |
| | 2015.01-2018.10 | 6MT | F | R | SUV FWD G4KJ | | GCI81068 | Inner Joint | | 28 | 35 | 42 | | 131 | |
| 2.4 (140 kw) | 2013.02-2015.12 | AT | F | R | SUV 4WD G4KJ | | GDS27221 | Intermediate Shaft | | 28 | 28 | | | 420.5 | |
| | 2017.07-2020.12 | AT | F | R | SUV 4WD G4KJ | | GDS27221 | Intermediate Shaft | | 28 | 28 | | | 420.5 | |
| 2.4 (141 kw) | 2012.10-2015.12 | 6AT | F | L | SUV 4WD G4KJ | | GDS24449 | Drive Shaft | 52T | 30 | 28 | 73 | 94.5 | 681 | |
| | 2012.10-2015.12 | 6AT | F | L | SUV 4WD G4KJ | | GCI24140 | Inner Joint | | 28 | 33 | 33 | 67 | 105.5 | |
| | 2012.10-2015.12 | 6AT/6MT | F | R | SUV 4WD G4KJ | | GDS24479 | Drive Shaft | 52T | 30 | 28 | 73 | 94.5 | 596 | |
| | 2012.10-2015.12 | 6AT/6MT | F | R | SUV 4WD G4KJ | | GCO24296 | Outer Joint | 52T | 30 | 25 | 73 | 94.5 | 67 | M |
| | 2012.10-2015.12 | 6MT | F | L/R | SUV 4WD G4KJ | | GCO24301 | Outer Joint | 52T | 30 | 35 | 73 | 94.5 | 67 | M |
| | 2012.10-2015.12 | 6MT | F | R | SUV 4WD G4KJ | | GCI81068 | Inner Joint | | 28 | 35 | 42 | | 131 | |
| | 2012.10-2015.12 | AT | F | L | SUV 4WD G4KJ | | GDS24449 | Drive Shaft | 52T | 30 | 28 | 73 | 94.5 | 681 | |
| | 2012.10-2015.12 | AT | F | R | SUV 4WD G4KJ | | GCO24296 | Outer Joint | 52T | 30 | 25 | 73 | 94.5 | 67 | M |
| | 2012.10-2015.12 | AT | F | L | SUV 4WD G4KJ | | GCI24140 | Inner Joint | | 28 | 33 | 33 | 67 | 105.5 | |
| | 2012.10-2015.12 | AT | F | R | SUV 4WD G4KJ | | GCI24139 | Inner Joint | | 28 | 33 | 42 | | 129.5 | |
| | 2012.10-2015.12 | AT/MT | F | R | SUV 4WD G4KJ | | GDS24479 | Drive Shaft | 52T | 30 | 28 | 73 | 94.5 | 596 | |
| | 2012.10-2015.12 | MT | F | L | SUV 4WD G4KJ | | GCI24144 | Inner Joint | | 28 | 35 | 41 | 61.5 | 120 | |
| | 2012.10-2015.12 | 6AT/6MT | R | L | SUV 4WD G4KJ | | GDS24555 | Drive Shaft | 52T | 30 | 25 | 57 | 93.5 | 848 | |
| | 2012.10-2015.12 | 6AT/6MT | R | R | SUV 4WD G4KJ | | GDS24554 | Drive Shaft | 52T | 30 | 25 | 57 | 93.5 | 829 | |
| | 2012.10-2015.12 | 6AT/6MT | R | L/R | SUV 4WD G4KJ | DOJ | GCI24032 | Inner Joint | | 25 | 23 | 35 | 63 | 88 | |
| | 2012.10-2015.12 | 6AT/6MT | R | L/R | SUV 4WD G4KJ | | GCI39041 | Inner Joint | | 25 | 23 | 35 | 63 | 92.5 | |
| | 2012.10-2015.12 | AT/MT | R | L | SUV 4WD G4KJ | | GDS24555 | Drive Shaft | 52T | 30 | 25 | 57 | 93.5 | 848 | |
| | 2012.10-2015.12 | AT/MT | R | R | SUV 4WD G4KJ | | GDS24554 | Drive Shaft | 52T | 30 | 25 | 57 | 93.5 | 829 | |
| | 2012.10-2015.12 | AT/MT | R | L/R | SUV 4WD G4KJ | | GCO24321 | Outer Joint | 52T | 30 | 20 | 57 | 93.5 | 61 | M |
| | 2012.10-2015.12 | 6AT | F | L | SUV FWD G4KJ | | GDS24449 | Drive Shaft | 52T | 30 | 28 | 73 | 94.5 | 681 | |
| | 2012.10-2015.12 | 6AT/6MT | F | R | SUV FWD G4KJ | | GDS24479 | Drive Shaft | 52T | 30 | 28 | 73 | 94.5 | 596 | |
| | 2012.10-2015.12 | 6AT/6MT | F | R | SUV FWD G4KJ | | GCO24296 | Outer Joint | 52T | 30 | 25 | 73 | 94.5 | 67 | M |
| | 2012.10-2015.12 | 6MT | F | L/R | SUV FWD G4KJ | | GCO24301 | Outer Joint | 52T | 30 | 35 | 73 | 94.5 | 67 | M |
| | 2012.10-2015.12 | 6MT | F | R | SUV FWD G4KJ | | GCI81068 | Inner Joint | | 28 | 35 | 42 | | 131 | |
| | 2012.10-2015.12 | AT | F | L | SUV FWD G4KJ | | GDS24449 | Drive Shaft | 52T | 30 | 28 | 73 | 94.5 | 681 | |
| | 2012.10-2015.12 | AT | F | R | SUV FWD G4KJ | | GCO24296 | Outer Joint | 52T | 30 | 25 | 73 | 94.5 | 67 | M |
| | 2012.10-2015.12 | AT | F | R | SUV FWD G4KJ | | GCI24139 | Inner Joint | | 28 | 33 | 42 | | 129.5 | |
| | 2012.10-2015.12 | AT/MT | F | R | SUV FWD G4KJ | | GDS24479 | Drive Shaft | 52T | 30 | 28 | 73 | 94.5 | 596 | |
| | 2012.10-2015.12 | MT | F | L | SUV FWD G4KJ | | GCI24144 | Inner Joint | | 28 | 35 | 41 | 61.5 | 120 | |
| 2.4 (142 kw) | 2013.09- | AT | F | R | SUV 4WD G4KJ | | GDS27221 | Intermediate Shaft | | 28 | 28 | | | 420.5 | |
| 2.5 (103 kw) | 2002.08-2011.03 | 4AT/5AT/5MT | F | L | SUV 4WD D4CB | | GDS27065 | Drive Shaft | | 28 | 30 | 56 | 102 | 635 | |
| | 2002.08-2011.03 | 4AT/5AT/5MT | F | R | SUV 4WD D4CB | | GDS27064 | Drive Shaft | | 28 | 28 | 56 | 102 | 567 | |
| | 2002.08-2011.03 | 4AT/5AT/5MT | F | L/R | SUV 4WD D4CB | | GCO27014 | Outer Joint | | 28 | 25 | 56 | 102 | 63 | M |
| | 2002.08-2011.03 | 4AT/5AT/5MT | F | L | SUV 4WD D4CB | | GCI34079 | Inner Joint | | 30 | 25 | 38 | 77.5 | 108 | |
| | 2002.08-2011.03 | 4AT/5AT/5MT | F | R | SUV 4WD D4CB | TJ;Angular | GCI34078 | Inner Joint | | 28 | 25 | 43 | | 119 | |
| | 2005.08-2006.10 | 5AT/5MT | F | L | SUV Van 4WD D4CB | | GDS27065 | Drive Shaft | | 28 | 30 | 56 | 102 | 635 | |
| | 2005.08-2006.10 | 5AT/5MT | F | R | SUV Van 4WD D4CB | | GDS27064 | Drive Shaft | | 28 | 28 | 56 | 102 | 567 | |
| | 2005.08-2006.10 | 5AT/5MT | F | L/R | SUV Van 4WD D4CB | | GCO27014 | Outer Joint | | 28 | 25 | 56 | 102 | 63 | M |
| | 2005.08-2006.10 | 5AT/5MT | F | L | SUV Van 4WD D4CB | | GCI34079 | Inner Joint | | 30 | 25 | 38 | 77.5 | 108 | |
| | 2005.08-2006.10 | 5AT/5MT | F | R | SUV Van 4WD D4CB | | GCI34078 | Inner Joint | | 28 | 25 | 43 | | 119 | |

| | YEAR | TRANSM. | F/R | L/R | BODY STYLE & DRIVE TYPE & ENGINE | REMARKS | G-AP Ref. | PRODUCT | ABS | Technical Specifications A | B | C | H | L | P |
|---|---|---|---|---|---|---|---|---|---|---|---|---|---|---|---|
| **KIA** **Sorento** | | | | | | | | | | | | | | | |
| 2.5 (120 kw) | 2006.05-2011.12 | 5AT/5MT | F | L | SUV 4WD D4CB | | GDS27065 | Drive Shaft | | 28 | 30 | 56 | 102 | 635 | |
| | 2006.05-2011.12 | 5AT/5MT | F | R | SUV 4WD D4CB | | GDS27064 | Drive Shaft | | 28 | 28 | 56 | 102 | 567 | |
| | 2006.05-2011.12 | 5AT/5MT | F | L/R | SUV 4WD D4CB | | GCO27014 | Outer Joint | | 28 | 25 | 56 | 102 | 63 | M |
| | 2006.05-2011.12 | | F | L | SUV 4WD D4CB | Date From:2006.09,Date To:2006.09 | GCI34079 | Inner Joint | | 30 | 25 | 38 | 77.5 | 108 | |
| | 2006.05-2011.12 | | F | R | SUV 4WD D4CB | Date From:2006.09,Date To:2006.09 | GCI34078 | Inner Joint | | 28 | 25 | 43 | | 119 | |
| 2.5 (125 kw) | 2006.12-2011.12 | 5AT/5MT | F | L/R | SUV 4WD D4CB | | GCO27014 | Outer Joint | | 28 | 25 | 56 | 102 | 63 | M |
| | 2006.12-2011.12 | AT/MT | F | L | SUV 4WD D4CB | | GDS27065 | Drive Shaft | | 28 | 30 | 56 | 102 | 635 | |
| | 2006.12-2011.12 | AT/MT | F | R | SUV 4WD D4CB | | GDS27064 | Drive Shaft | | 28 | 28 | 56 | 102 | 567 | |
| | 2006.12-2011.12 | | F | L | SUV 4WD D4CB | | GCI34079 | Inner Joint | | 30 | 25 | 38 | 77.5 | 108 | |
| | 2006.12-2011.12 | | F | R | SUV 4WD D4CB | TJ;Angular | GCI34078 | Inner Joint | | 28 | 25 | 43 | | 119 | |
| 2.5 (132 kw) | 2021.04- | 6AT | F | L | SUV 4WD G4KM | | GDS56928 | Drive Shaft | | 30 | 27 | 72.5 | 95 | 692 | |
| | 2021.04- | 6AT | F | R | SUV 4WD G4KM | | GDS56929 | Drive Shaft | | 30 | 28 | 72.5 | 95 | 587 | |
| | 2021.04- | 6AT | F | L/R | SUV 4WD G4KM | | GCO83480 | Outer Joint | | 30 | 34 | 72.5 | 95 | 65 | M |
| | 2021.04- | 6AT | F | L | SUV 4WD G4KM | | GCI83117 | Inner Joint | | 27 | 33 | 30 | 67 | 103 | |
| | 2021.04- | 6AT | F | R | SUV 4WD G4KM | | GCI83118 | Inner Joint | | 28 | 33 | 42 | | 129 | |
| | 2021.04- | 6AT | F | R | SUV 4WD G4KM | | GDS87095 | Intermediate Shaft | | 28 | 27 | | | 439 | |
| | 2021.04- | 6AT | R | L | SUV 4WD G4KM | | GDS56177 | Drive Shaft | | 30 | 25 | 57 | 95 | 875 | |
| | 2021.04- | 6AT | R | R | SUV 4WD G4KM | | GDS56112 | Drive Shaft | | 30 | 25 | 57 | 95 | 831 | |
| | 2021.04- | 6AT | R | L/R | SUV 4WD G4KM | | GCO82582 | Outer Joint | | 30 | 20 | 57 | 95 | 48 | |
| | 2021.04- | 6AT | R | L/R | SUV 4WD G4KM | | GCI82201 | Inner Joint | | 25 | 20 | 35 | 62.5 | 58 | |
| | 2021.04- | 6AT | F | L | SUV FWD G4KM | | GDS56928 | Drive Shaft | | 30 | 27 | 72.5 | 95 | 692 | |
| | 2021.04- | 6AT | F | R | SUV FWD G4KM | | GDS56929 | Drive Shaft | | 30 | 28 | 72.5 | 95 | 587 | |
| | 2021.04- | 6AT | F | L/R | SUV FWD G4KM | | GCO83480 | Outer Joint | | 30 | 34 | 72.5 | 95 | 65 | M |
| | 2021.04- | 6AT | F | L | SUV FWD G4KM | | GCI83117 | Inner Joint | | 27 | 33 | 30 | 67 | 103 | |
| | 2021.04- | 6AT | F | R | SUV FWD G4KM | | GCI83118 | Inner Joint | | 28 | 33 | 42 | | 129 | |
| | 2021.04- | 6AT | F | R | SUV FWD G4KM | | GDS87095 | Intermediate Shaft | | 28 | 27 | | | 439 | |
| 3.3 (182 kw) | 2007.02-2011.12 | 5AT | F | L | SUV 4WD G6DB | | GDS27065 | Drive Shaft | | 28 | 30 | 56 | 102 | 635 | |
| | 2007.02-2011.12 | 5AT | F | R | SUV 4WD G6DB | | GDS27064 | Drive Shaft | | 28 | 28 | 56 | 102 | 567 | |
| | 2007.02-2011.12 | 5AT | F | L/R | SUV 4WD G6DB | | GCO27014 | Outer Joint | | 28 | 25 | 56 | 102 | 63 | M |
| | 2007.02-2011.12 | 5AT | F | L | SUV 4WD G6DB | | GCI34079 | Inner Joint | | 30 | 25 | 38 | 77.5 | 108 | |
| | 2007.02-2011.12 | 5AT | F | R | SUV 4WD G6DB | | GCI34078 | Inner Joint | | 28 | 25 | 43 | | 119 | |
| 3.3 (184 kw) | 2015.04-2020.12 | 6AT | F | L | SUV 4WD G6DF | | GDS81149 | Drive Shaft | 52T | 30 | 28 | 73 | 94.5 | 667 | |
| | 2015.04-2020.12 | 6AT | F | R | SUV 4WD G6DF | | GDS81147 | Drive Shaft | 52T | 30 | 28 | 73 | 94.5 | 612 | |
| | 2015.04-2020.12 | 6AT | F | L/R | SUV 4WD G6DF | | GCO81038 | Outer Joint | 52T | 30 | 36 | 73 | 94.5 | 67.5 | I |
| | 2015.04-2020.12 | 6AT | F | R | SUV 4WD G6DF | | GCI81068 | Inner Joint | | 28 | 35 | 42 | | 131 | |
| | 2015.04-2020.12 | 6AT | R | L | SUV 4WD G6DF | | GDS83403 | Drive Shaft | 52T | 30 | 25 | 57 | 95 | 844 | |
| | 2015.04-2020.12 | 6AT | R | R | SUV 4WD G6DF | | GDS83404 | Drive Shaft | 52T | 30 | 25 | 57 | 95 | 858 | |
| | 2015.04-2020.12 | 6AT | R | L/R | SUV 4WD G6DF | | GCI82200 | Outer Joint | 52T | 30 | 20 | 57 | 95 | 48 | |
| | 2015.04-2020.12 | 6AT | R | L/R | SUV 4WD G6DF | | GCI82201 | Inner Joint | | 25 | 20 | 35 | 62.5 | 58 | |
| 3.3 (196 kw) | 2015.01-2020.12 | 8AT | F | R | SUV 4WD G6DF | Date from:2017.12,Date to:2020.06 | GDS87080 | Intermediate Shaft | | 28 | 28 | | | 422 | |
| 3.3 (199 kw) | 2015.04-2018.12 | 6AT | F | L | SUV 4WD G6DF | | GDS81149 | Drive Shaft | 52T | 30 | 28 | 73 | 94.5 | 667 | |
| | 2015.04-2018.12 | 6AT | F | R | SUV 4WD G6DF | | GDS81147 | Drive Shaft | 52T | 30 | 28 | 73 | 94.5 | 612 | |
| | 2015.04-2018.12 | 6AT | F | L/R | SUV 4WD G6DF | | GCO81038 | Outer Joint | 52T | 30 | 36 | 73 | 94.5 | 67.5 | I |
| | 2015.04-2018.12 | 6AT | F | L | SUV 4WD G6DF | | GCI24145 | Inner Joint | | 28 | 35 | 33 | 67 | 105.5 | |
| | 2015.04-2018.12 | 6AT | F | R | SUV 4WD G6DF | | GCI81068 | Inner Joint | | 28 | 35 | 42 | | 131 | |
| | 2015.04-2018.12 | 6AT | R | L | SUV 4WD G6DF | | GDS83403 | Drive Shaft | 52T | 30 | 25 | 57 | 95 | 844 | |
| | 2015.04-2018.12 | 6AT | R | R | SUV 4WD G6DF | | GDS83404 | Drive Shaft | 52T | 30 | 25 | 57 | 95 | 858 | |
| | 2015.04-2018.12 | 6AT | R | L/R | SUV 4WD G6DF | | GCI82200 | Outer Joint | 52T | 30 | 20 | 57 | 95 | 48 | |
| | 2015.04-2018.12 | 6AT | R | L/R | SUV 4WD G6DF | | GCI82201 | Inner Joint | | 25 | 20 | 35 | 62.5 | 58 | |
| | 2015.04-2018.12 | 6AT | F | L | SUV FWD G6DF | | GDS81149 | Drive Shaft | 52T | 30 | 28 | 73 | 94.5 | 667 | |
| | 2015.04-2018.12 | 6AT | F | R | SUV FWD G6DF | | GDS81147 | Drive Shaft | 52T | 30 | 28 | 73 | 94.5 | 612 | |
| | 2015.04-2018.12 | 6AT | F | L/R | SUV FWD G6DF | | GCO81038 | Outer Joint | 52T | 30 | 36 | 73 | 94.5 | 67.5 | I |
| | 2015.04-2018.12 | 6AT | F | L | SUV FWD G6DF | | GCI24145 | Inner Joint | | 28 | 35 | 33 | 67 | 105.5 | |
| | 2015.04-2018.12 | 6AT | F | R | SUV FWD G6DF | | GCI81068 | Inner Joint | | 28 | 35 | 42 | | 131 | |
| 3.5 (143 kw) | 2002.08-2011.12 | 4AT | F | L | SUV 4WD G6CU | | GDS27065 | Drive Shaft | | 28 | 30 | 56 | 102 | 635 | |
| | 2002.08-2011.12 | 4AT | F | R | SUV 4WD G6CU | | GDS27064 | Drive Shaft | | 28 | 28 | 56 | 102 | 567 | |
| | 2002.08-2011.12 | 4AT | F | L/R | SUV 4WD G6CU | | GCO27014 | Outer Joint | | 28 | 25 | 56 | 102 | 63 | M |
| | 2002.08-2011.12 | 4AT | F | L | SUV 4WD G6CU | | GCI34079 | Inner Joint | | 30 | 25 | 38 | 77.5 | 108 | |
| | 2002.08-2011.12 | 4AT | F | R | SUV 4WD G6CU | | GCI34078 | Inner Joint | | 28 | 25 | 43 | | 119 | |
| 3.5 (183 kw) | 2018.12-2020.12 | 8AT | F | L | SUV 4WD G6DC | | GCI24145 | Inner Joint | | 28 | 35 | 33 | 67 | 105.5 | |
| | 2018.12-2020.12 | 8AT | F | R | SUV 4WD G6DC | | GCI82132 | Inner Joint | | 28 | 35 | 42 | | 131.5 | |
| | 2018.12-2020.12 | 8AT | R | L/R | SUV 4WD G6DC | | GCI82200 | Outer Joint | 52T | 30 | 20 | 57 | 95 | 48 | |
| | 2018.12-2020.12 | 8AT | R | L/R | SUV 4WD G6DC | | GCI82201 | Inner Joint | | 25 | 20 | 35 | 62.5 | 58 | |
| | 2018.12-2020.12 | 8AT | F | R | SUV FWD G6DC | | GCO83863 | Outer Joint | 52T | 30 | 35 | 73 | 94.5 | 67 | M |
| | 2018.12-2020.12 | 8AT | F | L | SUV FWD G6DC | | GCI24145 | Inner Joint | | 28 | 35 | 33 | 67 | 105.5 | |

| | YEAR | TRANSM. | F/R | L/R | BODY STYLE & DRIVE TYPE & ENGINE | REMARKS | G-AP Ref. | PRODUCT | ABS | Technical Specifications | | | | | |
|---|---|---|---|---|---|---|---|---|---|---|---|---|---|---|---|
| | | | | | | | | | | A | B | C | H | L | P |
| **KIA** | | | | | | | | | | | | | | | |
| **Sorento** | | | | | | | | | | | | | | | |
| 3.5 (183 kw) | 2018.12-2020.12 | 8AT | F | R | SUV FWD G6DC | | GCI82132 | Inner Joint | | 28 | 35 | 42 | | 131.5 | |
| 3.5 (204 kw) | 2013.05-2015.12 | AT | F | | SUV 4WD G6DC | | GCI39041 | Inner Joint | | 25 | 23 | 35 | 63 | 92.5 | |
| | 2013.05-2015.12 | AT | R | | SUV 4WD G6DC | | GCO24321 | Outer Joint | 52T | 30 | 20 | 57 | 93.5 | 61 | M |
| | 2013.05-2015.12 | 6AT | F | L | SUV FWD G6DC | | GDS24233 | Drive Shaft | 52T | 30 | 28 | 73 | 97 | 659 | |
| | 2013.05-2015.12 | AT | F | R | SUV FWD G6DC | | GDS24477 | Drive Shaft | 52T | 30 | 28 | 73 | 97 | 599 | |
| **Soul** | | | | | | | | | | | | | | | |
| 1.6 (77 kw) | 2009.02-2011.12 | 5MT | F | L | Hatchback FWD G4FC | | GDS24181 | Drive Shaft | 46T | 27 | 25 | 60 | 94.5 | 679 | |
| | 2009.02-2011.12 | 5MT | F | R | Hatchback FWD G4FC | Date to:2009.08 | GDS39210 | Drive Shaft | 46T | 27 | 27 | 60 | 94 | 945 | |
| | 2009.02-2011.12 | | F | L | Hatchback FWD G4FC | | GCI39052 | Inner Joint | | 25 | 22 | 41 | 63 | 86 | |
| 1.6 (85 kw) | 2009.02-2014.12 | 4AT/6AT/5MT | F | R | Hatchback FWD D4FB | Date to:2011.06 | GDS39210 | Drive Shaft | 46T | 27 | 27 | 60 | 94 | 945 | |
| | 2009.02-2014.12 | 4AT/6AT/5MT | F | L | Hatchback FWD D4FB | | GCI27044 | Inner Joint | | 27 | 24 | 41 | 62.5 | 88.5 | |
| | 2009.02-2014.12 | 5MT | F | L | Hatchback FWD D4FB | | GDS39263 | Drive Shaft | 46T | 27 | 27 | 60 | 94 | 658 | |
| | 2009.02-2014.12 | AT | F | | Hatchback FWD D4FB | | GCO24227 | Outer Joint | 46T | 27 | 24 | 60 | 92.5 | 58 | M |
| | 2009.02-2014.12 | AT/MT | F | L | Hatchback FWD D4FB | Date to:2011.06 | GCO24137 | Outer Joint | 46T | 27 | 24 | 60 | 95 | 59 | M |
| 1.6 (87 kw) | 2011.06-2014.12 | 5MT | F | L | Hatchback FWD G4FC | | GDS83870 | Drive Shaft | 46T | 27 | 25 | 60 | 92.5 | 682 | |
| | 2011.06-2014.12 | 5MT | F | L/R | Hatchback FWD G4FC | | GCO82525 | Outer Joint | 46T | 27 | 30 | 60 | 92.5 | 57 | M |
| | 2011.06-2014.12 | 5MT | F | L | Hatchback FWD G4FC | | GCI82403 | Inner Joint | | 25 | 30 | 41 | 61.5 | 90 | |
| | 2011.06-2014.12 | 6MT | F | R | Hatchback FWD G4FC | | GDS57959 | Drive Shaft | 46T | 27 | 25 | 60 | 92.5 | 958 | |
| 1.6 (91 kw) | 2009.09-2014.12 | 4AT/5MT | F | L | Hatchback FWD G4FC | For Europe,Inner teeth of wheel side:22 | GDS24181 | Drive Shaft | 46T | 27 | 25 | 60 | 94.5 | 679 | |
| | 2009.09-2014.12 | 4AT/5MT | F | R | Hatchback FWD G4FC | Date from:2009.09;Date to:2011.06 | GCI24047 | Inner Joint | | 27 | 26 | 41 | 61.5 | 103 | |
| | 2009.09-2014.12 | | F | R | Hatchback FWD G4FC | Date From:2009.09;Date To:2011.06 | GDS39210 | Drive Shaft | 46T | 27 | 27 | 60 | 94 | 945 | |
| | 2014.02-2018.12 | 6AT | F | R | Hatchback FWD G4FG | | GDS81249 | Drive Shaft | 46T | 27 | 27 | 60 | 92.5 | 958 | |
| | 2019.01- | 6AT | F | L | Hatchback FWD G4FG | | GDS84134 | Drive Shaft | | 27 | 27 | 60 | 95.5 | 671 | |
| | 2019.01- | 6AT | F | R | Hatchback FWD G4FG | | GDS84135 | Drive Shaft | | 27 | 27 | 60 | 95.5 | 960 | |
| | 2019.01- | 6AT | F | L/R | Hatchback FWD G4FG | | GCI24080 | Inner Joint | | 27 | 30 | 30 | 67.5 | 81 | |
| 1.6 (92 kw) | 2009.02-2011.12 | 5MT | F | L | Hatchback FWD G4FC | | GDS24181 | Drive Shaft | 46T | 27 | 25 | 60 | 94.5 | 679 | |
| | 2009.02-2011.12 | 5MT | F | R | Hatchback FWD G4FC | Date to:2009.08 | GDS39210 | Drive Shaft | 46T | 27 | 27 | 60 | 94 | 945 | |
| | 2009.02-2011.12 | 5MT | F | R | Hatchback FWD G4FC | Date to:2009.08 | GCI24047 | Inner Joint | | 27 | 26 | 41 | 61.5 | 103 | |
| 1.6 (93 kw) | 2009.02-2011.12 | 4AT/5MT | F | L | Hatchback FWD G4FC | For Europe,Inner teeth of wheel side:22 | GDS24181 | Drive Shaft | 46T | 27 | 25 | 60 | 94.5 | 679 | |
| | 2009.02-2011.12 | 4AT/5MT | F | R | Hatchback FWD G4FC | | GDS39210 | Drive Shaft | 46T | 27 | 27 | 60 | 94 | 945 | |
| | 2009.02-2011.12 | 4AT/5MT | F | L | Hatchback FWD G4FC | Date to:2011.07 | GCI39052 | Inner Joint | | 25 | 22 | 41 | 63 | 86 | |
| | 2009.02-2011.12 | MT | F | L | Hatchback FWD G4FC | | GCI82403 | Inner Joint | | 25 | 30 | 41 | 61.5 | 90 | |
| 1.6 (94 kw) | 2009.02-2014.12 | 4AT/5MT | F | R | Hatchback FWD D4FB | | GDS39210 | Drive Shaft | 46T | 27 | 27 | 60 | 94 | 945 | |
| | 2009.02-2014.12 | 4AT/5MT | F | L | Hatchback FWD D4FB | Date to:2011.06 | GCO24227 | Outer Joint | 46T | 27 | 24 | 60 | 92.5 | 58 | M |
| | 2009.02-2014.12 | 4AT/5MT | F | L | Hatchback FWD D4FB | | GCI27044 | Inner Joint | | 27 | 24 | 41 | 62.5 | 88.5 | |
| | 2009.02-2014.12 | 5MT | F | L | Hatchback FWD D4FB | | GDS39263 | Drive Shaft | 46T | 27 | 27 | 60 | 94 | 658 | |
| | 2009.02-2014.12 | 6MT | F | L | Hatchback FWD D4FB | | GDS56780 | Drive Shaft | 46T | 27 | 27 | 60 | 92.5 | 670 | |
| | 2009.02-2014.12 | 6MT | F | R | Hatchback FWD D4FB | | GDS56779 | Drive Shaft | 46T | 27 | 27 | 60 | 92.5 | 967 | |
| | 2009.02-2014.12 | 6MT | F | L/R | Hatchback FWD D4FB | | GCO83432 | Outer Joint | 46T | 27 | 25 | 60 | 92.5 | 61 | M |
| | 2009.02-2014.12 | 6MT | F | L/R | Hatchback FWD D4FB | | GCI82713 | Inner Joint | | 27 | 25 | 41 | 61.5 | 91.5 | |
| | 2014.02-2018.12 | 6MT | F | L | Hatchback FWD D4FB | Date to:2014.10 | GCI81148 | Inner Joint | | 27 | 23 | 41 | 61.5 | 91 | |
| 1.6 (95 kw) | 2011.06-2014.12 | 6AT | F | L | Hatchback FWD G4FC | | GDS84462 | Drive Shaft | 46T | 27 | 27 | 60 | 92 | 663 | |
| | 2011.06-2014.12 | 6AT | F | R | Hatchback FWD G4FC | | GDS84461 | Drive Shaft | 46T | 27 | 27 | 60 | 92 | 950 | |
| | 2011.06-2014.12 | 6AT | F | L/R | Hatchback FWD G4FC | | GCO82823 | Outer Joint | 46T | 27 | 22 | 60 | 92 | 54 | M |
| | 2011.06-2014.12 | 6AT | F | L/R | Hatchback FWD G4FC | | GCI82228 | Inner Joint | | 27 | 30 | 30 | 67.5 | 81 | |
| | 2011.06-2014.12 | 6MT | F | L | Hatchback FWD G4FC | | GDS83870 | Drive Shaft | 46T | 27 | 25 | 60 | 92.5 | 682 | |
| | 2011.06-2014.12 | 6MT | F | R | Hatchback FWD G4FC | | GDS57959 | Drive Shaft | 46T | 27 | 25 | 60 | 92.5 | 958 | |
| | 2011.06-2014.12 | 6MT | F | L/R | Hatchback FWD G4FC | | GCO82525 | Outer Joint | 46T | 27 | 30 | 60 | 92.5 | 57 | M |
| | 2011.06-2014.12 | 6MT | F | L | Hatchback FWD G4FC | | GCI82403 | Inner Joint | | 25 | 30 | 41 | 61.5 | 90 | |
| | 2016.07-2018.12 | 6AT | F | R | Hatchback FWD G4FG | | GDS81249 | Drive Shaft | 46T | 27 | 27 | 60 | 92.5 | 958 | |
| | 2016.07-2018.12 | 6AT | F | R | Hatchback FWD G4FG | | GCO81087 | Outer Joint | 46T | 27 | 23 | 60 | 92.5 | 59.5 | M |
| | 2016.07-2018.12 | 6AT | F | R | Hatchback FWD G4FG | | GCI81112 | Inner Joint | | 27 | 23 | 30 | 67 | 84 | |
| 1.6 (97 kw) | 2014.02-2018.12 | 6AT | F | R | Hatchback FWD G4FD | | GDS81249 | Drive Shaft | 46T | 27 | 27 | 60 | 92.5 | 958 | |
| | 2014.02-2018.12 | 6AT | F | R | Hatchback FWD G4FD | | GCO81087 | Outer Joint | 46T | 27 | 23 | 60 | 92.5 | 59.5 | M |
| | 2014.02-2018.12 | 6AT | F | R | Hatchback FWD G4FD | | GCI81112 | Inner Joint | | 27 | 23 | 30 | 67 | 84 | |
| 1.6 (103 kw) | 2011.06-2014.12 | 6AT | F | L | Hatchback FWD G4FD | | GDS84462 | Drive Shaft | 46T | 27 | 27 | 60 | 92 | 663 | |
| | 2011.06-2014.12 | 6AT | F | R | Hatchback FWD G4FD | | GDS84461 | Drive Shaft | 46T | 27 | 27 | 60 | 92 | 950 | |
| | 2011.06-2014.12 | 6AT | F | L/R | Hatchback FWD G4FD | | GCO82823 | Outer Joint | 46T | 27 | 22 | 60 | 92 | 54 | M |
| | 2011.06-2014.12 | 6AT | F | L/R | Hatchback FWD G4FD | | GCI82228 | Inner Joint | | 27 | 30 | 30 | 67.5 | 81 | |
| | 2011.06-2014.12 | 6MT | F | L | Hatchback FWD G4FD | | GDS83870 | Drive Shaft | 46T | 27 | 25 | 60 | 92.5 | 682 | |
| | 2011.06-2014.12 | 6MT | F | R | Hatchback FWD G4FD | | GDS57959 | Drive Shaft | 46T | 27 | 25 | 60 | 92.5 | 958 | |
| | 2011.06-2014.12 | 6MT | F | L | Hatchback FWD G4FD | | GCO82525 | Outer Joint | 46T | 27 | 30 | 60 | 92.5 | 57 | M |
| | 2011.06-2014.12 | 6MT | F | R | Hatchback FWD G4FD | | GCO83835 | Outer Joint | 46T | 27 | 24 | 62.5 | 91 | 56.5 | M |
| | 2011.06-2014.12 | 6MT | F | L | Hatchback FWD G4FD | | GCI82403 | Inner Joint | | 25 | 30 | 41 | 61.5 | 90 | |
| 2.0 (110 kw) | 2016.08-2018.12 | 6AT | F | L | Hatchback FWD G4NA | | GDS81242 | Drive Shaft | 46T | 27 | 27 | 60 | 92.5 | 670 | |

| | YEAR | TRANSM. | F/R | L/R | BODY STYLE & DRIVE TYPE & ENGINE | REMARKS | G-AP Ref. | PRODUCT | ABS | Technical Specifications A | B | C | H | L | P |
|---|---|---|---|---|---|---|---|---|---|---|---|---|---|---|---|
| **KIA** | | | | | | | | | | | | | | | |
| **Soul** | | | | | | | | | | | | | | | |
| 2.0 (110 kw) | 2016.08-2018.12 | 6AT | F | R | Hatchback FWD G4NA | | GDS81249 | Drive Shaft | 46T | 27 | 27 | 60 | 92.5 | 958 | |
| | 2016.08-2018.12 | 6AT | F | L/R | Hatchback FWD G4NA | | GCO81087 | Outer Joint | 46T | 27 | 23 | 60 | 92.5 | 59.5 | M |
| | 2016.08-2018.12 | 6AT | F | L/R | Hatchback FWD G4NA | | GCI81112 | Inner Joint | | 27 | 23 | 30 | 67 | 84 | |
| | 2019.01- | 6AT | F | L | Hatchback FWD G4NA;G4NH | | GDS84134 | Drive Shaft | | 27 | 27 | 60 | 95.5 | 671 | |
| | 2019.01- | 6AT | F | R | Hatchback FWD G4NA;G4NH | | GDS84135 | Drive Shaft | | 27 | 27 | 60 | 95.5 | 960 | |
| | 2019.01- | 6AT | F | L/R | Hatchback FWD G4NA;G4NH | | GCI24080 | Inner Joint | | 27 | 30 | 30 | 67.5 | 81 | |
| 2.0 (113 kw) | 2014.02-2018.12 | 6AT/6MT | F | L | Hatchback FWD G4NA | | GDS81242 | Drive Shaft | 46T | 27 | 27 | 60 | 92.5 | 670 | |
| | 2014.02-2018.12 | 6AT/6MT | F | R | Hatchback FWD G4NA | | GDS81249 | Drive Shaft | 46T | 27 | 27 | 60 | 92.5 | 958 | |
| | 2014.02-2018.12 | 6AT/6MT | F | L/R | Hatchback FWD G4NA | | GCO81087 | Outer Joint | 46T | 27 | 23 | 60 | 92.5 | 59.5 | M |
| | 2014.02-2018.12 | 6AT/6MT | F | L/R | Hatchback FWD G4NA | | GCI81112 | Inner Joint | | 27 | 23 | 30 | 67 | 84 | |
| **Spectra** | | | | | | | | | | | | | | | |
| 1.6 (75 kw) | 2004.04-2009.12 | AT | F | L | Saloon FWD B4ZE | | GDS27011 | Drive Shaft | 46T | 28 | 24 | 56 | 89.7 | 635 | |
| | 2004.04-2009.12 | AT | F | L | Saloon FWD B4ZE | | GCI27005 | Inner Joint | | 24 | 22 | 35 | 64 | 91 | |
| | 2004.04-2009.12 | AT/MT | F | R | Saloon FWD B4ZE | | GDS27030 | Drive Shaft | 46T | 28 | 28 | 56 | 89.7 | 574 | |
| | 2004.04-2009.12 | AT/MT | F | L/R | Saloon FWD B4ZE | | GCO27032 | Outer Joint | 46T | 28 | 22 | 56 | 89.7 | 55.5 | M |
| | 2004.04-2009.12 | AT/MT | F | R | Saloon FWD B4ZE | | GCI27004 | Inner Joint | | 28 | 22 | 43 | | 107 | |
| | 2004.04-2009.12 | MT | F | L/R | Saloon FWD B4ZE | | GCO34032 | Outer Joint | | 28 | 22 | 56 | 89.7 | 55.5 | M |
| | 2004.04-2009.12 | MT | F | L | Saloon FWD B4ZE | | GCI34008 | Inner Joint | | 26 | 22 | 35 | 66.7 | 92 | |
| 1.8 (81 kw) | 2001.10-2004.07 | AT/MT | F | L/R | Hatchback FWD TE | | GCO27004 | Outer Joint | | 28 | 22 | 56 | 90 | 55.5 | M |
| 1.8 (85 kw) | 2001.10-2004.07 | MT | F | L | Saloon FWD T8 | | GDS27071 | Drive Shaft | 46T | 28 | 24 | 56 | 90 | 624 | |
| | 2001.10-2004.07 | | F | R | Saloon FWD T8 | | GDS27070 | Drive Shaft | 46T | 28 | 28 | 56 | 90 | 618.5 | |
| | 2001.10-2004.07 | | F | R | Saloon FWD T8 | | GCO27010 | Outer Joint | | 28 | 24 | 56 | 90 | 60 | M |
| **Sportage** | | | | | | | | | | | | | | | |
| 1.6 (85 kw) | 2021.11- | 6MT | F | L | SUV FWD D4FE | | GDS57522 | Drive Shaft | | 30 | 27 | 73 | 95 | 681 | |
| | 2021.11- | 6MT | F | R | SUV FWD D4FE | | GDS57523 | Drive Shaft | | 30 | 27 | 73 | 95 | 982 | |
| | 2021.11- | 6MT | F | L | SUV FWD D4FE | | GCO81090 | Outer Joint | | 30 | 24 | 73 | 95 | 59 | M |
| | 2021.11- | 6MT | F | R | SUV FWD D4FE | | GCO83587 | Outer Joint | | 30 | 24 | 73 | 95 | 59 | M |
| | 2021.11- | 6MT | F | L | SUV FWD D4FE | | GCI83724 | Inner Joint | | 27 | 32 | 41 | 61.5 | 107.5 | |
| | 2021.11- | 6MT | F | R | SUV FWD D4FE | | GCI83725 | Inner Joint | | 27 | 32 | 41 | 61.5 | 107.5 | |
| 1.6 (93 kw) | 2020.07-2022.09 | 6MT | F | L | SUV FWD G4FD | | GDS82331 | Drive Shaft | 48T | 30 | 25 | 73 | 95 | 702 | |
| | 2020.07-2022.09 | 6MT | F | R | SUV FWD G4FD | | GDS82332 | Drive Shaft | 48T | 30 | 25 | 73 | 95 | 976 | |
| 1.6 (97 kw) | 2015.09-2022.09 | 6AT | F | L | SUV FWD G4FD | | GDS81245 | Drive Shaft | 48T | 30 | 27 | 73 | 95 | 683 | |
| | 2015.09-2022.09 | 6AT | F | R | SUV FWD G4FD | | GDS81254 | Drive Shaft | 48T | 30 | 27 | 73 | 95 | 967 | |
| | 2015.09-2022.09 | 6AT | F | L/R | SUV FWD G4FD | | GCI24126 | Inner Joint | | 27 | 32 | 30 | 67 | 89.5 | |
| | 2015.09-2022.09 | 6AT/6MT | F | L/R | SUV FWD G4FD | | GCO81091 | Outer Joint | 48T | 30 | 24 | 73 | 95 | 59 | M |
| | 2015.09-2022.09 | 6MT | F | L | SUV FWD G4FD | | GDS82331 | Drive Shaft | 48T | 30 | 25 | 73 | 95 | 702 | |
| | 2015.09-2022.09 | 6MT | F | R | SUV FWD G4FD | | GDS82332 | Drive Shaft | 48T | 30 | 25 | 73 | 95 | 976 | |
| | 2015.09-2022.09 | 6MT | F | L/R | SUV FWD G4FD | | GCI81781 | Inner Joint | | 25 | 32 | 41 | 63 | 100.5 | |
| 1.6 (99 kw) | 2010.06-2015.12 | 6AT | F | L | SUV FWD G4FD | | GDS81240 | Drive Shaft | 48T | 27 | 27 | 62 | 95 | 676 | |
| | 2010.06-2015.12 | 6AT | F | R | SUV FWD G4FD | | GDS81996 | Drive Shaft | 48T | 27 | 27 | 62 | 95 | 963 | |
| | 2010.06-2015.12 | 6AT | F | L | SUV FWD G4FD | | GCO81085 | Outer Joint | 48T | 27 | 24 | 62 | 95 | 59 | M |
| | 2010.06-2015.12 | 6MT | F | L | SUV FWD G4FD | No Facelift | GDS24526 | Drive Shaft | 48T | 27 | 25 | 62 | 95 | 692 | |
| | 2010.06-2015.12 | 6MT | F | L | SUV FWD G4FD | Facelift | GDS82257 | Drive Shaft | 48T | 27 | 25 | 62 | 95 | 698 | |
| | 2010.06-2015.12 | 6MT | F | R | SUV FWD G4FD | No Facelift | GDS24546 | Drive Shaft | 48T | 27 | 25 | 62 | 95 | 974 | |
| | 2010.06-2015.12 | 6MT | F | R | SUV FWD G4FD | Facelift | GDS82243 | Drive Shaft | 48T | 27 | 25 | 62 | 95 | 981 | |
| | 2010.06-2015.12 | 6MT | F | L | SUV FWD G4FD | | GCO24284 | Outer Joint | 48T | 27 | 24 | 62 | 95 | 59 | M |
| | 2010.06-2015.12 | 6MT | F | L/R | SUV FWD G4FD | | GCI24128 | Inner Joint | | 25 | 23 | 41 | 63 | 98.5 | |
| | 2010.06-2015.12 | MT | F | L/R | SUV FWD G4FD | | GCO27067 | Outer Joint | 48T | 27 | 24 | 62.1 | 95 | 63 | M |
| | 2014.01-2015.12 | MT | F | L | SUV FWD G4FD | | GDS82257 | Drive Shaft | 48T | 27 | 25 | 62 | 95 | 698 | |
| | 2014.01-2015.12 | MT | F | R | SUV FWD G4FD | | GDS82243 | Drive Shaft | 48T | 27 | 25 | 62 | 95 | 981 | |
| | 2014.01-2015.12 | MT | F | L/R | SUV FWD G4FD | | GCO81085 | Outer Joint | 48T | 27 | 24 | 62 | 95 | 59 | M |
| | 2014.01-2015.12 | MT | F | L/R | SUV FWD G4FD | | GCI24128 | Inner Joint | | 25 | 23 | 41 | 63 | 98.5 | |
| 1.6 (100 kw) | 2018.07-2022.09 | 6MT | F | L | SUV 4WD D4FE | | GDS58252 | Drive Shaft | 48T | 30 | 28 | 73 | 95 | 674 | |
| | 2018.07-2022.09 | 6MT | F | L | SUV 4WD D4FE | | GCI81747 | Inner Joint | | 28 | 32 | 41 | 61.5 | 101 | |
| | 2018.07-2022.09 | 7AT/6MT | F | R | SUV 4WD D4FE | | GDS58251 | Drive Shaft | 48T | 30 | 28 | 73 | 95 | 655 | |
| | 2018.07-2022.09 | 7AT/6MT | F | R | SUV 4WD D4FE | | GCI81150 | Inner Joint | | 28 | 32 | 44.1 | | 116 | |
| | 2018.07-2022.09 | 7AT/6MT | R | L/R | SUV 4WD D4FE | | GDS83156 | Drive Shaft | 48T | 27 | 25 | 62 | 98.5 | 838 | |
| | 2018.07-2022.09 | 7AT/6MT | R | L/R | SUV 4WD D4FE | | GCO82315 | Outer Joint | 48T | 27 | 20 | 62 | 98.5 | 43 | M |
| | 2018.07-2022.09 | 7AT/6MT | R | L/R | SUV 4WD D4FE | | GCI24154 | Inner Joint | | 25 | 20 | 35 | 62 | 78 | |
| | 2018.07-2022.09 | 6MT | F | L | SUV FWD D4FE | | GDS58252 | Drive Shaft | 48T | 30 | 28 | 73 | 95 | 674 | |
| | 2018.07-2022.09 | 6MT | F | R | SUV FWD D4FE | | GDS58251 | Drive Shaft | 48T | 30 | 28 | 73 | 95 | 655 | |
| | 2018.07-2022.09 | 6MT | F | L | SUV FWD D4FE | | GCI81747 | Inner Joint | | 28 | 32 | 41 | 61.5 | 101 | |
| | 2018.07-2022.09 | 6MT | F | R | SUV FWD D4FE | | GCI81150 | Inner Joint | | 28 | 32 | 44.1 | | 116 | |
| | 2018.07-2022.09 | 7DCT | F | L | SUV FWD D4FE | | GDS82335 | Drive Shaft | 48T | 30 | 28 | 73 | 95 | 655 | |
| | 2018.07-2022.09 | 7DCT | F | R | SUV FWD D4FE | | GDS82336 | Drive Shaft | 48T | 30 | 28 | 73 | 95 | 1020 | |

| | YEAR | TRANSM. | F/R | L/R | BODY STYLE & DRIVE TYPE & ENGINE | REMARKS | G-AP Ref. | PRODUCT | ABS | Technical Specifications A | B | C | H | L | P |
|---|---|---|---|---|---|---|---|---|---|---|---|---|---|---|---|
| **KIA** **Sportage** | | | | | | | | | | | | | | | |
| 1.6 (100 kw) | 2018.07-2022.09 | 7DCT | F | L/R | SUV FWD D4FE | | GCI81747 | Inner Joint | | 28 | 32 | 41 | 61.5 | 101 | |
| | 2018.07-2022.09 | 7DCT/6MT | F | L/R | SUV FWD D4FE | | GCO81091 | Outer Joint | 48T | 30 | 24 | 73 | 95 | 59 | M |
| | 2019.03- | 7AT | F | R | SUV Van 4WD D4FE | | GDS58251 | Drive Shaft | 48T | 30 | 28 | 73 | 95 | 655 | |
| | 2019.03- | 7AT | F | L/R | SUV Van 4WD D4FE | | GCO81091 | Outer Joint | 48T | 30 | 24 | 73 | 95 | 59 | M |
| | 2019.03- | 7AT | F | R | SUV Van 4WD D4FE | | GCI81150 | Inner Joint | | 28 | 32 | 44.1 | | 116 | |
| | 2019.03- | 7AT | R | L/R | SUV Van 4WD D4FE | | GDS83156 | Drive Shaft | 48T | 27 | 25 | 62 | 98.5 | 838 | |
| | 2019.03- | 7AT | R | L/R | SUV Van 4WD D4FE | | GCO82315 | Outer Joint | 48T | 27 | 20 | 62 | 98.5 | 43 | M |
| | 2019.03- | 7AT | R | L/R | SUV Van 4WD D4FE | | GCI24154 | Inner Joint | | 25 | 20 | 35 | 62 | 78 | |
| | 2019.03- | 7DCT | F | L | SUV Van FWD D4FE | | GDS82335 | Drive Shaft | 48T | 30 | 28 | 73 | 95 | 655 | |
| | 2019.03- | 7DCT | F | R | SUV Van FWD D4FE | | GDS82336 | Drive Shaft | 48T | 30 | 28 | 73 | 95 | 1020 | |
| | 2019.03- | 7DCT | F | L/R | SUV Van FWD D4FE | | GCO81091 | Outer Joint | 48T | 30 | 24 | 73 | 95 | 59 | M |
| | 2019.03- | 7DCT | F | L/R | SUV Van FWD D4FE | | GCI81747 | Inner Joint | | 28 | 32 | 41 | 61.5 | 101 | |
| | 2019.03-2022.09 | 6MT | F | L | SUV 4WD D4FE | | GDS58252 | Drive Shaft | 48T | 30 | 28 | 73 | 95 | 674 | |
| | 2019.03-2022.09 | 6MT | F | L | SUV 4WD D4FE | | GCI81747 | Inner Joint | | 28 | 32 | 41 | 61.5 | 101 | |
| | 2019.03-2022.09 | 7AT/6MT | F | R | SUV 4WD D4FE | | GDS58251 | Drive Shaft | 48T | 30 | 28 | 73 | 95 | 655 | |
| | 2019.03-2022.09 | 7AT/6MT | F | R | SUV 4WD D4FE | | GCI81150 | Inner Joint | | 28 | 32 | 44.1 | | 116 | |
| | 2019.03-2022.09 | 7AT/6MT | R | L/R | SUV 4WD D4FE | | GDS83156 | Drive Shaft | 48T | 27 | 25 | 62 | 98.5 | 838 | |
| | 2019.03-2022.09 | 7AT/6MT | R | L/R | SUV 4WD D4FE | | GCO82315 | Outer Joint | 48T | 27 | 20 | 62 | 98.5 | 43 | M |
| | 2019.03-2022.09 | 7AT/6MT | R | L/R | SUV 4WD D4FE | | GCI24154 | Inner Joint | | 25 | 20 | 35 | 62 | 78 | |
| | 2019.03-2022.09 | 6MT | F | L | SUV FWD D4FE | | GDS58252 | Drive Shaft | 48T | 30 | 28 | 73 | 95 | 674 | |
| | 2019.03-2022.09 | 6MT | F | R | SUV FWD D4FE | | GDS58251 | Drive Shaft | 48T | 30 | 28 | 73 | 95 | 655 | |
| | 2019.03-2022.09 | 6MT | F | L | SUV FWD D4FE | | GCI81747 | Inner Joint | | 28 | 32 | 41 | 61.5 | 101 | |
| | 2019.03-2022.09 | 6MT | F | R | SUV FWD D4FE | | GCI81150 | Inner Joint | | 28 | 32 | 44.1 | | 116 | |
| | 2019.03-2022.09 | 7DCT | F | L | SUV FWD D4FE | | GDS82335 | Drive Shaft | 48T | 30 | 28 | 73 | 95 | 655 | |
| | 2019.03-2022.09 | 7DCT | F | R | SUV FWD D4FE | | GDS82336 | Drive Shaft | 48T | 30 | 28 | 73 | 95 | 1020 | |
| | 2019.03-2022.09 | 7DCT | F | L/R | SUV FWD D4FE | | GCI81747 | Inner Joint | | 28 | 32 | 41 | 61.5 | 101 | |
| | 2019.03-2022.09 | 7DCT/6MT | F | L/R | SUV FWD D4FE | | GCO81091 | Outer Joint | 48T | 30 | 24 | 73 | 95 | 59 | M |
| | 2021.11- | 6MT | F | L | SUV 4WD D4FE | | GDS57522 | Drive Shaft | | 30 | 27 | 73 | 95 | 681 | |
| | 2021.11- | 6MT | F | L | SUV 4WD D4FE | | GCI83724 | Inner Joint | | 27 | 32 | 41 | 61.5 | 107.5 | |
| | 2021.11- | 6MT/7DCT | F | R | SUV 4WD D4FE | | GDS56751 | Drive Shaft | | 30 | 28 | 73 | 95 | 651 | |
| | 2021.11- | 6MT/7DCT | F | L/R | SUV 4WD D4FE | | GCO81090 | Outer Joint | | 30 | 24 | 73 | 95 | 59 | M |
| | 2021.11- | 6MT/7DCT | F | R | SUV 4WD D4FE | | GCI83473 | Inner Joint | | 28 | 32 | 44 | | 123 | |
| | 2021.11- | 7DCT | F | L | SUV 4WD D4FE | | GDS56750 | Drive Shaft | | 30 | 28 | 73 | 95 | 644 | |
| | 2021.11- | 7DCT | F | L | SUV 4WD D4FE | | GCI83472 | Inner Joint | | 28 | 32 | 33 | 67 | 95.5 | |
| | 2021.11- | 6MT | F | L | SUV FWD D4FE | | GDS57522 | Drive Shaft | | 30 | 27 | 73 | 95 | 681 | |
| | 2021.11- | 6MT | F | R | SUV FWD D4FE | | GDS57523 | Drive Shaft | | 30 | 27 | 73 | 95 | 982 | |
| | 2021.11- | 6MT | F | L | SUV FWD D4FE | | GCO81090 | Outer Joint | | 30 | 24 | 73 | 95 | 59 | M |
| | 2021.11- | 6MT | F | R | SUV FWD D4FE | | GCO83587 | Outer Joint | | 30 | 24 | 73 | 95 | 59 | M |
| | 2021.11- | 6MT | F | L | SUV FWD D4FE | | GCI83724 | Inner Joint | | 27 | 32 | 41 | 61.5 | 107.5 | |
| | 2021.11- | 6MT | F | R | SUV FWD D4FE | | GCI83725 | Inner Joint | | 27 | 32 | 41 | 61.5 | 107.5 | |
| | 2021.11- | 7DCT | F | L | SUV FWD D4FE | | GDS56750 | Drive Shaft | | 30 | 28 | 73 | 95 | 644 | |
| | 2021.11- | 7DCT | F | R | SUV FWD D4FE | | GDS56751 | Drive Shaft | | 30 | 28 | 73 | 95 | 651 | |
| | 2021.11- | 7DCT | F | L | SUV FWD D4FE | | GCI83472 | Inner Joint | | 28 | 32 | 33 | 67 | 95.5 | |
| | 2021.11- | 7DCT | F | R | SUV FWD D4FE | | GCI83473 | Inner Joint | | 28 | 32 | 44 | | 123 | |
| 1.6 (110 kw) | 2021.11- | 6MT/7DCT | F | R | SUV 4WD G4FP;G4FU | | GDS56763 | Drive Shaft | | 30 | 28 | 73 | 95 | 590 | |
| | 2021.11- | 6MT/7DCT | F | R | SUV 4WD G4FP;G4FU | | GCI82294 | Inner Joint | | 28 | 33 | 44.1 | | 121 | |
| | 2021.11- | 7DCT | F | L | SUV 4WD G4FP;G4FU | | GDS56762 | Drive Shaft | | 30 | 28 | 73 | 95 | 663 | |
| | 2021.11- | 7DCT | F | L/R | SUV 4WD G4FP;G4FU | | GCO81092 | Outer Joint | | 30 | 25 | 73 | 95 | 64 | M |
| | 2021.11- | 7DCT | F | L | SUV 4WD G4FP;G4FU | | GCI82295 | Inner Joint | | 28 | 33 | 33 | 67 | 94.5 | |
| | 2021.11- | 7DCT | F | L | SUV FWD G4FP;G4FU | | GDS56762 | Drive Shaft | | 30 | 28 | 73 | 95 | 663 | |
| | 2021.11- | 7DCT | F | R | SUV FWD G4FP;G4FU | | GDS56763 | Drive Shaft | | 30 | 28 | 73 | 95 | 590 | |
| | 2021.11- | 7DCT | F | L/R | SUV FWD G4FP;G4FU | | GCO81092 | Outer Joint | | 30 | 25 | 73 | 95 | 64 | M |
| | 2021.11- | 7DCT | F | L | SUV FWD G4FP;G4FU | | GCI82295 | Inner Joint | | 28 | 33 | 33 | 67 | 94.5 | |
| | 2021.11- | 7DCT | F | R | SUV FWD G4FP;G4FU | | GCI82294 | Inner Joint | | 28 | 33 | 44.1 | | 121 | |
| 1.6 (118 kw) | 2024.02- | 7DCT | F | L | SUV 4WD G4FP, G4FU | | GDS56762 | Drive Shaft | | 30 | 28 | 73 | 95 | 663 | |
| | 2024.02- | 7DCT | F | R | SUV 4WD G4FP, G4FU | | GDS56763 | Drive Shaft | | 30 | 28 | 73 | 95 | 590 | |
| | 2024.02- | 7DCT | F | L/R | SUV 4WD G4FP, G4FU | | GCO81092 | Outer Joint | | 30 | 25 | 73 | 95 | 64 | M |
| | 2024.02- | 7DCT | F | L | SUV 4WD G4FP, G4FU | | GCI82295 | Inner Joint | | 28 | 33 | 33 | 67 | 94.5 | |
| | 2024.02- | 7DCT | F | R | SUV 4WD G4FP, G4FU | | GCI82294 | Inner Joint | | 28 | 33 | 44.1 | | 121 | |
| | 2024.02- | 7DCT | F | L | SUV FWD G4FP, G4FU | | GDS56762 | Drive Shaft | | 30 | 28 | 73 | 95 | 663 | |
| | 2024.02- | 7DCT | F | R | SUV FWD G4FP, G4FU | | GDS56763 | Drive Shaft | | 30 | 28 | 73 | 95 | 590 | |
| | 2024.02- | 7DCT | F | L/R | SUV FWD G4FP, G4FU | | GCO81092 | Outer Joint | | 30 | 25 | 73 | 95 | 64 | M |
| | 2024.02- | 7DCT | F | L | SUV FWD G4FP, G4FU | | GCI82295 | Inner Joint | | 28 | 33 | 33 | 67 | 94.5 | |
| | 2024.02- | 7DCT | F | R | SUV FWD G4FP, G4FU | | GCI82294 | Inner Joint | | 28 | 33 | 44.1 | | 121 | |
| 1.6 (130 kw) | 2015.09-2022.09 | 6MT | F | L | SUV 4WD G4FJ | | GDS58114 | Drive Shaft | 48T | 30 | 27 | 73 | 95 | 683 | |

| | YEAR | TRANSM. | F/R | L/R | BODY STYLE & DRIVE TYPE & ENGINE | REMARKS | G-AP Ref. | PRODUCT | ABS | Technical Specifications A | B | C | H | L | P |
|---|---|---|---|---|---|---|---|---|---|---|---|---|---|---|---|
| **KIA** **Sportage** | | | | | | | | | | | | | | | |
| 1.6 (130 kw) | 2015.09-2022.09 | 6MT | F | R | SUV 4WD G4FJ | | GDS58115 | Drive Shaft | 48T | 30 | 28 | 73 | 95 | 586 | |
| | 2015.09-2022.09 | 6MT | F | L/R | SUV 4WD G4FJ | | GCO83620 | Outer Joint | 48T | 30 | 26 | 73 | 95 | 67.5 | M |
| | 2015.09-2022.09 | 7AT | F | R | SUV 4WD G4FJ | | GCI81748 | Inner Joint | | 28 | 33 | 44.1 | | 121 | |
| | 2015.09-2022.09 | 7DCT | F | L | SUV 4WD G4FJ | | GDS82334 | Drive Shaft | 48T | 30 | 27 | 73 | 95 | 654 | |
| | 2015.09-2022.09 | 7DCT | F | R | SUV 4WD G4FJ | | GDS83786 | Drive Shaft | 48T | 30 | 28 | 73 | 95 | 586 | |
| | 2015.09-2022.09 | 7DCT | F | L/R | SUV 4WD G4FJ | | GCO81095 | Outer Joint | 48T | 30 | 25 | 73 | 95 | 65 | M |
| | 2015.09-2022.09 | 7DCT | F | L | SUV 4WD G4FJ | | GCI81149 | Inner Joint | | 27 | 33 | 41 | 61.5 | 105 | |
| | 2015.09-2022.09 | 7DCT | R | L/R | SUV 4WD G4FJ | | GDS83156 | Drive Shaft | 48T | 27 | 25 | 62 | 98.5 | 838 | |
| | 2015.09-2022.09 | 7DCT | R | L/R | SUV 4WD G4FJ | | GCO82315 | Outer Joint | 48T | 27 | 20 | 62 | 98.5 | 43 | M |
| | 2015.09-2022.09 | 7DCT | R | L/R | SUV 4WD G4FJ | | GCI24154 | Inner Joint | | 25 | 20 | 35 | 62 | 78 | |
| | 2015.09-2022.09 | 6MT | F | L | SUV FWD G4FJ | | GDS58114 | Drive Shaft | 48T | 30 | 27 | 73 | 95 | 683 | |
| | 2015.09-2022.09 | 6MT | F | R | SUV FWD G4FJ | | GDS58115 | Drive Shaft | 48T | 30 | 28 | 73 | 95 | 586 | |
| | 2015.09-2022.09 | 6MT | F | L/R | SUV FWD G4FJ | | GCO83620 | Outer Joint | 48T | 30 | 26 | 73 | 95 | 67.5 | M |
| | 2015.09-2022.09 | 6MT | F | L | SUV FWD G4FJ | | GCI82622 | Inner Joint | | 28 | 33 | 41 | 61.5 | 107.5 | |
| | 2015.09-2022.09 | 6MT | F | R | SUV FWD G4FJ | | GCI81748 | Inner Joint | | 28 | 33 | 44.1 | | 121 | |
| | 2015.09-2022.09 | 7DCT | F | L | SUV FWD G4FJ | | GDS56643 | Drive Shaft | 48T | 30 | 28 | 73 | 95 | 656 | |
| | 2015.09-2022.09 | 7DCT | F | R | SUV FWD G4FJ | | GDS83786 | Drive Shaft | 48T | 30 | 28 | 73 | 95 | 586 | |
| | 2015.09-2022.09 | 7DCT | F | L/R | SUV FWD G4FJ | | GCO81095 | Outer Joint | 48T | 30 | 25 | 73 | 95 | 65 | M |
| | 2015.09-2022.09 | 7DCT | F | L | SUV FWD G4FJ | | GCI81149 | Inner Joint | | 27 | 33 | 41 | 61.5 | 105 | |
| | 2018.05- | 6MT | F | L | SUV Van FWD G4FJ | | GDS58114 | Drive Shaft | 48T | 30 | 27 | 73 | 95 | 683 | |
| | 2018.05- | 6MT | F | R | SUV Van FWD G4FJ | | GDS58115 | Drive Shaft | 48T | 30 | 28 | 73 | 95 | 586 | |
| | 2018.05- | 6MT | F | L/R | SUV Van FWD G4FJ | | GCO83620 | Outer Joint | 48T | 30 | 26 | 73 | 95 | 67.5 | M |
| | 2018.05- | 6MT | F | L | SUV Van FWD G4FJ | | GCI81149 | Inner Joint | | 27 | 33 | 41 | 61.5 | 105 | |
| | 2018.05- | 6MT | F | R | SUV Van FWD G4FJ | | GCI81748 | Inner Joint | | 28 | 33 | 44.1 | | 121 | |
| 1.6 (132 kw) | 2021.09- | 7DCT | F | L | SUV 4WD G4FP | | GDS56762 | Drive Shaft | | 30 | 28 | 73 | 95 | 663 | |
| | 2021.09- | 7DCT | F | R | SUV 4WD G4FP | | GDS56763 | Drive Shaft | | 30 | 28 | 73 | 95 | 590 | |
| | 2021.09- | 7DCT | F | L/R | SUV 4WD G4FP | | GCO81092 | Outer Joint | | 30 | 25 | 73 | 95 | 64 | M |
| | 2021.09- | 7DCT | F | L | SUV 4WD G4FP | | GCI82295 | Inner Joint | | 28 | 33 | 33 | 67 | 94.5 | |
| | 2021.09- | 7DCT | F | R | SUV 4WD G4FP | | GCI82294 | Inner Joint | | 28 | 33 | 44.1 | | 121 | |
| | 2021.09- | 7DCT | F | L | SUV FWD G4FP | | GDS56762 | Drive Shaft | | 30 | 28 | 73 | 95 | 663 | |
| | 2021.09- | 7DCT | F | R | SUV FWD G4FP | | GDS56763 | Drive Shaft | | 30 | 28 | 73 | 95 | 590 | |
| | 2021.09- | 7DCT | F | L/R | SUV FWD G4FP | | GCO81092 | Outer Joint | | 30 | 25 | 73 | 95 | 64 | M |
| | 2021.09- | 7DCT | F | L | SUV FWD G4FP | | GCI82295 | Inner Joint | | 28 | 33 | 33 | 67 | 94.5 | |
| | 2021.09- | 7DCT | F | R | SUV FWD G4FP | | GCI82294 | Inner Joint | | 28 | 33 | 44.1 | | 121 | |
| | 2021.11- | 7DCT | F | L | SUV 4WD G4FP;G4FU | | GDS56762 | Drive Shaft | | 30 | 28 | 73 | 95 | 663 | |
| | 2021.11- | 7DCT | F | R | SUV 4WD G4FP;G4FU | | GDS56763 | Drive Shaft | | 30 | 28 | 73 | 95 | 590 | |
| | 2021.11- | 7DCT | F | L/R | SUV 4WD G4FP;G4FU | | GCO81092 | Outer Joint | | 30 | 25 | 73 | 95 | 64 | M |
| | 2021.11- | 7DCT | F | L | SUV 4WD G4FP;G4FU | | GCI82295 | Inner Joint | | 28 | 33 | 33 | 67 | 94.5 | |
| | 2021.11- | 7DCT | F | R | SUV 4WD G4FP;G4FU | | GCI82294 | Inner Joint | | 28 | 33 | 44.1 | | 121 | |
| | 2021.11- | 7DCT | F | L | SUV FWD G4FP;G4FU | | GDS56762 | Drive Shaft | | 30 | 28 | 73 | 95 | 663 | |
| | 2021.11- | 7DCT | F | R | SUV FWD G4FP;G4FU | | GDS56763 | Drive Shaft | | 30 | 28 | 73 | 95 | 590 | |
| | 2021.11- | 7DCT | F | L/R | SUV FWD G4FP;G4FU | | GCO81092 | Outer Joint | | 30 | 25 | 73 | 95 | 64 | M |
| | 2021.11- | 7DCT | F | L | SUV FWD G4FP;G4FU | | GCI82295 | Inner Joint | | 28 | 33 | 33 | 67 | 94.5 | |
| | 2021.11- | 7DCT | F | R | SUV FWD G4FP;G4FU | | GCI82294 | Inner Joint | | 28 | 33 | 44.1 | | 121 | |
| 1.6 (154 kw) | 2024.06- | 6AT | F | R | SUV 4WD G4FT | | GDS56763 | Drive Shaft | | 30 | 28 | 73 | 95 | 590 | |
| | 2024.06- | AT | F | R | SUV 4WD G4FT | | GCI82294 | Inner Joint | | 28 | 33 | 44.1 | | 121 | |
| | 2024.06- | 6AT | F | R | SUV FWD G4FT | Vehicle Production Country:Slovakia | GDS56763 | Drive Shaft | | 30 | 28 | 73 | 95 | 590 | |
| | 2024.06- | AT | F | R | SUV FWD G4FT | | GCI82294 | Inner Joint | | 28 | 33 | 44.1 | | 121 | |
| 1.6 (158 kw) | 2024.02- | 6AT | F | R | SUV 4WD G4FT | | GDS56763 | Drive Shaft | | 30 | 28 | 73 | 95 | 590 | |
| | 2024.02- | AT | F | R | SUV 4WD G4FT | | GCI82294 | Inner Joint | | 28 | 33 | 44.1 | | 121 | |
| | 2024.02- | 6AT | F | R | SUV FWD G4FT | Vehicle Production Country:Slovakia | GDS56763 | Drive Shaft | | 30 | 28 | 73 | 95 | 590 | |
| | 2024.02- | AT | F | R | SUV FWD G4FT | | GCI82294 | Inner Joint | | 28 | 33 | 44.1 | | 121 | |
| 1.6 (169 kw) | 2021.11- | 6AT | F | R | SUV 4WD G4FT | | GDS56763 | Drive Shaft | | 30 | 28 | 73 | 95 | 590 | |
| | 2021.11- | AT | F | L | SUV 4WD G4FT | | GCI82295 | Inner Joint | | 28 | 33 | 33 | 67 | 94.5 | |
| | 2021.11- | AT | F | R | SUV 4WD G4FT | | GCI82294 | Inner Joint | | 28 | 33 | 44.1 | | 121 | |
| | 2021.11- | 6AT | F | R | SUV FWD G4FT | | GDS56763 | Drive Shaft | | 30 | 28 | 73 | 95 | 590 | |
| | 2021.11- | AT | F | L | SUV FWD G4FT | | GCI82295 | Inner Joint | | 28 | 33 | 33 | 67 | 94.5 | |
| | 2021.11- | AT | F | R | SUV FWD G4FT | | GCI82294 | Inner Joint | | 28 | 33 | 44.1 | | 121 | |
| 1.6 (185 kw) | 2024.02- | 6AT | F | L | SUV 4WD G4FT | | GDS57679 | Drive Shaft | | 30 | 28 | 73 | 95 | 645 | |
| | 2024.02- | 6AT | F | R | SUV 4WD G4FT | | GDS56763 | Drive Shaft | | 30 | 28 | 73 | 95 | 590 | |
| | 2024.02- | 6AT | F | L/R | SUV 4WD G4FT | | GCO81092 | Outer Joint | | 30 | 25 | 73 | 95 | 64 | M |
| | 2024.02- | 6AT | F | L | SUV 4WD G4FT | | GCI82295 | Inner Joint | | 28 | 33 | 33 | 67 | 94.5 | |
| | 2024.02- | AT | F | R | SUV 4WD G4FT | | GCI82294 | Inner Joint | | 28 | 33 | 44.1 | | 121 | |
| 1.6 (195 kw) | 2021.11- | 6AT | F | L | SUV 4WD G4FT | | GDS57679 | Drive Shaft | | 30 | 28 | 73 | 95 | 645 | |
| | 2021.11- | 6AT | F | R | SUV 4WD G4FT | | GDS56763 | Drive Shaft | | 30 | 28 | 73 | 95 | 590 | |

| | YEAR | TRANSM. | F/R | L/R | BODY STYLE & DRIVE TYPE & ENGINE | REMARKS | G-AP Ref. | PRODUCT | ABS | Technical Specifications A | B | C | H | L | P |
|---|---|---|---|---|---|---|---|---|---|---|---|---|---|---|---|
| **KIA** **Sportage** | | | | | | | | | | | | | | | |
| 1.6 (195 kw) | 2021.11- | 6AT | F | L/R | SUV 4WD G4FT | | GCO81092 | Outer Joint | | 30 | 25 | 73 | 95 | 64 | M |
| | 2021.11- | 6AT | F | L | SUV 4WD G4FT | | GCI82295 | Inner Joint | | 28 | 33 | 33 | 67 | 94.5 | |
| | 2021.11- | AT | F | R | SUV 4WD G4FT | | GCI82294 | Inner Joint | | 28 | 33 | 44.1 | | 121 | |
| 1.7 (85 kw) | 2010.12-2015.12 | 6MT | F | L | SUV FWD D4FD | | GDS24299 | Drive Shaft | 48T | 30 | 27 | 62 | 95 | 690 | |
| | 2010.12-2015.12 | 6MT | F | R | SUV FWD D4FD | | GDS24362 | Drive Shaft | 48T | 30 | 27 | 62 | 95 | 979 | |
| | 2010.12-2015.12 | 6MT | F | L/R | SUV FWD D4FD | Seal diam.:62mm | GCO24221 | Outer Joint | 48T | 30 | 25 | 62 | 95 | 63 | M |
| | 2010.12-2015.12 | 6MT | F | L/R | SUV FWD D4FD | | GCI27031 | Inner Joint | | 27 | 24 | 41 | 61.5 | 100 | |
| | 2010.12-2015.12 | MT | F | L/R | SUV FWD D4FD | Seal diam.:65mm | GCO24153 | Outer Joint | 48T | 30 | 25 | 65 | 95 | 69.5 | M |
| | 2015.09-2022.09 | 6MT | F | L | SUV FWD D4FD | | GDS83623 | Drive Shaft | 48T | 30 | 27 | 73 | 95 | 684 | |
| | 2015.09-2022.09 | 6MT | F | R | SUV FWD D4FD | | GDS82245 | Drive Shaft | 48T | 30 | 27 | 73 | 95 | 991 | |
| | 2015.09-2022.09 | 6MT | F | L/R | SUV FWD D4FD | | GCI81693 | Inner Joint | | 27 | 32 | 41 | 61.5 | 100.5 | |
| | 2015.09-2022.09 | AT | F | L | SUV FWD D4FD | Date from:2016.01 | GDS82335 | Drive Shaft | 48T | 30 | 28 | 73 | 95 | 655 | |
| | 2015.09-2022.09 | AT | F | R | SUV FWD D4FD | Date from:2016.01 | GDS82336 | Drive Shaft | 48T | 30 | 28 | 73 | 95 | 1020 | |
| | 2015.09-2022.09 | AT | F | L/R | SUV FWD D4FD | | GCI81747 | Inner Joint | | 28 | 32 | 41 | 61.5 | 101 | |
| | 2015.09-2022.09 | AT/6MT | F | L/R | SUV FWD D4FD | | GCO81091 | Outer Joint | 48T | 30 | 24 | 73 | 95 | 59 | M |
| 1.7 (104 kw) | 2016.11-2022.09 | 7DCT | F | L | SUV FWD D4FD | | GDS82335 | Drive Shaft | 48T | 30 | 28 | 73 | 95 | 655 | |
| | 2016.11-2022.09 | 7DCT | F | R | SUV FWD D4FD | | GDS82336 | Drive Shaft | 48T | 30 | 28 | 73 | 95 | 1020 | |
| | 2016.11-2022.09 | 7DCT | F | L/R | SUV FWD D4FD | | GCO81091 | Outer Joint | 48T | 30 | 24 | 73 | 95 | 59 | M |
| | 2016.11-2022.09 | 7DCT | F | L/R | SUV FWD D4FD | | GCI81747 | Inner Joint | | 28 | 32 | 41 | 61.5 | 101 | |
| 2.0 (61 kw) | 1997.10-2003.08 | 4AT/5MT | F | R | SUV 4WD RF | Date to:2000.10 | GDS27067 | Drive Shaft | | 26 | 26 | 65 | 122 | 577.5 | |
| | 1997.10-2003.08 | 4AT/5MT | F | L/R | SUV 4WD RF | Date to:2000.10 | GCO99053 | Outer Joint | | 26 | 25 | 65 | 122 | 63 | M |
| | 1997.10-2003.08 | AT/MT | F | L/R | SUV 4WD RF | Date from:1998.01,Date to:2000.10 | GCO27002 | Outer Joint | | 26 | 24 | 65 | 122 | 62 | M |
| | 1997.10-2003.08 | 5MT | F | R | SUV Van 4WD RF | Date to:2000.10 | GDS27067 | Drive Shaft | | 26 | 26 | 65 | 122 | 577.5 | |
| 2.0 (70 kw) | 1994.08-1999.08 | 5MT | F | R | SUV 4WD FE(8V) | | GDS27067 | Drive Shaft | | 26 | 26 | 65 | 122 | 577.5 | |
| | 1994.08-1999.08 | 5MT | F | R | SUV 4WD FE(8V) | Date from:1998.11 | GCO99053 | Outer Joint | | 26 | 25 | 65 | 122 | 63 | M |
| | 1994.08-1999.08 | 5MT | F | L/R | SUV 4WD FE(8V) | | GCO27002 | Outer Joint | | 26 | 24 | 65 | 122 | 62 | M |
| | 1995.06-1998.11 | 5MT | F | R | SUV Van 4WD FE(8V) | | GDS27067 | Drive Shaft | | 26 | 26 | 65 | 122 | 577.5 | |
| | 1995.06-1998.11 | 5MT | F | R | SUV Van 4WD FE(8V) | Date to:1995.09 | GCO27002 | Outer Joint | | 26 | 24 | 65 | 122 | 62 | M |
| 2.0 (83 kw) | 2004.09-2006.12 | 4AT | F | L | SUV 4WD D4EA | | GCI27031 | Inner Joint | | 27 | 24 | 41 | 61.5 | 100 | |
| | 2004.09-2006.12 | 4AT | F | R | SUV 4WD D4EA | | GCI27024 | Inner Joint | | 26 | 24 | 42 | | 115 | |
| | 2004.09-2006.12 | 4AT/5MT | F | L | SUV 4WD D4EA | | GDS27232 | Drive Shaft | 48T | 27 | 27 | 62.1 | 95 | 670 | |
| | 2004.09-2006.12 | 4AT/5MT | F | R | SUV 4WD D4EA | | GDS27105 | Drive Shaft | 48T | 27 | 26 | 62.1 | 95 | 608 | |
| | 2004.09-2006.12 | 5MT | F | L | SUV 4WD D4EA | | GCI27020 | Inner Joint | | 27 | 25 | 41 | 62 | 100.5 | |
| | 2004.09-2006.12 | AT/MT | F | L | SUV 4WD D4EA | | GDS24300 | Drive Shaft | 48T | 30 | 28 | 65 | 95 | 653 | |
| | 2004.09-2006.12 | AT/MT | F | L/R | SUV 4WD D4EA | | GCO24094 | Outer Joint | 48T | 27 | 26 | 62 | 94.5 | 65 | M |
| | 2004.09-2006.12 | AT/MT | F | L/R | SUV 4WD D4EA | | GCO27067 | Outer Joint | 48T | 27 | 24 | 62.1 | 95 | 63 | M |
| | 2004.09-2006.12 | MT | F | R | SUV 4WD D4EA | | GDS24221 | Drive Shaft | 48T | 27 | 26 | 61.9 | 95 | 610 | |
| | 2004.09-2006.12 | MT | F | R | SUV 4WD D4EA | | GCI39063 | Inner Joint | | 26 | 25 | 42 | | 108 | |
| | 2004.09-2006.12 | | F | L/R | SUV 4WD D4EA | | GCO24153 | Outer Joint | 48T | 30 | 25 | 65 | 95 | 69.5 | M |
| | 2004.09-2006.12 | | F | | SUV 4WD D4EA | | GCO24049 | Outer Joint | 48T | 27 | 25 | 62.2 | 95 | 60 | M |
| | 2004.09-2006.12 | 4AT/5MT | R | L/R | SUV 4WD D4EA | | GCO24111 | Outer Joint | 48T | 27 | 22 | 60 | 95 | 59.5 | M |
| | 2004.09-2006.12 | 5MT | R | L/R | SUV 4WD D4EA | | GDS57348 | Drive Shaft | 48T | 27 | 25 | 60 | 95 | 802 | |
| | 2004.09-2006.12 | 5MT | R | L/R | SUV 4WD D4EA | | GCI27042 | Inner Joint | | 25 | 22 | 35 | 62.5 | 95 | |
| | 2004.09-2006.12 | 6MT | R | L | SUV 4WD D4EA | | GCI27018 | Inner Joint | | 27 | 24 | 41 | 61.5 | 100.5 | |
| | 2005.02-2006.12 | 4AT | F | L | SUV FWD D4EA | | GDS24300 | Drive Shaft | 48T | 30 | 28 | 65 | 95 | 653 | |
| | 2005.02-2006.12 | 5MT | F | L | SUV FWD D4EA | | GDS27232 | Drive Shaft | 48T | 27 | 27 | 62.1 | 95 | 670 | |
| | 2005.02-2006.12 | 5MT | F | L/R | SUV FWD D4EA | | GCI27020 | Inner Joint | | 27 | 25 | 41 | 62 | 100.5 | |
| | 2005.02-2006.12 | 6AT | F | R | SUV FWD D4EA | Date from:2010.03 | GCI24158 | Inner Joint | | 27 | 24 | 30 | 67 | 88.5 | |
| | 2005.02-2006.12 | AT | F | L | SUV FWD D4EA | Date from:2007.11,Date to:2007.11 | GCI27018 | Inner Joint | | 27 | 24 | 41 | 61.5 | 100.5 | |
| | 2005.02-2006.12 | AT/MT | F | L/R | SUV FWD D4EA | | GCO24094 | Outer Joint | 48T | 27 | 26 | 62 | 94.5 | 65 | M |
| | 2005.02-2006.12 | AT/MT | F | L/R | SUV FWD D4EA | | GCO27067 | Outer Joint | 48T | 27 | 24 | 62.1 | 95 | 63 | M |
| | 2005.02-2006.12 | MT | F | R | SUV FWD D4EA | | GDS24221 | Drive Shaft | 48T | 27 | 26 | 61.9 | 95 | 610 | |
| | 2005.02-2006.12 | MT | F | R | SUV FWD D4EA | | GCI39063 | Inner Joint | | 26 | 25 | 42 | | 108 | |
| | 2005.02-2006.12 | | F | L/R | SUV FWD D4EA | | GCO24153 | Outer Joint | 48T | 30 | 25 | 65 | 95 | 69.5 | M |
| | 2005.02-2006.12 | | F | | SUV FWD D4EA | | GCO24049 | Outer Joint | 48T | 27 | 25 | 62.2 | 95 | 60 | M |
| | 2005.02-2006.12 | | F | R | SUV FWD D4EA | | GCI27024 | Inner Joint | | 26 | 24 | 42 | | 115 | |
| 2.0 (87 kw) | 2000.10-2002.12 | 5MT | F | L | SUV 4WD FE(16V) | | GDS27076 | Drive Shaft | | 26 | 26 | 66.8 | 125 | 511 | |
| | 2000.10-2002.12 | MT | F | L/R | SUV 4WD FE(16V) | Date to:2000.12 | GCO27002 | Outer Joint | | 26 | 24 | 65 | 122 | 62 | M |
| 2.0 (94 kw) | 1994.06-2004.04 | 4AT/5MT | F | R | SUV 4WD FE(16V) | Date to:2000.10 | GDS27067 | Drive Shaft | | 26 | 26 | 65 | 122 | 577.5 | |
| | 1994.06-2004.04 | 4AT/5MT | F | R | SUV 4WD FE(16V) | Date to:1995.09 | GCO27002 | Outer Joint | | 26 | 24 | 65 | 122 | 62 | M |
| | 1994.06-2004.04 | 4AT/5MT | F | R | SUV 4WD FE(16V) | Date to:2000.10 | GCO99053 | Outer Joint | | 26 | 25 | 65 | 122 | 63 | M |
| 2.0 (95 kw) | 1998.11-2004.08 | | F | | SUV 4WD FE | | GCO27002 | Outer Joint | | 26 | 24 | 65 | 122 | 62 | M |
| 2.0 (100 kw) | 2006.01-2010.05 | 6MT | F | L | SUV 4WD D4EA | | GDS24300 | Drive Shaft | 48T | 30 | 28 | 65 | 95 | 653 | |
| | 2006.01-2010.05 | 6MT | F | R | SUV 4WD D4EA | | GDS24301 | Drive Shaft | 48T | 30 | 28 | 65 | 95 | 605 | |
| | 2006.01-2010.05 | AT | F | L/R | SUV 4WD D4EA | Date from:2006.09,Date to:2006.09 | GCO27067 | Outer Joint | 48T | 27 | 24 | 62.1 | 95 | 63 | M |

| | YEAR | TRANSM. | F/R | L/R | BODY STYLE & DRIVE TYPE & ENGINE | REMARKS | G-AP Ref. | PRODUCT | ABS | Technical Specifications A | B | C | H | L | P |
|---|---|---|---|---|---|---|---|---|---|---|---|---|---|---|---|
| **KIA** **Sportage** | | | | | | | | | | | | | | | |
| 2.0 (100 kw) | 2006.01-2010.05 | AT/MT | F | L/R | SUV 4WD D4EA | | GCO24153 | Outer Joint | 48T | 30 | 25 | 65 | 95 | 69.5 | M |
| | 2006.01-2010.05 | MT | F | L | SUV 4WD D4EA | | GDS27232 | Drive Shaft | 48T | 27 | 27 | 62.1 | 95 | 670 | |
| | 2006.01-2010.05 | MT | F | R | SUV 4WD D4EA | | GDS24221 | Drive Shaft | 48T | 27 | 26 | 61.9 | 95 | 610 | |
| | 2006.01-2010.05 | MT | F | L | SUV 4WD D4EA | Date from:2006.09,Date to:2006.09 | GCI27020 | Inner Joint | | 27 | 25 | 41 | 62 | 100.5 | |
| | 2006.01-2010.05 | MT | F | R | SUV 4WD D4EA | | GCI39063 | Inner Joint | | 26 | 25 | 42 | | 108 | |
| | 2006.01-2010.05 | | F | | SUV 4WD D4EA | | GCO24049 | Outer Joint | 48T | 27 | 25 | 62.2 | 95 | 60 | M |
| | 2006.01-2010.05 | | F | R | SUV 4WD D4EA | | GCI27024 | Inner Joint | | 26 | 24 | 42 | | 115 | |
| | 2006.01-2010.05 | 6MT | R | L/R | SUV 4WD D4EA | Date from:2006.09,Date to:2006.09 | GCO24111 | Outer Joint | 48T | 27 | 22 | 60 | 95 | 59.5 | M |
| | 2006.01-2010.05 | | R | L | SUV 4WD D4EA | | GCI27018 | Inner Joint | | 27 | 24 | 41 | 61.5 | 100.5 | |
| | 2006.01-2010.05 | 4AT | F | L | SUV FWD D4EA | | GDS24300 | Drive Shaft | 48T | 30 | 28 | 65 | 95 | 653 | |
| | 2006.01-2010.05 | AT | F | | SUV FWD D4EA | Date From:2007.11,Date To:2007.11 | GCO27067 | Outer Joint | 48T | 27 | 24 | 62.1 | 95 | 63 | M |
| | 2006.01-2010.05 | AT | F | L | SUV FWD D4EA | Date from:2007.11,Date to:2007.11 | GCI27018 | Inner Joint | | 27 | 24 | 41 | 61.5 | 100.5 | |
| | 2006.01-2010.05 | AT/MT | F | L/R | SUV FWD D4EA | | GCO24153 | Outer Joint | 48T | 30 | 25 | 65 | 95 | 69.5 | M |
| | 2006.01-2010.05 | MT | F | L | SUV FWD D4EA | | GDS27232 | Drive Shaft | 48T | 27 | 27 | 62.1 | 95 | 670 | |
| | 2006.01-2010.05 | MT | F | R | SUV FWD D4EA | | GDS24221 | Drive Shaft | 48T | 27 | 26 | 61.9 | 95 | 610 | |
| | 2006.01-2010.05 | MT | F | L | SUV FWD D4EA | Date from:2006.09,Date to:2006.09 | GCI27020 | Inner Joint | | 27 | 25 | 41 | 62 | 100.5 | |
| | 2006.01-2010.05 | MT | F | R | SUV FWD D4EA | | GCI39063 | Inner Joint | | 26 | 25 | 42 | | 108 | |
| | 2006.01-2010.05 | | F | | SUV FWD D4EA | | GCO24049 | Outer Joint | 48T | 27 | 25 | 62.2 | 95 | 60 | M |
| | 2006.01-2010.05 | | F | R | SUV FWD D4EA | | GCI27024 | Inner Joint | | 26 | 24 | 42 | | 115 | |
| | 2010.07-2015.12 | 6AT | F | L | SUV 4WD D4HA | Vehicle Production Country:Slovakia | GDS24550 | Drive Shaft | 48T | 30 | 28 | 62 | 95 | 671 | |
| | 2010.07-2015.12 | 6AT | F | L | SUV 4WD D4HA | Vehicle Production Country:Republic of Korea (South Korea);Not For facelift | GDS27233 | Drive Shaft | 48T | 30 | 28 | 62 | 95 | 672 | |
| | 2010.07-2015.12 | 6AT | F | L/R | SUV 4WD D4HA | Vehicle Production Country:Slovakia | GCO27128 | Outer Joint | 48T | 30 | 25 | 62 | 95 | 63 | M |
| | 2010.07-2015.12 | 6AT | F | R | SUV 4WD D4HA | Date from:2013.10 | GDS87091 | Intermediate Shaft | | 28 | 28 | | | 430 | |
| | 2010.07-2015.12 | 6AT/6MT | F | R | SUV 4WD D4HA | Not For facelift,Vehicle Production Country:Slovakia | GDS24522 | Drive Shaft | 48T | 30 | 28 | 62 | 95 | 585 | |
| | 2010.07-2015.12 | 6AT/6MT | F | R | SUV 4WD D4HA | Facelift | GCI81105 | Inner Joint | | 26 | 24 | 44.1 | | 115 | |
| | 2010.07-2015.12 | 6MT | F | L | SUV 4WD D4HA | Vehicle Production Country:Slovakia;Not For facelift | GDS24523 | Drive Shaft | 48T | 30 | 28 | 62 | 95 | 680 | |
| | 2010.07-2015.12 | 6MT | F | L | SUV 4WD D4HA | Vehicle Production Country:Republic of Korea (South Korea) | GDS27236 | Drive Shaft | 48T | 30 | 28 | 62 | 95 | 680 | |
| | 2010.07-2015.12 | 6MT | F | L | SUV 4WD D4HA | | GCI27057 | Inner Joint | | 28 | 25 | 41 | 61.5 | 107 | |
| | 2010.07-2015.12 | 6MT/6AT | F | R | SUV 4WD D4HA | For facelift;Vehicle Production Country:Republic of Korea (South Korea) | GDS27235 | Drive Shaft | 48T | 30 | 28 | 62 | 95 | 585 | |
| | 2010.07-2015.12 | AT | F | L | SUV 4WD D4HA | | GCI27056 | Inner Joint | | 28 | 25 | 33 | 67 | 103.5 | |
| | 2010.07-2015.12 | AT/MT | F | L/R | SUV 4WD D4HA | | GCO24153 | Outer Joint | 48T | 30 | 25 | 65 | 95 | 69.5 | M |
| | 2010.07-2015.12 | AT/MT | F | L/R | SUV 4WD D4HA | | GCO24221 | Outer Joint | 48T | 30 | 25 | 62 | 95 | 63 | M |
| | 2010.07-2015.12 | AT/MT | F | R | SUV 4WD D4HA | Not Facelift | GCI24064 | Inner Joint | | 28 | 25 | 44.1 | | 120 | |
| | 2010.07-2015.12 | 6AT | R | L/R | SUV 4WD D4HA | Not Facelift | GCO24311 | Outer Joint | 48T | 27 | 20 | 62 | 94.5 | 53 | M |
| | 2010.07-2015.12 | 6AT/6MT | R | L | SUV 4WD D4HA | Not For facelift | GDS24524 | Drive Shaft | 48T | 27 | 25 | 62 | 94.5 | 837 | |
| | 2010.07-2015.12 | 6AT/6MT | R | L | SUV 4WD D4HA | For facelift | GDS84062 | Drive Shaft | 48T | 27 | 25 | 62 | 95 | 834 | |
| | 2010.07-2015.12 | 6AT/6MT | R | R | SUV 4WD D4HA | Not For Facelift | GDS24536 | Drive Shaft | 48T | 27 | 25 | 62 | 94.5 | 816 | |
| | 2010.07-2015.12 | 6AT/6MT | R | R | SUV 4WD D4HA | For Facelift | GDS24538 | Drive Shaft | 48T | 27 | 25 | 62 | 95 | 817 | |
| | 2010.07-2015.12 | 6AT/6MT | R | L/R | SUV 4WD D4HA | Facelift | GCI24154 | Inner Joint | | 25 | 20 | 35 | 62 | 78 | |
| | 2010.07-2015.12 | AT/MT | R | L/R | SUV 4WD D4HA | Not Facelift | GCI24077 | Inner Joint | | 25 | 20 | 35 | 62 | 82 | |
| | 2010.07-2015.12 | 6AT | F | R | SUV FWD D4HA | | GCI24158 | Inner Joint | | 27 | 24 | 30 | 67 | 88.5 | |
| | 2010.07-2015.12 | 6AT | F | R | SUV FWD D4HA | Date from:2013.10,Vehicle Production Country:Slovakia | GDS87092 | Intermediate Shaft | | 28 | 28 | | | 429 | |
| | 2010.07-2015.12 | 6MT | F | L | SUV FWD D4HA | Vehicle Production Country:Slovakia;Not For facelift | GDS24523 | Drive Shaft | 48T | 30 | 28 | 62 | 95 | 680 | |
| | 2010.07-2015.12 | 6MT | F | L | SUV FWD D4HA | Vehicle Production Country:Republic of Korea (South Korea) | GDS27236 | Drive Shaft | 48T | 30 | 28 | 62 | 95 | 680 | |
| | 2010.07-2015.12 | 6MT | F | R | SUV FWD D4HA | Vehicle Production Country:Slovakia | GDS24551 | Drive Shaft | 48T | 30 | 28 | 62 | 95 | 989 | |
| | 2010.07-2015.12 | 6MT | F | R | SUV FWD D4HA | For facelift;Vehicle Production Country:Republic of Korea (South Korea) | GDS27235 | Drive Shaft | 48T | 30 | 28 | 62 | 95 | 585 | |
| | 2010.07-2015.12 | 6MT | F | R | SUV FWD D4HA | Not For facelift;Vehicle Production Country:Republic of Korea (South Korea) | GDS27237 | Drive Shaft | 48T | 30 | 28 | 62 | 95 | 989 | |
| | 2010.07-2015.12 | 6MT | F | R | SUV FWD D4HA | Vehicle Production Country:Slovakia | GCO27128 | Outer Joint | 48T | 30 | 25 | 62 | 95 | 63 | M |
| | 2010.07-2015.12 | 6MT | F | L/R | SUV FWD D4HA | Not Facelift | GCI27057 | Inner Joint | | 28 | 25 | 41 | 61.5 | 107 | |
| | 2010.07-2015.12 | 6MT | F | R | SUV FWD D4HA | Date from:2013.10,Vehicle Production Country:Slovakia | GDS87093 | Intermediate Shaft | | 28 | 28 | | | 442 | |
| | 2010.07-2015.12 | AT/MT | F | L/R | SUV FWD D4HA | | GCO24153 | Outer Joint | 48T | 30 | 25 | 65 | 95 | 69.5 | M |
| | 2010.07-2015.12 | MT | F | L | SUV FWD D4HA | | GCO24221 | Outer Joint | 48T | 30 | 25 | 62 | 95 | 63 | M |
| | 2015.09-2022.09 | 6AT | F | L | SUV 4WD D4HA | DIESEL;4WD | GDS82221 | Drive Shaft | 48T | 30 | 28 | 73 | 95 | 671 | |
| | 2015.09-2022.09 | 6AT | F | R | SUV 4WD D4HA | | GDS82337 | Drive Shaft | 48T | 30 | 28 | 73 | 95 | 583 | |
| | 2015.09-2022.09 | 6AT | F | R | SUV 4WD D4HA | | GCO81093 | Outer Joint | 48T | 30 | 25 | 73 | 95 | 64 | M |
| | 2015.09-2022.09 | 6AT | F | L | SUV 4WD D4HA | DIESEL;4WD | GCI81676 | Inner Joint | | 28 | 33 | 33 | 67 | 94.5 | |
| | 2015.09-2022.09 | 6MT | F | L | SUV 4WD D4HA | | GDS56718 | Drive Shaft | 48T | 30 | 28 | 73 | 95 | 682 | |
| | 2015.09-2022.09 | 6MT | F | R | SUV 4WD D4HA | | GDS83786 | Drive Shaft | 48T | 30 | 28 | 73 | 95 | 586 | |
| | 2015.09-2022.09 | 6MT | F | L/R | SUV 4WD D4HA | | GCO81095 | Outer Joint | 48T | 30 | 25 | 73 | 95 | 65 | M |
| | 2015.09-2022.09 | 6MT | F | L | SUV 4WD D4HA | | GCI82622 | Inner Joint | | 28 | 33 | 41 | 61.5 | 107.5 | |
| | 2015.09-2022.09 | 6MT/6AT | F | R | SUV 4WD D4HA | | GCI81748 | Inner Joint | | 28 | 33 | 44.1 | | 121 | |
| | 2015.09-2022.09 | 6AT/6MT | R | L/R | SUV 4WD D4HA | | GDS83156 | Drive Shaft | 48T | 27 | 25 | 62 | 98.5 | 838 | |
| | 2015.09-2022.09 | 6AT/6MT | R | L/R | SUV 4WD D4HA | | GCO82315 | Outer Joint | 48T | 27 | 20 | 62 | 98.5 | 43 | M |
| | 2015.09-2022.09 | 6AT/6MT | R | L/R | SUV 4WD D4HA | | GCI24154 | Inner Joint | | 25 | 20 | 35 | 62 | 78 | |
| | 2015.09-2022.09 | 6MT | F | L | SUV FWD D4HA | | GDS56718 | Drive Shaft | 48T | 30 | 28 | 73 | 95 | 682 | |

| | YEAR | TRANSM. | F/R | L/R | BODY STYLE & DRIVE TYPE & ENGINE | REMARKS | G-AP Ref. | PRODUCT | ABS | Technical Specifications A | B | C | H | L | P |
|---|---|---|---|---|---|---|---|---|---|---|---|---|---|---|---|
| **KIA** **Sportage** | | | | | | | | | | | | | | | |
| 2.0 (100 kw) | 2015.09-2022.09 | 6MT | F | R | SUV FWD D4HA | | GDS83786 | Drive Shaft | 48T | 30 | 28 | 73 | 95 | 586 | |
| | 2015.09-2022.09 | 6MT | F | L/R | SUV FWD D4HA | | GCO81095 | Outer Joint | 48T | 30 | 25 | 73 | 95 | 65 | M |
| | 2015.09-2022.09 | 6MT | F | L | SUV FWD D4HA | | GCI82622 | Inner Joint | | 28 | 33 | 41 | 61.5 | 107.5 | |
| | 2015.09-2022.09 | 6MT | F | R | SUV FWD D4HA | | GCI81748 | Inner Joint | | 28 | 33 | 44.1 | | 121 | |
| 2.0 (101 kw) | 2009.06-2010.05 | 5MT | F | L | SUV FWD G4GC | | GDS27232 | Drive Shaft | 48T | 27 | 27 | 62.1 | 95 | 670 | |
| | 2009.06-2010.05 | 5MT | F | R | SUV FWD G4GC | | GDS27231 | Drive Shaft | 48T | 27 | 27 | 62.1 | 95 | 955 | |
| | 2009.06-2010.05 | 5MT | F | L/R | SUV FWD G4GC | | GCO27067 | Outer Joint | 48T | 27 | 24 | 62.1 | 95 | 63 | M |
| | 2009.06-2010.05 | 5MT | F | L/R | SUV FWD G4GC | | GCI27018 | Inner Joint | | 27 | 24 | 41 | 61.5 | 100.5 | |
| | 2009.06-2010.05 | 5MT | F | L/R | SUV FWD G4GC | | GCI27031 | Inner Joint | | 27 | 24 | 41 | 61.5 | 100 | |
| 2.0 (103 kw) | 2006.01-2008.10 | 5MT | F | L | SUV 4WD D4EA | | GDS27232 | Drive Shaft | 48T | 27 | 27 | 62.1 | 95 | 670 | |
| | 2006.01-2008.10 | 5MT | F | R | SUV 4WD D4EA | | GDS27105 | Drive Shaft | 48T | 27 | 26 | 62.1 | 95 | 608 | |
| | 2006.01-2008.10 | 5MT | F | L | SUV 4WD D4EA | | GCI27020 | Inner Joint | | 27 | 25 | 41 | 62 | 100.5 | |
| | 2006.01-2008.10 | 6MT | F | L | SUV 4WD D4EA | | GDS24300 | Drive Shaft | 48T | 30 | 28 | 65 | 95 | 653 | |
| | 2006.01-2008.10 | 6MT | F | R | SUV 4WD D4EA | | GDS24301 | Drive Shaft | 48T | 30 | 28 | 65 | 95 | 605 | |
| | 2006.01-2008.10 | AT | F | L/R | SUV 4WD D4EA | Date from:2006.09,Date to:2006.09 | GCO27067 | Outer Joint | 48T | 27 | 24 | 62.1 | 95 | 63 | M |
| | 2006.01-2008.10 | AT/MT | F | L/R | SUV 4WD D4EA | | GCO24153 | Outer Joint | 48T | 30 | 25 | 65 | 95 | 69.5 | M |
| | 2006.01-2008.10 | MT | F | R | SUV 4WD D4EA | | GDS24221 | Drive Shaft | 48T | 27 | 26 | 61.9 | 95 | 610 | |
| | 2006.01-2008.10 | MT | F | R | SUV 4WD D4EA | | GCI39063 | Inner Joint | | 26 | 25 | 42 | | 108 | |
| | 2006.01-2008.10 | | F | | SUV 4WD D4EA | | GCO24049 | Outer Joint | 48T | 27 | 25 | 62.2 | 95 | 60 | M |
| | 2006.01-2008.10 | | F | R | SUV 4WD D4EA | | GCI27024 | Inner Joint | | 26 | 24 | 42 | | 115 | |
| | 2006.01-2008.10 | 5MT | R | L/R | SUV 4WD D4EA | | GDS57348 | Drive Shaft | 48T | 27 | 25 | 60 | 95 | 802 | |
| | 2006.01-2008.10 | 5MT | R | L/R | SUV 4WD D4EA | | GCI27042 | Inner Joint | | 25 | 22 | 35 | 62.5 | 95 | |
| | 2006.01-2008.10 | 5MT/6MT | R | L/R | SUV 4WD D4EA | Date from:2006.09,Date to:2006.09 | GCO24111 | Outer Joint | 48T | 27 | 22 | 60 | 95 | 59.5 | M |
| | 2006.01-2008.10 | 6MT | R | L | SUV 4WD D4EA | | GCI27018 | Inner Joint | | 27 | 24 | 41 | 61.5 | 100.5 | |
| | 2006.01-2008.10 | 6AT | F | R | SUV FWD D4EA | Date from:2010.03 | GCI24158 | Inner Joint | | 27 | 24 | 30 | 67 | 88.5 | |
| | 2006.01-2008.10 | 6MT | F | L | SUV FWD D4EA | | GDS24300 | Drive Shaft | 48T | 30 | 28 | 65 | 95 | 653 | |
| | 2006.01-2008.10 | AT | F | | SUV FWD D4EA | Date From:2007.11,Date To:2007.11 | GCO27067 | Outer Joint | 48T | 27 | 24 | 62.1 | 95 | 63 | M |
| | 2006.01-2008.10 | AT | F | L | SUV FWD D4EA | Date from:2007.11,Date to:2007.11 | GCI27018 | Inner Joint | | 27 | 24 | 41 | 61.5 | 100.5 | |
| | 2006.01-2008.10 | AT/MT | F | L/R | SUV FWD D4EA | | GCO24153 | Outer Joint | 48T | 30 | 25 | 65 | 95 | 69.5 | M |
| | 2006.01-2008.10 | MT | F | L | SUV FWD D4EA | | GDS27232 | Drive Shaft | 48T | 27 | 27 | 62.1 | 95 | 670 | |
| | 2006.01-2008.10 | MT | F | R | SUV FWD D4EA | | GDS24221 | Drive Shaft | 48T | 27 | 26 | 61.9 | 95 | 610 | |
| | 2006.01-2008.10 | MT | F | L | SUV FWD D4EA | Date from:2006.09,Date to:2006.09 | GCI27020 | Inner Joint | | 27 | 25 | 41 | 62 | 100.5 | |
| | 2006.01-2008.10 | MT | F | R | SUV FWD D4EA | | GCI39063 | Inner Joint | | 26 | 25 | 42 | | 108 | |
| | 2006.01-2008.10 | | F | | SUV FWD D4EA | | GCO24049 | Outer Joint | 48T | 27 | 25 | 62.2 | 95 | 60 | M |
| | 2006.01-2008.10 | | F | R | SUV FWD D4EA | | GCI27024 | Inner Joint | | 26 | 24 | 42 | | 115 | |
| 2.0 (104 kw) | 2004.09-2010.08 | 4AT/5MT | F | L | SUV 4WD G4GC | | GDS27232 | Drive Shaft | 48T | 27 | 27 | 62.1 | 95 | 670 | |
| | 2004.09-2010.08 | 4AT/5MT | F | L | SUV 4WD G4GC | Non-Original design | GCI27018 | Inner Joint | | 27 | 24 | 41 | 61.5 | 100.5 | |
| | 2004.09-2010.08 | 4AT/5MT | F | L | SUV 4WD G4GC | Original design | GCI27031 | Inner Joint | | 27 | 24 | 41 | 61.5 | 100 | |
| | 2004.09-2010.08 | 4AT/5MT | F | R | SUV 4WD G4GC | | GCI27024 | Inner Joint | | 26 | 24 | 42 | | 115 | |
| | 2004.09-2010.08 | AT/MT | F | R | SUV 4WD G4GC | | GDS24173 | Drive Shaft | 48T | 27 | 26 | 62.2 | 95 | 609 | |
| | 2004.09-2010.08 | AT/MT | F | L/R | SUV 4WD G4GC | ABS ring thickness 13.5mm | GCO24090 | Outer Joint | 48T | 27 | 25 | 61.9 | 95 | 61 | M |
| | 2004.09-2010.08 | AT/MT | F | L/R | SUV 4WD G4GC | | GCO27067 | Outer Joint | 48T | 27 | 24 | 62.1 | 95 | 63 | M |
| | 2004.09-2010.08 | AT/MT | F | R | SUV 4WD G4GC | | GCI24030 | Inner Joint | | 26 | 25 | 42 | | 108 | |
| | 2004.09-2010.08 | MT | F | L | SUV 4WD G4GC | | GDS24110 | Drive Shaft | 48T | 27 | 27 | 62.2 | 95 | 673 | |
| | 2004.09-2010.08 | MT | F | L | SUV 4WD G4GC | | GCI27020 | Inner Joint | | 27 | 25 | 41 | 62 | 100.5 | |
| | 2004.09-2010.08 | MT | F | R | SUV 4WD G4GC | | GDS81695 | Intermediate Shaft | | 26 | 27 | | | 422 | |
| | 2004.09-2010.08 | | F | L/R | SUV 4WD G4GC | ABS ring thickness 15.5mm | GCO24049 | Outer Joint | 48T | 27 | 25 | 62.2 | 95 | 60 | M |
| | 2004.09-2010.08 | 5MT | R | L/R | SUV 4WD G4GC | | GDS57348 | Drive Shaft | 48T | 27 | 25 | 60 | 95 | 802 | |
| | 2004.09-2010.08 | 5MT | R | L/R | SUV 4WD G4GC | | GCI27042 | Inner Joint | | 25 | 22 | 35 | 62.5 | 95 | |
| | 2004.09-2010.11 | 4AT/5MT | F | L | SUV FWD G4GC | | GDS27232 | Drive Shaft | 48T | 27 | 27 | 62.1 | 95 | 670 | |
| | 2004.09-2010.11 | 4AT/5MT | F | R | SUV FWD G4GC | | GDS27231 | Drive Shaft | 48T | 27 | 27 | 62.1 | 95 | 955 | |
| | 2004.09-2010.11 | 4AT/5MT | F | L/R | SUV FWD G4GC | ABS ring thickness 15.5mm | GCO24049 | Outer Joint | 48T | 27 | 25 | 62.2 | 95 | 60 | M |
| | 2004.09-2010.11 | 4AT/5MT | F | L/R | SUV FWD G4GC | | GCO27067 | Outer Joint | 48T | 27 | 24 | 62.1 | 95 | 63 | M |
| | 2004.09-2010.11 | 4AT/5MT | F | L/R | SUV FWD G4GC | Non-Original design | GCI27018 | Inner Joint | | 27 | 24 | 41 | 61.5 | 100.5 | |
| | 2004.09-2010.11 | 4AT/5MT | F | L/R | SUV FWD G4GC | Original design | GCI27031 | Inner Joint | | 27 | 24 | 41 | 61.5 | 100 | |
| | 2004.09-2010.11 | AT/MT | F | L/R | SUV FWD G4GC | ABS ring thickness 13.5mm | GCO24090 | Outer Joint | 48T | 27 | 25 | 61.9 | 95 | 61 | M |
| | 2004.09-2010.11 | MT | F | L | SUV FWD G4GC | | GCI27020 | Inner Joint | | 27 | 25 | 41 | 62 | 100.5 | |
| 2.0 (110 kw) | 2007.09-2010.12 | 5MT | F | L | SUV FWD D4EA | | GDS27232 | Drive Shaft | 48T | 27 | 27 | 62.1 | 95 | 670 | |
| | 2007.09-2010.12 | 5MT | F | L/R | SUV FWD D4EA | | GCI27020 | Inner Joint | | 27 | 25 | 41 | 62 | 100.5 | |
| | 2007.09-2010.12 | 6AT | F | R | SUV FWD D4EA | Date from:2010.03 | GCI24158 | Inner Joint | | 27 | 24 | 30 | 67 | 88.5 | |
| | 2007.09-2010.12 | AT | F | | SUV FWD D4EA | Date From:2007.11,Date To:2007.11 | GCO27067 | Outer Joint | 48T | 27 | 24 | 62.1 | 95 | 63 | M |
| | 2007.09-2010.12 | AT | F | L | SUV FWD D4EA | Date from:2007.11,Date to:2007.11 | GCI27018 | Inner Joint | | 27 | 24 | 41 | 61.5 | 100.5 | |
| | 2007.09-2010.12 | AT/MT | F | L/R | SUV FWD D4EA | Date from:2008.01 | GCO24153 | Outer Joint | 48T | 30 | 25 | 65 | 95 | 69.5 | M |
| | 2007.09-2010.12 | MT | F | L | SUV FWD D4EA | Date from:2008.01 | GDS24300 | Drive Shaft | 48T | 30 | 28 | 65 | 95 | 653 | |
| | 2007.09-2010.12 | MT | F | R | SUV FWD D4EA | | GDS24221 | Drive Shaft | 48T | 27 | 26 | 61.9 | 95 | 610 | |

| | YEAR | TRANSM. | F/R | L/R | BODY STYLE & DRIVE TYPE & ENGINE | REMARKS | G-AP Ref. | PRODUCT | ABS | Technical Specifications A | B | C | H | L | P |
|---|---|---|---|---|---|---|---|---|---|---|---|---|---|---|---|
| **KIA** **Sportage** | | | | | | | | | | | | | | | |
| 2.0 (110 kw) | 2007.09-2010.12 | MT | F | R | SUV FWD D4EA | | GCI39063 | Inner Joint | | 26 | 25 | 42 | | 108 | |
| | 2007.09-2010.12 | | F | | SUV FWD D4EA | | GCO24049 | Outer Joint | 48T | 27 | 25 | 62.2 | 95 | 60 | M |
| | 2007.09-2010.12 | | F | R | SUV FWD D4EA | | GCI27024 | Inner Joint | | 26 | 24 | 42 | | 115 | |
| | 2008.09-2010.05 | 6MT | F | R | SUV 4WD D4EA | | GDS24301 | Drive Shaft | 48T | 30 | 28 | 65 | 95 | 605 | |
| | 2008.09-2010.05 | AT | F | | SUV 4WD D4EA | | GCO27067 | Outer Joint | 48T | 27 | 24 | 62.1 | 95 | 63 | M |
| | 2008.09-2010.05 | AT/MT | F | L | SUV 4WD D4EA | | GDS24300 | Drive Shaft | 48T | 30 | 28 | 65 | 95 | 653 | |
| | 2008.09-2010.05 | AT/MT | F | L/R | SUV 4WD D4EA | | GCO24153 | Outer Joint | 48T | 30 | 25 | 65 | 95 | 69.5 | M |
| | 2008.09-2010.05 | MT | F | L | SUV 4WD D4EA | | GDS27232 | Drive Shaft | 48T | 27 | 27 | 62.1 | 95 | 670 | |
| | 2008.09-2010.05 | MT | F | R | SUV 4WD D4EA | | GDS24221 | Drive Shaft | 48T | 27 | 26 | 61.9 | 95 | 610 | |
| | 2008.09-2010.05 | MT | F | L | SUV 4WD D4EA | | GCI27020 | Inner Joint | | 27 | 25 | 41 | 62 | 100.5 | |
| | 2008.09-2010.05 | MT | F | R | SUV 4WD D4EA | | GCI39063 | Inner Joint | | 26 | 25 | 42 | | 108 | |
| | 2008.09-2010.05 | | F | | SUV 4WD D4EA | | GCO24049 | Outer Joint | 48T | 27 | 25 | 62.2 | 95 | 60 | M |
| | 2008.09-2010.05 | | F | R | SUV 4WD D4EA | | GCI27024 | Inner Joint | | 26 | 24 | 42 | | 115 | |
| | 2008.09-2010.05 | 6MT | R | L/R | SUV 4WD D4EA | | GCO24111 | Outer Joint | 48T | 27 | 22 | 60 | 95 | 59.5 | M |
| | 2008.09-2010.05 | | R | L | SUV 4WD D4EA | | GCI27018 | Inner Joint | | 27 | 24 | 41 | 61.5 | 100.5 | |
| | 2010.06-2013.12 | 5MT/6AT | F | R | SUV 4WD G4KD | Vehicle Production Country:South Korea | GDS81188 | Drive Shaft | 48T | 27 | 26 | 62 | 95 | 588 | |
| | 2010.06-2013.12 | 5MT/6AT | F | L/R | SUV 4WD G4KD | Vehicle Production Country:Slovakia | GCO24284 | Outer Joint | 48T | 27 | 24 | 62 | 95 | 59 | M |
| | 2010.06-2013.12 | 5MT/6AT | F | R | SUV 4WD G4KD | Vehicle Production Country:South Korea | GCI81105 | Inner Joint | | 26 | 24 | 44.1 | | 115 | |
| | 2010.06-2013.12 | 6AT | F | L/R | SUV 4WD G4KD | Vehicle Production Country:South Korea | GCO24124 | Outer Joint | 48T | 27 | 24 | 62 | 95 | 58 | M |
| | 2010.06-2013.12 | AT | F | L | SUV 4WD G4KD | Vehicle Production Country:South Korea | GDS24231 | Drive Shaft | 48T | 27 | 27 | 62 | 95 | 676 | |
| | 2010.06-2013.12 | AT | F | L | SUV 4WD G4KD | Vehicle Production Country:Slovakia | GDS27217 | Drive Shaft | 48T | 27 | 27 | 62 | 95 | 678 | |
| | 2010.06-2013.12 | AT | F | L | SUV 4WD G4KD | Vehicle Production Country:Slovakia/South Korea | GCI24158 | Inner Joint | | 27 | 24 | 30 | 67 | 88.5 | |
| | 2010.06-2013.12 | AT/MT | F | R | SUV 4WD G4KD | Vehicle Production Country:Slovakia | GDS24568 | Drive Shaft | 48T | 27 | 26 | 62 | 95 | 590 | |
| | 2010.06-2013.12 | AT/MT | F | R | SUV 4WD G4KD | Vehicle Production Country:Slovakia | GCI27032 | Inner Joint | | 26 | 24 | 44.1 | | 115 | |
| | 2010.06-2013.12 | MT | F | L | SUV 4WD G4KD | Vehicle Production Country:Slovakia | GDS24525 | Drive Shaft | 48T | 27 | 27 | 62 | 95 | 694 | |
| | 2010.06-2013.12 | MT | F | L | SUV 4WD G4KD | Vehicle Production Country:Slovakia | GCI27031 | Inner Joint | | 27 | 24 | 41 | 61.5 | 100 | |
| | 2010.06-2013.12 | 6AT | R | L/R | SUV 4WD G4KD | | GCO24311 | Outer Joint | 48T | 27 | 20 | 62 | 94.5 | 53 | M |
| | 2010.06-2013.12 | AT/MT | R | L | SUV 4WD G4KD | | GDS24524 | Drive Shaft | 48T | 27 | 25 | 62 | 94.5 | 837 | |
| | 2010.06-2013.12 | AT/MT | R | R | SUV 4WD G4KD | | GDS24536 | Drive Shaft | 48T | 27 | 25 | 62 | 94.5 | 816 | |
| | 2010.06-2013.12 | AT/MT | R | L/R | SUV 4WD G4KD | | GCI24077 | Inner Joint | | 25 | 20 | 35 | 62 | 82 | |
| | 2010.06-2013.12 | 5MT | F | L | SUV FWD G4KD | Vehicle Production Country:Slovakia | GDS24525 | Drive Shaft | 48T | 27 | 27 | 62 | 95 | 694 | |
| | 2010.06-2013.12 | 5MT | F | R | SUV FWD G4KD | Vehicle Production Country:Slovakia | GDS24535 | Drive Shaft | 48T | 27 | 27 | 62 | 95 | 966 | |
| | 2010.06-2013.12 | 6AT | F | L | SUV FWD G4KD | Vehicle Production Country:Republic of Korea (South Korea) | GDS24231 | Drive Shaft | 48T | 27 | 27 | 62 | 95 | 676 | |
| | 2010.06-2013.12 | 6AT | F | L | SUV FWD G4KD | Vehicle Production Country:Slovakia | GDS27217 | Drive Shaft | 48T | 27 | 27 | 62 | 95 | 678 | |
| | 2010.06-2013.12 | 6AT | F | L | SUV FWD G4KD | Vehicle Production Country:Slovakia | GCO24284 | Outer Joint | 48T | 27 | 24 | 62 | 95 | 59 | M |
| | 2010.06-2013.12 | 6AT | F | L/R | SUV FWD G4KD | Vehicle Production Country:South Korea | GCO24124 | Outer Joint | 48T | 27 | 24 | 62 | 95 | 58 | M |
| | 2010.06-2013.12 | 6AT | F | R | SUV FWD G4KD | Vehicle Production Country:Slovakia | GCI24053 | Inner Joint | | 27 | 24 | 30 | 67.5 | 88.5 | |
| | 2010.06-2013.12 | AT | F | R | SUV FWD G4KD | Vehicle Production Country:South Korea | GDS24230 | Drive Shaft | 48T | 27 | 27 | 62 | 95 | 961 | |
| | 2010.06-2013.12 | MT/5MT | F | L/R | SUV FWD G4KD | Date from:2011.01 | GCO27067 | Outer Joint | 48T | 27 | 24 | 62.1 | 95 | 63 | M |
| | 2010.06-2013.12 | | F | L | SUV FWD G4KD | Vehicle Production Country:South Korea | GCI24158 | Inner Joint | | 27 | 24 | 30 | 67 | 88.5 | |
| | 2014.01-2015.12 | 6AT | F | L/R | SUV 4WD G4NA | Vehicle Production Country:Slovakia | GCO81085 | Outer Joint | 48T | 27 | 24 | 62 | 95 | 59 | M |
| | 2014.01-2015.12 | 6AT | F | L | SUV 4WD G4NA | | GCI81106 | Inner Joint | | 27 | 24 | 30 | 67.5 | 88.5 | |
| | 2014.01-2015.12 | 6AT/6MT | F | L/R | SUV 4WD G4NA | Vehicle Production Country:South Korea | GCO24124 | Outer Joint | 48T | 27 | 24 | 62 | 95 | 58 | M |
| | 2014.01-2015.12 | 6AT/6MT | F | L | SUV 4WD G4NA | | GCI81104 | Inner Joint | | 27 | 24 | 41 | 61.5 | 100 | |
| | 2014.01-2015.12 | 6AT/6MT | F | R | SUV 4WD G4NA | | GCI27032 | Inner Joint | | 26 | 24 | 44.1 | | 115 | |
| | 2014.01-2015.12 | 6AT/6MT | F | R | SUV 4WD G4NA | | GCI81105 | Inner Joint | | 26 | 24 | 44.1 | | 115 | |
| | 2014.01-2015.12 | 6MT | F | L/R | SUV 4WD G4NA | Vehicle Production Country:Slovakia | GCO24284 | Outer Joint | 48T | 27 | 24 | 62 | 95 | 59 | M |
| | 2014.01-2015.12 | AT | F | L | SUV 4WD G4NA | Vehicle Production Country:South Korea | GDS24231 | Drive Shaft | 48T | 27 | 27 | 62 | 95 | 676 | |
| | 2014.01-2015.12 | AT | F | L | SUV 4WD G4NA | Vehicle Production Country:Slovakia | GDS81239 | Drive Shaft | 48T | 27 | 27 | 62 | 95 | 682 | |
| | 2014.01-2015.12 | AT | F | R | SUV 4WD G4NA | Vehicle Production Country:Slovakia | GDS24518 | Drive Shaft | 48T | 27 | 26 | 62 | 95 | 580 | |
| | 2014.01-2015.12 | AT | F | R | SUV 4WD G4NA | | GDS81187 | Drive Shaft | 48T | 27 | 26 | 62 | 95 | 579 | |
| | 2014.01-2015.12 | AT | F | R | SUV 4WD G4NA | | GDS82876 | Intermediate Shaft | | 26 | 27 | | | 430.5 | |
| | 2014.01-2015.12 | MT | F | L | SUV 4WD G4NA | | GDS81185 | Drive Shaft | 48T | 27 | 27 | 62 | 95 | 682 | |
| | 2014.01-2015.12 | MT | F | R | SUV 4WD G4NA | Vehicle Production Country:Slovakia | GDS24537 | Drive Shaft | 48T | 27 | 26 | 62 | 95 | 562 | |
| | 2014.01-2015.12 | MT | F | R | SUV 4WD G4NA | | GDS81186 | Drive Shaft | 48T | 27 | 26 | 62 | 95 | 560 | |
| | 2014.01-2015.12 | 6AT/6MT | R | L | SUV 4WD G4NA | | GDS84062 | Drive Shaft | 48T | 27 | 25 | 62 | 95 | 834 | |
| | 2014.01-2015.12 | 6AT/6MT | R | L/R | SUV 4WD G4NA | | GCI24154 | Inner Joint | | 25 | 20 | 35 | 62 | 78 | |
| | 2014.01-2015.12 | AT/MT | R | R | SUV 4WD G4NA | | GDS24538 | Drive Shaft | 48T | 27 | 25 | 62 | 95 | 817 | |
| | 2014.01-2015.12 | AT/MT | R | R | SUV 4WD G4NA | | GCO24315 | Outer Joint | 48T | 27 | 20 | 62 | 95 | 43 | M |
| | 2014.01-2015.12 | 6AT | F | L | SUV FWD G4NA | vehicle production country:Republic of South Korea | GDS81189 | Drive Shaft | 48T | 27 | 27 | 62 | 95 | 682 | |
| | 2014.01-2015.12 | 6AT | F | L/R | SUV FWD G4NA | Vehicle Production Country:Slovakia | GCO81085 | Outer Joint | 48T | 27 | 24 | 62 | 95 | 59 | M |
| | 2014.01-2015.12 | 6AT | F | L | SUV FWD G4NA | | GCI81106 | Inner Joint | | 27 | 24 | 30 | 67.5 | 88.5 | |
| | 2014.01-2015.12 | 6AT/6MT | F | L/R | SUV FWD G4NA | Vehicle Production Country:South Korea | GCO24124 | Outer Joint | 48T | 27 | 24 | 62 | 95 | 58 | M |
| | 2014.01-2015.12 | 6AT/6MT | F | L | SUV FWD G4NA | | GCI81104 | Inner Joint | | 27 | 24 | 41 | 61.5 | 100 | |
| | 2014.01-2015.12 | 6AT/6MT | F | R | SUV FWD G4NA | TJ | GCI27032 | Inner Joint | | 26 | 24 | 44.1 | | 115 | |

| | YEAR | TRANSM. | F/R | L/R | BODY STYLE & DRIVE TYPE & ENGINE | REMARKS | G-AP Ref. | PRODUCT | ABS | Technical Specifications A | B | C | H | L | P |
|---|---|---|---|---|---|---|---|---|---|---|---|---|---|---|---|
| **KIA** **Sportage** | | | | | | | | | | | | | | | |
| 2.0 (110 kw) | 2014.01-2015.12 | 6AT/6MT | F | R | SUV FWD G4NA | PTJ | GCI81105 | Inner Joint | | 26 | 24 | 44.1 | | 115 | |
| | 2014.01-2015.12 | 6MT | F | L/R | SUV FWD G4NA | Vehicle Production Country:Slovakia | GCO24284 | Outer Joint | 48T | 27 | 24 | 62 | 95 | 59 | M |
| | 2014.01-2015.12 | AT | F | L | SUV FWD G4NA | Vehicle Production Country:Slovakia | GDS81239 | Drive Shaft | 48T | 27 | 27 | 62 | 95 | 682 | |
| | 2014.01-2015.12 | AT | F | R | SUV FWD G4NA | | GDS82876 | Intermediate Shaft | | 26 | 27 | | | 430.5 | |
| | 2014.01-2015.12 | MT | F | L | SUV FWD G4NA | | GDS81185 | Drive Shaft | 48T | 27 | 27 | 62 | 95 | 682 | |
| | 2014.01-2015.12 | MT | F | R | SUV FWD G4NA | Vehicle Production Country:Slovakia | GDS24537 | Drive Shaft | 48T | 27 | 26 | 62 | 95 | 562 | |
| | 2014.01-2015.12 | MT | F | R | SUV FWD G4NA | | GDS81186 | Drive Shaft | 48T | 27 | 26 | 62 | 95 | 560 | |
| | 2015.12-2022.09 | 6AT | F | L | SUV 4WD G4NA | | GDS81245 | Drive Shaft | 48T | 30 | 27 | 73 | 95 | 683 | |
| | 2015.12-2022.09 | 6AT | F | R | SUV 4WD G4NA | | GDS81252 | Drive Shaft | 48T | 30 | 28 | 73 | 95 | 571 | |
| | 2015.12-2022.09 | 6AT | F | L/R | SUV 4WD G4NA | | GCO81091 | Outer Joint | 48T | 30 | 24 | 73 | 95 | 59 | M |
| | 2015.12-2022.09 | 6AT | F | L | SUV 4WD G4NA | | GCI24126 | Inner Joint | | 27 | 32 | 30 | 67 | 89.5 | |
| | 2015.12-2022.09 | 6AT | F | R | SUV 4WD G4NA | | GCI81150 | Inner Joint | | 28 | 32 | 44.1 | | 116 | |
| | 2015.12-2022.09 | 6MT | F | L | SUV 4WD G4NA | | GDS81247 | Drive Shaft | 48T | 30 | 27 | 73 | 95 | 695 | |
| | 2015.12-2022.09 | 6MT | F | L | SUV 4WD G4NA | | GCI81149 | Inner Joint | | 27 | 33 | 41 | 61.5 | 105 | |
| | 2015.12-2022.09 | 6MT | F | R | SUV 4WD G4NA | Vehicle Production Country:Slovakia | GCI81748 | Inner Joint | | 28 | 33 | 44.1 | | 121 | |
| | 2015.12-2022.09 | 6AT/6MT | R | L/R | SUV 4WD G4NA | | GDS83156 | Drive Shaft | 48T | 27 | 25 | 62 | 98.5 | 838 | |
| | 2015.12-2022.09 | 6AT/6MT | R | L/R | SUV 4WD G4NA | | GCO82315 | Outer Joint | 48T | 27 | 20 | 62 | 98.5 | 43 | M |
| | 2015.12-2022.09 | 6AT/6MT | R | L/R | SUV 4WD G4NA | | GCI24154 | Inner Joint | | 25 | 20 | 35 | 62 | 78 | |
| | 2015.12-2022.09 | 6AT | F | L | SUV FWD G4NA | | GDS81244 | Drive Shaft | 48T | 30 | 27 | 73 | 95 | 693 | |
| | 2015.12-2022.09 | 6AT | F | R | SUV FWD G4NA | | GDS81641 | Drive Shaft | 48T | 30 | 27 | 73 | 95 | 957 | |
| | 2015.12-2022.09 | 6AT | F | L/R | SUV FWD G4NA | | GCO81091 | Outer Joint | 48T | 30 | 24 | 73 | 95 | 59 | M |
| | 2015.12-2022.09 | 6AT | F | L/R | SUV FWD G4NA | | GCI24126 | Inner Joint | | 27 | 32 | 30 | 67 | 89.5 | |
| | 2015.12-2022.09 | 6MT | F | L | SUV FWD G4NA | | GDS81246 | Drive Shaft | 48T | 30 | 27 | 73 | 95 | 692 | |
| | 2015.12-2022.09 | 6MT | F | R | SUV FWD G4NA | | GDS81253 | Drive Shaft | 48T | 30 | 27 | 73 | 95 | 982 | |
| | 2015.12-2022.09 | 6MT | F | L | SUV FWD G4NA | | GCO81093 | Outer Joint | 48T | 30 | 25 | 73 | 95 | 64 | M |
| | 2015.12-2022.09 | 6MT | F | L/R | SUV FWD G4NA | | GCI81149 | Inner Joint | | 27 | 33 | 41 | 61.5 | 105 | |
| 2.0 (113 kw) | 2014.11-2015.12 | 6AT | F | L/R | SUV 4WD G4NA | Vehicle Production Country:Slovakia | GCO81085 | Outer Joint | 48T | 27 | 24 | 62 | 95 | 59 | M |
| | 2014.11-2015.12 | 6AT | F | L | SUV 4WD G4NA | Vehicle Production Country:Slovakia | GCI81106 | Inner Joint | | 27 | 24 | 30 | 67.5 | 88.5 | |
| | 2014.11-2015.12 | 6AT/6MT | F | L/R | SUV 4WD G4NA | Vehicle Production Country:South Korea | GCO24124 | Outer Joint | 48T | 27 | 24 | 62 | 95 | 58 | M |
| | 2014.11-2015.12 | 6AT/6MT | F | R | SUV 4WD G4NA | Vehicle Production Country:Slovakia | GCI27032 | Inner Joint | | 26 | 24 | 44.1 | | 115 | |
| | 2014.11-2015.12 | 6AT/6MT | F | R | SUV 4WD G4NA | Vehicle Production Country:South Korea | GCI81105 | Inner Joint | | 26 | 24 | 44.1 | | 115 | |
| | 2014.11-2015.12 | 6MT | F | L/R | SUV 4WD G4NA | Vehicle Production Country:Slovakia | GCO24284 | Outer Joint | 48T | 27 | 24 | 62 | 95 | 59 | M |
| | 2014.11-2015.12 | 6MT | F | L | SUV 4WD G4NA | Vehicle Production Country:Slovakia/South Korea | GCI81104 | Inner Joint | | 27 | 24 | 41 | 61.5 | 100 | |
| | 2014.11-2015.12 | AT | F | L | SUV 4WD G4NA | Vehicle Production Country:South Korea | GDS24231 | Drive Shaft | 48T | 27 | 27 | 62 | 95 | 676 | |
| | 2014.11-2015.12 | AT | F | L | SUV 4WD G4NA | Vehicle Production Country:Slovakia | GDS81239 | Drive Shaft | 48T | 27 | 27 | 62 | 95 | 682 | |
| | 2014.11-2015.12 | AT | F | R | SUV 4WD G4NA | Vehicle Production Country:Slovakia | GDS24518 | Drive Shaft | 48T | 27 | 26 | 62 | 95 | 580 | |
| | 2014.11-2015.12 | AT | F | R | SUV 4WD G4NA | | GDS81187 | Drive Shaft | 48T | 27 | 26 | 62 | 95 | 579 | |
| | 2014.11-2015.12 | AT | F | R | SUV 4WD G4NA | | GDS82876 | Intermediate Shaft | | 26 | 27 | | | 430.5 | |
| | 2014.11-2015.12 | MT | F | L | SUV 4WD G4NA | | GDS81185 | Drive Shaft | 48T | 27 | 27 | 62 | 95 | 682 | |
| | 2014.11-2015.12 | MT | F | R | SUV 4WD G4NA | Vehicle Production Country:Slovakia | GDS24537 | Drive Shaft | 48T | 27 | 26 | 62 | 95 | 562 | |
| | 2014.11-2015.12 | MT | F | R | SUV 4WD G4NA | | GDS81186 | Drive Shaft | 48T | 27 | 26 | 62 | 95 | 560 | |
| | 2014.11-2015.12 | 6AT/6MT | R | L | SUV 4WD G4NA | | GDS84062 | Drive Shaft | 48T | 27 | 25 | 62 | 95 | 834 | |
| | 2014.11-2015.12 | 6AT/6MT | R | L/R | SUV 4WD G4NA | | GCI24154 | Inner Joint | | 25 | 20 | 35 | 62 | 78 | |
| | 2014.11-2015.12 | AT/MT | R | R | SUV 4WD G4NA | | GDS24538 | Drive Shaft | 48T | 27 | 25 | 62 | 95 | 817 | |
| | 2014.11-2015.12 | AT/MT | R | R | SUV 4WD G4NA | | GCO24315 | Outer Joint | 48T | 27 | 20 | 62 | 95 | 43 | M |
| | 2014.11-2015.12 | 6AT | F | L | SUV FWD G4NA | Vehicle Production Country:Republic of South Korea | GDS81189 | Drive Shaft | 48T | 27 | 27 | 62 | 95 | 682 | |
| | 2014.11-2015.12 | 6AT | F | L | SUV FWD G4NA | Vehicle Production Country:Slovakia | GDS81239 | Drive Shaft | 48T | 27 | 27 | 62 | 95 | 682 | |
| | 2014.11-2015.12 | 6AT | F | L | SUV FWD G4NA | Vehicle Production Country:Slovakia/South Korea | GCI81106 | Inner Joint | | 27 | 24 | 30 | 67.5 | 88.5 | |
| | 2014.11-2015.12 | 6AT/6MT | F | R | SUV FWD G4NA | | GDS81186 | Drive Shaft | 48T | 27 | 26 | 62 | 95 | 560 | |
| | 2014.11-2015.12 | 6AT/6MT | F | L/R | SUV FWD G4NA | Vehicle Production Country:South Korea | GCO24124 | Outer Joint | 48T | 27 | 24 | 62 | 95 | 58 | M |
| | 2014.11-2015.12 | 6AT/6MT | F | L/R | SUV FWD G4NA | Vehicle Production Country:Slovakia | GCO24284 | Outer Joint | 48T | 27 | 24 | 62 | 95 | 59 | M |
| | 2014.11-2015.12 | 6AT/6MT | F | R | SUV FWD G4NA | Vehicle Production Country:Slovakia | GCI27032 | Inner Joint | | 26 | 24 | 44.1 | | 115 | |
| | 2014.11-2015.12 | 6AT/6MT | F | R | SUV FWD G4NA | Outer teeth of transm.side:26 | GCI81105 | Inner Joint | | 26 | 24 | 44.1 | | 115 | |
| | 2014.11-2015.12 | 6MT | F | L | SUV FWD G4NA | Vehicle Production Country:Republic of South Korea | GDS81185 | Drive Shaft | 48T | 27 | 27 | 62 | 95 | 682 | |
| | 2014.11-2015.12 | 6MT | F | L | SUV FWD G4NA | Vehicle Production Country:Slovakia/South Korea | GCI81104 | Inner Joint | | 27 | 24 | 41 | 61.5 | 100 | |
| | 2014.11-2015.12 | MT | F | R | SUV FWD G4NA | Vehicle Production Country:Slovakia | GDS24537 | Drive Shaft | 48T | 27 | 26 | 62 | 95 | 562 | |
| 2.0 (114 kw) | 2015.12-2022.09 | 6AT | F | L | SUV 4WD G4NA | | GDS81245 | Drive Shaft | 48T | 30 | 27 | 73 | 95 | 683 | |
| | 2015.12-2022.09 | 6AT | F | R | SUV 4WD G4NA | | GDS81252 | Drive Shaft | 48T | 30 | 28 | 73 | 95 | 571 | |
| | 2015.12-2022.09 | 6AT | F | L/R | SUV 4WD G4NA | | GCO81091 | Outer Joint | 48T | 30 | 24 | 73 | 95 | 59 | M |
| | 2015.12-2022.09 | 6AT | F | L | SUV 4WD G4NA | | GCI24126 | Inner Joint | | 27 | 32 | 30 | 67 | 89.5 | |
| | 2015.12-2022.09 | 6AT | F | R | SUV 4WD G4NA | | GCI81150 | Inner Joint | | 28 | 32 | 44.1 | | 116 | |
| | 2015.12-2022.09 | 6MT | F | L | SUV 4WD G4NA | | GDS81247 | Drive Shaft | 48T | 30 | 27 | 73 | 95 | 695 | |
| | 2015.12-2022.09 | 6MT | F | L/R | SUV 4WD G4NA | | GCO81095 | Outer Joint | 48T | 30 | 25 | 73 | 95 | 65 | M |
| | 2015.12-2022.09 | 6MT | F | L | SUV 4WD G4NA | | GCI81149 | Inner Joint | | 27 | 33 | 41 | 61.5 | 105 | |
| | 2015.12-2022.09 | 6MT | F | R | SUV 4WD G4NA | For Modelcode:QLE,Vehicle Production Country:Slovakia | GCI81748 | Inner Joint | | 28 | 33 | 44.1 | | 121 | |

| | YEAR | TRANSM. | F/R | L/R | BODY STYLE & DRIVE TYPE & ENGINE | REMARKS | G-AP Ref. | PRODUCT | ABS | Technical Specifications | | | | | |
|---|---|---|---|---|---|---|---|---|---|---|---|---|---|---|---|
| | | | | | | | | | | A | B | C | H | L | P |
| **KIA** **Sportage** | | | | | | | | | | | | | | | |
| 2.0 (114 kw) | 2015.12-2022.09 | AT | F | R | SUV 4WD G4NA | | GCO81093 | Outer Joint | 48T | 30 | 25 | 73 | 95 | 64 | M |
| | 2015.12-2022.09 | 6AT/6MT | R | L/R | SUV 4WD G4NA | | GDS83156 | Drive Shaft | 48T | 27 | 25 | 62 | 98.5 | 838 | |
| | 2015.12-2022.09 | 6AT/6MT | R | L/R | SUV 4WD G4NA | | GCO82315 | Outer Joint | 48T | 27 | 20 | 62 | 98.5 | 43 | M |
| | 2015.12-2022.09 | 6AT/6MT | R | L/R | SUV 4WD G4NA | | GCI24154 | Inner Joint | | 25 | 20 | 35 | 62 | 78 | |
| | 2015.12-2022.09 | 6AT | F | L | SUV FWD G4NA | | GDS81244 | Drive Shaft | 48T | 30 | 27 | 73 | 95 | 693 | |
| | 2015.12-2022.09 | 6AT | F | R | SUV FWD G4NA | | GDS81641 | Drive Shaft | 48T | 30 | 27 | 73 | 95 | 957 | |
| | 2015.12-2022.09 | 6AT | F | L/R | SUV FWD G4NA | | GCO81091 | Outer Joint | 48T | 30 | 24 | 73 | 95 | 59 | M |
| | 2015.12-2022.09 | 6AT | F | L/R | SUV FWD G4NA | | GCI24126 | Inner Joint | | 27 | 32 | 30 | 67 | 89.5 | |
| | 2015.12-2022.09 | 6MT | F | L | SUV FWD G4NA | | GDS81246 | Drive Shaft | 48T | 30 | 27 | 73 | 95 | 692 | |
| | 2015.12-2022.09 | 6MT | F | R | SUV FWD G4NA | | GDS81253 | Drive Shaft | 48T | 30 | 27 | 73 | 95 | 982 | |
| | 2015.12-2022.09 | 6MT | F | L | SUV FWD G4NA | | GCO81093 | Outer Joint | 48T | 30 | 25 | 73 | 95 | 64 | M |
| | 2015.12-2022.09 | 6MT | F | L/R | SUV FWD G4NA | | GCI81149 | Inner Joint | | 27 | 33 | 41 | 61.5 | 105 | |
| 2.0 (115 kw) | 2015.12-2022.09 | 6AT | F | L | SUV FWD G4NA | | GDS81244 | Drive Shaft | 48T | 30 | 27 | 73 | 95 | 693 | |
| | 2015.12-2022.09 | 6AT | F | L | SUV FWD G4NA | | GCO81091 | Outer Joint | 48T | 30 | 24 | 73 | 95 | 59 | M |
| | 2015.12-2022.09 | 6AT | F | L | SUV FWD G4NA | | GCI24126 | Inner Joint | | 27 | 32 | 30 | 67 | 89.5 | |
| | 2015.12-2022.09 | 6MT | F | L | SUV FWD G4NA | | GDS81246 | Drive Shaft | 48T | 30 | 27 | 73 | 95 | 692 | |
| | 2015.12-2022.09 | 6MT | F | R | SUV FWD G4NA | | GDS81253 | Drive Shaft | 48T | 30 | 27 | 73 | 95 | 982 | |
| | 2015.12-2022.09 | 6MT | F | R | SUV FWD G4NA | | GCO81093 | Outer Joint | 48T | 30 | 25 | 73 | 95 | 64 | M |
| | 2015.12-2022.09 | 6MT | F | R | SUV FWD G4NA | | GCI81149 | Inner Joint | | 27 | 33 | 41 | 61.5 | 105 | |
| | 2021.09- | 6AT | F | L | SUV FWD G4NL | | GDS57526 | Drive Shaft | | 30 | 27 | 73 | 95 | 692 | |
| | 2021.09- | 6AT | F | R | SUV FWD G4NL | | GDS57525 | Drive Shaft | | 30 | 27 | 73 | 95 | 949 | |
| | 2021.09- | 6AT | F | L | SUV FWD G4NL | | GCI83728 | Inner Joint | | 27 | 32 | 30 | 67 | 96.5 | |
| | 2021.09- | 6AT | F | R | SUV FWD G4NL | | GCI83727 | Inner Joint | | 27 | 32 | 30 | 67 | 96.5 | |
| | 2021.09- | 6AT/6MT | F | L | SUV FWD G4NL | | GCO81090 | Outer Joint | | 30 | 24 | 73 | 95 | 59 | M |
| | 2021.09- | 6AT/6MT | F | R | SUV FWD G4NL | | GCO83587 | Outer Joint | | 30 | 24 | 73 | 95 | 59 | M |
| | 2021.09- | 6MT | F | L | SUV FWD G4NL | | GDS57618 | Drive Shaft | | 30 | 27 | 73 | 95 | 698 | |
| | 2021.09- | 6MT | F | R | SUV FWD G4NL | | GDS57615 | Drive Shaft | | 30 | 27 | 73 | 95 | 973 | |
| | 2021.09- | 6MT | F | L | SUV FWD G4NL | | GCI83724 | Inner Joint | | 27 | 32 | 41 | 61.5 | 107.5 | |
| | 2021.09- | 6MT | F | R | SUV FWD G4NL | | GCI83725 | Inner Joint | | 27 | 32 | 41 | 61.5 | 107.5 | |
| 2.0 (120 kw) | 2010.07-2015.12 | 5MT | F | L | SUV 4WD G4KD | Vehicle Production Country:Slovakia | GDS24525 | Drive Shaft | 48T | 27 | 27 | 62 | 95 | 694 | |
| | 2010.07-2015.12 | 5MT | F | R | SUV 4WD G4KD | Vehicle Production Country:Slovakia | GDS24568 | Drive Shaft | 48T | 27 | 26 | 62 | 95 | 590 | |
| | 2010.07-2015.12 | 5MT | F | R | SUV 4WD G4KD | Vehicle Production Country:South Korea | GDS81188 | Drive Shaft | 48T | 27 | 26 | 62 | 95 | 588 | |
| | 2010.07-2015.12 | 5MT | F | L/R | SUV 4WD G4KD | Date from:2011.01 | GCO27067 | Outer Joint | 48T | 27 | 24 | 62.1 | 95 | 63 | M |
| | 2010.07-2015.12 | 5MT | F | L | SUV 4WD G4KD | Vehicle Production Country:Slovakia | GCI27031 | Inner Joint | | 27 | 24 | 41 | 61.5 | 100 | |
| | 2010.07-2015.12 | 6AT | F | L | SUV 4WD G4KD | Vehicle Production Country:South Korea | GDS24231 | Drive Shaft | 48T | 27 | 27 | 62 | 95 | 676 | |
| | 2010.07-2015.12 | 6AT | F | L | SUV 4WD G4KD | Not Facelift,Vehicle Production Country:Slovakia | GDS27217 | Drive Shaft | 48T | 27 | 27 | 62 | 95 | 678 | |
| | 2010.07-2015.12 | 6AT | F | L | SUV 4WD G4KD | Facelift,Vehicle Production Country:Slovakia | GDS81239 | Drive Shaft | 48T | 27 | 27 | 62 | 95 | 682 | |
| | 2010.07-2015.12 | 6AT | F | R | SUV 4WD G4KD | Facelift,Vehicle Production Country:Slovakia | GDS24518 | Drive Shaft | 48T | 27 | 26 | 62 | 95 | 580 | |
| | 2010.07-2015.12 | 6AT | F | R | SUV 4WD G4KD | Not Facelift,Vehicle Production Country:Slovakia | GDS24568 | Drive Shaft | 48T | 27 | 26 | 62 | 95 | 590 | |
| | 2010.07-2015.12 | 6AT | F | R | SUV 4WD G4KD | Facelift,Vehicle Production Country:South Korea | GDS81187 | Drive Shaft | 48T | 27 | 26 | 62 | 95 | 579 | |
| | 2010.07-2015.12 | 6AT | F | R | SUV 4WD G4KD | Not Facelift,Vehicle Production Country:South Korea | GDS81188 | Drive Shaft | 48T | 27 | 26 | 62 | 95 | 588 | |
| | 2010.07-2015.12 | 6AT | F | L/R | SUV 4WD G4KD | Vehicle Production Country:South Korea | GCO24124 | Outer Joint | 48T | 27 | 24 | 62 | 95 | 58 | M |
| | 2010.07-2015.12 | 6AT | F | L/R | SUV 4WD G4KD | Vehicle Production Country:Slovakia | GCO24284 | Outer Joint | 48T | 27 | 24 | 62 | 95 | 59 | M |
| | 2010.07-2015.12 | 6AT | F | L | SUV 4WD G4KD | Not Facelift,Vehicle Production Country:South Korea | GCI24053 | Inner Joint | | 27 | 24 | 30 | 67.5 | 88.5 | |
| | 2010.07-2015.12 | 6AT | F | L | SUV 4WD G4KD | Not Facelift,Vehicle Production Country:Slovakia | GCI24158 | Inner Joint | | 27 | 24 | 30 | 67 | 88.5 | |
| | 2010.07-2015.12 | 6AT | F | L | SUV 4WD G4KD | Not Facelift,Vehicle Production Country:South Korea/Slovakia | GCI81106 | Inner Joint | | 27 | 24 | 30 | 67.5 | 88.5 | |
| | 2010.07-2015.12 | 6AT | F | R | SUV 4WD G4KD | Facelift,Vehicle Production Country:South Korea | GCI81105 | Inner Joint | | 26 | 24 | 44.1 | | 115 | |
| | 2010.07-2015.12 | 6AT/5MT | F | R | SUV 4WD G4KD | Vehicle Production Country:Slovakia | GCI27032 | Inner Joint | | 26 | 24 | 44.1 | | 115 | |
| | 2010.07-2015.12 | 6MT | F | L/R | SUV 4WD G4KD | Date from:2011.01 | GCO24153 | Outer Joint | 48T | 30 | 25 | 65 | 95 | 69.5 | M |
| | 2010.07-2015.12 | MT | F | R | SUV 4WD G4KD | | GDS81695 | Intermediate Shaft | | 26 | 27 | | | 422 | |
| | 2010.07-2015.12 | 6AT | R | L/R | SUV 4WD G4KD | Not Facelift | GCO24311 | Outer Joint | 48T | 27 | 20 | 62 | 94.5 | 53 | M |
| | 2010.07-2015.12 | 6AT/5MT | R | L | SUV 4WD G4KD | Not Facelift | GDS24524 | Drive Shaft | 48T | 27 | 25 | 62 | 94.5 | 837 | |
| | 2010.07-2015.12 | 6AT/5MT | R | L | SUV 4WD G4KD | Facelift | GDS84062 | Drive Shaft | 48T | 27 | 25 | 62 | 95 | 834 | |
| | 2010.07-2015.12 | 6AT/5MT | R | R | SUV 4WD G4KD | Not Facelift | GDS24536 | Drive Shaft | 48T | 27 | 25 | 62 | 94.5 | 816 | |
| | 2010.07-2015.12 | 6AT/5MT | R | R | SUV 4WD G4KD | Facelift | GDS24538 | Drive Shaft | 48T | 27 | 25 | 62 | 95 | 817 | |
| | 2010.07-2015.12 | 6AT/5MT | R | L/R | SUV 4WD G4KD | Facelift | GCO24315 | Outer Joint | 48T | 27 | 20 | 62 | 95 | 43 | M |
| | 2010.07-2015.12 | 6AT/5MT | R | L/R | SUV 4WD G4KD | Not Facelift | GCI24077 | Inner Joint | | 25 | 20 | 35 | 62 | 82 | |
| | 2010.07-2015.12 | 6AT/5MT | R | L/R | SUV 4WD G4KD | Facelift | GCI24154 | Inner Joint | | 25 | 20 | 35 | 62 | 78 | |
| | 2010.07-2015.12 | 5MT | F | L | SUV FWD G4KD | | GCI27031 | Inner Joint | | 27 | 24 | 41 | 61.5 | 100 | |
| | 2010.07-2015.12 | 6AT | F | L | SUV FWD G4KD | Not for Facelift,Vehicle Production Country:Republic of Korea (South Korea) | GDS24231 | Drive Shaft | 48T | 27 | 27 | 62 | 95 | 676 | |
| | 2010.07-2015.12 | 6AT | F | L | SUV FWD G4KD | Facelift,Vehicle Production Country:Republic of South Korea | GDS81189 | Drive Shaft | 48T | 27 | 27 | 62 | 95 | 682 | |
| | 2010.07-2015.12 | 6AT | F | L | SUV FWD G4KD | Facelift,Vehicle Production Country:Slovakia | GDS81239 | Drive Shaft | 48T | 27 | 27 | 62 | 95 | 682 | |
| | 2010.07-2015.12 | 6AT | F | R | SUV FWD G4KD | Not for Facelift,Vehicle Production Country:Slovakia/Republic of Korea (South Korea) | GDS24230 | Drive Shaft | 48T | 27 | 27 | 62 | 95 | 961 | |
| | 2010.07-2015.12 | 6AT | F | R | SUV FWD G4KD | For facelift,Vehicle Production Country:Slovakia | GDS24537 | Drive Shaft | 48T | 27 | 26 | 62 | 95 | 562 | |
| | 2010.07-2015.12 | 6AT | F | R | SUV FWD G4KD | Facelift,Vehicle Production Country:Republic of South Korea | GDS81186 | Drive Shaft | 48T | 27 | 26 | 62 | 95 | 560 | |

| | YEAR | TRANSM. | F/R | L/R | BODY STYLE & DRIVE TYPE & ENGINE | REMARKS | G-AP Ref. | PRODUCT | ABS | Technical Specifications A | B | C | H | L | P |
|---|---|---|---|---|---|---|---|---|---|---|---|---|---|---|---|
| **KIA** **Sportage** | | | | | | | | | | | | | | | |
| 2.0 (120 kw) | 2010.07-2015.12 | 6AT | F | L/R | SUV FWD G4KD | Not Facelift,Veh Prd Country:South Korea | GCO24124 | Outer Joint | 48T | 27 | 24 | 62 | 95 | 58 | M |
| | 2010.07-2015.12 | 6AT | F | L/R | SUV FWD G4KD | Not Facelift,Veh Prd Country:Slovakia | GCO24284 | Outer Joint | 48T | 27 | 24 | 62 | 95 | 59 | M |
| | 2010.07-2015.12 | 6AT | F | L | SUV FWD G4KD | Not Facelift | GCI24158 | Inner Joint | | 27 | 24 | 30 | 67 | 88.5 | |
| | 2010.07-2015.12 | 6AT | F | L | SUV FWD G4KD | Facelift | GCI81106 | Inner Joint | | 27 | 24 | 30 | 67.5 | 88.5 | |
| | 2010.07-2015.12 | 6AT | F | R | SUV FWD G4KD | Vehicle Production Country:South Korea | GCI81105 | Inner Joint | | 26 | 24 | 44.1 | | 115 | |
| | 2010.07-2015.12 | AT | F | L | SUV FWD G4KD | Vehicle Production Country:Slovakia | GDS27217 | Drive Shaft | 48T | 27 | 27 | 62 | 95 | 678 | |
| | 2010.07-2015.12 | AT | F | R | SUV FWD G4KD | Vehicle Production Country:Slovakia | GCI24053 | Inner Joint | | 27 | 24 | 30 | 67.5 | 88.5 | |
| | 2010.07-2015.12 | MT | F | L | SUV FWD G4KD | | GDS24525 | Drive Shaft | 48T | 27 | 27 | 62 | 95 | 694 | |
| | 2010.07-2015.12 | MT | F | R | SUV FWD G4KD | Vehicle Production Country:Slovakia | GDS24535 | Drive Shaft | 48T | 27 | 27 | 62 | 95 | 966 | |
| 2.0 (122 kw) | 2009.01-2010.05 | 5MT | F | L | SUV FWD G4KD | | GDS27232 | Drive Shaft | 48T | 27 | 27 | 62.1 | 95 | 670 | |
| | 2009.01-2010.05 | 5MT | F | R | SUV FWD G4KD | | GDS27231 | Drive Shaft | 48T | 27 | 27 | 62.1 | 95 | 955 | |
| | 2009.01-2010.05 | 5MT | F | L/R | SUV FWD G4KD | | GCO27067 | Outer Joint | 48T | 27 | 24 | 62.1 | 95 | 63 | M |
| | 2009.01-2010.05 | 5MT | F | L/R | SUV FWD G4KD | | GCI27018 | Inner Joint | | 27 | 24 | 41 | 61.5 | 100.5 | |
| | 2009.01-2010.05 | 5MT | F | L/R | SUV FWD G4KD | | GCI27031 | Inner Joint | | 27 | 24 | 41 | 61.5 | 100 | |
| | 2010.07-2015.12 | 5MT | F | L | SUV 4WD G4KD | Vehicle Production Country:Slovakia | GDS24525 | Drive Shaft | 48T | 27 | 27 | 62 | 95 | 694 | |
| | 2010.07-2015.12 | 5MT | F | R | SUV 4WD G4KD | Vehicle Production Country:Slovakia | GDS24568 | Drive Shaft | 48T | 27 | 26 | 62 | 95 | 590 | |
| | 2010.07-2015.12 | 5MT | F | R | SUV 4WD G4KD | Vehicle Production Country:South Korea | GDS81188 | Drive Shaft | 48T | 27 | 26 | 62 | 95 | 588 | |
| | 2010.07-2015.12 | 5MT | F | R | SUV 4WD G4KD | Vehicle Production Country:Slovakia | GCI27032 | Inner Joint | | 26 | 24 | 44.1 | | 115 | |
| | 2010.07-2015.12 | 5MT/6AT | F | R | SUV 4WD G4KD | Vehicle Production Country:South Korea | GCI81105 | Inner Joint | | 26 | 24 | 44.1 | | 115 | |
| | 2010.07-2015.12 | 6AT | F | L | SUV 4WD G4KD | Vehicle Production Country:South Korea | GDS24231 | Drive Shaft | 48T | 27 | 27 | 62 | 95 | 676 | |
| | 2010.07-2015.12 | 6AT | F | L | SUV 4WD G4KD | Vehicle Production Country:Slovakia | GDS27217 | Drive Shaft | 48T | 27 | 27 | 62 | 95 | 678 | |
| | 2010.07-2015.12 | 6AT | F | L | SUV 4WD G4KD | Facelift,Vehicle Production Country:Slovakia | GDS81239 | Drive Shaft | 48T | 27 | 27 | 62 | 95 | 682 | |
| | 2010.07-2015.12 | 6AT | F | R | SUV 4WD G4KD | For Facelift,Vehicle Production Country:Slovakia | GDS24518 | Drive Shaft | 48T | 27 | 26 | 62 | 95 | 580 | |
| | 2010.07-2015.12 | 6AT | F | R | SUV 4WD G4KD | Facelift,Vehicle Production Country:Republic of South Korea | GDS81187 | Drive Shaft | 48T | 27 | 26 | 62 | 95 | 579 | |
| | 2010.07-2015.12 | 6AT | F | R | SUV 4WD G4KD | Not for Facelift,Vehicle Production Country:South Korea | GDS81188 | Drive Shaft | 48T | 27 | 26 | 62 | 95 | 588 | |
| | 2010.07-2015.12 | 6AT | F | L/R | SUV 4WD G4KD | Vehicle Production Country:South Korea | GCO24124 | Outer Joint | 48T | 27 | 24 | 62 | 95 | 58 | M |
| | 2010.07-2015.12 | 6AT | F | L/R | SUV 4WD G4KD | Vehicle Production Country:Slovakia | GCO24284 | Outer Joint | 48T | 27 | 24 | 62 | 95 | 59 | M |
| | 2010.07-2015.12 | 6AT | F | L | SUV 4WD G4KD | Vehicle Production Country:Slovakia,Not Facelift | GCI24158 | Inner Joint | | 27 | 24 | 30 | 67 | 88.5 | |
| | 2010.07-2015.12 | 6AT | F | L | SUV 4WD G4KD | Vehicle Production Country:Slovakia,Facelift | GCI81106 | Inner Joint | | 27 | 24 | 30 | 67.5 | 88.5 | |
| | 2010.07-2015.12 | MT | F | R | SUV 4WD G4KD | Date to:2014.01 | GDS81695 | Intermediate Shaft | | 26 | 27 | | | 422 | |
| | 2010.07-2015.12 | 6AT | R | L/R | SUV 4WD G4KD | Not Facelift | GCO24311 | Outer Joint | 48T | 27 | 20 | 62 | 94.5 | 53 | M |
| | 2010.07-2015.12 | 6AT/5MT | R | L | SUV 4WD G4KD | Not For facelift | GDS24524 | Drive Shaft | 48T | 27 | 25 | 62 | 94.5 | 837 | |
| | 2010.07-2015.12 | 6AT/5MT | R | L | SUV 4WD G4KD | For facelift | GDS84062 | Drive Shaft | 48T | 27 | 25 | 62 | 95 | 834 | |
| | 2010.07-2015.12 | 6AT/5MT | R | R | SUV 4WD G4KD | Not For Facelift | GDS24536 | Drive Shaft | 48T | 27 | 25 | 62 | 94.5 | 816 | |
| | 2010.07-2015.12 | 6AT/5MT | R | R | SUV 4WD G4KD | For Facelift | GDS24538 | Drive Shaft | 48T | 27 | 25 | 62 | 95 | 817 | |
| | 2010.07-2015.12 | 6AT/5MT | R | L/R | SUV 4WD G4KD | Not Facelift | GCI24077 | Inner Joint | | 25 | 20 | 35 | 62 | 82 | |
| | 2010.07-2015.12 | 6AT/5MT | R | L/R | SUV 4WD G4KD | Facelift | GCI24154 | Inner Joint | | 25 | 20 | 35 | 62 | 78 | |
| | 2010.07-2015.12 | 5MT | F | L | SUV FWD G4KD | Vehicle Production Country:Slovakia | GDS24525 | Drive Shaft | 48T | 27 | 27 | 62 | 95 | 694 | |
| | 2010.07-2015.12 | 5MT | F | R | SUV FWD G4KD | Vehicle Production Country:Slovakia | GDS24535 | Drive Shaft | 48T | 27 | 27 | 62 | 95 | 966 | |
| | 2010.07-2015.12 | 6AT | F | L | SUV FWD G4KD | Not for Facelift,Vehicle Production Country:South Korea | GDS24231 | Drive Shaft | 48T | 27 | 27 | 62 | 95 | 676 | |
| | 2010.07-2015.12 | 6AT | F | L | SUV FWD G4KD | Not for Facelift,Vehicle Production Country:Slovakia | GDS27217 | Drive Shaft | 48T | 27 | 27 | 62 | 95 | 678 | |
| | 2010.07-2015.12 | 6AT | F | L | SUV FWD G4KD | Facelift,Vehicle Production Country:Republic of South Korea | GDS81189 | Drive Shaft | 48T | 27 | 27 | 62 | 95 | 682 | |
| | 2010.07-2015.12 | 6AT | F | L | SUV FWD G4KD | Facelift,Vehicle Production Country:Slovakia | GDS81239 | Drive Shaft | 48T | 27 | 27 | 62 | 95 | 682 | |
| | 2010.07-2015.12 | 6AT | F | R | SUV FWD G4KD | Not for Facelift,Vehicle Production Country:South Korea | GDS24230 | Drive Shaft | 48T | 27 | 27 | 62 | 95 | 961 | |
| | 2010.07-2015.12 | 6AT | F | R | SUV FWD G4KD | | GCO24284 | Outer Joint | 48T | 27 | 24 | 62 | 95 | 59 | M |
| | 2010.07-2015.12 | 6AT | F | L/R | SUV FWD G4KD | Vehicle Production Country:South Korea | GCO24124 | Outer Joint | 48T | 27 | 24 | 62 | 95 | 58 | M |
| | 2010.07-2015.12 | 6AT | F | L | SUV FWD G4KD | | GCI81106 | Inner Joint | | 27 | 24 | 30 | 67.5 | 88.5 | |
| | 2010.07-2015.12 | 6AT | F | R | SUV FWD G4KD | Not Facelift,Vehicle Production Country:Slovakia | GCI24053 | Inner Joint | | 27 | 24 | 30 | 67.5 | 88.5 | |
| | 2010.07-2015.12 | 6AT | F | R | SUV FWD G4KD | Not Facelift,Vehicle Production Country:Slovakia/South Korea | GCI24158 | Inner Joint | | 27 | 24 | 30 | 67 | 88.5 | |
| | 2010.07-2015.12 | 6AT/6MT | F | R | SUV FWD G4KD | Transmission:6AT,For facelift;Transmission:6MT,Not For facelift;Vehicle Production Country:Slovakia | GDS24537 | Drive Shaft | 48T | 27 | 26 | 62 | 95 | 562 | |
| | 2010.07-2015.12 | 6AT/6MT | F | R | SUV FWD G4KD | Transmission:6AT,Facelift;Transmission:6MT,Vehicle Production Country:Slovakia | GCI27032 | Inner Joint | | 26 | 24 | 44.1 | | 115 | |
| | 2010.07-2015.12 | 6MT | F | L | SUV FWD G4KD | Vehicle Production Country:Republic of South Korea | GDS81185 | Drive Shaft | 48T | 27 | 27 | 62 | 95 | 682 | |
| | 2010.07-2015.12 | 6MT | F | R | SUV FWD G4KD | Transmission:6MT,Facelift;Transmission:6MT,Not for facelift;Vehicle Production Country:Republic of South Korea | GDS81186 | Drive Shaft | 48T | 27 | 26 | 62 | 95 | 560 | |
| | 2010.07-2015.12 | 6MT/6AT | F | R | SUV FWD G4KD | Transmission:6AT,Facelift;Transmission:6MT,Vehicle Production Country:South Korea | GCI81105 | Inner Joint | | 26 | 24 | 44.1 | | 115 | |
| | 2010.07-2015.12 | MT | F | L | SUV FWD G4KD | | GCI27031 | Inner Joint | | 27 | 24 | 41 | 61.5 | 100 | |
| | 2010.07-2015.12 | MT/5MT | F | L/R | SUV FWD G4KD | Date from:2011.01 | GCO27067 | Outer Joint | 48T | 27 | 24 | 62.1 | 95 | 63 | M |
| | 2014.02-2015.12 | 6AT | F | L/R | SUV 4WD G4NC | | GCO81085 | Outer Joint | 48T | 27 | 24 | 62 | 95 | 59 | M |
| | 2014.02-2015.12 | 6AT | F | L | SUV 4WD G4NC | | GCI81106 | Inner Joint | | 27 | 24 | 30 | 67.5 | 88.5 | |
| | 2014.02-2015.12 | 6AT/6MT | F | R | SUV 4WD G4NC | | GCI27032 | Inner Joint | | 26 | 24 | 44.1 | | 115 | |
| | 2014.02-2015.12 | 6MT | F | L/R | SUV 4WD G4NC | | GCO24284 | Outer Joint | 48T | 27 | 24 | 62 | 95 | 59 | M |
| | 2014.02-2015.12 | AT | F | L | SUV 4WD G4NC | Vehicle Production Country:Slovakia | GDS81239 | Drive Shaft | 48T | 27 | 27 | 62 | 95 | 682 | |
| | 2014.02-2015.12 | AT | F | R | SUV 4WD G4NC | Vehicle Production Country:Slovakia | GDS24518 | Drive Shaft | 48T | 27 | 26 | 62 | 95 | 580 | |
| | 2014.02-2015.12 | MT | F | R | SUV 4WD G4NC | Vehicle Production Country:Slovakia | GDS24537 | Drive Shaft | 48T | 27 | 26 | 62 | 95 | 562 | |
| | 2014.02-2015.12 | 6AT/6MT | R | L | SUV 4WD G4NC | | GDS84062 | Drive Shaft | 48T | 27 | 25 | 62 | 95 | 834 | |
| | 2014.02-2015.12 | 6AT/6MT | R | L/R | SUV 4WD G4NC | | GCI24154 | Inner Joint | | 25 | 20 | 35 | 62 | 78 | |

| | YEAR | TRANSM. | F/R | L/R | BODY STYLE & DRIVE TYPE & ENGINE | REMARKS | G-AP Ref. | PRODUCT | ABS | Technical Specifications | | | | | |
|---|---|---|---|---|---|---|---|---|---|---|---|---|---|---|---|
| | | | | | | | | | | A | B | C | H | L | P |
| **KIA** **Sportage** | | | | | | | | | | | | | | | |
| 2.0 (122 kw) | 2014.02-2015.12 | 6MT | R | L/R | SUV 4WD G4NC | | GCO24315 | Outer Joint | 48T | 27 | 20 | 62 | 95 | 43 | M |
| | 2014.02-2015.12 | AT/MT | R | R | SUV 4WD G4NC | | GDS24538 | Drive Shaft | 48T | 27 | 25 | 62 | 95 | 817 | |
| | 2014.02-2015.12 | 6AT | F | L | SUV FWD G4NC | | GCI81106 | Inner Joint | | 27 | 24 | 30 | 67.5 | 88.5 | |
| | 2014.02-2015.12 | 6AT/6MT | F | R | SUV FWD G4NC | | GCI27032 | Inner Joint | | 26 | 24 | 44.1 | | 115 | |
| | 2014.02-2015.12 | AT | F | L | SUV FWD G4NC | | GDS81239 | Drive Shaft | 48T | 27 | 27 | 62 | 95 | 682 | |
| | 2014.02-2015.12 | AT | F | L | SUV FWD G4NC | | GCO81085 | Outer Joint | 48T | 27 | 24 | 62 | 95 | 59 | M |
| | 2014.02-2015.12 | AT/MT | F | R | SUV FWD G4NC | | GDS24537 | Drive Shaft | 48T | 27 | 26 | 62 | 95 | 562 | |
| | 2014.02-2015.12 | AT/MT | F | R | SUV FWD G4NC | | GCO24284 | Outer Joint | 48T | 27 | 24 | 62 | 95 | 59 | M |
| 2.0 (130 kw) | 2012.08-2016.12 | 6AT | F | L | SUV 4WD D4HA | Vehicle Production Country:Slovakia | GDS24550 | Drive Shaft | 48T | 30 | 28 | 62 | 95 | 671 | |
| | 2012.08-2016.12 | 6AT | F | L | SUV 4WD D4HA | Vehicle Production Country:Republic of Korea (South Korea);Not For facelift | GDS27233 | Drive Shaft | 48T | 30 | 28 | 62 | 95 | 672 | |
| | 2012.08-2016.12 | 6AT | F | L | SUV 4WD D4HA | Vehicle Production Country:Slovakia | GCO27128 | Outer Joint | 48T | 30 | 25 | 62 | 95 | 63 | M |
| | 2012.08-2016.12 | 6AT | F | L | SUV 4WD D4HA | Not Facelift,Vehicle Production Country:Slovakia | GCI27056 | Inner Joint | | 28 | 25 | 33 | 67 | 103.5 | |
| | 2012.08-2016.12 | 6AT | F | R | SUV 4WD D4HA | No Facelift | GDS82862 | Intermediate Shaft | | 28 | 28 | | | 430 | |
| | 2012.08-2016.12 | 6AT | F | R | SUV 4WD D4HA | Date from:2013.10,Facelift | GDS87091 | Intermediate Shaft | | 28 | 28 | | | 430 | |
| | 2012.08-2016.12 | 6AT/6MT | F | R | SUV 4WD D4HA | Facelift | GCI81105 | Inner Joint | | 26 | 24 | 44.1 | | 115 | |
| | 2012.08-2016.12 | 6MT | F | L | SUV 4WD D4HA | Not For facelift,Vehicle Production Country:Slovakia | GDS24523 | Drive Shaft | 48T | 30 | 28 | 62 | 95 | 680 | |
| | 2012.08-2016.12 | 6MT | F | L | SUV 4WD D4HA | Vehicle Production Country:Republic of Korea (South Korea) | GDS27236 | Drive Shaft | 48T | 30 | 28 | 62 | 95 | 680 | |
| | 2012.08-2016.12 | 6MT | F | L | SUV 4WD D4HA | Not Facelift | GCI27057 | Inner Joint | | 28 | 25 | 41 | 61.5 | 107 | |
| | 2012.08-2016.12 | AT/MT | F | R | SUV 4WD D4HA | Not For facelift,Vehicle Production Country:Slovakia | GDS24522 | Drive Shaft | 48T | 30 | 28 | 62 | 95 | 585 | |
| | 2012.08-2016.12 | AT/MT | F | R | SUV 4WD D4HA | For facelift;Vehicle Production Country:Republic of Korea (South Korea) | GDS27235 | Drive Shaft | 48T | 30 | 28 | 62 | 95 | 585 | |
| | 2012.08-2016.12 | AT/MT | F | L | SUV 4WD D4HA | | GCO24221 | Outer Joint | 48T | 30 | 25 | 62 | 95 | 63 | M |
| | 2012.08-2016.12 | AT/MT | F | R | SUV 4WD D4HA | Not Facelift | GCI24064 | Inner Joint | | 28 | 25 | 44.1 | | 120 | |
| | 2012.08-2016.12 | | F | R | SUV 4WD D4HA | Vehicle Production Country:Slovakia | GCO27128 | Outer Joint | 48T | 30 | 25 | 62 | 95 | 63 | M |
| | 2012.08-2016.12 | 6AT | R | L/R | SUV 4WD D4HA | Not Facelift | GCO24311 | Outer Joint | 48T | 27 | 20 | 62 | 94.5 | 53 | M |
| | 2012.08-2016.12 | 6AT/6MT | R | L | SUV 4WD D4HA | Not For facelift | GDS24524 | Drive Shaft | 48T | 27 | 25 | 62 | 94.5 | 837 | |
| | 2012.08-2016.12 | 6AT/6MT | R | L | SUV 4WD D4HA | For facelift | GDS84062 | Drive Shaft | 48T | 27 | 25 | 62 | 95 | 834 | |
| | 2012.08-2016.12 | 6AT/6MT | R | L/R | SUV 4WD D4HA | Facelift | GCI24154 | Inner Joint | | 25 | 20 | 35 | 62 | 78 | |
| | 2012.08-2016.12 | AT/MT | R | R | SUV 4WD D4HA | Not For Facelift | GDS24536 | Drive Shaft | 48T | 27 | 25 | 62 | 94.5 | 816 | |
| | 2012.08-2016.12 | AT/MT | R | R | SUV 4WD D4HA | For Facelift | GDS24538 | Drive Shaft | 48T | 27 | 25 | 62 | 95 | 817 | |
| | 2012.08-2016.12 | AT/MT | R | L/R | SUV 4WD D4HA | Not Facelift | GCI24077 | Inner Joint | | 25 | 20 | 35 | 62 | 82 | |
| 2.0 (131 kw) | 2015.09-2022.09 | 6AT | F | L | SUV 4WD D4HA | DIESEL;4WD | GDS82221 | Drive Shaft | 48T | 30 | 28 | 73 | 95 | 671 | |
| | 2015.09-2022.09 | 6AT | F | R | SUV 4WD D4HA | | GDS82337 | Drive Shaft | 48T | 30 | 28 | 73 | 95 | 583 | |
| | 2015.09-2022.09 | 6AT | F | L | SUV 4WD D4HA | DIESEL;4WD | GCO81093 | Outer Joint | 48T | 30 | 25 | 73 | 95 | 64 | M |
| | 2015.09-2022.09 | 6AT | F | R | SUV 4WD D4HA | | GCO81091 | Outer Joint | 48T | 30 | 24 | 73 | 95 | 59 | M |
| | 2015.09-2022.09 | 6AT | F | L | SUV 4WD D4HA | DIESEL;4WD | GCI81676 | Inner Joint | | 28 | 33 | 33 | 67 | 94.5 | |
| | 2015.09-2022.09 | 6AT | F | R | SUV 4WD D4HA | | GCI81748 | Inner Joint | | 28 | 33 | 44.1 | | 121 | |
| | 2015.09-2022.09 | 6AT/8AT | R | L/R | SUV 4WD D4HA | | GDS83156 | Drive Shaft | 48T | 27 | 25 | 62 | 98.5 | 838 | |
| | 2015.09-2022.09 | 6AT/8AT | R | L/R | SUV 4WD D4HA | | GCO82315 | Outer Joint | 48T | 27 | 20 | 62 | 98.5 | 43 | M |
| | 2015.09-2022.09 | 6AT/8AT | R | L/R | SUV 4WD D4HA | | GCI24154 | Inner Joint | | 25 | 20 | 35 | 62 | 78 | |
| 2.0 (135 kw) | 2010.08-2015.12 | 6AT | F | L | SUV 4WD D4HA | Vehicle Production Country:Slovakia | GDS24550 | Drive Shaft | 48T | 30 | 28 | 62 | 95 | 671 | |
| | 2010.08-2015.12 | 6AT | F | L | SUV 4WD D4HA | Vehicle Production Country:Slovakia | GCO27128 | Outer Joint | 48T | 30 | 25 | 62 | 95 | 63 | M |
| | 2010.08-2015.12 | 6AT | F | R | SUV 4WD D4HA | NOT Facelift | GCI24064 | Inner Joint | | 28 | 25 | 44.1 | | 120 | |
| | 2010.08-2015.12 | 6AT | F | R | SUV 4WD D4HA | Facelift | GCI81105 | Inner Joint | | 26 | 24 | 44.1 | | 115 | |
| | 2010.08-2015.12 | 6AT | F | R | SUV 4WD D4HA | Vehicle Production Country:Slovakia,No Facelift | GDS82862 | Intermediate Shaft | | 28 | 28 | | | 430 | |
| | 2010.08-2015.12 | 6AT | F | R | SUV 4WD D4HA | Date from:2013.10,Facelift | GDS87091 | Intermediate Shaft | | 28 | 28 | | | 430 | |
| | 2010.08-2015.12 | 6AT/6MT | F | R | SUV 4WD D4HA | Not For facelift,Vehicle Production Country:Slovakia | GDS24522 | Drive Shaft | 48T | 30 | 28 | 62 | 95 | 585 | |
| | 2010.08-2015.12 | 6AT/6MT | F | R | SUV 4WD D4HA | Vehicle Production Country:Republic of Korea (South Korea) | GDS27235 | Drive Shaft | 48T | 30 | 28 | 62 | 95 | 585 | |
| | 2010.08-2015.12 | 6AT/6MT | F | L | SUV 4WD D4HA | | GCI27056 | Inner Joint | | 28 | 25 | 33 | 67 | 103.5 | |
| | 2010.08-2015.12 | 6MT | F | L | SUV 4WD D4HA | | GCI27057 | Inner Joint | | 28 | 25 | 41 | 61.5 | 107 | |
| | 2010.08-2015.12 | AT | F | L | SUV 4WD D4HA | Vehicle Production Country:South Korea | GDS27233 | Drive Shaft | 48T | 30 | 28 | 62 | 95 | 672 | |
| | 2010.08-2015.12 | AT/MT | F | L/R | SUV 4WD D4HA | Date to:2016.12 | GCO24153 | Outer Joint | 48T | 30 | 25 | 65 | 95 | 69.5 | M |
| | 2010.08-2015.12 | AT/MT | F | L/R | SUV 4WD D4HA | Date to:2013.12;Vehicle Production Country:Slovakia | GCO24221 | Outer Joint | 48T | 30 | 25 | 62 | 95 | 63 | M |
| | 2010.08-2015.12 | MT | F | L | SUV 4WD D4HA | Date to:2013.12;Vehicle Production Country:Slovakia | GDS24523 | Drive Shaft | 48T | 30 | 28 | 62 | 95 | 680 | |
| | 2010.08-2015.12 | MT | F | L | SUV 4WD D4HA | Vehicle Production Country:South Korea | GDS27236 | Drive Shaft | 48T | 30 | 28 | 62 | 95 | 680 | |
| | 2010.08-2015.12 | | F | R | SUV 4WD D4HA | Vehicle Production Country:Slovakia | GCO27128 | Outer Joint | 48T | 30 | 25 | 62 | 95 | 63 | M |
| | 2010.08-2015.12 | 6AT | R | L/R | SUV 4WD D4HA | Not Facelift | GCO24311 | Outer Joint | 48T | 27 | 20 | 62 | 94.5 | 53 | M |
| | 2010.08-2015.12 | 6AT/6MT | R | L | SUV 4WD D4HA | Not For facelift | GDS24524 | Drive Shaft | 48T | 27 | 25 | 62 | 94.5 | 837 | |
| | 2010.08-2015.12 | 6AT/6MT | R | L | SUV 4WD D4HA | For facelift | GDS84062 | Drive Shaft | 48T | 27 | 25 | 62 | 95 | 834 | |
| | 2010.08-2015.12 | 6AT/6MT | R | L/R | SUV 4WD D4HA | Facelift | GCI24077 | Inner Joint | | 25 | 20 | 35 | 62 | 82 | |
| | 2010.08-2015.12 | 6AT/6MT | R | L/R | SUV 4WD D4HA | no Facelift | GCI24154 | Inner Joint | | 25 | 20 | 35 | 62 | 78 | |
| | 2010.08-2015.12 | AT/MT | R | R | SUV 4WD D4HA | Date to:2013.12;Vehicle Production Country:Slovakia | GDS24536 | Drive Shaft | 48T | 27 | 25 | 62 | 94.5 | 816 | |
| | 2010.08-2015.12 | AT/MT | R | R | SUV 4WD D4HA | Date from:2014.01;Vehicle Production Country:Slovakia | GDS24538 | Drive Shaft | 48T | 27 | 25 | 62 | 95 | 817 | |
| | 2010.08-2015.12 | 6AT | F | R | SUV FWD D4HA | Date from:2013.10,Vehicle Production Country:Slovakia | GDS87092 | Intermediate Shaft | | 28 | 28 | | | 429 | |
| | 2010.08-2015.12 | 6MT | F | L | SUV FWD D4HA | Vehicle Production Country:Slovakia,Not Facelift | GDS24523 | Drive Shaft | 48T | 30 | 28 | 62 | 95 | 680 | |
| | 2010.08-2015.12 | 6MT | F | L | SUV FWD D4HA | Vehicle Production Country:Republic of Korea (South Korea) | GDS27236 | Drive Shaft | 48T | 30 | 28 | 62 | 95 | 680 | |

| | YEAR | TRANSM. | F/R | L/R | BODY STYLE & DRIVE TYPE & ENGINE | REMARKS | G-AP Ref. | PRODUCT | ABS | Technical Specifications A | B | C | H | L | P |
|---|---|---|---|---|---|---|---|---|---|---|---|---|---|---|---|
| **KIA** **Sportage** | | | | | | | | | | | | | | | |
| 2.0 (135 kw) | 2010.08-2015.12 | 6MT | F | R | SUV FWD D4HA | Vehicle Production Country:Slovakia | GDS24551 | Drive Shaft | 48T | 30 | 28 | 62 | 95 | 989 | |
| | 2010.08-2015.12 | 6MT | F | R | SUV FWD D4HA | For facelift;Vehicle Production Country:Republic of Korea (South Korea) | GDS27235 | Drive Shaft | 48T | 30 | 28 | 62 | 95 | 585 | |
| | 2010.08-2015.12 | 6MT | F | R | SUV FWD D4HA | Not For facelift;Vehicle Production Country:Republic of Korea (South Korea) | GDS27237 | Drive Shaft | 48T | 30 | 28 | 62 | 95 | 989 | |
| | 2010.08-2015.12 | 6MT | F | R | SUV FWD D4HA | Vehicle Production Country:Slovakia | GCO27128 | Outer Joint | 48T | 30 | 25 | 62 | 95 | 63 | M |
| | 2010.08-2015.12 | 6MT | F | R | SUV FWD D4HA | Facelift | GCI81105 | Inner Joint | | 26 | 24 | 44.1 | | 115 | |
| | 2010.08-2015.12 | 6MT | F | L/R | SUV FWD D4HA | Not Facelift | GCI27057 | Inner Joint | | 28 | 25 | 41 | 61.5 | 107 | |
| | 2010.08-2015.12 | 6MT | F | R | SUV FWD D4HA | Date from:2013.10,Vehicle Production Country:Slovakia | GDS87093 | Intermediate Shaft | | 28 | 28 | | | 442 | |
| | 2010.08-2015.12 | AT/MT | F | L/R | SUV FWD D4HA | Date to:2016.12 | GCO24153 | Outer Joint | 48T | 30 | 25 | 65 | 95 | 69.5 | M |
| 2.0 (136 kw) | 2015.09-2022.09 | 6AT | F | L | SUV 4WD D4HA | DIESEL;4WD | GDS82221 | Drive Shaft | 48T | 30 | 28 | 73 | 95 | 671 | |
| | 2015.09-2022.09 | 6AT | F | R | SUV 4WD D4HA | | GDS82337 | Drive Shaft | 48T | 30 | 28 | 73 | 95 | 583 | |
| | 2015.09-2022.09 | 6AT | F | R | SUV 4WD D4HA | | GCO81093 | Outer Joint | 48T | 30 | 25 | 73 | 95 | 64 | M |
| | 2015.09-2022.09 | 6AT | F | L | SUV 4WD D4HA | DIESEL;4WD | GCI81676 | Inner Joint | | 28 | 33 | 33 | 67 | 94.5 | |
| | 2015.09-2022.09 | 6AT/6MT | F | R | SUV 4WD D4HA | Transmion:6MT,For Modelcode:QLE,Vehicle Production Country:Slovakia | GCI81748 | Inner Joint | | 28 | 33 | 44.1 | | 121 | |
| | 2015.09-2022.09 | 6MT | F | L | SUV 4WD D4HA | For Modelcode:QLE,Vehicle Production Country:Slovakia | GDS56718 | Drive Shaft | 48T | 30 | 28 | 73 | 95 | 682 | |
| | 2015.09-2022.09 | 6MT | F | R | SUV 4WD D4HA | For Modelcode:QLE,Vehicle Production Country:Slovakia | GDS83786 | Drive Shaft | 48T | 30 | 28 | 73 | 95 | 586 | |
| | 2015.09-2022.09 | 6MT | F | L/R | SUV 4WD D4HA | For Modelcode:QLE,Vehicle Production Country:Slovakia | GCO81095 | Outer Joint | 48T | 30 | 25 | 73 | 95 | 65 | M |
| | 2015.09-2022.09 | 6MT | F | L | SUV 4WD D4HA | For Modelcode:QLE,Vehicle Production Country:Slovakia | GCI82622 | Inner Joint | | 28 | 33 | 41 | 61.5 | 107.5 | |
| | 2015.09-2022.09 | 6AT/6MT | R | L/R | SUV 4WD D4HA | | GCO82315 | Outer Joint | 48T | 27 | 20 | 62 | 98.5 | 43 | M |
| | 2015.09-2022.09 | 6AT/6MT | R | L/R | SUV 4WD D4HA | | GCI24154 | Inner Joint | | 25 | 20 | 35 | 62 | 78 | |
| | 2015.09-2022.09 | 6AT/8AT/6MT | R | L/R | SUV 4WD D4HA | | GDS83156 | Drive Shaft | 48T | 27 | 25 | 62 | 98.5 | 838 | |
| | 2015.09-2022.09 | 6MT | F | L | SUV FWD D4HA | | GDS56718 | Drive Shaft | 48T | 30 | 28 | 73 | 95 | 682 | |
| | 2015.09-2022.09 | 6MT | F | R | SUV FWD D4HA | | GDS83786 | Drive Shaft | 48T | 30 | 28 | 73 | 95 | 586 | |
| | 2015.09-2022.09 | 6MT | F | L/R | SUV FWD D4HA | | GCO81095 | Outer Joint | 48T | 30 | 25 | 73 | 95 | 65 | M |
| | 2015.09-2022.09 | 6MT | F | L | SUV FWD D4HA | | GCI82622 | Inner Joint | | 28 | 33 | 41 | 61.5 | 107.5 | |
| | 2015.09-2022.09 | 6MT | F | R | SUV FWD D4HA | | GCI81748 | Inner Joint | | 28 | 33 | 44.1 | | 121 | |
| | 2018.06-2022.09 | 6MT | F | L | SUV 4WD D4HA | | GDS56718 | Drive Shaft | 48T | 30 | 28 | 73 | 95 | 682 | |
| | 2018.06-2022.09 | 6MT | F | R | SUV 4WD D4HA | | GDS83786 | Drive Shaft | 48T | 30 | 28 | 73 | 95 | 586 | |
| | 2018.06-2022.09 | 6MT | F | L/R | SUV 4WD D4HA | | GCO81095 | Outer Joint | 48T | 30 | 25 | 73 | 95 | 65 | M |
| | 2018.06-2022.09 | 6MT | F | L | SUV 4WD D4HA | | GCI82622 | Inner Joint | | 28 | 33 | 41 | 61.5 | 107.5 | |
| | 2018.06-2022.09 | 6MT | F | R | SUV 4WD D4HA | | GCI81748 | Inner Joint | | 28 | 33 | 44.1 | | 121 | |
| | 2018.06-2022.09 | 8AT | F | L | SUV 4WD D4HA | | GDS82221 | Drive Shaft | 48T | 30 | 28 | 73 | 95 | 671 | |
| | 2018.06-2022.09 | 8AT | F | L | SUV 4WD D4HA | | GCO81093 | Outer Joint | 48T | 30 | 25 | 73 | 95 | 64 | M |
| | 2018.06-2022.09 | 8AT | F | L | SUV 4WD D4HA | | GCI81676 | Inner Joint | | 28 | 33 | 33 | 67 | 94.5 | |
| | 2018.06-2022.09 | 8AT/6MT | R | L/R | SUV 4WD D4HA | | GDS83156 | Drive Shaft | 48T | 27 | 25 | 62 | 98.5 | 838 | |
| | 2018.06-2022.09 | 8AT/6MT | R | L/R | SUV 4WD D4HA | | GCO82315 | Outer Joint | 48T | 27 | 20 | 62 | 98.5 | 43 | M |
| | 2018.06-2022.09 | 8AT/6MT | R | L/R | SUV 4WD D4HA | | GCI24154 | Inner Joint | | 25 | 20 | 35 | 62 | 78 | |
| 2.0 (177 kw) | 2016.05- | 6AT | F | L/R | SUV 4WD G4KH | | GCO81093 | Outer Joint | 48T | 30 | 25 | 73 | 95 | 64 | M |
| | 2016.05- | 6AT | F | R | SUV 4WD G4KH | | GCI81748 | Inner Joint | | 28 | 33 | 44.1 | | 121 | |
| 2.0 (179 kw) | 2016.05- | 6AT | F | L/R | SUV FWD G4KH | | GCO81093 | Outer Joint | 48T | 30 | 25 | 73 | 95 | 64 | M |
| | 2016.05- | 6AT | F | R | SUV FWD G4KH | | GCI81748 | Inner Joint | | 28 | 33 | 44.1 | | 121 | |
| 2.2 (52 kw) | 1994.08-1999.04 | | F | R | SUV 4WD OK016 | | GDS27067 | Drive Shaft | | 26 | 26 | 65 | 122 | 577.5 | |
| | 1994.08-1999.04 | | F | R | SUV 4WD OK016 | Date To:1995.09 | GCO27002 | Outer Joint | | 26 | 24 | 65 | 122 | 62 | M |
| | 1994.08-1999.04 | | F | R | SUV 4WD OK016 | | GCO99053 | Outer Joint | | 26 | 25 | 65 | 122 | 63 | M |
| 2.4 (135 kw) | 2015.09-2022.09 | 6AT | F | L | SUV 4WD G4KJ | | GDS81248 | Drive Shaft | 48T | 30 | 27 | 73 | 95 | 674 | |
| | 2015.09-2022.09 | 6AT | F | R | SUV 4WD G4KJ | | GDS81255 | Drive Shaft | 48T | 30 | 28 | 73 | 95 | 577 | |
| | 2015.09-2022.09 | 6AT | F | L/R | SUV 4WD G4KJ | | GCO81091 | Outer Joint | 48T | 30 | 24 | 73 | 95 | 59 | M |
| | 2015.09-2022.09 | 6AT | F | L | SUV 4WD G4KJ | | GCI24126 | Inner Joint | | 27 | 32 | 30 | 67 | 89.5 | |
| | 2015.09-2022.09 | 6AT | F | R | SUV 4WD G4KJ | | GCI81150 | Inner Joint | | 28 | 32 | 44.1 | | 116 | |
| | 2015.09-2022.09 | 6AT | R | L/R | SUV 4WD G4KJ | | GDS83156 | Drive Shaft | 48T | 27 | 25 | 62 | 98.5 | 838 | |
| | 2015.09-2022.09 | 6AT | R | L/R | SUV 4WD G4KJ | | GCO82315 | Outer Joint | 48T | 27 | 20 | 62 | 98.5 | 43 | M |
| | 2015.09-2022.09 | 6AT | R | L/R | SUV 4WD G4KJ | | GCI24154 | Inner Joint | | 25 | 20 | 35 | 62 | 78 | |
| | 2016.05-2022.09 | 6AT | F | R | SUV FWD G4KJ | | GDS83440 | Drive Shaft | 48T | 30 | 27 | 73 | 95 | 978 | |
| | 2016.05-2022.09 | 6AT | F | R | SUV FWD G4KJ | | GCO81091 | Outer Joint | 48T | 30 | 24 | 73 | 95 | 59 | M |
| | 2016.05-2022.09 | 6AT | F | L/R | SUV FWD G4KJ | | GCI24126 | Inner Joint | | 27 | 32 | 30 | 67 | 89.5 | |
| | 2016.05-2022.09 | | F | L | SUV FWD G4KJ | | GDS81248 | Drive Shaft | 48T | 30 | 27 | 73 | 95 | 674 | |
| 2.4 (136 kw) | 2013.09-2016.05 | 6AT | F | L/R | SUV FWD G4KJ | | GCO24124 | Outer Joint | 48T | 27 | 24 | 62 | 95 | 58 | M |
| | 2013.09-2016.05 | 6AT | F | R | SUV FWD G4KJ | | GCI81106 | Inner Joint | | 27 | 24 | 30 | 67.5 | 88.5 | |
| 2.5 (139 kw) | 2021.09- | 8AT | F | L | SUV FWD G4KN | Korea built | GDS58254 | Drive Shaft | | 30 | 27 | 73 | 95 | 672 | |
| | 2021.09- | 8AT | F | R | SUV FWD G4KN | Korea built | GDS58253 | Drive Shaft | | 30 | 28 | 73 | 95 | 562 | |
| | 2021.09- | 8AT | F | L/R | SUV FWD G4KN | | GCO81090 | Outer Joint | | 30 | 24 | 73 | 95 | 59 | M |
| | 2021.09- | 8AT | F | L | SUV FWD G4KN | | GCI84046 | Inner Joint | | 27 | 32 | 30 | 67 | 111.5 | |
| | 2021.09- | 8AT | F | R | SUV FWD G4KN | | GCI84045 | Inner Joint | | 28 | 32 | 44.1 | | 138 | |
| 2.7 (129 kw) | 2004.09-2010.08 | 4AT/5MT | F | L | SUV 4WD G6BA | Date to:2007.03 | GDS27232 | Drive Shaft | 48T | 27 | 27 | 62.1 | 95 | 670 | |
| | 2004.09-2010.08 | 4AT/5MT | F | R | SUV 4WD G6BA | Date to:2007.03 | GDS27105 | Drive Shaft | 48T | 27 | 26 | 62.1 | 95 | 608 | |
| | 2004.09-2010.08 | 4AT/5MT | F | L/R | SUV 4WD G6BA | Date to:2007.03 | GCO27067 | Outer Joint | 48T | 27 | 24 | 62.1 | 95 | 63 | M |

| | YEAR | TRANSM. | F/R | L/R | BODY STYLE & DRIVE TYPE & ENGINE | REMARKS | G-AP Ref. | PRODUCT | ABS | Technical Specifications A | B | C | H | L | P |
|---|---|---|---|---|---|---|---|---|---|---|---|---|---|---|---|
| **KIA** | | | | | | | | | | | | | | | |
| **Sportage** | | | | | | | | | | | | | | | |
| 2.7 (129 kw) | 2004.09-2010.08 | 4AT/5MT | F | L | SUV 4WD G6BA | Date to:2007.03 | GCI27020 | Inner Joint | | 27 | 25 | 41 | 62 | 100.5 | |
| | 2004.09-2010.08 | AT/MT | F | L/R | SUV 4WD G6BA | Non-Original design,Date to:2009.12 | GCO24090 | Outer Joint | 48T | 27 | 25 | 61.9 | 95 | 61 | M |
| | 2004.09-2010.08 | | F | L | SUV 4WD G6BA | Date from:2004.10,Date to:2006.12 | GCI24013 | Inner Joint | | 27 | 33 | 41 | 61.5 | 107 | |
| | 2004.09-2010.08 | | F | R | SUV 4WD G6BA | Date from:2004.10,Date to:2006.12 | GCI24014 | Inner Joint | | 26 | 33 | 42 | | 124 | |
| | 2004.09-2010.08 | 4AT | R | L/R | SUV 4WD G6BA | | GCO24111 | Outer Joint | 48T | 27 | 22 | 60 | 95 | 59.5 | M |
| | 2004.09-2010.08 | 5MT | R | L/R | SUV 4WD G6BA | | GDS57348 | Drive Shaft | 48T | 27 | 25 | 60 | 95 | 802 | |
| | 2004.09-2010.08 | 5MT | R | L/R | SUV 4WD G6BA | | GCI27042 | Inner Joint | | 25 | 22 | 35 | 62.5 | 95 | |
| **Sportage R** | | | | | | | | | | | | | | | |
| 2.0 (194 kw) | 2013.09-2015.12 | MT | F | R | SUV 4WD G4KH | | GDS81695 | Intermediate Shaft | | 26 | 27 | | | 422 | |
| **Sportage Van** | | | | | | | | | | | | | | | |
| 2.0 (110 kw) | 2008.09-2010.05 | 6MT | F | L | SUV Van 4WD D4EA | | GDS24300 | Drive Shaft | 48T | 30 | 28 | 65 | 95 | 653 | |
| | 2008.09-2010.05 | 6MT | F | R | SUV Van 4WD D4EA | | GDS24301 | Drive Shaft | 48T | 30 | 28 | 65 | 95 | 605 | |
| | 2008.09-2010.05 | 6MT | F | L/R | SUV Van 4WD D4EA | | GCO24153 | Outer Joint | 48T | 30 | 25 | 65 | 95 | 69.5 | M |
| | 2008.09-2010.05 | 6MT | R | L | SUV Van 4WD D4EA | | GCI27018 | Inner Joint | | 27 | 24 | 41 | 61.5 | 100.5 | |
| | 2008.09-2010.05 | 6MT | F | L | SUV Van FWD D4EA | | GDS24300 | Drive Shaft | 48T | 30 | 28 | 65 | 95 | 653 | |
| | 2008.09-2010.05 | 6MT | F | L | SUV Van FWD D4EA | | GCO24153 | Outer Joint | 48T | 30 | 25 | 65 | 95 | 69.5 | M |
| **Stonic** | | | | | | | | | | | | | | | |
| 1.0 (74 kw) | 2018.08- | 5MT | F | L | Hatchback FWD G3LC;G3LE | | GDS84367 | Drive Shaft | | 25 | 25 | 52.6 | 95 | 710 | |
| | 2018.08- | 5MT | F | R | Hatchback FWD G3LC;G3LE | | GDS84366 | Drive Shaft | | 25 | 25 | 52.6 | 95 | 907 | |
| | 2018.08- | 5MT/6MT | F | L/R | Hatchback FWD G3LC;G3LE | | GCI82403 | Inner Joint | | 25 | 30 | 41 | 61.5 | 90 | |
| | 2018.08- | 5MT/6MT/7DCT | F | L/R | Hatchback FWD G3LC;G3LE | | GCO82732 | Outer Joint | | 25 | 30 | 52.6 | 95 | 57 | M |
| | 2018.08- | 6MT | F | L | Hatchback FWD G3LC;G3LE | | GDS84369 | Drive Shaft | | 25 | 25 | 52.6 | 95 | 702 | |
| | 2018.08- | 6MT | F | R | Hatchback FWD G3LC;G3LE | | GDS84368 | Drive Shaft | | 25 | 25 | 52.6 | 95 | 915 | |
| | 2018.08- | 7DCT | F | L | Hatchback FWD G3LC;G3LE | Not for Facelift | GDS84362 | Drive Shaft | | 25 | 27 | 52.6 | 95 | 682 | |
| | 2018.08- | 7DCT | F | R | Hatchback FWD G3LC;G3LE | Not for Facelift | GDS84361 | Drive Shaft | | 25 | 27 | 52.6 | 95 | 934 | |
| | 2018.08- | 7DCT | F | L/R | Hatchback FWD G3LC;G3LE | | GCI24015 | Inner Joint | | 27 | 30 | 41 | 62 | 90 | |
| | 2018.08- | 6MT | F | L | Hatchback Van FWD G3LC | | GDS84369 | Drive Shaft | | 25 | 25 | 52.6 | 95 | 702 | |
| | 2018.08- | 6MT | F | R | Hatchback Van FWD G3LC | | GDS84368 | Drive Shaft | | 25 | 25 | 52.6 | 95 | 915 | |
| | 2018.08- | 6MT | F | L/R | Hatchback Van FWD G3LC | | GCO82732 | Outer Joint | | 25 | 30 | 52.6 | 95 | 57 | M |
| | 2018.08- | 6MT | F | L/R | Hatchback Van FWD G3LC | | GCI82403 | Inner Joint | | 25 | 30 | 41 | 61.5 | 90 | |
| | 2021.01- | 6MT | F | L | Hatchback FWD G3LF | | GDS84369 | Drive Shaft | | 25 | 25 | 52.6 | 95 | 702 | |
| | 2021.01- | 6MT | F | R | Hatchback FWD G3LF | | GDS84368 | Drive Shaft | | 25 | 25 | 52.6 | 95 | 915 | |
| | 2021.01- | 6MT | F | L/R | Hatchback FWD G3LF | | GCO82732 | Outer Joint | | 25 | 30 | 52.6 | 95 | 57 | M |
| | 2021.01- | 6MT | F | L/R | Hatchback FWD G3LF | | GCI82403 | Inner Joint | | 25 | 30 | 41 | 61.5 | 90 | |
| 1.0 (85 kw) | 2025.09- | 6MT | F | L | Hatchback FWD G3LJ | | GDS84369 | Drive Shaft | | 25 | 25 | 52.6 | 95 | 702 | |
| | 2025.09- | 6MT | F | R | Hatchback FWD G3LJ | | GDS84368 | Drive Shaft | | 25 | 25 | 52.6 | 95 | 915 | |
| 1.0 (88 kw) | 2017.07- | 6MT | F | L | Hatchback Van FWD G3LC | | GDS84369 | Drive Shaft | | 25 | 25 | 52.6 | 95 | 702 | |
| | 2017.07- | 6MT | F | R | Hatchback Van FWD G3LC | | GDS84368 | Drive Shaft | | 25 | 25 | 52.6 | 95 | 915 | |
| | 2017.07- | 6MT | F | L/R | Hatchback Van FWD G3LC | | GCI82403 | Inner Joint | | 25 | 30 | 41 | 61.5 | 90 | |
| | 2017.07- | 6MT/7DCT | F | L/R | Hatchback Van FWD G3LC | | GCO82732 | Outer Joint | | 25 | 30 | 52.6 | 95 | 57 | M |
| | 2017.07- | 7DCT | F | L | Hatchback Van FWD G3LC | Not for Facelift | GDS84362 | Drive Shaft | | 25 | 27 | 52.6 | 95 | 682 | |
| | 2017.07- | 7DCT | F | R | Hatchback Van FWD G3LC | Not for Facelift | GDS84361 | Drive Shaft | | 25 | 27 | 52.6 | 95 | 934 | |
| | 2017.07- | 7DCT | F | L/R | Hatchback Van FWD G3LC | | GCI24015 | Inner Joint | | 27 | 30 | 41 | 62 | 90 | |
| | 2017.07-2025.12 | 6MT | F | L | Hatchback FWD G3LC | | GDS84369 | Drive Shaft | | 25 | 25 | 52.6 | 95 | 702 | |
| | 2017.07-2025.12 | 6MT | F | R | Hatchback FWD G3LC | | GDS84368 | Drive Shaft | | 25 | 25 | 52.6 | 95 | 915 | |
| | 2017.07-2025.12 | 6MT | F | L/R | Hatchback FWD G3LC | | GCI82403 | Inner Joint | | 25 | 30 | 41 | 61.5 | 90 | |
| | 2017.07-2025.12 | 6MT/7DCT | F | L/R | Hatchback FWD G3LC | | GCO82732 | Outer Joint | | 25 | 30 | 52.6 | 95 | 57 | M |
| | 2017.07-2025.12 | 7DCT | F | L | Hatchback FWD G3LC | Not for Facelift | GDS84362 | Drive Shaft | | 25 | 27 | 52.6 | 95 | 682 | |
| | 2017.07-2025.12 | 7DCT | F | R | Hatchback FWD G3LC | Not for Facelift | GDS84361 | Drive Shaft | | 25 | 27 | 52.6 | 95 | 934 | |
| | 2017.07-2025.12 | 7DCT | F | L/R | Hatchback FWD G3LC | | GCI24015 | Inner Joint | | 27 | 30 | 41 | 62 | 90 | |
| | 2020.07-2025.12 | 6MT | F | L | Hatchback FWD G3LF | | GDS84369 | Drive Shaft | | 25 | 25 | 52.6 | 95 | 702 | |
| | 2020.07-2025.12 | 6MT | F | R | Hatchback FWD G3LF | | GDS84368 | Drive Shaft | | 25 | 25 | 52.6 | 95 | 915 | |
| | 2020.07-2025.12 | 6MT | F | L/R | Hatchback FWD G3LF | | GCO82732 | Outer Joint | | 25 | 30 | 52.6 | 95 | 57 | M |
| | 2020.07-2025.12 | 6MT | F | L/R | Hatchback FWD G3LF | | GCI82403 | Inner Joint | | 25 | 30 | 41 | 61.5 | 90 | |
| 1.4 (71 kw) | 2018.11-2025.12 | 6MT | F | L | Hatchback FWD G4LC | | GDS84364 | Drive Shaft | | 25 | 25 | 52.5 | 94.5 | 687 | |
| | 2018.11-2025.12 | 6MT | F | R | Hatchback FWD G4LC | | GDS84365 | Drive Shaft | | 25 | 25 | 52.5 | 94.5 | 933 | |
| | 2018.11-2025.12 | 6MT | F | L/R | Hatchback FWD G4LC | | GCO82442 | Outer Joint | | 25 | 22 | 52.5 | 94.5 | 54 | M |
| | 2018.11-2025.12 | 6MT | F | L/R | Hatchback FWD G4LC | | GCI82316 | Inner Joint | | 25 | 29 | 41 | 63 | 86.5 | |
| 1.4 (73 kw) | 2017.07-2025.12 | 6AT | F | L | Hatchback FWD G4LC | | GDS84189 | Drive Shaft | | 25 | 27 | 52.5 | 94.5 | 669 | |
| | 2017.07-2025.12 | 6AT | F | R | Hatchback FWD G4LC | | GDS84188 | Drive Shaft | | 25 | 27 | 52.5 | 94.5 | 927 | |
| | 2017.07-2025.12 | 6AT | F | L/R | Hatchback FWD G4LC | | GCO82726 | Outer Joint | | 25 | 22 | 52.5 | 94.5 | 54 | M |
| | 2017.07-2025.12 | 6AT | F | L/R | Hatchback FWD G4LC | | GCI82296 | Inner Joint | | 27 | 29 | 30 | 67.5 | 81 | |
| | 2017.07-2025.12 | 6MT | F | L | Hatchback FWD G4LC | | GDS84364 | Drive Shaft | | 25 | 25 | 52.5 | 94.5 | 687 | |
| | 2017.07-2025.12 | 6MT | F | R | Hatchback FWD G4LC | | GDS84365 | Drive Shaft | | 25 | 25 | 52.5 | 94.5 | 933 | |
| | 2017.07-2025.12 | 6MT | F | L/R | Hatchback FWD G4LC | | GCO82442 | Outer Joint | | 25 | 22 | 52.5 | 94.5 | 54 | M |

| | YEAR | TRANSM. | F/R | L/R | BODY STYLE & DRIVE TYPE & ENGINE | REMARKS | G-AP Ref. | PRODUCT | ABS | Technical Specifications A | B | C | H | L | P |
|---|---|---|---|---|---|---|---|---|---|---|---|---|---|---|---|
| **KIA** | | | | | | | | | | | | | | | |
| **Stonic** | | | | | | | | | | | | | | | |
| 1.4 (73 kw) | 2017.07-2025.12 | 6MT | F | L/R | Hatchback FWD G4LC | | GCI82316 | Inner Joint | | 25 | 29 | 41 | 63 | 86.5 | |
| 1.6 (81 kw) | 2017.07-2025.12 | 6MT | F | L | Hatchback FWD D4FB | | GDS84210 | Drive Shaft | | 25 | 27 | 52.6 | 95 | 665 | |
| | 2017.07-2025.12 | 6MT | F | R | Hatchback FWD D4FB | | GDS84209 | Drive Shaft | | 25 | 27 | 52.6 | 95 | 954 | |
| | 2017.07-2025.12 | 6MT | F | L/R | Hatchback FWD D4FB | | GCO82732 | Outer Joint | | 25 | 30 | 52.6 | 95 | 57 | M |
| | 2017.07-2025.12 | 6MT | F | L/R | Hatchback FWD D4FB | | GCI24015 | Inner Joint | | 27 | 30 | 41 | 62 | 90 | |
| 1.6 (85 kw) | 2018.08- | 6MT | F | L/R | Hatchback Van FWD D4FE | | GCO82732 | Outer Joint | | 25 | 30 | 52.6 | 95 | 57 | M |
| | 2018.08- | 6MT | F | L/R | Hatchback Van FWD D4FE | | GCI24015 | Inner Joint | | 27 | 30 | 41 | 62 | 90 | |
| | 2018.08-2025.12 | 6MT | F | L/R | Hatchback FWD D4FE | | GCO82732 | Outer Joint | | 25 | 30 | 52.6 | 95 | 57 | M |
| | 2018.08-2025.12 | 6MT | F | L/R | Hatchback FWD D4FE | | GCI24015 | Inner Joint | | 27 | 30 | 41 | 62 | 90 | |
| 1.6 (100 kw) | 2018.08-2025.12 | 6MT | F | L/R | Hatchback FWD D4FE | | GCO82732 | Outer Joint | | 25 | 30 | 52.6 | 95 | 57 | M |
| | 2018.08-2025.12 | 6MT | F | L/R | Hatchback FWD D4FE | | GCI24015 | Inner Joint | | 27 | 30 | 41 | 62 | 90 | |
| **Venga** | | | | | | | | | | | | | | | |
| 1.4 (55 kw) | 2010.02-2019.03 | MT | F | R | Hatchback FWD D4FC | | GDS24400 | Drive Shaft | 46T | 27 | 27 | 60 | 95 | 967 | |
| | 2010.02-2019.03 | MT | F | R | Hatchback FWD D4FC | | GCO24137 | Outer Joint | 46T | 27 | 24 | 60 | 95 | 59 | M |
| | 2010.02-2019.03 | MT | F | L | Hatchback FWD D4FC | | GCI27002 | Inner Joint | | 28 | 24 | 43 | | 123.6 | |
| | 2010.02-2019.03 | | F | L | Hatchback FWD D4FC | | GDS24318 | Drive Shaft | 46T | 27 | 27 | 60 | 95 | 672 | |
| 1.4 (57 kw) | 2010.02-2019.03 | MT | F | R | Hatchback FWD D4FC | | GDS24400 | Drive Shaft | 46T | 27 | 27 | 60 | 95 | 967 | |
| | 2010.02-2019.03 | MT | F | R | Hatchback FWD D4FC | | GCO24137 | Outer Joint | 46T | 27 | 24 | 60 | 95 | 59 | M |
| | 2010.02-2019.03 | MT | F | L | Hatchback FWD D4FC | | GCI27002 | Inner Joint | | 28 | 24 | 43 | | 123.6 | |
| | 2010.02-2019.03 | | F | L | Hatchback FWD D4FC | | GDS24318 | Drive Shaft | 46T | 27 | 27 | 60 | 95 | 672 | |
| | 2015.04- | MT | F | L | Hatchback Van FWD D4FC | | GCI27002 | Inner Joint | | 28 | 24 | 43 | | 123.6 | |
| | 2015.04- | | F | L | Hatchback Van FWD D4FC | | GDS24318 | Drive Shaft | 46T | 27 | 27 | 60 | 95 | 672 | |
| | 2015.04- | | F | R | Hatchback Van FWD D4FC | | GDS24400 | Drive Shaft | 46T | 27 | 27 | 60 | 95 | 967 | |
| | 2015.04- | | F | R | Hatchback Van FWD D4FC | | GCO24137 | Outer Joint | 46T | 27 | 24 | 60 | 95 | 59 | M |
| 1.4 (66 kw) | 2010.02-2019.03 | 6MT | F | L | Hatchback FWD D4FC | | GDS24318 | Drive Shaft | 46T | 27 | 27 | 60 | 95 | 672 | |
| | 2010.02-2019.03 | 6MT | F | R | Hatchback FWD D4FC | | GDS24400 | Drive Shaft | 46T | 27 | 27 | 60 | 95 | 967 | |
| | 2010.02-2019.03 | 6MT | F | R | Hatchback FWD D4FC | | GCO24137 | Outer Joint | 46T | 27 | 24 | 60 | 95 | 59 | M |
| | 2010.02-2019.03 | 6MT | F | L/R | Hatchback FWD D4FC | | GCO27088 | Outer Joint | 46T | 27 | 22 | 60 | 94.5 | 54.5 | M |
| | 2010.02-2019.03 | 6MT | F | L | Hatchback FWD D4FC | | GCI27002 | Inner Joint | | 28 | 24 | 43 | | 123.6 | |
| | 2010.02-2019.03 | 6MT | F | R | Hatchback FWD D4FC | | GCI27043 | Inner Joint | | 27 | 24 | 41 | 61.5 | 91 | |
| | 2010.02-2019.03 | 5MT | F | L | Hatchback FWD G4FA | | GDS24548 | Drive Shaft | 46T | 27 | 25 | 60 | 94.5 | 687 | |
| | 2010.02-2019.03 | 5MT | F | R | Hatchback FWD G4FA | | GDS39237 | Drive Shaft | 46T | 27 | 25 | 60 | 94.5 | 959 | |
| | 2010.02-2019.03 | 5MT | F | L/R | Hatchback FWD G4FA | | GCO24132 | Outer Joint | 46T | 27 | 22 | 60 | 94.5 | 54.5 | M |
| | 2010.02-2019.03 | 5MT | F | L/R | Hatchback FWD G4FA | | GCO27088 | Outer Joint | 46T | 27 | 22 | 60 | 94.5 | 54.5 | M |
| | 2010.02-2019.03 | 5MT | F | R | Hatchback FWD G4FA | | GCI39052 | Inner Joint | | 25 | 22 | 41 | 63 | 86 | |
| | 2010.02-2019.03 | MT | F | L | Hatchback FWD G4FA | | GDS24548 | Drive Shaft | 46T | 27 | 25 | 60 | 94.5 | 687 | |
| | 2010.02-2019.03 | MT | F | R | Hatchback FWD G4FA | | GDS39237 | Drive Shaft | 46T | 27 | 25 | 60 | 94.5 | 959 | |
| | 2010.02-2019.03 | MT | F | L | Hatchback FWD G4FA | | GCO27088 | Outer Joint | 46T | 27 | 22 | 60 | 94.5 | 54.5 | M |
| | 2010.02-2019.03 | MT | F | L/R | Hatchback FWD G4FA | | GCI39052 | Inner Joint | | 25 | 22 | 41 | 63 | 86 | |
| | 2015.04- | MT | F | L | Hatchback Van FWD D4FC | | GCI27002 | Inner Joint | | 28 | 24 | 43 | | 123.6 | |
| | 2015.04- | | F | L | Hatchback Van FWD D4FC | | GDS24318 | Drive Shaft | 46T | 27 | 27 | 60 | 95 | 672 | |
| | 2015.04- | | F | R | Hatchback Van FWD D4FC | | GDS24400 | Drive Shaft | 46T | 27 | 27 | 60 | 95 | 967 | |
| | 2015.04- | | F | R | Hatchback Van FWD D4FC | | GCO24137 | Outer Joint | 46T | 27 | 24 | 60 | 95 | 59 | M |
| | 2015.04- | MT | F | R | Hatchback Van FWD G4FA | | GCI39052 | Inner Joint | | 25 | 22 | 41 | 63 | 86 | |
| | 2015.04- | | F | L | Hatchback Van FWD G4FA | | GDS24548 | Drive Shaft | 46T | 27 | 25 | 60 | 94.5 | 687 | |
| | 2015.04- | | F | R | Hatchback Van FWD G4FA | | GDS39237 | Drive Shaft | 46T | 27 | 25 | 60 | 94.5 | 959 | |
| | 2015.04- | | F | L | Hatchback Van FWD G4FA | | GCO27088 | Outer Joint | 46T | 27 | 22 | 60 | 94.5 | 54.5 | M |
| 1.6 (85 kw) | 2010.02-2019.03 | 6MT | F | L | Hatchback FWD D4FB | | GDS24318 | Drive Shaft | 46T | 27 | 27 | 60 | 95 | 672 | |
| | 2010.02-2019.03 | 6MT | F | R | Hatchback FWD D4FB | | GDS24400 | Drive Shaft | 46T | 27 | 27 | 60 | 95 | 967 | |
| | 2010.02-2019.03 | 6MT | F | R | Hatchback FWD D4FB | | GCO24137 | Outer Joint | 46T | 27 | 24 | 60 | 95 | 59 | M |
| | 2010.02-2019.03 | 6MT | F | L/R | Hatchback FWD D4FB | | GCO27088 | Outer Joint | 46T | 27 | 22 | 60 | 94.5 | 54.5 | M |
| | 2010.02-2019.03 | 6MT | F | L | Hatchback FWD D4FB | | GCI27002 | Inner Joint | | 28 | 24 | 43 | | 123.6 | |
| | 2010.02-2019.03 | 6MT | F | R | Hatchback FWD D4FB | | GCI27043 | Inner Joint | | 27 | 24 | 41 | 61.5 | 91 | |
| 1.6 (92 kw) | 2010.02-2019.03 | 4AT/5MT/6MT | F | L/R | Hatchback FWD G4FC | | GCI39052 | Inner Joint | | 25 | 22 | 41 | 63 | 86 | |
| | 2010.02-2019.03 | 5MT/6MT | F | L | Hatchback FWD G4FC | | GDS24548 | Drive Shaft | 46T | 27 | 25 | 60 | 94.5 | 687 | |
| | 2010.02-2019.03 | 5MT/6MT | F | R | Hatchback FWD G4FC | | GDS39237 | Drive Shaft | 46T | 27 | 25 | 60 | 94.5 | 959 | |
| | 2010.02-2019.03 | 5MT/6MT | F | L | Hatchback FWD G4FC | | GCO27088 | Outer Joint | 46T | 27 | 22 | 60 | 94.5 | 54.5 | M |
| | 2015.02- | 6MT | F | L | Hatchback Van FWD G4FC | | GDS24548 | Drive Shaft | 46T | 27 | 25 | 60 | 94.5 | 687 | |
| | 2015.02- | 6MT | F | R | Hatchback Van FWD G4FC | | GDS39237 | Drive Shaft | 46T | 27 | 25 | 60 | 94.5 | 959 | |
| | 2015.02- | AT/MT | F | R | Hatchback Van FWD G4FC | | GCI39052 | Inner Joint | | 25 | 22 | 41 | 63 | 86 | |
| | 2015.02- | | F | L | Hatchback Van FWD G4FC | | GCO27088 | Outer Joint | 46T | 27 | 22 | 60 | 94.5 | 54.5 | M |
| 1.6 (94 kw) | 2010.02-2019.03 | MT | F | R | Hatchback FWD D4FB | | GDS24400 | Drive Shaft | 46T | 27 | 27 | 60 | 95 | 967 | |
| | 2010.02-2019.03 | MT | F | R | Hatchback FWD D4FB | | GCO24137 | Outer Joint | 46T | 27 | 24 | 60 | 95 | 59 | M |
| | 2010.02-2019.03 | MT | F | R | Hatchback FWD D4FB | | GCI27043 | Inner Joint | | 27 | 24 | 41 | 61.5 | 91 | |
| | 2010.02-2019.03 | | F | L | Hatchback FWD D4FB | | GDS24318 | Drive Shaft | 46T | 27 | 27 | 60 | 95 | 672 | |

| | YEAR | TRANSM. | F/R | L/R | BODY STYLE & DRIVE TYPE & ENGINE | REMARKS | G-AP Ref. | PRODUCT | ABS | Technical Specifications A | B | C | H | L | P |
|---|---|---|---|---|---|---|---|---|---|---|---|---|---|---|---|
| **KIA** | | | | | | | | | | | | | | | |
| **Venga** | | | | | | | | | | | | | | | |
| 1.6 (94 kw) | 2010.02-2019.03 | | F | L | Hatchback FWD D4FB | | GCI27002 | Inner Joint | | 28 | 24 | 43 | | 123.6 | |
| **Xceed** | | | | | | | | | | | | | | | |
| 1.4 (103 kw) | 2019.06-2020.12 | 6MT | F | L | SUV FWD G4LD | | GDS84208 | Drive Shaft | | 27 | 27 | 60 | 95 | 689 | |
| | 2019.06-2020.12 | 6MT | F | R | SUV FWD G4LD | | GDS84207 | Drive Shaft | | 27 | 27 | 60 | 95 | 962 | |
| | 2019.06-2020.12 | 6MT | F | L/R | SUV FWD G4LD | | GCI82642 | Inner Joint | | 27 | 32 | 41 | 61.5 | 108.5 | |
| | 2019.06-2020.12 | 6MT/7DCT | F | L/R | SUV FWD G4LD | | GCO81818 | Outer Joint | | 27 | 24 | 60 | 95 | 59 | M |
| | 2019.06-2020.12 | 7DCT | F | L | SUV FWD G4LD | | GDS84399 | Drive Shaft | | 27 | 28 | 60 | 95 | 654 | |
| | 2019.06-2020.12 | 7DCT | F | R | SUV FWD G4LD | | GDS84398 | Drive Shaft | | 27 | 28 | 60 | 95 | 1000 | |
| | 2019.06-2020.12 | 7DCT | F | L/R | SUV FWD G4LD | | GCI82741 | Inner Joint | | 28 | 32 | 41 | 61.5 | 109 | |
| | 2019.06-2020.12 | 7DCT | F | L | SUV Van FWD G4LD | | GDS84399 | Drive Shaft | | 27 | 28 | 60 | 95 | 654 | |
| | 2019.06-2020.12 | 7DCT | F | R | SUV Van FWD G4LD | | GDS84398 | Drive Shaft | | 27 | 28 | 60 | 95 | 1000 | |
| | 2019.06-2020.12 | 7DCT | F | L/R | SUV Van FWD G4LD | | GCO81818 | Outer Joint | | 27 | 24 | 60 | 95 | 59 | M |
| | 2019.06-2020.12 | 7DCT | F | L/R | SUV Van FWD G4LD | | GCI82741 | Inner Joint | | 28 | 32 | 41 | 61.5 | 109 | |
| 1.5 (103 kw) | 2024.02- | 6MT | F | L | SUV FWD G4LH | | GDS84208 | Drive Shaft | | 27 | 27 | 60 | 95 | 689 | |
| | 2024.02- | 6MT | F | R | SUV FWD G4LH | | GDS84207 | Drive Shaft | | 27 | 27 | 60 | 95 | 962 | |
| 1.5 (118 kw) | 2021.01- | 6MT | F | L | SUV FWD G4LH | | GDS84208 | Drive Shaft | | 27 | 27 | 60 | 95 | 689 | |
| | 2021.01- | 6MT | F | R | SUV FWD G4LH | | GDS84207 | Drive Shaft | | 27 | 27 | 60 | 95 | 962 | |
| | 2021.01- | 6MT | F | L/R | SUV FWD G4LH | | GCO81818 | Outer Joint | | 27 | 24 | 60 | 95 | 59 | M |
| | 2021.01- | 6MT | F | L/R | SUV FWD G4LH | | GCI82642 | Inner Joint | | 27 | 32 | 41 | 61.5 | 108.5 | |
| | 2021.01- | 6MT | F | L | SUV FWD G4LH;G4LK | | GDS84208 | Drive Shaft | | 27 | 27 | 60 | 95 | 689 | |
| | 2021.01- | 6MT | F | R | SUV FWD G4LH;G4LK | | GDS84207 | Drive Shaft | | 27 | 27 | 60 | 95 | 962 | |
| | 2021.01- | 6MT | F | L/R | SUV FWD G4LH;G4LK | | GCO81818 | Outer Joint | | 27 | 24 | 60 | 95 | 59 | M |
| | 2021.01- | 6MT | F | L/R | SUV FWD G4LH;G4LK | | GCI82642 | Inner Joint | | 27 | 32 | 41 | 61.5 | 108.5 | |
| 1.6 (85 kw) | 2019.06- | 6MT | F | L/R | SUV FWD D4FE | | GCI82642 | Inner Joint | | 27 | 32 | 41 | 61.5 | 108.5 | |
| | 2019.12- | 6MT | F | L/R | SUV FWD D4FE | | GCI82642 | Inner Joint | | 27 | 32 | 41 | 61.5 | 108.5 | |
| 1.6 (100 kw) | 2019.06- | 6MT | F | L/R | SUV FWD D4FE | | GCI82642 | Inner Joint | | 27 | 32 | 41 | 61.5 | 108.5 | |
| | 2019.12- | 6MT | F | L/R | SUV FWD D4FE | | GCI82642 | Inner Joint | | 27 | 32 | 41 | 61.5 | 108.5 | |
| 1.6 (150 kw) | 2019.06- | 6MT | F | L | SUV FWD G4FJ | | GCI82642 | Inner Joint | | 27 | 32 | 41 | 61.5 | 108.5 | |
| **KIA (DYK)** | | | | | | | | | | | | | | | |
| **K3** | | | | | | | | | | | | | | | |
| 1.6 (77 kw) | 2019.09- | 6DCT | F | L | Saloon FWD G4LE | | GCI81747 | Inner Joint | | 28 | 32 | 41 | 61.5 | 101 | |
| EV (135 kw) | 2020.11- | ET | F | R | Saloon FWD EM13 | | GCI83118 | Inner Joint | | 28 | 33 | 42 | | 129 | |
| **K5** | | | | | | | | | | | | | | | |
| 2.0 (180 kw) | 2013.12- | 6AT | F | R | Saloon FWD G4KH | Model year from:2015,Model year to:2017 | GCI81748 | Inner Joint | | 28 | 33 | 44.1 | | 121 | |
| | 2015.10- | 6AT | F | R | Saloon FWD G4KH | Model year to:2017 | GCI81748 | Inner Joint | | 28 | 33 | 44.1 | | 121 | |
| **KX1** | | | | | | | | | | | | | | | |
| 1.4 (74 kw) | 2018.08- | CVT | F | L/R | SUV FWD G4LC | | GCI24065 | Inner Joint | | 27 | 22 | 30 | 68 | 77 | |
| **Sportage** | | | | | | | | | | | | | | | |
| 1.5 (147 kw) | 2022.11- | 8AMT | F | L | SUV FWD G4FS | | GDS56278 | Drive Shaft | | 30 | 27 | 73 | 95 | 699 | |
| | 2022.11- | 8AMT | F | L | SUV FWD G4FS | | GCI83223 | Inner Joint | | 27 | 33 | 30 | 67 | 95 | |
| | 2022.11- | 8AMT | F | R | SUV FWD G4FS | | GCI82294 | Inner Joint | | 28 | 33 | 44.1 | | 121 | |
| **Sportage-Ace** | | | | | | | | | | | | | | | |
| 1.5 (147 kw) | 2021.07- | 7DCT | F | L | SUV FWD G4FS | | GDS84588 | Drive Shaft | 48T | 30 | 28 | 73 | 95 | 635 | |
| | 2021.07- | 7DCT | F | R | SUV FWD G4FS | | GDS84587 | Drive Shaft | 48T | 30 | 28 | 73 | 95 | 590 | |
| | 2021.07- | 7DCT | F | L/R | SUV FWD G4FS | | GCO82885 | Outer Joint | 48T | 30 | 25 | 73 | 95 | 64 | M |
| | 2021.07- | 7DCT | F | L | SUV FWD G4FS | | GCI82295 | Inner Joint | | 28 | 33 | 33 | 67 | 94.5 | |
| | 2021.07- | 7DCT | F | R | SUV FWD G4FS | | GCI82294 | Inner Joint | | 28 | 33 | 44.1 | | 121 | |
| **LADA** | | | | | | | | | | | | | | | |
| **110** | | | | | | | | | | | | | | | |
| 1.3 (88 kw) | 1997.06-2004.09 | MT | F | L/R | Saloon FWD 415 | | GCO28001 | Outer Joint | | 22 | 22 | 50 | 77 | 53.5 | I |
| 1.5 (52 kw) | 1996.06-2004.09 | 5MT | F | L | Saloon FWD 2111 | | GDS28001 | Drive Shaft | | 22 | 24 | 50 | 77 | 600 | |
| | 1996.06-2004.09 | 5MT | F | R | Saloon FWD 2111 | | GDS28004 | Drive Shaft | | 22 | 24 | 50 | 77 | 856.2 | |
| | 1996.06-2004.09 | 5MT | F | L/R | Saloon FWD 2111 | | GCO28001 | Outer Joint | | 22 | 22 | 50 | 77 | 53.5 | I |
| | 1996.06-2004.09 | 5MT | F | L/R | Saloon FWD 2111 | | GCI28001 | Inner Joint | | 24 | 22 | 35 | 60.8 | 97 | |
| | 1996.06-2004.09 | 5MT | F | L/R | Saloon FWD 2111 | | GCI28002 | Inner Joint | | 24 | 22 | 35 | 60.8 | 97 | |
| 1.5 (54 kw) | 1995.01-2005.12 | 5MT | F | L/R | Saloon FWD 2110 | TJ | GCI28001 | Inner Joint | | 24 | 22 | 35 | 60.8 | 97 | |
| | 1995.01-2005.12 | MT | F | L | Saloon FWD 2110 | | GDS28001 | Drive Shaft | | 22 | 24 | 50 | 77 | 600 | |
| | 1995.01-2005.12 | MT | F | R | Saloon FWD 2110 | | GDS28004 | Drive Shaft | | 22 | 24 | 50 | 77 | 856.2 | |
| | 1995.01-2005.12 | MT | F | L/R | Saloon FWD 2110 | | GCO28001 | Outer Joint | | 22 | 22 | 50 | 77 | 53.5 | I |
| | 1995.01-2005.12 | MT | F | L/R | Saloon FWD 2110 | DOJ | GCI28002 | Inner Joint | | 24 | 22 | 35 | 60.8 | 97 | |
| 1.5 (56 kw) | 2000.10-2004.09 | 5MT | F | L | Saloon FWD 2111 | | GDS28001 | Drive Shaft | | 22 | 24 | 50 | 77 | 600 | |
| | 2000.10-2004.09 | 5MT | F | R | Saloon FWD 2111 | | GDS28004 | Drive Shaft | | 22 | 24 | 50 | 77 | 856.2 | |
| | 2000.10-2004.09 | 5MT | F | L/R | Saloon FWD 2111 | | GCO28001 | Outer Joint | | 22 | 22 | 50 | 77 | 53.5 | I |
| | 2000.10-2004.09 | 5MT | F | L/R | Saloon FWD 2111 | | GCI28001 | Inner Joint | | 24 | 22 | 35 | 60.8 | 97 | |
| | 2000.10-2004.09 | 5MT | F | L/R | Saloon FWD 2111 | | GCI28002 | Inner Joint | | 24 | 22 | 35 | 60.8 | 97 | |

| | YEAR | TRANSM. | F/R | L/R | BODY STYLE & DRIVE TYPE & ENGINE | REMARKS | G-AP Ref. | PRODUCT | ABS | Technical Specifications A | B | C | H | L | P |
|---|---|---|---|---|---|---|---|---|---|---|---|---|---|---|---|
| **LADA** | | | | | | | | | | | | | | | |
| **110** | | | | | | | | | | | | | | | |
| 1.5 (57 kw) | 1995.01-2005.12 | 5MT | F | L/R | Saloon FWD 2111 | TJ | GCI28001 | Inner Joint | | 24 | 22 | 35 | 60.8 | 97 | |
| | 1995.01-2005.12 | MT | F | L | Saloon FWD 2111 | | GDS28001 | Drive Shaft | | 22 | 24 | 50 | 77 | 600 | |
| | 1995.01-2005.12 | MT | F | R | Saloon FWD 2111 | | GDS28004 | Drive Shaft | | 22 | 24 | 50 | 77 | 856.2 | |
| | 1995.01-2005.12 | MT | F | L/R | Saloon FWD 2111 | | GCO28001 | Outer Joint | | 22 | 22 | 50 | 77 | 53.5 | I |
| | 1995.01-2005.12 | MT | F | L/R | Saloon FWD 2111 | DOJ | GCI28002 | Inner Joint | | 24 | 22 | 35 | 60.8 | 97 | |
| 1.5 (67 kw) | 2000.10-2010.12 | 5MT | F | L/R | Saloon FWD 2112 | | GCI28001 | Inner Joint | | 24 | 22 | 35 | 60.8 | 97 | |
| | 2000.10-2010.12 | 5MT | F | L/R | Saloon FWD 2112 | | GCI28002 | Inner Joint | | 24 | 22 | 35 | 60.8 | 97 | |
| | 2000.10-2010.12 | MT | F | L | Saloon FWD 2112 | | GDS28001 | Drive Shaft | | 22 | 24 | 50 | 77 | 600 | |
| | 2000.10-2010.12 | MT | F | R | Saloon FWD 2112 | | GDS28004 | Drive Shaft | | 22 | 24 | 50 | 77 | 856.2 | |
| | 2000.10-2010.12 | MT | F | L/R | Saloon FWD 2112 | | GCO28001 | Outer Joint | | 22 | 22 | 50 | 77 | 53.5 | I |
| 1.5 (70 kw) | 1995.01-2005.12 | 5MT | F | L/R | Saloon FWD 2112 | TJ | GCI28001 | Inner Joint | | 24 | 22 | 35 | 60.8 | 97 | |
| | 1995.01-2005.12 | MT | F | L | Saloon FWD 2112 | | GDS28001 | Drive Shaft | | 22 | 24 | 50 | 77 | 600 | |
| | 1995.01-2005.12 | MT | F | R | Saloon FWD 2112 | | GDS28004 | Drive Shaft | | 22 | 24 | 50 | 77 | 856.2 | |
| | 1995.01-2005.12 | MT | F | L/R | Saloon FWD 2112 | | GCO28001 | Outer Joint | | 22 | 22 | 50 | 77 | 53.5 | I |
| | 1995.01-2005.12 | MT | F | L/R | Saloon FWD 2112 | DOJ | GCI28002 | Inner Joint | | 24 | 22 | 35 | 60.8 | 97 | |
| 1.6 (60 kw) | 2000.01-2012.12 | 5MT | F | L | Saloon FWD 21114 | | GDS28001 | Drive Shaft | | 22 | 24 | 50 | 77 | 600 | |
| | 2000.01-2012.12 | 5MT | F | R | Saloon FWD 21114 | | GDS28004 | Drive Shaft | | 22 | 24 | 50 | 77 | 856.2 | |
| | 2000.01-2012.12 | 5MT | F | L/R | Saloon FWD 21114 | | GCO28001 | Outer Joint | | 22 | 22 | 50 | 77 | 53.5 | I |
| | 2000.01-2012.12 | 5MT | F | L/R | Saloon FWD 21114 | TJ | GCI28001 | Inner Joint | | 24 | 22 | 35 | 60.8 | 97 | |
| | 2000.01-2012.12 | 5MT | F | L/R | Saloon FWD 21114 | DOJ | GCI28002 | Inner Joint | | 24 | 22 | 35 | 60.8 | 97 | |
| | 2000.01-2012.12 | MT | F | R | Saloon FWD 21114 | | GDS28002 | Drive Shaft | | 22 | 24 | 50 | 77 | 848 | |
| | 2004.10-2007.03 | 5MT | F | L/R | Saloon FWD 21114 | | GCI28001 | Inner Joint | | 24 | 22 | 35 | 60.8 | 97 | |
| | 2004.10-2007.03 | 5MT | F | L/R | Saloon FWD 21114 | | GCI28002 | Inner Joint | | 24 | 22 | 35 | 60.8 | 97 | |
| | 2004.10-2007.03 | MT | F | L | Saloon FWD 21114 | | GDS28001 | Drive Shaft | | 22 | 24 | 50 | 77 | 600 | |
| | 2004.10-2007.03 | MT | F | R | Saloon FWD 21114 | | GDS28004 | Drive Shaft | | 22 | 24 | 50 | 77 | 856.2 | |
| | 2004.10-2007.03 | MT | F | L/R | Saloon FWD 21114 | | GCO28001 | Outer Joint | | 22 | 22 | 50 | 77 | 53.5 | I |
| 1.6 (66 kw) | 2000.01-2008.12 | 5MT | F | L | Saloon FWD 21124 | | GDS28001 | Drive Shaft | | 22 | 24 | 50 | 77 | 600 | |
| | 2000.01-2008.12 | 5MT | F | R | Saloon FWD 21124 | | GDS28004 | Drive Shaft | | 22 | 24 | 50 | 77 | 856.2 | |
| | 2000.01-2008.12 | 5MT | F | L/R | Saloon FWD 21124 | | GCO28001 | Outer Joint | | 22 | 22 | 50 | 77 | 53.5 | I |
| | 2000.01-2008.12 | 5MT | F | L/R | Saloon FWD 21124 | | GCI28001 | Inner Joint | | 24 | 22 | 35 | 60.8 | 97 | |
| | 2000.01-2008.12 | 5MT | F | L/R | Saloon FWD 21124 | | GCI28002 | Inner Joint | | 24 | 22 | 35 | 60.8 | 97 | |
| | 2000.01-2008.12 | MT | F | R | Saloon FWD 21124 | | GDS28002 | Drive Shaft | | 22 | 24 | 50 | 77 | 848 | |
| 1.6 (67 kw) | 2004.10-2010.12 | 5MT | F | L/R | Saloon FWD 21124 | | GCI28001 | Inner Joint | | 24 | 22 | 35 | 60.8 | 97 | |
| | 2004.10-2010.12 | 5MT | F | L/R | Saloon FWD 21124 | | GCI28002 | Inner Joint | | 24 | 22 | 35 | 60.8 | 97 | |
| | 2004.10-2010.12 | MT | F | L | Saloon FWD 21124 | | GDS28001 | Drive Shaft | | 22 | 24 | 50 | 77 | 600 | |
| | 2004.10-2010.12 | MT | F | R | Saloon FWD 21124 | | GDS28004 | Drive Shaft | | 22 | 24 | 50 | 77 | 856.2 | |
| | 2004.10-2010.12 | MT | F | L/R | Saloon FWD 21124 | | GCO28001 | Outer Joint | | 22 | 22 | 50 | 77 | 53.5 | I |
| 1.6 (72 kw) | 1995.01-2007.12 | 5MT | F | L | Saloon FWD 21114 | | GDS28001 | Drive Shaft | | 22 | 24 | 50 | 77 | 600 | |
| | 1995.01-2007.12 | 5MT | F | R | Saloon FWD 21114 | | GDS28004 | Drive Shaft | | 22 | 24 | 50 | 77 | 856.2 | |
| | 1995.01-2007.12 | 5MT | F | L/R | Saloon FWD 21114 | | GCO28001 | Outer Joint | | 22 | 22 | 50 | 77 | 53.5 | I |
| | 1995.01-2007.12 | 5MT | F | L/R | Saloon FWD 21114 | | GCI28001 | Inner Joint | | 24 | 22 | 35 | 60.8 | 97 | |
| | 1995.01-2007.12 | 5MT | F | L/R | Saloon FWD 21114 | | GCI28002 | Inner Joint | | 24 | 22 | 35 | 60.8 | 97 | |
| 2.0 (110 kw) | 1996.08-2000.07 | MT | F | L/R | Saloon FWD C 20 XE | | GCO28001 | Outer Joint | | 22 | 22 | 50 | 77 | 53.5 | I |
| **111** | | | | | | | | | | | | | | | |
| 1.5 (52 kw) | 1997.01-2003.10 | 5MT | F | L | Estate FWD 2111 | | GDS28001 | Drive Shaft | | 22 | 24 | 50 | 77 | 600 | |
| | 1997.01-2003.10 | 5MT | F | R | Estate FWD 2111 | | GDS28004 | Drive Shaft | | 22 | 24 | 50 | 77 | 856.2 | |
| | 1997.01-2003.10 | 5MT | F | L/R | Estate FWD 2111 | | GCO28001 | Outer Joint | | 22 | 22 | 50 | 77 | 53.5 | I |
| | 1997.01-2003.10 | 5MT | F | L/R | Estate FWD 2111 | | GCI28001 | Inner Joint | | 24 | 22 | 35 | 60.8 | 97 | |
| | 1997.01-2003.10 | 5MT | F | L/R | Estate FWD 2111 | | GCI28002 | Inner Joint | | 24 | 22 | 35 | 60.8 | 97 | |
| 1.5 (56 kw) | 2000.10-2009.02 | 5MT | F | L | Estate FWD 2111 | | GDS28001 | Drive Shaft | | 22 | 24 | 50 | 77 | 600 | |
| | 2000.10-2009.02 | 5MT | F | R | Estate FWD 2111 | | GDS28004 | Drive Shaft | | 22 | 24 | 50 | 77 | 856.2 | |
| | 2000.10-2009.02 | 5MT | F | L/R | Estate FWD 2111 | | GCO28001 | Outer Joint | | 22 | 22 | 50 | 77 | 53.5 | I |
| | 2000.10-2009.02 | 5MT | F | L/R | Estate FWD 2111 | | GCI28001 | Inner Joint | | 24 | 22 | 35 | 60.8 | 97 | |
| | 2000.10-2009.02 | 5MT | F | L/R | Estate FWD 2111 | | GCI28002 | Inner Joint | | 24 | 22 | 35 | 60.8 | 97 | |
| 1.5 (57 kw) | 1997.01-2004.09 | 5MT | F | L | Estate FWD 2111 | | GDS28001 | Drive Shaft | | 22 | 24 | 50 | 77 | 600 | |
| | 1997.01-2004.09 | 5MT | F | R | Estate FWD 2111 | | GDS28004 | Drive Shaft | | 22 | 24 | 50 | 77 | 856.2 | |
| | 1997.01-2004.09 | 5MT | F | L/R | Estate FWD 2111 | | GCO28001 | Outer Joint | | 22 | 22 | 50 | 77 | 53.5 | I |
| | 1997.01-2004.09 | 5MT | F | L/R | Estate FWD 2111 | TJ | GCI28001 | Inner Joint | | 24 | 22 | 35 | 60.8 | 97 | |
| | 1997.01-2004.09 | 5MT | F | L/R | Estate FWD 2111 | DOJ | GCI28002 | Inner Joint | | 24 | 22 | 35 | 60.8 | 97 | |
| 1.5 (58 kw) | 2000.10-2004.09 | 5MT | F | L | Estate FWD 2111 | | GDS28001 | Drive Shaft | | 22 | 24 | 50 | 77 | 600 | |
| | 2000.10-2004.09 | 5MT | F | R | Estate FWD 2111 | | GDS28004 | Drive Shaft | | 22 | 24 | 50 | 77 | 856.2 | |
| | 2000.10-2004.09 | 5MT | F | L/R | Estate FWD 2111 | | GCO28001 | Outer Joint | | 22 | 22 | 50 | 77 | 53.5 | I |
| | 2000.10-2004.09 | 5MT | F | L/R | Estate FWD 2111 | | GCI28001 | Inner Joint | | 24 | 22 | 35 | 60.8 | 97 | |
| | 2000.10-2004.09 | 5MT | F | L/R | Estate FWD 2111 | | GCI28002 | Inner Joint | | 24 | 22 | 35 | 60.8 | 97 | |
| 1.5 (67 kw) | 2000.10-2004.09 | 5MT | F | L | Estate FWD 2112 | | GDS28001 | Drive Shaft | | 22 | 24 | 50 | 77 | 600 | |

| | YEAR | TRANSM. | F/R | L/R | BODY STYLE & DRIVE TYPE & ENGINE | REMARKS | G-AP Ref. | PRODUCT | ABS | Technical Specifications A | B | C | H | L | P |
|---|---|---|---|---|---|---|---|---|---|---|---|---|---|---|---|
| **LADA** | | | | | | | | | | | | | | | |
| **111** | | | | | | | | | | | | | | | |
| 1.5 (67 kw) | 2000.10-2004.09 | 5MT | F | R | Estate FWD 2112 | | GDS28004 | Drive Shaft | | 22 | 24 | 50 | 77 | 856.2 | |
| | 2000.10-2004.09 | 5MT | F | L/R | Estate FWD 2112 | | GCO28001 | Outer Joint | | 22 | 22 | 50 | 77 | 53.5 | I |
| | 2000.10-2004.09 | 5MT | F | L/R | Estate FWD 2112 | | GCI28001 | Inner Joint | | 24 | 22 | 35 | 60.8 | 97 | |
| | 2000.10-2004.09 | 5MT | F | L/R | Estate FWD 2112 | | GCI28002 | Inner Joint | | 24 | 22 | 35 | 60.8 | 97 | |
| 1.5 (70 kw) | 1995.01-2002.08 | 5MT | F | L | Estate FWD 2112 | | GDS28001 | Drive Shaft | | 22 | 24 | 50 | 77 | 600 | |
| | 1995.01-2002.08 | 5MT | F | R | Estate FWD 2112 | | GDS28004 | Drive Shaft | | 22 | 24 | 50 | 77 | 856.2 | |
| | 1995.01-2002.08 | 5MT | F | L/R | Estate FWD 2112 | | GCO28001 | Outer Joint | | 22 | 22 | 50 | 77 | 53.5 | I |
| | 1995.01-2002.08 | 5MT | F | L/R | Estate FWD 2112 | TJ | GCI28001 | Inner Joint | | 24 | 22 | 35 | 60.8 | 97 | |
| | 1995.01-2002.08 | 5MT | F | L/R | Estate FWD 2112 | DOJ | GCI28002 | Inner Joint | | 24 | 22 | 35 | 60.8 | 97 | |
| 1.6 (59 kw) | 2004.09-2009.02 | 5MT | F | L/R | Estate FWD 21114 | | GCO28010 | Outer Joint | 43T | 22 | 22 | 50 | 77 | 53.5 | I |
| | 2004.09-2009.02 | 5MT | F | L/R | Estate FWD 21114 | | GCI28001 | Inner Joint | | 24 | 22 | 35 | 60.8 | 97 | |
| | 2004.09-2009.02 | 5MT | F | L/R | Estate FWD 21114 | | GCI28002 | Inner Joint | | 24 | 22 | 35 | 60.8 | 97 | |
| 1.6 (66 kw) | 2005.01-2007.12 | 5MT | F | L | Estate FWD 21124 | | GDS28009 | Drive Shaft | | 22 | 24 | 50 | 77 | 600 | |
| | 2005.01-2007.12 | 5MT | F | L/R | Estate FWD 21124 | | GCO28010 | Outer Joint | 43T | 22 | 22 | 50 | 77 | 53.5 | I |
| | 2005.01-2007.12 | 5MT | F | L/R | Estate FWD 21124 | | GCI28001 | Inner Joint | | 24 | 22 | 35 | 60.8 | 97 | |
| | 2005.01-2007.12 | 5MT | F | L/R | Estate FWD 21124 | | GCI28002 | Inner Joint | | 24 | 22 | 35 | 60.8 | 97 | |
| **112** | | | | | | | | | | | | | | | |
| 1.5 (56 kw) | 2000.10-2004.09 | 5MT | F | L | Hatchback FWD 2111 | | GDS28001 | Drive Shaft | | 22 | 24 | 50 | 77 | 600 | |
| | 2000.10-2004.09 | 5MT | F | R | Hatchback FWD 2111 | | GDS28004 | Drive Shaft | | 22 | 24 | 50 | 77 | 856.2 | |
| | 2000.10-2004.09 | 5MT | F | L/R | Hatchback FWD 2111 | | GCO28001 | Outer Joint | | 22 | 22 | 50 | 77 | 53.5 | I |
| | 2000.10-2004.09 | 5MT | F | L/R | Hatchback FWD 2111 | | GCI28001 | Inner Joint | | 24 | 22 | 35 | 60.8 | 97 | |
| | 2000.10-2004.09 | 5MT | F | L/R | Hatchback FWD 2111 | | GCI28002 | Inner Joint | | 24 | 22 | 35 | 60.8 | 97 | |
| 1.5 (57 kw) | 2002.02-2004.09 | 5MT | F | L | Hatchback FWD 2111 | | GDS28001 | Drive Shaft | | 22 | 24 | 50 | 77 | 600 | |
| | 2002.02-2004.09 | 5MT | F | R | Hatchback FWD 2111 | | GDS28004 | Drive Shaft | | 22 | 24 | 50 | 77 | 856.2 | |
| | 2002.02-2004.09 | 5MT | F | L/R | Hatchback FWD 2111 | | GCO28001 | Outer Joint | | 22 | 22 | 50 | 77 | 53.5 | I |
| | 2002.02-2004.09 | 5MT | F | L/R | Hatchback FWD 2111 | TJ | GCI28001 | Inner Joint | | 24 | 22 | 35 | 60.8 | 97 | |
| | 2002.02-2004.09 | 5MT | F | L/R | Hatchback FWD 2111 | DOJ | GCI28002 | Inner Joint | | 24 | 22 | 35 | 60.8 | 97 | |
| 1.5 (67 kw) | 2000.10-2005.12 | 5MT | F | L | Hatchback FWD 2112 | | GDS28001 | Drive Shaft | | 22 | 24 | 50 | 77 | 600 | |
| | 2000.10-2005.12 | 5MT | F | R | Hatchback FWD 2112 | | GDS28004 | Drive Shaft | | 22 | 24 | 50 | 77 | 856.2 | |
| | 2000.10-2005.12 | 5MT | F | L/R | Hatchback FWD 2112 | | GCO28001 | Outer Joint | | 22 | 22 | 50 | 77 | 53.5 | I |
| | 2000.10-2005.12 | 5MT | F | L/R | Hatchback FWD 2112 | | GCI28001 | Inner Joint | | 24 | 22 | 35 | 60.8 | 97 | |
| | 2000.10-2005.12 | 5MT | F | L/R | Hatchback FWD 2112 | | GCI28002 | Inner Joint | | 24 | 22 | 35 | 60.8 | 97 | |
| 1.5 (70 kw) | 1995.01-2000.09 | MT | F | L | Hatchback FWD 2112 | | GDS28001 | Drive Shaft | | 22 | 24 | 50 | 77 | 600 | |
| | 1995.01-2000.09 | MT | F | R | Hatchback FWD 2112 | | GDS28002 | Drive Shaft | | 22 | 24 | 50 | 77 | 848 | |
| | 1995.01-2000.09 | MT | F | L/R | Hatchback FWD 2112 | | GCO28001 | Outer Joint | | 22 | 22 | 50 | 77 | 53.5 | I |
| | 1995.01-2000.09 | MT | F | L/R | Hatchback FWD 2112 | | GCI28001 | Inner Joint | | 24 | 22 | 35 | 60.8 | 97 | |
| 1.6 (60 kw) | 2005.01-2011.12 | | F | L | Hatchback FWD 21114 | | GDS28001 | Drive Shaft | | 22 | 24 | 50 | 77 | 600 | |
| 1.6 (66 kw) | 2006.03-2008.12 | 5MT | F | L | Hatchback FWD 21124 | | GDS28001 | Drive Shaft | | 22 | 24 | 50 | 77 | 600 | |
| | 2006.03-2008.12 | 5MT | F | R | Hatchback FWD 21124 | | GDS28004 | Drive Shaft | | 22 | 24 | 50 | 77 | 856.2 | |
| | 2006.03-2008.12 | 5MT | F | L/R | Hatchback FWD 21124 | | GCO28001 | Outer Joint | | 22 | 22 | 50 | 77 | 53.5 | I |
| | 2006.03-2008.12 | 5MT | F | L/R | Hatchback FWD 21124 | | GCI28001 | Inner Joint | | 24 | 22 | 35 | 60.8 | 97 | |
| | 2006.03-2008.12 | 5MT | F | L/R | Hatchback FWD 21124 | | GCI28002 | Inner Joint | | 24 | 22 | 35 | 60.8 | 97 | |
| **Granta** | | | | | | | | | | | | | | | |
| 1.6 (60 kw) | 2011.10- | 5MT | F | L | Saloon FWD 11183 | | GDS28009 | Drive Shaft | | 22 | 24 | 50 | 77 | 600 | |
| | 2011.10- | 5MT | F | L | Saloon FWD 11183 | | GDS28025 | Drive Shaft | 43T | 22 | 24 | 50 | 77 | 594 | |
| | 2011.10- | 5MT | F | R | Saloon FWD 11183 | | GDS28024 | Drive Shaft | 43T | 22 | 24 | 50 | 77 | 874 | |
| | 2011.10- | 5MT | F | R | Saloon FWD 11183 | | GDS28026 | Drive Shaft | | 22 | 24 | 50 | 77 | 874 | |
| | 2011.10- | 5MT | F | L/R | Saloon FWD 11183 | | GCO28010 | Outer Joint | 43T | 22 | 22 | 50 | 77 | 53.5 | I |
| | 2011.10- | 5MT | F | L/R | Saloon FWD 11183 | | GCI28001 | Inner Joint | | 24 | 22 | 35 | 60.8 | 97 | |
| | 2011.10- | 5MT | F | L/R | Saloon FWD 11183 | | GCI28002 | Inner Joint | | 24 | 22 | 35 | 60.8 | 97 | |
| 1.6 (64 kw) | 2011.10- | 5MT | F | L | Saloon FWD 11186 | | GDS28009 | Drive Shaft | | 22 | 24 | 50 | 77 | 600 | |
| | 2011.10- | 5MT | F | L | Saloon FWD 11186 | | GDS28025 | Drive Shaft | 43T | 22 | 24 | 50 | 77 | 594 | |
| | 2011.10- | 5MT | F | R | Saloon FWD 11186 | | GDS28024 | Drive Shaft | 43T | 22 | 24 | 50 | 77 | 874 | |
| | 2011.10- | 5MT | F | R | Saloon FWD 11186 | | GDS28026 | Drive Shaft | | 22 | 24 | 50 | 77 | 874 | |
| | 2011.10- | 5MT | F | L/R | Saloon FWD 11186 | | GCO28010 | Outer Joint | 43T | 22 | 22 | 50 | 77 | 53.5 | I |
| | 2011.10- | 5MT | F | L/R | Saloon FWD 11186 | | GCI28001 | Inner Joint | | 24 | 22 | 35 | 60.8 | 97 | |
| | 2011.10- | 5MT | F | L/R | Saloon FWD 11186 | | GCI28002 | Inner Joint | | 24 | 22 | 35 | 60.8 | 97 | |
| | 2014.08- | 5MT | F | L | Hatchback FWD 11186;21116 | | GDS28009 | Drive Shaft | | 22 | 24 | 50 | 77 | 600 | |
| | 2014.08- | 5MT | F | L | Hatchback FWD 11186;21116 | | GDS28025 | Drive Shaft | 43T | 22 | 24 | 50 | 77 | 594 | |
| | 2014.08- | 5MT | F | R | Hatchback FWD 11186;21116 | | GDS28024 | Drive Shaft | 43T | 22 | 24 | 50 | 77 | 874 | |
| | 2014.08- | 5MT | F | R | Hatchback FWD 11186;21116 | | GDS28026 | Drive Shaft | | 22 | 24 | 50 | 77 | 874 | |
| | 2014.08- | 5MT | F | L/R | Hatchback FWD 11186;21116 | | GCO28010 | Outer Joint | 43T | 22 | 22 | 50 | 77 | 53.5 | I |
| | 2014.08- | 5MT | F | L/R | Hatchback FWD 11186;21116 | | GCI28001 | Inner Joint | | 24 | 22 | 35 | 60.8 | 97 | |
| | 2014.08- | 5MT | F | L/R | Hatchback FWD 11186;21116 | | GCI28002 | Inner Joint | | 24 | 22 | 35 | 60.8 | 97 | |
| | 2018.08- | 5MT | F | L | Estate FWD 11186 | | GDS28025 | Drive Shaft | 43T | 22 | 24 | 50 | 77 | 594 | |

| | YEAR | TRANSM. | F/R | L/R | BODY STYLE & DRIVE TYPE & ENGINE | REMARKS | G-AP Ref. | PRODUCT | ABS | Technical Specifications A | B | C | H | L | P |
|---|---|---|---|---|---|---|---|---|---|---|---|---|---|---|---|
| **LADA** **Granta** | | | | | | | | | | | | | | | |
| 1.6 (64 kw) | 2018.08- | 5MT | F | R | Estate FWD 11186 | | GDS28024 | Drive Shaft | 43T | 22 | 24 | 50 | 77 | 874 | |
| | 2018.08- | MT | F | R | Estate FWD 11186 | | GDS28026 | Drive Shaft | | 22 | 24 | 50 | 77 | 874 | |
| | 2018.08- | 5MT | F | L | Hatchback FWD 11186;21116 | | GDS28009 | Drive Shaft | | 22 | 24 | 50 | 77 | 600 | |
| | 2018.08- | 5MT | F | L | Hatchback FWD 11186;21116 | | GDS28025 | Drive Shaft | 43T | 22 | 24 | 50 | 77 | 594 | |
| | 2018.08- | 5MT | F | R | Hatchback FWD 11186;21116 | | GDS28024 | Drive Shaft | 43T | 22 | 24 | 50 | 77 | 874 | |
| | 2018.08- | 5MT | F | R | Hatchback FWD 11186;21116 | | GDS28026 | Drive Shaft | | 22 | 24 | 50 | 77 | 874 | |
| | 2018.08- | 5MT | F | L/R | Hatchback FWD 11186;21116 | | GCO28010 | Outer Joint | 43T | 22 | 22 | 50 | 77 | 53.5 | I |
| | 2018.08- | 5MT | F | L/R | Hatchback FWD 11186;21116 | TJ | GCI28001 | Inner Joint | | 24 | 22 | 35 | 60.8 | 97 | |
| | 2018.08- | 5MT | F | L/R | Hatchback FWD 11186;21116 | DOJ | GCI28002 | Inner Joint | | 24 | 22 | 35 | 60.8 | 97 | |
| 1.6 (66 kw) | 2021.04- | 5MT | F | L | Saloon FWD 11182 | | GDS28025 | Drive Shaft | 43T | 22 | 24 | 50 | 77 | 594 | |
| | 2021.04- | 5MT | F | R | Saloon FWD 11182 | | GDS28024 | Drive Shaft | 43T | 22 | 24 | 50 | 77 | 874 | |
| | 2021.04- | 5MT | F | R | Saloon FWD 11182 | BVM5,BVR5 | GDS28026 | Drive Shaft | | 22 | 24 | 50 | 77 | 874 | |
| | 2021.04- | 5MT | F | L/R | Saloon FWD 11182 | | GCO28010 | Outer Joint | 43T | 22 | 22 | 50 | 77 | 53.5 | I |
| | 2021.04- | 5MT | F | L | Saloon FWD 11182 | | GCI28002 | Inner Joint | | 24 | 22 | 35 | 60.8 | 97 | |
| | 2021.04- | 5MT | F | L/R | Saloon FWD 11182 | | GCI28001 | Inner Joint | | 24 | 22 | 35 | 60.8 | 97 | |
| 1.6 (72 kw) | 2011.10- | 4AT/5MT | F | R | Saloon FWD 21126 | | GDS28026 | Drive Shaft | | 22 | 24 | 50 | 77 | 874 | |
| | 2011.10- | 5MT | F | L | Saloon FWD 21126 | | GDS28009 | Drive Shaft | | 22 | 24 | 50 | 77 | 600 | |
| | 2011.10- | 5MT | F | L | Saloon FWD 21126 | | GDS28025 | Drive Shaft | 43T | 22 | 24 | 50 | 77 | 594 | |
| | 2011.10- | 5MT | F | R | Saloon FWD 21126 | | GDS28024 | Drive Shaft | 43T | 22 | 24 | 50 | 77 | 874 | |
| | 2011.10- | 5MT | F | L/R | Saloon FWD 21126 | | GCO28010 | Outer Joint | 43T | 22 | 22 | 50 | 77 | 53.5 | I |
| | 2011.10- | 5MT | F | L/R | Saloon FWD 21126 | | GCI28001 | Inner Joint | | 24 | 22 | 35 | 60.8 | 97 | |
| | 2011.10- | 5MT | F | L/R | Saloon FWD 21126 | | GCI28002 | Inner Joint | | 24 | 22 | 35 | 60.8 | 97 | |
| | 2014.08- | 5MT | F | R | Hatchback FWD 21126 | | GDS28026 | Drive Shaft | | 22 | 24 | 50 | 77 | 874 | |
| | 2014.08- | AT/MT | F | L | Hatchback FWD 21126 | | GDS81292 | Drive Shaft | 43T | 22 | 25 | 50 | 77 | 568 | |
| | 2014.08- | AT/MT | F | R | Hatchback FWD 21126 | | GDS81290 | Drive Shaft | 43T | 22 | 25 | 50 | 77 | 887 | |
| | 2014.08- | AT/MT | F | L/R | Hatchback FWD 21126 | | GCO81156 | Outer Joint | 43T | 22 | 21 | 50 | 77 | 55 | M |
| | 2014.08- | AT/MT | F | L/R | Hatchback FWD 21126 | | GCI41098 | Inner Joint | | 25 | 21 | 40 | 63 | 95.5 | |
| | 2014.08- | MT | F | L | Hatchback FWD 21126 | | GDS28025 | Drive Shaft | 43T | 22 | 24 | 50 | 77 | 594 | |
| | 2014.08- | MT | F | R | Hatchback FWD 21126 | | GDS28024 | Drive Shaft | 43T | 22 | 24 | 50 | 77 | 874 | |
| | 2018.08- | 4AT | F | L | Estate FWD 21126 | | GDS28025 | Drive Shaft | 43T | 22 | 24 | 50 | 77 | 594 | |
| | 2018.08- | 4AT | F | R | Estate FWD 21126 | | GDS28024 | Drive Shaft | 43T | 22 | 24 | 50 | 77 | 874 | |
| | 2018.08- | MT | F | R | Estate FWD 21126 | | GDS28026 | Drive Shaft | | 22 | 24 | 50 | 77 | 874 | |
| | 2018.08- | 4AT/5MT | F | L | Hatchback FWD 21126 | | GDS81292 | Drive Shaft | 43T | 22 | 25 | 50 | 77 | 568 | |
| | 2018.08- | 4AT/5MT | F | R | Hatchback FWD 21126 | | GDS81290 | Drive Shaft | 43T | 22 | 25 | 50 | 77 | 887 | |
| 1.6 (78 kw) | 2013.07- | 4AT/5MT | F | R | Saloon FWD 21127 | | GDS28026 | Drive Shaft | | 22 | 24 | 50 | 77 | 874 | |
| | 2013.07- | 5MT | F | L | Saloon FWD 21127 | | GDS28009 | Drive Shaft | | 22 | 24 | 50 | 77 | 600 | |
| | 2013.07- | 5MT | F | L | Saloon FWD 21127 | | GDS28025 | Drive Shaft | 43T | 22 | 24 | 50 | 77 | 594 | |
| | 2013.07- | 5MT | F | R | Saloon FWD 21127 | | GDS28024 | Drive Shaft | 43T | 22 | 24 | 50 | 77 | 874 | |
| | 2013.07- | 5MT | F | L/R | Saloon FWD 21127 | | GCO28010 | Outer Joint | 43T | 22 | 22 | 50 | 77 | 53.5 | I |
| | 2013.07- | 5MT | F | L/R | Saloon FWD 21127 | | GCI28001 | Inner Joint | | 24 | 22 | 35 | 60.8 | 97 | |
| | 2013.07- | 5MT | F | L/R | Saloon FWD 21127 | | GCI28002 | Inner Joint | | 24 | 22 | 35 | 60.8 | 97 | |
| | 2014.08- | 5AT/5MT | F | R | Hatchback FWD 21127 | | GDS28026 | Drive Shaft | | 22 | 24 | 50 | 77 | 874 | |
| | 2014.08- | 5MT | F | L | Hatchback FWD 21127 | | GDS28009 | Drive Shaft | | 22 | 24 | 50 | 77 | 600 | |
| | 2014.08- | 5MT | F | L | Hatchback FWD 21127 | | GDS28025 | Drive Shaft | 43T | 22 | 24 | 50 | 77 | 594 | |
| | 2014.08- | 5MT | F | R | Hatchback FWD 21127 | | GDS28024 | Drive Shaft | 43T | 22 | 24 | 50 | 77 | 874 | |
| | 2014.08- | 5MT | F | L/R | Hatchback FWD 21127 | | GCO28010 | Outer Joint | 43T | 22 | 22 | 50 | 77 | 53.5 | I |
| | 2014.08- | 5MT | F | L/R | Hatchback FWD 21127 | | GCI28001 | Inner Joint | | 24 | 22 | 35 | 60.8 | 97 | |
| | 2014.08- | 5MT | F | L/R | Hatchback FWD 21127 | | GCI28002 | Inner Joint | | 24 | 22 | 35 | 60.8 | 97 | |
| | 2018.08- | MT | F | L | Estate FWD 21127 | | GDS28025 | Drive Shaft | 43T | 22 | 24 | 50 | 77 | 594 | |
| | 2018.08- | MT | F | R | Estate FWD 21127 | | GDS28024 | Drive Shaft | 43T | 22 | 24 | 50 | 77 | 874 | |
| | 2018.08- | MT | F | R | Estate FWD 21127 | | GDS28026 | Drive Shaft | | 22 | 24 | 50 | 77 | 874 | |
| | 2018.08- | 5AT/5MT | F | L | Hatchback FWD 21127 | | GDS28009 | Drive Shaft | | 22 | 24 | 50 | 77 | 600 | |
| | 2018.08- | 5AT/5MT | F | L | Hatchback FWD 21127 | | GDS28025 | Drive Shaft | 43T | 22 | 24 | 50 | 77 | 594 | |
| | 2018.08- | 5AT/5MT | F | R | Hatchback FWD 21127 | | GDS28024 | Drive Shaft | 43T | 22 | 24 | 50 | 77 | 874 | |
| | 2018.08- | 5AT/5MT | F | R | Hatchback FWD 21127 | | GDS28026 | Drive Shaft | | 22 | 24 | 50 | 77 | 874 | |
| | 2018.08- | 5AT/5MT | F | L/R | Hatchback FWD 21127 | | GCO28010 | Outer Joint | 43T | 22 | 22 | 50 | 77 | 53.5 | I |
| | 2018.08- | 5AT/5MT | F | L/R | Hatchback FWD 21127 | TJ | GCI28001 | Inner Joint | | 24 | 22 | 35 | 60.8 | 97 | |
| | 2018.08- | 5AT/5MT | F | L/R | Hatchback FWD 21127 | DOJ | GCI28002 | Inner Joint | | 24 | 22 | 35 | 60.8 | 97 | |
| 1.6 (84 kw) | 2016.04-2019.01 | 5MT | F | L | Saloon FWD 21126 | | GDS28025 | Drive Shaft | 43T | 22 | 24 | 50 | 77 | 594 | |
| | 2016.04-2019.01 | 5MT | F | R | Saloon FWD 21126 | | GDS28024 | Drive Shaft | 43T | 22 | 24 | 50 | 77 | 874 | |
| | 2016.04-2019.01 | MT | F | R | Saloon FWD 21126 | | GDS28026 | Drive Shaft | | 22 | 24 | 50 | 77 | 874 | |
| 1.6 (87 kw) | 2013.07-2018.09 | 5MT | F | L | Saloon FWD 21126 | | GDS28025 | Drive Shaft | 43T | 22 | 24 | 50 | 77 | 594 | |
| | 2013.07-2018.09 | 5MT | F | R | Saloon FWD 21126 | | GDS28024 | Drive Shaft | 43T | 22 | 24 | 50 | 77 | 874 | |
| | 2013.07-2018.09 | MT | F | R | Saloon FWD 21126 | | GDS28026 | Drive Shaft | | 22 | 24 | 50 | 77 | 874 | |

| | YEAR | TRANSM. | F/R | L/R | BODY STYLE & DRIVE TYPE & ENGINE | REMARKS | G-AP Ref. | PRODUCT | ABS | Technical Specifications | | | | | |
|---|---|---|---|---|---|---|---|---|---|---|---|---|---|---|---|
| | | | | | | | | | | A | B | C | H | L | P |
| **LADA** **Kalina** | | | | | | | | | | | | | | | |
| 1.4 (65 kw) | 2008.11-2013.12 | 5MT | F | L | Estate FWD 11194 | Date from:2010.06 | GDS28009 | Drive Shaft | | 22 | 24 | 50 | 77 | 600 | |
| | 2008.11-2013.12 | 5MT | F | L | Estate FWD 11194 | Date from:2010.06 | GDS28025 | Drive Shaft | 43T | 22 | 24 | 50 | 77 | 594 | |
| | 2008.11-2013.12 | 5MT | F | R | Estate FWD 11194 | | GDS28024 | Drive Shaft | 43T | 22 | 24 | 50 | 77 | 874 | |
| | 2008.11-2013.12 | 5MT | F | L/R | Estate FWD 11194 | | GCO28010 | Outer Joint | 43T | 22 | 22 | 50 | 77 | 53.5 | I |
| | 2008.11-2013.12 | 5MT | F | L | Estate FWD 11194 | Date from:2010.06 | GCI28002 | Inner Joint | | 24 | 22 | 35 | 60.8 | 97 | |
| | 2008.11-2013.12 | 5MT | F | L/R | Estate FWD 11194 | | GCI28001 | Inner Joint | | 24 | 22 | 35 | 60.8 | 97 | |
| | 2008.11-2013.12 | MT | F | R | Estate FWD 11194 | | GDS28026 | Drive Shaft | | 22 | 24 | 50 | 77 | 874 | |
| | 2008.11-2013.12 | 5MT | F | L | Hatchback FWD 11194 | Date from:2011.02 | GDS28009 | Drive Shaft | | 22 | 24 | 50 | 77 | 600 | |
| | 2008.11-2013.12 | 5MT | F | L | Hatchback FWD 11194 | | GDS28025 | Drive Shaft | 43T | 22 | 24 | 50 | 77 | 594 | |
| | 2008.11-2013.12 | 5MT | F | R | Hatchback FWD 11194 | | GDS28024 | Drive Shaft | 43T | 22 | 24 | 50 | 77 | 874 | |
| | 2008.11-2013.12 | 5MT | F | L/R | Hatchback FWD 11194 | | GCO28010 | Outer Joint | 43T | 22 | 22 | 50 | 77 | 53.5 | I |
| | 2008.11-2013.12 | 5MT | F | L/R | Hatchback FWD 11194 | | GCI28001 | Inner Joint | | 24 | 22 | 35 | 60.8 | 97 | |
| | 2008.11-2013.12 | 5MT | F | L/R | Hatchback FWD 11194 | | GCI28002 | Inner Joint | | 24 | 22 | 35 | 60.8 | 97 | |
| | 2008.11-2013.12 | MT | F | R | Hatchback FWD 11194 | | GDS28026 | Drive Shaft | | 22 | 24 | 50 | 77 | 874 | |
| | 2008.11-2013.12 | 5MT | F | L | Saloon FWD 11194 | Date from:2011.02 | GDS28009 | Drive Shaft | | 22 | 24 | 50 | 77 | 600 | |
| | 2008.11-2013.12 | 5MT | F | L | Saloon FWD 11194 | | GDS28025 | Drive Shaft | 43T | 22 | 24 | 50 | 77 | 594 | |
| | 2008.11-2013.12 | 5MT | F | R | Saloon FWD 11194 | | GDS28024 | Drive Shaft | 43T | 22 | 24 | 50 | 77 | 874 | |
| | 2008.11-2013.12 | 5MT | F | L/R | Saloon FWD 11194 | | GCO28010 | Outer Joint | 43T | 22 | 22 | 50 | 77 | 53.5 | I |
| | 2008.11-2013.12 | 5MT | F | L | Saloon FWD 11194 | Date from:2011.02 | GCI28002 | Inner Joint | | 24 | 22 | 35 | 60.8 | 97 | |
| | 2008.11-2013.12 | 5MT | F | L/R | Saloon FWD 11194 | | GCI28001 | Inner Joint | | 24 | 22 | 35 | 60.8 | 97 | |
| 1.4 (66 kw) | 2006.09-2013.12 | 5MT | F | L | Saloon FWD 11194 | Date from:2011.02 | GDS28009 | Drive Shaft | | 22 | 24 | 50 | 77 | 600 | |
| | 2006.09-2013.12 | 5MT | F | L | Saloon FWD 11194 | | GDS28025 | Drive Shaft | 43T | 22 | 24 | 50 | 77 | 594 | |
| | 2006.09-2013.12 | 5MT | F | R | Saloon FWD 11194 | | GDS28024 | Drive Shaft | 43T | 22 | 24 | 50 | 77 | 874 | |
| | 2006.09-2013.12 | 5MT | F | R | Saloon FWD 11194 | | GDS28026 | Drive Shaft | | 22 | 24 | 50 | 77 | 874 | |
| | 2006.09-2013.12 | 5MT | F | L/R | Saloon FWD 11194 | | GCO28010 | Outer Joint | 43T | 22 | 22 | 50 | 77 | 53.5 | I |
| | 2006.09-2013.12 | 5MT | F | L/R | Saloon FWD 11194 | | GCI28001 | Inner Joint | | 24 | 22 | 35 | 60.8 | 97 | |
| | 2006.09-2013.12 | 5MT | F | L/R | Saloon FWD 11194 | | GCI28002 | Inner Joint | | 24 | 22 | 35 | 60.8 | 97 | |
| | 2008.11-2013.12 | 5MT | F | L | Estate FWD 11194 | Date from:2010.06 | GDS28009 | Drive Shaft | | 22 | 24 | 50 | 77 | 600 | |
| | 2008.11-2013.12 | 5MT | F | L | Estate FWD 11194 | | GDS28025 | Drive Shaft | 43T | 22 | 24 | 50 | 77 | 594 | |
| | 2008.11-2013.12 | 5MT | F | R | Estate FWD 11194 | | GDS28024 | Drive Shaft | 43T | 22 | 24 | 50 | 77 | 874 | |
| | 2008.11-2013.12 | 5MT | F | R | Estate FWD 11194 | | GDS28026 | Drive Shaft | | 22 | 24 | 50 | 77 | 874 | |
| | 2008.11-2013.12 | 5MT | F | L/R | Estate FWD 11194 | | GCO28010 | Outer Joint | 43T | 22 | 22 | 50 | 77 | 53.5 | I |
| | 2008.11-2013.12 | 5MT | F | L/R | Estate FWD 11194 | | GCI28001 | Inner Joint | | 24 | 22 | 35 | 60.8 | 97 | |
| | 2008.11-2013.12 | 5MT | F | L/R | Estate FWD 11194 | | GCI28002 | Inner Joint | | 24 | 22 | 35 | 60.8 | 97 | |
| | 2008.11-2013.12 | 5MT | F | L | Hatchback FWD 11194 | Date from:2011.02 | GDS28009 | Drive Shaft | | 22 | 24 | 50 | 77 | 600 | |
| | 2008.11-2013.12 | 5MT | F | L | Hatchback FWD 11194 | | GDS28025 | Drive Shaft | 43T | 22 | 24 | 50 | 77 | 594 | |
| | 2008.11-2013.12 | 5MT | F | R | Hatchback FWD 11194 | | GDS28024 | Drive Shaft | 43T | 22 | 24 | 50 | 77 | 874 | |
| | 2008.11-2013.12 | 5MT | F | L/R | Hatchback FWD 11194 | | GCO28010 | Outer Joint | 43T | 22 | 22 | 50 | 77 | 53.5 | I |
| | 2008.11-2013.12 | 5MT | F | L/R | Hatchback FWD 11194 | | GCI28001 | Inner Joint | | 24 | 22 | 35 | 60.8 | 97 | |
| | 2008.11-2013.12 | 5MT | F | L/R | Hatchback FWD 11194 | | GCI28002 | Inner Joint | | 24 | 22 | 35 | 60.8 | 97 | |
| 1.6 (60 kw) | 2004.10-2013.12 | 5MT | F | L | Hatchback FWD 21114 | Date from:2011.02 | GDS28009 | Drive Shaft | | 22 | 24 | 50 | 77 | 600 | |
| | 2004.10-2013.12 | 5MT | F | L | Hatchback FWD 21114 | Date from:2006.09 | GDS28025 | Drive Shaft | 43T | 22 | 24 | 50 | 77 | 594 | |
| | 2004.10-2013.12 | 5MT | F | R | Hatchback FWD 21114 | Date from:2006.09 | GDS28024 | Drive Shaft | 43T | 22 | 24 | 50 | 77 | 874 | |
| | 2004.10-2013.12 | 5MT | F | R | Hatchback FWD 21114 | | GDS28026 | Drive Shaft | | 22 | 24 | 50 | 77 | 874 | |
| | 2004.10-2013.12 | 5MT | F | L/R | Hatchback FWD 21114 | | GCO28010 | Outer Joint | 43T | 22 | 22 | 50 | 77 | 53.5 | I |
| | 2004.10-2013.12 | 5MT | F | L/R | Hatchback FWD 21114 | | GCI28001 | Inner Joint | | 24 | 22 | 35 | 60.8 | 97 | |
| | 2004.10-2013.12 | 5MT | F | L/R | Hatchback FWD 21114 | | GCI28002 | Inner Joint | | 24 | 22 | 35 | 60.8 | 97 | |
| | 2004.10-2013.12 | 5MT | F | L | Saloon FWD 21114;11183 | Date from:2011.02 | GDS28009 | Drive Shaft | | 22 | 24 | 50 | 77 | 600 | |
| | 2004.10-2013.12 | 5MT | F | L | Saloon FWD 21114;11183 | Date from:2006.09 | GDS28025 | Drive Shaft | 43T | 22 | 24 | 50 | 77 | 594 | |
| | 2004.10-2013.12 | 5MT | F | R | Saloon FWD 21114;11183 | Date from:2006.09 | GDS28024 | Drive Shaft | 43T | 22 | 24 | 50 | 77 | 874 | |
| | 2004.10-2013.12 | 5MT | F | R | Saloon FWD 21114;11183 | | GDS28026 | Drive Shaft | | 22 | 24 | 50 | 77 | 874 | |
| | 2004.10-2013.12 | 5MT | F | L/R | Saloon FWD 21114;11183 | | GCO28010 | Outer Joint | 43T | 22 | 22 | 50 | 77 | 53.5 | I |
| | 2004.10-2013.12 | 5MT | F | L/R | Saloon FWD 21114;11183 | | GCI28001 | Inner Joint | | 24 | 22 | 35 | 60.8 | 97 | |
| | 2004.10-2013.12 | 5MT | F | L/R | Saloon FWD 21114;11183 | | GCI28002 | Inner Joint | | 24 | 22 | 35 | 60.8 | 97 | |
| | 2007.10-2013.12 | 5MT | F | L | Estate FWD 21114 | Date from:2010.06 | GDS28009 | Drive Shaft | | 22 | 24 | 50 | 77 | 600 | |
| | 2007.10-2013.12 | 5MT | F | L | Estate FWD 21114 | Date from:2010.06 | GDS28025 | Drive Shaft | 43T | 22 | 24 | 50 | 77 | 594 | |
| | 2007.10-2013.12 | 5MT | F | R | Estate FWD 21114 | | GDS28024 | Drive Shaft | 43T | 22 | 24 | 50 | 77 | 874 | |
| | 2007.10-2013.12 | 5MT | F | R | Estate FWD 21114 | | GDS28026 | Drive Shaft | | 22 | 24 | 50 | 77 | 874 | |
| | 2007.10-2013.12 | 5MT | F | L/R | Estate FWD 21114 | | GCO28010 | Outer Joint | 43T | 22 | 22 | 50 | 77 | 53.5 | I |
| | 2007.10-2013.12 | 5MT | F | L/R | Estate FWD 21114 | | GCI28001 | Inner Joint | | 24 | 22 | 35 | 60.8 | 97 | |
| | 2007.10-2013.12 | 5MT | F | L/R | Estate FWD 21114 | | GCI28002 | Inner Joint | | 24 | 22 | 35 | 60.8 | 97 | |
| 1.6 (62 kw) | 2010.01-2013.12 | 5MT | F | L | Estate FWD VAZ1110 | Date from:2010.06 | GDS28009 | Drive Shaft | | 22 | 24 | 50 | 77 | 600 | |
| | 2010.01-2013.12 | 5MT | F | L | Estate FWD VAZ1110 | Date from:2010.06 | GDS28025 | Drive Shaft | 43T | 22 | 24 | 50 | 77 | 594 | |
| | 2010.01-2013.12 | 5MT | F | R | Estate FWD VAZ1110 | | GDS28024 | Drive Shaft | 43T | 22 | 24 | 50 | 77 | 874 | |
| | 2010.01-2013.12 | 5MT | F | R | Estate FWD VAZ1110 | | GDS28026 | Drive Shaft | | 22 | 24 | 50 | 77 | 874 | |

| | YEAR | TRANSM. | F/R | L/R | BODY STYLE & DRIVE TYPE & ENGINE | REMARKS | G-AP Ref. | PRODUCT | ABS | Technical Specifications A | B | C | H | L | P |
|---|---|---|---|---|---|---|---|---|---|---|---|---|---|---|---|
| **LADA** **Kalina** | | | | | | | | | | | | | | | |
| 1.6 (62 kw) | 2010.01-2013.12 | 5MT | F | L/R | Estate FWD VAZ1110 | | GCO28010 | Outer Joint | 43T | 22 | 22 | 50 | 77 | 53.5 | I |
| | 2010.01-2013.12 | 5MT | F | L/R | Estate FWD VAZ1110 | | GCI28001 | Inner Joint | | 24 | 22 | 35 | 60.8 | 97 | |
| | 2010.01-2013.12 | 5MT | F | L/R | Estate FWD VAZ1110 | | GCI28002 | Inner Joint | | 24 | 22 | 35 | 60.8 | 97 | |
| | 2010.01-2013.12 | 5MT | F | L | Hatchback FWD VAZ1110 | Date from:2011.02 | GDS28009 | Drive Shaft | | 22 | 24 | 50 | 77 | 600 | |
| | 2010.01-2013.12 | 5MT | F | L | Hatchback FWD VAZ1110 | | GDS28025 | Drive Shaft | 43T | 22 | 24 | 50 | 77 | 594 | |
| | 2010.01-2013.12 | 5MT | F | R | Hatchback FWD VAZ1110 | Date from:2006.09 | GDS28024 | Drive Shaft | 43T | 22 | 24 | 50 | 77 | 874 | |
| | 2010.01-2013.12 | 5MT | F | R | Hatchback FWD VAZ1110 | | GDS28026 | Drive Shaft | | 22 | 24 | 50 | 77 | 874 | |
| | 2010.01-2013.12 | 5MT | F | L/R | Hatchback FWD VAZ1110 | | GCO28010 | Outer Joint | 43T | 22 | 22 | 50 | 77 | 53.5 | I |
| | 2010.01-2013.12 | 5MT | F | L/R | Hatchback FWD VAZ1110 | | GCI28001 | Inner Joint | | 24 | 22 | 35 | 60.8 | 97 | |
| | 2010.01-2013.12 | 5MT | F | L/R | Hatchback FWD VAZ1110 | | GCI28002 | Inner Joint | | 24 | 22 | 35 | 60.8 | 97 | |
| | 2010.01-2013.12 | 5MT | F | L | Saloon FWD VAZ1110 | | GDS28025 | Drive Shaft | 43T | 22 | 24 | 50 | 77 | 594 | |
| | 2010.01-2013.12 | 5MT | F | R | Saloon FWD VAZ1110 | | GDS28026 | Drive Shaft | | 22 | 24 | 50 | 77 | 874 | |
| | 2010.01-2013.12 | 5MT | F | L/R | Saloon FWD VAZ1110 | | GCO28001 | Outer Joint | | 22 | 22 | 50 | 77 | 53.5 | I |
| | 2010.01-2013.12 | 5MT | F | L/R | Saloon FWD VAZ1110 | | GCO28010 | Outer Joint | 43T | 22 | 22 | 50 | 77 | 53.5 | I |
| | 2010.01-2013.12 | 5MT | F | R | Saloon FWD VAZ1110 | | GCI28001 | Inner Joint | | 24 | 22 | 35 | 60.8 | 97 | |
| 1.6 (64 kw) | 2013.06-2018.09 | 4AT/5MT | F | L | Hatchback FWD 11186 | | GDS28009 | Drive Shaft | | 22 | 24 | 50 | 77 | 600 | |
| | 2013.06-2018.09 | 4AT/5MT | F | L/R | Hatchback FWD 11186 | | GCO28010 | Outer Joint | 43T | 22 | 22 | 50 | 77 | 53.5 | I |
| | 2013.06-2018.09 | 4AT/5MT | F | L/R | Hatchback FWD 11186 | | GCI28002 | Inner Joint | | 24 | 22 | 35 | 60.8 | 97 | |
| | 2013.06-2018.09 | 5MT | F | L | Hatchback FWD 11186 | | GDS28025 | Drive Shaft | 43T | 22 | 24 | 50 | 77 | 594 | |
| | 2013.06-2018.09 | 5MT | F | R | Hatchback FWD 11186 | | GDS28024 | Drive Shaft | 43T | 22 | 24 | 50 | 77 | 874 | |
| | 2013.06-2018.09 | 5MT | F | R | Hatchback FWD 11186 | | GDS28026 | Drive Shaft | | 22 | 24 | 50 | 77 | 874 | |
| | 2013.06-2018.09 | 5MT | F | L/R | Hatchback FWD 11186 | | GCI28001 | Inner Joint | | 24 | 22 | 35 | 60.8 | 97 | |
| | 2013.11-2018.09 | 4AT/5MT | F | L | Estate FWD 11186 | | GDS28009 | Drive Shaft | | 22 | 24 | 50 | 77 | 600 | |
| | 2013.11-2018.09 | 4AT/5MT | F | L/R | Estate FWD 11186 | | GCO28010 | Outer Joint | 43T | 22 | 22 | 50 | 77 | 53.5 | I |
| | 2013.11-2018.09 | 4AT/5MT | F | L/R | Estate FWD 11186 | | GCI28002 | Inner Joint | | 24 | 22 | 35 | 60.8 | 97 | |
| | 2013.11-2018.09 | 5MT | F | L | Estate FWD 11186 | | GDS28025 | Drive Shaft | 43T | 22 | 24 | 50 | 77 | 594 | |
| | 2013.11-2018.09 | 5MT | F | R | Estate FWD 11186 | | GDS28024 | Drive Shaft | 43T | 22 | 24 | 50 | 77 | 874 | |
| | 2013.11-2018.09 | 5MT | F | R | Estate FWD 11186 | | GDS28026 | Drive Shaft | | 22 | 24 | 50 | 77 | 874 | |
| | 2013.11-2018.09 | 5MT | F | L/R | Estate FWD 11186 | | GCI28001 | Inner Joint | | 24 | 22 | 35 | 60.8 | 97 | |
| 1.6 (72 kw) | 2004.10-2013.12 | 5MT | F | L | Estate FWD 21126 | Date from:2010.06 | GDS28009 | Drive Shaft | | 22 | 24 | 50 | 77 | 600 | |
| | 2004.10-2013.12 | 5MT | F | L | Estate FWD 21126 | Date from:2006.09 | GDS28025 | Drive Shaft | 43T | 22 | 24 | 50 | 77 | 594 | |
| | 2004.10-2013.12 | 5MT | F | R | Estate FWD 21126 | Date from:2006.09 | GDS28024 | Drive Shaft | 43T | 22 | 24 | 50 | 77 | 874 | |
| | 2004.10-2013.12 | 5MT | F | R | Estate FWD 21126 | | GDS28026 | Drive Shaft | | 22 | 24 | 50 | 77 | 874 | |
| | 2004.10-2013.12 | 5MT | F | L/R | Estate FWD 21126 | | GCO28010 | Outer Joint | 43T | 22 | 22 | 50 | 77 | 53.5 | I |
| | 2004.10-2013.12 | 5MT | F | L/R | Estate FWD 21126 | | GCI28001 | Inner Joint | | 24 | 22 | 35 | 60.8 | 97 | |
| | 2004.10-2013.12 | 5MT | F | L/R | Estate FWD 21126 | | GCI28002 | Inner Joint | | 24 | 22 | 35 | 60.8 | 97 | |
| | 2004.10-2013.12 | 5MT | F | L | Saloon FWD 21126 | Date from:2011.02 | GDS28009 | Drive Shaft | | 22 | 24 | 50 | 77 | 600 | |
| | 2004.10-2013.12 | 5MT | F | L | Saloon FWD 21126 | Date from:2006.09 | GDS28025 | Drive Shaft | 43T | 22 | 24 | 50 | 77 | 594 | |
| | 2004.10-2013.12 | 5MT | F | R | Saloon FWD 21126 | Date from:2006.09 | GDS28024 | Drive Shaft | 43T | 22 | 24 | 50 | 77 | 874 | |
| | 2004.10-2013.12 | 5MT | F | L/R | Saloon FWD 21126 | | GCO28010 | Outer Joint | 43T | 22 | 22 | 50 | 77 | 53.5 | I |
| | 2004.10-2013.12 | 5MT | F | L/R | Saloon FWD 21126 | | GCI28001 | Inner Joint | | 24 | 22 | 35 | 60.8 | 97 | |
| | 2004.10-2013.12 | 5MT | F | L/R | Saloon FWD 21126 | | GCI28002 | Inner Joint | | 24 | 22 | 35 | 60.8 | 97 | |
| | 2004.10-2013.12 | | F | R | Saloon FWD 21126 | | GDS28026 | Drive Shaft | | 22 | 24 | 50 | 77 | 874 | |
| | 2006.09-2013.06 | 5MT | F | L | Hatchback FWD 21126 | Date from:2011.02 | GDS28009 | Drive Shaft | | 22 | 24 | 50 | 77 | 600 | |
| | 2006.09-2013.06 | 5MT | F | L | Hatchback FWD 21126 | | GDS28025 | Drive Shaft | 43T | 22 | 24 | 50 | 77 | 594 | |
| | 2006.09-2013.06 | 5MT | F | R | Hatchback FWD 21126 | | GDS28024 | Drive Shaft | 43T | 22 | 24 | 50 | 77 | 874 | |
| | 2006.09-2013.06 | 5MT | F | L/R | Hatchback FWD 21126 | | GCO28010 | Outer Joint | 43T | 22 | 22 | 50 | 77 | 53.5 | I |
| | 2006.09-2013.06 | 5MT | F | L/R | Hatchback FWD 21126 | | GCI28001 | Inner Joint | | 24 | 22 | 35 | 60.8 | 97 | |
| | 2006.09-2013.06 | 5MT | F | L/R | Hatchback FWD 21126 | | GCI28002 | Inner Joint | | 24 | 22 | 35 | 60.8 | 97 | |
| | 2006.09-2013.06 | MT | F | R | Hatchback FWD 21126 | | GDS28026 | Drive Shaft | | 22 | 24 | 50 | 77 | 874 | |
| | 2013.06-2018.08 | 4AT | F | L | Hatchback FWD 21126 | | GDS28025 | Drive Shaft | 43T | 22 | 24 | 50 | 77 | 594 | |
| | 2013.06-2018.08 | 4AT | F | L | Hatchback FWD 21126 | | GDS81292 | Drive Shaft | 43T | 22 | 25 | 50 | 77 | 568 | |
| | 2013.06-2018.08 | 4AT | F | R | Hatchback FWD 21126 | | GDS28024 | Drive Shaft | 43T | 22 | 24 | 50 | 77 | 874 | |
| | 2013.06-2018.08 | 4AT | F | R | Hatchback FWD 21126 | | GDS81290 | Drive Shaft | 43T | 22 | 25 | 50 | 77 | 887 | |
| | 2013.06-2018.08 | 4AT | F | L/R | Hatchback FWD 21126 | | GCO81156 | Outer Joint | 43T | 22 | 21 | 50 | 77 | 55 | M |
| | 2013.06-2018.08 | 4AT | F | L/R | Hatchback FWD 21126 | | GCI41098 | Inner Joint | | 25 | 21 | 40 | 63 | 95.5 | |
| | 2013.06-2018.08 | MT | F | R | Hatchback FWD 21126 | | GDS28026 | Drive Shaft | | 22 | 24 | 50 | 77 | 874 | |
| | 2013.11-2018.09 | 4AT/5MT | F | L | Estate FWD 21126 | | GDS81292 | Drive Shaft | 43T | 22 | 25 | 50 | 77 | 568 | |
| | 2013.11-2018.09 | 4AT/5MT | F | R | Estate FWD 21126 | | GDS81290 | Drive Shaft | 43T | 22 | 25 | 50 | 77 | 887 | |
| | 2013.11-2018.09 | 4AT/5MT | F | L/R | Estate FWD 21126 | | GCO81156 | Outer Joint | 43T | 22 | 21 | 50 | 77 | 55 | M |
| | 2013.11-2018.09 | 4AT/5MT | F | L/R | Estate FWD 21126 | | GCI41098 | Inner Joint | | 25 | 21 | 40 | 63 | 95.5 | |
| | 2013.11-2018.09 | 5MT | F | L | Estate FWD 21126 | | GDS28025 | Drive Shaft | 43T | 22 | 24 | 50 | 77 | 594 | |
| | 2013.11-2018.09 | 5MT | F | R | Estate FWD 21126 | | GDS28024 | Drive Shaft | 43T | 22 | 24 | 50 | 77 | 874 | |
| | 2013.11-2018.09 | 5MT | F | R | Estate FWD 21126 | | GDS28026 | Drive Shaft | | 22 | 24 | 50 | 77 | 874 | |
| 1.6 (78 kw) | 2013.06-2018.09 | 4AT/5AT/5MT | F | L | Hatchback FWD 21127 | | GDS28009 | Drive Shaft | | 22 | 24 | 50 | 77 | 600 | |

| | YEAR | TRANSM. | F/R | L/R | BODY STYLE & DRIVE TYPE & ENGINE | REMARKS | G-AP Ref. | PRODUCT | ABS | Technical Specifications A | B | C | H | L | P |
|---|---|---|---|---|---|---|---|---|---|---|---|---|---|---|---|
| **LADA** | | | | | | | | | | | | | | | |
| **Kalina** | | | | | | | | | | | | | | | |
| 1.6 (78 kw) | 2013.06-2018.09 | 4AT/5AT/5MT | F | R | Hatchback FWD 21127 | | GDS28026 | Drive Shaft | | 22 | 24 | 50 | 77 | 874 | |
| | 2013.06-2018.09 | 4AT/5AT/5MT | F | L/R | Hatchback FWD 21127 | | GCO28010 | Outer Joint | 43T | 22 | 22 | 50 | 77 | 53.5 | I |
| | 2013.06-2018.09 | 4AT/5AT/5MT | F | L/R | Hatchback FWD 21127 | | GCI28002 | Inner Joint | | 24 | 22 | 35 | 60.8 | 97 | |
| | 2013.06-2018.09 | 5MT | F | L | Hatchback FWD 21127 | | GDS28025 | Drive Shaft | 43T | 22 | 24 | 50 | 77 | 594 | |
| | 2013.06-2018.09 | 5MT | F | R | Hatchback FWD 21127 | | GDS28024 | Drive Shaft | 43T | 22 | 24 | 50 | 77 | 874 | |
| | 2013.06-2018.09 | 5MT | F | L/R | Hatchback FWD 21127 | | GCI28001 | Inner Joint | | 24 | 22 | 35 | 60.8 | 97 | |
| | 2013.11-2018.09 | 4AT/5AT/5MT | F | L | Estate FWD 21127 | | GDS28009 | Drive Shaft | | 22 | 24 | 50 | 77 | 600 | |
| | 2013.11-2018.09 | 4AT/5AT/5MT | F | R | Estate FWD 21127 | | GDS28026 | Drive Shaft | | 22 | 24 | 50 | 77 | 874 | |
| | 2013.11-2018.09 | 4AT/5AT/5MT | F | L/R | Estate FWD 21127 | | GCO28010 | Outer Joint | 43T | 22 | 22 | 50 | 77 | 53.5 | I |
| | 2013.11-2018.09 | 4AT/5AT/5MT | F | L/R | Estate FWD 21127 | | GCI28002 | Inner Joint | | 24 | 22 | 35 | 60.8 | 97 | |
| | 2013.11-2018.09 | 5MT | F | L | Estate FWD 21127 | | GDS28025 | Drive Shaft | 43T | 22 | 24 | 50 | 77 | 594 | |
| | 2013.11-2018.09 | 5MT | F | R | Estate FWD 21127 | | GDS28024 | Drive Shaft | 43T | 22 | 24 | 50 | 77 | 874 | |
| | 2013.11-2018.09 | 5MT | F | L/R | Estate FWD 21127 | | GCI28001 | Inner Joint | | 24 | 22 | 35 | 60.8 | 97 | |
| 1.6 (85 kw) | 2017.04-2018.08 | 5MT | F | L | Hatchback FWD 21126-79 | | GDS28009 | Drive Shaft | | 22 | 24 | 50 | 77 | 600 | |
| | 2017.04-2018.08 | 5MT | F | L | Hatchback FWD 21126-79 | | GDS28025 | Drive Shaft | 43T | 22 | 24 | 50 | 77 | 594 | |
| | 2017.04-2018.08 | 5MT | F | R | Hatchback FWD 21126-79 | | GDS28024 | Drive Shaft | 43T | 22 | 24 | 50 | 77 | 874 | |
| | 2017.04-2018.08 | 5MT | F | R | Hatchback FWD 21126-79 | | GDS28026 | Drive Shaft | | 22 | 24 | 50 | 77 | 874 | |
| | 2017.04-2018.08 | 5MT | F | L/R | Hatchback FWD 21126-79 | | GCO28010 | Outer Joint | 43T | 22 | 22 | 50 | 77 | 53.5 | I |
| | 2017.04-2018.08 | 5MT | F | L/R | Hatchback FWD 21126-79 | | GCI28001 | Inner Joint | | 24 | 22 | 35 | 60.8 | 97 | |
| | 2017.04-2018.08 | 5MT | F | L/R | Hatchback FWD 21126-79 | | GCI28002 | Inner Joint | | 24 | 22 | 35 | 60.8 | 97 | |
| 1.6 (87 kw) | 2013.06-2013.12 | 5MT | F | L | Hatchback FWD 21126-77 | | GDS28009 | Drive Shaft | | 22 | 24 | 50 | 77 | 600 | |
| | 2013.06-2013.12 | 5MT | F | L | Hatchback FWD 21126-77 | | GDS28025 | Drive Shaft | 43T | 22 | 24 | 50 | 77 | 594 | |
| | 2013.06-2013.12 | 5MT | F | R | Hatchback FWD 21126-77 | | GDS28024 | Drive Shaft | 43T | 22 | 24 | 50 | 77 | 874 | |
| | 2013.06-2013.12 | 5MT | F | L/R | Hatchback FWD 21126-77 | | GCO28010 | Outer Joint | 43T | 22 | 22 | 50 | 77 | 53.5 | I |
| | 2013.06-2013.12 | 5MT | F | L/R | Hatchback FWD 21126-77 | | GCI28001 | Inner Joint | | 24 | 22 | 35 | 60.8 | 97 | |
| | 2013.06-2013.12 | 5MT | F | L/R | Hatchback FWD 21126-77 | | GCI28002 | Inner Joint | | 24 | 22 | 35 | 60.8 | 97 | |
| | 2013.06-2013.12 | MT | F | R | Hatchback FWD 21126-77 | | GDS28026 | Drive Shaft | | 22 | 24 | 50 | 77 | 874 | |
| | 2014.06-2018.08 | 5MT | F | L | Hatchback FWD 21126-77 | | GDS28009 | Drive Shaft | | 22 | 24 | 50 | 77 | 600 | |
| | 2014.06-2018.08 | 5MT | F | L | Hatchback FWD 21126-77 | | GDS28025 | Drive Shaft | 43T | 22 | 24 | 50 | 77 | 594 | |
| | 2014.06-2018.08 | 5MT | F | R | Hatchback FWD 21126-77 | | GDS28024 | Drive Shaft | 43T | 22 | 24 | 50 | 77 | 874 | |
| | 2014.06-2018.08 | 5MT | F | R | Hatchback FWD 21126-77 | | GDS28026 | Drive Shaft | | 22 | 24 | 50 | 77 | 874 | |
| | 2014.06-2018.08 | 5MT | F | L/R | Hatchback FWD 21126-77 | | GCO28010 | Outer Joint | 43T | 22 | 22 | 50 | 77 | 53.5 | I |
| | 2014.06-2018.08 | 5MT | F | L/R | Hatchback FWD 21126-77 | | GCI28001 | Inner Joint | | 24 | 22 | 35 | 60.8 | 97 | |
| | 2014.06-2018.08 | 5MT | F | L/R | Hatchback FWD 21126-77 | | GCI28002 | Inner Joint | | 24 | 22 | 35 | 60.8 | 97 | |
| 1.6 (100 kw) | 2016.09-2017.12 | 5MT | F | L | Hatchback FWD 21126-81 | | GDS28009 | Drive Shaft | | 22 | 24 | 50 | 77 | 600 | |
| | 2016.09-2017.12 | 5MT | F | L | Hatchback FWD 21126-81 | | GDS28025 | Drive Shaft | 43T | 22 | 24 | 50 | 77 | 594 | |
| | 2016.09-2017.12 | 5MT | F | R | Hatchback FWD 21126-81 | | GDS28024 | Drive Shaft | 43T | 22 | 24 | 50 | 77 | 874 | |
| | 2016.09-2017.12 | 5MT | F | R | Hatchback FWD 21126-81 | | GDS28026 | Drive Shaft | | 22 | 24 | 50 | 77 | 874 | |
| | 2016.09-2017.12 | 5MT | F | L/R | Hatchback FWD 21126-81 | | GCO28010 | Outer Joint | 43T | 22 | 22 | 50 | 77 | 53.5 | I |
| | 2016.09-2017.12 | 5MT | F | L/R | Hatchback FWD 21126-81 | | GCI28001 | Inner Joint | | 24 | 22 | 35 | 60.8 | 97 | |
| | 2016.09-2017.12 | 5MT | F | L/R | Hatchback FWD 21126-81 | | GCI28002 | Inner Joint | | 24 | 22 | 35 | 60.8 | 97 | |
| **Largus** | | | | | | | | | | | | | | | |
| 1.6 (62 kw) | 2012.03- | MT | F | L | Estate FWD K7M | Manufacturer:NTN | GDS11021 | Drive Shaft | | 23 | 30 | 49 | 86 | 683 | |
| | 2012.03- | MT | F | L | Estate FWD K7M | Manufacturer:GKN | GDS50570 | Drive Shaft | | 23 | 26 | 49 | 83.5 | 647 | |
| | 2012.03- | MT | F | R | Estate FWD K7M | Manufacturer:NTN | GDS11016 | Drive Shaft | | 23 | 23 | 49 | 86 | 764 | |
| | 2012.03- | MT | F | R | Estate FWD K7M | Manufacturer:GKN | GDS50507 | Drive Shaft | | 23 | 26 | 49 | 86 | 898 | |
| | 2012.03- | MT | F | L | Estate FWD K7M | Manufacturer:NTN | GCO50219 | Outer Joint | | 23 | 28 | 49 | 86 | 52 | I |
| | 2012.03- | MT | F | R | Estate FWD K7M | Manufacturer:GKN | GCO50175 | Outer Joint | | 23 | 22 | 49 | 86 | 58.5 | I |
| | 2012.03- | MT | F | R | Estate FWD K7M | Manufacturer:NTN | GCO99085 | Outer Joint | | 23 | 30 | 49 | 86 | 59 | I |
| | 2012.03- | MT | F | L | Estate FWD K7M | Manufacturer:GKN | GCI50057 | Inner Joint | | 26 | 22 | 40 | 64 | 104 | |
| | 2012.03- | MT | F | R | Estate FWD K7M | Manufacturer:NTN | GCI50008 | Inner Joint | | 23 | 30 | 36.3 | | 120.7 | |
| | 2012.03- | MT | F | R | Estate FWD K7M | Manufacturer:GKN | GCI50107 | Inner Joint | | 26 | 21 | 40 | 64 | 105.5 | |
| | 2012.03- | MT | F | L | Estate Van FWD K7M | Manufacturer:NTN | GDS11021 | Drive Shaft | | 23 | 30 | 49 | 86 | 683 | |
| | 2012.03- | MT | F | L | Estate Van FWD K7M | Manufacturer:GKN | GDS50570 | Drive Shaft | | 23 | 26 | 49 | 83.5 | 647 | |
| | 2012.03- | MT | F | R | Estate Van FWD K7M | Manufacturer:NTN | GDS11016 | Drive Shaft | | 23 | 23 | 49 | 86 | 764 | |
| | 2012.03- | MT | F | R | Estate Van FWD K7M | Manufacturer:GKN | GDS50507 | Drive Shaft | | 23 | 26 | 49 | 86 | 898 | |
| | 2012.03- | MT | F | L | Estate Van FWD K7M | Manufacturer:NTN | GCO50219 | Outer Joint | | 23 | 28 | 49 | 86 | 52 | I |
| | 2012.03- | MT | F | R | Estate Van FWD K7M | Manufacturer:GKN | GCO50175 | Outer Joint | | 23 | 22 | 49 | 86 | 58.5 | I |
| | 2012.03- | MT | F | R | Estate Van FWD K7M | Manufacturer:NTN | GCO99085 | Outer Joint | | 23 | 30 | 49 | 86 | 59 | I |
| | 2012.03- | MT | F | L | Estate Van FWD K7M | Manufacturer:GKN | GCI50057 | Inner Joint | | 26 | 22 | 40 | 64 | 104 | |
| | 2012.03- | MT | F | R | Estate Van FWD K7M | Manufacturer:NTN | GCI50008 | Inner Joint | | 23 | 30 | 36.3 | | 120.7 | |
| | 2012.03- | MT | F | R | Estate Van FWD K7M | Manufacturer:GKN | GCI50107 | Inner Joint | | 26 | 21 | 40 | 64 | 105.5 | |
| 1.6 (64 kw) | 2016.04-2021.03 | MT | F | L | Estate FWD 11189 | Manufacturer:NTN | GDS11021 | Drive Shaft | | 23 | 30 | 49 | 86 | 683 | |
| | 2016.04-2021.03 | MT | F | L | Estate FWD 11189 | For special-purpose vehicles,Manufacturer:GKN | GDS50570 | Drive Shaft | | 23 | 26 | 49 | 83.5 | 647 | |
| | 2016.04-2021.03 | MT | F | R | Estate FWD 11189 | Manufacturer:NTN | GDS11016 | Drive Shaft | | 23 | 23 | 49 | 86 | 764 | |

| | YEAR | TRANSM. | F/R | L/R | BODY STYLE & DRIVE TYPE & ENGINE | REMARKS | G-AP Ref. | PRODUCT | ABS | Technical Specifications | | | | | |
|---|---|---|---|---|---|---|---|---|---|---|---|---|---|---|---|
| | | | | | | | | | | A | B | C | H | L | P |
| **LADA** | | | | | | | | | | | | | | | |
| **Largus** | | | | | | | | | | | | | | | |
| 1.6 (64 kw) | 2016.04-2021.03 | MT | F | R | Estate FWD 11189 | For special-purpose vehicles,Manufacturer:GKN | GDS50507 | Drive Shaft | | 23 | 26 | 49 | 86 | 898 | |
| | 2016.04-2021.03 | MT | F | L | Estate FWD 11189 | Manufacturer:NTN | GCO50219 | Outer Joint | | 23 | 28 | 49 | 86 | 52 | I |
| | 2016.04-2021.03 | MT | F | R | Estate FWD 11189 | For special-purpose vehicles,Manufacturer:GKN | GCO50175 | Outer Joint | | 23 | 22 | 49 | 86 | 58.5 | I |
| | 2016.04-2021.03 | MT | F | R | Estate FWD 11189 | Manufacturer:NTN | GCO99085 | Outer Joint | | 23 | 30 | 49 | 86 | 59 | I |
| | 2016.04-2021.03 | MT | F | L | Estate FWD 11189 | For special-purpose vehicles,Manufacturer:GKN | GCI50057 | Inner Joint | | 26 | 22 | 40 | 64 | 104 | |
| | 2016.04-2021.03 | MT | F | R | Estate FWD 11189 | Manufacturer:NTN | GCI50008 | Inner Joint | | 23 | 30 | 36.3 | | 120.7 | |
| | 2016.04-2021.03 | MT | F | R | Estate FWD 11189 | For special-purpose vehicles,Manufacturer:GKN | GCI50107 | Inner Joint | | 26 | 21 | 40 | 64 | 105.5 | |
| | 2016.06- | MT | F | L | Estate Van FWD 11189 | Manufacturer:NTN | GDS11021 | Drive Shaft | | 23 | 30 | 49 | 86 | 683 | |
| | 2016.06- | MT | F | L | Estate Van FWD 11189 | For special-purpose vehicles,Manufacturer:GKN | GDS50570 | Drive Shaft | | 23 | 26 | 49 | 83.5 | 647 | |
| | 2016.06- | MT | F | R | Estate Van FWD 11189 | Manufacturer:NTN | GDS11016 | Drive Shaft | | 23 | 23 | 49 | 86 | 764 | |
| | 2016.06- | MT | F | R | Estate Van FWD 11189 | For special-purpose vehicles,Manufacturer:GKN | GDS50507 | Drive Shaft | | 23 | 26 | 49 | 86 | 898 | |
| | 2016.06- | MT | F | L | Estate Van FWD 11189 | Manufacturer:NTN | GCO50219 | Outer Joint | | 23 | 28 | 49 | 86 | 52 | I |
| | 2016.06- | MT | F | R | Estate Van FWD 11189 | For special-purpose vehicles,Manufacturer:GKN | GCO50175 | Outer Joint | | 23 | 22 | 49 | 86 | 58.5 | I |
| | 2016.06- | MT | F | R | Estate Van FWD 11189 | Manufacturer:NTN | GCO99085 | Outer Joint | | 23 | 30 | 49 | 86 | 59 | I |
| | 2016.06- | MT | F | L | Estate Van FWD 11189 | For special-purpose vehicles,Manufacturer:GKN | GCI50057 | Inner Joint | | 26 | 22 | 40 | 64 | 104 | |
| | 2016.06- | MT | F | R | Estate Van FWD 11189 | Manufacturer:NTN | GCI50008 | Inner Joint | | 23 | 30 | 36.3 | | 120.7 | |
| | 2016.06- | MT | F | R | Estate Van FWD 11189 | For special-purpose vehicles,Manufacturer:GKN | GCI50107 | Inner Joint | | 26 | 21 | 40 | 64 | 105.5 | |
| 1.6 (69 kw) | 2018.11- | | F | R | Estate FWD 21129 | | GCI50008 | Inner Joint | | 23 | 30 | 36.3 | | 120.7 | |
| | 2018.11- | MT | F | L | Estate Van FWD 21129 | Manufacturer:NTN | GDS11021 | Drive Shaft | | 23 | 30 | 49 | 86 | 683 | |
| | 2018.11- | MT | F | L | Estate Van FWD 21129 | For special-purpose vehicles,Manufacturer:GKN | GDS50570 | Drive Shaft | | 23 | 26 | 49 | 83.5 | 647 | |
| | 2018.11- | MT | F | L | Estate Van FWD 21129 | Manufacturer:NTN | GCO50219 | Outer Joint | | 23 | 28 | 49 | 86 | 52 | I |
| | 2018.11- | | F | R | Estate Van FWD 21129 | | GDS11016 | Drive Shaft | | 23 | 23 | 49 | 86 | 764 | |
| | 2018.11- | | F | R | Estate Van FWD 21129 | For special-purpose vehicles | GDS50507 | Drive Shaft | | 23 | 26 | 49 | 86 | 898 | |
| | 2018.11- | | F | R | Estate Van FWD 21129 | For special-purpose vehicles | GCO50175 | Outer Joint | | 23 | 22 | 49 | 86 | 58.5 | I |
| | 2018.11- | | F | R | Estate Van FWD 21129 | | GCO99085 | Outer Joint | | 23 | 30 | 49 | 86 | 59 | I |
| | 2018.11- | | F | R | Estate Van FWD 21129 | | GCI50008 | Inner Joint | | 23 | 30 | 36.3 | | 120.7 | |
| 1.6 (75 kw) | 2016.04- | MT | F | L | Estate Van FWD K4M | Manufacturer:NTN | GDS11021 | Drive Shaft | | 23 | 30 | 49 | 86 | 683 | |
| | 2016.04- | MT | F | L | Estate Van FWD K4M | Manufacturer:GKN | GDS50570 | Drive Shaft | | 23 | 26 | 49 | 83.5 | 647 | |
| | 2016.04- | MT | F | R | Estate Van FWD K4M | Manufacturer:NTN | GDS11016 | Drive Shaft | | 23 | 23 | 49 | 86 | 764 | |
| | 2016.04- | MT | F | R | Estate Van FWD K4M | Manufacturer:GKN | GDS50507 | Drive Shaft | | 23 | 26 | 49 | 86 | 898 | |
| | 2016.04- | MT | F | L | Estate Van FWD K4M | Manufacturer:NTN | GCO50219 | Outer Joint | | 23 | 28 | 49 | 86 | 52 | I |
| | 2016.04- | MT | F | R | Estate Van FWD K4M | Manufacturer:GKN | GCO50175 | Outer Joint | | 23 | 22 | 49 | 86 | 58.5 | I |
| | 2016.04- | MT | F | R | Estate Van FWD K4M | Manufacturer:NTN | GCO99085 | Outer Joint | | 23 | 30 | 49 | 86 | 59 | I |
| | 2016.04- | MT | F | L | Estate Van FWD K4M | Manufacturer:GKN | GCI50057 | Inner Joint | | 26 | 22 | 40 | 64 | 104 | |
| | 2016.04- | MT | F | R | Estate Van FWD K4M | Manufacturer:NTN | GCI50008 | Inner Joint | | 23 | 30 | 36.3 | | 120.7 | |
| | 2016.04- | MT | F | R | Estate Van FWD K4M | Manufacturer:GKN | GCI50107 | Inner Joint | | 26 | 21 | 40 | 64 | 105.5 | |
| 1.6 (77 kw) | 2012.03- | MT | F | L | Estate FWD K4M | Manufacturer:NTN | GDS11021 | Drive Shaft | | 23 | 30 | 49 | 86 | 683 | |
| | 2012.03- | MT | F | L | Estate FWD K4M | Manufacturer:GKN | GDS50570 | Drive Shaft | | 23 | 26 | 49 | 83.5 | 647 | |
| | 2012.03- | MT | F | R | Estate FWD K4M | Manufacturer:NTN | GDS11016 | Drive Shaft | | 23 | 23 | 49 | 86 | 764 | |
| | 2012.03- | MT | F | R | Estate FWD K4M | Manufacturer:GKN | GDS50507 | Drive Shaft | | 23 | 26 | 49 | 86 | 898 | |
| | 2012.03- | MT | F | L | Estate FWD K4M | Manufacturer:NTN | GCO50219 | Outer Joint | | 23 | 28 | 49 | 86 | 52 | I |
| | 2012.03- | MT | F | R | Estate FWD K4M | Manufacturer:GKN | GCO50175 | Outer Joint | | 23 | 22 | 49 | 86 | 58.5 | I |
| | 2012.03- | MT | F | R | Estate FWD K4M | Manufacturer:NTN | GCO99085 | Outer Joint | | 23 | 30 | 49 | 86 | 59 | I |
| | 2012.03- | MT | F | R | Estate FWD K4M | Manufacturer:NTN | GCI50008 | Inner Joint | | 23 | 30 | 36.3 | | 120.7 | |
| | 2012.03- | MT | F | R | Estate FWD K4M | Manufacturer:GKN | GCI50107 | Inner Joint | | 26 | 21 | 40 | 64 | 105.5 | |
| | 2012.03- | MT | F | L | Estate Van FWD K4M | Manufacturer:NTN | GDS11021 | Drive Shaft | | 23 | 30 | 49 | 86 | 683 | |
| | 2012.03- | MT | F | L | Estate Van FWD K4M | Manufacturer:GKN | GDS50570 | Drive Shaft | | 23 | 26 | 49 | 83.5 | 647 | |
| | 2012.03- | MT | F | R | Estate Van FWD K4M | Manufacturer:NTN | GDS11016 | Drive Shaft | | 23 | 23 | 49 | 86 | 764 | |
| | 2012.03- | MT | F | R | Estate Van FWD K4M | Manufacturer:GKN | GDS50507 | Drive Shaft | | 23 | 26 | 49 | 86 | 898 | |
| | 2012.03- | MT | F | L | Estate Van FWD K4M | Manufacturer:NTN | GCO50219 | Outer Joint | | 23 | 28 | 49 | 86 | 52 | I |
| | 2012.03- | MT | F | R | Estate Van FWD K4M | Manufacturer:GKN | GCO50175 | Outer Joint | | 23 | 22 | 49 | 86 | 58.5 | I |
| | 2012.03- | MT | F | R | Estate Van FWD K4M | Manufacturer:NTN | GCO99085 | Outer Joint | | 23 | 30 | 49 | 86 | 59 | I |
| | 2012.03- | MT | F | L | Estate Van FWD K4M | Manufacturer:GKN | GCI50057 | Inner Joint | | 26 | 22 | 40 | 64 | 104 | |
| | 2012.03- | MT | F | R | Estate Van FWD K4M | Manufacturer:NTN | GCI50008 | Inner Joint | | 23 | 30 | 36.3 | | 120.7 | |
| | 2012.03- | MT | F | R | Estate Van FWD K4M | Manufacturer:GKN | GCI50107 | Inner Joint | | 26 | 21 | 40 | 64 | 105.5 | |
| 1.6 (78 kw) | 2017.09- | 5MT | F | L | Estate FWD 21129 | Manufacturer:NTN | GDS11021 | Drive Shaft | | 23 | 30 | 49 | 86 | 683 | |
| | 2017.09- | 5MT | F | L | Estate FWD 21129 | For special-purpose vehicles,Manufacturer:GKN | GDS50570 | Drive Shaft | | 23 | 26 | 49 | 83.5 | 647 | |
| | 2017.09- | 5MT | F | R | Estate FWD 21129 | Manufacturer:NTN | GDS11016 | Drive Shaft | | 23 | 23 | 49 | 86 | 764 | |
| | 2017.09- | 5MT | F | R | Estate FWD 21129 | For special-purpose vehicles,Manufacturer:GKN | GDS50507 | Drive Shaft | | 23 | 26 | 49 | 86 | 898 | |
| | 2017.09- | 5MT | F | L | Estate FWD 21129 | Manufacturer:NTN | GCO50219 | Outer Joint | | 23 | 28 | 49 | 86 | 52 | I |
| | 2017.09- | 5MT | F | R | Estate FWD 21129 | Manufacturer:NTN | GCO99085 | Outer Joint | | 23 | 30 | 49 | 86 | 59 | I |
| | 2017.09- | 5MT | F | R | Estate FWD 21129 | Manufacturer:NTN | GCI50008 | Inner Joint | | 23 | 30 | 36.3 | | 120.7 | |
| | 2017.09- | 5MT | F | R | Estate FWD 21129 | For special-purpose vehicles,Manufacturer:GKN | GCI50107 | Inner Joint | | 26 | 21 | 40 | 64 | 105.5 | |
| | 2017.09- | MT | F | R | Estate FWD 21129 | For special-purpose vehicles,Manufacturer:GKN | GCO50175 | Outer Joint | | 23 | 22 | 49 | 86 | 58.5 | I |
| | 2017.09- | MT | F | L | Estate FWD 21129 | For special-purpose vehicles,Manufacturer:GKN | GCI50057 | Inner Joint | | 26 | 22 | 40 | 64 | 104 | |

| | YEAR | TRANSM. | F/R | L/R | BODY STYLE & DRIVE TYPE & ENGINE | REMARKS | G-AP Ref. | PRODUCT | ABS | Technical Specifications A | B | C | H | L | P |
|---|---|---|---|---|---|---|---|---|---|---|---|---|---|---|---|
| **LADA** | | | | | | | | | | | | | | | |
| **Largus** | | | | | | | | | | | | | | | |
| 1.6 (78 kw) | 2017.09- | MT | F | L | Estate Van FWD 21129 | Manufacturer:NTN | GDS11021 | Drive Shaft | | 23 | 30 | 49 | 86 | 683 | |
| | 2017.09- | MT | F | L | Estate Van FWD 21129 | For special-purpose vehicles,Manufacturer:GKN | GDS50570 | Drive Shaft | | 23 | 26 | 49 | 83.5 | 647 | |
| | 2017.09- | MT | F | R | Estate Van FWD 21129 | Manufacturer:NTN | GDS11016 | Drive Shaft | | 23 | 23 | 49 | 86 | 764 | |
| | 2017.09- | MT | F | R | Estate Van FWD 21129 | For special-purpose vehicles,Manufacturer:GKN | GDS50507 | Drive Shaft | | 23 | 26 | 49 | 86 | 898 | |
| | 2017.09- | MT | F | L | Estate Van FWD 21129 | Manufacturer:NTN | GCO50219 | Outer Joint | | 23 | 28 | 49 | 86 | 52 | I |
| | 2017.09- | MT | F | R | Estate Van FWD 21129 | For special-purpose vehicles,Manufacturer:GKN | GCO50175 | Outer Joint | | 23 | 22 | 49 | 86 | 58.5 | I |
| | 2017.09- | MT | F | R | Estate Van FWD 21129 | Manufacturer:NTN | GCO99085 | Outer Joint | | 23 | 30 | 49 | 86 | 59 | I |
| | 2017.09- | MT | F | L | Estate Van FWD 21129 | For special-purpose vehicles,Manufacturer:GKN | GCI50057 | Inner Joint | | 26 | 22 | 40 | 64 | 104 | |
| | 2017.09- | MT | F | R | Estate Van FWD 21129 | Manufacturer:NTN | GCI50008 | Inner Joint | | 23 | 30 | 36.3 | | 120.7 | |
| | 2017.09- | MT | F | R | Estate Van FWD 21129 | For special-purpose vehicles,Manufacturer:GKN | GCI50107 | Inner Joint | | 26 | 21 | 40 | 64 | 105.5 | |
| **Nadeschda** | | | | | | | | | | | | | | | |
| 1.7 (58 kw) | 1997.09-2003.10 | 5MT | F | L | MPV 4WD 21213 | Date from:2002.03 | GDS28005 | Drive Shaft | | 22 | 22 | 46 | 107.5 | 707 | |
| | 1997.09-2003.10 | 5MT | F | R | MPV 4WD 21213 | Date to:2002.02 | GDS28006 | Drive Shaft | | 22 | 22 | 46 | 107.5 | 831 | |
| | 1997.09-2003.10 | 5MT | F | L/R | MPV 4WD 21213 | | GCO28002 | Outer Joint | | 22 | 22 | 46 | 107.5 | 66.5 | I |
| | 1997.09-2003.10 | 5MT | F | L | MPV 4WD 21213 | | GCI28003 | Inner Joint | | 22 | 22 | 40 | 93.5 | 116 | |
| | 1997.09-2003.10 | 5MT | F | R | MPV 4WD 21213 | | GCI28004 | Inner Joint | | 22 | 22 | 40 | 217.8 | 116 | |
| 1.7 (59 kw) | 1997.09-2007.08 | 5MT | F | L | MPV 4WD 2121427 | Date from:2002.03 | GDS28005 | Drive Shaft | | 22 | 22 | 46 | 107.5 | 707 | |
| | 1997.09-2007.08 | 5MT | F | R | MPV 4WD 2121427 | Date to:2002.02 | GDS28006 | Drive Shaft | | 22 | 22 | 46 | 107.5 | 831 | |
| | 1997.09-2007.08 | 5MT | F | L/R | MPV 4WD 2121427 | | GCO28002 | Outer Joint | | 22 | 22 | 46 | 107.5 | 66.5 | I |
| | 1997.09-2007.08 | 5MT | F | L | MPV 4WD 2121427 | | GCI28003 | Inner Joint | | 22 | 22 | 40 | 93.5 | 116 | |
| | 1997.09-2007.08 | 5MT | F | R | MPV 4WD 2121427 | | GCI28004 | Inner Joint | | 22 | 22 | 40 | 217.8 | 116 | |
| 1.8 (60 kw) | 1997.09-2003.10 | 5MT | F | L | MPV 4WD 2130 | Date from:2002.03 | GDS28005 | Drive Shaft | | 22 | 22 | 46 | 107.5 | 707 | |
| | 1997.09-2003.10 | 5MT | F | R | MPV 4WD 2130 | Date to:2002.02 | GDS28006 | Drive Shaft | | 22 | 22 | 46 | 107.5 | 831 | |
| | 1997.09-2003.10 | 5MT | F | L/R | MPV 4WD 2130 | | GCO28002 | Outer Joint | | 22 | 22 | 46 | 107.5 | 66.5 | I |
| | 1997.09-2003.10 | 5MT | F | L | MPV 4WD 2130 | | GCI28003 | Inner Joint | | 22 | 22 | 40 | 93.5 | 116 | |
| | 1997.09-2003.10 | 5MT | F | R | MPV 4WD 2130 | | GCI28004 | Inner Joint | | 22 | 22 | 40 | 217.8 | 116 | |
| **Niva** | | | | | | | | | | | | | | | |
| 1.7 (57 kw) | 2002.09-2015.12 | 5MT | F | L | Terrain cab wagon closed 4WD 21214 | | GCI28019 | Inner Joint | | 24 | 22 | 40 | 93.5 | 114.5 | |
| | 2002.09-2015.12 | MT | F | L/R | Terrain cab wagon closed 4WD 21214 | Date from:2003.01 | GCO28004 | Outer Joint | | 24 | 22 | 46 | 107.5 | 66.5 | I |
| | 2002.09-2015.12 | MT | F | L/R | Terrain cab wagon closed 4WD 21214 | | GCO83676 | Outer Joint | 48T | 24 | 22 | 46 | 107.5 | 66.5 | I |
| 1.7 (59 kw) | 1996.06-2006.12 | 5MT | F | L | Closed Off-Road Vehicle 4WD 21213, 21214 | | GCI28019 | Inner Joint | | 24 | 22 | 40 | 93.5 | 114.5 | |
| | 1996.06-2006.12 | AT/MT | F | L/R | Closed Off-Road Vehicle 4WD 21213, 21214 | | GCO28002 | Outer Joint | | 22 | 22 | 46 | 107.5 | 66.5 | I |
| | 1996.06-2006.12 | MT | F | R | Closed Off-Road Vehicle 4WD 21213, 21214 | | GDS28006 | Drive Shaft | | 22 | 22 | 46 | 107.5 | 831 | |
| | 2020.07- | 5MT | F | L | Terrain cab wagon closed 4WD 2123 | DOJ | GCI28019 | Inner Joint | | 24 | 22 | 40 | 93.5 | 114.5 | |
| | 2020.07- | MT | F | L | Terrain cab wagon closed 4WD 2123 | | GDS57693 | Drive Shaft | 48T | 24 | 24 | 46 | 107.5 | 691 | |
| | 2020.07- | MT | F | R | Terrain cab wagon closed 4WD 2123 | | GDS57692 | Drive Shaft | 48T | 24 | 24 | 46 | 107.5 | 816 | |
| | 2020.07- | MT | F | L/R | Terrain cab wagon closed 4WD 2123 | | GCO83676 | Outer Joint | 48T | 24 | 22 | 46 | 107.5 | 66.5 | I |
| 1.7 (60 kw) | 2000.10-2015.12 | 5MT | F | L | Terrain cab wagon closed 4WD 21213/21214 | | GCI28019 | Inner Joint | | 24 | 22 | 40 | 93.5 | 114.5 | |
| | 2000.10-2015.12 | AT/MT | F | L/R | Terrain cab wagon closed 4WD 21213/21214 | | GCO28002 | Outer Joint | | 22 | 22 | 46 | 107.5 | 66.5 | I |
| | 2000.10-2015.12 | MT | F | R | Terrain cab wagon closed 4WD 21213/21214 | | GDS28006 | Drive Shaft | | 22 | 22 | 46 | 107.5 | 831 | |
| 1.7 (61 kw) | 2004.05- | 5MT | F | L | Closed Off-Road Vehicle 4WD 21214 | | GCI28019 | Inner Joint | | 24 | 22 | 40 | 93.5 | 114.5 | |
| 1.9 (48 kw) | 1993.01-1999.08 | MT | F | R | Closed Off-Road Vehicle 4WD XUD9SD | | GDS28006 | Drive Shaft | | 22 | 22 | 46 | 107.5 | 831 | |
| 1.9 (55 kw) | 1999.01-2006.12 | MT | F | R | Closed Off-Road Vehicle 4WD XUD9SD | | GDS28006 | Drive Shaft | | 22 | 22 | 46 | 107.5 | 831 | |
| **Oka** | | | | | | | | | | | | | | | |
| 0.6 (22 kw) | 1988.02-2000.09 | | F | L | Hatchback FWD VAZ1111/VAZ11111 | | GDS28008 | Drive Shaft | | 20 | 20 | 42 | 90 | 606 | |
| | 1988.02-2000.09 | | F | L/R | Hatchback FWD VAZ1111/VAZ11111 | | GCO99012 | Outer Joint | | 20 | 19 | 42 | 90 | 47 | M |
| 0.8 (24 kw) | 1992.10-2004.09 | MT | F | L/R | Hatchback FWD B6113E | Date from:1997.01 | GCO99012 | Outer Joint | | 20 | 19 | 42 | 90 | 47 | M |
| 0.8 (26 kw) | 1988.02-2008.12 | MT | F | L/R | Hatchback FWD B6113E | | GCO99012 | Outer Joint | | 20 | 19 | 42 | 90 | 47 | M |
| | 1988.02-2008.12 | | F | L | Hatchback FWD B6113E | | GDS28008 | Drive Shaft | | 20 | 20 | 42 | 90 | 606 | |
| 0.8 (30 kw) | 1992.01-2003.01 | MT | F | L/R | Hatchback FWD B6113E | Date from:1997.01 | GCO99012 | Outer Joint | | 20 | 19 | 42 | 90 | 47 | M |
| | 1992.01-2003.01 | | F | L | Hatchback FWD B6113E | | GDS28008 | Drive Shaft | | 20 | 20 | 42 | 90 | 606 | |
| **Priora** | | | | | | | | | | | | | | | |
| 1.6 (60 kw) | 2008.12-2013.12 | 5MT | F | L | Hatchback FWD 21114 | | GDS28009 | Drive Shaft | | 22 | 24 | 50 | 77 | 600 | |
| | 2008.12-2013.12 | 5MT | F | L | Hatchback FWD 21114 | | GDS28025 | Drive Shaft | 43T | 22 | 24 | 50 | 77 | 594 | |
| | 2008.12-2013.12 | 5MT | F | R | Hatchback FWD 21114 | | GDS28004 | Drive Shaft | | 22 | 24 | 50 | 77 | 856.2 | |
| | 2008.12-2013.12 | 5MT | F | L/R | Hatchback FWD 21114 | | GCO28010 | Outer Joint | 43T | 22 | 22 | 50 | 77 | 53.5 | I |
| | 2008.12-2013.12 | 5MT | F | L/R | Hatchback FWD 21114 | | GCI28001 | Inner Joint | | 24 | 22 | 35 | 60.8 | 97 | |
| | 2008.12-2013.12 | 5MT | F | L/R | Hatchback FWD 21114 | | GCI28002 | Inner Joint | | 24 | 22 | 35 | 60.8 | 97 | |
| | 2008.12-2013.12 | 5MT | F | L | Saloon FWD 21114 | | GDS28009 | Drive Shaft | | 22 | 24 | 50 | 77 | 600 | |
| | 2008.12-2013.12 | 5MT | F | L | Saloon FWD 21114 | | GDS28025 | Drive Shaft | 43T | 22 | 24 | 50 | 77 | 594 | |
| | 2008.12-2013.12 | 5MT | F | R | Saloon FWD 21114 | | GDS28004 | Drive Shaft | | 22 | 24 | 50 | 77 | 856.2 | |
| | 2008.12-2013.12 | 5MT | F | L/R | Saloon FWD 21114 | | GCO28010 | Outer Joint | 43T | 22 | 22 | 50 | 77 | 53.5 | I |
| | 2008.12-2013.12 | 5MT | F | L/R | Saloon FWD 21114 | | GCI28001 | Inner Joint | | 24 | 22 | 35 | 60.8 | 97 | |
| | 2008.12-2013.12 | 5MT | F | L/R | Saloon FWD 21114 | | GCI28002 | Inner Joint | | 24 | 22 | 35 | 60.8 | 97 | |
| 1.6 (66 kw) | 2011.01-2013.12 | 5MT | F | L | Hatchback FWD 21116 | | GDS28009 | Drive Shaft | | 22 | 24 | 50 | 77 | 600 | |

| | YEAR | TRANSM. | F/R | L/R | BODY STYLE & DRIVE TYPE & ENGINE | REMARKS | G-AP Ref. | PRODUCT | ABS | Technical Specifications A | B | C | H | L | P |
|---|---|---|---|---|---|---|---|---|---|---|---|---|---|---|---|
| **LADA** **Priora** | | | | | | | | | | | | | | | |
| 1.6 (66 kw) | 2011.01-2013.12 | 5MT | F | L | Hatchback FWD 21116 | | GDS28025 | Drive Shaft | 43T | 22 | 24 | 50 | 77 | 594 | |
| | 2011.01-2013.12 | 5MT | F | R | Hatchback FWD 21116 | | GDS28004 | Drive Shaft | | 22 | 24 | 50 | 77 | 856.2 | |
| | 2011.01-2013.12 | 5MT | F | L/R | Hatchback FWD 21116 | | GCO28010 | Outer Joint | 43T | 22 | 22 | 50 | 77 | 53.5 | I |
| | 2011.01-2013.12 | 5MT | F | L/R | Hatchback FWD 21116 | | GCI28001 | Inner Joint | | 24 | 22 | 35 | 60.8 | 97 | |
| | 2011.01-2013.12 | 5MT | F | L/R | Hatchback FWD 21116 | | GCI28002 | Inner Joint | | 24 | 22 | 35 | 60.8 | 97 | |
| | 2011.01-2013.12 | 5MT | F | L | Saloon FWD 21116 | | GDS28009 | Drive Shaft | | 22 | 24 | 50 | 77 | 600 | |
| | 2011.01-2013.12 | 5MT | F | L | Saloon FWD 21116 | | GDS28025 | Drive Shaft | 43T | 22 | 24 | 50 | 77 | 594 | |
| | 2011.01-2013.12 | 5MT | F | R | Saloon FWD 21116 | | GDS28004 | Drive Shaft | | 22 | 24 | 50 | 77 | 856.2 | |
| | 2011.01-2013.12 | 5MT | F | L/R | Saloon FWD 21116 | | GCO28010 | Outer Joint | 43T | 22 | 22 | 50 | 77 | 53.5 | I |
| | 2011.01-2013.12 | 5MT | F | L/R | Saloon FWD 21116 | | GCI28001 | Inner Joint | | 24 | 22 | 35 | 60.8 | 97 | |
| | 2011.01-2013.12 | 5MT | F | L/R | Saloon FWD 21116 | | GCI28002 | Inner Joint | | 24 | 22 | 35 | 60.8 | 97 | |
| 1.6 (71 kw) | 2008.12-2013.12 | 5MT | F | L | Hatchback FWD 21126 | | GDS28009 | Drive Shaft | | 22 | 24 | 50 | 77 | 600 | |
| | 2008.12-2013.12 | 5MT | F | L | Hatchback FWD 21126 | | GDS28025 | Drive Shaft | 43T | 22 | 24 | 50 | 77 | 594 | |
| | 2008.12-2013.12 | 5MT | F | R | Hatchback FWD 21126 | | GDS28004 | Drive Shaft | | 22 | 24 | 50 | 77 | 856.2 | |
| | 2008.12-2013.12 | 5MT | F | L/R | Hatchback FWD 21126 | | GCO28010 | Outer Joint | 43T | 22 | 22 | 50 | 77 | 53.5 | I |
| | 2008.12-2013.12 | 5MT | F | L/R | Hatchback FWD 21126 | | GCI28001 | Inner Joint | | 24 | 22 | 35 | 60.8 | 97 | |
| | 2008.12-2013.12 | 5MT | F | L/R | Hatchback FWD 21126 | | GCI28002 | Inner Joint | | 24 | 22 | 35 | 60.8 | 97 | |
| | 2009.03-2016.09 | 5MT | F | L | Saloon FWD 21126 | | GDS28009 | Drive Shaft | | 22 | 24 | 50 | 77 | 600 | |
| | 2009.03-2016.09 | 5MT | F | L | Saloon FWD 21126 | | GDS28025 | Drive Shaft | 43T | 22 | 24 | 50 | 77 | 594 | |
| | 2009.03-2016.09 | 5MT | F | R | Saloon FWD 21126 | | GDS28004 | Drive Shaft | | 22 | 24 | 50 | 77 | 856.2 | |
| | 2009.03-2016.09 | 5MT | F | L/R | Saloon FWD 21126 | | GCO28010 | Outer Joint | 43T | 22 | 22 | 50 | 77 | 53.5 | I |
| | 2009.03-2016.09 | 5MT | F | L/R | Saloon FWD 21126 | | GCI28001 | Inner Joint | | 24 | 22 | 35 | 60.8 | 97 | |
| | 2009.03-2016.09 | 5MT | F | L/R | Saloon FWD 21126 | | GCI28002 | Inner Joint | | 24 | 22 | 35 | 60.8 | 97 | |
| 1.6 (72 kw) | 2007.04-2018.07 | 5MT | F | L | Saloon FWD 21126 | | GDS28009 | Drive Shaft | | 22 | 24 | 50 | 77 | 600 | |
| | 2007.04-2018.07 | 5MT | F | R | Saloon FWD 21126 | | GDS28004 | Drive Shaft | | 22 | 24 | 50 | 77 | 856.2 | |
| | 2007.04-2018.07 | 5MT | F | L/R | Saloon FWD 21126 | | GCO28010 | Outer Joint | 43T | 22 | 22 | 50 | 77 | 53.5 | I |
| | 2007.04-2018.07 | 5MT | F | L/R | Saloon FWD 21126 | | GCI28001 | Inner Joint | | 24 | 22 | 35 | 60.8 | 97 | |
| | 2007.04-2018.07 | 5MT | F | L/R | Saloon FWD 21126 | | GCI28002 | Inner Joint | | 24 | 22 | 35 | 60.8 | 97 | |
| | 2007.04-2018.07 | MT | F | L | Saloon FWD 21126 | | GDS28025 | Drive Shaft | 43T | 22 | 24 | 50 | 77 | 594 | |
| | 2008.12-2015.12 | 5MT | F | L | Hatchback FWD 21126 | | GDS28009 | Drive Shaft | | 22 | 24 | 50 | 77 | 600 | |
| | 2008.12-2015.12 | 5MT | F | R | Hatchback FWD 21126 | | GDS28004 | Drive Shaft | | 22 | 24 | 50 | 77 | 856.2 | |
| | 2008.12-2015.12 | 5MT | F | L/R | Hatchback FWD 21126 | | GCO28010 | Outer Joint | 43T | 22 | 22 | 50 | 77 | 53.5 | I |
| | 2008.12-2015.12 | 5MT | F | L/R | Hatchback FWD 21126 | | GCI28001 | Inner Joint | | 24 | 22 | 35 | 60.8 | 97 | |
| | 2008.12-2015.12 | 5MT | F | L/R | Hatchback FWD 21126 | | GCI28002 | Inner Joint | | 24 | 22 | 35 | 60.8 | 97 | |
| | 2008.12-2015.12 | MT | F | L | Hatchback FWD 21126 | | GDS28025 | Drive Shaft | 43T | 22 | 24 | 50 | 77 | 594 | |
| | 2009.10-2015.12 | 5MT | F | L | Estate FWD 21126 | | GDS28009 | Drive Shaft | | 22 | 24 | 50 | 77 | 600 | |
| | 2009.10-2015.12 | 5MT | F | L | Estate FWD 21126 | | GDS28025 | Drive Shaft | 43T | 22 | 24 | 50 | 77 | 594 | |
| | 2009.10-2015.12 | 5MT | F | R | Estate FWD 21126 | | GDS28004 | Drive Shaft | | 22 | 24 | 50 | 77 | 856.2 | |
| | 2009.10-2015.12 | 5MT | F | L/R | Estate FWD 21126 | | GCO28010 | Outer Joint | 43T | 22 | 22 | 50 | 77 | 53.5 | I |
| | 2009.10-2015.12 | 5MT | F | L/R | Estate FWD 21126 | | GCI28001 | Inner Joint | | 24 | 22 | 35 | 60.8 | 97 | |
| | 2009.10-2015.12 | 5MT | F | L/R | Estate FWD 21126 | | GCI28002 | Inner Joint | | 24 | 22 | 35 | 60.8 | 97 | |
| 1.6 (78 kw) | 2014.02-2015.12 | 5MT | F | L | Estate FWD 21127 | | GDS28009 | Drive Shaft | | 22 | 24 | 50 | 77 | 600 | |
| | 2014.02-2015.12 | 5MT | F | L | Estate FWD 21127 | | GDS28025 | Drive Shaft | 43T | 22 | 24 | 50 | 77 | 594 | |
| | 2014.02-2015.12 | 5MT | F | R | Estate FWD 21127 | | GDS28004 | Drive Shaft | | 22 | 24 | 50 | 77 | 856.2 | |
| | 2014.02-2015.12 | 5MT | F | L/R | Estate FWD 21127 | | GCO28010 | Outer Joint | 43T | 22 | 22 | 50 | 77 | 53.5 | I |
| | 2014.02-2015.12 | 5MT | F | L/R | Estate FWD 21127 | | GCI28001 | Inner Joint | | 24 | 22 | 35 | 60.8 | 97 | |
| | 2014.02-2015.12 | 5MT | F | L/R | Estate FWD 21127 | | GCI28002 | Inner Joint | | 24 | 22 | 35 | 60.8 | 97 | |
| | 2014.02-2015.12 | 5MT | F | L | Hatchback FWD 21127 | | GDS28009 | Drive Shaft | | 22 | 24 | 50 | 77 | 600 | |
| | 2014.02-2015.12 | 5MT | F | L | Hatchback FWD 21127 | | GDS28025 | Drive Shaft | 43T | 22 | 24 | 50 | 77 | 594 | |
| | 2014.02-2015.12 | 5MT | F | R | Hatchback FWD 21127 | | GDS28004 | Drive Shaft | | 22 | 24 | 50 | 77 | 856.2 | |
| | 2014.02-2015.12 | 5MT | F | L/R | Hatchback FWD 21127 | | GCO28010 | Outer Joint | 43T | 22 | 22 | 50 | 77 | 53.5 | I |
| | 2014.02-2015.12 | 5MT | F | L/R | Hatchback FWD 21127 | | GCI28001 | Inner Joint | | 24 | 22 | 35 | 60.8 | 97 | |
| | 2014.02-2015.12 | 5MT | F | L/R | Hatchback FWD 21127 | | GCI28002 | Inner Joint | | 24 | 22 | 35 | 60.8 | 97 | |
| | 2014.02-2018.07 | 5MT | F | L | Saloon FWD 21127 | | GDS28009 | Drive Shaft | | 22 | 24 | 50 | 77 | 600 | |
| | 2014.02-2018.07 | 5MT | F | L | Saloon FWD 21127 | | GDS28025 | Drive Shaft | 43T | 22 | 24 | 50 | 77 | 594 | |
| | 2014.02-2018.07 | 5MT | F | R | Saloon FWD 21127 | | GDS28004 | Drive Shaft | | 22 | 24 | 50 | 77 | 856.2 | |
| | 2014.02-2018.07 | 5MT | F | L/R | Saloon FWD 21127 | | GCO28010 | Outer Joint | 43T | 22 | 22 | 50 | 77 | 53.5 | I |
| | 2014.02-2018.07 | 5MT | F | L/R | Saloon FWD 21127 | | GCI28001 | Inner Joint | | 24 | 22 | 35 | 60.8 | 97 | |
| | 2014.02-2018.07 | 5MT | F | L/R | Saloon FWD 21127 | | GCI28002 | Inner Joint | | 24 | 22 | 35 | 60.8 | 97 | |
| 1.8 (90 kw) | 2014.10-2016.08 | 5MT | F | L | Saloon FWD 21128 | | GDS28009 | Drive Shaft | | 22 | 24 | 50 | 77 | 600 | |
| | 2014.10-2016.08 | 5MT | F | R | Saloon FWD 21128 | | GDS28004 | Drive Shaft | | 22 | 24 | 50 | 77 | 856.2 | |
| | 2014.10-2016.08 | 5MT | F | L/R | Saloon FWD 21128 | | GCO28010 | Outer Joint | 43T | 22 | 22 | 50 | 77 | 53.5 | I |
| | 2014.10-2016.08 | 5MT | F | L/R | Saloon FWD 21128 | | GCI28001 | Inner Joint | | 24 | 22 | 35 | 60.8 | 97 | |
| | 2014.10-2016.08 | 5MT | F | L/R | Saloon FWD 21128 | | GCI28002 | Inner Joint | | 24 | 22 | 35 | 60.8 | 97 | |

| | YEAR | TRANSM. | F/R | L/R | BODY STYLE & DRIVE TYPE & ENGINE | REMARKS | G-AP Ref. | PRODUCT | ABS | Technical Specifications A | B | C | H | L | P |
|---|---|---|---|---|---|---|---|---|---|---|---|---|---|---|---|
| **LADA** | | | | | | | | | | | | | | | |
| **Samara** | | | | | | | | | | | | | | | |
| 1.3 (48 kw) | 1989.05-1997.07 | MT | F | L | Saloon FWD BA3 2108 | | GDS28001 | Drive Shaft | | 22 | 24 | 50 | 77 | 600 | |
| | 1989.05-1997.07 | MT | F | R | Saloon FWD BA3 2108 | | GDS28002 | Drive Shaft | | 22 | 24 | 50 | 77 | 848 | |
| | 1989.05-1997.07 | MT | F | L/R | Saloon FWD BA3 2108 | | GCO28001 | Outer Joint | | 22 | 22 | 50 | 77 | 53.5 | I |
| | 1989.05-1997.07 | MT | F | L/R | Saloon FWD BA3 2108 | | GCI28001 | Inner Joint | | 24 | 22 | 35 | 60.8 | 97 | |
| | 1989.05-1997.07 | MT | F | L/R | Saloon FWD BA3 2108 | | GCI28002 | Inner Joint | | 24 | 22 | 35 | 60.8 | 97 | |
| 1.3 (50 kw) | 1995.06-2006.12 | MT | F | L | Saloon FWD BA3 21115 | | GDS28001 | Drive Shaft | | 22 | 24 | 50 | 77 | 600 | |
| | 1995.06-2006.12 | MT | F | R | Saloon FWD BA3 21115 | | GDS28004 | Drive Shaft | | 22 | 24 | 50 | 77 | 856.2 | |
| | 1995.06-2006.12 | MT | F | L/R | Saloon FWD BA3 21115 | | GCO28001 | Outer Joint | | 22 | 22 | 50 | 77 | 53.5 | I |
| | 1995.06-2006.12 | MT | F | L/R | Saloon FWD BA3 21115 | | GCI28001 | Inner Joint | | 24 | 22 | 35 | 60.8 | 97 | |
| | 1995.06-2006.12 | MT | F | L/R | Saloon FWD BA3 21115 | | GCI28002 | Inner Joint | | 24 | 22 | 35 | 60.8 | 97 | |
| 1.5 (50 kw) | 1991.07-1996.12 | MT | F | L | Saloon FWD 21083 | | GDS28001 | Drive Shaft | | 22 | 24 | 50 | 77 | 600 | |
| | 1991.07-1996.12 | MT | F | R | Saloon FWD 21083 | | GDS28004 | Drive Shaft | | 22 | 24 | 50 | 77 | 856.2 | |
| | 1991.07-1996.12 | MT | F | L/R | Saloon FWD 21083 | | GCO28001 | Outer Joint | | 22 | 22 | 50 | 77 | 53.5 | I |
| | 1991.07-1996.12 | MT | F | L/R | Saloon FWD 21083 | | GCI28001 | Inner Joint | | 24 | 22 | 35 | 60.8 | 97 | |
| | 1991.07-1996.12 | MT | F | L/R | Saloon FWD 21083 | | GCI28002 | Inner Joint | | 24 | 22 | 35 | 60.8 | 97 | |
| 1.5 (52 kw) | 1994.11-2006.12 | MT | F | L | Saloon FWD 2111 | | GDS28001 | Drive Shaft | | 22 | 24 | 50 | 77 | 600 | |
| | 1994.11-2006.12 | MT | F | R | Saloon FWD 2111 | | GDS28002 | Drive Shaft | | 22 | 24 | 50 | 77 | 848 | |
| | 1994.11-2006.12 | MT | F | L/R | Saloon FWD 2111 | | GCO28001 | Outer Joint | | 22 | 22 | 50 | 77 | 53.5 | I |
| | 1994.11-2006.12 | MT | F | L/R | Saloon FWD 2111 | | GCI28001 | Inner Joint | | 24 | 22 | 35 | 60.8 | 97 | |
| | 1994.11-2006.12 | MT | F | L/R | Saloon FWD 2111 | | GCI28002 | Inner Joint | | 24 | 22 | 35 | 60.8 | 97 | |
| 1.5 (53 kw) | 1991.09-1996.12 | MT | F | L | Saloon FWD 21083 | | GDS28001 | Drive Shaft | | 22 | 24 | 50 | 77 | 600 | |
| | 1991.09-1996.12 | MT | F | R | Saloon FWD 21083 | | GDS28004 | Drive Shaft | | 22 | 24 | 50 | 77 | 856.2 | |
| | 1991.09-1996.12 | MT | F | L/R | Saloon FWD 21083 | | GCO28001 | Outer Joint | | 22 | 22 | 50 | 77 | 53.5 | I |
| | 1991.09-1996.12 | MT | F | L/R | Saloon FWD 21083 | | GCI28001 | Inner Joint | | 24 | 22 | 35 | 60.8 | 97 | |
| | 1991.09-1996.12 | MT | F | L/R | Saloon FWD 21083 | | GCI28002 | Inner Joint | | 24 | 22 | 35 | 60.8 | 97 | |
| **Samara (Sputnik)** | | | | | | | | | | | | | | | |
| 1.1 (43 kw) | 1996.02-1998.07 | MT | F | L | Hatchback FWD 21081 | | GDS28001 | Drive Shaft | | 22 | 24 | 50 | 77 | 600 | |
| | 1996.02-1998.07 | MT | F | R | Hatchback FWD 21081 | | GDS28002 | Drive Shaft | | 22 | 24 | 50 | 77 | 848 | |
| | 1996.02-1998.07 | MT | F | L/R | Hatchback FWD 21081 | | GCO28001 | Outer Joint | | 22 | 22 | 50 | 77 | 53.5 | I |
| | 1996.02-1998.07 | MT | F | L/R | Hatchback FWD 21081 | | GCI28001 | Inner Joint | | 24 | 22 | 35 | 60.8 | 97 | |
| | 1996.02-1998.07 | MT | F | L/R | Hatchback FWD 21081 | | GCI28002 | Inner Joint | | 24 | 22 | 35 | 60.8 | 97 | |
| 1.3 (45 kw) | 1991.09-1996.01 | MT | F | L | Hatchback FWD 2108 | | GDS28001 | Drive Shaft | | 22 | 24 | 50 | 77 | 600 | |
| | 1991.09-1996.01 | MT | F | R | Hatchback FWD 2108 | | GDS28002 | Drive Shaft | | 22 | 24 | 50 | 77 | 848 | |
| | 1991.09-1996.01 | MT | F | L/R | Hatchback FWD 2108 | | GCO28001 | Outer Joint | | 22 | 22 | 50 | 77 | 53.5 | I |
| | 1991.09-1996.01 | MT | F | L/R | Hatchback FWD 2108 | | GCI28001 | Inner Joint | | 24 | 22 | 35 | 60.8 | 97 | |
| | 1991.09-1996.01 | MT | F | L/R | Hatchback FWD 2108 | | GCI28002 | Inner Joint | | 24 | 22 | 35 | 60.8 | 97 | |
| 1.3 (50 kw) | 1996.02-1999.12 | MT | F | L | Hatchback FWD 2108 | | GDS28001 | Drive Shaft | | 22 | 24 | 50 | 77 | 600 | |
| | 1996.02-1999.12 | MT | F | R | Hatchback FWD 2108 | | GDS28002 | Drive Shaft | | 22 | 24 | 50 | 77 | 848 | |
| | 1996.02-1999.12 | MT | F | L/R | Hatchback FWD 2108 | | GCO28001 | Outer Joint | | 22 | 22 | 50 | 77 | 53.5 | I |
| | 1996.02-1999.12 | MT | F | L/R | Hatchback FWD 2108 | | GCI28001 | Inner Joint | | 24 | 22 | 35 | 60.8 | 97 | |
| | 1996.02-1999.12 | MT | F | L/R | Hatchback FWD 2108 | | GCI28002 | Inner Joint | | 24 | 22 | 35 | 60.8 | 97 | |
| 1.5 (50 kw) | 1991.09-1999.12 | MT | F | L | Hatchback FWD 211183 | | GDS28001 | Drive Shaft | | 22 | 24 | 50 | 77 | 600 | |
| | 1991.09-1999.12 | MT | F | R | Hatchback FWD 211183 | | GDS28002 | Drive Shaft | | 22 | 24 | 50 | 77 | 848 | |
| | 1991.09-1999.12 | MT | F | L/R | Hatchback FWD 211183 | | GCO28001 | Outer Joint | | 22 | 22 | 50 | 77 | 53.5 | I |
| | 1991.09-1999.12 | MT | F | L/R | Hatchback FWD 211183 | | GCI28001 | Inner Joint | | 24 | 22 | 35 | 60.8 | 97 | |
| | 1991.09-1999.12 | MT | F | L/R | Hatchback FWD 211183 | | GCI28002 | Inner Joint | | 24 | 22 | 35 | 60.8 | 97 | |
| 1.5 (52 kw) | 1995.02-2003.07 | MT | F | L | Hatchback FWD 211186/211187 | | GDS28001 | Drive Shaft | | 22 | 24 | 50 | 77 | 600 | |
| | 1995.02-2003.07 | MT | F | R | Hatchback FWD 211186/211187 | | GDS28002 | Drive Shaft | | 22 | 24 | 50 | 77 | 848 | |
| | 1995.02-2003.07 | MT | F | L/R | Hatchback FWD 211186/211187 | | GCO28001 | Outer Joint | | 22 | 22 | 50 | 77 | 53.5 | I |
| | 1995.02-2003.07 | MT | F | L/R | Hatchback FWD 211186/211187 | | GCI28001 | Inner Joint | | 24 | 22 | 35 | 60.8 | 97 | |
| | 1995.02-2003.07 | MT | F | L/R | Hatchback FWD 211186/211187 | | GCI28002 | Inner Joint | | 24 | 22 | 35 | 60.8 | 97 | |
| 1.5 (53 kw) | 1988.01-2001.10 | MT | F | L | Hatchback FWD 21083 | | GDS28001 | Drive Shaft | | 22 | 24 | 50 | 77 | 600 | |
| | 1988.01-2001.10 | MT | F | R | Hatchback FWD 21083 | | GDS28002 | Drive Shaft | | 22 | 24 | 50 | 77 | 848 | |
| | 1988.01-2001.10 | MT | F | L/R | Hatchback FWD 21083 | | GCO28001 | Outer Joint | | 22 | 22 | 50 | 77 | 53.5 | I |
| | 1988.01-2001.10 | MT | F | L/R | Hatchback FWD 21083 | | GCI28001 | Inner Joint | | 24 | 22 | 35 | 60.8 | 97 | |
| | 1988.01-2001.10 | MT | F | L/R | Hatchback FWD 21083 | | GCI28002 | Inner Joint | | 24 | 22 | 35 | 60.8 | 97 | |
| | 2003.08-2013.12 | 4MT/5MT | F | L | Hatchback FWD 21083 | | GDS28001 | Drive Shaft | | 22 | 24 | 50 | 77 | 600 | |
| | 2003.08-2013.12 | 4MT/5MT | F | R | Hatchback FWD 21083 | | GDS28002 | Drive Shaft | | 22 | 24 | 50 | 77 | 848 | |
| | 2003.08-2013.12 | 4MT/5MT | F | L/R | Hatchback FWD 21083 | | GCO28001 | Outer Joint | | 22 | 22 | 50 | 77 | 53.5 | I |
| | 2003.08-2013.12 | 4MT/5MT | F | L/R | Hatchback FWD 21083 | | GCO28010 | Outer Joint | 43T | 22 | 22 | 50 | 77 | 53.5 | I |
| | 2003.08-2013.12 | 4MT/5MT | F | L/R | Hatchback FWD 21083 | DOJ | GCI28002 | Inner Joint | | 24 | 22 | 35 | 60.8 | 97 | |
| | 2003.08-2013.12 | 5MT | F | L/R | Hatchback FWD 21083 | TJ | GCI28001 | Inner Joint | | 24 | 22 | 35 | 60.8 | 97 | |
| 1.5 (56 kw) | 1996.04-2013.12 | 5MT | F | L | Hatchback FWD 2111 | Model code:2108/2109/2113/2114 | GDS28001 | Drive Shaft | | 22 | 24 | 50 | 77 | 600 | |
| | 1996.04-2013.12 | 5MT | F | R | Hatchback FWD 2111 | Model code:2113/2114 | GDS28002 | Drive Shaft | | 22 | 24 | 50 | 77 | 848 | |
| | 1996.04-2013.12 | 5MT | F | R | Hatchback FWD 2111 | Model code:2108/2109 | GDS28004 | Drive Shaft | | 22 | 24 | 50 | 77 | 856.2 | |

| | YEAR | TRANSM. | F/R | L/R | BODY STYLE & DRIVE TYPE & ENGINE | REMARKS | G-AP Ref. | PRODUCT | ABS | Technical Specifications A | B | C | H | L | P |
|---|---|---|---|---|---|---|---|---|---|---|---|---|---|---|---|
| **LADA** | | | | | | | | | | | | | | | |
| **Samara (Sputnik)** | | | | | | | | | | | | | | | |
| 1.5 (56 kw) | 1996.04-2013.12 | 5MT | F | L/R | Hatchback FWD 2111 | | GCO28001 | Outer Joint | | 22 | 22 | 50 | 77 | 53.5 | I |
| | 1996.04-2013.12 | 5MT | F | L/R | Hatchback FWD 2111 | Model code:2113/2114 | GCO28010 | Outer Joint | 43T | 22 | 22 | 50 | 77 | 53.5 | I |
| | 1996.04-2013.12 | 5MT | F | L/R | Hatchback FWD 2111 | | GCI28001 | Inner Joint | | 24 | 22 | 35 | 60.8 | 97 | |
| | 1996.04-2013.12 | 5MT | F | L/R | Hatchback FWD 2111 | | GCI28002 | Inner Joint | | 24 | 22 | 35 | 60.8 | 97 | |
| 1.5 (59 kw) | 1997.05-2012.12 | 5MT | F | L | Saloon FWD 2111 | | GDS28001 | Drive Shaft | | 22 | 24 | 50 | 77 | 600 | |
| | 1997.05-2012.12 | 5MT | F | R | Saloon FWD 2111 | | GDS28002 | Drive Shaft | | 22 | 24 | 50 | 77 | 848 | |
| | 1997.05-2012.12 | 5MT | F | L/R | Saloon FWD 2111 | | GCO28001 | Outer Joint | | 22 | 22 | 50 | 77 | 53.5 | I |
| | 1997.05-2012.12 | 5MT | F | L/R | Saloon FWD 2111 | | GCO28010 | Outer Joint | 43T | 22 | 22 | 50 | 77 | 53.5 | I |
| | 1997.05-2012.12 | 5MT | F | L/R | Saloon FWD 2111 | TJ | GCI28001 | Inner Joint | | 24 | 22 | 35 | 60.8 | 97 | |
| | 1997.05-2012.12 | 5MT | F | L/R | Saloon FWD 2111 | DOJ | GCI28002 | Inner Joint | | 24 | 22 | 35 | 60.8 | 97 | |
| | 2003.08-2013.12 | 5MT | F | L | Hatchback FWD 211186 | | GDS28001 | Drive Shaft | | 22 | 24 | 50 | 77 | 600 | |
| | 2003.08-2013.12 | 5MT | F | R | Hatchback FWD 211186 | | GDS28002 | Drive Shaft | | 22 | 24 | 50 | 77 | 848 | |
| | 2003.08-2013.12 | 5MT | F | L/R | Hatchback FWD 211186 | | GCO28001 | Outer Joint | | 22 | 22 | 50 | 77 | 53.5 | I |
| | 2003.08-2013.12 | 5MT | F | L/R | Hatchback FWD 211186 | | GCO28010 | Outer Joint | 43T | 22 | 22 | 50 | 77 | 53.5 | I |
| | 2003.08-2013.12 | 5MT | F | L/R | Hatchback FWD 211186 | TJ | GCI28001 | Inner Joint | | 24 | 22 | 35 | 60.8 | 97 | |
| | 2003.08-2013.12 | 5MT | F | L/R | Hatchback FWD 211186 | DOJ | GCI28002 | Inner Joint | | 24 | 22 | 35 | 60.8 | 97 | |
| 1.6 (60 kw) | 1997.05-2012.12 | 5MT | F | L | Saloon FWD B321842 | | GDS28001 | Drive Shaft | | 22 | 24 | 50 | 77 | 600 | |
| | 1997.05-2012.12 | 5MT | F | R | Saloon FWD B321842 | | GDS28002 | Drive Shaft | | 22 | 24 | 50 | 77 | 848 | |
| | 1997.05-2012.12 | 5MT | F | L/R | Saloon FWD B321842 | | GCO28001 | Outer Joint | | 22 | 22 | 50 | 77 | 53.5 | I |
| | 1997.05-2012.12 | 5MT | F | L/R | Saloon FWD B321842 | | GCO28010 | Outer Joint | 43T | 22 | 22 | 50 | 77 | 53.5 | I |
| | 1997.05-2012.12 | 5MT | F | L/R | Saloon FWD B321842 | | GCI28001 | Inner Joint | | 24 | 22 | 35 | 60.8 | 97 | |
| | 1997.05-2012.12 | 5MT | F | L/R | Saloon FWD B321842 | | GCI28002 | Inner Joint | | 24 | 22 | 35 | 60.8 | 97 | |
| | 2009.02-2013.12 | 5MT | F | L | Hatchback FWD B321842 | | GDS28001 | Drive Shaft | | 22 | 24 | 50 | 77 | 600 | |
| | 2009.02-2013.12 | 5MT | F | R | Hatchback FWD B321842 | | GDS28002 | Drive Shaft | | 22 | 24 | 50 | 77 | 848 | |
| | 2009.02-2013.12 | 5MT | F | L/R | Hatchback FWD B321842 | | GCO28001 | Outer Joint | | 22 | 22 | 50 | 77 | 53.5 | I |
| | 2009.02-2013.12 | 5MT | F | L/R | Hatchback FWD B321842 | TJ | GCI28001 | Inner Joint | | 24 | 22 | 35 | 60.8 | 97 | |
| | 2009.02-2013.12 | 5MT | F | L/R | Hatchback FWD B321842 | DOJ | GCI28002 | Inner Joint | | 24 | 22 | 35 | 60.8 | 97 | |
| **Samara Forma** | | | | | | | | | | | | | | | |
| 1.1 (39 kw) | 1991.07-1999.08 | MT | F | L | Saloon FWD BA3 21081 | | GDS28001 | Drive Shaft | | 22 | 24 | 50 | 77 | 600 | |
| | 1991.07-1999.08 | MT | F | R | Saloon FWD BA3 21081 | | GDS28002 | Drive Shaft | | 22 | 24 | 50 | 77 | 848 | |
| | 1991.07-1999.08 | MT | F | L/R | Saloon FWD BA3 21081 | | GCO28001 | Outer Joint | | 22 | 22 | 50 | 77 | 53.5 | I |
| | 1991.07-1999.08 | MT | F | L/R | Saloon FWD BA3 21081 | | GCI28001 | Inner Joint | | 24 | 22 | 35 | 60.8 | 97 | |
| | 1991.07-1999.08 | MT | F | L/R | Saloon FWD BA3 21081 | | GCI28002 | Inner Joint | | 24 | 22 | 35 | 60.8 | 97 | |
| 1.3 (45 kw) | 1991.07-1999.08 | MT | F | L | Saloon FWD BA3 2108 | | GDS28001 | Drive Shaft | | 22 | 24 | 50 | 77 | 600 | |
| | 1991.07-1999.08 | MT | F | R | Saloon FWD BA3 2108 | | GDS28004 | Drive Shaft | | 22 | 24 | 50 | 77 | 856.2 | |
| | 1991.07-1999.08 | MT | F | L/R | Saloon FWD BA3 2108 | | GCO28001 | Outer Joint | | 22 | 22 | 50 | 77 | 53.5 | I |
| | 1991.07-1999.08 | MT | F | L/R | Saloon FWD BA3 2108 | | GCI28001 | Inner Joint | | 24 | 22 | 35 | 60.8 | 97 | |
| | 1991.07-1999.08 | MT | F | L/R | Saloon FWD BA3 2108 | | GCI28002 | Inner Joint | | 24 | 22 | 35 | 60.8 | 97 | |
| 1.3 (46 kw) | 1990.05-1999.08 | MT | F | L | Saloon FWD BA3 2108 | | GDS28001 | Drive Shaft | | 22 | 24 | 50 | 77 | 600 | |
| | 1990.05-1999.08 | MT | F | R | Saloon FWD BA3 2108 | | GDS28004 | Drive Shaft | | 22 | 24 | 50 | 77 | 856.2 | |
| | 1990.05-1999.08 | MT | F | L/R | Saloon FWD BA3 2108 | | GCO28001 | Outer Joint | | 22 | 22 | 50 | 77 | 53.5 | I |
| | 1990.05-1999.08 | MT | F | L/R | Saloon FWD BA3 2108 | | GCI28001 | Inner Joint | | 24 | 22 | 35 | 60.8 | 97 | |
| | 1990.05-1999.08 | MT | F | L/R | Saloon FWD BA3 2108 | | GCI28002 | Inner Joint | | 24 | 22 | 35 | 60.8 | 97 | |
| **Vesta** | | | | | | | | | | | | | | | |
| 1.6 (75 kw) | 2018.11- | 5AMT | F | L | Estate FWD 21129 | | GDS81283 | Drive Shaft | 48T | 23 | 24 | 50 | 84 | 649 | |
| | 2018.11- | 5AMT | F | R | Estate FWD 21129 | | GDS57617 | Drive Shaft | 48T | 23 | 24 | 50 | 84 | 914 | |
| | 2018.11- | 5AMT | F | L/R | Estate FWD 21129 | | GCI81174 | Inner Joint | | 24 | 21 | 35 | 60 | 93 | |
| | 2018.11- | 5MT | F | L | Estate FWD 21129 | | GDS81291 | Drive Shaft | 48T | 23 | 26 | 50 | 84 | 652 | |
| | 2018.11- | 5MT | F | R | Estate FWD 21129 | | GDS81288 | Drive Shaft | 48T | 23 | 26 | 50 | 84 | 927 | |
| | 2018.11- | 5MT | F | L/R | Estate FWD 21129 | | GCI50107 | Inner Joint | | 26 | 21 | 40 | 64 | 105.5 | |
| | 2018.11- | 5MT/5AMT | F | L/R | Estate FWD 21129 | | GCO50206 | Outer Joint | 48T | 23 | 21 | 50 | 84 | 53 | M |
| | 2018.11- | 5AMT | F | L | Saloon FWD 21129 | | GDS81283 | Drive Shaft | 48T | 23 | 24 | 50 | 84 | 649 | |
| | 2018.11- | 5AMT | F | R | Saloon FWD 21129 | | GDS57617 | Drive Shaft | 48T | 23 | 24 | 50 | 84 | 914 | |
| | 2018.11- | 5AMT | F | L/R | Saloon FWD 21129 | | GCI81174 | Inner Joint | | 24 | 21 | 35 | 60 | 93 | |
| | 2018.11- | 5MT | F | L | Saloon FWD 21129 | | GDS81291 | Drive Shaft | 48T | 23 | 26 | 50 | 84 | 652 | |
| | 2018.11- | 5MT | F | R | Saloon FWD 21129 | | GDS81288 | Drive Shaft | 48T | 23 | 26 | 50 | 84 | 927 | |
| | 2018.11- | 5MT | F | L/R | Saloon FWD 21129 | | GCI50107 | Inner Joint | | 26 | 21 | 40 | 64 | 105.5 | |
| | 2018.11- | 5MT/5AMT | F | L/R | Saloon FWD 21129 | | GCO50206 | Outer Joint | 48T | 23 | 21 | 50 | 84 | 53 | M |
| 1.6 (78 kw) | 2015.11- | 5AMT | F | L | Estate FWD 21129 | | GDS81283 | Drive Shaft | 48T | 23 | 24 | 50 | 84 | 649 | |
| | 2015.11- | 5AMT | F | R | Estate FWD 21129 | | GDS57617 | Drive Shaft | 48T | 23 | 24 | 50 | 84 | 914 | |
| | 2015.11- | 5AMT | F | L/R | Estate FWD 21129 | | GCI81174 | Inner Joint | | 24 | 21 | 35 | 60 | 93 | |
| | 2015.11- | 5MT | F | L | Estate FWD 21129 | | GDS81291 | Drive Shaft | 48T | 23 | 26 | 50 | 84 | 652 | |
| | 2015.11- | 5MT | F | R | Estate FWD 21129 | | GDS81288 | Drive Shaft | 48T | 23 | 26 | 50 | 84 | 927 | |
| | 2015.11- | 5MT | F | L/R | Estate FWD 21129 | | GCI50107 | Inner Joint | | 26 | 21 | 40 | 64 | 105.5 | |
| | 2015.11- | 5MT/5AMT | F | L/R | Estate FWD 21129 | | GCO50206 | Outer Joint | 48T | 23 | 21 | 50 | 84 | 53 | M |

| | YEAR | TRANSM. | F/R | L/R | BODY STYLE & DRIVE TYPE & ENGINE | REMARKS | G-AP Ref. | PRODUCT | ABS | Technical Specifications A | B | C | H | L | P |
|---|---|---|---|---|---|---|---|---|---|---|---|---|---|---|---|
| **LADA** | | | | | | | | | | | | | | | |
| **Vesta** | | | | | | | | | | | | | | | |
| 1.6 (78 kw) | 2015.11- | 5AMT | F | L | Saloon FWD 21129 | | GDS81283 | Drive Shaft | 48T | 23 | 24 | 50 | 84 | 649 | |
| | 2015.11- | 5AMT | F | R | Saloon FWD 21129 | | GDS57617 | Drive Shaft | 48T | 23 | 24 | 50 | 84 | 914 | |
| | 2015.11- | 5AMT | F | L/R | Saloon FWD 21129 | | GCI81174 | Inner Joint | | 24 | 21 | 35 | 60 | 93 | |
| | 2015.11- | 5MT | F | L | Saloon FWD 21129 | | GDS81291 | Drive Shaft | 48T | 23 | 26 | 50 | 84 | 652 | |
| | 2015.11- | 5MT | F | R | Saloon FWD 21129 | | GDS81288 | Drive Shaft | 48T | 23 | 26 | 50 | 84 | 927 | |
| | 2015.11- | 5MT | F | L/R | Saloon FWD 21129 | | GCI50107 | Inner Joint | | 26 | 21 | 40 | 64 | 105.5 | |
| | 2015.11- | 5MT/5AMT | F | L/R | Saloon FWD 21129 | | GCO50206 | Outer Joint | 48T | 23 | 21 | 50 | 84 | 53 | M |
| | 2017.08- | 5MT | F | L | Saloon FWD 21129 | | GDS81291 | Drive Shaft | 48T | 23 | 26 | 50 | 84 | 652 | |
| | 2017.08- | 5MT | F | R | Saloon FWD 21129 | | GDS81288 | Drive Shaft | 48T | 23 | 26 | 50 | 84 | 927 | |
| | 2017.08- | 5MT | F | L/R | Saloon FWD 21129 | | GCO50206 | Outer Joint | 48T | 23 | 21 | 50 | 84 | 53 | M |
| | 2017.08- | 5MT | F | L/R | Saloon FWD 21129 | | GCI50107 | Inner Joint | | 26 | 21 | 40 | 64 | 105.5 | |
| 1.6 (83 kw) | 2019.11- | CVT | F | L | Estate FWD H4M | | GDS57456 | Drive Shaft | 48T | 23 | 25 | 50 | 84 | 662 | |
| | 2019.11- | CVT | F | R | Estate FWD H4M | | GDS57551 | Drive Shaft | 48T | 23 | 25 | 50 | 84 | 917 | |
| | 2019.11- | CVT | F | L/R | Estate FWD H4M | | GCO83446 | Outer Joint | 48T | 23 | 22 | 50 | 84 | 55 | M |
| | 2019.11- | CVT | F | L | Estate FWD H4M | | GCI81686 | Inner Joint | | 25 | 23 | 40 | 53 | 120 | |
| | 2019.11- | CVT | F | L | Saloon FWD H4M | | GDS57456 | Drive Shaft | 48T | 23 | 25 | 50 | 84 | 662 | |
| | 2019.11- | CVT | F | R | Saloon FWD H4M | | GDS57551 | Drive Shaft | 48T | 23 | 25 | 50 | 84 | 917 | |
| | 2019.11- | CVT | F | L/R | Saloon FWD H4M | | GCO83446 | Outer Joint | 48T | 23 | 22 | 50 | 84 | 55 | M |
| | 2019.11- | CVT | F | L | Saloon FWD H4M | | GCI81686 | Inner Joint | | 25 | 23 | 40 | 53 | 120 | |
| 1.8 (90 kw) | 2016.06- | 5AMT | F | L | Saloon FWD 21179 | | GDS56814 | Drive Shaft | 48T | 23 | 24 | 50 | 84 | 652 | |
| | 2016.06- | 5AMT | F | R | Saloon FWD 21179 | | GDS56815 | Drive Shaft | 48T | 23 | 24 | 50 | 84 | 917 | |
| | 2016.06- | 5AMT | F | L/R | Saloon FWD 21179 | | GCI83480 | Inner Joint | | 24 | 22 | 35 | 60.5 | 99 | |
| | 2016.06- | 5MT | F | L | Saloon FWD 21179 | | GDS56817 | Drive Shaft | 48T | 23 | 26 | 50 | 84 | 651 | |
| | 2016.06- | 5MT | F | R | Saloon FWD 21179 | | GDS56816 | Drive Shaft | 48T | 23 | 26 | 50 | 84 | 926 | |
| | 2016.06- | 5MT | F | L/R | Saloon FWD 21179 | | GCI50057 | Inner Joint | | 26 | 22 | 40 | 64 | 104 | |
| | 2016.06- | 5MT/5AMT | F | L/R | Saloon FWD 21179 | | GCO83446 | Outer Joint | 48T | 23 | 22 | 50 | 84 | 55 | M |
| | 2016.07- | 5AMT | F | L | Estate FWD 21179 | | GDS56814 | Drive Shaft | 48T | 23 | 24 | 50 | 84 | 652 | |
| | 2016.07- | 5AMT | F | R | Estate FWD 21179 | | GDS56815 | Drive Shaft | 48T | 23 | 24 | 50 | 84 | 917 | |
| | 2016.07- | 5AMT | F | L/R | Estate FWD 21179 | | GCI83480 | Inner Joint | | 24 | 22 | 35 | 60.5 | 99 | |
| | 2016.07- | 5MT | F | L | Estate FWD 21179 | | GDS56817 | Drive Shaft | 48T | 23 | 26 | 50 | 84 | 651 | |
| | 2016.07- | 5MT | F | R | Estate FWD 21179 | | GDS56816 | Drive Shaft | 48T | 23 | 26 | 50 | 84 | 926 | |
| | 2016.07- | 5MT | F | L/R | Estate FWD 21179 | | GCI50057 | Inner Joint | | 26 | 22 | 40 | 64 | 104 | |
| | 2016.07- | 5MT/5AMT | F | L/R | Estate FWD 21179 | | GCO83446 | Outer Joint | 48T | 23 | 22 | 50 | 84 | 55 | M |
| 1.8 (107 kw) | 2019.02- | 5MT | F | L | Saloon FWD 21179 | | GDS57499 | Drive Shaft | 48T | 29 | 26 | 56 | 93 | 675 | |
| | 2019.02- | 5MT | F | R | Saloon FWD 21179 | | GDS57498 | Drive Shaft | 48T | 29 | 26 | 56 | 93 | 953 | |
| | 2019.02- | 5MT | F | L/R | Saloon FWD 21179 | | GCO83580 | Outer Joint | 48T | 29 | 24 | 56 | 93 | 57 | M |
| | 2019.02- | 5MT | F | L/R | Saloon FWD 21179 | | GCI83712 | Inner Joint | | 26 | 24 | 40.4 | 64.5 | 136 | |
| **X Ray** | | | | | | | | | | | | | | | |
| 1.6 (78 kw) | 2016.02- | 5MT | F | L | Hatchback FWD VAZ-21129 | | GDS50508 | Drive Shaft | | 23 | 26 | 49 | 86 | 660 | |
| | 2016.02- | 5MT | F | R | Hatchback FWD VAZ-21129 | | GDS50507 | Drive Shaft | | 23 | 26 | 49 | 86 | 898 | |
| | 2016.02- | 5MT | F | L | Hatchback FWD VAZ-21129 | | GCI82311 | Inner Joint | | 26 | 22 | 39.95 | 64 | 109 | |
| | 2016.02- | 5MT | F | R | Hatchback FWD VAZ-21129 | | GCI50107 | Inner Joint | | 26 | 21 | 40 | 64 | 105.5 | |
| 1.6 (81 kw) | 2016.02- | 5MT | F | L | Hatchback FWD HR16DE;H4M | | GDS50508 | Drive Shaft | | 23 | 26 | 49 | 86 | 660 | |
| | 2016.02- | 5MT | F | R | Hatchback FWD HR16DE;H4M | | GDS50507 | Drive Shaft | | 23 | 26 | 49 | 86 | 898 | |
| | 2016.02- | 5MT | F | L/R | Hatchback FWD HR16DE;H4M | | GCO50175 | Outer Joint | | 23 | 22 | 49 | 86 | 58.5 | I |
| | 2016.02- | 5MT | F | L | Hatchback FWD HR16DE;H4M | | GCI82311 | Inner Joint | | 26 | 22 | 39.95 | 64 | 109 | |
| | 2016.02- | 5MT | F | R | Hatchback FWD HR16DE;H4M | | GCI50107 | Inner Joint | | 26 | 21 | 40 | 64 | 105.5 | |
| 1.8 (90 kw) | 2016.02- | AT/MT | F | L | Hatchback FWD 21179 | | GDS50508 | Drive Shaft | | 23 | 26 | 49 | 86 | 660 | |
| | 2016.02- | AT/MT | F | R | Hatchback FWD 21179 | | GDS50507 | Drive Shaft | | 23 | 26 | 49 | 86 | 898 | |
| | 2016.02- | AT/MT | F | L/R | Hatchback FWD 21179 | | GCO50175 | Outer Joint | | 23 | 22 | 49 | 86 | 58.5 | I |
| | 2016.02- | AT/MT | F | L | Hatchback FWD 21179 | | GCI82311 | Inner Joint | | 26 | 22 | 39.95 | 64 | 109 | |
| | 2016.02- | AT/MT | F | R | Hatchback FWD 21179 | | GCI50107 | Inner Joint | | 26 | 21 | 40 | 64 | 105.5 | |
| **X Ray Cross** | | | | | | | | | | | | | | | |
| 1.6 (83 kw) | 2019.10- | CVT | F | L | Hatchback FWD H4M | | GDS57456 | Drive Shaft | 48T | 23 | 25 | 50 | 84 | 662 | |
| | 2019.10- | CVT | F | R | Hatchback FWD H4M | | GDS57413 | Drive Shaft | 48T | 23 | 25 | 50 | 84 | 903 | |
| | 2019.10- | CVT | F | L/R | Hatchback FWD H4M | | GCO83446 | Outer Joint | 48T | 23 | 22 | 50 | 84 | 55 | M |
| | 2019.10- | CVT | F | L | Hatchback FWD H4M | | GCI81686 | Inner Joint | | 25 | 23 | 40 | 53 | 120 | |
| | 2019.10- | CVT | F | R | Hatchback FWD H4M | | GCI83654 | Inner Joint | | 25 | 23 | 33 | 328 | 104.5 | |
| **LANCIA** | | | | | | | | | | | | | | | |
| **Dedra** | | | | | | | | | | | | | | | |
| 1.6 (55 kw) | 1993.04-1999.07 | AT/MT | F | L/R | Saloon FWD 835C1000 | | GCI48004 | Inner Joint | | | 25 | | | 32 | |
| | 1993.04-1999.07 | MT | F | L | Saloon FWD 835C1000 | | GDS17010 | Drive Shaft | | 22 | 32 | 46.8 | 75.5 | 569 | |
| | 1993.04-1999.07 | MT | F | R | Saloon FWD 835C1000 | | GDS17011 | Drive Shaft | | 22 | 32 | 46.8 | 75.5 | 928.5 | |
| | 1993.04-1999.07 | MT | F | L/R | Saloon FWD 835C1000 | | GCO17001 | Outer Joint | | 22 | 20 | 46.8 | 75.5 | 52 | O |
| | 1993.04-1999.07 | MT | F | L/R | Saloon FWD 835C1000 | | GCO17039 | Outer Joint | 44T | 22 | 20 | 46.8 | 75.5 | 52 | O |

| | YEAR | TRANSM. | F/R | L/R | BODY STYLE & DRIVE TYPE & ENGINE | REMARKS | G-AP Ref. | PRODUCT | ABS | Technical Specifications A | B | C | H | L | P |
|---|---|---|---|---|---|---|---|---|---|---|---|---|---|---|---|
| **LANCIA** | | | | | | | | | | | | | | | |
| **Dedra** | | | | | | | | | | | | | | | |
| 1.6 (66 kw) | 1994.07-1997.08 | 5MT | F | L | Estate FWD 159B9000 | | GDS17010 | Drive Shaft | | 22 | 32 | 46.8 | 75.5 | 569 | |
| | 1994.07-1997.08 | 5MT | F | R | Estate FWD 159B9000 | | GDS17011 | Drive Shaft | | 22 | 32 | 46.8 | 75.5 | 928.5 | |
| | 1994.07-1997.08 | MT | F | L/R | Estate FWD 159B9000 | Date to:1997.08 | GCO17004 | Outer Joint | | 25 | 25 | 52 | 85 | 58 | I |
| | 1994.07-1997.08 | MT | F | L/R | Estate FWD 159B9000 | Date to:1997.08 | GCO82004 | Outer Joint | 44T | 25 | 25 | 52 | 85 | 58 | I |
| | 1994.07-1999.07 | AT/MT | F | L/R | Saloon FWD 159 B9.000 | | GCO17001 | Outer Joint | | 22 | 20 | 46.8 | 75.5 | 52 | O |
| | 1994.07-1999.07 | AT/MT | F | L/R | Saloon FWD 159 B9.000 | | GCO17039 | Outer Joint | 44T | 22 | 20 | 46.8 | 75.5 | 52 | O |
| | 1994.07-1999.07 | AT/MT | F | L/R | Saloon FWD 159 B9.000 | | GCI48004 | Inner Joint | | | 25 | | | 32 | |
| 1.6 (76 kw) | 1997.02-1999.09 | | F | | Estate FWD 182A4000 | | GCO82005 | Outer Joint | 44T | 25 | 22 | 52 | 84 | 57 | O |
| | 1997.02-1999.09 | | F | | Saloon FWD 182A4000 | | GCO82005 | Outer Joint | 44T | 25 | 22 | 52 | 84 | 57 | O |
| 1.8 (66 kw) | 1993.08-1999.07 | MT | F | L/R | Saloon FWD 835C5000 | Date from:1994.06 | GCO17004 | Outer Joint | | 25 | 25 | 52 | 85 | 58 | I |
| | 1993.08-1999.07 | MT | F | L/R | Saloon FWD 835C5000 | Date to:1994.06 | GCO17012 | Outer Joint | | 25 | 25 | 52 | 84.5 | 56 | I |
| | 1993.08-1999.07 | MT | F | L/R | Saloon FWD 835C5000 | Date from:1994.07 | GCO82004 | Outer Joint | 44T | 25 | 25 | 52 | 85 | 58 | I |
| | 1993.08-1999.07 | MT | F | L/R | Saloon FWD 835C5000 | | GCI48004 | Inner Joint | | | 25 | | | 32 | |
| | 1993.08-1999.07 | | F | | Saloon FWD 835C5000 | | GCI82005 | Inner Joint | | | 25 | | | 32 | |
| 1.8 (74 kw) | 1994.07-1997.08 | MT | F | L/R | Estate FWD 836A5000 | Date to:1997.08 | GCO17004 | Outer Joint | | 25 | 25 | 52 | 85 | 58 | I |
| | 1994.07-1997.08 | MT | F | L/R | Estate FWD 836A5000 | Date to:1997.08 | GCO82004 | Outer Joint | 44T | 25 | 25 | 52 | 85 | 58 | I |
| | 1994.07-1997.08 | | F | | Estate FWD 836A5000 | | GCI82005 | Inner Joint | | | 25 | | | 32 | |
| | 1994.07-1999.07 | MT | F | L/R | Saloon FWD 836A5000 | | GCO17004 | Outer Joint | | 25 | 25 | 52 | 85 | 58 | I |
| | 1994.07-1999.07 | MT | F | L/R | Saloon FWD 836A5000 | | GCO82004 | Outer Joint | 44T | 25 | 25 | 52 | 85 | 58 | I |
| | 1994.07-1999.07 | | F | | Saloon FWD 836A5000 | | GCI82005 | Inner Joint | | | 25 | | | 32 | |
| 1.8 (77 kw) | 1989.09-1999.07 | MT | F | L/R | Saloon FWD 835A2046 | Date from:1994.06 | GCO17004 | Outer Joint | | 25 | 25 | 52 | 85 | 58 | I |
| | 1989.09-1999.07 | MT | F | L/R | Saloon FWD 835A2046 | Date to:1994.06 | GCO17012 | Outer Joint | | 25 | 25 | 52 | 84.5 | 56 | I |
| | 1989.09-1999.07 | MT | F | L/R | Saloon FWD 835A2046 | | GCO82004 | Outer Joint | 44T | 25 | 25 | 52 | 85 | 58 | I |
| | 1989.09-1999.07 | MT | F | L/R | Saloon FWD 835A2046 | | GCI48004 | Inner Joint | | | 25 | | | 32 | |
| | 1989.09-1999.07 | | F | | Saloon FWD 835A2046 | | GCI82006 | Inner Joint | | | 25 | | | 32 | |
| 1.8 (83 kw) | 1994.07-1998.10 | MT | F | L/R | Saloon FWD 182A2000 | | GCO17004 | Outer Joint | | 25 | 25 | 52 | 85 | 58 | I |
| | 1994.07-1998.10 | MT | F | L/R | Saloon FWD 182A2000 | | GCO82004 | Outer Joint | 44T | 25 | 25 | 52 | 85 | 58 | I |
| | 1994.07-1998.10 | | F | | Saloon FWD 182A2000 | | GCI82005 | Inner Joint | | | 25 | | | 32 | |
| | 1996.03-1999.07 | MT | F | L/R | Estate FWD 182A2000 | | GCO17004 | Outer Joint | | 25 | 25 | 52 | 85 | 58 | I |
| | 1996.03-1999.07 | MT | F | L/R | Estate FWD 182A2000 | | GCO82004 | Outer Joint | 44T | 25 | 25 | 52 | 85 | 58 | I |
| | 1996.03-1999.07 | | F | | Estate FWD 182A2000 | | GCI82005 | Inner Joint | | | 25 | | | 32 | |
| 1.8 (96 kw) | 1996.03-1999.10 | | F | | Estate FWD 183A1000 | | GCO82006 | Outer Joint | 44T | 25 | 25 | 52 | 85 | 58 | O |
| | 1996.03-1999.10 | | F | | Estate FWD 183A1000 | | GCI82005 | Inner Joint | | | 25 | | | 32 | |
| | 1996.03-1999.10 | AT/MT | F | L/R | Saloon FWD 183A1000 | | GCO17042 | Outer Joint | | 25 | 25 | 51 | 85 | 58 | O |
| | 1996.03-1999.10 | AT/MT | F | L/R | Saloon FWD 183A1000 | | GCO82006 | Outer Joint | 44T | 25 | 25 | 52 | 85 | 58 | O |
| | 1996.03-1999.10 | | F | | Saloon FWD 183A1000 | | GCI82005 | Inner Joint | | | 25 | | | 32 | |
| 1.9 (66 kw) | 1989.09-1999.09 | MT | F | L/R | Saloon FWD 160D1000/835A4000 | Date from:1989.09 | GCO17012 | Outer Joint | | 25 | 25 | 52 | 84.5 | 56 | I |
| | 1989.09-1999.09 | MT | F | L/R | Saloon FWD 160D1000/835A4000 | | GCI48004 | Inner Joint | | | 25 | | | 32 | |
| | 1989.09-1999.09 | | F | L/R | Saloon FWD 160D1000/835A4000 | | GCO82004 | Outer Joint | 44T | 25 | 25 | 52 | 85 | 58 | I |
| | 1989.09-1999.09 | | F | | Saloon FWD 160D1000/835A4000 | | GCO82006 | Outer Joint | 44T | 25 | 25 | 52 | 85 | 58 | O |
| | 1989.09-1999.09 | | F | | Saloon FWD 160D1000/835A4000 | | GCI82005 | Inner Joint | | | 25 | | | 32 | |
| | 1994.07-1999.09 | | F | | Estate FWD 160D1000/835A4000 | | GCO82004 | Outer Joint | 44T | 25 | 25 | 52 | 85 | 58 | I |
| | 1994.07-1999.09 | | F | | Estate FWD 160D1000/835A4000 | | GCO82006 | Outer Joint | 44T | 25 | 25 | 52 | 85 | 58 | O |
| | 1994.07-1999.09 | | F | | Estate FWD 160D1000/835A4000 | | GCI82005 | Inner Joint | | | 25 | | | 32 | |
| 2.0 (83 kw) | 1989.09-1997.08 | MT | F | L/R | Saloon FWD 835A5046 | | GCO17004 | Outer Joint | | 25 | 25 | 52 | 85 | 58 | I |
| | 1989.09-1997.08 | MT | F | L/R | Saloon FWD 835A5046 | | GCO82004 | Outer Joint | 44T | 25 | 25 | 52 | 85 | 58 | I |
| | 1989.09-1997.08 | MT | F | L/R | Saloon FWD 835A5046 | | GCI48004 | Inner Joint | | | 25 | | | 32 | |
| | 1989.09-1997.08 | MT | F | | Saloon FWD 835A5046 | | GCI82005 | Inner Joint | | | 25 | | | 32 | |
| | 1989.09-1997.08 | | F | | Saloon FWD 835A5046 | | GCI82006 | Inner Joint | | | 25 | | | 32 | |
| 2.0 (102 kw) | 1994.07-1999.07 | MT | F | L/R | Estate FWD 836A3000 | | GCO17004 | Outer Joint | | 25 | 25 | 52 | 85 | 58 | I |
| | 1994.07-1999.07 | MT | F | L/R | Estate FWD 836A3000 | | GCO82004 | Outer Joint | 44T | 25 | 25 | 52 | 85 | 58 | I |
| | 1994.07-1999.07 | | F | | Estate FWD 836A3000 | | GCI82005 | Inner Joint | | | 25 | | | 32 | |
| | 1994.07-1999.07 | MT | F | L/R | Saloon FWD 836A3000 | | GCO17004 | Outer Joint | | 25 | 25 | 52 | 85 | 58 | I |
| | 1994.07-1999.07 | MT | F | L/R | Saloon FWD 836A3000 | | GCO82004 | Outer Joint | 44T | 25 | 25 | 52 | 85 | 58 | I |
| | 1994.07-1999.07 | | F | | Saloon FWD 836A3000 | | GCI82005 | Inner Joint | | | 25 | | | 32 | |
| 2.0 (119 kw) | 1991.04-1999.07 | | F | | Saloon FWD 835A8046 | | GCI82006 | Inner Joint | | | 25 | | | 32 | |
| **Dedra Integrale** | | | | | | | | | | | | | | | |
| 2.0 (102 kw) | 1994.07-1999.07 | MT | F | L/R | Estate 4WD 836A3000 | | GCO17004 | Outer Joint | | 25 | 25 | 52 | 85 | 58 | I |
| | 1994.07-1999.07 | MT | F | L/R | Estate 4WD 836A3000 | | GCO82004 | Outer Joint | 44T | 25 | 25 | 52 | 85 | 58 | I |
| | 1994.07-1999.07 | | F | | Estate 4WD 836A3000 | | GCI82005 | Inner Joint | | | 25 | | | 32 | |
| **Delta** | | | | | | | | | | | | | | | |
| 1.4 (51 kw) | 1994.10-1999.09 | MT | F | L | Hatchback FWD 160A1046/836A4000 | | GDS17010 | Drive Shaft | | 22 | 32 | 46.8 | 75.5 | 569 | |
| | 1994.10-1999.09 | MT | F | R | Hatchback FWD 160A1046/836A4000 | | GDS17011 | Drive Shaft | | 22 | 32 | 46.8 | 75.5 | 928.5 | |
| | 1994.10-1999.09 | MT | F | L/R | Hatchback FWD 160A1046/836A4000 | | GCO17001 | Outer Joint | | 22 | 20 | 46.8 | 75.5 | 52 | O |
| | 1994.10-1999.09 | MT | F | L/R | Hatchback FWD 160A1046/836A4000 | | GCO17039 | Outer Joint | 44T | 22 | 20 | 46.8 | 75.5 | 52 | O |

| | YEAR | TRANSM. | F/R | L/R | BODY STYLE & DRIVE TYPE & ENGINE | REMARKS | G-AP Ref. | PRODUCT | ABS | Technical Specifications A | B | C | H | L | P |
|---|---|---|---|---|---|---|---|---|---|---|---|---|---|---|---|
| **LANCIA** **Delta** | | | | | | | | | | | | | | | |
| 1.4 (88 kw) | 2008.09-2014.08 | 6MT | F | L | Hatchback FWD 198 A4.000 | Date to:2010.03;Equipment code:PCC544 | GDS17180 | Drive Shaft | | 25 | 25 | 51 | 84.5 | 628 | |
| | 2008.09-2014.08 | 6MT | F | L/R | Hatchback FWD 198 A4.000 | Date to:2012.06;Equipment code:PCC635 | GDS17226 | Drive Shaft | | 25 | 25 | 51.1 | 84.5 | 955 | |
| | 2008.09-2014.08 | 6MT | F | L/R | Hatchback FWD 198 A4.000 | Equipment code:PCC635 | GCO17063 | Outer Joint | | 25 | 25 | 51.1 | 84.5 | 61 | M |
| | 2008.09-2014.08 | 6MT | F | L | Hatchback FWD 198 A4.000 | Date to:2010.03;Equipment code:PCC544 | GCI17035 | Inner Joint | | 25 | 26 | 34.9 | 57.5 | 114.5 | |
| | 2008.09-2014.08 | 6MT | F | L | Hatchback FWD 198 A4.000 | Date from:2010.04;Equipment code:PCC544 | GCI17083 | Inner Joint | | 25 | 24 | 34.9 | 57 | 107.5 | |
| | 2008.09-2014.08 | AT/MT | F | L/R | Hatchback FWD 198 A4.000 | | GCO82025 | Outer Joint | | 25 | 26 | 51 | 84.5 | 64.5 | M |
| | 2008.09-2014.08 | MT | F | R | Hatchback FWD 198 A4.000 | Date from:2010.04;Equipment code:PCC544 | GDS81768 | Drive Shaft | | 25 | 25 | 51 | 84.5 | 930 | |
| | 2008.09-2014.08 | MT | F | R | Hatchback FWD 198 A4.000 | | GCI17058 | Inner Joint | | 25 | 26 | 34.9 | 367 | 108.5 | |
| | 2011.07-2014.08 | 6MT | F | R | Hatchback FWD 198 A4.000 | | GDS17226 | Drive Shaft | | 25 | 25 | 51.1 | 84.5 | 955 | |
| | 2011.07-2014.08 | 6MT | F | L/R | Hatchback FWD 198 A4.000 | | GCO17063 | Outer Joint | | 25 | 25 | 51.1 | 84.5 | 61 | M |
| | 2011.07-2014.08 | 6MT | F | L | Hatchback FWD 198 A4.000 | | GCI17031 | Inner Joint | | 25 | 26 | 32 | 59 | 110.5 | |
| | 2011.07-2014.08 | 6MT | F | L | Hatchback FWD 198 A4.000 | Date from:2012.07 | GCI17126 | Inner Joint | | 25 | 26 | 32 | 59 | 110.5 | |
| | 2011.07-2014.08 | 6MT | F | R | Hatchback FWD 198 A4.000 | | GCI17123 | Inner Joint | | 25 | 26 | 29.75 | 409 | 108.5 | |
| 1.4 (103 kw) | 2010.07-2014.08 | 6MT | F | R | Hatchback FWD 198 A7.000 | | GDS17226 | Drive Shaft | | 25 | 25 | 51.1 | 84.5 | 955 | |
| | 2010.07-2014.08 | 6MT | F | L/R | Hatchback FWD 198 A7.000 | | GCO17063 | Outer Joint | | 25 | 25 | 51.1 | 84.5 | 61 | M |
| | 2010.07-2014.08 | 6MT | F | L | Hatchback FWD 198 A7.000 | | GCI17031 | Inner Joint | | 25 | 26 | 32 | 59 | 110.5 | |
| | 2010.07-2014.08 | 6MT | F | L | Hatchback FWD 198 A7.000 | Date from:2012.07 | GCI17126 | Inner Joint | | 25 | 26 | 32 | 59 | 110.5 | |
| | 2010.07-2014.08 | 6MT | F | R | Hatchback FWD 198 A7.000 | | GCI17123 | Inner Joint | | 25 | 26 | 29.75 | 409 | 108.5 | |
| 1.4 (110 kw) | 2008.09-2014.08 | 6MT | F | L | Hatchback FWD 198 A1.000 | | GDS17180 | Drive Shaft | | 25 | 25 | 51 | 84.5 | 628 | |
| | 2008.09-2014.08 | 6MT | F | R | Hatchback FWD 198 A1.000 | Date from:2010.04 | GDS81768 | Drive Shaft | | 25 | 25 | 51 | 84.5 | 930 | |
| | 2008.09-2014.08 | 6MT | F | L | Hatchback FWD 198 A1.000 | Date to:2010.03 | GCI17035 | Inner Joint | | 25 | 26 | 34.9 | 57.5 | 114.5 | |
| | 2008.09-2014.08 | 6MT | F | L | Hatchback FWD 198 A1.000 | Date from:2010.04 | GCI17083 | Inner Joint | | 25 | 24 | 34.9 | 57 | 107.5 | |
| | 2008.09-2014.08 | AT/MT | F | L/R | Hatchback FWD 198 A1.000 | | GCO82025 | Outer Joint | | 25 | 26 | 51 | 84.5 | 64.5 | M |
| | 2008.09-2014.08 | MT | F | R | Hatchback FWD 198 A1.000 | | GCI17058 | Inner Joint | | 25 | 26 | 34.9 | 367 | 108.5 | |
| | 2008.09-2014.08 | | F | L/R | Hatchback FWD 198 A1.000 | | GCO17030 | Outer Joint | | 25 | 26 | 51 | 84.5 | 64.5 | M |
| 1.6 (55 kw) | 1993.11-1996.08 | MT | F | L | Hatchback FWD 835C1000 | | GDS17010 | Drive Shaft | | 22 | 32 | 46.8 | 75.5 | 569 | |
| | 1993.11-1996.08 | MT | F | R | Hatchback FWD 835C1000 | | GDS17011 | Drive Shaft | | 22 | 32 | 46.8 | 75.5 | 928.5 | |
| | 1993.11-1996.08 | MT | F | L/R | Hatchback FWD 835C1000 | | GCO17001 | Outer Joint | | 22 | 20 | 46.8 | 75.5 | 52 | O |
| | 1993.11-1996.08 | MT | F | L/R | Hatchback FWD 835C1000 | Date from:1996.02;Date to:1996.08 | GCO17021 | Outer Joint | | 22 | 22 | 46.8 | 75.5 | 52 | O |
| | 1993.11-1996.08 | MT | F | L/R | Hatchback FWD 835C1000 | Date from:1996.02;Date to:1996.08 | GCO17022 | Outer Joint | 44T | 22 | 22 | 46.8 | 75.5 | 52 | O |
| | 1993.11-1996.08 | MT | F | L/R | Hatchback FWD 835C1000 | | GCO17039 | Outer Joint | 44T | 22 | 20 | 46.8 | 75.5 | 52 | O |
| 1.6 (66 kw) | 1996.03-1999.08 | MT | F | L/R | Hatchback FWD 182 A6.000 | Type:Delta HPE | GCO17004 | Outer Joint | | 25 | 25 | 52 | 85 | 58 | I |
| | 1996.03-1999.08 | MT | F | L/R | Hatchback FWD 182 A6.000 | Type:Delta HPE | GCO82004 | Outer Joint | 44T | 25 | 25 | 52 | 85 | 58 | I |
| 1.6 (77 kw) | 2011.04-2014.08 | 6MT | F | R | Hatchback FWD 844 A3.000 | | GDS17226 | Drive Shaft | | 25 | 25 | 51.1 | 84.5 | 955 | |
| | 2011.04-2014.08 | 6MT | F | L/R | Hatchback FWD 844 A3.000 | | GCO17063 | Outer Joint | | 25 | 25 | 51.1 | 84.5 | 61 | M |
| | 2011.04-2014.08 | 6MT | F | L | Hatchback FWD 844 A3.000 | Date to:2012.06 | GCI17031 | Inner Joint | | 25 | 26 | 32 | 59 | 110.5 | |
| | 2011.04-2014.08 | 6MT | F | L | Hatchback FWD 844 A3.000 | Date from:2012.07 | GCI17126 | Inner Joint | | 25 | 26 | 32 | 59 | 110.5 | |
| | 2011.04-2014.08 | 6MT | F | R | Hatchback FWD 844 A3.000 | | GCI17123 | Inner Joint | | 25 | 26 | 29.75 | 409 | 108.5 | |
| 1.6 (85 kw) | 2008.08-2014.08 | 6AMT | F | L/R | Hatchback FWD 955 A4.000 | | GCO17030 | Outer Joint | | 25 | 26 | 51 | 84.5 | 64.5 | M |
| | 2008.08-2014.08 | 6MT | F | L/R | Hatchback FWD 955 A4.000 | Equipment code:PCC635 | GCO17063 | Outer Joint | | 25 | 25 | 51.1 | 84.5 | 61 | M |
| | 2008.08-2014.08 | 6MT | F | L | Hatchback FWD 955 A4.000 | VET no. from:1040238;Equipment code:PCC530 | GCI17084 | Inner Joint | | 25 | 24 | 31.95 | 91 | 87 | |
| | 2008.08-2014.08 | AT | F | R | Hatchback FWD 955 A4.000 | | GDS17226 | Drive Shaft | | 25 | 25 | 51.1 | 84.5 | 955 | |
| | 2008.08-2014.08 | AT | F | L | Hatchback FWD 955 A4.000 | | GCI17123 | Inner Joint | | 25 | 26 | 29.75 | 409 | 108.5 | |
| | 2008.08-2014.08 | MT | F | L | Hatchback FWD 955 A4.000 | | GDS17194 | Drive Shaft | | 25 | 39 | 51 | 84.5 | 523 | |
| 1.6 (88 kw) | 2008.09-2014.08 | 6AT | F | L | Hatchback FWD 198 A2.000 | | GCI17035 | Inner Joint | | 25 | 26 | 34.9 | 57.5 | 114.5 | |
| | 2008.09-2014.08 | 6AT/6MT | F | L/R | Hatchback FWD 198 A2.000 | Transmission:6MT,Equipment code:PCC530 | GCO82025 | Outer Joint | | 25 | 26 | 51 | 84.5 | 64.5 | M |
| | 2008.09-2014.08 | 6MT | F | R | Hatchback FWD 198 A2.000 | Date to:2012.06,Equipment code:PCC635 | GDS17226 | Drive Shaft | | 25 | 25 | 51.1 | 84.5 | 955 | |
| | 2008.09-2014.08 | 6MT | F | R | Hatchback FWD 198 A2.000 | VET no. to:1040237,Equipment code:PCC530 | GDS82008 | Drive Shaft | | 25 | 25 | 51 | 84.5 | 931.5 | |
| | 2008.09-2014.08 | 6MT | F | L/R | Hatchback FWD 198 A2.000 | VET no. from:1040238,Equipment code:PCC530 | GDS17194 | Drive Shaft | | 25 | 39 | 51 | 84.5 | 523 | |
| | 2008.09-2014.08 | 6MT | F | L/R | Hatchback FWD 198 A2.000 | Equipment code:PCC635 | GCO17063 | Outer Joint | | 25 | 25 | 51.1 | 84.5 | 61 | M |
| | 2008.09-2014.08 | 6MT | F | L | Hatchback FWD 198 A2.000 | VET no. to:1040237,Equipment code:PCC530 | GCI17005 | Inner Joint | | 25 | 26 | 32 | 91 | 95 | |
| | 2008.09-2014.08 | 6MT | F | L | Hatchback FWD 198 A2.000 | Equipment code:PCC635 | GCI17031 | Inner Joint | | 25 | 26 | 32 | 59 | 110.5 | |
| | 2008.09-2014.08 | 6MT | F | L | Hatchback FWD 198 A2.000 | VET no. from:1040238;Equipment code:PCC530 | GCI17084 | Inner Joint | | 25 | 24 | 31.95 | 91 | 87 | |
| | 2008.09-2014.08 | 6MT | F | R | Hatchback FWD 198 A2.000 | VET no. to:1040237,Equipment code:PCC530 | GCI17006 | Inner Joint | | 25 | 26 | 29.8 | 377 | 108 | |
| | 2008.09-2014.08 | 6MT | F | R | Hatchback FWD 198 A2.000 | Date from:2011.07,Date to:2012.06,Equipment code:PCC635 | GCI17123 | Inner Joint | | 25 | 26 | 29.75 | 409 | 108.5 | |
| 1.8 (66 kw) | 1994.11-1996.08 | MT | F | L/R | Hatchback FWD 835C4000 | Date from:1994.11;Date to:1996.08 | GCO17004 | Outer Joint | | 25 | 25 | 52 | 85 | 58 | I |
| | 1994.11-1996.08 | MT | F | L/R | Hatchback FWD 835C4000 | Date from:1994.11;Date to:1996.08 | GCO82004 | Outer Joint | 44T | 25 | 25 | 52 | 85 | 58 | I |
| | 1994.11-1996.08 | | F | | Hatchback FWD 835C4000 | | GCI82005 | Inner Joint | | | 25 | | | 32 | |
| 1.8 (76 kw) | 1993.11-1996.08 | MT | F | L/R | Hatchback FWD 835C2000 | | GCO17004 | Outer Joint | | 25 | 25 | 52 | 85 | 58 | I |
| | 1993.11-1996.08 | MT | F | L/R | Hatchback FWD 835C2000 | | GCO82004 | Outer Joint | 44T | 25 | 25 | 52 | 85 | 58 | I |
| | 1993.11-1996.08 | | F | | Hatchback FWD 835C2000 | | GCI82005 | Inner Joint | | | 25 | | | 32 | |
| 1.8 (83 kw) | 1995.05-1998.04 | | F | | Hatchback FWD 182A2000 | | GCO82004 | Outer Joint | 44T | 25 | 25 | 52 | 85 | 58 | I |
| | 1995.05-1998.04 | | F | | Hatchback FWD 182A2000 | | GCI82005 | Inner Joint | | | 25 | | | 32 | |
| 1.8 (147 kw) | 2009.01-2014.08 | 6AT | F | L/R | Hatchback FWD 939 B1.000 | | GCO17064 | Outer Joint | | 27 | 27 | 59 | 84.5 | 64 | M |
| | 2009.01-2014.08 | 6AT | F | L | Hatchback FWD 939 B1.000 | | GCI21017 | Inner Joint | | 27 | 27 | 35 | 78.5 | 112 | |

| | YEAR | TRANSM. | F/R | L/R | BODY STYLE & DRIVE TYPE & ENGINE | REMARKS | G-AP Ref. | PRODUCT | ABS | Technical Specifications A | B | C | H | L | P |
|---|---|---|---|---|---|---|---|---|---|---|---|---|---|---|---|
| **LANCIA** | | | | | | | | | | | | | | | |
| **Delta** | | | | | | | | | | | | | | | |
| 1.9 (66 kw) | 1994.10-1999.08 | MT | F | L/R | Hatchback FWD 160 D1.000, 835 A4.000 | Date From:1995.05;Type:Delta HPE | GCO17004 | Outer Joint | | 25 | 25 | 52 | 85 | 58 | I |
| | 1994.10-1999.08 | MT | F | L/R | Hatchback FWD 160 D1.000, 835 A4.000 | Date From:1995.05;Type:Delta HPE | GCO82004 | Outer Joint | 44T | 25 | 25 | 52 | 85 | 58 | I |
| | 1994.10-1999.08 | | F | | Hatchback FWD 160 D1.000, 835 A4.000 | | GCO82006 | Outer Joint | 44T | 25 | 25 | 52 | 85 | 58 | O |
| | 1994.10-1999.08 | | F | | Hatchback FWD 160 D1.000, 835 A4.000 | | GCI82005 | Inner Joint | | | 25 | | | 32 | |
| 1.9 (140 kw) | 2009.01-2014.08 | 6MT | F | L | Hatchback FWD 844 A1.000 | | GDS17121 | Drive Shaft | | 25 | 25 | 59 | 84 | 630 | |
| | 2009.01-2014.08 | 6MT | F | L | Hatchback FWD 844 A1.000 | | GCI17005 | Inner Joint | | 25 | 26 | 32 | 91 | 95 | |
| | 2009.01-2014.08 | | F | L | Hatchback FWD 844 A1.000 | | GCO17064 | Outer Joint | | 27 | 27 | 59 | 84.5 | 64 | M |
| 2.0 (102 kw) | 1993.11-2000.05 | MT | F | L/R | Hatchback FWD 836A3000 | | GCO17004 | Outer Joint | | 25 | 25 | 52 | 85 | 58 | I |
| | 1993.11-2000.05 | MT | F | L/R | Hatchback FWD 836A3000 | Date from:1993.11 | GCO82004 | Outer Joint | 44T | 25 | 25 | 52 | 85 | 58 | I |
| | 1993.11-2000.05 | | F | | Hatchback FWD 836A3000 | | GCO82006 | Outer Joint | 44T | 25 | 25 | 52 | 85 | 58 | O |
| | 1993.11-2000.05 | | F | | Hatchback FWD 836A3000 | | GCI82005 | Inner Joint | | | 25 | | | 32 | |
| 2.0 (120 kw) | 2008.09-2014.08 | 6MT | F | L/R | Hatchback FWD 844 A2.000 | Equipment code:PCC542 | GDS17121 | Drive Shaft | | 25 | 25 | 59 | 84 | 630 | |
| | 2008.09-2014.08 | 6MT | F | L/R | Hatchback FWD 844 A2.000 | | GCO17064 | Outer Joint | | 27 | 27 | 59 | 84.5 | 64 | M |
| | 2008.09-2014.08 | 6MT | F | R | Hatchback FWD 844 A2.000 | Date from:2011.07,Equipment code:PCC635 | GCI17123 | Inner Joint | | 25 | 26 | 29.75 | 409 | 108.5 | |
| 2.0 (121 kw) | 2008.09-2014.08 | 6MT | F | L | Hatchback FWD 198 A5.000;198 A8.000 | | GDS17121 | Drive Shaft | | 25 | 25 | 59 | 84 | 630 | |
| | 2008.09-2014.08 | 6MT | F | L | Hatchback FWD 198 A5.000;198 A8.000 | | GCI17005 | Inner Joint | | 25 | 26 | 32 | 91 | 95 | |
| | 2008.09-2014.08 | 6MT | F | R | Hatchback FWD 198 A5.000;198 A8.000 | Date from:2011.07,Equipment code:PCC635 | GCI17123 | Inner Joint | | 25 | 26 | 29.75 | 409 | 108.5 | |
| | 2008.09-2014.08 | | F | L | Hatchback FWD 198 A5.000;198 A8.000 | | GCO17064 | Outer Joint | | 27 | 27 | 59 | 84.5 | 64 | M |
| 2.0 (137 kw) | 1993.06-1999.08 | MT | F | L/R | Hatchback FWD 836 A2.000 | | GCO17004 | Outer Joint | | 25 | 25 | 52 | 85 | 58 | I |
| | 1993.06-1999.08 | MT | F | L/R | Hatchback FWD 836 A2.000 | | GCO82004 | Outer Joint | 44T | 25 | 25 | 52 | 85 | 58 | I |
| | 1993.06-1999.08 | | F | | Hatchback FWD 836 A2.000 | | GCI82005 | Inner Joint | | | 25 | | | 32 | |
| **Delta HPE** | | | | | | | | | | | | | | | |
| 1.8 (96 kw) | 1996.03-1999.08 | | F | | Hatchback FWD 183A1000 | | GCO82006 | Outer Joint | 44T | 25 | 25 | 52 | 85 | 58 | O |
| | 1996.03-1999.08 | | F | | Hatchback FWD 183A1000 | | GCI82005 | Inner Joint | | | 25 | | | 32 | |
| 2.0 (142 kw) | 1995.05-1999.09 | | F | | Hatchback FWD 175A4000 | | GCI82005 | Inner Joint | | | 25 | | | 32 | |
| **Flavia** | | | | | | | | | | | | | | | |
| 2.4 (125 kw) | 2012.03-2014.12 | 6AT | F | R | Convertible FWD EDG | | GDS88118 | Drive Shaft | | 32 | 28 | 56.7 | 104.5 | 580 | |
| 2.4 (129 kw) | 2012.03-2014.12 | 6AT | F | R | Convertible FWD EDG | | GDS88118 | Drive Shaft | | 32 | 28 | 56.7 | 104.5 | 580 | |
| **K(appa)** | | | | | | | | | | | | | | | |
| 2.0 (107 kw) | 1994.10-2001.10 | AT/MT | F | L/R | Saloon FWD 838A1000 | Date From:1997.03;VET From:2062042 | GCO29001 | Outer Joint | 44T | 27 | 25 | 60 | 84.5 | 57.5 | O |
| | 1994.10-2001.10 | AT/MT | F | L/R | Saloon FWD 838A1000 | Date To:1997.02;VET To:2062041 | GCO29003 | Outer Joint | 44T | 27 | 25 | 60 | 85 | 58 | I |
| | 1994.10-2001.10 | MT | F | L/R | Saloon FWD 838A1000 | | GCI82011 | Inner Joint | | | 25 | | | 32 | |
| 2.0 (114 kw) | 1996.09-2001.12 | AT/MT | F | L/R | Saloon FWD 838A6000 | Date From:1997.03;VET From:2062042 | GCO29001 | Outer Joint | 44T | 27 | 25 | 60 | 84.5 | 57.5 | O |
| | 1996.09-2001.12 | AT/MT | F | L/R | Saloon FWD 838A6000 | From TEL:2084920 | GCO82002 | Outer Joint | | 27 | 25 | 59 | 84.5 | 58 | O |
| | 1996.09-2001.12 | AT/MT | F | L/R | Saloon FWD 838A6000 | | GCI82011 | Inner Joint | | | 25 | | | 32 | |
| | 1996.09-2001.12 | | F | | Saloon FWD 838A6000 | | GCO29003 | Outer Joint | 44T | 27 | 25 | 60 | 85 | 58 | I |
| 2.0 (151 kw) | 1995.02-2001.10 | | F | | Saloon FWD 838A4000 | | GCO82011 | Outer Joint | 44T | 27 | 28 | 56 | 85 | 63.5 | O |
| 2.0 (162 kw) | 1998.03-2001.12 | MT | F | L/R | Saloon FWD 175A3000 | | GCO82013 | Outer Joint | | 27 | 28 | 59 | 83.5 | 63 | O |
| 2.4 (91 kw) | 1994.08-2001.10 | MT | F | L/R | Saloon FWD 838A3000/838A7000 | | GCO82011 | Outer Joint | 44T | 27 | 28 | 56 | 85 | 63.5 | O |
| 2.4 (100 kw) | 1998.02-2001.12 | 4AT | F | L/R | Saloon FWD 838A8000 | | GCO82013 | Outer Joint | | 27 | 28 | 59 | 83.5 | 63 | O |
| 2.4 (129 kw) | 1995.06-2001.12 | AT/MT | F | L/R | Saloon FWD 838A2000/838A2027/838B2000 | To TEL:2084919 | GCO82011 | Outer Joint | 44T | 27 | 28 | 56 | 85 | 63.5 | O |
| | 1995.06-2001.12 | AT/MT | F | L/R | Saloon FWD 838A2000/838A2027/838B2000 | From TEL:2081920 | GCO82013 | Outer Joint | | 27 | 28 | 59 | 83.5 | 63 | O |
| 3.0 (150 kw) | 1994.10-2001.12 | AT | F | L/R | Saloon FWD 838B000 | From TEL:2084920 | GCO82013 | Outer Joint | | 27 | 28 | 59 | 83.5 | 63 | O |
| | 1994.10-2001.12 | MT | F | L/R | Saloon FWD 838B000 | From TEL:2081778 | GCO82011 | Outer Joint | 44T | 27 | 28 | 56 | 85 | 63.5 | O |
| **K(appa) Coupe** | | | | | | | | | | | | | | | |
| 2.0 (151 kw) | 1997.02-1998.02 | | F | L/R | Coupe FWD 834A4000 | | GCO82011 | Outer Joint | 44T | 27 | 28 | 56 | 85 | 63.5 | O |
| 2.0 (162 kw) | 1998.06-2001.03 | MT | F | L/R | Coupe FWD 175A3000 | | GCO82013 | Outer Joint | | 27 | 28 | 59 | 83.5 | 63 | O |
| 2.4 (129 kw) | 1997.02-2001.12 | | F | L/R | Coupe FWD 838A2000/838B2000 | To TEL:1002101 | GCO82011 | Outer Joint | 44T | 27 | 28 | 56 | 85 | 63.5 | O |
| | 1997.02-2001.12 | | F | L/R | Coupe FWD 838A2000/838B2000 | From TEL:1002102 | GCO82013 | Outer Joint | | 27 | 28 | 59 | 83.5 | 63 | O |
| 3.0 (150 kw) | 1996.09-2000.12 | | F | L/R | Coupe FWD 838B000 | To TEL:1002101 | GCO82011 | Outer Joint | 44T | 27 | 28 | 56 | 85 | 63.5 | O |
| | 1996.09-2000.12 | | F | L/R | Coupe FWD 838B000 | From TEL:1002102 | GCO82013 | Outer Joint | | 27 | 28 | 59 | 83.5 | 63 | O |
| **K(appa) S.W.** | | | | | | | | | | | | | | | |
| 2.0 (114 kw) | 1996.09-2001.05 | AT/MT | F | L/R | Estate FWD 838A6000 | Date to:2001.05;Chassis no. to:2084918 | GCO29001 | Outer Joint | 44T | 27 | 25 | 60 | 84.5 | 57.5 | O |
| | 1996.09-2001.05 | | F | L/R | Estate FWD 838A6000 | From TEL:2084920 | GCO82002 | Outer Joint | | 27 | 25 | 59 | 84.5 | 58 | O |
| | 1996.09-2001.05 | | F | | Estate FWD 838A6000 | | GCO29003 | Outer Joint | 44T | 27 | 25 | 60 | 85 | 58 | I |
| | 1996.09-2001.05 | | F | L/R | Estate FWD 838A6000 | | GCI82005 | Inner Joint | | | 25 | | | 32 | |
| 2.0 (151 kw) | 1996.09-1998.02 | | F | L/R | Estate FWD 838A4000 | | GCO82011 | Outer Joint | 44T | 27 | 28 | 56 | 85 | 63.5 | O |
| 2.0 (162 kw) | 1998.03-2001.05 | | F | L/R | Estate FWD 175A3000 | | GCO82013 | Outer Joint | | 27 | 28 | 59 | 83.5 | 63 | O |
| 2.4 (91 kw) | 1996.09-1998.02 | | F | L/R | Estate FWD 838A7000 | | GCO82011 | Outer Joint | 44T | 27 | 28 | 56 | 85 | 63.5 | O |
| 2.4 (100 kw) | 1998.03-2001.05 | 5MT | F | L/R | Estate FWD 838A8000 | | GCO82013 | Outer Joint | | 27 | 28 | 59 | 83.5 | 63 | O |
| 2.4 (129 kw) | 1996.09-2001.12 | | F | L/R | Estate FWD 838A2000/838B2000/838B2027 | To TEL:2084919 | GCO82011 | Outer Joint | 44T | 27 | 28 | 56 | 85 | 63.5 | O |
| | 1996.09-2001.12 | | F | L/R | Estate FWD 838A2000/838B2000/838B2027 | From TEL:2084920 | GCO82013 | Outer Joint | | 27 | 28 | 59 | 83.5 | 63 | O |
| 3.0 (150 kw) | 1996.09-2001.05 | | F | L/R | Estate FWD 838B000 | To TEL:2084919 | GCO82011 | Outer Joint | 44T | 27 | 28 | 56 | 85 | 63.5 | O |
| | 1996.09-2001.05 | | F | L/R | Estate FWD 838B000 | From TEL:2084920 | GCO82013 | Outer Joint | | 27 | 28 | 59 | 83.5 | 63 | O |

| | YEAR | TRANSM. | F/R | L/R | BODY STYLE & DRIVE TYPE & ENGINE | REMARKS | G-AP Ref. | PRODUCT | ABS | Technical Specifications A | B | C | H | L | P |
|---|---|---|---|---|---|---|---|---|---|---|---|---|---|---|---|
| **LANCIA** | | | | | | | | | | | | | | | |
| **Lybra** | | | | | | | | | | | | | | | |
| 1.6 (76 kw) | 1999.07-2005.10 | MT | F | L/R | Saloon FWD 182 A4.000 | Date to:2001.09 | GCO17011 | Outer Joint | | 25 | 22 | 51 | 84.5 | 57 | O |
| | 2000.10-2005.10 | | F | L/R | Saloon FWD 182 B6.000 | | GCO17011 | Outer Joint | | 25 | 22 | 51 | 84.5 | 57 | O |
| 1.8 (96 kw) | 1999.07-2005.10 | MT | F | L/R | Saloon FWD 839 A4.000;839 A7.000;839 A9.000 | | GCO17042 | Outer Joint | | 25 | 25 | 51 | 85 | 58 | O |
| | 1999.07-2005.10 | MT | F | L/R | Saloon FWD 839 A4.000;839 A7.000;839 A9.000 | | GCI82011 | Inner Joint | | | 25 | | | 32 | |
| | 1999.07-2005.10 | | F | | Saloon FWD 839 A4.000;839 A7.000;839 A9.000 | | GCI82005 | Inner Joint | | | 25 | | | 32 | |
| 1.9 (77 kw) | 1999.07-2000.09 | 5MT | F | L | Saloon FWD AR 32302 | | GDS82001 | Drive Shaft | | 25 | | 59 | 85 | 520 | |
| | 1999.07-2000.09 | MT | F | L/R | Saloon FWD AR 32302 | | GCO82012 | Outer Joint | | 25 | 28 | 59 | 85 | 63 | O |
| | 1999.07-2000.09 | MT | F | L/R | Saloon FWD AR 32302 | | GCI82011 | Inner Joint | | | 25 | | | 32 | |
| 1.9 (81 kw) | 2000.09-2001.05 | 5MT | F | L | Saloon FWD AR 37101 | | GDS82001 | Drive Shaft | | 25 | | 59 | 85 | 520 | |
| | 2000.09-2001.05 | 5MT | F | L/R | Saloon FWD AR 37101 | | GCO82012 | Outer Joint | | 25 | 28 | 59 | 85 | 63 | O |
| 1.9 (85 kw) | 2001.05-2005.10 | 5MT | F | L | Saloon FWD 937 A2.000 | Chassis no. From:0137878 | GDS17107 | Drive Shaft | | 25 | 25 | 59 | 84 | 615 | |
| | 2001.05-2005.10 | 5MT | F | L | Saloon FWD 937 A2.000 | Chassis no. to:0137877 | GDS82001 | Drive Shaft | | 25 | | 59 | 85 | 520 | |
| | 2001.05-2005.10 | 5MT | F | L | Saloon FWD 937 A2.000 | Chassis no. From:0137878 | GDS82003 | Drive Shaft | | 25 | 43 | 59 | 84 | 502 | |
| | 2001.05-2005.10 | 5MT | F | R | Saloon FWD 937 A2.000 | Chassis no. From:0137878 | GDS82004 | Drive Shaft | | 25 | 43 | 59 | 84 | 521 | |
| | 2001.05-2005.10 | 5MT | F | L/R | Saloon FWD 937 A2.000 | Chassis no. From:0137878 | GCO17009 | Outer Joint | | 25 | 26 | 59 | 84 | 63 | M |
| | 2001.05-2005.10 | 5MT | F | L/R | Saloon FWD 937 A2.000 | Chassis no. To:0137877 | GCO82012 | Outer Joint | | 25 | 28 | 59 | 85 | 63 | O |
| | 2001.05-2005.10 | 5MT | F | L | Saloon FWD 937 A2.000 | Chassis no. From:0137878 | GCI17005 | Inner Joint | | 25 | 26 | 32 | 91 | 95 | |
| | 2001.05-2005.10 | 5MT | F | R | Saloon FWD 937 A2.000 | Chassis no. From:0137878 | GCI17006 | Inner Joint | | 25 | 26 | 29.8 | 377 | 108 | |
| 2.0 (110 kw) | 2000.09-2005.10 | MT | F | L/R | Saloon FWD 185 A8.000 | | GCI82011 | Inner Joint | | | 25 | | | 32 | |
| | 2000.09-2005.10 | MT | F | | Saloon FWD 185 A8.000 | | GCI82005 | Inner Joint | | | 25 | | | 32 | |
| | 2000.09-2005.10 | | F | L/R | Saloon FWD 185 A8.000 | | GCO82017 | Outer Joint | | 25 | 25 | 58.8 | 85 | 58 | O |
| 2.0 (113 kw) | 1999.07-2000.09 | AT/MT | F | L/R | Saloon FWD 182 B7.000 | | GCO82017 | Outer Joint | | 25 | 25 | 58.8 | 85 | 58 | O |
| | 1999.07-2000.09 | MT | F | L/R | Saloon FWD 182 B7.000 | | GCI18070 | Inner Joint | | | 25 | | | 32 | |
| | 1999.07-2000.09 | MT | F | L/R | Saloon FWD 182 B7.000 | | GCI82011 | Inner Joint | | | 25 | | | 32 | |
| | 1999.07-2000.09 | MT | F | | Saloon FWD 182 B7.000 | | GCI82005 | Inner Joint | | | 25 | | | 32 | |
| 2.4 (99 kw) | 1999.07-2001.02 | 5MT | F | L | Saloon FWD 839 A5.000;AR 32501 | | GDS83671 | Drive Shaft | | 25 | 25 | 59 | 84 | 572 | |
| | 1999.07-2001.02 | 5MT | F | R | Saloon FWD 839 A5.000;AR 32501 | | GDS83670 | Drive Shaft | | 25 | 25 | 59 | 84 | 980 | |
| | 1999.07-2001.02 | 5MT | F | L/R | Saloon FWD 839 A5.000;AR 32501 | | GCO17009 | Outer Joint | | 25 | 26 | 59 | 84 | 63 | M |
| | 1999.07-2001.02 | 5MT | F | L | Saloon FWD 839 A5.000;AR 32501 | | GCI17005 | Inner Joint | | 25 | 26 | 32 | 91 | 95 | |
| 2.4 (103 kw) | 2000.09-2002.05 | 5MT | F | L | Saloon FWD 839 A6.000 | | GDS83671 | Drive Shaft | | 25 | 25 | 59 | 84 | 572 | |
| | 2000.09-2002.05 | 5MT | F | R | Saloon FWD 839 A6.000 | | GDS83670 | Drive Shaft | | 25 | 25 | 59 | 84 | 980 | |
| | 2000.09-2002.05 | 5MT | F | L/R | Saloon FWD 839 A6.000 | | GCO17009 | Outer Joint | | 25 | 26 | 59 | 84 | 63 | M |
| | 2000.09-2002.05 | 5MT | F | L | Saloon FWD 839 A6.000 | | GCI17005 | Inner Joint | | 25 | 26 | 32 | 91 | 95 | |
| | 2000.09-2002.05 | MT | F | L/R | Saloon FWD 839 A6.000 | | GCO82012 | Outer Joint | | 25 | 28 | 59 | 85 | 63 | O |
| 2.4 (110 kw) | 2002.05-2005.10 | 5MT | F | L | Saloon FWD 841 C.000 | | GDS83671 | Drive Shaft | | 25 | 25 | 59 | 84 | 572 | |
| | 2002.05-2005.10 | 5MT | F | R | Saloon FWD 841 C.000 | | GDS83670 | Drive Shaft | | 25 | 25 | 59 | 84 | 980 | |
| | 2002.05-2005.10 | 5MT | F | L/R | Saloon FWD 841 C.000 | Inner teeth of wheel side:26 | GCO17009 | Outer Joint | | 25 | 26 | 59 | 84 | 63 | M |
| | 2002.05-2005.10 | 5MT | F | L | Saloon FWD 841 C.000 | | GCI17005 | Inner Joint | | 25 | 26 | 32 | 91 | 95 | |
| 2.4 (125 kw) | 2001.10-2005.10 | MT | F | L | Saloon FWD 192 A2.000 | | GCO82012 | Outer Joint | | 25 | 28 | 59 | 85 | 63 | O |
| **Lybra Estate/Wagon** | | | | | | | | | | | | | | | |
| 1.6 (76 kw) | 1999.07-2005.10 | MT | F | L/R | Estate FWD 182 A4.000 | Date to:2001.09 | GCO17011 | Outer Joint | | 25 | 22 | 51 | 84.5 | 57 | O |
| | 2000.10-2005.10 | | F | L/R | Estate FWD 182 B6.000 | | GCO17011 | Outer Joint | | 25 | 22 | 51 | 84.5 | 57 | O |
| 1.8 (96 kw) | 1999.07-2005.10 | 5MT | F | L/R | Estate FWD 839 A4.000;839 A7.000 | | GCI48004 | Inner Joint | | | 25 | | | 32 | |
| | 1999.07-2005.10 | 5MT | F | L/R | Estate FWD 839 A4.000;839 A7.000 | | GCI82011 | Inner Joint | | | 25 | | | 32 | |
| | 1999.07-2005.10 | MT | F | L/R | Estate FWD 839 A4.000;839 A7.000 | | GCO17042 | Outer Joint | | 25 | 25 | 51 | 85 | 58 | O |
| | 1999.07-2005.10 | | F | | Estate FWD 839 A4.000;839 A7.000 | | GCI82005 | Inner Joint | | | 25 | | | 32 | |
| 1.9 (77 kw) | 1999.07-2001.09 | 5MT | F | L | Estate FWD AR 32302 | | GDS82001 | Drive Shaft | | 25 | | 59 | 85 | 520 | |
| | 1999.07-2001.09 | MT | F | L/R | Estate FWD AR 32302 | | GCO82012 | Outer Joint | | 25 | 28 | 59 | 85 | 63 | O |
| 1.9 (81 kw) | 2000.09-2001.05 | 5MT | F | L | Estate FWD AR 37101 | | GDS82001 | Drive Shaft | | 25 | | 59 | 85 | 520 | |
| | 2000.09-2001.05 | 5MT | F | L/R | Estate FWD AR 37101 | | GCO82012 | Outer Joint | | 25 | 28 | 59 | 85 | 63 | O |
| 1.9 (85 kw) | 2001.05-2005.10 | 5MT | F | L | Estate FWD 937 A2.000 | Chassis no. from:0137878;Trans. side with housing | GDS17107 | Drive Shaft | | 25 | 25 | 59 | 84 | 615 | |
| | 2001.05-2005.10 | 5MT | F | L | Estate FWD 937 A2.000 | Chassis no. to:0137877 | GDS82001 | Drive Shaft | | 25 | | 59 | 85 | 520 | |
| | 2001.05-2005.10 | 5MT | F | L | Estate FWD 937 A2.000 | Chassis no. from:0137878;Trans. side without housing | GDS82003 | Drive Shaft | | 25 | 43 | 59 | 84 | 502 | |
| | 2001.05-2005.10 | 5MT | F | R | Estate FWD 937 A2.000 | Chassis no. from:0137878;Trans. side without housing | GDS82004 | Drive Shaft | | 25 | 43 | 59 | 84 | 521 | |
| | 2001.05-2005.10 | 5MT | F | L/R | Estate FWD 937 A2.000 | Chassis no. from:0137878 | GCO17009 | Outer Joint | | 25 | 26 | 59 | 84 | 63 | M |
| | 2001.05-2005.10 | 5MT | F | L/R | Estate FWD 937 A2.000 | Chassis no. to:0137877 | GCO82012 | Outer Joint | | 25 | 28 | 59 | 85 | 63 | O |
| | 2001.05-2005.10 | 5MT | F | L | Estate FWD 937 A2.000 | Chassis no. from:0137878 | GCI17005 | Inner Joint | | 25 | 26 | 32 | 91 | 95 | |
| | 2001.05-2005.10 | 5MT | F | R | Estate FWD 937 A2.000 | Chassis no. from:0137878 | GCI17006 | Inner Joint | | 25 | 26 | 29.8 | 377 | 108 | |
| 2.0 (110 kw) | 2000.09-2005.10 | 5MT | F | L/R | Estate FWD 185 A8.000 | | GCI48004 | Inner Joint | | | 25 | | | 32 | |
| | 2000.09-2005.10 | 5MT | F | L/R | Estate FWD 185 A8.000 | | GCI82011 | Inner Joint | | | 25 | | | 32 | |
| | 2000.09-2005.10 | MT | F | | Estate FWD 185 A8.000 | | GCI82005 | Inner Joint | | | 25 | | | 32 | |
| | 2000.09-2005.10 | | F | L/R | Estate FWD 185 A8.000 | | GCO82017 | Outer Joint | | 25 | 25 | 58.8 | 85 | 58 | O |
| 2.0 (113 kw) | 1999.07-2000.09 | AT/MT | F | L/R | Estate FWD 182 B7.000 | | GCO82017 | Outer Joint | | 25 | 25 | 58.8 | 85 | 58 | O |
| | 1999.07-2000.09 | MT | F | L/R | Estate FWD 182 B7.000 | | GCI18070 | Inner Joint | | | 25 | | | 32 | |
| | 1999.07-2000.09 | MT | F | L/R | Estate FWD 182 B7.000 | | GCI82011 | Inner Joint | | | 25 | | | 32 | |

| | YEAR | TRANSM. | F/R | L/R | BODY STYLE & DRIVE TYPE & ENGINE | REMARKS | G-AP Ref. | PRODUCT | ABS | Technical Specifications A | B | C | H | L | P |
|---|---|---|---|---|---|---|---|---|---|---|---|---|---|---|---|
| **LANCIA** | | | | | | | | | | | | | | | |
| **Lybra Estate/Wagon** | | | | | | | | | | | | | | | |
| 2.0 (113 kw) | 1999.07-2000.09 | MT | F | | Estate FWD 182 B7.000 | | GCI82005 | Inner Joint | | | 25 | | | 32 | |
| 2.4 (99 kw) | 1999.10-2000.09 | 5MT | F | L | Estate FWD 839 A5.000;AR 32501 | | GDS83671 | Drive Shaft | | 25 | 25 | 59 | 84 | 572 | |
| | 1999.10-2000.09 | 5MT | F | R | Estate FWD 839 A5.000;AR 32501 | | GDS83670 | Drive Shaft | | 25 | 25 | 59 | 84 | 980 | |
| | 1999.10-2000.09 | 5MT | F | L/R | Estate FWD 839 A5.000;AR 32501 | Inner teeth of wheel side:26 | GCO17009 | Outer Joint | | 25 | 26 | 59 | 84 | 63 | M |
| | 1999.10-2000.09 | 5MT | F | L | Estate FWD 839 A5.000;AR 32501 | | GCI17005 | Inner Joint | | 25 | 26 | 32 | 91 | 95 | |
| 2.4 (103 kw) | 2000.09-2005.10 | 5MT | F | L | Estate FWD 839 A6.000 | | GDS83671 | Drive Shaft | | 25 | 25 | 59 | 84 | 572 | |
| | 2000.09-2005.10 | 5MT | F | R | Estate FWD 839 A6.000 | | GDS83670 | Drive Shaft | | 25 | 25 | 59 | 84 | 980 | |
| | 2000.09-2005.10 | 5MT | F | L/R | Estate FWD 839 A6.000 | Inner teeth of wheel side:26 | GCO17009 | Outer Joint | | 25 | 26 | 59 | 84 | 63 | M |
| | 2000.09-2005.10 | 5MT | F | L | Estate FWD 839 A6.000 | | GCI17005 | Inner Joint | | 25 | 26 | 32 | 91 | 95 | |
| 2.4 (110 kw) | 2002.05-2005.10 | 5MT | F | L | Estate FWD 841 C.000 | | GDS83671 | Drive Shaft | | 25 | 25 | 59 | 84 | 572 | |
| | 2002.05-2005.10 | 5MT | F | R | Estate FWD 841 C.000 | | GDS83670 | Drive Shaft | | 25 | 25 | 59 | 84 | 980 | |
| | 2002.05-2005.10 | 5MT | F | L/R | Estate FWD 841 C.000 | Inner teeth of wheel side:26 | GCO17009 | Outer Joint | | 25 | 26 | 59 | 84 | 63 | M |
| | 2002.05-2005.10 | 5MT | F | L | Estate FWD 841 C.000 | | GCI17005 | Inner Joint | | 25 | 26 | 32 | 91 | 95 | |
| **Musa** | | | | | | | | | | | | | | | |
| 1.3 (51 kw) | 2004.10-2012.09 | 5MT | F | L/R | MPV FWD 188 A9.000 | Date to:2005.09 | GCO17027 | Outer Joint | | 25 | 23 | 51 | 84.5 | 60 | M |
| | 2004.10-2012.09 | 5MT | F | L/R | MPV FWD 188 A9.000 | Date from:2005.10 | GCO17053 | Outer Joint | | 25 | 23 | 51 | 84.5 | 60 | M |
| | 2004.10-2012.09 | 5MT/5AMT | F | L | MPV FWD 188 A9.000 | Date from:2005.10 | GCI17011 | Inner Joint | | 24 | 23 | 29.7 | 86.5 | 93 | |
| | 2004.10-2012.09 | 5MT/5AMT | F | L/R | MPV FWD 188 A9.000 | Date to:2005.09;with screw | GCI82005 | Inner Joint | | | 25 | | | 32 | |
| | 2004.10-2012.09 | 5MT/5AMT | F | L/R | MPV FWD 188 A9.000 | Date to:2005.09;without screw | GCI82011 | Inner Joint | | | 25 | | | 32 | |
| | 2004.10-2012.09 | MT | F | L | MPV FWD 188 A9.000 | Trans. side with housing | GDS17062 | Drive Shaft | | 25 | 24 | 51 | 84.5 | 582 | |
| | 2004.10-2012.09 | MT | F | R | MPV FWD 188 A9.000 | TJ | GCI17012 | Inner Joint | | 24 | 23 | 29.7 | 379 | 100.5 | |
| | 2004.10-2012.09 | SAT/5MT | F | L | MPV FWD 188 A9.000 | Date from:2015.10;Trans. side without housing | GDS17147 | Drive Shaft | | 25 | 34 | 51 | 84.5 | 480 | |
| | 2004.10-2012.09 | SAT/5MT | F | R | MPV FWD 188 A9.000 | Date from:2015.10;Trans. side without housing | GDS17066 | Drive Shaft | | 25 | 34 | 51 | 84.5 | 497 | |
| | 2004.10-2012.09 | SAT/5MT | F | R | MPV FWD 188 A9.000 | Date from:2015.10;Trans. side with housing | GDS17109 | Drive Shaft | | 25 | 24 | 51 | 84.5 | 908 | |
| 1.3 (66 kw) | 2006.09-2012.09 | 5MT/5AMT | F | R | MPV FWD 199 A3.000 | | GDS17144 | Drive Shaft | | 25 | 24 | 51.1 | 84.5 | 908 | |
| | 2006.09-2012.09 | 5MT/5AMT | F | L | MPV FWD 199 A3.000 | | GCI99008 | Inner Joint | | 24 | 24 | 29.7 | 86.5 | 93 | |
| | 2006.09-2012.09 | 5MT/5AMT | F | R | MPV FWD 199 A3.000 | | GCI17015 | Inner Joint | | 24 | 24 | 29.7 | 379 | 100.5 | |
| | 2006.09-2012.09 | MT | F | L | MPV FWD 199 A3.000 | | GDS17062 | Drive Shaft | | 25 | 24 | 51 | 84.5 | 582 | |
| | 2006.09-2012.09 | MT | F | L/R | MPV FWD 199 A3.000 | | GCO17028 | Outer Joint | | 25 | 24 | 51 | 84.5 | 62 | M |
| | 2006.09-2012.09 | SAT/5MT | F | L | MPV FWD 199 A3.000 | | GDS17054 | Drive Shaft | | 25 | 35 | 51 | 84.5 | 472 | |
| 1.3 (70 kw) | 2009.03-2012.09 | 5AT/5MT | F | L | MPV FWD 199 B1.000 | | GDS17054 | Drive Shaft | | 25 | 35 | 51 | 84.5 | 472 | |
| | 2009.03-2012.09 | 5MT/5AMT | F | R | MPV FWD 199 B1.000 | | GDS17144 | Drive Shaft | | 25 | 24 | 51.1 | 84.5 | 908 | |
| | 2009.03-2012.09 | 5MT/5AMT | F | L | MPV FWD 199 B1.000 | | GCI99008 | Inner Joint | | 24 | 24 | 29.7 | 86.5 | 93 | |
| | 2009.03-2012.09 | 5MT/5AMT | F | R | MPV FWD 199 B1.000 | | GCI17015 | Inner Joint | | 24 | 24 | 29.7 | 379 | 100.5 | |
| | 2009.03-2012.09 | MT | F | L | MPV FWD 199 B1.000 | | GDS17062 | Drive Shaft | | 25 | 24 | 51 | 84.5 | 582 | |
| | 2009.03-2012.09 | | F | L/R | MPV FWD 199 B1.000 | | GCO17028 | Outer Joint | | 25 | 24 | 51 | 84.5 | 62 | M |
| 1.4 (57 kw) | 2005.09-2012.09 | 5MT | F | L | MPV FWD 350 A1.000 | | GDS17230 | Drive Shaft | | 22 | 22 | 51 | 79.5 | 636 | |
| | 2005.09-2012.09 | 5MT | F | R | MPV FWD 350 A1.000 | | GDS17227 | Drive Shaft | | 22 | 22 | 51 | 79.5 | 863 | |
| | 2005.09-2012.09 | 5MT | F | L | MPV FWD 350 A1.000 | | GCO17014 | Outer Joint | | 22 | 21 | 51 | 79.5 | 54 | M |
| | 2005.09-2012.09 | 5MT | F | R | MPV FWD 350 A1.000 | | GCO44081 | Outer Joint | | 22 | 21 | 51 | 79.5 | 54 | M |
| | 2005.09-2012.09 | 5MT | F | L/R | MPV FWD 350 A1.000 | | GCI17004 | Inner Joint | | 22 | 21 | 36 | 61 | 93.5 | |
| | 2010.11-2012.09 | 5MT | F | L | MPV FWD 350 A1.000 | | GDS17230 | Drive Shaft | | 22 | 22 | 51 | 79.5 | 636 | |
| | 2010.11-2012.09 | 5MT | F | R | MPV FWD 350 A1.000 | | GDS17227 | Drive Shaft | | 22 | 22 | 51 | 79.5 | 863 | |
| | 2010.11-2012.09 | 5MT | F | L | MPV FWD 350 A1.000 | | GCO17014 | Outer Joint | | 22 | 21 | 51 | 79.5 | 54 | M |
| | 2010.11-2012.09 | 5MT | F | R | MPV FWD 350 A1.000 | | GCO44081 | Outer Joint | | 22 | 21 | 51 | 79.5 | 54 | M |
| | 2010.11-2012.09 | 5MT | F | L/R | MPV FWD 350 A1.000 | | GCI17004 | Inner Joint | | 22 | 21 | 36 | 61 | 93.5 | |
| 1.4 (66 kw) | 2007.10-2012.09 | 5MT | F | L | MPV FWD 192 B2.000 | | GDS17230 | Drive Shaft | | 22 | 22 | 51 | 79.5 | 636 | |
| | 2007.10-2012.09 | 5MT | F | R | MPV FWD 192 B2.000 | | GDS17227 | Drive Shaft | | 22 | 22 | 51 | 79.5 | 863 | |
| | 2007.10-2012.09 | 5MT | F | L | MPV FWD 192 B2.000 | | GCO17014 | Outer Joint | | 22 | 21 | 51 | 79.5 | 54 | M |
| | 2007.10-2012.09 | 5MT | F | R | MPV FWD 192 B2.000 | | GCO44081 | Outer Joint | | 22 | 21 | 51 | 79.5 | 54 | M |
| | 2007.10-2012.09 | 5MT | F | L/R | MPV FWD 192 B2.000 | | GCI17004 | Inner Joint | | 22 | 21 | 36 | 61 | 93.5 | |
| 1.4 (70 kw) | 2004.10-2012.09 | 5AT/6AT/5MT/6MT | F | L | MPV FWD 843 A 1.000 | | GDS17230 | Drive Shaft | | 22 | 22 | 51 | 79.5 | 636 | |
| | 2004.10-2012.09 | 5AT/6AT/5MT/6MT | F | R | MPV FWD 843 A 1.000 | | GDS17227 | Drive Shaft | | 22 | 22 | 51 | 79.5 | 863 | |
| | 2004.10-2012.09 | 5AT/6AT/5MT/6MT | F | R | MPV FWD 843 A 1.000 | | GCO44081 | Outer Joint | | 22 | 21 | 51 | 79.5 | 54 | M |
| | 2004.10-2012.09 | 5AT/6AT/5MT/6MT | F | L/R | MPV FWD 843 A 1.000 | | GCI17004 | Inner Joint | | 22 | 21 | 36 | 61 | 93.5 | |
| | 2004.10-2012.09 | MT | F | L/R | MPV FWD 843 A 1.000 | | GCO17014 | Outer Joint | | 22 | 21 | 51 | 79.5 | 54 | M |
| 1.6 (85 kw) | 2008.07-2012.09 | | F | L | MPV FWD 350 A2.000;350 A3.000 | | GCO82025 | Outer Joint | | 25 | 26 | 51 | 84.5 | 64.5 | M |
| | 2008.07-2012.09 | | F | L/R | MPV FWD 350 A2.000;350 A3.000 | | GCO17014 | Outer Joint | | 22 | 21 | 51 | 79.5 | 54 | M |
| 1.6 (88 kw) | 2008.07-2012.09 | MT | F | L/R | MPV FWD 350 A2.000 | | GCO82025 | Outer Joint | | 25 | 26 | 51 | 84.5 | 64.5 | M |
| 1.9 (74 kw) | 2004.10-2012.09 | MT | F | L/R | MPV FWD 188 B2.000 | | GCO17028 | Outer Joint | | 25 | 24 | 51 | 84.5 | 62 | M |
| **Phedra** | | | | | | | | | | | | | | | |
| 2.0 (79 kw) | 2003.07-2010.11 | 5MT | F | L | MPV FWD RHM (DW10ATED4) | | GDS10072 | Drive Shaft | | 27 | 37 | 59 | 82 | 641 | |
| | 2003.07-2010.11 | 5MT | F | R | MPV FWD RHM (DW10ATED4) | | GDS18291 | Drive Shaft | | 27 | 37 | 58 | 81 | 977 | |
| | 2003.07-2010.11 | AT/MT | F | L/R | MPV FWD RHM (DW10ATED4) | | GCO17044 | Outer Joint | | 27 | 28 | 58 | 81.5 | 62 | M |
| 2.0 (80 kw) | 2002.09-2010.11 | 5MT | F | L | MPV FWD RHW (DW10ATED4) | | GDS10072 | Drive Shaft | | 27 | 37 | 59 | 82 | 641 | |

| | YEAR | TRANSM. | F/R | L/R | BODY STYLE & DRIVE TYPE & ENGINE | REMARKS | G-AP Ref. | PRODUCT | ABS | Technical Specifications A | B | C | H | L | P |
|---|---|---|---|---|---|---|---|---|---|---|---|---|---|---|---|
| **LANCIA** | | | | | | | | | | | | | | | |
| **Phedra** | | | | | | | | | | | | | | | |
| 2.0 (80 kw) | 2002.09-2010.11 | 5MT | F | R | MPV FWD RHW (DW10ATED4) | | GDS18291 | Drive Shaft | | 27 | 37 | 58 | 81 | 977 | |
| | 2002.09-2010.11 | AT/MT | F | L/R | MPV FWD RHW (DW10ATED4) | | GCO17044 | Outer Joint | | 27 | 28 | 58 | 81.5 | 62 | M |
| 2.0 (88 kw) | 2006.06-2010.11 | 5MT | F | L | MPV FWD RHK (DW10UTED4) | | GDS10072 | Drive Shaft | | 27 | 37 | 59 | 82 | 641 | |
| | 2006.06-2010.11 | AT/MT | F | L/R | MPV FWD RHK (DW10UTED4) | | GCO17044 | Outer Joint | | 27 | 28 | 58 | 81.5 | 62 | M |
| 2.0 (100 kw) | 2002.09-2010.11 | AT | F | L | MPV FWD RFN (EW10J4) | | GDS17220 | Drive Shaft | | 27 | 26 | 58 | 81.5 | 648 | |
| | 2002.09-2010.11 | AT | F | R | MPV FWD RFN (EW10J4) | | GDS17218 | Drive Shaft | | 27 | 26 | 58 | 81.5 | 855 | |
| | 2002.09-2010.11 | AT | F | R | MPV FWD RFN (EW10J4) | | GCO45059 | Outer Joint | | 27 | 34 | 58 | 81.5 | 56.5 | I |
| | 2002.09-2010.11 | AT | F | L | MPV FWD RFN (EW10J4) | | GCI81321 | Inner Joint | | 26 | 34 | 30.2 | 46.5 | 103.5 | |
| | 2002.09-2010.11 | AT | F | R | MPV FWD RFN (EW10J4) | | GCI10105 | Inner Joint | | 26 | 34 | | 259 | 87 | |
| | 2002.09-2010.11 | AT/MT | F | L/R | MPV FWD RFN (EW10J4) | Date to:2006.12 | GCO10059 | Outer Joint | 48T | 27 | 34 | 59 | 82 | 56.5 | I |
| | 2002.09-2010.11 | MT | F | L | MPV FWD RFN (EW10J4) | | GDS10422 | Drive Shaft | | 27 | 24 | 58 | 81.5 | 659 | |
| | 2002.09-2010.11 | | F | | MPV FWD RFN (EW10J4) | | GCO17044 | Outer Joint | | 27 | 28 | 58 | 81.5 | 62 | M |
| | 2006.07-2010.11 | 6MT | F | L | MPV FWD RHR (DW10BTED4) | | GDS10072 | Drive Shaft | | 27 | 37 | 59 | 82 | 641 | |
| | 2006.07-2010.11 | | F | L/R | MPV FWD RHR (DW10BTED4) | | GCO17044 | Outer Joint | | 27 | 28 | 58 | 81.5 | 62 | M |
| 2.2 (94 kw) | 2002.09-2010.11 | 5MT | F | L | MPV FWD 4HW (DW12ATED4) | | GDS10430 | Drive Shaft | | 27 | 37 | 59 | 82 | 630 | |
| | 2002.09-2010.11 | 5MT | F | R | MPV FWD 4HW (DW12ATED4) | | GDS18291 | Drive Shaft | | 27 | 37 | 58 | 81 | 977 | |
| | 2002.09-2010.11 | 5MT | F | L/R | MPV FWD 4HW (DW12ATED4) | | GCO18098 | Outer Joint | | 27 | 29 | 58 | 81 | 71 | M |
| | 2002.09-2010.11 | 5MT/6MT | F | L/R | MPV FWD 4HW (DW12ATED4) | Date from:2004.03 | GCO17044 | Outer Joint | | 27 | 28 | 58 | 81.5 | 62 | M |
| | 2002.09-2010.11 | AT | F | L | MPV FWD 4HW (DW12ATED4) | | GDS17220 | Drive Shaft | | 27 | 26 | 58 | 81.5 | 648 | |
| | 2002.09-2010.11 | AT | F | R | MPV FWD 4HW (DW12ATED4) | | GDS17218 | Drive Shaft | | 27 | 26 | 58 | 81.5 | 855 | |
| | 2002.09-2010.11 | AT | F | L/R | MPV FWD 4HW (DW12ATED4) | | GCO45059 | Outer Joint | | 27 | 34 | 58 | 81.5 | 56.5 | I |
| 2.2 (120 kw) | 2006.04-2010.11 | AT/MT | F | L/R | MPV FWD 4HP;4HR | | GCO18098 | Outer Joint | | 27 | 29 | 58 | 81 | 71 | M |
| 2.2 (125 kw) | 2008.03-2010.11 | AT/MT | F | L/R | MPV FWD 4HT;4HS | | GCO18098 | Outer Joint | | 27 | 29 | 58 | 81 | 71 | M |
| 3.0 (150 kw) | 2002.09-2010.11 | 4AT | F | L | MPV FWD ES9 J4S | | GCI10168 | Inner Joint | | 37 | 28 | 40.3 | 60 | 94 | |
| | 2002.09-2010.11 | 4AT | F | R | MPV FWD ES9 J4S | Date from:2003.08;VET From:9739 | GCI10167 | Inner Joint | | 37 | 28 | | 340 | 93 | |
| | 2002.09-2010.11 | | F | L | MPV FWD ES9 J4S | | GDS17221 | Drive Shaft | | 27 | 37 | 58 | 81.5 | 624 | |
| | 2002.09-2010.11 | | F | R | MPV FWD ES9 J4S | Date From:2003.08;VET From:9739 | GDS17217 | Drive Shaft | | 27 | 37 | 58 | 81.5 | 924 | |
| | 2002.09-2010.11 | | F | L/R | MPV FWD ES9 J4S | | GCO17044 | Outer Joint | | 27 | 28 | 58 | 81.5 | 62 | M |
| **Thesis** | | | | | | | | | | | | | | | |
| 2.0 (136 kw) | 2002.07-2009.07 | 6MT | F | L/R | Saloon FWD 841 E.000 | | GCO17047 | Outer Joint | | 27 | 26 | 59 | 83.5 | 63 | M |
| | 2002.07-2009.07 | 6MT | F | L | Saloon FWD 841 E.000 | | GCI17005 | Inner Joint | | 25 | 26 | 32 | 91 | 95 | |
| 2.4 (110 kw) | 2002.07-2009.07 | 6MT | F | L/R | Saloon FWD 841 C.000 | | GCO17047 | Outer Joint | | 27 | 26 | 59 | 83.5 | 63 | M |
| | 2002.07-2009.07 | 6MT | F | L | Saloon FWD 841 C.000 | | GCI17005 | Inner Joint | | 25 | 26 | 32 | 91 | 95 | |
| 2.4 (120 kw) | 2003.09-2009.07 | 5AT | F | L | Saloon FWD 841 M.000;841 N.000 | | GCI17048 | Inner Joint | | 26 | 26 | 31 | 68 | 94.5 | |
| | 2003.09-2009.07 | 5AT | F | R | Saloon FWD 841 M.000;841 N.000 | | GCI17069 | Inner Joint | | 26 | 26 | 28 | 418.5 | 108.5 | |
| | 2003.09-2009.07 | 5AT/6MT | F | L/R | Saloon FWD 841 M.000;841 N.000 | | GCO17047 | Outer Joint | | 27 | 26 | 59 | 83.5 | 63 | M |
| | 2003.09-2009.07 | 6MT | F | R | Saloon FWD 841 M.000;841 N.000 | | GCI17076 | Inner Joint | | 27 | 26 | 35 | 428 | 108.5 | |
| 2.4 (125 kw) | 2002.07-2009.07 | 5AT | F | R | Saloon FWD 841 D.000 | | GCI17069 | Inner Joint | | 26 | 26 | 28 | 418.5 | 108.5 | |
| | 2002.07-2009.07 | 5AT/6MT | F | L/R | Saloon FWD 841 D.000 | | GCO17047 | Outer Joint | | 27 | 26 | 59 | 83.5 | 63 | M |
| | 2002.07-2009.07 | 6MT | F | L | Saloon FWD 841 D.000 | | GCI17005 | Inner Joint | | 25 | 26 | 32 | 91 | 95 | |
| | 2002.07-2009.07 | AT | F | L | Saloon FWD 841 D.000 | | GCI17048 | Inner Joint | | 26 | 26 | 31 | 68 | 94.5 | |
| 2.4 (129 kw) | 2003.05-2009.07 | 5AT | F | L | Saloon FWD 841 G.000 | | GCI17048 | Inner Joint | | 26 | 26 | 31 | 68 | 94.5 | |
| | 2003.05-2009.07 | 5AT | F | R | Saloon FWD 841 G.000 | | GCI17069 | Inner Joint | | 26 | 26 | 28 | 418.5 | 108.5 | |
| | 2003.05-2009.07 | 5AT/6MT | F | L/R | Saloon FWD 841 G.000 | | GCO17047 | Outer Joint | | 27 | 26 | 59 | 83.5 | 63 | M |
| | 2003.05-2009.07 | 6MT | F | R | Saloon FWD 841 G.000 | | GCI17076 | Inner Joint | | 27 | 26 | 35 | 428 | 108.5 | |
| 2.4 (136 kw) | 2006.04-2009.07 | 5AT | F | L/R | Saloon FWD 841 P.000 | | GCO17047 | Outer Joint | | 27 | 26 | 59 | 83.5 | 63 | M |
| | 2006.04-2009.07 | 5AT | F | L | Saloon FWD 841 P.000 | | GCI17048 | Inner Joint | | 26 | 26 | 31 | 68 | 94.5 | |
| | 2006.04-2009.07 | 5AT | F | R | Saloon FWD 841 P.000 | | GCI17069 | Inner Joint | | 26 | 26 | 28 | 418.5 | 108.5 | |
| 3.0 (158 kw) | 2002.07-2009.07 | 5AT | F | L/R | Saloon FWD 841 A.000 | | GCO17047 | Outer Joint | | 27 | 26 | 59 | 83.5 | 63 | M |
| | 2002.07-2009.07 | 5AT | F | L | Saloon FWD 841 A.000 | | GCI17048 | Inner Joint | | 26 | 26 | 31 | 68 | 94.5 | |
| | 2002.07-2009.07 | 5AT | F | R | Saloon FWD 841 A.000 | | GCI17069 | Inner Joint | | 26 | 26 | 28 | 418.5 | 108.5 | |
| 3.2 (169 kw) | 2003.05-2009.07 | 5AT | F | L/R | Saloon FWD 841 L.000 | | GCO17047 | Outer Joint | | 27 | 26 | 59 | 83.5 | 63 | M |
| | 2003.05-2009.07 | 5AT | F | L | Saloon FWD 841 L.000 | | GCI17048 | Inner Joint | | 26 | 26 | 31 | 68 | 94.5 | |
| | 2003.05-2009.07 | 5AT | F | R | Saloon FWD 841 L.000 | | GCI17069 | Inner Joint | | 26 | 26 | 28 | 418.5 | 108.5 | |
| **Y (Ypsilon)** | | | | | | | | | | | | | | | |
| 1.1 (40 kw) | 1995.09-2000.07 | AT/MT | F | L/R | Hatchback FWD 176B2000 | VET no. to:3336902 | GCO17039 | Outer Joint | 44T | 22 | 20 | 46.8 | 75.5 | 52 | O |
| | 1995.09-2000.07 | MT | F | L | Hatchback FWD 176B2000 | | GDS17010 | Drive Shaft | | 22 | 32 | 46.8 | 75.5 | 569 | |
| | 1995.09-2000.07 | MT | F | L | Hatchback FWD 176B2000 | | GDS17018 | Drive Shaft | | 22 | 22 | 46.8 | 75.5 | 581 | |
| | 1995.09-2000.07 | MT | F | L | Hatchback FWD 176B2000 | | GDS17037 | Drive Shaft | 44T | 22 | 22 | 46.8 | 75.5 | 581 | |
| | 1995.09-2000.07 | MT | F | R | Hatchback FWD 176B2000 | | GDS17011 | Drive Shaft | | 22 | 32 | 46.8 | 75.5 | 928.5 | |
| | 1995.09-2000.07 | MT | F | R | Hatchback FWD 176B2000 | | GDS17022 | Drive Shaft | | 22 | 22 | 46.8 | 75.5 | 874 | |
| | 1995.09-2000.07 | MT | F | R | Hatchback FWD 176B2000 | | GDS17039 | Drive Shaft | 44T | 22 | 22 | 46.8 | 75.5 | 874 | |
| | 1995.09-2000.07 | MT | F | L/R | Hatchback FWD 176B2000 | VET no. to:3336902 | GCO17001 | Outer Joint | | 22 | 20 | 46.8 | 75.5 | 52 | O |
| | 1995.09-2000.07 | MT | F | L/R | Hatchback FWD 176B2000 | VET From:3336903 | GCO17008 | Outer Joint | | 22 | 20 | 51 | 79.5 | 51.5 | O |
| | 1995.09-2000.07 | MT | F | L | Hatchback FWD 176B2000 | | GCI17001 | Inner Joint | | 22 | 19 | 36 | 61.5 | 88.5 | |

| | YEAR | TRANSM. | F/R | L/R | BODY STYLE & DRIVE TYPE & ENGINE | REMARKS | G-AP Ref. | PRODUCT | ABS | Technical Specifications A | B | C | H | L | P |
|---|---|---|---|---|---|---|---|---|---|---|---|---|---|---|---|
| **LANCIA** | | | | | | | | | | | | | | | |
| **Y (Ypsilon)** | | | | | | | | | | | | | | | |
| 1.2 (44 kw) | 1995.09-2003.09 | 5MT | F | L | Hatchback FWD 188A4000/840A3000 | VET no. to:3559480,Trans. side with housing | GDS17018 | Drive Shaft | | 22 | 22 | 46.8 | 75.5 | 581 | |
| | 1995.09-2003.09 | 5MT | F | L | Hatchback FWD 188A4000/840A3000 | VET no. to:3559480 | GDS17037 | Drive Shaft | 44T | 22 | 22 | 46.8 | 75.5 | 581 | |
| | 1995.09-2003.09 | 5MT | F | R | Hatchback FWD 188A4000/840A3000 | VET no. to:3559480,Trans. side with housing | GDS17022 | Drive Shaft | | 22 | 22 | 46.8 | 75.5 | 874 | |
| | 1995.09-2003.09 | 5MT | F | L | Hatchback FWD 188A4000/840A3000 | VET no. to:3559480 | GCI17001 | Inner Joint | | 22 | 19 | 36 | 61.5 | 88.5 | |
| | 1995.09-2003.09 | 5MT/6MT/CVT | F | L/R | Hatchback FWD 188A4000/840A3000 | VET no. to:3336902 | GCO17001 | Outer Joint | | 22 | 20 | 46.8 | 75.5 | 52 | O |
| | 1995.09-2003.09 | 5MT/6MT/CVT | F | L/R | Hatchback FWD 188A4000/840A3000 | VET no. from:3336903 | GCO17008 | Outer Joint | | 22 | 20 | 51 | 79.5 | 51.5 | O |
| | 1995.09-2003.09 | 6MT | F | R | Hatchback FWD 188A4000/840A3000 | | GDS17039 | Drive Shaft | 44T | 22 | 22 | 46.8 | 75.5 | 874 | |
| | 1995.09-2003.09 | 6MT | F | L/R | Hatchback FWD 188A4000/840A3000 | VET no. from:3395979 | GCO17014 | Outer Joint | | 22 | 21 | 51 | 79.5 | 54 | M |
| | 1995.09-2003.09 | CVT/MT | F | L/R | Hatchback FWD 188A4000/840A3000 | VET no. to:336902 | GCO17039 | Outer Joint | 44T | 22 | 20 | 46.8 | 75.5 | 52 | O |
| | 1995.09-2003.09 | MT | F | L | Hatchback FWD 188A4000/840A3000 | Trans. side without housing | GDS17010 | Drive Shaft | | 22 | 32 | 46.8 | 75.5 | 569 | |
| | 1995.09-2003.09 | MT | F | R | Hatchback FWD 188A4000/840A3000 | Trans. side without housing | GDS17011 | Drive Shaft | | 22 | 32 | 46.8 | 75.5 | 928.5 | |
| 1.2 (59 kw) | 2000.08-2003.09 | 6MT | F | L/R | Hatchback FWD 188A5000 | VET From:3395979 | GCO17014 | Outer Joint | | 22 | 21 | 51 | 79.5 | 54 | M |
| | 2000.08-2003.09 | AT | F | L/R | Hatchback FWD 188A5000 | Chassis no. to:3336902 | GCO17039 | Outer Joint | 44T | 22 | 20 | 46.8 | 75.5 | 52 | O |
| | 2000.08-2003.09 | | F | | Hatchback FWD 188A5000 | | GCO17034 | Outer Joint | | 22 | 21 | 51 | 79.5 | 54 | M |
| 1.2 (63 kw) | 1997.04-2003.09 | 6MT | F | L/R | Hatchback FWD 176B9000 | VET From:3395979 | GCO17014 | Outer Joint | | 22 | 21 | 51 | 79.5 | 54 | M |
| | 1997.04-2003.09 | AT | F | L/R | Hatchback FWD 176B9000 | VET From:3336903 | GCO17008 | Outer Joint | | 22 | 20 | 51 | 79.5 | 51.5 | O |
| | 1997.04-2003.09 | AT/MT | F | L/R | Hatchback FWD 176B9000 | | GCO17001 | Outer Joint | | 22 | 20 | 46.8 | 75.5 | 52 | O |
| | 1997.04-2003.09 | AT/MT | F | L/R | Hatchback FWD 176B9000 | | GCO17039 | Outer Joint | 44T | 22 | 20 | 46.8 | 75.5 | 52 | O |
| | 1997.04-2003.09 | MT | F | L | Hatchback FWD 176B9000 | | GDS17018 | Drive Shaft | | 22 | 22 | 46.8 | 75.5 | 581 | |
| | 1997.04-2003.09 | MT | F | L | Hatchback FWD 176B9000 | | GCI17001 | Inner Joint | | 22 | 19 | 36 | 61.5 | 88.5 | |
| 1.4 (55 kw) | 1996.03-2003.09 | AT/MT | F | L/R | Hatchback FWD 840A4000 | | GCO17001 | Outer Joint | | 22 | 20 | 46.8 | 75.5 | 52 | O |
| | 1996.03-2003.09 | AT/MT | F | L/R | Hatchback FWD 840A4000 | | GCO17039 | Outer Joint | 44T | 22 | 20 | 46.8 | 75.5 | 52 | O |
| | 1996.03-2003.09 | MT | F | L | Hatchback FWD 840A4000 | | GDS17010 | Drive Shaft | | 22 | 32 | 46.8 | 75.5 | 569 | |
| | 1996.03-2003.09 | MT | F | L | Hatchback FWD 840A4000 | | GDS17018 | Drive Shaft | | 22 | 22 | 46.8 | 75.5 | 581 | |
| | 1996.03-2003.09 | MT | F | R | Hatchback FWD 840A4000 | | GDS17011 | Drive Shaft | | 22 | 32 | 46.8 | 75.5 | 928.5 | |
| | 1996.03-2003.09 | MT | F | R | Hatchback FWD 840A4000 | | GDS17022 | Drive Shaft | | 22 | 22 | 46.8 | 75.5 | 874 | |
| | 1996.03-2003.09 | MT | F | L | Hatchback FWD 840A4000 | | GCI17001 | Inner Joint | | 22 | 19 | 36 | 61.5 | 88.5 | |
| | 1996.03-2003.09 | | F | L/R | Hatchback FWD 840A4000 | VET From:33369903 | GCO17008 | Outer Joint | | 22 | 20 | 51 | 79.5 | 51.5 | O |
| 1.4 (59 kw) | 1996.10-2000.07 | AT/MT | F | L/R | Hatchback FWD 840A2000 | Date to:2000.07 | GCO17001 | Outer Joint | | 22 | 20 | 46.8 | 75.5 | 52 | O |
| | 1996.10-2000.07 | AT/MT | F | L/R | Hatchback FWD 840A2000 | Date to:2000.07 | GCO17039 | Outer Joint | 44T | 22 | 20 | 46.8 | 75.5 | 52 | O |
| | 1996.10-2000.07 | MT | F | L | Hatchback FWD 840A2000 | | GDS17010 | Drive Shaft | | 22 | 32 | 46.8 | 75.5 | 569 | |
| | 1996.10-2000.07 | MT | F | L | Hatchback FWD 840A2000 | | GDS17018 | Drive Shaft | | 22 | 22 | 46.8 | 75.5 | 581 | |
| | 1996.10-2000.07 | MT | F | R | Hatchback FWD 840A2000 | | GDS17011 | Drive Shaft | | 22 | 32 | 46.8 | 75.5 | 928.5 | |
| | 1996.10-2000.07 | MT | F | R | Hatchback FWD 840A2000 | | GDS17022 | Drive Shaft | | 22 | 22 | 46.8 | 75.5 | 874 | |
| | 1996.10-2000.07 | MT | F | L | Hatchback FWD 840A2000 | | GCI17001 | Inner Joint | | 22 | 19 | 36 | 61.5 | 88.5 | |
| | 1996.10-2000.07 | | F | L/R | Hatchback FWD 840A2000 | VET From:33369903 | GCO17008 | Outer Joint | | 22 | 20 | 51 | 79.5 | 51.5 | O |
| **Ypsilon** | | | | | | | | | | | | | | | |
| 0.9 (59 kw) | 2013.12-2018.12 | 5AT/5MT | F | L | Hatchback FWD 312 A2.000;312 A5.000 | | GDS17119 | Drive Shaft | | 25 | 22 | 51 | 84 | 615 | |
| | 2013.12-2018.12 | 5MT | F | R | Hatchback FWD 312 A2.000;312 A5.000 | Manufacturer:GKN | GDS17120 | Drive Shaft | | 25 | 22 | 51 | 84 | 846 | |
| | 2013.12-2018.12 | MT | F | L/R | Hatchback FWD 312 A2.000;312 A5.000 | | GCO17026 | Outer Joint | | 25 | 22 | 51 | 84 | 57 | M |
| | 2014.01- | 5AT/5MT | F | L | Hatchback FWD 312 A5.000 | Manufacturer:GKN | GDS17119 | Drive Shaft | | 25 | 22 | 51 | 84 | 615 | |
| | 2014.01- | 5MT | F | R | Hatchback FWD 312 A5.000 | Manufacturer:GKN | GDS17120 | Drive Shaft | | 25 | 22 | 51 | 84 | 846 | |
| | 2014.01- | MT | F | L/R | Hatchback FWD 312 A5.000 | | GCO17026 | Outer Joint | | 25 | 22 | 51 | 84 | 57 | M |
| 0.9 (63 kw) | 2011.05- | 5MT | F | L | Hatchback FWD 312 A2.000 | Manufacturer:GKN | GDS17119 | Drive Shaft | | 25 | 22 | 51 | 84 | 615 | |
| | 2011.05- | 5MT | F | R | Hatchback FWD 312 A2.000 | Manufacturer:GKN | GDS17120 | Drive Shaft | | 25 | 22 | 51 | 84 | 846 | |
| | 2011.05- | 5MT | F | L/R | Hatchback FWD 312 A2.000 | | GCO17026 | Outer Joint | | 25 | 22 | 51 | 84 | 57 | M |
| | 2011.05- | 5MT | F | L/R | Hatchback FWD 312 A2.000 | | GCI17027 | Inner Joint | | 22 | 22 | 36 | 61.5 | 93.5 | |
| | 2011.05-2018.12 | 5AT/5MT | F | L | Hatchback FWD 312 A2.000 | Manufacturer:GKN | GDS17119 | Drive Shaft | | 25 | 22 | 51 | 84 | 615 | |
| | 2011.05-2018.12 | 5AT/5MT | F | L/R | Hatchback FWD 312 A2.000 | | GCO17026 | Outer Joint | | 25 | 22 | 51 | 84 | 57 | M |
| | 2011.05-2018.12 | 5AT/5MT | F | L/R | Hatchback FWD 312 A2.000 | | GCI17027 | Inner Joint | | 22 | 22 | 36 | 61.5 | 93.5 | |
| | 2011.05-2018.12 | 5MT | F | R | Hatchback FWD 312 A2.000 | Manufacturer:GKN | GDS17120 | Drive Shaft | | 25 | 22 | 51 | 84 | 846 | |
| 1.0 (51 kw) | 2020.03- | 6MT | F | L/R | Hatchback FWD 463 41 162 | | GCO17075 | Outer Joint | | 22 | 21 | 47 | 79 | 54 | M |
| | 2020.03- | 6MT | F | L | Hatchback FWD 463 41 162 | | GCI17046 | Inner Joint | | 22 | 20 | 36 | 61.5 | 88.5 | |
| | 2020.03- | 6MT | F | L/R | Hatchback FWD 463 41 162 | | GCI17027 | Inner Joint | | 22 | 22 | 36 | 61.5 | 93.5 | |
| 1.2 (44 kw) | 2003.10-2011.12 | 5MT | F | L | Hatchback FWD 188 A4.000 | | GDS17230 | Drive Shaft | | 22 | 22 | 51 | 79.5 | 636 | |
| | 2003.10-2011.12 | 5MT | F | R | Hatchback FWD 188 A4.000 | | GDS17227 | Drive Shaft | | 22 | 22 | 51 | 79.5 | 863 | |
| | 2003.10-2011.12 | 5MT | F | L | Hatchback FWD 188 A4.000 | | GCO17014 | Outer Joint | | 22 | 21 | 51 | 79.5 | 54 | M |
| | 2003.10-2011.12 | 5MT | F | R | Hatchback FWD 188 A4.000 | | GCO44081 | Outer Joint | | 22 | 21 | 51 | 79.5 | 54 | M |
| | 2003.10-2011.12 | 5MT | F | L/R | Hatchback FWD 188 A4.000 | | GCI17004 | Inner Joint | | 22 | 21 | 36 | 61 | 93.5 | |
| 1.2 (49 kw) | 2011.05- | 5MT | F | L | Hatchback FWD 169 A4.000 | | GDS17101 | Drive Shaft | | 22 | 22 | 47 | 75.5 | 613 | |
| | 2011.05- | 5MT | F | R | Hatchback FWD 169 A4.000 | | GDS17112 | Drive Shaft | | 22 | 22 | 47 | 75.5 | 846 | |
| | 2011.05- | 5MT | F | L/R | Hatchback FWD 169 A4.000 | | GCO17043 | Outer Joint | | 22 | 20 | 47 | 75.5 | 54.5 | M |
| | 2011.05- | 5MT | F | L/R | Hatchback FWD 169 A4.000 | | GCI17001 | Inner Joint | | 22 | 19 | 36 | 61.5 | 88.5 | |
| | 2011.05- | 5MT | F | L/R | Hatchback FWD 169 A4.000 | | GCI17046 | Inner Joint | | 22 | 20 | 36 | 61.5 | 88.5 | |
| 1.2 (51 kw) | 2010.08-2011.12 | 5MT | F | L | Hatchback FWD 169 A4.000 | | GDS17230 | Drive Shaft | | 22 | 22 | 51 | 79.5 | 636 | |

| | YEAR | TRANSM. | F/R | L/R | BODY STYLE & DRIVE TYPE & ENGINE | REMARKS | G-AP Ref. | PRODUCT | ABS | Technical Specifications A | B | C | H | L | P |
|---|---|---|---|---|---|---|---|---|---|---|---|---|---|---|---|
| **LANCIA** **Ypsilon** | | | | | | | | | | | | | | | |
| 1.2 (51 kw) | 2010.08-2011.12 | 5MT | F | R | Hatchback FWD 169 A4.000 | | GDS17227 | Drive Shaft | | 22 | 22 | 51 | 79.5 | 863 | |
| | 2010.08-2011.12 | 5MT | F | L/R | Hatchback FWD 169 A4.000 | | GCI17027 | Inner Joint | | 22 | 22 | 36 | 61.5 | 93.5 | |
| | 2011.05- | 5MT | F | L/R | Hatchback FWD 169 A4.000 | | GCI17001 | Inner Joint | | 22 | 19 | 36 | 61.5 | 88.5 | |
| | 2011.05- | MT | F | L | Hatchback FWD 169 A4.000 | | GDS17101 | Drive Shaft | | 22 | 22 | 47 | 75.5 | 613 | |
| | 2011.05- | MT | F | R | Hatchback FWD 169 A4.000 | | GDS17112 | Drive Shaft | | 22 | 22 | 47 | 75.5 | 846 | |
| | 2011.05- | MT | F | L/R | Hatchback FWD 169 A4.000 | | GCO17043 | Outer Joint | | 22 | 20 | 47 | 75.5 | 54.5 | M |
| | 2011.05- | MT | F | L/R | Hatchback FWD 169 A4.000 | | GCI17046 | Inner Joint | | 22 | 20 | 36 | 61.5 | 88.5 | |
| | 2011.05-2021.12 | 5MT | F | L | Hatchback FWD 169 A4.000 | | GDS17101 | Drive Shaft | | 22 | 22 | 47 | 75.5 | 613 | |
| | 2011.05-2021.12 | 5MT | F | R | Hatchback FWD 169 A4.000 | | GDS17112 | Drive Shaft | | 22 | 22 | 47 | 75.5 | 846 | |
| | 2011.05-2021.12 | 5MT | F | L/R | Hatchback FWD 169 A4.000 | | GCO17043 | Outer Joint | | 22 | 20 | 47 | 75.5 | 54.5 | M |
| | 2011.05-2021.12 | 5MT | F | L/R | Hatchback FWD 169 A4.000 | | GCI17001 | Inner Joint | | 22 | 19 | 36 | 61.5 | 88.5 | |
| | 2011.05-2021.12 | 5MT | F | L/R | Hatchback FWD 169 A4.000 | | GCI17046 | Inner Joint | | 22 | 20 | 36 | 61.5 | 88.5 | |
| 1.2 (59 kw) | 2003.10-2011.12 | 5MT | F | L | Hatchback FWD 188 A5.000 | | GDS17230 | Drive Shaft | | 22 | 22 | 51 | 79.5 | 636 | |
| | 2003.10-2011.12 | 5MT | F | R | Hatchback FWD 188 A5.000 | | GDS17227 | Drive Shaft | | 22 | 22 | 51 | 79.5 | 863 | |
| | 2003.10-2011.12 | 5MT | F | L/R | Hatchback FWD 188 A5.000 | | GCI17027 | Inner Joint | | 22 | 22 | 36 | 61.5 | 93.5 | |
| | 2003.10-2011.12 | MT | F | L/R | Hatchback FWD 188 A5.000 | Date to:2006.06 | GCO17014 | Outer Joint | | 22 | 21 | 51 | 79.5 | 54 | M |
| | 2003.10-2011.12 | MT | F | R | Hatchback FWD 188 A5.000 | | GCI17004 | Inner Joint | | 22 | 21 | 36 | 61 | 93.5 | |
| | 2003.10-2011.12 | | F | | Hatchback FWD 188 A5.000 | | GCO17034 | Outer Joint | | 22 | 21 | 51 | 79.5 | 54 | M |
| 1.2 (74 kw) | 2024.04- | 6DCT | F | R | Hatchback FWD HPX (EB2LTEDH2) | | GDS83114 | Drive Shaft | | 25 | 37 | 55.7 | 84 | 880 | |
| | 2024.04- | 6MT/6DCT | F | R | Hatchback FWD HPX (EB2LTEDH2) | | GCI82118 | Inner Joint | | 37 | 34 | | 290 | 88 | |
| 1.3 (51 kw) | 2003.10-2011.12 | AT | F | L/R | Hatchback FWD 188 A9.000 | | GCO17053 | Outer Joint | | 25 | 23 | 51 | 84.5 | 60 | M |
| | 2003.10-2011.12 | MT | F | L | Hatchback FWD 188 A9.000 | Trans. side with housing | GDS17182 | Drive Shaft | | 25 | 24 | 51 | 84.5 | 624 | |
| | 2003.10-2011.12 | MT | F | R | Hatchback FWD 188 A9.000 | | GDS17109 | Drive Shaft | | 25 | 24 | 51 | 84.5 | 908 | |
| | 2003.10-2011.12 | MT | F | R | Hatchback FWD 188 A9.000 | | GCI17012 | Inner Joint | | 24 | 23 | 29.7 | 379 | 100.5 | |
| | 2003.10-2011.12 | SAT | F | L | Hatchback FWD 188 A9.000 | | GDS17147 | Drive Shaft | | 25 | 34 | 51 | 84.5 | 480 | |
| | 2003.10-2011.12 | SAT | F | R | Hatchback FWD 188 A9.000 | | GDS17066 | Drive Shaft | | 25 | 34 | 51 | 84.5 | 497 | |
| | 2003.10-2011.12 | SAT | F | L | Hatchback FWD 188 A9.000 | | GCI17011 | Inner Joint | | 24 | 23 | 29.7 | 86.5 | 93 | |
| | 2003.10-2011.12 | SAT | F | R | Hatchback FWD 188 A9.000 | Manufacturer:Delphi | GCI17016 | Inner Joint | | | 28 | | | 48.5 | |
| | 2003.10-2011.12 | | F | L/R | Hatchback FWD 188 A9.000 | | GCO29002 | Outer Joint | | 25 | 28 | 51 | 84 | 58.5 | O |
| 1.3 (55 kw) | 2006.09-2011.12 | 5AT/5MT | F | L | Hatchback FWD 199 A2.000;199 A9.000 | | GCI17011 | Inner Joint | | 24 | 23 | 29.7 | 86.5 | 93 | |
| | 2006.09-2011.12 | 5MT/SAT | F | L/R | Hatchback FWD 199 A2.000;199 A9.000 | | GCO17053 | Outer Joint | | 25 | 23 | 51 | 84.5 | 60 | M |
| | 2006.09-2011.12 | 5MT/SAT | F | L/R | Hatchback FWD 199 A2.000;199 A9.000 | | GCO29002 | Outer Joint | | 25 | 28 | 51 | 84 | 58.5 | O |
| | 2006.09-2011.12 | 5MT/SAT | F | R | Hatchback FWD 199 A2.000;199 A9.000 | Manufacturer:Delphi | GCI17016 | Inner Joint | | | 28 | | | 48.5 | |
| | 2006.09-2011.12 | MT/SAT/5MT | F | R | Hatchback FWD 199 A2.000;199 A9.000 | | GCI17012 | Inner Joint | | 24 | 23 | 29.7 | 379 | 100.5 | |
| | 2006.09-2011.12 | SAT/5MT | F | L | Hatchback FWD 199 A2.000;199 A9.000 | | GDS17147 | Drive Shaft | | 25 | 34 | 51 | 84.5 | 480 | |
| | 2006.09-2011.12 | SAT/5MT | F | R | Hatchback FWD 199 A2.000;199 A9.000 | Trans. side without housing | GDS17066 | Drive Shaft | | 25 | 34 | 51 | 84.5 | 497 | |
| | 2006.09-2011.12 | SAT/5MT | F | R | Hatchback FWD 199 A2.000;199 A9.000 | Trans. side with housing | GDS17109 | Drive Shaft | | 25 | 24 | 51 | 84.5 | 908 | |
| 1.3 (57 kw) | 2017.03- | MT | F | L | Hatchback FWD 312 B5.000 | | GCI17011 | Inner Joint | | 24 | 23 | 29.7 | 86.5 | 93 | |
| 1.3 (66 kw) | 2006.09-2011.12 | 5MT | F | R | Hatchback FWD 199 A3.000 | | GDS17144 | Drive Shaft | | 25 | 24 | 51.1 | 84.5 | 908 | |
| | 2006.09-2011.12 | 5MT/5AMT | F | R | Hatchback FWD 199 A3.000 | | GCI17015 | Inner Joint | | 24 | 24 | 29.7 | 379 | 100.5 | |
| | 2006.09-2011.12 | 5MT/SAT | F | L | Hatchback FWD 199 A3.000 | | GDS17062 | Drive Shaft | | 25 | 24 | 51 | 84.5 | 582 | |
| | 2006.09-2011.12 | 5MT/SAT | F | L | Hatchback FWD 199 A3.000 | | GCI99008 | Inner Joint | | 24 | 24 | 29.7 | 86.5 | 93 | |
| | 2006.09-2011.12 | 6MT | F | L | Hatchback FWD 199 A3.000 | | GDS17172 | Drive Shaft | | 25 | 34 | 51 | 84.5 | 486 | |
| | 2006.09-2011.12 | MT | F | L/R | Hatchback FWD 199 A3.000 | | GCO17028 | Outer Joint | | 25 | 24 | 51 | 84.5 | 62 | M |
| | 2006.09-2011.12 | SAT/5MT | F | L | Hatchback FWD 199 A3.000 | | GDS17054 | Drive Shaft | | 25 | 35 | 51 | 84.5 | 472 | |
| 1.3 (70 kw) | 2011.05-2018.08 | 5MT | F | L/R | Hatchback FWD 199 B1.000;312 B1.000 | | GCO17079 | Outer Joint | | 25 | 22 | 51 | 85 | 53.5 | I |
| | 2011.05-2018.08 | 5MT | F | L | Hatchback FWD 199 B1.000;312 B1.000 | | GCI17011 | Inner Joint | | 24 | 23 | 29.7 | 86.5 | 93 | |
| 1.3 (77 kw) | 2007.05-2011.12 | 5MT | F | R | Hatchback FWD 199 A3.000 | | GDS17144 | Drive Shaft | | 25 | 24 | 51.1 | 84.5 | 908 | |
| | 2007.05-2011.12 | 5MT/5AMT | F | R | Hatchback FWD 199 A3.000 | | GCI17015 | Inner Joint | | 24 | 24 | 29.7 | 379 | 100.5 | |
| | 2007.05-2011.12 | 5MT/SAT | F | L | Hatchback FWD 199 A3.000 | | GDS17062 | Drive Shaft | | 25 | 24 | 51 | 84.5 | 582 | |
| | 2007.05-2011.12 | 5MT/SAT | F | L | Hatchback FWD 199 A3.000 | | GCI99008 | Inner Joint | | 24 | 24 | 29.7 | 86.5 | 93 | |
| | 2007.05-2011.12 | MT | F | L/R | Hatchback FWD 199 A3.000 | | GCO17028 | Outer Joint | | 25 | 24 | 51 | 84.5 | 62 | M |
| | 2007.05-2011.12 | SAT/5MT | F | L | Hatchback FWD 199 A3.000 | | GDS17054 | Drive Shaft | | 25 | 35 | 51 | 84.5 | 472 | |
| 1.4 (57 kw) | 2006.02-2011.12 | 5MT | F | L | Hatchback FWD 350 A1.000 | | GDS17230 | Drive Shaft | | 22 | 22 | 51 | 79.5 | 636 | |
| | 2006.02-2011.12 | 5MT | F | R | Hatchback FWD 350 A1.000 | | GDS17227 | Drive Shaft | | 22 | 22 | 51 | 79.5 | 863 | |
| | 2006.02-2011.12 | 5MT | F | L | Hatchback FWD 350 A1.000 | | GCO17014 | Outer Joint | | 22 | 21 | 51 | 79.5 | 54 | M |
| | 2006.02-2011.12 | 5MT | F | R | Hatchback FWD 350 A1.000 | | GCO44081 | Outer Joint | | 22 | 21 | 51 | 79.5 | 54 | M |
| | 2006.02-2011.12 | 5MT | F | L/R | Hatchback FWD 350 A1.000 | | GCI17004 | Inner Joint | | 22 | 21 | 36 | 61 | 93.5 | |
| | 2010.11-2011.12 | 5MT | F | L | Hatchback FWD 350 A1.000 | | GDS17230 | Drive Shaft | | 22 | 22 | 51 | 79.5 | 636 | |
| | 2010.11-2011.12 | 5MT | F | R | Hatchback FWD 350 A1.000 | | GDS17227 | Drive Shaft | | 22 | 22 | 51 | 79.5 | 863 | |
| | 2010.11-2011.12 | 5MT | F | L | Hatchback FWD 350 A1.000 | | GCO17014 | Outer Joint | | 22 | 21 | 51 | 79.5 | 54 | M |
| | 2010.11-2011.12 | 5MT | F | R | Hatchback FWD 350 A1.000 | | GCO44081 | Outer Joint | | 22 | 21 | 51 | 79.5 | 54 | M |
| | 2010.11-2011.12 | 5MT | F | L/R | Hatchback FWD 350 A1.000 | | GCI17004 | Inner Joint | | 22 | 21 | 36 | 61 | 93.5 | |
| 1.4 (70 kw) | 2003.10-2011.12 | 6AT/6MT | F | L/R | Hatchback FWD 843 A 1.000 | | GCI17027 | Inner Joint | | 22 | 22 | 36 | 61.5 | 93.5 | |
| | 2003.10-2011.12 | MT | F | L/R | Hatchback FWD 843 A 1.000 | | GCO17014 | Outer Joint | | 22 | 21 | 51 | 79.5 | 54 | M |

| | YEAR | TRANSM. | F/R | L/R | BODY STYLE & DRIVE TYPE & ENGINE | REMARKS | G-AP Ref. | PRODUCT | ABS | Technical Specifications A | B | C | H | L | P |
|---|---|---|---|---|---|---|---|---|---|---|---|---|---|---|---|
| **LANCIA** | | | | | | | | | | | | | | | |
| **Ypsilon** | | | | | | | | | | | | | | | |
| 1.4 (70 kw) | 2003.10-2011.12 | MT | F | R | Hatchback FWD 843 A 1.000 | | GCI17004 | Inner Joint | | 22 | 21 | 36 | 61 | 93.5 | |
| | 2003.10-2011.12 | SAT/6AT/6MT | F | L | Hatchback FWD 843 A 1.000 | | GDS17230 | Drive Shaft | | 22 | 22 | 51 | 79.5 | 636 | |
| | 2003.10-2011.12 | SAT/6AT/6MT | F | R | Hatchback FWD 843 A 1.000 | | GDS17227 | Drive Shaft | | 22 | 22 | 51 | 79.5 | 863 | |
| | 2003.10-2011.12 | | F | | Hatchback FWD 843 A 1.000 | | GCO17034 | Outer Joint | | 22 | 21 | 51 | 79.5 | 54 | M |
| EV (115 kw) | 2024.02- | ET | F | L | Hatchback FWD | | GDS57917 | Drive Shaft | | 25 | 24 | 55.7 | 84.5 | 655 | |
| | 2024.02- | ET | F | R | Hatchback FWD | | GDS57916 | Drive Shaft | | 25 | 24 | 55.7 | 84.5 | 880 | |
| | 2024.02- | ET | F | L/R | Hatchback FWD | | GCO83785 | Outer Joint | | 25 | 34 | 55.7 | 84.5 | 55.5 | I |
| **Z(eta)** | | | | | | | | | | | | | | | |
| 2.0 (80 kw) | 1999.09-2002.09 | MT | F | L | MPV FWD RHZ | | GDS10264 | Drive Shaft | 48T | 27 | 37 | 59 | 82 | 630 | |
| | 1999.09-2002.09 | MT | F | L | MPV FWD RHZ | | GDS10430 | Drive Shaft | | 27 | 37 | 59 | 82 | 630 | |
| | 1999.09-2002.09 | MT | F | R | MPV FWD RHZ | | GDS10057 | Drive Shaft | | 27 | 37 | 59 | 82 | 960 | |
| | 1999.09-2002.09 | MT | F | R | MPV FWD RHZ | | GDS45120 | Drive Shaft | 48T | 27 | 37 | 59 | 82 | 960 | |
| | 1999.09-2002.09 | MT | F | L/R | MPV FWD RHZ | | GCO10014 | Outer Joint | | 27 | 39 | 59 | 82 | 63 | I |
| | 1999.09-2002.09 | MT | F | L/R | MPV FWD RHZ | | GCO10015 | Outer Joint | 48T | 27 | 39 | 59 | 82 | 63 | I |
| | 1999.09-2002.09 | MT | F | L | MPV FWD RHZ | | GCI10015 | Inner Joint | | 37 | 39 | 40 | 68.5 | 104 | |
| | 1999.09-2002.09 | MT | F | R | MPV FWD RHZ | | GCI10034 | Inner Joint | | 37 | 39 | 31.9 | 369.5 | 99 | |
| 2.0 (81 kw) | 2001.04-2003.10 | 5MT | F | L | MPV FWD RHW | | GDS10264 | Drive Shaft | 48T | 27 | 37 | 59 | 82 | 630 | |
| | 2001.04-2003.10 | 5MT | F | L | MPV FWD RHW | | GDS10430 | Drive Shaft | | 27 | 37 | 59 | 82 | 630 | |
| | 2001.04-2003.10 | 5MT | F | R | MPV FWD RHW | | GDS10057 | Drive Shaft | | 27 | 37 | 59 | 82 | 960 | |
| | 2001.04-2003.10 | 5MT | F | R | MPV FWD RHW | | GDS45120 | Drive Shaft | 48T | 27 | 37 | 59 | 82 | 960 | |
| | 2001.04-2003.10 | 5MT | F | L/R | MPV FWD RHW | | GCO10014 | Outer Joint | | 27 | 39 | 59 | 82 | 63 | I |
| | 2001.04-2003.10 | 5MT | F | L/R | MPV FWD RHW | | GCO10015 | Outer Joint | 48T | 27 | 39 | 59 | 82 | 63 | I |
| | 2001.04-2003.10 | 5MT | F | L | MPV FWD RHW | | GCI10015 | Inner Joint | | 37 | 39 | 40 | 68.5 | 104 | |
| | 2001.04-2003.10 | 5MT | F | R | MPV FWD RHW | | GCI10034 | Inner Joint | | 37 | 39 | 31.9 | 369.5 | 99 | |
| 2.0 (97 kw) | 1998.05-2000.07 | 5MT | F | L | MPV FWD RFV | Trim Level:CF 2,with ABS | GDS10016 | Drive Shaft | 48T | 27 | 37 | 59 | 82 | 641 | |
| | 1998.05-2000.07 | 5MT | F | L | MPV FWD RFV | Trim Level:CF 2,without ABS | GDS10072 | Drive Shaft | | 27 | 37 | 59 | 82 | 641 | |
| | 1998.05-2000.07 | 5MT | F | L | MPV FWD RFV | Trim Level:CF 3,with ABS | GDS10082 | Drive Shaft | 48T | 27 | 24 | 59 | 82 | 648 | |
| | 1998.05-2000.07 | 5MT | F | L | MPV FWD RFV | Trim Level:CF 3,without ABS | GDS10112 | Drive Shaft | | 27 | 24 | 59 | 82 | 648 | |
| | 1998.05-2000.07 | 5MT | F | R | MPV FWD RFV | Trim Level:CF 2,with ABS | GDS10014 | Drive Shaft | 48T | 27 | 37 | 59 | 82 | 947 | |
| | 1998.05-2000.07 | 5MT | F | R | MPV FWD RFV | Trim Level:CF 3 | GDS10081 | Drive Shaft | 48T | 27 | 24 | 59 | 82 | 935 | |
| | 1998.05-2000.07 | 5MT | F | R | MPV FWD RFV | Trim Level:CF 3 | GDS10120 | Drive Shaft | | 27 | 24 | 59 | 82 | 928 | |
| | 1998.05-2000.07 | 5MT | F | R | MPV FWD RFV | Trim Level:CF 2,without ABS | GDS10155 | Drive Shaft | | 27 | 37 | 59 | 82 | 947 | |
| | 1998.05-2000.07 | 5MT | F | L | MPV FWD RFV | Type:CF 3 | GCO10059 | Outer Joint | 48T | 27 | 34 | 59 | 82 | 56.5 | I |
| | 1998.05-2000.07 | 5MT | F | R | MPV FWD RFV | Type:CF 3 | GCO10018 | Outer Joint | 48T | 27 | 34 | 61 | 82 | 56.5 | I |
| | 1998.05-2000.07 | 5MT | F | L/R | MPV FWD RFV | Trim Level:CF 2,without ABS | GCO10014 | Outer Joint | | 27 | 39 | 59 | 82 | 63 | I |
| | 1998.05-2000.07 | 5MT | F | L/R | MPV FWD RFV | Trim Level:CF 2,with ABS | GCO10015 | Outer Joint | 48T | 27 | 39 | 59 | 82 | 63 | I |
| | 1998.05-2000.07 | 5MT | F | L | MPV FWD RFV | Type:CF 2 | GCI10015 | Inner Joint | | 37 | 39 | 40 | 68.5 | 104 | |
| | 1998.05-2000.07 | 5MT | F | R | MPV FWD RFV | Type:CF 2 | GCI10034 | Inner Joint | | 37 | 39 | 31.9 | 369.5 | 99 | |
| 2.0 (100 kw) | 2000.07-2002.09 | 4AT/5MT | F | L | MPV FWD RFN | Trim Level:CF 2 | GDS10016 | Drive Shaft | 48T | 27 | 37 | 59 | 82 | 641 | |
| | 2000.07-2002.09 | 4AT/5MT | F | L | MPV FWD RFN | Trim Level:CF 2 | GDS10072 | Drive Shaft | | 27 | 37 | 59 | 82 | 641 | |
| | 2000.07-2002.09 | 4AT/5MT | F | R | MPV FWD RFN | Trim Level:CF 2 | GDS10014 | Drive Shaft | 48T | 27 | 37 | 59 | 82 | 947 | |
| | 2000.07-2002.09 | 4AT/5MT | F | R | MPV FWD RFN | Trim Level:CF 2 | GDS10155 | Drive Shaft | | 27 | 37 | 59 | 82 | 947 | |
| | 2000.07-2002.09 | 5MT | F | L | MPV FWD RFN | Trim Level:CF 3 | GDS10082 | Drive Shaft | 48T | 27 | 24 | 59 | 82 | 648 | |
| | 2000.07-2002.09 | 5MT | F | L | MPV FWD RFN | Trim Level:CF 3 | GDS10112 | Drive Shaft | | 27 | 24 | 59 | 82 | 648 | |
| | 2000.07-2002.09 | 5MT | F | L/R | MPV FWD RFN | Trim Level:CF 2 | GCO10014 | Outer Joint | | 27 | 39 | 59 | 82 | 63 | I |
| | 2000.07-2002.09 | 5MT | F | L/R | MPV FWD RFN | Trim Level:CF 2 | GCO10015 | Outer Joint | 48T | 27 | 39 | 59 | 82 | 63 | I |
| | 2000.07-2002.09 | 5MT | F | L/R | MPV FWD RFN | Trim Level:CF 3 | GCO10018 | Outer Joint | 48T | 27 | 34 | 61 | 82 | 56.5 | I |
| | 2000.07-2002.09 | 5MT | F | L/R | MPV FWD RFN | Trim Level:CF 3 | GCO10059 | Outer Joint | 48T | 27 | 34 | 59 | 82 | 56.5 | I |
| | 2000.07-2002.09 | 5MT | F | L | MPV FWD RFN | Trim Level:CF 2 | GCI10015 | Inner Joint | | 37 | 39 | 40 | 68.5 | 104 | |
| | 2000.07-2002.09 | 5MT | F | R | MPV FWD RFN | Trim Level:CF 2 | GCI10034 | Inner Joint | | 37 | 39 | 31.9 | 369.5 | 99 | |
| | 2000.07-2002.09 | MT | F | R | MPV FWD RFN | Trim Level:CF 3 | GDS10081 | Drive Shaft | 48T | 27 | 24 | 59 | 82 | 935 | |
| | 2000.07-2002.09 | MT | F | R | MPV FWD RFN | Trim Level:CF 3 | GDS10120 | Drive Shaft | | 27 | 24 | 59 | 82 | 928 | |
| 2.0 (108 kw) | 1994.08-1999.12 | 5MT | F | L | MPV FWD RGX | | GDS10016 | Drive Shaft | 48T | 27 | 37 | 59 | 82 | 641 | |
| | 1994.08-1999.12 | 5MT | F | L | MPV FWD RGX | | GDS10072 | Drive Shaft | | 27 | 37 | 59 | 82 | 641 | |
| | 1994.08-1999.12 | 5MT | F | R | MPV FWD RGX | | GDS10014 | Drive Shaft | 48T | 27 | 37 | 59 | 82 | 947 | |
| | 1994.08-1999.12 | 5MT | F | R | MPV FWD RGX | | GDS10155 | Drive Shaft | | 27 | 37 | 59 | 82 | 947 | |
| | 1994.08-1999.12 | 5MT | F | L/R | MPV FWD RGX | | GCO10014 | Outer Joint | | 27 | 39 | 59 | 82 | 63 | I |
| | 1994.08-1999.12 | 5MT | F | L/R | MPV FWD RGX | | GCO10015 | Outer Joint | 48T | 27 | 39 | 59 | 82 | 63 | I |
| | 1994.08-1999.12 | 5MT | F | L | MPV FWD RGX | | GCI10015 | Inner Joint | | 37 | 39 | 40 | 68.5 | 104 | |
| | 1994.08-1999.12 | 5MT | F | R | MPV FWD RGX | | GCI10034 | Inner Joint | | 37 | 39 | 31.9 | 369.5 | 99 | |
| 2.1 (80 kw) | 1996.07-1999.12 | 5MT | F | L | MPV FWD P8C | | GDS10016 | Drive Shaft | 48T | 27 | 37 | 59 | 82 | 641 | |
| | 1996.07-1999.12 | 5MT | F | R | MPV FWD P8C | | GDS10014 | Drive Shaft | 48T | 27 | 37 | 59 | 82 | 947 | |
| | 1996.07-1999.12 | 5MT | F | R | MPV FWD P8C | | GDS10155 | Drive Shaft | | 27 | 37 | 59 | 82 | 947 | |
| | 1996.07-1999.12 | 5MT | F | L/R | MPV FWD P8C | | GCO10014 | Outer Joint | | 27 | 39 | 59 | 82 | 63 | I |
| | 1996.07-1999.12 | 5MT | F | L/R | MPV FWD P8C | | GCO10015 | Outer Joint | 48T | 27 | 39 | 59 | 82 | 63 | I |

| | YEAR | TRANSM. | F/R | L/R | BODY STYLE & DRIVE TYPE & ENGINE | REMARKS | G-AP Ref. | PRODUCT | ABS | Technical Specifications A | B | C | H | L | P |
|---|---|---|---|---|---|---|---|---|---|---|---|---|---|---|---|
| **LANCIA** | | | | | | | | | | | | | | | |
| **Z(eta)** | | | | | | | | | | | | | | | |
| 2.1 (80 kw) | 1996.07-1999.12 | 5MT | F | L | MPV FWD P8C | | GCI10015 | Inner Joint | | 37 | 39 | 40 | 68.5 | 104 | |
| | 1996.07-1999.12 | 5MT | F | R | MPV FWD P8C | | GCI10034 | Inner Joint | | 37 | 39 | 31.9 | 369.5 | 99 | |
| **LAND ROVER** | | | | | | | | | | | | | | | |
| **Defender** | | | | | | | | | | | | | | | |
| 2.2 (90 kw) | 2011.08-2016.02 | 6MT | F | L | Platform/Chassis 4WD DT224(PUMA) | | GDS83633 | Drive Shaft | 60W | 24 | | 40 | 154 | 1010 | |
| | 2011.08-2016.02 | 6MT | F | R | Platform/Chassis 4WD DT224(PUMA) | | GDS83650 | Drive Shaft | 60W | 24 | | 40 | 154 | 622 | |
| | 2011.08-2016.02 | 6MT | F | L/R | Platform/Chassis 4WD DT224(PUMA) | | GCO82447 | Outer Joint | 60W | 24 | 26 | 40 | 154 | 56 | I |
| **Defender 110** | | | | | | | | | | | | | | | |
| 2.0 (221 kw) | 2023.07- | 8AT | R | L | Closed Off-Road Vehicle 4WD PT204(AJ20P4) | For vehicles without electronic limited slip diff. | GDS82346 | Drive Shaft | | 31 | 31 | 68.2 | 97 | 838 | |
| | 2023.07- | 8AT | R | L | Closed Off-Road Vehicle 4WD PT204(AJ20P4) | For vehicles with electronic limited slip diff. | GDS84013 | Drive Shaft | | 31 | 31 | 68.2 | 97 | 838 | |
| | 2023.07- | 8AT | R | R | Closed Off-Road Vehicle 4WD PT204(AJ20P4) | | GDS83549 | Drive Shaft | | 31 | 31 | 68.2 | 97 | 860 | |
| | 2023.07- | 8AT | R | L/R | Closed Off-Road Vehicle 4WD PT204(AJ20P4) | | GCO82414 | Outer Joint | | 31 | 28 | 68.2 | 97 | 61 | I |
| | 2023.07- | 8AT | R | L | Closed Off-Road Vehicle 4WD PT204(AJ20P4) | For vehicles with electronic limited slip diff. | GCI82452 | Inner Joint | | 31 | 28 | 44 | 152 | 105 | |
| | 2024.06- | 8AT | R | L | Closed Off-Road Vehicle 4WD PT204(AJ20P4) | For vehicles without electronic limited slip diff. | GDS82346 | Drive Shaft | | 31 | 31 | 68.2 | 97 | 838 | |
| | 2024.06- | 8AT | R | L | Closed Off-Road Vehicle 4WD PT204(AJ20P4) | For vehicles with electronic limited slip diff. | GDS84013 | Drive Shaft | | 31 | 31 | 68.2 | 97 | 838 | |
| | 2024.06- | 8AT | R | R | Closed Off-Road Vehicle 4WD PT204(AJ20P4) | | GDS83549 | Drive Shaft | | 31 | 31 | 68.2 | 97 | 860 | |
| | 2024.06- | 8AT | R | L/R | Closed Off-Road Vehicle 4WD PT204(AJ20P4) | | GCO82414 | Outer Joint | | 31 | 28 | 68.2 | 97 | 61 | I |
| | 2024.06- | 8AT | R | L | Closed Off-Road Vehicle 4WD PT204(AJ20P4) | For vehicles with electronic limited slip diff. | GCI82452 | Inner Joint | | 31 | 28 | 44 | 152 | 105 | |
| 2.0 (297 kw) | 2020.09- | 8AT | R | L | Closed Off-Road Van 4WD PT204(AJ20P4) | For vehicles without electronic limited slip diff. | GDS82346 | Drive Shaft | | 31 | 31 | 68.2 | 97 | 838 | |
| | 2020.09- | 8AT | R | L | Closed Off-Road Van 4WD PT204(AJ20P4) | For vehicles with electronic limited slip diff. | GDS84013 | Drive Shaft | | 31 | 31 | 68.2 | 97 | 838 | |
| | 2020.09- | 8AT | R | R | Closed Off-Road Van 4WD PT204(AJ20P4) | | GDS83549 | Drive Shaft | | 31 | 31 | 68.2 | 97 | 860 | |
| | 2020.09- | 8AT | R | L/R | Closed Off-Road Van 4WD PT204(AJ20P4) | | GCO82414 | Outer Joint | | 31 | 28 | 68.2 | 97 | 61 | I |
| | 2020.09- | 8AT | R | L | Closed Off-Road Van 4WD PT204(AJ20P4) | For vehicles with electronic limited slip diff. | GCI82452 | Inner Joint | | 31 | 28 | 44 | 152 | 105 | |
| | 2020.09- | 8AT | R | L/R | Closed Off-Road Van 4WD PT204(AJ20P4) | Possion:Left,For vehicles without electronic limited slip diff. | GCI81763 | Inner Joint | | 31 | 28 | 44 | 86 | 110.5 | |
| | 2020.09- | 8AT | R | L | Closed Off-Road Vehicle 4WD PT204(AJ20P4) | For vehicles without electronic limited slip diff. | GDS82346 | Drive Shaft | | 31 | 31 | 68.2 | 97 | 838 | |
| | 2020.09- | 8AT | R | L | Closed Off-Road Vehicle 4WD PT204(AJ20P4) | For Vehicles With Electronic Limited Slip Diff. | GDS84013 | Drive Shaft | | 31 | 31 | 68.2 | 97 | 838 | |
| | 2020.09- | 8AT | R | R | Closed Off-Road Vehicle 4WD PT204(AJ20P4) | | GDS83549 | Drive Shaft | | 31 | 31 | 68.2 | 97 | 860 | |
| | 2020.09- | 8AT | R | L/R | Closed Off-Road Vehicle 4WD PT204(AJ20P4) | | GCO82414 | Outer Joint | | 31 | 28 | 68.2 | 97 | 61 | I |
| | 2020.09- | 8AT | R | L | Closed Off-Road Vehicle 4WD PT204(AJ20P4) | For vehicles with electronic limited slip diff. | GCI82452 | Inner Joint | | 31 | 28 | 44 | 152 | 105 | |
| | 2020.09- | 8AT | R | L/R | Closed Off-Road Vehicle 4WD PT204(AJ20P4) | Possion:Left,For vehicles without electronic limited slip diff. | GCI81763 | Inner Joint | | 31 | 28 | 44 | 86 | 110.5 | |
| 2.4 (90 kw) | 2007.05-2016.02 | MT | F | L | Platform/Chassis 4WD DT244(PUMA) | | GDS83633 | Drive Shaft | 60W | 24 | | 40 | 154 | 1010 | |
| | 2007.05-2016.02 | MT | F | R | Platform/Chassis 4WD DT244(PUMA) | | GDS83650 | Drive Shaft | 60W | 24 | | 40 | 154 | 622 | |
| | 2007.05-2016.02 | MT | F | L/R | Platform/Chassis 4WD DT244(PUMA) | | GCO82447 | Outer Joint | 60W | 24 | 26 | 40 | 154 | 56 | I |
| 2.4 (103 kw) | 2009.10-2016.05 | 6MT | F | L | Open Off-Road Vehicle 4WD DT244(PUMA) | | GDS83633 | Drive Shaft | 60W | 24 | | 40 | 154 | 1010 | |
| | 2009.10-2016.05 | 6MT | F | R | Open Off-Road Vehicle 4WD DT244(PUMA) | | GDS83650 | Drive Shaft | 60W | 24 | | 40 | 154 | 622 | |
| | 2009.10-2016.05 | 6MT | R | L | Open Off-Road Vehicle 4WD DT244(PUMA) | | GDS59713 | Drive Shaft | | | 24 | | | 934.5 | |
| | 2009.10-2016.05 | 6MT | R | R | Open Off-Road Vehicle 4WD DT244(PUMA) | | GDS59712 | Drive Shaft | | | 24 | | | 668.5 | |
| **Defender 130** | | | | | | | | | | | | | | | |
| 3.0 (221 kw) | 2022.05- | 8AT | R | L | Closed Off-Road Vehicle 4WD PT306(AJ20P6) | For vehicles with electronic limited slip diff. | GDS84013 | Drive Shaft | | 31 | 31 | 68.2 | 97 | 838 | |
| | 2022.05- | 8AT | R | R | Closed Off-Road Vehicle 4WD PT306(AJ20P6) | | GDS83549 | Drive Shaft | | 31 | 31 | 68.2 | 97 | 860 | |
| | 2022.05- | 8AT | R | L/R | Closed Off-Road Vehicle 4WD PT306(AJ20P6) | | GCO82414 | Outer Joint | | 31 | 28 | 68.2 | 97 | 61 | I |
| | 2022.05- | 8AT | R | L | Closed Off-Road Vehicle 4WD PT306(AJ20P6) | For vehicles with electronic limited slip diff. | GCI82452 | Inner Joint | | 31 | 28 | 44 | 152 | 105 | |
| | 2022.05- | AT | R | L | Closed Off-Road Vehicle 4WD PT306(AJ20P6) | For vehicles without electronic limited slip diff. | GDS82346 | Drive Shaft | | 31 | 31 | 68.2 | 97 | 838 | |
| | 2022.05- | AT | R | L/R | Closed Off-Road Vehicle 4WD PT306(AJ20P6) | Possion:Left,For vehicles without electronic limited slip diff. | GCI81763 | Inner Joint | | 31 | 28 | 44 | 86 | 110.5 | |
| 5.0 (368 kw) | 2023.04- | 8AT | R | L | Closed Off-Road Vehicle 4WD 508PS(AJ133) | For vehicles without electronic limited slip diff. | GDS82346 | Drive Shaft | | 31 | 31 | 68.2 | 97 | 838 | |
| | 2023.04- | 8AT | R | L | Closed Off-Road Vehicle 4WD 508PS(AJ133) | For vehicles with electronic limited slip diff. | GDS84013 | Drive Shaft | | 31 | 31 | 68.2 | 97 | 838 | |
| | 2023.04- | 8AT | R | R | Closed Off-Road Vehicle 4WD 508PS(AJ133) | | GDS83549 | Drive Shaft | | 31 | 31 | 68.2 | 97 | 860 | |
| | 2023.04- | 8AT | R | L/R | Closed Off-Road Vehicle 4WD 508PS(AJ133) | | GCO82414 | Outer Joint | | 31 | 28 | 68.2 | 97 | 61 | I |
| | 2023.04- | 8AT | R | L | Closed Off-Road Vehicle 4WD 508PS(AJ133) | For vehicles with electronic limited slip diff. | GCI82452 | Inner Joint | | 31 | 28 | 44 | 152 | 105 | |
| **Defender 90** | | | | | | | | | | | | | | | |
| 2.2 (110 kw) | 2015.02-2016.02 | 6MT | F | L | Closed Off-Road Vehicle 4WD DT224(PUMA) | | GDS83633 | Drive Shaft | 60W | 24 | | 40 | 154 | 1010 | |
| | 2015.02-2016.02 | 6MT | F | R | Closed Off-Road Vehicle 4WD DT224(PUMA) | | GDS83650 | Drive Shaft | 60W | 24 | | 40 | 154 | 622 | |
| | 2015.02-2016.02 | 6MT | F | L/R | Closed Off-Road Vehicle 4WD DT224(PUMA) | | GCO82447 | Outer Joint | 60W | 24 | 26 | 40 | 154 | 56 | I |
| 2.4 (103 kw) | 2007.07-2016.02 | 6MT | F | L | Closed Off-Road Vehicle 4WD DT244(PUMA) | | GDS83633 | Drive Shaft | 60W | 24 | | 40 | 154 | 1010 | |
| | 2007.07-2016.02 | 6MT | F | R | Closed Off-Road Vehicle 4WD DT244(PUMA) | | GDS83650 | Drive Shaft | 60W | 24 | | 40 | 154 | 622 | |
| | 2007.07-2016.02 | 6MT | F | L/R | Closed Off-Road Vehicle 4WD DT244(PUMA) | | GCO82447 | Outer Joint | 60W | 24 | 26 | 40 | 154 | 56 | I |
| | 2007.07-2016.02 | 6MT | R | L | Closed Off-Road Vehicle 4WD DT244(PUMA) | for Model code:L316 | GDS59713 | Drive Shaft | | | 24 | | | 934.5 | |
| | 2007.07-2016.02 | 6MT | R | R | Closed Off-Road Vehicle 4WD DT244(PUMA) | for Model code:L316 | GDS59712 | Drive Shaft | | | 24 | | | 668.5 | |
| **Defender Cabrio** | | | | | | | | | | | | | | | |
| 2.2 (90 kw) | 2011.08-2016.02 | 6MT | F | L | Open Off-Road Vehicle 4WD DT224(PUMA) | | GDS83633 | Drive Shaft | 60W | 24 | | 40 | 154 | 1010 | |
| | 2011.08-2016.02 | 6MT | F | R | Open Off-Road Vehicle 4WD DT224(PUMA) | | GDS83650 | Drive Shaft | 60W | 24 | | 40 | 154 | 622 | |
| | 2011.08-2016.02 | 6MT | F | L/R | Open Off-Road Vehicle 4WD DT224(PUMA) | | GCO82447 | Outer Joint | 60W | 24 | 26 | 40 | 154 | 56 | I |
| 2.4 (90 kw) | 2007.05-2016.02 | 6MT | F | L | Open Off-Road Vehicle 4WD DT244(PUMA) | | GDS83633 | Drive Shaft | 60W | 24 | | 40 | 154 | 1010 | |
| | 2007.05-2016.02 | 6MT | F | R | Open Off-Road Vehicle 4WD DT244(PUMA) | | GDS83650 | Drive Shaft | 60W | 24 | | 40 | 154 | 622 | |
| | 2007.05-2016.02 | 6MT | F | L/R | Open Off-Road Vehicle 4WD DT244(PUMA) | | GCO82447 | Outer Joint | 60W | 24 | 26 | 40 | 154 | 56 | I |

| | YEAR | TRANSM. | F/R | L/R | BODY STYLE & DRIVE TYPE & ENGINE | REMARKS | G-AP Ref. | PRODUCT | ABS | Technical Specifications A | B | C | H | L | P |
|---|---|---|---|---|---|---|---|---|---|---|---|---|---|---|---|
| **LAND ROVER** | | | | | | | | | | | | | | | |
| **Defender Cabrio** | | | | | | | | | | | | | | | |
| 2.5 (83 kw) | 1990.08-1998.11 | | F | L/R | Open Off-Road Vehicle 4WD 23 L, 11 L, 16 L | Chassis no. from:LA930456,Chassis no. to:WA159806 | GCO30004 | Outer Joint | 60W | 24 | 32 | 40 | 154 | 56 | I |
| | 1990.08-1998.11 | | F | L/R | Open Off-Road Vehicle 4WD 23 L, 11 L, 16 L | Chassis no. to:KA930455 | GCO51016 | Outer Joint | | 24 | 32 | 44.3 | 180.5 | 56 | I |
| **Defender Pick Up** | | | | | | | | | | | | | | | |
| 2.2 (90 kw) | 2011.08-2016.02 | 6MT | F | L | Open Off-Road Vehicle 4WD DT224(PUMA) | | GDS83633 | Drive Shaft | 60W | 24 | | 40 | 154 | 1010 | |
| | 2011.08-2016.02 | 6MT | F | R | Open Off-Road Vehicle 4WD DT224(PUMA) | | GDS83650 | Drive Shaft | 60W | 24 | | 40 | 154 | 622 | |
| | 2011.08-2016.02 | 6MT | F | L/R | Open Off-Road Vehicle 4WD DT224(PUMA) | | GCO82447 | Outer Joint | 60W | 24 | 26 | 40 | 154 | 56 | I |
| 2.4 (90 kw) | 2007.05-2016.02 | 6MT | F | L | Open Off-Road Vehicle 4WD DT244(PUMA) | | GDS83633 | Drive Shaft | 60W | 24 | | 40 | 154 | 1010 | |
| | 2007.05-2016.02 | 6MT | F | R | Open Off-Road Vehicle 4WD DT244(PUMA) | | GDS83650 | Drive Shaft | 60W | 24 | | 40 | 154 | 622 | |
| 2.5 (90 kw) | 1998.06-2016.02 | | F | L/R | Open Off-Road Vehicle 4WD 15 P, 10 P | Chassis no. from:LA930456,Chassis no. to:WA159806 | GCO30004 | Outer Joint | 60W | 24 | 32 | 40 | 154 | 56 | I |
| | 1998.06-2016.02 | | F | L/R | Open Off-Road Vehicle 4WD 15 P, 10 P | Chassis no. to:KA930455 | GCO51016 | Outer Joint | | 24 | 32 | 44.3 | 180.5 | 56 | I |
| **Defender Station Wagon** | | | | | | | | | | | | | | | |
| 2.0 (147 kw) | 2019.09- | 8AT | R | L | Closed Off-Road Vehicle 4WD 204DTA(AJ20D4) | For vehicles without electronic limited slip diff. | GDS82346 | Drive Shaft | | 31 | 31 | 68.2 | 97 | 838 | |
| | 2019.09- | 8AT | R | L | Closed Off-Road Vehicle 4WD 204DTA(AJ20D4) | For vehicles with electronic limited slip diff. | GDS84013 | Drive Shaft | | 31 | 31 | 68.2 | 97 | 838 | |
| | 2019.09- | 8AT | R | R | Closed Off-Road Vehicle 4WD 204DTA(AJ20D4) | | GDS83549 | Drive Shaft | | 31 | 31 | 68.2 | 97 | 860 | |
| | 2019.09- | 8AT | R | L/R | Closed Off-Road Vehicle 4WD 204DTA(AJ20D4) | | GCO82414 | Outer Joint | | 31 | 28 | 68.2 | 97 | 61 | I |
| | 2019.09- | 8AT | R | L | Closed Off-Road Vehicle 4WD 204DTA(AJ20D4) | For vehicles with electronic limited slip diff. | GCI82452 | Inner Joint | | 31 | 28 | 44 | 152 | 105 | |
| | 2019.09- | 8AT | R | L/R | Closed Off-Road Vehicle 4WD 204DTA(AJ20D4) | Possion:Left,For vehicles without electronic limited slip diff. | GCI81763 | Inner Joint | | 31 | 28 | 44 | 86 | 110.5 | |
| 2.0 (177 kw) | 2019.09- | 8AT | R | L | Closed Off-Road Vehicle 4WD 204DTA(AJ20D4) | For vehicles without electronic limited slip diff. | GDS82346 | Drive Shaft | | 31 | 31 | 68.2 | 97 | 838 | |
| | 2019.09- | 8AT | R | L | Closed Off-Road Vehicle 4WD 204DTA(AJ20D4) | For vehicles with electronic limited slip diff. | GDS84013 | Drive Shaft | | 31 | 31 | 68.2 | 97 | 838 | |
| | 2019.09- | 8AT | R | R | Closed Off-Road Vehicle 4WD 204DTA(AJ20D4) | | GDS83549 | Drive Shaft | | 31 | 31 | 68.2 | 97 | 860 | |
| | 2019.09- | 8AT | R | L/R | Closed Off-Road Vehicle 4WD 204DTA(AJ20D4) | | GCO82414 | Outer Joint | | 31 | 28 | 68.2 | 97 | 61 | I |
| | 2019.09- | 8AT | R | L | Closed Off-Road Vehicle 4WD 204DTA(AJ20D4) | For vehicles with electronic limited slip diff. | GCI82452 | Inner Joint | | 31 | 28 | 44 | 152 | 105 | |
| | 2019.09- | 8AT | R | L/R | Closed Off-Road Vehicle 4WD 204DTA(AJ20D4) | Possion:Left,For vehicles without electronic limited slip diff. | GCI81763 | Inner Joint | | 31 | 28 | 44 | 86 | 110.5 | |
| 2.0 (221 kw) | 2019.09- | 8AT | R | L | Closed Off-Road Vehicle 4WD PT204(AJ20P4) | For vehicles without electronic limited slip diff. | GDS82346 | Drive Shaft | | 31 | 31 | 68.2 | 97 | 838 | |
| | 2019.09- | 8AT | R | L | Closed Off-Road Vehicle 4WD PT204(AJ20P4) | For vehicles with electronic limited slip diff. | GDS84013 | Drive Shaft | | 31 | 31 | 68.2 | 97 | 838 | |
| | 2019.09- | 8AT | R | R | Closed Off-Road Vehicle 4WD PT204(AJ20P4) | | GDS83549 | Drive Shaft | | 31 | 31 | 68.2 | 97 | 860 | |
| | 2019.09- | 8AT | R | L/R | Closed Off-Road Vehicle 4WD PT204(AJ20P4) | | GCO82414 | Outer Joint | | 31 | 28 | 68.2 | 97 | 61 | I |
| | 2019.09- | 8AT | R | L | Closed Off-Road Vehicle 4WD PT204(AJ20P4) | For vehicles with electronic limited slip diff. | GCI82452 | Inner Joint | | 31 | 28 | 44 | 152 | 105 | |
| | 2019.09- | 8AT | R | L/R | Closed Off-Road Vehicle 4WD PT204(AJ20P4) | Possion:Left,For vehicles without electronic limited slip diff. | GCI81763 | Inner Joint | | 31 | 28 | 44 | 86 | 110.5 | |
| 2.2 (90 kw) | 2011.08-2016.02 | 6MT | F | L | Closed Off-Road Vehicle 4WD DT224(PUMA) | | GDS83633 | Drive Shaft | 60W | 24 | | 40 | 154 | 1010 | |
| | 2011.08-2016.02 | 6MT | F | R | Closed Off-Road Vehicle 4WD DT224(PUMA) | | GDS83650 | Drive Shaft | 60W | 24 | | 40 | 154 | 622 | |
| | 2011.08-2016.02 | 6MT | F | L/R | Closed Off-Road Vehicle 4WD DT224(PUMA) | | GCO82447 | Outer Joint | 60W | 24 | 26 | 40 | 154 | 56 | I |
| | 2011.08-2016.02 | 6MT | R | L | Closed Off-Road Vehicle 4WD DT224(PUMA) | for Model code:L316 | GDS59713 | Drive Shaft | | | 24 | | | 934.5 | |
| | 2011.08-2016.02 | 6MT | R | R | Closed Off-Road Vehicle 4WD DT224(PUMA) | for Model code:L316 | GDS59712 | Drive Shaft | | | 24 | | | 668.5 | |
| 2.4 (90 kw) | 2006.10-2016.02 | 6MT | F | L | Closed Off-Road Vehicle 4WD DT244(PUMA) | | GDS83633 | Drive Shaft | 60W | 24 | | 40 | 154 | 1010 | |
| | 2006.10-2016.02 | 6MT | F | R | Closed Off-Road Vehicle 4WD DT244(PUMA) | | GDS83650 | Drive Shaft | 60W | 24 | | 40 | 154 | 622 | |
| | 2006.10-2016.02 | 6MT | F | L/R | Closed Off-Road Vehicle 4WD DT244(PUMA) | | GCO82447 | Outer Joint | 60W | 24 | 26 | 40 | 154 | 56 | I |
| 2.5 (83 kw) | 1990.08-1998.12 | | F | L/R | Closed Off-Road Vehicle 4WD 23 L, 11 L, 16 L | Chassis no. from:LA930456,Chassis no. to:WA159806 | GCO30004 | Outer Joint | 60W | 24 | 32 | 40 | 154 | 56 | I |
| | 1990.08-1998.12 | | F | L/R | Closed Off-Road Vehicle 4WD 23 L, 11 L, 16 L | Chassis no. to:KA930455 | GCO51016 | Outer Joint | | 24 | 32 | 44.3 | 180.5 | 56 | I |
| | 1990.08-1998.12 | | F | | Closed Off-Road Vehicle 4WD 23 L, 11 L, 16 L | | GCO99113 | Outer Joint | | 24 | 23 | 44.3 | 180.5 | 56 | I |
| 2.5 (90 kw) | 1998.06-2016.02 | MT | F | L | Closed Off-Road Vehicle 4WD 14 P, 15 P, 10 P | | GDS83633 | Drive Shaft | 60W | 24 | | 40 | 154 | 1010 | |
| | 1998.06-2016.02 | MT | F | R | Closed Off-Road Vehicle 4WD 14 P, 15 P, 10 P | | GDS83650 | Drive Shaft | 60W | 24 | | 40 | 154 | 622 | |
| | 1998.06-2016.02 | | F | L/R | Closed Off-Road Vehicle 4WD 14 P, 15 P, 10 P | Chassis no. from:LA930456,Chassis no. to:WA159806 | GCO30004 | Outer Joint | 60W | 24 | 32 | 40 | 154 | 56 | I |
| | 1998.06-2016.02 | | F | L/R | Closed Off-Road Vehicle 4WD 14 P, 15 P, 10 P | Chassis no. to:KA930455 | GCO51016 | Outer Joint | | 24 | 32 | 44.3 | 180.5 | 56 | I |
| 3.0 (147 kw) | 2020.09- | 8AT | R | L | Closed Off-Road Vehicle 4WD DT306(AJ20D6) | For vehicles without electronic limited slip diff. | GDS82346 | Drive Shaft | | 31 | 31 | 68.2 | 97 | 838 | |
| | 2020.09- | 8AT | R | L | Closed Off-Road Vehicle 4WD DT306(AJ20D6) | For Vehicles With Electronic Limited Slip Diff. | GDS84013 | Drive Shaft | | 31 | 31 | 68.2 | 97 | 838 | |
| | 2020.09- | 8AT | R | R | Closed Off-Road Vehicle 4WD DT306(AJ20D6) | | GDS83549 | Drive Shaft | | 31 | 31 | 68.2 | 97 | 860 | |
| | 2020.09- | 8AT | R | L/R | Closed Off-Road Vehicle 4WD DT306(AJ20D6) | | GCO82414 | Outer Joint | | 31 | 28 | 68.2 | 97 | 61 | I |
| | 2020.09- | 8AT | R | L | Closed Off-Road Vehicle 4WD DT306(AJ20D6) | For vehicles with electronic limited slip diff. | GCI82452 | Inner Joint | | 31 | 28 | 44 | 152 | 105 | |
| | 2020.09- | 8AT | R | L/R | Closed Off-Road Vehicle 4WD DT306(AJ20D6) | Possion:Left,For vehicles without electronic limited slip diff. | GCI81763 | Inner Joint | | 31 | 28 | 44 | 86 | 110.5 | |
| 3.0 (183 kw) | 2020.09- | 8AT | R | L | Closed Off-Road Vehicle 4WD DT306(AJ20D6) | For vehicles without electronic limited slip diff. | GDS82346 | Drive Shaft | | 31 | 31 | 68.2 | 97 | 838 | |
| | 2020.09- | 8AT | R | L | Closed Off-Road Vehicle 4WD DT306(AJ20D6) | For Vehicles With Electronic Limited Slip Diff. | GDS84013 | Drive Shaft | | 31 | 31 | 68.2 | 97 | 838 | |
| | 2020.09- | 8AT | R | R | Closed Off-Road Vehicle 4WD DT306(AJ20D6) | | GDS83549 | Drive Shaft | | 31 | 31 | 68.2 | 97 | 860 | |
| | 2020.09- | 8AT | R | L/R | Closed Off-Road Vehicle 4WD DT306(AJ20D6) | | GCO82414 | Outer Joint | | 31 | 28 | 68.2 | 97 | 61 | I |
| | 2020.09- | 8AT | R | L | Closed Off-Road Vehicle 4WD DT306(AJ20D6) | For vehicles with electronic limited slip diff. | GCI82452 | Inner Joint | | 31 | 28 | 44 | 152 | 105 | |
| | 2020.09- | 8AT | R | L/R | Closed Off-Road Vehicle 4WD DT306(AJ20D6) | Possion:Left,For vehicles without electronic limited slip diff. | GCI81763 | Inner Joint | | 31 | 28 | 44 | 86 | 110.5 | |
| 3.0 (221 kw) | 2020.09- | 8AT | R | L | Closed Off-Road Vehicle 4WD DT306(AJ20D6) | For vehicles without electronic limited slip diff. | GDS82346 | Drive Shaft | | 31 | 31 | 68.2 | 97 | 838 | |
| | 2020.09- | 8AT | R | L | Closed Off-Road Vehicle 4WD DT306(AJ20D6) | For Vehicles With Electronic Limited Slip Diff. | GDS84013 | Drive Shaft | | 31 | 31 | 68.2 | 97 | 838 | |
| | 2020.09- | 8AT | R | R | Closed Off-Road Vehicle 4WD DT306(AJ20D6) | | GDS83549 | Drive Shaft | | 31 | 31 | 68.2 | 97 | 860 | |
| | 2020.09- | 8AT | R | L/R | Closed Off-Road Vehicle 4WD DT306(AJ20D6) | | GCO82414 | Outer Joint | | 31 | 28 | 68.2 | 97 | 61 | I |
| | 2020.09- | 8AT | R | L | Closed Off-Road Vehicle 4WD DT306(AJ20D6) | For vehicles with electronic limited slip diff. | GCI82452 | Inner Joint | | 31 | 28 | 44 | 152 | 105 | |
| | 2020.09- | 8AT | R | L/R | Closed Off-Road Vehicle 4WD DT306(AJ20D6) | Possion:Left,For vehicles without electronic limited slip diff. | GCI81763 | Inner Joint | | 31 | 28 | 44 | 86 | 110.5 | |
| 3.0 (258 kw) | 2024.05- | 8AT | R | L | Closed Off-Road Vehicle 4WD DT306(AJ20D6) | For vehicles without electronic limited slip diff. | GDS82346 | Drive Shaft | | 31 | 31 | 68.2 | 97 | 838 | |
| | 2024.05- | 8AT | R | L | Closed Off-Road Vehicle 4WD DT306(AJ20D6) | For vehicles with electronic limited slip diff. | GDS84013 | Drive Shaft | | 31 | 31 | 68.2 | 97 | 838 | |
| | 2024.05- | 8AT | R | R | Closed Off-Road Vehicle 4WD DT306(AJ20D6) | | GDS83549 | Drive Shaft | | 31 | 31 | 68.2 | 97 | 860 | |

| | YEAR | TRANSM. | F/R | L/R | BODY STYLE & DRIVE TYPE & ENGINE | REMARKS | G-AP Ref. | PRODUCT | ABS | Technical Specifications A | B | C | H | L | P |
|---|---|---|---|---|---|---|---|---|---|---|---|---|---|---|---|
| **LAND ROVER** | | | | | | | | | | | | | | | |
| **Defender Station Wagon** | | | | | | | | | | | | | | | |
| 3.0 (258 kw) | 2024.05- | 8AT | R | L/R | Closed Off-Road Vehicle 4WD DT306(AJ20D6) | | GCO82414 | Outer Joint | | 31 | 28 | 68.2 | 97 | 61 | I |
| | 2024.05- | 8AT | R | L | Closed Off-Road Vehicle 4WD DT306(AJ20D6) | For vehicles with electronic limited slip diff. | GCI82452 | Inner Joint | | 31 | 28 | 44 | 152 | 105 | |
| 3.0 (294 kw) | 2019.09- | 8AT | R | L | Closed Off-Road Vehicle 4WD PT306(AJ20P6) | For vehicles without electronic limited slip diff. | GDS82346 | Drive Shaft | | 31 | 31 | 68.2 | 97 | 838 | |
| | 2019.09- | 8AT | R | L | Closed Off-Road Vehicle 4WD PT306(AJ20P6) | For Vehicles With Electronic Limited Slip Diff. | GDS84013 | Drive Shaft | | 31 | 31 | 68.2 | 97 | 838 | |
| | 2019.09- | 8AT | R | R | Closed Off-Road Vehicle 4WD PT306(AJ20P6) | | GDS83549 | Drive Shaft | | 31 | 31 | 68.2 | 97 | 860 | |
| | 2019.09- | 8AT | R | L/R | Closed Off-Road Vehicle 4WD PT306(AJ20P6) | | GCO82414 | Outer Joint | | 31 | 28 | 68.2 | 97 | 61 | I |
| | 2019.09- | 8AT | R | L | Closed Off-Road Vehicle 4WD PT306(AJ20P6) | For vehicles with electronic limited slip diff. | GCI82452 | Inner Joint | | 31 | 28 | 44 | 152 | 105 | |
| | 2019.09- | 8AT | R | L/R | Closed Off-Road Vehicle 4WD PT306(AJ20P6) | Possion:Left,For vehicles without electronic limited slip diff. | GCI81763 | Inner Joint | | 31 | 28 | 44 | 86 | 110.5 | |
| 5.0 (313 kw) | 2024.05- | 8AT | R | L | Closed Off-Road Vehicle 4WD 508PS(AJ133) | For vehicles without electronic limited slip diff. | GDS82346 | Drive Shaft | | 31 | 31 | 68.2 | 97 | 838 | |
| | 2024.05- | 8AT | R | L | Closed Off-Road Vehicle 4WD 508PS(AJ133) | For vehicles with electronic limited slip diff. | GDS84013 | Drive Shaft | | 31 | 31 | 68.2 | 97 | 838 | |
| | 2024.05- | 8AT | R | R | Closed Off-Road Vehicle 4WD 508PS(AJ133) | | GDS83549 | Drive Shaft | | 31 | 31 | 68.2 | 97 | 860 | |
| | 2024.05- | 8AT | R | L/R | Closed Off-Road Vehicle 4WD 508PS(AJ133) | | GCO82414 | Outer Joint | | 31 | 28 | 68.2 | 97 | 61 | I |
| | 2024.05- | 8AT | R | L | Closed Off-Road Vehicle 4WD 508PS(AJ133) | For vehicles with electronic limited slip diff. | GCI82452 | Inner Joint | | 31 | 28 | 44 | 152 | 105 | |
| 5.0 (386 kw) | 2021.05- | 8AT | R | L | Closed Off-Road Vehicle 4WD 508PS(AJ133) | For vehicles without electronic limited slip diff. | GDS82346 | Drive Shaft | | 31 | 31 | 68.2 | 97 | 838 | |
| | 2021.05- | 8AT | R | L | Closed Off-Road Vehicle 4WD 508PS(AJ133) | For vehicles with electronic limited slip diff. | GDS84013 | Drive Shaft | | 31 | 31 | 68.2 | 97 | 838 | |
| | 2021.05- | 8AT | R | R | Closed Off-Road Vehicle 4WD 508PS(AJ133) | | GDS83549 | Drive Shaft | | 31 | 31 | 68.2 | 97 | 860 | |
| | 2021.05- | 8AT | R | L/R | Closed Off-Road Vehicle 4WD 508PS(AJ133) | | GCO82414 | Outer Joint | | 31 | 28 | 68.2 | 97 | 61 | I |
| | 2021.05- | 8AT | R | L | Closed Off-Road Vehicle 4WD 508PS(AJ133) | For vehicles with electronic limited slip diff. | GCI82452 | Inner Joint | | 31 | 28 | 44 | 152 | 105 | |
| | 2021.05- | 8AT | R | L/R | Closed Off-Road Vehicle 4WD 508PS(AJ133) | Possion:Left,For vehicles without electronic limited slip diff. | GCI81763 | Inner Joint | | 31 | 28 | 44 | 86 | 110.5 | |
| **Defender Van** | | | | | | | | | | | | | | | |
| 2.0 (147 kw) | 2020.02- | 8AT | R | L | Closed Off-Road Van 4WD 204DTA(AJ20D4) | For vehicles without electronic limited slip diff. | GDS82346 | Drive Shaft | | 31 | 31 | 68.2 | 97 | 838 | |
| | 2020.02- | 8AT | R | L | Closed Off-Road Van 4WD 204DTA(AJ20D4) | For vehicles with electronic limited slip diff. | GDS84013 | Drive Shaft | | 31 | 31 | 68.2 | 97 | 838 | |
| | 2020.02- | 8AT | R | R | Closed Off-Road Van 4WD 204DTA(AJ20D4) | | GDS83549 | Drive Shaft | | 31 | 31 | 68.2 | 97 | 860 | |
| | 2020.02- | 8AT | R | L/R | Closed Off-Road Van 4WD 204DTA(AJ20D4) | | GCO82414 | Outer Joint | | 31 | 28 | 68.2 | 97 | 61 | I |
| | 2020.02- | 8AT | R | L | Closed Off-Road Van 4WD 204DTA(AJ20D4) | For vehicles with electronic limited slip diff. | GCI82452 | Inner Joint | | 31 | 28 | 44 | 152 | 105 | |
| | 2020.02- | 8AT | R | L/R | Closed Off-Road Van 4WD 204DTA(AJ20D4) | Possion:Left,For vehicles without electronic limited slip diff. | GCI81763 | Inner Joint | | 31 | 28 | 44 | 86 | 110.5 | |
| 2.0 (177 kw) | 2020.02- | 8AT | R | L | Closed Off-Road Van 4WD 204DTA(AJ20D4) | For vehicles without electronic limited slip diff. | GDS82346 | Drive Shaft | | 31 | 31 | 68.2 | 97 | 838 | |
| | 2020.02- | 8AT | R | L | Closed Off-Road Van 4WD 204DTA(AJ20D4) | For vehicles with electronic limited slip diff. | GDS84013 | Drive Shaft | | 31 | 31 | 68.2 | 97 | 838 | |
| | 2020.02- | 8AT | R | R | Closed Off-Road Van 4WD 204DTA(AJ20D4) | | GDS83549 | Drive Shaft | | 31 | 31 | 68.2 | 97 | 860 | |
| | 2020.02- | 8AT | R | L/R | Closed Off-Road Van 4WD 204DTA(AJ20D4) | | GCO82414 | Outer Joint | | 31 | 28 | 68.2 | 97 | 61 | I |
| | 2020.02- | 8AT | R | L | Closed Off-Road Van 4WD 204DTA(AJ20D4) | For vehicles with electronic limited slip diff. | GCI82452 | Inner Joint | | 31 | 28 | 44 | 152 | 105 | |
| | 2020.02- | 8AT | R | L/R | Closed Off-Road Van 4WD 204DTA(AJ20D4) | Possion:Left,For vehicles without electronic limited slip diff. | GCI81763 | Inner Joint | | 31 | 28 | 44 | 86 | 110.5 | |
| 2.0 (221 kw) | 2020.02- | 8AT | R | L | Closed Off-Road Van 4WD PT204(AJ20P4) | For vehicles without electronic limited slip diff. | GDS82346 | Drive Shaft | | 31 | 31 | 68.2 | 97 | 838 | |
| | 2020.02- | 8AT | R | L | Closed Off-Road Van 4WD PT204(AJ20P4) | For vehicles with electronic limited slip diff. | GDS84013 | Drive Shaft | | 31 | 31 | 68.2 | 97 | 838 | |
| | 2020.02- | 8AT | R | R | Closed Off-Road Van 4WD PT204(AJ20P4) | | GDS83549 | Drive Shaft | | 31 | 31 | 68.2 | 97 | 860 | |
| | 2020.02- | 8AT | R | L/R | Closed Off-Road Van 4WD PT204(AJ20P4) | | GCO82414 | Outer Joint | | 31 | 28 | 68.2 | 97 | 61 | I |
| | 2020.02- | 8AT | R | L | Closed Off-Road Van 4WD PT204(AJ20P4) | For vehicles with electronic limited slip diff. | GCI82452 | Inner Joint | | 31 | 28 | 44 | 152 | 105 | |
| | 2020.02- | 8AT | R | L/R | Closed Off-Road Van 4WD PT204(AJ20P4) | Possion:Left,For vehicles without electronic limited slip diff. | GCI81763 | Inner Joint | | 31 | 28 | 44 | 86 | 110.5 | |
| 3.0 (147 kw) | 2020.09- | 8AT | R | L | Closed Off-Road Van 4WD DT306(AJ20D6) | For vehicles without electronic limited slip diff. | GDS82346 | Drive Shaft | | 31 | 31 | 68.2 | 97 | 838 | |
| | 2020.09- | 8AT | R | L | Closed Off-Road Van 4WD DT306(AJ20D6) | For vehicles with electronic limited slip diff. | GDS84013 | Drive Shaft | | 31 | 31 | 68.2 | 97 | 838 | |
| | 2020.09- | 8AT | R | R | Closed Off-Road Van 4WD DT306(AJ20D6) | | GDS83549 | Drive Shaft | | 31 | 31 | 68.2 | 97 | 860 | |
| | 2020.09- | 8AT | R | L/R | Closed Off-Road Van 4WD DT306(AJ20D6) | | GCO82414 | Outer Joint | | 31 | 28 | 68.2 | 97 | 61 | I |
| | 2020.09- | 8AT | R | L | Closed Off-Road Van 4WD DT306(AJ20D6) | For vehicles with electronic limited slip diff. | GCI82452 | Inner Joint | | 31 | 28 | 44 | 152 | 105 | |
| | 2020.09- | 8AT | R | L/R | Closed Off-Road Van 4WD DT306(AJ20D6) | Possion:Left,For vehicles without electronic limited slip diff. | GCI81763 | Inner Joint | | 31 | 28 | 44 | 86 | 110.5 | |
| 3.0 (183 kw) | 2020.09- | 8AT | R | L | Closed Off-Road Van 4WD DT306(AJ20D6) | For vehicles without electronic limited slip diff. | GDS82346 | Drive Shaft | | 31 | 31 | 68.2 | 97 | 838 | |
| | 2020.09- | 8AT | R | L | Closed Off-Road Van 4WD DT306(AJ20D6) | For vehicles with electronic limited slip diff. | GDS84013 | Drive Shaft | | 31 | 31 | 68.2 | 97 | 838 | |
| | 2020.09- | 8AT | R | R | Closed Off-Road Van 4WD DT306(AJ20D6) | | GDS83549 | Drive Shaft | | 31 | 31 | 68.2 | 97 | 860 | |
| | 2020.09- | 8AT | R | L/R | Closed Off-Road Van 4WD DT306(AJ20D6) | | GCO82414 | Outer Joint | | 31 | 28 | 68.2 | 97 | 61 | I |
| | 2020.09- | 8AT | R | L | Closed Off-Road Van 4WD DT306(AJ20D6) | For vehicles with electronic limited slip diff. | GCI82452 | Inner Joint | | 31 | 28 | 44 | 152 | 105 | |
| | 2020.09- | 8AT | R | L/R | Closed Off-Road Van 4WD DT306(AJ20D6) | Possion:Left,For vehicles without electronic limited slip diff. | GCI81763 | Inner Joint | | 31 | 28 | 44 | 86 | 110.5 | |
| 3.0 (221 kw) | 2020.09- | 8AT | R | L | Closed Off-Road Van 4WD DT306(AJ20D6) | For vehicles without electronic limited slip diff. | GDS82346 | Drive Shaft | | 31 | 31 | 68.2 | 97 | 838 | |
| | 2020.09- | 8AT | R | L | Closed Off-Road Van 4WD DT306(AJ20D6) | For vehicles with electronic limited slip diff. | GDS84013 | Drive Shaft | | 31 | 31 | 68.2 | 97 | 838 | |
| | 2020.09- | 8AT | R | R | Closed Off-Road Van 4WD DT306(AJ20D6) | | GDS83549 | Drive Shaft | | 31 | 31 | 68.2 | 97 | 860 | |
| | 2020.09- | 8AT | R | L/R | Closed Off-Road Van 4WD DT306(AJ20D6) | | GCO82414 | Outer Joint | | 31 | 28 | 68.2 | 97 | 61 | I |
| | 2020.09- | 8AT | R | L | Closed Off-Road Van 4WD DT306(AJ20D6) | For vehicles with electronic limited slip diff. | GCI82452 | Inner Joint | | 31 | 28 | 44 | 152 | 105 | |
| | 2020.09- | 8AT | R | L/R | Closed Off-Road Van 4WD DT306(AJ20D6) | Possion:Left,For vehicles without electronic limited slip diff. | GCI81763 | Inner Joint | | 31 | 28 | 44 | 86 | 110.5 | |
| 3.0 (258 kw) | 2024.05- | 8AT | R | L | Closed Off-Road Van 4WD DT306(AJ20D6) | For vehicles without electronic limited slip diff. | GDS82346 | Drive Shaft | | 31 | 31 | 68.2 | 97 | 838 | |
| | 2024.05- | 8AT | R | L | Closed Off-Road Van 4WD DT306(AJ20D6) | For vehicles with electronic limited slip diff. | GDS84013 | Drive Shaft | | 31 | 31 | 68.2 | 97 | 838 | |
| | 2024.05- | 8AT | R | R | Closed Off-Road Van 4WD DT306(AJ20D6) | | GDS83549 | Drive Shaft | | 31 | 31 | 68.2 | 97 | 860 | |
| | 2024.05- | 8AT | R | L/R | Closed Off-Road Van 4WD DT306(AJ20D6) | | GCO82414 | Outer Joint | | 31 | 28 | 68.2 | 97 | 61 | I |
| | 2024.05- | 8AT | R | L | Closed Off-Road Van 4WD DT306(AJ20D6) | For vehicles with electronic limited slip diff. | GCI82452 | Inner Joint | | 31 | 28 | 44 | 152 | 105 | |
| 3.0 (294 kw) | 2020.02- | 8AT | R | L | Closed Off-Road Van 4WD PT306(AJ20P6) | For vehicles without electronic limited slip diff. | GDS82346 | Drive Shaft | | 31 | 31 | 68.2 | 97 | 838 | |
| | 2020.02- | 8AT | R | L | Closed Off-Road Van 4WD PT306(AJ20P6) | For vehicles with electronic limited slip diff. | GDS84013 | Drive Shaft | | 31 | 31 | 68.2 | 97 | 838 | |
| | 2020.02- | 8AT | R | R | Closed Off-Road Van 4WD PT306(AJ20P6) | | GDS83549 | Drive Shaft | | 31 | 31 | 68.2 | 97 | 860 | |
| | 2020.02- | 8AT | R | L/R | Closed Off-Road Van 4WD PT306(AJ20P6) | | GCO82414 | Outer Joint | | 31 | 28 | 68.2 | 97 | 61 | I |

| | YEAR | TRANSM. | F/R | L/R | BODY STYLE & DRIVE TYPE & ENGINE | REMARKS | G-AP Ref. | PRODUCT | ABS | Technical Specifications A | B | C | H | L | P |
|---|---|---|---|---|---|---|---|---|---|---|---|---|---|---|---|
| **LAND ROVER** | | | | | | | | | | | | | | | |
| **Defender Van** | | | | | | | | | | | | | | | |
| 3.0 (294 kw) | 2020.02- | 8AT | R | L | Closed Off-Road Van 4WD PT306(AJ20P6) | For vehicles with electronic limited slip diff. | GCI82452 | Inner Joint | | 31 | 28 | 44 | 152 | 105 | |
| | 2020.02- | 8AT | R | L/R | Closed Off-Road Van 4WD PT306(AJ20P6) | Possion:Left,For vehicles without electronic limited slip diff. | GCI81763 | Inner Joint | | 31 | 28 | 44 | 86 | 110.5 | |
| **Discovery** | | | | | | | | | | | | | | | |
| 2.0 (132 kw) | 2016.09- | 8AT | F | L | SUV 4WD 204DTD(AJ20D4) | | GDS84004 | Drive Shaft | | 31 | 29 | 68.5 | 97 | 661 | |
| | 2016.09- | 8AT | F | R | SUV 4WD 204DTD(AJ20D4) | | GDS82516 | Drive Shaft | | 31 | 29 | 68.5 | 97 | 1027 | |
| | 2016.09- | 8AT | F | L/R | SUV 4WD 204DTD(AJ20D4) | | GCO81975 | Outer Joint | | 31 | 27 | 68.5 | 97 | 61 | I |
| | 2016.09- | 8AT | F | L | SUV 4WD 204DTD(AJ20D4) | | GCI82248 | Inner Joint | | 29 | 27 | 44 | 71.5 | 129 | |
| | 2016.09- | 8AT | F | R | SUV 4WD 204DTD(AJ20D4) | | GCI82268 | Inner Joint | | 29 | 27 | 44 | 461 | 100 | |
| | 2016.09- | 8AT | R | L | SUV 4WD 204DTD(AJ20D4) | For vehicles without electronic limited slip diff. | GDS82346 | Drive Shaft | | 31 | 31 | 68.2 | 97 | 838 | |
| | 2016.09- | 8AT | R | L | SUV 4WD 204DTD(AJ20D4) | For vehicles with electronic limited slip diff. | GDS84013 | Drive Shaft | | 31 | 31 | 68.2 | 97 | 838 | |
| | 2016.09- | 8AT | R | R | SUV 4WD 204DTD(AJ20D4) | | GDS83549 | Drive Shaft | | 31 | 31 | 68.2 | 97 | 860 | |
| | 2016.09- | 8AT | R | L/R | SUV 4WD 204DTD(AJ20D4) | | GCO82414 | Outer Joint | | 31 | 28 | 68.2 | 97 | 61 | I |
| | 2016.09- | 8AT | R | L | SUV 4WD 204DTD(AJ20D4) | For vehicles with electronic limited slip diff. | GCI82452 | Inner Joint | | 31 | 28 | 44 | 152 | 105 | |
| | 2016.09- | 8AT | R | L/R | SUV 4WD 204DTD(AJ20D4) | Possion:Left,For vehicles without electronic limited slip diff. | GCI81763 | Inner Joint | | 31 | 28 | 44 | 86 | 110.5 | |
| | 2016.09-2018.12 | 8AT | F | L | SUV Van 4WD 204DTD(AJ20D4) | | GDS84004 | Drive Shaft | | 31 | 29 | 68.5 | 97 | 661 | |
| | 2016.09-2018.12 | 8AT | F | R | SUV Van 4WD 204DTD(AJ20D4) | | GDS82516 | Drive Shaft | | 31 | 29 | 68.5 | 97 | 1027 | |
| | 2016.09-2018.12 | 8AT | F | L/R | SUV Van 4WD 204DTD(AJ20D4) | | GCO81975 | Outer Joint | | 31 | 27 | 68.5 | 97 | 61 | I |
| | 2016.09-2018.12 | 8AT | F | L | SUV Van 4WD 204DTD(AJ20D4) | | GCI82248 | Inner Joint | | 29 | 27 | 44 | 71.5 | 129 | |
| | 2016.09-2018.12 | 8AT | F | R | SUV Van 4WD 204DTD(AJ20D4) | | GCI82268 | Inner Joint | | 29 | 27 | 44 | 461 | 100 | |
| | 2016.09-2018.12 | 8AT | R | L | SUV Van 4WD 204DTD(AJ20D4) | For vehicles without electronic limited slip diff. | GDS82346 | Drive Shaft | | 31 | 31 | 68.2 | 97 | 838 | |
| | 2016.09-2018.12 | 8AT | R | L | SUV Van 4WD 204DTD(AJ20D4) | For vehicles with electronic limited slip diff. | GDS84013 | Drive Shaft | | 31 | 31 | 68.2 | 97 | 838 | |
| | 2016.09-2018.12 | 8AT | R | R | SUV Van 4WD 204DTD(AJ20D4) | | GDS83549 | Drive Shaft | | 31 | 31 | 68.2 | 97 | 860 | |
| | 2016.09-2018.12 | 8AT | R | L/R | SUV Van 4WD 204DTD(AJ20D4) | | GCO82414 | Outer Joint | | 31 | 28 | 68.2 | 97 | 61 | I |
| | 2016.09-2018.12 | 8AT | R | L | SUV Van 4WD 204DTD(AJ20D4) | For vehicles with electronic limited slip diff. | GCI82452 | Inner Joint | | 31 | 28 | 44 | 152 | 105 | |
| | 2016.09-2018.12 | 8AT | R | L/R | SUV Van 4WD 204DTD(AJ20D4) | Possion:Left,For vehicles without electronic limited slip diff. | GCI81763 | Inner Joint | | 31 | 28 | 44 | 86 | 110.5 | |
| 2.0 (176 kw) | 2015.03- | 9AT | F | L | SUV 4WD 204PT | | GDS84193 | Drive Shaft | | 31 | 31 | 68.5 | 97 | 600 | |
| | 2015.03- | 9AT | F | R | SUV 4WD 204PT | | GDS84191 | Drive Shaft | | 31 | 28 | 68.5 | 97 | 1042 | |
| 2.0 (177 kw) | 2016.09- | 8AT | F | L | SUV 4WD 204DTA(AJ20D4) | | GDS84004 | Drive Shaft | | 31 | 29 | 68.5 | 97 | 661 | |
| | 2016.09- | 8AT | F | R | SUV 4WD 204DTA(AJ20D4) | | GDS82516 | Drive Shaft | | 31 | 29 | 68.5 | 97 | 1027 | |
| | 2016.09- | 8AT | F | L/R | SUV 4WD 204DTA(AJ20D4) | | GCO81975 | Outer Joint | | 31 | 27 | 68.5 | 97 | 61 | I |
| | 2016.09- | 8AT | F | L | SUV 4WD 204DTA(AJ20D4) | | GCI82248 | Inner Joint | | 29 | 27 | 44 | 71.5 | 129 | |
| | 2016.09- | 8AT | F | R | SUV 4WD 204DTA(AJ20D4) | | GCI82268 | Inner Joint | | 29 | 27 | 44 | 461 | 100 | |
| | 2016.09- | 8AT | R | L | SUV 4WD 204DTA(AJ20D4) | For vehicles without electronic limited slip diff. | GDS82346 | Drive Shaft | | 31 | 31 | 68.2 | 97 | 838 | |
| | 2016.09- | 8AT | R | L | SUV 4WD 204DTA(AJ20D4) | For vehicles with electronic limited slip diff. | GDS84013 | Drive Shaft | | 31 | 31 | 68.2 | 97 | 838 | |
| | 2016.09- | 8AT | R | R | SUV 4WD 204DTA(AJ20D4) | | GDS83549 | Drive Shaft | | 31 | 31 | 68.2 | 97 | 860 | |
| | 2016.09- | 8AT | R | L/R | SUV 4WD 204DTA(AJ20D4) | | GCO82414 | Outer Joint | | 31 | 28 | 68.2 | 97 | 61 | I |
| | 2016.09- | 8AT | R | L | SUV 4WD 204DTA(AJ20D4) | For vehicles with electronic limited slip diff. | GCI82452 | Inner Joint | | 31 | 28 | 44 | 152 | 105 | |
| | 2016.09- | 8AT | R | L/R | SUV 4WD 204DTA(AJ20D4) | Possion:Left,For vehicles without electronic limited slip diff. | GCI81763 | Inner Joint | | 31 | 28 | 44 | 86 | 110.5 | |
| | 2016.09- | 8AT | F | L | SUV Van 4WD 204DTA(AJ20D4) | | GDS84004 | Drive Shaft | | 31 | 29 | 68.5 | 97 | 661 | |
| | 2016.09- | 8AT | F | R | SUV Van 4WD 204DTA(AJ20D4) | | GDS82516 | Drive Shaft | | 31 | 29 | 68.5 | 97 | 1027 | |
| | 2016.09- | 8AT | F | L/R | SUV Van 4WD 204DTA(AJ20D4) | | GCO81975 | Outer Joint | | 31 | 27 | 68.5 | 97 | 61 | I |
| | 2016.09- | 8AT | F | L | SUV Van 4WD 204DTA(AJ20D4) | | GCI82248 | Inner Joint | | 29 | 27 | 44 | 71.5 | 129 | |
| | 2016.09- | 8AT | F | R | SUV Van 4WD 204DTA(AJ20D4) | | GCI82268 | Inner Joint | | 29 | 27 | 44 | 461 | 100 | |
| | 2016.09- | 8AT | R | L | SUV Van 4WD 204DTA(AJ20D4) | For vehicles without electronic limited slip diff. | GDS82346 | Drive Shaft | | 31 | 31 | 68.2 | 97 | 838 | |
| | 2016.09- | 8AT | R | L | SUV Van 4WD 204DTA(AJ20D4) | For vehicles with electronic limited slip diff. | GDS84013 | Drive Shaft | | 31 | 31 | 68.2 | 97 | 838 | |
| | 2016.09- | 8AT | R | R | SUV Van 4WD 204DTA(AJ20D4) | | GDS83549 | Drive Shaft | | 31 | 31 | 68.2 | 97 | 860 | |
| | 2016.09- | 8AT | R | L/R | SUV Van 4WD 204DTA(AJ20D4) | | GCO82414 | Outer Joint | | 31 | 28 | 68.2 | 97 | 61 | I |
| | 2016.09- | 8AT | R | L | SUV Van 4WD 204DTA(AJ20D4) | For vehicles with electronic limited slip diff. | GCI82452 | Inner Joint | | 31 | 28 | 44 | 152 | 105 | |
| | 2016.09- | 8AT | R | L/R | SUV Van 4WD 204DTA(AJ20D4) | Possion:Left,For vehicles without electronic limited slip diff. | GCI81763 | Inner Joint | | 31 | 28 | 44 | 86 | 110.5 | |
| 2.0 (221 kw) | 2017.09- | 8AT | F | L | SUV 4WD PT204(AJ20P4) | | GDS84004 | Drive Shaft | | 31 | 29 | 68.5 | 97 | 661 | |
| | 2017.09- | 8AT | F | R | SUV 4WD PT204(AJ20P4) | | GDS82516 | Drive Shaft | | 31 | 29 | 68.5 | 97 | 1027 | |
| | 2017.09- | 8AT | F | L/R | SUV 4WD PT204(AJ20P4) | | GCO81975 | Outer Joint | | 31 | 27 | 68.5 | 97 | 61 | I |
| | 2017.09- | 8AT | F | L | SUV 4WD PT204(AJ20P4) | | GCI82248 | Inner Joint | | 29 | 27 | 44 | 71.5 | 129 | |
| | 2017.09- | 8AT | F | R | SUV 4WD PT204(AJ20P4) | | GCI82268 | Inner Joint | | 29 | 27 | 44 | 461 | 100 | |
| | 2017.09- | 8AT | R | L | SUV 4WD PT204(AJ20P4) | For vehicles without electronic limited slip diff. | GDS82346 | Drive Shaft | | 31 | 31 | 68.2 | 97 | 838 | |
| | 2017.09- | 8AT | R | L | SUV 4WD PT204(AJ20P4) | For vehicles with electronic limited slip diff. | GDS84013 | Drive Shaft | | 31 | 31 | 68.2 | 97 | 838 | |
| | 2017.09- | 8AT | R | R | SUV 4WD PT204(AJ20P4) | | GDS83549 | Drive Shaft | | 31 | 31 | 68.2 | 97 | 860 | |
| | 2017.09- | 8AT | R | L/R | SUV 4WD PT204(AJ20P4) | | GCO82414 | Outer Joint | | 31 | 28 | 68.2 | 97 | 61 | I |
| | 2017.09- | 8AT | R | L | SUV 4WD PT204(AJ20P4) | For vehicles with electronic limited slip diff. | GCI82452 | Inner Joint | | 31 | 28 | 44 | 152 | 105 | |
| | 2017.09- | 8AT | R | L/R | SUV 4WD PT204(AJ20P4) | Possion:Left,For vehicles without electronic limited slip diff. | GCI81763 | Inner Joint | | 31 | 28 | 44 | 86 | 110.5 | |
| | 2017.09- | 8AT | F | L | SUV Van 4WD PT204(AJ20P4) | | GDS84004 | Drive Shaft | | 31 | 29 | 68.5 | 97 | 661 | |
| | 2017.09- | 8AT | F | R | SUV Van 4WD PT204(AJ20P4) | | GDS82516 | Drive Shaft | | 31 | 29 | 68.5 | 97 | 1027 | |
| | 2017.09- | 8AT | F | L/R | SUV Van 4WD PT204(AJ20P4) | | GCO81975 | Outer Joint | | 31 | 27 | 68.5 | 97 | 61 | I |
| | 2017.09- | 8AT | F | L | SUV Van 4WD PT204(AJ20P4) | | GCI82248 | Inner Joint | | 29 | 27 | 44 | 71.5 | 129 | |
| | 2017.09- | 8AT | F | R | SUV Van 4WD PT204(AJ20P4) | | GCI82268 | Inner Joint | | 29 | 27 | 44 | 461 | 100 | |

| | YEAR | TRANSM. | F/R | L/R | BODY STYLE & DRIVE TYPE & ENGINE | REMARKS | G-AP Ref. | PRODUCT | ABS | Technical Specifications A | B | C | H | L | P |
|---|---|---|---|---|---|---|---|---|---|---|---|---|---|---|---|
| **LAND ROVER** | | | | | | | | | | | | | | | |
| **Discovery** | | | | | | | | | | | | | | | |
| 2.0 (221 kw) | 2017.09- | 8AT | R | L | SUV Van 4WD PT204(AJ20P4) | For vehicles without electronic limited slip diff. | GDS82346 | Drive Shaft | | 31 | 31 | 68.2 | 97 | 838 | |
| | 2017.09- | 8AT | R | L | SUV Van 4WD PT204(AJ20P4) | For vehicles with electronic limited slip diff. | GDS84013 | Drive Shaft | | 31 | 31 | 68.2 | 97 | 838 | |
| | 2017.09- | 8AT | R | R | SUV Van 4WD PT204(AJ20P4) | | GDS83549 | Drive Shaft | | 31 | 31 | 68.2 | 97 | 860 | |
| | 2017.09- | 8AT | R | L/R | SUV Van 4WD PT204(AJ20P4) | | GCO82414 | Outer Joint | | 31 | 28 | 68.2 | 97 | 61 | I |
| | 2017.09- | 8AT | R | L | SUV Van 4WD PT204(AJ20P4) | For vehicles with electronic limited slip diff. | GCI82452 | Inner Joint | | 31 | 28 | 44 | 152 | 105 | |
| | 2017.09- | 8AT | R | L/R | SUV Van 4WD PT204(AJ20P4) | Possion:Left,For vehicles without electronic limited slip diff. | GCI81763 | Inner Joint | | 31 | 28 | 44 | 86 | 110.5 | |
| 2.5 (83 kw) | 1989.10-1998.12 | MT | F | L | Terrain cab wagon closed 4WD 12L/17L/21L | | GDS83633 | Drive Shaft | 60W | 24 | | 40 | 154 | 1010 | |
| | 1989.10-1998.12 | MT | F | R | Terrain cab wagon closed 4WD 12L/17L/21L | | GDS83650 | Drive Shaft | 60W | 24 | | 40 | 154 | 622 | |
| | 1989.10-1998.12 | MT | F | L/R | Terrain cab wagon closed 4WD 12L/17L/21L | Chassis no. from:JA032850 | GCO30004 | Outer Joint | 60W | 24 | 32 | 40 | 154 | 56 | I |
| 2.5 (90 kw) | 1994.07-1998.10 | | F | L/R | Terrain cab wagon closed 4WD 19L/21L/22L | Chassis no. from:JA032850 | GCO30004 | Outer Joint | 60W | 24 | 32 | 40 | 154 | 56 | I |
| 2.5 (100 kw) | 1998.11-2004.06 | 5MT | F | L | Terrain cab wagon closed 4WD 15P | | GDS51074 | Drive Shaft | | 24 | 24 | 62 | 100 | 1005 | |
| | 1998.11-2004.06 | 5MT | F | R | Terrain cab wagon closed 4WD 15P | | GDS51075 | Drive Shaft | | 24 | 24 | 62 | 100 | 654 | |
| | 1998.11-2004.06 | | F | L/R | Terrain cab wagon closed 4WD 15P | | GCO99211 | Outer Joint | | 24 | 32 | 62 | 100 | 95 | I |
| 2.5 (102 kw) | 1998.11-2004.06 | 4AT/5MT | F | L | Terrain cab wagon closed 4WD 10P/15P | | GDS51074 | Drive Shaft | | 24 | 24 | 62 | 100 | 1005 | |
| | 1998.11-2004.06 | 4AT/5MT | F | R | Terrain cab wagon closed 4WD 10P/15P | | GDS51075 | Drive Shaft | | 24 | 24 | 62 | 100 | 654 | |
| | 1998.11-2004.06 | AT/MT | F | L/R | Terrain cab wagon closed 4WD 10P/15P | | GCO99211 | Outer Joint | | 24 | 32 | 62 | 100 | 95 | I |
| 2.7 (140 kw) | 2004.07-2009.09 | 6MT | F | L | Closed Off-Road Vehicle 4WD 276DT(TDV6) | | GDS30002 | Drive Shaft | 48T | 29 | 29 | 74 | 96 | 638 | |
| | 2004.07-2009.09 | 6MT | F | L | Closed Off-Road Vehicle 4WD 276DT(TDV6) | | GCI59115 | Inner Joint | | 29 | 27 | 44 | 71.5 | 111.5 | |
| | 2004.07-2009.09 | MT | F | L/R | Closed Off-Road Vehicle 4WD 276DT(TDV6) | | GCO30012 | Outer Joint | 48T | 29 | 27 | 74 | 96 | 67.5 | M |
| | 2004.07-2009.09 | MT | F | R | Closed Off-Road Vehicle 4WD 276DT(TDV6) | | GCI59194 | Inner Joint | | 29 | 27 | 41.3 | 364 | 93 | |
| | 2004.07-2009.09 | Semi-AT | F | L | Closed Off-Road Vehicle 4WD 276DT(TDV6) | | GDS59535 | Drive Shaft | 48T | 29 | 29 | 74 | 96 | 639 | |
| | 2004.07-2009.09 | Semi-AT | F | L/R | Closed Off-Road Vehicle 4WD 276DT(TDV6) | | GCO30015 | Outer Joint | 48T | 29 | 26 | 74 | 96 | 64.5 | M |
| | 2004.07-2009.09 | Semi-AT | F | R | Closed Off-Road Vehicle 4WD 276DT(TDV6) | | GCI59195 | Inner Joint | | 29 | 26 | 41.3 | 370 | 85.5 | |
| | 2004.07-2009.09 | Semi-AT/MT | F | R | Closed Off-Road Vehicle 4WD 276DT(TDV6) | | GDS59623 | Drive Shaft | 48T | 29 | 29 | 74 | 96 | 998 | |
| | 2004.07-2009.09 | AT | R | R | Closed Off-Road Vehicle 4WD 276DT(TDV6) | With differential lock | GCI83500 | Inner Joint | | 31 | 30 | 44 | 182 | 124.5 | |
| | 2004.07-2009.09 | SAT/6MT | R | L | Closed Off-Road Vehicle 4WD 276DT(TDV6) | with differential lock | GDS83160 | Drive Shaft | 48T | 31 | 31 | 73 | 97.5 | 786 | |
| | 2004.07-2009.09 | SAT/6MT | R | R | Closed Off-Road Vehicle 4WD 276DT(TDV6) | | GDS83159 | Drive Shaft | 48T | 31 | 31 | 73 | 97.5 | 839 | |
| | 2004.07-2009.09 | SAT/6MT | R | L/R | Closed Off-Road Vehicle 4WD 276DT(TDV6) | without differential lock | GCO18229 | Outer Joint | 48T | 31 | 27 | 73 | 97.5 | 67.5 | M |
| | 2004.07-2009.09 | SAT/6MT | R | L/R | Closed Off-Road Vehicle 4WD 276DT(TDV6) | with differential lock | GCO30014 | Outer Joint | 48T | 31 | 29 | 74 | 96.5 | 75.5 | M |
| | 2004.07-2009.09 | SAT/6MT | R | L | Closed Off-Road Vehicle 4WD 276DT(TDV6) | with differential lock | GCI82147 | Inner Joint | | 31 | 30 | 44 | 151.5 | 124.5 | |
| | 2004.07-2009.09 | SAT/6MT | R | R | Closed Off-Road Vehicle 4WD 276DT(TDV6) | Without differential lock | GCI82146 | Inner Joint | | 31 | 30 | 44 | 182 | 124.5 | |
| | 2007.01-2009.07 | 6MT | F | L | Van 4WD 276DT(TDV6) | | GDS59535 | Drive Shaft | 48T | 29 | 29 | 74 | 96 | 639 | |
| | 2007.01-2009.07 | 6MT | F | R | Van 4WD 276DT(TDV6) | | GDS59623 | Drive Shaft | 48T | 29 | 29 | 74 | 96 | 998 | |
| | 2007.01-2009.07 | 6MT | F | L/R | Van 4WD 276DT(TDV6) | | GCO30012 | Outer Joint | 48T | 29 | 27 | 74 | 96 | 67.5 | M |
| | 2007.01-2009.07 | AT | F | R | Van 4WD 276DT(TDV6) | | GCO30015 | Outer Joint | 48T | 29 | 26 | 74 | 96 | 64.5 | M |
| | 2007.01-2009.07 | AT | F | R | Van 4WD 276DT(TDV6) | | GCI59195 | Inner Joint | | 29 | 26 | 41.3 | 370 | 85.5 | |
| | 2007.01-2009.07 | AT | R | R | Van 4WD 276DT(TDV6) | With differential lock | GCI83500 | Inner Joint | | 31 | 30 | 44 | 182 | 124.5 | |
| | 2007.01-2009.07 | SAT/6MT | R | L | Van 4WD 276DT(TDV6) | With differential lock | GDS83160 | Drive Shaft | 48T | 31 | 31 | 73 | 97.5 | 786 | |
| | 2007.01-2009.07 | SAT/6MT | R | R | Van 4WD 276DT(TDV6) | | GDS83159 | Drive Shaft | 48T | 31 | 31 | 73 | 97.5 | 839 | |
| | 2007.01-2009.07 | SAT/6MT | R | L/R | Van 4WD 276DT(TDV6) | | GCO18229 | Outer Joint | 48T | 31 | 27 | 73 | 97.5 | 67.5 | M |
| | 2007.01-2009.07 | SAT/6MT | R | L | Van 4WD 276DT(TDV6) | With differential lock | GCI82147 | Inner Joint | | 31 | 30 | 44 | 151.5 | 124.5 | |
| | 2007.01-2009.07 | SAT/6MT | R | R | Van 4WD 276DT(TDV6) | Without differential lock | GCI82146 | Inner Joint | | 31 | 30 | 44 | 182 | 124.5 | |
| | 2007.01-2009.07 | | R | L/R | Van 4WD 276DT(TDV6) | Differential:With differential lock | GCO30014 | Outer Joint | 48T | 31 | 29 | 74 | 96.5 | 75.5 | M |
| | 2009.09-2018.12 | 6AT | F | L | Closed Off-Road Vehicle 4WD 276DT(TDV6) | | GDS59535 | Drive Shaft | 48T | 29 | 29 | 74 | 96 | 639 | |
| | 2009.09-2018.12 | 6AT | F | L/R | Closed Off-Road Vehicle 4WD 276DT(TDV6) | | GCO30015 | Outer Joint | 48T | 29 | 26 | 74 | 96 | 64.5 | M |
| | 2009.09-2018.12 | 6AT | F | R | Closed Off-Road Vehicle 4WD 276DT(TDV6) | | GCI59195 | Inner Joint | | 29 | 26 | 41.3 | 370 | 85.5 | |
| | 2009.09-2018.12 | 6AT/6MT | F | R | Closed Off-Road Vehicle 4WD 276DT(TDV6) | | GDS59623 | Drive Shaft | 48T | 29 | 29 | 74 | 96 | 998 | |
| | 2009.09-2018.12 | 6MT | F | L | Closed Off-Road Vehicle 4WD 276DT(TDV6) | | GDS30002 | Drive Shaft | 48T | 29 | 29 | 74 | 96 | 638 | |
| | 2009.09-2018.12 | 6MT | F | L/R | Closed Off-Road Vehicle 4WD 276DT(TDV6) | | GCO30012 | Outer Joint | 48T | 29 | 27 | 74 | 96 | 67.5 | M |
| | 2009.09-2018.12 | 6MT | F | L | Closed Off-Road Vehicle 4WD 276DT(TDV6) | | GCI59115 | Inner Joint | | 29 | 27 | 44 | 71.5 | 111.5 | |
| | 2009.09-2018.12 | 6MT | F | R | Closed Off-Road Vehicle 4WD 276DT(TDV6) | | GCI59194 | Inner Joint | | 29 | 27 | 41.3 | 364 | 93 | |
| | 2009.09-2018.12 | 6AT/6MT | R | L | Closed Off-Road Vehicle 4WD 276DT(TDV6) | with differential lock | GDS83160 | Drive Shaft | 48T | 31 | 31 | 73 | 97.5 | 786 | |
| | 2009.09-2018.12 | 6AT/6MT | R | R | Closed Off-Road Vehicle 4WD 276DT(TDV6) | without differential lock | GDS83159 | Drive Shaft | 48T | 31 | 31 | 73 | 97.5 | 839 | |
| | 2009.09-2018.12 | 6AT/6MT | R | L/R | Closed Off-Road Vehicle 4WD 276DT(TDV6) | without differential lock | GCO18229 | Outer Joint | 48T | 31 | 27 | 73 | 97.5 | 67.5 | M |
| | 2009.09-2018.12 | 6AT/6MT | R | L/R | Closed Off-Road Vehicle 4WD 276DT(TDV6) | with differential lock | GCO30014 | Outer Joint | 48T | 31 | 29 | 74 | 96.5 | 75.5 | M |
| | 2009.09-2018.12 | 6AT/6MT | R | L | Closed Off-Road Vehicle 4WD 276DT(TDV6) | with differential lock | GCI82147 | Inner Joint | | 31 | 30 | 44 | 151.5 | 124.5 | |
| | 2009.09-2018.12 | 6AT/6MT | R | R | Closed Off-Road Vehicle 4WD 276DT(TDV6) | Without differential lock | GCI82146 | Inner Joint | | 31 | 30 | 44 | 182 | 124.5 | |
| | 2009.09-2018.12 | AT | R | R | Closed Off-Road Vehicle 4WD 276DT(TDV6) | With differential lock | GCI83500 | Inner Joint | | 31 | 30 | 44 | 182 | 124.5 | |
| 3.0 (155 kw) | 2010.05-2018.12 | 6AT/8AT | F | L | Closed Off-Road Vehicle 4WD 306DT(TDV6) | | GDS59535 | Drive Shaft | 48T | 29 | 29 | 74 | 96 | 639 | |
| | 2010.05-2018.12 | 6AT/8AT | F | R | Closed Off-Road Vehicle 4WD 306DT(TDV6) | | GDS59623 | Drive Shaft | 48T | 29 | 29 | 74 | 96 | 998 | |
| | 2010.05-2018.12 | 6AT/8AT | F | L/R | Closed Off-Road Vehicle 4WD 306DT(TDV6) | | GCO30015 | Outer Joint | 48T | 29 | 26 | 74 | 96 | 64.5 | M |
| | 2010.05-2018.12 | 6AT/8AT | F | R | Closed Off-Road Vehicle 4WD 306DT(TDV6) | | GCI59195 | Inner Joint | | 29 | 26 | 41.3 | 370 | 85.5 | |
| | 2010.05-2018.12 | 6AT/8AT | R | L | Closed Off-Road Vehicle 4WD 306DT(TDV6) | With differential lock | GDS83160 | Drive Shaft | 48T | 31 | 31 | 73 | 97.5 | 786 | |
| | 2010.05-2018.12 | 6AT/8AT | R | R | Closed Off-Road Vehicle 4WD 306DT(TDV6) | Without differential lock | GDS83159 | Drive Shaft | 48T | 31 | 31 | 73 | 97.5 | 839 | |
| | 2010.05-2018.12 | 6AT/8AT | R | L/R | Closed Off-Road Vehicle 4WD 306DT(TDV6) | | GCO18229 | Outer Joint | 48T | 31 | 27 | 73 | 97.5 | 67.5 | M |

| | YEAR | TRANSM. | F/R | L/R | BODY STYLE & DRIVE TYPE & ENGINE | REMARKS | G-AP Ref. | PRODUCT | ABS | Technical Specifications A | B | C | H | L | P |
|---|---|---|---|---|---|---|---|---|---|---|---|---|---|---|---|
| **LAND ROVER** | | | | | | | | | | | | | | | |
| **Discovery** | | | | | | | | | | | | | | | |
| 3.0 (155 kw) | 2010.05-2018.12 | 6AT/8AT | R | L | Closed Off-Road Vehicle 4WD 306DT(TDV6) | With differential lock | GCI82147 | Inner Joint | | 31 | 30 | 44 | 151.5 | 124.5 | |
| | 2010.05-2018.12 | 6AT/8AT | R | R | Closed Off-Road Vehicle 4WD 306DT(TDV6) | Without differential lock | GCI82146 | Inner Joint | | 31 | 30 | 44 | 182 | 124.5 | |
| | 2010.05-2018.12 | AT | R | L/R | Closed Off-Road Vehicle 4WD 306DT(TDV6) | With differential lock | GCO30014 | Outer Joint | 48T | 31 | 29 | 74 | 96.5 | 75.5 | M |
| | 2010.05-2018.12 | AT | R | R | Closed Off-Road Vehicle 4WD 306DT(TDV6) | With differential lock | GCI83500 | Inner Joint | | 31 | 30 | 44 | 182 | 124.5 | |
| | 2011.01-2017.12 | 6AT | F | L | Van 4WD 306DT(TDV6) | | GDS59535 | Drive Shaft | 48T | 29 | 29 | 74 | 96 | 639 | |
| | 2011.01-2017.12 | 6AT | F | R | Van 4WD 306DT(TDV6) | | GDS59623 | Drive Shaft | 48T | 29 | 29 | 74 | 96 | 998 | |
| | 2011.01-2017.12 | | F | L/R | Van 4WD 306DT(TDV6) | | GCO30015 | Outer Joint | 48T | 29 | 26 | 74 | 96 | 64.5 | M |
| | 2011.01-2017.12 | | F | R | Van 4WD 306DT(TDV6) | | GCI59195 | Inner Joint | | 29 | 26 | 41.3 | 370 | 85.5 | |
| | 2011.01-2017.12 | 6AT | R | L | Van 4WD 306DT(TDV6) | With differential lock | GDS83160 | Drive Shaft | 48T | 31 | 31 | 73 | 97.5 | 786 | |
| | 2011.01-2017.12 | 6AT | R | R | Van 4WD 306DT(TDV6) | Without differential lock | GDS83159 | Drive Shaft | 48T | 31 | 31 | 73 | 97.5 | 839 | |
| | 2011.01-2017.12 | 6AT | R | L/R | Van 4WD 306DT(TDV6) | Differential:Without differential lock | GCO18229 | Outer Joint | 48T | 31 | 27 | 73 | 97.5 | 67.5 | M |
| | 2011.01-2017.12 | 6AT | R | L | Van 4WD 306DT(TDV6) | With differential lock | GCI82147 | Inner Joint | | 31 | 30 | 44 | 151.5 | 124.5 | |
| | 2011.01-2017.12 | 6AT | R | R | Van 4WD 306DT(TDV6) | Without differential lock | GCI82146 | Inner Joint | | 31 | 30 | 44 | 182 | 124.5 | |
| | 2011.01-2017.12 | 6AT | R | R | Van 4WD 306DT(TDV6) | With differential lock | GCI83500 | Inner Joint | | 31 | 30 | 44 | 182 | 124.5 | |
| | 2011.01-2017.12 | | R | L/R | Van 4WD 306DT(TDV6) | Differential:With differential lock | GCO30014 | Outer Joint | 48T | 31 | 29 | 74 | 96.5 | 75.5 | M |
| | 2016.09- | 8AT | F | L | SUV 4WD 306DT(TDV6) | | GDS84004 | Drive Shaft | | 31 | 29 | 68.5 | 97 | 661 | |
| | 2016.09- | 8AT | F | R | SUV 4WD 306DT(TDV6) | | GDS82516 | Drive Shaft | | 31 | 29 | 68.5 | 97 | 1027 | |
| | 2016.09- | 8AT | F | L/R | SUV 4WD 306DT(TDV6) | | GCO81975 | Outer Joint | | 31 | 27 | 68.5 | 97 | 61 | I |
| | 2016.09- | 8AT | F | L | SUV 4WD 306DT(TDV6) | | GCI82248 | Inner Joint | | 29 | 27 | 44 | 71.5 | 129 | |
| | 2016.09- | 8AT | F | R | SUV 4WD 306DT(TDV6) | | GCI82268 | Inner Joint | | 29 | 27 | 44 | 461 | 100 | |
| | 2016.09- | 8AT | R | L | SUV 4WD 306DT(TDV6) | For vehicles without electronic limited slip diff. | GDS82346 | Drive Shaft | | 31 | 31 | 68.2 | 97 | 838 | |
| | 2016.09- | 8AT | R | L | SUV 4WD 306DT(TDV6) | For vehicles with electronic limited slip diff. | GDS84013 | Drive Shaft | | 31 | 31 | 68.2 | 97 | 838 | |
| | 2016.09- | 8AT | R | R | SUV 4WD 306DT(TDV6) | | GDS83549 | Drive Shaft | | 31 | 31 | 68.2 | 97 | 860 | |
| | 2016.09- | 8AT | R | L/R | SUV 4WD 306DT(TDV6) | | GCO82414 | Outer Joint | | 31 | 28 | 68.2 | 97 | 61 | I |
| | 2016.09- | 8AT | R | L | SUV 4WD 306DT(TDV6) | For vehicles with electronic limited slip diff. | GCI82452 | Inner Joint | | 31 | 28 | 44 | 152 | 105 | |
| | 2016.09- | 8AT | R | L/R | SUV 4WD 306DT(TDV6) | Possion:Left,For vehicles without electronic limited slip diff. | GCI81763 | Inner Joint | | 31 | 28 | 44 | 86 | 110.5 | |
| 3.0 (180 kw) | 2009.09-2018.12 | 6AT | F | L | Closed Off-Road Vehicle 4WD 306DT(TDV6) | | GDS59535 | Drive Shaft | 48T | 29 | 29 | 74 | 96 | 639 | |
| | 2009.09-2018.12 | 6AT | F | R | Closed Off-Road Vehicle 4WD 306DT(TDV6) | | GDS59623 | Drive Shaft | 48T | 29 | 29 | 74 | 96 | 998 | |
| | 2009.09-2018.12 | 6AT | F | R | Closed Off-Road Vehicle 4WD 306DT(TDV6) | | GCI59195 | Inner Joint | | 29 | 26 | 41.3 | 370 | 85.5 | |
| | 2009.09-2018.12 | AT | F | L/R | Closed Off-Road Vehicle 4WD 306DT(TDV6) | | GCO30015 | Outer Joint | 48T | 29 | 26 | 74 | 96 | 64.5 | M |
| | 2009.09-2018.12 | 6AT | R | L | Closed Off-Road Vehicle 4WD 306DT(TDV6) | With differential lock | GDS83160 | Drive Shaft | 48T | 31 | 31 | 73 | 97.5 | 786 | |
| | 2009.09-2018.12 | 6AT | R | R | Closed Off-Road Vehicle 4WD 306DT(TDV6) | Without differential lock | GDS83159 | Drive Shaft | 48T | 31 | 31 | 73 | 97.5 | 839 | |
| | 2009.09-2018.12 | 6AT | R | L/R | Closed Off-Road Vehicle 4WD 306DT(TDV6) | | GCO18229 | Outer Joint | 48T | 31 | 27 | 73 | 97.5 | 67.5 | M |
| | 2009.09-2018.12 | 6AT | R | L | Closed Off-Road Vehicle 4WD 306DT(TDV6) | With differential lock | GCI82147 | Inner Joint | | 31 | 30 | 44 | 151.5 | 124.5 | |
| | 2009.09-2018.12 | 6AT | R | R | Closed Off-Road Vehicle 4WD 306DT(TDV6) | Without differential lock | GCI82146 | Inner Joint | | 31 | 30 | 44 | 182 | 124.5 | |
| | 2009.09-2018.12 | 6AT | R | R | Closed Off-Road Vehicle 4WD 306DT(TDV6) | With differential lock | GCI83500 | Inner Joint | | 31 | 30 | 44 | 182 | 124.5 | |
| | 2009.09-2018.12 | | R | L/R | Closed Off-Road Vehicle 4WD 306DT(TDV6) | Differential:With differential lock | GCO30014 | Outer Joint | 48T | 31 | 29 | 74 | 96.5 | 75.5 | M |
| | 2011.01-2017.12 | 6AT | F | L | Van 4WD 306DT(TDV6) | | GDS59535 | Drive Shaft | 48T | 29 | 29 | 74 | 96 | 639 | |
| | 2011.01-2017.12 | 6AT | F | R | Van 4WD 306DT(TDV6) | | GDS59623 | Drive Shaft | 48T | 29 | 29 | 74 | 96 | 998 | |
| | 2011.01-2017.12 | | F | L/R | Van 4WD 306DT(TDV6) | | GCO30015 | Outer Joint | 48T | 29 | 26 | 74 | 96 | 64.5 | M |
| | 2011.01-2017.12 | | F | R | Van 4WD 306DT(TDV6) | | GCI59195 | Inner Joint | | 29 | 26 | 41.3 | 370 | 85.5 | |
| | 2011.01-2017.12 | 6AT | R | L | Van 4WD 306DT(TDV6) | With differential lock | GDS83160 | Drive Shaft | 48T | 31 | 31 | 73 | 97.5 | 786 | |
| | 2011.01-2017.12 | 6AT | R | R | Van 4WD 306DT(TDV6) | Without differential lock | GDS83159 | Drive Shaft | 48T | 31 | 31 | 73 | 97.5 | 839 | |
| | 2011.01-2017.12 | 6AT | R | L/R | Van 4WD 306DT(TDV6) | | GCO18229 | Outer Joint | 48T | 31 | 27 | 73 | 97.5 | 67.5 | M |
| | 2011.01-2017.12 | 6AT | R | L | Van 4WD 306DT(TDV6) | With differential lock | GCI82147 | Inner Joint | | 31 | 30 | 44 | 151.5 | 124.5 | |
| | 2011.01-2017.12 | 6AT | R | R | Van 4WD 306DT(TDV6) | Without differential lock | GCI82146 | Inner Joint | | 31 | 30 | 44 | 182 | 124.5 | |
| | 2011.01-2017.12 | 6AT | R | R | Van 4WD 306DT(TDV6) | With differential lock | GCI83500 | Inner Joint | | 31 | 30 | 44 | 182 | 124.5 | |
| | 2011.01-2017.12 | | R | L/R | Van 4WD 306DT(TDV6) | Differential:With differential lock | GCO30014 | Outer Joint | 48T | 31 | 29 | 74 | 96.5 | 75.5 | M |
| 3.0 (183 kw) | 2012.07-2018.12 | 6AT/8AT | F | L | Closed Off-Road Vehicle 4WD 306DT(TDV6) | | GDS59535 | Drive Shaft | 48T | 29 | 29 | 74 | 96 | 639 | |
| | 2012.07-2018.12 | 6AT/8AT | F | R | Closed Off-Road Vehicle 4WD 306DT(TDV6) | | GDS59623 | Drive Shaft | 48T | 29 | 29 | 74 | 96 | 998 | |
| | 2012.07-2018.12 | | F | L/R | Closed Off-Road Vehicle 4WD 306DT(TDV6) | | GCO30015 | Outer Joint | 48T | 29 | 26 | 74 | 96 | 64.5 | M |
| | 2012.07-2018.12 | | F | R | Closed Off-Road Vehicle 4WD 306DT(TDV6) | | GCI59195 | Inner Joint | | 29 | 26 | 41.3 | 370 | 85.5 | |
| | 2012.07-2018.12 | 6AT/8AT | R | L | Closed Off-Road Vehicle 4WD 306DT(TDV6) | With differential lock | GDS83160 | Drive Shaft | 48T | 31 | 31 | 73 | 97.5 | 786 | |
| | 2012.07-2018.12 | 6AT/8AT | R | R | Closed Off-Road Vehicle 4WD 306DT(TDV6) | Without differential lock | GDS83159 | Drive Shaft | 48T | 31 | 31 | 73 | 97.5 | 839 | |
| | 2012.07-2018.12 | 6AT/8AT | R | L/R | Closed Off-Road Vehicle 4WD 306DT(TDV6) | | GCO18229 | Outer Joint | 48T | 31 | 27 | 73 | 97.5 | 67.5 | M |
| | 2012.07-2018.12 | 6AT/8AT | R | L | Closed Off-Road Vehicle 4WD 306DT(TDV6) | With differential lock | GCI82147 | Inner Joint | | 31 | 30 | 44 | 151.5 | 124.5 | |
| | 2012.07-2018.12 | 6AT/8AT | R | R | Closed Off-Road Vehicle 4WD 306DT(TDV6) | Without differential lock | GCI82146 | Inner Joint | | 31 | 30 | 44 | 182 | 124.5 | |
| | 2012.07-2018.12 | AT | R | R | Closed Off-Road Vehicle 4WD 306DT(TDV6) | With differential lock | GCI83500 | Inner Joint | | 31 | 30 | 44 | 182 | 124.5 | |
| | 2012.07-2018.12 | | R | L/R | Closed Off-Road Vehicle 4WD 306DT(TDV6) | Differential:With differential lock | GCO30014 | Outer Joint | 48T | 31 | 29 | 74 | 96.5 | 75.5 | M |
| | 2016.09- | 8AT | F | L | SUV 4WD 306DT(TDV6) | | GDS84004 | Drive Shaft | | 31 | 29 | 68.5 | 97 | 661 | |
| | 2016.09- | 8AT | F | R | SUV 4WD 306DT(TDV6) | | GDS82516 | Drive Shaft | | 31 | 29 | 68.5 | 97 | 1027 | |
| | 2016.09- | 8AT | F | L/R | SUV 4WD 306DT(TDV6) | | GCO81975 | Outer Joint | | 31 | 27 | 68.5 | 97 | 61 | I |
| | 2016.09- | 8AT | F | L | SUV 4WD 306DT(TDV6) | | GCI82248 | Inner Joint | | 29 | 27 | 44 | 71.5 | 129 | |
| | 2016.09- | 8AT | F | R | SUV 4WD 306DT(TDV6) | | GCI82268 | Inner Joint | | 29 | 27 | 44 | 461 | 100 | |
| | 2016.09- | 8AT | R | L | SUV 4WD 306DT(TDV6) | For vehicles without electronic limited slip diff. | GDS82346 | Drive Shaft | | 31 | 31 | 68.2 | 97 | 838 | |

| | YEAR | TRANSM. | F/R | L/R | BODY STYLE & DRIVE TYPE & ENGINE | REMARKS | G-AP Ref. | PRODUCT | ABS | Technical Specifications A | B | C | H | L | P |
|---|---|---|---|---|---|---|---|---|---|---|---|---|---|---|---|
| **LAND ROVER** | | | | | | | | | | | | | | | |
| **Discovery** | | | | | | | | | | | | | | | |
| 3.0 (183 kw) | 2016.09- | 8AT | R | L | SUV 4WD 306DT(TDV6) | For vehicles with electronic limited slip diff. | GDS84013 | Drive Shaft | | 31 | 31 | 68.2 | 97 | 838 | |
| | 2016.09- | 8AT | R | R | SUV 4WD 306DT(TDV6) | | GDS83549 | Drive Shaft | | 31 | 31 | 68.2 | 97 | 860 | |
| | 2016.09- | 8AT | R | L/R | SUV 4WD 306DT(TDV6) | | GCO82414 | Outer Joint | | 31 | 28 | 68.2 | 97 | 61 | I |
| | 2016.09- | 8AT | R | L | SUV 4WD 306DT(TDV6) | For vehicles with electronic limited slip diff. | GCI82452 | Inner Joint | | 31 | 28 | 44 | 152 | 105 | |
| | 2016.09- | 8AT | R | L/R | SUV 4WD 306DT(TDV6) | Possion:Left,For vehicles without electronic limited slip diff. | GCI81763 | Inner Joint | | 31 | 28 | 44 | 86 | 110.5 | |
| | 2020.12- | 8AT | F | L | SUV 4WD DT306(AJ20D6) | Vehicle Production Country:Great Britain;Chassis no. to:L2898998;Vehicle Production Country:Slovakia | GDS84004 | Drive Shaft | | 31 | 29 | 68.5 | 97 | 661 | |
| | 2020.12- | 8AT | F | R | SUV 4WD DT306(AJ20D6) | Vehicle Production Country:Great Britain;Chassis no. to:L2898998;Vehicle Production Country:Slovakia | GDS82516 | Drive Shaft | | 31 | 29 | 68.5 | 97 | 1027 | |
| | 2020.12- | 8AT | F | L/R | SUV 4WD DT306(AJ20D6) | | GCO81975 | Outer Joint | | 31 | 27 | 68.5 | 97 | 61 | I |
| | 2020.12- | 8AT | F | L | SUV 4WD DT306(AJ20D6) | Vehicle Production Country:Great Britain;Chassis no. to:L2898998;Vehicle Production Country:Slovakia | GCI82248 | Inner Joint | | 29 | 27 | 44 | 71.5 | 129 | |
| | 2020.12- | 8AT | F | R | SUV 4WD DT306(AJ20D6) | Vehicle Production Country:Great Britain;Chassis no. to:L2898998;Vehicle Production Country:Slovakia | GCI82268 | Inner Joint | | 29 | 27 | 44 | 461 | 100 | |
| | 2020.12- | 8AT | R | L | SUV 4WD DT306(AJ20D6) | For vehicles without electronic limited slip diff. | GDS82346 | Drive Shaft | | 31 | 31 | 68.2 | 97 | 838 | |
| | 2020.12- | 8AT | R | L | SUV 4WD DT306(AJ20D6) | For Vehicles With Electronic Limited Slip Diff. | GDS84013 | Drive Shaft | | 31 | 31 | 68.2 | 97 | 838 | |
| | 2020.12- | 8AT | R | R | SUV 4WD DT306(AJ20D6) | | GDS83549 | Drive Shaft | | 31 | 31 | 68.2 | 97 | 860 | |
| | 2020.12- | 8AT | R | L/R | SUV 4WD DT306(AJ20D6) | | GCO82414 | Outer Joint | | 31 | 28 | 68.2 | 97 | 61 | I |
| | 2020.12- | 8AT | R | L | SUV 4WD DT306(AJ20D6) | For vehicles with electronic limited slip diff. | GCI82452 | Inner Joint | | 31 | 28 | 44 | 152 | 105 | |
| 3.0 (188 kw) | 2009.11-2018.12 | 8AT | F | L | Closed Off-Road Vehicle 4WD 306DT(TDV6) | | GDS59535 | Drive Shaft | 48T | 29 | 29 | 74 | 96 | 639 | |
| | 2009.11-2018.12 | 8AT | F | R | Closed Off-Road Vehicle 4WD 306DT(TDV6) | | GDS59623 | Drive Shaft | 48T | 29 | 29 | 74 | 96 | 998 | |
| | 2009.11-2018.12 | 8AT | F | R | Closed Off-Road Vehicle 4WD 306DT(TDV6) | | GCI59195 | Inner Joint | | 29 | 26 | 41.3 | 370 | 85.5 | |
| | 2009.11-2018.12 | AT | F | L/R | Closed Off-Road Vehicle 4WD 306DT(TDV6) | | GCO30015 | Outer Joint | 48T | 29 | 26 | 74 | 96 | 64.5 | M |
| | 2009.11-2018.12 | 8AT | R | L | Closed Off-Road Vehicle 4WD 306DT(TDV6) | With differential lock | GDS83160 | Drive Shaft | 48T | 31 | 31 | 73 | 97.5 | 786 | |
| | 2009.11-2018.12 | 8AT | R | R | Closed Off-Road Vehicle 4WD 306DT(TDV6) | Without differential lock | GDS83159 | Drive Shaft | 48T | 31 | 31 | 73 | 97.5 | 839 | |
| | 2009.11-2018.12 | 8AT | R | L/R | Closed Off-Road Vehicle 4WD 306DT(TDV6) | | GCO18229 | Outer Joint | 48T | 31 | 27 | 73 | 97.5 | 67.5 | M |
| | 2009.11-2018.12 | 8AT | R | L | Closed Off-Road Vehicle 4WD 306DT(TDV6) | With differential lock | GCI82147 | Inner Joint | | 31 | 30 | 44 | 151.5 | 124.5 | |
| | 2009.11-2018.12 | 8AT | R | R | Closed Off-Road Vehicle 4WD 306DT(TDV6) | Without differential lock | GCI82146 | Inner Joint | | 31 | 30 | 44 | 182 | 124.5 | |
| | 2009.11-2018.12 | 8AT | R | R | Closed Off-Road Vehicle 4WD 306DT(TDV6) | With differential lock | GCI83500 | Inner Joint | | 31 | 30 | 44 | 182 | 124.5 | |
| | 2009.11-2018.12 | | R | L/R | Closed Off-Road Vehicle 4WD 306DT(TDV6) | Differential:With differential lock | GCO30014 | Outer Joint | 48T | 31 | 29 | 74 | 96.5 | 75.5 | M |
| | 2011.01-2017.12 | 8AT | F | L | Van 4WD 306DT(TDV6) | | GDS59535 | Drive Shaft | 48T | 29 | 29 | 74 | 96 | 639 | |
| | 2011.01-2017.12 | 8AT | F | R | Van 4WD 306DT(TDV6) | | GDS59623 | Drive Shaft | 48T | 29 | 29 | 74 | 96 | 998 | |
| | 2011.01-2017.12 | | F | L/R | Van 4WD 306DT(TDV6) | | GCO30015 | Outer Joint | 48T | 29 | 26 | 74 | 96 | 64.5 | M |
| | 2011.01-2017.12 | | F | R | Van 4WD 306DT(TDV6) | | GCI59195 | Inner Joint | | 29 | 26 | 41.3 | 370 | 85.5 | |
| | 2011.01-2017.12 | 8AT | R | L | Van 4WD 306DT(TDV6) | With differential lock | GDS83160 | Drive Shaft | 48T | 31 | 31 | 73 | 97.5 | 786 | |
| | 2011.01-2017.12 | 8AT | R | R | Van 4WD 306DT(TDV6) | Without differential lock | GDS83159 | Drive Shaft | 48T | 31 | 31 | 73 | 97.5 | 839 | |
| | 2011.01-2017.12 | 8AT | R | L/R | Van 4WD 306DT(TDV6) | | GCO18229 | Outer Joint | 48T | 31 | 27 | 73 | 97.5 | 67.5 | M |
| | 2011.01-2017.12 | 8AT | R | L | Van 4WD 306DT(TDV6) | With differential lock | GCI82147 | Inner Joint | | 31 | 30 | 44 | 151.5 | 124.5 | |
| | 2011.01-2017.12 | 8AT | R | R | Van 4WD 306DT(TDV6) | Without differential lock | GCI82146 | Inner Joint | | 31 | 30 | 44 | 182 | 124.5 | |
| | 2011.01-2017.12 | 8AT | R | R | Van 4WD 306DT(TDV6) | With differential lock | GCI83500 | Inner Joint | | 31 | 30 | 44 | 182 | 124.5 | |
| | 2011.01-2017.12 | | R | L/R | Van 4WD 306DT(TDV6) | Differential:With differential lock | GCO30014 | Outer Joint | 48T | 31 | 29 | 74 | 96.5 | 75.5 | M |
| 3.0 (190 kw) | 2016.09- | 8AT | F | L | SUV 4WD 306DT(TDV6) | | GDS84004 | Drive Shaft | | 31 | 29 | 68.5 | 97 | 661 | |
| | 2016.09- | 8AT | F | R | SUV 4WD 306DT(TDV6) | | GDS82516 | Drive Shaft | | 31 | 29 | 68.5 | 97 | 1027 | |
| | 2016.09- | 8AT | F | L/R | SUV 4WD 306DT(TDV6) | | GCO81975 | Outer Joint | | 31 | 27 | 68.5 | 97 | 61 | I |
| | 2016.09- | 8AT | F | L | SUV 4WD 306DT(TDV6) | | GCI82248 | Inner Joint | | 29 | 27 | 44 | 71.5 | 129 | |
| | 2016.09- | 8AT | F | R | SUV 4WD 306DT(TDV6) | | GCI82268 | Inner Joint | | 29 | 27 | 44 | 461 | 100 | |
| | 2016.09- | 8AT | R | L | SUV 4WD 306DT(TDV6) | For vehicles without electronic limited slip diff. | GDS82346 | Drive Shaft | | 31 | 31 | 68.2 | 97 | 838 | |
| | 2016.09- | 8AT | R | L | SUV 4WD 306DT(TDV6) | For vehicles with electronic limited slip diff. | GDS84013 | Drive Shaft | | 31 | 31 | 68.2 | 97 | 838 | |
| | 2016.09- | 8AT | R | R | SUV 4WD 306DT(TDV6) | | GDS83549 | Drive Shaft | | 31 | 31 | 68.2 | 97 | 860 | |
| | 2016.09- | 8AT | R | L/R | SUV 4WD 306DT(TDV6) | | GCO82414 | Outer Joint | | 31 | 28 | 68.2 | 97 | 61 | I |
| | 2016.09- | 8AT | R | L | SUV 4WD 306DT(TDV6) | For vehicles with electronic limited slip diff. | GCI82452 | Inner Joint | | 31 | 28 | 44 | 152 | 105 | |
| | 2016.09- | 8AT | R | L/R | SUV 4WD 306DT(TDV6) | Possion:Left,For vehicles without electronic limited slip diff. | GCI81763 | Inner Joint | | 31 | 28 | 44 | 86 | 110.5 | |
| | 2016.09- | 8AT | F | L | SUV Van 4WD 306DT(TDV6) | | GDS84004 | Drive Shaft | | 31 | 29 | 68.5 | 97 | 661 | |
| | 2016.09- | 8AT | F | R | SUV Van 4WD 306DT(TDV6) | | GDS82516 | Drive Shaft | | 31 | 29 | 68.5 | 97 | 1027 | |
| | 2016.09- | 8AT | F | L/R | SUV Van 4WD 306DT(TDV6) | | GCO81975 | Outer Joint | | 31 | 27 | 68.5 | 97 | 61 | I |
| | 2016.09- | 8AT | F | L | SUV Van 4WD 306DT(TDV6) | | GCI82248 | Inner Joint | | 29 | 27 | 44 | 71.5 | 129 | |
| | 2016.09- | 8AT | F | R | SUV Van 4WD 306DT(TDV6) | | GCI82268 | Inner Joint | | 29 | 27 | 44 | 461 | 100 | |
| | 2016.09- | 8AT | R | L | SUV Van 4WD 306DT(TDV6) | For vehicles without electronic limited slip diff. | GDS82346 | Drive Shaft | | 31 | 31 | 68.2 | 97 | 838 | |
| | 2016.09- | 8AT | R | L | SUV Van 4WD 306DT(TDV6) | For vehicles with electronic limited slip diff. | GDS84013 | Drive Shaft | | 31 | 31 | 68.2 | 97 | 838 | |
| | 2016.09- | 8AT | R | R | SUV Van 4WD 306DT(TDV6) | | GDS83549 | Drive Shaft | | 31 | 31 | 68.2 | 97 | 860 | |
| | 2016.09- | 8AT | R | L/R | SUV Van 4WD 306DT(TDV6) | | GCO82414 | Outer Joint | | 31 | 28 | 68.2 | 97 | 61 | I |
| | 2016.09- | 8AT | R | L | SUV Van 4WD 306DT(TDV6) | For vehicles with electronic limited slip diff. | GCI82452 | Inner Joint | | 31 | 28 | 44 | 152 | 105 | |
| | 2016.09- | 8AT | R | L/R | SUV Van 4WD 306DT(TDV6) | Possion:Left,For vehicles without electronic limited slip diff. | GCI81763 | Inner Joint | | 31 | 28 | 44 | 86 | 110.5 | |
| 3.0 (200 kw) | 2009.09-2018.12 | 6AT | F | L | Closed Off-Road Vehicle 4WD 306DT(TDV6) | | GDS59535 | Drive Shaft | 48T | 29 | 29 | 74 | 96 | 639 | |
| | 2009.09-2018.12 | 6AT | F | R | Closed Off-Road Vehicle 4WD 306DT(TDV6) | | GDS59623 | Drive Shaft | 48T | 29 | 29 | 74 | 96 | 998 | |
| | 2009.09-2018.12 | 6AT | F | L/R | Closed Off-Road Vehicle 4WD 306DT(TDV6) | | GCO30015 | Outer Joint | 48T | 29 | 26 | 74 | 96 | 64.5 | M |
| | 2009.09-2018.12 | 6AT | F | R | Closed Off-Road Vehicle 4WD 306DT(TDV6) | | GCI59195 | Inner Joint | | 29 | 26 | 41.3 | 370 | 85.5 | |
| | 2009.09-2018.12 | 6AT | R | L | Closed Off-Road Vehicle 4WD 306DT(TDV6) | With differential lock | GDS83160 | Drive Shaft | 48T | 31 | 31 | 73 | 97.5 | 786 | |
| | 2009.09-2018.12 | 6AT | R | R | Closed Off-Road Vehicle 4WD 306DT(TDV6) | Without differential lock | GDS83159 | Drive Shaft | 48T | 31 | 31 | 73 | 97.5 | 839 | |

| | YEAR | TRANSM. | F/R | L/R | BODY STYLE & DRIVE TYPE & ENGINE | REMARKS | G-AP Ref. | PRODUCT | ABS | Technical Specifications A | B | C | H | L | P |
|---|---|---|---|---|---|---|---|---|---|---|---|---|---|---|---|
| **LAND ROVER** **Discovery** | | | | | | | | | | | | | | | |
| 3.0 (200 kw) | 2009.09-2018.12 | 6AT | R | L/R | Closed Off-Road Vehicle 4WD 306DT(TDV6) | | GCO18229 | Outer Joint | 48T | 31 | 27 | 73 | 97.5 | 67.5 | M |
| | 2009.09-2018.12 | 6AT | R | L | Closed Off-Road Vehicle 4WD 306DT(TDV6) | With differential lock | GCI82147 | Inner Joint | | 31 | 30 | 44 | 151.5 | 124.5 | |
| | 2009.09-2018.12 | 6AT | R | R | Closed Off-Road Vehicle 4WD 306DT(TDV6) | Without differential lock | GCI82146 | Inner Joint | | 31 | 30 | 44 | 182 | 124.5 | |
| | 2009.09-2018.12 | 6AT | R | R | Closed Off-Road Vehicle 4WD 306DT(TDV6) | With differential lock | GCI83500 | Inner Joint | | 31 | 30 | 44 | 182 | 124.5 | |
| | 2009.09-2018.12 | AT | R | L/R | Closed Off-Road Vehicle 4WD 306DT(TDV6) | With differential lock | GCO30014 | Outer Joint | 48T | 31 | 29 | 74 | 96.5 | 75.5 | M |
| 3.0 (221 kw) | 2020.12- | 8AT | F | L | SUV 4WD DT306(AJ20D6) | Vehicle Production Country:Great Britain;Chassis no. to:L2999999;Vehicle Production Country:Slovakia | GDS84004 | Drive Shaft | | 31 | 29 | 68.5 | 97 | 661 | |
| | 2020.12- | 8AT | F | R | SUV 4WD DT306(AJ20D6) | Vehicle Production Country:Great Britain;Chassis no. to:L2999999;Vehicle Production Country:Slovakia | GDS82516 | Drive Shaft | | 31 | 29 | 68.5 | 97 | 1027 | |
| | 2020.12- | 8AT | F | L/R | SUV 4WD DT306(AJ20D6) | | GCO81975 | Outer Joint | | 31 | 27 | 68.5 | 97 | 61 | I |
| | 2020.12- | 8AT | F | L | SUV 4WD DT306(AJ20D6) | Vehicle Production Country:Great Britain;Chassis no. to:L2999999;Vehicle Production Country:Slovakia | GCI82248 | Inner Joint | | 29 | 27 | 44 | 71.5 | 129 | |
| | 2020.12- | 8AT | F | R | SUV 4WD DT306(AJ20D6) | Vehicle Production Country:Great Britain;Chassis no. to:L2999999;Vehicle Production Country:Slovakia | GCI82268 | Inner Joint | | 29 | 27 | 44 | 461 | 100 | |
| | 2020.12- | 8AT | R | L | SUV 4WD DT306(AJ20D6) | For vehicles without electronic limited slip diff. | GDS82346 | Drive Shaft | | 31 | 31 | 68.2 | 97 | 838 | |
| | 2020.12- | 8AT | R | L | SUV 4WD DT306(AJ20D6) | For Vehicles With Electronic Limited Slip Diff. | GDS84013 | Drive Shaft | | 31 | 31 | 68.2 | 97 | 838 | |
| | 2020.12- | 8AT | R | R | SUV 4WD DT306(AJ20D6) | | GDS83549 | Drive Shaft | | 31 | 31 | 68.2 | 97 | 860 | |
| | 2020.12- | 8AT | R | L/R | SUV 4WD DT306(AJ20D6) | | GCO82414 | Outer Joint | | 31 | 28 | 68.2 | 97 | 61 | I |
| | 2020.12- | 8AT | R | L | SUV 4WD DT306(AJ20D6) | For vehicles with electronic limited slip diff. | GCI82452 | Inner Joint | | 31 | 28 | 44 | 152 | 105 | |
| | 2020.12- | 8AT | F | L | SUV Van 4WD DT306(AJ20D6) | Vehicle Production Country:Great Britain;Chassis no. to:L2999999;Vehicle Production Country:Slovakia | GDS84004 | Drive Shaft | | 31 | 29 | 68.5 | 97 | 661 | |
| | 2020.12- | 8AT | F | R | SUV Van 4WD DT306(AJ20D6) | Chassis no. to:L2999999 | GDS82516 | Drive Shaft | | 31 | 29 | 68.5 | 97 | 1027 | |
| | 2020.12- | 8AT | F | L/R | SUV Van 4WD DT306(AJ20D6) | | GCO81975 | Outer Joint | | 31 | 27 | 68.5 | 97 | 61 | I |
| | 2020.12- | 8AT | F | L | SUV Van 4WD DT306(AJ20D6) | Vehicle Production Country:Great Britain;Chassis no. to:L2999999;Vehicle Production Country:Slovakia | GCI82248 | Inner Joint | | 29 | 27 | 44 | 71.5 | 129 | |
| | 2020.12- | 8AT | R | L | SUV Van 4WD DT306(AJ20D6) | For vehicles without electronic limited slip diff. | GDS82346 | Drive Shaft | | 31 | 31 | 68.2 | 97 | 838 | |
| | 2020.12- | 8AT | R | L | SUV Van 4WD DT306(AJ20D6) | For vehicles with electronic limited slip diff. | GDS84013 | Drive Shaft | | 31 | 31 | 68.2 | 97 | 838 | |
| | 2020.12- | 8AT | R | R | SUV Van 4WD DT306(AJ20D6) | | GDS83549 | Drive Shaft | | 31 | 31 | 68.2 | 97 | 860 | |
| | 2020.12- | 8AT | R | L/R | SUV Van 4WD DT306(AJ20D6) | | GCO82414 | Outer Joint | | 31 | 28 | 68.2 | 97 | 61 | I |
| | 2020.12- | 8AT | R | L | SUV Van 4WD DT306(AJ20D6) | For vehicles with electronic limited slip diff. | GCI82452 | Inner Joint | | 31 | 28 | 44 | 152 | 105 | |
| 3.0 (225 kw) | 2018.09- | 8AT | F | L | SUV 4WD 306DT(TDV6) | | GDS84004 | Drive Shaft | | 31 | 29 | 68.5 | 97 | 661 | |
| | 2018.09- | 8AT | F | R | SUV 4WD 306DT(TDV6) | | GDS82516 | Drive Shaft | | 31 | 29 | 68.5 | 97 | 1027 | |
| | 2018.09- | 8AT | F | L/R | SUV 4WD 306DT(TDV6) | | GCO81975 | Outer Joint | | 31 | 27 | 68.5 | 97 | 61 | I |
| | 2018.09- | 8AT | F | L | SUV 4WD 306DT(TDV6) | | GCI82248 | Inner Joint | | 29 | 27 | 44 | 71.5 | 129 | |
| | 2018.09- | 8AT | F | R | SUV 4WD 306DT(TDV6) | | GCI82268 | Inner Joint | | 29 | 27 | 44 | 461 | 100 | |
| | 2018.09- | 8AT | R | L | SUV 4WD 306DT(TDV6) | For vehicles without electronic limited slip diff. | GDS82346 | Drive Shaft | | 31 | 31 | 68.2 | 97 | 838 | |
| | 2018.09- | 8AT | R | L | SUV 4WD 306DT(TDV6) | For vehicles with electronic limited slip diff. | GDS84013 | Drive Shaft | | 31 | 31 | 68.2 | 97 | 838 | |
| | 2018.09- | 8AT | R | R | SUV 4WD 306DT(TDV6) | | GDS83549 | Drive Shaft | | 31 | 31 | 68.2 | 97 | 860 | |
| | 2018.09- | 8AT | R | L/R | SUV 4WD 306DT(TDV6) | | GCO82414 | Outer Joint | | 31 | 28 | 68.2 | 97 | 61 | I |
| | 2018.09- | 8AT | R | L | SUV 4WD 306DT(TDV6) | For vehicles with electronic limited slip diff. | GCI82452 | Inner Joint | | 31 | 28 | 44 | 152 | 105 | |
| | 2018.09- | 8AT | R | L/R | SUV 4WD 306DT(TDV6) | Possion:Left,For vehicles without electronic limited slip diff. | GCI81763 | Inner Joint | | 31 | 28 | 44 | 86 | 110.5 | |
| | 2018.09- | 8AT | F | L | SUV Van 4WD 306DT(TDV6) | | GDS84004 | Drive Shaft | | 31 | 29 | 68.5 | 97 | 661 | |
| | 2018.09- | 8AT | F | R | SUV Van 4WD 306DT(TDV6) | | GDS82516 | Drive Shaft | | 31 | 29 | 68.5 | 97 | 1027 | |
| | 2018.09- | 8AT | F | L/R | SUV Van 4WD 306DT(TDV6) | | GCO81975 | Outer Joint | | 31 | 27 | 68.5 | 97 | 61 | I |
| | 2018.09- | 8AT | F | L | SUV Van 4WD 306DT(TDV6) | | GCI82248 | Inner Joint | | 29 | 27 | 44 | 71.5 | 129 | |
| | 2018.09- | 8AT | F | R | SUV Van 4WD 306DT(TDV6) | | GCI82268 | Inner Joint | | 29 | 27 | 44 | 461 | 100 | |
| | 2018.09- | 8AT | R | L | SUV Van 4WD 306DT(TDV6) | For vehicles without electronic limited slip diff. | GDS82346 | Drive Shaft | | 31 | 31 | 68.2 | 97 | 838 | |
| | 2018.09- | 8AT | R | L | SUV Van 4WD 306DT(TDV6) | For vehicles with electronic limited slip diff. | GDS84013 | Drive Shaft | | 31 | 31 | 68.2 | 97 | 838 | |
| | 2018.09- | 8AT | R | R | SUV Van 4WD 306DT(TDV6) | | GDS83549 | Drive Shaft | | 31 | 31 | 68.2 | 97 | 860 | |
| | 2018.09- | 8AT | R | L/R | SUV Van 4WD 306DT(TDV6) | | GCO82414 | Outer Joint | | 31 | 28 | 68.2 | 97 | 61 | I |
| | 2018.09- | 8AT | R | L | SUV Van 4WD 306DT(TDV6) | For vehicles with electronic limited slip diff. | GCI82452 | Inner Joint | | 31 | 28 | 44 | 152 | 105 | |
| | 2018.09- | 8AT | R | L/R | SUV Van 4WD 306DT(TDV6) | Possion:Left,For vehicles without electronic limited slip diff. | GCI81763 | Inner Joint | | 31 | 28 | 44 | 86 | 110.5 | |
| 3.0 (250 kw) | 2013.08-2018.12 | 6AT/8AT | F | L | Closed Off-Road Vehicle 4WD 306PS(AJ126) | | GDS30002 | Drive Shaft | 48T | 29 | 29 | 74 | 96 | 638 | |
| | 2013.08-2018.12 | 6AT/8AT | F | R | Closed Off-Road Vehicle 4WD 306PS(AJ126) | | GDS59623 | Drive Shaft | 48T | 29 | 29 | 74 | 96 | 998 | |
| | 2013.08-2018.12 | | F | L/R | Closed Off-Road Vehicle 4WD 306PS(AJ126) | | GCO30012 | Outer Joint | 48T | 29 | 27 | 74 | 96 | 67.5 | M |
| | 2013.08-2018.12 | | F | L | Closed Off-Road Vehicle 4WD 306PS(AJ126) | | GCI59115 | Inner Joint | | 29 | 27 | 44 | 71.5 | 111.5 | |
| | 2013.08-2018.12 | | F | R | Closed Off-Road Vehicle 4WD 306PS(AJ126) | | GCI59194 | Inner Joint | | 29 | 27 | 41.3 | 364 | 93 | |
| | 2013.08-2018.12 | 6AT/8AT | R | L | Closed Off-Road Vehicle 4WD 306PS(AJ126) | With differential lock | GDS83160 | Drive Shaft | 48T | 31 | 31 | 73 | 97.5 | 786 | |
| | 2013.08-2018.12 | 6AT/8AT | R | R | Closed Off-Road Vehicle 4WD 306PS(AJ126) | Without differential lock | GDS83159 | Drive Shaft | 48T | 31 | 31 | 73 | 97.5 | 839 | |
| | 2013.08-2018.12 | 6AT/8AT | R | L/R | Closed Off-Road Vehicle 4WD 306PS(AJ126) | | GCO18229 | Outer Joint | 48T | 31 | 27 | 73 | 97.5 | 67.5 | M |
| | 2013.08-2018.12 | 6AT/8AT | R | L | Closed Off-Road Vehicle 4WD 306PS(AJ126) | With differential lock | GCI82147 | Inner Joint | | 31 | 30 | 44 | 151.5 | 124.5 | |
| | 2013.08-2018.12 | 6AT/8AT | R | R | Closed Off-Road Vehicle 4WD 306PS(AJ126) | Without differential lock | GCI82146 | Inner Joint | | 31 | 30 | 44 | 182 | 124.5 | |
| | 2013.08-2018.12 | AT | R | R | Closed Off-Road Vehicle 4WD 306PS(AJ126) | With differential lock | GCI83500 | Inner Joint | | 31 | 30 | 44 | 182 | 124.5 | |
| | 2013.08-2018.12 | | R | L/R | Closed Off-Road Vehicle 4WD 306PS(AJ126) | Differential:With differential lock | GCO30014 | Outer Joint | 48T | 31 | 29 | 74 | 96.5 | 75.5 | M |
| | 2016.09- | 8AT | F | L | SUV 4WD 306PS(AJ126) | | GDS84004 | Drive Shaft | | 31 | 29 | 68.5 | 97 | 661 | |
| | 2016.09- | 8AT | F | R | SUV 4WD 306PS(AJ126) | | GDS82516 | Drive Shaft | | 31 | 29 | 68.5 | 97 | 1027 | |
| | 2016.09- | 8AT | F | L/R | SUV 4WD 306PS(AJ126) | | GCO81975 | Outer Joint | | 31 | 27 | 68.5 | 97 | 61 | I |
| | 2016.09- | 8AT | F | L | SUV 4WD 306PS(AJ126) | | GCI82248 | Inner Joint | | 29 | 27 | 44 | 71.5 | 129 | |
| | 2016.09- | 8AT | F | R | SUV 4WD 306PS(AJ126) | | GCI82268 | Inner Joint | | 29 | 27 | 44 | 461 | 100 | |
| | 2016.09- | 8AT | R | L | SUV 4WD 306PS(AJ126) | For vehicles without electronic limited slip diff. | GDS82346 | Drive Shaft | | 31 | 31 | 68.2 | 97 | 838 | |
| | 2016.09- | 8AT | R | L | SUV 4WD 306PS(AJ126) | For vehicles with electronic limited slip diff. | GDS84013 | Drive Shaft | | 31 | 31 | 68.2 | 97 | 838 | |

| | YEAR | TRANSM. | F/R | L/R | BODY STYLE & DRIVE TYPE & ENGINE | REMARKS | G-AP Ref. | PRODUCT | ABS | Technical Specifications A | B | C | H | L | P |
|---|---|---|---|---|---|---|---|---|---|---|---|---|---|---|---|
| **LAND ROVER** | | | | | | | | | | | | | | | |
| **Discovery** | | | | | | | | | | | | | | | |
| 3.0 (250 kw) | 2016.09- | 8AT | R | R | SUV 4WD 306PS(AJ126) | | GDS83549 | Drive Shaft | | 31 | 31 | 68.2 | 97 | 860 | |
| | 2016.09- | 8AT | R | L/R | SUV 4WD 306PS(AJ126) | | GCO82414 | Outer Joint | | 31 | 28 | 68.2 | 97 | 61 | I |
| | 2016.09- | 8AT | R | L | SUV 4WD 306PS(AJ126) | For vehicles with electronic limited slip diff. | GCI82452 | Inner Joint | | 31 | 28 | 44 | 152 | 105 | |
| | 2016.09- | 8AT | R | L/R | SUV 4WD 306PS(AJ126) | Possion:Left,For vehicles without electronic limited slip diff. | GCI81763 | Inner Joint | | 31 | 28 | 44 | 86 | 110.5 | |
| | 2016.09- | 8AT | F | L | SUV Van 4WD 306PS(AJ126) | | GDS84004 | Drive Shaft | | 31 | 29 | 68.5 | 97 | 661 | |
| | 2016.09- | 8AT | F | R | SUV Van 4WD 306PS(AJ126) | | GDS82516 | Drive Shaft | | 31 | 29 | 68.5 | 97 | 1027 | |
| | 2016.09- | 8AT | F | L/R | SUV Van 4WD 306PS(AJ126) | | GCO81975 | Outer Joint | | 31 | 27 | 68.5 | 97 | 61 | I |
| | 2016.09- | 8AT | F | L | SUV Van 4WD 306PS(AJ126) | | GCI82248 | Inner Joint | | 29 | 27 | 44 | 71.5 | 129 | |
| | 2016.09- | 8AT | F | R | SUV Van 4WD 306PS(AJ126) | | GCI82268 | Inner Joint | | 29 | 27 | 44 | 461 | 100 | |
| | 2016.09- | 8AT | R | L | SUV Van 4WD 306PS(AJ126) | For vehicles without electronic limited slip diff. | GDS82346 | Drive Shaft | | 31 | 31 | 68.2 | 97 | 838 | |
| | 2016.09- | 8AT | R | L | SUV Van 4WD 306PS(AJ126) | For vehicles with electronic limited slip diff. | GDS84013 | Drive Shaft | | 31 | 31 | 68.2 | 97 | 838 | |
| | 2016.09- | 8AT | R | R | SUV Van 4WD 306PS(AJ126) | | GDS83549 | Drive Shaft | | 31 | 31 | 68.2 | 97 | 860 | |
| | 2016.09- | 8AT | R | L/R | SUV Van 4WD 306PS(AJ126) | | GCO82414 | Outer Joint | | 31 | 28 | 68.2 | 97 | 61 | I |
| | 2016.09- | 8AT | R | L | SUV Van 4WD 306PS(AJ126) | For vehicles with electronic limited slip diff. | GCI82452 | Inner Joint | | 31 | 28 | 44 | 152 | 105 | |
| | 2016.09- | 8AT | R | L/R | SUV Van 4WD 306PS(AJ126) | Possion:Left,For vehicles without electronic limited slip diff. | GCI81763 | Inner Joint | | 31 | 28 | 44 | 86 | 110.5 | |
| 3.0 (257 kw) | 2024.05- | 8AT | R | L | SUV 4WD DT306(AJ20D6) | For vehicles without electronic limited slip diff. | GDS82346 | Drive Shaft | | 31 | 31 | 68.2 | 97 | 838 | |
| | 2024.05- | 8AT | R | L | SUV 4WD DT306(AJ20D6) | For vehicles with electronic limited slip diff. | GDS84013 | Drive Shaft | | 31 | 31 | 68.2 | 97 | 838 | |
| | 2024.05- | 8AT | R | R | SUV 4WD DT306(AJ20D6) | | GDS83549 | Drive Shaft | | 31 | 31 | 68.2 | 97 | 860 | |
| | 2024.05- | 8AT | R | L/R | SUV 4WD DT306(AJ20D6) | | GCO82414 | Outer Joint | | 31 | 28 | 68.2 | 97 | 61 | I |
| | 2024.05- | 8AT | R | L | SUV 4WD DT306(AJ20D6) | For vehicles with electronic limited slip diff. | GCI82452 | Inner Joint | | 31 | 28 | 44 | 152 | 105 | |
| | 2024.05- | 8AT | R | L | SUV Van 4WD DT306(AJ20D6) | | GDS82346 | Drive Shaft | | 31 | 31 | 68.2 | 97 | 838 | |
| | 2024.05- | 8AT | R | R | SUV Van 4WD DT306(AJ20D6) | | GDS83549 | Drive Shaft | | 31 | 31 | 68.2 | 97 | 860 | |
| 3.0 (265 kw) | 2020.12- | 8AT | F | L | SUV 4WD PT306(AJ20P6) | Vehicle Production Country:Great Britain;Chassis no. to:L2898898;Vehicle Production Country:Slovakia | GDS84004 | Drive Shaft | | 31 | 29 | 68.5 | 97 | 661 | |
| | 2020.12- | 8AT | F | R | SUV 4WD PT306(AJ20P6) | Vehicle Production Country:Great Britain;Chassis no. to:L2898898;Vehicle Production Country:Slovakia | GDS82516 | Drive Shaft | | 31 | 29 | 68.5 | 97 | 1027 | |
| | 2020.12- | 8AT | F | L/R | SUV 4WD PT306(AJ20P6) | | GCO81975 | Outer Joint | | 31 | 27 | 68.5 | 97 | 61 | I |
| | 2020.12- | 8AT | F | L | SUV 4WD PT306(AJ20P6) | Vehicle Production Country:Great Britain;Chassis no. to:L2898898;Vehicle Production Country:Slovakia | GCI82248 | Inner Joint | | 29 | 27 | 44 | 71.5 | 129 | |
| | 2020.12- | 8AT | F | R | SUV 4WD PT306(AJ20P6) | Vehicle Production Country:Great Britain;Chassis no. to:L2898898;Vehicle Production Country:Slovakia | GCI82268 | Inner Joint | | 29 | 27 | 44 | 461 | 100 | |
| | 2020.12- | 8AT | R | L | SUV 4WD PT306(AJ20P6) | For vehicles without electronic limited slip diff. | GDS82346 | Drive Shaft | | 31 | 31 | 68.2 | 97 | 838 | |
| | 2020.12- | 8AT | R | L | SUV 4WD PT306(AJ20P6) | For Vehicles With Electronic Limited Slip Diff. | GDS84013 | Drive Shaft | | 31 | 31 | 68.2 | 97 | 838 | |
| | 2020.12- | 8AT | R | R | SUV 4WD PT306(AJ20P6) | | GDS83549 | Drive Shaft | | 31 | 31 | 68.2 | 97 | 860 | |
| | 2020.12- | 8AT | R | L/R | SUV 4WD PT306(AJ20P6) | | GCO82414 | Outer Joint | | 31 | 28 | 68.2 | 97 | 61 | I |
| | 2020.12- | 8AT | R | L | SUV 4WD PT306(AJ20P6) | For vehicles with electronic limited slip diff. | GCI82452 | Inner Joint | | 31 | 28 | 44 | 152 | 105 | |
| 4.0 (136 kw) | 1998.11-2004.06 | 4AT/5MT | F | L | Terrain cab wagon closed 4WD 56D | | GDS51074 | Drive Shaft | | 24 | 24 | 62 | 100 | 1005 | |
| | 1998.11-2004.06 | 4AT/5MT | F | R | Terrain cab wagon closed 4WD 56D | | GDS51075 | Drive Shaft | | 24 | 24 | 62 | 100 | 654 | |
| | 1998.11-2004.06 | MT | F | L/R | Terrain cab wagon closed 4WD 56D | | GCO99211 | Outer Joint | | 24 | 32 | 62 | 100 | 95 | I |
| 4.0 (160 kw) | 2004.10-2009.09 | 6AT | F | L | Closed Off-Road Vehicle 4WD 406PN(COLOGNE V6) | | GDS30002 | Drive Shaft | 48T | 29 | 29 | 74 | 96 | 638 | |
| | 2004.10-2009.09 | AT | F | R | Closed Off-Road Vehicle 4WD 406PN(COLOGNE V6) | | GDS59623 | Drive Shaft | 48T | 29 | 29 | 74 | 96 | 998 | |
| | 2004.10-2009.09 | AT | F | L | Closed Off-Road Vehicle 4WD 406PN(COLOGNE V6) | | GCO30012 | Outer Joint | 48T | 29 | 27 | 74 | 96 | 67.5 | M |
| | 2004.10-2009.09 | AT | F | L | Closed Off-Road Vehicle 4WD 406PN(COLOGNE V6) | | GCI59115 | Inner Joint | | 29 | 27 | 44 | 71.5 | 111.5 | |
| | 2004.10-2009.09 | | F | R | Closed Off-Road Vehicle 4WD 406PN(COLOGNE V6) | | GCI59194 | Inner Joint | | 29 | 27 | 41.3 | 364 | 93 | |
| | 2004.10-2009.09 | 6AT | R | R | Closed Off-Road Vehicle 4WD 406PN(COLOGNE V6) | With differential lock | GCI83500 | Inner Joint | | 31 | 30 | 44 | 182 | 124.5 | |
| | 2004.10-2009.09 | AT | R | L | Closed Off-Road Vehicle 4WD 406PN(COLOGNE V6) | With differential lock | GDS83160 | Drive Shaft | 48T | 31 | 31 | 73 | 97.5 | 786 | |
| | 2004.10-2009.09 | AT | R | R | Closed Off-Road Vehicle 4WD 406PN(COLOGNE V6) | Without differential lock | GDS83159 | Drive Shaft | 48T | 31 | 31 | 73 | 97.5 | 839 | |
| | 2004.10-2009.09 | AT | R | L/R | Closed Off-Road Vehicle 4WD 406PN(COLOGNE V6) | | GCO18229 | Outer Joint | 48T | 31 | 27 | 73 | 97.5 | 67.5 | M |
| | 2004.10-2009.09 | AT | R | L | Closed Off-Road Vehicle 4WD 406PN(COLOGNE V6) | With differential lock | GCI82147 | Inner Joint | | 31 | 30 | 44 | 151.5 | 124.5 | |
| | 2004.10-2009.09 | AT | R | R | Closed Off-Road Vehicle 4WD 406PN(COLOGNE V6) | Without differential lock | GCI82146 | Inner Joint | | 31 | 30 | 44 | 182 | 124.5 | |
| | 2004.10-2009.09 | | R | L/R | Closed Off-Road Vehicle 4WD 406PN(COLOGNE V6) | Differential:With differential lock | GCO30014 | Outer Joint | 48T | 31 | 29 | 74 | 96.5 | 75.5 | M |
| | 2005.02-2009.09 | 6MT | F | R | Closed Off-Road Vehicle 4WD 406PN(COLOGNE V6) | | GDS59623 | Drive Shaft | 48T | 29 | 29 | 74 | 96 | 998 | |
| | 2005.02-2009.09 | AT | F | L | Closed Off-Road Vehicle 4WD 406PN(COLOGNE V6) | | GCI59115 | Inner Joint | | 29 | 27 | 44 | 71.5 | 111.5 | |
| | 2005.02-2009.09 | SAT/6MT | F | L | Closed Off-Road Vehicle 4WD 406PN(COLOGNE V6) | | GDS30002 | Drive Shaft | 48T | 29 | 29 | 74 | 96 | 638 | |
| | 2005.02-2009.09 | SAT/6MT | F | L/R | Closed Off-Road Vehicle 4WD 406PN(COLOGNE V6) | | GCO30012 | Outer Joint | 48T | 29 | 27 | 74 | 96 | 67.5 | M |
| | 2005.02-2009.09 | | F | R | Closed Off-Road Vehicle 4WD 406PN(COLOGNE V6) | | GCI59194 | Inner Joint | | 29 | 27 | 41.3 | 364 | 93 | |
| | 2005.02-2009.09 | AT | R | L/R | Closed Off-Road Vehicle 4WD 406PN(COLOGNE V6) | With differential lock | GCO30014 | Outer Joint | 48T | 31 | 29 | 74 | 96.5 | 75.5 | M |
| | 2005.02-2009.09 | AT | R | R | Closed Off-Road Vehicle 4WD 406PN(COLOGNE V6) | With differential lock | GCI83500 | Inner Joint | | 31 | 30 | 44 | 182 | 124.5 | |
| | 2005.02-2009.09 | SAT/6MT | R | L | Closed Off-Road Vehicle 4WD 406PN(COLOGNE V6) | With differential lock | GDS83160 | Drive Shaft | 48T | 31 | 31 | 73 | 97.5 | 786 | |
| | 2005.02-2009.09 | SAT/6MT | R | R | Closed Off-Road Vehicle 4WD 406PN(COLOGNE V6) | | GDS83159 | Drive Shaft | 48T | 31 | 31 | 73 | 97.5 | 839 | |
| | 2005.02-2009.09 | SAT/6MT | R | L/R | Closed Off-Road Vehicle 4WD 406PN(COLOGNE V6) | | GCO18229 | Outer Joint | 48T | 31 | 27 | 73 | 97.5 | 67.5 | M |
| | 2005.02-2009.09 | SAT/6MT | R | L | Closed Off-Road Vehicle 4WD 406PN(COLOGNE V6) | With differential lock | GCI82147 | Inner Joint | | 31 | 30 | 44 | 151.5 | 124.5 | |
| | 2005.02-2009.09 | SAT/6MT | R | R | Closed Off-Road Vehicle 4WD 406PN(COLOGNE V6) | Without differential lock | GCI82146 | Inner Joint | | 31 | 30 | 44 | 182 | 124.5 | |
| | 2009.09-2018.12 | 6AT | F | L | Closed Off-Road Vehicle 4WD 406PN(COLOGNE V6) | | GDS30002 | Drive Shaft | 48T | 29 | 29 | 74 | 96 | 638 | |
| | 2009.09-2018.12 | 6AT | F | R | Closed Off-Road Vehicle 4WD 406PN(COLOGNE V6) | | GDS59623 | Drive Shaft | 48T | 29 | 29 | 74 | 96 | 998 | |
| | 2009.09-2018.12 | 6AT | F | L/R | Closed Off-Road Vehicle 4WD 406PN(COLOGNE V6) | | GCO30012 | Outer Joint | 48T | 29 | 27 | 74 | 96 | 67.5 | M |
| | 2009.09-2018.12 | 6AT | R | L | Closed Off-Road Vehicle 4WD 406PN(COLOGNE V6) | | GDS83160 | Drive Shaft | 48T | 31 | 31 | 73 | 97.5 | 786 | |
| | 2009.09-2018.12 | 6AT | R | R | Closed Off-Road Vehicle 4WD 406PN(COLOGNE V6) | | GDS83159 | Drive Shaft | 48T | 31 | 31 | 73 | 97.5 | 839 | |
| | 2009.09-2018.12 | 6AT | R | L/R | Closed Off-Road Vehicle 4WD 406PN(COLOGNE V6) | Without differential lock | GCO18229 | Outer Joint | 48T | 31 | 27 | 73 | 97.5 | 67.5 | M |

| | YEAR | TRANSM. | F/R | L/R | BODY STYLE & DRIVE TYPE & ENGINE | REMARKS | G-AP Ref. | PRODUCT | ABS | A | B | C | H | L | P |
|---|---|---|---|---|---|---|---|---|---|---|---|---|---|---|---|
| **LAND ROVER** | | | | | | | | | | | | | | | |
| **Discovery** | | | | | | | | | | | | | | | |
| 4.0 (160 kw) | 2009.09-2018.12 | 6AT | R | L/R | Closed Off-Road Vehicle 4WD 406PN(COLOGNE V6) | With differential lock | GCO30014 | Outer Joint | 48T | 31 | 29 | 74 | 96.5 | 75.5 | M |
| | 2009.09-2018.12 | 6AT | R | L | Closed Off-Road Vehicle 4WD 406PN(COLOGNE V6) | With differential lock | GCI82147 | Inner Joint | | 31 | 30 | 44 | 151.5 | 124.5 | |
| | 2009.09-2018.12 | 6AT | R | R | Closed Off-Road Vehicle 4WD 406PN(COLOGNE V6) | Without differential lock | GCI82146 | Inner Joint | | 31 | 30 | 44 | 182 | 124.5 | |
| | 2009.09-2018.12 | 6AT | R | R | Closed Off-Road Vehicle 4WD 406PN(COLOGNE V6) | With differential lock | GCI83500 | Inner Joint | | 31 | 30 | 44 | 182 | 124.5 | |
| 4.0 (161 kw) | 2005.02-2009.09 | 6AT | F | R | Closed Off-Road Vehicle 4WD 406PN(COLOGNE V6) | | GDS59623 | Drive Shaft | 48T | 29 | 29 | 74 | 96 | 998 | |
| | 2005.02-2009.09 | 6AT | F | L | Closed Off-Road Vehicle 4WD 406PN(COLOGNE V6) | | GCO30012 | Outer Joint | 48T | 29 | 27 | 74 | 96 | 67.5 | M |
| | 2005.02-2009.09 | 6AT | R | L | Closed Off-Road Vehicle 4WD 406PN(COLOGNE V6) | | GDS83160 | Drive Shaft | 48T | 31 | 31 | 73 | 97.5 | 786 | |
| | 2005.02-2009.09 | 6AT | R | R | Closed Off-Road Vehicle 4WD 406PN(COLOGNE V6) | | GDS83159 | Drive Shaft | 48T | 31 | 31 | 73 | 97.5 | 839 | |
| | 2005.02-2009.09 | AT | R | L/R | Closed Off-Road Vehicle 4WD 406PN(COLOGNE V6) | | GCO30014 | Outer Joint | 48T | 31 | 29 | 74 | 96.5 | 75.5 | M |
| | 2005.02-2009.09 | AT | R | R | Closed Off-Road Vehicle 4WD 406PN(COLOGNE V6) | With differential lock | GCI83500 | Inner Joint | | 31 | 30 | 44 | 182 | 124.5 | |
| 4.4 (220 kw) | 2004.07-2009.09 | 6AT | F | L | Closed Off-Road Vehicle 4WD 448PN(AJV8) | | GDS30002 | Drive Shaft | 48T | 29 | 29 | 74 | 96 | 638 | |
| | 2004.07-2009.09 | 6MT | F | R | Closed Off-Road Vehicle 4WD 448PN(AJV8) | | GDS59623 | Drive Shaft | 48T | 29 | 29 | 74 | 96 | 998 | |
| | 2004.07-2009.09 | SAT/6MT | F | L/R | Closed Off-Road Vehicle 4WD 448PN(AJV8) | | GCO30012 | Outer Joint | 48T | 29 | 27 | 74 | 96 | 67.5 | M |
| | 2004.07-2009.09 | | F | L | Closed Off-Road Vehicle 4WD 448PN(AJV8) | | GCI59115 | Inner Joint | | 29 | 27 | 44 | 71.5 | 111.5 | |
| | 2004.07-2009.09 | | F | R | Closed Off-Road Vehicle 4WD 448PN(AJV8) | | GCI59194 | Inner Joint | | 29 | 27 | 41.3 | 364 | 93 | |
| | 2004.07-2009.09 | AT | R | L/R | Closed Off-Road Vehicle 4WD 448PN(AJV8) | With differential lock | GCO30014 | Outer Joint | 48T | 31 | 29 | 74 | 96.5 | 75.5 | M |
| | 2004.07-2009.09 | AT | R | R | Closed Off-Road Vehicle 4WD 448PN(AJV8) | With differential lock | GCI83500 | Inner Joint | | 31 | 30 | 44 | 182 | 124.5 | |
| | 2004.07-2009.09 | SAT/6MT | R | L | Closed Off-Road Vehicle 4WD 448PN(AJV8) | With differential lock | GDS83160 | Drive Shaft | 48T | 31 | 31 | 73 | 97.5 | 786 | |
| | 2004.07-2009.09 | SAT/6MT | R | R | Closed Off-Road Vehicle 4WD 448PN(AJV8) | | GDS83159 | Drive Shaft | 48T | 31 | 31 | 73 | 97.5 | 839 | |
| | 2004.07-2009.09 | SAT/6MT | R | L/R | Closed Off-Road Vehicle 4WD 448PN(AJV8) | | GCO18229 | Outer Joint | 48T | 31 | 27 | 73 | 97.5 | 67.5 | M |
| | 2004.07-2009.09 | SAT/6MT | R | L | Closed Off-Road Vehicle 4WD 448PN(AJV8) | With differential lock | GCI82147 | Inner Joint | | 31 | 30 | 44 | 151.5 | 124.5 | |
| | 2004.07-2009.09 | SAT/6MT | R | R | Closed Off-Road Vehicle 4WD 448PN(AJV8) | Without differential lock | GCI82146 | Inner Joint | | 31 | 30 | 44 | 182 | 124.5 | |
| 5.0 (276 kw) | 2009.09-2018.12 | 6AT | F | L | Closed Off-Road Vehicle 4WD 508PN(AJ133) | | GDS30002 | Drive Shaft | 48T | 29 | 29 | 74 | 96 | 638 | |
| | 2009.09-2018.12 | 6AT | F | R | Closed Off-Road Vehicle 4WD 508PN(AJ133) | | GDS59623 | Drive Shaft | 48T | 29 | 29 | 74 | 96 | 998 | |
| | 2009.09-2018.12 | 6AT | F | L/R | Closed Off-Road Vehicle 4WD 508PN(AJ133) | | GCO30012 | Outer Joint | 48T | 29 | 27 | 74 | 96 | 67.5 | M |
| | 2009.09-2018.12 | | F | L | Closed Off-Road Vehicle 4WD 508PN(AJ133) | | GCI59115 | Inner Joint | | 29 | 27 | 44 | 71.5 | 111.5 | |
| | 2009.09-2018.12 | | F | R | Closed Off-Road Vehicle 4WD 508PN(AJ133) | | GCI59194 | Inner Joint | | 29 | 27 | 41.3 | 364 | 93 | |
| | 2009.09-2018.12 | 6AT | R | L | Closed Off-Road Vehicle 4WD 508PN(AJ133) | With differential lock | GDS83160 | Drive Shaft | 48T | 31 | 31 | 73 | 97.5 | 786 | |
| | 2009.09-2018.12 | 6AT | R | R | Closed Off-Road Vehicle 4WD 508PN(AJ133) | Without differential lock | GDS83159 | Drive Shaft | 48T | 31 | 31 | 73 | 97.5 | 839 | |
| | 2009.09-2018.12 | 6AT | R | L/R | Closed Off-Road Vehicle 4WD 508PN(AJ133) | | GCO18229 | Outer Joint | 48T | 31 | 27 | 73 | 97.5 | 67.5 | M |
| | 2009.09-2018.12 | 6AT | R | L | Closed Off-Road Vehicle 4WD 508PN(AJ133) | With differential lock | GCI82147 | Inner Joint | | 31 | 30 | 44 | 151.5 | 124.5 | |
| | 2009.09-2018.12 | 6AT | R | R | Closed Off-Road Vehicle 4WD 508PN(AJ133) | Without differential lock | GCI82146 | Inner Joint | | 31 | 30 | 44 | 182 | 124.5 | |
| | 2009.09-2018.12 | 6AT | R | R | Closed Off-Road Vehicle 4WD 508PN(AJ133) | With differential lock | GCI83500 | Inner Joint | | 31 | 30 | 44 | 182 | 124.5 | |
| | 2009.09-2018.12 | AT | R | L/R | Closed Off-Road Vehicle 4WD 508PN(AJ133) | With differential lock | GCO30014 | Outer Joint | 48T | 31 | 29 | 74 | 96.5 | 75.5 | M |
| **Discovery Sport** | | | | | | | | | | | | | | | |
| 1.5 (198 kw) | 2024.05- | 8AT | F | L | SUV 4WD PT153(AJ20P3) | | GDS82992 | Drive Shaft | | 31 | 31 | 68.5 | 97 | 590 | |
| 1.5 (227 kw) | 2020.02- | 8AT | F | L | SUV 4WD PT153(AJ20P3) | | GDS82992 | Drive Shaft | | 31 | 31 | 68.5 | 97 | 590 | |
| | 2020.02- | 8AT | F | L/R | SUV 4WD PT153(AJ20P3) | 8 balls | GCO81975 | Outer Joint | | 31 | 27 | 68.5 | 97 | 61 | I |
| | 2020.02- | 9AT | F | L/R | SUV 4WD PT153(AJ20P3) | 6 balls | GCO18250 | Outer Joint | | 31 | 27 | 68.3 | 97 | 61 | I |
| 2.0 (110 kw) | 2014.12- | 6MT | F | L | SUV 4WD 204DTD(AJ20D4) | Date to:2018.12,Chassis no. to:JH999999,Trans. code:M66 | GDS56383 | Drive Shaft | | 31 | 31 | 68.5 | 97 | 614 | |
| | 2014.12- | 6MT | F | L | SUV 4WD 204DTD(AJ20D4) | Date from:2019.01,Chassis no. from:KH000001,Trans. code:BG6 | GDS56503 | Drive Shaft | | 31 | 31 | 68.5 | 97 | 600 | |
| | 2014.12- | 6MT | F | R | SUV 4WD 204DTD(AJ20D4) | Trans. code:M66,Date to:2018.12,Chassis no. to:JH999999 | GDS57776 | Drive Shaft | | 31 | 28 | 68.5 | 97 | 1061 | |
| | 2014.12- | 6MT | F | L/R | SUV 4WD 204DTD(AJ20D4) | Date from:2019.01,Chassis no. from:KH000001,Trans. code:BG6;8 balls | GCO81975 | Outer Joint | | 31 | 27 | 68.5 | 97 | 61 | I |
| | 2014.12- | 6MT | F | L | SUV 4WD 204DTD(AJ20D4) | Date to:2018.12,Chassis no. to:JH999999,Trans. code:M66;Date from:2019.01,Chassis no. from:KH000001,Trans. code:BG6 | GCI82631 | Inner Joint | | 31 | 27 | 44 | 65 | 112 | |
| | 2014.12- | 6MT | F | R | SUV 4WD 204DTD(AJ20D4) | Trans. code:M66,Date to:2018.12,Chassis no. to:JH999999 | GCI83851 | Inner Joint | | 28 | 27 | 29.95 | 538 | 96.5 | |
| | 2014.12- | 9AT | F | L | SUV 4WD 204DTD(AJ20D4) | | GDS82992 | Drive Shaft | | 31 | 31 | 68.5 | 97 | 590 | |
| | 2014.12- | 9AT | F | R | SUV 4WD 204DTD(AJ20D4) | Chassis no. from:KH000001,Chassis no. to:KH999999 | GDS56284 | Drive Shaft | | 31 | 28 | 68.5 | 97 | 1042 | |
| | 2014.12- | 9AT | F | R | SUV 4WD 204DTD(AJ20D4) | Date from:2020.01,Trans. code:9HP50,Chassis no. from:LH000001 | GDS84191 | Drive Shaft | | 31 | 28 | 68.5 | 97 | 1042 | |
| | 2014.12- | 9AT | F | L | SUV 4WD 204DTD(AJ20D4) | | GCI85049 | Inner Joint | | 31 | 27 | 36.2 | 68 | 95 | |
| | 2014.12- | 9AT | F | R | SUV 4WD 204DTD(AJ20D4) | Date to:2018.12;Chassis no. to:JH999999 | GCI82629 | Inner Joint | | 28 | 27 | 30 | 520 | 95 | |
| | 2014.12- | 9AT/6MT | F | L/R | SUV 4WD 204DTD(AJ20D4) | 6 balls | GCO18250 | Outer Joint | | 31 | 27 | 68.3 | 97 | 61 | I |
| | 2014.12- | 9AT/6MT | R | R | SUV 4WD 204DTD(AJ20D4) | Date from:2020.01;Chassis no. from:LH000001,Chassis no. to:MH892125;For vehicles with efficient driveline | GDS58199 | Drive Shaft | | 31 | 26 | 65.3 | 95.5 | 815 | |
| | 2014.12- | 9AT/6MT | R | L/R | SUV 4WD 204DTD(AJ20D4) | Date to:2019.12,Chassis no. to:KH999999,For vehicles with efficient driveline | GDS56790 | Drive Shaft | | 31 | 26 | 65.3 | 95.5 | 830 | |
| | 2014.12- | 9AT/6MT | R | L/R | SUV 4WD 204DTD(AJ20D4) | Date from:2020.01,Chassis no. from:LH000001;Position:Rear axle left and right,For vehicles with active driveline;Position:Rear axle left,For vehicles with efficient driveline | GDS58309 | Drive Shaft | | 31 | 26 | 65.3 | 95.5 | 723 | |
| | 2014.12- | 9AT/6MT | R | L/R | SUV 4WD 204DTD(AJ20D4) | Date to:2019.12,Chassis no. to:KH999999,For vehicles with efficient driveline | GCO82426 | Outer Joint | | 31 | 29 | 65.3 | 95.5 | 49 | I |
| | 2014.12- | 9AT/6MT | R | L/R | SUV 4WD 204DTD(AJ20D4) | Date from:2020.01;Chassis no. from:LH000001,Chassis no. to:MH892125;For vehicles with efficient driveline | GCO83861 | Outer Joint | | 31 | 29 | 65.3 | 95.5 | 49 | I |
| | 2014.12- | 9AT/6MT | R | R | SUV 4WD 204DTD(AJ20D4) | Date to:2019.12;Chassis to:KH999999;For vehicles with active driveline | GCI82281 | Inner Joint | | 26 | 29 | 34.95 | 67.5 | 106.5 | |
| | 2014.12- | 9AT/6MT | R | L/R | SUV 4WD 204DTD(AJ20D4) | Date to:2019.12,Chassis no. to:KH999999,For vehicles with efficient driveline | GCI18187 | Inner Joint | | 26 | 29 | 35 | 69.5 | 107.5 | |
| | 2014.12- | 9AT/6MT | R | L/R | SUV 4WD 204DTD(AJ20D4) | Date from:2020.01;Chassis no. from:LH000001,Chassis no. to:MH892125;For vehicles with efficient driveline | GCI84035 | Inner Joint | | 26 | 29 | 35 | 56 | 109 | |
| | 2014.12- | 6MT | F | L | SUV Van 4WD 204DTD(AJ20D4) | Date to:2018.12,Chassis no. to:JH999999,Trans. code:M66 | GDS56383 | Drive Shaft | | 31 | 31 | 68.5 | 97 | 614 | |
| | 2014.12- | 6MT | F | L | SUV Van 4WD 204DTD(AJ20D4) | Date from:2019.01,Chassis no. from:KH000001,Trans. code:BG6 | GDS56503 | Drive Shaft | | 31 | 31 | 68.5 | 97 | 600 | |
| | 2014.12- | 6MT | F | R | SUV Van 4WD 204DTD(AJ20D4) | Trans. code:M66,Date to:2018.12,Chassis no. to:JH999999 | GDS57776 | Drive Shaft | | 31 | 28 | 68.5 | 97 | 1061 | |
| | 2014.12- | 6MT | F | L | SUV Van 4WD 204DTD(AJ20D4) | Date to:2018.12,Chassis no. to:JH999999,Trans. code:M66;Date from:2019.01,Chassis no. from:KH000001,Trans. code:BG6 | GCI82631 | Inner Joint | | 31 | 27 | 44 | 65 | 112 | |
| | 2014.12- | 6MT | F | R | SUV Van 4WD 204DTD(AJ20D4) | Trans. code:M66,Date to:2018.12,Chassis no. to:JH999999 | GCI83851 | Inner Joint | | 28 | 27 | 29.95 | 538 | 96.5 | |
| | 2014.12- | 9AT | F | L | SUV Van 4WD 204DTD(AJ20D4) | | GDS82992 | Drive Shaft | | 31 | 31 | 68.5 | 97 | 590 | |

| LAND ROVER Discovery Sport | YEAR | TRANSM. | F/R | L/R | BODY STYLE & DRIVE TYPE & ENGINE | REMARKS | G-AP Ref. | PRODUCT | ABS | A | B | C | H | L | P |
|---|---|---|---|---|---|---|---|---|---|---|---|---|---|---|---|
| 2.0 (110 kw) | 2014.12- | 9AT | F | R | SUV Van 4WD 204DTD(AJ20D4) | Chassis no. from:KH000001,Chassis no. to:KH999999 | GDS56284 | Drive Shaft | | 31 | 28 | 68.5 | 97 | 1042 | |
| | 2014.12- | 9AT | F | R | SUV Van 4WD 204DTD(AJ20D4) | Date from:2020.01,Trans. code:9HP50,Chassis no. from:LH000001 | GDS84191 | Drive Shaft | | 31 | 28 | 68.5 | 97 | 1042 | |
| | 2014.12- | 9AT | F | L | SUV Van 4WD 204DTD(AJ20D4) | | GCI85049 | Inner Joint | | 31 | 27 | 36.2 | 68 | 95 | |
| | 2014.12- | 9AT | F | R | SUV Van 4WD 204DTD(AJ20D4) | Date to:2018.12;Chassis no. to:JH999999 | GCI82629 | Inner Joint | | 28 | 27 | 30 | 520 | 95 | |
| | 2014.12- | 9AT/6MT | F | L/R | SUV Van 4WD 204DTD(AJ20D4) | Transmission:6MT,Date from:2019.01,Chassis no. from:KH000001,Trans. code:BG6;8 balls | GCO81975 | Outer Joint | | 31 | 27 | 68.5 | 97 | 61 | I |
| | 2014.12- | 9AT/6MT | R | R | SUV Van 4WD 204DTD(AJ20D4) | Date from:2020.01;Chassis no. from:LH000001,Chassis no. to:MH892125;For vehicles with efficient driveline | GDS58199 | Drive Shaft | | 31 | 26 | 65.3 | 95.5 | 815 | |
| | 2014.12- | 9AT/6MT | R | L/R | SUV Van 4WD 204DTD(AJ20D4) | Date to:2019.12,Chassis no. to:KH999999,For vehicles with efficient driveline | GDS56790 | Drive Shaft | | 31 | 26 | 65.3 | 95.5 | 830 | |
| | 2014.12- | 9AT/6MT | R | L/R | SUV Van 4WD 204DTD(AJ20D4) | Date from:2020.01,Chassis no. from:LH000001;Position:Rear axle left and right,For vehicles with active driveline;Position:Rear axle left,For vehicles with efficient driveline | GDS58309 | Drive Shaft | | 31 | 26 | 65.3 | 95.5 | 723 | |
| | 2014.12- | 9AT/6MT | R | L/R | SUV Van 4WD 204DTD(AJ20D4) | Date to:2019.12,Chassis no. to:KH999999,For vehicles with efficient driveline | GCO82426 | Outer Joint | | 31 | 29 | 65.3 | 95.5 | 49 | I |
| | 2014.12- | 9AT/6MT | R | L/R | SUV Van 4WD 204DTD(AJ20D4) | Date from:2020.01;Chassis no. from:LH000001,Chassis no. to:MH892125;For vehicles with efficient driveline | GCO83861 | Outer Joint | | 31 | 29 | 65.3 | 95.5 | 49 | I |
| | 2014.12- | 9AT/6MT | R | R | SUV Van 4WD 204DTD(AJ20D4) | Date to:2019.12;Chassis to:KH999999;For vehicles with active driveline | GCI82281 | Inner Joint | | 26 | 29 | 34.95 | 67.5 | 106.5 | |
| | 2014.12- | 9AT/6MT | R | L/R | SUV Van 4WD 204DTD(AJ20D4) | Date to:2019.12,Chassis no. to:KH999999,For vehicles with efficient driveline | GCI18187 | Inner Joint | | 26 | 29 | 35 | 69.5 | 107.5 | |
| | 2014.12- | 9AT/6MT | R | L/R | SUV Van 4WD 204DTD(AJ20D4) | Date from:2020.01;Chassis no. from:LH000001,Chassis no. to:MH892125;For vehicles with efficient driveline | GCI84035 | Inner Joint | | 26 | 29 | 35 | 56 | 109 | |
| | 2015.08- | 6MT | F | L | SUV FWD 204DTD(AJ20D4) | Date to:2018.12,Chassis no. to:JH999999,Trans. code:M66 | GDS56383 | Drive Shaft | | 31 | 31 | 68.5 | 97 | 614 | |
| | 2015.08- | 6MT | F | L | SUV FWD 204DTD(AJ20D4) | Date from:2019.01,Chassis no. from:KH000001,Trans. code:BG6 | GDS56503 | Drive Shaft | | 31 | 31 | 68.5 | 97 | 600 | |
| | 2015.08- | 6MT | F | R | SUV FWD 204DTD(AJ20D4) | Date to:2018.12,Chassis no. to:JH999999 | GDS56284 | Drive Shaft | | 31 | 28 | 68.5 | 97 | 1042 | |
| | 2015.08- | 6MT | F | R | SUV FWD 204DTD(AJ20D4) | Date from:2019.01,Chassis no. from:KH000001,Trans. code:BG6 | GDS84192 | Drive Shaft | | 31 | 28 | 68.5 | 97 | 1068 | |
| | 2015.08- | 6MT | F | L/R | SUV FWD 204DTD(AJ20D4) | 6 balls | GCO18250 | Outer Joint | | 31 | 27 | 68.3 | 97 | 61 | I |
| | 2015.08- | 6MT | F | L/R | SUV FWD 204DTD(AJ20D4) | Date from:2019.01,Chassis no. from:KH000001,Trans. code:BG6;8 balls | GCO81975 | Outer Joint | | 31 | 27 | 68.5 | 97 | 61 | I |
| | 2015.08- | 6MT | F | L | SUV FWD 204DTD(AJ20D4) | Date to:2018.12,Chassis no. to:JH999999,Trans. code:M66;Date from:2019.01,Chassis no. from:KH000001,Trans. code:BG6 | GCI82631 | Inner Joint | | 31 | 27 | 44 | 65 | 112 | |
| | 2015.08- | 9AT | F | L | SUV FWD 204DTD(AJ20D4) | Date to:2019.12,Chassis no. to:KH999999 | GDS82992 | Drive Shaft | | 31 | 31 | 68.5 | 97 | 590 | |
| | 2015.08- | 6MT | F | L | SUV Van FWD 204DTD(AJ20D4) | Date to:2018.12,Chassis no. to:JH999999,Trans. code:M66 | GDS56383 | Drive Shaft | | 31 | 31 | 68.5 | 97 | 614 | |
| | 2015.08- | 6MT | F | L | SUV Van FWD 204DTD(AJ20D4) | Date from:2019.01,Chassis no. from:KH000001,Trans. code:BG6 | GDS56503 | Drive Shaft | | 31 | 31 | 68.5 | 97 | 600 | |
| | 2015.08- | 6MT | F | R | SUV Van FWD 204DTD(AJ20D4) | Date to:2018.12,Chassis no. to:JH999999 | GDS56284 | Drive Shaft | | 31 | 28 | 68.5 | 97 | 1042 | |
| | 2015.08- | 6MT | F | R | SUV Van FWD 204DTD(AJ20D4) | Date from:2019.01,Chassis no. from:KH000001,Trans. code:BG6 | GDS84192 | Drive Shaft | | 31 | 28 | 68.5 | 97 | 1068 | |
| | 2015.08- | 6MT | F | L/R | SUV Van FWD 204DTD(AJ20D4) | Date from:2019.01,Chassis no. from:KH000001,Trans. code:BG6;8 balls | GCO81975 | Outer Joint | | 31 | 27 | 68.5 | 97 | 61 | I |
| | 2015.08- | 6MT | F | L | SUV Van FWD 204DTD(AJ20D4) | Date to:2018.12,Chassis no. to:JH999999,Trans. code:M66;Date from:2019.01,Chassis no. from:KH000001,Trans. code:BG6 | GCI82631 | Inner Joint | | 31 | 27 | 44 | 65 | 112 | |
| | 2015.08- | 9AT | F | L | SUV Van FWD 204DTD(AJ20D4) | Date to:2019.12,Chassis no. to:KH999999 | GDS82992 | Drive Shaft | | 31 | 31 | 68.5 | 97 | 590 | |
| | 2019.05- | 9AT | F | L | SUV 4WD 204DTD(AJ20D4) | | GDS82992 | Drive Shaft | | 31 | 31 | 68.5 | 97 | 590 | |
| | 2019.05- | 9AT | F | R | SUV 4WD 204DTD(AJ20D4) | Chassis no. from:KH000001,Chassis no. to:KH999999 | GDS56284 | Drive Shaft | | 31 | 28 | 68.5 | 97 | 1042 | |
| | 2019.05- | 9AT | F | R | SUV 4WD 204DTD(AJ20D4) | Date from:2020.01,Trans. code:9HP50,Chassis no. from:LH000001 | GDS84191 | Drive Shaft | | 31 | 28 | 68.5 | 97 | 1042 | |
| | 2019.05- | 9AT | F | L/R | SUV 4WD 204DTD(AJ20D4) | 6 balls | GCO18250 | Outer Joint | | 31 | 27 | 68.3 | 97 | 61 | I |
| | 2019.05- | 9AT | F | L/R | SUV 4WD 204DTD(AJ20D4) | 8 balls | GCO81975 | Outer Joint | | 31 | 27 | 68.5 | 97 | 61 | I |
| | 2019.05- | 9AT | F | R | SUV 4WD 204DTD(AJ20D4) | | GCI82629 | Inner Joint | | 28 | 27 | 30 | 520 | 95 | |
| | 2019.05- | 9AT | R | R | SUV 4WD 204DTD(AJ20D4) | Date from:2020.01;Chassis no. from:LH000001,Chassis no. to:MH892125;For vehicles with efficient driveline | GDS58199 | Drive Shaft | | 31 | 26 | 65.3 | 95.5 | 815 | |
| | 2019.05- | 9AT | R | L/R | SUV 4WD 204DTD(AJ20D4) | Date to:2019.12,Chassis no. to:KH999999,For vehicles with efficient driveline | GDS56790 | Drive Shaft | | 31 | 26 | 65.3 | 95.5 | 830 | |
| | 2019.05- | 9AT | R | L/R | SUV 4WD 204DTD(AJ20D4) | Date from:2020.01,Chassis no. from:LH000001;Position:Rear axle left and right,For vehicles with active driveline;Position:Rear axle left,For vehicles with efficient driveline | GDS58309 | Drive Shaft | | 31 | 26 | 65.3 | 95.5 | 723 | |
| | 2019.05- | 9AT | R | L/R | SUV 4WD 204DTD(AJ20D4) | Date to:2019.12,Chassis no. to:KH999999,For vehicles with efficient driveline | GCO82426 | Outer Joint | | 31 | 29 | 65.3 | 95.5 | 49 | I |
| | 2019.05- | 9AT | R | L/R | SUV 4WD 204DTD(AJ20D4) | Date from:2020.01;Chassis no. from:LH000001,Chassis no. to:MH892125;For vehicles with efficient driveline | GCO83861 | Outer Joint | | 31 | 29 | 65.3 | 95.5 | 49 | I |
| | 2019.05- | 9AT | R | R | SUV 4WD 204DTD(AJ20D4) | Date to:2019.12;Chassis to:KH999999;For vehicles with active driveline | GCI82281 | Inner Joint | | 26 | 29 | 34.95 | 67.5 | 106.5 | |
| | 2019.05- | 9AT | R | L/R | SUV 4WD 204DTD(AJ20D4) | Date to:2019.12,Chassis no. to:KH999999,For vehicles with efficient driveline | GCI18187 | Inner Joint | | 26 | 29 | 35 | 69.5 | 107.5 | |
| | 2019.05- | 9AT | R | L/R | SUV 4WD 204DTD(AJ20D4) | Date from:2020.01;Chassis no. from:LH000001,Chassis no. to:MH892125;For vehicles with efficient driveline | GCI84035 | Inner Joint | | 26 | 29 | 35 | 56 | 109 | |
| 2.0 (120 kw) | 2020.07- | 9AT | F | L | SUV 4WD 204DTY(AJ21D4) | | GDS82992 | Drive Shaft | | 31 | 31 | 68.5 | 97 | 590 | |
| | 2020.07- | 9AT | F | R | SUV 4WD 204DTY(AJ21D4) | Chassis no. from:KH000001,Chassis no. to:KH999999 | GDS56284 | Drive Shaft | | 31 | 28 | 68.5 | 97 | 1042 | |
| | 2020.07- | 9AT | F | R | SUV 4WD 204DTY(AJ21D4) | Date from:2020.01,Trans. code:9HP50,Chassis no. from:LH000001 | GDS84191 | Drive Shaft | | 31 | 28 | 68.5 | 97 | 1042 | |
| | 2020.07- | 9AT | F | L/R | SUV 4WD 204DTY(AJ21D4) | 6 balls | GCO18250 | Outer Joint | | 31 | 27 | 68.3 | 97 | 61 | I |
| | 2020.07- | 9AT | F | L/R | SUV 4WD 204DTY(AJ21D4) | 8 balls | GCO81975 | Outer Joint | | 31 | 27 | 68.5 | 97 | 61 | I |
| | 2020.07- | 9AT | F | R | SUV 4WD 204DTY(AJ21D4) | | GCI82629 | Inner Joint | | 28 | 27 | 30 | 520 | 95 | |
| | 2020.07- | 9AT | R | R | SUV 4WD 204DTY(AJ21D4) | Chassis no. to:MH892125;For vehicles with efficient driveline | GDS58199 | Drive Shaft | | 31 | 26 | 65.3 | 95.5 | 815 | |
| | 2020.07- | 9AT | R | L/R | SUV 4WD 204DTY(AJ21D4) | Position:Rear axle left and right,For vehicles with active driveline;Position:Rear axle left,For vehicles with efficient driveline | GDS58309 | Drive Shaft | | 31 | 26 | 65.3 | 95.5 | 723 | |
| | 2020.07- | 9AT | R | L/R | SUV 4WD 204DTY(AJ21D4) | Chassis no. to:MH892125;For vehicles with efficient driveline | GCO83861 | Outer Joint | | 31 | 29 | 65.3 | 95.5 | 49 | I |
| | 2020.07- | 9AT | R | L/R | SUV 4WD 204DTY(AJ21D4) | Chassis no. to:MH892125;For vehicles with efficient driveline | GCI84035 | Inner Joint | | 26 | 29 | 35 | 56 | 109 | |
| | 2020.07- | 6MT | F | L | SUV FWD 204DTD(AJ20D4) | | GDS56503 | Drive Shaft | | 31 | 31 | 68.5 | 97 | 600 | |
| | 2020.07- | 6MT | F | R | SUV FWD 204DTD(AJ20D4) | | GDS84192 | Drive Shaft | | 31 | 28 | 68.5 | 97 | 1068 | |
| | 2020.07- | 6MT | F | L/R | SUV FWD 204DTD(AJ20D4) | 8 balls | GCO81975 | Outer Joint | | 31 | 27 | 68.5 | 97 | 61 | I |
| | 2020.07- | 6MT | F | L | SUV FWD 204DTD(AJ20D4) | | GCI82631 | Inner Joint | | 31 | 27 | 44 | 65 | 112 | |
| | 2021.03- | 6MT | F | L | SUV FWD 204DTY(AJ21D4) | | GDS56503 | Drive Shaft | | 31 | 31 | 68.5 | 97 | 600 | |
| | 2021.03- | 6MT | F | R | SUV FWD 204DTY(AJ21D4) | | GDS84192 | Drive Shaft | | 31 | 28 | 68.5 | 97 | 1068 | |
| | 2021.03- | 6MT | F | L/R | SUV FWD 204DTY(AJ21D4) | | GCO81975 | Outer Joint | | 31 | 27 | 68.5 | 97 | 61 | I |
| | 2021.03- | 6MT | F | L | SUV FWD 204DTY(AJ21D4) | | GCI82631 | Inner Joint | | 31 | 27 | 44 | 65 | 112 | |
| 2.0 (132 kw) | 2015.06- | 6MT | F | L | SUV 4WD 204DTD(AJ20D4) | Date to:2018.12,Chassis no. to:JH999999,Trans. code:M66 | GDS56383 | Drive Shaft | | 31 | 31 | 68.5 | 97 | 614 | |
| | 2015.06- | 6MT | F | L | SUV 4WD 204DTD(AJ20D4) | Date from:2019.01,Chassis no. from:KH000001,Trans. code:BG6 | GDS56503 | Drive Shaft | | 31 | 31 | 68.5 | 97 | 600 | |
| | 2015.06- | 6MT | F | R | SUV 4WD 204DTD(AJ20D4) | Trans. code:M66,Date to:2018.12,Chassis no. to:JH999999 | GDS57776 | Drive Shaft | | 31 | 28 | 68.5 | 97 | 1061 | |
| | 2015.06- | 6MT | F | L | SUV 4WD 204DTD(AJ20D4) | Date to:2018.12,Chassis no. to:JH999999,Trans. code:M66;Date from:2019.01,Chassis no. from:KH000001,Trans. code:BG6 | GCI82631 | Inner Joint | | 31 | 27 | 44 | 65 | 112 | |
| | 2015.06- | 6MT | F | R | SUV 4WD 204DTD(AJ20D4) | Trans. code:M66,Date to:2018.12,Chassis no. to:JH999999 | GCI83851 | Inner Joint | | 28 | 27 | 29.95 | 538 | 96.5 | |

| | YEAR | TRANSM. | F/R | L/R | BODY STYLE & DRIVE TYPE & ENGINE | REMARKS | G-AP Ref. | PRODUCT | ABS | A | B | C | H | L | P |
|---|---|---|---|---|---|---|---|---|---|---|---|---|---|---|---|
| **LAND ROVER** **Discovery Sport** | | | | | | | | | | | | | | | |
| 2.0 (132 kw) | 2015.06- | 9AT | F | L | SUV 4WD 204DTD(AJ20D4) | | GDS82992 | Drive Shaft | | 31 | 31 | 68.5 | 97 | 590 | |
| | 2015.06- | 9AT | F | R | SUV 4WD 204DTD(AJ20D4) | Chassis no. from:KH000001,Chassis no. to:KH999999 | GDS56284 | Drive Shaft | | 31 | 28 | 68.5 | 97 | 1042 | |
| | 2015.06- | 9AT | F | R | SUV 4WD 204DTD(AJ20D4) | Date from:2020.01,Trans. code:9HP50,Chassis no. from:LH000001 | GDS84191 | Drive Shaft | | 31 | 28 | 68.5 | 97 | 1042 | |
| | 2015.06- | 9AT | F | L | SUV 4WD 204DTD(AJ20D4) | | GCI85049 | Inner Joint | | 31 | 27 | 36.2 | 68 | 95 | |
| | 2015.06- | 9AT | F | R | SUV 4WD 204DTD(AJ20D4) | Date to:2018.12;Chassis no. to:JH999999 | GCI82629 | Inner Joint | | 28 | 27 | 30 | 520 | 95 | |
| | 2015.06- | 9AT/6MT | F | L/R | SUV 4WD 204DTD(AJ20D4) | 6 balls | GCO18250 | Outer Joint | | 31 | 27 | 68.3 | 97 | 61 | I |
| | 2015.06- | 9AT/6MT | F | L/R | SUV 4WD 204DTD(AJ20D4) | Transmission:6MT,Date from:2019.01,Chassis no. from:KH000001,Trans. code:BG6;8 balls | GCO81975 | Outer Joint | | 31 | 27 | 68.5 | 97 | 61 | I |
| | 2015.06- | 9AT/6MT | R | R | SUV 4WD 204DTD(AJ20D4) | Date from:2020.01;Chassis no. from:LH000001,Chassis no. to:MH892125;For vehicles with efficient driveline | GDS58199 | Drive Shaft | | 31 | 26 | 65.3 | 95.5 | 815 | |
| | 2015.06- | 9AT/6MT | R | L/R | SUV 4WD 204DTD(AJ20D4) | Date to:2019.12,Chassis no. to:KH999999,For vehicles with efficient driveline | GDS56790 | Drive Shaft | | 31 | 26 | 65.3 | 95.5 | 830 | |
| | 2015.06- | 9AT/6MT | R | L/R | SUV 4WD 204DTD(AJ20D4) | Date from:2020.01,Chassis no. from:LH000001;Position:Rear axle left and right,For vehicles with active driveline;Position:Rear axle left,For vehicles with efficient driveline | GDS58309 | Drive Shaft | | 31 | 26 | 65.3 | 95.5 | 723 | |
| | 2015.06- | 9AT/6MT | R | L/R | SUV 4WD 204DTD(AJ20D4) | Date to:2019.12,Chassis no. to:KH999999,For vehicles with efficient driveline | GCO82426 | Outer Joint | | 31 | 29 | 65.3 | 95.5 | 49 | I |
| | 2015.06- | 9AT/6MT | R | L/R | SUV 4WD 204DTD(AJ20D4) | Date from:2020.01;Chassis no. from:LH000001,Chassis no. to:MH892125;For vehicles with efficient driveline | GCO83861 | Outer Joint | | 31 | 29 | 65.3 | 95.5 | 49 | I |
| | 2015.06- | 9AT/6MT | R | R | SUV 4WD 204DTD(AJ20D4) | Date to:2019.12;Chassis to:KH999999;For vehicles with active driveline | GCI82281 | Inner Joint | | 26 | 29 | 34.95 | 67.5 | 106.5 | |
| | 2015.06- | 9AT/6MT | R | L/R | SUV 4WD 204DTD(AJ20D4) | Date to:2019.12,Chassis no. to:KH999999,For vehicles with efficient driveline | GCI18187 | Inner Joint | | 26 | 29 | 35 | 69.5 | 107.5 | |
| | 2015.06- | 9AT/6MT | R | L/R | SUV 4WD 204DTD(AJ20D4) | Date from:2020.01;Chassis no. from:LH000001,Chassis no. to:MH892125;For vehicles with efficient driveline | GCI84035 | Inner Joint | | 26 | 29 | 35 | 56 | 109 | |
| | 2015.06- | 6MT | F | L | SUV Van 4WD 204DTD(AJ20D4) | Date to:2018.12,Chassis no. to:JH999999,Trans. code:M66 | GDS56383 | Drive Shaft | | 31 | 31 | 68.5 | 97 | 614 | |
| | 2015.06- | 6MT | F | L | SUV Van 4WD 204DTD(AJ20D4) | Date from:2019.01,Chassis no. from:KH000001,Trans. code:BG6 | GDS56503 | Drive Shaft | | 31 | 31 | 68.5 | 97 | 600 | |
| | 2015.06- | 6MT | F | R | SUV Van 4WD 204DTD(AJ20D4) | Trans. code:M66,Date to:2018.12,Chassis no. to:JH999999 | GDS57776 | Drive Shaft | | 31 | 28 | 68.5 | 97 | 1061 | |
| | 2015.06- | 6MT | F | L | SUV Van 4WD 204DTD(AJ20D4) | Date to:2018.12,Chassis no. to:JH999999,Trans. code:M66;Date from:2019.01,Chassis no. from:KH000001,Trans. code:BG6 | GCI82631 | Inner Joint | | 31 | 27 | 44 | 65 | 112 | |
| | 2015.06- | 6MT | F | R | SUV Van 4WD 204DTD(AJ20D4) | Trans. code:M66,Date to:2018.12,Chassis no. to:JH999999 | GCI83851 | Inner Joint | | 28 | 27 | 29.95 | 538 | 96.5 | |
| | 2015.06- | 9AT | F | L | SUV Van 4WD 204DTD(AJ20D4) | | GDS82992 | Drive Shaft | | 31 | 31 | 68.5 | 97 | 590 | |
| | 2015.06- | 9AT | F | R | SUV Van 4WD 204DTD(AJ20D4) | Chassis no. from:KH000001,Chassis no. to:KH999999 | GDS56284 | Drive Shaft | | 31 | 28 | 68.5 | 97 | 1042 | |
| | 2015.06- | 9AT | F | R | SUV Van 4WD 204DTD(AJ20D4) | Date from:2020.01,Trans. code:9HP50,Chassis no. from:LH000001 | GDS84191 | Drive Shaft | | 31 | 28 | 68.5 | 97 | 1042 | |
| | 2015.06- | 9AT | F | L | SUV Van 4WD 204DTD(AJ20D4) | | GCI85049 | Inner Joint | | 31 | 27 | 36.2 | 68 | 95 | |
| | 2015.06- | 9AT | F | R | SUV Van 4WD 204DTD(AJ20D4) | Date to:2018.12;Chassis no. to:JH999999 | GCI82629 | Inner Joint | | 28 | 27 | 30 | 520 | 95 | |
| | 2015.06- | 9AT/6MT | F | L/R | SUV Van 4WD 204DTD(AJ20D4) | Transmission:6MT,Date from:2019.01,Chassis no. from:KH000001,Trans. code:BG6;8 balls | GCO81975 | Outer Joint | | 31 | 27 | 68.5 | 97 | 61 | I |
| | 2015.06- | 9AT/6MT | R | R | SUV Van 4WD 204DTD(AJ20D4) | Date from:2020.01;Chassis no. from:LH000001,Chassis no. to:MH892125;For vehicles with efficient driveline | GDS58199 | Drive Shaft | | 31 | 26 | 65.3 | 95.5 | 815 | |
| | 2015.06- | 9AT/6MT | R | L/R | SUV Van 4WD 204DTD(AJ20D4) | Date to:2019.12,Chassis no. to:KH999999,For vehicles with efficient driveline | GDS56790 | Drive Shaft | | 31 | 26 | 65.3 | 95.5 | 830 | |
| | 2015.06- | 9AT/6MT | R | L/R | SUV Van 4WD 204DTD(AJ20D4) | Date from:2020.01,Chassis no. from:LH000001;Position:Rear axle left and right,For vehicles with active driveline;Position:Rear axle left,For vehicles with efficient driveline | GDS58309 | Drive Shaft | | 31 | 26 | 65.3 | 95.5 | 723 | |
| | 2015.06- | 9AT/6MT | R | L/R | SUV Van 4WD 204DTD(AJ20D4) | Date to:2019.12,Chassis no. to:KH999999,For vehicles with efficient driveline | GCO82426 | Outer Joint | | 31 | 29 | 65.3 | 95.5 | 49 | I |
| | 2015.06- | 9AT/6MT | R | L/R | SUV Van 4WD 204DTD(AJ20D4) | Date from:2020.01;Chassis no. from:LH000001,Chassis no. to:MH892125;For vehicles with efficient driveline | GCO83861 | Outer Joint | | 31 | 29 | 65.3 | 95.5 | 49 | I |
| | 2015.06- | 9AT/6MT | R | R | SUV Van 4WD 204DTD(AJ20D4) | Date to:2019.12;Chassis to:KH999999;For vehicles with active driveline | GCI82281 | Inner Joint | | 26 | 29 | 34.95 | 67.5 | 106.5 | |
| | 2015.06- | 9AT/6MT | R | L/R | SUV Van 4WD 204DTD(AJ20D4) | Date to:2019.12,Chassis no. to:KH999999,For vehicles with efficient driveline | GCI18187 | Inner Joint | | 26 | 29 | 35 | 69.5 | 107.5 | |
| | 2015.06- | 9AT/6MT | R | L/R | SUV Van 4WD 204DTD(AJ20D4) | Date from:2020.01;Chassis no. from:LH000001,Chassis no. to:MH892125;For vehicles with efficient driveline | GCI84035 | Inner Joint | | 26 | 29 | 35 | 56 | 109 | |
| | 2019.05- | 9AT | F | L | SUV 4WD 204DTD(AJ20D4) | | GDS82992 | Drive Shaft | | 31 | 31 | 68.5 | 97 | 590 | |
| | 2019.05- | 9AT | F | R | SUV 4WD 204DTD(AJ20D4) | Chassis no. from:KH000001,Chassis no. to:KH999999 | GDS56284 | Drive Shaft | | 31 | 28 | 68.5 | 97 | 1042 | |
| | 2019.05- | 9AT | F | R | SUV 4WD 204DTD(AJ20D4) | Date from:2020.01,Trans. code:9HP50,Chassis no. from:LH000001 | GDS84191 | Drive Shaft | | 31 | 28 | 68.5 | 97 | 1042 | |
| | 2019.05- | 9AT | F | L/R | SUV 4WD 204DTD(AJ20D4) | 6 balls | GCO18250 | Outer Joint | | 31 | 27 | 68.3 | 97 | 61 | I |
| | 2019.05- | 9AT | F | L/R | SUV 4WD 204DTD(AJ20D4) | 8 balls | GCO81975 | Outer Joint | | 31 | 27 | 68.5 | 97 | 61 | I |
| | 2019.05- | 9AT | F | R | SUV 4WD 204DTD(AJ20D4) | | GCI82629 | Inner Joint | | 28 | 27 | 30 | 520 | 95 | |
| | 2019.05- | 9AT | R | R | SUV 4WD 204DTD(AJ20D4) | Date from:2020.01;Chassis no. from:LH000001,Chassis no. to:MH892125;For vehicles with efficient driveline | GDS58199 | Drive Shaft | | 31 | 26 | 65.3 | 95.5 | 815 | |
| | 2019.05- | 9AT | R | L/R | SUV 4WD 204DTD(AJ20D4) | Date to:2019.12,Chassis no. to:KH999999,For vehicles with efficient driveline | GDS56790 | Drive Shaft | | 31 | 26 | 65.3 | 95.5 | 830 | |
| | 2019.05- | 9AT | R | L/R | SUV 4WD 204DTD(AJ20D4) | Date from:2020.01,Chassis no. from:LH000001;Position:Rear axle left and right,For vehicles with active driveline;Position:Rear axle left,For vehicles with efficient driveline | GDS58309 | Drive Shaft | | 31 | 26 | 65.3 | 95.5 | 723 | |
| | 2019.05- | 9AT | R | L/R | SUV 4WD 204DTD(AJ20D4) | Date to:2019.12,Chassis no. to:KH999999,For vehicles with efficient driveline | GCO82426 | Outer Joint | | 31 | 29 | 65.3 | 95.5 | 49 | I |
| | 2019.05- | 9AT | R | L/R | SUV 4WD 204DTD(AJ20D4) | Date from:2020.01;Chassis no. from:LH000001,Chassis no. to:MH892125;For vehicles with efficient driveline | GCO83861 | Outer Joint | | 31 | 29 | 65.3 | 95.5 | 49 | I |
| | 2019.05- | 9AT | R | R | SUV 4WD 204DTD(AJ20D4) | Date to:2019.12;Chassis to:KH999999;For vehicles with active driveline | GCI82281 | Inner Joint | | 26 | 29 | 34.95 | 67.5 | 106.5 | |
| | 2019.05- | 9AT | R | L/R | SUV 4WD 204DTD(AJ20D4) | Date to:2019.12,Chassis no. to:KH999999,For vehicles with efficient driveline | GCI18187 | Inner Joint | | 26 | 29 | 35 | 69.5 | 107.5 | |
| | 2019.05- | 9AT | R | L/R | SUV 4WD 204DTD(AJ20D4) | Date from:2020.01;Chassis no. from:LH000001,Chassis no. to:MH892125;For vehicles with efficient driveline | GCI84035 | Inner Joint | | 26 | 29 | 35 | 56 | 109 | |
| 2.0 (147 kw) | 2019.05- | 9AT | F | L | SUV 4WD PT204(AJ20P4) | | GDS82992 | Drive Shaft | | 31 | 31 | 68.5 | 97 | 590 | |
| | 2019.05- | 9AT | F | R | SUV 4WD PT204(AJ20P4) | Chassis no. from:KH000001,Chassis no. to:KH999999 | GDS56284 | Drive Shaft | | 31 | 28 | 68.5 | 97 | 1042 | |
| | 2019.05- | 9AT | F | R | SUV 4WD PT204(AJ20P4) | Date from:2020.01,Trans. code:9HP50,Chassis no. from:LH000001 | GDS84191 | Drive Shaft | | 31 | 28 | 68.5 | 97 | 1042 | |
| | 2019.05- | 9AT | F | L/R | SUV 4WD PT204(AJ20P4) | 6 balls | GCO18250 | Outer Joint | | 31 | 27 | 68.3 | 97 | 61 | I |
| | 2019.05- | 9AT | F | L/R | SUV 4WD PT204(AJ20P4) | 8 balls | GCO81975 | Outer Joint | | 31 | 27 | 68.5 | 97 | 61 | I |
| | 2019.05- | 9AT | F | L | SUV 4WD PT204(AJ20P4) | | GCI85049 | Inner Joint | | 31 | 27 | 36.2 | 68 | 95 | |
| | 2019.05- | 9AT | R | R | SUV 4WD PT204(AJ20P4) | Date from:2020.01;Chassis no. from:LH000001,Chassis no. to:MH892125;For vehicles with efficient driveline | GDS58199 | Drive Shaft | | 31 | 26 | 65.3 | 95.5 | 815 | |
| | 2019.05- | 9AT | R | L/R | SUV 4WD PT204(AJ20P4) | Date to:2019.12,Chassis no. to:KH999999,For vehicles with efficient driveline | GDS56790 | Drive Shaft | | 31 | 26 | 65.3 | 95.5 | 830 | |
| | 2019.05- | 9AT | R | L/R | SUV 4WD PT204(AJ20P4) | Date from:2020.01,Chassis no. from:LH000001;Position:Rear axle left and right,For vehicles with active driveline;Position:Rear axle left,For vehicles with efficient driveline | GDS58309 | Drive Shaft | | 31 | 26 | 65.3 | 95.5 | 723 | |
| | 2019.05- | 9AT | R | L/R | SUV 4WD PT204(AJ20P4) | Date to:2019.12,Chassis no. to:KH999999,For vehicles with efficient driveline | GCO82426 | Outer Joint | | 31 | 29 | 65.3 | 95.5 | 49 | I |
| | 2019.05- | 9AT | R | L/R | SUV 4WD PT204(AJ20P4) | Date from:2020.01;Chassis no. from:LH000001,Chassis no. to:MH892125;For vehicles with efficient driveline | GCO83861 | Outer Joint | | 31 | 29 | 65.3 | 95.5 | 49 | I |
| | 2019.05- | 9AT | R | R | SUV 4WD PT204(AJ20P4) | Date to:2019.12;Chassis to:KH999999;For vehicles with active driveline | GCI82281 | Inner Joint | | 26 | 29 | 34.95 | 67.5 | 106.5 | |
| | 2019.05- | 9AT | R | L/R | SUV 4WD PT204(AJ20P4) | Date to:2019.12,Chassis no. to:KH999999,For vehicles with efficient driveline | GCI18187 | Inner Joint | | 26 | 29 | 35 | 69.5 | 107.5 | |
| | 2019.05- | 9AT | R | L/R | SUV 4WD PT204(AJ20P4) | Date from:2020.01;Chassis no. from:LH000001,Chassis no. to:MH892125;For vehicles with efficient driveline | GCI84035 | Inner Joint | | 26 | 29 | 35 | 56 | 109 | |
| | 2020.07- | 9AT | F | L | SUV 4WD PT204(AJ20P4) | | GDS82992 | Drive Shaft | | 31 | 31 | 68.5 | 97 | 590 | |
| | 2020.07- | 9AT | F | R | SUV 4WD PT204(AJ20P4) | Chassis no. from:KH000001,Chassis no. to:KH999999 | GDS56284 | Drive Shaft | | 31 | 28 | 68.5 | 97 | 1042 | |
| | 2020.07- | 9AT | F | R | SUV 4WD PT204(AJ20P4) | Date from:2020.01,Trans. code:9HP50,Chassis no. from:LH000001 | GDS84191 | Drive Shaft | | 31 | 28 | 68.5 | 97 | 1042 | |

Technical Specifications

| | YEAR | TRANSM. | F/R | L/R | BODY STYLE & DRIVE TYPE & ENGINE | REMARKS | G-AP Ref. | PRODUCT | ABS | Technical Specifications | | | | | |
|---|---|---|---|---|---|---|---|---|---|---|---|---|---|---|---|
| | | | | | | | | | | A | B | C | H | L | P |
| **LAND ROVER** | | | | | | | | | | | | | | | |
| **Discovery Sport** | | | | | | | | | | | | | | | |
| 2.0 (147 kw) | 2020.07- | 9AT | F | L/R | SUV 4WD PT204(AJ20P4) | | GCO81975 | Outer Joint | | 31 | 27 | 68.5 | 97 | 61 | I |
| | 2020.07- | 9AT | F | R | SUV 4WD PT204(AJ20P4) | | GCI82629 | Inner Joint | | 28 | 27 | 30 | 520 | 95 | |
| | 2020.07- | 9AT | R | R | SUV 4WD PT204(AJ20P4) | Chassis no. to:MH892125;For vehicles with efficient driveline | GDS58199 | Drive Shaft | | 31 | 26 | 65.3 | 95.5 | 815 | |
| | 2020.07- | 9AT | R | L/R | SUV 4WD PT204(AJ20P4) | Position:Rear axle left and right;For vehicles with active driveline;Position:Rear axle left;For vehicles with efficient driveline | GDS58309 | Drive Shaft | | 31 | 26 | 65.3 | 95.5 | 723 | |
| | 2020.07- | 9AT | R | L/R | SUV 4WD PT204(AJ20P4) | Chassis no. to:MH892125;For vehicles with efficient driveline | GCO83861 | Outer Joint | | 31 | 29 | 65.3 | 95.5 | 49 | I |
| | 2020.07- | 9AT | R | L/R | SUV 4WD PT204(AJ20P4) | Chassis no. to:MH892125;For vehicles with efficient driveline | GCI84035 | Inner Joint | | 26 | 29 | 35 | 56 | 109 | |
| | 2020.09- | 9AT | F | L | SUV 4WD PT204(AJ20P4) | | GDS82992 | Drive Shaft | | 31 | 31 | 68.5 | 97 | 590 | |
| | 2020.09- | 9AT | F | R | SUV 4WD PT204(AJ20P4) | Chassis no. from:KH000001,Chassis no. to:KH999999 | GDS56284 | Drive Shaft | | 31 | 28 | 68.5 | 97 | 1042 | |
| | 2020.09- | 9AT | F | R | SUV 4WD PT204(AJ20P4) | Date from:2020.01,Trans. code:9HP50,Chassis no. from:LH000001 | GDS84191 | Drive Shaft | | 31 | 28 | 68.5 | 97 | 1042 | |
| | 2020.09- | 9AT | F | L/R | SUV 4WD PT204(AJ20P4) | 6 balls | GCO18250 | Outer Joint | | 31 | 27 | 68.3 | 97 | 61 | I |
| | 2020.09- | 9AT | F | L/R | SUV 4WD PT204(AJ20P4) | 8 balls | GCO81975 | Outer Joint | | 31 | 27 | 68.5 | 97 | 61 | I |
| | 2020.09- | 9AT | F | R | SUV 4WD PT204(AJ20P4) | | GCI82629 | Inner Joint | | 28 | 27 | 30 | 520 | 95 | |
| | 2020.09- | 9AT | R | R | SUV 4WD PT204(AJ20P4) | Chassis no. to:MH892125;For vehicles with efficient driveline | GDS58199 | Drive Shaft | | 31 | 26 | 65.3 | 95.5 | 815 | |
| | 2020.09- | 9AT | R | L/R | SUV 4WD PT204(AJ20P4) | Position:Rear axle left and right;For vehicles with active driveline;Position:Rear axle left;For vehicles with efficient driveline | GDS58309 | Drive Shaft | | 31 | 26 | 65.3 | 95.5 | 723 | |
| | 2020.09- | 9AT | R | L/R | SUV 4WD PT204(AJ20P4) | Chassis no. to:MH892125;For vehicles with efficient driveline | GCO83861 | Outer Joint | | 31 | 29 | 65.3 | 95.5 | 49 | I |
| | 2020.09- | 9AT | R | L/R | SUV 4WD PT204(AJ20P4) | Chassis no. to:MH892125;For vehicles with efficient driveline | GCI84035 | Inner Joint | | 26 | 29 | 35 | 56 | 109 | |
| 2.0 (150 kw) | 2020.07- | 9AT | F | L | SUV 4WD 204DTY(AJ21D4) | | GDS82992 | Drive Shaft | | 31 | 31 | 68.5 | 97 | 590 | |
| | 2020.07- | 9AT | F | R | SUV 4WD 204DTY(AJ21D4) | Chassis no. from:KH000001,Chassis no. to:KH999999 | GDS56284 | Drive Shaft | | 31 | 28 | 68.5 | 97 | 1042 | |
| | 2020.07- | 9AT | F | R | SUV 4WD 204DTY(AJ21D4) | Date from:2020.01,Trans. code:9HP50,Chassis no. from:LH000001 | GDS84191 | Drive Shaft | | 31 | 28 | 68.5 | 97 | 1042 | |
| | 2020.07- | 9AT | F | L/R | SUV 4WD 204DTY(AJ21D4) | 6 balls | GCO18250 | Outer Joint | | 31 | 27 | 68.3 | 97 | 61 | I |
| | 2020.07- | 9AT | F | L/R | SUV 4WD 204DTY(AJ21D4) | 8 balls | GCO81975 | Outer Joint | | 31 | 27 | 68.5 | 97 | 61 | I |
| | 2020.07- | 9AT | F | R | SUV 4WD 204DTY(AJ21D4) | | GCI82629 | Inner Joint | | 28 | 27 | 30 | 520 | 95 | |
| | 2020.07- | 9AT | R | R | SUV 4WD 204DTY(AJ21D4) | Chassis no. to:MH892125;For vehicles with efficient driveline | GDS58199 | Drive Shaft | | 31 | 26 | 65.3 | 95.5 | 815 | |
| | 2020.07- | 9AT | R | L/R | SUV 4WD 204DTY(AJ21D4) | Position:Rear axle left and right;For vehicles with active driveline;Position:Rear axle left;For vehicles with efficient driveline | GDS58309 | Drive Shaft | | 31 | 26 | 65.3 | 95.5 | 723 | |
| | 2020.07- | 9AT | R | L/R | SUV 4WD 204DTY(AJ21D4) | Chassis no. to:MH892125;For vehicles with efficient driveline | GCO83861 | Outer Joint | | 31 | 29 | 65.3 | 95.5 | 49 | I |
| | 2020.07- | 9AT | R | L/R | SUV 4WD 204DTY(AJ21D4) | Chassis no. to:MH892125;For vehicles with efficient driveline | GCI84035 | Inner Joint | | 26 | 29 | 35 | 56 | 109 | |
| 2.0 (177 kw) | 2014.11- | 9AT | F | L | SUV 4WD 204PT(GTDI) | Trans. code:9HP50 | GDS82992 | Drive Shaft | | 31 | 31 | 68.5 | 97 | 590 | |
| | 2014.11- | 9AT | F | L | SUV 4WD 204PT(GTDI) | Not for Trans. code:9HP50 | GDS83419 | Drive Shaft | | 31 | 31 | 68.5 | 97 | 623 | |
| | 2014.11- | 9AT | F | R | SUV 4WD 204PT(GTDI) | Date to:2019.12,Chassis no. to:KH999999,Trans. code:9HP50 | GDS56284 | Drive Shaft | | 31 | 28 | 68.5 | 97 | 1042 | |
| | 2014.11- | 9AT | F | R | SUV 4WD 204PT(GTDI) | Date to:2019.12,Chassis no. to:KH999999,not for Trans. code:9HP50 | GDS83420 | Drive Shaft | | 31 | 28 | 68.5 | 97 | 1017 | |
| | 2014.11- | 9AT | F | R | SUV 4WD 204PT(GTDI) | Date from:2020.01,Trans. code:9HP50,Chassis no. from:LH000001 | GDS84191 | Drive Shaft | | 31 | 28 | 68.5 | 97 | 1042 | |
| | 2014.11- | 9AT | F | L/R | SUV 4WD 204PT(GTDI) | 6 balls | GCO18250 | Outer Joint | | 31 | 27 | 68.3 | 97 | 61 | I |
| | 2014.11- | 9AT | F | L/R | SUV 4WD 204PT(GTDI) | 8 balls | GCO81975 | Outer Joint | | 31 | 27 | 68.5 | 97 | 61 | I |
| | 2014.11- | 9AT | F | L | SUV 4WD 204PT(GTDI) | | GCI85049 | Inner Joint | | 31 | 27 | 36.2 | 68 | 95 | |
| | 2014.11- | 9AT | F | R | SUV 4WD 204PT(GTDI) | | GCI82209 | Inner Joint | | 28 | 27 | 30 | 436 | 96 | |
| | 2014.11- | 9AT | R | R | SUV 4WD 204PT(GTDI) | Date from:2020.01,Chassis no. from:LH000001,Chassis no. to:MH892125;For vehicles with efficient driveline | GDS58199 | Drive Shaft | | 31 | 26 | 65.3 | 95.5 | 815 | |
| | 2014.11- | 9AT | R | L/R | SUV 4WD 204PT(GTDI) | Date to:2019.12,Chassis no. to:KH999999;For vehicles with efficient driveline | GDS56790 | Drive Shaft | | 31 | 26 | 65.3 | 95.5 | 830 | |
| | 2014.11- | 9AT | R | L/R | SUV 4WD 204PT(GTDI) | Position:Rear axle left and right;For vehicles with active driveline;Position:Rear axle left;For vehicles with efficient driveline | GDS58309 | Drive Shaft | | 31 | 26 | 65.3 | 95.5 | 723 | |
| | 2014.11- | 9AT | R | L/R | SUV 4WD 204PT(GTDI) | Date to:2019.12,Chassis no. to:KH999999;For vehicles with efficient driveline | GCO82426 | Outer Joint | | 31 | 29 | 65.3 | 95.5 | 49 | I |
| | 2014.11- | 9AT | R | L/R | SUV 4WD 204PT(GTDI) | Date from:2020.01,Chassis no. from:LH000001,Chassis no. to:MH892125;For vehicles with efficient driveline | GCO83861 | Outer Joint | | 31 | 29 | 65.3 | 95.5 | 49 | I |
| | 2014.11- | 9AT | R | R | SUV 4WD 204PT(GTDI) | Date to:2019.12;Chassis to:KH999999;For vehicles with active driveline | GCI82281 | Inner Joint | | 26 | 29 | 34.95 | 67.5 | 106.5 | |
| | 2014.11- | 9AT | R | L/R | SUV 4WD 204PT(GTDI) | Date to:2019.12,Chassis no. to:KH999999;For vehicles with efficient driveline | GCI18187 | Inner Joint | | 26 | 29 | 35 | 69.5 | 107.5 | |
| | 2014.11- | 9AT | R | L/R | SUV 4WD 204PT(GTDI) | Date from:2020.01,Chassis no. from:LH000001,Chassis no. to:MH892125;For vehicles with efficient driveline | GCI84035 | Inner Joint | | 26 | 29 | 35 | 56 | 109 | |
| | 2017.01- | 9AT | F | L | SUV Van 4WD 204PT(GTDI) | Trans. code:9HP50 | GDS82992 | Drive Shaft | | 31 | 31 | 68.5 | 97 | 590 | |
| | 2017.01- | 9AT | F | R | SUV Van 4WD 204PT(GTDI) | Date to:2019.12,Chassis no. to:KH999999 | GDS56284 | Drive Shaft | | 31 | 28 | 68.5 | 97 | 1042 | |
| | 2017.01- | 9AT | F | R | SUV Van 4WD 204PT(GTDI) | Date from:2020.01,Trans. code:9HP50,Chassis no. from:LH000001 | GDS84191 | Drive Shaft | | 31 | 28 | 68.5 | 97 | 1042 | |
| | 2017.01- | 9AT | F | L/R | SUV Van 4WD 204PT(GTDI) | | GCO81975 | Outer Joint | | 31 | 27 | 68.5 | 97 | 61 | I |
| | 2017.01- | AT | F | L | SUV Van 4WD 204PT(GTDI) | Not for Trans. code:9HP50 | GDS83419 | Drive Shaft | | 31 | 31 | 68.5 | 97 | 623 | |
| | 2017.01- | AT | F | L | SUV Van 4WD 204PT(GTDI) | | GCI85049 | Inner Joint | | 31 | 27 | 36.2 | 68 | 95 | |
| | 2017.01- | AT | F | R | SUV Van 4WD 204PT(GTDI) | | GCI82209 | Inner Joint | | 28 | 27 | 30 | 436 | 96 | |
| | 2017.01- | AT | R | R | SUV Van 4WD 204PT(GTDI) | Date from:2020.01,Chassis no. from:LH000001,Chassis no. to:MH892125;For vehicles with efficient driveline | GDS58199 | Drive Shaft | | 31 | 26 | 65.3 | 95.5 | 815 | |
| | 2017.01- | AT | R | L/R | SUV Van 4WD 204PT(GTDI) | Date to:2019.12,Chassis no. to:KH999999;For vehicles with efficient driveline | GDS56790 | Drive Shaft | | 31 | 26 | 65.3 | 95.5 | 830 | |
| | 2017.01- | AT | R | L/R | SUV Van 4WD 204PT(GTDI) | Position:Rear axle left and right;For vehicles with active driveline;Position:Rear axle left;For vehicles with efficient driveline | GDS58309 | Drive Shaft | | 31 | 26 | 65.3 | 95.5 | 723 | |
| | 2017.01- | AT | R | L/R | SUV Van 4WD 204PT(GTDI) | Date to:2019.12,Chassis no. to:KH999999;For vehicles with efficient driveline | GCO82426 | Outer Joint | | 31 | 29 | 65.3 | 95.5 | 49 | I |
| | 2017.01- | AT | R | L/R | SUV Van 4WD 204PT(GTDI) | Date from:2020.01,Chassis no. from:LH000001,Chassis no. to:MH892125;For vehicles with efficient driveline | GCO83861 | Outer Joint | | 31 | 29 | 65.3 | 95.5 | 49 | I |
| | 2017.01- | AT | R | L/R | SUV Van 4WD 204PT(GTDI) | Date to:2019.12,Chassis no. to:KH999999;For vehicles with efficient driveline | GCI18187 | Inner Joint | | 26 | 29 | 35 | 69.5 | 107.5 | |
| | 2017.01- | AT | R | L/R | SUV Van 4WD 204PT(GTDI) | Date from:2020.01,Chassis no. from:LH000001,Chassis no. to:MH892125;For vehicles with efficient driveline | GCI84035 | Inner Joint | | 26 | 29 | 35 | 56 | 109 | |
| | 2017.01- | AT/MT | R | R | SUV Van 4WD 204PT(GTDI) | Date to:2019.12;Chassis to:KH999999;For vehicles with active driveline | GCI82281 | Inner Joint | | 26 | 29 | 34.95 | 67.5 | 106.5 | |
| | 2017.08- | 9AT | F | L | SUV 4WD 204DTA(AJ20D4) | | GDS82992 | Drive Shaft | | 31 | 31 | 68.5 | 97 | 590 | |
| | 2017.08- | 9AT | F | R | SUV 4WD 204DTA(AJ20D4) | Chassis no. from:KH000001,Chassis no. to:KH999999 | GDS56284 | Drive Shaft | | 31 | 28 | 68.5 | 97 | 1042 | |
| | 2017.08- | 9AT | F | R | SUV 4WD 204DTA(AJ20D4) | Date from:2020.01,Trans. code:9HP50,Chassis no. from:LH000001 | GDS84191 | Drive Shaft | | 31 | 28 | 68.5 | 97 | 1042 | |
| | 2017.08- | 9AT | F | L/R | SUV 4WD 204DTA(AJ20D4) | 6 balls | GCO18250 | Outer Joint | | 31 | 27 | 68.3 | 97 | 61 | I |
| | 2017.08- | 9AT | F | L/R | SUV 4WD 204DTA(AJ20D4) | 8 balls | GCO81975 | Outer Joint | | 31 | 27 | 68.5 | 97 | 61 | I |
| | 2017.08- | 9AT | F | L | SUV 4WD 204DTA(AJ20D4) | | GCI85049 | Inner Joint | | 31 | 27 | 36.2 | 68 | 95 | |
| | 2017.08- | 9AT | F | R | SUV 4WD 204DTA(AJ20D4) | Date to:2018.12;Chassis no. to:JH999999 | GCI82629 | Inner Joint | | 28 | 27 | 30 | 520 | 95 | |

| | YEAR | TRANSM. | F/R | L/R | BODY STYLE & DRIVE TYPE & ENGINE | REMARKS | G-AP Ref. | PRODUCT | ABS | Technical Specifications A | B | C | H | L | P |
|---|---|---|---|---|---|---|---|---|---|---|---|---|---|---|---|
| **LAND ROVER** | | | | | | | | | | | | | | | |
| **Discovery Sport** | | | | | | | | | | | | | | | |
| 2.0 (177 kw) | 2017.08- | 9AT | R | R | SUV 4WD 204DTA(AJ20D4) | Date from:2020.01,Chassis no. from:LH000001,Chassis no. to:MH902129,For vehicles with efficient driveline | GDS58199 | Drive Shaft | | 31 | 26 | 65.3 | 95.5 | 815 | |
| | 2017.08- | 9AT | R | L/R | SUV 4WD 204DTA(AJ20D4) | Date to:2019.12,Chassis no. to:KH999999,For vehicles with efficient driveline | GDS56790 | Drive Shaft | | 31 | 26 | 65.3 | 95.5 | 830 | |
| | 2017.08- | 9AT | R | L/R | SUV 4WD 204DTA(AJ20D4) | Date from:2020.01,Chassis no. from:LH000001,Chassis no. to:MH902129,For vehicles with efficient driveline | GDS58309 | Drive Shaft | | 31 | 26 | 65.3 | 95.5 | 723 | |
| | 2017.08- | 9AT | R | L/R | SUV 4WD 204DTA(AJ20D4) | Date to:2019.12,Chassis no. to:KH999999,For vehicles with efficient driveline | GCO82426 | Outer Joint | | 31 | 29 | 65.3 | 95.5 | 49 | I |
| | 2017.08- | 9AT | R | L/R | SUV 4WD 204DTA(AJ20D4) | Date from:2020.01,Chassis no. from:LH000001,Chassis no. to:MH902129,For vehicles with efficient driveline | GCO83861 | Outer Joint | | 31 | 29 | 65.3 | 95.5 | 49 | I |
| | 2017.08- | 9AT | R | R | SUV 4WD 204DTA(AJ20D4) | Date to:2019.12;Chassis to:KH999999;For vehicles with active driveline | GCI82281 | Inner Joint | | 26 | 29 | 34.95 | 67.5 | 106.5 | |
| | 2017.08- | 9AT | R | L/R | SUV 4WD 204DTA(AJ20D4) | Date to:2019.12,Chassis no. to:KH999999,For vehicles with efficient driveline | GCI18187 | Inner Joint | | 26 | 29 | 35 | 69.5 | 107.5 | |
| | 2017.08- | 9AT | R | L/R | SUV 4WD 204DTA(AJ20D4) | Date from:2020.01,Chassis no. from:LH000001,Chassis no. to:MH902129,For vehicles with efficient driveline | GCI84035 | Inner Joint | | 26 | 29 | 35 | 56 | 109 | |
| | 2017.08- | 9AT | F | L | SUV Van 4WD 204DTA(AJ20D4) | | GDS82992 | Drive Shaft | | 31 | 31 | 68.5 | 97 | 590 | |
| | 2017.08- | 9AT | F | L | SUV Van 4WD 204DTA(AJ20D4) | Date from:2016.01 | GDS84193 | Drive Shaft | | 31 | 31 | 68.5 | 97 | 600 | |
| | 2017.08- | 9AT | F | R | SUV Van 4WD 204DTA(AJ20D4) | Chassis no. from:KH000001,Chassis no. to:KH999999 | GDS56284 | Drive Shaft | | 31 | 28 | 68.5 | 97 | 1042 | |
| | 2017.08- | 9AT | F | R | SUV Van 4WD 204DTA(AJ20D4) | Date from:2020.01,Trans. code:9HP50,Chassis no. from:LH000001 | GDS84191 | Drive Shaft | | 31 | 28 | 68.5 | 97 | 1042 | |
| | 2017.08- | 9AT | F | L | SUV Van 4WD 204DTA(AJ20D4) | | GCI85049 | Inner Joint | | 31 | 27 | 36.2 | 68 | 95 | |
| | 2017.08- | 9AT | F | R | SUV Van 4WD 204DTA(AJ20D4) | Date to:2018.12;Chassis no. to:JH999999 | GCI82629 | Inner Joint | | 28 | 27 | 30 | 520 | 95 | |
| | 2017.08- | | F | L/R | SUV Van 4WD 204DTA(AJ20D4) | | GCO81975 | Outer Joint | | 31 | 27 | 68.5 | 97 | 61 | I |
| | 2017.08- | AT | R | L/R | SUV Van 4WD 204DTA(AJ20D4) | Date to:2019.12,Chassis no. to:KH999999,For vehicles with efficient driveline | GDS56790 | Drive Shaft | | 31 | 26 | 65.3 | 95.5 | 830 | |
| | 2017.08- | AT | R | L/R | SUV Van 4WD 204DTA(AJ20D4) | Date from:2020.01,Chassis no. from:LH000001,Chassis no. to:MH902129,For vehicles with efficient driveline | GDS58309 | Drive Shaft | | 31 | 26 | 65.3 | 95.5 | 723 | |
| | 2017.08- | AT | R | L/R | SUV Van 4WD 204DTA(AJ20D4) | Date to:2019.12,Chassis no. to:KH999999,For vehicles with efficient driveline | GCO82426 | Outer Joint | | 31 | 29 | 65.3 | 95.5 | 49 | I |
| | 2017.08- | AT | R | L/R | SUV Van 4WD 204DTA(AJ20D4) | Date to:2019.12,Chassis no. to:KH999999,For vehicles with efficient driveline | GCI18187 | Inner Joint | | 26 | 29 | 35 | 69.5 | 107.5 | |
| | 2017.08- | AT/MT | R | R | SUV Van 4WD 204DTA(AJ20D4) | Date to:2019.12;Chassis to:KH999999;For vehicles with active driveline | GCI82281 | Inner Joint | | 26 | 29 | 34.95 | 67.5 | 106.5 | |
| | 2017.08- | | R | R | SUV Van 4WD 204DTA(AJ20D4) | Date from:2020.01,Chassis no. from:LH000001,Chassis no. to:MH902129,For vehicles with efficient driveline | GDS58199 | Drive Shaft | | 31 | 26 | 65.3 | 95.5 | 815 | |
| | 2017.08- | | R | L/R | SUV Van 4WD 204DTA(AJ20D4) | Date from:2020.01,Chassis no. from:LH000001,Chassis no. to:MH902129,For vehicles with efficient driveline | GCO83861 | Outer Joint | | 31 | 29 | 65.3 | 95.5 | 49 | I |
| | 2017.08- | | R | L/R | SUV Van 4WD 204DTA(AJ20D4) | Date from:2020.01,Chassis no. from:LH000001,Chassis no. to:MH902129,For vehicles with efficient driveline | GCI84035 | Inner Joint | | 26 | 29 | 35 | 56 | 109 | |
| | 2017.12- | 9AT | F | L | SUV 4WD PT204(AJ20P4) | Trans. code:9HP50 | GDS82992 | Drive Shaft | | 31 | 31 | 68.5 | 97 | 590 | |
| | 2017.12- | 9AT | F | L | SUV 4WD PT204(AJ20P4) | not for Trans. code:9HP50 | GDS83419 | Drive Shaft | | 31 | 31 | 68.5 | 97 | 623 | |
| | 2017.12- | 9AT | F | R | SUV 4WD PT204(AJ20P4) | Chassis no. from:KH000001,Chassis no. to:KH999999 | GDS56284 | Drive Shaft | | 31 | 28 | 68.5 | 97 | 1042 | |
| | 2017.12- | 9AT | F | R | SUV 4WD PT204(AJ20P4) | Date from:2020.01,Trans. code:9HP50,Chassis no. from:LH000001 | GDS84191 | Drive Shaft | | 31 | 28 | 68.5 | 97 | 1042 | |
| | 2017.12- | 9AT | F | L/R | SUV 4WD PT204(AJ20P4) | 6 balls | GCO18250 | Outer Joint | | 31 | 27 | 68.3 | 97 | 61 | I |
| | 2017.12- | 9AT | F | L/R | SUV 4WD PT204(AJ20P4) | 8 balls | GCO81975 | Outer Joint | | 31 | 27 | 68.5 | 97 | 61 | I |
| | 2017.12- | 9AT | F | L | SUV 4WD PT204(AJ20P4) | | GCI85049 | Inner Joint | | 31 | 27 | 36.2 | 68 | 95 | |
| | 2017.12- | 9AT | F | R | SUV 4WD PT204(AJ20P4) | | GCI82209 | Inner Joint | | 28 | 27 | 30 | 436 | 96 | |
| | 2017.12- | 9AT | R | L/R | SUV 4WD PT204(AJ20P4) | Date to:2019.12,Chassis no. to:KH999999,For vehicles with efficient driveline | GDS56790 | Drive Shaft | | 31 | 26 | 65.3 | 95.5 | 830 | |
| | 2017.12- | 9AT | R | L/R | SUV 4WD PT204(AJ20P4) | Date to:2019.12,Chassis no. to:KH999999,For vehicles with efficient driveline | GCO82426 | Outer Joint | | 31 | 29 | 65.3 | 95.5 | 49 | I |
| | 2017.12- | 9AT | R | L/R | SUV 4WD PT204(AJ20P4) | Date to:2019.12,Chassis no. to:KH999999,For vehicles with efficient driveline | GCI18187 | Inner Joint | | 26 | 29 | 35 | 69.5 | 107.5 | |
| | 2017.12- | AT | R | L/R | SUV 4WD PT204(AJ20P4) | | GDS58309 | Drive Shaft | | 31 | 26 | 65.3 | 95.5 | 723 | |
| | 2017.12- | AT/MT | R | R | SUV 4WD PT204(AJ20P4) | Date to:2019.12;Chassis to:KH999999;For vehicles with active driveline | GCI82281 | Inner Joint | | 26 | 29 | 34.95 | 67.5 | 106.5 | |
| | 2017.12- | | R | R | SUV 4WD PT204(AJ20P4) | Date from:2020.01,Chassis no. from:LH000001,Chassis no. to:MH902129,For vehicles with efficient driveline | GDS58199 | Drive Shaft | | 31 | 26 | 65.3 | 95.5 | 815 | |
| | 2017.12- | | R | L/R | SUV 4WD PT204(AJ20P4) | Date from:2020.01,Chassis no. from:LH000001,Chassis no. to:MH902129,For vehicles with efficient driveline | GCO83861 | Outer Joint | | 31 | 29 | 65.3 | 95.5 | 49 | I |
| | 2017.12- | | R | L/R | SUV 4WD PT204(AJ20P4) | Date from:2020.01,Chassis no. from:LH000001,Chassis no. to:MH902129,For vehicles with efficient driveline | GCI84035 | Inner Joint | | 26 | 29 | 35 | 56 | 109 | |
| | 2017.12- | 9AT | F | L | SUV Van 4WD PT204(AJ20P4) | Trans. code:9HP50 | GDS82992 | Drive Shaft | | 31 | 31 | 68.5 | 97 | 590 | |
| | 2017.12- | 9AT | F | L | SUV Van 4WD PT204(AJ20P4) | Not for Trans. code:9HP50 | GDS83419 | Drive Shaft | | 31 | 31 | 68.5 | 97 | 623 | |
| | 2017.12- | 9AT | F | R | SUV Van 4WD PT204(AJ20P4) | Chassis no. from:KH000001,Chassis no. to:KH999999 | GDS56284 | Drive Shaft | | 31 | 28 | 68.5 | 97 | 1042 | |
| | 2017.12- | 9AT | F | R | SUV Van 4WD PT204(AJ20P4) | Date from:2020.01,Trans. code:9HP50,Chassis no. from:LH000001 | GDS84191 | Drive Shaft | | 31 | 28 | 68.5 | 97 | 1042 | |
| | 2017.12- | 9AT | F | L/R | SUV Van 4WD PT204(AJ20P4) | | GCO81975 | Outer Joint | | 31 | 27 | 68.5 | 97 | 61 | I |
| | 2017.12- | 9AT | F | L | SUV Van 4WD PT204(AJ20P4) | | GCI85049 | Inner Joint | | 31 | 27 | 36.2 | 68 | 95 | |
| | 2017.12- | 9AT | F | R | SUV Van 4WD PT204(AJ20P4) | | GCI82209 | Inner Joint | | 28 | 27 | 30 | 436 | 96 | |
| | 2017.12- | 9AT | R | R | SUV Van 4WD PT204(AJ20P4) | Date from:2020.01,Chassis no. from:LH000001,Chassis no. to:MH902129,For vehicles with efficient driveline | GDS58199 | Drive Shaft | | 31 | 26 | 65.3 | 95.5 | 815 | |
| | 2017.12- | 9AT | R | L/R | SUV Van 4WD PT204(AJ20P4) | Date to:2019.12,Chassis no. to:KH999999,For vehicles with efficient driveline | GDS56790 | Drive Shaft | | 31 | 26 | 65.3 | 95.5 | 830 | |
| | 2017.12- | 9AT | R | L/R | SUV Van 4WD PT204(AJ20P4) | | GDS58309 | Drive Shaft | | 31 | 26 | 65.3 | 95.5 | 723 | |
| | 2017.12- | 9AT | R | L/R | SUV Van 4WD PT204(AJ20P4) | Date to:2019.12,Chassis no. to:KH999999,For vehicles with efficient driveline | GCO82426 | Outer Joint | | 31 | 29 | 65.3 | 95.5 | 49 | I |
| | 2017.12- | 9AT | R | L/R | SUV Van 4WD PT204(AJ20P4) | Date from:2020.01,Chassis no. from:LH000001,Chassis no. to:MH902129,For vehicles with efficient driveline | GCO83861 | Outer Joint | | 31 | 29 | 65.3 | 95.5 | 49 | I |
| | 2017.12- | 9AT | R | R | SUV Van 4WD PT204(AJ20P4) | Date to:2019.12;Chassis to:KH999999;For vehicles with active driveline | GCI82281 | Inner Joint | | 26 | 29 | 34.95 | 67.5 | 106.5 | |
| | 2017.12- | 9AT | R | L/R | SUV Van 4WD PT204(AJ20P4) | Date to:2019.12,Chassis no. to:KH999999,For vehicles with efficient driveline | GCI18187 | Inner Joint | | 26 | 29 | 35 | 69.5 | 107.5 | |
| | 2017.12- | 9AT | R | L/R | SUV Van 4WD PT204(AJ20P4) | Date from:2020.01,Chassis no. from:LH000001,Chassis no. to:MH902129,For vehicles with efficient driveline | GCI84035 | Inner Joint | | 26 | 29 | 35 | 56 | 109 | |
| | 2018.12- | 9AT | F | L | SUV 4WD PT204(AJ20P4) | Trans. code:9HP50 | GDS82992 | Drive Shaft | | 31 | 31 | 68.5 | 97 | 590 | |
| | 2018.12- | 9AT | F | R | SUV 4WD PT204(AJ20P4) | Chassis no. from:KH000001,Chassis no. to:KH999999 | GDS56284 | Drive Shaft | | 31 | 28 | 68.5 | 97 | 1042 | |
| | 2018.12- | 9AT | F | R | SUV 4WD PT204(AJ20P4) | Date from:2020.01,Trans. code:9HP50,Chassis no. from:LH000001 | GDS84191 | Drive Shaft | | 31 | 28 | 68.5 | 97 | 1042 | |
| | 2018.12- | 9AT | F | L/R | SUV 4WD PT204(AJ20P4) | | GCO81975 | Outer Joint | | 31 | 27 | 68.5 | 97 | 61 | I |
| | 2018.12- | AT | F | L | SUV 4WD PT204(AJ20P4) | Not for Trans. code:9HP50 | GDS83419 | Drive Shaft | | 31 | 31 | 68.5 | 97 | 623 | |
| | 2018.12- | AT | F | R | SUV 4WD PT204(AJ20P4) | Chassis no. from:FG000001,Chassis no. to:HG379387 | GDS83420 | Drive Shaft | | 31 | 28 | 68.5 | 97 | 1017 | |
| | 2018.12- | AT | F | L | SUV 4WD PT204(AJ20P4) | | GCI85049 | Inner Joint | | 31 | 27 | 36.2 | 68 | 95 | |
| | 2018.12- | AT | F | R | SUV 4WD PT204(AJ20P4) | | GCI82209 | Inner Joint | | 28 | 27 | 30 | 436 | 96 | |
| | 2018.12- | 8AT/6MT | R | R | SUV 4WD PT204(AJ20P4) | Date from:2020.01,Chassis no. from:LH000001,Chassis no. to:MH902129,For vehicles with efficient driveline | GDS58199 | Drive Shaft | | 31 | 26 | 65.3 | 95.5 | 815 | |
| | 2018.12- | 8AT/6MT | R | L/R | SUV 4WD PT204(AJ20P4) | Date from:2020.01,Chassis no. from:LH000001,Chassis no. to:MH902129,For vehicles with efficient driveline | GCO83861 | Outer Joint | | 31 | 29 | 65.3 | 95.5 | 49 | I |
| | 2018.12- | 8AT/6MT | R | L/R | SUV 4WD PT204(AJ20P4) | Date from:2020.01,Chassis no. from:LH000001,Chassis no. to:MH902129,For vehicles with efficient driveline | GCI84035 | Inner Joint | | 26 | 29 | 35 | 56 | 109 | |

| LAND ROVER Discovery Sport | YEAR | TRANSM. | F/R | L/R | BODY STYLE & DRIVE TYPE & ENGINE | REMARKS | G-AP Ref. | PRODUCT | ABS | A | B | C | H | L | P |
|---|---|---|---|---|---|---|---|---|---|---|---|---|---|---|---|
| 2.0 (177 kw) | 2018.12- | AT | R | L/R | SUV 4WD PT204(AJ20P4) | Date to:2019.12,Chassis no. to:KH999999,For vehicles with efficient driveline | GDS56790 | Drive Shaft | | 31 | 26 | 65.3 | 95.5 | 830 | |
| | 2018.12- | AT | R | L/R | SUV 4WD PT204(AJ20P4) | Date to:2019.12,Chassis no. to:KH999999,For vehicles with efficient driveline | GCO82426 | Outer Joint | | 31 | 29 | 65.3 | 95.5 | 49 | I |
| | 2018.12- | AT | R | L/R | SUV 4WD PT204(AJ20P4) | Date to:2019.12,Chassis no. to:KH999999,For vehicles with efficient driveline | GCI18187 | Inner Joint | | 26 | 29 | 35 | 69.5 | 107.5 | |
| | 2018.12- | AT/MT | R | L/R | SUV 4WD PT204(AJ20P4) | Date from:2020.01,Chassis no. from:LH000001;Position:Rear axle left and right,For vehicles with active driveline;Position:Rear axle left,For vehicles with efficient driveline | GDS58309 | Drive Shaft | | 31 | 26 | 65.3 | 95.5 | 723 | |
| | 2018.12- | AT/MT | R | R | SUV 4WD PT204(AJ20P4) | Date to:2019.12;Chassis to:KH999999;For vehicles with active driveline | GCI82281 | Inner Joint | | 26 | 29 | 34.95 | 67.5 | 106.5 | |
| | 2019.05- | 9AT | F | L | SUV 4WD 204DTA(AJ20D4) | | GDS82992 | Drive Shaft | | 31 | 31 | 68.5 | 97 | 590 | |
| | 2019.05- | 9AT | F | R | SUV 4WD 204DTA(AJ20D4) | Chassis no. from:KH000001,Chassis no. to:KH999999 | GDS56284 | Drive Shaft | | 31 | 28 | 68.5 | 97 | 1042 | |
| | 2019.05- | 9AT | F | R | SUV 4WD 204DTA(AJ20D4) | Date from:2020.01,Trans. code:9HP50,Chassis no. from:LH000001 | GDS84191 | Drive Shaft | | 31 | 28 | 68.5 | 97 | 1042 | |
| | 2019.05- | 9AT | F | L/R | SUV 4WD 204DTA(AJ20D4) | 6 balls | GCO18250 | Outer Joint | | 31 | 27 | 68.3 | 97 | 61 | I |
| | 2019.05- | 9AT | F | L/R | SUV 4WD 204DTA(AJ20D4) | 8 balls | GCO81975 | Outer Joint | | 31 | 27 | 68.5 | 97 | 61 | I |
| | 2019.05- | 9AT | F | R | SUV 4WD 204DTA(AJ20D4) | | GCI82629 | Inner Joint | | 28 | 27 | 30 | 520 | 95 | |
| | 2019.05- | 9AT | R | R | SUV 4WD 204DTA(AJ20D4) | Date from:2020.01;Chassis no. from:LH000001,Chassis no. to:MH892125;For vehicles with efficient driveline | GDS58199 | Drive Shaft | | 31 | 26 | 65.3 | 95.5 | 815 | |
| | 2019.05- | 9AT | R | L/R | SUV 4WD 204DTA(AJ20D4) | Date to:2019.12,Chassis no. to:KH999999,For vehicles with efficient driveline | GDS56790 | Drive Shaft | | 31 | 26 | 65.3 | 95.5 | 830 | |
| | 2019.05- | 9AT | R | L/R | SUV 4WD 204DTA(AJ20D4) | Date from:2020.01,Chassis no. from:LH000001;Position:Rear axle left and right,For vehicles with active driveline;Position:Rear axle left,For vehicles with efficient driveline | GDS58309 | Drive Shaft | | 31 | 26 | 65.3 | 95.5 | 723 | |
| | 2019.05- | 9AT | R | L/R | SUV 4WD 204DTA(AJ20D4) | Date to:2019.12,Chassis no. to:KH999999,For vehicles with efficient driveline | GCO82426 | Outer Joint | | 31 | 29 | 65.3 | 95.5 | 49 | I |
| | 2019.05- | 9AT | R | L/R | SUV 4WD 204DTA(AJ20D4) | Date from:2020.01;Chassis no. from:LH000001,Chassis no. to:MH892125;For vehicles with efficient driveline | GCO83861 | Outer Joint | | 31 | 29 | 65.3 | 95.5 | 49 | I |
| | 2019.05- | 9AT | R | R | SUV 4WD 204DTA(AJ20D4) | Date to:2019.12;Chassis to:KH999999;For vehicles with active driveline | GCI82281 | Inner Joint | | 26 | 29 | 34.95 | 67.5 | 106.5 | |
| | 2019.05- | 9AT | R | L/R | SUV 4WD 204DTA(AJ20D4) | Date to:2019.12,Chassis no. to:KH999999,For vehicles with efficient driveline | GCI18187 | Inner Joint | | 26 | 29 | 35 | 69.5 | 107.5 | |
| | 2019.05- | 9AT | R | L/R | SUV 4WD 204DTA(AJ20D4) | Date from:2020.01;Chassis no. from:LH000001,Chassis no. to:MH892125;For vehicles with efficient driveline | GCI84035 | Inner Joint | | 26 | 29 | 35 | 56 | 109 | |
| 2.0 (183 kw) | 2019.05- | 9AT | F | L | SUV 4WD PT204(AJ20P4) | Trans. code:9HP50 | GDS82992 | Drive Shaft | | 31 | 31 | 68.5 | 97 | 590 | |
| | 2019.05- | 9AT | F | R | SUV 4WD PT204(AJ20P4) | Chassis no. from:KH000001,Chassis no. to:KH999999 | GDS56284 | Drive Shaft | | 31 | 28 | 68.5 | 97 | 1042 | |
| | 2019.05- | 9AT | F | R | SUV 4WD PT204(AJ20P4) | Date from:2020.01,Trans. code:9HP50,Chassis no. from:LH000001 | GDS84191 | Drive Shaft | | 31 | 28 | 68.5 | 97 | 1042 | |
| | 2019.05- | 9AT | F | L/R | SUV 4WD PT204(AJ20P4) | | GCO81975 | Outer Joint | | 31 | 27 | 68.5 | 97 | 61 | I |
| | 2019.05- | 9AT | F | L | SUV 4WD PT204(AJ20P4) | | GCI85049 | Inner Joint | | 31 | 27 | 36.2 | 68 | 95 | |
| | 2019.05- | 9AT | R | R | SUV 4WD PT204(AJ20P4) | Date from:2020.01;Chassis no. from:LH000001,Chassis no. to:MH892125;For vehicles with efficient driveline | GDS58199 | Drive Shaft | | 31 | 26 | 65.3 | 95.5 | 815 | |
| | 2019.05- | 9AT | R | L/R | SUV 4WD PT204(AJ20P4) | Date to:2019.12,Chassis no. to:KH999999,For vehicles with efficient driveline | GDS56790 | Drive Shaft | | 31 | 26 | 65.3 | 95.5 | 830 | |
| | 2019.05- | 9AT | R | L/R | SUV 4WD PT204(AJ20P4) | Date from:2020.01,Chassis no. from:LH000001;Position:Rear axle left and right,For vehicles with active driveline;Position:Rear axle left,For vehicles with efficient driveline | GDS58309 | Drive Shaft | | 31 | 26 | 65.3 | 95.5 | 723 | |
| | 2019.05- | 9AT | R | L/R | SUV 4WD PT204(AJ20P4) | Date to:2019.12,Chassis no. to:KH999999,For vehicles with efficient driveline | GCO82426 | Outer Joint | | 31 | 29 | 65.3 | 95.5 | 49 | I |
| | 2019.05- | 9AT | R | L/R | SUV 4WD PT204(AJ20P4) | Date from:2020.01;Chassis no. from:LH000001,Chassis no. to:MH892125;For vehicles with efficient driveline | GCO83861 | Outer Joint | | 31 | 29 | 65.3 | 95.5 | 49 | I |
| | 2019.05- | 9AT | R | R | SUV 4WD PT204(AJ20P4) | Date to:2019.12;Chassis to:KH999999;For vehicles with active driveline | GCI82281 | Inner Joint | | 26 | 29 | 34.95 | 67.5 | 106.5 | |
| | 2019.05- | 9AT | R | L/R | SUV 4WD PT204(AJ20P4) | Date to:2019.12,Chassis no. to:KH999999,For vehicles with efficient driveline | GCI18187 | Inner Joint | | 26 | 29 | 35 | 69.5 | 107.5 | |
| | 2019.05- | 9AT | R | L/R | SUV 4WD PT204(AJ20P4) | Date from:2020.01;Chassis no. from:LH000001,Chassis no. to:MH892125;For vehicles with efficient driveline | GCI84035 | Inner Joint | | 26 | 29 | 35 | 56 | 109 | |
| 2.0 (184 kw) | 2019.05- | 9AT | F | L | SUV 4WD PT204(AJ20P4) | | GDS82992 | Drive Shaft | | 31 | 31 | 68.5 | 97 | 590 | |
| | 2019.05- | 9AT | F | R | SUV 4WD PT204(AJ20P4) | Chassis no. from:KH000001,Chassis no. to:KH999999 | GDS56284 | Drive Shaft | | 31 | 28 | 68.5 | 97 | 1042 | |
| | 2019.05- | 9AT | F | R | SUV 4WD PT204(AJ20P4) | Date from:2020.01,Trans. code:9HP50,Chassis no. from:LH000001 | GDS84191 | Drive Shaft | | 31 | 28 | 68.5 | 97 | 1042 | |
| | 2019.05- | 9AT | F | L/R | SUV 4WD PT204(AJ20P4) | 6 balls | GCO18250 | Outer Joint | | 31 | 27 | 68.3 | 97 | 61 | I |
| | 2019.05- | 9AT | F | L/R | SUV 4WD PT204(AJ20P4) | 8 balls | GCO81975 | Outer Joint | | 31 | 27 | 68.5 | 97 | 61 | I |
| | 2019.05- | 9AT | F | L | SUV 4WD PT204(AJ20P4) | | GCI85049 | Inner Joint | | 31 | 27 | 36.2 | 68 | 95 | |
| | 2019.05- | 9AT | R | R | SUV 4WD PT204(AJ20P4) | Date from:2020.01;Chassis no. from:LH000001,Chassis no. to:MH892125;For vehicles with efficient driveline | GDS58199 | Drive Shaft | | 31 | 26 | 65.3 | 95.5 | 815 | |
| | 2019.05- | 9AT | R | L/R | SUV 4WD PT204(AJ20P4) | Date to:2019.12,Chassis no. to:KH999999,For vehicles with efficient driveline | GDS56790 | Drive Shaft | | 31 | 26 | 65.3 | 95.5 | 830 | |
| | 2019.05- | 9AT | R | L/R | SUV 4WD PT204(AJ20P4) | Date from:2020.01,Chassis no. from:LH000001;Position:Rear axle left and right,For vehicles with active driveline;Position:Rear axle left,For vehicles with efficient driveline | GDS58309 | Drive Shaft | | 31 | 26 | 65.3 | 95.5 | 723 | |
| | 2019.05- | 9AT | R | L/R | SUV 4WD PT204(AJ20P4) | Date to:2019.12,Chassis no. to:KH999999,For vehicles with efficient driveline | GCO82426 | Outer Joint | | 31 | 29 | 65.3 | 95.5 | 49 | I |
| | 2019.05- | 9AT | R | L/R | SUV 4WD PT204(AJ20P4) | Date from:2020.01;Chassis no. from:LH000001,Chassis no. to:MH892125;For vehicles with efficient driveline | GCO83861 | Outer Joint | | 31 | 29 | 65.3 | 95.5 | 49 | I |
| | 2019.05- | 9AT | R | R | SUV 4WD PT204(AJ20P4) | Date to:2019.12;Chassis to:KH999999;For vehicles with active driveline | GCI82281 | Inner Joint | | 26 | 29 | 34.95 | 67.5 | 106.5 | |
| | 2019.05- | 9AT | R | L/R | SUV 4WD PT204(AJ20P4) | Date to:2019.12,Chassis no. to:KH999999,For vehicles with efficient driveline | GCI18187 | Inner Joint | | 26 | 29 | 35 | 69.5 | 107.5 | |
| | 2019.05- | 9AT | R | L/R | SUV 4WD PT204(AJ20P4) | Date from:2020.01;Chassis no. from:LH000001,Chassis no. to:MH892125;For vehicles with efficient driveline | GCI84035 | Inner Joint | | 26 | 29 | 35 | 56 | 109 | |
| 2.0 (213 kw) | 2017.08- | 9AT | F | L | SUV 4WD PT204(AJ20P4) | | GDS82992 | Drive Shaft | | 31 | 31 | 68.5 | 97 | 590 | |
| | 2017.08- | 9AT | F | L | SUV 4WD PT204(AJ20P4) | Date from:2018.01 | GDS84193 | Drive Shaft | | 31 | 31 | 68.5 | 97 | 600 | |
| | 2017.08- | 9AT | F | R | SUV 4WD PT204(AJ20P4) | Chassis no. from:KH000001,Chassis no. to:KH999999 | GDS56284 | Drive Shaft | | 31 | 28 | 68.5 | 97 | 1042 | |
| | 2017.08- | 9AT | F | R | SUV 4WD PT204(AJ20P4) | Date from:2020.01,Trans. code:9HP50,Chassis no. from:LH000001 | GDS84191 | Drive Shaft | | 31 | 28 | 68.5 | 97 | 1042 | |
| | 2017.08- | 9AT | F | L/R | SUV 4WD PT204(AJ20P4) | 6 balls | GCO18250 | Outer Joint | | 31 | 27 | 68.3 | 97 | 61 | I |
| | 2017.08- | 9AT | F | L/R | SUV 4WD PT204(AJ20P4) | 8 balls | GCO81975 | Outer Joint | | 31 | 27 | 68.5 | 97 | 61 | I |
| | 2017.08- | 9AT | F | L | SUV 4WD PT204(AJ20P4) | | GCI85049 | Inner Joint | | 31 | 27 | 36.2 | 68 | 95 | |
| | 2017.08- | 9AT | F | R | SUV 4WD PT204(AJ20P4) | Date to:2018.12;Chassis no. to:JH999999 | GCI82629 | Inner Joint | | 28 | 27 | 30 | 520 | 95 | |
| | 2017.08- | 9AT | R | R | SUV 4WD PT204(AJ20P4) | Date from:2020.01;Chassis no. from:LH000001,Chassis no. to:MH892125;For vehicles with efficient driveline | GDS58199 | Drive Shaft | | 31 | 26 | 65.3 | 95.5 | 815 | |
| | 2017.08- | 9AT | R | L/R | SUV 4WD PT204(AJ20P4) | Date to:2019.12,Chassis no. to:KH999999,For vehicles with efficient driveline | GDS56790 | Drive Shaft | | 31 | 26 | 65.3 | 95.5 | 830 | |
| | 2017.08- | 9AT | R | L/R | SUV 4WD PT204(AJ20P4) | Date from:2020.01,Chassis no. from:LH000001;Position:Rear axle left and right,For vehicles with active driveline;Position:Rear axle left,For vehicles with efficient driveline | GDS58309 | Drive Shaft | | 31 | 26 | 65.3 | 95.5 | 723 | |
| | 2017.08- | 9AT | R | L/R | SUV 4WD PT204(AJ20P4) | Date to:2019.12,Chassis no. to:KH999999,For vehicles with efficient driveline | GCO82426 | Outer Joint | | 31 | 29 | 65.3 | 95.5 | 49 | I |
| | 2017.08- | 9AT | R | L/R | SUV 4WD PT204(AJ20P4) | Date from:2020.01;Chassis no. from:LH000001,Chassis no. to:MH892125;For vehicles with efficient driveline | GCO83861 | Outer Joint | | 31 | 29 | 65.3 | 95.5 | 49 | I |
| | 2017.08- | 9AT | R | R | SUV 4WD PT204(AJ20P4) | Date to:2019.12;Chassis to:KH999999;For vehicles with active driveline | GCI82281 | Inner Joint | | 26 | 29 | 34.95 | 67.5 | 106.5 | |
| | 2017.08- | 9AT | R | L/R | SUV 4WD PT204(AJ20P4) | Date to:2019.12,Chassis no. to:KH999999,For vehicles with efficient driveline | GCI18187 | Inner Joint | | 26 | 29 | 35 | 69.5 | 107.5 | |
| | 2017.08- | 9AT | R | L/R | SUV 4WD PT204(AJ20P4) | Date from:2020.01;Chassis no. from:LH000001,Chassis no. to:MH892125;For vehicles with efficient driveline | GCI84035 | Inner Joint | | 26 | 29 | 35 | 56 | 109 | |
| | 2017.08- | 9AT | F | L | SUV Van 4WD PT204(AJ20P4) | | GDS82992 | Drive Shaft | | 31 | 31 | 68.5 | 97 | 590 | |
| | 2017.08- | 9AT | F | L | SUV Van 4WD PT204(AJ20P4) | Date from:2018.01 | GDS84193 | Drive Shaft | | 31 | 31 | 68.5 | 97 | 600 | |
| | 2017.08- | 9AT | F | R | SUV Van 4WD PT204(AJ20P4) | Chassis no. from:KH000001,Chassis no. to:KH999999 | GDS56284 | Drive Shaft | | 31 | 28 | 68.5 | 97 | 1042 | |

| LAND ROVER Discovery Sport | YEAR | TRANSM. | F/R | L/R | BODY STYLE & DRIVE TYPE & ENGINE | REMARKS | G-AP Ref. | PRODUCT | ABS | A | B | C | H | L | P |
|---|---|---|---|---|---|---|---|---|---|---|---|---|---|---|---|
| 2.0 (213 kw) | 2017.08- | 9AT | F | R | SUV Van 4WD PT204(AJ20P4) | Date from:2020.01,Trans. code:9HP50,Chassis no. from:LH000001 | GDS84191 | Drive Shaft | | 31 | 28 | 68.5 | 97 | 1042 | |
| | 2017.08- | 9AT | F | L/R | SUV Van 4WD PT204(AJ20P4) | | GCO81975 | Outer Joint | | 31 | 27 | 68.5 | 97 | 61 | I |
| | 2017.08- | 9AT | F | L | SUV Van 4WD PT204(AJ20P4) | | GCI85049 | Inner Joint | | 31 | 27 | 36.2 | 68 | 95 | |
| | 2017.08- | 9AT | F | R | SUV Van 4WD PT204(AJ20P4) | Date to:2018.12;Chassis no. to:JH999999 | GCI82629 | Inner Joint | | 28 | 27 | 30 | 520 | 95 | |
| | 2017.08- | 9AT | R | R | SUV Van 4WD PT204(AJ20P4) | Date from:2020.01;Chassis no. from:LH000001,Chassis no. to:MH892125;For vehicles with efficient driveline | GDS58199 | Drive Shaft | | 31 | 26 | 65.3 | 95.5 | 815 | |
| | 2017.08- | 9AT | R | L/R | SUV Van 4WD PT204(AJ20P4) | Date to:2019.12,Chassis no. to:KH999999,For vehicles with efficient driveline | GDS56790 | Drive Shaft | | 31 | 26 | 65.3 | 95.5 | 830 | |
| | 2017.08- | 9AT | R | L/R | SUV Van 4WD PT204(AJ20P4) | Date from:2020.01,Chassis no. from:LH000001;Position:Rear axle left and right,For vehicles with active driveline;Position:Rear axle left,For vehicles with efficient driveline | GDS58309 | Drive Shaft | | 31 | 26 | 65.3 | 95.5 | 723 | |
| | 2017.08- | 9AT | R | L/R | SUV Van 4WD PT204(AJ20P4) | Date to:2019.12,Chassis no. to:KH999999,For vehicles with efficient driveline | GCO82426 | Outer Joint | | 31 | 29 | 65.3 | 95.5 | 49 | I |
| | 2017.08- | 9AT | R | L/R | SUV Van 4WD PT204(AJ20P4) | Date from:2020.01;Chassis no. from:LH000001,Chassis no. to:MH892125;For vehicles with efficient driveline | GCO83861 | Outer Joint | | 31 | 29 | 65.3 | 95.5 | 49 | I |
| | 2017.08- | 9AT | R | R | SUV Van 4WD PT204(AJ20P4) | Date to:2019.12;Chassis to:KH999999;For vehicles with active driveline | GCI82281 | Inner Joint | | 26 | 29 | 34.95 | 67.5 | 106.5 | |
| | 2017.08- | 9AT | R | L/R | SUV Van 4WD PT204(AJ20P4) | Date to:2019.12,Chassis no. to:KH999999,For vehicles with efficient driveline | GCI18187 | Inner Joint | | 26 | 29 | 35 | 69.5 | 107.5 | |
| | 2017.08- | 9AT | R | L/R | SUV Van 4WD PT204(AJ20P4) | Date from:2020.01;Chassis no. from:LH000001,Chassis no. to:MH892125;For vehicles with efficient driveline | GCI84035 | Inner Joint | | 26 | 29 | 35 | 56 | 109 | |
| | 2020.07- | 9AT | F | L | SUV 4WD PT204(AJ20P4) | | GDS82992 | Drive Shaft | | 31 | 31 | 68.5 | 97 | 590 | |
| | 2020.07- | 9AT | F | R | SUV 4WD PT204(AJ20P4) | Chassis no. from:KH000001,Chassis no. to:KH999999 | GDS56284 | Drive Shaft | | 31 | 28 | 68.5 | 97 | 1042 | |
| | 2020.07- | 9AT | F | R | SUV 4WD PT204(AJ20P4) | Date from:2020.01,Trans. code:9HP50,Chassis no. from:LH000001 | GDS84191 | Drive Shaft | | 31 | 28 | 68.5 | 97 | 1042 | |
| | 2020.07- | 9AT | F | L/R | SUV 4WD PT204(AJ20P4) | 6 balls | GCO18250 | Outer Joint | | 31 | 27 | 68.3 | 97 | 61 | I |
| | 2020.07- | 9AT | F | L/R | SUV 4WD PT204(AJ20P4) | 8 balls | GCO81975 | Outer Joint | | 31 | 27 | 68.5 | 97 | 61 | I |
| | 2020.07- | 9AT | F | R | SUV 4WD PT204(AJ20P4) | | GCI82629 | Inner Joint | | 28 | 27 | 30 | 520 | 95 | |
| | 2020.07- | 9AT | R | R | SUV 4WD PT204(AJ20P4) | Chassis no. to:MH892125;For vehicles with efficient driveline | GDS58199 | Drive Shaft | | 31 | 26 | 65.3 | 95.5 | 815 | |
| | 2020.07- | 9AT | R | L/R | SUV 4WD PT204(AJ20P4) | Position:Rear axle left and right,For vehicles with active driveline;Position:Rear axle left,For vehicles with efficient driveline | GDS58309 | Drive Shaft | | 31 | 26 | 65.3 | 95.5 | 723 | |
| | 2020.07- | 9AT | R | L/R | SUV 4WD PT204(AJ20P4) | Chassis no. to:MH892125;For vehicles with efficient driveline | GCO83861 | Outer Joint | | 31 | 29 | 65.3 | 95.5 | 49 | I |
| | 2020.07- | 9AT | R | L/R | SUV 4WD PT204(AJ20P4) | Chassis no. to:MH892125;For vehicles with efficient driveline | GCI84035 | Inner Joint | | 26 | 29 | 35 | 56 | 109 | |
| 2.2 (110 kw) | 2014.09- | 6MT | F | L | SUV 4WD 224DT(DW12BTED4) | | GDS56383 | Drive Shaft | | 31 | 31 | 68.5 | 97 | 614 | |
| | 2014.09- | 6MT | F | L | SUV 4WD 224DT(DW12BTED4) | Date from:2019.01,Chassis no. from:KH000001,Trans. code:BG6 | GDS56503 | Drive Shaft | | 31 | 31 | 68.5 | 97 | 600 | |
| | 2014.09- | 6MT | F | R | SUV 4WD 224DT(DW12BTED4) | Trans. code:M66 | GDS56229 | Drive Shaft | | 31 | 28 | 68.5 | 97 | 1049 | |
| | 2014.09- | 6MT | F | L | SUV 4WD 224DT(DW12BTED4) | Trans. code:M66;Date from:2019.01,Chassis no. from:KH000001,Trans. code:BG6 | GCI82631 | Inner Joint | | 31 | 27 | 44 | 65 | 112 | |
| | 2014.09- | 6MT | F | R | SUV 4WD 224DT(DW12BTED4) | Trans. code:M66 | GCI83302 | Inner Joint | | 28 | 27 | 30 | 455.5 | 95.5 | |
| | 2014.09- | 9AT | F | L | SUV 4WD 224DT(DW12BTED4) | Chassis no. to:JH776925 | GDS82992 | Drive Shaft | | 31 | 31 | 68.5 | 97 | 590 | |
| | 2014.09- | 9AT | F | R | SUV 4WD 224DT(DW12BTED4) | Chassis no. from:KH000001,Chassis no. to:KH999999,Trans. code:9HP50 | GDS56284 | Drive Shaft | | 31 | 28 | 68.5 | 97 | 1042 | |
| | 2014.09- | 9AT | F | R | SUV 4WD 224DT(DW12BTED4) | Date from:2020.01,Trans. code:9HP50,Chassis no. from:LH000001 | GDS84191 | Drive Shaft | | 31 | 28 | 68.5 | 97 | 1042 | |
| | 2014.09- | 9AT | F | R | SUV 4WD 224DT(DW12BTED4) | Date to:2019.12,Chassis no. to:KH999999,not for Trans. code:9HP50 | GDS84565 | Drive Shaft | | 31 | 28 | 68.5 | 97 | 1031 | |
| | 2014.09- | 9AT | F | L | SUV 4WD 224DT(DW12BTED4) | Chassis no. to:JH776925 | GCI85049 | Inner Joint | | 31 | 27 | 36.2 | 68 | 95 | |
| | 2014.09- | 9AT | F | R | SUV 4WD 224DT(DW12BTED4) | | GCI82209 | Inner Joint | | 28 | 27 | 30 | 436 | 96 | |
| | 2014.09- | 9AT/6MT | F | L/R | SUV 4WD 224DT(DW12BTED4) | 6 balls | GCO18250 | Outer Joint | | 31 | 27 | 68.3 | 97 | 61 | I |
| | 2014.09- | 9AT/6MT | F | L/R | SUV 4WD 224DT(DW12BTED4) | Transmission:6MT,Date from:2019.01,Chassis no. from:KH000001,Trans. code:BG6;8 balls | GCO81975 | Outer Joint | | 31 | 27 | 68.5 | 97 | 61 | I |
| | 2014.09- | 9AT/6MT | R | R | SUV 4WD 224DT(DW12BTED4) | Date from:2020.01;Chassis no. from:LH000001,Chassis no. to:MH892125;For vehicles with efficient driveline | GDS58199 | Drive Shaft | | 31 | 26 | 65.3 | 95.5 | 815 | |
| | 2014.09- | 9AT/6MT | R | L/R | SUV 4WD 224DT(DW12BTED4) | Date to:2019.12,Chassis no. to:KH999999,For vehicles with efficient driveline | GDS56790 | Drive Shaft | | 31 | 26 | 65.3 | 95.5 | 830 | |
| | 2014.09- | 9AT/6MT | R | L/R | SUV 4WD 224DT(DW12BTED4) | Date from:2020.01,Chassis no. from:LH000001;Position:Rear axle left and right,For vehicles with active driveline;Position:Rear axle left,For vehicles with efficient driveline | GDS58309 | Drive Shaft | | 31 | 26 | 65.3 | 95.5 | 723 | |
| | 2014.09- | 9AT/6MT | R | L/R | SUV 4WD 224DT(DW12BTED4) | Date to:2019.12,Chassis no. to:KH999999,For vehicles with efficient driveline | GCO82426 | Outer Joint | | 31 | 29 | 65.3 | 95.5 | 49 | I |
| | 2014.09- | 9AT/6MT | R | L/R | SUV 4WD 224DT(DW12BTED4) | Date from:2020.01;Chassis no. from:LH000001,Chassis no. to:MH892125;For vehicles with efficient driveline | GCO83861 | Outer Joint | | 31 | 29 | 65.3 | 95.5 | 49 | I |
| | 2014.09- | 9AT/6MT | R | R | SUV 4WD 224DT(DW12BTED4) | Date to:2019.12;Chassis to:KH999999;For vehicles with active driveline | GCI82281 | Inner Joint | | 26 | 29 | 34.95 | 67.5 | 106.5 | |
| | 2014.09- | 9AT/6MT | R | L/R | SUV 4WD 224DT(DW12BTED4) | Date to:2019.12,Chassis no. to:KH999999,For vehicles with efficient driveline | GCI18187 | Inner Joint | | 26 | 29 | 35 | 69.5 | 107.5 | |
| | 2014.09- | 9AT/6MT | R | L/R | SUV 4WD 224DT(DW12BTED4) | Date from:2020.01;Chassis no. from:LH000001,Chassis no. to:MH892125;For vehicles with efficient driveline | GCI84035 | Inner Joint | | 26 | 29 | 35 | 56 | 109 | |
| 2.2 (140 kw) | 2014.09- | 6MT | F | L | SUV 4WD 224DT(DW12BTED4) | | GDS56383 | Drive Shaft | | 31 | 31 | 68.5 | 97 | 614 | |
| | 2014.09- | 6MT | F | L | SUV 4WD 224DT(DW12BTED4) | Date from:2019.01,Chassis no. from:KH000001,Trans. code:BG6 | GDS56503 | Drive Shaft | | 31 | 31 | 68.5 | 97 | 600 | |
| | 2014.09- | 6MT | F | R | SUV 4WD 224DT(DW12BTED4) | Trans. code:M66 | GDS56229 | Drive Shaft | | 31 | 28 | 68.5 | 97 | 1049 | |
| | 2014.09- | 6MT | F | L | SUV 4WD 224DT(DW12BTED4) | Trans. code:M66;Date from:2019.01,Chassis no. from:KH000001,Trans. code:BG6 | GCI82631 | Inner Joint | | 31 | 27 | 44 | 65 | 112 | |
| | 2014.09- | 6MT | F | R | SUV 4WD 224DT(DW12BTED4) | Trans. code:M66 | GCI83302 | Inner Joint | | 28 | 27 | 30 | 455.5 | 95.5 | |
| | 2014.09- | 9AT | F | L | SUV 4WD 224DT(DW12BTED4) | Chassis no. to:JH776925 | GDS82992 | Drive Shaft | | 31 | 31 | 68.5 | 97 | 590 | |
| | 2014.09- | 9AT | F | R | SUV 4WD 224DT(DW12BTED4) | Chassis no. from:KH000001,Chassis no. to:KH999999,Trans. code:9HP50 | GDS56284 | Drive Shaft | | 31 | 28 | 68.5 | 97 | 1042 | |
| | 2014.09- | 9AT | F | R | SUV 4WD 224DT(DW12BTED4) | Date from:2020.01,Trans. code:9HP50,Chassis no. from:LH000001 | GDS84191 | Drive Shaft | | 31 | 28 | 68.5 | 97 | 1042 | |
| | 2014.09- | 9AT | F | R | SUV 4WD 224DT(DW12BTED4) | Date to:2019.12,Chassis no. to:KH999999,not for Trans. code:9HP50 | GDS84565 | Drive Shaft | | 31 | 28 | 68.5 | 97 | 1031 | |
| | 2014.09- | 9AT | F | L | SUV 4WD 224DT(DW12BTED4) | Chassis no. to:JH776925 | GCI85049 | Inner Joint | | 31 | 27 | 36.2 | 68 | 95 | |
| | 2014.09- | 9AT | F | R | SUV 4WD 224DT(DW12BTED4) | | GCI82209 | Inner Joint | | 28 | 27 | 30 | 436 | 96 | |
| | 2014.09- | 9AT/6MT | F | L/R | SUV 4WD 224DT(DW12BTED4) | 6 balls | GCO18250 | Outer Joint | | 31 | 27 | 68.3 | 97 | 61 | I |
| | 2014.09- | 9AT/6MT | F | L/R | SUV 4WD 224DT(DW12BTED4) | Transmission:6MT,Date from:2019.01,Chassis no. from:KH000001,Trans. code:BG6;8 balls | GCO81975 | Outer Joint | | 31 | 27 | 68.5 | 97 | 61 | I |
| | 2014.09- | 9AT/6MT | R | R | SUV 4WD 224DT(DW12BTED4) | Date from:2020.01;Chassis no. from:LH000001,Chassis no. to:MH892125;For vehicles with efficient driveline | GDS58199 | Drive Shaft | | 31 | 26 | 65.3 | 95.5 | 815 | |
| | 2014.09- | 9AT/6MT | R | L/R | SUV 4WD 224DT(DW12BTED4) | Date to:2019.12,Chassis no. to:KH999999,For vehicles with efficient driveline | GDS56790 | Drive Shaft | | 31 | 26 | 65.3 | 95.5 | 830 | |
| | 2014.09- | 9AT/6MT | R | L/R | SUV 4WD 224DT(DW12BTED4) | Date from:2020.01,Chassis no. from:LH000001;Position:Rear axle left and right,For vehicles with active driveline;Position:Rear axle left,For vehicles with efficient driveline | GDS58309 | Drive Shaft | | 31 | 26 | 65.3 | 95.5 | 723 | |
| | 2014.09- | 9AT/6MT | R | L/R | SUV 4WD 224DT(DW12BTED4) | Date to:2019.12,Chassis no. to:KH999999,For vehicles with efficient driveline | GCO82426 | Outer Joint | | 31 | 29 | 65.3 | 95.5 | 49 | I |
| | 2014.09- | 9AT/6MT | R | L/R | SUV 4WD 224DT(DW12BTED4) | Date from:2020.01;Chassis no. from:LH000001,Chassis no. to:MH892125;For vehicles with efficient driveline | GCO83861 | Outer Joint | | 31 | 29 | 65.3 | 95.5 | 49 | I |
| | 2014.09- | 9AT/6MT | R | R | SUV 4WD 224DT(DW12BTED4) | Date to:2019.12;Chassis to:KH999999;For vehicles with active driveline | GCI82281 | Inner Joint | | 26 | 29 | 34.95 | 67.5 | 106.5 | |
| | 2014.09- | 9AT/6MT | R | L/R | SUV 4WD 224DT(DW12BTED4) | Date to:2019.12,Chassis no. to:KH999999,For vehicles with efficient driveline | GCI18187 | Inner Joint | | 26 | 29 | 35 | 69.5 | 107.5 | |
| | 2014.09- | 9AT/6MT | R | L/R | SUV 4WD 224DT(DW12BTED4) | Date from:2020.01;Chassis no. from:LH000001,Chassis no. to:MH892125;For vehicles with efficient driveline | GCI84035 | Inner Joint | | 26 | 29 | 35 | 56 | 109 | |

| | YEAR | TRANSM. | F/R | L/R | BODY STYLE & DRIVE TYPE & ENGINE | REMARKS | G-AP Ref. | PRODUCT | ABS | Technical Specifications A | B | C | H | L | P |
|---|---|---|---|---|---|---|---|---|---|---|---|---|---|---|---|
| **LAND ROVER** | | | | | | | | | | | | | | | |
| **Freelander** | | | | | | | | | | | | | | | |
| 1.8 (86 kw) | 1998.04-2006.10 | 5MT | F | L/R | Terrain cab wagon closed 4WD 18K4F | | GDS51009 | Drive Shaft | 60W | 28 | 25 | 55.6 | 85 | 611 | |
| | 1998.04-2006.10 | 5MT | F | L/R | Terrain cab wagon closed 4WD 18K4F | | GCO51020 | Outer Joint | 60W | 28 | 32 | 55.6 | 85 | 61 | I |
| | 1998.04-2006.10 | MT | F | L/R | Terrain cab wagon closed 4WD 18K4F | | GDS51008 | Drive Shaft | 60W | 28 | 25 | 57.7 | 85 | 613 | |
| | 1998.04-2006.10 | | F | | Terrain cab wagon closed 4WD 18K4F | | GCO30009 | Outer Joint | | 28 | 32 | 56 | 83.5 | 61 | I |
| | 1998.04-2006.10 | 5MT | R | L/R | Terrain cab wagon closed 4WD 18K4F | Chassis no. to:1A323599 | GDS51025 | Drive Shaft | 60W | 28 | 23 | 55.6 | 85 | 808 | |
| | 1998.04-2006.10 | 5MT | R | L/R | Terrain cab wagon closed 4WD 18K4F | Chassis no. from:2A000001 | GDS51030 | Drive Shaft | 60W | 28 | 23 | 57.7 | 85 | 806 | |
| | 1998.04-2006.10 | 5MT | R | L/R | Terrain cab wagon closed 4WD 18K4F | Chassis no. from:2A000001 | GDS51037 | Drive Shaft | | 28 | 23 | 57.7 | 85 | 806 | |
| | 1998.04-2006.10 | 5MT | R | L/R | Terrain cab wagon closed 4WD 18K4F | Chassis no. from:1A323600,Chassis no. to:1A999999 | GCO18200 | Outer Joint | 60W | 28 | 21 | 57.7 | 85 | 61 | M |
| | 1998.04-2006.10 | 5MT | R | L/R | Terrain cab wagon closed 4WD 18K4F | | GCO30016 | Outer Joint | | 28 | 21 | 57.7 | 85 | 61 | M |
| | 2000.10-2006.10 | 5MT | F | L/R | Terrain cab open 4WD 18K4F | | GDS51009 | Drive Shaft | 60W | 28 | 25 | 55.6 | 85 | 611 | |
| | 2000.10-2006.10 | 5MT | F | L/R | Terrain cab open 4WD 18K4F | | GCO51020 | Outer Joint | 60W | 28 | 32 | 55.6 | 85 | 61 | I |
| | 2000.10-2006.10 | 5MT | R | L/R | Terrain cab open 4WD 18K4F | Chassis no. to:1A323599 | GDS51025 | Drive Shaft | 60W | 28 | 23 | 55.6 | 85 | 808 | |
| | 2000.10-2006.10 | 5MT | R | L/R | Terrain cab open 4WD 18K4F | Chassis no. from:2A000001 | GDS51030 | Drive Shaft | 60W | 28 | 23 | 57.7 | 85 | 806 | |
| | 2000.10-2006.10 | 5MT | R | L/R | Terrain cab open 4WD 18K4F | Chassis no. from:2A000001 | GDS51037 | Drive Shaft | | 28 | 23 | 57.7 | 85 | 806 | |
| | 2000.10-2006.10 | 5MT | R | L/R | Terrain cab open 4WD 18K4F | Chassis no. from:1A323600,Chassis no. to:1A999999 | GCO18200 | Outer Joint | 60W | 28 | 21 | 57.7 | 85 | 61 | M |
| | 2000.10-2006.10 | 5MT | R | L/R | Terrain cab open 4WD 18K4F | Chassis no. from:2A000001 | GCO30016 | Outer Joint | | 28 | 21 | 57.7 | 85 | 61 | M |
| 1.8 (88 kw) | 1998.02-2000.11 | 5MT | F | L/R | Terrain cab wagon closed 4WD 18K4F | | GDS51009 | Drive Shaft | 60W | 28 | 25 | 55.6 | 85 | 611 | |
| | 1998.02-2000.11 | 5MT | F | L/R | Terrain cab wagon closed 4WD 18K4F | | GCO51020 | Outer Joint | 60W | 28 | 32 | 55.6 | 85 | 61 | I |
| | 1998.02-2000.11 | MT | F | L/R | Terrain cab wagon closed 4WD 18K4F | | GDS51008 | Drive Shaft | 60W | 28 | 25 | 57.7 | 85 | 613 | |
| | 1998.02-2000.11 | | F | | Terrain cab wagon closed 4WD 18K4F | | GCO30009 | Outer Joint | | 28 | 32 | 56 | 83.5 | 61 | I |
| | 1998.02-2000.11 | 5MT | R | L/R | Terrain cab wagon closed 4WD 18K4F | Chassis no. to:1A323599 | GDS51025 | Drive Shaft | 60W | 28 | 23 | 55.6 | 85 | 808 | |
| | 1998.02-2000.11 | 5MT | R | L/R | Terrain cab wagon closed 4WD 18K4F | Chassis no. from:2A000001 | GDS51030 | Drive Shaft | 60W | 28 | 23 | 57.7 | 85 | 806 | |
| | 1998.02-2000.11 | 5MT | R | L/R | Terrain cab wagon closed 4WD 18K4F | Chassis no. from:2A000001 | GDS51037 | Drive Shaft | | 28 | 23 | 57.7 | 85 | 806 | |
| | 1998.02-2000.11 | 5MT | R | L/R | Terrain cab wagon closed 4WD 18K4F | Chassis no. from:1A323600,Chassis no. to:1A999999 | GCO18200 | Outer Joint | 60W | 28 | 21 | 57.7 | 85 | 61 | M |
| | 1998.02-2000.11 | 5MT | R | L/R | Terrain cab wagon closed 4WD 18K4F | | GCO30016 | Outer Joint | | 28 | 21 | 57.7 | 85 | 61 | M |
| | 1998.02-2006.10 | 5MT | F | L/R | Terrain cab open 4WD 18K4F | | GDS51009 | Drive Shaft | 60W | 28 | 25 | 55.6 | 85 | 611 | |
| | 1998.02-2006.10 | 5MT | F | L/R | Terrain cab open 4WD 18K4F | | GCO51020 | Outer Joint | 60W | 28 | 32 | 55.6 | 85 | 61 | I |
| | 1998.02-2006.10 | MT | F | L/R | Terrain cab open 4WD 18K4F | | GDS51008 | Drive Shaft | 60W | 28 | 25 | 57.7 | 85 | 613 | |
| | 1998.02-2006.10 | | F | | Terrain cab open 4WD 18K4F | | GCO30009 | Outer Joint | | 28 | 32 | 56 | 83.5 | 61 | I |
| | 1998.02-2006.10 | 5MT | R | L/R | Terrain cab open 4WD 18K4F | Chassis no. to:1A323599 | GDS51025 | Drive Shaft | 60W | 28 | 23 | 55.6 | 85 | 808 | |
| | 1998.02-2006.10 | 5MT | R | L/R | Terrain cab open 4WD 18K4F | Chassis no. from:2A000001 | GDS51030 | Drive Shaft | 60W | 28 | 23 | 57.7 | 85 | 806 | |
| | 1998.02-2006.10 | 5MT | R | L/R | Terrain cab open 4WD 18K4F | Chassis no. from:2A000001 | GDS51037 | Drive Shaft | | 28 | 23 | 57.7 | 85 | 806 | |
| | 1998.02-2006.10 | 5MT | R | L/R | Terrain cab open 4WD 18K4F | Chassis no. from:1A323600,Chassis no. to:1A999999 | GCO18200 | Outer Joint | 60W | 28 | 21 | 57.7 | 85 | 61 | M |
| | 1998.02-2006.10 | 5MT | R | L/R | Terrain cab open 4WD 18K4F | | GCO30016 | Outer Joint | | 28 | 21 | 57.7 | 85 | 61 | M |
| 2.0 (72 kw) | 1998.02-2000.11 | 5MT | F | R | Terrain cab open 4WD 20TCIE | | GDS51002 | Drive Shaft | 60W | 28 | 25 | 55.6 | 85 | 592 | |
| | 1998.02-2000.11 | 5MT | F | L/R | Terrain cab open 4WD 20TCIE | | GCO51020 | Outer Joint | 60W | 28 | 32 | 55.6 | 85 | 61 | I |
| | 1998.02-2000.11 | AT/MT | F | L/R | Terrain cab open 4WD 20TCIE | | GDS51009 | Drive Shaft | 60W | 28 | 25 | 55.6 | 85 | 611 | |
| | 1998.02-2000.11 | MT | F | L | Terrain cab open 4WD 20TCIE | | GDS51024 | Drive Shaft | 60W | 28 | 25 | 57.7 | 85 | 631 | |
| | 1998.02-2000.11 | | F | | Terrain cab open 4WD 20TCIE | | GCO30009 | Outer Joint | | 28 | 32 | 56 | 83.5 | 61 | I |
| | 1998.02-2000.11 | 5MT | R | L/R | Terrain cab open 4WD 20TCIE | Chassis no. to:1A323599 | GDS51025 | Drive Shaft | 60W | 28 | 23 | 55.6 | 85 | 808 | |
| | 1998.02-2000.11 | 5MT | R | L/R | Terrain cab open 4WD 20TCIE | Chassis no. from:2A000001 | GDS51030 | Drive Shaft | 60W | 28 | 23 | 57.7 | 85 | 806 | |
| | 1998.02-2000.11 | 5MT | R | L/R | Terrain cab open 4WD 20TCIE | Chassis no. from:2A000001 | GDS51037 | Drive Shaft | | 28 | 23 | 57.7 | 85 | 806 | |
| | 1998.02-2000.11 | 5MT | R | L/R | Terrain cab open 4WD 20TCIE | Chassis no. from:1A323600,Chassis no. to:1A999999 | GCO18200 | Outer Joint | 60W | 28 | 21 | 57.7 | 85 | 61 | M |
| | 1998.02-2000.11 | 5MT | R | L/R | Terrain cab open 4WD 20TCIE | | GCO30016 | Outer Joint | | 28 | 21 | 57.7 | 85 | 61 | M |
| | 1998.02-2000.11 | 5MT | F | L/R | Terrain cab wagon closed 4WD 20TCIE | | GCO51020 | Outer Joint | 60W | 28 | 32 | 55.6 | 85 | 61 | I |
| | 1998.02-2000.11 | AT/MT | F | L/R | Terrain cab wagon closed 4WD 20TCIE | | GDS51009 | Drive Shaft | 60W | 28 | 25 | 55.6 | 85 | 611 | |
| | 1998.02-2000.11 | 5MT | R | L/R | Terrain cab wagon closed 4WD 20TCIE | Chassis no. to:1A323599 | GDS51025 | Drive Shaft | 60W | 28 | 23 | 55.6 | 85 | 808 | |
| | 1998.02-2000.11 | 5MT | R | L/R | Terrain cab wagon closed 4WD 20TCIE | Chassis no. from:2A000001 | GDS51030 | Drive Shaft | 60W | 28 | 23 | 57.7 | 85 | 806 | |
| | 1998.02-2000.11 | 5MT | R | L/R | Terrain cab wagon closed 4WD 20TCIE | Chassis no. from:2A000001 | GDS51037 | Drive Shaft | | 28 | 23 | 57.7 | 85 | 806 | |
| | 1998.02-2000.11 | 5MT | R | L/R | Terrain cab wagon closed 4WD 20TCIE | Chassis no. from:1A323600,Chassis no. to:1A999999 | GCO18200 | Outer Joint | 60W | 28 | 21 | 57.7 | 85 | 61 | M |
| | 1998.02-2000.11 | 5MT | R | L/R | Terrain cab wagon closed 4WD 20TCIE | | GCO30016 | Outer Joint | | 28 | 21 | 57.7 | 85 | 61 | M |
| | 1998.02-2000.11 | | F/R | | Terrain cab wagon closed 4WD 20TCIE | | GCO30009 | Outer Joint | | 28 | 32 | 56 | 83.5 | 61 | I |
| 2.0 (80 kw) | 2001.11-2006.10 | 5MT | F | L | Terrain cab wagon closed 4WD M47 | Chassis no. to:1A999999 | GDS51003 | Drive Shaft | 60W | 28 | 25 | 55.6 | 85 | 629 | |
| | 2001.11-2006.10 | 5MT | F | L | Terrain cab wagon closed 4WD M47 | Chassis no. from:2A000001 | GDS99133 | Drive Shaft | | 28 | 25 | 57.7 | 85 | 631 | |
| | 2001.11-2006.10 | 5MT | F | R | Terrain cab wagon closed 4WD M47 | Chassis no. to:1A999999 | GDS51002 | Drive Shaft | 60W | 28 | 25 | 55.6 | 85 | 592 | |
| | 2001.11-2006.10 | 5MT | F | R | Terrain cab wagon closed 4WD M47 | Chassis no. from:2A000001 | GDS99134 | Drive Shaft | | 28 | 25 | 57.7 | 85 | 596 | |
| | 2001.11-2006.10 | AT/MT | F | L/R | Terrain cab wagon closed 4WD M47 | | GCO30009 | Outer Joint | | 28 | 32 | 56 | 83.5 | 61 | I |
| | 2001.11-2006.10 | | F | L/R | Terrain cab wagon closed 4WD M47 | Chassis no. From:2A000001 | GCI51005 | Inner Joint | | 25 | 26 | 40 | 57.5 | 101.5 | |
| | 2001.11-2006.10 | 5MT | R | L/R | Terrain cab wagon closed 4WD M47 | Chassis no. to:1A323599 | GDS51025 | Drive Shaft | 60W | 28 | 23 | 55.6 | 85 | 808 | |
| | 2001.11-2006.10 | 5MT | R | L/R | Terrain cab wagon closed 4WD M47 | Chassis no. from:2A000001 | GDS51030 | Drive Shaft | 60W | 28 | 23 | 57.7 | 85 | 806 | |
| | 2001.11-2006.10 | 5MT | R | L/R | Terrain cab wagon closed 4WD M47 | Chassis no. from:2A000001 | GDS51037 | Drive Shaft | | 28 | 23 | 57.7 | 85 | 806 | |
| | 2001.11-2006.10 | 5MT | R | L/R | Terrain cab wagon closed 4WD M47 | Chassis no. from:1A316655,Chassis no. to:1A316654 | GCO18200 | Outer Joint | 60W | 28 | 21 | 57.7 | 85 | 61 | M |
| | 2001.11-2006.10 | 5MT | R | L/R | Terrain cab wagon closed 4WD M47 | | GCO30016 | Outer Joint | | 28 | 21 | 57.7 | 85 | 61 | M |
| 2.0 (82 kw) | 2000.04-2006.10 | 5AT/5MT | F | L | Terrain cab wagon closed 4WD M47 | Chassis no. to:1A999999 | GDS51003 | Drive Shaft | 60W | 28 | 25 | 55.6 | 85 | 629 | |
| | 2000.04-2006.10 | 5AT/5MT | F | L | Terrain cab wagon closed 4WD M47 | Chassis no. from:2A000001 | GDS99133 | Drive Shaft | | 28 | 25 | 57.7 | 85 | 631 | |

| | YEAR | TRANSM. | F/R | L/R | BODY STYLE & DRIVE TYPE & ENGINE | REMARKS | G-AP Ref. | PRODUCT | ABS | Technical Specifications A | B | C | H | L | P |
|---|---|---|---|---|---|---|---|---|---|---|---|---|---|---|---|
| **LAND ROVER** | | | | | | | | | | | | | | | |
| **Freelander** | | | | | | | | | | | | | | | |
| 2.0 (82 kw) | 2000.04-2006.10 | 5AT/5MT | F | R | Terrain cab wagon closed 4WD M47 | Chassis no. to:1A999999 | GDS51002 | Drive Shaft | 60W | 28 | 25 | 55.6 | 85 | 592 | |
| | 2000.04-2006.10 | 5AT/5MT | F | R | Terrain cab wagon closed 4WD M47 | Chassis no. from:2A000001 | GDS99134 | Drive Shaft | | 28 | 25 | 57.7 | 85 | 596 | |
| | 2000.04-2006.10 | 5AT/5MT | F | L/R | Terrain cab wagon closed 4WD M47 | Chassis no. From:2A000001 | GCI51005 | Inner Joint | | 25 | 26 | 40 | 57.5 | 101.5 | |
| | 2000.04-2006.10 | AT/MT | F | L/R | Terrain cab wagon closed 4WD M47 | | GCO30009 | Outer Joint | | 28 | 32 | 56 | 83.5 | 61 | I |
| | 2000.04-2006.10 | 5AT/5MT | R | L/R | Terrain cab wagon closed 4WD M47 | Chassis no. from:1A323600,Chassis no. to:1A999999;Chassis no. to:1A323599 | GDS51025 | Drive Shaft | 60W | 28 | 23 | 55.6 | 85 | 808 | |
| | 2000.04-2006.10 | 5AT/5MT | R | L/R | Terrain cab wagon closed 4WD M47 | Chassis no. from:1A316655,Chassis no. to:1A352374 | GDS51030 | Drive Shaft | 60W | 28 | 23 | 57.7 | 85 | 806 | |
| | 2000.04-2006.10 | 5AT/5MT | R | L/R | Terrain cab wagon closed 4WD M47 | Chassis no. from:2A000001 | GDS51037 | Drive Shaft | | 28 | 23 | 57.7 | 85 | 806 | |
| | 2000.04-2006.10 | 5AT/5MT | R | L/R | Terrain cab wagon closed 4WD M47 | Chassis no. from:1A323600,Chassis no. to:1A999999 | GCO18200 | Outer Joint | 60W | 28 | 21 | 57.7 | 85 | 61 | M |
| | 2000.04-2006.10 | 5AT/5MT | R | L/R | Terrain cab wagon closed 4WD M47 | Chassis no. from:1A323600,Chassis no. to:1A999999;Chassis from. to:2A000001 | GCO30016 | Outer Joint | | 28 | 21 | 57.7 | 85 | 61 | M |
| | 2000.10-2006.10 | 5AT/5MT | F | L | Terrain cab open 4WD M47 | Chassis no. to:1A999999 | GDS51003 | Drive Shaft | 60W | 28 | 25 | 55.6 | 85 | 629 | |
| | 2000.10-2006.10 | 5AT/5MT | F | L | Terrain cab open 4WD M47 | Chassis no. from:2A000001 | GDS99133 | Drive Shaft | | 28 | 25 | 57.7 | 85 | 631 | |
| | 2000.10-2006.10 | 5AT/5MT | F | R | Terrain cab open 4WD M47 | Chassis no. to:1A999999 | GDS51002 | Drive Shaft | 60W | 28 | 25 | 55.6 | 85 | 592 | |
| | 2000.10-2006.10 | 5AT/5MT | F | R | Terrain cab open 4WD M47 | Chassis no. from:2A000001 | GDS99134 | Drive Shaft | | 28 | 25 | 57.7 | 85 | 596 | |
| | 2000.10-2006.10 | 5AT/5MT | F | L/R | Terrain cab open 4WD M47 | Chassis no. From:2A000001 | GCI51005 | Inner Joint | | 25 | 26 | 40 | 57.5 | 101.5 | |
| | 2000.10-2006.10 | 5AT/5MT | R | L/R | Terrain cab open 4WD M47 | Chassis no. to:1A323599 | GDS51025 | Drive Shaft | 60W | 28 | 23 | 55.6 | 85 | 808 | |
| | 2000.10-2006.10 | 5AT/5MT | R | L/R | Terrain cab open 4WD M47 | Chassis no. from:2A000001 | GDS51037 | Drive Shaft | | 28 | 23 | 57.7 | 85 | 806 | |
| | 2000.10-2006.10 | 5AT/5MT | R | L/R | Terrain cab open 4WD M47 | Chassis no. from:1A323600,Chassis no. to:1A999999 | GCO18200 | Outer Joint | 60W | 28 | 21 | 57.7 | 85 | 61 | M |
| | 2000.10-2006.10 | 5AT/5MT | R | L/R | Terrain cab open 4WD M47 | Chassis no. from:2A000001 | GCO30016 | Outer Joint | | 28 | 21 | 57.7 | 85 | 61 | M |
| | 2000.10-2006.10 | 5MT | R | L/R | Terrain cab open 4WD M47 | Chassis no. from:2A000001 | GDS51030 | Drive Shaft | 60W | 28 | 23 | 57.7 | 85 | 806 | |
| 2.0 (177 kw) | 2011.10-2014.10 | AT/MT | F | L | Closed Off-Road Vehicle 4WD 204PT(GTDI) | | GDS56818 | Drive Shaft | | 40 | 31 | 57.7 | 52 | 577 | |
| | 2011.10-2014.10 | AT/MT | F | R | Closed Off-Road Vehicle 4WD 204PT(GTDI) | | GDS56813 | Drive Shaft | | 40 | 28 | 57.7 | 52 | 969 | |
| | 2011.10-2014.10 | AT/MT | F | L/R | Closed Off-Road Vehicle 4WD 204PT(GTDI) | | GCO83445 | Outer Joint | | 40 | 27 | 57.7 | 52 | 63.5 | M |
| | 2011.10-2014.10 | AT/MT | F | R | Closed Off-Road Vehicle 4WD 204PT(GTDI) | | GCI82209 | Inner Joint | | 28 | 27 | 30 | 436 | 96 | |
| | 2011.10-2014.10 | AT/MT | R | L/R | Closed Off-Road Vehicle 4WD 204PT(GTDI) | | GDS57165 | Drive Shaft | | 28 | 26 | 57.7 | 84 | 819.5 | |
| | 2011.10-2014.10 | AT/MT | R | L/R | Closed Off-Road Vehicle 4WD 204PT(GTDI) | | GCO57132 | Outer Joint | | 28 | 22 | 57.7 | 84 | 61.5 | M |
| | 2011.10-2014.10 | AT/MT | R | L/R | Closed Off-Road Vehicle 4WD 204PT(GTDI) | | GCI57071 | Inner Joint | | 26 | 22 | 35 | 69.5 | 95 | |
| | 2011.10-2014.10 | MT/AT | R | L/R | Closed Off-Road Vehicle 4WD 204PT(GTDI) | | GCI18187 | Inner Joint | | 26 | 29 | 35 | 69.5 | 107.5 | |
| 2.2 (110 kw) | 2006.10-2014.10 | 6AT/6MT | F | L/R | Closed Off-Road Vehicle 4WD 224DT(DW12BTED4),DW12BTED4 | | GCO59285 | Outer Joint | | 40 | 27 | 57.7 | 52 | 63.5 | M |
| | 2006.10-2014.10 | AT | F | L | Closed Off-Road Vehicle 4WD 224DT(DW12BTED4),DW12BTED4 | | GDS51038 | Drive Shaft | | 40 | 31 | 57.7 | 52 | 538 | |
| | 2006.10-2014.10 | AT | F | R | Closed Off-Road Vehicle 4WD 224DT(DW12BTED4),DW12BTED4 | | GDS51039 | Drive Shaft | | 40 | 28 | 57.7 | 52 | 1000 | |
| | 2006.10-2014.10 | MT | F | L | Closed Off-Road Vehicle 4WD 224DT(DW12BTED4),DW12BTED4 | | GDS59344 | Drive Shaft | | 40 | 31 | 57.7 | 52 | 554.5 | |
| | 2006.10-2014.10 | MT | F | R | Closed Off-Road Vehicle 4WD 224DT(DW12BTED4),DW12BTED4 | | GDS59346 | Drive Shaft | | 40 | 28 | 57.7 | 52 | 1022.5 | |
| | 2006.10-2014.10 | AT/MT | R | L/R | Closed Off-Road Vehicle 4WD 224DT(DW12BTED4),DW12BTED4 | | GDS57165 | Drive Shaft | | 28 | 26 | 57.7 | 84 | 819.5 | |
| | 2006.10-2014.10 | AT/MT | R | L/R | Closed Off-Road Vehicle 4WD 224DT(DW12BTED4),DW12BTED4 | | GCO57132 | Outer Joint | | 28 | 22 | 57.7 | 84 | 61.5 | M |
| | 2006.10-2014.10 | AT/MT | R | L/R | Closed Off-Road Vehicle 4WD 224DT(DW12BTED4),DW12BTED4 | | GCI57071 | Inner Joint | | 26 | 22 | 35 | 69.5 | 95 | |
| | 2006.10-2014.10 | | R | L/R | Closed Off-Road Vehicle 4WD 224DT(DW12BTED4),DW12BTED4 | | GCI18187 | Inner Joint | | 26 | 29 | 35 | 69.5 | 107.5 | |
| | 2010.08-2014.10 | 6MT | F | L | Closed Off-Road Vehicle FWD 224DT(DW12BTED4),DW12BTED4 | | GDS59344 | Drive Shaft | | 40 | 31 | 57.7 | 52 | 554.5 | |
| | 2010.08-2014.10 | 6MT | F | L/R | Closed Off-Road Vehicle FWD 224DT(DW12BTED4),DW12BTED4 | | GCO59285 | Outer Joint | | 40 | 27 | 57.7 | 52 | 63.5 | M |
| | 2010.08-2014.10 | AT | F | L | Closed Off-Road Vehicle FWD 224DT(DW12BTED4),DW12BTED4 | | GDS51038 | Drive Shaft | | 40 | 31 | 57.7 | 52 | 538 | |
| | 2010.08-2014.10 | AT | F | R | Closed Off-Road Vehicle FWD 224DT(DW12BTED4),DW12BTED4 | | GDS51039 | Drive Shaft | | 40 | 28 | 57.7 | 52 | 1000 | |
| 2.2 (112 kw) | 2007.01-2014.10 | 6MT | F | L | Closed Off-Road Vehicle 4WD 224DT(DW12BTED4) | | GDS59344 | Drive Shaft | | 40 | 31 | 57.7 | 52 | 554.5 | |
| | 2007.01-2014.10 | 6MT | F | R | Closed Off-Road Vehicle 4WD 224DT(DW12BTED4) | | GDS59346 | Drive Shaft | | 40 | 28 | 57.7 | 52 | 1022.5 | |
| | 2007.01-2014.10 | 6MT | F | L/R | Closed Off-Road Vehicle 4WD 224DT(DW12BTED4) | | GCO59285 | Outer Joint | | 40 | 27 | 57.7 | 52 | 63.5 | M |
| | 2007.01-2014.10 | AT | F | L | Closed Off-Road Vehicle 4WD 224DT(DW12BTED4) | | GDS51038 | Drive Shaft | | 40 | 31 | 57.7 | 52 | 538 | |
| | 2007.01-2014.10 | AT | F | R | Closed Off-Road Vehicle 4WD 224DT(DW12BTED4) | | GDS51039 | Drive Shaft | | 40 | 28 | 57.7 | 52 | 1000 | |
| | 2007.01-2014.10 | 6MT | R | L/R | Closed Off-Road Vehicle 4WD 224DT(DW12BTED4) | | GDS57165 | Drive Shaft | | 28 | 26 | 57.7 | 84 | 819.5 | |
| | 2007.01-2014.10 | 6MT | R | L/R | Closed Off-Road Vehicle 4WD 224DT(DW12BTED4) | | GCO57132 | Outer Joint | | 28 | 22 | 57.7 | 84 | 61.5 | M |
| | 2007.01-2014.10 | 6MT | R | L/R | Closed Off-Road Vehicle 4WD 224DT(DW12BTED4) | | GCI18187 | Inner Joint | | 26 | 29 | 35 | 69.5 | 107.5 | |
| | 2007.01-2014.10 | 6MT | R | L/R | Closed Off-Road Vehicle 4WD 224DT(DW12BTED4) | | GCI57071 | Inner Joint | | 26 | 22 | 35 | 69.5 | 95 | |
| 2.2 (115 kw) | 2006.10-2014.10 | 4AT | F | L | Closed Off-Road Vehicle 4WD 224DT(DW12BTED4) | | GDS51038 | Drive Shaft | | 40 | 31 | 57.7 | 52 | 538 | |
| | 2006.10-2014.10 | 4AT | F | R | Closed Off-Road Vehicle 4WD 224DT(DW12BTED4) | | GDS51039 | Drive Shaft | | 40 | 28 | 57.7 | 52 | 1000 | |
| | 2006.10-2014.10 | 4AT | F | L/R | Closed Off-Road Vehicle 4WD 224DT(DW12BTED4) | | GCO59285 | Outer Joint | | 40 | 27 | 57.7 | 52 | 63.5 | M |
| | 2006.10-2014.10 | MT | F | L | Closed Off-Road Vehicle 4WD 224DT(DW12BTED4) | | GDS59344 | Drive Shaft | | 40 | 31 | 57.7 | 52 | 554.5 | |
| | 2006.10-2014.10 | MT | F | R | Closed Off-Road Vehicle 4WD 224DT(DW12BTED4) | | GDS59346 | Drive Shaft | | 40 | 28 | 57.7 | 52 | 1022.5 | |
| | 2006.10-2014.10 | 4AT | R | L/R | Closed Off-Road Vehicle 4WD 224DT(DW12BTED4) | | GDS57165 | Drive Shaft | | 28 | 26 | 57.7 | 84 | 819.5 | |
| | 2006.10-2014.10 | 4AT | R | L/R | Closed Off-Road Vehicle 4WD 224DT(DW12BTED4) | | GCO57132 | Outer Joint | | 28 | 22 | 57.7 | 84 | 61.5 | M |
| | 2006.10-2014.10 | 4AT | R | L/R | Closed Off-Road Vehicle 4WD 224DT(DW12BTED4) | | GCI18187 | Inner Joint | | 26 | 29 | 35 | 69.5 | 107.5 | |
| | 2006.10-2014.10 | 4AT | R | L/R | Closed Off-Road Vehicle 4WD 224DT(DW12BTED4) | | GCI57071 | Inner Joint | | 26 | 22 | 35 | 69.5 | 95 | |
| 2.2 (118 kw) | 2006.10-2014.10 | 6AT | F | L | Closed Off-Road Vehicle 4WD 224DT(DW12BTED4),DW12BTED4 | | GDS51038 | Drive Shaft | | 40 | 31 | 57.7 | 52 | 538 | |
| | 2006.10-2014.10 | 6AT | F | R | Closed Off-Road Vehicle 4WD 224DT(DW12BTED4),DW12BTED4 | | GDS51039 | Drive Shaft | | 40 | 28 | 57.7 | 52 | 1000 | |
| | 2006.10-2014.10 | 6MT | F | L | Closed Off-Road Vehicle 4WD 224DT(DW12BTED4),DW12BTED4 | | GDS59344 | Drive Shaft | | 40 | 31 | 57.7 | 52 | 554.5 | |
| | 2006.10-2014.10 | 6MT | F | R | Closed Off-Road Vehicle 4WD 224DT(DW12BTED4),DW12BTED4 | | GDS59346 | Drive Shaft | | 40 | 28 | 57.7 | 52 | 1022.5 | |
| | 2006.10-2014.10 | 6MT | F | L/R | Closed Off-Road Vehicle 4WD 224DT(DW12BTED4),DW12BTED4 | | GCO59285 | Outer Joint | | 40 | 27 | 57.7 | 52 | 63.5 | M |
| | 2006.10-2014.10 | 6AT/6MT | R | L/R | Closed Off-Road Vehicle 4WD 224DT(DW12BTED4),DW12BTED4 | | GDS57165 | Drive Shaft | | 28 | 26 | 57.7 | 84 | 819.5 | |
| | 2006.10-2014.10 | 6AT/6MT | R | L/R | Closed Off-Road Vehicle 4WD 224DT(DW12BTED4),DW12BTED4 | | GCO57132 | Outer Joint | | 28 | 22 | 57.7 | 84 | 61.5 | M |

| | YEAR | TRANSM. | F/R | L/R | BODY STYLE & DRIVE TYPE & ENGINE | REMARKS | G-AP Ref. | PRODUCT | ABS | Technical Specifications A | B | C | H | L | P |
|---|---|---|---|---|---|---|---|---|---|---|---|---|---|---|---|
| **LAND ROVER** | | | | | | | | | | | | | | | |
| **Freelander** | | | | | | | | | | | | | | | |
| 2.2 (118 kw) | 2006.10-2014.10 | 6MT | R | L/R | Closed Off-Road Vehicle 4WD 224DT(DW12BTED4);DW12BTED4 | | GCI18187 | Inner Joint | | 26 | 29 | 35 | 69.5 | 107.5 | |
| | 2006.10-2014.10 | 6MT | R | L/R | Closed Off-Road Vehicle 4WD 224DT(DW12BTED4);DW12BTED4 | | GCI57071 | Inner Joint | | 26 | 22 | 35 | 69.5 | 95 | |
| | 2006.10-2014.10 | 6MT | F | L | Van 4WD 224DT(DW12BTED4) | | GDS59344 | Drive Shaft | | 40 | 31 | 57.7 | 52 | 554.5 | |
| | 2006.10-2014.10 | 6MT | F | R | Van 4WD 224DT(DW12BTED4) | | GDS59346 | Drive Shaft | | 40 | 28 | 57.7 | 52 | 1022.5 | |
| | 2006.10-2014.10 | 6MT | F | L/R | Van 4WD 224DT(DW12BTED4) | | GCO59285 | Outer Joint | | 40 | 27 | 57.7 | 52 | 63.5 | M |
| | 2006.10-2014.10 | 6MT | R | L/R | Van 4WD 224DT(DW12BTED4) | | GDS57165 | Drive Shaft | | 28 | 26 | 57.7 | 84 | 819.5 | |
| | 2006.10-2014.10 | 6MT | R | L/R | Van 4WD 224DT(DW12BTED4) | | GCO57132 | Outer Joint | | 28 | 22 | 57.7 | 84 | 61.5 | M |
| | 2006.10-2014.10 | 6MT | R | L/R | Van 4WD 224DT(DW12BTED4) | | GCI18187 | Inner Joint | | 26 | 29 | 35 | 69.5 | 107.5 | |
| | 2006.10-2014.10 | 6MT | R | L/R | Van 4WD 224DT(DW12BTED4) | | GCI57071 | Inner Joint | | 26 | 22 | 35 | 69.5 | 95 | |
| 2.2 (140 kw) | 2010.08-2014.10 | 6AT | F | L | Closed Off-Road Vehicle 4WD 224DT(DW12BTED4) | | GDS51038 | Drive Shaft | | 40 | 31 | 57.7 | 52 | 538 | |
| | 2010.08-2014.10 | 6AT | F | R | Closed Off-Road Vehicle 4WD 224DT(DW12BTED4) | | GDS51039 | Drive Shaft | | 40 | 28 | 57.7 | 52 | 1000 | |
| | 2010.08-2014.10 | 6AT | F | L/R | Closed Off-Road Vehicle 4WD 224DT(DW12BTED4) | | GCO59285 | Outer Joint | | 40 | 27 | 57.7 | 52 | 63.5 | M |
| | 2010.08-2014.10 | MT | F | L | Closed Off-Road Vehicle 4WD 224DT(DW12BTED4) | | GDS59344 | Drive Shaft | | 40 | 31 | 57.7 | 52 | 554.5 | |
| | 2010.08-2014.10 | MT | F | R | Closed Off-Road Vehicle 4WD 224DT(DW12BTED4) | | GDS59346 | Drive Shaft | | 40 | 28 | 57.7 | 52 | 1022.5 | |
| | 2010.08-2014.10 | 6AT | R | L/R | Closed Off-Road Vehicle 4WD 224DT(DW12BTED4) | | GDS57165 | Drive Shaft | | 28 | 26 | 57.7 | 84 | 819.5 | |
| | 2010.08-2014.10 | 6AT | R | L/R | Closed Off-Road Vehicle 4WD 224DT(DW12BTED4) | | GCO57132 | Outer Joint | | 28 | 22 | 57.7 | 84 | 61.5 | M |
| | 2010.08-2014.10 | 6AT | R | L/R | Closed Off-Road Vehicle 4WD 224DT(DW12BTED4) | | GCI18187 | Inner Joint | | 26 | 29 | 35 | 69.5 | 107.5 | |
| | 2010.08-2014.10 | 6AT | R | L/R | Closed Off-Road Vehicle 4WD 224DT(DW12BTED4) | | GCI57071 | Inner Joint | | 26 | 22 | 35 | 69.5 | 95 | |
| 2.5 (130 kw) | 2000.10-2006.10 | 5AT | F | L | Terrain cab open 4WD 25KV6 | Chassis no. to:1A999999 | GDS51003 | Drive Shaft | 60W | 28 | 25 | 55.6 | 85 | 629 | |
| | 2000.10-2006.10 | 5AT | F | L | Terrain cab open 4WD 25KV6 | Chassis no. from:2A000001 | GDS99133 | Drive Shaft | | 28 | 25 | 57.7 | 85 | 631 | |
| | 2000.10-2006.10 | 5AT | F | R | Terrain cab open 4WD 25KV6 | Chassis no. to:1A999999 | GDS51002 | Drive Shaft | 60W | 28 | 25 | 55.6 | 85 | 592 | |
| | 2000.10-2006.10 | 5AT | F | R | Terrain cab open 4WD 25KV6 | Chassis no. from:2A000001 | GDS99134 | Drive Shaft | | 28 | 25 | 57.7 | 85 | 596 | |
| | 2000.10-2006.10 | | F | L/R | Terrain cab open 4WD 25KV6 | Chassis no. From:2A000001 | GCI51005 | Inner Joint | | 25 | 26 | 40 | 57.5 | 101.5 | |
| | 2000.10-2006.10 | 5AT | R | L/R | Terrain cab open 4WD 25KV6 | Chassis no. to:1A323599 | GDS51025 | Drive Shaft | 60W | 28 | 23 | 55.6 | 85 | 808 | |
| | 2000.10-2006.10 | 5AT | R | L/R | Terrain cab open 4WD 25KV6 | Chassis no. from:2A000001 | GDS51030 | Drive Shaft | 60W | 28 | 23 | 57.7 | 85 | 806 | |
| | 2000.10-2006.10 | 5AT | R | L/R | Terrain cab open 4WD 25KV6 | Chassis no. from:2A000001 | GDS51037 | Drive Shaft | | 28 | 23 | 57.7 | 85 | 806 | |
| | 2000.10-2006.10 | 5AT | R | L/R | Terrain cab open 4WD 25KV6 | Chassis no. from:1A323600,Chassis no. to:1A999999 | GCO18200 | Outer Joint | 60W | 28 | 21 | 57.7 | 85 | 61 | M |
| | 2000.10-2006.10 | 5AT | R | L/R | Terrain cab open 4WD 25KV6 | Chassis no. from:2A000001 | GCO30016 | Outer Joint | | 28 | 21 | 57.7 | 85 | 61 | M |
| | 2000.11-2006.10 | 5AT | F | L | Terrain cab wagon closed 4WD 25KV6 | Chassis no. to:1A999999 | GDS51003 | Drive Shaft | 60W | 28 | 25 | 55.6 | 85 | 629 | |
| | 2000.11-2006.10 | 5AT | F | L | Terrain cab wagon closed 4WD 25KV6 | Chassis no. from:2A000001 | GDS99133 | Drive Shaft | | 28 | 25 | 57.7 | 85 | 631 | |
| | 2000.11-2006.10 | 5AT | F | R | Terrain cab wagon closed 4WD 25KV6 | Chassis no. to:1A999999 | GDS51002 | Drive Shaft | 60W | 28 | 25 | 55.6 | 85 | 592 | |
| | 2000.11-2006.10 | 5AT | F | R | Terrain cab wagon closed 4WD 25KV6 | Chassis no. from:2A000001 | GDS99134 | Drive Shaft | | 28 | 25 | 57.7 | 85 | 596 | |
| | 2000.11-2006.10 | AT/MT | F | L/R | Terrain cab wagon closed 4WD 25KV6 | | GCO30009 | Outer Joint | | 28 | 32 | 56 | 83.5 | 61 | I |
| | 2000.11-2006.10 | MT | F | L | Terrain cab wagon closed 4WD 25KV6 | | GDS51024 | Drive Shaft | 60W | 28 | 25 | 57.7 | 85 | 631 | |
| | 2000.11-2006.10 | | F | L/R | Terrain cab wagon closed 4WD 25KV6 | Chassis no. From:2A000001 | GCI51005 | Inner Joint | | 25 | 26 | 40 | 57.5 | 101.5 | |
| | 2000.11-2006.10 | 5AT | R | L/R | Terrain cab wagon closed 4WD 25KV6 | Chassis no. to:1A323599 | GDS51025 | Drive Shaft | 60W | 28 | 23 | 55.6 | 85 | 808 | |
| | 2000.11-2006.10 | 5AT | R | L/R | Terrain cab wagon closed 4WD 25KV6 | Chassis no. from:2A000001 | GDS51037 | Drive Shaft | | 28 | 23 | 57.7 | 85 | 806 | |
| | 2000.11-2006.10 | 5AT | R | L/R | Terrain cab wagon closed 4WD 25KV6 | Chassis no. from:1A323600,Chassis no. to:1A999999 | GCO18200 | Outer Joint | 60W | 28 | 21 | 57.7 | 85 | 61 | M |
| | 2000.11-2006.10 | 5AT | R | L/R | Terrain cab wagon closed 4WD 25KV6 | | GCO30016 | Outer Joint | | 28 | 21 | 57.7 | 85 | 61 | M |
| | 2000.11-2006.10 | MT | R | L/R | Terrain cab wagon closed 4WD 25KV6 | | GDS51030 | Drive Shaft | 60W | 28 | 23 | 57.7 | 85 | 806 | |
| 3.2 (171 kw) | 2006.10-2014.10 | 6AT | F | L | Closed Off-Road Vehicle 4WD B6324S(32PDPR) | | GDS51038 | Drive Shaft | | 40 | 31 | 57.7 | 52 | 538 | |
| | 2006.10-2014.10 | 6AT | F | R | Closed Off-Road Vehicle 4WD B6324S(32PDPR) | | GDS83901 | Drive Shaft | | 40 | 28 | 57.7 | 52 | 1010 | |
| | 2006.10-2014.10 | 6AT | F | L/R | Closed Off-Road Vehicle 4WD B6324S(32PDPR) | | GCO59285 | Outer Joint | | 40 | 27 | 57.7 | 52 | 63.5 | M |
| | 2006.10-2014.10 | 6AT | F | R | Closed Off-Road Vehicle 4WD B6324S(32PDPR) | | GCI85050 | Inner Joint | | 28 | 27 | 30 | 524.5 | 109.5 | |
| | 2006.10-2014.10 | 6AT | R | L/R | Closed Off-Road Vehicle 4WD B6324S(32PDPR) | | GDS57165 | Drive Shaft | | 28 | 26 | 57.7 | 84 | 819.5 | |
| | 2006.10-2014.10 | 6AT | R | L/R | Closed Off-Road Vehicle 4WD B6324S(32PDPR) | | GCO57132 | Outer Joint | | 28 | 22 | 57.7 | 84 | 61.5 | M |
| | 2006.10-2014.10 | 6AT | R | L/R | Closed Off-Road Vehicle 4WD B6324S(32PDPR) | | GCI18187 | Inner Joint | | 26 | 29 | 35 | 69.5 | 107.5 | |
| | 2006.10-2014.10 | 6AT | R | L/R | Closed Off-Road Vehicle 4WD B6324S(32PDPR) | | GCI57071 | Inner Joint | | 26 | 22 | 35 | 69.5 | 95 | |
| **Range Rover** | | | | | | | | | | | | | | | |
| 2.0 (297 kw) | 2017.10-2021.09 | 8AT | F | L | SUV 4WD PT204(AJ20P4) | | GDS84004 | Drive Shaft | | 31 | 29 | 68.5 | 97 | 661 | |
| | 2017.10-2021.09 | 8AT | F | R | SUV 4WD PT204(AJ20P4) | | GDS82516 | Drive Shaft | | 31 | 29 | 68.5 | 97 | 1027 | |
| | 2017.10-2021.09 | 8AT | F | L/R | SUV 4WD PT204(AJ20P4) | | GCO81975 | Outer Joint | | 31 | 27 | 68.5 | 97 | 61 | I |
| | 2017.10-2021.09 | 8AT | F | L | SUV 4WD PT204(AJ20P4) | | GCI82248 | Inner Joint | | 29 | 27 | 44 | 71.5 | 129 | |
| | 2017.10-2021.09 | 8AT | F | R | SUV 4WD PT204(AJ20P4) | | GCI82268 | Inner Joint | | 29 | 27 | 44 | 461 | 100 | |
| | 2017.10-2021.09 | 8AT | R | L | SUV 4WD PT204(AJ20P4) | Without differential lock | GDS82346 | Drive Shaft | | 31 | 31 | 68.2 | 97 | 838 | |
| | 2017.10-2021.09 | 8AT | R | L | SUV 4WD PT204(AJ20P4) | With Differential Lock | GDS84013 | Drive Shaft | | 31 | 31 | 68.2 | 97 | 838 | |
| | 2017.10-2021.09 | 8AT | R | R | SUV 4WD PT204(AJ20P4) | Chassis no. to:FA227762 | GDS82345 | Drive Shaft | | 31 | 31 | 68.2 | 97 | 860 | |
| | 2017.10-2021.09 | 8AT | R | R | SUV 4WD PT204(AJ20P4) | Chassis no. from:FA227763 | GDS83549 | Drive Shaft | | 31 | 31 | 68.2 | 97 | 860 | |
| | 2017.10-2021.09 | 8AT | R | L/R | SUV 4WD PT204(AJ20P4) | Chassis no. to:FA227762 | GCO81813 | Outer Joint | | 31 | 28 | 68.2 | 97 | 61 | I |
| | 2017.10-2021.09 | 8AT | R | L/R | SUV 4WD PT204(AJ20P4) | Chassis no. from:FA227763 | GCO82414 | Outer Joint | | 31 | 28 | 68.2 | 97 | 61 | I |
| | 2017.10-2021.09 | 8AT | R | L | SUV 4WD PT204(AJ20P4) | With differential lock | GCI82452 | Inner Joint | | 31 | 28 | 44 | 152 | 105 | |
| | 2017.10-2021.09 | 8AT | R | L/R | SUV 4WD PT204(AJ20P4) | Possion:Left,Without differential lock | GCI81763 | Inner Joint | | 31 | 28 | 44 | 86 | 110.5 | |
| 2.5 (83 kw) | 1992.11-1996.04 | | F | L/R | Terrain cab wagon closed 4WD 14L/21L | Chassis no. from:KA624756 | GCO30004 | Outer Joint | 60W | 24 | 32 | 40 | 154 | 56 | I |
| 2.5 (100 kw) | 1994.08-2002.03 | 4AT/5MT | F | L | Terrain cab wagon closed 4WD M51256T | Chassis no. from:XA410482 | GDS30006 | Drive Shaft | 60T | 24 | | 61.7 | 101 | 656 | |
| | 1994.08-2002.03 | AT/MT | F | L/R | Terrain cab wagon closed 4WD M51256T | | GCO30006 | Outer Joint | 60T | 24 | 32 | 61.7 | 101 | 60 | I |

| | YEAR | TRANSM. | F/R | L/R | BODY STYLE & DRIVE TYPE & ENGINE | REMARKS | G-AP Ref. | PRODUCT | ABS | Technical Specifications A | B | C | H | L | P |
|---|---|---|---|---|---|---|---|---|---|---|---|---|---|---|---|
| **LAND ROVER** | | | | | | | | | | | | | | | |
| **Range Rover** | | | | | | | | | | | | | | | |
| 3.0 (130 kw) | 2002.03-2012.08 | AT | F | L | Closed Off-Road Vehicle 4WD 306D1(M57D30) | | GCO81284 | Inner Joint | | 30 | 29 | 43.97 | 68 | 89 | |
| | 2002.03-2012.08 | SAT | F | R | Closed Off-Road Vehicle 4WD 306D1(M57D30) | | GDS81463 | Drive Shaft | 48W | 30 | 30 | 68 | 84 | 968 | |
| | 2002.03-2012.08 | AT | R | L | Closed Off-Road Vehicle 4WD 306D1(M57D30) | Chassis no. from:7A000001 | GDS85104 | Drive Shaft | 48W | 30 | 31 | 68 | 84 | 820 | |
| | 2002.03-2012.08 | AT | R | R | Closed Off-Road Vehicle 4WD 306D1(M57D30) | Chassis no. from:7A000001 | GDS85105 | Drive Shaft | 48W | 30 | 31 | 68 | 84 | 800 | |
| | 2002.03-2012.08 | AT | R | L/R | Closed Off-Road Vehicle 4WD 306D1(M57D30) | Chassis no. to:6A999999 | GDS51036 | Drive Shaft | 48W | 30 | | 68 | 84 | 690 | |
| | 2002.03-2012.08 | AT | R | L | Closed Off-Road Vehicle 4WD 306D1(M57D30) | Chassis no. from:7A000001 | GCI85059 | Inner Joint | | 31 | 30 | 44 | 151.5 | 124.5 | |
| | 2002.03-2012.08 | AT | R | L/R | Closed Off-Road Vehicle 4WD 306D1(M57D30) | Chassis no. to:6A999999 | GCI35001 | Inner Joint | | | 30 | | | 36.2 | |
| | 2002.03-2012.08 | AT | F/R | L/R | Closed Off-Road Vehicle 4WD 306D1(M57D30) | | GCO85004 | Outer Joint | 48W | 30 | 29 | 68 | 84 | 74 | M |
| 3.0 (155 kw) | 2013.10-2016.01 | 8AT | F | L | SUV 4WD 306DT(TDV6) | | GDS84004 | Drive Shaft | | 31 | 29 | 68.5 | 97 | 661 | |
| | 2013.10-2016.01 | 8AT | F | R | SUV 4WD 306DT(TDV6) | | GDS82516 | Drive Shaft | | 31 | 29 | 68.5 | 97 | 1027 | |
| | 2013.10-2016.01 | 8AT | F | L/R | SUV 4WD 306DT(TDV6) | | GCO81975 | Outer Joint | | 31 | 27 | 68.5 | 97 | 61 | I |
| | 2013.10-2016.01 | 8AT | F | L | SUV 4WD 306DT(TDV6) | | GCI82248 | Inner Joint | | 29 | 27 | 44 | 71.5 | 129 | |
| | 2013.10-2016.01 | 8AT | F | R | SUV 4WD 306DT(TDV6) | | GCI82268 | Inner Joint | | 29 | 27 | 44 | 461 | 100 | |
| | 2013.10-2016.01 | 8AT | R | L | SUV 4WD 306DT(TDV6) | Without differential lock | GDS82346 | Drive Shaft | | 31 | 31 | 68.2 | 97 | 838 | |
| | 2013.10-2016.01 | 8AT | R | L | SUV 4WD 306DT(TDV6) | With differential lock | GDS84013 | Drive Shaft | | 31 | 31 | 68.2 | 97 | 838 | |
| | 2013.10-2016.01 | 8AT | R | R | SUV 4WD 306DT(TDV6) | Chassis no. to:FA227762 | GDS82345 | Drive Shaft | | 31 | 31 | 68.2 | 97 | 860 | |
| | 2013.10-2016.01 | 8AT | R | R | SUV 4WD 306DT(TDV6) | Chassis no. from:FA227763 | GDS83549 | Drive Shaft | | 31 | 31 | 68.2 | 97 | 860 | |
| | 2013.10-2016.01 | 8AT | R | L/R | SUV 4WD 306DT(TDV6) | Chassis no. to:FA227762 | GCO81813 | Outer Joint | | 31 | 28 | 68.2 | 97 | 61 | I |
| | 2013.10-2016.01 | 8AT | R | L/R | SUV 4WD 306DT(TDV6) | Chassis no. from:FA227763 | GCO82414 | Outer Joint | | 31 | 28 | 68.2 | 97 | 61 | I |
| | 2013.10-2016.01 | 8AT | R | L | SUV 4WD 306DT(TDV6) | With differential lock | GCI82452 | Inner Joint | | 31 | 28 | 44 | 152 | 105 | |
| | 2013.10-2016.01 | 8AT | R | L/R | SUV 4WD 306DT(TDV6) | Possion:Left,Without differential lock | GCI81763 | Inner Joint | | 31 | 28 | 44 | 86 | 110.5 | |
| 3.0 (183 kw) | 2012.08-2016.01 | 8AT | F | L | SUV 4WD 306DT(TDV6) | | GDS84004 | Drive Shaft | | 31 | 29 | 68.5 | 97 | 661 | |
| | 2012.08-2016.01 | 8AT | F | R | SUV 4WD 306DT(TDV6) | | GDS82516 | Drive Shaft | | 31 | 29 | 68.5 | 97 | 1027 | |
| | 2012.08-2016.01 | 8AT | F | L/R | SUV 4WD 306DT(TDV6) | | GCO81975 | Outer Joint | | 31 | 27 | 68.5 | 97 | 61 | I |
| | 2012.08-2016.01 | 8AT | F | L | SUV 4WD 306DT(TDV6) | | GCI82248 | Inner Joint | | 29 | 27 | 44 | 71.5 | 129 | |
| | 2012.08-2016.01 | 8AT | F | R | SUV 4WD 306DT(TDV6) | | GCI82268 | Inner Joint | | 29 | 27 | 44 | 461 | 100 | |
| | 2012.08-2016.01 | 8AT | R | L | SUV 4WD 306DT(TDV6) | Without differential lock | GDS82346 | Drive Shaft | | 31 | 31 | 68.2 | 97 | 838 | |
| | 2012.08-2016.01 | 8AT | R | L | SUV 4WD 306DT(TDV6) | With Differential Lock | GDS84013 | Drive Shaft | | 31 | 31 | 68.2 | 97 | 838 | |
| | 2012.08-2016.01 | 8AT | R | R | SUV 4WD 306DT(TDV6) | Chassis no. to:FA227762 | GDS82345 | Drive Shaft | | 31 | 31 | 68.2 | 97 | 860 | |
| | 2012.08-2016.01 | 8AT | R | R | SUV 4WD 306DT(TDV6) | Chassis no. from:FA227763 | GDS83549 | Drive Shaft | | 31 | 31 | 68.2 | 97 | 860 | |
| | 2012.08-2016.01 | 8AT | R | L/R | SUV 4WD 306DT(TDV6) | Chassis no. to:FA227762 | GCO81813 | Outer Joint | | 31 | 28 | 68.2 | 97 | 61 | I |
| | 2012.08-2016.01 | 8AT | R | L/R | SUV 4WD 306DT(TDV6) | Chassis no. from:FA227763 | GCO82414 | Outer Joint | | 31 | 28 | 68.2 | 97 | 61 | I |
| | 2012.08-2016.01 | 8AT | R | L | SUV 4WD 306DT(TDV6) | With differential lock | GCI82452 | Inner Joint | | 31 | 28 | 44 | 152 | 105 | |
| | 2012.08-2016.01 | 8AT | R | L/R | SUV 4WD 306DT(TDV6) | Possion:Left,Without differential lock | GCI81763 | Inner Joint | | 31 | 28 | 44 | 86 | 110.5 | |
| | 2020.07-2021.09 | 8AT | F | L | SUV 4WD DT306(AJ20D6) | | GDS84004 | Drive Shaft | | 31 | 29 | 68.5 | 97 | 661 | |
| | 2020.07-2021.09 | 8AT | F | R | SUV 4WD DT306(AJ20D6) | | GDS82516 | Drive Shaft | | 31 | 29 | 68.5 | 97 | 1027 | |
| | 2020.07-2021.09 | 8AT | F | L/R | SUV 4WD DT306(AJ20D6) | | GCO81975 | Outer Joint | | 31 | 27 | 68.5 | 97 | 61 | I |
| | 2020.07-2021.09 | 8AT | F | L | SUV 4WD DT306(AJ20D6) | | GCI82248 | Inner Joint | | 29 | 27 | 44 | 71.5 | 129 | |
| | 2020.07-2021.09 | 8AT | F | R | SUV 4WD DT306(AJ20D6) | | GCI82268 | Inner Joint | | 29 | 27 | 44 | 461 | 100 | |
| | 2020.07-2021.09 | 8AT | R | L | SUV 4WD DT306(AJ20D6) | Without differential lock | GDS82346 | Drive Shaft | | 31 | 31 | 68.2 | 97 | 838 | |
| | 2020.07-2021.09 | 8AT | R | L | SUV 4WD DT306(AJ20D6) | With Differential Lock | GDS84013 | Drive Shaft | | 31 | 31 | 68.2 | 97 | 838 | |
| | 2020.07-2021.09 | 8AT | R | R | SUV 4WD DT306(AJ20D6) | Chassis no. to:FA227762 | GDS82345 | Drive Shaft | | 31 | 31 | 68.2 | 97 | 860 | |
| | 2020.07-2021.09 | 8AT | R | R | SUV 4WD DT306(AJ20D6) | Chassis no. from:FA227763 | GDS83549 | Drive Shaft | | 31 | 31 | 68.2 | 97 | 860 | |
| | 2020.07-2021.09 | 8AT | R | L/R | SUV 4WD DT306(AJ20D6) | Chassis no. to:FA227762 | GCO81813 | Outer Joint | | 31 | 28 | 68.2 | 97 | 61 | I |
| | 2020.07-2021.09 | 8AT | R | L/R | SUV 4WD DT306(AJ20D6) | Chassis no. from:FA227763 | GCO82414 | Outer Joint | | 31 | 28 | 68.2 | 97 | 61 | I |
| | 2020.07-2021.09 | 8AT | R | L | SUV 4WD DT306(AJ20D6) | With differential lock | GCI82452 | Inner Joint | | 31 | 28 | 44 | 152 | 105 | |
| | 2021.10- | 8AT | F | L | SUV 4WD DT306(AJ20D6) | | GDS58302 | Drive Shaft | | 31 | 29 | 68 | 97 | 690 | |
| | 2021.10- | 8AT | F | R | SUV 4WD DT306(AJ20D6) | | GDS57596 | Drive Shaft | | 31 | 29 | 68.5 | 97 | 1036 | |
| | 2021.10- | 8AT | F | L/R | SUV 4WD DT306(AJ20D6) | | GCO81975 | Outer Joint | | 31 | 27 | 68.5 | 97 | 61 | I |
| | 2021.10- | 8AT | F | L | SUV 4WD DT306(AJ20D6) | | GCI81849 | Inner Joint | | 29 | 26 | 44 | 71.5 | 125 | |
| | 2021.10- | 8AT | F | R | SUV 4WD DT306(AJ20D6) | | GCI83763 | Inner Joint | | 29 | 26 | 44 | 437 | 106 | |
| | 2021.10- | 8AT | R | L/R | SUV 4WD DT306(AJ20D6) | | GCO81813 | Outer Joint | | 31 | 28 | 68.2 | 97 | 61 | I |
| | 2021.10- | 8AT | R | L/R | SUV 4WD DT306(AJ20D6) | | GCO82414 | Outer Joint | | 31 | 28 | 68.2 | 97 | 61 | I |
| 3.0 (190 kw) | 2012.08-2021.09 | 8AT | F | L | SUV 4WD 306DT(TDV6) | | GDS84004 | Drive Shaft | | 31 | 29 | 68.5 | 97 | 661 | |
| | 2012.08-2021.09 | 8AT | F | R | SUV 4WD 306DT(TDV6) | | GDS82516 | Drive Shaft | | 31 | 29 | 68.5 | 97 | 1027 | |
| | 2012.08-2021.09 | 8AT | F | L/R | SUV 4WD 306DT(TDV6) | | GCO81975 | Outer Joint | | 31 | 27 | 68.5 | 97 | 61 | I |
| | 2012.08-2021.09 | 8AT | F | L | SUV 4WD 306DT(TDV6) | | GCI82248 | Inner Joint | | 29 | 27 | 44 | 71.5 | 129 | |
| | 2012.08-2021.09 | 8AT | F | R | SUV 4WD 306DT(TDV6) | | GCI82268 | Inner Joint | | 29 | 27 | 44 | 461 | 100 | |
| | 2012.08-2021.09 | 8AT | R | L | SUV 4WD 306DT(TDV6) | Without differential lock | GDS82346 | Drive Shaft | | 31 | 31 | 68.2 | 97 | 838 | |
| | 2012.08-2021.09 | 8AT | R | L | SUV 4WD 306DT(TDV6) | With differential lock | GDS84013 | Drive Shaft | | 31 | 31 | 68.2 | 97 | 838 | |
| | 2012.08-2021.09 | 8AT | R | R | SUV 4WD 306DT(TDV6) | Chassis no. to:FA227762 | GDS82345 | Drive Shaft | | 31 | 31 | 68.2 | 97 | 860 | |
| | 2012.08-2021.09 | 8AT | R | R | SUV 4WD 306DT(TDV6) | Chassis no. from:FA227763 | GDS83549 | Drive Shaft | | 31 | 31 | 68.2 | 97 | 860 | |
| | 2012.08-2021.09 | 8AT | R | L/R | SUV 4WD 306DT(TDV6) | Chassis no. to:FA227762 | GCO81813 | Outer Joint | | 31 | 28 | 68.2 | 97 | 61 | I |
| | 2012.08-2021.09 | 8AT | R | L/R | SUV 4WD 306DT(TDV6) | Chassis no. from:FA227763 | GCO82414 | Outer Joint | | 31 | 28 | 68.2 | 97 | 61 | I |
| | 2012.08-2021.09 | 8AT | R | L | SUV 4WD 306DT(TDV6) | With differential lock | GCI82452 | Inner Joint | | 31 | 28 | 44 | 152 | 105 | |

| | YEAR | TRANSM. | F/R | L/R | BODY STYLE & DRIVE TYPE & ENGINE | REMARKS | G-AP Ref. | PRODUCT | ABS | Technical Specifications | | | | | |
|---|---|---|---|---|---|---|---|---|---|---|---|---|---|---|---|
| | | | | | | | | | | A | B | C | H | L | P |
| **LAND ROVER** | | | | | | | | | | | | | | | |
| **Range Rover** | | | | | | | | | | | | | | | |
| 3.0 (190 kw) | 2012.08-2021.09 | 8AT | R | L/R | SUV 4WD 306DT(TDV6) | Possion:Left,Without differential lock | GCI81763 | Inner Joint | | 31 | 28 | 44 | 86 | 110.5 | |
| 3.0 (202 kw) | 2018.10-2021.09 | 8AT | F | L | SUV 4WD 306DT(TDV6) | | GDS84004 | Drive Shaft | | 31 | 29 | 68.5 | 97 | 661 | |
| | 2018.10-2021.09 | 8AT | F | R | SUV 4WD 306DT(TDV6) | | GDS82516 | Drive Shaft | | 31 | 29 | 68.5 | 97 | 1027 | |
| | 2018.10-2021.09 | 8AT | F | L/R | SUV 4WD 306DT(TDV6) | | GCO81975 | Outer Joint | | 31 | 27 | 68.5 | 97 | 61 | I |
| | 2018.10-2021.09 | 8AT | F | L | SUV 4WD 306DT(TDV6) | | GCI82248 | Inner Joint | | 29 | 27 | 44 | 71.5 | 129 | |
| | 2018.10-2021.09 | 8AT | F | R | SUV 4WD 306DT(TDV6) | | GCI82268 | Inner Joint | | 29 | 27 | 44 | 461 | 100 | |
| | 2018.10-2021.09 | 8AT | R | L | SUV 4WD 306DT(TDV6) | Without differential lock | GDS82346 | Drive Shaft | | 31 | 31 | 68.2 | 97 | 838 | |
| | 2018.10-2021.09 | 8AT | R | L | SUV 4WD 306DT(TDV6) | With differential lock | GDS84013 | Drive Shaft | | 31 | 31 | 68.2 | 97 | 838 | |
| | 2018.10-2021.09 | 8AT | R | R | SUV 4WD 306DT(TDV6) | Chassis no. to:FA227762 | GDS82345 | Drive Shaft | | 31 | 31 | 68.2 | 97 | 860 | |
| | 2018.10-2021.09 | 8AT | R | R | SUV 4WD 306DT(TDV6) | Chassis no. from:FA227763 | GDS83549 | Drive Shaft | | 31 | 31 | 68.2 | 97 | 860 | |
| | 2018.10-2021.09 | 8AT | R | L/R | SUV 4WD 306DT(TDV6) | Chassis no. to:FA227762 | GCO81813 | Outer Joint | | 31 | 28 | 68.2 | 97 | 61 | I |
| | 2018.10-2021.09 | 8AT | R | L/R | SUV 4WD 306DT(TDV6) | Chassis no. from:FA227763 | GCO82414 | Outer Joint | | 31 | 28 | 68.2 | 97 | 61 | I |
| | 2018.10-2021.09 | 8AT | R | L | SUV 4WD 306DT(TDV6) | With differential lock | GCI82452 | Inner Joint | | 31 | 28 | 44 | 152 | 105 | |
| | 2018.10-2021.09 | 8AT | R | L/R | SUV 4WD 306DT(TDV6) | Possion:Left,Without differential lock | GCI81763 | Inner Joint | | 31 | 28 | 44 | 86 | 110.5 | |
| 3.0 (215 kw) | 2012.10-2021.09 | 8AT | F | L | SUV 4WD 306DT(TDV6) | | GDS84004 | Drive Shaft | | 31 | 29 | 68.5 | 97 | 661 | |
| | 2012.10-2021.09 | 8AT | F | R | SUV 4WD 306DT(TDV6) | | GDS82516 | Drive Shaft | | 31 | 29 | 68.5 | 97 | 1027 | |
| | 2012.10-2021.09 | 8AT | F | L/R | SUV 4WD 306DT(TDV6) | | GCO81975 | Outer Joint | | 31 | 27 | 68.5 | 97 | 61 | I |
| | 2012.10-2021.09 | 8AT | F | L | SUV 4WD 306DT(TDV6) | | GCI82248 | Inner Joint | | 29 | 27 | 44 | 71.5 | 129 | |
| | 2012.10-2021.09 | 8AT | F | R | SUV 4WD 306DT(TDV6) | | GCI82268 | Inner Joint | | 29 | 27 | 44 | 461 | 100 | |
| | 2012.10-2021.09 | 8AT | R | L | SUV 4WD 306DT(TDV6) | Without differential lock | GDS82346 | Drive Shaft | | 31 | 31 | 68.2 | 97 | 838 | |
| | 2012.10-2021.09 | 8AT | R | L | SUV 4WD 306DT(TDV6) | With differential lock | GDS84013 | Drive Shaft | | 31 | 31 | 68.2 | 97 | 838 | |
| | 2012.10-2021.09 | 8AT | R | R | SUV 4WD 306DT(TDV6) | Chassis no. to:FA227762 | GDS82345 | Drive Shaft | | 31 | 31 | 68.2 | 97 | 860 | |
| | 2012.10-2021.09 | 8AT | R | R | SUV 4WD 306DT(TDV6) | Chassis no. from:FA227763 | GDS83549 | Drive Shaft | | 31 | 31 | 68.2 | 97 | 860 | |
| | 2012.10-2021.09 | 8AT | R | L/R | SUV 4WD 306DT(TDV6) | Chassis no. to:FA227762 | GCO81813 | Outer Joint | | 31 | 28 | 68.2 | 97 | 61 | I |
| | 2012.10-2021.09 | 8AT | R | L/R | SUV 4WD 306DT(TDV6) | Chassis no. from:FA227763 | GCO82414 | Outer Joint | | 31 | 28 | 68.2 | 97 | 61 | I |
| | 2012.10-2021.09 | 8AT | R | L | SUV 4WD 306DT(TDV6) | With differential lock | GCI82452 | Inner Joint | | 31 | 28 | 44 | 152 | 105 | |
| | 2012.10-2021.09 | 8AT | R | L/R | SUV 4WD 306DT(TDV6) | Possion:Left,Without differential lock | GCI81763 | Inner Joint | | 31 | 28 | 44 | 86 | 110.5 | |
| 3.0 (221 kw) | 2020.07-2021.09 | 8AT | F | L | SUV 4WD DT306(AJ20D6) | | GDS84004 | Drive Shaft | | 31 | 29 | 68.5 | 97 | 661 | |
| | 2020.07-2021.09 | 8AT | F | R | SUV 4WD DT306(AJ20D6) | | GDS82516 | Drive Shaft | | 31 | 29 | 68.5 | 97 | 1027 | |
| | 2020.07-2021.09 | 8AT | F | L/R | SUV 4WD DT306(AJ20D6) | | GCO81975 | Outer Joint | | 31 | 27 | 68.5 | 97 | 61 | I |
| | 2020.07-2021.09 | 8AT | F | L | SUV 4WD DT306(AJ20D6) | | GCI82248 | Inner Joint | | 29 | 27 | 44 | 71.5 | 129 | |
| | 2020.07-2021.09 | 8AT | F | R | SUV 4WD DT306(AJ20D6) | | GCI82268 | Inner Joint | | 29 | 27 | 44 | 461 | 100 | |
| | 2020.07-2021.09 | 8AT | R | L | SUV 4WD DT306(AJ20D6) | Without differential lock | GDS82346 | Drive Shaft | | 31 | 31 | 68.2 | 97 | 838 | |
| | 2020.07-2021.09 | 8AT | R | L | SUV 4WD DT306(AJ20D6) | With Differential Lock | GDS84013 | Drive Shaft | | 31 | 31 | 68.2 | 97 | 838 | |
| | 2020.07-2021.09 | 8AT | R | R | SUV 4WD DT306(AJ20D6) | Chassis no. to:FA227762 | GDS82345 | Drive Shaft | | 31 | 31 | 68.2 | 97 | 860 | |
| | 2020.07-2021.09 | 8AT | R | R | SUV 4WD DT306(AJ20D6) | Chassis no. from:FA227763 | GDS83549 | Drive Shaft | | 31 | 31 | 68.2 | 97 | 860 | |
| | 2020.07-2021.09 | 8AT | R | L/R | SUV 4WD DT306(AJ20D6) | Chassis no. to:FA227762 | GCO81813 | Outer Joint | | 31 | 28 | 68.2 | 97 | 61 | I |
| | 2020.07-2021.09 | 8AT | R | L/R | SUV 4WD DT306(AJ20D6) | Chassis no. from:FA227763 | GCO82414 | Outer Joint | | 31 | 28 | 68.2 | 97 | 61 | I |
| | 2020.07-2021.09 | 8AT | R | L | SUV 4WD DT306(AJ20D6) | With differential lock | GCI82452 | Inner Joint | | 31 | 28 | 44 | 152 | 105 | |
| | 2020.07-2021.09 | 8AT | R | L/R | SUV 4WD DT306(AJ20D6) | Possion:Left,Without differential lock | GCI81763 | Inner Joint | | 31 | 28 | 44 | 86 | 110.5 | |
| | 2021.10- | 8AT | F | L | SUV 4WD DT306(AJ20D6) | | GDS58302 | Drive Shaft | | 31 | 29 | 68 | 97 | 690 | |
| | 2021.10- | 8AT | F | R | SUV 4WD DT306(AJ20D6) | | GDS57596 | Drive Shaft | | 31 | 29 | 68.5 | 97 | 1036 | |
| | 2021.10- | 8AT | F | L/R | SUV 4WD DT306(AJ20D6) | | GCO81975 | Outer Joint | | 31 | 27 | 68.5 | 97 | 61 | I |
| | 2021.10- | 8AT | F | L | SUV 4WD DT306(AJ20D6) | | GCI81849 | Inner Joint | | 29 | 26 | 44 | 71.5 | 125 | |
| | 2021.10- | 8AT | F | R | SUV 4WD DT306(AJ20D6) | | GCI83763 | Inner Joint | | 29 | 26 | 44 | 437 | 106 | |
| | 2021.10- | 8AT | R | L/R | SUV 4WD DT306(AJ20D6) | | GCO81813 | Outer Joint | | 31 | 28 | 68.2 | 97 | 61 | I |
| | 2021.10- | 8AT | R | L/R | SUV 4WD DT306(AJ20D6) | | GCO82414 | Outer Joint | | 31 | 28 | 68.2 | 97 | 61 | I |
| 3.0 (250 kw) | 2013.10-2021.09 | 8AT | F | L | SUV 4WD 306DT(TDV6) | | GDS84004 | Drive Shaft | | 31 | 29 | 68.5 | 97 | 661 | |
| | 2013.10-2021.09 | 8AT | F | R | SUV 4WD 306DT(TDV6) | | GDS82516 | Drive Shaft | | 31 | 29 | 68.5 | 97 | 1027 | |
| | 2013.10-2021.09 | 8AT | F | L/R | SUV 4WD 306DT(TDV6) | | GCO81975 | Outer Joint | | 31 | 27 | 68.5 | 97 | 61 | I |
| | 2013.10-2021.09 | 8AT | F | L | SUV 4WD 306DT(TDV6) | | GCI82248 | Inner Joint | | 29 | 27 | 44 | 71.5 | 129 | |
| | 2013.10-2021.09 | 8AT | F | R | SUV 4WD 306DT(TDV6) | | GCI82268 | Inner Joint | | 29 | 27 | 44 | 461 | 100 | |
| | 2013.10-2021.09 | 8AT | R | L | SUV 4WD 306DT(TDV6) | Without differential lock | GDS82346 | Drive Shaft | | 31 | 31 | 68.2 | 97 | 838 | |
| | 2013.10-2021.09 | 8AT | R | L | SUV 4WD 306DT(TDV6) | With Differential Lock | GDS84013 | Drive Shaft | | 31 | 31 | 68.2 | 97 | 838 | |
| | 2013.10-2021.09 | 8AT | R | R | SUV 4WD 306DT(TDV6) | Chassis no. to:FA227762 | GDS82345 | Drive Shaft | | 31 | 31 | 68.2 | 97 | 860 | |
| | 2013.10-2021.09 | 8AT | R | R | SUV 4WD 306DT(TDV6) | Chassis no. from:FA227763 | GDS83549 | Drive Shaft | | 31 | 31 | 68.2 | 97 | 860 | |
| | 2013.10-2021.09 | 8AT | R | L/R | SUV 4WD 306DT(TDV6) | Chassis no. to:FA227762 | GCO81813 | Outer Joint | | 31 | 28 | 68.2 | 97 | 61 | I |
| | 2013.10-2021.09 | 8AT | R | L/R | SUV 4WD 306DT(TDV6) | Chassis no. from:FA227763 | GCO82414 | Outer Joint | | 31 | 28 | 68.2 | 97 | 61 | I |
| | 2013.10-2021.09 | 8AT | R | L | SUV 4WD 306DT(TDV6) | With differential lock | GCI82452 | Inner Joint | | 31 | 28 | 44 | 152 | 105 | |
| | 2013.10-2021.09 | 8AT | R | L/R | SUV 4WD 306DT(TDV6) | Possion:Left,Without differential lock | GCI81763 | Inner Joint | | 31 | 28 | 44 | 86 | 110.5 | |
| | 2013.10-2021.09 | 8AT | F | L | SUV 4WD 306PS(AJ126) | | GDS84004 | Drive Shaft | | 31 | 29 | 68.5 | 97 | 661 | |
| | 2013.10-2021.09 | 8AT | F | R | SUV 4WD 306PS(AJ126) | | GDS82516 | Drive Shaft | | 31 | 29 | 68.5 | 97 | 1027 | |
| | 2013.10-2021.09 | 8AT | F | L/R | SUV 4WD 306PS(AJ126) | | GCO81975 | Outer Joint | | 31 | 27 | 68.5 | 97 | 61 | I |
| | 2013.10-2021.09 | 8AT | F | L | SUV 4WD 306PS(AJ126) | | GCI82248 | Inner Joint | | 29 | 27 | 44 | 71.5 | 129 | |
| | 2013.10-2021.09 | 8AT | F | R | SUV 4WD 306PS(AJ126) | | GCI82268 | Inner Joint | | 29 | 27 | 44 | 461 | 100 | |

| | YEAR | TRANSM. | F/R | L/R | BODY STYLE & DRIVE TYPE & ENGINE | REMARKS | G-AP Ref. | PRODUCT | ABS | Technical Specifications A | B | C | H | L | P |
|---|---|---|---|---|---|---|---|---|---|---|---|---|---|---|---|
| **LAND ROVER** | | | | | | | | | | | | | | | |
| **Range Rover** | | | | | | | | | | | | | | | |
| 3.0 (250 kw) | 2013.10-2021.09 | 8AT | R | L | SUV 4WD 306PS(AJ126) | Without differential lock | GDS82346 | Drive Shaft | | 31 | 31 | 68.2 | 97 | 838 | |
| | 2013.10-2021.09 | 8AT | R | L | SUV 4WD 306PS(AJ126) | With differential lock | GDS84013 | Drive Shaft | | 31 | 31 | 68.2 | 97 | 838 | |
| | 2013.10-2021.09 | 8AT | R | R | SUV 4WD 306PS(AJ126) | Chassis no. to:FA227762 | GDS82345 | Drive Shaft | | 31 | 31 | 68.2 | 97 | 860 | |
| | 2013.10-2021.09 | 8AT | R | R | SUV 4WD 306PS(AJ126) | Chassis no. from:FA227763 | GDS83549 | Drive Shaft | | 31 | 31 | 68.2 | 97 | 860 | |
| | 2013.10-2021.09 | 8AT | R | L/R | SUV 4WD 306PS(AJ126) | Chassis no. to:FA227762 | GCO81813 | Outer Joint | | 31 | 28 | 68.2 | 97 | 61 | I |
| | 2013.10-2021.09 | 8AT | R | L/R | SUV 4WD 306PS(AJ126) | Chassis no. from:FA227763 | GCO82414 | Outer Joint | | 31 | 28 | 68.2 | 97 | 61 | I |
| | 2013.10-2021.09 | 8AT | R | L | SUV 4WD 306PS(AJ126) | With differential lock | GCI82452 | Inner Joint | | 31 | 28 | 44 | 152 | 105 | |
| | 2013.10-2021.09 | 8AT | R | L/R | SUV 4WD 306PS(AJ126) | Possion:Left,Without differential lock | GCI81763 | Inner Joint | | 31 | 28 | 44 | 86 | 110.5 | |
| 3.0 (258 kw) | 2020.07-2021.09 | 8AT | F | L | SUV 4WD DT306(AJ20D6) | | GDS84004 | Drive Shaft | | 31 | 29 | 68.5 | 97 | 661 | |
| | 2020.07-2021.09 | 8AT | F | R | SUV 4WD DT306(AJ20D6) | | GDS82516 | Drive Shaft | | 31 | 29 | 68.5 | 97 | 1027 | |
| | 2020.07-2021.09 | 8AT | F | L/R | SUV 4WD DT306(AJ20D6) | | GCO81975 | Outer Joint | | 31 | 27 | 68.5 | 97 | 61 | I |
| | 2020.07-2021.09 | 8AT | F | L | SUV 4WD DT306(AJ20D6) | | GCI82248 | Inner Joint | | 29 | 27 | 44 | 71.5 | 129 | |
| | 2020.07-2021.09 | 8AT | F | R | SUV 4WD DT306(AJ20D6) | | GCI82268 | Inner Joint | | 29 | 27 | 44 | 461 | 100 | |
| | 2020.07-2021.09 | 8AT | R | L | SUV 4WD DT306(AJ20D6) | Without differential lock | GDS82346 | Drive Shaft | | 31 | 31 | 68.2 | 97 | 838 | |
| | 2020.07-2021.09 | 8AT | R | L | SUV 4WD DT306(AJ20D6) | With Differential Lock | GDS84013 | Drive Shaft | | 31 | 31 | 68.2 | 97 | 838 | |
| | 2020.07-2021.09 | 8AT | R | R | SUV 4WD DT306(AJ20D6) | Chassis no. to:FA227762 | GDS82345 | Drive Shaft | | 31 | 31 | 68.2 | 97 | 860 | |
| | 2020.07-2021.09 | 8AT | R | R | SUV 4WD DT306(AJ20D6) | Chassis no. from:FA227763 | GDS83549 | Drive Shaft | | 31 | 31 | 68.2 | 97 | 860 | |
| | 2020.07-2021.09 | 8AT | R | L/R | SUV 4WD DT306(AJ20D6) | Chassis no. to:FA227762 | GCO81813 | Outer Joint | | 31 | 28 | 68.2 | 97 | 61 | I |
| | 2020.07-2021.09 | 8AT | R | L/R | SUV 4WD DT306(AJ20D6) | Chassis no. from:FA227763 | GCO82414 | Outer Joint | | 31 | 28 | 68.2 | 97 | 61 | I |
| | 2020.07-2021.09 | 8AT | R | L | SUV 4WD DT306(AJ20D6) | With differential lock | GCI82452 | Inner Joint | | 31 | 28 | 44 | 152 | 105 | |
| | 2020.07-2021.09 | 8AT | R | L/R | SUV 4WD DT306(AJ20D6) | Possion:Left,Without differential lock | GCI81763 | Inner Joint | | 31 | 28 | 44 | 86 | 110.5 | |
| | 2021.10- | 8AT | F | L | SUV 4WD DT306(AJ20D6) | | GDS58302 | Drive Shaft | | 31 | 29 | 68 | 97 | 690 | |
| | 2021.10- | 8AT | F | R | SUV 4WD DT306(AJ20D6) | | GDS57596 | Drive Shaft | | 31 | 29 | 68.5 | 97 | 1036 | |
| | 2021.10- | 8AT | F | L/R | SUV 4WD DT306(AJ20D6) | | GCO81975 | Outer Joint | | 31 | 27 | 68.5 | 97 | 61 | I |
| | 2021.10- | 8AT | F | L | SUV 4WD DT306(AJ20D6) | | GCI81849 | Inner Joint | | 29 | 26 | 44 | 71.5 | 125 | |
| | 2021.10- | 8AT | F | R | SUV 4WD DT306(AJ20D6) | | GCI83763 | Inner Joint | | 29 | 26 | 44 | 437 | 106 | |
| | 2021.10- | 8AT | R | L/R | SUV 4WD DT306(AJ20D6) | | GCO81813 | Outer Joint | | 31 | 28 | 68.2 | 97 | 61 | I |
| | 2021.10- | 8AT | R | L/R | SUV 4WD DT306(AJ20D6) | | GCO82414 | Outer Joint | | 31 | 28 | 68.2 | 97 | 61 | I |
| 3.0 (260 kw) | 2015.06-2021.09 | 8AT | F | L | SUV 4WD 306DT(TDV6) | | GDS84004 | Drive Shaft | | 31 | 29 | 68.5 | 97 | 661 | |
| | 2015.06-2021.09 | 8AT | F | R | SUV 4WD 306DT(TDV6) | | GDS82516 | Drive Shaft | | 31 | 29 | 68.5 | 97 | 1027 | |
| | 2015.06-2021.09 | 8AT | F | L/R | SUV 4WD 306DT(TDV6) | | GCO81975 | Outer Joint | | 31 | 27 | 68.5 | 97 | 61 | I |
| | 2015.06-2021.09 | 8AT | F | L | SUV 4WD 306DT(TDV6) | | GCI82248 | Inner Joint | | 29 | 27 | 44 | 71.5 | 129 | |
| | 2015.06-2021.09 | 8AT | F | R | SUV 4WD 306DT(TDV6) | | GCI82268 | Inner Joint | | 29 | 27 | 44 | 461 | 100 | |
| | 2015.06-2021.09 | 8AT | R | L | SUV 4WD 306DT(TDV6) | Without differential lock | GDS82346 | Drive Shaft | | 31 | 31 | 68.2 | 97 | 838 | |
| | 2015.06-2021.09 | 8AT | R | L | SUV 4WD 306DT(TDV6) | With Differential Lock | GDS84013 | Drive Shaft | | 31 | 31 | 68.2 | 97 | 838 | |
| | 2015.06-2021.09 | 8AT | R | R | SUV 4WD 306DT(TDV6) | Chassis no. to:FA227762 | GDS82345 | Drive Shaft | | 31 | 31 | 68.2 | 97 | 860 | |
| | 2015.06-2021.09 | 8AT | R | R | SUV 4WD 306DT(TDV6) | Chassis no. from:FA227763 | GDS83549 | Drive Shaft | | 31 | 31 | 68.2 | 97 | 860 | |
| | 2015.06-2021.09 | 8AT | R | L/R | SUV 4WD 306DT(TDV6) | Chassis no. to:FA227762 | GCO81813 | Outer Joint | | 31 | 28 | 68.2 | 97 | 61 | I |
| | 2015.06-2021.09 | 8AT | R | L/R | SUV 4WD 306DT(TDV6) | Chassis no. from:FA227763 | GCO82414 | Outer Joint | | 31 | 28 | 68.2 | 97 | 61 | I |
| | 2015.06-2021.09 | 8AT | R | L | SUV 4WD 306DT(TDV6) | With differential lock | GCI82452 | Inner Joint | | 31 | 28 | 44 | 152 | 105 | |
| | 2015.06-2021.09 | 8AT | R | L/R | SUV 4WD 306DT(TDV6) | Possion:Left,Without differential lock | GCI81763 | Inner Joint | | 31 | 28 | 44 | 86 | 110.5 | |
| 3.0 (265 kw) | 2019.12-2021.09 | 8AT | F | L | SUV 4WD PT306(AJ20P6) | | GDS84004 | Drive Shaft | | 31 | 29 | 68.5 | 97 | 661 | |
| | 2019.12-2021.09 | 8AT | F | R | SUV 4WD PT306(AJ20P6) | | GDS82516 | Drive Shaft | | 31 | 29 | 68.5 | 97 | 1027 | |
| | 2019.12-2021.09 | 8AT | F | L/R | SUV 4WD PT306(AJ20P6) | | GCO81975 | Outer Joint | | 31 | 27 | 68.5 | 97 | 61 | I |
| | 2019.12-2021.09 | 8AT | F | L | SUV 4WD PT306(AJ20P6) | | GCI82248 | Inner Joint | | 29 | 27 | 44 | 71.5 | 129 | |
| | 2019.12-2021.09 | 8AT | F | R | SUV 4WD PT306(AJ20P6) | | GCI82268 | Inner Joint | | 29 | 27 | 44 | 461 | 100 | |
| | 2019.12-2021.09 | 8AT | R | L | SUV 4WD PT306(AJ20P6) | For vehicles without electronic limited slip diff. | GDS82346 | Drive Shaft | | 31 | 31 | 68.2 | 97 | 838 | |
| | 2019.12-2021.09 | 8AT | R | L | SUV 4WD PT306(AJ20P6) | For Vehicles With Electronic Limited Slip Diff. | GDS84013 | Drive Shaft | | 31 | 31 | 68.2 | 97 | 838 | |
| | 2019.12-2021.09 | 8AT | R | R | SUV 4WD PT306(AJ20P6) | Chassis no. to:FA227762 | GDS82345 | Drive Shaft | | 31 | 31 | 68.2 | 97 | 860 | |
| | 2019.12-2021.09 | 8AT | R | R | SUV 4WD PT306(AJ20P6) | Chassis no. from:FA227763 | GDS83549 | Drive Shaft | | 31 | 31 | 68.2 | 97 | 860 | |
| | 2019.12-2021.09 | 8AT | R | L/R | SUV 4WD PT306(AJ20P6) | Chassis no. to:FA227762 | GCO81813 | Outer Joint | | 31 | 28 | 68.2 | 97 | 61 | I |
| | 2019.12-2021.09 | 8AT | R | L/R | SUV 4WD PT306(AJ20P6) | Chassis no. from:FA227763 | GCO82414 | Outer Joint | | 31 | 28 | 68.2 | 97 | 61 | I |
| | 2019.12-2021.09 | 8AT | R | L | SUV 4WD PT306(AJ20P6) | With differential lock | GCI82452 | Inner Joint | | 31 | 28 | 44 | 152 | 105 | |
| 3.0 (280 kw) | 2015.06-2021.09 | 8AT | F | L | SUV 4WD 306PS(AJ126) | | GDS84004 | Drive Shaft | | 31 | 29 | 68.5 | 97 | 661 | |
| | 2015.06-2021.09 | 8AT | F | R | SUV 4WD 306PS(AJ126) | | GDS82516 | Drive Shaft | | 31 | 29 | 68.5 | 97 | 1027 | |
| | 2015.06-2021.09 | 8AT | F | L/R | SUV 4WD 306PS(AJ126) | | GCO81975 | Outer Joint | | 31 | 27 | 68.5 | 97 | 61 | I |
| | 2015.06-2021.09 | 8AT | F | L | SUV 4WD 306PS(AJ126) | | GCI82248 | Inner Joint | | 29 | 27 | 44 | 71.5 | 129 | |
| | 2015.06-2021.09 | 8AT | F | R | SUV 4WD 306PS(AJ126) | | GCI82268 | Inner Joint | | 29 | 27 | 44 | 461 | 100 | |
| | 2015.06-2021.09 | 8AT | R | L | SUV 4WD 306PS(AJ126) | Without differential lock | GDS82346 | Drive Shaft | | 31 | 31 | 68.2 | 97 | 838 | |
| | 2015.06-2021.09 | 8AT | R | L | SUV 4WD 306PS(AJ126) | With differential lock | GDS84013 | Drive Shaft | | 31 | 31 | 68.2 | 97 | 838 | |
| | 2015.06-2021.09 | 8AT | R | R | SUV 4WD 306PS(AJ126) | Chassis no. to:FA227762 | GDS82345 | Drive Shaft | | 31 | 31 | 68.2 | 97 | 860 | |
| | 2015.06-2021.09 | 8AT | R | R | SUV 4WD 306PS(AJ126) | Chassis no. from:FA227763 | GDS83549 | Drive Shaft | | 31 | 31 | 68.2 | 97 | 860 | |
| | 2015.06-2021.09 | 8AT | R | L/R | SUV 4WD 306PS(AJ126) | Chassis no. to:FA227762 | GCO81813 | Outer Joint | | 31 | 28 | 68.2 | 97 | 61 | I |
| | 2015.06-2021.09 | 8AT | R | L/R | SUV 4WD 306PS(AJ126) | Chassis no. from:FA227763 | GCO82414 | Outer Joint | | 31 | 28 | 68.2 | 97 | 61 | I |
| | 2015.06-2021.09 | 8AT | R | L | SUV 4WD 306PS(AJ126) | With differential lock | GCI82452 | Inner Joint | | 31 | 28 | 44 | 152 | 105 | |

| | YEAR | TRANSM. | F/R | L/R | BODY STYLE & DRIVE TYPE & ENGINE | REMARKS | G-AP Ref. | PRODUCT | ABS | Technical Specifications A | B | C | H | L | P |
|---|---|---|---|---|---|---|---|---|---|---|---|---|---|---|---|
| **LAND ROVER** **Range Rover** | | | | | | | | | | | | | | | |
| 3.0 (280 kw) | 2015.06-2021.09 | 8AT | R | L/R | SUV 4WD 306PS(AJ126) | Possion:Left,Without differential lock | GCI81763 | Inner Joint | | 31 | 28 | 44 | 86 | 110.5 | |
| 3.0 (294 kw) | 2019.05-2021.09 | 8AT | F | L | SUV 4WD PT306(AJ20P6) | | GDS84004 | Drive Shaft | | 31 | 29 | 68.5 | 97 | 661 | |
| | 2019.05-2021.09 | 8AT | F | R | SUV 4WD PT306(AJ20P6) | | GDS82516 | Drive Shaft | | 31 | 29 | 68.5 | 97 | 1027 | |
| | 2019.05-2021.09 | 8AT | F | L/R | SUV 4WD PT306(AJ20P6) | | GCO81975 | Outer Joint | | 31 | 27 | 68.5 | 97 | 61 | I |
| | 2019.05-2021.09 | 8AT | F | L | SUV 4WD PT306(AJ20P6) | | GCI82248 | Inner Joint | | 29 | 27 | 44 | 71.5 | 129 | |
| | 2019.05-2021.09 | 8AT | F | R | SUV 4WD PT306(AJ20P6) | | GCI82268 | Inner Joint | | 29 | 27 | 44 | 461 | 100 | |
| | 2019.05-2021.09 | 8AT | R | L | SUV 4WD PT306(AJ20P6) | Without differential lock | GDS82346 | Drive Shaft | | 31 | 31 | 68.2 | 97 | 838 | |
| | 2019.05-2021.09 | 8AT | R | L | SUV 4WD PT306(AJ20P6) | With Differential Lock | GDS84013 | Drive Shaft | | 31 | 31 | 68.2 | 97 | 838 | |
| | 2019.05-2021.09 | 8AT | R | R | SUV 4WD PT306(AJ20P6) | Chassis no. to:FA227762 | GDS82345 | Drive Shaft | | 31 | 31 | 68.2 | 97 | 860 | |
| | 2019.05-2021.09 | 8AT | R | R | SUV 4WD PT306(AJ20P6) | Chassis no. from:FA227763 | GDS83549 | Drive Shaft | | 31 | 31 | 68.2 | 97 | 860 | |
| | 2019.05-2021.09 | 8AT | R | L/R | SUV 4WD PT306(AJ20P6) | Chassis no. to:FA227762 | GCO81813 | Outer Joint | | 31 | 28 | 68.2 | 97 | 61 | I |
| | 2019.05-2021.09 | 8AT | R | L/R | SUV 4WD PT306(AJ20P6) | Chassis no. from:FA227763 | GCO82414 | Outer Joint | | 31 | 28 | 68.2 | 97 | 61 | I |
| | 2019.05-2021.09 | 8AT | R | L | SUV 4WD PT306(AJ20P6) | With differential lock | GCI82452 | Inner Joint | | 31 | 28 | 44 | 152 | 105 | |
| | 2019.05-2021.09 | 8AT | R | L/R | SUV 4WD PT306(AJ20P6) | Possion:Left,Without differential lock | GCI81763 | Inner Joint | | 31 | 28 | 44 | 86 | 110.5 | |
| | 2020.07-2021.09 | 8AT | F | L | SUV 4WD PT306(AJ20P6) | | GDS84004 | Drive Shaft | | 31 | 29 | 68.5 | 97 | 661 | |
| | 2020.07-2021.09 | 8AT | F | R | SUV 4WD PT306(AJ20P6) | | GDS82516 | Drive Shaft | | 31 | 29 | 68.5 | 97 | 1027 | |
| | 2020.07-2021.09 | 8AT | F | L/R | SUV 4WD PT306(AJ20P6) | | GCO81975 | Outer Joint | | 31 | 27 | 68.5 | 97 | 61 | I |
| | 2020.07-2021.09 | 8AT | F | L | SUV 4WD PT306(AJ20P6) | | GCI82248 | Inner Joint | | 29 | 27 | 44 | 71.5 | 129 | |
| | 2020.07-2021.09 | 8AT | R | L | SUV 4WD PT306(AJ20P6) | For vehicles without electronic limited slip diff. | GDS82346 | Drive Shaft | | 31 | 31 | 68.2 | 97 | 838 | |
| | 2020.07-2021.09 | 8AT | R | L | SUV 4WD PT306(AJ20P6) | For vehicles with electronic limited slip diff. | GDS84013 | Drive Shaft | | 31 | 31 | 68.2 | 97 | 838 | |
| | 2020.07-2021.09 | 8AT | R | R | SUV 4WD PT306(AJ20P6) | Chassis no. to:FA227762 | GDS82345 | Drive Shaft | | 31 | 31 | 68.2 | 97 | 860 | |
| | 2020.07-2021.09 | 8AT | R | R | SUV 4WD PT306(AJ20P6) | Chassis no. from:FA227763 | GDS83549 | Drive Shaft | | 31 | 31 | 68.2 | 97 | 860 | |
| | 2020.07-2021.09 | 8AT | R | L/R | SUV 4WD PT306(AJ20P6) | Chassis no. to:FA227762 | GCO81813 | Outer Joint | | 31 | 28 | 68.2 | 97 | 61 | I |
| | 2020.07-2021.09 | 8AT | R | L/R | SUV 4WD PT306(AJ20P6) | Chassis no. from:FA227763 | GCO82414 | Outer Joint | | 31 | 28 | 68.2 | 97 | 61 | I |
| | 2020.07-2021.09 | 8AT | R | L | SUV 4WD PT306(AJ20P6) | With differential lock | GCI82452 | Inner Joint | | 31 | 28 | 44 | 152 | 105 | |
| | 2021.10- | 8AT | F | R | SUV 4WD PT306(AJ20P6) | For vehicles without active driveline | GDS57596 | Drive Shaft | | 31 | 29 | 68.5 | 97 | 1036 | |
| | 2021.10- | 8AT | F | L/R | SUV 4WD PT306(AJ20P6) | For vehicles with active driveline,Position:Left and Right;For vehicles without active driveline,Position:Left | GDS58302 | Drive Shaft | | 31 | 29 | 68 | 97 | 690 | |
| | 2021.10- | 8AT | F | L/R | SUV 4WD PT306(AJ20P6) | | GCO81975 | Outer Joint | | 31 | 27 | 68.5 | 97 | 61 | I |
| | 2021.10- | 8AT | F | R | SUV 4WD PT306(AJ20P6) | For vehicles without active driveline | GCI83763 | Inner Joint | | 29 | 26 | 44 | 437 | 106 | |
| | 2021.10- | 8AT | F | L/R | SUV 4WD PT306(AJ20P6) | For vehicles with active driveline,Position:Left and Right;For vehicles without active driveline,Position:Left | GCI81849 | Inner Joint | | 29 | 26 | 44 | 71.5 | 125 | |
| | 2021.10- | 8AT | R | L/R | SUV 4WD PT306(AJ20P6) | | GCO81813 | Outer Joint | | 31 | 28 | 68.2 | 97 | 61 | I |
| | 2021.10- | 8AT | R | L/R | SUV 4WD PT306(AJ20P6) | | GCO82414 | Outer Joint | | 31 | 28 | 68.2 | 97 | 61 | I |
| 3.0 (324 kw) | 2022.02- | 8AT | F | R | SUV 4WD | For vehicles without active driveline | GDS57596 | Drive Shaft | | 31 | 29 | 68.5 | 97 | 1036 | |
| | 2022.02- | 8AT | F | L/R | SUV 4WD | For vehicles with active driveline,Position:Left and Right;For vehicles without active driveline,Position:Left | GDS58302 | Drive Shaft | | 31 | 29 | 68 | 97 | 690 | |
| | 2022.02- | 8AT | F | L/R | SUV 4WD | | GCO81975 | Outer Joint | | 31 | 27 | 68.5 | 97 | 61 | I |
| | 2022.02- | 8AT | F | R | SUV 4WD | For vehicles without active driveline | GCI83763 | Inner Joint | | 29 | 26 | 44 | 437 | 106 | |
| | 2022.02- | 8AT | F | L/R | SUV 4WD | For vehicles with active driveline,Position:Left and Right;For vehicles without active driveline,Position:Left | GCI81849 | Inner Joint | | 29 | 26 | 44 | 71.5 | 125 | |
| | 2022.02- | 8AT | R | L/R | SUV 4WD | Chassis no. to:FA227762 | GCO81813 | Outer Joint | | 31 | 28 | 68.2 | 97 | 61 | I |
| 3.0 (338 kw) | 2023.05- | 8AT | F | R | SUV 4WD PT306(AJ20P6) | For vehicles without active driveline | GDS57596 | Drive Shaft | | 31 | 29 | 68.5 | 97 | 1036 | |
| | 2023.05- | 8AT | F | L/R | SUV 4WD PT306(AJ20P6) | For vehicles with active driveline,Position:Left and Right;For vehicles without active driveline,Position:Left | GDS58302 | Drive Shaft | | 31 | 29 | 68 | 97 | 690 | |
| | 2023.05- | 8AT | F | L/R | SUV 4WD PT306(AJ20P6) | | GCO81975 | Outer Joint | | 31 | 27 | 68.5 | 97 | 61 | I |
| | 2023.05- | 8AT | F | R | SUV 4WD PT306(AJ20P6) | For vehicles without active driveline | GCI83763 | Inner Joint | | 29 | 26 | 44 | 437 | 106 | |
| | 2023.05- | 8AT | F | L/R | SUV 4WD PT306(AJ20P6) | For vehicles with active driveline,Position:Left and Right;For vehicles without active driveline,Position:Left | GCI81849 | Inner Joint | | 29 | 26 | 44 | 71.5 | 125 | |
| | 2023.05- | | F | L | SUV 4WD PT306(AJ20P6) | | GDS58302 | Drive Shaft | | 31 | 29 | 68 | 97 | 690 | |
| | 2023.05- | | F | R | SUV 4WD PT306(AJ20P6) | | GDS57596 | Drive Shaft | | 31 | 29 | 68.5 | 97 | 1036 | |
| | 2023.05- | | F | R | SUV 4WD PT306(AJ20P6) | | GCI83763 | Inner Joint | | 29 | 26 | 44 | 437 | 106 | |
| | 2023.05- | 8AT | R | L/R | SUV 4WD PT306(AJ20P6) | Chassis no. to:FA227762 | GCO81813 | Outer Joint | | 31 | 28 | 68.2 | 97 | 61 | I |
| 3.0 (375 kw) | 2022.02- | 8AT | F | R | SUV 4WD | For vehicles without active driveline | GDS57596 | Drive Shaft | | 31 | 29 | 68.5 | 97 | 1036 | |
| | 2022.02- | 8AT | F | L/R | SUV 4WD | For vehicles with active driveline,Position:Left and Right;For vehicles without active driveline,Position:Left | GDS58302 | Drive Shaft | | 31 | 29 | 68 | 97 | 690 | |
| | 2022.02- | 8AT | F | L/R | SUV 4WD | | GCO81975 | Outer Joint | | 31 | 27 | 68.5 | 97 | 61 | I |
| | 2022.02- | 8AT | F | R | SUV 4WD | For vehicles without active driveline | GCI83763 | Inner Joint | | 29 | 26 | 44 | 437 | 106 | |
| | 2022.02- | 8AT | F | L/R | SUV 4WD | For vehicles with active driveline,Position:Left and Right;For vehicles without active driveline,Position:Left | GCI81849 | Inner Joint | | 29 | 26 | 44 | 71.5 | 125 | |
| | 2022.02- | 8AT | R | L/R | SUV 4WD | Chassis no. to:FA227762 | GCO81813 | Outer Joint | | 31 | 28 | 68.2 | 97 | 61 | I |
| 3.0 (405 kw) | 2023.05- | 8AT | F | R | SUV 4WD PT306(AJ20P6) | For vehicles without active driveline | GDS57596 | Drive Shaft | | 31 | 29 | 68.5 | 97 | 1036 | |
| | 2023.05- | 8AT | F | L/R | SUV 4WD PT306(AJ20P6) | For vehicles with active driveline,Position:Left and Right;For vehicles without active driveline,Position:Left | GDS58302 | Drive Shaft | | 31 | 29 | 68 | 97 | 690 | |
| | 2023.05- | 8AT | F | L/R | SUV 4WD PT306(AJ20P6) | | GCO81975 | Outer Joint | | 31 | 27 | 68.5 | 97 | 61 | I |
| | 2023.05- | 8AT | F | R | SUV 4WD PT306(AJ20P6) | For vehicles without active driveline | GCI83763 | Inner Joint | | 29 | 26 | 44 | 437 | 106 | |
| | 2023.05- | 8AT | F | L/R | SUV 4WD PT306(AJ20P6) | For vehicles with active driveline,Position:Left and Right;For vehicles without active driveline,Position:Left | GCI81849 | Inner Joint | | 29 | 26 | 44 | 71.5 | 125 | |
| | 2023.05- | 8AT | R | L/R | SUV 4WD PT306(AJ20P6) | Chassis no. to:FA227762 | GCO81813 | Outer Joint | | 31 | 28 | 68.2 | 97 | 61 | I |
| 3.6 (200 kw) | 2006.04-2012.08 | AT | F | L | Closed Off-Road Vehicle 4WD 368DT(LION) | | GCO81284 | Inner Joint | | 30 | 29 | 43.97 | 68 | 89 | |
| | 2006.04-2012.08 | SAT | F | R | Closed Off-Road Vehicle 4WD 368DT(LION) | | GDS81463 | Drive Shaft | 48W | 30 | 30 | 68 | 84 | 968 | |
| | 2006.04-2012.08 | AT | R | L | Closed Off-Road Vehicle 4WD 368DT(LION) | | GDS85104 | Drive Shaft | 48W | 30 | 31 | 68 | 84 | 820 | |
| | 2006.04-2012.08 | AT | R | R | Closed Off-Road Vehicle 4WD 368DT(LION) | | GDS85105 | Drive Shaft | 48W | 30 | 31 | 68 | 84 | 800 | |
| | 2006.04-2012.08 | AT | R | L | Closed Off-Road Vehicle 4WD 368DT(LION) | | GCI85059 | Inner Joint | | 31 | 30 | 44 | 151.5 | 124.5 | |
| | 2006.04-2012.08 | AT | F/R | L/R | Closed Off-Road Vehicle 4WD 368DT(LION) | | GCO85004 | Outer Joint | 48W | 30 | 29 | 68 | 84 | 74 | M |

| | YEAR | TRANSM. | F/R | L/R | BODY STYLE & DRIVE TYPE & ENGINE | REMARKS | G-AP Ref. | PRODUCT | ABS | Technical Specifications A | B | C | H | L | P |
|---|---|---|---|---|---|---|---|---|---|---|---|---|---|---|---|
| **LAND ROVER** | | | | | | | | | | | | | | | |
| **Range Rover** | | | | | | | | | | | | | | | |
| 4.0 (136 kw) | 1995.01-2002.08 | 4AT | F | L | Terrain cab wagon closed 4WD 58D | Chassis no. from:XA410482 | GDS30006 | Drive Shaft | 60T | 24 | | 61.7 | 101 | 656 | |
| | 1995.01-2002.08 | AT/MT | F | L/R | Terrain cab wagon closed 4WD 58D | Date from:1998.01 | GCO30006 | Outer Joint | 60T | 24 | 32 | 61.7 | 101 | 60 | I |
| 4.0 (140 kw) | 1994.07-2002.03 | 4AT/5MT | F | L | Terrain cab wagon closed 4WD 42D | Chassis no. from:XA410482 | GDS30006 | Drive Shaft | 60T | 24 | | 61.7 | 101 | 656 | |
| | 1994.07-2002.03 | AT/MT | F | L/R | Terrain cab wagon closed 4WD 42D | | GCO30006 | Outer Joint | 60T | 24 | 32 | 61.7 | 101 | 60 | I |
| 4.2 (291 kw) | 2005.05-2012.08 | AT | F | L | Closed Off-Road Vehicle 4WD 428PS(AJV8) | | GCO81284 | Inner Joint | | 30 | 29 | 43.97 | 68 | 89 | |
| | 2005.05-2012.08 | SAT | F | R | Closed Off-Road Vehicle 4WD 428PS(AJV8) | | GDS81463 | Drive Shaft | 48W | 30 | 30 | 68 | 84 | 968 | |
| | 2005.05-2012.08 | AT | R | L | Closed Off-Road Vehicle 4WD 428PS(AJV8) | | GDS85104 | Drive Shaft | 48W | 30 | 31 | 68 | 84 | 820 | |
| | 2005.05-2012.08 | AT | R | R | Closed Off-Road Vehicle 4WD 428PS(AJV8) | | GDS85105 | Drive Shaft | 48W | 30 | 31 | 68 | 84 | 800 | |
| | 2005.05-2012.08 | AT | R | L | Closed Off-Road Vehicle 4WD 428PS(AJV8) | | GCI85059 | Inner Joint | | 31 | 30 | 44 | 151.5 | 124.5 | |
| | 2005.05-2012.08 | AT | F/R | L/R | Closed Off-Road Vehicle 4WD 428PS(AJV8) | | GCO85004 | Outer Joint | 48W | 30 | 29 | 68 | 84 | 74 | M |
| 4.4 (210 kw) | 2002.03-2005.08 | 5AT/6AT | F | R | Closed Off-Road Vehicle 4WD M62 B44 | | GDS81463 | Drive Shaft | 48W | 30 | 30 | 68 | 84 | 968 | |
| | 2002.03-2005.08 | AT | F | L | Closed Off-Road Vehicle 4WD M62 B44 | | GCO81284 | Inner Joint | | 30 | 29 | 43.97 | 68 | 89 | |
| | 2002.03-2005.08 | AT | R | L | Closed Off-Road Vehicle 4WD M62 B44 | Date from:2005.06 | GDS85104 | Drive Shaft | 48W | 30 | 31 | 68 | 84 | 820 | |
| | 2002.03-2005.08 | AT | R | R | Closed Off-Road Vehicle 4WD M62 B44 | Date from:2005.06 | GDS85105 | Drive Shaft | 48W | 30 | 31 | 68 | 84 | 800 | |
| | 2002.03-2005.08 | AT | R | L | Closed Off-Road Vehicle 4WD M62 B44 | Date from:2005.06 | GCI85059 | Inner Joint | | 31 | 30 | 44 | 151.5 | 124.5 | |
| | 2002.03-2005.08 | SAT/5AT | R | L/R | Closed Off-Road Vehicle 4WD M62 B44 | | GDS51036 | Drive Shaft | 48W | 30 | | 68 | 84 | 690 | |
| | 2002.03-2005.08 | AT | F/R | L/R | Closed Off-Road Vehicle 4WD M62 B44 | | GCO85004 | Outer Joint | 48W | 30 | 29 | 68 | 84 | 74 | M |
| 4.4 (220 kw) | 2004.08-2012.08 | 6AT | F | R | Closed Off-Road Vehicle 4WD 448PN(AJV8) | | GDS81463 | Drive Shaft | 48W | 30 | 30 | 68 | 84 | 968 | |
| | 2004.08-2012.08 | AT | F | L | Closed Off-Road Vehicle 4WD 448PN(AJV8) | | GCO81284 | Inner Joint | | 30 | 29 | 43.97 | 68 | 89 | |
| | 2004.08-2012.08 | 6AT | R | L | Closed Off-Road Vehicle 4WD 448PN(AJV8) | | GDS85104 | Drive Shaft | 48W | 30 | 31 | 68 | 84 | 820 | |
| | 2004.08-2012.08 | 6AT | R | R | Closed Off-Road Vehicle 4WD 448PN(AJV8) | | GDS85105 | Drive Shaft | 48W | 30 | 31 | 68 | 84 | 800 | |
| | 2004.08-2012.08 | 6AT | R | L | Closed Off-Road Vehicle 4WD 448PN(AJV8) | | GCI85059 | Inner Joint | | 31 | 30 | 44 | 151.5 | 124.5 | |
| | 2004.08-2012.08 | AT | F/R | L/R | Closed Off-Road Vehicle 4WD 448PN(AJV8) | | GCO85004 | Outer Joint | 48W | 30 | 29 | 68 | 84 | 74 | M |
| 4.4 (225 kw) | 2005.05-2012.08 | AT | F | L | Closed Off-Road Vehicle 4WD 448PN(AJV8) | | GCO81284 | Inner Joint | | 30 | 29 | 43.97 | 68 | 89 | |
| | 2005.05-2012.08 | SAT | F | R | Closed Off-Road Vehicle 4WD 448PN(AJV8) | | GDS81463 | Drive Shaft | 48W | 30 | 30 | 68 | 84 | 968 | |
| | 2005.05-2012.08 | AT | R | L | Closed Off-Road Vehicle 4WD 448PN(AJV8) | | GDS85104 | Drive Shaft | 48W | 30 | 31 | 68 | 84 | 820 | |
| | 2005.05-2012.08 | AT | R | R | Closed Off-Road Vehicle 4WD 448PN(AJV8) | | GDS85105 | Drive Shaft | 48W | 30 | 31 | 68 | 84 | 800 | |
| | 2005.05-2012.08 | AT | R | L | Closed Off-Road Vehicle 4WD 448PN(AJV8) | | GCI85059 | Inner Joint | | 31 | 30 | 44 | 151.5 | 124.5 | |
| | 2005.05-2012.08 | AT | F/R | L/R | Closed Off-Road Vehicle 4WD 448PN(AJV8) | | GCO85004 | Outer Joint | 48W | 30 | 29 | 68 | 84 | 74 | M |
| 4.4 (230 kw) | 2010.07-2012.08 | 8AT | F | R | Closed Off-Road Vehicle 4WD 448DT(DITC) | | GDS81463 | Drive Shaft | 48W | 30 | 30 | 68 | 84 | 968 | |
| | 2010.07-2012.08 | AT | F | L | Closed Off-Road Vehicle 4WD 448DT(DITC) | | GCO81284 | Inner Joint | | 30 | 29 | 43.97 | 68 | 89 | |
| | 2010.07-2012.08 | AT | R | L | Closed Off-Road Vehicle 4WD 448DT(DITC) | | GDS85104 | Drive Shaft | 48W | 30 | 31 | 68 | 84 | 820 | |
| | 2010.07-2012.08 | AT | R | R | Closed Off-Road Vehicle 4WD 448DT(DITC) | | GDS85105 | Drive Shaft | 48W | 30 | 31 | 68 | 84 | 800 | |
| | 2010.07-2012.08 | AT | R | L | Closed Off-Road Vehicle 4WD 448DT(DITC) | | GCI85059 | Inner Joint | | 31 | 30 | 44 | 151.5 | 124.5 | |
| | 2010.07-2012.08 | AT | F/R | L/R | Closed Off-Road Vehicle 4WD 448DT(DITC) | | GCO85004 | Outer Joint | 48W | 30 | 29 | 68 | 84 | 74 | M |
| | 2013.08-2021.09 | 8AT | F | L | SUV 4WD 448DT(DITC) | | GDS84004 | Drive Shaft | | 31 | 29 | 68.5 | 97 | 661 | |
| | 2013.08-2021.09 | 8AT | F | R | SUV 4WD 448DT(DITC) | | GDS82516 | Drive Shaft | | 31 | 29 | 68.5 | 97 | 1027 | |
| | 2013.08-2021.09 | 8AT | F | L/R | SUV 4WD 448DT(DITC) | | GCO81975 | Outer Joint | | 31 | 27 | 68.5 | 97 | 61 | I |
| | 2013.08-2021.09 | 8AT | F | L | SUV 4WD 448DT(DITC) | | GCI82248 | Inner Joint | | 29 | 27 | 44 | 71.5 | 129 | |
| | 2013.08-2021.09 | 8AT | F | R | SUV 4WD 448DT(DITC) | | GCI82268 | Inner Joint | | 29 | 27 | 44 | 461 | 100 | |
| | 2013.08-2021.09 | 8AT | R | L | SUV 4WD 448DT(DITC) | Without differential lock | GDS82346 | Drive Shaft | | 31 | 31 | 68.2 | 97 | 838 | |
| | 2013.08-2021.09 | 8AT | R | L | SUV 4WD 448DT(DITC) | With differential lock | GDS84013 | Drive Shaft | | 31 | 31 | 68.2 | 97 | 838 | |
| | 2013.08-2021.09 | 8AT | R | R | SUV 4WD 448DT(DITC) | Chassis no. to:FA227762 | GDS82345 | Drive Shaft | | 31 | 31 | 68.2 | 97 | 860 | |
| | 2013.08-2021.09 | 8AT | R | R | SUV 4WD 448DT(DITC) | Chassis no. from:FA227763 | GDS83549 | Drive Shaft | | 31 | 31 | 68.2 | 97 | 860 | |
| | 2013.08-2021.09 | 8AT | R | L/R | SUV 4WD 448DT(DITC) | Chassis no. to:FA227762 | GCO81813 | Outer Joint | | 31 | 28 | 68.2 | 97 | 61 | I |
| | 2013.08-2021.09 | 8AT | R | L/R | SUV 4WD 448DT(DITC) | Chassis no. from:FA227763 | GCO82414 | Outer Joint | | 31 | 28 | 68.2 | 97 | 61 | I |
| | 2013.08-2021.09 | 8AT | R | L | SUV 4WD 448DT(DITC) | With differential lock | GCI82452 | Inner Joint | | 31 | 28 | 44 | 152 | 105 | |
| | 2013.08-2021.09 | 8AT | R | L/R | SUV 4WD 448DT(DITC) | Possion:Left,Without differential lock | GCI81763 | Inner Joint | | 31 | 28 | 44 | 86 | 110.5 | |
| 4.4 (250 kw) | 2012.08-2021.09 | 8AT | F | L | SUV 4WD 448DT(DITC) | | GDS84004 | Drive Shaft | | 31 | 29 | 68.5 | 97 | 661 | |
| | 2012.08-2021.09 | 8AT | F | R | SUV 4WD 448DT(DITC) | | GDS82516 | Drive Shaft | | 31 | 29 | 68.5 | 97 | 1027 | |
| | 2012.08-2021.09 | 8AT | F | L/R | SUV 4WD 448DT(DITC) | | GCO81975 | Outer Joint | | 31 | 27 | 68.5 | 97 | 61 | I |
| | 2012.08-2021.09 | 8AT | F | L | SUV 4WD 448DT(DITC) | | GCI82248 | Inner Joint | | 29 | 27 | 44 | 71.5 | 129 | |
| | 2012.08-2021.09 | 8AT | F | R | SUV 4WD 448DT(DITC) | | GCI82268 | Inner Joint | | 29 | 27 | 44 | 461 | 100 | |
| | 2012.08-2021.09 | 8AT | R | L | SUV 4WD 448DT(DITC) | Without differential lock | GDS82346 | Drive Shaft | | 31 | 31 | 68.2 | 97 | 838 | |
| | 2012.08-2021.09 | 8AT | R | L | SUV 4WD 448DT(DITC) | With differential lock | GDS84013 | Drive Shaft | | 31 | 31 | 68.2 | 97 | 838 | |
| | 2012.08-2021.09 | 8AT | R | R | SUV 4WD 448DT(DITC) | Chassis no. to:FA227762 | GDS82345 | Drive Shaft | | 31 | 31 | 68.2 | 97 | 860 | |
| | 2012.08-2021.09 | 8AT | R | R | SUV 4WD 448DT(DITC) | Chassis no. from:FA227763 | GDS83549 | Drive Shaft | | 31 | 31 | 68.2 | 97 | 860 | |
| | 2012.08-2021.09 | 8AT | R | L/R | SUV 4WD 448DT(DITC) | Chassis no. to:FA227762 | GCO81813 | Outer Joint | | 31 | 28 | 68.2 | 97 | 61 | I |
| | 2012.08-2021.09 | 8AT | R | L/R | SUV 4WD 448DT(DITC) | Chassis no. from:FA227763 | GCO82414 | Outer Joint | | 31 | 28 | 68.2 | 97 | 61 | I |
| | 2012.08-2021.09 | 8AT | R | L | SUV 4WD 448DT(DITC) | With differential lock | GCI82452 | Inner Joint | | 31 | 28 | 44 | 152 | 105 | |
| | 2012.08-2021.09 | 8AT | R | L/R | SUV 4WD 448DT(DITC) | Possion:Left,Without differential lock | GCI81763 | Inner Joint | | 31 | 28 | 44 | 86 | 110.5 | |
| 4.4 (390 kw) | 2021.10- | 8AT | F | R | SUV 4WD N63B44E(NC10) | For vehicles without active driveline | GDS57596 | Drive Shaft | | 31 | 29 | 68.5 | 97 | 1036 | |
| | 2021.10- | 8AT | F | L/R | SUV 4WD N63B44E(NC10) | For vehicles with active driveline Position:Left and Right;For vehicles without active driveline Position:Left | GDS58302 | Drive Shaft | | 31 | 29 | 68 | 97 | 690 | |
| | 2021.10- | 8AT | F | L/R | SUV 4WD N63B44E(NC10) | | GCO81975 | Outer Joint | | 31 | 27 | 68.5 | 97 | 61 | I |
| | 2021.10- | 8AT | F | R | SUV 4WD N63B44E(NC10) | For vehicles without active driveline | GCI83763 | Inner Joint | | 29 | 26 | 44 | 437 | 106 | |

| | YEAR | TRANSM. | F/R | L/R | BODY STYLE & DRIVE TYPE & ENGINE | REMARKS | G-AP Ref. | PRODUCT | ABS | Technical Specifications A | B | C | H | L | P |
|---|---|---|---|---|---|---|---|---|---|---|---|---|---|---|---|
| **LAND ROVER** | | | | | | | | | | | | | | | |
| **Range Rover** | | | | | | | | | | | | | | | |
| 4.4 (390 kw) | 2021.10- | 8AT | F | L/R | SUV 4WD N63B44E(NC10) | For vehicles with active driveline,Position:Left and Right;For vehicles without active driveline,Position:Left | GCI81849 | Inner Joint | | 29 | 26 | 44 | 71.5 | 125 | |
| | 2021.10- | 8AT | R | L/R | SUV 4WD N63B44E(NC10) | Chassis no. to:FA227762 | GCO81813 | Outer Joint | | 31 | 28 | 68.2 | 97 | 61 | I |
| | 2023.05- | 8AT | F | R | SUV 4WD S68B44B(NC11) | For vehicles without active driveline | GDS57596 | Drive Shaft | | 31 | 29 | 68.5 | 97 | 1036 | |
| | 2023.05- | 8AT | F | L/R | SUV 4WD S68B44B(NC11) | For vehicles with active driveline,Position:Left and Right;For vehicles without active driveline,Position:Left | GDS58302 | Drive Shaft | | 31 | 29 | 68 | 97 | 690 | |
| | 2023.05- | 8AT | F | L/R | SUV 4WD S68B44B(NC11) | | GCO81975 | Outer Joint | | 31 | 27 | 68.5 | 97 | 61 | I |
| | 2023.05- | 8AT | F | R | SUV 4WD S68B44B(NC11) | For vehicles without active driveline | GCI83763 | Inner Joint | | 29 | 26 | 44 | 437 | 106 | |
| | 2023.05- | 8AT | F | L/R | SUV 4WD S68B44B(NC11) | For vehicles with active driveline,Position:Left and Right;For vehicles without active driveline,Position:Left | GCI81849 | Inner Joint | | 29 | 26 | 44 | 71.5 | 125 | |
| | 2023.05- | 8AT | R | L/R | SUV 4WD S68B44B(NC11) | Chassis no. to:FA227762 | GCO81813 | Outer Joint | | 31 | 28 | 68.2 | 97 | 61 | I |
| 4.4 (452 kw) | 2023.05- | 8AT | F | R | SUV 4WD S68B44B(NC11) | For vehicles without active driveline | GDS57596 | Drive Shaft | | 31 | 29 | 68.5 | 97 | 1036 | |
| | 2023.05- | 8AT | F | L/R | SUV 4WD S68B44B(NC11) | For vehicles with active driveline,Position:Left and Right;For vehicles without active driveline,Position:Left | GDS58302 | Drive Shaft | | 31 | 29 | 68 | 97 | 690 | |
| | 2023.05- | 8AT | F | L/R | SUV 4WD S68B44B(NC11) | | GCO81975 | Outer Joint | | 31 | 27 | 68.5 | 97 | 61 | I |
| | 2023.05- | 8AT | F | R | SUV 4WD S68B44B(NC11) | For vehicles without active driveline | GCI83763 | Inner Joint | | 29 | 26 | 44 | 437 | 106 | |
| | 2023.05- | 8AT | F | L/R | SUV 4WD S68B44B(NC11) | For vehicles with active driveline,Position:Left and Right;For vehicles without active driveline,Position:Left | GCI81849 | Inner Joint | | 29 | 26 | 44 | 71.5 | 125 | |
| | 2023.05- | 8AT | R | L/R | SUV 4WD S68B44B(NC11) | Chassis no. to:FA227762 | GCO81813 | Outer Joint | | 31 | 28 | 68.2 | 97 | 61 | I |
| 4.6 (160 kw) | 1998.11-2002.01 | 4AT | F | L | Terrain cab wagon closed 4WD 60D | Chassis no. from:XA410482 | GDS30006 | Drive Shaft | 60T | 24 | | 61.7 | 101 | 656 | |
| | 1998.11-2002.01 | AT | F | L/R | Terrain cab wagon closed 4WD 60D | | GCO30006 | Outer Joint | 60T | 24 | 32 | 61.7 | 101 | 60 | I |
| 4.6 (165 kw) | 1994.07-2002.03 | 4AT | F | L | Terrain cab wagon closed 4WD 48D/60D | Chassis no. from:XA410482 | GDS30006 | Drive Shaft | 60T | 24 | | 61.7 | 101 | 656 | |
| | 1994.07-2002.03 | AT | F | L/R | Terrain cab wagon closed 4WD 48D/60D | | GCO30006 | Outer Joint | 60T | 24 | 32 | 61.7 | 101 | 60 | I |
| 5.0 (276 kw) | 2009.09-2012.08 | 6AT | F | R | Closed Off-Road Vehicle 4WD 508PN(AJ133) | | GDS81463 | Drive Shaft | 48W | 30 | 30 | 68 | 84 | 968 | |
| | 2009.09-2012.08 | AT | F | L | Closed Off-Road Vehicle 4WD 508PN(AJ133) | | GCO81284 | Inner Joint | | 30 | 29 | 43.97 | 68 | 89 | |
| | 2009.09-2012.08 | AT | R | L | Closed Off-Road Vehicle 4WD 508PN(AJ133) | | GDS85104 | Drive Shaft | 48W | 30 | 31 | 68 | 84 | 820 | |
| | 2009.09-2012.08 | AT | R | R | Closed Off-Road Vehicle 4WD 508PN(AJ133) | | GDS85105 | Drive Shaft | 48W | 30 | 31 | 68 | 84 | 800 | |
| | 2009.09-2012.08 | AT | R | L | Closed Off-Road Vehicle 4WD 508PN(AJ133) | | GCI85059 | Inner Joint | | 31 | 30 | 44 | 151.5 | 124.5 | |
| | 2009.09-2012.08 | AT | F/R | L/R | Closed Off-Road Vehicle 4WD 508PN(AJ133) | | GCO85004 | Outer Joint | 48W | 30 | 29 | 68 | 84 | 74 | M |
| | 2013.12-2016.01 | 8AT | F | L | SUV 4WD 508PN(AJ133) | | GDS84004 | Drive Shaft | | 31 | 29 | 68.5 | 97 | 661 | |
| | 2013.12-2016.01 | 8AT | F | R | SUV 4WD 508PN(AJ133) | | GDS82516 | Drive Shaft | | 31 | 29 | 68.5 | 97 | 1027 | |
| | 2013.12-2016.01 | 8AT | F | L/R | SUV 4WD 508PN(AJ133) | | GCO81975 | Outer Joint | | 31 | 27 | 68.5 | 97 | 61 | I |
| | 2013.12-2016.01 | 8AT | F | L | SUV 4WD 508PN(AJ133) | | GCI82248 | Inner Joint | | 29 | 27 | 44 | 71.5 | 129 | |
| | 2013.12-2016.01 | 8AT | F | R | SUV 4WD 508PN(AJ133) | | GCI82268 | Inner Joint | | 29 | 27 | 44 | 461 | 100 | |
| | 2013.12-2016.01 | 8AT | R | L | SUV 4WD 508PN(AJ133) | Without differential lock | GDS82346 | Drive Shaft | | 31 | 31 | 68.2 | 97 | 838 | |
| | 2013.12-2016.01 | 8AT | R | L | SUV 4WD 508PN(AJ133) | With differential lock | GDS84013 | Drive Shaft | | 31 | 31 | 68.2 | 97 | 838 | |
| | 2013.12-2016.01 | 8AT | R | R | SUV 4WD 508PN(AJ133) | Chassis no. to:FA227762 | GDS82345 | Drive Shaft | | 31 | 31 | 68.2 | 97 | 860 | |
| | 2013.12-2016.01 | 8AT | R | R | SUV 4WD 508PN(AJ133) | Chassis no. from:FA227763 | GDS83549 | Drive Shaft | | 31 | 31 | 68.2 | 97 | 860 | |
| | 2013.12-2016.01 | 8AT | R | L/R | SUV 4WD 508PN(AJ133) | Chassis no. to:FA227762 | GCO81813 | Outer Joint | | 31 | 28 | 68.2 | 97 | 61 | I |
| | 2013.12-2016.01 | 8AT | R | L/R | SUV 4WD 508PN(AJ133) | Chassis no. from:FA227763 | GCO82414 | Outer Joint | | 31 | 28 | 68.2 | 97 | 61 | I |
| | 2013.12-2016.01 | 8AT | R | L | SUV 4WD 508PN(AJ133) | With differential lock | GCI82452 | Inner Joint | | 31 | 28 | 44 | 152 | 105 | |
| | 2013.12-2016.01 | 8AT | R | L/R | SUV 4WD 508PN(AJ133) | Possion:Left,Without differential lock | GCI81763 | Inner Joint | | 31 | 28 | 44 | 86 | 110.5 | |
| 5.0 (375 kw) | 2009.09-2012.08 | 6AT/SAT | F | R | Closed Off-Road Vehicle 4WD 508PS(AJ133) | | GDS81463 | Drive Shaft | 48W | 30 | 30 | 68 | 84 | 968 | |
| | 2009.09-2012.08 | AT | F | L | Closed Off-Road Vehicle 4WD 508PS(AJ133) | | GCO81284 | Inner Joint | | 30 | 29 | 43.97 | 68 | 89 | |
| | 2009.09-2012.08 | AT | R | L | Closed Off-Road Vehicle 4WD 508PS(AJ133) | | GDS85104 | Drive Shaft | 48W | 30 | 31 | 68 | 84 | 820 | |
| | 2009.09-2012.08 | AT | R | R | Closed Off-Road Vehicle 4WD 508PS(AJ133) | | GDS85105 | Drive Shaft | 48W | 30 | 31 | 68 | 84 | 800 | |
| | 2009.09-2012.08 | AT | R | L | Closed Off-Road Vehicle 4WD 508PS(AJ133) | | GCI85059 | Inner Joint | | 31 | 30 | 44 | 151.5 | 124.5 | |
| | 2009.09-2012.08 | AT | F/R | L/R | Closed Off-Road Vehicle 4WD 508PS(AJ133) | | GCO85004 | Outer Joint | 48W | 30 | 29 | 68 | 84 | 74 | M |
| | 2012.08-2021.09 | 8AT | F | L | SUV 4WD 508PS(AJ133) | | GDS84004 | Drive Shaft | | 31 | 29 | 68.5 | 97 | 661 | |
| | 2012.08-2021.09 | 8AT | F | R | SUV 4WD 508PS(AJ133) | | GDS82516 | Drive Shaft | | 31 | 29 | 68.5 | 97 | 1027 | |
| | 2012.08-2021.09 | 8AT | F | L/R | SUV 4WD 508PS(AJ133) | | GCO81975 | Outer Joint | | 31 | 27 | 68.5 | 97 | 61 | I |
| | 2012.08-2021.09 | 8AT | F | L | SUV 4WD 508PS(AJ133) | | GCI82248 | Inner Joint | | 29 | 27 | 44 | 71.5 | 129 | |
| | 2012.08-2021.09 | 8AT | F | R | SUV 4WD 508PS(AJ133) | | GCI82268 | Inner Joint | | 29 | 27 | 44 | 461 | 100 | |
| | 2012.08-2021.09 | 8AT | R | L | SUV 4WD 508PS(AJ133) | Possion:Left,Without differential lock | GDS82346 | Drive Shaft | | 31 | 31 | 68.2 | 97 | 838 | |
| | 2012.08-2021.09 | 8AT | R | L | SUV 4WD 508PS(AJ133) | With differential lock | GDS84013 | Drive Shaft | | 31 | 31 | 68.2 | 97 | 838 | |
| | 2012.08-2021.09 | 8AT | R | R | SUV 4WD 508PS(AJ133) | Chassis no. to:FA227762 | GDS82345 | Drive Shaft | | 31 | 31 | 68.2 | 97 | 860 | |
| | 2012.08-2021.09 | 8AT | R | R | SUV 4WD 508PS(AJ133) | Chassis no. from:FA227763 | GDS83549 | Drive Shaft | | 31 | 31 | 68.2 | 97 | 860 | |
| | 2012.08-2021.09 | 8AT | R | L/R | SUV 4WD 508PS(AJ133) | Chassis no. to:FA227762 | GCO81813 | Outer Joint | | 31 | 28 | 68.2 | 97 | 61 | I |
| | 2012.08-2021.09 | 8AT | R | L/R | SUV 4WD 508PS(AJ133) | Chassis no. from:FA227763 | GCO82414 | Outer Joint | | 31 | 28 | 68.2 | 97 | 61 | I |
| | 2012.08-2021.09 | 8AT | R | L | SUV 4WD 508PS(AJ133) | With differential lock | GCI82452 | Inner Joint | | 31 | 28 | 44 | 152 | 105 | |
| | 2012.08-2021.09 | 8AT | R | L/R | SUV 4WD 508PS(AJ133) | Possion:Left,Without differential lock | GCI81763 | Inner Joint | | 31 | 28 | 44 | 86 | 110.5 | |
| 5.0 (386 kw) | 2017.11-2021.09 | 8AT | F | L | SUV 4WD 508PS(AJ133) | | GDS84004 | Drive Shaft | | 31 | 29 | 68.5 | 97 | 661 | |
| | 2017.11-2021.09 | 8AT | F | R | SUV 4WD 508PS(AJ133) | | GDS82516 | Drive Shaft | | 31 | 29 | 68.5 | 97 | 1027 | |
| | 2017.11-2021.09 | 8AT | F | L/R | SUV 4WD 508PS(AJ133) | | GCO81975 | Outer Joint | | 31 | 27 | 68.5 | 97 | 61 | I |
| | 2017.11-2021.09 | 8AT | F | L | SUV 4WD 508PS(AJ133) | | GCI82248 | Inner Joint | | 29 | 27 | 44 | 71.5 | 129 | |
| | 2017.11-2021.09 | 8AT | F | R | SUV 4WD 508PS(AJ133) | | GCI82268 | Inner Joint | | 29 | 27 | 44 | 461 | 100 | |
| | 2017.11-2021.09 | 8AT | R | L | SUV 4WD 508PS(AJ133) | Without differential lock | GDS82346 | Drive Shaft | | 31 | 31 | 68.2 | 97 | 838 | |
| | 2017.11-2021.09 | 8AT | R | L | SUV 4WD 508PS(AJ133) | With differential lock | GDS84013 | Drive Shaft | | 31 | 31 | 68.2 | 97 | 838 | |
| | 2017.11-2021.09 | 8AT | R | R | SUV 4WD 508PS(AJ133) | Chassis no. to:FA227762 | GDS82345 | Drive Shaft | | 31 | 31 | 68.2 | 97 | 860 | |
| | 2017.11-2021.09 | 8AT | R | R | SUV 4WD 508PS(AJ133) | Chassis no. from:FA227763 | GDS83549 | Drive Shaft | | 31 | 31 | 68.2 | 97 | 860 | |

| | YEAR | TRANSM. | F/R | L/R | BODY STYLE & DRIVE TYPE & ENGINE | REMARKS | G-AP Ref. | PRODUCT | ABS | Technical Specifications A | B | C | H | L | P |
|---|---|---|---|---|---|---|---|---|---|---|---|---|---|---|---|
| **LAND ROVER** | | | | | | | | | | | | | | | |
| **Range Rover** | | | | | | | | | | | | | | | |
| 5.0 (386 kw) | 2017.11-2021.09 | 8AT | R | L/R | SUV 4WD 508PS(AJ133) | Chassis no. to:FA227762 | GCO81813 | Outer Joint | | 31 | 28 | 68.2 | 97 | 61 | I |
| | 2017.11-2021.09 | 8AT | R | L/R | SUV 4WD 508PS(AJ133) | Chassis no. from:FA227763 | GCO82414 | Outer Joint | | 31 | 28 | 68.2 | 97 | 61 | I |
| | 2017.11-2021.09 | 8AT | R | L | SUV 4WD 508PS(AJ133) | With differential lock | GCI82452 | Inner Joint | | 31 | 28 | 44 | 152 | 105 | |
| | 2017.11-2021.09 | 8AT | R | L/R | SUV 4WD 508PS(AJ133) | Possion:Left,Without differential lock | GCI81763 | Inner Joint | | 31 | 28 | 44 | 86 | 110.5 | |
| 5.0 (405 kw) | 2015.06-2021.09 | 8AT | F | L | SUV 4WD 508PS(AJ133) | Chassis no. to:DA999999;Chassis no. from:EA000001 | GDS84004 | Drive Shaft | | 31 | 29 | 68.5 | 97 | 661 | |
| | 2015.06-2021.09 | 8AT | F | R | SUV 4WD 508PS(AJ133) | Chassis no. to:DA999999;Chassis no. from:EA000001 | GDS82516 | Drive Shaft | | 31 | 29 | 68.5 | 97 | 1027 | |
| | 2015.06-2021.09 | 8AT | F | L/R | SUV 4WD 508PS(AJ133) | | GCO81975 | Outer Joint | | 31 | 27 | 68.5 | 97 | 61 | I |
| | 2015.06-2021.09 | 8AT | F | L | SUV 4WD 508PS(AJ133) | Chassis no. to:DA999999;Chassis no. from:EA000001 | GCI82248 | Inner Joint | | 29 | 27 | 44 | 71.5 | 129 | |
| | 2015.06-2021.09 | 8AT | F | R | SUV 4WD 508PS(AJ133) | Chassis no. to:DA999999;Chassis no. from:EA000001 | GCI82268 | Inner Joint | | 29 | 27 | 44 | 461 | 100 | |
| | 2015.06-2021.09 | 8AT | R | L | SUV 4WD 508PS(AJ133) | For vehicles without electronic limited slip diff. | GDS82346 | Drive Shaft | | 31 | 31 | 68.2 | 97 | 838 | |
| | 2015.06-2021.09 | 8AT | R | L | SUV 4WD 508PS(AJ133) | For vehicles with electronic ltd slip differential | GDS84013 | Drive Shaft | | 31 | 31 | 68.2 | 97 | 838 | |
| | 2015.06-2021.09 | 8AT | R | R | SUV 4WD 508PS(AJ133) | Chassis no. to:FA227762 | GDS82345 | Drive Shaft | | 31 | 31 | 68.2 | 97 | 860 | |
| | 2015.06-2021.09 | 8AT | R | R | SUV 4WD 508PS(AJ133) | Chassis no. from:FA227763 | GDS83549 | Drive Shaft | | 31 | 31 | 68.2 | 97 | 860 | |
| | 2015.06-2021.09 | 8AT | R | L/R | SUV 4WD 508PS(AJ133) | Chassis no. to:FA227762 | GCO81813 | Outer Joint | | 31 | 28 | 68.2 | 97 | 61 | I |
| | 2015.06-2021.09 | 8AT | R | L/R | SUV 4WD 508PS(AJ133) | Chassis no. from:FA227763 | GCO82414 | Outer Joint | | 31 | 28 | 68.2 | 97 | 61 | I |
| | 2015.06-2021.09 | 8AT | R | L | SUV 4WD 508PS(AJ133) | With differential lock | GCI82452 | Inner Joint | | 31 | 28 | 44 | 152 | 105 | |
| | 2015.06-2021.09 | 8AT | R | L/R | SUV 4WD 508PS(AJ133) | Possion:Left,Without differential lock | GCI81763 | Inner Joint | | 31 | 28 | 44 | 86 | 110.5 | |
| 5.0 (415 kw) | 2019.01-2021.09 | 8AT | R | L | SUV 4WD 508PS(AJ133) | Without differential lock | GDS82346 | Drive Shaft | | 31 | 31 | 68.2 | 97 | 838 | |
| | 2019.01-2021.09 | 8AT | R | L | SUV 4WD 508PS(AJ133) | With differential lock | GDS84013 | Drive Shaft | | 31 | 31 | 68.2 | 97 | 838 | |
| | 2019.01-2021.09 | 8AT | R | R | SUV 4WD 508PS(AJ133) | Chassis no. to:FA227762 | GDS82345 | Drive Shaft | | 31 | 31 | 68.2 | 97 | 860 | |
| | 2019.01-2021.09 | 8AT | R | R | SUV 4WD 508PS(AJ133) | Chassis no. from:FA227763 | GDS83549 | Drive Shaft | | 31 | 31 | 68.2 | 97 | 860 | |
| | 2019.01-2021.09 | 8AT | R | L/R | SUV 4WD 508PS(AJ133) | Chassis no. to:FA227762 | GCO81813 | Outer Joint | | 31 | 28 | 68.2 | 97 | 61 | I |
| | 2019.01-2021.09 | 8AT | R | L/R | SUV 4WD 508PS(AJ133) | Chassis no. from:FA227763 | GCO82414 | Outer Joint | | 31 | 28 | 68.2 | 97 | 61 | I |
| | 2019.01-2021.09 | 8AT | R | L | SUV 4WD 508PS(AJ133) | With differential lock | GCI82452 | Inner Joint | | 31 | 28 | 44 | 152 | 105 | |
| 5.0 (416 kw) | 2017.11-2021.09 | 8AT | F | L | SUV 4WD 508PS(AJ133) | | GDS84004 | Drive Shaft | | 31 | 29 | 68.5 | 97 | 661 | |
| | 2017.11-2021.09 | 8AT | F | R | SUV 4WD 508PS(AJ133) | | GDS82516 | Drive Shaft | | 31 | 29 | 68.5 | 97 | 1027 | |
| | 2017.11-2021.09 | 8AT | F | L/R | SUV 4WD 508PS(AJ133) | | GCO81975 | Outer Joint | | 31 | 27 | 68.5 | 97 | 61 | I |
| | 2017.11-2021.09 | 8AT | F | L | SUV 4WD 508PS(AJ133) | | GCI82248 | Inner Joint | | 29 | 27 | 44 | 71.5 | 129 | |
| | 2017.11-2021.09 | 8AT | F | R | SUV 4WD 508PS(AJ133) | | GCI82268 | Inner Joint | | 29 | 27 | 44 | 461 | 100 | |
| | 2017.11-2021.09 | 8AT | R | L | SUV 4WD 508PS(AJ133) | Without differential lock | GDS82346 | Drive Shaft | | 31 | 31 | 68.2 | 97 | 838 | |
| | 2017.11-2021.09 | 8AT | R | L | SUV 4WD 508PS(AJ133) | With differential lock | GDS84013 | Drive Shaft | | 31 | 31 | 68.2 | 97 | 838 | |
| | 2017.11-2021.09 | 8AT | R | R | SUV 4WD 508PS(AJ133) | Chassis no. to:FA227762 | GDS82345 | Drive Shaft | | 31 | 31 | 68.2 | 97 | 860 | |
| | 2017.11-2021.09 | 8AT | R | R | SUV 4WD 508PS(AJ133) | Chassis no. from:FA227763 | GDS83549 | Drive Shaft | | 31 | 31 | 68.2 | 97 | 860 | |
| | 2017.11-2021.09 | 8AT | R | L/R | SUV 4WD 508PS(AJ133) | Chassis no. to:FA227762 | GCO81813 | Outer Joint | | 31 | 28 | 68.2 | 97 | 61 | I |
| | 2017.11-2021.09 | 8AT | R | L/R | SUV 4WD 508PS(AJ133) | Chassis no. from:FA227763 | GCO82414 | Outer Joint | | 31 | 28 | 68.2 | 97 | 61 | I |
| | 2017.11-2021.09 | 8AT | R | L | SUV 4WD 508PS(AJ133) | With differential lock | GCI82452 | Inner Joint | | 31 | 28 | 44 | 152 | 105 | |
| | 2017.11-2021.09 | 8AT | R | L/R | SUV 4WD 508PS(AJ133) | Possion:Left,Without differential lock | GCI81763 | Inner Joint | | 31 | 28 | 44 | 86 | 110.5 | |
| **Range Rover Evoque** | | | | | | | | | | | | | | | |
| 1.5 (118 kw) | 2020.09- | 8AT | F | L | SUV FWD PT153(AJ20P3) | | GDS82992 | Drive Shaft | | 31 | 31 | 68.5 | 97 | 590 | |
| | 2020.09- | 8AT | F | L/R | SUV FWD PT153(AJ20P3) | 6 balls | GCO18250 | Outer Joint | | 31 | 27 | 68.3 | 97 | 61 | I |
| | 2020.09- | 8AT | F | L/R | SUV FWD PT153(AJ20P3) | 8 balls | GCO81975 | Outer Joint | | 31 | 27 | 68.5 | 97 | 61 | I |
| 1.5 (198 kw) | 2024.04- | 6MT/8AT/9AT | F | L | SUV 4WD PT153(AJ20P3) | | GDS82992 | Drive Shaft | | 31 | 31 | 68.5 | 97 | 590 | |
| 1.5 (227 kw) | 2020.02- | 8AT | F | L | SUV 4WD PT153(AJ20P3) | | GDS82992 | Drive Shaft | | 31 | 31 | 68.5 | 97 | 590 | |
| | 2020.02- | 8AT | F | L/R | SUV 4WD PT153(AJ20P3) | 6 balls | GCO18250 | Outer Joint | | 31 | 27 | 68.3 | 97 | 61 | I |
| | 2020.02- | 8AT | F | L/R | SUV 4WD PT153(AJ20P3) | 8 balls | GCO81975 | Outer Joint | | 31 | 27 | 68.5 | 97 | 61 | I |
| 2.0 (110 kw) | 2015.06-2019.12 | 6MT | F | L | SUV 4WD 204DTD(AJ20D4) | | GDS56383 | Drive Shaft | | 31 | 31 | 68.5 | 97 | 614 | |
| | 2015.06-2019.12 | 6MT | F | R | SUV 4WD 204DTD(AJ20D4) | | GDS57776 | Drive Shaft | | 31 | 28 | 68.5 | 97 | 1061 | |
| | 2015.06-2019.12 | 6MT | F | L | SUV 4WD 204DTD(AJ20D4) | | GCI82631 | Inner Joint | | 31 | 27 | 44 | 65 | 112 | |
| | 2015.06-2019.12 | 6MT | F | R | SUV 4WD 204DTD(AJ20D4) | | GCI83851 | Inner Joint | | 28 | 27 | 29.95 | 538 | 96.5 | |
| | 2015.06-2019.12 | 9AT | F | L | SUV 4WD 204DTD(AJ20D4) | | GDS82992 | Drive Shaft | | 31 | 31 | 68.5 | 97 | 590 | |
| | 2015.06-2019.12 | 9AT | F | R | SUV 4WD 204DTD(AJ20D4) | | GDS56284 | Drive Shaft | | 31 | 28 | 68.5 | 97 | 1042 | |
| | 2015.06-2019.12 | 9AT | F | L | SUV 4WD 204DTD(AJ20D4) | | GCI85049 | Inner Joint | | 31 | 27 | 36.2 | 68 | 95 | |
| | 2015.06-2019.12 | 9AT | F | R | SUV 4WD 204DTD(AJ20D4) | | GCI82629 | Inner Joint | | 28 | 27 | 30 | 520 | 95 | |
| | 2015.06-2019.12 | AT/MT | F | L/R | SUV 4WD 204DTD(AJ20D4) | 6 balls | GCO18250 | Outer Joint | | 31 | 27 | 68.3 | 97 | 61 | I |
| | 2015.06-2019.12 | AT/MT | F | L/R | SUV 4WD 204DTD(AJ20D4) | 8 balls | GCO81975 | Outer Joint | | 31 | 27 | 68.5 | 97 | 61 | I |
| | 2015.06-2019.12 | 6MT/9AT | R | L/R | SUV 4WD 204DTD(AJ20D4) | For vehicles with active driveline | GDS83574 | Drive Shaft | | 31 | 26 | 65.3 | 95.5 | 775 | |
| | 2015.06-2019.12 | 6MT/9AT | R | L/R | SUV 4WD 204DTD(AJ20D4) | For vehicles with efficient driveline | GDS83575 | Drive Shaft | | 31 | 26 | 65.3 | 95.5 | 822 | |
| | 2015.06-2019.12 | 9AT/6MT | R | L/R | SUV 4WD 204DTD(AJ20D4) | | GCO82426 | Outer Joint | | 31 | 29 | 65.3 | 95.5 | 49 | I |
| | 2015.06-2019.12 | 9AT/6MT | R | L/R | SUV 4WD 204DTD(AJ20D4) | For vehicles with efficient driveline | GCI18187 | Inner Joint | | 26 | 29 | 35 | 69.5 | 107.5 | |
| | 2015.06-2019.12 | 9AT/6MT | R | L/R | SUV 4WD 204DTD(AJ20D4) | For vehicles with active driveline | GCI82281 | Inner Joint | | 26 | 29 | 34.95 | 67.5 | 106.5 | |
| | 2015.06-2019.12 | 6MT | F | L | SUV FWD 204DTD(AJ20D4) | | GDS56383 | Drive Shaft | | 31 | 31 | 68.5 | 97 | 614 | |
| | 2015.06-2019.12 | 6MT | F | L | SUV FWD 204DTD(AJ20D4) | | GCI82631 | Inner Joint | | 31 | 27 | 44 | 65 | 112 | |
| | 2015.06-2019.12 | MT | F | L/R | SUV FWD 204DTD(AJ20D4) | 6 balls | GCO18250 | Outer Joint | | 31 | 27 | 68.3 | 97 | 61 | I |
| | 2015.06-2019.12 | MT | F | L/R | SUV FWD 204DTD(AJ20D4) | 8 balls | GCO81975 | Outer Joint | | 31 | 27 | 68.5 | 97 | 61 | I |
| | 2015.11-2019.12 | 9AT | F | L | Convertible 4WD 204DTD(AJ20D4) | | GDS82992 | Drive Shaft | | 31 | 31 | 68.5 | 97 | 590 | |

| | YEAR | TRANSM. | F/R | L/R | BODY STYLE & DRIVE TYPE & ENGINE | REMARKS | G-AP Ref. | PRODUCT | ABS | Technical Specifications A | B | C | H | L | P |
|---|---|---|---|---|---|---|---|---|---|---|---|---|---|---|---|
| **LAND ROVER** **Range Rover Evoque** | | | | | | | | | | | | | | | |
| 2.0 (110 kw) | 2015.11-2019.12 | 9AT | F | L | Convertible 4WD 204DTD(AJ20D4) | Date from:2016.01 | GDS84193 | Drive Shaft | | 31 | 31 | 68.5 | 97 | 600 | |
| | 2015.11-2019.12 | 9AT | F | R | Convertible 4WD 204DTD(AJ20D4) | | GDS56284 | Drive Shaft | | 31 | 28 | 68.5 | 97 | 1042 | |
| | 2015.11-2019.12 | 9AT | F | L | Convertible 4WD 204DTD(AJ20D4) | | GCI85049 | Inner Joint | | 31 | 27 | 36.2 | 68 | 95 | |
| | 2015.11-2019.12 | 9AT | F | R | Convertible 4WD 204DTD(AJ20D4) | | GCI82629 | Inner Joint | | 28 | 27 | 30 | 520 | 95 | |
| | 2015.11-2019.12 | AT | F | L/R | Convertible 4WD 204DTD(AJ20D4) | 6 balls | GCO18250 | Outer Joint | | 31 | 27 | 68.3 | 97 | 61 | I |
| | 2015.11-2019.12 | AT | F | L/R | Convertible 4WD 204DTD(AJ20D4) | 8 balls | GCO81975 | Outer Joint | | 31 | 27 | 68.5 | 97 | 61 | I |
| | 2015.11-2019.12 | 9AT | R | L/R | Convertible 4WD 204DTD(AJ20D4) | For vehicles with active driveline | GDS83574 | Drive Shaft | | 31 | 26 | 65.3 | 95.5 | 775 | |
| | 2015.11-2019.12 | 9AT | R | L/R | Convertible 4WD 204DTD(AJ20D4) | For vehicles with efficient driveline | GDS83575 | Drive Shaft | | 31 | 26 | 65.3 | 95.5 | 822 | |
| | 2015.11-2019.12 | 9AT | R | L/R | Convertible 4WD 204DTD(AJ20D4) | | GCO82426 | Outer Joint | | 31 | 29 | 65.3 | 95.5 | 49 | I |
| | 2015.11-2019.12 | 9AT | R | L/R | Convertible 4WD 204DTD(AJ20D4) | For vehicles with efficient driveline | GCI18187 | Inner Joint | | 26 | 29 | 35 | 69.5 | 107.5 | |
| | 2015.11-2019.12 | 9AT | R | L/R | Convertible 4WD 204DTD(AJ20D4) | For vehicles with active driveline | GCI82281 | Inner Joint | | 26 | 29 | 34.95 | 67.5 | 106.5 | |
| | 2018.12- | 9AT | F | L | SUV 4WD 204DTD(AJ20D4) | | GDS82992 | Drive Shaft | | 31 | 31 | 68.5 | 97 | 590 | |
| | 2018.12- | 9AT | F | R | SUV 4WD 204DTD(AJ20D4) | Trans. code:9HP50,Chassis no. to:LH045169 | GDS56284 | Drive Shaft | | 31 | 28 | 68.5 | 97 | 1042 | |
| | 2018.12- | 9AT | F | R | SUV 4WD 204DTD(AJ20D4) | Trans. code:9HP50,Chassis no. from:LH045170 | GDS84191 | Drive Shaft | | 31 | 28 | 68.5 | 97 | 1042 | |
| | 2018.12- | 9AT | F | L/R | SUV 4WD 204DTD(AJ20D4) | 6 balls | GCO18250 | Outer Joint | | 31 | 27 | 68.3 | 97 | 61 | I |
| | 2018.12- | 9AT | F | L/R | SUV 4WD 204DTD(AJ20D4) | 8 balls | GCO81975 | Outer Joint | | 31 | 27 | 68.5 | 97 | 61 | I |
| | 2018.12- | 9AT | F | L | SUV 4WD 204DTD(AJ20D4) | Chassis no. to:LH033466 | GCI85049 | Inner Joint | | 31 | 27 | 36.2 | 68 | 95 | |
| | 2018.12- | 9AT | R | R | SUV 4WD 204DTD(AJ20D4) | Chassis no. to:MH139585;For vehicles with efficient driveline | GDS58199 | Drive Shaft | | 31 | 26 | 65.3 | 95.5 | 815 | |
| | 2018.12- | 9AT | R | L/R | SUV 4WD 204DTD(AJ20D4) | Position:Rear axle left and right;For vehicles with active driveline;Position:Rear axle left;For vehicles with efficient driveline | GDS58309 | Drive Shaft | | 31 | 26 | 65.3 | 95.5 | 723 | |
| | 2018.12- | 9AT | R | L/R | SUV 4WD 204DTD(AJ20D4) | Chassis no. to:MH139585;For vehicles with efficient driveline | GCO83861 | Outer Joint | | 31 | 29 | 65.3 | 95.5 | 49 | I |
| | 2018.12- | 9AT | R | L/R | SUV 4WD 204DTD(AJ20D4) | Chassis no. to:MH139585;For vehicles with efficient driveline | GCI84035 | Inner Joint | | 26 | 29 | 35 | 56 | 109 | |
| | 2018.12- | 9AT | F | L | SUV 4WD 204DTD(AJ21D4) | | GDS82992 | Drive Shaft | | 31 | 31 | 68.5 | 97 | 590 | |
| | 2018.12- | 9AT | F | R | SUV 4WD 204DTD(AJ21D4) | Trans. code:9HP50,Chassis no. to:LH045169 | GDS56284 | Drive Shaft | | 31 | 28 | 68.5 | 97 | 1042 | |
| | 2018.12- | 9AT | F | R | SUV 4WD 204DTD(AJ21D4) | Trans. code:9HP50,Chassis no. from:LH045170 | GDS84191 | Drive Shaft | | 31 | 28 | 68.5 | 97 | 1042 | |
| | 2018.12- | 9AT | F | L/R | SUV 4WD 204DTD(AJ21D4) | 6 balls | GCO18250 | Outer Joint | | 31 | 27 | 68.3 | 97 | 61 | I |
| | 2018.12- | 9AT | F | L/R | SUV 4WD 204DTD(AJ21D4) | 8 balls | GCO81975 | Outer Joint | | 31 | 27 | 68.5 | 97 | 61 | I |
| | 2018.12- | 9AT | F | L | SUV 4WD 204DTD(AJ21D4) | Chassis no. to:LH033466 | GCI85049 | Inner Joint | | 31 | 27 | 36.2 | 68 | 95 | |
| | 2018.12- | 9AT | R | R | SUV 4WD 204DTD(AJ21D4) | Chassis no. to:MH139585;For vehicles with efficient driveline | GDS58199 | Drive Shaft | | 31 | 26 | 65.3 | 95.5 | 815 | |
| | 2018.12- | 9AT | R | L/R | SUV 4WD 204DTD(AJ21D4) | Position:Rear axle left and right;For vehicles with active driveline;Position:Rear axle left;For vehicles with efficient driveline | GDS58309 | Drive Shaft | | 31 | 26 | 65.3 | 95.5 | 723 | |
| | 2018.12- | 9AT | R | L/R | SUV 4WD 204DTD(AJ21D4) | Chassis no. to:MH139585;For vehicles with efficient driveline | GCO83861 | Outer Joint | | 31 | 29 | 65.3 | 95.5 | 49 | I |
| | 2018.12- | 9AT | R | L/R | SUV 4WD 204DTD(AJ21D4) | Chassis no. to:MH139585;For vehicles with efficient driveline | GCI84035 | Inner Joint | | 26 | 29 | 35 | 56 | 109 | |
| | 2018.12- | 6MT | F | L | SUV FWD 204DTD(AJ20D4) | | GDS56503 | Drive Shaft | | 31 | 31 | 68.5 | 97 | 600 | |
| | 2018.12- | 6MT | F | R | SUV FWD 204DTD(AJ20D4) | | GDS84192 | Drive Shaft | | 31 | 28 | 68.5 | 97 | 1068 | |
| | 2018.12- | 6MT | F | L/R | SUV FWD 204DTD(AJ20D4) | 6 balls | GCO18250 | Outer Joint | | 31 | 27 | 68.3 | 97 | 61 | I |
| | 2018.12- | 6MT | F | L/R | SUV FWD 204DTD(AJ20D4) | 8 balls | GCO81975 | Outer Joint | | 31 | 27 | 68.5 | 97 | 61 | I |
| | 2018.12- | 6MT | F | L | SUV FWD 204DTD(AJ20D4) | | GCI82631 | Inner Joint | | 31 | 27 | 44 | 65 | 112 | |
| 2.0 (120 kw) | 2020.07- | 9AT | F | L | SUV 4WD 204DTY(AJ21D4) | Chassis no. to:LH033466 | GDS82992 | Drive Shaft | | 31 | 31 | 68.5 | 97 | 590 | |
| | 2020.07- | 9AT | F | R | SUV 4WD 204DTY(AJ21D4) | Trans. code:9HP50,Chassis no. to:LH045169 | GDS56284 | Drive Shaft | | 31 | 28 | 68.5 | 97 | 1042 | |
| | 2020.07- | 9AT | F | R | SUV 4WD 204DTY(AJ21D4) | Trans. code:9HP50,Chassis no. from:LH045170 | GDS84191 | Drive Shaft | | 31 | 28 | 68.5 | 97 | 1042 | |
| | 2020.07- | 9AT | F | L/R | SUV 4WD 204DTY(AJ21D4) | 6 balls | GCO18250 | Outer Joint | | 31 | 27 | 68.3 | 97 | 61 | I |
| | 2020.07- | 9AT | F | L/R | SUV 4WD 204DTY(AJ21D4) | 8 balls | GCO81975 | Outer Joint | | 31 | 27 | 68.5 | 97 | 61 | I |
| | 2020.07- | 9AT | F | L | SUV 4WD 204DTY(AJ21D4) | Chassis no. to:LH033466 | GCI85049 | Inner Joint | | 31 | 27 | 36.2 | 68 | 95 | |
| | 2020.07- | 9AT | R | R | SUV 4WD 204DTY(AJ21D4) | Chassis no. to:MH139585;For vehicles with efficient driveline | GDS58199 | Drive Shaft | | 31 | 26 | 65.3 | 95.5 | 815 | |
| | 2020.07- | 9AT | R | L/R | SUV 4WD 204DTY(AJ21D4) | Position:Rear axle left and right;For vehicles with active driveline;Position:Rear axle left;For vehicles with efficient driveline | GDS58309 | Drive Shaft | | 31 | 26 | 65.3 | 95.5 | 723 | |
| | 2020.07- | 9AT | R | L/R | SUV 4WD 204DTY(AJ21D4) | Chassis no. to:MH139585;For vehicles with efficient driveline | GCO83861 | Outer Joint | | 31 | 29 | 65.3 | 95.5 | 49 | I |
| | 2020.07- | 9AT | R | L/R | SUV 4WD 204DTY(AJ21D4) | Chassis no. to:MH139585;For vehicles with efficient driveline | GCI84035 | Inner Joint | | 26 | 29 | 35 | 56 | 109 | |
| | 2020.07- | 6MT | F | L | SUV FWD 204DTY(AJ20D4) | | GDS56503 | Drive Shaft | | 31 | 31 | 68.5 | 97 | 600 | |
| | 2020.07- | 6MT | F | R | SUV FWD 204DTY(AJ20D4) | | GDS84192 | Drive Shaft | | 31 | 28 | 68.5 | 97 | 1068 | |
| | 2020.07- | 6MT | F | L/R | SUV FWD 204DTY(AJ20D4) | 8 balls | GCO81975 | Outer Joint | | 31 | 27 | 68.5 | 97 | 61 | I |
| | 2020.07- | 6MT | F | L | SUV FWD 204DTY(AJ20D4) | | GCI82631 | Inner Joint | | 31 | 27 | 44 | 65 | 112 | |
| 2.0 (132 kw) | 2015.05-2019.12 | 6MT | F | L | SUV 4WD 204DTD(AJ20D4) | | GDS56383 | Drive Shaft | | 31 | 31 | 68.5 | 97 | 614 | |
| | 2015.05-2019.12 | 6MT | F | R | SUV 4WD 204DTD(AJ20D4) | | GDS57776 | Drive Shaft | | 31 | 28 | 68.5 | 97 | 1061 | |
| | 2015.05-2019.12 | 6MT | F | L | SUV 4WD 204DTD(AJ20D4) | | GCI82631 | Inner Joint | | 31 | 27 | 44 | 65 | 112 | |
| | 2015.05-2019.12 | 6MT | F | R | SUV 4WD 204DTD(AJ20D4) | | GCI83851 | Inner Joint | | 28 | 27 | 29.95 | 538 | 96.5 | |
| | 2015.05-2019.12 | 9AT | F | L | SUV 4WD 204DTD(AJ20D4) | | GDS82992 | Drive Shaft | | 31 | 31 | 68.5 | 97 | 590 | |
| | 2015.05-2019.12 | 9AT | F | R | SUV 4WD 204DTD(AJ20D4) | | GDS56284 | Drive Shaft | | 31 | 28 | 68.5 | 97 | 1042 | |
| | 2015.05-2019.12 | 9AT | F | L | SUV 4WD 204DTD(AJ20D4) | | GCI85049 | Inner Joint | | 31 | 27 | 36.2 | 68 | 95 | |
| | 2015.05-2019.12 | 9AT | F | R | SUV 4WD 204DTD(AJ20D4) | | GCI82629 | Inner Joint | | 28 | 27 | 30 | 520 | 95 | |
| | 2015.05-2019.12 | AT/MT | F | L/R | SUV 4WD 204DTD(AJ20D4) | 6 balls | GCO18250 | Outer Joint | | 31 | 27 | 68.3 | 97 | 61 | I |
| | 2015.05-2019.12 | AT/MT | F | L/R | SUV 4WD 204DTD(AJ20D4) | 8 balls | GCO81975 | Outer Joint | | 31 | 27 | 68.5 | 97 | 61 | I |
| | 2015.05-2019.12 | 6MT/9AT | R | L/R | SUV 4WD 204DTD(AJ20D4) | For vehicles with active driveline | GDS83574 | Drive Shaft | | 31 | 26 | 65.3 | 95.5 | 775 | |
| | 2015.05-2019.12 | 6MT/9AT | R | L/R | SUV 4WD 204DTD(AJ20D4) | For vehicles with efficient driveline | GDS83575 | Drive Shaft | | 31 | 26 | 65.3 | 95.5 | 822 | |
| | 2015.05-2019.12 | 9AT/6MT | R | L/R | SUV 4WD 204DTD(AJ20D4) | | GCO82426 | Outer Joint | | 31 | 29 | 65.3 | 95.5 | 49 | I |
| | 2015.05-2019.12 | 9AT/6MT | R | L/R | SUV 4WD 204DTD(AJ20D4) | For vehicles with efficient driveline | GCI18187 | Inner Joint | | 26 | 29 | 35 | 69.5 | 107.5 | |
| | 2015.05-2019.12 | 9AT/6MT | R | L/R | SUV 4WD 204DTD(AJ20D4) | For vehicles with active driveline | GCI82281 | Inner Joint | | 26 | 29 | 34.95 | 67.5 | 106.5 | |

| | YEAR | TRANSM. | F/R | L/R | BODY STYLE & DRIVE TYPE & ENGINE | REMARKS | G-AP Ref. | PRODUCT | ABS | Technical Specifications A | B | C | H | L | P |
|---|---|---|---|---|---|---|---|---|---|---|---|---|---|---|---|
| **LAND ROVER** **Range Rover Evoque** | | | | | | | | | | | | | | | |
| 2.0 (132 kw) | 2015.11-2019.12 | 9AT | F | L | Convertible 4WD 204DTD(AJ20D4) | | GDS82992 | Drive Shaft | | 31 | 31 | 68.5 | 97 | 590 | |
| | 2015.11-2019.12 | 9AT | F | L | Convertible 4WD 204DTD(AJ20D4) | Date from:2016.01 | GDS84193 | Drive Shaft | | 31 | 31 | 68.5 | 97 | 600 | |
| | 2015.11-2019.12 | 9AT | F | R | Convertible 4WD 204DTD(AJ20D4) | | GDS56284 | Drive Shaft | | 31 | 28 | 68.5 | 97 | 1042 | |
| | 2015.11-2019.12 | 9AT | F | L | Convertible 4WD 204DTD(AJ20D4) | | GCI85049 | Inner Joint | | 31 | 27 | 36.2 | 68 | 95 | |
| | 2015.11-2019.12 | 9AT | F | R | Convertible 4WD 204DTD(AJ20D4) | | GCI82629 | Inner Joint | | 28 | 27 | 30 | 520 | 95 | |
| | 2015.11-2019.12 | AT | F | L/R | Convertible 4WD 204DTD(AJ20D4) | 6 balls | GCO18250 | Outer Joint | | 31 | 27 | 68.3 | 97 | 61 | I |
| | 2015.11-2019.12 | AT | F | L/R | Convertible 4WD 204DTD(AJ20D4) | 8 balls | GCO81975 | Outer Joint | | 31 | 27 | 68.5 | 97 | 61 | I |
| | 2015.11-2019.12 | 9AT | R | L/R | Convertible 4WD 204DTD(AJ20D4) | For vehicles with active driveline | GDS83574 | Drive Shaft | | 31 | 26 | 65.3 | 95.5 | 775 | |
| | 2015.11-2019.12 | 9AT | R | L/R | Convertible 4WD 204DTD(AJ20D4) | For vehicles with efficient driveline | GDS83575 | Drive Shaft | | 31 | 26 | 65.3 | 95.5 | 822 | |
| | 2015.11-2019.12 | 9AT | R | L/R | Convertible 4WD 204DTD(AJ20D4) | | GCO82426 | Outer Joint | | 31 | 29 | 65.3 | 95.5 | 49 | I |
| | 2015.11-2019.12 | 9AT | R | L/R | Convertible 4WD 204DTD(AJ20D4) | For vehicles with efficient driveline | GCI18187 | Inner Joint | | 26 | 29 | 35 | 69.5 | 107.5 | |
| | 2015.11-2019.12 | 9AT | R | L/R | Convertible 4WD 204DTD(AJ20D4) | For vehicles with active driveline | GCI82281 | Inner Joint | | 26 | 29 | 34.95 | 67.5 | 106.5 | |
| | 2018.12- | 9AT | F | L | SUV 4WD 204DTD(AJ20D4) | | GDS82992 | Drive Shaft | | 31 | 31 | 68.5 | 97 | 590 | |
| | 2018.12- | 9AT | F | R | SUV 4WD 204DTD(AJ20D4) | Trans. code:9HP50,Chassis no. to:LH045169 | GDS56284 | Drive Shaft | | 31 | 28 | 68.5 | 97 | 1042 | |
| | 2018.12- | 9AT | F | R | SUV 4WD 204DTD(AJ20D4) | Trans. code:9HP50,Chassis no. from:LH045170 | GDS84191 | Drive Shaft | | 31 | 28 | 68.5 | 97 | 1042 | |
| | 2018.12- | 9AT | F | L/R | SUV 4WD 204DTD(AJ20D4) | 6 balls | GCO18250 | Outer Joint | | 31 | 27 | 68.3 | 97 | 61 | I |
| | 2018.12- | 9AT | F | L/R | SUV 4WD 204DTD(AJ20D4) | 8 balls | GCO81975 | Outer Joint | | 31 | 27 | 68.5 | 97 | 61 | I |
| | 2018.12- | 9AT | F | L | SUV 4WD 204DTD(AJ20D4) | Chassis no. to:LH033466 | GCI85049 | Inner Joint | | 31 | 27 | 36.2 | 68 | 95 | |
| | 2018.12- | 9AT | R | R | SUV 4WD 204DTD(AJ20D4) | Chassis no. to:MH139585;For vehicles with efficient driveline | GDS58199 | Drive Shaft | | 31 | 26 | 65.3 | 95.5 | 815 | |
| | 2018.12- | 9AT | R | L/R | SUV 4WD 204DTD(AJ20D4) | Position:Rear axle left and right;For vehicles with active driveline;Position:Rear axle left;For vehicles with efficient driveline | GDS58309 | Drive Shaft | | 31 | 26 | 65.3 | 95.5 | 723 | |
| | 2018.12- | 9AT | R | L/R | SUV 4WD 204DTD(AJ20D4) | Chassis no. to:MH139585;For vehicles with efficient driveline | GCO83861 | Outer Joint | | 31 | 29 | 65.3 | 95.5 | 49 | I |
| | 2018.12- | 9AT | R | L/R | SUV 4WD 204DTD(AJ20D4) | Chassis no. to:MH139585;For vehicles with efficient driveline | GCI84035 | Inner Joint | | 26 | 29 | 35 | 56 | 109 | |
| | 2018.12- | 9AT | F | L | SUV 4WD 204DTD(AJ21D4) | | GDS82992 | Drive Shaft | | 31 | 31 | 68.5 | 97 | 590 | |
| | 2018.12- | 9AT | F | R | SUV 4WD 204DTD(AJ21D4) | Trans. code:9HP50,Chassis no. to:LH045169 | GDS56284 | Drive Shaft | | 31 | 28 | 68.5 | 97 | 1042 | |
| | 2018.12- | 9AT | F | R | SUV 4WD 204DTD(AJ21D4) | Trans. code:9HP50,Chassis no. from:LH045170 | GDS84191 | Drive Shaft | | 31 | 28 | 68.5 | 97 | 1042 | |
| | 2018.12- | 9AT | F | L/R | SUV 4WD 204DTD(AJ21D4) | 6 balls | GCO18250 | Outer Joint | | 31 | 27 | 68.3 | 97 | 61 | I |
| | 2018.12- | 9AT | F | L/R | SUV 4WD 204DTD(AJ21D4) | 8 balls | GCO81975 | Outer Joint | | 31 | 27 | 68.5 | 97 | 61 | I |
| | 2018.12- | 9AT | F | L | SUV 4WD 204DTD(AJ21D4) | Chassis no. to:LH033466 | GCI85049 | Inner Joint | | 31 | 27 | 36.2 | 68 | 95 | |
| | 2018.12- | 9AT | R | R | SUV 4WD 204DTD(AJ21D4) | Chassis no. to:MH139585;For vehicles with efficient driveline | GDS58199 | Drive Shaft | | 31 | 26 | 65.3 | 95.5 | 815 | |
| | 2018.12- | 9AT | R | L/R | SUV 4WD 204DTD(AJ21D4) | Position:Rear axle left and right;For vehicles with active driveline;Position:Rear axle left;For vehicles with efficient driveline | GDS58309 | Drive Shaft | | 31 | 26 | 65.3 | 95.5 | 723 | |
| | 2018.12- | 9AT | R | L/R | SUV 4WD 204DTD(AJ21D4) | Chassis no. to:MH139585;For vehicles with efficient driveline | GCO83861 | Outer Joint | | 31 | 29 | 65.3 | 95.5 | 49 | I |
| | 2018.12- | 9AT | R | L/R | SUV 4WD 204DTD(AJ21D4) | Chassis no. to:MH139585;For vehicles with efficient driveline | GCI84035 | Inner Joint | | 26 | 29 | 35 | 56 | 109 | |
| 2.0 (147 kw) | 2018.12- | 6MT/8AT/9AT | F | L | SUV 4WD PT204(AJ20P4) | | GDS82992 | Drive Shaft | | 31 | 31 | 68.5 | 97 | 590 | |
| | 2018.12- | 9AT | F | L | SUV 4WD PT204(AJ20P4) | | GDS82992 | Drive Shaft | | 31 | 31 | 68.5 | 97 | 590 | |
| | 2018.12- | 9AT | F | R | SUV 4WD PT204(AJ20P4) | Trans. code:9HP50,Chassis no. to:LH045169 | GDS56284 | Drive Shaft | | 31 | 28 | 68.5 | 97 | 1042 | |
| | 2018.12- | 9AT | F | R | SUV 4WD PT204(AJ20P4) | Trans. code:9HP50,Chassis no. from:LH045170 | GDS84191 | Drive Shaft | | 31 | 28 | 68.5 | 97 | 1042 | |
| | 2018.12- | 9AT | F | L/R | SUV 4WD PT204(AJ20P4) | 6 balls | GCO18250 | Outer Joint | | 31 | 27 | 68.3 | 97 | 61 | I |
| | 2018.12- | 9AT | F | L/R | SUV 4WD PT204(AJ20P4) | 8 balls | GCO81975 | Outer Joint | | 31 | 27 | 68.5 | 97 | 61 | I |
| | 2018.12- | 9AT | F | L | SUV 4WD PT204(AJ20P4) | Chassis no. to:LH033466 | GCI85049 | Inner Joint | | 31 | 27 | 36.2 | 68 | 95 | |
| | 2018.12- | AT | F | L/R | SUV 4WD PT204(AJ20P4) | | GCO81975 | Outer Joint | | 31 | 27 | 68.5 | 97 | 61 | I |
| | 2018.12- | AT | F | L | SUV 4WD PT204(AJ20P4) | Chassis no. to:LH033466 | GCI85049 | Inner Joint | | 31 | 27 | 36.2 | 68 | 95 | |
| | 2018.12- | 9AT | R | R | SUV 4WD PT204(AJ20P4) | Chassis no. to:MH139585;For vehicles with efficient driveline | GDS58199 | Drive Shaft | | 31 | 26 | 65.3 | 95.5 | 815 | |
| | 2018.12- | 9AT | R | L/R | SUV 4WD PT204(AJ20P4) | Position:Rear axle left and right;For vehicles with active driveline;Position:Rear axle left;For vehicles with efficient driveline | GDS58309 | Drive Shaft | | 31 | 26 | 65.3 | 95.5 | 723 | |
| | 2018.12- | 9AT | R | L/R | SUV 4WD PT204(AJ20P4) | Chassis no. to:MH139585;For vehicles with efficient driveline | GCO83861 | Outer Joint | | 31 | 29 | 65.3 | 95.5 | 49 | I |
| | 2018.12- | 9AT | R | L/R | SUV 4WD PT204(AJ20P4) | Chassis no. to:MH139585;For vehicles with efficient driveline | GCI84035 | Inner Joint | | 26 | 29 | 35 | 56 | 109 | |
| | 2018.12- | AT | R | L/R | SUV 4WD PT204(AJ20P4) | Position:Rear axle left and right;For vehicles with active driveline;Position:Rear axle left;For vehicles with efficient driveline | GDS58309 | Drive Shaft | | 31 | 26 | 65.3 | 95.5 | 723 | |
| | 2018.12- | | R | R | SUV 4WD PT204(AJ20P4) | Chassis no. to:MH139585;For vehicles with efficient driveline | GDS58199 | Drive Shaft | | 31 | 26 | 65.3 | 95.5 | 815 | |
| | 2018.12- | | R | L/R | SUV 4WD PT204(AJ20P4) | Chassis no. to:MH139585;For vehicles with efficient driveline | GCO83861 | Outer Joint | | 31 | 29 | 65.3 | 95.5 | 49 | I |
| | 2018.12- | | R | L/R | SUV 4WD PT204(AJ20P4) | Chassis no. to:MH139585;For vehicles with efficient driveline | GCI84035 | Inner Joint | | 26 | 29 | 35 | 56 | 109 | |
| | 2020.09- | 9AT | F | L | SUV 4WD PT204(AJ20P4) | Chassis no. to:LH033466 | GDS82992 | Drive Shaft | | 31 | 31 | 68.5 | 97 | 590 | |
| | 2020.09- | 9AT | F | R | SUV 4WD PT204(AJ20P4) | Trans. code:9HP50,Chassis no. to:LH045169 | GDS56284 | Drive Shaft | | 31 | 28 | 68.5 | 97 | 1042 | |
| | 2020.09- | 9AT | F | R | SUV 4WD PT204(AJ20P4) | Trans. code:9HP50,Chassis no. from:LH045170 | GDS84191 | Drive Shaft | | 31 | 28 | 68.5 | 97 | 1042 | |
| | 2020.09- | 9AT | F | L/R | SUV 4WD PT204(AJ20P4) | | GCO81975 | Outer Joint | | 31 | 27 | 68.5 | 97 | 61 | I |
| | 2020.09- | 9AT | F | L | SUV 4WD PT204(AJ20P4) | Chassis no. to:LH033466 | GCI85049 | Inner Joint | | 31 | 27 | 36.2 | 68 | 95 | |
| | 2020.09- | 9AT | R | R | SUV 4WD PT204(AJ20P4) | Chassis no. to:MH139585;For vehicles with efficient driveline | GDS58199 | Drive Shaft | | 31 | 26 | 65.3 | 95.5 | 815 | |
| | 2020.09- | 9AT | R | L/R | SUV 4WD PT204(AJ20P4) | Position:Rear axle left and right;For vehicles with active driveline;Position:Rear axle left;For vehicles with efficient driveline | GDS58309 | Drive Shaft | | 31 | 26 | 65.3 | 95.5 | 723 | |
| | 2020.09- | 9AT | R | L/R | SUV 4WD PT204(AJ20P4) | Chassis no. to:MH139585;For vehicles with efficient driveline | GCO83861 | Outer Joint | | 31 | 29 | 65.3 | 95.5 | 49 | I |
| | 2020.09- | 9AT | R | L/R | SUV 4WD PT204(AJ20P4) | Chassis no. to:MH139585;For vehicles with efficient driveline | GCI84035 | Inner Joint | | 26 | 29 | 35 | 56 | 109 | |
| 2.0 (150 kw) | 2020.07- | 9AT | F | L | SUV 4WD 204DTY(AJ21D4) | Chassis no. to:LH033466 | GDS82992 | Drive Shaft | | 31 | 31 | 68.5 | 97 | 590 | |
| | 2020.07- | 9AT | F | R | SUV 4WD 204DTY(AJ21D4) | Trans. code:9HP50,Chassis no. to:LH045169 | GDS56284 | Drive Shaft | | 31 | 28 | 68.5 | 97 | 1042 | |
| | 2020.07- | 9AT | F | R | SUV 4WD 204DTY(AJ21D4) | Trans. code:9HP50,Chassis no. from:LH045170 | GDS84191 | Drive Shaft | | 31 | 28 | 68.5 | 97 | 1042 | |
| | 2020.07- | 9AT | F | L/R | SUV 4WD 204DTY(AJ21D4) | | GCO18250 | Outer Joint | | 31 | 27 | 68.3 | 97 | 61 | I |
| | 2020.07- | 9AT | F | L/R | SUV 4WD 204DTY(AJ21D4) | 8 balls | GCO81975 | Outer Joint | | 31 | 27 | 68.5 | 97 | 61 | I |
| | 2020.07- | 9AT | F | L | SUV 4WD 204DTY(AJ21D4) | Chassis no. to:LH033466 | GCI85049 | Inner Joint | | 31 | 27 | 36.2 | 68 | 95 | |
| | 2020.07- | 9AT | R | R | SUV 4WD 204DTY(AJ21D4) | Chassis no. to:MH139585;For vehicles with efficient driveline | GDS58199 | Drive Shaft | | 31 | 26 | 65.3 | 95.5 | 815 | |

| | YEAR | TRANSM. | F/R | L/R | BODY STYLE & DRIVE TYPE & ENGINE | REMARKS | G-AP Ref. | PRODUCT | ABS | Technical Specifications A | B | C | H | L | P |
|---|---|---|---|---|---|---|---|---|---|---|---|---|---|---|---|
| **LAND ROVER** **Range Rover Evoque** | | | | | | | | | | | | | | | |
| 2.0 (150 kw) | 2020.07- | 9AT | R | L/R | SUV 4WD 204DTY(AJ21D4) | Position:Rear axle left and right;For vehicles with active driveline;Position:Rear axle left;For vehicles with efficient driveline | GDS58309 | Drive Shaft | | 31 | 26 | 65.3 | 95.5 | 723 | |
| | 2020.07- | 9AT | R | L/R | SUV 4WD 204DTY(AJ21D4) | Chassis no. to:MH139585;For vehicles with efficient driveline | GCO83861 | Outer Joint | | 31 | 29 | 65.3 | 95.5 | 49 | I |
| | 2020.07- | 9AT | R | L/R | SUV 4WD 204DTY(AJ21D4) | Chassis no. to:MH139585;For vehicles with efficient driveline | GCI84035 | Inner Joint | | 26 | 29 | 35 | 56 | 109 | |
| 2.0 (176 kw) | 2011.09-2019.12 | AT | F | L | SUV 4WD 204PT(GTDI) | | GDS83419 | Drive Shaft | | 31 | 31 | 68.5 | 97 | 623 | |
| | 2011.09-2019.12 | AT | F | R | SUV 4WD 204PT(GTDI) | | GDS83420 | Drive Shaft | | 31 | 28 | 68.5 | 97 | 1017 | |
| | 2011.09-2019.12 | AT | F | L/R | SUV 4WD 204PT(GTDI) | 6 balls | GCO18250 | Outer Joint | | 31 | 27 | 68.3 | 97 | 61 | I |
| | 2011.09-2019.12 | AT | F | L/R | SUV 4WD 204PT(GTDI) | 8 balls | GCO81975 | Outer Joint | | 31 | 27 | 68.5 | 97 | 61 | I |
| | 2011.09-2019.12 | AT | F | R | SUV 4WD 204PT(GTDI) | | GCI82209 | Inner Joint | | 28 | 27 | 30 | 436 | 96 | |
| | 2011.09-2019.12 | 9AT | R | L/R | SUV 4WD 204PT(GTDI) | Chassis No. To:DH999999;Chassis No. From:EH000001;For Vehicles With Efficient Driveline | GDS83575 | Drive Shaft | | 31 | 26 | 65.3 | 95.5 | 822 | |
| | 2011.09-2019.12 | 9AT | R | L/R | SUV 4WD 204PT(GTDI) | | GCO82426 | Outer Joint | | 31 | 29 | 65.3 | 95.5 | 49 | I |
| | 2011.09-2019.12 | 9AT | R | L/R | SUV 4WD 204PT(GTDI) | Chassis no. to:DH999999;Chassis no. from:EH000001;For vehicles with efficient driveline | GCI18187 | Inner Joint | | 26 | 29 | 35 | 69.5 | 107.5 | |
| | 2011.09-2019.12 | 9AT | R | L/R | SUV 4WD 204PT(GTDI) | Chassis no. from:EH000001;For vehicles with active driveline | GCI82281 | Inner Joint | | 26 | 29 | 34.95 | 67.5 | 106.5 | |
| | 2011.09-2019.12 | AT | R | L/R | SUV 4WD 204PT(GTDI) | Chassis no. from:EH000001;For vehicles with active driveline | GDS83574 | Drive Shaft | | 31 | 26 | 65.3 | 95.5 | 775 | |
| 2.0 (177 kw) | 2011.06-2019.12 | AT | F | L | SUV 4WD 204PT(GTDI) | | GDS83419 | Drive Shaft | | 31 | 31 | 68.5 | 97 | 623 | |
| | 2011.06-2019.12 | AT | F | R | SUV 4WD 204PT(GTDI) | | GDS83420 | Drive Shaft | | 31 | 28 | 68.5 | 97 | 1017 | |
| | 2011.06-2019.12 | AT | F | L/R | SUV 4WD 204PT(GTDI) | 6 balls | GCO18250 | Outer Joint | | 31 | 27 | 68.3 | 97 | 61 | I |
| | 2011.06-2019.12 | AT | F | L/R | SUV 4WD 204PT(GTDI) | 8 balls | GCO81975 | Outer Joint | | 31 | 27 | 68.5 | 97 | 61 | I |
| | 2011.06-2019.12 | AT | F | R | SUV 4WD 204PT(GTDI) | | GCI82209 | Inner Joint | | 28 | 27 | 30 | 436 | 96 | |
| | 2011.06-2019.12 | 6AT/9AT | R | L/R | SUV 4WD 204PT(GTDI) | Chassis No. To:DH999999;Chassis No. From:EH000001;For Vehicles With Efficient Driveline | GDS83575 | Drive Shaft | | 31 | 26 | 65.3 | 95.5 | 822 | |
| | 2011.06-2019.12 | 6AT/9AT | R | L/R | SUV 4WD 204PT(GTDI) | | GCO82426 | Outer Joint | | 31 | 29 | 65.3 | 95.5 | 49 | I |
| | 2011.06-2019.12 | 6AT/9AT | R | L/R | SUV 4WD 204PT(GTDI) | Chassis no. to:DH999999;Chassis no. from:EH000001;For vehicles with efficient driveline | GCI18187 | Inner Joint | | 26 | 29 | 35 | 69.5 | 107.5 | |
| | 2011.06-2019.12 | 6AT/9AT | R | L/R | SUV 4WD 204PT(GTDI) | Chassis no. from:EH000001;For vehicles with active driveline | GCI82281 | Inner Joint | | 26 | 29 | 34.95 | 67.5 | 106.5 | |
| | 2011.06-2019.12 | AT | R | L/R | SUV 4WD 204PT(GTDI) | Chassis no. from:EH000001;For vehicles with active driveline | GDS83574 | Drive Shaft | | 31 | 26 | 65.3 | 95.5 | 775 | |
| | 2013.09-2019.12 | AT | F | L | SUV Van 4WD 204PT(GTDI) | | GDS83419 | Drive Shaft | | 31 | 31 | 68.5 | 97 | 623 | |
| | 2013.09-2019.12 | AT | F | R | SUV Van 4WD 204PT(GTDI) | | GDS83420 | Drive Shaft | | 31 | 28 | 68.5 | 97 | 1017 | |
| | 2013.09-2019.12 | AT | F | L/R | SUV Van 4WD 204PT(GTDI) | | GCO81975 | Outer Joint | | 31 | 27 | 68.5 | 97 | 61 | I |
| | 2013.09-2019.12 | AT | F | R | SUV Van 4WD 204PT(GTDI) | | GCI82209 | Inner Joint | | 28 | 27 | 30 | 436 | 96 | |
| | 2013.09-2019.12 | 9AT | R | L/R | SUV Van 4WD 204PT(GTDI) | Chassis No. To:DH999999;Chassis No. From:EH000001;For Vehicles With Efficient Driveline | GDS83575 | Drive Shaft | | 31 | 26 | 65.3 | 95.5 | 822 | |
| | 2013.09-2019.12 | 9AT | R | L/R | SUV Van 4WD 204PT(GTDI) | Chassis no. to:DH999999 | GCO82426 | Outer Joint | | 31 | 29 | 65.3 | 95.5 | 49 | I |
| | 2013.09-2019.12 | 9AT | R | L/R | SUV Van 4WD 204PT(GTDI) | Chassis no. to:DH999999;Chassis no. from:EH000001;For vehicles with efficient driveline | GCI18187 | Inner Joint | | 26 | 29 | 35 | 69.5 | 107.5 | |
| | 2013.09-2019.12 | 9AT | R | L/R | SUV Van 4WD 204PT(GTDI) | Chassis no. from:EH000001;For vehicles with active driveline | GCI82281 | Inner Joint | | 26 | 29 | 34.95 | 67.5 | 106.5 | |
| | 2013.09-2019.12 | AT | R | L/R | SUV Van 4WD 204PT(GTDI) | Chassis no. from:EH000001;For vehicles with active driveline | GDS83574 | Drive Shaft | | 31 | 26 | 65.3 | 95.5 | 775 | |
| | 2015.11-2019.12 | 9AT | F | L | Convertible 4WD 204PT(GTDI) | Chassis no. from:(V)FH957070 | GDS83419 | Drive Shaft | | 31 | 31 | 68.5 | 97 | 623 | |
| | 2015.11-2019.12 | 9AT | F | R | Convertible 4WD 204PT(GTDI) | Chassis no. from:(V)FH957070 | GDS83420 | Drive Shaft | | 31 | 28 | 68.5 | 97 | 1017 | |
| | 2015.11-2019.12 | 9AT | F | L/R | Convertible 4WD 204PT(GTDI) | 8 balls;Chassis no. from:FH957070 | GCO81975 | Outer Joint | | 31 | 27 | 68.5 | 97 | 61 | I |
| | 2015.11-2019.12 | 9AT | F | L | Convertible 4WD 204PT(GTDI) | Chassis no. from:FH957070 | GCI85049 | Inner Joint | | 31 | 27 | 36.2 | 68 | 95 | |
| | 2015.11-2019.12 | 9AT | F | R | Convertible 4WD 204PT(GTDI) | | GCI82209 | Inner Joint | | 28 | 27 | 30 | 436 | 96 | |
| | 2015.11-2019.12 | AT | F | L/R | Convertible 4WD 204PT(GTDI) | 6 balls | GCO18250 | Outer Joint | | 31 | 27 | 68.3 | 97 | 61 | I |
| | 2015.11-2019.12 | 9AT | R | L/R | Convertible 4WD 204PT(GTDI) | For vehicles with active driveline | GDS83574 | Drive Shaft | | 31 | 26 | 65.3 | 95.5 | 775 | |
| | 2015.11-2019.12 | 9AT | R | L/R | Convertible 4WD 204PT(GTDI) | For Vehicles With Efficient Driveline | GDS83575 | Drive Shaft | | 31 | 26 | 65.3 | 95.5 | 822 | |
| | 2015.11-2019.12 | 9AT | R | L/R | Convertible 4WD 204PT(GTDI) | | GCO82426 | Outer Joint | | 31 | 29 | 65.3 | 95.5 | 49 | I |
| | 2015.11-2019.12 | 9AT | R | L/R | Convertible 4WD 204PT(GTDI) | For vehicles with efficient driveline | GCI18187 | Inner Joint | | 26 | 29 | 35 | 69.5 | 107.5 | |
| | 2015.11-2019.12 | 9AT | R | L/R | Convertible 4WD 204PT(GTDI) | For vehicles with active driveline | GCI82281 | Inner Joint | | 26 | 29 | 34.95 | 67.5 | 106.5 | |
| | 2017.08-2019.12 | 9AT | F | L | Convertible 4WD 204DTA(AJ20D4) | | GDS82992 | Drive Shaft | | 31 | 31 | 68.5 | 97 | 590 | |
| | 2017.08-2019.12 | 9AT | F | L | Convertible 4WD 204DTA(AJ20D4) | Date from:2018.01 | GDS84193 | Drive Shaft | | 31 | 31 | 68.5 | 97 | 600 | |
| | 2017.08-2019.12 | 9AT | F | R | Convertible 4WD 204DTA(AJ20D4) | | GDS56284 | Drive Shaft | | 31 | 28 | 68.5 | 97 | 1042 | |
| | 2017.08-2019.12 | 9AT | F | L/R | Convertible 4WD 204DTA(AJ20D4) | 6 balls | GCO18250 | Outer Joint | | 31 | 27 | 68.3 | 97 | 61 | I |
| | 2017.08-2019.12 | 9AT | F | L/R | Convertible 4WD 204DTA(AJ20D4) | 8 balls | GCO81975 | Outer Joint | | 31 | 27 | 68.5 | 97 | 61 | I |
| | 2017.08-2019.12 | 9AT | F | L | Convertible 4WD 204DTA(AJ20D4) | | GCI85049 | Inner Joint | | 31 | 27 | 36.2 | 68 | 95 | |
| | 2017.08-2019.12 | 9AT | F | R | Convertible 4WD 204DTA(AJ20D4) | | GCI82629 | Inner Joint | | 28 | 27 | 30 | 520 | 95 | |
| | 2017.08-2019.12 | 9AT | R | L/R | Convertible 4WD 204DTA(AJ20D4) | For vehicles with active driveline | GDS83574 | Drive Shaft | | 31 | 26 | 65.3 | 95.5 | 775 | |
| | 2017.08-2019.12 | 9AT | R | L/R | Convertible 4WD 204DTA(AJ20D4) | For vehicles with efficient driveline | GDS83575 | Drive Shaft | | 31 | 26 | 65.3 | 95.5 | 822 | |
| | 2017.08-2019.12 | 9AT | R | L/R | Convertible 4WD 204DTA(AJ20D4) | | GCO82426 | Outer Joint | | 31 | 29 | 65.3 | 95.5 | 49 | I |
| | 2017.08-2019.12 | 9AT | R | L/R | Convertible 4WD 204DTA(AJ20D4) | For vehicles with efficient driveline | GCI18187 | Inner Joint | | 26 | 29 | 35 | 69.5 | 107.5 | |
| | 2017.08-2019.12 | 9AT | R | L/R | Convertible 4WD 204DTA(AJ20D4) | For vehicles with active driveline | GCI82281 | Inner Joint | | 26 | 29 | 34.95 | 67.5 | 106.5 | |
| | 2017.08-2019.12 | 9AT | F | L | Convertible 4WD PT204(AJ20P4) | | GDS82992 | Drive Shaft | | 31 | 31 | 68.5 | 97 | 590 | |
| | 2017.08-2019.12 | 9AT | F | L | Convertible 4WD PT204(AJ20P4) | Date from:2018.01 | GDS84193 | Drive Shaft | | 31 | 31 | 68.5 | 97 | 600 | |
| | 2017.08-2019.12 | 9AT | F | R | Convertible 4WD PT204(AJ20P4) | | GDS56284 | Drive Shaft | | 31 | 28 | 68.5 | 97 | 1042 | |
| | 2017.08-2019.12 | 9AT | F | L/R | Convertible 4WD PT204(AJ20P4) | 6 balls | GCO18250 | Outer Joint | | 31 | 27 | 68.3 | 97 | 61 | I |
| | 2017.08-2019.12 | 9AT | F | L/R | Convertible 4WD PT204(AJ20P4) | 8 balls | GCO81975 | Outer Joint | | 31 | 27 | 68.5 | 97 | 61 | I |
| | 2017.08-2019.12 | 9AT | F | L | Convertible 4WD PT204(AJ20P4) | | GCI85049 | Inner Joint | | 31 | 27 | 36.2 | 68 | 95 | |
| | 2017.08-2019.12 | 9AT | F | R | Convertible 4WD PT204(AJ20P4) | | GCI82629 | Inner Joint | | 28 | 27 | 30 | 520 | 95 | |
| | 2017.08-2019.12 | 9AT | R | L/R | Convertible 4WD PT204(AJ20P4) | For vehicles with active driveline | GDS83574 | Drive Shaft | | 31 | 26 | 65.3 | 95.5 | 775 | |
| | 2017.08-2019.12 | 9AT | R | L/R | Convertible 4WD PT204(AJ20P4) | For vehicles with efficient driveline | GDS83575 | Drive Shaft | | 31 | 26 | 65.3 | 95.5 | 822 | |
| | 2017.08-2019.12 | 9AT | R | L/R | Convertible 4WD PT204(AJ20P4) | | GCO82426 | Outer Joint | | 31 | 29 | 65.3 | 95.5 | 49 | I |

| | YEAR | TRANSM. | F/R | L/R | BODY STYLE & DRIVE TYPE & ENGINE | REMARKS | G-AP Ref. | PRODUCT | ABS | Technical Specifications | | | | | |
|---|---|---|---|---|---|---|---|---|---|---|---|---|---|---|---|
| | | | | | | | | | | A | B | C | H | L | P |
| **LAND ROVER** | | | | | | | | | | | | | | | |
| **Range Rover Evoque** | | | | | | | | | | | | | | | |
| 2.0 (177 kw) | 2017.08-2019.12 | 9AT | R | L/R | Convertible 4WD PT204(AJ20P4) | For vehicles with efficient driveline | GCI18187 | Inner Joint | | 26 | 29 | 35 | 69.5 | 107.5 | |
| | 2017.08-2019.12 | 9AT | R | L/R | Convertible 4WD PT204(AJ20P4) | For vehicles with active driveline | GCI82281 | Inner Joint | | 26 | 29 | 34.95 | 67.5 | 106.5 | |
| | 2017.08-2019.12 | 9AT | F | L | SUV 4WD 204DTA(AJ20D4) | | GDS82992 | Drive Shaft | | 31 | 31 | 68.5 | 97 | 590 | |
| | 2017.08-2019.12 | 9AT | F | L | SUV 4WD 204DTA(AJ20D4) | Date from:2018.01 | GDS84193 | Drive Shaft | | 31 | 31 | 68.5 | 97 | 600 | |
| | 2017.08-2019.12 | 9AT | F | R | SUV 4WD 204DTA(AJ20D4) | | GDS56284 | Drive Shaft | | 31 | 28 | 68.5 | 97 | 1042 | |
| | 2017.08-2019.12 | 9AT | F | L/R | SUV 4WD 204DTA(AJ20D4) | 6 balls | GCO18250 | Outer Joint | | 31 | 27 | 68.3 | 97 | 61 | I |
| | 2017.08-2019.12 | 9AT | F | L/R | SUV 4WD 204DTA(AJ20D4) | 8 balls | GCO81975 | Outer Joint | | 31 | 27 | 68.5 | 97 | 61 | I |
| | 2017.08-2019.12 | 9AT | F | L | SUV 4WD 204DTA(AJ20D4) | | GCI85049 | Inner Joint | | 31 | 27 | 36.2 | 68 | 95 | |
| | 2017.08-2019.12 | 9AT | F | R | SUV 4WD 204DTA(AJ20D4) | | GCI82629 | Inner Joint | | 28 | 27 | 30 | 520 | 95 | |
| | 2017.08-2019.12 | 9AT | R | L/R | SUV 4WD 204DTA(AJ20D4) | For vehicles with active driveline | GDS83574 | Drive Shaft | | 31 | 26 | 65.3 | 95.5 | 775 | |
| | 2017.08-2019.12 | 9AT | R | L/R | SUV 4WD 204DTA(AJ20D4) | For vehicles with efficient driveline | GDS83575 | Drive Shaft | | 31 | 26 | 65.3 | 95.5 | 822 | |
| | 2017.08-2019.12 | 9AT | R | L/R | SUV 4WD 204DTA(AJ20D4) | | GCO82426 | Outer Joint | | 31 | 29 | 65.3 | 95.5 | 49 | I |
| | 2017.08-2019.12 | 9AT | R | L/R | SUV 4WD 204DTA(AJ20D4) | For vehicles with efficient driveline | GCI18187 | Inner Joint | | 26 | 29 | 35 | 69.5 | 107.5 | |
| | 2017.08-2019.12 | 9AT | R | L/R | SUV 4WD 204DTA(AJ20D4) | For vehicles with active driveline | GCI82281 | Inner Joint | | 26 | 29 | 34.95 | 67.5 | 106.5 | |
| | 2017.08-2019.12 | 9AT | F | L | SUV 4WD PT204(AJ20P4) | | GDS82992 | Drive Shaft | | 31 | 31 | 68.5 | 97 | 590 | |
| | 2017.08-2019.12 | 9AT | F | L | SUV 4WD PT204(AJ20P4) | Date from:2018.01 | GDS84193 | Drive Shaft | | 31 | 31 | 68.5 | 97 | 600 | |
| | 2017.08-2019.12 | 9AT | F | R | SUV 4WD PT204(AJ20P4) | | GDS56284 | Drive Shaft | | 31 | 28 | 68.5 | 97 | 1042 | |
| | 2017.08-2019.12 | 9AT | F | L/R | SUV 4WD PT204(AJ20P4) | 6 balls | GCO18250 | Outer Joint | | 31 | 27 | 68.3 | 97 | 61 | I |
| | 2017.08-2019.12 | 9AT | F | L/R | SUV 4WD PT204(AJ20P4) | 8 balls | GCO81975 | Outer Joint | | 31 | 27 | 68.5 | 97 | 61 | I |
| | 2017.08-2019.12 | 9AT | F | L | SUV 4WD PT204(AJ20P4) | | GCI85049 | Inner Joint | | 31 | 27 | 36.2 | 68 | 95 | |
| | 2017.08-2019.12 | 9AT | F | R | SUV 4WD PT204(AJ20P4) | | GCI82629 | Inner Joint | | 28 | 27 | 30 | 520 | 95 | |
| | 2017.08-2019.12 | 9AT | R | L/R | SUV 4WD PT204(AJ20P4) | For vehicles with active driveline | GDS83574 | Drive Shaft | | 31 | 26 | 65.3 | 95.5 | 775 | |
| | 2017.08-2019.12 | 9AT | R | L/R | SUV 4WD PT204(AJ20P4) | For vehicles with efficient driveline | GDS83575 | Drive Shaft | | 31 | 26 | 65.3 | 95.5 | 822 | |
| | 2017.08-2019.12 | 9AT | R | L/R | SUV 4WD PT204(AJ20P4) | | GCO82426 | Outer Joint | | 31 | 29 | 65.3 | 95.5 | 49 | I |
| | 2017.08-2019.12 | 9AT | R | L/R | SUV 4WD PT204(AJ20P4) | For vehicles with efficient driveline | GCI18187 | Inner Joint | | 26 | 29 | 35 | 69.5 | 107.5 | |
| | 2017.08-2019.12 | 9AT | R | L/R | SUV 4WD PT204(AJ20P4) | For vehicles with active driveline | GCI82281 | Inner Joint | | 26 | 29 | 34.95 | 67.5 | 106.5 | |
| | 2018.12- | 9AT | F | L | SUV 4WD 204DTA(AJ20D4) | | GDS82992 | Drive Shaft | | 31 | 31 | 68.5 | 97 | 590 | |
| | 2018.12- | 9AT | F | R | SUV 4WD 204DTA(AJ20D4) | Trans. code:9HP50,Chassis no. to:LH045169 | GDS56284 | Drive Shaft | | 31 | 28 | 68.5 | 97 | 1042 | |
| | 2018.12- | 9AT | F | R | SUV 4WD 204DTA(AJ20D4) | Trans. code:9HP50,Chassis no. from:LH045170 | GDS84191 | Drive Shaft | | 31 | 28 | 68.5 | 97 | 1042 | |
| | 2018.12- | 9AT | F | L/R | SUV 4WD 204DTA(AJ20D4) | 6 balls | GCO18250 | Outer Joint | | 31 | 27 | 68.3 | 97 | 61 | I |
| | 2018.12- | 9AT | F | L/R | SUV 4WD 204DTA(AJ20D4) | 8 balls | GCO81975 | Outer Joint | | 31 | 27 | 68.5 | 97 | 61 | I |
| | 2018.12- | 9AT | F | L | SUV 4WD 204DTA(AJ20D4) | Chassis no. to:LH033466 | GCI85049 | Inner Joint | | 31 | 27 | 36.2 | 68 | 95 | |
| | 2018.12- | 9AT | R | R | SUV 4WD 204DTA(AJ20D4) | Chassis no. to:MH139585;For vehicles with efficient driveline | GDS58199 | Drive Shaft | | 31 | 26 | 65.3 | 95.5 | 815 | |
| | 2018.12- | 9AT | R | L/R | SUV 4WD 204DTA(AJ20D4) | Position:Rear wire left and right;For vehicles with active driveline;Position:Rear wire left;For vehicles with efficient driveline | GDS58309 | Drive Shaft | | 31 | 26 | 65.3 | 95.5 | 723 | |
| | 2018.12- | 9AT | R | L/R | SUV 4WD 204DTA(AJ20D4) | Chassis no. to:MH139585;For vehicles with efficient driveline | GCO83861 | Outer Joint | | 31 | 29 | 65.3 | 95.5 | 49 | I |
| | 2018.12- | 9AT | R | L/R | SUV 4WD 204DTA(AJ20D4) | Chassis no. to:MH139585;For vehicles with efficient driveline | GCI84035 | Inner Joint | | 26 | 29 | 35 | 56 | 109 | |
| 2.0 (183 kw) | 2018.12- | 9AT | F | L | SUV 4WD PT204(AJ20P4) | | GDS82992 | Drive Shaft | | 31 | 31 | 68.5 | 97 | 590 | |
| | 2018.12- | 9AT | F | R | SUV 4WD PT204(AJ20P4) | Trans. code:9HP50,Chassis no. to:LH045169 | GDS56284 | Drive Shaft | | 31 | 28 | 68.5 | 97 | 1042 | |
| | 2018.12- | 9AT | F | R | SUV 4WD PT204(AJ20P4) | Trans. code:9HP50,Chassis no. from:LH045170 | GDS84191 | Drive Shaft | | 31 | 28 | 68.5 | 97 | 1042 | |
| | 2018.12- | 9AT | F | L/R | SUV 4WD PT204(AJ20P4) | 6 balls | GCO18250 | Outer Joint | | 31 | 27 | 68.3 | 97 | 61 | I |
| | 2018.12- | 9AT | F | L/R | SUV 4WD PT204(AJ20P4) | 8 balls | GCO81975 | Outer Joint | | 31 | 27 | 68.5 | 97 | 61 | I |
| | 2018.12- | 9AT | F | L | SUV 4WD PT204(AJ20P4) | Chassis no. to:LH033466 | GCI85049 | Inner Joint | | 31 | 27 | 36.2 | 68 | 95 | |
| | 2018.12- | 9AT | R | R | SUV 4WD PT204(AJ20P4) | Chassis no. to:MH139585;For vehicles with efficient driveline | GDS58199 | Drive Shaft | | 31 | 26 | 65.3 | 95.5 | 815 | |
| | 2018.12- | 9AT | R | L/R | SUV 4WD PT204(AJ20P4) | Position:Rear wire left and right;For vehicles with active driveline;Position:Rear wire left;For vehicles with efficient driveline | GDS58309 | Drive Shaft | | 31 | 26 | 65.3 | 95.5 | 723 | |
| | 2018.12- | 9AT | R | L/R | SUV 4WD PT204(AJ20P4) | Chassis no. to:MH139585;For vehicles with efficient driveline | GCO83861 | Outer Joint | | 31 | 29 | 65.3 | 95.5 | 49 | I |
| | 2018.12- | 9AT | R | L/R | SUV 4WD PT204(AJ20P4) | Chassis no. to:MH139585;For vehicles with efficient driveline | GCI84035 | Inner Joint | | 26 | 29 | 35 | 56 | 109 | |
| 2.0 (184 kw) | 2018.12- | 9AT | F | L | SUV 4WD PT204(AJ20P4) | | GDS82992 | Drive Shaft | | 31 | 31 | 68.5 | 97 | 590 | |
| | 2018.12- | 9AT | F | R | SUV 4WD PT204(AJ20P4) | Trans. code:9HP50,Chassis no. to:LH045169 | GDS56284 | Drive Shaft | | 31 | 28 | 68.5 | 97 | 1042 | |
| | 2018.12- | 9AT | F | R | SUV 4WD PT204(AJ20P4) | Trans. code:9HP50,Chassis no. from:LH045170 | GDS84191 | Drive Shaft | | 31 | 28 | 68.5 | 97 | 1042 | |
| | 2018.12- | 9AT | F | L/R | SUV 4WD PT204(AJ20P4) | 6 balls | GCO18250 | Outer Joint | | 31 | 27 | 68.3 | 97 | 61 | I |
| | 2018.12- | 9AT | F | L/R | SUV 4WD PT204(AJ20P4) | 8 balls | GCO81975 | Outer Joint | | 31 | 27 | 68.5 | 97 | 61 | I |
| | 2018.12- | 9AT | F | L | SUV 4WD PT204(AJ20P4) | Chassis no. to:LH033466 | GCI85049 | Inner Joint | | 31 | 27 | 36.2 | 68 | 95 | |
| | 2018.12- | 9AT | R | R | SUV 4WD PT204(AJ20P4) | Chassis no. to:MH139585;For vehicles with efficient driveline | GDS58199 | Drive Shaft | | 31 | 26 | 65.3 | 95.5 | 815 | |
| | 2018.12- | 9AT | R | L/R | SUV 4WD PT204(AJ20P4) | Position:Rear wire left and right;For vehicles with active driveline;Position:Rear wire left;For vehicles with efficient driveline | GDS58309 | Drive Shaft | | 31 | 26 | 65.3 | 95.5 | 723 | |
| | 2018.12- | 9AT | R | L/R | SUV 4WD PT204(AJ20P4) | Chassis no. to:MH139585;For vehicles with efficient driveline | GCO83861 | Outer Joint | | 31 | 29 | 65.3 | 95.5 | 49 | I |
| | 2018.12- | 9AT | R | L/R | SUV 4WD PT204(AJ20P4) | Chassis no. to:MH139585;For vehicles with efficient driveline | GCI84035 | Inner Joint | | 26 | 29 | 35 | 56 | 109 | |
| 2.0 (213 kw) | 2017.08-2019.12 | 9AT | F | L | SUV 4WD PT204(AJ20P4) | | GDS82992 | Drive Shaft | | 31 | 31 | 68.5 | 97 | 590 | |
| | 2017.08-2019.12 | 9AT | F | L | SUV 4WD PT204(AJ20P4) | Date from:2018.01 | GDS84193 | Drive Shaft | | 31 | 31 | 68.5 | 97 | 600 | |
| | 2017.08-2019.12 | 9AT | F | R | SUV 4WD PT204(AJ20P4) | | GDS56284 | Drive Shaft | | 31 | 28 | 68.5 | 97 | 1042 | |
| | 2017.08-2019.12 | 9AT | F | L/R | SUV 4WD PT204(AJ20P4) | 6 balls | GCO18250 | Outer Joint | | 31 | 27 | 68.3 | 97 | 61 | I |
| | 2017.08-2019.12 | 9AT | F | L/R | SUV 4WD PT204(AJ20P4) | 8 balls | GCO81975 | Outer Joint | | 31 | 27 | 68.5 | 97 | 61 | I |
| | 2017.08-2019.12 | 9AT | F | L | SUV 4WD PT204(AJ20P4) | | GCI85049 | Inner Joint | | 31 | 27 | 36.2 | 68 | 95 | |
| | 2017.08-2019.12 | 9AT | F | R | SUV 4WD PT204(AJ20P4) | | GCI82629 | Inner Joint | | 28 | 27 | 30 | 520 | 95 | |
| | 2017.08-2019.12 | 9AT | R | L/R | SUV 4WD PT204(AJ20P4) | For vehicles with active driveline | GDS83574 | Drive Shaft | | 31 | 26 | 65.3 | 95.5 | 775 | |
| | 2017.08-2019.12 | 9AT | R | L/R | SUV 4WD PT204(AJ20P4) | For vehicles with efficient driveline | GDS83575 | Drive Shaft | | 31 | 26 | 65.3 | 95.5 | 822 | |

| | YEAR | TRANSM. | F/R | L/R | BODY STYLE & DRIVE TYPE & ENGINE | REMARKS | G-AP Ref. | PRODUCT | ABS | Technical Specifications A | B | C | H | L | P |
|---|---|---|---|---|---|---|---|---|---|---|---|---|---|---|---|
| **LAND ROVER** **Range Rover Evoque** | | | | | | | | | | | | | | | |
| 2.0 (213 kw) | 2017.08-2019.12 | 9AT | R | L/R | SUV 4WD PT204(AJ20P4) | | GCO82426 | Outer Joint | | 31 | 29 | 65.3 | 95.5 | 49 | I |
| | 2017.08-2019.12 | 9AT | R | L/R | SUV 4WD PT204(AJ20P4) | For vehicles with efficient driveline | GCI18187 | Inner Joint | | 26 | 29 | 35 | 69.5 | 107.5 | |
| | 2017.08-2019.12 | 9AT | R | L/R | SUV 4WD PT204(AJ20P4) | For vehicles with active driveline | GCI82281 | Inner Joint | | 26 | 29 | 34.95 | 67.5 | 106.5 | |
| 2.0 (221 kw) | 2018.12- | 9AT | F | L | SUV 4WD PT204(AJ20P4) | | GDS82992 | Drive Shaft | | 31 | 31 | 68.5 | 97 | 590 | |
| | 2018.12- | 9AT | F | R | SUV 4WD PT204(AJ20P4) | Trans. code:9HP50,Chassis no. to:LH045169 | GDS56284 | Drive Shaft | | 31 | 28 | 68.5 | 97 | 1042 | |
| | 2018.12- | 9AT | F | R | SUV 4WD PT204(AJ20P4) | Trans. code:9HP50,Chassis no. from:LH045170 | GDS84191 | Drive Shaft | | 31 | 28 | 68.5 | 97 | 1042 | |
| | 2018.12- | 9AT | F | L/R | SUV 4WD PT204(AJ20P4) | 6 balls | GCO18250 | Outer Joint | | 31 | 27 | 68.3 | 97 | 61 | I |
| | 2018.12- | 9AT | F | L/R | SUV 4WD PT204(AJ20P4) | 8 balls | GCO81975 | Outer Joint | | 31 | 27 | 68.5 | 97 | 61 | I |
| | 2018.12- | 9AT | F | L | SUV 4WD PT204(AJ20P4) | Chassis no. to:LH033466 | GCI85049 | Inner Joint | | 31 | 27 | 36.2 | 68 | 95 | |
| | 2018.12- | 9AT | R | R | SUV 4WD PT204(AJ20P4) | Chassis no. to:MH139585;For vehicles with efficient driveline | GDS58199 | Drive Shaft | | 31 | 26 | 65.3 | 95.5 | 815 | |
| | 2018.12- | 9AT | R | L/R | SUV 4WD PT204(AJ20P4) | Position:Rear axle left and right;For vehicles with active driveline;Position:Rear axle left;For vehicles with efficient driveline | GDS58309 | Drive Shaft | | 31 | 26 | 65.3 | 95.5 | 723 | |
| | 2018.12- | 9AT | R | L/R | SUV 4WD PT204(AJ20P4) | Chassis no. to:MH139585;For vehicles with efficient driveline | GCO83861 | Outer Joint | | 31 | 29 | 65.3 | 95.5 | 49 | I |
| | 2018.12- | 9AT | R | L/R | SUV 4WD PT204(AJ20P4) | Chassis no. to:MH139585;For vehicles with efficient driveline | GCI84035 | Inner Joint | | 26 | 29 | 35 | 56 | 109 | |
| | 2020.07- | 9AT | F | L | SUV 4WD PT204(AJ20P4) | Chassis no. to:LH033466 | GDS82992 | Drive Shaft | | 31 | 31 | 68.5 | 97 | 590 | |
| | 2020.07- | 9AT | F | R | SUV 4WD PT204(AJ20P4) | Trans. code:9HP50,Chassis no. to:LH045169 | GDS56284 | Drive Shaft | | 31 | 28 | 68.5 | 97 | 1042 | |
| | 2020.07- | 9AT | F | R | SUV 4WD PT204(AJ20P4) | Trans. code:9HP50,Chassis no. from:LH045170 | GDS84191 | Drive Shaft | | 31 | 28 | 68.5 | 97 | 1042 | |
| | 2020.07- | 9AT | F | L/R | SUV 4WD PT204(AJ20P4) | | GCO81975 | Outer Joint | | 31 | 27 | 68.5 | 97 | 61 | I |
| | 2020.07- | 9AT | F | L | SUV 4WD PT204(AJ20P4) | Chassis no. to:LH033466 | GCI85049 | Inner Joint | | 31 | 27 | 36.2 | 68 | 95 | |
| | 2020.07- | 9AT | R | R | SUV 4WD PT204(AJ20P4) | Chassis no. to:MH139585;For vehicles with efficient driveline | GDS58199 | Drive Shaft | | 31 | 26 | 65.3 | 95.5 | 815 | |
| | 2020.07- | 9AT | R | L/R | SUV 4WD PT204(AJ20P4) | Position:Rear axle left and right;For vehicles with active driveline;Position:Rear axle left;For vehicles with efficient driveline | GDS58309 | Drive Shaft | | 31 | 26 | 65.3 | 95.5 | 723 | |
| | 2020.07- | 9AT | R | L/R | SUV 4WD PT204(AJ20P4) | Chassis no. to:MH139585;For vehicles with efficient driveline | GCO83861 | Outer Joint | | 31 | 29 | 65.3 | 95.5 | 49 | I |
| | 2020.07- | 9AT | R | L/R | SUV 4WD PT204(AJ20P4) | Chassis no. to:MH139585;For vehicles with efficient driveline | GCI84035 | Inner Joint | | 26 | 29 | 35 | 56 | 109 | |
| 2.2 (110 kw) | 2011.06-2019.12 | 6AT | F | L | SUV 4WD 224DT(DW12BTED4) | | GDS82992 | Drive Shaft | | 31 | 31 | 68.5 | 97 | 590 | |
| | 2011.06-2019.12 | 6AT | F | R | SUV 4WD 224DT(DW12BTED4) | | GDS83177 | Drive Shaft | | 31 | 28 | 68.5 | 97 | 1051 | |
| | 2011.06-2019.12 | 6AT | F | R | SUV 4WD 224DT(DW12BTED4) | | GCI82155 | Inner Joint | | 28 | 27 | 30 | 529.5 | 95.5 | |
| | 2011.06-2019.12 | 6AT/9AT | F | L | SUV 4WD 224DT(DW12BTED4) | Transmission:9AT,Chassis no. from:FH957070 | GCI85049 | Inner Joint | | 31 | 27 | 36.2 | 68 | 95 | |
| | 2011.06-2019.12 | 6MT | F | L | SUV 4WD 224DT(DW12BTED4) | Chassis no. to:(V)DH999999 | GDS18408 | Drive Shaft | | 31 | 31 | 68.3 | 97 | 602 | |
| | 2011.06-2019.12 | 6MT | F | L | SUV 4WD 224DT(DW12BTED4) | Chassis no. from:EH000001,Chassis no. to:FH957069 | GDS56383 | Drive Shaft | | 31 | 31 | 68.5 | 97 | 614 | |
| | 2011.06-2019.12 | 6MT | F | R | SUV 4WD 224DT(DW12BTED4) | Chassis no. from:EH000001 | GDS56229 | Drive Shaft | | 31 | 28 | 68.5 | 97 | 1049 | |
| | 2011.06-2019.12 | 6MT | F | R | SUV 4WD 224DT(DW12BTED4) | Chassis no. to:DH999999 | GDS83888 | Drive Shaft | | 31 | 28 | 68.5 | 97 | 1068 | |
| | 2011.06-2019.12 | 6MT | F | L | SUV 4WD 224DT(DW12BTED4) | Chassis no. from:FH957070;Chassis no. to:(V)DH999999 | GCI82631 | Inner Joint | | 31 | 27 | 44 | 65 | 112 | |
| | 2011.06-2019.12 | 6MT | F | R | SUV 4WD 224DT(DW12BTED4) | Chassis no. to:DH999999 | GCI82401 | Inner Joint | | 28 | 27 | 30 | 548.5 | 95.5 | |
| | 2011.06-2019.12 | 6MT | F | R | SUV 4WD 224DT(DW12BTED4) | Chassis no. from:FH957070 | GCI83302 | Inner Joint | | 28 | 27 | 30 | 455.5 | 95.5 | |
| | 2011.06-2019.12 | 9AT | F | L | SUV 4WD 224DT(DW12BTED4) | Chassis no. from:FH957070 | GDS82992 | Drive Shaft | | 31 | 31 | 68.5 | 97 | 590 | |
| | 2011.06-2019.12 | 9AT | F | R | SUV 4WD 224DT(DW12BTED4) | Chassis no. from:KH000001 | GDS56284 | Drive Shaft | | 31 | 28 | 68.5 | 97 | 1042 | |
| | 2011.06-2019.12 | 9AT | F | R | SUV 4WD 224DT(DW12BTED4) | Chassis no. to:JH999999 | GDS84565 | Drive Shaft | | 31 | 28 | 68.5 | 97 | 1031 | |
| | 2011.06-2019.12 | 9AT | F | R | SUV 4WD 224DT(DW12BTED4) | Chassis no. from:K1Z73623 | GCI82209 | Inner Joint | | 28 | 27 | 30 | 436 | 96 | |
| | 2011.06-2019.12 | 9AT/6MT | F | L/R | SUV 4WD 224DT(DW12BTED4) | Transmission:6MT,Chassis no. to:DH999999;Transmission:9AT,Chassis no. from:FH957070;6 balls | GCO81975 | Outer Joint | | 31 | 27 | 68.5 | 97 | 61 | I |
| | 2011.06-2019.12 | AT/MT | F | L/R | SUV 4WD 224DT(DW12BTED4) | 6 balls | GCO18250 | Outer Joint | | 31 | 27 | 68.3 | 97 | 61 | I |
| | 2011.06-2019.12 | 6AT/9AT/6MT | R | L/R | SUV 4WD 224DT(DW12BTED4) | Chassis no. to:(V)DH999999;Chassis no. from:(V)EH000001;For vehicles with efficient driveline | GDS83575 | Drive Shaft | | 31 | 26 | 65.3 | 95.5 | 822 | |
| | 2011.06-2019.12 | 6AT/9AT/6MT | R | L/R | SUV 4WD 224DT(DW12BTED4) | | GCO82426 | Outer Joint | | 31 | 29 | 65.3 | 95.5 | 49 | I |
| | 2011.06-2019.12 | 6AT/9AT/6MT | R | L/R | SUV 4WD 224DT(DW12BTED4) | Chassis no. to:DH999999;Chassis no. from:EH000001;For vehicles with efficient driveline | GCI18187 | Inner Joint | | 26 | 29 | 35 | 69.5 | 107.5 | |
| | 2011.06-2019.12 | 6AT/9AT/6MT | R | L/R | SUV 4WD 224DT(DW12BTED4) | Chassis no. from:EH000001;For vehicles with active driveline | GCI82281 | Inner Joint | | 26 | 29 | 34.95 | 67.5 | 106.5 | |
| | 2011.06-2019.12 | 9AT | R | L/R | SUV 4WD 224DT(DW12BTED4) | Chassis no. from:EH000001;For vehicles with active driveline | GDS83574 | Drive Shaft | | 31 | 26 | 65.3 | 95.5 | 775 | |
| | 2011.06-2019.12 | 6MT | F | L | SUV FWD 224DT(DW12BTED4) | Chassis no. to:(V)DH999999 | GDS18408 | Drive Shaft | | 31 | 31 | 68.3 | 97 | 602 | |
| | 2011.06-2019.12 | 6MT | F | L | SUV FWD 224DT(DW12BTED4) | Chassis no. from:EH000001,Chassis no. to:FH957069 | GDS56383 | Drive Shaft | | 31 | 31 | 68.5 | 97 | 614 | |
| | 2011.06-2019.12 | 6MT | F | R | SUV FWD 224DT(DW12BTED4) | Chassis no. to:(V)DH999999 | GDS18409 | Drive Shaft | | 31 | 28 | 68.3 | 97 | 1069 | |
| | 2011.06-2019.12 | 6MT | F | R | SUV FWD 224DT(DW12BTED4) | Chassis no. from:(V)EH000001;Chassis no. to:(V)FH957069;Chassis no. from:(V)FH957070 | GDS83993 | Drive Shaft | | 31 | 28 | 68.5 | 97 | 1050 | |
| | 2011.06-2019.12 | 6MT | F | L/R | SUV FWD 224DT(DW12BTED4) | 6 balls | GCO18250 | Outer Joint | | 31 | 27 | 68.3 | 97 | 61 | I |
| | 2011.06-2019.12 | 6MT | F | L/R | SUV FWD 224DT(DW12BTED4) | 8 balls | GCO81975 | Outer Joint | | 31 | 27 | 68.5 | 97 | 61 | I |
| | 2011.06-2019.12 | 6MT | F | L | SUV FWD 224DT(DW12BTED4) | Chassis no. from:FH957070 | GCI82631 | Inner Joint | | 31 | 27 | 44 | 65 | 112 | |
| | 2011.06-2019.12 | 6MT | F | R | SUV FWD 224DT(DW12BTED4) | Chassis no. from:(V)EH000001;Chassis no. to:(V)FH957069;Chassis no. from:(V)FH957070 | GCI82480 | Inner Joint | | 28 | 27 | 39.95 | 455.5 | 95.5 | |
| | 2015.05-2019.12 | 6MT | F | L | SUV Van 4WD 224DT(DW12BTED4) | Chassis no. to:(V)DH999999 | GDS18408 | Drive Shaft | | 31 | 31 | 68.3 | 97 | 602 | |
| | 2015.05-2019.12 | 6MT | F | L | SUV Van 4WD 224DT(DW12BTED4) | Chassis no. from:EH000001 | GDS56383 | Drive Shaft | | 31 | 31 | 68.5 | 97 | 614 | |
| | 2015.05-2019.12 | 6MT | F | R | SUV Van 4WD 224DT(DW12BTED4) | Chassis no. from:EH000001 | GDS56229 | Drive Shaft | | 31 | 28 | 68.5 | 97 | 1049 | |
| | 2015.05-2019.12 | 6MT | F | L | SUV Van 4WD 224DT(DW12BTED4) | Chassis no. from:FH957070 | GCI82631 | Inner Joint | | 31 | 27 | 44 | 65 | 112 | |
| | 2015.05-2019.12 | 6MT | F | R | SUV Van 4WD 224DT(DW12BTED4) | Chassis no. from:FH957070 | GCI83302 | Inner Joint | | 28 | 27 | 30 | 455.5 | 95.5 | |
| | 2015.05-2019.12 | 9AT | F | L | SUV Van 4WD 224DT(DW12BTED4) | Chassis no. from:FH957070 | GDS82992 | Drive Shaft | | 31 | 31 | 68.5 | 97 | 590 | |
| | 2015.05-2019.12 | 9AT | F | R | SUV Van 4WD 224DT(DW12BTED4) | Chassis no. from:KH000001 | GDS56284 | Drive Shaft | | 31 | 28 | 68.5 | 97 | 1042 | |
| | 2015.05-2019.12 | 9AT | F | R | SUV Van 4WD 224DT(DW12BTED4) | Chassis no. to:JH999999 | GDS84565 | Drive Shaft | | 31 | 28 | 68.5 | 97 | 1031 | |
| | 2015.05-2019.12 | 9AT | F | L | SUV Van 4WD 224DT(DW12BTED4) | Chassis no. from:FH957070 | GCI85049 | Inner Joint | | 31 | 27 | 36.2 | 68 | 95 | |
| | 2015.05-2019.12 | 9AT | F | R | SUV Van 4WD 224DT(DW12BTED4) | Chassis no. from:K1Z73623 | GCI82209 | Inner Joint | | 28 | 27 | 30 | 436 | 96 | |
| | 2015.05-2019.12 | 9AT/6MT | F | L/R | SUV Van 4WD 224DT(DW12BTED4) | Transmission:6MT,Chassis no. to:DH999999;Transmission:9AT,Chassis no. from:FH957070;6 balls | GCO81975 | Outer Joint | | 31 | 27 | 68.5 | 97 | 61 | I |
| | 2015.05-2019.12 | 9AT | R | L/R | SUV Van 4WD 224DT(DW12BTED4) | For vehicles with active driveline | GDS83574 | Drive Shaft | | 31 | 26 | 65.3 | 95.5 | 775 | |
| | 2015.05-2019.12 | 9AT | R | L/R | SUV Van 4WD 224DT(DW12BTED4) | Chassis no. to:DH999999;Chassis no. from:EH000001;For vehicles with efficient driveline | GDS83575 | Drive Shaft | | 31 | 26 | 65.3 | 95.5 | 822 | |

| | YEAR | TRANSM. | F/R | L/R | BODY STYLE & DRIVE TYPE & ENGINE | REMARKS | G-AP Ref. | PRODUCT | ABS | Technical Specifications | | | | | |
|---|---|---|---|---|---|---|---|---|---|---|---|---|---|---|---|
| | | | | | | | | | | A | B | C | H | L | P |
| **LAND ROVER** | | | | | | | | | | | | | | | |
| **Range Rover Evoque** | | | | | | | | | | | | | | | |
| 2.2 (110 kw) | 2015.05-2019.12 | 9AT | R | L/R | SUV Van 4WD 224DT(DW12BTED4) | | GCO82426 | Outer Joint | | 31 | 29 | 65.3 | 95.5 | 49 | I |
| | 2015.05-2019.12 | 9AT | R | L/R | SUV Van 4WD 224DT(DW12BTED4) | For vehicles with efficient driveline | GCI18187 | Inner Joint | | 26 | 29 | 35 | 69.5 | 107.5 | |
| | 2015.05-2019.12 | 9AT | R | L/R | SUV Van 4WD 224DT(DW12BTED4) | For vehicles with active driveline | GCI82281 | Inner Joint | | 26 | 29 | 34.95 | 67.5 | 106.5 | |
| | 2015.05-2019.12 | 6MT | F | L | SUV Van FWD 224DT(DW12BTED4) | Chassis no. to:(V)DH999999 | GDS18408 | Drive Shaft | | 31 | 31 | 68.3 | 97 | 602 | |
| | 2015.05-2019.12 | 6MT | F | L | SUV Van FWD 224DT(DW12BTED4) | Chassis no. from:EH000001 | GDS56383 | Drive Shaft | | 31 | 31 | 68.5 | 97 | 614 | |
| | 2015.05-2019.12 | 6MT | F | R | SUV Van FWD 224DT(DW12BTED4) | Chassis no. to:(V)DH999999 | GDS18409 | Drive Shaft | | 31 | 28 | 68.3 | 97 | 1069 | |
| | 2015.05-2019.12 | 6MT | F | R | SUV Van FWD 224DT(DW12BTED4) | Chassis no. from:(V)EH000001,Chassis no. to:(V)FH957069;Chassis no. from:(V)FH957070 | GDS83993 | Drive Shaft | | 31 | 28 | 68.5 | 97 | 1050 | |
| | 2015.05-2019.12 | 6MT | F | L/R | SUV Van FWD 224DT(DW12BTED4) | | GCO81975 | Outer Joint | | 31 | 27 | 68.5 | 97 | 61 | I |
| | 2015.05-2019.12 | 6MT | F | L | SUV Van FWD 224DT(DW12BTED4) | Chassis no. from:FH957070 | GCI82631 | Inner Joint | | 31 | 27 | 44 | 65 | 112 | |
| | 2015.05-2019.12 | 6MT | F | R | SUV Van FWD 224DT(DW12BTED4) | Chassis no. from:(V)EH000001,Chassis no. to:(V)FH957069;Chassis no. from:(V)FH957070 | GCI82480 | Inner Joint | | 28 | 27 | 39.95 | 455.5 | 95.5 | |
| 2.2 (140 kw) | 2011.06-2019.12 | 6AT | F | L | SUV 4WD 224DT(DW12BTED4) | | GDS82992 | Drive Shaft | | 31 | 31 | 68.5 | 97 | 590 | |
| | 2011.06-2019.12 | 6AT | F | R | SUV 4WD 224DT(DW12BTED4) | | GDS83177 | Drive Shaft | | 31 | 28 | 68.5 | 97 | 1051 | |
| | 2011.06-2019.12 | 6AT | F | R | SUV 4WD 224DT(DW12BTED4) | | GCI82155 | Inner Joint | | 28 | 27 | 30 | 529.5 | 95.5 | |
| | 2011.06-2019.12 | 6AT/9AT | F | L | SUV 4WD 224DT(DW12BTED4) | Transmission:9AT,Chassis no. from:FH957070 | GCI85049 | Inner Joint | | 31 | 27 | 36.2 | 68 | 95 | |
| | 2011.06-2019.12 | 6MT | F | L | SUV 4WD 224DT(DW12BTED4) | Chassis no. to:(V)DH999999 | GDS18408 | Drive Shaft | | 31 | 31 | 68.3 | 97 | 602 | |
| | 2011.06-2019.12 | 6MT | F | L | SUV 4WD 224DT(DW12BTED4) | Chassis no. from:EH000001,Chassis no. to:FH957069 | GDS56383 | Drive Shaft | | 31 | 31 | 68.5 | 97 | 614 | |
| | 2011.06-2019.12 | 6MT | F | R | SUV 4WD 224DT(DW12BTED4) | Chassis no. from:EH000001 | GDS56229 | Drive Shaft | | 31 | 28 | 68.5 | 97 | 1049 | |
| | 2011.06-2019.12 | 6MT | F | R | SUV 4WD 224DT(DW12BTED4) | Chassis no. to:DH999999 | GDS83888 | Drive Shaft | | 31 | 28 | 68.5 | 97 | 1068 | |
| | 2011.06-2019.12 | 6MT | F | L | SUV 4WD 224DT(DW12BTED4) | Chassis no. from:FH957070;Chassis no. to:(V)DH999999 | GCI82631 | Inner Joint | | 31 | 27 | 44 | 65 | 112 | |
| | 2011.06-2019.12 | 6MT | F | R | SUV 4WD 224DT(DW12BTED4) | Chassis no. to:DH999999 | GCI82401 | Inner Joint | | 28 | 27 | 30 | 548.5 | 95.5 | |
| | 2011.06-2019.12 | 6MT | F | R | SUV 4WD 224DT(DW12BTED4) | Chassis no. from:FH957070 | GCI83302 | Inner Joint | | 28 | 27 | 30 | 455.5 | 95.5 | |
| | 2011.06-2019.12 | 9AT | F | L | SUV 4WD 224DT(DW12BTED4) | Chassis no. from:FH957070 | GDS82992 | Drive Shaft | | 31 | 31 | 68.5 | 97 | 590 | |
| | 2011.06-2019.12 | 9AT | F | R | SUV 4WD 224DT(DW12BTED4) | Chassis no. from:KH000001 | GDS56284 | Drive Shaft | | 31 | 28 | 68.5 | 97 | 1042 | |
| | 2011.06-2019.12 | 9AT | F | R | SUV 4WD 224DT(DW12BTED4) | Chassis no. to:JH999999 | GDS84565 | Drive Shaft | | 31 | 28 | 68.5 | 97 | 1031 | |
| | 2011.06-2019.12 | 9AT | F | R | SUV 4WD 224DT(DW12BTED4) | Chassis no. from:K1Z73623 | GCI82209 | Inner Joint | | 28 | 27 | 30 | 436 | 96 | |
| | 2011.06-2019.12 | 9AT/6MT | F | L/R | SUV 4WD 224DT(DW12BTED4) | Transmission:6MT,Chassis no. to:DH999999;Transmission:9AT,Chassis no. from:FH957070;6 balls | GCO81975 | Outer Joint | | 31 | 27 | 68.5 | 97 | 61 | I |
| | 2011.06-2019.12 | AT/MT | F | L/R | SUV 4WD 224DT(DW12BTED4) | 6 balls | GCO18250 | Outer Joint | | 31 | 27 | 68.3 | 97 | 61 | I |
| | 2011.06-2019.12 | 6AT/9AT/6MT | R | L/R | SUV 4WD 224DT(DW12BTED4) | Chassis no. to:DH999999;Chassis no. from:EH000001,For vehicles with efficient driveline | GDS83575 | Drive Shaft | | 31 | 26 | 65.3 | 95.5 | 822 | |
| | 2011.06-2019.12 | 6AT/9AT/6MT | R | L/R | SUV 4WD 224DT(DW12BTED4) | | GCO82426 | Outer Joint | | 31 | 29 | 65.3 | 95.5 | 49 | I |
| | 2011.06-2019.12 | 6AT/9AT/6MT | R | L/R | SUV 4WD 224DT(DW12BTED4) | Chassis no. to:DH999999;Chassis no. from:EH000001,For vehicles with efficient driveline | GCI18187 | Inner Joint | | 26 | 29 | 35 | 69.5 | 107.5 | |
| | 2011.06-2019.12 | 6AT/9AT/6MT | R | L/R | SUV 4WD 224DT(DW12BTED4) | Chassis no. from:EH000001,For vehicles with active driveline | GCI82281 | Inner Joint | | 26 | 29 | 34.95 | 67.5 | 106.5 | |
| | 2011.06-2019.12 | 9AT | R | L/R | SUV 4WD 224DT(DW12BTED4) | Chassis no. from:EH000001,For vehicles with active driveline | GDS83574 | Drive Shaft | | 31 | 26 | 65.3 | 95.5 | 775 | |
| | 2015.05-2019.12 | 6MT | F | L | SUV Van 4WD 224DT(DW12BTED4) | Chassis no. to:(V)DH999999 | GDS18408 | Drive Shaft | | 31 | 31 | 68.3 | 97 | 602 | |
| | 2015.05-2019.12 | 6MT | F | L | SUV Van 4WD 224DT(DW12BTED4) | Chassis no. from:EH000001 | GDS56383 | Drive Shaft | | 31 | 31 | 68.5 | 97 | 614 | |
| | 2015.05-2019.12 | 6MT | F | R | SUV Van 4WD 224DT(DW12BTED4) | Chassis no. from:EH000001 | GDS56229 | Drive Shaft | | 31 | 28 | 68.5 | 97 | 1049 | |
| | 2015.05-2019.12 | 6MT | F | L | SUV Van 4WD 224DT(DW12BTED4) | Chassis no. from:FH957070 | GCI82631 | Inner Joint | | 31 | 27 | 44 | 65 | 112 | |
| | 2015.05-2019.12 | 6MT | F | R | SUV Van 4WD 224DT(DW12BTED4) | Chassis no. from:FH957070 | GCI83302 | Inner Joint | | 28 | 27 | 30 | 455.5 | 95.5 | |
| | 2015.05-2019.12 | 9AT | F | L | SUV Van 4WD 224DT(DW12BTED4) | Chassis no. from:FH957070 | GDS82992 | Drive Shaft | | 31 | 31 | 68.5 | 97 | 590 | |
| | 2015.05-2019.12 | 9AT | F | R | SUV Van 4WD 224DT(DW12BTED4) | Chassis no. from:KH000001 | GDS56284 | Drive Shaft | | 31 | 28 | 68.5 | 97 | 1042 | |
| | 2015.05-2019.12 | 9AT | F | R | SUV Van 4WD 224DT(DW12BTED4) | Chassis no. to:JH999999 | GDS84565 | Drive Shaft | | 31 | 28 | 68.5 | 97 | 1031 | |
| | 2015.05-2019.12 | 9AT | F | L | SUV Van 4WD 224DT(DW12BTED4) | Chassis no. from:FH957070 | GCI85049 | Inner Joint | | 31 | 27 | 36.2 | 68 | 95 | |
| | 2015.05-2019.12 | 9AT | F | R | SUV Van 4WD 224DT(DW12BTED4) | Chassis no. from:K1Z73623 | GCI82209 | Inner Joint | | 28 | 27 | 30 | 436 | 96 | |
| | 2015.05-2019.12 | 9AT/6MT | F | L/R | SUV Van 4WD 224DT(DW12BTED4) | Transmission:6MT,Chassis no. to:DH999999;Transmission:9AT,Chassis no. from:FH957070;6 balls | GCO81975 | Outer Joint | | 31 | 27 | 68.5 | 97 | 61 | I |
| | 2015.05-2019.12 | 9AT | R | L/R | SUV Van 4WD 224DT(DW12BTED4) | | GCO82426 | Outer Joint | | 31 | 29 | 65.3 | 95.5 | 49 | I |
| | 2015.05-2019.12 | AT | R | L/R | SUV Van 4WD 224DT(DW12BTED4) | Chassis no. from:EH000001,For vehicles with active driveline | GDS83574 | Drive Shaft | | 31 | 26 | 65.3 | 95.5 | 775 | |
| | 2015.05-2019.12 | AT | R | L/R | SUV Van 4WD 224DT(DW12BTED4) | Chassis no. to:DH999999;Chassis no. from:EH000001,For vehicles with efficient driveline | GDS83575 | Drive Shaft | | 31 | 26 | 65.3 | 95.5 | 822 | |
| | 2015.05-2019.12 | AT | R | L/R | SUV Van 4WD 224DT(DW12BTED4) | For vehicles with efficient driveline | GCI18187 | Inner Joint | | 26 | 29 | 35 | 69.5 | 107.5 | |
| | 2015.05-2019.12 | AT | R | L/R | SUV Van 4WD 224DT(DW12BTED4) | For vehicles with active driveline | GCI82281 | Inner Joint | | 26 | 29 | 34.95 | 67.5 | 106.5 | |
| **Range Rover Sport** | | | | | | | | | | | | | | | |
| 2.0 (177 kw) | 2016.08-2022.03 | 8AT | F | L | SUV 4WD 204DTA(AJ20D4) | Single speed transfer case | GDS82515 | Drive Shaft | | 31 | 29 | 68.5 | 97 | 664 | |
| | 2016.08-2022.03 | 8AT | F | L | SUV 4WD 204DTA(AJ20D4) | Dual speed transfer case | GDS84004 | Drive Shaft | | 31 | 29 | 68.5 | 97 | 661 | |
| | 2016.08-2022.03 | 8AT | F | R | SUV 4WD 204DTA(AJ20D4) | Dual speed transfer case;Single speed transfer case | GDS82516 | Drive Shaft | | 31 | 29 | 68.5 | 97 | 1027 | |
| | 2016.08-2022.03 | 8AT | F | L/R | SUV 4WD 204DTA(AJ20D4) | Dual speed transfer case;Single speed transfer case | GCO81975 | Outer Joint | | 31 | 27 | 68.5 | 97 | 61 | I |
| | 2016.08-2022.03 | 8AT | F | L | SUV 4WD 204DTA(AJ20D4) | Single speed transfer case | GCI81849 | Inner Joint | | 29 | 26 | 44 | 71.5 | 125 | |
| | 2016.08-2022.03 | 8AT | F | L | SUV 4WD 204DTA(AJ20D4) | Dual speed transfer case | GCI82248 | Inner Joint | | 29 | 27 | 44 | 71.5 | 129 | |
| | 2016.08-2022.03 | 8AT | F | R | SUV 4WD 204DTA(AJ20D4) | Dual speed transfer case;Single speed transfer case | GCI82268 | Inner Joint | | 29 | 27 | 44 | 461 | 100 | |
| | 2016.08-2022.03 | 8AT | R | L | SUV 4WD 204DTA(AJ20D4) | For vehicles without electronic limited slip diff. | GDS82346 | Drive Shaft | | 31 | 31 | 68.2 | 97 | 838 | |
| | 2016.08-2022.03 | 8AT | R | L | SUV 4WD 204DTA(AJ20D4) | For vehicles with electronic limited slip diff. | GDS84013 | Drive Shaft | | 31 | 31 | 68.2 | 97 | 838 | |
| | 2016.08-2022.03 | 8AT | R | R | SUV 4WD 204DTA(AJ20D4) | Chassis no. to:FA527639 | GDS82345 | Drive Shaft | | 31 | 31 | 68.2 | 97 | 860 | |
| | 2016.08-2022.03 | 8AT | R | R | SUV 4WD 204DTA(AJ20D4) | Chassis no. from:FA527640 | GDS83549 | Drive Shaft | | 31 | 31 | 68.2 | 97 | 860 | |
| | 2016.08-2022.03 | 8AT | R | L/R | SUV 4WD 204DTA(AJ20D4) | Chassis no. to:FA527639 | GCO81813 | Outer Joint | | 31 | 28 | 68.2 | 97 | 61 | I |
| | 2016.08-2022.03 | 8AT | R | L/R | SUV 4WD 204DTA(AJ20D4) | Chassis no. from:FA527640 | GCO82414 | Outer Joint | | 31 | 28 | 68.2 | 97 | 61 | I |
| | 2016.08-2022.03 | 8AT | R | L | SUV 4WD 204DTA(AJ20D4) | For vehicles with electronic limited slip diff. | GCI82452 | Inner Joint | | 31 | 28 | 44 | 152 | 105 | |
| | 2016.08-2022.03 | 8AT | R | L/R | SUV 4WD 204DTA(AJ20D4) | Possion:Left,For vehicles without electronic limited slip diff. | GCI81763 | Inner Joint | | 31 | 28 | 44 | 86 | 110.5 | |
| 2.0 (221 kw) | 2017.10-2022.03 | 8AT | F | L | SUV 4WD PT204(AJ20P4) | Single speed transfer case | GDS82515 | Drive Shaft | | 31 | 29 | 68.5 | 97 | 664 | |

| | YEAR | TRANSM. | F/R | L/R | BODY STYLE & DRIVE TYPE & ENGINE | REMARKS | G-AP Ref. | PRODUCT | ABS | Technical Specifications A | B | C | H | L | P |
|---|---|---|---|---|---|---|---|---|---|---|---|---|---|---|---|
| **LAND ROVER** **Range Rover Sport** | | | | | | | | | | | | | | | |
| 2.0 (221 kw) | 2017.10-2022.03 | 8AT | F | L | SUV 4WD PT204(AJ20P4) | Dual speed transfer case | GDS84004 | Drive Shaft | | 31 | 29 | 68.5 | 97 | 661 | |
| | 2017.10-2022.03 | 8AT | F | R | SUV 4WD PT204(AJ20P4) | Dual speed transfer case;Single speed transfer case | GDS82516 | Drive Shaft | | 31 | 29 | 68.5 | 97 | 1027 | |
| | 2017.10-2022.03 | 8AT | F | L/R | SUV 4WD PT204(AJ20P4) | Dual speed transfer case | GCO81975 | Outer Joint | | 31 | 27 | 68.5 | 97 | 61 | I |
| | 2017.10-2022.03 | 8AT | F | L | SUV 4WD PT204(AJ20P4) | Single speed transfer case | GCI81849 | Inner Joint | | 29 | 26 | 44 | 71.5 | 125 | |
| | 2017.10-2022.03 | 8AT | F | L | SUV 4WD PT204(AJ20P4) | Dual speed transfer case | GCI82248 | Inner Joint | | 29 | 27 | 44 | 71.5 | 129 | |
| | 2017.10-2022.03 | 8AT | F | R | SUV 4WD PT204(AJ20P4) | Dual speed transfer case;Single speed transfer case | GCI82268 | Inner Joint | | 29 | 27 | 44 | 461 | 100 | |
| | 2017.10-2022.03 | 8AT | R | L | SUV 4WD PT204(AJ20P4) | For vehicles without electronic limited slip diff. | GDS82346 | Drive Shaft | | 31 | 31 | 68.2 | 97 | 838 | |
| | 2017.10-2022.03 | 8AT | R | L | SUV 4WD PT204(AJ20P4) | For vehicles with electronic limited slip diff. | GDS84013 | Drive Shaft | | 31 | 31 | 68.2 | 97 | 838 | |
| | 2017.10-2022.03 | 8AT | R | R | SUV 4WD PT204(AJ20P4) | Chassis no. to:FA527639 | GDS82345 | Drive Shaft | | 31 | 31 | 68.2 | 97 | 860 | |
| | 2017.10-2022.03 | 8AT | R | R | SUV 4WD PT204(AJ20P4) | Chassis no. from:FA527640 | GDS83549 | Drive Shaft | | 31 | 31 | 68.2 | 97 | 860 | |
| | 2017.10-2022.03 | 8AT | R | L/R | SUV 4WD PT204(AJ20P4) | Chassis no. to:FA527639 | GCO81813 | Outer Joint | | 31 | 28 | 68.2 | 97 | 61 | I |
| | 2017.10-2022.03 | 8AT | R | L/R | SUV 4WD PT204(AJ20P4) | Chassis no. from:FA527640 | GCO82414 | Outer Joint | | 31 | 28 | 68.2 | 97 | 61 | I |
| | 2017.10-2022.03 | 8AT | R | L | SUV 4WD PT204(AJ20P4) | For vehicles with electronic limited slip diff. | GCI82452 | Inner Joint | | 31 | 28 | 44 | 152 | 105 | |
| | 2017.10-2022.03 | 8AT | R | L/R | SUV 4WD PT204(AJ20P4) | Possion:Left,For vehicles without electronic limited slip diff. | GCI81763 | Inner Joint | | 31 | 28 | 44 | 86 | 110.5 | |
| 2.0 (297 kw) | 2017.10-2022.03 | 8AT | F | L | SUV 4WD PT204(AJ20P4) | | GDS82515 | Drive Shaft | | 31 | 29 | 68.5 | 97 | 664 | |
| | 2017.10-2022.03 | 8AT | F | L | SUV 4WD PT204(AJ20P4) | Dual speed transfer case | GDS84004 | Drive Shaft | | 31 | 29 | 68.5 | 97 | 661 | |
| | 2017.10-2022.03 | 8AT | F | R | SUV 4WD PT204(AJ20P4) | Dual speed transfer case;Single speed transfer case | GDS82516 | Drive Shaft | | 31 | 29 | 68.5 | 97 | 1027 | |
| | 2017.10-2022.03 | 8AT | F | L/R | SUV 4WD PT204(AJ20P4) | Dual speed transfer case | GCO81975 | Outer Joint | | 31 | 27 | 68.5 | 97 | 61 | I |
| | 2017.10-2022.03 | 8AT | F | L | SUV 4WD PT204(AJ20P4) | Dual speed transfer case | GCI82248 | Inner Joint | | 29 | 27 | 44 | 71.5 | 129 | |
| | 2017.10-2022.03 | 8AT | F | R | SUV 4WD PT204(AJ20P4) | Dual speed transfer case;Single speed transfer case | GCI82268 | Inner Joint | | 29 | 27 | 44 | 461 | 100 | |
| | 2017.10-2022.03 | 8AT | R | L | SUV 4WD PT204(AJ20P4) | For vehicles without electronic limited slip diff. | GDS82346 | Drive Shaft | | 31 | 31 | 68.2 | 97 | 838 | |
| | 2017.10-2022.03 | 8AT | R | L | SUV 4WD PT204(AJ20P4) | For vehicles with electronic LTD slip differential;Bellows Material:Thermoplastic | GDS84013 | Drive Shaft | | 31 | 31 | 68.2 | 97 | 838 | |
| | 2017.10-2022.03 | 8AT | R | R | SUV 4WD PT204(AJ20P4) | Chassis no. to:FA527639 | GDS82345 | Drive Shaft | | 31 | 31 | 68.2 | 97 | 860 | |
| | 2017.10-2022.03 | 8AT | R | R | SUV 4WD PT204(AJ20P4) | Chassis no. from:FA527640 | GDS83549 | Drive Shaft | | 31 | 31 | 68.2 | 97 | 860 | |
| | 2017.10-2022.03 | 8AT | R | L/R | SUV 4WD PT204(AJ20P4) | Chassis no. to:FA527639 | GCO81813 | Outer Joint | | 31 | 28 | 68.2 | 97 | 61 | I |
| | 2017.10-2022.03 | 8AT | R | L/R | SUV 4WD PT204(AJ20P4) | Chassis no. from:FA527640 | GCO82414 | Outer Joint | | 31 | 28 | 68.2 | 97 | 61 | I |
| | 2017.10-2022.03 | 8AT | R | L | SUV 4WD PT204(AJ20P4) | For vehicles with electronic limited slip diff. | GCI82452 | Inner Joint | | 31 | 28 | 44 | 152 | 105 | |
| | 2017.10-2022.03 | 8AT | R | L/R | SUV 4WD PT204(AJ20P4) | Possion:Left,For vehicles without electronic limited slip diff. | GCI81763 | Inner Joint | | 31 | 28 | 44 | 86 | 110.5 | |
| 2.7 (140 kw) | 2005.02-2013.03 | 6AT | F | L | SUV 4WD 276DT(TDV6) | | GDS59535 | Drive Shaft | 48T | 29 | 29 | 74 | 96 | 639 | |
| | 2005.02-2013.03 | 6AT | F | R | SUV 4WD 276DT(TDV6) | | GDS59623 | Drive Shaft | 48T | 29 | 29 | 74 | 96 | 998 | |
| | 2005.02-2013.03 | 6AT | F | R | SUV 4WD 276DT(TDV6) | | GCI59195 | Inner Joint | | 29 | 26 | 41.3 | 370 | 85.5 | |
| | 2005.02-2013.03 | AT | F | L/R | SUV 4WD 276DT(TDV6) | | GCO30015 | Outer Joint | 48T | 29 | 26 | 74 | 96 | 64.5 | M |
| | 2005.02-2013.03 | 6AT | R | L | SUV 4WD 276DT(TDV6) | With differential lock | GDS83160 | Drive Shaft | 48T | 31 | 31 | 73 | 97.5 | 786 | |
| | 2005.02-2013.03 | 6AT | R | R | SUV 4WD 276DT(TDV6) | | GDS83159 | Drive Shaft | 48T | 31 | 31 | 73 | 97.5 | 839 | |
| | 2005.02-2013.03 | 6AT | R | L/R | SUV 4WD 276DT(TDV6) | | GCO18229 | Outer Joint | 48T | 31 | 27 | 73 | 97.5 | 67.5 | M |
| | 2005.02-2013.03 | 6AT | R | L | SUV 4WD 276DT(TDV6) | With differential lock | GCI82147 | Inner Joint | | 31 | 30 | 44 | 151.5 | 124.5 | |
| | 2005.02-2013.03 | 6AT | R | R | SUV 4WD 276DT(TDV6) | Without differential lock | GCI82146 | Inner Joint | | 31 | 30 | 44 | 182 | 124.5 | |
| | 2005.02-2013.03 | 6AT | R | R | SUV 4WD 276DT(TDV6) | With differential lock | GCI83500 | Inner Joint | | 31 | 30 | 44 | 182 | 124.5 | |
| | 2005.02-2013.03 | AT | R | L/R | SUV 4WD 276DT(TDV6) | | GCO30014 | Outer Joint | 48T | 31 | 29 | 74 | 96.5 | 75.5 | M |
| 3.0 (155 kw) | 2010.05-2013.03 | 6AT/8AT | F | L | SUV 4WD 306DT(TDV6) | | GDS59535 | Drive Shaft | 48T | 29 | 29 | 74 | 96 | 639 | |
| | 2010.05-2013.03 | 6AT/8AT | F | R | SUV 4WD 306DT(TDV6) | | GDS59623 | Drive Shaft | 48T | 29 | 29 | 74 | 96 | 998 | |
| | 2010.05-2013.03 | AT | F | L/R | SUV 4WD 306DT(TDV6) | | GCO30015 | Outer Joint | 48T | 29 | 26 | 74 | 96 | 64.5 | M |
| | 2010.05-2013.03 | | F | R | SUV 4WD 306DT(TDV6) | | GCI59195 | Inner Joint | | 29 | 26 | 41.3 | 370 | 85.5 | |
| | 2010.05-2013.03 | 6AT/8AT | R | L | SUV 4WD 306DT(TDV6) | | GDS83160 | Drive Shaft | 48T | 31 | 31 | 73 | 97.5 | 786 | |
| | 2010.05-2013.03 | 6AT/8AT | R | L | SUV 4WD 306DT(TDV6) | | GDS85104 | Drive Shaft | 48W | 30 | 31 | 68 | 84 | 820 | |
| | 2010.05-2013.03 | 6AT/8AT | R | R | SUV 4WD 306DT(TDV6) | | GDS83159 | Drive Shaft | 48T | 31 | 31 | 73 | 97.5 | 839 | |
| | 2010.05-2013.03 | 6AT/8AT | R | R | SUV 4WD 306DT(TDV6) | | GDS85105 | Drive Shaft | 48W | 30 | 31 | 68 | 84 | 800 | |
| | 2010.05-2013.03 | 6AT/8AT | R | L/R | SUV 4WD 306DT(TDV6) | | GCO18229 | Outer Joint | 48T | 31 | 27 | 73 | 97.5 | 67.5 | M |
| | 2010.05-2013.03 | 6AT/8AT | R | L | SUV 4WD 306DT(TDV6) | With differential lock | GCI82147 | Inner Joint | | 31 | 30 | 44 | 151.5 | 124.5 | |
| | 2010.05-2013.03 | 6AT/8AT | R | R | SUV 4WD 306DT(TDV6) | Without differential lock | GCI82146 | Inner Joint | | 31 | 30 | 44 | 182 | 124.5 | |
| | 2010.05-2013.03 | AT | R | L | SUV 4WD 306DT(TDV6) | With differential lock | GCI85059 | Inner Joint | | 31 | 30 | 44 | 151.5 | 124.5 | |
| | 2010.05-2013.03 | AT | R | R | SUV 4WD 306DT(TDV6) | With differential lock | GCI83500 | Inner Joint | | 31 | 30 | 44 | 182 | 124.5 | |
| | 2010.05-2013.03 | | R | L/R | SUV 4WD 306DT(TDV6) | Differential:With differential lock | GCO30014 | Outer Joint | 48T | 31 | 29 | 74 | 96.5 | 75.5 | M |
| | 2013.04-2018.12 | 8AT | F | L | SUV 4WD 306DT(TDV6) | Single speed transfer case | GDS82515 | Drive Shaft | | 31 | 29 | 68.5 | 97 | 664 | |
| | 2013.04-2018.12 | 8AT | F | L | SUV 4WD 306DT(TDV6) | Dual speed transfer case | GDS84004 | Drive Shaft | | 31 | 29 | 68.5 | 97 | 661 | |
| | 2013.04-2018.12 | 8AT | F | R | SUV 4WD 306DT(TDV6) | Dual speed transfer case;Single speed transfer case | GDS82516 | Drive Shaft | | 31 | 29 | 68.5 | 97 | 1027 | |
| | 2013.04-2018.12 | 8AT | F | L/R | SUV 4WD 306DT(TDV6) | Dual speed transfer case/Single speed transfer case | GCO81975 | Outer Joint | | 31 | 27 | 68.5 | 97 | 61 | I |
| | 2013.04-2018.12 | 8AT | F | L | SUV 4WD 306DT(TDV6) | Single speed transfer case | GCI81849 | Inner Joint | | 29 | 26 | 44 | 71.5 | 125 | |
| | 2013.04-2018.12 | 8AT | F | L | SUV 4WD 306DT(TDV6) | Dual speed transfer case | GCI82248 | Inner Joint | | 29 | 27 | 44 | 71.5 | 129 | |
| | 2013.04-2018.12 | 8AT | F | R | SUV 4WD 306DT(TDV6) | Dual speed transfer case;Single speed transfer case | GCI82268 | Inner Joint | | 29 | 27 | 44 | 461 | 100 | |
| | 2013.04-2018.12 | 8AT | R | L | SUV 4WD 306DT(TDV6) | For vehicles without electronic limited slip diff. | GDS82346 | Drive Shaft | | 31 | 31 | 68.2 | 97 | 838 | |
| | 2013.04-2018.12 | 8AT | R | L | SUV 4WD 306DT(TDV6) | For vehicles with electronic limited slip diff. | GDS84013 | Drive Shaft | | 31 | 31 | 68.2 | 97 | 838 | |
| | 2013.04-2018.12 | 8AT | R | R | SUV 4WD 306DT(TDV6) | Chassis no. to:FA527639 | GDS82345 | Drive Shaft | | 31 | 31 | 68.2 | 97 | 860 | |
| | 2013.04-2018.12 | 8AT | R | R | SUV 4WD 306DT(TDV6) | Chassis no. from:FA527640 | GDS83549 | Drive Shaft | | 31 | 31 | 68.2 | 97 | 860 | |
| | 2013.04-2018.12 | 8AT | R | L/R | SUV 4WD 306DT(TDV6) | Chassis no. to:FA527639 | GCO81813 | Outer Joint | | 31 | 28 | 68.2 | 97 | 61 | I |

| | YEAR | TRANSM. | F/R | L/R | BODY STYLE & DRIVE TYPE & ENGINE | REMARKS | G-AP Ref. | PRODUCT | ABS | Technical Specifications A | B | C | H | L | P |
|---|---|---|---|---|---|---|---|---|---|---|---|---|---|---|---|
| **LAND ROVER** **Range Rover Sport** | | | | | | | | | | | | | | | |
| 3.0 (155 kw) | 2013.04-2018.12 | 8AT | R | L/R | SUV 4WD 306DT(TDV6) | Chassis no. from:FA527640 | GCO82414 | Outer Joint | | 31 | 28 | 68.2 | 97 | 61 | I |
| | 2013.04-2018.12 | 8AT | R | L | SUV 4WD 306DT(TDV6) | For vehicles with electronic limited slip diff. | GCI82452 | Inner Joint | | 31 | 28 | 44 | 152 | 105 | |
| | 2013.04-2018.12 | 8AT | R | L/R | SUV 4WD 306DT(TDV6) | Possion:Left,For vehicles without electronic limited slip diff. | GCI81763 | Inner Joint | | 31 | 28 | 44 | 86 | 110.5 | |
| 3.0 (180 kw) | 2009.09-2013.03 | 6AT | F | L | SUV 4WD 306DT(TDV6) | | GDS59535 | Drive Shaft | 48T | 29 | 29 | 74 | 96 | 639 | |
| | 2009.09-2013.03 | 6AT | F | R | SUV 4WD 306DT(TDV6) | | GDS59623 | Drive Shaft | 48T | 29 | 29 | 74 | 96 | 998 | |
| | 2009.09-2013.03 | AT | F | L/R | SUV 4WD 306DT(TDV6) | | GCO30015 | Outer Joint | 48T | 29 | 26 | 74 | 96 | 64.5 | M |
| | 2009.09-2013.03 | | F | R | SUV 4WD 306DT(TDV6) | | GCI59195 | Inner Joint | | 29 | 26 | 41.3 | 370 | 85.5 | |
| | 2009.09-2013.03 | 6AT | R | L | SUV 4WD 306DT(TDV6) | | GDS83160 | Drive Shaft | 48T | 31 | 31 | 73 | 97.5 | 786 | |
| | 2009.09-2013.03 | 6AT | R | L | SUV 4WD 306DT(TDV6) | | GDS85104 | Drive Shaft | 48W | 30 | 31 | 68 | 84 | 820 | |
| | 2009.09-2013.03 | 6AT | R | R | SUV 4WD 306DT(TDV6) | | GDS83159 | Drive Shaft | 48T | 31 | 31 | 73 | 97.5 | 839 | |
| | 2009.09-2013.03 | 6AT | R | R | SUV 4WD 306DT(TDV6) | | GDS85105 | Drive Shaft | 48W | 30 | 31 | 68 | 84 | 800 | |
| | 2009.09-2013.03 | 6AT | R | L/R | SUV 4WD 306DT(TDV6) | | GCO18229 | Outer Joint | 48T | 31 | 27 | 73 | 97.5 | 67.5 | M |
| | 2009.09-2013.03 | 6AT | R | L | SUV 4WD 306DT(TDV6) | With differential lock | GCI82147 | Inner Joint | | 31 | 30 | 44 | 151.5 | 124.5 | |
| | 2009.09-2013.03 | 6AT | R | L | SUV 4WD 306DT(TDV6) | With differential lock | GCI85059 | Inner Joint | | 31 | 30 | 44 | 151.5 | 124.5 | |
| | 2009.09-2013.03 | 6AT | R | R | SUV 4WD 306DT(TDV6) | Without differential lock | GCI82146 | Inner Joint | | 31 | 30 | 44 | 182 | 124.5 | |
| | 2009.09-2013.03 | 6AT | R | R | SUV 4WD 306DT(TDV6) | With differential lock | GCI83500 | Inner Joint | | 31 | 30 | 44 | 182 | 124.5 | |
| | 2009.09-2013.03 | | R | L/R | SUV 4WD 306DT(TDV6) | Differential:With differential lock | GCO30014 | Outer Joint | 48T | 31 | 29 | 74 | 96.5 | 75.5 | M |
| 3.0 (183 kw) | 2012.08-2013.03 | 8AT | F | L | SUV 4WD 306DT(TDV6) | | GDS59535 | Drive Shaft | 48T | 29 | 29 | 74 | 96 | 639 | |
| | 2012.08-2013.03 | 8AT | F | R | SUV 4WD 306DT(TDV6) | | GDS59623 | Drive Shaft | 48T | 29 | 29 | 74 | 96 | 998 | |
| | 2012.08-2013.03 | 8AT | F | L/R | SUV 4WD 306DT(TDV6) | | GCO30015 | Outer Joint | 48T | 29 | 26 | 74 | 96 | 64.5 | M |
| | 2012.08-2013.03 | 8AT | F | R | SUV 4WD 306DT(TDV6) | | GCI59195 | Inner Joint | | 29 | 26 | 41.3 | 370 | 85.5 | |
| | 2012.08-2013.03 | 8AT | R | L | SUV 4WD 306DT(TDV6) | With differential lock | GDS83160 | Drive Shaft | 48T | 31 | 31 | 73 | 97.5 | 786 | |
| | 2012.08-2013.03 | 8AT | R | R | SUV 4WD 306DT(TDV6) | | GDS83159 | Drive Shaft | 48T | 31 | 31 | 73 | 97.5 | 839 | |
| | 2012.08-2013.03 | 8AT | R | L/R | SUV 4WD 306DT(TDV6) | | GCO18229 | Outer Joint | 48T | 31 | 27 | 73 | 97.5 | 67.5 | M |
| | 2012.08-2013.03 | 8AT | R | L/R | SUV 4WD 306DT(TDV6) | With differential lock | GCO30014 | Outer Joint | 48T | 31 | 29 | 74 | 96.5 | 75.5 | M |
| | 2012.08-2013.03 | 8AT | R | L | SUV 4WD 306DT(TDV6) | With differential lock | GCI82147 | Inner Joint | | 31 | 30 | 44 | 151.5 | 124.5 | |
| | 2012.08-2013.03 | 8AT | R | R | SUV 4WD 306DT(TDV6) | Without differential lock | GCI82146 | Inner Joint | | 31 | 30 | 44 | 182 | 124.5 | |
| | 2012.08-2013.03 | 8AT | R | R | SUV 4WD 306DT(TDV6) | With differential lock | GCI83500 | Inner Joint | | 31 | 30 | 44 | 182 | 124.5 | |
| | 2013.04-2022.03 | 8AT | F | L | SUV 4WD 306DT(TDV6) | Single speed transfer case | GDS82515 | Drive Shaft | | 31 | 29 | 68.5 | 97 | 664 | |
| | 2013.04-2022.03 | 8AT | F | L | SUV 4WD 306DT(TDV6) | Dual speed transfer case | GDS84004 | Drive Shaft | | 31 | 29 | 68.5 | 97 | 661 | |
| | 2013.04-2022.03 | 8AT | F | R | SUV 4WD 306DT(TDV6) | Dual speed transfer case;Single speed transfer case | GDS82516 | Drive Shaft | | 31 | 29 | 68.5 | 97 | 1027 | |
| | 2013.04-2022.03 | 8AT | F | L/R | SUV 4WD 306DT(TDV6) | Dual speed transfer case/Single speed transfer case | GCO81975 | Outer Joint | | 31 | 27 | 68.5 | 97 | 61 | I |
| | 2013.04-2022.03 | 8AT | F | L | SUV 4WD 306DT(TDV6) | Single speed transfer case | GCI81849 | Inner Joint | | 29 | 26 | 44 | 71.5 | 125 | |
| | 2013.04-2022.03 | 8AT | F | L | SUV 4WD 306DT(TDV6) | Dual speed transfer case | GCI82248 | Inner Joint | | 29 | 27 | 44 | 71.5 | 129 | |
| | 2013.04-2022.03 | 8AT | F | R | SUV 4WD 306DT(TDV6) | Dual speed transfer case;Single speed transfer case | GCI82268 | Inner Joint | | 29 | 27 | 44 | 461 | 100 | |
| | 2013.04-2022.03 | 8AT | R | L | SUV 4WD 306DT(TDV6) | For vehicles without electronic limited slip diff. | GDS82346 | Drive Shaft | | 31 | 31 | 68.2 | 97 | 838 | |
| | 2013.04-2022.03 | 8AT | R | L | SUV 4WD 306DT(TDV6) | For vehicles with electronic limited slip diff. | GDS84013 | Drive Shaft | | 31 | 31 | 68.2 | 97 | 838 | |
| | 2013.04-2022.03 | 8AT | R | R | SUV 4WD 306DT(TDV6) | Chassis no. to:FA527639 | GDS82345 | Drive Shaft | | 31 | 31 | 68.2 | 97 | 860 | |
| | 2013.04-2022.03 | 8AT | R | R | SUV 4WD 306DT(TDV6) | Chassis no. from:FA527640 | GDS83549 | Drive Shaft | | 31 | 31 | 68.2 | 97 | 860 | |
| | 2013.04-2022.03 | 8AT | R | L/R | SUV 4WD 306DT(TDV6) | Chassis no. to:FA527639 | GCO81813 | Outer Joint | | 31 | 28 | 68.2 | 97 | 61 | I |
| | 2013.04-2022.03 | 8AT | R | L/R | SUV 4WD 306DT(TDV6) | Chassis no. from:FA527640 | GCO82414 | Outer Joint | | 31 | 28 | 68.2 | 97 | 61 | I |
| | 2013.04-2022.03 | 8AT | R | L | SUV 4WD 306DT(TDV6) | For vehicles with electronic limited slip diff. | GCI82452 | Inner Joint | | 31 | 28 | 44 | 152 | 105 | |
| | 2013.04-2022.03 | 8AT | R | L/R | SUV 4WD 306DT(TDV6) | Possion:Left,For vehicles without electronic limited slip diff. | GCI81763 | Inner Joint | | 31 | 28 | 44 | 86 | 110.5 | |
| | 2020.07-2022.03 | 8AT | F | L | SUV 4WD DT306(AJ20D6) | | GDS82515 | Drive Shaft | | 31 | 29 | 68.5 | 97 | 664 | |
| | 2020.07-2022.03 | 8AT | F | L | SUV 4WD DT306(AJ20D6) | Single speed transfer case | GDS82515 | Drive Shaft | | 31 | 29 | 68.5 | 97 | 664 | |
| | 2020.07-2022.03 | 8AT | F | L | SUV 4WD DT306(AJ20D6) | Dual speed transfer case | GDS84004 | Drive Shaft | | 31 | 29 | 68.5 | 97 | 661 | |
| | 2020.07-2022.03 | 8AT | F | R | SUV 4WD DT306(AJ20D6) | | GDS82516 | Drive Shaft | | 31 | 29 | 68.5 | 97 | 1027 | |
| | 2020.07-2022.03 | 8AT | F | R | SUV 4WD DT306(AJ20D6) | Dual speed transfer case;Single speed transfer case | GDS82516 | Drive Shaft | | 31 | 29 | 68.5 | 97 | 1027 | |
| | 2020.07-2022.03 | 8AT | F | L/R | SUV 4WD DT306(AJ20D6) | Dual speed transfer case/Single speed transfer case | GCO81975 | Outer Joint | | 31 | 27 | 68.5 | 97 | 61 | I |
| | 2020.07-2022.03 | 8AT | F | L | SUV 4WD DT306(AJ20D6) | | GCI81849 | Inner Joint | | 29 | 26 | 44 | 71.5 | 125 | |
| | 2020.07-2022.03 | 8AT | F | L | SUV 4WD DT306(AJ20D6) | Single speed transfer case | GCI81849 | Inner Joint | | 29 | 26 | 44 | 71.5 | 125 | |
| | 2020.07-2022.03 | 8AT | F | L | SUV 4WD DT306(AJ20D6) | Dual speed transfer case | GCI82248 | Inner Joint | | 29 | 27 | 44 | 71.5 | 129 | |
| | 2020.07-2022.03 | 8AT | F | R | SUV 4WD DT306(AJ20D6) | | GCI82268 | Inner Joint | | 29 | 27 | 44 | 461 | 100 | |
| | 2020.07-2022.03 | 8AT | F | R | SUV 4WD DT306(AJ20D6) | Dual speed transfer case;Single speed transfer case | GCI82268 | Inner Joint | | 29 | 27 | 44 | 461 | 100 | |
| | 2020.07-2022.03 | 8AT | R | L | SUV 4WD DT306(AJ20D6) | For vehicles without electronic limited slip diff. | GDS82346 | Drive Shaft | | 31 | 31 | 68.2 | 97 | 838 | |
| | 2020.07-2022.03 | 8AT | R | L | SUV 4WD DT306(AJ20D6) | For Vehicles With Electronic Limited Slip Diff. | GDS84013 | Drive Shaft | | 31 | 31 | 68.2 | 97 | 838 | |
| | 2020.07-2022.03 | 8AT | R | R | SUV 4WD DT306(AJ20D6) | Chassis no. to:FA527639 | GDS82345 | Drive Shaft | | 31 | 31 | 68.2 | 97 | 860 | |
| | 2020.07-2022.03 | 8AT | R | R | SUV 4WD DT306(AJ20D6) | Chassis no. from:FA527640 | GDS83549 | Drive Shaft | | 31 | 31 | 68.2 | 97 | 860 | |
| | 2020.07-2022.03 | 8AT | R | L/R | SUV 4WD DT306(AJ20D6) | Chassis no. to:FA527639 | GCO81813 | Outer Joint | | 31 | 28 | 68.2 | 97 | 61 | I |
| | 2020.07-2022.03 | 8AT | R | L/R | SUV 4WD DT306(AJ20D6) | Chassis no. from:FA227763 | GCO82414 | Outer Joint | | 31 | 28 | 68.2 | 97 | 61 | I |
| | 2020.07-2022.03 | 8AT | R | L | SUV 4WD DT306(AJ20D6) | For vehicles with electronic limited slip diff. | GCI82452 | Inner Joint | | 31 | 28 | 44 | 152 | 105 | |
| | 2020.07-2022.03 | 8AT | R | L/R | SUV 4WD DT306(AJ20D6) | Possion:Left,For vehicles without electronic limited slip diff. | GCI81763 | Inner Joint | | 31 | 28 | 44 | 86 | 110.5 | |
| | 2022.04- | 8AT | F | L | SUV 4WD DT306(AJ20D6) | | GDS58302 | Drive Shaft | | 31 | 29 | 68 | 97 | 690 | |
| | 2022.04- | 8AT | F | R | SUV 4WD DT306(AJ20D6) | | GDS57596 | Drive Shaft | | 31 | 29 | 68.5 | 97 | 1036 | |
| | 2022.04- | 8AT | F | L/R | SUV 4WD DT306(AJ20D6) | | GCO81975 | Outer Joint | | 31 | 27 | 68.5 | 97 | 61 | I |

| | YEAR | TRANSM. | F/R | L/R | BODY STYLE & DRIVE TYPE & ENGINE | REMARKS | G-AP Ref. | PRODUCT | ABS | Technical Specifications A | B | C | H | L | P |
|---|---|---|---|---|---|---|---|---|---|---|---|---|---|---|---|
| **LAND ROVER** **Range Rover Sport** | | | | | | | | | | | | | | | |
| 3.0 (183 kw) | 2022.04- | 8AT | F | L | SUV 4WD DT306(AJ20D6) | | GCI81849 | Inner Joint | | 29 | 26 | 44 | 71.5 | 125 | |
| | 2022.04- | 8AT | F | R | SUV 4WD DT306(AJ20D6) | | GCI83763 | Inner Joint | | 29 | 26 | 44 | 437 | 106 | |
| | 2022.04- | 8AT | R | L/R | SUV 4WD DT306(AJ20D6) | Chassis no. to:FA527639 | GCO81813 | Outer Joint | | 31 | 28 | 68.2 | 97 | 61 | I |
| 3.0 (188 kw) | 2011.06-2013.03 | 8AT | F | L | SUV 4WD 306DT(TDV6) | | GDS59535 | Drive Shaft | 48T | 29 | 29 | 74 | 96 | 639 | |
| | 2011.06-2013.03 | 8AT | F | R | SUV 4WD 306DT(TDV6) | | GDS59623 | Drive Shaft | 48T | 29 | 29 | 74 | 96 | 998 | |
| | 2011.06-2013.03 | 8AT | F | L/R | SUV 4WD 306DT(TDV6) | | GCO30015 | Outer Joint | 48T | 29 | 26 | 74 | 96 | 64.5 | M |
| | 2011.06-2013.03 | 8AT | F | R | SUV 4WD 306DT(TDV6) | | GCI59195 | Inner Joint | | 29 | 26 | 41.3 | 370 | 85.5 | |
| | 2011.06-2013.03 | 8AT | R | L | SUV 4WD 306DT(TDV6) | With differential lock | GDS83160 | Drive Shaft | 48T | 31 | 31 | 73 | 97.5 | 786 | |
| | 2011.06-2013.03 | 8AT | R | R | SUV 4WD 306DT(TDV6) | | GDS83159 | Drive Shaft | 48T | 31 | 31 | 73 | 97.5 | 839 | |
| | 2011.06-2013.03 | 8AT | R | L/R | SUV 4WD 306DT(TDV6) | | GCO18229 | Outer Joint | 48T | 31 | 27 | 73 | 97.5 | 67.5 | M |
| | 2011.06-2013.03 | 8AT | R | L | SUV 4WD 306DT(TDV6) | With differential lock | GCI82147 | Inner Joint | | 31 | 30 | 44 | 151.5 | 124.5 | |
| | 2011.06-2013.03 | 8AT | R | R | SUV 4WD 306DT(TDV6) | Without differential lock | GCI82146 | Inner Joint | | 31 | 30 | 44 | 182 | 124.5 | |
| | 2011.06-2013.03 | 8AT | R | R | SUV 4WD 306DT(TDV6) | With differential lock | GCI83500 | Inner Joint | | 31 | 30 | 44 | 182 | 124.5 | |
| | 2011.06-2013.03 | AT | R | L/R | SUV 4WD 306DT(TDV6) | With differential lock | GCO30014 | Outer Joint | 48T | 31 | 29 | 74 | 96.5 | 75.5 | M |
| 3.0 (190 kw) | 2013.04-2022.03 | 8AT | F | L | SUV 4WD 306DT(TDV6) | Single speed transfer case | GDS82515 | Drive Shaft | | 31 | 29 | 68.5 | 97 | 664 | |
| | 2013.04-2022.03 | 8AT | F | L | SUV 4WD 306DT(TDV6) | Dual speed transfer case | GDS84004 | Drive Shaft | | 31 | 29 | 68.5 | 97 | 661 | |
| | 2013.04-2022.03 | 8AT | F | R | SUV 4WD 306DT(TDV6) | Dual speed transfer case;Single speed transfer case | GDS82516 | Drive Shaft | | 31 | 29 | 68.5 | 97 | 1027 | |
| | 2013.04-2022.03 | 8AT | F | L/R | SUV 4WD 306DT(TDV6) | Dual speed transfer case/Single speed transfer case | GCO81975 | Outer Joint | | 31 | 27 | 68.5 | 97 | 61 | I |
| | 2013.04-2022.03 | 8AT | F | L | SUV 4WD 306DT(TDV6) | Single speed transfer case | GCI81849 | Inner Joint | | 29 | 26 | 44 | 71.5 | 125 | |
| | 2013.04-2022.03 | 8AT | F | L | SUV 4WD 306DT(TDV6) | Dual speed transfer case | GCI82248 | Inner Joint | | 29 | 27 | 44 | 71.5 | 129 | |
| | 2013.04-2022.03 | 8AT | F | R | SUV 4WD 306DT(TDV6) | Dual speed transfer case;Single speed transfer case | GCI82268 | Inner Joint | | 29 | 27 | 44 | 461 | 100 | |
| | 2013.04-2022.03 | 8AT | R | L | SUV 4WD 306DT(TDV6) | For vehicles without electronic limited slip diff. | GDS82346 | Drive Shaft | | 31 | 31 | 68.2 | 97 | 838 | |
| | 2013.04-2022.03 | 8AT | R | L | SUV 4WD 306DT(TDV6) | For vehicles with electronic limited slip diff. | GDS84013 | Drive Shaft | | 31 | 31 | 68.2 | 97 | 838 | |
| | 2013.04-2022.03 | 8AT | R | R | SUV 4WD 306DT(TDV6) | Chassis no. to:FA527639 | GDS82345 | Drive Shaft | | 31 | 31 | 68.2 | 97 | 860 | |
| | 2013.04-2022.03 | 8AT | R | R | SUV 4WD 306DT(TDV6) | Chassis no. from:FA527640 | GDS83549 | Drive Shaft | | 31 | 31 | 68.2 | 97 | 860 | |
| | 2013.04-2022.03 | 8AT | R | L/R | SUV 4WD 306DT(TDV6) | Chassis no. to:FA527639 | GCO81813 | Outer Joint | | 31 | 28 | 68.2 | 97 | 61 | I |
| | 2013.04-2022.03 | 8AT | R | L/R | SUV 4WD 306DT(TDV6) | Chassis no. from:FA527640 | GCO82414 | Outer Joint | | 31 | 28 | 68.2 | 97 | 61 | I |
| | 2013.04-2022.03 | 8AT | R | L | SUV 4WD 306DT(TDV6) | For vehicles with electronic limited slip diff. | GCI82452 | Inner Joint | | 31 | 28 | 44 | 152 | 105 | |
| | 2013.04-2022.03 | 8AT | R | L/R | SUV 4WD 306DT(TDV6) | Possion:Left,For vehicles without electronic limited slip diff. | GCI81763 | Inner Joint | | 31 | 28 | 44 | 86 | 110.5 | |
| 3.0 (215 kw) | 2013.04-2016.12 | 8AT | F | L | SUV 4WD 306DT(TDV6) | Single speed transfer case | GDS82515 | Drive Shaft | | 31 | 29 | 68.5 | 97 | 664 | |
| | 2013.04-2016.12 | 8AT | F | L | SUV 4WD 306DT(TDV6) | Dual speed transfer case | GDS84004 | Drive Shaft | | 31 | 29 | 68.5 | 97 | 661 | |
| | 2013.04-2016.12 | 8AT | F | R | SUV 4WD 306DT(TDV6) | Dual speed transfer case;Single speed transfer case | GDS82516 | Drive Shaft | | 31 | 29 | 68.5 | 97 | 1027 | |
| | 2013.04-2016.12 | 8AT | F | L/R | SUV 4WD 306DT(TDV6) | Dual speed transfer case/Single speed transfer case | GCO81975 | Outer Joint | | 31 | 27 | 68.5 | 97 | 61 | I |
| | 2013.04-2016.12 | 8AT | F | L | SUV 4WD 306DT(TDV6) | Single speed transfer case | GCI81849 | Inner Joint | | 29 | 26 | 44 | 71.5 | 125 | |
| | 2013.04-2016.12 | 8AT | F | L | SUV 4WD 306DT(TDV6) | Dual speed transfer case | GCI82248 | Inner Joint | | 29 | 27 | 44 | 71.5 | 129 | |
| | 2013.04-2016.12 | 8AT | F | R | SUV 4WD 306DT(TDV6) | Dual speed transfer case;Single speed transfer case | GCI82268 | Inner Joint | | 29 | 27 | 44 | 461 | 100 | |
| | 2013.04-2016.12 | 8AT | R | L | SUV 4WD 306DT(TDV6) | For vehicles without electronic limited slip diff. | GDS82346 | Drive Shaft | | 31 | 31 | 68.2 | 97 | 838 | |
| | 2013.04-2016.12 | 8AT | R | L | SUV 4WD 306DT(TDV6) | For vehicles with electronic limited slip diff. | GDS84013 | Drive Shaft | | 31 | 31 | 68.2 | 97 | 838 | |
| | 2013.04-2016.12 | 8AT | R | R | SUV 4WD 306DT(TDV6) | Chassis no. to:FA527639 | GDS82345 | Drive Shaft | | 31 | 31 | 68.2 | 97 | 860 | |
| | 2013.04-2016.12 | 8AT | R | R | SUV 4WD 306DT(TDV6) | Chassis no. from:FA527640 | GDS83549 | Drive Shaft | | 31 | 31 | 68.2 | 97 | 860 | |
| | 2013.04-2016.12 | 8AT | R | L/R | SUV 4WD 306DT(TDV6) | Chassis no. to:FA527639 | GCO81813 | Outer Joint | | 31 | 28 | 68.2 | 97 | 61 | I |
| | 2013.04-2016.12 | 8AT | R | L/R | SUV 4WD 306DT(TDV6) | Chassis no. from:FA527640 | GCO82414 | Outer Joint | | 31 | 28 | 68.2 | 97 | 61 | I |
| | 2013.04-2016.12 | 8AT | R | L | SUV 4WD 306DT(TDV6) | For vehicles with electronic limited slip diff. | GCI82452 | Inner Joint | | 31 | 28 | 44 | 152 | 105 | |
| | 2013.04-2016.12 | 8AT | R | L/R | SUV 4WD 306DT(TDV6) | Possion:Left,For vehicles without electronic limited slip diff. | GCI81763 | Inner Joint | | 31 | 28 | 44 | 86 | 110.5 | |
| 3.0 (221 kw) | 2020.07-2022.03 | 8AT | F | L | SUV 4WD DT306(AJ20D6) | | GDS82515 | Drive Shaft | | 31 | 29 | 68.5 | 97 | 664 | |
| | 2020.07-2022.03 | 8AT | F | L | SUV 4WD DT306(AJ20D6) | Single speed transfer case | GDS82515 | Drive Shaft | | 31 | 29 | 68.5 | 97 | 664 | |
| | 2020.07-2022.03 | 8AT | F | L | SUV 4WD DT306(AJ20D6) | Dual speed transfer case | GDS84004 | Drive Shaft | | 31 | 29 | 68.5 | 97 | 661 | |
| | 2020.07-2022.03 | 8AT | F | R | SUV 4WD DT306(AJ20D6) | | GDS82516 | Drive Shaft | | 31 | 29 | 68.5 | 97 | 1027 | |
| | 2020.07-2022.03 | 8AT | F | R | SUV 4WD DT306(AJ20D6) | Single speed transfer case | GDS82516 | Drive Shaft | | 31 | 29 | 68.5 | 97 | 1027 | |
| | 2020.07-2022.03 | 8AT | F | L/R | SUV 4WD DT306(AJ20D6) | Dual speed transfer case | GCO81975 | Outer Joint | | 31 | 27 | 68.5 | 97 | 61 | I |
| | 2020.07-2022.03 | 8AT | F | L | SUV 4WD DT306(AJ20D6) | | GCI81849 | Inner Joint | | 29 | 26 | 44 | 71.5 | 125 | |
| | 2020.07-2022.03 | 8AT | F | L | SUV 4WD DT306(AJ20D6) | Single speed transfer case | GCI81849 | Inner Joint | | 29 | 26 | 44 | 71.5 | 125 | |
| | 2020.07-2022.03 | 8AT | F | L | SUV 4WD DT306(AJ20D6) | Dual speed transfer case | GCI82248 | Inner Joint | | 29 | 27 | 44 | 71.5 | 129 | |
| | 2020.07-2022.03 | 8AT | F | R | SUV 4WD DT306(AJ20D6) | | GCI82268 | Inner Joint | | 29 | 27 | 44 | 461 | 100 | |
| | 2020.07-2022.03 | 8AT | F | R | SUV 4WD DT306(AJ20D6) | Single speed transfer case | GCI82268 | Inner Joint | | 29 | 27 | 44 | 461 | 100 | |
| | 2020.07-2022.03 | 8AT | R | L | SUV 4WD DT306(AJ20D6) | For vehicles without electronic limited slip diff. | GDS82346 | Drive Shaft | | 31 | 31 | 68.2 | 97 | 838 | |
| | 2020.07-2022.03 | 8AT | R | L | SUV 4WD DT306(AJ20D6) | For Vehicles With Electronic Limited Slip Diff. | GDS84013 | Drive Shaft | | 31 | 31 | 68.2 | 97 | 838 | |
| | 2020.07-2022.03 | 8AT | R | R | SUV 4WD DT306(AJ20D6) | Chassis no. to:FA527639 | GDS82345 | Drive Shaft | | 31 | 31 | 68.2 | 97 | 860 | |
| | 2020.07-2022.03 | 8AT | R | R | SUV 4WD DT306(AJ20D6) | Chassis no. from:FA527640 | GDS83549 | Drive Shaft | | 31 | 31 | 68.2 | 97 | 860 | |
| | 2020.07-2022.03 | 8AT | R | L/R | SUV 4WD DT306(AJ20D6) | Chassis no. to:FA527639 | GCO81813 | Outer Joint | | 31 | 28 | 68.2 | 97 | 61 | I |
| | 2020.07-2022.03 | 8AT | R | L/R | SUV 4WD DT306(AJ20D6) | Chassis no. from:FA227763 | GCO82414 | Outer Joint | | 31 | 28 | 68.2 | 97 | 61 | I |
| | 2020.07-2022.03 | 8AT | R | L | SUV 4WD DT306(AJ20D6) | For vehicles with electronic limited slip diff. | GCI82452 | Inner Joint | | 31 | 28 | 44 | 152 | 105 | |
| | 2020.07-2022.03 | 8AT | R | L/R | SUV 4WD DT306(AJ20D6) | Possion:Left,For vehicles without electronic limited slip diff. | GCI81763 | Inner Joint | | 31 | 28 | 44 | 86 | 110.5 | |
| | 2022.04- | 8AT | F | L | SUV 4WD DT306(AJ20D6) | | GDS58302 | Drive Shaft | | 31 | 29 | 68 | 97 | 690 | |
| | 2022.04- | 8AT | F | R | SUV 4WD DT306(AJ20D6) | | GDS57596 | Drive Shaft | | 31 | 29 | 68.5 | 97 | 1036 | |

| | YEAR | TRANSM. | F/R | L/R | BODY STYLE & DRIVE TYPE & ENGINE | REMARKS | G-AP Ref. | PRODUCT | ABS | Technical Specifications | | | | | |
|---|---|---|---|---|---|---|---|---|---|---|---|---|---|---|---|
| | | | | | | | | | | A | B | C | H | L | P |
| **LAND ROVER** **Range Rover Sport** | | | | | | | | | | | | | | | |
| 3.0 (221 kw) | 2022.04- | 8AT | F | L/R | SUV 4WD DT306(AJ20D6) | | GCO81975 | Outer Joint | | 31 | 27 | 68.5 | 97 | 61 | I |
| | 2022.04- | 8AT | F | L | SUV 4WD DT306(AJ20D6) | | GCI81849 | Inner Joint | | 29 | 26 | 44 | 71.5 | 125 | |
| | 2022.04- | 8AT | F | R | SUV 4WD DT306(AJ20D6) | | GCI83763 | Inner Joint | | 29 | 26 | 44 | 437 | 106 | |
| | 2022.04- | 8AT | R | L/R | SUV 4WD DT306(AJ20D6) | Chassis no. to:FA527639 | GCO81813 | Outer Joint | | 31 | 28 | 68.2 | 97 | 61 | I |
| 3.0 (225 kw) | 2014.09-2022.03 | 8AT | F | L | SUV 4WD 306DT(TDV6) | Single speed transfer case | GDS82515 | Drive Shaft | | 31 | 29 | 68.5 | 97 | 664 | |
| | 2014.09-2022.03 | 8AT | F | L | SUV 4WD 306DT(TDV6) | Dual speed transfer case | GDS84004 | Drive Shaft | | 31 | 29 | 68.5 | 97 | 661 | |
| | 2014.09-2022.03 | 8AT | F | R | SUV 4WD 306DT(TDV6) | Dual speed transfer case;Single speed transfer case | GDS82516 | Drive Shaft | | 31 | 29 | 68.5 | 97 | 1027 | |
| | 2014.09-2022.03 | 8AT | F | L/R | SUV 4WD 306DT(TDV6) | Dual speed transfer case/Single speed transfer case | GCO81975 | Outer Joint | | 31 | 27 | 68.5 | 97 | 61 | I |
| | 2014.09-2022.03 | 8AT | F | L | SUV 4WD 306DT(TDV6) | Single speed transfer case | GCI81849 | Inner Joint | | 29 | 26 | 44 | 71.5 | 125 | |
| | 2014.09-2022.03 | 8AT | F | L | SUV 4WD 306DT(TDV6) | Dual speed transfer case | GCI82248 | Inner Joint | | 29 | 27 | 44 | 71.5 | 129 | |
| | 2014.09-2022.03 | 8AT | F | R | SUV 4WD 306DT(TDV6) | Dual speed transfer case;Single speed transfer case | GCI82268 | Inner Joint | | 29 | 27 | 44 | 461 | 100 | |
| | 2014.09-2022.03 | 8AT | R | L | SUV 4WD 306DT(TDV6) | For vehicles without electronic limited slip diff. | GDS82346 | Drive Shaft | | 31 | 31 | 68.2 | 97 | 838 | |
| | 2014.09-2022.03 | 8AT | R | L | SUV 4WD 306DT(TDV6) | For vehicles with electronic limited slip diff. | GDS84013 | Drive Shaft | | 31 | 31 | 68.2 | 97 | 838 | |
| | 2014.09-2022.03 | 8AT | R | R | SUV 4WD 306DT(TDV6) | Chassis no. to:FA527639 | GDS82345 | Drive Shaft | | 31 | 31 | 68.2 | 97 | 860 | |
| | 2014.09-2022.03 | 8AT | R | R | SUV 4WD 306DT(TDV6) | Chassis no. from:FA527640 | GDS83549 | Drive Shaft | | 31 | 31 | 68.2 | 97 | 860 | |
| | 2014.09-2022.03 | 8AT | R | L/R | SUV 4WD 306DT(TDV6) | Chassis no. to:FA527639 | GCO81813 | Outer Joint | | 31 | 28 | 68.2 | 97 | 61 | I |
| | 2014.09-2022.03 | 8AT | R | L/R | SUV 4WD 306DT(TDV6) | Chassis no. from:FA527640 | GCO82414 | Outer Joint | | 31 | 28 | 68.2 | 97 | 61 | I |
| | 2014.09-2022.03 | 8AT | R | L | SUV 4WD 306DT(TDV6) | For vehicles with electronic limited slip diff. | GCI82452 | Inner Joint | | 31 | 28 | 44 | 152 | 105 | |
| | 2014.09-2022.03 | 8AT | R | L/R | SUV 4WD 306DT(TDV6) | Possion:Left,For vehicles without electronic limited slip diff. | GCI81763 | Inner Joint | | 31 | 28 | 44 | 86 | 110.5 | |
| 3.0 (250 kw) | 2013.04-2019.12 | 8AT | F | L | SUV 4WD 306PS(AJ126) | Single speed transfer case | GDS82515 | Drive Shaft | | 31 | 29 | 68.5 | 97 | 664 | |
| | 2013.04-2019.12 | 8AT | F | L | SUV 4WD 306PS(AJ126) | Dual speed transfer case | GDS84004 | Drive Shaft | | 31 | 29 | 68.5 | 97 | 661 | |
| | 2013.04-2019.12 | 8AT | F | R | SUV 4WD 306PS(AJ126) | Dual speed transfer case;Single speed transfer case | GDS82516 | Drive Shaft | | 31 | 29 | 68.5 | 97 | 1027 | |
| | 2013.04-2019.12 | 8AT | F | L/R | SUV 4WD 306PS(AJ126) | Dual speed transfer case/Single speed transfer case | GCO81975 | Outer Joint | | 31 | 27 | 68.5 | 97 | 61 | I |
| | 2013.04-2019.12 | 8AT | F | L | SUV 4WD 306PS(AJ126) | Single speed transfer case | GCI81849 | Inner Joint | | 29 | 26 | 44 | 71.5 | 125 | |
| | 2013.04-2019.12 | 8AT | F | L | SUV 4WD 306PS(AJ126) | Dual speed transfer case | GCI82248 | Inner Joint | | 29 | 27 | 44 | 71.5 | 129 | |
| | 2013.04-2019.12 | 8AT | F | R | SUV 4WD 306PS(AJ126) | Dual speed transfer case;Single speed transfer case | GCI82268 | Inner Joint | | 29 | 27 | 44 | 461 | 100 | |
| | 2013.04-2019.12 | 8AT | R | L | SUV 4WD 306PS(AJ126) | For vehicles without electronic limited slip diff. | GDS82346 | Drive Shaft | | 31 | 31 | 68.2 | 97 | 838 | |
| | 2013.04-2019.12 | 8AT | R | L | SUV 4WD 306PS(AJ126) | For vehicles with electronic limited slip diff. | GDS84013 | Drive Shaft | | 31 | 31 | 68.2 | 97 | 838 | |
| | 2013.04-2019.12 | 8AT | R | R | SUV 4WD 306PS(AJ126) | Chassis no. to:FA527639 | GDS82345 | Drive Shaft | | 31 | 31 | 68.2 | 97 | 860 | |
| | 2013.04-2019.12 | 8AT | R | R | SUV 4WD 306PS(AJ126) | Chassis no. from:FA527640 | GDS83549 | Drive Shaft | | 31 | 31 | 68.2 | 97 | 860 | |
| | 2013.04-2019.12 | 8AT | R | L/R | SUV 4WD 306PS(AJ126) | Chassis no. to:FA527639 | GCO81813 | Outer Joint | | 31 | 28 | 68.2 | 97 | 61 | I |
| | 2013.04-2019.12 | 8AT | R | L/R | SUV 4WD 306PS(AJ126) | Chassis no. from:FA527640 | GCO82414 | Outer Joint | | 31 | 28 | 68.2 | 97 | 61 | I |
| | 2013.04-2019.12 | 8AT | R | L | SUV 4WD 306PS(AJ126) | For vehicles with electronic limited slip diff. | GCI82452 | Inner Joint | | 31 | 28 | 44 | 152 | 105 | |
| | 2013.04-2019.12 | 8AT | R | L/R | SUV 4WD 306PS(AJ126) | Possion:Left,For vehicles without electronic limited slip diff. | GCI81763 | Inner Joint | | 31 | 28 | 44 | 86 | 110.5 | |
| | 2013.10-2022.03 | 8AT | F | L | SUV 4WD 306DT(TDV6) | Single speed transfer case | GDS82515 | Drive Shaft | | 31 | 29 | 68.5 | 97 | 664 | |
| | 2013.10-2022.03 | 8AT | F | L | SUV 4WD 306DT(TDV6) | Dual speed transfer case | GDS84004 | Drive Shaft | | 31 | 29 | 68.5 | 97 | 661 | |
| | 2013.10-2022.03 | 8AT | F | R | SUV 4WD 306DT(TDV6) | Dual speed transfer case;Single speed transfer case | GDS82516 | Drive Shaft | | 31 | 29 | 68.5 | 97 | 1027 | |
| | 2013.10-2022.03 | 8AT | F | L/R | SUV 4WD 306DT(TDV6) | Dual speed transfer case | GCO81975 | Outer Joint | | 31 | 27 | 68.5 | 97 | 61 | I |
| | 2013.10-2022.03 | 8AT | F | L | SUV 4WD 306DT(TDV6) | Dual speed transfer case | GCI82248 | Inner Joint | | 29 | 27 | 44 | 71.5 | 129 | |
| | 2013.10-2022.03 | 8AT | F | R | SUV 4WD 306DT(TDV6) | Dual speed transfer case;Single speed transfer case | GCI82268 | Inner Joint | | 29 | 27 | 44 | 461 | 100 | |
| | 2013.10-2022.03 | 8AT | R | L | SUV 4WD 306DT(TDV6) | For vehicles without electronic limited slip diff. | GDS82346 | Drive Shaft | | 31 | 31 | 68.2 | 97 | 838 | |
| | 2013.10-2022.03 | 8AT | R | L | SUV 4WD 306DT(TDV6) | For Vehicles With Electronic Limited Slip Diff. | GDS84013 | Drive Shaft | | 31 | 31 | 68.2 | 97 | 838 | |
| | 2013.10-2022.03 | 8AT | R | R | SUV 4WD 306DT(TDV6) | Chassis no. to:FA527639 | GDS82345 | Drive Shaft | | 31 | 31 | 68.2 | 97 | 860 | |
| | 2013.10-2022.03 | 8AT | R | R | SUV 4WD 306DT(TDV6) | Chassis no. from:FA527640 | GDS83549 | Drive Shaft | | 31 | 31 | 68.2 | 97 | 860 | |
| | 2013.10-2022.03 | 8AT | R | L/R | SUV 4WD 306DT(TDV6) | Chassis no. to:FA527639 | GCO81813 | Outer Joint | | 31 | 28 | 68.2 | 97 | 61 | I |
| | 2013.10-2022.03 | 8AT | R | L/R | SUV 4WD 306DT(TDV6) | Chassis no. from:FA527640 | GCO82414 | Outer Joint | | 31 | 28 | 68.2 | 97 | 61 | I |
| | 2013.10-2022.03 | 8AT | R | L | SUV 4WD 306DT(TDV6) | For vehicles with electronic limited slip diff. | GCI82452 | Inner Joint | | 31 | 28 | 44 | 152 | 105 | |
| | 2013.10-2022.03 | 8AT | R | L/R | SUV 4WD 306DT(TDV6) | Possion:Left,For vehicles without electronic limited slip diff. | GCI81763 | Inner Joint | | 31 | 28 | 44 | 86 | 110.5 | |
| 3.0 (258 kw) | 2020.07-2022.03 | 8AT | F | L | SUV 4WD DT306(AJ20D6) | | GDS82515 | Drive Shaft | | 31 | 29 | 68.5 | 97 | 664 | |
| | 2020.07-2022.03 | 8AT | F | L | SUV 4WD DT306(AJ20D6) | Single speed transfer case | GDS82515 | Drive Shaft | | 31 | 29 | 68.5 | 97 | 664 | |
| | 2020.07-2022.03 | 8AT | F | L | SUV 4WD DT306(AJ20D6) | Dual speed transfer case | GDS84004 | Drive Shaft | | 31 | 29 | 68.5 | 97 | 661 | |
| | 2020.07-2022.03 | 8AT | F | R | SUV 4WD DT306(AJ20D6) | | GDS82516 | Drive Shaft | | 31 | 29 | 68.5 | 97 | 1027 | |
| | 2020.07-2022.03 | 8AT | F | R | SUV 4WD DT306(AJ20D6) | Single speed transfer case | GDS82516 | Drive Shaft | | 31 | 29 | 68.5 | 97 | 1027 | |
| | 2020.07-2022.03 | 8AT | F | L/R | SUV 4WD DT306(AJ20D6) | Dual speed transfer case | GCO81975 | Outer Joint | | 31 | 27 | 68.5 | 97 | 61 | I |
| | 2020.07-2022.03 | 8AT | F | L | SUV 4WD DT306(AJ20D6) | | GCI81849 | Inner Joint | | 29 | 26 | 44 | 71.5 | 125 | |
| | 2020.07-2022.03 | 8AT | F | L | SUV 4WD DT306(AJ20D6) | Single speed transfer case | GCI81849 | Inner Joint | | 29 | 26 | 44 | 71.5 | 125 | |
| | 2020.07-2022.03 | 8AT | F | L | SUV 4WD DT306(AJ20D6) | Dual speed transfer case | GCI82248 | Inner Joint | | 29 | 27 | 44 | 71.5 | 129 | |
| | 2020.07-2022.03 | 8AT | F | R | SUV 4WD DT306(AJ20D6) | | GCI82268 | Inner Joint | | 29 | 27 | 44 | 461 | 100 | |
| | 2020.07-2022.03 | 8AT | F | R | SUV 4WD DT306(AJ20D6) | Single speed transfer case | GCI82268 | Inner Joint | | 29 | 27 | 44 | 461 | 100 | |
| | 2020.07-2022.03 | 8AT | R | L | SUV 4WD DT306(AJ20D6) | For vehicles without electronic limited slip diff. | GDS82346 | Drive Shaft | | 31 | 31 | 68.2 | 97 | 838 | |
| | 2020.07-2022.03 | 8AT | R | L | SUV 4WD DT306(AJ20D6) | For Vehicles With Electronic Limited Slip Diff. | GDS84013 | Drive Shaft | | 31 | 31 | 68.2 | 97 | 838 | |
| | 2020.07-2022.03 | 8AT | R | R | SUV 4WD DT306(AJ20D6) | Chassis no. to:FA527639 | GDS82345 | Drive Shaft | | 31 | 31 | 68.2 | 97 | 860 | |
| | 2020.07-2022.03 | 8AT | R | R | SUV 4WD DT306(AJ20D6) | Chassis no. from:FA527640 | GDS83549 | Drive Shaft | | 31 | 31 | 68.2 | 97 | 860 | |
| | 2020.07-2022.03 | 8AT | R | L/R | SUV 4WD DT306(AJ20D6) | Chassis no. to:FA527639 | GCO81813 | Outer Joint | | 31 | 28 | 68.2 | 97 | 61 | I |
| | 2020.07-2022.03 | 8AT | R | L/R | SUV 4WD DT306(AJ20D6) | Chassis no. from:FA227763 | GCO82414 | Outer Joint | | 31 | 28 | 68.2 | 97 | 61 | I |

| | YEAR | TRANSM. | F/R | L/R | BODY STYLE & DRIVE TYPE & ENGINE | REMARKS | G-AP Ref. | PRODUCT | ABS | Technical Specifications A | B | C | H | L | P |
|---|---|---|---|---|---|---|---|---|---|---|---|---|---|---|---|
| **LAND ROVER** **Range Rover Sport** | | | | | | | | | | | | | | | |
| 3.0 (258 kw) | 2020.07-2022.03 | 8AT | R | L | SUV 4WD DT306(AJ20D6) | For vehicles with electronic limited slip diff. | GCI82452 | Inner Joint | | 31 | 28 | 44 | 152 | 105 | |
| | 2020.07-2022.03 | 8AT | R | L/R | SUV 4WD DT306(AJ20D6) | Possion:Left,For vehicles without electronic limited slip diff. | GCI81763 | Inner Joint | | 31 | 28 | 44 | 86 | 110.5 | |
| | 2022.04- | 8AT | F | L | SUV 4WD DT306(AJ20D6) | | GDS58302 | Drive Shaft | | 31 | 29 | 68 | 97 | 690 | |
| | 2022.04- | 8AT | F | R | SUV 4WD DT306(AJ20D6) | | GDS57596 | Drive Shaft | | 31 | 29 | 68.5 | 97 | 1036 | |
| | 2022.04- | 8AT | F | L/R | SUV 4WD DT306(AJ20D6) | | GCO81975 | Outer Joint | | 31 | 27 | 68.5 | 97 | 61 | I |
| | 2022.04- | 8AT | F | L | SUV 4WD DT306(AJ20D6) | | GCI81849 | Inner Joint | | 29 | 26 | 44 | 71.5 | 125 | |
| | 2022.04- | 8AT | F | R | SUV 4WD DT306(AJ20D6) | | GCI83763 | Inner Joint | | 29 | 26 | 44 | 437 | 106 | |
| | 2022.04- | 8AT | R | L/R | SUV 4WD DT306(AJ20D6) | Chassis no. to:FA527639 | GCO81813 | Outer Joint | | 31 | 28 | 68.2 | 97 | 61 | I |
| 3.0 (260 kw) | 2015.06-2017.12 | 8AT | F | L | SUV 4WD 306DT(TDV6) | Single speed transfer case | GDS82515 | Drive Shaft | | 31 | 29 | 68.5 | 97 | 664 | |
| | 2015.06-2017.12 | 8AT | F | L | SUV 4WD 306DT(TDV6) | Dual speed transfer case | GDS84004 | Drive Shaft | | 31 | 29 | 68.5 | 97 | 661 | |
| | 2015.06-2017.12 | 8AT | F | R | SUV 4WD 306DT(TDV6) | Dual speed transfer case;Single speed transfer case | GDS82516 | Drive Shaft | | 31 | 29 | 68.5 | 97 | 1027 | |
| | 2015.06-2017.12 | 8AT | F | L/R | SUV 4WD 306DT(TDV6) | Dual speed transfer case/Single speed transfer case | GCO81975 | Outer Joint | | 31 | 27 | 68.5 | 97 | 61 | I |
| | 2015.06-2017.12 | 8AT | F | L | SUV 4WD 306DT(TDV6) | Single speed transfer case | GCI81849 | Inner Joint | | 29 | 26 | 44 | 71.5 | 125 | |
| | 2015.06-2017.12 | 8AT | F | L | SUV 4WD 306DT(TDV6) | Dual speed transfer case | GCI82248 | Inner Joint | | 29 | 27 | 44 | 71.5 | 129 | |
| | 2015.06-2017.12 | 8AT | F | R | SUV 4WD 306DT(TDV6) | Dual speed transfer case;Single speed transfer case | GCI82268 | Inner Joint | | 29 | 27 | 44 | 461 | 100 | |
| | 2015.06-2017.12 | 8AT | R | L | SUV 4WD 306DT(TDV6) | For vehicles without electronic limited slip diff. | GDS82346 | Drive Shaft | | 31 | 31 | 68.2 | 97 | 838 | |
| | 2015.06-2017.12 | 8AT | R | L | SUV 4WD 306DT(TDV6) | For Vehicles With Electronic Limited Slip Diff. | GDS84013 | Drive Shaft | | 31 | 31 | 68.2 | 97 | 838 | |
| | 2015.06-2017.12 | 8AT | R | R | SUV 4WD 306DT(TDV6) | Chassis no. to:FA527639 | GDS82345 | Drive Shaft | | 31 | 31 | 68.2 | 97 | 860 | |
| | 2015.06-2017.12 | 8AT | R | R | SUV 4WD 306DT(TDV6) | Chassis no. from:FA527640 | GDS83549 | Drive Shaft | | 31 | 31 | 68.2 | 97 | 860 | |
| | 2015.06-2017.12 | 8AT | R | L/R | SUV 4WD 306DT(TDV6) | Chassis no. to:FA527639 | GCO81813 | Outer Joint | | 31 | 28 | 68.2 | 97 | 61 | I |
| | 2015.06-2017.12 | 8AT | R | L/R | SUV 4WD 306DT(TDV6) | Chassis no. from:FA527640 | GCO82414 | Outer Joint | | 31 | 28 | 68.2 | 97 | 61 | I |
| | 2015.06-2017.12 | 8AT | R | L | SUV 4WD 306DT(TDV6) | For vehicles with electronic limited slip diff. | GCI82452 | Inner Joint | | 31 | 28 | 44 | 152 | 105 | |
| | 2015.06-2017.12 | 8AT | R | L/R | SUV 4WD 306DT(TDV6) | Possion:Left,For vehicles without electronic limited slip diff. | GCI81763 | Inner Joint | | 31 | 28 | 44 | 86 | 110.5 | |
| 3.0 (265 kw) | 2019.06-2022.03 | 8AT | F | L | SUV 4WD PT306(AJ20P6) | Single speed transfer case | GDS82515 | Drive Shaft | | 31 | 29 | 68.5 | 97 | 664 | |
| | 2019.06-2022.03 | 8AT | F | L | SUV 4WD PT306(AJ20P6) | Dual speed transfer case | GDS84004 | Drive Shaft | | 31 | 29 | 68.5 | 97 | 661 | |
| | 2019.06-2022.03 | 8AT | F | R | SUV 4WD PT306(AJ20P6) | Dual speed transfer case;Single speed transfer case | GDS82516 | Drive Shaft | | 31 | 29 | 68.5 | 97 | 1027 | |
| | 2019.06-2022.03 | 8AT | F | L/R | SUV 4WD PT306(AJ20P6) | Dual speed transfer case/Single speed transfer case | GCO81975 | Outer Joint | | 31 | 27 | 68.5 | 97 | 61 | I |
| | 2019.06-2022.03 | 8AT | F | L | SUV 4WD PT306(AJ20P6) | Single speed transfer case | GCI81849 | Inner Joint | | 29 | 26 | 44 | 71.5 | 125 | |
| | 2019.06-2022.03 | 8AT | F | L | SUV 4WD PT306(AJ20P6) | Dual speed transfer case | GCI82248 | Inner Joint | | 29 | 27 | 44 | 71.5 | 129 | |
| | 2019.06-2022.03 | 8AT | F | R | SUV 4WD PT306(AJ20P6) | Dual speed transfer case;Single speed transfer case | GCI82268 | Inner Joint | | 29 | 27 | 44 | 461 | 100 | |
| | 2019.06-2022.03 | 8AT | R | L | SUV 4WD PT306(AJ20P6) | For vehicles without electronic limited slip diff. | GDS82346 | Drive Shaft | | 31 | 31 | 68.2 | 97 | 838 | |
| | 2019.06-2022.03 | 8AT | R | L | SUV 4WD PT306(AJ20P6) | For Vehicles With Electronic Limited Slip Diff. | GDS84013 | Drive Shaft | | 31 | 31 | 68.2 | 97 | 838 | |
| | 2019.06-2022.03 | 8AT | R | R | SUV 4WD PT306(AJ20P6) | Chassis no. to:FA527639 | GDS82345 | Drive Shaft | | 31 | 31 | 68.2 | 97 | 860 | |
| | 2019.06-2022.03 | 8AT | R | R | SUV 4WD PT306(AJ20P6) | Chassis no. from:FA527640 | GDS83549 | Drive Shaft | | 31 | 31 | 68.2 | 97 | 860 | |
| | 2019.06-2022.03 | 8AT | R | L/R | SUV 4WD PT306(AJ20P6) | Chassis no. to:FA527639 | GCO81813 | Outer Joint | | 31 | 28 | 68.2 | 97 | 61 | I |
| | 2019.06-2022.03 | 8AT | R | L/R | SUV 4WD PT306(AJ20P6) | Chassis no. from:FA527640 | GCO82414 | Outer Joint | | 31 | 28 | 68.2 | 97 | 61 | I |
| | 2019.06-2022.03 | 8AT | R | L | SUV 4WD PT306(AJ20P6) | For vehicles with electronic limited slip diff. | GCI82452 | Inner Joint | | 31 | 28 | 44 | 152 | 105 | |
| 3.0 (280 kw) | 2015.06-2018.12 | 8AT | F | L | SUV 4WD 306PS(AJ126) | Single speed transfer case | GDS82515 | Drive Shaft | | 31 | 29 | 68.5 | 97 | 664 | |
| | 2015.06-2018.12 | 8AT | F | L | SUV 4WD 306PS(AJ126) | Dual speed transfer case | GDS84004 | Drive Shaft | | 31 | 29 | 68.5 | 97 | 661 | |
| | 2015.06-2018.12 | 8AT | F | R | SUV 4WD 306PS(AJ126) | Dual speed transfer case;Single speed transfer case | GDS82516 | Drive Shaft | | 31 | 29 | 68.5 | 97 | 1027 | |
| | 2015.06-2018.12 | 8AT | F | L/R | SUV 4WD 306PS(AJ126) | Dual speed transfer case/Single speed transfer case | GCO81975 | Outer Joint | | 31 | 27 | 68.5 | 97 | 61 | I |
| | 2015.06-2018.12 | 8AT | F | L | SUV 4WD 306PS(AJ126) | Single speed transfer case | GCI81849 | Inner Joint | | 29 | 26 | 44 | 71.5 | 125 | |
| | 2015.06-2018.12 | 8AT | F | L | SUV 4WD 306PS(AJ126) | Dual speed transfer case | GCI82248 | Inner Joint | | 29 | 27 | 44 | 71.5 | 129 | |
| | 2015.06-2018.12 | 8AT | F | R | SUV 4WD 306PS(AJ126) | Dual speed transfer case;Single speed transfer case | GCI82268 | Inner Joint | | 29 | 27 | 44 | 461 | 100 | |
| | 2015.06-2018.12 | 8AT | R | L | SUV 4WD 306PS(AJ126) | For vehicles without electronic limited slip diff. | GDS82346 | Drive Shaft | | 31 | 31 | 68.2 | 97 | 838 | |
| | 2015.06-2018.12 | 8AT | R | L | SUV 4WD 306PS(AJ126) | For vehicles with electronic limited slip diff. | GDS84013 | Drive Shaft | | 31 | 31 | 68.2 | 97 | 838 | |
| | 2015.06-2018.12 | 8AT | R | R | SUV 4WD 306PS(AJ126) | Chassis no. to:FA527639 | GDS82345 | Drive Shaft | | 31 | 31 | 68.2 | 97 | 860 | |
| | 2015.06-2018.12 | 8AT | R | R | SUV 4WD 306PS(AJ126) | Chassis no. from:FA527640 | GDS83549 | Drive Shaft | | 31 | 31 | 68.2 | 97 | 860 | |
| | 2015.06-2018.12 | 8AT | R | L/R | SUV 4WD 306PS(AJ126) | Chassis no. to:FA527639 | GCO81813 | Outer Joint | | 31 | 28 | 68.2 | 97 | 61 | I |
| | 2015.06-2018.12 | 8AT | R | L/R | SUV 4WD 306PS(AJ126) | Chassis no. from:FA527640 | GCO82414 | Outer Joint | | 31 | 28 | 68.2 | 97 | 61 | I |
| | 2015.06-2018.12 | 8AT | R | L | SUV 4WD 306PS(AJ126) | For vehicles with electronic limited slip diff. | GCI82452 | Inner Joint | | 31 | 28 | 44 | 152 | 105 | |
| | 2015.06-2018.12 | 8AT | R | L/R | SUV 4WD 306PS(AJ126) | Possion:Left,For vehicles without electronic limited slip diff. | GCI81763 | Inner Joint | | 31 | 28 | 44 | 86 | 110.5 | |
| 3.0 (294 kw) | 2019.02-2022.03 | 8AT | F | L | SUV 4WD PT306(AJ20P6) | | GDS82515 | Drive Shaft | | 31 | 29 | 68.5 | 97 | 664 | |
| | 2019.02-2022.03 | 8AT | F | R | SUV 4WD PT306(AJ20P6) | | GDS82516 | Drive Shaft | | 31 | 29 | 68.5 | 97 | 1027 | |
| | 2019.02-2022.03 | 8AT | F | L | SUV 4WD PT306(AJ20P6) | | GCI81849 | Inner Joint | | 29 | 26 | 44 | 71.5 | 125 | |
| | 2019.02-2022.03 | 8AT | F | R | SUV 4WD PT306(AJ20P6) | | GCI82268 | Inner Joint | | 29 | 27 | 44 | 461 | 100 | |
| | 2019.02-2022.03 | 8AT | R | L | SUV 4WD PT306(AJ20P6) | For vehicles without electronic limited slip diff. | GDS82346 | Drive Shaft | | 31 | 31 | 68.2 | 97 | 838 | |
| | 2019.02-2022.03 | 8AT | R | L | SUV 4WD PT306(AJ20P6) | For Vehicles With Electronic Limited Slip Diff. | GDS84013 | Drive Shaft | | 31 | 31 | 68.2 | 97 | 838 | |
| | 2019.02-2022.03 | 8AT | R | R | SUV 4WD PT306(AJ20P6) | Chassis no. to:FA527639 | GDS82345 | Drive Shaft | | 31 | 31 | 68.2 | 97 | 860 | |
| | 2019.02-2022.03 | 8AT | R | R | SUV 4WD PT306(AJ20P6) | Chassis no. from:FA527640 | GDS83549 | Drive Shaft | | 31 | 31 | 68.2 | 97 | 860 | |
| | 2019.02-2022.03 | 8AT | R | L/R | SUV 4WD PT306(AJ20P6) | Chassis no. to:FA527639 | GCO81813 | Outer Joint | | 31 | 28 | 68.2 | 97 | 61 | I |
| | 2019.02-2022.03 | 8AT | R | L/R | SUV 4WD PT306(AJ20P6) | Chassis no. from:FA527640 | GCO82414 | Outer Joint | | 31 | 28 | 68.2 | 97 | 61 | I |
| | 2019.02-2022.03 | 8AT | R | L | SUV 4WD PT306(AJ20P6) | For vehicles with electronic limited slip diff. | GCI82452 | Inner Joint | | 31 | 28 | 44 | 152 | 105 | |
| | 2019.02-2022.03 | 8AT | R | L/R | SUV 4WD PT306(AJ20P6) | Possion:Left,For vehicles without electronic limited slip diff. | GCI81763 | Inner Joint | | 31 | 28 | 44 | 86 | 110.5 | |
| | 2022.04- | 8AT | F | R | SUV 4WD PT306(AJ20P6) | For vehicles without active driveline | GDS57596 | Drive Shaft | | 31 | 29 | 68.5 | 97 | 1036 | |

| | YEAR | TRANSM. | F/R | L/R | BODY STYLE & DRIVE TYPE & ENGINE | REMARKS | G-AP Ref. | PRODUCT | ABS | Technical Specifications A | B | C | H | L | P |
|---|---|---|---|---|---|---|---|---|---|---|---|---|---|---|---|
| **LAND ROVER** **Range Rover Sport** | | | | | | | | | | | | | | | |
| 3.0 (294 kw) | 2022.04- | 8AT | F | L/R | SUV 4WD PT306(AJ20P6) | For vehicles with active driveline,Position:Left and Right;For vehicles without active driveline,Position:Left | GDS58302 | Drive Shaft | | 31 | 29 | 68 | 97 | 690 | |
| | 2022.04- | 8AT | F | L/R | SUV 4WD PT306(AJ20P6) | | GCO81975 | Outer Joint | | 31 | 27 | 68.5 | 97 | 61 | I |
| | 2022.04- | 8AT | F | R | SUV 4WD PT306(AJ20P6) | For vehicles without active driveline | GCI83763 | Inner Joint | | 29 | 26 | 44 | 437 | 106 | |
| | 2022.04- | 8AT | F | L/R | SUV 4WD PT306(AJ20P6) | For vehicles with active driveline,Position:Left and Right;For vehicles without active driveline,Position:Left | GCI81849 | Inner Joint | | 29 | 26 | 44 | 71.5 | 125 | |
| | 2022.04- | 8AT | R | L/R | SUV 4WD PT306(AJ20P6) | Chassis no. to:FA527639 | GCO81813 | Outer Joint | | 31 | 28 | 68.2 | 97 | 61 | I |
| 3.0 (324 kw) | 2022.04- | 8AT | F | R | SUV 4WD PT306(AJ20P6) | For vehicles without active driveline | GDS57596 | Drive Shaft | | 31 | 29 | 68.5 | 97 | 1036 | |
| | 2022.04- | 8AT | F | L/R | SUV 4WD PT306(AJ20P6) | For vehicles with active driveline,Position:Left and Right;For vehicles without active driveline,Position:Left | GDS58302 | Drive Shaft | | 31 | 29 | 68 | 97 | 690 | |
| | 2022.04- | 8AT | F | L/R | SUV 4WD PT306(AJ20P6) | | GCO81975 | Outer Joint | | 31 | 27 | 68.5 | 97 | 61 | I |
| | 2022.04- | 8AT | F | R | SUV 4WD PT306(AJ20P6) | For vehicles without active driveline | GCI83763 | Inner Joint | | 29 | 26 | 44 | 437 | 106 | |
| | 2022.04- | 8AT | F | L/R | SUV 4WD PT306(AJ20P6) | For vehicles with active driveline,Position:Left and Right;For vehicles without active driveline,Position:Left | GCI81849 | Inner Joint | | 29 | 26 | 44 | 71.5 | 125 | |
| | 2022.04- | 8AT | R | L/R | SUV 4WD PT306(AJ20P6) | Chassis no. to:FA527639 | GCO81813 | Outer Joint | | 31 | 28 | 68.2 | 97 | 61 | I |
| 3.0 (338 kw) | 2023.05- | 8AT | F | R | SUV 4WD PT306(AJ20P6) | For vehicles without active driveline | GDS57596 | Drive Shaft | | 31 | 29 | 68.5 | 97 | 1036 | |
| | 2023.05- | 8AT | F | L/R | SUV 4WD PT306(AJ20P6) | For vehicles with active driveline,Position:Left and Right;For vehicles without active driveline,Position:Left | GDS58302 | Drive Shaft | | 31 | 29 | 68 | 97 | 690 | |
| | 2023.05- | 8AT | F | L/R | SUV 4WD PT306(AJ20P6) | | GCO81975 | Outer Joint | | 31 | 27 | 68.5 | 97 | 61 | I |
| | 2023.05- | 8AT | F | R | SUV 4WD PT306(AJ20P6) | For vehicles without active driveline | GCI83763 | Inner Joint | | 29 | 26 | 44 | 437 | 106 | |
| | 2023.05- | 8AT | F | L/R | SUV 4WD PT306(AJ20P6) | For vehicles with active driveline,Position:Left and Right;For vehicles without active driveline,Position:Left | GCI81849 | Inner Joint | | 29 | 26 | 44 | 71.5 | 125 | |
| | 2023.05- | 8AT | R | L/R | SUV 4WD PT306(AJ20P6) | Chassis no. to:FA527639 | GCO81813 | Outer Joint | | 31 | 28 | 68.2 | 97 | 61 | I |
| 3.0 (375 kw) | 2022.04- | 8AT | F | R | SUV 4WD PT306(AJ20P6) | For vehicles without active driveline | GDS57596 | Drive Shaft | | 31 | 29 | 68.5 | 97 | 1036 | |
| | 2022.04- | 8AT | F | L/R | SUV 4WD PT306(AJ20P6) | For vehicles with active driveline,Position:Left and Right;For vehicles without active driveline,Position:Left | GDS58302 | Drive Shaft | | 31 | 29 | 68 | 97 | 690 | |
| | 2022.04- | 8AT | F | L/R | SUV 4WD PT306(AJ20P6) | | GCO81975 | Outer Joint | | 31 | 27 | 68.5 | 97 | 61 | I |
| | 2022.04- | 8AT | F | R | SUV 4WD PT306(AJ20P6) | For vehicles without active driveline | GCI83763 | Inner Joint | | 29 | 26 | 44 | 437 | 106 | |
| | 2022.04- | 8AT | F | L/R | SUV 4WD PT306(AJ20P6) | For vehicles with active driveline,Position:Left and Right;For vehicles without active driveline,Position:Left | GCI81849 | Inner Joint | | 29 | 26 | 44 | 71.5 | 125 | |
| | 2022.04- | 8AT | R | L/R | SUV 4WD PT306(AJ20P6) | Chassis no. to:FA527639 | GCO81813 | Outer Joint | | 31 | 28 | 68.2 | 97 | 61 | I |
| 3.0 (405 kw) | 2023.05- | 8AT | F | R | SUV 4WD PT306(AJ20P6) | For vehicles without active driveline | GDS57596 | Drive Shaft | | 31 | 29 | 68.5 | 97 | 1036 | |
| | 2023.05- | 8AT | F | L/R | SUV 4WD PT306(AJ20P6) | For vehicles with active driveline,Position:Left and Right;For vehicles without active driveline,Position:Left | GDS58302 | Drive Shaft | | 31 | 29 | 68 | 97 | 690 | |
| | 2023.05- | 8AT | F | L/R | SUV 4WD PT306(AJ20P6) | | GCO81975 | Outer Joint | | 31 | 27 | 68.5 | 97 | 61 | I |
| | 2023.05- | 8AT | F | R | SUV 4WD PT306(AJ20P6) | For vehicles without active driveline | GCI83763 | Inner Joint | | 29 | 26 | 44 | 437 | 106 | |
| | 2023.05- | 8AT | F | L/R | SUV 4WD PT306(AJ20P6) | For vehicles with active driveline,Position:Left and Right;For vehicles without active driveline,Position:Left | GCI81849 | Inner Joint | | 29 | 26 | 44 | 71.5 | 125 | |
| | 2023.05- | 8AT | R | L/R | SUV 4WD PT306(AJ20P6) | Chassis no. to:FA527639 | GCO81813 | Outer Joint | | 31 | 28 | 68.2 | 97 | 61 | I |
| 3.6 (200 kw) | 2006.04-2013.03 | 6AT/8AT | F | L | SUV 4WD 368DT(LION) | | GDS30002 | Drive Shaft | 48T | 29 | 29 | 74 | 96 | 638 | |
| | 2006.04-2013.03 | 6AT/8AT | F | R | SUV 4WD 368DT(LION) | | GDS59623 | Drive Shaft | 48T | 29 | 29 | 74 | 96 | 998 | |
| | 2006.04-2013.03 | 6AT/8AT | F | L | SUV 4WD 368DT(LION) | | GCO30012 | Outer Joint | 48T | 29 | 27 | 74 | 96 | 67.5 | M |
| | 2006.04-2013.03 | 6AT/8AT | F | R | SUV 4WD 368DT(LION) | | GCO30015 | Outer Joint | 48T | 29 | 26 | 74 | 96 | 64.5 | M |
| | 2006.04-2013.03 | 6AT/8AT | F | L | SUV 4WD 368DT(LION) | | GCI59115 | Inner Joint | | 29 | 27 | 44 | 71.5 | 111.5 | |
| | 2006.04-2013.03 | 6AT/8AT | F | R | SUV 4WD 368DT(LION) | | GCI59194 | Inner Joint | | 29 | 27 | 41.3 | 364 | 93 | |
| | 2006.04-2013.03 | 6AT | R | R | SUV 4WD 368DT(LION) | | GDS83159 | Drive Shaft | 48T | 31 | 31 | 73 | 97.5 | 839 | |
| | 2006.04-2013.03 | 6AT | R | L | SUV 4WD 368DT(LION) | | GCO18229 | Outer Joint | 48T | 31 | 27 | 73 | 97.5 | 67.5 | M |
| | 2006.04-2013.03 | 6AT | R | L | SUV 4WD 368DT(LION) | | GCI82147 | Inner Joint | | 31 | 30 | 44 | 151.5 | 124.5 | |
| | 2006.04-2013.03 | 6AT | R | R | SUV 4WD 368DT(LION) | | GCI83500 | Inner Joint | | 31 | 30 | 44 | 182 | 124.5 | |
| | 2006.04-2013.03 | 6AT/8AT | R | L | SUV 4WD 368DT(LION) | | GDS83160 | Drive Shaft | 48T | 31 | 31 | 73 | 97.5 | 786 | |
| | 2006.04-2013.03 | 6AT/8AT | R | L/R | SUV 4WD 368DT(LION) | | GCO30014 | Outer Joint | 48T | 31 | 29 | 74 | 96.5 | 75.5 | M |
| 4.2 (287 kw) | 2005.02-2013.03 | 6AT | F | L | SUV 4WD 428PS(AJV8) | | GDS30002 | Drive Shaft | 48T | 29 | 29 | 74 | 96 | 638 | |
| | 2005.02-2013.03 | 6AT | F | R | SUV 4WD 428PS(AJV8) | | GDS59623 | Drive Shaft | 48T | 29 | 29 | 74 | 96 | 998 | |
| | 2005.02-2013.03 | 6AT | F | L | SUV 4WD 428PS(AJV8) | | GCI59115 | Inner Joint | | 29 | 27 | 44 | 71.5 | 111.5 | |
| | 2005.02-2013.03 | 6AT | F | R | SUV 4WD 428PS(AJV8) | | GCI59194 | Inner Joint | | 29 | 27 | 41.3 | 364 | 93 | |
| | 2005.02-2013.03 | | F | L/R | SUV 4WD 428PS(AJV8) | | GCO30012 | Outer Joint | 48T | 29 | 27 | 74 | 96 | 67.5 | M |
| | 2005.02-2013.03 | 6AT | R | L | SUV 4WD 428PS(AJV8) | | GDS83160 | Drive Shaft | 48T | 31 | 31 | 73 | 97.5 | 786 | |
| | 2005.02-2013.03 | 6AT | R | R | SUV 4WD 428PS(AJV8) | | GDS83159 | Drive Shaft | 48T | 31 | 31 | 73 | 97.5 | 839 | |
| | 2005.02-2013.03 | 6AT | R | L | SUV 4WD 428PS(AJV8) | | GCO18229 | Outer Joint | 48T | 31 | 27 | 73 | 97.5 | 67.5 | M |
| | 2005.02-2013.03 | 6AT | R | L | SUV 4WD 428PS(AJV8) | | GCI82147 | Inner Joint | | 31 | 30 | 44 | 151.5 | 124.5 | |
| | 2005.02-2013.03 | 6AT | R | R | SUV 4WD 428PS(AJV8) | | GCI83500 | Inner Joint | | 31 | 30 | 44 | 182 | 124.5 | |
| | 2005.02-2013.03 | AT | R | L/R | SUV 4WD 428PS(AJV8) | | GCO30014 | Outer Joint | 48T | 31 | 29 | 74 | 96.5 | 75.5 | M |
| 4.2 (291 kw) | 2006.01-2010.02 | 6AT | F | L | SUV 4WD 428PS(AJV8) | | GDS30002 | Drive Shaft | 48T | 29 | 29 | 74 | 96 | 638 | |
| | 2006.01-2010.02 | 6AT | F | R | SUV 4WD 428PS(AJV8) | | GDS59623 | Drive Shaft | 48T | 29 | 29 | 74 | 96 | 998 | |
| | 2006.01-2010.02 | 6AT | F | L | SUV 4WD 428PS(AJV8) | | GCI59115 | Inner Joint | | 29 | 27 | 44 | 71.5 | 111.5 | |
| | 2006.01-2010.02 | 6AT | F | R | SUV 4WD 428PS(AJV8) | | GCI59194 | Inner Joint | | 29 | 27 | 41.3 | 364 | 93 | |
| | 2006.01-2010.02 | | F | L/R | SUV 4WD 428PS(AJV8) | | GCO30012 | Outer Joint | 48T | 29 | 27 | 74 | 96 | 67.5 | M |
| | 2006.01-2010.02 | 6AT | R | L | SUV 4WD 428PS(AJV8) | | GDS83160 | Drive Shaft | 48T | 31 | 31 | 73 | 97.5 | 786 | |
| | 2006.01-2010.02 | 6AT | R | R | SUV 4WD 428PS(AJV8) | | GDS83159 | Drive Shaft | 48T | 31 | 31 | 73 | 97.5 | 839 | |
| | 2006.01-2010.02 | 6AT | R | L | SUV 4WD 428PS(AJV8) | | GCO18229 | Outer Joint | 48T | 31 | 27 | 73 | 97.5 | 67.5 | M |
| | 2006.01-2010.02 | 6AT | R | L | SUV 4WD 428PS(AJV8) | | GCI82147 | Inner Joint | | 31 | 30 | 44 | 151.5 | 124.5 | |
| | 2006.01-2010.02 | 6AT | R | R | SUV 4WD 428PS(AJV8) | | GCI83500 | Inner Joint | | 31 | 30 | 44 | 182 | 124.5 | |
| | 2006.01-2010.02 | | R | L/R | SUV 4WD 428PS(AJV8) | | GCO30014 | Outer Joint | 48T | 31 | 29 | 74 | 96.5 | 75.5 | M |
| 4.2 (298 kw) | 2005.09-2010.02 | 6AT | F | L | SUV 4WD 428PS(AJV8) | | GDS30002 | Drive Shaft | 48T | 29 | 29 | 74 | 96 | 638 | |
| | 2005.09-2010.02 | 6AT | F | R | SUV 4WD 428PS(AJV8) | | GDS59623 | Drive Shaft | 48T | 29 | 29 | 74 | 96 | 998 | |

| | YEAR | TRANSM. | F/R | L/R | BODY STYLE & DRIVE TYPE & ENGINE | REMARKS | G-AP Ref. | PRODUCT | ABS | Technical Specifications A | B | C | H | L | P |
|---|---|---|---|---|---|---|---|---|---|---|---|---|---|---|---|
| **LAND ROVER** **Range Rover Sport** | | | | | | | | | | | | | | | |
| 4.2 (298 kw) | 2005.09-2010.02 | 6AT | R | L | SUV 4WD 428PS(AJV8) | | GDS83160 | Drive Shaft | 48T | 31 | 31 | 73 | 97.5 | 786 | |
| | 2005.09-2010.02 | 6AT | R | R | SUV 4WD 428PS(AJV8) | | GDS83159 | Drive Shaft | 48T | 31 | 31 | 73 | 97.5 | 839 | |
| | 2005.09-2010.02 | 6AT | R | L/R | SUV 4WD 428PS(AJV8) | | GCO30014 | Outer Joint | 48T | 31 | 29 | 74 | 96.5 | 75.5 | M |
| | 2005.09-2010.02 | 6AT | R | L | SUV 4WD 428PS(AJV8) | | GCI82147 | Inner Joint | | 31 | 30 | 44 | 151.5 | 124.5 | |
| | 2005.09-2010.02 | 6AT | R | R | SUV 4WD 428PS(AJV8) | | GCI83500 | Inner Joint | | 31 | 30 | 44 | 182 | 124.5 | |
| 4.4 (220 kw) | 2005.02-2013.03 | 6AT | F | L | SUV 4WD 448PN(AJV8) | | GDS30002 | Drive Shaft | 48T | 29 | 29 | 74 | 96 | 638 | |
| | 2005.02-2013.03 | 6AT | F | R | SUV 4WD 448PN(AJV8) | | GDS59623 | Drive Shaft | 48T | 29 | 29 | 74 | 96 | 998 | |
| | 2005.02-2013.03 | | F | L/R | SUV 4WD 448PN(AJV8) | | GCO30012 | Outer Joint | 48T | 29 | 27 | 74 | 96 | 67.5 | M |
| | 2005.02-2013.03 | | F | L | SUV 4WD 448PN(AJV8) | | GCI59115 | Inner Joint | | 29 | 27 | 44 | 71.5 | 111.5 | |
| | 2005.02-2013.03 | | F | R | SUV 4WD 448PN(AJV8) | | GCI59194 | Inner Joint | | 29 | 27 | 41.3 | 364 | 93 | |
| | 2005.02-2013.03 | 6AT | R | L | SUV 4WD 448PN(AJV8) | With differential lock | GDS83160 | Drive Shaft | 48T | 31 | 31 | 73 | 97.5 | 786 | |
| | 2005.02-2013.03 | 6AT | R | R | SUV 4WD 448PN(AJV8) | | GDS83159 | Drive Shaft | 48T | 31 | 31 | 73 | 97.5 | 839 | |
| | 2005.02-2013.03 | 6AT | R | L/R | SUV 4WD 448PN(AJV8) | | GCO18229 | Outer Joint | 48T | 31 | 27 | 73 | 97.5 | 67.5 | M |
| | 2005.02-2013.03 | 6AT | R | L | SUV 4WD 448PN(AJV8) | With differential lock | GCI82147 | Inner Joint | | 31 | 30 | 44 | 151.5 | 124.5 | |
| | 2005.02-2013.03 | 6AT | R | R | SUV 4WD 448PN(AJV8) | Without differential lock | GCI82146 | Inner Joint | | 31 | 30 | 44 | 182 | 124.5 | |
| | 2005.02-2013.03 | 6AT | R | R | SUV 4WD 448PN(AJV8) | With differential lock | GCI83500 | Inner Joint | | 31 | 30 | 44 | 182 | 124.5 | |
| | 2005.02-2013.03 | AT | R | L/R | SUV 4WD 448PN(AJV8) | | GCO30014 | Outer Joint | 48T | 31 | 29 | 74 | 96.5 | 75.5 | M |
| 4.4 (250 kw) | 2013.10-2022.03 | 8AT | F | L | SUV 4WD 448DT(DITC) | Single speed transfer case | GDS82515 | Drive Shaft | | 31 | 29 | 68.5 | 97 | 664 | |
| | 2013.10-2022.03 | 8AT | F | L | SUV 4WD 448DT(DITC) | Dual speed transfer case | GDS84004 | Drive Shaft | | 31 | 29 | 68.5 | 97 | 661 | |
| | 2013.10-2022.03 | 8AT | F | R | SUV 4WD 448DT(DITC) | Dual speed transfer case;Single speed transfer case | GDS82516 | Drive Shaft | | 31 | 29 | 68.5 | 97 | 1027 | |
| | 2013.10-2022.03 | 8AT | F | L/R | SUV 4WD 448DT(DITC) | Dual speed transfer case/Single speed transfer case | GCO81975 | Outer Joint | | 31 | 27 | 68.5 | 97 | 61 | I |
| | 2013.10-2022.03 | 8AT | F | L | SUV 4WD 448DT(DITC) | Single speed transfer case | GCI81849 | Inner Joint | | 29 | 26 | 44 | 71.5 | 125 | |
| | 2013.10-2022.03 | 8AT | F | L | SUV 4WD 448DT(DITC) | Dual speed transfer case | GCI82248 | Inner Joint | | 29 | 27 | 44 | 71.5 | 129 | |
| | 2013.10-2022.03 | 8AT | F | R | SUV 4WD 448DT(DITC) | Dual speed transfer case;Single speed transfer case | GCI82268 | Inner Joint | | 29 | 27 | 44 | 461 | 100 | |
| | 2013.10-2022.03 | 8AT | R | L | SUV 4WD 448DT(DITC) | For vehicles without electronic limited slip diff. | GDS82346 | Drive Shaft | | 31 | 31 | 68.2 | 97 | 838 | |
| | 2013.10-2022.03 | 8AT | R | L | SUV 4WD 448DT(DITC) | For vehicles with electronic limited slip diff. | GDS84013 | Drive Shaft | | 31 | 31 | 68.2 | 97 | 838 | |
| | 2013.10-2022.03 | 8AT | R | R | SUV 4WD 448DT(DITC) | Chassis no. to:FA527639 | GDS82345 | Drive Shaft | | 31 | 31 | 68.2 | 97 | 860 | |
| | 2013.10-2022.03 | 8AT | R | R | SUV 4WD 448DT(DITC) | Chassis no. from:FA527640 | GDS83549 | Drive Shaft | | 31 | 31 | 68.2 | 97 | 860 | |
| | 2013.10-2022.03 | 8AT | R | L/R | SUV 4WD 448DT(DITC) | Chassis no. to:FA527639 | GCO81813 | Outer Joint | | 31 | 28 | 68.2 | 97 | 61 | I |
| | 2013.10-2022.03 | 8AT | R | L/R | SUV 4WD 448DT(DITC) | Chassis no. from:FA527640 | GCO82414 | Outer Joint | | 31 | 28 | 68.2 | 97 | 61 | I |
| | 2013.10-2022.03 | 8AT | R | L | SUV 4WD 448DT(DITC) | For vehicles with electronic limited slip diff. | GCI82452 | Inner Joint | | 31 | 28 | 44 | 152 | 105 | |
| | 2013.10-2022.03 | 8AT | R | L/R | SUV 4WD 448DT(DITC) | Possion:Left,For vehicles without electronic limited slip diff. | GCI81763 | Inner Joint | | 31 | 28 | 44 | 86 | 110.5 | |
| 4.4 (390 kw) | 2022.04- | 8AT | F | R | SUV 4WD N63B44E(NC10) | For vehicles without active driveline | GDS57596 | Drive Shaft | | 31 | 29 | 68.5 | 97 | 1036 | |
| | 2022.04- | 8AT | F | L/R | SUV 4WD N63B44E(NC10) | For vehicles with active driveline;Position:Left and Right;For vehicles without active driveline;Position:Left | GDS58302 | Drive Shaft | | 31 | 29 | 68 | 97 | 690 | |
| | 2022.04- | 8AT | F | L/R | SUV 4WD N63B44E(NC10) | | GCO81975 | Outer Joint | | 31 | 27 | 68.5 | 97 | 61 | I |
| | 2022.04- | 8AT | F | R | SUV 4WD N63B44E(NC10) | For vehicles without active driveline | GCI83763 | Inner Joint | | 29 | 26 | 44 | 437 | 106 | |
| | 2022.04- | 8AT | F | L/R | SUV 4WD N63B44E(NC10) | For vehicles with active driveline;Position:Left and Right;For vehicles without active driveline;Position:Left | GCI81849 | Inner Joint | | 29 | 26 | 44 | 71.5 | 125 | |
| | 2022.04- | 8AT | R | L/R | SUV 4WD N63B44E(NC10) | Chassis no. to:FA527639 | GCO81813 | Outer Joint | | 31 | 28 | 68.2 | 97 | 61 | I |
| | 2023.05- | 8AT | F | R | SUV 4WD S68B44B(NC11) | For vehicles without active driveline | GDS57596 | Drive Shaft | | 31 | 29 | 68.5 | 97 | 1036 | |
| | 2023.05- | 8AT | F | L/R | SUV 4WD S68B44B(NC11) | For vehicles with active driveline;Position:Left and Right;For vehicles without active driveline;Position:Left | GDS58302 | Drive Shaft | | 31 | 29 | 68 | 97 | 690 | |
| | 2023.05- | 8AT | F | L/R | SUV 4WD S68B44B(NC11) | | GCO81975 | Outer Joint | | 31 | 27 | 68.5 | 97 | 61 | I |
| | 2023.05- | 8AT | F | R | SUV 4WD S68B44B(NC11) | For vehicles without active driveline | GCI83763 | Inner Joint | | 29 | 26 | 44 | 437 | 106 | |
| | 2023.05- | 8AT | F | L/R | SUV 4WD S68B44B(NC11) | For vehicles with active driveline;Position:Left and Right;For vehicles without active driveline;Position:Left | GCI81849 | Inner Joint | | 29 | 26 | 44 | 71.5 | 125 | |
| | 2023.05- | 8AT | R | L/R | SUV 4WD S68B44B(NC11) | Chassis no. to:FA527639 | GCO81813 | Outer Joint | | 31 | 28 | 68.2 | 97 | 61 | I |
| 4.4 (467 kw) | 2023.05- | 8AT | F | R | SUV 4WD S68B44B(NC11) | For vehicles without active driveline | GDS57596 | Drive Shaft | | 31 | 29 | 68.5 | 97 | 1036 | |
| | 2023.05- | 8AT | F | L/R | SUV 4WD S68B44B(NC11) | For vehicles with active driveline;Position:Left and Right;For vehicles without active driveline;Position:Left | GDS58302 | Drive Shaft | | 31 | 29 | 68 | 97 | 690 | |
| | 2023.05- | 8AT | F | L/R | SUV 4WD S68B44B(NC11) | | GCO81975 | Outer Joint | | 31 | 27 | 68.5 | 97 | 61 | I |
| | 2023.05- | 8AT | F | R | SUV 4WD S68B44B(NC11) | For vehicles without active driveline | GCI83763 | Inner Joint | | 29 | 26 | 44 | 437 | 106 | |
| | 2023.05- | 8AT | F | L/R | SUV 4WD S68B44B(NC11) | For vehicles with active driveline;Position:Left and Right;For vehicles without active driveline;Position:Left | GCI81849 | Inner Joint | | 29 | 26 | 44 | 71.5 | 125 | |
| | 2023.05- | 8AT | R | L/R | SUV 4WD S68B44B(NC11) | Chassis no. to:FA527639 | GCO81813 | Outer Joint | | 31 | 28 | 68.2 | 97 | 61 | I |
| 5.0 (276 kw) | 2009.07-2013.03 | 6AT | F | R | SUV 4WD 508PN(AJ133) | | GDS59623 | Drive Shaft | 48T | 29 | 29 | 74 | 96 | 998 | |
| | 2009.07-2013.03 | AT | F | L | SUV 4WD 508PN(AJ133) | | GDS30002 | Drive Shaft | 48T | 29 | 29 | 74 | 96 | 638 | |
| | 2009.07-2013.03 | | F | L/R | SUV 4WD 508PN(AJ133) | | GCO30012 | Outer Joint | 48T | 29 | 27 | 74 | 96 | 67.5 | M |
| | 2009.07-2013.03 | | F | L | SUV 4WD 508PN(AJ133) | | GCI59115 | Inner Joint | | 29 | 27 | 44 | 71.5 | 111.5 | |
| | 2009.07-2013.03 | | F | R | SUV 4WD 508PN(AJ133) | | GCI59194 | Inner Joint | | 29 | 27 | 41.3 | 364 | 93 | |
| | 2009.07-2013.03 | 6AT | R | L | SUV 4WD 508PN(AJ133) | | GDS83160 | Drive Shaft | 48T | 31 | 31 | 73 | 97.5 | 786 | |
| | 2009.07-2013.03 | 6AT | R | R | SUV 4WD 508PN(AJ133) | | GDS83159 | Drive Shaft | 48T | 31 | 31 | 73 | 97.5 | 839 | |
| | 2009.07-2013.03 | 6AT | R | R | SUV 4WD 508PN(AJ133) | | GDS85105 | Drive Shaft | 48W | 30 | 31 | 68 | 84 | 800 | |
| | 2009.07-2013.03 | 6AT | R | L/R | SUV 4WD 508PN(AJ133) | | GCO18229 | Outer Joint | 48T | 31 | 27 | 73 | 97.5 | 67.5 | M |
| | 2009.07-2013.03 | 6AT | R | L | SUV 4WD 508PN(AJ133) | With differential lock | GCI82147 | Inner Joint | | 31 | 30 | 44 | 151.5 | 124.5 | |
| | 2009.07-2013.03 | 6AT | R | R | SUV 4WD 508PN(AJ133) | Without differential lock | GCI82146 | Inner Joint | | 31 | 30 | 44 | 182 | 124.5 | |
| | 2009.07-2013.03 | 6AT | R | R | SUV 4WD 508PN(AJ133) | With differential lock | GCI83500 | Inner Joint | | 31 | 30 | 44 | 182 | 124.5 | |
| | 2009.07-2013.03 | | R | L/R | SUV 4WD 508PN(AJ133) | | GCO30014 | Outer Joint | 48T | 31 | 29 | 74 | 96.5 | 75.5 | M |
| 5.0 (372 kw) | 2009.04-2013.03 | 6AT | F | L | SUV 4WD 508PS(AJ133) | | GDS30002 | Drive Shaft | 48T | 29 | 29 | 74 | 96 | 638 | |
| | 2009.04-2013.03 | 6AT | F | R | SUV 4WD 508PS(AJ133) | | GDS59623 | Drive Shaft | 48T | 29 | 29 | 74 | 96 | 998 | |

| | YEAR | TRANSM. | F/R | L/R | BODY STYLE & DRIVE TYPE & ENGINE | REMARKS | G-AP Ref. | PRODUCT | ABS | Technical Specifications A | B | C | H | L | P |
|---|---|---|---|---|---|---|---|---|---|---|---|---|---|---|---|
| **LAND ROVER** **Range Rover Sport** | | | | | | | | | | | | | | | |
| 5.0 (372 kw) | 2009.04-2013.03 | 6AT | F | L/R | SUV 4WD 508PS(AJ133) | | GCO30012 | Outer Joint | 48T | 29 | 27 | 74 | 96 | 67.5 | M |
| | 2009.04-2013.03 | | F | L | SUV 4WD 508PS(AJ133) | | GCI59115 | Inner Joint | | 29 | 27 | 44 | 71.5 | 111.5 | |
| | 2009.04-2013.03 | | F | R | SUV 4WD 508PS(AJ133) | | GCI59194 | Inner Joint | | 29 | 27 | 41.3 | 364 | 93 | |
| | 2009.04-2013.03 | 6AT | R | L | SUV 4WD 508PS(AJ133) | | GDS83160 | Drive Shaft | 48T | 31 | 31 | 73 | 97.5 | 786 | |
| | 2009.04-2013.03 | 6AT | R | R | SUV 4WD 508PS(AJ133) | | GDS83159 | Drive Shaft | 48T | 31 | 31 | 73 | 97.5 | 839 | |
| | 2009.04-2013.03 | 6AT | R | L/R | SUV 4WD 508PS(AJ133) | | GCO18229 | Outer Joint | 48T | 31 | 27 | 73 | 97.5 | 67.5 | M |
| | 2009.04-2013.03 | 6AT | R | L | SUV 4WD 508PS(AJ133) | | GCI82147 | Inner Joint | | 31 | 30 | 44 | 151.5 | 124.5 | |
| | 2009.04-2013.03 | 6AT | R | R | SUV 4WD 508PS(AJ133) | Without differential lock | GCI82146 | Inner Joint | | 31 | 30 | 44 | 182 | 124.5 | |
| | 2009.04-2013.03 | 6AT | R | R | SUV 4WD 508PS(AJ133) | With differential lock | GCI83500 | Inner Joint | | 31 | 30 | 44 | 182 | 124.5 | |
| | 2009.04-2013.03 | AT | R | L/R | SUV 4WD 508PS(AJ133) | | GCO30014 | Outer Joint | 48T | 31 | 29 | 74 | 96.5 | 75.5 | M |
| 5.0 (375 kw) | 2009.09-2013.03 | 6AT | F | L | SUV 4WD 508PS(AJ133) | | GDS30002 | Drive Shaft | 48T | 29 | 29 | 74 | 96 | 638 | |
| | 2009.09-2013.03 | 6AT | F | R | SUV 4WD 508PS(AJ133) | | GDS59623 | Drive Shaft | 48T | 29 | 29 | 74 | 96 | 998 | |
| | 2009.09-2013.03 | | F | L/R | SUV 4WD 508PS(AJ133) | | GCO30012 | Outer Joint | 48T | 29 | 27 | 74 | 96 | 67.5 | M |
| | 2009.09-2013.03 | | F | L | SUV 4WD 508PS(AJ133) | | GCI59115 | Inner Joint | | 29 | 27 | 44 | 71.5 | 111.5 | |
| | 2009.09-2013.03 | | F | R | SUV 4WD 508PS(AJ133) | | GCI59194 | Inner Joint | | 29 | 27 | 41.3 | 364 | 93 | |
| | 2009.09-2013.03 | 6AT | R | L | SUV 4WD 508PS(AJ133) | | GDS83160 | Drive Shaft | 48T | 31 | 31 | 73 | 97.5 | 786 | |
| | 2009.09-2013.03 | 6AT | R | R | SUV 4WD 508PS(AJ133) | | GDS83159 | Drive Shaft | 48T | 31 | 31 | 73 | 97.5 | 839 | |
| | 2009.09-2013.03 | 6AT | R | R | SUV 4WD 508PS(AJ133) | | GDS85105 | Drive Shaft | 48W | 30 | 31 | 68 | 84 | 800 | |
| | 2009.09-2013.03 | 6AT | R | L | SUV 4WD 508PS(AJ133) | | GCO85004 | Outer Joint | 48W | 30 | 29 | 68 | 84 | 74 | M |
| | 2009.09-2013.03 | 6AT | R | L/R | SUV 4WD 508PS(AJ133) | | GCO18229 | Outer Joint | 48T | 31 | 27 | 73 | 97.5 | 67.5 | M |
| | 2009.09-2013.03 | 6AT | R | L | SUV 4WD 508PS(AJ133) | | GCI82147 | Inner Joint | | 31 | 30 | 44 | 151.5 | 124.5 | |
| | 2009.09-2013.03 | 6AT | R | L | SUV 4WD 508PS(AJ133) | | GCI85059 | Inner Joint | | 31 | 30 | 44 | 151.5 | 124.5 | |
| | 2009.09-2013.03 | 6AT | R | R | SUV 4WD 508PS(AJ133) | Without differential lock | GCI82146 | Inner Joint | | 31 | 30 | 44 | 182 | 124.5 | |
| | 2009.09-2013.03 | 6AT | R | R | SUV 4WD 508PS(AJ133) | With differential lock | GCI83500 | Inner Joint | | 31 | 30 | 44 | 182 | 124.5 | |
| | 2009.09-2013.03 | | R | L/R | SUV 4WD 508PS(AJ133) | | GCO30014 | Outer Joint | 48T | 31 | 29 | 74 | 96.5 | 75.5 | M |
| | 2013.04-2018.12 | 8AT | F | L | SUV 4WD 508PS(AJ133) | Single speed transfer case | GDS82515 | Drive Shaft | | 31 | 29 | 68.5 | 97 | 664 | |
| | 2013.04-2018.12 | 8AT | F | L | SUV 4WD 508PS(AJ133) | Chassis no. to:HA999999,Dual speed transfer case | GDS84004 | Drive Shaft | | 31 | 29 | 68.5 | 97 | 661 | |
| | 2013.04-2018.12 | 8AT | F | R | SUV 4WD 508PS(AJ133) | Chassis no. to:HA999999,Dual speed transfer case;Single speed transfer case | GDS82516 | Drive Shaft | | 31 | 29 | 68.5 | 97 | 1027 | |
| | 2013.04-2018.12 | 8AT | F | L/R | SUV 4WD 508PS(AJ133) | Chassis no. to:HA999999,Dual speed transfer case;Single speed transfer case | GCO81975 | Outer Joint | | 31 | 27 | 68.5 | 97 | 61 | I |
| | 2013.04-2018.12 | 8AT | F | L | SUV 4WD 508PS(AJ133) | Single speed transfer case | GCI81849 | Inner Joint | | 29 | 26 | 44 | 71.5 | 125 | |
| | 2013.04-2018.12 | 8AT | F | L | SUV 4WD 508PS(AJ133) | Chassis no. to:HA999999,Dual speed transfer case | GCI82248 | Inner Joint | | 29 | 27 | 44 | 71.5 | 129 | |
| | 2013.04-2018.12 | 8AT | F | R | SUV 4WD 508PS(AJ133) | Chassis no. to:HA999999,Dual speed transfer case;Single speed transfer case | GCI82268 | Inner Joint | | 29 | 27 | 44 | 461 | 100 | |
| | 2013.04-2018.12 | 8AT | R | L | SUV 4WD 508PS(AJ133) | For vehicles without electronic limited slip diff. | GDS82346 | Drive Shaft | | 31 | 31 | 68.2 | 97 | 838 | |
| | 2013.04-2018.12 | 8AT | R | L | SUV 4WD 508PS(AJ133) | For vehicles with electronic limited slip diff. | GDS84013 | Drive Shaft | | 31 | 31 | 68.2 | 97 | 838 | |
| | 2013.04-2018.12 | 8AT | R | R | SUV 4WD 508PS(AJ133) | Chassis no. to:FA527639 | GDS82345 | Drive Shaft | | 31 | 31 | 68.2 | 97 | 860 | |
| | 2013.04-2018.12 | 8AT | R | R | SUV 4WD 508PS(AJ133) | Chassis no. from:FA527640 | GDS83549 | Drive Shaft | | 31 | 31 | 68.2 | 97 | 860 | |
| | 2013.04-2018.12 | 8AT | R | L/R | SUV 4WD 508PS(AJ133) | Chassis no. to:FA527639 | GCO81813 | Outer Joint | | 31 | 28 | 68.2 | 97 | 61 | I |
| | 2013.04-2018.12 | 8AT | R | L/R | SUV 4WD 508PS(AJ133) | Chassis no. from:FA527640 | GCO82414 | Outer Joint | | 31 | 28 | 68.2 | 97 | 61 | I |
| | 2013.04-2018.12 | 8AT | R | L | SUV 4WD 508PS(AJ133) | For vehicles with electronic limited slip diff. | GCI82452 | Inner Joint | | 31 | 28 | 44 | 152 | 105 | |
| | 2013.04-2018.12 | 8AT | R | L/R | SUV 4WD 508PS(AJ133) | Possion:Left,For vehicles without electronic limited slip diff. | GCI81763 | Inner Joint | | 31 | 28 | 44 | 86 | 110.5 | |
| 5.0 (386 kw) | 2017.11-2022.03 | 8AT | F | L | SUV 4WD 508PS(AJ133) | Single speed transfer case | GDS82515 | Drive Shaft | | 31 | 29 | 68.5 | 97 | 664 | |
| | 2017.11-2022.03 | 8AT | F | L | SUV 4WD 508PS(AJ133) | Chassis no. to:HA999999,Dual speed transfer case | GDS84004 | Drive Shaft | | 31 | 29 | 68.5 | 97 | 661 | |
| | 2017.11-2022.03 | 8AT | F | R | SUV 4WD 508PS(AJ133) | Chassis no. to:HA999999,Dual speed transfer case;Single speed transfer case | GDS82516 | Drive Shaft | | 31 | 29 | 68.5 | 97 | 1027 | |
| | 2017.11-2022.03 | 8AT | F | L/R | SUV 4WD 508PS(AJ133) | Chassis no. to:HA999999,Dual speed transfer case;Single speed transfer case | GCO81975 | Outer Joint | | 31 | 27 | 68.5 | 97 | 61 | I |
| | 2017.11-2022.03 | 8AT | F | L | SUV 4WD 508PS(AJ133) | Single speed transfer case | GCI81849 | Inner Joint | | 29 | 26 | 44 | 71.5 | 125 | |
| | 2017.11-2022.03 | 8AT | F | L | SUV 4WD 508PS(AJ133) | Chassis no. to:HA999999,Dual speed transfer case | GCI82248 | Inner Joint | | 29 | 27 | 44 | 71.5 | 129 | |
| | 2017.11-2022.03 | 8AT | F | R | SUV 4WD 508PS(AJ133) | Chassis no. to:HA999999,Dual speed transfer case;Single speed transfer case | GCI82268 | Inner Joint | | 29 | 27 | 44 | 461 | 100 | |
| | 2017.11-2022.03 | 8AT | R | L | SUV 4WD 508PS(AJ133) | For vehicles without electronic limited slip diff. | GDS82346 | Drive Shaft | | 31 | 31 | 68.2 | 97 | 838 | |
| | 2017.11-2022.03 | 8AT | R | L | SUV 4WD 508PS(AJ133) | For vehicles with electronic limited slip diff. | GDS84013 | Drive Shaft | | 31 | 31 | 68.2 | 97 | 838 | |
| | 2017.11-2022.03 | 8AT | R | R | SUV 4WD 508PS(AJ133) | Chassis no. to:FA527639 | GDS82345 | Drive Shaft | | 31 | 31 | 68.2 | 97 | 860 | |
| | 2017.11-2022.03 | 8AT | R | R | SUV 4WD 508PS(AJ133) | Chassis no. from:FA527640 | GDS83549 | Drive Shaft | | 31 | 31 | 68.2 | 97 | 860 | |
| | 2017.11-2022.03 | 8AT | R | L/R | SUV 4WD 508PS(AJ133) | Chassis no. to:FA527639 | GCO81813 | Outer Joint | | 31 | 28 | 68.2 | 97 | 61 | I |
| | 2017.11-2022.03 | 8AT | R | L/R | SUV 4WD 508PS(AJ133) | Chassis no. from:FA527640 | GCO82414 | Outer Joint | | 31 | 28 | 68.2 | 97 | 61 | I |
| | 2017.11-2022.03 | 8AT | R | L | SUV 4WD 508PS(AJ133) | For vehicles with electronic limited slip diff. | GCI82452 | Inner Joint | | 31 | 28 | 44 | 152 | 105 | |
| | 2017.11-2022.03 | 8AT | R | L/R | SUV 4WD 508PS(AJ133) | Possion:Left,For vehicles without electronic limited slip diff. | GCI81763 | Inner Joint | | 31 | 28 | 44 | 86 | 110.5 | |
| 5.0 (405 kw) | 2014.01-2018.12 | 8AT | F | L | SUV 4WD 508PS(AJ133) | Single speed transfer case | GDS82515 | Drive Shaft | | 31 | 29 | 68.5 | 97 | 664 | |
| | 2014.01-2018.12 | 8AT | F | L | SUV 4WD 508PS(AJ133) | Chassis no. to:HA999999,Dual speed transfer case | GDS84004 | Drive Shaft | | 31 | 29 | 68.5 | 97 | 661 | |
| | 2014.01-2018.12 | 8AT | F | R | SUV 4WD 508PS(AJ133) | Chassis no. to:HA999999,Dual speed transfer case;Single speed transfer case | GDS82516 | Drive Shaft | | 31 | 29 | 68.5 | 97 | 1027 | |
| | 2014.01-2018.12 | 8AT | F | L/R | SUV 4WD 508PS(AJ133) | Chassis no. to:HA999999,Dual speed transfer case;Single speed transfer case | GCO81975 | Outer Joint | | 31 | 27 | 68.5 | 97 | 61 | I |
| | 2014.01-2018.12 | 8AT | F | L | SUV 4WD 508PS(AJ133) | Single speed transfer case | GCI81849 | Inner Joint | | 29 | 26 | 44 | 71.5 | 125 | |
| | 2014.01-2018.12 | 8AT | F | L | SUV 4WD 508PS(AJ133) | Chassis no. to:HA999999,Dual speed transfer case | GCI82248 | Inner Joint | | 29 | 27 | 44 | 71.5 | 129 | |
| | 2014.01-2018.12 | 8AT | F | R | SUV 4WD 508PS(AJ133) | Chassis no. to:HA999999,Dual speed transfer case;Single speed transfer case | GCI82268 | Inner Joint | | 29 | 27 | 44 | 461 | 100 | |
| | 2014.01-2018.12 | 8AT | R | L | SUV 4WD 508PS(AJ133) | For vehicles without electronic limited slip diff. | GDS82346 | Drive Shaft | | 31 | 31 | 68.2 | 97 | 838 | |
| | 2014.01-2018.12 | 8AT | R | L | SUV 4WD 508PS(AJ133) | For vehicles with electronic limited slip diff. | GDS84013 | Drive Shaft | | 31 | 31 | 68.2 | 97 | 838 | |
| | 2014.01-2018.12 | 8AT | R | R | SUV 4WD 508PS(AJ133) | Chassis no. to:FA527639 | GDS82345 | Drive Shaft | | 31 | 31 | 68.2 | 97 | 860 | |

| | YEAR | TRANSM. | F/R | L/R | BODY STYLE & DRIVE TYPE & ENGINE | REMARKS | G-AP Ref. | PRODUCT | ABS | Technical Specifications A | B | C | H | L | P |
|---|---|---|---|---|---|---|---|---|---|---|---|---|---|---|---|
| **LAND ROVER** | | | | | | | | | | | | | | | |
| **Range Rover Sport** | | | | | | | | | | | | | | | |
| 5.0 (405 kw) | 2014.01-2018.12 | 8AT | R | R | SUV 4WD 508PS(AJ133) | Chassis no. from:FA527640 | GDS83549 | Drive Shaft | | 31 | 31 | 68.2 | 97 | 860 | |
| | 2014.01-2018.12 | 8AT | R | L/R | SUV 4WD 508PS(AJ133) | Chassis no. to:FA527639 | GCO81813 | Outer Joint | | 31 | 28 | 68.2 | 97 | 61 | I |
| | 2014.01-2018.12 | 8AT | R | L/R | SUV 4WD 508PS(AJ133) | Chassis no. from:FA527640 | GCO82414 | Outer Joint | | 31 | 28 | 68.2 | 97 | 61 | I |
| | 2014.01-2018.12 | 8AT | R | L | SUV 4WD 508PS(AJ133) | For vehicles with electronic limited slip diff. | GCI82452 | Inner Joint | | 31 | 28 | 44 | 152 | 105 | |
| | 2014.01-2018.12 | 8AT | R | L/R | SUV 4WD 508PS(AJ133) | Possion:Left,For vehicles without electronic limited slip diff. | GCI81763 | Inner Joint | | 31 | 28 | 44 | 86 | 110.5 | |
| 5.0 (423 kw) | 2017.11-2022.03 | 8AT | F | L | SUV 4WD 508PS(AJ133) | Single speed transfer case | GDS82515 | Drive Shaft | | 31 | 29 | 68.5 | 97 | 664 | |
| | 2017.11-2022.03 | 8AT | F | L | SUV 4WD 508PS(AJ133) | Chassis no. to:HA999999,Dual speed transfer case | GDS84004 | Drive Shaft | | 31 | 29 | 68.5 | 97 | 661 | |
| | 2017.11-2022.03 | 8AT | F | R | SUV 4WD 508PS(AJ133) | Chassis no. to:HA999999,Dual speed transfer case,Single speed transfer case | GDS82516 | Drive Shaft | | 31 | 29 | 68.5 | 97 | 1027 | |
| | 2017.11-2022.03 | 8AT | F | L/R | SUV 4WD 508PS(AJ133) | Chassis no. to:HA999999,Dual speed transfer case,Single speed transfer case | GCO81975 | Outer Joint | | 31 | 27 | 68.5 | 97 | 61 | I |
| | 2017.11-2022.03 | 8AT | F | L | SUV 4WD 508PS(AJ133) | Single speed transfer case | GCI81849 | Inner Joint | | 29 | 26 | 44 | 71.5 | 125 | |
| | 2017.11-2022.03 | 8AT | F | L | SUV 4WD 508PS(AJ133) | Chassis no. to:HA999999,Dual speed transfer case | GCI82248 | Inner Joint | | 29 | 27 | 44 | 71.5 | 129 | |
| | 2017.11-2022.03 | 8AT | F | R | SUV 4WD 508PS(AJ133) | Chassis no. to:HA999999,Dual speed transfer case,Single speed transfer case | GCI82268 | Inner Joint | | 29 | 27 | 44 | 461 | 100 | |
| | 2017.11-2022.03 | 8AT | R | L | SUV 4WD 508PS(AJ133) | For vehicles without electronic limited slip diff. | GDS82346 | Drive Shaft | | 31 | 31 | 68.2 | 97 | 838 | |
| | 2017.11-2022.03 | 8AT | R | L | SUV 4WD 508PS(AJ133) | For vehicles with electronic limited slip diff. | GDS84013 | Drive Shaft | | 31 | 31 | 68.2 | 97 | 838 | |
| | 2017.11-2022.03 | 8AT | R | R | SUV 4WD 508PS(AJ133) | Chassis no. to:FA527639 | GDS82345 | Drive Shaft | | 31 | 31 | 68.2 | 97 | 860 | |
| | 2017.11-2022.03 | 8AT | R | R | SUV 4WD 508PS(AJ133) | Chassis no. from:FA527640 | GDS83549 | Drive Shaft | | 31 | 31 | 68.2 | 97 | 860 | |
| | 2017.11-2022.03 | 8AT | R | L/R | SUV 4WD 508PS(AJ133) | Chassis no. to:FA527639 | GCO81813 | Outer Joint | | 31 | 28 | 68.2 | 97 | 61 | I |
| | 2017.11-2022.03 | 8AT | R | L/R | SUV 4WD 508PS(AJ133) | Chassis no. from:FA527640 | GCO82414 | Outer Joint | | 31 | 28 | 68.2 | 97 | 61 | I |
| | 2017.11-2022.03 | 8AT | R | L | SUV 4WD 508PS(AJ133) | For vehicles with electronic limited slip diff. | GCI82452 | Inner Joint | | 31 | 28 | 44 | 152 | 105 | |
| | 2017.11-2022.03 | 8AT | R | L/R | SUV 4WD 508PS(AJ133) | Possion:Left,For vehicles without electronic limited slip diff. | GCI81763 | Inner Joint | | 31 | 28 | 44 | 86 | 110.5 | |
| **Range Rover Velar** | | | | | | | | | | | | | | | |
| 2.0 (132 kw) | 2017.03- | 8AT | F | L | SUV 4WD 204DTD(AJ20D4);204DTH(AJ20D4) | | GDS56109 | Drive Shaft | | 31 | 28 | 65 | 97 | 673 | |
| | 2017.03- | 8AT | F | R | SUV 4WD 204DTD(AJ20D4);204DTH(AJ20D4) | | GDS56110 | Drive Shaft | | 31 | 28 | 65 | 97 | 1035 | |
| | 2017.03- | 8AT | F | L/R | SUV 4WD 204DTD(AJ20D4);204DTH(AJ20D4) | | GCO83156 | Outer Joint | | 31 | 24 | 65 | 97 | 58 | I |
| | 2017.03- | 8AT | R | L | SUV 4WD 204DTD(AJ20D4);204DTH(AJ20D4) | Without differential lock | GDS56184 | Drive Shaft | | 31 | 31 | 65 | 97 | 801 | |
| | 2017.03- | 8AT | R | R | SUV 4WD 204DTD(AJ20D4);204DTH(AJ20D4) | | GDS56185 | Drive Shaft | | 31 | 31 | 65 | 97 | 873 | |
| | 2017.03- | 8AT | R | L/R | SUV 4WD 204DTD(AJ20D4);204DTH(AJ20D4) | | GCO83197 | Outer Joint | | 31 | 25 | 65 | 97 | 55 | I |
| | 2017.03- | 8AT | R | L | SUV 4WD 204DTD(AJ20D4);204DTH(AJ20D4) | Without differential lock | GCI83188 | Inner Joint | | 31 | 26 | 44 | 86 | 83 | |
| 2.0 (150 kw) | 2020.07- | 8AT | F | L | SUV 4WD 204DTY(AJ21D4) | | GDS56109 | Drive Shaft | | 31 | 28 | 65 | 97 | 673 | |
| | 2020.07- | 8AT | F | R | SUV 4WD 204DTY(AJ21D4) | | GDS56110 | Drive Shaft | | 31 | 28 | 65 | 97 | 1035 | |
| | 2020.07- | 8AT | F | L/R | SUV 4WD 204DTY(AJ21D4) | | GCO83156 | Outer Joint | | 31 | 24 | 65 | 97 | 58 | I |
| | 2020.07- | 8AT | R | L | SUV 4WD 204DTY(AJ21D4) | | GDS56184 | Drive Shaft | | 31 | 31 | 65 | 97 | 801 | |
| | 2020.07- | 8AT | R | R | SUV 4WD 204DTY(AJ21D4) | | GDS56185 | Drive Shaft | | 31 | 31 | 65 | 97 | 873 | |
| | 2020.07- | 8AT | R | L/R | SUV 4WD 204DTY(AJ21D4) | | GCO83197 | Outer Joint | | 31 | 25 | 65 | 97 | 55 | I |
| | 2020.07- | 8AT | R | L | SUV 4WD 204DTY(AJ21D4) | | GCI83188 | Inner Joint | | 31 | 26 | 44 | 86 | 83 | |
| 2.0 (177 kw) | 2017.03- | 8AT | F | L | SUV 4WD 204DTA(AJ20D4) | | GDS56109 | Drive Shaft | | 31 | 28 | 65 | 97 | 673 | |
| | 2017.03- | 8AT | F | R | SUV 4WD 204DTA(AJ20D4) | | GDS56110 | Drive Shaft | | 31 | 28 | 65 | 97 | 1035 | |
| | 2017.03- | 8AT | F | L/R | SUV 4WD 204DTA(AJ20D4) | | GCO83156 | Outer Joint | | 31 | 24 | 65 | 97 | 58 | I |
| | 2017.03- | 8AT | R | L | SUV 4WD 204DTA(AJ20D4) | Without differential lock | GDS56184 | Drive Shaft | | 31 | 31 | 65 | 97 | 801 | |
| | 2017.03- | 8AT | R | R | SUV 4WD 204DTA(AJ20D4) | | GDS56185 | Drive Shaft | | 31 | 31 | 65 | 97 | 873 | |
| | 2017.03- | 8AT | R | L/R | SUV 4WD 204DTA(AJ20D4) | | GCO83197 | Outer Joint | | 31 | 25 | 65 | 97 | 55 | I |
| | 2017.03- | 8AT | R | L | SUV 4WD 204DTA(AJ20D4) | Without differential lock | GCI83188 | Inner Joint | | 31 | 26 | 44 | 86 | 83 | |
| 2.0 (184 kw) | 2017.03- | 8AT | F | L | SUV 4WD PT204(AJ20P4) | | GDS56109 | Drive Shaft | | 31 | 28 | 65 | 97 | 673 | |
| | 2017.03- | 8AT | F | R | SUV 4WD PT204(AJ20P4) | | GDS56110 | Drive Shaft | | 31 | 28 | 65 | 97 | 1035 | |
| | 2017.03- | 8AT | F | L/R | SUV 4WD PT204(AJ20P4) | | GCO83156 | Outer Joint | | 31 | 24 | 65 | 97 | 58 | I |
| | 2017.03- | 8AT | R | L | SUV 4WD PT204(AJ20P4) | Without differential lock | GDS56184 | Drive Shaft | | 31 | 31 | 65 | 97 | 801 | |
| | 2017.03- | 8AT | R | R | SUV 4WD PT204(AJ20P4) | | GDS56185 | Drive Shaft | | 31 | 31 | 65 | 97 | 873 | |
| | 2017.03- | 8AT | R | L/R | SUV 4WD PT204(AJ20P4) | | GCO83197 | Outer Joint | | 31 | 25 | 65 | 97 | 55 | I |
| | 2017.03- | 8AT | R | L | SUV 4WD PT204(AJ20P4) | Without differential lock | GCI83188 | Inner Joint | | 31 | 26 | 44 | 86 | 83 | |
| 2.0 (221 kw) | 2017.03- | 8AT | F | L | SUV 4WD PT204(AJ20P4) | | GDS56109 | Drive Shaft | | 31 | 28 | 65 | 97 | 673 | |
| | 2017.03- | 8AT | F | R | SUV 4WD PT204(AJ20P4) | | GDS56110 | Drive Shaft | | 31 | 28 | 65 | 97 | 1035 | |
| | 2017.03- | 8AT | F | L/R | SUV 4WD PT204(AJ20P4) | | GCO83156 | Outer Joint | | 31 | 24 | 65 | 97 | 58 | I |
| | 2017.03- | 8AT | R | L | SUV 4WD PT204(AJ20P4) | Without differential lock | GDS56184 | Drive Shaft | | 31 | 31 | 65 | 97 | 801 | |
| | 2017.03- | 8AT | R | R | SUV 4WD PT204(AJ20P4) | | GDS56185 | Drive Shaft | | 31 | 31 | 65 | 97 | 873 | |
| | 2017.03- | 8AT | R | L/R | SUV 4WD PT204(AJ20P4) | | GCO83197 | Outer Joint | | 31 | 25 | 65 | 97 | 55 | I |
| | 2017.03- | 8AT | R | L | SUV 4WD PT204(AJ20P4) | Without differential lock | GCI83188 | Inner Joint | | 31 | 26 | 44 | 86 | 83 | |
| 2.0 (297 kw) | 2020.07- | 8AT | F | L | SUV 4WD PT204(AJ20P4) | | GDS56109 | Drive Shaft | | 31 | 28 | 65 | 97 | 673 | |
| | 2020.07- | 8AT | F | R | SUV 4WD PT204(AJ20P4) | | GDS56110 | Drive Shaft | | 31 | 28 | 65 | 97 | 1035 | |
| | 2020.07- | 8AT | F | L/R | SUV 4WD PT204(AJ20P4) | | GCO83156 | Outer Joint | | 31 | 24 | 65 | 97 | 58 | I |
| | 2020.07- | 8AT | R | L | SUV 4WD PT204(AJ20P4) | | GDS56184 | Drive Shaft | | 31 | 31 | 65 | 97 | 801 | |
| | 2020.07- | 8AT | R | R | SUV 4WD PT204(AJ20P4) | | GDS56185 | Drive Shaft | | 31 | 31 | 65 | 97 | 873 | |
| | 2020.07- | 8AT | R | L/R | SUV 4WD PT204(AJ20P4) | | GCO83197 | Outer Joint | | 31 | 25 | 65 | 97 | 55 | I |
| | 2020.07- | 8AT | R | L | SUV 4WD PT204(AJ20P4) | | GCI83188 | Inner Joint | | 31 | 26 | 44 | 86 | 83 | |
| 3.0 (202 kw) | 2018.04- | 8AT | F | L | SUV 4WD 306DT(TDV6) | | GDS56109 | Drive Shaft | | 31 | 28 | 65 | 97 | 673 | |
| | 2018.04- | 8AT | F | R | SUV 4WD 306DT(TDV6) | | GDS56110 | Drive Shaft | | 31 | 28 | 65 | 97 | 1035 | |

| | YEAR | TRANSM. | F/R | L/R | BODY STYLE & DRIVE TYPE & ENGINE | REMARKS | G-AP Ref. | PRODUCT | ABS | Technical Specifications A | B | C | H | L | P |
|---|---|---|---|---|---|---|---|---|---|---|---|---|---|---|---|
| **LAND ROVER** **Range Rover Velar** | | | | | | | | | | | | | | | |
| 3.0 (202 kw) | 2018.04- | 8AT | F | L/R | SUV 4WD 306DT(TDV6) | | GCO83156 | Outer Joint | | 31 | 24 | 65 | 97 | 58 | I |
| | 2018.04- | 8AT | R | L | SUV 4WD 306DT(TDV6) | Without differential lock | GDS56184 | Drive Shaft | | 31 | 31 | 65 | 97 | 801 | |
| | 2018.04- | 8AT | R | R | SUV 4WD 306DT(TDV6) | | GDS56185 | Drive Shaft | | 31 | 31 | 65 | 97 | 873 | |
| | 2018.04- | 8AT | R | L/R | SUV 4WD 306DT(TDV6) | | GCO83197 | Outer Joint | | 31 | 25 | 65 | 97 | 55 | I |
| | 2018.04- | 8AT | R | L | SUV 4WD 306DT(TDV6) | Without differential lock | GCI83188 | Inner Joint | | 31 | 26 | 44 | 86 | 83 | |
| 3.0 (221 kw) | 2017.03- | 8AT | F | L | SUV 4WD 306DT(TDV6) | | GDS56109 | Drive Shaft | | 31 | 28 | 65 | 97 | 673 | |
| | 2017.03- | 8AT | F | R | SUV 4WD 306DT(TDV6) | | GDS56110 | Drive Shaft | | 31 | 28 | 65 | 97 | 1035 | |
| | 2017.03- | 8AT | F | L/R | SUV 4WD 306DT(TDV6) | | GCO83156 | Outer Joint | | 31 | 24 | 65 | 97 | 58 | I |
| | 2017.03- | 8AT | R | L | SUV 4WD 306DT(TDV6) | Without differential lock | GDS56184 | Drive Shaft | | 31 | 31 | 65 | 97 | 801 | |
| | 2017.03- | 8AT | R | R | SUV 4WD 306DT(TDV6) | | GDS56185 | Drive Shaft | | 31 | 31 | 65 | 97 | 873 | |
| | 2017.03- | 8AT | R | L/R | SUV 4WD 306DT(TDV6) | | GCO83197 | Outer Joint | | 31 | 25 | 65 | 97 | 55 | I |
| | 2017.03- | 8AT | R | L | SUV 4WD 306DT(TDV6) | Without differential lock | GCI83188 | Inner Joint | | 31 | 26 | 44 | 86 | 83 | |
| | 2020.07- | 8AT | F | L | SUV 4WD DT306(AJ20D6) | | GDS56109 | Drive Shaft | | 31 | 28 | 65 | 97 | 673 | |
| | 2020.07- | 8AT | F | R | SUV 4WD DT306(AJ20D6) | | GDS56110 | Drive Shaft | | 31 | 28 | 65 | 97 | 1035 | |
| | 2020.07- | 8AT | F | L/R | SUV 4WD DT306(AJ20D6) | | GCO83156 | Outer Joint | | 31 | 24 | 65 | 97 | 58 | I |
| | 2020.07- | 8AT | R | L | SUV 4WD DT306(AJ20D6) | | GDS56184 | Drive Shaft | | 31 | 31 | 65 | 97 | 801 | |
| | 2020.07- | 8AT | R | R | SUV 4WD DT306(AJ20D6) | | GDS56185 | Drive Shaft | | 31 | 31 | 65 | 97 | 873 | |
| | 2020.07- | 8AT | R | L/R | SUV 4WD DT306(AJ20D6) | | GCO83197 | Outer Joint | | 31 | 25 | 65 | 97 | 55 | I |
| | 2020.07- | 8AT | R | L | SUV 4WD DT306(AJ20D6) | | GCI83188 | Inner Joint | | 31 | 26 | 44 | 86 | 83 | |
| 3.0 (250 kw) | 2018.04- | 8AT | F | L | SUV 4WD 306PS(AJ126) | | GDS56109 | Drive Shaft | | 31 | 28 | 65 | 97 | 673 | |
| | 2018.04- | 8AT | F | R | SUV 4WD 306PS(AJ126) | | GDS56110 | Drive Shaft | | 31 | 28 | 65 | 97 | 1035 | |
| | 2018.04- | 8AT | F | L/R | SUV 4WD 306PS(AJ126) | | GCO83156 | Outer Joint | | 31 | 24 | 65 | 97 | 58 | I |
| | 2018.04- | 8AT | R | L | SUV 4WD 306PS(AJ126) | Without differential lock | GDS56184 | Drive Shaft | | 31 | 31 | 65 | 97 | 801 | |
| | 2018.04- | 8AT | R | R | SUV 4WD 306PS(AJ126) | | GDS56185 | Drive Shaft | | 31 | 31 | 65 | 97 | 873 | |
| | 2018.04- | 8AT | R | L/R | SUV 4WD 306PS(AJ126) | | GCO83197 | Outer Joint | | 31 | 25 | 65 | 97 | 55 | I |
| | 2018.04- | 8AT | R | L | SUV 4WD 306PS(AJ126) | Without differential lock | GCI83188 | Inner Joint | | 31 | 26 | 44 | 86 | 83 | |
| 3.0 (280 kw) | 2017.03- | 8AT | F | L | SUV 4WD 306PS(AJ126) | | GDS56109 | Drive Shaft | | 31 | 28 | 65 | 97 | 673 | |
| | 2017.03- | 8AT | F | R | SUV 4WD 306PS(AJ126) | | GDS56110 | Drive Shaft | | 31 | 28 | 65 | 97 | 1035 | |
| | 2017.03- | 8AT | F | L/R | SUV 4WD 306PS(AJ126) | | GCO83156 | Outer Joint | | 31 | 24 | 65 | 97 | 58 | I |
| | 2017.03- | 8AT | R | L | SUV 4WD 306PS(AJ126) | Without differential lock | GDS56184 | Drive Shaft | | 31 | 31 | 65 | 97 | 801 | |
| | 2017.03- | 8AT | R | R | SUV 4WD 306PS(AJ126) | | GDS56185 | Drive Shaft | | 31 | 31 | 65 | 97 | 873 | |
| | 2017.03- | 8AT | R | L/R | SUV 4WD 306PS(AJ126) | | GCO83197 | Outer Joint | | 31 | 25 | 65 | 97 | 55 | I |
| | 2017.03- | 8AT | R | L | SUV 4WD 306PS(AJ126) | Without differential lock | GCI83188 | Inner Joint | | 31 | 26 | 44 | 86 | 83 | |
| 3.0 (294 kw) | 2020.07- | 8AT | F | L | SUV 4WD PT306(AJ20P6) | | GDS56109 | Drive Shaft | | 31 | 28 | 65 | 97 | 673 | |
| | 2020.07- | 8AT | F | R | SUV 4WD PT306(AJ20P6) | | GDS56110 | Drive Shaft | | 31 | 28 | 65 | 97 | 1035 | |
| | 2020.07- | 8AT | F | L/R | SUV 4WD PT306(AJ20P6) | | GCO83156 | Outer Joint | | 31 | 24 | 65 | 97 | 58 | I |
| | 2020.07- | 8AT | R | L | SUV 4WD PT306(AJ20P6) | | GDS56184 | Drive Shaft | | 31 | 31 | 65 | 97 | 801 | |
| | 2020.07- | 8AT | R | R | SUV 4WD PT306(AJ20P6) | | GDS56185 | Drive Shaft | | 31 | 31 | 65 | 97 | 873 | |
| | 2020.07- | 8AT | R | L/R | SUV 4WD PT306(AJ20P6) | | GCO83197 | Outer Joint | | 31 | 25 | 65 | 97 | 55 | I |
| | 2020.07- | 8AT | R | L | SUV 4WD PT306(AJ20P6) | | GCI83188 | Inner Joint | | 31 | 26 | 44 | 86 | 83 | |
| 5.0 (405 kw) | 2019.01- | 8AT | F | L | SUV 4WD 508PS(AJ133) | | GDS56109 | Drive Shaft | | 31 | 28 | 65 | 97 | 673 | |
| | 2019.01- | 8AT | F | R | SUV 4WD 508PS(AJ133) | | GDS56110 | Drive Shaft | | 31 | 28 | 65 | 97 | 1035 | |
| | 2019.01- | 8AT | F | L/R | SUV 4WD 508PS(AJ133) | | GCO83156 | Outer Joint | | 31 | 24 | 65 | 97 | 58 | I |
| | 2019.01- | 8AT | R | L | SUV 4WD 508PS(AJ133) | Without differential lock | GDS56184 | Drive Shaft | | 31 | 31 | 65 | 97 | 801 | |
| | 2019.01- | 8AT | R | R | SUV 4WD 508PS(AJ133) | | GDS56185 | Drive Shaft | | 31 | 31 | 65 | 97 | 873 | |
| | 2019.01- | 8AT | R | L/R | SUV 4WD 508PS(AJ133) | | GCO83197 | Outer Joint | | 31 | 25 | 65 | 97 | 55 | I |
| | 2019.01- | 8AT | R | L | SUV 4WD 508PS(AJ133) | Without differential lock | GCI83188 | Inner Joint | | 31 | 26 | 44 | 86 | 83 | |
| **LDV** **Maxus** | | | | | | | | | | | | | | | |
| 2.5 (70 kw) | 2005.02-2008.12 | MT | F | L | Bus FWD VM39C, VM40C | | GDS18231 | Drive Shaft | 48T | 30 | 30 | 70 | 117.5 | 723 | |
| | 2005.02-2008.12 | MT | F | L | Bus FWD VM39C, VM40C | | GDS18402 | Drive Shaft | | 30 | 30 | 70 | 117.5 | 723 | |
| | 2005.02-2008.12 | MT | F | R | Bus FWD VM39C, VM40C | | GDS18232 | Drive Shaft | 48T | 30 | 30 | 70 | 117.5 | 1095 | |
| | 2005.02-2008.12 | MT | F | R | Bus FWD VM39C, VM40C | | GDS75056 | Drive Shaft | | 30 | 30 | 70 | 117.5 | 1095 | |
| | 2005.02-2008.12 | MT | F | L | Bus FWD VM39C, VM40C | | GCO35025 | Outer Joint | | 30 | 36 | 70 | 117.5 | 68.5 | I |
| | 2005.02-2008.12 | | F | L | Bus FWD VM39C, VM40C | | GCI34112 | Inner Joint | | 30 | 26 | 35 | 86 | 81 | |
| | 2005.02-2008.12 | | F | R | Bus FWD VM39C, VM40C | | GCI18174 | Inner Joint | | 30 | 26 | 35 | 434 | 105 | |
| | 2005.02-2008.12 | MT | F | L | Platform/Chassis FWD VM39C, VMR425 | | GDS18231 | Drive Shaft | 48T | 30 | 30 | 70 | 117.5 | 723 | |
| | 2005.02-2008.12 | MT | F | R | Platform/Chassis FWD VM39C, VMR425 | | GDS18232 | Drive Shaft | 48T | 30 | 30 | 70 | 117.5 | 1095 | |
| | 2005.02-2008.12 | MT | F | L | Platform/Chassis FWD VM39C, VMR425 | Date from:2005.06 | GCO35025 | Outer Joint | | 30 | 36 | 70 | 117.5 | 68.5 | I |
| | 2005.02-2008.12 | | F | L | Platform/Chassis FWD VM39C, VMR425 | Date From:2005.06 | GDS18402 | Drive Shaft | | 30 | 30 | 70 | 117.5 | 723 | |
| | 2005.02-2008.12 | | F | R | Platform/Chassis FWD VM39C, VMR425 | Date From:2005.06 | GDS75056 | Drive Shaft | | 30 | 30 | 70 | 117.5 | 1095 | |
| | 2005.02-2008.12 | | F | L | Platform/Chassis FWD VM39C, VMR425 | | GCI34112 | Inner Joint | | 30 | 26 | 35 | 86 | 81 | |
| | 2005.02-2008.12 | | F | R | Platform/Chassis FWD VM39C, VMR425 | | GCI18174 | Inner Joint | | 30 | 26 | 35 | 434 | 105 | |
| | 2005.02-2008.12 | MT | F | L | Van FWD VM39C, VM40C | | GDS18231 | Drive Shaft | 48T | 30 | 30 | 70 | 117.5 | 723 | |
| | 2005.02-2008.12 | MT | F | L | Van FWD VM39C, VM40C | | GDS18402 | Drive Shaft | | 30 | 30 | 70 | 117.5 | 723 | |

| | YEAR | TRANSM. | F/R | L/R | BODY STYLE & DRIVE TYPE & ENGINE | REMARKS | G-AP Ref. | PRODUCT | ABS | Technical Specifications A | B | C | H | L | P |
|---|---|---|---|---|---|---|---|---|---|---|---|---|---|---|---|
| **LDV** | | | | | | | | | | | | | | | |
| **Maxus** | | | | | | | | | | | | | | | |
| 2.5 (70 kw) | 2005.02-2008.12 | MT | F | R | Van FWD VM39C, VM40C | | GDS18232 | Drive Shaft | 48T | 30 | 30 | 70 | 117.5 | 1095 | |
| | 2005.02-2008.12 | MT | F | R | Van FWD VM39C, VM40C | | GDS75056 | Drive Shaft | | 30 | 30 | 70 | 117.5 | 1095 | |
| | 2005.02-2008.12 | MT | F | L | Van FWD VM39C, VM40C | | GCO35025 | Outer Joint | | 30 | 36 | 70 | 117.5 | 68.5 | I |
| | 2005.02-2008.12 | | F | L | Van FWD VM39C, VM40C | | GCI34112 | Inner Joint | | 30 | 26 | 35 | 86 | 81 | |
| | 2005.02-2008.12 | | F | R | Van FWD VM39C, VM40C | | GCI18174 | Inner Joint | | 30 | 26 | 35 | 434 | 105 | |
| 2.5 (78 kw) | 2007.04-2009.12 | MT | F | L | Van FWD | | GDS18231 | Drive Shaft | 48T | 30 | 30 | 70 | 117.5 | 723 | |
| | 2007.04-2009.12 | MT | F | R | Van FWD | | GDS18232 | Drive Shaft | 48T | 30 | 30 | 70 | 117.5 | 1095 | |
| 2.5 (88 kw) | 2005.02-2009.12 | MT | F | L | Bus FWD VM39C | | GDS18231 | Drive Shaft | 48T | 30 | 30 | 70 | 117.5 | 723 | |
| | 2005.02-2009.12 | MT | F | L | Bus FWD VM39C | | GDS18402 | Drive Shaft | | 30 | 30 | 70 | 117.5 | 723 | |
| | 2005.02-2009.12 | MT | F | R | Bus FWD VM39C | | GDS18232 | Drive Shaft | 48T | 30 | 30 | 70 | 117.5 | 1095 | |
| | 2005.02-2009.12 | MT | F | R | Bus FWD VM39C | | GDS75056 | Drive Shaft | | 30 | 30 | 70 | 117.5 | 1095 | |
| | 2005.02-2009.12 | MT | F | L | Bus FWD VM39C | Date from:2005.10,Date to:2008.12 | GCO35025 | Outer Joint | | 30 | 36 | 70 | 117.5 | 68.5 | I |
| | 2005.02-2009.12 | | F | L | Bus FWD VM39C | | GCI34112 | Inner Joint | | 30 | 26 | 35 | 86 | 81 | |
| | 2005.02-2009.12 | | F | R | Bus FWD VM39C | | GCI18174 | Inner Joint | | 30 | 26 | 35 | 434 | 105 | |
| | 2005.10-2009.12 | MT | F | L | Platform/Chassis FWD BS580VM, VMR425 | | GDS18231 | Drive Shaft | 48T | 30 | 30 | 70 | 117.5 | 723 | |
| | 2005.10-2009.12 | MT | F | R | Platform/Chassis FWD BS580VM, VMR425 | | GDS18232 | Drive Shaft | 48T | 30 | 30 | 70 | 117.5 | 1095 | |
| | 2005.10-2009.12 | MT | F | L | Platform/Chassis FWD BS580VM, VMR425 | Date to:2007.07 | GCO35025 | Outer Joint | | 30 | 36 | 70 | 117.5 | 68.5 | I |
| | 2005.10-2009.12 | | F | L | Platform/Chassis FWD BS580VM, VMR425 | Date To:2007.07 | GDS18402 | Drive Shaft | | 30 | 30 | 70 | 117.5 | 723 | |
| | 2005.10-2009.12 | | F | R | Platform/Chassis FWD BS580VM, VMR425 | Date To:2007.07 | GDS75056 | Drive Shaft | | 30 | 30 | 70 | 117.5 | 1095 | |
| | 2005.10-2009.12 | | F | L | Platform/Chassis FWD BS580VM, VMR425 | | GCI34112 | Inner Joint | | 30 | 26 | 35 | 86 | 81 | |
| | 2005.10-2009.12 | | F | R | Platform/Chassis FWD BS580VM, VMR425 | | GCI18174 | Inner Joint | | 30 | 26 | 35 | 434 | 105 | |
| | 2005.10-2009.12 | MT | F | L | Van FWD BS580VM | | GDS18231 | Drive Shaft | 48T | 30 | 30 | 70 | 117.5 | 723 | |
| | 2005.10-2009.12 | MT | F | L | Van FWD BS580VM | | GDS18402 | Drive Shaft | | 30 | 30 | 70 | 117.5 | 723 | |
| | 2005.10-2009.12 | MT | F | R | Van FWD BS580VM | | GDS18232 | Drive Shaft | 48T | 30 | 30 | 70 | 117.5 | 1095 | |
| | 2005.10-2009.12 | MT | F | R | Van FWD BS580VM | | GDS75056 | Drive Shaft | | 30 | 30 | 70 | 117.5 | 1095 | |
| | 2005.10-2009.12 | MT | F | L | Van FWD BS580VM | | GCO35025 | Outer Joint | | 30 | 36 | 70 | 117.5 | 68.5 | I |
| | 2005.10-2009.12 | | F | L | Van FWD BS580VM | | GCI34112 | Inner Joint | | 30 | 26 | 35 | 86 | 81 | |
| | 2005.10-2009.12 | | F | R | Van FWD BS580VM | | GCI18174 | Inner Joint | | 30 | 26 | 35 | 434 | 105 | |
| 2.5 (99 kw) | 2006.02-2009.12 | MT | F | L | Bus FWD BS582VM | | GDS18231 | Drive Shaft | 48T | 30 | 30 | 70 | 117.5 | 723 | |
| | 2006.02-2009.12 | MT | F | R | Bus FWD BS582VM | | GDS18232 | Drive Shaft | 48T | 30 | 30 | 70 | 117.5 | 1095 | |
| | 2006.02-2009.12 | MT | F | L | Bus FWD BS582VM | Date to:2008.12 | GCO35025 | Outer Joint | | 30 | 36 | 70 | 117.5 | 68.5 | I |
| | 2006.02-2009.12 | | F | L | Bus FWD BS582VM | Date To:2008.12 | GDS18402 | Drive Shaft | | 30 | 30 | 70 | 117.5 | 723 | |
| | 2006.02-2009.12 | | F | R | Bus FWD BS582VM | Date To:2008.12 | GDS75056 | Drive Shaft | | 30 | 30 | 70 | 117.5 | 1095 | |
| | 2006.02-2009.12 | | F | L | Bus FWD BS582VM | | GCI34112 | Inner Joint | | 30 | 26 | 35 | 86 | 81 | |
| | 2006.02-2009.12 | | F | R | Bus FWD BS582VM | | GCI18174 | Inner Joint | | 30 | 26 | 35 | 434 | 105 | |
| | 2006.02-2009.12 | MT | F | L | Platform/Chassis FWD BS582VM | | GDS18231 | Drive Shaft | 48T | 30 | 30 | 70 | 117.5 | 723 | |
| | 2006.02-2009.12 | MT | F | R | Platform/Chassis FWD BS582VM | | GDS18232 | Drive Shaft | 48T | 30 | 30 | 70 | 117.5 | 1095 | |
| | 2006.02-2009.12 | MT | F | L | Platform/Chassis FWD BS582VM | Date to:2008.12 | GCO35025 | Outer Joint | | 30 | 36 | 70 | 117.5 | 68.5 | I |
| | 2006.02-2009.12 | | F | L | Platform/Chassis FWD BS582VM | Date To:2008.12 | GDS18402 | Drive Shaft | | 30 | 30 | 70 | 117.5 | 723 | |
| | 2006.02-2009.12 | | F | R | Platform/Chassis FWD BS582VM | Date To:2008.12 | GDS75056 | Drive Shaft | | 30 | 30 | 70 | 117.5 | 1095 | |
| | 2006.02-2009.12 | | F | L | Platform/Chassis FWD BS582VM | | GCI34112 | Inner Joint | | 30 | 26 | 35 | 86 | 81 | |
| | 2006.02-2009.12 | | F | R | Platform/Chassis FWD BS582VM | | GCI18174 | Inner Joint | | 30 | 26 | 35 | 434 | 105 | |
| | 2006.02-2009.12 | MT | F | L | Van FWD BS582VM | | GDS18231 | Drive Shaft | 48T | 30 | 30 | 70 | 117.5 | 723 | |
| | 2006.02-2009.12 | MT | F | R | Van FWD BS582VM | | GDS18232 | Drive Shaft | 48T | 30 | 30 | 70 | 117.5 | 1095 | |
| | 2006.02-2009.12 | MT | F | L | Van FWD BS582VM | Date to:2008.12 | GCO35025 | Outer Joint | | 30 | 36 | 70 | 117.5 | 68.5 | I |
| | 2006.02-2009.12 | | F | L | Van FWD BS582VM | Date To:2008.12 | GDS18402 | Drive Shaft | | 30 | 30 | 70 | 117.5 | 723 | |
| | 2006.02-2009.12 | | F | R | Van FWD BS582VM | Date To:2008.12 | GDS75056 | Drive Shaft | | 30 | 30 | 70 | 117.5 | 1095 | |
| | 2006.02-2009.12 | | F | L | Van FWD BS582VM | | GCI34112 | Inner Joint | | 30 | 26 | 35 | 86 | 81 | |
| | 2006.02-2009.12 | | F | R | Van FWD BS582VM | | GCI18174 | Inner Joint | | 30 | 26 | 35 | 434 | 105 | |
| **LEXUS** | | | | | | | | | | | | | | | |
| **CT 200h** | | | | | | | | | | | | | | | |
| 1.8 (100 kw) | 2011.09- | CVT | F | L | Hatchback FWD 2ZR-FXE;5ZR-FXE | | GDS59377 | Drive Shaft | | 26 | 24 | 55.6 | 95.5 | 624 | |
| | 2011.09- | CVT | F | R | Hatchback FWD 2ZR-FXE;5ZR-FXE | | GDS59378 | Drive Shaft | | 26 | 24 | 55.6 | 95.5 | 973 | |
| | 2011.09- | CVT | F | L | Hatchback FWD 2ZR-FXE;5ZR-FXE | | GCO59244 | Outer Joint | | 26 | 25 | 55.6 | 95.5 | 57 | I |
| | 2011.09- | CVT | F | R | Hatchback FWD 2ZR-FXE;5ZR-FXE | | GCO59340 | Outer Joint | | 26 | 25 | 55.6 | 95.5 | 57 | I |
| | 2011.09- | CVT | F | L | Hatchback FWD 2ZR-FXE;5ZR-FXE | AAR | GCI59227 | Inner Joint | | 24 | 25 | 50 | 67 | 109.5 | |
| | 2011.09- | CVT | F | L | Hatchback FWD 2ZR-FXE;5ZR-FXE | TJ | GCI59246 | Inner Joint | | 24 | 25 | 50 | 67 | 104 | |
| | 2011.09- | CVT | F | R | Hatchback FWD 2ZR-FXE;5ZR-FXE | | GCI59228 | Inner Joint | | 24 | 25 | 40 | 98 | 93 | |
| **ES 200** | | | | | | | | | | | | | | | |
| 2.0 (110 kw) | 2015.08-2018.06 | 6AT | F | L | Saloon FWD 6AR-FSE | | GCI59073 | Inner Joint | | 24 | 27 | 50 | 67 | 110 | |
| | 2015.08-2018.06 | 6AT | F | L | Saloon FWD 6AR-FSE | | GCI59125 | Inner Joint | | 24 | 27 | 50 | 67 | 109.5 | |
| | 2015.08-2018.06 | 6AT | F | R | Saloon FWD 6AR-FSE | Date from:2017.08 | GCI59206 | Inner Joint | | 24 | 27 | 40 | 377 | 104.5 | |
| | 2015.08-2018.06 | AT | F | L | Saloon FWD 6AR-FSE | | GDS59624 | Drive Shaft | 48T | 26 | 24 | 61.2 | 100 | 657 | |
| | 2015.08-2018.06 | AT | F | R | Saloon FWD 6AR-FSE | | GDS59654 | Drive Shaft | 48T | 26 | 24 | 63.3 | 100 | 981 | |
| | 2015.08-2018.06 | AT | F | L | Saloon FWD 6AR-FSE | | GCO59314 | Outer Joint | 48T | 26 | 27 | 61.2 | 100 | 59.5 | I |

| | YEAR | TRANSM. | F/R | L/R | BODY STYLE & DRIVE TYPE & ENGINE | REMARKS | G-AP Ref. | PRODUCT | ABS | Technical Specifications A | B | C | H | L | P |
|---|---|---|---|---|---|---|---|---|---|---|---|---|---|---|---|
| **LEXUS** | | | | | | | | | | | | | | | |
| **ES 200** | | | | | | | | | | | | | | | |
| 2.0 (110 kw) | 2015.08-2018.06 | AT | F | L/R | Saloon FWD 6AR-FSE | | GCO59290 | Outer Joint | 48T | 26 | 27 | 63.3 | 100 | 59.5 | I |
| **ES 250** | | | | | | | | | | | | | | | |
| 2.5 (135 kw) | 2012.06-2018.06 | 6AT | F | L | Saloon FWD 2AR-FE | | GDS59624 | Drive Shaft | 48T | 26 | 24 | 61.2 | 100 | 657 | |
| | 2012.06-2018.06 | 6AT | F | L | Saloon FWD 2AR-FE | | GCI59073 | Inner Joint | | 24 | 27 | 50 | 67 | 110 | |
| | 2012.06-2018.06 | 6AT | F | L | Saloon FWD 2AR-FE | | GCI59125 | Inner Joint | | 24 | 27 | 50 | 67 | 109.5 | |
| | 2012.06-2018.06 | 6AT | F | R | Saloon FWD 2AR-FE | Date from:2017.08 | GCI59206 | Inner Joint | | 24 | 27 | 40 | 377 | 104.5 | |
| | 2012.06-2018.06 | AT | F | R | Saloon FWD 2AR-FE | | GDS59654 | Drive Shaft | 48T | 26 | 24 | 63.3 | 100 | 981 | |
| | 2012.06-2018.06 | AT | F | L/R | Saloon FWD 2AR-FE | | GCO59290 | Outer Joint | 48T | 26 | 27 | 63.3 | 100 | 59.5 | I |
| **ES 300** | | | | | | | | | | | | | | | |
| 3.0 (138 kw) | 1991.09-1997.12 | | F | R | Saloon FWD 3VZFE | | GDS59027 | Drive Shaft | 48T | 30 | | 56 | 95.5 | 553 | |
| | 1991.09-1997.12 | | F | | Saloon FWD 3VZFE | | GCO59009 | Outer Joint | 48T | 30 | 27 | 56 | 100 | 67.5 | I |
| | 1991.09-1997.12 | | F | | Saloon FWD 3VZFE | | GCO59446 | Outer Joint | 48T | 30 | 27 | 56 | 100 | 66 | M |
| | 1991.09-1997.12 | | F | | Saloon FWD 3VZFE | | GCI31001 | Inner Joint | | | 27 | | | 33.2 | |
| 3.0 (140 kw) | 1996.06-2001.07 | | F | | Saloon FWD 1MZFE | | GCO59446 | Outer Joint | 48T | 30 | 27 | 56 | 100 | 66 | M |
| 3.0 (157 kw) | 2001.08-2006.10 | AT | F | L/R | Saloon FWD 1MZ-FE | Date to:2003.07,For left-hand drive vehicles | GCO59154 | Outer Joint | 48T | 30 | 27 | 63.4 | 100 | 64.5 | M |
| | 2001.08-2006.10 | AT | F | L/R | Saloon FWD 1MZ-FE | Date to:2002.07 | GCO59225 | Outer Joint | 48T | 30 | 26 | 61 | 99 | 67 | M |
| | 2001.08-2006.10 | AT | F | L/R | Saloon FWD 1MZ-FE | Date to:2003.07,For left-hand drive vehicles | GCI31001 | Inner Joint | | | 27 | | | 33.2 | |
| **ES 300h** | | | | | | | | | | | | | | | |
| 2.5 (131 kw) | 2018.07- | CVT | F | L | Saloon FWD A25AFXS | | GCI82129 | Inner Joint | | 24 | 27 | 50 | 67 | 108 | |
| 2.5 (151 kw) | 2012.06-2018.06 | AT/CVT | F | L | Saloon FWD 2AR-FXE | | GDS81303 | Drive Shaft | 48T | 30 | 24 | 61 | 100 | 647 | |
| | 2012.06-2018.06 | AT/CVT | F | R | Saloon FWD 2AR-FXE | | GDS81304 | Drive Shaft | 48T | 30 | 24 | 61 | 100 | 985 | |
| | 2012.06-2018.06 | AT/CVT | F | R | Saloon FWD 2AR-FXE | | GCI59206 | Inner Joint | | 24 | 27 | 40 | 377 | 104.5 | |
| | 2012.06-2018.06 | CVT | F | L/R | Saloon FWD 2AR-FXE | | GCO59486 | Outer Joint | 48T | 30 | 27 | 61 | 100 | 65 | I |
| | 2012.06-2018.06 | | F | L | Saloon FWD 2AR-FXE | Date To:2014.09 | GCO59431 | Outer Joint | 48T | 30 | 27 | 61.2 | 100 | 64.5 | M |
| | 2012.06-2018.06 | | F | R | Saloon FWD 2AR-FXE | Date To:2014.10 | GCO59431 | Outer Joint | 48T | 30 | 27 | 61.2 | 100 | 64.5 | M |
| | 2012.06-2018.06 | | F | L | Saloon FWD 2AR-FXE | | GCI59109 | Inner Joint | | 24 | 27 | 50 | 84 | 109 | |
| 2.5 (160 kw) | 2018.07- | CVT | F | L | Saloon FWD A25A-FXS;A25B-FXS | Date from:2021.08 | GDS84344 | Drive Shaft | | 26 | 24 | 61.2 | 100 | 675 | |
| | 2018.07- | CVT | F | R | Saloon FWD A25A-FXS;A25B-FXS | Date from:2021.08 | GDS56657 | Drive Shaft | | 26 | 24 | 61.2 | 100 | 971 | |
| | 2018.07- | CVT | F | L/R | Saloon FWD A25A-FXS;A25B-FXS | Date from:2021.08 | GCO59245 | Outer Joint | | 26 | 27 | 61.2 | 100 | 59 | I |
| | 2018.07- | CVT | F | L/R | Saloon FWD A25A-FXS;A25B-FXS | | GCO99320 | Outer Joint | | 30 | 27 | 61.2 | 100 | 64 | I |
| | 2018.07- | CVT | F | L | Saloon FWD A25A-FXS;A25B-FXS | | GCI82129 | Inner Joint | | 24 | 27 | 50 | 67 | 108 | |
| | 2018.07- | CVT | F | R | Saloon FWD A25A-FXS;A25B-FXS | | GCI82484 | Inner Joint | | 24 | 27 | 40 | 368.5 | 105 | |
| **ES 350** | | | | | | | | | | | | | | | |
| 3.5 (183 kw) | 2012.06-2018.06 | 6AT | F | L | Saloon FWD 2GR-FE | | GDS59324 | Drive Shaft | 48T | 30 | 24 | 61 | 100 | 659 | |
| | 2012.06-2018.06 | 6AT | F | R | Saloon FWD 2GR-FE | | GDS59323 | Drive Shaft | 48T | 30 | 24 | 61 | 100 | 978 | |
| | 2012.06-2018.06 | AT | F | L | Saloon FWD 2GR-FE | With Shaft | GCO59305 | Outer Joint | 48T | 30 | 26 | 61 | 100 | 68.5 | M |
| | 2012.06-2018.06 | AT | F | | Saloon FWD 2GR-FE | | GCO59214 | Outer Joint | 48T | 30 | 26 | 61 | 100 | 67 | I |
| | 2012.06-2018.06 | AT | F | L | Saloon FWD 2GR-FE | | GCI59082 | Inner Joint | | 24 | 27 | 50 | 67 | 109 | |
| | 2012.06-2018.06 | AT | F | R | Saloon FWD 2GR-FE | | GCI59116 | Inner Joint | | 24 | 27 | 40 | 379 | 105 | |
| | 2018.10- | 8AT | F | L | Saloon FWD 2GR-FKS | | GDS56904 | Drive Shaft | | 30 | 24 | 61.2 | 100 | 670 | |
| | 2018.10- | 8AT | F | R | Saloon FWD 2GR-FKS | | GDS57410 | Drive Shaft | | 30 | 24 | 61.2 | 100 | 996 | |
| | 2018.10- | 8AT | F | L/R | Saloon FWD 2GR-FKS | | GCO83471 | Outer Joint | | 30 | 27 | 61.2 | 100 | 70 | I |
| | 2018.10- | 8AT | F | L | Saloon FWD 2GR-FKS | | GCI83552 | Inner Joint | | 24 | 27 | 50 | 83.5 | 109 | |
| | 2018.10- | 8AT | F | R | Saloon FWD 2GR-FKS | | GCI82249 | Inner Joint | | 24 | 27 | 40 | 383 | 106 | |
| 3.5 (200 kw) | 2012.06-2018.06 | AT | F | R | Saloon FWD 2GR-FE | | GCI59116 | Inner Joint | | 24 | 27 | 40 | 379 | 105 | |
| 3.5 (204 kw) | 2006.05-2012.06 | 6AT | F | L | Saloon FWD 2GR-FE | | GDS59324 | Drive Shaft | 48T | 30 | 24 | 61 | 100 | 659 | |
| | 2006.05-2012.06 | 6AT | F | R | Saloon FWD 2GR-FE | | GDS59323 | Drive Shaft | 48T | 30 | 24 | 61 | 100 | 978 | |
| | 2006.05-2012.06 | 6AT | F | L/R | Saloon FWD 2GR-FE | | GCO59214 | Outer Joint | 48T | 30 | 26 | 61 | 100 | 67 | I |
| | 2006.05-2012.06 | 6AT | F | R | Saloon FWD 2GR-FE | | GCI59116 | Inner Joint | | 24 | 27 | 40 | 379 | 105 | |
| | 2006.05-2012.06 | AT | F | L | Saloon FWD 2GR-FE | | GCI59082 | Inner Joint | | 24 | 27 | 50 | 67 | 109 | |
| | 2012.06-2018.06 | 6AT | F | L | Saloon FWD 2GR-FE | | GDS59324 | Drive Shaft | 48T | 30 | 24 | 61 | 100 | 659 | |
| | 2012.06-2018.06 | 6AT | F | R | Saloon FWD 2GR-FE | | GDS59323 | Drive Shaft | 48T | 30 | 24 | 61 | 100 | 978 | |
| | 2012.06-2018.06 | AT | F | L | Saloon FWD 2GR-FE | Date from:2012.08,With Shaft | GCO59305 | Outer Joint | 48T | 30 | 26 | 61 | 100 | 68.5 | M |
| | 2012.06-2018.06 | AT | F | L/R | Saloon FWD 2GR-FE | | GCO59214 | Outer Joint | 48T | 30 | 26 | 61 | 100 | 67 | I |
| | 2012.06-2018.06 | AT | F | L | Saloon FWD 2GR-FE | | GCI59082 | Inner Joint | | 24 | 27 | 50 | 67 | 109 | |
| | 2012.06-2018.06 | AT | F | R | Saloon FWD 2GR-FE | | GCI59116 | Inner Joint | | 24 | 27 | 40 | 379 | 105 | |
| **GS 200t** | | | | | | | | | | | | | | | |
| 2.0 (180 kw) | 2015.09- | 8AT | R | R | Saloon RWD 8AR-FTS | | GDS56111 | Drive Shaft | | 30 | 30 | 58.6 | 115 | 843 | |
| **GS 300** | | | | | | | | | | | | | | | |
| 2.0 (180 kw) | 2017.09- | 8AT | R | R | Saloon RWD 8AR-FTS | | GDS56111 | Drive Shaft | | 30 | 30 | 58.6 | 115 | 843 | |
| 3.0 (161 kw) | 2000.08-2005.03 | AT | R | L | Saloon RWD 2JZGE | | GDS57832 | Drive Shaft | 48T | 30 | | 63 | 108.5 | 655 | |
| | 2000.08-2005.03 | AT | R | R | Saloon RWD 2JZGE | | GDS57833 | Drive Shaft | 48T | 30 | | 63 | 108.5 | 700 | |
| | 2000.08-2005.03 | AT | R | L/R | Saloon RWD 2JZGE | | GCI83880 | Inner Joint | | | 24 | | | 31 | |
| 3.0 (163 kw) | 1997.09-2000.07 | AT | R | L/R | Saloon RWD 2JZGE | | GCI83880 | Inner Joint | | | 24 | | | 31 | |

| | YEAR | TRANSM. | F/R | L/R | BODY STYLE & DRIVE TYPE & ENGINE | REMARKS | G-AP Ref. | PRODUCT | ABS | Technical Specifications A | B | C | H | L | P |
|---|---|---|---|---|---|---|---|---|---|---|---|---|---|---|---|
| **LEXUS** | | | | | | | | | | | | | | | |
| **GS 300h** | | | | | | | | | | | | | | | |
| 2.5 (164 kw) | 2013.10- | CVT | R | R | Saloon RWD 2AR-FSE | | GDS56111 | Drive Shaft | | 30 | 30 | 58.6 | 115 | 843 | |
| **GS 350** | | | | | | | | | | | | | | | |
| 3.5 (226 kw) | 2006.09-2011.11 | 6AT | F | L/R | Saloon 4WD 2GR-FSE | | GCO59453 | Outer Joint | | 30 | 30 | 57 | 82 | 55.5 | I |
| | 2006.09-2011.11 | AT | F | L | Saloon 4WD 2GR-FSE | | GDS82658 | Drive Shaft | | 30 | 23 | 57 | 82 | 595 | |
| | 2006.09-2011.11 | AT | F | R | Saloon 4WD 2GR-FSE | | GDS82602 | Drive Shaft | | 30 | 23 | 57 | 82 | 973 | |
| | 2006.09-2011.11 | AT | F | L/R | Saloon 4WD 2GR-FSE | | GCO59306 | Outer Joint | | 30 | 30 | 57 | 82 | 55 | M |
| | 2006.09-2011.11 | AT | F | L | Saloon 4WD 2GR-FSE | | GCI59225 | Inner Joint | | 23 | 30 | 35 | 94 | 89.5 | |
| | 2006.09-2011.11 | AT | F | R | Saloon 4WD 2GR-FSE | | GCI31007 | Inner Joint | | 23 | 30 | 35 | 358.5 | 171 | |
| 3.5 (232 kw) | 2008.05-2011.11 | AT | F | L | Saloon 4WD 2GR-FSE | | GDS82658 | Drive Shaft | | 30 | 23 | 57 | 82 | 595 | |
| | 2008.05-2011.11 | AT | F | R | Saloon 4WD 2GR-FSE | | GDS82602 | Drive Shaft | | 30 | 23 | 57 | 82 | 973 | |
| | 2008.05-2011.11 | AT | F | L/R | Saloon 4WD 2GR-FSE | | GCO59306 | Outer Joint | | 30 | 30 | 57 | 82 | 55 | M |
| | 2008.05-2011.11 | AT | F | L/R | Saloon 4WD 2GR-FSE | | GCO59453 | Outer Joint | | 30 | 30 | 57 | 82 | 55.5 | I |
| | 2008.05-2011.11 | AT | F | L | Saloon 4WD 2GR-FSE | | GCI59225 | Inner Joint | | 23 | 30 | 35 | 94 | 89.5 | |
| | 2008.05-2011.11 | AT | F | R | Saloon 4WD 2GR-FSE | | GCI31007 | Inner Joint | | 23 | 30 | 35 | 358.5 | 171 | |
| 3.5 (233 kw) | 2012.03- | 6AT | F | L | Saloon 4WD 2GR-FSE | | GDS59609 | Drive Shaft | | 30 | 23 | 57 | 82 | 617 | |
| | 2012.03- | 6AT | F | R | Saloon 4WD 2GR-FSE | | GDS59686 | Drive Shaft | | 30 | 23 | 57 | 82 | 995 | |
| | 2012.03- | 6AT | F | L/R | Saloon 4WD 2GR-FSE | | GCO59453 | Outer Joint | | 30 | 30 | 57 | 82 | 55.5 | I |
| | 2012.03- | 6AT | F | L | Saloon 4WD 2GR-FSE | | GCI59225 | Inner Joint | | 23 | 30 | 35 | 94 | 89.5 | |
| | 2012.03- | 6AT | F | R | Saloon 4WD 2GR-FSE | | GCI31007 | Inner Joint | | 23 | 30 | 35 | 358.5 | 171 | |
| | 2012.03- | 6AT | R | R | Saloon 4WD 2GR-FSE | | GDS56111 | Drive Shaft | | 30 | 30 | 58.6 | 115 | 843 | |
| | 2012.03- | 6AT | R | R | Saloon RWD 2GR-FSE | | GDS56111 | Drive Shaft | | 30 | 30 | 58.6 | 115 | 843 | |
| 3.5 (234 kw) | 2011.12- | AT | F | L | Saloon 4WD 2GR-FSE | | GDS59609 | Drive Shaft | | 30 | 23 | 57 | 82 | 617 | |
| | 2011.12- | AT | F | R | Saloon 4WD 2GR-FSE | | GDS59686 | Drive Shaft | | 30 | 23 | 57 | 82 | 995 | |
| | 2011.12- | | F | R | Saloon 4WD 2GR-FSE | | GCO59453 | Outer Joint | | 30 | 30 | 57 | 82 | 55.5 | I |
| | 2011.12- | | F | L | Saloon 4WD 2GR-FSE | | GCI59225 | Inner Joint | | 23 | 30 | 35 | 94 | 89.5 | |
| | 2011.12- | | F | R | Saloon 4WD 2GR-FSE | | GCI31007 | Inner Joint | | 23 | 30 | 35 | 358.5 | 171 | |
| | 2011.12- | 6AT | R | R | Saloon 4WD 2GR-FSE | | GDS56111 | Drive Shaft | | 30 | 30 | 58.6 | 115 | 843 | |
| | 2012.01- | 6AT | R | R | Saloon RWD 2GR-FSE | | GDS56111 | Drive Shaft | | 30 | 30 | 58.6 | 115 | 843 | |
| **GS 400** | | | | | | | | | | | | | | | |
| 4.0 (216 kw) | 1997.08-2000.12 | AT | R | L | Saloon RWD 1UZFE | | GDS57832 | Drive Shaft | 48T | 30 | | 63 | 108.5 | 655 | |
| | 1997.08-2000.12 | AT | R | R | Saloon RWD 1UZFE | | GDS57833 | Drive Shaft | 48T | 30 | | 63 | 108.5 | 700 | |
| | 1997.08-2000.12 | AT | R | L/R | Saloon RWD 1UZFE | | GCI83880 | Inner Joint | | | 24 | | | 31 | |
| **GS 430** | | | | | | | | | | | | | | | |
| 4.3 (208 kw) | 2000.07-2005.12 | AT | R | L | Saloon RWD 3UZFE | | GDS57832 | Drive Shaft | 48T | 30 | | 63 | 108.5 | 655 | |
| | 2000.07-2005.12 | AT | R | R | Saloon RWD 3UZFE | | GDS57833 | Drive Shaft | 48T | 30 | | 63 | 108.5 | 700 | |
| | 2000.07-2005.12 | AT | R | L/R | Saloon RWD 3UZFE | | GCI83880 | Inner Joint | | | 24 | | | 31 | |
| **GS 450h** | | | | | | | | | | | | | | | |
| 3.5 (254 kw) | 2012.03-2018.09 | AT | R | R | Saloon RWD 2GR-FXE | | GDS56111 | Drive Shaft | | 30 | 30 | 58.6 | 115 | 843 | |
| | 2012.03-2018.09 | CVT | R | R | Saloon RWD 2GR-FXE | | GDS56111 | Drive Shaft | | 30 | 30 | 58.6 | 115 | 843 | |
| **GS F** | | | | | | | | | | | | | | | |
| 5.0 (351 kw) | 2015.09- | 8AT | R | L | Saloon RWD 2UR-GSE | For vehicles without electronic limited slip diff. | GDS57797 | Drive Shaft | | 30 | 30 | 58.6 | 116 | 655 | |
| | 2015.09- | 8AT | R | L | Saloon RWD 2UR-GSE | For vehicles with electronic limited slip diff. | GDS57820 | Drive Shaft | | 30 | 30 | 58.6 | 115.5 | 777 | |
| | 2015.09- | 8AT | R | R | Saloon RWD 2UR-GSE | | GDS57802 | Drive Shaft | | 30 | 30 | 58.6 | 116 | 700 | |
| | 2015.09- | 8AT | R | L/R | Saloon RWD 2UR-GSE | | GCO83710 | Outer Joint | | 30 | 27 | 58.6 | 116 | 71 | M |
| | 2015.09- | 8AT | R | L/R | Saloon RWD 2UR-GSE | | GCI83863 | Inner Joint | | 30 | 29 | 50 | 72 | 109.5 | |
| **GX 400** | | | | | | | | | | | | | | | |
| 4.0 (202 kw) | 2012.05- | 5AT | R | L/R | SUV 4WD 1GR-FE | Date to:2013.08 | GDS98004 | Drive Shaft | | | 30 | | | 807 | |
| **GX 460** | | | | | | | | | | | | | | | |
| 4.6 (218 kw) | 2010.01- | 6AT | F | L/R | SUV 4WD 1UR-FE | | GDS59015 | Drive Shaft | | 30 | 30 | 70 | 103.5 | 647 | |
| | 2010.01- | 6AT | F | L/R | SUV 4WD 1UR-FE | Date to:2010.07 | GCO59097 | Outer Joint | | 30 | 30 | 70 | 103.5 | 82.5 | I |
| | 2010.01- | 6AT | F | L/R | SUV 4WD 1UR-FE | | GCI59049 | Inner Joint | | 30 | 30 | 47 | 75.5 | 125.5 | |
| | 2010.01- | 6AT | R | L/R | SUV 4WD 1UR-FE | Date to:2013.07 | GDS98004 | Drive Shaft | | | 30 | | | 807 | |
| 4.6 (225 kw) | 2010.01- | 6AT | F | L/R | SUV 4WD 1UR-FE | | GDS59015 | Drive Shaft | | 30 | 30 | 70 | 103.5 | 647 | |
| | 2010.01- | 6AT | F | L/R | SUV 4WD 1UR-FE | Date from:2010.08 | GCO59097 | Outer Joint | | 30 | 30 | 70 | 103.5 | 82.5 | I |
| | 2010.01- | 6AT | F | L/R | SUV 4WD 1UR-FE | Date to:2010.07 | GCI59049 | Inner Joint | | 30 | 30 | 47 | 75.5 | 125.5 | |
| | 2010.01- | 6AT | R | L/R | SUV 4WD 1UR-FE | Date to:2013.07 | GDS98004 | Drive Shaft | | | 30 | | | 807 | |
| **GX 470** | | | | | | | | | | | | | | | |
| 4.7 (175 kw) | 2001.11-2009.11 | 5AT | F | L/R | SUV 4WD 2UZ-FE | | GDS59015 | Drive Shaft | | 30 | 30 | 70 | 103.5 | 647 | |
| | 2001.11-2009.11 | 5AT | F | L/R | SUV 4WD 2UZ-FE | | GCO59097 | Outer Joint | | 30 | 30 | 70 | 103.5 | 82.5 | I |
| | 2001.11-2009.11 | | F | L/R | SUV 4WD 2UZ-FE | | GCI59049 | Inner Joint | | 30 | 30 | 47 | 75.5 | 125.5 | |
| 4.7 (199 kw) | 2001.11-2009.11 | 5AT | F | L/R | SUV 4WD 2UZ-FE | | GDS59015 | Drive Shaft | | 30 | 30 | 70 | 103.5 | 647 | |
| | 2001.11-2009.11 | 5AT | F | L/R | SUV 4WD 2UZ-FE | | GCO59097 | Outer Joint | | 30 | 30 | 70 | 103.5 | 82.5 | I |
| | 2001.11-2009.11 | | F | L/R | SUV 4WD 2UZ-FE | | GCI59049 | Inner Joint | | 30 | 30 | 47 | 75.5 | 125.5 | |

| | YEAR | TRANSM. | F/R | L/R | BODY STYLE & DRIVE TYPE & ENGINE | REMARKS | G-AP Ref. | PRODUCT | ABS | Technical Specifications A | B | C | H | L | P |
|---|---|---|---|---|---|---|---|---|---|---|---|---|---|---|---|
| **LEXUS** | | | | | | | | | | | | | | | |
| **HS 250h** | | | | | | | | | | | | | | | |
| 2.4 (139 kw) | 2009.09-2012.12 | AT/CVT | F | R | Saloon FWD 2AZ-FXE | Date from:2013.08,Date to:2018.01 | GDS84112 | Drive Shaft | | 26 | 24 | 61.2 | 100 | 968 | |
| | 2009.09-2012.12 | AT/CVT | F | L/R | Saloon FWD 2AZ-FXE | Date from:2013.08,Date to:2018.01 | GCO59245 | Outer Joint | | 26 | 27 | 61.2 | 100 | 59 | I |
| **IS 200** | | | | | | | | | | | | | | | |
| 2.0 (114 kw) | 1999.01-2005.07 | 4AT | R | L/R | Saloon RWD 1GFE | Date to:2000.01 | GCI39089 | Inner Joint | | | 20 | | | 66.2 | |
| | 1999.01-2005.07 | 4AT/6MT | R | L/R | Saloon RWD 1GFE | | GCO59390 | Outer Joint | 48T | 30 | 27 | 63 | 108.5 | 64 | I |
| | 2002.08-2005.07 | AT/MT | R | L/R | Estate RWD 1GFE | | GCO59390 | Outer Joint | 48T | 30 | 27 | 63 | 108.5 | 64 | I |
| **IS 200t** | | | | | | | | | | | | | | | |
| 2.0 (180 kw) | 2015.08- | 8AT | R | L | Saloon RWD 8AR-FTS | | GDS57820 | Drive Shaft | | 30 | 30 | 58.6 | 115.5 | 777 | |
| **IS 250** | | | | | | | | | | | | | | | |
| 2.5 (153 kw) | 2005.08-2013.03 | 6AT/6MT | R | L | Saloon RWD 4GR-FSE | | GDS59653 | Drive Shaft | | 30 | 30 | 58.6 | 115 | 770 | |
| | 2005.08-2013.03 | 6AT/6MT | R | R | Saloon RWD 4GR-FSE | | GDS59652 | Drive Shaft | | 30 | 30 | 58.6 | 115 | 816 | |
| | 2005.10-2013.03 | AT | F | L | Saloon 4WD 4GR-FSE | | GDS82658 | Drive Shaft | | 30 | 23 | 57 | 82 | 595 | |
| | 2005.10-2013.03 | AT | F | R | Saloon 4WD 4GR-FSE | | GDS82602 | Drive Shaft | | 30 | 23 | 57 | 82 | 973 | |
| | 2005.10-2013.03 | AT | F | L/R | Saloon 4WD 4GR-FSE | | GCO59306 | Outer Joint | | 30 | 30 | 57 | 82 | 55 | M |
| | 2005.10-2013.03 | AT | F | L/R | Saloon 4WD 4GR-FSE | | GCO59453 | Outer Joint | | 30 | 30 | 57 | 82 | 55.5 | I |
| | 2005.10-2013.03 | AT | F | L | Saloon 4WD 4GR-FSE | | GCI59225 | Inner Joint | | 23 | 30 | 35 | 94 | 89.5 | |
| | 2005.10-2013.03 | AT | F | R | Saloon 4WD 4GR-FSE | | GCI31007 | Inner Joint | | 23 | 30 | 35 | 358.5 | 171 | |
| | 2005.10-2013.03 | AT | R | L | Saloon 4WD 4GR-FSE | Date From:2008.09 | GDS59653 | Drive Shaft | | 30 | 30 | 58.6 | 115 | 770 | |
| | 2005.10-2013.03 | AT | R | R | Saloon 4WD 4GR-FSE | Date from:2008.09 | GDS59652 | Drive Shaft | | 30 | 30 | 58.6 | 115 | 816 | |
| **IS 250 C** | | | | | | | | | | | | | | | |
| 2.5 (153 kw) | 2009.04-2015.06 | 6AT/6MT | R | L | Convertible RWD 4GR-FSE | | GDS59653 | Drive Shaft | | 30 | 30 | 58.6 | 115 | 770 | |
| | 2009.04-2015.06 | 6AT/6MT | R | R | Convertible RWD 4GR-FSE | | GDS59652 | Drive Shaft | | 30 | 30 | 58.6 | 115 | 816 | |
| **IS 300** | | | | | | | | | | | | | | | |
| 2.0 (180 kw) | 2017.10- | 8AT | R | L | Saloon RWD 8AR-FTS | | GDS57820 | Drive Shaft | | 30 | 30 | 58.6 | 115.5 | 777 | |
| 3.0 (157 kw) | 2001.07-2005.07 | AT/MT | R | L/R | Saloon RWD 2JZGE | | GCO59390 | Outer Joint | 48T | 30 | 27 | 63 | 108.5 | 64 | I |
| | 2001.07-2005.10 | AT/MT | R | L/R | Estate RWD 2JZGE | | GCO59390 | Outer Joint | 48T | 30 | 27 | 63 | 108.5 | 64 | I |
| **IS 300h** | | | | | | | | | | | | | | | |
| 2.5 (162 kw) | 2013.04-2020.09 | CVT | R | L | Saloon RWD 2AR-FSE | | GDS57820 | Drive Shaft | | 30 | 30 | 58.6 | 115.5 | 777 | |
| 2.5 (164 kw) | 2013.04-2020.09 | CVT | R | L | Saloon RWD 2AR-FSE | | GDS57820 | Drive Shaft | | 30 | 30 | 58.6 | 115.5 | 777 | |
| **IS 350** | | | | | | | | | | | | | | | |
| 3.5 (228 kw) | 2010.09-2013.03 | | F | L | Saloon 4WD 2GR-FSE | | GDS82658 | Drive Shaft | | 30 | 23 | 57 | 82 | 595 | |
| | 2010.09-2013.03 | | F | R | Saloon 4WD 2GR-FSE | | GDS82602 | Drive Shaft | | 30 | 23 | 57 | 82 | 973 | |
| | 2010.09-2013.03 | | F | L | Saloon 4WD 2GR-FSE | | GCI59225 | Inner Joint | | 23 | 30 | 35 | 94 | 89.5 | |
| | 2010.09-2013.03 | | F | R | Saloon 4WD 2GR-FSE | | GCI31007 | Inner Joint | | 23 | 30 | 35 | 358.5 | 171 | |
| **LBX** | | | | | | | | | | | | | | | |
| 1.5 (100 kw) | 2023.09- | | R | L/R | SUV 4WD M15A-FXE | | GDS56358 | Drive Shaft | | 26 | | 52 | 99.5 | 604 | |
| | 2023.09- | | R | L/R | SUV 4WD M15A-FXE | | GCI59203 | Inner Joint | | | 20 | | | 83 | |
| **LM 300h** | | | | | | | | | | | | | | | |
| 2.5 (145 kw) | 2020.03- | E-CVT | F | L | MPV 4WD 2AR-FXE | | GDS58267 | Drive Shaft | | 30 | 24 | 61.2 | 100 | 644 | |
| | 2020.03- | E-CVT | F | R | MPV 4WD 2AR-FXE | | GDS58266 | Drive Shaft | | 30 | 24 | 61.2 | 100 | 1000 | |
| | 2020.03- | E-CVT | F | L/R | MPV 4WD 2AR-FXE | | GCO82357 | Outer Joint | | 30 | 27 | 61.2 | 100 | 66 | M |
| | 2020.03- | E-CVT | F | L | MPV 4WD 2AR-FXE | | GCI81534 | Inner Joint | | 24 | 26 | 50 | 83.5 | 108 | |
| | 2020.03- | E-CVT | F | R | MPV 4WD 2AR-FXE | | GCI83224 | Inner Joint | | 24 | 26 | 40 | 382 | 100.5 | |
| **LS 350** | | | | | | | | | | | | | | | |
| 3.5 (229 kw) | 2017.10- | 10AT | R | L | Saloon RWD 8GR-FKS | | GDS57821 | Drive Shaft | | 30 | 30 | 58.6 | 115 | 803 | |
| 3.5 (232 kw) | 2017.10- | 10AT | R | L | Saloon RWD 8GR-FKS | | GDS57821 | Drive Shaft | | 30 | 30 | 58.6 | 115 | 803 | |
| **LS 400** | | | | | | | | | | | | | | | |
| 4.0 (194 kw) | 1994.10-1997.12 | 4AT | R | L/R | Saloon RWD 1UZFE | | GCI83880 | Inner Joint | | | 24 | | | 31 | |
| 4.0 (203 kw) | 1998.10-2000.07 | 5AT | R | L/R | Saloon RWD 1UZFE | | GCI83880 | Inner Joint | | | 24 | | | 31 | |
| 4.0 (209 kw) | 1997.08-1998.09 | 5AT | R | L/R | Saloon RWD 1UZFE | | GCI83880 | Inner Joint | | | 24 | | | 31 | |
| 4.0 (216 kw) | 1997.10-2000.07 | 5AT | R | L/R | Saloon RWD 1UZFE | | GCI83880 | Inner Joint | | | 24 | | | 31 | |
| **LS 430** | | | | | | | | | | | | | | | |
| 4.3 (207 kw) | 2000.08-2006.08 | 5AT | R | L/R | Saloon RWD 3UZ-FE | | GCI83880 | Inner Joint | | | 24 | | | 31 | |
| 4.3 (208 kw) | 2000.10-2006.08 | 5AT | R | L/R | Saloon RWD 3UZ-FE | | GCI83880 | Inner Joint | | | 24 | | | 31 | |
| **LS 460** | | | | | | | | | | | | | | | |
| 4.6 (255 kw) | 2006.08- | 8AT | R | L | Saloon RWD 1UR-FE | | GDS84000 | Drive Shaft | | 30 | 30 | 58.6 | 115 | 790 | |
| | 2006.08- | 8AT | R | R | Saloon RWD 1UR-FE | | GDS83999 | Drive Shaft | | 30 | 30 | 58.6 | 115 | 836 | |
| | 2006.08- | 8AT | R | L/R | Saloon RWD 1UR-FE | | GCO82564 | Outer Joint | | 30 | 28 | 58.6 | 115 | 111.7 | |
| | 2006.08- | 8AT | R | L/R | Saloon RWD 1UR-FE | | GCI82483 | Inner Joint | | 30 | 28 | 47 | 83 | 115.7 | |
| 4.6 (270 kw) | 2008.10- | 8AT | F | L | Saloon 4WD 1UR-FSE | | GDS83070 | Drive Shaft | | 30 | 27 | 57 | 92 | 605 | |
| | 2008.10- | 8AT | F | R | Saloon 4WD 1UR-FSE | | GDS83069 | Drive Shaft | | 30 | 27 | 57 | 92 | 1020 | |
| | 2008.10- | 8AT | F | L/R | Saloon 4WD 1UR-FSE | | GCO82277 | Outer Joint | | 30 | 36 | 57 | 92 | 62 | I |
| | 2008.10- | AT | F | L | Saloon 4WD 1UR-FSE | Date to:2009.08;Date from:2012.09,Date to:2017.07 | GCI82128 | Inner Joint | | 27 | 35 | 47 | 67.5 | 110.5 | |
| | 2008.10- | AT | F | R | Saloon 4WD 1UR-FSE | Date to:2009.08;Date from:2012.09,Date to:2017.07 | GCI82127 | Inner Joint | | 27 | 35 | 35 | 384 | 208 | |
| | 2008.10- | 8AT | R | L | Saloon 4WD 1UR-FSE | | GDS84000 | Drive Shaft | | 30 | 30 | 58.6 | 115 | 790 | |

| | YEAR | TRANSM. | F/R | L/R | BODY STYLE & DRIVE TYPE & ENGINE | REMARKS | G-AP Ref. | PRODUCT | ABS | Technical Specifications A | B | C | H | L | P |
|---|---|---|---|---|---|---|---|---|---|---|---|---|---|---|---|
| **LEXUS** | | | | | | | | | | | | | | | |
| **LS 460** | | | | | | | | | | | | | | | |
| 4.6 (270 kw) | 2008.10- | 8AT | R | R | Saloon 4WD 1UR-FSE | | GDS83999 | Drive Shaft | | 30 | 30 | 58.6 | 115 | 836 | |
| | 2008.10- | 8AT | R | L/R | Saloon 4WD 1UR-FSE | | GCO82564 | Outer Joint | | 30 | 28 | 58.6 | 115 | 111.7 | |
| | 2008.10- | 8AT | R | L/R | Saloon 4WD 1UR-FSE | | GCI82483 | Inner Joint | | 30 | 28 | 47 | 83 | 115.7 | |
| 4.6 (272 kw) | 2012.09- | 8AT | F | L | Saloon 4WD 1UR-FSE | | GDS83070 | Drive Shaft | | 30 | 27 | 57 | 92 | 605 | |
| | 2012.09- | 8AT | F | R | Saloon 4WD 1UR-FSE | | GDS83069 | Drive Shaft | | 30 | 27 | 57 | 92 | 1020 | |
| | 2012.09- | 8AT | F | L/R | Saloon 4WD 1UR-FSE | | GCO82277 | Outer Joint | | 30 | 36 | 57 | 92 | 62 | I |
| | 2012.09- | AT | F | L | Saloon 4WD 1UR-FSE | Date to:2017.07 | GCI82128 | Inner Joint | | 27 | 35 | 47 | 67.5 | 110.5 | |
| | 2012.09- | AT | F | R | Saloon 4WD 1UR-FSE | Date to:2017.07 | GCI82127 | Inner Joint | | 27 | 35 | 35 | 384 | 208 | |
| | 2012.09- | AT | R | L | Saloon 4WD 1UR-FSE | | GDS84000 | Drive Shaft | | 30 | 30 | 58.6 | 115 | 790 | |
| | 2012.09- | AT | R | R | Saloon 4WD 1UR-FSE | | GDS83999 | Drive Shaft | | 30 | 30 | 58.6 | 115 | 836 | |
| | 2012.09- | AT | R | L/R | Saloon 4WD 1UR-FSE | | GCO82564 | Outer Joint | | 30 | 28 | 58.6 | 115 | 111.7 | |
| | 2012.09- | AT | R | L/R | Saloon 4WD 1UR-FSE | | GCI82483 | Inner Joint | | 30 | 28 | 47 | 83 | 115.7 | |
| 4.6 (280 kw) | 2006.04- | 8AT | R | L | Saloon RWD 1UR-FSE | | GDS84000 | Drive Shaft | | 30 | 30 | 58.6 | 115 | 790 | |
| | 2006.04- | 8AT | R | R | Saloon RWD 1UR-FSE | | GDS83999 | Drive Shaft | | 30 | 30 | 58.6 | 115 | 836 | |
| | 2006.04- | 8AT | R | L/R | Saloon RWD 1UR-FSE | | GCO82564 | Outer Joint | | 30 | 28 | 58.6 | 115 | 111.7 | |
| | 2006.04- | 8AT | R | L/R | Saloon RWD 1UR-FSE | | GCI82483 | Inner Joint | | 30 | 28 | 47 | 83 | 115.7 | |
| | 2006.08- | 8AT | F | L | Saloon 4WD 1UR-FSE | | GDS83070 | Drive Shaft | | 30 | 27 | 57 | 92 | 605 | |
| | 2006.08- | 8AT | F | R | Saloon 4WD 1UR-FSE | | GDS83069 | Drive Shaft | | 30 | 27 | 57 | 92 | 1020 | |
| | 2006.08- | 8AT | F | L/R | Saloon 4WD 1UR-FSE | | GCO82277 | Outer Joint | | 30 | 36 | 57 | 92 | 62 | I |
| | 2006.08- | AT | F | L | Saloon 4WD 1UR-FSE | Date from:2008.09,Date to:2009.08;Date from:2012.09,Date to:2017.07 | GCI82128 | Inner Joint | | 27 | 35 | 47 | 67.5 | 110.5 | |
| | 2006.08- | AT | F | R | Saloon 4WD 1UR-FSE | Date from:2008.09,Date to:2009.08;Date from:2012.09,Date to:2017.07 | GCI82127 | Inner Joint | | 27 | 35 | 35 | 384 | 208 | |
| | 2006.08- | 8AT | R | L | Saloon 4WD 1UR-FSE | | GDS84000 | Drive Shaft | | 30 | 30 | 58.6 | 115 | 790 | |
| | 2006.08- | 8AT | R | R | Saloon 4WD 1UR-FSE | | GDS83999 | Drive Shaft | | 30 | 30 | 58.6 | 115 | 836 | |
| | 2006.08- | 8AT | R | L/R | Saloon 4WD 1UR-FSE | | GCO82564 | Outer Joint | | 30 | 28 | 58.6 | 115 | 111.7 | |
| | 2006.08- | 8AT | R | L/R | Saloon 4WD 1UR-FSE | | GCI82483 | Inner Joint | | 30 | 28 | 47 | 83 | 115.7 | |
| 4.6 (283 kw) | 2009.10- | 8AT | F | L | Saloon 4WD 1UR-FSE | | GDS83070 | Drive Shaft | | 30 | 27 | 57 | 92 | 605 | |
| | 2009.10- | 8AT | F | R | Saloon 4WD 1UR-FSE | | GDS83069 | Drive Shaft | | 30 | 27 | 57 | 92 | 1020 | |
| | 2009.10- | 8AT | F | L/R | Saloon 4WD 1UR-FSE | | GCO82277 | Outer Joint | | 30 | 36 | 57 | 92 | 62 | I |
| | 2009.10- | AT | F | L | Saloon 4WD 1UR-FSE | Date from:2012.09,Date to:2017.07 | GCI82128 | Inner Joint | | 27 | 35 | 47 | 67.5 | 110.5 | |
| | 2009.10- | AT | F | R | Saloon 4WD 1UR-FSE | Date from:2012.09,Date to:2017.07 | GCI82127 | Inner Joint | | 27 | 35 | 35 | 384 | 208 | |
| | 2009.10- | AT | R | L | Saloon 4WD 1UR-FSE | | GDS84000 | Drive Shaft | | 30 | 30 | 58.6 | 115 | 790 | |
| | 2009.10- | AT | R | R | Saloon 4WD 1UR-FSE | | GDS83999 | Drive Shaft | | 30 | 30 | 58.6 | 115 | 836 | |
| | 2009.10- | AT | R | L/R | Saloon 4WD 1UR-FSE | | GCO82564 | Outer Joint | | 30 | 28 | 58.6 | 115 | 111.7 | |
| | 2009.10- | AT | R | L/R | Saloon 4WD 1UR-FSE | | GCI82483 | Inner Joint | | 30 | 28 | 47 | 83 | 115.7 | |
| 4.6 (285 kw) | 2012.09- | AT | R | L | Saloon RWD 1UR-FSE | | GDS84000 | Drive Shaft | | 30 | 30 | 58.6 | 115 | 790 | |
| | 2012.09- | AT | R | R | Saloon RWD 1UR-FSE | | GDS83999 | Drive Shaft | | 30 | 30 | 58.6 | 115 | 836 | |
| | 2012.09- | AT | R | L/R | Saloon RWD 1UR-FSE | | GCO82564 | Outer Joint | | 30 | 28 | 58.6 | 115 | 111.7 | |
| | 2012.09- | AT | R | L/R | Saloon RWD 1UR-FSE | | GCI82483 | Inner Joint | | 30 | 28 | 47 | 83 | 115.7 | |
| 4.6 (288 kw) | 2012.09- | | R | L | Saloon RWD 1UR-FSE | | GDS84000 | Drive Shaft | | 30 | 30 | 58.6 | 115 | 790 | |
| | 2012.09- | | R | R | Saloon RWD 1UR-FSE | | GDS83999 | Drive Shaft | | 30 | 30 | 58.6 | 115 | 836 | |
| **LS 500** | | | | | | | | | | | | | | | |
| 3.4 (307 kw) | 2017.12- | 10AT | F | L | Saloon 4WD V35A-FTS | | GDS56694 | Drive Shaft | | 30 | 27 | 57 | 99.5 | 608 | |
| | 2017.12- | 10AT | F | R | Saloon 4WD V35A-FTS | | GDS56325 | Drive Shaft | | 30 | 27 | 57 | 99.5 | 1021 | |
| | 2017.12- | 10AT | F | R | Saloon 4WD V35A-FTS | | GCO83254 | Outer Joint | | 30 | 36 | 57 | 99.5 | 65 | I |
| | 2017.12- | 10AT | F | L | Saloon 4WD V35A-FTS | | GCI83443 | Inner Joint | | 27 | 35 | 47 | 67.5 | 116 | |
| | 2017.12- | 10AT | F | R | Saloon 4WD V35A-FTS | | GCI83242 | Inner Joint | | 27 | 35 | 35 | 372 | 226 | |
| | 2017.12- | 10AT | R | L | Saloon 4WD V35A-FTS | | GDS57821 | Drive Shaft | | 30 | 30 | 58.6 | 115 | 803 | |
| 3.4 (310 kw) | 2017.10- | 10AT | F | L | Saloon 4WD V35A-FTS | | GDS56694 | Drive Shaft | | 30 | 27 | 57 | 99.5 | 608 | |
| | 2017.10- | 10AT | F | R | Saloon 4WD V35A-FTS | | GDS56325 | Drive Shaft | | 30 | 27 | 57 | 99.5 | 1021 | |
| | 2017.10- | 10AT | F | R | Saloon 4WD V35A-FTS | | GCO83254 | Outer Joint | | 30 | 36 | 57 | 99.5 | 65 | I |
| | 2017.10- | 10AT | F | L | Saloon 4WD V35A-FTS | | GCI83443 | Inner Joint | | 27 | 35 | 47 | 67.5 | 116 | |
| | 2017.10- | 10AT | F | R | Saloon 4WD V35A-FTS | | GCI83242 | Inner Joint | | 27 | 35 | 35 | 372 | 226 | |
| | 2017.10- | 10AT | R | L | Saloon 4WD V35A-FTS | | GDS57821 | Drive Shaft | | 30 | 30 | 58.6 | 115 | 803 | |
| **LS 500h** | | | | | | | | | | | | | | | |
| 3.5 (264 kw) | 2017.11- | CVT | F | L | Saloon 4WD 8GR-FXS | | GDS56694 | Drive Shaft | | 30 | 27 | 57 | 99.5 | 608 | |
| | 2017.11- | CVT | F | R | Saloon 4WD 8GR-FXS | | GDS56325 | Drive Shaft | | 30 | 27 | 57 | 99.5 | 1021 | |
| | 2017.11- | CVT | F | R | Saloon 4WD 8GR-FXS | | GCO83254 | Outer Joint | | 30 | 36 | 57 | 99.5 | 65 | I |
| | 2017.11- | CVT | F | L | Saloon 4WD 8GR-FXS | | GCI83443 | Inner Joint | | 27 | 35 | 47 | 67.5 | 116 | |
| | 2017.11- | CVT | F | R | Saloon 4WD 8GR-FXS | | GCI83242 | Inner Joint | | 27 | 35 | 35 | 372 | 226 | |
| | 2017.11- | CVT | R | L | Saloon 4WD 8GR-FXS | | GDS57821 | Drive Shaft | | 30 | 30 | 58.6 | 115 | 803 | |
| **LS 600h** | | | | | | | | | | | | | | | |
| 5.0 (272 kw) | 2012.07-2017.07 | CVT | F | L | Saloon 4WD 2URFSE | | GDS83070 | Drive Shaft | | 30 | 27 | 57 | 92 | 605 | |
| | 2012.07-2017.07 | CVT | R | L | Saloon 4WD 2URFSE | | GDS84000 | Drive Shaft | | 30 | 30 | 58.6 | 115 | 790 | |
| | 2012.07-2017.07 | CVT | R | R | Saloon 4WD 2URFSE | | GDS83999 | Drive Shaft | | 30 | 30 | 58.6 | 115 | 836 | |
| | 2012.07-2017.07 | CVT | R | L/R | Saloon 4WD 2URFSE | | GCO82564 | Outer Joint | | 30 | 28 | 58.6 | 115 | 111.7 | |

| | YEAR | TRANSM. | F/R | L/R | BODY STYLE & DRIVE TYPE & ENGINE | REMARKS | G-AP Ref. | PRODUCT | ABS | Technical Specifications A | B | C | H | L | P |
|---|---|---|---|---|---|---|---|---|---|---|---|---|---|---|---|
| **LEXUS** | | | | | | | | | | | | | | | |
| **LS 600h** | | | | | | | | | | | | | | | |
| 5.0 (272 kw) | 2012.07-2017.07 | CVT | R | L/R | Saloon 4WD 2URFSE | | GCI82483 | Inner Joint | | 30 | 28 | 47 | 83 | 115.7 | |
| 5.0 (327 kw) | 2007.09- | E-CVT | F | L | Saloon 4WD 2UR-FSE | For Modelcode:UVF45,Date from:2012.09,Date to:2017.07,F SPORT X LINE | GDS57778 | Drive Shaft | | 30 | 27 | 57 | 92 | 607 | |
| | 2007.09- | E-CVT | F | L | Saloon 4WD 2UR-FSE | Not for F SPORT X LINE | GDS83070 | Drive Shaft | | 30 | 27 | 57 | 92 | 605 | |
| | 2007.09- | E-CVT | F | R | Saloon 4WD 2UR-FSE | For Modelcode:UVF45,Date from:2012.09,Date to:2017.07,F SPORT X LINE | GDS57777 | Drive Shaft | | 30 | 27 | 57 | 92 | 1021 | |
| | 2007.09- | E-CVT | F | R | Saloon 4WD 2UR-FSE | Not for F SPORT X LINE | GDS83069 | Drive Shaft | | 30 | 27 | 57 | 92 | 1020 | |
| | 2007.09- | E-CVT | F | L/R | Saloon 4WD 2UR-FSE | Not for F SPORT X LINE | GCO82277 | Outer Joint | | 30 | 36 | 57 | 92 | 62 | I |
| | 2007.09- | E-CVT | F | L | Saloon 4WD 2UR-FSE | Date to:2008.08;Date from:2012.09,Date to:2017.07 | GCI82128 | Inner Joint | | 27 | 35 | 47 | 67.5 | 110.5 | |
| | 2007.09- | E-CVT | F | R | Saloon 4WD 2UR-FSE | Date to:2008.08;Date from:2012.09,Date to:2017.07 | GCI82127 | Inner Joint | | 27 | 35 | 35 | 384 | 208 | |
| | 2007.09- | AT | R | L/R | Saloon 4WD 2UR-FSE | | GCO82564 | Outer Joint | | 30 | 28 | 58.6 | 115 | 111.7 | |
| | 2007.09- | AT | R | L/R | Saloon 4WD 2UR-FSE | | GCI82483 | Inner Joint | | 30 | 28 | 47 | 83 | 115.7 | |
| | 2007.09- | E-CVT | R | L | Saloon 4WD 2UR-FSE | | GDS84000 | Drive Shaft | | 30 | 30 | 58.6 | 115 | 790 | |
| | 2007.09- | E-CVT | R | R | Saloon 4WD 2UR-FSE | | GDS83999 | Drive Shaft | | 30 | 30 | 58.6 | 115 | 836 | |
| **LX 450d** | | | | | | | | | | | | | | | |
| 4.5 (200 kw) | 2015.09- | 6AT | F | L/R | SUV 4WD 1VD-FTV | | GDS59325 | Drive Shaft | | 36 | 34 | 83 | 121 | 668 | |
| | 2015.09- | 6AT | F | L/R | SUV 4WD 1VD-FTV | | GCO59303 | Outer Joint | | 36 | 30 | 83 | 121 | 78 | I |
| | 2015.09- | 6AT | F | L/R | SUV 4WD 1VD-FTV | | GCI59065 | Inner Joint | | 34 | 30 | 47 | 87 | 141 | |
| **LX 470** | | | | | | | | | | | | | | | |
| 4.7 (170 kw) | 1998.05-2008.03 | 4AT | F | L/R | SUV 4WD 2UZFE | DOJ | GDS59017 | Drive Shaft | | 30 | 30 | 72.58 | 176 | 711.5 | |
| | 1998.05-2008.03 | | F | L/R | SUV 4WD 2UZFE | | GCO59085 | Outer Joint | | 30 | 30 | 72.58 | 176 | 78 | I |
| | 1998.05-2008.03 | | F | L/R | SUV 4WD 2UZFE | | GCI59107 | Inner Joint | | 30 | 30 | 47 | 77 | 133.5 | |
| 4.7 (173 kw) | 1998.05-2008.03 | 4AT | F | L/R | SUV 4WD 2UZFE | DOJ | GDS59017 | Drive Shaft | | 30 | 30 | 72.58 | 176 | 711.5 | |
| | 1998.05-2008.03 | | F | L/R | SUV 4WD 2UZFE | | GCO59085 | Outer Joint | | 30 | 30 | 72.58 | 176 | 78 | I |
| | 1998.05-2008.03 | | F | L/R | SUV 4WD 2UZFE | | GCI59107 | Inner Joint | | 30 | 30 | 47 | 77 | 133.5 | |
| 4.7 (197 kw) | 1998.05-2008.03 | 5AT | F | L/R | SUV 4WD 2UZFE | DOJ | GDS59017 | Drive Shaft | | 30 | 30 | 72.58 | 176 | 711.5 | |
| | 1998.05-2008.03 | | F | L/R | SUV 4WD 2UZFE | | GCO59085 | Outer Joint | | 30 | 30 | 72.58 | 176 | 78 | I |
| | 1998.05-2008.03 | | F | L/R | SUV 4WD 2UZFE | | GCI59107 | Inner Joint | | 30 | 30 | 47 | 77 | 133.5 | |
| 4.7 (202 kw) | 2002.08-2008.03 | 5AT | F | L/R | SUV 4WD 2UZFE | DOJ | GDS59017 | Drive Shaft | | 30 | 30 | 72.58 | 176 | 711.5 | |
| | 2002.08-2008.03 | | F | L/R | SUV 4WD 2UZFE | | GCO59085 | Outer Joint | | 30 | 30 | 72.58 | 176 | 78 | I |
| | 2002.08-2008.03 | | F | L/R | SUV 4WD 2UZFE | | GCI59107 | Inner Joint | | 30 | 30 | 47 | 77 | 133.5 | |
| **LX 500d** | | | | | | | | | | | | | | | |
| 3.3 (220 kw) | 2021.10- | 10AT | F | L | SUV 4WD F33A-FTV | | GDS56711 | Drive Shaft | | 36 | 36 | 83 | 121 | 683 | |
| | 2021.10- | 10AT | F | R | SUV 4WD F33A-FTV | | GDS56712 | Drive Shaft | | 36 | 36 | 83 | 121 | 731 | |
| | 2021.10- | 10AT | F | L/R | SUV 4WD F33A-FTV | | GCO59303 | Outer Joint | | 36 | 30 | 83 | 121 | 78 | I |
| | 2021.10- | 10AT | F | L/R | SUV 4WD F33A-FTV | | GCI83451 | Inner Joint | | 36 | 30 | 47 | 87 | 128.5 | |
| **LX 570** | | | | | | | | | | | | | | | |
| 5.7 (270 kw) | 2007.11- | 5AT/6AT/8AT | F | L/R | SUV 4WD 3UR-FE | | GDS59325 | Drive Shaft | | 36 | 34 | 83 | 121 | 668 | |
| | 2007.11- | 5AT/6AT/8AT | F | L/R | SUV 4WD 3UR-FE | | GCO59303 | Outer Joint | | 36 | 30 | 83 | 121 | 78 | I |
| | 2007.11- | 5AT/6AT/8AT | F | L/R | SUV 4WD 3UR-FE | | GCI59065 | Inner Joint | | 34 | 30 | 47 | 87 | 141 | |
| 5.7 (282 kw) | 2007.11- | 6AT | F | L/R | SUV 4WD 3UR-FE | | GDS59325 | Drive Shaft | | 36 | 34 | 83 | 121 | 668 | |
| | 2007.11- | 6AT | F | L/R | SUV 4WD 3UR-FE | | GCO59303 | Outer Joint | | 36 | 30 | 83 | 121 | 78 | I |
| | 2007.11- | 6AT | F | L/R | SUV 4WD 3UR-FE | | GCI59065 | Inner Joint | | 34 | 30 | 47 | 87 | 141 | |
| 5.7 (285 kw) | 2007.08- | 5AT | F | L/R | SUV 4WD 3UR-FE | | GDS59325 | Drive Shaft | | 36 | 34 | 83 | 121 | 668 | |
| | 2007.08- | 5AT | F | L/R | SUV 4WD 3UR-FE | | GCO59303 | Outer Joint | | 36 | 30 | 83 | 121 | 78 | I |
| | 2007.08- | 5AT | F | L/R | SUV 4WD 3UR-FE | | GCI59065 | Inner Joint | | 34 | 30 | 47 | 87 | 141 | |
| **LX 600** | | | | | | | | | | | | | | | |
| 3.4 (305 kw) | 2021.10- | 10AT | F | L | SUV 4WD V35A-FTS | | GDS56711 | Drive Shaft | | 36 | 36 | 83 | 121 | 683 | |
| | 2021.10- | 10AT | F | R | SUV 4WD V35A-FTS | | GDS56712 | Drive Shaft | | 36 | 36 | 83 | 121 | 731 | |
| | 2021.10- | 10AT | F | L/R | SUV 4WD V35A-FTS | | GCO59303 | Outer Joint | | 36 | 30 | 83 | 121 | 78 | I |
| | 2021.10- | 10AT | F | L/R | SUV 4WD V35A-FTS | | GCI83451 | Inner Joint | | 36 | 30 | 47 | 87 | 128.5 | |
| **NX 200** | | | | | | | | | | | | | | | |
| 2.0 (110 kw) | 2014.11- | AT/CVT | F | R | SUV 4WD 3ZR-FAE | | GDS59672 | Drive Shaft | | 30 | 24 | 61.2 | 100 | 967 | |
| | 2014.11- | CVT | F | L | SUV 4WD 3ZR-FAE | Date to:2017.12,Manufactured in:Russia;TJ | GCI59073 | Inner Joint | | 24 | 27 | 50 | 67 | 110 | |
| | 2014.11- | CVT | F | L | SUV 4WD 3ZR-FAE | Date to:2017.12,Manufactured in:Russia;AAR | GCI59125 | Inner Joint | | 24 | 27 | 50 | 67 | 109.5 | |
| | 2014.11- | CVT | F | R | SUV 4WD 3ZR-FAE | | GCI82193 | Inner Joint | | 24 | 27 | 35.5 | 373 | 105 | |
| | 2014.11- | CVT | R | L/R | SUV 4WD 3ZR-FAE | | GDS59656 | Drive Shaft | | 26 | 20 | 51.9 | 99.5 | 811 | |
| | 2014.11- | CVT | R | L/R | SUV 4WD 3ZR-FAE | | GCO59488 | Outer Joint | | 26 | 19 | 51.9 | 99.5 | 49 | I |
| | 2014.11- | CVT | R | L/R | SUV 4WD 3ZR-FAE | | GCI59213 | Inner Joint | | 20 | 19 | 37 | 60 | 84 | |
| | 2014.11- | AT/CVT | F | R | SUV FWD 3ZR-FAE | | GDS81234 | Drive Shaft | | 30 | 24 | 61.2 | 100 | 964 | |
| | 2014.11- | AT/CVT | F | R | SUV FWD 3ZR-FAE | | GCO99320 | Outer Joint | | 30 | 27 | 61.2 | 100 | 64 | I |
| | 2014.11- | CVT | F | L | SUV FWD 3ZR-FAE | Date to:2017.12,Manufactured in:Russia;TJ | GCI59073 | Inner Joint | | 24 | 27 | 50 | 67 | 110 | |
| | 2014.11- | CVT | F | L | SUV FWD 3ZR-FAE | Date to:2017.12,Manufactured in:Russia;AAR | GCI59125 | Inner Joint | | 24 | 27 | 50 | 67 | 109.5 | |
| | 2014.11- | CVT | F | R | SUV FWD 3ZR-FAE | | GCI59078 | Inner Joint | | 24 | 27 | 40 | 370 | 105 | |
| **NX 200t** | | | | | | | | | | | | | | | |
| 2.0 (175 kw) | 2014.07- | 6AT | F | L | SUV 4WD 8AR-FTS | | GDS56239 | Drive Shaft | | 30 | 24 | 61.2 | 100 | 650 | |
| | 2014.07- | 6AT | F | R | SUV 4WD 8AR-FTS | | GDS56238 | Drive Shaft | | 30 | 24 | 61.2 | 100 | 994 | |

| | YEAR | TRANSM. | F/R | L/R | BODY STYLE & DRIVE TYPE & ENGINE | REMARKS | G-AP Ref. | PRODUCT | ABS | Technical Specifications A | B | C | H | L | P |
|---|---|---|---|---|---|---|---|---|---|---|---|---|---|---|---|
| **LEXUS** | | | | | | | | | | | | | | | |
| **NX 200t** | | | | | | | | | | | | | | | |
| 2.0 (175 kw) | 2014.07- | 6AT | F | L/R | SUV 4WD 8AR-FTS | | GCO59365 | Outer Joint | | 30 | 26 | 61.2 | 99.5 | 62 | I |
| | 2014.07- | 6AT | F | L | SUV 4WD 8AR-FTS | | GCI81234 | Inner Joint | | 24 | 26 | 50 | 67 | 106.5 | |
| | 2014.07- | 6AT | F | R | SUV 4WD 8AR-FTS | | GCI83208 | Inner Joint | | 24 | 26 | 35.5 | 385 | 100 | |
| | 2014.07- | 6AT | R | L/R | SUV 4WD 8AR-FTS | | GDS59656 | Drive Shaft | | 26 | 20 | 51.9 | 99.5 | 811 | |
| | 2014.07- | AT | R | L/R | SUV 4WD 8AR-FTS | | GCO59488 | Outer Joint | | 26 | 19 | 51.9 | 99.5 | 49 | I |
| | 2014.07- | AT | R | L/R | SUV 4WD 8AR-FTS | | GCI59213 | Inner Joint | | 20 | 19 | 37 | 60 | 84 | |
| | 2014.07- | 6AT | F | L | SUV FWD 8AR-FTS | | GDS56239 | Drive Shaft | | 30 | 24 | 61.2 | 100 | 650 | |
| | 2014.07- | 6AT | F | R | SUV FWD 8AR-FTS | | GDS56235 | Drive Shaft | | 30 | 24 | 61.2 | 100 | 992 | |
| | 2014.07- | 6AT | F | L/R | SUV FWD 8AR-FTS | | GCO59365 | Outer Joint | | 30 | 26 | 61.2 | 99.5 | 62 | I |
| | 2014.07- | 6AT | F | L | SUV FWD 8AR-FTS | | GCI81234 | Inner Joint | | 24 | 26 | 50 | 67 | 106.5 | |
| | 2014.07- | 6AT | F | R | SUV FWD 8AR-FTS | Date to:2016.01 | GCI83224 | Inner Joint | | 24 | 26 | 40 | 382 | 100.5 | |
| **NX 300** | | | | | | | | | | | | | | | |
| 2.0 (175 kw) | 2017.09- | 6AT | F | L | SUV 4WD 8AR-FTS | | GDS56239 | Drive Shaft | | 30 | 24 | 61.2 | 100 | 650 | |
| | 2017.09- | 6AT | F | R | SUV 4WD 8AR-FTS | | GDS56238 | Drive Shaft | | 30 | 24 | 61.2 | 100 | 994 | |
| | 2017.09- | 6AT | F | L/R | SUV 4WD 8AR-FTS | | GCO59365 | Outer Joint | | 30 | 26 | 61.2 | 99.5 | 62 | I |
| | 2017.09- | 6AT | F | R | SUV 4WD 8AR-FTS | | GCI83208 | Inner Joint | | 24 | 26 | 35.5 | 385 | 100 | |
| | 2017.09- | 6AT | R | L/R | SUV 4WD 8AR-FTS | | GDS59656 | Drive Shaft | | 26 | 20 | 51.9 | 99.5 | 811 | |
| | 2017.09- | 6AT | R | L/R | SUV 4WD 8AR-FTS | | GCO59488 | Outer Joint | | 26 | 19 | 51.9 | 99.5 | 49 | I |
| | 2017.09- | 6AT | R | L/R | SUV 4WD 8AR-FTS | | GCI59213 | Inner Joint | | 20 | 19 | 37 | 60 | 84 | |
| | 2017.09- | 6AT | F | L | SUV FWD 8AR-FTS | | GDS56239 | Drive Shaft | | 30 | 24 | 61.2 | 100 | 650 | |
| | 2017.09- | 6AT | F | R | SUV FWD 8AR-FTS | | GDS56235 | Drive Shaft | | 30 | 24 | 61.2 | 100 | 992 | |
| | 2017.09- | 6AT | F | L/R | SUV FWD 8AR-FTS | | GCO59365 | Outer Joint | | 30 | 26 | 61.2 | 99.5 | 62 | I |
| | 2017.09- | 6AT | F | L | SUV FWD 8AR-FTS | | GCI81234 | Inner Joint | | 24 | 26 | 50 | 67 | 106.5 | |
| | 2017.09- | 6AT | F | R | SUV FWD 8AR-FTS | | GCI83224 | Inner Joint | | 24 | 26 | 40 | 382 | 100.5 | |
| **NX 300h** | | | | | | | | | | | | | | | |
| 2.5 (145 kw) | 2014.07- | CVT | F | L | SUV 4WD 2AR-FXE | | GDS58092 | Drive Shaft | | 30 | 24 | 61.2 | 100 | 639 | |
| | 2014.07- | CVT | F | R | SUV 4WD 2AR-FXE | | GDS56235 | Drive Shaft | | 30 | 24 | 61.2 | 100 | 992 | |
| | 2014.07- | CVT | F | R | SUV 4WD 2AR-FXE | | GCO59365 | Outer Joint | | 30 | 26 | 61.2 | 99.5 | 62 | I |
| | 2014.07- | CVT | F | L | SUV 4WD 2AR-FXE | | GCI81534 | Inner Joint | | 24 | 26 | 50 | 83.5 | 108 | |
| | 2014.07- | CVT | F | R | SUV 4WD 2AR-FXE | | GCI83224 | Inner Joint | | 24 | 26 | 40 | 382 | 100.5 | |
| | 2014.07- | CVT | F | R | SUV 4WD 2AR-FXE | Date to:2016.01 | GCI83224 | Inner Joint | | 24 | 26 | 40 | 382 | 100.5 | |
| | 2014.07- | CVT | R | L/R | SUV 4WD 2AR-FXE | | GDS56354 | Drive Shaft | | 26 | | 52 | 99.5 | 675 | |
| | 2014.07- | CVT | R | L/R | SUV 4WD 2AR-FXE | | GCO82771 | Outer Joint | | 26 | 19 | 52 | 99.5 | 46 | I |
| | 2014.07- | CVT | R | L/R | SUV 4WD 2AR-FXE | | GCI59203 | Inner Joint | | | 20 | | | 83 | |
| | 2014.07- | CVT | F | L | SUV FWD 2AR-FXE | | GDS58092 | Drive Shaft | | 30 | 24 | 61.2 | 100 | 639 | |
| | 2014.07- | CVT | F | R | SUV FWD 2AR-FXE | | GDS56235 | Drive Shaft | | 30 | 24 | 61.2 | 100 | 992 | |
| | 2014.07- | CVT | F | R | SUV FWD 2AR-FXE | | GCO59365 | Outer Joint | | 30 | 26 | 61.2 | 99.5 | 62 | I |
| | 2014.07- | CVT | F | L | SUV FWD 2AR-FXE | | GCI81534 | Inner Joint | | 24 | 26 | 50 | 83.5 | 108 | |
| | 2014.07- | CVT | F | R | SUV FWD 2AR-FXE | Date to:2017.08 | GCI83224 | Inner Joint | | 24 | 26 | 40 | 382 | 100.5 | |
| | 2014.11- | CVT | F | L | SUV FWD 2AR-FXE | | GDS58092 | Drive Shaft | | 30 | 24 | 61.2 | 100 | 639 | |
| | 2014.11- | CVT | F | R | SUV FWD 2AR-FXE | | GDS56235 | Drive Shaft | | 30 | 24 | 61.2 | 100 | 992 | |
| | 2014.11- | CVT | F | R | SUV FWD 2AR-FXE | | GCO59365 | Outer Joint | | 30 | 26 | 61.2 | 99.5 | 62 | I |
| | 2014.11- | CVT | F | L | SUV FWD 2AR-FXE | | GCI81534 | Inner Joint | | 24 | 26 | 50 | 83.5 | 108 | |
| | 2014.11- | CVT | F | R | SUV FWD 2AR-FXE | | GCI83224 | Inner Joint | | 24 | 26 | 40 | 382 | 100.5 | |
| 2.5 (147 kw) | 2018.11- | CVT | F | L | SUV 4WD 2AR-FXE | | GDS58092 | Drive Shaft | | 30 | 24 | 61.2 | 100 | 639 | |
| | 2018.11- | CVT | F | R | SUV 4WD 2AR-FXE | | GDS56235 | Drive Shaft | | 30 | 24 | 61.2 | 100 | 992 | |
| | 2018.11- | CVT | F | R | SUV 4WD 2AR-FXE | | GCO59365 | Outer Joint | | 30 | 26 | 61.2 | 99.5 | 62 | I |
| | 2018.11- | CVT | F | L | SUV 4WD 2AR-FXE | | GCI81534 | Inner Joint | | 24 | 26 | 50 | 83.5 | 108 | |
| | 2018.11- | CVT | F | R | SUV 4WD 2AR-FXE | | GCI83224 | Inner Joint | | 24 | 26 | 40 | 382 | 100.5 | |
| | 2018.11- | CVT | R | L/R | SUV 4WD 2AR-FXE | | GDS56354 | Drive Shaft | | 26 | | 52 | 99.5 | 675 | |
| | 2018.11- | CVT | R | L/R | SUV 4WD 2AR-FXE | | GCI59203 | Inner Joint | | | 20 | | | 83 | |
| **NX 350h** | | | | | | | | | | | | | | | |
| 2.5 (179 kw) | 2021.09- | CVT | F | L | SUV 4WD A25A-FXS | | GDS56220 | Drive Shaft | | 30 | 24 | 61.2 | 100 | 665 | |
| | 2021.09- | CVT | F | R | SUV 4WD A25A-FXS | | GDS56219 | Drive Shaft | | 30 | 24 | 61.2 | 100 | 991 | |
| | 2021.09- | CVT | F | L/R | SUV 4WD A25A-FXS | | GCO83209 | Outer Joint | | 30 | 27 | 61.2 | 100 | 69 | I |
| | 2021.09- | CVT | F | L | SUV 4WD A25A-FXS | | GCI83200 | Inner Joint | | 24 | 27 | 50 | 84 | 109 | |
| | 2021.09- | CVT | F | R | SUV 4WD A25A-FXS | | GCI83199 | Inner Joint | | 24 | 27 | 40 | 383 | 105 | |
| | 2021.09- | CVT | F | L | SUV FWD A25A-FXS | | GDS56220 | Drive Shaft | | 30 | 24 | 61.2 | 100 | 665 | |
| | 2021.09- | CVT | F | R | SUV FWD A25A-FXS | | GDS56219 | Drive Shaft | | 30 | 24 | 61.2 | 100 | 991 | |
| | 2021.09- | CVT | F | L/R | SUV FWD A25A-FXS | | GCO83209 | Outer Joint | | 30 | 27 | 61.2 | 100 | 69 | I |
| | 2021.09- | CVT | F | L | SUV FWD A25A-FXS | | GCI83200 | Inner Joint | | 24 | 27 | 50 | 84 | 109 | |
| | 2021.09- | CVT | F | R | SUV FWD A25A-FXS | | GCI83199 | Inner Joint | | 24 | 27 | 40 | 383 | 105 | |
| | 2021.11- | CVT | F | L | SUV 4WD A25B-FXS | | GDS56220 | Drive Shaft | | 30 | 24 | 61.2 | 100 | 665 | |
| | 2021.11- | CVT | F | R | SUV 4WD A25B-FXS | | GDS56219 | Drive Shaft | | 30 | 24 | 61.2 | 100 | 991 | |
| | 2021.11- | CVT | F | L | SUV FWD A25B-FXS | | GDS56220 | Drive Shaft | | 30 | 24 | 61.2 | 100 | 665 | |

| | YEAR | TRANSM. | F/R | L/R | BODY STYLE & DRIVE TYPE & ENGINE | REMARKS | G-AP Ref. | PRODUCT | ABS | Technical Specifications A | B | C | H | L | P |
|---|---|---|---|---|---|---|---|---|---|---|---|---|---|---|---|
| **LEXUS** | | | | | | | | | | | | | | | |
| **NX 350h** | | | | | | | | | | | | | | | |
| 2.5 (179 kw) | 2021.11- | CVT | F | R | SUV FWD A25B-FXS | | GDS56219 | Drive Shaft | | 30 | 24 | 61.2 | 100 | 991 | |
| | 2023.09- | CVT | F | R | SUV 4WD A25B-FXS | | GDS56219 | Drive Shaft | | 30 | 24 | 61.2 | 100 | 991 | |
| | 2023.09- | CVT | R | L | SUV 4WD A25B-FXS | | GDS56220 | Drive Shaft | | 30 | 24 | 61.2 | 100 | 665 | |
| | 2023.09- | CVT | F | L | SUV FWD A25B-FXS | | GDS56220 | Drive Shaft | | 30 | 24 | 61.2 | 100 | 665 | |
| | 2023.09- | CVT | F | R | SUV FWD A25B-FXS | | GDS56219 | Drive Shaft | | 30 | 24 | 61.2 | 100 | 991 | |
| **NX 450h+** | | | | | | | | | | | | | | | |
| 2.5 (136 kw) | 2021.09- | CVT | R | L/R | SUV 4WD A25AFXS | | GCI82651 | Inner Joint | | 23 | 29 | 42 | 60.5 | 98 | |
| 2.5 (227 kw) | 2021.09- | CVT | F | L | SUV 4WD A25A-FXS | | GDS56220 | Drive Shaft | | 30 | 24 | 61.2 | 100 | 665 | |
| | 2021.09- | CVT | F | R | SUV 4WD A25A-FXS | | GDS56219 | Drive Shaft | | 30 | 24 | 61.2 | 100 | 991 | |
| | 2021.09- | CVT | F | L/R | SUV 4WD A25A-FXS | | GCO83209 | Outer Joint | | 30 | 27 | 61.2 | 100 | 69 | I |
| | 2021.09- | CVT | F | L | SUV 4WD A25A-FXS | | GCI83200 | Inner Joint | | 24 | 27 | 50 | 84 | 109 | |
| | 2021.09- | CVT | F | R | SUV 4WD A25A-FXS | | GCI83199 | Inner Joint | | 24 | 27 | 40 | 383 | 105 | |
| | 2021.09- | CVT | R | L | SUV 4WD A25A-FXS | | GDS56221 | Drive Shaft | | 26 | 23 | 56 | 99.5 | 777 | |
| | 2021.09- | CVT | R | R | SUV 4WD A25A-FXS | | GDS56222 | Drive Shaft | | 26 | 23 | 56 | 99.5 | 847 | |
| | 2021.09- | CVT | R | L/R | SUV 4WD A25A-FXS | | GCO82740 | Outer Joint | | 26 | 29 | 56 | 99.5 | 55.5 | I |
| | 2021.09- | CVT | R | L/R | SUV 4WD A25A-FXS | | GCI82651 | Inner Joint | | 23 | 29 | 42 | 60.5 | 98 | |
| **RC 200t** | | | | | | | | | | | | | | | |
| 2.0 (180 kw) | 2015.08- | 8AT | R | R | Coupe RWD 8AR-FTS | | GDS56111 | Drive Shaft | | 30 | 30 | 58.6 | 115 | 843 | |
| **RC 300** | | | | | | | | | | | | | | | |
| 2.0 (180 kw) | 2017.11- | 8AT | R | R | Coupe RWD 8AR-FTS | | GDS56111 | Drive Shaft | | 30 | 30 | 58.6 | 115 | 843 | |
| **RC 300h** | | | | | | | | | | | | | | | |
| 2.5 (162 kw) | 2014.09- | | R | R | Coupe RWD 2AR-FSE | | GDS56111 | Drive Shaft | | 30 | 30 | 58.6 | 115 | 843 | |
| 2.5 (164 kw) | 2014.09- | CVT | R | R | Coupe RWD 2AR-FSE | | GDS56111 | Drive Shaft | | 30 | 30 | 58.6 | 115 | 843 | |
| **RC 350** | | | | | | | | | | | | | | | |
| 3.5 (234 kw) | 2014.09-2017.11 | 8AT | R | R | Coupe RWD 2GR-FSE | | GDS56111 | Drive Shaft | | 30 | 30 | 58.6 | 115 | 843 | |
| **RCF** | | | | | | | | | | | | | | | |
| 5.0 (330 kw) | 2014.08- | 8AT | R | L | Coupe RWD 2UR-GSE | For vehicles with electronic ltd slip differential | GDS57797 | Drive Shaft | | 30 | 30 | 58.6 | 116 | 655 | |
| | 2014.08- | 8AT | R | L | Coupe RWD 2UR-GSE | Date to:2019.02,For vehicles without electronic ltd slip differential | GDS57820 | Drive Shaft | | 30 | 30 | 58.6 | 115.5 | 777 | |
| | 2014.08- | 8AT | R | R | Coupe RWD 2UR-GSE | For vehicles with electronic ltd slip differential | GDS57802 | Drive Shaft | | 30 | 30 | 58.6 | 116 | 700 | |
| | 2014.08- | 8AT | R | L/R | Coupe RWD 2UR-GSE | For vehicles with electronic ltd slip differential | GCO83710 | Outer Joint | | 30 | 27 | 58.6 | 116 | 71 | M |
| | 2014.08- | 8AT | R | L/R | Coupe RWD 2UR-GSE | For vehicles with electronic ltd slip differential | GCI83863 | Inner Joint | | 30 | 29 | 50 | 72 | 109.5 | |
| 5.0 (341 kw) | 2018.03- | 8AT | R | L | Coupe RWD 2UR-GSE | For vehicles with electronic ltd slip differential | GDS57797 | Drive Shaft | | 30 | 30 | 58.6 | 116 | 655 | |
| | 2018.03- | 8AT | R | L | Coupe RWD 2UR-GSE | Date to:2019.02,For vehicles without electronic ltd slip differential | GDS57820 | Drive Shaft | | 30 | 30 | 58.6 | 115.5 | 777 | |
| | 2018.03- | 8AT | R | R | Coupe RWD 2UR-GSE | For vehicles with electronic ltd slip differential | GDS57802 | Drive Shaft | | 30 | 30 | 58.6 | 116 | 700 | |
| | 2018.03- | 8AT | R | L/R | Coupe RWD 2UR-GSE | For vehicles with electronic ltd slip differential | GCO83710 | Outer Joint | | 30 | 27 | 58.6 | 116 | 71 | M |
| | 2018.03- | 8AT | R | L/R | Coupe RWD 2UR-GSE | For vehicles with electronic ltd slip differential | GCI83863 | Inner Joint | | 30 | 29 | 50 | 72 | 109.5 | |
| 5.0 (344 kw) | 2014.08- | 8AT | R | L | Coupe RWD 2UR-GSE | For vehicles with electronic ltd slip differential | GDS57797 | Drive Shaft | | 30 | 30 | 58.6 | 116 | 655 | |
| | 2014.08- | 8AT | R | L | Coupe RWD 2UR-GSE | Date to:2019.02,For vehicles without electronic ltd slip differential | GDS57820 | Drive Shaft | | 30 | 30 | 58.6 | 115.5 | 777 | |
| | 2014.08- | 8AT | R | R | Coupe RWD 2UR-GSE | For vehicles with electronic ltd slip differential | GDS57802 | Drive Shaft | | 30 | 30 | 58.6 | 116 | 700 | |
| | 2014.08- | 8AT | R | L/R | Coupe RWD 2UR-GSE | For vehicles with electronic ltd slip differential | GCO83710 | Outer Joint | | 30 | 27 | 58.6 | 116 | 71 | M |
| | 2014.08- | 8AT | R | L/R | Coupe RWD 2UR-GSE | For vehicles with electronic ltd slip differential | GCI83863 | Inner Joint | | 30 | 29 | 50 | 72 | 109.5 | |
| 5.0 (351 kw) | 2014.08- | 8AT | R | L | Coupe RWD 2UR-GSE | For vehicles with electronic ltd slip differential | GDS57797 | Drive Shaft | | 30 | 30 | 58.6 | 116 | 655 | |
| | 2014.08- | 8AT | R | L | Coupe RWD 2UR-GSE | Date to:2019.02,For vehicles without electronic ltd slip differential | GDS57820 | Drive Shaft | | 30 | 30 | 58.6 | 115.5 | 777 | |
| | 2014.08- | 8AT | R | R | Coupe RWD 2UR-GSE | For vehicles with electronic ltd slip differential | GDS57802 | Drive Shaft | | 30 | 30 | 58.6 | 116 | 700 | |
| | 2014.08- | 8AT | R | L/R | Coupe RWD 2UR-GSE | For vehicles with electronic ltd slip differential | GCO83710 | Outer Joint | | 30 | 27 | 58.6 | 116 | 71 | M |
| | 2014.08- | 8AT | R | L/R | Coupe RWD 2UR-GSE | For vehicles with electronic ltd slip differential | GCI83863 | Inner Joint | | 30 | 29 | 50 | 72 | 109.5 | |
| **RX 200t** | | | | | | | | | | | | | | | |
| 2.0 (175 kw) | 2015.10-2017.12 | 6AT | F | L | SUV 4WD 8AR-FTS | | GDS83880 | Drive Shaft | 48T | 30 | 24 | 61 | 100 | 672 | |
| | 2015.10-2017.12 | 6AT | F | L | SUV 4WD 8AR-FTS | | GCO82530 | Outer Joint | 48T | 30 | 27 | 61 | 100 | 67 | I |
| | 2015.10-2017.12 | 6AT | F | L | SUV 4WD 8AR-FTS | | GCI59193 | Inner Joint | | 24 | 27 | 50 | 66.5 | 107 | |
| | 2015.10-2017.12 | 6AT | F | R | SUV 4WD 8AR-FTS | | GCI81140 | Inner Joint | | 24 | 27 | 34 | 349 | 106 | |
| | 2015.10-2017.12 | 6AT | R | L | SUV 4WD 8AR-FTS | | GDS83548 | Drive Shaft | | 26 | 23 | 56 | 95.5 | 830 | |
| | 2015.10-2017.12 | 6AT | R | R | SUV 4WD 8AR-FTS | | GDS83547 | Drive Shaft | | 26 | 23 | 56 | 95.5 | 809 | |
| | 2015.10-2017.12 | 6AT | R | R | SUV 4WD 8AR-FTS | | GCO82413 | Outer Joint | | 26 | 29 | 56 | 95.5 | 55.5 | I |
| | 2015.10-2017.12 | 6AT | F | L | SUV FWD 8AR-FTS | | GDS83880 | Drive Shaft | 48T | 30 | 24 | 61 | 100 | 672 | |
| | 2015.10-2017.12 | 6AT | F | R | SUV FWD 8AR-FTS | | GDS84338 | Drive Shaft | 48T | 30 | 24 | 61 | 100 | 997 | |
| | 2015.10-2017.12 | 6AT | F | L/R | SUV FWD 8AR-FTS | | GCO82530 | Outer Joint | 48T | 30 | 27 | 61 | 100 | 67 | I |
| | 2015.10-2017.12 | 6AT | F | L | SUV FWD 8AR-FTS | | GCI59193 | Inner Joint | | 24 | 27 | 50 | 66.5 | 107 | |
| | 2015.10-2017.12 | 6AT | F | R | SUV FWD 8AR-FTS | | GCI82716 | Inner Joint | | 24 | 27 | 40 | 382 | 106 | |
| **RX 270** | | | | | | | | | | | | | | | |
| 2.7 (138 kw) | 2008.12-2015.10 | 6AT | F | L | SUV FWD 1AR-FE | | GDS59598 | Drive Shaft | 48T | 30 | 24 | 61 | 100 | 673 | |
| | 2008.12-2015.10 | 6AT | F | R | SUV FWD 1AR-FE | | GDS59597 | Drive Shaft | 48T | 30 | 24 | 61 | 100 | 992 | |
| | 2008.12-2015.10 | 6AT | F | L/R | SUV FWD 1AR-FE | | GCO59486 | Outer Joint | 48T | 30 | 27 | 61 | 100 | 65 | I |
| | 2008.12-2015.10 | 6AT | F | L | SUV FWD 1AR-FE | TJ | GCI59073 | Inner Joint | | 24 | 27 | 50 | 67 | 110 | |
| | 2008.12-2015.10 | 6AT | F | L | SUV FWD 1AR-FE | AAR | GCI59125 | Inner Joint | | 24 | 27 | 50 | 67 | 109.5 | |

| | YEAR | TRANSM. | F/R | L/R | BODY STYLE & DRIVE TYPE & ENGINE | REMARKS | G-AP Ref. | PRODUCT | ABS | Technical Specifications A | B | C | H | L | P |
|---|---|---|---|---|---|---|---|---|---|---|---|---|---|---|---|
| **LEXUS** | | | | | | | | | | | | | | | |
| **RX 270** | | | | | | | | | | | | | | | |
| 2.7 (138 kw) | 2008.12-2015.10 | 6AT | F | R | SUV FWD 1AR-FE | | GCI59206 | Inner Joint | | 24 | 27 | 40 | 377 | 104.5 | |
| **RX 300** | | | | | | | | | | | | | | | |
| 2.0 (175 kw) | 2017.12- | 6AT | F | L | SUV 4WD 8AR-FTS | | GDS83880 | Drive Shaft | 48T | 30 | 24 | 61 | 100 | 672 | |
| | 2017.12- | 6AT | F | L | SUV 4WD 8AR-FTS | | GCO82530 | Outer Joint | 48T | 30 | 27 | 61 | 100 | 67 | I |
| | 2017.12- | 6AT | F | L | SUV 4WD 8AR-FTS | | GCI59193 | Inner Joint | | 24 | 27 | 50 | 66.5 | 107 | |
| | 2017.12- | 6AT | F | R | SUV 4WD 8AR-FTS | | GCI81140 | Inner Joint | | 24 | 27 | 34 | 349 | 106 | |
| | 2017.12- | 6AT | R | L | SUV 4WD 8AR-FTS | | GDS83548 | Drive Shaft | | 26 | 23 | 56 | 95.5 | 830 | |
| | 2017.12- | 6AT | R | R | SUV 4WD 8AR-FTS | | GDS83547 | Drive Shaft | | 26 | 23 | 56 | 95.5 | 809 | |
| | 2017.12- | 6AT | R | R | SUV 4WD 8AR-FTS | | GCO82413 | Outer Joint | | 26 | 29 | 56 | 95.5 | 55.5 | I |
| | 2017.12- | 6AT | F | L | SUV FWD 8AR-FTS | | GDS83880 | Drive Shaft | 48T | 30 | 24 | 61 | 100 | 672 | |
| | 2017.12- | 6AT | F | R | SUV FWD 8AR-FTS | | GDS84338 | Drive Shaft | 48T | 30 | 24 | 61 | 100 | 997 | |
| | 2017.12- | 6AT | F | L/R | SUV FWD 8AR-FTS | | GCO82530 | Outer Joint | 48T | 30 | 27 | 61 | 100 | 67 | I |
| | 2017.12- | 6AT | F | L | SUV FWD 8AR-FTS | | GCI59193 | Inner Joint | | 24 | 27 | 50 | 66.5 | 107 | |
| | 2017.12- | 6AT | F | R | SUV FWD 8AR-FTS | | GCI82716 | Inner Joint | | 24 | 27 | 40 | 382 | 106 | |
| 3.0 (148 kw) | 1998.01-2003.02 | 4AT | F | L/R | SUV FWD 1MZFE | | GDS31001 | Drive Shaft | 48T | 30 | | 56 | 100 | 563 | |
| | 1998.01-2003.02 | 4AT | F | L/R | SUV FWD 1MZFE | without groove in internal component | GCO59009 | Outer Joint | 48T | 30 | 27 | 56 | 100 | 67.5 | I |
| | 1998.01-2003.02 | AT | F | L/R | SUV FWD 1MZFE | with groove in internal component | GCO59446 | Outer Joint | 48T | 30 | 27 | 56 | 100 | 66 | M |
| | 1998.01-2003.02 | | F | L/R | SUV FWD 1MZFE | | GCO59173 | Outer Joint | 48T | 30 | 27 | 63.4 | 100 | 64.5 | M |
| | 2000.07-2003.02 | AT | F | L/R | SUV 4WD 1MZFE | | GCO59320 | Outer Joint | 48T | 26 | 25 | 56 | 100 | 63 | M |
| | 2000.07-2003.02 | 4AT | R | L/R | SUV 4WD 1MZFE | | GDS31010 | Drive Shaft | 48T | 26 | | 56 | 96 | 695 | |
| 3.0 (150 kw) | 2003.05-2008.12 | 5AT | F | L | SUV 4WD 1MZ-FE | | GDS59415 | Drive Shaft | 48T | 26 | 23 | 63 | 100 | 630 | |
| | 2003.05-2008.12 | 5AT | F | L | SUV 4WD 1MZ-FE | Date to:2003.11 | GCO59043 | Outer Joint | 48T | 26 | 27 | 58 | 96 | 62 | I |
| | 2003.05-2008.12 | 5AT | F | L | SUV 4WD 1MZ-FE | Date to:2003.11 | GCO59167 | Outer Joint | 48T | 26 | 27 | 63 | 100 | 62 | I |
| | 2003.05-2008.12 | AT | F | R | SUV 4WD 1MZ-FE | | GDS59242 | Drive Shaft | 48T | 26 | 23 | 63.3 | 100 | 1003 | |
| | 2003.05-2008.12 | AT | F | R | SUV 4WD 1MZ-FE | Date to:2003.11,GrooveType:Inner | GCO59314 | Outer Joint | 48T | 26 | 27 | 61.2 | 100 | 59.5 | I |
| | 2003.05-2008.12 | AT | F | L/R | SUV 4WD 1MZ-FE | GrooveType:Middle | GCO59175 | Outer Joint | 48T | 26 | 27 | 63.3 | 100 | 59 | M |
| | 2003.05-2008.12 | AT | F | L/R | SUV 4WD 1MZ-FE | GrooveType:Inner | GCO59290 | Outer Joint | 48T | 26 | 27 | 63.3 | 100 | 59.5 | I |
| | 2003.05-2008.12 | AT | F | L | SUV 4WD 1MZ-FE | | GCI59084 | Inner Joint | | 23 | 27 | 50 | 62 | 108.5 | |
| | 2003.05-2008.12 | AT | F | R | SUV 4WD 1MZ-FE | | GCI59079 | Inner Joint | | 23 | 27 | 34 | 394 | 123 | |
| | 2003.05-2008.12 | AT | R | L/R | SUV 4WD 1MZ-FE | | GDS82317 | Drive Shaft | 48T | 26 | 23 | 56 | 100 | 790 | |
| | 2003.05-2008.12 | AT | R | L/R | SUV 4WD 1MZ-FE | | GCO81806 | Outer Joint | 48T | 26 | 23 | 56 | 100 | 64 | M |
| | 2003.05-2008.12 | AT | R | L/R | SUV 4WD 1MZ-FE | | GCI81746 | Inner Joint | | 23 | 23 | 35 | 90.5 | 81.5 | |
| 3.0 (164 kw) | 1998.01-2003.02 | | F | L/R | SUV 4WD 1MZFE | | GCO59320 | Outer Joint | 48T | 26 | 25 | 56 | 100 | 63 | M |
| | 1998.01-2003.02 | 4AT | R | L/R | SUV 4WD 1MZFE | | GDS31010 | Drive Shaft | 48T | 26 | | 56 | 96 | 695 | |
| | 1999.10-2003.02 | 4AT | F | L/R | SUV FWD 1MZFE | | GDS31001 | Drive Shaft | 48T | 30 | | 56 | 100 | 563 | |
| | 1999.10-2003.02 | | F | R | SUV FWD 1MZFE | | GCO59173 | Outer Joint | 48T | 30 | 27 | 63.4 | 100 | 64.5 | M |
| | 1999.10-2003.02 | | F | R | SUV FWD 1MZFE | | GCO59446 | Outer Joint | 48T | 30 | 27 | 56 | 100 | 66 | M |
| | 1999.10-2003.02 | | F | L/R | SUV FWD 1MZFE | | GCO59009 | Outer Joint | 48T | 30 | 27 | 56 | 100 | 67.5 | I |
| **RX 330** | | | | | | | | | | | | | | | |
| 3.3 (171 kw) | 2003.04-2006.01 | AT | F | L | SUV FWD 3MZ-FE | | GDS59244 | Drive Shaft | 48T | 30 | 24 | 63 | 100.5 | 648 | |
| | 2003.04-2006.01 | AT | F | L/R | SUV FWD 3MZ-FE | | GCO59304 | Outer Joint | 48T | 30 | 34 | 61 | 100 | 68.5 | M |
| | 2003.04-2008.12 | 5AT | F | L | SUV 4WD 3MZ-FE | | GDS31005 | Drive Shaft | 48T | 30 | 23 | 61 | 99 | 626 | |
| | 2003.04-2008.12 | 5AT | F | R | SUV 4WD 3MZ-FE | | GDS31009 | Drive Shaft | 48T | 30 | 23 | 61 | 99 | 994 | |
| | 2003.04-2008.12 | 5AT | F | L/R | SUV 4WD 3MZ-FE | | GCO59305 | Outer Joint | 48T | 30 | 26 | 61 | 100 | 68.5 | M |
| | 2003.04-2008.12 | 5AT | F | L | SUV 4WD 3MZ-FE | | GCI59192 | Inner Joint | | 23 | 26 | 50 | 62 | 108.5 | |
| | 2003.04-2008.12 | 5AT | F | R | SUV 4WD 3MZ-FE | | GCI59191 | Inner Joint | | 23 | 26 | 34 | 394 | 124 | |
| | 2003.04-2008.12 | AT | F | | SUV 4WD 3MZ-FE | | GCO59214 | Outer Joint | 48T | 30 | 26 | 61 | 100 | 67 | I |
| | 2003.04-2008.12 | 5AT | R | L/R | SUV 4WD 3MZ-FE | | GDS56384 | Drive Shaft | 48T | 26 | 23 | 56 | 100 | 792 | |
| | 2003.04-2008.12 | 5AT | R | L/R | SUV 4WD 3MZ-FE | | GDS82317 | Drive Shaft | 48T | 26 | 23 | 56 | 100 | 790 | |
| | 2003.04-2008.12 | 5AT | R | L/R | SUV 4WD 3MZ-FE | Japan Product | GCO81806 | Outer Joint | 48T | 26 | 23 | 56 | 100 | 64 | M |
| | 2003.04-2008.12 | AT | R | L | SUV 4WD 3MZ-FE | | GCI81746 | Inner Joint | | 23 | 23 | 35 | 90.5 | 81.5 | |
| **RX 350** | | | | | | | | | | | | | | | |
| 3.5 (201 kw) | 2006.09-2008.12 | 5AT | R | L/R | SUV 4WD 2GRFE | | GDS56384 | Drive Shaft | 48T | 26 | 23 | 56 | 100 | 792 | |
| | 2006.09-2008.12 | 5AT | R | L/R | SUV 4WD 2GRFE | | GCO41135 | Outer Joint | 42T | 25 | 32 | 55 | 105 | 62 | I |
| | 2006.09-2008.12 | 5AT | R | L/R | SUV 4WD 2GRFE | | GCI82670 | Inner Joint | | 23 | 30 | 35 | 68 | 115 | |
| 3.5 (202 kw) | 2009.01-2015.09 | 6AT | F | L | SUV FWD 2GR-FE | | GDS59371 | Drive Shaft | 48T | 30 | 24 | 61 | 100 | 676 | |
| | 2009.01-2015.09 | 6AT | F | L | SUV FWD 2GR-FE | | GCO59214 | Outer Joint | 48T | 30 | 26 | 61 | 100 | 67 | I |
| | 2009.01-2015.09 | 6AT | F | L | SUV FWD 2GR-FE | | GCI59082 | Inner Joint | | 24 | 27 | 50 | 67 | 109 | |
| 3.5 (203 kw) | 2006.01-2008.12 | AT | F | L | SUV FWD 2GR-FE | | GDS59244 | Drive Shaft | 48T | 30 | 24 | 63 | 100.5 | 648 | |
| | 2006.01-2008.12 | AT | F | L/R | SUV FWD 2GR-FE | | GCO59304 | Outer Joint | 48T | 30 | 34 | 61 | 100 | 68.5 | M |
| | 2006.02-2008.12 | 5AT | F | L | SUV 4WD 2GR-FE | | GDS31005 | Drive Shaft | 48T | 30 | 23 | 61 | 99 | 626 | |
| | 2006.02-2008.12 | 5AT | F | R | SUV 4WD 2GR-FE | | GDS31009 | Drive Shaft | 48T | 30 | 23 | 61 | 99 | 994 | |
| | 2006.02-2008.12 | 5AT | F | L | SUV 4WD 2GR-FE | | GCO59214 | Outer Joint | 48T | 30 | 26 | 61 | 100 | 67 | I |
| | 2006.02-2008.12 | 5AT | F | L/R | SUV 4WD 2GR-FE | | GCO59305 | Outer Joint | 48T | 30 | 26 | 61 | 100 | 68.5 | M |
| | 2006.02-2008.12 | 5AT | F | L | SUV 4WD 2GR-FE | | GCI59192 | Inner Joint | | 23 | 26 | 50 | 62 | 108.5 | |

| | YEAR | TRANSM. | F/R | L/R | BODY STYLE & DRIVE TYPE & ENGINE | REMARKS | G-AP Ref. | PRODUCT | ABS | Technical Specifications A | B | C | H | L | P |
|---|---|---|---|---|---|---|---|---|---|---|---|---|---|---|---|
| **LEXUS** | | | | | | | | | | | | | | | |
| **RX 350** | | | | | | | | | | | | | | | |
| 3.5 (203 kw) | 2006.02-2008.12 | 5AT | F | R | SUV 4WD 2GR-FE | | GCI59191 | Inner Joint | | 23 | 26 | 34 | 394 | 124 | |
| | 2006.02-2008.12 | | F | L/R | SUV 4WD 2GR-FE | | GCO59233 | Outer Joint | 48T | 30 | 36 | 63 | 99 | 67 | I |
| | 2006.02-2008.12 | 5AT | R | L/R | SUV 4WD 2GR-FE | | GDS56384 | Drive Shaft | 48T | 26 | 23 | 56 | 100 | 792 | |
| | 2006.02-2008.12 | 5AT | R | L/R | SUV 4WD 2GR-FE | | GDS82317 | Drive Shaft | 48T | 26 | 23 | 56 | 100 | 790 | |
| | 2006.02-2008.12 | 5AT | R | L/R | SUV 4WD 2GR-FE | Japan Product | GCO81806 | Outer Joint | 48T | 26 | 23 | 56 | 100 | 64 | M |
| | 2006.02-2008.12 | AT | R | L | SUV 4WD 2GR-FE | | GCI81746 | Inner Joint | | 23 | 23 | 35 | 90.5 | 81.5 | |
| 3.5 (204 kw) | 2008.12-2015.08 | 6AT | F | L | SUV 4WD 2GR-FE;2GR-FXE | | GDS59371 | Drive Shaft | 48T | 30 | 24 | 61 | 100 | 676 | |
| | 2008.12-2015.08 | 6AT | F | R | SUV 4WD 2GR-FE;2GR-FXE | | GDS81227 | Drive Shaft | 48T | 30 | 24 | 61 | 100 | 995 | |
| | 2008.12-2015.08 | 6AT | F | R | SUV 4WD 2GR-FE;2GR-FXE | Date to:2012.02 | GCO59214 | Outer Joint | 48T | 30 | 26 | 61 | 100 | 67 | I |
| | 2008.12-2015.08 | 6AT | F | L/R | SUV 4WD 2GR-FE;2GR-FXE | | GCO59233 | Outer Joint | 48T | 30 | 36 | 63 | 99 | 67 | I |
| | 2008.12-2015.08 | 6AT | F | L | SUV 4WD 2GR-FE;2GR-FXE | TJ | GCI59082 | Inner Joint | | 24 | 27 | 50 | 67 | 109 | |
| | 2008.12-2015.08 | 6AT | F | L | SUV 4WD 2GR-FE;2GR-FXE | AAR | GCI59193 | Inner Joint | | 24 | 27 | 50 | 66.5 | 107 | |
| 3.5 (206 kw) | 2008.12-2015.10 | 6AT | F | L | SUV FWD 2GR-FXE | | GDS59371 | Drive Shaft | 48T | 30 | 24 | 61 | 100 | 676 | |
| | 2008.12-2015.10 | 6AT | F | L | SUV FWD 2GR-FXE | | GCO59214 | Outer Joint | 48T | 30 | 26 | 61 | 100 | 67 | I |
| | 2008.12-2015.10 | 6AT | F | L | SUV FWD 2GR-FXE | | GCI59082 | Inner Joint | | 24 | 27 | 50 | 67 | 109 | |
| 3.5 (215 kw) | 2015.10- | AT | R | L | SUV 4WD 2GR-FKS | | GDS83548 | Drive Shaft | | 26 | 23 | 56 | 95.5 | 830 | |
| | 2015.10- | AT | R | R | SUV 4WD 2GR-FKS | | GDS83547 | Drive Shaft | | 26 | 23 | 56 | 95.5 | 809 | |
| | 2015.10- | AT | R | L/R | SUV 4WD 2GR-FKS | | GCO82413 | Outer Joint | | 26 | 29 | 56 | 95.5 | 55.5 | I |
| | 2015.10- | AT | R | L/R | SUV 4WD 2GR-FKS | | GCI82274 | Inner Joint | | 23 | 29 | 42 | 60.5 | 98 | |
| 3.5 (216 kw) | 2015.10- | 8AT | F | L | SUV 4WD 2GR-FKS | | GDS83880 | Drive Shaft | 48T | 30 | 24 | 61 | 100 | 672 | |
| | 2015.10- | 8AT | F | R | SUV 4WD 2GR-FKS | | GDS83881 | Drive Shaft | 48T | 30 | 24 | 61 | 100 | 999 | |
| | 2015.10- | 8AT | F | L/R | SUV 4WD 2GR-FKS | | GCO82530 | Outer Joint | 48T | 30 | 27 | 61 | 100 | 67 | I |
| | 2015.10- | 8AT | F | L | SUV 4WD 2GR-FKS | | GCI59193 | Inner Joint | | 24 | 27 | 50 | 66.5 | 107 | |
| | 2015.10- | 8AT | F | R | SUV 4WD 2GR-FKS | | GCI81140 | Inner Joint | | 24 | 27 | 34 | 349 | 106 | |
| | 2015.10- | 8AT | R | L | SUV 4WD 2GR-FKS | | GDS83548 | Drive Shaft | | 26 | 23 | 56 | 95.5 | 830 | |
| | 2015.10- | 8AT | R | R | SUV 4WD 2GR-FKS | | GDS83547 | Drive Shaft | | 26 | 23 | 56 | 95.5 | 809 | |
| 3.5 (217 kw) | 2015.10- | AT | R | L | SUV 4WD 2GR-FKS | | GDS83548 | Drive Shaft | | 26 | 23 | 56 | 95.5 | 830 | |
| | 2015.10- | AT | R | R | SUV 4WD 2GR-FKS | | GDS83547 | Drive Shaft | | 26 | 23 | 56 | 95.5 | 809 | |
| | 2015.10- | AT | R | L/R | SUV 4WD 2GR-FKS | | GCO82413 | Outer Joint | | 26 | 29 | 56 | 95.5 | 55.5 | I |
| | 2015.10- | AT | R | L/R | SUV 4WD 2GR-FKS | | GCI82274 | Inner Joint | | 23 | 29 | 42 | 60.5 | 98 | |
| 3.5 (218 kw) | 2015.10- | AT | R | L | SUV 4WD 2GR-FKS | | GDS83548 | Drive Shaft | | 26 | 23 | 56 | 95.5 | 830 | |
| | 2015.10- | AT | R | R | SUV 4WD 2GR-FKS | | GDS83547 | Drive Shaft | | 26 | 23 | 56 | 95.5 | 809 | |
| | 2015.10- | AT | R | L/R | SUV 4WD 2GR-FKS | | GCO82413 | Outer Joint | | 26 | 29 | 56 | 95.5 | 55.5 | I |
| | 2015.10- | AT | R | L/R | SUV 4WD 2GR-FKS | | GCI82274 | Inner Joint | | 23 | 29 | 42 | 60.5 | 98 | |
| 3.5 (221 kw) | 2015.10- | 8AT | F | L | SUV 4WD 2GR-FKS | | GDS83880 | Drive Shaft | 48T | 30 | 24 | 61 | 100 | 672 | |
| | 2015.10- | 8AT | F | R | SUV 4WD 2GR-FKS | | GDS83881 | Drive Shaft | 48T | 30 | 24 | 61 | 100 | 999 | |
| | 2015.10- | 8AT | F | L/R | SUV 4WD 2GR-FKS | | GCO82530 | Outer Joint | 48T | 30 | 27 | 61 | 100 | 67 | I |
| | 2015.10- | 8AT | F | L | SUV 4WD 2GR-FKS | | GCI59193 | Inner Joint | | 24 | 27 | 50 | 66.5 | 107 | |
| | 2015.10- | 8AT | F | R | SUV 4WD 2GR-FKS | | GCI81140 | Inner Joint | | 24 | 27 | 34 | 349 | 106 | |
| | 2015.10- | 8AT | R | L | SUV 4WD 2GR-FKS | | GDS83548 | Drive Shaft | | 26 | 23 | 56 | 95.5 | 830 | |
| | 2015.10- | 8AT | R | R | SUV 4WD 2GR-FKS | | GDS83547 | Drive Shaft | | 26 | 23 | 56 | 95.5 | 809 | |
| 3.5 (224 kw) | 2015.10- | AT | R | L | SUV 4WD 2GR-FKS | | GDS83548 | Drive Shaft | | 26 | 23 | 56 | 95.5 | 830 | |
| | 2015.10- | AT | R | R | SUV 4WD 2GR-FKS | | GDS83547 | Drive Shaft | | 26 | 23 | 56 | 95.5 | 809 | |
| | 2015.10- | AT | R | L/R | SUV 4WD 2GR-FKS | | GCO82413 | Outer Joint | | 26 | 29 | 56 | 95.5 | 55.5 | I |
| | 2015.10- | AT | R | L/R | SUV 4WD 2GR-FKS | | GCI82274 | Inner Joint | | 23 | 29 | 42 | 60.5 | 98 | |
| **RX 400h** | | | | | | | | | | | | | | | |
| 3.3 (200 kw) | 2005.09-2008.12 | CVT | R | L/R | SUV 4WD 3MZ-FE | | GDS56832 | Drive Shaft | 48T | 26 | | 56 | 95.5 | 661 | |
| | 2005.09-2008.12 | CVT | R | L/R | SUV 4WD 3MZ-FE | | GCO83449 | Outer Joint | 48T | 26 | 20 | 56 | 95.5 | 48.5 | I |
| | 2005.09-2008.12 | CVT | R | L/R | SUV 4WD 3MZ-FE | | GCI59203 | Inner Joint | | | 20 | | | 83 | |
| **RX 450h** | | | | | | | | | | | | | | | |
| 3.5 (183 kw) | 2008.12-2015.09 | CVT | F | R | SUV FWD 2GRFXE | | GDS83735 | Drive Shaft | 48T | 30 | 24 | 61 | 100 | 1007 | |
| | 2008.12-2015.09 | CVT | F | R | SUV FWD 2GRFXE | | GCO59214 | Outer Joint | 48T | 30 | 26 | 61 | 100 | 67 | I |
| | 2008.12-2015.09 | CVT | F | R | SUV FWD 2GRFXE | | GCI82351 | Inner Joint | | 24 | 27 | 40 | 390 | 106 | |
| | 2009.01-2015.09 | CVT | F | R | SUV 4WD 2GRFXE | | GDS83735 | Drive Shaft | 48T | 30 | 24 | 61 | 100 | 1007 | |
| | 2009.01-2015.09 | CVT | F | R | SUV 4WD 2GRFXE | | GCO59214 | Outer Joint | 48T | 30 | 26 | 61 | 100 | 67 | I |
| | 2009.01-2015.09 | CVT | F | R | SUV 4WD 2GRFXE | | GCI82351 | Inner Joint | | 24 | 27 | 40 | 390 | 106 | |
| | 2009.01-2015.09 | CVT | R | L/R | SUV 4WD 2GRFXE | | GDS84064 | Drive Shaft | | 26 | | 56 | 95.5 | 688 | |
| 3.5 (220 kw) | 2009.03-2015.09 | CVT | F | L | SUV 4WD 2GR-FXE | | GDS57735 | Drive Shaft | 48T | 30 | 24 | 61 | 100 | 664 | |
| | 2009.03-2015.09 | CVT | F | R | SUV 4WD 2GR-FXE | | GDS83735 | Drive Shaft | 48T | 30 | 24 | 61 | 100 | 1007 | |
| | 2009.03-2015.09 | CVT | F | L/R | SUV 4WD 2GR-FXE | | GCO59214 | Outer Joint | 48T | 30 | 26 | 61 | 100 | 67 | I |
| | 2009.03-2015.09 | CVT | F | L | SUV 4WD 2GR-FXE | | GCI59211 | Inner Joint | | 24 | 27 | 50 | 83.5 | 108 | |
| | 2009.03-2015.09 | CVT | F | R | SUV 4WD 2GR-FXE | | GCI82351 | Inner Joint | | 24 | 27 | 40 | 390 | 106 | |
| | 2009.03-2015.09 | CVT | R | L/R | SUV 4WD 2GR-FXE | | GDS84064 | Drive Shaft | | 26 | | 56 | 95.5 | 688 | |
| | 2009.03-2015.09 | CVT | R | L/R | SUV 4WD 2GR-FXE | | GCO82576 | Outer Joint | | 26 | 20 | 56 | 95.5 | 48.5 | I |
| | 2009.03-2015.09 | CVT | R | L/R | SUV 4WD 2GR-FXE | | GCI59203 | Inner Joint | | | 20 | | | 83 | |

| | YEAR | TRANSM. | F/R | L/R | BODY STYLE & DRIVE TYPE & ENGINE | REMARKS | G-AP Ref. | PRODUCT | ABS | Technical Specifications A | B | C | H | L | P |
|---|---|---|---|---|---|---|---|---|---|---|---|---|---|---|---|
| **LEXUS** | | | | | | | | | | | | | | | |
| **RX 450h** | | | | | | | | | | | | | | | |
| 3.5 (220 kw) | 2009.03-2015.09 | CVT | F | L | SUV FWD 2GR-FXE | | GDS57735 | Drive Shaft | 48T | 30 | 24 | 61 | 100 | 664 | |
| | 2009.03-2015.09 | CVT | F | R | SUV FWD 2GR-FXE | | GDS83735 | Drive Shaft | 48T | 30 | 24 | 61 | 100 | 1007 | |
| | 2009.03-2015.09 | CVT | F | L/R | SUV FWD 2GR-FXE | | GCO59214 | Outer Joint | 48T | 30 | 26 | 61 | 100 | 67 | I |
| | 2009.03-2015.09 | CVT | F | L | SUV FWD 2GR-FXE | | GCI59211 | Inner Joint | | 24 | 27 | 50 | 83.5 | 108 | |
| | 2009.03-2015.09 | CVT | F | R | SUV FWD 2GR-FXE | | GCI82351 | Inner Joint | | 24 | 27 | 40 | 390 | 106 | |
| 3.5 (230 kw) | 2015.10- | CVT | F | L | SUV FWD 2GR-FXS | | GDS57373 | Drive Shaft | 48T | 30 | 24 | 61.2 | 100 | 663 | |
| | 2015.10- | CVT | F | R | SUV FWD 2GR-FXS | | GDS56350 | Drive Shaft | 48T | 30 | 24 | 61.2 | 100 | 1010 | |
| | 2015.10- | CVT | F | L/R | SUV FWD 2GR-FXS | | GCO82593 | Outer Joint | 48T | 30 | 27 | 61.2 | 100 | 69 | I |
| | 2015.10- | CVT | F | L | SUV FWD 2GR-FXS | | GCI83627 | Inner Joint | | 24 | 27 | 50 | 83.5 | 102.5 | |
| | 2015.10- | CVT | F | R | SUV FWD 2GR-FXS | | GCI83260 | Inner Joint | | 24 | 27 | 40 | 396 | 105 | |
| | 2015.11- | CVT | F | L | SUV 4WD 2GR-FXS | | GDS84065 | Drive Shaft | 48T | 30 | 24 | 61 | 100 | 660 | |
| | 2015.11- | CVT | F | R | SUV 4WD 2GR-FXS | Date To:2018.05 | GDS84066 | Drive Shaft | 48T | 30 | 24 | 61 | 100 | 1011 | |
| | 2015.11- | CVT | F | L/R | SUV 4WD 2GR-FXS | Date To:2018.05 | GCO82530 | Outer Joint | 48T | 30 | 27 | 61 | 100 | 67 | I |
| | 2015.11- | CVT | F | L | SUV 4WD 2GR-FXS | Date To:2018.05 | GCI59211 | Inner Joint | | 24 | 27 | 50 | 83.5 | 108 | |
| | 2015.11- | CVT | F | R | SUV 4WD 2GR-FXS | Date To:2018.05 | GCI82511 | Inner Joint | | 24 | 27 | 40 | 396 | 106 | |
| | 2015.11- | CVT | R | L/R | SUV 4WD 2GR-FXS | | GDS56357 | Drive Shaft | | 26 | | 56 | 95.5 | 688 | |
| | 2015.11- | CVT | R | L/R | SUV 4WD 2GR-FXS | | GCO82413 | Outer Joint | | 26 | 29 | 56 | 95.5 | 55.5 | I |
| **RZ 300e** | | | | | | | | | | | | | | | |
| EV (150 kw) | 2023.12- | ET | F | L/R | SUV FWD 1XM | | GDS57979 | Drive Shaft | | 30 | 30 | 59.6 | 94.5 | 715 | |
| | 2023.12- | ET | F | L/R | SUV FWD 1XM | | GCO83820 | Outer Joint | | 30 | 27 | 59.6 | 94.5 | 72 | M |
| | 2023.12- | ET | F | L/R | SUV FWD 1XM | | GCI83974 | Inner Joint | | 30 | 29 | 50 | 74.5 | 111 | |
| **RZ 350e** | | | | | | | | | | | | | | | |
| EV (167 kw) | 2025.10- | | F | L/R | SUV FWD 2XM | | GCI83974 | Inner Joint | | 30 | 29 | 50 | 74.5 | 111 | |
| **RZ 450e** | | | | | | | | | | | | | | | |
| EV (230 kw) | 2023.01- | ET | F | L/R | SUV 4WD 1XM;1YM | | GDS57979 | Drive Shaft | | 30 | 30 | 59.6 | 94.5 | 715 | |
| | 2023.01- | ET | F | L/R | SUV 4WD 1XM;1YM | | GCO83820 | Outer Joint | | 30 | 27 | 59.6 | 94.5 | 72 | M |
| | 2023.01- | ET | F | L/R | SUV 4WD 1XM;1YM | | GCI83974 | Inner Joint | | 30 | 29 | 50 | 74.5 | 111 | |
| **RZ 500e** | | | | | | | | | | | | | | | |
| EV (280 kw) | 2025.10- | | F | L/R | SUV 4WD 2XM | | GCI83974 | Inner Joint | | 30 | 29 | 50 | 74.5 | 111 | |
| **RZ 550e** | | | | | | | | | | | | | | | |
| EV (300 kw) | 2025.10- | | F | L/R | SUV 4WD 2XM | | GCI83974 | Inner Joint | | 30 | 29 | 50 | 74.5 | 111 | |
| **SC 430** | | | | | | | | | | | | | | | |
| 4.3 (210 kw) | 2001.05-2010.07 | 5AT | R | L/R | Convertible RWD 3UZ-FE | | GCI83880 | Inner Joint | | | 24 | | | 31 | |
| 4.3 (215 kw) | 2001.01-2010.07 | 5AT | R | L/R | Convertible RWD 3UZ-FE | | GCI83880 | Inner Joint | | | 24 | | | 31 | |
| 4.3 (244 kw) | 2001.05-2010.07 | 5AT | R | L/R | Convertible RWD 3UZ-FE | | GCI83880 | Inner Joint | | | 24 | | | 31 | |
| **UX 200** | | | | | | | | | | | | | | | |
| 2.0 (110 kw) | 2018.10- | CVT | F | L | SUV FWD M20A-FKS | | GDS56972 | Drive Shaft | | 26 | 24 | 55.6 | 95.5 | 660 | |
| | 2018.10- | CVT | F | R | SUV FWD M20A-FKS | | GDS56300 | Drive Shaft | | 26 | 24 | 55.6 | 95.5 | 963 | |
| | 2018.10- | CVT | F | L/R | SUV FWD M20A-FKS | | GCO59340 | Outer Joint | | 26 | 25 | 55.6 | 95.5 | 57 | I |
| | 2018.10- | CVT | F | L | SUV FWD M20A-FKS | | GCI83357 | Inner Joint | | 24 | 25 | 50 | 67 | 108 | |
| | 2018.10- | CVT | F | R | SUV FWD M20A-FKS | | GCI83232 | Inner Joint | | 24 | 25 | 40 | 98 | 93 | |
| 2.0 (126 kw) | 2018.10- | CVT | F | L | SUV FWD M20A-FKS | | GDS56972 | Drive Shaft | | 26 | 24 | 55.6 | 95.5 | 660 | |
| | 2018.10- | CVT | F | R | SUV FWD M20A-FKS | | GDS56300 | Drive Shaft | | 26 | 24 | 55.6 | 95.5 | 963 | |
| | 2018.10- | CVT | F | L/R | SUV FWD M20A-FKS | | GCO59340 | Outer Joint | | 26 | 25 | 55.6 | 95.5 | 57 | I |
| | 2018.10- | CVT | F | L | SUV FWD M20A-FKS | | GCI83357 | Inner Joint | | 24 | 25 | 50 | 67 | 108 | |
| | 2018.10- | CVT | F | R | SUV FWD M20A-FKS | | GCI83232 | Inner Joint | | 24 | 25 | 40 | 98 | 93 | |
| 2.0 (127 kw) | 2019.01- | CVT | F | L | SUV FWD M20A-FKS | | GDS56972 | Drive Shaft | | 26 | 24 | 55.6 | 95.5 | 660 | |
| | 2019.01- | CVT | F | R | SUV FWD M20A-FKS | | GDS56300 | Drive Shaft | | 26 | 24 | 55.6 | 95.5 | 963 | |
| | 2019.01- | CVT | F | L/R | SUV FWD M20A-FKS | | GCO59340 | Outer Joint | | 26 | 25 | 55.6 | 95.5 | 57 | I |
| | 2019.01- | CVT | F | L | SUV FWD M20A-FKS | | GCI83357 | Inner Joint | | 24 | 25 | 50 | 67 | 108 | |
| | 2019.01- | CVT | F | R | SUV FWD M20A-FKS | | GCI83232 | Inner Joint | | 24 | 25 | 40 | 98 | 93 | |
| **UX 250h** | | | | | | | | | | | | | | | |
| 2.0 (131 kw) | 2018.10- | CVT | F | L | SUV 4WD M20A-FXS | | GDS84370 | Drive Shaft | | 26 | 24 | 61.2 | 100 | 659 | |
| | 2018.10- | CVT | F | R | SUV 4WD M20A-FXS | | GDS84554 | Drive Shaft | | 26 | 24 | 61.2 | 100 | 967 | |
| | 2018.10- | CVT | F | L/R | SUV 4WD M20A-FXS | | GCO82798 | Outer Joint | | 26 | 27 | 61.2 | 100 | 59 | I |
| | 2018.10- | CVT | F | L | SUV 4WD M20A-FXS | | GCI82129 | Inner Joint | | 24 | 27 | 50 | 67 | 108 | |
| | 2018.10- | CVT | F | R | SUV 4WD M20A-FXS | | GCI82484 | Inner Joint | | 24 | 27 | 40 | 368.5 | 105 | |
| | 2018.10- | CVT | R | L/R | SUV 4WD M20A-FXS | | GDS56358 | Drive Shaft | | 26 | | 52 | 99.5 | 604 | |
| | 2018.10- | CVT | R | L/R | SUV 4WD M20A-FXS | | GCO82771 | Outer Joint | | 26 | 19 | 52 | 99.5 | 46 | I |
| | 2018.10- | CVT | R | L/R | SUV 4WD M20A-FXS | | GCI59203 | Inner Joint | | | 20 | | | 83 | |
| | 2018.10- | CVT | F | L | SUV FWD M20A-FXS | | GDS84370 | Drive Shaft | | 26 | 24 | 61.2 | 100 | 659 | |
| | 2018.10- | CVT | F | R | SUV FWD M20A-FXS | | GDS84554 | Drive Shaft | | 26 | 24 | 61.2 | 100 | 967 | |
| | 2018.10- | CVT | F | L | SUV FWD M20A-FXS | | GCO82798 | Outer Joint | | 26 | 27 | 61.2 | 100 | 59 | I |
| | 2018.10- | CVT | F | L | SUV FWD M20A-FXS | | GCI82129 | Inner Joint | | 24 | 27 | 50 | 67 | 108 | |
| | 2018.10- | CVT | F | R | SUV FWD M20A-FXS | | GCI82484 | Inner Joint | | 24 | 27 | 40 | 368.5 | 105 | |

| | YEAR | TRANSM. | F/R | L/R | BODY STYLE & DRIVE TYPE & ENGINE | REMARKS | G-AP Ref. | PRODUCT | ABS | Technical Specifications A | B | C | H | L | P |
|---|---|---|---|---|---|---|---|---|---|---|---|---|---|---|---|
| **LEXUS** | | | | | | | | | | | | | | | |
| **UX 250h** | | | | | | | | | | | | | | | |
| 2.0 (135 kw) | 2018.10- | CVT | F | L | SUV 4WD M20A-FXS | | GDS84370 | Drive Shaft | | 26 | 24 | 61.2 | 100 | 659 | |
| | 2018.10- | CVT | F | R | SUV 4WD M20A-FXS | | GDS84554 | Drive Shaft | | 26 | 24 | 61.2 | 100 | 967 | |
| | 2018.10- | CVT | F | L/R | SUV 4WD M20A-FXS | | GCO82798 | Outer Joint | | 26 | 27 | 61.2 | 100 | 59 | I |
| | 2018.10- | CVT | F | L | SUV 4WD M20A-FXS | | GCI82129 | Inner Joint | | 24 | 27 | 50 | 67 | 108 | |
| | 2018.10- | CVT | F | R | SUV 4WD M20A-FXS | | GCI82484 | Inner Joint | | 24 | 27 | 40 | 368.5 | 105 | |
| | 2018.10- | CVT | R | L/R | SUV 4WD M20A-FXS | | GDS56358 | Drive Shaft | | 26 | | 52 | 99.5 | 604 | |
| | 2018.10- | CVT | R | L/R | SUV 4WD M20A-FXS | | GCO82771 | Outer Joint | | 26 | 19 | 52 | 99.5 | 46 | I |
| | 2018.10- | CVT | R | L/R | SUV 4WD M20A-FXS | | GCI59203 | Inner Joint | | | 20 | | | 83 | |
| | 2018.10- | CVT | F | L | SUV FWD M20A-FXS | | GDS84370 | Drive Shaft | | 26 | 24 | 61.2 | 100 | 659 | |
| | 2018.10- | CVT | F | R | SUV FWD M20A-FXS | | GDS84554 | Drive Shaft | | 26 | 24 | 61.2 | 100 | 967 | |
| | 2018.10- | CVT | F | L/R | SUV FWD M20A-FXS | | GCO82798 | Outer Joint | | 26 | 27 | 61.2 | 100 | 59 | I |
| | 2018.10- | CVT | F | L | SUV FWD M20A-FXS | | GCI82129 | Inner Joint | | 24 | 27 | 50 | 67 | 108 | |
| | 2018.10- | CVT | F | R | SUV FWD M20A-FXS | | GCI82484 | Inner Joint | | 24 | 27 | 40 | 368.5 | 105 | |
| **UX 300h** | | | | | | | | | | | | | | | |
| 2.0 (146 kw) | 2024.02- | | R | L/R | SUV 4WD M20A-FXS | | GCI59203 | Inner Joint | | | 20 | | | 83 | |
| **LIFAN** | | | | | | | | | | | | | | | |
| **320/Smily** | | | | | | | | | | | | | | | |
| 1.3 (65 kw) | 2008.12-2015.12 | CVT/5MT | F | L/R | Hatchback FWD LF479Q3 | Model year from:2011,Model year to:2012 | GCO14014 | Outer Joint | | 24 | 21 | 54 | 92 | 47.5 | M |
| **330** | | | | | | | | | | | | | | | |
| 1.3 (67 kw) | 2014.01- | 5MT | F | L/R | Hatchback FWD LF479Q3-B | Model year to:2015 | GCO14013 | Outer Joint | | 24 | 21 | 54 | 92 | 50 | M |
| **520** | | | | | | | | | | | | | | | |
| 1.5 (69 kw) | 2006.04-2015.12 | 5MT | F | L/R | Saloon FWD LF479Q2 | Model year from:2011,Model year to:2013 | GCO10058 | Outer Joint | 29T | 25 | 30 | 59 | 79 | 61 | I |
| **520/Breez** | | | | | | | | | | | | | | | |
| 1.3 (65 kw) | 2006.04- | 5MT | F | L/R | Hatchback FWD LF479Q3 | Model year from:2008,Model year to:2013 | GCO10058 | Outer Joint | 29T | 25 | 30 | 59 | 79 | 61 | I |
| | 2006.07-2015.12 | 5MT | F | L/R | Saloon FWD LF479Q1, LF479Q3, LF479Q4 | Model year to:2012 | GCO10058 | Outer Joint | 29T | 25 | 30 | 59 | 79 | 61 | I |
| 1.6 (78 kw) | 2006.04- | 5MT | F | L/R | Hatchback FWD LF481Q3 | Model year from:2008,Model year to:2009 | GCO10058 | Outer Joint | 29T | 25 | 30 | 59 | 79 | 61 | I |
| | 2006.04-2012.12 | 5MT | F | L/R | Saloon FWD LF481Q3 | Model year from:2007,Model year to:2009 | GCO10058 | Outer Joint | 29T | 25 | 30 | 59 | 79 | 61 | I |
| **520i** | | | | | | | | | | | | | | | |
| 1.3 (69 kw) | 2007.01- | 5MT | F | L/R | Hatchback FWD LF479Q3B | Model year from:2012,Model year to:2013 | GCO10058 | Outer Joint | 29T | 25 | 30 | 59 | 79 | 61 | I |
| **620** | | | | | | | | | | | | | | | |
| 1.6 (78 kw) | 2008.06-2016.12 | 5MT/CVT | F | R | Saloon FWD LF481Q3 | *Transmission:5MT,Model year to:2012;Transmission:CVT,Model year from:2009,Model year to:2013 | GDS81134 | Drive Shaft | 48T | 26 | 25 | 55.3 | 100.5 | 956 | |
| **X60** | | | | | | | | | | | | | | | |
| 1.8 (98 kw) | 2011.01-2020.12 | 5MT | F | L | SUV FWD LFB479Q | Model year to:2015 | GDS14075 | Drive Shaft | 48T | 26 | 25 | 55.3 | 100.5 | 622 | |
| | 2011.01-2020.12 | 5MT | F | R | SUV FWD LFB479Q | Model year to:2015 | GDS81134 | Drive Shaft | 48T | 26 | 25 | 55.3 | 100.5 | 956 | |
| **LINCOLN** | | | | | | | | | | | | | | | |
| **MKC** | | | | | | | | | | | | | | | |
| 2.0 (149 kw) | 2014.10- | 6AT | F | L/R | SUV 4WD TPWA | Model year from:2014,Model year to:2015 | GCO82141 | Outer Joint | | 27 | 27 | 63.5 | 96 | 65 | I |
| | 2014.10- | 6AT | F | L/R | SUV FWD TPWA | Model year from:2014,Model year to:2015 | GCO82141 | Outer Joint | | 27 | 27 | 63.5 | 96 | 65 | I |
| 2.0 (186 kw) | 2014.10- | 6AT | F | L/R | SUV 4WD TPWA | Model year from:2016,Model year to:2017 | GCO82141 | Outer Joint | | 27 | 27 | 63.5 | 96 | 65 | I |
| 2.3 (210 kw) | 2016.11- | 6AT | F | L/R | SUV 4WD T23HD0D | Model year for:2016 | GCO82141 | Outer Joint | | 27 | 27 | 63.5 | 96 | 65 | I |
| **LIVAN AUTO** | | | | | | | | | | | | | | | |
| **X6 Pro** | | | | | | | | | | | | | | | |
| 1.5 (128 kw) | 2024.12- | AT | F | L | SUV FWD BHE15 | | GDS57919 | Drive Shaft | 48T | 26 | 28 | 58 | 86 | 629 | |
| | 2024.12- | AT | F | R | SUV FWD BHE15 | | GDS57918 | Drive Shaft | 48T | 26 | 28 | 58 | 86 | 977 | |
| | 2024.12- | AT | F | L/R | SUV FWD BHE15 | | GCO83786 | Outer Joint | 48T | 26 | 25 | 58 | 86 | 63 | I |
| | 2024.12- | AT | F | L | SUV FWD BHE15 | | GCI83922 | Inner Joint | | 28 | 33 | 33 | 64 | 101 | |
| | 2024.12- | AT | F | R | SUV FWD BHE15 | | GCI83921 | Inner Joint | | 28 | 33 | 33 | 421.5 | 100.5 | |
| **LIXIANG** | | | | | | | | | | | | | | | |
| **L7** | | | | | | | | | | | | | | | |
| 1.5 (330 kw) | 2022.09- | ET | F | L | SUV 4WD L2E15M, TZ180XS008, TZ180XS118, TZ210XY0P1, TZ220XS066 | for Engine Code:L2E15M | GDS58261 | Drive Shaft | | 30 | 37 | 58 | 105.5 | 752 | |
| | 2022.09- | ET | F | R | SUV 4WD L2E15M, TZ180XS008, TZ180XS118, TZ210XY0P1, TZ220XS066 | for Engine Code:L2E15M | GDS58262 | Drive Shaft | | 30 | 37 | 58 | 105.5 | 1026 | |
| | 2022.09- | ET | F | L | SUV 4WD L2E15M, TZ180XS008, TZ180XS118, TZ210XY0P1, TZ220XS066 | for Engine Code:L2E15M | GCI84049 | Inner Joint | | 37 | 32 | 42 | 54.5 | 126 | |
| | 2022.09- | ET | F | R | SUV 4WD L2E15M, TZ180XS008, TZ180XS118, TZ210XY0P1, TZ220XS066 | for Engine Code:L2E15M | GCI84050 | Inner Joint | | 37 | 32 | 31 | 350 | 104 | |
| **L8** | | | | | | | | | | | | | | | |
| 1.5 (330 kw) | 2022.09- | ET | F | R | SUV 4WD L2E15M, TZ180XS008, TZ220XS066 | for Engine Code:L2E15M | GDS58262 | Drive Shaft | | 30 | 37 | 58 | 105.5 | 1026 | |
| | 2022.09- | ET | F | R | SUV 4WD L2E15M, TZ180XS008, TZ220XS066 | for Engine Code:L2E15M | GCI84050 | Inner Joint | | 37 | 32 | 31 | 350 | 104 | |
| **LOTUS** | | | | | | | | | | | | | | | |
| **Elise** | | | | | | | | | | | | | | | |
| 1.8 (88 kw) | 1995.08-2000.08 | | R | | Cabriolet RWD 18K4F | | GCO99242 | Outer Joint | 42T | 25 | 22 | 50 | 82 | 56 | I |
| **LUXGEN** | | | | | | | | | | | | | | | |
| **Luxgen U6** | | | | | | | | | | | | | | | |
| 1.8 (116 kw) | 2014.06-2015.06 | 5AT | F | L | SUV FWD G18TE | | GCI51029 | Inner Joint | | 27 | 24 | 41 | 62 | 91 | |

| | YEAR | TRANSM. | F/R | L/R | BODY STYLE & DRIVE TYPE & ENGINE | REMARKS | G-AP Ref. | PRODUCT | ABS | Technical Specifications A | B | C | H | L | P |
|---|---|---|---|---|---|---|---|---|---|---|---|---|---|---|---|
| **LYNK & CO** | | | | | | | | | | | | | | | |
| **02** | | | | | | | | | | | | | | | |
| 2.0 (140 kw) | 2018.06- | 7DCT | F | L | SUV FWD B4204T30, JLH-4G20TD | Date from:2021.07,Date to:2022.12 | GDS57588 | Drive Shaft | | 36 | 28 | 56 | 90 | 638 | |
| | 2018.06- | 7DCT | F | L/R | SUV FWD B4204T30, JLH-4G20TD | Date from:2021.07,Date to:2022.12 | GCO83635 | Outer Joint | | 36 | 26 | 56 | 90 | 63.5 | I |
| | 2018.06- | 7DCT | F | L | SUV FWD B4204T30, JLH-4G20TD | Date from:2021.07,Date to:2022.12 | GCI83761 | Inner Joint | | 28 | 26 | 33 | 67 | 101.5 | |
| | 2022.03- | 7DCT | F | L | Hatchback FWD JLH-4G20TD | Date to:2022.12 | GDS57588 | Drive Shaft | | 36 | 28 | 56 | 90 | 638 | |
| | 2022.03- | 7DCT | F | L/R | Hatchback FWD JLH-4G20TD | Date to:2022.12 | GCO83635 | Outer Joint | | 36 | 26 | 56 | 90 | 63.5 | I |
| | 2022.03- | 7DCT | F | L | Hatchback FWD JLH-4G20TD | Date to:2022.12 | GCI83761 | Inner Joint | | 28 | 26 | 33 | 67 | 101.5 | |
| **03** | | | | | | | | | | | | | | | |
| 2.0 (140 kw) | 2019.04- | 7DCT | F | L | Saloon FWD B4204T30, JLH-4G20TD | Date from:2021.07,Date to:2022.08 | GDS57588 | Drive Shaft | | 36 | 28 | 56 | 90 | 638 | |
| | 2019.04- | 7DCT | F | L/R | Saloon FWD B4204T30, JLH-4G20TD | Date from:2021.07,Date to:2022.08 | GCO83635 | Outer Joint | | 36 | 26 | 56 | 90 | 63.5 | I |
| | 2019.04- | 7DCT | F | L | Saloon FWD B4204T30, JLH-4G20TD | Date from:2021.07,Date to:2022.08 | GCI83761 | Inner Joint | | 28 | 26 | 33 | 67 | 101.5 | |
| 2.0 (187 kw) | 2022.09- | 7DCT | F | L | Saloon FWD JLH-4G20TDC | | GDS57588 | Drive Shaft | | 36 | 28 | 56 | 90 | 638 | |
| | 2022.09- | 7DCT | F | L/R | Saloon FWD JLH-4G20TDC | | GCO83635 | Outer Joint | | 36 | 26 | 56 | 90 | 63.5 | I |
| | 2022.09- | 7DCT | F | L | Saloon FWD JLH-4G20TDC | | GCI83761 | Inner Joint | | 28 | 26 | 33 | 67 | 101.5 | |
| 2.0 (257 kw) | 2023.10- | 8AMT | F | L | Saloon FWD B4204L43 | | GDS57588 | Drive Shaft | | 36 | 28 | 56 | 90 | 638 | |
| | 2023.10- | 8AMT | F | L/R | Saloon FWD B4204L43 | | GCO83635 | Outer Joint | | 36 | 26 | 56 | 90 | 63.5 | I |
| | 2023.10- | 8AMT | F | L | Saloon FWD B4204L43 | | GCI83761 | Inner Joint | | 28 | 26 | 33 | 67 | 101.5 | |
| **05** | | | | | | | | | | | | | | | |
| 1.5 (132 kw) | 2021.05- | 7DCT | F | L | SUV FWD JLH3G15TD | Model year from:2021,Model year to:2022 | GDS57588 | Drive Shaft | | 36 | 28 | 56 | 90 | 638 | |
| | 2021.05- | 7DCT | F | R | SUV FWD JLH3G15TD | Model year from:2021,Model year to:2022 | GDS57587 | Drive Shaft | | 36 | 28 | 56 | 90 | 993 | |
| | 2021.05- | 7DCT | F | L/R | SUV FWD JLH3G15TD | Model year from:2021,Model year to:2022 | GCO83635 | Outer Joint | | 36 | 26 | 56 | 90 | 63.5 | I |
| | 2021.05- | 7DCT | F | L | SUV FWD JLH3G15TD | Model year from:2021,Model year to:2022 | GCI83761 | Inner Joint | | 28 | 26 | 33 | 67 | 101.5 | |
| | 2021.05- | 7DCT | F | R | SUV FWD JLH3G15TD | Model year from:2021,Model year to:2022 | GCI83760 | Inner Joint | | 28 | 26 | 33 | 423.5 | 101 | |
| **MAN** | | | | | | | | | | | | | | | |
| **TGE** | | | | | | | | | | | | | | | |
| 2.0 (75 kw) | 2016.11-2024.06 | 6MT | F | R | Platform/Chassis FWD DAUB, DNAD | Date to:2022.06,Model code:U* | GDS83935 | Drive Shaft | | 44 | 42 | 72.4 | 109.5 | 1089 | |
| | 2017.02-2024.06 | 6MT | F | R | Bus FWD DAUB, DNAD | Date to:2022.06,Model code:U* | GDS83935 | Drive Shaft | | 44 | 42 | 72.4 | 109.5 | 1089 | |
| | 2017.02-2024.06 | 6MT | F | R | Van FWD DAUB, DNAD | Date to:2022.06,Model code:U* | GDS83935 | Drive Shaft | | 44 | 42 | 72.4 | 109.5 | 1089 | |
| 2.0 (103 kw) | 2016.11- | 6MT | F | L | Platform/Chassis FWD DAUA, DMZE, DNAE | Date from:2017.04,Model code:U* | GDS83938 | Drive Shaft | | 44 | 42 | 72.4 | 109.5 | 722 | |
| | 2016.11- | 8AT | F | L | Platform/Chassis FWD DAUA, DMZE, DNAE | | GDS83937 | Drive Shaft | | 44 | 42 | 72.4 | 109.5 | 707 | |
| | 2016.11- | 8AT/6MT | F | R | Platform/Chassis FWD DAUA, DMZE, DNAE | Transmission:6MT,Date to:2022.06;Transmission:8AT,Date to:2022.11 | GDS83935 | Drive Shaft | | 44 | 42 | 72.4 | 109.5 | 1089 | |
| | 2016.11- | 8AT/6MT | F | L/R | Platform/Chassis FWD DAUA, DMZE, DNAE | | GCO82542 | Outer Joint | | 44 | 31 | 72.4 | 109.5 | 65.5 | I |
| | 2016.11- | 8AT/6MT | F | L | Platform/Chassis FWD DAUA, DMZE, DNAE | | GCI82429 | Inner Joint | | 42 | 29 | | 67.5 | 100 | |
| | 2016.11- | 8AT/6MT | F | R | Platform/Chassis FWD DAUA, DMZE, DNAE | Transmission:6MT,Date to:2022.06;Transmission:8AT,Date to:2022.11 | GCI82446 | Inner Joint | | 42 | 29 | 36.5 | 421.5 | 106.5 | |
| | 2017.02- | 6MT | F | L | Bus 4WD DAUA, DNAE | Model code:U* | GDS83938 | Drive Shaft | | 44 | 42 | 72.4 | 109.5 | 722 | |
| | 2017.02- | 6MT | F | R | Bus 4WD DAUA, DNAE | Date to:2022.11;Model code:*V | GDS83935 | Drive Shaft | | 44 | 42 | 72.4 | 109.5 | 1089 | |
| | 2017.02- | 6MT | F | R | Bus 4WD DAUA, DNAE | Model code:U* | GDS83936 | Drive Shaft | | 44 | 26 | 72.4 | 109.5 | 687 | |
| | 2017.02- | 6MT | F | L/R | Bus 4WD DAUA, DNAE | | GCO82542 | Outer Joint | | 44 | 31 | 72.4 | 109.5 | 65.5 | I |
| | 2017.02- | 6MT | F | L | Bus 4WD DAUA, DNAE | Model code:U* | GCI82429 | Inner Joint | | 42 | 29 | | 67.5 | 100 | |
| | 2017.02- | 6MT | F | R | Bus 4WD DAUA, DNAE | Model code:U* | GCI82428 | Inner Joint | | 26 | 29 | 47 | 39.5 | 100 | |
| | 2017.02- | 6MT | F | R | Bus 4WD DAUA, DNAE | Date to:2022.11;Model code:*V | GCI82446 | Inner Joint | | 42 | 29 | 36.5 | 421.5 | 106.5 | |
| | 2017.02- | 6MT | F | L | Bus FWD DAUA, DNAE | Date from:2017.04,Model code:U* | GDS83938 | Drive Shaft | | 44 | 42 | 72.4 | 109.5 | 722 | |
| | 2017.02- | 8AT | F | L | Bus FWD DAUA, DNAE | | GDS83937 | Drive Shaft | | 44 | 42 | 72.4 | 109.5 | 707 | |
| | 2017.02- | 8AT/6MT | F | R | Bus FWD DAUA, DNAE | Transmission:6MT,Date to:2022.06;Transmission:8AT,Date to:2022.11 | GDS83935 | Drive Shaft | | 44 | 42 | 72.4 | 109.5 | 1089 | |
| | 2017.02- | 8AT/6MT | F | L/R | Bus FWD DAUA, DNAE | | GCO82542 | Outer Joint | | 44 | 31 | 72.4 | 109.5 | 65.5 | I |
| | 2017.02- | 8AT/6MT | F | L | Bus FWD DAUA, DNAE | | GCI82429 | Inner Joint | | 42 | 29 | | 67.5 | 100 | |
| | 2017.02- | 8AT/6MT | F | R | Bus FWD DAUA, DNAE | Transmission:6MT,Date to:2022.06;Transmission:8AT,Date to:2022.11 | GCI82446 | Inner Joint | | 42 | 29 | 36.5 | 421.5 | 106.5 | |
| | 2017.02- | 6MT | F | L | Van FWD DAUA, DMZE, DNAE | Date from:2017.04,Model code:U* | GDS83938 | Drive Shaft | | 44 | 42 | 72.4 | 109.5 | 722 | |
| | 2017.02- | 8AT | F | L | Van FWD DAUA, DMZE, DNAE | | GDS83937 | Drive Shaft | | 44 | 42 | 72.4 | 109.5 | 707 | |
| | 2017.02- | 8AT/6MT | F | R | Van FWD DAUA, DMZE, DNAE | Transmission:6MT,Date to:2022.06;Transmission:8AT,Date to:2022.11 | GDS83935 | Drive Shaft | | 44 | 42 | 72.4 | 109.5 | 1089 | |
| | 2017.02- | 8AT/6MT | F | L/R | Van FWD DAUA, DMZE, DNAE | | GCO82542 | Outer Joint | | 44 | 31 | 72.4 | 109.5 | 65.5 | I |
| | 2017.02- | 8AT/6MT | F | L | Van FWD DAUA, DMZE, DNAE | | GCI82429 | Inner Joint | | 42 | 29 | | 67.5 | 100 | |
| | 2017.02- | 8AT/6MT | F | R | Van FWD DAUA, DMZE, DNAE | Transmission:6MT,Date to:2022.06;Transmission:8AT,Date to:2022.11 | GCI82446 | Inner Joint | | 42 | 29 | 36.5 | 421.5 | 106.5 | |
| | 2017.04- | 6MT | F | L | Van 4WD DAUA, DMZE, DNAE | Model code:U* | GDS83938 | Drive Shaft | | 44 | 42 | 72.4 | 109.5 | 722 | |
| | 2017.04- | 6MT | F | R | Van 4WD DAUA, DMZE, DNAE | Date to:2022.11;Model code:*V | GDS83935 | Drive Shaft | | 44 | 42 | 72.4 | 109.5 | 1089 | |
| | 2017.04- | 6MT | F | R | Van 4WD DAUA, DMZE, DNAE | Model code:U* | GDS83936 | Drive Shaft | | 44 | 26 | 72.4 | 109.5 | 687 | |
| | 2017.04- | 6MT | F | L/R | Van 4WD DAUA, DMZE, DNAE | | GCO82542 | Outer Joint | | 44 | 31 | 72.4 | 109.5 | 65.5 | I |
| | 2017.04- | 6MT | F | L | Van 4WD DAUA, DMZE, DNAE | Model code:U* | GCI82429 | Inner Joint | | 42 | 29 | | 67.5 | 100 | |
| | 2017.04- | 6MT | F | R | Van 4WD DAUA, DMZE, DNAE | Model code:U* | GCI82428 | Inner Joint | | 26 | 29 | 47 | 39.5 | 100 | |
| | 2017.04- | 6MT | F | R | Van 4WD DAUA, DMZE, DNAE | Date to:2022.11;Model code:*V | GCI82446 | Inner Joint | | 42 | 29 | 36.5 | 421.5 | 106.5 | |
| | 2017.11- | 6MT | F | L | Platform/Chassis 4WD DAUA, DMZE, DNAE | Model code:U* | GDS83938 | Drive Shaft | | 44 | 42 | 72.4 | 109.5 | 722 | |
| | 2017.11- | 6MT | F | R | Platform/Chassis 4WD DAUA, DMZE, DNAE | Date to:2022.11;Model code:*V | GDS83935 | Drive Shaft | | 44 | 42 | 72.4 | 109.5 | 1089 | |
| | 2017.11- | 6MT | F | R | Platform/Chassis 4WD DAUA, DMZE, DNAE | Model code:U* | GDS83936 | Drive Shaft | | 44 | 26 | 72.4 | 109.5 | 687 | |
| | 2017.11- | 6MT | F | L/R | Platform/Chassis 4WD DAUA, DMZE, DNAE | | GCO82542 | Outer Joint | | 44 | 31 | 72.4 | 109.5 | 65.5 | I |
| | 2017.11- | 6MT | F | L | Platform/Chassis 4WD DAUA, DMZE, DNAE | Model code:U* | GCI82429 | Inner Joint | | 42 | 29 | | 67.5 | 100 | |
| | 2017.11- | 6MT | F | R | Platform/Chassis 4WD DAUA, DMZE, DNAE | Model code:U* | GCI82428 | Inner Joint | | 26 | 29 | 47 | 39.5 | 100 | |

| | YEAR | TRANSM. | F/R | L/R | BODY STYLE & DRIVE TYPE & ENGINE | REMARKS | G-AP Ref. | PRODUCT | ABS | Technical Specifications | | | | | |
|---|---|---|---|---|---|---|---|---|---|---|---|---|---|---|---|
| | | | | | | | | | | A | B | C | H | L | P |
| **MAN**<br>**TGE** | | | | | | | | | | | | | | | |
| 2.0 (103 kw) | 2017.11- | 6MT | F | R | Platform/Chassis 4WD DAUA, DMZE, DNAE | Date to:2022.11;Model code:*V | GCI82446 | Inner Joint | | 42 | 29 | 36.5 | 421.5 | 106.5 | |
| 2.0 (120 kw) | 2022.11- | 8AT | F | L | Platform/Chassis 4WD DMZD | | GDS83937 | Drive Shaft | | 44 | 42 | 72.4 | 109.5 | 707 | |
| | 2022.11- | 8AT/6MT | F | R | Platform/Chassis 4WD DMZD | Date to:2022.11,Model code:*V | GDS83935 | Drive Shaft | | 44 | 42 | 72.4 | 109.5 | 1089 | |
| | 2022.11- | 8AT/6MT | F | L/R | Platform/Chassis 4WD DMZD | | GCO82542 | Outer Joint | | 44 | 31 | 72.4 | 109.5 | 65.5 | I |
| | 2022.11- | 8AT/6MT | F | L | Platform/Chassis 4WD DMZD | | GCI82429 | Inner Joint | | 42 | 29 | | 67.5 | 100 | |
| | 2022.11- | 8AT/6MT | F | R | Platform/Chassis 4WD DMZD | Date to:2022.11 | GCI82446 | Inner Joint | | 42 | 29 | 36.5 | 421.5 | 106.5 | |
| | 2022.11- | 8AT | F | L | Platform/Chassis FWD DMZD | | GDS83937 | Drive Shaft | | 44 | 42 | 72.4 | 109.5 | 707 | |
| | 2022.11- | 8AT | F | R | Platform/Chassis FWD DMZD | Ex GF No. 2H0407372R,Date to 2022.11;For PR code:0SG7M4;Trans. code:Fu;Ex GF No. 6E0616682T,Date to 2022.11 | GDS83935 | Drive Shaft | | 44 | 42 | 72.4 | 109.5 | 1089 | |
| | 2022.11- | 8AT | F | R | Platform/Chassis FWD DMZD | Ex GF No. 2H0407372R,Date to 2022.11;For PR code:0SG7M4;Trans. code:Fu;Ex GF No. 6E0616682T,Date to 2022.11 | GCI82446 | Inner Joint | | 42 | 29 | 36.5 | 421.5 | 106.5 | |
| | 2022.11- | 8AT/6MT | F | L/R | Platform/Chassis FWD DMZD | | GCO82542 | Outer Joint | | 44 | 31 | 72.4 | 109.5 | 65.5 | I |
| | 2022.11- | 8AT/6MT | F | L | Platform/Chassis FWD DMZD | | GCI82429 | Inner Joint | | 42 | 29 | | 67.5 | 100 | |
| | 2022.11- | 8AT | F | L | Van 4WD DMZD | | GDS83937 | Drive Shaft | | 44 | 42 | 72.4 | 109.5 | 707 | |
| | 2022.11- | 8AT/6MT | F | R | Van 4WD DMZD | Date to:2022.11,Model code:*V | GDS83935 | Drive Shaft | | 44 | 42 | 72.4 | 109.5 | 1089 | |
| | 2022.11- | 8AT/6MT | F | L/R | Van 4WD DMZD | | GCO82542 | Outer Joint | | 44 | 31 | 72.4 | 109.5 | 65.5 | I |
| | 2022.11- | 8AT/6MT | F | L | Van 4WD DMZD | | GCI82429 | Inner Joint | | 42 | 29 | | 67.5 | 100 | |
| | 2022.11- | 8AT/6MT | F | R | Van 4WD DMZD | Date to:2022.11 | GCI82446 | Inner Joint | | 42 | 29 | 36.5 | 421.5 | 106.5 | |
| | 2022.11- | 8AT | F | L | Van FWD DMZD | | GDS83937 | Drive Shaft | | 44 | 42 | 72.4 | 109.5 | 707 | |
| | 2022.11- | 8AT | F | R | Van FWD DMZD | Ex GF No. 2H0407372R,Date to 2022.11;For PR code:0SG7M4;Trans. code:Fu;Ex GF No. 6E0616682T,Date to 2022.11 | GDS83935 | Drive Shaft | | 44 | 42 | 72.4 | 109.5 | 1089 | |
| | 2022.11- | 8AT | F | R | Van FWD DMZD | Ex GF No. 2H0407372R,Date to 2022.11;For PR code:0SG7M4;Trans. code:Fu;Ex GF No. 6E0616682T,Date to 2022.11 | GCI82446 | Inner Joint | | 42 | 29 | 36.5 | 421.5 | 106.5 | |
| | 2022.11- | 8AT/6MT | F | L/R | Van FWD DMZD | | GCO82542 | Outer Joint | | 44 | 31 | 72.4 | 109.5 | 65.5 | I |
| | 2022.11- | 8AT/6MT | F | L | Van FWD DMZD | | GCI82429 | Inner Joint | | 42 | 29 | | 67.5 | 100 | |
| 2.0 (130 kw) | 2016.11- | 6MT | F | L | Platform/Chassis FWD DMZB, DAVA | Date from:2017.04,Model code:U* | GDS83938 | Drive Shaft | | 44 | 42 | 72.4 | 109.5 | 722 | |
| | 2016.11- | 8AT | F | L | Platform/Chassis FWD DMZB, DAVA | | GDS83937 | Drive Shaft | | 44 | 42 | 72.4 | 109.5 | 707 | |
| | 2016.11- | 8AT/6MT | F | R | Platform/Chassis FWD DMZB, DAVA | Transmission:6MT,Date to:2022.06;Transmission:8AT,Date to:2022.11 | GDS83935 | Drive Shaft | | 44 | 42 | 72.4 | 109.5 | 1089 | |
| | 2016.11- | 8AT/6MT | F | L/R | Platform/Chassis FWD DMZB, DAVA | | GCO82542 | Outer Joint | | 44 | 31 | 72.4 | 109.5 | 65.5 | I |
| | 2016.11- | 8AT/6MT | F | L | Platform/Chassis FWD DMZB, DAVA | | GCI82429 | Inner Joint | | 42 | 29 | | 67.5 | 100 | |
| | 2016.11- | 8AT/6MT | F | R | Platform/Chassis FWD DMZB, DAVA | Transmission:6MT,Date to:2022.06;Transmission:8AT,Date to:2022.11 | GCI82446 | Inner Joint | | 42 | 29 | 36.5 | 421.5 | 106.5 | |
| | 2017.02- | 6MT | F | L | Bus 4WD DMZB, DAVA | Date from:2017.04,Model code:U* | GDS83938 | Drive Shaft | | 44 | 42 | 72.4 | 109.5 | 722 | |
| | 2017.02- | 8AT | F | L | Bus 4WD DMZB, DAVA | | GDS83937 | Drive Shaft | | 44 | 42 | 72.4 | 109.5 | 707 | |
| | 2017.02- | 8AT/6MT | F | R | Bus 4WD DMZB, DAVA | Transmission:6MT,Date to:2022.11;Transmission:8AT,Date to:2022.11;Model code:*V | GDS83935 | Drive Shaft | | 44 | 42 | 72.4 | 109.5 | 1089 | |
| | 2017.02- | 8AT/6MT | F | R | Bus 4WD DMZB, DAVA | Date from:2017.04,Model code:U* | GDS83936 | Drive Shaft | | 44 | 26 | 72.4 | 109.5 | 687 | |
| | 2017.02- | 8AT/6MT | F | L/R | Bus 4WD DMZB, DAVA | | GCO82542 | Outer Joint | | 44 | 31 | 72.4 | 109.5 | 65.5 | I |
| | 2017.02- | 8AT/6MT | F | L | Bus 4WD DMZB, DAVA | | GCI82429 | Inner Joint | | 42 | 29 | | 67.5 | 100 | |
| | 2017.02- | 8AT/6MT | F | R | Bus 4WD DMZB, DAVA | Model code:U* | GCI82428 | Inner Joint | | 26 | 29 | 47 | 39.5 | 100 | |
| | 2017.02- | 8AT/6MT | F | R | Bus 4WD DMZB, DAVA | Transmission:6MT,Date from:2017.04,Date to:2022.06;Transmission:8AT,Date to:2022.11;Model code:*V | GCI82446 | Inner Joint | | 42 | 29 | 36.5 | 421.5 | 106.5 | |
| | 2017.02- | 6MT | F | L | Bus FWD DMZB, DAVA | Date from:2017.04,Model code:U* | GDS83938 | Drive Shaft | | 44 | 42 | 72.4 | 109.5 | 722 | |
| | 2017.02- | 8AT | F | L | Bus FWD DMZB, DAVA | | GDS83937 | Drive Shaft | | 44 | 42 | 72.4 | 109.5 | 707 | |
| | 2017.02- | 8AT/6MT | F | R | Bus FWD DMZB, DAVA | Transmission:6MT,Date to:2022.06;Transmission:8AT,Date to:2022.11 | GDS83935 | Drive Shaft | | 44 | 42 | 72.4 | 109.5 | 1089 | |
| | 2017.02- | 8AT/6MT | F | L/R | Bus FWD DMZB, DAVA | | GCO82542 | Outer Joint | | 44 | 31 | 72.4 | 109.5 | 65.5 | I |
| | 2017.02- | 8AT/6MT | F | L | Bus FWD DMZB, DAVA | | GCI82429 | Inner Joint | | 42 | 29 | | 67.5 | 100 | |
| | 2017.02- | 8AT/6MT | F | R | Bus FWD DMZB, DAVA | Transmission:6MT,Date to:2022.06;Transmission:8AT,Date to:2022.11 | GCI82446 | Inner Joint | | 42 | 29 | 36.5 | 421.5 | 106.5 | |
| | 2017.02- | 6MT | F | L | Van FWD DMZB, DAVA | Date from:2017.04,Model code:U* | GDS83938 | Drive Shaft | | 44 | 42 | 72.4 | 109.5 | 722 | |
| | 2017.02- | 8AT | F | L | Van FWD DMZB, DAVA | | GDS83937 | Drive Shaft | | 44 | 42 | 72.4 | 109.5 | 707 | |
| | 2017.02- | 8AT/6MT | F | R | Van FWD DMZB, DAVA | Transmission:6MT,Date to:2022.06;Transmission:8AT,Date to:2022.11 | GDS83935 | Drive Shaft | | 44 | 42 | 72.4 | 109.5 | 1089 | |
| | 2017.02- | 8AT/6MT | F | L/R | Van FWD DMZB, DAVA | | GCO82542 | Outer Joint | | 44 | 31 | 72.4 | 109.5 | 65.5 | I |
| | 2017.02- | 8AT/6MT | F | L | Van FWD DMZB, DAVA | | GCI82429 | Inner Joint | | 42 | 29 | | 67.5 | 100 | |
| | 2017.02- | 8AT/6MT | F | R | Van FWD DMZB, DAVA | Transmission:6MT,Date to:2022.06;Transmission:8AT,Date to:2022.11 | GCI82446 | Inner Joint | | 42 | 29 | 36.5 | 421.5 | 106.5 | |
| | 2017.03- | 6MT | F | L | Van 4WD DMZB, DAVA | Date from:2017.04,Model code:U* | GDS83938 | Drive Shaft | | 44 | 42 | 72.4 | 109.5 | 722 | |
| | 2017.03- | 8AT | F | L | Van 4WD DMZB, DAVA | | GDS83937 | Drive Shaft | | 44 | 42 | 72.4 | 109.5 | 707 | |
| | 2017.03- | 8AT/6MT | F | R | Van 4WD DMZB, DAVA | Transmission:6MT,Date from:2017.04,Date to:2022.11;Transmission:8AT,Date to:2022.11;Model code:*V | GDS83935 | Drive Shaft | | 44 | 42 | 72.4 | 109.5 | 1089 | |
| | 2017.03- | 8AT/6MT | F | R | Van 4WD DMZB, DAVA | Date from:2017.04,Model code:U* | GDS83936 | Drive Shaft | | 44 | 26 | 72.4 | 109.5 | 687 | |
| | 2017.03- | 8AT/6MT | F | L/R | Van 4WD DMZB, DAVA | | GCO82542 | Outer Joint | | 44 | 31 | 72.4 | 109.5 | 65.5 | I |
| | 2017.03- | 8AT/6MT | F | L | Van 4WD DMZB, DAVA | | GCI82429 | Inner Joint | | 42 | 29 | | 67.5 | 100 | |
| | 2017.03- | 8AT/6MT | F | R | Van 4WD DMZB, DAVA | Model code:U* | GCI82428 | Inner Joint | | 26 | 29 | 47 | 39.5 | 100 | |
| | 2017.03- | 8AT/6MT | F | R | Van 4WD DMZB, DAVA | Transmission:6MT,Date from:2017.04,Date to:2022.06;Transmission:8AT,Date to:2022.11;Model code:*V | GCI82446 | Inner Joint | | 42 | 29 | 36.5 | 421.5 | 106.5 | |
| | 2017.11- | 6MT | F | L | Platform/Chassis 4WD DMZB, DAVA | Model code:U* | GDS83938 | Drive Shaft | | 44 | 42 | 72.4 | 109.5 | 722 | |
| | 2017.11- | 8AT | F | L | Platform/Chassis 4WD DMZB, DAVA | | GDS83937 | Drive Shaft | | 44 | 42 | 72.4 | 109.5 | 707 | |
| | 2017.11- | 8AT/6MT | F | R | Platform/Chassis 4WD DMZB, DAVA | Date to:2022.11;Model code:*V | GDS83935 | Drive Shaft | | 44 | 42 | 72.4 | 109.5 | 1089 | |
| | 2017.11- | 8AT/6MT | F | R | Platform/Chassis 4WD DMZB, DAVA | Model code:U* | GDS83936 | Drive Shaft | | 44 | 26 | 72.4 | 109.5 | 687 | |
| | 2017.11- | 8AT/6MT | F | L/R | Platform/Chassis 4WD DMZB, DAVA | | GCO82542 | Outer Joint | | 44 | 31 | 72.4 | 109.5 | 65.5 | I |
| | 2017.11- | 8AT/6MT | F | L | Platform/Chassis 4WD DMZB, DAVA | | GCI82429 | Inner Joint | | 42 | 29 | | 67.5 | 100 | |
| | 2017.11- | 8AT/6MT | F | R | Platform/Chassis 4WD DMZB, DAVA | Model code:U* | GCI82428 | Inner Joint | | 26 | 29 | 47 | 39.5 | 100 | |
| | 2017.11- | 8AT/6MT | F | R | Platform/Chassis 4WD DMZB, DAVA | Transmission:6MT,Date from:2017.04,Date to:2022.06;Transmission:8AT,Date to:2022.11;Model code:*V | GCI82446 | Inner Joint | | 42 | 29 | 36.5 | 421.5 | 106.5 | |
| EV (100 kw) | 2018.07- | ET | F | L | Van FWD EBHA | | GDS58367 | Drive Shaft | | 44 | 37 | 72.4 | 109.5 | 746 | |
| | 2018.07- | ET | F | R | Van FWD EBHA | | GDS58372 | Drive Shaft | | 44 | 37 | 72.4 | 109.5 | 1067 | |

| | YEAR | TRANSM. | F/R | L/R | BODY STYLE & DRIVE TYPE & ENGINE | REMARKS | G-AP Ref. | PRODUCT | ABS | Technical Specifications A | B | C | H | L | P |
|---|---|---|---|---|---|---|---|---|---|---|---|---|---|---|---|
| **MAN** | | | | | | | | | | | | | | | |
| **TGE** | | | | | | | | | | | | | | | |
| EV (100 kw) | 2018.07- | ET | F | L/R | Van FWD EBHA | | GCO83893 | Outer Joint | | 44 | 30 | 72.4 | 109.5 | 65.5 | I |
| | 2018.07- | ET | F | R | Van FWD EBHA | | GCI84088 | Inner Joint | | 37 | 27 | 34.5 | 401 | 96 | |
| **MAPLE (SMA)** | | | | | | | | | | | | | | | |
| **Haijing** | | | | | | | | | | | | | | | |
| 1.5 (78 kw) | 2009.11- | 5MT | F | L | Saloon FWD JL4G15D | Model year to:2012 | GCI14038 | Inner Joint | | 25 | 23 | 45 | 57.5 | 110.5 | |
| **MARUTI** | | | | | | | | | | | | | | | |
| **800** | | | | | | | | | | | | | | | |
| 0.8 (26 kw) | 1991.01-2006.12 | | F | | Hatchback FWD F8B | | GCO57053 | Outer Joint | | 23 | 18 | 44 | 92 | 48.5 | I |
| **MARUTI SUZUKI** | | | | | | | | | | | | | | | |
| **Kizashi** | | | | | | | | | | | | | | | |
| 2.4 (131 kw) | 2011.02-2014.06 | | F | L | Saloon FWD J24B | | GCO57207 | Outer Joint | | 31 | 33 | 58 | 92 | 64 | I |
| **MAXUS** | | | | | | | | | | | | | | | |
| **eDeliver 3** | | | | | | | | | | | | | | | |
| EV (90 kw) | 2020.07- | ET | F | L | Van FWD TZ200XSSQA/TZ204XS85K05 | | GDS56382 | Drive Shaft | 48T | 36 | 27 | 53 | 92.5 | 740 | |
| | 2020.07- | ET | F | R | Van FWD TZ200XSSQA/TZ204XS85K05 | | GDS56381 | Drive Shaft | 48T | 36 | 27 | 53 | 92.5 | 877 | |
| | 2020.07- | ET | F | L/R | Van FWD TZ200XSSQA/TZ204XS85K05 | | GCO83272 | Outer Joint | 48T | 36 | 24 | 53 | 92.5 | 62 | I |
| | 2020.07- | ET | F | L/R | Van FWD TZ200XSSQA/TZ204XS85K05 | | GCI83279 | Inner Joint | | 27 | 24 | 45 | 58.5 | 105 | |
| **MAZDA** | | | | | | | | | | | | | | | |
| **121** | | | | | | | | | | | | | | | |
| 1.2 (55 kw) | 1996.01-2002.10 | AT/MT | F | L | Hatchback FWD 1E05 | | GDS18040 | Drive Shaft | | 25 | 23 | 56.5 | 88.5 | 608 | |
| | 1996.01-2002.10 | AT/MT | F | R | Hatchback FWD 1E05 | | GDS18011 | Drive Shaft | | 25 | 25 | 55.5 | 88.5 | 813.5 | |
| | 1996.01-2002.10 | AT/MT | F | L/R | Hatchback FWD 1E05 | | GCO18004 | Outer Joint | | 25 | 22 | 56.5 | 88.5 | 53.5 | O |
| 1.3 (37 kw) | 1996.01-2002.10 | MT | F | L | Hatchback FWD 1E03 | | GDS18040 | Drive Shaft | | 25 | 23 | 56.5 | 88.5 | 608 | |
| | 1996.01-2002.10 | MT | F | R | Hatchback FWD 1E03 | | GDS18011 | Drive Shaft | | 25 | 25 | 55.5 | 88.5 | 813.5 | |
| | 1996.01-2002.10 | MT | F | L/R | Hatchback FWD 1E03 | Date to:2002.10 | GCO18012 | Outer Joint | | 25 | 20 | 56.5 | 88.5 | 49 | O |
| | 1996.01-2002.10 | | F | | Hatchback FWD 1E03 | | GCO34018 | Outer Joint | | 24 | 21 | 52 | 86 | 50 | M |
| 1.3 (39 kw) | 1990.11-1996.03 | AT | F | L/R | Saloon FWD B3C9 | inner teeth of wheel side:21 | GCO27003 | Outer Joint | | 24 | 21 | 52 | 86 | 54.5 | I |
| | 1990.11-1996.03 | AT | F | L | Saloon FWD B3C9 | | GCI18006 | Inner Joint | | 24 | 22 | 35 | 64 | 98.5 | |
| | 1990.11-1996.03 | MT | F | L/R | Saloon FWD B3C9 | inner teeth of wheel side:19 | GCO18030 | Outer Joint | | 24 | 19 | 52 | 86 | 50.5 | M |
| | 1990.11-1996.03 | MT | F | L/R | Saloon FWD B3C9 | | GCO34062 | Outer Joint | 44T | 24 | 19 | 52 | 86 | 54.5 | I |
| | 1990.11-1996.03 | | F | | Saloon FWD B3C9 | inner teeth of wheel side:19 | GCO18036 | Outer Joint | | 24 | 19 | 52 | 86 | 50 | M |
| | 1990.11-1996.03 | | F | | Saloon FWD B3C9 | inner teeth of wheel side:21 | GCO34003 | Outer Joint | | 24 | 21 | 52 | 86.5 | 53 | M |
| | 1990.11-1996.03 | | F | | Saloon FWD B3C9 | inner teeth of wheel side:21 | GCO34018 | Outer Joint | | 24 | 21 | 52 | 86 | 50 | M |
| 1.3 (44 kw) | 1996.03-2002.10 | AT/MT | F | L | Hatchback FWD 1E04/1E09 | | GDS18040 | Drive Shaft | | 25 | 23 | 56.5 | 88.5 | 608 | |
| | 1996.03-2002.10 | AT/MT | F | R | Hatchback FWD 1E04/1E09 | | GDS18011 | Drive Shaft | | 25 | 25 | 55.5 | 88.5 | 813.5 | |
| | 1996.03-2002.10 | MT | F | L/R | Hatchback FWD 1E04/1E09 | Date to:2002.10 | GCO18012 | Outer Joint | | 25 | 20 | 56.5 | 88.5 | 49 | O |
| | 1996.03-2002.10 | | F | | Hatchback FWD 1E04/1E09 | | GCO34018 | Outer Joint | | 24 | 21 | 52 | 86 | 50 | M |
| 1.3 (53 kw) | 1990.11-1996.03 | AT | F | L/R | Saloon FWD B3C9 | inner teeth of wheel side:21 | GCO27003 | Outer Joint | | 24 | 21 | 52 | 86 | 54.5 | I |
| | 1990.11-1996.03 | AT | F | L/R | Saloon FWD B3C9 | | GCO99232 | Outer Joint | 44T | 24 | 21 | 52 | 86.5 | 53 | I |
| | 1990.11-1996.03 | AT | F | | Saloon FWD B3C9 | inner teeth of wheel side:21 | GCO34003 | Outer Joint | | 24 | 21 | 52 | 86.5 | 53 | M |
| | 1990.11-1996.03 | AT | F | L | Saloon FWD B3C9 | | GCI18006 | Inner Joint | | 24 | 22 | 35 | 64 | 98.5 | |
| | 1990.11-1996.03 | MT | F | L/R | Saloon FWD B3C9 | inner teeth of wheel side:19 | GCO18030 | Outer Joint | | 24 | 19 | 52 | 86 | 50.5 | M |
| | 1990.11-1996.03 | MT | F | L/R | Saloon FWD B3C9 | Chassis no. from:DB_158063 | GCO18036 | Outer Joint | | 24 | 19 | 52 | 86 | 50 | M |
| | 1990.11-1996.03 | MT | F | L/R | Saloon FWD B3C9 | | GCO34062 | Outer Joint | 44T | 24 | 19 | 52 | 86 | 54.5 | I |
| | 1990.11-1996.03 | | F | L/R | Saloon FWD B3C9 | inner teeth of wheel side:20 | GCO18033 | Outer Joint | | 24 | 20 | 52 | 86 | 50.5 | M |
| | 1990.11-1996.03 | | F | | Saloon FWD B3C9 | inner teeth of wheel side:21 | GCO34018 | Outer Joint | | 24 | 21 | 52 | 86 | 50 | M |
| 1.8 (44 kw) | 1996.03-2002.10 | AT/MT | F | L | Hatchback FWD 1E07 | | GDS18040 | Drive Shaft | | 25 | 23 | 56.5 | 88.5 | 608 | |
| | 1996.03-2002.10 | AT/MT | F | R | Hatchback FWD 1E07 | | GDS18032 | Drive Shaft | | 25 | 23 | 56.5 | 88.5 | 900 | |
| | 1996.03-2002.10 | AT/MT | F | L/R | Hatchback FWD 1E07 | | GCO18004 | Outer Joint | | 25 | 22 | 56.5 | 88.5 | 53.5 | O |
| **2** | | | | | | | | | | | | | | | |
| 1.2 (55 kw) | 2003.04-2007.06 | MT | F | L | Hatchback FWD FUJA | | GDS18216 | Drive Shaft | | 25 | 23 | 53.3 | 90 | 621 | |
| | 2003.04-2007.06 | MT | F | R | Hatchback FWD FUJA | | GDS18201 | Drive Shaft | | 25 | 23 | 53.3 | 90 | 919 | |
| | 2003.04-2007.06 | | F | R | Hatchback FWD FUJA | | GCO18009 | Outer Joint | | 25 | 22 | 53.3 | 90 | 51 | M |
| 1.3 (55 kw) | 2007.10-2015.06 | 5MT | F | L | Hatchback FWD ZJ-VE;ZJ46 | | GDS57463 | Drive Shaft | | 25 | 24 | 54 | 89 | 635 | |
| | 2007.10-2015.06 | 5MT | F | R | Hatchback FWD ZJ-VE;ZJ46 | | GDS18324 | Drive Shaft | | 25 | 28 | 53.8 | 89 | 576 | |
| | 2007.10-2015.06 | 5MT | F | L/R | Hatchback FWD ZJ-VE;ZJ46 | | GCO83556 | Outer Joint | | 25 | 29 | 54 | 89 | 51 | I |
| | 2007.10-2015.06 | 5MT | F | L | Hatchback FWD ZJ-VE;ZJ46 | | GCI83681 | Inner Joint | | 24 | 29 | 35 | 64 | 78 | |
| | 2007.10-2015.06 | 5MT | F | R | Hatchback FWD ZJ-VE;ZJ46 | | GCI18141 | Inner Joint | | 28 | 29 | 43 | | 99 | |
| | 2011.05-2014.11 | 5MT | F | R | Hatchback FWD ZJ-46 | | GDS18324 | Drive Shaft | | 25 | 28 | 53.8 | 89 | 576 | |
| | 2011.05-2014.11 | 5MT | F | L/R | Hatchback FWD ZJ-46 | | GCO83556 | Outer Joint | | 25 | 29 | 54 | 89 | 51 | I |
| | 2011.05-2014.11 | 5MT | F | L | Hatchback FWD ZJ-46 | | GCI83681 | Inner Joint | | 24 | 29 | 35 | 64 | 78 | |
| | 2011.05-2014.11 | 5MT | F | R | Hatchback FWD ZJ-46 | | GCI18141 | Inner Joint | | 28 | 29 | 43 | | 99 | |
| | 2011.05-2014.11 | MT | F | L | Hatchback FWD ZJ-46 | | GDS57463 | Drive Shaft | | 25 | 24 | 54 | 89 | 635 | |
| 1.3 (62 kw) | 2010.01-2015.06 | 5MT | F | L | Hatchback FWD ZJ-VE;ZJ46 | | GDS57463 | Drive Shaft | | 25 | 24 | 54 | 89 | 635 | |
| | 2010.01-2015.06 | 5MT | F | R | Hatchback FWD ZJ-VE;ZJ46 | | GDS18324 | Drive Shaft | | 25 | 28 | 53.8 | 89 | 576 | |

| | YEAR | TRANSM. | F/R | L/R | BODY STYLE & DRIVE TYPE & ENGINE | REMARKS | G-AP Ref. | PRODUCT | ABS | Technical Specifications A | B | C | H | L | P |
|---|---|---|---|---|---|---|---|---|---|---|---|---|---|---|---|
| **MAZDA 2** | | | | | | | | | | | | | | | |
| 1.3 (62 kw) | 2010.01-2015.06 | 5MT | F | L/R | Hatchback FWD ZJ-VE;ZJ46 | | GCO83556 | Outer Joint | | 25 | 29 | 54 | 89 | 51 | I |
| | 2010.01-2015.06 | 5MT | F | L | Hatchback FWD ZJ-VE;ZJ46 | | GCI83681 | Inner Joint | | 24 | 29 | 35 | 64 | 78 | |
| | 2010.01-2015.06 | 5MT | F | R | Hatchback FWD ZJ-VE;ZJ46 | | GCI18141 | Inner Joint | | 28 | 29 | 43 | | 99 | |
| | 2011.05-2014.11 | 5MT | F | L | Hatchback FWD ZJ-46 | | GDS57463 | Drive Shaft | | 25 | 24 | 54 | 89 | 635 | |
| | 2011.05-2014.11 | 5MT | F | R | Hatchback FWD ZJ-46 | | GDS18324 | Drive Shaft | | 25 | 28 | 53.8 | 89 | 576 | |
| | 2011.05-2014.11 | 5MT | F | L/R | Hatchback FWD ZJ-46 | | GCO83556 | Outer Joint | | 25 | 29 | 54 | 89 | 51 | I |
| | 2011.05-2014.11 | 5MT | F | L | Hatchback FWD ZJ-46 | | GCI83681 | Inner Joint | | 24 | 29 | 35 | 64 | 78 | |
| | 2011.05-2014.11 | 5MT | F | R | Hatchback FWD ZJ-46 | | GCI18141 | Inner Joint | | 28 | 29 | 43 | | 99 | |
| 1.3 (63 kw) | 2007.10-2015.06 | 5MT | F | L | Hatchback FWD ZJ-VE;ZJ46 | | GDS57463 | Drive Shaft | | 25 | 24 | 54 | 89 | 635 | |
| | 2007.10-2015.06 | 5MT | F | R | Hatchback FWD ZJ-VE;ZJ46 | | GDS18324 | Drive Shaft | | 25 | 28 | 53.8 | 89 | 576 | |
| | 2007.10-2015.06 | 5MT | F | L/R | Hatchback FWD ZJ-VE;ZJ46 | | GCO83556 | Outer Joint | | 25 | 29 | 54 | 89 | 51 | I |
| | 2007.10-2015.06 | 5MT | F | R | Hatchback FWD ZJ-VE;ZJ46 | | GCI18141 | Inner Joint | | 28 | 29 | 43 | | 99 | |
| | 2007.10-2015.06 | MT | F | L | Hatchback FWD ZJ-VE;ZJ46 | | GCI83681 | Inner Joint | | 24 | 29 | 35 | 64 | 78 | |
| 1.3 (67 kw) | 2003.04-2007.06 | | F | R | Hatchback FWD ZJ-VE;ZJ-04 | | GCO18009 | Outer Joint | | 25 | 22 | 53.3 | 90 | 51 | M |
| 1.3 (68 kw) | 2014.11- | 6AT | F | L | Hatchback FWD P3-VPS | | GDS82097 | Drive Shaft | | 26 | 26 | 52 | 87 | 613 | |
| | 2014.11- | 6AT | F | L | Hatchback FWD P3-VPS | | GCO81406 | Outer Joint | | 26 | 21 | 52 | 87 | 54 | M |
| | 2014.11- | 6AT | F | L | Hatchback FWD P3-VPS | | GCI81621 | Inner Joint | | 26 | 20 | 35 | 65 | 98.5 | |
| 1.4 (50 kw) | 2003.04-2007.06 | MT | F | L | Hatchback FWD F6JA;F6JB | | GDS18216 | Drive Shaft | | 25 | 23 | 53.3 | 90 | 621 | |
| | 2003.04-2007.06 | MT | F | R | Hatchback FWD F6JA;F6JB | | GDS18201 | Drive Shaft | | 25 | 23 | 53.3 | 90 | 919 | |
| | 2003.04-2007.06 | MT | F | L/R | Hatchback FWD F6JA;F6JB | | GCO18001 | Outer Joint | | 25 | 20 | 52.9 | 89 | 52 | M |
| 1.4 (59 kw) | 2003.04-2007.06 | AT/MT | F | L/R | Hatchback FWD FXJA | | GCO18009 | Outer Joint | | 25 | 22 | 53.3 | 90 | 51 | M |
| | 2003.04-2007.06 | MT | F | L | Hatchback FWD FXJA | | GDS18216 | Drive Shaft | | 25 | 23 | 53.3 | 90 | 621 | |
| | 2003.04-2007.06 | MT | F | R | Hatchback FWD FXJA | | GDS18201 | Drive Shaft | | 25 | 23 | 53.3 | 90 | 919 | |
| 1.5 (55 kw) | 2014.08- | MT | F | L | Hatchback FWD P5Y5;P5Y8;P5X0;P5X2;P5Z7;P5Z8;P5Z9 | For right-hand drive vehicles | GDS82465 | Drive Shaft | | 26 | 26 | 52 | 87 | 635 | |
| | 2014.08- | MT | F | R | Hatchback FWD P5Y5;P5Y8;P5X0;P5X2;P5Z7;P5Z8;P5Z9 | For right-hand drive vehicles | GDS82466 | Drive Shaft | | 26 | 26 | 52 | 87 | 941 | |
| | 2014.08- | MT | F | R | Hatchback FWD P5Y5;P5Y8;P5X0;P5X2;P5Z7;P5Z8;P5Z9 | For right-hand drive vehicles | GCO81944 | Outer Joint | | 26 | 29 | 52 | 87 | 51.5 | I |
| | 2014.08- | MT | F | L | Hatchback FWD P5Y5;P5Y8;P5X0;P5X2;P5Z7;P5Z8;P5Z9 | For right-hand drive vehicles | GCI81834 | Inner Joint | | 26 | 29 | 35 | 65 | 88 | |
| | 2014.08- | MT | F | R | Hatchback FWD P5Y5;P5Y8;P5X0;P5X2;P5Z7;P5Z8;P5Z9 | For right-hand drive vehicles | GCI81835 | Inner Joint | | 26 | 29 | 35 | 358 | 75 | |
| 1.5 (66 kw) | 2014.08- | AT | F | L | Hatchback FWD P5Y5;P5Y8;P5Y6;P5X0;P5X2;P5Z7;P5Z8;P5Z9;P5Z2;P5Z1 | For left-hand drive vehicles | GDS82097 | Drive Shaft | | 26 | 26 | 52 | 87 | 613 | |
| | 2014.08- | AT | F | R | Hatchback FWD P5Y5;P5Y8;P5Y6;P5X0;P5X2;P5Z7;P5Z8;P5Z9;P5Z2;P5Z1 | For left-hand drive vehicles | GDS81576 | Drive Shaft | | 26 | 26 | 52 | 87 | 947 | |
| | 2014.08- | AT | F | L/R | Hatchback FWD P5Y5;P5Y8;P5Y6;P5X0;P5X2;P5Z7;P5Z8;P5Z9;P5Z2;P5Z1 | For left-hand drive vehicles | GCO81406 | Outer Joint | | 26 | 21 | 52 | 87 | 54 | M |
| | 2014.08- | AT | F | L | Hatchback FWD P5Y5;P5Y8;P5Y6;P5X0;P5X2;P5Z7;P5Z8;P5Z9;P5Z2;P5Z1 | Driver Pos:For left-hand drive vehicles | GCI81621 | Inner Joint | | 26 | 20 | 35 | 65 | 98.5 | |
| | 2014.08- | AT | F | R | Hatchback FWD P5Y5;P5Y8;P5Y6;P5X0;P5X2;P5Z7;P5Z8;P5Z9;P5Z2;P5Z1 | For left-hand drive vehicles | GCI81417 | Inner Joint | | 26 | 20 | 35 | 370.5 | 89.5 | |
| | 2014.08- | MT | F | L | Hatchback FWD P5Y5;P5Y8;P5Y6;P5X0;P5X2;P5Z7;P5Z8;P5Z9;P5Z2;P5Z1 | For right-hand drive vehicles | GDS82465 | Drive Shaft | | 26 | 26 | 52 | 87 | 635 | |
| | 2014.08- | MT | F | R | Hatchback FWD P5Y5;P5Y8;P5Y6;P5X0;P5X2;P5Z7;P5Z8;P5Z9;P5Z2;P5Z1 | For right-hand drive vehicles | GDS82466 | Drive Shaft | | 26 | 26 | 52 | 87 | 941 | |
| | 2014.08- | MT | F | R | Hatchback FWD P5Y5;P5Y8;P5Y6;P5X0;P5X2;P5Z7;P5Z8;P5Z9;P5Z2;P5Z1 | For right-hand drive vehicles | GCO81944 | Outer Joint | | 26 | 29 | 52 | 87 | 51.5 | I |
| | 2014.08- | MT | F | L | Hatchback FWD P5Y5;P5Y8;P5Y6;P5X0;P5X2;P5Z7;P5Z8;P5Z9;P5Z2;P5Z1 | For right-hand drive vehicles | GCI81834 | Inner Joint | | 26 | 29 | 35 | 65 | 88 | |
| | 2014.08- | MT | F | R | Hatchback FWD P5Y5;P5Y8;P5Y6;P5X0;P5X2;P5Z7;P5Z8;P5Z9;P5Z2;P5Z1 | For right-hand drive vehicles | GCI81835 | Inner Joint | | 26 | 29 | 35 | 358 | 75 | |
| 1.5 (75 kw) | 2011.06-2015.06 | 4AT | F | L | Hatchback FWD ZY-VE;ZY05;ZY66 | | GDS18473 | Drive Shaft | | 25 | 26 | 53.8 | 89 | 621 | |
| | 2011.06-2015.06 | AT | F | R | Hatchback FWD ZY-VE;ZY05;ZY66 | | GDS18424 | Drive Shaft | | 25 | 28 | 53.8 | 89 | 574 | |
| | 2011.06-2015.06 | AT | F | L/R | Hatchback FWD ZY-VE;ZY05;ZY66 | | GCO18223 | Outer Joint | | 25 | 29 | 53.8 | 89 | 51.5 | I |
| | 2011.06-2015.06 | AT | F | R | Hatchback FWD ZY-VE;ZY05;ZY66 | | GCI34022 | Inner Joint | | 28 | 29 | 43 | | 115 | |
| | 2011.06-2015.06 | MT | F | L | Hatchback FWD ZY-VE;ZY05;ZY66 | | GDS57463 | Drive Shaft | | 25 | 24 | 54 | 89 | 635 | |
| | 2011.06-2015.06 | MT | F | R | Hatchback FWD ZY-VE;ZY05;ZY66 | | GDS18324 | Drive Shaft | | 25 | 28 | 53.8 | 89 | 576 | |
| | 2011.06-2015.06 | MT | F | L/R | Hatchback FWD ZY-VE;ZY05;ZY66 | | GCO83556 | Outer Joint | | 25 | 29 | 54 | 89 | 51 | I |
| | 2011.06-2015.06 | MT | F | L | Hatchback FWD ZY-VE;ZY05;ZY66 | | GCI83681 | Inner Joint | | 24 | 29 | 35 | 64 | 78 | |
| | 2011.06-2015.06 | MT | F | R | Hatchback FWD ZY-VE;ZY05;ZY66 | | GCI18141 | Inner Joint | | 28 | 29 | 43 | | 99 | |
| 1.5 (76 kw) | 2007.07-2015.06 | 4AT | F | L | Hatchback FWD ZY-VE;ZY66;ZY84 | | GDS18473 | Drive Shaft | | 25 | 26 | 53.8 | 89 | 621 | |
| | 2007.07-2015.06 | AT | F | R | Hatchback FWD ZY-VE;ZY66;ZY84 | | GDS18424 | Drive Shaft | | 25 | 28 | 53.8 | 89 | 574 | |
| | 2007.07-2015.06 | AT | F | L/R | Hatchback FWD ZY-VE;ZY66;ZY84 | Date to:2008.06,Date from:2007.12,Chassis no. from:125223,Chassis no. to:180188 | GCO18223 | Outer Joint | | 25 | 29 | 53.8 | 89 | 51.5 | I |
| | 2007.07-2015.06 | AT | F | R | Hatchback FWD ZY-VE;ZY66;ZY84 | | GCI34022 | Inner Joint | | 28 | 29 | 43 | | 115 | |
| | 2007.07-2015.06 | MT | F | L | Hatchback FWD ZY-VE;ZY66;ZY84 | | GDS57463 | Drive Shaft | | 25 | 24 | 54 | 89 | 635 | |
| | 2007.07-2015.06 | MT | F | R | Hatchback FWD ZY-VE;ZY66;ZY84 | | GDS18324 | Drive Shaft | | 25 | 28 | 53.8 | 89 | 576 | |
| | 2007.07-2015.06 | MT | F | L/R | Hatchback FWD ZY-VE;ZY66;ZY84 | Date from:2007.12,Chassis no. from:125223 | GCO83556 | Outer Joint | | 25 | 29 | 54 | 89 | 51 | I |
| | 2007.07-2015.06 | MT | F | L | Hatchback FWD ZY-VE;ZY66;ZY84 | | GCI83681 | Inner Joint | | 24 | 29 | 35 | 64 | 78 | |
| | 2007.07-2015.06 | MT | F | R | Hatchback FWD ZY-VE;ZY66;ZY84 | | GCI18141 | Inner Joint | | 28 | 29 | 43 | | 99 | |
| | 2010.05-2014.11 | 4AT | F | L | Hatchback FWD | | GDS18473 | Drive Shaft | | 25 | 26 | 53.8 | 89 | 621 | |
| | 2010.05-2014.11 | 4AT | F | R | Hatchback FWD | | GDS18424 | Drive Shaft | | 25 | 28 | 53.8 | 89 | 574 | |
| | 2010.05-2014.11 | 4AT/5MT | F | L/R | Hatchback FWD | | GCO18223 | Outer Joint | | 25 | 29 | 53.8 | 89 | 51.5 | I |
| | 2010.05-2014.11 | 5MT | F | R | Hatchback FWD | | GDS18324 | Drive Shaft | | 25 | 28 | 53.8 | 89 | 576 | |
| | 2010.05-2014.11 | 5MT | F | R | Hatchback FWD | | GCI18141 | Inner Joint | | 28 | 29 | 43 | | 99 | |
| | 2010.05-2015.02 | 4AT | F | L | Saloon FWD | | GDS18473 | Drive Shaft | | 25 | 26 | 53.8 | 89 | 621 | |
| | 2010.05-2015.02 | 4AT | F | R | Saloon FWD | | GDS18424 | Drive Shaft | | 25 | 28 | 53.8 | 89 | 574 | |
| | 2010.05-2015.02 | 4AT/5MT | F | L/R | Saloon FWD | | GCO18223 | Outer Joint | | 25 | 29 | 53.8 | 89 | 51.5 | I |
| | 2010.05-2015.02 | 5MT | F | R | Saloon FWD | | GDS18324 | Drive Shaft | | 25 | 28 | 53.8 | 89 | 576 | |

| | YEAR | TRANSM. | F/R | L/R | BODY STYLE & DRIVE TYPE & ENGINE | REMARKS | G-AP Ref. | PRODUCT | ABS | Technical Specifications A | B | C | H | L | P |
|---|---|---|---|---|---|---|---|---|---|---|---|---|---|---|---|
| **MAZDA** | | | | | | | | | | | | | | | |
| **2** | | | | | | | | | | | | | | | |
| 1.5 (76 kw) | 2010.05-2015.02 | 5MT | F | R | Saloon FWD | | GCI18141 | Inner Joint | | 28 | 29 | 43 | | 99 | |
| | 2010.05-2015.06 | 4AT | F | L | Saloon FWD ZY-DE, ZY-VE | | GDS18473 | Drive Shaft | | 25 | 26 | 53.8 | 89 | 621 | |
| | 2010.05-2015.06 | 4AT | F | R | Saloon FWD ZY-DE, ZY-VE | | GDS18424 | Drive Shaft | | 25 | 28 | 53.8 | 89 | 574 | |
| | 2010.05-2015.06 | 5MT | F | R | Saloon FWD ZY-DE, ZY-VE | | GDS18324 | Drive Shaft | | 25 | 28 | 53.8 | 89 | 576 | |
| | 2010.05-2015.06 | 5MT | F | R | Saloon FWD ZY-DE, ZY-VE | | GCI18141 | Inner Joint | | 28 | 29 | 43 | | 99 | |
| | 2010.05-2015.06 | MT | F | L/R | Saloon FWD ZY-DE, ZY-VE | | GCO18223 | Outer Joint | | 25 | 29 | 53.8 | 89 | 51.5 | I |
| 1.5 (77 kw) | 2015.04-2017.12 | 6AT | F | L | Saloon FWD S5Y2 | | GDS82099 | Drive Shaft | | 26 | 31 | 52 | 87 | 611 | |
| | 2015.04-2017.12 | 6AT | F | R | Saloon FWD S5Y2 | | GDS82098 | Drive Shaft | | 26 | 31 | 52 | 87 | 956 | |
| | 2015.04-2017.12 | 6AT | F | L/R | Saloon FWD S5Y2 | | GCO81645 | Outer Joint | | 26 | 22 | 52 | 87 | 59 | M |
| | 2015.04-2017.12 | 6AT | F | L | Saloon FWD S5Y2 | | GCI81623 | Inner Joint | | 31 | 22 | 40 | 77 | 112.5 | |
| | 2015.04-2017.12 | 6AT | F | R | Saloon FWD S5Y2 | | GCI81622 | Inner Joint | | 31 | 22 | 40 | 415 | 96.5 | |
| 1.5 (79 kw) | 2014.11- | 6MT | F | L | Hatchback FWD P5Y6;P5Y4;P5-VPS | | GDS82465 | Drive Shaft | | 26 | 26 | 52 | 87 | 635 | |
| | 2014.11- | 6MT | F | R | Hatchback FWD P5Y6;P5Y4;P5-VPS | | GDS82466 | Drive Shaft | | 26 | 26 | 52 | 87 | 941 | |
| | 2014.11- | 6MT | F | L/R | Hatchback FWD P5Y6;P5Y4;P5-VPS | | GCO81944 | Outer Joint | | 26 | 29 | 52 | 87 | 51.5 | I |
| | 2014.11- | 6MT | F | L | Hatchback FWD P5Y6;P5Y4;P5-VPS | | GCI81834 | Inner Joint | | 26 | 29 | 35 | 65 | 88 | |
| | 2014.11- | 6MT | F | R | Hatchback FWD P5Y6;P5Y4;P5-VPS | | GCI81835 | Inner Joint | | 26 | 29 | 35 | 358 | 75 | |
| 1.5 (83 kw) | 2007.10-2015.06 | 4AT | F | L | Hatchback FWD ZY66;ZY84 | | GDS18473 | Drive Shaft | | 25 | 26 | 53.8 | 89 | 621 | |
| | 2007.10-2015.06 | AT | F | R | Hatchback FWD ZY66;ZY84 | | GDS18424 | Drive Shaft | | 25 | 28 | 53.8 | 89 | 574 | |
| | 2007.10-2015.06 | AT | F | R | Hatchback FWD ZY66;ZY84 | | GCI34022 | Inner Joint | | 28 | 29 | 43 | | 115 | |
| | 2007.10-2015.06 | MT | F | L/R | Hatchback FWD ZY66;ZY84 | Date from:2008.01 | GCO18223 | Outer Joint | | 25 | 29 | 53.8 | 89 | 51.5 | I |
| 1.5 (85 kw) | 2014.08- | MT | F | L | Hatchback FWD P5Y5;P5-VPS;P5X0;P5X2;P5Z7;P5Z8;P5Z9;P5Z3 | For right-hand drive vehicles | GDS82465 | Drive Shaft | | 26 | 26 | 52 | 87 | 635 | |
| | 2014.08- | MT | F | R | Hatchback FWD P5Y5;P5-VPS;P5X0;P5X2;P5Z7;P5Z8;P5Z9;P5Z3 | For right-hand drive vehicles | GDS82466 | Drive Shaft | | 26 | 26 | 52 | 87 | 941 | |
| | 2014.08- | MT | F | R | Hatchback FWD P5Y5;P5-VPS;P5X0;P5X2;P5Z7;P5Z8;P5Z9;P5Z3 | For right-hand drive vehicles | GCO81944 | Outer Joint | | 26 | 29 | 52 | 87 | 51.5 | I |
| | 2014.08- | MT | F | L | Hatchback FWD P5Y5;P5-VPS;P5X0;P5X2;P5Z7;P5Z8;P5Z9;P5Z3 | For right-hand drive vehicles | GCI81834 | Inner Joint | | 26 | 29 | 35 | 65 | 88 | |
| | 2014.08- | MT | F | R | Hatchback FWD P5Y5;P5-VPS;P5X0;P5X2;P5Z7;P5Z8;P5Z9;P5Z3 | For right-hand drive vehicles | GCI81835 | Inner Joint | | 26 | 29 | 35 | 358 | 75 | |
| 1.6 (74 kw) | 2003.02-2007.06 | 5MT | F | R | Hatchback FWD FYJA | | GDS18201 | Drive Shaft | | 25 | 23 | 53.3 | 90 | 919 | |
| | 2003.04-2007.06 | AT/MT | F | L/R | Hatchback FWD FYJA | | GCO18009 | Outer Joint | | 25 | 22 | 53.3 | 90 | 51 | M |
| | 2003.04-2007.06 | MT | F | L | Hatchback FWD FYJA | | GDS18216 | Drive Shaft | | 25 | 23 | 53.3 | 90 | 621 | |
| | 2003.04-2007.06 | MT | F | R | Hatchback FWD FYJA | | GDS18201 | Drive Shaft | | 25 | 23 | 53.3 | 90 | 919 | |
| **3** | | | | | | | | | | | | | | | |
| 1.3 (62 kw) | 2003.10-2009.06 | 5MT | F | L | Hatchback FWD ZJ-VE;ZJ32;ZJ07;ZJ30 | Date from:2005.01,Date to:2006.04 | GDS34095 | Drive Shaft | | 28 | 24 | 58.7 | 90 | 648 | |
| | 2003.10-2009.06 | 5MT | F | L | Hatchback FWD ZJ-VE;ZJ32;ZJ07;ZJ30 | Date to:2004.12 | GDS83387 | Drive Shaft | | 36 | 24 | 55.2 | 48.5 | 602 | |
| | 2003.10-2009.06 | 5MT | F | R | Hatchback FWD ZJ-VE;ZJ32;ZJ07;ZJ30 | Date from:2006.05 | GDS18421 | Drive Shaft | | 28 | 28 | 58.6 | 92 | 597 | |
| | 2003.10-2009.06 | 5MT | F | R | Hatchback FWD ZJ-VE;ZJ32;ZJ07;ZJ30 | Date to:2004.12 | GDS57407 | Drive Shaft | | 36 | 28 | 55.2 | 48.5 | 498 | |
| | 2003.10-2009.06 | 5MT | F | R | Hatchback FWD ZJ-VE;ZJ32;ZJ07;ZJ30 | Date from:2005.01,Date to:2006.04 | GDS57533 | Drive Shaft | | 28 | 28 | 58.7 | 90 | 545 | |
| | 2003.10-2009.06 | 5MT | F | L/R | Hatchback FWD ZJ-VE;ZJ32;ZJ07;ZJ30 | Date to:2004.12 | GCO34015 | Outer Joint | | 36 | 22 | 55.2 | 48.5 | 55.5 | I |
| | 2003.10-2009.06 | 5MT | F | L/R | Hatchback FWD ZJ-VE;ZJ32;ZJ07;ZJ30 | Date from:2005.01,Date to:2006.04 | GCO34099 | Outer Joint | | 28 | 22 | 58.7 | 90 | 60 | I |
| | 2003.10-2009.06 | 5MT | F | L/R | Hatchback FWD ZJ-VE;ZJ32;ZJ07;ZJ30 | Date from:2006.05 | GCO34103 | Outer Joint | | 28 | 23 | 58.7 | 90 | 61 | I |
| | 2003.10-2009.06 | 5MT | F | L | Hatchback FWD ZJ-VE;ZJ32;ZJ07;ZJ30 | | GCI34091 | Inner Joint | | 24 | 22 | 35 | 64 | 109.5 | |
| | 2003.10-2009.06 | 5MT | F | R | Hatchback FWD ZJ-VE;ZJ32;ZJ07;ZJ30 | Date from:2006.05 | GCI83093 | Inner Joint | | 24 | 22 | 35 | 348 | 119 | |
| | 2003.10-2009.06 | 5MT | F | R | Hatchback FWD ZJ-VE;ZJ32;ZJ07;ZJ30 | Date to:2006.02 | GCI83651 | Inner Joint | | 28 | 22 | 43 | | 130 | |
| | 2003.10-2009.06 | 5MT | F | R | Hatchback FWD ZJ-VE;ZJ32;ZJ07;ZJ30 | Date to:2004.12 | GDS87094 | Intermediate Shaft | | 28 | 24 | | | 433 | |
| 1.5 (74 kw) | 2013.09-2019.05 | MT | F | L | Hatchback FWD P5Y5;P5Y4;P5Y1;P5Z3 | | GDS82086 | Drive Shaft | | 28 | 28 | 59 | 87 | 648 | |
| | 2013.09-2019.05 | MT | F | L | Hatchback FWD P5Y5;P5Y4;P5Y1;P5Z3 | | GCO81639 | Outer Joint | | 28 | 32 | 59 | 87 | 60.5 | I |
| | 2013.09-2019.05 | MT | F | L | Hatchback FWD P5Y5;P5Y4;P5Y1;P5Z3 | | GCI81614 | Inner Joint | | 28 | 32 | 40 | 67 | 93 | |
| | 2014.10-2019.05 | MT | F | L | Saloon FWD P5Y5;P5Y4;P5Y1;P5Z3 | | GDS82086 | Drive Shaft | | 28 | 28 | 59 | 87 | 648 | |
| | 2014.10-2019.05 | MT | F | L | Saloon FWD P5Y5;P5Y4;P5Y1;P5Z3 | | GCO81639 | Outer Joint | | 28 | 32 | 59 | 87 | 60.5 | I |
| | 2014.10-2019.05 | MT | F | L | Saloon FWD P5Y5;P5Y4;P5Y1;P5Z3 | | GCI81614 | Inner Joint | | 28 | 32 | 40 | 67 | 93 | |
| | 2015.04-2016.05 | MT | F | L | Hatchback Van FWD P5Y1 | | GDS82086 | Drive Shaft | | 28 | 28 | 59 | 87 | 648 | |
| | 2015.04-2016.05 | MT | F | L | Hatchback Van FWD P5Y1 | | GCO81639 | Outer Joint | | 28 | 32 | 59 | 87 | 60.5 | I |
| | 2015.04-2016.05 | MT | F | L | Hatchback Van FWD P5Y1 | | GCI81614 | Inner Joint | | 28 | 32 | 40 | 67 | 93 | |
| 1.5 (77 kw) | 2016.02-2019.05 | 6AT | F | L | Hatchback FWD S5Y7;S5Y8;S5-DPTS;S5-DPTR | Vehicle Production Country:Japan;Vehicle Production Country:Mexico;No Facelift | GCI83436 | Inner Joint | | 31 | 23 | 40 | 77 | 114 | |
| 1.5 (88 kw) | 2013.10-2019.05 | 6AT | F | L | Hatchback FWD P5Y5;P5Y4;P5Y1;P5Z3 | For facelift,For left-hand drive vehicles | GDS56536 | Drive Shaft | | 28 | 26 | 59 | 86.5 | 650 | |
| | 2013.10-2019.05 | 6AT | F | L | Hatchback FWD P5Y5;P5Y4;P5Y1;P5Z3 | ---------- | GDS84402 | Drive Shaft | | 28 | 28 | 59 | 87 | 642 | |
| | 2013.10-2019.05 | 6AT | F | R | Hatchback FWD P5Y5;P5Y4;P5Y1;P5Z3 | ---------- | GDS84403 | Drive Shaft | | 28 | 28 | 59 | 87 | 1004 | |
| | 2013.10-2019.05 | 6AT | F | R | Hatchback FWD P5Y5;P5Y4;P5Y1;P5Z3 | For facelift,For left-hand drive vehicles | GDS84453 | Drive Shaft | | 28 | 26 | 59 | 86.5 | 997 | |
| | 2013.10-2019.05 | 6AT | F | L/R | Hatchback FWD P5Y5;P5Y4;P5Y1;P5Z3 | ---------- | GCO82807 | Outer Joint | | 28 | 23 | 59 | 87 | 60 | I |
| | 2013.10-2019.05 | 6AT | F | L/R | Hatchback FWD P5Y5;P5Y4;P5Y1;P5Z3 | For facelift,For left-hand drive vehicles | GCO82819 | Outer Joint | | 28 | 23 | 59 | 86.5 | 60.5 | I |
| | 2013.10-2019.05 | 6AT | F | L | Hatchback FWD P5Y5;P5Y4;P5Y1;P5Z3 | ---------- | GCI82743 | Inner Joint | | 28 | 23 | 40 | 67.5 | 108 | |
| | 2013.10-2019.05 | 6AT | F | L | Hatchback FWD P5Y5;P5Y4;P5Y1;P5Z3 | For facelift,For left-hand drive vehicles | GCI83356 | Inner Joint | | 26 | 23 | 35 | 65 | 104 | |
| | 2013.10-2019.05 | 6AT | F | R | Hatchback FWD P5Y5;P5Y4;P5Y1;P5Z3 | ---------- | GCI82744 | Inner Joint | | 28 | 23 | 40 | 377 | 95 | |
| | 2013.10-2019.05 | 6AT | F | R | Hatchback FWD P5Y5;P5Y4;P5Y1;P5Z3 | For facelift,For left-hand drive vehicles | GCI82766 | Inner Joint | | 26 | 23 | 35 | 370.5 | 96.5 | |
| | 2013.10-2019.05 | 6MT | F | L | Hatchback FWD P5Y5;P5Y4;P5Y1;P5Z3 | For left-hand drive vehicles,No Facelift;For right-hand drive vehicles,Chassis no. to:300001 | GDS82086 | Drive Shaft | | 28 | 28 | 59 | 87 | 648 | |
| | 2013.10-2019.05 | 6AT | F | L | Saloon FWD P5Y5;P5Y4;P5Y1;P5Z3 | For facelift,For left-hand drive vehicles | GDS56536 | Drive Shaft | | 28 | 26 | 59 | 86.5 | 650 | |
| | 2013.10-2019.05 | 6AT | F | L | Saloon FWD P5Y5;P5Y4;P5Y1;P5Z3 | ---------- | GDS84402 | Drive Shaft | | 28 | 28 | 59 | 87 | 642 | |

| | YEAR | TRANSM. | F/R | L/R | BODY STYLE & DRIVE TYPE & ENGINE | REMARKS | G-AP Ref. | PRODUCT | ABS | Technical Specifications A | B | C | H | L | P |
|---|---|---|---|---|---|---|---|---|---|---|---|---|---|---|---|
| **MAZDA** | | | | | | | | | | | | | | | |
| **3** | | | | | | | | | | | | | | | |
| 1.5 (88 kw) | 2013.10-2019.05 | 6AT | F | R | Saloon FWD P5Y5;P5Y4;P5Y1;P5Z3 | ---------- | GDS84403 | Drive Shaft | | 28 | 28 | 59 | 87 | 1004 | |
| | 2013.10-2019.05 | 6AT | F | R | Saloon FWD P5Y5;P5Y4;P5Y1;P5Z3 | For facelift,For left-hand drive vehicles | GDS84453 | Drive Shaft | | 28 | 26 | 59 | 86.5 | 997 | |
| | 2013.10-2019.05 | 6AT | F | L/R | Saloon FWD P5Y5;P5Y4;P5Y1;P5Z3 | ---------- | GCO82807 | Outer Joint | | 28 | 23 | 59 | 87 | 60 | I |
| | 2013.10-2019.05 | 6AT | F | L/R | Saloon FWD P5Y5;P5Y4;P5Y1;P5Z3 | For facelift,For left-hand drive vehicles | GCO82819 | Outer Joint | | 28 | 23 | 59 | 86.5 | 60.5 | I |
| | 2013.10-2019.05 | 6AT | F | L | Saloon FWD P5Y5;P5Y4;P5Y1;P5Z3 | ---------- | GCI82743 | Inner Joint | | 28 | 23 | 40 | 67.5 | 108 | |
| | 2013.10-2019.05 | 6AT | F | L | Saloon FWD P5Y5;P5Y4;P5Y1;P5Z3 | For facelift,For left-hand drive vehicles | GCI83356 | Inner Joint | | 26 | 23 | 35 | 65 | 104 | |
| | 2013.10-2019.05 | 6AT | F | R | Saloon FWD P5Y5;P5Y4;P5Y1;P5Z3 | ---------- | GCI82744 | Inner Joint | | 28 | 23 | 40 | 377 | 95 | |
| | 2013.10-2019.05 | 6AT | F | R | Saloon FWD P5Y5;P5Y4;P5Y1;P5Z3 | For facelift,For left-hand drive vehicles | GCI82766 | Inner Joint | | 26 | 23 | 35 | 370.5 | 96.5 | |
| | 2013.10-2019.05 | 6MT | F | L | Saloon FWD P5Y5;P5Y4;P5Y1;P5Z3 | For left-hand drive vehicles,No Facelift,For right-hand drive vehicles,Chassis no. to:300999 | GDS82086 | Drive Shaft | | 28 | 28 | 59 | 87 | 648 | |
| 1.6 (66 kw) | 2006.06-2009.12 | | F | | Hatchback FWD Y406 | | GCO34093 | Outer Joint | | 36 | 24 | 55.3 | 48 | 59 | I |
| 1.6 (77 kw) | 2003.10-2009.06 | 4AT | F | L | Hatchback FWD Z601;Z627 | | GDS34192 | Drive Shaft | | 28 | 26 | 58.6 | 92 | 624 | |
| | 2003.10-2009.06 | 4AT | F | R | Hatchback FWD Z601;Z627 | Date to:2004.12 | GDS34101 | Drive Shaft | | 36 | 28 | 55.2 | 48.5 | 501 | |
| | 2003.10-2009.06 | 4AT | F | R | Hatchback FWD Z601;Z627 | | GDS34189 | Drive Shaft | | 28 | 28 | 58.6 | 92 | 598 | |
| | 2003.10-2009.06 | 5MT | F | L | Hatchback FWD Z601;Z627 | Date from:2005.01,Date to:2006.04 | GDS34095 | Drive Shaft | | 28 | 24 | 58.7 | 90 | 648 | |
| | 2003.10-2009.06 | 5MT | F | L | Hatchback FWD Z601;Z627 | Date to:2004.12 | GDS83387 | Drive Shaft | | 36 | 24 | 55.2 | 48.5 | 602 | |
| | 2003.10-2009.06 | 5MT | F | R | Hatchback FWD Z601;Z627 | Date from:2006.05 | GDS56117 | Drive Shaft | | 28 | 24 | 58.7 | 90 | 941 | |
| | 2003.10-2009.06 | 5MT | F | R | Hatchback FWD Z601;Z627 | Date to:2004.12 | GDS57407 | Drive Shaft | | 36 | 28 | 55.2 | 48.5 | 498 | |
| | 2003.10-2009.06 | 5MT | F | R | Hatchback FWD Z601;Z627 | Date from:2005.01,Date to:2006.04 | GDS57533 | Drive Shaft | | 28 | 28 | 58.7 | 90 | 545 | |
| | 2003.10-2009.06 | 5MT | F | L/R | Hatchback FWD Z601;Z627 | Date to:2004.12 | GCO34015 | Outer Joint | | 36 | 22 | 55.2 | 48.5 | 55.5 | I |
| | 2003.10-2009.06 | 5MT | F | L/R | Hatchback FWD Z601;Z627 | Date from:2005.01,Date to:2006.04 | GCO34099 | Outer Joint | | 28 | 22 | 58.7 | 90 | 60 | I |
| | 2003.10-2009.06 | 5MT | F | L/R | Hatchback FWD Z601;Z627 | Date from:2006.05 | GCO34103 | Outer Joint | | 28 | 23 | 58.7 | 90 | 61 | I |
| | 2003.10-2009.06 | 5MT | F | L | Hatchback FWD Z601;Z627 | | GCI34091 | Inner Joint | | 24 | 22 | 35 | 64 | 109.5 | |
| | 2003.10-2009.06 | 5MT | F | R | Hatchback FWD Z601;Z627 | Date to:2006.02 | GCI83651 | Inner Joint | | 28 | 22 | 43 | | 130 | |
| | 2003.10-2009.06 | 5MT | F | R | Hatchback FWD Z601;Z627 | Date to:2004.12 | GDS87094 | Intermediate Shaft | | 28 | 24 | | | 433 | |
| | 2003.10-2009.06 | AT | F | L/R | Hatchback FWD Z601;Z627 | Date to:2006.02,For Engine code:Z627 | GCO34131 | Outer Joint | | 28 | 22 | 58.6 | 90 | 59 | I |
| | 2003.10-2009.06 | AT | F | L/R | Hatchback FWD Z601;Z627 | Date from:2006.03,For Engine code:Z627 | GCO34174 | Outer Joint | | 28 | 23 | 58.6 | 90 | 59 | M |
| | 2003.10-2009.06 | AT | F | L | Hatchback FWD Z601;Z627 | For Engine code:Z627 | GCI34047 | Inner Joint | | 26 | 22 | 35 | 66.5 | 109.5 | |
| | 2003.10-2009.06 | AT | F | R | Hatchback FWD Z601;Z627 | For Engine code:Z627 | GCI34045 | Inner Joint | | 28 | 22 | 43 | | 118 | |
| | 2003.10-2009.06 | MT | F | R | Hatchback FWD Z601;Z627 | Date from:2006.03,For Engine code:Z627 | GCI83093 | Inner Joint | | 24 | 22 | 35 | 348 | 119 | |
| | 2004.02-2009.06 | 4AT | F | L | Saloon FWD Z601;Z627 | | GDS34192 | Drive Shaft | | 28 | 26 | 58.6 | 92 | 624 | |
| | 2004.02-2009.06 | 4AT | F | R | Saloon FWD Z601;Z627 | Date to:2004.12 | GDS34101 | Drive Shaft | | 36 | 28 | 55.2 | 48.5 | 501 | |
| | 2004.02-2009.06 | 4AT | F | R | Saloon FWD Z601;Z627 | | GDS34189 | Drive Shaft | | 28 | 28 | 58.6 | 92 | 598 | |
| | 2004.02-2009.06 | 5MT | F | L | Saloon FWD Z601;Z627 | Date from:2005.01,Date to:2006.04 | GDS34095 | Drive Shaft | | 28 | 24 | 58.7 | 90 | 648 | |
| | 2004.02-2009.06 | 5MT | F | L | Saloon FWD Z601;Z627 | Date to:2004.12 | GDS83387 | Drive Shaft | | 36 | 24 | 55.2 | 48.5 | 602 | |
| | 2004.02-2009.06 | 5MT | F | R | Saloon FWD Z601;Z627 | Date from:2006.05 | GDS56117 | Drive Shaft | | 28 | 24 | 58.7 | 90 | 941 | |
| | 2004.02-2009.06 | 5MT | F | R | Saloon FWD Z601;Z627 | Date to:2004.12 | GDS57407 | Drive Shaft | | 36 | 28 | 55.2 | 48.5 | 498 | |
| | 2004.02-2009.06 | 5MT | F | R | Saloon FWD Z601;Z627 | Date from:2005.01,Date to:2006.04 | GDS57533 | Drive Shaft | | 28 | 28 | 58.7 | 90 | 545 | |
| | 2004.02-2009.06 | 5MT | F | L/R | Saloon FWD Z601;Z627 | Date to:2004.12 | GCO34015 | Outer Joint | | 36 | 22 | 55.2 | 48.5 | 55.5 | I |
| | 2004.02-2009.06 | 5MT | F | L/R | Saloon FWD Z601;Z627 | Date from:2005.01,Date to:2006.04 | GCO34099 | Outer Joint | | 28 | 22 | 58.7 | 90 | 60 | I |
| | 2004.02-2009.06 | 5MT | F | L/R | Saloon FWD Z601;Z627 | Date from:2006.05 | GCO34103 | Outer Joint | | 28 | 23 | 58.7 | 90 | 61 | I |
| | 2004.02-2009.06 | 5MT | F | L | Saloon FWD Z601;Z627 | | GCI34091 | Inner Joint | | 24 | 22 | 35 | 64 | 109.5 | |
| | 2004.02-2009.06 | 5MT | F | R | Saloon FWD Z601;Z627 | Date to:2006.02 | GCI83651 | Inner Joint | | 28 | 22 | 43 | | 130 | |
| | 2004.02-2009.06 | 5MT | F | R | Saloon FWD Z601;Z627 | Date to:2004.12 | GDS87094 | Intermediate Shaft | | 28 | 24 | | | 433 | |
| | 2004.02-2009.06 | AT | F | L/R | Saloon FWD Z601;Z627 | Date to:2006.02,For Engine code:Z627 | GCO34131 | Outer Joint | | 28 | 22 | 58.6 | 90 | 59 | I |
| | 2004.02-2009.06 | AT | F | L/R | Saloon FWD Z601;Z627 | Date from:2006.03,For Engine code:Z627 | GCO34174 | Outer Joint | | 28 | 23 | 58.6 | 90 | 59 | M |
| | 2004.02-2009.06 | AT | F | L | Saloon FWD Z601;Z627 | | GCI34047 | Inner Joint | | 26 | 22 | 35 | 66.5 | 109.5 | |
| | 2004.02-2009.06 | AT | F | R | Saloon FWD Z601;Z627 | Date to:2006.03,For Engine code:Z627 | GCI34045 | Inner Joint | | 28 | 22 | 43 | | 118 | |
| | 2004.02-2009.06 | MT | F | R | Saloon FWD Z601;Z627 | Date from:2006.03,For Engine code:Z627 | GCI83093 | Inner Joint | | 24 | 22 | 35 | 348 | 119 | |
| | 2008.12-2014.09 | 4AT | F | L | Hatchback FWD Z668;Z682;Z683 | | GDS34192 | Drive Shaft | | 28 | 26 | 58.6 | 92 | 624 | |
| | 2008.12-2014.09 | 5MT | F | L/R | Hatchback FWD Z668;Z682;Z683 | | GCO34103 | Outer Joint | | 28 | 23 | 58.7 | 90 | 61 | I |
| | 2008.12-2014.09 | AT | F | L/R | Hatchback FWD Z668;Z682;Z683 | | GCO27082 | Outer Joint | | 28 | 23 | 58.6 | 92 | 61 | I |
| | 2008.12-2014.09 | AT | F | L | Hatchback FWD Z668;Z682;Z683 | | GCI34047 | Inner Joint | | 26 | 22 | 35 | 66.5 | 109.5 | |
| | 2008.12-2014.09 | AT | F | L | Hatchback FWD Z668;Z682;Z683 | | GCI34146 | Inner Joint | | 26 | 23 | 35 | 66.5 | 109.5 | |
| | 2008.12-2014.09 | AT | F | R | Hatchback FWD Z668;Z682;Z683 | | GCI34045 | Inner Joint | | 28 | 22 | 43 | | 118 | |
| | 2008.12-2014.09 | MT | F | L | Hatchback FWD Z668;Z682;Z683 | | GDS34254 | Drive Shaft | | 28 | 24 | 58.6 | 92 | 655 | |
| | 2008.12-2014.09 | MT | F | R | Hatchback FWD Z668;Z682;Z683 | | GDS56117 | Drive Shaft | | 28 | 24 | 58.7 | 90 | 941 | |
| | 2008.12-2014.09 | MT | F | R | Hatchback FWD Z668;Z682;Z683 | | GCI83093 | Inner Joint | | 24 | 22 | 35 | 348 | 119 | |
| | 2008.12-2014.09 | MT/AT | F | R | Hatchback FWD Z668;Z682;Z683 | | GDS18421 | Drive Shaft | | 28 | 28 | 58.6 | 92 | 597 | |
| | 2008.12-2014.09 | 4AT | F | L | Saloon FWD Z668;Z682;Z683 | | GDS34192 | Drive Shaft | | 28 | 26 | 58.6 | 92 | 624 | |
| | 2008.12-2014.09 | 5MT | F | L/R | Saloon FWD Z668;Z682;Z683 | | GCO34103 | Outer Joint | | 28 | 23 | 58.7 | 90 | 61 | I |
| | 2008.12-2014.09 | AT | F | L/R | Saloon FWD Z668;Z682;Z683 | | GCO27082 | Outer Joint | | 28 | 23 | 58.6 | 92 | 61 | I |
| | 2008.12-2014.09 | AT | F | L | Saloon FWD Z668;Z682;Z683 | | GCI34047 | Inner Joint | | 26 | 22 | 35 | 66.5 | 109.5 | |
| | 2008.12-2014.09 | AT | F | L | Saloon FWD Z668;Z682;Z683 | | GCI34146 | Inner Joint | | 26 | 23 | 35 | 66.5 | 109.5 | |
| | 2008.12-2014.09 | AT | F | R | Saloon FWD Z668;Z682;Z683 | | GCI34045 | Inner Joint | | 28 | 22 | 43 | | 118 | |
| | 2008.12-2014.09 | MT | F | L | Saloon FWD Z668;Z682;Z683 | | GDS34254 | Drive Shaft | | 28 | 24 | 58.6 | 92 | 655 | |

| | YEAR | TRANSM. | F/R | L/R | BODY STYLE & DRIVE TYPE & ENGINE | REMARKS | G-AP Ref. | PRODUCT | ABS | Technical Specifications | | | | | |
|---|---|---|---|---|---|---|---|---|---|---|---|---|---|---|---|
| | | | | | | | | | | A | B | C | H | L | P |
| **MAZDA** | | | | | | | | | | | | | | | |
| **3** | | | | | | | | | | | | | | | |
| 1.6 (77 kw) | 2008.12-2014.09 | MT | F | R | Saloon FWD Z668;Z682;Z683 | | GDS56117 | Drive Shaft | | 28 | 24 | 58.7 | 90 | 941 | |
| | 2008.12-2014.09 | MT | F | R | Saloon FWD Z668;Z682;Z683 | | GCI83093 | Inner Joint | | 24 | 22 | 35 | 348 | 119 | |
| | 2008.12-2014.09 | MT/AT | F | R | Saloon FWD Z668;Z682;Z683 | | GDS18421 | Drive Shaft | | 28 | 28 | 58.6 | 92 | 597 | |
| | 2013.09-2019.05 | AT | F | R | Hatchback FWD Z6Y3;Z6Y1 | | GCO82093 | Outer Joint | | 28 | 22 | 59 | 87 | 59 | M |
| | 2013.09-2019.05 | AT | F | R | Saloon FWD Z6Y3;Z6Y1 | | GCO82093 | Outer Joint | | 28 | 22 | 59 | 87 | 59 | M |
| 1.6 (79 kw) | 2010.01-2013.12 | 5MT | F | L | Hatchback FWD Z6 | | GDS34254 | Drive Shaft | | 28 | 24 | 58.6 | 92 | 655 | |
| | 2010.01-2013.12 | 5MT | F | L/R | Hatchback FWD Z6 | | GCO34103 | Outer Joint | | 28 | 23 | 58.7 | 90 | 61 | I |
| | 2010.01-2013.12 | 5MT | F | R | Hatchback FWD Z6 | | GCI83093 | Inner Joint | | 24 | 22 | 35 | 348 | 119 | |
| | 2010.01-2013.12 | 7AT | F | R | Hatchback FWD Z6 | | GDS18421 | Drive Shaft | | 28 | 28 | 58.6 | 92 | 597 | |
| | 2010.01-2013.12 | 7AT | F | R | Hatchback FWD Z6 | | GDS56117 | Drive Shaft | | 28 | 24 | 58.7 | 90 | 941 | |
| | 2010.01-2013.12 | AT | F | | Hatchback FWD Z6 | | GCO27082 | Outer Joint | | 28 | 23 | 58.6 | 92 | 61 | I |
| | 2010.01-2013.12 | AT | F | L | Hatchback FWD Z6 | | GCI34047 | Inner Joint | | 26 | 22 | 35 | 66.5 | 109.5 | |
| | 2010.01-2013.12 | | F | R | Hatchback FWD Z6 | | GCI34045 | Inner Joint | | 28 | 22 | 43 | | 118 | |
| 1.6 (80 kw) | 2004.06-2009.06 | AT/MT | F | L/R | Hatchback FWD Y601;Y642;Y603;Y605 | | GCO34093 | Outer Joint | | 36 | 24 | 55.3 | 48 | 59 | I |
| | 2004.06-2009.06 | MT | F | L/R | Hatchback FWD Y601;Y642;Y603;Y605 | | GCO34091 | Outer Joint | | 28 | 24 | 59 | 90 | 64 | I |
| | 2004.06-2009.06 | AT/MT | F | L/R | Saloon FWD Y601;Y642;Y603;Y605 | | GCO34093 | Outer Joint | | 36 | 24 | 55.3 | 48 | 59 | I |
| | 2004.06-2009.06 | MT | F | L/R | Saloon FWD Y601;Y642;Y603;Y605 | | GCO34091 | Outer Joint | | 28 | 24 | 59 | 90 | 64 | I |
| | 2008.12-2013.05 | MT | F | R | Hatchback FWD Y642 | | GDS34195 | Drive Shaft | | 28 | 28 | 58.5 | 92 | 586 | |
| | 2008.12-2013.05 | MT | F | R | Saloon FWD Y642 | | GDS34195 | Drive Shaft | | 28 | 28 | 58.5 | 92 | 586 | |
| | 2008.12-2013.05 | | F | | Saloon FWD Y642 | | GCO34200 | Outer Joint | | 28 | 24 | 58.5 | 92 | 63 | I |
| 1.6 (85 kw) | 2010.09-2013.05 | MT | F | R | Hatchback FWD Y655;Y650 | | GDS34195 | Drive Shaft | | 28 | 28 | 58.5 | 92 | 586 | |
| | 2010.09-2013.05 | MT | F | R | Hatchback FWD Y655;Y650 | | GCO34200 | Outer Joint | | 28 | 24 | 58.5 | 92 | 63 | I |
| | 2010.09-2013.05 | MT | F | R | Saloon FWD Y655;Y650 | | GDS34195 | Drive Shaft | | 28 | 28 | 58.5 | 92 | 586 | |
| | 2010.09-2013.05 | | F | | Saloon FWD Y655;Y650 | | GCO34200 | Outer Joint | | 28 | 24 | 58.5 | 92 | 63 | I |
| 1.8 (85 kw) | 2019.01- | 6MT | F | L | Hatchback FWD S8Y1 | | GCI82163 | Inner Joint | | 31 | 32 | 40 | 67 | 110 | |
| | 2019.01- | 6MT | F | L | Saloon FWD S8Y1;S8Y2 | | GCI82163 | Inner Joint | | 31 | 32 | 40 | 67 | 110 | |
| 2.0 (88 kw) | 2013.09-2019.05 | 6AT | F | L | Hatchback FWD PEY7;PEY5;PEXL | | GCI82742 | Inner Joint | | 28 | 32 | 40 | 67.5 | 108.5 | |
| | 2013.09-2019.05 | 6MT | F | L | Hatchback FWD PEY7;PEY5;PEXL | | GDS82086 | Drive Shaft | | 28 | 28 | 59 | 87 | 648 | |
| | 2013.09-2019.05 | 6MT | F | R | Hatchback FWD PEY7;PEY5;PEXL | | GDS82087 | Drive Shaft | | 28 | 28 | 59 | 87 | 1012 | |
| | 2013.09-2019.05 | 6MT | F | L/R | Hatchback FWD PEY7;PEY5;PEXL | | GCO81639 | Outer Joint | | 28 | 32 | 59 | 87 | 60.5 | I |
| | 2013.09-2019.05 | 6MT | F | L | Hatchback FWD PEY7;PEY5;PEXL | | GCI81614 | Inner Joint | | 28 | 32 | 40 | 67 | 93 | |
| | 2013.09-2019.05 | 6MT | F | R | Hatchback FWD PEY7;PEY5;PEXL | | GCI81615 | Inner Joint | | 28 | 32 | 40 | 416 | 94 | |
| | 2013.09-2019.05 | 6AT | F | L | Saloon FWD PEY7;PEY5;PEXL | | GCI82742 | Inner Joint | | 28 | 32 | 40 | 67.5 | 108.5 | |
| | 2013.09-2019.05 | 6MT | F | L | Saloon FWD PEY7;PEY5;PEXL | | GDS82086 | Drive Shaft | | 28 | 28 | 59 | 87 | 648 | |
| | 2013.09-2019.05 | 6MT | F | R | Saloon FWD PEY7;PEY5;PEXL | | GDS82087 | Drive Shaft | | 28 | 28 | 59 | 87 | 1012 | |
| | 2013.09-2019.05 | 6MT | F | L/R | Saloon FWD PEY7;PEY5;PEXL | | GCO81639 | Outer Joint | | 28 | 32 | 59 | 87 | 60.5 | I |
| | 2013.09-2019.05 | 6MT | F | L | Saloon FWD PEY7;PEY5;PEXL | | GCI81614 | Inner Joint | | 28 | 32 | 40 | 67 | 93 | |
| | 2013.09-2019.05 | 6MT | F | R | Saloon FWD PEY7;PEY5;PEXL | | GCI81615 | Inner Joint | | 28 | 32 | 40 | 416 | 94 | |
| | 2015.04-2016.05 | 6AT | F | L | Hatchback Van FWD PEY7 | | GCI82742 | Inner Joint | | 28 | 32 | 40 | 67.5 | 108.5 | |
| | 2015.04-2016.05 | 6MT | F | L | Hatchback Van FWD PEY7 | | GDS82086 | Drive Shaft | | 28 | 28 | 59 | 87 | 648 | |
| | 2015.04-2016.05 | 6MT | F | R | Hatchback Van FWD PEY7 | | GDS82087 | Drive Shaft | | 28 | 28 | 59 | 87 | 1012 | |
| | 2015.04-2016.05 | 6MT | F | L/R | Hatchback Van FWD PEY7 | | GCO81639 | Outer Joint | | 28 | 32 | 59 | 87 | 60.5 | I |
| | 2015.04-2016.05 | 6MT | F | L | Hatchback Van FWD PEY7 | | GCI81614 | Inner Joint | | 28 | 32 | 40 | 67 | 93 | |
| | 2015.04-2016.05 | 6MT | F | R | Hatchback Van FWD PEY7 | | GCI81615 | Inner Joint | | 28 | 32 | 40 | 416 | 94 | |
| 2.0 (90 kw) | 2018.11- | 6AT | F | L | Hatchback FWD PEXN | For vehicles without cylinder shutdown | GDS84513 | Drive Shaft | | 28 | 31 | 59 | 86.5 | 631 | |
| | 2018.11- | 6AT | F | L | Hatchback FWD PEXN | For vehicles with cylinder shutdown | GDS84514 | Drive Shaft | | 28 | 31 | 59 | 86.5 | 637 | |
| | 2018.11- | 6AT | F | R | Hatchback FWD PEXN | For vehicles with cylinder shutdown | GDS84355 | Drive Shaft | | 28 | 31 | 59 | 86.5 | 1016 | |
| | 2018.11- | 6AT | F | R | Hatchback FWD PEXN | For vehicles without cylinder shutdown | GDS84530 | Drive Shaft | | 28 | 31 | 59 | 86.5 | 1012 | |
| | 2018.11- | 6AT | F | L/R | Hatchback FWD PEXN | | GCO82793 | Outer Joint | | 28 | 32 | 59 | 86.5 | 58.5 | I |
| | 2018.11- | 6AT | F | L | Hatchback FWD PEXN | | GCI82838 | Inner Joint | | 31 | 32 | 40 | 77 | 110.5 | |
| | 2018.11- | 6AT | F | R | Hatchback FWD PEXN | For vehicles with cylinder shutdown | GCI82728 | Inner Joint | | 31 | 32 | 40 | 423 | 106 | |
| | 2018.11- | 6AT | F | R | Hatchback FWD PEXN | For vehicles without cylinder shutdown | GCI82837 | Inner Joint | | 31 | 32 | 40 | 440 | 100 | |
| | 2018.11- | 6MT | F | L | Hatchback FWD PEXN | For vehicles with cylinder shutdown | GDS84401 | Drive Shaft | | 28 | 28 | 59 | 86.5 | 645 | |
| | 2018.11- | 6MT | F | L | Hatchback FWD PEXN | For vehicles without cylinder shutdown | GDS84489 | Drive Shaft | | 28 | 28 | 59 | 87 | 642 | |
| | 2018.11- | 6MT | F | R | Hatchback FWD PEXN | For vehicles without cylinder shutdown | GDS84386 | Drive Shaft | | 28 | 28 | 59 | 87 | 1005 | |
| | 2018.11- | 6MT | F | R | Hatchback FWD PEXN | For vehicles with cylinder shutdown | GDS84400 | Drive Shaft | | 28 | 28 | 59 | 86.5 | 1011 | |
| | 2018.11- | 6MT | F | L/R | Hatchback FWD PEXN | For vehicles with cylinder shutdown | GCO82793 | Outer Joint | | 28 | 32 | 59 | 86.5 | 58.5 | I |
| | 2018.11- | 6MT | F | L/R | Hatchback FWD PEXN | For vehicles without cylinder shutdown | GCO82801 | Outer Joint | | 28 | 33 | 59 | 87 | 60.5 | I |
| | 2018.11- | 6MT | F | L | Hatchback FWD PEXN | For vehicles with cylinder shutdown | GCI82742 | Inner Joint | | 28 | 32 | 40 | 67.5 | 108.5 | |
| | 2018.11- | 6MT | F | L | Hatchback FWD PEXN | For vehicles without cylinder shutdown | GCI82825 | Inner Joint | | 28 | 33 | 40 | 67.5 | 108 | |
| | 2018.11- | 6MT | F | R | Hatchback FWD PEXN | For vehicles with cylinder shutdown | GCI81615 | Inner Joint | | 28 | 32 | 40 | 416 | 94 | |
| | 2018.11- | 6MT | F | R | Hatchback FWD PEXN | For vehicles without cylinder shutdown | GCI82735 | Inner Joint | | 28 | 33 | 40 | 432 | 84 | |
| | 2018.11- | 6AT | F | L | Saloon FWD PEXN | For vehicles without cylinder shutdown | GDS84513 | Drive Shaft | | 28 | 31 | 59 | 86.5 | 631 | |
| | 2018.11- | 6AT | F | L | Saloon FWD PEXN | For vehicles with cylinder shutdown | GDS84514 | Drive Shaft | | 28 | 31 | 59 | 86.5 | 637 | |
| | 2018.11- | 6AT | F | R | Saloon FWD PEXN | For vehicles with cylinder shutdown | GDS84355 | Drive Shaft | | 28 | 31 | 59 | 86.5 | 1016 | |

| | YEAR | TRANSM. | F/R | L/R | BODY STYLE & DRIVE TYPE & ENGINE | REMARKS | G-AP Ref. | PRODUCT | ABS | Technical Specifications A | B | C | H | L | P |
|---|---|---|---|---|---|---|---|---|---|---|---|---|---|---|---|
| **MAZDA** | | | | | | | | | | | | | | | |
| **3** | | | | | | | | | | | | | | | |
| 2.0 (90 kw) | 2018.11- | 6AT | F | R | Saloon FWD PEXN | For vehicles without cylinder shutdown | GDS84530 | Drive Shaft | | 28 | 31 | 59 | 86.5 | 1012 | |
| | 2018.11- | 6AT | F | L/R | Saloon FWD PEXN | | GCO82793 | Outer Joint | | 28 | 32 | 59 | 86.5 | 58.5 | I |
| | 2018.11- | 6AT | F | L | Saloon FWD PEXN | | GCI82838 | Inner Joint | | 31 | 32 | 40 | 77 | 110.5 | |
| | 2018.11- | 6AT | F | R | Saloon FWD PEXN | For vehicles with cylinder shutdown | GCI82728 | Inner Joint | | 31 | 32 | 40 | 423 | 106 | |
| | 2018.11- | 6AT | F | R | Saloon FWD PEXN | For vehicles without cylinder shutdown | GCI82837 | Inner Joint | | 31 | 32 | 40 | 440 | 100 | |
| | 2018.11- | 6MT | F | L | Saloon FWD PEXN | For vehicles with cylinder shutdown | GDS84401 | Drive Shaft | | 28 | 28 | 59 | 86.5 | 645 | |
| | 2018.11- | 6MT | F | L | Saloon FWD PEXN | For vehicles without cylinder shutdown | GDS84489 | Drive Shaft | | 28 | 28 | 59 | 87 | 642 | |
| | 2018.11- | 6MT | F | R | Saloon FWD PEXN | For vehicles without cylinder shutdown | GDS84386 | Drive Shaft | | 28 | 28 | 59 | 87 | 1005 | |
| | 2018.11- | 6MT | F | R | Saloon FWD PEXN | For vehicles with cylinder shutdown | GDS84400 | Drive Shaft | | 28 | 28 | 59 | 86.5 | 1011 | |
| | 2018.11- | 6MT | F | L/R | Saloon FWD PEXN | For vehicles with cylinder shutdown | GCO82793 | Outer Joint | | 28 | 32 | 59 | 86.5 | 58.5 | I |
| | 2018.11- | 6MT | F | L/R | Saloon FWD PEXN | For vehicles without cylinder shutdown | GCO82801 | Outer Joint | | 28 | 33 | 59 | 87 | 60.5 | I |
| | 2018.11- | 6MT | F | L | Saloon FWD PEXN | For vehicles with cylinder shutdown | GCI82742 | Inner Joint | | 28 | 32 | 40 | 67.5 | 108.5 | |
| | 2018.11- | 6MT | F | L | Saloon FWD PEXN | For vehicles without cylinder shutdown | GCI82825 | Inner Joint | | 28 | 33 | 40 | 67.5 | 108 | |
| | 2018.11- | 6MT | F | R | Saloon FWD PEXN | For vehicles with cylinder shutdown | GCI81615 | Inner Joint | | 28 | 32 | 40 | 416 | 94 | |
| | 2018.11- | 6MT | F | R | Saloon FWD PEXN | For vehicles without cylinder shutdown | GCI82735 | Inner Joint | | 28 | 33 | 40 | 432 | 84 | |
| 2.0 (104 kw) | 2003.10-2006.06 | 4AT | F | L | Saloon FWD LF-DE;LF72 | Date to:2004.12 | GDS34102 | Drive Shaft | | 36 | 26 | 55.2 | 48.5 | 574 | |
| | 2003.10-2006.06 | 4AT | F | L | Saloon FWD LF-DE;LF72 | Date from:2005.01 | GDS34116 | Drive Shaft | | 28 | 26 | 59 | 90 | 620 | |
| | 2003.10-2006.06 | 4AT | F | R | Saloon FWD LF-DE;LF72 | Date from:2005.01 | GDS34104 | Drive Shaft | | 28 | 28 | 59 | 90 | 551 | |
| | 2003.10-2006.06 | 4AT | F | L/R | Saloon FWD LF-DE;LF72 | Date to:2004.12 | GCO34015 | Outer Joint | | 36 | 22 | 55.2 | 48.5 | 55.5 | I |
| | 2003.10-2006.06 | 4AT | F | R | Saloon FWD LF-DE;LF72 | | GCI34099 | Inner Joint | | 28 | 23 | 43 | | 119 | |
| | 2003.10-2006.06 | AT | F | R | Saloon FWD LF-DE;LF72 | | GCI34124 | Inner Joint | | 28 | 24 | 43 | | 128 | |
| | 2003.10-2006.06 | | F | R | Saloon FWD LF-DE;LF72 | | GCI34045 | Inner Joint | | 28 | 22 | 43 | | 118 | |
| 2.0 (105 kw) | 2006.07-2009.06 | 6MT | F | L | Hatchback FWD RF7J;RF8G | | GDS34226 | Drive Shaft | | 28 | 30 | 58.5 | 88 | 587 | |
| | 2006.07-2009.06 | 6MT | F | R | Hatchback FWD RF7J;RF8G | | GDS34225 | Drive Shaft | | 28 | 28 | 58.5 | 88 | 541 | |
| | 2006.07-2009.06 | | F | | Hatchback FWD RF7J;RF8G | | GCO34093 | Outer Joint | | 36 | 24 | 55.3 | 48 | 59 | I |
| | 2006.12-2009.06 | 6MT | F | L | Saloon FWD RF7J;RF8G | | GDS34226 | Drive Shaft | | 28 | 30 | 58.5 | 88 | 587 | |
| | 2006.12-2009.06 | 6MT | F | R | Saloon FWD RF7J;RF8G | | GDS34225 | Drive Shaft | | 28 | 28 | 58.5 | 88 | 541 | |
| | 2006.12-2009.06 | 6MT | F | L/R | Saloon FWD RF7J;RF8G | | GCO34237 | Outer Joint | | 28 | 24 | 58.5 | 88 | 63 | I |
| 2.0 (108 kw) | 2009.04-2013.10 | 5AT | F | L | Saloon FWD LF5H/LF5W | | GDS34241 | Drive Shaft | | 28 | 28 | 58.5 | 92 | 635 | |
| | 2009.04-2013.10 | 5AT | F | L/R | Saloon FWD LF5H/LF5W | | GCO34177 | Outer Joint | | 28 | 24 | 58.6 | 90 | 60 | M |
| | 2009.04-2013.10 | 5AT | F | L | Saloon FWD LF5H/LF5W | | GCI34125 | Inner Joint | | 28 | 24 | 35 | 66.5 | 115 | |
| | 2009.04-2013.10 | 5AT | F | R | Saloon FWD LF5H/LF5W | | GCI34124 | Inner Joint | | 28 | 24 | 43 | | 128 | |
| | 2009.04-2013.10 | 6MT | F | L | Saloon FWD LF5H/LF5W | | GDS34261 | Drive Shaft | | 28 | 28 | 58.5 | 92 | 637 | |
| | 2009.04-2013.10 | 6MT | F | R | Saloon FWD LF5H/LF5W | | GDS34195 | Drive Shaft | | 28 | 28 | 58.5 | 92 | 586 | |
| | 2009.04-2014.09 | 6MT | F | L | Hatchback FWD LF-VE, LF5H, LF5W | | GDS34261 | Drive Shaft | | 28 | 28 | 58.5 | 92 | 637 | |
| | 2009.04-2014.09 | 6MT | F | R | Hatchback FWD LF-VE, LF5H, LF5W | | GDS34195 | Drive Shaft | | 28 | 28 | 58.5 | 92 | 586 | |
| | 2009.04-2014.09 | 6MT | F | L | Hatchback FWD LF-VE, LF5H, LF5W | | GCI34141 | Inner Joint | | 28 | 24 | 35 | 66.5 | 116.5 | |
| | 2009.04-2014.09 | MT | F | L | Hatchback FWD LF-VE, LF5H, LF5W | | GCO34200 | Outer Joint | | 28 | 24 | 58.5 | 92 | 63 | I |
| | 2010.06-2013.05 | AT | F | L | Hatchback FWD LF5H | | GDS34241 | Drive Shaft | | 28 | 28 | 58.5 | 92 | 635 | |
| | 2010.06-2013.05 | AT | F | L/R | Hatchback FWD LF5H | | GCO34177 | Outer Joint | | 28 | 24 | 58.6 | 90 | 60 | M |
| | 2010.06-2013.05 | AT | F | L | Hatchback FWD LF5H | | GCI34125 | Inner Joint | | 28 | 24 | 35 | 66.5 | 115 | |
| | 2010.06-2013.05 | AT | F | R | Hatchback FWD LF5H | | GCI34124 | Inner Joint | | 28 | 24 | 43 | | 128 | |
| | 2010.06-2013.05 | MT | F | L | Hatchback FWD LF5H | | GDS34261 | Drive Shaft | | 28 | 28 | 58.5 | 92 | 637 | |
| | 2010.06-2013.05 | MT | F | R | Hatchback FWD LF5H | | GDS34195 | Drive Shaft | | 28 | 28 | 58.5 | 92 | 586 | |
| | 2010.06-2013.05 | 5AT | F | L | Saloon FWD LF5H | | GDS34241 | Drive Shaft | | 28 | 28 | 58.5 | 92 | 635 | |
| | 2010.06-2013.05 | 5AT | F | L/R | Saloon FWD LF5H | | GCO34177 | Outer Joint | | 28 | 24 | 58.6 | 90 | 60 | M |
| | 2010.06-2013.05 | 5AT | F | L | Saloon FWD LF5H | | GCI34125 | Inner Joint | | 28 | 24 | 35 | 66.5 | 115 | |
| | 2010.06-2013.05 | 5AT | F | R | Saloon FWD LF5H | | GCI34124 | Inner Joint | | 28 | 24 | 43 | | 128 | |
| | 2010.06-2013.05 | 6MT | F | L | Saloon FWD LF5H | | GDS34261 | Drive Shaft | | 28 | 28 | 58.5 | 92 | 637 | |
| | 2010.06-2013.05 | 6MT | F | R | Saloon FWD LF5H | | GDS34195 | Drive Shaft | | 28 | 28 | 58.5 | 92 | 586 | |
| 2.0 (110 kw) | 2003.10-2009.12 | 4AT | F | L | Hatchback FWD LF-VE;LF-DE;LF50;LF72;LFN7;LFN8 | Date to:2004.12 | GDS34102 | Drive Shaft | | 36 | 26 | 55.2 | 48.5 | 574 | |
| | 2003.10-2009.12 | 4AT | F | L | Hatchback FWD LF-VE;LF-DE;LF50;LF72;LFN7;LFN8 | Date from:2005.01,Date to:2006.02 | GDS34116 | Drive Shaft | | 28 | 26 | 59 | 90 | 620 | |
| | 2003.10-2009.12 | 4AT | F | L/R | Hatchback FWD LF-VE;LF-DE;LF50;LF72;LFN7;LFN8 | Date to:2004.12 | GCO34015 | Outer Joint | | 36 | 22 | 55.2 | 48.5 | 55.5 | I |
| | 2003.10-2009.12 | 4AT | F | L | Hatchback FWD LF-VE;LF-DE;LF50;LF72;LFN7;LFN8 | Date to:2006.02,Engine code:LF72;AAR | GCI34146 | Inner Joint | | 26 | 23 | 35 | 66.5 | 109.5 | |
| | 2003.10-2009.12 | 4AT | F | R | Hatchback FWD LF-VE;LF-DE;LF50;LF72;LFN7;LFN8 | For Engine Code:LF72 | GCI34099 | Inner Joint | | 28 | 23 | 43 | | 119 | |
| | 2003.10-2009.12 | 5MT | F | L | Hatchback FWD LF-VE;LF-DE;LF50;LF72;LFN7;LFN8 | Date to:2005.01 | GDS34085 | Drive Shaft | | 36 | 28 | 55.3 | 48 | 588 | |
| | 2003.10-2009.12 | 5MT | F | L | Hatchback FWD LF-VE;LF-DE;LF50;LF72;LFN7;LFN8 | Date from:2005.02;TJ | GDS34091 | Drive Shaft | | 28 | 28 | 59 | 90 | 639 | |
| | 2003.10-2009.12 | 5MT | F | R | Hatchback FWD LF-VE;LF-DE;LF50;LF72;LFN7;LFN8 | Date from:2006.04 | GDS34104 | Drive Shaft | | 28 | 28 | 59 | 90 | 551 | |
| | 2003.10-2009.12 | 5MT | F | L/R | Hatchback FWD LF-VE;LF-DE;LF50;LF72;LFN7;LFN8 | Date To:2005.01,For Engine Code:LF50 | GCO34048 | Outer Joint | | 36 | 24 | 55.3 | 48.3 | 55.5 | M |
| | 2003.10-2009.12 | 5MT | F | L/R | Hatchback FWD LF-VE;LF-DE;LF50;LF72;LFN7;LFN8 | Date from:2005.02,Engine code:LF50 | GCO34237 | Outer Joint | | 28 | 24 | 58.5 | 88 | 63 | I |
| | 2003.10-2009.12 | 5MT | F | L | Hatchback FWD LF-VE;LF-DE;LF50;LF72;LFN7;LFN8 | Engine code:LF50 | GCI34049 | Inner Joint | | 28 | 24 | 35 | 67 | 115 | |
| | 2003.10-2009.12 | AT | F | L/R | Hatchback FWD LF-VE;LF-DE;LF50;LF72;LFN7;LFN8 | Date From:2006.03,For Engine Code:LF72 | GCO34174 | Outer Joint | | 28 | 23 | 58.6 | 90 | 59 | M |
| | 2003.10-2009.12 | AT | F | R | Hatchback FWD LF-VE;LF-DE;LF50;LF72;LFN7;LFN8 | | GCI34124 | Inner Joint | | 28 | 24 | 43 | | 128 | |
| | 2003.10-2009.12 | MT | F | L | Hatchback FWD LF-VE;LF-DE;LF50;LF72;LFN7;LFN8 | Date from:2005.01;DOJ | GDS34261 | Drive Shaft | | 28 | 28 | 58.5 | 92 | 637 | |
| | 2003.10-2009.12 | 4AT | F | L | Saloon FWD LF-VE;LF-DE;LF50;LF72;LFN7;LFN8 | Date to:2004.12 | GDS34102 | Drive Shaft | | 36 | 26 | 55.2 | 48.5 | 574 | |

| | YEAR | TRANSM. | F/R | L/R | BODY STYLE & DRIVE TYPE & ENGINE | REMARKS | G-AP Ref. | PRODUCT | ABS | Technical Specifications A | B | C | H | L | P |
|---|---|---|---|---|---|---|---|---|---|---|---|---|---|---|---|
| **MAZDA** | | | | | | | | | | | | | | | |
| **3** | | | | | | | | | | | | | | | |
| 2.0 (110 kw) | 2003.10-2009.12 | 4AT | F | L | Saloon FWD LF-VE;LF-DE;LF50;LF72;LFN7;LFN8 | Date from:2005.01,Date to:2006.02 | GDS34116 | Drive Shaft | | 28 | 26 | 59 | 90 | 620 | |
| | 2003.10-2009.12 | 4AT | F | L/R | Saloon FWD LF-VE;LF-DE;LF50;LF72;LFN7;LFN8 | Date to:2004.12 | GCO34015 | Outer Joint | | 36 | 22 | 55.2 | 48.5 | 55.5 | I |
| | 2003.10-2009.12 | 4AT | F | L | Saloon FWD LF-VE;LF-DE;LF50;LF72;LFN7;LFN8 | Date to:2006.02,Engine code:LF72 | GCI34146 | Inner Joint | | 26 | 23 | 35 | 66.5 | 109.5 | |
| | 2003.10-2009.12 | 4AT/5MT | F | R | Saloon FWD LF-VE;LF-DE;LF50;LF72;LFN7;LFN8 | For Engine Code:LF72 | GCI34099 | Inner Joint | | 28 | 23 | 43 | | 119 | |
| | 2003.10-2009.12 | 5MT | F | L | Saloon FWD LF-VE;LF-DE;LF50;LF72;LFN7;LFN8 | Date to:2005.01 | GDS34085 | Drive Shaft | | 36 | 28 | 55.3 | 48 | 588 | |
| | 2003.10-2009.12 | 5MT | F | L | Saloon FWD LF-VE;LF-DE;LF50;LF72;LFN7;LFN8 | Date from:2005.02;TJ | GDS34091 | Drive Shaft | | 28 | 28 | 59 | 90 | 639 | |
| | 2003.10-2009.12 | 5MT | F | R | Saloon FWD LF-VE;LF-DE;LF50;LF72;LFN7;LFN8 | Date from:2006.04 | GDS34104 | Drive Shaft | | 28 | 28 | 59 | 90 | 551 | |
| | 2003.10-2009.12 | 5MT | F | L/R | Saloon FWD LF-VE;LF-DE;LF50;LF72;LFN7;LFN8 | Date To:2005.01,For Engine Code:LF50 | GCO34048 | Outer Joint | | 36 | 24 | 55.3 | 48.3 | 55.5 | M |
| | 2003.10-2009.12 | 5MT | F | L/R | Saloon FWD LF-VE;LF-DE;LF50;LF72;LFN7;LFN8 | Date from:2005.02,Engine code:LF50 | GCO34237 | Outer Joint | | 28 | 24 | 58.5 | 88 | 63 | I |
| | 2003.10-2009.12 | 5MT | F | L | Saloon FWD LF-VE;LF-DE;LF50;LF72;LFN7;LFN8 | For Engine Code:LF50 | GCI34049 | Inner Joint | | 28 | 24 | 35 | 67 | 115 | |
| | 2003.10-2009.12 | AT | F | L/R | Saloon FWD LF-VE;LF-DE;LF50;LF72;LFN7;LFN8 | Date From:2006.03,For Engine Code:LF72 | GCO34174 | Outer Joint | | 28 | 23 | 58.6 | 90 | 59 | M |
| | 2003.10-2009.12 | AT | F | L | Saloon FWD LF-VE;LF-DE;LF50;LF72;LFN7;LFN8 | | GCI34047 | Inner Joint | | 26 | 22 | 35 | 66.5 | 109.5 | |
| | 2003.10-2009.12 | AT | F | R | Saloon FWD LF-VE;LF-DE;LF50;LF72;LFN7;LFN8 | | GCI34045 | Inner Joint | | 28 | 22 | 43 | | 118 | |
| | 2003.10-2009.12 | AT | F | R | Saloon FWD LF-VE;LF-DE;LF50;LF72;LFN7;LFN8 | | GCI34086 | Inner Joint | | 28 | 24 | 43 | | 124 | |
| | 2003.10-2009.12 | AT | F | R | Saloon FWD LF-VE;LF-DE;LF50;LF72;LFN7;LFN8 | | GCI34124 | Inner Joint | | 28 | 24 | 43 | | 128 | |
| | 2003.10-2009.12 | MT | F | L | Saloon FWD LF-VE;LF-DE;LF50;LF72;LFN7;LFN8 | Date from:2005.01;DOJ | GDS34261 | Drive Shaft | | 28 | 28 | 58.5 | 92 | 637 | |
| | 2003.10-2009.12 | MT | F | L | Saloon FWD LF-VE;LF-DE;LF50;LF72;LFN7;LFN8 | | GCI34139 | Inner Joint | | 30 | 26 | 50 | 77.5 | 107.5 | |
| | 2003.10-2009.12 | | F | L/R | Saloon FWD LF-VE;LF-DE;LF50;LF72;LFN7;LFN8 | Model year from:2005 | GCO34131 | Outer Joint | | 28 | 22 | 58.6 | 90 | 59 | I |
| | 2009.01-2014.09 | 5AT | F | L | Hatchback FWD LF-VE;LF5W;LF5H | | GDS34241 | Drive Shaft | | 28 | 28 | 58.5 | 92 | 635 | |
| | 2009.01-2014.09 | 5AT | F | L | Hatchback FWD LF-VE;LF5W;LF5H | Date from:2011.07,For right-hand drive vehicles,For vehicles with start-stop function | GDS83513 | Drive Shaft | | 28 | 28 | 58.5 | 92 | 626 | |
| | 2009.01-2014.09 | 5AT | F | R | Hatchback FWD LF-VE;LF5W;LF5H | Date from:2011.07,For right-hand drive vehicles,For vehicles with start-stop function | GDS83514 | Drive Shaft | | 28 | 28 | 58.5 | 92 | 558 | |
| | 2009.01-2014.09 | 5AT | F | L/R | Hatchback FWD LF-VE;LF5W;LF5H | For right-hand drive vehicles,For vehicles without start-stop function | GCO34177 | Outer Joint | | 28 | 24 | 58.6 | 90 | 60 | M |
| | 2009.01-2014.09 | 5AT | F | L/R | Hatchback FWD LF-VE;LF5W;LF5H | | GCO34200 | Outer Joint | | 28 | 24 | 58.5 | 92 | 63 | I |
| | 2009.01-2014.09 | 5AT | F | L/R | Hatchback FWD LF-VE;LF5W;LF5H | Date from:2011.07,For right-hand drive vehicles,For vehicles with start-stop function | GCO81876 | Outer Joint | | 28 | 32 | 58.5 | 92 | 57.5 | I |
| | 2009.01-2014.09 | 5AT | F | L | Hatchback FWD LF-VE;LF5W;LF5H | For right-hand drive vehicles,For vehicles without start-stop function | GCI34125 | Inner Joint | | 28 | 24 | 35 | 66.5 | 115 | |
| | 2009.01-2014.09 | 5AT | F | R | Hatchback FWD LF-VE;LF5W;LF5H | | GCI34124 | Inner Joint | | 28 | 24 | 43 | | 128 | |
| | 2009.01-2014.09 | 5AT | F | L/R | Hatchback FWD LF-VE;LF5W;LF5H | Date from:2011.07,For right-hand drive vehicles,For vehicles with start-stop function | GCI82251 | Inner Joint | | 28 | 30 | 43 | | 119.5 | |
| | 2009.01-2014.09 | 6MT | F | L | Hatchback FWD LF-VE;LF5W;LF5H | | GDS34261 | Drive Shaft | | 28 | 28 | 58.5 | 92 | 637 | |
| | 2009.01-2014.09 | 6MT | F | R | Hatchback FWD LF-VE;LF5W;LF5H | | GDS34195 | Drive Shaft | | 28 | 28 | 58.5 | 92 | 586 | |
| | 2009.03-2014.09 | 5AT | F | L | Saloon FWD LF5W;LF5H | | GDS34241 | Drive Shaft | | 28 | 28 | 58.5 | 92 | 635 | |
| | 2009.03-2014.09 | 5AT | F | L | Saloon FWD LF5W;LF5H | Date from:2011.07,For right-hand drive vehicles,For vehicles with start-stop function | GDS83513 | Drive Shaft | | 28 | 28 | 58.5 | 92 | 626 | |
| | 2009.03-2014.09 | 5AT | F | R | Saloon FWD LF5W;LF5H | Date from:2011.07,For right-hand drive vehicles,For vehicles with start-stop function | GDS83514 | Drive Shaft | | 28 | 28 | 58.5 | 92 | 558 | |
| | 2009.03-2014.09 | 5AT | F | L/R | Saloon FWD LF5W;LF5H | For right-hand drive vehicles,For vehicles without start-stop function | GCO34177 | Outer Joint | | 28 | 24 | 58.6 | 90 | 60 | M |
| | 2009.03-2014.09 | 5AT | F | L/R | Saloon FWD LF5W;LF5H | | GCO34200 | Outer Joint | | 28 | 24 | 58.5 | 92 | 63 | I |
| | 2009.03-2014.09 | 5AT | F | L/R | Saloon FWD LF5W;LF5H | Date from:2011.07,For right-hand drive vehicles,For vehicles with start-stop function | GCO81876 | Outer Joint | | 28 | 32 | 58.5 | 92 | 57.5 | I |
| | 2009.03-2014.09 | 5AT | F | L | Saloon FWD LF5W;LF5H | For right-hand drive vehicles,For vehicles without start-stop function | GCI34125 | Inner Joint | | 28 | 24 | 35 | 66.5 | 115 | |
| | 2009.03-2014.09 | 5AT | F | R | Saloon FWD LF5W;LF5H | | GCI34124 | Inner Joint | | 28 | 24 | 43 | | 128 | |
| | 2009.03-2014.09 | 5AT | F | L/R | Saloon FWD LF5W;LF5H | Date from:2011.07,For right-hand drive vehicles,For vehicles with start-stop function | GCI82251 | Inner Joint | | 28 | 30 | 43 | | 119.5 | |
| | 2009.03-2014.09 | 6MT | F | L | Saloon FWD LF5W;LF5H | | GDS34261 | Drive Shaft | | 28 | 28 | 58.5 | 92 | 637 | |
| | 2009.03-2014.09 | 6MT | F | R | Saloon FWD LF5W;LF5H | | GDS34195 | Drive Shaft | | 28 | 28 | 58.5 | 92 | 586 | |
| | 2013.11-2016.05 | 6AT | F | L | Hatchback FWD PEY7 | | GCI82742 | Inner Joint | | 28 | 32 | 40 | 67.5 | 108.5 | |
| | 2013.11-2016.05 | 6AT | F | L | Saloon FWD PEY7 | | GCI82742 | Inner Joint | | 28 | 32 | 40 | 67.5 | 108.5 | |
| | 2018.11- | 6AT | F | L | Hatchback FWD PEXP;PEXN | | GDS84513 | Drive Shaft | | 28 | 31 | 59 | 86.5 | 631 | |
| | 2018.11- | 6AT | F | R | Hatchback FWD PEXP;PEXN | | GDS84530 | Drive Shaft | | 28 | 31 | 59 | 86.5 | 1012 | |
| | 2018.11- | 6AT | F | L/R | Hatchback FWD PEXP;PEXN | | GCO82793 | Outer Joint | | 28 | 32 | 59 | 86.5 | 58.5 | I |
| | 2018.11- | 6AT | F | L | Hatchback FWD PEXP;PEXN | | GCI82838 | Inner Joint | | 31 | 32 | 40 | 77 | 110.5 | |
| | 2018.11- | 6AT | F | R | Hatchback FWD PEXP;PEXN | | GCI82837 | Inner Joint | | 31 | 32 | 40 | 440 | 100 | |
| | 2020.01- | 6AT | F | L | Hatchback FWD PEXN | For vehicles without cylinder shutdown | GDS84513 | Drive Shaft | | 28 | 31 | 59 | 86.5 | 631 | |
| | 2020.01- | 6AT | F | L | Hatchback FWD PEXN | For vehicles with cylinder shutdown | GDS84514 | Drive Shaft | | 28 | 31 | 59 | 86.5 | 637 | |
| | 2020.01- | 6AT | F | R | Hatchback FWD PEXN | For vehicles with cylinder shutdown | GDS84355 | Drive Shaft | | 28 | 31 | 59 | 86.5 | 1016 | |
| | 2020.01- | 6AT | F | R | Hatchback FWD PEXN | For vehicles without cylinder shutdown | GDS84530 | Drive Shaft | | 28 | 31 | 59 | 86.5 | 1012 | |
| | 2020.01- | 6AT | F | L/R | Hatchback FWD PEXN | | GCO82793 | Outer Joint | | 28 | 32 | 59 | 86.5 | 58.5 | I |
| | 2020.01- | 6AT | F | L | Hatchback FWD PEXN | | GCI82838 | Inner Joint | | 31 | 32 | 40 | 77 | 110.5 | |
| | 2020.01- | 6AT | F | R | Hatchback FWD PEXN | For vehicles with cylinder shutdown | GCI82728 | Inner Joint | | 31 | 32 | 40 | 423 | 106 | |
| | 2020.01- | 6AT | F | R | Hatchback FWD PEXN | For vehicles without cylinder shutdown | GCI82837 | Inner Joint | | 31 | 32 | 40 | 440 | 100 | |
| | 2020.01- | 6MT | F | L | Hatchback FWD PEXN | For vehicles with cylinder shutdown | GDS84401 | Drive Shaft | | 28 | 28 | 59 | 86.5 | 645 | |
| | 2020.01- | 6MT | F | L | Hatchback FWD PEXN | For vehicles without cylinder shutdown | GDS84489 | Drive Shaft | | 28 | 28 | 59 | 87 | 642 | |
| | 2020.01- | 6MT | F | R | Hatchback FWD PEXN | For vehicles without cylinder shutdown | GDS84386 | Drive Shaft | | 28 | 28 | 59 | 87 | 1005 | |
| | 2020.01- | 6MT | F | R | Hatchback FWD PEXN | For vehicles with cylinder shutdown | GDS84400 | Drive Shaft | | 28 | 28 | 59 | 86.5 | 1011 | |
| | 2020.01- | 6MT | F | L/R | Hatchback FWD PEXN | For vehicles with cylinder shutdown | GCO82793 | Outer Joint | | 28 | 32 | 59 | 86.5 | 58.5 | I |
| | 2020.01- | 6MT | F | L/R | Hatchback FWD PEXN | For vehicles without cylinder shutdown | GCO82801 | Outer Joint | | 28 | 33 | 59 | 87 | 60.5 | I |
| | 2020.01- | 6MT | F | L | Hatchback FWD PEXN | For vehicles with cylinder shutdown | GCI82742 | Inner Joint | | 28 | 32 | 40 | 67.5 | 108.5 | |
| | 2020.01- | 6MT | F | L | Hatchback FWD PEXN | For vehicles without cylinder shutdown | GCI82825 | Inner Joint | | 28 | 33 | 40 | 67.5 | 108 | |
| | 2020.01- | 6MT | F | R | Hatchback FWD PEXN | For vehicles with cylinder shutdown | GCI81615 | Inner Joint | | 28 | 32 | 40 | 416 | 94 | |
| | 2020.01- | 6MT | F | R | Hatchback FWD PEXN | For vehicles without cylinder shutdown | GCI82735 | Inner Joint | | 28 | 33 | 40 | 432 | 84 | |

| | YEAR | TRANSM. | F/R | L/R | BODY STYLE & DRIVE TYPE & ENGINE | REMARKS | G-AP Ref. | PRODUCT | ABS | Technical Specifications A | B | C | H | L | P |
|---|---|---|---|---|---|---|---|---|---|---|---|---|---|---|---|
| **MAZDA** | | | | | | | | | | | | | | | |
| **3** | | | | | | | | | | | | | | | |
| 2.0 (110 kw) | 2020.07- | 6AT | F | L | Saloon FWD PEXN | For vehicles without cylinder shutdown | GDS84513 | Drive Shaft | | 28 | 31 | 59 | 86.5 | 631 | |
| | 2020.07- | 6AT | F | L | Saloon FWD PEXN | For vehicles with cylinder shutdown | GDS84514 | Drive Shaft | | 28 | 31 | 59 | 86.5 | 637 | |
| | 2020.07- | 6AT | F | R | Saloon FWD PEXN | For vehicles with cylinder shutdown | GDS84355 | Drive Shaft | | 28 | 31 | 59 | 86.5 | 1016 | |
| | 2020.07- | 6AT | F | R | Saloon FWD PEXN | For vehicles without cylinder shutdown | GDS84530 | Drive Shaft | | 28 | 31 | 59 | 86.5 | 1012 | |
| | 2020.07- | 6AT | F | L/R | Saloon FWD PEXN | | GCO82793 | Outer Joint | | 28 | 32 | 59 | 86.5 | 58.5 | I |
| | 2020.07- | 6AT | F | L | Saloon FWD PEXN | | GCI82838 | Inner Joint | | 31 | 32 | 40 | 77 | 110.5 | |
| | 2020.07- | 6AT | F | R | Saloon FWD PEXN | For vehicles with cylinder shutdown | GCI82728 | Inner Joint | | 31 | 32 | 40 | 423 | 106 | |
| | 2020.07- | 6AT | F | R | Saloon FWD PEXN | For vehicles without cylinder shutdown | GCI82837 | Inner Joint | | 31 | 32 | 40 | 440 | 100 | |
| | 2020.07- | 6MT | F | L | Saloon FWD PEXN | For vehicles with cylinder shutdown | GDS84401 | Drive Shaft | | 28 | 28 | 59 | 86.5 | 645 | |
| | 2020.07- | 6MT | F | L | Saloon FWD PEXN | For vehicles without cylinder shutdown | GDS84489 | Drive Shaft | | 28 | 28 | 59 | 87 | 642 | |
| | 2020.07- | 6MT | F | R | Saloon FWD PEXN | For vehicles without cylinder shutdown | GDS84386 | Drive Shaft | | 28 | 28 | 59 | 87 | 1005 | |
| | 2020.07- | 6MT | F | R | Saloon FWD PEXN | For vehicles with cylinder shutdown | GDS84400 | Drive Shaft | | 28 | 28 | 59 | 86.5 | 1011 | |
| | 2020.07- | 6MT | F | L/R | Saloon FWD PEXN | For vehicles with cylinder shutdown | GCO82793 | Outer Joint | | 28 | 32 | 59 | 86.5 | 58.5 | I |
| | 2020.07- | 6MT | F | L/R | Saloon FWD PEXN | For vehicles without cylinder shutdown | GCO82801 | Outer Joint | | 28 | 33 | 59 | 87 | 60.5 | I |
| | 2020.07- | 6MT | F | L | Saloon FWD PEXN | For vehicles with cylinder shutdown | GCI82742 | Inner Joint | | 28 | 32 | 40 | 67.5 | 108.5 | |
| | 2020.07- | 6MT | F | L | Saloon FWD PEXN | For vehicles without cylinder shutdown | GCI82825 | Inner Joint | | 28 | 33 | 40 | 67.5 | 108 | |
| | 2020.07- | 6MT | F | R | Saloon FWD PEXN | | GCI81615 | Inner Joint | | 28 | 32 | 40 | 416 | 94 | |
| | 2020.07- | 6MT | F | R | Saloon FWD PEXN | For vehicles without cylinder shutdown | GCI82735 | Inner Joint | | 28 | 33 | 40 | 432 | 84 | |
| 2.0 (111 kw) | 2008.12-2013.05 | 5AT | F | L | Hatchback FWD LF-VD;LFZ2 | | GDS34241 | Drive Shaft | | 28 | 28 | 58.5 | 92 | 635 | |
| | 2008.12-2013.05 | 5AT | F | L | Hatchback FWD LF-VD;LFZ2 | Date from 2011.07,For right-hand drive vehicles,For vehicles with start-stop function | GDS83513 | Drive Shaft | | 28 | 28 | 58.5 | 92 | 626 | |
| | 2008.12-2013.05 | 5AT | F | R | Hatchback FWD LF-VD;LFZ2 | Date from 2011.07,For right-hand drive vehicles,For vehicles with start-stop function | GDS83514 | Drive Shaft | | 28 | 28 | 58.5 | 92 | 558 | |
| | 2008.12-2013.05 | 5AT | F | L/R | Hatchback FWD LF-VD;LFZ2 | For right-hand drive vehicles,For vehicles without start-stop function | GCO34177 | Outer Joint | | 28 | 24 | 58.6 | 90 | 60 | M |
| | 2008.12-2013.05 | 5AT | F | L/R | Hatchback FWD LF-VD;LFZ2 | | GCO34200 | Outer Joint | | 28 | 24 | 58.5 | 92 | 63 | I |
| | 2008.12-2013.05 | 5AT | F | L/R | Hatchback FWD LF-VD;LFZ2 | Date from 2011.07,For right-hand drive vehicles,For vehicles with start-stop function | GCO81876 | Outer Joint | | 28 | 32 | 58.5 | 92 | 57.5 | I |
| | 2008.12-2013.05 | 5AT | F | L | Hatchback FWD LF-VD;LFZ2 | For right-hand drive vehicles,For vehicles without start-stop function | GCI34125 | Inner Joint | | 28 | 24 | 35 | 66.5 | 115 | |
| | 2008.12-2013.05 | 5AT | F | L | Hatchback FWD LF-VD;LFZ2 | Date from 2011.07,For right-hand drive vehicles,For vehicles with start-stop function | GCI34158 | Inner Joint | | 28 | 30 | 40 | 67.5 | 108 | |
| | 2008.12-2013.05 | 5AT | F | R | Hatchback FWD LF-VD;LFZ2 | | GCI34124 | Inner Joint | | 28 | 24 | 43 | | 128 | |
| | 2008.12-2013.05 | 5AT | F | R | Hatchback FWD LF-VD;LFZ2 | Date from 2011.07,For right-hand drive vehicles,For vehicles with start-stop function | GCI82251 | Inner Joint | | 28 | 30 | 43 | | 119.5 | |
| | 2008.12-2013.05 | 6MT | F | L | Hatchback FWD LF-VD;LFZ2 | | GDS34261 | Drive Shaft | | 28 | 28 | 58.5 | 92 | 637 | |
| | 2008.12-2013.05 | 6MT | F | R | Hatchback FWD LF-VD;LFZ2 | | GDS34195 | Drive Shaft | | 28 | 28 | 58.5 | 92 | 586 | |
| | 2009.02-2013.05 | 5AT | F | L | Saloon FWD LFZ2 | | GDS34241 | Drive Shaft | | 28 | 28 | 58.5 | 92 | 635 | |
| | 2009.02-2013.05 | 5AT | F | L | Saloon FWD LFZ2 | Date from 2011.07,For right-hand drive vehicles,For vehicles with start-stop function | GDS83513 | Drive Shaft | | 28 | 28 | 58.5 | 92 | 626 | |
| | 2009.02-2013.05 | 5AT | F | R | Saloon FWD LFZ2 | | GDS34104 | Drive Shaft | | 28 | 28 | 59 | 90 | 551 | |
| | 2009.02-2013.05 | 5AT | F | R | Saloon FWD LFZ2 | Date from 2011.07,For right-hand drive vehicles,For vehicles with start-stop function | GDS83514 | Drive Shaft | | 28 | 28 | 58.5 | 92 | 558 | |
| | 2009.02-2013.05 | 5AT | F | L/R | Saloon FWD LFZ2 | | GCO34200 | Outer Joint | | 28 | 24 | 58.5 | 92 | 63 | I |
| | 2009.02-2013.05 | 5AT | F | L/R | Saloon FWD LFZ2 | Date from 2011.07,For right-hand drive vehicles,For vehicles with start-stop function | GCO81876 | Outer Joint | | 28 | 32 | 58.5 | 92 | 57.5 | I |
| | 2009.02-2013.05 | 5AT | F | L | Saloon FWD LFZ2 | For right-hand drive vehicles,For vehicles without start-stop function | GCI34125 | Inner Joint | | 28 | 24 | 35 | 66.5 | 115 | |
| | 2009.02-2013.05 | 5AT | F | R | Saloon FWD LFZ2 | | GCI34124 | Inner Joint | | 28 | 24 | 43 | | 128 | |
| | 2009.02-2013.05 | 5AT | F | L/R | Saloon FWD LFZ2 | Date from 2011.07,For right-hand drive vehicles,For vehicles with start-stop function | GCI82251 | Inner Joint | | 28 | 30 | 43 | | 119.5 | |
| | 2009.02-2013.05 | 6MT | F | L | Saloon FWD LFZ2 | | GDS34261 | Drive Shaft | | 28 | 28 | 58.5 | 92 | 637 | |
| | 2009.02-2013.05 | 6MT | F | R | Saloon FWD LFZ2 | | GDS34195 | Drive Shaft | | 28 | 28 | 58.5 | 92 | 586 | |
| | 2009.02-2013.05 | MT | F | L | Saloon FWD LFZ2 | | GCI34141 | Inner Joint | | 28 | 24 | 35 | 66.5 | 116.5 | |
| 2.0 (116 kw) | 2011.09-2013.05 | 5AT/6AT | F | L | Hatchback FWD PEY7 | Without i-stop | GDS34241 | Drive Shaft | | 28 | 28 | 58.5 | 92 | 635 | |
| | 2011.09-2013.05 | 5AT/6AT | F | L | Hatchback FWD PEY7 | With i-stop | GDS83513 | Drive Shaft | | 28 | 28 | 58.5 | 92 | 626 | |
| | 2011.09-2013.05 | 5AT/6AT | F | R | Hatchback FWD PEY7 | With i-stop | GDS83514 | Drive Shaft | | 28 | 28 | 58.5 | 92 | 558 | |
| | 2011.09-2013.05 | 5AT/6AT | F | L/R | Hatchback FWD PEY7 | Without i-stop | GCO34177 | Outer Joint | | 28 | 24 | 58.6 | 90 | 60 | M |
| | 2011.09-2013.05 | 5AT/6AT | F | L/R | Hatchback FWD PEY7 | With i-stop | GCO81876 | Outer Joint | | 28 | 32 | 58.5 | 92 | 57.5 | I |
| | 2011.09-2013.05 | 5AT/6AT | F | L | Hatchback FWD PEY7 | Without i-stop | GCI34125 | Inner Joint | | 28 | 24 | 35 | 66.5 | 115 | |
| | 2011.09-2013.05 | 5AT/6AT | F | L | Hatchback FWD PEY7 | With i-stop | GCI34158 | Inner Joint | | 28 | 30 | 40 | 67.5 | 108 | |
| | 2011.09-2013.05 | 5AT/6AT | F | R | Hatchback FWD PEY7 | | GCI34124 | Inner Joint | | 28 | 24 | 43 | | 128 | |
| | 2011.09-2013.05 | 6MT | F | L | Hatchback FWD PEY7 | | GDS34261 | Drive Shaft | | 28 | 28 | 58.5 | 92 | 637 | |
| | 2011.09-2013.05 | 6MT | F | R | Hatchback FWD PEY7 | | GDS34195 | Drive Shaft | | 28 | 28 | 58.5 | 92 | 586 | |
| 2.0 (121 kw) | 2013.07-2019.05 | 6MT | F | L | Hatchback FWD PEY7;PEY5;PEX2;PEXL | Vehicle Production Country:Japan;Not for Facelift;Vehicle Production Country:Mexico | GDS82086 | Drive Shaft | | 28 | 28 | 59 | 87 | 648 | |
| | 2013.07-2019.05 | 6MT | F | R | Hatchback FWD PEY7;PEY5;PEX2;PEXL | Vehicle Production Country:Japan;Not for Facelift;Vehicle Production Country:Mexico | GDS82087 | Drive Shaft | | 28 | 28 | 59 | 87 | 1012 | |
| | 2013.07-2019.05 | 6MT | F | L/R | Hatchback FWD PEY7;PEY5;PEX2;PEXL | Vehicle Production Country:Japan;Not for Facelift;Vehicle Production Country:Mexico | GCO81639 | Outer Joint | | 28 | 32 | 59 | 87 | 60.5 | I |
| | 2013.07-2019.05 | 6MT | F | L | Hatchback FWD PEY7;PEY5;PEX2;PEXL | Vehicle Production Country:Japan;Not for Facelift;Vehicle Production Country:Mexico | GCI81614 | Inner Joint | | 28 | 32 | 40 | 67 | 93 | |
| | 2013.07-2019.05 | 6MT | F | R | Hatchback FWD PEY7;PEY5;PEX2;PEXL | Vehicle Production Country:Japan;Not for Facelift;Vehicle Production Country:Mexico | GCI81615 | Inner Joint | | 28 | 32 | 40 | 416 | 94 | |
| | 2014.11-2019.05 | 6AT | F | L | Saloon FWD PEY7;PEY5;PEX2 | | GCI82742 | Inner Joint | | 28 | 32 | 40 | 67.5 | 108.5 | |
| | 2014.11-2019.05 | 6MT | F | L | Saloon FWD PEY7;PEY5;PEX2 | Vehicle Production Country:Japan;Not for Facelift;Vehicle Production Country:Mexico | GDS82086 | Drive Shaft | | 28 | 28 | 59 | 87 | 648 | |
| | 2014.11-2019.05 | 6MT | F | R | Saloon FWD PEY7;PEY5;PEX2 | Vehicle Production Country:Japan;Not for Facelift;Vehicle Production Country:Mexico | GDS82087 | Drive Shaft | | 28 | 28 | 59 | 87 | 1012 | |
| | 2014.11-2019.05 | 6MT | F | L/R | Saloon FWD PEY7;PEY5;PEX2 | Vehicle Production Country:Japan;Not for Facelift;Vehicle Production Country:Mexico | GCO81639 | Outer Joint | | 28 | 32 | 59 | 87 | 60.5 | I |
| | 2014.11-2019.05 | 6MT | F | L | Saloon FWD PEY7;PEY5;PEX2 | Vehicle Production Country:Japan;Not for Facelift;Vehicle Production Country:Mexico | GCI81614 | Inner Joint | | 28 | 32 | 40 | 67 | 93 | |
| | 2014.11-2019.05 | 6MT | F | R | Saloon FWD PEY7;PEY5;PEX2 | Vehicle Production Country:Japan;Not for Facelift;Vehicle Production Country:Mexico | GCI81615 | Inner Joint | | 28 | 32 | 40 | 416 | 94 | |
| | 2014.11-2019.06 | 6AT | F | L | Hatchback FWD PEX2 | | GDS82086 | Drive Shaft | | 28 | 28 | 59 | 87 | 648 | |
| | 2014.11-2019.06 | 6AT | F | R | Hatchback FWD PEX2 | | GDS82087 | Drive Shaft | | 28 | 28 | 59 | 87 | 1012 | |

| | YEAR | TRANSM. | F/R | L/R | BODY STYLE & DRIVE TYPE & ENGINE | REMARKS | G-AP Ref. | PRODUCT | ABS | Technical Specifications A | B | C | H | L | P |
|---|---|---|---|---|---|---|---|---|---|---|---|---|---|---|---|
| **MAZDA** | | | | | | | | | | | | | | | |
| **3** | | | | | | | | | | | | | | | |
| 2.0 (121 kw) | 2014.11-2019.06 | 6AT | F | L/R | Hatchback FWD PEX2 | | GCO81639 | Outer Joint | | 28 | 32 | 59 | 87 | 60.5 | I |
| | 2014.11-2019.06 | 6AT | F | L | Hatchback FWD PEX2 | | GCI81614 | Inner Joint | | 28 | 32 | 40 | 67 | 93 | |
| | 2014.11-2019.06 | 6AT | F | R | Hatchback FWD PEX2 | | GCI81615 | Inner Joint | | 28 | 32 | 40 | 416 | 94 | |
| | 2014.11-2019.06 | 6AT | F | L | Saloon FWD PEX2 | | GDS82086 | Drive Shaft | | 28 | 28 | 59 | 87 | 648 | |
| | 2014.11-2019.06 | 6AT | F | R | Saloon FWD PEX2 | | GDS82087 | Drive Shaft | | 28 | 28 | 59 | 87 | 1012 | |
| | 2014.11-2019.06 | 6AT | F | L/R | Saloon FWD PEX2 | | GCO81639 | Outer Joint | | 28 | 32 | 59 | 87 | 60.5 | I |
| | 2014.11-2019.06 | 6AT | F | L | Saloon FWD PEX2 | | GCI81614 | Inner Joint | | 28 | 32 | 40 | 67 | 93 | |
| | 2014.11-2019.06 | 6AT | F | R | Saloon FWD PEX2 | | GCI81615 | Inner Joint | | 28 | 32 | 40 | 416 | 94 | |
| | 2015.04-2016.05 | 6MT | F | L | Hatchback Van FWD PEX2 | | GDS82086 | Drive Shaft | | 28 | 28 | 59 | 87 | 648 | |
| | 2015.04-2016.05 | 6MT | F | R | Hatchback Van FWD PEX2 | | GDS82087 | Drive Shaft | | 28 | 28 | 59 | 87 | 1012 | |
| | 2015.04-2016.05 | 6MT | F | L/R | Hatchback Van FWD PEX2 | | GCO81639 | Outer Joint | | 28 | 32 | 59 | 87 | 60.5 | I |
| | 2015.04-2016.05 | 6MT | F | L | Hatchback Van FWD PEX2 | | GCI81614 | Inner Joint | | 28 | 32 | 40 | 67 | 93 | |
| | 2015.04-2016.05 | 6MT | F | R | Hatchback Van FWD PEX2 | | GCI81615 | Inner Joint | | 28 | 32 | 40 | 416 | 94 | |
| 2.0 (132 kw) | 2019.06- | 6AT | F | L | Hatchback 4WD HFY1 | For vehicles without cylinder shutdown | GDS84513 | Drive Shaft | | 28 | 31 | 59 | 86.5 | 631 | |
| | 2019.06- | 6AT | F | L | Hatchback 4WD HFY1 | For vehicles with cylinder shutdown | GDS84514 | Drive Shaft | | 28 | 31 | 59 | 86.5 | 637 | |
| | 2019.06- | 6AT | F | R | Hatchback 4WD HFY1 | For vehicles with cylinder shutdown | GDS84355 | Drive Shaft | | 28 | 31 | 59 | 86.5 | 1016 | |
| | 2019.06- | 6AT | F | L/R | Hatchback 4WD HFY1 | | GCO82793 | Outer Joint | | 28 | 32 | 59 | 86.5 | 58.5 | I |
| | 2019.06- | 6AT | F | L | Hatchback 4WD HFY1 | | GCI82838 | Inner Joint | | 31 | 32 | 40 | 77 | 110.5 | |
| | 2019.06- | 6AT | F | R | Hatchback 4WD HFY1 | For vehicles with cylinder shutdown | GCI82728 | Inner Joint | | 31 | 32 | 40 | 423 | 106 | |
| | 2019.06- | 6MT | F | L | Hatchback 4WD HFY1 | For vehicles with cylinder shutdown | GDS84401 | Drive Shaft | | 28 | 28 | 59 | 86.5 | 645 | |
| | 2019.06- | 6MT | F | R | Hatchback 4WD HFY1 | For vehicles with cylinder shutdown | GDS84400 | Drive Shaft | | 28 | 28 | 59 | 86.5 | 1011 | |
| | 2019.06- | 6MT | F | L/R | Hatchback 4WD HFY1 | For vehicles with cylinder shutdown | GCO82793 | Outer Joint | | 28 | 32 | 59 | 86.5 | 58.5 | I |
| | 2019.06- | 6MT | F | L/R | Hatchback 4WD HFY1 | For vehicles without cylinder shutdown | GCO82801 | Outer Joint | | 28 | 33 | 59 | 87 | 60.5 | I |
| | 2019.06- | 6MT | F | L | Hatchback 4WD HFY1 | For vehicles with cylinder shutdown | GCI82742 | Inner Joint | | 28 | 32 | 40 | 67.5 | 108.5 | |
| | 2019.06- | 6MT | F | R | Hatchback 4WD HFY1 | For vehicles with cylinder shutdown | GCI81615 | Inner Joint | | 28 | 32 | 40 | 416 | 94 | |
| | 2019.06- | 6AT | F | L | Hatchback FWD HFY1 | For vehicles without cylinder shutdown | GDS84513 | Drive Shaft | | 28 | 31 | 59 | 86.5 | 631 | |
| | 2019.06- | 6AT | F | L | Hatchback FWD HFY1 | For vehicles with cylinder shutdown | GDS84514 | Drive Shaft | | 28 | 31 | 59 | 86.5 | 637 | |
| | 2019.06- | 6AT | F | R | Hatchback FWD HFY1 | For vehicles with cylinder shutdown | GDS84355 | Drive Shaft | | 28 | 31 | 59 | 86.5 | 1016 | |
| | 2019.06- | 6AT | F | R | Hatchback FWD HFY1 | For vehicles without cylinder shutdown | GDS84530 | Drive Shaft | | 28 | 31 | 59 | 86.5 | 1012 | |
| | 2019.06- | 6AT | F | L/R | Hatchback FWD HFY1 | | GCO82793 | Outer Joint | | 28 | 32 | 59 | 86.5 | 58.5 | I |
| | 2019.06- | 6AT | F | L | Hatchback FWD HFY1 | | GCI82838 | Inner Joint | | 31 | 32 | 40 | 77 | 110.5 | |
| | 2019.06- | 6AT | F | R | Hatchback FWD HFY1 | For vehicles with cylinder shutdown | GCI82728 | Inner Joint | | 31 | 32 | 40 | 423 | 106 | |
| | 2019.06- | 6AT | F | R | Hatchback FWD HFY1 | For vehicles without cylinder shutdown | GCI82837 | Inner Joint | | 31 | 32 | 40 | 440 | 100 | |
| | 2019.06- | 6MT | F | L | Hatchback FWD HFY1 | For vehicles with cylinder shutdown | GDS84401 | Drive Shaft | | 28 | 28 | 59 | 86.5 | 645 | |
| | 2019.06- | 6MT | F | L | Hatchback FWD HFY1 | For vehicles without cylinder shutdown | GDS84489 | Drive Shaft | | 28 | 28 | 59 | 87 | 642 | |
| | 2019.06- | 6MT | F | R | Hatchback FWD HFY1 | For vehicles without cylinder shutdown | GDS84386 | Drive Shaft | | 28 | 28 | 59 | 87 | 1005 | |
| | 2019.06- | 6MT | F | R | Hatchback FWD HFY1 | For vehicles with cylinder shutdown | GDS84400 | Drive Shaft | | 28 | 28 | 59 | 86.5 | 1011 | |
| | 2019.06- | 6MT | F | L/R | Hatchback FWD HFY1 | For vehicles with cylinder shutdown | GCO82793 | Outer Joint | | 28 | 32 | 59 | 86.5 | 58.5 | I |
| | 2019.06- | 6MT | F | L/R | Hatchback FWD HFY1 | For vehicles without cylinder shutdown | GCO82801 | Outer Joint | | 28 | 33 | 59 | 87 | 60.5 | I |
| | 2019.06- | 6MT | F | L | Hatchback FWD HFY1 | For vehicles with cylinder shutdown | GCI82742 | Inner Joint | | 28 | 32 | 40 | 67.5 | 108.5 | |
| | 2019.06- | 6MT | F | L | Hatchback FWD HFY1 | For vehicles without cylinder shutdown | GCI82825 | Inner Joint | | 28 | 33 | 40 | 67.5 | 108 | |
| | 2019.06- | 6MT | F | R | Hatchback FWD HFY1 | For vehicles with cylinder shutdown | GCI81615 | Inner Joint | | 28 | 32 | 40 | 416 | 94 | |
| | 2019.06- | 6MT | F | R | Hatchback FWD HFY1 | For vehicles without cylinder shutdown | GCI82735 | Inner Joint | | 28 | 33 | 40 | 432 | 84 | |
| | 2019.06- | 6AT | F | L | Saloon FWD HFY1 | For vehicles without cylinder shutdown | GDS84513 | Drive Shaft | | 28 | 31 | 59 | 86.5 | 631 | |
| | 2019.06- | 6AT | F | L | Saloon FWD HFY1 | For vehicles with cylinder shutdown | GDS84514 | Drive Shaft | | 28 | 31 | 59 | 86.5 | 637 | |
| | 2019.06- | 6AT | F | R | Saloon FWD HFY1 | For vehicles with cylinder shutdown | GDS84355 | Drive Shaft | | 28 | 31 | 59 | 86.5 | 1016 | |
| | 2019.06- | 6AT | F | R | Saloon FWD HFY1 | For vehicles without cylinder shutdown | GDS84530 | Drive Shaft | | 28 | 31 | 59 | 86.5 | 1012 | |
| | 2019.06- | 6AT | F | L/R | Saloon FWD HFY1 | | GCO82793 | Outer Joint | | 28 | 32 | 59 | 86.5 | 58.5 | I |
| | 2019.06- | 6AT | F | L | Saloon FWD HFY1 | | GCI82838 | Inner Joint | | 31 | 32 | 40 | 77 | 110.5 | |
| | 2019.06- | 6AT | F | R | Saloon FWD HFY1 | For vehicles with cylinder shutdown | GCI82728 | Inner Joint | | 31 | 32 | 40 | 423 | 106 | |
| | 2019.06- | 6AT | F | R | Saloon FWD HFY1 | For vehicles without cylinder shutdown | GCI82837 | Inner Joint | | 31 | 32 | 40 | 440 | 100 | |
| | 2019.06- | 6MT | F | L | Saloon FWD HFY1 | For vehicles with cylinder shutdown | GDS84401 | Drive Shaft | | 28 | 28 | 59 | 86.5 | 645 | |
| | 2019.06- | 6MT | F | L | Saloon FWD HFY1 | For vehicles without cylinder shutdown | GDS84489 | Drive Shaft | | 28 | 28 | 59 | 87 | 642 | |
| | 2019.06- | 6MT | F | R | Saloon FWD HFY1 | For vehicles without cylinder shutdown | GDS84386 | Drive Shaft | | 28 | 28 | 59 | 87 | 1005 | |
| | 2019.06- | 6MT | F | R | Saloon FWD HFY1 | For vehicles with cylinder shutdown | GDS84400 | Drive Shaft | | 28 | 28 | 59 | 86.5 | 1011 | |
| | 2019.06- | 6MT | F | L/R | Saloon FWD HFY1 | For vehicles with cylinder shutdown | GCO82793 | Outer Joint | | 28 | 32 | 59 | 86.5 | 58.5 | I |
| | 2019.06- | 6MT | F | L/R | Saloon FWD HFY1 | For vehicles without cylinder shutdown | GCO82801 | Outer Joint | | 28 | 33 | 59 | 87 | 60.5 | I |
| | 2019.06- | 6MT | F | L | Saloon FWD HFY1 | For vehicles with cylinder shutdown | GCI82742 | Inner Joint | | 28 | 32 | 40 | 67.5 | 108.5 | |
| | 2019.06- | 6MT | F | L | Saloon FWD HFY1 | For vehicles without cylinder shutdown | GCI82825 | Inner Joint | | 28 | 33 | 40 | 67.5 | 108 | |
| | 2019.06- | 6MT | F | R | Saloon FWD HFY1 | For vehicles with cylinder shutdown | GCI81615 | Inner Joint | | 28 | 32 | 40 | 416 | 94 | |
| | 2019.06- | 6MT | F | R | Saloon FWD HFY1 | For vehicles without cylinder shutdown | GCI82735 | Inner Joint | | 28 | 33 | 40 | 432 | 84 | |
| 2.0 (137 kw) | 2021.02- | 6AT | F | L | Hatchback 4WD HFY7 | For vehicles without cylinder shutdown | GDS84513 | Drive Shaft | | 28 | 31 | 59 | 86.5 | 631 | |
| | 2021.02- | 6AT | F | L | Hatchback 4WD HFY7 | For vehicles with cylinder shutdown | GDS84514 | Drive Shaft | | 28 | 31 | 59 | 86.5 | 637 | |
| | 2021.02- | 6AT | F | R | Hatchback 4WD HFY7 | For vehicles with cylinder shutdown | GDS84355 | Drive Shaft | | 28 | 31 | 59 | 86.5 | 1016 | |
| | 2021.02- | 6AT | F | L/R | Hatchback 4WD HFY7 | | GCO82793 | Outer Joint | | 28 | 32 | 59 | 86.5 | 58.5 | I |

| | YEAR | TRANSM. | F/R | L/R | BODY STYLE & DRIVE TYPE & ENGINE | REMARKS | G-AP Ref. | PRODUCT | ABS | Technical Specifications | | | | | |
|---|---|---|---|---|---|---|---|---|---|---|---|---|---|---|---|
| | | | | | | | | | | A | B | C | H | L | P |
| **MAZDA** | | | | | | | | | | | | | | | |
| **3** | | | | | | | | | | | | | | | |
| 2.0 (137 kw) | 2021.02- | 6AT | F | L | Hatchback 4WD HFY7 | | GCI82838 | Inner Joint | | 31 | 32 | 40 | 77 | 110.5 | |
| | 2021.02- | 6AT | F | R | Hatchback 4WD HFY7 | For vehicles with cylinder shutdown | GCI82728 | Inner Joint | | 31 | 32 | 40 | 423 | 106 | |
| | 2021.02- | 6MT | F | L | Hatchback 4WD HFY7 | For vehicles with cylinder shutdown | GDS84401 | Drive Shaft | | 28 | 28 | 59 | 86.5 | 645 | |
| | 2021.02- | 6MT | F | R | Hatchback 4WD HFY7 | For vehicles with cylinder shutdown | GDS84400 | Drive Shaft | | 28 | 28 | 59 | 86.5 | 1011 | |
| | 2021.02- | 6MT | F | L/R | Hatchback 4WD HFY7 | For vehicles with cylinder shutdown | GCO82793 | Outer Joint | | 28 | 32 | 59 | 86.5 | 58.5 | I |
| | 2021.02- | 6MT | F | L/R | Hatchback 4WD HFY7 | For vehicles without cylinder shutdown | GCO82801 | Outer Joint | | 28 | 33 | 59 | 87 | 60.5 | I |
| | 2021.02- | 6MT | F | L | Hatchback 4WD HFY7 | For vehicles with cylinder shutdown | GCI82742 | Inner Joint | | 28 | 32 | 40 | 67.5 | 108.5 | |
| | 2021.02- | 6MT | F | R | Hatchback 4WD HFY7 | | GCI81615 | Inner Joint | | 28 | 32 | 40 | 416 | 94 | |
| | 2021.02- | 6AT | F | L | Hatchback FWD HFY7 | For vehicles without cylinder shutdown | GDS84513 | Drive Shaft | | 28 | 31 | 59 | 86.5 | 631 | |
| | 2021.02- | 6AT | F | L | Hatchback FWD HFY7 | For vehicles with cylinder shutdown | GDS84514 | Drive Shaft | | 28 | 31 | 59 | 86.5 | 637 | |
| | 2021.02- | 6AT | F | R | Hatchback FWD HFY7 | For vehicles with cylinder shutdown | GDS84355 | Drive Shaft | | 28 | 31 | 59 | 86.5 | 1016 | |
| | 2021.02- | 6AT | F | R | Hatchback FWD HFY7 | For vehicles without cylinder shutdown | GDS84530 | Drive Shaft | | 28 | 31 | 59 | 86.5 | 1012 | |
| | 2021.02- | 6AT | F | L/R | Hatchback FWD HFY7 | | GCO82793 | Outer Joint | | 28 | 32 | 59 | 86.5 | 58.5 | I |
| | 2021.02- | 6AT | F | L | Hatchback FWD HFY7 | | GCI82838 | Inner Joint | | 31 | 32 | 40 | 77 | 110.5 | |
| | 2021.02- | 6AT | F | R | Hatchback FWD HFY7 | For vehicles with cylinder shutdown | GCI82728 | Inner Joint | | 31 | 32 | 40 | 423 | 106 | |
| | 2021.02- | 6AT | F | R | Hatchback FWD HFY7 | For vehicles without cylinder shutdown | GCI82837 | Inner Joint | | 31 | 32 | 40 | 440 | 100 | |
| | 2021.02- | 6MT | F | L | Hatchback FWD HFY7 | For vehicles with cylinder shutdown | GDS84401 | Drive Shaft | | 28 | 28 | 59 | 86.5 | 645 | |
| | 2021.02- | 6MT | F | L | Hatchback FWD HFY7 | For vehicles without cylinder shutdown | GDS84489 | Drive Shaft | | 28 | 28 | 59 | 87 | 642 | |
| | 2021.02- | 6MT | F | R | Hatchback FWD HFY7 | For vehicles without cylinder shutdown | GDS84386 | Drive Shaft | | 28 | 28 | 59 | 87 | 1005 | |
| | 2021.02- | 6MT | F | R | Hatchback FWD HFY7 | For vehicles with cylinder shutdown | GDS84400 | Drive Shaft | | 28 | 28 | 59 | 86.5 | 1011 | |
| | 2021.02- | 6MT | F | L/R | Hatchback FWD HFY7 | For vehicles with cylinder shutdown | GCO82793 | Outer Joint | | 28 | 32 | 59 | 86.5 | 58.5 | I |
| | 2021.02- | 6MT | F | L/R | Hatchback FWD HFY7 | For vehicles without cylinder shutdown | GCO82801 | Outer Joint | | 28 | 33 | 59 | 87 | 60.5 | I |
| | 2021.02- | 6MT | F | L | Hatchback FWD HFY7 | For vehicles with cylinder shutdown | GCI82742 | Inner Joint | | 28 | 32 | 40 | 67.5 | 108.5 | |
| | 2021.02- | 6MT | F | L | Hatchback FWD HFY7 | For vehicles without cylinder shutdown | GCI82825 | Inner Joint | | 28 | 33 | 40 | 67.5 | 108 | |
| | 2021.02- | 6MT | F | R | Hatchback FWD HFY7 | | GCI81615 | Inner Joint | | 28 | 32 | 40 | 416 | 94 | |
| | 2021.02- | 6MT | F | R | Hatchback FWD HFY7 | For vehicles without cylinder shutdown | GCI82735 | Inner Joint | | 28 | 33 | 40 | 432 | 84 | |
| | 2021.02- | 6AT | F | L | Saloon FWD HFY7 | For vehicles without cylinder shutdown | GDS84513 | Drive Shaft | | 28 | 31 | 59 | 86.5 | 631 | |
| | 2021.02- | 6AT | F | L | Saloon FWD HFY7 | For vehicles with cylinder shutdown | GDS84514 | Drive Shaft | | 28 | 31 | 59 | 86.5 | 637 | |
| | 2021.02- | 6AT | F | R | Saloon FWD HFY7 | For vehicles with cylinder shutdown | GDS84355 | Drive Shaft | | 28 | 31 | 59 | 86.5 | 1016 | |
| | 2021.02- | 6AT | F | R | Saloon FWD HFY7 | For vehicles without cylinder shutdown | GDS84530 | Drive Shaft | | 28 | 31 | 59 | 86.5 | 1012 | |
| | 2021.02- | 6AT | F | L/R | Saloon FWD HFY7 | | GCO82793 | Outer Joint | | 28 | 32 | 59 | 86.5 | 58.5 | I |
| | 2021.02- | 6AT | F | L | Saloon FWD HFY7 | | GCI82838 | Inner Joint | | 31 | 32 | 40 | 77 | 110.5 | |
| | 2021.02- | 6AT | F | R | Saloon FWD HFY7 | For vehicles with cylinder shutdown | GCI82728 | Inner Joint | | 31 | 32 | 40 | 423 | 106 | |
| | 2021.02- | 6AT | F | R | Saloon FWD HFY7 | For vehicles without cylinder shutdown | GCI82837 | Inner Joint | | 31 | 32 | 40 | 440 | 100 | |
| | 2021.02- | 6MT | F | L | Saloon FWD HFY7 | For vehicles with cylinder shutdown | GDS84401 | Drive Shaft | | 28 | 28 | 59 | 86.5 | 645 | |
| | 2021.02- | 6MT | F | L | Saloon FWD HFY7 | For vehicles without cylinder shutdown | GDS84489 | Drive Shaft | | 28 | 28 | 59 | 87 | 642 | |
| | 2021.02- | 6MT | F | R | Saloon FWD HFY7 | For vehicles without cylinder shutdown | GDS84386 | Drive Shaft | | 28 | 28 | 59 | 87 | 1005 | |
| | 2021.02- | 6MT | F | R | Saloon FWD HFY7 | For vehicles with cylinder shutdown | GDS84400 | Drive Shaft | | 28 | 28 | 59 | 86.5 | 1011 | |
| | 2021.02- | 6MT | F | L/R | Saloon FWD HFY7 | For vehicles with cylinder shutdown | GCO82793 | Outer Joint | | 28 | 32 | 59 | 86.5 | 58.5 | I |
| | 2021.02- | 6MT | F | L/R | Saloon FWD HFY7 | For vehicles without cylinder shutdown | GCO82801 | Outer Joint | | 28 | 33 | 59 | 87 | 60.5 | I |
| | 2021.02- | 6MT | F | L | Saloon FWD HFY7 | For vehicles with cylinder shutdown | GCI82742 | Inner Joint | | 28 | 32 | 40 | 67.5 | 108.5 | |
| | 2021.02- | 6MT | F | L | Saloon FWD HFY7 | For vehicles without cylinder shutdown | GCI82825 | Inner Joint | | 28 | 33 | 40 | 67.5 | 108 | |
| | 2021.02- | 6MT | F | R | Saloon FWD HFY7 | | GCI81615 | Inner Joint | | 28 | 32 | 40 | 416 | 94 | |
| | 2021.02- | 6MT | F | R | Saloon FWD HFY7 | For vehicles without cylinder shutdown | GCI82735 | Inner Joint | | 28 | 33 | 40 | 432 | 84 | |
| 2.2 (110 kw) | 2009.01-2013.10 | 6MT | F | L | Hatchback FWD R2AA | | GCI83510 | Inner Joint | | 30 | 26 | 50 | 77.5 | 121.5 | |
| | 2009.01-2013.10 | | F | | Hatchback FWD R2AA | | GCO34093 | Outer Joint | | 36 | 24 | 55.3 | 48 | 59 | I |
| | 2009.01-2014.09 | 6MT | F | L | Saloon FWD R2AA | | GCI83510 | Inner Joint | | 30 | 26 | 50 | 77.5 | 121.5 | |
| | 2013.09-2019.05 | 6AT | F | L | Hatchback FWD SHY4;SHY6 | | GCI83785 | Inner Joint | | 31 | 27 | 40 | 74.5 | 115.5 | |
| | 2013.09-2019.05 | 6AT | F | R | Hatchback FWD SHY4;SHY6 | | GCI82285 | Inner Joint | | 31 | 27 | 40 | 442 | 121.5 | |
| | 2015.04-2016.05 | 6AT | F | L | Hatchback Van FWD SHY4 | | GCI83785 | Inner Joint | | 31 | 27 | 40 | 74.5 | 115.5 | |
| | 2015.04-2016.05 | 6AT | F | R | Hatchback Van FWD SHY4 | | GCI82285 | Inner Joint | | 31 | 27 | 40 | 442 | 121.5 | |
| 2.2 (136 kw) | 2009.01-2013.05 | 6MT | F | L | Hatchback FWD R2AA | | GCI83510 | Inner Joint | | 30 | 26 | 50 | 77.5 | 121.5 | |
| | 2009.01-2013.05 | | F | | Hatchback FWD R2AA | | GCO34093 | Outer Joint | | 36 | 24 | 55.3 | 48 | 59 | I |
| | 2009.06-2013.05 | 6MT | F | L | Saloon FWD R2AA | | GCI83510 | Inner Joint | | 30 | 26 | 50 | 77.5 | 121.5 | |
| | 2009.06-2013.05 | | F | | Saloon FWD R2AA | | GCO34093 | Outer Joint | | 36 | 24 | 55.3 | 48 | 59 | I |
| 2.3 (115 kw) | 2003.10-2009.03 | 4AT | F | L | Hatchback FWD L3-VE | | GCI34125 | Inner Joint | | 28 | 24 | 35 | 66.5 | 115 | |
| | 2003.10-2009.03 | AT | F | L | Hatchback FWD L3-VE | Date from:2005.01 | GDS34090 | Drive Shaft | | 28 | 28 | 59 | 90 | 620.5 | |
| | 2003.10-2009.03 | AT | F | R | Hatchback FWD L3-VE | Date from:2005.01 | GDS34104 | Drive Shaft | | 28 | 28 | 59 | 90 | 551 | |
| | 2003.10-2009.03 | | F | | Hatchback FWD L3-VE | | GCO34174 | Outer Joint | | 28 | 23 | 58.6 | 90 | 59 | M |
| 2.3 (118 kw) | 2004.03-2009.03 | | F | | Saloon FWD L3YS/L3YY | | GCO34174 | Outer Joint | | 28 | 23 | 58.6 | 90 | 59 | M |
| | 2004.03-2009.03 | | F | R | Saloon FWD L3YS/L3YY | | GCI34045 | Inner Joint | | 28 | 22 | 43 | | 118 | |
| 2.3 (191 kw) | 2006.12-2009.06 | 6MT | F | L | Hatchback FWD L3-VDT;L3M6 | LIM.DIF.SLIP(-) | GDS34091 | Drive Shaft | | 28 | 28 | 59 | 90 | 639 | |
| | 2006.12-2009.06 | 6MT | F | L | Hatchback FWD L3-VDT;L3M6 | Date from:2006.07 Date to:2008.05;For left-hand drive vehicles Date to:2008.05;For right-hand drive vehicles;NOSP SLIP(-) | GDS34258 | Drive Shaft | | 28 | 30 | 58.6 | 92 | 602 | |
| | 2006.12-2009.06 | 6MT | F | R | Hatchback FWD L3-VDT;L3M6 | For left-hand drive vehicles;For right-hand drive vehicles;For vehicles with electronic limited slip diff | GDS57843 | Drive Shaft | | 28 | 28 | 58.6 | 92 | 589 | |
| | 2006.12-2009.06 | 6MT | F | R | Hatchback FWD L3-VDT;L3M6 | For right-hand drive vehicles.Type:LIM.DIF.SLIP(-) | GDS83386 | Drive Shaft | | 28 | 28 | 58.5 | 88 | 588 | |

| | YEAR | TRANSM. | F/R | L/R | BODY STYLE & DRIVE TYPE & ENGINE | REMARKS | G-AP Ref. | PRODUCT | ABS | Technical Specifications A | B | C | H | L | P |
|---|---|---|---|---|---|---|---|---|---|---|---|---|---|---|---|
| **MAZDA** | | | | | | | | | | | | | | | |
| **3** | | | | | | | | | | | | | | | |
| 2.3 (191 kw) | 2006.12-2009.06 | 6MT | F | R | Hatchback FWD L3-VDT;L3M6 | For left-hand drive vehicles,For right-hand drive vehicles,For vehicles with electronic limited slip diff | GCO81551 | Outer Joint | | 28 | 26 | 58.6 | 92 | 64 | I |
| | 2006.12-2009.06 | 6MT | F | L/R | Hatchback FWD L3-VDT;L3M6 | For right-hand drive vehicles,Type:LIM.DIF.SLIP(-) | GCO34237 | Outer Joint | | 28 | 24 | 58.5 | 88 | 63 | I |
| | 2006.12-2009.06 | 6MT | F | L | Hatchback FWD L3-VDT;L3M6 | Trim Level:LIM.DIF.SLIP(-) | GCI34049 | Inner Joint | | 28 | 24 | 35 | 67 | 115 | |
| | 2006.12-2009.06 | 6MT | F | L | Hatchback FWD L3-VDT;L3M6 | Trim Level:LIM.DIF.SLIP(+) | GCI34139 | Inner Joint | | 30 | 26 | 50 | 77.5 | 107.5 | |
| | 2006.12-2009.06 | 6MT | F | R | Hatchback FWD L3-VDT;L3M6 | For right-hand drive vehicles,Type:LIM.DIF.SLIP(-) | GCI82189 | Inner Joint | | 28 | 24 | 43 | | 126.5 | |
| | 2006.12-2009.06 | 6MT | F | R | Hatchback FWD L3-VDT;L3M6 | For left-hand drive vehicles,For right-hand drive vehicles,For vehicles with electronic limited slip diff | GCI83886 | Inner Joint | | 28 | 34 | 43 | | 130 | |
| | 2006.12-2009.06 | | F | L | Hatchback FWD L3-VDT;L3M6 | | GCO34178 | Outer Joint | | 28 | 26 | 58.6 | 92 | 64 | M |
| | 2008.12-2014.09 | 6MT | F | L | Hatchback FWD L3-VDT;L3Y7 | | GDS56812 | Drive Shaft | | 28 | 30 | 58.6 | 92 | 608 | |
| | 2008.12-2014.09 | 6MT | F | R | Hatchback FWD L3-VDT;L3Y7 | | GDS57843 | Drive Shaft | | 28 | 28 | 58.6 | 92 | 589 | |
| | 2008.12-2014.09 | 6MT | F | L/R | Hatchback FWD L3-VDT;L3Y7 | Date to:2010.06 | GCO34178 | Outer Joint | | 28 | 26 | 58.6 | 92 | 64 | M |
| | 2008.12-2014.09 | 6MT | F | L/R | Hatchback FWD L3-VDT;L3Y7 | | GCO81551 | Outer Joint | | 28 | 26 | 58.6 | 92 | 64 | I |
| | 2008.12-2014.09 | 6MT | F | L | Hatchback FWD L3-VDT;L3Y7 | | GCI83510 | Inner Joint | | 30 | 26 | 50 | 77.5 | 121.5 | |
| | 2008.12-2014.09 | 6MT | F | R | Hatchback FWD L3-VDT;L3Y7 | | GCI83886 | Inner Joint | | 28 | 34 | 43 | | 130 | |
| 2.5 (122 kw) | 2009.04-2014.09 | | F | R | Saloon FWD L5-VE | | GCI34045 | Inner Joint | | 28 | 22 | 43 | | 118 | |
| **3 Hatchback (Bp) \| Axela** | | | | | | | | | | | | | | | |
| 2.5 (103 kw) | 2024.06- | 6AT | F | L | Hatchback FWD PXY5, PYZC | | GDS84514 | Drive Shaft | | 28 | 31 | 59 | 86.5 | 637 | |
| **3 Saloon (Bp_) \| Axela** | | | | | | | | | | | | | | | |
| 2.5 (103 kw) | 2024.06- | 6AT | F | L | Saloon FWD PXY5, PYZC | | GDS84514 | Drive Shaft | | 28 | 31 | 59 | 86.5 | 637 | |
| **323** | | | | | | | | | | | | | | | |
| 1.3 (53 kw) | 2001.01-2004.05 | 5MT | F | L | Saloon FWD B35S | | GCI34027 | Inner Joint | | 24 | 29 | 35 | 64 | 96 | |
| | 2001.01-2004.05 | AT/MT | F | L/R | Saloon FWD B35S | | GCO34059 | Outer Joint | 44T | 26 | 28 | 56 | 93.5 | 53 | I |
| | 2001.01-2004.05 | MT | F | L/R | Saloon FWD B35S | | GCO34124 | Outer Joint | 44T | 26 | 28 | 56 | 93.1 | 53 | M |
| | 2001.01-2004.05 | MT | F | | Saloon FWD B35S | | GCO34123 | Outer Joint | 44T | 26 | 29 | 56 | 92 | 56 | I |
| | 2001.01-2004.05 | | F | R | Saloon FWD B35S | | GCO34026 | Outer Joint | | 26 | 28 | 56 | 93.5 | 53 | I |
| | 2001.01-2004.05 | | F | L/R | Saloon FWD B35S | | GCO34020 | Outer Joint | | 26 | 28 | 56 | 93.1 | 53 | M |
| | 2001.01-2004.05 | | F | R | Saloon FWD B35S | | GCI34022 | Inner Joint | | 28 | 29 | 43 | | 115 | |
| 1.3 (54 kw) | 1994.08-1998.09 | AT/MT | F | L | Saloon FWD B32A/B3P7 | | GDS27047 | Drive Shaft | | 26 | 24 | 56 | 94 | 635 | |
| | 1994.08-1998.09 | AT/MT | F | L | Saloon FWD B32A/B3P7 | | GDS27048 | Drive Shaft | 44T | 26 | 24 | 56 | 94 | 635 | |
| | 1994.08-1998.09 | AT/MT | F | R | Saloon FWD B32A/B3P7 | | GDS34005 | Drive Shaft | | 26 | 28 | 56 | 94 | 576 | |
| | 1994.08-1998.09 | AT/MT | F | L/R | Saloon FWD B32A/B3P7 | | GCO34005 | Outer Joint | | 26 | 22 | 56 | 94 | 59 | M |
| | 1994.08-1998.09 | AT/MT | F | L/R | Saloon FWD B32A/B3P7 | | GCO34006 | Outer Joint | 44T | 26 | 22 | 56 | 94 | 59 | M |
| | 1994.08-1998.09 | | F | | Saloon FWD B32A/B3P7 | | GCO34055 | Outer Joint | | 26 | 22 | 56 | 94 | 59 | M |
| | 1994.08-1998.09 | | F | L | Saloon FWD B32A/B3P7 | | GCI18006 | Inner Joint | | 24 | 22 | 35 | 64 | 98.5 | |
| | 1998.09-2001.01 | 5MT | F | L | Saloon FWD B33G | | GCI34027 | Inner Joint | | 24 | 29 | 35 | 64 | 96 | |
| | 1998.09-2001.01 | AT/MT | F | L/R | Saloon FWD B33G | | GCO34059 | Outer Joint | 44T | 26 | 28 | 56 | 93.5 | 53 | I |
| | 1998.09-2001.01 | MT | F | L/R | Saloon FWD B33G | | GCO34026 | Outer Joint | | 26 | 28 | 56 | 93.5 | 53 | I |
| | 1998.09-2001.01 | MT | F | L/R | Saloon FWD B33G | | GCO34124 | Outer Joint | 44T | 26 | 28 | 56 | 93.1 | 53 | M |
| | 1998.09-2001.01 | MT | F | | Saloon FWD B33G | | GCO34123 | Outer Joint | 44T | 26 | 29 | 56 | 92 | 56 | I |
| | 1998.09-2001.01 | | F | L/R | Saloon FWD B33G | | GCO34020 | Outer Joint | | 26 | 28 | 56 | 93.1 | 53 | M |
| | 1998.09-2001.01 | | F | R | Saloon FWD B33G | | GCI34022 | Inner Joint | | 28 | 29 | 43 | | 115 | |
| 1.5 (65 kw) | 1994.08-1998.09 | AT/MT | F | L | Saloon FWD Z501 | | GDS27047 | Drive Shaft | | 26 | 24 | 56 | 94 | 635 | |
| | 1994.08-1998.09 | AT/MT | F | L | Saloon FWD Z501 | | GDS27048 | Drive Shaft | 44T | 26 | 24 | 56 | 94 | 635 | |
| | 1994.08-1998.09 | AT/MT | F | R | Saloon FWD Z501 | | GDS34005 | Drive Shaft | | 26 | 28 | 56 | 94 | 576 | |
| | 1994.08-1998.09 | AT/MT | F | L/R | Saloon FWD Z501 | | GCO27001 | Outer Joint | | 26 | 22 | 56 | 93.5 | 55.5 | M |
| | 1994.08-1998.09 | AT/MT | F | L/R | Saloon FWD Z501 | | GCO34005 | Outer Joint | | 26 | 22 | 56 | 94 | 59 | M |
| | 1994.08-1998.09 | AT/MT | F | L/R | Saloon FWD Z501 | | GCO34006 | Outer Joint | 44T | 26 | 22 | 56 | 94 | 59 | M |
| | 1994.08-1998.09 | | F | | Saloon FWD Z501 | | GCO34051 | Outer Joint | | 26 | 21 | 56 | 94 | 56 | M |
| | 1994.08-1998.09 | | F | | Saloon FWD Z501 | | GCO34055 | Outer Joint | | 26 | 22 | 56 | 94 | 59 | M |
| | 1998.09-2001.01 | AT | F | L/R | Saloon FWD ZL05/ZL06 | | GCO34020 | Outer Joint | | 26 | 28 | 56 | 93.1 | 53 | M |
| | 1998.09-2001.01 | AT/MT | F | L/R | Saloon FWD ZL05/ZL06 | | GCO34059 | Outer Joint | 44T | 26 | 28 | 56 | 93.5 | 53 | I |
| | 1998.09-2001.01 | MT | F | L/R | Saloon FWD ZL05/ZL06 | | GCO34026 | Outer Joint | | 26 | 28 | 56 | 93.5 | 53 | I |
| | 1998.09-2001.01 | MT | F | L/R | Saloon FWD ZL05/ZL06 | | GCO34124 | Outer Joint | 44T | 26 | 28 | 56 | 93.1 | 53 | M |
| | 1998.09-2001.01 | MT | F | | Saloon FWD ZL05/ZL06 | | GCO34123 | Outer Joint | 44T | 26 | 29 | 56 | 92 | 56 | I |
| | 1998.09-2001.01 | MT | F | L | Saloon FWD ZL05/ZL06 | | GCI34027 | Inner Joint | | 24 | 29 | 35 | 64 | 96 | |
| | 1998.09-2001.01 | | F | R | Saloon FWD ZL05/ZL06 | | GCI34022 | Inner Joint | | 28 | 29 | 43 | | 115 | |
| 1.6 (65 kw) | 1989.08-1996.10 | MT | F | L | Saloon FWD B67L | | GDS18056 | Drive Shaft | | 26 | 24 | 56 | 93 | 625 | |
| | 1989.08-1996.10 | MT | F | R | Saloon FWD B67L | | GDS34044 | Drive Shaft | | 26 | 24 | 56 | 94 | 903 | |
| | 1989.08-1996.10 | MT | F | R | Saloon FWD B67L | | GDS50268 | Drive Shaft | | 23 | 39 | 56 | 84 | 935 | |
| | 1989.08-1996.10 | MT | F | L/R | Saloon FWD B67L | | GCO18034 | Outer Joint | | 26 | 22 | 56 | 94 | 59 | I |
| | 1989.08-1996.10 | MT | F | L/R | Saloon FWD B67L | | GCO34007 | Outer Joint | | 26 | 22 | 56 | 93 | 56.5 | I |
| 1.6 (70 kw) | 2001.01-2004.05 | 5MT | F | L | Saloon FWD ZM39 | | GCI34027 | Inner Joint | | 24 | 29 | 35 | 64 | 96 | |
| | 2001.01-2004.05 | AT/MT | F | L/R | Saloon FWD ZM39 | | GCO34059 | Outer Joint | 44T | 26 | 28 | 56 | 93.5 | 53 | I |
| | 2001.01-2004.05 | MT | F | R | Saloon FWD ZM39 | | GCO34026 | Outer Joint | | 26 | 28 | 56 | 93.5 | 53 | I |
| | 2001.01-2004.05 | MT | F | L/R | Saloon FWD ZM39 | | GCO34020 | Outer Joint | | 26 | 28 | 56 | 93.1 | 53 | M |
| | 2001.01-2004.05 | MT | F | L/R | Saloon FWD ZM39 | | GCO34124 | Outer Joint | 44T | 26 | 28 | 56 | 93.1 | 53 | M |

| | YEAR | TRANSM. | F/R | L/R | BODY STYLE & DRIVE TYPE & ENGINE | REMARKS | G-AP Ref. | PRODUCT | ABS | Technical Specifications A | B | C | H | L | P |
|---|---|---|---|---|---|---|---|---|---|---|---|---|---|---|---|
| **MAZDA** | | | | | | | | | | | | | | | |
| **323** | | | | | | | | | | | | | | | |
| 1.6 (70 kw) | 2001.01-2004.05 | | F | R | Saloon FWD ZM39 | | GCI34022 | Inner Joint | | 28 | 29 | 43 | | 115 | |
| 1.6 (72 kw) | 2001.01-2004.05 | AT | F | L/R | Saloon FWD ZM39/ZM40 | Date to:2001.02 | GCO34020 | Outer Joint | | 26 | 28 | 56 | 93.1 | 53 | M |
| | 2001.01-2004.05 | AT/MT | F | L/R | Saloon FWD ZM39/ZM40 | | GCO34059 | Outer Joint | 44T | 26 | 28 | 56 | 93.5 | 53 | I |
| | 2001.01-2004.05 | MT | F | R | Saloon FWD ZM39/ZM40 | | GCO34026 | Outer Joint | | 26 | 28 | 56 | 93.5 | 53 | I |
| | 2001.01-2004.05 | MT | F | L/R | Saloon FWD ZM39/ZM40 | | GCO34020 | Outer Joint | | 26 | 28 | 56 | 93.1 | 53 | M |
| | 2001.01-2004.05 | MT | F | L/R | Saloon FWD ZM39/ZM40 | | GCO34124 | Outer Joint | 44T | 26 | 28 | 56 | 93.1 | 53 | M |
| | 2001.01-2004.05 | MT | F | L | Saloon FWD ZM39/ZM40 | | GCI34027 | Inner Joint | | 24 | 29 | 35 | 64 | 96 | |
| | 2001.01-2004.05 | | F | R | Saloon FWD ZM39/ZM40 | | GCI34022 | Inner Joint | | 28 | 29 | 43 | | 115 | |
| 1.7 (60 kw) | 1994.11-1996.10 | AT/MT | F | L/R | Saloon FWD Y709 | Date from:1995.01 | GCO34023 | Outer Joint | | 26 | 30 | 56 | 93 | 55 | I |
| | 1994.11-1996.10 | AT/MT | F | L/R | Saloon FWD Y709 | Date from:1995.01 | GCO34058 | Outer Joint | 44T | 26 | 30 | 56 | 93 | 55 | I |
| | 1994.11-1996.10 | MT | F | L/R | Saloon FWD Y709 | Date from:1994.11;Date to:1996.10 | GCO34005 | Outer Joint | | 26 | 22 | 56 | 94 | 59 | M |
| | 1994.11-1996.10 | MT | F | L/R | Saloon FWD Y709 | Date from:1994.11;Date to:1996.10 | GCO34006 | Outer Joint | 44T | 26 | 22 | 56 | 94 | 59 | M |
| 1.8 (84 kw) | 1994.08-1998.09 | AT/MT | F | L/R | Saloon FWD BP3G/BP3H/BPE4/BPE5 | | GCO34023 | Outer Joint | | 26 | 30 | 56 | 93 | 55 | I |
| | 1994.08-1998.09 | AT/MT | F | L/R | Saloon FWD BP3G/BP3H/BPE4/BPE5 | without groove in internal component | GCO34058 | Outer Joint | 44T | 26 | 30 | 56 | 93 | 55 | I |
| | 1994.08-1998.09 | MT | F | L/R | Saloon FWD BP3G/BP3H/BPE4/BPE5 | with groove in internal component | GCO34081 | Outer Joint | | 26 | 30 | 56 | 93 | 56.5 | M |
| | 1998.09-2004.05 | AT | F | L/R | Saloon FWD FP55 | | GCO34123 | Outer Joint | 44T | 26 | 29 | 56 | 92 | 56 | I |
| | 1998.09-2004.05 | AT/MT | F | L/R | Saloon FWD FP55 | | GCO34060 | Outer Joint | 44T | 26 | 29 | 56 | 93.5 | 59 | I |
| | 1998.09-2004.05 | MT | F | L | Saloon FWD FP55 | | GDS57696 | Drive Shaft | 44T | 26 | 24 | 56 | 93.5 | 630 | |
| | 1998.09-2004.05 | MT | F | L/R | Saloon FWD FP55 | | GCO34008 | Outer Joint | | 26 | 29 | 56 | 93.5 | 59 | I |
| | 1998.09-2004.05 | MT | F | | Saloon FWD FP55 | | GCO34124 | Outer Joint | 44T | 26 | 28 | 56 | 93.1 | 53 | M |
| | 1998.09-2004.05 | MT | F | L | Saloon FWD FP55 | | GCI34027 | Inner Joint | | 24 | 29 | 35 | 64 | 96 | |
| | 1998.09-2004.05 | | F | R | Saloon FWD FP55 | Date To:2000.07 | GCI34022 | Inner Joint | | 28 | 29 | 43 | | 115 | |
| 1.8 (92 kw) | 1998.05-2004.05 | MT | F | L | Saloon FWD FP55 | | GDS57696 | Drive Shaft | 44T | 26 | 24 | 56 | 93.5 | 630 | |
| | 1998.05-2004.05 | MT | F | R | Saloon FWD FP55 | | GCO34008 | Outer Joint | | 26 | 29 | 56 | 93.5 | 59 | I |
| | 1998.05-2004.05 | MT | F | L/R | Saloon FWD FP55 | | GCO34060 | Outer Joint | 44T | 26 | 29 | 56 | 93.5 | 59 | I |
| | 1998.05-2004.05 | MT | F | L | Saloon FWD FP55 | | GCI34027 | Inner Joint | | 24 | 29 | 35 | 64 | 96 | |
| | 1998.05-2004.05 | | F | R | Saloon FWD FP55 | Date To:2000.07 | GCI34022 | Inner Joint | | 28 | 29 | 43 | | 115 | |
| 2.0 (52 kw) | 1996.10-1998.09 | | F | | Saloon FWD RF1G | | GCO34018 | Outer Joint | | 24 | 21 | 52 | 86 | 50 | M |
| | 1996.10-1998.09 | | F | | Saloon FWD RF1G | | GCO34055 | Outer Joint | | 26 | 22 | 56 | 94 | 59 | M |
| | 1998.09-2004.05 | 5MT | F | L | Saloon FWD RF1S | Date from:2000.08 | GDS34057 | Drive Shaft | 44T | 26 | 28 | 56 | 93.5 | 626 | |
| | 1998.09-2004.05 | AT/MT | F | L/R | Saloon FWD RF1S | | GCO34008 | Outer Joint | | 26 | 29 | 56 | 93.5 | 59 | I |
| | 1998.09-2004.05 | MT | F | | Saloon FWD RF1S | Model year to:2003 | GCO34026 | Outer Joint | | 26 | 28 | 56 | 93.5 | 53 | I |
| | 1998.09-2004.05 | MT | F | | Saloon FWD RF1S | | GCO34124 | Outer Joint | 44T | 26 | 28 | 56 | 93.1 | 53 | M |
| | 1998.09-2004.05 | | F | L | Saloon FWD RF1S | Date From:2000.08 | GCO34123 | Outer Joint | 44T | 26 | 29 | 56 | 92 | 56 | I |
| | 1998.09-2004.05 | | F | R | Saloon FWD RF1S | | GCI34022 | Inner Joint | | 28 | 29 | 43 | | 115 | |
| 2.0 (66 kw) | 1998.09-2004.05 | 5MT | F | L | Saloon FWD RF4F | Date from:2000.08 | GDS34057 | Drive Shaft | 44T | 26 | 28 | 56 | 93.5 | 626 | |
| | 1998.09-2004.05 | AT/MT | F | L/R | Saloon FWD RF4F | | GCO34008 | Outer Joint | | 26 | 29 | 56 | 93.5 | 59 | I |
| | 1998.09-2004.05 | MT | F | | Saloon FWD RF4F | Model year to:2003 | GCO34026 | Outer Joint | | 26 | 28 | 56 | 93.5 | 53 | I |
| | 1998.09-2004.05 | MT | F | | Saloon FWD RF4F | | GCO34124 | Outer Joint | 44T | 26 | 28 | 56 | 93.1 | 53 | M |
| | 1998.09-2004.05 | | F | L | Saloon FWD RF4F | Date From:2000.08 | GCO34123 | Outer Joint | 44T | 26 | 29 | 56 | 92 | 56 | I |
| | 1998.09-2004.05 | | F | R | Saloon FWD RF4F | | GCI34022 | Inner Joint | | 28 | 29 | 43 | | 115 | |
| 2.0 (74 kw) | 2000.10-2002.10 | 5MT | F | L | Saloon FWD RF4F | | GDS34057 | Drive Shaft | 44T | 26 | 28 | 56 | 93.5 | 626 | |
| | 2000.10-2002.10 | MT | F | | Saloon FWD RF4F | | GCO34026 | Outer Joint | | 26 | 28 | 56 | 93.5 | 53 | I |
| | 2000.10-2002.10 | MT | F | | Saloon FWD RF4F | | GCO34124 | Outer Joint | 44T | 26 | 28 | 56 | 93.1 | 53 | M |
| | 2000.10-2002.10 | | F | L | Saloon FWD RF4F | Date From:2000.08 | GCO34123 | Outer Joint | 44T | 26 | 29 | 56 | 92 | 56 | I |
| | 2000.10-2002.10 | | F | R | Saloon FWD RF4F | | GCO34008 | Outer Joint | | 26 | 29 | 56 | 93.5 | 59 | I |
| | 2000.10-2002.10 | | F | | Saloon FWD RF4F | | GCO34060 | Outer Joint | 44T | 26 | 29 | 56 | 93.5 | 59 | I |
| | 2000.10-2002.10 | | F | R | Saloon FWD RF4F | | GCI34022 | Inner Joint | | 28 | 29 | 43 | | 115 | |
| 2.0 (96 kw) | 2000.10-2003.10 | AT | F | L/R | Saloon FWD FS7E/FS7G | | GCO34123 | Outer Joint | 44T | 26 | 29 | 56 | 92 | 56 | I |
| | 2000.10-2003.10 | AT/MT | F | | Saloon FWD FS7E/FS7G | Model year to:2003 | GCO34020 | Outer Joint | | 26 | 28 | 56 | 93.1 | 53 | M |
| | 2000.10-2003.10 | AT/MT | F | | Saloon FWD FS7E/FS7G | Model year to:2003 | GCO34124 | Outer Joint | 44T | 26 | 28 | 56 | 93.1 | 53 | M |
| | 2000.10-2003.10 | MT | F | L/R | Saloon FWD FS7E/FS7G | | GCO34008 | Outer Joint | | 26 | 29 | 56 | 93.5 | 59 | I |
| | 2000.10-2003.10 | MT | F | | Saloon FWD FS7E/FS7G | | GCO34026 | Outer Joint | | 26 | 28 | 56 | 93.5 | 53 | I |
| | 2000.10-2003.10 | MT | F | R | Saloon FWD FS7E/FS7G | | GCI34022 | Inner Joint | | 28 | 29 | 43 | | 115 | |
| | 2000.10-2003.10 | | F | | Saloon FWD FS7E/FS7G | | GCO34060 | Outer Joint | 44T | 26 | 29 | 56 | 93.5 | 59 | I |
| **323C** | | | | | | | | | | | | | | | |
| 1.8 (84 kw) | 1994.08-1998.09 | AT/MT | F | L/R | Coupe FWD BP3G/BP3H/BPE4/BPE5 | | GCO34023 | Outer Joint | | 26 | 30 | 56 | 93 | 55 | I |
| | 1994.08-1998.09 | AT/MT | F | L/R | Coupe FWD BP3G/BP3H/BPE4/BPE5 | without groove in internal component | GCO34058 | Outer Joint | 44T | 26 | 30 | 56 | 93 | 55 | I |
| | 1994.08-1998.09 | MT | F | L/R | Coupe FWD BP3G/BP3H/BPE4/BPE5 | with groove in internal component | GCO34081 | Outer Joint | | 26 | 30 | 56 | 93 | 56.5 | M |
| **323C IV/Familia** | | | | | | | | | | | | | | | |
| 1.6 (66 kw) | 1993.09-2000.09 | AT/MT | F | L | Hatchback FWD B67K | Date from:1992.0701 | GCI18006 | Inner Joint | | 24 | 22 | 35 | 64 | 98.5 | |
| **323C/Familia** | | | | | | | | | | | | | | | |
| 1.3 (54 kw) | 1994.08-1998.09 | AT/MT | F | L | Coupe FWD B3P7 | | GDS27047 | Drive Shaft | | 26 | 24 | 56 | 94 | 635 | |
| | 1994.08-1998.09 | AT/MT | F | L | Coupe FWD B3P7 | | GDS27048 | Drive Shaft | 44T | 26 | 24 | 56 | 94 | 635 | |
| | 1994.08-1998.09 | AT/MT | F | R | Coupe FWD B3P7 | | GDS34005 | Drive Shaft | | 26 | 28 | 56 | 94 | 576 | |

| | YEAR | TRANSM. | F/R | L/R | BODY STYLE & DRIVE TYPE & ENGINE | REMARKS | G-AP Ref. | PRODUCT | ABS | Technical Specifications A | B | C | H | L | P |
|---|---|---|---|---|---|---|---|---|---|---|---|---|---|---|---|
| **MAZDA** | | | | | | | | | | | | | | | |
| **323C/Familia** | | | | | | | | | | | | | | | |
| 1.3 (54 kw) | 1994.08-1998.09 | AT/MT | F | L/R | Coupe FWD B3P7 | | GCO34005 | Outer Joint | | 26 | 22 | 56 | 94 | 59 | M |
| | 1994.08-1998.09 | AT/MT | F | L/R | Coupe FWD B3P7 | | GCO34006 | Outer Joint | 44T | 26 | 22 | 56 | 94 | 59 | M |
| | 1994.08-1998.09 | | F | | Coupe FWD B3P7 | | GCO34055 | Outer Joint | | 26 | 22 | 56 | 94 | 59 | M |
| | 1994.08-1998.09 | | F | L | Coupe FWD B3P7 | | GCI18006 | Inner Joint | | 24 | 22 | 35 | 64 | 98.5 | |
| 1.5 (65 kw) | 1994.08-1998.09 | AT/MT | F | L | Coupe FWD Z5-DE | | GDS27047 | Drive Shaft | | 26 | 24 | 56 | 94 | 635 | |
| | 1994.08-1998.09 | AT/MT | F | L | Coupe FWD Z5-DE | | GDS27048 | Drive Shaft | 44T | 26 | 24 | 56 | 94 | 635 | |
| | 1994.08-1998.09 | AT/MT | F | R | Coupe FWD Z5-DE | | GDS34005 | Drive Shaft | | 26 | 28 | 56 | 94 | 576 | |
| | 1994.08-1998.09 | AT/MT | F | L/R | Coupe FWD Z5-DE | | GCO27001 | Outer Joint | | 26 | 22 | 56 | 93.5 | 55.5 | M |
| | 1994.08-1998.09 | AT/MT | F | L/R | Coupe FWD Z5-DE | | GCO34005 | Outer Joint | | 26 | 22 | 56 | 94 | 59 | M |
| | 1994.08-1998.09 | AT/MT | F | L/R | Coupe FWD Z5-DE | | GCO34006 | Outer Joint | 44T | 26 | 22 | 56 | 94 | 59 | M |
| | 1994.08-1998.09 | AT/MT | F | L/R | Coupe FWD Z5-DE | | GCO34051 | Outer Joint | | 26 | 21 | 56 | 94 | 56 | M |
| | 1994.08-1998.09 | AT/MT | F | L/R | Coupe FWD Z5-DE | | GCO34055 | Outer Joint | | 26 | 22 | 56 | 94 | 59 | M |
| **323F** | | | | | | | | | | | | | | | |
| 1.3 (53 kw) | 2001.01-2004.05 | 5MT | F | L/R | Hatchback FWD B35S | Inner teeth:28,without ABS,GrooveType:Middle | GCO34020 | Outer Joint | | 26 | 28 | 56 | 93.1 | 53 | M |
| | 2001.01-2004.05 | 5MT | F | L/R | Hatchback FWD B35S | Inner teeth:28,without ABS,GrooveType:Inner | GCO34026 | Outer Joint | | 26 | 28 | 56 | 93.5 | 53 | I |
| | 2001.01-2004.05 | 5MT | F | L | Hatchback FWD B35S | | GCI34027 | Inner Joint | | 24 | 29 | 35 | 64 | 96 | |
| | 2001.01-2004.05 | 5MT | F | R | Hatchback FWD B35S | | GCI34022 | Inner Joint | | 28 | 29 | 43 | | 115 | |
| | 2001.01-2004.05 | AT/MT | F | L/R | Hatchback FWD B35S | Inner teeth:28,with ABS,GrooveType:Inner | GCO34059 | Outer Joint | 44T | 26 | 28 | 56 | 93.5 | 53 | I |
| | 2001.01-2004.05 | MT | F | L/R | Hatchback FWD B35S | Inner teeth:28,with ABS,GrooveType:Middle | GCO34124 | Outer Joint | 44T | 26 | 28 | 56 | 93.1 | 53 | M |
| 1.3 (54 kw) | 1998.09-2001.01 | 5MT | F | L | Hatchback FWD B33G | | GCI34027 | Inner Joint | | 24 | 29 | 35 | 64 | 96 | |
| | 1998.09-2001.01 | 5MT | F | R | Hatchback FWD B33G | | GCI34022 | Inner Joint | | 28 | 29 | 43 | | 115 | |
| | 1998.09-2001.01 | AT/MT | F | L/R | Hatchback FWD B33G | without ABS,GrooveType:Middle | GCO34020 | Outer Joint | | 26 | 28 | 56 | 93.1 | 53 | M |
| | 1998.09-2001.01 | AT/MT | F | L/R | Hatchback FWD B33G | with ABS,GrooveType:Inner | GCO34059 | Outer Joint | 44T | 26 | 28 | 56 | 93.5 | 53 | I |
| | 1998.09-2001.01 | MT | F | L/R | Hatchback FWD B33G | without ABS,GrooveType:Inner | GCO34026 | Outer Joint | | 26 | 28 | 56 | 93.5 | 53 | I |
| | 1998.09-2001.01 | MT | F | L/R | Hatchback FWD B33G | with ABS,GrooveType:Middle | GCO34124 | Outer Joint | 44T | 26 | 28 | 56 | 93.1 | 53 | M |
| 1.5 (65 kw) | 1994.07-1998.09 | 5MT | F | L | Hatchback FWD Z501 | | GDS27047 | Drive Shaft | | 26 | 24 | 56 | 94 | 635 | |
| | 1994.07-1998.09 | 5MT | F | R | Hatchback FWD Z501 | | GDS34005 | Drive Shaft | | 26 | 28 | 56 | 94 | 576 | |
| | 1994.07-1998.09 | 5MT | F | L/R | Hatchback FWD Z501 | without Rim protector | GCO27006 | Outer Joint | | 26 | 22 | 56 | 93 | 55 | M |
| | 1994.07-1998.09 | 5MT | F | L/R | Hatchback FWD Z501 | without Rim protector | GCO34051 | Outer Joint | | 26 | 21 | 56 | 94 | 56 | M |
| | 1994.07-1998.09 | 5MT | F | L/R | Hatchback FWD Z501 | with Rim protector | GCO34055 | Outer Joint | | 26 | 22 | 56 | 94 | 59 | M |
| | 1994.07-1998.09 | AT/MT | F | L/R | Hatchback FWD Z501 | without Rim protector | GCO27001 | Outer Joint | | 26 | 22 | 56 | 93.5 | 55.5 | M |
| | 1994.07-1998.09 | AT/MT | F | L/R | Hatchback FWD Z501 | without Rim protector | GCO34005 | Outer Joint | | 26 | 22 | 56 | 94 | 59 | M |
| | 1994.07-1998.09 | AT/MT | F | L/R | Hatchback FWD Z501 | without Rim protector | GCO34006 | Outer Joint | 44T | 26 | 22 | 56 | 94 | 59 | M |
| | 1998.09-2001.01 | 4AT/5MT | F | R | Hatchback FWD ZL05/ZL06 | | GCI34022 | Inner Joint | | 28 | 29 | 43 | | 115 | |
| | 1998.09-2001.01 | AT | F | L/R | Hatchback FWD ZL05/ZL06 | without ABS,GrooveType:Middle | GCO34020 | Outer Joint | | 26 | 28 | 56 | 93.1 | 53 | M |
| | 1998.09-2001.01 | AT/MT | F | L/R | Hatchback FWD ZL05/ZL06 | with ABS,GrooveType:Inner | GCO34059 | Outer Joint | 44T | 26 | 28 | 56 | 93.5 | 53 | I |
| | 1998.09-2001.01 | MT | F | L/R | Hatchback FWD ZL05/ZL06 | without ABS,GrooveType:Inner | GCO34026 | Outer Joint | | 26 | 28 | 56 | 93.5 | 53 | I |
| | 1998.09-2001.01 | MT | F | L/R | Hatchback FWD ZL05/ZL06 | with ABS,GrooveType:Middle | GCO34124 | Outer Joint | 44T | 26 | 28 | 56 | 93.1 | 53 | M |
| | 1998.09-2001.01 | MT | F | L | Hatchback FWD ZL05/ZL06 | | GCI34027 | Inner Joint | | 24 | 29 | 35 | 64 | 96 | |
| 1.6 (70 kw) | 2001.01-2004.05 | 5MT | F | L/R | Hatchback FWD ZM39 | without ABS,GrooveType:Middle | GCO34020 | Outer Joint | | 26 | 28 | 56 | 93.1 | 53 | M |
| | 2001.01-2004.05 | 5MT | F | L/R | Hatchback FWD ZM39 | without ABS,GrooveType:Inner | GCO34026 | Outer Joint | | 26 | 28 | 56 | 93.5 | 53 | I |
| | 2001.01-2004.05 | 5MT | F | L/R | Hatchback FWD ZM39 | with ABS,GrooveType:Middle | GCO34124 | Outer Joint | 44T | 26 | 28 | 56 | 93.1 | 53 | M |
| | 2001.01-2004.05 | 5MT | F | L | Hatchback FWD ZM39 | | GCI34027 | Inner Joint | | 24 | 29 | 35 | 64 | 96 | |
| | 2001.01-2004.05 | 5MT | F | R | Hatchback FWD ZM39 | | GCI34022 | Inner Joint | | 28 | 29 | 43 | | 115 | |
| | 2001.01-2004.05 | MT | F | L/R | Hatchback FWD ZM39 | with ABS,GrooveType:Inner | GCO34059 | Outer Joint | 44T | 26 | 28 | 56 | 93.5 | 53 | I |
| 1.6 (72 kw) | 1998.09-2003.10 | 4AT/5MT | F | R | Hatchback FWD ZM39/ZM40 | | GCI34022 | Inner Joint | | 28 | 29 | 43 | | 115 | |
| | 1998.09-2003.10 | AT/MT | F | L/R | Hatchback FWD ZM39/ZM40 | without ABS,GrooveType:Middle | GCO34020 | Outer Joint | | 26 | 28 | 56 | 93.1 | 53 | M |
| | 1998.09-2003.10 | MT | F | L/R | Hatchback FWD ZM39/ZM40 | without ABS,GrooveType:Inner | GCO34026 | Outer Joint | | 26 | 28 | 56 | 93.5 | 53 | I |
| | 1998.09-2003.10 | MT | F | L/R | Hatchback FWD ZM39/ZM40 | with ABS,GrooveType:Inner | GCO34059 | Outer Joint | 44T | 26 | 28 | 56 | 93.5 | 53 | I |
| | 1998.09-2003.10 | MT | F | L/R | Hatchback FWD ZM39/ZM40 | with ABS,GrooveType:Middle | GCO34124 | Outer Joint | 44T | 26 | 28 | 56 | 93.1 | 53 | M |
| | 1998.09-2003.10 | MT | F | L | Hatchback FWD ZM39/ZM40 | | GCI34027 | Inner Joint | | 24 | 29 | 35 | 64 | 96 | |
| 1.8 (84 kw) | 1994.05-1998.07 | MT | F | L/R | Hatchback FWD BP3G/BP3H/BPE4/BPE5 | Inner teeth:22,with Rim protector | GCO18034 | Outer Joint | | 26 | 22 | 56 | 94 | 59 | I |
| | 1994.05-1998.07 | MT | F | L/R | Hatchback FWD BP3G/BP3H/BPE4/BPE5 | Inner teeth:30,GrooveType:Inner,without ABS | GCO34023 | Outer Joint | | 26 | 30 | 56 | 93 | 55 | I |
| | 1994.05-1998.07 | MT | F | L/R | Hatchback FWD BP3G/BP3H/BPE4/BPE5 | Inner teeth:30,GrooveType:Inner,with ABS | GCO34058 | Outer Joint | 44T | 26 | 30 | 56 | 93 | 55 | I |
| | 1994.05-1998.07 | MT | F | L/R | Hatchback FWD BP3G/BP3H/BPE4/BPE5 | Inner teeth:30,GrooveType:Middle,without ABS | GCO34081 | Outer Joint | | 26 | 30 | 56 | 93 | 56.5 | M |
| | 1998.09-2001.07 | AT | F | L/R | Hatchback FWD FP55 | | GCO34123 | Outer Joint | 44T | 26 | 29 | 56 | 92 | 56 | I |
| | 1998.09-2001.07 | AT/MT | F | L/R | Hatchback FWD FP55 | | GCO34008 | Outer Joint | | 26 | 29 | 56 | 93.5 | 59 | I |
| | 1998.09-2001.07 | MT | F | L | Hatchback FWD FP55 | | GDS57696 | Drive Shaft | 44T | 26 | 24 | 56 | 93.5 | 630 | |
| | 1998.09-2001.07 | MT | F | L/R | Hatchback FWD FP55 | | GCO34060 | Outer Joint | 44T | 26 | 29 | 56 | 93.5 | 59 | I |
| | 1998.09-2001.07 | MT | F | L | Hatchback FWD FP55 | | GCI34027 | Inner Joint | | 24 | 29 | 35 | 64 | 96 | |
| | 1998.09-2001.07 | | F | R | Hatchback FWD FP55 | Date To:2000.07 | GCI34022 | Inner Joint | | 28 | 29 | 43 | | 115 | |
| 2.0 (52 kw) | 1998.09-2004.05 | 5MT | F | L | Hatchback FWD RF1G | | GCI34027 | Inner Joint | | 24 | 29 | 35 | 64 | 96 | |
| | 1998.09-2004.05 | AT/MT | F | L/R | Hatchback FWD RF1G | | GCO34008 | Outer Joint | | 26 | 29 | 56 | 93.5 | 59 | I |
| | 1998.09-2004.05 | AT/MT | F | L/R | Hatchback FWD RF1G | | GCO34060 | Outer Joint | 44T | 26 | 29 | 56 | 93.5 | 59 | I |
| | 1998.09-2004.05 | MT | F | L | Hatchback FWD RF1G | | GDS57696 | Drive Shaft | 44T | 26 | 24 | 56 | 93.5 | 630 | |

| | YEAR | TRANSM. | F/R | L/R | BODY STYLE & DRIVE TYPE & ENGINE | REMARKS | G-AP Ref. | PRODUCT | ABS | Technical Specifications A | B | C | H | L | P |
|---|---|---|---|---|---|---|---|---|---|---|---|---|---|---|---|
| **MAZDA** | | | | | | | | | | | | | | | |
| **323F** | | | | | | | | | | | | | | | |
| 2.0 (52 kw) | 1998.09-2004.05 | MT | F | | Hatchback FWD RF1G | | GCO34123 | Outer Joint | 44T | 26 | 29 | 56 | 92 | 56 | I |
| | 1998.09-2004.05 | | F | R | Hatchback FWD RF1G | | GCI34022 | Inner Joint | | 28 | 29 | 43 | | 115 | |
| 2.0 (66 kw) | 1998.09-2001.01 | 5MT | F | L | Hatchback FWD RF4F | Date from:2000.08 | GDS34057 | Drive Shaft | 44T | 26 | 28 | 56 | 93.5 | 626 | |
| | 1998.09-2001.01 | AT/MT | F | L/R | Hatchback FWD RF4F | Date to:2001.01 | GCO34008 | Outer Joint | | 26 | 29 | 56 | 93.5 | 59 | I |
| | 1998.09-2001.01 | | F | L | Hatchback FWD RF4F | Date From:2000.08 | GCO34123 | Outer Joint | 44T | 26 | 29 | 56 | 92 | 56 | I |
| | 1998.09-2001.01 | | F | R | Hatchback FWD RF4F | | GCI34022 | Inner Joint | | 28 | 29 | 43 | | 115 | |
| 2.0 (74 kw) | 2000.10-2003.10 | 5MT | F | L | Hatchback FWD RF2A/RF4F | Date to:2003.01 | GDS34057 | Drive Shaft | 44T | 26 | 28 | 56 | 93.5 | 626 | |
| | 2000.10-2003.10 | 5MT | F | L | Hatchback FWD RF2A/RF4F | Date from:2000.08 | GCO34123 | Outer Joint | 44T | 26 | 29 | 56 | 92 | 56 | I |
| | 2000.10-2003.10 | 5MT | F | R | Hatchback FWD RF2A/RF4F | | GCI34022 | Inner Joint | | 28 | 29 | 43 | | 115 | |
| | 2000.10-2003.10 | AT/MT | F | L/R | Hatchback FWD RF2A/RF4F | | GCO34008 | Outer Joint | | 26 | 29 | 56 | 93.5 | 59 | I |
| | 2000.10-2003.10 | AT/MT | F | L/R | Hatchback FWD RF2A/RF4F | | GCO34060 | Outer Joint | 44T | 26 | 29 | 56 | 93.5 | 59 | I |
| 2.0 (96 kw) | 2001.01-2004.05 | AT/MT | F | L | Hatchback FWD FS7E/FS7G | | GCO34123 | Outer Joint | 44T | 26 | 29 | 56 | 92 | 56 | I |
| | 2001.01-2004.05 | AT/MT | F | L/R | Hatchback FWD FS7E/FS7G | | GCO34008 | Outer Joint | | 26 | 29 | 56 | 93.5 | 59 | I |
| | 2001.01-2004.05 | MT | F | R | Hatchback FWD FS7E/FS7G | | GCI34022 | Inner Joint | | 28 | 29 | 43 | | 115 | |
| | 2001.01-2004.05 | | F | L/R | Hatchback FWD FS7E/FS7G | | GCO34060 | Outer Joint | 44T | 26 | 29 | 56 | 93.5 | 59 | I |
| 2.0 (106 kw) | 1994.08-1998.09 | AT/MT | F | L/R | Hatchback FWD KF | | GCO27027 | Outer Joint | 44T | 26 | 23 | 56 | 93 | 55 | M |
| | 1994.08-1998.09 | AT/MT | F | L/R | Hatchback FWD KF | Chassis no. to:BA_300000 | GCO34075 | Outer Joint | 44T | 26 | 24 | 56 | 92 | 60 | M |
| **323P** | | | | | | | | | | | | | | | |
| 1.5 (65 kw) | 1996.11-2001.07 | AT/MT | F | L/R | Hatchback FWD Z501 | | GCO34005 | Outer Joint | | 26 | 22 | 56 | 94 | 59 | M |
| | 1996.11-2001.07 | AT/MT | F | L/R | Hatchback FWD Z501 | | GCO34006 | Outer Joint | 44T | 26 | 22 | 56 | 94 | 59 | M |
| | 1996.11-2001.07 | | F | L | Hatchback FWD Z501 | | GDS27047 | Drive Shaft | | 26 | 24 | 56 | 94 | 635 | |
| | 1996.11-2001.07 | | F | R | Hatchback FWD Z501 | | GDS34005 | Drive Shaft | | 26 | 28 | 56 | 94 | 576 | |
| | 1996.11-2001.07 | | F | | Hatchback FWD Z501 | | GCO34051 | Outer Joint | | 26 | 21 | 56 | 94 | 56 | M |
| | 1996.11-2001.07 | | F | | Hatchback FWD Z501 | | GCO34055 | Outer Joint | | 26 | 22 | 56 | 94 | 59 | M |
| 2.0 (52 kw) | 1997.03-1999.10 | | F | | Hatchback FWD RF1G | | GCO34055 | Outer Joint | | 26 | 22 | 56 | 94 | 59 | M |
| **323P/Familia** | | | | | | | | | | | | | | | |
| 1.3 (54 kw) | 1996.10-1998.09 | AT/MT | F | L/R | Hatchback FWD B32A | | GCO34005 | Outer Joint | | 26 | 22 | 56 | 94 | 59 | M |
| | 1996.10-1998.09 | AT/MT | F | L/R | Hatchback FWD B32A | | GCO34006 | Outer Joint | 44T | 26 | 22 | 56 | 94 | 59 | M |
| | 1996.10-1998.09 | MT | F | L | Hatchback FWD B32A | | GDS27047 | Drive Shaft | | 26 | 24 | 56 | 94 | 635 | |
| | 1996.10-1998.09 | MT | F | R | Hatchback FWD B32A | | GDS34005 | Drive Shaft | | 26 | 28 | 56 | 94 | 576 | |
| | 1996.10-1998.09 | | F | | Hatchback FWD B32A | | GCO34055 | Outer Joint | | 26 | 22 | 56 | 94 | 59 | M |
| **5** | | | | | | | | | | | | | | | |
| 1.6 (85 kw) | 2010.07- | 6MT | F | R | MPV FWD Y655;Y650;Y6Y1 | | GDS34195 | Drive Shaft | | 28 | 28 | 58.5 | 92 | 586 | |
| | 2010.07- | 6MT | F | R | MPV FWD Y655;Y650;Y6Y1 | | GCO34200 | Outer Joint | | 28 | 24 | 58.5 | 92 | 63 | I |
| 1.8 (85 kw) | 2005.02-2010.05 | 5MT | F | L | MPV FWD L823;L8-VE | | GDS34091 | Drive Shaft | | 28 | 28 | 59 | 90 | 639 | |
| | 2005.02-2010.05 | 5MT | F | R | MPV FWD L823;L8-VE | | GDS83386 | Drive Shaft | | 28 | 28 | 58.5 | 88 | 588 | |
| | 2005.02-2010.05 | 5MT | F | L/R | MPV FWD L823;L8-VE | | GCO34237 | Outer Joint | | 28 | 24 | 58.5 | 88 | 63 | I |
| | 2005.02-2010.05 | 5MT | F | L | MPV FWD L823;L8-VE | | GCI34049 | Inner Joint | | 28 | 24 | 35 | 67 | 115 | |
| | 2005.02-2010.05 | 5MT | F | R | MPV FWD L823;L8-VE | | GCI82189 | Inner Joint | | 28 | 24 | 43 | | 126.5 | |
| | 2010.09- | 6MT | F | L | MPV FWD L850 | | GDS34261 | Drive Shaft | | 28 | 28 | 58.5 | 92 | 637 | |
| | 2010.09- | 6MT | F | R | MPV FWD L850 | | GDS34195 | Drive Shaft | | 28 | 28 | 58.5 | 92 | 586 | |
| | 2010.09- | 6MT | F | L | MPV FWD L850 | | GCO34200 | Outer Joint | | 28 | 24 | 58.5 | 92 | 63 | I |
| | 2010.09- | 6MT | F | L | MPV FWD L850 | | GCI34141 | Inner Joint | | 28 | 24 | 35 | 66.5 | 116.5 | |
| | 2010.09- | AT | F | L | MPV FWD L850 | | GDS82430 | Drive Shaft | | 28 | 28 | 58.5 | 92 | 645 | |
| | 2010.09- | AT | F | R | MPV FWD L850 | | GDS82429 | Drive Shaft | | 28 | 28 | 58.5 | 92 | 564 | |
| | 2010.09- | AT | F | L/R | MPV FWD L850 | | GCO81876 | Outer Joint | | 28 | 32 | 58.5 | 92 | 57.5 | I |
| | 2010.09- | AT | F | L | MPV FWD L850 | | GCI81799 | Inner Joint | | 28 | 32 | 35 | 67 | 104 | |
| | 2010.09- | AT | F | R | MPV FWD L850 | | GCI81798 | Inner Joint | | 28 | 32 | 43 | | 122.5 | |
| 2.0 (81 kw) | 2005.02-2010.05 | 6MT | F | R | MPV FWD RF7J | | GDS34225 | Drive Shaft | | 28 | 28 | 58.5 | 88 | 541 | |
| | 2005.02-2010.05 | AT/MT | F | L/R | MPV FWD RF7J | | GCO34237 | Outer Joint | | 28 | 24 | 58.5 | 88 | 63 | I |
| | 2005.02-2010.05 | MT | F | L | MPV FWD RF7J | | GDS34226 | Drive Shaft | | 28 | 30 | 58.5 | 88 | 587 | |
| 2.0 (105 kw) | 2005.02-2010.05 | 6MT | F | R | MPV FWD RF7J | | GDS34225 | Drive Shaft | | 28 | 28 | 58.5 | 88 | 541 | |
| | 2005.02-2010.05 | AT/MT | F | L/R | MPV FWD RF7J | | GCO34237 | Outer Joint | | 28 | 24 | 58.5 | 88 | 63 | I |
| | 2005.02-2010.05 | MT | F | L | MPV FWD RF7J | | GDS34226 | Drive Shaft | | 28 | 30 | 58.5 | 88 | 587 | |
| 2.0 (106 kw) | 2010.06- | AT | F | L | MPV FWD LF-ZB | | GDS82430 | Drive Shaft | | 28 | 28 | 58.5 | 92 | 645 | |
| | 2010.06- | AT | F | R | MPV FWD LF-ZB | | GDS82429 | Drive Shaft | | 28 | 28 | 58.5 | 92 | 564 | |
| | 2010.06- | AT | F | L/R | MPV FWD LF-ZB | | GCO34252 | Outer Joint | | 28 | 32 | 62 | 92 | 57.5 | I |
| | 2010.06- | AT | F | L | MPV FWD LF-ZB | | GCI81799 | Inner Joint | | 28 | 32 | 35 | 67 | 104 | |
| | 2010.06- | AT | F | R | MPV FWD LF-ZB | | GCI81798 | Inner Joint | | 28 | 32 | 43 | | 122.5 | |
| | 2010.06- | MT | F | L | MPV FWD LF-ZB | | GDS34261 | Drive Shaft | | 28 | 28 | 58.5 | 92 | 637 | |
| | 2010.06- | MT | F | L | MPV FWD LF-ZB | | GCI34141 | Inner Joint | | 28 | 24 | 35 | 66.5 | 116.5 | |
| 2.0 (107 kw) | 2005.02-2010.05 | 4AT | F | R | MPV FWD LFF7, LF-DE | | GDS34104 | Drive Shaft | | 28 | 28 | 59 | 90 | 551 | |
| | 2005.02-2010.05 | 5MT | F | R | MPV FWD LFF7, LF-DE | | GDS83386 | Drive Shaft | | 28 | 28 | 58.5 | 88 | 588 | |
| | 2005.02-2010.05 | 5MT | F | R | MPV FWD LFF7, LF-DE | DOJ | GCI82189 | Inner Joint | | 28 | 24 | 43 | | 126.5 | |
| | 2005.02-2010.05 | AT | F | L | MPV FWD LFF7, LF-DE | Date to:2007.06 | GDS82523 | Drive Shaft | | 28 | 28 | 58.5 | 88 | 620 | |

| | YEAR | TRANSM. | F/R | L/R | BODY STYLE & DRIVE TYPE & ENGINE | REMARKS | G-AP Ref. | PRODUCT | ABS | Technical Specifications A | B | C | H | L | P |
|---|---|---|---|---|---|---|---|---|---|---|---|---|---|---|---|
| **MAZDA** | | | | | | | | | | | | | | | |
| **5** | | | | | | | | | | | | | | | |
| 2.0 (107 kw) | 2005.02-2010.05 | AT | F | L | MPV FWD LFF7, LF-DE | Date from:2007.07 | GCO34177 | Outer Joint | | 28 | 24 | 58.6 | 90 | 60 | M |
| | 2005.02-2010.05 | AT | F | L | MPV FWD LFF7, LF-DE | Date to:2005.04;Date from:2005.05 | GCI34125 | Inner Joint | | 28 | 24 | 35 | 66.5 | 115 | |
| | 2005.02-2010.05 | AT | F | R | MPV FWD LFF7, LF-DE | | GCI34086 | Inner Joint | | 28 | 24 | 43 | | 124 | |
| | 2005.02-2010.05 | MT | F | L | MPV FWD LFF7, LF-DE | | GDS34091 | Drive Shaft | | 28 | 28 | 59 | 90 | 639 | |
| | 2005.02-2010.05 | MT | F | R | MPV FWD LFF7, LF-DE | | GCO34237 | Outer Joint | | 28 | 24 | 58.5 | 88 | 63 | I |
| | 2005.02-2010.05 | MT | F | L | MPV FWD LFF7, LF-DE | | GCI34049 | Inner Joint | | 28 | 24 | 35 | 67 | 115 | |
| 2.0 (108 kw) | 2011.01- | AT | F | L | MPV FWD LF-ZB | | GDS82430 | Drive Shaft | | 28 | 28 | 58.5 | 92 | 645 | |
| | 2011.01- | AT | F | R | MPV FWD LF-ZB | | GDS82429 | Drive Shaft | | 28 | 28 | 58.5 | 92 | 564 | |
| | 2011.01- | AT | F | L/R | MPV FWD LF-ZB | | GCO81876 | Outer Joint | | 28 | 32 | 58.5 | 92 | 57.5 | I |
| | 2011.01- | AT | F | L | MPV FWD LF-ZB | | GCI81799 | Inner Joint | | 28 | 32 | 35 | 67 | 104 | |
| | 2011.01- | AT | F | R | MPV FWD LF-ZB | | GCI81798 | Inner Joint | | 28 | 32 | 43 | | 122.5 | |
| | 2011.01- | MT | F | L | MPV FWD LF-ZB | | GDS34261 | Drive Shaft | | 28 | 28 | 58.5 | 92 | 637 | |
| | 2011.01- | MT | F | L | MPV FWD LF-ZB | | GCO34200 | Outer Joint | | 28 | 24 | 58.5 | 92 | 63 | I |
| | 2011.01- | MT | F | L | MPV FWD LF-ZB | | GCI34141 | Inner Joint | | 28 | 24 | 35 | 66.5 | 116.5 | |
| 2.0 (110 kw) | 2010.09- | 5AT | F | R | MPV FWD LF-ZB | | GDS82429 | Drive Shaft | | 28 | 28 | 58.5 | 92 | 564 | |
| | 2010.09- | 6MT | F | L | MPV FWD LF-ZB | | GDS34261 | Drive Shaft | | 28 | 28 | 58.5 | 92 | 637 | |
| | 2010.09- | 6MT | F | R | MPV FWD LF-ZB | | GDS34195 | Drive Shaft | | 28 | 28 | 58.5 | 92 | 586 | |
| | 2010.09- | 6MT | F | L | MPV FWD LF-ZB | | GCO34200 | Outer Joint | | 28 | 24 | 58.5 | 92 | 63 | I |
| | 2010.09- | 6MT | F | L | MPV FWD LF-ZB | | GCI34141 | Inner Joint | | 28 | 24 | 35 | 66.5 | 116.5 | |
| | 2010.09- | AT | F | L | MPV FWD LF-ZB | | GDS82430 | Drive Shaft | | 28 | 28 | 58.5 | 92 | 645 | |
| | 2010.09- | AT | F | L/R | MPV FWD LF-ZB | | GCO81876 | Outer Joint | | 28 | 32 | 58.5 | 92 | 57.5 | I |
| | 2010.09- | AT | F | L | MPV FWD LF-ZB | | GCI81799 | Inner Joint | | 28 | 32 | 35 | 67 | 104 | |
| | 2010.09- | AT | F | R | MPV FWD LF-ZB | | GCI81798 | Inner Joint | | 28 | 32 | 43 | | 122.5 | |
| **6** | | | | | | | | | | | | | | | |
| 1.8 (88 kw) | 2002.08-2007.08 | 5MT | F | R | Hatchback FWD L8-VE, L813 | Date to:2005.02 | GCO99273 | Outer Joint | 44T | 28 | 33 | 56.6 | 90 | 59 | I |
| | 2002.08-2007.08 | 5MT | F | L/R | Hatchback FWD L8-VE, L813 | Internal teeth:32 | GCO34084 | Outer Joint | 44T | 28 | 32 | 62 | 90 | 58 | I |
| | 2002.08-2007.08 | MT | F | L | Hatchback FWD L8-VE, L813 | | GDS34137 | Drive Shaft | 44T | 28 | 28 | 56.6 | 90 | 648 | |
| | 2002.08-2007.08 | MT | F | R | Hatchback FWD L8-VE, L813 | | GDS34088 | Drive Shaft | 44T | 28 | 28 | 56.6 | 90 | 599 | |
| | 2002.08-2007.08 | MT | F | L/R | Hatchback FWD L8-VE, L813 | Date from:2005.03 | GCO34135 | Outer Joint | 44T | 28 | 23 | 56 | 90 | 57.5 | I |
| | 2002.08-2007.08 | MT | F | | Hatchback FWD L8-VE, L813 | Model year to:2006 | GCO34021 | Outer Joint | 44T | 28 | 23 | 56 | 90 | 59 | I |
| | 2002.08-2007.08 | MT | F | R | Hatchback FWD L8-VE, L813 | Date from:2005.03 | GCI34026 | Inner Joint | | 28 | 33 | 43 | | 124 | |
| | 2002.08-2007.08 | | F | | Hatchback FWD L8-VE, L813 | | GCO34070 | Outer Joint | 44T | 28 | 32 | 56 | 90 | 59 | I |
| | 2002.08-2007.08 | 5MT | F | R | Saloon FWD L813;L829;L8-DE | Date to:2005.02 | GCO99273 | Outer Joint | 44T | 28 | 33 | 56.6 | 90 | 59 | I |
| | 2002.08-2007.08 | 5MT | F | L/R | Saloon FWD L813;L829;L8-DE | Internal teeth:32 | GCO34084 | Outer Joint | 44T | 28 | 32 | 62 | 90 | 58 | I |
| | 2002.08-2007.08 | MT | F | L | Saloon FWD L813;L829;L8-DE | | GDS34137 | Drive Shaft | 44T | 28 | 28 | 56.6 | 90 | 648 | |
| | 2002.08-2007.08 | MT | F | R | Saloon FWD L813;L829;L8-DE | | GDS34088 | Drive Shaft | 44T | 28 | 28 | 56.6 | 90 | 599 | |
| | 2002.08-2007.08 | MT | F | L/R | Saloon FWD L813;L829;L8-DE | Date from:2005.03 | GCO34135 | Outer Joint | 44T | 28 | 23 | 56 | 90 | 57.5 | I |
| | 2002.08-2007.08 | MT | F | | Saloon FWD L813;L829;L8-DE | Model year to:2006 | GCO34021 | Outer Joint | 44T | 28 | 23 | 56 | 90 | 59 | I |
| | 2002.08-2007.08 | MT | F | R | Saloon FWD L813;L829;L8-DE | Date from:2005.03 | GCI34026 | Inner Joint | | 28 | 33 | 43 | | 124 | |
| | 2002.08-2007.08 | | F | L/R | Saloon FWD L813;L829;L8-DE | | GCO34110 | Outer Joint | 44T | 28 | 32 | 62 | 90 | 57.5 | I |
| | 2002.08-2007.08 | | F | | Saloon FWD L813;L829;L8-DE | | GCO34070 | Outer Joint | 44T | 28 | 32 | 56 | 90 | 59 | I |
| | 2007.08-2013.07 | AT | F | L/R | Hatchback FWD L813;L8-DE | | GCO34252 | Outer Joint | | 28 | 32 | 62 | 92 | 57.5 | I |
| | 2007.08-2013.07 | MT | F | R | Hatchback FWD L813;L8-DE | | GCI34050 | Inner Joint | | 31 | 36 | 48 | | 126 | |
| | 2007.08-2013.07 | AT | F | L/R | Saloon FWD L813;L8-DE | | GCO34252 | Outer Joint | | 28 | 32 | 62 | 92 | 57.5 | I |
| | 2007.08-2013.07 | MT | F | R | Saloon FWD L813;L8-DE | | GCI34050 | Inner Joint | | 31 | 36 | 48 | | 126 | |
| 2.0 (89 kw) | 2002.08-2007.08 | 5AT | F | R | Hatchback FWD RF7J, RF5C | | GDS34088 | Drive Shaft | 44T | 28 | 28 | 56.6 | 90 | 599 | |
| | 2002.08-2007.08 | 5AT | F | | Hatchback FWD RF7J, RF5C | | GCO34070 | Outer Joint | 44T | 28 | 32 | 56 | 90 | 59 | I |
| | 2002.08-2007.08 | 5MT/6MT | F | L | Hatchback FWD RF7J, RF5C | Date to:2005.02 | GDS34039 | Drive Shaft | 44T | 28 | 30 | 56.6 | 90 | 643 | |
| | 2002.08-2007.08 | 5MT/6MT | F | L | Hatchback FWD RF7J, RF5C | Date from:2006.12 | GDS34153 | Drive Shaft | 44T | 31 | 30 | 65 | 94 | 611.5 | |
| | 2002.08-2007.08 | 5MT/6MT | F | R | Hatchback FWD RF7J, RF5C | | GDS34165 | Drive Shaft | 44T | 31 | 31 | 65 | 94 | 555 | |
| | 2002.08-2007.08 | 5MT/6MT | F | R | Hatchback FWD RF7J, RF5C | Date from:2006.05 to 2006.11 | GDS99064 | Drive Shaft | 44T | 28 | 28 | 56.6 | 90 | 587 | |
| | 2002.08-2007.08 | 5MT/6MT | F | L/R | Hatchback FWD RF7J, RF5C | | GCO99273 | Outer Joint | 44T | 28 | 33 | 56.6 | 90 | 59 | I |
| | 2002.08-2007.08 | 6MT | F | | Hatchback FWD RF7J, RF5C | | GCO34114 | Outer Joint | 44T | 31 | 36 | 65 | 94 | 65 | I |
| | 2002.08-2007.08 | 6MT | F | R | Hatchback FWD RF7J, RF5C | | GCI34050 | Inner Joint | | 31 | 36 | 48 | | 126 | |
| | 2002.08-2007.08 | AT/MT | F | L | Hatchback FWD RF7J, RF5C | | GCI34085 | Inner Joint | | 30 | 36 | 50 | 77.5 | 107 | |
| | 2002.08-2007.08 | | F | L | Hatchback FWD RF7J, RF5C | Date From:2005.03;Date To:2006.11 | GCO34161 | Outer Joint | 44T | 31 | 36 | 65 | 94 | 62.5 | I |
| | 2002.08-2007.08 | | F | R | Hatchback FWD RF7J, RF5C | | GCO34084 | Outer Joint | 44T | 28 | 32 | 62 | 90 | 58 | I |
| | 2002.08-2007.08 | | F | R | Hatchback FWD RF7J, RF5C | Date To:2006.04 | GCO34161 | Outer Joint | 44T | 31 | 36 | 65 | 94 | 62.5 | I |
| | 2002.08-2007.08 | 5AT | F | R | Saloon FWD RF5C;RF7J | | GDS34088 | Drive Shaft | 44T | 28 | 28 | 56.6 | 90 | 599 | |
| | 2002.08-2007.08 | 5AT | F | | Saloon FWD RF5C;RF7J | | GCO34070 | Outer Joint | 44T | 28 | 32 | 56 | 90 | 59 | I |
| | 2002.08-2007.08 | 5MT/6MT | F | L | Saloon FWD RF5C;RF7J | Date to:2005.02 | GDS34039 | Drive Shaft | 44T | 28 | 30 | 56.6 | 90 | 643 | |
| | 2002.08-2007.08 | 5MT/6MT | F | L | Saloon FWD RF5C;RF7J | Date from:2006.12 | GDS34153 | Drive Shaft | 44T | 31 | 30 | 65 | 94 | 611.5 | |
| | 2002.08-2007.08 | 5MT/6MT | F | R | Saloon FWD RF5C;RF7J | | GDS34165 | Drive Shaft | 44T | 31 | 31 | 65 | 94 | 555 | |
| | 2002.08-2007.08 | 5MT/6MT | F | R | Saloon FWD RF5C;RF7J | Date from:2006.05 to 2006.11 | GDS99064 | Drive Shaft | 44T | 28 | 28 | 56.6 | 90 | 587 | |
| | 2002.08-2007.08 | 5MT/6MT | F | L/R | Saloon FWD RF5C;RF7J | | GCO99273 | Outer Joint | 44T | 28 | 33 | 56.6 | 90 | 59 | I |

| | YEAR | TRANSM. | F/R | L/R | BODY STYLE & DRIVE TYPE & ENGINE | REMARKS | G-AP Ref. | PRODUCT | ABS | Technical Specifications A | B | C | H | L | P |
|---|---|---|---|---|---|---|---|---|---|---|---|---|---|---|---|
| **MAZDA** | | | | | | | | | | | | | | | |
| **6** | | | | | | | | | | | | | | | |
| 2.0 (89 kw) | 2002.08-2007.08 | 6MT | F | | Saloon FWD RF5C;RF7J | | GCO34114 | Outer Joint | 44T | 31 | 36 | 65 | 94 | 65 | I |
| | 2002.08-2007.08 | 6MT | F | R | Saloon FWD RF5C;RF7J | | GCI34050 | Inner Joint | | 31 | 36 | 48 | | 126 | |
| | 2002.08-2007.08 | AT/MT | F | L | Saloon FWD RF5C;RF7J | | GCI34085 | Inner Joint | | 30 | 36 | 50 | 77.5 | 107 | |
| | 2002.08-2007.08 | | F | L | Saloon FWD RF5C;RF7J | Date From:2005.03;Date To:2006.11 | GCO34161 | Outer Joint | 44T | 31 | 36 | 65 | 94 | 62.5 | I |
| | 2002.08-2007.08 | | F | R | Saloon FWD RF5C;RF7J | | GCO34084 | Outer Joint | 44T | 28 | 32 | 62 | 90 | 58 | I |
| | 2002.08-2007.08 | | F | R | Saloon FWD RF5C;RF7J | Date To:2006.04 | GCO34161 | Outer Joint | 44T | 31 | 36 | 65 | 94 | 62.5 | I |
| 2.0 (100 kw) | 2002.06-2007.08 | 5AT | F | R | Saloon FWD RF5C | | GDS34088 | Drive Shaft | 44T | 28 | 28 | 56.6 | 90 | 599 | |
| | 2002.06-2007.08 | 5AT | F | | Saloon FWD RF5C | | GCO34070 | Outer Joint | 44T | 28 | 32 | 56 | 90 | 59 | I |
| | 2002.06-2007.08 | 5MT | F | L | Saloon FWD RF5C | Date to:2005.02 | GDS34039 | Drive Shaft | 44T | 28 | 30 | 56.6 | 90 | 643 | |
| | 2002.06-2007.08 | 5MT | F | L | Saloon FWD RF5C | Date from:2006.12 | GDS34153 | Drive Shaft | 44T | 31 | 30 | 65 | 94 | 611.5 | |
| | 2002.06-2007.08 | 5MT | F | R | Saloon FWD RF5C | | GDS34165 | Drive Shaft | 44T | 31 | 31 | 65 | 94 | 555 | |
| | 2002.06-2007.08 | 5MT | F | R | Saloon FWD RF5C | Date from:2006.05 to 2006.11 | GDS99064 | Drive Shaft | 44T | 28 | 28 | 56.6 | 90 | 587 | |
| | 2002.06-2007.08 | 5MT | F | L/R | Saloon FWD RF5C | | GCO99273 | Outer Joint | 44T | 28 | 33 | 56.6 | 90 | 59 | I |
| | 2002.06-2007.08 | 6MT | F | | Saloon FWD RF5C | | GCO34114 | Outer Joint | 44T | 31 | 36 | 65 | 94 | 65 | I |
| | 2002.06-2007.08 | 6MT | F | R | Saloon FWD RF5C | | GCI34050 | Inner Joint | | 31 | 36 | 48 | | 126 | |
| | 2002.06-2007.08 | AT/MT | F | L | Saloon FWD RF5C | | GCI34085 | Inner Joint | | 30 | 36 | 50 | 77.5 | 107 | |
| | 2002.06-2007.08 | | F | L | Saloon FWD RF5C | Date From:2005.03;Date To:2006.11 | GCO34161 | Outer Joint | 44T | 31 | 36 | 65 | 94 | 62.5 | I |
| | 2002.06-2007.08 | | F | R | Saloon FWD RF5C | | GCO34084 | Outer Joint | 44T | 28 | 32 | 62 | 90 | 58 | I |
| | 2002.06-2007.08 | | F | R | Saloon FWD RF5C | Date To:2006.04 | GCO34161 | Outer Joint | 44T | 31 | 36 | 65 | 94 | 62.5 | I |
| | 2002.08-2007.08 | 5AT | F | R | Hatchback FWD RF5C | | GDS34088 | Drive Shaft | 44T | 28 | 28 | 56.6 | 90 | 599 | |
| | 2002.08-2007.08 | 5AT | F | | Hatchback FWD RF5C | | GCO34070 | Outer Joint | 44T | 28 | 32 | 56 | 90 | 59 | I |
| | 2002.08-2007.08 | 5MT | F | L | Hatchback FWD RF5C | Date to:2005.02 | GDS34039 | Drive Shaft | 44T | 28 | 30 | 56.6 | 90 | 643 | |
| | 2002.08-2007.08 | 5MT | F | L | Hatchback FWD RF5C | Date from:2006.12 | GDS34153 | Drive Shaft | 44T | 31 | 30 | 65 | 94 | 611.5 | |
| | 2002.08-2007.08 | 5MT | F | R | Hatchback FWD RF5C | | GDS34165 | Drive Shaft | 44T | 31 | 31 | 65 | 94 | 555 | |
| | 2002.08-2007.08 | 5MT | F | R | Hatchback FWD RF5C | Date from:2006.05 to 2006.11 | GDS99064 | Drive Shaft | 44T | 28 | 28 | 56.6 | 90 | 587 | |
| | 2002.08-2007.08 | 5MT | F | L/R | Hatchback FWD RF5C | | GCO99273 | Outer Joint | 44T | 28 | 33 | 56.6 | 90 | 59 | I |
| | 2002.08-2007.08 | 6MT | F | | Hatchback FWD RF5C | | GCO34114 | Outer Joint | 44T | 31 | 36 | 65 | 94 | 65 | I |
| | 2002.08-2007.08 | 6MT | F | R | Hatchback FWD RF5C | | GCI34050 | Inner Joint | | 31 | 36 | 48 | | 126 | |
| | 2002.08-2007.08 | AT/MT | F | L | Hatchback FWD RF5C | | GCI34085 | Inner Joint | | 30 | 36 | 50 | 77.5 | 107 | |
| | 2002.08-2007.08 | | F | L | Hatchback FWD RF5C | Date From:2005.03;Date To:2006.11 | GCO34161 | Outer Joint | 44T | 31 | 36 | 65 | 94 | 62.5 | I |
| | 2002.08-2007.08 | | F | R | Hatchback FWD RF5C | | GCO34084 | Outer Joint | 44T | 28 | 32 | 62 | 90 | 58 | I |
| | 2002.08-2007.08 | | F | R | Hatchback FWD RF5C | Date To:2006.04 | GCO34161 | Outer Joint | 44T | 31 | 36 | 65 | 94 | 62.5 | I |
| 2.0 (103 kw) | 2007.08-2009.10 | 6MT | F | R | Hatchback FWD RF7J | | GDS18325 | Drive Shaft | | 31 | 31 | 65 | 94 | 567 | |
| | 2007.08-2009.10 | 6MT | F | L/R | Hatchback FWD RF7J | | GCO18245 | Outer Joint | | 31 | 36 | 65 | 94 | 63 | I |
| | 2007.08-2009.10 | 6MT | F | R | Hatchback FWD RF7J | | GCI34050 | Inner Joint | | 31 | 36 | 48 | | 126 | |
| | 2007.08-2010.10 | 6MT | F | R | Saloon FWD RF7J | | GDS18325 | Drive Shaft | | 31 | 31 | 65 | 94 | 567 | |
| | 2007.08-2010.10 | 6MT | F | L/R | Saloon FWD RF7J | | GCO18245 | Outer Joint | | 31 | 36 | 65 | 94 | 63 | I |
| 2.0 (104 kw) | 2002.06-2007.08 | AT | F | L | Saloon FWD LF17;LF18;LF-DE | Date from:2005.03 | GDS84520 | Drive Shaft | 44T | 28 | 28 | 62 | 89.5 | 645 | |
| | 2002.06-2007.08 | AT | F | R | Saloon FWD LF17;LF18;LF-DE | | GDS83960 | Drive Shaft | 44T | 28 | 28 | 62 | 89.5 | 602 | |
| | 2002.06-2007.08 | AT | F | L/R | Saloon FWD LF17;LF18;LF-DE | | GCO34070 | Outer Joint | 44T | 28 | 32 | 56 | 90 | 59 | I |
| | 2002.06-2007.08 | AT | F | L/R | Saloon FWD LF17;LF18;LF-DE | | GCO34110 | Outer Joint | 44T | 28 | 32 | 62 | 90 | 57.5 | I |
| | 2002.06-2007.08 | AT | F | L/R | Saloon FWD LF17;LF18;LF-DE | | GCO34201 | Outer Joint | 44T | 28 | 32 | 62 | 89.5 | 57.5 | I |
| | 2002.06-2007.08 | AT | F | L | Saloon FWD LF17;LF18;LF-DE | Date to:2003.07 | GCI34029 | Inner Joint | | 28 | 33 | 35 | 66.5 | 114 | |
| | 2002.06-2007.08 | AT | F | L | Saloon FWD LF17;LF18;LF-DE | Date from:2003.08,Date to:2005.02 | GCI34135 | Inner Joint | | 28 | 33 | 35 | 66.5 | 113.5 | |
| | 2002.06-2007.08 | AT | F | L | Saloon FWD LF17;LF18;LF-DE | Date from:2005.03 | GCI82832 | Inner Joint | | 28 | 33 | 35 | 66.5 | 113 | |
| | 2002.06-2007.08 | AT | F | R | Saloon FWD LF17;LF18;LF-DE | Date to:2003.07;Date from:2005.03 | GCI81449 | Inner Joint | | 28 | 33 | 43 | | 133 | |
| | 2002.06-2007.08 | AT | F | R | Saloon FWD LF17;LF18;LF-DE | | GDS34267 | Intermediate Shaft | | 28 | 28 | | | 399 | |
| | 2002.06-2007.08 | MT | F | L | Saloon FWD LF17;LF18;LF-DE | | GDS34137 | Drive Shaft | 44T | 28 | 28 | 56.6 | 90 | 648 | |
| | 2002.06-2007.08 | MT | F | R | Saloon FWD LF17;LF18;LF-DE | | GDS34088 | Drive Shaft | 44T | 28 | 28 | 56.6 | 90 | 599 | |
| | 2002.06-2007.08 | MT | F | L | Saloon FWD LF17;LF18;LF-DE | | GCO34135 | Outer Joint | 44T | 28 | 23 | 56 | 90 | 57.5 | I |
| | 2002.06-2007.08 | MT | F | R | Saloon FWD LF17;LF18;LF-DE | | GCO99273 | Outer Joint | 44T | 28 | 33 | 56.6 | 90 | 59 | I |
| | 2002.06-2007.08 | MT | F | L/R | Saloon FWD LF17;LF18;LF-DE | Model year to:2006 | GCO34021 | Outer Joint | 44T | 28 | 23 | 56 | 90 | 59 | I |
| | 2002.06-2007.08 | MT | F | L/R | Saloon FWD LF17;LF18;LF-DE | Date to:2003.07 | GCO34084 | Outer Joint | 44T | 28 | 32 | 62 | 90 | 58 | I |
| | 2002.08-2007.08 | AT | F | L | Hatchback FWD LF-DE, LF17, LF18 | Date from:2005.03 | GDS84520 | Drive Shaft | 44T | 28 | 28 | 62 | 89.5 | 645 | |
| | 2002.08-2007.08 | AT | F | R | Hatchback FWD LF-DE, LF17, LF18 | | GDS83960 | Drive Shaft | 44T | 28 | 28 | 62 | 89.5 | 602 | |
| | 2002.08-2007.08 | AT | F | L/R | Hatchback FWD LF-DE, LF17, LF18 | | GCO34070 | Outer Joint | 44T | 28 | 32 | 56 | 90 | 59 | I |
| | 2002.08-2007.08 | AT | F | L/R | Hatchback FWD LF-DE, LF17, LF18 | | GCO34110 | Outer Joint | 44T | 28 | 32 | 62 | 90 | 57.5 | I |
| | 2002.08-2007.08 | AT | F | L/R | Hatchback FWD LF-DE, LF17, LF18 | | GCO34201 | Outer Joint | 44T | 28 | 32 | 62 | 89.5 | 57.5 | I |
| | 2002.08-2007.08 | AT | F | L | Hatchback FWD LF-DE, LF17, LF18 | Date to:2003.07 | GCI34029 | Inner Joint | | 28 | 33 | 35 | 66.5 | 114 | |
| | 2002.08-2007.08 | AT | F | L | Hatchback FWD LF-DE, LF17, LF18 | Date from:2003.08,Date to:2005.02 | GCI34135 | Inner Joint | | 28 | 33 | 35 | 66.5 | 113.5 | |
| | 2002.08-2007.08 | AT | F | L | Hatchback FWD LF-DE, LF17, LF18 | Date from:2005.03 | GCI82832 | Inner Joint | | 28 | 33 | 35 | 66.5 | 113 | |
| | 2002.08-2007.08 | AT | F | R | Hatchback FWD LF-DE, LF17, LF18 | Date to:2003.07;Date from:2005.03 | GCI81449 | Inner Joint | | 28 | 33 | 43 | | 133 | |
| | 2002.08-2007.08 | AT | F | R | Hatchback FWD LF-DE, LF17, LF18 | | GDS34267 | Intermediate Shaft | | 28 | 28 | | | 399 | |
| | 2002.08-2007.08 | MT | F | L | Hatchback FWD LF-DE, LF17, LF18 | | GDS34137 | Drive Shaft | 44T | 28 | 28 | 56.6 | 90 | 648 | |
| | 2002.08-2007.08 | MT | F | R | Hatchback FWD LF-DE, LF17, LF18 | | GDS34088 | Drive Shaft | 44T | 28 | 28 | 56.6 | 90 | 599 | |

| | YEAR | TRANSM. | F/R | L/R | BODY STYLE & DRIVE TYPE & ENGINE | REMARKS | G-AP Ref. | PRODUCT | ABS | Technical Specifications A | B | C | H | L | P |
|---|---|---|---|---|---|---|---|---|---|---|---|---|---|---|---|
| **MAZDA** | | | | | | | | | | | | | | | |
| **6** | | | | | | | | | | | | | | | |
| 2.0 (104 kw) | 2002.08-2007.08 | MT | F | L | Hatchback FWD LF-DE, LF17, LF18 | | GCO34135 | Outer Joint | 44T | 28 | 23 | 56 | 90 | 57.5 | I |
| | 2002.08-2007.08 | MT | F | R | Hatchback FWD LF-DE, LF17, LF18 | | GCO99273 | Outer Joint | 44T | 28 | 33 | 56.6 | 90 | 59 | I |
| | 2002.08-2007.08 | MT | F | L/R | Hatchback FWD LF-DE, LF17, LF18 | Model year to:2006 | GCO34021 | Outer Joint | 44T | 28 | 23 | 56 | 90 | 59 | I |
| | 2002.08-2007.08 | MT | F | L/R | Hatchback FWD LF-DE, LF17, LF18 | Date to:2003.07 | GCO34084 | Outer Joint | 44T | 28 | 32 | 62 | 90 | 58 | I |
| 2.0 (105 kw) | 2005.06-2007.08 | 6MT | F | L | Hatchback FWD RF7J | Date from:2006.12 | GDS34153 | Drive Shaft | 44T | 31 | 30 | 65 | 94 | 611.5 | |
| | 2005.06-2007.08 | 6MT | F | R | Hatchback FWD RF7J | | GDS34165 | Drive Shaft | 44T | 31 | 31 | 65 | 94 | 555 | |
| | 2005.06-2007.08 | 6MT | F | R | Hatchback FWD RF7J | Date from:2006.05 to 2006.11 | GDS99064 | Drive Shaft | 44T | 28 | 28 | 56.6 | 90 | 587 | |
| | 2005.06-2007.08 | 6MT | F | L/R | Hatchback FWD RF7J | | GCO99273 | Outer Joint | 44T | 28 | 33 | 56.6 | 90 | 59 | I |
| | 2005.06-2007.08 | 6MT | F | | Hatchback FWD RF7J | | GCO34114 | Outer Joint | 44T | 31 | 36 | 65 | 94 | 65 | I |
| | 2005.06-2007.08 | AT | F | R | Hatchback FWD RF7J | | GCI34050 | Inner Joint | | 31 | 36 | 48 | | 126 | |
| | 2005.06-2007.08 | AT/MT | F | L | Hatchback FWD RF7J | | GCI34085 | Inner Joint | | 30 | 36 | 50 | 77.5 | 107 | |
| | 2005.06-2007.08 | | F | L | Hatchback FWD RF7J | Date From:2005.03;Date To:2006.11 | GCO34161 | Outer Joint | 44T | 31 | 36 | 65 | 94 | 62.5 | I |
| | 2005.06-2007.08 | | F | R | Hatchback FWD RF7J | | GCO34084 | Outer Joint | 44T | 28 | 32 | 62 | 90 | 58 | I |
| | 2005.06-2007.08 | | F | R | Hatchback FWD RF7J | Date To:2006.04 | GCO34161 | Outer Joint | 44T | 31 | 36 | 65 | 94 | 62.5 | I |
| | 2005.06-2007.08 | 5AT | F | R | Saloon FWD RF7J | | GDS34088 | Drive Shaft | 44T | 28 | 28 | 56.6 | 90 | 599 | |
| | 2005.06-2007.08 | 5AT | F | | Saloon FWD RF7J | | GCO34070 | Outer Joint | 44T | 28 | 32 | 56 | 90 | 59 | I |
| | 2005.06-2007.08 | 6MT | F | L | Saloon FWD RF7J | Date from:2006.12 | GDS34153 | Drive Shaft | 44T | 31 | 30 | 65 | 94 | 611.5 | |
| | 2005.06-2007.08 | 6MT | F | R | Saloon FWD RF7J | | GDS34165 | Drive Shaft | 44T | 31 | 31 | 65 | 94 | 555 | |
| | 2005.06-2007.08 | 6MT | F | R | Saloon FWD RF7J | Date from:2006.05 to 2006.11 | GDS99064 | Drive Shaft | 44T | 28 | 28 | 56.6 | 90 | 587 | |
| | 2005.06-2007.08 | 6MT | F | L/R | Saloon FWD RF7J | | GCO99273 | Outer Joint | 44T | 28 | 33 | 56.6 | 90 | 59 | I |
| | 2005.06-2007.08 | 6MT | F | | Saloon FWD RF7J | | GCO34114 | Outer Joint | 44T | 31 | 36 | 65 | 94 | 65 | I |
| | 2005.06-2007.08 | AT | F | R | Saloon FWD RF7J | | GCI34050 | Inner Joint | | 31 | 36 | 48 | | 126 | |
| | 2005.06-2007.08 | AT/MT | F | L | Saloon FWD RF7J | | GCI34085 | Inner Joint | | 30 | 36 | 50 | 77.5 | 107 | |
| | 2005.06-2007.08 | | F | L | Saloon FWD RF7J | Date From:2005.03;Date To:2006.11 | GCO34161 | Outer Joint | 44T | 31 | 36 | 65 | 94 | 62.5 | I |
| | 2005.06-2007.08 | | F | R | Saloon FWD RF7J | | GCO34084 | Outer Joint | 44T | 28 | 32 | 62 | 90 | 58 | I |
| | 2005.06-2007.08 | | F | R | Saloon FWD RF7J | Date To:2006.04 | GCO34161 | Outer Joint | 44T | 31 | 36 | 65 | 94 | 62.5 | I |
| 2.0 (107 kw) | 2013.01- | 6AT | F | L | Saloon FWD PEY7;PEY5;PE-VPS;PEXB;PEXL;PEXP | For Engine code:PEXL/PEY7 | GDS34236 | Drive Shaft | | 31 | 31 | 59 | 86.5 | 652 | |
| | 2013.01- | 6AT | F | L | Saloon FWD PEY7;PEY5;PE-VPS;PEXB;PEXL;PEXP | For Engine code:PEXB/PEXP | GDS84025 | Drive Shaft | | 31 | 31 | 59 | 87 | 659 | |
| | 2013.01- | 6AT | F | R | Saloon FWD PEY7;PEY5;PE-VPS;PEXB;PEXL;PEXP | For Engine code:PEXL/PEY7 | GDS34235 | Drive Shaft | | 31 | 31 | 59 | 86.5 | 1016 | |
| | 2013.01- | 6AT | F | R | Saloon FWD PEY7;PEY5;PE-VPS;PEXB;PEXL;PEXP | For Engine code:PEXB/PEXP | GDS84044 | Drive Shaft | | 31 | 31 | 59 | 87 | 1024 | |
| | 2013.01- | 6AT | F | L | Saloon FWD PEY7;PEY5;PE-VPS;PEXB;PEXL;PEXP | For Engine code:PEXL/PEY7 | GCI34129 | Inner Joint | | 31 | 24 | 40 | 67 | 113.5 | |
| | 2013.01- | 6AT | F | L | Saloon FWD PEY7;PEY5;PE-VPS;PEXB;PEXL;PEXP | For Engine code:PEXB/PEXP | GCI82163 | Inner Joint | | 31 | 32 | 40 | 67 | 110 | |
| | 2013.01- | AT | F | L/R | Saloon FWD PEY7;PEY5;PE-VPS;PEXB;PEXL;PEXP | | GCO34207 | Outer Joint | | 31 | 24 | 59 | 86.5 | 69 | I |
| | 2013.01- | AT | F | R | Saloon FWD PEY7;PEY5;PE-VPS;PEXB;PEXL;PEXP | | GCI34128 | Inner Joint | | 31 | 24 | 40 | 416 | 115 | |
| | 2013.01- | MT | F | R | Saloon FWD PEY7;PEY5;PE-VPS;PEXB;PEXL;PEXP | | GCO82495 | Outer Joint | | 31 | 33 | 59 | 86.5 | 67.5 | I |
| | 2013.01- | MT | F | L | Saloon FWD PEY7;PEY5;PE-VPS;PEXB;PEXL;PEXP | | GCI81614 | Inner Joint | | 28 | 32 | 40 | 67 | 93 | |
| | 2013.01- | MT | F | R | Saloon FWD PEY7;PEY5;PE-VPS;PEXB;PEXL;PEXP | | GCI81615 | Inner Joint | | 28 | 32 | 40 | 416 | 94 | |
| 2.0 (108 kw) | 2005.03-2007.08 | AT | F | L | Hatchback FWD LFF7;LF-VE | | GDS84520 | Drive Shaft | 44T | 28 | 28 | 62 | 89.5 | 645 | |
| | 2005.03-2007.08 | AT | F | R | Hatchback FWD LFF7;LF-VE | | GDS83960 | Drive Shaft | 44T | 28 | 28 | 62 | 89.5 | 602 | |
| | 2005.03-2007.08 | AT | F | L/R | Hatchback FWD LFF7;LF-VE | | GCO34070 | Outer Joint | 44T | 28 | 32 | 56 | 90 | 59 | I |
| | 2005.03-2007.08 | AT | F | L/R | Hatchback FWD LFF7;LF-VE | | GCO34110 | Outer Joint | 44T | 28 | 32 | 62 | 90 | 57.5 | I |
| | 2005.03-2007.08 | AT | F | L/R | Hatchback FWD LFF7;LF-VE | | GCO34201 | Outer Joint | 44T | 28 | 32 | 62 | 89.5 | 57.5 | I |
| | 2005.03-2007.08 | AT | F | L | Hatchback FWD LFF7;LF-VE | | GCI82832 | Inner Joint | | 28 | 33 | 35 | 66.5 | 113 | |
| | 2005.03-2007.08 | AT | F | R | Hatchback FWD LFF7;LF-VE | | GCI81449 | Inner Joint | | 28 | 33 | 43 | | 133 | |
| | 2005.03-2007.08 | AT | F | R | Hatchback FWD LFF7;LF-VE | | GDS34267 | Intermediate Shaft | | 28 | 28 | | | 399 | |
| | 2005.03-2007.08 | MT | F | L | Hatchback FWD LFF7;LF-VE | | GDS34137 | Drive Shaft | 44T | 28 | 28 | 56.6 | 90 | 648 | |
| | 2005.03-2007.08 | MT | F | R | Hatchback FWD LFF7;LF-VE | | GDS34088 | Drive Shaft | 44T | 28 | 28 | 56.6 | 90 | 599 | |
| | 2005.03-2007.08 | MT | F | L | Hatchback FWD LFF7;LF-VE | | GCO34135 | Outer Joint | 44T | 28 | 23 | 56 | 90 | 57.5 | I |
| | 2005.03-2007.08 | MT | F | R | Hatchback FWD LFF7;LF-VE | | GCO99273 | Outer Joint | 44T | 28 | 33 | 56.6 | 90 | 59 | I |
| | 2005.03-2007.08 | MT | F | L/R | Hatchback FWD LFF7;LF-VE | | GCO34084 | Outer Joint | 44T | 28 | 32 | 62 | 90 | 58 | I |
| | 2005.03-2007.08 | AT | F | L | Saloon FWD LFF7;LF-VE | | GDS84520 | Drive Shaft | 44T | 28 | 28 | 62 | 89.5 | 645 | |
| | 2005.03-2007.08 | AT | F | R | Saloon FWD LFF7;LF-VE | | GDS83960 | Drive Shaft | 44T | 28 | 28 | 62 | 89.5 | 602 | |
| | 2005.03-2007.08 | AT | F | L | Saloon FWD LFF7;LF-VE | | GCO34110 | Outer Joint | 44T | 28 | 32 | 62 | 90 | 57.5 | I |
| | 2005.03-2007.08 | AT | F | L/R | Saloon FWD LFF7;LF-VE | | GCO34070 | Outer Joint | 44T | 28 | 32 | 56 | 90 | 59 | I |
| | 2005.03-2007.08 | AT | F | L/R | Saloon FWD LFF7;LF-VE | | GCO34201 | Outer Joint | 44T | 28 | 32 | 62 | 89.5 | 57.5 | I |
| | 2005.03-2007.08 | AT | F | L | Saloon FWD LFF7;LF-VE | | GCI82832 | Inner Joint | | 28 | 33 | 35 | 66.5 | 113 | |
| | 2005.03-2007.08 | AT | F | R | Saloon FWD LFF7;LF-VE | | GCI81449 | Inner Joint | | 28 | 33 | 43 | | 133 | |
| | 2005.03-2007.08 | AT | F | R | Saloon FWD LFF7;LF-VE | | GDS34267 | Intermediate Shaft | | 28 | 28 | | | 399 | |
| | 2005.03-2007.08 | MT | F | L | Saloon FWD LFF7;LF-VE | | GDS34137 | Drive Shaft | 44T | 28 | 28 | 56.6 | 90 | 648 | |
| | 2005.03-2007.08 | MT | F | R | Saloon FWD LFF7;LF-VE | | GDS34088 | Drive Shaft | 44T | 28 | 28 | 56.6 | 90 | 599 | |
| | 2005.03-2007.08 | MT | F | L | Saloon FWD LFF7;LF-VE | | GCO34135 | Outer Joint | 44T | 28 | 23 | 56 | 90 | 57.5 | I |
| | 2005.03-2007.08 | MT | F | R | Saloon FWD LFF7;LF-VE | | GCO99273 | Outer Joint | 44T | 28 | 33 | 56.6 | 90 | 59 | I |
| | 2005.03-2007.08 | MT | F | L/R | Saloon FWD LFF7;LF-VE | | GCO34084 | Outer Joint | 44T | 28 | 32 | 62 | 90 | 58 | I |
| | 2007.08-2012.12 | AT | F | L/R | Saloon FWD LF-VE;LF4J;LF4K;LFYA;LFYB | | GCO34173 | Outer Joint | | 28 | 33 | 62 | 90 | 58 | M |
| | 2007.08-2012.12 | AT | F | R | Saloon FWD LF-VE;LF4J;LF4K;LFYA;LFYB | | GCI81449 | Inner Joint | | 28 | 33 | 43 | | 133 | |

| | YEAR | TRANSM. | F/R | L/R | BODY STYLE & DRIVE TYPE & ENGINE | REMARKS | G-AP Ref. | PRODUCT | ABS | Technical Specifications A | B | C | H | L | P |
|---|---|---|---|---|---|---|---|---|---|---|---|---|---|---|---|
| **MAZDA** | | | | | | | | | | | | | | | |
| **6** | | | | | | | | | | | | | | | |
| 2.0 (108 kw) | 2007.08-2012.12 | MT | F | L/R | Saloon FWD LF-VE;LF4J;LF4K;LFYA;LFYB | | GCO34252 | Outer Joint | | 28 | 32 | 62 | 92 | 57.5 | I |
| | 2007.08-2012.12 | MT | F | R | Saloon FWD LF-VE;LF4J;LF4K;LFYA;LFYB | | GCI34050 | Inner Joint | | 31 | 36 | 48 | | 126 | |
| | 2007.08-2013.07 | AT | F | L/R | Hatchback FWD LF17;LF-VE | | GCO34173 | Outer Joint | | 28 | 33 | 62 | 90 | 58 | M |
| | 2007.08-2013.07 | AT | F | R | Hatchback FWD LF17;LF-VE | | GCI81449 | Inner Joint | | 28 | 33 | 43 | | 133 | |
| | 2007.08-2013.07 | MT | F | L/R | Hatchback FWD LF17;LF-VE | | GCO34252 | Outer Joint | | 28 | 32 | 62 | 92 | 57.5 | I |
| | 2007.08-2013.07 | MT | F | R | Hatchback FWD LF17;LF-VE | | GCI34050 | Inner Joint | | 31 | 36 | 48 | | 126 | |
| 2.0 (110 kw) | 2012.12-2018.02 | AT | F | L | Saloon FWD PEY7;PEXL | | GDS34236 | Drive Shaft | | 31 | 31 | 59 | 86.5 | 652 | |
| | 2012.12-2018.02 | AT | F | R | Saloon FWD PEY7;PEXL | | GDS34235 | Drive Shaft | | 31 | 31 | 59 | 86.5 | 1016 | |
| | 2012.12-2018.02 | AT | F | L/R | Saloon FWD PEY7;PEXL | | GCO34207 | Outer Joint | | 31 | 24 | 59 | 86.5 | 69 | I |
| | 2012.12-2018.02 | AT | F | L | Saloon FWD PEY7;PEXL | | GCI34129 | Inner Joint | | 31 | 24 | 40 | 67 | 113.5 | |
| | 2012.12-2018.02 | AT | F | R | Saloon FWD PEY7;PEXL | | GCI34128 | Inner Joint | | 31 | 24 | 40 | 416 | 115 | |
| | 2012.12-2018.02 | MT | F | R | Saloon FWD PEY7;PEXL | | GCO82495 | Outer Joint | | 31 | 33 | 59 | 86.5 | 67.5 | I |
| | 2012.12-2018.02 | MT | F | L | Saloon FWD PEY7;PEXL | | GCI81614 | Inner Joint | | 28 | 32 | 40 | 67 | 93 | |
| | 2012.12-2018.02 | MT | F | R | Saloon FWD PEY7;PEXL | | GCI81615 | Inner Joint | | 28 | 32 | 40 | 416 | 94 | |
| 2.0 (114 kw) | 2010.01-2012.12 | AT | F | L/R | Hatchback FWD LF-DE | | GCO34173 | Outer Joint | | 28 | 33 | 62 | 90 | 58 | M |
| | 2010.01-2012.12 | AT | F | R | Hatchback FWD LF-DE | | GCI81449 | Inner Joint | | 28 | 33 | 43 | | 133 | |
| | 2010.01-2012.12 | MT | F | L/R | Hatchback FWD LF-DE | | GCO34252 | Outer Joint | | 28 | 32 | 62 | 92 | 57.5 | I |
| | 2010.01-2012.12 | MT | F | R | Hatchback FWD LF-DE | | GCI34050 | Inner Joint | | 31 | 36 | 48 | | 126 | |
| | 2010.01-2012.12 | AT | F | L/R | Saloon FWD LF-DE | | GCO34173 | Outer Joint | | 28 | 33 | 62 | 90 | 58 | M |
| | 2010.01-2012.12 | AT | F | R | Saloon FWD LF-DE | | GCI81449 | Inner Joint | | 28 | 33 | 43 | | 133 | |
| | 2010.01-2012.12 | MT | F | L/R | Saloon FWD LF-DE | | GCO34252 | Outer Joint | | 28 | 32 | 62 | 92 | 57.5 | I |
| | 2010.01-2012.12 | MT | F | R | Saloon FWD LF-DE | | GCI34050 | Inner Joint | | 31 | 36 | 48 | | 126 | |
| | 2012.12- | | F | R | Saloon FWD PE-VPR, PEY5, PEY7 | | GCI34115 | Inner Joint | | 28 | 33 | 43 | | 132 | |
| 2.0 (121 kw) | 2013.01- | 6AT | F | L | Saloon FWD PEY7;PEY5;PE-VPS;PEXB;PEXL;PEXP | For Engine code:PEXL/PEY7 | GDS34236 | Drive Shaft | | 31 | 31 | 59 | 86.5 | 652 | |
| | 2013.01- | 6AT | F | L | Saloon FWD PEY7;PEY5;PE-VPS;PEXB;PEXL;PEXP | For Engine code:PEXB/PEXP | GDS84025 | Drive Shaft | | 31 | 31 | 59 | 87 | 659 | |
| | 2013.01- | 6AT | F | R | Saloon FWD PEY7;PEY5;PE-VPS;PEXB;PEXL;PEXP | For Engine code:PEXL/PEY7 | GDS34235 | Drive Shaft | | 31 | 31 | 59 | 86.5 | 1016 | |
| | 2013.01- | 6AT | F | R | Saloon FWD PEY7;PEY5;PE-VPS;PEXB;PEXL;PEXP | For Engine code:PEXB/PEXP | GDS84044 | Drive Shaft | | 31 | 31 | 59 | 87 | 1024 | |
| | 2013.01- | 6AT | F | L | Saloon FWD PEY7;PEY5;PE-VPS;PEXB;PEXL;PEXP | For Engine code:PEXL/PEY7 | GCI34129 | Inner Joint | | 31 | 24 | 40 | 67 | 113.5 | |
| | 2013.01- | 6AT | F | L | Saloon FWD PEY7;PEY5;PE-VPS;PEXB;PEXL;PEXP | For Engine code:PEXB/PEXP | GCI82163 | Inner Joint | | 31 | 32 | 40 | 67 | 110 | |
| | 2013.01- | AT | F | L/R | Saloon FWD PEY7;PEY5;PE-VPS;PEXB;PEXL;PEXP | | GCO34207 | Outer Joint | | 31 | 24 | 59 | 86.5 | 69 | I |
| | 2013.01- | AT | F | R | Saloon FWD PEY7;PEY5;PE-VPS;PEXB;PEXL;PEXP | | GCI34128 | Inner Joint | | 31 | 24 | 40 | 416 | 115 | |
| | 2013.01- | MT | F | R | Saloon FWD PEY7;PEY5;PE-VPS;PEXB;PEXL;PEXP | | GCO82495 | Outer Joint | | 31 | 33 | 59 | 86.5 | 67.5 | I |
| | 2013.01- | MT | F | L | Saloon FWD PEY7;PEY5;PE-VPS;PEXB;PEXL;PEXP | | GCI81614 | Inner Joint | | 28 | 32 | 40 | 67 | 93 | |
| | 2013.01- | MT | F | R | Saloon FWD PEY7;PEY5;PE-VPS;PEXB;PEXL;PEXP | | GCI81615 | Inner Joint | | 28 | 32 | 40 | 416 | 94 | |
| 2.2 (92 kw) | 2009.01-2012.12 | 6MT | F | R | Hatchback FWD R2BF | | GDS18325 | Drive Shaft | | 31 | 31 | 65 | 94 | 567 | |
| | 2009.01-2012.12 | 6MT | F | L/R | Hatchback FWD R2BF | | GCO18245 | Outer Joint | | 31 | 36 | 65 | 94 | 63 | I |
| | 2009.01-2012.12 | 6MT | F | R | Saloon FWD R2BF | | GDS18325 | Drive Shaft | | 31 | 31 | 65 | 94 | 567 | |
| | 2009.01-2012.12 | 6MT | F | L/R | Saloon FWD R2BF | | GCO18245 | Outer Joint | | 31 | 36 | 65 | 94 | 63 | I |
| 2.2 (95 kw) | 2010.01-2012.12 | 6MT | F | R | Hatchback FWD R2BF | | GDS18325 | Drive Shaft | | 31 | 31 | 65 | 94 | 567 | |
| | 2010.01-2012.12 | 6MT | F | L/R | Hatchback FWD R2BF | | GCO18245 | Outer Joint | | 31 | 36 | 65 | 94 | 63 | I |
| | 2010.01-2012.12 | 6MT | F | R | Saloon FWD R2BF | | GDS18325 | Drive Shaft | | 31 | 31 | 65 | 94 | 567 | |
| | 2010.01-2012.12 | 6MT | F | L/R | Saloon FWD R2BF | | GCO18245 | Outer Joint | | 31 | 36 | 65 | 94 | 63 | I |
| 2.2 (110 kw) | 2012.12-2020.11 | 6AT | F | L | Saloon FWD SHY1;SHY4;SHY6;SHY8 | | GDS81992 | Drive Shaft | | 31 | 31 | 59 | 87 | 645 | |
| | 2012.12-2020.11 | 6AT | F | R | Saloon FWD SHY1;SHY4;SHY6;SHY8 | | GDS81993 | Drive Shaft | | 31 | 31 | 59 | 87 | 1021 | |
| | 2012.12-2020.11 | 6AT | F | R | Saloon FWD SHY1;SHY4;SHY6;SHY8 | | GCO81805 | Outer Joint | | 31 | 26 | 59 | 87 | 68.5 | I |
| | 2012.12-2020.11 | 6AT | F | L | Saloon FWD SHY1;SHY4;SHY6;SHY8 | | GCI83785 | Inner Joint | | 31 | 27 | 40 | 74.5 | 115.5 | |
| | 2012.12-2020.11 | 6AT | F | R | Saloon FWD SHY1;SHY4;SHY6;SHY8 | | GCI82285 | Inner Joint | | 31 | 27 | 40 | 442 | 121.5 | |
| 2.2 (120 kw) | 2009.01-2012.12 | 6MT | F | R | Hatchback FWD R2AA | | GDS18325 | Drive Shaft | | 31 | 31 | 65 | 94 | 567 | |
| | 2009.01-2012.12 | 6MT | F | L/R | Hatchback FWD R2AA | | GCO18245 | Outer Joint | | 31 | 36 | 65 | 94 | 63 | I |
| | 2009.01-2012.12 | 6MT | F | R | Saloon FWD R2AA | | GDS18325 | Drive Shaft | | 31 | 31 | 65 | 94 | 567 | |
| | 2009.01-2012.12 | 6MT | F | L/R | Saloon FWD R2AA | | GCO18245 | Outer Joint | | 31 | 36 | 65 | 94 | 63 | I |
| 2.2 (129 kw) | 2012.12- | 6AT | F | L | Saloon FWD SHY1 | | GDS81992 | Drive Shaft | | 31 | 31 | 59 | 87 | 645 | |
| | 2012.12- | 6AT | F | R | Saloon FWD SHY1 | | GDS81993 | Drive Shaft | | 31 | 31 | 59 | 87 | 1021 | |
| | 2012.12- | 6AT | F | L/R | Saloon FWD SHY1 | | GCO81805 | Outer Joint | | 31 | 26 | 59 | 87 | 68.5 | I |
| | 2012.12- | 6AT | F | L | Saloon FWD SHY1 | | GCI83785 | Inner Joint | | 31 | 27 | 40 | 74.5 | 115.5 | |
| | 2012.12- | 6AT | F | R | Saloon FWD SHY1 | | GCI82285 | Inner Joint | | 31 | 27 | 40 | 442 | 121.5 | |
| 2.2 (132 kw) | 2010.01-2012.12 | 6MT | F | R | Hatchback FWD R2AA | | GDS18325 | Drive Shaft | | 31 | 31 | 65 | 94 | 567 | |
| | 2010.01-2012.12 | 6MT | F | L/R | Hatchback FWD R2AA | | GCO18245 | Outer Joint | | 31 | 36 | 65 | 94 | 63 | I |
| | 2010.01-2013.07 | 6MT | F | R | Saloon FWD R2AA | | GDS18325 | Drive Shaft | | 31 | 31 | 65 | 94 | 567 | |
| | 2010.01-2013.07 | 6MT | F | L/R | Saloon FWD R2AA | | GCO18245 | Outer Joint | | 31 | 36 | 65 | 94 | 63 | I |
| 2.2 (136 kw) | 2009.01-2012.12 | 6MT | F | R | Hatchback FWD R2AA | | GDS18325 | Drive Shaft | | 31 | 31 | 65 | 94 | 567 | |
| | 2009.01-2012.12 | 6MT | F | L/R | Hatchback FWD R2AA | | GCO18245 | Outer Joint | | 31 | 36 | 65 | 94 | 63 | I |
| | 2009.01-2012.12 | 6MT | F | R | Saloon FWD R2AA | | GDS18325 | Drive Shaft | | 31 | 31 | 65 | 94 | 567 | |
| | 2009.01-2012.12 | 6MT | F | L/R | Saloon FWD R2AA | | GCO18245 | Outer Joint | | 31 | 36 | 65 | 94 | 63 | I |
| 2.3 (120 kw) | 2005.03-2007.07 | 5AT | F | L | Saloon FWD L3C1 | | GDS84520 | Drive Shaft | 44T | 28 | 28 | 62 | 89.5 | 645 | |

| | YEAR | TRANSM. | F/R | L/R | BODY STYLE & DRIVE TYPE & ENGINE | REMARKS | G-AP Ref. | PRODUCT | ABS | Technical Specifications A | B | C | H | L | P |
|---|---|---|---|---|---|---|---|---|---|---|---|---|---|---|---|
| **MAZDA** | | | | | | | | | | | | | | | |
| **6** | | | | | | | | | | | | | | | |
| 2.3 (120 kw) | 2005.03-2007.07 | 5AT | F | R | Saloon FWD L3C1 | | GDS83960 | Drive Shaft | 44T | 28 | 28 | 62 | 89.5 | 602 | |
| | 2005.03-2007.07 | 5AT | F | L/R | Saloon FWD L3C1 | | GCO34201 | Outer Joint | 44T | 28 | 32 | 62 | 89.5 | 57.5 | I |
| | 2005.03-2007.07 | 5AT | F | L | Saloon FWD L3C1 | | GCI82832 | Inner Joint | | 28 | 33 | 35 | 66.5 | 113 | |
| | 2005.03-2007.07 | 5AT | F | R | Saloon FWD L3C1 | | GCI81449 | Inner Joint | | 28 | 33 | 43 | | 133 | |
| | 2005.03-2007.07 | AT | F | R | Saloon FWD L3C1 | | GCO34110 | Outer Joint | 44T | 28 | 32 | 62 | 90 | 57.5 | I |
| | 2005.03-2007.07 | AT | F | L/R | Saloon FWD L3C1 | | GCO34070 | Outer Joint | 44T | 28 | 32 | 56 | 90 | 59 | I |
| | 2005.03-2007.07 | AT | F | R | Saloon FWD L3C1 | | GDS34267 | Intermediate Shaft | | 28 | 28 | | | 399 | |
| | 2005.03-2007.07 | MT | F | L | Saloon FWD L3C1 | Date from:2003.01 | GCO34180 | Outer Joint | 44T | 28 | 33 | 62 | 90 | 58 | M |
| | 2005.03-2007.07 | MT | F | R | Saloon FWD L3C1 | | GCO99273 | Outer Joint | 44T | 28 | 33 | 56.6 | 90 | 59 | I |
| | 2005.03-2007.07 | MT | F | R | Saloon FWD L3C1 | | GCI34026 | Inner Joint | | 28 | 33 | 43 | | 124 | |
| 2.3 (122 kw) | 2002.06-2007.08 | AT | F | L | Saloon FWD L3C1;L3-VE | Date to:2003.07 | GDS34137 | Drive Shaft | 44T | 28 | 28 | 56.6 | 90 | 648 | |
| | 2002.06-2007.08 | AT | F | L | Saloon FWD L3C1;L3-VE | Date from:2005.03 | GDS84520 | Drive Shaft | 44T | 28 | 28 | 62 | 89.5 | 645 | |
| | 2002.06-2007.08 | AT | F | R | Saloon FWD L3C1;L3-VE | | GDS83960 | Drive Shaft | 44T | 28 | 28 | 62 | 89.5 | 602 | |
| | 2002.06-2007.08 | AT | F | L | Saloon FWD L3C1;L3-VE | | GCO34110 | Outer Joint | 44T | 28 | 32 | 62 | 90 | 57.5 | I |
| | 2002.06-2007.08 | AT | F | L/R | Saloon FWD L3C1;L3-VE | | GCO34070 | Outer Joint | 44T | 28 | 32 | 56 | 90 | 59 | I |
| | 2002.06-2007.08 | AT | F | L/R | Saloon FWD L3C1;L3-VE | | GCO34201 | Outer Joint | 44T | 28 | 32 | 62 | 89.5 | 57.5 | I |
| | 2002.06-2007.08 | AT | F | L | Saloon FWD L3C1;L3-VE | Date to:2003.07 | GCI34029 | Inner Joint | | 28 | 33 | 35 | 66.5 | 114 | |
| | 2002.06-2007.08 | AT | F | L | Saloon FWD L3C1;L3-VE | Date from:2003.08,Date to:2005.02 | GCI34135 | Inner Joint | | 28 | 33 | 35 | 66.5 | 113.5 | |
| | 2002.06-2007.08 | AT | F | L | Saloon FWD L3C1;L3-VE | Date from:2005.03 | GCI82832 | Inner Joint | | 28 | 33 | 35 | 66.5 | 113 | |
| | 2002.06-2007.08 | AT | F | R | Saloon FWD L3C1;L3-VE | | GCI81449 | Inner Joint | | 28 | 33 | 43 | | 133 | |
| | 2002.06-2007.08 | MT | F | L | Saloon FWD L3C1;L3-VE | Date from:2003.01 | GCO34180 | Outer Joint | 44T | 28 | 33 | 62 | 90 | 58 | M |
| | 2002.06-2007.08 | MT | F | L/R | Saloon FWD L3C1;L3-VE | | GCO34084 | Outer Joint | 44T | 28 | 32 | 62 | 90 | 58 | I |
| | 2002.06-2007.08 | MT | F | L/R | Saloon FWD L3C1;L3-VE | | GCO99273 | Outer Joint | 44T | 28 | 33 | 56.6 | 90 | 59 | I |
| | 2002.06-2007.08 | MT | F | R | Saloon FWD L3C1;L3-VE | Date from:2005.03 | GCI34026 | Inner Joint | | 28 | 33 | 43 | | 124 | |
| | 2002.08-2007.08 | AT | F | L | Hatchback FWD L3C1, L3-VE | Date to:2003.07 | GDS34137 | Drive Shaft | 44T | 28 | 28 | 56.6 | 90 | 648 | |
| | 2002.08-2007.08 | AT | F | L | Hatchback FWD L3C1, L3-VE | Date from:2005.03 | GDS84520 | Drive Shaft | 44T | 28 | 28 | 62 | 89.5 | 645 | |
| | 2002.08-2007.08 | AT | F | R | Hatchback FWD L3C1, L3-VE | Date from:2003.08 | GDS83960 | Drive Shaft | 44T | 28 | 28 | 62 | 89.5 | 602 | |
| | 2002.08-2007.08 | AT | F | L/R | Hatchback FWD L3C1, L3-VE | | GCO34070 | Outer Joint | 44T | 28 | 32 | 56 | 90 | 59 | I |
| | 2002.08-2007.08 | AT | F | L/R | Hatchback FWD L3C1, L3-VE | | GCO34110 | Outer Joint | 44T | 28 | 32 | 62 | 90 | 57.5 | I |
| | 2002.08-2007.08 | AT | F | L/R | Hatchback FWD L3C1, L3-VE | | GCO34201 | Outer Joint | 44T | 28 | 32 | 62 | 89.5 | 57.5 | I |
| | 2002.08-2007.08 | AT | F | L | Hatchback FWD L3C1, L3-VE | Date to:2003.07 | GCI34029 | Inner Joint | | 28 | 33 | 35 | 66.5 | 114 | |
| | 2002.08-2007.08 | AT | F | L | Hatchback FWD L3C1, L3-VE | Date from:2003.08,Date to:2005.02 | GCI34135 | Inner Joint | | 28 | 33 | 35 | 66.5 | 113.5 | |
| | 2002.08-2007.08 | AT | F | L | Hatchback FWD L3C1, L3-VE | Date from:2005.03 | GCI82832 | Inner Joint | | 28 | 33 | 35 | 66.5 | 113 | |
| | 2002.08-2007.08 | AT | F | R | Hatchback FWD L3C1, L3-VE | Date from:2003.08,Date to:2005.02 | GCI81449 | Inner Joint | | 28 | 33 | 43 | | 133 | |
| | 2002.08-2007.08 | AT | F | R | Hatchback FWD L3C1, L3-VE | | GDS34267 | Intermediate Shaft | | 28 | 28 | | | 399 | |
| | 2002.08-2007.08 | MT | F | L | Hatchback FWD L3C1, L3-VE | Date from:2003.01 | GCO34180 | Outer Joint | 44T | 28 | 33 | 62 | 90 | 58 | M |
| | 2002.08-2007.08 | MT | F | L/R | Hatchback FWD L3C1, L3-VE | Date to:2003.07 | GCO34084 | Outer Joint | 44T | 28 | 32 | 62 | 90 | 58 | I |
| | 2002.08-2007.08 | MT | F | L/R | Hatchback FWD L3C1, L3-VE | | GCO99273 | Outer Joint | 44T | 28 | 33 | 56.6 | 90 | 59 | I |
| | 2002.08-2007.08 | MT | F | R | Hatchback FWD L3C1, L3-VE | Date from:2005.03 | GCI34026 | Inner Joint | | 28 | 33 | 43 | | 124 | |
| 2.3 (191 kw) | 2005.12-2007.08 | AT | F | L/R | Saloon 4WD L3-VDT;L3KG | | GCO34084 | Outer Joint | 44T | 28 | 32 | 62 | 90 | 58 | I |
| | 2005.12-2007.08 | MT | F | R | Saloon 4WD L3-VDT;L3KG | | GDS34165 | Drive Shaft | 44T | 31 | 31 | 65 | 94 | 555 | |
| | 2005.12-2007.08 | MT | F | L | Saloon 4WD L3-VDT;L3KG | Date from:2003.01 | GCO34180 | Outer Joint | 44T | 28 | 33 | 62 | 90 | 58 | M |
| | 2005.12-2007.08 | MT | F | L/R | Saloon 4WD L3-VDT;L3KG | | GCO99273 | Outer Joint | 44T | 28 | 33 | 56.6 | 90 | 59 | I |
| | 2005.12-2007.08 | MT | F | R | Saloon 4WD L3-VDT;L3KG | | GCI34026 | Inner Joint | | 28 | 33 | 43 | | 124 | |
| | 2005.12-2007.08 | | F | L/R | Saloon 4WD L3-VDT;L3KG | | GCO34110 | Outer Joint | 44T | 28 | 32 | 62 | 90 | 57.5 | I |
| | 2005.12-2007.08 | 6MT | R | R | Saloon 4WD L3-VDT;L3KG | | GDS81621 | Drive Shaft | 44T | 28 | 26 | 56 | 90 | 785 | |
| 2.5 (125 kw) | 2007.08-2013.03 | MT | F | L/R | Hatchback FWD L5-VE | | GCO34173 | Outer Joint | | 28 | 33 | 62 | 90 | 58 | M |
| | 2007.08-2013.03 | | F | R | Hatchback FWD L5-VE | | GCI34115 | Inner Joint | | 28 | 33 | 43 | | 132 | |
| | 2007.08-2013.07 | AT | F | L/R | Saloon FWD L5-VE | | GCO34173 | Outer Joint | | 28 | 33 | 62 | 90 | 58 | M |
| | 2007.08-2013.07 | AT | F | R | Saloon FWD L5-VE | | GCI81449 | Inner Joint | | 28 | 33 | 43 | | 133 | |
| 2.5 (140 kw) | 2018.03- | 6AT | F | L | Saloon FWD PYZC;PY-RPR;PY-VPR | For vehicles with cylinder shutdown | GDS83172 | Drive Shaft | | 31 | 31 | 59 | 87 | 650 | |
| | 2018.03- | 6AT | F | L | Saloon FWD PYZC;PY-RPR;PY-VPR | For vehicles without cylinder shutdown | GDS84025 | Drive Shaft | | 31 | 31 | 59 | 87 | 659 | |
| | 2018.03- | 6AT | F | R | Saloon FWD PYZC;PY-RPR;PY-VPR | For vehicles with cylinder shutdown | GDS83168 | Drive Shaft | | 31 | 31 | 59 | 87 | 1030 | |
| | 2018.03- | 6AT | F | R | Saloon FWD PYZC;PY-RPR;PY-VPR | For vehicles without cylinder shutdown | GDS84046 | Drive Shaft | | 31 | 31 | 59 | 87 | 1023 | |
| | 2018.03- | 6AT | F | L/R | Saloon FWD PYZC;PY-RPR;PY-VPR | | GCO82330 | Outer Joint | | 31 | 32 | 59 | 87 | 66.5 | I |
| | 2018.03- | 6AT | F | L | Saloon FWD PYZC;PY-RPR;PY-VPR | | GCI82163 | Inner Joint | | 31 | 32 | 40 | 67 | 110 | |
| | 2018.03- | 6AT | F | R | Saloon FWD PYZC;PY-RPR;PY-VPR | For vehicles with cylinder shutdown | GCI82165 | Inner Joint | | 31 | 32 | 40 | 438.5 | 109 | |
| | 2018.03- | 6AT | F | R | Saloon FWD PYZC;PY-RPR;PY-VPR | For vehicles without cylinder shutdown | GCI82498 | Inner Joint | | 31 | 32 | 40 | 430.5 | 109 | |
| 2.5 (141 kw) | 2013.01- | 6AT | F | L | Saloon FWD PYY1;PY-Y8;PY-ZA;PY-VPR | | GDS34236 | Drive Shaft | | 31 | 31 | 59 | 86.5 | 652 | |
| | 2013.01- | 6AT | F | L/R | Saloon FWD PYY1;PY-Y8;PY-ZA;PY-VPR | | GCO34207 | Outer Joint | | 31 | 24 | 59 | 86.5 | 69 | I |
| | 2013.01- | 6AT | F | L | Saloon FWD PYY1;PY-Y8;PY-ZA;PY-VPR | | GCI34129 | Inner Joint | | 31 | 24 | 40 | 67 | 113.5 | |
| | 2013.01- | | F | R | Saloon FWD PYY1;PY-Y8;PY-ZA;PY-VPR | | GCI34115 | Inner Joint | | 28 | 33 | 43 | | 132 | |
| 2.5 (143 kw) | 2018.03- | 6AT | F | L | Saloon FWD PYZ8;PYZC | For vehicles with cylinder shutdown | GDS83172 | Drive Shaft | | 31 | 31 | 59 | 87 | 650 | |
| | 2018.03- | 6AT | F | L | Saloon FWD PYZ8;PYZC | For vehicles without cylinder shutdown | GDS84025 | Drive Shaft | | 31 | 31 | 59 | 87 | 659 | |
| | 2018.03- | 6AT | F | R | Saloon FWD PYZ8;PYZC | For vehicles with cylinder shutdown | GDS83168 | Drive Shaft | | 31 | 31 | 59 | 87 | 1030 | |

| | YEAR | TRANSM. | F/R | L/R | BODY STYLE & DRIVE TYPE & ENGINE | REMARKS | G-AP Ref. | PRODUCT | ABS | Technical Specifications A | B | C | H | L | P |
|---|---|---|---|---|---|---|---|---|---|---|---|---|---|---|---|
| **MAZDA** | | | | | | | | | | | | | | | |
| **6** | | | | | | | | | | | | | | | |
| 2.5 (143 kw) | 2018.03- | 6AT | F | R | Saloon FWD PYZ8;PYZC | For vehicles without cylinder shutdown | GDS84046 | Drive Shaft | | 31 | 31 | 59 | 87 | 1023 | |
| | 2018.03- | 6AT | F | L/R | Saloon FWD PYZ8;PYZC | | GCO82330 | Outer Joint | | 31 | 32 | 59 | 87 | 66.5 | I |
| | 2018.03- | 6AT | F | L | Saloon FWD PYZ8;PYZC | | GCI82163 | Inner Joint | | 31 | 32 | 40 | 67 | 110 | |
| | 2018.03- | 6AT | F | R | Saloon FWD PYZ8;PYZC | For vehicles with cylinder shutdown | GCI82165 | Inner Joint | | 31 | 32 | 40 | 438.5 | 109 | |
| | 2018.03- | 6AT | F | R | Saloon FWD PYZ8;PYZC | For vehicles without cylinder shutdown | GCI82498 | Inner Joint | | 31 | 32 | 40 | 430.5 | 109 | |
| 2.5 (170 kw) | 2018.03- | 6AT | F | L/R | Saloon FWD PY-VPS;PYZ4 | | GCO82330 | Outer Joint | | 31 | 32 | 59 | 87 | 66.5 | I |
| | 2018.03- | 6AT | F | L | Saloon FWD PY-VPS;PYZ4 | | GCI82163 | Inner Joint | | 31 | 32 | 40 | 67 | 110 | |
| | 2018.03- | 6AT | F | R | Saloon FWD PY-VPS;PYZ4 | For vehicles with cylinder shutdown | GCI82165 | Inner Joint | | 31 | 32 | 40 | 438.5 | 109 | |
| **6 Estate/Wagon** | | | | | | | | | | | | | | | |
| 1.8 (88 kw) | 2002.08-2007.08 | 5MT | F | R | Estate FWD L813;L8-DE | Date to:2005.02 | GCO99273 | Outer Joint | 44T | 28 | 33 | 56.6 | 90 | 59 | I |
| | 2002.08-2007.08 | 5MT | F | L/R | Estate FWD L813;L8-DE | Internal teeth:32 | GCO34084 | Outer Joint | 44T | 28 | 32 | 62 | 90 | 58 | I |
| | 2002.08-2007.08 | MT | F | L | Estate FWD L813;L8-DE | | GDS34137 | Drive Shaft | 44T | 28 | 28 | 56.6 | 90 | 648 | |
| | 2002.08-2007.08 | MT | F | R | Estate FWD L813;L8-DE | | GDS34088 | Drive Shaft | 44T | 28 | 28 | 56.6 | 90 | 599 | |
| | 2002.08-2007.08 | MT | F | L/R | Estate FWD L813;L8-DE | Date from:2005.03 | GCO34135 | Outer Joint | 44T | 28 | 23 | 56 | 90 | 57.5 | I |
| | 2002.08-2007.08 | MT | F | | Estate FWD L813;L8-DE | Model year to:2006 | GCO34021 | Outer Joint | 44T | 28 | 23 | 56 | 90 | 59 | I |
| | 2002.08-2007.08 | MT | F | R | Estate FWD L813;L8-DE | Date from:2006.11 | GCI34026 | Inner Joint | | 28 | 33 | 43 | | 124 | |
| | 2002.08-2007.08 | | F | L/R | Estate FWD L813;L8-DE | | GCO34110 | Outer Joint | 44T | 28 | 32 | 62 | 90 | 57.5 | I |
| | 2002.08-2007.08 | | F | | Estate FWD L813;L8-DE | | GCO34070 | Outer Joint | 44T | 28 | 32 | 56 | 90 | 59 | I |
| | 2008.02-2013.07 | AT | F | L/R | Estate FWD L813;L8-DE | | GCO34252 | Outer Joint | | 28 | 32 | 62 | 92 | 57.5 | I |
| | 2008.02-2013.07 | MT | F | R | Estate FWD L813;L8-DE | | GCI34050 | Inner Joint | | 31 | 36 | 48 | | 126 | |
| 2.0 (89 kw) | 2002.08-2007.08 | 5AT | F | R | Estate FWD RF5C;RF7J | | GDS34088 | Drive Shaft | 44T | 28 | 28 | 56.6 | 90 | 599 | |
| | 2002.08-2007.08 | 5AT | F | | Estate FWD RF5C;RF7J | | GCO34070 | Outer Joint | 44T | 28 | 32 | 56 | 90 | 59 | I |
| | 2002.08-2007.08 | 5MT/6MT | F | L | Estate FWD RF5C;RF7J | Date to:2005.02 | GDS34039 | Drive Shaft | 44T | 28 | 30 | 56.6 | 90 | 643 | |
| | 2002.08-2007.08 | 5MT/6MT | F | L | Estate FWD RF5C;RF7J | Date from:2006.12 to 2007.09;Date from:2007.10 | GDS34153 | Drive Shaft | 44T | 31 | 30 | 65 | 94 | 611.5 | |
| | 2002.08-2007.08 | 5MT/6MT | F | R | Estate FWD RF5C;RF7J | Date from:2005.03 | GDS34165 | Drive Shaft | 44T | 31 | 31 | 65 | 94 | 555 | |
| | 2002.08-2007.08 | 5MT/6MT | F | R | Estate FWD RF5C;RF7J | Date to:2005.02 | GDS99064 | Drive Shaft | 44T | 28 | 28 | 56.6 | 90 | 587 | |
| | 2002.08-2007.08 | 5MT/6MT | F | L/R | Estate FWD RF5C;RF7J | | GCO99273 | Outer Joint | 44T | 28 | 33 | 56.6 | 90 | 59 | I |
| | 2002.08-2007.08 | 6MT | F | R | Estate FWD RF5C;RF7J | | GCI34050 | Inner Joint | | 31 | 36 | 48 | | 126 | |
| | 2002.08-2007.08 | AT/MT | F | L | Estate FWD RF5C;RF7J | | GCI34085 | Inner Joint | | 30 | 36 | 50 | 77.5 | 107 | |
| | 2002.08-2007.08 | | F | L | Estate FWD RF5C;RF7J | Date To:2006.11 | GCO34161 | Outer Joint | 44T | 31 | 36 | 65 | 94 | 62.5 | I |
| | 2002.08-2007.08 | | F | R | Estate FWD RF5C;RF7J | | GCO34084 | Outer Joint | 44T | 28 | 32 | 62 | 90 | 58 | I |
| | 2002.08-2007.08 | | F | R | Estate FWD RF5C;RF7J | Date To:2006.04 | GCO34161 | Outer Joint | 44T | 31 | 36 | 65 | 94 | 62.5 | I |
| | 2002.08-2007.08 | | F | L/R | Estate FWD RF5C;RF7J | Date From:2007.10 | GCO34114 | Outer Joint | 44T | 31 | 36 | 65 | 94 | 65 | I |
| 2.0 (100 kw) | 2002.08-2005.02 | 5AT | F | R | Estate FWD RF5C | | GDS34088 | Drive Shaft | 44T | 28 | 28 | 56.6 | 90 | 599 | |
| | 2002.08-2005.02 | 5AT | F | | Estate FWD RF5C | | GCO34070 | Outer Joint | 44T | 28 | 32 | 56 | 90 | 59 | I |
| | 2002.08-2005.02 | 5MT | F | L | Estate FWD RF5C | | GDS34039 | Drive Shaft | 44T | 28 | 30 | 56.6 | 90 | 643 | |
| | 2002.08-2005.02 | 5MT | F | R | Estate FWD RF5C | | GDS99064 | Drive Shaft | 44T | 28 | 28 | 56.6 | 90 | 587 | |
| | 2002.08-2005.02 | 5MT | F | L/R | Estate FWD RF5C | | GCO99273 | Outer Joint | 44T | 28 | 33 | 56.6 | 90 | 59 | I |
| | 2002.08-2005.02 | 6MT | F | | Estate FWD RF5C | | GCO34114 | Outer Joint | 44T | 31 | 36 | 65 | 94 | 65 | I |
| | 2002.08-2005.02 | 6MT | F | R | Estate FWD RF5C | | GCI34050 | Inner Joint | | 31 | 36 | 48 | | 126 | |
| | 2002.08-2005.02 | MT | F | R | Estate FWD RF5C | | GDS34165 | Drive Shaft | 44T | 31 | 31 | 65 | 94 | 555 | |
| | 2002.08-2005.02 | | F | R | Estate FWD RF5C | | GCO34084 | Outer Joint | 44T | 28 | 32 | 62 | 90 | 58 | I |
| 2.0 (103 kw) | 2007.12-2010.12 | 6MT | F | R | Estate FWD RF7J | | GDS18325 | Drive Shaft | | 31 | 31 | 65 | 94 | 567 | |
| | 2007.12-2010.12 | 6MT | F | L/R | Estate FWD RF7J | | GCO18245 | Outer Joint | | 31 | 36 | 65 | 94 | 63 | I |
| 2.0 (104 kw) | 2002.08-2007.08 | AT | F | R | Estate FWD LF17;LF18;LF-DE | Date from:2003.08 | GDS83960 | Drive Shaft | 44T | 28 | 28 | 62 | 89.5 | 602 | |
| | 2002.08-2007.08 | AT | F | L/R | Estate FWD LF17;LF18;LF-DE | | GCO34070 | Outer Joint | 44T | 28 | 32 | 56 | 90 | 59 | I |
| | 2002.08-2007.08 | AT | F | L/R | Estate FWD LF17;LF18;LF-DE | | GCO34110 | Outer Joint | 44T | 28 | 32 | 62 | 90 | 57.5 | I |
| | 2002.08-2007.08 | AT | F | L/R | Estate FWD LF17;LF18;LF-DE | | GCO34201 | Outer Joint | 44T | 28 | 32 | 62 | 89.5 | 57.5 | I |
| | 2002.08-2007.08 | AT | F | L | Estate FWD LF17;LF18;LF-DE | Date to:2003.07 | GCI34029 | Inner Joint | | 28 | 33 | 35 | 66.5 | 114 | |
| | 2002.08-2007.08 | AT | F | L | Estate FWD LF17;LF18;LF-DE | Date from:2003.08 | GCI34135 | Inner Joint | | 28 | 33 | 35 | 66.5 | 113.5 | |
| | 2002.08-2007.08 | AT | F | R | Estate FWD LF17;LF18;LF-DE | | GCI81449 | Inner Joint | | 28 | 33 | 43 | | 133 | |
| | 2002.08-2007.08 | AT | F | R | Estate FWD LF17;LF18;LF-DE | | GDS34267 | Intermediate Shaft | | 28 | 28 | | | 399 | |
| | 2002.08-2007.08 | MT | F | L | Estate FWD LF17;LF18;LF-DE | | GDS34137 | Drive Shaft | 44T | 28 | 28 | 56.6 | 90 | 648 | |
| | 2002.08-2007.08 | MT | F | R | Estate FWD LF17;LF18;LF-DE | | GDS34088 | Drive Shaft | 44T | 28 | 28 | 56.6 | 90 | 599 | |
| | 2002.08-2007.08 | MT | F | L | Estate FWD LF17;LF18;LF-DE | Date to:2005.02 | GCO34135 | Outer Joint | 44T | 28 | 23 | 56 | 90 | 57.5 | I |
| | 2002.08-2007.08 | MT | F | R | Estate FWD LF17;LF18;LF-DE | Date to:2005.02 | GCO99273 | Outer Joint | 44T | 28 | 33 | 56.6 | 90 | 59 | I |
| | 2002.08-2007.08 | MT | F | L/R | Estate FWD LF17;LF18;LF-DE | Model year to:2006 | GCO34021 | Outer Joint | 44T | 28 | 23 | 56 | 90 | 59 | I |
| | 2002.08-2007.08 | MT | F | L/R | Estate FWD LF17;LF18;LF-DE | Date to:2005.02 | GCO34084 | Outer Joint | 44T | 28 | 32 | 62 | 90 | 58 | I |
| 2.0 (105 kw) | 2005.06-2007.08 | 5AT | F | R | Estate FWD RF7J | | GDS34088 | Drive Shaft | 44T | 28 | 28 | 56.6 | 90 | 599 | |
| | 2005.06-2007.08 | 5AT | F | | Estate FWD RF7J | | GCO34070 | Outer Joint | 44T | 28 | 32 | 56 | 90 | 59 | I |
| | 2005.06-2007.08 | 6MT | F | L | Estate FWD RF7J | Date from:2006.12 to 2007.09;Date from:2007.10 | GDS34153 | Drive Shaft | 44T | 31 | 30 | 65 | 94 | 611.5 | |
| | 2005.06-2007.08 | 6MT | F | R | Estate FWD RF7J | | GDS34165 | Drive Shaft | 44T | 31 | 31 | 65 | 94 | 555 | |
| | 2005.06-2007.08 | 6MT | F | L/R | Estate FWD RF7J | | GCO34161 | Outer Joint | 44T | 31 | 36 | 65 | 94 | 62.5 | I |
| | 2005.06-2007.08 | 6MT | F | R | Estate FWD RF7J | | GCI34050 | Inner Joint | | 31 | 36 | 48 | | 126 | |
| | 2005.06-2007.08 | AT/MT | F | L | Estate FWD RF7J | | GCI34085 | Inner Joint | | 30 | 36 | 50 | 77.5 | 107 | |

| | YEAR | TRANSM. | F/R | L/R | BODY STYLE & DRIVE TYPE & ENGINE | REMARKS | G-AP Ref. | PRODUCT | ABS | Technical Specifications A | B | C | H | L | P |
|---|---|---|---|---|---|---|---|---|---|---|---|---|---|---|---|
| **MAZDA** | | | | | | | | | | | | | | | |
| **6 Estate/Wagon** | | | | | | | | | | | | | | | |
| 2.0 (105 kw) | 2005.06-2007.08 | | F | L/R | Estate FWD RF7J | Date From:2007.10 | GCO34114 | Outer Joint | 44T | 31 | 36 | 65 | 94 | 65 | I |
| 2.0 (107 kw) | 2013.01- | 6AT | F | L | Estate FWD PEY7;PEY5;PE-VPS;PEXB;PEXL;PEXP | For Engine code:PEXL/PEY5/PEY7 | GDS34236 | Drive Shaft | | 31 | 31 | 59 | 86.5 | 652 | |
| | 2013.01- | 6AT | F | L | Estate FWD PEY7;PEY5;PE-VPS;PEXB;PEXL;PEXP | For Engine code:PEXB/PEXP | GDS84025 | Drive Shaft | | 31 | 31 | 59 | 87 | 659 | |
| | 2013.01- | 6AT | F | R | Estate FWD PEY7;PEY5;PE-VPS;PEXB;PEXL;PEXP | For Engine code:PEXL/PEY5/PEY7 | GDS34235 | Drive Shaft | | 31 | 31 | 59 | 86.5 | 1016 | |
| | 2013.01- | 6AT | F | R | Estate FWD PEY7;PEY5;PE-VPS;PEXB;PEXL;PEXP | For Engine code:PEXB/PEXP | GDS84044 | Drive Shaft | | 31 | 31 | 59 | 87 | 1024 | |
| | 2013.01- | 6AT | F | L | Estate FWD PEY7;PEY5;PE-VPS;PEXB;PEXL;PEXP | For Engine code:PEXL/PEY5/PEY7 | GCI34129 | Inner Joint | | 31 | 24 | 40 | 67 | 113.5 | |
| | 2013.01- | 6AT | F | L | Estate FWD PEY7;PEY5;PE-VPS;PEXB;PEXL;PEXP | For Engine code:PEXB/PEXP | GCI82163 | Inner Joint | | 31 | 32 | 40 | 67 | 110 | |
| | 2013.01- | AT | F | L/R | Estate FWD PEY7;PEY5;PE-VPS;PEXB;PEXL;PEXP | | GCO34207 | Outer Joint | | 31 | 24 | 59 | 86.5 | 69 | I |
| | 2013.01- | AT | F | R | Estate FWD PEY7;PEY5;PE-VPS;PEXB;PEXL;PEXP | | GCI34128 | Inner Joint | | 31 | 24 | 40 | 416 | 115 | |
| | 2013.01- | MT | F | R | Estate FWD PEY7;PEY5;PE-VPS;PEXB;PEXL;PEXP | | GCO82495 | Outer Joint | | 31 | 33 | 59 | 86.5 | 67.5 | I |
| | 2013.01- | MT | F | L | Estate FWD PEY7;PEY5;PE-VPS;PEXB;PEXL;PEXP | | GCI81614 | Inner Joint | | 28 | 32 | 40 | 67 | 93 | |
| | 2013.01- | MT | F | R | Estate FWD PEY7;PEY5;PE-VPS;PEXB;PEXL;PEXP | | GCI81615 | Inner Joint | | 28 | 32 | 40 | 416 | 94 | |
| | 2015.04-2016.05 | MT | F | R | Estate Van FWD PEY7 | | GCO82495 | Outer Joint | | 31 | 33 | 59 | 86.5 | 67.5 | I |
| | 2015.04-2016.05 | MT | F | L | Estate Van FWD PEY7 | | GCI81614 | Inner Joint | | 28 | 32 | 40 | 67 | 93 | |
| | 2015.04-2016.05 | MT | F | R | Estate Van FWD PEY7 | | GCI81615 | Inner Joint | | 28 | 32 | 40 | 416 | 94 | |
| 2.0 (108 kw) | 2005.03-2007.08 | AT | F | L | Estate FWD LFF7;LF-VE | | GDS84520 | Drive Shaft | 44T | 28 | 28 | 62 | 89.5 | 645 | |
| | 2005.03-2007.08 | AT | F | R | Estate FWD LFF7;LF-VE | | GDS83960 | Drive Shaft | 44T | 28 | 28 | 62 | 89.5 | 602 | |
| | 2005.03-2007.08 | AT | F | L/R | Estate FWD LFF7;LF-VE | | GCO34070 | Outer Joint | 44T | 28 | 32 | 56 | 90 | 59 | I |
| | 2005.03-2007.08 | AT | F | L/R | Estate FWD LFF7;LF-VE | | GCO34110 | Outer Joint | 44T | 28 | 32 | 62 | 90 | 57.5 | I |
| | 2005.03-2007.08 | AT | F | L/R | Estate FWD LFF7;LF-VE | | GCO34201 | Outer Joint | 44T | 28 | 32 | 62 | 89.5 | 57.5 | I |
| | 2005.03-2007.08 | AT | F | L | Estate FWD LFF7;LF-VE | | GCI82832 | Inner Joint | | 28 | 33 | 35 | 66.5 | 113 | |
| | 2005.03-2007.08 | AT | F | R | Estate FWD LFF7;LF-VE | | GCI81449 | Inner Joint | | 28 | 33 | 43 | | 133 | |
| | 2005.03-2007.08 | AT | F | R | Estate FWD LFF7;LF-VE | | GDS34267 | Intermediate Shaft | | 28 | 28 | | | 399 | |
| | 2005.03-2007.08 | MT | F | L | Estate FWD LFF7;LF-VE | | GDS34137 | Drive Shaft | 44T | 28 | 28 | 56.6 | 90 | 648 | |
| | 2005.03-2007.08 | MT | F | R | Estate FWD LFF7;LF-VE | | GDS34088 | Drive Shaft | 44T | 28 | 28 | 56.6 | 90 | 599 | |
| | 2005.03-2007.08 | MT | F | L | Estate FWD LFF7;LF-VE | | GCO34084 | Outer Joint | 44T | 28 | 32 | 62 | 90 | 58 | I |
| | 2005.03-2007.08 | MT | F | R | Estate FWD LFF7;LF-VE | | GCO99273 | Outer Joint | 44T | 28 | 33 | 56.6 | 90 | 59 | I |
| | 2005.03-2007.08 | MT | F | L/R | Estate FWD LFF7;LF-VE | | GCO34135 | Outer Joint | 44T | 28 | 23 | 56 | 90 | 57.5 | I |
| | 2005.03-2007.08 | MT | F | R | Estate FWD LFF7;LF-VE | Date from:2006.11 | GCI34026 | Inner Joint | | 28 | 33 | 43 | | 124 | |
| | 2007.12-2013.07 | AT | F | L | Estate FWD LF17;LF-VE | | GDS84470 | Drive Shaft | | 28 | 28 | 62 | 92 | 664 | |
| | 2007.12-2013.07 | AT | F | R | Estate FWD LF17;LF-VE | | GCO34173 | Outer Joint | | 28 | 33 | 62 | 90 | 58 | M |
| | 2007.12-2013.07 | AT | F | L/R | Estate FWD LF17;LF-VE | | GCO82829 | Outer Joint | | 28 | 33 | 62 | 92 | 58.5 | I |
| | 2007.12-2013.07 | AT | F | L | Estate FWD LF17;LF-VE | | GCI81444 | Inner Joint | | 28 | 33 | 35 | 66.5 | 114.5 | |
| | 2007.12-2013.07 | AT | F | R | Estate FWD LF17;LF-VE | | GCI81449 | Inner Joint | | 28 | 33 | 43 | | 133 | |
| | 2007.12-2013.07 | MT | F | L/R | Estate FWD LF17;LF-VE | | GCO34252 | Outer Joint | | 28 | 32 | 62 | 92 | 57.5 | I |
| | 2007.12-2013.07 | MT | F | R | Estate FWD LF17;LF-VE | | GCI34050 | Inner Joint | | 31 | 36 | 48 | | 126 | |
| 2.0 (114 kw) | 2010.01-2013.07 | AT | F | R | Estate FWD LF-DE | | GCO34173 | Outer Joint | | 28 | 33 | 62 | 90 | 58 | M |
| | 2010.01-2013.07 | AT | F | R | Estate FWD LF-DE | | GCI81449 | Inner Joint | | 28 | 33 | 43 | | 133 | |
| | 2010.01-2013.07 | MT | F | L/R | Estate FWD LF-DE | | GCO34252 | Outer Joint | | 28 | 32 | 62 | 92 | 57.5 | I |
| | 2010.01-2013.07 | MT | F | R | Estate FWD LF-DE | | GCI34050 | Inner Joint | | 31 | 36 | 48 | | 126 | |
| 2.0 (121 kw) | 2013.01- | 6AT | F | L | Estate FWD PEY7;PEY5;PE-VPS;PEXB;PEXL;PEXP | For Engine code:PEXL/PEY5/PEY7 | GDS34236 | Drive Shaft | | 31 | 31 | 59 | 86.5 | 652 | |
| | 2013.01- | 6AT | F | L | Estate FWD PEY7;PEY5;PE-VPS;PEXB;PEXL;PEXP | For Engine code:PEXB/PEXP | GDS84025 | Drive Shaft | | 31 | 31 | 59 | 87 | 659 | |
| | 2013.01- | 6AT | F | R | Estate FWD PEY7;PEY5;PE-VPS;PEXB;PEXL;PEXP | For Engine code:PEXL/PEY5/PEY7 | GDS34235 | Drive Shaft | | 31 | 31 | 59 | 86.5 | 1016 | |
| | 2013.01- | 6AT | F | R | Estate FWD PEY7;PEY5;PE-VPS;PEXB;PEXL;PEXP | For Engine code:PEXB/PEXP | GDS84044 | Drive Shaft | | 31 | 31 | 59 | 87 | 1024 | |
| | 2013.01- | 6AT | F | L | Estate FWD PEY7;PEY5;PE-VPS;PEXB;PEXL;PEXP | For Engine code:PEXL/PEY5/PEY7 | GCI34129 | Inner Joint | | 31 | 24 | 40 | 67 | 113.5 | |
| | 2013.01- | 6AT | F | L | Estate FWD PEY7;PEY5;PE-VPS;PEXB;PEXL;PEXP | For Engine code:PEXB/PEXP | GCI82163 | Inner Joint | | 31 | 32 | 40 | 67 | 110 | |
| | 2013.01- | AT | F | L/R | Estate FWD PEY7;PEY5;PE-VPS;PEXB;PEXL;PEXP | | GCO34207 | Outer Joint | | 31 | 24 | 59 | 86.5 | 69 | I |
| | 2013.01- | AT | F | R | Estate FWD PEY7;PEY5;PE-VPS;PEXB;PEXL;PEXP | | GCI34128 | Inner Joint | | 31 | 24 | 40 | 416 | 115 | |
| | 2013.01- | MT | F | R | Estate FWD PEY7;PEY5;PE-VPS;PEXB;PEXL;PEXP | | GCO82495 | Outer Joint | | 31 | 33 | 59 | 86.5 | 67.5 | I |
| | 2013.01- | MT | F | L | Estate FWD PEY7;PEY5;PE-VPS;PEXB;PEXL;PEXP | | GCI81614 | Inner Joint | | 28 | 32 | 40 | 67 | 93 | |
| | 2013.01- | MT | F | R | Estate FWD PEY7;PEY5;PE-VPS;PEXB;PEXL;PEXP | | GCI81615 | Inner Joint | | 28 | 32 | 40 | 416 | 94 | |
| | 2015.04-2016.05 | AT | F | L | Estate Van FWD PEY7 | | GDS34236 | Drive Shaft | | 31 | 31 | 59 | 86.5 | 652 | |
| | 2015.04-2016.05 | AT | F | R | Estate Van FWD PEY7 | | GDS34235 | Drive Shaft | | 31 | 31 | 59 | 86.5 | 1016 | |
| | 2015.04-2016.05 | AT | F | L/R | Estate Van FWD PEY7 | | GCO34207 | Outer Joint | | 31 | 24 | 59 | 86.5 | 69 | I |
| | 2015.04-2016.05 | AT | F | L | Estate Van FWD PEY7 | | GCI34129 | Inner Joint | | 31 | 24 | 40 | 67 | 113.5 | |
| | 2015.04-2016.05 | AT | F | R | Estate Van FWD PEY7 | | GCI34128 | Inner Joint | | 31 | 24 | 40 | 416 | 115 | |
| | 2015.04-2016.05 | MT | F | R | Estate Van FWD PEY7 | | GCO82495 | Outer Joint | | 31 | 33 | 59 | 86.5 | 67.5 | I |
| | 2015.04-2016.05 | MT | F | L | Estate Van FWD PEY7 | | GCI81614 | Inner Joint | | 28 | 32 | 40 | 67 | 93 | |
| | 2015.04-2016.05 | MT | F | R | Estate Van FWD PEY7 | | GCI81615 | Inner Joint | | 28 | 32 | 40 | 416 | 94 | |
| 2.2 (92 kw) | 2009.01-2010.12 | 6MT | F | R | Estate FWD R2BF | | GDS18325 | Drive Shaft | | 31 | 31 | 65 | 94 | 567 | |
| | 2009.01-2010.12 | 6MT | F | L/R | Estate FWD R2BF | | GCO18245 | Outer Joint | | 31 | 36 | 65 | 94 | 63 | I |
| 2.2 (95 kw) | 2010.01-2013.07 | 6MT | F | R | Estate FWD R2BF | | GDS18325 | Drive Shaft | | 31 | 31 | 65 | 94 | 567 | |
| | 2010.01-2013.07 | 6MT | F | L/R | Estate FWD R2BF | | GCO18245 | Outer Joint | | 31 | 36 | 65 | 94 | 63 | I |
| 2.2 (110 kw) | 2012.10-2020.12 | 6AT | F | L | Estate FWD SHY1;SHY4;SHY6;SHY8 | | GDS81992 | Drive Shaft | | 31 | 31 | 59 | 87 | 645 | |
| | 2012.10-2020.12 | 6AT | F | R | Estate FWD SHY1;SHY4;SHY6;SHY8 | | GDS81993 | Drive Shaft | | 31 | 31 | 59 | 87 | 1021 | |

| | YEAR | TRANSM. | F/R | L/R | BODY STYLE & DRIVE TYPE & ENGINE | REMARKS | G-AP Ref. | PRODUCT | ABS | Technical Specifications A | B | C | H | L | P |
|---|---|---|---|---|---|---|---|---|---|---|---|---|---|---|---|
| **MAZDA**<br>**6 Estate/Wagon** | | | | | | | | | | | | | | | |
| 2.2 (110 kw) | 2012.10-2020.12 | 6AT | F | L/R | Estate FWD SHY1;SHY4;SHY6;SHY8 | | GCO81805 | Outer Joint | | 31 | 26 | 59 | 87 | 68.5 | I |
| | 2012.10-2020.12 | 6AT | F | L | Estate FWD SHY1;SHY4;SHY6;SHY8 | | GCI83785 | Inner Joint | | 31 | 27 | 40 | 74.5 | 115.5 | |
| | 2012.10-2020.12 | 6AT | F | R | Estate FWD SHY1;SHY4;SHY6;SHY8 | | GCI82285 | Inner Joint | | 31 | 27 | 40 | 442 | 121.5 | |
| | 2012.12-2020.12 | 6MT | R | L/R | Estate 4WD SHY4;SHY6;SHY8 | For Engine code:SHY8 | GCI82501 | Inner Joint | | 22 | 24 | 30 | 65 | 98 | |
| | 2015.04-2016.05 | 6AT | F | L | Estate Van FWD SHY4 | | GDS81992 | Drive Shaft | | 31 | 31 | 59 | 87 | 645 | |
| | 2015.04-2016.05 | 6AT | F | R | Estate Van FWD SHY4 | | GDS81993 | Drive Shaft | | 31 | 31 | 59 | 87 | 1021 | |
| | 2015.04-2016.05 | 6AT | F | L/R | Estate Van FWD SHY4 | | GCO81805 | Outer Joint | | 31 | 26 | 59 | 87 | 68.5 | I |
| | 2015.04-2016.05 | 6AT | F | L | Estate Van FWD SHY4 | | GCI83785 | Inner Joint | | 31 | 27 | 40 | 74.5 | 115.5 | |
| | 2015.04-2016.05 | 6AT | F | R | Estate Van FWD SHY4 | | GCI82285 | Inner Joint | | 31 | 27 | 40 | 442 | 121.5 | |
| 2.2 (120 kw) | 2008.08-2013.07 | 6MT | F | R | Estate FWD R2AA | | GDS18325 | Drive Shaft | | 31 | 31 | 65 | 94 | 567 | |
| | 2008.08-2013.07 | 6MT | F | L/R | Estate FWD R2AA | | GCO18245 | Outer Joint | | 31 | 36 | 65 | 94 | 63 | I |
| 2.2 (129 kw) | 2012.08-2018.02 | 6AT | F | L | Estate FWD SHY4;SHY6 | | GDS81992 | Drive Shaft | | 31 | 31 | 59 | 87 | 645 | |
| | 2012.08-2018.02 | 6AT | F | R | Estate FWD SHY4;SHY6 | | GDS81993 | Drive Shaft | | 31 | 31 | 59 | 87 | 1021 | |
| | 2012.08-2018.02 | 6AT | F | L/R | Estate FWD SHY4;SHY6 | | GCO81805 | Outer Joint | | 31 | 26 | 59 | 87 | 68.5 | I |
| | 2012.08-2018.02 | 6AT | F | L | Estate FWD SHY4;SHY6 | | GCI83785 | Inner Joint | | 31 | 27 | 40 | 74.5 | 115.5 | |
| | 2012.08-2018.02 | 6AT | F | R | Estate FWD SHY4;SHY6 | | GCI82285 | Inner Joint | | 31 | 27 | 40 | 442 | 121.5 | |
| | 2015.02- | 6AT | F | L | Estate 4WD SHY4 | | GDS81992 | Drive Shaft | | 31 | 31 | 59 | 87 | 645 | |
| | 2015.02- | 6AT | F | R | Estate 4WD SHY4 | | GDS82313 | Drive Shaft | | 31 | 31 | 59 | 87 | 1024 | |
| | 2015.02- | 6AT | F | L/R | Estate 4WD SHY4 | | GCO81805 | Outer Joint | | 31 | 26 | 59 | 87 | 68.5 | I |
| | 2015.02- | 6AT | F | L | Estate 4WD SHY4 | | GCI83785 | Inner Joint | | 31 | 27 | 40 | 74.5 | 115.5 | |
| | 2015.02- | 6AT | F | R | Estate 4WD SHY4 | | GCI81745 | Inner Joint | | 31 | 27 | 37 | 442.5 | 121.5 | |
| | 2015.04-2016.05 | 6AT | F | L | Estate Van 4WD SHY4 | | GDS81992 | Drive Shaft | | 31 | 31 | 59 | 87 | 645 | |
| | 2015.04-2016.05 | 6AT | F | R | Estate Van 4WD SHY4 | | GDS82313 | Drive Shaft | | 31 | 31 | 59 | 87 | 1024 | |
| | 2015.04-2016.05 | 6AT | F | L/R | Estate Van 4WD SHY4 | | GCO81805 | Outer Joint | | 31 | 26 | 59 | 87 | 68.5 | I |
| | 2015.04-2016.05 | 6AT | F | L | Estate Van 4WD SHY4 | | GCI83785 | Inner Joint | | 31 | 27 | 40 | 74.5 | 115.5 | |
| | 2015.04-2016.05 | 6AT | F | R | Estate Van 4WD SHY4 | | GCI81745 | Inner Joint | | 31 | 27 | 37 | 442.5 | 121.5 | |
| | 2015.04-2016.05 | 6AT | F | L | Estate Van FWD SHY4 | | GDS81992 | Drive Shaft | | 31 | 31 | 59 | 87 | 645 | |
| | 2015.04-2016.05 | 6AT | F | R | Estate Van FWD SHY4 | | GDS81993 | Drive Shaft | | 31 | 31 | 59 | 87 | 1021 | |
| | 2015.04-2016.05 | 6AT | F | L/R | Estate Van FWD SHY4 | | GCO81805 | Outer Joint | | 31 | 26 | 59 | 87 | 68.5 | I |
| | 2015.04-2016.05 | 6AT | F | L | Estate Van FWD SHY4 | | GCI83785 | Inner Joint | | 31 | 27 | 40 | 74.5 | 115.5 | |
| | 2015.04-2016.05 | 6AT | F | R | Estate Van FWD SHY4 | | GCI82285 | Inner Joint | | 31 | 27 | 40 | 442 | 121.5 | |
| 2.2 (132 kw) | 2010.01-2013.07 | 6MT | F | R | Estate FWD R2AA | | GDS18325 | Drive Shaft | | 31 | 31 | 65 | 94 | 567 | |
| | 2010.01-2013.07 | 6MT | F | L/R | Estate FWD R2AA | | GCO18245 | Outer Joint | | 31 | 36 | 65 | 94 | 63 | I |
| 2.2 (135 kw) | 2018.03-2020.12 | 6AT | R | L/R | Estate 4WD SHY8 | | GCI82501 | Inner Joint | | 22 | 24 | 30 | 65 | 98 | |
| 2.2 (136 kw) | 2008.08-2011.12 | 6MT | F | R | Estate FWD R2AA | | GDS18325 | Drive Shaft | | 31 | 31 | 65 | 94 | 567 | |
| | 2008.08-2011.12 | 6MT | F | L/R | Estate FWD R2AA | | GCO18245 | Outer Joint | | 31 | 36 | 65 | 94 | 63 | I |
| | 2008.08-2011.12 | MT | F | | Estate FWD R2AA | | GCO34252 | Outer Joint | | 28 | 32 | 62 | 92 | 57.5 | I |
| 2.3 (119 kw) | 2002.11-2007.08 | 5AT | F | R | Estate 4WD L3C1;L3-VE | | GDS83960 | Drive Shaft | 44T | 28 | 28 | 62 | 89.5 | 602 | |
| | 2002.11-2007.08 | 5AT | F | L/R | Estate 4WD L3C1;L3-VE | | GCO34070 | Outer Joint | 44T | 28 | 32 | 56 | 90 | 59 | I |
| | 2002.11-2007.08 | 5AT | F | L/R | Estate 4WD L3C1;L3-VE | Date To:2005.02 | GCO34110 | Outer Joint | 44T | 28 | 32 | 62 | 90 | 57.5 | I |
| | 2002.11-2007.08 | 5AT | F | L/R | Estate 4WD L3C1;L3-VE | | GCO34201 | Outer Joint | 44T | 28 | 32 | 62 | 89.5 | 57.5 | I |
| | 2002.11-2007.08 | 5AT | F | L/R | Estate 4WD L3C1;L3-VE | Date To:2005.02 | GCO99273 | Outer Joint | 44T | 28 | 33 | 56.6 | 90 | 59 | I |
| | 2002.11-2007.08 | 5AT | F | L | Estate 4WD L3C1;L3-VE | | GCI34092 | Inner Joint | | 30 | 33 | 40 | 73 | 114 | |
| | 2002.11-2007.08 | AT | F | L | Estate 4WD L3C1;L3-VE | | GDS34137 | Drive Shaft | 44T | 28 | 28 | 56.6 | 90 | 648 | |
| | 2002.11-2007.08 | AT | F | R | Estate 4WD L3C1;L3-VE | | GCI81449 | Inner Joint | | 28 | 33 | 43 | | 133 | |
| 2.3 (122 kw) | 2002.01-2008.02 | 5AT | F | L | Estate FWD L3C1;L3-VE | | GDS84520 | Drive Shaft | 44T | 28 | 28 | 62 | 89.5 | 645 | |
| | 2002.01-2008.02 | 5AT | F | R | Estate FWD L3C1;L3-VE | | GDS83960 | Drive Shaft | 44T | 28 | 28 | 62 | 89.5 | 602 | |
| | 2002.01-2008.02 | 5AT | F | L/R | Estate FWD L3C1;L3-VE | | GCO34110 | Outer Joint | 44T | 28 | 32 | 62 | 90 | 57.5 | I |
| | 2002.01-2008.02 | 5AT | F | L/R | Estate FWD L3C1;L3-VE | | GCO34201 | Outer Joint | 44T | 28 | 32 | 62 | 89.5 | 57.5 | I |
| | 2002.01-2008.02 | 5MT/6MT | F | L | Estate FWD L3C1;L3-VE | | GCO34180 | Outer Joint | 44T | 28 | 33 | 62 | 90 | 58 | M |
| | 2002.01-2008.02 | AT | F | L | Estate FWD L3C1;L3-VE | | GDS34137 | Drive Shaft | 44T | 28 | 28 | 56.6 | 90 | 648 | |
| | 2002.01-2008.02 | AT | F | L/R | Estate FWD L3C1;L3-VE | | GCO34070 | Outer Joint | 44T | 28 | 32 | 56 | 90 | 59 | I |
| | 2002.01-2008.02 | AT | F | L/R | Estate FWD L3C1;L3-VE | Date from:2002.06 | GCO34084 | Outer Joint | 44T | 28 | 32 | 62 | 90 | 58 | I |
| | 2002.01-2008.02 | AT | F | L | Estate FWD L3C1;L3-VE | | GCI82832 | Inner Joint | | 28 | 33 | 35 | 66.5 | 113 | |
| | 2002.01-2008.02 | AT | F | R | Estate FWD L3C1;L3-VE | | GCI81449 | Inner Joint | | 28 | 33 | 43 | | 133 | |
| | 2002.01-2008.02 | AT | F | R | Estate FWD L3C1;L3-VE | | GDS34267 | Intermediate Shaft | | 28 | 28 | | | 399 | |
| | 2002.01-2008.02 | MT | F | L/R | Estate FWD L3C1;L3-VE | Date from:2002.06 | GCO99273 | Outer Joint | 44T | 28 | 33 | 56.6 | 90 | 59 | I |
| | 2002.01-2008.02 | MT | F | R | Estate FWD L3C1;L3-VE | Date from:2006.11 | GCI34026 | Inner Joint | | 28 | 33 | 43 | | 124 | |
| 2.5 (125 kw) | 2008.02-2013.07 | MT | F | L/R | Estate FWD L5-VE | | GCO34173 | Outer Joint | | 28 | 33 | 62 | 90 | 58 | M |
| | 2008.02-2013.07 | MT | F | | Estate FWD L5-VE | | GCO34252 | Outer Joint | | 28 | 32 | 62 | 92 | 57.5 | I |
| | 2008.02-2013.07 | | F | R | Estate FWD L5-VE | | GCI34115 | Inner Joint | | 28 | 33 | 43 | | 132 | |
| 2.5 (141 kw) | 2012.12- | 6AT | F | L | Estate FWD PYY1;PY-Y8;PY-ZA | | GDS34236 | Drive Shaft | | 31 | 31 | 59 | 86.5 | 652 | |
| | 2012.12- | 6AT | F | L/R | Estate FWD PYY1;PY-Y8;PY-ZA | | GCO34207 | Outer Joint | | 31 | 24 | 59 | 86.5 | 69 | I |
| | 2012.12- | 6AT | F | L | Estate FWD PYY1;PY-Y8;PY-ZA | | GCI34129 | Inner Joint | | 31 | 24 | 40 | 67 | 113.5 | |
| | 2012.12- | | F | R | Estate FWD PYY1;PY-Y8;PY-ZA | | GCI34115 | Inner Joint | | 28 | 33 | 43 | | 132 | |

| | YEAR | TRANSM. | F/R | L/R | BODY STYLE & DRIVE TYPE & ENGINE | REMARKS | G-AP Ref. | PRODUCT | ABS | Technical Specifications A | B | C | H | L | P |
|---|---|---|---|---|---|---|---|---|---|---|---|---|---|---|---|
| **MAZDA** | | | | | | | | | | | | | | | |
| **6 Estate/Wagon** | | | | | | | | | | | | | | | |
| 2.5 (141 kw) | 2015.04-2016.05 | AT | F | L | Estate Van FWD PYY1 | | GDS34236 | Drive Shaft | | 31 | 31 | 59 | 86.5 | 652 | |
| | 2015.04-2016.05 | AT | F | L/R | Estate Van FWD PYY1 | | GCO34207 | Outer Joint | | 31 | 24 | 59 | 86.5 | 69 | I |
| | 2015.04-2016.05 | AT | F | L | Estate Van FWD PYY1 | | GCI34129 | Inner Joint | | 31 | 24 | 40 | 67 | 113.5 | |
| 2.5 (143 kw) | 2018.03- | 6AT | F | L | Estate FWD PYZ8;PYZC | | GDS83172 | Drive Shaft | | 31 | 31 | 59 | 87 | 650 | |
| | 2018.03- | 6AT | F | R | Estate FWD PYZ8;PYZC | | GDS83168 | Drive Shaft | | 31 | 31 | 59 | 87 | 1030 | |
| | 2018.03- | 6AT | F | L/R | Estate FWD PYZ8;PYZC | | GCO82330 | Outer Joint | | 31 | 32 | 59 | 87 | 66.5 | I |
| | 2018.03- | 6AT | F | L | Estate FWD PYZ8;PYZC | | GCI82163 | Inner Joint | | 31 | 32 | 40 | 67 | 110 | |
| | 2018.03- | 6AT | F | R | Estate FWD PYZ8;PYZC | | GCI82165 | Inner Joint | | 31 | 32 | 40 | 438.5 | 109 | |
| **626** | | | | | | | | | | | | | | | |
| 1.8 (66 kw) | 1994.05-1997.06 | AT | F | | Hatchback FWD FP01LP | | GCO34063 | Outer Joint | 44T | 28 | 32 | 56 | 90 | 59 | I |
| | 1994.05-1997.06 | AT/MT | F | L/R | Hatchback FWD FP01LP | | GCO18035 | Outer Joint | | 28 | 23 | 56 | 90 | 59 | I |
| | 1994.05-1997.06 | AT/MT | F | L/R | Hatchback FWD FP01LP | | GCO34080 | Outer Joint | 44T | 28 | 23 | 56 | 90 | 59 | M |
| | 1994.05-1997.06 | | F | | Hatchback FWD FP01LP | | GCO34014 | Outer Joint | | 28 | 23 | 56 | 89.1 | 59.5 | M |
| | 1994.05-1997.06 | AT | F | | Saloon FWD FP01LP | | GCO34063 | Outer Joint | 44T | 28 | 32 | 56 | 90 | 59 | I |
| | 1994.05-1997.06 | AT/MT | F | L/R | Saloon FWD FP01LP | | GCO18035 | Outer Joint | | 28 | 23 | 56 | 90 | 59 | I |
| | 1994.05-1997.06 | AT/MT | F | L/R | Saloon FWD FP01LP | | GCO34080 | Outer Joint | 44T | 28 | 23 | 56 | 90 | 59 | M |
| | 1994.05-1997.06 | | F | | Saloon FWD FP01LP | | GCO34014 | Outer Joint | | 28 | 23 | 56 | 89.1 | 59.5 | M |
| | 1997.05-1999.12 | 5MT | F | L/R | Hatchback FWD FP33 | | GCO34010 | Outer Joint | | 28 | 30 | 56 | 89.5 | 57 | I |
| | 1997.05-1999.12 | 5MT | F | L/R | Hatchback FWD FP33 | | GCO99042 | Outer Joint | | 28 | 22 | 56 | 89.1 | 59.5 | I |
| | 1997.05-1999.12 | AT | F | L/R | Hatchback FWD FP33 | for vehicles with automatic transmission | GCO34013 | Outer Joint | 44T | 28 | 23 | 56 | 90 | 59 | M |
| | 1997.05-1999.12 | MT | F | L | Hatchback FWD FP33 | | GDS18176 | Drive Shaft | 44T | 28 | 28 | 56 | 91.5 | 629 | |
| | 1997.05-1999.12 | | F | L/R | Hatchback FWD FP33 | | GCO34072 | Outer Joint | 44T | 28 | 30 | 56 | 89.5 | 57 | I |
| | 1997.05-1999.12 | | F | L | Hatchback FWD FP33 | | GCI34009 | Inner Joint | | 28 | 30 | 35 | 66.5 | 99 | |
| | 1997.05-1999.12 | 5MT | F | L/R | Saloon FWD FP33 | Date from:1999.01 | GCO34010 | Outer Joint | | 28 | 30 | 56 | 89.5 | 57 | I |
| | 1997.05-1999.12 | 5MT | F | L/R | Saloon FWD FP33 | | GCO34072 | Outer Joint | 44T | 28 | 30 | 56 | 89.5 | 57 | I |
| | 1997.05-1999.12 | | F | L | Saloon FWD FP33 | | GCI34009 | Inner Joint | | 28 | 30 | 35 | 66.5 | 99 | |
| 1.8 (74 kw) | 1999.08-2002.04 | AT | F | L/R | Hatchback FWD FPA1 | for vehicles with automatic transmission | GCO34013 | Outer Joint | 44T | 28 | 23 | 56 | 90 | 59 | M |
| | 1999.08-2002.04 | MT | F | L | Hatchback FWD FPA1 | | GDS18176 | Drive Shaft | 44T | 28 | 28 | 56 | 91.5 | 629 | |
| | 1999.08-2002.04 | MT | F | L/R | Hatchback FWD FPA1 | | GCO34010 | Outer Joint | | 28 | 30 | 56 | 89.5 | 57 | I |
| | 1999.08-2002.04 | MT | F | L/R | Hatchback FWD FPA1 | | GCO34072 | Outer Joint | 44T | 28 | 30 | 56 | 89.5 | 57 | I |
| | 1999.08-2002.04 | | F | L | Hatchback FWD FPA1 | | GCI34009 | Inner Joint | | 28 | 30 | 35 | 66.5 | 99 | |
| 1.8 (77 kw) | 1991.08-1997.04 | AT | F | | Hatchback FWD FP | | GCO34063 | Outer Joint | 44T | 28 | 32 | 56 | 90 | 59 | I |
| | 1991.08-1997.04 | AT/MT | F | L/R | Hatchback FWD FP | | GCO18035 | Outer Joint | | 28 | 23 | 56 | 90 | 59 | I |
| | 1991.08-1997.04 | AT/MT | F | L/R | Hatchback FWD FP | | GCO34080 | Outer Joint | 44T | 28 | 23 | 56 | 90 | 59 | M |
| | 1991.08-1997.04 | MT | F | | Hatchback FWD FP | | GCO34021 | Outer Joint | 44T | 28 | 23 | 56 | 90 | 59 | I |
| | 1991.08-1997.04 | | F | | Hatchback FWD FP | | GCO34014 | Outer Joint | | 28 | 23 | 56 | 89.1 | 59.5 | M |
| | 1991.08-1997.04 | AT | F | | Saloon FWD FP | | GCO34063 | Outer Joint | 44T | 28 | 32 | 56 | 90 | 59 | I |
| | 1991.08-1997.04 | AT/MT | F | L/R | Saloon FWD FP | | GCO18035 | Outer Joint | | 28 | 23 | 56 | 90 | 59 | I |
| | 1991.08-1997.04 | AT/MT | F | L/R | Saloon FWD FP | | GCO34080 | Outer Joint | 44T | 28 | 23 | 56 | 90 | 59 | M |
| | 1991.08-1997.04 | MT | F | | Saloon FWD FP | | GCO34021 | Outer Joint | 44T | 28 | 23 | 56 | 90 | 59 | I |
| | 1991.08-1997.04 | | F | | Saloon FWD FP | | GCO34014 | Outer Joint | | 28 | 23 | 56 | 89.1 | 59.5 | M |
| 1.8 (78 kw) | 1994.05-1997.06 | AT | F | | Saloon FWD FP01HP | | GCO34063 | Outer Joint | 44T | 28 | 32 | 56 | 90 | 59 | I |
| 1.9 (74 kw) | 1999.08-2002.04 | 5MT | F | L/R | Saloon FWD FPA1 | | GCO34010 | Outer Joint | | 28 | 30 | 56 | 89.5 | 57 | I |
| | 1999.08-2002.04 | 5MT | F | L/R | Saloon FWD FPA1 | | GCO34072 | Outer Joint | 44T | 28 | 30 | 56 | 89.5 | 57 | I |
| | 1999.08-2002.04 | | F | L | Saloon FWD FPA1 | | GCI34009 | Inner Joint | | 28 | 30 | 35 | 66.5 | 99 | |
| 2.0 (55 kw) | 1992.04-1997.04 | AT/MT | F | L/R | Saloon FWD RFG5 | | GCO18035 | Outer Joint | | 28 | 23 | 56 | 90 | 59 | I |
| | 1992.04-1997.04 | AT/MT | F | L/R | Saloon FWD RFG5 | | GCO34080 | Outer Joint | 44T | 28 | 23 | 56 | 90 | 59 | M |
| | 1992.04-1997.04 | | F | | Saloon FWD RFG5 | | GCO34021 | Outer Joint | 44T | 28 | 23 | 56 | 90 | 59 | I |
| | 1993.01-1997.04 | AT/MT | F | L/R | Hatchback FWD RFG5 | | GCO18035 | Outer Joint | | 28 | 23 | 56 | 90 | 59 | I |
| | 1993.01-1997.04 | AT/MT | F | L/R | Hatchback FWD RFG5 | | GCO34080 | Outer Joint | 44T | 28 | 23 | 56 | 90 | 59 | M |
| | 1993.01-1997.04 | | F | | Hatchback FWD RFG5 | | GCO34021 | Outer Joint | 44T | 28 | 23 | 56 | 90 | 59 | I |
| 2.0 (66 kw) | 1998.04-2002.10 | 5MT | F | L | Hatchback FWD RF3F | | GCI34032 | Inner Joint | | 28 | 23 | 35 | 66 | 105 | |
| | 1998.04-2002.10 | AT/MT | F | L/R | Hatchback FWD RF3F | | GCO34013 | Outer Joint | 44T | 28 | 23 | 56 | 90 | 59 | M |
| | 1998.04-2002.10 | MT | F | L/R | Hatchback FWD RF3F | | GCO18035 | Outer Joint | | 28 | 23 | 56 | 90 | 59 | I |
| | 1998.04-2002.10 | MT | F | L/R | Hatchback FWD RF3F | | GCO34021 | Outer Joint | 44T | 28 | 23 | 56 | 90 | 59 | I |
| | 1998.04-2002.10 | | F | | Hatchback FWD RF3F | | GCO34121 | Outer Joint | 44T | 28 | 23 | 56 | 89.1 | 59.5 | M |
| | 1999.04-2002.04 | 5MT | F | L | Saloon FWD RF3F | | GCI34032 | Inner Joint | | 28 | 23 | 35 | 66 | 105 | |
| | 1999.04-2002.04 | MT | F | L | Saloon FWD RF3F | | GDS18176 | Drive Shaft | 44T | 28 | 28 | 56 | 91.5 | 629 | |
| | 1999.04-2002.04 | MT | F | L/R | Saloon FWD RF3F | Date from:1999.04,Date to:2002.04 | GCO18035 | Outer Joint | | 28 | 23 | 56 | 90 | 59 | I |
| | 1999.04-2002.04 | MT | F | L/R | Saloon FWD RF3F | | GCO34021 | Outer Joint | 44T | 28 | 23 | 56 | 90 | 59 | I |
| | 1999.04-2002.04 | | F | L/R | Saloon FWD RF3F | | GCO34061 | Outer Joint | 44T | 28 | 23 | 56 | 89 | 60.5 | M |
| | 1999.04-2002.04 | | F | | Saloon FWD RF3F | | GCO34121 | Outer Joint | 44T | 28 | 23 | 56 | 89.1 | 59.5 | M |
| 2.0 (74 kw) | 1997.07-2002.04 | 5MT | F | L | Hatchback FWD RF2A | | GCI34032 | Inner Joint | | 28 | 23 | 35 | 66 | 105 | |
| | 1997.07-2002.04 | AT/MT | F | L/R | Hatchback FWD RF2A | | GCO34013 | Outer Joint | 44T | 28 | 23 | 56 | 90 | 59 | M |
| | 1997.07-2002.04 | MT | F | L/R | Hatchback FWD RF2A | Date to:2002.04 | GCO18035 | Outer Joint | | 28 | 23 | 56 | 90 | 59 | I |

| | YEAR | TRANSM. | F/R | L/R | BODY STYLE & DRIVE TYPE & ENGINE | REMARKS | G-AP Ref. | PRODUCT | ABS | Technical Specifications A | B | C | H | L | P |
|---|---|---|---|---|---|---|---|---|---|---|---|---|---|---|---|
| **MAZDA** | | | | | | | | | | | | | | | |
| **626** | | | | | | | | | | | | | | | |
| 2.0 (74 kw) | 1997.07-2002.04 | MT | F | L/R | Hatchback FWD RF2A | Date to:2002.04 | GCO34021 | Outer Joint | 44T | 28 | 23 | 56 | 90 | 59 | I |
| | 1997.07-2002.04 | MT | F | L/R | Hatchback FWD RF2A | Date to:2002.04 | GCO34080 | Outer Joint | 44T | 28 | 23 | 56 | 90 | 59 | M |
| | 1997.07-2002.04 | | F | | Hatchback FWD RF2A | | GCO34121 | Outer Joint | 44T | 28 | 23 | 56 | 89.1 | 59.5 | M |
| | 1997.07-2002.04 | 5MT | F | L | Saloon FWD RF2A | | GCI34032 | Inner Joint | | 28 | 23 | 35 | 66 | 105 | |
| | 1997.07-2002.04 | AT/MT | F | L/R | Saloon FWD RF2A | | GCO34013 | Outer Joint | 44T | 28 | 23 | 56 | 90 | 59 | M |
| | 1997.07-2002.04 | MT | F | L | Saloon FWD RF2A | | GDS18176 | Drive Shaft | 44T | 28 | 28 | 56 | 91.5 | 629 | |
| | 1997.07-2002.04 | MT | F | L/R | Saloon FWD RF2A | Date to:2002.04 | GCO18035 | Outer Joint | | 28 | 23 | 56 | 90 | 59 | I |
| | 1997.07-2002.04 | MT | F | L/R | Saloon FWD RF2A | Date to:2002.04 | GCO34021 | Outer Joint | 44T | 28 | 23 | 56 | 90 | 59 | I |
| | 1997.07-2002.04 | MT | F | L/R | Saloon FWD RF2A | | GCO34061 | Outer Joint | 44T | 28 | 23 | 56 | 89 | 60.5 | M |
| | 1997.07-2002.04 | MT | F | L/R | Saloon FWD RF2A | Date to:2002.04 | GCO34080 | Outer Joint | 44T | 28 | 23 | 56 | 90 | 59 | M |
| | 1997.07-2002.04 | | F | | Saloon FWD RF2A | | GCO34121 | Outer Joint | 44T | 28 | 23 | 56 | 89.1 | 59.5 | M |
| 2.0 (81 kw) | 2000.10-2002.10 | 5MT | F | L | Hatchback FWD RF4F | | GCI34032 | Inner Joint | | 28 | 23 | 35 | 66 | 105 | |
| | 2000.10-2002.10 | AT/MT | F | L/R | Hatchback FWD RF4F | | GCO34013 | Outer Joint | 44T | 28 | 23 | 56 | 90 | 59 | M |
| | 2000.10-2002.10 | AT/MT | F | L/R | Hatchback FWD RF4F | | GCO34061 | Outer Joint | 44T | 28 | 23 | 56 | 89 | 60.5 | M |
| | 2000.10-2002.10 | MT | F | L | Hatchback FWD RF4F | | GDS18176 | Drive Shaft | 44T | 28 | 28 | 56 | 91.5 | 629 | |
| | 2000.10-2002.10 | MT | F | L/R | Hatchback FWD RF4F | | GCO18035 | Outer Joint | | 28 | 23 | 56 | 90 | 59 | I |
| | 2000.10-2002.10 | MT | F | L/R | Hatchback FWD RF4F | | GCO34021 | Outer Joint | 44T | 28 | 23 | 56 | 90 | 59 | I |
| | 2000.10-2002.10 | | F | | Hatchback FWD RF4F | | GCO34121 | Outer Joint | 44T | 28 | 23 | 56 | 89.1 | 59.5 | M |
| | 2000.10-2002.10 | 5MT | F | L | Saloon FWD RF4F | | GCI34032 | Inner Joint | | 28 | 23 | 35 | 66 | 105 | |
| | 2000.10-2002.10 | AT/MT | F | L/R | Saloon FWD RF4F | | GCO34013 | Outer Joint | 44T | 28 | 23 | 56 | 90 | 59 | M |
| | 2000.10-2002.10 | MT | F | L | Saloon FWD RF4F | | GDS18176 | Drive Shaft | 44T | 28 | 28 | 56 | 91.5 | 629 | |
| | 2000.10-2002.10 | MT | F | L/R | Saloon FWD RF4F | | GCO18035 | Outer Joint | | 28 | 23 | 56 | 90 | 59 | I |
| | 2000.10-2002.10 | MT | F | L/R | Saloon FWD RF4F | | GCO34021 | Outer Joint | 44T | 28 | 23 | 56 | 90 | 59 | I |
| | 2000.10-2002.10 | | F | | Saloon FWD RF4F | | GCO34072 | Outer Joint | 44T | 28 | 30 | 56 | 89.5 | 57 | I |
| | 2000.10-2002.10 | | F | | Saloon FWD RF4F | | GCO34121 | Outer Joint | 44T | 28 | 23 | 56 | 89.1 | 59.5 | M |
| 2.0 (85 kw) | 1991.08-1997.04 | AT | F | | Hatchback FWD FS | | GCO34063 | Outer Joint | 44T | 28 | 32 | 56 | 90 | 59 | I |
| | 1991.08-1997.04 | AT/MT | F | L/R | Hatchback FWD FS | | GCO18035 | Outer Joint | | 28 | 23 | 56 | 90 | 59 | I |
| | 1991.08-1997.04 | AT/MT | F | L/R | Hatchback FWD FS | | GCO34080 | Outer Joint | 44T | 28 | 23 | 56 | 90 | 59 | M |
| | 1991.08-1997.04 | MT | F | L | Hatchback FWD FS | Model year from:1994 | GDS18083 | Drive Shaft | 44T | 28 | 35 | 56 | 91.5 | 670 | |
| | 1991.08-1997.04 | MT | F | | Hatchback FWD FS | | GCO34021 | Outer Joint | 44T | 28 | 23 | 56 | 90 | 59 | I |
| | 1991.08-1997.04 | | F | | Hatchback FWD FS | | GCO34014 | Outer Joint | | 28 | 23 | 56 | 89.1 | 59.5 | M |
| | 1991.08-1997.04 | | F | R | Hatchback FWD FS | | GCI34033 | Inner Joint | | 28 | 23 | 43 | | 123 | |
| | 1992.01-1997.04 | AT | F | | Saloon FWD FS | | GCO34063 | Outer Joint | 44T | 28 | 32 | 56 | 90 | 59 | I |
| | 1992.01-1997.04 | AT/MT/AMT | F | L/R | Saloon FWD FS | | GCO18035 | Outer Joint | | 28 | 23 | 56 | 90 | 59 | I |
| | 1992.01-1997.04 | AT/MT/AMT | F | L/R | Saloon FWD FS | | GCO34080 | Outer Joint | 44T | 28 | 23 | 56 | 90 | 59 | M |
| | 1992.01-1997.04 | MT | F | L | Saloon FWD FS | Model year from:1994 | GDS18083 | Drive Shaft | 44T | 28 | 35 | 56 | 91.5 | 670 | |
| | 1992.01-1997.04 | MT | F | | Saloon FWD FS | | GCO34021 | Outer Joint | 44T | 28 | 23 | 56 | 90 | 59 | I |
| | 1992.01-1997.04 | | F | L/R | Saloon FWD FS | Vehicle Production Country:USA | GCO18078 | Outer Joint | 44T | 28 | 32 | 56 | 91.5 | 65 | I |
| | 1992.01-1997.04 | | F | | Saloon FWD FS | | GCO34014 | Outer Joint | | 28 | 23 | 56 | 89.1 | 59.5 | M |
| | 1992.01-1997.04 | | F | R | Saloon FWD FS | | GCI34033 | Inner Joint | | 28 | 23 | 43 | | 123 | |
| | 1992.04-1997.04 | AT | F | | Hatchback 4WD FS31/FS84 | | GCO34063 | Outer Joint | 44T | 28 | 32 | 56 | 90 | 59 | I |
| | 1992.04-1997.04 | AT/MT | F | L/R | Hatchback 4WD FS31/FS84 | | GCO18035 | Outer Joint | | 28 | 23 | 56 | 90 | 59 | I |
| | 1992.04-1997.04 | AT/MT | F | L/R | Hatchback 4WD FS31/FS84 | | GCO34014 | Outer Joint | | 28 | 23 | 56 | 89.1 | 59.5 | M |
| | 1992.04-1997.04 | AT/MT | F | L/R | Hatchback 4WD FS31/FS84 | | GCO34080 | Outer Joint | 44T | 28 | 23 | 56 | 90 | 59 | M |
| | 1992.04-1997.04 | MT | F | L | Hatchback 4WD FS31/FS84 | Model year from:1994 | GDS18083 | Drive Shaft | 44T | 28 | 35 | 56 | 91.5 | 670 | |
| | 1992.04-1997.04 | | F | | Hatchback 4WD FS31/FS84 | | GCO34021 | Outer Joint | 44T | 28 | 23 | 56 | 90 | 59 | I |
| | 1992.04-1997.04 | | F | | Hatchback 4WD FS31/FS84 | | GCO39123 | Outer Joint | | 28 | 21 | 56 | 90 | 58 | I |
| | 1992.04-1997.04 | | F | R | Hatchback 4WD FS31/FS84 | | GCI34033 | Inner Joint | | 28 | 23 | 43 | | 123 | |
| | 1992.04-1997.04 | AT/MT | F | L/R | Saloon 4WD FS84 | | GCO18035 | Outer Joint | | 28 | 23 | 56 | 90 | 59 | I |
| | 1992.04-1997.04 | AT/MT | F | L/R | Saloon 4WD FS84 | | GCO34014 | Outer Joint | | 28 | 23 | 56 | 89.1 | 59.5 | M |
| | 1992.04-1997.04 | AT/MT | F | L/R | Saloon 4WD FS84 | | GCO34080 | Outer Joint | 44T | 28 | 23 | 56 | 90 | 59 | M |
| | 1992.04-1997.04 | MT | F | L | Saloon 4WD FS84 | Model year from:1994 | GDS18083 | Drive Shaft | 44T | 28 | 35 | 56 | 91.5 | 670 | |
| | 1992.04-1997.04 | | F | | Saloon 4WD FS84 | Vehicle Production Country:USA | GCO18078 | Outer Joint | 44T | 28 | 32 | 56 | 91.5 | 65 | I |
| | 1992.04-1997.04 | | F | | Saloon 4WD FS84 | | GCO34021 | Outer Joint | 44T | 28 | 23 | 56 | 90 | 59 | I |
| | 1992.04-1997.04 | | F | | Saloon 4WD FS84 | | GCO34063 | Outer Joint | 44T | 28 | 32 | 56 | 90 | 59 | I |
| | 1992.04-1997.04 | | F | | Saloon 4WD FS84 | | GCO39123 | Outer Joint | | 28 | 21 | 56 | 90 | 58 | I |
| | 1992.04-1997.04 | | F | R | Saloon 4WD FS84 | | GCI34033 | Inner Joint | | 28 | 23 | 43 | | 123 | |
| | 1997.07-2002.04 | 4AT/5MT | F | L/R | Hatchback FWD FS2A/FS2B/FSJ2 | | GCO34010 | Outer Joint | | 28 | 30 | 56 | 89.5 | 57 | I |
| | 1997.07-2002.04 | AT | F | R | Hatchback FWD FS2A/FS2B/FSJ2 | | GDS34001 | Drive Shaft | | 28 | | 56 | 90 | 516.8 | |
| | 1997.07-2002.04 | AT | F | L/R | Hatchback FWD FS2A/FS2B/FSJ2 | for vehicles with automatic transmission | GCO34013 | Outer Joint | 44T | 28 | 23 | 56 | 90 | 59 | M |
| | 1997.07-2002.04 | AT | F | L/R | Hatchback FWD FS2A/FS2B/FSJ2 | | GCO34061 | Outer Joint | 44T | 28 | 23 | 56 | 89 | 60.5 | M |
| | 1997.07-2002.04 | MT | F | L | Hatchback FWD FS2A/FS2B/FSJ2 | | GDS18176 | Drive Shaft | 44T | 28 | 28 | 56 | 91.5 | 629 | |
| | 1997.07-2002.04 | MT | F | L/R | Hatchback FWD FS2A/FS2B/FSJ2 | | GCO34072 | Outer Joint | 44T | 28 | 30 | 56 | 89.5 | 57 | I |
| | 1997.07-2002.04 | MT | F | L | Hatchback FWD FS2A/FS2B/FSJ2 | | GCI34009 | Inner Joint | | 28 | 30 | 35 | 66.5 | 99 | |
| | 1997.07-2002.04 | | F | | Hatchback FWD FS2A/FS2B/FSJ2 | | GCO34121 | Outer Joint | 44T | 28 | 23 | 56 | 89.1 | 59.5 | M |

| | YEAR | TRANSM. | F/R | L/R | BODY STYLE & DRIVE TYPE & ENGINE | REMARKS | G-AP Ref. | PRODUCT | ABS | Technical Specifications A | B | C | H | L | P |
|---|---|---|---|---|---|---|---|---|---|---|---|---|---|---|---|
| **MAZDA** | | | | | | | | | | | | | | | |
| **626** | | | | | | | | | | | | | | | |
| 2.0 (85 kw) | 1997.07-2002.04 | | F | R | Hatchback FWD FS2A/FS2B/FSJ2 | Model year from:2000 | GCI34099 | Inner Joint | | 28 | 23 | 43 | | 119 | |
| | 1997.07-2002.04 | 4AT/5MT | F | L/R | Saloon FWD FS2A/FS2B/FSJ2 | | GCO34010 | Outer Joint | | 28 | 30 | 56 | 89.5 | 57 | I |
| | 1997.07-2002.04 | AT | F | R | Saloon FWD FS2A/FS2B/FSJ2 | | GDS34001 | Drive Shaft | | 28 | | 56 | 90 | 516.8 | |
| | 1997.07-2002.04 | AT | F | L/R | Saloon FWD FS2A/FS2B/FSJ2 | for vehicles with automatic transmission | GCO34013 | Outer Joint | 44T | 28 | 23 | 56 | 90 | 59 | M |
| | 1997.07-2002.04 | MT | F | L/R | Saloon FWD FS2A/FS2B/FSJ2 | | GCO34072 | Outer Joint | 44T | 28 | 30 | 56 | 89.5 | 57 | I |
| | 1997.07-2002.04 | MT | F | L | Saloon FWD FS2A/FS2B/FSJ2 | | GCI34009 | Inner Joint | | 28 | 30 | 35 | 66.5 | 99 | |
| | 1997.07-2002.04 | | F | | Saloon FWD FS2A/FS2B/FSJ2 | | GCO34121 | Outer Joint | 44T | 28 | 23 | 56 | 89.1 | 59.5 | M |
| | 1997.07-2002.04 | | F | R | Saloon FWD FS2A/FS2B/FSJ2 | Model year from:2000 | GCI34099 | Inner Joint | | 28 | 23 | 43 | | 119 | |
| 2.0 (100 kw) | 1998.02-2002.10 | 4AT/5MT | F | L/R | Hatchback FWD FS2C/FS2D/FSH9/FSJ1/FSJ4 | | GCO34010 | Outer Joint | | 28 | 30 | 56 | 89.5 | 57 | I |
| | 1998.02-2002.10 | AT | F | R | Hatchback FWD FS2C/FS2D/FSH9/FSJ1/FSJ4 | | GDS34001 | Drive Shaft | | 28 | | 56 | 90 | 516.8 | |
| | 1998.02-2002.10 | AT | F | L/R | Hatchback FWD FS2C/FS2D/FSH9/FSJ1/FSJ4 | for vehicles with automatic transmission | GCO34013 | Outer Joint | 44T | 28 | 23 | 56 | 90 | 59 | M |
| | 1998.02-2002.10 | AT | F | L/R | Hatchback FWD FS2C/FS2D/FSH9/FSJ1/FSJ4 | | GCO34061 | Outer Joint | 44T | 28 | 23 | 56 | 89 | 60.5 | M |
| | 1998.02-2002.10 | MT | F | L/R | Hatchback FWD FS2C/FS2D/FSH9/FSJ1/FSJ4 | | GCO34072 | Outer Joint | 44T | 28 | 30 | 56 | 89.5 | 57 | I |
| | 1998.02-2002.10 | MT | F | L | Hatchback FWD FS2C/FS2D/FSH9/FSJ1/FSJ4 | | GCI34009 | Inner Joint | | 28 | 30 | 35 | 66.5 | 99 | |
| | 1998.02-2002.10 | | F | | Hatchback FWD FS2C/FS2D/FSH9/FSJ1/FSJ4 | | GCO34121 | Outer Joint | 44T | 28 | 23 | 56 | 89.1 | 59.5 | M |
| | 1998.02-2002.10 | | F | R | Hatchback FWD FS2C/FS2D/FSH9/FSJ1/FSJ4 | Model year from:2000 | GCI34099 | Inner Joint | | 28 | 23 | 43 | | 119 | |
| | 1998.04-2002.10 | AT | F | R | Saloon FWD FS2C/FS2D | | GDS34001 | Drive Shaft | | 28 | | 56 | 90 | 516.8 | |
| | 1998.04-2002.10 | AT | F | L/R | Saloon FWD FS2C/FS2D | | GCO34061 | Outer Joint | 44T | 28 | 23 | 56 | 89 | 60.5 | M |
| | 1998.04-2002.10 | MT | F | L/R | Saloon FWD FS2C/FS2D | | GCO34010 | Outer Joint | | 28 | 30 | 56 | 89.5 | 57 | I |
| | 1998.04-2002.10 | MT | F | L/R | Saloon FWD FS2C/FS2D | | GCO34072 | Outer Joint | 44T | 28 | 30 | 56 | 89.5 | 57 | I |
| | 1998.04-2002.10 | | F | | Saloon FWD FS2C/FS2D | | GCO34121 | Outer Joint | 44T | 28 | 23 | 56 | 89.1 | 59.5 | M |
| | 1998.04-2002.10 | | F | R | Saloon FWD FS2C/FS2D | Model year from:2000 | GCI34099 | Inner Joint | | 28 | 23 | 43 | | 119 | |
| 2.5 (120 kw) | 1994.08-1997.04 | AT | F | L/R | Hatchback FWD KLY1 | | GCO34117 | Outer Joint | 44T | 28 | 32 | 56 | 89 | 59 | M |
| | 1994.08-1997.04 | AT/MT | F | R | Hatchback FWD KLY1 | | GDS18085 | Drive Shaft | 44T | 28 | 28 | 56 | 89 | 575.5 | |
| | 1994.08-1997.04 | MT | F | L/R | Hatchback FWD KLY1 | | GCO18028 | Outer Joint | | 28 | 26 | 56 | 89 | 65 | I |
| | 1994.08-1997.04 | MT | F | L/R | Hatchback FWD KLY1 | | GCO18029 | Outer Joint | 44T | 28 | 26 | 56 | 89 | 65 | I |
| | 1994.08-1997.04 | MT | F | L/R | Hatchback FWD KLY1 | | GCO34082 | Outer Joint | 44T | 28 | 26 | 56 | 94 | 63 | M |
| | 1994.08-1997.04 | | F | | Hatchback FWD KLY1 | | GCO34011 | Outer Joint | | 26 | 25 | 56 | 95 | 61 | M |
| 2.5 (121 kw) | 1992.01-1997.04 | AT | F | L/R | Hatchback FWD KL | for vehicles with automatic transmission | GCO34117 | Outer Joint | 44T | 28 | 32 | 56 | 89 | 59 | M |
| | 1992.01-1997.04 | AT | F | | Hatchback FWD KL | | GCO34063 | Outer Joint | 44T | 28 | 32 | 56 | 90 | 59 | I |
| | 1992.01-1997.04 | AT/MT | F | R | Hatchback FWD KL | | GDS18085 | Drive Shaft | 44T | 28 | 28 | 56 | 89 | 575.5 | |
| | 1992.01-1997.04 | AT/MT | F | L/R | Hatchback FWD KL | | GCO34082 | Outer Joint | 44T | 28 | 26 | 56 | 94 | 63 | M |
| | 1992.01-1997.04 | MT | F | L/R | Hatchback FWD KL | | GCO18028 | Outer Joint | | 28 | 26 | 56 | 89 | 65 | I |
| | 1992.01-1997.04 | MT | F | L/R | Hatchback FWD KL | | GCO18029 | Outer Joint | 44T | 28 | 26 | 56 | 89 | 65 | I |
| | 1992.01-1997.04 | | F | | Hatchback FWD KL | | GCO34011 | Outer Joint | | 26 | 25 | 56 | 95 | 61 | M |
| **626 Estate/Wagon** | | | | | | | | | | | | | | | |
| 1.8 (66 kw) | 1998.02-2000.01 | 5MT | F | L/R | Estate FWD FP33/FP63 | | GCO34010 | Outer Joint | | 28 | 30 | 56 | 89.5 | 57 | I |
| | 1998.02-2000.01 | 5MT | F | L/R | Estate FWD FP33/FP63 | | GCO99042 | Outer Joint | | 28 | 22 | 56 | 89.1 | 59.5 | I |
| | 1998.02-2000.01 | AT/MT | F | L/R | Estate FWD FP33/FP63 | | GCO34072 | Outer Joint | 44T | 28 | 30 | 56 | 89.5 | 57 | I |
| | 1998.02-2000.01 | MT | F | L | Estate FWD FP33/FP63 | | GDS18176 | Drive Shaft | 44T | 28 | 28 | 56 | 91.5 | 629 | |
| | 1998.02-2000.01 | | F | L/R | Estate FWD FP33/FP63 | | GCO99233 | Outer Joint | 44T | 28 | 22 | 56 | 90 | 59 | I |
| | 1998.02-2000.01 | | F | L | Estate FWD FP33/FP63 | | GCI34009 | Inner Joint | | 28 | 30 | 35 | 66.5 | 99 | |
| 1.8 (74 kw) | 1999.10-2002.04 | MT | F | L | Estate FWD FPA1 | | GDS18176 | Drive Shaft | 44T | 28 | 28 | 56 | 91.5 | 629 | |
| | 1999.10-2002.04 | MT | F | L/R | Estate FWD FPA1 | | GCO34010 | Outer Joint | | 28 | 30 | 56 | 89.5 | 57 | I |
| | 1999.10-2002.04 | MT | F | L/R | Estate FWD FPA1 | | GCO34072 | Outer Joint | 44T | 28 | 30 | 56 | 89.5 | 57 | I |
| | 1999.10-2002.04 | | F | L | Estate FWD FPA1 | | GCI34009 | Inner Joint | | 28 | 30 | 35 | 66.5 | 99 | |
| 2.0 (55 kw) | 1992.04-1997.09 | AT/MT | F | L/R | Estate FWD RFH7 | | GCO34004 | Outer Joint | | 26 | 23 | 56 | 93.5 | 56.5 | M |
| | 1992.04-1997.09 | AT/MT | F | L/R | Estate FWD RFH7 | | GCO34021 | Outer Joint | 44T | 28 | 23 | 56 | 90 | 59 | I |
| 2.0 (60 kw) | 1994.11-1996.04 | AT | F | L/R | Estate FWD RFG5 | Date to:1996.04 | GCO34081 | Outer Joint | | 26 | 30 | 56 | 93 | 56.5 | M |
| | 1994.11-1996.04 | MT | F | L | Estate FWD RFG5 | Date to:1996.04 | GCO34004 | Outer Joint | | 26 | 23 | 56 | 93.5 | 56.5 | M |
| 2.0 (66 kw) | 1988.03-1997.09 | AT | F | L/R | Estate FWD FE6E/FEAA/FEAB/FEFJ/FEY8 | | GCO18031 | Outer Joint | | 26 | 25 | 56 | 93 | 61 | M |
| | 1988.03-1997.09 | AT | F | L/R | Estate FWD FE6E/FEAA/FEAB/FEFJ/FEY8 | for vehicles with automatic transmission | GCO34074 | Outer Joint | 90T | 26 | 25 | 56 | 93 | 61 | M |
| | 1988.03-1997.09 | MT | F | L/R | Estate FWD FE6E/FEAA/FEAB/FEFJ/FEY8 | | GCO18028 | Outer Joint | | 28 | 26 | 56 | 89 | 65 | I |
| | 1988.03-1997.09 | MT | F | L/R | Estate FWD FE6E/FEAA/FEAB/FEFJ/FEY8 | | GCO18029 | Outer Joint | 44T | 28 | 26 | 56 | 89 | 65 | I |
| | 1988.03-1997.09 | MT | F | L/R | Estate FWD FE6E/FEAA/FEAB/FEFJ/FEY8 | | GCO34082 | Outer Joint | 44T | 28 | 26 | 56 | 94 | 63 | M |
| | 1988.03-1997.09 | | F | | Estate FWD FE6E/FEAA/FEAB/FEFJ/FEY8 | | GCO34011 | Outer Joint | | 26 | 25 | 56 | 95 | 61 | M |
| | 1999.09-2002.10 | 5MT | F | L | Estate FWD RF3F | | GCI34032 | Inner Joint | | 28 | 23 | 35 | 66 | 105 | |
| | 1999.09-2002.10 | AT/MT | F | R | Estate FWD RF3F | | GDS18085 | Drive Shaft | 44T | 28 | 28 | 56 | 89 | 575.5 | |
| | 1999.09-2002.10 | AT/MT | F | L/R | Estate FWD RF3F | | GCO34013 | Outer Joint | 44T | 28 | 23 | 56 | 90 | 59 | M |
| | 1999.09-2002.10 | MT | F | L/R | Estate FWD RF3F | | GCO18035 | Outer Joint | | 28 | 23 | 56 | 90 | 59 | I |
| | 1999.09-2002.10 | MT | F | L/R | Estate FWD RF3F | | GCO34021 | Outer Joint | 44T | 28 | 23 | 56 | 90 | 59 | I |
| | 1999.09-2002.10 | | F | | Estate FWD RF3F | | GCO34121 | Outer Joint | 44T | 28 | 23 | 56 | 89.1 | 59.5 | M |
| 2.0 (74 kw) | 1998.04-2002.10 | 5MT | F | L | Estate FWD RF2A | | GCI34032 | Inner Joint | | 28 | 23 | 35 | 66 | 105 | |
| | 1998.04-2002.10 | AT/MT | F | L/R | Estate FWD RF2A | Date to:2001.12 | GCO34013 | Outer Joint | 44T | 28 | 23 | 56 | 90 | 59 | M |
| | 1998.04-2002.10 | MT | F | L | Estate FWD RF2A | | GDS18176 | Drive Shaft | 44T | 28 | 28 | 56 | 91.5 | 629 | |

| | YEAR | TRANSM. | F/R | L/R | BODY STYLE & DRIVE TYPE & ENGINE | REMARKS | G-AP Ref. | PRODUCT | ABS | Technical Specifications A | B | C | H | L | P |
|---|---|---|---|---|---|---|---|---|---|---|---|---|---|---|---|
| **MAZDA** | | | | | | | | | | | | | | | |
| **626 Estate/Wagon** | | | | | | | | | | | | | | | |
| 2.0 (74 kw) | 1998.04-2002.10 | MT | F | L/R | Estate FWD RF2A | | GCO18035 | Outer Joint | | 28 | 23 | 56 | 90 | 59 | I |
| | 1998.04-2002.10 | MT | F | L/R | Estate FWD RF2A | | GCO34021 | Outer Joint | 44T | 28 | 23 | 56 | 90 | 59 | I |
| | 1998.04-2002.10 | MT | F | L/R | Estate FWD RF2A | | GCO34061 | Outer Joint | 44T | 28 | 23 | 56 | 89 | 60.5 | M |
| | 1998.04-2002.10 | MT | F | L/R | Estate FWD RF2A | | GCO34080 | Outer Joint | 44T | 28 | 23 | 56 | 90 | 59 | M |
| | 1998.04-2002.10 | | F | | Estate FWD RF2A | | GCO34121 | Outer Joint | 44T | 28 | 23 | 56 | 89.1 | 59.5 | M |
| 2.0 (81 kw) | 2000.12-2002.10 | 5MT | F | L | Estate FWD RF4F | | GCI34032 | Inner Joint | | 28 | 23 | 35 | 66 | 105 | |
| | 2000.12-2002.10 | AT/MT | F | L/R | Estate FWD RF4F | | GCO34013 | Outer Joint | 44T | 28 | 23 | 56 | 90 | 59 | M |
| | 2000.12-2002.10 | AT/MT | F | L/R | Estate FWD RF4F | | GCO34061 | Outer Joint | 44T | 28 | 23 | 56 | 89 | 60.5 | M |
| | 2000.12-2002.10 | MT | F | L | Estate FWD RF4F | | GDS18176 | Drive Shaft | 44T | 28 | 28 | 56 | 91.5 | 629 | |
| | 2000.12-2002.10 | MT | F | L/R | Estate FWD RF4F | | GCO18035 | Outer Joint | | 28 | 23 | 56 | 90 | 59 | I |
| | 2000.12-2002.10 | MT | F | L/R | Estate FWD RF4F | | GCO34021 | Outer Joint | 44T | 28 | 23 | 56 | 90 | 59 | I |
| | 2000.12-2002.10 | | F | | Estate FWD RF4F | | GCO34121 | Outer Joint | 44T | 28 | 23 | 56 | 89.1 | 59.5 | M |
| 2.0 (85 kw) | 1997.10-2002.10 | 4AT/5MT | F | L/R | Estate FWD FS2A/FSJ2/FSS9 | | GCO34010 | Outer Joint | | 28 | 30 | 56 | 89.5 | 57 | I |
| | 1997.10-2002.10 | AT | F | R | Estate FWD FS2A/FSJ2/FSS9 | | GDS34001 | Drive Shaft | | 28 | | 56 | 90 | 516.8 | |
| | 1997.10-2002.10 | AT/MT | F | L/R | Estate FWD FS2A/FSJ2/FSS9 | | GCO34013 | Outer Joint | 44T | 28 | 23 | 56 | 90 | 59 | M |
| | 1997.10-2002.10 | MT | F | L/R | Estate FWD FS2A/FSJ2/FSS9 | | GCO34072 | Outer Joint | 44T | 28 | 30 | 56 | 89.5 | 57 | I |
| | 1997.10-2002.10 | MT | F | L | Estate FWD FS2A/FSJ2/FSS9 | | GCI34009 | Inner Joint | | 28 | 30 | 35 | 66.5 | 99 | |
| | 1997.10-2002.10 | | F | | Estate FWD FS2A/FSJ2/FSS9 | | GCO34121 | Outer Joint | 44T | 28 | 23 | 56 | 89.1 | 59.5 | M |
| 2.0 (100 kw) | 1997.10-2002.10 | 4AT/5MT | F | L/R | Estate FWD FS2C/FSH9/FSJ1 | | GCO34010 | Outer Joint | | 28 | 30 | 56 | 89.5 | 57 | I |
| | 1997.10-2002.10 | AT | F | R | Estate FWD FS2C/FSH9/FSJ1 | | GDS34001 | Drive Shaft | | 28 | | 56 | 90 | 516.8 | |
| | 1997.10-2002.10 | AT/MT | F | L/R | Estate FWD FS2C/FSH9/FSJ1 | | GCO34013 | Outer Joint | 44T | 28 | 23 | 56 | 90 | 59 | M |
| | 1997.10-2002.10 | MT | F | L/R | Estate FWD FS2C/FSH9/FSJ1 | | GCO34072 | Outer Joint | 44T | 28 | 30 | 56 | 89.5 | 57 | I |
| | 1997.10-2002.10 | MT | F | L | Estate FWD FS2C/FSH9/FSJ1 | | GCI34009 | Inner Joint | | 28 | 30 | 35 | 66.5 | 99 | |
| | 1997.10-2002.10 | | F | | Estate FWD FS2C/FSH9/FSJ1 | | GCO34121 | Outer Joint | 44T | 28 | 23 | 56 | 89.1 | 59.5 | M |
| 2.0 (110 kw) | 1988.10-1997.09 | AT | F | L/R | Estate FWD FECM | | GCO18031 | Outer Joint | | 26 | 25 | 56 | 93 | 61 | M |
| | 1988.10-1997.09 | AT | F | L/R | Estate FWD FECM | | GCO34074 | Outer Joint | 90T | 26 | 25 | 56 | 93 | 61 | M |
| | 1988.10-1997.09 | AT | F | | Estate FWD FECM | | GCO34063 | Outer Joint | 44T | 28 | 32 | 56 | 90 | 59 | I |
| | 1988.10-1997.09 | MT | F | L/R | Estate FWD FECM | | GCO18028 | Outer Joint | | 28 | 26 | 56 | 89 | 65 | I |
| | 1988.10-1997.09 | MT | F | L/R | Estate FWD FECM | | GCO18029 | Outer Joint | 44T | 28 | 26 | 56 | 89 | 65 | I |
| | 1988.10-1997.09 | | F | | Estate FWD FECM | | GCO34011 | Outer Joint | | 26 | 25 | 56 | 95 | 61 | M |
| 2.2 (85 kw) | 1988.12-1997.09 | AT | F | L/R | Estate FWD F2D3/F2G2/F2M2/F2Y4 | | GCO18031 | Outer Joint | | 26 | 25 | 56 | 93 | 61 | M |
| | 1988.12-1997.09 | AT | F | L/R | Estate FWD F2D3/F2G2/F2M2/F2Y4 | for vehicles with automatic transmission | GCO34074 | Outer Joint | 90T | 26 | 25 | 56 | 93 | 61 | M |
| | 1988.12-1997.09 | MT | F | L/R | Estate FWD F2D3/F2G2/F2M2/F2Y4 | | GCO18028 | Outer Joint | | 28 | 26 | 56 | 89 | 65 | I |
| | 1988.12-1997.09 | MT | F | L/R | Estate FWD F2D3/F2G2/F2M2/F2Y4 | | GCO18029 | Outer Joint | 44T | 28 | 26 | 56 | 89 | 65 | I |
| | 1988.12-1997.09 | MT | F | L/R | Estate FWD F2D3/F2G2/F2M2/F2Y4 | | GCO34082 | Outer Joint | 44T | 28 | 26 | 56 | 94 | 63 | M |
| | 1988.12-1997.09 | | F | | Estate FWD F2D3/F2G2/F2M2/F2Y4 | | GCO34011 | Outer Joint | | 26 | 25 | 56 | 95 | 61 | M |
| | 1991.05-1997.10 | AT | F | L/R | Estate 4WD F2G6/F2L1 | | GCO18031 | Outer Joint | | 26 | 25 | 56 | 93 | 61 | M |
| | 1991.05-1997.10 | AT | F | L/R | Estate 4WD F2G6/F2L1 | | GCO34074 | Outer Joint | 90T | 26 | 25 | 56 | 93 | 61 | M |
| | 1991.05-1997.10 | MT | F | L/R | Estate 4WD F2G6/F2L1 | | GCO18028 | Outer Joint | | 28 | 26 | 56 | 89 | 65 | I |
| | 1991.05-1997.10 | MT | F | L/R | Estate 4WD F2G6/F2L1 | | GCO18029 | Outer Joint | 44T | 28 | 26 | 56 | 89 | 65 | I |
| | 1991.05-1997.10 | MT | F | L/R | Estate 4WD F2G6/F2L1 | | GCO34082 | Outer Joint | 44T | 28 | 26 | 56 | 94 | 63 | M |
| | 1991.05-1997.10 | | F | | Estate 4WD F2G6/F2L1 | | GCO34011 | Outer Joint | | 26 | 25 | 56 | 95 | 61 | M |
| **Atenza** | | | | | | | | | | | | | | | |
| 2.5 (122 kw) | 2008.01-2012.12 | | F | R | Hatchback 4WD L5-VE | | GCI34115 | Inner Joint | | 28 | 33 | 43 | | 132 | |
| | 2008.01-2012.12 | | F | R | Saloon 4WD L5-VE | | GCI34115 | Inner Joint | | 28 | 33 | 43 | | 132 | |
| 2.5 (138 kw) | 2012.12- | | F | R | Saloon FWD PY-VPR, PYY1 | | GCI34115 | Inner Joint | | 28 | 33 | 43 | | 132 | |
| **Atenza Wagon** | | | | | | | | | | | | | | | |
| 2.0 (114 kw) | 2012.12- | | F | R | Estate FWD PE-VPR, PEY7 | | GCI34115 | Inner Joint | | 28 | 33 | 43 | | 132 | |
| 2.5 (138 kw) | 2012.12- | | F | R | Estate FWD PY-VPR, PYY1 | | GCI34115 | Inner Joint | | 28 | 33 | 43 | | 132 | |
| **B-Series** | | | | | | | | | | | | | | | |
| 2.5 (80 kw) | 1996.05-2001.10 | 5MT | F | L | Platform/Chassis 4WD WL84 | | GDS34020 | Drive Shaft | | 26 | 26 | 65 | 143.5 | 536 | |
| | 1996.05-2001.10 | 5MT | F | R | Platform/Chassis 4WD WL84 | | GDS34019 | Drive Shaft | | 26 | 26 | 65 | 143.5 | 606 | |
| | 1996.05-2001.10 | 5MT | F | L/R | Platform/Chassis 4WD WL84 | | GCO34056 | Outer Joint | | 26 | 25 | 65 | 143.5 | 60.5 | M |
| | 1996.05-2001.10 | 5MT | F | R | Platform/Chassis 4WD WL84 | | GCI34019 | Inner Joint | | 26 | 25 | 35 | 82.5 | 95.5 | |
| 2.5 (86 kw) | 1999.02-2005.03 | MT | F | R | Platform/Chassis 4WD WLF5 | | GDS82832 | Intermediate Shaft | | 28 | 28 | | | 356 | |
| **B2200** | | | | | | | | | | | | | | | |
| 2.2 (60 kw) | 1999.02-1999.10 | 5MT | F | L | Pickup 4WD F5A2 | | GDS34020 | Drive Shaft | | 26 | 26 | 65 | 143.5 | 536 | |
| | 1999.02-1999.10 | 5MT | F | R | Pickup 4WD F5A2 | | GDS34019 | Drive Shaft | | 26 | 26 | 65 | 143.5 | 606 | |
| | 1999.02-1999.10 | 5MT | F | L/R | Pickup 4WD F5A2 | | GCO34056 | Outer Joint | | 26 | 25 | 65 | 143.5 | 60.5 | M |
| | 1999.02-1999.10 | 5MT | F | R | Pickup 4WD F5A2 | | GCI34019 | Inner Joint | | 26 | 25 | 35 | 82.5 | 95.5 | |
| | 1999.02-1999.10 | MT | F | R | Pickup 4WD F5A2 | | GDS82832 | Intermediate Shaft | | 28 | 28 | | | 356 | |
| 2.2 (68 kw) | 1999.06-2002.08 | 5MT | F | L | Pickup 4WD F2R4 | | GDS34020 | Drive Shaft | | 26 | 26 | 65 | 143.5 | 536 | |
| | 1999.06-2002.08 | 5MT | F | R | Pickup 4WD F2R4 | | GDS34019 | Drive Shaft | | 26 | 26 | 65 | 143.5 | 606 | |
| | 1999.06-2002.08 | 5MT | F | R | Pickup 4WD F2R4 | | GCO34056 | Outer Joint | | 26 | 25 | 65 | 143.5 | 60.5 | M |
| | 1999.06-2002.08 | 5MT | F | R | Pickup 4WD F2R4 | | GCI34019 | Inner Joint | | 26 | 25 | 35 | 82.5 | 95.5 | |

| | YEAR | TRANSM. | F/R | L/R | BODY STYLE & DRIVE TYPE & ENGINE | REMARKS | G-AP Ref. | PRODUCT | ABS | Technical Specifications A | B | C | H | L | P |
|---|---|---|---|---|---|---|---|---|---|---|---|---|---|---|---|
| **MAZDA** | | | | | | | | | | | | | | | |
| **B2200** | | | | | | | | | | | | | | | |
| 2.2 (68 kw) | 1999.06-2002.08 | MT | F | R | Pickup 4WD F2R4 | | GDS82832 | Intermediate Shaft | | 28 | 28 | | | 356 | |
| **B2500** | | | | | | | | | | | | | | | |
| 2.5 (57 kw) | 1998.09-2006.07 | 5MT | F | L | Pickup 4WD WL81 | Date from:2003.10 | GDS27063 | Drive Shaft | 44W | 26 | 26 | 61 | 103.5 | 509 | |
| | 1998.09-2006.07 | 5MT | F | R | Pickup 4WD WL81 | Date from:2003.10 | GDS27062 | Drive Shaft | 44W | 26 | 26 | 61 | 103.5 | 579.5 | |
| | 1998.09-2006.07 | 5MT | F | L/R | Pickup 4WD WL81 | Date from:2002.08 | GCO27017 | Outer Joint | | 26 | 25 | 61 | 103.5 | 75.5 | M |
| | 1998.09-2006.07 | 5MT | F | L/R | Pickup 4WD WL81 | Date from:2002.08 | GCO34067 | Outer Joint | 44W | 26 | 25 | 61 | 103.5 | 75.5 | M |
| | 1998.09-2006.07 | MT | F | L | Pickup 4WD WL81 | Date from:2002.08 | GDS27046 | Drive Shaft | | 26 | 26 | 61 | 103.5 | 513 | |
| | 1998.09-2006.07 | MT | F | L | Pickup 4WD WL81 | Date to:2000.06 | GDS34020 | Drive Shaft | | 26 | 26 | 65 | 143.5 | 536 | |
| | 1998.09-2006.07 | MT | F | R | Pickup 4WD WL81 | Date to:2000.06 | GDS34019 | Drive Shaft | | 26 | 26 | 65 | 143.5 | 606 | |
| | 1998.09-2006.07 | MT | F | R | Pickup 4WD WL81 | Date from:2002.08 | GDS34031 | Drive Shaft | | 26 | 26 | 61 | 103.5 | 579.5 | |
| | 1998.09-2006.07 | MT | F | L/R | Pickup 4WD WL81 | Date to:2000.06 | GCO34056 | Outer Joint | | 26 | 25 | 65 | 143.5 | 60.5 | M |
| | 1998.09-2006.07 | MT | F | R | Pickup 4WD WL81 | | GCI34019 | Inner Joint | | 26 | 25 | 35 | 82.5 | 95.5 | |
| | 1998.09-2006.07 | MT | F | R | Pickup 4WD WL81 | | GDS82832 | Intermediate Shaft | | 28 | 28 | | | 356 | |
| 2.5 (61 kw) | 1999.11-2001.12 | MT | F | L | Pickup 4WD WLE7 | | GDS39001 | Drive Shaft | | 26 | 26 | 65 | 143.5 | 527 | |
| | 1999.11-2001.12 | MT | F | R | Pickup 4WD WLE7 | | GDS34012 | Drive Shaft | | 26 | 26 | 65 | 143.5 | 606 | |
| | 1999.11-2001.12 | MT | F | L | Pickup 4WD WLE7 | | GCI34011 | Inner Joint | | 26 | 25 | 40 | | 120 | |
| | 1999.11-2001.12 | MT | F | R | Pickup 4WD WLE7 | | GDS82832 | Intermediate Shaft | | 28 | 28 | | | 356 | |
| | 1999.11-2001.12 | | F | L | Pickup 4WD WLE7 | | GDS27063 | Drive Shaft | 44W | 26 | 26 | 61 | 103.5 | 509 | |
| | 1999.11-2001.12 | | F | R | Pickup 4WD WLE7 | | GDS27062 | Drive Shaft | 44W | 26 | 26 | 61 | 103.5 | 579.5 | |
| 2.5 (62 kw) | 2002.12-2006.07 | 5MT | F | L | Pickup 4WD WLE7 | Date to:2003.10 | GDS27046 | Drive Shaft | | 26 | 26 | 61 | 103.5 | 513 | |
| | 2002.12-2006.07 | 5MT | F | R | Pickup 4WD WLE7 | Date to:2003.10 | GDS34031 | Drive Shaft | | 26 | 26 | 61 | 103.5 | 579.5 | |
| | 2002.12-2006.07 | 5MT | F | L/R | Pickup 4WD WLE7 | | GCO27017 | Outer Joint | | 26 | 25 | 61 | 103.5 | 75.5 | M |
| | 2002.12-2006.07 | 5MT | F | L/R | Pickup 4WD WLE7 | | GCO34067 | Outer Joint | 44W | 26 | 25 | 61 | 103.5 | 75.5 | M |
| | 2002.12-2006.07 | 5MT | F | R | Pickup 4WD WLE7 | Date from:2003.02 | GCI34019 | Inner Joint | | 26 | 25 | 35 | 82.5 | 95.5 | |
| | 2002.12-2006.07 | AT/MT | F | L | Pickup 4WD WLE7 | | GDS27063 | Drive Shaft | 44W | 26 | 26 | 61 | 103.5 | 509 | |
| | 2002.12-2006.07 | AT/MT | F | R | Pickup 4WD WLE7 | | GDS27062 | Drive Shaft | 44W | 26 | 26 | 61 | 103.5 | 579.5 | |
| 2.5 (63 kw) | 1996.02-1999.06 | MT | F | L/R | Pickup 4WD WLE7 | Chassis no. to:UN***2-140471 | GCO34056 | Outer Joint | | 26 | 25 | 65 | 143.5 | 60.5 | M |
| | 1996.02-1999.06 | MT | F | R | Pickup 4WD WLE7 | | GDS82832 | Intermediate Shaft | | 28 | 28 | | | 356 | |
| 2.5 (65 kw) | 1999.11-2002.07 | MT | F | R | Pickup 4WD WLE9 | | GDS82832 | Intermediate Shaft | | 28 | 28 | | | 356 | |
| 2.5 (80 kw) | 1999.06-2006.07 | 5MT | F | L | Pickup 4WD R581/MD25TI/WL84/WLF1/WLF2 | Date from:2002.08 | GDS27046 | Drive Shaft | | 26 | 26 | 61 | 103.5 | 513 | |
| | 1999.06-2006.07 | 5MT | F | L | Pickup 4WD R581/MD25TI/WL84/WLF1/WLF2 | Date from:2003.11 | GDS27063 | Drive Shaft | 44W | 26 | 26 | 61 | 103.5 | 509 | |
| | 1999.06-2006.07 | 5MT | F | L | Pickup 4WD R581/MD25TI/WL84/WLF1/WLF2 | Date to:2000.07 | GDS34020 | Drive Shaft | | 26 | 26 | 65 | 143.5 | 536 | |
| | 1999.06-2006.07 | 5MT | F | R | Pickup 4WD R581/MD25TI/WL84/WLF1/WLF2 | Date from:2003.11 | GDS27062 | Drive Shaft | 44W | 26 | 26 | 61 | 103.5 | 579.5 | |
| | 1999.06-2006.07 | 5MT | F | R | Pickup 4WD R581/MD25TI/WL84/WLF1/WLF2 | Date to:2000.07 | GDS34019 | Drive Shaft | | 26 | 26 | 65 | 143.5 | 606 | |
| | 1999.06-2006.07 | 5MT | F | R | Pickup 4WD R581/MD25TI/WL84/WLF1/WLF2 | Date from:2002.08 | GDS34031 | Drive Shaft | | 26 | 26 | 61 | 103.5 | 579.5 | |
| | 1999.06-2006.07 | 5MT | F | L/R | Pickup 4WD R581/MD25TI/WL84/WLF1/WLF2 | Date from:2002.08 | GCO27017 | Outer Joint | | 26 | 25 | 61 | 103.5 | 75.5 | M |
| | 1999.06-2006.07 | 5MT | F | L/R | Pickup 4WD R581/MD25TI/WL84/WLF1/WLF2 | Date to:2000.07 | GCO34056 | Outer Joint | | 26 | 25 | 65 | 143.5 | 60.5 | M |
| | 1999.06-2006.07 | 5MT | F | L/R | Pickup 4WD R581/MD25TI/WL84/WLF1/WLF2 | Date from:2002.08 | GCO34067 | Outer Joint | 44W | 26 | 25 | 61 | 103.5 | 75.5 | M |
| | 1999.06-2006.07 | 5MT | F | R | Pickup 4WD R581/MD25TI/WL84/WLF1/WLF2 | | GCI34019 | Inner Joint | | 26 | 25 | 35 | 82.5 | 95.5 | |
| | 1999.06-2006.07 | MT | F | R | Pickup 4WD R581/MD25TI/WL84/WLF1/WLF2 | | GDS82832 | Intermediate Shaft | | 28 | 28 | | | 356 | |
| **B2600** | | | | | | | | | | | | | | | |
| 2.6 (90 kw) | 1988.09-1999.06 | 5MT | F | L | Pickup 4WD G6T1/G6Y3 | Date from:1996.03 | GDS34020 | Drive Shaft | | 26 | 26 | 65 | 143.5 | 536 | |
| | 1988.09-1999.06 | 5MT | F | L | Pickup 4WD G6T1/G6Y3 | Date to:1996.02 | GDS34067 | Drive Shaft | | 26 | 26 | 65 | 143.5 | 541 | |
| | 1988.09-1999.06 | 5MT | F | R | Pickup 4WD G6T1/G6Y3 | Date to:1996.02 | GDS34012 | Drive Shaft | | 26 | 26 | 65 | 143.5 | 606 | |
| | 1988.09-1999.06 | 5MT | F | R | Pickup 4WD G6T1/G6Y3 | Date from:1996.03 | GDS34019 | Drive Shaft | | 26 | 26 | 65 | 143.5 | 606 | |
| | 1988.09-1999.06 | 5MT | F | L/R | Pickup 4WD G6T1/G6Y3 | Date from:1996.03 | GCO34056 | Outer Joint | | 26 | 25 | 65 | 143.5 | 60.5 | M |
| | 1988.09-1999.06 | 5MT | F | R | Pickup 4WD G6T1/G6Y3 | Date from:1996.03 | GCI34019 | Inner Joint | | 26 | 25 | 35 | 82.5 | 95.5 | |
| | 1999.02-2002.07 | 5MT | F | L | Pickup 4WD G6T1/R585 | | GDS34020 | Drive Shaft | | 26 | 26 | 65 | 143.5 | 536 | |
| | 1999.02-2002.07 | 5MT | F | R | Pickup 4WD G6T1/R585 | | GDS34019 | Drive Shaft | | 26 | 26 | 65 | 143.5 | 606 | |
| | 1999.02-2002.07 | 5MT | F | R | Pickup 4WD G6T1/R585 | | GCI34019 | Inner Joint | | 26 | 25 | 35 | 82.5 | 95.5 | |
| | 1999.02-2002.07 | MT | F | L/R | Pickup 4WD G6T1/R585 | Date to:2002.07;Chassis no. to:UN***2-140471 | GCO34056 | Outer Joint | | 26 | 25 | 65 | 143.5 | 60.5 | M |
| | 1999.02-2002.07 | MT | F | R | Pickup 4WD G6T1/R585 | | GDS82832 | Intermediate Shaft | | 28 | 28 | | | 356 | |
| **Bongo** | | | | | | | | | | | | | | | |
| 2.2 (47 kw) | 1991.03-2003.05 | | F | L/R | Van 4WD R203, R207 | | GCO34017 | Outer Joint | | 26 | 23 | 65 | 148.5 | 57 | M |
| **Bongo Friendee** | | | | | | | | | | | | | | | |
| 2.5 (92 kw) | 1999.09-2001.10 | AT/MT | F | | Bus 4WD WL-T | | GCO99046 | Outer Joint | | 26 | 23 | 56 | 101 | 59.5 | I |
| **BT-50** | | | | | | | | | | | | | | | |
| 2.5 (105 kw) | 2006.12-2015.12 | 5MT | F | L | Pickup 4WD WLAA | For Vehicles With Abs | GDS18210 | Drive Shaft | 44W | 28 | 28 | 61 | 104.5 | 492 | |
| | 2006.12-2015.12 | 5MT | F | R | Pickup 4WD WLAA | For Vehicles With Abs | GDS18211 | Drive Shaft | 44W | 28 | 30 | 61 | 104.5 | 577 | |
| | 2006.12-2015.12 | AT/MT | F | L/R | Pickup 4WD WLAA | | GCO18206 | Outer Joint | 44W | 28 | 36 | 61 | 104.5 | 78.5 | I |
| | 2006.12-2015.12 | MT | F | L | Pickup 4WD WLAA | | GCI18076 | Inner Joint | | 28 | 36 | 42 | | 112 | |
| | 2006.12-2015.12 | MT | F | R | Pickup 4WD WLAA | | GDS82832 | Intermediate Shaft | | 28 | 28 | | | 356 | |
| 3.0 (115 kw) | 2006.10-2015.12 | 5AT/5MT | F | L | Pickup 4WD WEAT | For vehicles with ABS | GDS18210 | Drive Shaft | 44W | 28 | 28 | 61 | 104.5 | 492 | |
| | 2006.10-2015.12 | 5AT/5MT | F | R | Pickup 4WD WEAT | For vehicles with ABS | GDS18211 | Drive Shaft | 44W | 28 | 30 | 61 | 104.5 | 577 | |
| | 2006.10-2015.12 | 5AT/5MT | F | L | Pickup 4WD WEAT | | GCI18076 | Inner Joint | | 28 | 36 | 42 | | 112 | |

| | YEAR | TRANSM. | F/R | L/R | BODY STYLE & DRIVE TYPE & ENGINE | REMARKS | G-AP Ref. | PRODUCT | ABS | Technical Specifications A | B | C | H | L | P |
|---|---|---|---|---|---|---|---|---|---|---|---|---|---|---|---|
| **MAZDA** | | | | | | | | | | | | | | | |
| **BT-50** | | | | | | | | | | | | | | | |
| 3.0 (115 kw) | 2006.10-2015.12 | AT/MT | F | L/R | Pickup 4WD WEAT | | GCO18206 | Outer Joint | 44W | 28 | 36 | 61 | 104.5 | 78.5 | I |
| | 2006.12- | 5AT/5MT | F | L | Platform/Chassis 4WD WEAT | For vehicles with ABS | GDS18210 | Drive Shaft | 44W | 28 | 28 | 61 | 104.5 | 492 | |
| | 2006.12- | 5AT/5MT | F | R | Platform/Chassis 4WD WEAT | For vehicles with ABS | GDS18211 | Drive Shaft | 44W | 28 | 30 | 61 | 104.5 | 577 | |
| | 2006.12- | | F | L | Platform/Chassis 4WD WEAT | | GCI18076 | Inner Joint | | 28 | 36 | 42 | | 112 | |
| 3.2 (147 kw) | 2011.11- | 6AT/6MT | F | L | Pickup 4WD P5-AT | | GDS34221 | Drive Shaft | | 28 | 29 | 61 | 104 | 608 | |
| | 2011.11- | 6AT/6MT | F | R | Pickup 4WD P5-AT | | GDS34220 | Drive Shaft | | 28 | 29 | 61 | 104 | 566 | |
| | 2011.11- | 6AT/6MT | F | L/R | Pickup 4WD P5-AT | | GCO34165 | Outer Joint | | 28 | 26 | 61 | 104 | 70.5 | I |
| | 2011.11- | 6AT/6MT | F | L | Pickup 4WD P5-AT | | GCI34116 | Inner Joint | | 29 | 27 | 35.5 | 97.5 | 95 | |
| | 2011.11- | 6AT/6MT | F | R | Pickup 4WD P5-AT | | GCI34117 | Inner Joint | | 29 | 27 | 56 | | 149 | |
| **Capella** | | | | | | | | | | | | | | | |
| 1.8 (66 kw) | 1997.05-1999.12 | AT | F | L/R | Saloon FWD FPY3 | for vehicles with automatic transmission | GCO34013 | Outer Joint | 44T | 28 | 23 | 56 | 90 | 59 | M |
| 1.8 (74 kw) | 1999.12-2002.10 | AT | F | L/R | Saloon FWD FP9A | for vehicles with automatic transmission | GCO34013 | Outer Joint | 44T | 28 | 23 | 56 | 90 | 59 | M |
| **CX-3** | | | | | | | | | | | | | | | |
| 1.5 (77 kw) | 2015.02-2018.01 | 6AT | F | R | SUV 4WD S5Y5;S5Y2;S5Y7;S5Y9;S5-DPTS;S5-DPTR | | GDS84474 | Drive Shaft | | 28 | 31 | 59 | 87 | 984 | |
| | 2015.02-2018.01 | AT | F | L | SUV 4WD S5Y5;S5Y2;S5Y7;S5Y9;S5-DPTS;S5-DPTR | | GDS83702 | Drive Shaft | | 28 | 31 | 59 | 87 | 636 | |
| | 2015.02-2018.01 | AT | F | L | SUV 4WD S5Y5;S5Y2;S5Y7;S5Y9;S5-DPTS;S5-DPTR | | GCI83436 | Inner Joint | | 31 | 23 | 40 | 77 | 114 | |
| | 2015.02-2018.01 | AT/MT | F | L/R | SUV 4WD S5Y5;S5Y2;S5Y7;S5Y9;S5-DPTS;S5-DPTR | | GCO82818 | Outer Joint | | 28 | 23 | 59 | 87 | 63 | M |
| | 2015.02-2018.01 | AT/MT | F | R | SUV 4WD S5Y5;S5Y2;S5Y7;S5Y9;S5-DPTS;S5-DPTR | | GCI82778 | Inner Joint | | 31 | 23 | 37 | 415 | 97 | |
| | 2015.02-2018.01 | AT/MT | R | R | SUV 4WD S5Y5;S5Y2;S5Y7;S5Y9;S5-DPTS;S5-DPTR | | GDS56116 | Drive Shaft | 48T | 26 | 22 | 51 | 87 | 824 | |
| | 2015.02-2018.01 | MT/AT | R | L/R | SUV 4WD S5Y5;S5Y2;S5Y7;S5Y9;S5-DPTS;S5-DPTR | | GCO83160 | Outer Joint | 48T | 26 | 23 | 51 | 87 | 66 | I |
| | 2015.02-2018.01 | MT/AT | R | L/R | SUV 4WD S5Y5;S5Y2;S5Y7;S5Y9;S5-DPTS;S5-DPTR | | GCI83092 | Inner Joint | | 22 | 17 | 30 | 65.5 | 106 | |
| | 2015.02-2018.01 | MT | F | L/R | SUV FWD S5Y5;S5Y2;S5Y7;S5Y9;S5-DPTS;S5-DPTR | | GCO82818 | Outer Joint | | 28 | 23 | 59 | 87 | 63 | M |
| 1.8 (85 kw) | 2018.02- | 6AT | F | L | SUV 4WD S8Y1;S8-DPTS;S8-DPTR | | GDS83702 | Drive Shaft | | 28 | 31 | 59 | 87 | 636 | |
| | 2018.02- | 6AT | F | R | SUV 4WD S8Y1;S8-DPTS;S8-DPTR | | GDS84474 | Drive Shaft | | 28 | 31 | 59 | 87 | 984 | |
| | 2018.02- | 6AT | F | L | SUV 4WD S8Y1;S8-DPTS;S8-DPTR | | GCI83436 | Inner Joint | | 31 | 23 | 40 | 77 | 114 | |
| | 2018.02- | 6AT | F | R | SUV 4WD S8Y1;S8-DPTS;S8-DPTR | | GCI82778 | Inner Joint | | 31 | 23 | 37 | 415 | 97 | |
| | 2018.02- | 6AT/6MT | F | L/R | SUV 4WD S8Y1;S8-DPTS;S8-DPTR | | GCO82818 | Outer Joint | | 28 | 23 | 59 | 87 | 63 | M |
| | 2018.02- | AT/MT | R | R | SUV 4WD S8Y1;S8-DPTS;S8-DPTR | | GDS56116 | Drive Shaft | 48T | 26 | 22 | 51 | 87 | 824 | |
| | 2018.02- | MT/AT | R | L/R | SUV 4WD S8Y1;S8-DPTS;S8-DPTR | | GCO83160 | Outer Joint | 48T | 26 | 23 | 51 | 87 | 66 | I |
| | 2018.02- | MT/AT | R | L/R | SUV 4WD S8Y1;S8-DPTS;S8-DPTR | | GCI83092 | Inner Joint | | 22 | 17 | 30 | 65.5 | 106 | |
| | 2018.02- | 6AT | F | L | SUV FWD S8Y1;S8-DPTS;S8-DPTR | | GDS83702 | Drive Shaft | | 28 | 31 | 59 | 87 | 636 | |
| | 2018.02- | 6AT | F | R | SUV FWD S8Y1;S8-DPTS;S8-DPTR | | GDS83703 | Drive Shaft | | 28 | 31 | 59 | 87 | 984 | |
| | 2018.02- | 6AT | F | L | SUV FWD S8Y1;S8-DPTS;S8-DPTR | | GCI83436 | Inner Joint | | 31 | 23 | 40 | 77 | 114 | |
| | 2018.02- | 6AT/6MT | F | L/R | SUV FWD S8Y1;S8-DPTS;S8-DPTR | | GCO82818 | Outer Joint | | 28 | 23 | 59 | 87 | 63 | M |
| 2.0 (88 kw) | 2015.05- | 6AT | F | R | SUV FWD PEXB;PEX3 | For left-hand drive vehicles | GCI82168 | Inner Joint | | 31 | 22 | 40 | 415 | 107 | |
| | 2015.05- | AT | F | L | SUV FWD PEXB;PEX3 | | GDS83197 | Drive Shaft | | 28 | 31 | 59 | 87 | 622 | |
| | 2015.05- | AT | F | R | SUV FWD PEXB;PEX3 | | GDS83196 | Drive Shaft | | 28 | 31 | 59 | 87 | 998 | |
| | 2015.05- | AT | F | L/R | SUV FWD PEXB;PEX3 | | GCO82093 | Outer Joint | | 28 | 22 | 59 | 87 | 59 | M |
| | 2015.05- | AT | F | L | SUV FWD PEXB;PEX3 | | GCI81623 | Inner Joint | | 31 | 22 | 40 | 77 | 112.5 | |
| | 2015.05- | MT | F | L | SUV FWD PEXB;PEX3 | | GDS56840 | Drive Shaft | | 28 | 28 | 59 | 87 | 622 | |
| | 2015.05- | MT | F | R | SUV FWD PEXB;PEX3 | | GDS56841 | Drive Shaft | | 28 | 28 | 59 | 87 | 995 | |
| | 2015.05- | MT | F | L/R | SUV FWD PEXB;PEX3 | | GCO82818 | Outer Joint | | 28 | 23 | 59 | 87 | 63 | M |
| | 2015.05- | MT | F | L | SUV FWD PEXB;PEX3 | | GCI83519 | Inner Joint | | 28 | 23 | 40 | 67.5 | 109 | |
| | 2015.05- | MT | F | R | SUV FWD PEXB;PEX3 | | GCI83520 | Inner Joint | | 28 | 23 | 40 | 415 | 107.5 | |
| 2.0 (89 kw) | 2018.02- | 6AT | F | L | SUV FWD PEXB;PEXT | Vehicle Production Country:Republic of Korea;Vehicle Production Country:Thailand;Date to:2018.02 | GDS83197 | Drive Shaft | | 28 | 31 | 59 | 87 | 622 | |
| | 2018.02- | 6AT | F | R | SUV FWD PEXB;PEXT | | GDS83196 | Drive Shaft | | 28 | 31 | 59 | 87 | 998 | |
| | 2018.02- | 6AT | F | L | SUV FWD PEXB;PEXT | | GCI81623 | Inner Joint | | 31 | 22 | 40 | 77 | 112.5 | |
| | 2018.02- | 6AT | F | R | SUV FWD PEXB;PEXT | Date to:2018.03;Vehicle Production Country:Thailand;For other date;Vehicle Production Country:Japan | GCI82168 | Inner Joint | | 31 | 22 | 40 | 415 | 107 | |
| | 2018.02- | 6MT | F | L | SUV FWD PEXB;PEXT | | GDS56840 | Drive Shaft | | 28 | 28 | 59 | 87 | 622 | |
| | 2018.02- | 6MT | F | R | SUV FWD PEXB;PEXT | | GDS56841 | Drive Shaft | | 28 | 28 | 59 | 87 | 995 | |
| | 2018.02- | 6MT | F | L/R | SUV FWD PEXB;PEXT | | GCO82818 | Outer Joint | | 28 | 23 | 59 | 87 | 63 | M |
| | 2018.02- | 6MT | F | L | SUV FWD PEXB;PEXT | | GCI83519 | Inner Joint | | 28 | 23 | 40 | 67.5 | 109 | |
| | 2018.02- | 6MT | F | R | SUV FWD PEXB;PEXT | | GCI83520 | Inner Joint | | 28 | 23 | 40 | 415 | 107.5 | |
| 2.0 (109 kw) | 2015.07- | 6AT | F | L | SUV 4WD PEX0 | | GDS83197 | Drive Shaft | | 28 | 31 | 59 | 87 | 622 | |
| | 2015.07- | 6AT | F | L | SUV 4WD PEX0 | | GCI81623 | Inner Joint | | 31 | 22 | 40 | 77 | 112.5 | |
| | 2015.07- | 6MT | F | R | SUV 4WD PEX0 | | GCO82818 | Outer Joint | | 28 | 23 | 59 | 87 | 63 | M |
| | 2015.07- | AT | F | R | SUV 4WD PEX0 | | GDS83801 | Drive Shaft | | 28 | 31 | 59 | 87 | 998 | |
| | 2015.07- | AT | F | R | SUV 4WD PEX0 | | GCO82093 | Outer Joint | | 28 | 22 | 59 | 87 | 59 | M |
| | 2015.07- | AT | F | R | SUV 4WD PEX0 | | GCI82654 | Inner Joint | | 31 | 22 | 37 | 415 | 107 | |
| | 2015.07- | 6AT/6MT | R | R | SUV 4WD PEX0 | | GDS56116 | Drive Shaft | 48T | 26 | 22 | 51 | 87 | 824 | |
| | 2015.07- | 6AT/6MT | R | L/R | SUV 4WD PEX0 | | GCI83092 | Inner Joint | | 22 | 17 | 30 | 65.5 | 106 | |
| 2.0 (110 kw) | 2015.05- | 6AT | F | L | SUV 4WD PE-VPS;PEXB;PEX3;PEXT | | GDS83197 | Drive Shaft | | 28 | 31 | 59 | 87 | 622 | |
| | 2015.05- | 6AT | F | L | SUV 4WD PE-VPS;PEXB;PEX3;PEXT | | GCI81623 | Inner Joint | | 31 | 22 | 40 | 77 | 112.5 | |
| | 2015.05- | 6MT | F | R | SUV 4WD PE-VPS;PEXB;PEX3;PEXT | | GCO82818 | Outer Joint | | 28 | 23 | 59 | 87 | 63 | M |
| | 2015.05- | AT | F | R | SUV 4WD PE-VPS;PEXB;PEX3;PEXT | | GDS83801 | Drive Shaft | | 28 | 31 | 59 | 87 | 998 | |

| | YEAR | TRANSM. | F/R | L/R | BODY STYLE & DRIVE TYPE & ENGINE | REMARKS | G-AP Ref. | PRODUCT | ABS | Technical Specifications A | B | C | H | L | P |
|---|---|---|---|---|---|---|---|---|---|---|---|---|---|---|---|
| **MAZDA** | | | | | | | | | | | | | | | |
| **CX-3** | | | | | | | | | | | | | | | |
| 2.0 (110 kw) | 2015.05- | AT | F | R | SUV 4WD PE-VPS;PEXB;PEX3;PEXT | | GCO82093 | Outer Joint | | 28 | 22 | 59 | 87 | 59 | M |
| | 2015.05- | AT | F | R | SUV 4WD PE-VPS;PEXB;PEX3;PEXT | | GCI82654 | Inner Joint | | 31 | 22 | 37 | 415 | 107 | |
| | 2015.05- | MT | R | R | SUV 4WD PE-VPS;PEXB;PEX3;PEXT | | GDS56116 | Drive Shaft | 48T | 26 | 22 | 51 | 87 | 824 | |
| | 2015.05- | MT | R | L/R | SUV 4WD PE-VPS;PEXB;PEX3;PEXT | | GCO83160 | Outer Joint | 48T | 26 | 23 | 51 | 87 | 66 | I |
| | 2015.05- | MT | R | L/R | SUV 4WD PE-VPS;PEXB;PEX3;PEXT | | GCI83092 | Inner Joint | | 22 | 17 | 30 | 65.5 | 106 | |
| | 2018.05- | 6AT | F | L | SUV FWD PE-VPS;PEXB | Driver Pos:For right-hand drive vehicles | GCI81623 | Inner Joint | | 31 | 22 | 40 | 77 | 112.5 | |
| | 2018.05- | 6AT | F | R | SUV FWD PE-VPS;PEXB | For left-hand drive vehicles | GCI82168 | Inner Joint | | 31 | 22 | 40 | 415 | 107 | |
| | 2018.05- | 6MT | F | L | SUV FWD PE-VPS;PEXB | | GDS56840 | Drive Shaft | | 28 | 28 | 59 | 87 | 622 | |
| | 2018.05- | 6MT | F | R | SUV FWD PE-VPS;PEXB | | GDS56841 | Drive Shaft | | 28 | 28 | 59 | 87 | 995 | |
| | 2018.05- | 6MT | F | L/R | SUV FWD PE-VPS;PEXB | | GCO82818 | Outer Joint | | 28 | 23 | 59 | 87 | 63 | M |
| | 2018.05- | 6MT | F | L | SUV FWD PE-VPS;PEXB | | GCI83519 | Inner Joint | | 28 | 23 | 40 | 67.5 | 109 | |
| | 2018.05- | 6MT | F | R | SUV FWD PE-VPS;PEXB | | GCI83520 | Inner Joint | | 28 | 23 | 40 | 415 | 107.5 | |
| | 2018.05- | AT | F | L | SUV FWD PE-VPS;PEXB | | GDS83197 | Drive Shaft | | 28 | 31 | 59 | 87 | 622 | |
| | 2018.05- | AT | F | R | SUV FWD PE-VPS;PEXB | | GDS83196 | Drive Shaft | | 28 | 31 | 59 | 87 | 998 | |
| | 2018.05- | AT | F | L/R | SUV FWD PE-VPS;PEXB | | GCO82093 | Outer Joint | | 28 | 22 | 59 | 87 | 59 | M |
| 2.0 (115 kw) | 2016.01- | 6AT | F | L | SUV FWD PEX3 | | GDS83197 | Drive Shaft | | 28 | 31 | 59 | 87 | 622 | |
| | 2016.01- | 6AT | F | R | SUV FWD PEX3 | | GDS83196 | Drive Shaft | | 28 | 31 | 59 | 87 | 998 | |
| | 2016.01- | 6AT | F | L/R | SUV FWD PEX3 | | GCO82093 | Outer Joint | | 28 | 22 | 59 | 87 | 59 | M |
| | 2016.01- | 6AT | F | L | SUV FWD PEX3 | | GCI81623 | Inner Joint | | 31 | 22 | 40 | 77 | 112.5 | |
| | 2016.01- | 6AT | F | R | SUV FWD PEX3 | | GCI82168 | Inner Joint | | 31 | 22 | 40 | 415 | 107 | |
| **CX-30** | | | | | | | | | | | | | | | |
| 1.8 (85 kw) | 2019.07-2020.09 | 6AT/6MT | R | L | SUV 4WD S8Y1 | | GDS56237 | Drive Shaft | 48T | 26 | 22 | 51 | 87 | 806 | |
| | 2019.07-2020.09 | 6AT/6MT | R | R | SUV 4WD S8Y1 | | GDS56236 | Drive Shaft | 48T | 26 | 22 | 51 | 87 | 846 | |
| | 2019.07-2020.09 | 6AT/6MT | R | L/R | SUV 4WD S8Y1 | | GCO83215 | Outer Joint | 48T | 26 | 23 | 51 | 87 | 56.5 | I |
| | 2019.07-2020.09 | 6AT/6MT | R | L/R | SUV 4WD S8Y1 | | GCI83207 | Inner Joint | | 22 | 17 | 30 | 62.5 | 105 | |
| 2.0 (90 kw) | 2019.07- | 6AT | F | L | SUV 4WD PEXN | | GDS84513 | Drive Shaft | | 28 | 31 | 59 | 86.5 | 631 | |
| | 2019.07- | 6AT | F | L/R | SUV 4WD PEXN | | GCO82793 | Outer Joint | | 28 | 32 | 59 | 86.5 | 58.5 | I |
| | 2019.07- | 6AT | F | L | SUV 4WD PEXN | | GCI82838 | Inner Joint | | 31 | 32 | 40 | 77 | 110.5 | |
| | 2019.07- | 6MT | F | L | SUV 4WD PEXN | For vehicles without cylinder shutdown | GDS84567 | Drive Shaft | | 28 | 31 | 59 | 87 | 640 | |
| | 2019.07- | 6MT | F | L/R | SUV 4WD PEXN | For vehicles without cylinder shutdown | GCO82801 | Outer Joint | | 28 | 33 | 59 | 87 | 60.5 | I |
| | 2019.07- | 6MT | F | L | SUV 4WD PEXN | For vehicles without cylinder shutdown | GCI82864 | Inner Joint | | 31 | 33 | 40 | 67 | 109.5 | |
| | 2019.07- | 6AT/6MT | R | L | SUV 4WD PEXN | | GDS56237 | Drive Shaft | 48T | 26 | 22 | 51 | 87 | 806 | |
| | 2019.07- | 6AT/6MT | R | R | SUV 4WD PEXN | | GDS56236 | Drive Shaft | 48T | 26 | 22 | 51 | 87 | 846 | |
| | 2019.07- | 6AT/6MT | R | L/R | SUV 4WD PEXN | | GCO83215 | Outer Joint | 48T | 26 | 23 | 51 | 87 | 56.5 | I |
| | 2019.07- | 6AT/6MT | R | L/R | SUV 4WD PEXN | | GCI83207 | Inner Joint | | 22 | 17 | 30 | 62.5 | 105 | |
| | 2019.07- | 6AT | F | L | SUV FWD PEXN | | GDS84513 | Drive Shaft | | 28 | 31 | 59 | 86.5 | 631 | |
| | 2019.07- | 6AT | F | R | SUV FWD PEXN | Country Version:Russia;For vehicles without cylinder shutdown;For vehicles with cylinder shutdown | GDS84355 | Drive Shaft | | 28 | 31 | 59 | 86.5 | 1016 | |
| | 2019.07- | 6AT | F | R | SUV FWD PEXN | For vehicles without cylinder shutdown | GDS84530 | Drive Shaft | | 28 | 31 | 59 | 86.5 | 1012 | |
| | 2019.07- | 6AT | F | L/R | SUV FWD PEXN | | GCO82793 | Outer Joint | | 28 | 32 | 59 | 86.5 | 58.5 | I |
| | 2019.07- | 6AT | F | L | SUV FWD PEXN | | GCI82838 | Inner Joint | | 31 | 32 | 40 | 77 | 110.5 | |
| | 2019.07- | 6MT | F | L | SUV FWD PEXN | Country Version:Russia;For vehicles without cylinder shutdown;For vehicles with cylinder shutdown;outer teeth of wheel side:31 | GDS84528 | Drive Shaft | | 28 | 28 | 59 | 86.5 | 640 | |
| | 2019.07- | 6MT | F | L | SUV FWD PEXN | For vehicles without cylinder shutdown;outer teeth of wheel side:31 | GDS84567 | Drive Shaft | | 28 | 31 | 59 | 87 | 640 | |
| | 2019.07- | 6MT | F | R | SUV FWD PEXN | Country Version:Russia;For vehicles without cylinder shutdown;For vehicles with cylinder shutdown;outer teeth of wheel side:31 | GDS84527 | Drive Shaft | | 28 | 28 | 59 | 86.5 | 1005 | |
| | 2019.07- | 6MT | F | R | SUV FWD PEXN | For vehicles without cylinder shutdown;outer teeth of wheel side:31 | GDS84566 | Drive Shaft | | 28 | 31 | 59 | 87 | 1003 | |
| | 2019.07- | 6MT | F | L/R | SUV FWD PEXN | For vehicles without cylinder shutdown;Inner teeth:33 | GCO82801 | Outer Joint | | 28 | 33 | 59 | 87 | 60.5 | I |
| | 2019.07- | 6MT | F | L/R | SUV FWD PEXN | Country Version:Russia;For vehicles without cylinder shutdown;For vehicles with cylinder shutdown | GCO82857 | Outer Joint | | 28 | 32 | 59 | 86.5 | 58.5 | I |
| | 2019.07- | 6MT | F | L | SUV FWD PEXN | Country Version:Russia;For vehicles without cylinder shutdown;For vehicles with cylinder shutdown;outer teeth of wheel side:31 | GCI82742 | Inner Joint | | 28 | 32 | 40 | 67.5 | 108.5 | |
| | 2019.07- | 6MT | F | L | SUV FWD PEXN | For vehicles without cylinder shutdown | GCI82864 | Inner Joint | | 31 | 33 | 40 | 67 | 109.5 | |
| | 2019.07- | 6MT | F | R | SUV FWD PEXN | Country Version:Russia;For vehicles without cylinder shutdown;For vehicles with cylinder shutdown;outer teeth of wheel side:31 | GCI81615 | Inner Joint | | 28 | 32 | 40 | 416 | 94 | |
| | 2019.07- | 6MT | F | R | SUV FWD PEXN | For vehicles without cylinder shutdown | GCI82863 | Inner Joint | | 31 | 33 | 40 | 430 | 85 | |
| 2.0 (110 kw) | 2020.01-2023.08 | 6AT | F | L | SUV 4WD PEXW | | GDS84513 | Drive Shaft | | 28 | 31 | 59 | 86.5 | 631 | |
| | 2020.01-2023.08 | 6AT | F | L/R | SUV 4WD PEXW | | GCO82793 | Outer Joint | | 28 | 32 | 59 | 86.5 | 58.5 | I |
| | 2020.01-2023.08 | 6AT | F | L | SUV 4WD PEXW | | GCI82838 | Inner Joint | | 31 | 32 | 40 | 77 | 110.5 | |
| | 2020.01-2023.08 | 6AT/6MT | R | L | SUV 4WD PEXW | | GDS56237 | Drive Shaft | 48T | 26 | 22 | 51 | 87 | 806 | |
| | 2020.01-2023.08 | 6AT/6MT | R | R | SUV 4WD PEXW | | GDS56236 | Drive Shaft | 48T | 26 | 22 | 51 | 87 | 846 | |
| | 2020.01-2023.08 | 6AT/6MT | R | L/R | SUV 4WD PEXW | | GCO83215 | Outer Joint | 48T | 26 | 23 | 51 | 87 | 56.5 | I |
| | 2020.01-2023.08 | 6AT/6MT | R | L/R | SUV 4WD PEXW | | GCI83207 | Inner Joint | | 22 | 17 | 30 | 62.5 | 105 | |
| | 2020.01-2023.08 | 6AT | F | L | SUV FWD PEXW | | GDS84513 | Drive Shaft | | 28 | 31 | 59 | 86.5 | 631 | |
| | 2020.01-2023.08 | 6AT | F | R | SUV FWD PEXW | | GDS84355 | Drive Shaft | | 28 | 31 | 59 | 86.5 | 1016 | |
| | 2020.01-2023.08 | 6AT | F | L/R | SUV FWD PEXW | | GCO82793 | Outer Joint | | 28 | 32 | 59 | 86.5 | 58.5 | I |
| | 2020.01-2023.08 | 6AT | F | L | SUV FWD PEXW | | GCI82838 | Inner Joint | | 31 | 32 | 40 | 77 | 110.5 | |
| | 2020.01-2023.08 | 6AT | F | R | SUV FWD PEXW | | GCI82728 | Inner Joint | | 31 | 32 | 40 | 423 | 106 | |
| 2.0 (132 kw) | 2019.07-2020.09 | 6AT | F | L | SUV FWD HFY1 | | GDS84513 | Drive Shaft | | 28 | 31 | 59 | 86.5 | 631 | |
| | 2019.07-2020.09 | 6AT | F | R | SUV FWD HFY1 | Country Version:Russia;For vehicles without cylinder shutdown;For vehicles with cylinder shutdown | GDS84355 | Drive Shaft | | 28 | 31 | 59 | 86.5 | 1016 | |
| | 2019.07-2020.09 | 6AT | F | R | SUV FWD HFY1 | For vehicles without cylinder shutdown | GDS84530 | Drive Shaft | | 28 | 31 | 59 | 86.5 | 1012 | |

| | YEAR | TRANSM. | F/R | L/R | BODY STYLE & DRIVE TYPE & ENGINE | REMARKS | G-AP Ref. | PRODUCT | ABS | Technical Specifications A | B | C | H | L | P |
|---|---|---|---|---|---|---|---|---|---|---|---|---|---|---|---|
| **MAZDA** | | | | | | | | | | | | | | | |
| **CX-30** | | | | | | | | | | | | | | | |
| 2.0 (132 kw) | 2019.07-2020.09 | 6AT | F | L/R | SUV FWD HFY1 | | GCO82793 | Outer Joint | | 28 | 32 | 59 | 86.5 | 58.5 | I |
| | 2019.07-2020.09 | 6AT | F | L | SUV FWD HFY1 | | GCI82838 | Inner Joint | | 31 | 32 | 40 | 77 | 110.5 | |
| | 2019.07-2020.09 | 6MT | F | L | SUV FWD HFY1 | Country Version:Russia;For vehicles without cylinder shutdown;For vehicles with cylinder shutdown;outer teeth of wheel side:28 | GDS84528 | Drive Shaft | | 28 | 28 | 59 | 86.5 | 640 | |
| | 2019.07-2020.09 | 6MT | F | L | SUV FWD HFY1 | For vehicles without cylinder shutdown;outer teeth of wheel side:31 | GDS84567 | Drive Shaft | | 28 | 31 | 59 | 87 | 640 | |
| | 2019.07-2020.09 | 6MT | F | R | SUV FWD HFY1 | Country Version:Russia;For vehicles without cylinder shutdown;For vehicles with cylinder shutdown;outer teeth of wheel side:28 | GDS84527 | Drive Shaft | | 28 | 28 | 59 | 86.5 | 1005 | |
| | 2019.07-2020.09 | 6MT | F | R | SUV FWD HFY1 | For vehicles without cylinder shutdown;outer teeth of wheel side:31 | GDS84566 | Drive Shaft | | 28 | 31 | 59 | 87 | 1003 | |
| | 2019.07-2020.09 | 6MT | F | L/R | SUV FWD HFY1 | For vehicles without cylinder shutdown;Inner teeth:33 | GCO82801 | Outer Joint | | 28 | 33 | 59 | 87 | 60.5 | I |
| | 2019.07-2020.09 | 6MT | F | L/R | SUV FWD HFY1 | Country Version:Russia;For vehicles without cylinder shutdown;For vehicles with cylinder shutdown | GCO82857 | Outer Joint | | 28 | 32 | 59 | 86.5 | 58.5 | I |
| | 2019.07-2020.09 | 6MT | F | L | SUV FWD HFY1 | Country Version:Russia;For vehicles without cylinder shutdown;For vehicles with cylinder shutdown;outer teeth:28 | GCI82742 | Inner Joint | | 28 | 32 | 40 | 67.5 | 108.5 | |
| | 2019.07-2020.09 | 6MT | F | L | SUV FWD HFY1 | For vehicles without cylinder shutdown | GCI82864 | Inner Joint | | 31 | 33 | 40 | 67 | 109.5 | |
| | 2019.07-2020.09 | 6MT | F | R | SUV FWD HFY1 | Country Version:Russia;For vehicles without cylinder shutdown;For vehicles with cylinder shutdown;outer teeth:28 | GCI81615 | Inner Joint | | 28 | 32 | 40 | 416 | 94 | |
| | 2019.07-2020.09 | 6MT | F | R | SUV FWD HFY1 | For vehicles without cylinder shutdown | GCI82863 | Inner Joint | | 31 | 33 | 40 | 430 | 85 | |
| | 2019.07-2020.12 | 6AT | F | L | SUV 4WD HFY1 | | GDS84513 | Drive Shaft | | 28 | 31 | 59 | 86.5 | 631 | |
| | 2019.07-2020.12 | 6AT | F | L/R | SUV 4WD HFY1 | | GCO82793 | Outer Joint | | 28 | 32 | 59 | 86.5 | 58.5 | I |
| | 2019.07-2020.12 | 6AT | F | L | SUV 4WD HFY1 | | GCI82838 | Inner Joint | | 31 | 32 | 40 | 77 | 110.5 | |
| | 2019.07-2020.12 | 6MT | F | L | SUV 4WD HFY1 | For vehicles without cylinder shutdown | GDS84567 | Drive Shaft | | 28 | 31 | 59 | 87 | 640 | |
| | 2019.07-2020.12 | 6MT | F | L/R | SUV 4WD HFY1 | For vehicles without cylinder shutdown | GCO82801 | Outer Joint | | 28 | 33 | 59 | 87 | 60.5 | I |
| | 2019.07-2020.12 | 6MT | F | L | SUV 4WD HFY1 | For vehicles without cylinder shutdown | GCI82864 | Inner Joint | | 31 | 33 | 40 | 67 | 109.5 | |
| | 2019.07-2020.12 | 6AT/6MT | R | L | SUV 4WD HFY1 | | GDS56237 | Drive Shaft | 48T | 26 | 22 | 51 | 87 | 806 | |
| | 2019.07-2020.12 | 6AT/6MT | R | R | SUV 4WD HFY1 | | GDS56236 | Drive Shaft | 48T | 26 | 22 | 51 | 87 | 846 | |
| | 2019.07-2020.12 | 6AT/6MT | R | L/R | SUV 4WD HFY1 | | GCO83215 | Outer Joint | 48T | 26 | 23 | 51 | 87 | 56.5 | I |
| | 2019.07-2020.12 | 6AT/6MT | R | L/R | SUV 4WD HFY1 | | GCI83207 | Inner Joint | | 22 | 17 | 30 | 62.5 | 105 | |
| 2.0 (137 kw) | 2021.06- | 6AT | F | L | SUV 4WD HFY7 | | GDS84513 | Drive Shaft | | 28 | 31 | 59 | 86.5 | 631 | |
| | 2021.06- | 6AT | F | L/R | SUV 4WD HFY7 | | GCO82793 | Outer Joint | | 28 | 32 | 59 | 86.5 | 58.5 | I |
| | 2021.06- | 6AT | F | L | SUV 4WD HFY7 | | GCI82838 | Inner Joint | | 31 | 32 | 40 | 77 | 110.5 | |
| | 2021.06- | 6MT | F | L | SUV 4WD HFY7 | For vehicles without cylinder shutdown | GDS84567 | Drive Shaft | | 28 | 31 | 59 | 87 | 640 | |
| | 2021.06- | 6MT | F | L/R | SUV 4WD HFY7 | For vehicles without cylinder shutdown | GCO82801 | Outer Joint | | 28 | 33 | 59 | 87 | 60.5 | I |
| | 2021.06- | 6MT | F | L | SUV 4WD HFY7 | For vehicles without cylinder shutdown | GCI82864 | Inner Joint | | 31 | 33 | 40 | 67 | 109.5 | |
| | 2021.06- | 6AT/6MT | R | L | SUV 4WD HFY7 | | GDS56237 | Drive Shaft | 48T | 26 | 22 | 51 | 87 | 806 | |
| | 2021.06- | 6AT/6MT | R | R | SUV 4WD HFY7 | | GDS56236 | Drive Shaft | 48T | 26 | 22 | 51 | 87 | 846 | |
| | 2021.06- | 6AT/6MT | R | L/R | SUV 4WD HFY7 | | GCO83215 | Outer Joint | 48T | 26 | 23 | 51 | 87 | 56.5 | I |
| | 2021.06- | 6AT/6MT | R | L/R | SUV 4WD HFY7 | | GCI83207 | Inner Joint | | 22 | 17 | 30 | 62.5 | 105 | |
| | 2021.06- | 6AT | F | L | SUV FWD HFY7 | | GDS84513 | Drive Shaft | | 28 | 31 | 59 | 86.5 | 631 | |
| | 2021.06- | 6AT | F | R | SUV FWD HFY7 | Country Version:Russia;For vehicles without cylinder shutdown;For vehicles with cylinder shutdown | GDS84355 | Drive Shaft | | 28 | 31 | 59 | 86.5 | 1016 | |
| | 2021.06- | 6AT | F | R | SUV FWD HFY7 | For vehicles without cylinder shutdown | GDS84530 | Drive Shaft | | 28 | 31 | 59 | 86.5 | 1012 | |
| | 2021.06- | 6AT | F | L/R | SUV FWD HFY7 | | GCO82793 | Outer Joint | | 28 | 32 | 59 | 86.5 | 58.5 | I |
| | 2021.06- | 6AT | F | L | SUV FWD HFY7 | | GCI82838 | Inner Joint | | 31 | 32 | 40 | 77 | 110.5 | |
| | 2021.06- | 6MT | F | L | SUV FWD HFY7 | Country Version:Russia;For vehicles without cylinder shutdown;For vehicles with cylinder shutdown;outer teeth of wheel side:28 | GDS84528 | Drive Shaft | | 28 | 28 | 59 | 86.5 | 640 | |
| | 2021.06- | 6MT | F | L | SUV FWD HFY7 | For vehicles without cylinder shutdown;outer teeth of wheel side:31 | GDS84567 | Drive Shaft | | 28 | 31 | 59 | 87 | 640 | |
| | 2021.06- | 6MT | F | R | SUV FWD HFY7 | Country Version:Russia;For vehicles without cylinder shutdown;For vehicles with cylinder shutdown;outer teeth of wheel side:28 | GDS84527 | Drive Shaft | | 28 | 28 | 59 | 86.5 | 1005 | |
| | 2021.06- | 6MT | F | R | SUV FWD HFY7 | For vehicles without cylinder shutdown;outer teeth of wheel side:31 | GDS84566 | Drive Shaft | | 28 | 31 | 59 | 87 | 1003 | |
| | 2021.06- | 6MT | F | L/R | SUV FWD HFY7 | For vehicles without cylinder shutdown;Inner teeth:33 | GCO82801 | Outer Joint | | 28 | 33 | 59 | 87 | 60.5 | I |
| | 2021.06- | 6MT | F | L/R | SUV FWD HFY7 | Country Version:Russia;For vehicles without cylinder shutdown;For vehicles with cylinder shutdown | GCO82857 | Outer Joint | | 28 | 32 | 59 | 86.5 | 58.5 | I |
| | 2021.06- | 6MT | F | L | SUV FWD HFY7 | Country Version:Russia;For vehicles without cylinder shutdown;For vehicles with cylinder shutdown;outer teeth:28 | GCI82742 | Inner Joint | | 28 | 32 | 40 | 67.5 | 108.5 | |
| | 2021.06- | 6MT | F | L | SUV FWD HFY7 | For vehicles without cylinder shutdown | GCI82864 | Inner Joint | | 31 | 33 | 40 | 67 | 109.5 | |
| | 2021.06- | 6MT | F | R | SUV FWD HFY7 | Country Version:Russia;For vehicles without cylinder shutdown;For vehicles with cylinder shutdown;outer teeth:28 | GCI81615 | Inner Joint | | 28 | 32 | 40 | 416 | 94 | |
| | 2021.06- | 6MT | F | R | SUV FWD HFY7 | For vehicles without cylinder shutdown | GCI82863 | Inner Joint | | 31 | 33 | 40 | 430 | 85 | |
| 2.5 (103 kw) | 2024.06- | 6AT | F | L | SUV FWD PXY5, PYZC | | GDS84513 | Drive Shaft | | 28 | 31 | 59 | 86.5 | 631 | |
| | 2024.06- | 6AT | F | R | SUV FWD PXY5, PYZC | Country Version:Russia | GDS84355 | Drive Shaft | | 28 | 31 | 59 | 86.5 | 1016 | |
| | 2024.06- | 6AT | F | R | SUV FWD PXY5, PYZC | not for Country Version:Russia | GDS84530 | Drive Shaft | | 28 | 31 | 59 | 86.5 | 1012 | |
| | 2024.06- | 6MT | F | L | SUV FWD PXY5, PYZC | | GDS84567 | Drive Shaft | | 28 | 31 | 59 | 87 | 640 | |
| | 2024.06- | 6MT | F | R | SUV FWD PXY5, PYZC | | GDS84566 | Drive Shaft | | 28 | 31 | 59 | 87 | 1003 | |
| | 2024.06- | 6MT | F | L/R | SUV FWD PXY5, PYZC | | GCO82801 | Outer Joint | | 28 | 33 | 59 | 87 | 60.5 | I |
| **CX-5** | | | | | | | | | | | | | | | |
| 2.0 (110 kw) | 2012.02-2017.02 | 6AT | F | L | SUV 4WD PEY5 | For left-hand drive vehicles,Date to:2014.11;For right-hand drive vehicles | GDS34236 | Drive Shaft | | 31 | 31 | 59 | 86.5 | 652 | |
| | 2012.02-2017.02 | 6AT | F | L | SUV 4WD PEY5 | For left-hand drive vehicles,Date from:2014.12 | GDS34239 | Drive Shaft | | 31 | 31 | 59 | 87 | 653 | |
| | 2012.02-2017.02 | 6AT | F | R | SUV 4WD PEY5 | For left-hand drive vehicles,Date to:2014.11;For right-hand drive vehicles | GDS34237 | Drive Shaft | | 31 | 31 | 59 | 86.5 | 1016 | |
| | 2012.02-2017.02 | 6AT | F | L/R | SUV 4WD PEY5 | For left-hand drive vehicles,Date to:2014.11;For right-hand drive vehicles | GCO34207 | Outer Joint | | 31 | 24 | 59 | 86.5 | 69 | I |
| | 2012.02-2017.02 | 6AT | F | L | SUV 4WD PEY5 | | GCI34129 | Inner Joint | | 31 | 24 | 40 | 67 | 113.5 | |
| | 2012.02-2017.02 | 6AT | F | R | SUV 4WD PEY5 | | GCI34127 | Inner Joint | | 31 | 24 | 37 | 416 | 115 | |
| | 2012.02-2017.02 | 6MT | F | L | SUV 4WD PEY5 | | GDS83824 | Drive Shaft | | 31 | 31 | 59 | 86.5 | 662 | |
| | 2012.02-2017.02 | 6MT | F | R | SUV 4WD PEY5 | For right-hand drive vehicles | GDS83874 | Drive Shaft | | 31 | 31 | 59 | 86.5 | 1024 | |
| | 2012.02-2017.02 | 6MT | F | R | SUV 4WD PEY5 | | GCO82495 | Outer Joint | | 31 | 33 | 59 | 86.5 | 67.5 | I |
| | 2012.02-2017.02 | 6MT | F | L | SUV 4WD PEY5 | | GCI82383 | Inner Joint | | 31 | 33 | 40 | 67 | 94 | |
| | 2012.02-2017.02 | 6MT | F | R | SUV 4WD PEY5 | For right-hand drive vehicles | GCI82405 | Inner Joint | | 31 | 33 | 40 | 416 | 95 | |

| | YEAR | TRANSM. | F/R | L/R | BODY STYLE & DRIVE TYPE & ENGINE | REMARKS | G-AP Ref. | PRODUCT | ABS | Technical Specifications A | B | C | H | L | P |
|---|---|---|---|---|---|---|---|---|---|---|---|---|---|---|---|
| **MAZDA** | | | | | | | | | | | | | | | |
| **CX-5** | | | | | | | | | | | | | | | |
| 2.0 (110 kw) | 2012.02-2017.02 | 6AT/6MT | R | L | SUV 4WD PEY5 | | GDS34240 | Drive Shaft | 48T | 28 | 22 | 51.7 | 85 | 815 | |
| | 2012.02-2017.02 | 6AT/6MT | R | R | SUV 4WD PEY5 | | GDS82314 | Drive Shaft | 48T | 28 | 22 | 51.7 | 85 | 852 | |
| | 2012.02-2017.02 | 6AT/6MT | R | L/R | SUV 4WD PEY5 | | GCO34213 | Outer Joint | 48T | 28 | 26 | 51.7 | 85 | 56 | I |
| | 2012.02-2017.02 | 6AT/6MT | R | L/R | SUV 4WD PEY5 | | GCI34131 | Inner Joint | | 22 | 26 | 30 | 65 | 98.5 | |
| | 2012.02-2017.02 | 6AT | F | L | SUV FWD PEY5 | | GDS34236 | Drive Shaft | | 31 | 31 | 59 | 86.5 | 652 | |
| | 2012.02-2017.02 | 6AT | F | R | SUV FWD PEY5 | | GDS34235 | Drive Shaft | | 31 | 31 | 59 | 86.5 | 1016 | |
| | 2012.02-2017.02 | 6AT | F | L/R | SUV FWD PEY5 | | GCO34207 | Outer Joint | | 31 | 24 | 59 | 86.5 | 69 | I |
| | 2012.02-2017.02 | 6AT | F | L | SUV FWD PEY5 | | GCI34129 | Inner Joint | | 31 | 24 | 40 | 67 | 113.5 | |
| | 2012.02-2017.02 | 6AT | F | R | SUV FWD PEY5 | | GCI34128 | Inner Joint | | 31 | 24 | 40 | 416 | 115 | |
| | 2012.02-2017.02 | 6MT | F | L | SUV FWD PEY5 | | GDS83824 | Drive Shaft | | 31 | 31 | 59 | 86.5 | 662 | |
| | 2012.02-2017.02 | 6MT | F | R | SUV FWD PEY5 | | GDS83874 | Drive Shaft | | 31 | 31 | 59 | 86.5 | 1024 | |
| | 2012.02-2017.02 | 6MT | F | L/R | SUV FWD PEY5 | | GCO82495 | Outer Joint | | 31 | 33 | 59 | 86.5 | 67.5 | I |
| | 2012.02-2017.02 | 6MT | F | L | SUV FWD PEY5 | | GCI82383 | Inner Joint | | 31 | 33 | 40 | 67 | 94 | |
| | 2012.02-2017.02 | 6MT | F | R | SUV FWD PEY5 | | GCI82405 | Inner Joint | | 31 | 33 | 40 | 416 | 95 | |
| | 2018.03- | 6AT | F | L | SUV 4WD PEXB | Date from:2020.08;Date to:2022.11;For vehicles with cylinder shutdown;Date from:2022.12;not for Russia | GDS83172 | Drive Shaft | | 31 | 31 | 59 | 87 | 650 | |
| | 2018.03- | 6AT | F | L | SUV 4WD PEXB | Date to:2020.08;Date from:2020.09;Date to:2022.11;For vehicles without cylinder shutdown;Date from:2022.12;Country Version:Russia | GDS84025 | Drive Shaft | | 31 | 31 | 59 | 87 | 659 | |
| | 2018.03- | 6AT | F | R | SUV 4WD PEXB | Date to:2022.11;Country Version:Russia;Date from:2022.12 | GDS84026 | Drive Shaft | | 31 | 31 | 59 | 87 | 1023 | |
| | 2018.03- | 6AT | F | L/R | SUV 4WD PEXB | | GCO82330 | Outer Joint | | 31 | 32 | 59 | 87 | 66.5 | I |
| | 2018.03- | 6AT | F | L | SUV 4WD PEXB | | GCI82163 | Inner Joint | | 31 | 32 | 40 | 67 | 110 | |
| | 2018.03- | 6AT | R | L | SUV 4WD PEXB | | GDS84052 | Drive Shaft | 48T | 28 | 22 | 51.7 | 85 | 815 | |
| | 2018.03- | 6AT | R | R | SUV 4WD PEXB | | GDS84063 | Drive Shaft | 48T | 28 | 22 | 51.7 | 85 | 853 | |
| | 2018.03- | 6AT | R | L/R | SUV 4WD PEXB | | GCO82578 | Outer Joint | 48T | 28 | 24 | 51.7 | 85 | 56 | I |
| | 2018.03- | 6AT | R | L/R | SUV 4WD PEXB | | GCI82501 | Inner Joint | | 22 | 24 | 30 | 65 | 98 | |
| | 2018.03- | 6AT | F | L | SUV FWD PEXB;PEXP | Date from:2022.12;For right-hand drive vehicles | GDS83172 | Drive Shaft | | 31 | 31 | 59 | 87 | 650 | |
| | 2018.03- | 6AT | F | L | SUV FWD PEXB;PEXP | For left-hand drive vehicles;For right-hand drive vehicles;Date to:2022.11 | GDS84025 | Drive Shaft | | 31 | 31 | 59 | 87 | 659 | |
| | 2018.03- | 6AT | F | R | SUV FWD PEXB;PEXP | | GDS84044 | Drive Shaft | | 31 | 31 | 59 | 87 | 1024 | |
| | 2018.03- | 6AT | F | L/R | SUV FWD PEXB;PEXP | | GCO82330 | Outer Joint | | 31 | 32 | 59 | 87 | 66.5 | I |
| | 2018.03- | 6AT | F | L | SUV FWD PEXB;PEXP | | GCI82163 | Inner Joint | | 31 | 32 | 40 | 67 | 110 | |
| | 2018.03- | 6AT | F | R | SUV FWD PEXB;PEXP | | GCI82500 | Inner Joint | | 31 | 32 | 40 | 415 | 109 | |
| 2.0 (113 kw) | 2012.02-2017.02 | 6AT | F | L | SUV 4WD PEY5;PEY4;PE-VPS | Date to:2013.12,For left-hand drive vehicles | GDS34239 | Drive Shaft | | 31 | 31 | 59 | 87 | 653 | |
| | 2012.02-2017.02 | 6AT/6MT | F | L | SUV 4WD PEY5;PEY4;PE-VPS | date to:2014.11;for left-hand drive vehicles | GDS34236 | Drive Shaft | | 31 | 31 | 59 | 86.5 | 652 | |
| | 2012.02-2017.02 | 6AT/6MT | F | R | SUV 4WD PEY5;PEY4;PE-VPS | Date to:2014.11;for left-hand drive vehicles | GDS34237 | Drive Shaft | | 31 | 31 | 59 | 86.5 | 1016 | |
| | 2012.02-2017.02 | 6AT/6MT | F | L | SUV 4WD PEY5;PEY4;PE-VPS | for left-hand drive vehicles | GCO34207 | Outer Joint | | 31 | 24 | 59 | 86.5 | 69 | I |
| | 2012.02-2017.02 | 6AT/6MT | F | R | SUV 4WD PEY5;PEY4;PE-VPS | Date to:2014.11;for left-hand drive vehicles | GCO34207 | Outer Joint | | 31 | 24 | 59 | 86.5 | 69 | I |
| | 2012.02-2017.02 | | F | L | SUV 4WD PEY5;PEY4;PE-VPS | Driver Pos:For right-hand drive vehicles | GCI34129 | Inner Joint | | 31 | 24 | 40 | 67 | 113.5 | |
| | 2012.02-2017.02 | | F | R | SUV 4WD PEY5;PEY4;PE-VPS | | GCI34115 | Inner Joint | | 28 | 33 | 43 | | 132 | |
| | 2012.02-2017.02 | 6AT/6MT | R | L | SUV 4WD PEY5;PEY4;PE-VPS | | GDS34240 | Drive Shaft | 48T | 28 | 22 | 51.7 | 85 | 815 | |
| | 2012.02-2017.02 | 6AT/6MT | R | R | SUV 4WD PEY5;PEY4;PE-VPS | | GDS82314 | Drive Shaft | 48T | 28 | 22 | 51.7 | 85 | 852 | |
| | 2012.02-2017.02 | 6AT/6MT | R | L/R | SUV 4WD PEY5;PEY4;PE-VPS | | GCO34213 | Outer Joint | 48T | 28 | 26 | 51.7 | 85 | 56 | I |
| | 2012.02-2017.02 | 6AT/6MT | R | L/R | SUV 4WD PEY5;PEY4;PE-VPS | | GCI34131 | Inner Joint | | 22 | 26 | 30 | 65 | 98.5 | |
| | 2015.04-2017.02 | | F | R | SUV FWD PEY4/PEY5 | | GCI34115 | Inner Joint | | 28 | 33 | 43 | | 132 | |
| 2.0 (114 kw) | 2012.07-2017.02 | 6AT | F | L | SUV FWD PEY5;PEY4;PE-VPS | Date to:2013.12,For left-hand drive vehicles | GDS34239 | Drive Shaft | | 31 | 31 | 59 | 87 | 653 | |
| | 2012.07-2017.02 | 6AT/6MT | F | L | SUV FWD PEY5;PEY4;PE-VPS | date from:2014.01;for left-hand drive vehicles | GDS34236 | Drive Shaft | | 31 | 31 | 59 | 86.5 | 652 | |
| | 2012.07-2017.02 | 6AT/6MT | F | R | SUV FWD PEY5;PEY4;PE-VPS | | GDS34235 | Drive Shaft | | 31 | 31 | 59 | 86.5 | 1016 | |
| | 2012.07-2017.02 | 6AT/6MT | F | L | SUV FWD PEY5;PEY4;PE-VPS | for left-hand drive vehicles | GCO34207 | Outer Joint | | 31 | 24 | 59 | 86.5 | 69 | I |
| | 2012.07-2017.02 | 6AT/6MT | F | R | SUV FWD PEY5;PEY4;PE-VPS | | GCO34207 | Outer Joint | | 31 | 24 | 59 | 86.5 | 69 | I |
| | 2012.07-2017.02 | 6AT/6MT | F | L | SUV FWD PEY5;PEY4;PE-VPS | for left-hand drive vehicles | GCI34129 | Inner Joint | | 31 | 24 | 40 | 67 | 113.5 | |
| | 2012.07-2017.02 | 6AT/6MT | F | R | SUV FWD PEY5;PEY4;PE-VPS | | GCI34128 | Inner Joint | | 31 | 24 | 40 | 416 | 115 | |
| | 2012.07-2017.02 | | F | R | SUV FWD PEY5;PEY4;PE-VPS | | GCI34115 | Inner Joint | | 28 | 33 | 43 | | 132 | |
| 2.0 (115 kw) | 2012.01-2017.02 | 6AT | F | L | SUV 4WD PEY7;PEY5;PE-VPS | Date to:2013.12,For left-hand drive vehicles | GDS34239 | Drive Shaft | | 31 | 31 | 59 | 87 | 653 | |
| | 2012.01-2017.02 | 6AT | F | L | SUV 4WD PEY7;PEY5;PE-VPS | | GCI34129 | Inner Joint | | 31 | 24 | 40 | 67 | 113.5 | |
| | 2012.01-2017.02 | 6AT | F | R | SUV 4WD PEY7;PEY5;PE-VPS | | GCI34128 | Inner Joint | | 31 | 24 | 40 | 416 | 115 | |
| | 2012.01-2017.02 | | F | R | SUV 4WD PEY7;PEY5;PE-VPS | Date To:2014.11;Driver Pos:For left-hand drive vehicles | GDS34237 | Drive Shaft | | 31 | 31 | 59 | 86.5 | 1016 | |
| | 2012.01-2017.02 | | F | R | SUV 4WD PEY7;PEY5;PE-VPS | | GCO34207 | Outer Joint | | 31 | 24 | 59 | 86.5 | 69 | I |
| | 2012.01-2017.02 | 6AT | R | L/R | SUV 4WD PEY7;PEY5;PE-VPS | | GCI34131 | Inner Joint | | 22 | 26 | 30 | 65 | 98.5 | |
| | 2012.01-2017.02 | | R | L | SUV 4WD PEY7;PEY5;PE-VPS | | GDS34240 | Drive Shaft | 48T | 28 | 22 | 51.7 | 85 | 815 | |
| | 2012.01-2017.02 | | R | R | SUV 4WD PEY7;PEY5;PE-VPS | | GDS82314 | Drive Shaft | 48T | 28 | 22 | 51.7 | 85 | 852 | |
| | 2012.01-2017.02 | | R | R | SUV 4WD PEY7;PEY5;PE-VPS | | GCO34213 | Outer Joint | 48T | 28 | 26 | 51.7 | 85 | 56 | I |
| | 2012.01-2017.02 | 6AT | F | L | SUV FWD PEY7;PEY5;PE-VPS | date from:2014.01;for left-hand drive vehicles | GDS34236 | Drive Shaft | | 31 | 31 | 59 | 86.5 | 652 | |
| | 2012.01-2017.02 | 6AT | F | L | SUV FWD PEY7;PEY5;PE-VPS | Date to:2013.12,For left-hand drive vehicles | GDS34239 | Drive Shaft | | 31 | 31 | 59 | 87 | 653 | |
| | 2012.01-2017.02 | 6AT | F | R | SUV FWD PEY7;PEY5;PE-VPS | | GDS34235 | Drive Shaft | | 31 | 31 | 59 | 86.5 | 1016 | |
| | 2012.01-2017.02 | 6AT | F | L | SUV FWD PEY7;PEY5;PE-VPS | for left-hand drive vehicles | GCO34207 | Outer Joint | | 31 | 24 | 59 | 86.5 | 69 | I |
| | 2012.01-2017.02 | 6AT | F | R | SUV FWD PEY7;PEY5;PE-VPS | | GCO34207 | Outer Joint | | 31 | 24 | 59 | 86.5 | 69 | I |
| | 2012.01-2017.02 | 6AT | F | L | SUV FWD PEY7;PEY5;PE-VPS | for left-hand drive vehicles | GCI34129 | Inner Joint | | 31 | 24 | 40 | 67 | 113.5 | |
| | 2012.01-2017.02 | 6AT | F | R | SUV FWD PEY7;PEY5;PE-VPS | | GCI34128 | Inner Joint | | 31 | 24 | 40 | 416 | 115 | |

| | YEAR | TRANSM. | F/R | L/R | BODY STYLE & DRIVE TYPE & ENGINE | REMARKS | G-AP Ref. | PRODUCT | ABS | Technical Specifications A | B | C | H | L | P |
|---|---|---|---|---|---|---|---|---|---|---|---|---|---|---|---|
| **MAZDA** | | | | | | | | | | | | | | | |
| **CX-5** | | | | | | | | | | | | | | | |
| 2.0 (115 kw) | 2012.01-2017.02 | | F | R | SUV FWD PEY7;PEY5;PE-VPS | | GCI34115 | Inner Joint | | 28 | 33 | 43 | | 132 | |
| 2.0 (118 kw) | 2011.11-2017.02 | 6AT | F | L | SUV 4WD PEY7;PEY6;PE-VPS | For right-hand drive vehicles | GDS34236 | Drive Shaft | | 31 | 31 | 59 | 86.5 | 652 | |
| | 2011.11-2017.02 | 6AT | F | L | SUV 4WD PEY7;PEY6;PE-VPS | For left-hand drive vehicles | GDS34239 | Drive Shaft | | 31 | 31 | 59 | 87 | 653 | |
| | 2011.11-2017.02 | 6AT | F | R | SUV 4WD PEY7;PEY6;PE-VPS | For right-hand drive vehicles | GDS34237 | Drive Shaft | | 31 | 31 | 59 | 86.5 | 1016 | |
| | 2011.11-2017.02 | 6AT | F | L/R | SUV 4WD PEY7;PEY6;PE-VPS | For right-hand drive vehicles | GCO34207 | Outer Joint | | 31 | 24 | 59 | 86.5 | 69 | I |
| | 2011.11-2017.02 | 6AT | F | L/R | SUV 4WD PEY7;PEY6;PE-VPS | For left-hand drive vehicles | GCO34208 | Outer Joint | | 31 | 26 | 59 | 87 | 69 | I |
| | 2011.11-2017.02 | 6AT | F | L | SUV 4WD PEY7;PEY6;PE-VPS | | GCI34129 | Inner Joint | | 31 | 24 | 40 | 67 | 113.5 | |
| | 2011.11-2017.02 | 6AT | F | R | SUV 4WD PEY7;PEY6;PE-VPS | For right-hand drive vehicles | GCI34127 | Inner Joint | | 31 | 24 | 37 | 416 | 115 | |
| | 2011.11-2017.02 | 6MT | F | L | SUV 4WD PEY7;PEY6;PE-VPS | | GDS83824 | Drive Shaft | | 31 | 31 | 59 | 86.5 | 662 | |
| | 2011.11-2017.02 | 6MT | F | R | SUV 4WD PEY7;PEY6;PE-VPS | For right-hand drive vehicles | GDS83874 | Drive Shaft | | 31 | 31 | 59 | 86.5 | 1024 | |
| | 2011.11-2017.02 | 6MT | F | R | SUV 4WD PEY7;PEY6;PE-VPS | | GCO82495 | Outer Joint | | 31 | 33 | 59 | 86.5 | 67.5 | I |
| | 2011.11-2017.02 | 6MT | F | L | SUV 4WD PEY7;PEY6;PE-VPS | | GCI82383 | Inner Joint | | 31 | 33 | 40 | 67 | 94 | |
| | 2011.11-2017.02 | 6MT | F | R | SUV 4WD PEY7;PEY6;PE-VPS | For right-hand drive vehicles | GCI82405 | Inner Joint | | 31 | 33 | 40 | 416 | 95 | |
| | 2011.11-2017.02 | 6AT/6MT | R | L | SUV 4WD PEY7;PEY6;PE-VPS | | GDS34240 | Drive Shaft | 48T | 28 | 22 | 51.7 | 85 | 815 | |
| | 2011.11-2017.02 | 6AT/6MT | R | R | SUV 4WD PEY7;PEY6;PE-VPS | | GDS82314 | Drive Shaft | 48T | 28 | 22 | 51.7 | 85 | 852 | |
| | 2011.11-2017.02 | 6AT/6MT | R | L/R | SUV 4WD PEY7;PEY6;PE-VPS | | GCO34213 | Outer Joint | 48T | 28 | 26 | 51.7 | 85 | 56 | I |
| | 2011.11-2017.02 | 6AT/6MT | R | L/R | SUV 4WD PEY7;PEY6;PE-VPS | | GCI34131 | Inner Joint | | 22 | 26 | 30 | 65 | 98.5 | |
| | 2015.04-2017.02 | 6AT | F | L | SUV Van 4WD PEY7;PE-VPS | For right-hand drive vehicles | GDS34236 | Drive Shaft | | 31 | 31 | 59 | 86.5 | 652 | |
| | 2015.04-2017.02 | 6AT | F | L | SUV Van 4WD PEY7;PE-VPS | For left-hand drive vehicles | GDS34239 | Drive Shaft | | 31 | 31 | 59 | 87 | 653 | |
| | 2015.04-2017.02 | 6AT | F | L/R | SUV Van 4WD PEY7;PE-VPS | For right-hand drive vehicles | GCO34207 | Outer Joint | | 31 | 24 | 59 | 86.5 | 69 | I |
| | 2015.04-2017.02 | 6AT | F | L | SUV Van 4WD PEY7;PE-VPS | | GCI34129 | Inner Joint | | 31 | 24 | 40 | 67 | 113.5 | |
| | 2015.04-2017.02 | 6AT | F | R | SUV Van 4WD PEY7;PE-VPS | | GCI34127 | Inner Joint | | 31 | 24 | 37 | 416 | 115 | |
| | 2015.04-2017.02 | 6MT | F | L | SUV Van 4WD PEY7;PE-VPS | | GDS83824 | Drive Shaft | | 31 | 31 | 59 | 86.5 | 662 | |
| | 2015.04-2017.02 | 6MT | F | R | SUV Van 4WD PEY7;PE-VPS | For right-hand drive vehicles | GDS83874 | Drive Shaft | | 31 | 31 | 59 | 86.5 | 1024 | |
| | 2015.04-2017.02 | 6MT | F | R | SUV Van 4WD PEY7;PE-VPS | | GCO82495 | Outer Joint | | 31 | 33 | 59 | 86.5 | 67.5 | I |
| | 2015.04-2017.02 | 6MT | F | L | SUV Van 4WD PEY7;PE-VPS | | GCI82383 | Inner Joint | | 31 | 33 | 40 | 67 | 94 | |
| | 2015.04-2017.02 | 6MT | F | R | SUV Van 4WD PEY7;PE-VPS | For right-hand drive vehicles | GCI82405 | Inner Joint | | 31 | 33 | 40 | 416 | 95 | |
| | 2015.04-2017.02 | 6AT/6MT | R | L | SUV Van 4WD PEY7;PE-VPS | | GDS34240 | Drive Shaft | 48T | 28 | 22 | 51.7 | 85 | 815 | |
| | 2015.04-2017.02 | 6AT/6MT | R | R | SUV Van 4WD PEY7;PE-VPS | | GDS82314 | Drive Shaft | 48T | 28 | 22 | 51.7 | 85 | 852 | |
| | 2015.04-2017.02 | 6AT/6MT | R | L/R | SUV Van 4WD PEY7;PE-VPS | | GCI34131 | Inner Joint | | 22 | 26 | 30 | 65 | 98.5 | |
| | 2017.05- | 6AT | F | L | SUV 4WD PEX3 | | GDS84025 | Drive Shaft | | 31 | 31 | 59 | 87 | 659 | |
| | 2017.05- | 6AT | F | R | SUV 4WD PEX3 | | GDS84026 | Drive Shaft | | 31 | 31 | 59 | 87 | 1023 | |
| | 2017.05- | 6AT | F | L/R | SUV 4WD PEX3 | | GCO82330 | Outer Joint | | 31 | 32 | 59 | 87 | 66.5 | I |
| | 2017.05- | 6AT | F | L | SUV 4WD PEX3 | | GCI82163 | Inner Joint | | 31 | 32 | 40 | 67 | 110 | |
| | 2017.05- | 6AT | F | R | SUV 4WD PEX3 | | GCI82459 | Inner Joint | | 31 | 32 | 37 | 415 | 109 | |
| | 2017.05- | AT/MT | R | L | SUV 4WD PEX3 | | GDS84052 | Drive Shaft | 48T | 28 | 22 | 51.7 | 85 | 815 | |
| | 2017.05- | AT/MT | R | R | SUV 4WD PEX3 | | GDS84063 | Drive Shaft | 48T | 28 | 22 | 51.7 | 85 | 853 | |
| | 2017.05- | AT/MT | R | L/R | SUV 4WD PEX3 | | GCO82578 | Outer Joint | 48T | 28 | 24 | 51.7 | 85 | 56 | I |
| | 2017.05- | AT/MT | R | L/R | SUV 4WD PEX3 | | GCI82501 | Inner Joint | | 22 | 24 | 30 | 65 | 98 | |
| 2.0 (120 kw) | 2018.03- | 6AT | F | L | SUV 4WD PEXB;PEXP | Date from:2020.08;Date to:2022.11;For vehicles with cylinder shutdown;Date from:2022.12;not for Russia | GDS83172 | Drive Shaft | | 31 | 31 | 59 | 87 | 650 | |
| | 2018.03- | 6AT | F | L | SUV 4WD PEXB;PEXP | Date to:2020.08;Date from:2020.09;Date to:2022.11;For vehicles without cylinder shutdown;Date from:2022.12;Country Version:Russia | GDS84025 | Drive Shaft | | 31 | 31 | 59 | 87 | 659 | |
| | 2018.03- | 6AT | F | R | SUV 4WD PEXB;PEXP | Date to:2022.11;Country Version:Russia;Date from:2022.12 | GDS84026 | Drive Shaft | | 31 | 31 | 59 | 87 | 1023 | |
| | 2018.03- | 6AT | F | L/R | SUV 4WD PEXB;PEXP | | GCO82330 | Outer Joint | | 31 | 32 | 59 | 87 | 66.5 | I |
| | 2018.03- | 6AT | F | L | SUV 4WD PEXB;PEXP | | GCI82163 | Inner Joint | | 31 | 32 | 40 | 67 | 110 | |
| | 2018.03- | 6AT/6MT | R | L | SUV 4WD PEXB;PEXP | | GDS84052 | Drive Shaft | 48T | 28 | 22 | 51.7 | 85 | 815 | |
| | 2018.03- | 6AT/6MT | R | R | SUV 4WD PEXB;PEXP | Chassis no. to::B32752 | GDS84063 | Drive Shaft | 48T | 28 | 22 | 51.7 | 85 | 853 | |
| | 2018.03- | 6AT/6MT | R | L/R | SUV 4WD PEXB;PEXP | | GCI82501 | Inner Joint | | 22 | 24 | 30 | 65 | 98 | |
| | 2018.03- | 6AT | F | L | SUV FWD PEXB;PEXP | Date from:2022.12;For right-hand drive vehicles | GDS83172 | Drive Shaft | | 31 | 31 | 59 | 87 | 650 | |
| | 2018.03- | 6AT | F | L | SUV FWD PEXB;PEXP | For left-hand drive vehicles;For right-hand drive vehicles;Date to:2022.11 | GDS84025 | Drive Shaft | | 31 | 31 | 59 | 87 | 659 | |
| | 2018.03- | 6AT | F | R | SUV FWD PEXB;PEXP | | GDS84044 | Drive Shaft | | 31 | 31 | 59 | 87 | 1024 | |
| | 2018.03- | 6AT | F | L/R | SUV FWD PEXB;PEXP | | GCO82330 | Outer Joint | | 31 | 32 | 59 | 87 | 66.5 | I |
| | 2018.03- | 6AT | F | L | SUV FWD PEXB;PEXP | | GCI82163 | Inner Joint | | 31 | 32 | 40 | 67 | 110 | |
| | 2018.03- | 6AT | F | R | SUV FWD PEXB;PEXP | | GCI82500 | Inner Joint | | 31 | 32 | 40 | 415 | 109 | |
| 2.0 (121 kw) | 2011.11-2017.02 | 6AT | F | L | SUV FWD PEY7;PEY6;PE-VPS | Date from:2014.01,for left-hand drive vehicles;For right-hand drive vehicles | GDS34236 | Drive Shaft | | 31 | 31 | 59 | 86.5 | 652 | |
| | 2011.11-2017.02 | 6AT | F | L | SUV FWD PEY7;PEY6;PE-VPS | Date to:2013.12;For left-hand drive vehicles | GDS34239 | Drive Shaft | | 31 | 31 | 59 | 87 | 653 | |
| | 2011.11-2017.02 | 6AT | F | R | SUV FWD PEY7;PEY6;PE-VPS | | GDS34235 | Drive Shaft | | 31 | 31 | 59 | 86.5 | 1016 | |
| | 2011.11-2017.02 | 6AT | F | L | SUV FWD PEY7;PEY6;PE-VPS | Date to:2013.12;For left-hand drive vehicles | GCO34208 | Outer Joint | | 31 | 26 | 59 | 87 | 69 | I |
| | 2011.11-2017.02 | 6AT | F | L/R | SUV FWD PEY7;PEY6;PE-VPS | | GCO34207 | Outer Joint | | 31 | 24 | 59 | 86.5 | 69 | I |
| | 2011.11-2017.02 | 6AT | F | L | SUV FWD PEY7;PEY6;PE-VPS | | GCI34129 | Inner Joint | | 31 | 24 | 40 | 67 | 113.5 | |
| | 2011.11-2017.02 | 6AT | F | R | SUV FWD PEY7;PEY6;PE-VPS | | GCI34128 | Inner Joint | | 31 | 24 | 40 | 416 | 115 | |
| | 2011.11-2017.02 | 6MT | F | L | SUV FWD PEY7;PEY6;PE-VPS | | GDS83824 | Drive Shaft | | 31 | 31 | 59 | 86.5 | 662 | |
| | 2011.11-2017.02 | 6MT | F | R | SUV FWD PEY7;PEY6;PE-VPS | | GDS83874 | Drive Shaft | | 31 | 31 | 59 | 86.5 | 1024 | |
| | 2011.11-2017.02 | 6MT | F | R | SUV FWD PEY7;PEY6;PE-VPS | | GCO82495 | Outer Joint | | 31 | 33 | 59 | 86.5 | 67.5 | I |
| | 2011.11-2017.02 | 6MT | F | L | SUV FWD PEY7;PEY6;PE-VPS | | GCI82383 | Inner Joint | | 31 | 33 | 40 | 67 | 94 | |
| | 2011.11-2017.02 | 6MT | F | R | SUV FWD PEY7;PEY6;PE-VPS | | GCI82405 | Inner Joint | | 31 | 33 | 40 | 416 | 95 | |

| | YEAR | TRANSM. | F/R | L/R | BODY STYLE & DRIVE TYPE & ENGINE | REMARKS | G-AP Ref. | PRODUCT | ABS | Technical Specifications A | B | C | H | L | P |
|---|---|---|---|---|---|---|---|---|---|---|---|---|---|---|---|
| **MAZDA** | | | | | | | | | | | | | | | |
| **CX-5** | | | | | | | | | | | | | | | |
| 2.0 (121 kw) | 2011.11-2017.02 | | F | R | SUV FWD PEY7;PEY6;PE-VPS | | GCI34115 | Inner Joint | | 28 | 33 | 43 | | 132 | |
| | 2015.04-2017.02 | 6MT | F | L | SUV Van FWD PEY7;PE-VPS | | GDS83824 | Drive Shaft | | 31 | 31 | 59 | 86.5 | 662 | |
| | 2015.04-2017.02 | 6MT | F | R | SUV Van FWD PEY7;PE-VPS | | GDS83874 | Drive Shaft | | 31 | 31 | 59 | 86.5 | 1024 | |
| | 2015.04-2017.02 | 6MT | F | R | SUV Van FWD PEY7;PE-VPS | | GCO82495 | Outer Joint | | 31 | 33 | 59 | 86.5 | 67.5 | I |
| | 2015.04-2017.02 | 6MT | F | L | SUV Van FWD PEY7;PE-VPS | | GCI82383 | Inner Joint | | 31 | 33 | 40 | 67 | 94 | |
| | 2015.04-2017.02 | 6MT | F | R | SUV Van FWD PEY7;PE-VPS | | GCI82405 | Inner Joint | | 31 | 33 | 40 | 416 | 95 | |
| | 2017.05- | 6AT | F | L | SUV FWD PEXB;PEX3;PEXP | Date from:2022.12,For right-hand drive vehicles | GDS83172 | Drive Shaft | | 31 | 31 | 59 | 87 | 650 | |
| | 2017.05- | 6AT | F | L | SUV FWD PEXB;PEX3;PEXP | For left-hand drive vehicles;For right-hand drive vehicles,Date to:2023.11 | GDS84025 | Drive Shaft | | 31 | 31 | 59 | 87 | 659 | |
| | 2017.05- | 6AT | F | R | SUV FWD PEXB;PEX3;PEXP | | GDS84044 | Drive Shaft | | 31 | 31 | 59 | 87 | 1024 | |
| | 2017.05- | 6AT | F | L/R | SUV FWD PEXB;PEX3;PEXP | | GCO82330 | Outer Joint | | 31 | 32 | 59 | 87 | 66.5 | I |
| | 2017.05- | 6AT | F | L | SUV FWD PEXB;PEX3;PEXP | | GCI82163 | Inner Joint | | 31 | 32 | 40 | 67 | 110 | |
| | 2017.05- | 6AT | F | R | SUV FWD PEXB;PEX3;PEXP | | GCI82500 | Inner Joint | | 31 | 32 | 40 | 415 | 109 | |
| | 2018.06- | 6AT | F | L | SUV 4WD PEXB;PEXP | Date from:2020.09;Date to:2022.11;For vehicles with cylinder shutdown;Date from:2022.12;not for Russia | GDS83172 | Drive Shaft | | 31 | 31 | 59 | 87 | 650 | |
| | 2018.06- | 6AT | F | L | SUV 4WD PEXB;PEXP | Date to:2020.05;Date from:2020.06;Date to:2022.11;For vehicles without cylinder shutdown;Date from:2022.12;Country Version:Russia | GDS84025 | Drive Shaft | | 31 | 31 | 59 | 87 | 659 | |
| | 2018.06- | 6AT | F | R | SUV 4WD PEXB;PEXP | | GDS84026 | Drive Shaft | | 31 | 31 | 59 | 87 | 1023 | |
| | 2018.06- | 6AT | F | L/R | SUV 4WD PEXB;PEXP | | GCO82330 | Outer Joint | | 31 | 32 | 59 | 87 | 66.5 | I |
| | 2018.06- | 6AT | F | L | SUV 4WD PEXB;PEXP | | GCI82163 | Inner Joint | | 31 | 32 | 40 | 67 | 110 | |
| | 2018.06- | 6AT | F | R | SUV 4WD PEXB;PEXP | | GCI82459 | Inner Joint | | 31 | 32 | 37 | 415 | 109 | |
| | 2018.06- | AT/MT | R | L | SUV 4WD PEXB;PEXP | | GDS84052 | Drive Shaft | 48T | 28 | 22 | 51.7 | 85 | 815 | |
| | 2018.06- | AT/MT | R | R | SUV 4WD PEXB;PEXP | | GDS84063 | Drive Shaft | 48T | 28 | 22 | 51.7 | 85 | 853 | |
| | 2018.06- | AT/MT | R | L/R | SUV 4WD PEXB;PEXP | | GCO82578 | Outer Joint | 48T | 28 | 24 | 51.7 | 85 | 56 | I |
| | 2018.06- | AT/MT | R | L/R | SUV 4WD PEXB;PEXP | | GCI82501 | Inner Joint | | 22 | 24 | 30 | 65 | 98 | |
| | 2023.02- | 6AT | F | L | SUV 4WD PEYK | | GDS83172 | Drive Shaft | | 31 | 31 | 59 | 87 | 650 | |
| | 2023.02- | 6AT | F | L | SUV 4WD PEYK | | GDS84025 | Drive Shaft | | 31 | 31 | 59 | 87 | 659 | |
| | 2023.02- | 6AT | F | R | SUV 4WD PEYK | Country Version:Russia | GDS84026 | Drive Shaft | | 31 | 31 | 59 | 87 | 1023 | |
| | 2023.02- | 6AT | F | L/R | SUV 4WD PEYK | For right-hand drive vehicles | GCO82330 | Outer Joint | | 31 | 32 | 59 | 87 | 66.5 | I |
| | 2023.02- | 6AT | F | L | SUV 4WD PEYK | | GCI82163 | Inner Joint | | 31 | 32 | 40 | 67 | 110 | |
| | 2023.02- | 6AT/6MT | R | L | SUV 4WD PEYK | | GDS84052 | Drive Shaft | 48T | 28 | 22 | 51.7 | 85 | 815 | |
| | 2023.02- | AT/MT | R | R | SUV 4WD PEYK | Chassis no. to::B32752 | GDS84063 | Drive Shaft | 48T | 28 | 22 | 51.7 | 85 | 853 | |
| | 2023.02- | AT/MT | R | R | SUV 4WD PEYK | Chassis no. to::B32752 | GCO82578 | Outer Joint | 48T | 28 | 24 | 51.7 | 85 | 56 | I |
| | 2023.02- | AT/MT | R | R | SUV 4WD PEYK | Chassis no. to::B32752 | GCI82501 | Inner Joint | | 22 | 24 | 30 | 65 | 98 | |
| | 2023.02- | 6AT | F | L | SUV FWD PEYK | | GDS83172 | Drive Shaft | | 31 | 31 | 59 | 87 | 650 | |
| | 2023.02- | 6AT | F | L | SUV FWD PEYK | | GCI82163 | Inner Joint | | 31 | 32 | 40 | 67 | 110 | |
| 2.2 (110 kw) | 2012.04-2017.02 | 6AT | F | L | SUV 4WD SHY1 | | GDS81992 | Drive Shaft | | 31 | 31 | 59 | 87 | 645 | |
| | 2012.04-2017.02 | 6AT | F | R | SUV 4WD SHY1 | | GDS82313 | Drive Shaft | | 31 | 31 | 59 | 87 | 1024 | |
| | 2012.04-2017.02 | 6AT | F | L/R | SUV 4WD SHY1 | | GCO81805 | Outer Joint | | 31 | 26 | 59 | 87 | 68.5 | I |
| | 2012.04-2017.02 | 6AT | F | L | SUV 4WD SHY1 | | GCI83785 | Inner Joint | | 31 | 27 | 40 | 74.5 | 115.5 | |
| | 2012.04-2017.02 | 6AT | F | R | SUV 4WD SHY1 | | GCI81745 | Inner Joint | | 31 | 27 | 37 | 442.5 | 121.5 | |
| | 2012.04-2017.02 | 6AT/6MT | R | L | SUV 4WD SHY1 | | GDS34240 | Drive Shaft | 48T | 28 | 22 | 51.7 | 85 | 815 | |
| | 2012.04-2017.02 | 6AT/6MT | R | R | SUV 4WD SHY1 | | GDS82314 | Drive Shaft | 48T | 28 | 22 | 51.7 | 85 | 852 | |
| | 2012.04-2017.02 | 6AT/6MT | R | L/R | SUV 4WD SHY1 | | GCO34213 | Outer Joint | 48T | 28 | 26 | 51.7 | 85 | 56 | I |
| | 2012.04-2017.02 | 6AT/6MT | R | L/R | SUV 4WD SHY1 | | GCI34131 | Inner Joint | | 22 | 26 | 30 | 65 | 98.5 | |
| | 2012.04-2017.02 | 6AT | F | L | SUV FWD SHY1;SHY4 | | GDS81992 | Drive Shaft | | 31 | 31 | 59 | 87 | 645 | |
| | 2012.04-2017.02 | 6AT | F | R | SUV FWD SHY1;SHY4 | | GDS81993 | Drive Shaft | | 31 | 31 | 59 | 87 | 1021 | |
| | 2012.04-2017.02 | 6AT | F | L/R | SUV FWD SHY1;SHY4 | | GCO81805 | Outer Joint | | 31 | 26 | 59 | 87 | 68.5 | I |
| | 2012.04-2017.02 | 6AT | F | L | SUV FWD SHY1;SHY4 | | GCI83785 | Inner Joint | | 31 | 27 | 40 | 74.5 | 115.5 | |
| | 2012.04-2017.02 | 6AT | F | R | SUV FWD SHY1;SHY4 | | GCI82285 | Inner Joint | | 31 | 27 | 40 | 442 | 121.5 | |
| | 2015.04-2017.02 | 6AT | F | L | SUV Van 4WD SHY4 | | GDS81992 | Drive Shaft | | 31 | 31 | 59 | 87 | 645 | |
| | 2015.04-2017.02 | 6AT | F | R | SUV Van 4WD SHY4 | | GDS82313 | Drive Shaft | | 31 | 31 | 59 | 87 | 1024 | |
| | 2015.04-2017.02 | 6AT | F | L/R | SUV Van 4WD SHY4 | | GCO81805 | Outer Joint | | 31 | 26 | 59 | 87 | 68.5 | I |
| | 2015.04-2017.02 | 6AT | F | L | SUV Van 4WD SHY4 | | GCI83785 | Inner Joint | | 31 | 27 | 40 | 74.5 | 115.5 | |
| | 2015.04-2017.02 | 6AT/6MT | R | L | SUV Van 4WD SHY4 | | GDS34240 | Drive Shaft | 48T | 28 | 22 | 51.7 | 85 | 815 | |
| | 2015.04-2017.02 | 6AT/6MT | R | R | SUV Van 4WD SHY4 | | GDS82314 | Drive Shaft | 48T | 28 | 22 | 51.7 | 85 | 852 | |
| | 2015.04-2017.02 | 6AT/6MT | R | L/R | SUV Van 4WD SHY4 | | GCI34131 | Inner Joint | | 22 | 26 | 30 | 65 | 98.5 | |
| | 2015.04-2017.02 | 6AT | F | L | SUV Van FWD SHY4 | | GDS81992 | Drive Shaft | | 31 | 31 | 59 | 87 | 645 | |
| | 2015.04-2017.02 | 6AT | F | R | SUV Van FWD SHY4 | | GDS81993 | Drive Shaft | | 31 | 31 | 59 | 87 | 1021 | |
| | 2015.04-2017.02 | 6AT | F | L/R | SUV Van FWD SHY4 | | GCO81805 | Outer Joint | | 31 | 26 | 59 | 87 | 68.5 | I |
| | 2015.04-2017.02 | 6AT | F | L | SUV Van FWD SHY4 | | GCI83785 | Inner Joint | | 31 | 27 | 40 | 74.5 | 115.5 | |
| | 2015.04-2017.02 | 6AT | F | R | SUV Van FWD SHY4 | | GCI82285 | Inner Joint | | 31 | 27 | 40 | 442 | 121.5 | |
| | 2017.05-2024.12 | 6AT | F | L | SUV 4WD SHY6;SHY8 | Date from:2021.08;For right-hand drive vehicles;For vehicles with start-stop function | GDS83172 | Drive Shaft | | 31 | 31 | 59 | 87 | 650 | |
| | 2017.05-2024.12 | 6AT | F | L | SUV 4WD SHY6;SHY8 | Date from:2021.08;For right-hand drive vehicles;For vehicles with start-stop function | GCI82163 | Inner Joint | | 31 | 32 | 40 | 67 | 110 | |
| | 2017.05-2024.12 | AT/MT | R | L | SUV 4WD SHY6;SHY8 | | GDS84052 | Drive Shaft | 48T | 28 | 22 | 51.7 | 85 | 815 | |
| | 2017.05-2024.12 | AT/MT | R | R | SUV 4WD SHY6;SHY8 | | GDS84063 | Drive Shaft | 48T | 28 | 22 | 51.7 | 85 | 853 | |
| | 2017.05-2024.12 | AT/MT | R | L/R | SUV 4WD SHY6;SHY8 | | GCO82578 | Outer Joint | 48T | 28 | 24 | 51.7 | 85 | 56 | I |
| | 2017.05-2024.12 | AT/MT | R | L/R | SUV 4WD SHY6;SHY8 | | GCI82501 | Inner Joint | | 22 | 24 | 30 | 65 | 98 | |

| | YEAR | TRANSM. | F/R | L/R | BODY STYLE & DRIVE TYPE & ENGINE | REMARKS | G-AP Ref. | PRODUCT | ABS | Technical Specifications A | B | C | H | L | P |
|---|---|---|---|---|---|---|---|---|---|---|---|---|---|---|---|
| **MAZDA** | | | | | | | | | | | | | | | |
| **CX-5** | | | | | | | | | | | | | | | |
| 2.2 (129 kw) | 2012.04-2017.02 | 6AT | F | L | SUV 4WD SHY4 | | GDS81992 | Drive Shaft | | 31 | 31 | 59 | 87 | 645 | |
| | 2012.04-2017.02 | 6AT | F | R | SUV 4WD SHY4 | | GDS82313 | Drive Shaft | | 31 | 31 | 59 | 87 | 1024 | |
| | 2012.04-2017.02 | 6AT | F | L/R | SUV 4WD SHY4 | | GCO81805 | Outer Joint | | 31 | 26 | 59 | 87 | 68.5 | I |
| | 2012.04-2017.02 | 6AT | F | L | SUV 4WD SHY4 | | GCI83785 | Inner Joint | | 31 | 27 | 40 | 74.5 | 115.5 | |
| | 2012.04-2017.02 | 6AT | F | R | SUV 4WD SHY4 | | GCI81745 | Inner Joint | | 31 | 27 | 37 | 442.5 | 121.5 | |
| | 2012.04-2017.02 | 6AT/6MT | R | L | SUV 4WD SHY4 | | GDS34240 | Drive Shaft | 48T | 28 | 22 | 51.7 | 85 | 815 | |
| | 2012.04-2017.02 | 6AT/6MT | R | R | SUV 4WD SHY4 | | GDS82314 | Drive Shaft | 48T | 28 | 22 | 51.7 | 85 | 852 | |
| | 2012.04-2017.02 | 6AT/6MT | R | L/R | SUV 4WD SHY4 | | GCO34213 | Outer Joint | 48T | 28 | 26 | 51.7 | 85 | 56 | I |
| | 2012.04-2017.02 | 6AT/6MT | R | L/R | SUV 4WD SHY4 | | GCI34131 | Inner Joint | | 22 | 26 | 30 | 65 | 98.5 | |
| | 2015.04-2017.02 | 6AT | F | L | SUV Van 4WD SHY4 | | GDS81992 | Drive Shaft | | 31 | 31 | 59 | 87 | 645 | |
| | 2015.04-2017.02 | 6AT | F | R | SUV Van 4WD SHY4 | | GDS82313 | Drive Shaft | | 31 | 31 | 59 | 87 | 1024 | |
| | 2015.04-2017.02 | 6AT | F | L/R | SUV Van 4WD SHY4 | | GCO81805 | Outer Joint | | 31 | 26 | 59 | 87 | 68.5 | I |
| | 2015.04-2017.02 | 6AT | F | L | SUV Van 4WD SHY4 | | GCI83785 | Inner Joint | | 31 | 27 | 40 | 74.5 | 115.5 | |
| | 2015.04-2017.02 | 6AT | R | L | SUV Van 4WD SHY4 | | GDS34240 | Drive Shaft | 48T | 28 | 22 | 51.7 | 85 | 815 | |
| | 2015.04-2017.02 | 6AT | R | R | SUV Van 4WD SHY4 | | GDS82314 | Drive Shaft | 48T | 28 | 22 | 51.7 | 85 | 852 | |
| | 2015.04-2017.02 | 6AT | R | L/R | SUV Van 4WD SHY4 | | GCI34131 | Inner Joint | | 22 | 26 | 30 | 65 | 98.5 | |
| | 2017.05-2018.02 | AT/MT | R | L | SUV 4WD SHY6 | | GDS84052 | Drive Shaft | 48T | 28 | 22 | 51.7 | 85 | 815 | |
| | 2017.05-2018.02 | AT/MT | R | R | SUV 4WD SHY6 | | GDS84063 | Drive Shaft | 48T | 28 | 22 | 51.7 | 85 | 853 | |
| | 2017.05-2018.02 | AT/MT | R | L/R | SUV 4WD SHY6 | | GCO82578 | Outer Joint | 48T | 28 | 24 | 51.7 | 85 | 56 | I |
| | 2017.05-2018.02 | AT/MT | R | L/R | SUV 4WD SHY6 | | GCI82501 | Inner Joint | | 22 | 24 | 30 | 65 | 98 | |
| 2.2 (135 kw) | 2018.06- | 6AT | F | L | SUV 4WD SHY8 | Date from:2021.06.For right-hand drive vehicles.For vehicles with start-stop function | GDS83172 | Drive Shaft | | 31 | 31 | 59 | 87 | 650 | |
| | 2018.06- | 6AT | F | L | SUV 4WD SHY8 | Date from:2021.06.For right-hand drive vehicles.For vehicles with start-stop function | GCI82163 | Inner Joint | | 31 | 32 | 40 | 67 | 110 | |
| | 2018.06- | AT/MT | R | L | SUV 4WD SHY8 | | GDS84052 | Drive Shaft | 48T | 28 | 22 | 51.7 | 85 | 815 | |
| | 2018.06- | AT/MT | R | R | SUV 4WD SHY8 | | GDS84063 | Drive Shaft | 48T | 28 | 22 | 51.7 | 85 | 853 | |
| | 2018.06- | AT/MT | R | L/R | SUV 4WD SHY8 | | GCO82578 | Outer Joint | 48T | 28 | 24 | 51.7 | 85 | 56 | I |
| | 2018.06- | AT/MT | R | L/R | SUV 4WD SHY8 | | GCI82501 | Inner Joint | | 22 | 24 | 30 | 65 | 98 | |
| 2.2 (138 kw) | 2018.03- | 6AT | F | L | SUV 4WD SHY8 | Date from:2021.06.For right-hand drive vehicles.For vehicles with start-stop function | GDS83172 | Drive Shaft | | 31 | 31 | 59 | 87 | 650 | |
| | 2018.03- | 6AT | F | L | SUV 4WD SHY8 | Date from:2021.06.For right-hand drive vehicles.For vehicles with start-stop function | GCI82163 | Inner Joint | | 31 | 32 | 40 | 67 | 110 | |
| | 2018.03- | 6AT | R | L | SUV 4WD SHY8 | | GDS84052 | Drive Shaft | 48T | 28 | 22 | 51.7 | 85 | 815 | |
| | 2018.03- | 6AT | R | R | SUV 4WD SHY8 | | GDS84063 | Drive Shaft | 48T | 28 | 22 | 51.7 | 85 | 853 | |
| | 2018.03- | 6AT | R | L/R | SUV 4WD SHY8 | | GCO82578 | Outer Joint | 48T | 28 | 24 | 51.7 | 85 | 56 | I |
| | 2018.03- | 6AT | R | L/R | SUV 4WD SHY8 | | GCI82501 | Inner Joint | | 22 | 24 | 30 | 65 | 98 | |
| 2.5 (135 kw) | 2014.07-2017.02 | | F | R | SUV 4WD PY-VPS | | GCI34115 | Inner Joint | | 28 | 33 | 43 | | 132 | |
| 2.5 (138 kw) | 2013.02-2017.02 | | F | R | SUV FWD PY-VPS | | GCI34115 | Inner Joint | | 28 | 33 | 43 | | 132 | |
| 2.5 (141 kw) | 2015.02-2017.02 | 6AT | F | L | SUV 4WD PYY1 | | GDS34239 | Drive Shaft | | 31 | 31 | 59 | 87 | 653 | |
| | 2015.02-2017.02 | 6AT | F | R | SUV 4WD PYY1 | | GDS34238 | Drive Shaft | | 31 | 31 | 59 | 87 | 1019 | |
| | 2015.02-2017.02 | 6AT | F | L | SUV 4WD PYY1 | | GCO34207 | Outer Joint | | 31 | 24 | 59 | 86.5 | 69 | I |
| | 2015.02-2017.02 | 6AT | F | L/R | SUV 4WD PYY1 | | GCO34208 | Outer Joint | | 31 | 26 | 59 | 87 | 69 | I |
| | 2015.02-2017.02 | 6AT | F | L | SUV 4WD PYY1 | | GCI34129 | Inner Joint | | 31 | 24 | 40 | 67 | 113.5 | |
| | 2015.02-2017.02 | 6AT | F | R | SUV 4WD PYY1 | | GCI34130 | Inner Joint | | 31 | 24 | 37 | 431 | 115 | |
| | 2015.02-2017.02 | | F | R | SUV 4WD PYY1 | | GCI34115 | Inner Joint | | 28 | 33 | 43 | | 132 | |
| | 2015.02-2017.02 | 6AT | R | L | SUV 4WD PYY1 | | GDS34240 | Drive Shaft | 48T | 28 | 22 | 51.7 | 85 | 815 | |
| | 2015.02-2017.02 | 6AT | R | R | SUV 4WD PYY1 | | GDS82314 | Drive Shaft | 48T | 28 | 22 | 51.7 | 85 | 852 | |
| | 2015.02-2017.02 | 6AT | R | L/R | SUV 4WD PYY1 | | GCO34213 | Outer Joint | 48T | 28 | 26 | 51.7 | 85 | 56 | I |
| | 2015.02-2017.02 | 6AT | R | L/R | SUV 4WD PYY1 | | GCI34131 | Inner Joint | | 22 | 26 | 30 | 65 | 98.5 | |
| | 2015.04-2017.02 | 6AT | F | L | SUV Van 4WD PYY1 | | GDS34239 | Drive Shaft | | 31 | 31 | 59 | 87 | 653 | |
| | 2015.04-2017.02 | 6AT | F | R | SUV Van 4WD PYY1 | | GDS34238 | Drive Shaft | | 31 | 31 | 59 | 87 | 1019 | |
| | 2015.04-2017.02 | 6AT | F | L/R | SUV Van 4WD PYY1 | | GCO34208 | Outer Joint | | 31 | 26 | 59 | 87 | 69 | I |
| | 2015.04-2017.02 | 6AT | F | L | SUV Van 4WD PYY1 | | GCI34129 | Inner Joint | | 31 | 24 | 40 | 67 | 113.5 | |
| | 2015.04-2017.02 | 6AT | R | L | SUV Van 4WD PYY1 | | GDS34240 | Drive Shaft | 48T | 28 | 22 | 51.7 | 85 | 815 | |
| | 2015.04-2017.02 | 6AT | R | R | SUV Van 4WD PYY1 | | GDS82314 | Drive Shaft | 48T | 28 | 22 | 51.7 | 85 | 852 | |
| | 2015.04-2017.02 | 6AT | R | L/R | SUV Van 4WD PYY1 | | GCO34213 | Outer Joint | 48T | 28 | 26 | 51.7 | 85 | 56 | I |
| | 2015.04-2017.02 | 6AT | R | L/R | SUV Van 4WD PYY1 | | GCI34131 | Inner Joint | | 22 | 26 | 30 | 65 | 98.5 | |
| 2.5 (143 kw) | 2017.05- | 6AT | F | L | SUV 4WD PY-VPS;PY-Y8;PY-ZA;PYZ8;PYZC | For vehicles with cylinder shutdown | GDS83172 | Drive Shaft | | 31 | 31 | 59 | 87 | 650 | |
| | 2017.05- | 6AT | F | L | SUV 4WD PY-VPS;PY-Y8;PY-ZA;PYZ8;PYZC | For vehicles without cylinder shutdown | GDS84025 | Drive Shaft | | 31 | 31 | 59 | 87 | 659 | |
| | 2017.05- | 6AT | F | R | SUV 4WD PY-VPS;PY-Y8;PY-ZA;PYZ8;PYZC | For vehicles with cylinder shutdown | GDS83585 | Drive Shaft | | 31 | 31 | 59 | 87 | 1032 | |
| | 2017.05- | 6AT | F | R | SUV 4WD PY-VPS;PY-Y8;PY-ZA;PYZ8;PYZC | For vehicles without cylinder shutdown | GDS84077 | Drive Shaft | | 31 | 31 | 59 | 87 | 1023 | |
| | 2017.05- | 6AT | F | L/R | SUV 4WD PY-VPS;PY-Y8;PY-ZA;PYZ8;PYZC | | GCO82330 | Outer Joint | | 31 | 32 | 59 | 87 | 66.5 | I |
| | 2017.05- | 6AT | F | L | SUV 4WD PY-VPS;PY-Y8;PY-ZA;PYZ8;PYZC | | GCI82163 | Inner Joint | | 31 | 32 | 40 | 67 | 110 | |
| | 2017.05- | 6AT | F | R | SUV 4WD PY-VPS;PY-Y8;PY-ZA;PYZ8;PYZC | For vehicles with cylinder shutdown | GCI82298 | Inner Joint | | 31 | 32 | 37 | 440 | 109 | |
| | 2017.05- | 6AT | F | R | SUV 4WD PY-VPS;PY-Y8;PY-ZA;PYZ8;PYZC | For vehicles without cylinder shutdown | GCI82499 | Inner Joint | | 31 | 32 | 37 | 431 | 109 | |
| | 2017.05- | 6AT | R | L | SUV 4WD PY-VPS;PY-Y8;PY-ZA;PYZ8;PYZC | | GDS84052 | Drive Shaft | 48T | 28 | 22 | 51.7 | 85 | 815 | |
| | 2017.05- | 6AT | R | R | SUV 4WD PY-VPS;PY-Y8;PY-ZA;PYZ8;PYZC | | GDS84063 | Drive Shaft | 48T | 28 | 22 | 51.7 | 85 | 853 | |
| | 2017.05- | 6AT | R | L/R | SUV 4WD PY-VPS;PY-Y8;PY-ZA;PYZ8;PYZC | | GCO82578 | Outer Joint | 48T | 28 | 24 | 51.7 | 85 | 56 | I |
| | 2017.05- | 6AT | R | L/R | SUV 4WD PY-VPS;PY-Y8;PY-ZA;PYZ8;PYZC | | GCI82501 | Inner Joint | | 22 | 24 | 30 | 65 | 98 | |

| | YEAR | TRANSM. | F/R | L/R | BODY STYLE & DRIVE TYPE & ENGINE | REMARKS | G-AP Ref. | PRODUCT | ABS | Technical Specifications A | B | C | H | L | P |
|---|---|---|---|---|---|---|---|---|---|---|---|---|---|---|---|
| **MAZDA** | | | | | | | | | | | | | | | |
| **CX-5** | | | | | | | | | | | | | | | |
| 2.5 (143 kw) | 2019.03-2022.11 | 6AT | F | L | SUV FWD PYZ8;PYZC | | GDS83172 | Drive Shaft | | 31 | 31 | 59 | 87 | 650 | |
| | 2019.03-2022.11 | 6AT | F | R | SUV FWD PYZ8;PYZC | | GDS83168 | Drive Shaft | | 31 | 31 | 59 | 87 | 1030 | |
| | 2019.03-2022.11 | 6AT | F | L/R | SUV FWD PYZ8;PYZC | | GCO82330 | Outer Joint | | 31 | 32 | 59 | 87 | 66.5 | I |
| | 2019.03-2022.11 | 6AT | F | L | SUV FWD PYZ8;PYZC | | GCI82163 | Inner Joint | | 31 | 32 | 40 | 67 | 110 | |
| | 2019.03-2022.11 | 6AT | F | R | SUV FWD PYZ8;PYZC | | GCI82165 | Inner Joint | | 31 | 32 | 40 | 438.5 | 109 | |
| | 2023.02- | 6AT | F | L | SUV 4WD PYZX | | GDS83172 | Drive Shaft | | 31 | 31 | 59 | 87 | 650 | |
| | 2023.02- | 6AT | F | L | SUV 4WD PYZX | | GDS84025 | Drive Shaft | | 31 | 31 | 59 | 87 | 659 | |
| | 2023.02- | 6AT | F | L/R | SUV 4WD PYZX | Position:Front axle left and right;For right-hand drive vehicles;Position:Front axle right;For left-hand drive vehicles | GCO82330 | Outer Joint | | 31 | 32 | 59 | 87 | 66.5 | I |
| | 2023.02- | 6AT | F | L | SUV 4WD PYZX | | GCI82163 | Inner Joint | | 31 | 32 | 40 | 67 | 110 | |
| | 2023.02- | 6AT | R | L | SUV 4WD PYZX | | GDS84052 | Drive Shaft | 48T | 28 | 22 | 51.7 | 85 | 815 | |
| | 2023.02- | AT/MT | R | R | SUV 4WD PYZX | Chassis no. to::B32752 | GDS84063 | Drive Shaft | 48T | 28 | 22 | 51.7 | 85 | 853 | |
| | 2023.02- | AT/MT | R | R | SUV 4WD PYZX | Chassis no. to::B32752 | GCO82578 | Outer Joint | 48T | 28 | 24 | 51.7 | 85 | 56 | I |
| | 2023.02- | AT/MT | R | R | SUV 4WD PYZX | Chassis no. to::B32752 | GCI82501 | Inner Joint | | 22 | 24 | 30 | 65 | 98 | |
| | 2023.02- | 6AT | F | L | SUV FWD PYZX | | GDS83172 | Drive Shaft | | 31 | 31 | 59 | 87 | 650 | |
| | 2023.02- | 6AT | F | R | SUV FWD PYZX | | GDS83168 | Drive Shaft | | 31 | 31 | 59 | 87 | 1030 | |
| | 2023.02- | 6AT | F | L/R | SUV FWD PYZX | | GCO82330 | Outer Joint | | 31 | 32 | 59 | 87 | 66.5 | I |
| | 2023.02- | 6AT | F | L | SUV FWD PYZX | | GCI82163 | Inner Joint | | 31 | 32 | 40 | 67 | 110 | |
| | 2023.02- | 6AT | F | R | SUV FWD PYZX | | GCI82165 | Inner Joint | | 31 | 32 | 40 | 438.5 | 109 | |
| **CX-60** | | | | | | | | | | | | | | | |
| 2.5 (241 kw) | 2022.03- | 8AT | R | L | SUV 4WD PY-VPS;PYZR | | GDS57675 | Drive Shaft | | 34 | 34 | 60 | 93 | 806 | |
| | 2022.03- | 8AT | R | R | SUV 4WD PY-VPS;PYZR | | GDS57676 | Drive Shaft | | 34 | 34 | 60 | 93 | 852 | |
| | 2022.03- | 8AT | R | L/R | SUV 4WD PY-VPS;PYZR | | GCO83673 | Outer Joint | | 34 | 37 | 60 | 93 | 52.5 | I |
| | 2022.03- | 8AT | R | L/R | SUV 4WD PY-VPS;PYZR | | GCI83803 | Inner Joint | | 34 | 37 | 45 | 81.5 | 116 | |
| 3.3 (147 kw) | 2022.11- | 8AT | R | L | SUV RWD T3Y5 | | GDS57675 | Drive Shaft | | 34 | 34 | 60 | 93 | 806 | |
| | 2022.11- | 8AT | R | R | SUV RWD T3Y5 | | GDS57676 | Drive Shaft | | 34 | 34 | 60 | 93 | 852 | |
| | 2022.11- | 8AT | R | L/R | SUV RWD T3Y5 | | GCO83673 | Outer Joint | | 34 | 37 | 60 | 93 | 52.5 | I |
| | 2022.11- | 8AT | R | L/R | SUV RWD T3Y5 | | GCI83803 | Inner Joint | | 34 | 37 | 45 | 81.5 | 116 | |
| **CX-7** | | | | | | | | | | | | | | | |
| 2.2 (120 kw) | 2012.01-2013.03 | 6MT | F | L | SUV 4WD R2AA | | GCI34085 | Inner Joint | | 30 | 36 | 50 | 77.5 | 107 | |
| | 2012.01-2013.03 | 6MT | R | L | SUV 4WD R2AA | | GDS84415 | Drive Shaft | 44T | 28 | 26 | 56 | 90 | 821 | |
| | 2012.01-2013.03 | 6MT | R | R | SUV 4WD R2AA | | GDS84419 | Drive Shaft | 44T | 28 | 26 | 56 | 90 | 841 | |
| | 2012.01-2013.03 | 6MT | R | L/R | SUV 4WD R2AA | | GCO82824 | Outer Joint | 44T | 28 | 30 | 56 | 90 | 69 | I |
| | 2012.01-2013.03 | 6MT | R | L/R | SUV 4WD R2AA | | GCI39114 | Inner Joint | | 26 | 30 | 35 | 78.5 | 95 | |
| 2.2 (127 kw) | 2009.07-2013.03 | 6MT | F | L | SUV 4WD R2AA | | GCI34085 | Inner Joint | | 30 | 36 | 50 | 77.5 | 107 | |
| | 2009.07-2013.03 | 6MT | F | R | SUV 4WD R2AA | | GCI18255 | Inner Joint | | 31 | 36 | 48 | | 137 | |
| | 2009.07-2013.03 | 6MT | R | L | SUV 4WD R2AA | | GDS84415 | Drive Shaft | 44T | 28 | 26 | 56 | 90 | 821 | |
| | 2009.07-2013.03 | 6MT | R | R | SUV 4WD R2AA | | GDS84419 | Drive Shaft | 44T | 28 | 26 | 56 | 90 | 841 | |
| | 2009.07-2013.03 | 6MT | R | L/R | SUV 4WD R2AA | | GCO82824 | Outer Joint | 44T | 28 | 30 | 56 | 90 | 69 | I |
| | 2009.07-2013.03 | 6MT | R | L/R | SUV 4WD R2AA | | GCI39114 | Inner Joint | | 26 | 30 | 35 | 78.5 | 95 | |
| 2.3 (175 kw) | 2006.06-2014.12 | 6AT | F | L | SUV 4WD L3-VDT | | GDS84389 | Drive Shaft | 44T | 31 | 31 | 65 | 94 | 641 | |
| | 2006.06-2014.12 | 6AT | F | R | SUV 4WD L3-VDT | | GDS56500 | Drive Shaft | 44T | 31 | 31 | 65 | 94 | 603 | |
| | 2006.06-2014.12 | 6AT | F | L/R | SUV 4WD L3-VDT | | GCO18218 | Outer Joint | 44T | 31 | 36 | 65 | 94 | 62.5 | I |
| | 2006.06-2014.12 | 6AT | F | L | SUV 4WD L3-VDT | | GCI34142 | Inner Joint | | 31 | 36 | 36.2 | 65.5 | 99.5 | |
| | 2006.06-2014.12 | 6AT | F | R | SUV 4WD L3-VDT | | GCI18255 | Inner Joint | | 31 | 36 | 48 | | 137 | |
| | 2006.06-2014.12 | 6AT | R | L | SUV 4WD L3-VDT | | GDS84415 | Drive Shaft | 44T | 28 | 26 | 56 | 90 | 821 | |
| | 2006.06-2014.12 | 6AT | R | R | SUV 4WD L3-VDT | | GDS84419 | Drive Shaft | 44T | 28 | 26 | 56 | 90 | 841 | |
| | 2006.06-2014.12 | 6AT | R | L/R | SUV 4WD L3-VDT | | GCO82824 | Outer Joint | 44T | 28 | 30 | 56 | 90 | 69 | I |
| | 2006.06-2014.12 | 6AT | R | L/R | SUV 4WD L3-VDT | | GCI39114 | Inner Joint | | 26 | 30 | 35 | 78.5 | 95 | |
| | 2008.10-2013.03 | 6AT | F | L | SUV FWD L3Y7 | | GDS81646 | Drive Shaft | 44T | 31 | 28 | 65 | 94 | 692 | |
| | 2008.10-2013.03 | 6AT | F | R | SUV FWD L3Y7 | | GDS81645 | Drive Shaft | 44T | 31 | 28 | 65 | 94 | 607 | |
| | 2008.10-2013.03 | 6AT | F | L/R | SUV FWD L3Y7 | | GCO18218 | Outer Joint | 44T | 31 | 36 | 65 | 94 | 62.5 | I |
| | 2008.10-2013.03 | 6AT | F | L | SUV FWD L3Y7 | TJ | GCI34029 | Inner Joint | | 28 | 33 | 35 | 66.5 | 114 | |
| | 2008.10-2013.03 | 6AT | F | L | SUV FWD L3Y7 | PTJ | GCI81444 | Inner Joint | | 28 | 33 | 35 | 66.5 | 114.5 | |
| | 2008.10-2013.03 | 6AT | F | R | SUV FWD L3Y7 | | GCI81449 | Inner Joint | | 28 | 33 | 43 | | 133 | |
| 2.3 (177 kw) | 2006.06-2009.06 | 6AT | F | L | SUV FWD L3K7 | | GDS81646 | Drive Shaft | 44T | 31 | 28 | 65 | 94 | 692 | |
| | 2006.06-2009.06 | 6AT | F | R | SUV FWD L3K7 | | GDS81645 | Drive Shaft | 44T | 31 | 28 | 65 | 94 | 607 | |
| | 2006.06-2009.06 | 6AT | F | L | SUV FWD L3K7 | | GCI81444 | Inner Joint | | 28 | 33 | 35 | 66.5 | 114.5 | |
| | 2006.06-2009.06 | 6AT | F | R | SUV FWD L3K7 | | GCI81449 | Inner Joint | | 28 | 33 | 43 | | 133 | |
| 2.3 (182 kw) | 2006.06-2012.12 | AT | F | L | SUV 4WD L3-VDT | | GDS84389 | Drive Shaft | 44T | 31 | 31 | 65 | 94 | 641 | |
| | 2006.06-2012.12 | AT | F | R | SUV 4WD L3-VDT | | GDS56500 | Drive Shaft | 44T | 31 | 31 | 65 | 94 | 603 | |
| | 2006.06-2012.12 | AT | F | L/R | SUV 4WD L3-VDT | | GCO18218 | Outer Joint | 44T | 31 | 36 | 65 | 94 | 62.5 | I |
| | 2006.06-2012.12 | AT | F | L | SUV 4WD L3-VDT | | GCI34142 | Inner Joint | | 31 | 36 | 36.2 | 65.5 | 99.5 | |
| | 2006.06-2012.12 | AT | F | R | SUV 4WD L3-VDT | | GCI18255 | Inner Joint | | 31 | 36 | 48 | | 137 | |
| | 2006.06-2012.12 | AT | R | L | SUV 4WD L3-VDT | | GDS84415 | Drive Shaft | 44T | 28 | 26 | 56 | 90 | 821 | |
| | 2006.06-2012.12 | AT | R | R | SUV 4WD L3-VDT | | GDS84419 | Drive Shaft | 44T | 28 | 26 | 56 | 90 | 841 | |

| | YEAR | TRANSM. | F/R | L/R | BODY STYLE & DRIVE TYPE & ENGINE | REMARKS | G-AP Ref. | PRODUCT | ABS | Technical Specifications A | B | C | H | L | P |
|---|---|---|---|---|---|---|---|---|---|---|---|---|---|---|---|
| **MAZDA** | | | | | | | | | | | | | | | |
| **CX-7** | | | | | | | | | | | | | | | |
| 2.3 (182 kw) | 2006.06-2012.12 | AT | R | L/R | SUV 4WD L3-VDT | | GCO82824 | Outer Joint | 44T | 28 | 30 | 56 | 90 | 69 | I |
| | 2006.06-2012.12 | AT | R | L/R | SUV 4WD L3-VDT | | GCI39114 | Inner Joint | | 26 | 30 | 35 | 78.5 | 95 | |
| 2.3 (190 kw) | 2007.10-2009.08 | 6MT | F | L | SUV 4WD L3-VDT | | GCI34085 | Inner Joint | | 30 | 36 | 50 | 77.5 | 107 | |
| | 2007.10-2009.08 | AT | F | L | SUV 4WD L3-VDT | | GDS84389 | Drive Shaft | 44T | 31 | 31 | 65 | 94 | 641 | |
| | 2007.10-2009.08 | AT | F | R | SUV 4WD L3-VDT | | GDS56500 | Drive Shaft | 44T | 31 | 31 | 65 | 94 | 603 | |
| | 2007.10-2009.08 | AT | F | L/R | SUV 4WD L3-VDT | | GCO18218 | Outer Joint | 44T | 31 | 36 | 65 | 94 | 62.5 | I |
| | 2007.10-2009.08 | AT | F | L | SUV 4WD L3-VDT | | GCI34142 | Inner Joint | | 31 | 36 | 36.2 | 65.5 | 99.5 | |
| | 2007.10-2009.08 | AT | F | R | SUV 4WD L3-VDT | | GCI18255 | Inner Joint | | 31 | 36 | 48 | | 137 | |
| | 2007.10-2009.08 | 6AT/6MT | R | L | SUV 4WD L3-VDT | | GDS84415 | Drive Shaft | 44T | 28 | 26 | 56 | 90 | 821 | |
| | 2007.10-2009.08 | 6AT/6MT | R | R | SUV 4WD L3-VDT | | GDS84419 | Drive Shaft | 44T | 28 | 26 | 56 | 90 | 841 | |
| | 2007.10-2009.08 | 6AT/6MT | R | L/R | SUV 4WD L3-VDT | | GCO82824 | Outer Joint | 44T | 28 | 30 | 56 | 90 | 69 | I |
| | 2007.10-2009.08 | 6AT/6MT | R | L/R | SUV 4WD L3-VDT | | GCI39114 | Inner Joint | | 26 | 30 | 35 | 78.5 | 95 | |
| 2.3 (191 kw) | 2009.06-2013.03 | 6MT | F | L | SUV 4WD L3-VDT | | GCI34085 | Inner Joint | | 30 | 36 | 50 | 77.5 | 107 | |
| | 2009.06-2013.03 | AT | F | L | SUV 4WD L3-VDT | | GDS84389 | Drive Shaft | 44T | 31 | 31 | 65 | 94 | 641 | |
| | 2009.06-2013.03 | AT | F | R | SUV 4WD L3-VDT | | GDS56500 | Drive Shaft | 44T | 31 | 31 | 65 | 94 | 603 | |
| | 2009.06-2013.03 | AT | F | L/R | SUV 4WD L3-VDT | | GCO18218 | Outer Joint | 44T | 31 | 36 | 65 | 94 | 62.5 | I |
| | 2009.06-2013.03 | AT | F | L | SUV 4WD L3-VDT | | GCI34142 | Inner Joint | | 31 | 36 | 36.2 | 65.5 | 99.5 | |
| | 2009.06-2013.03 | AT | F | R | SUV 4WD L3-VDT | | GCI18255 | Inner Joint | | 31 | 36 | 48 | | 137 | |
| | 2009.06-2013.03 | 6AT/6MT | R | L | SUV 4WD L3-VDT | | GDS84415 | Drive Shaft | 44T | 28 | 26 | 56 | 90 | 821 | |
| | 2009.06-2013.03 | 6AT/6MT | R | R | SUV 4WD L3-VDT | | GDS84419 | Drive Shaft | 44T | 28 | 26 | 56 | 90 | 841 | |
| | 2009.06-2013.03 | 6AT/6MT | R | L/R | SUV 4WD L3-VDT | | GCO82824 | Outer Joint | 44T | 28 | 30 | 56 | 90 | 69 | I |
| | 2009.06-2013.03 | 6AT/6MT | R | L/R | SUV 4WD L3-VDT | | GCI39114 | Inner Joint | | 26 | 30 | 35 | 78.5 | 95 | |
| 2.5 (120 kw) | 2009.07-2013.03 | 5AT | F | L | SUV FWD L5-VE | | GDS81646 | Drive Shaft | 44T | 31 | 28 | 65 | 94 | 692 | |
| | 2009.07-2013.03 | 5AT | F | R | SUV FWD L5-VE | | GDS81645 | Drive Shaft | 44T | 31 | 28 | 65 | 94 | 607 | |
| | 2009.07-2013.03 | AT | F | R | SUV FWD L5-VE | | GCI81449 | Inner Joint | | 28 | 33 | 43 | | 133 | |
| **CX-80** | | | | | | | | | | | | | | | |
| 3.3 (187 kw) | 2024.04- | 8AT | R | L | SUV 4WD | | GDS57675 | Drive Shaft | | 34 | 34 | 60 | 93 | 806 | |
| | 2024.04- | 8AT | R | R | SUV 4WD | | GDS57676 | Drive Shaft | | 34 | 34 | 60 | 93 | 852 | |
| | 2024.04- | 8AT | R | L/R | SUV 4WD | | GCO83673 | Outer Joint | | 34 | 37 | 60 | 93 | 52.5 | I |
| | 2024.04- | 8AT | R | L/R | SUV 4WD | | GCI83803 | Inner Joint | | 34 | 37 | 45 | 81.5 | 116 | |
| **CX-9** | | | | | | | | | | | | | | | |
| 2.5 (170 kw) | 2016.06- | 6AT | F | L | SUV 4WD PY-VPS;PYZ4 | | GDS83554 | Drive Shaft | | 31 | 31 | 59 | 87 | 675 | |
| | 2016.06- | 6AT | F | R | SUV 4WD PY-VPS;PYZ4 | | GDS83628 | Drive Shaft | | 31 | 31 | 59 | 87 | 1056 | |
| | 2016.06- | 6AT | F | L/R | SUV 4WD PY-VPS;PYZ4 | | GCO81805 | Outer Joint | | 31 | 26 | 59 | 87 | 68.5 | I |
| | 2016.06- | 6AT | F | L | SUV 4WD PY-VPS;PYZ4 | | GCI82275 | Inner Joint | | 31 | 27 | 40 | 74.5 | 115.5 | |
| | 2016.06- | 6AT | F | R | SUV 4WD PY-VPS;PYZ4 | | GCI81745 | Inner Joint | | 31 | 27 | 37 | 442.5 | 121.5 | |
| | 2016.06- | 6AT | F | R | SUV FWD PY, PY-VPS | | GDS82973 | Drive Shaft | | 31 | 31 | 59 | 87 | 1058 | |
| 3.7 (204 kw) | 2007.01- | 6AT | F | R | SUV 4WD CA;CAY1;CAY5;CAY6 | | GDS18439 | Drive Shaft | 44T | 31 | 31 | 65 | 94 | 612 | |
| | 2007.01- | 6AT | F | L | SUV 4WD CA;CAY1;CAY5;CAY6 | | GCO18218 | Outer Joint | 44T | 31 | 36 | 65 | 94 | 62.5 | I |
| | 2007.01- | 6AT | F | L | SUV 4WD CA;CAY1;CAY5;CAY6 | | GCI34142 | Inner Joint | | 31 | 36 | 36.2 | 65.5 | 99.5 | |
| | 2007.01- | 6AT | F | R | SUV 4WD CA;CAY1;CAY5;CAY6 | | GCI18255 | Inner Joint | | 31 | 36 | 48 | | 137 | |
| | 2007.01- | 6AT | R | L | SUV 4WD CA;CAY1;CAY5;CAY6 | | GDS39302 | Drive Shaft | 44T | 28 | 26 | 56 | 92 | 818 | |
| | 2007.01- | 6AT | R | R | SUV 4WD CA;CAY1;CAY5;CAY6 | | GDS39303 | Drive Shaft | 44T | 28 | 26 | 56 | 92 | 874 | |
| | 2007.01- | 6AT | R | L/R | SUV 4WD CA;CAY1;CAY5;CAY6 | | GCO39364 | Outer Joint | 44T | 28 | 30 | 56 | 92 | 69 | I |
| | 2007.01- | 6AT | R | L/R | SUV 4WD CA;CAY1;CAY5;CAY6 | | GCI39114 | Inner Joint | | 26 | 30 | 35 | 78.5 | 95 | |
| | 2007.01- | 6AT | F | R | SUV FWD CAY1;CAY5;CAY6 | | GDS18439 | Drive Shaft | 44T | 31 | 31 | 65 | 94 | 612 | |
| | 2007.01- | 6AT | F | L | SUV FWD CAY1;CAY5;CAY6 | | GCO18218 | Outer Joint | 44T | 31 | 36 | 65 | 94 | 62.5 | I |
| | 2007.01- | 6AT | F | L | SUV FWD CAY1;CAY5;CAY6 | | GCI34142 | Inner Joint | | 31 | 36 | 36.2 | 65.5 | 99.5 | |
| | 2007.01- | 6AT | F | R | SUV FWD CAY1;CAY5;CAY6 | | GCI18255 | Inner Joint | | 31 | 36 | 48 | | 137 | |
| **Demio** | | | | | | | | | | | | | | | |
| 1.3 (46 kw) | 1998.05-2002.12 | 5MT | F | L/R | Hatchback FWD B33L/B34P/B35J | Inner teeth of wheel side:19 | GCO18036 | Outer Joint | | 24 | 19 | 52 | 86 | 50 | M |
| | 1998.05-2002.12 | | F | L/R | Hatchback FWD B33L/B34P/B35J | | GCO34062 | Outer Joint | 44T | 24 | 19 | 52 | 86 | 54.5 | I |
| | 1998.05-2002.12 | | F | L/R | Hatchback FWD B33L/B34P/B35J | Date to:2002.12 | GCO34130 | Outer Joint | 44T | 24 | 19 | 52 | 86 | 50 | M |
| | 1998.05-2002.12 | | F | | Hatchback FWD B33L/B34P/B35J | Inner teeth of wheel side:21 | GCO34018 | Outer Joint | | 24 | 21 | 52 | 86 | 50 | M |
| 1.3 (53 kw) | 1996.10-2000.04 | MT | F | R | Hatchback FWD B32L/B34P/B35J | | GCO34130 | Outer Joint | 44T | 24 | 19 | 52 | 86 | 50 | M |
| | 1996.10-2000.04 | MT | F | L/R | Hatchback FWD B32L/B34P/B35J | inner teeth of wheel side:19 | GCO18036 | Outer Joint | | 24 | 19 | 52 | 86 | 50 | M |
| | 1996.10-2000.04 | | F | L/R | Hatchback FWD B32L/B34P/B35J | | GCO34062 | Outer Joint | 44T | 24 | 19 | 52 | 86 | 54.5 | I |
| | 1996.10-2000.04 | | F | | Hatchback FWD B32L/B34P/B35J | inner teeth of wheel side:21 | GCO34018 | Outer Joint | | 24 | 21 | 52 | 86 | 50 | M |
| 1.3 (61 kw) | 1996.01-2002.10 | MT | F | L/R | Hatchback FWD B3ME | | GCO34130 | Outer Joint | 44T | 24 | 19 | 52 | 86 | 50 | M |
| 1.3 (62 kw) | 2011.06-2014.11 | | F | L/R | Hatchback FWD P3-VPS | | GCO34181 | Outer Joint | | 25 | 29 | 53.8 | 89 | 51.5 | I |
| 1.3 (67 kw) | 2007.07-2014.11 | | F | L/R | Hatchback 4WD ZJ-VE | | GCO34181 | Outer Joint | | 25 | 29 | 53.8 | 89 | 51.5 | I |
| 1.5 (55 kw) | 2000.01-2002.12 | AT/MT | F | R | Hatchback FWD B5E1/B5E2/B5E3/B5E4/B5F3/B5F5 | | GCO34130 | Outer Joint | 44T | 24 | 19 | 52 | 86 | 50 | M |
| | 2000.01-2002.12 | MT | F | L/R | Hatchback FWD B5E1/B5E2/B5E3/B5E4/B5F3/B5F5 | inner teeth of wheel side:19 | GCO18036 | Outer Joint | | 24 | 19 | 52 | 86 | 50 | M |
| | 2000.01-2002.12 | | F | L/R | Hatchback FWD B5E1/B5E2/B5E3/B5E4/B5F3/B5F5 | | GCO34062 | Outer Joint | 44T | 24 | 19 | 52 | 86 | 54.5 | I |
| | 2000.01-2002.12 | | F | | Hatchback FWD B5E1/B5E2/B5E3/B5E4/B5F3/B5F5 | inner teeth of wheel side:21 | GCO34018 | Outer Joint | | 24 | 21 | 52 | 86 | 50 | M |

| | YEAR | TRANSM. | F/R | L/R | BODY STYLE & DRIVE TYPE & ENGINE | REMARKS | G-AP Ref. | PRODUCT | ABS | Technical Specifications A | B | C | H | L | P |
|---|---|---|---|---|---|---|---|---|---|---|---|---|---|---|---|
| **MAZDA** | | | | | | | | | | | | | | | |
| **E2000** | | | | | | | | | | | | | | | |
| 2.0 (71 kw) | 1997.04-1999.08 | | F | L/R | Van 4WD FEY9 | | GCO34017 | Outer Joint | | 26 | 23 | 65 | 148.5 | 57 | M |
| **E2200** | | | | | | | | | | | | | | | |
| 2.2 (52 kw) | 1997.02-2003.05 | | F | L/R | Van 4WD R2 | | GCO34017 | Outer Joint | | 26 | 23 | 65 | 148.5 | 57 | M |
| **MPV** | | | | | | | | | | | | | | | |
| 2.0 (88 kw) | 2000.08-2002.07 | MT | F | L/R | MPV FWD FS | | GCO34063 | Outer Joint | 44T | 28 | 32 | 56 | 90 | 59 | I |
| | 2000.08-2002.07 | MT | F | L/R | MPV FWD FS | | GCO34117 | Outer Joint | 44T | 28 | 32 | 56 | 89 | 59 | M |
| | 2000.08-2002.07 | | F | | MPV FWD FS | | GCO34118 | Outer Joint | 44T | 28 | 33 | 56.5 | 89 | 59 | M |
| 2.0 (90 kw) | 1999.09-2000.08 | MT | F | L/R | MPV FWD FS-DS | | GCO34117 | Outer Joint | 44T | 28 | 32 | 56 | 89 | 59 | M |
| 2.0 (100 kw) | 2002.07-2006.02 | MT | F | L/R | MPV FWD RF5C | Date to:2004.12 | GCO34117 | Outer Joint | 44T | 28 | 32 | 56 | 89 | 59 | M |
| | 2002.07-2006.02 | | F | R | MPV FWD RF5C | | GCI34115 | Inner Joint | | 28 | 33 | 43 | | 132 | |
| 2.3 (104 kw) | 2002.07-2006.02 | MT | F | L/R | MPV FWD L3 | | GCO34063 | Outer Joint | 44T | 28 | 32 | 56 | 90 | 59 | I |
| | 2002.07-2006.02 | MT | F | L/R | MPV FWD L3 | | GCO34117 | Outer Joint | 44T | 28 | 32 | 56 | 89 | 59 | M |
| | 2002.07-2006.02 | | F | | MPV FWD L3 | | GCO34077 | Outer Joint | 44T | 28 | 35 | 56 | 91 | 65 | I |
| | 2002.07-2006.02 | | F | | MPV FWD L3 | | GCO34118 | Outer Joint | 44T | 28 | 33 | 56.5 | 89 | 59 | M |
| | 2002.07-2006.02 | | F | L | MPV FWD L3 | | GCI34092 | Inner Joint | | 30 | 33 | 40 | 73 | 114 | |
| | 2002.07-2006.02 | | F | R | MPV FWD L3 | | GCI34115 | Inner Joint | | 28 | 33 | 43 | | 132 | |
| 3.0 (147 kw) | 2002.10-2005.12 | | F | R | MPV FWD AJ55/AJA8 | | GCI34115 | Inner Joint | | 28 | 33 | 43 | | 132 | |
| **MX-3** | | | | | | | | | | | | | | | |
| 1.6 (79 kw) | 1993.11-1998.09 | AT/MT | F | L/R | Coupe FWD B6DA | Date from:1994.01 | GCO27001 | Outer Joint | | 26 | 22 | 56 | 93.5 | 55.5 | M |
| | 1993.11-1998.09 | MT | F | L | Coupe FWD B6DA | Date from:1994.01 | GDS27047 | Drive Shaft | | 26 | 24 | 56 | 94 | 635 | |
| | 1993.11-1998.09 | MT | F | L | Coupe FWD B6DA | | GDS27048 | Drive Shaft | 44T | 26 | 24 | 56 | 94 | 635 | |
| | 1993.11-1998.09 | MT | F | R | Coupe FWD B6DA | Date from:1994.01 | GDS34005 | Drive Shaft | | 26 | 28 | 56 | 94 | 576 | |
| | 1993.11-1998.09 | | F | | Coupe FWD B6DA | | GCO34055 | Outer Joint | | 26 | 22 | 56 | 94 | 59 | M |
| 1.8 (95 kw) | 1994.01-1997.10 | AT/MT | F | L/R | Coupe FWD K8Y1 | | GCO34023 | Outer Joint | | 26 | 30 | 56 | 93 | 55 | I |
| | 1994.01-1997.10 | AT/MT | F | L/R | Coupe FWD K8Y1 | | GCO34058 | Outer Joint | 44T | 26 | 30 | 56 | 93 | 55 | I |
| **MX-30** | | | | | | | | | | | | | | | |
| EV (105 kw) | 2020.05- | ET | F | L | SUV FWD MH01 | | GDS56893 | Drive Shaft | | 28 | 27 | 59 | 93.5 | 903 | |
| | 2020.05- | ET | F | R | SUV FWD MH01 | | GDS56892 | Drive Shaft | | 28 | 27 | 59 | 93.5 | 740 | |
| | 2020.05- | ET | F | L/R | SUV FWD MH01 | | GCO83466 | Outer Joint | | 28 | 32 | 59 | 93.5 | 58.5 | I |
| | 2020.05- | ET | F | L | SUV FWD MH01 | | GCI83545 | Inner Joint | | 27 | 32 | 40 | 292 | 97.5 | |
| | 2020.05- | ET | F | R | SUV FWD MH01 | | GCI83544 | Inner Joint | | 27 | 32 | 40 | 171.5 | 97.5 | |
| EV (107 kw) | 2020.05- | ET | F | L | SUV FWD MH01 | | GDS56893 | Drive Shaft | | 28 | 27 | 59 | 93.5 | 903 | |
| | 2020.05- | ET | F | R | SUV FWD MH01 | | GDS56892 | Drive Shaft | | 28 | 27 | 59 | 93.5 | 740 | |
| | 2020.05- | ET | F | L/R | SUV FWD MH01 | | GCO83466 | Outer Joint | | 28 | 32 | 59 | 93.5 | 58.5 | I |
| | 2020.05- | ET | F | L | SUV FWD MH01 | | GCI83545 | Inner Joint | | 27 | 32 | 40 | 292 | 97.5 | |
| | 2020.05- | ET | F | R | SUV FWD MH01 | | GCI83544 | Inner Joint | | 27 | 32 | 40 | 171.5 | 97.5 | |
| **MX-5** | | | | | | | | | | | | | | | |
| 1.6 (81 kw) | 1998.05-2005.10 | 5MT/6MT | R | L/R | Convertible RWD B6MC, B6MU | | GDS34204 | Drive Shaft | 44T | 26 | 26 | 56 | 94 | 750 | |
| 1.8 (93 kw) | 2005.03-2014.12 | 6AT/5MT/6MT | R | L | Convertible RWD L828;L831;L8-VE;L8-DE | Date from:2007.07 | GDS34211 | Drive Shaft | 44T | 28 | 28 | 56.5 | 81.5 | 759 | |
| | 2005.03-2014.12 | 6AT/5MT/6MT | R | R | Convertible RWD L828;L831;L8-VE;L8-DE | Date from:2007.07 | GDS34212 | Drive Shaft | 44T | 28 | 28 | 56.5 | 81.5 | 799 | |
| | 2005.03-2014.12 | 6AT/5MT/6MT | R | L/R | Convertible RWD L828;L831;L8-VE;L8-DE | Date From:2007.07 | GCO34233 | Outer Joint | 44T | 28 | 32 | 56.5 | 81.5 | 54.5 | I |
| 1.8 (102 kw) | 1998.04-2005.10 | 4AT/5MT/6MT | R | L/R | Cabriolet RWD BP6J | | GDS34204 | Drive Shaft | 44T | 26 | 26 | 56 | 94 | 750 | |
| | 1998.04-2005.10 | AT/MT | R | L/R | Cabriolet RWD BP6J | | GCO34023 | Outer Joint | | 26 | 30 | 56 | 93 | 55 | I |
| | 1998.04-2005.10 | AT/MT | R | L/R | Cabriolet RWD BP6J | | GCO34058 | Outer Joint | 44T | 26 | 30 | 56 | 93 | 55 | I |
| 1.8 (103 kw) | 1998.01-2002.07 | 5MT/6MT | R | L/R | Cabriolet RWD BP5A/BP6J | | GDS34204 | Drive Shaft | 44T | 26 | 26 | 56 | 94 | 750 | |
| | 1998.05-2005.10 | 5MT/6MT | R | L/R | Cabriolet RWD BP5A/BP6J | | GDS34204 | Drive Shaft | 44T | 26 | 26 | 56 | 94 | 750 | |
| 1.8 (107 kw) | 2000.11-2005.10 | 5MT/6MT | R | L/R | Cabriolet RWD BP-ZE/BP6J | | GDS34204 | Drive Shaft | 44T | 26 | 26 | 56 | 94 | 750 | |
| | 2000.11-2005.10 | AT/MT | R | L/R | Cabriolet RWD BP-ZE/BP6J | | GCO34023 | Outer Joint | | 26 | 30 | 56 | 93 | 55 | I |
| | 2000.11-2005.10 | AT/MT | R | L/R | Cabriolet RWD BP-ZE/BP6J | | GCO34058 | Outer Joint | 44T | 26 | 30 | 56 | 93 | 55 | I |
| | 2002.08-2005.10 | 5MT/6MT | R | L/R | Cabriolet RWD BP6J | | GDS34204 | Drive Shaft | 44T | 26 | 26 | 56 | 94 | 750 | |
| 2.0 (114 kw) | 2015.11-2018.05 | 6AT | R | L | Convertible RWD PEX6 | | GDS57749 | Drive Shaft | | 26 | 28 | 52 | 76.5 | 767 | |
| | 2015.11-2018.05 | 6AT | R | R | Convertible RWD PEX6 | | GDS57748 | Drive Shaft | | 26 | 28 | 52 | 76.5 | 790 | |
| | 2015.11-2018.05 | 6AT | R | L/R | Convertible RWD PEX6 | | GCO83696 | Outer Joint | | 26 | 32 | 52 | 76.5 | 52.5 | I |
| | 2015.11-2018.05 | 6AT/6MT | R | L/R | Convertible RWD PEX6 | | GCI83836 | Inner Joint | | 28 | 32 | 35 | 81.5 | 88.5 | |
| 2.0 (118 kw) | 2005.07-2016.12 | 6AT/5MT/6MT | R | L | Convertible RWD LF-VE;LFG7;LFY7;LFG8;LFZD | Date from:2007.07 | GDS34211 | Drive Shaft | 44T | 28 | 28 | 56.5 | 81.5 | 759 | |
| | 2005.07-2016.12 | 6AT/5MT/6MT | R | R | Convertible RWD LF-VE;LFG7;LFY7;LFG8;LFZD | Date from:2007.07 | GDS34212 | Drive Shaft | 44T | 28 | 28 | 56.5 | 81.5 | 799 | |
| | 2005.07-2016.12 | 6AT/5MT/6MT | R | L/R | Convertible RWD LF-VE;LFG7;LFY7;LFG8;LFZD | Date From:2007.07 | GCO34233 | Outer Joint | 44T | 28 | 32 | 56.5 | 81.5 | 54.5 | I |
| | 2015.06- | 6AT | R | L | Convertible RWD PE-VPS;PEX6;PEX4 | | GDS57749 | Drive Shaft | | 26 | 28 | 52 | 76.5 | 767 | |
| | 2015.06- | 6AT | R | R | Convertible RWD PE-VPS;PEX6;PEX4 | | GDS57748 | Drive Shaft | | 26 | 28 | 52 | 76.5 | 790 | |
| | 2015.06- | 6AT | R | L/R | Convertible RWD PE-VPS;PEX6;PEX4 | | GCO83696 | Outer Joint | | 26 | 32 | 52 | 76.5 | 52.5 | I |
| | 2015.06- | 6AT/6MT | R | L/R | Convertible RWD PE-VPS;PEX6;PEX4 | | GCI83836 | Inner Joint | | 28 | 32 | 35 | 81.5 | 88.5 | |
| | 2016.12-2018.05 | 6AT | R | L | Targa RWD PE-VPS;PEX6 | | GDS57749 | Drive Shaft | | 26 | 28 | 52 | 76.5 | 767 | |
| | 2016.12-2018.05 | 6AT | R | R | Targa RWD PE-VPS;PEX6 | | GDS57748 | Drive Shaft | | 26 | 28 | 52 | 76.5 | 790 | |
| | 2016.12-2018.05 | 6AT | R | L/R | Targa RWD PE-VPS;PEX6 | | GCO83696 | Outer Joint | | 26 | 32 | 52 | 76.5 | 52.5 | I |
| | 2016.12-2018.05 | 6AT/6MT | R | L/R | Targa RWD PE-VPS;PEX6 | | GCI83836 | Inner Joint | | 28 | 32 | 35 | 81.5 | 88.5 | |

| | YEAR | TRANSM. | F/R | L/R | BODY STYLE & DRIVE TYPE & ENGINE | REMARKS | G-AP Ref. | PRODUCT | ABS | Technical Specifications A | B | C | H | L | P |
|---|---|---|---|---|---|---|---|---|---|---|---|---|---|---|---|
| **MAZDA** | | | | | | | | | | | | | | | |
| **MX-5** | | | | | | | | | | | | | | | |
| 2.0 (135 kw) | 2018.05-2026.04 | 6AT | R | L | Convertible RWD PE-VPR;PEXF | | GDS57749 | Drive Shaft | | 26 | 28 | 52 | 76.5 | 767 | |
| | 2018.05-2026.04 | 6AT | R | R | Convertible RWD PE-VPR;PEXF | | GDS57748 | Drive Shaft | | 26 | 28 | 52 | 76.5 | 790 | |
| | 2018.05-2026.04 | 6AT | R | L/R | Convertible RWD PE-VPR;PEXF | | GCO83696 | Outer Joint | | 26 | 32 | 52 | 76.5 | 52.5 | I |
| | 2018.05-2026.04 | 6AT/6MT | R | L/R | Convertible RWD PE-VPR;PEXF | | GCI83836 | Inner Joint | | 28 | 32 | 35 | 81.5 | 88.5 | |
| | 2018.05-2026.04 | 6AT | R | L | Targa RWD PE-VPR;PEXF | | GDS57749 | Drive Shaft | | 26 | 28 | 52 | 76.5 | 767 | |
| | 2018.05-2026.04 | 6AT | R | R | Targa RWD PE-VPR;PEXF | | GDS57748 | Drive Shaft | | 26 | 28 | 52 | 76.5 | 790 | |
| | 2018.05-2026.04 | 6AT | R | L/R | Targa RWD PE-VPR;PEXF | | GCO83696 | Outer Joint | | 26 | 32 | 52 | 76.5 | 52.5 | I |
| | 2018.05-2026.04 | 6AT/6MT | R | L/R | Targa RWD PE-VPR;PEXF | | GCI83836 | Inner Joint | | 28 | 32 | 35 | 81.5 | 88.5 | |
| **MX-6** | | | | | | | | | | | | | | | |
| 2.0 (85 kw) | 1992.02-1997.02 | AT | F | L/R | Coupe FWD FS (02.92-.) | for vehicles with automatic transmission | GCO34117 | Outer Joint | 44T | 28 | 32 | 56 | 89 | 59 | M |
| | 1992.02-1997.02 | AT/MT | F | R | Coupe FWD FS (02.92-.) | | GDS18085 | Drive Shaft | 44T | 28 | 28 | 56 | 89 | 575.5 | |
| | 1992.02-1997.02 | AT/MT | F | L/R | Coupe FWD FS (02.92-.) | Date from:1992.06 | GCO18035 | Outer Joint | | 28 | 23 | 56 | 90 | 59 | I |
| | 1992.02-1997.02 | AT/MT | F | L/R | Coupe FWD FS (02.92-.) | | GCO18035 | Outer Joint | | 28 | 23 | 56 | 90 | 59 | I |
| | 1992.02-1997.02 | AT/MT | F | L/R | Coupe FWD FS (02.92-.) | Date from:1992.06 | GCO34080 | Outer Joint | 44T | 28 | 23 | 56 | 90 | 59 | M |
| | 1992.02-1997.02 | MT | F | L | Coupe FWD FS (02.92-.) | Model year from:1994 | GDS18083 | Drive Shaft | 44T | 28 | 35 | 56 | 91.5 | 670 | |
| | 1992.02-1997.02 | | F | | Coupe FWD FS (02.92-.) | | GCO34014 | Outer Joint | | 28 | 23 | 56 | 89.1 | 59.5 | M |
| | 1992.02-1997.02 | | F | R | Coupe FWD FS (02.92-.) | | GCI34033 | Inner Joint | | 28 | 23 | 43 | | 123 | |
| 2.5 (120 kw) | 1994.08-1997.02 | AT | F | L/R | Coupe FWD KLH5 | with groove in internal component | GCO34117 | Outer Joint | 44T | 28 | 32 | 56 | 89 | 59 | M |
| | 1994.08-1997.02 | AT | F | | Coupe FWD KLH5 | | GCO34063 | Outer Joint | 44T | 28 | 32 | 56 | 90 | 59 | I |
| | 1994.08-1997.02 | AT/MT | F | R | Coupe FWD KLH5 | | GDS18085 | Drive Shaft | 44T | 28 | 28 | 56 | 89 | 575.5 | |
| | 1994.08-1997.02 | MT | F | L/R | Coupe FWD KLH5 | without groove in internal component | GCO18028 | Outer Joint | | 28 | 26 | 56 | 89 | 65 | I |
| | 1994.08-1997.02 | MT | F | L/R | Coupe FWD KLH5 | | GCO18029 | Outer Joint | 44T | 28 | 26 | 56 | 89 | 65 | I |
| | 1994.08-1997.02 | MT | F | L/R | Coupe FWD KLH5 | with groove in internal component | GCO34082 | Outer Joint | 44T | 28 | 26 | 56 | 94 | 63 | M |
| 2.5 (121 kw) | 1991.11-1997.09 | AT | F | L/R | Coupe FWD KLY1 | for vehicles with automatic transmission | GCO34117 | Outer Joint | 44T | 28 | 32 | 56 | 89 | 59 | M |
| | 1991.11-1997.09 | AT | F | | Coupe FWD KLY1 | | GCO34063 | Outer Joint | 44T | 28 | 32 | 56 | 90 | 59 | I |
| | 1991.11-1997.09 | AT/MT | F | R | Coupe FWD KLY1 | | GDS18085 | Drive Shaft | 44T | 28 | 28 | 56 | 89 | 575.5 | |
| | 1991.11-1997.09 | MT | F | L/R | Coupe FWD KLY1 | | GCO18028 | Outer Joint | | 28 | 26 | 56 | 89 | 65 | I |
| | 1991.11-1997.09 | MT | F | L/R | Coupe FWD KLY1 | | GCO18029 | Outer Joint | 44T | 28 | 26 | 56 | 89 | 65 | I |
| | 1991.11-1997.09 | MT | F | | Coupe FWD KLY1 | | GCO34082 | Outer Joint | 44T | 28 | 26 | 56 | 94 | 63 | M |
| 2.5 (122 kw) | 1992.09-1997.01 | AT/MT | F | L/R | Coupe FWD KL | | GCO34082 | Outer Joint | 44T | 28 | 26 | 56 | 94 | 63 | M |
| **Premacy** | | | | | | | | | | | | | | | |
| 1.8 (74 kw) | 1999.07-2005.06 | 5MT | F | L | MPV FWD FP87/FP88/FPE1 | | GCI34027 | Inner Joint | | 24 | 29 | 35 | 64 | 96 | |
| | 1999.07-2005.06 | AT/MT | F | L/R | MPV FWD FP87/FP88/FPE1 | | GCO34008 | Outer Joint | | 26 | 29 | 56 | 93.5 | 59 | I |
| | 1999.07-2005.06 | AT/MT | F | L/R | MPV FWD FP87/FP88/FPE1 | | GCO34060 | Outer Joint | 44T | 26 | 29 | 56 | 93.5 | 59 | I |
| | 1999.07-2005.06 | | F | R | MPV FWD FP87/FP88/FPE1 | | GCI34022 | Inner Joint | | 28 | 29 | 43 | | 115 | |
| | 1999.07-2005.06 | 5MT | F | L | MPV Van FWD FP87/FPE1 | | GCI34027 | Inner Joint | | 24 | 29 | 35 | 64 | 96 | |
| | 1999.07-2005.06 | 5MT | F | R | MPV Van FWD FP87/FPE1 | | GCI34022 | Inner Joint | | 28 | 29 | 43 | | 115 | |
| | 1999.07-2005.06 | MT | F | L/R | MPV Van FWD FP87/FPE1 | | GCO34060 | Outer Joint | 44T | 26 | 29 | 56 | 93.5 | 59 | I |
| 1.8 (84 kw) | 1999.07-2005.03 | AT | F | L/R | MPV FWD FP88/FPD9 | | GCO34123 | Outer Joint | 44T | 26 | 29 | 56 | 92 | 56 | I |
| | 1999.07-2005.03 | MT | F | L/R | MPV FWD FP88/FPD9 | | GCO34008 | Outer Joint | | 26 | 29 | 56 | 93.5 | 59 | I |
| | 1999.07-2005.03 | MT | F | L/R | MPV FWD FP88/FPD9 | | GCO34060 | Outer Joint | 44T | 26 | 29 | 56 | 93.5 | 59 | I |
| | 1999.07-2005.03 | MT | F | L | MPV FWD FP88/FPD9 | | GCI34027 | Inner Joint | | 24 | 29 | 35 | 64 | 96 | |
| | 1999.07-2005.03 | | F | R | MPV FWD FP88/FPD9 | | GCI34022 | Inner Joint | | 28 | 29 | 43 | | 115 | |
| | 1999.07-2005.03 | 5MT | F | L | MPV Van FWD FPD9 | | GCI34027 | Inner Joint | | 24 | 29 | 35 | 64 | 96 | |
| | 1999.07-2005.03 | 5MT | F | R | MPV Van FWD FPD9 | | GCI34022 | Inner Joint | | 28 | 29 | 43 | | 115 | |
| | 1999.07-2005.03 | MT | F | L/R | MPV Van FWD FPD9 | | GCO34060 | Outer Joint | 44T | 26 | 29 | 56 | 93.5 | 59 | I |
| 2.0 (66 kw) | 1999.03-2000.03 | 5MT | F | L | MPV FWD RF3F | | GDS34057 | Drive Shaft | 44T | 26 | 28 | 56 | 93.5 | 626 | |
| | 1999.03-2000.03 | AT/MT | F | L/R | MPV FWD RF3F | Date to:2000.03 | GCO34008 | Outer Joint | | 26 | 29 | 56 | 93.5 | 59 | I |
| | 1999.03-2000.03 | AT/MT | F | L/R | MPV FWD RF3F | | GCO34060 | Outer Joint | 44T | 26 | 29 | 56 | 93.5 | 59 | I |
| | 1999.03-2000.03 | | F | L | MPV FWD RF3F | | GCO34123 | Outer Joint | 44T | 26 | 29 | 56 | 92 | 56 | I |
| | 1999.03-2000.03 | | F | R | MPV FWD RF3F | | GCI34022 | Inner Joint | | 28 | 29 | 43 | | 115 | |
| 2.0 (74 kw) | 2000.07-2005.06 | 5MT | F | L | MPV FWD RF2A/RF4F | Date to:2003.08 | GDS34057 | Drive Shaft | 44T | 26 | 28 | 56 | 93.5 | 626 | |
| | 2000.07-2005.06 | AT/MT | F | L/R | MPV FWD RF2A/RF4F | | GCO34008 | Outer Joint | | 26 | 29 | 56 | 93.5 | 59 | I |
| | 2000.07-2005.06 | AT/MT | F | L/R | MPV FWD RF2A/RF4F | | GCO34060 | Outer Joint | 44T | 26 | 29 | 56 | 93.5 | 59 | I |
| | 2000.07-2005.06 | | F | L | MPV FWD RF2A/RF4F | | GCO34123 | Outer Joint | 44T | 26 | 29 | 56 | 92 | 56 | I |
| | 2000.07-2005.06 | | F | R | MPV FWD RF2A/RF4F | | GCI34022 | Inner Joint | | 28 | 29 | 43 | | 115 | |
| | 2000.08-2005.06 | 5MT | F | L | MPV Van FWD RF4F | Date to:2003.08 | GDS34057 | Drive Shaft | 44T | 26 | 28 | 56 | 93.5 | 626 | |
| | 2000.08-2005.06 | 5MT | F | L | MPV Van FWD RF4F | | GCO34123 | Outer Joint | 44T | 26 | 29 | 56 | 92 | 56 | I |
| | 2000.08-2005.06 | 5MT | F | R | MPV Van FWD RF4F | | GCO34008 | Outer Joint | | 26 | 29 | 56 | 93.5 | 59 | I |
| | 2000.08-2005.06 | 5MT | F | R | MPV Van FWD RF4F | | GCO34060 | Outer Joint | 44T | 26 | 29 | 56 | 93.5 | 59 | I |
| | 2000.08-2005.06 | 5MT | F | R | MPV Van FWD RF4F | | GCI34022 | Inner Joint | | 28 | 29 | 43 | | 115 | |
| 2.0 (96 kw) | 2001.08-2005.06 | AT/MT | F | L | MPV FWD FS7E/FS7G | | GCO34123 | Outer Joint | 44T | 26 | 29 | 56 | 92 | 56 | I |
| | 2001.08-2005.06 | AT/MT | F | L/R | MPV FWD FS7E/FS7G | | GCO34060 | Outer Joint | 44T | 26 | 29 | 56 | 93.5 | 59 | I |
| | 2001.08-2005.06 | MT | F | L | MPV FWD FS7E/FS7G | Date to:2003.01,For vehicles with 3rd seating rowDate from:2003.02 | GDS34057 | Drive Shaft | 44T | 26 | 28 | 56 | 93.5 | 626 | |
| | 2001.08-2005.06 | MT | F | R | MPV FWD FS7E/FS7G | | GCI34022 | Inner Joint | | 28 | 29 | 43 | | 115 | |

| | YEAR | TRANSM. | F/R | L/R | BODY STYLE & DRIVE TYPE & ENGINE | REMARKS | G-AP Ref. | PRODUCT | ABS | Technical Specifications A | B | C | H | L | P |
|---|---|---|---|---|---|---|---|---|---|---|---|---|---|---|---|
| **MAZDA** | | | | | | | | | | | | | | | |
| **Premacy** | | | | | | | | | | | | | | | |
| 2.0 (96 kw) | 2001.08-2005.06 | 4AT/5MT | F | L | MPV Van FWD FS7E/FS7G | | GCO34123 | Outer Joint | 44T | 26 | 29 | 56 | 92 | 56 | I |
| | 2001.08-2005.06 | MT | F | L | MPV Van FWD FS7E/FS7G | Date to:2003.01,For vehicles with 3rd seating row;Date from:2003.02 | GDS34057 | Drive Shaft | 44T | 26 | 28 | 56 | 93.5 | 626 | |
| | 2001.08-2005.06 | MT | F | R | MPV Van FWD FS7E/FS7G | | GCI34022 | Inner Joint | | 28 | 29 | 43 | | 115 | |
| **Proceed** | | | | | | | | | | | | | | | |
| 2.9 (70 kw) | 2001.09-2006.07 | MT | F | R | Pickup 4WD D29UYT | | GDS82832 | Intermediate Shaft | | 28 | 28 | | | 356 | |
| **Protege** | | | | | | | | | | | | | | | |
| 2.0 (98 kw) | 2000.02-2004.05 | 4AT/5MT | F | L | Saloon FWD FS7G | | GCO34123 | Outer Joint | 44T | 26 | 29 | 56 | 92 | 56 | I |
| | 2000.02-2004.05 | 5MT | F | R | Saloon FWD FS7G | | GCO34008 | Outer Joint | | 26 | 29 | 56 | 93.5 | 59 | I |
| | 2000.02-2004.05 | 5MT | F | R | Saloon FWD FS7G | | GCO34060 | Outer Joint | 44T | 26 | 29 | 56 | 93.5 | 59 | I |
| | 2000.02-2004.05 | 5MT | F | R | Saloon FWD FS7G | | GCI34022 | Inner Joint | | 28 | 29 | 43 | | 115 | |
| **Tribute** | | | | | | | | | | | | | | | |
| 2.0 (91 kw) | 2000.03-2008.05 | AT | F | R | SUV 4WD YF | | GDS34087 | Drive Shaft | 44T | 28 | 35 | 56 | 94 | 545 | |
| | 2000.03-2008.05 | AT/MT | F | L/R | SUV 4WD YF | | GCO34090 | Outer Joint | 44T | 28 | 24 | 56 | 89.1 | 59.5 | M |
| | 2000.03-2008.05 | MT | F | L | SUV 4WD YF | | GDS34096 | Drive Shaft | 44T | 28 | 28 | 56 | 94 | 635 | |
| | 2000.03-2008.05 | MT | F | R | SUV 4WD YF | | GDS34196 | Drive Shaft | 44T | 28 | 35 | 56 | 94 | 570 | |
| | 2000.03-2008.05 | MT | F | L | SUV 4WD YF | | GCI34071 | Inner Joint | | 28 | 32 | 35 | 66.5 | 112 | |
| | 2000.03-2008.05 | 5MT | R | L/R | SUV 4WD YF | | GCO34064 | Outer Joint | 44T | 28 | 24 | 56 | 94 | 62 | M |
| | 2000.03-2008.05 | | R | | SUV 4WD YF | | GCO18204 | Outer Joint | 44T | 26 | 30 | 56 | 114 | 58 | I |
| | 2000.03-2008.05 | AT | F | R | SUV FWD YF | | GDS34087 | Drive Shaft | 44T | 28 | 35 | 56 | 94 | 545 | |
| | 2000.03-2008.05 | AT/MT | F | L/R | SUV FWD YF | | GCO34090 | Outer Joint | 44T | 28 | 24 | 56 | 89.1 | 59.5 | M |
| | 2000.03-2008.05 | MT | F | L | SUV FWD YF | | GDS34096 | Drive Shaft | 44T | 28 | 28 | 56 | 94 | 635 | |
| | 2000.03-2008.05 | MT | F | R | SUV FWD YF | | GDS34196 | Drive Shaft | 44T | 28 | 35 | 56 | 94 | 570 | |
| | 2000.03-2008.05 | MT | F | L | SUV FWD YF | | GCI34071 | Inner Joint | | 28 | 32 | 35 | 66.5 | 112 | |
| | 2000.03-2008.05 | | F | | SUV FWD YF | | GCO34064 | Outer Joint | 44T | 28 | 24 | 56 | 94 | 62 | M |
| 2.0 (97 kw) | 2000.09-2004.12 | | R | L | SUV 4WD | | GCO34064 | Outer Joint | 44T | 28 | 24 | 56 | 94 | 62 | M |
| | 2000.09-2004.12 | | R | L | SUV 4WD YF | | GCO34064 | Outer Joint | 44T | 28 | 24 | 56 | 94 | 62 | M |
| 2.3 (110 kw) | 2003.12-2004.10 | MT | F | L | SUV FWD L3-VE | | GDS34203 | Drive Shaft | 44T | 28 | 30 | 56 | 94 | 617 | |
| | 2003.12-2004.10 | | F | R | SUV FWD L3-VE | | GCI34115 | Inner Joint | | 28 | 33 | 43 | | 132 | |
| | 2004.04-2008.05 | AT | F | R | SUV 4WD L3-VE | | GDS34087 | Drive Shaft | 44T | 28 | 35 | 56 | 94 | 545 | |
| | 2004.04-2008.05 | AT/MT | F | L/R | SUV 4WD L3-VE | | GCO34090 | Outer Joint | 44T | 28 | 24 | 56 | 89.1 | 59.5 | M |
| | 2004.04-2008.05 | | F | R | SUV 4WD L3-VE | | GCI34115 | Inner Joint | | 28 | 33 | 43 | | 132 | |
| 2.3 (114 kw) | 2005.01-2006.12 | | F | L | SUV FWD L3VE | Date from:2006.05 | GDS56129 | Drive Shaft | 44T | 28 | 28 | 56.5 | 93.5 | 626 | |
| | 2005.01-2006.12 | | F | R | SUV FWD L3VE | Date from:2006.05 | GDS56130 | Drive Shaft | 44T | 28 | 28 | 56.5 | 93.5 | 580 | |
| | 2005.01-2006.12 | | F | L/R | SUV FWD L3VE | Date from:2006.05 | GCO82914 | Outer Joint | 44T | 28 | 33 | 56.5 | 93.5 | 58.5 | I |
| | 2005.01-2006.12 | | F | L | SUV FWD L3VE | Date from:2006.05 | GCI34135 | Inner Joint | | 28 | 33 | 35 | 66.5 | 113.5 | |
| | 2005.01-2006.12 | | F | R | SUV FWD L3VE | Date from:2006.05 | GCI81449 | Inner Joint | | 28 | 33 | 43 | | 133 | |
| 3.0 (145 kw) | 2000.03-2008.05 | AT | F | R | SUV 4WD AJ | | GDS34087 | Drive Shaft | 44T | 28 | 35 | 56 | 94 | 545 | |
| | 2000.03-2008.05 | AT/MT | F | L/R | SUV 4WD AJ | Date to:2007.12 | GCO34090 | Outer Joint | 44T | 28 | 24 | 56 | 89.1 | 59.5 | M |
| | 2000.03-2008.05 | MT | F | L | SUV 4WD AJ | | GDS34096 | Drive Shaft | 44T | 28 | 28 | 56 | 94 | 635 | |
| | 2000.03-2008.05 | MT | F | R | SUV 4WD AJ | | GDS34196 | Drive Shaft | 44T | 28 | 35 | 56 | 94 | 570 | |
| | 2000.03-2008.05 | | F | R | SUV 4WD AJ | | GCI34115 | Inner Joint | | 28 | 33 | 43 | | 132 | |
| | 2000.03-2008.05 | 4AT | R | L/R | SUV 4WD AJ | | GCO34064 | Outer Joint | 44T | 28 | 24 | 56 | 94 | 62 | M |
| | 2000.03-2008.05 | | R | | SUV 4WD AJ | | GCO18204 | Outer Joint | 44T | 26 | 30 | 56 | 114 | 58 | I |
| 3.0 (149 kw) | 2004.04-2008.05 | AT | F | R | SUV 4WD AJ | | GDS34087 | Drive Shaft | 44T | 28 | 35 | 56 | 94 | 545 | |
| | 2004.04-2008.05 | AT | F | L/R | SUV 4WD AJ | | GCO34090 | Outer Joint | 44T | 28 | 24 | 56 | 89.1 | 59.5 | M |
| | 2004.04-2008.05 | MT | F | L | SUV 4WD AJ | | GDS34096 | Drive Shaft | 44T | 28 | 28 | 56 | 94 | 635 | |
| | 2004.04-2008.05 | MT | F | R | SUV 4WD AJ | | GDS34196 | Drive Shaft | 44T | 28 | 35 | 56 | 94 | 570 | |
| | 2004.04-2008.05 | | F | R | SUV 4WD AJ | | GCI34115 | Inner Joint | | 28 | 33 | 43 | | 132 | |
| **Xedos 6** | | | | | | | | | | | | | | | |
| 1.6 (79 kw) | 1994.04-1999.10 | AT/MT | F | R | Saloon FWD B6EW | | GCI34014 | Inner Joint | | 28 | 22 | 43 | | 119 | |
| | 1994.04-1999.10 | MT | F | | Saloon FWD B6EW | | GCO34100 | Outer Joint | | 28 | 22 | 56 | 89.1 | 59.5 | M |
| | 1994.04-1999.10 | | F | | Saloon FWD B6EW | | GCO99233 | Outer Joint | 44T | 28 | 22 | 56 | 90 | 59 | I |
| 2.0 (103 kw) | 1994.06-1999.10 | MT | F | L/R | Saloon FWD KF1 | Type:Xedos 6 | GCO18035 | Outer Joint | | 28 | 23 | 56 | 90 | 59 | I |
| | 1994.06-1999.10 | MT | F | L/R | Saloon FWD KF1 | Type:Xedos 6 | GCO34080 | Outer Joint | 44T | 28 | 23 | 56 | 90 | 59 | M |
| | 1994.06-1999.10 | | F | | Saloon FWD KF1 | | GCO34014 | Outer Joint | | 28 | 23 | 56 | 89.1 | 59.5 | M |
| | 1994.06-1999.10 | | F | | Saloon FWD KF1 | | GCO99233 | Outer Joint | 44T | 28 | 22 | 56 | 90 | 59 | I |
| | 1994.06-1999.10 | | F | R | Saloon FWD KF1 | | GCI34033 | Inner Joint | | 28 | 23 | 43 | | 123 | |
| **Xedos 9** | | | | | | | | | | | | | | | |
| 2.0 (105 kw) | 1993.09-2000.08 | AT/MT | F | L/R | Saloon FWD KF42 | | GCO18028 | Outer Joint | | 28 | 26 | 56 | 89 | 65 | I |
| | 1993.09-2000.08 | AT/MT | F | L/R | Saloon FWD KF42 | | GCO18029 | Outer Joint | 44T | 28 | 26 | 56 | 89 | 65 | I |
| | 1993.09-2000.08 | | F | L/R | Saloon FWD KF42 | | GCO99233 | Outer Joint | 44T | 28 | 22 | 56 | 90 | 59 | I |
| | 1993.09-2000.08 | | F | | Saloon FWD KF42 | | GCO34014 | Outer Joint | | 28 | 23 | 56 | 89.1 | 59.5 | M |
| 2.3 (155 kw) | 1995.02-2000.01 | AT | F | L/R | Saloon FWD KJ -ZEM | for vehicles with automatic transmission | GCO18028 | Outer Joint | | 28 | 26 | 56 | 89 | 65 | I |
| | 1995.02-2000.01 | AT | F | L/R | Saloon FWD KJ -ZEM | | GCO18029 | Outer Joint | 44T | 28 | 26 | 56 | 89 | 65 | I |
| 2.5 (120 kw) | 2000.07-2002.09 | AT/MT | F | L/R | Saloon FWD KL | | GCO18028 | Outer Joint | | 28 | 26 | 56 | 89 | 65 | I |

| | YEAR | TRANSM. | F/R | L/R | BODY STYLE & DRIVE TYPE & ENGINE | REMARKS | G-AP Ref. | PRODUCT | ABS | Technical Specifications A | B | C | H | L | P |
|---|---|---|---|---|---|---|---|---|---|---|---|---|---|---|---|
| **MAZDA** | | | | | | | | | | | | | | | |
| **Xedos 9** | | | | | | | | | | | | | | | |
| 2.5 (120 kw) | 2000.07-2002.09 | AT/MT | F | L/R | Saloon FWD KL | | GCO18029 | Outer Joint | 44T | 28 | 26 | 56 | 89 | 65 | I |
| 2.5 (123 kw) | 1993.07-2000.07 | AT | F | L | Saloon FWD KL | | GDS18176 | Drive Shaft | 44T | 28 | 28 | 56 | 91.5 | 629 | |
| | 1993.07-2000.07 | AT | F | R | Saloon FWD KL | | GDS18085 | Drive Shaft | 44T | 28 | 28 | 56 | 89 | 575.5 | |
| | 1993.07-2000.07 | AT/MT | F | L/R | Saloon FWD KL | | GCO18028 | Outer Joint | | 28 | 26 | 56 | 89 | 65 | I |
| | 1993.07-2000.07 | AT/MT | F | L/R | Saloon FWD KL | | GCO18029 | Outer Joint | 44T | 28 | 26 | 56 | 89 | 65 | I |
| **MAZDA (CHANGAN)** | | | | | | | | | | | | | | | |
| **3** | | | | | | | | | | | | | | | |
| 2.0 (110 kw) | 2006.02-2011.12 | | F | | Saloon FWD LF-DE | | GDS34085 | Drive Shaft | | 36 | 28 | 55.3 | 48 | 588 | |
| | 2011.09-2017.12 | | F | | Hatchback FWD LF | | GDS34085 | Drive Shaft | | 36 | 28 | 55.3 | 48 | 588 | |
| | 2011.09-2017.12 | | F | | Saloon FWD LF | | GDS34085 | Drive Shaft | | 36 | 28 | 55.3 | 48 | 588 | |
| **MAZDA (FAW)** | | | | | | | | | | | | | | | |
| **6** | | | | | | | | | | | | | | | |
| 2.0 (108 kw) | 2003.07-2016.12 | 6MT/5AT | F | L/R | Saloon FWD LF | Transmission:6MT,Model year from:2003,Model year to:2010,Transmission:5AT,Model year from:2003 | GCO75019 | Outer Joint | 44T | 28 | 24 | 62 | 90 | 60 | M |
| 2.3 (120 kw) | 2005.09-2009.12 | 5AT | F | L/R | Saloon FWD L3 | | GCO75019 | Outer Joint | 44T | 28 | 24 | 62 | 90 | 60 | M |
| **6 (Ruiyi)** | | | | | | | | | | | | | | | |
| 2.5 (124 kw) | 2009.01-2014.12 | AT | F | L | Saloon FWD L5 | | GDS99237 | Drive Shaft | | 28 | 28 | 62 | 92 | 664 | |
| | 2009.01-2014.12 | AT | F | R | Saloon FWD L5 | | GCI34048 | Inner Joint | | 28 | 33 | 43 | | 132 | |
| **6 Estate/Wagon** | | | | | | | | | | | | | | | |
| 2.3 (120 kw) | 2003.04-2009.12 | 5AT | F | L/R | Estate FWD L3 | Model year from:2006,Model year to:2008 | GCO75019 | Outer Joint | 44T | 28 | 24 | 62 | 90 | 60 | M |
| **MERCEDES-BENZ** | | | | | | | | | | | | | | | |
| **230GE** | | | | | | | | | | | | | | | |
| 2.3 (90 kw) | 1989.09-1996.07 | AT/MT | F | L/R | Terrain cab wagon closed 4WD 102979/102998 | | GCO35033 | Outer Joint | 54T | 26 | 28 | 62 | 124 | 62 | O |
| 2.3 (92 kw) | 1989.09-2000.07 | AT/MT | F | L/R | Terrain cab wagon closed 4WD 102979/102981/102996 | | GCO35033 | Outer Joint | 54T | 26 | 28 | 62 | 124 | 62 | O |
| **250GD** | | | | | | | | | | | | | | | |
| 2.5 (69 kw) | 1990.06-1996.07 | AT/MT | F | L/R | Terrain cab wagon closed 4WD 602931 | | GCO35033 | Outer Joint | 54T | 26 | 28 | 62 | 124 | 62 | O |
| **300GE** | | | | | | | | | | | | | | | |
| 3.0 (125 kw) | 1989.09-1997.09 | AT/MT | F | L/R | Terrain cab open 4WD 103987 | | GCO35033 | Outer Joint | 54T | 26 | 28 | 62 | 124 | 62 | O |
| 3.0 (128 kw) | 1990.06-1997.08 | AT/MT | F | L/R | Terrain cab wagon closed 4WD 103987 | | GCO35033 | Outer Joint | 54T | 26 | 28 | 62 | 124 | 62 | O |
| **400 SE/400 SEL/S420** | | | | | | | | | | | | | | | |
| 4.2 (210 kw) | 1991.02-1998.10 | AT | R | | Saloon RWD M 119.971 | | GDS35009 | Drive Shaft | 48T | | | | | 665 | |
| **A140** | | | | | | | | | | | | | | | |
| 1.4 (60 kw) | 1997.07-2004.08 | AT | F | L | Hatchback FWD 166940 | | GDS35021 | Drive Shaft | 48W | 24 | 22 | 57 | 67.5 | 561 | |
| | 1997.07-2004.08 | AT | F | R | Hatchback FWD 166940 | | GDS35023 | Drive Shaft | 48W | 24 | 22 | 57 | 67.5 | 965 | |
| | 1997.07-2004.08 | AT | F | L/R | Hatchback FWD 166940 | | GCO35004 | Outer Joint | 48W | 24 | 27 | 57 | 67.5 | 56 | I |
| | 1997.07-2004.08 | MT | F | L | Hatchback FWD 166940 | | GDS35037 | Drive Shaft | 48W | 24 | 22 | 57 | 67.5 | 572 | |
| | 1997.07-2004.08 | MT | F | R | Hatchback FWD 166940 | | GDS35038 | Drive Shaft | 48W | 24 | 22 | 57 | 67.5 | 954 | |
| | 1997.07-2004.08 | MT | F | L/R | Hatchback FWD 166940 | | GCO35022 | Outer Joint | 48W | 24 | 27 | 57 | 67.5 | 56 | I |
| | 1997.07-2004.08 | MT | F | R | Hatchback FWD 166940 | | GCI35010 | Inner Joint | | 22 | 27 | 36 | 459 | 76 | |
| | 1997.07-2004.08 | | F | | Hatchback FWD 166940 | | GCO35010 | Outer Joint | | 24 | 27 | 57 | 67.5 | 50 | I |
| 1.6 (60 kw) | 2000.01-2005.06 | AT | F | L | Hatchback FWD 166960 | | GDS35021 | Drive Shaft | 48W | 24 | 22 | 57 | 67.5 | 561 | |
| | 2000.01-2005.06 | AT | F | R | Hatchback FWD 166960 | | GDS35023 | Drive Shaft | 48W | 24 | 22 | 57 | 67.5 | 965 | |
| | 2000.01-2005.06 | AT | F | L/R | Hatchback FWD 166960 | | GCO35004 | Outer Joint | 48W | 24 | 27 | 57 | 67.5 | 56 | I |
| | 2000.01-2005.06 | MT | F | L/R | Hatchback FWD 166960 | | GCO35022 | Outer Joint | 48W | 24 | 27 | 57 | 67.5 | 56 | I |
| | 2000.01-2005.06 | MT | F | R | Hatchback FWD 166960 | | GCI35010 | Inner Joint | | 22 | 27 | 36 | 459 | 76 | |
| **A150** | | | | | | | | | | | | | | | |
| 1.5 (70 kw) | 2004.09-2012.06 | 5MT | F | R | Hatchback FWD M 266.920 | | GCI35011 | Inner Joint | | 22 | 27 | 36 | 459 | 81 | |
| | 2004.09-2012.06 | AT/MT | F | L/R | Hatchback FWD M 266.920 | Locking type:Bolt on | GCO35027 | Outer Joint | | 25 | 27 | 60.3 | 43 | 53 | I |
| | 2004.09-2012.06 | CVT | F | L | Hatchback FWD M 266.920 | | GDS84300 | Drive Shaft | | 25 | 27 | 60 | 73.5 | 608 | |
| | 2004.09-2012.06 | CVT | F | R | Hatchback FWD M 266.920 | | GDS35055 | Drive Shaft | | 25 | 27 | 60 | 73.5 | 948 | |
| | 2004.09-2012.06 | CVT | F | L | Hatchback FWD M 266.920 | | GCO99037 | Outer Joint | | 25 | 25 | 60 | 73.5 | 58.5 | I |
| | 2004.09-2012.06 | CVT | F | R | Hatchback FWD M 266.920 | | GCO35030 | Outer Joint | | 25 | 25 | 60.4 | 74 | 56 | I |
| | 2004.09-2012.06 | CVT | F | L | Hatchback FWD M 266.920 | | GCI82700 | Inner Joint | | 27 | 25 | 38 | 62 | 120 | |
| | 2004.09-2012.06 | CVT | F | R | Hatchback FWD M 266.920 | | GCI35040 | Inner Joint | | 27 | 25 | 38 | 422 | 100 | |
| | 2004.09-2012.06 | MT | F | L | Hatchback FWD M 266.920 | Hollow shaft | GDS35032 | Drive Shaft | | 25 | 22 | 60.3 | 43 | 580 | |
| | 2004.09-2012.06 | MT | F | L | Hatchback FWD M 266.920 | Solid shaft | GDS35074 | Drive Shaft | | 25 | 22 | 60 | 73.5 | 600 | |
| | 2004.09-2012.06 | MT | F | R | Hatchback FWD M 266.920 | Locking type:Nut on;Hollow shaft | GDS35039 | Drive Shaft | | 25 | 22 | 60 | 73.5 | 975 | |
| | 2004.09-2012.06 | MT | F | R | Hatchback FWD M 266.920 | Locking type:Bolt on;Hollow shaft | GDS35075 | Drive Shaft | | 25 | 22 | 60.5 | 42 | 944 | |
| | 2004.09-2012.06 | MT | F | L/R | Hatchback FWD M 266.920 | Locking type:Nut on | GCO35026 | Outer Joint | | 25 | 27 | 60 | 73.5 | 52 | I |
| | 2004.09-2012.06 | MT | F | L | Hatchback FWD M 266.920 | | GCI99136 | Inner Joint | | 22 | 27 | 36 | 55 | 100 | |
| **A160** | | | | | | | | | | | | | | | |
| 1.3 (80 kw) | 2018.06- | 6MT | F | L | Hatchback FWD M 282.914 | | GDS84227 | Drive Shaft | | 30 | 27 | 65 | 53 | 546 | |
| | 2018.06- | 6MT | F | R | Hatchback FWD M 282.914 | | GDS84228 | Drive Shaft | | 30 | 27 | 65 | 53 | 511 | |
| | 2018.06- | 6MT | F | L/R | Hatchback FWD M 282.914 | | GCO82739 | Outer Joint | | 30 | 27 | 65 | 53 | 64 | M |
| | 2018.06- | 6MT | F | L | Hatchback FWD M 282.914 | | GCI82443 | Inner Joint | | 27 | 28 | 38 | 65 | 109.5 | |
| | 2018.06- | 6MT | F | R | Hatchback FWD M 282.914 | | GCI82442 | Inner Joint | | 27 | 28 | 42.4 | 49 | 91 | |

| | YEAR | TRANSM. | F/R | L/R | BODY STYLE & DRIVE TYPE & ENGINE | REMARKS | G-AP Ref. | PRODUCT | ABS | Technical Specifications A | B | C | H | L | P |
|---|---|---|---|---|---|---|---|---|---|---|---|---|---|---|---|
| **MERCEDES-BENZ** | | | | | | | | | | | | | | | |
| **A160** | | | | | | | | | | | | | | | |
| 1.5 (66 kw) | 2013.06-2018.05 | 7DCT/6MT | F | L | Hatchback FWD OM 607.951 (K9K) | | GDS35067 | Drive Shaft | | 30 | 27 | 65 | 53 | 535 | |
| | 2013.06-2018.05 | 7DCT/6MT | F | R | Hatchback FWD OM 607.951 (K9K) | | GDS35068 | Drive Shaft | | 30 | 27 | 65 | 53 | 498 | |
| | 2013.06-2018.05 | 7DCT/6MT | F | R | Hatchback FWD OM 607.951 (K9K) | | GDS81470 | Drive Shaft | | 30 | 27 | 65 | 53 | 996 | |
| | 2013.06-2018.05 | AT | F | L/R | Hatchback FWD OM 607.951 (K9K) | | GCO61065 | Outer Joint | | 30 | 27 | 65 | 53 | 61.5 | M |
| | 2013.06-2018.05 | AT/MT | F | L | Hatchback FWD OM 607.951 (K9K) | | GCI61082 | Inner Joint | | 27 | 27 | 38 | 65 | 111.7 | |
| | 2013.06-2018.05 | AT/MT | F | R | Hatchback FWD OM 607.951 (K9K) | | GCI35071 | Inner Joint | | 27 | 27 | 42.1 | 41.5 | 97.2 | |
| | 2013.06-2018.05 | AT/MT | F | R | Hatchback FWD OM 607.951 (K9K) | | GDS35140 | Intermediate Shaft | | 27 | 27 | | | 540 | |
| 1.5 (70 kw) | 2009.04-2012.06 | 5MT | F | L | Hatchback FWD M 266.920 | Hollow shaft | GDS35032 | Drive Shaft | | 25 | 22 | 60.3 | 43 | 580 | |
| | 2009.04-2012.06 | 5MT | F | L | Hatchback FWD M 266.920 | | GCI99136 | Inner Joint | | 22 | 27 | 36 | 55 | 100 | |
| | 2009.04-2012.06 | 5MT | F | R | Hatchback FWD M 266.920 | | GCI35011 | Inner Joint | | 22 | 27 | 36 | 459 | 81 | |
| | 2009.04-2012.06 | AT | F | L | Hatchback FWD M 266.920 | Locking type:Nut on | GDS84300 | Drive Shaft | | 25 | 27 | 60 | 73.5 | 608 | |
| | 2009.04-2012.06 | AT | F | R | Hatchback FWD M 266.920 | Locking type:Nut on | GDS35055 | Drive Shaft | | 25 | 27 | 60 | 73.5 | 948 | |
| | 2009.04-2012.06 | AT | F | L | Hatchback FWD M 266.920 | Locking type:Nut on | GCO99037 | Outer Joint | | 25 | 25 | 60 | 73.5 | 58.5 | I |
| | 2009.04-2012.06 | AT | F | R | Hatchback FWD M 266.920 | | GCO35030 | Outer Joint | | 25 | 25 | 60.4 | 74 | 56 | I |
| | 2009.04-2012.06 | AT | F | R | Hatchback FWD M 266.920 | | GCI35040 | Inner Joint | | 27 | 25 | 38 | 422 | 100 | |
| | 2009.04-2012.06 | CVT | F | L | Hatchback FWD M 266.920 | | GCI82700 | Inner Joint | | 27 | 25 | 38 | 62 | 120 | |
| | 2009.04-2012.06 | MT | F | L | Hatchback FWD M 266.920 | Solid shaft | GDS35074 | Drive Shaft | | 25 | 22 | 60 | 73.5 | 600 | |
| | 2009.04-2012.06 | MT | F | R | Hatchback FWD M 266.920 | Locking type:Nut on;Hollow shaft | GDS35039 | Drive Shaft | | 25 | 22 | 60 | 73.5 | 975 | |
| | 2009.04-2012.06 | MT | F | R | Hatchback FWD M 266.920 | Locking type:Bolt on;Hollow shaft | GDS35075 | Drive Shaft | | 25 | 22 | 60.5 | 42 | 944 | |
| | 2009.04-2012.06 | MT | F | L/R | Hatchback FWD M 266.920 | | GCO35026 | Outer Joint | | 25 | 27 | 60 | 73.5 | 52 | I |
| | 2019.05- | 6MT | F | L | Hatchback FWD OM 608.915 (K9K) | | GDS83980 | Drive Shaft | | 30 | 27 | 65 | 53 | 543 | |
| | 2019.05- | 6MT | F | R | Hatchback FWD OM 608.915 (K9K) | | GDS83979 | Drive Shaft | | 30 | 27 | 65 | 53 | 509 | |
| | 2019.05- | 6MT | F | L/R | Hatchback FWD OM 608.915 (K9K) | | GCO82462 | Outer Joint | | 30 | 26 | 65 | 53 | 62.5 | I |
| | 2019.05- | 6MT | F | L | Hatchback FWD OM 608.915 (K9K) | | GCI82443 | Inner Joint | | 27 | 28 | 38 | 65 | 109.5 | |
| | 2019.05- | 6MT | F | R | Hatchback FWD OM 608.915 (K9K) | | GCI82442 | Inner Joint | | 27 | 28 | 42.4 | 49 | 91 | |
| | 2019.10- | 6MT | F | L | Saloon FWD OM 608.915 (K9K) | | GDS83980 | Drive Shaft | | 30 | 27 | 65 | 53 | 543 | |
| | 2019.10- | 6MT | F | R | Saloon FWD OM 608.915 (K9K) | | GDS83979 | Drive Shaft | | 30 | 27 | 65 | 53 | 509 | |
| | 2019.10- | 6MT | F | L/R | Saloon FWD OM 608.915 (K9K) | | GCO82462 | Outer Joint | | 30 | 26 | 65 | 53 | 62.5 | I |
| | 2019.10- | 6MT | F | L | Saloon FWD OM 608.915 (K9K) | | GCI82443 | Inner Joint | | 27 | 28 | 38 | 65 | 109.5 | |
| | 2019.10- | 6MT | F | R | Saloon FWD OM 608.915 (K9K) | | GCI82442 | Inner Joint | | 27 | 28 | 42.4 | 49 | 91 | |
| 1.6 (75 kw) | 1997.07-2005.08 | AT | F | L | Hatchback FWD 166960 | | GDS35021 | Drive Shaft | 48W | 24 | 22 | 57 | 67.5 | 561 | |
| | 1997.07-2005.08 | AT | F | R | Hatchback FWD 166960 | | GDS35023 | Drive Shaft | 48W | 24 | 22 | 57 | 67.5 | 965 | |
| | 1997.07-2005.08 | AT | F | L/R | Hatchback FWD 166960 | | GCO35004 | Outer Joint | 48W | 24 | 27 | 57 | 67.5 | 56 | I |
| | 1997.07-2005.08 | MT | F | L | Hatchback FWD 166960 | | GDS35037 | Drive Shaft | 48W | 24 | 22 | 57 | 67.5 | 572 | |
| | 1997.07-2005.08 | MT | F | R | Hatchback FWD 166960 | | GDS35038 | Drive Shaft | 48W | 24 | 22 | 57 | 67.5 | 954 | |
| | 1997.07-2005.08 | MT | F | L/R | Hatchback FWD 166960 | | GCO35022 | Outer Joint | 48W | 24 | 27 | 57 | 67.5 | 56 | I |
| | 1997.07-2005.08 | MT | F | R | Hatchback FWD 166960 | | GCI35010 | Inner Joint | | 22 | 27 | 36 | 459 | 76 | |
| | 1997.07-2005.08 | | F | | Hatchback FWD 166960 | | GCO35010 | Outer Joint | | 24 | 27 | 57 | 67.5 | 50 | I |
| | 2015.07-2018.05 | 7AT/6MT | F | L | Hatchback FWD M 270.910 | For taxis | GDS35067 | Drive Shaft | | 30 | 27 | 65 | 53 | 535 | |
| | 2015.07-2018.05 | 7AT/6MT | F | L | Hatchback FWD M 270.910 | Not For taxis | GDS56795 | Drive Shaft | | 30 | 27 | 65 | 53 | 530 | |
| | 2015.07-2018.05 | 7AT/6MT | F | L/R | Hatchback FWD M 270.910 | Supplier B,Length:105 | GCO35071 | Outer Joint | | 30 | 27 | 65 | 53 | 52 | M |
| | 2015.07-2018.05 | 7AT/6MT | F | L | Hatchback FWD M 270.910 | | GCI83495 | Inner Joint | | 27 | 27 | 38 | 65 | 80 | |
| | 2015.07-2018.05 | 7DCT/6MT | F | R | Hatchback FWD M 270.910 | For taxis | GDS35068 | Drive Shaft | | 30 | 27 | 65 | 53 | 498 | |
| | 2015.07-2018.05 | 7DCT/6MT | F | R | Hatchback FWD M 270.910 | Not For taxis | GDS35104 | Drive Shaft | | 30 | 27 | 65 | 53 | 496 | |
| | 2015.07-2018.05 | 7DCT/6MT | F | R | Hatchback FWD M 270.910 | For taxis | GDS81470 | Drive Shaft | | 30 | 27 | 65 | 53 | 996 | |
| | 2015.07-2018.05 | AT/MT | F | L/R | Hatchback FWD M 270.910 | Supplier A,Length:114.5 | GCO61065 | Outer Joint | | 30 | 27 | 65 | 53 | 61.5 | M |
| | 2015.07-2018.05 | AT/MT | F | R | Hatchback FWD M 270.910 | | GCI35071 | Inner Joint | | 27 | 27 | 42.1 | 41.5 | 97.2 | |
| | 2015.07-2018.05 | AT/MT | F | R | Hatchback FWD M 270.910 | | GDS35140 | Intermediate Shaft | | 27 | 27 | | | 540 | |
| 1.7 (44 kw) | 1998.03-2001.02 | AT | F | L | Hatchback FWD 668941 | | GDS35021 | Drive Shaft | 48W | 24 | 22 | 57 | 67.5 | 561 | |
| | 1998.03-2001.02 | AT | F | R | Hatchback FWD 668941 | | GDS35023 | Drive Shaft | 48W | 24 | 22 | 57 | 67.5 | 965 | |
| | 1998.03-2001.02 | AT | F | L/R | Hatchback FWD 668941 | | GCO35004 | Outer Joint | 48W | 24 | 27 | 57 | 67.5 | 56 | I |
| | 1998.03-2001.02 | MT | F | L | Hatchback FWD 668941 | | GDS35037 | Drive Shaft | 48W | 24 | 22 | 57 | 67.5 | 572 | |
| | 1998.03-2001.02 | MT | F | R | Hatchback FWD 668941 | | GDS35038 | Drive Shaft | 48W | 24 | 22 | 57 | 67.5 | 954 | |
| | 1998.03-2001.02 | MT | F | L/R | Hatchback FWD 668941 | | GCO35022 | Outer Joint | 48W | 24 | 27 | 57 | 67.5 | 56 | I |
| | 1998.03-2001.02 | MT | F | R | Hatchback FWD 668941 | | GCI35010 | Inner Joint | | 22 | 27 | 36 | 459 | 76 | |
| | 1998.03-2001.02 | | F | | Hatchback FWD 668941 | | GCO35010 | Outer Joint | | 24 | 27 | 57 | 67.5 | 50 | I |
| 1.7 (55 kw) | 2001.03-2004.08 | AT | F | L | Hatchback FWD 668940 | | GDS35021 | Drive Shaft | 48W | 24 | 22 | 57 | 67.5 | 561 | |
| | 2001.03-2004.08 | AT | F | R | Hatchback FWD 668940 | | GDS35023 | Drive Shaft | 48W | 24 | 22 | 57 | 67.5 | 965 | |
| | 2001.03-2004.08 | AT | F | L/R | Hatchback FWD 668940 | | GCO35004 | Outer Joint | 48W | 24 | 27 | 57 | 67.5 | 56 | I |
| | 2001.03-2004.08 | MT | F | L | Hatchback FWD 668940 | | GDS35037 | Drive Shaft | 48W | 24 | 22 | 57 | 67.5 | 572 | |
| | 2001.03-2004.08 | MT | F | R | Hatchback FWD 668940 | | GDS35038 | Drive Shaft | 48W | 24 | 22 | 57 | 67.5 | 954 | |
| | 2001.03-2004.08 | MT | F | L/R | Hatchback FWD 668940 | | GCO35022 | Outer Joint | 48W | 24 | 27 | 57 | 67.5 | 56 | I |
| | 2001.03-2004.08 | MT | F | R | Hatchback FWD 668940 | | GCI35010 | Inner Joint | | 22 | 27 | 36 | 459 | 76 | |
| | 2001.03-2004.08 | | F | | Hatchback FWD 668940 | | GCO35010 | Outer Joint | | 24 | 27 | 57 | 67.5 | 50 | I |
| 2.0 (60 kw) | 2004.09-2012.06 | 5MT | F | R | Hatchback FWD OM 640.942 | | GCI35011 | Inner Joint | | 22 | 27 | 36 | 459 | 81 | |

| | YEAR | TRANSM. | F/R | L/R | BODY STYLE & DRIVE TYPE & ENGINE | REMARKS | G-AP Ref. | PRODUCT | ABS | Technical Specifications A | B | C | H | L | P |
|---|---|---|---|---|---|---|---|---|---|---|---|---|---|---|---|
| **MERCEDES-BENZ** | | | | | | | | | | | | | | | |
| **A160** | | | | | | | | | | | | | | | |
| 2.0 (60 kw) | 2004.09-2012.06 | AT/MT | F | L/R | Hatchback FWD OM 640.942 | Locking type:Bolt on | GCO35027 | Outer Joint | | 25 | 27 | 60.3 | 43 | 53 | I |
| | 2004.09-2012.06 | CVT | F | L | Hatchback FWD OM 640.942 | | GDS84300 | Drive Shaft | | 25 | 27 | 60 | 73.5 | 608 | |
| | 2004.09-2012.06 | CVT | F | R | Hatchback FWD OM 640.942 | | GDS35055 | Drive Shaft | | 25 | 27 | 60 | 73.5 | 948 | |
| | 2004.09-2012.06 | CVT | F | L | Hatchback FWD OM 640.942 | | GCO99037 | Outer Joint | | 25 | 25 | 60 | 73.5 | 58.5 | I |
| | 2004.09-2012.06 | CVT | F | R | Hatchback FWD OM 640.942 | | GCO35030 | Outer Joint | | 25 | 25 | 60.4 | 74 | 56 | I |
| | 2004.09-2012.06 | CVT | F | L | Hatchback FWD OM 640.942 | | GCI82700 | Inner Joint | | 27 | 25 | 38 | 62 | 120 | |
| | 2004.09-2012.06 | CVT | F | R | Hatchback FWD OM 640.942 | | GCI35040 | Inner Joint | | 27 | 25 | 38 | 422 | 100 | |
| | 2004.09-2012.06 | MT | F | L | Hatchback FWD OM 640.942 | Hollow shaft | GDS35032 | Drive Shaft | | 25 | 22 | 60.3 | 43 | 580 | |
| | 2004.09-2012.06 | MT | F | L | Hatchback FWD OM 640.942 | Solid shaft | GDS35074 | Drive Shaft | | 25 | 22 | 60 | 73.5 | 600 | |
| | 2004.09-2012.06 | MT | F | R | Hatchback FWD OM 640.942 | Locking type:Nut on;Hollow shaft | GDS35039 | Drive Shaft | | 25 | 22 | 60 | 73.5 | 975 | |
| | 2004.09-2012.06 | MT | F | R | Hatchback FWD OM 640.942 | Locking type:Bolt on;Hollow shaft | GDS35075 | Drive Shaft | | 25 | 22 | 60.5 | 42 | 944 | |
| | 2004.09-2012.06 | MT | F | L/R | Hatchback FWD OM 640.942 | Locking type:Nut on | GCO35026 | Outer Joint | | 25 | 27 | 60 | 73.5 | 52 | I |
| | 2004.09-2012.06 | MT | F | L | Hatchback FWD OM 640.942 | | GCI99136 | Inner Joint | | 22 | 27 | 36 | 55 | 100 | |
| **A170** | | | | | | | | | | | | | | | |
| 1.7 (66 kw) | 1998.03-2001.02 | AT | F | L | Hatchback FWD 668940 | | GDS35021 | Drive Shaft | 48W | 24 | 22 | 57 | 67.5 | 561 | |
| | 1998.03-2001.02 | AT | F | R | Hatchback FWD 668940 | | GDS35023 | Drive Shaft | 48W | 24 | 22 | 57 | 67.5 | 965 | |
| | 1998.03-2001.02 | AT | F | L/R | Hatchback FWD 668940 | | GCO35004 | Outer Joint | 48W | 24 | 27 | 57 | 67.5 | 56 | I |
| | 1998.03-2001.02 | MT | F | L | Hatchback FWD 668940 | | GDS35037 | Drive Shaft | 48W | 24 | 22 | 57 | 67.5 | 572 | |
| | 1998.03-2001.02 | MT | F | R | Hatchback FWD 668940 | | GDS35038 | Drive Shaft | 48W | 24 | 22 | 57 | 67.5 | 954 | |
| | 1998.03-2001.02 | MT | F | L/R | Hatchback FWD 668940 | | GCO35022 | Outer Joint | 48W | 24 | 27 | 57 | 67.5 | 56 | I |
| | 1998.03-2001.02 | MT | F | R | Hatchback FWD 668940 | | GCI35010 | Inner Joint | | 22 | 27 | 36 | 459 | 76 | |
| | 1998.03-2001.02 | | F | | Hatchback FWD 668940 | | GCO35010 | Outer Joint | | 24 | 27 | 57 | 67.5 | 50 | I |
| 1.7 (70 kw) | 2001.03-2004.08 | AT | F | L | Hatchback FWD 668942 | | GDS35021 | Drive Shaft | 48W | 24 | 22 | 57 | 67.5 | 561 | |
| | 2001.03-2004.08 | AT | F | R | Hatchback FWD 668942 | | GDS35023 | Drive Shaft | 48W | 24 | 22 | 57 | 67.5 | 965 | |
| | 2001.03-2004.08 | AT | F | L/R | Hatchback FWD 668942 | | GCO35004 | Outer Joint | 48W | 24 | 27 | 57 | 67.5 | 56 | I |
| | 2001.03-2004.08 | MT | F | L | Hatchback FWD 668942 | | GDS35037 | Drive Shaft | 48W | 24 | 22 | 57 | 67.5 | 572 | |
| | 2001.03-2004.08 | MT | F | R | Hatchback FWD 668942 | | GDS35038 | Drive Shaft | 48W | 24 | 22 | 57 | 67.5 | 954 | |
| | 2001.03-2004.08 | MT | F | L/R | Hatchback FWD 668942 | | GCO35022 | Outer Joint | 48W | 24 | 27 | 57 | 67.5 | 56 | I |
| | 2001.03-2004.08 | MT | F | R | Hatchback FWD 668942 | | GCI35010 | Inner Joint | | 22 | 27 | 36 | 459 | 76 | |
| | 2001.03-2004.08 | | F | | Hatchback FWD 668942 | | GCO35010 | Outer Joint | | 24 | 27 | 57 | 67.5 | 50 | I |
| 1.7 (85 kw) | 2004.09-2012.06 | 5MT | F | R | Hatchback FWD M 266.940 | | GCI35011 | Inner Joint | | 22 | 27 | 36 | 459 | 81 | |
| | 2004.09-2012.06 | AT/MT | F | L/R | Hatchback FWD M 266.940 | Locking type:Bolt on | GCO35027 | Outer Joint | | 25 | 27 | 60.3 | 43 | 53 | I |
| | 2004.09-2012.06 | CVT | F | L | Hatchback FWD M 266.940 | | GDS84300 | Drive Shaft | | 25 | 27 | 60 | 73.5 | 608 | |
| | 2004.09-2012.06 | CVT | F | R | Hatchback FWD M 266.940 | | GDS35055 | Drive Shaft | | 25 | 27 | 60 | 73.5 | 948 | |
| | 2004.09-2012.06 | CVT | F | L | Hatchback FWD M 266.940 | | GCO99037 | Outer Joint | | 25 | 25 | 60 | 73.5 | 58.5 | I |
| | 2004.09-2012.06 | CVT | F | R | Hatchback FWD M 266.940 | | GCO35030 | Outer Joint | | 25 | 25 | 60.4 | 74 | 56 | I |
| | 2004.09-2012.06 | CVT | F | L | Hatchback FWD M 266.940 | | GCI82700 | Inner Joint | | 27 | 25 | 38 | 62 | 120 | |
| | 2004.09-2012.06 | CVT | F | R | Hatchback FWD M 266.940 | | GCI35040 | Inner Joint | | 27 | 25 | 38 | 422 | 100 | |
| | 2004.09-2012.06 | MT | F | L | Hatchback FWD M 266.940 | Hollow shaft | GDS35032 | Drive Shaft | | 25 | 22 | 60.3 | 43 | 580 | |
| | 2004.09-2012.06 | MT | F | L | Hatchback FWD M 266.940 | Solid shaft | GDS35074 | Drive Shaft | | 25 | 22 | 60 | 73.5 | 600 | |
| | 2004.09-2012.06 | MT | F | R | Hatchback FWD M 266.940 | Locking type:Nut on;Hollow shaft | GDS35039 | Drive Shaft | | 25 | 22 | 60 | 73.5 | 975 | |
| | 2004.09-2012.06 | MT | F | R | Hatchback FWD M 266.940 | Locking type:Bolt on;Hollow shaft | GDS35075 | Drive Shaft | | 25 | 22 | 60.5 | 42 | 944 | |
| | 2004.09-2012.06 | MT | F | L/R | Hatchback FWD M 266.940 | Locking type:Nut on | GCO35026 | Outer Joint | | 25 | 27 | 60 | 73.5 | 52 | I |
| | 2004.09-2012.06 | MT | F | L | Hatchback FWD M 266.940 | | GCI99136 | Inner Joint | | 22 | 27 | 36 | 55 | 100 | |
| **A180** | | | | | | | | | | | | | | | |
| 1.3 (100 kw) | 2018.06- | 6MT | F | L | Hatchback FWD M 282.914 | | GDS84227 | Drive Shaft | | 30 | 27 | 65 | 53 | 546 | |
| | 2018.06- | 6MT/7DCT | F | R | Hatchback FWD M 282.914 | | GDS84228 | Drive Shaft | | 30 | 27 | 65 | 53 | 511 | |
| | 2018.06- | 6MT/7DCT | F | L/R | Hatchback FWD M 282.914 | | GCO82739 | Outer Joint | | 30 | 27 | 65 | 53 | 64 | M |
| | 2018.06- | 6MT/7DCT | F | L | Hatchback FWD M 282.914 | | GCI82443 | Inner Joint | | 27 | 28 | 38 | 65 | 109.5 | |
| | 2018.06- | 6MT/7DCT | F | R | Hatchback FWD M 282.914 | | GCI82442 | Inner Joint | | 27 | 28 | 42.4 | 49 | 91 | |
| | 2018.06- | 7DCT | F | L | Hatchback FWD M 282.914 | | GDS84229 | Drive Shaft | | 30 | 27 | 65 | 53 | 584 | |
| | 2019.04- | 6MT | F | L | Saloon FWD M 282.914 | | GDS84227 | Drive Shaft | | 30 | 27 | 65 | 53 | 546 | |
| | 2019.04- | 6MT/7DCT | F | R | Saloon FWD M 282.914 | | GDS84228 | Drive Shaft | | 30 | 27 | 65 | 53 | 511 | |
| | 2019.04- | 6MT/7DCT | F | L/R | Saloon FWD M 282.914 | | GCO82739 | Outer Joint | | 30 | 27 | 65 | 53 | 64 | M |
| | 2019.04- | 6MT/7DCT | F | L | Saloon FWD M 282.914 | | GCI82443 | Inner Joint | | 27 | 28 | 38 | 65 | 109.5 | |
| | 2019.04- | 6MT/7DCT | F | R | Saloon FWD M 282.914 | | GCI82442 | Inner Joint | | 27 | 28 | 42.4 | 49 | 91 | |
| | 2019.04- | 7DCT | F | L | Saloon FWD M 282.914 | | GDS84229 | Drive Shaft | | 30 | 27 | 65 | 53 | 584 | |
| | 2022.10- | 7AT | F | L | Hatchback FWD 282.814 | | GDS84229 | Drive Shaft | | 30 | 27 | 65 | 53 | 584 | |
| | 2022.10- | 7AT | F | R | Hatchback FWD 282.814 | | GDS84228 | Drive Shaft | | 30 | 27 | 65 | 53 | 511 | |
| | 2022.10- | AT/MT | F | L | Hatchback FWD 282.814 | | GCI82443 | Inner Joint | | 27 | 28 | 38 | 65 | 109.5 | |
| | 2022.10- | 7AT | F | L | Saloon FWD 282.814 | | GDS84229 | Drive Shaft | | 30 | 27 | 65 | 53 | 584 | |
| | 2022.10- | 7AT | F | R | Saloon FWD 282.814 | | GDS84228 | Drive Shaft | | 30 | 27 | 65 | 53 | 511 | |
| | 2022.10- | AT/MT | F | L | Saloon FWD 282.814 | | GCI82443 | Inner Joint | | 27 | 28 | 38 | 65 | 109.5 | |
| 1.5 (80 kw) | 2012.06-2018.05 | 7AT/6MT | F | L/R | Hatchback FWD OM 607.951 (K9K) | | GCO61065 | Outer Joint | | 30 | 27 | 65 | 53 | 61.5 | M |
| | 2012.06-2018.05 | 7AT/6MT | F | L | Hatchback FWD OM 607.951 (K9K) | | GCI61082 | Inner Joint | | 27 | 27 | 38 | 65 | 111.7 | |

| | YEAR | TRANSM. | F/R | L/R | BODY STYLE & DRIVE TYPE & ENGINE | REMARKS | G-AP Ref. | PRODUCT | ABS | Technical Specifications A | B | C | H | L | P |
|---|---|---|---|---|---|---|---|---|---|---|---|---|---|---|---|
| **MERCEDES-BENZ** | | | | | | | | | | | | | | | |
| **A180** | | | | | | | | | | | | | | | |
| 1.5 (80 kw) | 2012.06-2018.05 | 7DCT/6MT | F | L | Hatchback FWD OM 607.951 (K9K) | | GDS35067 | Drive Shaft | | 30 | 27 | 65 | 53 | 535 | |
| | 2012.06-2018.05 | 7DCT/6MT | F | R | Hatchback FWD OM 607.951 (K9K) | | GDS35068 | Drive Shaft | | 30 | 27 | 65 | 53 | 498 | |
| | 2012.06-2018.05 | 7DCT/6MT | F | R | Hatchback FWD OM 607.951 (K9K) | | GDS81470 | Drive Shaft | | 30 | 27 | 65 | 53 | 996 | |
| | 2012.06-2018.05 | AT/MT | F | R | Hatchback FWD OM 607.951 (K9K) | | GDS35140 | Intermediate Shaft | | 27 | 27 | | | 540 | |
| 1.5 (85 kw) | 2018.03- | 6MT | F | L | Hatchback FWD OM 608.915 (K9K) | | GDS83980 | Drive Shaft | | 30 | 27 | 65 | 53 | 543 | |
| | 2018.03- | 6MT | F | R | Hatchback FWD OM 608.915 (K9K) | | GDS83979 | Drive Shaft | | 30 | 27 | 65 | 53 | 509 | |
| | 2018.03- | 6MT | F | L | Hatchback FWD OM 608.915 (K9K) | | GCI82443 | Inner Joint | | 27 | 28 | 38 | 65 | 109.5 | |
| | 2018.03- | 6MT | F | R | Hatchback FWD OM 608.915 (K9K) | | GCI82442 | Inner Joint | | 27 | 28 | 42.4 | 49 | 91 | |
| | 2018.03- | 7DCT | F | L | Hatchback FWD OM 608.915 (K9K) | | GDS83682 | Drive Shaft | | 30 | 27 | 65 | 53 | 576 | |
| | 2018.03- | 7DCT | F | R | Hatchback FWD OM 608.915 (K9K) | | GDS83685 | Drive Shaft | | 30 | 27 | 65 | 53 | 501 | |
| | 2018.03- | 7DCT | F | L/R | Hatchback FWD OM 608.915 (K9K) | | GCO82462 | Outer Joint | | 30 | 26 | 65 | 53 | 62.5 | I |
| | 2018.03- | 7DCT | F | L | Hatchback FWD OM 608.915 (K9K) | | GCI82332 | Inner Joint | | 27 | 26 | 38 | 65 | 104.5 | |
| | 2018.03- | 7DCT | F | R | Hatchback FWD OM 608.915 (K9K) | | GCI82361 | Inner Joint | | 27 | 26 | 42 | | 136 | |
| | 2018.03- | 7DCT | F | R | Hatchback FWD OM 608.915 (K9K) | | GDS82867 | Intermediate Shaft | | 27 | 27 | | | 503 | |
| | 2018.09- | 6MT | F | L | Saloon FWD OM 608.915 (K9K) | | GDS83980 | Drive Shaft | | 30 | 27 | 65 | 53 | 543 | |
| | 2018.09- | 6MT | F | R | Saloon FWD OM 608.915 (K9K) | | GDS83979 | Drive Shaft | | 30 | 27 | 65 | 53 | 509 | |
| | 2018.09- | 6MT | F | L | Saloon FWD OM 608.915 (K9K) | | GCI82443 | Inner Joint | | 27 | 28 | 38 | 65 | 109.5 | |
| | 2018.09- | 6MT | F | R | Saloon FWD OM 608.915 (K9K) | | GCI82442 | Inner Joint | | 27 | 28 | 42.4 | 49 | 91 | |
| | 2018.09- | 7DCT | F | L | Saloon FWD OM 608.915 (K9K) | | GDS83682 | Drive Shaft | | 30 | 27 | 65 | 53 | 576 | |
| | 2018.09- | 7DCT | F | R | Saloon FWD OM 608.915 (K9K) | | GDS83685 | Drive Shaft | | 30 | 27 | 65 | 53 | 501 | |
| | 2018.09- | 7DCT | F | L/R | Saloon FWD OM 608.915 (K9K) | | GCO82462 | Outer Joint | | 30 | 26 | 65 | 53 | 62.5 | I |
| | 2018.09- | 7DCT | F | L | Saloon FWD OM 608.915 (K9K) | | GCI82332 | Inner Joint | | 27 | 26 | 38 | 65 | 104.5 | |
| | 2018.09- | 7DCT | F | R | Saloon FWD OM 608.915 (K9K) | | GCI82361 | Inner Joint | | 27 | 26 | 42 | | 136 | |
| | 2018.09- | 7DCT | F | R | Saloon FWD OM 608.915 (K9K) | | GDS82867 | Intermediate Shaft | | 27 | 27 | | | 503 | |
| 1.6 (90 kw) | 2012.09-2018.05 | 7AT/6MT | F | L | Hatchback FWD M 270.910 | For taxis | GDS35067 | Drive Shaft | | 30 | 27 | 65 | 53 | 535 | |
| | 2012.09-2018.05 | 7AT/6MT | F | L | Hatchback FWD M 270.910 | Not For taxis | GDS56795 | Drive Shaft | | 30 | 27 | 65 | 53 | 530 | |
| | 2012.09-2018.05 | 7AT/6MT | F | L/R | Hatchback FWD M 270.910 | Supplier B,Length:105 | GCO35071 | Outer Joint | | 30 | 27 | 65 | 53 | 52 | M |
| | 2012.09-2018.05 | 7AT/6MT | F | L/R | Hatchback FWD M 270.910 | Supplier A,Length:114.5 | GCO61065 | Outer Joint | | 30 | 27 | 65 | 53 | 61.5 | M |
| | 2012.09-2018.05 | 7AT/6MT | F | L | Hatchback FWD M 270.910 | | GCI83495 | Inner Joint | | 27 | 27 | 38 | 65 | 80 | |
| | 2012.09-2018.05 | 7DCT/6MT | F | R | Hatchback FWD M 270.910 | For taxis | GDS35068 | Drive Shaft | | 30 | 27 | 65 | 53 | 498 | |
| | 2012.09-2018.05 | 7DCT/6MT | F | R | Hatchback FWD M 270.910 | Not For taxis | GDS35104 | Drive Shaft | | 30 | 27 | 65 | 53 | 496 | |
| | 2012.09-2018.05 | 7DCT/6MT | F | R | Hatchback FWD M 270.910 | For taxis | GDS81470 | Drive Shaft | | 30 | 27 | 65 | 53 | 996 | |
| | 2012.09-2018.05 | AT/MT | F | R | Hatchback FWD M 270.910 | Date from:2013.01 | GCI35071 | Inner Joint | | 27 | 27 | 42.1 | 41.5 | 97.2 | |
| | 2012.09-2018.05 | AT/MT | F | R | Hatchback FWD M 270.910 | | GDS35140 | Intermediate Shaft | | 27 | 27 | | | 540 | |
| 1.7 (85 kw) | 2009.04-2012.06 | 5MT | F | L | Hatchback FWD M 266.940 | Hollow shaft | GDS35032 | Drive Shaft | | 25 | 22 | 60.3 | 43 | 580 | |
| | 2009.04-2012.06 | 5MT | F | L | Hatchback FWD M 266.940 | | GCI99136 | Inner Joint | | 22 | 27 | 36 | 55 | 100 | |
| | 2009.04-2012.06 | 5MT | F | R | Hatchback FWD M 266.940 | | GCI35011 | Inner Joint | | 22 | 27 | 36 | 459 | 81 | |
| | 2009.04-2012.06 | AT/MT | F | L/R | Hatchback FWD M 266.940 | Locking type:Bolt on | GCO35027 | Outer Joint | | 25 | 27 | 60.3 | 43 | 53 | I |
| | 2009.04-2012.06 | CVT | F | L | Hatchback FWD M 266.940 | | GDS84300 | Drive Shaft | | 25 | 27 | 60 | 73.5 | 608 | |
| | 2009.04-2012.06 | CVT | F | R | Hatchback FWD M 266.940 | | GDS35055 | Drive Shaft | | 25 | 27 | 60 | 73.5 | 948 | |
| | 2009.04-2012.06 | CVT | F | L | Hatchback FWD M 266.940 | | GCO99037 | Outer Joint | | 25 | 25 | 60 | 73.5 | 58.5 | I |
| | 2009.04-2012.06 | CVT | F | R | Hatchback FWD M 266.940 | | GCO35030 | Outer Joint | | 25 | 25 | 60.4 | 74 | 56 | I |
| | 2009.04-2012.06 | CVT | F | L | Hatchback FWD M 266.940 | | GCI82700 | Inner Joint | | 27 | 25 | 38 | 62 | 120 | |
| | 2009.04-2012.06 | CVT | F | R | Hatchback FWD M 266.940 | | GCI35040 | Inner Joint | | 27 | 25 | 38 | 422 | 100 | |
| | 2009.04-2012.06 | MT | F | L | Hatchback FWD M 266.940 | Solid shaft | GDS35074 | Drive Shaft | | 25 | 22 | 60 | 73.5 | 600 | |
| | 2009.04-2012.06 | MT | F | R | Hatchback FWD M 266.940 | Locking type:Nut on;Hollow shaft | GDS35039 | Drive Shaft | | 25 | 22 | 60 | 73.5 | 975 | |
| | 2009.04-2012.06 | MT | F | R | Hatchback FWD M 266.940 | Locking type:Bolt on;Hollow shaft | GDS35075 | Drive Shaft | | 25 | 22 | 60.5 | 42 | 944 | |
| | 2009.04-2012.06 | MT | F | L/R | Hatchback FWD M 266.940 | Locking type:Nut on | GCO35026 | Outer Joint | | 25 | 27 | 60 | 73.5 | 52 | I |
| 1.8 (80 kw) | 2012.06-2014.10 | 7AT/6MT | F | L | Hatchback FWD OM 651.901 | Inner teeth of tranm.side:27 | GDS35067 | Drive Shaft | | 30 | 27 | 65 | 53 | 535 | |
| | 2012.06-2014.10 | 7AT/6MT | F | R | Hatchback FWD OM 651.901 | Without Intermediate Shaft | GDS35068 | Drive Shaft | | 30 | 27 | 65 | 53 | 498 | |
| | 2012.06-2014.10 | 7AT/6MT | F | R | Hatchback FWD OM 651.901 | With Intermediate Shaft | GDS81470 | Drive Shaft | | 30 | 27 | 65 | 53 | 996 | |
| | 2012.06-2014.10 | 7AT/6MT | F | L/R | Hatchback FWD OM 651.901 | | GCO61065 | Outer Joint | | 30 | 27 | 65 | 53 | 61.5 | M |
| | 2012.06-2014.10 | AT/MT | F | L | Hatchback FWD OM 651.901 | | GCI61082 | Inner Joint | | 27 | 27 | 38 | 65 | 111.7 | |
| | 2012.06-2014.10 | AT/MT | F | R | Hatchback FWD OM 651.901 | | GCI35071 | Inner Joint | | 27 | 27 | 42.1 | 41.5 | 97.2 | |
| | 2012.06-2014.10 | AT/MT | F | R | Hatchback FWD OM 651.901 | | GDS35140 | Intermediate Shaft | | 27 | 27 | | | 540 | |
| 2.0 (80 kw) | 2004.09-2012.06 | AT/MT | F | L/R | Hatchback FWD OM 640.940 | Locking type:Bolt on | GCO35019 | Outer Joint | | 25 | 25 | 60.5 | 42 | 59 | I |
| | 2004.09-2012.06 | CVT | F | L | Hatchback FWD OM 640.940 | | GDS84300 | Drive Shaft | | 25 | 27 | 60 | 73.5 | 608 | |
| | 2004.09-2012.06 | CVT | F | R | Hatchback FWD OM 640.940 | | GDS35055 | Drive Shaft | | 25 | 27 | 60 | 73.5 | 948 | |
| | 2004.09-2012.06 | CVT | F | L | Hatchback FWD OM 640.940 | | GCI82700 | Inner Joint | | 27 | 25 | 38 | 62 | 120 | |
| | 2004.09-2012.06 | CVT | F | R | Hatchback FWD OM 640.940 | | GCI35040 | Inner Joint | | 27 | 25 | 38 | 422 | 100 | |
| | 2004.09-2012.06 | MT | F | L | Hatchback FWD OM 640.940 | Locking type:Nut on;Inner teeth of tranm.side:27 | GDS35066 | Drive Shaft | | 25 | 27 | 60 | 73.5 | 583 | |
| | 2004.09-2012.06 | MT | F | L | Hatchback FWD OM 640.940 | Locking type:Bolt on;Date from:2015.03,Chassis no. from:J116414 | GDS35076 | Drive Shaft | | 25 | 27 | 60.5 | 42 | 551 | |
| | 2004.09-2012.06 | MT | F | L | Hatchback FWD OM 640.940 | Locking type:Nut on;Inner teeth of tranm.side:25 | GDS35078 | Drive Shaft | | 25 | 27 | 60 | 73.5 | 583 | |
| | 2004.09-2012.06 | MT | F | R | Hatchback FWD OM 640.940 | | GDS35081 | Drive Shaft | | 25 | 27 | 60 | 73.5 | 987 | |
| | 2004.09-2012.06 | MT | F | L | Hatchback FWD OM 640.940 | | GCI35014 | Inner Joint | | 27 | 25 | 38 | 62 | 102 | |

| | YEAR | TRANSM. | F/R | L/R | BODY STYLE & DRIVE TYPE & ENGINE | REMARKS | G-AP Ref. | PRODUCT | ABS | Technical Specifications A | B | C | H | L | P |
|---|---|---|---|---|---|---|---|---|---|---|---|---|---|---|---|
| **MERCEDES-BENZ** | | | | | | | | | | | | | | | |
| **A180** | | | | | | | | | | | | | | | |
| 2.0 (80 kw) | 2004.09-2012.06 | MT/CVT | F | L/R | Hatchback FWD OM 640.940 | Locking type:Nut on | GCO99037 | Outer Joint | | 25 | 25 | 60 | 73.5 | 58.5 | I |
| 2.0 (85 kw) | 2020.10- | 6MT | F | L | Hatchback FWD OM 654.920 | | GDS83980 | Drive Shaft | | 30 | 27 | 65 | 53 | 543 | |
| | 2020.10- | 6MT | F | R | Hatchback FWD OM 654.920 | | GDS83979 | Drive Shaft | | 30 | 27 | 65 | 53 | 509 | |
| | 2020.10- | 6MT | F | L | Hatchback FWD OM 654.920 | | GCI82443 | Inner Joint | | 27 | 28 | 38 | 65 | 109.5 | |
| | 2020.10- | 6MT | F | R | Hatchback FWD OM 654.920 | | GCI82442 | Inner Joint | | 27 | 28 | 42.4 | 49 | 91 | |
| | 2020.10- | 8DCT | F | R | Hatchback FWD OM 654.920 | | GDS83685 | Drive Shaft | | 30 | 27 | 65 | 53 | 501 | |
| | 2020.10- | 8DCT | F | L | Hatchback FWD OM 654.920 | | GCI82332 | Inner Joint | | 27 | 26 | 38 | 65 | 104.5 | |
| | 2020.10- | 8DCT/6MT | F | L/R | Hatchback FWD OM 654.920 | | GCO82462 | Outer Joint | | 30 | 26 | 65 | 53 | 62.5 | I |
| | 2020.10- | 6MT | F | L | Saloon FWD OM 654.920 | | GDS83980 | Drive Shaft | | 30 | 27 | 65 | 53 | 543 | |
| | 2020.10- | 6MT | F | R | Saloon FWD OM 654.920 | | GDS83979 | Drive Shaft | | 30 | 27 | 65 | 53 | 509 | |
| | 2020.10- | 6MT | F | L | Saloon FWD OM 654.920 | | GCI82443 | Inner Joint | | 27 | 28 | 38 | 65 | 109.5 | |
| | 2020.10- | 6MT | F | R | Saloon FWD OM 654.920 | | GCI82442 | Inner Joint | | 27 | 28 | 42.4 | 49 | 91 | |
| | 2020.10- | 8DCT | F | L | Saloon FWD OM 654.920 | | GDS84230 | Drive Shaft | | 30 | 27 | 65 | 53 | 533 | |
| | 2020.10- | 8DCT | F | R | Saloon FWD OM 654.920 | Date To:2021.02 | GDS83685 | Drive Shaft | | 30 | 27 | 65 | 53 | 501 | |
| | 2020.10- | 8DCT | F | L | Saloon FWD OM 654.920 | | GCO82462 | Outer Joint | | 30 | 26 | 65 | 53 | 62.5 | I |
| | 2020.10- | 8DCT | F | L | Saloon FWD OM 654.920 | | GCI82332 | Inner Joint | | 27 | 26 | 38 | 65 | 104.5 | |
| **A190** | | | | | | | | | | | | | | | |
| 1.9 (92 kw) | 1999.02-2005.06 | AT | F | L | Hatchback FWD 166990 | Date from:2001.03 | GDS35021 | Drive Shaft | 48W | 24 | 22 | 57 | 67.5 | 561 | |
| | 1999.02-2005.06 | AT | F | R | Hatchback FWD 166990 | | GDS35023 | Drive Shaft | 48W | 24 | 22 | 57 | 67.5 | 965 | |
| | 1999.02-2005.06 | AT | F | L/R | Hatchback FWD 166990 | | GCO35005 | Outer Joint | 48W | 24 | 27 | 57 | 67.5 | 58 | I |
| | 1999.02-2005.06 | AT/MT | F | L/R | Hatchback FWD 166990 | | GCO35004 | Outer Joint | 48W | 24 | 27 | 57 | 67.5 | 56 | I |
| | 1999.02-2005.06 | MT | F | L | Hatchback FWD 166990 | | GDS35037 | Drive Shaft | 48W | 24 | 22 | 57 | 67.5 | 572 | |
| | 1999.02-2005.06 | MT | F | R | Hatchback FWD 166990 | | GDS56737 | Drive Shaft | 48W | 24 | 22 | 57 | 67.5 | 958 | |
| | 1999.02-2005.06 | MT | F | L/R | Hatchback FWD 166990 | | GCO35010 | Outer Joint | | 24 | 27 | 57 | 67.5 | 50 | I |
| | 1999.02-2005.06 | MT | F | L/R | Hatchback FWD 166990 | | GCO35023 | Outer Joint | 48W | 24 | 27 | 57 | 67.5 | 58 | I |
| | 1999.02-2005.06 | MT | F | R | Hatchback FWD 166990 | | GCI35010 | Inner Joint | | 22 | 27 | 36 | 459 | 76 | |
| | 1999.02-2005.06 | | F | L/R | Hatchback FWD 166990 | | GCO35003 | Outer Joint | 48W | 24 | 27 | 57 | 67.5 | 50 | I |
| **A200** | | | | | | | | | | | | | | | |
| 1.3 (110 kw) | 2018.06- | 7AT | F | L | Hatchback FWD M 282.914 | | GDS84229 | Drive Shaft | | 30 | 27 | 65 | 53 | 584 | |
| | 2018.06- | 7AT | F | R | Hatchback FWD M 282.914 | | GDS84228 | Drive Shaft | | 30 | 27 | 65 | 53 | 511 | |
| | 2018.06- | 7AT | F | L/R | Hatchback FWD M 282.914 | | GCO82739 | Outer Joint | | 30 | 27 | 65 | 53 | 64 | M |
| | 2018.06- | 7AT | F | L | Hatchback FWD M 282.914 | | GCI82443 | Inner Joint | | 27 | 28 | 38 | 65 | 109.5 | |
| | 2018.06- | 7AT | F | R | Hatchback FWD M 282.914 | | GCI82442 | Inner Joint | | 27 | 28 | 42.4 | 49 | 91 | |
| | 2018.09- | 7AT | F | L | Saloon FWD M 282.914 | | GDS84229 | Drive Shaft | | 30 | 27 | 65 | 53 | 584 | |
| | 2018.09- | 7AT | F | R | Saloon FWD M 282.914 | | GDS84228 | Drive Shaft | | 30 | 27 | 65 | 53 | 511 | |
| | 2018.09- | 7AT | F | L/R | Saloon FWD M 282.914 | | GCO82739 | Outer Joint | | 30 | 27 | 65 | 53 | 64 | M |
| | 2018.09- | 7AT | F | L | Saloon FWD M 282.914 | | GCI82443 | Inner Joint | | 27 | 28 | 38 | 65 | 109.5 | |
| | 2018.09- | 7AT | F | R | Saloon FWD M 282.914 | | GCI82442 | Inner Joint | | 27 | 28 | 42.4 | 49 | 91 | |
| 1.3 (120 kw) | 2018.03- | 6MT | F | L | Hatchback FWD M 282.914 | | GDS84227 | Drive Shaft | | 30 | 27 | 65 | 53 | 546 | |
| | 2018.03- | 6MT/7DCT | F | R | Hatchback FWD M 282.914 | | GDS84228 | Drive Shaft | | 30 | 27 | 65 | 53 | 511 | |
| | 2018.03- | 6MT/7DCT | F | L/R | Hatchback FWD M 282.914 | | GCO82739 | Outer Joint | | 30 | 27 | 65 | 53 | 64 | M |
| | 2018.03- | 6MT/7DCT | F | L | Hatchback FWD M 282.914 | | GCI82443 | Inner Joint | | 27 | 28 | 38 | 65 | 109.5 | |
| | 2018.03- | 6MT/7DCT | F | R | Hatchback FWD M 282.914 | | GCI82442 | Inner Joint | | 27 | 28 | 42.4 | 49 | 91 | |
| | 2018.03- | 7DCT | F | L | Hatchback FWD M 282.914 | | GDS84229 | Drive Shaft | | 30 | 27 | 65 | 53 | 584 | |
| | 2018.09- | 6MT | F | L | Saloon FWD M 282.914 | | GDS84227 | Drive Shaft | | 30 | 27 | 65 | 53 | 546 | |
| | 2018.09- | 6MT/7DCT | F | R | Saloon FWD M 282.914 | | GDS84228 | Drive Shaft | | 30 | 27 | 65 | 53 | 511 | |
| | 2018.09- | 6MT/7DCT | F | L/R | Saloon FWD M 282.914 | | GCO82739 | Outer Joint | | 30 | 27 | 65 | 53 | 64 | M |
| | 2018.09- | 6MT/7DCT | F | L | Saloon FWD M 282.914 | | GCI82443 | Inner Joint | | 27 | 28 | 38 | 65 | 109.5 | |
| | 2018.09- | 6MT/7DCT | F | R | Saloon FWD M 282.914 | | GCI82442 | Inner Joint | | 27 | 28 | 42.4 | 49 | 91 | |
| | 2018.09- | 7DCT | F | L | Saloon FWD M 282.914 | | GDS84229 | Drive Shaft | | 30 | 27 | 65 | 53 | 584 | |
| | 2020.10- | 8AT | F | R | Hatchback 4WD M 282.914 | | GDS84228 | Drive Shaft | | 30 | 27 | 65 | 53 | 511 | |
| | 2020.10- | 8AT | F | R | Hatchback 4WD M 282.914 | | GCO82739 | Outer Joint | | 30 | 27 | 65 | 53 | 64 | M |
| | 2020.10- | 8AT | F | R | Hatchback 4WD M 282.914 | | GCI82442 | Inner Joint | | 27 | 28 | 42.4 | 49 | 91 | |
| | 2020.10- | 8AT | F | R | Saloon 4WD M 282.914 | | GDS84228 | Drive Shaft | | 30 | 27 | 65 | 53 | 511 | |
| | 2020.10- | 8AT | F | R | Saloon 4WD M 282.914 | | GCO82739 | Outer Joint | | 30 | 27 | 65 | 53 | 64 | M |
| | 2020.10- | 8AT | F | R | Saloon 4WD M 282.914 | | GCI82442 | Inner Joint | | 27 | 28 | 42.4 | 49 | 91 | |
| | 2022.10- | 7AT | F | L | Hatchback FWD 282.814 | | GDS84229 | Drive Shaft | | 30 | 27 | 65 | 53 | 584 | |
| | 2022.10- | 7AT | F | R | Hatchback FWD 282.814 | | GDS84228 | Drive Shaft | | 30 | 27 | 65 | 53 | 511 | |
| | 2022.10- | AT/MT | F | L | Hatchback FWD 282.814 | | GCI82443 | Inner Joint | | 27 | 28 | 38 | 65 | 109.5 | |
| | 2022.10- | 7AT | F | L | Saloon FWD 282.814 | | GDS84229 | Drive Shaft | | 30 | 27 | 65 | 53 | 584 | |
| | 2022.10- | 7AT | F | R | Saloon FWD 282.814 | | GDS84228 | Drive Shaft | | 30 | 27 | 65 | 53 | 511 | |
| | 2022.10- | AT/MT | F | L | Saloon FWD 282.814 | | GCI82443 | Inner Joint | | 27 | 28 | 38 | 65 | 109.5 | |
| 1.6 (115 kw) | 2012.06-2018.05 | 7AT/6MT | F | L/R | Hatchback FWD M 270.910 | | GCO35071 | Outer Joint | | 30 | 27 | 65 | 53 | 52 | M |
| | 2012.06-2018.05 | 7AT/6MT | F | L | Hatchback FWD M 270.910 | | GCI83495 | Inner Joint | | 27 | 27 | 38 | 65 | 80 | |
| | 2012.06-2018.05 | 7DCT/6MT | F | L | Hatchback FWD M 270.910 | For taxis | GDS35067 | Drive Shaft | | 30 | 27 | 65 | 53 | 535 | |

| | YEAR | TRANSM. | F/R | L/R | BODY STYLE & DRIVE TYPE & ENGINE | REMARKS | G-AP Ref. | PRODUCT | ABS | Technical Specifications A | B | C | H | L | P |
|---|---|---|---|---|---|---|---|---|---|---|---|---|---|---|---|
| **MERCEDES-BENZ** | | | | | | | | | | | | | | | |
| **A200** | | | | | | | | | | | | | | | |
| 1.6 (115 kw) | 2012.06-2018.05 | 7DCT/6MT | F | L | Hatchback FWD M 270.910 | Not For taxis | GDS56795 | Drive Shaft | | 30 | 27 | 65 | 53 | 530 | |
| | 2012.06-2018.05 | 7DCT/6MT | F | R | Hatchback FWD M 270.910 | For taxis | GDS35068 | Drive Shaft | | 30 | 27 | 65 | 53 | 498 | |
| | 2012.06-2018.05 | 7DCT/6MT | F | R | Hatchback FWD M 270.910 | Not For taxis | GDS35104 | Drive Shaft | | 30 | 27 | 65 | 53 | 496 | |
| | 2012.06-2018.05 | 7DCT/6MT | F | R | Hatchback FWD M 270.910 | For taxis | GDS81470 | Drive Shaft | | 30 | 27 | 65 | 53 | 996 | |
| | 2012.06-2018.05 | AT/MT | F | R | Hatchback FWD M 270.910 | | GCI35071 | Inner Joint | | 27 | 27 | 42.1 | 41.5 | 97.2 | |
| | 2012.06-2018.05 | AT/MT | F | R | Hatchback FWD M 270.910 | | GDS35140 | Intermediate Shaft | | 27 | 27 | | | 540 | |
| 1.8 (100 kw) | 2012.06-2014.10 | 7AT/6MT | F | L | Hatchback FWD OM 651.901 | Inner teeth of tranm.side:27 | GDS35067 | Drive Shaft | | 30 | 27 | 65 | 53 | 535 | |
| | 2012.06-2014.10 | 7AT/6MT | F | R | Hatchback FWD OM 651.901 | Without Intermediate Shaft | GDS35068 | Drive Shaft | | 30 | 27 | 65 | 53 | 498 | |
| | 2012.06-2014.10 | 7AT/6MT | F | R | Hatchback FWD OM 651.901 | With Intermediate Shaft | GDS81470 | Drive Shaft | | 30 | 27 | 65 | 53 | 996 | |
| | 2012.06-2014.10 | 7AT/6MT | F | L/R | Hatchback FWD OM 651.901 | | GCO61065 | Outer Joint | | 30 | 27 | 65 | 53 | 61.5 | M |
| | 2012.06-2014.10 | AT/MT | F | L | Hatchback FWD OM 651.901 | | GCI61082 | Inner Joint | | 27 | 27 | 38 | 65 | 111.7 | |
| | 2012.06-2014.10 | AT/MT | F | R | Hatchback FWD OM 651.901 | | GCI35071 | Inner Joint | | 27 | 27 | 42.1 | 41.5 | 97.2 | |
| | 2012.06-2014.10 | AT/MT | F | R | Hatchback FWD OM 651.901 | | GDS35140 | Intermediate Shaft | | 27 | 27 | | | 540 | |
| 2.0 (100 kw) | 2004.09-2012.06 | 5MT | F | R | Hatchback FWD M 266.960 | | GCI35011 | Inner Joint | | 22 | 27 | 36 | 459 | 81 | |
| | 2004.09-2012.06 | AT/MT | F | L/R | Hatchback FWD M 266.960 | Locking type:Bolt on | GCO35027 | Outer Joint | | 25 | 27 | 60.3 | 43 | 53 | I |
| | 2004.09-2012.06 | CVT | F | L | Hatchback FWD M 266.960 | | GDS84300 | Drive Shaft | | 25 | 27 | 60 | 73.5 | 608 | |
| | 2004.09-2012.06 | CVT | F | R | Hatchback FWD M 266.960 | | GDS35055 | Drive Shaft | | 25 | 27 | 60 | 73.5 | 948 | |
| | 2004.09-2012.06 | CVT | F | L | Hatchback FWD M 266.960 | | GCO99037 | Outer Joint | | 25 | 25 | 60 | 73.5 | 58.5 | I |
| | 2004.09-2012.06 | CVT | F | R | Hatchback FWD M 266.960 | | GCO35030 | Outer Joint | | 25 | 25 | 60.4 | 74 | 56 | I |
| | 2004.09-2012.06 | CVT | F | L | Hatchback FWD M 266.960 | | GCI82700 | Inner Joint | | 27 | 25 | 38 | 62 | 120 | |
| | 2004.09-2012.06 | CVT | F | R | Hatchback FWD M 266.960 | | GCI35040 | Inner Joint | | 27 | 25 | 38 | 422 | 100 | |
| | 2004.09-2012.06 | MT | F | L | Hatchback FWD M 266.960 | Hollow shaft | GDS35032 | Drive Shaft | | 25 | 22 | 60.3 | 43 | 580 | |
| | 2004.09-2012.06 | MT | F | L | Hatchback FWD M 266.960 | Solid shaft | GDS35074 | Drive Shaft | | 25 | 22 | 60 | 73.5 | 600 | |
| | 2004.09-2012.06 | MT | F | R | Hatchback FWD M 266.960 | Locking type:Nut on;Hollow shaft | GDS35039 | Drive Shaft | | 25 | 22 | 60 | 73.5 | 975 | |
| | 2004.09-2012.06 | MT | F | R | Hatchback FWD M 266.960 | Locking type:Bolt on;Hollow shaft | GDS35075 | Drive Shaft | | 25 | 22 | 60.5 | 42 | 944 | |
| | 2004.09-2012.06 | MT | F | L | Hatchback FWD M 266.960 | | GCI99136 | Inner Joint | | 22 | 27 | 36 | 55 | 100 | |
| | 2004.09-2012.06 | AT/MT | F | L/R | Hatchback FWD OM 640.941 | | GCO99037 | Outer Joint | | 25 | 25 | 60 | 73.5 | 58.5 | I |
| | 2004.09-2012.06 | CVT | F | L | Hatchback FWD OM 640.941 | | GDS84300 | Drive Shaft | | 25 | 27 | 60 | 73.5 | 608 | |
| | 2004.09-2012.06 | CVT | F | R | Hatchback FWD OM 640.941 | | GDS35055 | Drive Shaft | | 25 | 27 | 60 | 73.5 | 948 | |
| | 2004.09-2012.06 | CVT | F | L | Hatchback FWD OM 640.941 | | GCI82700 | Inner Joint | | 27 | 25 | 38 | 62 | 120 | |
| | 2004.09-2012.06 | CVT | F | R | Hatchback FWD OM 640.941 | | GCI35040 | Inner Joint | | 27 | 25 | 38 | 422 | 100 | |
| | 2004.09-2012.06 | MT | F | L | Hatchback FWD OM 640.941 | Collar Nut type on Outer Joint;Inner teeth of tranm.side:27 | GDS35066 | Drive Shaft | | 25 | 27 | 60 | 73.5 | 583 | |
| | 2004.09-2012.06 | MT | F | L | Hatchback FWD OM 640.941 | Bolt type on Outer Joint;Date from:2015.03,Chassis no. from:J116414 | GDS35076 | Drive Shaft | | 25 | 27 | 60.5 | 42 | 551 | |
| | 2004.09-2012.06 | MT | F | L | Hatchback FWD OM 640.941 | Collar Nut type on Outer Joint;Inner teeth of tranm.side:25 | GDS35078 | Drive Shaft | | 25 | 27 | 60 | 73.5 | 583 | |
| | 2004.09-2012.06 | MT | F | R | Hatchback FWD OM 640.941 | | GDS35081 | Drive Shaft | | 25 | 27 | 60 | 73.5 | 987 | |
| | 2004.09-2012.06 | MT | F | L | Hatchback FWD OM 640.941 | | GCI35014 | Inner Joint | | 27 | 25 | 38 | 62 | 102 | |
| 2.0 (103 kw) | 2004.09-2012.06 | AT/MT | F | L/R | Hatchback FWD OM 640.941 | Locking type:Bolt on | GCO35019 | Outer Joint | | 25 | 25 | 60.5 | 42 | 59 | I |
| | 2004.09-2012.06 | CVT | F | L | Hatchback FWD OM 640.941 | | GDS84300 | Drive Shaft | | 25 | 27 | 60 | 73.5 | 608 | |
| | 2004.09-2012.06 | CVT | F | R | Hatchback FWD OM 640.941 | | GDS35055 | Drive Shaft | | 25 | 27 | 60 | 73.5 | 948 | |
| | 2004.09-2012.06 | CVT | F | L | Hatchback FWD OM 640.941 | | GCI82700 | Inner Joint | | 27 | 25 | 38 | 62 | 120 | |
| | 2004.09-2012.06 | CVT | F | R | Hatchback FWD OM 640.941 | | GCI35040 | Inner Joint | | 27 | 25 | 38 | 422 | 100 | |
| | 2004.09-2012.06 | MT | F | L | Hatchback FWD OM 640.941 | Locking type:Nut on;Inner teeth of tranm.side:27 | GDS35066 | Drive Shaft | | 25 | 27 | 60 | 73.5 | 583 | |
| | 2004.09-2012.06 | MT | F | L | Hatchback FWD OM 640.941 | Locking type:Bolt on;Date from:2015.03,Chassis no. from:J116414 | GDS35076 | Drive Shaft | | 25 | 27 | 60.5 | 42 | 551 | |
| | 2004.09-2012.06 | MT | F | L | Hatchback FWD OM 640.941 | Locking type:Nut on;Inner teeth of tranm.side:25 | GDS35078 | Drive Shaft | | 25 | 27 | 60 | 73.5 | 583 | |
| | 2004.09-2012.06 | MT | F | R | Hatchback FWD OM 640.941 | | GDS35081 | Drive Shaft | | 25 | 27 | 60 | 73.5 | 987 | |
| | 2004.09-2012.06 | MT | F | L | Hatchback FWD OM 640.941 | | GCI35014 | Inner Joint | | 27 | 25 | 38 | 62 | 102 | |
| | 2004.09-2012.06 | MT/CVT | F | L/R | Hatchback FWD OM 640.941 | Locking type:Nut on | GCO99037 | Outer Joint | | 25 | 25 | 60 | 73.5 | 58.5 | I |
| 2.0 (110 kw) | 2018.11- | 6MT | F | L | Hatchback FWD OM 654.920 | | GDS83980 | Drive Shaft | | 30 | 27 | 65 | 53 | 543 | |
| | 2018.11- | 6MT | F | R | Hatchback FWD OM 654.920 | | GDS83979 | Drive Shaft | | 30 | 27 | 65 | 53 | 509 | |
| | 2018.11- | 6MT | F | L | Hatchback FWD OM 654.920 | | GCI82443 | Inner Joint | | 27 | 28 | 38 | 65 | 109.5 | |
| | 2018.11- | 6MT | F | R | Hatchback FWD OM 654.920 | | GCI82442 | Inner Joint | | 27 | 28 | 42.4 | 49 | 91 | |
| | 2018.11- | 8DCT | F | R | Hatchback FWD OM 654.920 | | GDS83685 | Drive Shaft | | 30 | 27 | 65 | 53 | 501 | |
| | 2018.11- | DCT | F | L | Hatchback FWD OM 654.920 | | GDS84230 | Drive Shaft | | 30 | 27 | 65 | 53 | 533 | |
| | 2018.11- | DCT | F | L/R | Hatchback FWD OM 654.920 | | GCO82462 | Outer Joint | | 30 | 26 | 65 | 53 | 62.5 | I |
| | 2018.11- | DCT | F | L | Hatchback FWD OM 654.920 | | GCI82332 | Inner Joint | | 27 | 26 | 38 | 65 | 104.5 | |
| | 2018.11- | DCT | F | R | Hatchback FWD OM 654.920 | | GCI82361 | Inner Joint | | 27 | 26 | 42 | | 136 | |
| | 2018.11- | DCT | F | R | Hatchback FWD OM 654.920 | | GDS82867 | Intermediate Shaft | | 27 | 27 | | | 503 | |
| | 2019.08- | 8AT | F | L | Saloon FWD OM 654.920 | | GDS84230 | Drive Shaft | | 30 | 27 | 65 | 53 | 533 | |
| | 2019.08- | 8AT | F | L/R | Saloon FWD OM 654.920 | | GCO82462 | Outer Joint | | 30 | 26 | 65 | 53 | 62.5 | I |
| | 2019.08- | 8AT | F | L | Saloon FWD OM 654.920 | | GCI82332 | Inner Joint | | 27 | 26 | 38 | 65 | 104.5 | |
| | 2019.08- | 8AT | F | R | Saloon FWD OM 654.920 | | GCI82361 | Inner Joint | | 27 | 26 | 42 | | 136 | |
| | 2019.08- | 8AT | F | R | Saloon FWD OM 654.920 | | GDS82867 | Intermediate Shaft | | 27 | 27 | | | 503 | |
| | 2019.08- | 8DCT | F | R | Saloon FWD OM 654.920 | | GDS83685 | Drive Shaft | | 30 | 27 | 65 | 53 | 501 | |
| | 2019.10- | 8AT | F | L | Hatchback 4WD OM 654.920 | | GDS84230 | Drive Shaft | | 30 | 27 | 65 | 53 | 533 | |
| | 2019.10- | 8AT | F | L/R | Hatchback 4WD OM 654.920 | | GCO82462 | Outer Joint | | 30 | 26 | 65 | 53 | 62.5 | I |

| | YEAR | TRANSM. | F/R | L/R | BODY STYLE & DRIVE TYPE & ENGINE | REMARKS | G-AP Ref. | PRODUCT | ABS | Technical Specifications A | B | C | H | L | P |
|---|---|---|---|---|---|---|---|---|---|---|---|---|---|---|---|
| **MERCEDES-BENZ** | | | | | | | | | | | | | | | |
| **A200** | | | | | | | | | | | | | | | |
| 2.0 (110 kw) | 2019.10- | 8AT | F | L | Hatchback 4WD OM 654.920 | | GCI82332 | Inner Joint | | 27 | 26 | 38 | 65 | 104.5 | |
| | 2019.10- | 8AT | F | R | Hatchback 4WD OM 654.920 | | GCI82361 | Inner Joint | | 27 | 26 | 42 | | 136 | |
| | 2019.10- | 8AT | F | R | Hatchback 4WD OM 654.920 | | GDS82867 | Intermediate Shaft | | 27 | 27 | | | 503 | |
| | 2019.10- | 8DCT | F | R | Hatchback 4WD OM 654.920 | | GDS83685 | Drive Shaft | | 30 | 27 | 65 | 53 | 501 | |
| | 2019.10- | 8AT | F | L | Saloon 4WD OM 654.920 | | GDS84230 | Drive Shaft | | 30 | 27 | 65 | 53 | 533 | |
| | 2019.10- | 8AT | F | L/R | Saloon 4WD OM 654.920 | | GCO82462 | Outer Joint | | 30 | 26 | 65 | 53 | 62.5 | I |
| | 2019.10- | 8AT | F | L | Saloon 4WD OM 654.920 | | GCI82332 | Inner Joint | | 27 | 26 | 38 | 65 | 104.5 | |
| | 2019.10- | 8AT | F | R | Saloon 4WD OM 654.920 | | GCI82361 | Inner Joint | | 27 | 26 | 42 | | 136 | |
| | 2019.10- | 8AT | F | R | Saloon 4WD OM 654.920 | | GDS82867 | Intermediate Shaft | | 27 | 27 | | | 503 | |
| | 2019.10- | 8DCT | F | R | Saloon 4WD OM 654.920 | | GDS83685 | Drive Shaft | | 30 | 27 | 65 | 53 | 501 | |
| 2.0 (142 kw) | 2005.09-2012.06 | AT/MT | F | L/R | Hatchback FWD M 266.980 | | GCO35019 | Outer Joint | | 25 | 25 | 60.5 | 42 | 59 | I |
| | 2005.09-2012.06 | CVT | F | L | Hatchback FWD M 266.980 | | GDS84300 | Drive Shaft | | 25 | 27 | 60 | 73.5 | 608 | |
| | 2005.09-2012.06 | CVT | F | R | Hatchback FWD M 266.980 | | GDS35055 | Drive Shaft | | 25 | 27 | 60 | 73.5 | 948 | |
| | 2005.09-2012.06 | CVT | F | L | Hatchback FWD M 266.980 | | GCI82700 | Inner Joint | | 27 | 25 | 38 | 62 | 120 | |
| | 2005.09-2012.06 | CVT | F | R | Hatchback FWD M 266.980 | | GCI35040 | Inner Joint | | 27 | 25 | 38 | 422 | 100 | |
| | 2005.09-2012.06 | MT | F | L | Hatchback FWD M 266.980 | Collar Nut type on Outer Joint;Inner teeth of tranm.side:27 | GDS35066 | Drive Shaft | | 25 | 27 | 60 | 73.5 | 583 | |
| | 2005.09-2012.06 | MT | F | L | Hatchback FWD M 266.980 | Bolt type on Outer Joint;Date from:2015.03;Chassis no. from:J116414 | GDS35076 | Drive Shaft | | 25 | 27 | 60.5 | 42 | 551 | |
| | 2005.09-2012.06 | MT | F | L | Hatchback FWD M 266.980 | Collar Nut type on Outer Joint;Inner teeth of tranm.side:25 | GDS35078 | Drive Shaft | | 25 | 27 | 60 | 73.5 | 583 | |
| | 2005.09-2012.06 | MT | F | R | Hatchback FWD M 266.980 | | GDS35081 | Drive Shaft | | 25 | 27 | 60 | 73.5 | 987 | |
| | 2005.09-2012.06 | MT | F | L | Hatchback FWD M 266.980 | | GCI35014 | Inner Joint | | 27 | 25 | 38 | 62 | 102 | |
| | 2005.09-2012.06 | MT/CVT | F | L/R | Hatchback FWD M 266.980 | | GCO99037 | Outer Joint | | 25 | 25 | 60 | 73.5 | 58.5 | I |
| 2.2 (100 kw) | 2014.02-2018.05 | AT | F | L | Hatchback 4WD OM 651.930 | Inner teeth of tranm.side:27 | GDS35067 | Drive Shaft | | 30 | 27 | 65 | 53 | 535 | |
| | 2014.02-2018.05 | AT | F | R | Hatchback 4WD OM 651.930 | Without Intermediate Shaft | GDS35068 | Drive Shaft | | 30 | 27 | 65 | 53 | 498 | |
| | 2014.02-2018.05 | AT | F | R | Hatchback 4WD OM 651.930 | With Intermediate Shaft | GDS81470 | Drive Shaft | | 30 | 27 | 65 | 53 | 996 | |
| | 2014.02-2018.05 | AT | F | L/R | Hatchback 4WD OM 651.930 | | GCO61065 | Outer Joint | | 30 | 27 | 65 | 53 | 61.5 | M |
| | 2014.02-2018.05 | AT/MT | F | L | Hatchback 4WD OM 651.930 | | GCI61082 | Inner Joint | | 27 | 27 | 38 | 65 | 111.7 | |
| | 2014.02-2018.05 | AT/MT | F | R | Hatchback 4WD OM 651.930 | | GCI35071 | Inner Joint | | 27 | 27 | 42.1 | 41.5 | 97.2 | |
| | 2014.02-2018.05 | AT/MT | F | R | Hatchback 4WD OM 651.930 | | GDS35140 | Intermediate Shaft | | 27 | 27 | | | 540 | |
| | 2014.02-2018.05 | AT | F | L | Hatchback FWD OM 651.930 | Inner teeth of tranm.side:27 | GDS35067 | Drive Shaft | | 30 | 27 | 65 | 53 | 535 | |
| | 2014.02-2018.05 | AT | F | R | Hatchback FWD OM 651.930 | Without Intermediate Shaft | GDS35068 | Drive Shaft | | 30 | 27 | 65 | 53 | 498 | |
| | 2014.02-2018.05 | AT | F | R | Hatchback FWD OM 651.930 | With Intermediate Shaft | GDS81470 | Drive Shaft | | 30 | 27 | 65 | 53 | 996 | |
| | 2014.02-2018.05 | AT | F | L/R | Hatchback FWD OM 651.930 | | GCO61065 | Outer Joint | | 30 | 27 | 65 | 53 | 61.5 | M |
| | 2014.02-2018.05 | AT/MT | F | L | Hatchback FWD OM 651.930 | | GCI61082 | Inner Joint | | 27 | 27 | 38 | 65 | 111.7 | |
| | 2014.02-2018.05 | AT/MT | F | R | Hatchback FWD OM 651.930 | | GCI35071 | Inner Joint | | 27 | 27 | 42.1 | 41.5 | 97.2 | |
| | 2014.02-2018.05 | AT/MT | F | R | Hatchback FWD OM 651.930 | | GDS35140 | Intermediate Shaft | | 27 | 27 | | | 540 | |
| **A210** | | | | | | | | | | | | | | | |
| 2.1 (103 kw) | 2001.12-2004.08 | AT | F | L | Hatchback FWD 166995 | Date from:2003.03 | GDS35021 | Drive Shaft | 48W | 24 | 22 | 57 | 67.5 | 561 | |
| | 2001.12-2004.08 | AT | F | R | Hatchback FWD 166995 | | GDS35023 | Drive Shaft | 48W | 24 | 22 | 57 | 67.5 | 965 | |
| | 2001.12-2004.08 | AT | F | L/R | Hatchback FWD 166995 | | GCO35005 | Outer Joint | 48W | 24 | 27 | 57 | 67.5 | 58 | I |
| | 2001.12-2004.08 | AT/MT | F | L/R | Hatchback FWD 166995 | Date from:2002.01 | GCO35004 | Outer Joint | 48W | 24 | 27 | 57 | 67.5 | 56 | I |
| | 2001.12-2004.08 | MT | F | L | Hatchback FWD 166995 | | GDS35037 | Drive Shaft | 48W | 24 | 22 | 57 | 67.5 | 572 | |
| | 2001.12-2004.08 | MT | F | R | Hatchback FWD 166995 | | GDS56737 | Drive Shaft | 48W | 24 | 22 | 57 | 67.5 | 958 | |
| | 2001.12-2004.08 | MT | F | L/R | Hatchback FWD 166995 | | GCO35023 | Outer Joint | 48W | 24 | 27 | 57 | 67.5 | 58 | I |
| | 2001.12-2004.08 | | F | | Hatchback FWD 166995 | | GCO35003 | Outer Joint | 48W | 24 | 27 | 57 | 67.5 | 50 | I |
| **A220** | | | | | | | | | | | | | | | |
| 2.0 (135 kw) | 2014.05-2018.05 | 7AT | F | L/R | Hatchback 4WD M 270.920 | | GCO61065 | Outer Joint | | 30 | 27 | 65 | 53 | 61.5 | M |
| | 2014.05-2018.05 | 7DCT | F | L | Hatchback 4WD M 270.920 | | GDS35067 | Drive Shaft | | 30 | 27 | 65 | 53 | 535 | |
| | 2014.05-2018.05 | 7DCT | F | R | Hatchback 4WD M 270.920 | | GDS35068 | Drive Shaft | | 30 | 27 | 65 | 53 | 498 | |
| | 2014.05-2018.05 | 7DCT | F | R | Hatchback 4WD M 270.920 | | GDS81470 | Drive Shaft | | 30 | 27 | 65 | 53 | 996 | |
| 2.0 (140 kw) | 2018.07- | 7AT | F | L | Hatchback FWD M 260.920 | | GDS84227 | Drive Shaft | | 30 | 27 | 65 | 53 | 546 | |
| | 2018.07- | 7AT | F | R | Hatchback FWD M 260.920 | | GDS84228 | Drive Shaft | | 30 | 27 | 65 | 53 | 511 | |
| | 2018.07- | 7AT | F | L/R | Hatchback FWD M 260.920 | | GCO82739 | Outer Joint | | 30 | 27 | 65 | 53 | 64 | M |
| | 2018.07- | 7AT | F | L | Hatchback FWD M 260.920 | | GCI82443 | Inner Joint | | 27 | 28 | 38 | 65 | 109.5 | |
| | 2018.07- | 7AT | F | R | Hatchback FWD M 260.920 | | GCI82442 | Inner Joint | | 27 | 28 | 42.4 | 49 | 91 | |
| | 2018.07-2019.10 | 7AT | F | L | Hatchback 4WD M 260.920 | | GDS84227 | Drive Shaft | | 30 | 27 | 65 | 53 | 546 | |
| | 2018.07-2019.10 | 7AT | F | R | Hatchback 4WD M 260.920 | | GDS84228 | Drive Shaft | | 30 | 27 | 65 | 53 | 511 | |
| | 2018.07-2019.10 | 7AT | F | L/R | Hatchback 4WD M 260.920 | | GCO82739 | Outer Joint | | 30 | 27 | 65 | 53 | 64 | M |
| | 2018.07-2019.10 | 7AT | F | L | Hatchback 4WD M 260.920 | | GCI82443 | Inner Joint | | 27 | 28 | 38 | 65 | 109.5 | |
| | 2018.07-2019.10 | 7AT | F | R | Hatchback 4WD M 260.920 | | GCI82442 | Inner Joint | | 27 | 28 | 42.4 | 49 | 91 | |
| | 2018.09- | 7AT | F | L | Saloon 4WD M 260.920 | | GDS84227 | Drive Shaft | | 30 | 27 | 65 | 53 | 546 | |
| | 2018.09- | 7AT | F | R | Saloon 4WD M 260.920 | | GDS84228 | Drive Shaft | | 30 | 27 | 65 | 53 | 511 | |
| | 2018.09- | 7AT | F | L/R | Saloon 4WD M 260.920 | | GCO82739 | Outer Joint | | 30 | 27 | 65 | 53 | 64 | M |
| | 2018.09- | 7AT | F | L | Saloon 4WD M 260.920 | | GCI82443 | Inner Joint | | 27 | 28 | 38 | 65 | 109.5 | |
| | 2018.09- | 7AT | F | R | Saloon 4WD M 260.920 | | GCI82442 | Inner Joint | | 27 | 28 | 42.4 | 49 | 91 | |
| | 2019.01- | 7AT | F | L | Saloon FWD M 260.920 | | GDS84227 | Drive Shaft | | 30 | 27 | 65 | 53 | 546 | |

| | YEAR | TRANSM. | F/R | L/R | BODY STYLE & DRIVE TYPE & ENGINE | REMARKS | G-AP Ref. | PRODUCT | ABS | Technical Specifications A | B | C | H | L | P |
|---|---|---|---|---|---|---|---|---|---|---|---|---|---|---|---|
| **MERCEDES-BENZ** | | | | | | | | | | | | | | | |
| **A220** | | | | | | | | | | | | | | | |
| 2.0 (140 kw) | 2019.01- | 7AT | F | R | Saloon FWD M 260.920 | | GDS84228 | Drive Shaft | | 30 | 27 | 65 | 53 | 511 | |
| | 2019.01- | 7AT | F | L/R | Saloon FWD M 260.920 | | GCO82739 | Outer Joint | | 30 | 27 | 65 | 53 | 64 | M |
| | 2019.01- | 7AT | F | L | Saloon FWD M 260.920 | | GCI82443 | Inner Joint | | 27 | 28 | 38 | 65 | 109.5 | |
| | 2019.01- | 7AT | F | R | Saloon FWD M 260.920 | | GCI82442 | Inner Joint | | 27 | 28 | 42.4 | 49 | 91 | |
| | 2022.10- | 8AT | F | L | Hatchback 4WD 260.920 | | GDS84227 | Drive Shaft | | 30 | 27 | 65 | 53 | 546 | |
| | 2022.10- | 8AT | F | R | Hatchback 4WD 260.920 | | GDS84228 | Drive Shaft | | 30 | 27 | 65 | 53 | 511 | |
| | 2022.10- | 8AT | F | L | Saloon 4WD 260.920 | | GDS84227 | Drive Shaft | | 30 | 27 | 65 | 53 | 546 | |
| | 2022.10- | 8AT | F | R | Saloon 4WD 260.920 | | GDS84228 | Drive Shaft | | 30 | 27 | 65 | 53 | 511 | |
| 2.2 (120 kw) | 2014.01-2018.05 | AT | F | L | Hatchback FWD OM 651.930 | Inner teeth of tranm.side:27 | GDS35067 | Drive Shaft | | 30 | 27 | 65 | 53 | 535 | |
| | 2014.01-2018.05 | AT | F | R | Hatchback FWD OM 651.930 | Without Intermediate Shaft | GDS35068 | Drive Shaft | | 30 | 27 | 65 | 53 | 498 | |
| | 2014.01-2018.05 | AT | F | R | Hatchback FWD OM 651.930 | With Intermediate Shaft | GDS81470 | Drive Shaft | | 30 | 27 | 65 | 53 | 996 | |
| | 2014.01-2018.05 | AT | F | L/R | Hatchback FWD OM 651.930 | | GCO61065 | Outer Joint | | 30 | 27 | 65 | 53 | 61.5 | M |
| | 2014.01-2018.05 | AT/MT | F | L | Hatchback FWD OM 651.930 | | GCI61082 | Inner Joint | | 27 | 27 | 38 | 65 | 111.7 | |
| | 2014.01-2018.05 | AT/MT | F | R | Hatchback FWD OM 651.930 | | GCI35071 | Inner Joint | | 27 | 27 | 42.1 | 41.5 | 97.2 | |
| | 2014.01-2018.05 | AT/MT | F | R | Hatchback FWD OM 651.930 | | GDS35140 | Intermediate Shaft | | 27 | 27 | | | 540 | |
| 2.2 (125 kw) | 2012.09-2018.05 | 7AT/6MT | F | L | Hatchback FWD OM 651.930 | Inner teeth of tranm.side:27 | GDS35067 | Drive Shaft | | 30 | 27 | 65 | 53 | 535 | |
| | 2012.09-2018.05 | 7AT/6MT | F | R | Hatchback FWD OM 651.930 | | GDS35068 | Drive Shaft | | 30 | 27 | 65 | 53 | 498 | |
| | 2012.09-2018.05 | 7AT/6MT | F | R | Hatchback FWD OM 651.930 | | GDS81470 | Drive Shaft | | 30 | 27 | 65 | 53 | 996 | |
| | 2012.09-2018.05 | AT | F | L/R | Hatchback FWD OM 651.930 | | GCO61065 | Outer Joint | | 30 | 27 | 65 | 53 | 61.5 | M |
| | 2012.09-2018.05 | AT/MT | F | L | Hatchback FWD OM 651.930 | | GCI61082 | Inner Joint | | 27 | 27 | 38 | 65 | 111.7 | |
| | 2012.09-2018.05 | AT/MT | F | R | Hatchback FWD OM 651.930 | | GCI35071 | Inner Joint | | 27 | 27 | 42.1 | 41.5 | 97.2 | |
| | 2012.09-2018.05 | AT/MT | F | R | Hatchback FWD OM 651.930 | | GDS35140 | Intermediate Shaft | | 27 | 27 | | | 540 | |
| | 2014.02-2018.05 | AT | F | L | Hatchback 4WD OM 651.930 | Inner teeth of tranm.side:27 | GDS35067 | Drive Shaft | | 30 | 27 | 65 | 53 | 535 | |
| | 2014.02-2018.05 | AT | F | R | Hatchback 4WD OM 651.930 | Without Intermediate Shaft | GDS35068 | Drive Shaft | | 30 | 27 | 65 | 53 | 498 | |
| | 2014.02-2018.05 | AT | F | R | Hatchback 4WD OM 651.930 | With Intermediate Shaft | GDS81470 | Drive Shaft | | 30 | 27 | 65 | 53 | 996 | |
| | 2014.02-2018.05 | AT | F | L/R | Hatchback 4WD OM 651.930 | | GCO61065 | Outer Joint | | 30 | 27 | 65 | 53 | 61.5 | M |
| | 2014.02-2018.05 | AT/MT | F | L | Hatchback 4WD OM 651.930 | | GCI61082 | Inner Joint | | 27 | 27 | 38 | 65 | 111.7 | |
| | 2014.02-2018.05 | AT/MT | F | R | Hatchback 4WD OM 651.930 | | GCI35071 | Inner Joint | | 27 | 27 | 42.1 | 41.5 | 97.2 | |
| | 2014.02-2018.05 | AT/MT | F | R | Hatchback 4WD OM 651.930 | | GDS35140 | Intermediate Shaft | | 27 | 27 | | | 540 | |
| 2.2 (130 kw) | 2015.07-2018.05 | AT/DCT | F | L/R | Hatchback 4WD OM 651.930 | | GCO61065 | Outer Joint | | 30 | 27 | 65 | 53 | 61.5 | M |
| | 2015.07-2018.05 | AT/MT | F | L | Hatchback 4WD OM 651.930 | | GCI61082 | Inner Joint | | 27 | 27 | 38 | 65 | 111.7 | |
| | 2015.07-2018.05 | AT/MT | F | R | Hatchback 4WD OM 651.930 | | GCI35071 | Inner Joint | | 27 | 27 | 42.1 | 41.5 | 97.2 | |
| | 2015.07-2018.05 | AT/MT | F | R | Hatchback 4WD OM 651.930 | | GDS35140 | Intermediate Shaft | | 27 | 27 | | | 540 | |
| | 2015.07-2018.05 | DCT | F | L | Hatchback 4WD OM 651.930 | Inner teeth of tranm.side:27 | GDS35067 | Drive Shaft | | 30 | 27 | 65 | 53 | 535 | |
| | 2015.07-2018.05 | DCT | F | R | Hatchback 4WD OM 651.930 | Without Intermediate Shaft | GDS35068 | Drive Shaft | | 30 | 27 | 65 | 53 | 498 | |
| | 2015.07-2018.05 | DCT | F | R | Hatchback 4WD OM 651.930 | With Intermediate Shaft | GDS81470 | Drive Shaft | | 30 | 27 | 65 | 53 | 996 | |
| | 2015.07-2018.05 | AT/DCT | F | L/R | Hatchback FWD OM 651.930 | | GCO61065 | Outer Joint | | 30 | 27 | 65 | 53 | 61.5 | M |
| | 2015.07-2018.05 | AT/MT | F | L | Hatchback FWD OM 651.930 | | GCI61082 | Inner Joint | | 27 | 27 | 38 | 65 | 111.7 | |
| | 2015.07-2018.05 | AT/MT | F | R | Hatchback FWD OM 651.930 | | GCI35071 | Inner Joint | | 27 | 27 | 42.1 | 41.5 | 97.2 | |
| | 2015.07-2018.05 | AT/MT | F | R | Hatchback FWD OM 651.930 | | GDS35140 | Intermediate Shaft | | 27 | 27 | | | 540 | |
| | 2015.07-2018.05 | DCT | F | L | Hatchback FWD OM 651.930 | Inner teeth of tranm.side:27 | GDS35067 | Drive Shaft | | 30 | 27 | 65 | 53 | 535 | |
| | 2015.07-2018.05 | DCT | F | R | Hatchback FWD OM 651.930 | Without Intermediate Shaft | GDS35068 | Drive Shaft | | 30 | 27 | 65 | 53 | 498 | |
| | 2015.07-2018.05 | DCT | F | R | Hatchback FWD OM 651.930 | With Intermediate Shaft | GDS81470 | Drive Shaft | | 30 | 27 | 65 | 53 | 996 | |
| **A250** | | | | | | | | | | | | | | | |
| 1.3 (160 kw) | 2019.08- | 8AT | F | L | Hatchback FWD M 282.914 | | GDS57394 | Drive Shaft | | 30 | 27 | 65 | 53 | 544 | |
| | 2019.08- | 8AT | F | R | Hatchback FWD M 282.914 | | GDS84248 | Drive Shaft | | 30 | 27 | 65 | 53 | 514 | |
| | 2019.08- | 8AT | F | L/R | Hatchback FWD M 282.914 | | GCO82746 | Outer Joint | | 30 | 27 | 65 | 53 | 64 | I |
| | 2019.08- | 8AT | F | L | Hatchback FWD M 282.914 | | GCI83641 | Inner Joint | | 27 | 28 | 38 | 65 | 76.5 | |
| | 2019.08- | 8AT | F | R | Hatchback FWD M 282.914 | | GCI82657 | Inner Joint | | 27 | 28 | 42.2 | | 149.2 | |
| | 2019.08- | 8AT | F | L | Saloon FWD M 282.914 | | GDS57394 | Drive Shaft | | 30 | 27 | 65 | 53 | 544 | |
| | 2019.08- | 8AT | F | R | Saloon FWD M 282.914 | | GDS84248 | Drive Shaft | | 30 | 27 | 65 | 53 | 514 | |
| | 2019.08- | 8AT | F | L/R | Saloon FWD M 282.914 | | GCO82746 | Outer Joint | | 30 | 27 | 65 | 53 | 64 | I |
| | 2019.08- | 8AT | F | L | Saloon FWD M 282.914 | | GCI83641 | Inner Joint | | 27 | 28 | 38 | 65 | 76.5 | |
| | 2019.08- | 8AT | F | R | Saloon FWD M 282.914 | | GCI82657 | Inner Joint | | 27 | 28 | 42.2 | | 149.2 | |
| | 2022.10- | 8AT | F | L | Hatchback FWD 282.814 | | GDS57394 | Drive Shaft | | 30 | 27 | 65 | 53 | 544 | |
| | 2022.10- | 8AT | F | R | Hatchback FWD 282.814 | | GDS84248 | Drive Shaft | | 30 | 27 | 65 | 53 | 514 | |
| | 2022.10- | 8AT | F | L | Hatchback FWD 282.814 | | GCI83641 | Inner Joint | | 27 | 28 | 38 | 65 | 76.5 | |
| | 2022.10- | 8AT | F | L | Saloon FWD 282.814 | | GDS57394 | Drive Shaft | | 30 | 27 | 65 | 53 | 544 | |
| | 2022.10- | 8AT | F | R | Saloon FWD 282.814 | | GDS84248 | Drive Shaft | | 30 | 27 | 65 | 53 | 514 | |
| | 2022.10- | 8AT | F | L | Saloon FWD 282.814 | | GCI83641 | Inner Joint | | 27 | 28 | 38 | 65 | 76.5 | |
| 2.0 (155 kw) | 2012.06-2018.05 | 7DCT/6MT | F | L | Hatchback FWD M 270.920 | | GDS35067 | Drive Shaft | | 30 | 27 | 65 | 53 | 535 | |
| | 2012.06-2018.05 | 7DCT/6MT | F | R | Hatchback FWD M 270.920 | | GDS35068 | Drive Shaft | | 30 | 27 | 65 | 53 | 498 | |
| | 2012.06-2018.05 | 7DCT/6MT | F | R | Hatchback FWD M 270.920 | | GDS81470 | Drive Shaft | | 30 | 27 | 65 | 53 | 996 | |
| | 2012.06-2018.05 | | F | L/R | Hatchback FWD M 270.920 | | GCO61065 | Outer Joint | | 30 | 27 | 65 | 53 | 61.5 | M |
| | 2013.06-2018.05 | 7DCT/6MT | F | L | Hatchback 4WD M 270.920 | | GDS35067 | Drive Shaft | | 30 | 27 | 65 | 53 | 535 | |

| | YEAR | TRANSM. | F/R | L/R | BODY STYLE & DRIVE TYPE & ENGINE | REMARKS | G-AP Ref. | PRODUCT | ABS | Technical Specifications A | B | C | H | L | P |
|---|---|---|---|---|---|---|---|---|---|---|---|---|---|---|---|
| **MERCEDES-BENZ** | | | | | | | | | | | | | | | |
| **A250** | | | | | | | | | | | | | | | |
| 2.0 (155 kw) | 2013.06-2018.05 | 7DCT/6MT | F | R | Hatchback 4WD M 270.920 | | GDS35068 | Drive Shaft | | 30 | 27 | 65 | 53 | 498 | |
| | 2013.06-2018.05 | 7DCT/6MT | F | R | Hatchback 4WD M 270.920 | | GDS81470 | Drive Shaft | | 30 | 27 | 65 | 53 | 996 | |
| | 2013.06-2018.05 | | F | L/R | Hatchback 4WD M 270.920 | | GCO61065 | Outer Joint | | 30 | 27 | 65 | 53 | 61.5 | M |
| 2.0 (160 kw) | 2015.07-2018.05 | 7DCT | F | L | Hatchback 4WD M 270.920 | | GDS35067 | Drive Shaft | | 30 | 27 | 65 | 53 | 535 | |
| | 2015.07-2018.05 | 7DCT | F | R | Hatchback 4WD M 270.920 | | GDS35068 | Drive Shaft | | 30 | 27 | 65 | 53 | 498 | |
| | 2015.07-2018.05 | 7DCT | F | R | Hatchback 4WD M 270.920 | | GDS81470 | Drive Shaft | | 30 | 27 | 65 | 53 | 996 | |
| | 2015.07-2018.05 | | F | L/R | Hatchback 4WD M 270.920 | | GCO61065 | Outer Joint | | 30 | 27 | 65 | 53 | 61.5 | M |
| | 2015.07-2018.05 | 7AT/6MT | F | R | Hatchback FWD M 270.920 | | GDS81470 | Drive Shaft | | 30 | 27 | 65 | 53 | 996 | |
| | 2015.07-2018.05 | MT/DCT | F | L | Hatchback FWD M 270.920 | | GDS35067 | Drive Shaft | | 30 | 27 | 65 | 53 | 535 | |
| | 2015.07-2018.05 | MT/DCT | F | R | Hatchback FWD M 270.920 | | GDS35068 | Drive Shaft | | 30 | 27 | 65 | 53 | 498 | |
| | 2015.07-2018.05 | | F | L/R | Hatchback FWD M 270.920 | | GCO61065 | Outer Joint | | 30 | 27 | 65 | 53 | 61.5 | M |
| 2.0 (165 kw) | 2018.03- | 7AT | F | L | Hatchback FWD M 260.920 | | GDS84227 | Drive Shaft | | 30 | 27 | 65 | 53 | 546 | |
| | 2018.03- | 7AT | F | R | Hatchback FWD M 260.920 | | GDS84228 | Drive Shaft | | 30 | 27 | 65 | 53 | 511 | |
| | 2018.03- | 7AT | F | L/R | Hatchback FWD M 260.920 | | GCO82739 | Outer Joint | | 30 | 27 | 65 | 53 | 64 | M |
| | 2018.03- | 7AT | F | L | Hatchback FWD M 260.920 | | GCI82443 | Inner Joint | | 27 | 28 | 38 | 65 | 109.5 | |
| | 2018.03- | 7AT | F | R | Hatchback FWD M 260.920 | | GCI82442 | Inner Joint | | 27 | 28 | 42.4 | 49 | 91 | |
| | 2018.07- | 7AT | F | L | Hatchback 4WD M 260.920 | | GDS84227 | Drive Shaft | | 30 | 27 | 65 | 53 | 546 | |
| | 2018.07- | 7AT | F | R | Hatchback 4WD M 260.920 | | GDS84228 | Drive Shaft | | 30 | 27 | 65 | 53 | 511 | |
| | 2018.07- | 7AT | F | L/R | Hatchback 4WD M 260.920 | | GCO82739 | Outer Joint | | 30 | 27 | 65 | 53 | 64 | M |
| | 2018.07- | 7AT | F | L | Hatchback 4WD M 260.920 | | GCI82443 | Inner Joint | | 27 | 28 | 38 | 65 | 109.5 | |
| | 2018.07- | 7AT | F | R | Hatchback 4WD M 260.920 | | GCI82442 | Inner Joint | | 27 | 28 | 42.4 | 49 | 91 | |
| | 2018.09- | 7AT | F | L | Saloon 4WD M 260.920 | | GDS84227 | Drive Shaft | | 30 | 27 | 65 | 53 | 546 | |
| | 2018.09- | 7AT | F | R | Saloon 4WD M 260.920 | | GDS84228 | Drive Shaft | | 30 | 27 | 65 | 53 | 511 | |
| | 2018.09- | 7AT | F | L/R | Saloon 4WD M 260.920 | | GCO82739 | Outer Joint | | 30 | 27 | 65 | 53 | 64 | M |
| | 2018.09- | 7AT | F | L | Saloon 4WD M 260.920 | | GCI82443 | Inner Joint | | 27 | 28 | 38 | 65 | 109.5 | |
| | 2018.09- | 7AT | F | R | Saloon 4WD M 260.920 | | GCI82442 | Inner Joint | | 27 | 28 | 42.4 | 49 | 91 | |
| | 2018.09- | 7AT | F | L | Saloon FWD M 260.920 | | GDS84227 | Drive Shaft | | 30 | 27 | 65 | 53 | 546 | |
| | 2018.09- | 7AT | F | R | Saloon FWD M 260.920 | | GDS84228 | Drive Shaft | | 30 | 27 | 65 | 53 | 511 | |
| | 2018.09- | 7AT | F | L/R | Saloon FWD M 260.920 | | GCO82739 | Outer Joint | | 30 | 27 | 65 | 53 | 64 | M |
| | 2018.09- | 7AT | F | L | Saloon FWD M 260.920 | | GCI82443 | Inner Joint | | 27 | 28 | 38 | 65 | 109.5 | |
| | 2018.09- | 7AT | F | R | Saloon FWD M 260.920 | | GCI82442 | Inner Joint | | 27 | 28 | 42.4 | 49 | 91 | |
| | 2022.10- | 8AT | F | L | Hatchback 4WD 260.920 | | GDS84227 | Drive Shaft | | 30 | 27 | 65 | 53 | 546 | |
| | 2022.10- | 8AT | F | R | Hatchback 4WD 260.920 | | GDS84228 | Drive Shaft | | 30 | 27 | 65 | 53 | 511 | |
| | 2022.10- | 8AT | F | L | Saloon 4WD 260.920 | | GDS84227 | Drive Shaft | | 30 | 27 | 65 | 53 | 546 | |
| | 2022.10- | 8AT | F | R | Saloon 4WD 260.920 | | GDS84228 | Drive Shaft | | 30 | 27 | 65 | 53 | 511 | |
| **A35 AMG** | | | | | | | | | | | | | | | |
| 2.0 (225 kw) | 2018.09- | 7DCT | F | L | Hatchback 4WD M 260.920 | | GDS57546 | Drive Shaft | | 30 | 27 | 65 | 53 | 538 | |
| | 2018.09- | 7DCT | F | R | Hatchback 4WD M 260.920 | | GDS84247 | Drive Shaft | | 30 | 27 | 65 | 53 | 508 | |
| | 2018.09- | 7DCT | F | L/R | Hatchback 4WD M 260.920 | | GCO82746 | Outer Joint | | 30 | 27 | 65 | 53 | 64 | I |
| | 2018.09- | 7DCT | F | L | Hatchback 4WD M 260.920 | | GCI83641 | Inner Joint | | 27 | 28 | 38 | 65 | 76.5 | |
| | 2018.09- | 7DCT | F | R | Hatchback 4WD M 260.920 | | GCI82657 | Inner Joint | | 27 | 28 | 42.2 | | 149.2 | |
| | 2019.03- | 7DCT | F | L | Saloon 4WD M 260.920 | | GDS57546 | Drive Shaft | | 30 | 27 | 65 | 53 | 538 | |
| | 2019.03- | 7DCT | F | R | Saloon 4WD M 260.920 | | GDS84247 | Drive Shaft | | 30 | 27 | 65 | 53 | 508 | |
| | 2019.03- | 7DCT | F | L/R | Saloon 4WD M 260.920 | | GCO82746 | Outer Joint | | 30 | 27 | 65 | 53 | 64 | I |
| | 2019.03- | 7DCT | F | L | Saloon 4WD M 260.920 | | GCI83641 | Inner Joint | | 27 | 28 | 38 | 65 | 76.5 | |
| | 2019.03- | 7DCT | F | R | Saloon 4WD M 260.920 | | GCI82657 | Inner Joint | | 27 | 28 | 42.2 | | 149.2 | |
| | 2022.10- | 7DCT | F | L | Hatchback 4WD 260.920 | | GDS57546 | Drive Shaft | | 30 | 27 | 65 | 53 | 538 | |
| | 2022.10- | 7DCT | F | R | Hatchback 4WD 260.920 | | GDS84247 | Drive Shaft | | 30 | 27 | 65 | 53 | 508 | |
| | 2022.10- | 7DCT | F | L/R | Hatchback 4WD 260.920 | | GCO82746 | Outer Joint | | 30 | 27 | 65 | 53 | 64 | I |
| | 2022.10- | 7DCT | F | L | Hatchback 4WD 260.920 | | GCI83641 | Inner Joint | | 27 | 28 | 38 | 65 | 76.5 | |
| | 2022.10- | 7DCT | F | R | Hatchback 4WD 260.920 | | GCI82657 | Inner Joint | | 27 | 28 | 42.2 | | 149.2 | |
| | 2022.10- | 7DCT | F | L | Saloon 4WD 260.920 | | GDS57546 | Drive Shaft | | 30 | 27 | 65 | 53 | 538 | |
| | 2022.10- | 7DCT | F | R | Saloon 4WD 260.920 | | GDS84247 | Drive Shaft | | 30 | 27 | 65 | 53 | 508 | |
| | 2022.10- | 7DCT | F | L/R | Saloon 4WD 260.920 | | GCO82746 | Outer Joint | | 30 | 27 | 65 | 53 | 64 | I |
| | 2022.10- | 7DCT | F | L | Saloon 4WD 260.920 | | GCI83641 | Inner Joint | | 27 | 28 | 38 | 65 | 76.5 | |
| | 2022.10- | 7DCT | F | R | Saloon 4WD 260.920 | | GCI82657 | Inner Joint | | 27 | 28 | 42.2 | | 149.2 | |
| **A45 AMG** | | | | | | | | | | | | | | | |
| 2.0 (265 kw) | 2013.06-2018.05 | 7AT | F | L | Hatchback 4WD M 133.980 | | GDS35067 | Drive Shaft | | 30 | 27 | 65 | 53 | 535 | |
| | 2013.06-2018.05 | 7AT | F | R | Hatchback 4WD M 133.980 | | GDS35068 | Drive Shaft | | 30 | 27 | 65 | 53 | 498 | |
| | 2013.06-2018.05 | 7AT | F | R | Hatchback 4WD M 133.980 | | GDS81470 | Drive Shaft | | 30 | 27 | 65 | 53 | 996 | |
| | 2013.06-2018.05 | | F | L/R | Hatchback 4WD M 133.980 | | GCO61065 | Outer Joint | | 30 | 27 | 65 | 53 | 61.5 | M |
| 2.0 (280 kw) | 2015.07-2018.05 | 7AT | F | L | Hatchback 4WD M 133.980 | | GDS35067 | Drive Shaft | | 30 | 27 | 65 | 53 | 535 | |
| | 2015.07-2018.05 | 7AT | F | R | Hatchback 4WD M 133.980 | | GDS81470 | Drive Shaft | | 30 | 27 | 65 | 53 | 996 | |
| | 2015.07-2018.05 | 7AT | F | L/R | Hatchback 4WD M 133.980 | | GCO61065 | Outer Joint | | 30 | 27 | 65 | 53 | 61.5 | M |
| | 2015.07-2018.05 | 7AT | F | L | Hatchback 4WD M 133.980 | | GCI61082 | Inner Joint | | 27 | 27 | 38 | 65 | 111.7 | |

| | YEAR | TRANSM. | F/R | L/R | BODY STYLE & DRIVE TYPE & ENGINE | REMARKS | G-AP Ref. | PRODUCT | ABS | Technical Specifications | | | | | |
|---|---|---|---|---|---|---|---|---|---|---|---|---|---|---|---|
| | | | | | | | | | | A | B | C | H | L | P |
| **MERCEDES-BENZ** | | | | | | | | | | | | | | | |
| **A45 AMG** | | | | | | | | | | | | | | | |
| 2.0 (280 kw) | 2015.07-2018.05 | 7AT | F | R | Hatchback 4WD M 133.980 | | GCI61083 | Inner Joint | | 27 | 27 | 42.5 | | 139.2 | |
| **B150** | | | | | | | | | | | | | | | |
| 1.5 (70 kw) | 2005.03-2011.11 | AT | F | R | Hatchback FWD M 266.920 | | GCI35040 | Inner Joint | | 27 | 25 | 38 | 422 | 100 | |
| | 2005.03-2011.11 | AT/MT | F | L/R | Hatchback FWD M 266.920 | Locking type:Bolt on | GCO35027 | Outer Joint | | 25 | 27 | 60.3 | 43 | 53 | I |
| | 2005.03-2011.11 | CVT | F | L | Hatchback FWD M 266.920 | | GDS84300 | Drive Shaft | | 25 | 27 | 60 | 73.5 | 608 | |
| | 2005.03-2011.11 | CVT | F | R | Hatchback FWD M 266.920 | | GDS35055 | Drive Shaft | | 25 | 27 | 60 | 73.5 | 948 | |
| | 2005.03-2011.11 | CVT | F | L | Hatchback FWD M 266.920 | | GCO99037 | Outer Joint | | 25 | 25 | 60 | 73.5 | 58.5 | I |
| | 2005.03-2011.11 | CVT | F | L/R | Hatchback FWD M 266.920 | | GCO35030 | Outer Joint | | 25 | 25 | 60.4 | 74 | 56 | I |
| | 2005.03-2011.11 | CVT | F | L | Hatchback FWD M 266.920 | | GCI82700 | Inner Joint | | 27 | 25 | 38 | 62 | 120 | |
| | 2005.03-2011.11 | MT | F | L | Hatchback FWD M 266.920 | Hollow shaft | GDS35032 | Drive Shaft | | 25 | 22 | 60.3 | 43 | 580 | |
| | 2005.03-2011.11 | MT | F | L | Hatchback FWD M 266.920 | Solid shaft | GDS35074 | Drive Shaft | | 25 | 22 | 60 | 73.5 | 600 | |
| | 2005.03-2011.11 | MT | F | R | Hatchback FWD M 266.920 | Locking type:Nut on;Hollow shaft | GDS35039 | Drive Shaft | | 25 | 22 | 60 | 73.5 | 975 | |
| | 2005.03-2011.11 | MT | F | R | Hatchback FWD M 266.920 | Locking type:Bolt on;Hollow shaft | GDS35075 | Drive Shaft | | 25 | 22 | 60.5 | 42 | 944 | |
| | 2005.03-2011.11 | MT | F | L/R | Hatchback FWD M 266.920 | Locking type:Nut on | GCO35026 | Outer Joint | | 25 | 27 | 60 | 73.5 | 52 | I |
| | 2005.03-2011.11 | MT | F | L | Hatchback FWD M 266.920 | | GCI99136 | Inner Joint | | 22 | 27 | 36 | 55 | 100 | |
| | 2005.03-2011.11 | MT | F | R | Hatchback FWD M 266.920 | | GCI35011 | Inner Joint | | 22 | 27 | 36 | 459 | 81 | |
| **B160** | | | | | | | | | | | | | | | |
| 1.3 (80 kw) | 2019.04- | 6MT | F | L | Hatchback FWD M 282.914 | | GDS84227 | Drive Shaft | | 30 | 27 | 65 | 53 | 546 | |
| | 2019.04- | 6MT/7DCT | F | R | Hatchback FWD M 282.914 | | GDS84228 | Drive Shaft | | 30 | 27 | 65 | 53 | 511 | |
| | 2019.04- | 6MT/7DCT | F | L/R | Hatchback FWD M 282.914 | | GCO82739 | Outer Joint | | 30 | 27 | 65 | 53 | 64 | M |
| | 2019.04- | 6MT/7DCT | F | L | Hatchback FWD M 282.914 | | GCI82443 | Inner Joint | | 27 | 28 | 38 | 65 | 109.5 | |
| | 2019.04- | 6MT/7DCT | F | R | Hatchback FWD M 282.914 | | GCI82442 | Inner Joint | | 27 | 28 | 42.4 | 49 | 91 | |
| | 2019.04- | 7DCT | F | L | Hatchback FWD M 282.914 | | GDS84229 | Drive Shaft | | 30 | 27 | 65 | 53 | 584 | |
| 1.5 (66 kw) | 2013.05-2018.12 | 7DCT/6MT | F | L | Hatchback FWD OM 607.951 (K9K) | | GDS35067 | Drive Shaft | | 30 | 27 | 65 | 53 | 535 | |
| | 2013.05-2018.12 | 7DCT/6MT | F | R | Hatchback FWD OM 607.951 (K9K) | | GDS35068 | Drive Shaft | | 30 | 27 | 65 | 53 | 498 | |
| | 2013.05-2018.12 | 7DCT/6MT | F | R | Hatchback FWD OM 607.951 (K9K) | | GDS81470 | Drive Shaft | | 30 | 27 | 65 | 53 | 996 | |
| | 2013.05-2018.12 | AT | F | L/R | Hatchback FWD OM 607.951 (K9K) | | GCO61065 | Outer Joint | | 30 | 27 | 65 | 53 | 61.5 | M |
| | 2013.05-2018.12 | AT/MT | F | L | Hatchback FWD OM 607.951 (K9K) | | GCI61082 | Inner Joint | | 27 | 27 | 38 | 65 | 111.7 | |
| | 2013.05-2018.12 | AT/MT | F | R | Hatchback FWD OM 607.951 (K9K) | | GCI35071 | Inner Joint | | 27 | 27 | 42.1 | 41.5 | 97.2 | |
| | 2013.05-2018.12 | AT/MT | F | R | Hatchback FWD OM 607.951 (K9K) | | GDS35140 | Intermediate Shaft | | 27 | 27 | | | 540 | |
| 1.5 (70 kw) | 2009.04-2011.11 | 5MT | F | L | Hatchback FWD M 266.920 | Hollow shaft | GDS35032 | Drive Shaft | | 25 | 22 | 60.3 | 43 | 580 | |
| | 2009.04-2011.11 | 5MT | F | L | Hatchback FWD M 266.920 | | GCI99136 | Inner Joint | | 22 | 27 | 36 | 55 | 100 | |
| | 2009.04-2011.11 | AT | F | L | Hatchback FWD M 266.920 | | GDS84300 | Drive Shaft | | 25 | 27 | 60 | 73.5 | 608 | |
| | 2009.04-2011.11 | AT | F | R | Hatchback FWD M 266.920 | | GDS35055 | Drive Shaft | | 25 | 27 | 60 | 73.5 | 948 | |
| | 2009.04-2011.11 | AT | F | L | Hatchback FWD M 266.920 | | GCO99037 | Outer Joint | | 25 | 25 | 60 | 73.5 | 58.5 | I |
| | 2009.04-2011.11 | AT | F | R | Hatchback FWD M 266.920 | | GCO35030 | Outer Joint | | 25 | 25 | 60.4 | 74 | 56 | I |
| | 2009.04-2011.11 | AT | F | R | Hatchback FWD M 266.920 | | GCI35040 | Inner Joint | | 27 | 25 | 38 | 422 | 100 | |
| | 2009.04-2011.11 | CVT | F | L | Hatchback FWD M 266.920 | | GCI82700 | Inner Joint | | 27 | 25 | 38 | 62 | 120 | |
| | 2009.04-2011.11 | MT | F | L | Hatchback FWD M 266.920 | Solid shaft | GDS35074 | Drive Shaft | | 25 | 22 | 60 | 73.5 | 600 | |
| | 2009.04-2011.11 | MT | F | R | Hatchback FWD M 266.920 | Locking type:Nut | GDS35039 | Drive Shaft | | 25 | 22 | 60 | 73.5 | 975 | |
| | 2009.04-2011.11 | MT | F | R | Hatchback FWD M 266.920 | Locking type:Bolt | GDS35075 | Drive Shaft | | 25 | 22 | 60.5 | 42 | 944 | |
| | 2009.04-2011.11 | MT | F | L/R | Hatchback FWD M 266.920 | | GCO35026 | Outer Joint | | 25 | 27 | 60 | 73.5 | 52 | I |
| | 2009.04-2011.11 | MT | F | R | Hatchback FWD M 266.920 | | GCI35011 | Inner Joint | | 22 | 27 | 36 | 459 | 81 | |
| | 2019.05- | 6MT | F | L | Hatchback FWD OM 608.915 (K9K) | | GDS83980 | Drive Shaft | | 30 | 27 | 65 | 53 | 543 | |
| | 2019.05- | 6MT | F | R | Hatchback FWD OM 608.915 (K9K) | | GDS83979 | Drive Shaft | | 30 | 27 | 65 | 53 | 509 | |
| | 2019.05- | 6MT | F | L | Hatchback FWD OM 608.915 (K9K) | | GCI82443 | Inner Joint | | 27 | 28 | 38 | 65 | 109.5 | |
| | 2019.05- | 6MT | F | R | Hatchback FWD OM 608.915 (K9K) | | GCI82442 | Inner Joint | | 27 | 28 | 42.4 | 49 | 91 | |
| | 2019.05- | 7DCT | F | L | Hatchback FWD OM 608.915 (K9K) | | GDS83682 | Drive Shaft | | 30 | 27 | 65 | 53 | 576 | |
| | 2019.05- | 7DCT | F | R | Hatchback FWD OM 608.915 (K9K) | | GDS83685 | Drive Shaft | | 30 | 27 | 65 | 53 | 501 | |
| | 2019.05- | 7DCT | F | L/R | Hatchback FWD OM 608.915 (K9K) | | GCO82462 | Outer Joint | | 30 | 26 | 65 | 53 | 62.5 | I |
| | 2019.05- | 7DCT | F | L | Hatchback FWD OM 608.915 (K9K) | | GCI82332 | Inner Joint | | 27 | 26 | 38 | 65 | 104.5 | |
| | 2019.05- | 7DCT | F | R | Hatchback FWD OM 608.915 (K9K) | | GCI82361 | Inner Joint | | 27 | 26 | 42 | | 136 | |
| | 2019.05- | 7DCT | F | R | Hatchback FWD OM 608.915 (K9K) | | GDS82867 | Intermediate Shaft | | 27 | 27 | | | 503 | |
| 1.6 (75 kw) | 2015.07-2018.12 | 7AT/6MT | F | L | Hatchback FWD M 270.910 | For taxis | GDS35067 | Drive Shaft | | 30 | 27 | 65 | 53 | 535 | |
| | 2015.07-2018.12 | 7AT/6MT | F | L | Hatchback FWD M 270.910 | Not For taxis | GDS56795 | Drive Shaft | | 30 | 27 | 65 | 53 | 530 | |
| | 2015.07-2018.12 | 7AT/6MT | F | L/R | Hatchback FWD M 270.910 | Supplier B,Length:105 | GCO35071 | Outer Joint | | 30 | 27 | 65 | 53 | 52 | M |
| | 2015.07-2018.12 | 7AT/6MT | F | L | Hatchback FWD M 270.910 | | GCI83495 | Inner Joint | | 27 | 27 | 38 | 65 | 80 | |
| | 2015.07-2018.12 | 7DCT/6MT | F | R | Hatchback FWD M 270.910 | For taxis | GDS35068 | Drive Shaft | | 30 | 27 | 65 | 53 | 498 | |
| | 2015.07-2018.12 | 7DCT/6MT | F | R | Hatchback FWD M 270.910 | Not For taxis | GDS35104 | Drive Shaft | | 30 | 27 | 65 | 53 | 496 | |
| | 2015.07-2018.12 | 7DCT/6MT | F | R | Hatchback FWD M 270.910 | For taxis | GDS81470 | Drive Shaft | | 30 | 27 | 65 | 53 | 996 | |
| | 2015.07-2018.12 | AT/MT | F | R | Hatchback FWD M 270.910 | | GCI35071 | Inner Joint | | 27 | 27 | 42.1 | 41.5 | 97.2 | |
| | 2015.07-2018.12 | AT/MT | F | R | Hatchback FWD M 270.910 | | GDS35140 | Intermediate Shaft | | 27 | 27 | | | 540 | |
| | 2015.07-2018.12 | MT/DCT | F | L/R | Hatchback FWD M 270.910 | Supplier A,Length:114.5 | GCO61065 | Outer Joint | | 30 | 27 | 65 | 53 | 61.5 | M |

| | YEAR | TRANSM. | F/R | L/R | BODY STYLE & DRIVE TYPE & ENGINE | REMARKS | G-AP Ref. | PRODUCT | ABS | Technical Specifications A | B | C | H | L | P |
|---|---|---|---|---|---|---|---|---|---|---|---|---|---|---|---|
| **MERCEDES-BENZ** | | | | | | | | | | | | | | | |
| **B170** | | | | | | | | | | | | | | | |
| 1.7 (85 kw) | 2005.03-2011.11 | 5MT | F | R | Hatchback FWD M 266.940 | | GCI35011 | Inner Joint | | 22 | 27 | 36 | 459 | 81 | |
| | 2005.03-2011.11 | AT/MT | F | L/R | Hatchback FWD M 266.940 | Locking type:Bolt on | GCO35027 | Outer Joint | | 25 | 27 | 60.3 | 43 | 53 | I |
| | 2005.03-2011.11 | CVT | F | L | Hatchback FWD M 266.940 | | GDS84300 | Drive Shaft | | 25 | 27 | 60 | 73.5 | 608 | |
| | 2005.03-2011.11 | CVT | F | R | Hatchback FWD M 266.940 | | GDS35055 | Drive Shaft | | 25 | 27 | 60 | 73.5 | 948 | |
| | 2005.03-2011.11 | CVT | F | L | Hatchback FWD M 266.940 | | GCO99037 | Outer Joint | | 25 | 25 | 60 | 73.5 | 58.5 | I |
| | 2005.03-2011.11 | CVT | F | R | Hatchback FWD M 266.940 | | GCO35030 | Outer Joint | | 25 | 25 | 60.4 | 74 | 56 | I |
| | 2005.03-2011.11 | CVT | F | L | Hatchback FWD M 266.940 | | GCI82700 | Inner Joint | | 27 | 25 | 38 | 62 | 120 | |
| | 2005.03-2011.11 | CVT | F | R | Hatchback FWD M 266.940 | | GCI35040 | Inner Joint | | 27 | 25 | 38 | 422 | 100 | |
| | 2005.03-2011.11 | MT | F | L | Hatchback FWD M 266.940 | Hollow shaft | GDS35032 | Drive Shaft | | 25 | 22 | 60.3 | 43 | 580 | |
| | 2005.03-2011.11 | MT | F | L | Hatchback FWD M 266.940 | Solid shaft | GDS35074 | Drive Shaft | | 25 | 22 | 60 | 73.5 | 600 | |
| | 2005.03-2011.11 | MT | F | R | Hatchback FWD M 266.940 | Locking type:Nut on;Hollow shaft | GDS35039 | Drive Shaft | | 25 | 22 | 60 | 73.5 | 975 | |
| | 2005.03-2011.11 | MT | F | R | Hatchback FWD M 266.940 | Locking type:Bolt on;Hollow shaft | GDS35075 | Drive Shaft | | 25 | 22 | 60.5 | 42 | 944 | |
| | 2005.03-2011.11 | MT | F | L/R | Hatchback FWD M 266.940 | Locking type:Nut on | GCO35026 | Outer Joint | | 25 | 27 | 60 | 73.5 | 52 | I |
| | 2005.03-2011.11 | MT | F | L | Hatchback FWD M 266.940 | | GCI99136 | Inner Joint | | 22 | 27 | 36 | 55 | 100 | |
| 2.0 (85 kw) | 2008.04-2011.11 | 5MT | F | L | Hatchback FWD M 266.960 | Hollow shaft | GDS35032 | Drive Shaft | | 25 | 22 | 60.3 | 43 | 580 | |
| | 2008.04-2011.11 | 5MT | F | L | Hatchback FWD M 266.960 | | GCI99136 | Inner Joint | | 22 | 27 | 36 | 55 | 100 | |
| | 2008.04-2011.11 | 5MT | F | R | Hatchback FWD M 266.960 | | GCI35011 | Inner Joint | | 22 | 27 | 36 | 459 | 81 | |
| | 2008.04-2011.11 | AT/MT | F | L/R | Hatchback FWD M 266.960 | | GCO35027 | Outer Joint | | 25 | 27 | 60.3 | 43 | 53 | I |
| | 2008.04-2011.11 | CVT | F | L | Hatchback FWD M 266.960 | | GDS84300 | Drive Shaft | | 25 | 27 | 60 | 73.5 | 608 | |
| | 2008.04-2011.11 | CVT | F | R | Hatchback FWD M 266.960 | | GDS35055 | Drive Shaft | | 25 | 27 | 60 | 73.5 | 948 | |
| | 2008.04-2011.11 | CVT | F | L | Hatchback FWD M 266.960 | | GCO99037 | Outer Joint | | 25 | 25 | 60 | 73.5 | 58.5 | I |
| | 2008.04-2011.11 | CVT | F | R | Hatchback FWD M 266.960 | | GCO35030 | Outer Joint | | 25 | 25 | 60.4 | 74 | 56 | I |
| | 2008.04-2011.11 | CVT | F | L | Hatchback FWD M 266.960 | | GCI82700 | Inner Joint | | 27 | 25 | 38 | 62 | 120 | |
| | 2008.04-2011.11 | CVT | F | R | Hatchback FWD M 266.960 | | GCI35040 | Inner Joint | | 27 | 25 | 38 | 422 | 100 | |
| | 2008.04-2011.11 | MT | F | L | Hatchback FWD M 266.960 | Solid shaft | GDS35074 | Drive Shaft | | 25 | 22 | 60 | 73.5 | 600 | |
| | 2008.04-2011.11 | MT | F | R | Hatchback FWD M 266.960 | Locking type:Nut | GDS35039 | Drive Shaft | | 25 | 22 | 60 | 73.5 | 975 | |
| | 2008.04-2011.11 | MT | F | R | Hatchback FWD M 266.960 | Locking type:Bolt | GDS35075 | Drive Shaft | | 25 | 22 | 60.5 | 42 | 944 | |
| | 2008.04-2011.11 | MT | F | L/R | Hatchback FWD M 266.960 | | GCO35026 | Outer Joint | | 25 | 27 | 60 | 73.5 | 52 | I |
| **B180** | | | | | | | | | | | | | | | |
| 1.3 (100 kw) | 2018.12- | 6MT | F | L | Hatchback FWD M 282.914 | | GDS84227 | Drive Shaft | | 30 | 27 | 65 | 53 | 546 | |
| | 2018.12- | 6MT/7DCT | F | R | Hatchback FWD M 282.914 | | GDS84228 | Drive Shaft | | 30 | 27 | 65 | 53 | 511 | |
| | 2018.12- | 6MT/7DCT | F | L/R | Hatchback FWD M 282.914 | | GCO82739 | Outer Joint | | 30 | 27 | 65 | 53 | 64 | M |
| | 2018.12- | 6MT/7DCT | F | L | Hatchback FWD M 282.914 | | GCI82443 | Inner Joint | | 27 | 28 | 38 | 65 | 109.5 | |
| | 2018.12- | 6MT/7DCT | F | R | Hatchback FWD M 282.914 | | GCI82442 | Inner Joint | | 27 | 28 | 42.4 | 49 | 91 | |
| | 2018.12- | 7DCT | F | L | Hatchback FWD M 282.914 | | GDS84229 | Drive Shaft | | 30 | 27 | 65 | 53 | 584 | |
| | 2022.11- | 7AT | F | L | Hatchback FWD 282.814 | | GDS84229 | Drive Shaft | | 30 | 27 | 65 | 53 | 584 | |
| | 2022.11- | 7AT | F | R | Hatchback FWD 282.814 | | GDS84228 | Drive Shaft | | 30 | 27 | 65 | 53 | 511 | |
| | 2022.11- | AT/MT | F | L | Hatchback FWD 282.814 | | GCI82443 | Inner Joint | | 27 | 28 | 38 | 65 | 109.5 | |
| 1.5 (80 kw) | 2013.02-2018.12 | 7DCT/6MT | F | L | Hatchback FWD OM 607.951 (K9K) | | GDS35067 | Drive Shaft | | 30 | 27 | 65 | 53 | 535 | |
| | 2013.02-2018.12 | 7DCT/6MT | F | R | Hatchback FWD OM 607.951 (K9K) | | GDS35068 | Drive Shaft | | 30 | 27 | 65 | 53 | 498 | |
| | 2013.02-2018.12 | 7DCT/6MT | F | R | Hatchback FWD OM 607.951 (K9K) | | GDS81470 | Drive Shaft | | 30 | 27 | 65 | 53 | 996 | |
| | 2013.02-2018.12 | AT/MT | F | L/R | Hatchback FWD OM 607.951 (K9K) | | GCO61065 | Outer Joint | | 30 | 27 | 65 | 53 | 61.5 | M |
| | 2013.02-2018.12 | AT/MT | F | L | Hatchback FWD OM 607.951 (K9K) | | GCI61082 | Inner Joint | | 27 | 27 | 38 | 65 | 111.7 | |
| | 2013.02-2018.12 | AT/MT | F | R | Hatchback FWD OM 607.951 (K9K) | | GDS35140 | Intermediate Shaft | | 27 | 27 | | | 540 | |
| 1.5 (85 kw) | 2018.12- | 6MT | F | L | Hatchback FWD OM 608.915 (K9K) | | GDS83980 | Drive Shaft | | 30 | 27 | 65 | 53 | 543 | |
| | 2018.12- | 6MT | F | R | Hatchback FWD OM 608.915 (K9K) | | GDS83979 | Drive Shaft | | 30 | 27 | 65 | 53 | 509 | |
| | 2018.12- | 6MT | F | L | Hatchback FWD OM 608.915 (K9K) | | GCI82443 | Inner Joint | | 27 | 28 | 38 | 65 | 109.5 | |
| | 2018.12- | 6MT | F | R | Hatchback FWD OM 608.915 (K9K) | | GCI82442 | Inner Joint | | 27 | 28 | 42.4 | 49 | 91 | |
| | 2018.12- | 7DCT | F | L | Hatchback FWD OM 608.915 (K9K) | | GDS83682 | Drive Shaft | | 30 | 27 | 65 | 53 | 576 | |
| | 2018.12- | 7DCT | F | R | Hatchback FWD OM 608.915 (K9K) | | GDS83685 | Drive Shaft | | 30 | 27 | 65 | 53 | 501 | |
| | 2018.12- | 7DCT | F | L/R | Hatchback FWD OM 608.915 (K9K) | | GCO82462 | Outer Joint | | 30 | 26 | 65 | 53 | 62.5 | I |
| | 2018.12- | 7DCT | F | L | Hatchback FWD OM 608.915 (K9K) | | GCI82332 | Inner Joint | | 27 | 26 | 38 | 65 | 104.5 | |
| | 2018.12- | 7DCT | F | R | Hatchback FWD OM 608.915 (K9K) | | GCI82361 | Inner Joint | | 27 | 26 | 42 | | 136 | |
| | 2018.12- | 7DCT | F | R | Hatchback FWD OM 608.915 (K9K) | | GDS82867 | Intermediate Shaft | | 27 | 27 | | | 503 | |
| 1.6 (90 kw) | 2011.11-2018.12 | 7AT/6MT | F | L | Hatchback FWD M 270.910 | For taxis | GDS35067 | Drive Shaft | | 30 | 27 | 65 | 53 | 535 | |
| | 2011.11-2018.12 | 7AT/6MT | F | L | Hatchback FWD M 270.910 | Not For taxis | GDS56795 | Drive Shaft | | 30 | 27 | 65 | 53 | 530 | |
| | 2011.11-2018.12 | 7AT/6MT | F | L/R | Hatchback FWD M 270.910 | Supplier B,Length:105 | GCO35071 | Outer Joint | | 30 | 27 | 65 | 53 | 52 | M |
| | 2011.11-2018.12 | 7AT/6MT | F | L/R | Hatchback FWD M 270.910 | Supplier A,Length:114.5 | GCO61065 | Outer Joint | | 30 | 27 | 65 | 53 | 61.5 | M |
| | 2011.11-2018.12 | 7AT/6MT | F | L | Hatchback FWD M 270.910 | | GCI83495 | Inner Joint | | 27 | 27 | 38 | 65 | 80 | |
| | 2011.11-2018.12 | 7DCT/6MT | F | R | Hatchback FWD M 270.910 | For taxis | GDS35068 | Drive Shaft | | 30 | 27 | 65 | 53 | 498 | |
| | 2011.11-2018.12 | 7DCT/6MT | F | R | Hatchback FWD M 270.910 | Not For taxis | GDS35104 | Drive Shaft | | 30 | 27 | 65 | 53 | 496 | |
| | 2011.11-2018.12 | 7DCT/6MT | F | R | Hatchback FWD M 270.910 | For taxis | GDS81470 | Drive Shaft | | 30 | 27 | 65 | 53 | 996 | |
| | 2011.11-2018.12 | AT/MT | F | R | Hatchback FWD M 270.910 | | GCI35071 | Inner Joint | | 27 | 27 | 42.1 | 41.5 | 97.2 | |
| | 2011.11-2018.12 | AT/MT | F | R | Hatchback FWD M 270.910 | | GDS35140 | Intermediate Shaft | | 27 | 27 | | | 540 | |
| 1.7 (85 kw) | 2009.04-2011.11 | 5MT | F | L | Hatchback FWD M 266.940 | Hollow shaft | GDS35032 | Drive Shaft | | 25 | 22 | 60.3 | 43 | 580 | |

| | YEAR | TRANSM. | F/R | L/R | BODY STYLE & DRIVE TYPE & ENGINE | REMARKS | G-AP Ref. | PRODUCT | ABS | Technical Specifications A | B | C | H | L | P |
|---|---|---|---|---|---|---|---|---|---|---|---|---|---|---|---|
| **MERCEDES-BENZ** | | | | | | | | | | | | | | | |
| **B180** | | | | | | | | | | | | | | | |
| 1.7 (85 kw) | 2009.04-2011.11 | 5MT | F | L | Hatchback FWD M 266.940 | | GCI99136 | Inner Joint | | 22 | 27 | 36 | 55 | 100 | |
| | 2009.04-2011.11 | AT/MT | F | L/R | Hatchback FWD M 266.940 | Locking type:Bolt on | GCO35027 | Outer Joint | | 25 | 27 | 60.3 | 43 | 53 | I |
| | 2009.04-2011.11 | CVT | F | L | Hatchback FWD M 266.940 | | GDS84300 | Drive Shaft | | 25 | 27 | 60 | 73.5 | 608 | |
| | 2009.04-2011.11 | CVT | F | R | Hatchback FWD M 266.940 | | GDS35055 | Drive Shaft | | 25 | 27 | 60 | 73.5 | 948 | |
| | 2009.04-2011.11 | CVT | F | L | Hatchback FWD M 266.940 | | GCO99037 | Outer Joint | | 25 | 25 | 60 | 73.5 | 58.5 | I |
| | 2009.04-2011.11 | CVT | F | R | Hatchback FWD M 266.940 | | GCO35030 | Outer Joint | | 25 | 25 | 60.4 | 74 | 56 | I |
| | 2009.04-2011.11 | CVT | F | L | Hatchback FWD M 266.940 | | GCI82700 | Inner Joint | | 27 | 25 | 38 | 62 | 120 | |
| | 2009.04-2011.11 | CVT | F | R | Hatchback FWD M 266.940 | | GCI35040 | Inner Joint | | 27 | 25 | 38 | 422 | 100 | |
| | 2009.04-2011.11 | MT | F | L | Hatchback FWD M 266.940 | Solid shaft | GDS35074 | Drive Shaft | | 25 | 22 | 60 | 73.5 | 600 | |
| | 2009.04-2011.11 | MT | F | R | Hatchback FWD M 266.940 | Locking type:Nut on;Hollow shaft | GDS35039 | Drive Shaft | | 25 | 22 | 60 | 73.5 | 975 | |
| | 2009.04-2011.11 | MT | F | R | Hatchback FWD M 266.940 | Locking type:Bolt on;Hollow shaft | GDS35075 | Drive Shaft | | 25 | 22 | 60.5 | 42 | 944 | |
| | 2009.04-2011.11 | MT | F | L/R | Hatchback FWD M 266.940 | Locking type:Nut on | GCO35026 | Outer Joint | | 25 | 27 | 60 | 73.5 | 52 | I |
| 1.8 (80 kw) | 2011.11-2014.08 | AT/MT | F | L | Hatchback FWD OM 651.901 | Inner teeth of tranm.side:27 | GDS35067 | Drive Shaft | | 30 | 27 | 65 | 53 | 535 | |
| | 2011.11-2014.08 | AT/MT | F | R | Hatchback FWD OM 651.901 | Without Intermediate Shaft | GDS35068 | Drive Shaft | | 30 | 27 | 65 | 53 | 498 | |
| | 2011.11-2014.08 | AT/MT | F | R | Hatchback FWD OM 651.901 | With Intermediate Shaft | GDS81470 | Drive Shaft | | 30 | 27 | 65 | 53 | 996 | |
| | 2011.11-2014.08 | AT/MT | F | L/R | Hatchback FWD OM 651.901 | | GCO61065 | Outer Joint | | 30 | 27 | 65 | 53 | 61.5 | M |
| | 2011.11-2014.08 | AT/MT | F | L | Hatchback FWD OM 651.901 | | GCI61082 | Inner Joint | | 27 | 27 | 38 | 65 | 111.7 | |
| | 2011.11-2014.08 | AT/MT | F | R | Hatchback FWD OM 651.901 | | GCI35071 | Inner Joint | | 27 | 27 | 42.1 | 41.5 | 97.2 | |
| | 2011.11-2014.08 | AT/MT | F | R | Hatchback FWD OM 651.901 | | GDS35140 | Intermediate Shaft | | 27 | 27 | | | 540 | |
| 2.0 (80 kw) | 2005.03-2011.11 | AT/MT/CVT | F | L/R | Hatchback FWD OM 640.940 | Chassis no. from:J116410 | GCO99037 | Outer Joint | | 25 | 25 | 60 | 73.5 | 58.5 | I |
| | 2005.03-2011.11 | CVT | F | L | Hatchback FWD OM 640.940 | | GDS84300 | Drive Shaft | | 25 | 27 | 60 | 73.5 | 608 | |
| | 2005.03-2011.11 | CVT | F | R | Hatchback FWD OM 640.940 | | GDS35055 | Drive Shaft | | 25 | 27 | 60 | 73.5 | 948 | |
| | 2005.03-2011.11 | CVT | F | L | Hatchback FWD OM 640.940 | | GCI82700 | Inner Joint | | 27 | 25 | 38 | 62 | 120 | |
| | 2005.03-2011.11 | CVT | F | R | Hatchback FWD OM 640.940 | | GCI35040 | Inner Joint | | 27 | 25 | 38 | 422 | 100 | |
| | 2005.03-2011.11 | MT | F | L | Hatchback FWD OM 640.940 | Collar Nut type on Outer Joint;Inner teeth of tranm.side:27 | GDS35066 | Drive Shaft | | 25 | 27 | 60 | 73.5 | 583 | |
| | 2005.03-2011.11 | MT | F | L | Hatchback FWD OM 640.940 | Bolt type on Outer Joint;Date from:2015.03;Chassis no. from:J116414 | GDS35076 | Drive Shaft | | 25 | 27 | 60.5 | 42 | 551 | |
| | 2005.03-2011.11 | MT | F | L | Hatchback FWD OM 640.940 | Collar Nut type on Outer Joint;Inner teeth of tranm.side:25 | GDS35078 | Drive Shaft | | 25 | 27 | 60 | 73.5 | 583 | |
| | 2005.03-2011.11 | MT | F | R | Hatchback FWD OM 640.940 | | GDS35081 | Drive Shaft | | 25 | 27 | 60 | 73.5 | 987 | |
| | 2005.03-2011.11 | MT | F | L | Hatchback FWD OM 640.940 | | GCI35014 | Inner Joint | | 27 | 25 | 38 | 62 | 102 | |
| | 2005.03-2011.11 | MT | F | R | Hatchback FWD OM 640.940 | | GCI35012 | Inner Joint | | 27 | 25 | 38 | 476 | 83 | |
| 2.0 (85 kw) | 2008.04-2011.11 | 5MT | F | L | Hatchback FWD M 266.960 | Hollow shaft | GDS35032 | Drive Shaft | | 25 | 22 | 60.3 | 43 | 580 | |
| | 2008.04-2011.11 | 5MT | F | L | Hatchback FWD M 266.960 | | GCI99136 | Inner Joint | | 22 | 27 | 36 | 55 | 100 | |
| | 2008.04-2011.11 | 5MT | F | R | Hatchback FWD M 266.960 | | GCI35011 | Inner Joint | | 22 | 27 | 36 | 459 | 81 | |
| | 2008.04-2011.11 | AT/MT | F | L/R | Hatchback FWD M 266.960 | | GCO35027 | Outer Joint | | 25 | 27 | 60.3 | 43 | 53 | I |
| | 2008.04-2011.11 | CVT | F | L | Hatchback FWD M 266.960 | | GDS84300 | Drive Shaft | | 25 | 27 | 60 | 73.5 | 608 | |
| | 2008.04-2011.11 | CVT | F | R | Hatchback FWD M 266.960 | | GDS35055 | Drive Shaft | | 25 | 27 | 60 | 73.5 | 948 | |
| | 2008.04-2011.11 | CVT | F | L | Hatchback FWD M 266.960 | | GCO99037 | Outer Joint | | 25 | 25 | 60 | 73.5 | 58.5 | I |
| | 2008.04-2011.11 | CVT | F | R | Hatchback FWD M 266.960 | | GCO35030 | Outer Joint | | 25 | 25 | 60.4 | 74 | 56 | I |
| | 2008.04-2011.11 | CVT | F | L | Hatchback FWD M 266.960 | | GCI82700 | Inner Joint | | 27 | 25 | 38 | 62 | 120 | |
| | 2008.04-2011.11 | CVT | F | R | Hatchback FWD M 266.960 | | GCI35040 | Inner Joint | | 27 | 25 | 38 | 422 | 100 | |
| | 2008.04-2011.11 | MT | F | L | Hatchback FWD M 266.960 | Solid shaft | GDS35074 | Drive Shaft | | 25 | 22 | 60 | 73.5 | 600 | |
| | 2008.04-2011.11 | MT | F | R | Hatchback FWD M 266.960 | Locking type:Nut | GDS35039 | Drive Shaft | | 25 | 22 | 60 | 73.5 | 975 | |
| | 2008.04-2011.11 | MT | F | R | Hatchback FWD M 266.960 | Locking type:Bolt | GDS35075 | Drive Shaft | | 25 | 22 | 60.5 | 42 | 944 | |
| | 2008.04-2011.11 | MT | F | L/R | Hatchback FWD M 266.960 | | GCO35026 | Outer Joint | | 25 | 27 | 60 | 73.5 | 52 | I |
| | 2020.10- | 6MT | F | L | Hatchback FWD OM 654.920 | | GDS83980 | Drive Shaft | | 30 | 27 | 65 | 53 | 543 | |
| | 2020.10- | 6MT | F | R | Hatchback FWD OM 654.920 | | GDS83979 | Drive Shaft | | 30 | 27 | 65 | 53 | 509 | |
| | 2020.10- | 6MT | F | L | Hatchback FWD OM 654.920 | | GCI82443 | Inner Joint | | 27 | 28 | 38 | 65 | 109.5 | |
| | 2020.10- | 6MT | F | R | Hatchback FWD OM 654.920 | | GCI82442 | Inner Joint | | 27 | 28 | 42.4 | 49 | 91 | |
| | 2020.10- | 8DCT | F | L | Hatchback FWD OM 654.920 | | GDS84230 | Drive Shaft | | 30 | 27 | 65 | 53 | 533 | |
| | 2020.10- | 8DCT | F | R | Hatchback FWD OM 654.920 | | GDS83685 | Drive Shaft | | 30 | 27 | 65 | 53 | 501 | |
| | 2020.10- | 8DCT | F | L/R | Hatchback FWD OM 654.920 | | GCO82462 | Outer Joint | | 30 | 26 | 65 | 53 | 62.5 | I |
| | 2020.10- | 8DCT | F | L | Hatchback FWD OM 654.920 | | GCI82332 | Inner Joint | | 27 | 26 | 38 | 65 | 104.5 | |
| 2.2 (80 kw) | 2013.06-2014.08 | 7AT | F | L | Hatchback FWD OM 651.930 | | GCI61082 | Inner Joint | | 27 | 27 | 38 | 65 | 111.7 | |
| | 2013.06-2014.08 | 7AT/6MT | F | R | Hatchback FWD OM 651.930 | Without Intermediate Shaft | GDS35068 | Drive Shaft | | 30 | 27 | 65 | 53 | 498 | |
| | 2013.06-2014.08 | 7AT/6MT | F | R | Hatchback FWD OM 651.930 | With Intermediate Shaft | GDS81470 | Drive Shaft | | 30 | 27 | 65 | 53 | 996 | |
| | 2013.06-2014.08 | 7AT/6MT | F | R | Hatchback FWD OM 651.930 | | GCO61065 | Outer Joint | | 30 | 27 | 65 | 53 | 61.5 | M |
| | 2013.06-2014.08 | 7AT/6MT | F | R | Hatchback FWD OM 651.930 | | GCI61083 | Inner Joint | | 27 | 27 | 42.5 | | 139.2 | |
| | 2013.06-2014.08 | 7DCT | F | L | Hatchback FWD OM 651.930 | | GDS35067 | Drive Shaft | | 30 | 27 | 65 | 53 | 535 | |
| **B200** | | | | | | | | | | | | | | | |
| 1.3 (110 kw) | 2019.01- | 7AT | F | L | Hatchback FWD M 282.914 | | GDS84229 | Drive Shaft | | 30 | 27 | 65 | 53 | 584 | |
| | 2019.01- | 7AT | F | R | Hatchback FWD M 282.914 | | GDS84228 | Drive Shaft | | 30 | 27 | 65 | 53 | 511 | |
| | 2019.01- | 7AT | F | L/R | Hatchback FWD M 282.914 | | GCO82739 | Outer Joint | | 30 | 27 | 65 | 53 | 64 | M |
| | 2019.01- | 7AT | F | L | Hatchback FWD M 282.914 | | GCI82443 | Inner Joint | | 27 | 28 | 38 | 65 | 109.5 | |
| | 2019.01- | 7AT | F | R | Hatchback FWD M 282.914 | | GCI82442 | Inner Joint | | 27 | 28 | 42.4 | 49 | 91 | |
| 1.3 (120 kw) | 2018.12- | 6MT | F | L | Hatchback FWD M 282.914 | | GDS84227 | Drive Shaft | | 30 | 27 | 65 | 53 | 546 | |

| | YEAR | TRANSM. | F/R | L/R | BODY STYLE & DRIVE TYPE & ENGINE | REMARKS | G-AP Ref. | PRODUCT | ABS | Technical Specifications | | | | | |
|---|---|---|---|---|---|---|---|---|---|---|---|---|---|---|---|
| | | | | | | | | | | A | B | C | H | L | P |
| **MERCEDES-BENZ** | | | | | | | | | | | | | | | |
| **B200** | | | | | | | | | | | | | | | |
| 1.3 (120 kw) | 2018.12- | 6MT/7DCT | F | R | Hatchback FWD M 282.914 | | GDS84228 | Drive Shaft | | 30 | 27 | 65 | 53 | 511 | |
| | 2018.12- | 6MT/7DCT | F | L/R | Hatchback FWD M 282.914 | | GCO82739 | Outer Joint | | 30 | 27 | 65 | 53 | 64 | M |
| | 2018.12- | 6MT/7DCT | F | L | Hatchback FWD M 282.914 | | GCI82443 | Inner Joint | | 27 | 28 | 38 | 65 | 109.5 | |
| | 2018.12- | 6MT/7DCT | F | R | Hatchback FWD M 282.914 | | GCI82442 | Inner Joint | | 27 | 28 | 42.4 | 49 | 91 | |
| | 2018.12- | 7DCT | F | L | Hatchback FWD M 282.914 | | GDS84229 | Drive Shaft | | 30 | 27 | 65 | 53 | 584 | |
| | 2020.10- | 8AT | F | R | Hatchback 4WD M 282.914 | | GDS84228 | Drive Shaft | | 30 | 27 | 65 | 53 | 511 | |
| | 2020.10- | 8AT | F | R | Hatchback 4WD M 282.914 | | GCO82739 | Outer Joint | | 30 | 27 | 65 | 53 | 64 | M |
| | 2020.10- | 8AT | F | R | Hatchback 4WD M 282.914 | | GCI82442 | Inner Joint | | 27 | 28 | 42.4 | 49 | 91 | |
| | 2022.11- | 7AT | F | L | Hatchback FWD 282.814 | | GDS84229 | Drive Shaft | | 30 | 27 | 65 | 53 | 584 | |
| | 2022.11- | 7AT | F | R | Hatchback FWD 282.814 | | GDS84228 | Drive Shaft | | 30 | 27 | 65 | 53 | 511 | |
| | 2022.11- | AT/MT | F | L | Hatchback FWD 282.814 | | GCI82443 | Inner Joint | | 27 | 28 | 38 | 65 | 109.5 | |
| 1.6 (115 kw) | 2011.11-2018.12 | 7AT/6MT | F | L/R | Hatchback FWD M 270.910 | | GCO35071 | Outer Joint | | 30 | 27 | 65 | 53 | 52 | M |
| | 2011.11-2018.12 | 7AT/6MT | F | L | Hatchback FWD M 270.910 | | GCI83495 | Inner Joint | | 27 | 27 | 38 | 65 | 80 | |
| | 2011.11-2018.12 | 7DCT/6MT | F | L | Hatchback FWD M 270.910 | For taxis | GDS35067 | Drive Shaft | | 30 | 27 | 65 | 53 | 535 | |
| | 2011.11-2018.12 | 7DCT/6MT | F | L | Hatchback FWD M 270.910 | Not For taxis | GDS56795 | Drive Shaft | | 30 | 27 | 65 | 53 | 530 | |
| | 2011.11-2018.12 | 7DCT/6MT | F | R | Hatchback FWD M 270.910 | For taxis | GDS35068 | Drive Shaft | | 30 | 27 | 65 | 53 | 498 | |
| | 2011.11-2018.12 | 7DCT/6MT | F | R | Hatchback FWD M 270.910 | Not For taxis | GDS35104 | Drive Shaft | | 30 | 27 | 65 | 53 | 496 | |
| | 2011.11-2018.12 | 7DCT/6MT | F | R | Hatchback FWD M 270.910 | For taxis | GDS81470 | Drive Shaft | | 30 | 27 | 65 | 53 | 996 | |
| | 2011.11-2018.12 | AT/MT | F | R | Hatchback FWD M 270.910 | | GCI35071 | Inner Joint | | 27 | 27 | 42.1 | 41.5 | 97.2 | |
| | 2011.11-2018.12 | AT/MT | F | R | Hatchback FWD M 270.910 | | GDS35140 | Intermediate Shaft | | 27 | 27 | | | 540 | |
| 1.8 (100 kw) | 2011.11-2014.08 | AT/MT | F | L | Hatchback FWD OM 651.901 | Inner teeth of tranm.side:27 | GDS35067 | Drive Shaft | | 30 | 27 | 65 | 53 | 535 | |
| | 2011.11-2014.08 | AT/MT | F | R | Hatchback FWD OM 651.901 | Without Intermediate Shaft | GDS35068 | Drive Shaft | | 30 | 27 | 65 | 53 | 498 | |
| | 2011.11-2014.08 | AT/MT | F | R | Hatchback FWD OM 651.901 | With Intermediate Shaft | GDS81470 | Drive Shaft | | 30 | 27 | 65 | 53 | 996 | |
| | 2011.11-2014.08 | AT/MT | F | L/R | Hatchback FWD OM 651.901 | | GCO61065 | Outer Joint | | 30 | 27 | 65 | 53 | 61.5 | M |
| | 2011.11-2014.08 | AT/MT | F | L | Hatchback FWD OM 651.901 | | GCI61082 | Inner Joint | | 27 | 27 | 38 | 65 | 111.7 | |
| | 2011.11-2014.08 | AT/MT | F | R | Hatchback FWD OM 651.901 | | GCI35071 | Inner Joint | | 27 | 27 | 42.1 | 41.5 | 97.2 | |
| | 2011.11-2014.08 | AT/MT | F | R | Hatchback FWD OM 651.901 | | GDS35140 | Intermediate Shaft | | 27 | 27 | | | 540 | |
| 2.0 (100 kw) | 2005.03-2011.11 | 5MT | F | R | Hatchback FWD M 266.960 | | GCI35011 | Inner Joint | | 22 | 27 | 36 | 459 | 81 | |
| | 2005.03-2011.11 | AT/MT | F | L/R | Hatchback FWD M 266.960 | Locking type:Bolt on | GCO35027 | Outer Joint | | 25 | 27 | 60.3 | 43 | 53 | I |
| | 2005.03-2011.11 | CVT | F | L | Hatchback FWD M 266.960 | | GDS84300 | Drive Shaft | | 25 | 27 | 60 | 73.5 | 608 | |
| | 2005.03-2011.11 | CVT | F | R | Hatchback FWD M 266.960 | | GDS35055 | Drive Shaft | | 25 | 27 | 60 | 73.5 | 948 | |
| | 2005.03-2011.11 | CVT | F | L | Hatchback FWD M 266.960 | | GCO99037 | Outer Joint | | 25 | 25 | 60 | 73.5 | 58.5 | I |
| | 2005.03-2011.11 | CVT | F | R | Hatchback FWD M 266.960 | | GCO35030 | Outer Joint | | 25 | 25 | 60.4 | 74 | 56 | I |
| | 2005.03-2011.11 | CVT | F | L | Hatchback FWD M 266.960 | | GCI82700 | Inner Joint | | 27 | 25 | 38 | 62 | 120 | |
| | 2005.03-2011.11 | CVT | F | R | Hatchback FWD M 266.960 | | GCI35040 | Inner Joint | | 27 | 25 | 38 | 422 | 100 | |
| | 2005.03-2011.11 | MT | F | L | Hatchback FWD M 266.960 | Hollow shaft | GDS35032 | Drive Shaft | | 25 | 22 | 60.3 | 43 | 580 | |
| | 2005.03-2011.11 | MT | F | L | Hatchback FWD M 266.960 | Solid shaft | GDS35074 | Drive Shaft | | 25 | 22 | 60 | 73.5 | 600 | |
| | 2005.03-2011.11 | MT | F | R | Hatchback FWD M 266.960 | Locking type:Nut on;Hollow shaft | GDS35039 | Drive Shaft | | 25 | 22 | 60 | 73.5 | 975 | |
| | 2005.03-2011.11 | MT | F | R | Hatchback FWD M 266.960 | Locking type:Bolt on;Hollow shaft | GDS35075 | Drive Shaft | | 25 | 22 | 60.5 | 42 | 944 | |
| | 2005.03-2011.11 | MT | F | L/R | Hatchback FWD M 266.960 | Locking type:Nut on | GCO35026 | Outer Joint | | 25 | 27 | 60 | 73.5 | 52 | I |
| | 2005.03-2011.11 | MT | F | L | Hatchback FWD M 266.960 | | GCI99136 | Inner Joint | | 22 | 27 | 36 | 55 | 100 | |
| | 2005.03-2011.11 | AT/MT | F | L/R | Hatchback FWD OM 640.941 | | GCO99037 | Outer Joint | | 25 | 25 | 60 | 73.5 | 58.5 | I |
| | 2005.03-2011.11 | CVT | F | L | Hatchback FWD OM 640.941 | | GDS84300 | Drive Shaft | | 25 | 27 | 60 | 73.5 | 608 | |
| | 2005.03-2011.11 | CVT | F | R | Hatchback FWD OM 640.941 | | GDS35055 | Drive Shaft | | 25 | 27 | 60 | 73.5 | 948 | |
| | 2005.03-2011.11 | CVT | F | L | Hatchback FWD OM 640.941 | | GCI82700 | Inner Joint | | 27 | 25 | 38 | 62 | 120 | |
| | 2005.03-2011.11 | CVT | F | R | Hatchback FWD OM 640.941 | | GCI35040 | Inner Joint | | 27 | 25 | 38 | 422 | 100 | |
| | 2005.03-2011.11 | MT | F | L | Hatchback FWD OM 640.941 | Collar Nut type on Outer Joint;Inner teeth of tranm.side:27 | GDS35066 | Drive Shaft | | 25 | 27 | 60 | 73.5 | 583 | |
| | 2005.03-2011.11 | MT | F | L | Hatchback FWD OM 640.941 | Bolt type on Outer Joint;Date from:2015.03,Chassis no. from:J116414 | GDS35076 | Drive Shaft | | 25 | 27 | 60.5 | 42 | 551 | |
| | 2005.03-2011.11 | MT | F | L | Hatchback FWD OM 640.941 | Collar Nut type on Outer Joint;Inner teeth of tranm.side:25 | GDS35078 | Drive Shaft | | 25 | 27 | 60 | 73.5 | 583 | |
| | 2005.03-2011.11 | MT | F | R | Hatchback FWD OM 640.941 | | GDS35081 | Drive Shaft | | 25 | 27 | 60 | 73.5 | 987 | |
| | 2005.03-2011.11 | MT | F | L | Hatchback FWD OM 640.941 | | GCI35014 | Inner Joint | | 27 | 25 | 38 | 62 | 102 | |
| 2.0 (103 kw) | 2005.03-2011.11 | AT/MT | F | L/R | Hatchback FWD OM 640.941 | Locking type:Bolt on | GCO35019 | Outer Joint | | 25 | 25 | 60.5 | 42 | 59 | I |
| | 2005.03-2011.11 | CVT | F | L | Hatchback FWD OM 640.941 | | GDS84300 | Drive Shaft | | 25 | 27 | 60 | 73.5 | 608 | |
| | 2005.03-2011.11 | CVT | F | R | Hatchback FWD OM 640.941 | | GDS35055 | Drive Shaft | | 25 | 27 | 60 | 73.5 | 948 | |
| | 2005.03-2011.11 | CVT | F | R | Hatchback FWD OM 640.941 | | GCO35030 | Outer Joint | | 25 | 25 | 60.4 | 74 | 56 | I |
| | 2005.03-2011.11 | CVT | F | L | Hatchback FWD OM 640.941 | | GCI82700 | Inner Joint | | 27 | 25 | 38 | 62 | 120 | |
| | 2005.03-2011.11 | CVT | F | R | Hatchback FWD OM 640.941 | | GCI35040 | Inner Joint | | 27 | 25 | 38 | 422 | 100 | |
| | 2005.03-2011.11 | MT | F | L | Hatchback FWD OM 640.941 | Locking type:Nut on;Inner teeth of tranm.side:27 | GDS35066 | Drive Shaft | | 25 | 27 | 60 | 73.5 | 583 | |
| | 2005.03-2011.11 | MT | F | L | Hatchback FWD OM 640.941 | Locking type:Bolt on;Date from:2015.03,Chassis no. from:J116414 | GDS35076 | Drive Shaft | | 25 | 27 | 60.5 | 42 | 551 | |
| | 2005.03-2011.11 | MT | F | L | Hatchback FWD OM 640.941 | Locking type:Nut on;Inner teeth of tranm.side:25 | GDS35078 | Drive Shaft | | 25 | 27 | 60 | 73.5 | 583 | |
| | 2005.03-2011.11 | MT | F | R | Hatchback FWD OM 640.941 | | GDS35081 | Drive Shaft | | 25 | 27 | 60 | 73.5 | 987 | |
| | 2005.03-2011.11 | MT | F | L/R | Hatchback FWD OM 640.941 | Locking type:Nut on | GCO99037 | Outer Joint | | 25 | 25 | 60 | 73.5 | 58.5 | I |
| | 2005.03-2011.11 | MT | F | L | Hatchback FWD OM 640.941 | | GCI35014 | Inner Joint | | 27 | 25 | 38 | 62 | 102 | |
| 2.0 (110 kw) | 2018.12- | 6MT | F | L | Hatchback FWD OM 654.920 | | GDS83980 | Drive Shaft | | 30 | 27 | 65 | 53 | 543 | |
| | 2018.12- | 6MT | F | R | Hatchback FWD OM 654.920 | | GDS83979 | Drive Shaft | | 30 | 27 | 65 | 53 | 509 | |

| | YEAR | TRANSM. | F/R | L/R | BODY STYLE & DRIVE TYPE & ENGINE | REMARKS | G-AP Ref. | PRODUCT | ABS | Technical Specifications A | B | C | H | L | P |
|---|---|---|---|---|---|---|---|---|---|---|---|---|---|---|---|
| **MERCEDES-BENZ** | | | | | | | | | | | | | | | |
| **B200** | | | | | | | | | | | | | | | |
| 2.0 (110 kw) | 2018.12- | 6MT | F | L | Hatchback FWD OM 654.920 | | GCI82443 | Inner Joint | | 27 | 28 | 38 | 65 | 109.5 | |
| | 2018.12- | 8AT/6MT | F | R | Hatchback FWD OM 654.920 | | GCO82462 | Outer Joint | | 30 | 26 | 65 | 53 | 62.5 | I |
| | 2018.12- | 8AT/6MT | F | R | Hatchback FWD OM 654.920 | | GCI82361 | Inner Joint | | 27 | 26 | 42 | | 136 | |
| | 2018.12- | 8DCT | F | L | Hatchback FWD OM 654.920 | Date to:2021.02 | GDS84230 | Drive Shaft | | 30 | 27 | 65 | 53 | 533 | |
| | 2018.12- | 8DCT | F | R | Hatchback FWD OM 654.920 | Date To:2021.02 | GDS83685 | Drive Shaft | | 30 | 27 | 65 | 53 | 501 | |
| | 2018.12- | 8DCT | F | L | Hatchback FWD OM 654.920 | Date to:2021.02 | GCI82332 | Inner Joint | | 27 | 26 | 38 | 65 | 104.5 | |
| | 2019.10-2021.09 | 8AT | F | L | Hatchback 4WD OM 654.920 | | GDS84230 | Drive Shaft | | 30 | 27 | 65 | 53 | 533 | |
| | 2019.10-2021.09 | 8AT | F | L/R | Hatchback 4WD OM 654.920 | | GCO82462 | Outer Joint | | 30 | 26 | 65 | 53 | 62.5 | I |
| | 2019.10-2021.09 | 8AT | F | L | Hatchback 4WD OM 654.920 | | GCI82332 | Inner Joint | | 27 | 26 | 38 | 65 | 104.5 | |
| | 2019.10-2021.09 | 8AT | F | R | Hatchback 4WD OM 654.920 | | GCI82361 | Inner Joint | | 27 | 26 | 42 | | 136 | |
| | 2019.10-2021.09 | 8AT | F | R | Hatchback 4WD OM 654.920 | | GDS82867 | Intermediate Shaft | | 27 | 27 | | | 503 | |
| | 2019.10-2021.09 | 8DCT | F | R | Hatchback 4WD OM 654.920 | | GDS83685 | Drive Shaft | | 30 | 27 | 65 | 53 | 501 | |
| 2.0 (115 kw) | 2012.11-2017.12 | 7AT/6MT | F | R | Hatchback FWD M 270.920 | Date from:2016.04 | GDS35104 | Drive Shaft | | 30 | 27 | 65 | 53 | 496 | |
| | 2012.11-2017.12 | 7AT/6MT | F | R | Hatchback FWD M 270.920 | Date to:2016.03 | GDS81470 | Drive Shaft | | 30 | 27 | 65 | 53 | 996 | |
| | 2012.11-2017.12 | 7AT/6MT | F | L/R | Hatchback FWD M 270.920 | | GCO61065 | Outer Joint | | 30 | 27 | 65 | 53 | 61.5 | M |
| | 2012.11-2017.12 | AT/MT | F | L | Hatchback FWD M 270.920 | | GDS35067 | Drive Shaft | | 30 | 27 | 65 | 53 | 535 | |
| | 2012.11-2017.12 | AT/MT | F | R | Hatchback FWD M 270.920 | Date From:2013.01 | GDS35068 | Drive Shaft | | 30 | 27 | 65 | 53 | 498 | |
| | 2012.11-2017.12 | AT/MT | F | L | Hatchback FWD M 270.920 | Date from:2013.01 | GCI61082 | Inner Joint | | 27 | 27 | 38 | 65 | 111.7 | |
| | 2012.11-2017.12 | AT/MT | F | R | Hatchback FWD M 270.920 | Date from:2013.01 | GCI35071 | Inner Joint | | 27 | 27 | 42.1 | 41.5 | 97.2 | |
| 2.0 (142 kw) | 2005.03-2011.11 | AT/MT | F | L/R | Hatchback FWD M 266.980 | | GCO35019 | Outer Joint | | 25 | 25 | 60.5 | 42 | 59 | I |
| | 2005.03-2011.11 | AT/MT | F | L/R | Hatchback FWD M 266.980 | | GCO99037 | Outer Joint | | 25 | 25 | 60 | 73.5 | 58.5 | I |
| | 2005.03-2011.11 | CVT | F | L | Hatchback FWD M 266.980 | | GDS84300 | Drive Shaft | | 25 | 27 | 60 | 73.5 | 608 | |
| | 2005.03-2011.11 | CVT | F | R | Hatchback FWD M 266.980 | | GDS35055 | Drive Shaft | | 25 | 27 | 60 | 73.5 | 948 | |
| | 2005.03-2011.11 | CVT | F | L | Hatchback FWD M 266.980 | | GCI82700 | Inner Joint | | 27 | 25 | 38 | 62 | 120 | |
| | 2005.03-2011.11 | CVT | F | R | Hatchback FWD M 266.980 | | GCI35040 | Inner Joint | | 27 | 25 | 38 | 422 | 100 | |
| | 2005.03-2011.11 | MT | F | L | Hatchback FWD M 266.980 | Collar Nut type on Outer Joint;Inner teeth of tranm.side:27 | GDS35066 | Drive Shaft | | 25 | 27 | 60 | 73.5 | 583 | |
| | 2005.03-2011.11 | MT | F | L | Hatchback FWD M 266.980 | Bolt type on Outer Joint;Date from:2015.03,Chassis no. from:J116414 | GDS35076 | Drive Shaft | | 25 | 27 | 60.5 | 42 | 551 | |
| | 2005.03-2011.11 | MT | F | L | Hatchback FWD M 266.980 | Collar Nut type on Outer Joint;Inner teeth of tranm.side:25 | GDS35078 | Drive Shaft | | 25 | 27 | 60 | 73.5 | 583 | |
| | 2005.03-2011.11 | MT | F | R | Hatchback FWD M 266.980 | | GDS35081 | Drive Shaft | | 25 | 27 | 60 | 73.5 | 987 | |
| | 2005.03-2011.11 | MT | F | L | Hatchback FWD M 266.980 | | GCI35014 | Inner Joint | | 27 | 25 | 38 | 62 | 102 | |
| 2.2 (100 kw) | 2014.08-2018.12 | AT/MT | F | L | Hatchback 4WD OM 651.930 | Inner teeth of tranm.side:27 | GDS35067 | Drive Shaft | | 30 | 27 | 65 | 53 | 535 | |
| | 2014.08-2018.12 | AT/MT | F | R | Hatchback 4WD OM 651.930 | Without Intermediate Shaft | GDS35068 | Drive Shaft | | 30 | 27 | 65 | 53 | 498 | |
| | 2014.08-2018.12 | AT/MT | F | R | Hatchback 4WD OM 651.930 | With Intermediate Shaft | GDS81470 | Drive Shaft | | 30 | 27 | 65 | 53 | 996 | |
| | 2014.08-2018.12 | AT/MT | F | L/R | Hatchback 4WD OM 651.930 | | GCO61065 | Outer Joint | | 30 | 27 | 65 | 53 | 61.5 | M |
| | 2014.08-2018.12 | AT/MT | F | L | Hatchback 4WD OM 651.930 | | GCI61082 | Inner Joint | | 27 | 27 | 38 | 65 | 111.7 | |
| | 2014.08-2018.12 | AT/MT | F | R | Hatchback 4WD OM 651.930 | | GCI35071 | Inner Joint | | 27 | 27 | 42.1 | 41.5 | 97.2 | |
| | 2014.08-2018.12 | AT/MT | F | R | Hatchback 4WD OM 651.930 | | GDS35140 | Intermediate Shaft | | 27 | 27 | | | 540 | |
| | 2014.08-2018.12 | AT/MT | F | L | Hatchback FWD OM 651.930 | Inner teeth of tranm.side:27 | GDS35067 | Drive Shaft | | 30 | 27 | 65 | 53 | 535 | |
| | 2014.08-2018.12 | AT/MT | F | R | Hatchback FWD OM 651.930 | Without Intermediate Shaft | GDS35068 | Drive Shaft | | 30 | 27 | 65 | 53 | 498 | |
| | 2014.08-2018.12 | AT/MT | F | R | Hatchback FWD OM 651.930 | With Intermediate Shaft | GDS81470 | Drive Shaft | | 30 | 27 | 65 | 53 | 996 | |
| | 2014.08-2018.12 | AT/MT | F | L/R | Hatchback FWD OM 651.930 | | GCO61065 | Outer Joint | | 30 | 27 | 65 | 53 | 61.5 | M |
| | 2014.08-2018.12 | AT/MT | F | L | Hatchback FWD OM 651.930 | | GCI61082 | Inner Joint | | 27 | 27 | 38 | 65 | 111.7 | |
| | 2014.08-2018.12 | AT/MT | F | R | Hatchback FWD OM 651.930 | | GCI35071 | Inner Joint | | 27 | 27 | 42.1 | 41.5 | 97.2 | |
| | 2014.08-2018.12 | AT/MT | F | R | Hatchback FWD OM 651.930 | | GDS35140 | Intermediate Shaft | | 27 | 27 | | | 540 | |
| **B220** | | | | | | | | | | | | | | | |
| 2.0 (135 kw) | 2013.05-2018.12 | 7AT/6MT | F | L/R | Hatchback 4WD M 270.920 | | GCO61065 | Outer Joint | | 30 | 27 | 65 | 53 | 61.5 | M |
| | 2013.05-2018.12 | 7DCT/6MT | F | L | Hatchback 4WD M 270.920 | | GDS35067 | Drive Shaft | | 30 | 27 | 65 | 53 | 535 | |
| | 2013.05-2018.12 | 7DCT/6MT | F | R | Hatchback 4WD M 270.920 | | GDS35068 | Drive Shaft | | 30 | 27 | 65 | 53 | 498 | |
| | 2013.05-2018.12 | 7DCT/6MT | F | R | Hatchback 4WD M 270.920 | | GDS81470 | Drive Shaft | | 30 | 27 | 65 | 53 | 996 | |
| 2.0 (140 kw) | 2018.12- | 8DCT | F | L/R | Hatchback FWD OM 654.920 | | GCO82746 | Outer Joint | | 30 | 27 | 65 | 53 | 64 | I |
| | 2019.01- | 7AT | F | L | Hatchback 4WD M 260.920 | | GDS84227 | Drive Shaft | | 30 | 27 | 65 | 53 | 546 | |
| | 2019.01- | 7AT | F | R | Hatchback 4WD M 260.920 | | GDS84228 | Drive Shaft | | 30 | 27 | 65 | 53 | 511 | |
| | 2019.01- | 7AT | F | L/R | Hatchback 4WD M 260.920 | | GCO82739 | Outer Joint | | 30 | 27 | 65 | 53 | 64 | M |
| | 2019.01- | 7AT | F | L | Hatchback 4WD M 260.920 | | GCI82443 | Inner Joint | | 27 | 28 | 38 | 65 | 109.5 | |
| | 2019.01- | 7AT | F | R | Hatchback 4WD M 260.920 | | GCI82442 | Inner Joint | | 27 | 28 | 42.4 | 49 | 91 | |
| | 2019.04- | 7AT | F | L | Hatchback FWD M 260.920 | | GDS84227 | Drive Shaft | | 30 | 27 | 65 | 53 | 546 | |
| | 2019.04- | 7AT | F | R | Hatchback FWD M 260.920 | | GDS84228 | Drive Shaft | | 30 | 27 | 65 | 53 | 511 | |
| | 2019.04- | 7AT | F | L/R | Hatchback FWD M 260.920 | | GCO82739 | Outer Joint | | 30 | 27 | 65 | 53 | 64 | M |
| | 2019.04- | 7AT | F | L | Hatchback FWD M 260.920 | | GCI82443 | Inner Joint | | 27 | 28 | 38 | 65 | 109.5 | |
| | 2019.04- | 7AT | F | R | Hatchback FWD M 260.920 | | GCI82442 | Inner Joint | | 27 | 28 | 42.4 | 49 | 91 | |
| | 2019.10- | 8DCT | F | L/R | Hatchback 4WD OM 654.920 | | GCO82746 | Outer Joint | | 30 | 27 | 65 | 53 | 64 | I |
| | 2022.10- | 8AT | F | L | Hatchback 4WD 260.920 | | GDS84227 | Drive Shaft | | 30 | 27 | 65 | 53 | 546 | |
| | 2022.10- | 8AT | F | R | Hatchback 4WD 260.920 | | GDS84228 | Drive Shaft | | 30 | 27 | 65 | 53 | 511 | |
| 2.2 (120 kw) | 2013.06-2018.12 | 7AT | F | R | Hatchback FWD OM 651.930 | | GDS35068 | Drive Shaft | | 30 | 27 | 65 | 53 | 498 | |
| | 2013.06-2018.12 | 7AT | F | R | Hatchback FWD OM 651.930 | | GDS81470 | Drive Shaft | | 30 | 27 | 65 | 53 | 996 | |

| | YEAR | TRANSM. | F/R | L/R | BODY STYLE & DRIVE TYPE & ENGINE | REMARKS | G-AP Ref. | PRODUCT | ABS | Technical Specifications A | B | C | H | L | P |
|---|---|---|---|---|---|---|---|---|---|---|---|---|---|---|---|
| **MERCEDES-BENZ** | | | | | | | | | | | | | | | |
| **B220** | | | | | | | | | | | | | | | |
| 2.2 (120 kw) | 2013.06-2018.12 | AT/MT | F | L | Hatchback FWD OM 651.930 | Date from:2014.01;Inner teeth of tranm.side:27 | GDS35067 | Drive Shaft | | 30 | 27 | 65 | 53 | 535 | |
| | 2013.06-2018.12 | AT/MT | F | L/R | Hatchback FWD OM 651.930 | | GCO61065 | Outer Joint | | 30 | 27 | 65 | 53 | 61.5 | M |
| | 2013.06-2018.12 | AT/MT | F | L | Hatchback FWD OM 651.930 | Date from:2014.01 | GCI61082 | Inner Joint | | 27 | 27 | 38 | 65 | 111.7 | |
| | 2013.06-2018.12 | AT/MT | F | R | Hatchback FWD OM 651.930 | Date from:2014.01 | GCI35071 | Inner Joint | | 27 | 27 | 42.1 | 41.5 | 97.2 | |
| | 2013.06-2018.12 | AT/MT | F | R | Hatchback FWD OM 651.930 | | GDS35140 | Intermediate Shaft | | 27 | 27 | | | 540 | |
| 2.2 (125 kw) | 2011.11-2018.12 | 7AT | F | R | Hatchback FWD OM 651.930 | | GDS35068 | Drive Shaft | | 30 | 27 | 65 | 53 | 498 | |
| | 2011.11-2018.12 | 7AT | F | R | Hatchback FWD OM 651.930 | | GDS81470 | Drive Shaft | | 30 | 27 | 65 | 53 | 996 | |
| | 2011.11-2018.12 | AT | F | L/R | Hatchback FWD OM 651.930 | | GCO61065 | Outer Joint | | 30 | 27 | 65 | 53 | 61.5 | M |
| | 2011.11-2018.12 | AT/MT | F | L | Hatchback FWD OM 651.930 | Inner teeth of tranm.side:27 | GDS35067 | Drive Shaft | | 30 | 27 | 65 | 53 | 535 | |
| | 2011.11-2018.12 | AT/MT | F | L | Hatchback FWD OM 651.930 | | GCI61082 | Inner Joint | | 27 | 27 | 38 | 65 | 111.7 | |
| | 2011.11-2018.12 | AT/MT | F | R | Hatchback FWD OM 651.930 | | GCI35071 | Inner Joint | | 27 | 27 | 42.1 | 41.5 | 97.2 | |
| | 2011.11-2018.12 | AT/MT | F | R | Hatchback FWD OM 651.930 | | GDS35140 | Intermediate Shaft | | 27 | 27 | | | 540 | |
| | 2018.06-2018.12 | 7AT/6MT | F | L | Hatchback 4WD OM 651.930 | Inner teeth of tranm.side:27 | GDS35067 | Drive Shaft | | 30 | 27 | 65 | 53 | 535 | |
| | 2018.06-2018.12 | 7AT/6MT | F | R | Hatchback 4WD OM 651.930 | Without Intermediate Shaft | GDS35068 | Drive Shaft | | 30 | 27 | 65 | 53 | 498 | |
| | 2018.06-2018.12 | 7AT/6MT | F | R | Hatchback 4WD OM 651.930 | With Intermediate Shaft | GDS81470 | Drive Shaft | | 30 | 27 | 65 | 53 | 996 | |
| | 2018.06-2018.12 | 7AT/6MT | F | L/R | Hatchback 4WD OM 651.930 | | GCO61065 | Outer Joint | | 30 | 27 | 65 | 53 | 61.5 | M |
| | 2018.06-2018.12 | AT/MT | F | L | Hatchback 4WD OM 651.930 | | GCI61082 | Inner Joint | | 27 | 27 | 38 | 65 | 111.7 | |
| | 2018.06-2018.12 | AT/MT | F | R | Hatchback 4WD OM 651.930 | | GCI35071 | Inner Joint | | 27 | 27 | 42.1 | 41.5 | 97.2 | |
| 2.2 (130 kw) | 2014.08-2018.12 | 7AT/6MT | F | L | Hatchback 4WD OM 651.930 | Inner teeth of tranm.side:27 | GDS35067 | Drive Shaft | | 30 | 27 | 65 | 53 | 535 | |
| | 2014.08-2018.12 | 7AT/6MT | F | R | Hatchback 4WD OM 651.930 | Without Intermediate Shaft | GDS35068 | Drive Shaft | | 30 | 27 | 65 | 53 | 498 | |
| | 2014.08-2018.12 | 7AT/6MT | F | R | Hatchback 4WD OM 651.930 | With Intermediate Shaft | GDS81470 | Drive Shaft | | 30 | 27 | 65 | 53 | 996 | |
| | 2014.08-2018.12 | AT/MT | F | L/R | Hatchback 4WD OM 651.930 | | GCO61065 | Outer Joint | | 30 | 27 | 65 | 53 | 61.5 | M |
| | 2014.08-2018.12 | AT/MT | F | L | Hatchback 4WD OM 651.930 | | GCI61082 | Inner Joint | | 27 | 27 | 38 | 65 | 111.7 | |
| | 2014.08-2018.12 | AT/MT | F | R | Hatchback 4WD OM 651.930 | | GCI35071 | Inner Joint | | 27 | 27 | 42.1 | 41.5 | 97.2 | |
| | 2014.08-2018.12 | AT/MT | F | R | Hatchback 4WD OM 651.930 | | GDS35140 | Intermediate Shaft | | 27 | 27 | | | 540 | |
| | 2014.08-2018.12 | AT/MT | F | L | Hatchback FWD OM 651.930 | | GCI61082 | Inner Joint | | 27 | 27 | 38 | 65 | 111.7 | |
| | 2014.08-2018.12 | AT/MT | F | R | Hatchback FWD OM 651.930 | | GCI35071 | Inner Joint | | 27 | 27 | 42.1 | 41.5 | 97.2 | |
| | 2014.08-2018.12 | AT/MT | F | R | Hatchback FWD OM 651.930 | | GDS35140 | Intermediate Shaft | | 27 | 27 | | | 540 | |
| | 2014.08-2018.12 | AT/MT/DCT | F | L/R | Hatchback FWD OM 651.930 | | GCO61065 | Outer Joint | | 30 | 27 | 65 | 53 | 61.5 | M |
| | 2014.08-2018.12 | MT/DCT | F | L | Hatchback FWD OM 651.930 | Inner teeth of tranm.side:27 | GDS35067 | Drive Shaft | | 30 | 27 | 65 | 53 | 535 | |
| | 2014.08-2018.12 | MT/DCT | F | R | Hatchback FWD OM 651.930 | Without Intermediate Shaft | GDS35068 | Drive Shaft | | 30 | 27 | 65 | 53 | 498 | |
| | 2014.08-2018.12 | MT/DCT | F | R | Hatchback FWD OM 651.930 | With Intermediate Shaft | GDS81470 | Drive Shaft | | 30 | 27 | 65 | 53 | 996 | |
| **B250** | | | | | | | | | | | | | | | |
| 1.3 (160 kw) | 2020.06- | 8AT | F | L | Hatchback FWD M 282.914 | | GDS57394 | Drive Shaft | | 30 | 27 | 65 | 53 | 544 | |
| | 2020.06- | 8AT | F | R | Hatchback FWD M 282.914 | | GDS84248 | Drive Shaft | | 30 | 27 | 65 | 53 | 514 | |
| | 2020.06- | 8AT | F | L | Hatchback FWD M 282.914 | | GCI83641 | Inner Joint | | 27 | 28 | 38 | 65 | 76.5 | |
| | 2020.06- | 8AT | F | R | Hatchback FWD M 282.914 | | GCI82657 | Inner Joint | | 27 | 28 | 42.2 | | 149.2 | |
| | 2020.06- | 8DCT | F | L/R | Hatchback FWD M 282.914 | | GCO82746 | Outer Joint | | 30 | 27 | 65 | 53 | 64 | I |
| | 2022.11- | 8AT | F | L | Hatchback FWD 282.814 | | GDS57394 | Drive Shaft | | 30 | 27 | 65 | 53 | 544 | |
| | 2022.11- | 8AT | F | R | Hatchback FWD 282.814 | | GDS84248 | Drive Shaft | | 30 | 27 | 65 | 53 | 514 | |
| | 2022.11- | 8AT | F | L | Hatchback FWD 282.814 | | GCI83641 | Inner Joint | | 27 | 28 | 38 | 65 | 76.5 | |
| 2.0 (155 kw) | 2012.05-2018.12 | 7AT/6MT | F | R | Hatchback FWD M 270.920 | | GDS81470 | Drive Shaft | | 30 | 27 | 65 | 53 | 996 | |
| | 2012.05-2018.12 | AT | F | L/R | Hatchback FWD M 270.920 | | GCO61065 | Outer Joint | | 30 | 27 | 65 | 53 | 61.5 | M |
| | 2012.05-2018.12 | MT/DCT | F | L | Hatchback FWD M 270.920 | | GDS35067 | Drive Shaft | | 30 | 27 | 65 | 53 | 535 | |
| | 2012.05-2018.12 | MT/DCT | F | R | Hatchback FWD M 270.920 | | GDS35068 | Drive Shaft | | 30 | 27 | 65 | 53 | 498 | |
| | 2014.08-2018.12 | 7DCT | F | L | Hatchback 4WD M 270.920 | | GDS35067 | Drive Shaft | | 30 | 27 | 65 | 53 | 535 | |
| | 2014.08-2018.12 | 7DCT | F | R | Hatchback 4WD M 270.920 | | GDS35068 | Drive Shaft | | 30 | 27 | 65 | 53 | 498 | |
| | 2014.08-2018.12 | 7DCT | F | R | Hatchback 4WD M 270.920 | | GDS81470 | Drive Shaft | | 30 | 27 | 65 | 53 | 996 | |
| | 2014.08-2018.12 | AT | F | L/R | Hatchback 4WD M 270.920 | | GCO61065 | Outer Joint | | 30 | 27 | 65 | 53 | 61.5 | M |
| 2.0 (165 kw) | 2019.01- | 7AT | F | L | Hatchback 4WD M 260.920 | | GDS84227 | Drive Shaft | | 30 | 27 | 65 | 53 | 546 | |
| | 2019.01- | 7AT | F | R | Hatchback 4WD M 260.920 | | GDS84228 | Drive Shaft | | 30 | 27 | 65 | 53 | 511 | |
| | 2019.01- | 7AT | F | L/R | Hatchback 4WD M 260.920 | | GCO82739 | Outer Joint | | 30 | 27 | 65 | 53 | 64 | M |
| | 2019.01- | 7AT | F | L | Hatchback 4WD M 260.920 | | GCI82443 | Inner Joint | | 27 | 28 | 38 | 65 | 109.5 | |
| | 2019.01- | 7AT | F | R | Hatchback 4WD M 260.920 | | GCI82442 | Inner Joint | | 27 | 28 | 42.4 | 49 | 91 | |
| | 2019.01- | 7AT | F | L | Hatchback FWD M 260.920 | | GDS84227 | Drive Shaft | | 30 | 27 | 65 | 53 | 546 | |
| | 2019.01- | 7AT | F | R | Hatchback FWD M 260.920 | | GDS84228 | Drive Shaft | | 30 | 27 | 65 | 53 | 511 | |
| | 2019.01- | 7AT | F | L/R | Hatchback FWD M 260.920 | | GCO82739 | Outer Joint | | 30 | 27 | 65 | 53 | 64 | M |
| | 2019.01- | 7AT | F | L | Hatchback FWD M 260.920 | | GCI82443 | Inner Joint | | 27 | 28 | 38 | 65 | 109.5 | |
| | 2019.01- | 7AT | F | R | Hatchback FWD M 260.920 | | GCI82442 | Inner Joint | | 27 | 28 | 42.4 | 49 | 91 | |
| | 2022.10- | 8AT | F | L | Hatchback 4WD 260.920 | | GDS84227 | Drive Shaft | | 30 | 27 | 65 | 53 | 546 | |
| | 2022.10- | 8AT | F | R | Hatchback 4WD 260.920 | | GDS84228 | Drive Shaft | | 30 | 27 | 65 | 53 | 511 | |
| **C160** | | | | | | | | | | | | | | | |
| 1.5 (95 kw) | 2019.06-2019.11 | 9AT | R | L/R | Estate RWD M 264.915 | | GDS83794 | Drive Shaft | | 27 | 27 | 68.5 | 72 | 782 | |
| | 2019.06-2021.05 | 9AT | R | L/R | Saloon RWD M 264.915 | | GDS83794 | Drive Shaft | | 27 | 27 | 68.5 | 72 | 782 | |
| 1.6 (95 kw) | 2015.04-2019.11 | 6MT | R | L | Estate RWD M 274.910 | | GDS83409 | Drive Shaft | | 27 | 27 | 68.5 | 72 | 785 | |

| | YEAR | TRANSM. | F/R | L/R | BODY STYLE & DRIVE TYPE & ENGINE | REMARKS | G-AP Ref. | PRODUCT | ABS | Technical Specifications A | B | C | H | L | P |
|---|---|---|---|---|---|---|---|---|---|---|---|---|---|---|---|
| **MERCEDES-BENZ** | | | | | | | | | | | | | | | |
| **C160** | | | | | | | | | | | | | | | |
| 1.6 (95 kw) | 2015.04-2019.11 | 6MT/7AT/9AT | R | L/R | Estate RWD M 274.910 | [illegible] | GDS83794 | Drive Shaft | | 27 | 27 | 68.5 | 72 | 782 | |
| | 2015.04-2019.11 | 7AT | R | R | Estate RWD M 274.910 | Date To:2016.10 | GDS35106 | Drive Shaft | | 27 | 27 | 68.5 | 72 | 785 | |
| | 2015.04-2019.11 | 6MT | R | L | Saloon RWD M 274.910 | Veh Prd Country:USA | GDS35109 | Drive Shaft | | 27 | 27 | 68.5 | 72 | 785 | |
| | 2015.04-2019.11 | 6MT/7AT/9AT | R | R | Saloon RWD M 274.910 | [illegible] | GDS83794 | Drive Shaft | | 27 | 27 | 68.5 | 72 | 782 | |
| | 2015.04-2019.11 | 7AT | R | L | Saloon RWD M 274.910 | Vehicle Production Country:USA | GDS83409 | Drive Shaft | | 27 | 27 | 68.5 | 72 | 785 | |
| | 2015.04-2019.11 | 7AT | R | R | Saloon RWD M 274.910 | Date to:2015.10,To Chassis:R134785,Veh Prd Country:South Africa | GDS35106 | Drive Shaft | | 27 | 27 | 68.5 | 72 | 785 | |
| 1.8 (90 kw) | 2002.05-2008.05 | 6MT/5AT/6AMT | R | L/R | Coupe RWD M 271.921 | | GDS35133 | Drive Shaft | 48NS | 25 | 27 | 64.9 | 70 | 731 | |
| **C180** | | | | | | | | | | | | | | | |
| 1.5 (115 kw) | 2019.06-2021.02 | 9AT | R | L/R | Estate RWD M 264.915 | | GDS83794 | Drive Shaft | | 27 | 27 | 68.5 | 72 | 782 | |
| | 2019.06-2021.05 | 9AT | R | L/R | Saloon RWD M 264.915 | | GDS83794 | Drive Shaft | | 27 | 27 | 68.5 | 72 | 782 | |
| | 2019.06-2023.04 | 9AT | R | L/R | Convertible RWD M 264.915 | | GDS83794 | Drive Shaft | | 27 | 27 | 68.5 | 72 | 782 | |
| | 2019.06-2023.04 | 9AT | R | L/R | Coupe RWD M 264.915 | | GDS83794 | Drive Shaft | | 27 | 27 | 68.5 | 72 | 782 | |
| 1.6 (85 kw) | 2014.05-2018.05 | 7AT | R | L | Saloon RWD OM 626.951 | Vehicle Production Country:USA/South Africa,Date to 2016.05 | GDS35109 | Drive Shaft | | 27 | 27 | 68.5 | 72 | 785 | |
| | 2014.05-2018.05 | 7AT | R | L | Saloon RWD OM 626.951 | Vehicle Production Country:USA/South Africa,Date from:2016.05,For other Country,Date from:2016.05 | GDS83409 | Drive Shaft | | 27 | 27 | 68.5 | 72 | 785 | |
| | 2014.05-2018.05 | 7AT | R | R | Saloon RWD OM 626.951 | For SA code:M013,Vehicle Production Country:USA/South Africa | GDS35106 | Drive Shaft | | 27 | 27 | 68.5 | 72 | 785 | |
| 1.6 (90 kw) | 2018.05-2021.02 | 9AT | R | L | Estate RWD OM 654.916 | | GDS83409 | Drive Shaft | | 27 | 27 | 68.5 | 72 | 785 | |
| | 2018.05-2021.02 | 9AT | R | R | Estate RWD OM 654.916 | | GDS83794 | Drive Shaft | | 27 | 27 | 68.5 | 72 | 782 | |
| | 2018.05-2021.02 | 9AT | R | L | Estate RWD OM 654.916 | | GCI82204 | Inner Joint | | 27 | 28 | 46.97 | 79.5 | 96.8 | |
| | 2018.05-2021.05 | 9AT | R | L | Saloon RWD OM 654.916 | | GDS83409 | Drive Shaft | | 27 | 27 | 68.5 | 72 | 785 | |
| | 2018.05-2021.05 | 9AT | R | R | Saloon RWD OM 654.916 | | GDS83794 | Drive Shaft | | 27 | 27 | 68.5 | 72 | 782 | |
| | 2018.05-2021.05 | 9AT | R | L | Saloon RWD OM 654.916 | | GCI82204 | Inner Joint | | 27 | 28 | 46.97 | 79.5 | 96.8 | |
| 1.6 (110 kw) | 2018.10-2021.03 | 9AT | R | L | Saloon RWD M 274.910 | For SA code:M013 | GDS83409 | Drive Shaft | | 27 | 27 | 68.5 | 72 | 785 | |
| | 2018.10-2021.03 | 9AT | R | L/R | Saloon RWD M 274.910 | | GDS83794 | Drive Shaft | | 27 | 27 | 68.5 | 72 | 782 | |
| | 2018.11-2020.08 | 9AT | R | L/R | Coupe RWD M 274.910 | | GDS83794 | Drive Shaft | | 27 | 27 | 68.5 | 72 | 782 | |
| 1.6 (115 kw) | 2008.01-2014.01 | 5AT/6MT | R | L/R | Saloon RWD M 271.910 | | GDS35134 | Drive Shaft | 48NS | 27 | 27 | 68 | 72 | 776 | |
| | 2008.01-2014.01 | 7AT/6MT | R | L/R | Saloon RWD M 274.910 | | GDS35134 | Drive Shaft | 48NS | 27 | 27 | 68 | 72 | 776 | |
| | 2008.01-2014.08 | 5AT/6MT | R | L/R | Estate RWD M 271.910 | | GDS35134 | Drive Shaft | 48NS | 27 | 27 | 68 | 72 | 776 | |
| | 2012.02-2014.08 | 7AT/6MT | R | L/R | Estate RWD M 274.910 | | GDS35134 | Drive Shaft | 48NS | 27 | 27 | 68 | 72 | 776 | |
| | 2013.01- | 7AT/6MT | R | L/R | Coupe RWD M 274.910 | | GDS35134 | Drive Shaft | 48NS | 27 | 27 | 68 | 72 | 776 | |
| | 2014.03-2021.03 | 6MT | R | L | Saloon RWD M 274.910 | Veh Prd Country:USA | GDS35109 | Drive Shaft | | 27 | 27 | 68.5 | 72 | 785 | |
| | 2014.03-2021.03 | 6MT | R | R | Saloon RWD M 274.910 | For SA code:056;Date To:2016.05;To Chassis:R195675,Veh Prd Country:USA | GDS35106 | Drive Shaft | | 27 | 27 | 68.5 | 72 | 785 | |
| | 2014.03-2021.03 | 6MT/7AT/9AT | R | L | Saloon RWD M 274.910 | Transmission:M47,For SA code:056/M013,Transmission:7AT,Veh Prd Country:USA,Transmission:M47,For SA code:M013 | GDS83409 | Drive Shaft | | 27 | 27 | 68.5 | 72 | 785 | |
| | 2014.03-2021.03 | 7AT | R | R | Saloon RWD M 274.910 | Date To:2015.10,To Chassis:R134785,Veh Prd Country:South Africa;Date To:2016.05,Veh Prd Country:USA | GDS35106 | Drive Shaft | | 27 | 27 | 68.5 | 72 | 785 | |
| | 2014.03-2021.03 | 9AT | R | L/R | Saloon RWD M 274.910 | | GDS83794 | Drive Shaft | | 27 | 27 | 68.5 | 72 | 782 | |
| | 2014.09-2020.08 | 6MT | R | L | Estate RWD M 274.910 | Model year to:2015;Inner teeth of tranm.side:27 | GDS35109 | Drive Shaft | | 27 | 27 | 68.5 | 72 | 785 | |
| | 2014.09-2020.08 | 6MT | R | L | Estate RWD M 274.910 | Inner teeth of tranm.side:28 | GDS83409 | Drive Shaft | | 27 | 27 | 68.5 | 72 | 785 | |
| | 2014.09-2020.08 | 6MT | R | R | Estate RWD M 274.910 | Model year to:2015 | GDS35106 | Drive Shaft | | 27 | 27 | 68.5 | 72 | 785 | |
| | 2014.09-2020.08 | 7AT | R | R | Estate RWD M 274.910 | For SA code:805/806 | GDS35106 | Drive Shaft | | 27 | 27 | 68.5 | 72 | 785 | |
| | 2014.09-2020.08 | 9AT | R | L/R | Estate RWD M 274.910 | | GDS83794 | Drive Shaft | | 27 | 27 | 68.5 | 72 | 782 | |
| | 2015.10-2020.08 | 6MT | R | L | Coupe RWD M 274.910 | Date from:2018.09 | GDS83409 | Drive Shaft | | 27 | 27 | 68.5 | 72 | 785 | |
| | 2015.10-2020.08 | 6MT | R | R | Coupe RWD M 274.910 | Date From:2018.09 | GDS83794 | Drive Shaft | | 27 | 27 | 68.5 | 72 | 782 | |
| | 2016.06-2020.08 | 6MT | R | L | Convertible RWD M 274.910 | Date from:2018.09 | GDS83409 | Drive Shaft | | 27 | 27 | 68.5 | 72 | 785 | |
| | 2016.06-2020.08 | 6MT | R | R | Convertible RWD M 274.910 | | GDS83794 | Drive Shaft | | 27 | 27 | 68.5 | 72 | 782 | |
| | 2016.06-2020.08 | 9AT | R | L | Convertible RWD M 274.910 | | GDS83794 | Drive Shaft | | 27 | 27 | 68.5 | 72 | 782 | |
| 1.8 (89 kw) | 1994.11-2000.05 | 5AT | R | L/R | Saloon RWD 111921 | for vehicles without ESP | GDS35006 | Drive Shaft | | 25 | | | 69 | 627 | |
| 1.8 (90 kw) | 1993.06-2000.10 | AT/MT | R | L/R | Saloon RWD 111920/111921 | Date from:1993.06,for vehicles without ETS,for vehicles without ASR,for vehicles without ASD | GDS35007 | Drive Shaft | | | | | | 630 | |
| | 1993.06-2000.10 | AT/MT | R | L/R | Saloon RWD 111920/111921 | Date from:1993.06,for vehicles without ETS,for vehicles without ASR,for vehicles without ASD | GCI85007 | Inner Joint | | | 24 | | | 27 | |
| | 1996.02-2000.10 | AT/MT | R | L/R | Estate RWD 111920/111921 | Without Stability Control System (ESP/DSC) | GDS35007 | Drive Shaft | | | | | | 630 | |
| | 1996.02-2000.10 | AT/MT | R | L/R | Estate RWD 111920/111921 | Without Stability Control System (ESP/DSC),Inner Teeth:24 | GCI85007 | Inner Joint | | | 24 | | | 27 | |
| 1.8 (105 kw) | 2002.05-2007.02 | 6MT/5AT/6AMT | R | L/R | Saloon RWD M 271.946 | | GDS35133 | Drive Shaft | 48NS | 25 | 27 | 64.9 | 70 | 731 | |
| | 2002.05-2007.08 | 6MT/5AT/6AMT | R | L/R | Estate RWD M 271.946 | | GDS35133 | Drive Shaft | 48NS | 25 | 27 | 64.9 | 70 | 731 | |
| | 2002.05-2008.05 | 6MT/5AT/6AMT | R | L/R | Coupe RWD M 271.946 | | GDS35133 | Drive Shaft | 48NS | 25 | 27 | 64.9 | 70 | 731 | |
| 1.8 (115 kw) | 2007.01-2009.01 | 5AT/7AT/6MT | R | L/R | Saloon RWD M 271.952 | | GDS35134 | Drive Shaft | 48NS | 27 | 27 | 68 | 72 | 776 | |
| | 2007.01-2014.01 | 5AT/7AT/6MT | R | L/R | Saloon RWD M 271.820 | | GDS35134 | Drive Shaft | 48NS | 27 | 27 | 68 | 72 | 776 | |
| | 2007.08-2014.08 | 5AT/7AT/6MT | R | L/R | Estate RWD M 271.952 | | GDS35134 | Drive Shaft | 48NS | 27 | 27 | 68 | 72 | 776 | |
| | 2009.11-2014.08 | 5AT/7AT/6MT | R | L/R | Estate RWD M 271.820 | | GDS35134 | Drive Shaft | 48NS | 27 | 27 | 68 | 72 | 776 | |
| | 2011.06- | AT | R | L/R | Coupe RWD M 271.820 | | GDS35134 | Drive Shaft | 48NS | 27 | 27 | 68 | 72 | 776 | |
| 2.0 (95 kw) | 2000.09-2001.03 | 5AT/6MT | R | L/R | Estate RWD 111952 | | GDS35007 | Drive Shaft | | | | | | 630 | |
| | 2000.09-2001.03 | | R | L/R | Estate RWD 111952 | | GCI35006 | Inner Joint | | | 25 | | | 26 | |
| | 2000.10-2002.05 | 6MT/5AT/6AMT | R | L/R | Saloon RWD M 111.951 | | GDS35133 | Drive Shaft | 48NS | 25 | 27 | 64.9 | 70 | 731 | |
| | 2001.03-2002.05 | 6MT/5AT/6AMT | R | L/R | Coupe RWD M 111.951 | | GDS35133 | Drive Shaft | 48NS | 25 | 27 | 64.9 | 70 | 731 | |
| | 2001.03-2002.05 | 6MT/5AT/6AMT | R | L/R | Estate RWD M 111.951 | | GDS35133 | Drive Shaft | 48NS | 25 | 27 | 64.9 | 70 | 731 | |
| 2.2 (88 kw) | 2010.04-2014.03 | 5AT/7AT | R | L/R | Saloon RWD OM 651.913 | | GDS35125 | Drive Shaft | 48NS | 27 | 27 | 68 | 72 | 771 | |
| | 2010.04-2014.08 | 5AT/7AT | R | L/R | Estate RWD OM 651.913 | | GDS35125 | Drive Shaft | 48NS | 27 | 27 | 68 | 72 | 771 | |

| | YEAR | TRANSM. | F/R | L/R | BODY STYLE & DRIVE TYPE & ENGINE | REMARKS | G-AP Ref. | PRODUCT | ABS | Technical Specifications A | B | C | H | L | P |
|---|---|---|---|---|---|---|---|---|---|---|---|---|---|---|---|
| **MERCEDES-BENZ** | | | | | | | | | | | | | | | |
| **C200** | | | | | | | | | | | | | | | |
| 1.5 (135 kw) | 2018.04-2021.02 | 9AT | F | L | Estate 4WD M 264.915 | | GDS83679 | Drive Shaft | | 30 | 27 | 71 | 56 | 526 | |
| | 2018.04-2021.02 | 9AT | F | L/R | Estate 4WD M 264.915 | 8 balls | GCO82353 | Outer Joint | | 30 | 25 | 71 | 56 | 53.5 | I |
| | 2018.04-2021.02 | 9AT | F | L | Estate 4WD M 264.915 | | GCI82159 | Inner Joint | | 27 | 24 | 41 | | 136.5 | |
| | 2018.04-2021.02 | 9AT | R | L/R | Estate 4WD M 264.915 | | GDS83794 | Drive Shaft | | 27 | 27 | 68.5 | 72 | 782 | |
| | 2018.04-2021.02 | 9AT | R | L/R | Estate RWD M 264.915 | | GDS83794 | Drive Shaft | | 27 | 27 | 68.5 | 72 | 782 | |
| | 2018.04-2021.05 | 9AT | F | L | Saloon 4WD M 264.915 | | GDS83679 | Drive Shaft | | 30 | 27 | 71 | 56 | 526 | |
| | 2018.04-2021.05 | 9AT | F | L/R | Saloon 4WD M 264.915 | 8 balls | GCO82353 | Outer Joint | | 30 | 25 | 71 | 56 | 53.5 | I |
| | 2018.04-2021.05 | 9AT | F | L | Saloon 4WD M 264.915 | | GCI82159 | Inner Joint | | 27 | 24 | 41 | | 136.5 | |
| | 2018.04-2021.05 | 9AT | R | R | Saloon 4WD M 264.915 | | GDS83794 | Drive Shaft | | 27 | 27 | 68.5 | 72 | 782 | |
| | 2018.04-2021.05 | 9AT | R | L | Saloon 4WD M 264.915 | | GCI82204 | Inner Joint | | 27 | 28 | 46.97 | 79.5 | 96.8 | |
| | 2018.04-2021.06 | 9AT | R | L | Saloon RWD M 264.915 | | GDS83409 | Drive Shaft | | 27 | 27 | 68.5 | 72 | 785 | |
| | 2018.04-2021.06 | 9AT | R | R | Saloon RWD M 264.915 | | GDS83794 | Drive Shaft | | 27 | 27 | 68.5 | 72 | 782 | |
| | 2018.04-2021.06 | 9AT | R | L | Saloon RWD M 264.915 | | GCI82204 | Inner Joint | | 27 | 28 | 46.97 | 79.5 | 96.8 | |
| | 2018.05-2023.04 | 9AT | F | L | Convertible 4WD M 264.915 | | GDS83679 | Drive Shaft | | 30 | 27 | 71 | 56 | 526 | |
| | 2018.05-2023.04 | 9AT | F | L/R | Convertible 4WD M 264.915 | 8 balls | GCO82353 | Outer Joint | | 30 | 25 | 71 | 56 | 53.5 | I |
| | 2018.05-2023.04 | 9AT | F | L | Convertible 4WD M 264.915 | | GCI82159 | Inner Joint | | 27 | 24 | 41 | | 136.5 | |
| | 2018.05-2023.04 | 9AT | R | L/R | Convertible 4WD M 264.915 | | GDS83794 | Drive Shaft | | 27 | 27 | 68.5 | 72 | 782 | |
| | 2018.05-2023.04 | 9AT | R | L/R | Convertible RWD M 264.915 | | GDS83794 | Drive Shaft | | 27 | 27 | 68.5 | 72 | 782 | |
| | 2018.05-2023.04 | 9AT | F | L | Coupe 4WD M 264.915 | | GDS83679 | Drive Shaft | | 30 | 27 | 71 | 56 | 526 | |
| | 2018.05-2023.04 | 9AT | F | L/R | Coupe 4WD M 264.915 | 8 balls | GCO82353 | Outer Joint | | 30 | 25 | 71 | 56 | 53.5 | I |
| | 2018.05-2023.04 | 9AT | F | L | Coupe 4WD M 264.915 | | GCI82159 | Inner Joint | | 27 | 24 | 41 | | 136.5 | |
| | 2018.05-2023.04 | 9AT | R | L/R | Coupe 4WD M 264.915 | | GDS83794 | Drive Shaft | | 27 | 27 | 68.5 | 72 | 782 | |
| | 2018.05-2023.04 | 9AT | R | L/R | Coupe RWD M 264.915 | | GDS83794 | Drive Shaft | | 27 | 27 | 68.5 | 72 | 782 | |
| 1.6 (100 kw) | 2014.05-2018.05 | 7AT | R | L | Saloon RWD OM 626.951 | Vehicle Production Country:USA/South Africa,Date to 2016.05 | GDS35109 | Drive Shaft | | 27 | 27 | 68.5 | 72 | 785 | |
| | 2014.05-2018.05 | 7AT | R | L | Saloon RWD OM 626.951 | Vehicle Production Country:USA/South Africa,Date from 2016.05 | GDS83409 | Drive Shaft | | 27 | 27 | 68.5 | 72 | 785 | |
| | 2014.05-2018.05 | 7AT | R | R | Saloon RWD OM 626.951 | For SA code:M013,Vehicle Production Country:USA/South Africa | GDS35106 | Drive Shaft | | 27 | 27 | 68.5 | 72 | 785 | |
| 1.6 (118 kw) | 2018.05-2021.02 | 9AT | R | L | Estate RWD OM 654.916 | | GDS83409 | Drive Shaft | | 27 | 27 | 68.5 | 72 | 785 | |
| | 2018.05-2021.02 | 9AT | R | R | Estate RWD OM 654.916 | | GDS83794 | Drive Shaft | | 27 | 27 | 68.5 | 72 | 782 | |
| | 2018.05-2021.02 | 9AT | R | L | Estate RWD OM 654.916 | | GCI82204 | Inner Joint | | 27 | 28 | 46.97 | 79.5 | 96.8 | |
| | 2018.05-2021.05 | 9AT | R | L | Saloon RWD OM 654.916 | | GDS83409 | Drive Shaft | | 27 | 27 | 68.5 | 72 | 785 | |
| | 2018.05-2021.05 | 9AT | R | R | Saloon RWD OM 654.916 | | GDS83794 | Drive Shaft | | 27 | 27 | 68.5 | 72 | 782 | |
| | 2018.05-2021.05 | 9AT | R | L | Saloon RWD OM 654.916 | | GCI82204 | Inner Joint | | 27 | 28 | 46.97 | 79.5 | 96.8 | |
| | 2018.07-2019.11 | 9AT | R | L | Convertible RWD OM 654.916 | | GDS83409 | Drive Shaft | | 27 | 27 | 68.5 | 72 | 785 | |
| | 2018.07-2019.11 | 9AT | R | R | Convertible RWD OM 654.916 | | GDS83794 | Drive Shaft | | 27 | 27 | 68.5 | 72 | 782 | |
| | 2018.07-2019.11 | 9AT | R | L | Convertible RWD OM 654.916 | | GCI82204 | Inner Joint | | 27 | 28 | 46.97 | 79.5 | 96.8 | |
| | 2018.07-2019.11 | 9AT | R | L | Coupe RWD OM 654.916 | | GDS83409 | Drive Shaft | | 27 | 27 | 68.5 | 72 | 785 | |
| | 2018.07-2019.11 | 9AT | R | R | Coupe RWD OM 654.916 | | GDS83794 | Drive Shaft | | 27 | 27 | 68.5 | 72 | 782 | |
| | 2018.07-2019.11 | 9AT | R | L | Coupe RWD OM 654.916 | | GCI82204 | Inner Joint | | 27 | 28 | 46.97 | 79.5 | 96.8 | |
| 1.8 (120 kw) | 2002.05-2007.02 | 6MT/5AT/6AMT | R | L/R | Saloon RWD M 271.940 | | GDS35133 | Drive Shaft | 48NS | 25 | 27 | 64.9 | 70 | 731 | |
| | 2002.05-2007.08 | 6MT/5AT/6AMT | R | L/R | Estate RWD M 271.940 | | GDS35133 | Drive Shaft | 48NS | 25 | 27 | 64.9 | 70 | 731 | |
| | 2002.05-2008.05 | 6MT/5AT/6AMT | R | L/R | Coupe RWD M 271.940 | | GDS35133 | Drive Shaft | 48NS | 25 | 27 | 64.9 | 70 | 731 | |
| 1.8 (125 kw) | 2003.03-2008.05 | 6MT/5AT/6AMT | R | L/R | Coupe RWD M 271.942 | | GDS35133 | Drive Shaft | 48NS | 25 | 27 | 64.9 | 70 | 731 | |
| | 2003.07-2007.02 | 6MT/5AT/6AMT | R | L/R | Saloon RWD M 271.942 | | GDS35133 | Drive Shaft | 48NS | 25 | 27 | 64.9 | 70 | 731 | |
| | 2003.07-2007.08 | 6MT/5AT/6AMT | R | L/R | Estate RWD M 271.942 | | GDS35133 | Drive Shaft | 48NS | 25 | 27 | 64.9 | 70 | 731 | |
| 1.8 (135 kw) | 2007.01-2014.01 | 5AT/7AT/6MT | R | L/R | Saloon RWD M 271.860;M 271.820 | | GDS35134 | Drive Shaft | 48NS | 27 | 27 | 68 | 72 | 776 | |
| | 2007.01-2014.01 | 5AT/7AT/6MT | R | L/R | Saloon RWD M 271.950 | | GDS35134 | Drive Shaft | 48NS | 27 | 27 | 68 | 72 | 776 | |
| | 2007.08-2014.08 | 5AT/7AT/6MT | R | L/R | Estate RWD M 271.860;M 271.820 | | GDS35134 | Drive Shaft | 48NS | 27 | 27 | 68 | 72 | 776 | |
| | 2007.08-2014.08 | AT | R | L/R | Estate RWD M 271.950 | | GDS35134 | Drive Shaft | 48NS | 27 | 27 | 68 | 72 | 776 | |
| | 2011.06- | AT | R | L/R | Coupe RWD M 271.860 | | GDS35134 | Drive Shaft | 48NS | 27 | 27 | 68 | 72 | 776 | |
| 1.8 (137 kw) | 2011.05-2014.01 | 7AT | R | L/R | Saloon RWD M 271.820 | | GDS35134 | Drive Shaft | 48NS | 27 | 27 | 68 | 72 | 776 | |
| 2.0 (55 kw) | 1993.06-2000.05 | AT/MT | R | L/R | Saloon RWD 601913 | Date from:1993.06;for vehicles without ETS;for vehicles without ASR;for vehicles without ADS | GDS35007 | Drive Shaft | | | | | | 630 | |
| 2.0 (65 kw) | 1995.07-2000.05 | 4AT/5MT | R | L/R | Estate RWD 604915 | for vehicles without ESP | GDS35006 | Drive Shaft | | 25 | | | 69 | 627 | |
| | 1995.07-2000.05 | | R | L/R | Estate RWD 604915 | | GCI35006 | Inner Joint | | | 25 | | | 26 | |
| | 1995.07-2000.05 | 4AT/5MT | R | L/R | Saloon RWD 604915 | for vehicles without ESP | GDS35006 | Drive Shaft | | 25 | | | 69 | 627 | |
| 2.0 (100 kw) | 1993.06-2000.05 | AT/MT | R | L/R | Saloon RWD 111941/111945 | for vehicles without ETS;for vehicles without ASR;for vehicles without ADS | GDS35007 | Drive Shaft | | | | | | 630 | |
| | 1993.06-2000.05 | AT/MT | R | L/R | Saloon RWD 111941/111945 | for vehicles without ETS;for vehicles without ASR;for vehicles without ADS | GCI85007 | Inner Joint | | | 24 | | | 27 | |
| | 1996.02-2000.10 | AT/MT | R | L/R | Estate RWD 111941/111945 | Date to:2000.10;for vehicles without ETS;for vehicles without ASR | GDS35007 | Drive Shaft | | | | | | 630 | |
| | 1996.02-2000.10 | | R | L/R | Estate RWD 111941/111945 | | GCI35006 | Inner Joint | | | 25 | | | 26 | |
| 2.0 (120 kw) | 2000.05-2002.06 | 5AT/6MT/SAT | R | L/R | Saloon RWD M 111.955 | | GCI99143 | Inner Joint | | | 27 | | | 28 | |
| | 2000.05-2002.06 | 6MT/5AT/6AMT | R | L/R | Saloon RWD M 111.955 | | GDS35133 | Drive Shaft | 48NS | 25 | 27 | 64.9 | 70 | 731 | |
| | 2000.09-2001.03 | | R | L/R | Estate RWD 111956 | | GCI35006 | Inner Joint | | | 25 | | | 26 | |
| | 2001.03-2002.05 | 5AT/6MT/SAT | R | L/R | Coupe RWD M 111.955 | | GCI99143 | Inner Joint | | | 27 | | | 28 | |
| | 2001.03-2002.05 | 6MT/5AT/6AMT | R | L/R | Coupe RWD M 111.955 | | GDS35133 | Drive Shaft | 48NS | 25 | 27 | 64.9 | 70 | 731 | |
| | 2001.03-2002.05 | 5AT/6MT/SAT | R | L/R | Estate RWD M 111.955 | | GCI99143 | Inner Joint | | | 27 | | | 28 | |
| | 2001.03-2002.05 | 6MT/5AT/6AMT | R | L/R | Estate RWD M 111.955 | | GDS35133 | Drive Shaft | 48NS | 25 | 27 | 64.9 | 70 | 731 | |

| | YEAR | TRANSM. | F/R | L/R | BODY STYLE & DRIVE TYPE & ENGINE | REMARKS | G-AP Ref. | PRODUCT | ABS | Technical Specifications A | B | C | H | L | P |
|---|---|---|---|---|---|---|---|---|---|---|---|---|---|---|---|
| **MERCEDES-BENZ** | | | | | | | | | | | | | | | |
| **C200** | | | | | | | | | | | | | | | |
| 2.0 (120 kw) | 2021.07- | 9AT | R | L/R | Estate RWD OM 654.820 | | GDS58223 | Drive Shaft | | 30 | 30 | 65 | 53 | 777 | |
| | 2021.07- | 9AT | R | L/R | Saloon RWD OM 654.820 | | GDS58223 | Drive Shaft | | 30 | 30 | 65 | 53 | 777 | |
| 2.0 (132 kw) | 1995.10-2000.05 | 5MT | R | L/R | Saloon RWD 111944 | for vehicles without ESP | GDS35006 | Drive Shaft | | 25 | | | 69 | 627 | |
| 2.0 (135 kw) | 2013.12-2018.08 | 6MT | R | L | Saloon RWD M 274.920 | Date to:2016.04 | GDS35109 | Drive Shaft | | 27 | 27 | 68.5 | 72 | 785 | |
| | 2013.12-2018.08 | 6MT | R | R | Saloon RWD M 274.920 | Date To:2016.05,To Chassis:R195675 | GDS35106 | Drive Shaft | | 27 | 27 | 68.5 | 72 | 785 | |
| | 2013.12-2018.08 | 7AT | R | L | Saloon RWD M 274.920 | Date to:2015.11;Vehicle Production Country:USA | GDS83409 | Drive Shaft | | 27 | 27 | 68.5 | 72 | 785 | |
| | 2013.12-2018.08 | 7AT | R | R | Saloon RWD M 274.920 | Veh Prd Country:South Africa | GDS35106 | Drive Shaft | | 27 | 27 | 68.5 | 72 | 785 | |
| | 2013.12-2018.08 | 9AT/6MT | R | L/R | Saloon RWD M 274.920 | | GDS83794 | Drive Shaft | | 27 | 27 | 68.5 | 72 | 782 | |
| | 2014.09-2018.05 | 6MT | R | L | Estate RWD M 274.920 | Date To:2016.04 | GDS35109 | Drive Shaft | | 27 | 27 | 68.5 | 72 | 785 | |
| | 2014.09-2018.05 | 6MT | R | R | Estate RWD M 274.920 | | GDS35109 | Drive Shaft | | 27 | 27 | 68.5 | 72 | 785 | |
| | 2014.09-2018.05 | 7AT | R | L | Estate RWD M 274.920 | Inner teeth of tranm.side:28 | GDS83794 | Drive Shaft | | 27 | 27 | 68.5 | 72 | 782 | |
| | 2014.09-2018.05 | 7AT | R | L/R | Estate RWD M 274.920 | Inner teeth of tranm.side:27 | GDS35106 | Drive Shaft | | 27 | 27 | 68.5 | 72 | 785 | |
| | 2014.09-2018.05 | 9AT | R | L/R | Estate RWD M 274.920 | Date from:2016.05 | GDS83794 | Drive Shaft | | 27 | 27 | 68.5 | 72 | 782 | |
| | 2015.04-2018.05 | 7AT | F | R | Estate 4WD M 274.920 | | GDS83231 | Drive Shaft | | 30 | 27 | 71 | 56 | 556 | |
| | 2015.04-2018.05 | 7AT/9AT | F | L | Estate 4WD M 274.920 | | GDS83679 | Drive Shaft | | 30 | 27 | 71 | 56 | 526 | |
| | 2015.04-2018.05 | AT | F | L/R | Estate 4WD M 274.920 | Neoprene | GCO82353 | Outer Joint | | 30 | 25 | 71 | 56 | 53.5 | I |
| | 2015.04-2018.05 | AT | F | L | Estate 4WD M 274.920 | | GCI82159 | Inner Joint | | 27 | 24 | 41 | | 136.5 | |
| | 2015.04-2018.05 | AT | F | R | Estate 4WD M 274.920 | | GCI82185 | Inner Joint | | 27 | 24 | 38 | 62 | 106 | |
| | 2015.04-2018.05 | 7AT | R | L | Estate 4WD M 274.920 | Date From:2016.05 | GDS35106 | Drive Shaft | | 27 | 27 | 68.5 | 72 | 785 | |
| | 2015.04-2018.05 | 7AT | R | L | Estate 4WD M 274.920 | Date To:2016.04 | GDS35109 | Drive Shaft | | 27 | 27 | 68.5 | 72 | 785 | |
| | 2015.04-2018.05 | 7AT | R | R | Estate 4WD M 274.920 | | GDS35106 | Drive Shaft | | 27 | 27 | 68.5 | 72 | 785 | |
| | 2015.04-2018.05 | 9AT | R | L | Estate 4WD M 274.920 | | GDS83794 | Drive Shaft | | 27 | 27 | 68.5 | 72 | 782 | |
| | 2015.04-2018.08 | 7AT | F | R | Saloon 4WD M 274.920 | For left-hand drive vehicles | GDS83231 | Drive Shaft | | 30 | 27 | 71 | 56 | 556 | |
| | 2015.04-2018.08 | 7AT | F | L/R | Saloon 4WD M 274.920 | Neoprene | GCO82353 | Outer Joint | | 30 | 25 | 71 | 56 | 53.5 | I |
| | 2015.04-2018.08 | 7AT | F | R | Saloon 4WD M 274.920 | | GCI82185 | Inner Joint | | 27 | 24 | 38 | 62 | 106 | |
| | 2015.04-2018.08 | 7AT/9AT | F | L | Saloon 4WD M 274.920 | | GDS83679 | Drive Shaft | | 30 | 27 | 71 | 56 | 526 | |
| | 2015.04-2018.08 | AT | F | L | Saloon 4WD M 274.920 | | GCI82159 | Inner Joint | | 27 | 24 | 41 | | 136.5 | |
| | 2015.04-2018.08 | 7AT | R | L | Saloon 4WD M 274.920 | Veh Prd Country:South Africa | GDS35109 | Drive Shaft | | 27 | 27 | 68.5 | 72 | 785 | |
| | 2015.04-2018.08 | 7AT | R | L | Saloon 4WD M 274.920 | For SA code:M013/M014;Vehicle Production Country:South Africa | GDS83409 | Drive Shaft | | 27 | 27 | 68.5 | 72 | 785 | |
| | 2015.04-2018.08 | 7AT | R | R | Saloon 4WD M 274.920 | | GDS35106 | Drive Shaft | | 27 | 27 | 68.5 | 72 | 785 | |
| | 2015.04-2018.08 | 9AT | R | L/R | Saloon 4WD M 274.920 | | GDS83794 | Drive Shaft | | 27 | 27 | 68.5 | 72 | 782 | |
| | 2015.10-2018.05 | 6MT | R | L | Coupe RWD M 274.920 | | GDS83409 | Drive Shaft | | 27 | 27 | 68.5 | 72 | 785 | |
| | 2015.10-2018.05 | 6MT | R | L | Coupe RWD M 274.920 | | GCI82204 | Inner Joint | | 27 | 28 | 46.97 | 79.5 | 96.8 | |
| | 2015.10-2018.05 | AT | R | L | Coupe RWD M 274.920 | Date from:2016.11 | GDS83794 | Drive Shaft | | 27 | 27 | 68.5 | 72 | 782 | |
| | 2016.04-2018.05 | 9AT | F | L | Coupe 4WD M 274.920 | | GDS83679 | Drive Shaft | | 30 | 27 | 71 | 56 | 526 | |
| | 2016.04-2018.05 | 9AT | F | L/R | Coupe 4WD M 274.920 | 8 balls | GCO82353 | Outer Joint | | 30 | 25 | 71 | 56 | 53.5 | I |
| | 2016.04-2018.05 | 9AT | F | L | Coupe 4WD M 274.920 | | GCI82159 | Inner Joint | | 27 | 24 | 41 | | 136.5 | |
| | 2016.04-2018.05 | 9AT | R | L | Coupe 4WD M 274.920 | | GDS83794 | Drive Shaft | | 27 | 27 | 68.5 | 72 | 782 | |
| | 2016.06-2018.05 | 9AT | F | L | Convertible 4WD M 274.920 | | GDS83679 | Drive Shaft | | 30 | 27 | 71 | 56 | 526 | |
| | 2016.06-2018.05 | 9AT | F | L | Convertible 4WD M 274.920 | | GCO82353 | Outer Joint | | 30 | 25 | 71 | 56 | 53.5 | I |
| | 2016.06-2018.05 | 9AT | F | L | Convertible 4WD M 274.920 | | GCI82159 | Inner Joint | | 27 | 24 | 41 | | 136.5 | |
| | 2016.06-2018.05 | 9AT | R | R | Convertible 4WD M 274.920 | | GDS83794 | Drive Shaft | | 27 | 27 | 68.5 | 72 | 782 | |
| | 2016.06-2018.05 | 9AT | R | L | Convertible RWD M 274.920 | | GDS83794 | Drive Shaft | | 27 | 27 | 68.5 | 72 | 782 | |
| 2.0 (141 kw) | 1995.09-2000.10 | 5AT/5MT | R | L/R | Estate RWD 111944 | | GDS35007 | Drive Shaft | | | | | | 630 | |
| | 1995.09-2000.10 | | R | L/R | Estate RWD 111944 | | GCI35006 | Inner Joint | | | 25 | | | 26 | |
| | 1995.10-2000.05 | AT/MT | R | L/R | Saloon RWD 111944 | | GDS35007 | Drive Shaft | | | | | | 630 | |
| | 1995.10-2000.05 | AT/MT | R | L/R | Saloon RWD 111944 | | GCI85007 | Inner Joint | | | 24 | | | 27 | |
| 2.0 (150 kw) | 2019.08-2021.05 | 9AT | F | L | Saloon 4WD M 264.920 | | GDS83679 | Drive Shaft | | 30 | 27 | 71 | 56 | 526 | |
| | 2019.08-2021.05 | 9AT | F | L/R | Saloon 4WD M 264.920 | 8 balls | GCO82353 | Outer Joint | | 30 | 25 | 71 | 56 | 53.5 | I |
| | 2019.08-2021.05 | 9AT | F | L | Saloon 4WD M 264.920 | | GCI82159 | Inner Joint | | 27 | 24 | 41 | | 136.5 | |
| | 2019.08-2021.05 | 9AT | R | L/R | Saloon 4WD M 264.920 | | GDS83794 | Drive Shaft | | 27 | 27 | 68.5 | 72 | 782 | |
| 2.2 (75 kw) | 2001.02-2003.06 | 5AT | R | L/R | Saloon RWD OM 611.962 | Chassis no. from:A436252/F339180/R077679/E012619;For taxis | GDS35110 | Drive Shaft | 48NS | 25 | 27 | 65 | 70 | 720 | |
| | 2001.02-2003.06 | 5AT/6MT | R | L/R | Saloon RWD OM 611.962 | | GCI99143 | Inner Joint | | | 27 | | | 28 | |
| | 2001.02-2003.06 | 6MT/5AT | R | L/R | Saloon RWD OM 611.962 | | GDS35133 | Drive Shaft | 48NS | 25 | 27 | 64.9 | 70 | 731 | |
| | 2001.03-2007.08 | 5AT | R | L/R | Estate RWD OM 611.962 | | GDS35110 | Drive Shaft | 48NS | 25 | 27 | 65 | 70 | 720 | |
| | 2001.03-2007.08 | 5AT/6MT | R | L/R | Estate RWD OM 611.962 | | GCI99143 | Inner Joint | | | 27 | | | 28 | |
| | 2001.03-2007.08 | 6MT | R | L/R | Estate RWD OM 611.962 | Chassis no. from:A171911/F244800;Chassis no. to:A407164/F326376 | GDS35133 | Drive Shaft | 48NS | 25 | 27 | 64.9 | 70 | 731 | |
| 2.2 (85 kw) | 2000.09-2003.06 | 5AT | R | L/R | Saloon RWD OM 611.962 | Chassis no. from:A436252/F339180/R077679/E012619;For taxis | GDS35110 | Drive Shaft | 48NS | 25 | 27 | 65 | 70 | 720 | |
| | 2000.09-2003.06 | 5AT/6MT | R | L/R | Saloon RWD OM 611.962 | | GDS35133 | Drive Shaft | 48NS | 25 | 27 | 64.9 | 70 | 731 | |
| | 2000.09-2003.06 | 5AT/6MT | R | L/R | Saloon RWD OM 611.962 | | GCI99143 | Inner Joint | | | 27 | | | 28 | |
| | 2001.03-2007.08 | 5AT | R | L/R | Estate RWD OM 611.962 | | GDS35110 | Drive Shaft | 48NS | 25 | 27 | 65 | 70 | 720 | |
| | 2001.03-2007.08 | 5AT/6MT | R | L/R | Estate RWD OM 611.962 | | GCI99143 | Inner Joint | | | 27 | | | 28 | |
| | 2001.03-2007.08 | 6MT | R | L/R | Estate RWD OM 611.962 | Chassis no. from:A171911/F244800;Chassis no. to:A407164/F326376 | GDS35133 | Drive Shaft | 48NS | 25 | 27 | 64.9 | 70 | 731 | |
| 2.2 (90 kw) | 2003.03-2008.05 | 6MT/5AT | R | L/R | Coupe RWD OM 646.962 | | GDS35133 | Drive Shaft | 48NS | 25 | 27 | 64.9 | 70 | 731 | |
| | 2003.04-2007.02 | 6MT/5AT | R | L/R | Saloon RWD OM 646.962;OM 646.963 | | GDS35133 | Drive Shaft | 48NS | 25 | 27 | 64.9 | 70 | 731 | |

# MERCEDES-BENZ

| Model | YEAR | TRANSM. | F/R | L/R | BODY STYLE & DRIVE TYPE & ENGINE | REMARKS | G-AP Ref. | PRODUCT | ABS | A | B | C | H | L | P |
|---|---|---|---|---|---|---|---|---|---|---|---|---|---|---|---|
| **C200** | | | | | | | | | | | | | | | |
| 2.2 (90 kw) | 2003.04-2007.08 | 6MT/5AT | R | L/R | Estate RWD OM 646.962;OM 646.963 | Transmission:6MT,Chassis no. from:A171911/F457375,Chassis no. to:A666025/F582998 | GDS35133 | Drive Shaft | 48NS | 25 | 27 | 64.9 | 70 | 731 | |
| 2.2 (100 kw) | 2007.01-2009.12 | 5AT | R | L/R | Saloon RWD OM 646.811;OM 646.812 | For taxis | GDS35125 | Drive Shaft | 48NS | 27 | 27 | 68 | 72 | 771 | |
| | 2007.01-2009.12 | AT/MT | R | L/R | Saloon RWD OM 646.811;OM 646.812 | Not for taxis | GDS35134 | Drive Shaft | 48NS | 27 | 27 | 68 | 72 | 776 | |
| | 2007.01-2009.12 | MT | R | L/R | Saloon RWD OM 646.811;OM 646.812 | For taxis | GDS35111 | Drive Shaft | 48NS | 27 | 27 | 68 | 72 | 771 | |
| | 2007.08-2009.12 | 5AT | R | L/R | Estate RWD OM 646.811 | For taxis | GDS35125 | Drive Shaft | 48NS | 27 | 27 | 68 | 72 | 771 | |
| | 2007.08-2009.12 | 5AT/6MT | R | L/R | Estate RWD OM 646.811 | For taxis | GDS35111 | Drive Shaft | 48NS | 27 | 27 | 68 | 72 | 771 | |
| | 2007.08-2009.12 | MT/5AT | R | L/R | Estate RWD OM 646.811 | Transmission:MT,For SA code:M006;Transmission:5AT | GDS35134 | Drive Shaft | 48NS | 27 | 27 | 68 | 72 | 776 | |
| | 2009.11-2014.03 | 5AT/7AT | R | L/R | Saloon RWD OM 651.913 | | GDS35125 | Drive Shaft | 48NS | 27 | 27 | 68 | 72 | 771 | |
| | 2010.08-2014.08 | 5AT/7AT | R | L/R | Estate RWD OM 651.913 | | GDS35125 | Drive Shaft | 48NS | 27 | 27 | 68 | 72 | 771 | |
| | 2015.10-2018.05 | 7AT | R | L | Estate RWD OM 651.921 | | GDS35109 | Drive Shaft | | 27 | 27 | 68.5 | 72 | 785 | |
| | 2015.10-2018.05 | 7AT | R | R | Estate RWD OM 651.921 | | GDS35106 | Drive Shaft | | 27 | 27 | 68.5 | 72 | 785 | |
| | 2015.10-2018.05 | 9AT | R | L | Estate RWD OM 651.921 | | GDS83409 | Drive Shaft | | 27 | 27 | 68.5 | 72 | 785 | |
| | 2015.10-2018.05 | 9AT | R | R | Estate RWD OM 651.921 | | GDS83794 | Drive Shaft | | 27 | 27 | 68.5 | 72 | 782 | |
| | 2015.10-2018.05 | 9AT | R | L/R | Estate RWD OM 651.921 | for Model year:2015/2016 | GDS83978 | Drive Shaft | | 27 | 27 | 68.5 | 72 | 787 | |
| | 2015.10-2018.05 | 9AT | R | L | Estate RWD OM 651.921 | | GCI82204 | Inner Joint | | 27 | 28 | 46.97 | 79.5 | 96.8 | |
| | 2015.10-2018.05 | 7AT | R | R | Saloon RWD OM 651.921 | Veh Prd Country:South Africa,Alt Version:2053504019 | GDS35106 | Drive Shaft | | 27 | 27 | 68.5 | 72 | 785 | |
| | 2015.10-2018.05 | 9AT | R | L | Saloon RWD OM 651.921 | | GDS83409 | Drive Shaft | | 27 | 27 | 68.5 | 72 | 785 | |
| | 2015.10-2018.05 | 9AT | R | R | Saloon RWD OM 651.921 | | GDS83794 | Drive Shaft | | 27 | 27 | 68.5 | 72 | 782 | |
| | 2015.10-2018.05 | 9AT | R | L/R | Saloon RWD OM 651.921 | for Model year:2015/2016 | GDS83978 | Drive Shaft | | 27 | 27 | 68.5 | 72 | 787 | |
| | 2015.10-2018.05 | 9AT | R | L | Saloon RWD OM 651.921 | | GCI82204 | Inner Joint | | 27 | 28 | 46.97 | 79.5 | 96.8 | |
| **C220** | | | | | | | | | | | | | | | |
| 2.0 (143 kw) | 2018.05-2021.02 | 9AT | F | L | Estate 4WD OM 654.920 | | GDS83679 | Drive Shaft | | 30 | 27 | 71 | 56 | 526 | |
| | 2018.05-2021.02 | 9AT | F | L/R | Estate 4WD OM 654.920 | 8 balls | GCO82353 | Outer Joint | | 30 | 25 | 71 | 56 | 53.5 | I |
| | 2018.05-2021.02 | 9AT | F | L | Estate 4WD OM 654.920 | | GCI82159 | Inner Joint | | 27 | 24 | 41 | | 136.5 | |
| | 2018.05-2021.05 | 9AT | F | L | Saloon 4WD OM 654.920 | | GDS83679 | Drive Shaft | | 30 | 27 | 71 | 56 | 526 | |
| | 2018.05-2021.05 | 9AT | F | L/R | Saloon 4WD OM 654.920 | 8 balls | GCO82353 | Outer Joint | | 30 | 25 | 71 | 56 | 53.5 | I |
| | 2018.05-2021.05 | 9AT | F | L | Saloon 4WD OM 654.920 | | GCI82159 | Inner Joint | | 27 | 24 | 41 | | 136.5 | |
| | 2018.06-2023.04 | 9AT | F | L | Convertible 4WD OM 654.920 | | GDS83679 | Drive Shaft | | 30 | 27 | 71 | 56 | 526 | |
| | 2018.06-2023.04 | 9AT | F | L/R | Convertible 4WD OM 654.920 | 8 balls | GCO82353 | Outer Joint | | 30 | 25 | 71 | 56 | 53.5 | I |
| | 2018.06-2023.04 | 9AT | F | L | Convertible 4WD OM 654.920 | | GCI82159 | Inner Joint | | 27 | 24 | 41 | | 136.5 | |
| | 2018.06-2023.04 | 9AT | F | L | Coupe 4WD OM 654.920 | | GDS83679 | Drive Shaft | | 30 | 27 | 71 | 56 | 526 | |
| | 2018.06-2023.04 | 9AT | F | L/R | Coupe 4WD OM 654.920 | 8 balls | GCO82353 | Outer Joint | | 30 | 25 | 71 | 56 | 53.5 | I |
| | 2018.06-2023.04 | 9AT | F | L | Coupe 4WD OM 654.920 | | GCI82159 | Inner Joint | | 27 | 24 | 41 | | 136.5 | |
| 2.0 (145 kw) | 2023.06- | 9AT | R | L/R | Estate RWD OM 654.820 | | GDS58223 | Drive Shaft | | 30 | 30 | 65 | 53 | 777 | |
| | 2023.06- | 9AT | R | L/R | Saloon RWD OM 654.820 | | GDS58223 | Drive Shaft | | 30 | 30 | 65 | 53 | 777 | |
| 2.0 (147 kw) | 2021.03- | 9AT | R | L/R | Estate RWD OM 654.820 | For Type code:206216 | GDS58118 | Drive Shaft | | 30 | 30 | | 53 | 777 | |
| | 2021.03- | 9AT | R | L/R | Estate RWD OM 654.820 | For Type code:206204 | GDS58223 | Drive Shaft | | 30 | 30 | 65 | 53 | 777 | |
| | 2021.03- | 9AT | R | L/R | Saloon RWD OM 654.820 | For Type code:206016 | GDS58118 | Drive Shaft | | 30 | 30 | | 53 | 777 | |
| | 2021.03- | 9AT | R | L/R | Saloon RWD OM 654.820 | For Type code:206004 | GDS58223 | Drive Shaft | | 30 | 30 | 65 | 53 | 777 | |
| 2.2 (55 kw) | 1996.07-1999.07 | 4AT/5MT | R | L/R | Estate RWD 604910 | | GDS35007 | Drive Shaft | | | | | | 630 | |
| | 1996.07-1999.07 | | R | L/R | Estate RWD 604910 | | GCI35006 | Inner Joint | | | 25 | | | 26 | |
| 2.2 (70 kw) | 1993.06-1998.06 | AT/MT | R | L/R | Saloon RWD 604910 | Date to:1998.06,for vehicles without ETS,for vehicles without ASR,for vehicles without ADS | GDS35007 | Drive Shaft | | | | | | 630 | |
| | 1993.06-1998.06 | AT/MT | R | L/R | Saloon RWD 604910 | Date to:1998.06,for vehicles without ETS,for vehicles without ASR,for vehicles without ADS | GCI85007 | Inner Joint | | | 24 | | | 27 | |
| | 1996.01-1998.05 | AT/MT | R | L/R | Estate RWD 604910 | Date to:1998.05;for vehicles without ETS;for vehicles without ASR | GDS35007 | Drive Shaft | | | | | | 630 | |
| | 1996.01-1998.05 | | R | L/R | Estate RWD 604910 | | GCI35006 | Inner Joint | | | 25 | | | 26 | |
| 2.2 (100 kw) | 2000.05-2007.02 | 5AT | R | L/R | Saloon RWD OM 611.962 | | GDS35110 | Drive Shaft | 48NS | 25 | 27 | 65 | 70 | 720 | |
| | 2000.05-2007.02 | 5AT/6MT | R | L/R | Saloon RWD OM 611.962 | | GCI99143 | Inner Joint | | | 27 | | | 28 | |
| | 2001.03-2004.01 | 5AT | R | L/R | Coupe RWD OM 611.962 | | GDS35110 | Drive Shaft | 48NS | 25 | 27 | 65 | 70 | 720 | |
| | 2001.03-2004.01 | 5AT/6MT | R | L/R | Coupe RWD OM 611.962 | | GCI99143 | Inner Joint | | | 27 | | | 28 | |
| | 2006.08-2007.08 | 5AT | R | L/R | Estate RWD OM 646.963 | Chassis no. to:A826739/F743167;For taxis | GDS35110 | Drive Shaft | 48NS | 25 | 27 | 65 | 70 | 720 | |
| 2.2 (105 kw) | 2000.05-2007.02 | 5AT/6MT | R | L/R | Saloon RWD OM 611.962;OM 646.963 | Transmission:5AT,For Enginecode:611962,For Enginecode:646963,Chassis no. to:A826740/F743167/R208367;Transmission:6MT,For Enginecode:646963,For taxis | GDS35110 | Drive Shaft | 48NS | 25 | 27 | 65 | 70 | 720 | |
| | 2000.05-2007.02 | 5AT/6MT/5AT | R | L/R | Saloon RWD OM 611.962;OM 646.963 | For Engine code:611962 | GCI99143 | Inner Joint | | | 27 | | | 28 | |
| | 2001.03-2004.01 | 5AT | R | L/R | Coupe RWD OM 611.962 | | GDS35110 | Drive Shaft | 48NS | 25 | 27 | 65 | 70 | 720 | |
| | 2001.03-2004.01 | 5AT/6MT/5AT | R | L/R | Coupe RWD OM 611.962 | | GCI99143 | Inner Joint | | | 27 | | | 28 | |
| | 2001.03-2007.08 | 5AT/6MT | R | L/R | Estate RWD OM 611.962;OM 646.963 | Transmission:5AT,For Enginecode:611962,For Enginecode:646963,Chassis no. to:A826740/F743167/R208367;Transmission:6MT,For Enginecode:646963,For taxis | GDS35110 | Drive Shaft | 48NS | 25 | 27 | 65 | 70 | 720 | |
| | 2001.03-2007.08 | 5AT/6MT/5AT | R | L/R | Estate RWD OM 611.962;OM 646.963 | For Engine code:611962 | GCI99143 | Inner Joint | | | 27 | | | 28 | |
| 2.2 (110 kw) | 1993.06-2000.05 | AT/MT | R | L/R | Saloon RWD 111961 | Date from:1993.06;for vehicles without ETS;for vehicles without ASR;for vehicles without ADS;for vehicles without ASD | GDS35007 | Drive Shaft | | | | | | 630 | |
| | 2003.04-2007.02 | | R | R | Saloon RWD OM 646.963 | Chassis no. to:A826740/F743167/R208367;For taxis | GDS35110 | Drive Shaft | 48NS | 25 | 27 | 65 | 70 | 720 | |
| | 2004.02-2007.08 | 5AT | R | L/R | Estate RWD OM 646.963 | Chassis no. to:A826739/F743167;For taxis | GDS35110 | Drive Shaft | 48NS | 25 | 27 | 65 | 70 | 720 | |
| | 2004.02-2008.05 | 5AT | R | L/R | Coupe RWD OM 646.963 | Chassis no. to:A826740;For taxis | GDS35110 | Drive Shaft | 48NS | 25 | 27 | 65 | 70 | 720 | |
| 2.2 (120 kw) | 2007.01-2008.11 | 5AT | R | L/R | Saloon RWD OM 646.811 | | GDS35125 | Drive Shaft | 48NS | 27 | 27 | 68 | 72 | 771 | |
| | 2007.01-2008.11 | MT | R | L/R | Saloon RWD OM 646.811 | | GDS35111 | Drive Shaft | 48NS | 27 | 27 | 68 | 72 | 771 | |
| | 2007.08-2008.11 | 5AT | R | L/R | Estate RWD OM 646.811 | | GDS35125 | Drive Shaft | 48NS | 27 | 27 | 68 | 72 | 771 | |
| | 2007.08-2008.11 | MT | R | L/R | Estate RWD OM 646.811 | | GDS35111 | Drive Shaft | 48NS | 27 | 27 | 68 | 72 | 771 | |
| | 2008.10-2014.01 | 7AT | R | L/R | Saloon RWD OM 651.911 | | GDS35125 | Drive Shaft | 48NS | 27 | 27 | 68 | 72 | 771 | |

| | YEAR | TRANSM. | F/R | L/R | BODY STYLE & DRIVE TYPE & ENGINE | REMARKS | G-AP Ref. | PRODUCT | ABS | Technical Specifications A | B | C | H | L | P |
|---|---|---|---|---|---|---|---|---|---|---|---|---|---|---|---|
| **MERCEDES-BENZ** | | | | | | | | | | | | | | | |
| **C220** | | | | | | | | | | | | | | | |
| 2.2 (120 kw) | 2008.10-2014.01 | 7AT/6MT | R | L/R | Saloon RWD OM 651.911 | Model year to:2010 | GDS83793 | Drive Shaft | 48NS | 27 | 30 | 68 | 72 | 767 | |
| | 2008.10-2014.01 | MT | R | L/R | Saloon RWD OM 651.911 | | GDS35111 | Drive Shaft | 48NS | 27 | 27 | 68 | 72 | 771 | |
| | 2008.12-2014.08 | 6MT | R | L/R | Estate RWD OM 651.911 | Model year to:2001 | GDS83793 | Drive Shaft | 48NS | 27 | 30 | 68 | 72 | 767 | |
| | 2008.12-2014.08 | 7AT | R | L/R | Estate RWD OM 651.911 | | GDS35111 | Drive Shaft | 48NS | 27 | 27 | 68 | 72 | 771 | |
| | 2011.06- | 7AT | R | L/R | Coupe RWD OM 651.911 | | GDS35125 | Drive Shaft | 48NS | 27 | 27 | 68 | 72 | 771 | |
| | 2011.06- | MT | R | L/R | Coupe RWD OM 651.911 | | GDS35111 | Drive Shaft | 48NS | 27 | 27 | 68 | 72 | 771 | |
| | 2014.03-2016.05 | 7AT | R | L | Saloon RWD OM 651.921 | Date To:2015.03 | GDS35109 | Drive Shaft | | 27 | 27 | 68.5 | 72 | 785 | |
| | 2014.03-2016.05 | 7AT | R | L | Saloon RWD OM 651.921 | Date from:2015.04 | GDS83409 | Drive Shaft | | 27 | 27 | 68.5 | 72 | 785 | |
| | 2014.03-2016.05 | 7AT | R | R | Saloon RWD OM 651.921 | Date To:2015.03,Veh Prd Country:USA,Veh Prd Country:South Africa,AR Version:2003/90/EC | GDS35106 | Drive Shaft | | 27 | 27 | 68.5 | 72 | 785 | |
| | 2014.03-2016.05 | 7AT | R | R | Saloon RWD OM 651.921 | Date from:2015.03,Veh Prd Country:USA,Veh Prd Country:South Africa,AR Version:2003/90/EC | GDS83794 | Drive Shaft | | 27 | 27 | 68.5 | 72 | 782 | |
| | 2014.03-2016.05 | 9AT | R | L/R | Saloon RWD OM 651.921 | | GDS83978 | Drive Shaft | | 27 | 27 | 68.5 | 72 | 787 | |
| | 2014.09-2018.05 | 7AT | R | L | Estate RWD OM 651.921 | | GDS35109 | Drive Shaft | | 27 | 27 | 68.5 | 72 | 785 | |
| | 2014.09-2018.05 | 7AT | R | R | Estate RWD OM 651.921 | | GDS35106 | Drive Shaft | | 27 | 27 | 68.5 | 72 | 785 | |
| 2.2 (125 kw) | 2007.01-2008.11 | 5AT | R | L/R | Saloon RWD OM 646.811 | | GDS35125 | Drive Shaft | 48NS | 27 | 27 | 68 | 72 | 771 | |
| | 2007.01-2008.11 | MT | R | L/R | Saloon RWD OM 646.811 | | GDS35111 | Drive Shaft | 48NS | 27 | 27 | 68 | 72 | 771 | |
| | 2007.08-2008.11 | 5AT | R | L/R | Estate RWD OM 646.811 | | GDS35125 | Drive Shaft | 48NS | 27 | 27 | 68 | 72 | 771 | |
| | 2007.08-2008.11 | MT | R | L/R | Estate RWD OM 646.811 | | GDS35111 | Drive Shaft | 48NS | 27 | 27 | 68 | 72 | 771 | |
| | 2008.12-2014.01 | 5AT/7AT | R | L/R | Saloon RWD OM 651.911 | | GDS35125 | Drive Shaft | 48NS | 27 | 27 | 68 | 72 | 771 | |
| | 2008.12-2014.01 | 5AT/7AT/6MT | R | L/R | Saloon RWD OM 651.911 | Model year to:2010 | GDS83793 | Drive Shaft | 48NS | 27 | 30 | 68 | 72 | 767 | |
| | 2008.12-2014.01 | MT | R | L/R | Saloon RWD OM 651.911 | | GDS35111 | Drive Shaft | 48NS | 27 | 27 | 68 | 72 | 771 | |
| | 2008.12-2014.08 | 5AT/7AT | R | L/R | Estate RWD OM 651.911 | | GDS35111 | Drive Shaft | 48NS | 27 | 27 | 68 | 72 | 771 | |
| | 2008.12-2014.08 | 5AT/7AT | R | L/R | Estate RWD OM 651.911 | | GDS35125 | Drive Shaft | 48NS | 27 | 27 | 68 | 72 | 771 | |
| | 2008.12-2014.08 | MT | R | L/R | Estate RWD OM 651.911 | Model year to:2001 | GDS83793 | Drive Shaft | 48NS | 27 | 30 | 68 | 72 | 767 | |
| | 2011.06- | 7AT | R | L/R | Coupe RWD OM 651.911 | | GDS35125 | Drive Shaft | 48NS | 27 | 27 | 68 | 72 | 771 | |
| | 2011.06- | MT | R | L/R | Coupe RWD OM 651.911 | | GDS35111 | Drive Shaft | 48NS | 27 | 27 | 68 | 72 | 771 | |
| | 2013.02-2014.01 | 7AT | F | R | Saloon 4WD OM 651.912 | | GDS35096 | Drive Shaft | | 30 | 27 | 71 | 56.5 | 529 | |
| | 2013.02-2014.01 | 7AT | F | L/R | Saloon 4WD OM 651.912 | for OE NO.:2043301400 | GCO35049 | Outer Joint | | 30 | 25 | 71 | 56.5 | 52 | I |
| | 2013.02-2014.01 | 7AT | F | R | Saloon 4WD OM 651.912 | | GCI99166 | Inner Joint | | 27 | 27 | 38 | 62 | 110.5 | |
| | 2013.02-2014.01 | AT/MT | F | L | Saloon 4WD OM 651.912 | | GDS81405 | Drive Shaft | | 30 | 34 | 71 | 56.5 | 497 | |
| | 2013.02-2014.01 | AT/MT | F | L | Saloon 4WD OM 651.912 | | GDS81696 | Intermediate Shaft | | 34 | 27 | | | 504.5 | |
| | 2013.02-2014.01 | 7AT | R | L/R | Saloon 4WD OM 651.912 | | GDS35134 | Drive Shaft | 48NS | 27 | 27 | 68 | 72 | 776 | |
| | 2013.02-2014.08 | 7AT | F | R | Estate 4WD OM 651.912 | | GDS35096 | Drive Shaft | | 30 | 27 | 71 | 56.5 | 529 | |
| | 2013.02-2014.08 | 7AT | F | L/R | Estate 4WD OM 651.912 | for OE NO.:2043301400 | GCO35049 | Outer Joint | | 30 | 25 | 71 | 56.5 | 52 | I |
| | 2013.02-2014.08 | 7AT | F | R | Estate 4WD OM 651.912 | | GCI99166 | Inner Joint | | 27 | 27 | 38 | 62 | 110.5 | |
| | 2013.02-2014.08 | AT/MT | F | L | Estate 4WD OM 651.912 | | GDS81405 | Drive Shaft | | 30 | 34 | 71 | 56.5 | 497 | |
| | 2013.02-2014.08 | AT/MT | F | L | Estate 4WD OM 651.912 | | GDS81696 | Intermediate Shaft | | 34 | 27 | | | 504.5 | |
| | 2013.02-2014.08 | 7AT | R | L/R | Estate 4WD OM 651.912 | | GDS35134 | Drive Shaft | 48NS | 27 | 27 | 68 | 72 | 776 | |
| | 2014.02-2018.05 | 7AT | R | L | Saloon RWD OM 651.921 | Date to:2015.03 | GDS35109 | Drive Shaft | | 27 | 27 | 68.5 | 72 | 785 | |
| | 2014.02-2018.05 | 7AT | R | L | Saloon RWD OM 651.921 | Date from:2015.04 | GDS83409 | Drive Shaft | | 27 | 27 | 68.5 | 72 | 785 | |
| | 2014.02-2018.05 | 7AT | R | R | Saloon RWD OM 651.921 | Date to:2015.03,Veh Prd Country:USA | GDS35106 | Drive Shaft | | 27 | 27 | 68.5 | 72 | 785 | |
| | 2014.02-2018.05 | 7AT/9AT | R | R | Saloon RWD OM 651.921 | Date from:2015.03,Veh Prd Country:USA,Veh Prd Country:South Africa,AR Version:2003/90/EC | GDS83794 | Drive Shaft | | 27 | 27 | 68.5 | 72 | 782 | |
| | 2014.02-2018.05 | 9AT | R | L/R | Saloon RWD OM 651.921 | For SA code:805/806 | GDS83978 | Drive Shaft | | 27 | 27 | 68.5 | 72 | 787 | |
| | 2014.09-2018.05 | 7AT | R | L | Estate RWD OM 651.921 | | GDS35109 | Drive Shaft | | 27 | 27 | 68.5 | 72 | 785 | |
| | 2014.09-2018.05 | 7AT | R | R | Estate RWD OM 651.921 | | GDS35106 | Drive Shaft | | 27 | 27 | 68.5 | 72 | 785 | |
| | 2014.09-2018.05 | 9AT | R | L | Estate RWD OM 651.921 | Not for SA code:805/806 | GDS83409 | Drive Shaft | | 27 | 27 | 68.5 | 72 | 785 | |
| | 2014.09-2018.05 | 9AT | R | R | Estate RWD OM 651.921 | Not for SA code:805/806 | GDS83794 | Drive Shaft | | 27 | 27 | 68.5 | 72 | 782 | |
| | 2014.09-2018.05 | 9AT | R | L/R | Estate RWD OM 651.921 | Model year to:2015,For SA code:805/806 | GDS83978 | Drive Shaft | | 27 | 27 | 68.5 | 72 | 787 | |
| | 2015.04-2018.05 | 7AT | F | R | Estate 4WD OM 651.921 | | GDS83231 | Drive Shaft | | 30 | 27 | 71 | 56 | 556 | |
| | 2015.04-2018.05 | 7AT | F | L/R | Estate 4WD OM 651.921 | Neoprene | GCO82353 | Outer Joint | | 30 | 25 | 71 | 56 | 53.5 | I |
| | 2015.04-2018.05 | 7AT | F | R | Estate 4WD OM 651.921 | | GCI82185 | Inner Joint | | 27 | 24 | 38 | 62 | 106 | |
| | 2015.04-2018.05 | 7AT/9AT | F | L | Estate 4WD OM 651.921 | | GDS83679 | Drive Shaft | | 30 | 27 | 71 | 56 | 526 | |
| | 2015.04-2018.05 | AT | F | L | Estate 4WD OM 651.921 | | GCI82159 | Inner Joint | | 27 | 24 | 41 | | 136.5 | |
| | 2015.04-2018.05 | 9AT | R | L | Estate 4WD OM 651.921 | Date to:2016.01 | GDS83794 | Drive Shaft | | 27 | 27 | 68.5 | 72 | 782 | |
| | 2015.04-2018.05 | 6MT/7AT/9AT | F | L | Saloon 4WD OM 651.921 | | GDS83679 | Drive Shaft | | 30 | 27 | 71 | 56 | 526 | |
| | 2015.04-2018.05 | 6MT/7AT/9AT | F | R | Saloon 4WD OM 651.921 | For left-hand drive vehicles | GDS83231 | Drive Shaft | | 30 | 27 | 71 | 56 | 556 | |
| | 2015.04-2018.05 | 7AT | F | L/R | Saloon 4WD OM 651.921 | Neoprene | GCO82353 | Outer Joint | | 30 | 25 | 71 | 56 | 53.5 | I |
| | 2015.04-2018.05 | 7AT | F | L | Saloon 4WD OM 651.921 | | GCI82159 | Inner Joint | | 27 | 24 | 41 | | 136.5 | |
| | 2015.04-2018.05 | 7AT | F | R | Saloon 4WD OM 651.921 | For left-hand drive vehicles | GCI82185 | Inner Joint | | 27 | 24 | 38 | 62 | 106 | |
| | 2015.04-2018.05 | 7AT | R | R | Saloon 4WD OM 651.921 | For SA code:805 | GDS83794 | Drive Shaft | | 27 | 27 | 68.5 | 72 | 782 | |
| | 2016.04-2018.05 | 9AT | F | L | Coupe 4WD OM 651.921 | | GDS83679 | Drive Shaft | | 30 | 27 | 71 | 56 | 526 | |
| | 2016.04-2018.05 | 9AT | F | L/R | Coupe 4WD OM 651.921 | 8 balls | GCO82353 | Outer Joint | | 30 | 25 | 71 | 56 | 53.5 | I |
| | 2016.04-2018.05 | 9AT | F | L | Coupe 4WD OM 651.921 | | GCI82159 | Inner Joint | | 27 | 24 | 41 | | 136.5 | |
| | 2016.06-2018.05 | 9AT | F | L | Convertible 4WD OM 651.921 | | GDS83679 | Drive Shaft | | 30 | 27 | 71 | 56 | 526 | |
| | 2016.06-2018.05 | 9AT | F | L/R | Convertible 4WD OM 651.921 | | GCO82353 | Outer Joint | | 30 | 25 | 71 | 56 | 53.5 | I |
| | 2016.06-2018.05 | 9AT | F | L | Convertible 4WD OM 651.921 | | GCI82159 | Inner Joint | | 27 | 24 | 41 | | 136.5 | |

| | YEAR | TRANSM. | F/R | L/R | BODY STYLE & DRIVE TYPE & ENGINE | REMARKS | G-AP Ref. | PRODUCT | ABS | Technical Specifications A | B | C | H | L | P |
|---|---|---|---|---|---|---|---|---|---|---|---|---|---|---|---|
| **MERCEDES-BENZ** | | | | | | | | | | | | | | | |
| **C230** | | | | | | | | | | | | | | | |
| 1.8 (120 kw) | 2002.05-2008.05 | 5AT/6AMT | R | L/R | Coupe RWD M 271.940 | | GDS35133 | Drive Shaft | 48NS | 25 | 27 | 64.9 | 70 | 731 | |
| 1.8 (141 kw) | 2002.05-2008.05 | 6MT/5AT/6AMT | R | L/R | Coupe RWD M 271.948 | | GDS35133 | Drive Shaft | 48NS | 25 | 27 | 64.9 | 70 | 731 | |
| | 2004.02-2007.02 | 6MT/5AT/6AMT | R | L/R | Saloon RWD M 271.948 | | GDS35133 | Drive Shaft | 48NS | 25 | 27 | 64.9 | 70 | 731 | |
| | 2004.02-2007.08 | 6MT/5AT/6AMT | R | L/R | Estate RWD M 271.948 | | GDS35133 | Drive Shaft | 48NS | 25 | 27 | 64.9 | 70 | 731 | |
| 2.3 (110 kw) | 1995.09-1997.06 | AT/MT | R | L/R | Saloon RWD 111974 | | GDS35007 | Drive Shaft | | | | | | 630 | |
| | 1995.09-1997.06 | AT/MT | R | L/R | Saloon RWD 111974 | | GCI35006 | Inner Joint | | | 25 | | | 26 | |
| | 1996.01-1998.06 | 5AT/5MT | R | L/R | Estate RWD 111974 | | GDS35007 | Drive Shaft | | | | | | 630 | |
| | 1996.01-1998.06 | AT/MT | R | L/R | Estate RWD 111974 | | GCI35006 | Inner Joint | | | 25 | | | 26 | |
| 2.3 (145 kw) | 2001.03-2002.05 | 5AT/6MT/SAT | R | L/R | Coupe RWD M 111.981 | | GCI99143 | Inner Joint | | | 27 | | | 28 | |
| | 2001.03-2002.05 | 6MT/5AT | R | L/R | Coupe RWD M 111.981 | | GDS35133 | Drive Shaft | 48NS | 25 | 27 | 64.9 | 70 | 731 | |
| 2.5 (150 kw) | 2005.01-2007.02 | 6MT | R | L/R | Saloon RWD M 272.920 | | GDS35133 | Drive Shaft | 48NS | 25 | 27 | 64.9 | 70 | 731 | |
| | 2005.01-2007.08 | 6MT | R | L/R | Estate RWD M 272.920 | | GDS35133 | Drive Shaft | 48NS | 25 | 27 | 64.9 | 70 | 731 | |
| | 2005.01-2008.05 | 6MT/7AT | R | L/R | Coupe RWD M 272.920 | | GDS35133 | Drive Shaft | 48NS | 25 | 27 | 64.9 | 70 | 731 | |
| | 2007.01-2014.01 | AT | R | L/R | Saloon RWD M 272.921 | | GDS35134 | Drive Shaft | 48NS | 27 | 27 | 68 | 72 | 776 | |
| | 2007.07-2014.01 | 7AT | F | L | Saloon 4WD M 272.911 | | GDS81405 | Drive Shaft | | 30 | 34 | 71 | 56.5 | 497 | |
| | 2007.07-2014.01 | 7AT | F | R | Saloon 4WD M 272.911 | | GDS35096 | Drive Shaft | | 30 | 27 | 71 | 56.5 | 529 | |
| | 2007.07-2014.01 | 7AT | F | R | Saloon 4WD M 272.911 | | GCI99166 | Inner Joint | | 27 | 27 | 38 | 62 | 110.5 | |
| | 2007.07-2014.01 | AT | F | L/R | Saloon 4WD M 272.911 | for OE NO.:2043301400 | GCO35049 | Outer Joint | | 30 | 25 | 71 | 56.5 | 52 | I |
| | 2007.07-2014.01 | AT/MT | F | L | Saloon 4WD M 272.911 | | GDS81696 | Intermediate Shaft | | 34 | 27 | | | 504.5 | |
| | 2007.07-2014.01 | AT | R | L/R | Saloon 4WD M 272.911 | | GDS35134 | Drive Shaft | 48NS | 27 | 27 | 68 | 72 | 776 | |
| | 2007.08-2014.08 | AT | R | L/R | Estate RWD M 272.921 | | GDS35134 | Drive Shaft | 48NS | 27 | 27 | 68 | 72 | 776 | |
| **C240** | | | | | | | | | | | | | | | |
| 2.4 (125 kw) | 1997.04-2000.10 | | R | L/R | Estate RWD 112910 | | GCI35006 | Inner Joint | | | 25 | | | 26 | |
| 2.6 (125 kw) | 2000.05-2007.02 | 5AT/6MT | R | L/R | Saloon RWD M 112.912 | [illegible] | GDS35133 | Drive Shaft | 48NS | 25 | 27 | 64.9 | 70 | 731 | |
| | 2000.09-2001.03 | | R | L/R | Estate RWD 112915 | | GCI35006 | Inner Joint | | | 25 | | | 26 | |
| | 2001.03-2007.08 | 6MT/5AT/6AMT | R | L/R | Estate RWD M 112.912 | | GDS35133 | Drive Shaft | 48NS | 25 | 27 | 64.9 | 70 | 731 | |
| | 2002.07-2007.02 | 5AT | F | L | Saloon 4WD M 112.916 | | GDS83871 | Drive Shaft | 48NS | 35 | 34 | 66.6 | 42 | 487 | |
| | 2002.07-2007.02 | 5AT | F | R | Saloon 4WD M 112.916 | | GDS83872 | Drive Shaft | 48NS | 35 | 24 | 66.6 | 42 | 509 | |
| | 2002.07-2007.02 | 5AT | F | L/R | Saloon 4WD M 112.916 | | GCO82527 | Outer Joint | 48NS | 35 | 27 | 66.6 | 42 | 53 | I |
| | 2002.07-2007.02 | 5AT | F | L | Saloon 4WD M 112.916 | | GCI81451 | Inner Joint | | 34 | 27 | 37.5 | | 141 | |
| | 2002.07-2007.02 | 5AT | F | R | Saloon 4WD M 112.916 | | GCI82404 | Inner Joint | | 24 | 27 | 37.95 | 58.5 | 104.5 | |
| | 2002.07-2007.02 | 5AT | R | L/R | Saloon 4WD M 112.916 | | GDS35133 | Drive Shaft | 48NS | 25 | 27 | 64.9 | 70 | 731 | |
| | 2002.07-2007.08 | 5AT | F | L | Estate 4WD M 112.916 | | GDS83871 | Drive Shaft | 48NS | 35 | 34 | 66.6 | 42 | 487 | |
| | 2002.07-2007.08 | 5AT | F | R | Estate 4WD M 112.916 | | GDS83872 | Drive Shaft | 48NS | 35 | 24 | 66.6 | 42 | 509 | |
| | 2002.07-2007.08 | 5AT | F | L/R | Estate 4WD M 112.916 | | GCO82527 | Outer Joint | 48NS | 35 | 27 | 66.6 | 42 | 53 | I |
| | 2002.07-2007.08 | 5AT | F | L | Estate 4WD M 112.916 | | GCI81451 | Inner Joint | | 34 | 27 | 37.5 | | 141 | |
| | 2002.07-2007.08 | 5AT | F | R | Estate 4WD M 112.916 | | GCI82404 | Inner Joint | | 24 | 27 | 37.95 | 58.5 | 104.5 | |
| | 2002.07-2007.08 | 5AT | R | L/R | Estate 4WD M 112.916 | | GDS35133 | Drive Shaft | 48NS | 25 | 27 | 64.9 | 70 | 731 | |
| **C250** | | | | | | | | | | | | | | | |
| 1.8 (150 kw) | 2009.07-2014.01 | 7AT | R | L/R | Saloon RWD M 271.860 | | GDS35111 | Drive Shaft | 48NS | 27 | 27 | 68 | 72 | 771 | |
| | 2009.07-2014.08 | 5AT/7AT/6MT | R | L/R | Estate RWD M 271.860 | | GDS35111 | Drive Shaft | 48NS | 27 | 27 | 68 | 72 | 771 | |
| | 2011.06- | 7AT | R | L/R | Coupe RWD M 271.860 | | GDS35111 | Drive Shaft | 48NS | 27 | 27 | 68 | 72 | 771 | |
| 2.0 (155 kw) | 2014.03-2018.05 | 6MT | R | L | Saloon RWD M 274.920 | Date to:2016.04 | GDS35109 | Drive Shaft | | 27 | 27 | 68.5 | 72 | 785 | |
| | 2014.03-2018.05 | 6MT | R | R | Saloon RWD M 274.920 | Date to:2016.05,To Chassis:R195675 | GDS35106 | Drive Shaft | | 27 | 27 | 68.5 | 72 | 785 | |
| | 2014.03-2018.05 | 7AT | R | L | Saloon RWD M 274.920 | Date to:2015.11;Vehicle Production Country:USA | GDS83409 | Drive Shaft | | 27 | 27 | 68.5 | 72 | 785 | |
| | 2014.03-2018.05 | 7AT | R | R | Saloon RWD M 274.920 | Veh Prd Country:South Africa | GDS35106 | Drive Shaft | | 27 | 27 | 68.5 | 72 | 785 | |
| | 2014.03-2018.05 | 9AT/6MT | R | L/R | Saloon RWD M 274.920 | [illegible] | GDS83794 | Drive Shaft | | 27 | 27 | 68.5 | 72 | 782 | |
| | 2014.09-2018.05 | 6MT | R | L | Estate RWD M 274.920 | Model year to:2015 | GDS35109 | Drive Shaft | | 27 | 27 | 68.5 | 72 | 785 | |
| | 2014.09-2018.05 | 7AT | R | L/R | Estate RWD M 274.920 | | GDS35106 | Drive Shaft | | 27 | 27 | 68.5 | 72 | 785 | |
| | 2014.09-2018.05 | 9AT | R | L/R | Estate RWD M 274.920 | Date from:2016.05 | GDS83794 | Drive Shaft | | 27 | 27 | 68.5 | 72 | 782 | |
| | 2015.10-2018.05 | 9AT | R | L | Coupe RWD M 274.920 | | GDS83794 | Drive Shaft | | 27 | 27 | 68.5 | 72 | 782 | |
| | 2016.06-2018.05 | 9AT | R | L | Convertible RWD M 274.920 | | GDS83794 | Drive Shaft | | 27 | 27 | 68.5 | 72 | 782 | |
| 2.2 (150 kw) | 2008.08-2014.01 | 5AT/7AT/6MT | R | L/R | Saloon RWD OM 651.911 | Model year to:2010 | GDS83792 | Drive Shaft | 48NS | 27 | 30 | 68 | 72 | 768 | |
| | 2008.08-2014.01 | 5AT/7AT/6MT | R | L/R | Saloon RWD OM 651.911 | Model year from:2011 | GDS83793 | Drive Shaft | 48NS | 27 | 30 | 68 | 72 | 767 | |
| | 2009.01-2014.08 | 5AT/7AT | R | L/R | Estate RWD OM 651.911 | For SA code:800/801/809 | GDS83793 | Drive Shaft | 48NS | 27 | 30 | 68 | 72 | 767 | |
| | 2009.01-2014.08 | 6MT | R | L/R | Estate RWD OM 651.911 | | GDS83792 | Drive Shaft | 48NS | 27 | 30 | 68 | 72 | 768 | |
| | 2010.04-2014.08 | 5AT/7AT | F | L | Estate 4WD OM 651.912 | | GDS81405 | Drive Shaft | | 30 | 34 | 71 | 56.5 | 497 | |
| | 2010.04-2014.08 | 5AT/7AT | F | R | Estate 4WD OM 651.912 | | GDS35096 | Drive Shaft | | 30 | 27 | 71 | 56.5 | 529 | |
| | 2010.04-2014.08 | 5AT/7AT | F | R | Estate 4WD OM 651.912 | | GCI99166 | Inner Joint | | 27 | 27 | 38 | 62 | 110.5 | |
| | 2010.04-2014.08 | 7AT | F | L/R | Estate 4WD OM 651.912 | for OE NO.:2043301400 | GCO35049 | Outer Joint | | 30 | 25 | 71 | 56.5 | 52 | I |
| | 2010.04-2014.08 | AT | R | L/R | Estate 4WD OM 651.912 | | GDS35134 | Drive Shaft | 48NS | 27 | 27 | 68 | 72 | 776 | |
| | 2011.01-2014.01 | 7AT | F | L | Saloon 4WD OM 651.912 | | GDS81405 | Drive Shaft | | 30 | 34 | 71 | 56.5 | 497 | |
| | 2011.01-2014.01 | 7AT | F | R | Saloon 4WD OM 651.912 | | GDS35096 | Drive Shaft | | 30 | 27 | 71 | 56.5 | 529 | |
| | 2011.01-2014.01 | 7AT | F | L/R | Saloon 4WD OM 651.912 | for OE NO.:2043301400 | GCO35049 | Outer Joint | | 30 | 25 | 71 | 56.5 | 52 | I |
| | 2011.01-2014.01 | 7AT | F | R | Saloon 4WD OM 651.912 | | GCI99166 | Inner Joint | | 27 | 27 | 38 | 62 | 110.5 | |

| | YEAR | TRANSM. | F/R | L/R | BODY STYLE & DRIVE TYPE & ENGINE | REMARKS | G-AP Ref. | PRODUCT | ABS | A | B | C | H | L | P |
|---|---|---|---|---|---|---|---|---|---|---|---|---|---|---|---|
| **MERCEDES-BENZ** | | | | | | | | | | | | | | | |
| **C250** | | | | | | | | | | | | | | | |
| 2.2 (150 kw) | 2011.01-2014.01 | AT/MT | F | L | Saloon 4WD OM 651.912 | | GDS81696 | Intermediate Shaft | | 34 | 27 | | | 504.5 | |
| | 2011.01-2014.01 | AT | R | L/R | Saloon 4WD OM 651.912 | | GDS35134 | Drive Shaft | 48NS | 27 | 27 | 68 | 72 | 776 | |
| | 2011.06- | AT | R | L/R | Coupe RWD OM 651.911 | | GDS83793 | Drive Shaft | 48NS | 27 | 30 | 68 | 72 | 767 | |
| | 2011.06- | MT | R | L/R | Coupe RWD OM 651.911 | | GDS83792 | Drive Shaft | 48NS | 27 | 30 | 68 | 72 | 768 | |
| | 2014.02-2018.05 | 6MT/7AT/9AT | F | L | Saloon 4WD OM 651.921 | | GDS83679 | Drive Shaft | | 30 | 27 | 71 | 56 | 526 | |
| | 2014.02-2018.05 | 6MT/7AT/9AT | F | R | Saloon 4WD OM 651.921 | For left-hand drive vehicles | GDS83231 | Drive Shaft | | 30 | 27 | 71 | 56 | 556 | |
| | 2014.02-2018.05 | 7AT | F | L/R | Saloon 4WD OM 651.921 | Neoprene | GCO82353 | Outer Joint | | 30 | 25 | 71 | 56 | 53.5 | I |
| | 2014.02-2018.05 | 7AT | F | R | Saloon 4WD OM 651.921 | | GCI82185 | Inner Joint | | 27 | 24 | 38 | 62 | 106 | |
| | 2014.02-2018.05 | AT | F | L | Saloon 4WD OM 651.921 | | GCI82159 | Inner Joint | | 27 | 24 | 41 | | 136.5 | |
| | 2014.02-2018.05 | 7AT/9AT | R | L/R | Saloon 4WD OM 651.921 | Transmision:7AT,For SA code:805,Position:Right;Transmision:9AT,Date to:2016.01,Position:Left and Right | GDS83794 | Drive Shaft | | 27 | 27 | 68.5 | 72 | 782 | |
| | 2014.02-2018.05 | 7AT | R | L | Saloon RWD OM 651.921 | Date to:2015.03 | GDS35109 | Drive Shaft | | 27 | 27 | 68.5 | 72 | 785 | |
| | 2014.02-2018.05 | 7AT | R | L | Saloon RWD OM 651.921 | Date from:2015.04 | GDS83409 | Drive Shaft | | 27 | 27 | 68.5 | 72 | 785 | |
| | 2014.02-2018.05 | 7AT | R | R | Saloon RWD OM 651.921 | Date To:2015.03,Veh Prd Country:USA;Veh Prd Country:South Africa,Alt Version:2053504019 | GDS35106 | Drive Shaft | | 27 | 27 | 68.5 | 72 | 785 | |
| | 2014.02-2018.05 | 7AT/9AT | R | R | Saloon RWD OM 651.921 | Transmission:7AT,Date from:2015.04,Veh Prd Country:USA;Transmission:9AT,Veh Prd Country:South Africa,not for SA code:805/806 | GDS83794 | Drive Shaft | | 27 | 27 | 68.5 | 72 | 782 | |
| | 2014.02-2018.05 | 9AT | R | L/R | Saloon RWD OM 651.921 | For SA code:805/806 | GDS83978 | Drive Shaft | | 27 | 27 | 68.5 | 72 | 787 | |
| | 2014.10-2018.05 | 7AT | F | R | Estate 4WD OM 651.921 | | GDS83231 | Drive Shaft | | 30 | 27 | 71 | 56 | 556 | |
| | 2014.10-2018.05 | 7AT | F | L/R | Estate 4WD OM 651.921 | Neoprene | GCO82353 | Outer Joint | | 30 | 25 | 71 | 56 | 53.5 | I |
| | 2014.10-2018.05 | 7AT | F | R | Estate 4WD OM 651.921 | | GCI82185 | Inner Joint | | 27 | 24 | 38 | 62 | 106 | |
| | 2014.10-2018.05 | 7AT/9AT | F | L | Estate 4WD OM 651.921 | | GDS83679 | Drive Shaft | | 30 | 27 | 71 | 56 | 526 | |
| | 2014.10-2018.05 | AT | F | L | Estate 4WD OM 651.921 | | GCI82159 | Inner Joint | | 27 | 24 | 41 | | 136.5 | |
| | 2014.10-2018.05 | 9AT | R | L/R | Estate 4WD OM 651.921 | Date to:2016.01 | GDS83794 | Drive Shaft | | 27 | 27 | 68.5 | 72 | 782 | |
| | 2016.04-2018.05 | 9AT | F | L | Coupe 4WD OM 651.921 | | GDS83679 | Drive Shaft | | 30 | 27 | 71 | 56 | 526 | |
| | 2016.04-2018.05 | 9AT | F | L/R | Coupe 4WD OM 651.921 | 8 balls | GCO82353 | Outer Joint | | 30 | 25 | 71 | 56 | 53.5 | I |
| | 2016.04-2018.05 | 9AT | F | L | Coupe 4WD OM 651.921 | | GCI82159 | Inner Joint | | 27 | 24 | 41 | | 136.5 | |
| 2.5 (83 kw) | 1993.06-2000.05 | 4AT | R | L/R | Saloon RWD 605910 | for vehicles without ESP | GDS35006 | Drive Shaft | | 25 | | | 69 | 627 | |
| 2.5 (150 kw) | 2008.02-2012.12 | 7AT | R | L/R | Estate RWD M 272.921 | | GDS35134 | Drive Shaft | 48NS | 27 | 27 | 68 | 72 | 776 | |
| **C270** | | | | | | | | | | | | | | | |
| 2.7 (120 kw) | 2000.12-2007.02 | 5AT/6MT | R | L/R | Saloon RWD OM 612.962 | With flange | GDS35122 | Drive Shaft | 48NS | 25 | 27 | 65 | 70 | 731 | |
| | 2000.12-2007.02 | 5AT/6MT | R | L/R | Saloon RWD OM 612.962 | | GCI99143 | Inner Joint | | | 27 | | | 28 | |
| | 2001.03-2007.08 | 5AT/6MT | R | L/R | Estate RWD OM 612.962 | With flange | GDS35122 | Drive Shaft | 48NS | 25 | 27 | 65 | 70 | 731 | |
| | 2001.03-2007.08 | 5AT/6MT | R | L/R | Estate RWD OM 612.962 | | GCI99143 | Inner Joint | | | 27 | | | 28 | |
| 2.7 (125 kw) | 2000.12-2007.02 | 5AT/6MT | R | L/R | Saloon RWD OM 612.962 | With flange | GDS35122 | Drive Shaft | 48NS | 25 | 27 | 65 | 70 | 731 | |
| | 2000.12-2007.02 | 5AT/6MT | R | L/R | Saloon RWD OM 612.962 | | GCI99143 | Inner Joint | | | 27 | | | 28 | |
| | 2001.03-2007.08 | 5AT/6MT | R | L/R | Estate RWD OM 612.962 | With flange | GDS35122 | Drive Shaft | 48NS | 25 | 27 | 65 | 70 | 731 | |
| | 2001.03-2007.08 | 5AT/6MT | R | L/R | Estate RWD OM 612.962 | | GCI99143 | Inner Joint | | | 27 | | | 28 | |
| **C280** | | | | | | | | | | | | | | | |
| 3.0 (170 kw) | 2005.01-2007.02 | 5AT | F | L | Saloon 4WD M 272.941 | | GDS83871 | Drive Shaft | 48NS | 35 | 34 | 66.6 | 42 | 487 | |
| | 2005.01-2007.02 | 5AT | F | R | Saloon 4WD M 272.941 | | GDS83872 | Drive Shaft | 48NS | 35 | 24 | 66.6 | 42 | 509 | |
| | 2005.01-2007.02 | 5AT | F | L/R | Saloon 4WD M 272.941 | | GCO82527 | Outer Joint | 48NS | 35 | 27 | 66.6 | 42 | 53 | I |
| | 2005.01-2007.02 | 5AT | F | L | Saloon 4WD M 272.941 | | GCI81451 | Inner Joint | | 34 | 27 | 37.5 | | 141 | |
| | 2005.01-2007.02 | 5AT | F | R | Saloon 4WD M 272.941 | | GCI82404 | Inner Joint | | 24 | 27 | 37.95 | 58.5 | 104.5 | |
| | 2005.01-2007.02 | 5AT | R | L/R | Saloon 4WD M 272.941 | | GDS35133 | Drive Shaft | 48NS | 25 | 27 | 64.9 | 70 | 731 | |
| | 2005.01-2007.08 | 5AT | F | L | Estate 4WD M 272.941 | | GDS83871 | Drive Shaft | 48NS | 35 | 34 | 66.6 | 42 | 487 | |
| | 2005.01-2007.08 | 5AT | F | R | Estate 4WD M 272.941 | | GDS83872 | Drive Shaft | 48NS | 35 | 24 | 66.6 | 42 | 509 | |
| | 2005.01-2007.08 | 5AT | F | L/R | Estate 4WD M 272.941 | | GCO82527 | Outer Joint | 48NS | 35 | 27 | 66.6 | 42 | 53 | I |
| | 2005.01-2007.08 | 5AT | F | L | Estate 4WD M 272.941 | | GCI81451 | Inner Joint | | 34 | 27 | 37.5 | | 141 | |
| | 2005.01-2007.08 | 5AT | F | R | Estate 4WD M 272.941 | | GCI82404 | Inner Joint | | 24 | 27 | 37.95 | 58.5 | 104.5 | |
| | 2005.01-2007.08 | 5AT | R | L/R | Estate 4WD M 272.941 | | GDS35133 | Drive Shaft | 48NS | 25 | 27 | 64.9 | 70 | 731 | |
| | 2007.01-2014.01 | AT | R | L/R | Saloon RWD M 272.947 | | GDS35134 | Drive Shaft | 48NS | 27 | 27 | 68 | 72 | 776 | |
| | 2007.07-2014.01 | 7AT | F | L/R | Saloon 4WD M 272.948 | for OE NO.:2043301400 | GCO35049 | Outer Joint | | 30 | 25 | 71 | 56.5 | 52 | I |
| | 2007.07-2014.01 | 7AT/6MT | F | L | Saloon 4WD M 272.948 | | GDS81405 | Drive Shaft | | 30 | 34 | 71 | 56.5 | 497 | |
| | 2007.07-2014.01 | 7AT/6MT | F | R | Saloon 4WD M 272.948 | | GDS35096 | Drive Shaft | | 30 | 27 | 71 | 56.5 | 529 | |
| | 2007.07-2014.01 | 7AT/6MT | F | R | Saloon 4WD M 272.948 | | GCI99166 | Inner Joint | | 27 | 27 | 38 | 62 | 110.5 | |
| | 2007.07-2014.01 | AT/MT | F | L | Saloon 4WD M 272.948 | | GDS81696 | Intermediate Shaft | | 34 | 27 | | | 504.5 | |
| | 2007.07-2014.01 | AT | R | L/R | Saloon 4WD M 272.948 | | GDS35134 | Drive Shaft | 48NS | 27 | 27 | 68 | 72 | 776 | |
| | 2007.08-2014.08 | 7AT/6MT | R | L/R | Estate RWD M 272.947 | | GDS35111 | Drive Shaft | 48NS | 27 | 27 | 68 | 72 | 771 | |
| | 2007.08-2014.08 | AT | R | L/R | Estate RWD M 272.947 | | GDS35134 | Drive Shaft | 48NS | 27 | 27 | 68 | 72 | 776 | |
| **C300** | | | | | | | | | | | | | | | |
| 2.0 (180 kw) | 2013.12-2018.08 | 7AT | F | R | Saloon 4WD M 274.920 | For left-hand drive vehicles | GDS83231 | Drive Shaft | | 30 | 27 | 71 | 56 | 556 | |
| | 2013.12-2018.08 | 7AT | F | L/R | Saloon 4WD M 274.920 | Neoprene | GCO82353 | Outer Joint | | 30 | 25 | 71 | 56 | 53.5 | I |
| | 2013.12-2018.08 | 7AT | F | L | Saloon 4WD M 274.920 | | GCI82159 | Inner Joint | | 27 | 24 | 41 | | 136.5 | |
| | 2013.12-2018.08 | 7AT | F | R | Saloon 4WD M 274.920 | | GCI82185 | Inner Joint | | 27 | 24 | 38 | 62 | 106 | |
| | 2013.12-2018.08 | 7AT/9AT | F | L | Saloon 4WD M 274.920 | | GDS83679 | Drive Shaft | | 30 | 27 | 71 | 56 | 526 | |
| | 2013.12-2018.08 | 7AT | R | L | Saloon 4WD M 274.920 | Veh Prd Country:South Africa | GDS35109 | Drive Shaft | | 27 | 27 | 68.5 | 72 | 785 | |
| | 2013.12-2018.08 | 7AT | R | L | Saloon 4WD M 274.920 | For SA code:M013/M014;Vehicle Production Country:South Africa | GDS83409 | Drive Shaft | | 27 | 27 | 68.5 | 72 | 785 | |

Technical Specifications

| | YEAR | TRANSM. | F/R | L/R | BODY STYLE & DRIVE TYPE & ENGINE | REMARKS | G-AP Ref. | PRODUCT | ABS | Technical Specifications A | B | C | H | L | P |
|---|---|---|---|---|---|---|---|---|---|---|---|---|---|---|---|
| **MERCEDES-BENZ C300** | | | | | | | | | | | | | | | |
| 2.0 (180 kw) | 2013.12-2018.08 | 7AT | R | R | Saloon 4WD M 274.920 | | GDS35106 | Drive Shaft | | 27 | 27 | 68.5 | 72 | 785 | |
| | 2013.12-2018.08 | 9AT | R | L/R | Saloon 4WD M 274.920 | | GDS83794 | Drive Shaft | | 27 | 27 | 68.5 | 72 | 782 | |
| | 2015.09-2018.08 | 7AT | R | L | Saloon RWD M 274.920 | Date to:2015.11;Vehicle Production Country:USA | GDS83409 | Drive Shaft | | 27 | 27 | 68.5 | 72 | 785 | |
| | 2015.09-2018.08 | 7AT | R | R | Saloon RWD M 274.920 | Veh Prd Country:South Africa | GDS35106 | Drive Shaft | | 27 | 27 | 68.5 | 72 | 785 | |
| | 2015.09-2018.08 | 9AT | R | L/R | Saloon RWD M 274.920 | Date from:2016.05,For SA code:M013 | GDS83794 | Drive Shaft | | 27 | 27 | 68.5 | 72 | 782 | |
| | 2018.06-2021.02 | 9AT | F | L | Estate 4WD OM 654.920 | | GDS83679 | Drive Shaft | | 30 | 27 | 71 | 56 | 526 | |
| | 2018.06-2021.02 | 9AT | F | L/R | Estate 4WD OM 654.920 | 8 balls | GCO82353 | Outer Joint | | 30 | 25 | 71 | 56 | 53.5 | I |
| | 2018.06-2021.02 | 9AT | F | L | Estate 4WD OM 654.920 | | GCI82159 | Inner Joint | | 27 | 24 | 41 | | 136.5 | |
| | 2018.06-2021.05 | 9AT | F | L | Saloon 4WD OM 654.920 | | GDS83679 | Drive Shaft | | 30 | 27 | 71 | 56 | 526 | |
| | 2018.06-2021.05 | 9AT | F | L/R | Saloon 4WD OM 654.920 | 8 balls | GCO82353 | Outer Joint | | 30 | 25 | 71 | 56 | 53.5 | I |
| | 2018.06-2021.05 | 9AT | F | L | Saloon 4WD OM 654.920 | | GCI82159 | Inner Joint | | 27 | 24 | 41 | | 136.5 | |
| | 2018.07-2023.04 | 9AT | F | L | Coupe 4WD OM 654.920 | | GDS83679 | Drive Shaft | | 30 | 27 | 71 | 56 | 526 | |
| | 2018.07-2023.04 | 9AT | F | L/R | Coupe 4WD OM 654.920 | 8 balls | GCO82353 | Outer Joint | | 30 | 25 | 71 | 56 | 53.5 | I |
| | 2018.07-2023.04 | 9AT | F | L | Coupe 4WD OM 654.920 | | GCI82159 | Inner Joint | | 27 | 24 | 41 | | 136.5 | |
| 2.0 (190 kw) | 2018.05-2021.02 | 9AT | F | L | Estate 4WD M 264.920 | | GDS83679 | Drive Shaft | | 30 | 27 | 71 | 56 | 526 | |
| | 2018.05-2021.02 | 9AT | F | L/R | Estate 4WD M 264.920 | 8 balls | GCO82353 | Outer Joint | | 30 | 25 | 71 | 56 | 53.5 | I |
| | 2018.05-2021.02 | 9AT | F | L | Estate 4WD M 264.920 | | GCI82159 | Inner Joint | | 27 | 24 | 41 | | 136.5 | |
| | 2018.05-2021.02 | 9AT | R | L | Estate 4WD M 264.920 | | GDS83409 | Drive Shaft | | 27 | 27 | 68.5 | 72 | 785 | |
| | 2018.05-2021.02 | 9AT | R | R | Estate 4WD M 264.920 | | GDS83794 | Drive Shaft | | 27 | 27 | 68.5 | 72 | 782 | |
| | 2018.05-2021.02 | 9AT | R | L | Estate 4WD M 264.920 | | GCI82204 | Inner Joint | | 27 | 28 | 46.97 | 79.5 | 96.8 | |
| | 2018.05-2021.05 | 9AT | F | L | Saloon 4WD M 264.920 | | GDS83679 | Drive Shaft | | 30 | 27 | 71 | 56 | 526 | |
| | 2018.05-2021.05 | 9AT | F | L/R | Saloon 4WD M 264.920 | 8 balls | GCO82353 | Outer Joint | | 30 | 25 | 71 | 56 | 53.5 | I |
| | 2018.05-2021.05 | 9AT | F | L | Saloon 4WD M 264.920 | | GCI82159 | Inner Joint | | 27 | 24 | 41 | | 136.5 | |
| | 2018.05-2021.05 | 9AT | R | L | Saloon 4WD M 264.920 | | GDS83409 | Drive Shaft | | 27 | 27 | 68.5 | 72 | 785 | |
| | 2018.05-2021.05 | 9AT | R | R | Saloon 4WD M 264.920 | | GDS83794 | Drive Shaft | | 27 | 27 | 68.5 | 72 | 782 | |
| | 2018.05-2023.04 | 9AT | F | L | Coupe 4WD M 264.920 | | GDS83679 | Drive Shaft | | 30 | 27 | 71 | 56 | 526 | |
| | 2018.05-2023.04 | 9AT | F | L/R | Coupe 4WD M 264.920 | 8 balls | GCO82353 | Outer Joint | | 30 | 25 | 71 | 56 | 53.5 | I |
| | 2018.05-2023.04 | 9AT | F | L | Coupe 4WD M 264.920 | | GCI82159 | Inner Joint | | 27 | 24 | 41 | | 136.5 | |
| | 2018.05-2023.04 | 9AT | R | L | Coupe 4WD M 264.920 | | GDS83409 | Drive Shaft | | 27 | 27 | 68.5 | 72 | 785 | |
| | 2018.05-2023.04 | 9AT | R | R | Coupe 4WD M 264.920 | | GDS83794 | Drive Shaft | | 27 | 27 | 68.5 | 72 | 782 | |
| | 2018.05-2023.04 | 9AT | R | L | Coupe 4WD M 264.920 | | GCI82204 | Inner Joint | | 27 | 28 | 46.97 | 79.5 | 96.8 | |
| | 2019.05-2021.02 | 9AT | F | L | Estate 4WD M 264.920 | | GDS83679 | Drive Shaft | | 30 | 27 | 71 | 56 | 526 | |
| | 2019.05-2021.02 | 9AT | F | L/R | Estate 4WD M 264.920 | 8 balls | GCO82353 | Outer Joint | | 30 | 25 | 71 | 56 | 53.5 | I |
| | 2019.05-2021.02 | 9AT | F | L | Estate 4WD M 264.920 | | GCI82159 | Inner Joint | | 27 | 24 | 41 | | 136.5 | |
| | 2019.05-2021.02 | 9AT | R | L | Estate 4WD M 264.920 | | GDS83409 | Drive Shaft | | 27 | 27 | 68.5 | 72 | 785 | |
| | 2019.05-2021.02 | 9AT | R | R | Estate 4WD M 264.920 | | GDS83794 | Drive Shaft | | 27 | 27 | 68.5 | 72 | 782 | |
| | 2019.05-2021.02 | 9AT | R | L | Estate 4WD M 264.920 | | GCI82204 | Inner Joint | | 27 | 28 | 46.97 | 79.5 | 96.8 | |
| | 2019.05-2021.05 | 9AT | F | L | Saloon 4WD M 264.920 | | GDS83679 | Drive Shaft | | 30 | 27 | 71 | 56 | 526 | |
| | 2019.05-2021.05 | 9AT | F | L/R | Saloon 4WD M 264.920 | 8 balls | GCO82353 | Outer Joint | | 30 | 25 | 71 | 56 | 53.5 | I |
| | 2019.05-2021.05 | 9AT | F | L | Saloon 4WD M 264.920 | | GCI82159 | Inner Joint | | 27 | 24 | 41 | | 136.5 | |
| | 2019.05-2021.05 | 9AT | R | L | Saloon 4WD M 264.920 | | GDS83409 | Drive Shaft | | 27 | 27 | 68.5 | 72 | 785 | |
| | 2019.05-2021.05 | 9AT | R | R | Saloon 4WD M 264.920 | | GDS83794 | Drive Shaft | | 27 | 27 | 68.5 | 72 | 782 | |
| | 2019.05-2023.04 | 9AT | F | L | Convertible 4WD M 264.920 | | GDS83679 | Drive Shaft | | 30 | 27 | 71 | 56 | 526 | |
| | 2019.05-2023.04 | 9AT | F | L/R | Convertible 4WD M 264.920 | 8 balls | GCO82353 | Outer Joint | | 30 | 25 | 71 | 56 | 53.5 | I |
| | 2019.05-2023.04 | 9AT | F | L | Convertible 4WD M 264.920 | | GCI82159 | Inner Joint | | 27 | 24 | 41 | | 136.5 | |
| | 2019.05-2023.04 | 9AT | R | L | Convertible 4WD M 264.920 | | GDS83409 | Drive Shaft | | 27 | 27 | 68.5 | 72 | 785 | |
| | 2019.05-2023.04 | 9AT | R | R | Convertible 4WD M 264.920 | | GDS83794 | Drive Shaft | | 27 | 27 | 68.5 | 72 | 782 | |
| | 2019.05-2023.04 | 9AT | R | L | Convertible 4WD M 264.920 | | GCI82204 | Inner Joint | | 27 | 28 | 46.97 | 79.5 | 96.8 | |
| | 2019.05-2023.04 | 9AT | F | L | Coupe 4WD M 264.920 | | GDS83679 | Drive Shaft | | 30 | 27 | 71 | 56 | 526 | |
| | 2019.05-2023.04 | 9AT | F | L/R | Coupe 4WD M 264.920 | 8 balls | GCO82353 | Outer Joint | | 30 | 25 | 71 | 56 | 53.5 | I |
| | 2019.05-2023.04 | 9AT | F | L | Coupe 4WD M 264.920 | | GCI82159 | Inner Joint | | 27 | 24 | 41 | | 136.5 | |
| | 2019.05-2023.04 | 9AT | R | L | Coupe 4WD M 264.920 | | GDS83409 | Drive Shaft | | 27 | 27 | 68.5 | 72 | 785 | |
| | 2019.05-2023.04 | 9AT | R | R | Coupe 4WD M 264.920 | | GDS83794 | Drive Shaft | | 27 | 27 | 68.5 | 72 | 782 | |
| | 2019.05-2023.04 | 9AT | R | L | Coupe 4WD M 264.920 | | GCI82204 | Inner Joint | | 27 | 28 | 46.97 | 79.5 | 96.8 | |
| | 2021.03- | 9AT | R | L/R | Saloon RWD M 254.920 | | GDS58223 | Drive Shaft | | 30 | 30 | 65 | 53 | 777 | |
| | 2021.10- | 9AT | R | L/R | Estate RWD M 254.920 | | GDS58223 | Drive Shaft | | 30 | 30 | 65 | 53 | 777 | |
| 2.0 (195 kw) | 2021.03- | 9AT | R | L/R | Estate RWD OM 654.820 | | GDS58118 | Drive Shaft | | 30 | 30 | | 53 | 777 | |
| | 2021.03- | 9AT | R | L/R | Saloon RWD OM 654.820 | | GDS58118 | Drive Shaft | | 30 | 30 | | 53 | 777 | |
| 2.0 (230 kw) | 2021.12- | 9AT | R | L/R | Estate RWD M 254.920 | | GDS58118 | Drive Shaft | | 30 | 30 | | 53 | 777 | |
| | 2021.12- | 9AT | R | L/R | Saloon RWD M 254.920 | | GDS58118 | Drive Shaft | | 30 | 30 | | 53 | 777 | |
| | 2022.05- | | R | L/R | Saloon 4WD M 254.920 | | GDS58123 | Drive Shaft | | 30 | 30 | 65 | 53 | 780 | |
| | 2022.12- | 9AT | R | L/R | Estate 4WD OM 654.820 | | GDS58118 | Drive Shaft | | 30 | 30 | | 53 | 777 | |
| | 2022.12- | 9AT | R | L/R | Estate RWD OM 654.820 | | GDS58118 | Drive Shaft | | 30 | 30 | | 53 | 777 | |
| | 2022.12- | 9AT | R | L/R | Saloon RWD OM 654.820 | | GDS58118 | Drive Shaft | | 30 | 30 | | 53 | 777 | |
| 2.0 (235 kw) | 2019.07-2021.05 | 9AT | F | L/R | Saloon 4WD M 274.920 | 8 balls | GCO82353 | Outer Joint | | 30 | 25 | 71 | 56 | 53.5 | I |

| | YEAR | TRANSM. | F/R | L/R | BODY STYLE & DRIVE TYPE & ENGINE | REMARKS | G-AP Ref. | PRODUCT | ABS | Technical Specifications A | B | C | H | L | P |
|---|---|---|---|---|---|---|---|---|---|---|---|---|---|---|---|
| **MERCEDES-BENZ** | | | | | | | | | | | | | | | |
| **C300** | | | | | | | | | | | | | | | |
| 3.0 (170 kw) | 2007.07-2014.01 | 7AT | F | L | Saloon 4WD M 272.948 | | GDS81405 | Drive Shaft | | 30 | 34 | 71 | 56.5 | 497 | |
| | 2007.07-2014.01 | 7AT | F | R | Saloon 4WD M 272.948 | | GDS35096 | Drive Shaft | | 30 | 27 | 71 | 56.5 | 529 | |
| | 2007.07-2014.01 | 7AT | F | R | Saloon 4WD M 272.948 | | GCI99166 | Inner Joint | | 27 | 27 | 38 | 62 | 110.5 | |
| | 2007.07-2014.01 | AT/MT | F | L | Saloon 4WD M 272.948 | | GDS81696 | Intermediate Shaft | | 34 | 27 | | | 504.5 | |
| | 2007.07-2014.01 | AT | R | L/R | Saloon 4WD M 272.948 | | GDS35134 | Drive Shaft | 48NS | 27 | 27 | 68 | 72 | 776 | |
| | 2007.08-2014.08 | 7AT/6MT | R | L/R | Estate RWD M 272.947 | | GDS35111 | Drive Shaft | 48NS | 27 | 27 | 68 | 72 | 771 | |
| | 2007.08-2014.08 | AT | R | L/R | Estate RWD M 272.947 | | GDS35134 | Drive Shaft | 48NS | 27 | 27 | 68 | 72 | 776 | |
| | 2009.07-2014.01 | AT | R | L/R | Saloon RWD M 272.947 | | GDS35134 | Drive Shaft | 48NS | 27 | 27 | 68 | 72 | 776 | |
| | 2011.01-2014.01 | 7AT | F | L | Saloon 4WD OM 642.832 | | GDS81405 | Drive Shaft | | 30 | 34 | 71 | 56.5 | 497 | |
| | 2011.01-2014.01 | 7AT | F | R | Saloon 4WD OM 642.832 | | GDS35096 | Drive Shaft | | 30 | 27 | 71 | 56.5 | 529 | |
| | 2011.01-2014.01 | 7AT | F | L/R | Saloon 4WD OM 642.832 | for OE NO.:2043301400 | GCO35049 | Outer Joint | | 30 | 25 | 71 | 56.5 | 52 | I |
| | 2011.01-2014.01 | 7AT | F | R | Saloon 4WD OM 642.832 | | GCI99166 | Inner Joint | | 27 | 27 | 38 | 62 | 110.5 | |
| | 2011.01-2014.01 | AT/MT | F | L | Saloon 4WD OM 642.832 | | GDS81696 | Intermediate Shaft | | 34 | 27 | | | 504.5 | |
| | 2011.01-2014.01 | AT | R | L/R | Saloon 4WD OM 642.832 | | GDS35134 | Drive Shaft | 48NS | 27 | 27 | 68 | 72 | 776 | |
| | 2011.06-2014.08 | 7AT | F | L | Estate 4WD OM 642.832 | | GDS81405 | Drive Shaft | | 30 | 34 | 71 | 56.5 | 497 | |
| | 2011.06-2014.08 | 7AT | F | R | Estate 4WD OM 642.832 | | GDS35096 | Drive Shaft | | 30 | 27 | 71 | 56.5 | 529 | |
| | 2011.06-2014.08 | 7AT | F | L/R | Estate 4WD OM 642.832 | | GCO35049 | Outer Joint | | 30 | 25 | 71 | 56.5 | 52 | I |
| | 2011.06-2014.08 | 7AT | F | R | Estate 4WD OM 642.832 | | GCI99166 | Inner Joint | | 27 | 27 | 38 | 62 | 110.5 | |
| | 2011.06-2014.08 | 7AT | R | L/R | Estate 4WD OM 642.832 | | GDS35134 | Drive Shaft | 48NS | 27 | 27 | 68 | 72 | 776 | |
| 3.5 (185 kw) | 2011.02-2014.01 | 7AT | F | R | Saloon 4WD M 276.957 | | GDS35096 | Drive Shaft | | 30 | 27 | 71 | 56.5 | 529 | |
| | 2011.02-2014.01 | 7AT | F | L/R | Saloon 4WD M 276.957 | for OE NO.:2043301400 | GCO35049 | Outer Joint | | 30 | 25 | 71 | 56.5 | 52 | I |
| | 2011.02-2014.01 | 7AT | F | R | Saloon 4WD M 276.957 | | GCI99166 | Inner Joint | | 27 | 27 | 38 | 62 | 110.5 | |
| | 2011.02-2014.01 | AT | F | L | Saloon 4WD M 276.957 | | GDS81405 | Drive Shaft | | 30 | 34 | 71 | 56.5 | 497 | |
| | 2011.02-2014.01 | AT/MT | F | L | Saloon 4WD M 276.957 | | GDS81696 | Intermediate Shaft | | 34 | 27 | | | 504.5 | |
| | 2011.02-2014.01 | 7AT | R | L/R | Saloon 4WD M 276.957 | | GDS35134 | Drive Shaft | 48NS | 27 | 27 | 68 | 72 | 776 | |
| | 2011.02-2014.01 | 7AT | R | L/R | Saloon RWD M 276.957 | | GDS35111 | Drive Shaft | 48NS | 27 | 27 | 68 | 72 | 771 | |
| **C30CDi AMG** | | | | | | | | | | | | | | | |
| 3.0 (170 kw) | 2002.09-2008.05 | 5AT | R | L/R | Coupe RWD OM 612.990 | With flange | GDS35122 | Drive Shaft | 48NS | 25 | 27 | 65 | 70 | 731 | |
| | 2002.09-2008.05 | 5AT | R | L/R | Coupe RWD OM 612.990 | | GCI99143 | Inner Joint | | | 27 | | | 28 | |
| | 2003.01-2007.02 | AT | R | L | Saloon RWD OM 612.990 | | GDS35122 | Drive Shaft | 48NS | 25 | 27 | 65 | 70 | 731 | |
| | 2003.01-2007.08 | 5AT | R | L/R | Estate RWD OM 612.990 | With flange | GDS35122 | Drive Shaft | 48NS | 25 | 27 | 65 | 70 | 731 | |
| **C32 AMG** | | | | | | | | | | | | | | | |
| 3.2 (260 kw) | 2001.02-2007.02 | SAT | R | L/R | Saloon RWD M 112.961 | Chassis no. to:A436252/F339180/R077679,With flange | GDS35122 | Drive Shaft | 48NS | 25 | 27 | 65 | 70 | 731 | |
| | 2001.02-2007.02 | SAT | R | L/R | Saloon RWD M 112.961 | | GCI99143 | Inner Joint | | | 27 | | | 28 | |
| | 2001.03-2007.08 | 5AT | R | L/R | Estate RWD M 112.961 | Chassis no. to:F339180,With flange | GDS35122 | Drive Shaft | 48NS | 25 | 27 | 65 | 70 | 731 | |
| | 2001.03-2007.08 | 5AT | R | L/R | Estate RWD M 112.961 | | GCI99143 | Inner Joint | | | 27 | | | 28 | |
| **C320** | | | | | | | | | | | | | | | |
| 3.0 (165 kw) | 2007.01-2014.01 | AT/MT | R | L/R | Saloon RWD OM 642.960 | | GDS83792 | Drive Shaft | 48NS | 27 | 30 | 68 | 72 | 768 | |
| | 2007.07-2014.01 | 7AT | F | L | Saloon 4WD OM 642.961 | | GDS81405 | Drive Shaft | | 30 | 34 | 71 | 56.5 | 497 | |
| | 2007.07-2014.01 | 7AT | F | R | Saloon 4WD OM 642.961 | | GDS35096 | Drive Shaft | | 30 | 27 | 71 | 56.5 | 529 | |
| | 2007.07-2014.01 | 7AT | F | L/R | Saloon 4WD OM 642.961 | for OE NO.:2043301400 | GCO35049 | Outer Joint | | 30 | 25 | 71 | 56.5 | 52 | I |
| | 2007.07-2014.01 | 7AT | F | R | Saloon 4WD OM 642.961 | | GCI99166 | Inner Joint | | 27 | 27 | 38 | 62 | 110.5 | |
| | 2007.07-2014.01 | AT/MT | F | L | Saloon 4WD OM 642.961 | | GDS81696 | Intermediate Shaft | | 34 | 27 | | | 504.5 | |
| | 2007.07-2014.01 | AT | R | L/R | Saloon 4WD OM 642.961 | | GDS35134 | Drive Shaft | 48NS | 27 | 27 | 68 | 72 | 776 | |
| | 2007.08-2011.12 | 7AT | F | L | Estate 4WD OM 642.961 | | GDS81405 | Drive Shaft | | 30 | 34 | 71 | 56.5 | 497 | |
| | 2007.08-2011.12 | 7AT | F | R | Estate 4WD OM 642.961 | | GDS35096 | Drive Shaft | | 30 | 27 | 71 | 56.5 | 529 | |
| | 2007.08-2011.12 | 7AT | F | L/R | Estate 4WD OM 642.961 | for OE NO.:2043301400 | GCO35049 | Outer Joint | | 30 | 25 | 71 | 56.5 | 52 | I |
| | 2007.08-2011.12 | 7AT | F | R | Estate 4WD OM 642.961 | | GCI99166 | Inner Joint | | 27 | 27 | 38 | 62 | 110.5 | |
| | 2007.08-2011.12 | AT/MT | F | L | Estate 4WD OM 642.961 | | GDS81696 | Intermediate Shaft | | 34 | 27 | | | 504.5 | |
| | 2007.08-2011.12 | AT | R | L/R | Estate 4WD OM 642.961 | | GDS35134 | Drive Shaft | 48NS | 27 | 27 | 68 | 72 | 776 | |
| | 2007.08-2014.08 | AT/MT | R | L/R | Estate RWD OM 642.960 | | GDS83792 | Drive Shaft | 48NS | 27 | 30 | 68 | 72 | 768 | |
| 3.2 (160 kw) | 2000.05-2007.02 | 5AT | R | L/R | Saloon RWD M 112.946 | | GDS35110 | Drive Shaft | 48NS | 25 | 27 | 65 | 70 | 720 | |
| | 2000.05-2007.02 | 5AT/6MT | R | L/R | Saloon RWD M 112.946 | | GCI99143 | Inner Joint | | | 27 | | | 28 | |
| | 2000.05-2007.02 | AT | R | | Saloon RWD M 112.946 | | GDS35133 | Drive Shaft | 48NS | 25 | 27 | 64.9 | 70 | 731 | |
| | 2001.03-2007.08 | 5AT | R | L/R | Estate RWD M 112.946 | | GDS35110 | Drive Shaft | 48NS | 25 | 27 | 65 | 70 | 720 | |
| | 2001.03-2007.08 | 5AT/6MT | R | L/R | Estate RWD M 112.946 | | GCI99143 | Inner Joint | | | 27 | | | 28 | |
| | 2001.03-2007.08 | AT | R | | Estate RWD M 112.946 | | GDS35133 | Drive Shaft | 48NS | 25 | 27 | 64.9 | 70 | 731 | |
| | 2002.07-2007.02 | 5AT | F | L | Saloon 4WD M 112.953 | | GDS83871 | Drive Shaft | 48NS | 35 | 34 | 66.6 | 42 | 487 | |
| | 2002.07-2007.02 | 5AT | F | R | Saloon 4WD M 112.953 | | GDS83872 | Drive Shaft | 48NS | 35 | 24 | 66.6 | 42 | 509 | |
| | 2002.07-2007.02 | 5AT | F | L/R | Saloon 4WD M 112.953 | | GCO82527 | Outer Joint | 48NS | 35 | 27 | 66.6 | 42 | 53 | I |
| | 2002.07-2007.02 | 5AT | F | L | Saloon 4WD M 112.953 | | GCI81451 | Inner Joint | | 34 | 27 | 37.5 | | 141 | |
| | 2002.07-2007.02 | 5AT | F | R | Saloon 4WD M 112.953 | | GCI82404 | Inner Joint | | 24 | 27 | 37.95 | 58.5 | 104.5 | |
| | 2002.07-2007.02 | 5AT | R | L/R | Saloon 4WD M 112.953 | | GDS35133 | Drive Shaft | 48NS | 25 | 27 | 64.9 | 70 | 731 | |
| | 2002.07-2007.08 | 5AT | F | L | Estate 4WD M 112.953 | | GDS83871 | Drive Shaft | 48NS | 35 | 34 | 66.6 | 42 | 487 | |
| | 2002.07-2007.08 | 5AT | F | R | Estate 4WD M 112.953 | | GDS83872 | Drive Shaft | 48NS | 35 | 24 | 66.6 | 42 | 509 | |

| | YEAR | TRANSM. | F/R | L/R | BODY STYLE & DRIVE TYPE & ENGINE | REMARKS | G-AP Ref. | PRODUCT | ABS | Technical Specifications A | B | C | H | L | P |
|---|---|---|---|---|---|---|---|---|---|---|---|---|---|---|---|
| **MERCEDES-BENZ** | | | | | | | | | | | | | | | |
| **C320** | | | | | | | | | | | | | | | |
| 3.2 (160 kw) | 2002.07-2007.08 | 5AT | F | L/R | Estate 4WD M 112.953 | | GCO82527 | Outer Joint | 48NS | 35 | 27 | 66.6 | 42 | 53 | I |
| | 2002.07-2007.08 | 5AT | F | L | Estate 4WD M 112.953 | | GCI81451 | Inner Joint | | 34 | 27 | 37.5 | | 141 | |
| | 2002.07-2007.08 | 5AT | F | R | Estate 4WD M 112.953 | | GCI82404 | Inner Joint | | 24 | 27 | 37.95 | 58.5 | 104.5 | |
| | 2002.07-2007.08 | 5AT | R | L/R | Estate 4WD M 112.953 | | GDS35133 | Drive Shaft | 48NS | 25 | 27 | 64.9 | 70 | 731 | |
| | 2002.09-2008.05 | 5AT | R | L/R | Coupe RWD M 112.946 | Chassis no. from:A358180 | GDS35110 | Drive Shaft | 48NS | 25 | 27 | 65 | 70 | 720 | |
| | 2002.09-2008.05 | 5AT/6MT | R | L/R | Coupe RWD M 112.946 | | GCI99143 | Inner Joint | | | 27 | | | 28 | |
| **C350** | | | | | | | | | | | | | | | |
| 3.0 (165 kw) | 2007.08-2011.12 | 7AT/SAT | F | L | Estate 4WD OM 642.961 | | GDS81405 | Drive Shaft | | 30 | 34 | 71 | 56.5 | 497 | |
| | 2007.08-2011.12 | 7AT/SAT | F | R | Estate 4WD OM 642.961 | | GDS35096 | Drive Shaft | | 30 | 27 | 71 | 56.5 | 529 | |
| | 2007.08-2011.12 | 7AT/SAT | F | R | Estate 4WD OM 642.961 | | GCI99166 | Inner Joint | | 27 | 27 | 38 | 62 | 110.5 | |
| | 2007.08-2011.12 | 7AT/SAT | R | L/R | Estate 4WD OM 642.961 | | GDS35134 | Drive Shaft | 48NS | 27 | 27 | 68 | 72 | 776 | |
| | 2007.08-2014.08 | 7AT/6MT | R | L/R | Estate RWD OM 642.830 | | GDS83792 | Drive Shaft | 48NS | 27 | 30 | 68 | 72 | 768 | |
| | 2009.07-2014.01 | 7AT | F | L | Saloon 4WD OM 642.961 | | GDS81405 | Drive Shaft | | 30 | 34 | 71 | 56.5 | 497 | |
| | 2009.07-2014.01 | 7AT | F | R | Saloon 4WD OM 642.961 | | GDS35096 | Drive Shaft | | 30 | 27 | 71 | 56.5 | 529 | |
| | 2009.07-2014.01 | 7AT | F | R | Saloon 4WD OM 642.961 | | GCI99166 | Inner Joint | | 27 | 27 | 38 | 62 | 110.5 | |
| | 2009.07-2014.01 | AT/MT | F | L | Saloon 4WD OM 642.961 | | GDS81696 | Intermediate Shaft | | 34 | 27 | | | 504.5 | |
| | 2009.07-2014.01 | AT | R | L/R | Saloon 4WD OM 642.961 | | GDS35134 | Drive Shaft | 48NS | 27 | 27 | 68 | 72 | 776 | |
| | 2009.07-2014.01 | 7AT/6MT | R | L/R | Saloon RWD OM 642.960 | | GDS83792 | Drive Shaft | 48NS | 27 | 30 | 68 | 72 | 768 | |
| 3.0 (170 kw) | 2009.10-2014.01 | 7AT | F | L | Saloon 4WD OM 642.832 | | GDS81405 | Drive Shaft | | 30 | 34 | 71 | 56.5 | 497 | |
| | 2009.10-2014.01 | 7AT | F | R | Saloon 4WD OM 642.832 | | GDS35096 | Drive Shaft | | 30 | 27 | 71 | 56.5 | 529 | |
| | 2009.10-2014.01 | 7AT | F | R | Saloon 4WD OM 642.832 | | GCI99166 | Inner Joint | | 27 | 27 | 38 | 62 | 110.5 | |
| | 2009.10-2014.01 | AT/MT | F | L | Saloon 4WD OM 642.832 | | GDS81696 | Intermediate Shaft | | 34 | 27 | | | 504.5 | |
| | 2009.10-2014.01 | AT | R | L/R | Saloon 4WD OM 642.832 | | GDS35134 | Drive Shaft | 48NS | 27 | 27 | 68 | 72 | 776 | |
| | 2009.10-2014.01 | 7AT | R | L/R | Saloon RWD OM 642.830 | | GDS83792 | Drive Shaft | 48NS | 27 | 30 | 68 | 72 | 768 | |
| | 2009.10-2014.08 | 7AT | F | L | Estate 4WD OM 642.832 | | GDS81405 | Drive Shaft | | 30 | 34 | 71 | 56.5 | 497 | |
| | 2009.10-2014.08 | 7AT | F | R | Estate 4WD OM 642.832 | | GDS35096 | Drive Shaft | | 30 | 27 | 71 | 56.5 | 529 | |
| | 2009.10-2014.08 | 7AT | F | R | Estate 4WD OM 642.832 | | GCI99166 | Inner Joint | | 27 | 27 | 38 | 62 | 110.5 | |
| | 2009.10-2014.08 | AT/MT | F | L | Estate 4WD OM 642.832 | | GDS81696 | Intermediate Shaft | | 34 | 27 | | | 504.5 | |
| | 2009.10-2014.08 | AT | R | L/R | Estate 4WD OM 642.832 | | GDS35134 | Drive Shaft | 48NS | 27 | 27 | 68 | 72 | 776 | |
| | 2009.10-2014.08 | 7AT/6MT | R | L/R | Estate RWD OM 642.830 | | GDS83792 | Drive Shaft | 48NS | 27 | 30 | 68 | 72 | 768 | |
| 3.5 (200 kw) | 2005.01-2007.02 | 5AT | F | L | Saloon 4WD M 272.960;M 272.970 | | GDS83871 | Drive Shaft | 48NS | 35 | 34 | 66.6 | 42 | 487 | |
| | 2005.01-2007.02 | 5AT | F | R | Saloon 4WD M 272.960;M 272.970 | | GDS83872 | Drive Shaft | 48NS | 35 | 24 | 66.6 | 42 | 509 | |
| | 2005.01-2007.02 | 5AT | F | L/R | Saloon 4WD M 272.960;M 272.970 | | GCO82527 | Outer Joint | 48NS | 35 | 27 | 66.6 | 42 | 53 | I |
| | 2005.01-2007.02 | 5AT | F | L | Saloon 4WD M 272.960;M 272.970 | | GCI81451 | Inner Joint | | 34 | 27 | 37.5 | | 141 | |
| | 2005.01-2007.02 | 5AT | F | R | Saloon 4WD M 272.960;M 272.970 | | GCI82404 | Inner Joint | | 24 | 27 | 37.95 | 58.5 | 104.5 | |
| | 2005.01-2007.02 | 5AT | R | L/R | Saloon 4WD M 272.960;M 272.970 | | GDS35133 | Drive Shaft | 48NS | 25 | 27 | 64.9 | 70 | 731 | |
| | 2005.01-2007.08 | SAT | F | L | Estate 4WD M 272.970 | | GDS83871 | Drive Shaft | 48NS | 35 | 34 | 66.6 | 42 | 487 | |
| | 2005.01-2007.08 | SAT | F | R | Estate 4WD M 272.970 | | GDS83872 | Drive Shaft | 48NS | 35 | 24 | 66.6 | 42 | 509 | |
| | 2005.01-2007.08 | SAT | F | L/R | Estate 4WD M 272.970 | | GCO82527 | Outer Joint | 48NS | 35 | 27 | 66.6 | 42 | 53 | I |
| | 2005.01-2007.08 | SAT | F | L | Estate 4WD M 272.970 | | GCI81451 | Inner Joint | | 34 | 27 | 37.5 | | 141 | |
| | 2005.01-2007.08 | SAT | F | R | Estate 4WD M 272.970 | | GCI82404 | Inner Joint | | 24 | 27 | 37.95 | 58.5 | 104.5 | |
| | 2005.01-2007.08 | SAT | R | L/R | Estate 4WD M 272.970 | | GDS35133 | Drive Shaft | 48NS | 25 | 27 | 64.9 | 70 | 731 | |
| | 2007.01-2014.01 | 7AT | R | L/R | Saloon RWD M 272.961 | | GDS35111 | Drive Shaft | 48NS | 27 | 27 | 68 | 72 | 771 | |
| | 2007.07-2014.01 | 7AT | F | L | Saloon 4WD M 272.971 | | GDS81405 | Drive Shaft | | 30 | 34 | 71 | 56.5 | 497 | |
| | 2007.07-2014.01 | 7AT | F | R | Saloon 4WD M 272.971 | | GDS35096 | Drive Shaft | | 30 | 27 | 71 | 56.5 | 529 | |
| | 2007.07-2014.01 | 7AT | F | R | Saloon 4WD M 272.971 | | GCI99166 | Inner Joint | | 27 | 27 | 38 | 62 | 110.5 | |
| | 2007.07-2014.01 | AT/MT | F | L | Saloon 4WD M 272.971 | | GDS81696 | Intermediate Shaft | | 34 | 27 | | | 504.5 | |
| | 2007.07-2014.01 | AT | R | L/R | Saloon 4WD M 272.971 | | GDS35134 | Drive Shaft | 48NS | 27 | 27 | 68 | 72 | 776 | |
| | 2007.08-2014.08 | 7AT | R | L/R | Estate RWD M 272.961 | | GDS35111 | Drive Shaft | 48NS | 27 | 27 | 68 | 72 | 771 | |
| 3.5 (215 kw) | 2008.09-2014.01 | 7AT | R | L/R | Saloon RWD M 272.982 | | GDS35111 | Drive Shaft | 48NS | 27 | 27 | 68 | 72 | 771 | |
| 3.5 (225 kw) | 2011.01-2014.01 | 7AT | F | L | Saloon 4WD M 276.957 | | GDS81405 | Drive Shaft | | 30 | 34 | 71 | 56.5 | 497 | |
| | 2011.01-2014.01 | 7AT | F | R | Saloon 4WD M 276.957 | | GDS35096 | Drive Shaft | | 30 | 27 | 71 | 56.5 | 529 | |
| | 2011.01-2014.01 | 7AT | F | L/R | Saloon 4WD M 276.957 | | GCO35049 | Outer Joint | | 30 | 25 | 71 | 56.5 | 52 | I |
| | 2011.01-2014.01 | 7AT | F | R | Saloon 4WD M 276.957 | | GCI99166 | Inner Joint | | 27 | 27 | 38 | 62 | 110.5 | |
| | 2011.01-2014.01 | AT/MT | F | L | Saloon 4WD M 276.957 | | GDS81696 | Intermediate Shaft | | 34 | 27 | | | 504.5 | |
| | 2011.01-2014.01 | AT | R | L/R | Saloon 4WD M 276.957 | | GDS35134 | Drive Shaft | 48NS | 27 | 27 | 68 | 72 | 776 | |
| | 2011.01-2014.01 | 7AT | R | L/R | Saloon RWD M 276.957 | | GDS35111 | Drive Shaft | 48NS | 27 | 27 | 68 | 72 | 771 | |
| | 2011.06- | 7AT | R | L/R | Coupe RWD M 276.957 | | GDS35111 | Drive Shaft | 48NS | 27 | 27 | 68 | 72 | 771 | |
| | 2011.06-2014.08 | 7AT | R | L/R | Estate RWD M 276.957 | | GDS35111 | Drive Shaft | 48NS | 27 | 27 | 68 | 72 | 771 | |
| | 2013.09- | 7AT | F | R | Coupe 4WD M 276.957 | | GDS35096 | Drive Shaft | | 30 | 27 | 71 | 56.5 | 529 | |
| | 2013.09- | 7AT | F | R | Coupe 4WD M 276.957 | | GCI99166 | Inner Joint | | 27 | 27 | 38 | 62 | 110.5 | |
| | 2013.09- | AT | F | L | Coupe 4WD M 276.957 | Date to:2014.01 | GDS81405 | Drive Shaft | | 30 | 34 | 71 | 56.5 | 497 | |
| | 2013.09- | AT | F | L/R | Coupe 4WD M 276.957 | Date to:2014.01;for OE NO.:2043301400 | GCO35049 | Outer Joint | | 30 | 25 | 71 | 56.5 | 52 | I |
| | 2013.09- | 7AT | R | L/R | Coupe 4WD M 276.957 | | GDS35134 | Drive Shaft | 48NS | 27 | 27 | 68 | 72 | 776 | |

| | YEAR | TRANSM. | F/R | L/R | BODY STYLE & DRIVE TYPE & ENGINE | REMARKS | G-AP Ref. | PRODUCT | ABS | Technical Specifications A | B | C | H | L | P |
|---|---|---|---|---|---|---|---|---|---|---|---|---|---|---|---|
| **MERCEDES-BENZ** | | | | | | | | | | | | | | | |
| **C400** | | | | | | | | | | | | | | | |
| 2.0 (280 kw) | 2022.05- | | R | L/R | Saloon 4WD M 254.920 | | GDS58123 | Drive Shaft | | 30 | 30 | 65 | 53 | 780 | |
| 3.0 (245 kw) | 2014.10-2020.11 | 7AT/9AT | F | L | Saloon 4WD M 276.823 | | GDS83679 | Drive Shaft | | 30 | 27 | 71 | 56 | 526 | |
| | 2014.10-2020.11 | 7AT/9AT | F | R | Saloon 4WD M 276.823 | | GDS83231 | Drive Shaft | | 30 | 27 | 71 | 56 | 556 | |
| | 2014.10-2020.11 | AT | F | L/R | Saloon 4WD M 276.823 | Neoprene | GCO82353 | Outer Joint | | 30 | 25 | 71 | 56 | 53.5 | I |
| | 2014.10-2020.11 | AT | F | L | Saloon 4WD M 276.823 | | GCI82159 | Inner Joint | | 27 | 24 | 41 | | 136.5 | |
| | 2014.10-2020.11 | AT | F | R | Saloon 4WD M 276.823 | | GCI82185 | Inner Joint | | 27 | 24 | 38 | 62 | 106 | |
| | 2014.10-2020.11 | AT | R | L | Saloon 4WD M 276.823 | | GDS35109 | Drive Shaft | | 27 | 27 | 68.5 | 72 | 785 | |
| | 2014.10-2020.11 | AT | R | R | Saloon 4WD M 276.823 | | GDS35106 | Drive Shaft | | 27 | 27 | 68.5 | 72 | 785 | |
| | 2014.10-2021.02 | 7AT/9AT | F | L | Estate 4WD M 276.823 | | GDS83679 | Drive Shaft | | 30 | 27 | 71 | 56 | 526 | |
| | 2014.10-2021.02 | 7AT/9AT | F | L/R | Estate 4WD M 276.823 | | GCO82353 | Outer Joint | | 30 | 25 | 71 | 56 | 53.5 | I |
| | 2014.10-2021.02 | 7AT/9AT | F | L | Estate 4WD M 276.823 | | GCI82159 | Inner Joint | | 27 | 24 | 41 | | 136.5 | |
| | 2014.10-2021.02 | 7AT/9AT | R | L | Estate 4WD M 276.823 | | GDS83409 | Drive Shaft | | 27 | 27 | 68.5 | 72 | 785 | |
| | 2014.10-2021.02 | 7AT/9AT | R | R | Estate 4WD M 276.823 | | GDS83794 | Drive Shaft | | 27 | 27 | 68.5 | 72 | 782 | |
| | 2016.04-2022.06 | 9AT | F | L | Coupe 4WD M 276.823 | | GDS83679 | Drive Shaft | | 30 | 27 | 71 | 56 | 526 | |
| | 2016.04-2022.06 | 9AT | F | L/R | Coupe 4WD M 276.823 | 8 balls | GCO82353 | Outer Joint | | 30 | 25 | 71 | 56 | 53.5 | I |
| | 2016.04-2022.06 | 9AT | F | L | Coupe 4WD M 276.823 | | GCI82159 | Inner Joint | | 27 | 24 | 41 | | 136.5 | |
| | 2016.04-2022.06 | 9AT | R | L | Coupe 4WD M 276.823 | Date from:2018.08 | GDS83409 | Drive Shaft | | 27 | 27 | 68.5 | 72 | 785 | |
| | 2016.04-2022.06 | 9AT | R | R | Coupe 4WD M 276.823 | | GDS83794 | Drive Shaft | | 27 | 27 | 68.5 | 72 | 782 | |
| | 2016.06-2023.04 | 9AT | F | L | Convertible 4WD M 276.823 | | GDS83679 | Drive Shaft | | 30 | 27 | 71 | 56 | 526 | |
| | 2016.06-2023.04 | 9AT | F | L/R | Convertible 4WD M 276.823 | 8 balls | GCO82353 | Outer Joint | | 30 | 25 | 71 | 56 | 53.5 | I |
| | 2016.06-2023.04 | 9AT | F | L | Convertible 4WD M 276.823 | | GCI82159 | Inner Joint | | 27 | 24 | 41 | | 136.5 | |
| | 2016.06-2023.04 | 9AT | R | L | Convertible 4WD M 276.823 | Date from:2018.08 | GDS83409 | Drive Shaft | | 27 | 27 | 68.5 | 72 | 785 | |
| | 2016.06-2023.04 | 9AT | R | R | Convertible 4WD M 276.823 | | GDS83794 | Drive Shaft | | 27 | 27 | 68.5 | 72 | 782 | |
| **C43 AMG** | | | | | | | | | | | | | | | |
| 2.0 (300 kw) | 2022.04- | | R | L/R | Estate 4WD 139.580 | | GDS58123 | Drive Shaft | | 30 | 30 | 65 | 53 | 780 | |
| | 2022.04- | | R | L/R | Saloon 4WD 139.580 | | GDS58123 | Drive Shaft | | 30 | 30 | 65 | 53 | 780 | |
| 2.0 (310 kw) | 2024.04- | | R | L/R | Estate 4WD 139.580 | | GDS58123 | Drive Shaft | | 30 | 30 | 65 | 53 | 780 | |
| | 2024.04- | | R | L/R | Saloon 4WD 139.580 | | GDS58123 | Drive Shaft | | 30 | 30 | 65 | 53 | 780 | |
| 3.0 (270 kw) | 2016.04-2018.05 | 9AT | F | L | Coupe 4WD M 276.823 | | GDS83679 | Drive Shaft | | 30 | 27 | 71 | 56 | 526 | |
| | 2016.04-2018.05 | 9AT | F | L/R | Coupe 4WD M 276.823 | 8 balls | GCO82353 | Outer Joint | | 30 | 25 | 71 | 56 | 53.5 | I |
| | 2016.04-2018.05 | 9AT | F | L | Coupe 4WD M 276.823 | | GCI82159 | Inner Joint | | 27 | 24 | 41 | | 136.5 | |
| | 2016.04-2018.05 | 9AT | R | L | Coupe 4WD M 276.823 | | GDS83794 | Drive Shaft | | 27 | 27 | 68.5 | 72 | 782 | |
| | 2016.04-2018.05 | 9AT | R | R | Coupe 4WD M 276.823 | Date To:2016.04 | GDS35106 | Drive Shaft | | 27 | 27 | 68.5 | 72 | 785 | |
| | 2016.04-2018.05 | 9AT | R | R | Coupe 4WD M 276.823 | Date From:2016.05 | GDS83794 | Drive Shaft | | 27 | 27 | 68.5 | 72 | 782 | |
| | 2016.04-2018.05 | 9AT | F | L | Estate 4WD M 276.823 | | GDS83679 | Drive Shaft | | 30 | 27 | 71 | 56 | 526 | |
| | 2016.04-2018.05 | 9AT | F | L/R | Estate 4WD M 276.823 | 8 balls | GCO82353 | Outer Joint | | 30 | 25 | 71 | 56 | 53.5 | I |
| | 2016.04-2018.05 | 9AT | F | L | Estate 4WD M 276.823 | | GCI82159 | Inner Joint | | 27 | 24 | 41 | | 136.5 | |
| | 2016.04-2018.05 | 9AT | R | L/R | Estate 4WD M 276.823 | | GDS83794 | Drive Shaft | | 27 | 27 | 68.5 | 72 | 782 | |
| | 2016.04-2018.05 | 9AT | F | L | Saloon 4WD M 276.823 | | GDS83679 | Drive Shaft | | 30 | 27 | 71 | 56 | 526 | |
| | 2016.04-2018.05 | 9AT | F | L/R | Saloon 4WD M 276.823 | 8 balls | GCO82353 | Outer Joint | | 30 | 25 | 71 | 56 | 53.5 | I |
| | 2016.04-2018.05 | 9AT | F | L | Saloon 4WD M 276.823 | | GCI82159 | Inner Joint | | 27 | 24 | 41 | | 136.5 | |
| | 2016.04-2018.05 | 9AT | R | L/R | Saloon 4WD M 276.823 | | GDS83794 | Drive Shaft | | 27 | 27 | 68.5 | 72 | 782 | |
| | 2016.10-2018.05 | 9AT | F | L | Convertible 4WD M 276.823 | | GDS83679 | Drive Shaft | | 30 | 27 | 71 | 56 | 526 | |
| | 2016.10-2018.05 | 9AT | F | L/R | Convertible 4WD M 276.823 | 8 balls | GCO82353 | Outer Joint | | 30 | 25 | 71 | 56 | 53.5 | I |
| | 2016.10-2018.05 | 9AT | F | L | Convertible 4WD M 276.823 | | GCI82159 | Inner Joint | | 27 | 24 | 41 | | 136.5 | |
| | 2016.10-2018.05 | 9AT | R | L/R | Convertible 4WD M 276.823 | | GDS83794 | Drive Shaft | | 27 | 27 | 68.5 | 72 | 782 | |
| 3.0 (287 kw) | 2018.05-2021.02 | 9AT | F | L | Estate 4WD M 276.823 | | GDS83679 | Drive Shaft | | 30 | 27 | 71 | 56 | 526 | |
| | 2018.05-2021.02 | 9AT | F | L/R | Estate 4WD M 276.823 | 8 balls | GCO82353 | Outer Joint | | 30 | 25 | 71 | 56 | 53.5 | I |
| | 2018.05-2021.02 | 9AT | F | L | Estate 4WD M 276.823 | | GCI82159 | Inner Joint | | 27 | 24 | 41 | | 136.5 | |
| | 2018.05-2021.02 | 9AT | R | L/R | Estate 4WD M 276.823 | | GDS83794 | Drive Shaft | | 27 | 27 | 68.5 | 72 | 782 | |
| | 2018.05-2021.05 | 9AT | F | L | Saloon 4WD M 276.823 | | GDS83679 | Drive Shaft | | 30 | 27 | 71 | 56 | 526 | |
| | 2018.05-2021.05 | 9AT | F | L/R | Saloon 4WD M 276.823 | 8 balls | GCO82353 | Outer Joint | | 30 | 25 | 71 | 56 | 53.5 | I |
| | 2018.05-2021.05 | 9AT | F | L | Saloon 4WD M 276.823 | | GCI82159 | Inner Joint | | 27 | 24 | 41 | | 136.5 | |
| | 2018.05-2021.05 | 9AT | R | L/R | Saloon 4WD M 276.823 | | GDS83794 | Drive Shaft | | 27 | 27 | 68.5 | 72 | 782 | |
| | 2018.05-2023.04 | 9AT | F | L | Convertible 4WD M 276.823 | | GDS83679 | Drive Shaft | | 30 | 27 | 71 | 56 | 526 | |
| | 2018.05-2023.04 | 9AT | F | L/R | Convertible 4WD M 276.823 | 8 balls | GCO82353 | Outer Joint | | 30 | 25 | 71 | 56 | 53.5 | I |
| | 2018.05-2023.04 | 9AT | F | L | Convertible 4WD M 276.823 | | GCI82159 | Inner Joint | | 27 | 24 | 41 | | 136.5 | |
| | 2018.05-2023.04 | 9AT | R | L/R | Convertible 4WD M 276.823 | | GDS83794 | Drive Shaft | | 27 | 27 | 68.5 | 72 | 782 | |
| | 2018.05-2023.04 | 9AT | F | L | Coupe 4WD M 276.823 | | GDS83679 | Drive Shaft | | 30 | 27 | 71 | 56 | 526 | |
| | 2018.05-2023.04 | 9AT | F | L/R | Coupe 4WD M 276.823 | 8 balls | GCO82353 | Outer Joint | | 30 | 25 | 71 | 56 | 53.5 | I |
| | 2018.05-2023.04 | 9AT | F | L | Coupe 4WD M 276.823 | | GCI82159 | Inner Joint | | 27 | 24 | 41 | | 136.5 | |
| | 2018.05-2023.04 | 9AT | R | L/R | Coupe 4WD M 276.823 | | GDS83794 | Drive Shaft | | 27 | 27 | 68.5 | 72 | 782 | |
| **C450 AMG** | | | | | | | | | | | | | | | |
| 3.0 (270 kw) | 2015.04-2018.05 | 7AT | F | L | Estate 4WD M 276.823 | | GDS83679 | Drive Shaft | | 30 | 27 | 71 | 56 | 526 | |
| | 2015.04-2018.05 | 7AT | F | R | Estate 4WD M 276.823 | For left-hand drive vehicles | GDS83231 | Drive Shaft | | 30 | 27 | 71 | 56 | 556 | |

| | YEAR | TRANSM. | F/R | L/R | BODY STYLE & DRIVE TYPE & ENGINE | REMARKS | G-AP Ref. | PRODUCT | ABS | Technical Specifications A | B | C | H | L | P |
|---|---|---|---|---|---|---|---|---|---|---|---|---|---|---|---|
| **MERCEDES-BENZ** | | | | | | | | | | | | | | | |
| **C450 AMG** | | | | | | | | | | | | | | | |
| 3.0 (270 kw) | 2015.04-2018.05 | 7AT | F | L/R | Estate 4WD M 276.823 | Neoprene | GCO82353 | Outer Joint | | 30 | 25 | 71 | 56 | 53.5 | I |
| | 2015.04-2018.05 | 7AT | F | L | Estate 4WD M 276.823 | | GCI82159 | Inner Joint | | 27 | 24 | 41 | | 136.5 | |
| | 2015.04-2018.05 | 7AT | F | R | Estate 4WD M 276.823 | For left-hand drive vehicles | GCI82185 | Inner Joint | | 27 | 24 | 38 | 62 | 106 | |
| | 2015.04-2018.05 | 7AT | R | L/R | Estate 4WD M 276.823 | Date To:2015.07 | GDS35106 | Drive Shaft | | 27 | 27 | 68.5 | 72 | 785 | |
| | 2015.04-2018.05 | 7AT | R | L/R | Estate 4WD M 276.823 | Date from:2015.08 | GDS83794 | Drive Shaft | | 27 | 27 | 68.5 | 72 | 782 | |
| | 2015.04-2018.05 | 7AT | F | L | Saloon 4WD M 276.823 | | GDS83679 | Drive Shaft | | 30 | 27 | 71 | 56 | 526 | |
| | 2015.04-2018.05 | 7AT | F | R | Saloon 4WD M 276.823 | For left-hand drive vehicles | GDS83231 | Drive Shaft | | 30 | 27 | 71 | 56 | 556 | |
| | 2015.04-2018.05 | 7AT | F | L/R | Saloon 4WD M 276.823 | Neoprene | GCO82353 | Outer Joint | | 30 | 25 | 71 | 56 | 53.5 | I |
| | 2015.04-2018.05 | 7AT | F | L | Saloon 4WD M 276.823 | | GCI82159 | Inner Joint | | 27 | 24 | 41 | | 136.5 | |
| | 2015.04-2018.05 | 7AT | F | R | Saloon 4WD M 276.823 | For left-hand drive vehicles | GCI82185 | Inner Joint | | 27 | 24 | 38 | 62 | 106 | |
| | 2015.04-2018.05 | 7AT | R | L/R | Saloon 4WD M 276.823 | Date To:2015.07 | GDS35106 | Drive Shaft | | 27 | 27 | 68.5 | 72 | 785 | |
| | 2015.04-2018.05 | 7AT | R | L/R | Saloon 4WD M 276.823 | Date from:2015.08 | GDS83794 | Drive Shaft | | 27 | 27 | 68.5 | 72 | 782 | |
| **C55 AMG** | | | | | | | | | | | | | | | |
| 5.4 (270 kw) | 2004.02-2007.02 | AT | R | L/R | Saloon RWD M 113.988 | | GDS35124 | Drive Shaft | 48NS | 25 | 30 | 65 | 70 | 731 | |
| | 2004.02-2007.08 | 5AT | R | L/R | Estate RWD M 113.988 | | GDS35124 | Drive Shaft | 48NS | 25 | 30 | 65 | 70 | 731 | |
| | 2005.09-2006.12 | AT | R | L/R | Saloon RWD M 113.988 | | GDS35124 | Drive Shaft | 48NS | 25 | 30 | 65 | 70 | 731 | |
| **C63 AMG** | | | | | | | | | | | | | | | |
| 6.2 (336 kw) | 2008.02-2014.01 | 7AT | R | L/R | Saloon RWD M 156.985 | | GDS35123 | Drive Shaft | 48NS | 27 | 30 | | 72 | 774 | |
| | 2008.02-2014.08 | 7AT | R | L/R | Estate RWD M 156.985 | | GDS35123 | Drive Shaft | 48NS | 27 | 30 | | 72 | 774 | |
| | 2011.06- | 7AT | R | L/R | Coupe RWD M 156.985 | | GDS35123 | Drive Shaft | 48NS | 27 | 30 | | 72 | 774 | |
| | 2012.09- | 7DCT | R | L/R | Coupe RWD M 156.985 | | GDS35123 | Drive Shaft | 48NS | 27 | 30 | | 72 | 774 | |
| 6.2 (358 kw) | 2008.02-2014.01 | 7AT | R | L/R | Saloon RWD M 156.985 | | GDS35123 | Drive Shaft | 48NS | 27 | 30 | | 72 | 774 | |
| | 2012.01- | 7AT | R | L/R | Coupe RWD M 156.985 | | GDS35123 | Drive Shaft | 48NS | 27 | 30 | | 72 | 774 | |
| | 2012.01-2014.08 | 7AT | R | L/R | Estate RWD M 156.985 | | GDS35123 | Drive Shaft | 48NS | 27 | 30 | | 72 | 774 | |
| 6.2 (373 kw) | 2008.02-2014.01 | 7AT | R | L/R | Saloon RWD M 156.985 | | GDS35123 | Drive Shaft | 48NS | 27 | 30 | | 72 | 774 | |
| | 2012.11- | 7AT | R | L/R | Coupe RWD M 156.985 | | GDS35123 | Drive Shaft | 48NS | 27 | 30 | | 72 | 774 | |
| | 2013.06-2014.08 | 7AT | R | L/R | Estate RWD M 156.985 | | GDS35123 | Drive Shaft | 48NS | 27 | 30 | | 72 | 774 | |
| 6.2 (380 kw) | 2012.01- | 7AT | R | L/R | Coupe RWD M 156.985 | | GDS35119 | Drive Shaft | 48NS | 27 | 27 | 68 | 82 | 803 | |
| 6.2 (383 kw) | 2010.07-2011.08 | 7AT | R | L/R | Estate RWD M 156.985 | | GDS35123 | Drive Shaft | 48NS | 27 | 30 | | 72 | 774 | |
| | 2010.07-2014.01 | 7AT | R | L/R | Saloon RWD M 156.985 | | GDS35123 | Drive Shaft | 48NS | 27 | 30 | | 72 | 774 | |
| **Citan 108D** | | | | | | | | | | | | | | | |
| 1.5 (55 kw) | 2012.11-2021.08 | 5MT | F | L | Box Body/MPV FWD OM 607.951 (K9K) | | GDS99228 | Drive Shaft | | 27 | 26 | 56.7 | 91 | 675 | |
| | 2012.11-2021.08 | 5MT | F | R | Box Body/MPV FWD OM 607.951 (K9K) | Without SA code:RS1 | GDS50612 | Drive Shaft | | 27 | 26 | 56.7 | 91 | 918 | |
| | 2012.11-2021.08 | 5MT | F | L | Box Body/MPV FWD OM 607.951 (K9K) | | GCI50057 | Inner Joint | | 26 | 22 | 40 | 64 | 104 | |
| | 2012.11-2021.08 | 5MT | F | R | Box Body/MPV FWD OM 607.951 (K9K) | | GCI50137 | Inner Joint | | 26 | 22 | 33 | 330 | 96.5 | |
| | 2012.11-2021.08 | MT | F | L/R | Box Body/MPV FWD OM 607.951 (K9K) | | GCO50136 | Outer Joint | | 27 | 22 | 56.7 | 91 | 55 | I |
| | 2012.11-2021.08 | 5MT | F | L | MPV FWD OM 607.951 (K9K) | | GDS99228 | Drive Shaft | | 27 | 26 | 56.7 | 91 | 675 | |
| | 2012.11-2021.08 | 5MT | F | R | MPV FWD OM 607.951 (K9K) | Without SA code:RS1 | GDS50612 | Drive Shaft | | 27 | 26 | 56.7 | 91 | 918 | |
| | 2012.11-2021.08 | 5MT | F | L | MPV FWD OM 607.951 (K9K) | | GCI50057 | Inner Joint | | 26 | 22 | 40 | 64 | 104 | |
| | 2012.11-2021.08 | 5MT | F | R | MPV FWD OM 607.951 (K9K) | | GCI50137 | Inner Joint | | 26 | 22 | 33 | 330 | 96.5 | |
| | 2012.11-2021.08 | MT | F | L/R | MPV FWD OM 607.951 (K9K) | | GCO50136 | Outer Joint | | 27 | 22 | 56.7 | 91 | 55 | I |
| | 2021.09- | 6MT | F | L | Box Body/MPV FWD OM 608.915 (K9K) | For vehicles without electric parking brake | GDS57637 | Drive Shaft | | 25 | 26 | 53 | 88.5 | 700 | |
| | 2021.09- | 6MT | F | L | Box Body/MPV FWD OM 608.915 (K9K) | For vehicles with electric parking brake | GDS58047 | Drive Shaft | | 29 | 26 | 60 | 95.5 | 705 | |
| | 2021.09- | 6MT | F | R | Box Body/MPV FWD OM 608.915 (K9K) | For vehicles without electric parking brake | GDS57834 | Drive Shaft | | 25 | 26 | 53 | 88.5 | 946 | |
| | 2021.09- | 6MT | F | R | Box Body/MPV FWD OM 608.915 (K9K) | For vehicles with electric parking brake | GDS58073 | Drive Shaft | | 29 | 26 | 60 | 95.5 | 951 | |
| | 2021.09- | 6MT | F | L | Box Body/MPV FWD OM 608.915 (K9K) | For vehicles without electric parking brake | GCO83588 | Outer Joint | | 25 | 24 | 53 | 88.5 | 61 | I |
| | 2021.09- | 6MT | F | L/R | Box Body/MPV FWD OM 608.915 (K9K) | For vehicles with electric parking brake | GCO83811 | Outer Joint | | 29 | 24 | 60 | 95.5 | 61 | I |
| | 2021.09- | 6MT | F | L | Box Body/MPV FWD OM 608.915 (K9K) | For vehicles with electric parking brake | GCI83418 | Inner Joint | | 26 | 24 | 40 | 64 | 114 | |
| | 2021.09- | 6MT | F | L | Box Body/MPV FWD OM 608.915 (K9K) | For vehicles without electric parking brake | GCI83782 | Inner Joint | | 26 | 24 | 40 | 64 | 114 | |
| | 2021.09- | 6MT | F | R | Box Body/MPV FWD OM 608.915 (K9K) | For vehicles without electric parking brake | GCI83417 | Inner Joint | | 26 | 24 | 33 | 330 | 105 | |
| | 2021.09- | 6MT | F | R | Box Body/MPV FWD OM 608.915 (K9K) | For vehicles with electric parking brake | GCI84005 | Inner Joint | | 26 | 24 | 33 | 330 | 103 | |
| | 2021.09- | 6MT | F | L | MPV FWD OM 608.915 (K9K) | For vehicles without electric parking brake | GDS57637 | Drive Shaft | | 25 | 26 | 53 | 88.5 | 700 | |
| | 2021.09- | 6MT | F | L | MPV FWD OM 608.915 (K9K) | For vehicles with electric parking brake | GDS58047 | Drive Shaft | | 29 | 26 | 60 | 95.5 | 705 | |
| | 2021.09- | 6MT | F | R | MPV FWD OM 608.915 (K9K) | For vehicles without electric parking brake | GDS57834 | Drive Shaft | | 25 | 26 | 53 | 88.5 | 946 | |
| | 2021.09- | 6MT | F | R | MPV FWD OM 608.915 (K9K) | For vehicles with electric parking brake | GDS58073 | Drive Shaft | | 29 | 26 | 60 | 95.5 | 951 | |
| | 2021.09- | 6MT | F | L | MPV FWD OM 608.915 (K9K) | For vehicles without electric parking brake | GCO83588 | Outer Joint | | 25 | 24 | 53 | 88.5 | 61 | I |
| | 2021.09- | 6MT | F | L/R | MPV FWD OM 608.915 (K9K) | For vehicles with electric parking brake | GCO83811 | Outer Joint | | 29 | 24 | 60 | 95.5 | 61 | I |
| | 2021.09- | 6MT | F | L | MPV FWD OM 608.915 (K9K) | For vehicles with electric parking brake | GCI83418 | Inner Joint | | 26 | 24 | 40 | 64 | 114 | |
| | 2021.09- | 6MT | F | L | MPV FWD OM 608.915 (K9K) | For vehicles without electric parking brake | GCI83782 | Inner Joint | | 26 | 24 | 40 | 64 | 114 | |
| | 2021.09- | 6MT | F | R | MPV FWD OM 608.915 (K9K) | For vehicles without electric parking brake | GCI83417 | Inner Joint | | 26 | 24 | 33 | 330 | 105 | |
| | 2021.09- | 6MT | F | R | MPV FWD OM 608.915 (K9K) | For vehicles with electric parking brake | GCI84005 | Inner Joint | | 26 | 24 | 33 | 330 | 103 | |
| 1.5 (59 kw) | 2019.02-2021.08 | 6MT | F | L | MPV FWD OM 608.915 (K9K) | | GDS58128 | Drive Shaft | | 27 | 26 | 51.5 | 90.5 | 670 | |
| | 2019.05-2021.08 | 6MT | F | L | Box Body/MPV FWD OM 608.915 (K9K) | | GDS58128 | Drive Shaft | | 27 | 26 | 51.5 | 90.5 | 670 | |

| | YEAR | TRANSM. | F/R | L/R | BODY STYLE & DRIVE TYPE & ENGINE | REMARKS | G-AP Ref. | PRODUCT | ABS | Technical Specifications A | B | C | H | L | P |
|---|---|---|---|---|---|---|---|---|---|---|---|---|---|---|---|
| **MERCEDES-BENZ** | | | | | | | | | | | | | | | |
| **Citan 109D** | | | | | | | | | | | | | | | |
| 1.5 (66 kw) | 2012.11-2021.08 | 5MT | F | L | Box Body/MPV FWD OM 607.951 (K9K) | | GDS99228 | Drive Shaft | | 27 | 26 | 56.7 | 91 | 675 | |
| | 2012.11-2021.08 | 5MT | F | R | Box Body/MPV FWD OM 607.951 (K9K) | Without SA code:RS1 | GDS50612 | Drive Shaft | | 27 | 26 | 56.7 | 91 | 918 | |
| | 2012.11-2021.08 | 5MT | F | L | Box Body/MPV FWD OM 607.951 (K9K) | | GCI50057 | Inner Joint | | 26 | 22 | 40 | 64 | 104 | |
| | 2012.11-2021.08 | 5MT | F | R | Box Body/MPV FWD OM 607.951 (K9K) | | GCI50137 | Inner Joint | | 26 | 22 | 33 | 330 | 96.5 | |
| | 2012.11-2021.08 | MT | F | L/R | Box Body/MPV FWD OM 607.951 (K9K) | | GCO50136 | Outer Joint | | 27 | 22 | 56.7 | 91 | 55 | I |
| | 2012.11-2021.08 | 5MT | F | L | MPV FWD OM 607.951 (K9K) | | GDS99228 | Drive Shaft | | 27 | 26 | 56.7 | 91 | 675 | |
| | 2012.11-2021.08 | 5MT | F | R | MPV FWD OM 607.951 (K9K) | Without SA code:RS1 | GDS50612 | Drive Shaft | | 27 | 26 | 56.7 | 91 | 918 | |
| | 2012.11-2021.08 | 5MT | F | L | MPV FWD OM 607.951 (K9K) | | GCI50057 | Inner Joint | | 26 | 22 | 40 | 64 | 104 | |
| | 2012.11-2021.08 | 5MT | F | R | MPV FWD OM 607.951 (K9K) | | GCI50137 | Inner Joint | | 26 | 22 | 33 | 330 | 96.5 | |
| | 2012.11-2021.08 | MT | F | L/R | MPV FWD OM 607.951 (K9K) | | GCO50136 | Outer Joint | | 27 | 22 | 56.7 | 91 | 55 | I |
| 1.5 (70 kw) | 2019.02-2021.08 | 6MT | F | L | MPV FWD OM 608.915 (K9K) | | GDS58128 | Drive Shaft | | 27 | 26 | 51.5 | 90.5 | 670 | |
| | 2019.05-2021.08 | 6MT | F | L | Box Body/MPV FWD OM 608.915 (K9K) | | GDS58128 | Drive Shaft | | 27 | 26 | 51.5 | 90.5 | 670 | |
| **Citan 110** | | | | | | | | | | | | | | | |
| 1.3 (75 kw) | 2021.09- | 6MT | F | L | Box Body/MPV FWD 200.731 | For vehicles without electric parking brake | GDS57637 | Drive Shaft | | 25 | 26 | 53 | 88.5 | 700 | |
| | 2021.09- | 6MT | F | L | Box Body/MPV FWD 200.731 | For vehicles with electric parking brake | GDS58047 | Drive Shaft | | 29 | 26 | 60 | 95.5 | 705 | |
| | 2021.09- | 6MT | F | R | Box Body/MPV FWD 200.731 | For vehicles without electric parking brake | GDS57941 | Drive Shaft | | 25 | 26 | 53 | 88.5 | 948 | |
| | 2021.09- | 6MT | F | R | Box Body/MPV FWD 200.731 | For vehicles with electric parking brake | GDS58079 | Drive Shaft | | 29 | 26 | 60 | 95.5 | 955 | |
| | 2021.09- | 6MT | F | L/R | Box Body/MPV FWD 200.731 | For vehicles without electric parking brake | GCO83588 | Outer Joint | | 25 | 24 | 53 | 88.5 | 61 | I |
| | 2021.09- | 6MT | F | L/R | Box Body/MPV FWD 200.731 | For vehicles with electric parking brake | GCO83811 | Outer Joint | | 29 | 24 | 60 | 95.5 | 61 | I |
| | 2021.09- | 6MT | F | L | Box Body/MPV FWD 200.731 | For vehicles with electric parking brake | GCI83418 | Inner Joint | | 26 | 24 | 40 | 64 | 114 | |
| | 2021.09- | 6MT | F | L | Box Body/MPV FWD 200.731 | For vehicles without electric parking brake | GCI83782 | Inner Joint | | 26 | 24 | 40 | 64 | 114 | |
| | 2021.09- | 6MT | F | R | Box Body/MPV FWD 200.731 | For vehicles without electric parking brake | GCI83949 | Inner Joint | | 26 | 24 | 33 | 346 | 105 | |
| | 2021.09- | 6MT | F | L | MPV FWD 200.731 | For vehicles without electric parking brake | GDS57637 | Drive Shaft | | 25 | 26 | 53 | 88.5 | 700 | |
| | 2021.09- | 6MT | F | L | MPV FWD 200.731 | For vehicles with electric parking brake | GDS58047 | Drive Shaft | | 29 | 26 | 60 | 95.5 | 705 | |
| | 2021.09- | 6MT | F | R | MPV FWD 200.731 | For vehicles without electric parking brake | GDS57941 | Drive Shaft | | 25 | 26 | 53 | 88.5 | 948 | |
| | 2021.09- | 6MT | F | R | MPV FWD 200.731 | For vehicles with electric parking brake | GDS58079 | Drive Shaft | | 29 | 26 | 60 | 95.5 | 955 | |
| | 2021.09- | 6MT | F | L/R | MPV FWD 200.731 | For vehicles without electric parking brake | GCO83588 | Outer Joint | | 25 | 24 | 53 | 88.5 | 61 | I |
| | 2021.09- | 6MT | F | L/R | MPV FWD 200.731 | For vehicles with electric parking brake | GCO83811 | Outer Joint | | 29 | 24 | 60 | 95.5 | 61 | I |
| | 2021.09- | 6MT | F | L | MPV FWD 200.731 | For vehicles with electric parking brake | GCI83418 | Inner Joint | | 26 | 24 | 40 | 64 | 114 | |
| | 2021.09- | 6MT | F | L | MPV FWD 200.731 | For vehicles without electric parking brake | GCI83782 | Inner Joint | | 26 | 24 | 40 | 64 | 114 | |
| | 2021.09- | 6MT | F | R | MPV FWD 200.731 | For vehicles without electric parking brake | GCI83949 | Inner Joint | | 26 | 24 | 33 | 346 | 105 | |
| **Citan 110D** | | | | | | | | | | | | | | | |
| 1.5 (70 kw) | 2021.09- | 6MT | F | L | Box Body/MPV FWD OM 608.915 (K9K) | For vehicles without electric parking brake;Not for SA code:I5B | GDS57637 | Drive Shaft | | 25 | 26 | 53 | 88.5 | 700 | |
| | 2021.09- | 6MT | F | L | Box Body/MPV FWD OM 608.915 (K9K) | For vehicles with electric parking brake | GDS58047 | Drive Shaft | | 29 | 26 | 60 | 95.5 | 705 | |
| | 2021.09- | 6MT | F | L | Box Body/MPV FWD OM 608.915 (K9K) | For vehicles without electric parking brake;For SA code:I5B | GDS58049 | Drive Shaft | | 25 | 27 | 53 | 88.5 | 686 | |
| | 2021.09- | 6MT | F | L | Box Body/MPV FWD OM 608.915 (K9K) | For SA code:I5B;For vehicles with electric parking brake | GDS58243 | Drive Shaft | | 29 | 27 | 60 | 95.5 | 695 | |
| | 2021.09- | 6MT | F | R | Box Body/MPV FWD OM 608.915 (K9K) | For vehicles without electric parking brake;Not for SA code:I5B | GDS57834 | Drive Shaft | | 25 | 26 | 53 | 88.5 | 946 | |
| | 2021.09- | 6MT | F | R | Box Body/MPV FWD OM 608.915 (K9K) | For SA code:I5B,For vehicles with electric parking brake | GDS58046 | Drive Shaft | | 29 | 27 | 60 | 95.5 | 960 | |
| | 2021.09- | 6MT | F | R | Box Body/MPV FWD OM 608.915 (K9K) | For vehicles without electric parking brake;For SA code:I5B | GDS58048 | Drive Shaft | | 25 | 27 | 53 | 88.5 | 953 | |
| | 2021.09- | 6MT | F | R | Box Body/MPV FWD OM 608.915 (K9K) | For vehicles with electric parking brake | GDS58073 | Drive Shaft | | 29 | 26 | 60 | 95.5 | 951 | |
| | 2021.09- | 6MT | F | L/R | Box Body/MPV FWD OM 608.915 (K9K) | For vehicles without electric parking brake | GCO83588 | Outer Joint | | 25 | 24 | 53 | 88.5 | 61 | I |
| | 2021.09- | 6MT | F | L | Box Body/MPV FWD OM 608.915 (K9K) | For vehicles with electric parking brake | GCI83418 | Inner Joint | | 26 | 24 | 40 | 64 | 114 | |
| | 2021.09- | 6MT | F | L | Box Body/MPV FWD OM 608.915 (K9K) | For vehicles without electric parking brake;Not for SA code:I5B | GCI83782 | Inner Joint | | 26 | 24 | 40 | 64 | 114 | |
| | 2021.09- | 6MT | F | L | Box Body/MPV FWD OM 608.915 (K9K) | For vehicles without electric parking brake;For SA code:I5B | GCI83989 | Inner Joint | | 27 | 24 | 39.95 | 67 | 114 | |
| | 2021.09- | 6MT | F | R | Box Body/MPV FWD OM 608.915 (K9K) | For vehicles without electric parking brake;Not for SA code:I5B | GCI83417 | Inner Joint | | 26 | 24 | 33 | 330 | 105 | |
| | 2021.09- | 6MT | F | R | Box Body/MPV FWD OM 608.915 (K9K) | For SA code:I5B,For vehicles with electric parking brake | GCI83988 | Inner Joint | | 27 | 24 | 33 | 339 | 103.5 | |
| | 2021.09- | 6MT | F | R | Box Body/MPV FWD OM 608.915 (K9K) | For vehicles with electric parking brake | GCI84005 | Inner Joint | | 26 | 24 | 33 | 330 | 103 | |
| | 2021.09- | 6MT/7DCT | F | L/R | Box Body/MPV FWD OM 608.915 (K9K) | For vehicles with electric parking brake | GCO83811 | Outer Joint | | 29 | 24 | 60 | 95.5 | 61 | I |
| | 2021.09- | 7DCT | F | L | Box Body/MPV FWD OM 608.915 (K9K) | For vehicles with electric parking brake | GDS58074 | Drive Shaft | | 29 | 27 | 60 | 95.5 | 651 | |
| | 2021.09- | 7DCT | F | L | Box Body/MPV FWD OM 608.915 (K9K) | For vehicles without electric parking brake | GDS58093 | Drive Shaft | | 25 | 27 | 53 | 88.5 | 642 | |
| | 2021.09- | 7DCT | F | R | Box Body/MPV FWD OM 608.915 (K9K) | For vehicles without electric parking brake | GDS57712 | Drive Shaft | | 25 | 27 | 53 | 88.5 | 1000 | |
| | 2021.09- | 7DCT | F | R | Box Body/MPV FWD OM 608.915 (K9K) | For vehicles with electric parking brake | GDS58075 | Drive Shaft | | 29 | 27 | 60 | 95.5 | 1007 | |
| | 2021.09- | 7DCT | F | L | Box Body/MPV FWD OM 608.915 (K9K) | For vehicles with electric parking brake | GCI84006 | Inner Joint | | 27 | 24 | 40 | 65.5 | 113.5 | |
| | 2021.09- | 7DCT | F | R | Box Body/MPV FWD OM 608.915 (K9K) | For vehicles with electric parking brake | GCI83825 | Inner Joint | | 27 | 24 | 40 | 384.5 | 105 | |
| | 2021.09- | 6MT | F | L | MPV FWD OM 608.915 (K9K) | For vehicles without electric parking brake | GDS57637 | Drive Shaft | | 25 | 26 | 53 | 88.5 | 700 | |
| | 2021.09- | 6MT | F | L | MPV FWD OM 608.915 (K9K) | For vehicles with electric parking brake | GDS58047 | Drive Shaft | | 29 | 26 | 60 | 95.5 | 705 | |
| | 2021.09- | 6MT | F | R | MPV FWD OM 608.915 (K9K) | For vehicles without electric parking brake | GDS57834 | Drive Shaft | | 25 | 26 | 53 | 88.5 | 946 | |
| | 2021.09- | 6MT | F | R | MPV FWD OM 608.915 (K9K) | For vehicles with electric parking brake | GDS58073 | Drive Shaft | | 29 | 26 | 60 | 95.5 | 951 | |
| | 2021.09- | 6MT | F | L | MPV FWD OM 608.915 (K9K) | For vehicles without electric parking brake | GCO83588 | Outer Joint | | 25 | 24 | 53 | 88.5 | 61 | I |
| | 2021.09- | 6MT | F | L | MPV FWD OM 608.915 (K9K) | For vehicles with electric parking brake | GCI83418 | Inner Joint | | 26 | 24 | 40 | 64 | 114 | |
| | 2021.09- | 6MT | F | L | MPV FWD OM 608.915 (K9K) | For vehicles without electric parking brake | GCI83782 | Inner Joint | | 26 | 24 | 40 | 64 | 114 | |
| | 2021.09- | 6MT | F | R | MPV FWD OM 608.915 (K9K) | For vehicles without electric parking brake | GCI83417 | Inner Joint | | 26 | 24 | 33 | 330 | 105 | |
| | 2021.09- | 6MT | F | R | MPV FWD OM 608.915 (K9K) | For vehicles with electric parking brake | GCI84005 | Inner Joint | | 26 | 24 | 33 | 330 | 103 | |
| | 2021.09- | 6MT/7DCT | F | L/R | MPV FWD OM 608.915 (K9K) | For vehicles with electric parking brake | GCO83811 | Outer Joint | | 29 | 24 | 60 | 95.5 | 61 | I |
| | 2021.09- | 7DCT | F | L | MPV FWD OM 608.915 (K9K) | For vehicles with electric parking brake | GDS58074 | Drive Shaft | | 29 | 27 | 60 | 95.5 | 651 | |

| | YEAR | TRANSM. | F/R | L/R | BODY STYLE & DRIVE TYPE & ENGINE | REMARKS | G-AP Ref. | PRODUCT | ABS | Technical Specifications A | B | C | H | L | P |
|---|---|---|---|---|---|---|---|---|---|---|---|---|---|---|---|
| **MERCEDES-BENZ** | | | | | | | | | | | | | | | |
| **Citan 110D** | | | | | | | | | | | | | | | |
| 1.5 (70 kw) | 2021.09- | 7DCT | F | L | MPV FWD OM 608.915 (K9K) | For vehicles without electric parking brake | GDS58093 | Drive Shaft | | 25 | 27 | 53 | 88.5 | 642 | |
| | 2021.09- | 7DCT | F | R | MPV FWD OM 608.915 (K9K) | For vehicles without electric parking brake | GDS57712 | Drive Shaft | | 25 | 27 | 53 | 88.5 | 1000 | |
| | 2021.09- | 7DCT | F | R | MPV FWD OM 608.915 (K9K) | For vehicles with electric parking brake | GDS58075 | Drive Shaft | | 29 | 27 | 60 | 95.5 | 1007 | |
| | 2021.09- | 7DCT | F | L | MPV FWD OM 608.915 (K9K) | For vehicles with electric parking brake | GCI84006 | Inner Joint | | 27 | 24 | 40 | 65.5 | 113.5 | |
| | 2021.09- | 7DCT | F | R | MPV FWD OM 608.915 (K9K) | For vehicles with electric parking brake | GCI83825 | Inner Joint | | 27 | 24 | 40 | 384.5 | 105 | |
| **Citan 111D** | | | | | | | | | | | | | | | |
| 1.5 (81 kw) | 2013.06-2021.08 | 5MT | F | R | Box Body/MPV FWD OM 607.951 (K9K) | | GDS99071 | Drive Shaft | | 23 | 26 | 49 | 86 | 911 | |
| | 2013.06-2021.08 | 6MT | F | L | Box Body/MPV FWD OM 607.951 (K9K) | Inner teeth of wheel side:22 | GDS99228 | Drive Shaft | | 27 | 26 | 56.7 | 91 | 675 | |
| | 2013.06-2021.08 | 6MT | F | L | Box Body/MPV FWD OM 607.951 (K9K) | | GDS99228 | Drive Shaft | | 27 | 26 | 56.7 | 91 | 675 | |
| | 2013.06-2021.08 | 6MT | F | R | Box Body/MPV FWD OM 607.951 (K9K) | | GDS50612 | Drive Shaft | | 27 | 26 | 56.7 | 91 | 918 | |
| | 2013.06-2021.08 | 6MT | F | L | Box Body/MPV FWD OM 607.951 (K9K) | | GCI50057 | Inner Joint | | 26 | 22 | 40 | 64 | 104 | |
| | 2013.06-2021.08 | 6MT | F | R | Box Body/MPV FWD OM 607.951 (K9K) | | GCI50137 | Inner Joint | | 26 | 22 | 33 | 330 | 96.5 | |
| | 2013.06-2021.08 | MT | F | L/R | Box Body/MPV FWD OM 607.951 (K9K) | | GCO50136 | Outer Joint | | 27 | 22 | 56.7 | 91 | 55 | I |
| | 2013.06-2021.08 | 6MT | F | L | MPV FWD OM 607.951 (K9K) | solid shaft | GDS99228 | Drive Shaft | | 27 | 26 | 56.7 | 91 | 675 | |
| | 2013.06-2021.08 | 6MT | F | R | MPV FWD OM 607.951 (K9K) | | GDS50612 | Drive Shaft | | 27 | 26 | 56.7 | 91 | 918 | |
| | 2013.06-2021.08 | 6MT | F | L | MPV FWD OM 607.951 (K9K) | | GCI50057 | Inner Joint | | 26 | 22 | 40 | 64 | 104 | |
| | 2013.06-2021.08 | MT | F | L/R | MPV FWD OM 607.951 (K9K) | | GCO50136 | Outer Joint | | 27 | 22 | 56.7 | 91 | 55 | I |
| 1.5 (85 kw) | 2019.02-2021.08 | 6MT | F | L | MPV FWD OM 608.915 (K9K) | | GDS58128 | Drive Shaft | | 27 | 26 | 51.5 | 90.5 | 670 | |
| | 2019.05-2021.08 | 6MT | F | L | Box Body/MPV FWD OM 608.915 (K9K) | | GDS58128 | Drive Shaft | | 27 | 26 | 51.5 | 90.5 | 670 | |
| **Citan 112** | | | | | | | | | | | | | | | |
| 1.2 (84 kw) | 2013.06-2021.08 | 6DCT | F | L | Box Body/MPV FWD M 200.711 | | GDS83777 | Drive Shaft | | 27 | 34 | 56.5 | 91 | 625 | |
| | 2013.06-2021.08 | 6MT | F | L | Box Body/MPV FWD M 200.711 | solid shaft | GDS99228 | Drive Shaft | | 27 | 26 | 56.7 | 91 | 675 | |
| | 2013.06-2021.08 | 6MT | F | L | Box Body/MPV FWD M 200.711 | | GCI50057 | Inner Joint | | 26 | 22 | 40 | 64 | 104 | |
| | 2013.06-2021.08 | MT | F | L/R | Box Body/MPV FWD M 200.711 | | GCO50136 | Outer Joint | | 27 | 22 | 56.7 | 91 | 55 | I |
| | 2013.06-2021.08 | 6DCT | F | L | MPV FWD M 200.711 | | GDS83777 | Drive Shaft | | 27 | 34 | 56.5 | 91 | 625 | |
| | 2013.06-2021.08 | 6MT | F | L | MPV FWD M 200.711 | solid shaft | GDS99228 | Drive Shaft | | 27 | 26 | 56.7 | 91 | 675 | |
| | 2013.06-2021.08 | 6MT | F | L | MPV FWD M 200.711 | | GCI50057 | Inner Joint | | 26 | 22 | 40 | 64 | 104 | |
| | 2013.06-2021.08 | MT | F | L/R | MPV FWD M 200.711 | | GCO50136 | Outer Joint | | 27 | 22 | 56.7 | 91 | 55 | I |
| **Citan 112D** | | | | | | | | | | | | | | | |
| 1.5 (85 kw) | 2021.09- | 6MT | F | L | Box Body/MPV FWD OM 608.915 (K9K) | For vehicles without electric parking brake | GDS58049 | Drive Shaft | | 25 | 27 | 53 | 88.5 | 686 | |
| | 2021.09- | 6MT | F | L | Box Body/MPV FWD OM 608.915 (K9K) | For vehicles with electric parking brake | GDS58243 | Drive Shaft | | 29 | 27 | 60 | 95.5 | 695 | |
| | 2021.09- | 6MT | F | R | Box Body/MPV FWD OM 608.915 (K9K) | For vehicles with electric parking brake | GDS58046 | Drive Shaft | | 29 | 27 | 60 | 95.5 | 960 | |
| | 2021.09- | 6MT | F | R | Box Body/MPV FWD OM 608.915 (K9K) | For vehicles without electric parking brake | GDS58048 | Drive Shaft | | 25 | 27 | 53 | 88.5 | 953 | |
| | 2021.09- | 6MT | F | L/R | Box Body/MPV FWD OM 608.915 (K9K) | For vehicles without electric parking brake | GCO83588 | Outer Joint | | 25 | 24 | 53 | 88.5 | 61 | I |
| | 2021.09- | 6MT | F | L | Box Body/MPV FWD OM 608.915 (K9K) | For vehicles without electric parking brake | GCI83989 | Inner Joint | | 27 | 24 | 39.95 | 67 | 114 | |
| | 2021.09- | 6MT | F | R | Box Body/MPV FWD OM 608.915 (K9K) | For vehicles without electric parking brake | GCI83988 | Inner Joint | | 27 | 24 | 33 | 339 | 103.5 | |
| | 2021.09- | 6MT/7DCT | F | L/R | Box Body/MPV FWD OM 608.915 (K9K) | For vehicles with electric parking brake | GCO83811 | Outer Joint | | 29 | 24 | 60 | 95.5 | 61 | I |
| | 2021.09- | 7DCT | F | L | Box Body/MPV FWD OM 608.915 (K9K) | For vehicles with electric parking brake | GDS58074 | Drive Shaft | | 29 | 27 | 60 | 95.5 | 651 | |
| | 2021.09- | 7DCT | F | L | Box Body/MPV FWD OM 608.915 (K9K) | For vehicles without electric parking brake | GDS58093 | Drive Shaft | | 25 | 27 | 53 | 88.5 | 642 | |
| | 2021.09- | 7DCT | F | R | Box Body/MPV FWD OM 608.915 (K9K) | For vehicles without electric parking brake | GDS57712 | Drive Shaft | | 25 | 27 | 53 | 88.5 | 1000 | |
| | 2021.09- | 7DCT | F | R | Box Body/MPV FWD OM 608.915 (K9K) | For vehicles with electric parking brake | GDS58075 | Drive Shaft | | 29 | 27 | 60 | 95.5 | 1007 | |
| | 2021.09- | 7DCT | F | L | Box Body/MPV FWD OM 608.915 (K9K) | For vehicles with electric parking brake | GCI84006 | Inner Joint | | 27 | 24 | 40 | 65.5 | 113.5 | |
| | 2021.09- | 7DCT | F | R | Box Body/MPV FWD OM 608.915 (K9K) | For vehicles with electric parking brake | GCI83825 | Inner Joint | | 27 | 24 | 40 | 384.5 | 105 | |
| | 2021.09- | 6MT | F | L | MPV FWD OM 608.915 (K9K) | For vehicles without electric parking brake | GDS58049 | Drive Shaft | | 25 | 27 | 53 | 88.5 | 686 | |
| | 2021.09- | 6MT | F | L | MPV FWD OM 608.915 (K9K) | For vehicles with electric parking brake | GDS58243 | Drive Shaft | | 29 | 27 | 60 | 95.5 | 695 | |
| | 2021.09- | 6MT | F | R | MPV FWD OM 608.915 (K9K) | For vehicles with electric parking brake | GDS58046 | Drive Shaft | | 29 | 27 | 60 | 95.5 | 960 | |
| | 2021.09- | 6MT | F | R | MPV FWD OM 608.915 (K9K) | For vehicles without electric parking brake | GDS58048 | Drive Shaft | | 25 | 27 | 53 | 88.5 | 953 | |
| | 2021.09- | 6MT | F | L/R | MPV FWD OM 608.915 (K9K) | For vehicles without electric parking brake | GCO83588 | Outer Joint | | 25 | 24 | 53 | 88.5 | 61 | I |
| | 2021.09- | 6MT | F | L | MPV FWD OM 608.915 (K9K) | For vehicles without electric parking brake | GCI83989 | Inner Joint | | 27 | 24 | 39.95 | 67 | 114 | |
| | 2021.09- | 6MT | F | R | MPV FWD OM 608.915 (K9K) | For vehicles without electric parking brake | GCI83988 | Inner Joint | | 27 | 24 | 33 | 339 | 103.5 | |
| | 2021.09- | 6MT/7DCT | F | L/R | MPV FWD OM 608.915 (K9K) | For vehicles with electric parking brake | GCO83811 | Outer Joint | | 29 | 24 | 60 | 95.5 | 61 | I |
| | 2021.09- | 7DCT | F | L | MPV FWD OM 608.915 (K9K) | For vehicles with electric parking brake | GDS58074 | Drive Shaft | | 29 | 27 | 60 | 95.5 | 651 | |
| | 2021.09- | 7DCT | F | L | MPV FWD OM 608.915 (K9K) | For vehicles without electric parking brake | GDS58093 | Drive Shaft | | 25 | 27 | 53 | 88.5 | 642 | |
| | 2021.09- | 7DCT | F | R | MPV FWD OM 608.915 (K9K) | For vehicles without electric parking brake | GDS57712 | Drive Shaft | | 25 | 27 | 53 | 88.5 | 1000 | |
| | 2021.09- | 7DCT | F | R | MPV FWD OM 608.915 (K9K) | For vehicles with electric parking brake | GDS58075 | Drive Shaft | | 29 | 27 | 60 | 95.5 | 1007 | |
| | 2021.09- | 7DCT | F | L | MPV FWD OM 608.915 (K9K) | For vehicles with electric parking brake | GCI84006 | Inner Joint | | 27 | 24 | 40 | 65.5 | 113.5 | |
| | 2021.09- | 7DCT | F | R | MPV FWD OM 608.915 (K9K) | For vehicles with electric parking brake | GCI83825 | Inner Joint | | 27 | 24 | 40 | 384.5 | 105 | |
| **Citan 113** | | | | | | | | | | | | | | | |
| 1.3 (96 kw) | 2021.09- | 6MT | F | L | Box Body/MPV FWD 200.731 | For vehicles without electric parking brake | GDS57637 | Drive Shaft | | 25 | 26 | 53 | 88.5 | 700 | |
| | 2021.09- | 6MT | F | L | Box Body/MPV FWD 200.731 | For vehicles with electric parking brake | GDS58047 | Drive Shaft | | 29 | 26 | 60 | 95.5 | 705 | |
| | 2021.09- | 6MT | F | R | Box Body/MPV FWD 200.731 | For vehicles without electric parking brake | GDS57941 | Drive Shaft | | 25 | 26 | 53 | 88.5 | 948 | |
| | 2021.09- | 6MT | F | R | Box Body/MPV FWD 200.731 | For vehicles with electric parking brake | GDS58079 | Drive Shaft | | 29 | 26 | 60 | 95.5 | 955 | |
| | 2021.09- | 6MT | F | L/R | Box Body/MPV FWD 200.731 | For vehicles without electric parking brake | GCO83588 | Outer Joint | | 25 | 24 | 53 | 88.5 | 61 | I |
| | 2021.09- | 6MT | F | L | Box Body/MPV FWD 200.731 | For vehicles with electric parking brake | GCI83418 | Inner Joint | | 26 | 24 | 40 | 64 | 114 | |
| | 2021.09- | 6MT | F | L | Box Body/MPV FWD 200.731 | For vehicles without electric parking brake | GCI83782 | Inner Joint | | 26 | 24 | 40 | 64 | 114 | |

| | YEAR | TRANSM. | F/R | L/R | BODY STYLE & DRIVE TYPE & ENGINE | REMARKS | G-AP Ref. | PRODUCT | ABS | Technical Specifications A | B | C | H | L | P |
|---|---|---|---|---|---|---|---|---|---|---|---|---|---|---|---|
| **MERCEDES-BENZ** | | | | | | | | | | | | | | | |
| **Citan 113** | | | | | | | | | | | | | | | |
| 1.3 (96 kw) | 2021.09- | 6MT | F | R | Box Body/MPV FWD 200.731 | For vehicles without electric parking brake | GCI83949 | Inner Joint | | 26 | 24 | 33 | 346 | 105 | |
| | 2021.09- | 6MT/7DCT | F | L/R | Box Body/MPV FWD 200.731 | For vehicles with electric parking brake | GCO83811 | Outer Joint | | 29 | 24 | 60 | 95.5 | 61 | I |
| | 2021.09- | 7DCT | F | L | Box Body/MPV FWD 200.731 | For vehicles with electric parking brake | GDS58074 | Drive Shaft | | 29 | 27 | 60 | 95.5 | 651 | |
| | 2021.09- | 7DCT | F | L | Box Body/MPV FWD 200.731 | For vehicles without electric parking brake | GDS58093 | Drive Shaft | | 25 | 27 | 53 | 88.5 | 642 | |
| | 2021.09- | 7DCT | F | R | Box Body/MPV FWD 200.731 | For vehicles with electric parking brake | GDS57958 | Drive Shaft | | 29 | 27 | 60 | 95.5 | 1009 | |
| | 2021.09- | 7DCT | F | R | Box Body/MPV FWD 200.731 | For vehicles without electric parking brake | GDS58078 | Drive Shaft | | 25 | 27 | 53 | 88.5 | 1003 | |
| | 2021.09- | 7DCT | F | L | Box Body/MPV FWD 200.731 | For vehicles with electric parking brake | GCI84006 | Inner Joint | | 27 | 24 | 40 | 65.5 | 113.5 | |
| | 2021.09- | 7DCT | F | R | Box Body/MPV FWD 200.731 | For vehicles with electric parking brake | GCI83962 | Inner Joint | | 27 | 24 | 32.5 | 400 | 104 | |
| | 2021.09- | 6MT | F | L | MPV FWD 200.731 | For vehicles without electric parking brake | GDS57637 | Drive Shaft | | 25 | 26 | 53 | 88.5 | 700 | |
| | 2021.09- | 6MT | F | L | MPV FWD 200.731 | For vehicles with electric parking brake | GDS58047 | Drive Shaft | | 29 | 26 | 60 | 95.5 | 705 | |
| | 2021.09- | 6MT | F | R | MPV FWD 200.731 | For vehicles without electric parking brake | GDS57941 | Drive Shaft | | 25 | 26 | 53 | 88.5 | 948 | |
| | 2021.09- | 6MT | F | R | MPV FWD 200.731 | For vehicles with electric parking brake | GDS58079 | Drive Shaft | | 29 | 26 | 60 | 95.5 | 955 | |
| | 2021.09- | 6MT | F | L/R | MPV FWD 200.731 | For vehicles without electric parking brake | GCO83588 | Outer Joint | | 25 | 24 | 53 | 88.5 | 61 | I |
| | 2021.09- | 6MT | F | L/R | MPV FWD 200.731 | For vehicles with electric parking brake | GCO83811 | Outer Joint | | 29 | 24 | 60 | 95.5 | 61 | I |
| | 2021.09- | 6MT | F | L | MPV FWD 200.731 | For vehicles with electric parking brake | GCI83418 | Inner Joint | | 26 | 24 | 40 | 64 | 114 | |
| | 2021.09- | 6MT | F | L | MPV FWD 200.731 | For vehicles without electric parking brake | GCI83782 | Inner Joint | | 26 | 24 | 40 | 64 | 114 | |
| | 2021.09- | 6MT | F | R | MPV FWD 200.731 | For vehicles without electric parking brake | GCI83949 | Inner Joint | | 26 | 24 | 33 | 346 | 105 | |
| | 2021.09- | 7DCT | F | L | MPV FWD 200.731 | For vehicles with electric parking brake | GDS58074 | Drive Shaft | | 29 | 27 | 60 | 95.5 | 651 | |
| | 2021.09- | 7DCT | F | L | MPV FWD 200.731 | For vehicles without electric parking brake | GDS58093 | Drive Shaft | | 25 | 27 | 53 | 88.5 | 642 | |
| | 2021.09- | 7DCT | F | R | MPV FWD 200.731 | For vehicles with electric parking brake | GDS57958 | Drive Shaft | | 29 | 27 | 60 | 95.5 | 1009 | |
| | 2021.09- | 7DCT | F | R | MPV FWD 200.731 | For vehicles without electric parking brake | GDS58078 | Drive Shaft | | 25 | 27 | 53 | 88.5 | 1003 | |
| | 2021.09- | 7DCT | F | L/R | MPV FWD 200.731 | | GCO83811 | Outer Joint | | 29 | 24 | 60 | 95.5 | 61 | I |
| | 2021.09- | 7DCT | F | L | MPV FWD 200.731 | For vehicles with electric parking brake | GCI84006 | Inner Joint | | 27 | 24 | 40 | 65.5 | 113.5 | |
| | 2021.09- | 7DCT | F | R | MPV FWD 200.731 | For vehicles with electric parking brake | GCI83962 | Inner Joint | | 27 | 24 | 32.5 | 400 | 104 | |
| **CL500** | | | | | | | | | | | | | | | |
| 4.7 (320 kw) | 2011.02-2013.12 | 7AT | F | L | Coupe 4WD M 278.920 | | GDS81662 | Drive Shaft | | 30 | 34 | 71 | 56.5 | 533 | |
| | 2011.02-2013.12 | 7AT | F | R | Coupe 4WD M 278.920 | | GDS81663 | Drive Shaft | | 30 | 27 | 71 | 56.5 | 563 | |
| | 2011.02-2013.12 | 7AT | F | L/R | Coupe 4WD M 278.920 | | GCO81466 | Outer Joint | | 30 | 25 | 71 | 56.5 | 52 | I |
| | 2011.02-2013.12 | 7AT | F | L | Coupe 4WD M 278.920 | | GCI81451 | Inner Joint | | 34 | 27 | 37.5 | | 141 | |
| | 2011.02-2013.12 | 7AT | F | R | Coupe 4WD M 278.920 | | GCI81452 | Inner Joint | | 27 | 27 | 38 | 62 | 110 | |
| | 2011.02-2013.12 | AT/MT | F | L | Coupe 4WD M 278.920 | | GDS81696 | Intermediate Shaft | | 34 | 27 | | | 504.5 | |
| | 2011.02-2013.12 | 7AT | R | L/R | Coupe 4WD M 278.920 | | GDS35119 | Drive Shaft | 48NS | 27 | 27 | 68 | 82 | 803 | |
| | 2011.02-2013.12 | 7AT | R | L/R | Coupe RWD M 278.920 | | GDS35127 | Drive Shaft | 48NS | 27 | 30 | 68 | 82 | 796 | |
| 5.5 (285 kw) | 2006.06-2013.12 | 7AT | R | L/R | Coupe RWD M 273.961 | | GDS35120 | Drive Shaft | 48NS | 27 | 30 | 68 | 82 | 800 | |
| | 2008.02-2013.12 | 7AT | F | L | Coupe 4WD M 273.968 | | GDS81662 | Drive Shaft | | 30 | 34 | 71 | 56.5 | 533 | |
| | 2008.02-2013.12 | 7AT | F | R | Coupe 4WD M 273.968 | | GDS81663 | Drive Shaft | | 30 | 27 | 71 | 56.5 | 563 | |
| | 2008.02-2013.12 | 7AT | F | L/R | Coupe 4WD M 273.968 | | GCO81466 | Outer Joint | | 30 | 25 | 71 | 56.5 | 52 | I |
| | 2008.02-2013.12 | 7AT | F | L | Coupe 4WD M 273.968 | | GCI81451 | Inner Joint | | 34 | 27 | 37.5 | | 141 | |
| | 2008.02-2013.12 | 7AT | F | R | Coupe 4WD M 273.968 | | GCI81452 | Inner Joint | | 27 | 27 | 38 | 62 | 110 | |
| | 2008.02-2013.12 | AT/MT | F | L | Coupe 4WD M 273.968 | | GDS81696 | Intermediate Shaft | | 34 | 27 | | | 504.5 | |
| | 2008.02-2013.12 | 7AT | R | L/R | Coupe 4WD M 273.968 | | GDS35119 | Drive Shaft | 48NS | 27 | 27 | 68 | 82 | 803 | |
| **CLA180** | | | | | | | | | | | | | | | |
| 1.3 (100 kw) | 2019.03- | 6MT | F | L | Coupe FWD M 282.914 | | GDS84226 | Drive Shaft | | 30 | 27 | 65 | 53 | 566 | |
| | 2019.03- | 6MT/7DCT | F | R | Coupe FWD M 282.914 | | GDS84225 | Drive Shaft | | 30 | 27 | 65 | 53 | 531 | |
| | 2019.03- | 6MT/7DCT | F | L/R | Coupe FWD M 282.914 | | GCO82739 | Outer Joint | | 30 | 27 | 65 | 53 | 64 | M |
| | 2019.03- | 6MT/7DCT | F | L | Coupe FWD M 282.914 | | GCI82443 | Inner Joint | | 27 | 28 | 38 | 65 | 109.5 | |
| | 2019.03- | 6MT/7DCT | F | R | Coupe FWD M 282.914 | | GCI82442 | Inner Joint | | 27 | 28 | 42.4 | 49 | 91 | |
| | 2019.03- | 7DCT | F | L | Coupe FWD M 282.914 | | GDS84224 | Drive Shaft | | 30 | 27 | 65 | 53 | 603 | |
| | 2019.06- | 6MT | F | L | Estate FWD M 282.914 | | GDS84226 | Drive Shaft | | 30 | 27 | 65 | 53 | 566 | |
| | 2019.06- | 6MT/7DCT | F | R | Estate FWD M 282.914 | | GDS84225 | Drive Shaft | | 30 | 27 | 65 | 53 | 531 | |
| | 2019.06- | 6MT/7DCT | F | L/R | Estate FWD M 282.914 | | GCO82739 | Outer Joint | | 30 | 27 | 65 | 53 | 64 | M |
| | 2019.06- | 6MT/7DCT | F | L | Estate FWD M 282.914 | | GCI82443 | Inner Joint | | 27 | 28 | 38 | 65 | 109.5 | |
| | 2019.06- | 6MT/7DCT | F | R | Estate FWD M 282.914 | | GCI82442 | Inner Joint | | 27 | 28 | 42.4 | 49 | 91 | |
| | 2019.06- | 7DCT | F | L | Estate FWD M 282.914 | | GDS84224 | Drive Shaft | | 30 | 27 | 65 | 53 | 603 | |
| | 2023.03- | 7AT | F | L | Coupe FWD 282.814 | | GDS84224 | Drive Shaft | | 30 | 27 | 65 | 53 | 603 | |
| | 2023.03- | 7AT | F | R | Coupe FWD 282.814 | | GDS84225 | Drive Shaft | | 30 | 27 | 65 | 53 | 531 | |
| | 2023.03- | AT/MT | F | L | Coupe FWD 282.814 | | GCI82443 | Inner Joint | | 27 | 28 | 38 | 65 | 109.5 | |
| | 2023.03- | 7AT | F | L | Estate FWD 282.814 | | GDS84224 | Drive Shaft | | 30 | 27 | 65 | 53 | 603 | |
| | 2023.03- | 7AT | F | R | Estate FWD 282.814 | | GDS84225 | Drive Shaft | | 30 | 27 | 65 | 53 | 531 | |
| | 2023.03- | AT/MT | F | L | Estate FWD 282.814 | | GCI82443 | Inner Joint | | 27 | 28 | 38 | 65 | 109.5 | |
| 1.5 (80 kw) | 2013.10-2018.05 | 7DCT/6MT | F | L | Coupe FWD OM 607.951 (K9K) | | GDS35067 | Drive Shaft | | 30 | 27 | 65 | 53 | 535 | |
| | 2013.10-2018.05 | 7DCT/6MT | F | R | Coupe FWD OM 607.951 (K9K) | | GDS35068 | Drive Shaft | | 30 | 27 | 65 | 53 | 498 | |
| | 2013.10-2018.05 | 7DCT/6MT | F | R | Coupe FWD OM 607.951 (K9K) | | GDS81470 | Drive Shaft | | 30 | 27 | 65 | 53 | 996 | |
| | 2013.10-2018.05 | AT | F | L/R | Coupe FWD OM 607.951 (K9K) | | GCO61065 | Outer Joint | | 30 | 27 | 65 | 53 | 61.5 | M |
| | 2013.10-2018.05 | AT/MT | F | L | Coupe FWD OM 607.951 (K9K) | | GCI61082 | Inner Joint | | 27 | 27 | 38 | 65 | 111.7 | |

| | YEAR | TRANSM. | F/R | L/R | BODY STYLE & DRIVE TYPE & ENGINE | REMARKS | G-AP Ref. | PRODUCT | ABS | Technical Specifications A | B | C | H | L | P |
|---|---|---|---|---|---|---|---|---|---|---|---|---|---|---|---|
| **MERCEDES-BENZ** | | | | | | | | | | | | | | | |
| **CLA180** | | | | | | | | | | | | | | | |
| 1.5 (80 kw) | 2013.10-2018.05 | AT/MT | F | R | Coupe FWD OM 607.951 (K9K) | | GCI35071 | Inner Joint | | 27 | 27 | 42.1 | 41.5 | 97.2 | |
| | 2013.10-2018.05 | AT/MT | F | R | Coupe FWD OM 607.951 (K9K) | | GDS35140 | Intermediate Shaft | | 27 | 27 | | | 540 | |
| | 2015.07-2018.05 | 7DCT/6MT | F | L | Estate FWD OM 607.951 (K9K) | | GDS35067 | Drive Shaft | | 30 | 27 | 65 | 53 | 535 | |
| | 2015.07-2018.05 | 7DCT/6MT | F | R | Estate FWD OM 607.951 (K9K) | | GDS35068 | Drive Shaft | | 30 | 27 | 65 | 53 | 498 | |
| | 2015.07-2018.05 | 7DCT/6MT | F | R | Estate FWD OM 607.951 (K9K) | | GDS81470 | Drive Shaft | | 30 | 27 | 65 | 53 | 996 | |
| | 2015.07-2018.05 | AT | F | L/R | Estate FWD OM 607.951 (K9K) | | GCO61065 | Outer Joint | | 30 | 27 | 65 | 53 | 61.5 | M |
| | 2015.07-2018.05 | AT/MT | F | L | Estate FWD OM 607.951 (K9K) | | GCI61082 | Inner Joint | | 27 | 27 | 38 | 65 | 111.7 | |
| | 2015.07-2018.05 | AT/MT | F | R | Estate FWD OM 607.951 (K9K) | | GCI35071 | Inner Joint | | 27 | 27 | 42.1 | 41.5 | 97.2 | |
| | 2015.07-2018.05 | AT/MT | F | R | Estate FWD OM 607.951 (K9K) | | GDS35140 | Intermediate Shaft | | 27 | 27 | | | 540 | |
| 1.6 (90 kw) | 2013.01-2019.03 | 7AT/6MT | F | L/R | Coupe FWD M 270.910 | Supplier B,Length:105 | GCO35071 | Outer Joint | | 30 | 27 | 65 | 53 | 52 | M |
| | 2013.01-2019.03 | 7AT/6MT | F | L | Coupe FWD M 270.910 | | GCI83495 | Inner Joint | | 27 | 27 | 38 | 65 | 80 | |
| | 2013.01-2019.03 | 7DCT/6MT | F | L | Coupe FWD M 270.910 | | GDS56795 | Drive Shaft | | 30 | 27 | 65 | 53 | 530 | |
| | 2013.01-2019.03 | 7DCT/6MT | F | R | Coupe FWD M 270.910 | | GDS35104 | Drive Shaft | | 30 | 27 | 65 | 53 | 496 | |
| | 2013.01-2019.03 | AT/MT | F | L/R | Coupe FWD M 270.910 | Supplier A,Length:114.5 | GCO61065 | Outer Joint | | 30 | 27 | 65 | 53 | 61.5 | M |
| | 2013.01-2019.03 | AT/MT | F | R | Coupe FWD M 270.910 | | GCI35071 | Inner Joint | | 27 | 27 | 42.1 | 41.5 | 97.2 | |
| | 2013.01-2019.03 | AT/MT | F | R | Coupe FWD M 270.910 | | GDS35140 | Intermediate Shaft | | 27 | 27 | | | 540 | |
| | 2015.01-2019.03 | 7AT/6MT | F | L/R | Estate FWD M 270.910 | Supplier B,Length:105 | GCO35071 | Outer Joint | | 30 | 27 | 65 | 53 | 52 | M |
| | 2015.01-2019.03 | 7AT/6MT | F | L | Estate FWD M 270.910 | | GCI83495 | Inner Joint | | 27 | 27 | 38 | 65 | 80 | |
| | 2015.01-2019.03 | 7DCT/6MT | F | L | Estate FWD M 270.910 | | GDS56795 | Drive Shaft | | 30 | 27 | 65 | 53 | 530 | |
| | 2015.01-2019.03 | 7DCT/6MT | F | R | Estate FWD M 270.910 | | GDS35104 | Drive Shaft | | 30 | 27 | 65 | 53 | 496 | |
| | 2015.01-2019.03 | AT/MT | F | L/R | Estate FWD M 270.910 | Supplier A,Length:114.5 | GCO61065 | Outer Joint | | 30 | 27 | 65 | 53 | 61.5 | M |
| | 2015.01-2019.03 | AT/MT | F | R | Estate FWD M 270.910 | | GCI35071 | Inner Joint | | 27 | 27 | 42.1 | 41.5 | 97.2 | |
| | 2015.01-2019.03 | AT/MT | F | R | Estate FWD M 270.910 | | GDS35140 | Intermediate Shaft | | 27 | 27 | | | 540 | |
| **CLA200** | | | | | | | | | | | | | | | |
| 1.3 (110 kw) | 2019.03- | 7AT | F | L | Coupe FWD M 282.914 | | GDS84224 | Drive Shaft | | 30 | 27 | 65 | 53 | 603 | |
| | 2019.03- | 7AT | F | R | Coupe FWD M 282.914 | | GDS84225 | Drive Shaft | | 30 | 27 | 65 | 53 | 531 | |
| | 2019.03- | 7AT | F | L/R | Coupe FWD M 282.914 | | GCO82739 | Outer Joint | | 30 | 27 | 65 | 53 | 64 | M |
| | 2019.03- | 7AT | F | L | Coupe FWD M 282.914 | | GCI82443 | Inner Joint | | 27 | 28 | 38 | 65 | 109.5 | |
| | 2019.03- | 7AT | F | R | Coupe FWD M 282.914 | | GCI82442 | Inner Joint | | 27 | 28 | 42.4 | 49 | 91 | |
| | 2019.06- | 7AT | F | L | Estate FWD M 282.914 | | GDS84224 | Drive Shaft | | 30 | 27 | 65 | 53 | 603 | |
| | 2019.06- | 7AT | F | R | Estate FWD M 282.914 | | GDS84225 | Drive Shaft | | 30 | 27 | 65 | 53 | 531 | |
| | 2019.06- | 7AT | F | L/R | Estate FWD M 282.914 | | GCO82739 | Outer Joint | | 30 | 27 | 65 | 53 | 64 | M |
| | 2019.06- | 7AT | F | L | Estate FWD M 282.914 | | GCI82443 | Inner Joint | | 27 | 28 | 38 | 65 | 109.5 | |
| | 2019.06- | 7AT | F | R | Estate FWD M 282.914 | | GCI82442 | Inner Joint | | 27 | 28 | 42.4 | 49 | 91 | |
| 1.3 (120 kw) | 2019.03- | 6MT | F | L | Coupe FWD M 282.914;282.814 | | GDS84226 | Drive Shaft | | 30 | 27 | 65 | 53 | 566 | |
| | 2019.03- | 6MT/7DCT | F | R | Coupe FWD M 282.914;282.814 | | GDS84225 | Drive Shaft | | 30 | 27 | 65 | 53 | 531 | |
| | 2019.03- | 6MT/7DCT | F | L/R | Coupe FWD M 282.914;282.814 | | GCO82739 | Outer Joint | | 30 | 27 | 65 | 53 | 64 | M |
| | 2019.03- | 6MT/7DCT | F | L | Coupe FWD M 282.914;282.814 | | GCI82443 | Inner Joint | | 27 | 28 | 38 | 65 | 109.5 | |
| | 2019.03- | 6MT/7DCT | F | R | Coupe FWD M 282.914;282.814 | | GCI82442 | Inner Joint | | 27 | 28 | 42.4 | 49 | 91 | |
| | 2019.03- | 7DCT | F | L | Coupe FWD M 282.914;282.814 | | GDS84224 | Drive Shaft | | 30 | 27 | 65 | 53 | 603 | |
| | 2019.06- | 6MT | F | L | Estate FWD M 282.914;282.814 | | GDS84226 | Drive Shaft | | 30 | 27 | 65 | 53 | 566 | |
| | 2019.06- | 6MT/7DCT | F | R | Estate FWD M 282.914;282.814 | | GDS84225 | Drive Shaft | | 30 | 27 | 65 | 53 | 531 | |
| | 2019.06- | 6MT/7DCT | F | L/R | Estate FWD M 282.914;282.814 | | GCO82739 | Outer Joint | | 30 | 27 | 65 | 53 | 64 | M |
| | 2019.06- | 6MT/7DCT | F | L | Estate FWD M 282.914;282.814 | | GCI82443 | Inner Joint | | 27 | 28 | 38 | 65 | 109.5 | |
| | 2019.06- | 6MT/7DCT | F | R | Estate FWD M 282.914;282.814 | | GCI82442 | Inner Joint | | 27 | 28 | 42.4 | 49 | 91 | |
| | 2019.06- | 7DCT | F | L | Estate FWD M 282.914;282.814 | | GDS84224 | Drive Shaft | | 30 | 27 | 65 | 53 | 603 | |
| | 2020.10- | 8AT | F | L | Coupe 4WD M 282.914 | | GDS84226 | Drive Shaft | | 30 | 27 | 65 | 53 | 566 | |
| | 2020.10- | 8AT | F | R | Coupe 4WD M 282.914 | | GDS84225 | Drive Shaft | | 30 | 27 | 65 | 53 | 531 | |
| | 2020.10- | 8AT | F | L/R | Coupe 4WD M 282.914 | | GCO82739 | Outer Joint | | 30 | 27 | 65 | 53 | 64 | M |
| | 2020.10- | 8AT | F | L | Coupe 4WD M 282.914 | | GCI82443 | Inner Joint | | 27 | 28 | 38 | 65 | 109.5 | |
| | 2020.10- | 8AT | F | R | Coupe 4WD M 282.914 | | GCI82442 | Inner Joint | | 27 | 28 | 42.4 | 49 | 91 | |
| | 2023.03- | 7AT | F | L | Coupe FWD 282.814 | | GDS84224 | Drive Shaft | | 30 | 27 | 65 | 53 | 603 | |
| | 2023.03- | 7AT | F | R | Coupe FWD 282.814 | | GDS84225 | Drive Shaft | | 30 | 27 | 65 | 53 | 531 | |
| | 2023.03- | AT/MT | F | L | Coupe FWD 282.814 | | GCI82443 | Inner Joint | | 27 | 28 | 38 | 65 | 109.5 | |
| | 2023.03- | 7AT | F | L | Estate FWD 282.814 | | GDS84224 | Drive Shaft | | 30 | 27 | 65 | 53 | 603 | |
| | 2023.03- | 7AT | F | R | Estate FWD 282.814 | | GDS84225 | Drive Shaft | | 30 | 27 | 65 | 53 | 531 | |
| | 2023.03- | AT/MT | F | L | Estate FWD 282.814 | | GCI82443 | Inner Joint | | 27 | 28 | 38 | 65 | 109.5 | |
| 1.6 (110 kw) | 2018.07-2019.03 | 7DCT/6MT | F | L | Coupe FWD M 270.910 | | GDS35067 | Drive Shaft | | 30 | 27 | 65 | 53 | 535 | |
| | 2018.07-2019.03 | 7DCT/6MT | F | R | Coupe FWD M 270.910 | | GDS35068 | Drive Shaft | | 30 | 27 | 65 | 53 | 498 | |
| | 2018.07-2019.03 | 7DCT/6MT | F | R | Coupe FWD M 270.910 | | GDS81470 | Drive Shaft | | 30 | 27 | 65 | 53 | 996 | |
| | 2018.07-2019.03 | AT/MT | F | L/R | Coupe FWD M 270.910 | | GCO61065 | Outer Joint | | 30 | 27 | 65 | 53 | 61.5 | M |
| | 2018.07-2019.03 | AT/MT | F | L | Coupe FWD M 270.910 | | GCI61082 | Inner Joint | | 27 | 27 | 38 | 65 | 111.7 | |
| | 2018.07-2019.03 | AT/MT | F | R | Coupe FWD M 270.910 | | GCI35071 | Inner Joint | | 27 | 27 | 42.1 | 41.5 | 97.2 | |
| 1.6 (115 kw) | 2013.01-2019.03 | 7DCT/6MT | F | L | Coupe FWD M 270.910 | | GDS35067 | Drive Shaft | | 30 | 27 | 65 | 53 | 535 | |
| | 2013.01-2019.03 | 7DCT/6MT | F | R | Coupe FWD M 270.910 | | GDS35068 | Drive Shaft | | 30 | 27 | 65 | 53 | 498 | |

| | YEAR | TRANSM. | F/R | L/R | BODY STYLE & DRIVE TYPE & ENGINE | REMARKS | G-AP Ref. | PRODUCT | ABS | Technical Specifications A | B | C | H | L | P |
|---|---|---|---|---|---|---|---|---|---|---|---|---|---|---|---|
| **MERCEDES-BENZ** | | | | | | | | | | | | | | | |
| **CLA200** | | | | | | | | | | | | | | | |
| 1.6 (115 kw) | 2013.01-2019.03 | 7DCT/6MT | F | R | Coupe FWD M 270.910 | | GDS81470 | Drive Shaft | | 30 | 27 | 65 | 53 | 996 | |
| | 2013.01-2019.03 | AT | F | L/R | Coupe FWD M 270.910 | | GCO61065 | Outer Joint | | 30 | 27 | 65 | 53 | 61.5 | M |
| | 2013.01-2019.03 | AT/MT | F | L | Coupe FWD M 270.910 | | GCI61082 | Inner Joint | | 27 | 27 | 38 | 65 | 111.7 | |
| | 2013.01-2019.03 | AT/MT | F | R | Coupe FWD M 270.910 | | GCI35071 | Inner Joint | | 27 | 27 | 42.1 | 41.5 | 97.2 | |
| | 2013.01-2019.03 | AT/MT | F | R | Coupe FWD M 270.910 | | GDS35140 | Intermediate Shaft | | 27 | 27 | | | 540 | |
| | 2015.01-2019.03 | 7DCT/6MT | F | L | Estate FWD M 270.910 | | GDS35067 | Drive Shaft | | 30 | 27 | 65 | 53 | 535 | |
| | 2015.01-2019.03 | 7DCT/6MT | F | R | Estate FWD M 270.910 | | GDS35068 | Drive Shaft | | 30 | 27 | 65 | 53 | 498 | |
| | 2015.01-2019.03 | 7DCT/6MT | F | R | Estate FWD M 270.910 | | GDS81470 | Drive Shaft | | 30 | 27 | 65 | 53 | 996 | |
| | 2015.01-2019.03 | AT | F | L/R | Estate FWD M 270.910 | | GCO61065 | Outer Joint | | 30 | 27 | 65 | 53 | 61.5 | M |
| | 2015.01-2019.03 | AT/MT | F | L | Estate FWD M 270.910 | | GCI61082 | Inner Joint | | 27 | 27 | 38 | 65 | 111.7 | |
| | 2015.01-2019.03 | AT/MT | F | R | Estate FWD M 270.910 | | GCI35071 | Inner Joint | | 27 | 27 | 42.1 | 41.5 | 97.2 | |
| | 2015.01-2019.03 | AT/MT | F | R | Estate FWD M 270.910 | | GDS35140 | Intermediate Shaft | | 27 | 27 | | | 540 | |
| 1.8 (100 kw) | 2013.06-2014.08 | AT/MT | F | L | Coupe FWD OM 651.901 | Inner teeth of tranm.side:27 | GDS35067 | Drive Shaft | | 30 | 27 | 65 | 53 | 535 | |
| | 2013.06-2014.08 | AT/MT | F | R | Coupe FWD OM 651.901 | Without Intermediate Shaft | GDS35068 | Drive Shaft | | 30 | 27 | 65 | 53 | 498 | |
| | 2013.06-2014.08 | AT/MT | F | R | Coupe FWD OM 651.901 | With Intermediate Shaft | GDS81470 | Drive Shaft | | 30 | 27 | 65 | 53 | 996 | |
| | 2013.06-2014.08 | AT/MT | F | L/R | Coupe FWD OM 651.901 | | GCO61065 | Outer Joint | | 30 | 27 | 65 | 53 | 61.5 | M |
| | 2013.06-2014.08 | AT/MT | F | L | Coupe FWD OM 651.901 | | GCI61082 | Inner Joint | | 27 | 27 | 38 | 65 | 111.7 | |
| | 2013.06-2014.08 | AT/MT | F | R | Coupe FWD OM 651.901 | | GCI35071 | Inner Joint | | 27 | 27 | 42.1 | 41.5 | 97.2 | |
| 2.2 (100 kw) | 2014.07-2019.03 | AT/MT | F | L | Coupe 4WD OM 651.930 | | GCI61082 | Inner Joint | | 27 | 27 | 38 | 65 | 111.7 | |
| | 2014.07-2019.03 | AT/MT | F | R | Coupe 4WD OM 651.930 | | GCI35071 | Inner Joint | | 27 | 27 | 42.1 | 41.5 | 97.2 | |
| | 2014.07-2019.03 | AT/MT | F | R | Coupe 4WD OM 651.930 | | GDS35140 | Intermediate Shaft | | 27 | 27 | | | 540 | |
| | 2014.07-2019.03 | AT/MT/DCT | F | L/R | Coupe 4WD OM 651.930 | | GCO61065 | Outer Joint | | 30 | 27 | 65 | 53 | 61.5 | M |
| | 2014.07-2019.03 | MT/DCT | F | L | Coupe 4WD OM 651.930 | Inner teeth of tranm.side:27 | GDS35067 | Drive Shaft | | 30 | 27 | 65 | 53 | 535 | |
| | 2014.07-2019.03 | MT/DCT | F | R | Coupe 4WD OM 651.930 | Without Intermediate Shaft | GDS35068 | Drive Shaft | | 30 | 27 | 65 | 53 | 498 | |
| | 2014.07-2019.03 | MT/DCT | F | R | Coupe 4WD OM 651.930 | With Intermediate Shaft | GDS81470 | Drive Shaft | | 30 | 27 | 65 | 53 | 996 | |
| | 2014.07-2019.03 | AT/MT | F | L | Coupe FWD OM 651.930 | Inner teeth of tranm.side:27 | GDS35067 | Drive Shaft | | 30 | 27 | 65 | 53 | 535 | |
| | 2014.07-2019.03 | AT/MT | F | R | Coupe FWD OM 651.930 | Without Intermediate Shaft | GDS35068 | Drive Shaft | | 30 | 27 | 65 | 53 | 498 | |
| | 2014.07-2019.03 | AT/MT | F | R | Coupe FWD OM 651.930 | With Intermediate Shaft | GDS81470 | Drive Shaft | | 30 | 27 | 65 | 53 | 996 | |
| | 2014.07-2019.03 | AT/MT | F | L/R | Coupe FWD OM 651.930 | | GCO61065 | Outer Joint | | 30 | 27 | 65 | 53 | 61.5 | M |
| | 2014.07-2019.03 | AT/MT | F | L | Coupe FWD OM 651.930 | | GCI61082 | Inner Joint | | 27 | 27 | 38 | 65 | 111.7 | |
| | 2014.07-2019.03 | AT/MT | F | R | Coupe FWD OM 651.930 | | GCI35071 | Inner Joint | | 27 | 27 | 42.1 | 41.5 | 97.2 | |
| | 2014.07-2019.03 | AT/MT | F | R | Coupe FWD OM 651.930 | | GDS35140 | Intermediate Shaft | | 27 | 27 | | | 540 | |
| | 2015.01-2019.03 | AT/DCT | F | L/R | Estate 4WD OM 651.930 | | GCO61065 | Outer Joint | | 30 | 27 | 65 | 53 | 61.5 | M |
| | 2015.01-2019.03 | AT/MT | F | L | Estate 4WD OM 651.930 | | GCI61082 | Inner Joint | | 27 | 27 | 38 | 65 | 111.7 | |
| | 2015.01-2019.03 | AT/MT | F | R | Estate 4WD OM 651.930 | | GCI35071 | Inner Joint | | 27 | 27 | 42.1 | 41.5 | 97.2 | |
| | 2015.01-2019.03 | AT/MT | F | R | Estate 4WD OM 651.930 | | GDS35140 | Intermediate Shaft | | 27 | 27 | | | 540 | |
| | 2015.01-2019.03 | DCT | F | L | Estate 4WD OM 651.930 | Inner teeth of tranm.side:27 | GDS35067 | Drive Shaft | | 30 | 27 | 65 | 53 | 535 | |
| | 2015.01-2019.03 | DCT | F | R | Estate 4WD OM 651.930 | Without Intermediate Shaft | GDS35068 | Drive Shaft | | 30 | 27 | 65 | 53 | 498 | |
| | 2015.01-2019.03 | DCT | F | R | Estate 4WD OM 651.930 | With Intermediate Shaft | GDS81470 | Drive Shaft | | 30 | 27 | 65 | 53 | 996 | |
| | 2015.01-2019.03 | AT/MT | F | L | Estate FWD OM 651.930 | Inner teeth of tranm.side:27 | GDS35067 | Drive Shaft | | 30 | 27 | 65 | 53 | 535 | |
| | 2015.01-2019.03 | AT/MT | F | R | Estate FWD OM 651.930 | Without Intermediate Shaft | GDS35068 | Drive Shaft | | 30 | 27 | 65 | 53 | 498 | |
| | 2015.01-2019.03 | AT/MT | F | R | Estate FWD OM 651.930 | With Intermediate Shaft | GDS81470 | Drive Shaft | | 30 | 27 | 65 | 53 | 996 | |
| | 2015.01-2019.03 | AT/MT | F | L/R | Estate FWD OM 651.930 | | GCO61065 | Outer Joint | | 30 | 27 | 65 | 53 | 61.5 | M |
| | 2015.01-2019.03 | AT/MT | F | L | Estate FWD OM 651.930 | | GCI61082 | Inner Joint | | 27 | 27 | 38 | 65 | 111.7 | |
| | 2015.01-2019.03 | AT/MT | F | R | Estate FWD OM 651.930 | | GCI35071 | Inner Joint | | 27 | 27 | 42.1 | 41.5 | 97.2 | |
| | 2015.01-2019.03 | AT/MT | F | R | Estate FWD OM 651.930 | | GDS35140 | Intermediate Shaft | | 27 | 27 | | | 540 | |
| **CLA220** | | | | | | | | | | | | | | | |
| 2.0 (135 kw) | 2016.04-2019.03 | 7DCT | F | L | Coupe 4WD M 270.920 | | GDS35067 | Drive Shaft | | 30 | 27 | 65 | 53 | 535 | |
| | 2016.04-2019.03 | 7DCT | F | R | Coupe 4WD M 270.920 | | GDS35068 | Drive Shaft | | 30 | 27 | 65 | 53 | 498 | |
| | 2016.04-2019.03 | 7DCT | F | R | Coupe 4WD M 270.920 | | GDS81470 | Drive Shaft | | 30 | 27 | 65 | 53 | 996 | |
| | 2016.04-2019.03 | | F | L/R | Coupe 4WD M 270.920 | | GCO61065 | Outer Joint | | 30 | 27 | 65 | 53 | 61.5 | M |
| | 2016.04-2019.03 | 7DCT | F | L | Estate 4WD M 270.920 | | GDS35067 | Drive Shaft | | 30 | 27 | 65 | 53 | 535 | |
| | 2016.04-2019.03 | 7DCT | F | R | Estate 4WD M 270.920 | | GDS35068 | Drive Shaft | | 30 | 27 | 65 | 53 | 498 | |
| | 2016.04-2019.03 | 7DCT | F | R | Estate 4WD M 270.920 | | GDS81470 | Drive Shaft | | 30 | 27 | 65 | 53 | 996 | |
| | 2016.04-2019.03 | | F | L/R | Estate 4WD M 270.920 | | GCO61065 | Outer Joint | | 30 | 27 | 65 | 53 | 61.5 | M |
| 2.0 (140 kw) | 2019.04- | 8DCT | F | L/R | Coupe FWD OM 654.920 | | GCO82746 | Outer Joint | | 30 | 27 | 65 | 53 | 64 | I |
| | 2019.06- | 8DCT | F | L/R | Estate FWD OM 654.920 | | GCO82746 | Outer Joint | | 30 | 27 | 65 | 53 | 64 | I |
| | 2019.10- | 8DCT | F | L/R | Estate 4WD OM 654.920 | | GCO82746 | Outer Joint | | 30 | 27 | 65 | 53 | 64 | I |
| | 2020.07- | 8DCT | F | L/R | Coupe 4WD OM 654.920 | | GCO82746 | Outer Joint | | 30 | 27 | 65 | 53 | 64 | I |
| 2.2 (120 kw) | 2013.01-2019.03 | AT/MT | F | L | Coupe FWD OM 651.930 | | GCI61082 | Inner Joint | | 27 | 27 | 38 | 65 | 111.7 | |
| | 2013.01-2019.03 | AT/MT | F | R | Coupe FWD OM 651.930 | | GCI35071 | Inner Joint | | 27 | 27 | 42.1 | 41.5 | 97.2 | |
| | 2013.01-2019.03 | AT/MT | F | R | Coupe FWD OM 651.930 | | GDS35140 | Intermediate Shaft | | 27 | 27 | | | 540 | |
| | 2013.01-2019.03 | MT/DCT | F | L | Coupe FWD OM 651.930 | Inner teeth of tranm.side:27 | GDS35067 | Drive Shaft | | 30 | 27 | 65 | 53 | 535 | |
| | 2013.01-2019.03 | MT/DCT | F | R | Coupe FWD OM 651.930 | Without Intermediate Shaft | GDS35068 | Drive Shaft | | 30 | 27 | 65 | 53 | 498 | |
| | 2013.01-2019.03 | MT/DCT | F | R | Coupe FWD OM 651.930 | With Intermediate Shaft | GDS81470 | Drive Shaft | | 30 | 27 | 65 | 53 | 996 | |

| | YEAR | TRANSM. | F/R | L/R | BODY STYLE & DRIVE TYPE & ENGINE | REMARKS | G-AP Ref. | PRODUCT | ABS | Technical Specifications | | | | | |
|---|---|---|---|---|---|---|---|---|---|---|---|---|---|---|---|
| | | | | | | | | | | A | B | C | H | L | P |
| **MERCEDES-BENZ** | | | | | | | | | | | | | | | |
| **CLA220** | | | | | | | | | | | | | | | |
| 2.2 (120 kw) | 2013.01-2019.03 | MT/DCT | F | L/R | Coupe FWD OM 651.930 | | GCO61065 | Outer Joint | | 30 | 27 | 65 | 53 | 61.5 | M |
| | 2014.08-2019.03 | 7AT/6MT | F | L | Coupe 4WD OM 651.930 | Inner teeth of tranm.side:27 | GDS35067 | Drive Shaft | | 30 | 27 | 65 | 53 | 535 | |
| | 2014.08-2019.03 | 7AT/6MT | F | R | Coupe 4WD OM 651.930 | Without Intermediate Shaft | GDS35068 | Drive Shaft | | 30 | 27 | 65 | 53 | 498 | |
| | 2014.08-2019.03 | 7AT/6MT | F | R | Coupe 4WD OM 651.930 | With Intermediate Shaft | GDS81470 | Drive Shaft | | 30 | 27 | 65 | 53 | 996 | |
| | 2014.08-2019.03 | AT/MT | F | L/R | Coupe 4WD OM 651.930 | | GCO61065 | Outer Joint | | 30 | 27 | 65 | 53 | 61.5 | M |
| | 2014.08-2019.03 | AT/MT | F | L | Coupe 4WD OM 651.930 | | GCI61082 | Inner Joint | | 27 | 27 | 38 | 65 | 111.7 | |
| | 2014.08-2019.03 | AT/MT | F | R | Coupe 4WD OM 651.930 | | GCI35071 | Inner Joint | | 27 | 27 | 42.1 | 41.5 | 97.2 | |
| | 2014.08-2019.03 | AT/MT | F | R | Coupe 4WD OM 651.930 | | GDS35140 | Intermediate Shaft | | 27 | 27 | | | 540 | |
| | 2015.01-2019.03 | 7AT | F | L | Estate FWD OM 651.930 | Inner teeth of tranm.side:27 | GDS35067 | Drive Shaft | | 30 | 27 | 65 | 53 | 535 | |
| | 2015.01-2019.03 | 7AT | F | R | Estate FWD OM 651.930 | Without Intermediate Shaft | GDS35068 | Drive Shaft | | 30 | 27 | 65 | 53 | 498 | |
| | 2015.01-2019.03 | 7AT | F | R | Estate FWD OM 651.930 | With Intermediate Shaft | GDS81470 | Drive Shaft | | 30 | 27 | 65 | 53 | 996 | |
| | 2015.01-2019.03 | AT/MT | F | L | Estate FWD OM 651.930 | | GCI61082 | Inner Joint | | 27 | 27 | 38 | 65 | 111.7 | |
| | 2015.01-2019.03 | AT/MT | F | R | Estate FWD OM 651.930 | | GCI35071 | Inner Joint | | 27 | 27 | 42.1 | 41.5 | 97.2 | |
| | 2015.01-2019.03 | AT/MT | F | R | Estate FWD OM 651.930 | | GDS35140 | Intermediate Shaft | | 27 | 27 | | | 540 | |
| | 2015.01-2019.03 | MT/DCT | F | L/R | Estate FWD OM 651.930 | | GCO61065 | Outer Joint | | 30 | 27 | 65 | 53 | 61.5 | M |
| | 2015.09-2019.03 | 7AT | F | L | Estate 4WD OM 651.930 | Inner teeth of tranm.side:27 | GDS35067 | Drive Shaft | | 30 | 27 | 65 | 53 | 535 | |
| | 2015.09-2019.03 | 7AT | F | R | Estate 4WD OM 651.930 | Without Intermediate Shaft | GDS35068 | Drive Shaft | | 30 | 27 | 65 | 53 | 498 | |
| | 2015.09-2019.03 | 7AT | F | R | Estate 4WD OM 651.930 | With Intermediate Shaft | GDS81470 | Drive Shaft | | 30 | 27 | 65 | 53 | 996 | |
| | 2015.09-2019.03 | AT/MT | F | L | Estate 4WD OM 651.930 | | GCI61082 | Inner Joint | | 27 | 27 | 38 | 65 | 111.7 | |
| | 2015.09-2019.03 | AT/MT | F | R | Estate 4WD OM 651.930 | | GCI35071 | Inner Joint | | 27 | 27 | 42.1 | 41.5 | 97.2 | |
| | 2015.09-2019.03 | AT/MT | F | R | Estate 4WD OM 651.930 | | GDS35140 | Intermediate Shaft | | 27 | 27 | | | 540 | |
| | 2015.09-2019.03 | MT/DCT | F | L/R | Estate 4WD OM 651.930 | | GCO61065 | Outer Joint | | 30 | 27 | 65 | 53 | 61.5 | M |
| 2.2 (125 kw) | 2013.01-2019.03 | AT/MT | F | L | Coupe FWD OM 651.930 | | GCI61082 | Inner Joint | | 27 | 27 | 38 | 65 | 111.7 | |
| | 2013.01-2019.03 | AT/MT | F | R | Coupe FWD OM 651.930 | | GCI35071 | Inner Joint | | 27 | 27 | 42.1 | 41.5 | 97.2 | |
| | 2013.01-2019.03 | MT/DCT | F | L | Coupe FWD OM 651.930 | Inner teeth of tranm.side:27 | GDS35067 | Drive Shaft | | 30 | 27 | 65 | 53 | 535 | |
| | 2013.01-2019.03 | MT/DCT | F | R | Coupe FWD OM 651.930 | Without Intermediate Shaft | GDS35068 | Drive Shaft | | 30 | 27 | 65 | 53 | 498 | |
| | 2013.01-2019.03 | MT/DCT | F | R | Coupe FWD OM 651.930 | With Intermediate Shaft | GDS81470 | Drive Shaft | | 30 | 27 | 65 | 53 | 996 | |
| | 2013.01-2019.03 | MT/DCT | F | L/R | Coupe FWD OM 651.930 | | GCO61065 | Outer Joint | | 30 | 27 | 65 | 53 | 61.5 | M |
| | 2014.07-2019.03 | AT/MT | F | L | Coupe 4WD OM 651.930 | | GCI61082 | Inner Joint | | 27 | 27 | 38 | 65 | 111.7 | |
| | 2014.07-2019.03 | AT/MT | F | R | Coupe 4WD OM 651.930 | | GCI35071 | Inner Joint | | 27 | 27 | 42.1 | 41.5 | 97.2 | |
| | 2014.07-2019.03 | MT/DCT | F | L | Coupe 4WD OM 651.930 | Inner teeth of tranm.side:27 | GDS35067 | Drive Shaft | | 30 | 27 | 65 | 53 | 535 | |
| | 2014.07-2019.03 | MT/DCT | F | R | Coupe 4WD OM 651.930 | Without Intermediate Shaft | GDS35068 | Drive Shaft | | 30 | 27 | 65 | 53 | 498 | |
| | 2014.07-2019.03 | MT/DCT | F | R | Coupe 4WD OM 651.930 | With Intermediate Shaft | GDS81470 | Drive Shaft | | 30 | 27 | 65 | 53 | 996 | |
| | 2014.07-2019.03 | MT/DCT | F | L/R | Coupe 4WD OM 651.930 | | GCO61065 | Outer Joint | | 30 | 27 | 65 | 53 | 61.5 | M |
| | 2018.07-2019.03 | 7AT | F | L | Estate 4WD OM 651.930 | Inner teeth of tranm.side:27 | GDS35067 | Drive Shaft | | 30 | 27 | 65 | 53 | 535 | |
| | 2018.07-2019.03 | 7AT | F | R | Estate 4WD OM 651.930 | Without Intermediate Shaft | GDS35068 | Drive Shaft | | 30 | 27 | 65 | 53 | 498 | |
| | 2018.07-2019.03 | 7AT | F | R | Estate 4WD OM 651.930 | With Intermediate Shaft | GDS81470 | Drive Shaft | | 30 | 27 | 65 | 53 | 996 | |
| | 2018.07-2019.03 | AT/MT | F | L | Estate 4WD OM 651.930 | | GCI61082 | Inner Joint | | 27 | 27 | 38 | 65 | 111.7 | |
| | 2018.07-2019.03 | AT/MT | F | R | Estate 4WD OM 651.930 | | GCI35071 | Inner Joint | | 27 | 27 | 42.1 | 41.5 | 97.2 | |
| | 2018.07-2019.03 | MT/DCT | F | L/R | Estate 4WD OM 651.930 | | GCO61065 | Outer Joint | | 30 | 27 | 65 | 53 | 61.5 | M |
| | 2018.07-2019.03 | 7AT | F | L | Estate FWD OM 651.930 | Inner teeth of tranm.side:27 | GDS35067 | Drive Shaft | | 30 | 27 | 65 | 53 | 535 | |
| | 2018.07-2019.03 | 7AT | F | R | Estate FWD OM 651.930 | Without Intermediate Shaft | GDS35068 | Drive Shaft | | 30 | 27 | 65 | 53 | 498 | |
| | 2018.07-2019.03 | 7AT | F | R | Estate FWD OM 651.930 | With Intermediate Shaft | GDS81470 | Drive Shaft | | 30 | 27 | 65 | 53 | 996 | |
| | 2018.07-2019.03 | AT/MT | F | L | Estate FWD OM 651.930 | | GCI61082 | Inner Joint | | 27 | 27 | 38 | 65 | 111.7 | |
| | 2018.07-2019.03 | AT/MT | F | R | Estate FWD OM 651.930 | | GCI35071 | Inner Joint | | 27 | 27 | 42.1 | 41.5 | 97.2 | |
| | 2018.07-2019.03 | MT/DCT | F | L/R | Estate FWD OM 651.930 | | GCO61065 | Outer Joint | | 30 | 27 | 65 | 53 | 61.5 | M |
| 2.2 (130 kw) | 2014.09-2019.03 | AT | F | L | Coupe 4WD OM 651.930 | Inner teeth of tranm.side:27 | GDS35067 | Drive Shaft | | 30 | 27 | 65 | 53 | 535 | |
| | 2014.09-2019.03 | AT | F | R | Coupe 4WD OM 651.930 | Without Intermediate Shaft | GDS35068 | Drive Shaft | | 30 | 27 | 65 | 53 | 498 | |
| | 2014.09-2019.03 | AT | F | R | Coupe 4WD OM 651.930 | With Intermediate Shaft | GDS81470 | Drive Shaft | | 30 | 27 | 65 | 53 | 996 | |
| | 2014.09-2019.03 | AT | F | L/R | Coupe 4WD OM 651.930 | | GCO61065 | Outer Joint | | 30 | 27 | 65 | 53 | 61.5 | M |
| | 2014.09-2019.03 | AT/MT | F | L | Coupe 4WD OM 651.930 | | GCI61082 | Inner Joint | | 27 | 27 | 38 | 65 | 111.7 | |
| | 2014.09-2019.03 | AT/MT | F | R | Coupe 4WD OM 651.930 | | GCI35071 | Inner Joint | | 27 | 27 | 42.1 | 41.5 | 97.2 | |
| | 2014.09-2019.03 | AT/MT | F | R | Coupe 4WD OM 651.930 | | GDS35140 | Intermediate Shaft | | 27 | 27 | | | 540 | |
| | 2014.09-2019.03 | AT/MT | F | L | Coupe FWD OM 651.930 | | GCI61082 | Inner Joint | | 27 | 27 | 38 | 65 | 111.7 | |
| | 2014.09-2019.03 | AT/MT | F | R | Coupe FWD OM 651.930 | | GCI35071 | Inner Joint | | 27 | 27 | 42.1 | 41.5 | 97.2 | |
| | 2014.09-2019.03 | AT/MT | F | R | Coupe FWD OM 651.930 | | GDS35140 | Intermediate Shaft | | 27 | 27 | | | 540 | |
| | 2014.09-2019.03 | AT/MT/DCT | F | L/R | Coupe FWD OM 651.930 | | GCO61065 | Outer Joint | | 30 | 27 | 65 | 53 | 61.5 | M |
| | 2014.09-2019.03 | MT/DCT | F | L | Coupe FWD OM 651.930 | Inner teeth of tranm.side:27 | GDS35067 | Drive Shaft | | 30 | 27 | 65 | 53 | 535 | |
| | 2014.09-2019.03 | MT/DCT | F | R | Coupe FWD OM 651.930 | Without Intermediate Shaft | GDS35068 | Drive Shaft | | 30 | 27 | 65 | 53 | 498 | |
| | 2014.09-2019.03 | MT/DCT | F | R | Coupe FWD OM 651.930 | With Intermediate Shaft | GDS81470 | Drive Shaft | | 30 | 27 | 65 | 53 | 996 | |
| | 2015.01-2019.03 | 7AT | F | L | Estate 4WD OM 651.930 | Inner teeth of tranm.side:27 | GDS35067 | Drive Shaft | | 30 | 27 | 65 | 53 | 535 | |
| | 2015.01-2019.03 | 7AT | F | R | Estate 4WD OM 651.930 | Without Intermediate Shaft | GDS35068 | Drive Shaft | | 30 | 27 | 65 | 53 | 498 | |
| | 2015.01-2019.03 | 7AT | F | R | Estate 4WD OM 651.930 | With Intermediate Shaft | GDS81470 | Drive Shaft | | 30 | 27 | 65 | 53 | 996 | |
| | 2015.01-2019.03 | AT | F | L/R | Estate 4WD OM 651.930 | | GCO61065 | Outer Joint | | 30 | 27 | 65 | 53 | 61.5 | M |
| | 2015.01-2019.03 | AT/MT | F | L | Estate 4WD OM 651.930 | | GCI61082 | Inner Joint | | 27 | 27 | 38 | 65 | 111.7 | |

| | YEAR | TRANSM. | F/R | L/R | BODY STYLE & DRIVE TYPE & ENGINE | REMARKS | G-AP Ref. | PRODUCT | ABS | Technical Specifications A | B | C | H | L | P |
|---|---|---|---|---|---|---|---|---|---|---|---|---|---|---|---|
| **MERCEDES-BENZ** | | | | | | | | | | | | | | | |
| **CLA220** | | | | | | | | | | | | | | | |
| 2.2 (130 kw) | 2015.01-2019.03 | AT/MT | F | R | Estate 4WD OM 651.930 | | GCI35071 | Inner Joint | | 27 | 27 | 42.1 | 41.5 | 97.2 | |
| | 2015.01-2019.03 | AT/MT | F | R | Estate 4WD OM 651.930 | | GDS35140 | Intermediate Shaft | | 27 | 27 | | | 540 | |
| | 2015.01-2019.03 | 7AT | F | L | Estate FWD OM 651.930 | Inner teeth of tranm.side:27 | GDS35067 | Drive Shaft | | 30 | 27 | 65 | 53 | 535 | |
| | 2015.01-2019.03 | 7AT | F | R | Estate FWD OM 651.930 | Without Intermediate Shaft | GDS35068 | Drive Shaft | | 30 | 27 | 65 | 53 | 498 | |
| | 2015.01-2019.03 | 7AT | F | R | Estate FWD OM 651.930 | With Intermediate Shaft | GDS81470 | Drive Shaft | | 30 | 27 | 65 | 53 | 996 | |
| | 2015.01-2019.03 | AT | F | L/R | Estate FWD OM 651.930 | | GCO61065 | Outer Joint | | 30 | 27 | 65 | 53 | 61.5 | M |
| | 2015.01-2019.03 | AT/MT | F | L | Estate FWD OM 651.930 | | GCI61082 | Inner Joint | | 27 | 27 | 38 | 65 | 111.7 | |
| | 2015.01-2019.03 | AT/MT | F | R | Estate FWD OM 651.930 | | GCI35071 | Inner Joint | | 27 | 27 | 42.1 | 41.5 | 97.2 | |
| | 2015.01-2019.03 | AT/MT | F | R | Estate FWD OM 651.930 | | GDS35140 | Intermediate Shaft | | 27 | 27 | | | 540 | |
| **CLA250** | | | | | | | | | | | | | | | |
| 1.3 (160 kw) | 2020.06- | 8DCT | F | L/R | Coupe FWD M 282.914 | | GCO82746 | Outer Joint | | 30 | 27 | 65 | 53 | 64 | I |
| | 2020.06- | 8DCT | F | L/R | Estate FWD M 282.914 | | GCO82746 | Outer Joint | | 30 | 27 | 65 | 53 | 64 | I |
| 2.0 (155 kw) | 2013.01-2019.03 | 7AT/6MT | F | R | Coupe FWD M 270.920 | | GDS81470 | Drive Shaft | | 30 | 27 | 65 | 53 | 996 | |
| | 2013.01-2019.03 | AT | F | L | Coupe FWD M 270.920 | | GDS35067 | Drive Shaft | | 30 | 27 | 65 | 53 | 535 | |
| | 2013.01-2019.03 | AT | F | R | Coupe FWD M 270.920 | | GDS35068 | Drive Shaft | | 30 | 27 | 65 | 53 | 498 | |
| | 2013.01-2019.03 | AT | F | L/R | Coupe FWD M 270.920 | | GCO61065 | Outer Joint | | 30 | 27 | 65 | 53 | 61.5 | M |
| | 2013.01-2019.03 | AT | F | R | Coupe FWD M 270.920 | For taxis | GCI35071 | Inner Joint | | 27 | 27 | 42.1 | 41.5 | 97.2 | |
| | 2013.07-2019.03 | 7DCT/6MT | F | L | Coupe 4WD M 270.920 | | GDS35067 | Drive Shaft | | 30 | 27 | 65 | 53 | 535 | |
| | 2013.07-2019.03 | 7DCT/6MT | F | R | Coupe 4WD M 270.920 | | GDS35068 | Drive Shaft | | 30 | 27 | 65 | 53 | 498 | |
| | 2013.07-2019.03 | 7DCT/6MT | F | R | Coupe 4WD M 270.920 | | GDS81470 | Drive Shaft | | 30 | 27 | 65 | 53 | 996 | |
| | 2013.07-2019.03 | AT | F | L/R | Coupe 4WD M 270.920 | | GCO61065 | Outer Joint | | 30 | 27 | 65 | 53 | 61.5 | M |
| | 2015.01-2019.03 | 7DCT | F | L | Estate 4WD M 270.920 | | GDS35067 | Drive Shaft | | 30 | 27 | 65 | 53 | 535 | |
| | 2015.01-2019.03 | 7DCT | F | R | Estate 4WD M 270.920 | | GDS35068 | Drive Shaft | | 30 | 27 | 65 | 53 | 498 | |
| | 2015.01-2019.03 | 7DCT | F | R | Estate 4WD M 270.920 | | GDS81470 | Drive Shaft | | 30 | 27 | 65 | 53 | 996 | |
| | 2015.01-2019.03 | AT | F | L/R | Estate 4WD M 270.920 | | GCO61065 | Outer Joint | | 30 | 27 | 65 | 53 | 61.5 | M |
| | 2015.01-2019.03 | 7AT/6MT | F | R | Estate FWD M 270.920 | | GDS81470 | Drive Shaft | | 30 | 27 | 65 | 53 | 996 | |
| | 2015.01-2019.03 | AT | F | L/R | Estate FWD M 270.920 | | GCO61065 | Outer Joint | | 30 | 27 | 65 | 53 | 61.5 | M |
| | 2015.01-2019.03 | MT/DCT | F | L | Estate FWD M 270.920 | | GDS35067 | Drive Shaft | | 30 | 27 | 65 | 53 | 535 | |
| | 2015.01-2019.03 | MT/DCT | F | R | Estate FWD M 270.920 | | GDS35068 | Drive Shaft | | 30 | 27 | 65 | 53 | 498 | |
| 2.0 (160 kw) | 2015.07-2019.03 | 7AT | F | L | Coupe 4WD M 270.920 | For OE No.:2463301801/2463307600 | GDS35067 | Drive Shaft | | 30 | 27 | 65 | 53 | 535 | |
| | 2015.07-2019.03 | 7AT | F | L | Coupe 4WD M 270.920 | For SA code:M013 | GDS56795 | Drive Shaft | | 30 | 27 | 65 | 53 | 530 | |
| | 2015.07-2019.03 | 7AT | F | L/R | Coupe 4WD M 270.920 | For SA code:M013 | GCO35071 | Outer Joint | | 30 | 27 | 65 | 53 | 52 | M |
| | 2015.07-2019.03 | 7AT | F | L | Coupe 4WD M 270.920 | For SA code:M013 | GCI83495 | Inner Joint | | 27 | 27 | 38 | 65 | 80 | |
| | 2015.07-2019.03 | 7AT | F | R | Coupe 4WD M 270.920 | For SA code:M013 | GCI35071 | Inner Joint | | 27 | 27 | 42.1 | 41.5 | 97.2 | |
| | 2015.07-2019.03 | 7DCT | F | R | Coupe 4WD M 270.920 | | GDS35068 | Drive Shaft | | 30 | 27 | 65 | 53 | 498 | |
| | 2015.07-2019.03 | 7DCT | F | R | Coupe 4WD M 270.920 | | GDS81470 | Drive Shaft | | 30 | 27 | 65 | 53 | 996 | |
| | 2015.07-2019.03 | AT | F | L/R | Coupe 4WD M 270.920 | Not for SA code:M013 | GCO61065 | Outer Joint | | 30 | 27 | 65 | 53 | 61.5 | M |
| | 2015.07-2019.03 | 7AT/6MT | F | L | Coupe FWD M 270.920 | For OE No.:2463301801/2463307600 | GDS35067 | Drive Shaft | | 30 | 27 | 65 | 53 | 535 | |
| | 2015.07-2019.03 | 7AT/6MT | F | L | Coupe FWD M 270.920 | For SA code:M013 | GDS56795 | Drive Shaft | | 30 | 27 | 65 | 53 | 530 | |
| | 2015.07-2019.03 | 7AT/6MT | F | R | Coupe FWD M 270.920 | For SA code:M013 | GDS35104 | Drive Shaft | | 30 | 27 | 65 | 53 | 496 | |
| | 2015.07-2019.03 | 7AT/6MT | F | R | Coupe FWD M 270.920 | | GDS81470 | Drive Shaft | | 30 | 27 | 65 | 53 | 996 | |
| | 2015.07-2019.03 | 7AT/6MT | F | L/R | Coupe FWD M 270.920 | For SA code:M013 | GCO35071 | Outer Joint | | 30 | 27 | 65 | 53 | 52 | M |
| | 2015.07-2019.03 | 7AT/6MT | F | L | Coupe FWD M 270.920 | For SA code:M013 | GCI83495 | Inner Joint | | 27 | 27 | 38 | 65 | 80 | |
| | 2015.07-2019.03 | 7AT/6MT | F | R | Coupe FWD M 270.920 | For SA code:M013 | GCI35071 | Inner Joint | | 27 | 27 | 42.1 | 41.5 | 97.2 | |
| | 2015.07-2019.03 | AT | F | L/R | Coupe FWD M 270.920 | Not for SA code:M013 | GCO61065 | Outer Joint | | 30 | 27 | 65 | 53 | 61.5 | M |
| | 2015.07-2019.03 | MT/DCT | F | R | Coupe FWD M 270.920 | | GDS35068 | Drive Shaft | | 30 | 27 | 65 | 53 | 498 | |
| | 2015.07-2019.03 | 7DCT | F | L | Estate 4WD M 270.920 | | GDS35067 | Drive Shaft | | 30 | 27 | 65 | 53 | 535 | |
| | 2015.07-2019.03 | 7DCT | F | R | Estate 4WD M 270.920 | | GDS35068 | Drive Shaft | | 30 | 27 | 65 | 53 | 498 | |
| | 2015.07-2019.03 | 7DCT | F | R | Estate 4WD M 270.920 | | GDS81470 | Drive Shaft | | 30 | 27 | 65 | 53 | 996 | |
| | 2015.07-2019.03 | AT | F | L/R | Estate 4WD M 270.920 | | GCO61065 | Outer Joint | | 30 | 27 | 65 | 53 | 61.5 | M |
| **CLA45 AMG** | | | | | | | | | | | | | | | |
| 2.0 (265 kw) | 2013.07-2019.03 | 7AT | F | L | Coupe 4WD M 133.980 | | GDS35067 | Drive Shaft | | 30 | 27 | 65 | 53 | 535 | |
| | 2013.07-2019.03 | 7AT | F | R | Coupe 4WD M 133.980 | Without Intermediate Shaft | GDS35068 | Drive Shaft | | 30 | 27 | 65 | 53 | 498 | |
| | 2013.07-2019.03 | 7AT | F | R | Coupe 4WD M 133.980 | With Intermediate Shaft | GDS81470 | Drive Shaft | | 30 | 27 | 65 | 53 | 996 | |
| | 2013.07-2019.03 | 7AT | F | L | Coupe 4WD M 133.980 | | GCI61082 | Inner Joint | | 27 | 27 | 38 | 65 | 111.7 | |
| | 2013.07-2019.03 | 7AT | F | R | Coupe 4WD M 133.980 | Without Intermediate Shaft | GCI61083 | Inner Joint | | 27 | 27 | 42.5 | | 139.2 | |
| | 2013.07-2019.03 | DCT | F | L/R | Coupe 4WD M 133.980 | | GCO61065 | Outer Joint | | 30 | 27 | 65 | 53 | 61.5 | M |
| | 2015.01-2015.07 | 7AT | F | L | Estate 4WD M 133.980 | | GDS35067 | Drive Shaft | | 30 | 27 | 65 | 53 | 535 | |
| | 2015.01-2015.07 | 7AT | F | R | Estate 4WD M 133.980 | Without Intermediate Shaft | GDS35068 | Drive Shaft | | 30 | 27 | 65 | 53 | 498 | |
| | 2015.01-2015.07 | 7AT | F | R | Estate 4WD M 133.980 | With Intermediate Shaft | GDS81470 | Drive Shaft | | 30 | 27 | 65 | 53 | 996 | |
| | 2015.01-2015.07 | 7AT | F | L | Estate 4WD M 133.980 | | GCI61082 | Inner Joint | | 27 | 27 | 38 | 65 | 111.7 | |
| | 2015.01-2015.07 | 7AT | F | R | Estate 4WD M 133.980 | Without Intermediate Shaft | GCI61083 | Inner Joint | | 27 | 27 | 42.5 | | 139.2 | |
| | 2015.01-2015.07 | DCT | F | L/R | Estate 4WD M 133.980 | | GCO61065 | Outer Joint | | 30 | 27 | 65 | 53 | 61.5 | M |
| 2.0 (280 kw) | 2015.07-2019.03 | 7AT | F | L | Coupe 4WD M 133.980 | | GDS35067 | Drive Shaft | | 30 | 27 | 65 | 53 | 535 | |
| | 2015.07-2019.03 | 7AT | F | R | Coupe 4WD M 133.980 | Without Intermediate Shaft | GDS35068 | Drive Shaft | | 30 | 27 | 65 | 53 | 498 | |

| | YEAR | TRANSM. | F/R | L/R | BODY STYLE & DRIVE TYPE & ENGINE | REMARKS | G-AP Ref. | PRODUCT | ABS | Technical Specifications A | B | C | H | L | P |
|---|---|---|---|---|---|---|---|---|---|---|---|---|---|---|---|
| **MERCEDES-BENZ** | | | | | | | | | | | | | | | |
| **CLA45 AMG** | | | | | | | | | | | | | | | |
| 2.0 (280 kw) | 2015.07-2019.03 | 7AT | F | R | Coupe 4WD M 133.980 | With Intermediate Shaft | GDS81470 | Drive Shaft | | 30 | 27 | 65 | 53 | 996 | |
| | 2015.07-2019.03 | 7AT | F | L | Coupe 4WD M 133.980 | | GCI61082 | Inner Joint | | 27 | 27 | 38 | 65 | 111.7 | |
| | 2015.07-2019.03 | 7AT | F | R | Coupe 4WD M 133.980 | Without Intermediate Shaft | GCI61083 | Inner Joint | | 27 | 27 | 42.5 | | 139.2 | |
| | 2015.07-2019.03 | DCT | F | L/R | Coupe 4WD M 133.980 | | GCO61065 | Outer Joint | | 30 | 27 | 65 | 53 | 61.5 | M |
| | 2015.07-2019.03 | 7AT | F | L | Estate 4WD M 133.980 | | GDS35067 | Drive Shaft | | 30 | 27 | 65 | 53 | 535 | |
| | 2015.07-2019.03 | 7AT | F | R | Estate 4WD M 133.980 | Without Intermediate Shaft | GDS35068 | Drive Shaft | | 30 | 27 | 65 | 53 | 498 | |
| | 2015.07-2019.03 | 7AT | F | R | Estate 4WD M 133.980 | With Intermediate Shaft | GDS81470 | Drive Shaft | | 30 | 27 | 65 | 53 | 996 | |
| | 2015.07-2019.03 | 7AT | F | L | Estate 4WD M 133.980 | | GCI61082 | Inner Joint | | 27 | 27 | 38 | 65 | 111.7 | |
| | 2015.07-2019.03 | 7AT | F | R | Estate 4WD M 133.980 | Without Intermediate Shaft | GCI61083 | Inner Joint | | 27 | 27 | 42.5 | | 139.2 | |
| | 2015.07-2019.03 | DCT | F | L/R | Estate 4WD M 133.980 | | GCO61065 | Outer Joint | | 30 | 27 | 65 | 53 | 61.5 | M |
| **CLC160** | | | | | | | | | | | | | | | |
| 1.6 (95 kw) | 2009.02-2011.06 | 6MT/5AT | R | L/R | Coupe RWD M 271.911 | | GDS35133 | Drive Shaft | 48NS | 25 | 27 | 64.9 | 70 | 731 | |
| **CLC180** | | | | | | | | | | | | | | | |
| 1.8 (105 kw) | 2008.05-2011.06 | 6MT/5AT | R | L/R | Coupe RWD M 271.946 | | GDS35133 | Drive Shaft | 48NS | 25 | 27 | 64.9 | 70 | 731 | |
| **CLC200** | | | | | | | | | | | | | | | |
| 1.8 (135 kw) | 2008.05-2011.06 | 6MT/5AT | R | L/R | Coupe RWD M 271.957 | | GDS35133 | Drive Shaft | 48NS | 25 | 27 | 64.9 | 70 | 731 | |
| 2.2 (90 kw) | 2008.05-2011.06 | 6MT/5AT | R | L/R | Coupe RWD OM 646.962 | | GDS35133 | Drive Shaft | 48NS | 25 | 27 | 64.9 | 70 | 731 | |
| **CLC220** | | | | | | | | | | | | | | | |
| 2.2 (100 kw) | 2008.05-2011.06 | 5AT | R | L/R | Coupe RWD OM 646.963 | For taxis | GDS35110 | Drive Shaft | 48NS | 25 | 27 | 65 | 70 | 720 | |
| 2.2 (110 kw) | 2008.05-2011.06 | 5AT | R | L/R | Coupe RWD OM 646.963 | For taxis | GDS35110 | Drive Shaft | 48NS | 25 | 27 | 65 | 70 | 720 | |
| **CLC230** | | | | | | | | | | | | | | | |
| 2.5 (150 kw) | 2008.05-2011.06 | 6MT/7AT | R | L/R | Coupe RWD M 272.920 | | GDS35133 | Drive Shaft | 48NS | 25 | 27 | 64.9 | 70 | 731 | |
| **CLC250** | | | | | | | | | | | | | | | |
| 2.5 (150 kw) | 2009.06-2011.06 | 6MT/7AT | R | L/R | Coupe RWD M 272.920 | | GDS35133 | Drive Shaft | 48NS | 25 | 27 | 64.9 | 70 | 731 | |
| **CLK200** | | | | | | | | | | | | | | | |
| 1.8 (120 kw) | 2002.09-2009.05 | 6MT/5AT/6AMT | R | L/R | Coupe RWD M 271.940 | | GDS35133 | Drive Shaft | 48NS | 25 | 27 | 64.9 | 70 | 731 | |
| | 2003.02-2010.03 | 6MT/5AT/6AMT | R | L/R | Convertible RWD M 271.940 | | GDS35133 | Drive Shaft | 48NS | 25 | 27 | 64.9 | 70 | 731 | |
| 1.8 (125 kw) | 2003.07-2009.05 | 6MT/5AT/6AMT | R | L/R | Coupe RWD M 271.942 | | GDS35133 | Drive Shaft | 48NS | 25 | 27 | 64.9 | 70 | 731 | |
| | 2003.07-2010.03 | 6MT/5AT/6AMT | R | L/R | Convertible RWD M 271.942 | | GDS35133 | Drive Shaft | 48NS | 25 | 27 | 64.9 | 70 | 731 | |
| 1.8 (135 kw) | 2006.10-2009.05 | 6MT/5AT | R | L/R | Coupe RWD M 271.955 | | GDS35133 | Drive Shaft | 48NS | 25 | 27 | 64.9 | 70 | 731 | |
| | 2006.10-2010.03 | 6MT/5AT | R | L/R | Convertible RWD M 271.955 | | GDS35133 | Drive Shaft | 48NS | 25 | 27 | 64.9 | 70 | 731 | |
| 2.0 (100 kw) | 1997.04-2000.05 | | R | L/R | Coupe RWD 111945 | | GCI35006 | Inner Joint | | | 25 | | | 26 | |
| | 1998.06-2002.03 | | R | L/R | Cabriolet RWD 111945 | | GCI35006 | Inner Joint | | | 25 | | | 26 | |
| 2.0 (120 kw) | 2000.06-2002.07 | | R | L/R | Cabriolet RWD 111956 | | GCI35006 | Inner Joint | | | 25 | | | 26 | |
| | 2000.06-2002.07 | | R | L/R | Coupe RWD 111956 | | GCI35006 | Inner Joint | | | 25 | | | 26 | |
| 2.0 (141 kw) | 1997.06-2000.06 | | R | L/R | Coupe RWD 111944 | | GCI35006 | Inner Joint | | | 25 | | | 26 | |
| | 1998.06-2000.06 | | R | L/R | Cabriolet RWD 111944 | | GCI35006 | Inner Joint | | | 25 | | | 26 | |
| **CLK230** | | | | | | | | | | | | | | | |
| 2.3 (142 kw) | 1997.04-2000.05 | 5AT/5MT/6MT | R | L/R | Coupe RWD 111975 | | GCI99143 | Inner Joint | | | 27 | | | 28 | |
| | 1998.06-2000.05 | 5AT | R | L/R | Cabriolet RWD 111975 | | GCI99143 | Inner Joint | | | 27 | | | 28 | |
| 2.3 (145 kw) | 1999.09-2002.07 | 5AT/6MT | R | L/R | Cabriolet RWD 111982 | | GCI99143 | Inner Joint | | | 27 | | | 28 | |
| | 1999.09-2003.01 | 5AT/6MT | R | L/R | Coupe RWD 111982 | | GCI99143 | Inner Joint | | | 27 | | | 28 | |
| **CLK240** | | | | | | | | | | | | | | | |
| 2.6 (120 kw) | 2002.06-2009.05 | 6MT/5AT/6AMT | R | L/R | Coupe RWD M 112.912 | | GDS35133 | Drive Shaft | 48NS | 25 | 27 | 64.9 | 70 | 731 | |
| 2.6 (125 kw) | 2002.06-2009.05 | 6MT/5AT/6AMT | R | L/R | Coupe RWD M 112.912 | | GDS35133 | Drive Shaft | 48NS | 25 | 27 | 64.9 | 70 | 731 | |
| | 2003.02-2010.03 | 6MT/5AT/6AMT | R | L/R | Convertible RWD M 112.912 | | GDS35133 | Drive Shaft | 48NS | 25 | 27 | 64.9 | 70 | 731 | |
| **CLK320** | | | | | | | | | | | | | | | |
| 3.2 (160 kw) | 1997.04-2002.07 | 5AT | R | L/R | Coupe RWD 112940 | | GCI99143 | Inner Joint | | | 27 | | | 28 | |
| | 1999.01-2003.12 | 5AT | R | L/R | Cabriolet RWD 112940 | | GCI99143 | Inner Joint | | | 27 | | | 28 | |
| | 2002.06-2009.05 | 5AT | R | L/R | Coupe RWD M 112.955 | Date from:2003.07,Chassis no. from:F015418 | GDS35110 | Drive Shaft | 48NS | 25 | 27 | 65 | 70 | 720 | |
| | 2003.02-2010.03 | 5AT | R | L/R | Convertible RWD M 112.955 | | GDS35110 | Drive Shaft | 48NS | 25 | 27 | 65 | 70 | 720 | |
| **CLK430** | | | | | | | | | | | | | | | |
| 4.3 (205 kw) | 1997.04-2003.07 | 5AT | R | L/R | Coupe RWD 113943 | | GCI99143 | Inner Joint | | | 27 | | | 28 | |
| | 1999.08-2003.01 | 5AT | R | L/R | Cabriolet RWD 113943 | | GCI99143 | Inner Joint | | | 27 | | | 28 | |
| **CLK500** | | | | | | | | | | | | | | | |
| 5.0 (225 kw) | 2002.06-2009.05 | 7AT | R | L/R | Coupe RWD M 113.968 | | GDS35124 | Drive Shaft | 48NS | 25 | 30 | 65 | 70 | 731 | |
| | 2003.02-2010.03 | 7AT | R | L/R | Convertible RWD M 113.968 | | GDS35124 | Drive Shaft | 48NS | 25 | 30 | 65 | 70 | 731 | |
| 5.5 (285 kw) | 2006.06-2009.05 | 7AT | R | L/R | Coupe RWD M 273.967 | | GDS35124 | Drive Shaft | 48NS | 25 | 30 | 65 | 70 | 731 | |
| | 2006.06-2010.03 | 7AT | R | L/R | Convertible RWD M 273.967 | | GDS35124 | Drive Shaft | 48NS | 25 | 30 | 65 | 70 | 731 | |
| **CLK55 AMG** | | | | | | | | | | | | | | | |
| 5.4 (255 kw) | 1998.10-2003.12 | 5AT | R | L/R | Coupe RWD 113984 | | GCI99143 | Inner Joint | | | 27 | | | 28 | |
| | 1999.08-2002.07 | 5AT | R | L/R | Cabriolet RWD 113984 | | GCI99143 | Inner Joint | | | 27 | | | 28 | |
| 5.4 (270 kw) | 2002.06-2010.03 | 5AT | R | L/R | Convertible RWD M 113.987 | Chassis no. from:F103001/F114636/T023346 | GDS35124 | Drive Shaft | 48NS | 25 | 30 | 65 | 70 | 731 | |
| | 2002.09-2009.05 | 5AT | R | L/R | Coupe RWD M 113.987 | Chassis no. from:F103001/F114636 | GDS35124 | Drive Shaft | 48NS | 25 | 30 | 65 | 70 | 731 | |
| 5.5 (255 kw) | 2001.09-2002.03 | 5AT | R | L/R | Convertible RWD M 113.981/M 113.984 | | GCI99143 | Inner Joint | | | 27 | | | 28 | |

| | YEAR | TRANSM. | F/R | L/R | BODY STYLE & DRIVE TYPE & ENGINE | REMARKS | G-AP Ref. | PRODUCT | ABS | Technical Specifications A | B | C | H | L | P |
|---|---|---|---|---|---|---|---|---|---|---|---|---|---|---|---|
| **MERCEDES-BENZ** | | | | | | | | | | | | | | | |
| **CLS220** | | | | | | | | | | | | | | | |
| 2.0 (143 kw) | 2018.06- | 9AT | R | L/R | Coupe RWD OM 654.920 | | GDS84018 | Drive Shaft | | 27 | 30 | 68.5 | 82 | 810 | |
| 2.2 (120 kw) | 2014.05-2017.12 | 9AT | R | L/R | Coupe RWD OM 651.924 | | GDS35119 | Drive Shaft | 48NS | 27 | 27 | 68 | 82 | 803 | |
| | 2014.05-2017.12 | 9AT | R | L/R | Estate RWD OM 651.924 | | GDS35119 | Drive Shaft | 48NS | 27 | 27 | 68 | 82 | 803 | |
| 2.2 (125 kw) | 2014.05-2017.12 | 7AT/9AT | R | L/R | Coupe RWD OM 651.924 | | GDS35119 | Drive Shaft | 48NS | 27 | 27 | 68 | 82 | 803 | |
| | 2014.05-2017.12 | 7AT/9AT | R | L/R | Estate RWD OM 651.924 | | GDS35119 | Drive Shaft | 48NS | 27 | 27 | 68 | 82 | 803 | |
| 2.2 (130 kw) | 2014.05-2017.12 | 7AT | R | L/R | Coupe RWD OM 651.924 | | GDS35119 | Drive Shaft | 48NS | 27 | 27 | 68 | 82 | 803 | |
| | 2014.05-2017.12 | 7AT | R | L/R | Estate RWD OM 651.924 | | GDS35119 | Drive Shaft | 48NS | 27 | 27 | 68 | 82 | 803 | |
| **CLS250** | | | | | | | | | | | | | | | |
| 2.2 (150 kw) | 2011.04-2017.12 | AT | R | L/R | Coupe RWD OM 651.924 | | GDS35120 | Drive Shaft | 48NS | 27 | 30 | 68 | 82 | 800 | |
| | 2012.10-2017.12 | AT | R | L/R | Estate RWD OM 651.924 | | GDS35120 | Drive Shaft | 48NS | 27 | 30 | 68 | 82 | 800 | |
| | 2014.05-2017.12 | 7AT | F | R | Coupe 4WD OM 651.924 | | GDS83179 | Drive Shaft | | 30 | 27 | 71 | 56.5 | 551 | |
| | 2014.05-2017.12 | 7AT | F | R | Coupe 4WD OM 651.924 | | GCI81452 | Inner Joint | | 27 | 27 | 38 | 62 | 110 | |
| | 2014.05-2017.12 | AT | F | L/R | Coupe 4WD OM 651.924 | | GCO35049 | Outer Joint | | 30 | 25 | 71 | 56.5 | 52 | I |
| | 2014.05-2017.12 | AT/MT | F | L | Coupe 4WD OM 651.924 | | GDS81696 | Intermediate Shaft | | 34 | 27 | | | 504.5 | |
| | 2014.05-2017.12 | 7AT | R | L/R | Coupe 4WD OM 651.924 | | GDS35137 | Drive Shaft | 48NS | 27 | 27 | 68 | 82 | 807 | |
| | 2014.05-2017.12 | 7AT | R | L/R | Coupe 4WD OM 651.924 | | GCI35021 | Inner Joint | 48NS | 27 | 27 | 68 | 82 | 51.5 | |
| | 2014.05-2017.12 | 7AT | F | R | Estate 4WD OM 651.924 | | GDS83179 | Drive Shaft | | 30 | 27 | 71 | 56.5 | 551 | |
| | 2014.05-2017.12 | 7AT | F | R | Estate 4WD OM 651.924 | | GCI81452 | Inner Joint | | 27 | 27 | 38 | 62 | 110 | |
| | 2014.05-2017.12 | AT | F | L/R | Estate 4WD OM 651.924 | | GCO35049 | Outer Joint | | 30 | 25 | 71 | 56.5 | 52 | I |
| | 2014.05-2017.12 | AT/MT | F | L | Estate 4WD OM 651.924 | | GDS81696 | Intermediate Shaft | | 34 | 27 | | | 504.5 | |
| | 2014.05-2017.12 | 7AT | R | L/R | Estate 4WD OM 651.924 | | GDS35137 | Drive Shaft | 48NS | 27 | 27 | 68 | 82 | 807 | |
| | 2014.05-2017.12 | 7AT | R | L/R | Estate 4WD OM 651.924 | | GCI35021 | Inner Joint | 48NS | 27 | 27 | 68 | 82 | 51.5 | |
| **CLS280** | | | | | | | | | | | | | | | |
| 3.0 (170 kw) | 2008.07-2010.12 | 7AT | R | L/R | Coupe RWD M 272.943 | | GDS35114 | Drive Shaft | 48NS | 27 | 27 | 68 | 82 | 773 | |
| **CLS300** | | | | | | | | | | | | | | | |
| 2.0 (180 kw) | 2018.04- | 9AT | R | L/R | Coupe RWD OM 654.920 | | GDS84018 | Drive Shaft | | 27 | 30 | 68.5 | 82 | 810 | |
| 2.0 (195 kw) | 2021.04- | 9AT | F | L | Coupe 4WD OM 654.820 | | GDS84218 | Drive Shaft | | 30 | 27 | 71 | 56 | 520 | |
| | 2021.04- | 9AT | F | R | Coupe 4WD OM 654.820 | For Right-hand drive vehicles | GDS57760 | Drive Shaft | | 30 | 24 | 71 | 56 | 582 | |
| | 2021.04- | 9AT | F | R | Coupe 4WD OM 654.820 | For left-hand drive vehicles | GDS84219 | Drive Shaft | | 30 | 27 | 71 | 56 | 550 | |
| | 2021.04- | 9AT | F | L | Coupe 4WD OM 654.820 | | GCO82737 | Outer Joint | | 30 | 26 | 71 | 56 | 54.5 | I |
| | 2021.04- | 9AT | F | R | Coupe 4WD OM 654.820 | For left-hand drive vehicles | GCO82737 | Outer Joint | | 30 | 26 | 71 | 56 | 54.5 | I |
| | 2021.04- | 9AT | F | L | Coupe 4WD OM 654.820 | | GCI82313 | Inner Joint | | 27 | 24 | 41 | | 155.5 | |
| | 2021.04- | 9AT | F | R | Coupe 4WD OM 654.820 | For left-hand drive vehicles | GCI82161 | Inner Joint | | 27 | 24 | 38 | 62 | 124.5 | |
| | 2021.04- | 9AT | F | R | Coupe 4WD OM 654.820 | For Right-hand drive vehicles | GCI82342 | Inner Joint | | 24 | 24 | 35 | 54.5 | 156 | |
| | 2021.04- | 9AT | F | L | Coupe 4WD OM 654.820 | | GDS87029 | Intermediate Shaft | | 27 | 27 | | | 510 | |
| 3.0 (170 kw) | 2009.04-2010.12 | 7AT | R | L/R | Coupe RWD M 272.943 | | GDS35114 | Drive Shaft | 48NS | 27 | 27 | 68 | 82 | 773 | |
| **CLS320** | | | | | | | | | | | | | | | |
| 3.0 (155 kw) | 2005.01-2010.12 | 7AT | R | L/R | Coupe RWD OM 642.920 | | GDS35118 | Drive Shaft | 48NS | 27 | 30 | 68 | 82 | 777 | |
| 3.0 (165 kw) | 2005.01-2010.12 | 7AT | R | L/R | Coupe RWD OM 642.920 | | GDS35118 | Drive Shaft | 48NS | 27 | 30 | 68 | 82 | 777 | |
| **CLS350** | | | | | | | | | | | | | | | |
| 2.0 (220 kw) | 2018.08- | 9AT | F | L | Coupe 4WD M 264.920 | | GDS84218 | Drive Shaft | | 30 | 27 | 71 | 56 | 520 | |
| | 2018.08- | 9AT | F | R | Coupe 4WD M 264.920 | | GDS57760 | Drive Shaft | | 30 | 24 | 71 | 56 | 582 | |
| | 2018.08- | 9AT | F | L | Coupe 4WD M 264.920 | | GCO82737 | Outer Joint | | 30 | 26 | 71 | 56 | 54.5 | I |
| | 2018.08- | 9AT | F | L | Coupe 4WD M 264.920 | | GCI82313 | Inner Joint | | 27 | 24 | 41 | | 155.5 | |
| | 2018.08- | 9AT | F | R | Coupe 4WD M 264.920 | | GCI82342 | Inner Joint | | 24 | 24 | 35 | 54.5 | 156 | |
| | 2018.08- | 9AT | F | L | Coupe 4WD M 264.920 | | GDS87029 | Intermediate Shaft | | 27 | 27 | | | 510 | |
| | 2018.08- | 9AT | R | L | Coupe 4WD M 264.920 | | GDS83741 | Drive Shaft | | 27 | 27 | 68.5 | 82 | 800 | |
| | 2018.08- | 9AT | R | R | Coupe 4WD M 264.920 | | GDS83743 | Drive Shaft | | 27 | 27 | 68.5 | 82 | 800 | |
| | 2018.08- | 9AT | R | L/R | Coupe RWD M 264.920 | | GDS84018 | Drive Shaft | | 27 | 30 | 68.5 | 82 | 810 | |
| 2.9 (183 kw) | 2017.12- | 9AT | F | L | Coupe 4WD OM 656.929 | | GDS84218 | Drive Shaft | | 30 | 27 | 71 | 56 | 520 | |
| | 2017.12- | 9AT | F | R | Coupe 4WD OM 656.929 | | GDS84219 | Drive Shaft | | 30 | 27 | 71 | 56 | 550 | |
| | 2017.12- | 9AT | F | L/R | Coupe 4WD OM 656.929 | | GCO82737 | Outer Joint | | 30 | 26 | 71 | 56 | 54.5 | I |
| | 2017.12- | 9AT | F | L | Coupe 4WD OM 656.929 | | GCI82313 | Inner Joint | | 27 | 24 | 41 | | 155.5 | |
| | 2017.12- | 9AT | F | R | Coupe 4WD OM 656.929 | | GCI82161 | Inner Joint | | 27 | 24 | 38 | 62 | 124.5 | |
| | 2017.12- | 9AT | F | L | Coupe 4WD OM 656.929 | | GDS87029 | Intermediate Shaft | | 27 | 27 | | | 510 | |
| | 2017.12- | 9AT | R | L/R | Coupe 4WD OM 656.929 | | GDS84018 | Drive Shaft | | 27 | 30 | 68.5 | 82 | 810 | |
| 2.9 (210 kw) | 2017.12- | 9AT | F | L | Coupe 4WD OM 656.929 | | GDS84218 | Drive Shaft | | 30 | 27 | 71 | 56 | 520 | |
| | 2017.12- | 9AT | F | R | Coupe 4WD OM 656.929 | For Right-hand drive vehicles | GDS57760 | Drive Shaft | | 30 | 24 | 71 | 56 | 582 | |
| | 2017.12- | 9AT | F | R | Coupe 4WD OM 656.929 | For left-hand drive vehicles | GDS84219 | Drive Shaft | | 30 | 27 | 71 | 56 | 550 | |
| | 2017.12- | 9AT | F | L | Coupe 4WD OM 656.929 | | GCO82737 | Outer Joint | | 30 | 26 | 71 | 56 | 54.5 | I |
| | 2017.12- | 9AT | F | R | Coupe 4WD OM 656.929 | For left-hand drive vehicles | GCO82737 | Outer Joint | | 30 | 26 | 71 | 56 | 54.5 | I |
| | 2017.12- | 9AT | F | L | Coupe 4WD OM 656.929 | | GCI82313 | Inner Joint | | 27 | 24 | 41 | | 155.5 | |
| | 2017.12- | 9AT | F | R | Coupe 4WD OM 656.929 | For left-hand drive vehicles | GCI82161 | Inner Joint | | 27 | 24 | 38 | 62 | 124.5 | |
| | 2017.12- | 9AT | F | R | Coupe 4WD OM 656.929 | For Right-hand drive vehicles | GCI82342 | Inner Joint | | 24 | 24 | 35 | 54.5 | 156 | |
| | 2017.12- | 9AT | F | L | Coupe 4WD OM 656.929 | | GDS87029 | Intermediate Shaft | | 27 | 27 | | | 510 | |

| | YEAR | TRANSM. | F/R | L/R | BODY STYLE & DRIVE TYPE & ENGINE | REMARKS | G-AP Ref. | PRODUCT | ABS | Technical Specifications A | B | C | H | L | P |
|---|---|---|---|---|---|---|---|---|---|---|---|---|---|---|---|
| **MERCEDES-BENZ** | | | | | | | | | | | | | | | |
| **CLS350** | | | | | | | | | | | | | | | |
| 2.9 (210 kw) | 2017.12- | 9AT | R | L/R | Coupe 4WD OM 656.929 | | GDS84018 | Drive Shaft | | 27 | 30 | 68.5 | 82 | 810 | |
| 3.0 (165 kw) | 2009.04-2010.12 | 7AT | R | L/R | Coupe RWD OM 642.920 | | GDS35118 | Drive Shaft | 48NS | 27 | 30 | 68 | 82 | 777 | |
| 3.0 (185 kw) | 2013.02-2017.12 | 7AT | F | R | Coupe 4WD OM 642.858;OM 642.854 | | GCI81452 | Inner Joint | | 27 | 27 | 38 | 62 | 110 | |
| | 2013.02-2017.12 | 9AT | F | R | Coupe 4WD OM 642.858;OM 642.854 | | GDS83179 | Drive Shaft | | 30 | 27 | 71 | 56.5 | 551 | |
| | 2013.02-2017.12 | AT/MT | F | L/R | Coupe 4WD OM 642.858;OM 642.854 | | GCO35049 | Outer Joint | | 30 | 25 | 71 | 56.5 | 52 | I |
| | 2013.02-2017.12 | AT/MT | F | L | Coupe 4WD OM 642.858;OM 642.854 | | GDS81696 | Intermediate Shaft | | 34 | 27 | | | 504.5 | |
| | 2013.02-2017.12 | 7AT/9AT | R | L/R | Coupe 4WD OM 642.858;OM 642.854 | | GDS35119 | Drive Shaft | 48NS | 27 | 27 | 68 | 82 | 803 | |
| | 2013.02-2017.12 | 7AT | R | L/R | Coupe RWD OM 642.852;OM 642.853 | | GDS35127 | Drive Shaft | 48NS | 27 | 30 | 68 | 82 | 796 | |
| | 2014.05-2017.12 | 7AT | F | R | Estate 4WD OM 642.858;OM 642.854 | | GDS83179 | Drive Shaft | | 30 | 27 | 71 | 56.5 | 551 | |
| | 2014.05-2017.12 | 7AT | F | R | Estate 4WD OM 642.858;OM 642.854 | | GCI81452 | Inner Joint | | 27 | 27 | 38 | 62 | 110 | |
| | 2014.05-2017.12 | AT | F | L/R | Estate 4WD OM 642.858;OM 642.854 | | GCO35049 | Outer Joint | | 30 | 25 | 71 | 56.5 | 52 | I |
| | 2014.05-2017.12 | AT/MT | F | L | Estate 4WD OM 642.858;OM 642.854 | | GDS81696 | Intermediate Shaft | | 34 | 27 | | | 504.5 | |
| | 2014.05-2017.12 | 7AT | R | L/R | Estate 4WD OM 642.858;OM 642.854 | | GDS35119 | Drive Shaft | 48NS | 27 | 27 | 68 | 82 | 803 | |
| | 2014.05-2017.12 | 9AT | R | L/R | Estate RWD OM 642.852;OM 642.853 | | GDS35127 | Drive Shaft | 48NS | 27 | 30 | 68 | 82 | 796 | |
| 3.0 (190 kw) | 2014.05-2017.12 | 7AT/9AT | R | L/R | Estate RWD OM 642.852;OM 642.853 | | GDS35127 | Drive Shaft | 48NS | 27 | 30 | 68 | 82 | 796 | |
| | 2014.06-2017.12 | 9AT | R | L/R | Coupe RWD OM 642.852;OM 642.853 | | GDS35127 | Drive Shaft | 48NS | 27 | 30 | 68 | 82 | 796 | |
| | 2015.04-2017.12 | 7AT | F | R | Coupe 4WD OM 642.858;OM 642.854 | | GCI81452 | Inner Joint | | 27 | 27 | 38 | 62 | 110 | |
| | 2015.04-2017.12 | 9AT | F | R | Coupe 4WD OM 642.858;OM 642.854 | | GDS83179 | Drive Shaft | | 30 | 27 | 71 | 56.5 | 551 | |
| | 2015.04-2017.12 | AT | F | L/R | Coupe 4WD OM 642.858;OM 642.854 | | GCO35049 | Outer Joint | | 30 | 25 | 71 | 56.5 | 52 | I |
| | 2015.04-2017.12 | AT/MT | F | L | Coupe 4WD OM 642.858;OM 642.854 | | GDS81696 | Intermediate Shaft | | 34 | 27 | | | 504.5 | |
| | 2015.04-2017.12 | 9AT | R | L/R | Coupe 4WD OM 642.858;OM 642.854 | | GDS35119 | Drive Shaft | 48NS | 27 | 27 | 68 | 82 | 803 | |
| | 2015.04-2017.12 | 7AT | F | R | Estate 4WD OM 642.858;OM 642.854 | | GCI81452 | Inner Joint | | 27 | 27 | 38 | 62 | 110 | |
| | 2015.04-2017.12 | 9AT | F | R | Estate 4WD OM 642.858;OM 642.854 | | GDS83179 | Drive Shaft | | 30 | 27 | 71 | 56.5 | 551 | |
| | 2015.04-2017.12 | AT | F | L/R | Estate 4WD OM 642.858;OM 642.854 | | GCO35049 | Outer Joint | | 30 | 25 | 71 | 56.5 | 52 | I |
| | 2015.04-2017.12 | AT/MT | F | L | Estate 4WD OM 642.858;OM 642.854 | | GDS81696 | Intermediate Shaft | | 34 | 27 | | | 504.5 | |
| | 2015.04-2017.12 | 9AT | R | L/R | Estate 4WD OM 642.858;OM 642.854 | | GDS35119 | Drive Shaft | 48NS | 27 | 27 | 68 | 82 | 803 | |
| 3.0 (195 kw) | 2011.01-2014.08 | 7AT | R | L/R | Coupe RWD OM 642.852;OM 642.853 | | GDS35127 | Drive Shaft | 48NS | 27 | 30 | 68 | 82 | 796 | |
| | 2011.09-2014.08 | 7AT | F | R | Coupe 4WD OM 642.858;OM 642.854 | | GDS83179 | Drive Shaft | | 30 | 27 | 71 | 56.5 | 551 | |
| | 2011.09-2014.08 | 7AT | F | R | Coupe 4WD OM 642.858;OM 642.854 | | GCI81452 | Inner Joint | | 27 | 27 | 38 | 62 | 110 | |
| | 2011.09-2014.08 | AT | F | L/R | Coupe 4WD OM 642.858;OM 642.854 | | GCO35049 | Outer Joint | | 30 | 25 | 71 | 56.5 | 52 | I |
| | 2011.09-2014.08 | AT/MT | F | L | Coupe 4WD OM 642.858;OM 642.854 | | GDS81696 | Intermediate Shaft | | 34 | 27 | | | 504.5 | |
| | 2011.09-2014.08 | 7AT | R | L/R | Coupe 4WD OM 642.858;OM 642.854 | | GDS35119 | Drive Shaft | 48NS | 27 | 27 | 68 | 82 | 803 | |
| | 2012.10-2014.08 | 7AT | F | R | Estate 4WD OM 642.854;OM 642.853 | | GDS83179 | Drive Shaft | | 30 | 27 | 71 | 56.5 | 551 | |
| | 2012.10-2014.08 | 7AT | F | R | Estate 4WD OM 642.854;OM 642.853 | | GCI81452 | Inner Joint | | 27 | 27 | 38 | 62 | 110 | |
| | 2012.10-2014.08 | AT/MT | F | L/R | Estate 4WD OM 642.854;OM 642.853 | | GCO35049 | Outer Joint | | 30 | 25 | 71 | 56.5 | 52 | I |
| | 2012.10-2014.08 | AT/MT | F | L | Estate 4WD OM 642.854;OM 642.853 | | GDS81696 | Intermediate Shaft | | 34 | 27 | | | 504.5 | |
| | 2012.10-2014.08 | 7AT | R | L/R | Estate 4WD OM 642.854;OM 642.853 | | GDS35119 | Drive Shaft | 48NS | 27 | 27 | 68 | 82 | 803 | |
| | 2012.10-2014.08 | 7AT | R | L/R | Estate RWD OM 642.852;OM 642.853 | | GDS35127 | Drive Shaft | 48NS | 27 | 30 | 68 | 82 | 796 | |
| 3.0 (200 kw) | 2009.04-2010.12 | 7AT | R | L/R | Coupe RWD OM 642.920 | | GDS35118 | Drive Shaft | 48NS | 27 | 30 | 68 | 82 | 777 | |
| 3.5 (200 kw) | 2004.10-2010.12 | 7AT | R | L/R | Coupe RWD M 272.964 | Date from:2005.07,Chassis no. from:A038333 | GDS35114 | Drive Shaft | 48NS | 27 | 27 | 68 | 82 | 773 | |
| | 2004.10-2010.12 | 7AT | R | L/R | Coupe RWD M 272.964 | Date to:2005.06,Chassis no. to:A038332 | GDS35115 | Drive Shaft | 48NS | 27 | 27 | 68 | 82 | 773 | |
| 3.5 (215 kw) | 2006.04-2010.12 | 7AT | R | L/R | Coupe RWD M 272.985 | Chassis no. from:A038332 | GDS35114 | Drive Shaft | 48NS | 27 | 27 | 68 | 82 | 773 | |
| | 2006.04-2010.12 | 7AT | R | L/R | Coupe RWD M 272.985 | Chassis no. to:A080024 | GDS35115 | Drive Shaft | 48NS | 27 | 27 | 68 | 82 | 773 | |
| 3.5 (225 kw) | 2011.01-2014.08 | 7AT | R | L/R | Coupe RWD M 276.952 | | GDS35119 | Drive Shaft | 48NS | 27 | 27 | 68 | 82 | 803 | |
| | 2012.10-2014.08 | 7AT | R | L/R | Estate RWD M 276.952 | | GDS35119 | Drive Shaft | 48NS | 27 | 27 | 68 | 82 | 803 | |
| **CLS400** | | | | | | | | | | | | | | | |
| 2.9 (243 kw) | 2020.06- | 9AT | F | L | Coupe 4WD OM 656.929 | | GDS84218 | Drive Shaft | | 30 | 27 | 71 | 56 | 520 | |
| | 2020.06- | 9AT | F | R | Coupe 4WD OM 656.929 | For Right-hand drive vehicles | GDS57760 | Drive Shaft | | 30 | 24 | 71 | 56 | 582 | |
| | 2020.06- | 9AT | F | R | Coupe 4WD OM 656.929 | For left-hand drive vehicles | GDS84219 | Drive Shaft | | 30 | 27 | 71 | 56 | 550 | |
| | 2020.06- | 9AT | F | L | Coupe 4WD OM 656.929 | | GCO82737 | Outer Joint | | 30 | 26 | 71 | 56 | 54.5 | I |
| | 2020.06- | 9AT | F | R | Coupe 4WD OM 656.929 | For left-hand drive vehicles | GCO82737 | Outer Joint | | 30 | 26 | 71 | 56 | 54.5 | I |
| | 2020.06- | 9AT | F | L | Coupe 4WD OM 656.929 | | GCI82313 | Inner Joint | | 27 | 24 | 41 | | 155.5 | |
| | 2020.06- | 9AT | F | R | Coupe 4WD OM 656.929 | For left-hand drive vehicles | GCI82161 | Inner Joint | | 27 | 24 | 38 | 62 | 124.5 | |
| | 2020.06- | 9AT | F | R | Coupe 4WD OM 656.929 | For Right-hand drive vehicles | GCI82342 | Inner Joint | | 24 | 24 | 35 | 54.5 | 156 | |
| | 2020.06- | 9AT | F | L | Coupe 4WD OM 656.929 | | GDS87029 | Intermediate Shaft | | 27 | 27 | | | 510 | |
| 2.9 (250 kw) | 2017.12- | 9AT | F | L | Coupe 4WD OM 656.929 | | GDS84218 | Drive Shaft | | 30 | 27 | 71 | 56 | 520 | |
| | 2017.12- | 9AT | F | R | Coupe 4WD OM 656.929 | For Right-hand drive vehicles | GDS57760 | Drive Shaft | | 30 | 24 | 71 | 56 | 582 | |
| | 2017.12- | 9AT | F | R | Coupe 4WD OM 656.929 | For left-hand drive vehicles | GDS84219 | Drive Shaft | | 30 | 27 | 71 | 56 | 550 | |
| | 2017.12- | 9AT | F | L | Coupe 4WD OM 656.929 | | GCO82737 | Outer Joint | | 30 | 26 | 71 | 56 | 54.5 | I |
| | 2017.12- | 9AT | F | R | Coupe 4WD OM 656.929 | For left-hand drive vehicles | GCO82737 | Outer Joint | | 30 | 26 | 71 | 56 | 54.5 | I |
| | 2017.12- | 9AT | F | L | Coupe 4WD OM 656.929 | | GCI82313 | Inner Joint | | 27 | 24 | 41 | | 155.5 | |
| | 2017.12- | 9AT | F | R | Coupe 4WD OM 656.929 | For left-hand drive vehicles | GCI82161 | Inner Joint | | 27 | 24 | 38 | 62 | 124.5 | |
| | 2017.12- | 9AT | F | R | Coupe 4WD OM 656.929 | For Right-hand drive vehicles | GCI82342 | Inner Joint | | 24 | 24 | 35 | 54.5 | 156 | |
| | 2017.12- | 9AT | F | L | Coupe 4WD OM 656.929 | | GDS87029 | Intermediate Shaft | | 27 | 27 | | | 510 | |
| | 2017.12- | 9AT | R | L/R | Coupe 4WD OM 656.929 | | GDS84018 | Drive Shaft | | 27 | 30 | 68.5 | 82 | 810 | |

| | YEAR | TRANSM. | F/R | L/R | BODY STYLE & DRIVE TYPE & ENGINE | REMARKS | G-AP Ref. | PRODUCT | ABS | Technical Specifications A | B | C | H | L | P |
|---|---|---|---|---|---|---|---|---|---|---|---|---|---|---|---|
| **MERCEDES-BENZ** | | | | | | | | | | | | | | | |
| **CLS400** | | | | | | | | | | | | | | | |
| 3.0 (245 kw) | 2014.05-2017.12 | 7AT | F | R | Coupe 4WD M 276.820 | | GDS83179 | Drive Shaft | | 30 | 27 | 71 | 56.5 | 551 | |
| | 2014.05-2017.12 | 7AT | F | R | Coupe 4WD M 276.820 | | GCI81452 | Inner Joint | | 27 | 27 | 38 | 62 | 110 | |
| | 2014.05-2017.12 | AT | F | L/R | Coupe 4WD M 276.820 | | GCO35049 | Outer Joint | | 30 | 25 | 71 | 56.5 | 52 | I |
| | 2014.05-2017.12 | AT/MT | F | L | Coupe 4WD M 276.820 | | GDS81696 | Intermediate Shaft | | 34 | 27 | | | 504.5 | |
| | 2014.05-2017.12 | AT | R | L/R | Coupe 4WD M 276.820 | | GDS35137 | Drive Shaft | 48NS | 27 | 27 | 68 | 82 | 807 | |
| | 2014.05-2017.12 | AT | R | L/R | Coupe 4WD M 276.820 | | GCI35021 | Inner Joint | 48NS | 27 | 27 | 68 | 82 | 51.5 | |
| | 2014.05-2017.12 | 7AT | R | L/R | Coupe RWD M 276.820 | | GDS35119 | Drive Shaft | 48NS | 27 | 27 | 68 | 82 | 803 | |
| | 2014.05-2017.12 | 9AT | R | L/R | Coupe RWD M 276.820 | | GDS35120 | Drive Shaft | 48NS | 27 | 30 | 68 | 82 | 800 | |
| | 2014.05-2017.12 | 7AT | F | R | Estate 4WD M 276.820 | | GDS83179 | Drive Shaft | | 30 | 27 | 71 | 56.5 | 551 | |
| | 2014.05-2017.12 | 7AT | F | R | Estate 4WD M 276.820 | | GCI81452 | Inner Joint | | 27 | 27 | 38 | 62 | 110 | |
| | 2014.05-2017.12 | AT | F | L/R | Estate 4WD M 276.820 | | GCO35049 | Outer Joint | | 30 | 25 | 71 | 56.5 | 52 | I |
| | 2014.05-2017.12 | AT/MT | F | L | Estate 4WD M 276.820 | | GDS81696 | Intermediate Shaft | | 34 | 27 | | | 504.5 | |
| | 2014.05-2017.12 | AT | R | L/R | Estate 4WD M 276.820 | | GDS35137 | Drive Shaft | 48NS | 27 | 27 | 68 | 82 | 807 | |
| | 2014.05-2017.12 | AT | R | L/R | Estate 4WD M 276.820 | | GCI35021 | Inner Joint | 48NS | 27 | 27 | 68 | 82 | 51.5 | |
| | 2014.05-2017.12 | 7AT | R | L/R | Estate RWD M 276.820 | | GDS35119 | Drive Shaft | 48NS | 27 | 27 | 68 | 82 | 803 | |
| | 2014.05-2017.12 | 9AT | R | L/R | Estate RWD M 276.820 | | GDS35120 | Drive Shaft | 48NS | 27 | 30 | 68 | 82 | 800 | |
| 3.5 (245 kw) | 2014.07-2017.12 | 7AT | F | R | Coupe 4WD M 276.850 | | GDS83179 | Drive Shaft | | 30 | 27 | 71 | 56.5 | 551 | |
| | 2014.07-2017.12 | 7AT | F | R | Coupe 4WD M 276.850 | | GCI81452 | Inner Joint | | 27 | 27 | 38 | 62 | 110 | |
| | 2014.07-2017.12 | AT | F | L/R | Coupe 4WD M 276.850 | | GCO35049 | Outer Joint | | 30 | 25 | 71 | 56.5 | 52 | I |
| | 2014.07-2017.12 | AT/MT | F | L | Coupe 4WD M 276.850 | | GDS81696 | Intermediate Shaft | | 34 | 27 | | | 504.5 | |
| | 2014.07-2017.12 | AT | R | L/R | Coupe 4WD M 276.850 | | GDS35137 | Drive Shaft | 48NS | 27 | 27 | 68 | 82 | 807 | |
| | 2014.07-2017.12 | AT | R | L/R | Coupe 4WD M 276.850 | | GCI35021 | Inner Joint | 48NS | 27 | 27 | 68 | 82 | 51.5 | |
| | 2014.07-2017.12 | 7AT | R | L/R | Coupe RWD M 276.850 | | GDS35119 | Drive Shaft | 48NS | 27 | 27 | 68 | 82 | 803 | |
| | 2014.07-2017.12 | 9AT | R | L/R | Coupe RWD M 276.850 | | GDS35120 | Drive Shaft | 48NS | 27 | 30 | 68 | 82 | 800 | |
| | 2014.07-2017.12 | 7AT | F | R | Estate 4WD M 276.850 | | GDS83179 | Drive Shaft | | 30 | 27 | 71 | 56.5 | 551 | |
| | 2014.07-2017.12 | 7AT | F | R | Estate 4WD M 276.850 | | GCI81452 | Inner Joint | | 27 | 27 | 38 | 62 | 110 | |
| | 2014.07-2017.12 | AT | F | L/R | Estate 4WD M 276.850 | | GCO35049 | Outer Joint | | 30 | 25 | 71 | 56.5 | 52 | I |
| | 2014.07-2017.12 | AT/MT | F | L | Estate 4WD M 276.850 | | GDS81696 | Intermediate Shaft | | 34 | 27 | | | 504.5 | |
| | 2014.07-2017.12 | AT | R | L/R | Estate 4WD M 276.850 | | GDS35137 | Drive Shaft | 48NS | 27 | 27 | 68 | 82 | 807 | |
| | 2014.07-2017.12 | AT | R | L/R | Estate 4WD M 276.850 | | GCI35021 | Inner Joint | 48NS | 27 | 27 | 68 | 82 | 51.5 | |
| | 2014.07-2017.12 | 7AT | R | L/R | Estate RWD M 276.850 | | GDS35119 | Drive Shaft | 48NS | 27 | 27 | 68 | 82 | 803 | |
| | 2014.07-2017.12 | 9AT | R | L/R | Estate RWD M 276.850 | | GDS35120 | Drive Shaft | 48NS | 27 | 30 | 68 | 82 | 800 | |
| **CLS450** | | | | | | | | | | | | | | | |
| 3.0 (270 kw) | 2017.12- | 9AT | F | L | Coupe 4WD M 256.930 | | GDS84218 | Drive Shaft | | 30 | 27 | 71 | 56 | 520 | |
| | 2017.12- | 9AT | F | R | Coupe 4WD M 256.930 | For Right-hand drive vehicles | GDS57760 | Drive Shaft | | 30 | 24 | 71 | 56 | 582 | |
| | 2017.12- | 9AT | F | R | Coupe 4WD M 256.930 | For left-hand drive vehicles | GDS84219 | Drive Shaft | | 30 | 27 | 71 | 56 | 550 | |
| | 2017.12- | 9AT | F | L | Coupe 4WD M 256.930 | | GCO82737 | Outer Joint | | 30 | 26 | 71 | 56 | 54.5 | I |
| | 2017.12- | 9AT | F | R | Coupe 4WD M 256.930 | For left-hand drive vehicles | GCO82737 | Outer Joint | | 30 | 26 | 71 | 56 | 54.5 | I |
| | 2017.12- | 9AT | F | L | Coupe 4WD M 256.930 | | GCI82313 | Inner Joint | | 27 | 24 | 41 | | 155.5 | |
| | 2017.12- | 9AT | F | R | Coupe 4WD M 256.930 | For left-hand drive vehicles | GCI82161 | Inner Joint | | 27 | 24 | 38 | 62 | 124.5 | |
| | 2017.12- | 9AT | F | R | Coupe 4WD M 256.930 | For Right-hand drive vehicles | GCI82342 | Inner Joint | | 24 | 24 | 35 | 54.5 | 156 | |
| | 2017.12- | 9AT | F | L | Coupe 4WD M 256.930 | | GDS87029 | Intermediate Shaft | | 27 | 27 | | | 510 | |
| | 2017.12- | 9AT | R | L | Coupe 4WD M 256.930 | For left-hand drive vehicles | GDS83627 | Drive Shaft | | 27 | 27 | 68.5 | 82 | 805 | |
| | 2017.12- | 9AT | R | R | Coupe 4WD M 256.930 | For left-hand drive vehicles | GDS83648 | Drive Shaft | | 27 | 27 | 68.5 | 82 | 805 | |
| | 2017.12- | 9AT | R | L/R | Coupe 4WD M 256.930 | For right-hand drive vehicles | GDS84018 | Drive Shaft | | 27 | 30 | 68.5 | 82 | 810 | |
| **CLS500** | | | | | | | | | | | | | | | |
| 4.7 (300 kw) | 2011.02-2017.12 | 7AT/9AT | R | L/R | Coupe RWD M 278.922 | | GDS35127 | Drive Shaft | 48NS | 27 | 30 | 68 | 82 | 796 | |
| | 2011.09-2017.12 | 7AT | F | R | Coupe 4WD M 278.922 | | GCI81452 | Inner Joint | | 27 | 27 | 38 | 62 | 110 | |
| | 2011.09-2017.12 | 9AT | F | R | Coupe 4WD M 278.922 | | GDS83179 | Drive Shaft | | 30 | 27 | 71 | 56.5 | 551 | |
| | 2011.09-2017.12 | AT | F | L/R | Coupe 4WD M 278.922 | | GCO35049 | Outer Joint | | 30 | 25 | 71 | 56.5 | 52 | I |
| | 2011.09-2017.12 | AT/MT | F | L | Coupe 4WD M 278.922 | | GDS81696 | Intermediate Shaft | | 34 | 27 | | | 504.5 | |
| | 2011.09-2017.12 | 7AT/9AT | R | L/R | Coupe 4WD M 278.922 | | GDS35119 | Drive Shaft | 48NS | 27 | 27 | 68 | 82 | 803 | |
| | 2012.10-2017.12 | 7AT | F | R | Estate 4WD M 278.922 | | GCI81452 | Inner Joint | | 27 | 27 | 38 | 62 | 110 | |
| | 2012.10-2017.12 | 9AT | F | R | Estate 4WD M 278.922 | | GDS83179 | Drive Shaft | | 30 | 27 | 71 | 56.5 | 551 | |
| | 2012.10-2017.12 | AT/MT | F | L/R | Estate 4WD M 278.922 | | GCO35049 | Outer Joint | | 30 | 25 | 71 | 56.5 | 52 | I |
| | 2012.10-2017.12 | AT/MT | F | L | Estate 4WD M 278.922 | | GDS81696 | Intermediate Shaft | | 34 | 27 | | | 504.5 | |
| | 2012.10-2017.12 | 7AT/9AT | R | L/R | Estate 4WD M 278.922 | | GDS35119 | Drive Shaft | 48NS | 27 | 27 | 68 | 82 | 803 | |
| | 2012.10-2017.12 | 7AT/9AT | R | L/R | Estate RWD M 278.922 | | GDS35127 | Drive Shaft | 48NS | 27 | 30 | 68 | 82 | 796 | |
| 5.0 (225 kw) | 2004.10-2010.12 | 7AT | R | L/R | Coupe RWD M 113.967 | | GDS35118 | Drive Shaft | 48NS | 27 | 30 | 68 | 82 | 777 | |
| **CLS55 AMG** | | | | | | | | | | | | | | | |
| 5.4 (350 kw) | 2005.01-2010.12 | 5AT | R | L/R | Coupe RWD M 113.990 | | GDS35126 | Drive Shaft | 48NS | 27 | 30 | 68 | 82 | 773 | |
| | 2005.09-2006.12 | 5AT | R | L/R | Coupe RWD M 113.990 | | GDS35126 | Drive Shaft | 48NS | 27 | 30 | 68 | 82 | 773 | |
| **CLS63 AMG** | | | | | | | | | | | | | | | |
| 5.5 (386 kw) | 2011.01-2017.12 | 7AT | R | L/R | Coupe RWD M 157.980;M 157.981 | | GDS35119 | Drive Shaft | 48NS | 27 | 27 | 68 | 82 | 803 | |
| | 2012.10-2017.12 | 7AT | R | L/R | Estate RWD M 157.981 | | GDS35119 | Drive Shaft | 48NS | 27 | 27 | 68 | 82 | 803 | |

| | YEAR | TRANSM. | F/R | L/R | BODY STYLE & DRIVE TYPE & ENGINE | REMARKS | G-AP Ref. | PRODUCT | ABS | Technical Specifications A | B | C | H | L | P |
|---|---|---|---|---|---|---|---|---|---|---|---|---|---|---|---|
| **MERCEDES-BENZ** | | | | | | | | | | | | | | | |
| **CLS63 AMG** | | | | | | | | | | | | | | | |
| 5.5 (410 kw) | 2011.01-2017.12 | 7AT | R | L/R | Coupe RWD M 157.980;M 157.981 | | GDS35119 | Drive Shaft | 48NS | 27 | 27 | 68 | 82 | 803 | |
| | 2013.05-2017.12 | 7AT | F | L | Coupe 4WD M 157.981 | | GDS81662 | Drive Shaft | | 30 | 34 | 71 | 56.5 | 533 | |
| | 2013.05-2017.12 | 7AT | F | R | Coupe 4WD M 157.981 | | GDS81663 | Drive Shaft | | 30 | 27 | 71 | 56.5 | 563 | |
| | 2013.05-2017.12 | 7AT | F | L/R | Coupe 4WD M 157.981 | | GCO81466 | Outer Joint | | 30 | 25 | 71 | 56.5 | 52 | I |
| | 2013.05-2017.12 | 7AT | F | L | Coupe 4WD M 157.981 | | GCI81451 | Inner Joint | | 34 | 27 | 37.5 | | 141 | |
| | 2013.05-2017.12 | 7AT | F | R | Coupe 4WD M 157.981 | | GCI81452 | Inner Joint | | 27 | 27 | 38 | 62 | 110 | |
| | 2013.05-2017.12 | AT/MT | F | L | Coupe 4WD M 157.981 | | GDS81696 | Intermediate Shaft | | 34 | 27 | | | 504.5 | |
| | 2013.05-2017.12 | | F | L/R | Coupe 4WD M 157.981 | | GCO35049 | Outer Joint | | 30 | 25 | 71 | 56.5 | 52 | I |
| | 2013.05-2017.12 | 7AT | R | L/R | Coupe 4WD M 157.981 | | GDS35119 | Drive Shaft | 48NS | 27 | 27 | 68 | 82 | 803 | |
| | 2013.05-2017.12 | 7AT | F | R | Estate 4WD M 157.981 | | GDS81663 | Drive Shaft | | 30 | 27 | 71 | 56.5 | 563 | |
| | 2013.05-2017.12 | AT | F | L | Estate 4WD M 157.981 | | GDS81662 | Drive Shaft | | 30 | 34 | 71 | 56.5 | 533 | |
| | 2013.05-2017.12 | AT | F | L/R | Estate 4WD M 157.981 | | GCO81466 | Outer Joint | | 30 | 25 | 71 | 56.5 | 52 | I |
| | 2013.05-2017.12 | AT | F | L | Estate 4WD M 157.981 | | GCI81451 | Inner Joint | | 34 | 27 | 37.5 | | 141 | |
| | 2013.05-2017.12 | AT | F | R | Estate 4WD M 157.981 | | GCI81452 | Inner Joint | | 27 | 27 | 38 | 62 | 110 | |
| | 2013.05-2017.12 | AT/MT | F | L | Estate 4WD M 157.981 | | GDS81696 | Intermediate Shaft | | 34 | 27 | | | 504.5 | |
| | 2013.05-2017.12 | | F | L/R | Estate 4WD M 157.981 | | GCO35049 | Outer Joint | | 30 | 25 | 71 | 56.5 | 52 | I |
| | 2013.05-2017.12 | 7AT | R | L/R | Estate 4WD M 157.981 | | GDS35119 | Drive Shaft | 48NS | 27 | 27 | 68 | 82 | 803 | |
| | 2013.05-2017.12 | 7AT | R | L/R | Estate RWD M 157.981 | | GDS35119 | Drive Shaft | 48NS | 27 | 27 | 68 | 82 | 803 | |
| 5.5 (430 kw) | 2013.02-2017.12 | 7AT | F | R | Coupe 4WD M 157.981 | | GDS81663 | Drive Shaft | | 30 | 27 | 71 | 56.5 | 563 | |
| | 2013.02-2017.12 | AT | F | L | Coupe 4WD M 157.981 | | GDS81662 | Drive Shaft | | 30 | 34 | 71 | 56.5 | 533 | |
| | 2013.02-2017.12 | AT | F | L/R | Coupe 4WD M 157.981 | | GCO81466 | Outer Joint | | 30 | 25 | 71 | 56.5 | 52 | I |
| | 2013.02-2017.12 | AT | F | L | Coupe 4WD M 157.981 | | GCI81451 | Inner Joint | | 34 | 27 | 37.5 | | 141 | |
| | 2013.02-2017.12 | AT | F | R | Coupe 4WD M 157.981 | | GCI81452 | Inner Joint | | 27 | 27 | 38 | 62 | 110 | |
| | 2013.02-2017.12 | AT/MT | F | L | Coupe 4WD M 157.981 | | GDS81696 | Intermediate Shaft | | 34 | 27 | | | 504.5 | |
| | 2013.02-2017.12 | | F | | Coupe 4WD M 157.981 | | GCO35049 | Outer Joint | | 30 | 25 | 71 | 56.5 | 52 | I |
| | 2013.02-2017.12 | 7AT | R | L/R | Coupe 4WD M 157.981 | | GDS35119 | Drive Shaft | 48NS | 27 | 27 | 68 | 82 | 803 | |
| | 2013.02-2017.12 | 7AT | R | L/R | Coupe RWD M 157.981 | | GDS35119 | Drive Shaft | 48NS | 27 | 27 | 68 | 82 | 803 | |
| | 2013.02-2017.12 | 7AT | F | R | Estate 4WD M 157.981 | | GDS81663 | Drive Shaft | | 30 | 27 | 71 | 56.5 | 563 | |
| | 2013.02-2017.12 | AT | F | L | Estate 4WD M 157.981 | | GDS81662 | Drive Shaft | | 30 | 34 | 71 | 56.5 | 533 | |
| | 2013.02-2017.12 | AT | F | L/R | Estate 4WD M 157.981 | | GCO81466 | Outer Joint | | 30 | 25 | 71 | 56.5 | 52 | I |
| | 2013.02-2017.12 | AT | F | L | Estate 4WD M 157.981 | | GCI81451 | Inner Joint | | 34 | 27 | 37.5 | | 141 | |
| | 2013.02-2017.12 | AT | F | R | Estate 4WD M 157.981 | | GCI81452 | Inner Joint | | 27 | 27 | 38 | 62 | 110 | |
| | 2013.02-2017.12 | AT/MT | F | L | Estate 4WD M 157.981 | | GDS81696 | Intermediate Shaft | | 34 | 27 | | | 504.5 | |
| | 2013.02-2017.12 | | F | | Estate 4WD M 157.981 | | GCO35049 | Outer Joint | | 30 | 25 | 71 | 56.5 | 52 | I |
| | 2013.02-2017.12 | 7AT | R | L/R | Estate 4WD M 157.981 | | GDS35119 | Drive Shaft | 48NS | 27 | 27 | 68 | 82 | 803 | |
| | 2013.02-2017.12 | 7AT | R | L/R | Estate RWD M 157.981 | | GDS35119 | Drive Shaft | 48NS | 27 | 27 | 68 | 82 | 803 | |
| 6.2 (378 kw) | 2006.04-2010.12 | 7AT | R | L/R | Coupe RWD M 156.983 | | GDS35126 | Drive Shaft | 48NS | 27 | 30 | 68 | 82 | 773 | |
| | 2006.09-2010.12 | 7AT | R | L/R | Coupe RWD M 156.983 | | GDS35126 | Drive Shaft | 48NS | 27 | 30 | 68 | 82 | 773 | |
| **E180** | | | | | | | | | | | | | | | |
| 1.5 (115 kw) | 2019.07-2023.10 | 9AT | R | L/R | Saloon RWD M 264.915 | | GDS83648 | Drive Shaft | | 27 | 27 | 68.5 | 82 | 805 | |
| 1.6 (115 kw) | 2013.08-2015.12 | 7AT | R | L/R | Saloon RWD M 274.910 | Date from:2014.04,Date to:2014.11 | GDS35119 | Drive Shaft | 48NS | 27 | 27 | 68 | 82 | 803 | |
| | 2013.08-2015.12 | 7AT | R | L/R | Saloon RWD M 274.910 | Date to:2014.03 | GDS35137 | Drive Shaft | 48NS | 27 | 27 | 68 | 82 | 807 | |
| | 2013.08-2015.12 | 7AT | R | L/R | Saloon RWD M 274.910 | Date to:2014.03 | GCI35021 | Inner Joint | 48NS | 27 | 27 | 68 | 82 | 51.5 | |
| | 2016.01-2019.06 | 9AT | R | L | Saloon RWD M 274.910 | | GDS83627 | Drive Shaft | | 27 | 27 | 68.5 | 82 | 805 | |
| | 2016.01-2019.06 | 9AT | R | R | Saloon RWD M 274.910 | | GDS83648 | Drive Shaft | | 27 | 27 | 68.5 | 82 | 805 | |
| **E200** | | | | | | | | | | | | | | | |
| 1.6 (118 kw) | 2018.11-2023.08 | 9AT | R | L | Estate RWD OM 654.916 | | GDS83627 | Drive Shaft | | 27 | 27 | 68.5 | 82 | 805 | |
| | 2018.11-2023.08 | 9AT | R | R | Estate RWD OM 654.916 | | GDS83648 | Drive Shaft | | 27 | 27 | 68.5 | 82 | 805 | |
| | 2018.11-2023.08 | 9AT | R | L | Saloon RWD OM 654.916 | | GDS83627 | Drive Shaft | | 27 | 27 | 68.5 | 82 | 805 | |
| | 2018.11-2023.08 | 9AT | R | R | Saloon RWD OM 654.916 | | GDS83648 | Drive Shaft | | 27 | 27 | 68.5 | 82 | 805 | |
| 1.8 (120 kw) | 2002.11-2008.12 | 5AT | R | L/R | Saloon RWD M 271.941 | Chassis no. to:B400000/X239998 | GDS35136 | Drive Shaft | 48NS | 27 | 27 | 68 | 82 | 778 | |
| | 2002.11-2008.12 | 5AT | R | L/R | Saloon RWD M 271.941 | Chassis no. to:B400000/X239998 | GCI35021 | Inner Joint | 48NS | 27 | 27 | 68 | 82 | 51.5 | |
| | 2003.03-2009.07 | 5AT | R | L/R | Estate RWD M 271.941 | | GDS35136 | Drive Shaft | 48NS | 27 | 27 | 68 | 82 | 778 | |
| | 2003.03-2009.07 | 5AT | R | L/R | Estate RWD M 271.941 | | GCI35021 | Inner Joint | 48NS | 27 | 27 | 68 | 82 | 51.5 | |
| | 2004.03-2008.12 | 5AT | R | L/R | Saloon RWD M 271.941 | | GDS35136 | Drive Shaft | 48NS | 27 | 27 | 68 | 82 | 778 | |
| | 2004.03-2008.12 | 5AT | R | L/R | Saloon RWD M 271.941 | | GCI35021 | Inner Joint | 48NS | 27 | 27 | 68 | 82 | 51.5 | |
| | 2011.03-2015.12 | 5AT | R | L/R | Saloon RWD M 271.958 | | GDS35137 | Drive Shaft | 48NS | 27 | 27 | 68 | 82 | 807 | |
| | 2011.03-2015.12 | | R | L/R | Saloon RWD M 271.958 | | GCI35021 | Inner Joint | 48NS | 27 | 27 | 68 | 82 | 51.5 | |
| 1.8 (135 kw) | 2006.04-2008.12 | 5AT | R | L/R | Saloon RWD M 271.956 | | GDS35136 | Drive Shaft | 48NS | 27 | 27 | 68 | 82 | 778 | |
| | 2006.04-2008.12 | 5AT | R | L/R | Saloon RWD M 271.956 | | GCI35021 | Inner Joint | 48NS | 27 | 27 | 68 | 82 | 51.5 | |
| | 2006.04-2009.07 | 5AT | R | L/R | Estate RWD M 271.956 | Chassis no. to:B400000/X239998 | GDS35136 | Drive Shaft | 48NS | 27 | 27 | 68 | 82 | 778 | |
| | 2006.04-2009.07 | 5AT | R | L/R | Estate RWD M 271.956 | Chassis no. to:B400000/X239998 | GCI35021 | Inner Joint | 48NS | 27 | 27 | 68 | 82 | 51.5 | |
| | 2009.08-2015.12 | 5AT/6MT/7AT | R | L/R | Saloon RWD M 271.860;M 271.820 | | GDS35137 | Drive Shaft | 48NS | 27 | 27 | 68 | 82 | 807 | |
| | 2009.08-2015.12 | | R | L/R | Saloon RWD M 271.860;M 271.820 | | GCI35021 | Inner Joint | 48NS | 27 | 27 | 68 | 82 | 51.5 | |
| | 2009.11-2016.12 | 5AT/7AT | R | L/R | Estate RWD M 271.860 | | GDS35137 | Drive Shaft | 48NS | 27 | 27 | 68 | 82 | 807 | |

| | YEAR | TRANSM. | F/R | L/R | BODY STYLE & DRIVE TYPE & ENGINE | REMARKS | G-AP Ref. | PRODUCT | ABS | Technical Specifications A | B | C | H | L | P |
|---|---|---|---|---|---|---|---|---|---|---|---|---|---|---|---|
| **MERCEDES-BENZ** | | | | | | | | | | | | | | | |
| **E200** | | | | | | | | | | | | | | | |
| 1.8 (135 kw) | 2009.11-2016.12 | 6MT | R | L/R | Estate RWD M 271.860 | | GDS35119 | Drive Shaft | 48NS | 27 | 27 | 68 | 82 | 803 | |
| | 2009.11-2016.12 | | R | L/R | Estate RWD M 271.860 | | GCI35021 | Inner Joint | 48NS | 27 | 27 | 68 | 82 | 51.5 | |
| | 2010.01-2016.12 | 5AT/7AT/6MT | R | L/R | Convertible RWD M 271.860;M 271.820 | | GDS35134 | Drive Shaft | 48NS | 27 | 27 | 68 | 72 | 776 | |
| | 2010.01-2016.12 | 5AT/7AT/6MT | R | L/R | Coupe RWD M 271.860;M 271.820 | | GDS35134 | Drive Shaft | 48NS | 27 | 27 | 68 | 72 | 776 | |
| 2.0 (65 kw) | 1995.07-2000.06 | AT | R | L/R | Saloon RWD 604917 | | GDS35008 | Drive Shaft | 48T | | | | | 674 | |
| | 1995.07-2000.06 | AT | R | L/R | Saloon RWD 604917 | | GDS35009 | Drive Shaft | 48T | | | | | 665 | |
| | 1995.07-2000.06 | | R | L/R | Saloon RWD 604917 | | GCI35006 | Inner Joint | | | 25 | | | 26 | |
| 2.0 (100 kw) | 1993.06-1996.01 | AT/MT | R | L/R | Estate RWD 111940 | | GDS35001 | Drive Shaft | | 25 | | | 69 | 665 | |
| | 1995.07-2000.06 | 4AT/5MT | R | L/R | Saloon RWD 111942 | | GDS35008 | Drive Shaft | 48T | | | | | 674 | |
| | 1995.07-2000.06 | 4AT/5MT | R | L/R | Saloon RWD 111942 | | GCI85007 | Inner Joint | | | 24 | | | 27 | |
| | 1995.07-2000.06 | AT | R | L/R | Saloon RWD 111942 | | GDS35009 | Drive Shaft | 48T | | | | | 665 | |
| 2.0 (110 kw) | 2016.07-2020.06 | 9AT | R | L/R | Saloon RWD OM 654.920 | | GDS84018 | Drive Shaft | | 27 | 30 | 68.5 | 82 | 810 | |
| | 2016.10-2019.06 | 9AT | R | L/R | Estate RWD OM 654.920 | | GDS84018 | Drive Shaft | | 27 | 30 | 68.5 | 82 | 810 | |
| 2.0 (115 kw) | 2013.07-2015.12 | AT | R | L/R | Saloon RWD M 274.920 | | GDS35137 | Drive Shaft | 48NS | 27 | 27 | 68 | 82 | 807 | |
| | 2013.07-2015.12 | AT | R | L/R | Saloon RWD M 274.920 | | GCI35021 | Inner Joint | 48NS | 27 | 27 | 68 | 82 | 51.5 | |
| 2.0 (120 kw) | 2000.07-2002.03 | AT | R | L/R | Saloon RWD 111957 | | GDS35009 | Drive Shaft | 48T | | | | | 665 | |
| | 2000.07-2002.03 | AT/MT | R | L/R | Saloon RWD 111957 | Date To:2002.01 | GDS35008 | Drive Shaft | 48T | | | | | 674 | |
| | 2000.07-2002.03 | AT/MT | R | L/R | Saloon RWD 111957 | Date To:2002.01 | GCI85007 | Inner Joint | | | 24 | | | 27 | |
| | 2000.08-2003.05 | AT | R | L/R | Estate RWD 111957 | Outer teeth of wheel side:25,Inner teeth of wheel side:33 | GDS35008 | Drive Shaft | 48T | | | | | 674 | |
| | 2000.08-2003.05 | AT | R | L/R | Estate RWD 111957 | Outer teeth of wheel side:25,Inner teeth of wheel side:24 | GDS35009 | Drive Shaft | 48T | | | | | 665 | |
| | 2000.08-2003.05 | AT | R | L/R | Estate RWD 111957 | Date to:2002.01,Chassis no. to:501885;Outer teeth of wheel side:27 | GDS83408 | Drive Shaft | 48W | 27 | | 67 | 78 | 665 | |
| | 2000.08-2003.05 | AT | R | L/R | Estate RWD 111957 | Date to:2002.01,Chassis no. to:501885 | GCI99143 | Inner Joint | | | 27 | | | 28 | |
| 2.0 (135 kw) | 2012.11-2016.12 | 7AT | R | L/R | Estate RWD M 274.920 | Date to:2014.09 | GDS35137 | Drive Shaft | 48NS | 27 | 27 | 68 | 82 | 807 | |
| | 2012.11-2016.12 | 7AT/6MT | R | L/R | Estate RWD M 274.920 | | GDS35119 | Drive Shaft | 48NS | 27 | 27 | 68 | 82 | 803 | |
| | 2012.11-2016.12 | AT | R | L/R | Estate RWD M 274.920 | | GCI35021 | Inner Joint | 48NS | 27 | 27 | 68 | 82 | 51.5 | |
| | 2013.01-2016.12 | 7AT | R | L/R | Saloon RWD M 274.920 | Date from:2014.04 | GDS35119 | Drive Shaft | 48NS | 27 | 27 | 68 | 82 | 803 | |
| | 2013.01-2016.12 | 7AT | R | L/R | Saloon RWD M 274.920 | Date to:2014.03 | GDS35137 | Drive Shaft | 48NS | 27 | 27 | 68 | 82 | 807 | |
| | 2013.01-2016.12 | 7AT | R | L/R | Saloon RWD M 274.920 | Date to:2014.03 | GCI35021 | Inner Joint | 48NS | 27 | 27 | 68 | 82 | 51.5 | |
| | 2013.03-2016.12 | 7AT/6MT | R | L/R | Convertible RWD M 274.920 | Not For SA code:M013 | GDS35111 | Drive Shaft | 48NS | 27 | 27 | 68 | 72 | 771 | |
| | 2013.03-2016.12 | 7AT/6MT | R | L/R | Convertible RWD M 274.920 | For SA code:M013 | GDS35134 | Drive Shaft | 48NS | 27 | 27 | 68 | 72 | 776 | |
| | 2013.06-2016.12 | 7AT/6MT | R | L/R | Coupe RWD M 274.920 | For SA code:M013 | GDS35111 | Drive Shaft | 48NS | 27 | 27 | 68 | 72 | 771 | |
| | 2013.06-2016.12 | 7AT/6MT | R | L/R | Coupe RWD M 274.920 | | GDS35134 | Drive Shaft | 48NS | 27 | 27 | 68 | 72 | 776 | |
| | 2016.01-2019.05 | 6MT | R | L/R | Saloon RWD M 274.920 | For SA code:550,For vehicles with towbar | GDS84018 | Drive Shaft | | 27 | 30 | 68.5 | 82 | 810 | |
| | 2016.01-2019.05 | 9AT | R | L | Saloon RWD M 274.920 | | GDS83627 | Drive Shaft | | 27 | 27 | 68.5 | 82 | 805 | |
| | 2016.01-2019.05 | 9AT | R | R | Saloon RWD M 274.920 | | GDS83648 | Drive Shaft | | 27 | 27 | 68.5 | 82 | 805 | |
| | 2016.07-2019.06 | 9AT | F | L | Saloon 4WD M 274.920 | | GDS84218 | Drive Shaft | | 30 | 27 | 71 | 56 | 520 | |
| | 2016.07-2019.06 | 9AT | F | R | Saloon 4WD M 274.920 | | GDS57760 | Drive Shaft | | 30 | 24 | 71 | 56 | 582 | |
| | 2016.07-2019.06 | 9AT | F | L | Saloon 4WD M 274.920 | | GCO82737 | Outer Joint | | 30 | 26 | 71 | 56 | 54.5 | I |
| | 2016.07-2019.06 | 9AT | F | L | Saloon 4WD M 274.920 | | GCI82313 | Inner Joint | | 27 | 24 | 41 | | 155.5 | |
| | 2016.07-2019.06 | 9AT | F | R | Saloon 4WD M 274.920 | | GCI82342 | Inner Joint | | 24 | 24 | 35 | 54.5 | 156 | |
| | 2016.07-2019.06 | 9AT | R | L | Saloon 4WD M 274.920 | | GDS83741 | Drive Shaft | | 27 | 27 | 68.5 | 82 | 800 | |
| | 2016.07-2019.06 | 9AT | R | R | Saloon 4WD M 274.920 | | GDS83743 | Drive Shaft | | 27 | 27 | 68.5 | 82 | 800 | |
| | 2016.07-2020.06 | 9AT | R | L | Estate RWD M 274.920 | | GDS83627 | Drive Shaft | | 27 | 27 | 68.5 | 82 | 805 | |
| | 2016.07-2020.06 | 9AT | R | R | Estate RWD M 274.920 | | GDS83648 | Drive Shaft | | 27 | 27 | 68.5 | 82 | 805 | |
| | 2016.12- | 6MT | R | R | Coupe RWD M 274.920 | Date to:2018.11,For SA code:550,For vehicles with towbar | GDS84018 | Drive Shaft | | 27 | 30 | 68.5 | 82 | 810 | |
| | 2016.12- | 9AT | R | L | Coupe RWD M 274.920 | For SA code:550,For vehicles with towbar | GDS83627 | Drive Shaft | | 27 | 27 | 68.5 | 82 | 805 | |
| | 2016.12- | 9AT | R | L/R | Coupe RWD M 274.920 | For SA code:550,For vehicles with towbar;Date to:2018.11;For SA code:550;For vehicles without towbar;Position:Left and Right | GDS83648 | Drive Shaft | | 27 | 27 | 68.5 | 82 | 805 | |
| | 2017.01-2019.06 | 9AT | F | L | Estate 4WD M 274.920 | | GDS84218 | Drive Shaft | | 30 | 27 | 71 | 56 | 520 | |
| | 2017.01-2019.06 | 9AT | F | R | Estate 4WD M 274.920 | | GDS57760 | Drive Shaft | | 30 | 24 | 71 | 56 | 582 | |
| | 2017.01-2019.06 | 9AT | F | L | Estate 4WD M 274.920 | | GCO82737 | Outer Joint | | 30 | 26 | 71 | 56 | 54.5 | I |
| | 2017.01-2019.06 | 9AT | F | L | Estate 4WD M 274.920 | | GCI82313 | Inner Joint | | 27 | 24 | 41 | | 155.5 | |
| | 2017.01-2019.06 | 9AT | F | R | Estate 4WD M 274.920 | | GCI82342 | Inner Joint | | 24 | 24 | 35 | 54.5 | 156 | |
| | 2017.01-2019.06 | 9AT | R | L | Estate 4WD M 274.920 | | GDS83741 | Drive Shaft | | 27 | 27 | 68.5 | 82 | 800 | |
| | 2017.01-2019.06 | 9AT | R | R | Estate 4WD M 274.920 | | GDS83743 | Drive Shaft | | 27 | 27 | 68.5 | 82 | 800 | |
| | 2017.06- | 6MT | R | R | Convertible RWD M 274.920 | Date to:2018.11,For SA code:550,For vehicles with towbar | GDS84018 | Drive Shaft | | 27 | 30 | 68.5 | 82 | 810 | |
| | 2017.06- | 9AT | R | L | Convertible RWD M 274.920 | For SA code:550,For vehicles with towbar | GDS83627 | Drive Shaft | | 27 | 27 | 68.5 | 82 | 805 | |
| | 2017.06- | 9AT | R | L/R | Convertible RWD M 274.920 | For SA code:550;For vehicles with towbar;Position:Right;Date:For SA code:550;For vehicles without towbar;Position:Left and Right | GDS83648 | Drive Shaft | | 27 | 27 | 68.5 | 82 | 805 | |
| | 2017.06- | 9AT | F | L | Coupe 4WD M 274.920 | | GDS84218 | Drive Shaft | | 30 | 27 | 71 | 56 | 520 | |
| | 2017.06- | 9AT | F | R | Coupe 4WD M 274.920 | | GDS57760 | Drive Shaft | | 30 | 24 | 71 | 56 | 582 | |
| | 2017.06- | 9AT | F | L | Coupe 4WD M 274.920 | | GCO82737 | Outer Joint | | 30 | 26 | 71 | 56 | 54.5 | I |
| | 2017.06- | 9AT | F | L | Coupe 4WD M 274.920 | | GCI82313 | Inner Joint | | 27 | 24 | 41 | | 155.5 | |
| | 2017.06- | 9AT | F | R | Coupe 4WD M 274.920 | | GCI82342 | Inner Joint | | 24 | 24 | 35 | 54.5 | 156 | |
| | 2017.06- | 9AT | R | L | Coupe 4WD M 274.920 | | GDS83741 | Drive Shaft | | 27 | 27 | 68.5 | 82 | 800 | |
| | 2017.06- | 9AT | R | R | Coupe 4WD M 274.920 | | GDS83743 | Drive Shaft | | 27 | 27 | 68.5 | 82 | 800 | |
| | 2017.10- | 9AT | F | L | Convertible 4WD M 274.920 | | GDS84218 | Drive Shaft | | 30 | 27 | 71 | 56 | 520 | |

| | YEAR | TRANSM. | F/R | L/R | BODY STYLE & DRIVE TYPE & ENGINE | REMARKS | G-AP Ref. | PRODUCT | ABS | Technical Specifications A | B | C | H | L | P |
|---|---|---|---|---|---|---|---|---|---|---|---|---|---|---|---|
| **MERCEDES-BENZ** | | | | | | | | | | | | | | | |
| **E200** | | | | | | | | | | | | | | | |
| 2.0 (135 kw) | 2017.10- | 9AT | F | R | Convertible 4WD M 274.920 | | GDS57760 | Drive Shaft | | 30 | 24 | 71 | 56 | 582 | |
| | 2017.10- | 9AT | F | L | Convertible 4WD M 274.920 | | GCO82737 | Outer Joint | | 30 | 26 | 71 | 56 | 54.5 | I |
| | 2017.10- | 9AT | F | L | Convertible 4WD M 274.920 | | GCI82313 | Inner Joint | | 27 | 24 | 41 | | 155.5 | |
| | 2017.10- | 9AT | F | R | Convertible 4WD M 274.920 | | GCI82342 | Inner Joint | | 24 | 24 | 35 | 54.5 | 156 | |
| | 2017.10- | 9AT | R | L | Convertible 4WD M 274.920 | | GDS83741 | Drive Shaft | | 27 | 27 | 68.5 | 82 | 800 | |
| | 2017.10- | 9AT | R | R | Convertible 4WD M 274.920 | | GDS83743 | Drive Shaft | | 27 | 27 | 68.5 | 82 | 800 | |
| 2.0 (137 kw) | 1997.04-2000.06 | 5AT/5MT | R | L/R | Saloon RWD 111947 | | GCI99143 | Inner Joint | | | 27 | | | 28 | |
| | 1997.04-2000.06 | AT | R | L/R | Saloon RWD 111947 | | GDS35008 | Drive Shaft | 48T | | | | | 674 | |
| | 1997.04-2000.06 | AT | R | L/R | Saloon RWD 111947 | | GDS35009 | Drive Shaft | 48T | | | | | 665 | |
| | 1997.11-2000.07 | AT | R | L/R | Estate RWD 111947 | | GDS83408 | Drive Shaft | 48W | 27 | | 67 | 78 | 665 | |
| | 1997.11-2000.07 | AT | R | L/R | Estate RWD 111947 | | GCI99143 | Inner Joint | | | 27 | | | 28 | |
| 2.0 (145 kw) | 2018.10-2023.10 | 9AT | R | L/R | Saloon RWD M 264.920 | | GDS84018 | Drive Shaft | | 27 | 30 | 68.5 | 82 | 810 | |
| | 2019.06- | 9AT | F | L | Convertible 4WD M 264.920 | | GDS84218 | Drive Shaft | | 30 | 27 | 71 | 56 | 520 | |
| | 2019.06- | 9AT | F | R | Convertible 4WD M 264.920 | | GDS57760 | Drive Shaft | | 30 | 24 | 71 | 56 | 582 | |
| | 2019.06- | 9AT | F | L | Convertible 4WD M 264.920 | | GCO82737 | Outer Joint | | 30 | 26 | 71 | 56 | 54.5 | I |
| | 2019.06- | 9AT | F | L | Convertible 4WD M 264.920 | | GCI82313 | Inner Joint | | 27 | 24 | 41 | | 155.5 | |
| | 2019.06- | 9AT | F | R | Convertible 4WD M 264.920 | | GCI82342 | Inner Joint | | 24 | 24 | 35 | 54.5 | 156 | |
| | 2019.06- | 9AT | R | L/R | Convertible 4WD M 264.920 | | GDS83743 | Drive Shaft | | 27 | 27 | 68.5 | 82 | 800 | |
| | 2019.06- | 9AT | F | L | Coupe 4WD M 264.920 | | GDS84218 | Drive Shaft | | 30 | 27 | 71 | 56 | 520 | |
| | 2019.06- | 9AT | F | R | Coupe 4WD M 264.920 | | GDS57760 | Drive Shaft | | 30 | 24 | 71 | 56 | 582 | |
| | 2019.06- | 9AT | F | L | Coupe 4WD M 264.920 | | GCO82737 | Outer Joint | | 30 | 26 | 71 | 56 | 54.5 | I |
| | 2019.06- | 9AT | F | L | Coupe 4WD M 264.920 | | GCI82313 | Inner Joint | | 27 | 24 | 41 | | 155.5 | |
| | 2019.06- | 9AT | F | R | Coupe 4WD M 264.920 | | GCI82342 | Inner Joint | | 24 | 24 | 35 | 54.5 | 156 | |
| | 2019.06- | 9AT | R | L/R | Coupe 4WD M 264.920 | | GDS83743 | Drive Shaft | | 27 | 27 | 68.5 | 82 | 800 | |
| | 2019.06-2023.10 | 9AT | F | L | Estate 4WD M 264.920 | | GDS84218 | Drive Shaft | | 30 | 27 | 71 | 56 | 520 | |
| | 2019.06-2023.10 | 9AT | F | R | Estate 4WD M 264.920 | | GDS57760 | Drive Shaft | | 30 | 24 | 71 | 56 | 582 | |
| | 2019.06-2023.10 | 9AT | F | L | Estate 4WD M 264.920 | | GCO82737 | Outer Joint | | 30 | 26 | 71 | 56 | 54.5 | I |
| | 2019.06-2023.10 | 9AT | F | L | Estate 4WD M 264.920 | | GCI82313 | Inner Joint | | 27 | 24 | 41 | | 155.5 | |
| | 2019.06-2023.10 | 9AT | F | R | Estate 4WD M 264.920 | | GCI82342 | Inner Joint | | 24 | 24 | 35 | 54.5 | 156 | |
| | 2019.06-2023.10 | 9AT | R | L/R | Estate 4WD M 264.920 | | GDS83743 | Drive Shaft | | 27 | 27 | 68.5 | 82 | 800 | |
| | 2019.06-2023.10 | 9AT | R | L/R | Estate RWD M 264.920 | | GDS84018 | Drive Shaft | | 27 | 30 | 68.5 | 82 | 810 | |
| | 2019.06-2023.10 | 9AT | F | L | Saloon 4WD M 264.920 | | GDS84218 | Drive Shaft | | 30 | 27 | 71 | 56 | 520 | |
| | 2019.06-2023.10 | 9AT | F | R | Saloon 4WD M 264.920 | | GDS57760 | Drive Shaft | | 30 | 24 | 71 | 56 | 582 | |
| | 2019.06-2023.10 | 9AT | F | L | Saloon 4WD M 264.920 | | GCO82737 | Outer Joint | | 30 | 26 | 71 | 56 | 54.5 | I |
| | 2019.06-2023.10 | 9AT | F | L | Saloon 4WD M 264.920 | | GCI82313 | Inner Joint | | 27 | 24 | 41 | | 155.5 | |
| | 2019.06-2023.10 | 9AT | F | R | Saloon 4WD M 264.920 | | GCI82342 | Inner Joint | | 24 | 24 | 35 | 54.5 | 156 | |
| | 2019.06-2023.10 | 9AT | R | L/R | Saloon 4WD M 264.920 | | GDS83743 | Drive Shaft | | 27 | 27 | 68.5 | 82 | 800 | |
| | 2019.06-2023.10 | 9AT | R | L/R | Saloon RWD M 264.920 | | GDS84018 | Drive Shaft | | 27 | 30 | 68.5 | 82 | 810 | |
| | 2020.08-2023.08 | 9AT | F | L | Estate 4WD M 264.920 | | GDS84218 | Drive Shaft | | 30 | 27 | 71 | 56 | 520 | |
| | 2020.08-2023.08 | 9AT | R | L/R | Estate 4WD M 264.920 | | GDS83743 | Drive Shaft | | 27 | 27 | 68.5 | 82 | 800 | |
| 2.2 (75 kw) | 1998.06-2002.03 | 5AT/5MT | R | L/R | Saloon RWD 611961 | | GCI99143 | Inner Joint | | | 27 | | | 28 | |
| | 1998.06-2002.03 | AT | R | L/R | Saloon RWD 611961 | | GDS35008 | Drive Shaft | 48T | | | | | 674 | |
| | 1998.06-2002.03 | AT | R | L/R | Saloon RWD 611961 | | GDS35009 | Drive Shaft | 48T | | | | | 665 | |
| | 2002.07-2008.12 | 5AT/6MT | R | R | Saloon RWD OM 646.951 | For taxis | GDS35115 | Drive Shaft | 48NS | 27 | 27 | 68 | 82 | 773 | |
| | 2002.07-2008.12 | 5AT/6MT | R | R | Saloon RWD OM 646.951 | Not for taxis | GDS35136 | Drive Shaft | 48NS | 27 | 27 | 68 | 82 | 778 | |
| | 2002.07-2008.12 | 5AT/6MT | R | R | Saloon RWD OM 646.951 | | GCI35021 | Inner Joint | 48NS | 27 | 27 | 68 | 82 | 51.5 | |
| | 2002.07-2008.12 | AT | R | L | Saloon RWD OM 646.951 | | GDS35116 | Drive Shaft | 48NS | 27 | 27 | 68 | 82 | 773 | |
| 2.2 (85 kw) | 1999.08-2002.03 | 5AT/5MT | R | L/R | Saloon RWD 611961 | | GCI99143 | Inner Joint | | | 27 | | | 28 | |
| | 1999.08-2002.03 | AT | R | L/R | Saloon RWD 611961 | | GDS35008 | Drive Shaft | 48T | | | | | 674 | |
| | 1999.08-2002.03 | AT | R | L/R | Saloon RWD 611961 | | GDS35009 | Drive Shaft | 48T | | | | | 665 | |
| 2.2 (90 kw) | 2002.07-2008.12 | 5AT/6MT | R | R | Saloon RWD OM 646.951 | For taxis | GDS35115 | Drive Shaft | 48NS | 27 | 27 | 68 | 82 | 773 | |
| | 2002.07-2008.12 | 5AT/6MT | R | R | Saloon RWD OM 646.951 | Not for taxis | GDS35136 | Drive Shaft | 48NS | 27 | 27 | 68 | 82 | 778 | |
| | 2002.07-2008.12 | 5AT/6MT | R | R | Saloon RWD OM 646.951 | | GCI35021 | Inner Joint | 48NS | 27 | 27 | 68 | 82 | 51.5 | |
| | 2002.07-2008.12 | AT | R | L | Saloon RWD OM 646.951 | | GDS35116 | Drive Shaft | 48NS | 27 | 27 | 68 | 82 | 773 | |
| 2.2 (100 kw) | 2006.04-2008.12 | 5AT/6MT | R | L | Saloon RWD OM 646.820 | For SA code:M010;Date from:2006.06;Chassis no. from:A990000;For taxis | GDS35114 | Drive Shaft | 48NS | 27 | 27 | 68 | 82 | 773 | |
| | 2006.04-2008.12 | 5AT/6MT | R | L | Saloon RWD OM 646.820 | Date to:2006.05,Chassis no. to:A989999 | GDS35116 | Drive Shaft | 48NS | 27 | 27 | 68 | 82 | 773 | |
| | 2006.04-2008.12 | 5AT/6MT | R | R | Saloon RWD OM 646.820 | Date to:2006.05,Chassis no. to:A989999 | GDS35115 | Drive Shaft | 48NS | 27 | 27 | 68 | 82 | 773 | |
| | 2006.04-2008.12 | 5AT/6MT | R | R | Saloon RWD OM 646.820 | Date from:2006.06,Chassis no. from:A990000;For SA code:M010 | GDS35117 | Drive Shaft | 48NS | 27 | 27 | 68 | 82 | 773 | |
| | 2006.04-2009.07 | 5AT/6MT | R | L | Estate RWD OM 646.821 | | GDS35114 | Drive Shaft | 48NS | 27 | 27 | 68 | 82 | 773 | |
| | 2006.04-2009.07 | AT | R | R | Estate RWD OM 646.821 | | GDS35117 | Drive Shaft | 48NS | 27 | 27 | 68 | 82 | 773 | |
| | 2009.01-2015.12 | 7AT/9AT | R | L/R | Saloon RWD OM 651.925 | | GDS35119 | Drive Shaft | 48NS | 27 | 27 | 68 | 82 | 803 | |
| | 2009.11-2016.12 | 7AT/9AT | R | L/R | Estate RWD OM 651.925 | | GDS35119 | Drive Shaft | 48NS | 27 | 27 | 68 | 82 | 803 | |
| **E220** | | | | | | | | | | | | | | | |
| 2.0 (120 kw) | 2016.01-2023.10 | 9AT | R | L/R | Saloon RWD OM 654.920 | | GDS84018 | Drive Shaft | | 27 | 30 | 68.5 | 82 | 810 | |
| | 2016.07-2023.10 | 9AT | R | L/R | Estate RWD OM 654.920 | | GDS84018 | Drive Shaft | | 27 | 30 | 68.5 | 82 | 810 | |

| | YEAR | TRANSM. | F/R | L/R | BODY STYLE & DRIVE TYPE & ENGINE | REMARKS | G-AP Ref. | PRODUCT | ABS | Technical Specifications A | B | C | H | L | P |
|---|---|---|---|---|---|---|---|---|---|---|---|---|---|---|---|
| **MERCEDES-BENZ** | | | | | | | | | | | | | | | |
| **E220** | | | | | | | | | | | | | | | |
| 2.0 (120 kw) | 2016.10-2023.10 | 9AT | F | L | Saloon 4WD OM 654.920 | | GDS84218 | Drive Shaft | | 30 | 27 | 71 | 56 | 520 | |
| | 2016.10-2023.10 | 9AT | F | R | Saloon 4WD OM 654.920 | For left/Right-hand drive vehicles | GDS57760 | Drive Shaft | | 30 | 24 | 71 | 56 | 582 | |
| | 2016.10-2023.10 | 9AT | F | R | Saloon 4WD OM 654.920 | For SA code:M014,For left-hand drive vehicles | GDS84219 | Drive Shaft | | 30 | 27 | 71 | 56 | 550 | |
| | 2016.10-2023.10 | 9AT | F | L | Saloon 4WD OM 654.920 | | GCO82737 | Outer Joint | | 30 | 26 | 71 | 56 | 54.5 | I |
| | 2016.10-2023.10 | 9AT | F | R | Saloon 4WD OM 654.920 | For SA code:M014,For left-hand drive vehicles | GCO82737 | Outer Joint | | 30 | 26 | 71 | 56 | 54.5 | I |
| | 2016.10-2023.10 | 9AT | F | L | Saloon 4WD OM 654.920 | | GCI82313 | Inner Joint | | 27 | 24 | 41 | | 155.5 | |
| | 2016.10-2023.10 | 9AT | F | R | Saloon 4WD OM 654.920 | For SA code:M014,For left-hand drive vehicles | GCI82161 | Inner Joint | | 27 | 24 | 38 | 62 | 124.5 | |
| | 2016.10-2023.10 | 9AT | F | R | Saloon 4WD OM 654.920 | For left/Right-hand drive vehicles | GCI82342 | Inner Joint | | 24 | 24 | 35 | 54.5 | 156 | |
| | 2016.10-2023.10 | 9AT | R | L | Saloon 4WD OM 654.920 | Not For SA code:9U8 | GDS83741 | Drive Shaft | | 27 | 27 | 68.5 | 82 | 800 | |
| | 2016.10-2023.10 | 9AT | R | L/R | Saloon 4WD OM 654.920 | For SA code:9U8,Position:Left/Right;Not For SA code:9U8,Position:Right | GDS83743 | Drive Shaft | | 27 | 27 | 68.5 | 82 | 800 | |
| | 2016.12- | 6MT | R | L/R | Coupe RWD OM 654.920 | Date to:2018.03 | GDS84018 | Drive Shaft | | 27 | 30 | 68.5 | 82 | 810 | |
| | 2016.12- | 9AT | R | L | Coupe RWD OM 654.920 | Date to:2018.01,For SA code:807/808 | GDS84018 | Drive Shaft | | 27 | 30 | 68.5 | 82 | 810 | |
| | 2016.12- | 9AT | R | R | Coupe RWD OM 654.920 | Date to:2018.01 | GDS84018 | Drive Shaft | | 27 | 30 | 68.5 | 82 | 810 | |
| | 2017.06- | 9AT | R | L/R | Convertible RWD OM 654.920 | Date to:2018.01,For SA code:807/808 | GDS84018 | Drive Shaft | | 27 | 30 | 68.5 | 82 | 810 | |
| 2.0 (143 kw) | 2016.01-2023.10 | 9AT | R | L/R | Saloon RWD OM 654.920 | | GDS84018 | Drive Shaft | | 27 | 30 | 68.5 | 82 | 810 | |
| | 2016.07-2023.10 | 9AT | R | L/R | Estate RWD OM 654.920 | | GDS84018 | Drive Shaft | | 27 | 30 | 68.5 | 82 | 810 | |
| | 2016.10-2023.10 | 9AT | F | L | Saloon 4WD OM 654.920 | | GDS84218 | Drive Shaft | | 30 | 27 | 71 | 56 | 520 | |
| | 2016.10-2023.10 | 9AT | F | R | Saloon 4WD OM 654.920 | For left/Right-hand drive vehicles | GDS57760 | Drive Shaft | | 30 | 24 | 71 | 56 | 582 | |
| | 2016.10-2023.10 | 9AT | F | R | Saloon 4WD OM 654.920 | For SA code:M014,For left-hand drive vehicles | GDS84219 | Drive Shaft | | 30 | 27 | 71 | 56 | 550 | |
| | 2016.10-2023.10 | 9AT | F | L | Saloon 4WD OM 654.920 | | GCO82737 | Outer Joint | | 30 | 26 | 71 | 56 | 54.5 | I |
| | 2016.10-2023.10 | 9AT | F | R | Saloon 4WD OM 654.920 | For SA code:M014,For left-hand drive vehicles | GCO82737 | Outer Joint | | 30 | 26 | 71 | 56 | 54.5 | I |
| | 2016.10-2023.10 | 9AT | F | L | Saloon 4WD OM 654.920 | | GCI82313 | Inner Joint | | 27 | 24 | 41 | | 155.5 | |
| | 2016.10-2023.10 | 9AT | F | R | Saloon 4WD OM 654.920 | For SA code:M014,For left-hand drive vehicles | GCI82161 | Inner Joint | | 27 | 24 | 38 | 62 | 124.5 | |
| | 2016.10-2023.10 | 9AT | F | R | Saloon 4WD OM 654.920 | For left/Right-hand drive vehicles | GCI82342 | Inner Joint | | 24 | 24 | 35 | 54.5 | 156 | |
| | 2016.10-2023.10 | 9AT | R | L | Saloon 4WD OM 654.920 | Not For SA code:9U8 | GDS83741 | Drive Shaft | | 27 | 27 | 68.5 | 82 | 800 | |
| | 2016.10-2023.10 | 9AT | R | L/R | Saloon 4WD OM 654.920 | For SA code:9U8,Position:Left/Right;Not For SA code:9U8,Position:Right | GDS83743 | Drive Shaft | | 27 | 27 | 68.5 | 82 | 800 | |
| | 2016.12- | 6MT | R | L/R | Coupe RWD OM 654.920 | Date to:2018.03 | GDS84018 | Drive Shaft | | 27 | 30 | 68.5 | 82 | 810 | |
| | 2016.12- | 9AT | R | L | Coupe RWD OM 654.920 | Date to:2018.01,For SA code:807/808 | GDS84018 | Drive Shaft | | 27 | 30 | 68.5 | 82 | 810 | |
| | 2016.12- | 9AT | R | R | Coupe RWD OM 654.920 | Date to:2018.01 | GDS84018 | Drive Shaft | | 27 | 30 | 68.5 | 82 | 810 | |
| | 2017.01-2023.10 | 9AT | F | L | Estate 4WD OM 654.920 | | GDS84218 | Drive Shaft | | 30 | 27 | 71 | 56 | 520 | |
| | 2017.01-2023.10 | 9AT | F | R | Estate 4WD OM 654.920 | Not for left-hand drive vehicles | GDS57760 | Drive Shaft | | 30 | 24 | 71 | 56 | 582 | |
| | 2017.01-2023.10 | 9AT | F | R | Estate 4WD OM 654.920 | For SA code:M014,For left-hand drive vehicles | GDS84219 | Drive Shaft | | 30 | 27 | 71 | 56 | 550 | |
| | 2017.01-2023.10 | 9AT | F | L | Estate 4WD OM 654.920 | | GCO82737 | Outer Joint | | 30 | 26 | 71 | 56 | 54.5 | I |
| | 2017.01-2023.10 | 9AT | F | R | Estate 4WD OM 654.920 | For SA code:M014,For left-hand drive vehicles | GCO82737 | Outer Joint | | 30 | 26 | 71 | 56 | 54.5 | I |
| | 2017.01-2023.10 | 9AT | F | L | Estate 4WD OM 654.920 | | GCI82313 | Inner Joint | | 27 | 24 | 41 | | 155.5 | |
| | 2017.01-2023.10 | 9AT | F | R | Estate 4WD OM 654.920 | For SA code:M014,For left-hand drive vehicles | GCI82161 | Inner Joint | | 27 | 24 | 38 | 62 | 124.5 | |
| | 2017.01-2023.10 | 9AT | F | R | Estate 4WD OM 654.920 | Not for left-hand drive vehicles | GCI82342 | Inner Joint | | 24 | 24 | 35 | 54.5 | 156 | |
| | 2017.01-2023.10 | 9AT | R | L | Estate 4WD OM 654.920 | | GDS83741 | Drive Shaft | | 27 | 27 | 68.5 | 82 | 800 | |
| | 2017.01-2023.10 | 9AT | R | R | Estate 4WD OM 654.920 | | GDS83743 | Drive Shaft | | 27 | 27 | 68.5 | 82 | 800 | |
| | 2017.03- | 9AT | F | L | Coupe 4WD OM 654.920 | | GDS84218 | Drive Shaft | | 30 | 27 | 71 | 56 | 520 | |
| | 2017.03- | 9AT | F | R | Coupe 4WD OM 654.920 | | GDS57760 | Drive Shaft | | 30 | 24 | 71 | 56 | 582 | |
| | 2017.03- | 9AT | F | L | Coupe 4WD OM 654.920 | | GCO82737 | Outer Joint | | 30 | 26 | 71 | 56 | 54.5 | I |
| | 2017.03- | 9AT | F | L | Coupe 4WD OM 654.920 | | GCI82313 | Inner Joint | | 27 | 24 | 41 | | 155.5 | |
| | 2017.03- | 9AT | F | R | Coupe 4WD OM 654.920 | | GCI82342 | Inner Joint | | 24 | 24 | 35 | 54.5 | 156 | |
| | 2017.03- | 9AT | R | L | Coupe 4WD OM 654.920 | For SA code:807/808 | GDS83741 | Drive Shaft | | 27 | 27 | 68.5 | 82 | 800 | |
| | 2017.03- | 9AT | R | L/R | Coupe 4WD OM 654.920 | For SA code:9U8,Position:Left/Right;Not For SA code:9U8,Position:Right;For SA code:M014,For left-hand drive vehicles | GDS83743 | Drive Shaft | | 27 | 27 | 68.5 | 82 | 800 | |
| | 2017.06- | 9AT | R | L/R | Convertible RWD OM 654.920 | Date to:2018.01,For SA code:807/808 | GDS84018 | Drive Shaft | | 27 | 30 | 68.5 | 82 | 810 | |
| | 2017.10- | 9AT | F | L | Convertible 4WD OM 654.920 | | GDS84218 | Drive Shaft | | 30 | 27 | 71 | 56 | 520 | |
| | 2017.10- | 9AT | F | R | Convertible 4WD OM 654.920 | | GDS57760 | Drive Shaft | | 30 | 24 | 71 | 56 | 582 | |
| | 2017.10- | 9AT | F | L | Convertible 4WD OM 654.920 | | GCO82737 | Outer Joint | | 30 | 26 | 71 | 56 | 54.5 | I |
| | 2017.10- | 9AT | F | L | Convertible 4WD OM 654.920 | | GCI82313 | Inner Joint | | 27 | 24 | 41 | | 155.5 | |
| | 2017.10- | 9AT | F | R | Convertible 4WD OM 654.920 | | GCI82342 | Inner Joint | | 24 | 24 | 35 | 54.5 | 156 | |
| | 2017.10- | 9AT | R | L | Convertible 4WD OM 654.920 | For SA code:807/808 | GDS83741 | Drive Shaft | | 27 | 27 | 68.5 | 82 | 800 | |
| | 2017.10- | 9AT | R | L/R | Convertible 4WD OM 654.920 | For SA code:9U8,Position:Left/Right;Not For SA code:9U8,Position:Right;For SA code:M014,For left-hand drive vehicles | GDS83743 | Drive Shaft | | 27 | 27 | 68.5 | 82 | 800 | |
| 2.0 (147 kw) | 2022.02-2023.10 | 9AT | F | L | Estate 4WD OM 654.820 | | GDS84218 | Drive Shaft | | 30 | 27 | 71 | 56 | 520 | |
| | 2022.02-2023.10 | 9AT | F | R | Estate 4WD OM 654.820 | | GDS84219 | Drive Shaft | | 30 | 27 | 71 | 56 | 550 | |
| | 2022.02-2023.10 | 9AT | F | L/R | Estate 4WD OM 654.820 | | GCO82737 | Outer Joint | | 30 | 26 | 71 | 56 | 54.5 | I |
| | 2022.02-2023.10 | 9AT | F | L | Estate 4WD OM 654.820 | | GCI82313 | Inner Joint | | 27 | 24 | 41 | | 155.5 | |
| | 2022.02-2023.10 | 9AT | F | R | Estate 4WD OM 654.820 | | GCI82161 | Inner Joint | | 27 | 24 | 38 | 62 | 124.5 | |
| | 2022.02-2023.10 | 9AT | R | L | Estate 4WD OM 654.820 | Not For SA code:9U8 | GDS83741 | Drive Shaft | | 27 | 27 | 68.5 | 82 | 800 | |
| | 2022.02-2023.10 | 9AT | R | L | Estate 4WD OM 654.820 | | GDS83741 | Drive Shaft | | 27 | 27 | 68.5 | 82 | 800 | |
| | 2022.02-2023.10 | AT | R | R | Estate 4WD OM 654.820 | For SA code:9U8 | GDS83743 | Drive Shaft | | 27 | 27 | 68.5 | 82 | 800 | |
| | 2022.02-2023.10 | 9AT | R | L/R | Estate RWD OM 654.820 | | GDS84018 | Drive Shaft | | 27 | 30 | 68.5 | 82 | 810 | |
| | 2022.02-2023.10 | 9AT | F | L | Saloon 4WD OM 654.820 | | GDS84218 | Drive Shaft | | 30 | 27 | 71 | 56 | 520 | |
| | 2022.02-2023.10 | 9AT | F | R | Saloon 4WD OM 654.820 | | GDS57760 | Drive Shaft | | 30 | 24 | 71 | 56 | 582 | |

| | YEAR | TRANSM. | F/R | L/R | BODY STYLE & DRIVE TYPE & ENGINE | REMARKS | G-AP Ref. | PRODUCT | ABS | Technical Specifications A | B | C | H | L | P |
|---|---|---|---|---|---|---|---|---|---|---|---|---|---|---|---|
| **MERCEDES-BENZ** | | | | | | | | | | | | | | | |
| **E220** | | | | | | | | | | | | | | | |
| 2.0 (147 kw) | 2022.02-2023.10 | 9AT | F | R | Saloon 4WD OM 654.820 | | GCI82342 | Inner Joint | | 24 | 24 | 35 | 54.5 | 156 | |
| | 2022.02-2023.10 | 9AT | R | L | Saloon 4WD OM 654.820 | Not For SA code:9U8 | GDS83741 | Drive Shaft | | 27 | 27 | 68.5 | 82 | 800 | |
| | 2022.02-2023.10 | 9AT | R | L/R | Saloon 4WD OM 654.820 | For SA code:9U8,Position:Left/Right;Not For SA code:9U8,Position:Right | GDS83743 | Drive Shaft | | 27 | 27 | 68.5 | 82 | 800 | |
| | 2022.02-2023.10 | 9AT | R | L/R | Saloon RWD OM 654.820 | | GDS84018 | Drive Shaft | | 27 | 30 | 68.5 | 82 | 810 | |
| 2.2 (55 kw) | 1995.07-1998.05 | AT | R | L/R | Saloon RWD 604912 | | GDS35008 | Drive Shaft | 48T | | | | | 674 | |
| | 1995.07-1998.05 | | R | L/R | Saloon RWD 604912 | | GCI35006 | Inner Joint | | | 25 | | | 26 | |
| 2.2 (70 kw) | 1995.07-1998.05 | AT | R | L/R | Saloon RWD 604912 | | GDS35008 | Drive Shaft | 48T | | | | | 674 | |
| | 1995.07-1998.05 | | R | L/R | Saloon RWD 604912 | | GCI35006 | Inner Joint | | | 25 | | | 26 | |
| 2.2 (92 kw) | 1998.06-1999.07 | AT | R | L/R | Estate RWD 611961 | | GDS35008 | Drive Shaft | 48T | | | | | 674 | |
| | 1998.06-1999.07 | MT | R | L/R | Estate RWD 611961 | | GDS83408 | Drive Shaft | 48W | 27 | | 67 | 78 | 665 | |
| | 1998.06-1999.07 | MT | R | L/R | Estate RWD 611961 | | GCI99143 | Inner Joint | | | 27 | | | 28 | |
| | 1998.06-1999.07 | 5AT/5MT | R | L/R | Saloon RWD 611961 | | GCI99143 | Inner Joint | | | 27 | | | 28 | |
| | 1998.06-1999.07 | AT | R | L/R | Saloon RWD 611961 | | GDS35008 | Drive Shaft | 48T | | | | | 674 | |
| | 1998.06-1999.07 | AT | R | L/R | Saloon RWD 611961 | | GDS35009 | Drive Shaft | 48T | | | | | 665 | |
| 2.2 (100 kw) | 1999.05-2003.03 | 4AT/5AT/5MT | R | L/R | Estate RWD 611961 | Date to:2002.01,Chassis no. to:B501885,Chassis no. to:X079466 | GDS83408 | Drive Shaft | 48W | 27 | | 67 | 78 | 665 | |
| | 1999.05-2003.03 | 4AT/5AT/5MT | R | L/R | Estate RWD 611961 | Date to:2002.01,Chassis no. to:B501885,Chassis no. to:X079466 | GCI99143 | Inner Joint | | | 27 | | | 28 | |
| | 1999.07-2002.03 | AT | R | L/R | Saloon RWD 611961 | | GDS35008 | Drive Shaft | 48T | | | | | 674 | |
| | 1999.07-2002.03 | | R | L/R | Saloon RWD 611961 | Date To:2002.01;Chassis no. to:B501855;Chassis no. to:X079466 | GDS35009 | Drive Shaft | 48T | | | | | 665 | |
| | 2002.03-2008.12 | 6MT | R | L | Saloon RWD OM 646.961 | | GDS35116 | Drive Shaft | 48NS | 27 | 27 | 68 | 82 | 773 | |
| | 2002.03-2008.12 | 6MT | R | R | Saloon RWD OM 646.961 | | GDS35115 | Drive Shaft | 48NS | 27 | 27 | 68 | 82 | 773 | |
| | 2003.03-2009.07 | 5AT | R | L | Estate RWD OM 646.961 | | GDS35116 | Drive Shaft | 48NS | 27 | 27 | 68 | 82 | 773 | |
| | 2003.03-2009.07 | 5AT | R | R | Estate RWD OM 646.961 | | GDS35115 | Drive Shaft | 48NS | 27 | 27 | 68 | 82 | 773 | |
| 2.2 (105 kw) | 1999.07-2002.12 | 5AT/5MT | R | L/R | Platform/Chassis RWD OM 611.961 | | GDS83408 | Drive Shaft | 48W | 27 | | 67 | 78 | 665 | |
| | 1999.07-2002.12 | 5AT/5MT | R | L/R | Platform/Chassis RWD OM 611.961 | | GCI99143 | Inner Joint | | | 27 | | | 28 | |
| | 1999.07-2003.03 | 4AT/5AT/5MT | R | L/R | Estate RWD 611961 | Date to:2002.01,Chassis no. to:501885 | GDS83408 | Drive Shaft | 48W | 27 | | 67 | 78 | 665 | |
| | 1999.07-2003.03 | 4AT/5AT/5MT | R | L/R | Estate RWD 611961 | Date to:2002.01,Chassis no. to:501885 | GCI99143 | Inner Joint | | | 27 | | | 28 | |
| | 1999.08-2002.03 | 5AT/5MT | R | L/R | Saloon RWD 611961 | | GCI99143 | Inner Joint | | | 27 | | | 28 | |
| | 1999.08-2002.03 | AT | R | L/R | Saloon RWD 611961 | | GDS35008 | Drive Shaft | 48T | | | | | 674 | |
| | 1999.08-2002.03 | AT | R | L/R | Saloon RWD 611961 | | GDS35009 | Drive Shaft | 48T | | | | | 665 | |
| 2.2 (110 kw) | 1993.06-1996.01 | 4AT/5MT | R | L/R | Estate RWD 111960 | for vehicles without ASD | GDS35001 | Drive Shaft | | 25 | | | 69 | 665 | |
| | 2002.03-2008.12 | 5AT/6MT | R | L | Saloon RWD OM 646.961 | | GDS35116 | Drive Shaft | 48NS | 27 | 27 | 68 | 82 | 773 | |
| | 2002.03-2008.12 | 5AT/6MT | R | R | Saloon RWD OM 646.961 | | GDS35115 | Drive Shaft | 48NS | 27 | 27 | 68 | 82 | 773 | |
| | 2003.03-2009.07 | 5AT/6MT | R | L | Estate RWD OM 646.961 | | GDS35116 | Drive Shaft | 48NS | 27 | 27 | 68 | 82 | 773 | |
| | 2003.03-2009.07 | 5AT/6MT | R | R | Estate RWD OM 646.961 | | GDS35115 | Drive Shaft | 48NS | 27 | 27 | 68 | 82 | 773 | |
| | 2003.10-2006.07 | 5AT/6MT | R | L | Platform/Chassis RWD OM 646.961 | | GDS35116 | Drive Shaft | 48NS | 27 | 27 | 68 | 82 | 773 | |
| | 2003.10-2006.07 | 5AT/6MT | R | R | Platform/Chassis RWD OM 646.961 | | GDS35115 | Drive Shaft | 48NS | 27 | 27 | 68 | 82 | 773 | |
| 2.2 (120 kw) | 2003.03-2008.12 | 5AT/6MT | R | L | Saloon RWD OM 646.821 | | GDS35114 | Drive Shaft | 48NS | 27 | 27 | 68 | 82 | 773 | |
| | 2003.03-2008.12 | 5AT/6MT | R | R | Saloon RWD OM 646.821 | | GDS35117 | Drive Shaft | 48NS | 27 | 27 | 68 | 82 | 773 | |
| | 2003.03-2009.07 | 5AT/6MT | R | L | Estate RWD OM 646.821 | | GDS35114 | Drive Shaft | 48NS | 27 | 27 | 68 | 82 | 773 | |
| | 2003.03-2009.07 | 5AT/6MT | R | R | Estate RWD OM 646.821 | | GDS35117 | Drive Shaft | 48NS | 27 | 27 | 68 | 82 | 773 | |
| | 2009.01-2015.12 | 6MT | R | L/R | Saloon RWD OM 651.924 | | GDS35119 | Drive Shaft | 48NS | 27 | 27 | 68 | 82 | 803 | |
| | 2009.01-2015.12 | 7AT | R | L/R | Saloon RWD OM 651.924 | For SA code:800/051/801/427 | GDS35119 | Drive Shaft | 48NS | 27 | 27 | 68 | 82 | 803 | |
| | 2009.08-2014.08 | 6MT/7AT | R | L/R | Estate RWD OM 651.924 | | GDS35119 | Drive Shaft | 48NS | 27 | 27 | 68 | 82 | 803 | |
| | 2010.02-2014.12 | 7AT | R | L/R | Coupe RWD OM 651.911 | | GDS35125 | Drive Shaft | 48NS | 27 | 27 | 68 | 72 | 771 | |
| | 2010.02-2014.12 | MT | R | L/R | Coupe RWD OM 651.911 | | GDS35111 | Drive Shaft | 48NS | 27 | 27 | 68 | 72 | 771 | |
| | 2010.02-2016.12 | 7AT | R | L/R | Convertible RWD OM 651.911 | | GDS35125 | Drive Shaft | 48NS | 27 | 27 | 68 | 72 | 771 | |
| | 2010.02-2016.12 | MT | R | L/R | Convertible RWD OM 651.911 | | GDS35111 | Drive Shaft | 48NS | 27 | 27 | 68 | 72 | 771 | |
| 2.2 (125 kw) | 2006.04-2008.12 | 5AT/6MT | R | R | Saloon RWD OM 646.821 | | GDS35117 | Drive Shaft | 48NS | 27 | 27 | 68 | 82 | 773 | |
| | 2006.04-2008.12 | 5AT/6MT | R | L/R | Saloon RWD OM 646.821 | For Thailand,Rear Axle Left and Right;For Europe,Rear Axle Left | GDS35114 | Drive Shaft | 48NS | 27 | 27 | 68 | 82 | 773 | |
| | 2006.04-2009.07 | 5AT/6MT | R | L | Estate RWD OM 646.821 | | GDS35114 | Drive Shaft | 48NS | 27 | 27 | 68 | 82 | 773 | |
| | 2006.04-2009.07 | 5AT/6MT | R | R | Estate RWD OM 646.821 | | GDS35117 | Drive Shaft | 48NS | 27 | 27 | 68 | 82 | 773 | |
| | 2006.04-2009.07 | 5AT | R | L | Platform/Chassis RWD OM 646.821 | | GDS35114 | Drive Shaft | 48NS | 27 | 27 | 68 | 82 | 773 | |
| | 2006.04-2009.07 | 5AT | R | R | Platform/Chassis RWD OM 646.821 | | GDS35117 | Drive Shaft | 48NS | 27 | 27 | 68 | 82 | 773 | |
| | 2009.01-2016.12 | 6MT/9AT | R | L/R | Saloon RWD OM 651.924 | | GDS35119 | Drive Shaft | 48NS | 27 | 27 | 68 | 82 | 803 | |
| | 2009.01-2016.12 | 7AT | R | L/R | Saloon RWD OM 651.924 | For SA code:800/051/801/427 | GDS35119 | Drive Shaft | 48NS | 27 | 27 | 68 | 82 | 803 | |
| | 2009.11-2016.12 | 6MT/7AT/9AT | R | L/R | Estate RWD OM 651.924 | | GDS35119 | Drive Shaft | 48NS | 27 | 27 | 68 | 82 | 803 | |
| | 2010.01-2016.12 | 7AT/9AT | R | L/R | Convertible RWD OM 651.911 | | GDS35125 | Drive Shaft | 48NS | 27 | 27 | 68 | 72 | 771 | |
| | 2010.01-2016.12 | MT | R | L/R | Convertible RWD OM 651.911 | | GDS35111 | Drive Shaft | 48NS | 27 | 27 | 68 | 72 | 771 | |
| | 2010.01-2016.12 | 7AT/9AT | R | L/R | Coupe RWD OM 651.911 | | GDS35125 | Drive Shaft | 48NS | 27 | 27 | 68 | 72 | 771 | |
| | 2010.01-2016.12 | MT | R | L/R | Coupe RWD OM 651.911 | | GDS35111 | Drive Shaft | 48NS | 27 | 27 | 68 | 72 | 771 | |
| | 2014.12-2016.12 | 7AT | F | R | Estate 4WD OM 651.924 | | GDS83179 | Drive Shaft | | 30 | 27 | 71 | 56.5 | 551 | |
| | 2014.12-2016.12 | 7AT | F | R | Estate 4WD OM 651.924 | | GCI81452 | Inner Joint | | 27 | 27 | 38 | 62 | 110 | |
| | 2014.12-2016.12 | 7AT/6MT | R | L/R | Estate 4WD OM 651.924 | | GDS35137 | Drive Shaft | 48NS | 27 | 27 | 68 | 82 | 807 | |
| | 2014.12-2016.12 | 7AT/6MT | R | L/R | Estate 4WD OM 651.924 | | GCI35021 | Inner Joint | 48NS | 27 | 27 | 68 | 82 | 51.5 | |
| | 2015.01-2015.12 | 7AT | F | R | Saloon 4WD OM 651.924 | | GDS83179 | Drive Shaft | | 30 | 27 | 71 | 56.5 | 551 | |

| | YEAR | TRANSM. | F/R | L/R | BODY STYLE & DRIVE TYPE & ENGINE | REMARKS | G-AP Ref. | PRODUCT | ABS | Technical Specifications A | B | C | H | L | P |
|---|---|---|---|---|---|---|---|---|---|---|---|---|---|---|---|
| **MERCEDES-BENZ** | | | | | | | | | | | | | | | |
| **E220** | | | | | | | | | | | | | | | |
| 2.2 (125 kw) | 2015.01-2015.12 | 7AT | F | R | Saloon 4WD OM 651.924 | | GCI81452 | Inner Joint | | 27 | 27 | 38 | 62 | 110 | |
| | 2015.01-2015.12 | 7AT/6MT | R | L/R | Saloon 4WD OM 651.924 | | GDS35137 | Drive Shaft | 48NS | 27 | 27 | 68 | 82 | 807 | |
| | 2015.01-2015.12 | 7AT/6MT | R | L/R | Saloon 4WD OM 651.924 | | GCI35021 | Inner Joint | 48NS | 27 | 27 | 68 | 82 | 51.5 | |
| 2.2 (130 kw) | 2014.05-2015.12 | 7AT | R | L/R | Saloon RWD OM 651.924 | | GDS35119 | Drive Shaft | 48NS | 27 | 27 | 68 | 82 | 803 | |
| | 2014.05-2016.12 | 7AT | R | L/R | Convertible RWD OM 651.911 | | GDS35125 | Drive Shaft | 48NS | 27 | 27 | 68 | 72 | 771 | |
| | 2014.05-2016.12 | 7AT | R | L/R | Coupe RWD OM 651.911 | | GDS35125 | Drive Shaft | 48NS | 27 | 27 | 68 | 72 | 771 | |
| | 2015.05-2016.12 | 7AT | R | L/R | Estate RWD OM 651.924 | | GDS35119 | Drive Shaft | 48NS | 27 | 27 | 68 | 82 | 803 | |
| **E230** | | | | | | | | | | | | | | | |
| 2.3 (110 kw) | 1995.07-1997.10 | AT | R | L/R | Saloon RWD 111970 | | GDS35008 | Drive Shaft | 48T | | | | | 674 | |
| | 1995.07-1997.10 | AT | R | L/R | Saloon RWD 111970 | Inner Teeth:25 | GCI35006 | Inner Joint | | | 25 | | | 26 | |
| | 1995.07-1997.10 | AT | R | L/R | Saloon RWD 111970 | Inner Teeth:24 | GCI85007 | Inner Joint | | | 24 | | | 27 | |
| | 1996.06-1997.10 | AT/MT | R | L/R | Estate RWD 111970 | | GDS35008 | Drive Shaft | 48T | | | | | 674 | |
| | 1996.06-1997.10 | | R | L/R | Estate RWD 111970 | | GCI35006 | Inner Joint | | | 25 | | | 26 | |
| 2.5 (150 kw) | 2007.05-2009.07 | 7AT | R | L/R | Estate RWD M 272.922 | | GDS35136 | Drive Shaft | 48NS | 27 | 27 | 68 | 82 | 778 | |
| | 2007.05-2009.07 | 7AT | R | L/R | Estate RWD M 272.922 | | GCI35021 | Inner Joint | 48NS | 27 | 27 | 68 | 82 | 51.5 | |
| | 2007.09-2008.12 | 7AT | R | L/R | Saloon RWD M 272.922 | | GDS35136 | Drive Shaft | 48NS | 27 | 27 | 68 | 82 | 778 | |
| | 2007.09-2008.12 | 7AT | R | L/R | Saloon RWD M 272.922 | | GCI35021 | Inner Joint | 48NS | 27 | 27 | 68 | 82 | 51.5 | |
| **E240** | | | | | | | | | | | | | | | |
| 2.4 (125 kw) | 1997.04-2000.06 | AT | R | L/R | Saloon RWD 112911 | | GDS35008 | Drive Shaft | 48T | | | | | 674 | |
| | 1997.04-2000.06 | AT | R | L/R | Saloon RWD 112911 | | GCI35006 | Inner Joint | | | 25 | | | 26 | |
| | 1997.04-2000.06 | AT | R | L/R | Saloon RWD 112911 | | GCI85007 | Inner Joint | | | 24 | | | 27 | |
| | 1997.10-2003.03 | AT | R | L/R | Estate RWD 112911 | | GDS35008 | Drive Shaft | 48T | | | | | 674 | |
| | 1997.10-2003.03 | | R | L/R | Estate RWD 112911 | | GCI35006 | Inner Joint | | | 25 | | | 26 | |
| 2.6 (125 kw) | 2000.07-2002.03 | 5AT/6MT/SAT | R | L/R | Saloon RWD 112914 | | GCI99143 | Inner Joint | | | 27 | | | 28 | |
| | 2000.07-2002.03 | AT | R | L/R | Saloon RWD 112914 | | GDS35008 | Drive Shaft | 48T | | | | | 674 | |
| 2.6 (130 kw) | 2002.03-2008.12 | 5AT | R | L/R | Saloon RWD M 112.917;M 112.913 | Chassis no. to:B400000/X239998 | GDS35136 | Drive Shaft | 48NS | 27 | 27 | 68 | 82 | 778 | |
| | 2002.03-2008.12 | 5AT | R | L/R | Saloon RWD M 112.917;M 112.913 | Chassis no. to:B400000/X239998 | GCI35021 | Inner Joint | 48NS | 27 | 27 | 68 | 82 | 51.5 | |
| | 2003.03-2008.12 | 5AT | F | L | Saloon 4WD M 112.917 | | GDS81728 | Drive Shaft | 48NS | 35 | 34 | 66.6 | 42 | 501 | |
| | 2003.03-2008.12 | 5AT | F | R | Saloon 4WD M 112.917 | | GDS81580 | Drive Shaft | 48NS | 35 | 24 | 66.6 | 42 | 517 | |
| | 2003.03-2008.12 | 5AT | F | R | Saloon 4WD M 112.917 | | GCO35053 | Outer Joint | 48NS | 35 | 27 | 66.6 | 42 | 53 | I |
| | 2003.03-2008.12 | 5AT | F | R | Saloon 4WD M 112.917 | | GCI81423 | Inner Joint | | 24 | 27 | 37.97 | 55.5 | 104.5 | |
| | 2003.03-2008.12 | AT | F | L | Saloon 4WD M 112.917 | | GCI35062 | Inner Joint | | 34 | 27 | 37.5 | | 156.5 | |
| | 2003.03-2008.12 | 5AT | R | L/R | Saloon 4WD M 112.917 | | GDS35136 | Drive Shaft | 48NS | 27 | 27 | 68 | 82 | 778 | |
| | 2003.03-2008.12 | 5AT | R | L/R | Saloon 4WD M 112.917 | | GCI35021 | Inner Joint | 48NS | 27 | 27 | 68 | 82 | 51.5 | |
| | 2003.03-2009.07 | 5AT | R | L/R | Estate RWD M 112.913 | | GDS35136 | Drive Shaft | 48NS | 27 | 27 | 68 | 82 | 778 | |
| | 2003.03-2009.07 | 5AT | R | L/R | Estate RWD M 112.913 | | GCI35021 | Inner Joint | 48NS | 27 | 27 | 68 | 82 | 51.5 | |
| | 2003.07-2009.07 | 5AT | F | L | Estate 4WD M 112.917 | | GDS81728 | Drive Shaft | 48NS | 35 | 34 | 66.6 | 42 | 501 | |
| | 2003.07-2009.07 | 5AT | F | R | Estate 4WD M 112.917 | | GDS81580 | Drive Shaft | 48NS | 35 | 24 | 66.6 | 42 | 517 | |
| | 2003.07-2009.07 | 5AT | F | R | Estate 4WD M 112.917 | | GCO35053 | Outer Joint | 48NS | 35 | 27 | 66.6 | 42 | 53 | I |
| | 2003.07-2009.07 | 5AT | F | R | Estate 4WD M 112.917 | | GCI81423 | Inner Joint | | 24 | 27 | 37.97 | 55.5 | 104.5 | |
| | 2003.07-2009.07 | AT | F | L | Estate 4WD M 112.917 | | GCI35062 | Inner Joint | | 34 | 27 | 37.5 | | 156.5 | |
| | 2003.07-2009.07 | 5AT | R | L/R | Estate 4WD M 112.917 | | GDS35136 | Drive Shaft | 48NS | 27 | 27 | 68 | 82 | 778 | |
| | 2003.07-2009.07 | 5AT | R | L/R | Estate 4WD M 112.917 | | GCI35021 | Inner Joint | 48NS | 27 | 27 | 68 | 82 | 51.5 | |
| **E250** | | | | | | | | | | | | | | | |
| 1.8 (150 kw) | 2009.01-2015.12 | 5AT/7AT | R | L/R | Saloon RWD M 271.860 | | GDS35119 | Drive Shaft | 48NS | 27 | 27 | 68 | 82 | 803 | |
| | 2009.01-2016.12 | 5AT | R | L/R | Coupe RWD M 271.860 | | GDS35111 | Drive Shaft | 48NS | 27 | 27 | 68 | 72 | 771 | |
| | 2009.11-2013.12 | 5AT/7AT | R | L/R | Estate RWD M 271.860 | | GDS35119 | Drive Shaft | 48NS | 27 | 27 | 68 | 82 | 803 | |
| | 2010.01-2016.12 | 5AT | R | L/R | Convertible RWD M 271.860 | | GDS35111 | Drive Shaft | 48NS | 27 | 27 | 68 | 72 | 771 | |
| 2.0 (155 kw) | 2012.11-2016.12 | 7AT/6MT | R | L/R | Estate RWD M 274.920 | | GDS35119 | Drive Shaft | 48NS | 27 | 27 | 68 | 82 | 803 | |
| | 2013.01-2016.12 | 7AT/6MT | R | L/R | Saloon RWD M 274.920 | | GDS35119 | Drive Shaft | 48NS | 27 | 27 | 68 | 82 | 803 | |
| | 2013.06-2016.12 | AT | R | L/R | Convertible RWD M 274.920 | | GDS35111 | Drive Shaft | 48NS | 27 | 27 | 68 | 72 | 771 | |
| | 2013.06-2016.12 | AT | R | L/R | Coupe RWD M 274.920 | | GDS35111 | Drive Shaft | 48NS | 27 | 27 | 68 | 72 | 771 | |
| | 2016.07-2018.11 | 9AT | R | L | Estate RWD M 274.920 | | GDS83627 | Drive Shaft | | 27 | 27 | 68.5 | 82 | 805 | |
| | 2016.07-2018.11 | 9AT | R | R | Estate RWD M 274.920 | | GDS83648 | Drive Shaft | | 27 | 27 | 68.5 | 82 | 805 | |
| | 2016.07-2023.10 | 9AT | R | L | Saloon RWD M 274.920 | | GDS83627 | Drive Shaft | | 27 | 27 | 68.5 | 82 | 805 | |
| | 2016.07-2023.10 | 9AT | R | R | Saloon RWD M 274.920 | | GDS83648 | Drive Shaft | | 27 | 27 | 68.5 | 82 | 805 | |
| 2.2 (150 kw) | 2009.01-2016.12 | AT | R | L/R | Coupe RWD OM 651.911 | | GDS83793 | Drive Shaft | 48NS | 27 | 30 | 68 | 72 | 767 | |
| | 2009.01-2016.12 | MT | R | L/R | Coupe RWD OM 651.911 | | GDS83792 | Drive Shaft | 48NS | 27 | 30 | 68 | 72 | 768 | |
| | 2009.01-2016.12 | 7AT/9AT | R | L/R | Saloon RWD OM 651.924 | | GDS35120 | Drive Shaft | 48NS | 27 | 30 | 68 | 82 | 800 | |
| | 2009.11-2016.12 | AT/MT | R | L/R | Estate RWD OM 651.924 | | GDS35120 | Drive Shaft | 48NS | 27 | 30 | 68 | 82 | 800 | |
| | 2010.01-2016.12 | AT | R | L/R | Convertible RWD OM 651.911 | | GDS83793 | Drive Shaft | 48NS | 27 | 30 | 68 | 72 | 767 | |
| | 2010.01-2016.12 | MT | R | L/R | Convertible RWD OM 651.911 | | GDS83792 | Drive Shaft | 48NS | 27 | 30 | 68 | 72 | 768 | |
| | 2010.07-2016.12 | 7AT | F | R | Estate 4WD OM 651.924 | | GDS83179 | Drive Shaft | | 30 | 27 | 71 | 56.5 | 551 | |
| | 2010.07-2016.12 | 7AT | F | R | Estate 4WD OM 651.924 | | GCI81452 | Inner Joint | | 27 | 27 | 38 | 62 | 110 | |
| | 2010.07-2016.12 | AT/MT | F | L | Estate 4WD OM 651.924 | | GDS81696 | Intermediate Shaft | | 34 | 27 | | | 504.5 | |

| | YEAR | TRANSM. | F/R | L/R | BODY STYLE & DRIVE TYPE & ENGINE | REMARKS | G-AP Ref. | PRODUCT | ABS | Technical Specifications A | B | C | H | L | P |
|---|---|---|---|---|---|---|---|---|---|---|---|---|---|---|---|
| **MERCEDES-BENZ** | | | | | | | | | | | | | | | |
| **E250** | | | | | | | | | | | | | | | |
| 2.2 (150 kw) | 2010.07-2016.12 | 7AT | R | L/R | Estate 4WD OM 651.924 | | GDS35137 | Drive Shaft | 48NS | 27 | 27 | 68 | 82 | 807 | |
| | 2010.07-2016.12 | 7AT | R | L/R | Estate 4WD OM 651.924 | | GCI35021 | Inner Joint | 48NS | 27 | 27 | 68 | 82 | 51.5 | |
| | 2011.01-2015.12 | 7AT | F | R | Saloon 4WD OM 651.924 | | GDS83179 | Drive Shaft | | 30 | 27 | 71 | 56.5 | 551 | |
| | 2011.01-2015.12 | 7AT | F | R | Saloon 4WD OM 651.924 | | GCI81452 | Inner Joint | | 27 | 27 | 38 | 62 | 110 | |
| | 2011.01-2015.12 | AT/MT | F | L | Saloon 4WD OM 651.924 | | GDS81696 | Intermediate Shaft | | 34 | 27 | | | 504.5 | |
| | 2011.01-2015.12 | 7AT | R | L/R | Saloon 4WD OM 651.924 | | GDS35137 | Drive Shaft | 48NS | 27 | 27 | 68 | 82 | 807 | |
| | 2011.01-2015.12 | AT | R | L/R | Saloon 4WD OM 651.924 | | GCI35021 | Inner Joint | 48NS | 27 | 27 | 68 | 82 | 51.5 | |
| 2.5 (83 kw) | 1995.07-2000.06 | AT | R | L/R | Saloon RWD 605912 | | GDS35008 | Drive Shaft | 48T | | | | | 674 | |
| | 1995.07-2000.06 | | R | L/R | Saloon RWD 605912 | | GCI35006 | Inner Joint | | | 25 | | | 26 | |
| | 1996.06-1998.06 | | R | L/R | Platform/Chassis RWD OM 605.912 | | GCI35006 | Inner Joint | | | 25 | | | 26 | |
| | 1996.06-1998.07 | AT | R | L/R | Estate RWD 605912 | | GDS35008 | Drive Shaft | 48T | | | | | 674 | |
| | 1996.06-1998.07 | | R | L/R | Estate RWD 605912 | | GCI35006 | Inner Joint | | | 25 | | | 26 | |
| 2.5 (110 kw) | 1995.07-2000.06 | 5MT | R | L/R | Saloon RWD 605962 | | GCI99143 | Inner Joint | | | 27 | | | 28 | |
| | 1995.07-2000.06 | AT | R | L/R | Saloon RWD 605962 | | GDS35008 | Drive Shaft | 48T | | | | | 674 | |
| | 1997.11-1999.09 | 5MT | R | L/R | Estate RWD 605962 | | GDS83408 | Drive Shaft | 48W | 27 | | 67 | 78 | 665 | |
| | 1997.11-1999.09 | 5MT | R | L/R | Estate RWD 605962 | | GCI99143 | Inner Joint | | | 27 | | | 28 | |
| | 1997.11-1999.09 | AT | R | L/R | Estate RWD 605962 | | GDS35008 | Drive Shaft | 48T | | | | | 674 | |
| 2.5 (150 kw) | 2009.05-2011.12 | 7AT | R | L/R | Saloon RWD M 272.923 | | GDS35137 | Drive Shaft | 48NS | 27 | 27 | 68 | 82 | 807 | |
| | 2009.05-2011.12 | AT | R | L/R | Saloon RWD M 272.923 | | GCI35021 | Inner Joint | 48NS | 27 | 27 | 68 | 82 | 51.5 | |
| **E270** | | | | | | | | | | | | | | | |
| 2.7 (120 kw) | 1999.07-2002.03 | 5AT/6MT | R | L/R | Saloon RWD 612961 | | GCI99143 | Inner Joint | | | 27 | | | 28 | |
| | 2000.02-2003.03 | 5AT/6MT | R | L/R | Estate RWD 612961 | | GCI99143 | Inner Joint | | | 27 | | | 28 | |
| 2.7 (125 kw) | 1999.07-2002.03 | 5AT/5MT | R | L/R | Saloon RWD 612961 | | GCI99143 | Inner Joint | | | 27 | | | 28 | |
| | 1999.07-2002.12 | 5AT | R | L/R | Platform/Chassis RWD OM 612.961 | | GCI99143 | Inner Joint | | | 27 | | | 28 | |
| | 1999.07-2003.03 | 5AT/5MT | R | L/R | Estate RWD 612961 | | GCI99143 | Inner Joint | | | 27 | | | 28 | |
| **E280** | | | | | | | | | | | | | | | |
| 2.8 (142 kw) | 1995.07-1997.10 | 4AT/5AT/5MT | R | L/R | Saloon RWD 104945 | | GCI99143 | Inner Joint | | | 27 | | | 28 | |
| | 1995.07-1997.10 | AT | R | L/R | Saloon RWD 104945 | Date To:2002.01 | GDS35009 | Drive Shaft | 48T | | | | | 665 | |
| 2.8 (150 kw) | 1997.04-2002.03 | 5AT/5MT | R | L/R | Saloon RWD 112921 | | GCI99143 | Inner Joint | | | 27 | | | 28 | |
| | 1997.04-2002.03 | AT | R | L/R | Saloon RWD 112921 | Date To:2002.01 | GDS35009 | Drive Shaft | 48T | | | | | 665 | |
| | 1997.11-2002.03 | | F | R | Saloon 4WD 112921 | | GDS35065 | Drive Shaft | 48T | 35 | 24 | 61 | 43 | 528 | |
| | 1997.11-2002.03 | 5AT | R | L/R | Saloon 4WD 112921 | | GCI99143 | Inner Joint | | | 27 | | | 28 | |
| | 1997.11-2002.03 | | R | L/R | Saloon 4WD 112921 | Date To:2002.01 | GDS35009 | Drive Shaft | 48T | | | | | 665 | |
| | 1997.11-2003.05 | | F | R | Estate 4WD 112921 | Date From:1998.01 | GDS35065 | Drive Shaft | 48T | 35 | 24 | 61 | 43 | 528 | |
| | 1997.11-2003.05 | 5AT | R | L/R | Estate 4WD 112921 | Date to:2002.01,Chassis no. to:501885 | GDS83408 | Drive Shaft | 48W | 27 | | 67 | 78 | 665 | |
| | 1997.11-2003.05 | 5AT | R | L/R | Estate 4WD 112921 | Date to:2002.01,Chassis no. to:501885 | GCI99143 | Inner Joint | | | 27 | | | 28 | |
| | 1997.11-2003.05 | 5AT | R | L/R | Estate RWD 112921 | Date to:2002.01,Chassis no. to:501885 | GDS83408 | Drive Shaft | 48W | 27 | | 67 | 78 | 665 | |
| | 1997.11-2003.05 | 5AT | R | L/R | Estate RWD 112921 | Date to:2002.01,Chassis no. to:501885 | GCI99143 | Inner Joint | | | 27 | | | 28 | |
| | 1999.07-2002.11 | 5AT/5MT | R | L/R | Platform/Chassis RWD M 112.921 | | GDS83408 | Drive Shaft | 48W | 27 | | 67 | 78 | 665 | |
| | 1999.07-2002.11 | 5AT/5MT | R | L/R | Platform/Chassis RWD M 112.921 | | GCI99143 | Inner Joint | | | 27 | | | 28 | |
| 3.0 (140 kw) | 2005.03-2008.12 | 5AT | F | L | Saloon 4WD OM 642.921 | | GDS81728 | Drive Shaft | 48NS | 35 | 34 | 66.6 | 42 | 501 | |
| | 2005.03-2008.12 | 5AT | F | R | Saloon 4WD OM 642.921 | | GDS81580 | Drive Shaft | 48NS | 35 | 24 | 66.6 | 42 | 517 | |
| | 2005.03-2008.12 | 5AT | F | R | Saloon 4WD OM 642.921 | | GCO35053 | Outer Joint | 48NS | 35 | 27 | 66.6 | 42 | 53 | I |
| | 2005.03-2008.12 | 5AT | F | R | Saloon 4WD OM 642.921 | | GCI81423 | Inner Joint | | 24 | 27 | 37.97 | 55.5 | 104.5 | |
| | 2005.03-2008.12 | | F | L | Saloon 4WD OM 642.921 | | GCI35062 | Inner Joint | | 34 | 27 | 37.5 | | 156.5 | |
| | 2005.03-2008.12 | 7AT/6MT | R | L/R | Saloon RWD OM 642.920 | | GDS35118 | Drive Shaft | 48NS | 27 | 30 | 68 | 82 | 777 | |
| | 2005.03-2009.07 | 5AT | F | L | Estate 4WD OM 642.921 | | GDS81728 | Drive Shaft | 48NS | 35 | 34 | 66.6 | 42 | 501 | |
| | 2005.03-2009.07 | 5AT | F | R | Estate 4WD OM 642.921 | | GDS81580 | Drive Shaft | 48NS | 35 | 24 | 66.6 | 42 | 517 | |
| | 2005.03-2009.07 | 5AT | F | R | Estate 4WD OM 642.921 | | GCO35053 | Outer Joint | 48NS | 35 | 27 | 66.6 | 42 | 53 | I |
| | 2005.03-2009.07 | 5AT | F | R | Estate 4WD OM 642.921 | | GCI81423 | Inner Joint | | 24 | 27 | 37.97 | 55.5 | 104.5 | |
| | 2005.03-2009.07 | | F | L | Estate 4WD OM 642.921 | | GCI35062 | Inner Joint | | 34 | 27 | 37.5 | | 156.5 | |
| | 2005.03-2009.07 | 7AT/6MT | R | L/R | Estate RWD OM 642.920 | | GDS35118 | Drive Shaft | 48NS | 27 | 30 | 68 | 82 | 777 | |
| | 2005.08-2009.07 | 7AT | R | L/R | Platform/Chassis RWD OM 642.920 | | GDS35118 | Drive Shaft | 48NS | 27 | 30 | 68 | 82 | 777 | |
| 3.0 (170 kw) | 2005.03-2008.12 | 7AT | R | L/R | Saloon RWD M 272.943 | Chassis no. from:A874312 | GDS35114 | Drive Shaft | 48NS | 27 | 27 | 68 | 82 | 773 | |
| | 2005.03-2008.12 | 7AT | R | L/R | Saloon RWD M 272.943 | Chassis no. to:989999 | GDS35116 | Drive Shaft | 48NS | 27 | 27 | 68 | 82 | 773 | |
| | 2005.03-2009.07 | 5AT | F | L | Estate 4WD M 272.943;M 272.944 | | GDS81728 | Drive Shaft | 48NS | 35 | 34 | 66.6 | 42 | 501 | |
| | 2005.03-2009.07 | 5AT | F | R | Estate 4WD M 272.943;M 272.944 | | GDS81580 | Drive Shaft | 48NS | 35 | 24 | 66.6 | 42 | 517 | |
| | 2005.03-2009.07 | 5AT | F | R | Estate 4WD M 272.943;M 272.944 | | GCO35053 | Outer Joint | 48NS | 35 | 27 | 66.6 | 42 | 53 | I |
| | 2005.03-2009.07 | 5AT | F | L | Estate 4WD M 272.943;M 272.944 | | GCI35062 | Inner Joint | | 34 | 27 | 37.5 | | 156.5 | |
| | 2005.03-2009.07 | 5AT | F | R | Estate 4WD M 272.943;M 272.944 | | GCI81423 | Inner Joint | | 24 | 27 | 37.97 | 55.5 | 104.5 | |
| | 2005.03-2009.07 | 5AT | R | L/R | Estate 4WD M 272.943;M 272.944 | Position:Rear,side left,Chassis no. to:A97203021198&Position:Rear,side right,Model year to:2009 | GDS35115 | Drive Shaft | 48NS | 27 | 27 | 68 | 82 | 773 | |
| | 2005.03-2009.07 | 6MT | R | L/R | Estate RWD M 272.943 | Chassis no. to:A990000 | GDS35116 | Drive Shaft | 48NS | 27 | 27 | 68 | 82 | 773 | |
| | 2005.03-2009.07 | 7AT | R | L/R | Estate RWD M 272.943 | Chassis no. from:A874312 | GDS35114 | Drive Shaft | 48NS | 27 | 27 | 68 | 82 | 773 | |
| | 2006.01-2008.12 | 5AT | F | L | Saloon 4WD M 272.943;M 272.944 | | GDS81728 | Drive Shaft | 48NS | 35 | 34 | 66.6 | 42 | 501 | |
| | 2006.01-2008.12 | 5AT | F | R | Saloon 4WD M 272.943;M 272.944 | | GDS81580 | Drive Shaft | 48NS | 35 | 24 | 66.6 | 42 | 517 | |

| | YEAR | TRANSM. | F/R | L/R | BODY STYLE & DRIVE TYPE & ENGINE | REMARKS | G-AP Ref. | PRODUCT | ABS | Technical Specifications A | B | C | H | L | P |
|---|---|---|---|---|---|---|---|---|---|---|---|---|---|---|---|
| **MERCEDES-BENZ** | | | | | | | | | | | | | | | |
| **E280** | | | | | | | | | | | | | | | |
| 3.0 (170 kw) | 2006.01-2008.12 | 5AT | F | R | Saloon 4WD M 272.943;M 272.944 | | GCO35053 | Outer Joint | 48NS | 35 | 27 | 66.6 | 42 | 53 | I |
| | 2006.01-2008.12 | 5AT | F | L | Saloon 4WD M 272.943;M 272.944 | | GCI35062 | Inner Joint | | 34 | 27 | 37.5 | | 156.5 | |
| | 2006.01-2008.12 | 5AT | F | R | Saloon 4WD M 272.943;M 272.944 | | GCI81423 | Inner Joint | | 24 | 27 | 37.97 | 55.5 | 104.5 | |
| | 2006.01-2008.12 | 5AT | R | L/R | Saloon 4WD M 272.943;M 272.944 | Chassis no. to:A978335/X211968 | GDS35115 | Drive Shaft | 48NS | 27 | 27 | 68 | 82 | 773 | |
| 3.2 (130 kw) | 2004.05-2008.12 | 5AT | R | L/R | Saloon RWD OM 648.961 | | GDS82455 | Drive Shaft | 48NS | 27 | 27 | 68 | 82 | 776 | |
| | 2004.05-2009.07 | 5AT | R | L/R | Estate RWD OM 648.961 | | GDS82455 | Drive Shaft | 48NS | 27 | 27 | 68 | 82 | 776 | |
| **E290** | | | | | | | | | | | | | | | |
| 2.9 (95 kw) | 1995.07-1999.08 | 4AT/5MT | R | L/R | Saloon RWD 602982 | | GCI99143 | Inner Joint | | | 27 | | | 28 | |
| | 1996.06-1999.08 | 4AT/5MT | R | L/R | Estate RWD 602982 | | GDS83408 | Drive Shaft | 48W | 27 | | 67 | 78 | 665 | |
| | 1996.06-1999.08 | 4AT/5MT | R | L/R | Estate RWD 602982 | | GCI99143 | Inner Joint | | | 27 | | | 28 | |
| | 1996.07-1999.07 | 5AT/5MT | R | L/R | Platform/Chassis RWD OM 602.982 | | GDS83408 | Drive Shaft | 48W | 27 | | 67 | 78 | 665 | |
| | 1996.07-1999.07 | 5AT/5MT | R | L/R | Platform/Chassis RWD OM 602.982 | | GCI99143 | Inner Joint | | | 27 | | | 28 | |
| **E300** | | | | | | | | | | | | | | | |
| 2.0 (180 kw) | 2016.07-2020.06 | 9AT | R | L/R | Saloon RWD M 274.920 | | GDS84018 | Drive Shaft | | 27 | 30 | 68.5 | 82 | 810 | |
| | 2016.12- | 9AT | R | L/R | Coupe RWD M 274.920 | Date to:2018.01 | GDS84018 | Drive Shaft | | 27 | 30 | 68.5 | 82 | 810 | |
| | 2017.06- | 9AT | R | L/R | Convertible RWD M 274.920 | Date to:2018.01 | GDS84018 | Drive Shaft | | 27 | 30 | 68.5 | 82 | 810 | |
| | 2017.12-2020.06 | 9AT | R | L/R | Estate RWD OM 654.920 | | GDS84018 | Drive Shaft | | 27 | 30 | 68.5 | 82 | 810 | |
| | 2017.12-2020.06 | 9AT | R | L/R | Saloon RWD OM 654.920 | | GDS84018 | Drive Shaft | | 27 | 30 | 68.5 | 82 | 810 | |
| | 2018.05- | 9AT | R | L | Convertible RWD OM 654.920 | Date to:2018.05 | GDS84018 | Drive Shaft | | 27 | 30 | 68.5 | 82 | 810 | |
| | 2018.05- | 9AT | R | L | Coupe RWD OM 654.920 | Date to:2018.05 | GDS84018 | Drive Shaft | | 27 | 30 | 68.5 | 82 | 810 | |
| 2.0 (190 kw) | 2019.02-2023.10 | 9AT | R | L/R | Saloon RWD M 274.920;M 264.920 | | GDS84018 | Drive Shaft | | 27 | 30 | 68.5 | 82 | 810 | |
| | 2019.06-2023.10 | 9AT | R | L/R | Estate RWD M 264.920 | | GDS84018 | Drive Shaft | | 27 | 30 | 68.5 | 82 | 810 | |
| | 2019.06-2023.10 | 9AT | R | L/R | Saloon RWD M 264.920 | | GDS84018 | Drive Shaft | | 27 | 30 | 68.5 | 82 | 810 | |
| 2.0 (195 kw) | 2021.01- | 9AT | F | L | Coupe 4WD OM 654.820 | | GDS84218 | Drive Shaft | | 30 | 27 | 71 | 56 | 520 | |
| | 2021.01- | 9AT | F | R | Coupe 4WD OM 654.820 | | GDS84219 | Drive Shaft | | 30 | 27 | 71 | 56 | 550 | |
| | 2021.01- | 9AT | F | L/R | Coupe 4WD OM 654.820 | | GCO82737 | Outer Joint | | 30 | 26 | 71 | 56 | 54.5 | I |
| | 2021.01- | 9AT | F | L | Coupe 4WD OM 654.820 | | GCI82313 | Inner Joint | | 27 | 24 | 41 | | 155.5 | |
| | 2021.01- | 9AT | F | R | Coupe 4WD OM 654.820 | | GCI82161 | Inner Joint | | 27 | 24 | 38 | 62 | 124.5 | |
| | 2021.01- | 9AT | R | L/R | Coupe 4WD OM 654.820 | | GDS83743 | Drive Shaft | | 27 | 27 | 68.5 | 82 | 800 | |
| | 2021.01-2023.10 | 9AT | F | L | Estate 4WD OM 654.820 | | GDS84218 | Drive Shaft | | 30 | 27 | 71 | 56 | 520 | |
| | 2021.01-2023.10 | 9AT | F | R | Estate 4WD OM 654.820 | | GDS84219 | Drive Shaft | | 30 | 27 | 71 | 56 | 550 | |
| | 2021.01-2023.10 | 9AT | F | L/R | Estate 4WD OM 654.820 | | GCO82737 | Outer Joint | | 30 | 26 | 71 | 56 | 54.5 | I |
| | 2021.01-2023.10 | 9AT | F | L | Estate 4WD OM 654.820 | | GCI82313 | Inner Joint | | 27 | 24 | 41 | | 155.5 | |
| | 2021.01-2023.10 | 9AT | F | R | Estate 4WD OM 654.820 | | GCI82161 | Inner Joint | | 27 | 24 | 38 | 62 | 124.5 | |
| | 2021.01-2023.10 | 9AT | R | L | Estate 4WD OM 654.820 | | GDS83741 | Drive Shaft | | 27 | 27 | 68.5 | 82 | 800 | |
| | 2021.01-2023.10 | 9AT | R | R | Estate 4WD OM 654.820 | | GDS83743 | Drive Shaft | | 27 | 27 | 68.5 | 82 | 800 | |
| | 2021.01-2023.10 | 9AT | F | L | Saloon 4WD OM 654.820 | | GDS84218 | Drive Shaft | | 30 | 27 | 71 | 56 | 520 | |
| | 2021.01-2023.10 | 9AT | F | R | Saloon 4WD OM 654.820 | | GDS84219 | Drive Shaft | | 30 | 27 | 71 | 56 | 550 | |
| | 2021.01-2023.10 | 9AT | F | L/R | Saloon 4WD OM 654.820 | | GCO82737 | Outer Joint | | 30 | 26 | 71 | 56 | 54.5 | I |
| | 2021.01-2023.10 | 9AT | F | L | Saloon 4WD OM 654.820 | | GCI82313 | Inner Joint | | 27 | 24 | 41 | | 155.5 | |
| | 2021.01-2023.10 | 9AT | F | R | Saloon 4WD OM 654.820 | | GCI82161 | Inner Joint | | 27 | 24 | 38 | 62 | 124.5 | |
| | 2021.01-2023.10 | 9AT | R | L | Saloon 4WD OM 654.820 | | GDS83741 | Drive Shaft | | 27 | 27 | 68.5 | 82 | 800 | |
| | 2021.01-2023.10 | 9AT | R | R | Saloon 4WD OM 654.820 | | GDS83743 | Drive Shaft | | 27 | 27 | 68.5 | 82 | 800 | |
| | 2021.04- | 9AT | F | L | Convertible 4WD OM 654.820 | | GDS84218 | Drive Shaft | | 30 | 27 | 71 | 56 | 520 | |
| | 2021.04- | 9AT | F | R | Convertible 4WD OM 654.820 | | GDS84219 | Drive Shaft | | 30 | 27 | 71 | 56 | 550 | |
| | 2021.04- | 9AT | F | L/R | Convertible 4WD OM 654.820 | | GCO82737 | Outer Joint | | 30 | 26 | 71 | 56 | 54.5 | I |
| | 2021.04- | 9AT | F | L | Convertible 4WD OM 654.820 | | GCI82313 | Inner Joint | | 27 | 24 | 41 | | 155.5 | |
| | 2021.04- | 9AT | F | R | Convertible 4WD OM 654.820 | | GCI82161 | Inner Joint | | 27 | 24 | 38 | 62 | 124.5 | |
| | 2021.04- | 9AT | R | L/R | Convertible 4WD OM 654.820 | | GDS83743 | Drive Shaft | | 27 | 27 | 68.5 | 82 | 800 | |
| 2.0 (225 kw) | 2020.06-2023.08 | 9AT | F | L | Saloon 4WD OM 654.920 | | GDS84218 | Drive Shaft | | 30 | 27 | 71 | 56 | 520 | |
| | 2020.06-2023.08 | 9AT | F | R | Saloon 4WD OM 654.920 | | GDS84219 | Drive Shaft | | 30 | 27 | 71 | 56 | 550 | |
| | 2020.06-2023.08 | 9AT | F | L/R | Saloon 4WD OM 654.920 | | GCO82737 | Outer Joint | | 30 | 26 | 71 | 56 | 54.5 | I |
| | 2020.06-2023.08 | 9AT | F | L | Saloon 4WD OM 654.920 | | GCI82313 | Inner Joint | | 27 | 24 | 41 | | 155.5 | |
| | 2020.06-2023.08 | 9AT | F | R | Saloon 4WD OM 654.920 | | GCI82161 | Inner Joint | | 27 | 24 | 38 | 62 | 124.5 | |
| | 2020.08-2023.08 | 9AT | F | L | Estate 4WD OM 654.920 | | GDS84218 | Drive Shaft | | 30 | 27 | 71 | 56 | 520 | |
| | 2020.08-2023.08 | 9AT | F | R | Estate 4WD OM 654.920 | | GDS84219 | Drive Shaft | | 30 | 27 | 71 | 56 | 550 | |
| | 2020.08-2023.08 | 9AT | F | L/R | Estate 4WD OM 654.920 | | GCO82737 | Outer Joint | | 30 | 26 | 71 | 56 | 54.5 | I |
| | 2020.08-2023.08 | 9AT | F | L | Estate 4WD OM 654.920 | | GCI82313 | Inner Joint | | 27 | 24 | 41 | | 155.5 | |
| | 2020.08-2023.08 | 9AT | F | R | Estate 4WD OM 654.920 | | GCI82161 | Inner Joint | | 27 | 24 | 38 | 62 | 124.5 | |
| 2.0 (230 kw) | 2023.07- | 9AT | R | L/R | Estate RWD M 254.920 | | GDS57899 | Drive Shaft | | 30 | 30 | | 53 | 785 | |
| | 2023.07- | 9AT | R | L/R | Saloon RWD M 254.920 | | GDS57899 | Drive Shaft | | 30 | 30 | | 53 | 785 | |
| | 2023.10- | 9AT | R | L/R | Estate RWD OM 654.820 | | GDS57899 | Drive Shaft | | 30 | 30 | | 53 | 785 | |
| 2.0 (235 kw) | 2020.07-2023.10 | 9AT | F | L | Saloon 4WD M 274.920 | | GDS84218 | Drive Shaft | | 30 | 27 | 71 | 56 | 520 | |
| | 2020.07-2023.10 | 9AT | F | R | Saloon 4WD M 274.920 | For Right-hand drive vehicles | GDS57760 | Drive Shaft | | 30 | 24 | 71 | 56 | 582 | |
| | 2020.07-2023.10 | 9AT | F | R | Saloon 4WD M 274.920 | For left-hand drive vehicles | GDS84219 | Drive Shaft | | 30 | 27 | 71 | 56 | 550 | |

| | YEAR | TRANSM. | F/R | L/R | BODY STYLE & DRIVE TYPE & ENGINE | REMARKS | G-AP Ref. | PRODUCT | ABS | Technical Specifications A | B | C | H | L | P |
|---|---|---|---|---|---|---|---|---|---|---|---|---|---|---|---|
| **MERCEDES-BENZ** | | | | | | | | | | | | | | | |
| **E300** | | | | | | | | | | | | | | | |
| 2.0 (235 kw) | 2020.07-2023.10 | 9AT | F | L | Saloon 4WD M 274.920 | | GCO82737 | Outer Joint | | 30 | 26 | 71 | 56 | 54.5 | I |
| | 2020.07-2023.10 | 9AT | F | R | Saloon 4WD M 274.920 | For left-hand drive vehicles | GCO82737 | Outer Joint | | 30 | 26 | 71 | 56 | 54.5 | I |
| | 2020.07-2023.10 | 9AT | F | L | Saloon 4WD M 274.920 | | GCI82313 | Inner Joint | | 27 | 24 | 41 | | 155.5 | |
| | 2020.07-2023.10 | 9AT | F | R | Saloon 4WD M 274.920 | For left-hand drive vehicles | GCI82161 | Inner Joint | | 27 | 24 | 38 | 62 | 124.5 | |
| | 2020.07-2023.10 | 9AT | F | R | Saloon 4WD M 274.920 | For Right-hand drive vehicles | GCI82342 | Inner Joint | | 24 | 24 | 35 | 54.5 | 156 | |
| 2.2 (150 kw) | 2011.12-2016.12 | 7AT | R | L/R | Estate RWD OM 651.924 | | GDS35120 | Drive Shaft | 48NS | 27 | 30 | 68 | 82 | 800 | |
| | 2011.12-2016.12 | 7AT | R | L/R | Saloon RWD OM 651.924 | | GDS35120 | Drive Shaft | 48NS | 27 | 30 | 68 | 82 | 800 | |
| 3.0 (100 kw) | 1993.06-1996.06 | 4AT/5MT | R | L/R | Estate RWD 606910 | for vehicles without ASD | GDS35001 | Drive Shaft | | 25 | | | 69 | 665 | |
| | 1995.07-1997.10 | 4AT/5MT | R | L/R | Saloon RWD 606912 | | GCI99143 | Inner Joint | | | 27 | | | 28 | |
| | 1995.07-1997.10 | AT | R | L/R | Saloon RWD 606912 | | GDS35009 | Drive Shaft | 48T | | | | | 665 | |
| 3.0 (108 kw) | 1993.06-1996.01 | AT/MT | R | L/R | Estate 4WD 603963 | | GDS35024 | Drive Shaft | 48W | 25 | | | 69 | 633 | |
| | 1993.06-1996.01 | AT/MT | R | L/R | Estate RWD 603960 | | GDS35005 | Drive Shaft | | 25 | | | 69 | 659 | |
| | 1993.06-1996.01 | AT/MT | R | L/R | Estate RWD 603960 | | GDS35024 | Drive Shaft | 48W | 25 | | | 69 | 633 | |
| | 1993.06-1996.01 | AT/MT | R | L/R | Estate RWD 603960 | Date to:1996.01;for vehicles without ASR;for vehicles without ASD | GCI99143 | Inner Joint | | | 27 | | | 28 | |
| 3.0 (130 kw) | 1996.10-1999.08 | 5AT | R | L/R | Saloon RWD 606962 | | GCI99143 | Inner Joint | | | 27 | | | 28 | |
| | 1996.10-1999.08 | AT | R | L/R | Saloon RWD 606962 | | GDS35009 | Drive Shaft | 48T | | | | | 665 | |
| | 1997.11-1999.09 | 5AT | R | L/R | Estate RWD 606962 | | GDS83408 | Drive Shaft | 48W | 27 | | 67 | 78 | 665 | |
| | 1997.11-1999.09 | 5AT | R | L/R | Estate RWD 606962 | | GCI99143 | Inner Joint | | | 27 | | | 28 | |
| | 1997.11-1999.09 | AT | R | | Estate RWD 606962 | | GDS35009 | Drive Shaft | 48T | | | | | 665 | |
| 3.0 (132 kw) | 1993.06-1996.01 | AT/MT | R | L/R | Estate 4WD 103985 | | GDS35024 | Drive Shaft | 48W | 25 | | | 69 | 633 | |
| 3.0 (150 kw) | 2009.12-2010.12 | 7AT | R | L/R | Estate RWD OM 642.850 | | GDS35120 | Drive Shaft | 48NS | 27 | 30 | 68 | 82 | 800 | |
| | 2009.12-2010.12 | 7AT | R | L/R | Saloon RWD OM 642.850 | | GDS35120 | Drive Shaft | 48NS | 27 | 30 | 68 | 82 | 800 | |
| 3.0 (155 kw) | 2007.09-2008.12 | 7AT | R | L/R | Saloon RWD OM 642.920 | | GDS35118 | Drive Shaft | 48NS | 27 | 30 | 68 | 82 | 777 | |
| 3.0 (170 kw) | 2009.01-2013.12 | 7AT | R | L/R | Saloon RWD M 272.952 | | GDS35137 | Drive Shaft | 48NS | 27 | 27 | 68 | 82 | 807 | |
| | 2009.01-2013.12 | | R | L/R | Saloon RWD M 272.952 | | GCI35021 | Inner Joint | 48NS | 27 | 27 | 68 | 82 | 51.5 | |
| | 2009.11-2011.12 | 6MT/7AT | R | L/R | Estate RWD M 272.952 | | GDS35137 | Drive Shaft | 48NS | 27 | 27 | 68 | 82 | 807 | |
| | 2009.11-2011.12 | | R | L/R | Estate RWD M 272.952 | | GCI35021 | Inner Joint | 48NS | 27 | 27 | 68 | 82 | 51.5 | |
| | 2009.11-2016.12 | 7AT/9AT/6MT | R | L/R | Estate RWD OM 642.850;OM 642.852 | For Type code:212020 | GDS35120 | Drive Shaft | 48NS | 27 | 30 | 68 | 82 | 800 | |
| | 2009.11-2016.12 | 7AT/9AT/6MT | R | L/R | Estate RWD OM 642.850;OM 642.852 | For Type code:212027 | GDS35127 | Drive Shaft | 48NS | 27 | 30 | 68 | 82 | 796 | |
| | 2011.03-2015.12 | 7AT/9AT/6MT | R | L/R | Saloon RWD OM 642.850;OM 642.852 | For Type code:212020 | GDS35120 | Drive Shaft | 48NS | 27 | 30 | 68 | 82 | 800 | |
| | 2011.03-2015.12 | AT | R | L/R | Saloon RWD OM 642.850;OM 642.852 | For Type code:212027 | GDS35127 | Drive Shaft | 48NS | 27 | 30 | 68 | 82 | 796 | |
| 3.5 (185 kw) | 2011.04-2016.06 | 7AT | R | L/R | Coupe RWD M 276.957 | | GDS35111 | Drive Shaft | 48NS | 27 | 27 | 68 | 72 | 771 | |
| | 2011.04-2016.12 | 7AT | R | L/R | Convertible RWD M 276.957 | | GDS35111 | Drive Shaft | 48NS | 27 | 27 | 68 | 72 | 771 | |
| | 2011.07-2015.12 | 7AT | F | R | Saloon 4WD M 276.952 | | GDS83179 | Drive Shaft | | 30 | 27 | 71 | 56.5 | 551 | |
| | 2011.07-2015.12 | 7AT | F | R | Saloon 4WD M 276.952 | | GCI81452 | Inner Joint | | 27 | 27 | 38 | 62 | 110 | |
| | 2011.07-2015.12 | AT/MT | F | L | Saloon 4WD M 276.952 | | GDS81696 | Intermediate Shaft | | 34 | 27 | | | 504.5 | |
| | 2011.07-2015.12 | 7AT | R | L/R | Saloon 4WD M 276.952 | | GDS35137 | Drive Shaft | 48NS | 27 | 27 | 68 | 82 | 807 | |
| | 2011.07-2015.12 | 7AT | R | L/R | Saloon RWD M 276.952 | | GDS35119 | Drive Shaft | 48NS | 27 | 27 | 68 | 82 | 803 | |
| | 2011.07-2016.12 | 7AT | F | R | Estate 4WD M 276.952 | | GDS83179 | Drive Shaft | | 30 | 27 | 71 | 56.5 | 551 | |
| | 2011.07-2016.12 | 7AT | F | R | Estate 4WD M 276.952 | | GCI81452 | Inner Joint | | 27 | 27 | 38 | 62 | 110 | |
| | 2011.07-2016.12 | AT/MT | F | L | Estate 4WD M 276.952 | | GDS81696 | Intermediate Shaft | | 34 | 27 | | | 504.5 | |
| | 2011.07-2016.12 | 7AT | R | L/R | Estate 4WD M 276.952 | | GDS35137 | Drive Shaft | 48NS | 27 | 27 | 68 | 82 | 807 | |
| | 2011.07-2016.12 | 7AT | R | L/R | Estate RWD M 276.952 | | GDS35119 | Drive Shaft | 48NS | 27 | 27 | 68 | 82 | 803 | |
| **E320** | | | | | | | | | | | | | | | |
| 3.0 (155 kw) | 2007.11-2009.07 | 7AT | R | L/R | Estate RWD OM 642.920 | | GDS35118 | Drive Shaft | 48NS | 27 | 30 | 68 | 82 | 777 | |
| 3.0 (165 kw) | 2005.03-2008.12 | 5AT | F | L | Saloon 4WD OM 642.910;OM 642.921 | | GDS81728 | Drive Shaft | 48NS | 35 | 34 | 66.6 | 42 | 501 | |
| | 2005.03-2008.12 | 5AT | F | R | Saloon 4WD OM 642.910;OM 642.921 | | GDS81580 | Drive Shaft | 48NS | 35 | 24 | 66.6 | 42 | 517 | |
| | 2005.03-2008.12 | 5AT | F | R | Saloon 4WD OM 642.910;OM 642.921 | | GCO35053 | Outer Joint | 48NS | 35 | 27 | 66.6 | 42 | 53 | I |
| | 2005.03-2008.12 | 5AT | F | R | Saloon 4WD OM 642.910;OM 642.921 | | GCI81423 | Inner Joint | | 24 | 27 | 37.97 | 55.5 | 104.5 | |
| | 2005.03-2008.12 | | F | L | Saloon 4WD OM 642.910;OM 642.921 | | GCI35062 | Inner Joint | | 34 | 27 | 37.5 | | 156.5 | |
| | 2005.03-2008.12 | SAT | R | L/R | Saloon RWD OM 642.920 | | GDS35118 | Drive Shaft | 48NS | 27 | 30 | 68 | 82 | 777 | |
| | 2005.03-2009.07 | 5AT | F | L | Estate 4WD OM 642.921 | | GDS81728 | Drive Shaft | 48NS | 35 | 34 | 66.6 | 42 | 501 | |
| | 2005.03-2009.07 | 5AT | F | R | Estate 4WD OM 642.921 | | GDS81580 | Drive Shaft | 48NS | 35 | 24 | 66.6 | 42 | 517 | |
| | 2005.03-2009.07 | 5AT | F | R | Estate 4WD OM 642.921 | | GCO35053 | Outer Joint | 48NS | 35 | 27 | 66.6 | 42 | 53 | I |
| | 2005.03-2009.07 | 5AT | F | L | Estate 4WD OM 642.921 | | GCI35062 | Inner Joint | | 34 | 27 | 37.5 | | 156.5 | |
| | 2005.03-2009.07 | 5AT | F | R | Estate 4WD OM 642.921 | | GCI81423 | Inner Joint | | 24 | 27 | 37.97 | 55.5 | 104.5 | |
| | 2005.03-2009.07 | 7AT | R | L/R | Estate RWD OM 642.920 | | GDS35118 | Drive Shaft | 48NS | 27 | 30 | 68 | 82 | 777 | |
| 3.0 (200 kw) | 2014.07-2016.12 | AT | R | L/R | Convertible RWD M 276.820 | | GDS35111 | Drive Shaft | 48NS | 27 | 27 | 68 | 72 | 771 | |
| | 2014.07-2016.12 | AT | R | L/R | Coupe RWD M 276.820 | | GDS35111 | Drive Shaft | 48NS | 27 | 27 | 68 | 72 | 771 | |
| 3.2 (145 kw) | 1999.07-2002.03 | 5AT | R | L/R | Saloon RWD 613961 | | GCI99143 | Inner Joint | | | 27 | | | 28 | |
| | 1999.07-2002.03 | AT | R | L/R | Saloon RWD 613961 | | GDS35009 | Drive Shaft | 48T | | | | | 665 | |
| | 1999.07-2003.05 | 5AT | R | L/R | Estate RWD 613961 | | GCI99143 | Inner Joint | | | 27 | | | 28 | |
| 3.2 (150 kw) | 2002.11-2008.12 | 5AT | R | L/R | Saloon RWD OM 648.961 | | GDS82455 | Drive Shaft | 48NS | 27 | 27 | 68 | 82 | 776 | |
| | 2003.03-2009.07 | 5AT | R | L/R | Estate RWD OM 648.961 | | GDS82455 | Drive Shaft | 48NS | 27 | 27 | 68 | 82 | 776 | |
| 3.2 (162 kw) | 1995.07-1997.06 | 4AT | R | L/R | Saloon RWD 104995 | | GCI99143 | Inner Joint | | | 27 | | | 28 | |

| | YEAR | TRANSM. | F/R | L/R | BODY STYLE & DRIVE TYPE & ENGINE | REMARKS | G-AP Ref. | PRODUCT | ABS | Technical Specifications A | B | C | H | L | P |
|---|---|---|---|---|---|---|---|---|---|---|---|---|---|---|---|
| **MERCEDES-BENZ** | | | | | | | | | | | | | | | |
| **E320** | | | | | | | | | | | | | | | |
| 3.2 (165 kw) | 1997.04-2002.03 | 5AT | R | L/R | Saloon RWD 112941 | | GDS35001 | Drive Shaft | | 25 | | | 69 | 665 | |
| | 1997.04-2002.03 | 5AT | R | L/R | Saloon RWD 112941 | | GCI99143 | Inner Joint | | | 27 | | | 28 | |
| | 1997.04-2003.05 | 5AT | R | L/R | Estate RWD 112941 | Date to:2002.01,Chassis no. to:501885 | GDS83408 | Drive Shaft | 48W | 27 | | 67 | 78 | 665 | |
| | 1997.04-2003.05 | 5AT | R | L/R | Estate RWD 112941 | Date to:2002.01,Chassis no. to:501885 | GCI99143 | Inner Joint | | | 27 | | | 28 | |
| | 1997.05-2002.03 | 5AT | R | L/R | Saloon 4WD 112941 | | GCI99143 | Inner Joint | | | 27 | | | 28 | |
| | 1997.05-2002.03 | | R | L/R | Saloon 4WD 112941 | | GDS35009 | Drive Shaft | 48T | | | | | 665 | |
| | 1997.05-2003.05 | | F | R | Estate 4WD 112941 | Date From:1998.01 | GDS35065 | Drive Shaft | 48T | 35 | 24 | 61 | 43 | 528 | |
| | 1997.05-2003.05 | 5AT | R | L/R | Estate 4WD 112941 | Date to:2002.01,Chassis no. to:501885 | GDS83408 | Drive Shaft | 48W | 27 | | 67 | 78 | 665 | |
| | 1997.05-2003.05 | 5AT | R | L/R | Estate 4WD 112941 | Date to:2002.01,Chassis no. to:501885 | GCI99143 | Inner Joint | | | 27 | | | 28 | |
| | 2002.03-2008.12 | 5AT | R | L/R | Saloon RWD M 112.949 | | GDS35115 | Drive Shaft | 48NS | 27 | 27 | 68 | 82 | 773 | |
| | 2003.03-2008.12 | 5AT | F | L | Saloon 4WD M 112.954 | | GDS81728 | Drive Shaft | 48NS | 35 | 34 | 66.6 | 42 | 501 | |
| | 2003.03-2008.12 | 5AT | F | R | Saloon 4WD M 112.954 | | GDS81580 | Drive Shaft | 48NS | 35 | 24 | 66.6 | 42 | 517 | |
| | 2003.03-2008.12 | 5AT | F | R | Saloon 4WD M 112.954 | | GCO35053 | Outer Joint | 48NS | 35 | 27 | 66.6 | 42 | 53 | I |
| | 2003.03-2008.12 | 5AT | F | R | Saloon 4WD M 112.954 | | GCI81423 | Inner Joint | | 24 | 27 | 37.97 | 55.5 | 104.5 | |
| | 2003.03-2008.12 | | F | L | Saloon 4WD M 112.954 | | GCI35062 | Inner Joint | | 34 | 27 | 37.5 | | 156.5 | |
| | 2003.03-2008.12 | 5AT | R | L/R | Saloon 4WD M 112.954 | | GDS35115 | Drive Shaft | 48NS | 27 | 27 | 68 | 82 | 773 | |
| | 2003.03-2009.07 | 5AT | R | L/R | Estate RWD M 112.949 | | GDS35115 | Drive Shaft | 48NS | 27 | 27 | 68 | 82 | 773 | |
| | 2003.07-2009.07 | 5AT | F | L | Estate 4WD M 112.954 | | GDS81728 | Drive Shaft | 48NS | 35 | 34 | 66.6 | 42 | 501 | |
| | 2003.07-2009.07 | 5AT | F | R | Estate 4WD M 112.954 | | GDS81580 | Drive Shaft | 48NS | 35 | 24 | 66.6 | 42 | 517 | |
| | 2003.07-2009.07 | 5AT | F | R | Estate 4WD M 112.954 | | GCO35053 | Outer Joint | 48NS | 35 | 27 | 66.6 | 42 | 53 | I |
| | 2003.07-2009.07 | 5AT | F | R | Estate 4WD M 112.954 | | GCI81423 | Inner Joint | | 24 | 27 | 37.97 | 55.5 | 104.5 | |
| | 2003.07-2009.07 | | F | L | Estate 4WD M 112.954 | | GCI35062 | Inner Joint | | 34 | 27 | 37.5 | | 156.5 | |
| | 2003.07-2009.07 | 5AT | R | L/R | Estate 4WD M 112.954 | | GDS35115 | Drive Shaft | 48NS | 27 | 27 | 68 | 82 | 773 | |
| **E350** | | | | | | | | | | | | | | | |
| 2.0 (220 kw) | 2017.10- | 9AT | R | L/R | Convertible RWD M 264.920 | Date to:2018.01 | GDS84018 | Drive Shaft | | 27 | 30 | 68.5 | 82 | 810 | |
| | 2017.10- | 9AT | R | L/R | Coupe RWD M 264.920 | Date to:2018.01 | GDS84018 | Drive Shaft | | 27 | 30 | 68.5 | 82 | 810 | |
| | 2018.08-2023.10 | 9AT | R | L/R | Saloon RWD M 264.920 | | GDS84018 | Drive Shaft | | 27 | 30 | 68.5 | 82 | 810 | |
| 3.0 (155 kw) | 2009.01-2015.12 | 7AT/9AT/6MT | R | L/R | Saloon RWD OM 642.850 | | GDS35120 | Drive Shaft | 48NS | 27 | 30 | 68 | 82 | 800 | |
| | 2009.11-2013.12 | 7AT | R | L/R | Estate RWD OM 642.850 | | GDS35120 | Drive Shaft | 48NS | 27 | 30 | 68 | 82 | 800 | |
| 3.0 (170 kw) | 2009.01-2011.06 | 7AT | R | L/R | Coupe RWD OM 642.836 | | GDS83792 | Drive Shaft | 48NS | 27 | 30 | 68 | 72 | 768 | |
| | 2009.01-2015.12 | 7AT/6MT | R | L/R | Saloon RWD OM 642.850 | | GDS35120 | Drive Shaft | 48NS | 27 | 30 | 68 | 82 | 800 | |
| | 2009.09-2011.08 | 7AT | F | R | Saloon 4WD OM 642.856 | | GDS83179 | Drive Shaft | | 30 | 27 | 71 | 56.5 | 551 | |
| | 2009.09-2011.08 | 7AT | F | R | Saloon 4WD OM 642.856 | | GCI81452 | Inner Joint | | 27 | 27 | 38 | 62 | 110 | |
| | 2009.09-2011.08 | AT/MT | F | L | Saloon 4WD OM 642.856 | | GDS81696 | Intermediate Shaft | | 34 | 27 | | | 504.5 | |
| | 2009.09-2011.08 | 7AT | R | L/R | Saloon 4WD OM 642.856 | | GDS35137 | Drive Shaft | 48NS | 27 | 27 | 68 | 82 | 807 | |
| | 2009.09-2011.08 | 7AT | R | L/R | Saloon 4WD OM 642.856 | | GCI35021 | Inner Joint | 48NS | 27 | 27 | 68 | 82 | 51.5 | |
| | 2009.11-2011.12 | 7AT | F | R | Estate 4WD OM 642.856 | | GDS83179 | Drive Shaft | | 30 | 27 | 71 | 56.5 | 551 | |
| | 2009.11-2011.12 | 7AT | F | R | Estate 4WD OM 642.856 | | GCI81452 | Inner Joint | | 27 | 27 | 38 | 62 | 110 | |
| | 2009.11-2011.12 | AT/MT | F | L | Estate 4WD OM 642.856 | | GDS81696 | Intermediate Shaft | | 34 | 27 | | | 504.5 | |
| | 2009.11-2011.12 | 7AT | R | L/R | Estate 4WD OM 642.856 | | GDS35137 | Drive Shaft | 48NS | 27 | 27 | 68 | 82 | 807 | |
| | 2009.11-2011.12 | 7AT | R | L/R | Estate RWD OM 642.850 | | GDS35120 | Drive Shaft | 48NS | 27 | 30 | 68 | 82 | 800 | |
| | 2010.01-2011.12 | 7AT | R | L/R | Convertible RWD OM 642.836 | | GDS83792 | Drive Shaft | 48NS | 27 | 30 | 68 | 72 | 768 | |
| 3.0 (185 kw) | 2012.11-2016.12 | 7AT | F | R | Estate 4WD OM 642.858 | | GDS83179 | Drive Shaft | | 30 | 27 | 71 | 56.5 | 551 | |
| | 2012.11-2016.12 | 7AT | F | R | Estate 4WD OM 642.858 | | GCI81452 | Inner Joint | | 27 | 27 | 38 | 62 | 110 | |
| | 2012.11-2016.12 | AT/MT | F | L | Estate 4WD OM 642.858 | | GDS81696 | Intermediate Shaft | | 34 | 27 | | | 504.5 | |
| | 2012.11-2016.12 | 7AT | R | L/R | Estate 4WD OM 642.858 | | GDS35119 | Drive Shaft | 48NS | 27 | 27 | 68 | 82 | 803 | |
| | 2012.11-2016.12 | 7AT/9AT | R | L/R | Estate RWD OM 642.852 | | GDS35127 | Drive Shaft | 48NS | 27 | 30 | 68 | 82 | 796 | |
| | 2013.01-2015.12 | 7AT | F | R | Saloon 4WD OM 642.858 | | GDS83179 | Drive Shaft | | 30 | 27 | 71 | 56.5 | 551 | |
| | 2013.01-2015.12 | 7AT | F | R | Saloon 4WD OM 642.858 | | GCI81452 | Inner Joint | | 27 | 27 | 38 | 62 | 110 | |
| | 2013.01-2015.12 | AT/MT | F | L | Saloon 4WD OM 642.858 | | GDS81696 | Intermediate Shaft | | 34 | 27 | | | 504.5 | |
| | 2013.01-2015.12 | 7AT | R | L/R | Saloon 4WD OM 642.858 | | GDS35119 | Drive Shaft | 48NS | 27 | 27 | 68 | 82 | 803 | |
| | 2013.01-2015.12 | 7AT/9AT/6MT | R | L/R | Saloon RWD OM 642.852 | | GDS35127 | Drive Shaft | 48NS | 27 | 30 | 68 | 82 | 796 | |
| | 2013.06-2016.12 | AT | R | L/R | Convertible RWD OM 642.838 | | GDS83792 | Drive Shaft | 48NS | 27 | 30 | 68 | 72 | 768 | |
| | 2013.06-2016.12 | AT | R | L/R | Coupe RWD OM 642.838 | | GDS83792 | Drive Shaft | 48NS | 27 | 30 | 68 | 72 | 768 | |
| 3.0 (190 kw) | 2014.05-2015.12 | 7AT | F | R | Saloon 4WD OM 642.858 | | GDS83179 | Drive Shaft | | 30 | 27 | 71 | 56.5 | 551 | |
| | 2014.05-2015.12 | 7AT | F | R | Saloon 4WD OM 642.858 | | GCI81452 | Inner Joint | | 27 | 27 | 38 | 62 | 110 | |
| | 2014.05-2015.12 | AT/MT | F | L | Saloon 4WD OM 642.858 | | GDS81696 | Intermediate Shaft | | 34 | 27 | | | 504.5 | |
| | 2014.05-2015.12 | 7AT | R | L/R | Saloon 4WD OM 642.858 | | GDS35119 | Drive Shaft | 48NS | 27 | 27 | 68 | 82 | 803 | |
| | 2014.05-2015.12 | 9AT | R | L/R | Saloon RWD OM 642.852 | | GDS35127 | Drive Shaft | 48NS | 27 | 30 | 68 | 82 | 796 | |
| | 2014.05-2016.12 | AT | R | L/R | Convertible RWD OM 642.838 | | GDS83792 | Drive Shaft | 48NS | 27 | 30 | 68 | 72 | 768 | |
| | 2014.05-2016.12 | AT | R | L/R | Coupe RWD OM 642.838 | | GDS83792 | Drive Shaft | 48NS | 27 | 30 | 68 | 72 | 768 | |
| | 2014.07-2016.12 | 7AT | F | R | Estate 4WD OM 642.858;OM 642.852 | | GDS83179 | Drive Shaft | | 30 | 27 | 71 | 56.5 | 551 | |
| | 2014.07-2016.12 | 7AT | F | R | Estate 4WD OM 642.858;OM 642.852 | | GCI81452 | Inner Joint | | 27 | 27 | 38 | 62 | 110 | |
| | 2014.07-2016.12 | AT/MT | F | L | Estate 4WD OM 642.858;OM 642.852 | | GDS81696 | Intermediate Shaft | | 34 | 27 | | | 504.5 | |
| | 2014.07-2016.12 | 7AT | R | L/R | Estate 4WD OM 642.858;OM 642.852 | | GDS35119 | Drive Shaft | 48NS | 27 | 27 | 68 | 82 | 803 | |

| | YEAR | TRANSM. | F/R | L/R | BODY STYLE & DRIVE TYPE & ENGINE | REMARKS | G-AP Ref. | PRODUCT | ABS | Technical Specifications A | B | C | H | L | P |
|---|---|---|---|---|---|---|---|---|---|---|---|---|---|---|---|
| **MERCEDES-BENZ** | | | | | | | | | | | | | | | |
| **E350** | | | | | | | | | | | | | | | |
| 3.0 (190 kw) | 2014.07-2016.12 | 9AT | R | L/R | Estate RWD OM 642.852 | | GDS35127 | Drive Shaft | 48NS | 27 | 30 | 68 | 82 | 796 | |
| | 2017.06- | 9AT | F | L | Convertible 4WD OM 642.873 | | GDS84218 | Drive Shaft | | 30 | 27 | 71 | 56 | 520 | |
| | 2017.06- | 9AT | F | R | Convertible 4WD OM 642.873 | For Right-hand drive vehicles | GDS57760 | Drive Shaft | | 30 | 24 | 71 | 56 | 582 | |
| | 2017.06- | 9AT | F | R | Convertible 4WD OM 642.873 | For left-hand drive vehicles | GDS84219 | Drive Shaft | | 30 | 27 | 71 | 56 | 550 | |
| | 2017.06- | 9AT | F | L | Convertible 4WD OM 642.873 | | GCO82737 | Outer Joint | | 30 | 26 | 71 | 56 | 54.5 | I |
| | 2017.06- | 9AT | F | R | Convertible 4WD OM 642.873 | For left-hand drive vehicles | GCO82737 | Outer Joint | | 30 | 26 | 71 | 56 | 54.5 | I |
| | 2017.06- | 9AT | F | L | Convertible 4WD OM 642.873 | | GCI82313 | Inner Joint | | 27 | 24 | 41 | | 155.5 | |
| | 2017.06- | 9AT | F | R | Convertible 4WD OM 642.873 | For left-hand drive vehicles | GCI82161 | Inner Joint | | 27 | 24 | 38 | 62 | 124.5 | |
| | 2017.06- | 9AT | F | R | Convertible 4WD OM 642.873 | For Right-hand drive vehicles | GCI82342 | Inner Joint | | 24 | 24 | 35 | 54.5 | 156 | |
| | 2017.06- | 9AT | R | L | Convertible 4WD OM 642.873 | | GDS84018 | Drive Shaft | | 27 | 30 | 68.5 | 82 | 810 | |
| | 2017.06- | 9AT | R | R | Convertible 4WD OM 642.873 | Date to:2018.01 | GDS84018 | Drive Shaft | | 27 | 30 | 68.5 | 82 | 810 | |
| | 2017.06- | 9AT | F | L | Coupe 4WD OM 642.873 | | GDS84218 | Drive Shaft | | 30 | 27 | 71 | 56 | 520 | |
| | 2017.06- | 9AT | F | R | Coupe 4WD OM 642.873 | For Right-hand drive vehicles | GDS57760 | Drive Shaft | | 30 | 24 | 71 | 56 | 582 | |
| | 2017.06- | 9AT | F | R | Coupe 4WD OM 642.873 | For left-hand drive vehicles | GDS84219 | Drive Shaft | | 30 | 27 | 71 | 56 | 550 | |
| | 2017.06- | 9AT | F | L | Coupe 4WD OM 642.873 | | GCO82737 | Outer Joint | | 30 | 26 | 71 | 56 | 54.5 | I |
| | 2017.06- | 9AT | F | R | Coupe 4WD OM 642.873 | For left-hand drive vehicles | GCO82737 | Outer Joint | | 30 | 26 | 71 | 56 | 54.5 | I |
| | 2017.06- | 9AT | F | L | Coupe 4WD OM 642.873 | | GCI82313 | Inner Joint | | 27 | 24 | 41 | | 155.5 | |
| | 2017.06- | 9AT | F | R | Coupe 4WD OM 642.873 | For left-hand drive vehicles | GCI82161 | Inner Joint | | 27 | 24 | 38 | 62 | 124.5 | |
| | 2017.06- | 9AT | F | R | Coupe 4WD OM 642.873 | For Right-hand drive vehicles | GCI82342 | Inner Joint | | 24 | 24 | 35 | 54.5 | 156 | |
| | 2017.06- | 9AT | R | L | Coupe 4WD OM 642.873 | | GDS84018 | Drive Shaft | | 27 | 30 | 68.5 | 82 | 810 | |
| | 2017.06- | 9AT | R | R | Coupe 4WD OM 642.873 | Date to:2018.01 | GDS84018 | Drive Shaft | | 27 | 30 | 68.5 | 82 | 810 | |
| | 2017.06-2018.05 | 9AT | F | L | Estate 4WD OM 642.873 | | GDS84218 | Drive Shaft | | 30 | 27 | 71 | 56 | 520 | |
| | 2017.06-2018.05 | 9AT | F | R | Estate 4WD OM 642.873 | For Right-hand drive vehicles | GDS57760 | Drive Shaft | | 30 | 24 | 71 | 56 | 582 | |
| | 2017.06-2018.05 | 9AT | F | R | Estate 4WD OM 642.873 | For left-hand drive vehicles | GDS84219 | Drive Shaft | | 30 | 27 | 71 | 56 | 550 | |
| | 2017.06-2018.05 | 9AT | F | L | Estate 4WD OM 642.873 | | GCO82737 | Outer Joint | | 30 | 26 | 71 | 56 | 54.5 | I |
| | 2017.06-2018.05 | 9AT | F | R | Estate 4WD OM 642.873 | For left-hand drive vehicles | GCO82737 | Outer Joint | | 30 | 26 | 71 | 56 | 54.5 | I |
| | 2017.06-2018.05 | 9AT | F | L | Estate 4WD OM 642.873 | | GCI82313 | Inner Joint | | 27 | 24 | 41 | | 155.5 | |
| | 2017.06-2018.05 | 9AT | F | R | Estate 4WD OM 642.873 | For left-hand drive vehicles | GCI82161 | Inner Joint | | 27 | 24 | 38 | 62 | 124.5 | |
| | 2017.06-2018.05 | 9AT | F | R | Estate 4WD OM 642.873 | For Right-hand drive vehicles | GCI82342 | Inner Joint | | 24 | 24 | 35 | 54.5 | 156 | |
| | 2017.06-2018.05 | 9AT | R | L/R | Estate 4WD OM 642.873 | | GDS84018 | Drive Shaft | | 27 | 30 | 68.5 | 82 | 810 | |
| | 2017.06-2018.05 | 9AT | F | L | Saloon 4WD OM 642.873 | | GDS84218 | Drive Shaft | | 30 | 27 | 71 | 56 | 520 | |
| | 2017.06-2018.05 | 9AT | F | R | Saloon 4WD OM 642.873 | For Right-hand drive vehicles | GDS57760 | Drive Shaft | | 30 | 24 | 71 | 56 | 582 | |
| | 2017.06-2018.05 | 9AT | F | R | Saloon 4WD OM 642.873 | For left-hand drive vehicles | GDS84219 | Drive Shaft | | 30 | 27 | 71 | 56 | 550 | |
| | 2017.06-2018.05 | 9AT | F | L | Saloon 4WD OM 642.873 | | GCO82737 | Outer Joint | | 30 | 26 | 71 | 56 | 54.5 | I |
| | 2017.06-2018.05 | 9AT | F | R | Saloon 4WD OM 642.873 | For left-hand drive vehicles | GCO82737 | Outer Joint | | 30 | 26 | 71 | 56 | 54.5 | I |
| | 2017.06-2018.05 | 9AT | F | L | Saloon 4WD OM 642.873 | | GCI82313 | Inner Joint | | 27 | 24 | 41 | | 155.5 | |
| | 2017.06-2018.05 | 9AT | F | R | Saloon 4WD OM 642.873 | For left-hand drive vehicles | GCI82161 | Inner Joint | | 27 | 24 | 38 | 62 | 124.5 | |
| | 2017.06-2018.05 | 9AT | F | R | Saloon 4WD OM 642.873 | For Right-hand drive vehicles | GCI82342 | Inner Joint | | 24 | 24 | 35 | 54.5 | 156 | |
| | 2017.06-2018.05 | 9AT | R | L/R | Saloon 4WD OM 642.873 | | GDS84018 | Drive Shaft | | 27 | 30 | 68.5 | 82 | 810 | |
| 3.0 (195 kw) | 2011.03-2015.12 | 7AT | F | R | Saloon 4WD OM 642.858 | | GDS83179 | Drive Shaft | | 30 | 27 | 71 | 56.5 | 551 | |
| | 2011.03-2015.12 | 7AT | F | R | Saloon 4WD OM 642.858 | | GCI81452 | Inner Joint | | 27 | 27 | 38 | 62 | 110 | |
| | 2011.03-2015.12 | AT/MT | F | L | Saloon 4WD OM 642.858 | | GDS81696 | Intermediate Shaft | | 34 | 27 | | | 504.5 | |
| | 2011.03-2015.12 | 7AT | R | L/R | Saloon 4WD OM 642.858 | | GDS35119 | Drive Shaft | 48NS | 27 | 27 | 68 | 82 | 803 | |
| | 2011.03-2015.12 | 7AT | R | L/R | Saloon RWD OM 642.852 | | GDS35127 | Drive Shaft | 48NS | 27 | 30 | 68 | 82 | 796 | |
| | 2011.04-2013.12 | 7AT | R | L/R | Convertible RWD OM 642.838 | | GDS83792 | Drive Shaft | 48NS | 27 | 30 | 68 | 72 | 768 | |
| | 2011.06-2013.06 | 7AT | R | L/R | Coupe RWD OM 642.838 | | GDS83792 | Drive Shaft | 48NS | 27 | 30 | 68 | 72 | 768 | |
| | 2011.07-2013.12 | 7AT | F | R | Estate 4WD OM 642.858 | | GDS83179 | Drive Shaft | | 30 | 27 | 71 | 56.5 | 551 | |
| | 2011.07-2013.12 | 7AT | F | R | Estate 4WD OM 642.858 | | GCI81452 | Inner Joint | | 27 | 27 | 38 | 62 | 110 | |
| | 2011.07-2013.12 | AT/MT | F | L | Estate 4WD OM 642.858 | | GDS81696 | Intermediate Shaft | | 34 | 27 | | | 504.5 | |
| | 2011.07-2013.12 | 7AT | R | L/R | Estate 4WD OM 642.858 | | GDS35119 | Drive Shaft | 48NS | 27 | 27 | 68 | 82 | 803 | |
| | 2011.07-2013.12 | 7AT | R | L/R | Estate RWD OM 642.852 | | GDS35127 | Drive Shaft | 48NS | 27 | 30 | 68 | 82 | 796 | |
| 3.5 (200 kw) | 2005.03-2008.12 | 5AT | F | L | Saloon 4WD M 272.972 | | GDS81728 | Drive Shaft | 48NS | 35 | 34 | 66.6 | 42 | 501 | |
| | 2005.03-2008.12 | 5AT | F | R | Saloon 4WD M 272.972 | | GDS81580 | Drive Shaft | 48NS | 35 | 24 | 66.6 | 42 | 517 | |
| | 2005.03-2008.12 | 5AT | F | R | Saloon 4WD M 272.972 | | GCO35053 | Outer Joint | 48NS | 35 | 27 | 66.6 | 42 | 53 | I |
| | 2005.03-2008.12 | 5AT | F | R | Saloon 4WD M 272.972 | | GCI81423 | Inner Joint | | 24 | 27 | 37.97 | 55.5 | 104.5 | |
| | 2005.03-2008.12 | | F | L | Saloon 4WD M 272.972 | | GCI35062 | Inner Joint | | 34 | 27 | 37.5 | | 156.5 | |
| | 2005.03-2008.12 | 5AT | R | L/R | Saloon 4WD M 272.972 | Chassis no. to:A978335/X211968 | GDS35115 | Drive Shaft | 48NS | 27 | 27 | 68 | 82 | 773 | |
| | 2005.03-2008.12 | 7AT/5MT | R | L/R | Saloon RWD M 272.964 | Chassis no. from:A874312 | GDS35114 | Drive Shaft | 48NS | 27 | 27 | 68 | 82 | 773 | |
| | 2005.03-2008.12 | 7AT/5MT | R | L/R | Saloon RWD M 272.964 | Chassis no. to:A990000 | GDS35115 | Drive Shaft | 48NS | 27 | 27 | 68 | 82 | 773 | |
| | 2005.03-2009.07 | 5AT | F | L | Estate 4WD M 272.972 | | GDS81728 | Drive Shaft | 48NS | 35 | 34 | 66.6 | 42 | 501 | |
| | 2005.03-2009.07 | 5AT | F | R | Estate 4WD M 272.972 | | GDS81580 | Drive Shaft | 48NS | 35 | 24 | 66.6 | 42 | 517 | |
| | 2005.03-2009.07 | 5AT | F | R | Estate 4WD M 272.972 | | GCO35053 | Outer Joint | 48NS | 35 | 27 | 66.6 | 42 | 53 | I |
| | 2005.03-2009.07 | 5AT | F | R | Estate 4WD M 272.972 | | GCI81423 | Inner Joint | | 24 | 27 | 37.97 | 55.5 | 104.5 | |
| | 2005.03-2009.07 | | F | L | Estate 4WD M 272.972 | | GCI35062 | Inner Joint | | 34 | 27 | 37.5 | | 156.5 | |
| | 2005.03-2009.07 | 5AT | R | L/R | Estate 4WD M 272.972 | Position:Rear axle left,Chassis no. to:A978335/X211968,Position:Rear axle right,Model year to:2008 | GDS35115 | Drive Shaft | 48NS | 27 | 27 | 68 | 82 | 773 | |

| | YEAR | TRANSM. | F/R | L/R | BODY STYLE & DRIVE TYPE & ENGINE | REMARKS | G-AP Ref. | PRODUCT | ABS | Technical Specifications A | B | C | H | L | P |
|---|---|---|---|---|---|---|---|---|---|---|---|---|---|---|---|
| **MERCEDES-BENZ** | | | | | | | | | | | | | | | |
| **E350** | | | | | | | | | | | | | | | |
| 3.5 (200 kw) | 2005.03-2009.07 | 7AT/6MT | R | L/R | Estate RWD M 272.964 | Chassis no. from:A874312 | GDS35114 | Drive Shaft | 48NS | 27 | 27 | 68 | 82 | 773 | |
| | 2005.03-2009.07 | 7AT/6MT | R | L/R | Estate RWD M 272.964 | Chassis no. to:A990000 | GDS35115 | Drive Shaft | 48NS | 27 | 27 | 68 | 82 | 773 | |
| | 2009.01-2011.08 | 7AT | F | R | Saloon 4WD M 272.977 | | GDS83179 | Drive Shaft | | 30 | 27 | 71 | 56.5 | 551 | |
| | 2009.01-2011.08 | 7AT | F | R | Saloon 4WD M 272.977 | | GCI81452 | Inner Joint | | 27 | 27 | 38 | 62 | 110 | |
| | 2009.01-2011.08 | AT/MT | F | L | Saloon 4WD M 272.977 | | GDS81696 | Intermediate Shaft | | 34 | 27 | | | 504.5 | |
| | 2009.01-2011.08 | 7AT | R | L/R | Saloon 4WD M 272.977 | | GDS35137 | Drive Shaft | 48NS | 27 | 27 | 68 | 82 | 807 | |
| | 2009.01-2013.12 | 7AT | R | L/R | Saloon RWD M 272.980 | | GDS35119 | Drive Shaft | 48NS | 27 | 27 | 68 | 82 | 803 | |
| | 2009.08-2011.12 | 7AT | R | L/R | Estate RWD M 272.980 | | GDS35119 | Drive Shaft | 48NS | 27 | 27 | 68 | 82 | 803 | |
| | 2009.11-2011.12 | 7AT | F | R | Estate 4WD M 272.977 | | GDS83179 | Drive Shaft | | 30 | 27 | 71 | 56.5 | 551 | |
| | 2009.11-2011.12 | 7AT | F | R | Estate 4WD M 272.977 | | GCI81452 | Inner Joint | | 27 | 27 | 38 | 62 | 110 | |
| | 2009.11-2011.12 | AT/MT | F | L | Estate 4WD M 272.977 | | GDS81696 | Intermediate Shaft | | 34 | 27 | | | 504.5 | |
| | 2009.11-2011.12 | 7AT | R | L/R | Estate 4WD M 272.977 | | GDS35137 | Drive Shaft | 48NS | 27 | 27 | 68 | 82 | 807 | |
| | 2010.01-2011.12 | 7AT | R | L/R | Coupe RWD M 272.961;M 272.988 | | GDS35111 | Drive Shaft | 48NS | 27 | 27 | 68 | 72 | 771 | |
| | 2010.03-2011.12 | 7AT | R | L/R | Convertible RWD M 272.961;M 272.988 | | GDS35111 | Drive Shaft | 48NS | 27 | 27 | 68 | 72 | 771 | |
| 3.5 (215 kw) | 2006.05-2009.07 | 7AT | R | L/R | Estate RWD M 272.985 | | GDS35114 | Drive Shaft | 48NS | 27 | 27 | 68 | 82 | 773 | |
| | 2007.09-2008.12 | 7AT | R | L/R | Saloon RWD M 272.985 | | GDS35114 | Drive Shaft | 48NS | 27 | 27 | 68 | 82 | 773 | |
| | 2009.01-2011.08 | 7AT | R | L/R | Saloon RWD M 272.982;M 272.983 | | GDS35119 | Drive Shaft | 48NS | 27 | 27 | 68 | 82 | 803 | |
| | 2009.01-2011.12 | 7AT | R | L/R | Coupe RWD M 272.984;M 272.982 | | GDS35111 | Drive Shaft | 48NS | 27 | 27 | 68 | 72 | 771 | |
| | 2009.11-2011.12 | 7AT | R | L/R | Estate RWD M 272.983 | | GDS35119 | Drive Shaft | 48NS | 27 | 27 | 68 | 82 | 803 | |
| | 2010.01-2014.12 | 7AT | R | L/R | Convertible RWD M 272.984;M 272.982 | | GDS35111 | Drive Shaft | 48NS | 27 | 27 | 68 | 72 | 771 | |
| 3.5 (225 kw) | 2011.04-2014.12 | 7AT | R | L/R | Convertible RWD M 276.957 | | GDS35111 | Drive Shaft | 48NS | 27 | 27 | 68 | 72 | 771 | |
| | 2011.04-2014.12 | 7AT | R | L/R | Coupe RWD M 276.957 | | GDS35111 | Drive Shaft | 48NS | 27 | 27 | 68 | 72 | 771 | |
| | 2011.09-2014.12 | 7AT | R | L/R | Estate RWD M 276.952 | | GDS35119 | Drive Shaft | 48NS | 27 | 27 | 68 | 82 | 803 | |
| | 2011.09-2015.12 | 7AT | F | R | Saloon 4WD M 276.952 | | GDS83179 | Drive Shaft | | 30 | 27 | 71 | 56.5 | 551 | |
| | 2011.09-2015.12 | 7AT | F | R | Saloon 4WD M 276.952 | | GCI81452 | Inner Joint | | 27 | 27 | 38 | 62 | 110 | |
| | 2011.09-2015.12 | AT/MT | F | L | Saloon 4WD M 276.952 | | GDS81696 | Intermediate Shaft | | 34 | 27 | | | 504.5 | |
| | 2011.09-2015.12 | 7AT | R | L/R | Saloon 4WD M 276.952 | | GDS35137 | Drive Shaft | 48NS | 27 | 27 | 68 | 82 | 807 | |
| | 2011.09-2015.12 | 7AT | R | L/R | Saloon RWD M 276.952 | | GDS35119 | Drive Shaft | 48NS | 27 | 27 | 68 | 82 | 803 | |
| | 2011.09-2016.12 | 7AT | F | R | Estate 4WD M 276.952 | | GDS83179 | Drive Shaft | | 30 | 27 | 71 | 56.5 | 551 | |
| | 2011.09-2016.12 | 7AT | F | R | Estate 4WD M 276.952 | | GCI81452 | Inner Joint | | 27 | 27 | 38 | 62 | 110 | |
| | 2011.09-2016.12 | AT/MT | F | L | Estate 4WD M 276.952 | | GDS81696 | Intermediate Shaft | | 34 | 27 | | | 504.5 | |
| | 2011.09-2016.12 | 7AT | R | L/R | Estate 4WD M 276.952 | | GDS35137 | Drive Shaft | 48NS | 27 | 27 | 68 | 82 | 807 | |
| | 2013.02-2016.12 | 7AT | F | R | Coupe 4WD M 276.957 | | GDS35096 | Drive Shaft | | 30 | 27 | 71 | 56.5 | 529 | |
| | 2013.02-2016.12 | 7AT | F | R | Coupe 4WD M 276.957 | | GCI99166 | Inner Joint | | 27 | 27 | 38 | 62 | 110.5 | |
| | 2013.02-2016.12 | AT | F | L | Coupe 4WD M 276.957 | | GDS81405 | Drive Shaft | | 30 | 34 | 71 | 56.5 | 497 | |
| | 2013.02-2016.12 | 7AT | R | L/R | Coupe 4WD M 276.957 | | GDS35134 | Drive Shaft | 48NS | 27 | 27 | 68 | 72 | 776 | |
| **E36 AMG** | | | | | | | | | | | | | | | |
| 3.6 (200 kw) | 1996.04-1998.01 | 4AT | R | L/R | Saloon RWD 104995AMG | | GCI99143 | Inner Joint | | | 27 | | | 28 | |
| **E400** | | | | | | | | | | | | | | | |
| 2.9 (243 kw) | 2020.06-2023.10 | 9AT | F | L | Saloon 4WD OM 656.929 | | GDS84218 | Drive Shaft | | 30 | 27 | 71 | 56 | 520 | |
| | 2020.06-2023.10 | 9AT | F | R | Saloon 4WD OM 656.929 | For Right-hand drive vehicles | GDS57760 | Drive Shaft | | 30 | 24 | 71 | 56 | 582 | |
| | 2020.06-2023.10 | 9AT | F | R | Saloon 4WD OM 656.929 | For left-hand drive vehicles | GDS84219 | Drive Shaft | | 30 | 27 | 71 | 56 | 550 | |
| | 2020.06-2023.10 | 9AT | F | L | Saloon 4WD OM 656.929 | | GCO82737 | Outer Joint | | 30 | 26 | 71 | 56 | 54.5 | I |
| | 2020.06-2023.10 | 9AT | F | R | Saloon 4WD OM 656.929 | For left-hand drive vehicles | GCO82737 | Outer Joint | | 30 | 26 | 71 | 56 | 54.5 | I |
| | 2020.06-2023.10 | 9AT | F | L | Saloon 4WD OM 656.929 | | GCI82313 | Inner Joint | | 27 | 24 | 41 | | 155.5 | |
| | 2020.06-2023.10 | 9AT | F | R | Saloon 4WD OM 656.929 | For left-hand drive vehicles | GCI82161 | Inner Joint | | 27 | 24 | 38 | 62 | 124.5 | |
| | 2020.06-2023.10 | 9AT | F | R | Saloon 4WD OM 656.929 | For Right-hand drive vehicles | GCI82342 | Inner Joint | | 24 | 24 | 35 | 54.5 | 156 | |
| | 2020.06-2023.10 | 9AT | R | L/R | Saloon 4WD OM 656.929 | | GDS84018 | Drive Shaft | | 27 | 30 | 68.5 | 82 | 810 | |
| | 2020.07- | 9AT | F | L | Convertible 4WD OM 656.929 | | GDS84218 | Drive Shaft | | 30 | 27 | 71 | 56 | 520 | |
| | 2020.07- | 9AT | F | R | Convertible 4WD OM 656.929 | For Right-hand drive vehicles | GDS57760 | Drive Shaft | | 30 | 24 | 71 | 56 | 582 | |
| | 2020.07- | 9AT | F | R | Convertible 4WD OM 656.929 | For left-hand drive vehicles | GDS84219 | Drive Shaft | | 30 | 27 | 71 | 56 | 550 | |
| | 2020.07- | 9AT | F | L | Convertible 4WD OM 656.929 | | GCO82737 | Outer Joint | | 30 | 26 | 71 | 56 | 54.5 | I |
| | 2020.07- | 9AT | F | R | Convertible 4WD OM 656.929 | For left-hand drive vehicles | GCO82737 | Outer Joint | | 30 | 26 | 71 | 56 | 54.5 | I |
| | 2020.07- | 9AT | F | L | Convertible 4WD OM 656.929 | | GCI82313 | Inner Joint | | 27 | 24 | 41 | | 155.5 | |
| | 2020.07- | 9AT | F | R | Convertible 4WD OM 656.929 | For left-hand drive vehicles | GCI82161 | Inner Joint | | 27 | 24 | 38 | 62 | 124.5 | |
| | 2020.07- | 9AT | F | R | Convertible 4WD OM 656.929 | For Right-hand drive vehicles | GCI82342 | Inner Joint | | 24 | 24 | 35 | 54.5 | 156 | |
| | 2020.07- | 9AT | F | L | Coupe 4WD OM 656.929 | | GDS84218 | Drive Shaft | | 30 | 27 | 71 | 56 | 520 | |
| | 2020.07- | 9AT | F | R | Coupe 4WD OM 656.929 | For Right-hand drive vehicles | GDS57760 | Drive Shaft | | 30 | 24 | 71 | 56 | 582 | |
| | 2020.07- | 9AT | F | R | Coupe 4WD OM 656.929 | For left-hand drive vehicles | GDS84219 | Drive Shaft | | 30 | 27 | 71 | 56 | 550 | |
| | 2020.07- | 9AT | F | L | Coupe 4WD OM 656.929 | | GCO82737 | Outer Joint | | 30 | 26 | 71 | 56 | 54.5 | I |
| | 2020.07- | 9AT | F | R | Coupe 4WD OM 656.929 | For left-hand drive vehicles | GCO82737 | Outer Joint | | 30 | 26 | 71 | 56 | 54.5 | I |
| | 2020.07- | 9AT | F | L | Coupe 4WD OM 656.929 | | GCI82313 | Inner Joint | | 27 | 24 | 41 | | 155.5 | |
| | 2020.07- | 9AT | F | R | Coupe 4WD OM 656.929 | For left-hand drive vehicles | GCI82161 | Inner Joint | | 27 | 24 | 38 | 62 | 124.5 | |
| | 2020.07- | 9AT | F | R | Coupe 4WD OM 656.929 | For Right-hand drive vehicles | GCI82342 | Inner Joint | | 24 | 24 | 35 | 54.5 | 156 | |
| | 2020.07-2023.10 | 9AT | F | L | Estate 4WD OM 656.929 | | GDS84218 | Drive Shaft | | 30 | 27 | 71 | 56 | 520 | |

| | YEAR | TRANSM. | F/R | L/R | BODY STYLE & DRIVE TYPE & ENGINE | REMARKS | G-AP Ref. | PRODUCT | ABS | Technical Specifications A | B | C | H | L | P |
|---|---|---|---|---|---|---|---|---|---|---|---|---|---|---|---|
| **MERCEDES-BENZ** | | | | | | | | | | | | | | | |
| **E400** | | | | | | | | | | | | | | | |
| 2.9 (243 kw) | 2020.07-2023.10 | 9AT | F | R | Estate 4WD OM 656.929 | For Right-hand drive vehicles | GDS57760 | Drive Shaft | | 30 | 24 | 71 | 56 | 582 | |
| | 2020.07-2023.10 | 9AT | F | R | Estate 4WD OM 656.929 | For left-hand drive vehicles | GDS84219 | Drive Shaft | | 30 | 27 | 71 | 56 | 550 | |
| | 2020.07-2023.10 | 9AT | F | L | Estate 4WD OM 656.929 | | GCO82737 | Outer Joint | | 30 | 26 | 71 | 56 | 54.5 | I |
| | 2020.07-2023.10 | 9AT | F | R | Estate 4WD OM 656.929 | For left-hand drive vehicles | GCO82737 | Outer Joint | | 30 | 26 | 71 | 56 | 54.5 | I |
| | 2020.07-2023.10 | 9AT | F | L | Estate 4WD OM 656.929 | | GCI82313 | Inner Joint | | 27 | 24 | 41 | | 155.5 | |
| | 2020.07-2023.10 | 9AT | F | R | Estate 4WD OM 656.929 | For left-hand drive vehicles | GCI82161 | Inner Joint | | 27 | 24 | 38 | 62 | 124.5 | |
| | 2020.07-2023.10 | 9AT | F | R | Estate 4WD OM 656.929 | For Right-hand drive vehicles | GCI82342 | Inner Joint | | 24 | 24 | 35 | 54.5 | 156 | |
| | 2020.07-2023.10 | 9AT | R | L/R | Estate 4WD OM 656.929 | | GDS84018 | Drive Shaft | | 27 | 30 | 68.5 | 82 | 810 | |
| 2.9 (250 kw) | 2018.04-2023.10 | 9AT | F | L | Estate 4WD OM 656.929 | | GDS84218 | Drive Shaft | | 30 | 27 | 71 | 56 | 520 | |
| | 2018.04-2023.10 | 9AT | F | R | Estate 4WD OM 656.929 | For Right-hand drive vehicles | GDS57760 | Drive Shaft | | 30 | 24 | 71 | 56 | 582 | |
| | 2018.04-2023.10 | 9AT | F | R | Estate 4WD OM 656.929 | For left-hand drive vehicles | GDS84219 | Drive Shaft | | 30 | 27 | 71 | 56 | 550 | |
| | 2018.04-2023.10 | 9AT | F | L | Estate 4WD OM 656.929 | | GCO82737 | Outer Joint | | 30 | 26 | 71 | 56 | 54.5 | I |
| | 2018.04-2023.10 | 9AT | F | R | Estate 4WD OM 656.929 | For left-hand drive vehicles | GCO82737 | Outer Joint | | 30 | 26 | 71 | 56 | 54.5 | I |
| | 2018.04-2023.10 | 9AT | F | L | Estate 4WD OM 656.929 | | GCI82313 | Inner Joint | | 27 | 24 | 41 | | 155.5 | |
| | 2018.04-2023.10 | 9AT | F | R | Estate 4WD OM 656.929 | For left-hand drive vehicles | GCI82161 | Inner Joint | | 27 | 24 | 38 | 62 | 124.5 | |
| | 2018.04-2023.10 | 9AT | F | R | Estate 4WD OM 656.929 | For Right-hand drive vehicles | GCI82342 | Inner Joint | | 24 | 24 | 35 | 54.5 | 156 | |
| | 2018.04-2023.10 | 9AT | R | L/R | Estate 4WD OM 656.929 | | GDS84018 | Drive Shaft | | 27 | 30 | 68.5 | 82 | 810 | |
| | 2018.04-2023.10 | 9AT | F | L | Saloon 4WD OM 656.929 | | GDS84218 | Drive Shaft | | 30 | 27 | 71 | 56 | 520 | |
| | 2018.04-2023.10 | 9AT | F | R | Saloon 4WD OM 656.929 | For Right-hand drive vehicles | GDS57760 | Drive Shaft | | 30 | 24 | 71 | 56 | 582 | |
| | 2018.04-2023.10 | 9AT | F | R | Saloon 4WD OM 656.929 | For left-hand drive vehicles | GDS84219 | Drive Shaft | | 30 | 27 | 71 | 56 | 550 | |
| | 2018.04-2023.10 | 9AT | F | L | Saloon 4WD OM 656.929 | | GCO82737 | Outer Joint | | 30 | 26 | 71 | 56 | 54.5 | I |
| | 2018.04-2023.10 | 9AT | F | R | Saloon 4WD OM 656.929 | For left-hand drive vehicles | GCO82737 | Outer Joint | | 30 | 26 | 71 | 56 | 54.5 | I |
| | 2018.04-2023.10 | 9AT | F | L | Saloon 4WD OM 656.929 | | GCI82313 | Inner Joint | | 27 | 24 | 41 | | 155.5 | |
| | 2018.04-2023.10 | 9AT | F | R | Saloon 4WD OM 656.929 | For left-hand drive vehicles | GCI82161 | Inner Joint | | 27 | 24 | 38 | 62 | 124.5 | |
| | 2018.04-2023.10 | 9AT | F | R | Saloon 4WD OM 656.929 | For Right-hand drive vehicles | GCI82342 | Inner Joint | | 24 | 24 | 35 | 54.5 | 156 | |
| | 2018.04-2023.10 | 9AT | R | L/R | Saloon 4WD OM 656.929 | | GDS84018 | Drive Shaft | | 27 | 30 | 68.5 | 82 | 810 | |
| | 2018.08- | 9AT | F | L | Convertible 4WD OM 656.929 | | GDS84218 | Drive Shaft | | 30 | 27 | 71 | 56 | 520 | |
| | 2018.08- | 9AT | F | R | Convertible 4WD OM 656.929 | For Right-hand drive vehicles | GDS57760 | Drive Shaft | | 30 | 24 | 71 | 56 | 582 | |
| | 2018.08- | 9AT | F | R | Convertible 4WD OM 656.929 | For left-hand drive vehicles | GDS84219 | Drive Shaft | | 30 | 27 | 71 | 56 | 550 | |
| | 2018.08- | 9AT | F | L | Convertible 4WD OM 656.929 | | GCO82737 | Outer Joint | | 30 | 26 | 71 | 56 | 54.5 | I |
| | 2018.08- | 9AT | F | R | Convertible 4WD OM 656.929 | For left-hand drive vehicles | GCO82737 | Outer Joint | | 30 | 26 | 71 | 56 | 54.5 | I |
| | 2018.08- | 9AT | F | L | Convertible 4WD OM 656.929 | | GCI82313 | Inner Joint | | 27 | 24 | 41 | | 155.5 | |
| | 2018.08- | 9AT | F | R | Convertible 4WD OM 656.929 | For left-hand drive vehicles | GCI82161 | Inner Joint | | 27 | 24 | 38 | 62 | 124.5 | |
| | 2018.08- | 9AT | F | R | Convertible 4WD OM 656.929 | For Right-hand drive vehicles | GCI82342 | Inner Joint | | 24 | 24 | 35 | 54.5 | 156 | |
| | 2018.08- | 9AT | R | L/R | Convertible 4WD OM 656.929 | Date to:2018.11 | GDS84018 | Drive Shaft | | 27 | 30 | 68.5 | 82 | 810 | |
| | 2018.08- | 9AT | F | L | Coupe 4WD OM 656.929 | | GDS84218 | Drive Shaft | | 30 | 27 | 71 | 56 | 520 | |
| | 2018.08- | 9AT | F | R | Coupe 4WD OM 656.929 | For Right-hand drive vehicles | GDS57760 | Drive Shaft | | 30 | 24 | 71 | 56 | 582 | |
| | 2018.08- | 9AT | F | R | Coupe 4WD OM 656.929 | For left-hand drive vehicles | GDS84219 | Drive Shaft | | 30 | 27 | 71 | 56 | 550 | |
| | 2018.08- | 9AT | F | L | Coupe 4WD OM 656.929 | | GCO82737 | Outer Joint | | 30 | 26 | 71 | 56 | 54.5 | I |
| | 2018.08- | 9AT | F | R | Coupe 4WD OM 656.929 | For left-hand drive vehicles | GCO82737 | Outer Joint | | 30 | 26 | 71 | 56 | 54.5 | I |
| | 2018.08- | 9AT | F | L | Coupe 4WD OM 656.929 | | GCI82313 | Inner Joint | | 27 | 24 | 41 | | 155.5 | |
| | 2018.08- | 9AT | F | R | Coupe 4WD OM 656.929 | For left-hand drive vehicles | GCI82161 | Inner Joint | | 27 | 24 | 38 | 62 | 124.5 | |
| | 2018.08- | 9AT | F | R | Coupe 4WD OM 656.929 | For Right-hand drive vehicles | GCI82342 | Inner Joint | | 24 | 24 | 35 | 54.5 | 156 | |
| | 2018.08- | 9AT | R | L/R | Coupe 4WD OM 656.929 | Date to:2018.11 | GDS84018 | Drive Shaft | | 27 | 30 | 68.5 | 82 | 810 | |
| | 2018.08-2023.10 | 9AT | F | L | Estate 4WD OM 656.929 | | GDS84218 | Drive Shaft | | 30 | 27 | 71 | 56 | 520 | |
| | 2018.08-2023.10 | 9AT | F | R | Estate 4WD OM 656.929 | For left-hand drive vehicles | GDS84219 | Drive Shaft | | 30 | 27 | 71 | 56 | 550 | |
| 3.0 (245 kw) | 2013.01-2016.12 | 7AT | F | R | Estate 4WD M 276.820 | | GDS83179 | Drive Shaft | | 30 | 27 | 71 | 56.5 | 551 | |
| | 2013.01-2016.12 | 7AT | F | R | Estate 4WD M 276.820 | | GCI81452 | Inner Joint | | 27 | 27 | 38 | 62 | 110 | |
| | 2013.01-2016.12 | AT/MT | F | L | Estate 4WD M 276.820 | | GDS81696 | Intermediate Shaft | | 34 | 27 | | | 504.5 | |
| | 2013.01-2016.12 | AT | R | L/R | Estate 4WD M 276.820 | | GDS35137 | Drive Shaft | 48NS | 27 | 27 | 68 | 82 | 807 | |
| | 2013.01-2016.12 | 7AT | R | L/R | Estate RWD M 276.820 | Model year from:2014 | GDS35119 | Drive Shaft | 48NS | 27 | 27 | 68 | 82 | 803 | |
| | 2013.01-2016.12 | 7AT | R | L/R | Estate RWD M 276.820 | Model year to:2013 | GDS35120 | Drive Shaft | 48NS | 27 | 30 | 68 | 82 | 800 | |
| | 2013.01-2016.12 | 7AT | F | R | Saloon 4WD M 276.820 | | GDS83179 | Drive Shaft | | 30 | 27 | 71 | 56.5 | 551 | |
| | 2013.01-2016.12 | 7AT | F | R | Saloon 4WD M 276.820 | | GCI81452 | Inner Joint | | 27 | 27 | 38 | 62 | 110 | |
| | 2013.01-2016.12 | AT/MT | F | L | Saloon 4WD M 276.820 | | GDS81696 | Intermediate Shaft | | 34 | 27 | | | 504.5 | |
| | 2013.01-2016.12 | AT | R | L/R | Saloon 4WD M 276.820 | | GDS35137 | Drive Shaft | 48NS | 27 | 27 | 68 | 82 | 807 | |
| | 2013.01-2016.12 | 7AT | R | L/R | Saloon RWD M 276.820 | Model year from:2014 | GDS35119 | Drive Shaft | 48NS | 27 | 27 | 68 | 82 | 803 | |
| | 2013.01-2016.12 | AT | R | L/R | Saloon RWD M 276.820 | Model year to:2013 | GDS35120 | Drive Shaft | 48NS | 27 | 30 | 68 | 82 | 800 | |
| | 2013.06-2016.12 | 7AT | R | L/R | Convertible RWD M 276.820 | Model year from:2014 | GDS35111 | Drive Shaft | 48NS | 27 | 27 | 68 | 72 | 771 | |
| | 2013.06-2016.12 | AT | R | L/R | Convertible RWD M 276.820 | | GDS83792 | Drive Shaft | 48NS | 27 | 30 | 68 | 72 | 768 | |
| | 2013.06-2016.12 | 7AT | R | L/R | Coupe RWD M 276.820 | Model year from:2014 | GDS35111 | Drive Shaft | 48NS | 27 | 27 | 68 | 72 | 771 | |
| | 2013.06-2016.12 | AT | R | L/R | Coupe RWD M 276.820 | | GDS83792 | Drive Shaft | 48NS | 27 | 30 | 68 | 72 | 768 | |
| | 2016.06-2018.05 | 9AT | F | L | Saloon 4WD M 276.823 | | GDS84218 | Drive Shaft | | 30 | 27 | 71 | 56 | 520 | |
| | 2016.06-2018.05 | 9AT | F | R | Saloon 4WD M 276.823 | For Right-hand drive vehicles | GDS57760 | Drive Shaft | | 30 | 24 | 71 | 56 | 582 | |
| | 2016.06-2018.05 | 9AT | F | R | Saloon 4WD M 276.823 | For left-hand drive vehicles | GDS84219 | Drive Shaft | | 30 | 27 | 71 | 56 | 550 | |

| | YEAR | TRANSM. | F/R | L/R | BODY STYLE & DRIVE TYPE & ENGINE | REMARKS | G-AP Ref. | PRODUCT | ABS | Technical Specifications A | B | C | H | L | P |
|---|---|---|---|---|---|---|---|---|---|---|---|---|---|---|---|
| **MERCEDES-BENZ** | | | | | | | | | | | | | | | |
| **E400** | | | | | | | | | | | | | | | |
| 3.0 (245 kw) | 2016.06-2018.05 | 9AT | F | L | Saloon 4WD M 276.823 | | GCO82737 | Outer Joint | | 30 | 26 | 71 | 56 | 54.5 | I |
| | 2016.06-2018.05 | 9AT | F | R | Saloon 4WD M 276.823 | For left-hand drive vehicles | GCO82737 | Outer Joint | | 30 | 26 | 71 | 56 | 54.5 | I |
| | 2016.06-2018.05 | 9AT | F | L | Saloon 4WD M 276.823 | | GCI82313 | Inner Joint | | 27 | 24 | 41 | | 155.5 | |
| | 2016.06-2018.05 | 9AT | F | R | Saloon 4WD M 276.823 | For left-hand drive vehicles | GCI82161 | Inner Joint | | 27 | 24 | 38 | 62 | 124.5 | |
| | 2016.06-2018.05 | 9AT | F | R | Saloon 4WD M 276.823 | For Right-hand drive vehicles | GCI82342 | Inner Joint | | 24 | 24 | 35 | 54.5 | 156 | |
| | 2016.06-2018.05 | 9AT | R | L | Saloon 4WD M 276.823 | For left-hand drive vehicles | GDS83627 | Drive Shaft | | 27 | 27 | 68.5 | 82 | 805 | |
| | 2016.06-2018.05 | 9AT | R | R | Saloon 4WD M 276.823 | For left-hand drive vehicles | GDS83648 | Drive Shaft | | 27 | 27 | 68.5 | 82 | 805 | |
| | 2016.06-2018.05 | 9AT | R | L/R | Saloon 4WD M 276.823 | For right-hand drive vehicles | GDS84018 | Drive Shaft | | 27 | 30 | 68.5 | 82 | 810 | |
| | 2016.12- | 9AT | F | L | Coupe 4WD M 276.823 | | GDS84218 | Drive Shaft | | 30 | 27 | 71 | 56 | 520 | |
| | 2016.12- | 9AT | F | R | Coupe 4WD M 276.823 | For Right-hand drive vehicles | GDS57760 | Drive Shaft | | 30 | 24 | 71 | 56 | 582 | |
| | 2016.12- | 9AT | F | R | Coupe 4WD M 276.823 | For left-hand drive vehicles | GDS84219 | Drive Shaft | | 30 | 27 | 71 | 56 | 550 | |
| | 2016.12- | 9AT | F | L | Coupe 4WD M 276.823 | | GCO82737 | Outer Joint | | 30 | 26 | 71 | 56 | 54.5 | I |
| | 2016.12- | 9AT | F | R | Coupe 4WD M 276.823 | For left-hand drive vehicles | GCO82737 | Outer Joint | | 30 | 26 | 71 | 56 | 54.5 | I |
| | 2016.12- | 9AT | F | L | Coupe 4WD M 276.823 | | GCI82313 | Inner Joint | | 27 | 24 | 41 | | 155.5 | |
| | 2016.12- | 9AT | F | R | Coupe 4WD M 276.823 | For left-hand drive vehicles | GCI82161 | Inner Joint | | 27 | 24 | 38 | 62 | 124.5 | |
| | 2016.12- | 9AT | F | R | Coupe 4WD M 276.823 | For Right-hand drive vehicles | GCI82342 | Inner Joint | | 24 | 24 | 35 | 54.5 | 156 | |
| | 2016.12- | 9AT | R | L | Coupe 4WD M 276.823 | For left-hand drive vehicles | GDS83627 | Drive Shaft | | 27 | 27 | 68.5 | 82 | 805 | |
| | 2016.12- | 9AT | R | R | Coupe 4WD M 276.823 | For left-hand drive vehicles | GDS83648 | Drive Shaft | | 27 | 27 | 68.5 | 82 | 805 | |
| | 2016.12- | 9AT | R | R | Coupe 4WD M 276.823 | For right-hand drive vehicles | GDS84018 | Drive Shaft | | 27 | 30 | 68.5 | 82 | 810 | |
| | 2017.06- | 9AT | F | L | Convertible 4WD M 276.823 | | GDS84218 | Drive Shaft | | 30 | 27 | 71 | 56 | 520 | |
| | 2017.06- | 9AT | F | R | Convertible 4WD M 276.823 | For Right-hand drive vehicles | GDS57760 | Drive Shaft | | 30 | 24 | 71 | 56 | 582 | |
| | 2017.06- | 9AT | F | R | Convertible 4WD M 276.823 | For left-hand drive vehicles | GDS84219 | Drive Shaft | | 30 | 27 | 71 | 56 | 550 | |
| | 2017.06- | 9AT | F | L | Convertible 4WD M 276.823 | | GCO82737 | Outer Joint | | 30 | 26 | 71 | 56 | 54.5 | I |
| | 2017.06- | 9AT | F | R | Convertible 4WD M 276.823 | For left-hand drive vehicles | GCO82737 | Outer Joint | | 30 | 26 | 71 | 56 | 54.5 | I |
| | 2017.06- | 9AT | F | L | Convertible 4WD M 276.823 | | GCI82313 | Inner Joint | | 27 | 24 | 41 | | 155.5 | |
| | 2017.06- | 9AT | F | R | Convertible 4WD M 276.823 | For left-hand drive vehicles | GCI82161 | Inner Joint | | 27 | 24 | 38 | 62 | 124.5 | |
| | 2017.06- | 9AT | F | R | Convertible 4WD M 276.823 | For Right-hand drive vehicles | GCI82342 | Inner Joint | | 24 | 24 | 35 | 54.5 | 156 | |
| | 2017.06- | 9AT | R | L | Convertible 4WD M 276.823 | For left-hand drive vehicles | GDS83627 | Drive Shaft | | 27 | 27 | 68.5 | 82 | 805 | |
| | 2017.06- | 9AT | R | R | Convertible 4WD M 276.823 | For left-hand drive vehicles | GDS83648 | Drive Shaft | | 27 | 27 | 68.5 | 82 | 805 | |
| | 2017.06- | 9AT | R | L/R | Convertible 4WD M 276.823 | For right-hand drive vehicles | GDS84018 | Drive Shaft | | 27 | 30 | 68.5 | 82 | 810 | |
| 3.5 (245 kw) | 2014.07-2015.12 | 7AT | F | R | Saloon 4WD M 276.850 | | GDS83179 | Drive Shaft | | 30 | 27 | 71 | 56.5 | 551 | |
| | 2014.07-2015.12 | 7AT | F | R | Saloon 4WD M 276.850 | | GCI81452 | Inner Joint | | 27 | 27 | 38 | 62 | 110 | |
| | 2014.07-2015.12 | AT/MT | F | L | Saloon 4WD M 276.850 | | GDS81696 | Intermediate Shaft | | 34 | 27 | | | 504.5 | |
| | 2014.07-2015.12 | AT | R | L/R | Saloon 4WD M 276.850 | | GDS35137 | Drive Shaft | 48NS | 27 | 27 | 68 | 82 | 807 | |
| | 2014.07-2015.12 | 7AT | R | L/R | Saloon RWD M 276.850 | | GDS35119 | Drive Shaft | 48NS | 27 | 27 | 68 | 82 | 803 | |
| | 2014.07-2016.12 | AT | R | L/R | Convertible RWD M 276.850 | | GDS35111 | Drive Shaft | 48NS | 27 | 27 | 68 | 72 | 771 | |
| | 2014.07-2016.12 | AT | R | L/R | Coupe RWD M 276.850 | | GDS35111 | Drive Shaft | 48NS | 27 | 27 | 68 | 72 | 771 | |
| | 2014.07-2016.12 | 7AT | F | R | Estate 4WD M 276.850 | | GDS83179 | Drive Shaft | | 30 | 27 | 71 | 56.5 | 551 | |
| | 2014.07-2016.12 | 7AT | F | R | Estate 4WD M 276.850 | | GCI81452 | Inner Joint | | 27 | 27 | 38 | 62 | 110 | |
| | 2014.07-2016.12 | AT/MT | F | L | Estate 4WD M 276.850 | | GDS81696 | Intermediate Shaft | | 34 | 27 | | | 504.5 | |
| | 2014.07-2016.12 | AT | R | L/R | Estate 4WD M 276.850 | | GDS35137 | Drive Shaft | 48NS | 27 | 27 | 68 | 82 | 807 | |
| | 2014.07-2016.12 | 7AT | R | L/R | Estate RWD M 276.850 | | GDS35119 | Drive Shaft | 48NS | 27 | 27 | 68 | 82 | 803 | |
| | 2016.07-2018.05 | 9AT | F | L | Saloon 4WD M 276.853 | | GDS84218 | Drive Shaft | | 30 | 27 | 71 | 56 | 520 | |
| | 2016.07-2018.05 | 9AT | F | R | Saloon 4WD M 276.853 | For Right-hand drive vehicles | GDS57760 | Drive Shaft | | 30 | 24 | 71 | 56 | 582 | |
| | 2016.07-2018.05 | 9AT | F | R | Saloon 4WD M 276.853 | For left-hand drive vehicles | GDS84219 | Drive Shaft | | 30 | 27 | 71 | 56 | 550 | |
| | 2016.07-2018.05 | 9AT | F | L | Saloon 4WD M 276.853 | | GCO82737 | Outer Joint | | 30 | 26 | 71 | 56 | 54.5 | I |
| | 2016.07-2018.05 | 9AT | F | R | Saloon 4WD M 276.853 | For left-hand drive vehicles | GCO82737 | Outer Joint | | 30 | 26 | 71 | 56 | 54.5 | I |
| | 2016.07-2018.05 | 9AT | F | L | Saloon 4WD M 276.853 | | GCI82313 | Inner Joint | | 27 | 24 | 41 | | 155.5 | |
| | 2016.07-2018.05 | 9AT | F | R | Saloon 4WD M 276.853 | For left-hand drive vehicles | GCI82161 | Inner Joint | | 27 | 24 | 38 | 62 | 124.5 | |
| | 2016.07-2018.05 | 9AT | F | R | Saloon 4WD M 276.853 | For Right-hand drive vehicles | GCI82342 | Inner Joint | | 24 | 24 | 35 | 54.5 | 156 | |
| | 2016.07-2018.05 | 9AT | R | L | Saloon 4WD M 276.853 | For left-hand drive vehicles | GDS83627 | Drive Shaft | | 27 | 27 | 68.5 | 82 | 805 | |
| | 2016.07-2018.05 | 9AT | R | R | Saloon 4WD M 276.853 | For left-hand drive vehicles | GDS83648 | Drive Shaft | | 27 | 27 | 68.5 | 82 | 805 | |
| | 2016.07-2018.05 | 9AT | R | L/R | Saloon 4WD M 276.853 | For right-hand drive vehicles | GDS84018 | Drive Shaft | | 27 | 30 | 68.5 | 82 | 810 | |
| | 2016.10-2018.05 | 9AT | F | L | Estate 4WD M 276.853 | | GDS84218 | Drive Shaft | | 30 | 27 | 71 | 56 | 520 | |
| | 2016.10-2018.05 | 9AT | F | R | Estate 4WD M 276.853 | For Right-hand drive vehicles | GDS57760 | Drive Shaft | | 30 | 24 | 71 | 56 | 582 | |
| | 2016.10-2018.05 | 9AT | F | R | Estate 4WD M 276.853 | For left-hand drive vehicles | GDS84219 | Drive Shaft | | 30 | 27 | 71 | 56 | 550 | |
| | 2016.10-2018.05 | 9AT | F | L | Estate 4WD M 276.853 | | GCO82737 | Outer Joint | | 30 | 26 | 71 | 56 | 54.5 | I |
| | 2016.10-2018.05 | 9AT | F | R | Estate 4WD M 276.853 | For left-hand drive vehicles | GCO82737 | Outer Joint | | 30 | 26 | 71 | 56 | 54.5 | I |
| | 2016.10-2018.05 | 9AT | F | L | Estate 4WD M 276.853 | | GCI82313 | Inner Joint | | 27 | 24 | 41 | | 155.5 | |
| | 2016.10-2018.05 | 9AT | F | R | Estate 4WD M 276.853 | For left-hand drive vehicles | GCI82161 | Inner Joint | | 27 | 24 | 38 | 62 | 124.5 | |
| | 2016.10-2018.05 | 9AT | F | R | Estate 4WD M 276.853 | For Right-hand drive vehicles | GCI82342 | Inner Joint | | 24 | 24 | 35 | 54.5 | 156 | |
| | 2016.10-2018.05 | 9AT | R | L | Estate 4WD M 276.853 | For left-hand drive vehicles | GDS83627 | Drive Shaft | | 27 | 27 | 68.5 | 82 | 805 | |
| | 2016.10-2018.05 | 9AT | R | R | Estate 4WD M 276.853 | For left-hand drive vehicles | GDS83648 | Drive Shaft | | 27 | 27 | 68.5 | 82 | 805 | |
| | 2016.10-2018.05 | 9AT | R | L/R | Estate 4WD M 276.853 | For right-hand drive vehicles | GDS84018 | Drive Shaft | | 27 | 30 | 68.5 | 82 | 810 | |
| 4.0 (191 kw) | 2003.02-2008.12 | 5AT | R | R | Saloon RWD OM 628.961 | | GDS82455 | Drive Shaft | 48NS | 27 | 27 | 68 | 82 | 776 | |

| | YEAR | TRANSM. | F/R | L/R | BODY STYLE & DRIVE TYPE & ENGINE | REMARKS | G-AP Ref. | PRODUCT | ABS | Technical Specifications A | B | C | H | L | P |
|---|---|---|---|---|---|---|---|---|---|---|---|---|---|---|---|
| **MERCEDES-BENZ** | | | | | | | | | | | | | | | |
| **E420** | | | | | | | | | | | | | | | |
| 4.2 (205 kw) | 1995.07-1997.10 | 5AT | R | L/R | Saloon RWD 119985 | | GCI99143 | Inner Joint | | | 27 | | | 28 | |
| | 1996.06-1997.10 | 5AT | R | L/R | Estate RWD 119985 | | GDS83408 | Drive Shaft | 48W | 27 | | 67 | 78 | 665 | |
| | 1996.06-1997.10 | 5AT | R | L/R | Estate RWD 119985 | | GCI99143 | Inner Joint | | | 27 | | | 28 | |
| **E43 AMG** | | | | | | | | | | | | | | | |
| 3.0 (295 kw) | 2016.07-2018.05 | 9AT | R | L/R | Saloon 4WD M 276.823 | | GDS84018 | Drive Shaft | | 27 | 30 | 68.5 | 82 | 810 | |
| | 2016.10-2018.05 | 9AT | R | L/R | Estate 4WD M 276.823 | | GDS84018 | Drive Shaft | | 27 | 30 | 68.5 | 82 | 810 | |
| **E430** | | | | | | | | | | | | | | | |
| 4.3 (205 kw) | 1997.04-2002.03 | 5AT | R | L/R | Saloon RWD 113940 | | GCI99143 | Inner Joint | | | 27 | | | 28 | |
| | 1997.04-2002.03 | | R | L/R | Saloon RWD 113940 | Date To:2002.01;Not for armoured vehicles;Chassis no. to:079466 | GDS35009 | Drive Shaft | 48T | | | | | 665 | |
| | 1997.11-2003.05 | 5AT | R | L/R | Estate RWD 113940 | | GCI99143 | Inner Joint | | | 27 | | | 28 | |
| | 1999.09-2002.03 | | F | R | Saloon 4WD 113940 | | GDS35065 | Drive Shaft | 48T | 35 | 24 | 61 | 43 | 528 | |
| | 1999.09-2002.03 | 5AT | R | L/R | Saloon 4WD 113940 | | GCI99143 | Inner Joint | | | 27 | | | 28 | |
| | 1999.09-2002.03 | | R | L/R | Saloon 4WD 113940 | Date To:2002.01;Not for armoured vehicles;Chassis no. to:079466 | GDS35009 | Drive Shaft | 48T | | | | | 665 | |
| | 1999.09-2003.05 | | F | R | Estate 4WD 113940 | | GDS35065 | Drive Shaft | 48T | 35 | 24 | 61 | 43 | 528 | |
| | 1999.09-2003.05 | 5AT | R | L/R | Estate 4WD 113940 | | GDS83408 | Drive Shaft | 48W | 27 | | 67 | 78 | 665 | |
| | 1999.09-2003.05 | 5AT | R | L/R | Estate 4WD 113940 | | GCI99143 | Inner Joint | | | 27 | | | 28 | |
| **E450** | | | | | | | | | | | | | | | |
| 3.0 (270 kw) | 2018.08- | 9AT | F | L | Convertible 4WD M 276.823 | | GDS84218 | Drive Shaft | | 30 | 27 | 71 | 56 | 520 | |
| | 2018.08- | 9AT | F | R | Convertible 4WD M 276.823 | For Right-hand drive vehicles | GDS57760 | Drive Shaft | | 30 | 24 | 71 | 56 | 582 | |
| | 2018.08- | 9AT | F | R | Convertible 4WD M 276.823 | For left-hand drive vehicles | GDS84219 | Drive Shaft | | 30 | 27 | 71 | 56 | 550 | |
| | 2018.08- | 9AT | F | L | Convertible 4WD M 276.823 | | GCO82737 | Outer Joint | | 30 | 26 | 71 | 56 | 54.5 | I |
| | 2018.08- | 9AT | F | R | Convertible 4WD M 276.823 | For left-hand drive vehicles | GCO82737 | Outer Joint | | 30 | 26 | 71 | 56 | 54.5 | I |
| | 2018.08- | 9AT | F | L | Convertible 4WD M 276.823 | | GCI82313 | Inner Joint | | 27 | 24 | 41 | | 155.5 | |
| | 2018.08- | 9AT | F | R | Convertible 4WD M 276.823 | For left-hand drive vehicles | GCI82161 | Inner Joint | | 27 | 24 | 38 | 62 | 124.5 | |
| | 2018.08- | 9AT | F | R | Convertible 4WD M 276.823 | For Right-hand drive vehicles | GCI82342 | Inner Joint | | 24 | 24 | 35 | 54.5 | 156 | |
| | 2018.08- | 9AT | R | L | Convertible 4WD M 276.823 | For left-hand drive vehicles | GDS83627 | Drive Shaft | | 27 | 27 | 68.5 | 82 | 805 | |
| | 2018.08- | 9AT | R | R | Convertible 4WD M 276.823 | For left-hand drive vehicles | GDS83648 | Drive Shaft | | 27 | 27 | 68.5 | 82 | 805 | |
| | 2018.08- | 9AT | R | R | Convertible 4WD M 276.823 | For right-hand drive vehicles | GDS84018 | Drive Shaft | | 27 | 30 | 68.5 | 82 | 810 | |
| | 2018.08- | 9AT | F | L | Coupe 4WD M 276.823 | | GDS84218 | Drive Shaft | | 30 | 27 | 71 | 56 | 520 | |
| | 2018.08- | 9AT | F | R | Coupe 4WD M 276.823 | For Right-hand drive vehicles | GDS57760 | Drive Shaft | | 30 | 24 | 71 | 56 | 582 | |
| | 2018.08- | 9AT | F | R | Coupe 4WD M 276.823 | For left-hand drive vehicles | GDS84219 | Drive Shaft | | 30 | 27 | 71 | 56 | 550 | |
| | 2018.08- | 9AT | F | L | Coupe 4WD M 276.823 | | GCO82737 | Outer Joint | | 30 | 26 | 71 | 56 | 54.5 | I |
| | 2018.08- | 9AT | F | R | Coupe 4WD M 276.823 | For left-hand drive vehicles | GCO82737 | Outer Joint | | 30 | 26 | 71 | 56 | 54.5 | I |
| | 2018.08- | 9AT | F | L | Coupe 4WD M 276.823 | | GCI82313 | Inner Joint | | 27 | 24 | 41 | | 155.5 | |
| | 2018.08- | 9AT | F | R | Coupe 4WD M 276.823 | For left-hand drive vehicles | GCI82161 | Inner Joint | | 27 | 24 | 38 | 62 | 124.5 | |
| | 2018.08- | 9AT | F | R | Coupe 4WD M 276.823 | For Right-hand drive vehicles | GCI82342 | Inner Joint | | 24 | 24 | 35 | 54.5 | 156 | |
| | 2018.08- | 9AT | R | L | Coupe 4WD M 276.823 | For left-hand drive vehicles | GDS83627 | Drive Shaft | | 27 | 27 | 68.5 | 82 | 805 | |
| | 2018.08- | 9AT | R | R | Coupe 4WD M 276.823 | For left-hand drive vehicles | GDS83648 | Drive Shaft | | 27 | 27 | 68.5 | 82 | 805 | |
| | 2018.08- | 9AT | R | R | Coupe 4WD M 276.823 | For right-hand drive vehicles | GDS84018 | Drive Shaft | | 27 | 30 | 68.5 | 82 | 810 | |
| | 2018.08-2020.06 | 9AT | F | L | Estate 4WD M 276.823 | | GDS84218 | Drive Shaft | | 30 | 27 | 71 | 56 | 520 | |
| | 2018.08-2020.06 | 9AT | F | R | Estate 4WD M 276.823 | For Right-hand drive vehicles | GDS57760 | Drive Shaft | | 30 | 24 | 71 | 56 | 582 | |
| | 2018.08-2020.06 | 9AT | F | R | Estate 4WD M 276.823 | For left-hand drive vehicles | GDS84219 | Drive Shaft | | 30 | 27 | 71 | 56 | 550 | |
| | 2018.08-2020.06 | 9AT | F | L | Estate 4WD M 276.823 | | GCO82737 | Outer Joint | | 30 | 26 | 71 | 56 | 54.5 | I |
| | 2018.08-2020.06 | 9AT | F | R | Estate 4WD M 276.823 | For left-hand drive vehicles | GCO82737 | Outer Joint | | 30 | 26 | 71 | 56 | 54.5 | I |
| | 2018.08-2020.06 | 9AT | F | L | Estate 4WD M 276.823 | | GCI82313 | Inner Joint | | 27 | 24 | 41 | | 155.5 | |
| | 2018.08-2020.06 | 9AT | F | R | Estate 4WD M 276.823 | For left-hand drive vehicles | GCI82161 | Inner Joint | | 27 | 24 | 38 | 62 | 124.5 | |
| | 2018.08-2020.06 | 9AT | F | R | Estate 4WD M 276.823 | For Right-hand drive vehicles | GCI82342 | Inner Joint | | 24 | 24 | 35 | 54.5 | 156 | |
| | 2018.08-2020.06 | 9AT | R | L | Estate 4WD M 276.823 | For left-hand drive vehicles | GDS83627 | Drive Shaft | | 27 | 27 | 68.5 | 82 | 805 | |
| | 2018.08-2020.06 | 9AT | R | R | Estate 4WD M 276.823 | For left-hand drive vehicles | GDS83648 | Drive Shaft | | 27 | 27 | 68.5 | 82 | 805 | |
| | 2018.08-2020.06 | 9AT | R | L/R | Estate 4WD M 276.823 | For right-hand drive vehicles | GDS84018 | Drive Shaft | | 27 | 30 | 68.5 | 82 | 810 | |
| | 2018.08-2020.06 | 9AT | F | L | Saloon 4WD M 276.823 | | GDS84218 | Drive Shaft | | 30 | 27 | 71 | 56 | 520 | |
| | 2018.08-2020.06 | 9AT | F | R | Saloon 4WD M 276.823 | For Right-hand drive vehicles | GDS57760 | Drive Shaft | | 30 | 24 | 71 | 56 | 582 | |
| | 2018.08-2020.06 | 9AT | F | R | Saloon 4WD M 276.823 | For left-hand drive vehicles | GDS84219 | Drive Shaft | | 30 | 27 | 71 | 56 | 550 | |
| | 2018.08-2020.06 | 9AT | F | L | Saloon 4WD M 276.823 | | GCO82737 | Outer Joint | | 30 | 26 | 71 | 56 | 54.5 | I |
| | 2018.08-2020.06 | 9AT | F | R | Saloon 4WD M 276.823 | For left-hand drive vehicles | GCO82737 | Outer Joint | | 30 | 26 | 71 | 56 | 54.5 | I |
| | 2018.08-2020.06 | 9AT | F | L | Saloon 4WD M 276.823 | | GCI82313 | Inner Joint | | 27 | 24 | 41 | | 155.5 | |
| | 2018.08-2020.06 | 9AT | F | R | Saloon 4WD M 276.823 | For left-hand drive vehicles | GCI82161 | Inner Joint | | 27 | 24 | 38 | 62 | 124.5 | |
| | 2018.08-2020.06 | 9AT | F | R | Saloon 4WD M 276.823 | For Right-hand drive vehicles | GCI82342 | Inner Joint | | 24 | 24 | 35 | 54.5 | 156 | |
| | 2018.08-2020.06 | 9AT | R | L | Saloon 4WD M 276.823 | For left-hand drive vehicles | GDS83627 | Drive Shaft | | 27 | 27 | 68.5 | 82 | 805 | |
| | 2018.08-2020.06 | 9AT | R | R | Saloon 4WD M 276.823 | For left-hand drive vehicles | GDS83648 | Drive Shaft | | 27 | 27 | 68.5 | 82 | 805 | |
| | 2018.08-2020.06 | 9AT | R | L/R | Saloon 4WD M 276.823 | For right-hand drive vehicles | GDS84018 | Drive Shaft | | 27 | 30 | 68.5 | 82 | 810 | |
| | 2020.07- | 9AT | F | L | Convertible 4WD M 256.930 | | GDS84218 | Drive Shaft | | 30 | 27 | 71 | 56 | 520 | |
| | 2020.07- | 9AT | F | R | Convertible 4WD M 256.930 | For Right-hand drive vehicles | GDS57760 | Drive Shaft | | 30 | 24 | 71 | 56 | 582 | |
| | 2020.07- | 9AT | F | R | Convertible 4WD M 256.930 | For left-hand drive vehicles | GDS84219 | Drive Shaft | | 30 | 27 | 71 | 56 | 550 | |
| | 2020.07- | 9AT | F | L | Convertible 4WD M 256.930 | | GCO82737 | Outer Joint | | 30 | 26 | 71 | 56 | 54.5 | I |

| | YEAR | TRANSM. | F/R | L/R | BODY STYLE & DRIVE TYPE & ENGINE | REMARKS | G-AP Ref. | PRODUCT | ABS | Technical Specifications A | B | C | H | L | P |
|---|---|---|---|---|---|---|---|---|---|---|---|---|---|---|---|
| **MERCEDES-BENZ** | | | | | | | | | | | | | | | |
| **E450** | | | | | | | | | | | | | | | |
| 3.0 (270 kw) | 2020.07- | 9AT | F | R | Convertible 4WD M 256.930 | For left-hand drive vehicles | GCO82737 | Outer Joint | | 30 | 26 | 71 | 56 | 54.5 | I |
| | 2020.07- | 9AT | F | L | Convertible 4WD M 256.930 | | GCI82313 | Inner Joint | | 27 | 24 | 41 | | 155.5 | |
| | 2020.07- | 9AT | F | R | Convertible 4WD M 256.930 | For left-hand drive vehicles | GCI82161 | Inner Joint | | 27 | 24 | 38 | 62 | 124.5 | |
| | 2020.07- | 9AT | F | R | Convertible 4WD M 256.930 | For Right-hand drive vehicles | GCI82342 | Inner Joint | | 24 | 24 | 35 | 54.5 | 156 | |
| | 2020.07- | 9AT | R | L | Convertible 4WD M 256.930 | For left-hand drive vehicles | GDS83627 | Drive Shaft | | 27 | 27 | 68.5 | 82 | 805 | |
| | 2020.07- | 9AT | R | R | Convertible 4WD M 256.930 | For left-hand drive vehicles | GDS83648 | Drive Shaft | | 27 | 27 | 68.5 | 82 | 805 | |
| | 2020.07- | 9AT | F | L | Coupe 4WD M 256.930 | | GDS84218 | Drive Shaft | | 30 | 27 | 71 | 56 | 520 | |
| | 2020.07- | 9AT | F | R | Coupe 4WD M 256.930 | For Right-hand drive vehicles | GDS57760 | Drive Shaft | | 30 | 24 | 71 | 56 | 582 | |
| | 2020.07- | 9AT | F | R | Coupe 4WD M 256.930 | For left-hand drive vehicles | GDS84219 | Drive Shaft | | 30 | 27 | 71 | 56 | 550 | |
| | 2020.07- | 9AT | F | L | Coupe 4WD M 256.930 | | GCO82737 | Outer Joint | | 30 | 26 | 71 | 56 | 54.5 | I |
| | 2020.07- | 9AT | F | R | Coupe 4WD M 256.930 | For left-hand drive vehicles | GCO82737 | Outer Joint | | 30 | 26 | 71 | 56 | 54.5 | I |
| | 2020.07- | 9AT | F | L | Coupe 4WD M 256.930 | | GCI82313 | Inner Joint | | 27 | 24 | 41 | | 155.5 | |
| | 2020.07- | 9AT | F | R | Coupe 4WD M 256.930 | For left-hand drive vehicles | GCI82161 | Inner Joint | | 27 | 24 | 38 | 62 | 124.5 | |
| | 2020.07- | 9AT | F | R | Coupe 4WD M 256.930 | For Right-hand drive vehicles | GCI82342 | Inner Joint | | 24 | 24 | 35 | 54.5 | 156 | |
| | 2020.07- | 9AT | R | L | Coupe 4WD M 256.930 | For left-hand drive vehicles | GDS83627 | Drive Shaft | | 27 | 27 | 68.5 | 82 | 805 | |
| | 2020.07- | 9AT | R | R | Coupe 4WD M 256.930 | For left-hand drive vehicles | GDS83648 | Drive Shaft | | 27 | 27 | 68.5 | 82 | 805 | |
| | 2020.07-2023.10 | 9AT | F | L | Saloon 4WD M 256.930 | | GDS84218 | Drive Shaft | | 30 | 27 | 71 | 56 | 520 | |
| | 2020.07-2023.10 | 9AT | F | R | Saloon 4WD M 256.930 | For Right-hand drive vehicles | GDS57760 | Drive Shaft | | 30 | 24 | 71 | 56 | 582 | |
| | 2020.07-2023.10 | 9AT | F | R | Saloon 4WD M 256.930 | For left-hand drive vehicles | GDS84219 | Drive Shaft | | 30 | 27 | 71 | 56 | 550 | |
| | 2020.07-2023.10 | 9AT | F | L | Saloon 4WD M 256.930 | | GCO82737 | Outer Joint | | 30 | 26 | 71 | 56 | 54.5 | I |
| | 2020.07-2023.10 | 9AT | F | R | Saloon 4WD M 256.930 | For left-hand drive vehicles | GCO82737 | Outer Joint | | 30 | 26 | 71 | 56 | 54.5 | I |
| | 2020.07-2023.10 | 9AT | F | L | Saloon 4WD M 256.930 | | GCI82313 | Inner Joint | | 27 | 24 | 41 | | 155.5 | |
| | 2020.07-2023.10 | 9AT | F | R | Saloon 4WD M 256.930 | For left-hand drive vehicles | GCI82161 | Inner Joint | | 27 | 24 | 38 | 62 | 124.5 | |
| | 2020.07-2023.10 | 9AT | F | R | Saloon 4WD M 256.930 | For Right-hand drive vehicles | GCI82342 | Inner Joint | | 24 | 24 | 35 | 54.5 | 156 | |
| | 2020.07-2023.10 | 9AT | R | L | Saloon 4WD M 256.930 | For left-hand drive vehicles | GDS83627 | Drive Shaft | | 27 | 27 | 68.5 | 82 | 805 | |
| | 2020.07-2023.10 | 9AT | R | R | Saloon 4WD M 256.930 | For left-hand drive vehicles | GDS83648 | Drive Shaft | | 27 | 27 | 68.5 | 82 | 805 | |
| | 2020.08-2023.08 | 9AT | F | L | Estate 4WD M 256.930 | | GDS84218 | Drive Shaft | | 30 | 27 | 71 | 56 | 520 | |
| | 2020.08-2023.08 | 9AT | F | R | Estate 4WD M 256.930 | For Right-hand drive vehicles | GDS57760 | Drive Shaft | | 30 | 24 | 71 | 56 | 582 | |
| | 2020.08-2023.08 | 9AT | F | R | Estate 4WD M 256.930 | For left-hand drive vehicles | GDS84219 | Drive Shaft | | 30 | 27 | 71 | 56 | 550 | |
| | 2020.08-2023.08 | 9AT | F | L | Estate 4WD M 256.930 | | GCO82737 | Outer Joint | | 30 | 26 | 71 | 56 | 54.5 | I |
| | 2020.08-2023.08 | 9AT | F | R | Estate 4WD M 256.930 | For left-hand drive vehicles | GCO82737 | Outer Joint | | 30 | 26 | 71 | 56 | 54.5 | I |
| | 2020.08-2023.08 | 9AT | F | L | Estate 4WD M 256.930 | | GCI82313 | Inner Joint | | 27 | 24 | 41 | | 155.5 | |
| | 2020.08-2023.08 | 9AT | F | R | Estate 4WD M 256.930 | For left-hand drive vehicles | GCI82161 | Inner Joint | | 27 | 24 | 38 | 62 | 124.5 | |
| | 2020.08-2023.08 | 9AT | F | R | Estate 4WD M 256.930 | For Right-hand drive vehicles | GCI82342 | Inner Joint | | 24 | 24 | 35 | 54.5 | 156 | |
| | 2020.08-2023.08 | 9AT | R | L | Estate 4WD M 256.930 | | GDS83627 | Drive Shaft | | 27 | 27 | 68.5 | 82 | 805 | |
| | 2020.08-2023.08 | 9AT | R | R | Estate 4WD M 256.930 | | GDS83648 | Drive Shaft | | 27 | 27 | 68.5 | 82 | 805 | |
| **E50 AMG** | | | | | | | | | | | | | | | |
| 5.0 (255 kw) | 1996.09-1997.10 | 5AT | R | L/R | Saloon RWD 119980 | | GCI99143 | Inner Joint | | | 27 | | | 28 | |
| **E500** | | | | | | | | | | | | | | | |
| 4.7 (300 kw) | 2011.09-2015.12 | 7AT | F | R | Saloon 4WD M 278.922 | | GDS83179 | Drive Shaft | | 30 | 27 | 71 | 56.5 | 551 | |
| | 2011.09-2015.12 | 7AT | F | R | Saloon 4WD M 278.922 | | GCI81452 | Inner Joint | | 27 | 27 | 38 | 62 | 110 | |
| | 2011.09-2015.12 | AT/MT | F | L | Saloon 4WD M 278.922 | | GDS81696 | Intermediate Shaft | | 34 | 27 | | | 504.5 | |
| | 2011.09-2015.12 | 7AT | R | L/R | Saloon 4WD M 278.922 | Alt Version:2213501910 | GDS35119 | Drive Shaft | 48NS | 27 | 27 | 68 | 82 | 803 | |
| | 2011.09-2015.12 | 7AT | R | L/R | Saloon 4WD M 278.922 | Alt Version:2213504802 | GDS35127 | Drive Shaft | 48NS | 27 | 30 | 68 | 82 | 796 | |
| | 2011.09-2015.12 | 7AT | R | L/R | Saloon RWD M 278.922 | | GDS35127 | Drive Shaft | 48NS | 27 | 30 | 68 | 82 | 796 | |
| | 2011.09-2016.12 | 7AT | F | R | Estate 4WD M 278.922 | | GDS83179 | Drive Shaft | | 30 | 27 | 71 | 56.5 | 551 | |
| | 2011.09-2016.12 | 7AT | F | R | Estate 4WD M 278.922 | | GCI81452 | Inner Joint | | 27 | 27 | 38 | 62 | 110 | |
| | 2011.09-2016.12 | AT/MT | F | L | Estate 4WD M 278.922 | | GDS81696 | Intermediate Shaft | | 34 | 27 | | | 504.5 | |
| | 2011.09-2016.12 | 7AT | R | L/R | Estate 4WD M 278.922 | | GDS35119 | Drive Shaft | 48NS | 27 | 27 | 68 | 82 | 803 | |
| | 2011.09-2016.12 | 7AT | R | L/R | Estate RWD M 278.922 | | GDS35127 | Drive Shaft | 48NS | 27 | 30 | 68 | 82 | 796 | |
| 5.0 (225 kw) | 2002.03-2008.12 | SAT | R | L/R | Saloon RWD M 113.967 | | GDS82455 | Drive Shaft | 48NS | 27 | 27 | 68 | 82 | 776 | |
| | 2003.10-2008.12 | 5AT | F | L | Saloon 4WD M 113.969 | | GDS81728 | Drive Shaft | 48NS | 35 | 34 | 66.6 | 42 | 501 | |
| | 2003.10-2008.12 | 5AT/7AT | F | R | Saloon 4WD M 113.969 | | GDS81580 | Drive Shaft | 48NS | 35 | 24 | 66.6 | 42 | 517 | |
| | 2003.10-2008.12 | 5AT/7AT | F | R | Saloon 4WD M 113.969 | | GCO35053 | Outer Joint | 48NS | 35 | 27 | 66.6 | 42 | 53 | I |
| | 2003.10-2008.12 | 5AT/7AT | F | R | Saloon 4WD M 113.969 | | GCI81423 | Inner Joint | | 24 | 27 | 37.97 | 55.5 | 104.5 | |
| | 2003.10-2008.12 | | F | L | Saloon 4WD M 113.969 | | GCI35062 | Inner Joint | | 34 | 27 | 37.5 | | 156.5 | |
| | 2003.10-2008.12 | 5AT/7AT | R | L | Saloon 4WD M 113.969 | | GDS35136 | Drive Shaft | 48NS | 27 | 27 | 68 | 82 | 778 | |
| | 2003.10-2008.12 | 5AT/7AT | R | L | Saloon 4WD M 113.969 | | GCI35021 | Inner Joint | 48NS | 27 | 27 | 68 | 82 | 51.5 | |
| | 2003.10-2009.07 | 5AT | F | L | Estate 4WD M 113.969 | | GDS81728 | Drive Shaft | 48NS | 35 | 34 | 66.6 | 42 | 501 | |
| | 2003.10-2009.07 | 5AT/7AT | F | R | Estate 4WD M 113.969 | | GDS81580 | Drive Shaft | 48NS | 35 | 24 | 66.6 | 42 | 517 | |
| | 2003.10-2009.07 | 5AT/7AT | F | R | Estate 4WD M 113.969 | | GCO35053 | Outer Joint | 48NS | 35 | 27 | 66.6 | 42 | 53 | I |
| | 2003.10-2009.07 | 5AT/7AT | F | R | Estate 4WD M 113.969 | | GCI81423 | Inner Joint | | 24 | 27 | 37.97 | 55.5 | 104.5 | |
| | 2003.10-2009.07 | AT | F | L | Estate 4WD M 113.969 | | GCI35062 | Inner Joint | | 34 | 27 | 37.5 | | 156.5 | |
| | 2003.10-2009.07 | 5AT/7AT | R | L/R | Estate 4WD M 113.969 | | GDS35136 | Drive Shaft | 48NS | 27 | 27 | 68 | 82 | 778 | |
| | 2003.10-2009.07 | 5AT/7AT | R | L/R | Estate 4WD M 113.969 | | GCI35021 | Inner Joint | 48NS | 27 | 27 | 68 | 82 | 51.5 | |

| | YEAR | TRANSM. | F/R | L/R | BODY STYLE & DRIVE TYPE & ENGINE | REMARKS | G-AP Ref. | PRODUCT | ABS | Technical Specifications A | B | C | H | L | P |
|---|---|---|---|---|---|---|---|---|---|---|---|---|---|---|---|
| **MERCEDES-BENZ** | | | | | | | | | | | | | | | |
| **E500** | | | | | | | | | | | | | | | |
| 5.0 (225 kw) | 2003.10-2009.07 | 5AT | R | L/R | Estate RWD M 113.967 | | GDS82455 | Drive Shaft | 48NS | 27 | 27 | 68 | 82 | 776 | |
| | 2003.10-2009.07 | 7AT | R | L/R | Estate RWD M 113.967 | Date from:2004.03 | GDS35118 | Drive Shaft | 48NS | 27 | 30 | 68 | 82 | 777 | |
| 5.5 (285 kw) | 2006.04-2008.12 | 5AT | F | L | Saloon 4WD M 273.962 | | GDS81728 | Drive Shaft | 48NS | 35 | 34 | 66.6 | 42 | 501 | |
| | 2006.04-2008.12 | SAT | F | R | Saloon 4WD M 273.962 | | GDS81580 | Drive Shaft | 48NS | 35 | 24 | 66.6 | 42 | 517 | |
| | 2006.04-2008.12 | SAT | F | R | Saloon 4WD M 273.962 | | GCO35053 | Outer Joint | 48NS | 35 | 27 | 66.6 | 42 | 53 | I |
| | 2006.04-2008.12 | SAT | F | R | Saloon 4WD M 273.962 | | GCI81423 | Inner Joint | | 24 | 27 | 37.97 | 55.5 | 104.5 | |
| | 2006.04-2008.12 | | F | L | Saloon 4WD M 273.962 | | GCI35062 | Inner Joint | | 34 | 27 | 37.5 | | 156.5 | |
| | 2006.04-2009.07 | 5AT | F | L | Estate 4WD M 273.962 | | GDS81728 | Drive Shaft | 48NS | 35 | 34 | 66.6 | 42 | 501 | |
| | 2006.04-2009.07 | 5AT | F | R | Estate 4WD M 273.962 | | GDS81580 | Drive Shaft | 48NS | 35 | 24 | 66.6 | 42 | 517 | |
| | 2006.04-2009.07 | 5AT | F | R | Estate 4WD M 273.962 | | GCO35053 | Outer Joint | 48NS | 35 | 27 | 66.6 | 42 | 53 | I |
| | 2006.04-2009.07 | 5AT | F | R | Estate 4WD M 273.962 | | GCI81423 | Inner Joint | | 24 | 27 | 37.97 | 55.5 | 104.5 | |
| | 2006.04-2009.07 | | F | L | Estate 4WD M 273.962 | | GCI35062 | Inner Joint | | 34 | 27 | 37.5 | | 156.5 | |
| | 2009.01-2011.12 | 7AT | F | R | Saloon 4WD M 273.970 | | GDS83179 | Drive Shaft | | 30 | 27 | 71 | 56.5 | 551 | |
| | 2009.01-2011.12 | 7AT | F | L | Saloon 4WD M 273.970 | | GCO81466 | Outer Joint | | 30 | 25 | 71 | 56.5 | 52 | I |
| | 2009.01-2011.12 | 7AT | F | L | Saloon 4WD M 273.970 | | GCI81451 | Inner Joint | | 34 | 27 | 37.5 | | 141 | |
| | 2009.01-2011.12 | 7AT | F | R | Saloon 4WD M 273.970 | | GCI81452 | Inner Joint | | 27 | 27 | 38 | 62 | 110 | |
| | 2009.01-2011.12 | AT/MT | F | L | Saloon 4WD M 273.970 | | GDS81696 | Intermediate Shaft | | 34 | 27 | | | 504.5 | |
| | 2009.01-2011.12 | 7AT | R | L/R | Saloon 4WD M 273.970 | | GDS35137 | Drive Shaft | 48NS | 27 | 27 | 68 | 82 | 807 | |
| | 2009.01-2011.12 | 7AT | R | L/R | Saloon RWD M 273.971 | | GDS35137 | Drive Shaft | 48NS | 27 | 27 | 68 | 82 | 807 | |
| | 2009.01-2011.12 | | R | L/R | Saloon RWD M 273.971 | | GCI35021 | Inner Joint | 48NS | 27 | 27 | 68 | 82 | 51.5 | |
| | 2009.01-2016.12 | 7AT | R | L/R | Coupe RWD M 273.966 | | GDS83792 | Drive Shaft | 48NS | 27 | 30 | 68 | 72 | 768 | |
| | 2009.11-2011.12 | 7AT | R | L/R | Estate RWD M 273.971 | | GDS35137 | Drive Shaft | 48NS | 27 | 27 | 68 | 82 | 807 | |
| | 2009.11-2011.12 | | R | L/R | Estate RWD M 273.971 | | GCI35021 | Inner Joint | 48NS | 27 | 27 | 68 | 82 | 51.5 | |
| | 2010.01-2011.12 | 7AT | R | L/R | Convertible RWD M 273.966 | | GDS83792 | Drive Shaft | 48NS | 27 | 30 | 68 | 72 | 768 | |
| **E53 AMG** | | | | | | | | | | | | | | | |
| 3.0 (320 kw) | 2018.04-2023.10 | 9AT | F | R | Estate 4WD M 256.930 | For left-hand drive vehicles | GDS84219 | Drive Shaft | | 30 | 27 | 71 | 56 | 550 | |
| | 2018.04-2023.10 | 9AT | F | R | Estate 4WD M 256.930 | For left-hand drive vehicles | GCO82737 | Outer Joint | | 30 | 26 | 71 | 56 | 54.5 | I |
| | 2018.04-2023.10 | 9AT | F | R | Estate 4WD M 256.930 | For left-hand drive vehicles | GCI82161 | Inner Joint | | 27 | 24 | 38 | 62 | 124.5 | |
| | 2018.05- | 9AT | F | R | Convertible 4WD M 256.930 | For left-hand drive vehicles | GDS84219 | Drive Shaft | | 30 | 27 | 71 | 56 | 550 | |
| | 2018.05- | 9AT | F | R | Convertible 4WD M 256.930 | For left-hand drive vehicles | GCO82737 | Outer Joint | | 30 | 26 | 71 | 56 | 54.5 | I |
| | 2018.05- | 9AT | F | R | Convertible 4WD M 256.930 | For left-hand drive vehicles | GCI82161 | Inner Joint | | 27 | 24 | 38 | 62 | 124.5 | |
| **E55** | | | | | | | | | | | | | | | |
| 5.5 (260 kw) | 1997.09-1998.12 | 5AT | R | L/R | Saloon RWD M 113.980 | | GCI99143 | Inner Joint | | | 27 | | | 28 | |
| **E55 AMG** | | | | | | | | | | | | | | | |
| 5.4 (260 kw) | 1997.01-2002.11 | 5AT | R | L/R | Saloon RWD 113980 | | GCI99143 | Inner Joint | | | 27 | | | 28 | |
| | 1997.11-2003.05 | 5AT | R | L/R | Estate RWD 113980 | | GCI99143 | Inner Joint | | | 27 | | | 28 | |
| | 1997.11-2003.05 | | R | L/R | Estate RWD 113980 | Date To:2000.10 | GDS35009 | Drive Shaft | 48T | | | | | 665 | |
| 5.4 (350 kw) | 2002.10-2008.12 | 5AT | R | L/R | Saloon RWD M 113.990 | Chassis no. from:A099290 | GDS35126 | Drive Shaft | 48NS | 27 | 30 | 68 | 82 | 773 | |
| | 2003.07-2009.07 | 5AT | R | L/R | Estate RWD M 113.990 | Chassis no. from:A099290 | GDS35126 | Drive Shaft | 48NS | 27 | 30 | 68 | 82 | 773 | |
| | 2005.09-2006.12 | 5AT | R | L/R | Estate RWD M 113.990 | Chassis no. from:A099290 | GDS35126 | Drive Shaft | 48NS | 27 | 30 | 68 | 82 | 773 | |
| **E63 AMG** | | | | | | | | | | | | | | | |
| 4.0 (420 kw) | 2017.01-2021.11 | 9AT | F | L | Saloon 4WD M 177.980 | | GDS84218 | Drive Shaft | | 30 | 27 | 71 | 56 | 520 | |
| | 2017.01-2021.11 | 9AT | F | L | Saloon 4WD M 177.980 | | GCO82737 | Outer Joint | | 30 | 26 | 71 | 56 | 54.5 | I |
| | 2017.01-2021.11 | 9AT | F | L | Saloon 4WD M 177.980 | | GCI82313 | Inner Joint | | 27 | 24 | 41 | | 155.5 | |
| | 2017.05-2023.10 | 9AT | F | L | Estate 4WD M 177.980 | | GDS84218 | Drive Shaft | | 30 | 27 | 71 | 56 | 520 | |
| | 2017.05-2023.10 | 9AT | F | L | Estate 4WD M 177.980 | | GCO82737 | Outer Joint | | 30 | 26 | 71 | 56 | 54.5 | I |
| | 2017.05-2023.10 | 9AT | F | L | Estate 4WD M 177.980 | | GCI82313 | Inner Joint | | 27 | 24 | 41 | | 155.5 | |
| 4.0 (450 kw) | 2017.01-2023.10 | 9AT | F | L | Saloon 4WD M 177.980 | | GDS84218 | Drive Shaft | | 30 | 27 | 71 | 56 | 520 | |
| | 2017.01-2023.10 | 9AT | F | L | Saloon 4WD M 177.980 | | GCO82737 | Outer Joint | | 30 | 26 | 71 | 56 | 54.5 | I |
| | 2017.01-2023.10 | 9AT | F | L | Saloon 4WD M 177.980 | | GCI82313 | Inner Joint | | 27 | 24 | 41 | | 155.5 | |
| | 2017.05-2023.10 | 9AT | F | L | Estate 4WD M 177.980 | | GDS84218 | Drive Shaft | | 30 | 27 | 71 | 56 | 520 | |
| | 2017.05-2023.10 | 9AT | F | L | Estate 4WD M 177.980 | | GCO82737 | Outer Joint | | 30 | 26 | 71 | 56 | 54.5 | I |
| | 2017.05-2023.10 | 9AT | F | L | Estate 4WD M 177.980 | | GCI82313 | Inner Joint | | 27 | 24 | 41 | | 155.5 | |
| 5.5 (386 kw) | 2011.02-2016.12 | 7AT | R | L/R | Estate RWD M 157.981 | | GDS35119 | Drive Shaft | 48NS | 27 | 27 | 68 | 82 | 803 | |
| | 2011.02-2016.12 | 7AT | R | L/R | Saloon RWD M 157.980;M 157.981 | | GDS35119 | Drive Shaft | 48NS | 27 | 27 | 68 | 82 | 803 | |
| 5.5 (410 kw) | 2011.02-2016.12 | 7AT | F | R | Estate 4WD M 157.981 | | GDS81663 | Drive Shaft | | 30 | 27 | 71 | 56.5 | 563 | |
| | 2011.02-2016.12 | AT | F | L | Estate 4WD M 157.981 | | GDS81662 | Drive Shaft | | 30 | 34 | 71 | 56.5 | 533 | |
| | 2011.02-2016.12 | AT | F | L/R | Estate 4WD M 157.981 | | GCO81466 | Outer Joint | | 30 | 25 | 71 | 56.5 | 52 | I |
| | 2011.02-2016.12 | AT | F | L | Estate 4WD M 157.981 | | GCI81451 | Inner Joint | | 34 | 27 | 37.5 | | 141 | |
| | 2011.02-2016.12 | AT | F | R | Estate 4WD M 157.981 | | GCI81452 | Inner Joint | | 27 | 27 | 38 | 62 | 110 | |
| | 2011.02-2016.12 | AT/MT | F | L | Estate 4WD M 157.981 | | GDS81696 | Intermediate Shaft | | 34 | 27 | | | 504.5 | |
| | 2011.02-2016.12 | 7AT | R | L/R | Estate 4WD M 157.981 | | GDS35119 | Drive Shaft | 48NS | 27 | 27 | 68 | 82 | 803 | |
| | 2011.02-2016.12 | 7AT | R | L/R | Estate RWD M 157.981 | | GDS35119 | Drive Shaft | 48NS | 27 | 27 | 68 | 82 | 803 | |
| | 2011.02-2016.12 | 7AT | R | L/R | Saloon RWD M 157.981 | | GDS35119 | Drive Shaft | 48NS | 27 | 27 | 68 | 82 | 803 | |
| | 2013.01-2016.12 | 7AT | F | R | Saloon 4WD M 157.981 | | GDS81663 | Drive Shaft | | 30 | 27 | 71 | 56.5 | 563 | |

| | YEAR | TRANSM. | F/R | L/R | BODY STYLE & DRIVE TYPE & ENGINE | REMARKS | G-AP Ref. | PRODUCT | ABS | Technical Specifications A | B | C | H | L | P |
|---|---|---|---|---|---|---|---|---|---|---|---|---|---|---|---|
| **MERCEDES-BENZ** | | | | | | | | | | | | | | | |
| **E63 AMG** | | | | | | | | | | | | | | | |
| 5.5 (410 kw) | 2013.01-2016.12 | AT | F | L | Saloon 4WD M 157.981 | | GDS81662 | Drive Shaft | | 30 | 34 | 71 | 56.5 | 533 | |
| | 2013.01-2016.12 | AT | F | L/R | Saloon 4WD M 157.981 | | GCO81466 | Outer Joint | | 30 | 25 | 71 | 56.5 | 52 | I |
| | 2013.01-2016.12 | AT | F | L | Saloon 4WD M 157.981 | | GCI81451 | Inner Joint | | 34 | 27 | 37.5 | | 141 | |
| | 2013.01-2016.12 | AT | F | R | Saloon 4WD M 157.981 | | GCI81452 | Inner Joint | | 27 | 27 | 38 | 62 | 110 | |
| | 2013.01-2016.12 | AT/MT | F | L | Saloon 4WD M 157.981 | | GDS81696 | Intermediate Shaft | | 34 | 27 | | | 504.5 | |
| | 2013.01-2016.12 | 7AT | R | L/R | Saloon 4WD M 157.981 | | GDS35119 | Drive Shaft | 48NS | 27 | 27 | 68 | 82 | 803 | |
| 5.5 (430 kw) | 2013.02-2016.12 | 7AT | F | R | Estate 4WD M 157.981 | | GDS81663 | Drive Shaft | | 30 | 27 | 71 | 56.5 | 563 | |
| | 2013.02-2016.12 | AT | F | L | Estate 4WD M 157.981 | | GDS81662 | Drive Shaft | | 30 | 34 | 71 | 56.5 | 533 | |
| | 2013.02-2016.12 | AT | F | L/R | Estate 4WD M 157.981 | | GCO81466 | Outer Joint | | 30 | 25 | 71 | 56.5 | 52 | I |
| | 2013.02-2016.12 | AT | F | L | Estate 4WD M 157.981 | | GCI81451 | Inner Joint | | 34 | 27 | 37.5 | | 141 | |
| | 2013.02-2016.12 | AT | F | R | Estate 4WD M 157.981 | | GCI81452 | Inner Joint | | 27 | 27 | 38 | 62 | 110 | |
| | 2013.02-2016.12 | AT/MT | F | L | Estate 4WD M 157.981 | | GDS81696 | Intermediate Shaft | | 34 | 27 | | | 504.5 | |
| | 2013.02-2016.12 | 7AT | R | L/R | Estate 4WD M 157.981 | | GDS35119 | Drive Shaft | 48NS | 27 | 27 | 68 | 82 | 803 | |
| | 2013.02-2016.12 | 7AT | R | L/R | Estate RWD M 157.981 | | GDS35119 | Drive Shaft | 48NS | 27 | 27 | 68 | 82 | 803 | |
| | 2013.02-2016.12 | 7AT | F | R | Saloon 4WD M 157.981 | | GDS81663 | Drive Shaft | | 30 | 27 | 71 | 56.5 | 563 | |
| | 2013.02-2016.12 | AT | F | L | Saloon 4WD M 157.981 | | GDS81662 | Drive Shaft | | 30 | 34 | 71 | 56.5 | 533 | |
| | 2013.02-2016.12 | AT | F | L/R | Saloon 4WD M 157.981 | | GCO81466 | Outer Joint | | 30 | 25 | 71 | 56.5 | 52 | I |
| | 2013.02-2016.12 | AT | F | L | Saloon 4WD M 157.981 | | GCI81451 | Inner Joint | | 34 | 27 | 37.5 | | 141 | |
| | 2013.02-2016.12 | AT | F | R | Saloon 4WD M 157.981 | | GCI81452 | Inner Joint | | 27 | 27 | 38 | 62 | 110 | |
| | 2013.02-2016.12 | AT/MT | F | L | Saloon 4WD M 157.981 | | GDS81696 | Intermediate Shaft | | 34 | 27 | | | 504.5 | |
| | 2013.02-2016.12 | 7AT | R | L/R | Saloon 4WD M 157.981 | | GDS35119 | Drive Shaft | 48NS | 27 | 27 | 68 | 82 | 803 | |
| | 2013.02-2016.12 | 7AT | R | L/R | Saloon RWD M 157.981 | | GDS35119 | Drive Shaft | 48NS | 27 | 27 | 68 | 82 | 803 | |
| 6.2 (378 kw) | 2006.03-2008.12 | 7AT | R | L/R | Saloon RWD M 156.983 | | GDS35126 | Drive Shaft | 48NS | 27 | 30 | 68 | 82 | 773 | |
| | 2006.03-2009.07 | 7AT | R | L/R | Estate RWD M 156.983 | | GDS35126 | Drive Shaft | 48NS | 27 | 30 | 68 | 82 | 773 | |
| | 2006.09-2008.12 | 7AT | R | L/R | Saloon RWD M 156.983 | | GDS35126 | Drive Shaft | 48NS | 27 | 30 | 68 | 82 | 773 | |
| 6.2 (386 kw) | 2009.08-2011.12 | 7AT | R | L/R | Estate RWD M 156.985 | | GDS35127 | Drive Shaft | 48NS | 27 | 30 | 68 | 82 | 796 | |
| | 2009.12-2015.12 | 7AT | R | L/R | Saloon RWD M 156.985 | | GDS35119 | Drive Shaft | 48NS | 27 | 27 | 68 | 82 | 803 | |
| **EQA250** | | | | | | | | | | | | | | | |
| EV (140 kw) | 2021.02- | ET | F | L/R | SUV FWD EM 780.200 | | GDS56771 | Drive Shaft | | 30 | 30 | 65 | 53 | 601 | |
| | 2021.02- | ET | F | L/R | SUV FWD EM 780.200 | | GCO83430 | Outer Joint | | 30 | 37 | 65 | 53 | 61 | I |
| | 2021.02- | ET | F | L/R | SUV FWD EM 780.200 | | GCI83482 | Inner Joint | | 30 | 37 | 44.7 | | 135 | |
| **EQA250+** | | | | | | | | | | | | | | | |
| EV (140 kw) | 2022.03- | ET | F | L/R | SUV FWD EM 780.200 | | GDS56771 | Drive Shaft | | 30 | 30 | 65 | 53 | 601 | |
| | 2022.03- | ET | F | L/R | SUV FWD EM 780.200 | | GCO83430 | Outer Joint | | 30 | 37 | 65 | 53 | 61 | I |
| | 2022.03- | ET | F | L/R | SUV FWD EM 780.200 | | GCI83482 | Inner Joint | | 30 | 37 | 44.7 | | 135 | |
| **EQA300** | | | | | | | | | | | | | | | |
| EV (168 kw) | 2021.05- | ET | F | L/R | SUV 4WD EM 780.200;780.500 | | GDS56771 | Drive Shaft | | 30 | 30 | 65 | 53 | 601 | |
| | 2021.05- | ET | F | L/R | SUV 4WD EM 780.200;780.500 | | GCO83430 | Outer Joint | | 30 | 37 | 65 | 53 | 61 | I |
| | 2021.05- | ET | F | L/R | SUV 4WD EM 780.200;780.500 | | GCI83482 | Inner Joint | | 30 | 37 | 44.7 | | 135 | |
| **EQA350** | | | | | | | | | | | | | | | |
| EV (215 kw) | 2021.05- | ET | F | L/R | SUV 4WD EM 780.200;780.500 | | GDS56771 | Drive Shaft | | 30 | 30 | 65 | 53 | 601 | |
| | 2021.05- | ET | F | L/R | SUV 4WD EM 780.200;780.500 | | GCO83430 | Outer Joint | | 30 | 37 | 65 | 53 | 61 | I |
| | 2021.05- | ET | F | L/R | SUV 4WD EM 780.200;780.500 | | GCI83482 | Inner Joint | | 30 | 37 | 44.7 | | 135 | |
| | 2024.06- | ET | F | L/R | SUV 4WD 780.200, 780.500 | | GDS56771 | Drive Shaft | | 30 | 30 | 65 | 53 | 601 | |
| | 2024.06- | | F | L/R | SUV 4WD 780.200, 780.500 | | GCI83482 | Inner Joint | | 30 | 37 | 44.7 | | 135 | |
| **EQB250** | | | | | | | | | | | | | | | |
| EV (140 kw) | 2022.02- | ET | F | L/R | SUV FWD EM 780.200 | | GDS56771 | Drive Shaft | | 30 | 30 | 65 | 53 | 601 | |
| | 2022.02- | ET | F | L/R | SUV FWD EM 780.200 | | GCO83430 | Outer Joint | | 30 | 37 | 65 | 53 | 61 | I |
| | 2022.02- | ET | F | L/R | SUV FWD EM 780.200 | | GCI83482 | Inner Joint | | 30 | 37 | 44.7 | | 135 | |
| **EQB250+** | | | | | | | | | | | | | | | |
| EV (140 kw) | 2022.09- | ET | F | L/R | SUV FWD 780.200 | | GDS56771 | Drive Shaft | | 30 | 30 | 65 | 53 | 601 | |
| | 2022.09- | ET | F | L/R | SUV FWD 780.200 | | GCO83430 | Outer Joint | | 30 | 37 | 65 | 53 | 61 | I |
| | 2022.09- | ET | F | L/R | SUV FWD 780.200 | | GCI83482 | Inner Joint | | 30 | 37 | 44.7 | | 135 | |
| **EQB300** | | | | | | | | | | | | | | | |
| EV (168 kw) | 2021.12- | ET | F | L/R | SUV 4WD EM 780.200;780.500 | | GDS56771 | Drive Shaft | | 30 | 30 | 65 | 53 | 601 | |
| | 2021.12- | ET | F | L/R | SUV 4WD EM 780.200;780.500 | | GCO83430 | Outer Joint | | 30 | 37 | 65 | 53 | 61 | I |
| | 2021.12- | ET | F | L/R | SUV 4WD EM 780.200;780.500 | | GCI83482 | Inner Joint | | 30 | 37 | 44.7 | | 135 | |
| **EQB350** | | | | | | | | | | | | | | | |
| EV (215 kw) | 2021.12-2024.08 | ET | F | L/R | SUV 4WD EM 780.200;780.500 | | GDS56771 | Drive Shaft | | 30 | 30 | 65 | 53 | 601 | |
| | 2021.12-2024.08 | ET | F | L/R | SUV 4WD EM 780.200;780.500 | | GCO83430 | Outer Joint | | 30 | 37 | 65 | 53 | 61 | I |
| | 2021.12-2024.08 | ET | F | L/R | SUV 4WD EM 780.200;780.500 | | GCI83482 | Inner Joint | | 30 | 37 | 44.7 | | 135 | |
| | 2024.06- | ET | F | L/R | SUV 4WD 780.200, 780.500 | | GDS56771 | Drive Shaft | | 30 | 30 | 65 | 53 | 601 | |
| | 2024.06- | | F | L/R | SUV 4WD 780.200, 780.500 | | GCI83482 | Inner Joint | | 30 | 37 | 44.7 | | 135 | |

| | YEAR | TRANSM. | F/R | L/R | BODY STYLE & DRIVE TYPE & ENGINE | REMARKS | G-AP Ref. | PRODUCT | ABS | Technical Specifications A | B | C | H | L | P |
|---|---|---|---|---|---|---|---|---|---|---|---|---|---|---|---|
| **MERCEDES-BENZ** | | | | | | | | | | | | | | | |
| **EQC400** | | | | | | | | | | | | | | | |
| EV (300 kw) | 2019.05-2023.07 | ET | F | L/R | SUV 4WD EM 780.998 | | GDS56738 | Drive Shaft | | 30 | 30 | 71 | 56 | 533 | |
| | 2019.05-2023.07 | ET | F | L/R | SUV 4WD EM 780.998 | | GCO83415 | Outer Joint | | 30 | 27 | 71 | 56 | 61 | I |
| | 2019.05-2023.07 | ET | F | L/R | SUV 4WD EM 780.998 | | GCI83463 | Inner Joint | | 30 | 27 | 44.6 | | 155 | |
| | 2019.05-2023.07 | ET | R | L/R | SUV 4WD EM 780.998 | | GDS56653 | Drive Shaft | | 30 | 30 | 68 | 90 | 623 | |
| | 2019.05-2023.07 | ET | R | L/R | SUV 4WD EM 780.998 | | GCO83373 | Outer Joint | | 30 | 30 | 68 | 90 | 102.2 | |
| | 2019.05-2023.07 | ET | R | L/R | SUV 4WD EM 780.998 | | GCI83421 | Inner Joint | | 30 | 30 | 44.8 | | 141.2 | |
| **EQE300** | | | | | | | | | | | | | | | |
| EV (180 kw) | 2022.07- | ET | R | L | Saloon RWD 780.600 | | GDS56725 | Drive Shaft | | 34 | 34 | 67.9 | 53 | 605 | |
| | 2022.07- | ET | R | R | Saloon RWD 780.600 | | GDS56724 | Drive Shaft | | 34 | 34 | 67.9 | 53 | 656 | |
| | 2022.07- | ET | R | L | Saloon RWD 780.600 | | GCI83456 | Inner Joint | | 34 | 40 | 48.6 | | 146 | |
| | 2022.07- | ET | R | R | Saloon RWD 780.600 | | GCI83455 | Inner Joint | | 34 | 40 | 51 | 81 | 116 | |
| EV (195 kw) | 2025.04- | ET | R | L | Saloon RWD 780.600 | | GDS56725 | Drive Shaft | | 34 | 34 | 67.9 | 53 | 605 | |
| | 2025.04- | ET | R | R | Saloon RWD 780.600 | | GDS56724 | Drive Shaft | | 34 | 34 | 67.9 | 53 | 656 | |
| | 2025.04- | ET | R | L | Saloon RWD 780.600 | | GCI83456 | Inner Joint | | 34 | 40 | 48.6 | | 146 | |
| | 2025.04- | ET | R | R | Saloon RWD 780.600 | | GCI83455 | Inner Joint | | 34 | 40 | 51 | 81 | 116 | |
| **EQE350** | | | | | | | | | | | | | | | |
| EV (215 kw) | 2022.07- | ET | F | L | Saloon 4WD 780.300;780.600 | For SA code:802/803/804 | GDS56740 | Drive Shaft | | 30 | 27 | 65 | 53 | 631 | |
| | 2022.07- | ET | F | R | Saloon 4WD 780.300;780.600 | For SA code:802/803/804 | GDS56739 | Drive Shaft | | 30 | 27 | 65 | 53 | 660 | |
| | 2022.07- | ET | F | L/R | Saloon 4WD 780.300;780.600 | For SA code:802/803/804 | GCO83416 | Outer Joint | | 30 | 36 | 65 | 53 | 66 | I |
| | 2022.07- | ET | F | L | Saloon 4WD 780.300;780.600 | For SA code:802/803/804 | GCI83465 | Inner Joint | | 27 | 36 | 42 | | 157.5 | |
| | 2022.07- | ET | F | R | Saloon 4WD 780.300;780.600 | For SA code:802/803/804 | GCI83464 | Inner Joint | | 27 | 36 | 38 | 65 | 127.5 | |
| | 2022.07- | ET | R | L | Saloon 4WD 780.300;780.600 | | GDS56725 | Drive Shaft | | 34 | 34 | 67.9 | 53 | 605 | |
| | 2022.07- | ET | R | R | Saloon 4WD 780.300;780.600 | | GDS56724 | Drive Shaft | | 34 | 34 | 67.9 | 53 | 656 | |
| | 2022.07- | ET | R | L | Saloon 4WD 780.300;780.600 | | GCI83456 | Inner Joint | | 34 | 40 | 48.6 | | 146 | |
| | 2022.07- | ET | R | R | Saloon 4WD 780.300;780.600 | | GCI83455 | Inner Joint | | 34 | 40 | 51 | 81 | 116 | |
| | 2022.07- | ET | R | L | Saloon RWD 780.600 | | GDS56725 | Drive Shaft | | 34 | 34 | 67.9 | 53 | 605 | |
| | 2022.07- | ET | R | R | Saloon RWD 780.600 | | GDS56724 | Drive Shaft | | 34 | 34 | 67.9 | 53 | 656 | |
| | 2022.07- | ET | R | L | Saloon RWD 780.600 | | GCI83456 | Inner Joint | | 34 | 40 | 48.6 | | 146 | |
| | 2022.07- | ET | R | R | Saloon RWD 780.600 | | GCI83455 | Inner Joint | | 34 | 40 | 51 | 81 | 116 | |
| | 2022.12- | ET | F | L | SUV 4WD 780.300;780.600 | | GDS56740 | Drive Shaft | | 30 | 27 | 65 | 53 | 631 | |
| | 2022.12- | ET | F | R | SUV 4WD 780.300;780.600 | | GDS56739 | Drive Shaft | | 30 | 27 | 65 | 53 | 660 | |
| | 2022.12- | ET | F | L/R | SUV 4WD 780.300;780.600 | | GCO83416 | Outer Joint | | 30 | 36 | 65 | 53 | 66 | I |
| | 2022.12- | ET | F | L | SUV 4WD 780.300;780.600 | | GCI83465 | Inner Joint | | 27 | 36 | 42 | | 157.5 | |
| | 2022.12- | ET | F | R | SUV 4WD 780.300;780.600 | | GCI83464 | Inner Joint | | 27 | 36 | 38 | 65 | 127.5 | |
| EV (235 kw) | 2025.04- | ET | F | L | Saloon 4WD 780.300, 780.600 | | GDS56740 | Drive Shaft | | 30 | 27 | 65 | 53 | 631 | |
| | 2025.04- | ET | F | R | Saloon 4WD 780.300, 780.600 | | GDS56739 | Drive Shaft | | 30 | 27 | 65 | 53 | 660 | |
| | 2025.04- | ET | F | L | Saloon 4WD 780.300, 780.600 | | GCI83465 | Inner Joint | | 27 | 36 | 42 | | 157.5 | |
| | 2025.04- | ET | F | R | Saloon 4WD 780.300, 780.600 | | GCI83464 | Inner Joint | | 27 | 36 | 38 | 65 | 127.5 | |
| | 2025.04- | ET | R | L | Saloon 4WD 780.300, 780.600 | | GDS56725 | Drive Shaft | | 34 | 34 | 67.9 | 53 | 605 | |
| | 2025.04- | ET | R | R | Saloon 4WD 780.300, 780.600 | | GDS56724 | Drive Shaft | | 34 | 34 | 67.9 | 53 | 656 | |
| | 2025.04- | ET | R | L | Saloon 4WD 780.300, 780.600 | | GCI83456 | Inner Joint | | 34 | 40 | 48.6 | | 146 | |
| | 2025.04- | ET | R | R | Saloon 4WD 780.300, 780.600 | | GCI83455 | Inner Joint | | 34 | 40 | 51 | 81 | 116 | |
| | 2025.04- | ET | F | L | SUV 4WD 780.300, 780.600, 780.620 | | GDS56740 | Drive Shaft | | 30 | 27 | 65 | 53 | 631 | |
| | 2025.04- | ET | F | R | SUV 4WD 780.300, 780.600, 780.620 | | GDS56739 | Drive Shaft | | 30 | 27 | 65 | 53 | 660 | |
| | 2025.04- | ET | F | L/R | SUV 4WD 780.300, 780.600, 780.620 | | GCO83416 | Outer Joint | | 30 | 36 | 65 | 53 | 66 | I |
| | 2025.04- | ET | F | L | SUV 4WD 780.300, 780.600, 780.620 | | GCI83465 | Inner Joint | | 27 | 36 | 42 | | 157.5 | |
| | 2025.04- | ET | F | R | SUV 4WD 780.300, 780.600, 780.620 | | GCI83464 | Inner Joint | | 27 | 36 | 38 | 65 | 127.5 | |
| **EQE350+** | | | | | | | | | | | | | | | |
| EV (215 kw) | 2022.02- | ET | R | L | Saloon RWD 780.600 | | GDS56725 | Drive Shaft | | 34 | 34 | 67.9 | 53 | 605 | |
| | 2022.02- | ET | R | R | Saloon RWD 780.600 | | GDS56724 | Drive Shaft | | 34 | 34 | 67.9 | 53 | 656 | |
| | 2022.02- | ET | R | L | Saloon RWD 780.600 | | GCI83456 | Inner Joint | | 34 | 40 | 48.6 | | 146 | |
| | 2022.02- | ET | R | R | Saloon RWD 780.600 | | GCI83455 | Inner Joint | | 34 | 40 | 51 | 81 | 116 | |
| EV (235 kw) | 2025.04- | ET | R | L | Saloon RWD 780.600 | | GDS56725 | Drive Shaft | | 34 | 34 | 67.9 | 53 | 605 | |
| | 2025.04- | ET | R | R | Saloon RWD 780.600 | | GDS56724 | Drive Shaft | | 34 | 34 | 67.9 | 53 | 656 | |
| | 2025.04- | ET | R | L | Saloon RWD 780.600 | | GCI83456 | Inner Joint | | 34 | 40 | 48.6 | | 146 | |
| | 2025.04- | ET | R | R | Saloon RWD 780.600 | | GCI83455 | Inner Joint | | 34 | 40 | 51 | 81 | 116 | |
| **EQE43 AMG** | | | | | | | | | | | | | | | |
| EV (350 kw) | 2022.02- | ET | R | L | Saloon 4WD 780.300;780.600 | | GDS56725 | Drive Shaft | | 34 | 34 | 67.9 | 53 | 605 | |
| | 2022.02- | ET | R | R | Saloon 4WD 780.300;780.600 | | GDS56724 | Drive Shaft | | 34 | 34 | 67.9 | 53 | 656 | |
| | 2022.02- | ET | R | L | Saloon 4WD 780.300;780.600 | | GCI83456 | Inner Joint | | 34 | 40 | 48.6 | | 146 | |
| | 2022.02- | ET | R | R | Saloon 4WD 780.300;780.600 | | GCI83455 | Inner Joint | | 34 | 40 | 51 | 81 | 116 | |
| | 2022.12- | ET | F | L/R | SUV 4WD 780.300;780.600 | | GCO83416 | Outer Joint | | 30 | 36 | 65 | 53 | 66 | I |
| **EQE500** | | | | | | | | | | | | | | | |
| EV (300 kw) | 2022.07- | ET | F | L | Saloon 4WD 780.300;780.600 | For SA code:802/803/804 | GDS56740 | Drive Shaft | | 30 | 27 | 65 | 53 | 631 | |
| | 2022.07- | ET | F | R | Saloon 4WD 780.300;780.600 | For SA code:802/803/804 | GDS56739 | Drive Shaft | | 30 | 27 | 65 | 53 | 660 | |

| | YEAR | TRANSM. | F/R | L/R | BODY STYLE & DRIVE TYPE & ENGINE | REMARKS | G-AP Ref. | PRODUCT | ABS | Technical Specifications A | B | C | H | L | P |
|---|---|---|---|---|---|---|---|---|---|---|---|---|---|---|---|
| **MERCEDES-BENZ** | | | | | | | | | | | | | | | |
| **EQE500** | | | | | | | | | | | | | | | |
| EV (300 kw) | 2022.07- | ET | F | L/R | Saloon 4WD 780.300;780.600 | For SA code:802/803/804 | GCO83416 | Outer Joint | | 30 | 36 | 65 | 53 | 66 | I |
| | 2022.07- | ET | F | L | Saloon 4WD 780.300;780.600 | For SA code:802/803/804 | GCI83465 | Inner Joint | | 27 | 36 | 42 | | 157.5 | |
| | 2022.07- | ET | F | R | Saloon 4WD 780.300;780.600 | For SA code:802/803/804 | GCI83464 | Inner Joint | | 27 | 36 | 38 | 65 | 127.5 | |
| | 2022.07- | ET | R | L | Saloon 4WD 780.300;780.600 | | GDS56725 | Drive Shaft | | 34 | 34 | 67.9 | 53 | 605 | |
| | 2022.07- | ET | R | R | Saloon 4WD 780.300;780.600 | | GDS56724 | Drive Shaft | | 34 | 34 | 67.9 | 53 | 656 | |
| | 2022.07- | ET | R | L | Saloon 4WD 780.300;780.600 | | GCI83456 | Inner Joint | | 34 | 40 | 48.6 | | 146 | |
| | 2022.07- | ET | R | R | Saloon 4WD 780.300;780.600 | | GCI83455 | Inner Joint | | 34 | 40 | 51 | 81 | 116 | |
| | 2022.12- | ET | F | L | SUV 4WD 780.300;780.600 | | GDS56740 | Drive Shaft | | 30 | 27 | 65 | 53 | 631 | |
| | 2022.12- | ET | F | R | SUV 4WD 780.300;780.600 | | GDS56739 | Drive Shaft | | 30 | 27 | 65 | 53 | 660 | |
| | 2022.12- | ET | F | L/R | SUV 4WD 780.300;780.600 | | GCO83416 | Outer Joint | | 30 | 36 | 65 | 53 | 66 | I |
| | 2022.12- | ET | F | L | SUV 4WD 780.300;780.600 | | GCI83465 | Inner Joint | | 27 | 36 | 42 | | 157.5 | |
| | 2022.12- | ET | F | R | SUV 4WD 780.300;780.600 | | GCI83464 | Inner Joint | | 27 | 36 | 38 | 65 | 127.5 | |
| EV (330 kw) | 2022.07- | ET | F | L | Saloon 4WD 780.300, 780.600 | | GDS56740 | Drive Shaft | | 30 | 27 | 65 | 53 | 631 | |
| | 2022.07- | ET | F | R | Saloon 4WD 780.300, 780.600 | | GDS56739 | Drive Shaft | | 30 | 27 | 65 | 53 | 660 | |
| | 2022.07- | ET | F | L | Saloon 4WD 780.300, 780.600 | | GCI83465 | Inner Joint | | 27 | 36 | 42 | | 157.5 | |
| | 2022.07- | ET | F | R | Saloon 4WD 780.300, 780.600 | | GCI83464 | Inner Joint | | 27 | 36 | 38 | 65 | 127.5 | |
| | 2022.07- | ET | R | L | Saloon 4WD 780.300, 780.600 | | GDS56725 | Drive Shaft | | 34 | 34 | 67.9 | 53 | 605 | |
| | 2022.07- | ET | R | R | Saloon 4WD 780.300, 780.600 | | GDS56724 | Drive Shaft | | 34 | 34 | 67.9 | 53 | 656 | |
| | 2022.07- | ET | R | L | Saloon 4WD 780.300, 780.600 | | GCI83456 | Inner Joint | | 34 | 40 | 48.6 | | 146 | |
| | 2022.07- | ET | R | R | Saloon 4WD 780.300, 780.600 | | GCI83455 | Inner Joint | | 34 | 40 | 51 | 81 | 116 | |
| | 2025.04- | ET | F | L | SUV 4WD 780.300, 780.600, 780.620 | | GDS56740 | Drive Shaft | | 30 | 27 | 65 | 53 | 631 | |
| | 2025.04- | ET | F | R | SUV 4WD 780.300, 780.600, 780.620 | | GDS56739 | Drive Shaft | | 30 | 27 | 65 | 53 | 660 | |
| | 2025.04- | ET | F | L/R | SUV 4WD 780.300, 780.600, 780.620 | | GCO83416 | Outer Joint | | 30 | 36 | 65 | 53 | 66 | I |
| | 2025.04- | ET | F | L | SUV 4WD 780.300, 780.600, 780.620 | | GCI83465 | Inner Joint | | 27 | 36 | 42 | | 157.5 | |
| | 2025.04- | ET | F | R | SUV 4WD 780.300, 780.600, 780.620 | | GCI83464 | Inner Joint | | 27 | 36 | 38 | 65 | 127.5 | |
| **EQE53 AMG** | | | | | | | | | | | | | | | |
| EV (460 kw) | 2022.07- | ET | R | L | Saloon 4WD 780.300;780.600 | | GDS56725 | Drive Shaft | | 34 | 34 | 67.9 | 53 | 605 | |
| | 2022.07- | ET | R | R | Saloon 4WD 780.300;780.600 | | GDS56724 | Drive Shaft | | 34 | 34 | 67.9 | 53 | 656 | |
| | 2022.07- | ET | R | L | Saloon 4WD 780.300;780.600 | | GCI83456 | Inner Joint | | 34 | 40 | 48.6 | | 146 | |
| | 2022.07- | ET | R | R | Saloon 4WD 780.300;780.600 | | GCI83455 | Inner Joint | | 34 | 40 | 51 | 81 | 116 | |
| EV (505 kw) | 2022.07- | ET | R | L | Saloon 4WD 780.300;780.600 | | GDS56725 | Drive Shaft | | 34 | 34 | 67.9 | 53 | 605 | |
| | 2022.07- | ET | R | R | Saloon 4WD 780.300;780.600 | | GDS56724 | Drive Shaft | | 34 | 34 | 67.9 | 53 | 656 | |
| | 2022.07- | ET | R | L | Saloon 4WD 780.300;780.600 | | GCI83456 | Inner Joint | | 34 | 40 | 48.6 | | 146 | |
| | 2022.07- | ET | R | R | Saloon 4WD 780.300;780.600 | | GCI83455 | Inner Joint | | 34 | 40 | 51 | 81 | 116 | |
| **EQS350** | | | | | | | | | | | | | | | |
| EV (215 kw) | 2021.12- | ET | R | L | Hatchback RWD 780.600 | | GDS56725 | Drive Shaft | | 34 | 34 | 67.9 | 53 | 605 | |
| | 2021.12- | ET | R | R | Hatchback RWD 780.600 | | GDS56724 | Drive Shaft | | 34 | 34 | 67.9 | 53 | 656 | |
| | 2021.12- | ET | R | L | Hatchback RWD 780.600 | | GCI83456 | Inner Joint | | 34 | 40 | 48.6 | | 146 | |
| | 2021.12- | ET | R | R | Hatchback RWD 780.600 | | GCI83455 | Inner Joint | | 34 | 40 | 51 | 81 | 116 | |
| **EQS450** | | | | | | | | | | | | | | | |
| EV (265 kw) | 2022.05- | ET | F | L | Hatchback 4WD 780.300;780.600 | | GDS56740 | Drive Shaft | | 30 | 27 | 65 | 53 | 631 | |
| | 2022.05- | ET | F | R | Hatchback 4WD 780.300;780.600 | | GDS56739 | Drive Shaft | | 30 | 27 | 65 | 53 | 660 | |
| | 2022.05- | ET | F | L/R | Hatchback 4WD 780.300;780.600 | | GCO83416 | Outer Joint | | 30 | 36 | 65 | 53 | 66 | I |
| | 2022.05- | ET | F | L | Hatchback 4WD 780.300;780.600 | | GCI83465 | Inner Joint | | 27 | 36 | 42 | | 157.5 | |
| | 2022.05- | ET | F | R | Hatchback 4WD 780.300;780.600 | | GCI83464 | Inner Joint | | 27 | 36 | 38 | 65 | 127.5 | |
| | 2022.05- | ET | R | L | Hatchback 4WD 780.300;780.600 | | GDS56725 | Drive Shaft | | 34 | 34 | 67.9 | 53 | 605 | |
| | 2022.05- | ET | R | R | Hatchback 4WD 780.300;780.600 | | GDS56724 | Drive Shaft | | 34 | 34 | 67.9 | 53 | 656 | |
| | 2022.05- | ET | R | L | Hatchback 4WD 780.300;780.600 | | GCI83456 | Inner Joint | | 34 | 40 | 48.6 | | 146 | |
| | 2022.05- | ET | R | R | Hatchback 4WD 780.300;780.600 | | GCI83455 | Inner Joint | | 34 | 40 | 51 | 81 | 116 | |
| | 2022.10- | ET | F | L | SUV 4WD 780.300;780.600 | | GDS56740 | Drive Shaft | | 30 | 27 | 65 | 53 | 631 | |
| | 2022.10- | ET | F | R | SUV 4WD 780.300;780.600 | | GDS56739 | Drive Shaft | | 30 | 27 | 65 | 53 | 660 | |
| | 2022.10- | ET | F | L/R | SUV 4WD 780.300;780.600 | | GCO83416 | Outer Joint | | 30 | 36 | 65 | 53 | 66 | I |
| | 2022.10- | ET | F | L | SUV 4WD 780.300;780.600 | | GCI83465 | Inner Joint | | 27 | 36 | 42 | | 157.5 | |
| | 2022.10- | ET | F | R | SUV 4WD 780.300;780.600 | | GCI83464 | Inner Joint | | 27 | 36 | 38 | 65 | 127.5 | |
| **EQS450+** | | | | | | | | | | | | | | | |
| EV (245 kw) | 2021.08- | ET | R | L | Hatchback RWD 780.600 | | GDS56725 | Drive Shaft | | 34 | 34 | 67.9 | 53 | 605 | |
| | 2021.08- | ET | R | R | Hatchback RWD 780.600 | | GDS56724 | Drive Shaft | | 34 | 34 | 67.9 | 53 | 656 | |
| | 2021.08- | ET | R | L | Hatchback RWD 780.600 | | GCI83456 | Inner Joint | | 34 | 40 | 48.6 | | 146 | |
| | 2021.08- | ET | R | R | Hatchback RWD 780.600 | | GCI83455 | Inner Joint | | 34 | 40 | 51 | 81 | 116 | |
| EV (265 kw) | 2023.05- | ET | R | L | Hatchback RWD 780.600 | | GDS56725 | Drive Shaft | | 34 | 34 | 67.9 | 53 | 605 | |
| | 2023.05- | ET | R | R | Hatchback RWD 780.600 | | GDS56724 | Drive Shaft | | 34 | 34 | 67.9 | 53 | 656 | |
| | 2023.05- | ET | R | L | Hatchback RWD 780.600 | | GCI83456 | Inner Joint | | 34 | 40 | 48.6 | | 146 | |
| | 2023.05- | ET | R | R | Hatchback RWD 780.600 | | GCI83455 | Inner Joint | | 34 | 40 | 51 | 81 | 116 | |

| | YEAR | TRANSM. | F/R | L/R | BODY STYLE & DRIVE TYPE & ENGINE | REMARKS | G-AP Ref. | PRODUCT | ABS | Technical Specifications A | B | C | H | L | P |
|---|---|---|---|---|---|---|---|---|---|---|---|---|---|---|---|
| **MERCEDES-BENZ** | | | | | | | | | | | | | | | |
| **EQS500** | | | | | | | | | | | | | | | |
| EV (330 kw) | 2022.05- | ET | F | L | Hatchback 4WD 780.300;780.600 | | GDS56740 | Drive Shaft | | 30 | 27 | 65 | 53 | 631 | |
| | 2022.05- | ET | F | R | Hatchback 4WD 780.300;780.600 | | GDS56739 | Drive Shaft | | 30 | 27 | 65 | 53 | 660 | |
| | 2022.05- | ET | F | L/R | Hatchback 4WD 780.300;780.600 | | GCO83416 | Outer Joint | | 30 | 36 | 65 | 53 | 66 | I |
| | 2022.05- | ET | F | L | Hatchback 4WD 780.300;780.600 | | GCI83465 | Inner Joint | | 27 | 36 | 42 | | 157.5 | |
| | 2022.05- | ET | F | R | Hatchback 4WD 780.300;780.600 | | GCI83464 | Inner Joint | | 27 | 36 | 38 | 65 | 127.5 | |
| | 2022.05- | ET | R | L | Hatchback 4WD 780.300;780.600 | | GDS56725 | Drive Shaft | | 34 | 34 | 67.9 | 53 | 605 | |
| | 2022.05- | ET | R | R | Hatchback 4WD 780.300;780.600 | | GDS56724 | Drive Shaft | | 34 | 34 | 67.9 | 53 | 656 | |
| | 2022.05- | ET | R | L | Hatchback 4WD 780.300;780.600 | | GCI83456 | Inner Joint | | 34 | 40 | 48.6 | | 146 | |
| | 2022.05- | ET | R | R | Hatchback 4WD 780.300;780.600 | | GCI83455 | Inner Joint | | 34 | 40 | 51 | 81 | 116 | |
| | 2022.12- | ET | F | L | SUV 4WD 780.300;780.600 | | GDS56740 | Drive Shaft | | 30 | 27 | 65 | 53 | 631 | |
| | 2022.12- | ET | F | R | SUV 4WD 780.300;780.600 | | GDS56739 | Drive Shaft | | 30 | 27 | 65 | 53 | 660 | |
| | 2022.12- | ET | F | L/R | SUV 4WD 780.300;780.600 | | GCO83416 | Outer Joint | | 30 | 36 | 65 | 53 | 66 | I |
| | 2022.12- | ET | F | L | SUV 4WD 780.300;780.600 | | GCI83465 | Inner Joint | | 27 | 36 | 42 | | 157.5 | |
| | 2022.12- | ET | F | R | SUV 4WD 780.300;780.600 | | GCI83464 | Inner Joint | | 27 | 36 | 38 | 65 | 127.5 | |
| **EQS53 AMG** | | | | | | | | | | | | | | | |
| EV (484 kw) | 2021.12- | ET | R | L | Hatchback 4WD 780.300;780.600 | | GDS56725 | Drive Shaft | | 34 | 34 | 67.9 | 53 | 605 | |
| | 2021.12- | ET | R | R | Hatchback 4WD 780.300;780.600 | | GDS56724 | Drive Shaft | | 34 | 34 | 67.9 | 53 | 656 | |
| | 2021.12- | ET | R | L | Hatchback 4WD 780.300;780.600 | | GCI83456 | Inner Joint | | 34 | 40 | 48.6 | | 146 | |
| | 2021.12- | ET | R | R | Hatchback 4WD 780.300;780.600 | | GCI83455 | Inner Joint | | 34 | 40 | 51 | 81 | 116 | |
| EV (560 kw) | 2021.12- | ET | R | L | Hatchback 4WD 780.300;780.600 | | GDS56725 | Drive Shaft | | 34 | 34 | 67.9 | 53 | 605 | |
| | 2021.12- | ET | R | R | Hatchback 4WD 780.300;780.600 | | GDS56724 | Drive Shaft | | 34 | 34 | 67.9 | 53 | 656 | |
| | 2021.12- | ET | R | L | Hatchback 4WD 780.300;780.600 | | GCI83456 | Inner Joint | | 34 | 40 | 48.6 | | 146 | |
| | 2021.12- | ET | R | R | Hatchback 4WD 780.300;780.600 | | GCI83455 | Inner Joint | | 34 | 40 | 51 | 81 | 116 | |
| **EQS580** | | | | | | | | | | | | | | | |
| EV (385 kw) | 2021.08- | ET | F | L | Hatchback 4WD 780.300;780.600 | | GDS56740 | Drive Shaft | | 30 | 27 | 65 | 53 | 631 | |
| | 2021.08- | ET | F | R | Hatchback 4WD 780.300;780.600 | | GDS56739 | Drive Shaft | | 30 | 27 | 65 | 53 | 660 | |
| | 2021.08- | ET | F | L/R | Hatchback 4WD 780.300;780.600 | | GCO83416 | Outer Joint | | 30 | 36 | 65 | 53 | 66 | I |
| | 2021.08- | ET | F | L | Hatchback 4WD 780.300;780.600 | | GCI83465 | Inner Joint | | 27 | 36 | 42 | | 157.5 | |
| | 2021.08- | ET | F | R | Hatchback 4WD 780.300;780.600 | | GCI83464 | Inner Joint | | 27 | 36 | 38 | 65 | 127.5 | |
| | 2021.08- | ET | R | L | Hatchback 4WD 780.300;780.600 | | GDS56725 | Drive Shaft | | 34 | 34 | 67.9 | 53 | 605 | |
| | 2021.08- | ET | R | R | Hatchback 4WD 780.300;780.600 | | GDS56724 | Drive Shaft | | 34 | 34 | 67.9 | 53 | 656 | |
| | 2021.08- | ET | R | L | Hatchback 4WD 780.300;780.600 | | GCI83456 | Inner Joint | | 34 | 40 | 48.6 | | 146 | |
| | 2021.08- | ET | R | R | Hatchback 4WD 780.300;780.600 | | GCI83455 | Inner Joint | | 34 | 40 | 51 | 81 | 116 | |
| EV (400 kw) | 2022.10- | ET | F | L | SUV 4WD 780.300;780.600 | | GDS56740 | Drive Shaft | | 30 | 27 | 65 | 53 | 631 | |
| | 2022.10- | ET | F | R | SUV 4WD 780.300;780.600 | | GDS56739 | Drive Shaft | | 30 | 27 | 65 | 53 | 660 | |
| | 2022.10- | ET | F | L/R | SUV 4WD 780.300;780.600 | | GCO83416 | Outer Joint | | 30 | 36 | 65 | 53 | 66 | I |
| | 2022.10- | ET | F | L | SUV 4WD 780.300;780.600 | | GCI83465 | Inner Joint | | 27 | 36 | 42 | | 157.5 | |
| | 2022.10- | ET | F | R | SUV 4WD 780.300;780.600 | | GCI83464 | Inner Joint | | 27 | 36 | 38 | 65 | 127.5 | |
| | 2023.05- | ET | F | L | Hatchback 4WD 780.300;780.600 | | GDS56740 | Drive Shaft | | 30 | 27 | 65 | 53 | 631 | |
| | 2023.05- | ET | F | R | Hatchback 4WD 780.300;780.600 | | GDS56739 | Drive Shaft | | 30 | 27 | 65 | 53 | 660 | |
| | 2023.05- | ET | F | L/R | Hatchback 4WD 780.300;780.600 | | GCO83416 | Outer Joint | | 30 | 36 | 65 | 53 | 66 | I |
| | 2023.05- | ET | F | L | Hatchback 4WD 780.300;780.600 | | GCI83465 | Inner Joint | | 27 | 36 | 42 | | 157.5 | |
| | 2023.05- | ET | F | R | Hatchback 4WD 780.300;780.600 | | GCI83464 | Inner Joint | | 27 | 36 | 38 | 65 | 127.5 | |
| | 2023.05- | ET | R | L | Hatchback 4WD 780.300;780.600 | | GDS56725 | Drive Shaft | | 34 | 34 | 67.9 | 53 | 605 | |
| | 2023.05- | ET | R | R | Hatchback 4WD 780.300;780.600 | | GDS56724 | Drive Shaft | | 34 | 34 | 67.9 | 53 | 656 | |
| | 2023.05- | ET | R | L | Hatchback 4WD 780.300;780.600 | | GCI83456 | Inner Joint | | 34 | 40 | 48.6 | | 146 | |
| | 2023.05- | ET | R | R | Hatchback 4WD 780.300;780.600 | | GCI83455 | Inner Joint | | 34 | 40 | 51 | 81 | 116 | |
| **EQS680 Maybach** | | | | | | | | | | | | | | | |
| EV (484 kw) | 2023.09- | ET | F | L | SUV 4WD 780.300;780.600 | | GDS56740 | Drive Shaft | | 30 | 27 | 65 | 53 | 631 | |
| | 2023.09- | ET | F | R | SUV 4WD 780.300;780.600 | | GDS56739 | Drive Shaft | | 30 | 27 | 65 | 53 | 660 | |
| | 2023.09- | ET | F | L/R | SUV 4WD 780.300;780.600 | | GCO83416 | Outer Joint | | 30 | 36 | 65 | 53 | 66 | I |
| | 2023.09- | ET | F | L | SUV 4WD 780.300;780.600 | | GCI83465 | Inner Joint | | 27 | 36 | 42 | | 157.5 | |
| | 2023.09- | ET | F | R | SUV 4WD 780.300;780.600 | | GCI83464 | Inner Joint | | 27 | 36 | 38 | 65 | 127.5 | |
| **EQV250** | | | | | | | | | | | | | | | |
| EV (150 kw) | 2021.11- | ET | F | L | Bus FWD EM 780.702 | | GDS56367 | Drive Shaft | | 37 | 32 | 65 | | 678 | |
| | 2021.11- | ET | F | R | Bus FWD EM 780.702 | | GDS56370 | Drive Shaft | | 37 | 32 | 65 | | 853 | |
| | 2021.11- | ET | F | L/R | Bus FWD EM 780.702 | | GCO83266 | Outer Joint | | 37 | 31 | 65 | | 91.5 | I |
| | 2021.11- | ET | F | L | Bus FWD EM 780.702 | | GCI83256 | Inner Joint | | 32 | 29 | 44.9 | 92 | 138 | |
| | 2021.11- | ET | F | R | Bus FWD EM 780.702 | | GCI83257 | Inner Joint | | 32 | 29 | 37.9 | 291 | 115 | |
| **EQV300** | | | | | | | | | | | | | | | |
| EV (150 kw) | 2020.06- | ET | F | L | Bus FWD EM 780.702 | | GDS56367 | Drive Shaft | | 37 | 32 | 65 | | 678 | |
| | 2020.06- | ET | F | R | Bus FWD EM 780.702 | | GDS56370 | Drive Shaft | | 37 | 32 | 65 | | 853 | |
| | 2020.06- | ET | F | L/R | Bus FWD EM 780.702 | | GCO83266 | Outer Joint | | 37 | 31 | 65 | | 91.5 | I |
| | 2020.06- | ET | F | L | Bus FWD EM 780.702 | | GCI83256 | Inner Joint | | 32 | 29 | 44.9 | 92 | 138 | |
| | 2020.06- | ET | F | R | Bus FWD EM 780.702 | | GCI83257 | Inner Joint | | 32 | 29 | 37.9 | 291 | 115 | |

| | YEAR | TRANSM. | F/R | L/R | BODY STYLE & DRIVE TYPE & ENGINE | REMARKS | G-AP Ref. | PRODUCT | ABS | Technical Specifications A | B | C | H | L | P |
|---|---|---|---|---|---|---|---|---|---|---|---|---|---|---|---|
| **MERCEDES-BENZ** | | | | | | | | | | | | | | | |
| **eSprinter** | | | | | | | | | | | | | | | |
| EV (85 kw) | 2020.02-2023.12 | ET | F | L | Van FWD EM 780.703 | | GDS58349 | Drive Shaft | | 37 | 32 | 65 | | 706 | |
| | 2020.02-2023.12 | ET | F | R | Van FWD EM 780.703 | | GDS56742 | Drive Shaft | | 37 | 32 | 65 | | 954 | |
| | 2020.02-2023.12 | ET | F | L | Van FWD EM 780.703 | | GCO82856 | Outer Joint | | 37 | 31 | 65 | | 91.5 | I |
| | 2020.02-2023.12 | ET | F | R | Van FWD EM 780.703 | | GCO83266 | Outer Joint | | 37 | 31 | 65 | | 91.5 | I |
| | 2020.02-2023.12 | ET | F | L | Van FWD EM 780.703 | | GCI84082 | Inner Joint | | 32 | 29 | 44.9 | 92 | 164.5 | |
| | 2020.02-2023.12 | ET | F | R | Van FWD EM 780.703 | | GCI83467 | Inner Joint | | 32 | 29 | 37.95 | 391 | 115 | |
| **eVito** | | | | | | | | | | | | | | | |
| EV (85 kw) | 2019.03- | ET | F | L | Van FWD EM 780.701 | Not For SA code:M8E | GDS56343 | Drive Shaft | | 30 | 32 | 66 | 98.5 | 766 | |
| | 2019.03- | ET | F | L | Van FWD EM 780.701 | For SA code:M8E | GDS56367 | Drive Shaft | | 37 | 32 | 65 | | 678 | |
| | 2019.03- | ET | F | R | Van FWD EM 780.701 | Not For SA code:M8E | GDS56344 | Drive Shaft | | 30 | 32 | 66 | 98.5 | 941 | |
| | 2019.03- | ET | F | R | Van FWD EM 780.701 | For SA code:M8E | GDS56370 | Drive Shaft | | 37 | 32 | 65 | | 853 | |
| | 2019.03- | ET | F | L/R | Van FWD EM 780.701 | Not For SA code:M8E | GCO83260 | Outer Joint | | 30 | 31 | 66 | 98.5 | 70.5 | I |
| | 2019.03- | ET | F | L/R | Van FWD EM 780.701 | For SA code:M8E | GCO83266 | Outer Joint | | 37 | 31 | 65 | | 91.5 | I |
| | 2019.03- | ET | F | L | Van FWD EM 780.701 | | GCI83256 | Inner Joint | | 32 | 29 | 44.9 | 92 | 138 | |
| | 2019.03- | ET | F | R | Van FWD EM 780.701 | | GCI83257 | Inner Joint | | 32 | 29 | 37.9 | 291 | 115 | |
| | 2019.04- | ET | F | L | Bus FWD EM 780.701 | Not For SA code:M8E | GDS56343 | Drive Shaft | | 30 | 32 | 66 | 98.5 | 766 | |
| | 2019.04- | ET | F | L | Bus FWD EM 780.701 | For SA code:M8E | GDS56367 | Drive Shaft | | 37 | 32 | 65 | | 678 | |
| | 2019.04- | ET | F | R | Bus FWD EM 780.701 | Not For SA code:M8E | GDS56344 | Drive Shaft | | 30 | 32 | 66 | 98.5 | 941 | |
| | 2019.04- | ET | F | R | Bus FWD EM 780.701 | For SA code:M8E | GDS56370 | Drive Shaft | | 37 | 32 | 65 | | 853 | |
| | 2019.04- | ET | F | L/R | Bus FWD EM 780.701 | Not For SA code:M8E | GCO83260 | Outer Joint | | 30 | 31 | 66 | 98.5 | 70.5 | I |
| | 2019.04- | ET | F | L/R | Bus FWD EM 780.701 | For SA code:M8E | GCO83266 | Outer Joint | | 37 | 31 | 65 | | 91.5 | I |
| | 2019.04- | ET | F | L | Bus FWD EM 780.701 | | GCI83256 | Inner Joint | | 32 | 29 | 44.9 | 92 | 138 | |
| | 2019.04- | ET | F | R | Bus FWD EM 780.701 | | GCI83257 | Inner Joint | | 32 | 29 | 37.9 | 291 | 115 | |
| EV (150 kw) | 2020.08- | ET | F | L | Bus FWD EM 780.702 | | GDS56367 | Drive Shaft | | 37 | 32 | 65 | | 678 | |
| | 2020.08- | ET | F | R | Bus FWD EM 780.702 | | GDS56370 | Drive Shaft | | 37 | 32 | 65 | | 853 | |
| | 2020.08- | ET | F | L/R | Bus FWD EM 780.702 | | GCO83266 | Outer Joint | | 37 | 31 | 65 | | 91.5 | I |
| | 2020.08- | ET | F | L | Bus FWD EM 780.702 | | GCI83256 | Inner Joint | | 32 | 29 | 44.9 | 92 | 138 | |
| | 2020.08- | ET | F | R | Bus FWD EM 780.702 | | GCI83257 | Inner Joint | | 32 | 29 | 37.9 | 291 | 115 | |
| | 2025.03- | | F | L | Van FWD EM 780.705 | | GDS56367 | Drive Shaft | | 37 | 32 | 65 | | 678 | |
| | 2025.03- | | F | R | Van FWD EM 780.705 | | GDS56370 | Drive Shaft | | 37 | 32 | 65 | | 853 | |
| **F-CELL** | | | | | | | | | | | | | | | |
| 0.0 (155 kw) | 2018.10-2020.04 | 9AT/6MT | R | L/R | SUV RWD FCELL | | GDS56653 | Drive Shaft | | 30 | 30 | 68 | 90 | 623 | |
| | 2018.10-2020.04 | 9AT/6MT | R | L/R | SUV RWD FCELL | | GCO83373 | Outer Joint | | 30 | 30 | 68 | 90 | 102.2 | |
| | 2018.10-2020.04 | 9AT/6MT | R | L/R | SUV RWD FCELL | | GCI83421 | Inner Joint | | 30 | 30 | 44.8 | | 141.2 | |
| **GL320** | | | | | | | | | | | | | | | |
| 3.0 (165 kw) | 2006.09-2009.05 | 7AT | F | L | SUV 4WD OM 642.940 | | GDS85060 | Drive Shaft | | 30 | 37 | 70.2 | 90.5 | 666 | |
| | 2006.09-2009.05 | 7AT | F | R | SUV 4WD OM 642.940 | | GDS85061 | Drive Shaft | | 30 | 37 | 70.2 | 90.5 | 1004 | |
| | 2006.09-2009.05 | AT | F | L/R | SUV 4WD OM 642.940 | not for SA code:430;Type:W/O Off-Road Pack | GCO85007 | Outer Joint | | 30 | 37 | 70.2 | 90.5 | 69 | I |
| | 2006.09-2009.05 | | F | L/R | SUV 4WD OM 642.940 | | GCO85015 | Outer Joint | | 30 | 39 | 70.2 | 90.5 | 71 | I |
| | 2006.09-2009.05 | 7AT | R | L/R | SUV 4WD OM 642.940 | Date from:2006.11,Chassis no. from:192262,For vehicles without off-road suspension | GDS83211 | Drive Shaft | | 30 | 37 | 70.3 | 90.5 | 837 | |
| | 2006.09-2009.05 | 7AT | R | L/R | SUV 4WD OM 642.940 | Date From:2006.11,Chassis no. from:192262,For vehicles without off-road suspension | GCO82348 | Outer Joint | | 30 | 33 | 70.3 | 90.5 | 59.5 | I |
| | 2006.09-2009.05 | 7AT | R | L/R | SUV 4WD OM 642.940 | Date From:2006.11,Chassis no. from:192262,For vehicles without off-road suspension | GCI85039 | Inner Joint | | 37 | 33 | 45 | 80 | 101 | |
| **GL320/350** | | | | | | | | | | | | | | | |
| 3.0 (155 kw) | 2009.12-2012.08 | 7AT | F | L | SUV 4WD OM 642.820 | | GDS85060 | Drive Shaft | | 30 | 37 | 70.2 | 90.5 | 666 | |
| | 2009.12-2012.08 | 7AT | F | R | SUV 4WD OM 642.820 | | GDS85061 | Drive Shaft | | 30 | 37 | 70.2 | 90.5 | 1004 | |
| | 2009.12-2012.08 | AT | F | L/R | SUV 4WD OM 642.820 | not for SA code:430;Type:W/O Off-Road Pack | GCO85007 | Outer Joint | | 30 | 37 | 70.2 | 90.5 | 69 | I |
| | 2009.12-2012.08 | | F | L/R | SUV 4WD OM 642.820 | | GCO85015 | Outer Joint | | 30 | 39 | 70.2 | 90.5 | 71 | I |
| | 2009.12-2012.08 | 7AT | R | L/R | SUV 4WD OM 642.820 | For vehicles without off-road suspension | GDS83211 | Drive Shaft | | 30 | 37 | 70.3 | 90.5 | 837 | |
| | 2009.12-2012.08 | 7AT | R | L/R | SUV 4WD OM 642.820 | For vehicles without off-road suspension | GCO82348 | Outer Joint | | 30 | 33 | 70.3 | 90.5 | 59.5 | I |
| | 2009.12-2012.08 | AT | R | R | SUV 4WD OM 642.820 | Not for SA code:430,For vehicles without off-road suspension | GCI85039 | Inner Joint | | 37 | 33 | 45 | 80 | 101 | |
| **GL350** | | | | | | | | | | | | | | | |
| 3.0 (165 kw) | 2009.05-2012.08 | 7AT | F | L | SUV 4WD OM 642.940 | | GDS85060 | Drive Shaft | | 30 | 37 | 70.2 | 90.5 | 666 | |
| | 2009.05-2012.08 | 7AT | F | R | SUV 4WD OM 642.940 | | GDS85061 | Drive Shaft | | 30 | 37 | 70.2 | 90.5 | 1004 | |
| | 2009.05-2012.08 | AT | F | L/R | SUV 4WD OM 642.940 | Type:W/O Off-Road Pack | GCO85007 | Outer Joint | | 30 | 37 | 70.2 | 90.5 | 69 | I |
| | 2009.05-2012.08 | | F | L/R | SUV 4WD OM 642.940 | | GCO85015 | Outer Joint | | 30 | 39 | 70.2 | 90.5 | 71 | I |
| | 2009.05-2012.08 | 7AT | R | L/R | SUV 4WD OM 642.940 | For vehicles without off-road suspension | GDS83211 | Drive Shaft | | 30 | 37 | 70.3 | 90.5 | 837 | |
| | 2009.05-2012.08 | 7AT | R | L/R | SUV 4WD OM 642.940 | For vehicles without off-road suspension | GCO82348 | Outer Joint | | 30 | 33 | 70.3 | 90.5 | 59.5 | I |
| | 2009.05-2012.08 | 7AT | R | L/R | SUV 4WD OM 642.940 | For vehicles without off-road suspension | GCI85039 | Inner Joint | | 37 | 33 | 45 | 80 | 101 | |
| 3.0 (183 kw) | 2012.07-2015.10 | 7AT | F | L | SUV 4WD OM 642.826 | Date to:2014.07;For vehicles without off-road suspension | GDS35089 | Drive Shaft | | 30 | 37 | 73 | 92.5 | 673 | |
| | 2012.07-2015.10 | 7AT | F | L | SUV 4WD OM 642.826 | For vehicles with off-road suspension | GDS82456 | Drive Shaft | | 30 | 37 | 73 | 92 | 672 | |
| | 2012.07-2015.10 | 7AT | F | L | SUV 4WD OM 642.826 | Date from:2014.08,For vehicles without off-road suspension | GDS84205 | Drive Shaft | | 30 | 37 | 73 | 92 | 672 | |
| | 2012.07-2015.10 | 7AT | F | R | SUV 4WD OM 642.826 | For vehicles without off-road suspension | GDS35088 | Drive Shaft | | 30 | 37 | 73 | 92.5 | 1015 | |
| | 2012.07-2015.10 | 7AT | F | R | SUV 4WD OM 642.826 | For vehicles with off-road suspension | GDS35113 | Drive Shaft | | 30 | 37 | 73 | 92 | 1017 | |
| | 2012.07-2015.10 | 7AT | F | L/R | SUV 4WD OM 642.826 | For vehicles without off-road suspension | GCO35059 | Outer Joint | | 30 | 37 | 73 | 92.5 | 66 | I |
| | 2012.07-2015.10 | 7AT | F | L/R | SUV 4WD OM 642.826 | For vehicles with off-road suspension | GCO35073 | Outer Joint | | 30 | 39 | 73 | 92 | 71 | I |

| | YEAR | TRANSM. | F/R | L/R | BODY STYLE & DRIVE TYPE & ENGINE | REMARKS | G-AP Ref. | PRODUCT | ABS | A | B | C | H | L | P |
|---|---|---|---|---|---|---|---|---|---|---|---|---|---|---|---|
| **MERCEDES-BENZ** | | | | | | | | | | | | | | | |
| **GL350** | | | | | | | | | | | | | | | |
| 3.0 (183 kw) | 2012.07-2015.10 | 7AT | F | L | SUV 4WD OM 642.826 | For vehicles without off-road suspension | GCI35057 | Inner Joint | | 37 | 33 | 45 | 80 | 104.5 | |
| | 2012.07-2015.10 | 7AT | F | L | SUV 4WD OM 642.826 | For vehicles with off-road suspension | GCI81822 | Inner Joint | | 37 | 26 | 44.95 | 79.5 | 107 | |
| | 2012.07-2015.10 | 7AT | F | R | SUV 4WD OM 642.826 | For vehicles with off-road suspension | GCI35073 | Inner Joint | | 37 | 26 | 45 | 263 | 113 | |
| | 2012.07-2015.10 | 7AT | F | R | SUV 4WD OM 642.826 | For vehicles without off-road suspension | GCI85042 | Inner Joint | | 37 | 33 | 45 | 264 | 111 | |
| | 2012.07-2015.10 | 7AT | R | L/R | SUV 4WD OM 642.826 | | GDS35090 | Drive Shaft | | 30 | 27 | 73 | 90.5 | 841 | |
| | 2012.07-2015.10 | 7AT | R | L/R | SUV 4WD OM 642.826 | For vehicles with bad road version | GDS35121 | Drive Shaft | | 30 | 30 | 73 | 90 | 846 | |
| 3.0 (190 kw) | 2012.07-2015.10 | 7AT | F | L | SUV 4WD OM 642.826 | For vehicles without off-road suspension | GDS35089 | Drive Shaft | | 30 | 37 | 73 | 92.5 | 673 | |
| | 2012.07-2015.10 | 7AT | F | L | SUV 4WD OM 642.826 | For vehicles with off-road suspension | GDS82456 | Drive Shaft | | 30 | 37 | 73 | 92 | 672 | |
| | 2012.07-2015.10 | 7AT | F | R | SUV 4WD OM 642.826 | For vehicles without off-road suspension | GDS35088 | Drive Shaft | | 30 | 37 | 73 | 92.5 | 1015 | |
| | 2012.07-2015.10 | 7AT | F | R | SUV 4WD OM 642.826 | For vehicles with off-road suspension | GDS35113 | Drive Shaft | | 30 | 37 | 73 | 92 | 1017 | |
| | 2012.07-2015.10 | 7AT | F | L/R | SUV 4WD OM 642.826 | For vehicles without off-road suspension | GCO35059 | Outer Joint | | 30 | 37 | 73 | 92.5 | 66 | I |
| | 2012.07-2015.10 | 7AT | F | L/R | SUV 4WD OM 642.826 | For vehicles with off-road suspension | GCO35073 | Outer Joint | | 30 | 39 | 73 | 92 | 71 | I |
| | 2012.07-2015.10 | 7AT | F | L | SUV 4WD OM 642.826 | For vehicles without off-road suspension | GCI35057 | Inner Joint | | 37 | 33 | 45 | 80 | 104.5 | |
| | 2012.07-2015.10 | 7AT | F | L | SUV 4WD OM 642.826 | For vehicles with off-road suspension | GCI81822 | Inner Joint | | 37 | 26 | 44.95 | 79.5 | 107 | |
| | 2012.07-2015.10 | 7AT | F | R | SUV 4WD OM 642.826 | For vehicles with off-road suspension | GCI35073 | Inner Joint | | 37 | 26 | 45 | 263 | 113 | |
| | 2012.07-2015.10 | 7AT | F | R | SUV 4WD OM 642.826 | For vehicles without off-road suspension | GCI85042 | Inner Joint | | 37 | 33 | 45 | 264 | 111 | |
| | 2012.07-2015.10 | AT | F | L/R | SUV 4WD OM 642.826 | not for SA code:430,Type:W/O Off-Road Pack | GCO85007 | Outer Joint | | 30 | 37 | 70.2 | 90.5 | 69 | I |
| | 2012.07-2015.10 | 7AT | R | L/R | SUV 4WD OM 642.826 | | GDS35090 | Drive Shaft | | 30 | 27 | 73 | 90.5 | 841 | |
| | 2012.07-2015.10 | 7AT | R | L/R | SUV 4WD OM 642.826 | For vehicles with off-road suspension | GDS35121 | Drive Shaft | | 30 | 30 | 73 | 90 | 846 | |
| 3.0 (195 kw) | 2010.10-2012.08 | 7AT | F | L | SUV 4WD OM 642.822 | | GDS85060 | Drive Shaft | | 30 | 37 | 70.2 | 90.5 | 666 | |
| | 2010.10-2012.08 | 7AT | F | R | SUV 4WD OM 642.822 | | GDS85061 | Drive Shaft | | 30 | 37 | 70.2 | 90.5 | 1004 | |
| | 2010.10-2012.08 | | F | L/R | SUV 4WD OM 642.822 | | GCO85015 | Outer Joint | | 30 | 39 | 70.2 | 90.5 | 71 | I |
| | 2010.10-2012.08 | 7AT | R | L/R | SUV 4WD OM 642.822 | Fitting Position:Rear Axle Left And Right,For right-hand drive vehicles;Fitting Position:Rear Axle Right,For left-hand drive vehicles | GDS83211 | Drive Shaft | | 30 | 37 | 70.3 | 90.5 | 837 | |
| | 2010.10-2012.08 | 7AT | R | R | SUV 4WD OM 642.822 | For left-hand drive vehicles | GCO82348 | Outer Joint | | 30 | 33 | 70.3 | 90.5 | 59.5 | I |
| | 2010.10-2012.08 | 7AT | R | L/R | SUV 4WD OM 642.822 | For right-hand drive vehicles | GCO82348 | Outer Joint | | 30 | 33 | 70.3 | 90.5 | 59.5 | I |
| | 2010.10-2012.08 | 7AT | R | R | SUV 4WD OM 642.822 | For left-hand drive vehicles | GCI85039 | Inner Joint | | 37 | 33 | 45 | 80 | 101 | |
| | 2010.10-2012.08 | 7AT | R | L/R | SUV 4WD OM 642.822 | For right-hand drive vehicles | GCI85039 | Inner Joint | | 37 | 33 | 45 | 80 | 101 | |
| **GL400** | | | | | | | | | | | | | | | |
| 3.0 (245 kw) | 2013.08-2015.10 | AT | F | L | SUV 4WD M 276.821 | For SA code:-430,For vehicles without off-road suspension | GDS35089 | Drive Shaft | | 30 | 37 | 73 | 92.5 | 673 | |
| | 2013.08-2015.10 | AT | F | L | SUV 4WD M 276.821 | For SA code:430,For vehicles with off-road suspension | GDS82456 | Drive Shaft | | 30 | 37 | 73 | 92 | 672 | |
| | 2013.08-2015.10 | AT | F | R | SUV 4WD M 276.821 | For SA code:-430,For vehicles without off-road suspension | GDS35088 | Drive Shaft | | 30 | 37 | 73 | 92.5 | 1015 | |
| | 2013.08-2015.10 | AT | F | R | SUV 4WD M 276.821 | For SA code:430,For vehicles with off-road suspension | GDS35113 | Drive Shaft | | 30 | 37 | 73 | 92 | 1017 | |
| | 2013.08-2015.10 | AT | F | L/R | SUV 4WD M 276.821 | For SA code:-430,For vehicles without off-road suspension | GCO35059 | Outer Joint | | 30 | 37 | 73 | 92.5 | 66 | I |
| | 2013.08-2015.10 | AT | F | L/R | SUV 4WD M 276.821 | For SA code:430,For vehicles with off-road suspension | GCO35073 | Outer Joint | | 30 | 39 | 73 | 92 | 71 | I |
| | 2013.08-2015.10 | AT | F | L/R | SUV 4WD M 276.821 | | GCO85007 | Outer Joint | | 30 | 37 | 70.2 | 90.5 | 69 | I |
| | 2013.08-2015.10 | AT | F | L/R | SUV 4WD M 276.821 | | GCO85015 | Outer Joint | | 30 | 39 | 70.2 | 90.5 | 71 | I |
| | 2013.08-2015.10 | AT | F | L | SUV 4WD M 276.821 | For SA code:-430,For vehicles without off-road suspension | GCI35057 | Inner Joint | | 37 | 33 | 45 | 80 | 104.5 | |
| | 2013.08-2015.10 | AT | F | L | SUV 4WD M 276.821 | For SA code:430,For vehicles with off-road suspension | GCI81822 | Inner Joint | | 37 | 26 | 44.95 | 79.5 | 107 | |
| | 2013.08-2015.10 | AT | F | L | SUV 4WD M 276.821 | | GCI85041 | Inner Joint | | 37 | 33 | 45 | 80 | 104.5 | |
| | 2013.08-2015.10 | AT | F | R | SUV 4WD M 276.821 | For SA code:430,For vehicles with off-road suspension | GCI35073 | Inner Joint | | 37 | 26 | 45 | 263 | 113 | |
| | 2013.08-2015.10 | AT | F | R | SUV 4WD M 276.821 | For SA code:-430,For vehicles without off-road suspension | GCI85042 | Inner Joint | | 37 | 33 | 45 | 264 | 111 | |
| | 2013.08-2015.10 | 7AT | R | L/R | SUV 4WD M 276.821 | For vehicles without off-road suspension | GDS35090 | Drive Shaft | | 30 | 27 | 73 | 90.5 | 841 | |
| | 2013.08-2015.10 | 7AT | R | L/R | SUV 4WD M 276.821 | For SA code:430,For vehicles with off-road suspension | GDS35121 | Drive Shaft | | 30 | 30 | 73 | 90 | 846 | |
| **GL420** | | | | | | | | | | | | | | | |
| 4.0 (225 kw) | 2006.09-2009.05 | 7AT | F | L | SUV 4WD OM 629.912 | | GDS85060 | Drive Shaft | | 30 | 37 | 70.2 | 90.5 | 666 | |
| | 2006.09-2009.05 | 7AT | F | R | SUV 4WD OM 629.912 | | GDS85061 | Drive Shaft | | 30 | 37 | 70.2 | 90.5 | 1004 | |
| | 2006.09-2009.05 | AT | F | L/R | SUV 4WD OM 629.912 | not for SA code:430;Type:W/O Off-Road Pack | GCO85007 | Outer Joint | | 30 | 37 | 70.2 | 90.5 | 69 | I |
| | 2006.09-2009.05 | | F | L/R | SUV 4WD OM 629.912 | | GCO85015 | Outer Joint | | 30 | 39 | 70.2 | 90.5 | 71 | I |
| | 2006.09-2009.05 | 7AT | R | L/R | SUV 4WD OM 629.912 | Date from:2006.11,Chassis no. from:192262,For vehicles without off-road suspension | GDS83211 | Drive Shaft | | 30 | 37 | 70.3 | 90.5 | 837 | |
| | 2006.09-2009.05 | 7AT | R | L/R | SUV 4WD OM 629.912 | Date From:2006.11,Chassis no. from:192262,For vehicles without off-road suspension | GCO82348 | Outer Joint | | 30 | 33 | 70.3 | 90.5 | 59.5 | I |
| | 2006.09-2009.05 | 7AT | R | L/R | SUV 4WD OM 629.912 | Date From:2006.11,Chassis no. from:192262,For vehicles without off-road suspension | GCI85039 | Inner Joint | | 37 | 33 | 45 | 80 | 101 | |
| **GL450** | | | | | | | | | | | | | | | |
| 4.0 (225 kw) | 2009.05-2012.08 | 7AT | F | L | SUV 4WD OM 629.912 | | GDS85060 | Drive Shaft | | 30 | 37 | 70.2 | 90.5 | 666 | |
| | 2009.05-2012.08 | 7AT | F | R | SUV 4WD OM 629.912 | | GDS85061 | Drive Shaft | | 30 | 37 | 70.2 | 90.5 | 1004 | |
| | 2009.05-2012.08 | AT | F | L/R | SUV 4WD OM 629.912 | not for SA code:430;Type:W/O Off-Road Pack | GCO85007 | Outer Joint | | 30 | 37 | 70.2 | 90.5 | 69 | I |
| | 2009.05-2012.08 | | F | L/R | SUV 4WD OM 629.912 | | GCO85015 | Outer Joint | | 30 | 39 | 70.2 | 90.5 | 71 | I |
| | 2009.05-2012.08 | 7AT | R | L/R | SUV 4WD OM 629.912 | For vehicles without off-road suspension | GDS83211 | Drive Shaft | | 30 | 37 | 70.3 | 90.5 | 837 | |
| | 2009.05-2012.08 | 7AT | R | L/R | SUV 4WD OM 629.912 | For vehicles without off-road suspension | GCO82348 | Outer Joint | | 30 | 33 | 70.3 | 90.5 | 59.5 | I |
| | 2009.05-2012.08 | 7AT | R | L/R | SUV 4WD OM 629.912 | For vehicles without off-road suspension | GCI85039 | Inner Joint | | 37 | 33 | 45 | 80 | 101 | |
| 4.7 (250 kw) | 2006.09-2012.08 | 7AT | F | L | SUV 4WD M 273.923 | | GDS85060 | Drive Shaft | | 30 | 37 | 70.2 | 90.5 | 666 | |
| | 2006.09-2012.08 | 7AT | F | R | SUV 4WD M 273.923 | | GDS85061 | Drive Shaft | | 30 | 37 | 70.2 | 90.5 | 1004 | |
| | 2006.09-2012.08 | AT | F | L/R | SUV 4WD M 273.923 | not for SA code:430;Type:W/O Off-Road Pack | GCO85007 | Outer Joint | | 30 | 37 | 70.2 | 90.5 | 69 | I |
| | 2006.09-2012.08 | | F | L/R | SUV 4WD M 273.923 | | GCO85015 | Outer Joint | | 30 | 39 | 70.2 | 90.5 | 71 | I |
| | 2006.09-2012.08 | 7AT | R | L/R | SUV 4WD M 273.923 | Date from:2006.11,Chassis no. from:192262,For vehicles without off-road suspension | GDS83211 | Drive Shaft | | 30 | 37 | 70.3 | 90.5 | 837 | |
| | 2006.09-2012.08 | 7AT | R | L/R | SUV 4WD M 273.923 | Date From:2006.11,Chassis no. from:192262,For vehicles without off-road suspension | GCO82348 | Outer Joint | | 30 | 33 | 70.3 | 90.5 | 59.5 | I |

Technical Specifications: A, B, C, H, L, P

| | YEAR | TRANSM. | F/R | L/R | BODY STYLE & DRIVE TYPE & ENGINE | REMARKS | G-AP Ref. | PRODUCT | ABS | Technical Specifications A | B | C | H | L | P |
|---|---|---|---|---|---|---|---|---|---|---|---|---|---|---|---|
| **MERCEDES-BENZ** | | | | | | | | | | | | | | | |
| **GL450** | | | | | | | | | | | | | | | |
| 4.7 (250 kw) | 2006.09-2012.08 | 7AT | R | L/R | SUV 4WD M 273.923 | Date From:2006.11,Chassis no. from:192262,For vehicles without off-road suspension | GCI85039 | Inner Joint | | 37 | 33 | 45 | 80 | 101 | |
| **GL500** | | | | | | | | | | | | | | | |
| 4.7 (300 kw) | 2014.07-2015.10 | 7AT | F | L | SUV 4WD M 278.928 | Date to:2014.07,Not for SA code:430 | GDS35089 | Drive Shaft | | 30 | 37 | 73 | 92.5 | 673 | |
| | 2014.07-2015.10 | 7AT | F | L | SUV 4WD M 278.928 | Date To:2014.08,For Sa Code:430,For Vehicles With Bad Road Version | GDS82456 | Drive Shaft | | 30 | 37 | 73 | 92 | 672 | |
| | 2014.07-2015.10 | 7AT | F | L | SUV 4WD M 278.928 | Date From:2014.08,Not For Sa Code:430 | GDS84205 | Drive Shaft | | 30 | 37 | 73 | 92 | 672 | |
| | 2014.07-2015.10 | 7AT | F | R | SUV 4WD M 278.928 | Not For Sa Code:430 | GDS35088 | Drive Shaft | | 30 | 37 | 73 | 92.5 | 1015 | |
| | 2014.07-2015.10 | 7AT | F | R | SUV 4WD M 278.928 | For Sa Code:430,For Vehicles With Bad Road Version | GDS35113 | Drive Shaft | | 30 | 37 | 73 | 92 | 1017 | |
| | 2014.07-2015.10 | AT | F | L | SUV 4WD M 278.928 | Not for SA code:430,Type:OFFROAD- | GCO82731 | Outer Joint | | 30 | 39 | 73 | 92 | 71 | I |
| | 2014.07-2015.10 | AT | F | R | SUV 4WD M 278.928 | Not for SA code:430,Type:OFFROAD- | GCO35059 | Outer Joint | | 30 | 37 | 73 | 92.5 | 66 | I |
| | 2014.07-2015.10 | AT | F | L/R | SUV 4WD M 278.928 | For SA code:430,Type:OFFROAD+ | GCO35073 | Outer Joint | | 30 | 39 | 73 | 92 | 71 | I |
| | 2014.07-2015.10 | AT | F | L | SUV 4WD M 278.928 | For SA code:430,Type:OFFROAD+ | GCI81822 | Inner Joint | | 37 | 26 | 44.95 | 79.5 | 107 | |
| | 2014.07-2015.10 | AT | F | L | SUV 4WD M 278.928 | Not for SA code:430,Type:OFFROAD- | GCI82640 | Inner Joint | | 37 | 26 | 44.95 | 79.5 | 107 | |
| | 2014.07-2015.10 | AT | F | R | SUV 4WD M 278.928 | For SA code:430,Type:OFFROAD+ | GCI35073 | Inner Joint | | 37 | 26 | 45 | 263 | 113 | |
| | 2014.07-2015.10 | AT | F | R | SUV 4WD M 278.928 | Not for SA code:430,Type:OFFROAD- | GCI85042 | Inner Joint | | 37 | 33 | 45 | 264 | 111 | |
| | 2014.07-2015.10 | 7AT | R | L/R | SUV 4WD M 278.928 | Not for SA code:430 | GDS35090 | Drive Shaft | | 30 | 27 | 73 | 90.5 | 841 | |
| | 2014.07-2015.10 | 7AT | R | L/R | SUV 4WD M 278.928 | For Sa Code:430,For Vehicles With Bad Road Version | GDS35121 | Drive Shaft | | 30 | 30 | 73 | 90 | 846 | |
| 4.7 (320 kw) | 2012.07-2015.10 | 7AT/9AT | F | L | SUV 4WD M 278.928 | For vehicles without off-road suspension | GDS35089 | Drive Shaft | | 30 | 37 | 73 | 92.5 | 673 | |
| | 2012.07-2015.10 | 7AT/9AT | F | L | SUV 4WD M 278.928 | For vehicles with off-road suspension | GDS82456 | Drive Shaft | | 30 | 37 | 73 | 92 | 672 | |
| | 2012.07-2015.10 | 7AT/9AT | F | R | SUV 4WD M 278.928 | For vehicles without off-road suspension | GDS35088 | Drive Shaft | | 30 | 37 | 73 | 92.5 | 1015 | |
| | 2012.07-2015.10 | 7AT/9AT | F | L/R | SUV 4WD M 278.928 | For vehicles without off-road suspension | GCO35059 | Outer Joint | | 30 | 37 | 73 | 92.5 | 66 | I |
| | 2012.07-2015.10 | 7AT/9AT | F | L/R | SUV 4WD M 278.928 | For vehicles with off-road suspension | GCO35073 | Outer Joint | | 30 | 39 | 73 | 92 | 71 | I |
| | 2012.07-2015.10 | 7AT/9AT | F | L | SUV 4WD M 278.928 | For vehicles without off-road suspension | GCI35057 | Inner Joint | | 37 | 33 | 45 | 80 | 104.5 | |
| | 2012.07-2015.10 | 7AT/9AT | F | L | SUV 4WD M 278.928 | For vehicles with off-road suspension | GCI81822 | Inner Joint | | 37 | 26 | 44.95 | 79.5 | 107 | |
| | 2012.07-2015.10 | 7AT/9AT | F | R | SUV 4WD M 278.928 | For vehicles without off-road suspension | GCI85042 | Inner Joint | | 37 | 33 | 45 | 264 | 111 | |
| | 2012.07-2015.10 | AT | F | R | SUV 4WD M 278.928 | For vehicles with off-road suspension | GDS35113 | Drive Shaft | | 30 | 37 | 73 | 92 | 1017 | |
| | 2012.07-2015.10 | AT | F | L/R | SUV 4WD M 278.928 | Non Original design | GCO85007 | Outer Joint | | 30 | 37 | 70.2 | 90.5 | 69 | I |
| | 2012.07-2015.10 | AT | F | L/R | SUV 4WD M 278.928 | | GCO85015 | Outer Joint | | 30 | 39 | 70.2 | 90.5 | 71 | I |
| | 2012.07-2015.10 | AT | F | L | SUV 4WD M 278.928 | | GCI85041 | Inner Joint | | 37 | 33 | 45 | 80 | 104.5 | |
| | 2012.07-2015.10 | AT | F | R | SUV 4WD M 278.928 | For vehicles with off-road suspension | GCI35073 | Inner Joint | | 37 | 26 | 45 | 263 | 113 | |
| | 2012.07-2015.10 | 7AT/9AT | R | L/R | SUV 4WD M 278.928 | | GDS35090 | Drive Shaft | | 30 | 27 | 73 | 90.5 | 841 | |
| | 2012.07-2015.10 | 7AT/9AT | R | L/R | SUV 4WD M 278.928 | For vehicles with off-road suspension | GDS35121 | Drive Shaft | | 30 | 30 | 73 | 90 | 846 | |
| 5.5 (285 kw) | 2006.09-2012.12 | 7AT | F | L | SUV 4WD M 273.963 | | GDS85060 | Drive Shaft | | 30 | 37 | 70.2 | 90.5 | 666 | |
| | 2006.09-2012.12 | 7AT | F | R | SUV 4WD M 273.963 | | GDS85061 | Drive Shaft | | 30 | 37 | 70.2 | 90.5 | 1004 | |
| | 2006.09-2012.12 | AT | F | L/R | SUV 4WD M 273.963 | not for SA code:430,Type:W/O Off-Road Pack | GCO85007 | Outer Joint | | 30 | 37 | 70.2 | 90.5 | 69 | I |
| | 2006.09-2012.12 | | F | L/R | SUV 4WD M 273.963 | | GCO85015 | Outer Joint | | 30 | 39 | 70.2 | 90.5 | 71 | I |
| | 2006.09-2012.12 | 7AT | R | L/R | SUV 4WD M 273.963 | Date from:2006.11,Chassis no. from:192262,For vehicles without off-road suspension | GDS83211 | Drive Shaft | | 30 | 37 | 70.3 | 90.5 | 837 | |
| | 2006.09-2012.12 | 7AT | R | L/R | SUV 4WD M 273.963 | Date From:2006.11,Chassis no. from:192262,For vehicles without off-road suspension | GCO82348 | Outer Joint | | 30 | 33 | 70.3 | 90.5 | 59.5 | I |
| | 2006.09-2012.12 | 7AT | R | L/R | SUV 4WD M 273.963 | Date From:2006.11,Chassis no. from:192262,For vehicles without off-road suspension | GCI85039 | Inner Joint | | 37 | 33 | 45 | 80 | 101 | |
| **GL63 AMG** | | | | | | | | | | | | | | | |
| 5.5 (400 kw) | 2012.07-2015.10 | 7AT | F | L | SUV 4WD M 157.982 | Date to:2014.08,For SA code:430,For vehicles with bad road version | GDS82456 | Drive Shaft | | 30 | 37 | 73 | 92 | 672 | |
| | 2012.07-2015.10 | 7AT | F | L | SUV 4WD M 157.982 | Date from:2014.09,For SA code:430,For vehicles with bad road version | GDS84205 | Drive Shaft | | 30 | 37 | 73 | 92 | 672 | |
| | 2012.07-2015.10 | 7AT | F | R | SUV 4WD M 157.982 | | GDS35113 | Drive Shaft | | 30 | 37 | 73 | 92 | 1017 | |
| | 2012.07-2015.10 | 7AT | F | L | SUV 4WD M 157.982 | | GCO35073 | Outer Joint | | 30 | 39 | 73 | 92 | 71 | I |
| | 2012.07-2015.10 | 7AT | F | L | SUV 4WD M 157.982 | | GCI81822 | Inner Joint | | 37 | 26 | 44.95 | 79.5 | 107 | |
| | 2012.07-2015.10 | 7AT | F | R | SUV 4WD M 157.982 | | GCI35073 | Inner Joint | | 37 | 26 | 45 | 263 | 113 | |
| | 2012.07-2015.10 | | F | L/R | SUV 4WD M 157.982 | | GCO85015 | Outer Joint | | 30 | 39 | 70.2 | 90.5 | 71 | I |
| | 2012.07-2015.10 | 7AT | R | L/R | SUV 4WD M 157.982 | | GDS35121 | Drive Shaft | | 30 | 30 | 73 | 90 | 846 | |
| 5.5 (410 kw) | 2012.07-2015.10 | 7AT | F | L | SUV 4WD M 157.982 | | GDS82456 | Drive Shaft | | 30 | 37 | 73 | 92 | 672 | |
| | 2012.07-2015.10 | 7AT | F | R | SUV 4WD M 157.982 | | GDS35113 | Drive Shaft | | 30 | 37 | 73 | 92 | 1017 | |
| | 2012.07-2015.10 | 7AT | F | L/R | SUV 4WD M 157.982 | | GCO35073 | Outer Joint | | 30 | 39 | 73 | 92 | 71 | I |
| | 2012.07-2015.10 | 7AT | F | L | SUV 4WD M 157.982 | | GCI81822 | Inner Joint | | 37 | 26 | 44.95 | 79.5 | 107 | |
| | 2012.07-2015.10 | AT | F | L/R | SUV 4WD M 157.982 | | GCO85015 | Outer Joint | | 30 | 39 | 70.2 | 90.5 | 71 | I |
| | 2012.07-2015.10 | 7AT | R | L/R | SUV 4WD M 157.982 | | GDS35121 | Drive Shaft | | 30 | 30 | 73 | 90 | 846 | |
| **GLA180** | | | | | | | | | | | | | | | |
| 1.5 (80 kw) | 2014.07-2018.05 | 7AT/6MT | F | L | SUV FWD OM 607.951 (K9K) | | GDS35067 | Drive Shaft | | 30 | 27 | 65 | 53 | 535 | |
| | 2014.07-2018.05 | 7AT/6MT | F | R | SUV FWD OM 607.951 (K9K) | Date to:2016.03,For SA code:482,For vehicles with increased ground clearance | GDS35068 | Drive Shaft | | 30 | 27 | 65 | 53 | 498 | |
| | 2014.07-2018.05 | 7AT/6MT | F | R | SUV FWD OM 607.951 (K9K) | Date from:2016.04,For SA code:482,For vehicles with increased ground clearance | GDS35104 | Drive Shaft | | 30 | 27 | 65 | 53 | 496 | |
| | 2014.07-2018.05 | 7AT/6MT | F | R | SUV FWD OM 607.951 (K9K) | Date to:2016.03,For SA code:482,For vehicles with increased ground clearance | GDS81470 | Drive Shaft | | 30 | 27 | 65 | 53 | 996 | |
| | 2014.07-2018.05 | 7AT/6MT | F | L | SUV FWD OM 607.951 (K9K) | | GCO61065 | Outer Joint | | 30 | 27 | 65 | 53 | 61.5 | M |
| | 2014.07-2018.05 | 7AT/6MT | F | R | SUV FWD OM 607.951 (K9K) | Date to:2016.03,For SA code:482,For vehicles with increased ground clearance | GCO61065 | Outer Joint | | 30 | 27 | 65 | 53 | 61.5 | M |
| | 2014.07-2018.05 | 7AT/6MT | F | L | SUV FWD OM 607.951 (K9K) | | GCI61082 | Inner Joint | | 27 | 27 | 38 | 65 | 111.7 | |
| | 2014.07-2018.05 | 7AT/6MT | F | R | SUV FWD OM 607.951 (K9K) | Date from:2016.04,For SA code:482,For vehicles with increased ground clearance | GCI35071 | Inner Joint | | 27 | 27 | 42.1 | 41.5 | 97.2 | |
| | 2014.07-2018.05 | 7AT/6MT | F | R | SUV FWD OM 607.951 (K9K) | Date to:2016.03,For SA code:482,For vehicles with increased ground clearance | GCI61083 | Inner Joint | | 27 | 27 | 42.5 | | 139.2 | |
| 1.6 (90 kw) | 2015.02-2019.12 | 7AT/6MT | F | L | SUV FWD M 270.910 | For taxis | GDS35067 | Drive Shaft | | 30 | 27 | 65 | 53 | 535 | |
| | 2015.02-2019.12 | 7AT/6MT | F | L | SUV FWD M 270.910 | Not For taxis | GDS56795 | Drive Shaft | | 30 | 27 | 65 | 53 | 530 | |

| | YEAR | TRANSM. | F/R | L/R | BODY STYLE & DRIVE TYPE & ENGINE | REMARKS | G-AP Ref. | PRODUCT | ABS | Technical Specifications A | B | C | H | L | P |
|---|---|---|---|---|---|---|---|---|---|---|---|---|---|---|---|
| **MERCEDES-BENZ** | | | | | | | | | | | | | | | |
| **GLA180** | | | | | | | | | | | | | | | |
| 1.6 (90 kw) | 2015.02-2019.12 | 7AT/6MT | F | R | SUV FWD M 270.910 | For taxis,without Intermediate Shaft | GDS35068 | Drive Shaft | | 30 | 27 | 65 | 53 | 498 | |
| | 2015.02-2019.12 | 7AT/6MT | F | R | SUV FWD M 270.910 | For taxis,with Intermediate Shaft | GDS81470 | Drive Shaft | | 30 | 27 | 65 | 53 | 996 | |
| | 2015.02-2019.12 | 7AT/6MT | F | L/R | SUV FWD M 270.910 | Supplier B,Length:105 | GCO35071 | Outer Joint | | 30 | 27 | 65 | 53 | 52 | M |
| | 2015.02-2019.12 | 7AT/6MT | F | L | SUV FWD M 270.910 | | GCI83495 | Inner Joint | | 27 | 27 | 38 | 65 | 80 | |
| | 2015.02-2019.12 | AT | F | L/R | SUV FWD M 270.910 | Supplier A,Length:114.5 | GCO61065 | Outer Joint | | 30 | 27 | 65 | 53 | 61.5 | M |
| | 2015.02-2019.12 | AT/MT | F | R | SUV FWD M 270.910 | Not For taxis | GDS35104 | Drive Shaft | | 30 | 27 | 65 | 53 | 496 | |
| | 2015.02-2019.12 | AT/MT | F | R | SUV FWD M 270.910 | | GCI35071 | Inner Joint | | 27 | 27 | 42.1 | 41.5 | 97.2 | |
| **GLA200** | | | | | | | | | | | | | | | |
| 1.6 (110 kw) | 2018.07-2019.12 | 7AT | F | L | SUV FWD M 270.910 | For taxis | GCI61082 | Inner Joint | | 27 | 27 | 38 | 65 | 111.7 | |
| | 2018.07-2019.12 | 7AT | F | R | SUV FWD M 270.910 | Not For taxis | GCI35071 | Inner Joint | | 27 | 27 | 42.1 | 41.5 | 97.2 | |
| | 2018.07-2019.12 | 7AT | F | R | SUV FWD M 270.910 | For taxis,without Intermediate Shaft | GCI61083 | Inner Joint | | 27 | 27 | 42.5 | | 139.2 | |
| | 2018.07-2019.12 | 7DCT | F | L | SUV FWD M 270.910 | For taxis | GDS35067 | Drive Shaft | | 30 | 27 | 65 | 53 | 535 | |
| | 2018.07-2019.12 | 7DCT | F | R | SUV FWD M 270.910 | For taxis | GDS35068 | Drive Shaft | | 30 | 27 | 65 | 53 | 498 | |
| | 2018.07-2019.12 | 7DCT | F | R | SUV FWD M 270.910 | Not For taxis | GDS35104 | Drive Shaft | | 30 | 27 | 65 | 53 | 496 | |
| | 2018.07-2019.12 | 7DCT | F | R | SUV FWD M 270.910 | For SA code:965,For taxis | GDS81470 | Drive Shaft | | 30 | 27 | 65 | 53 | 996 | |
| | 2018.07-2019.12 | AT/MT | F | L/R | SUV FWD M 270.910 | Supplier A,Length:114.5 | GCO61065 | Outer Joint | | 30 | 27 | 65 | 53 | 61.5 | M |
| 1.6 (115 kw) | 2013.12-2019.12 | 7AT/6MT | F | L | SUV FWD M 270.910 | All Version:24833/2013/24833/7833;For SA code:482;For vehicles with increased ground clearance | GDS35067 | Drive Shaft | | 30 | 27 | 65 | 53 | 535 | |
| | 2013.12-2019.12 | 7AT/6MT | F | R | SUV FWD M 270.910 | Date from:2016.04;For SA code:482;For vehicles with increased ground clearance | GDS35104 | Drive Shaft | | 30 | 27 | 65 | 53 | 496 | |
| | 2013.12-2019.12 | 7AT/6MT | F | R | SUV FWD M 270.910 | Date to:2016.03;For SA code:482;For vehicles with increased ground clearance | GDS81470 | Drive Shaft | | 30 | 27 | 65 | 53 | 996 | |
| | 2013.12-2019.12 | 7AT/6MT | F | L/R | SUV FWD M 270.910 | | GCO61065 | Outer Joint | | 30 | 27 | 65 | 53 | 61.5 | M |
| | 2013.12-2019.12 | 7AT/6MT | F | L | SUV FWD M 270.910 | All Version:24833/2013/24833/7833;For SA code:482;For vehicles with increased ground clearance | GCI61082 | Inner Joint | | 27 | 27 | 38 | 65 | 111.7 | |
| | 2013.12-2019.12 | 7AT/6MT | F | R | SUV FWD M 270.910 | Date from:2016.04;For SA code:482;For vehicles with increased ground clearance | GCI35071 | Inner Joint | | 27 | 27 | 42.1 | 41.5 | 97.2 | |
| | 2013.12-2019.12 | AT/MT | F | R | SUV FWD M 270.910 | For SA code:965,For taxis | GDS35068 | Drive Shaft | | 30 | 27 | 65 | 53 | 498 | |
| | 2013.12-2019.12 | AT/MT | F | R | SUV FWD M 270.910 | For SA code:965,For taxis | GCI61083 | Inner Joint | | 27 | 27 | 42.5 | | 139.2 | |
| 2.2 (100 kw) | 2013.12-2019.05 | 7AT | F | L | SUV 4WD OM 651.930 | | GCI61082 | Inner Joint | | 27 | 27 | 38 | 65 | 111.7 | |
| | 2013.12-2019.05 | AT | F | L | SUV 4WD OM 651.930 | Inner teeth of tranm.side:27 | GDS35067 | Drive Shaft | | 30 | 27 | 65 | 53 | 535 | |
| | 2013.12-2019.05 | AT | F | R | SUV 4WD OM 651.930 | Without Intermediate Shaft | GDS35068 | Drive Shaft | | 30 | 27 | 65 | 53 | 498 | |
| | 2013.12-2019.05 | AT | F | R | SUV 4WD OM 651.930 | With Intermediate Shaft | GDS81470 | Drive Shaft | | 30 | 27 | 65 | 53 | 996 | |
| | 2013.12-2019.05 | AT | F | L/R | SUV 4WD OM 651.930 | | GCO61065 | Outer Joint | | 30 | 27 | 65 | 53 | 61.5 | M |
| | 2013.12-2019.05 | AT | F | R | SUV 4WD OM 651.930 | | GCI61083 | Inner Joint | | 27 | 27 | 42.5 | | 139.2 | |
| | 2013.12-2019.12 | 7AT/6MT | F | L | SUV FWD OM 651.930 | | GCI61082 | Inner Joint | | 27 | 27 | 38 | 65 | 111.7 | |
| | 2013.12-2019.12 | AT/MT | F | L | SUV FWD OM 651.930 | Inner teeth of tranm.side:27 | GDS35067 | Drive Shaft | | 30 | 27 | 65 | 53 | 535 | |
| | 2013.12-2019.12 | AT/MT | F | R | SUV FWD OM 651.930 | Without Intermediate Shaft | GDS35068 | Drive Shaft | | 30 | 27 | 65 | 53 | 498 | |
| | 2013.12-2019.12 | AT/MT | F | R | SUV FWD OM 651.930 | With Intermediate Shaft | GDS81470 | Drive Shaft | | 30 | 27 | 65 | 53 | 996 | |
| | 2013.12-2019.12 | AT/MT | F | L/R | SUV FWD OM 651.930 | | GCO61065 | Outer Joint | | 30 | 27 | 65 | 53 | 61.5 | M |
| | 2013.12-2019.12 | AT/MT | F | R | SUV FWD OM 651.930 | | GCI61083 | Inner Joint | | 27 | 27 | 42.5 | | 139.2 | |
| **GLA220** | | | | | | | | | | | | | | | |
| 2.0 (135 kw) | 2017.01-2019.12 | 7AT | F | L/R | SUV 4WD M 270.920 | | GCO61065 | Outer Joint | | 30 | 27 | 65 | 53 | 61.5 | M |
| | 2017.01-2019.12 | 7AT | F | L | SUV 4WD M 270.920 | | GCI61082 | Inner Joint | | 27 | 27 | 38 | 65 | 111.7 | |
| | 2017.01-2019.12 | 7AT | F | R | SUV 4WD M 270.920 | | GCI61083 | Inner Joint | | 27 | 27 | 42.5 | | 139.2 | |
| | 2017.01-2019.12 | 7DCT | F | L | SUV 4WD M 270.920 | | GDS35067 | Drive Shaft | | 30 | 27 | 65 | 53 | 535 | |
| | 2017.01-2019.12 | 7DCT | F | R | SUV 4WD M 270.920 | For SA code:482;For vehicles with increased ground clearance | GDS35104 | Drive Shaft | | 30 | 27 | 65 | 53 | 496 | |
| | 2017.01-2019.12 | 7DCT | F | R | SUV 4WD M 270.920 | For vehicles without increased ground clearance | GDS81470 | Drive Shaft | | 30 | 27 | 65 | 53 | 996 | |
| 2.2 (120 kw) | 2013.12-2019.05 | 7AT | F | L | SUV FWD OM 651.930 | Inner teeth of tranm.side:27 | GDS35067 | Drive Shaft | | 30 | 27 | 65 | 53 | 535 | |
| | 2013.12-2019.05 | 7AT | F | L | SUV FWD OM 651.930 | | GCI61082 | Inner Joint | | 27 | 27 | 38 | 65 | 111.7 | |
| | 2013.12-2019.05 | AT | F | R | SUV FWD OM 651.930 | Without Intermediate Shaft | GDS35068 | Drive Shaft | | 30 | 27 | 65 | 53 | 498 | |
| | 2013.12-2019.05 | AT | F | R | SUV FWD OM 651.930 | With Intermediate Shaft | GDS81470 | Drive Shaft | | 30 | 27 | 65 | 53 | 996 | |
| | 2013.12-2019.05 | AT | F | R | SUV FWD OM 651.930 | | GCO61065 | Outer Joint | | 30 | 27 | 65 | 53 | 61.5 | M |
| | 2013.12-2019.05 | AT | F | R | SUV FWD OM 651.930 | | GCI61083 | Inner Joint | | 27 | 27 | 42.5 | | 139.2 | |
| | 2013.12-2019.12 | 7AT | F | L | SUV 4WD OM 651.930 | Inner teeth of tranm.side:27 | GDS35067 | Drive Shaft | | 30 | 27 | 65 | 53 | 535 | |
| | 2013.12-2019.12 | 7AT | F | R | SUV 4WD OM 651.930 | Without Intermediate Shaft | GDS35068 | Drive Shaft | | 30 | 27 | 65 | 53 | 498 | |
| | 2013.12-2019.12 | 7AT | F | R | SUV 4WD OM 651.930 | With Intermediate Shaft | GDS81470 | Drive Shaft | | 30 | 27 | 65 | 53 | 996 | |
| | 2013.12-2019.12 | 7AT | F | R | SUV 4WD OM 651.930 | | GCO61065 | Outer Joint | | 30 | 27 | 65 | 53 | 61.5 | M |
| | 2013.12-2019.12 | 7AT | F | L | SUV 4WD OM 651.930 | | GCI61082 | Inner Joint | | 27 | 27 | 38 | 65 | 111.7 | |
| | 2013.12-2019.12 | 7AT | F | R | SUV 4WD OM 651.930 | | GCI61083 | Inner Joint | | 27 | 27 | 42.5 | | 139.2 | |
| 2.2 (125 kw) | 2013.12-2019.05 | 7AT | F | L | SUV FWD OM 651.930 | Inner teeth of tranm.side:27 | GDS35067 | Drive Shaft | | 30 | 27 | 65 | 53 | 535 | |
| | 2013.12-2019.05 | 7AT | F | L | SUV FWD OM 651.930 | | GCI61082 | Inner Joint | | 27 | 27 | 38 | 65 | 111.7 | |
| | 2013.12-2019.05 | AT | F | R | SUV FWD OM 651.930 | With Intermediate Shaft | GDS81470 | Drive Shaft | | 30 | 27 | 65 | 53 | 996 | |
| | 2013.12-2019.05 | AT | F | L/R | SUV FWD OM 651.930 | | GCO61065 | Outer Joint | | 30 | 27 | 65 | 53 | 61.5 | M |
| | 2013.12-2019.05 | AT | F | R | SUV FWD OM 651.930 | | GCI61083 | Inner Joint | | 27 | 27 | 42.5 | | 139.2 | |
| | 2013.12-2019.05 | DCT | F | R | SUV FWD OM 651.930 | Without Intermediate Shaft | GDS35068 | Drive Shaft | | 30 | 27 | 65 | 53 | 498 | |
| | 2013.12-2019.12 | 7AT | F | L | SUV 4WD OM 651.930 | Inner teeth of tranm.side:27 | GDS35067 | Drive Shaft | | 30 | 27 | 65 | 53 | 535 | |
| | 2013.12-2019.12 | 7AT | F | R | SUV 4WD OM 651.930 | Without Intermediate Shaft | GDS35068 | Drive Shaft | | 30 | 27 | 65 | 53 | 498 | |
| | 2013.12-2019.12 | 7AT | F | R | SUV 4WD OM 651.930 | With Intermediate Shaft | GDS81470 | Drive Shaft | | 30 | 27 | 65 | 53 | 996 | |
| | 2013.12-2019.12 | 7AT | F | L | SUV 4WD OM 651.930 | | GCI61082 | Inner Joint | | 27 | 27 | 38 | 65 | 111.7 | |

| | YEAR | TRANSM. | F/R | L/R | BODY STYLE & DRIVE TYPE & ENGINE | REMARKS | G-AP Ref. | PRODUCT | ABS | Technical Specifications A | B | C | H | L | P |
|---|---|---|---|---|---|---|---|---|---|---|---|---|---|---|---|
| **MERCEDES-BENZ** | | | | | | | | | | | | | | | |
| **GLA220** | | | | | | | | | | | | | | | |
| 2.2 (125 kw) | 2013.12-2019.12 | 7AT | F | R | SUV 4WD OM 651.930 | | GCI61083 | Inner Joint | | 27 | 27 | 42.5 | | 139.2 | |
| | 2013.12-2019.12 | AT/MT | F | L/R | SUV 4WD OM 651.930 | | GCO61065 | Outer Joint | | 30 | 27 | 65 | 53 | 61.5 | M |
| 2.2 (130 kw) | 2015.07-2019.05 | 7AT | F | L | SUV FWD OM 651.930 | Inner teeth of tranm.side:27 | GDS35067 | Drive Shaft | | 30 | 27 | 65 | 53 | 535 | |
| | 2015.07-2019.05 | 7AT | F | L | SUV FWD OM 651.930 | | GCI61082 | Inner Joint | | 27 | 27 | 38 | 65 | 111.7 | |
| | 2015.07-2019.05 | DCT | F | R | SUV FWD OM 651.930 | Without Intermediate Shaft | GDS35068 | Drive Shaft | | 30 | 27 | 65 | 53 | 498 | |
| | 2015.07-2019.05 | DCT | F | R | SUV FWD OM 651.930 | With Intermediate Shaft | GDS81470 | Drive Shaft | | 30 | 27 | 65 | 53 | 996 | |
| | 2015.07-2019.05 | DCT | F | R | SUV FWD OM 651.930 | | GCO61065 | Outer Joint | | 30 | 27 | 65 | 53 | 61.5 | M |
| | 2015.07-2019.05 | DCT | F | R | SUV FWD OM 651.930 | | GCI61083 | Inner Joint | | 27 | 27 | 42.5 | | 139.2 | |
| | 2015.07-2019.12 | 7AT | F | L | SUV 4WD OM 651.930 | | GCI61082 | Inner Joint | | 27 | 27 | 38 | 65 | 111.7 | |
| | 2015.07-2019.12 | DCT | F | L | SUV 4WD OM 651.930 | Inner teeth of tranm.side:27 | GDS35067 | Drive Shaft | | 30 | 27 | 65 | 53 | 535 | |
| | 2015.07-2019.12 | DCT | F | R | SUV 4WD OM 651.930 | Without Intermediate Shaft | GDS35068 | Drive Shaft | | 30 | 27 | 65 | 53 | 498 | |
| | 2015.07-2019.12 | DCT | F | R | SUV 4WD OM 651.930 | With Intermediate Shaft | GDS81470 | Drive Shaft | | 30 | 27 | 65 | 53 | 996 | |
| | 2015.07-2019.12 | DCT | F | R | SUV 4WD OM 651.930 | | GCO61065 | Outer Joint | | 30 | 27 | 65 | 53 | 61.5 | M |
| | 2015.07-2019.12 | DCT | F | R | SUV 4WD OM 651.930 | | GCI61083 | Inner Joint | | 27 | 27 | 42.5 | | 139.2 | |
| **GLA250** | | | | | | | | | | | | | | | |
| 2.0 (155 kw) | 2013.12-2019.12 | 7AT | F | L | SUV 4WD M 270.920 | Date from:2016.04;For vehicles with increased ground clearance;For SA code:482 | GDS35067 | Drive Shaft | | 30 | 27 | 65 | 53 | 535 | |
| | 2013.12-2019.12 | 7AT | F | R | SUV 4WD M 270.920 | Date from:2016.04;For vehicles with increased ground clearance;For SA code:482 | GDS35104 | Drive Shaft | | 30 | 27 | 65 | 53 | 496 | |
| | 2013.12-2019.12 | 7AT | F | R | SUV 4WD M 270.920 | Date to:2016.03;For vehicles with increased ground clearance;For SA code:482 | GDS81470 | Drive Shaft | | 30 | 27 | 65 | 53 | 996 | |
| | 2013.12-2019.12 | 7AT | F | L | SUV 4WD M 270.920 | Date from:2016.04;For vehicles with increased ground clearance;For SA code:482 | GCI61082 | Inner Joint | | 27 | 27 | 38 | 65 | 111.7 | |
| | 2013.12-2019.12 | 7AT | F | R | SUV 4WD M 270.920 | Date from:2016.04;For vehicles with increased ground clearance;For SA code:482 | GCI35071 | Inner Joint | | 27 | 27 | 42.1 | 41.5 | 97.2 | |
| | 2013.12-2019.12 | | F | L/R | SUV 4WD M 270.920 | For SA code:027 | GCO61065 | Outer Joint | | 30 | 27 | 65 | 53 | 61.5 | M |
| | 2013.12-2019.12 | 7AT/6MT | F | L | SUV FWD M 270.920 | Date from:2016.04;For vehicles with increased ground clearance;For SA code:482 | GDS35067 | Drive Shaft | | 30 | 27 | 65 | 53 | 535 | |
| | 2013.12-2019.12 | 7AT/6MT | F | R | SUV FWD M 270.920 | Date from:2016.04;For vehicles with increased ground clearance;For SA code:482 | GDS35104 | Drive Shaft | | 30 | 27 | 65 | 53 | 496 | |
| | 2013.12-2019.12 | 7AT/6MT | F | L | SUV FWD M 270.920 | Date from:2016.04;For vehicles with increased ground clearance;For SA code:482 | GCI61082 | Inner Joint | | 27 | 27 | 38 | 65 | 111.7 | |
| | 2013.12-2019.12 | 7AT/6MT | F | R | SUV FWD M 270.920 | Date from:2016.04;For vehicles with increased ground clearance;For SA code:482 | GCI35071 | Inner Joint | | 27 | 27 | 42.1 | 41.5 | 97.2 | |
| | 2013.12-2019.12 | MT/DCT | F | R | SUV FWD M 270.920 | Date to:2016.03;For vehicles with increased ground clearance | GDS35068 | Drive Shaft | | 30 | 27 | 65 | 53 | 498 | |
| | 2013.12-2019.12 | MT/DCT | F | R | SUV FWD M 270.920 | Date to:2016.03;For vehicles with increased ground clearance;For SA code:482 | GDS81470 | Drive Shaft | | 30 | 27 | 65 | 53 | 996 | |
| | 2013.12-2019.12 | MT/DCT | F | R | SUV FWD M 270.920 | Date to:2016.03;For vehicles with increased ground clearance | GCI61083 | Inner Joint | | 27 | 27 | 42.5 | | 139.2 | |
| | 2013.12-2019.12 | | F | L/R | SUV FWD M 270.920 | Type:SUPPLIER A | GCO61065 | Outer Joint | | 30 | 27 | 65 | 53 | 61.5 | M |
| | 2015.01-2019.12 | 7AT | F | L | SUV FWD M 270.920 | Date from:2016.04;For SA code:482;For vehicles with increased ground clearance | GDS35067 | Drive Shaft | | 30 | 27 | 65 | 53 | 535 | |
| | 2015.01-2019.12 | 7AT | F | R | SUV FWD M 270.920 | Date to:2016.03;For SA code:482;For vehicles with increased ground clearance | GDS35068 | Drive Shaft | | 30 | 27 | 65 | 53 | 498 | |
| | 2015.01-2019.12 | 7AT | F | R | SUV FWD M 270.920 | Date from:2016.04;For SA code:482;For vehicles with increased ground clearance | GDS35104 | Drive Shaft | | 30 | 27 | 65 | 53 | 496 | |
| | 2015.01-2019.12 | 7AT | F | R | SUV FWD M 270.920 | Date to:2016.03;For SA code:482;For vehicles with increased ground clearance | GDS81470 | Drive Shaft | | 30 | 27 | 65 | 53 | 996 | |
| | 2015.01-2019.12 | 7AT | F | L/R | SUV FWD M 270.920 | | GCO61065 | Outer Joint | | 30 | 27 | 65 | 53 | 61.5 | M |
| **GLA45 AMG** | | | | | | | | | | | | | | | |
| 2.0 (265 kw) | 2014.05-2019.06 | 7AT | F | L | SUV 4WD M 133.980 | | GDS35067 | Drive Shaft | | 30 | 27 | 65 | 53 | 535 | |
| | 2014.05-2019.06 | 7AT | F | R | SUV 4WD M 133.980 | Without Intermediate Shaft | GDS35068 | Drive Shaft | | 30 | 27 | 65 | 53 | 498 | |
| | 2014.05-2019.06 | 7AT | F | R | SUV 4WD M 133.980 | With Intermediate Shaft | GDS81470 | Drive Shaft | | 30 | 27 | 65 | 53 | 996 | |
| | 2014.05-2019.06 | 7AT | F | L | SUV 4WD M 133.980 | | GCI61082 | Inner Joint | | 27 | 27 | 38 | 65 | 111.7 | |
| | 2014.05-2019.06 | 7AT | F | R | SUV 4WD M 133.980 | Without Intermediate Shaft | GCI61083 | Inner Joint | | 27 | 27 | 42.5 | | 139.2 | |
| | 2014.05-2019.06 | DCT | F | L/R | SUV 4WD M 133.980 | | GCO61065 | Outer Joint | | 30 | 27 | 65 | 53 | 61.5 | M |
| 2.0 (280 kw) | 2015.07-2019.06 | 7AT | F | L | SUV 4WD M 133.980 | | GDS35067 | Drive Shaft | | 30 | 27 | 65 | 53 | 535 | |
| | 2015.07-2019.06 | 7AT | F | R | SUV 4WD M 133.980 | Without Intermediate Shaft | GDS35068 | Drive Shaft | | 30 | 27 | 65 | 53 | 498 | |
| | 2015.07-2019.06 | 7AT | F | R | SUV 4WD M 133.980 | With Intermediate Shaft | GDS81470 | Drive Shaft | | 30 | 27 | 65 | 53 | 996 | |
| | 2015.07-2019.06 | 7AT | F | L | SUV 4WD M 133.980 | | GCI61082 | Inner Joint | | 27 | 27 | 38 | 65 | 111.7 | |
| | 2015.07-2019.06 | 7AT | F | R | SUV 4WD M 133.980 | Without Intermediate Shaft | GCI61083 | Inner Joint | | 27 | 27 | 42.5 | | 139.2 | |
| | 2015.07-2019.06 | DCT | F | L/R | SUV 4WD M 133.980 | | GCO61065 | Outer Joint | | 30 | 27 | 65 | 53 | 61.5 | M |
| **GLC180** | | | | | | | | | | | | | | | |
| 1.5 (125 kw) | 2022.06- | 9AT | R | L/R | SUV RWD M 254.915 | | GDS57899 | Drive Shaft | | 30 | 30 | | 53 | 785 | |
| **GLC200** | | | | | | | | | | | | | | | |
| 2.0 (120 kw) | 2019.04-2022.06 | 9AT | F | L | SUV 4WD OM 654.920 | For left-hand drive vehicles | GDS83655 | Drive Shaft | | 30 | 27 | 71 | 56 | 526 | |
| | 2019.04-2022.06 | 9AT | F | L | SUV 4WD OM 654.920 | | GDS83784 | Drive Shaft | | 30 | 27 | 71 | 56 | 524 | |
| | 2019.04-2022.06 | 9AT | F | R | SUV 4WD OM 654.920 | Outer teeth of tranm.side:24,6 balls | GDS83742 | Drive Shaft | | 30 | 24 | 71 | 56 | 592 | |
| | 2019.04-2022.06 | 9AT | F | R | SUV 4WD OM 654.920 | For left-hand drive vehicles | GDS83782 | Drive Shaft | | 30 | 27 | 71 | 56 | 557 | |
| | 2019.04-2022.06 | 9AT | F | R | SUV 4WD OM 654.920 | Outer teeth of tranm.side:24,8 balls | GDS84270 | Drive Shaft | | 30 | 24 | 71 | 56 | 591 | |
| | 2019.04-2022.06 | 9AT | F | L/R | SUV 4WD OM 654.920 | 8 balls;Neoprene;For SA code:430;For vehicles with bad road version | GCO82353 | Outer Joint | | 30 | 25 | 71 | 56 | 53.5 | I |
| | 2019.04-2022.06 | 9AT | F | L/R | SUV 4WD OM 654.920 | 6 balls;For left-hand drive vehicles | GCO82479 | Outer Joint | | 30 | 24 | 71 | 56 | 55.5 | I |
| | 2019.04-2022.06 | 9AT | F | L | SUV 4WD OM 654.920 | For left-hand drive vehicles | GCI82313 | Inner Joint | | 27 | 24 | 41 | | 155.5 | |
| | 2019.04-2022.06 | 9AT | F | R | SUV 4WD OM 654.920 | For left-hand drive vehicles | GCI82161 | Inner Joint | | 27 | 24 | 38 | 62 | 124.5 | |
| | 2019.04-2022.06 | 9AT | F | R | SUV 4WD OM 654.920 | | GCI82342 | Inner Joint | | 24 | 24 | 35 | 54.5 | 156 | |
| | 2019.04-2022.06 | 9AT | F | L | SUV 4WD OM 654.920 | | GDS87029 | Intermediate Shaft | | 27 | 27 | | | 510 | |
| | 2019.04-2023.03 | 9AT | F | L | SUV 4WD OM 654.920 | For left-hand drive vehicles | GDS83655 | Drive Shaft | | 30 | 27 | 71 | 56 | 526 | |
| | 2019.04-2023.03 | 9AT | F | L | SUV 4WD OM 654.920 | | GDS83784 | Drive Shaft | | 30 | 27 | 71 | 56 | 524 | |
| | 2019.04-2023.03 | 9AT | F | R | SUV 4WD OM 654.920 | For left-hand drive vehicles;6 balls | GDS83742 | Drive Shaft | | 30 | 24 | 71 | 56 | 592 | |
| | 2019.04-2023.03 | 9AT | F | R | SUV 4WD OM 654.920 | 8 balls | GDS84270 | Drive Shaft | | 30 | 24 | 71 | 56 | 591 | |

| | YEAR | TRANSM. | F/R | L/R | BODY STYLE & DRIVE TYPE & ENGINE | REMARKS | G-AP Ref. | PRODUCT | ABS | Technical Specifications A | B | C | H | L | P |
|---|---|---|---|---|---|---|---|---|---|---|---|---|---|---|---|
| **MERCEDES-BENZ** | | | | | | | | | | | | | | | |
| **GLC200** | | | | | | | | | | | | | | | |
| 2.0 (120 kw) | 2019.04-2023.03 | 9AT | F | L/R | SUV 4WD OM 654.920 | 8 balls;For left-hand drive vehicles;Neoprene | GCO82353 | Outer Joint | | 30 | 25 | 71 | 56 | 53.5 | I |
| | 2019.04-2023.03 | 9AT | F | L/R | SUV 4WD OM 654.920 | 6 balls;For left-hand drive vehicles | GCO82479 | Outer Joint | | 30 | 24 | 71 | 56 | 55.5 | I |
| | 2019.04-2023.03 | 9AT | F | L | SUV 4WD OM 654.920 | For left-hand drive vehicles | GCI82313 | Inner Joint | | 27 | 24 | 41 | | 155.5 | |
| | 2019.04-2023.03 | 9AT | F | R | SUV 4WD OM 654.920 | For left-hand drive vehicles | GCI82342 | Inner Joint | | 24 | 24 | 35 | 54.5 | 156 | |
| | 2019.04-2023.03 | 9AT | R | L/R | SUV 4WD OM 654.920 | | GDS83743 | Drive Shaft | | 27 | 27 | 68.5 | 82 | 800 | |
| 2.0 (145 kw) | 2016.01-2018.12 | 9AT | F | L | SUV 4WD M 274.920 | 6 balls | GDS83784 | Drive Shaft | | 30 | 27 | 71 | 56 | 524 | |
| | 2016.01-2018.12 | 9AT | F | R | SUV 4WD M 274.920 | | GDS83782 | Drive Shaft | | 30 | 27 | 71 | 56 | 557 | |
| | 2016.01-2018.12 | 9AT | F | L | SUV 4WD M 274.920 | 6 balls | GCO82479 | Outer Joint | | 30 | 24 | 71 | 56 | 55.5 | I |
| | 2016.01-2018.12 | 9AT | F | L/R | SUV 4WD M 274.920 | 8 balls | GCO82353 | Outer Joint | | 30 | 25 | 71 | 56 | 53.5 | I |
| | 2016.01-2018.12 | 9AT | F | L | SUV 4WD M 274.920 | | GCI82313 | Inner Joint | | 27 | 24 | 41 | | 155.5 | |
| | 2016.01-2018.12 | 9AT | F | R | SUV 4WD M 274.920 | | GCI82161 | Inner Joint | | 27 | 24 | 38 | 62 | 124.5 | |
| | 2016.01-2018.12 | 9AT | F | L | SUV 4WD M 274.920 | | GDS87029 | Intermediate Shaft | | 27 | 27 | | | 510 | |
| | 2016.01-2018.12 | AT | F | L | SUV 4WD M 274.920 | 8 balls | GDS83655 | Drive Shaft | | 30 | 27 | 71 | 56 | 526 | |
| | 2016.01-2018.12 | 9AT | R | L | SUV 4WD M 274.920 | | GDS83743 | Drive Shaft | | 27 | 27 | 68.5 | 82 | 800 | |
| | 2016.01-2018.12 | 9AT | R | R | SUV 4WD M 274.920 | | GDS83741 | Drive Shaft | | 27 | 27 | 68.5 | 82 | 800 | |
| | 2017.01-2019.05 | 9AT | F | L | SUV 4WD M 274.920 | 6 balls | GDS83784 | Drive Shaft | | 30 | 27 | 71 | 56 | 524 | |
| | 2017.01-2019.05 | 9AT | F | R | SUV 4WD M 274.920 | | GDS83782 | Drive Shaft | | 30 | 27 | 71 | 56 | 557 | |
| | 2017.01-2019.05 | 9AT | F | L | SUV 4WD M 274.920 | 6 balls | GCO82479 | Outer Joint | | 30 | 24 | 71 | 56 | 55.5 | I |
| | 2017.01-2019.05 | 9AT | F | L/R | SUV 4WD M 274.920 | 8 balls | GCO82353 | Outer Joint | | 30 | 25 | 71 | 56 | 53.5 | I |
| | 2017.01-2019.05 | 9AT | F | L | SUV 4WD M 274.920 | | GCI82313 | Inner Joint | | 27 | 24 | 41 | | 155.5 | |
| | 2017.01-2019.05 | 9AT | F | R | SUV 4WD M 274.920 | | GCI82161 | Inner Joint | | 27 | 24 | 38 | 62 | 124.5 | |
| | 2017.01-2019.05 | 9AT | F | L | SUV 4WD M 274.920 | | GDS87029 | Intermediate Shaft | | 27 | 27 | | | 510 | |
| | 2017.01-2019.05 | AT | F | L | SUV 4WD M 274.920 | 8 balls | GDS83655 | Drive Shaft | | 30 | 27 | 71 | 56 | 526 | |
| | 2017.01-2019.05 | 9AT | R | L | SUV 4WD M 274.920 | | GDS83743 | Drive Shaft | | 27 | 27 | 68.5 | 82 | 800 | |
| | 2017.01-2019.05 | 9AT | R | R | SUV 4WD M 274.920 | | GDS83741 | Drive Shaft | | 27 | 27 | 68.5 | 82 | 800 | |
| | 2019.04-2022.06 | 9AT | F | L | SUV 4WD M 264.920 | For left-hand drive vehicles;8 balls | GDS83655 | Drive Shaft | | 30 | 27 | 71 | 56 | 526 | |
| | 2019.04-2022.06 | 9AT | F | L | SUV 4WD M 264.920 | For left-hand drive vehicles;6 balls | GDS83784 | Drive Shaft | | 30 | 27 | 71 | 56 | 524 | |
| | 2019.04-2022.06 | 9AT | F | R | SUV 4WD M 264.920 | | GDS83782 | Drive Shaft | | 30 | 27 | 71 | 56 | 557 | |
| | 2019.04-2022.06 | 9AT | F | L/R | SUV 4WD M 264.920 | 8 balls;For left-hand drive vehicles | GCO82353 | Outer Joint | | 30 | 25 | 71 | 56 | 53.5 | I |
| | 2019.04-2022.06 | 9AT | F | L/R | SUV 4WD M 264.920 | 6 balls;For left-hand drive vehicles | GCO82479 | Outer Joint | | 30 | 24 | 71 | 56 | 55.5 | I |
| | 2019.04-2022.06 | 9AT | F | L | SUV 4WD M 264.920 | For left-hand drive vehicles | GCI82313 | Inner Joint | | 27 | 24 | 41 | | 155.5 | |
| | 2019.04-2022.06 | 9AT | F | R | SUV 4WD M 264.920 | For left-hand drive vehicles | GCI82161 | Inner Joint | | 27 | 24 | 38 | 62 | 124.5 | |
| | 2019.04-2022.06 | 9AT | F | L | SUV 4WD M 264.920 | | GDS87029 | Intermediate Shaft | | 27 | 27 | | | 510 | |
| | 2019.04-2022.06 | 9AT | R | L | SUV 4WD M 264.920 | | GDS83743 | Drive Shaft | | 27 | 27 | 68.5 | 82 | 800 | |
| | 2019.04-2022.06 | 9AT | R | R | SUV 4WD M 264.920 | | GDS83741 | Drive Shaft | | 27 | 27 | 68.5 | 82 | 800 | |
| | 2019.04-2023.03 | 9AT | F | L | SUV 4WD M 264.920 | For left-hand drive vehicles | GDS83655 | Drive Shaft | | 30 | 27 | 71 | 56 | 526 | |
| | 2019.04-2023.03 | 9AT | F | L | SUV 4WD M 264.920 | | GDS83784 | Drive Shaft | | 30 | 27 | 71 | 56 | 524 | |
| | 2019.04-2023.03 | 9AT | F | R | SUV 4WD M 264.920 | | GDS83782 | Drive Shaft | | 30 | 27 | 71 | 56 | 557 | |
| | 2019.04-2023.03 | 9AT | F | L/R | SUV 4WD M 264.920 | 8 balls;For left-hand drive vehicles | GCO82353 | Outer Joint | | 30 | 25 | 71 | 56 | 53.5 | I |
| | 2019.04-2023.03 | 9AT | F | L/R | SUV 4WD M 264.920 | 6 balls;For left-hand drive vehicles | GCO82479 | Outer Joint | | 30 | 24 | 71 | 56 | 55.5 | I |
| | 2019.04-2023.03 | 9AT | F | L | SUV 4WD M 264.920 | For left-hand drive vehicles | GCI82313 | Inner Joint | | 27 | 24 | 41 | | 155.5 | |
| | 2019.04-2023.03 | 9AT | F | R | SUV 4WD M 264.920 | For left-hand drive vehicles | GCI82161 | Inner Joint | | 27 | 24 | 38 | 62 | 124.5 | |
| | 2019.04-2023.03 | 9AT | F | L | SUV 4WD M 264.920 | | GDS87029 | Intermediate Shaft | | 27 | 27 | | | 510 | |
| | 2019.04-2023.03 | 9AT | R | L | SUV 4WD M 264.920 | | GDS83743 | Drive Shaft | | 27 | 27 | 68.5 | 82 | 800 | |
| | 2019.04-2023.03 | 9AT | R | R | SUV 4WD M 264.920 | | GDS83741 | Drive Shaft | | 27 | 27 | 68.5 | 82 | 800 | |
| 2.0 (150 kw) | 2022.06- | 9AT | F | L | SUV 4WD M 254.920 | | GDS57779 | Drive Shaft | | 30 | 27 | 65 | 53 | 538 | |
| | 2022.06- | 9AT | F | R | SUV 4WD M 254.920 | | GDS57780 | Drive Shaft | | 30 | 26 | 65 | 53 | 577 | |
| | 2022.06- | 9AT | F | L/R | SUV 4WD M 254.920 | | GCO83704 | Outer Joint | | 30 | 24 | 65 | 53 | 56 | M |
| | 2022.06- | 9AT | F | L | SUV 4WD M 254.920 | | GCI83852 | Inner Joint | | 27 | 32 | 41.5 | | 158 | |
| | 2022.06- | 9AT | F | R | SUV 4WD M 254.920 | | GCI83853 | Inner Joint | | 26 | 32 | 35 | 60 | 125.5 | |
| | 2023.07- | 9AT | F | L | SUV 4WD M 254.920 | | GDS57779 | Drive Shaft | | 30 | 27 | 65 | 53 | 538 | |
| | 2023.07- | 9AT | F | R | SUV 4WD M 254.920 | | GDS57780 | Drive Shaft | | 30 | 26 | 65 | 53 | 577 | |
| | 2023.07- | 9AT | F | L/R | SUV 4WD M 254.920 | | GCO83704 | Outer Joint | | 30 | 24 | 65 | 53 | 56 | M |
| | 2023.07- | 9AT | F | L | SUV 4WD M 254.920 | | GCI83852 | Inner Joint | | 27 | 32 | 41.5 | | 158 | |
| | 2023.07- | 9AT | F | R | SUV 4WD M 254.920 | | GCI83853 | Inner Joint | | 26 | 32 | 35 | 60 | 125.5 | |
| **GLC200d** | | | | | | | | | | | | | | | |
| 2.0 (120 kw) | 2024.11- | 9AT | F | L | SUV 4WD OM 654.820 | | GDS57779 | Drive Shaft | | 30 | 27 | 65 | 53 | 538 | |
| | 2024.11- | 9AT | F | R | SUV 4WD OM 654.820 | | GDS57780 | Drive Shaft | | 30 | 26 | 65 | 53 | 577 | |
| | 2024.11- | 9AT | F | L/R | SUV 4WD OM 654.820 | | GCO83704 | Outer Joint | | 30 | 24 | 65 | 53 | 56 | M |
| | 2024.11- | 9AT | F | L | SUV 4WD OM 654.820 | | GCI83852 | Inner Joint | | 27 | 32 | 41.5 | | 158 | |
| | 2024.11- | 9AT | F | R | SUV 4WD OM 654.820 | | GCI83853 | Inner Joint | | 26 | 32 | 35 | 60 | 125.5 | |
| **GLC220** | | | | | | | | | | | | | | | |
| 2.0 (143 kw) | 2019.04-2022.06 | 9AT | F | L | SUV 4WD OM 654.920 | For SA code:430;For vehicles with off-road suspension;For left-hand drive vehicles | GDS83655 | Drive Shaft | | 30 | 27 | 71 | 56 | 526 | |
| | 2019.04-2022.06 | 9AT | F | L | SUV 4WD OM 654.920 | | GDS83784 | Drive Shaft | | 30 | 27 | 71 | 56 | 524 | |
| | 2019.04-2022.06 | 9AT | F | R | SUV 4WD OM 654.920 | For left-hand drive vehicles;Outer teeth of tranm.side:24,6 balls | GDS83742 | Drive Shaft | | 30 | 24 | 71 | 56 | 592 | |

| | YEAR | TRANSM. | F/R | L/R | BODY STYLE & DRIVE TYPE & ENGINE | REMARKS | G-AP Ref. | PRODUCT | ABS | Technical Specifications A | B | C | H | L | P |
|---|---|---|---|---|---|---|---|---|---|---|---|---|---|---|---|
| **MERCEDES-BENZ** | | | | | | | | | | | | | | | |
| **GLC220** | | | | | | | | | | | | | | | |
| 2.0 (143 kw) | 2019.04-2022.06 | 9AT | F | R | SUV 4WD OM 654.920 | For SA code:430,For vehicles with off-road suspension,For left-hand drive vehicles | GDS83782 | Drive Shaft | | 30 | 27 | 71 | 56 | 557 | |
| | 2019.04-2022.06 | 9AT | F | R | SUV 4WD OM 654.920 | For left-hand drive vehicles;Outer teeth of tranm.side:24,8 balls | GDS84270 | Drive Shaft | | 30 | 24 | 71 | 56 | 591 | |
| | 2019.04-2022.06 | 9AT | F | L/R | SUV 4WD OM 654.920 | 8 balls;For SA code:430,For vehicles with bad road version;Neoprene | GCO82353 | Outer Joint | | 30 | 25 | 71 | 56 | 53.5 | I |
| | 2019.04-2022.06 | 9AT | F | L/R | SUV 4WD OM 654.920 | 6 balls;For left-hand drive vehicles | GCO82479 | Outer Joint | | 30 | 24 | 71 | 56 | 55.5 | I |
| | 2019.04-2022.06 | 9AT | F | L | SUV 4WD OM 654.920 | For SA code:430,For vehicles with off-road suspension,For left-hand drive vehicles | GCI82313 | Inner Joint | | 27 | 24 | 41 | | 155.5 | |
| | 2019.04-2022.06 | 9AT | F | R | SUV 4WD OM 654.920 | For SA code:430,For vehicles with off-road suspension,For left-hand drive vehicles | GCI82161 | Inner Joint | | 27 | 24 | 38 | 62 | 124.5 | |
| | 2019.04-2022.06 | 9AT | F | R | SUV 4WD OM 654.920 | For left-hand drive vehicles | GCI82342 | Inner Joint | | 24 | 24 | 35 | 54.5 | 156 | |
| | 2019.04-2022.06 | 9AT | F | L | SUV 4WD OM 654.920 | | GDS87029 | Intermediate Shaft | | 27 | 27 | | | 510 | |
| | 2019.04-2022.06 | 9AT | R | L/R | SUV 4WD OM 654.920 | | GDS83743 | Drive Shaft | | 27 | 27 | 68.5 | 82 | 800 | |
| | 2019.04-2023.03 | 9AT | F | L | SUV 4WD OM 654.920 | | GDS83655 | Drive Shaft | | 30 | 27 | 71 | 56 | 526 | |
| | 2019.04-2023.03 | 9AT | F | L | SUV 4WD OM 654.920 | | GDS83784 | Drive Shaft | | 30 | 27 | 71 | 56 | 524 | |
| | 2019.04-2023.03 | 9AT | F | R | SUV 4WD OM 654.920 | 6 balls | GDS83742 | Drive Shaft | | 30 | 24 | 71 | 56 | 592 | |
| | 2019.04-2023.03 | 9AT | F | R | SUV 4WD OM 654.920 | 8 balls | GDS84270 | Drive Shaft | | 30 | 24 | 71 | 56 | 591 | |
| | 2019.04-2023.03 | 9AT | F | L/R | SUV 4WD OM 654.920 | 8 balls,Neoprene | GCO82353 | Outer Joint | | 30 | 25 | 71 | 56 | 53.5 | I |
| | 2019.04-2023.03 | 9AT | F | L/R | SUV 4WD OM 654.920 | 6 balls | GCO82479 | Outer Joint | | 30 | 24 | 71 | 56 | 55.5 | I |
| | 2019.04-2023.03 | 9AT | F | L | SUV 4WD OM 654.920 | | GCI82313 | Inner Joint | | 27 | 24 | 41 | | 155.5 | |
| | 2019.04-2023.03 | 9AT | F | R | SUV 4WD OM 654.920 | | GCI82342 | Inner Joint | | 24 | 24 | 35 | 54.5 | 156 | |
| | 2019.04-2023.03 | 9AT | R | L/R | SUV 4WD OM 654.920 | | GDS83743 | Drive Shaft | | 27 | 27 | 68.5 | 82 | 800 | |
| 2.0 (145 kw) | 2022.09- | 9AT | F | L | SUV 4WD OM 654.820 | | GDS57779 | Drive Shaft | | 30 | 27 | 65 | 53 | 538 | |
| | 2022.09- | 9AT | F | R | SUV 4WD OM 654.820 | | GDS57780 | Drive Shaft | | 30 | 26 | 65 | 53 | 577 | |
| | 2022.09- | 9AT | F | L/R | SUV 4WD OM 654.820 | | GCO83704 | Outer Joint | | 30 | 24 | 65 | 53 | 56 | M |
| | 2022.09- | 9AT | F | L | SUV 4WD OM 654.820 | | GCI83852 | Inner Joint | | 27 | 32 | 41.5 | | 158 | |
| | 2022.09- | 9AT | F | R | SUV 4WD OM 654.820 | | GCI83853 | Inner Joint | | 26 | 32 | 35 | 60 | 125.5 | |
| | 2023.07- | 9AT | F | L | SUV 4WD OM 654.820 | | GDS57779 | Drive Shaft | | 30 | 27 | 65 | 53 | 538 | |
| | 2023.07- | 9AT | F | R | SUV 4WD OM 654.820 | | GDS57780 | Drive Shaft | | 30 | 26 | 65 | 53 | 577 | |
| | 2023.07- | 9AT | F | L/R | SUV 4WD OM 654.820 | | GCO83704 | Outer Joint | | 30 | 24 | 65 | 53 | 56 | M |
| | 2023.07- | 9AT | F | L | SUV 4WD OM 654.820 | | GCI83852 | Inner Joint | | 27 | 32 | 41.5 | | 158 | |
| | 2023.07- | 9AT | F | R | SUV 4WD OM 654.820 | | GCI83853 | Inner Joint | | 26 | 32 | 35 | 60 | 125.5 | |
| 2.2 (120 kw) | 2015.06-2019.04 | 9AT | F | L | SUV 4WD OM 651.921 | | GDS83655 | Drive Shaft | | 30 | 27 | 71 | 56 | 526 | |
| | 2015.06-2019.04 | 9AT | F | L | SUV 4WD OM 651.921 | | GDS83784 | Drive Shaft | | 30 | 27 | 71 | 56 | 524 | |
| | 2015.06-2019.04 | 9AT | F | R | SUV 4WD OM 651.921 | Outer teeth of tranm.side:24,6 balls | GDS83742 | Drive Shaft | | 30 | 24 | 71 | 56 | 592 | |
| | 2015.06-2019.04 | 9AT | F | R | SUV 4WD OM 651.921 | For SA code:430,For vehicles with off-road suspension | GDS83782 | Drive Shaft | | 30 | 27 | 71 | 56 | 557 | |
| | 2015.06-2019.04 | 9AT | F | R | SUV 4WD OM 651.921 | Outer teeth of tranm.side:24,8 balls | GDS84270 | Drive Shaft | | 30 | 24 | 71 | 56 | 591 | |
| | 2015.06-2019.04 | 9AT | F | L/R | SUV 4WD OM 651.921 | 8 balls;For SA code:430,For vehicles with bad road version | GCO82353 | Outer Joint | | 30 | 25 | 71 | 56 | 53.5 | I |
| | 2015.06-2019.04 | 9AT | F | L/R | SUV 4WD OM 651.921 | 6 balls | GCO82479 | Outer Joint | | 30 | 24 | 71 | 56 | 55.5 | I |
| | 2015.06-2019.04 | 9AT | F | L | SUV 4WD OM 651.921 | | GCI82313 | Inner Joint | | 27 | 24 | 41 | | 155.5 | |
| | 2015.06-2019.04 | 9AT | F | R | SUV 4WD OM 651.921 | For SA code:430,For vehicles with off-road suspension | GCI82161 | Inner Joint | | 27 | 24 | 38 | 62 | 124.5 | |
| | 2015.06-2019.04 | 9AT | F | R | SUV 4WD OM 651.921 | Type:1;Type:2 | GCI82342 | Inner Joint | | 24 | 24 | 35 | 54.5 | 156 | |
| | 2015.06-2019.04 | 9AT | F | L | SUV 4WD OM 651.921 | | GDS87029 | Intermediate Shaft | | 27 | 27 | | | 510 | |
| | 2015.06-2019.04 | 9AT | R | L | SUV 4WD OM 651.921 | Date to:2016.11,Chassis no. to:V000607 | GDS83648 | Drive Shaft | | 27 | 27 | 68.5 | 82 | 805 | |
| | 2015.06-2019.04 | 9AT | R | L | SUV 4WD OM 651.921 | Date from:2016.12,Chassis no. from:V000608 | GDS83743 | Drive Shaft | | 27 | 27 | 68.5 | 82 | 800 | |
| | 2015.06-2019.04 | 9AT | R | R | SUV 4WD OM 651.921 | | GDS83627 | Drive Shaft | | 27 | 27 | 68.5 | 82 | 805 | |
| | 2015.06-2019.04 | 9AT | R | R | SUV 4WD OM 651.921 | Date from:2016.12,Date to:2017.02,From Chassis:V000608,To Chassis:V002282 | GDS83741 | Drive Shaft | | 27 | 27 | 68.5 | 82 | 800 | |
| | 2015.06-2019.04 | 9AT | R | R | SUV 4WD OM 651.921 | Date from:2017.02,Chassis no. from:V002283 | GDS83743 | Drive Shaft | | 27 | 27 | 68.5 | 82 | 800 | |
| | 2016.06-2019.04 | 9AT | F | L | SUV 4WD OM 651.921 | | GDS83655 | Drive Shaft | | 30 | 27 | 71 | 56 | 526 | |
| | 2016.06-2019.04 | 9AT | F | L | SUV 4WD OM 651.921 | | GDS83784 | Drive Shaft | | 30 | 27 | 71 | 56 | 524 | |
| | 2016.06-2019.04 | 9AT | F | R | SUV 4WD OM 651.921 | 6 balls | GDS83742 | Drive Shaft | | 30 | 24 | 71 | 56 | 592 | |
| | 2016.06-2019.04 | 9AT | F | R | SUV 4WD OM 651.921 | 8 balls | GDS84270 | Drive Shaft | | 30 | 24 | 71 | 56 | 591 | |
| | 2016.06-2019.04 | 9AT | F | L/R | SUV 4WD OM 651.921 | 8 balls,Neoprene | GCO82353 | Outer Joint | | 30 | 25 | 71 | 56 | 53.5 | I |
| | 2016.06-2019.04 | 9AT | F | L/R | SUV 4WD OM 651.921 | 6 balls | GCO82479 | Outer Joint | | 30 | 24 | 71 | 56 | 55.5 | I |
| | 2016.06-2019.04 | 9AT | F | L | SUV 4WD OM 651.921 | | GCI82313 | Inner Joint | | 27 | 24 | 41 | | 155.5 | |
| | 2016.06-2019.04 | 9AT | F | R | SUV 4WD OM 651.921 | | GCI82342 | Inner Joint | | 24 | 24 | 35 | 54.5 | 156 | |
| | 2016.06-2019.04 | 9AT | R | L/R | SUV 4WD OM 651.921 | | GDS83743 | Drive Shaft | | 27 | 27 | 68.5 | 82 | 800 | |
| 2.2 (125 kw) | 2015.06-2019.04 | 9AT | F | L | SUV 4WD OM 651.921 | | GDS83655 | Drive Shaft | | 30 | 27 | 71 | 56 | 526 | |
| | 2015.06-2019.04 | 9AT | F | L | SUV 4WD OM 651.921 | | GDS83784 | Drive Shaft | | 30 | 27 | 71 | 56 | 524 | |
| | 2015.06-2019.04 | 9AT | F | R | SUV 4WD OM 651.921 | For SA code:430,For vehicles with off-road suspension | GDS83782 | Drive Shaft | | 30 | 27 | 71 | 56 | 557 | |
| | 2015.06-2019.04 | 9AT | F | L/R | SUV 4WD OM 651.921 | For SA code:430,For vehicles with bad road version | GCO82353 | Outer Joint | | 30 | 25 | 71 | 56 | 53.5 | I |
| | 2015.06-2019.04 | 9AT | F | L/R | SUV 4WD OM 651.921 | | GCO82479 | Outer Joint | | 30 | 24 | 71 | 56 | 55.5 | I |
| | 2015.06-2019.04 | 9AT | F | L | SUV 4WD OM 651.921 | | GCI82313 | Inner Joint | | 27 | 24 | 41 | | 155.5 | |
| | 2015.06-2019.04 | 9AT | F | R | SUV 4WD OM 651.921 | For SA code:430,For vehicles with off-road suspension | GCI82161 | Inner Joint | | 27 | 24 | 38 | 62 | 124.5 | |
| | 2015.06-2019.04 | 9AT | F | L | SUV 4WD OM 651.921 | | GDS87029 | Intermediate Shaft | | 27 | 27 | | | 510 | |
| | 2015.06-2019.04 | 9AT/6MT | F | R | SUV 4WD OM 651.921 | Outer teeth of tranm.side:24,6 balls | GDS83742 | Drive Shaft | | 30 | 24 | 71 | 56 | 592 | |
| | 2015.06-2019.04 | 9AT/6MT | F | R | SUV 4WD OM 651.921 | Outer teeth of tranm.side:24,8 balls | GDS84270 | Drive Shaft | | 30 | 24 | 71 | 56 | 591 | |
| | 2015.06-2019.04 | 9AT/6MT | F | R | SUV 4WD OM 651.921 | | GCI82342 | Inner Joint | | 24 | 24 | 35 | 54.5 | 156 | |
| | 2015.06-2019.04 | 9AT | R | L | SUV 4WD OM 651.921 | Date to:2016.11,Chassis no. to:V000607 | GDS83648 | Drive Shaft | | 27 | 27 | 68.5 | 82 | 805 | |

| | YEAR | TRANSM. | F/R | L/R | BODY STYLE & DRIVE TYPE & ENGINE | REMARKS | G-AP Ref. | PRODUCT | ABS | Technical Specifications A | B | C | H | L | P |
|---|---|---|---|---|---|---|---|---|---|---|---|---|---|---|---|
| **MERCEDES-BENZ** | | | | | | | | | | | | | | | |
| **GLC220** | | | | | | | | | | | | | | | |
| 2.2 (125 kw) | 2015.06-2019.04 | 9AT | R | L | SUV 4WD OM 651.921 | Date from:2016.12,Chassis no. from:V000608 | GDS83743 | Drive Shaft | | 27 | 27 | 68.5 | 82 | 800 | |
| | 2015.06-2019.04 | 9AT | R | R | SUV 4WD OM 651.921 | | GDS83627 | Drive Shaft | | 27 | 27 | 68.5 | 82 | 805 | |
| | 2015.06-2019.04 | 9AT | R | R | SUV 4WD OM 651.921 | Date from:2016.12,Date to:2017.02,From Chassis:V000608,To Chassis:V002282 | GDS83741 | Drive Shaft | | 27 | 27 | 68.5 | 82 | 800 | |
| | 2015.06-2019.04 | 9AT | R | R | SUV 4WD OM 651.921 | Date from:2017.02,Chassis no. from:V002283 | GDS83743 | Drive Shaft | | 27 | 27 | 68.5 | 82 | 800 | |
| | 2016.06-2019.04 | 9AT | F | L | SUV 4WD OM 651.921 | | GDS83655 | Drive Shaft | | 30 | 27 | 71 | 56 | 526 | |
| | 2016.06-2019.04 | 9AT | F | L | SUV 4WD OM 651.921 | | GDS83784 | Drive Shaft | | 30 | 27 | 71 | 56 | 524 | |
| | 2016.06-2019.04 | 9AT | F | R | SUV 4WD OM 651.921 | 6 balls | GDS83742 | Drive Shaft | | 30 | 24 | 71 | 56 | 592 | |
| | 2016.06-2019.04 | 9AT | F | R | SUV 4WD OM 651.921 | 8 balls | GDS84270 | Drive Shaft | | 30 | 24 | 71 | 56 | 591 | |
| | 2016.06-2019.04 | 9AT | F | L/R | SUV 4WD OM 651.921 | 8 balls,Neoprene | GCO82353 | Outer Joint | | 30 | 25 | 71 | 56 | 53.5 | I |
| | 2016.06-2019.04 | 9AT | F | L/R | SUV 4WD OM 651.921 | 6 balls | GCO82479 | Outer Joint | | 30 | 24 | 71 | 56 | 55.5 | I |
| | 2016.06-2019.04 | 9AT | F | L | SUV 4WD OM 651.921 | | GCI82313 | Inner Joint | | 27 | 24 | 41 | | 155.5 | |
| | 2016.06-2019.04 | 9AT | F | R | SUV 4WD OM 651.921 | | GCI82342 | Inner Joint | | 24 | 24 | 35 | 54.5 | 156 | |
| | 2016.06-2019.04 | 9AT | R | L/R | SUV 4WD OM 651.921 | | GDS83743 | Drive Shaft | | 27 | 27 | 68.5 | 82 | 800 | |
| **GLC250** | | | | | | | | | | | | | | | |
| 2.0 (155 kw) | 2015.06-2019.04 | 9AT | F | L | SUV 4WD M 274.920 | | GDS83655 | Drive Shaft | | 30 | 27 | 71 | 56 | 526 | |
| | 2015.06-2019.04 | 9AT | F | L | SUV 4WD M 274.920 | | GDS83784 | Drive Shaft | | 30 | 27 | 71 | 56 | 524 | |
| | 2015.06-2019.04 | 9AT | F | R | SUV 4WD M 274.920 | For SA code:430,For vehicles with off-road suspension | GDS83782 | Drive Shaft | | 30 | 27 | 71 | 56 | 557 | |
| | 2015.06-2019.04 | 9AT | F | L/R | SUV 4WD M 274.920 | 8 balls;For SA code:430,For vehicles with bad road version;Neoprene | GCO82353 | Outer Joint | | 30 | 25 | 71 | 56 | 53.5 | I |
| | 2015.06-2019.04 | 9AT | F | L/R | SUV 4WD M 274.920 | 6 balls | GCO82479 | Outer Joint | | 30 | 24 | 71 | 56 | 55.5 | I |
| | 2015.06-2019.04 | 9AT | F | L | SUV 4WD M 274.920 | | GCI82313 | Inner Joint | | 27 | 24 | 41 | | 155.5 | |
| | 2015.06-2019.04 | 9AT | F | R | SUV 4WD M 274.920 | For SA code:430,For vehicles with off-road suspension | GCI82161 | Inner Joint | | 27 | 24 | 38 | 62 | 124.5 | |
| | 2015.06-2019.04 | 9AT | F | L | SUV 4WD M 274.920 | | GDS87029 | Intermediate Shaft | | 27 | 27 | | | 510 | |
| | 2015.06-2019.04 | 9AT/6MT | F | R | SUV 4WD M 274.920 | Outer teeth of tranm.side:24,6 balls | GDS83742 | Drive Shaft | | 30 | 24 | 71 | 56 | 592 | |
| | 2015.06-2019.04 | 9AT/6MT | F | R | SUV 4WD M 274.920 | Outer teeth of tranm.side:24,8 balls | GDS84270 | Drive Shaft | | 30 | 24 | 71 | 56 | 591 | |
| | 2015.06-2019.04 | 9AT/6MT | F | R | SUV 4WD M 274.920 | | GCI82342 | Inner Joint | | 24 | 24 | 35 | 54.5 | 156 | |
| | 2015.06-2019.04 | 9AT | R | L | SUV 4WD M 274.920 | Date to:2016.09,Chassis no. to:V000102 | GDS83648 | Drive Shaft | | 27 | 27 | 68.5 | 82 | 805 | |
| | 2015.06-2019.04 | 9AT | R | L | SUV 4WD M 274.920 | Date from:2016.10 | GDS83743 | Drive Shaft | | 27 | 27 | 68.5 | 82 | 800 | |
| | 2015.06-2019.04 | 9AT | R | R | SUV 4WD M 274.920 | | GDS83627 | Drive Shaft | | 27 | 27 | 68.5 | 82 | 805 | |
| | 2015.06-2019.04 | 9AT | R | R | SUV 4WD M 274.920 | Date from:2016.10 | GDS83741 | Drive Shaft | | 27 | 27 | 68.5 | 82 | 800 | |
| | 2016.06-2019.04 | 9AT | F | L | SUV 4WD M 274.920 | | GDS83655 | Drive Shaft | | 30 | 27 | 71 | 56 | 526 | |
| | 2016.06-2019.04 | 9AT | F | L | SUV 4WD M 274.920 | | GDS83784 | Drive Shaft | | 30 | 27 | 71 | 56 | 524 | |
| | 2016.06-2019.04 | 9AT | F | R | SUV 4WD M 274.920 | 6 balls | GDS83742 | Drive Shaft | | 30 | 24 | 71 | 56 | 592 | |
| | 2016.06-2019.04 | 9AT | F | R | SUV 4WD M 274.920 | 8 balls | GDS84270 | Drive Shaft | | 30 | 24 | 71 | 56 | 591 | |
| | 2016.06-2019.04 | 9AT | F | L/R | SUV 4WD M 274.920 | 8 balls,Neoprene | GCO82353 | Outer Joint | | 30 | 25 | 71 | 56 | 53.5 | I |
| | 2016.06-2019.04 | 9AT | F | L/R | SUV 4WD M 274.920 | 6 balls | GCO82479 | Outer Joint | | 30 | 24 | 71 | 56 | 55.5 | I |
| | 2016.06-2019.04 | 9AT | F | L | SUV 4WD M 274.920 | | GCI82313 | Inner Joint | | 27 | 24 | 41 | | 155.5 | |
| | 2016.06-2019.04 | 9AT | F | R | SUV 4WD M 274.920 | | GCI82342 | Inner Joint | | 24 | 24 | 35 | 54.5 | 156 | |
| | 2016.06-2019.04 | 9AT | R | L | SUV 4WD M 274.920 | | GDS83743 | Drive Shaft | | 27 | 27 | 68.5 | 82 | 800 | |
| | 2016.06-2019.04 | 9AT | R | R | SUV 4WD M 274.920 | | GDS83741 | Drive Shaft | | 27 | 27 | 68.5 | 82 | 800 | |
| 2.2 (150 kw) | 2015.06-2019.04 | 9AT | F | L | SUV 4WD OM 651.921 | | GDS83655 | Drive Shaft | | 30 | 27 | 71 | 56 | 526 | |
| | 2015.06-2019.04 | 9AT | F | L | SUV 4WD OM 651.921 | | GDS83784 | Drive Shaft | | 30 | 27 | 71 | 56 | 524 | |
| | 2015.06-2019.04 | 9AT | F | R | SUV 4WD OM 651.921 | For SA code:430,For vehicles with off-road suspension | GDS83782 | Drive Shaft | | 30 | 27 | 71 | 56 | 557 | |
| | 2015.06-2019.04 | 9AT | F | L/R | SUV 4WD OM 651.921 | 8 balls;For SA code:430,For vehicles with bad road version;Neoprene | GCO82353 | Outer Joint | | 30 | 25 | 71 | 56 | 53.5 | I |
| | 2015.06-2019.04 | 9AT | F | L/R | SUV 4WD OM 651.921 | 6 balls | GCO82479 | Outer Joint | | 30 | 24 | 71 | 56 | 55.5 | I |
| | 2015.06-2019.04 | 9AT | F | L | SUV 4WD OM 651.921 | | GCI82313 | Inner Joint | | 27 | 24 | 41 | | 155.5 | |
| | 2015.06-2019.04 | 9AT | F | R | SUV 4WD OM 651.921 | For SA code:430,For vehicles with off-road suspension | GCI82161 | Inner Joint | | 27 | 24 | 38 | 62 | 124.5 | |
| | 2015.06-2019.04 | 9AT | F | L | SUV 4WD OM 651.921 | | GDS87029 | Intermediate Shaft | | 27 | 27 | | | 510 | |
| | 2015.06-2019.04 | 9AT/6MT | F | R | SUV 4WD OM 651.921 | Outer teeth of tranm.side:24,6 balls | GDS83742 | Drive Shaft | | 30 | 24 | 71 | 56 | 592 | |
| | 2015.06-2019.04 | 9AT/6MT | F | R | SUV 4WD OM 651.921 | Outer teeth of tranm.side:24,8 balls | GDS84270 | Drive Shaft | | 30 | 24 | 71 | 56 | 591 | |
| | 2015.06-2019.04 | 9AT/6MT | F | R | SUV 4WD OM 651.921 | | GCI82342 | Inner Joint | | 24 | 24 | 35 | 54.5 | 156 | |
| | 2015.06-2019.04 | 9AT | R | R | SUV 4WD OM 651.921 | Date from:2016.03,Chassis no. from:V000608,Chassis no. to:V002282,For left-hand drive vehicles | GDS83627 | Drive Shaft | | 27 | 27 | 68.5 | 82 | 805 | |
| | 2015.06-2019.04 | 9AT | R | L/R | SUV 4WD OM 651.921 | Date from:2016.12,Chassis no. from:V000608,Chassis no. to:V002282,For left-hand drive vehicles;Date to:2016.09,Chassis no. to:V000102,For right-hand drive vehicles | GDS83648 | Drive Shaft | | 27 | 27 | 68.5 | 82 | 805 | |
| | 2015.06-2019.04 | 9AT | R | L/R | SUV 4WD OM 651.921 | For right-hand drive vehicles | GDS84018 | Drive Shaft | | 27 | 30 | 68.5 | 82 | 810 | |
| | 2016.06-2019.04 | 9AT | F | L | SUV 4WD OM 651.921 | | GDS83655 | Drive Shaft | | 30 | 27 | 71 | 56 | 526 | |
| | 2016.06-2019.04 | 9AT | F | L | SUV 4WD OM 651.921 | | GDS83784 | Drive Shaft | | 30 | 27 | 71 | 56 | 524 | |
| | 2016.06-2019.04 | 9AT | F | R | SUV 4WD OM 651.921 | For right-hand drive vehicles;Outer teeth of tranm.side:24,6 balls | GDS83742 | Drive Shaft | | 30 | 24 | 71 | 56 | 592 | |
| | 2016.06-2019.04 | 9AT | F | R | SUV 4WD OM 651.921 | For left-hand drive vehicles | GDS83782 | Drive Shaft | | 30 | 27 | 71 | 56 | 557 | |
| | 2016.06-2019.04 | 9AT | F | R | SUV 4WD OM 651.921 | For right-hand drive vehicles;Outer teeth of tranm.side:24,8 balls | GDS84270 | Drive Shaft | | 30 | 24 | 71 | 56 | 591 | |
| | 2016.06-2019.04 | 9AT | F | L/R | SUV 4WD OM 651.921 | 8 balls,Neoprene | GCO82353 | Outer Joint | | 30 | 25 | 71 | 56 | 53.5 | I |
| | 2016.06-2019.04 | 9AT | F | L/R | SUV 4WD OM 651.921 | 6 balls | GCO82479 | Outer Joint | | 30 | 24 | 71 | 56 | 55.5 | I |
| | 2016.06-2019.04 | 9AT | F | L | SUV 4WD OM 651.921 | | GCI82313 | Inner Joint | | 27 | 24 | 41 | | 155.5 | |
| | 2016.06-2019.04 | 9AT | F | R | SUV 4WD OM 651.921 | | GCI82342 | Inner Joint | | 24 | 24 | 35 | 54.5 | 156 | |
| | 2016.06-2019.04 | 9AT | F | L | SUV 4WD OM 651.921 | | GDS87029 | Intermediate Shaft | | 27 | 27 | | | 510 | |
| | 2016.06-2019.04 | 9AT | R | L | SUV 4WD OM 651.921 | Not for SA code:M014/M013 | GDS83743 | Drive Shaft | | 27 | 27 | 68.5 | 82 | 800 | |
| | 2016.06-2019.04 | 9AT | R | L | SUV 4WD OM 651.921 | For SA code:M014,For right-hand drive vehicles | GDS84018 | Drive Shaft | | 27 | 30 | 68.5 | 82 | 810 | |

| | YEAR | TRANSM. | F/R | L/R | BODY STYLE & DRIVE TYPE & ENGINE | REMARKS | G-AP Ref. | PRODUCT | ABS | Technical Specifications A | B | C | H | L | P |
|---|---|---|---|---|---|---|---|---|---|---|---|---|---|---|---|
| **MERCEDES-BENZ** | | | | | | | | | | | | | | | |
| **GLC250** | | | | | | | | | | | | | | | |
| 2.2 (150 kw) | 2016.06-2019.04 | 9AT | R | L/R | SUV 4WD OM 651.921 | For SA code:M014,For left-hand drive vehicles | GDS83648 | Drive Shaft | | 27 | 27 | 68.5 | 82 | 805 | |
| **GLC300** | | | | | | | | | | | | | | | |
| 2.0 (180 kw) | 2015.07-2019.04 | 9AT | F | L | SUV 4WD M 274.920 | | GDS83655 | Drive Shaft | | 30 | 27 | 71 | 56 | 526 | |
| | 2015.07-2019.04 | 9AT | F | L | SUV 4WD M 274.920 | | GDS83784 | Drive Shaft | | 30 | 27 | 71 | 56 | 524 | |
| | 2015.07-2019.04 | 9AT | F | R | SUV 4WD M 274.920 | Outer teeth of tranm.side:24,6 balls | GDS83742 | Drive Shaft | | 30 | 24 | 71 | 56 | 592 | |
| | 2015.07-2019.04 | 9AT | F | R | SUV 4WD M 274.920 | For SA code:430,For vehicles with off-road suspension | GDS83782 | Drive Shaft | | 30 | 27 | 71 | 56 | 557 | |
| | 2015.07-2019.04 | 9AT | F | R | SUV 4WD M 274.920 | Outer teeth of tranm.side:24,8 balls | GDS84270 | Drive Shaft | | 30 | 24 | 71 | 56 | 591 | |
| | 2015.07-2019.04 | 9AT | F | L/R | SUV 4WD M 274.920 | 8 balls,Neoprene;For SA code:430,For vehicles with bad road version | GCO82353 | Outer Joint | | 30 | 25 | 71 | 56 | 53.5 | I |
| | 2015.07-2019.04 | 9AT | F | L/R | SUV 4WD M 274.920 | 6 balls | GCO82479 | Outer Joint | | 30 | 24 | 71 | 56 | 55.5 | I |
| | 2015.07-2019.04 | 9AT | F | L | SUV 4WD M 274.920 | | GCI82313 | Inner Joint | | 27 | 24 | 41 | | 155.5 | |
| | 2015.07-2019.04 | 9AT | F | R | SUV 4WD M 274.920 | | GCI82342 | Inner Joint | | 24 | 24 | 35 | 54.5 | 156 | |
| | 2015.07-2019.04 | 9AT | F | L | SUV 4WD M 274.920 | | GDS87029 | Intermediate Shaft | | 27 | 27 | | | 510 | |
| | 2015.07-2019.04 | 9AT | R | L | SUV 4WD M 274.920 | Date to:2016.09 | GDS83648 | Drive Shaft | | 27 | 27 | 68.5 | 82 | 805 | |
| | 2015.07-2019.04 | 9AT | R | L | SUV 4WD M 274.920 | Date from:2016.10 | GDS83743 | Drive Shaft | | 27 | 27 | 68.5 | 82 | 800 | |
| | 2015.07-2019.04 | 9AT | R | R | SUV 4WD M 274.920 | Date to:2016.09 | GDS83627 | Drive Shaft | | 27 | 27 | 68.5 | 82 | 805 | |
| | 2015.07-2019.04 | 9AT | R | R | SUV 4WD M 274.920 | Date from:2016.10 | GDS83741 | Drive Shaft | | 27 | 27 | 68.5 | 82 | 800 | |
| | 2016.10-2019.04 | 9AT | F | L | SUV 4WD M 274.920 | | GDS83655 | Drive Shaft | | 30 | 27 | 71 | 56 | 526 | |
| | 2016.10-2019.04 | 9AT | F | L | SUV 4WD M 274.920 | | GDS83784 | Drive Shaft | | 30 | 27 | 71 | 56 | 524 | |
| | 2016.10-2019.04 | 9AT | F | R | SUV 4WD M 274.920 | 6 balls | GDS83742 | Drive Shaft | | 30 | 24 | 71 | 56 | 592 | |
| | 2016.10-2019.04 | 9AT | F | R | SUV 4WD M 274.920 | 8 balls | GDS84270 | Drive Shaft | | 30 | 24 | 71 | 56 | 591 | |
| | 2016.10-2019.04 | 9AT | F | L/R | SUV 4WD M 274.920 | 8 balls,Neoprene | GCO82353 | Outer Joint | | 30 | 25 | 71 | 56 | 53.5 | I |
| | 2016.10-2019.04 | 9AT | F | L/R | SUV 4WD M 274.920 | 6 balls | GCO82479 | Outer Joint | | 30 | 24 | 71 | 56 | 55.5 | I |
| | 2016.10-2019.04 | 9AT | F | L | SUV 4WD M 274.920 | | GCI82313 | Inner Joint | | 27 | 24 | 41 | | 155.5 | |
| | 2016.10-2019.04 | 9AT | F | R | SUV 4WD M 274.920 | | GCI82342 | Inner Joint | | 24 | 24 | 35 | 54.5 | 156 | |
| | 2016.10-2019.04 | 9AT | R | L | SUV 4WD M 274.920 | | GDS83743 | Drive Shaft | | 27 | 27 | 68.5 | 82 | 800 | |
| | 2016.10-2019.04 | 9AT | R | R | SUV 4WD M 274.920 | | GDS83741 | Drive Shaft | | 27 | 27 | 68.5 | 82 | 800 | |
| | 2019.04-2022.06 | 9AT | F | L | SUV 4WD OM 654.920 | For left-hand drive vehicles | GDS83655 | Drive Shaft | | 30 | 27 | 71 | 56 | 526 | |
| | 2019.04-2022.06 | 9AT | F | L | SUV 4WD OM 654.920 | | GDS83784 | Drive Shaft | | 30 | 27 | 71 | 56 | 524 | |
| | 2019.04-2022.06 | 9AT | F | R | SUV 4WD OM 654.920 | For left-hand drive vehicles | GDS83782 | Drive Shaft | | 30 | 27 | 71 | 56 | 557 | |
| | 2019.04-2022.06 | 9AT | F | L/R | SUV 4WD OM 654.920 | 8 balls;For left-hand drive vehicles | GCO82353 | Outer Joint | | 30 | 25 | 71 | 56 | 53.5 | I |
| | 2019.04-2022.06 | 9AT | F | L/R | SUV 4WD OM 654.920 | 6 balls;For left-hand drive vehicles | GCO82479 | Outer Joint | | 30 | 24 | 71 | 56 | 55.5 | I |
| | 2019.04-2022.06 | 9AT | F | L | SUV 4WD OM 654.920 | For left-hand drive vehicles | GCI82313 | Inner Joint | | 27 | 24 | 41 | | 155.5 | |
| | 2019.04-2022.06 | 9AT | F | R | SUV 4WD OM 654.920 | For left-hand drive vehicles | GCI82161 | Inner Joint | | 27 | 24 | 38 | 62 | 124.5 | |
| | 2019.04-2022.06 | 9AT | F | L | SUV 4WD OM 654.920 | | GDS87029 | Intermediate Shaft | | 27 | 27 | | | 510 | |
| | 2019.04-2022.06 | 9AT | R | L/R | SUV 4WD OM 654.920 | For left-hand drive vehicles | GDS83743 | Drive Shaft | | 27 | 27 | 68.5 | 82 | 800 | |
| | 2019.04-2023.03 | 9AT | F | L | SUV 4WD OM 654.920 | | GDS83655 | Drive Shaft | | 30 | 27 | 71 | 56 | 526 | |
| | 2019.04-2023.03 | 9AT | F | L | SUV 4WD OM 654.920 | | GDS83784 | Drive Shaft | | 30 | 27 | 71 | 56 | 524 | |
| | 2019.04-2023.03 | 9AT | F | R | SUV 4WD OM 654.920 | Outer teeth of tranm.side:24,6 balls,CR | GDS83742 | Drive Shaft | | 30 | 24 | 71 | 56 | 592 | |
| | 2019.04-2023.03 | 9AT | F | R | SUV 4WD OM 654.920 | For SA code:M014 | GDS83782 | Drive Shaft | | 30 | 27 | 71 | 56 | 557 | |
| | 2019.04-2023.03 | 9AT | F | R | SUV 4WD OM 654.920 | Outer teeth of tranm.side:24,8 balls,TPE | GDS84270 | Drive Shaft | | 30 | 24 | 71 | 56 | 591 | |
| | 2019.04-2023.03 | 9AT | F | L/R | SUV 4WD OM 654.920 | 8 balls,Neoprene;For SA code:M014 | GCO82353 | Outer Joint | | 30 | 25 | 71 | 56 | 53.5 | I |
| | 2019.04-2023.03 | 9AT | F | L/R | SUV 4WD OM 654.920 | 6 balls | GCO82479 | Outer Joint | | 30 | 24 | 71 | 56 | 55.5 | I |
| | 2019.04-2023.03 | 9AT | F | L | SUV 4WD OM 654.920 | | GCI82313 | Inner Joint | | 27 | 24 | 41 | | 155.5 | |
| | 2019.04-2023.03 | 9AT | F | R | SUV 4WD OM 654.920 | | GCI82161 | Inner Joint | | 27 | 24 | 38 | 62 | 124.5 | |
| | 2019.04-2023.03 | 9AT | F | R | SUV 4WD OM 654.920 | | GCI82342 | Inner Joint | | 24 | 24 | 35 | 54.5 | 156 | |
| | 2019.04-2023.03 | 9AT | F | L | SUV 4WD OM 654.920 | | GDS87029 | Intermediate Shaft | | 27 | 27 | | | 510 | |
| | 2019.04-2023.03 | 9AT | R | L/R | SUV 4WD OM 654.920 | For left-hand drive vehicles | GDS83743 | Drive Shaft | | 27 | 27 | 68.5 | 82 | 800 | |
| 2.0 (190 kw) | 2015.09-2019.05 | 9AT | F | L | SUV 4WD M 274.920 | 6 balls | GDS83784 | Drive Shaft | | 30 | 27 | 71 | 56 | 524 | |
| | 2015.09-2019.05 | 9AT | F | R | SUV 4WD M 274.920 | | GDS83782 | Drive Shaft | | 30 | 27 | 71 | 56 | 557 | |
| | 2015.09-2019.05 | 9AT | F | L | SUV 4WD M 274.920 | 6 balls | GCO82479 | Outer Joint | | 30 | 24 | 71 | 56 | 55.5 | I |
| | 2015.09-2019.05 | 9AT | F | L/R | SUV 4WD M 274.920 | 8 balls | GCO82353 | Outer Joint | | 30 | 25 | 71 | 56 | 53.5 | I |
| | 2015.09-2019.05 | 9AT | F | L | SUV 4WD M 274.920 | | GCI82313 | Inner Joint | | 27 | 24 | 41 | | 155.5 | |
| | 2015.09-2019.05 | 9AT | F | R | SUV 4WD M 274.920 | | GCI82161 | Inner Joint | | 27 | 24 | 38 | 62 | 124.5 | |
| | 2015.09-2019.05 | 9AT | F | L | SUV 4WD M 274.920 | | GDS87029 | Intermediate Shaft | | 27 | 27 | | | 510 | |
| | 2015.09-2019.05 | AT | F | L | SUV 4WD M 274.920 | 8 balls | GDS83655 | Drive Shaft | | 30 | 27 | 71 | 56 | 526 | |
| | 2015.09-2019.05 | 9AT | R | L | SUV 4WD M 274.920 | For Modelcode:253949;For Modelcode:253984,For left-hand drive vehicles | GDS83743 | Drive Shaft | | 27 | 27 | 68.5 | 82 | 800 | |
| | 2015.09-2019.05 | 9AT | R | R | SUV 4WD M 274.920 | For Modelcode:253949;For Modelcode:253984,For left-hand drive vehicles | GDS83741 | Drive Shaft | | 27 | 27 | 68.5 | 82 | 800 | |
| | 2016.11-2019.05 | 9AT | F | L | SUV 4WD M 274.920 | 6 balls | GDS83784 | Drive Shaft | | 30 | 27 | 71 | 56 | 524 | |
| | 2016.11-2019.05 | 9AT | F | R | SUV 4WD M 274.920 | For Modelcode:253349,6 balls | GDS83742 | Drive Shaft | | 30 | 24 | 71 | 56 | 592 | |
| | 2016.11-2019.05 | 9AT | F | R | SUV 4WD M 274.920 | For Modelcode:253384 | GDS83782 | Drive Shaft | | 30 | 27 | 71 | 56 | 557 | |
| | 2016.11-2019.05 | 9AT | F | R | SUV 4WD M 274.920 | Model code:253349,8 balls | GDS84270 | Drive Shaft | | 30 | 24 | 71 | 56 | 591 | |
| | 2016.11-2019.05 | 9AT | F | L/R | SUV 4WD M 274.920 | 8 balls | GCO82353 | Outer Joint | | 30 | 25 | 71 | 56 | 53.5 | I |
| | 2016.11-2019.05 | 9AT | F | L/R | SUV 4WD M 274.920 | 6 balls | GCO82479 | Outer Joint | | 30 | 24 | 71 | 56 | 55.5 | I |
| | 2016.11-2019.05 | 9AT | F | L | SUV 4WD M 274.920 | | GCI82313 | Inner Joint | | 27 | 24 | 41 | | 155.5 | |
| | 2016.11-2019.05 | 9AT | F | R | SUV 4WD M 274.920 | For Modelcode:253384 | GCI82161 | Inner Joint | | 27 | 24 | 38 | 62 | 124.5 | |

| | YEAR | TRANSM. | F/R | L/R | BODY STYLE & DRIVE TYPE & ENGINE | REMARKS | G-AP Ref. | PRODUCT | ABS | Technical Specifications A | B | C | H | L | P |
|---|---|---|---|---|---|---|---|---|---|---|---|---|---|---|---|
| **MERCEDES-BENZ GLC300** | | | | | | | | | | | | | | | |
| 2.0 (190 kw) | 2016.11-2019.05 | 9AT | F | R | SUV 4WD M 274.920 | For Modelcode:253349 | GCI82342 | Inner Joint | | 24 | 24 | 35 | 54.5 | 156 | |
| | 2016.11-2019.05 | 9AT | F | L | SUV 4WD M 274.920 | | GDS87029 | Intermediate Shaft | | 27 | 27 | | | 510 | |
| | 2016.11-2019.05 | AT | F | L | SUV 4WD M 274.920 | 8 balls | GDS83655 | Drive Shaft | | 30 | 27 | 71 | 56 | 526 | |
| | 2016.11-2019.05 | 9AT | R | L | SUV 4WD M 274.920 | For Modelcode:253349;For Modelcode:253384,For left-hand drive vehicles | GDS83743 | Drive Shaft | | 27 | 27 | 68.5 | 82 | 800 | |
| | 2016.11-2019.05 | 9AT | R | R | SUV 4WD M 274.920 | For Modelcode:253349;For Modelcode:253384,For left-hand drive vehicles | GDS83741 | Drive Shaft | | 27 | 27 | 68.5 | 82 | 800 | |
| | 2019.04-2022.06 | 9AT | F | L | SUV 4WD M 264.920 | For left-hand drive vehicles | GDS83655 | Drive Shaft | | 30 | 27 | 71 | 56 | 526 | |
| | 2019.04-2022.06 | 9AT | F | L | SUV 4WD M 264.920 | | GDS83784 | Drive Shaft | | 30 | 27 | 71 | 56 | 524 | |
| | 2019.04-2022.06 | 9AT | F | R | SUV 4WD M 264.920 | For left-hand drive vehicles | GDS83782 | Drive Shaft | | 30 | 27 | 71 | 56 | 557 | |
| | 2019.04-2022.06 | 9AT | F | L/R | SUV 4WD M 264.920 | 8 balls;For left-hand drive vehicles | GCO82353 | Outer Joint | | 30 | 25 | 71 | 56 | 53.5 | I |
| | 2019.04-2022.06 | 9AT | F | L/R | SUV 4WD M 264.920 | 6 balls;For left-hand drive vehicles | GCO82479 | Outer Joint | | 30 | 24 | 71 | 56 | 55.5 | I |
| | 2019.04-2022.06 | 9AT | F | L | SUV 4WD M 264.920 | For left-hand drive vehicles | GCI82313 | Inner Joint | | 27 | 24 | 41 | | 155.5 | |
| | 2019.04-2022.06 | 9AT | F | R | SUV 4WD M 264.920 | For left-hand drive vehicles | GCI82161 | Inner Joint | | 27 | 24 | 38 | 62 | 124.5 | |
| | 2019.04-2022.06 | 9AT | F | L | SUV 4WD M 264.920 | | GDS87029 | Intermediate Shaft | | 27 | 27 | | | 510 | |
| | 2019.04-2022.06 | 9AT | R | L | SUV 4WD M 264.920 | For Modelcode:253349;For Modelcode:253384,For left-hand drive vehicles | GDS83743 | Drive Shaft | | 27 | 27 | 68.5 | 82 | 800 | |
| | 2019.04-2022.06 | 9AT | R | R | SUV 4WD M 264.920 | For Modelcode:253349;For Modelcode:253384,For left-hand drive vehicles | GDS83741 | Drive Shaft | | 27 | 27 | 68.5 | 82 | 800 | |
| | 2019.04-2023.03 | 9AT | F | L | SUV 4WD M 264.920 | | GDS83655 | Drive Shaft | | 30 | 27 | 71 | 56 | 526 | |
| | 2019.04-2023.03 | 9AT | F | L | SUV 4WD M 264.920 | | GDS83784 | Drive Shaft | | 30 | 27 | 71 | 56 | 524 | |
| | 2019.04-2023.03 | 9AT | F | R | SUV 4WD M 264.920 | For Modelcode:253349;Outer teeth of tranm.side:24,6 balls | GDS83742 | Drive Shaft | | 30 | 24 | 71 | 56 | 592 | |
| | 2019.04-2023.03 | 9AT | F | R | SUV 4WD M 264.920 | For Modelcode:253384 | GDS83782 | Drive Shaft | | 30 | 27 | 71 | 56 | 557 | |
| | 2019.04-2023.03 | 9AT | F | R | SUV 4WD M 264.920 | For Modelcode:253349;Outer teeth of tranm.side:24,8 balls | GDS84270 | Drive Shaft | | 30 | 24 | 71 | 56 | 591 | |
| | 2019.04-2023.03 | 9AT | F | L/R | SUV 4WD M 264.920 | 8 balls,Neoprene;For Modelcode:253384 | GCO82353 | Outer Joint | | 30 | 25 | 71 | 56 | 53.5 | I |
| | 2019.04-2023.03 | 9AT | F | L/R | SUV 4WD M 264.920 | 6 balls | GCO82479 | Outer Joint | | 30 | 24 | 71 | 56 | 55.5 | I |
| | 2019.04-2023.03 | 9AT | F | L | SUV 4WD M 264.920 | | GCI82313 | Inner Joint | | 27 | 24 | 41 | | 155.5 | |
| | 2019.04-2023.03 | 9AT | F | R | SUV 4WD M 264.920 | | GCI82161 | Inner Joint | | 27 | 24 | 38 | 62 | 124.5 | |
| | 2019.04-2023.03 | 9AT | F | R | SUV 4WD M 264.920 | For Modelcode:253349 | GCI82342 | Inner Joint | | 24 | 24 | 35 | 54.5 | 156 | |
| | 2019.04-2023.03 | 9AT | F | L | SUV 4WD M 264.920 | | GDS87029 | Intermediate Shaft | | 27 | 27 | | | 510 | |
| | 2019.04-2023.03 | 9AT | R | L | SUV 4WD M 264.920 | For Modelcode:253349;For Modelcode:253384,For left-hand drive vehicles | GDS83743 | Drive Shaft | | 27 | 27 | 68.5 | 82 | 800 | |
| | 2019.04-2023.03 | 9AT | R | R | SUV 4WD M 264.920 | For Modelcode:253349;For Modelcode:253384,For left-hand drive vehicles | GDS83741 | Drive Shaft | | 27 | 27 | 68.5 | 82 | 800 | |
| | 2019.11-2023.03 | 9AT | F | L | SUV 4WD M 264.920 | 8 balls | GDS83655 | Drive Shaft | | 30 | 27 | 71 | 56 | 526 | |
| | 2019.11-2023.03 | 9AT | F | L | SUV 4WD M 264.920 | 6 balls | GDS83784 | Drive Shaft | | 30 | 27 | 71 | 56 | 524 | |
| | 2019.11-2023.03 | 9AT | F | R | SUV 4WD M 264.920 | | GDS83782 | Drive Shaft | | 30 | 27 | 71 | 56 | 557 | |
| | 2019.11-2023.03 | 9AT | F | L/R | SUV 4WD M 264.920 | 8 balls | GCO82353 | Outer Joint | | 30 | 25 | 71 | 56 | 53.5 | I |
| | 2019.11-2023.03 | 9AT | F | L/R | SUV 4WD M 264.920 | 6 balls | GCO82479 | Outer Joint | | 30 | 24 | 71 | 56 | 55.5 | I |
| | 2019.11-2023.03 | 9AT | F | L | SUV 4WD M 264.920 | | GCI82313 | Inner Joint | | 27 | 24 | 41 | | 155.5 | |
| | 2019.11-2023.03 | 9AT | F | R | SUV 4WD M 264.920 | For SA code:550,For vehicles with towbar | GCI82161 | Inner Joint | | 27 | 24 | 38 | 62 | 124.5 | |
| | 2019.11-2023.03 | 9AT | F | L | SUV 4WD M 264.920 | | GDS87029 | Intermediate Shaft | | 27 | 27 | | | 510 | |
| | 2019.11-2023.03 | 9AT | R | L | SUV 4WD M 264.920 | For left-hand drive vehicles | GDS83743 | Drive Shaft | | 27 | 27 | 68.5 | 82 | 800 | |
| | 2019.11-2023.03 | 9AT | R | R | SUV 4WD M 264.920 | For left-hand drive vehicles | GDS83741 | Drive Shaft | | 27 | 27 | 68.5 | 82 | 800 | |
| | 2022.06- | 9AT | F | L | SUV 4WD M 254.920 | | GDS57779 | Drive Shaft | | 30 | 27 | 65 | 53 | 538 | |
| | 2022.06- | 9AT | F | R | SUV 4WD M 254.920 | | GDS57780 | Drive Shaft | | 30 | 26 | 65 | 53 | 577 | |
| | 2022.06- | 9AT | F | L/R | SUV 4WD M 254.920 | | GCO83704 | Outer Joint | | 30 | 24 | 65 | 53 | 56 | M |
| | 2022.06- | 9AT | F | L | SUV 4WD M 254.920 | | GCI83852 | Inner Joint | | 27 | 32 | 41.5 | | 158 | |
| | 2022.06- | 9AT | F | R | SUV 4WD M 254.920 | | GCI83853 | Inner Joint | | 26 | 32 | 35 | 60 | 125.5 | |
| | 2023.07- | 9AT | F | L | SUV 4WD M 254.920 | | GDS57779 | Drive Shaft | | 30 | 27 | 65 | 53 | 538 | |
| | 2023.07- | 9AT | F | R | SUV 4WD M 254.920 | | GDS57780 | Drive Shaft | | 30 | 26 | 65 | 53 | 577 | |
| | 2023.07- | 9AT | F | L/R | SUV 4WD M 254.920 | | GCO83704 | Outer Joint | | 30 | 24 | 65 | 53 | 56 | M |
| | 2023.07- | 9AT | F | L | SUV 4WD M 254.920 | | GCI83852 | Inner Joint | | 27 | 32 | 41.5 | | 158 | |
| | 2023.07- | 9AT | F | R | SUV 4WD M 254.920 | | GCI83853 | Inner Joint | | 26 | 32 | 35 | 60 | 125.5 | |
| 2.0 (198 kw) | 2022.09- | 9AT | F | L | SUV 4WD OM 654.820 | | GDS57779 | Drive Shaft | | 30 | 27 | 65 | 53 | 538 | |
| | 2022.09- | 9AT | F | L/R | SUV 4WD OM 654.820 | | GCO83704 | Outer Joint | | 30 | 24 | 65 | 53 | 56 | M |
| | 2022.09- | 9AT | F | L | SUV 4WD OM 654.820 | | GCI83852 | Inner Joint | | 27 | 32 | 41.5 | | 158 | |
| | 2023.07- | 9AT | F | L | SUV 4WD OM 654.820 | | GDS57779 | Drive Shaft | | 30 | 27 | 65 | 53 | 538 | |
| | 2023.07- | 9AT | F | L/R | SUV 4WD OM 654.820 | | GCO83704 | Outer Joint | | 30 | 24 | 65 | 53 | 56 | M |
| | 2023.07- | 9AT | F | L | SUV 4WD OM 654.820 | | GCI83852 | Inner Joint | | 27 | 32 | 41.5 | | 158 | |
| 2.0 (225 kw) | 2020.05-2022.06 | 9AT | F | L | SUV 4WD OM 654.920 | | GDS83655 | Drive Shaft | | 30 | 27 | 71 | 56 | 526 | |
| | 2020.05-2022.06 | 9AT | F | L | SUV 4WD OM 654.920 | | GDS83784 | Drive Shaft | | 30 | 27 | 71 | 56 | 524 | |
| | 2020.05-2022.06 | 9AT | F | R | SUV 4WD OM 654.920 | For right-hand drive vehicles;Outer teeth of tranm.side:24,6 balls | GDS83742 | Drive Shaft | | 30 | 24 | 71 | 56 | 592 | |
| | 2020.05-2022.06 | 9AT | F | R | SUV 4WD OM 654.920 | For left-hand drive vehicles | GDS83782 | Drive Shaft | | 30 | 27 | 71 | 56 | 557 | |
| | 2020.05-2022.06 | 9AT | F | R | SUV 4WD OM 654.920 | For right-hand drive vehicles;Outer teeth of tranm.side:24,8 balls | GDS84270 | Drive Shaft | | 30 | 24 | 71 | 56 | 591 | |
| | 2020.05-2022.06 | 9AT | F | L/R | SUV 4WD OM 654.920 | 8 balls,Neoprene | GCO82353 | Outer Joint | | 30 | 25 | 71 | 56 | 53.5 | I |
| | 2020.05-2022.06 | 9AT | F | L/R | SUV 4WD OM 654.920 | 6 balls | GCO82479 | Outer Joint | | 30 | 24 | 71 | 56 | 55.5 | I |
| | 2020.05-2022.06 | 9AT | F | L | SUV 4WD OM 654.920 | | GCI82313 | Inner Joint | | 27 | 24 | 41 | | 155.5 | |
| | 2020.05-2022.06 | 9AT | F | R | SUV 4WD OM 654.920 | | GCI82161 | Inner Joint | | 27 | 24 | 38 | 62 | 124.5 | |
| | 2020.05-2022.06 | 9AT | F | R | SUV 4WD OM 654.920 | For right-hand drive vehicles | GCI82342 | Inner Joint | | 24 | 24 | 35 | 54.5 | 156 | |
| | 2020.05-2022.06 | 9AT | F | L | SUV 4WD OM 654.920 | | GDS87029 | Intermediate Shaft | | 27 | 27 | | | 510 | |

| | YEAR | TRANSM. | F/R | L/R | BODY STYLE & DRIVE TYPE & ENGINE | REMARKS | G-AP Ref. | PRODUCT | ABS | Technical Specifications A | B | C | H | L | P |
|---|---|---|---|---|---|---|---|---|---|---|---|---|---|---|---|
| **MERCEDES-BENZ** | | | | | | | | | | | | | | | |
| **GLC300** | | | | | | | | | | | | | | | |
| 2.0 (225 kw) | 2020.05-2023.03 | 9AT | F | L | SUV 4WD OM 654.920 | 8 balls | GDS83655 | Drive Shaft | | 30 | 27 | 71 | 56 | 526 | |
| | 2020.05-2023.03 | 9AT | F | L | SUV 4WD OM 654.920 | 6 balls | GDS83784 | Drive Shaft | | 30 | 27 | 71 | 56 | 524 | |
| | 2020.05-2023.03 | 9AT | F | R | SUV 4WD OM 654.920 | | GDS83782 | Drive Shaft | | 30 | 27 | 71 | 56 | 557 | |
| | 2020.05-2023.03 | 9AT | F | L/R | SUV 4WD OM 654.920 | 8 balls | GCO82353 | Outer Joint | | 30 | 25 | 71 | 56 | 53.5 | I |
| | 2020.05-2023.03 | 9AT | F | L/R | SUV 4WD OM 654.920 | 6 balls | GCO82479 | Outer Joint | | 30 | 24 | 71 | 56 | 55.5 | I |
| | 2020.05-2023.03 | 9AT | F | L | SUV 4WD OM 654.920 | | GCI82313 | Inner Joint | | 27 | 24 | 41 | | 155.5 | |
| | 2020.05-2023.03 | 9AT | F | R | SUV 4WD OM 654.920 | | GCI82161 | Inner Joint | | 27 | 24 | 38 | 62 | 124.5 | |
| 2.0 (230 kw) | 2022.09- | 9AT | F | L | SUV 4WD M 254.920 | | GDS57779 | Drive Shaft | | 30 | 27 | 65 | 53 | 538 | |
| | 2022.09- | 9AT | F | L/R | SUV 4WD M 254.920 | | GCO83704 | Outer Joint | | 30 | 24 | 65 | 53 | 56 | M |
| | 2022.09- | 9AT | F | L | SUV 4WD M 254.920 | | GCI83852 | Inner Joint | | 27 | 32 | 41.5 | | 158 | |
| | 2022.09- | 9AT | R | L/R | SUV 4WD M 254.920 | | GDS57899 | Drive Shaft | | 30 | 30 | | 53 | 785 | |
| | 2023.07- | 9AT | F | L | SUV 4WD M 254.920 | | GDS57779 | Drive Shaft | | 30 | 27 | 65 | 53 | 538 | |
| | 2023.07- | 9AT | F | L/R | SUV 4WD M 254.920 | | GCO83704 | Outer Joint | | 30 | 24 | 65 | 53 | 56 | M |
| | 2023.07- | 9AT | F | L | SUV 4WD M 254.920 | | GCI83852 | Inner Joint | | 27 | 32 | 41.5 | | 158 | |
| | 2023.07- | 9AT | R | R | SUV 4WD M 254.920 | | GDS57899 | Drive Shaft | | 30 | 30 | | 53 | 785 | |
| 2.0 (235 kw) | 2019.11-2022.06 | 9AT | F | L | SUV 4WD M 274.920 | 8 balls | GDS83655 | Drive Shaft | | 30 | 27 | 71 | 56 | 526 | |
| | 2019.11-2022.06 | 9AT | F | L | SUV 4WD M 274.920 | 6 balls | GDS83784 | Drive Shaft | | 30 | 27 | 71 | 56 | 524 | |
| | 2019.11-2022.06 | 9AT | F | R | SUV 4WD M 274.920 | | GDS83782 | Drive Shaft | | 30 | 27 | 71 | 56 | 557 | |
| | 2019.11-2022.06 | 9AT | F | L/R | SUV 4WD M 274.920 | 8 balls | GCO82353 | Outer Joint | | 30 | 25 | 71 | 56 | 53.5 | I |
| | 2019.11-2022.06 | 9AT | F | L/R | SUV 4WD M 274.920 | 6 balls | GCO82479 | Outer Joint | | 30 | 24 | 71 | 56 | 55.5 | I |
| | 2019.11-2022.06 | 9AT | F | L | SUV 4WD M 274.920 | | GCI82313 | Inner Joint | | 27 | 24 | 41 | | 155.5 | |
| | 2019.11-2022.06 | 9AT | F | R | SUV 4WD M 274.920 | | GCI82161 | Inner Joint | | 27 | 24 | 38 | 62 | 124.5 | |
| | 2019.11-2022.06 | 9AT | F | L | SUV 4WD M 274.920 | | GDS87029 | Intermediate Shaft | | 27 | 27 | | | 510 | |
| | 2019.11-2022.06 | 9AT | R | L/R | SUV 4WD M 274.920 | | GDS84018 | Drive Shaft | | 27 | 30 | 68.5 | 82 | 810 | |
| | 2019.11-2023.03 | 9AT | F | L | SUV 4WD M 274.920 | 8 balls | GDS83655 | Drive Shaft | | 30 | 27 | 71 | 56 | 526 | |
| | 2019.11-2023.03 | 9AT | F | L | SUV 4WD M 274.920 | 6balls | GDS83784 | Drive Shaft | | 30 | 27 | 71 | 56 | 524 | |
| | 2019.11-2023.03 | 9AT | F | R | SUV 4WD M 274.920 | For right-hand drive vehicles;Outer teeth of tranm.side:24,6 balls | GDS83742 | Drive Shaft | | 30 | 24 | 71 | 56 | 592 | |
| | 2019.11-2023.03 | 9AT | F | R | SUV 4WD M 274.920 | For left-hand drive vehicles | GDS83782 | Drive Shaft | | 30 | 27 | 71 | 56 | 557 | |
| | 2019.11-2023.03 | 9AT | F | R | SUV 4WD M 274.920 | For right-hand drive vehicles;Outer teeth of tranm.side:24,8 balls | GDS84270 | Drive Shaft | | 30 | 24 | 71 | 56 | 591 | |
| | 2019.11-2023.03 | 9AT | F | L/R | SUV 4WD M 274.920 | 8 balls,Neoprene | GCO82353 | Outer Joint | | 30 | 25 | 71 | 56 | 53.5 | I |
| | 2019.11-2023.03 | 9AT | F | L/R | SUV 4WD M 274.920 | 6 balls | GCO82479 | Outer Joint | | 30 | 24 | 71 | 56 | 55.5 | I |
| | 2019.11-2023.03 | 9AT | F | L | SUV 4WD M 274.920 | | GCI82313 | Inner Joint | | 27 | 24 | 41 | | 155.5 | |
| | 2019.11-2023.03 | 9AT | F | R | SUV 4WD M 274.920 | | GCI82161 | Inner Joint | | 27 | 24 | 38 | 62 | 124.5 | |
| | 2019.11-2023.03 | 9AT | F | R | SUV 4WD M 274.920 | For right-hand drive vehicles | GCI82342 | Inner Joint | | 24 | 24 | 35 | 54.5 | 156 | |
| | 2019.11-2023.03 | 9AT | F | L | SUV 4WD M 274.920 | | GDS87029 | Intermediate Shaft | | 27 | 27 | | | 510 | |
| 2.0 (245 kw) | 2022.09- | 9AT | F | L | SUV 4WD OM 654.820 | | GDS57779 | Drive Shaft | | 30 | 27 | 65 | 53 | 538 | |
| | 2022.09- | 9AT | F | L/R | SUV 4WD OM 654.820 | | GCO83704 | Outer Joint | | 30 | 24 | 65 | 53 | 56 | M |
| | 2022.09- | 9AT | F | L | SUV 4WD OM 654.820 | | GCI83852 | Inner Joint | | 27 | 32 | 41.5 | | 158 | |
| | 2023.07- | 9AT | F | L | SUV 4WD OM 654.820 | | GDS57779 | Drive Shaft | | 30 | 27 | 65 | 53 | 538 | |
| | 2023.07- | 9AT | F | L/R | SUV 4WD OM 654.820 | | GCO83704 | Outer Joint | | 30 | 24 | 65 | 53 | 56 | M |
| | 2023.07- | 9AT | F | L | SUV 4WD OM 654.820 | | GCI83852 | Inner Joint | | 27 | 32 | 41.5 | | 158 | |
| **GLC300de** | | | | | | | | | | | | | | | |
| 2.0 (245 kw) | 2025.08- | | F | L | SUV 4WD OM654.820 | | GDS57779 | Drive Shaft | | 30 | 27 | 65 | 53 | 538 | |
| | 2025.08- | | F | L/R | SUV 4WD OM654.820 | | GCO83704 | Outer Joint | | 30 | 24 | 65 | 53 | 56 | M |
| | 2025.08- | | F | L | SUV 4WD OM654.820 | | GCI83852 | Inner Joint | | 27 | 32 | 41.5 | | 158 | |
| **GLC300e** | | | | | | | | | | | | | | | |
| 2.0 (230 kw) | 2025.08- | | F | L | SUV 4WD M254.920 | | GDS57779 | Drive Shaft | | 30 | 27 | 65 | 53 | 538 | |
| | 2025.08- | | F | L/R | SUV 4WD M254.920 | | GCO83704 | Outer Joint | | 30 | 24 | 65 | 53 | 56 | M |
| | 2025.08- | | F | L | SUV 4WD M254.920 | | GCI83852 | Inner Joint | | 27 | 32 | 41.5 | | 158 | |
| | 2025.08- | | R | R | SUV 4WD M254.920 | | GDS57899 | Drive Shaft | | 30 | 30 | | 53 | 785 | |
| **GLC350** | | | | | | | | | | | | | | | |
| 2.0 (235 kw) | 2016.01-2019.04 | 7AT | F | L | SUV 4WD M 274.920 | 8 balls | GDS83655 | Drive Shaft | | 30 | 27 | 71 | 56 | 526 | |
| | 2016.01-2019.04 | 7AT | F | L | SUV 4WD M 274.920 | 6 balls | GDS83784 | Drive Shaft | | 30 | 27 | 71 | 56 | 524 | |
| | 2016.01-2019.04 | 7AT | F | R | SUV 4WD M 274.920 | | GDS83782 | Drive Shaft | | 30 | 27 | 71 | 56 | 557 | |
| | 2016.01-2019.04 | 7AT | F | L/R | SUV 4WD M 274.920 | 8 balls;For SA code:430 | GCO82353 | Outer Joint | | 30 | 25 | 71 | 56 | 53.5 | I |
| | 2016.01-2019.04 | 7AT | F | L/R | SUV 4WD M 274.920 | 6 balls | GCO82479 | Outer Joint | | 30 | 24 | 71 | 56 | 55.5 | I |
| | 2016.01-2019.04 | 7AT | F | L | SUV 4WD M 274.920 | | GCI82313 | Inner Joint | | 27 | 24 | 41 | | 155.5 | |
| | 2016.01-2019.04 | 7AT | F | R | SUV 4WD M 274.920 | For SA code:430 | GCI82161 | Inner Joint | | 27 | 24 | 38 | 62 | 124.5 | |
| | 2016.01-2019.04 | 7AT | F | R | SUV 4WD M 274.920 | | GCI82342 | Inner Joint | | 24 | 24 | 35 | 54.5 | 156 | |
| | 2016.01-2019.04 | 7AT | F | L | SUV 4WD M 274.920 | | GDS87029 | Intermediate Shaft | | 27 | 27 | | | 510 | |
| | 2016.01-2019.04 | 7AT | R | L/R | SUV 4WD M 274.920 | | GDS84018 | Drive Shaft | | 27 | 30 | 68.5 | 82 | 810 | |
| | 2016.10-2019.04 | 7AT | F | L | SUV 4WD M 274.920 | | GDS83655 | Drive Shaft | | 30 | 27 | 71 | 56 | 526 | |
| | 2016.10-2019.04 | 7AT | F | L | SUV 4WD M 274.920 | | GDS83784 | Drive Shaft | | 30 | 27 | 71 | 56 | 524 | |
| | 2016.10-2019.04 | 7AT | F | R | SUV 4WD M 274.920 | Outer teeth of tranm.side:24,6 balls | GDS83742 | Drive Shaft | | 30 | 24 | 71 | 56 | 592 | |
| | 2016.10-2019.04 | 7AT | F | R | SUV 4WD M 274.920 | For left-hand drive vehicles | GDS83782 | Drive Shaft | | 30 | 27 | 71 | 56 | 557 | |

| | YEAR | TRANSM. | F/R | L/R | BODY STYLE & DRIVE TYPE & ENGINE | REMARKS | G-AP Ref. | PRODUCT | ABS | Technical Specifications A | B | C | H | L | P |
|---|---|---|---|---|---|---|---|---|---|---|---|---|---|---|---|
| **MERCEDES-BENZ** | | | | | | | | | | | | | | | |
| **GLC350** | | | | | | | | | | | | | | | |
| 2.0 (235 kw) | 2016.10-2019.04 | 7AT | F | R | SUV 4WD M 274.920 | For right-hand drive vehicles;Outer teeth of tranm.side:24,8 balls | GDS84270 | Drive Shaft | | 30 | 24 | 71 | 56 | 591 | |
| | 2016.10-2019.04 | 7AT | F | L/R | SUV 4WD M 274.920 | 8 balls,Neoprene | GCO82353 | Outer Joint | | 30 | 25 | 71 | 56 | 53.5 | I |
| | 2016.10-2019.04 | 7AT | F | L/R | SUV 4WD M 274.920 | 6 balls | GCO82479 | Outer Joint | | 30 | 24 | 71 | 56 | 55.5 | I |
| | 2016.10-2019.04 | 7AT | F | L | SUV 4WD M 274.920 | | GCI82313 | Inner Joint | | 27 | 24 | 41 | | 155.5 | |
| | 2016.10-2019.04 | 7AT | F | R | SUV 4WD M 274.920 | | GCI82342 | Inner Joint | | 24 | 24 | 35 | 54.5 | 156 | |
| | 2016.10-2019.04 | 7AT | F | L | SUV 4WD M 274.920 | | GDS87029 | Intermediate Shaft | | 27 | 27 | | | 510 | |
| | 2016.10-2019.04 | 7AT | R | L/R | SUV 4WD M 274.920 | | GDS84018 | Drive Shaft | | 27 | 30 | 68.5 | 82 | 810 | |
| 3.0 (190 kw) | 2016.10-2019.04 | 9AT | F | L | SUV 4WD OM 642.873 | 8 balls | GDS83655 | Drive Shaft | | 30 | 27 | 71 | 56 | 526 | |
| | 2016.10-2019.04 | 9AT | F | L | SUV 4WD OM 642.873 | | GDS83655 | Drive Shaft | | 30 | 27 | 71 | 56 | 526 | |
| | 2016.10-2019.04 | 9AT | F | L | SUV 4WD OM 642.873 | 6 balls | GDS83784 | Drive Shaft | | 30 | 27 | 71 | 56 | 524 | |
| | 2016.10-2019.04 | 9AT | F | L | SUV 4WD OM 642.873 | | GDS83784 | Drive Shaft | | 30 | 27 | 71 | 56 | 524 | |
| | 2016.10-2019.04 | 9AT | F | R | SUV 4WD OM 642.873 | Outer teeth of tranm.side:24,6 balls | GDS83742 | Drive Shaft | | 30 | 24 | 71 | 56 | 592 | |
| | 2016.10-2019.04 | 9AT | F | R | SUV 4WD OM 642.873 | | GDS83782 | Drive Shaft | | 30 | 27 | 71 | 56 | 557 | |
| | 2016.10-2019.04 | 9AT | F | R | SUV 4WD OM 642.873 | For SA code:M014 | GDS83782 | Drive Shaft | | 30 | 27 | 71 | 56 | 557 | |
| | 2016.10-2019.04 | 9AT | F | R | SUV 4WD OM 642.873 | Outer teeth of tranm.side:24,8 balls | GDS84270 | Drive Shaft | | 30 | 24 | 71 | 56 | 591 | |
| | 2016.10-2019.04 | 9AT | F | L/R | SUV 4WD OM 642.873 | 8 balls | GCO82353 | Outer Joint | | 30 | 25 | 71 | 56 | 53.5 | I |
| | 2016.10-2019.04 | 9AT | F | L/R | SUV 4WD OM 642.873 | 8 balls,Neoprene;For SA code:M014 | GCO82353 | Outer Joint | | 30 | 25 | 71 | 56 | 53.5 | I |
| | 2016.10-2019.04 | 9AT | F | L/R | SUV 4WD OM 642.873 | 6 balls | GCO82479 | Outer Joint | | 30 | 24 | 71 | 56 | 55.5 | I |
| | 2016.10-2019.04 | 9AT | F | L | SUV 4WD OM 642.873 | | GCI82313 | Inner Joint | | 27 | 24 | 41 | | 155.5 | |
| | 2016.10-2019.04 | 9AT | F | R | SUV 4WD OM 642.873 | | GCI82342 | Inner Joint | | 24 | 24 | 35 | 54.5 | 156 | |
| | 2016.10-2019.04 | 9AT | F | L | SUV 4WD OM 642.873 | | GDS87029 | Intermediate Shaft | | 27 | 27 | | | 510 | |
| | 2016.10-2019.04 | 9AT | R | L/R | SUV 4WD OM 642.873 | | GDS84018 | Drive Shaft | | 27 | 30 | 68.5 | 82 | 810 | |
| | 2016.10-2019.04 | 9AT | R | L/R | SUV 4WD OM 642.873 | Date to:2017.05 | GDS84018 | Drive Shaft | | 27 | 30 | 68.5 | 82 | 810 | |
| **GLC400** | | | | | | | | | | | | | | | |
| 2.0 (280 kw) | 2022.09- | 9AT | F | L | SUV 4WD M 254.920 | | GDS57779 | Drive Shaft | | 30 | 27 | 65 | 53 | 538 | |
| | 2022.09- | 9AT | F | L/R | SUV 4WD M 254.920 | | GCO83704 | Outer Joint | | 30 | 24 | 65 | 53 | 56 | M |
| | 2022.09- | 9AT | F | L | SUV 4WD M 254.920 | | GCI83852 | Inner Joint | | 27 | 32 | 41.5 | | 158 | |
| | 2022.09- | 9AT | R | L/R | SUV 4WD M 254.920 | | GDS57899 | Drive Shaft | | 30 | 30 | | 53 | 785 | |
| | 2023.07- | 9AT | F | L | SUV 4WD M 254.920 | | GDS57779 | Drive Shaft | | 30 | 27 | 65 | 53 | 538 | |
| | 2023.07- | 9AT | F | L/R | SUV 4WD M 254.920 | | GCO83704 | Outer Joint | | 30 | 24 | 65 | 53 | 56 | M |
| | 2023.07- | 9AT | F | L | SUV 4WD M 254.920 | | GCI83852 | Inner Joint | | 27 | 32 | 41.5 | | 158 | |
| | 2023.07- | 9AT | R | R | SUV 4WD M 254.920 | | GDS57899 | Drive Shaft | | 30 | 30 | | 53 | 785 | |
| 2.9 (243 kw) | 2019.08-2022.06 | 9AT | F | L | SUV 4WD OM 656.929 | 8 balls | GDS83655 | Drive Shaft | | 30 | 27 | 71 | 56 | 526 | |
| | 2019.08-2022.06 | 9AT | F | L | SUV 4WD OM 656.929 | 6 balls | GDS83784 | Drive Shaft | | 30 | 27 | 71 | 56 | 524 | |
| | 2019.08-2022.06 | 9AT | F | R | SUV 4WD OM 656.929 | | GDS83782 | Drive Shaft | | 30 | 27 | 71 | 56 | 557 | |
| | 2019.08-2022.06 | 9AT | F | L/R | SUV 4WD OM 656.929 | 8 balls | GCO82353 | Outer Joint | | 30 | 25 | 71 | 56 | 53.5 | I |
| | 2019.08-2022.06 | 9AT | F | L/R | SUV 4WD OM 656.929 | 6 balls | GCO82479 | Outer Joint | | 30 | 24 | 71 | 56 | 55.5 | I |
| | 2019.08-2022.06 | 9AT | F | L | SUV 4WD OM 656.929 | | GCI82313 | Inner Joint | | 27 | 24 | 41 | | 155.5 | |
| | 2019.08-2022.06 | 9AT | F | R | SUV 4WD OM 656.929 | | GCI82161 | Inner Joint | | 27 | 24 | 38 | 62 | 124.5 | |
| | 2019.08-2022.06 | 9AT | F | L | SUV 4WD OM 656.929 | | GDS87029 | Intermediate Shaft | | 27 | 27 | | | 510 | |
| | 2019.08-2023.03 | 9AT | F | L | SUV 4WD OM 656.929 | | GDS83655 | Drive Shaft | | 30 | 27 | 71 | 56 | 526 | |
| | 2019.08-2023.03 | 9AT | F | L | SUV 4WD OM 656.929 | | GDS83784 | Drive Shaft | | 30 | 27 | 71 | 56 | 524 | |
| | 2019.08-2023.03 | 9AT | F | R | SUV 4WD OM 656.929 | For right-hand drive vehicles;Outer teeth of tranm.side:24,6 balls | GDS83742 | Drive Shaft | | 30 | 24 | 71 | 56 | 592 | |
| | 2019.08-2023.03 | 9AT | F | R | SUV 4WD OM 656.929 | | GDS83782 | Drive Shaft | | 30 | 27 | 71 | 56 | 557 | |
| | 2019.08-2023.03 | 9AT | F | R | SUV 4WD OM 656.929 | For right-hand drive vehicles;Outer teeth of tranm.side:24,8 balls | GDS84270 | Drive Shaft | | 30 | 24 | 71 | 56 | 591 | |
| | 2019.08-2023.03 | 9AT | F | L/R | SUV 4WD OM 656.929 | 8 balls,Neoprene | GCO82353 | Outer Joint | | 30 | 25 | 71 | 56 | 53.5 | I |
| | 2019.08-2023.03 | 9AT | F | L/R | SUV 4WD OM 656.929 | 6 balls | GCO82479 | Outer Joint | | 30 | 24 | 71 | 56 | 55.5 | I |
| | 2019.08-2023.03 | 9AT | F | L | SUV 4WD OM 656.929 | | GCI82313 | Inner Joint | | 27 | 24 | 41 | | 155.5 | |
| | 2019.08-2023.03 | 9AT | F | R | SUV 4WD OM 656.929 | | GCI82161 | Inner Joint | | 27 | 24 | 38 | 62 | 124.5 | |
| | 2019.08-2023.03 | 9AT | F | R | SUV 4WD OM 656.929 | For right-hand drive vehicles | GCI82342 | Inner Joint | | 24 | 24 | 35 | 54.5 | 156 | |
| | 2019.08-2023.03 | 9AT | F | L | SUV 4WD OM 656.929 | | GDS87029 | Intermediate Shaft | | 27 | 27 | | | 510 | |
| **GLC400e** | | | | | | | | | | | | | | | |
| 2.0 (280 kw) | 2025.08- | | F | L | SUV 4WD M254.920 | | GDS57779 | Drive Shaft | | 30 | 27 | 65 | 53 | 538 | |
| | 2025.08- | | F | L/R | SUV 4WD M254.920 | | GCO83704 | Outer Joint | | 30 | 24 | 65 | 53 | 56 | M |
| | 2025.08- | | F | L | SUV 4WD M254.920 | | GCI83852 | Inner Joint | | 27 | 32 | 41.5 | | 158 | |
| | 2025.08- | | R | R | SUV 4WD M254.920 | | GDS57899 | Drive Shaft | | 30 | 30 | | 53 | 785 | |
| **GLC43 AMG** | | | | | | | | | | | | | | | |
| 2.0 (310 kw) | 2023.07- | | R | L/R | SUV 4WD 139.580 | | GDS58123 | Drive Shaft | | 30 | 30 | 65 | 53 | 780 | |
| 3.0 (270 kw) | 2016.04-2019.08 | 9AT | F | L | SUV 4WD M 276.823 | | GDS83655 | Drive Shaft | | 30 | 27 | 71 | 56 | 526 | |
| | 2016.04-2019.08 | 9AT | F | L | SUV 4WD M 276.823 | | GDS83784 | Drive Shaft | | 30 | 27 | 71 | 56 | 524 | |
| | 2016.04-2019.08 | 9AT | F | R | SUV 4WD M 276.823 | 6 balls | GDS83742 | Drive Shaft | | 30 | 24 | 71 | 56 | 592 | |
| | 2016.04-2019.08 | 9AT | F | R | SUV 4WD M 276.823 | 8 balls | GDS84270 | Drive Shaft | | 30 | 24 | 71 | 56 | 591 | |
| | 2016.04-2019.08 | 9AT | F | L/R | SUV 4WD M 276.823 | 8 balls,Neoprene | GCO82353 | Outer Joint | | 30 | 25 | 71 | 56 | 53.5 | I |
| | 2016.04-2019.08 | 9AT | F | L/R | SUV 4WD M 276.823 | 6 balls | GCO82479 | Outer Joint | | 30 | 24 | 71 | 56 | 55.5 | I |
| | 2016.04-2019.08 | 9AT | F | L | SUV 4WD M 276.823 | | GCI82313 | Inner Joint | | 27 | 24 | 41 | | 155.5 | |

| | YEAR | TRANSM. | F/R | L/R | BODY STYLE & DRIVE TYPE & ENGINE | REMARKS | G-AP Ref. | PRODUCT | ABS | Technical Specifications A | B | C | H | L | P |
|---|---|---|---|---|---|---|---|---|---|---|---|---|---|---|---|
| **MERCEDES-BENZ** | | | | | | | | | | | | | | | |
| **GLC43 AMG** | | | | | | | | | | | | | | | |
| 3.0 (270 kw) | 2016.04-2019.08 | 9AT | F | R | SUV 4WD M 276.823 | | GCI82342 | Inner Joint | | 24 | 24 | 35 | 54.5 | 156 | |
| | 2016.04-2019.08 | 9AT | F | L | SUV 4WD M 276.823 | | GDS87029 | Intermediate Shaft | | 27 | 27 | | | 510 | |
| | 2016.04-2019.08 | 9AT | R | L/R | SUV 4WD M 276.823 | | GDS84018 | Drive Shaft | | 27 | 30 | 68.5 | 82 | 810 | |
| | 2016.10-2019.08 | 9AT | F | L | SUV 4WD M 276.823 | | GDS83655 | Drive Shaft | | 30 | 27 | 71 | 56 | 526 | |
| | 2016.10-2019.08 | 9AT | F | L | SUV 4WD M 276.823 | | GDS83784 | Drive Shaft | | 30 | 27 | 71 | 56 | 524 | |
| | 2016.10-2019.08 | 9AT | F | R | SUV 4WD M 276.823 | 6 balls | GDS83742 | Drive Shaft | | 30 | 24 | 71 | 56 | 592 | |
| | 2016.10-2019.08 | 9AT | F | R | SUV 4WD M 276.823 | 8 balls | GDS84270 | Drive Shaft | | 30 | 24 | 71 | 56 | 591 | |
| | 2016.10-2019.08 | 9AT | F | L/R | SUV 4WD M 276.823 | 8 balls,Neoprene | GCO82353 | Outer Joint | | 30 | 25 | 71 | 56 | 53.5 | I |
| | 2016.10-2019.08 | 9AT | F | L/R | SUV 4WD M 276.823 | 6 balls | GCO82479 | Outer Joint | | 30 | 24 | 71 | 56 | 55.5 | I |
| | 2016.10-2019.08 | 9AT | F | L | SUV 4WD M 276.823 | | GCI82313 | Inner Joint | | 27 | 24 | 41 | | 155.5 | |
| | 2016.10-2019.08 | 9AT | F | R | SUV 4WD M 276.823 | | GCI82342 | Inner Joint | | 24 | 24 | 35 | 54.5 | 156 | |
| | 2016.10-2019.08 | 9AT | R | L/R | SUV 4WD M 276.823 | | GDS84018 | Drive Shaft | | 27 | 30 | 68.5 | 82 | 810 | |
| 3.0 (287 kw) | 2019.08-2022.06 | 9AT | F | L | SUV 4WD M 276.823 | | GDS83655 | Drive Shaft | | 30 | 27 | 71 | 56 | 526 | |
| | 2019.08-2022.06 | 9AT | F | L | SUV 4WD M 276.823 | | GDS83784 | Drive Shaft | | 30 | 27 | 71 | 56 | 524 | |
| | 2019.08-2022.06 | 9AT | F | R | SUV 4WD M 276.823 | 6 balls | GDS83742 | Drive Shaft | | 30 | 24 | 71 | 56 | 592 | |
| | 2019.08-2022.06 | 9AT | F | R | SUV 4WD M 276.823 | 8 balls | GDS84270 | Drive Shaft | | 30 | 24 | 71 | 56 | 591 | |
| | 2019.08-2022.06 | 9AT | F | L/R | SUV 4WD M 276.823 | 8 balls,Neoprene | GCO82353 | Outer Joint | | 30 | 25 | 71 | 56 | 53.5 | I |
| | 2019.08-2022.06 | 9AT | F | L/R | SUV 4WD M 276.823 | 6 balls | GCO82479 | Outer Joint | | 30 | 24 | 71 | 56 | 55.5 | I |
| | 2019.08-2022.06 | 9AT | F | L | SUV 4WD M 276.823 | | GCI82313 | Inner Joint | | 27 | 24 | 41 | | 155.5 | |
| | 2019.08-2022.06 | 9AT | F | R | SUV 4WD M 276.823 | | GCI82342 | Inner Joint | | 24 | 24 | 35 | 54.5 | 156 | |
| | 2019.08-2022.06 | 9AT | F | L | SUV 4WD M 276.823 | | GDS87029 | Intermediate Shaft | | 27 | 27 | | | 510 | |
| | 2019.08-2022.06 | 9AT | R | L/R | SUV 4WD M 276.823 | Date to:2019.08 | GDS84018 | Drive Shaft | | 27 | 30 | 68.5 | 82 | 810 | |
| | 2019.08-2023.03 | 9AT | F | L | SUV 4WD M 276.823 | | GDS83655 | Drive Shaft | | 30 | 27 | 71 | 56 | 526 | |
| | 2019.08-2023.03 | 9AT | F | L | SUV 4WD M 276.823 | | GDS83784 | Drive Shaft | | 30 | 27 | 71 | 56 | 524 | |
| | 2019.08-2023.03 | 9AT | F | R | SUV 4WD M 276.823 | 6 balls | GDS83742 | Drive Shaft | | 30 | 24 | 71 | 56 | 592 | |
| | 2019.08-2023.03 | 9AT | F | R | SUV 4WD M 276.823 | 8 balls | GDS84270 | Drive Shaft | | 30 | 24 | 71 | 56 | 591 | |
| | 2019.08-2023.03 | 9AT | F | L/R | SUV 4WD M 276.823 | 8 balls,Neoprene | GCO82353 | Outer Joint | | 30 | 25 | 71 | 56 | 53.5 | I |
| | 2019.08-2023.03 | 9AT | F | L/R | SUV 4WD M 276.823 | 6 balls | GCO82479 | Outer Joint | | 30 | 24 | 71 | 56 | 55.5 | I |
| | 2019.08-2023.03 | 9AT | F | L | SUV 4WD M 276.823 | | GCI82313 | Inner Joint | | 27 | 24 | 41 | | 155.5 | |
| | 2019.08-2023.03 | 9AT | F | R | SUV 4WD M 276.823 | | GCI82342 | Inner Joint | | 24 | 24 | 35 | 54.5 | 156 | |
| | 2019.08-2023.03 | 9AT | R | L/R | SUV 4WD M 276.823 | Date to:2019.08 | GDS84018 | Drive Shaft | | 27 | 30 | 68.5 | 82 | 810 | |
| **GLC450** | | | | | | | | | | | | | | | |
| 3.0 (270 kw) | 2023.10- | 9AT | F | L | SUV 4WD 656.830 | | GDS57779 | Drive Shaft | | 30 | 27 | 65 | 53 | 538 | |
| | 2023.10- | 9AT | F | L/R | SUV 4WD 656.830 | | GCO83704 | Outer Joint | | 30 | 24 | 65 | 53 | 56 | M |
| | 2023.10- | 9AT | F | L | SUV 4WD 656.830 | | GCI83852 | Inner Joint | | 27 | 32 | 41.5 | | 158 | |
| **GLC63 AMG** | | | | | | | | | | | | | | | |
| 4.0 (350 kw) | 2017.06-2022.06 | 9AT | F | L | SUV 4WD M 177.980 | | GDS84218 | Drive Shaft | | 30 | 27 | 71 | 56 | 520 | |
| | 2017.06-2022.06 | 9AT | F | L | SUV 4WD M 177.980 | | GCO82737 | Outer Joint | | 30 | 26 | 71 | 56 | 54.5 | I |
| | 2017.06-2022.06 | 9AT | F | L/R | SUV 4WD M 177.980 | | GCO82353 | Outer Joint | | 30 | 25 | 71 | 56 | 53.5 | I |
| | 2017.06-2022.06 | 9AT | F | L | SUV 4WD M 177.980 | | GCI82313 | Inner Joint | | 27 | 24 | 41 | | 155.5 | |
| | 2017.06-2023.03 | 9AT | F | L | SUV 4WD M 177.980 | | GDS84218 | Drive Shaft | | 30 | 27 | 71 | 56 | 520 | |
| | 2017.06-2023.03 | 9AT | F | L | SUV 4WD M 177.980 | | GCO82737 | Outer Joint | | 30 | 26 | 71 | 56 | 54.5 | I |
| | 2017.06-2023.03 | 9AT | F | L/R | SUV 4WD M 177.980 | | GCO82353 | Outer Joint | | 30 | 25 | 71 | 56 | 53.5 | I |
| | 2017.06-2023.03 | 9AT | F | L | SUV 4WD M 177.980 | | GCI82313 | Inner Joint | | 27 | 24 | 41 | | 155.5 | |
| | 2017.06-2023.03 | 9AT | F | L | SUV 4WD M 177.980 | | GDS87029 | Intermediate Shaft | | 27 | 27 | | | 510 | |
| 4.0 (375 kw) | 2017.06-2022.06 | 9AT | F | L | SUV 4WD M 177.980 | | GDS84218 | Drive Shaft | | 30 | 27 | 71 | 56 | 520 | |
| | 2017.06-2022.06 | 9AT | F | L | SUV 4WD M 177.980 | | GCO82737 | Outer Joint | | 30 | 26 | 71 | 56 | 54.5 | I |
| | 2017.06-2022.06 | 9AT | F | L/R | SUV 4WD M 177.980 | | GCO82353 | Outer Joint | | 30 | 25 | 71 | 56 | 53.5 | I |
| | 2017.06-2022.06 | 9AT | F | L | SUV 4WD M 177.980 | | GCI82313 | Inner Joint | | 27 | 24 | 41 | | 155.5 | |
| | 2017.06-2023.03 | 9AT | F | L | SUV 4WD M 177.980 | | GDS84218 | Drive Shaft | | 30 | 27 | 71 | 56 | 520 | |
| | 2017.06-2023.03 | 9AT | F | L | SUV 4WD M 177.980 | | GCO82737 | Outer Joint | | 30 | 26 | 71 | 56 | 54.5 | I |
| | 2017.06-2023.03 | 9AT | F | L/R | SUV 4WD M 177.980 | | GCO82353 | Outer Joint | | 30 | 25 | 71 | 56 | 53.5 | I |
| | 2017.06-2023.03 | 9AT | F | L | SUV 4WD M 177.980 | | GCI82313 | Inner Joint | | 27 | 24 | 41 | | 155.5 | |
| | 2017.06-2023.03 | 9AT | F | L | SUV 4WD M 177.980 | | GDS87029 | Intermediate Shaft | | 27 | 27 | | | 510 | |
| **GLE250** | | | | | | | | | | | | | | | |
| 2.2 (150 kw) | 2015.04-2018.10 | AT | F | L | SUV 4WD OM 651.960 | For SA code:430;For vehicles with off-road suspension | GDS84205 | Drive Shaft | | 30 | 37 | 73 | 92 | 672 | |
| | 2015.04-2018.10 | AT | F | R | SUV 4WD OM 651.960 | | GDS35088 | Drive Shaft | | 30 | 37 | 73 | 92.5 | 1015 | |
| | 2015.04-2018.10 | AT | F | R | SUV 4WD OM 651.960 | For SA code:430;For vehicles with off-road suspension | GDS35113 | Drive Shaft | | 30 | 37 | 73 | 92 | 1017 | |
| | 2015.04-2018.10 | AT | F | L | SUV 4WD OM 651.960 | For SA code:430;For vehicles with off-road suspension | GCO82731 | Outer Joint | | 30 | 39 | 73 | 92 | 71 | I |
| | 2015.04-2018.10 | AT | F | L/R | SUV 4WD OM 651.960 | | GCO85007 | Outer Joint | | 30 | 37 | 70.2 | 90.5 | 69 | I |
| | 2015.04-2018.10 | AT | F | L/R | SUV 4WD OM 651.960 | | GCO85015 | Outer Joint | | 30 | 39 | 70.2 | 90.5 | 71 | I |
| | 2015.04-2018.10 | AT | F | L | SUV 4WD OM 651.960 | For SA code:430;For vehicles with off-road suspension | GCI82640 | Inner Joint | | 37 | 26 | 44.95 | 79.5 | 107 | |
| | 2015.04-2018.10 | AT | F | L | SUV 4WD OM 651.960 | | GCI85041 | Inner Joint | | 37 | 33 | 45 | 80 | 104.5 | |
| | 2015.04-2018.10 | AT | F | R | SUV 4WD OM 651.960 | For SA code:430;For vehicles with off-road suspension | GCI35073 | Inner Joint | | 37 | 26 | 45 | 263 | 113 | |
| | 2015.04-2018.10 | AT | F | R | SUV 4WD OM 651.960 | | GCI85042 | Inner Joint | | 37 | 33 | 45 | 264 | 111 | |

| | YEAR | TRANSM. | F/R | L/R | BODY STYLE & DRIVE TYPE & ENGINE | REMARKS | G-AP Ref. | PRODUCT | ABS | Technical Specifications A | B | C | H | L | P |
|---|---|---|---|---|---|---|---|---|---|---|---|---|---|---|---|
| **MERCEDES-BENZ** | | | | | | | | | | | | | | | |
| **GLE250** | | | | | | | | | | | | | | | |
| 2.2 (150 kw) | 2015.04-2018.10 | AT | R | L/R | SUV 4WD OM 651.960 | For SA code:550/554,For vehicles with towbar | GDS35090 | Drive Shaft | | 30 | 27 | 73 | 90.5 | 841 | |
| | 2015.04-2018.10 | AT | R | L/R | SUV 4WD OM 651.960 | For SA code:430,For vehicles with bad road version | GDS35121 | Drive Shaft | | 30 | 30 | 73 | 90 | 846 | |
| | 2015.04-2018.10 | AT | R | L/R | SUV 4WD OM 651.960 | Not For SA code:550/554/430/421 | GDS84017 | Drive Shaft | | 30 | 27 | 73 | 90.5 | 852 | |
| | 2015.04-2018.10 | 7AT/9AT | R | L/R | SUV RWD OM 651.960 | For SA code:550/554,For vehicles with towbar | GDS35090 | Drive Shaft | | 30 | 27 | 73 | 90.5 | 841 | |
| | 2015.04-2018.10 | AT | R | L/R | SUV RWD OM 651.960 | For vehicles with off-road suspension | GDS35121 | Drive Shaft | | 30 | 30 | 73 | 90 | 846 | |
| | 2015.04-2018.10 | AT | R | L/R | SUV RWD OM 651.960 | Not For SA code:550/554 | GDS84017 | Drive Shaft | | 30 | 27 | 73 | 90.5 | 852 | |
| **GLE300** | | | | | | | | | | | | | | | |
| 2.0 (180 kw) | 2018.10-2023.03 | 9AT | F | L | SUV 4WD OM 654.920 | For SA code:557,For Increased towing capacity cars | GDS84393 | Drive Shaft | | 34 | 37 | 68 | 53 | 637 | |
| | 2018.10-2023.03 | 9AT | F | L | SUV 4WD OM 654.920 | Not for Increased towing capacity cars | GDS84451 | Drive Shaft | | 34 | 33 | 68 | 53 | 638 | |
| | 2018.10-2023.03 | 9AT | F | R | SUV 4WD OM 654.920 | For SA code:557,For Increased towing capacity cars | GDS84392 | Drive Shaft | | 34 | 37 | 68 | 53 | 1005 | |
| | 2018.10-2023.03 | 9AT | F | R | SUV 4WD OM 654.920 | Not for Increased towing capacity cars | GDS84450 | Drive Shaft | | 34 | 33 | 68 | 53 | 1005 | |
| | 2018.10-2023.03 | 9AT | F | L/R | SUV 4WD OM 654.920 | For SA code:557,For Increased towing capacity cars | GCO82803 | Outer Joint | | 34 | 27 | 68 | 53 | 60.5 | I |
| | 2018.10-2023.03 | 9AT | F | L/R | SUV 4WD OM 654.920 | Not for Increased towing capacity cars | GCO82817 | Outer Joint | | 34 | 25 | 68 | 53 | 55 | I |
| | 2018.10-2023.03 | 9AT | F | L | SUV 4WD OM 654.920 | For SA code:557,For Increased towing capacity cars | GCI82739 | Inner Joint | | 37 | 28 | 44.95 | 80 | 117 | |
| | 2018.10-2023.03 | 9AT | F | L | SUV 4WD OM 654.920 | Not for Increased towing capacity cars | GCI82764 | Inner Joint | | 33 | 25 | 44.9 | 75 | 112 | |
| | 2018.10-2023.03 | 9AT | F | R | SUV 4WD OM 654.920 | For SA code:557,For Increased towing capacity cars | GCI82738 | Inner Joint | | 37 | 28 | 40 | 304 | 117 | |
| | 2018.10-2023.03 | 9AT | F | R | SUV 4WD OM 654.920 | Not for Increased towing capacity cars | GCI82763 | Inner Joint | | 33 | 25 | 40 | 278 | 139 | |
| 2.0 (198 kw) | 2023.03- | 9AT | F | L | SUV 4WD OM 654.820 | For SA code:557,For vehicles with towbar | GDS84393 | Drive Shaft | | 34 | 37 | 68 | 53 | 637 | |
| | 2023.03- | 9AT | F | L | SUV 4WD OM 654.820 | | GDS84451 | Drive Shaft | | 34 | 33 | 68 | 53 | 638 | |
| | 2023.03- | 9AT | F | L | SUV 4WD OM 654.820 | For SA code:557/9U8,For vehicles with towbar;For vehicles without towbar | GDS84451 | Drive Shaft | | 34 | 33 | 68 | 53 | 638 | |
| | 2023.03- | 9AT | F | R | SUV 4WD OM 654.820 | For SA code:557,For vehicles with towbar | GDS84392 | Drive Shaft | | 34 | 37 | 68 | 53 | 1005 | |
| | 2023.03- | 9AT | F | R | SUV 4WD OM 654.820 | | GDS84450 | Drive Shaft | | 34 | 33 | 68 | 53 | 1005 | |
| | 2023.03- | 9AT | F | R | SUV 4WD OM 654.820 | For SA code:557/9U8,For vehicles with towbar;For vehicles without towbar | GDS84450 | Drive Shaft | | 34 | 33 | 68 | 53 | 1005 | |
| | 2023.03- | 9AT | F | L/R | SUV 4WD OM 654.820 | For SA code:557,For vehicles with towbar | GCO82803 | Outer Joint | | 34 | 27 | 68 | 53 | 60.5 | I |
| | 2023.03- | 9AT | F | L | SUV 4WD OM 654.820 | For SA code:557,For vehicles with towbar | GCI82739 | Inner Joint | | 37 | 28 | 44.95 | 80 | 117 | |
| | 2023.03- | 9AT | F | R | SUV 4WD OM 654.820 | For SA code:557,For vehicles with towbar | GCI82738 | Inner Joint | | 37 | 28 | 40 | 304 | 117 | |
| 2.0 (200 kw) | 2021.06-2023.03 | 9AT | F | L | SUV 4WD OM 654.820 | For SA code:557,For vehicles with towbar | GDS84393 | Drive Shaft | | 34 | 37 | 68 | 53 | 637 | |
| | 2021.06-2023.03 | 9AT | F | L | SUV 4WD OM 654.820 | For SA code:557/9U8,For vehicles with towbar;For vehicles without towbar | GDS84451 | Drive Shaft | | 34 | 33 | 68 | 53 | 638 | |
| | 2021.06-2023.03 | 9AT | F | L | SUV 4WD OM 654.820 | | GDS84451 | Drive Shaft | | 34 | 33 | 68 | 53 | 638 | |
| | 2021.06-2023.03 | 9AT | F | R | SUV 4WD OM 654.820 | For SA code:557,For vehicles with towbar | GDS84392 | Drive Shaft | | 34 | 37 | 68 | 53 | 1005 | |
| | 2021.06-2023.03 | 9AT | F | R | SUV 4WD OM 654.820 | For SA code:557/9U8,For vehicles with towbar;For vehicles without towbar | GDS84450 | Drive Shaft | | 34 | 33 | 68 | 53 | 1005 | |
| | 2021.06-2023.03 | 9AT | F | R | SUV 4WD OM 654.820 | | GDS84450 | Drive Shaft | | 34 | 33 | 68 | 53 | 1005 | |
| | 2021.06-2023.03 | 9AT | F | L/R | SUV 4WD OM 654.820 | | GCO82803 | Outer Joint | | 34 | 27 | 68 | 53 | 60.5 | I |
| | 2021.06-2023.03 | 9AT | F | L | SUV 4WD OM 654.820 | | GCI82739 | Inner Joint | | 37 | 28 | 44.95 | 80 | 117 | |
| | 2021.06-2023.03 | 9AT | F | R | SUV 4WD OM 654.820 | | GCI82738 | Inner Joint | | 37 | 28 | 40 | 304 | 117 | |
| **GLE320** | | | | | | | | | | | | | | | |
| 3.0 (200 kw) | 2015.10-2018.10 | 7AT | F | L | SUV 4WD M 276.821 | For SA code:430,For vehicles with off-road suspension | GDS84205 | Drive Shaft | | 30 | 37 | 73 | 92 | 672 | |
| | 2015.10-2018.10 | 7AT | F | R | SUV 4WD M 276.821 | | GDS35088 | Drive Shaft | | 30 | 37 | 73 | 92.5 | 1015 | |
| | 2015.10-2018.10 | 7AT | F | L | SUV 4WD M 276.821 | For SA code:430,For vehicles with off-road suspension | GCO82731 | Outer Joint | | 30 | 39 | 73 | 92 | 71 | I |
| | 2015.10-2018.10 | 7AT | F | L/R | SUV 4WD M 276.821 | | GCO85015 | Outer Joint | | 30 | 39 | 70.2 | 90.5 | 71 | I |
| | 2015.10-2018.10 | 7AT | F | L | SUV 4WD M 276.821 | For SA code:430,For vehicles with off-road suspension | GCI82640 | Inner Joint | | 37 | 26 | 44.95 | 79.5 | 107 | |
| | 2015.10-2018.10 | 7AT | F | L | SUV 4WD M 276.821 | | GCI85041 | Inner Joint | | 37 | 33 | 45 | 80 | 104.5 | |
| | 2015.10-2018.10 | AT | F | R | SUV 4WD M 276.821 | For SA code:430,For vehicles with off-road suspension | GDS35113 | Drive Shaft | | 30 | 37 | 73 | 92 | 1017 | |
| | 2015.10-2018.10 | AT | F | L/R | SUV 4WD M 276.821 | | GCO85007 | Outer Joint | | 30 | 37 | 70.2 | 90.5 | 69 | I |
| | 2015.10-2018.10 | AT | F | R | SUV 4WD M 276.821 | | GCI35073 | Inner Joint | | 37 | 26 | 45 | 263 | 113 | |
| | 2015.10-2018.10 | 9AT | R | L/R | SUV 4WD M 276.821 | For Non-electric adjustable air suspension; for Air-suspension; electronic adjustable air suspension; Equipped with air suspension | GDS35121 | Drive Shaft | | 30 | 30 | 73 | 90 | 846 | |
| | 2015.10-2018.10 | 9AT | R | L/R | SUV 4WD M 276.821 | Not for SA code:430/550 | GDS84017 | Drive Shaft | | 30 | 27 | 73 | 90.5 | 852 | |
| **GLE350** | | | | | | | | | | | | | | | |
| 2.0 (225 kw) | 2019.11-2023.03 | 9AT | F | L | SUV 4WD OM 654.920 | | GDS84393 | Drive Shaft | | 34 | 37 | 68 | 53 | 637 | |
| | 2019.11-2023.03 | 9AT | F | R | SUV 4WD OM 654.920 | | GDS84392 | Drive Shaft | | 34 | 37 | 68 | 53 | 1005 | |
| | 2019.11-2023.03 | 9AT | F | L/R | SUV 4WD OM 654.920 | | GCO82803 | Outer Joint | | 34 | 27 | 68 | 53 | 60.5 | I |
| | 2019.11-2023.03 | 9AT | F | L | SUV 4WD OM 654.920 | | GCI82739 | Inner Joint | | 37 | 28 | 44.95 | 80 | 117 | |
| | 2019.11-2023.03 | 9AT | F | R | SUV 4WD OM 654.920 | | GCI82738 | Inner Joint | | 37 | 28 | 40 | 304 | 117 | |
| 2.0 (235 kw) | 2020.03-2023.03 | 9AT | F | L | SUV 4WD OM 654.920 | | GDS84393 | Drive Shaft | | 34 | 37 | 68 | 53 | 637 | |
| | 2020.03-2023.03 | 9AT | F | R | SUV 4WD OM 654.920 | | GDS84392 | Drive Shaft | | 34 | 37 | 68 | 53 | 1005 | |
| | 2020.03-2023.03 | 9AT | F | L/R | SUV 4WD OM 654.920 | | GCO82803 | Outer Joint | | 34 | 27 | 68 | 53 | 60.5 | I |
| | 2020.03-2023.03 | 9AT | F | L | SUV 4WD OM 654.920 | | GCI82739 | Inner Joint | | 37 | 28 | 44.95 | 80 | 117 | |
| | 2020.03-2023.03 | 9AT | F | R | SUV 4WD OM 654.920 | | GCI82738 | Inner Joint | | 37 | 28 | 40 | 304 | 117 | |
| 2.0 (245 kw) | 2020.06-2023.03 | 9AT | F | L | SUV 4WD M 274.920 | | GDS84393 | Drive Shaft | | 34 | 37 | 68 | 53 | 637 | |
| | 2020.06-2023.03 | 9AT | F | R | SUV 4WD M 274.920 | | GDS84392 | Drive Shaft | | 34 | 37 | 68 | 53 | 1005 | |
| | 2020.06-2023.03 | 9AT | F | L/R | SUV 4WD M 274.920 | | GCO82803 | Outer Joint | | 34 | 27 | 68 | 53 | 60.5 | I |
| | 2020.06-2023.03 | 9AT | F | L | SUV 4WD M 274.920 | | GCI82739 | Inner Joint | | 37 | 28 | 44.95 | 80 | 117 | |
| | 2020.06-2023.03 | 9AT | F | R | SUV 4WD M 274.920 | | GCI82738 | Inner Joint | | 37 | 28 | 40 | 304 | 117 | |
| | 2023.03- | 9AT | F | L | SUV 4WD OM 654.820 | | GDS84393 | Drive Shaft | | 34 | 37 | 68 | 53 | 637 | |
| | 2023.03- | 9AT | F | R | SUV 4WD OM 654.820 | | GDS84392 | Drive Shaft | | 34 | 37 | 68 | 53 | 1005 | |

| | YEAR | TRANSM. | F/R | L/R | BODY STYLE & DRIVE TYPE & ENGINE | REMARKS | G-AP Ref. | PRODUCT | ABS | Technical Specifications A | B | C | H | L | P |
|---|---|---|---|---|---|---|---|---|---|---|---|---|---|---|---|
| **MERCEDES-BENZ** | | | | | | | | | | | | | | | |
| **GLE350** | | | | | | | | | | | | | | | |
| 2.0 (245 kw) | 2023.03- | 9AT | F | L/R | SUV 4WD OM 654.820 | | GCO82803 | Outer Joint | | 34 | 27 | 68 | 53 | 60.5 | I |
| | 2023.03- | 9AT | F | L | SUV 4WD OM 654.820 | | GCI82739 | Inner Joint | | 37 | 28 | 44.95 | 80 | 117 | |
| | 2023.03- | 9AT | F | R | SUV 4WD OM 654.820 | | GCI82738 | Inner Joint | | 37 | 28 | 40 | 304 | 117 | |
| 2.9 (183 kw) | 2021.10- | 9AT | F | L | SUV 4WD OM 656.929 | | GDS84451 | Drive Shaft | | 34 | 33 | 68 | 53 | 638 | |
| | 2021.10- | 9AT | F | R | SUV 4WD OM 656.929 | | GDS84450 | Drive Shaft | | 34 | 33 | 68 | 53 | 1005 | |
| | 2021.10- | 9AT | F | L/R | SUV 4WD OM 656.929 | | GCO82817 | Outer Joint | | 34 | 25 | 68 | 53 | 55 | I |
| | 2021.10- | 9AT | F | L | SUV 4WD OM 656.929 | | GCI82764 | Inner Joint | | 33 | 25 | 44.9 | 75 | 112 | |
| | 2021.10- | 9AT | F | R | SUV 4WD OM 656.929 | | GCI82763 | Inner Joint | | 33 | 25 | 40 | 278 | 139 | |
| 2.9 (200 kw) | 2018.12-2021.05 | 9AT | F | L | SUV 4WD OM 656.929 | For SA code:557,For vehicles with towbar | GDS84451 | Drive Shaft | | 34 | 33 | 68 | 53 | 638 | |
| | 2018.12-2021.05 | 9AT | F | R | SUV 4WD OM 656.929 | | GDS84450 | Drive Shaft | | 34 | 33 | 68 | 53 | 1005 | |
| | 2018.12-2021.05 | 9AT | F | L/R | SUV 4WD OM 656.929 | For SA code:557,For vehicles with towbar | GCO82817 | Outer Joint | | 34 | 25 | 68 | 53 | 55 | I |
| | 2018.12-2021.05 | 9AT | F | L | SUV 4WD OM 656.929 | For SA code:430,For vehicles with bad road version | GCI82739 | Inner Joint | | 37 | 28 | 44.95 | 80 | 117 | |
| | 2018.12-2021.05 | 9AT | F | L | SUV 4WD OM 656.929 | For SA code:557,For vehicles with towbar | GCI82764 | Inner Joint | | 33 | 25 | 44.9 | 75 | 112 | |
| | 2018.12-2021.05 | 9AT | F | R | SUV 4WD OM 656.929 | | GCI82763 | Inner Joint | | 33 | 25 | 40 | 278 | 139 | |
| | 2019.11-2023.03 | 9AT | F | L | SUV 4WD OM 656.929 | | GDS84451 | Drive Shaft | | 34 | 33 | 68 | 53 | 638 | |
| | 2019.11-2023.03 | 9AT | F | R | SUV 4WD OM 656.929 | | GDS84450 | Drive Shaft | | 34 | 33 | 68 | 53 | 1005 | |
| | 2019.11-2023.03 | 9AT | F | L/R | SUV 4WD OM 656.929 | | GCO82817 | Outer Joint | | 34 | 25 | 68 | 53 | 55 | I |
| | 2019.11-2023.03 | 9AT | F | L | SUV 4WD OM 656.929 | | GCI82764 | Inner Joint | | 33 | 25 | 44.9 | 75 | 112 | |
| | 2019.11-2023.03 | 9AT | F | R | SUV 4WD OM 656.929 | | GCI82763 | Inner Joint | | 33 | 25 | 40 | 278 | 139 | |
| 3.0 (183 kw) | 2015.04-2018.10 | 9AT | F | L | SUV 4WD OM 642.826 | For SA code:430,For vehicles with off-road suspension | GDS84205 | Drive Shaft | | 30 | 37 | 73 | 92 | 672 | |
| | 2015.04-2018.10 | 9AT | F | R | SUV 4WD OM 642.826 | | GDS35088 | Drive Shaft | | 30 | 37 | 73 | 92.5 | 1015 | |
| | 2015.04-2018.10 | 9AT | F | R | SUV 4WD OM 642.826 | For SA code:430;For vehicles with off-road suspension | GDS35113 | Drive Shaft | | 30 | 37 | 73 | 92 | 1017 | |
| | 2015.04-2018.10 | 9AT | F | L | SUV 4WD OM 642.826 | For SA code:430,For vehicles with off-road suspension | GCO82731 | Outer Joint | | 30 | 39 | 73 | 92 | 71 | I |
| | 2015.04-2018.10 | 9AT | F | L | SUV 4WD OM 642.826 | For SA code:430,For vehicles with off-road suspension | GCI82640 | Inner Joint | | 37 | 26 | 44.95 | 79.5 | 107 | |
| | 2015.04-2018.10 | 9AT | R | L/R | SUV 4WD OM 642.826 | For SA code:806/807/808/809/800 | GDS35090 | Drive Shaft | | 30 | 27 | 73 | 90.5 | 841 | |
| | 2015.04-2018.10 | 9AT | R | L/R | SUV 4WD OM 642.826 | For SA code:430,For vehicles with bad road version | GDS35121 | Drive Shaft | | 30 | 30 | 73 | 90 | 846 | |
| | 2017.01-2019.10 | 9AT | F | L | SUV 4WD OM 642.826 | | GDS84205 | Drive Shaft | | 30 | 37 | 73 | 92 | 672 | |
| | 2017.01-2019.10 | 9AT | F | R | SUV 4WD OM 642.826 | | GDS35088 | Drive Shaft | | 30 | 37 | 73 | 92.5 | 1015 | |
| | 2017.01-2019.10 | 9AT | F | L | SUV 4WD OM 642.826 | | GCO82731 | Outer Joint | | 30 | 39 | 73 | 92 | 71 | I |
| | 2017.01-2019.10 | 9AT | F | R | SUV 4WD OM 642.826 | | GCO35059 | Outer Joint | | 30 | 37 | 73 | 92.5 | 66 | I |
| | 2017.01-2019.10 | 9AT | F | L | SUV 4WD OM 642.826 | | GCI82640 | Inner Joint | | 37 | 26 | 44.95 | 79.5 | 107 | |
| | 2017.01-2019.10 | 9AT | F | R | SUV 4WD OM 642.826 | | GCI85042 | Inner Joint | | 37 | 33 | 45 | 264 | 111 | |
| 3.0 (190 kw) | 2015.03-2019.10 | 9AT | F | L | SUV 4WD OM 642.826;OM 642.824 | | GDS84205 | Drive Shaft | | 30 | 37 | 73 | 92 | 672 | |
| | 2015.03-2019.10 | 9AT | F | R | SUV 4WD OM 642.826;OM 642.824 | | GDS35088 | Drive Shaft | | 30 | 37 | 73 | 92.5 | 1015 | |
| | 2015.03-2019.10 | 9AT | F | L | SUV 4WD OM 642.826;OM 642.824 | | GCI35057 | Inner Joint | | 37 | 33 | 45 | 80 | 104.5 | |
| | 2015.03-2019.10 | 9AT | F | R | SUV 4WD OM 642.826;OM 642.824 | | GCI85042 | Inner Joint | | 37 | 33 | 45 | 264 | 111 | |
| | 2015.03-2019.10 | AT | F | L/R | SUV 4WD OM 642.826;OM 642.824 | not for SA code:430;Type:W/O Off-Road Pack | GCO85007 | Outer Joint | | 30 | 37 | 70.2 | 90.5 | 69 | I |
| | 2015.04-2018.10 | AT | F | L | SUV 4WD OM 642.826 | For SA code:430,For vehicles with off-road suspension | GDS84205 | Drive Shaft | | 30 | 37 | 73 | 92 | 672 | |
| | 2015.04-2018.10 | AT | F | R | SUV 4WD OM 642.826 | | GDS35088 | Drive Shaft | | 30 | 37 | 73 | 92.5 | 1015 | |
| | 2015.04-2018.10 | AT | F | R | SUV 4WD OM 642.826 | For SA code:430;For vehicles with off-road suspension | GDS35113 | Drive Shaft | | 30 | 37 | 73 | 92 | 1017 | |
| | 2015.04-2018.10 | AT | F | L | SUV 4WD OM 642.826 | For SA code:430,For vehicles with off-road suspension | GCO82731 | Outer Joint | | 30 | 39 | 73 | 92 | 71 | I |
| | 2015.04-2018.10 | AT | F | L/R | SUV 4WD OM 642.826 | not for SA code:430 | GCO85007 | Outer Joint | | 30 | 37 | 70.2 | 90.5 | 69 | I |
| | 2015.04-2018.10 | AT | F | L | SUV 4WD OM 642.826 | For SA code:430,For vehicles with off-road suspension | GCI82640 | Inner Joint | | 37 | 26 | 44.95 | 79.5 | 107 | |
| | 2015.04-2018.10 | 7AT | R | L/R | SUV 4WD OM 642.826 | | GDS35090 | Drive Shaft | | 30 | 27 | 73 | 90.5 | 841 | |
| | 2015.04-2018.10 | 9AT | R | L/R | SUV 4WD OM 642.826 | For SA code:430,For vehicles with bad road version | GDS35121 | Drive Shaft | | 30 | 30 | 73 | 90 | 846 | |
| **GLE400** | | | | | | | | | | | | | | | |
| 2.0 (280 kw) | 2023.03- | 9AT | F | L | SUV 4WD M 254.920 | | GDS84393 | Drive Shaft | | 34 | 37 | 68 | 53 | 637 | |
| | 2023.03- | 9AT | F | R | SUV 4WD M 254.920 | | GDS84392 | Drive Shaft | | 34 | 37 | 68 | 53 | 1005 | |
| | 2023.03- | 9AT | F | L/R | SUV 4WD M 254.920 | | GCO82803 | Outer Joint | | 34 | 27 | 68 | 53 | 60.5 | I |
| | 2023.03- | 9AT | F | L | SUV 4WD M 254.920 | | GCI82739 | Inner Joint | | 37 | 28 | 44.95 | 80 | 117 | |
| | 2023.03- | 9AT | F | R | SUV 4WD M 254.920 | | GCI82738 | Inner Joint | | 37 | 28 | 40 | 304 | 117 | |
| 2.9 (243 kw) | 2018.12-2023.03 | 9AT | F | L | SUV 4WD OM 656.929 | For SA code:557,For vehicles with towbar | GDS84451 | Drive Shaft | | 34 | 33 | 68 | 53 | 638 | |
| | 2018.12-2023.03 | 9AT | F | R | SUV 4WD OM 656.929 | | GDS84450 | Drive Shaft | | 34 | 33 | 68 | 53 | 1005 | |
| | 2018.12-2023.03 | 9AT | F | L/R | SUV 4WD OM 656.929 | For SA code:557,For vehicles with towbar | GCO82817 | Outer Joint | | 34 | 25 | 68 | 53 | 55 | I |
| | 2018.12-2023.03 | 9AT | F | L | SUV 4WD OM 656.929 | For SA code:430,For vehicles with bad road version | GCI82739 | Inner Joint | | 37 | 28 | 44.95 | 80 | 117 | |
| | 2018.12-2023.03 | 9AT | F | L | SUV 4WD OM 656.929 | For SA code:557,For vehicles with towbar | GCI82764 | Inner Joint | | 33 | 25 | 44.9 | 75 | 112 | |
| | 2018.12-2023.03 | 9AT | F | R | SUV 4WD OM 656.929 | | GCI82763 | Inner Joint | | 33 | 25 | 40 | 278 | 139 | |
| | 2019.11-2023.03 | 9AT | F | L | SUV 4WD OM 656.929 | | GDS84451 | Drive Shaft | | 34 | 33 | 68 | 53 | 638 | |
| | 2019.11-2023.03 | 9AT | F | R | SUV 4WD OM 656.929 | | GDS84450 | Drive Shaft | | 34 | 33 | 68 | 53 | 1005 | |
| | 2019.11-2023.03 | 9AT | F | L/R | SUV 4WD OM 656.929 | | GCO82817 | Outer Joint | | 34 | 25 | 68 | 53 | 55 | I |
| | 2019.11-2023.03 | 9AT | F | L | SUV 4WD OM 656.929 | | GCI82764 | Inner Joint | | 33 | 25 | 44.9 | 75 | 112 | |
| | 2019.11-2023.03 | 9AT | F | R | SUV 4WD OM 656.929 | | GCI82763 | Inner Joint | | 33 | 25 | 40 | 278 | 139 | |
| 3.0 (245 kw) | 2015.03-2019.10 | 9AT | F | L | SUV 4WD M 276.821;M 276.825 | | GDS84205 | Drive Shaft | | 30 | 37 | 73 | 92 | 672 | |
| | 2015.03-2019.10 | 9AT | F | R | SUV 4WD M 276.821;M 276.825 | | GDS35088 | Drive Shaft | | 30 | 37 | 73 | 92.5 | 1015 | |
| | 2015.03-2019.10 | 9AT | F | L | SUV 4WD M 276.821;M 276.825 | | GCI35057 | Inner Joint | | 37 | 33 | 45 | 80 | 104.5 | |

| | YEAR | TRANSM. | F/R | L/R | BODY STYLE & DRIVE TYPE & ENGINE | REMARKS | G-AP Ref. | PRODUCT | ABS | Technical Specifications A | B | C | H | L | P |
|---|---|---|---|---|---|---|---|---|---|---|---|---|---|---|---|
| **MERCEDES-BENZ** | | | | | | | | | | | | | | | |
| **GLE400** | | | | | | | | | | | | | | | |
| 3.0 (245 kw) | 2015.03-2019.10 | 9AT | F | R | SUV 4WD M 276.821;M 276.825 | | GCI85042 | Inner Joint | | 37 | 33 | 45 | 264 | 111 | |
| | 2015.03-2019.10 | AT | F | L/R | SUV 4WD M 276.821;M 276.825 | not for SA code:430;Type:W/O Off-Road Pack | GCO85007 | Outer Joint | | 30 | 37 | 70.2 | 90.5 | 69 | I |
| | 2015.04-2018.10 | 9AT | F | R | SUV 4WD M 276.821;M 276.825 | | GDS35088 | Drive Shaft | | 30 | 37 | 73 | 92.5 | 1015 | |
| | 2015.04-2018.10 | 9AT | F | R | SUV 4WD M 276.821;M 276.825 | | GCI85042 | Inner Joint | | 37 | 33 | 45 | 264 | 111 | |
| | 2015.04-2018.10 | AT | F | L | SUV 4WD M 276.821;M 276.825 | For SA code:430,For vehicles with off-road suspension | GDS84205 | Drive Shaft | | 30 | 37 | 73 | 92 | 672 | |
| | 2015.04-2018.10 | AT | F | R | SUV 4WD M 276.821;M 276.825 | For SA code:430,For vehicles with off-road suspension | GDS35113 | Drive Shaft | | 30 | 37 | 73 | 92 | 1017 | |
| | 2015.04-2018.10 | AT | F | L | SUV 4WD M 276.821;M 276.825 | For SA code:430,For vehicles with off-road suspension | GCO82731 | Outer Joint | | 30 | 39 | 73 | 92 | 71 | I |
| | 2015.04-2018.10 | AT | F | L/R | SUV 4WD M 276.821;M 276.825 | | GCO85007 | Outer Joint | | 30 | 37 | 70.2 | 90.5 | 69 | I |
| | 2015.04-2018.10 | AT | F | L/R | SUV 4WD M 276.821;M 276.825 | | GCO85015 | Outer Joint | | 30 | 39 | 70.2 | 90.5 | 71 | I |
| | 2015.04-2018.10 | AT | F | L | SUV 4WD M 276.821;M 276.825 | For SA code:430,For vehicles with off-road suspension | GCI82640 | Inner Joint | | 37 | 26 | 44.95 | 79.5 | 107 | |
| | 2015.04-2018.10 | AT | F | L | SUV 4WD M 276.821;M 276.825 | | GCI85041 | Inner Joint | | 37 | 33 | 45 | 80 | 104.5 | |
| | 2015.04-2018.10 | AT | F | R | SUV 4WD M 276.821;M 276.825 | For SA code:430;For vehicles with off-road suspension | GCI35073 | Inner Joint | | 37 | 26 | 45 | 263 | 113 | |
| | 2015.04-2018.10 | 7AT | R | L/R | SUV 4WD M 276.821;M 276.825 | | GDS35090 | Drive Shaft | | 30 | 27 | 73 | 90.5 | 841 | |
| | 2015.04-2018.10 | 9AT | R | L/R | SUV 4WD M 276.821;M 276.825 | For SA code:430,For vehicles with bad road version | GDS35121 | Drive Shaft | | 30 | 30 | 73 | 90 | 846 | |
| **GLE43 AMG** | | | | | | | | | | | | | | | |
| 3.0 (270 kw) | 2016.05-2018.10 | 9AT | F | L | SUV 4WD M 276.821 | For SA code:430,For vehicles with off-road suspension | GDS84205 | Drive Shaft | | 30 | 37 | 73 | 92 | 672 | |
| | 2016.05-2018.10 | 9AT | F | L | SUV 4WD M 276.821 | For SA code:430,For vehicles with off-road suspension | GCO82731 | Outer Joint | | 30 | 39 | 73 | 92 | 71 | I |
| | 2016.05-2018.10 | 9AT | F | L | SUV 4WD M 276.821 | For SA code:430,For vehicles with off-road suspension | GCI82640 | Inner Joint | | 37 | 26 | 44.95 | 79.5 | 107 | |
| | 2016.05-2018.10 | AT | F | R | SUV 4WD M 276.821 | | GDS35088 | Drive Shaft | | 30 | 37 | 73 | 92.5 | 1015 | |
| | 2016.05-2018.10 | AT | F | R | SUV 4WD M 276.821 | For SA code:430,For vehicles with off-road suspension | GDS35113 | Drive Shaft | | 30 | 37 | 73 | 92 | 1017 | |
| | 2016.05-2018.10 | AT | F | L/R | SUV 4WD M 276.821 | not for SA code:430 | GCO85007 | Outer Joint | | 30 | 37 | 70.2 | 90.5 | 69 | I |
| | 2016.05-2018.10 | 9AT | R | L/R | SUV 4WD M 276.821 | For SA code:806/807/808/809 | GDS35090 | Drive Shaft | | 30 | 27 | 73 | 90.5 | 841 | |
| | 2016.05-2018.10 | 9AT | R | L/R | SUV 4WD M 276.821 | For SA code:430,For vehicles with bad road version | GDS35121 | Drive Shaft | | 30 | 30 | 73 | 90 | 846 | |
| | 2016.05-2019.10 | 9AT | F | L | SUV 4WD M 276.821 | | GDS84205 | Drive Shaft | | 30 | 37 | 73 | 92 | 672 | |
| | 2016.05-2019.10 | 9AT | F | R | SUV 4WD M 276.821 | | GDS35088 | Drive Shaft | | 30 | 37 | 73 | 92.5 | 1015 | |
| | 2016.05-2019.10 | 9AT | F | L | SUV 4WD M 276.821 | | GCI35057 | Inner Joint | | 37 | 33 | 45 | 80 | 104.5 | |
| | 2016.05-2019.10 | AT | F | L/R | SUV 4WD M 276.821 | not for SA code:430;Type:W/O Off-Road Pack | GCO85007 | Outer Joint | | 30 | 37 | 70.2 | 90.5 | 69 | I |
| 3.0 (287 kw) | 2017.06-2018.10 | 9AT | F | L | SUV 4WD M 276.821 | For SA code:430,For vehicles with off-road suspension | GDS84205 | Drive Shaft | | 30 | 37 | 73 | 92 | 672 | |
| | 2017.06-2018.10 | 9AT | F | R | SUV 4WD M 276.821 | | GDS35088 | Drive Shaft | | 30 | 37 | 73 | 92.5 | 1015 | |
| | 2017.06-2018.10 | 9AT | F | L | SUV 4WD M 276.821 | For SA code:430,For vehicles with off-road suspension | GCO82731 | Outer Joint | | 30 | 39 | 73 | 92 | 71 | I |
| | 2017.06-2018.10 | 9AT | F | L | SUV 4WD M 276.821 | For SA code:430,For vehicles with off-road suspension | GCI82640 | Inner Joint | | 37 | 26 | 44.95 | 79.5 | 107 | |
| | 2017.06-2018.10 | AT | F | R | SUV 4WD M 276.821 | For SA code:430,For vehicles with off-road suspension | GDS35113 | Drive Shaft | | 30 | 37 | 73 | 92 | 1017 | |
| | 2017.06-2018.10 | AT | F | L/R | SUV 4WD M 276.821 | not for SA code:430 | GCO85007 | Outer Joint | | 30 | 37 | 70.2 | 90.5 | 69 | I |
| | 2017.06-2018.10 | 9AT | R | L/R | SUV 4WD M 276.821 | For SA code:430,For vehicles with bad road version | GDS35121 | Drive Shaft | | 30 | 30 | 73 | 90 | 846 | |
| | 2017.06-2019.10 | 9AT | F | L | SUV 4WD M 276.821 | | GDS84205 | Drive Shaft | | 30 | 37 | 73 | 92 | 672 | |
| | 2017.06-2019.10 | 9AT | F | R | SUV 4WD M 276.821 | | GDS35088 | Drive Shaft | | 30 | 37 | 73 | 92.5 | 1015 | |
| | 2017.06-2019.10 | 9AT | F | L | SUV 4WD M 276.821 | | GCI35057 | Inner Joint | | 37 | 33 | 45 | 80 | 104.5 | |
| | 2017.06-2019.10 | AT | F | L/R | SUV 4WD M 276.821 | not for SA code:430;Type:W/O Off-Road Pack | GCO85007 | Outer Joint | | 30 | 37 | 70.2 | 90.5 | 69 | I |
| **GLE450** | | | | | | | | | | | | | | | |
| 3.0 (270 kw) | 2018.10- | 9AT | F | L | SUV 4WD M 256.930 | For SA code:557,For vehicles with towbar | GDS84451 | Drive Shaft | | 34 | 33 | 68 | 53 | 638 | |
| | 2018.10- | 9AT | F | R | SUV 4WD M 256.930 | | GDS84450 | Drive Shaft | | 34 | 33 | 68 | 53 | 1005 | |
| | 2018.10- | 9AT | F | L/R | SUV 4WD M 256.930 | For SA code:557,For vehicles with towbar | GCO82817 | Outer Joint | | 34 | 25 | 68 | 53 | 55 | I |
| | 2018.10- | 9AT | F | L | SUV 4WD M 256.930 | For SA code:430,For vehicles with bad road version | GCI82739 | Inner Joint | | 37 | 28 | 44.95 | 80 | 117 | |
| | 2018.10- | 9AT | F | L | SUV 4WD M 256.930 | For SA code:557,For vehicles with towbar | GCI82764 | Inner Joint | | 33 | 25 | 44.9 | 75 | 112 | |
| | 2018.10- | 9AT | F | R | SUV 4WD M 256.930 | | GCI82763 | Inner Joint | | 33 | 25 | 40 | 278 | 139 | |
| 3.0 (272 kw) | 2023.03- | 9AT | F | L | SUV 4WD 656.830 | | GDS84451 | Drive Shaft | | 34 | 33 | 68 | 53 | 638 | |
| | 2023.03- | 9AT | F | L | SUV 4WD 656.830 | For SA code:557,For vehicles with towbar | GDS84451 | Drive Shaft | | 34 | 33 | 68 | 53 | 638 | |
| | 2023.03- | 9AT | F | R | SUV 4WD 656.830 | | GDS84450 | Drive Shaft | | 34 | 33 | 68 | 53 | 1005 | |
| | 2023.03- | 9AT | F | L | SUV 4WD 656.830 | For SA code:430,For vehicles with bad road version | GCI82739 | Inner Joint | | 37 | 28 | 44.95 | 80 | 117 | |
| 3.0 (280 kw) | 2023.03- | 9AT | F | L | SUV 4WD 256.830 | For SA code:557,For vehicles with towbar | GDS84451 | Drive Shaft | | 34 | 33 | 68 | 53 | 638 | |
| | 2023.03- | 9AT | F | R | SUV 4WD 256.830 | | GDS84450 | Drive Shaft | | 34 | 33 | 68 | 53 | 1005 | |
| | 2023.03- | 9AT | F | L | SUV 4WD 256.830 | For SA code:430,For vehicles with bad road version | GCI82739 | Inner Joint | | 37 | 28 | 44.95 | 80 | 117 | |
| **GLE450 AMG** | | | | | | | | | | | | | | | |
| 3.0 (270 kw) | 2015.03-2019.10 | 9AT | F | L | SUV 4WD M 276.821 | Not for SA code:430;For vehicles without off-road suspension | GDS84205 | Drive Shaft | | 30 | 37 | 73 | 92 | 672 | |
| | 2015.03-2019.10 | 9AT | F | L/R | SUV 4WD M 276.821 | Not for SA code:430;For vehicles without off-road suspension | GCO35059 | Outer Joint | | 30 | 37 | 73 | 92.5 | 66 | I |
| | 2015.03-2019.10 | 9AT | F | L | SUV 4WD M 276.821 | Not for SA code:430;For vehicles without off-road suspension | GCI35057 | Inner Joint | | 37 | 33 | 45 | 80 | 104.5 | |
| | 2015.03-2019.10 | AT | F | R | SUV 4WD M 276.821 | Not for SA code:430;For vehicles without off-road suspension | GDS35088 | Drive Shaft | | 30 | 37 | 73 | 92.5 | 1015 | |
| | 2015.03-2019.10 | AT | F | R | SUV 4WD M 276.821 | Not for SA code:430;For vehicles without off-road suspension | GCI85042 | Inner Joint | | 37 | 33 | 45 | 264 | 111 | |
| | 2015.10-2018.10 | 9AT | F | L | SUV 4WD M 276.821 | For SA code:430,For vehicles with off-road suspension | GDS84205 | Drive Shaft | | 30 | 37 | 73 | 92 | 672 | |
| | 2015.10-2018.10 | 9AT | F | L | SUV 4WD M 276.821 | For SA code:430,For vehicles with off-road suspension | GCO82731 | Outer Joint | | 30 | 39 | 73 | 92 | 71 | I |
| | 2015.10-2018.10 | 9AT | F | L | SUV 4WD M 276.821 | For SA code:430,For vehicles with off-road suspension | GCI82640 | Inner Joint | | 37 | 26 | 44.95 | 79.5 | 107 | |
| | 2015.10-2018.10 | AT | F | R | SUV 4WD M 276.821 | Not for SA code:430;For vehicles without off-road suspension | GDS35088 | Drive Shaft | | 30 | 37 | 73 | 92.5 | 1015 | |
| | 2015.10-2018.10 | AT | F | R | SUV 4WD M 276.821 | For SA code:430,For vehicles with off-road suspension | GDS35113 | Drive Shaft | | 30 | 37 | 73 | 92 | 1017 | |
| | 2015.10-2018.10 | AT | F | L/R | SUV 4WD M 276.821 | Date to:2016.12,not for SA code:430 | GCO85007 | Outer Joint | | 30 | 37 | 70.2 | 90.5 | 69 | I |
| | 2015.10-2018.10 | AT | F | R | SUV 4WD M 276.821 | For SA code:430,For vehicles with off-road suspension | GCI35073 | Inner Joint | | 37 | 26 | 45 | 263 | 113 | |

| | YEAR | TRANSM. | F/R | L/R | BODY STYLE & DRIVE TYPE & ENGINE | REMARKS | G-AP Ref. | PRODUCT | ABS | Technical Specifications A | B | C | H | L | P |
|---|---|---|---|---|---|---|---|---|---|---|---|---|---|---|---|
| **MERCEDES-BENZ** | | | | | | | | | | | | | | | |
| **GLE450 AMG** | | | | | | | | | | | | | | | |
| 3.0 (270 kw) | 2015.10-2018.10 | AT | F | R | SUV 4WD M 276.821 | Not for SA code:430,For vehicles without off-road suspension | GCI85042 | Inner Joint | | 37 | 33 | 45 | 264 | 111 | |
| | 2015.10-2018.10 | 9AT | R | L/R | SUV 4WD M 276.821 | | GDS35090 | Drive Shaft | | 30 | 27 | 73 | 90.5 | 841 | |
| | 2015.10-2018.10 | 9AT | R | L/R | SUV 4WD M 276.821 | For SA code:430,For vehicles with bad road version | GDS35121 | Drive Shaft | | 30 | 30 | 73 | 90 | 846 | |
| **GLE500** | | | | | | | | | | | | | | | |
| 3.0 (245 kw) | 2015.04-2018.10 | AT | F | L/R | SUV 4WD 276821 | | GCO35059 | Outer Joint | | 30 | 37 | 73 | 92.5 | 66 | I |
| | 2015.04-2018.10 | AT | F | L | SUV 4WD 276821 | | GCI35057 | Inner Joint | | 37 | 33 | 45 | 80 | 104.5 | |
| | 2015.04-2018.10 | AT | F | R | SUV 4WD 276821 | | GCI85042 | Inner Joint | | 37 | 33 | 45 | 264 | 111 | |
| 3.0 (325 kw) | 2015.04-2018.10 | AT | F | L | SUV 4WD M 276.821 | | GDS84205 | Drive Shaft | | 30 | 37 | 73 | 92 | 672 | |
| | 2015.04-2018.10 | AT | F | R | SUV 4WD M 276.821 | | GDS35088 | Drive Shaft | | 30 | 37 | 73 | 92.5 | 1015 | |
| | 2015.04-2018.10 | AT | R | L/R | SUV 4WD M 276.821 | Not For SA code:430 | GDS35090 | Drive Shaft | | 30 | 27 | 73 | 90.5 | 841 | |
| | 2015.04-2018.10 | AT | R | L/R | SUV 4WD M 276.821 | For SA code:430,For vehicles with bad road version | GDS35121 | Drive Shaft | | 30 | 30 | 73 | 90 | 846 | |
| 4.7 (320 kw) | 2015.04-2018.10 | AT | F | L | SUV 4WD M 278.928 | For SA code:430,For vehicles with off-road suspension | GDS84205 | Drive Shaft | | 30 | 37 | 73 | 92 | 672 | |
| | 2015.04-2018.10 | AT | F | R | SUV 4WD M 278.928 | Not for SA code:430,For vehicles without off-road suspension | GDS35088 | Drive Shaft | | 30 | 37 | 73 | 92.5 | 1015 | |
| | 2015.04-2018.10 | AT | F | R | SUV 4WD M 278.928 | For SA code:430,For vehicles with off-road suspension | GDS35113 | Drive Shaft | | 30 | 37 | 73 | 92 | 1017 | |
| | 2015.04-2018.10 | AT | F | L | SUV 4WD M 278.928 | For SA code:430,For vehicles with off-road suspension | GCO82731 | Outer Joint | | 30 | 39 | 73 | 92 | 71 | I |
| | 2015.04-2018.10 | AT | F | L/R | SUV 4WD M 278.928 | | GCO85007 | Outer Joint | | 30 | 37 | 70.2 | 90.5 | 69 | I |
| | 2015.04-2018.10 | AT | F | L/R | SUV 4WD M 278.928 | | GCO85015 | Outer Joint | | 30 | 39 | 70.2 | 90.5 | 71 | I |
| | 2015.04-2018.10 | AT | F | L | SUV 4WD M 278.928 | For SA code:430,For vehicles with off-road suspension | GCI82640 | Inner Joint | | 37 | 26 | 44.95 | 79.5 | 107 | |
| | 2015.04-2018.10 | AT | F | L | SUV 4WD M 278.928 | | GCI85041 | Inner Joint | | 37 | 33 | 45 | 80 | 104.5 | |
| | 2015.04-2018.10 | AT | F | R | SUV 4WD M 278.928 | For SA code:430,For vehicles with off-road suspension | GCI35073 | Inner Joint | | 37 | 26 | 45 | 263 | 113 | |
| | 2015.04-2018.10 | AT | F | R | SUV 4WD M 278.928 | Not for SA code:430,For vehicles without off-road suspension | GCI85042 | Inner Joint | | 37 | 33 | 45 | 264 | 111 | |
| | 2015.04-2018.10 | 7AT | R | L/R | SUV 4WD M 278.928 | | GDS35090 | Drive Shaft | | 30 | 27 | 73 | 90.5 | 841 | |
| | 2015.04-2018.10 | 9AT | R | L/R | SUV 4WD M 278.928 | For SA code:430,For vehicles with bad road version | GDS35121 | Drive Shaft | | 30 | 30 | 73 | 90 | 846 | |
| 4.7 (335 kw) | 2015.10-2018.10 | AT | F | L | SUV 4WD M 278.928 | For SA code:430,For vehicles with off-road suspension | GDS84205 | Drive Shaft | | 30 | 37 | 73 | 92 | 672 | |
| | 2015.10-2018.10 | AT | F | R | SUV 4WD M 278.928 | Not for SA code:430,For vehicles without off-road suspension | GDS35088 | Drive Shaft | | 30 | 37 | 73 | 92.5 | 1015 | |
| | 2015.10-2018.10 | AT | F | R | SUV 4WD M 278.928 | For SA code:430,For vehicles with off-road suspension | GDS35113 | Drive Shaft | | 30 | 37 | 73 | 92 | 1017 | |
| | 2015.10-2018.10 | AT | F | L | SUV 4WD M 278.928 | For SA code:430,For vehicles with off-road suspension | GCO82731 | Outer Joint | | 30 | 39 | 73 | 92 | 71 | I |
| | 2015.10-2018.10 | AT | F | L/R | SUV 4WD M 278.928 | | GCO85007 | Outer Joint | | 30 | 37 | 70.2 | 90.5 | 69 | I |
| | 2015.10-2018.10 | AT | F | L/R | SUV 4WD M 278.928 | | GCO85015 | Outer Joint | | 30 | 39 | 70.2 | 90.5 | 71 | I |
| | 2015.10-2018.10 | AT | F | L | SUV 4WD M 278.928 | For SA code:430,For vehicles with off-road suspension | GCI82640 | Inner Joint | | 37 | 26 | 44.95 | 79.5 | 107 | |
| | 2015.10-2018.10 | AT | F | L | SUV 4WD M 278.928 | | GCI85041 | Inner Joint | | 37 | 33 | 45 | 80 | 104.5 | |
| | 2015.10-2018.10 | AT | F | R | SUV 4WD M 278.928 | For SA code:430,For vehicles with off-road suspension | GCI35073 | Inner Joint | | 37 | 26 | 45 | 263 | 113 | |
| | 2015.10-2018.10 | AT | F | R | SUV 4WD M 278.928 | Not for SA code:430,For vehicles without off-road suspension | GCI85042 | Inner Joint | | 37 | 33 | 45 | 264 | 111 | |
| | 2015.10-2018.10 | 9AT | R | L/R | SUV 4WD M 278.928 | For SA code:430,For vehicles with bad road version | GDS35121 | Drive Shaft | | 30 | 30 | 73 | 90 | 846 | |
| | 2015.10-2019.10 | 9AT | F | L | SUV 4WD M 278.928 | | GDS84205 | Drive Shaft | | 30 | 37 | 73 | 92 | 672 | |
| | 2015.10-2019.10 | AT | F | R | SUV 4WD M 278.928 | Not for SA code:430;For vehicles without off-road suspension | GDS35088 | Drive Shaft | | 30 | 37 | 73 | 92.5 | 1015 | |
| | 2015.10-2019.10 | AT | F | L/R | SUV 4WD M 278.928 | not for SA code:430;Type:W/O Off-Road Pack | GCO85007 | Outer Joint | | 30 | 37 | 70.2 | 90.5 | 69 | I |
| | 2015.10-2019.10 | AT | F | L | SUV 4WD M 278.928 | Not for SA code:430;For vehicles without off-road suspension | GCI35057 | Inner Joint | | 37 | 33 | 45 | 80 | 104.5 | |
| | 2015.10-2019.10 | AT | F | R | SUV 4WD M 278.928 | Not for SA code:430;For vehicles without off-road suspension | GCI85042 | Inner Joint | | 37 | 33 | 45 | 264 | 111 | |
| **GLE53 AMG** | | | | | | | | | | | | | | | |
| 3.0 (320 kw) | 2019.04- | 9AT | F | L | SUV 4WD M 256.930;256.830 | | GCI82739 | Inner Joint | | 37 | 28 | 44.95 | 80 | 117 | |
| | 2019.04- | 9AT | R | L | SUV 4WD M 256.930;256.830 | | GDS56558 | Drive Shaft | | 34 | 34 | 68 | 53.5 | 829 | |
| | 2019.04- | 9AT | R | R | SUV 4WD M 256.930;256.830 | Not For SA code:430 | GDS56557 | Drive Shaft | | 34 | 34 | 68 | 53.5 | 811 | |
| | 2019.04- | 9AT | R | L/R | SUV 4WD M 256.930;256.830 | | GCO83340 | Outer Joint | | 34 | 40 | 68 | 53.5 | 71.5 | I |
| | 2019.04- | 9AT | R | L | SUV 4WD M 256.930;256.830 | | GCI83370 | Inner Joint | | 34 | 40 | 48.95 | 96.5 | 121 | |
| | 2019.04- | 9AT | R | R | SUV 4WD M 256.930;256.830 | | GCI83369 | Inner Joint | | 34 | 40 | 48.95 | 82.5 | 105 | |
| | 2019.11- | 9AT | F | L | SUV 4WD M 256.930;256.830 | | GCI82739 | Inner Joint | | 37 | 28 | 44.95 | 80 | 117 | |
| | 2019.11- | 9AT | R | L | SUV 4WD M 256.930;256.830 | | GDS56558 | Drive Shaft | | 34 | 34 | 68 | 53.5 | 829 | |
| | 2019.11- | 9AT | R | R | SUV 4WD M 256.930;256.830 | | GDS56557 | Drive Shaft | | 34 | 34 | 68 | 53.5 | 811 | |
| | 2019.11- | 9AT | R | L/R | SUV 4WD M 256.930;256.830 | | GCO83340 | Outer Joint | | 34 | 40 | 68 | 53.5 | 71.5 | I |
| | 2019.11- | 9AT | R | L | SUV 4WD M 256.930;256.830 | | GCI83370 | Inner Joint | | 34 | 40 | 48.95 | 96.5 | 121 | |
| | 2019.11- | 9AT | R | R | SUV 4WD M 256.930;256.830 | | GCI83369 | Inner Joint | | 34 | 40 | 48.95 | 82.5 | 105 | |
| 3.0 (400 kw) | 2023.11- | 9AT | F | L | SUV 4WD 256.830 | | GCI82739 | Inner Joint | | 37 | 28 | 44.95 | 80 | 117 | |
| | 2023.11- | 9AT | R | L | SUV 4WD 256.830 | | GDS56558 | Drive Shaft | | 34 | 34 | 68 | 53.5 | 829 | |
| | 2023.11- | 9AT | R | R | SUV 4WD 256.830 | | GDS56557 | Drive Shaft | | 34 | 34 | 68 | 53.5 | 811 | |
| **GLE580** | | | | | | | | | | | | | | | |
| 4.0 (360 kw) | 2019.11-2023.03 | 9AT | F | L | SUV 4WD M 176.980 | Inner teeth of wheel side:27 | GDS84393 | Drive Shaft | | 34 | 37 | 68 | 53 | 637 | |
| | 2019.11-2023.03 | 9AT | F | R | SUV 4WD M 176.980 | | GDS84392 | Drive Shaft | | 34 | 37 | 68 | 53 | 1005 | |
| | 2019.11-2023.03 | 9AT | F | L/R | SUV 4WD M 176.980 | | GCO82803 | Outer Joint | | 34 | 27 | 68 | 53 | 60.5 | I |
| | 2019.11-2023.03 | 9AT | F | L | SUV 4WD M 176.980 | | GCI82739 | Inner Joint | | 37 | 28 | 44.95 | 80 | 117 | |
| | 2019.11-2023.03 | 9AT | F | R | SUV 4WD M 176.980 | | GCI82738 | Inner Joint | | 37 | 28 | 40 | 304 | 117 | |
| 4.0 (380 kw) | 2023.08- | 9AT | F | L/R | SUV 4WD M 177.980 | | GCO82803 | Outer Joint | | 34 | 27 | 68 | 53 | 60.5 | I |
| | 2023.08- | 9AT | F | L | SUV 4WD M 177.980 | | GCI82739 | Inner Joint | | 37 | 28 | 44.95 | 80 | 117 | |
| | 2023.08- | 9AT | R | L | SUV 4WD M 177.980 | | GDS56558 | Drive Shaft | | 34 | 34 | 68 | 53.5 | 829 | |
| | 2023.08- | 9AT | R | R | SUV 4WD M 177.980 | | GDS56557 | Drive Shaft | | 34 | 34 | 68 | 53.5 | 811 | |

| | YEAR | TRANSM. | F/R | L/R | BODY STYLE & DRIVE TYPE & ENGINE | REMARKS | G-AP Ref. | PRODUCT | ABS | Technical Specifications A | B | C | H | L | P |
|---|---|---|---|---|---|---|---|---|---|---|---|---|---|---|---|
| **MERCEDES-BENZ** | | | | | | | | | | | | | | | |
| **GLE580** | | | | | | | | | | | | | | | |
| 4.0 (380 kw) | 2023.08- | 9AT | R | L/R | SUV 4WD M 177.980 | | GCO83340 | Outer Joint | | 34 | 40 | 68 | 53.5 | 71.5 | I |
| | 2023.08- | 9AT | R | L | SUV 4WD M 177.980 | | GCI83370 | Inner Joint | | 34 | 40 | 48.95 | 96.5 | 121 | |
| | 2023.08- | 9AT | R | R | SUV 4WD M 177.980 | | GCI83369 | Inner Joint | | 34 | 40 | 48.95 | 82.5 | 105 | |
| **GLE63 AMG** | | | | | | | | | | | | | | | |
| 4.0 (420 kw) | 2019.11-2023.03 | 9AT | F | L | SUV 4WD M 177.980 | | GCI82739 | Inner Joint | | 37 | 28 | 44.95 | 80 | 117 | |
| | 2019.11-2023.03 | 9AT | R | L | SUV 4WD M 177.980 | | GDS56558 | Drive Shaft | | 34 | 34 | 68 | 53.5 | 829 | |
| | 2019.11-2023.03 | 9AT | R | R | SUV 4WD M 177.980 | | GDS56557 | Drive Shaft | | 34 | 34 | 68 | 53.5 | 811 | |
| | 2019.11-2023.03 | 9AT | R | L/R | SUV 4WD M 177.980 | | GCO83340 | Outer Joint | | 34 | 40 | 68 | 53.5 | 71.5 | I |
| | 2019.11-2023.03 | 9AT | R | L | SUV 4WD M 177.980 | | GCI83370 | Inner Joint | | 34 | 40 | 48.95 | 96.5 | 121 | |
| | 2019.11-2023.03 | 9AT | R | R | SUV 4WD M 177.980 | | GCI83369 | Inner Joint | | 34 | 40 | 48.95 | 82.5 | 105 | |
| | 2020.03-2023.03 | 9AT | F | L | SUV 4WD M 177.980 | | GCI82739 | Inner Joint | | 37 | 28 | 44.95 | 80 | 117 | |
| | 2020.03-2023.03 | 9AT | R | L | SUV 4WD M 177.980 | | GDS56558 | Drive Shaft | | 34 | 34 | 68 | 53.5 | 829 | |
| | 2020.03-2023.03 | 9AT | R | R | SUV 4WD M 177.980 | | GDS56557 | Drive Shaft | | 34 | 34 | 68 | 53.5 | 811 | |
| | 2020.03-2023.03 | 9AT | R | L/R | SUV 4WD M 177.980 | | GCO83340 | Outer Joint | | 34 | 40 | 68 | 53.5 | 71.5 | I |
| | 2020.03-2023.03 | 9AT | R | L | SUV 4WD M 177.980 | | GCI83370 | Inner Joint | | 34 | 40 | 48.95 | 96.5 | 121 | |
| | 2020.03-2023.03 | 9AT | R | R | SUV 4WD M 177.980 | | GCI83369 | Inner Joint | | 34 | 40 | 48.95 | 82.5 | 105 | |
| 4.0 (450 kw) | 2019.11- | 9AT | F | L | SUV 4WD M 177.980 | | GCI82739 | Inner Joint | | 37 | 28 | 44.95 | 80 | 117 | |
| | 2019.11- | 9AT | R | L | SUV 4WD M 177.980 | | GDS56558 | Drive Shaft | | 34 | 34 | 68 | 53.5 | 829 | |
| | 2019.11- | 9AT | R | R | SUV 4WD M 177.980 | | GDS56557 | Drive Shaft | | 34 | 34 | 68 | 53.5 | 811 | |
| | 2019.11- | 9AT | R | L/R | SUV 4WD M 177.980 | | GCO83340 | Outer Joint | | 34 | 40 | 68 | 53.5 | 71.5 | I |
| | 2019.11- | 9AT | R | L | SUV 4WD M 177.980 | | GCI83370 | Inner Joint | | 34 | 40 | 48.95 | 96.5 | 121 | |
| | 2019.11- | 9AT | R | R | SUV 4WD M 177.980 | | GCI83369 | Inner Joint | | 34 | 40 | 48.95 | 82.5 | 105 | |
| | 2020.03- | 9AT | F | L | SUV 4WD M 177.980 | | GCI82739 | Inner Joint | | 37 | 28 | 44.95 | 80 | 117 | |
| | 2020.03- | 9AT | R | L | SUV 4WD M 177.980 | | GDS56558 | Drive Shaft | | 34 | 34 | 68 | 53.5 | 829 | |
| | 2020.03- | 9AT | R | R | SUV 4WD M 177.980 | | GDS56557 | Drive Shaft | | 34 | 34 | 68 | 53.5 | 811 | |
| | 2020.03- | 9AT | R | L/R | SUV 4WD M 177.980 | | GCO83340 | Outer Joint | | 34 | 40 | 68 | 53.5 | 71.5 | I |
| | 2020.03- | 9AT | R | L | SUV 4WD M 177.980 | | GCI83370 | Inner Joint | | 34 | 40 | 48.95 | 96.5 | 121 | |
| | 2020.03- | 9AT | R | R | SUV 4WD M 177.980 | | GCI83369 | Inner Joint | | 34 | 40 | 48.95 | 82.5 | 105 | |
| 5.5 (386 kw) | 2015.04-2017.05 | 7AT | F | L | SUV 4WD M 157.982 | | GDS82456 | Drive Shaft | | 30 | 37 | 73 | 92 | 672 | |
| | 2015.04-2017.05 | 7AT | F | R | SUV 4WD M 157.982 | | GDS35113 | Drive Shaft | | 30 | 37 | 73 | 92 | 1017 | |
| | 2015.04-2017.05 | 7AT | F | L/R | SUV 4WD M 157.982 | | GCO35073 | Outer Joint | | 30 | 39 | 73 | 92 | 71 | I |
| | 2015.04-2017.05 | 7AT | F | L | SUV 4WD M 157.982 | | GCI81822 | Inner Joint | | 37 | 26 | 44.95 | 79.5 | 107 | |
| | 2015.04-2017.05 | 7AT | F | R | SUV 4WD M 157.982 | | GCI35073 | Inner Joint | | 37 | 26 | 45 | 263 | 113 | |
| | 2015.04-2017.05 | 7AT | R | L/R | SUV 4WD M 157.982 | | GDS35121 | Drive Shaft | | 30 | 30 | 73 | 90 | 846 | |
| 5.5 (410 kw) | 2015.03-2019.10 | 7AT | F | L | SUV 4WD M 157.982 | | GDS82456 | Drive Shaft | | 30 | 37 | 73 | 92 | 672 | |
| | 2015.03-2019.10 | 7AT | F | R | SUV 4WD M 157.982 | | GDS35113 | Drive Shaft | | 30 | 37 | 73 | 92 | 1017 | |
| | 2015.03-2019.10 | 7AT | F | L/R | SUV 4WD M 157.982 | | GCO35073 | Outer Joint | | 30 | 39 | 73 | 92 | 71 | I |
| | 2015.03-2019.10 | 7AT | F | L | SUV 4WD M 157.982 | | GCI81822 | Inner Joint | | 37 | 26 | 44.95 | 79.5 | 107 | |
| | 2015.03-2019.10 | 7AT | F | R | SUV 4WD M 157.982 | | GCI35073 | Inner Joint | | 37 | 26 | 45 | 263 | 113 | |
| | 2015.03-2019.10 | 7AT | R | L/R | SUV 4WD M 157.982 | | GDS35121 | Drive Shaft | | 30 | 30 | 73 | 90 | 846 | |
| | 2015.04-2018.10 | 7AT | F | L | SUV 4WD M 157.982 | | GDS82456 | Drive Shaft | | 30 | 37 | 73 | 92 | 672 | |
| | 2015.04-2018.10 | 7AT | F | R | SUV 4WD M 157.982 | | GDS35113 | Drive Shaft | | 30 | 37 | 73 | 92 | 1017 | |
| | 2015.04-2018.10 | 7AT | F | L/R | SUV 4WD M 157.982 | | GCO35073 | Outer Joint | | 30 | 39 | 73 | 92 | 71 | I |
| | 2015.04-2018.10 | 7AT | F | L | SUV 4WD M 157.982 | | GCI81822 | Inner Joint | | 37 | 26 | 44.95 | 79.5 | 107 | |
| | 2015.04-2018.10 | 7AT | F | R | SUV 4WD M 157.982 | | GCI35073 | Inner Joint | | 37 | 26 | 45 | 263 | 113 | |
| | 2015.04-2018.10 | 7AT | R | L/R | SUV 4WD M 157.982 | | GDS35121 | Drive Shaft | | 30 | 30 | 73 | 90 | 846 | |
| 5.5 (430 kw) | 2015.03-2019.10 | 7AT | F | L | SUV 4WD M 157.982 | | GDS82456 | Drive Shaft | | 30 | 37 | 73 | 92 | 672 | |
| | 2015.03-2019.10 | 7AT | F | R | SUV 4WD M 157.982 | | GDS35113 | Drive Shaft | | 30 | 37 | 73 | 92 | 1017 | |
| | 2015.03-2019.10 | 7AT | F | L/R | SUV 4WD M 157.982 | | GCO35073 | Outer Joint | | 30 | 39 | 73 | 92 | 71 | I |
| | 2015.03-2019.10 | 7AT | F | L | SUV 4WD M 157.982 | | GCI81822 | Inner Joint | | 37 | 26 | 44.95 | 79.5 | 107 | |
| | 2015.03-2019.10 | 7AT | F | R | SUV 4WD M 157.982 | | GCI35073 | Inner Joint | | 37 | 26 | 45 | 263 | 113 | |
| | 2015.03-2019.10 | 7AT | R | L/R | SUV 4WD M 157.982 | | GDS35121 | Drive Shaft | | 30 | 30 | 73 | 90 | 846 | |
| | 2015.04-2018.10 | 7AT | F | L | SUV 4WD M 157.982 | | GDS82456 | Drive Shaft | | 30 | 37 | 73 | 92 | 672 | |
| | 2015.04-2018.10 | 7AT | F | R | SUV 4WD M 157.982 | | GDS35113 | Drive Shaft | | 30 | 37 | 73 | 92 | 1017 | |
| | 2015.04-2018.10 | 7AT | F | L/R | SUV 4WD M 157.982 | | GCO35073 | Outer Joint | | 30 | 39 | 73 | 92 | 71 | I |
| | 2015.04-2018.10 | 7AT | F | L | SUV 4WD M 157.982 | | GCI81822 | Inner Joint | | 37 | 26 | 44.95 | 79.5 | 107 | |
| | 2015.04-2018.10 | 7AT | F | R | SUV 4WD M 157.982 | | GCI35073 | Inner Joint | | 37 | 26 | 45 | 263 | 113 | |
| | 2015.04-2018.10 | 7AT | R | L/R | SUV 4WD M 157.982 | | GDS35121 | Drive Shaft | | 30 | 30 | 73 | 90 | 846 | |
| **GLK200** | | | | | | | | | | | | | | | |
| 2.0 (135 kw) | 2013.08-2015.06 | 6MT | R | L/R | SUV RWD M 274.920 | | GDS35119 | Drive Shaft | 48NS | 27 | 27 | 68 | 82 | 803 | |
| | 2013.08-2015.06 | 7AT | R | L/R | SUV RWD M 274.920 | | GDS83148 | Drive Shaft | 48NS | 27 | 27 | 68 | 82 | 798 | |
| 2.2 (100 kw) | 2013.12-2015.06 | 6MT/7AT | R | L/R | SUV RWD OM 651.916 | | GDS35119 | Drive Shaft | 48NS | 27 | 27 | 68 | 82 | 803 | |
| 2.2 (105 kw) | 2010.07-2015.06 | 6MT/7AT | R | L/R | SUV RWD OM 651.916;OM 651.913 | | GDS35119 | Drive Shaft | 48NS | 27 | 27 | 68 | 82 | 803 | |
| | 2010.07-2015.06 | 7AT | R | L/R | SUV RWD OM 651.916;OM 651.913 | Model year to:2010 | GDS35120 | Drive Shaft | 48NS | 27 | 30 | 68 | 82 | 800 | |

| | YEAR | TRANSM. | F/R | L/R | BODY STYLE & DRIVE TYPE & ENGINE | REMARKS | G-AP Ref. | PRODUCT | ABS | Technical Specifications A | B | C | H | L | P |
|---|---|---|---|---|---|---|---|---|---|---|---|---|---|---|---|
| **MERCEDES-BENZ** | | | | | | | | | | | | | | | |
| **GLK220** | | | | | | | | | | | | | | | |
| 2.2 (120 kw) | 2008.12-2015.06 | 7AT | F | L | SUV 4WD OM 651.912 | | GDS35094 | Drive Shaft | | 30 | 34 | 71 | 56.5 | 517 | |
| | 2008.12-2015.06 | 7AT | F | R | SUV 4WD OM 651.912 | | GDS35095 | Drive Shaft | | 30 | 27 | 71 | 56.5 | 548 | |
| | 2008.12-2015.06 | 7AT | F | L/R | SUV 4WD OM 651.912 | | GCO35049 | Outer Joint | | 30 | 25 | 71 | 56.5 | 52 | I |
| | 2008.12-2015.06 | 7AT | F | L | SUV 4WD OM 651.912 | | GCI35023 | Inner Joint | | 34 | 25 | 37.8 | | 150.5 | |
| | 2008.12-2015.06 | 7AT | F | R | SUV 4WD OM 651.912 | | GCI82700 | Inner Joint | | 27 | 25 | 38 | 62 | 120 | |
| | 2008.12-2015.06 | AT/MT | F | L | SUV 4WD OM 651.912 | | GDS81696 | Intermediate Shaft | | 34 | 27 | | | 504.5 | |
| | 2008.12-2015.06 | 7AT | R | L/R | SUV 4WD OM 651.912 | | GDS35137 | Drive Shaft | 48NS | 27 | 27 | 68 | 82 | 807 | |
| | 2008.12-2015.06 | 7AT | R | L/R | SUV 4WD OM 651.912 | | GCI35021 | Inner Joint | 48NS | 27 | 27 | 68 | 82 | 51.5 | |
| | 2008.12-2015.06 | 6MT/7AT | R | L/R | SUV RWD OM 651.916 | | GDS35119 | Drive Shaft | 48NS | 27 | 27 | 68 | 82 | 803 | |
| | 2008.12-2015.06 | 7AT | R | L/R | SUV RWD OM 651.916 | Model year to:2010 | GDS35120 | Drive Shaft | 48NS | 27 | 30 | 68 | 82 | 800 | |
| 2.2 (125 kw) | 2008.12-2015.06 | 7AT | F | L | SUV 4WD OM 651.912 | | GDS35094 | Drive Shaft | | 30 | 34 | 71 | 56.5 | 517 | |
| | 2008.12-2015.06 | 7AT | F | R | SUV 4WD OM 651.912 | | GDS35095 | Drive Shaft | | 30 | 27 | 71 | 56.5 | 548 | |
| | 2008.12-2015.06 | 7AT | F | L/R | SUV 4WD OM 651.912 | | GCO35049 | Outer Joint | | 30 | 25 | 71 | 56.5 | 52 | I |
| | 2008.12-2015.06 | 7AT | F | L | SUV 4WD OM 651.912 | | GCI35023 | Inner Joint | | 34 | 25 | 37.8 | | 150.5 | |
| | 2008.12-2015.06 | 7AT | F | R | SUV 4WD OM 651.912 | | GCI82700 | Inner Joint | | 27 | 25 | 38 | 62 | 120 | |
| | 2008.12-2015.06 | AT/MT | F | L | SUV 4WD OM 651.912 | | GDS81696 | Intermediate Shaft | | 34 | 27 | | | 504.5 | |
| | 2008.12-2015.06 | 7AT | R | L/R | SUV 4WD OM 651.912 | | GDS35137 | Drive Shaft | 48NS | 27 | 27 | 68 | 82 | 807 | |
| | 2008.12-2015.06 | 7AT | R | L/R | SUV 4WD OM 651.912 | | GCI35021 | Inner Joint | 48NS | 27 | 27 | 68 | 82 | 51.5 | |
| | 2008.12-2015.06 | 6MT/7AT | R | L/R | SUV RWD OM 651.916 | | GDS35119 | Drive Shaft | 48NS | 27 | 27 | 68 | 82 | 803 | |
| | 2008.12-2015.06 | 7AT | R | L/R | SUV RWD OM 651.916 | Model year to:2010 | GDS35120 | Drive Shaft | 48NS | 27 | 30 | 68 | 82 | 800 | |
| **GLK250** | | | | | | | | | | | | | | | |
| 2.0 (155 kw) | 2013.08-2015.06 | 7AT | F | L | SUV 4WD M 274.920 | | GDS35094 | Drive Shaft | | 30 | 34 | 71 | 56.5 | 517 | |
| | 2013.08-2015.06 | 7AT | F | R | SUV 4WD M 274.920 | | GDS35095 | Drive Shaft | | 30 | 27 | 71 | 56.5 | 548 | |
| | 2013.08-2015.06 | 7AT | F | L | SUV 4WD M 274.920 | | GCI35023 | Inner Joint | | 34 | 25 | 37.8 | | 150.5 | |
| | 2013.08-2015.06 | 7AT | F | R | SUV 4WD M 274.920 | | GCI82700 | Inner Joint | | 27 | 25 | 38 | 62 | 120 | |
| | 2013.08-2015.06 | AT/MT | F | L | SUV 4WD M 274.920 | | GDS81696 | Intermediate Shaft | | 34 | 27 | | | 504.5 | |
| | 2013.08-2015.06 | 7AT | R | L/R | SUV 4WD M 274.920 | | GDS84217 | Drive Shaft | 48NS | 27 | 27 | 68 | 82 | 805 | |
| | 2013.08-2015.06 | 7AT | R | L/R | SUV 4WD M 274.920 | | GCO82736 | Outer Joint | 48NS | 27 | 28 | 68 | 82 | 78.5 | |
| | 2013.08-2015.06 | 7AT | R | L/R | SUV 4WD M 274.920 | | GCI82646 | Inner Joint | | 27 | 28 | 45 | 69 | 90.5 | |
| | 2013.08-2015.06 | 7AT/6MT | R | L/R | SUV RWD M 274.920 | | GDS35119 | Drive Shaft | 48NS | 27 | 27 | 68 | 82 | 803 | |
| 2.2 (150 kw) | 2009.09-2015.06 | 7AT | F | L | SUV 4WD OM 651.912 | | GDS35094 | Drive Shaft | | 30 | 34 | 71 | 56.5 | 517 | |
| | 2009.09-2015.06 | 7AT | F | R | SUV 4WD OM 651.912 | | GDS35095 | Drive Shaft | | 30 | 27 | 71 | 56.5 | 548 | |
| | 2009.09-2015.06 | 7AT | F | L/R | SUV 4WD OM 651.912 | | GCO35049 | Outer Joint | | 30 | 25 | 71 | 56.5 | 52 | I |
| | 2009.09-2015.06 | 7AT | F | L | SUV 4WD OM 651.912 | | GCI35023 | Inner Joint | | 34 | 25 | 37.8 | | 150.5 | |
| | 2009.09-2015.06 | 7AT | F | R | SUV 4WD OM 651.912 | | GCI82700 | Inner Joint | | 27 | 25 | 38 | 62 | 120 | |
| | 2009.09-2015.06 | AT/MT | F | L | SUV 4WD OM 651.912 | | GDS81696 | Intermediate Shaft | | 34 | 27 | | | 504.5 | |
| | 2009.09-2015.06 | 7AT | R | L/R | SUV 4WD OM 651.912 | | GDS35137 | Drive Shaft | 48NS | 27 | 27 | 68 | 82 | 807 | |
| | 2009.09-2015.06 | 7AT | R | L/R | SUV 4WD OM 651.912 | | GCI35021 | Inner Joint | 48NS | 27 | 27 | 68 | 82 | 51.5 | |
| **GLK280** | | | | | | | | | | | | | | | |
| 3.0 (170 kw) | 2008.06-2009.06 | 7AT | F | L | SUV 4WD M 272.948 | | GDS35094 | Drive Shaft | | 30 | 34 | 71 | 56.5 | 517 | |
| | 2008.06-2009.06 | 7AT | F | R | SUV 4WD M 272.948 | | GDS35095 | Drive Shaft | | 30 | 27 | 71 | 56.5 | 548 | |
| | 2008.06-2009.06 | 7AT | F | L | SUV 4WD M 272.948 | | GCI35023 | Inner Joint | | 34 | 25 | 37.8 | | 150.5 | |
| | 2008.06-2009.06 | 7AT | F | R | SUV 4WD M 272.948 | | GCI82700 | Inner Joint | | 27 | 25 | 38 | 62 | 120 | |
| | 2008.06-2009.06 | AT/MT | F | L | SUV 4WD M 272.948 | | GDS81696 | Intermediate Shaft | | 34 | 27 | | | 504.5 | |
| | 2008.06-2009.06 | 7AT | R | L/R | SUV 4WD M 272.948 | Vehicle Production Country:not China | GDS35137 | Drive Shaft | 48NS | 27 | 27 | 68 | 82 | 807 | |
| | 2008.06-2009.06 | 7AT | R | L/R | SUV 4WD M 272.948 | | GDS84217 | Drive Shaft | 48NS | 27 | 27 | 68 | 82 | 805 | |
| | 2008.06-2009.06 | 7AT | R | L/R | SUV 4WD M 272.948 | | GCO82736 | Outer Joint | 48NS | 27 | 28 | 68 | 82 | 78.5 | |
| | 2008.06-2009.06 | 7AT | R | L/R | SUV 4WD M 272.948 | | GCI82646 | Inner Joint | | 27 | 28 | 45 | 69 | 90.5 | |
| **GLK300** | | | | | | | | | | | | | | | |
| 3.0 (170 kw) | 2009.07-2015.12 | 7AT | F | L | SUV 4WD M 272.948 | | GDS35094 | Drive Shaft | | 30 | 34 | 71 | 56.5 | 517 | |
| | 2009.07-2015.12 | 7AT | F | R | SUV 4WD M 272.948 | | GDS35095 | Drive Shaft | | 30 | 27 | 71 | 56.5 | 548 | |
| | 2009.07-2015.12 | 7AT | F | L/R | SUV 4WD M 272.948 | | GCO35049 | Outer Joint | | 30 | 25 | 71 | 56.5 | 52 | I |
| | 2009.07-2015.12 | 7AT | F | L | SUV 4WD M 272.948 | | GCI35023 | Inner Joint | | 34 | 25 | 37.8 | | 150.5 | |
| | 2009.07-2015.12 | 7AT | F | R | SUV 4WD M 272.948 | | GCI82700 | Inner Joint | | 27 | 25 | 38 | 62 | 120 | |
| | 2009.07-2015.12 | AT/MT | F | L | SUV 4WD M 272.948 | | GDS81696 | Intermediate Shaft | | 34 | 27 | | | 504.5 | |
| | 2009.07-2015.12 | 7AT | R | L/R | SUV 4WD M 272.948 | Vehicle Production Country:not China | GDS35137 | Drive Shaft | 48NS | 27 | 27 | 68 | 82 | 807 | |
| | 2009.07-2015.12 | 7AT | R | L/R | SUV 4WD M 272.948 | | GDS84217 | Drive Shaft | 48NS | 27 | 27 | 68 | 82 | 805 | |
| | 2009.07-2015.12 | 7AT | R | L/R | SUV 4WD M 272.948 | | GCO82736 | Outer Joint | 48NS | 27 | 28 | 68 | 82 | 78.5 | |
| | 2009.07-2015.12 | 7AT | R | L/R | SUV 4WD M 272.948 | | GCI82646 | Inner Joint | | 27 | 28 | 45 | 69 | 90.5 | |
| 3.5 (182 kw) | 2009.09-2015.12 | 7AT | F | L | SUV 4WD M 276.957 | | GDS35094 | Drive Shaft | | 30 | 34 | 71 | 56.5 | 517 | |
| | 2009.09-2015.12 | 7AT | F | R | SUV 4WD M 276.957 | | GDS35095 | Drive Shaft | | 30 | 27 | 71 | 56.5 | 548 | |
| | 2009.09-2015.12 | 7AT | F | L/R | SUV 4WD M 276.957 | | GCO35049 | Outer Joint | | 30 | 25 | 71 | 56.5 | 52 | I |
| | 2009.09-2015.12 | 7AT | F | L | SUV 4WD M 276.957 | | GCI35023 | Inner Joint | | 34 | 25 | 37.8 | | 150.5 | |
| | 2009.09-2015.12 | 7AT | F | R | SUV 4WD M 276.957 | | GCI82700 | Inner Joint | | 27 | 25 | 38 | 62 | 120 | |
| | 2009.09-2015.12 | AT | R | L/R | SUV 4WD M 276.957 | | GDS35137 | Drive Shaft | 48NS | 27 | 27 | 68 | 82 | 807 | |

| | YEAR | TRANSM. | F/R | L/R | BODY STYLE & DRIVE TYPE & ENGINE | REMARKS | G-AP Ref. | PRODUCT | ABS | Technical Specifications A | B | C | H | L | P |
|---|---|---|---|---|---|---|---|---|---|---|---|---|---|---|---|
| **MERCEDES-BENZ** | | | | | | | | | | | | | | | |
| **GLK300** | | | | | | | | | | | | | | | |
| 3.5 (182 kw) | 2009.09-2015.12 | AT | R | L/R | SUV 4WD M 276.957 | | GCI35021 | Inner Joint | 48NS | 27 | 27 | 68 | 82 | 51.5 | |
| 3.5 (185 kw) | 2009.09-2015.06 | 7AT | F | L | SUV 4WD M 276.957 | | GDS35094 | Drive Shaft | | 30 | 34 | 71 | 56.5 | 517 | |
| | 2009.09-2015.06 | 7AT | F | R | SUV 4WD M 276.957 | | GDS35095 | Drive Shaft | | 30 | 27 | 71 | 56.5 | 548 | |
| | 2009.09-2015.06 | 7AT | F | L/R | SUV 4WD M 276.957 | | GCO35049 | Outer Joint | | 30 | 25 | 71 | 56.5 | 52 | I |
| | 2009.09-2015.06 | 7AT | F | L | SUV 4WD M 276.957 | | GCI35023 | Inner Joint | | 34 | 25 | 37.8 | | 150.5 | |
| | 2009.09-2015.06 | 7AT | F | R | SUV 4WD M 276.957 | | GCI82700 | Inner Joint | | 27 | 25 | 38 | 62 | 120 | |
| | 2009.09-2015.06 | AT/MT | F | L | SUV 4WD M 276.957 | | GDS81696 | Intermediate Shaft | | 34 | 27 | | | 504.5 | |
| | 2009.09-2015.06 | AT | R | L/R | SUV 4WD M 276.957 | | GDS35137 | Drive Shaft | 48NS | 27 | 27 | 68 | 82 | 807 | |
| | 2009.09-2015.06 | AT | R | L/R | SUV 4WD M 276.957 | | GCI35021 | Inner Joint | 48NS | 27 | 27 | 68 | 82 | 51.5 | |
| **GLK320** | | | | | | | | | | | | | | | |
| 3.0 (165 kw) | 2008.06-2015.06 | 7AT | F | L | SUV 4WD OM 642.961 | | GDS35094 | Drive Shaft | | 30 | 34 | 71 | 56.5 | 517 | |
| | 2008.06-2015.06 | 7AT | F | R | SUV 4WD OM 642.961 | | GDS35095 | Drive Shaft | | 30 | 27 | 71 | 56.5 | 548 | |
| | 2008.06-2015.06 | 7AT | F | L/R | SUV 4WD OM 642.961 | | GCO35049 | Outer Joint | | 30 | 25 | 71 | 56.5 | 52 | I |
| | 2008.06-2015.06 | 7AT | F | L | SUV 4WD OM 642.961 | | GCI35023 | Inner Joint | | 34 | 25 | 37.8 | | 150.5 | |
| | 2008.06-2015.06 | 7AT | F | R | SUV 4WD OM 642.961 | | GCI82700 | Inner Joint | | 27 | 25 | 38 | 62 | 120 | |
| | 2008.06-2015.06 | AT/MT | F | L | SUV 4WD OM 642.961 | | GDS81696 | Intermediate Shaft | | 34 | 27 | | | 504.5 | |
| | 2008.06-2015.06 | AT | R | L/R | SUV 4WD OM 642.961 | | GDS35137 | Drive Shaft | 48NS | 27 | 27 | 68 | 82 | 807 | |
| | 2008.06-2015.06 | AT | R | L/R | SUV 4WD OM 642.961 | | GCI35021 | Inner Joint | 48NS | 27 | 27 | 68 | 82 | 51.5 | |
| **GLK350** | | | | | | | | | | | | | | | |
| 3.0 (165 kw) | 2009.07-2010.01 | 7AT | F | L | SUV 4WD OM 642.832 | | GDS35094 | Drive Shaft | | 30 | 34 | 71 | 56.5 | 517 | |
| | 2009.07-2010.01 | 7AT | F | R | SUV 4WD OM 642.832 | | GDS35095 | Drive Shaft | | 30 | 27 | 71 | 56.5 | 548 | |
| | 2009.07-2010.01 | 7AT | F | L/R | SUV 4WD OM 642.832 | | GCO35049 | Outer Joint | | 30 | 25 | 71 | 56.5 | 52 | I |
| | 2009.07-2010.01 | 7AT | F | L | SUV 4WD OM 642.832 | | GCI35023 | Inner Joint | | 34 | 25 | 37.8 | | 150.5 | |
| | 2009.07-2010.01 | 7AT | F | R | SUV 4WD OM 642.832 | | GCI82700 | Inner Joint | | 27 | 25 | 38 | 62 | 120 | |
| | 2009.07-2010.01 | AT/MT | F | L | SUV 4WD OM 642.832 | | GDS81696 | Intermediate Shaft | | 34 | 27 | | | 504.5 | |
| | 2009.07-2010.01 | 7AT | R | L/R | SUV 4WD OM 642.832 | | GDS35137 | Drive Shaft | 48NS | 27 | 27 | 68 | 82 | 807 | |
| | 2009.07-2010.01 | AT | R | L/R | SUV 4WD OM 642.832 | | GCI35021 | Inner Joint | 48NS | 27 | 27 | 68 | 82 | 51.5 | |
| 3.0 (170 kw) | 2010.02-2015.06 | 7AT | F | L | SUV 4WD OM 642.832 | | GDS35094 | Drive Shaft | | 30 | 34 | 71 | 56.5 | 517 | |
| | 2010.02-2015.06 | 7AT | F | R | SUV 4WD OM 642.832 | | GDS35095 | Drive Shaft | | 30 | 27 | 71 | 56.5 | 548 | |
| | 2010.02-2015.06 | 7AT | F | L/R | SUV 4WD OM 642.832 | | GCO35049 | Outer Joint | | 30 | 25 | 71 | 56.5 | 52 | I |
| | 2010.02-2015.06 | 7AT | F | L | SUV 4WD OM 642.832 | | GCI35023 | Inner Joint | | 34 | 25 | 37.8 | | 150.5 | |
| | 2010.02-2015.06 | 7AT | F | R | SUV 4WD OM 642.832 | | GCI82700 | Inner Joint | | 27 | 25 | 38 | 62 | 120 | |
| | 2010.02-2015.06 | AT/MT | F | L | SUV 4WD OM 642.832 | | GDS81696 | Intermediate Shaft | | 34 | 27 | | | 504.5 | |
| | 2010.02-2015.06 | 7AT | R | L/R | SUV 4WD OM 642.832 | | GDS35137 | Drive Shaft | 48NS | 27 | 27 | 68 | 82 | 807 | |
| | 2010.02-2015.06 | AT | R | L/R | SUV 4WD OM 642.832 | | GCI35021 | Inner Joint | 48NS | 27 | 27 | 68 | 82 | 51.5 | |
| 3.0 (195 kw) | 2012.07-2015.06 | 7AT | F | L | SUV 4WD OM 642.835 | | GDS35094 | Drive Shaft | | 30 | 34 | 71 | 56.5 | 517 | |
| | 2012.07-2015.06 | 7AT | F | R | SUV 4WD OM 642.835 | | GDS35095 | Drive Shaft | | 30 | 27 | 71 | 56.5 | 548 | |
| | 2012.07-2015.06 | 7AT | F | L | SUV 4WD OM 642.835 | | GCO35049 | Outer Joint | | 30 | 25 | 71 | 56.5 | 52 | I |
| | 2012.07-2015.06 | 7AT | F | R | SUV 4WD OM 642.835 | | GCO35038 | Outer Joint | | 30 | 25 | 71 | 56.5 | 52 | I |
| | 2012.07-2015.06 | 7AT | F | L | SUV 4WD OM 642.835 | | GCI35023 | Inner Joint | | 34 | 25 | 37.8 | | 150.5 | |
| | 2012.07-2015.06 | 7AT | F | R | SUV 4WD OM 642.835 | | GCI82700 | Inner Joint | | 27 | 25 | 38 | 62 | 120 | |
| | 2012.07-2015.06 | 7AT | R | L/R | SUV 4WD OM 642.835 | | GDS35119 | Drive Shaft | 48NS | 27 | 27 | 68 | 82 | 803 | |
| 3.5 (200 kw) | 2008.06-2011.04 | 7AT | F | L | SUV 4WD M 272.971 | | GDS35094 | Drive Shaft | | 30 | 34 | 71 | 56.5 | 517 | |
| | 2008.06-2011.04 | 7AT | F | R | SUV 4WD M 272.971 | | GDS35095 | Drive Shaft | | 30 | 27 | 71 | 56.5 | 548 | |
| | 2008.06-2011.04 | 7AT | F | L | SUV 4WD M 272.971 | | GCI35023 | Inner Joint | | 34 | 25 | 37.8 | | 150.5 | |
| | 2008.06-2011.04 | 7AT | F | R | SUV 4WD M 272.971 | | GCI82700 | Inner Joint | | 27 | 25 | 38 | 62 | 120 | |
| | 2008.06-2011.04 | AT/MT | F | L | SUV 4WD M 272.971 | | GDS81696 | Intermediate Shaft | | 34 | 27 | | | 504.5 | |
| | 2008.06-2011.04 | 7AT | R | L/R | SUV 4WD M 272.971 | | GDS84217 | Drive Shaft | 48NS | 27 | 27 | 68 | 82 | 805 | |
| | 2008.06-2011.04 | 7AT | R | L/R | SUV 4WD M 272.971 | | GCO82736 | Outer Joint | 48NS | 27 | 28 | 68 | 82 | 78.5 | |
| | 2008.06-2011.04 | 7AT | R | L/R | SUV 4WD M 272.971 | | GCI82646 | Inner Joint | | 27 | 28 | 45 | 69 | 90.5 | |
| | 2008.06-2011.04 | AT | R | L/R | SUV 4WD M 272.971 | Vehicle Production Country:not China | GDS35137 | Drive Shaft | 48NS | 27 | 27 | 68 | 82 | 807 | |
| | 2009.04-2015.06 | 7AT | R | L/R | SUV RWD M 272.991 | | GDS35119 | Drive Shaft | 48NS | 27 | 27 | 68 | 82 | 803 | |
| 3.5 (225 kw) | 2008.06-2015.06 | 7AT | F | L | SUV 4WD M 276.957 | | GDS35094 | Drive Shaft | | 30 | 34 | 71 | 56.5 | 517 | |
| | 2008.06-2015.06 | 7AT | F | R | SUV 4WD M 276.957 | | GDS35095 | Drive Shaft | | 30 | 27 | 71 | 56.5 | 548 | |
| | 2008.06-2015.06 | 7AT | F | L/R | SUV 4WD M 276.957 | | GCO35049 | Outer Joint | | 30 | 25 | 71 | 56.5 | 52 | I |
| | 2008.06-2015.06 | 7AT | F | L | SUV 4WD M 276.957 | | GCI35023 | Inner Joint | | 34 | 25 | 37.8 | | 150.5 | |
| | 2008.06-2015.06 | 7AT | F | R | SUV 4WD M 276.957 | | GCI82700 | Inner Joint | | 27 | 25 | 38 | 62 | 120 | |
| | 2008.06-2015.06 | AT/MT | F | L | SUV 4WD M 276.957 | | GDS81696 | Intermediate Shaft | | 34 | 27 | | | 504.5 | |
| | 2008.06-2015.06 | AT | R | L/R | SUV 4WD M 276.957 | | GDS35137 | Drive Shaft | 48NS | 27 | 27 | 68 | 82 | 807 | |
| | 2008.06-2015.06 | AT | R | L/R | SUV 4WD M 276.957 | | GCI35021 | Inner Joint | 48NS | 27 | 27 | 68 | 82 | 51.5 | |
| **GLS350** | | | | | | | | | | | | | | | |
| 2.9 (210 kw) | 2019.04- | 9AT | F | L | SUV 4WD OM 656.929 | Inner teeth of wheel side:27 | GDS84393 | Drive Shaft | | 34 | 37 | 68 | 53 | 637 | |
| | 2019.04- | 9AT | F | R | SUV 4WD OM 656.929 | | GDS84392 | Drive Shaft | | 34 | 37 | 68 | 53 | 1005 | |
| | 2019.04- | 9AT | F | L/R | SUV 4WD OM 656.929 | | GCO82803 | Outer Joint | | 34 | 27 | 68 | 53 | 60.5 | I |
| | 2019.04- | 9AT | F | L | SUV 4WD OM 656.929 | | GCI82739 | Inner Joint | | 37 | 28 | 44.95 | 80 | 117 | |

| | YEAR | TRANSM. | F/R | L/R | BODY STYLE & DRIVE TYPE & ENGINE | REMARKS | G-AP Ref. | PRODUCT | ABS | Technical Specifications A | B | C | H | L | P |
|---|---|---|---|---|---|---|---|---|---|---|---|---|---|---|---|
| **MERCEDES-BENZ** | | | | | | | | | | | | | | | |
| **GLS350** | | | | | | | | | | | | | | | |
| 2.9 (210 kw) | 2019.04- | 9AT | F | R | SUV 4WD OM 656.929 | | GCI82738 | Inner Joint | | 37 | 28 | 40 | 304 | 117 | |
| 3.0 (183 kw) | 2017.01-2019.04 | 9AT | F | L | SUV 4WD OM 642.826 | For SA code:430,For vehicles with off-road suspension | GDS84205 | Drive Shaft | | 30 | 37 | 73 | 92 | 672 | |
| | 2017.01-2019.04 | 9AT | F | L | SUV 4WD OM 642.826 | For SA code:430,For vehicles with off-road suspension | GCO82731 | Outer Joint | | 30 | 39 | 73 | 92 | 71 | I |
| | 2017.01-2019.04 | 9AT | F | L | SUV 4WD OM 642.826 | For SA code:430,For vehicles with off-road suspension | GCI82640 | Inner Joint | | 37 | 26 | 44.95 | 79.5 | 107 | |
| | 2017.01-2019.04 | AT | F | R | SUV 4WD OM 642.826 | | GDS35088 | Drive Shaft | | 30 | 37 | 73 | 92.5 | 1015 | |
| | 2017.01-2019.04 | AT | F | R | SUV 4WD OM 642.826 | For SA code:430,For vehicles with off-road suspension | GDS35113 | Drive Shaft | | 30 | 37 | 73 | 92 | 1017 | |
| | 2017.01-2019.04 | 9AT | R | L/R | SUV 4WD OM 642.826 | For SA code:430,For vehicles with bad road version | GDS35121 | Drive Shaft | | 30 | 30 | 73 | 90 | 846 | |
| 3.0 (190 kw) | 2015.11-2019.04 | AT | F | L | SUV 4WD OM 642.826 | For SA code:430,For vehicles with off-road suspension | GDS84205 | Drive Shaft | | 30 | 37 | 73 | 92 | 672 | |
| | 2015.11-2019.04 | AT | F | R | SUV 4WD OM 642.826 | not for SA code:430,For vehicles without off-road suspension | GDS35088 | Drive Shaft | | 30 | 37 | 73 | 92.5 | 1015 | |
| | 2015.11-2019.04 | AT | F | R | SUV 4WD OM 642.826 | For SA code:430,For vehicles with off-road suspension | GDS35113 | Drive Shaft | | 30 | 37 | 73 | 92 | 1017 | |
| | 2015.11-2019.04 | AT | F | L | SUV 4WD OM 642.826 | For SA code:430,For vehicles with off-road suspension | GCO82731 | Outer Joint | | 30 | 39 | 73 | 92 | 71 | I |
| | 2015.11-2019.04 | AT | F | L/R | SUV 4WD OM 642.826 | not for SA code:430 | GCO85007 | Outer Joint | | 30 | 37 | 70.2 | 90.5 | 69 | I |
| | 2015.11-2019.04 | AT | F | L | SUV 4WD OM 642.826 | For SA code:430,For vehicles with off-road suspension | GCI82640 | Inner Joint | | 37 | 26 | 44.95 | 79.5 | 107 | |
| | 2015.11-2019.04 | 9AT | R | L/R | SUV 4WD OM 642.826 | For SA code:056/806/807 | GDS35090 | Drive Shaft | | 30 | 27 | 73 | 90.5 | 841 | |
| | 2015.11-2019.04 | 9AT | R | L/R | SUV 4WD OM 642.826 | For SA code:430/550/556,For vehicles with bad road version,Veh Equip:For vehicles with towbar | GDS35121 | Drive Shaft | | 30 | 30 | 73 | 90 | 846 | |
| 3.0 (230 kw) | 2023.05- | 9AT | F | L | SUV 4WD 656.830 | | GDS84393 | Drive Shaft | | 34 | 37 | 68 | 53 | 637 | |
| | 2023.05- | 9AT | F | R | SUV 4WD 656.830 | | GDS84392 | Drive Shaft | | 34 | 37 | 68 | 53 | 1005 | |
| | 2023.05- | 9AT | F | L/R | SUV 4WD 656.830 | | GCO82803 | Outer Joint | | 34 | 27 | 68 | 53 | 60.5 | I |
| | 2023.05- | 9AT | F | L | SUV 4WD 656.830 | | GCI82739 | Inner Joint | | 37 | 28 | 44.95 | 80 | 117 | |
| | 2023.05- | 9AT | F | R | SUV 4WD 656.830 | | GCI82738 | Inner Joint | | 37 | 28 | 40 | 304 | 117 | |
| **GLS400** | | | | | | | | | | | | | | | |
| 2.9 (243 kw) | 2019.04- | 9AT | F | L | SUV 4WD OM 656.929 | Inner teeth of wheel side:27 | GDS84393 | Drive Shaft | | 34 | 37 | 68 | 53 | 637 | |
| | 2019.04- | 9AT | F | R | SUV 4WD OM 656.929 | | GDS84392 | Drive Shaft | | 34 | 37 | 68 | 53 | 1005 | |
| | 2019.04- | 9AT | F | L/R | SUV 4WD OM 656.929 | | GCO82803 | Outer Joint | | 34 | 27 | 68 | 53 | 60.5 | I |
| | 2019.04- | 9AT | F | L | SUV 4WD OM 656.929 | | GCI82739 | Inner Joint | | 37 | 28 | 44.95 | 80 | 117 | |
| | 2019.04- | 9AT | F | R | SUV 4WD OM 656.929 | | GCI82738 | Inner Joint | | 37 | 28 | 40 | 304 | 117 | |
| 3.0 (245 kw) | 2015.11-2019.04 | AT | F | L | SUV 4WD M 276.821 | For SA code:430,For vehicles with off-road suspension | GDS84205 | Drive Shaft | | 30 | 37 | 73 | 92 | 672 | |
| | 2015.11-2019.04 | AT | F | R | SUV 4WD M 276.821 | Not for SA code:430,For vehicles without off-road suspension | GDS35088 | Drive Shaft | | 30 | 37 | 73 | 92.5 | 1015 | |
| | 2015.11-2019.04 | AT | F | R | SUV 4WD M 276.821 | For SA code:430,For vehicles with off-road suspension | GDS35113 | Drive Shaft | | 30 | 37 | 73 | 92 | 1017 | |
| | 2015.11-2019.04 | AT | F | L | SUV 4WD M 276.821 | For SA code:430,For vehicles with off-road suspension | GCO82731 | Outer Joint | | 30 | 39 | 73 | 92 | 71 | I |
| | 2015.11-2019.04 | AT | F | L/R | SUV 4WD M 276.821 | | GCO85007 | Outer Joint | | 30 | 37 | 70.2 | 90.5 | 69 | I |
| | 2015.11-2019.04 | AT | F | L/R | SUV 4WD M 276.821 | | GCO85015 | Outer Joint | | 30 | 39 | 70.2 | 90.5 | 71 | I |
| | 2015.11-2019.04 | AT | F | L | SUV 4WD M 276.821 | For SA code:430,For vehicles with off-road suspension | GCI82640 | Inner Joint | | 37 | 26 | 44.95 | 79.5 | 107 | |
| | 2015.11-2019.04 | AT | F | L | SUV 4WD M 276.821 | | GCI85041 | Inner Joint | | 37 | 33 | 45 | 80 | 104.5 | |
| | 2015.11-2019.04 | AT | F | R | SUV 4WD M 276.821 | For SA code:430,For vehicles with off-road suspension | GCI35073 | Inner Joint | | 37 | 26 | 45 | 263 | 113 | |
| | 2015.11-2019.04 | AT | F | R | SUV 4WD M 276.821 | Not for SA code:430,For vehicles without off-road suspension | GCI85042 | Inner Joint | | 37 | 33 | 45 | 264 | 111 | |
| | 2015.11-2019.04 | 9AT | R | L/R | SUV 4WD M 276.821 | For SA code:056/806/807 | GDS35090 | Drive Shaft | | 30 | 27 | 73 | 90.5 | 841 | |
| | 2015.11-2019.04 | 9AT | R | L/R | SUV 4WD M 276.821 | For SA code:430/550/556,For vehicles with bad road version,Veh Equip:For vehicles with towbar | GDS35121 | Drive Shaft | | 30 | 30 | 73 | 90 | 846 | |
| **GLS450** | | | | | | | | | | | | | | | |
| 3.0 (270 kw) | 2019.06- | 9AT | F | L | SUV 4WD M 256.930 | Inner teeth of wheel side:27 | GDS84393 | Drive Shaft | | 34 | 37 | 68 | 53 | 637 | |
| | 2019.06- | 9AT | F | R | SUV 4WD M 256.930 | | GDS84392 | Drive Shaft | | 34 | 37 | 68 | 53 | 1005 | |
| | 2019.06- | 9AT | F | L/R | SUV 4WD M 256.930 | | GCO82803 | Outer Joint | | 34 | 27 | 68 | 53 | 60.5 | I |
| | 2019.06- | 9AT | F | L | SUV 4WD M 256.930 | | GCI82739 | Inner Joint | | 37 | 28 | 44.95 | 80 | 117 | |
| | 2019.06- | 9AT | F | R | SUV 4WD M 256.930 | | GCI82738 | Inner Joint | | 37 | 28 | 40 | 304 | 117 | |
| | 2023.04- | 9AT | F | L | SUV 4WD 656.830 | | GDS84393 | Drive Shaft | | 34 | 37 | 68 | 53 | 637 | |
| | 2023.04- | 9AT | F | R | SUV 4WD 656.830 | | GDS84392 | Drive Shaft | | 34 | 37 | 68 | 53 | 1005 | |
| | 2023.04- | 9AT | F | L/R | SUV 4WD 656.830 | | GCO82803 | Outer Joint | | 34 | 27 | 68 | 53 | 60.5 | I |
| | 2023.04- | 9AT | F | L | SUV 4WD 656.830 | | GCI82739 | Inner Joint | | 37 | 28 | 44.95 | 80 | 117 | |
| | 2023.04- | 9AT | F | R | SUV 4WD 656.830 | | GCI82738 | Inner Joint | | 37 | 28 | 40 | 304 | 117 | |
| 3.0 (280 kw) | 2023.04- | 9AT | F | L | SUV 4WD 256.830 | | GDS84393 | Drive Shaft | | 34 | 37 | 68 | 53 | 637 | |
| | 2023.04- | 9AT | F | R | SUV 4WD 256.830 | | GDS84392 | Drive Shaft | | 34 | 37 | 68 | 53 | 1005 | |
| | 2023.04- | 9AT | F | L/R | SUV 4WD 256.830 | | GCO82803 | Outer Joint | | 34 | 27 | 68 | 53 | 60.5 | I |
| | 2023.04- | 9AT | F | L | SUV 4WD 256.830 | | GCI82739 | Inner Joint | | 37 | 28 | 44.95 | 80 | 117 | |
| | 2023.04- | 9AT | F | R | SUV 4WD 256.830 | | GCI82738 | Inner Joint | | 37 | 28 | 40 | 304 | 117 | |
| **GLS500** | | | | | | | | | | | | | | | |
| 4.7 (335 kw) | 2015.11-2019.04 | AT | F | L | SUV 4WD M 278.928 | For SA code:430,For vehicles with off-road suspension | GDS84205 | Drive Shaft | | 30 | 37 | 73 | 92 | 672 | |
| | 2015.11-2019.04 | AT | F | R | SUV 4WD M 278.928 | Not for SA code:430,For vehicles without off-road suspension | GDS35088 | Drive Shaft | | 30 | 37 | 73 | 92.5 | 1015 | |
| | 2015.11-2019.04 | AT | F | R | SUV 4WD M 278.928 | For SA code:430,For vehicles with off-road suspension | GDS35113 | Drive Shaft | | 30 | 37 | 73 | 92 | 1017 | |
| | 2015.11-2019.04 | AT | F | L | SUV 4WD M 278.928 | For SA code:430,For vehicles with off-road suspension | GCO82731 | Outer Joint | | 30 | 39 | 73 | 92 | 71 | I |
| | 2015.11-2019.04 | AT | F | L/R | SUV 4WD M 278.928 | | GCO85007 | Outer Joint | | 30 | 37 | 70.2 | 90.5 | 69 | I |
| | 2015.11-2019.04 | AT | F | L/R | SUV 4WD M 278.928 | | GCO85015 | Outer Joint | | 30 | 39 | 70.2 | 90.5 | 71 | I |
| | 2015.11-2019.04 | AT | F | L | SUV 4WD M 278.928 | For SA code:430,For vehicles with off-road suspension | GCI82640 | Inner Joint | | 37 | 26 | 44.95 | 79.5 | 107 | |
| | 2015.11-2019.04 | AT | F | L | SUV 4WD M 278.928 | | GCI85041 | Inner Joint | | 37 | 33 | 45 | 80 | 104.5 | |
| | 2015.11-2019.04 | AT | F | R | SUV 4WD M 278.928 | For SA code:430,For vehicles with off-road suspension | GCI35073 | Inner Joint | | 37 | 26 | 45 | 263 | 113 | |
| | 2015.11-2019.04 | AT | F | R | SUV 4WD M 278.928 | Not for SA code:430,For vehicles without off-road suspension | GCI85042 | Inner Joint | | 37 | 33 | 45 | 264 | 111 | |

| | YEAR | TRANSM. | F/R | L/R | BODY STYLE & DRIVE TYPE & ENGINE | REMARKS | G-AP Ref. | PRODUCT | ABS | Technical Specifications A | B | C | H | L | P |
|---|---|---|---|---|---|---|---|---|---|---|---|---|---|---|---|
| **MERCEDES-BENZ** | | | | | | | | | | | | | | | |
| **GLS500** | | | | | | | | | | | | | | | |
| 4.7 (335 kw) | 2015.11-2019.04 | 9AT | R | L/R | SUV 4WD M 278.928 | For SA code:056/806/807 | GDS35090 | Drive Shaft | | 30 | 27 | 73 | 90.5 | 841 | |
| | 2015.11-2019.04 | 9AT | R | L/R | SUV 4WD M 278.928 | For SA code:056/806/807;For vehicles with load road version;VAR Equip:For vehicles with towbar | GDS35121 | Drive Shaft | | 30 | 30 | 73 | 90 | 846 | |
| **GLS580** | | | | | | | | | | | | | | | |
| 4.0 (360 kw) | 2019.11- | 9AT | F | L | SUV 4WD M 176.980 | Inner teeth of wheel side:27 | GDS84393 | Drive Shaft | | 34 | 37 | 68 | 53 | 637 | |
| | 2019.11- | 9AT | F | R | SUV 4WD M 176.980 | | GDS84392 | Drive Shaft | | 34 | 37 | 68 | 53 | 1005 | |
| | 2019.11- | 9AT | F | L/R | SUV 4WD M 176.980 | | GCO82803 | Outer Joint | | 34 | 27 | 68 | 53 | 60.5 | I |
| | 2019.11- | 9AT | F | L | SUV 4WD M 176.980 | | GCI82739 | Inner Joint | | 37 | 28 | 44.95 | 80 | 117 | |
| | 2019.11- | 9AT | F | R | SUV 4WD M 176.980 | | GCI82738 | Inner Joint | | 37 | 28 | 40 | 304 | 117 | |
| 4.0 (380 kw) | 2023.08- | 9AT | F | L/R | SUV 4WD M 177.980 | | GCO82803 | Outer Joint | | 34 | 27 | 68 | 53 | 60.5 | I |
| | 2023.08- | 9AT | F | L | SUV 4WD M 177.980 | | GCI82739 | Inner Joint | | 37 | 28 | 44.95 | 80 | 117 | |
| | 2023.08- | 9AT | R | L | SUV 4WD M 177.980 | | GDS56558 | Drive Shaft | | 34 | 34 | 68 | 53.5 | 829 | |
| | 2023.08- | 9AT | R | R | SUV 4WD M 177.980 | | GDS56557 | Drive Shaft | | 34 | 34 | 68 | 53.5 | 811 | |
| | 2023.08- | 9AT | R | L/R | SUV 4WD M 177.980 | | GCO83340 | Outer Joint | | 34 | 40 | 68 | 53.5 | 71.5 | I |
| | 2023.08- | 9AT | R | L | SUV 4WD M 177.980 | | GCI83370 | Inner Joint | | 34 | 40 | 48.95 | 96.5 | 121 | |
| | 2023.08- | 9AT | R | R | SUV 4WD M 177.980 | | GCI83369 | Inner Joint | | 34 | 40 | 48.95 | 82.5 | 105 | |
| **GLS600 Maybach** | | | | | | | | | | | | | | | |
| 4.0 (410 kw) | 2019.11- | 9AT | F | L | SUV 4WD M 177.980 | | GCI82739 | Inner Joint | | 37 | 28 | 44.95 | 80 | 117 | |
| | 2019.11- | 9AT | R | L | SUV 4WD M 177.980 | | GDS56558 | Drive Shaft | | 34 | 34 | 68 | 53.5 | 829 | |
| | 2019.11- | 9AT | R | R | SUV 4WD M 177.980 | | GDS56557 | Drive Shaft | | 34 | 34 | 68 | 53.5 | 811 | |
| | 2019.11- | 9AT | R | L/R | SUV 4WD M 177.980 | | GCO83340 | Outer Joint | | 34 | 40 | 68 | 53.5 | 71.5 | I |
| | 2019.11- | 9AT | R | L | SUV 4WD M 177.980 | | GCI83370 | Inner Joint | | 34 | 40 | 48.95 | 96.5 | 121 | |
| | 2019.11- | 9AT | R | R | SUV 4WD M 177.980 | | GCI83369 | Inner Joint | | 34 | 40 | 48.95 | 82.5 | 105 | |
| **GLS63 AMG** | | | | | | | | | | | | | | | |
| 4.0 (450 kw) | 2019.11- | 9AT | F | L | SUV 4WD M 177.980 | | GCI82739 | Inner Joint | | 37 | 28 | 44.95 | 80 | 117 | |
| | 2019.11- | 9AT | R | L | SUV 4WD M 177.980 | | GDS56558 | Drive Shaft | | 34 | 34 | 68 | 53.5 | 829 | |
| | 2019.11- | 9AT | R | R | SUV 4WD M 177.980 | | GDS56557 | Drive Shaft | | 34 | 34 | 68 | 53.5 | 811 | |
| | 2019.11- | 9AT | R | L/R | SUV 4WD M 177.980 | | GCO83340 | Outer Joint | | 34 | 40 | 68 | 53.5 | 71.5 | I |
| | 2019.11- | 9AT | R | L | SUV 4WD M 177.980 | | GCI83370 | Inner Joint | | 34 | 40 | 48.95 | 96.5 | 121 | |
| | 2019.11- | 9AT | R | R | SUV 4WD M 177.980 | | GCI83369 | Inner Joint | | 34 | 40 | 48.95 | 82.5 | 105 | |
| 5.5 (430 kw) | 2015.11-2019.04 | AT | F | L | SUV 4WD M 157.982 | | GDS82456 | Drive Shaft | | 30 | 37 | 73 | 92 | 672 | |
| | 2015.11-2019.04 | AT | F | R | SUV 4WD M 157.982 | | GDS35113 | Drive Shaft | | 30 | 37 | 73 | 92 | 1017 | |
| | 2015.11-2019.04 | AT | F | L/R | SUV 4WD M 157.982 | | GCO35073 | Outer Joint | | 30 | 39 | 73 | 92 | 71 | I |
| | 2015.11-2019.04 | AT | F | L/R | SUV 4WD M 157.982 | | GCO85015 | Outer Joint | | 30 | 39 | 70.2 | 90.5 | 71 | I |
| | 2015.11-2019.04 | AT | F | L | SUV 4WD M 157.982 | | GCI81822 | Inner Joint | | 37 | 26 | 44.95 | 79.5 | 107 | |
| | 2015.11-2019.04 | AT | F | R | SUV 4WD M 157.982 | | GCI35073 | Inner Joint | | 37 | 26 | 45 | 263 | 113 | |
| | 2015.11-2019.04 | AT | R | L/R | SUV 4WD M 157.982 | | GDS35121 | Drive Shaft | | 30 | 30 | 73 | 90 | 846 | |
| **MARCO POLO 160** | | | | | | | | | | | | | | | |
| 1.6 (65 kw) | 2015.03- | 6MT | F | L | Bus FWD OM 622.951 | | GDS83139 | Drive Shaft | | 30 | 39 | 66 | 98.5 | 699 | |
| | 2015.03- | 6MT | F | R | Bus FWD OM 622.951 | | GDS83138 | Drive Shaft | | 30 | 39 | 66 | 98.5 | 1023 | |
| | 2015.03- | 6MT | F | R | Bus FWD OM 622.951 | | GDS83200 | Drive Shaft | | 30 | 39 | 66 | 98.5 | 1020 | |
| | 2015.03- | 6MT | F | L/R | Bus FWD OM 622.951 | | GCO82369 | Outer Joint | | 30 | 31 | 66 | 98.5 | 70 | M |
| | 2015.03- | 6MT | F | R | Bus FWD OM 622.951 | | GCI82438 | Inner Joint | | 39 | 31 | 29.97 | 368 | 101.5 | |
| **MARCO POLO 170** | | | | | | | | | | | | | | | |
| 1.7 (75 kw) | 2020.06- | 6MT | F | L | Bus FWD OM 622.851 | | GDS83139 | Drive Shaft | | 30 | 39 | 66 | 98.5 | 699 | |
| | 2020.06- | 6MT | F | R | Bus FWD OM 622.851 | | GDS83138 | Drive Shaft | | 30 | 39 | 66 | 98.5 | 1023 | |
| | 2020.06- | 6MT | F | R | Bus FWD OM 622.851 | | GDS83200 | Drive Shaft | | 30 | 39 | 66 | 98.5 | 1020 | |
| | 2020.06- | 6MT | F | L/R | Bus FWD OM 622.851 | | GCO82369 | Outer Joint | | 30 | 31 | 66 | 98.5 | 70 | M |
| | 2020.06- | 6MT | F | R | Bus FWD OM 622.851 | | GCI82438 | Inner Joint | | 39 | 31 | 29.97 | 368 | 101.5 | |
| **MARCO POLO 180** | | | | | | | | | | | | | | | |
| 1.6 (84 kw) | 2015.03- | 6MT | F | L | Bus FWD OM 622.951 | | GDS83139 | Drive Shaft | | 30 | 39 | 66 | 98.5 | 699 | |
| | 2015.03- | 6MT | F | R | Bus FWD OM 622.951 | | GDS83138 | Drive Shaft | | 30 | 39 | 66 | 98.5 | 1023 | |
| | 2015.03- | 6MT | F | R | Bus FWD OM 622.951 | | GDS83200 | Drive Shaft | | 30 | 39 | 66 | 98.5 | 1020 | |
| | 2015.03- | 6MT | F | L/R | Bus FWD OM 622.951 | | GCO82369 | Outer Joint | | 30 | 31 | 66 | 98.5 | 70 | M |
| | 2015.03- | 6MT | F | R | Bus FWD OM 622.951 | | GCI82438 | Inner Joint | | 39 | 31 | 29.97 | 368 | 101.5 | |
| **MARCO POLO 200** | | | | | | | | | | | | | | | |
| 1.7 (100 kw) | 2020.06- | 6MT | F | L | Bus FWD OM 622.851 | | GDS83139 | Drive Shaft | | 30 | 39 | 66 | 98.5 | 699 | |
| | 2020.06- | 6MT | F | R | Bus FWD OM 622.851 | | GDS83138 | Drive Shaft | | 30 | 39 | 66 | 98.5 | 1023 | |
| | 2020.06- | 6MT | F | R | Bus FWD OM 622.851 | | GDS83200 | Drive Shaft | | 30 | 39 | 66 | 98.5 | 1020 | |
| | 2020.06- | 6MT | F | L/R | Bus FWD OM 622.851 | | GCO82369 | Outer Joint | | 30 | 31 | 66 | 98.5 | 70 | M |
| | 2020.06- | 6MT | F | R | Bus FWD OM 622.851 | | GCI82438 | Inner Joint | | 39 | 31 | 29.97 | 368 | 101.5 | |
| 2.0 (100 kw) | 2019.03- | 9AT | F | L/R | Bus 4WD OM 654.920 | No Facelift | GDS84138 | Drive Shaft | | 30 | 24 | 66 | 98.5 | 694 | |
| | 2019.03- | 9AT | F | L/R | Bus 4WD OM 654.920 | No Facelift | GCO82369 | Outer Joint | | 30 | 31 | 66 | 98.5 | 70 | M |
| | 2019.03- | 9AT | F | L/R | Bus 4WD OM 654.920 | | GCI82604 | Inner Joint | | 24 | 33 | 37.9 | 70.5 | 112 | |
| | 2019.03- | 9AT | R | L/R | Bus 4WD OM 654.920 | Manufacturer:IFA | GDS35121 | Drive Shaft | | 30 | 30 | 73 | 90 | 846 | |
| | 2019.03- | 9AT | R | L/R | Bus RWD OM 654.920 | [illegible] | GDS35121 | Drive Shaft | | 30 | 30 | 73 | 90 | 846 | |

| | YEAR | TRANSM. | F/R | L/R | BODY STYLE & DRIVE TYPE & ENGINE | REMARKS | G-AP Ref. | PRODUCT | ABS | Technical Specifications A | B | C | H | L | P |
|---|---|---|---|---|---|---|---|---|---|---|---|---|---|---|---|
| **MERCEDES-BENZ** | | | | | | | | | | | | | | | |
| **MARCO POLO 200** | | | | | | | | | | | | | | | |
| 2.0 (100 kw) | 2019.03- | 9AT | R | L/R | Bus RWD OM 654.920 | Date to:2019.04,Manufacturer:Neapco | GDS57577 | Drive Shaft | | 30 | 30 | 73 | 90 | 851 | |
| | 2019.03- | 9AT | R | L/R | Bus RWD OM 654.920 | | GDS58339 | Drive Shaft | | 30 | 30 | 73 | 90 | 849 | |
| | 2019.03- | 9AT | R | L/R | Bus RWD OM 654.920 | Date to:2019.04,Date form:2019.05,For SA code:Y03/Y04 | GCO83616 | Outer Joint | | 30 | 31 | 73 | 90 | 70.5 | M |
| | 2019.03- | 9AT | R | L/R | Bus RWD OM 654.920 | Date to:2019.04 | GCI83784 | Inner Joint | | 30 | 31 | 47 | 83 | 92.5 | |
| | 2019.03- | 9AT | R | L/R | Bus RWD OM 654.920 | Date form:2019.05,For SA code:Y03/Y04 | GCI84070 | Inner Joint | | 30 | 31 | 47 | 83.5 | 93 | |
| 2.2 (100 kw) | 2015.03- | 7AT | F | L/R | Bus 4WD OM 651.950 | No Facelift | GDS84138 | Drive Shaft | | 30 | 24 | 66 | 98.5 | 694 | |
| | 2015.03- | 7AT | F | L/R | Bus 4WD OM 651.950 | No Facelift | GCO82369 | Outer Joint | | 30 | 31 | 66 | 98.5 | 70 | M |
| | 2015.03- | 7AT | F | L/R | Bus 4WD OM 651.950 | | GCI82604 | Inner Joint | | 24 | 33 | 37.9 | 70.5 | 112 | |
| | 2015.03- | 7AT | R | L/R | Bus 4WD OM 651.950 | Manufacturer:IFA | GDS35121 | Drive Shaft | | 30 | 30 | 73 | 90 | 846 | |
| | 2015.03- | 7AT | R | L/R | Bus RWD OM 651.950 | Date to:2020.04,For SA code:XMT,Manufacturer:IFA,Date from:2020.05,Manufacturer:IFA | GDS35121 | Drive Shaft | | 30 | 30 | 73 | 90 | 846 | |
| | 2015.03- | 7AT | R | L/R | Bus RWD OM 651.950 | Date to:2019.04,Manufacturer:Neapco | GDS57577 | Drive Shaft | | 30 | 30 | 73 | 90 | 851 | |
| | 2015.03- | 7AT | R | L/R | Bus RWD OM 651.950 | | GDS58339 | Drive Shaft | | 30 | 30 | 73 | 90 | 849 | |
| | 2015.03- | 7AT | R | L/R | Bus RWD OM 651.950 | Date to:2019.04 | GCI83784 | Inner Joint | | 30 | 31 | 47 | 83 | 92.5 | |
| | 2015.03- | 7AT/6MT | R | L/R | Bus RWD OM 651.950 | Date to:2019.04,Date form:2019.05,For SA code:Y03/Y04 | GCO83616 | Outer Joint | | 30 | 31 | 73 | 90 | 70.5 | M |
| | 2015.03- | 7AT/6MT | R | L/R | Bus RWD OM 651.950 | Date form:2019.05,For SA code:Y03/Y04 | GCI84070 | Inner Joint | | 30 | 31 | 47 | 83.5 | 93 | |
| **MARCO POLO 220** | | | | | | | | | | | | | | | |
| 2.0 (120 kw) | 2019.03- | 9AT | F | L/R | Bus 4WD OM 654.920 | No Facelift | GDS84138 | Drive Shaft | | 30 | 24 | 66 | 98.5 | 694 | |
| | 2019.03- | 9AT | F | L/R | Bus 4WD OM 654.920 | No Facelift | GCO82369 | Outer Joint | | 30 | 31 | 66 | 98.5 | 70 | M |
| | 2019.03- | 9AT | F | L/R | Bus 4WD OM 654.920 | | GCI82604 | Inner Joint | | 24 | 33 | 37.9 | 70.5 | 112 | |
| | 2019.03- | 9AT | R | L/R | Bus 4WD OM 654.920 | Manufacturer:IFA | GDS35121 | Drive Shaft | | 30 | 30 | 73 | 90 | 846 | |
| | 2019.03- | 9AT | R | L/R | Bus RWD OM 654.920 | Date to:2020.04,For SA code:XMT,Manufacturer:IFA,Date from:2020.05,Manufacturer:IFA | GDS35121 | Drive Shaft | | 30 | 30 | 73 | 90 | 846 | |
| | 2019.03- | 9AT | R | L/R | Bus RWD OM 654.920 | Date to:2019.04,Manufacturer:Neapco | GDS57577 | Drive Shaft | | 30 | 30 | 73 | 90 | 851 | |
| | 2019.03- | 9AT | R | L/R | Bus RWD OM 654.920 | | GDS58339 | Drive Shaft | | 30 | 30 | 73 | 90 | 849 | |
| | 2019.03- | 9AT | R | L/R | Bus RWD OM 654.920 | Date to:2019.04,Date form:2019.05,For SA code:Y03/Y04 | GCO83616 | Outer Joint | | 30 | 31 | 73 | 90 | 70.5 | M |
| | 2019.03- | 9AT | R | L/R | Bus RWD OM 654.920 | Date to:2019.04 | GCI83784 | Inner Joint | | 30 | 31 | 47 | 83 | 92.5 | |
| | 2019.03- | 9AT | R | L/R | Bus RWD OM 654.920 | Date form:2019.05,For SA code:Y03/Y04 | GCI84070 | Inner Joint | | 30 | 31 | 47 | 83.5 | 93 | |
| 2.2 (120 kw) | 2015.03- | 7AT | F | L/R | Bus 4WD OM 651.950 | No Facelift | GDS84138 | Drive Shaft | | 30 | 24 | 66 | 98.5 | 694 | |
| | 2015.03- | 7AT | F | L/R | Bus 4WD OM 651.950 | No Facelift | GCO82369 | Outer Joint | | 30 | 31 | 66 | 98.5 | 70 | M |
| | 2015.03- | 7AT | F | L/R | Bus 4WD OM 651.950 | | GCI82604 | Inner Joint | | 24 | 33 | 37.9 | 70.5 | 112 | |
| | 2015.03- | 7AT | R | L/R | Bus 4WD OM 651.950 | Manufacturer:IFA | GDS35121 | Drive Shaft | | 30 | 30 | 73 | 90 | 846 | |
| | 2015.03- | 7AT | R | L/R | Bus RWD OM 651.950 | Date to:2020.04,For SA code:XMT,Manufacturer:IFA,Date from:2020.05,Manufacturer:IFA | GDS35121 | Drive Shaft | | 30 | 30 | 73 | 90 | 846 | |
| | 2015.03- | 7AT | R | L/R | Bus RWD OM 651.950 | Date form:2015.09,Date to:2019.04,Manufacturer:Neapco | GDS57577 | Drive Shaft | | 30 | 30 | 73 | 90 | 851 | |
| | 2015.03- | 7AT | R | L/R | Bus RWD OM 651.950 | | GDS58339 | Drive Shaft | | 30 | 30 | 73 | 90 | 849 | |
| | 2015.03- | 7AT | R | L/R | Bus RWD OM 651.950 | Date to:2019.04,Date form:2019.05,For SA code:Y03/Y04 | GCO83616 | Outer Joint | | 30 | 31 | 73 | 90 | 70.5 | M |
| | 2015.03- | 7AT | R | L/R | Bus RWD OM 651.950 | Date to:2019.04 | GCI83784 | Inner Joint | | 30 | 31 | 47 | 83 | 92.5 | |
| | 2015.03- | 7AT/6MT | R | L/R | Bus RWD OM 651.950 | Date form:2019.05,For SA code:Y03/Y04 | GCI84070 | Inner Joint | | 30 | 31 | 47 | 83.5 | 93 | |
| **MARCO POLO 250** | | | | | | | | | | | | | | | |
| 2.0 (140 kw) | 2019.03- | 9AT | F | L/R | Bus 4WD OM 654.920 | No Facelift | GDS84138 | Drive Shaft | | 30 | 24 | 66 | 98.5 | 694 | |
| | 2019.03- | 9AT | F | L/R | Bus 4WD OM 654.920 | No Facelift | GCO82369 | Outer Joint | | 30 | 31 | 66 | 98.5 | 70 | M |
| | 2019.03- | 9AT | F | L/R | Bus 4WD OM 654.920 | | GCI82604 | Inner Joint | | 24 | 33 | 37.9 | 70.5 | 112 | |
| | 2019.03- | 9AT | R | L/R | Bus 4WD OM 654.920 | Manufacturer:IFA | GDS35121 | Drive Shaft | | 30 | 30 | 73 | 90 | 846 | |
| | 2019.03- | 9AT | R | L/R | Bus RWD OM 654.920 | Date to:2020.04,For SA code:XMT,Manufacturer:IFA,Date from:2020.05,Manufacturer:IFA | GDS35121 | Drive Shaft | | 30 | 30 | 73 | 90 | 846 | |
| | 2019.03- | 9AT | R | L/R | Bus RWD OM 654.920 | Date to:2019.04,Manufacturer:Neapco | GDS57577 | Drive Shaft | | 30 | 30 | 73 | 90 | 851 | |
| | 2019.03- | 9AT | R | L/R | Bus RWD OM 654.920 | | GDS58339 | Drive Shaft | | 30 | 30 | 73 | 90 | 849 | |
| | 2019.03- | 9AT | R | L/R | Bus RWD OM 654.920 | Date to:2019.04,Date form:2019.05,For SA code:Y03/Y04 | GCO83616 | Outer Joint | | 30 | 31 | 73 | 90 | 70.5 | M |
| | 2019.03- | 9AT | R | L/R | Bus RWD OM 654.920 | Date to:2019.04 | GCI83784 | Inner Joint | | 30 | 31 | 47 | 83 | 92.5 | |
| | 2019.03- | 9AT | R | L/R | Bus RWD OM 654.920 | Date form:2019.05,For SA code:Y03/Y04 | GCI84070 | Inner Joint | | 30 | 31 | 47 | 83.5 | 93 | |
| 2.2 (140 kw) | 2015.03- | 7AT | F | L/R | Bus 4WD OM 651.950 | No Facelift | GDS84138 | Drive Shaft | | 30 | 24 | 66 | 98.5 | 694 | |
| | 2015.03- | 7AT | F | L/R | Bus 4WD OM 651.950 | No Facelift | GCO82369 | Outer Joint | | 30 | 31 | 66 | 98.5 | 70 | M |
| | 2015.03- | 7AT | F | L/R | Bus 4WD OM 651.950 | | GCI82604 | Inner Joint | | 24 | 33 | 37.9 | 70.5 | 112 | |
| | 2015.03- | 7AT | R | L/R | Bus 4WD OM 651.950 | Manufacturer:IFA | GDS35121 | Drive Shaft | | 30 | 30 | 73 | 90 | 846 | |
| | 2015.03- | 7AT | R | L/R | Bus RWD OM 651.950 | Date to:2020.04,For SA code:XMT,Manufacturer:IFA,Date from:2020.05,Manufacturer:IFA | GDS35121 | Drive Shaft | | 30 | 30 | 73 | 90 | 846 | |
| | 2015.03- | 7AT | R | L/R | Bus RWD OM 651.950 | Date form:2015.09,Date to:2019.04,Manufacturer:Neapco | GDS57577 | Drive Shaft | | 30 | 30 | 73 | 90 | 851 | |
| | 2015.03- | 7AT | R | L/R | Bus RWD OM 651.950 | | GDS58339 | Drive Shaft | | 30 | 30 | 73 | 90 | 849 | |
| | 2015.03- | 7AT | R | L/R | Bus RWD OM 651.950 | Date to:2019.04,Date form:2019.05,For SA code:Y03/Y04 | GCO83616 | Outer Joint | | 30 | 31 | 73 | 90 | 70.5 | M |
| | 2015.03- | 7AT | R | L/R | Bus RWD OM 651.950 | Date to:2019.04 | GCI83784 | Inner Joint | | 30 | 31 | 47 | 83 | 92.5 | |
| | 2015.03- | 7AT | R | L/R | Bus RWD OM 651.950 | Date form:2019.05,For SA code:Y03/Y04 | GCI84070 | Inner Joint | | 30 | 31 | 47 | 83.5 | 93 | |
| **MARCO POLO 300** | | | | | | | | | | | | | | | |
| 2.0 (174 kw) | 2021.01- | 9AT | F | L/R | Bus 4WD OM 654.920 | | GDS84138 | Drive Shaft | | 30 | 24 | 66 | 98.5 | 694 | |
| | 2021.01- | 9AT | F | L/R | Bus 4WD OM 654.920 | No Facelift | GCO82369 | Outer Joint | | 30 | 31 | 66 | 98.5 | 70 | M |
| | 2021.01- | 9AT | F | L/R | Bus 4WD OM 654.920 | | GCI82604 | Inner Joint | | 24 | 33 | 37.9 | 70.5 | 112 | |
| | 2021.01- | 9AT | R | L/R | Bus 4WD OM 654.920 | Manufacturer:IFA | GDS35121 | Drive Shaft | | 30 | 30 | 73 | 90 | 846 | |
| | 2021.01- | 9AT | R | L/R | Bus RWD OM 654.920 | | GDS35121 | Drive Shaft | | 30 | 30 | 73 | 90 | 846 | |
| | 2021.01- | 9AT | R | L/R | Bus RWD OM 654.920 | | GDS58339 | Drive Shaft | | 30 | 30 | 73 | 90 | 849 | |
| | 2021.01- | 9AT | R | L/R | Bus RWD OM 654.920 | For SA code:Y03/Y04 | GCO83616 | Outer Joint | | 30 | 31 | 73 | 90 | 70.5 | M |

| | YEAR | TRANSM. | F/R | L/R | BODY STYLE & DRIVE TYPE & ENGINE | REMARKS | G-AP Ref. | PRODUCT | ABS | Technical Specifications A | B | C | H | L | P |
|---|---|---|---|---|---|---|---|---|---|---|---|---|---|---|---|
| **MERCEDES-BENZ** | | | | | | | | | | | | | | | |
| **MARCO POLO 300** | | | | | | | | | | | | | | | |
| 2.0 (174 kw) | 2021.01- | 9AT | R | L/R | Bus RWD OM 654.920 | For SA code:Y03/Y04 | GCI84070 | Inner Joint | | 30 | 31 | 47 | 83.5 | 93 | |
| 2.0 (176 kw) | 2019.03-2020.12 | 9AT | F | L/R | Bus 4WD OM 654.920 | No Facelift | GDS84138 | Drive Shaft | | 30 | 24 | 66 | 98.5 | 694 | |
| | 2019.03-2020.12 | 9AT | F | L/R | Bus 4WD OM 654.920 | No Facelift | GCO82369 | Outer Joint | | 30 | 31 | 66 | 98.5 | 70 | M |
| | 2019.03-2020.12 | 9AT | F | L/R | Bus 4WD OM 654.920 | | GCI82604 | Inner Joint | | 24 | 33 | 37.9 | 70.5 | 112 | |
| | 2019.03-2020.12 | 9AT | R | L/R | Bus 4WD OM 654.920 | Manufacturer:IFA | GDS35121 | Drive Shaft | | 30 | 30 | 73 | 90 | 846 | |
| | 2019.03-2020.12 | 9AT | R | L/R | Bus RWD OM 654.920 | For SA code:XM7,Manufacturer:IFA;For SA code:VO1/VQ8/Y03/Y04,Manufacturer:IFA | GDS35121 | Drive Shaft | | 30 | 30 | 73 | 90 | 846 | |
| | 2019.03-2020.12 | 9AT | R | L/R | Bus RWD OM 654.920 | Date to:2019.04,Manufacturer:Neapco | GDS57577 | Drive Shaft | | 30 | 30 | 73 | 90 | 851 | |
| | 2019.03-2020.12 | 9AT | R | L/R | Bus RWD OM 654.920 | ---------- | GDS58339 | Drive Shaft | | 30 | 30 | 73 | 90 | 849 | |
| | 2019.03-2020.12 | 9AT | R | L/R | Bus RWD OM 654.920 | Date to:2019.04,Date form:2019.05,For SA code:Y03/Y04 | GCO83616 | Outer Joint | | 30 | 31 | 73 | 90 | 70.5 | M |
| | 2019.03-2020.12 | 9AT | R | L/R | Bus RWD OM 654.920 | Date to:2019.04 | GCI83784 | Inner Joint | | 30 | 31 | 47 | 83 | 92.5 | |
| | 2019.03-2020.12 | 9AT | R | L/R | Bus RWD OM 654.920 | Date form:2019.05,For SA code:Y03/Y04 | GCI84070 | Inner Joint | | 30 | 31 | 47 | 83.5 | 93 | |
| **MB100** | | | | | | | | | | | | | | | |
| 2.4 (55 kw) | 1990.12-1996.02 | 5MT | F | L/R | Bus FWD OM 616.963 (12.90-.) | | GDS35010 | Drive Shaft | | 30 | 30 | 72 | 142 | 729 | |
| | 1990.12-1996.02 | 5MT | F | L/R | Platform/Chassis FWD OM 616.963 | | GDS35010 | Drive Shaft | | 30 | 30 | 72 | 142 | 729 | |
| **MB80** | | | | | | | | | | | | | | | |
| 2.4 (55 kw) | 1990.12-1996.02 | 5MT | F | L/R | Van FWD OM 616.963 | | GDS35010 | Drive Shaft | | 30 | 30 | 72 | 142 | 729 | |
| **ML230** | | | | | | | | | | | | | | | |
| 2.3 (110 kw) | 1998.04-2000.08 | AT | F | L/R | SUV 4WD 111977 | | GCO35016 | Outer Joint | 48W | 30 | 26 | 79.1 | 89 | 60.5 | I |
| | 1998.04-2000.08 | MT | F | L | SUV 4WD 111977 | | GDS35027 | Drive Shaft | 48W | 30 | 37 | 79.1 | 89 | 630 | |
| | 1998.04-2000.08 | MT | F | R | SUV 4WD 111977 | | GDS35018 | Drive Shaft | 48W | 30 | 37 | 79.1 | 89 | 963 | |
| | 1998.04-2000.08 | MT | F | L/R | SUV 4WD 111977 | | GCO35052 | Outer Joint | | 30 | 26 | 79.1 | 89 | 60.5 | I |
| | 1998.04-2000.08 | MT | F | L | SUV 4WD 111977 | | GCI35039 | Inner Joint | | 37 | 26 | 45 | 83 | 117.5 | |
| | 1998.04-2000.08 | 5MT | R | L/R | SUV 4WD 111977 | | GDS35019 | Drive Shaft | 48W | 30 | 32 | 79.1 | 89 | 792 | |
| **ML250** | | | | | | | | | | | | | | | |
| 2.2 (150 kw) | 2011.06-2015.12 | 7AT | F | L | SUV 4WD OM 651.960 | Date to:2014.07,For vehicles without off-road suspension | GDS35089 | Drive Shaft | | 30 | 37 | 73 | 92.5 | 673 | |
| | 2011.06-2015.12 | 7AT | F | L | SUV 4WD OM 651.960 | Date to:2014.08,For vehicles with off-road suspension | GDS82456 | Drive Shaft | | 30 | 37 | 73 | 92 | 672 | |
| | 2011.06-2015.12 | 7AT | F | L | SUV 4WD OM 651.960 | Date from:2014.09,For vehicles with off-road suspension | GDS84205 | Drive Shaft | | 30 | 37 | 73 | 92 | 672 | |
| | 2011.06-2015.12 | 7AT | F | R | SUV 4WD OM 651.960 | For vehicles without off-road suspension | GDS35088 | Drive Shaft | | 30 | 37 | 73 | 92.5 | 1015 | |
| | 2011.06-2015.12 | 7AT | F | R | SUV 4WD OM 651.960 | For vehicles with off-road suspension | GDS35113 | Drive Shaft | | 30 | 37 | 73 | 92 | 1017 | |
| | 2011.06-2015.12 | 7AT | F | L | SUV 4WD OM 651.960 | Date from:2014.09,For vehicles with off-road suspension | GCO82731 | Outer Joint | | 30 | 39 | 73 | 92 | 71 | I |
| | 2011.06-2015.12 | 7AT | F | L/R | SUV 4WD OM 651.960 | For vehicles without off-road suspension | GCO35059 | Outer Joint | | 30 | 37 | 73 | 92.5 | 66 | I |
| | 2011.06-2015.12 | 7AT | F | L/R | SUV 4WD OM 651.960 | For vehicles with off-road suspension | GCO35073 | Outer Joint | | 30 | 39 | 73 | 92 | 71 | I |
| | 2011.06-2015.12 | 7AT | F | L | SUV 4WD OM 651.960 | Date to:2014.07,For vehicles without off-road suspension | GCI35057 | Inner Joint | | 37 | 33 | 45 | 80 | 104.5 | |
| | 2011.06-2015.12 | 7AT | F | L | SUV 4WD OM 651.960 | Date To:2014.08,For vehicles with off-road suspension | GCI81822 | Inner Joint | | 37 | 26 | 44.95 | 79.5 | 107 | |
| | 2011.06-2015.12 | 7AT | F | L | SUV 4WD OM 651.960 | Date from:2014.09,For vehicles with off-road suspension | GCI82640 | Inner Joint | | 37 | 26 | 44.95 | 79.5 | 107 | |
| | 2011.06-2015.12 | 7AT | F | R | SUV 4WD OM 651.960 | For vehicles with off-road suspension | GCI35073 | Inner Joint | | 37 | 26 | 45 | 263 | 113 | |
| | 2011.06-2015.12 | 7AT | F | R | SUV 4WD OM 651.960 | For vehicles without off-road suspension | GCI85042 | Inner Joint | | 37 | 33 | 45 | 264 | 111 | |
| | 2011.06-2015.12 | AT | F | L/R | SUV 4WD OM 651.960 | For vehicles without off-road suspension | GCO85007 | Outer Joint | | 30 | 37 | 70.2 | 90.5 | 69 | I |
| | 2011.06-2015.12 | 7AT | R | L/R | SUV 4WD OM 651.960 | For vehicles with off-road suspension,For vehicles with towbar | GDS35090 | Drive Shaft | | 30 | 27 | 73 | 90.5 | 841 | |
| | 2011.06-2015.12 | 7AT | R | L/R | SUV 4WD OM 651.960 | For vehicles with off-road suspension,For vehicles with towbar | GDS35121 | Drive Shaft | | 30 | 30 | 73 | 90 | 846 | |
| | 2011.06-2015.12 | 7AT | R | L/R | SUV 4WD OM 651.960 | For vehicles without towbar | GDS84017 | Drive Shaft | | 30 | 27 | 73 | 90.5 | 852 | |
| **ML270** | | | | | | | | | | | | | | | |
| 2.7 (120 kw) | 1999.06-2005.07 | AT/MT | F | L/R | SUV 4WD 612963 | | GCO35016 | Outer Joint | 48W | 30 | 26 | 79.1 | 89 | 60.5 | I |
| | 1999.06-2005.07 | MT | F | L | SUV 4WD 612963 | | GDS35027 | Drive Shaft | 48W | 30 | 37 | 79.1 | 89 | 630 | |
| | 1999.06-2005.07 | MT | F | R | SUV 4WD 612963 | | GDS35018 | Drive Shaft | 48W | 30 | 37 | 79.1 | 89 | 963 | |
| | 1999.06-2005.07 | MT | F | L/R | SUV 4WD 612963 | | GCO35052 | Outer Joint | | 30 | 26 | 79.1 | 89 | 60.5 | I |
| | 1999.06-2005.07 | MT | F | L | SUV 4WD 612963 | | GCI35039 | Inner Joint | | 37 | 26 | 45 | 83 | 117.5 | |
| | 1999.06-2005.07 | 5AT/6MT | R | L/R | SUV 4WD 612963 | | GDS35019 | Drive Shaft | 48W | 30 | 32 | 79.1 | 89 | 792 | |
| **ML280** | | | | | | | | | | | | | | | |
| 3.0 (140 kw) | 2005.07-2009.07 | 7AT | F | L | SUV 4WD OM 642.940 | | GDS85060 | Drive Shaft | | 30 | 37 | 70.2 | 90.5 | 666 | |
| | 2005.07-2009.07 | 7AT | F | R | SUV 4WD OM 642.940 | | GDS85061 | Drive Shaft | | 30 | 37 | 70.2 | 90.5 | 1004 | |
| | 2005.07-2009.07 | 7AT | F | L | SUV 4WD OM 642.940 | Date from:2008.06,Chassis no. from:A423084,For vehicles without bad road version | GCI85041 | Inner Joint | | 37 | 33 | 45 | 80 | 104.5 | |
| | 2005.07-2009.07 | 7AT | F | R | SUV 4WD OM 642.940 | | GCI85042 | Inner Joint | | 37 | 33 | 45 | 264 | 111 | |
| | 2005.07-2009.07 | AT | F | L/R | SUV 4WD OM 642.940 | not for SA code:430;Type:W/O Off-Road Pack | GCO85007 | Outer Joint | | 30 | 37 | 70.2 | 90.5 | 69 | I |
| | 2005.07-2009.07 | | F | L/R | SUV 4WD OM 642.940 | | GCO85015 | Outer Joint | | 30 | 39 | 70.2 | 90.5 | 71 | I |
| | 2005.07-2009.07 | 7AT | R | L/R | SUV 4WD OM 642.940 | Date from:2006.11,Chassis no. from:A192262,For vehicles without off-road suspension | GDS83211 | Drive Shaft | | 30 | 37 | 70.3 | 90.5 | 837 | |
| | 2005.07-2009.07 | 7AT | R | L/R | SUV 4WD OM 642.940 | Date From:2006.11,Chassis no. from:A192262,For vehicles without off-road suspension | GCO82348 | Outer Joint | | 30 | 33 | 70.3 | 90.5 | 59.5 | I |
| | 2005.07-2009.07 | 7AT | R | L/R | SUV 4WD OM 642.940 | Date from:2006.11,Chassis no. from:A192262,For vehicles without off-road suspension | GCI85039 | Inner Joint | | 37 | 33 | 45 | 80 | 101 | |
| **ML300** | | | | | | | | | | | | | | | |
| 3.0 (140 kw) | 2009.07-2011.12 | 7AT | F | L | SUV 4WD OM 642.940 | | GDS85060 | Drive Shaft | | 30 | 37 | 70.2 | 90.5 | 666 | |
| | 2009.07-2011.12 | 7AT | F | R | SUV 4WD OM 642.940 | | GDS85061 | Drive Shaft | | 30 | 37 | 70.2 | 90.5 | 1004 | |
| | 2009.07-2011.12 | 7AT | F | L | SUV 4WD OM 642.940 | For vehicles without bad road version | GCI85041 | Inner Joint | | 37 | 33 | 45 | 80 | 104.5 | |
| | 2009.07-2011.12 | AT | F | L/R | SUV 4WD OM 642.940 | not for SA code:430;Type:W/O Off-Road Pack | GCO85007 | Outer Joint | | 30 | 37 | 70.2 | 90.5 | 69 | I |
| | 2009.07-2011.12 | AT | F | R | SUV 4WD OM 642.940 | | GCI85042 | Inner Joint | | 37 | 33 | 45 | 264 | 111 | |
| | 2009.07-2011.12 | | F | L/R | SUV 4WD OM 642.940 | | GCO85015 | Outer Joint | | 30 | 39 | 70.2 | 90.5 | 71 | I |

| | YEAR | TRANSM. | F/R | L/R | BODY STYLE & DRIVE TYPE & ENGINE | REMARKS | G-AP Ref. | PRODUCT | ABS | A | B | C | H | L | P |
|---|---|---|---|---|---|---|---|---|---|---|---|---|---|---|---|
| **MERCEDES-BENZ** | | | | | | | | | | | | | | | |
| **ML300** | | | | | | | | | | | | | | | |
| 3.0 (140 kw) | 2009.07-2011.12 | 7AT | R | L/R | SUV 4WD OM 642.940 | For vehicles without off-road suspension | GDS83211 | Drive Shaft | | 30 | 37 | 70.3 | 90.5 | 837 | |
| | 2009.07-2011.12 | 7AT | R | L/R | SUV 4WD OM 642.940 | For vehicles without off-road suspension | GCO82348 | Outer Joint | | 30 | 33 | 70.3 | 90.5 | 59.5 | I |
| | 2009.07-2011.12 | 7AT | R | L/R | SUV 4WD OM 642.940 | For vehicles without off-road suspension | GCI85039 | Inner Joint | | 37 | 33 | 45 | 80 | 101 | |
| 3.0 (150 kw) | 2010.02-2011.12 | 7AT | F | L | SUV 4WD OM 642.820 | | GDS85060 | Drive Shaft | | 30 | 37 | 70.2 | 90.5 | 666 | |
| | 2010.02-2011.12 | 7AT | F | R | SUV 4WD OM 642.820 | | GDS85061 | Drive Shaft | | 30 | 37 | 70.2 | 90.5 | 1004 | |
| | 2010.02-2011.12 | 7AT | F | L | SUV 4WD OM 642.820 | For vehicles without bad road version | GCI85041 | Inner Joint | | 37 | 33 | 45 | 80 | 104.5 | |
| | 2010.02-2011.12 | AT | F | L/R | SUV 4WD OM 642.820 | Date to:2010.12;not for SA code:430;Type:W/O Off-Road Pack | GCO85007 | Outer Joint | | 30 | 37 | 70.2 | 90.5 | 69 | I |
| | 2010.02-2011.12 | AT | F | R | SUV 4WD OM 642.820 | | GCI85042 | Inner Joint | | 37 | 33 | 45 | 264 | 111 | |
| | 2010.02-2011.12 | | F | L/R | SUV 4WD OM 642.820 | | GCO85015 | Outer Joint | | 30 | 39 | 70.2 | 90.5 | 71 | I |
| | 2010.02-2011.12 | 7AT | R | L/R | SUV 4WD OM 642.820 | For vehicles without off-road suspension | GDS83211 | Drive Shaft | | 30 | 37 | 70.3 | 90.5 | 837 | |
| | 2010.02-2011.12 | 7AT | R | L/R | SUV 4WD OM 642.820 | For vehicles without off-road suspension | GCO82348 | Outer Joint | | 30 | 33 | 70.3 | 90.5 | 59.5 | I |
| | 2010.02-2011.12 | 7AT | R | L/R | SUV 4WD OM 642.820 | For vehicles without off-road suspension | GCI85039 | Inner Joint | | 37 | 33 | 45 | 80 | 101 | |
| 3.0 (170 kw) | 2010.03-2011.12 | 7AT | F | L | SUV 4WD M 272.945 | | GDS85060 | Drive Shaft | | 30 | 37 | 70.2 | 90.5 | 666 | |
| | 2010.03-2011.12 | 7AT | F | R | SUV 4WD M 272.945 | | GDS85061 | Drive Shaft | | 30 | 37 | 70.2 | 90.5 | 1004 | |
| | 2010.03-2011.12 | 7AT | R | L/R | SUV 4WD M 272.945 | Fitting Position:Rear Axle Left And Right,For right-hand drive vehicles;Fitting Position:Rear Axle Right,For left-hand drive vehicles | GDS83211 | Drive Shaft | | 30 | 37 | 70.3 | 90.5 | 837 | |
| | 2010.03-2011.12 | 7AT | R | R | SUV 4WD M 272.945 | For left-hand drive vehicles | GCO82348 | Outer Joint | | 30 | 33 | 70.3 | 90.5 | 59.5 | I |
| | 2010.03-2011.12 | 7AT | R | L/R | SUV 4WD M 272.945 | For right-hand drive vehicles | GCO82348 | Outer Joint | | 30 | 33 | 70.3 | 90.5 | 59.5 | I |
| | 2010.03-2011.12 | 7AT | R | R | SUV 4WD M 272.945 | For left-hand drive vehicles | GCI85039 | Inner Joint | | 37 | 33 | 45 | 80 | 101 | |
| | 2010.03-2011.12 | 7AT | R | L/R | SUV 4WD M 272.945 | For right-hand drive vehicles | GCI85039 | Inner Joint | | 37 | 33 | 45 | 80 | 101 | |
| 3.5 (183 kw) | 2012.08-2015.02 | 7AT | F | L | SUV 4WD M 276.955 | Date to:2014.08,not for SA code:430,For vehicles without off-road suspension | GDS35089 | Drive Shaft | | 30 | 37 | 73 | 92.5 | 673 | |
| | 2012.08-2015.02 | 7AT | F | L | SUV 4WD M 276.955 | Date to:2014.08,For SA code:430,For vehicles with off-road suspension | GDS82456 | Drive Shaft | | 30 | 37 | 73 | 92 | 672 | |
| | 2012.08-2015.02 | 7AT | F | L | SUV 4WD M 276.955 | Date from:2014.09,For SA code:430,For vehicles with off-road suspension | GDS84205 | Drive Shaft | | 30 | 37 | 73 | 92 | 672 | |
| | 2012.08-2015.02 | 7AT | F | R | SUV 4WD M 276.955 | not for SA code:430,For vehicles without off-road suspension | GDS35088 | Drive Shaft | | 30 | 37 | 73 | 92.5 | 1015 | |
| | 2012.08-2015.02 | 7AT | F | R | SUV 4WD M 276.955 | For SA code:430,For vehicles with off-road suspension | GDS35113 | Drive Shaft | | 30 | 37 | 73 | 92 | 1017 | |
| | 2012.08-2015.02 | 7AT | F | L | SUV 4WD M 276.955 | Date To:2014.08,For SA code:430,For vehicles with off-road suspension | GCO35073 | Outer Joint | | 30 | 39 | 73 | 92 | 71 | I |
| | 2012.08-2015.02 | 7AT | F | L | SUV 4WD M 276.955 | Date from:2014.09,For SA code:430,For vehicles with off-road suspension | GCO82731 | Outer Joint | | 30 | 39 | 73 | 92 | 71 | I |
| | 2012.08-2015.02 | 7AT | F | L | SUV 4WD M 276.955 | Date To:2014.08,For SA code:430,For vehicles with off-road suspension | GCI81822 | Inner Joint | | 37 | 26 | 44.95 | 79.5 | 107 | |
| | 2012.08-2015.02 | 7AT | F | L | SUV 4WD M 276.955 | Date from:2014.09,For SA code:430,For vehicles with off-road suspension | GCI82640 | Inner Joint | | 37 | 26 | 44.95 | 79.5 | 107 | |
| | 2012.08-2015.02 | 9AT | R | L/R | SUV 4WD M 276.955 | For SA code:430,For vehicles with bad road version;For SA code:430/550,For vehicles with bad road version,Veh Equip:For vehicles with towbar | GDS35121 | Drive Shaft | | 30 | 30 | 73 | 90 | 846 | |
| | 2012.08-2015.02 | 9AT | R | L/R | SUV 4WD M 276.955 | Not for SA code:430/550 | GDS84017 | Drive Shaft | | 30 | 27 | 73 | 90.5 | 852 | |
| 3.5 (185 kw) | 2012.08-2015.02 | 7AT | F | L | SUV 4WD M 276.955 | Date to:2014.07,For vehicles without off-road suspension | GDS35089 | Drive Shaft | | 30 | 37 | 73 | 92.5 | 673 | |
| | 2012.08-2015.02 | 7AT | F | L | SUV 4WD M 276.955 | Date to:2014.08,For vehicles with off-road suspension | GDS82456 | Drive Shaft | | 30 | 37 | 73 | 92 | 672 | |
| | 2012.08-2015.02 | 7AT | F | L | SUV 4WD M 276.955 | Date from:2014.09,For vehicles with off-road suspension | GDS84205 | Drive Shaft | | 30 | 37 | 73 | 92 | 672 | |
| | 2012.08-2015.02 | 7AT | F | R | SUV 4WD M 276.955 | not for SA code:430,For vehicles without off-road suspension | GDS35088 | Drive Shaft | | 30 | 37 | 73 | 92.5 | 1015 | |
| | 2012.08-2015.02 | 7AT | F | R | SUV 4WD M 276.955 | For SA code:430,For vehicles with off-road suspension | GDS35113 | Drive Shaft | | 30 | 37 | 73 | 92 | 1017 | |
| | 2012.08-2015.02 | 7AT | F | L | SUV 4WD M 276.955 | Date to:2014.08,For vehicles with off-road suspension | GCO35073 | Outer Joint | | 30 | 39 | 73 | 92 | 71 | I |
| | 2012.08-2015.02 | 7AT | F | L | SUV 4WD M 276.955 | Date from:2014.09,For vehicles with off-road suspension | GCO82731 | Outer Joint | | 30 | 39 | 73 | 92 | 71 | I |
| | 2012.08-2015.02 | 7AT | F | R | SUV 4WD M 276.955 | For SA code:430,For vehicles with off-road suspension | GCO35073 | Outer Joint | | 30 | 39 | 73 | 92 | 71 | I |
| | 2012.08-2015.02 | 7AT | F | L/R | SUV 4WD M 276.955 | For vehicles without off-road suspension | GCO35059 | Outer Joint | | 30 | 37 | 73 | 92.5 | 66 | I |
| | 2012.08-2015.02 | 7AT | F | L/R | SUV 4WD M 276.955 | | GCO85015 | Outer Joint | | 30 | 39 | 70.2 | 90.5 | 71 | I |
| | 2012.08-2015.02 | 7AT | F | L | SUV 4WD M 276.955 | Date to:2014.07,For vehicles without off-road suspension | GCI35057 | Inner Joint | | 37 | 33 | 45 | 80 | 104.5 | |
| | 2012.08-2015.02 | 7AT | F | L | SUV 4WD M 276.955 | Date to:2014.08,For vehicles with off-road suspension | GCI81822 | Inner Joint | | 37 | 26 | 44.95 | 79.5 | 107 | |
| | 2012.08-2015.02 | 7AT | F | L | SUV 4WD M 276.955 | Date from:2014.09,For vehicles with off-road suspension | GCI82640 | Inner Joint | | 37 | 26 | 44.95 | 79.5 | 107 | |
| | 2012.08-2015.02 | 7AT | F | L | SUV 4WD M 276.955 | | GCI85041 | Inner Joint | | 37 | 33 | 45 | 80 | 104.5 | |
| | 2012.08-2015.02 | 7AT | F | R | SUV 4WD M 276.955 | For SA code:430,For vehicles with off-road suspension | GCI35073 | Inner Joint | | 37 | 26 | 45 | 263 | 113 | |
| | 2012.08-2015.02 | 7AT | F | R | SUV 4WD M 276.955 | not for SA code:430,For vehicles without off-road suspension | GCI85042 | Inner Joint | | 37 | 33 | 45 | 264 | 111 | |
| | 2012.08-2015.02 | AT | F | L/R | SUV 4WD M 276.955 | | GCO85007 | Outer Joint | | 30 | 37 | 70.2 | 90.5 | 69 | I |
| | 2012.08-2015.02 | 7AT | R | L/R | SUV 4WD M 276.955 | For vehicles with bad road version,For vehicles with towbar | GDS35121 | Drive Shaft | | 30 | 30 | 73 | 90 | 846 | |
| | 2012.08-2015.02 | 7AT | R | L/R | SUV 4WD M 276.955 | For vehicles without towbar | GDS84017 | Drive Shaft | | 30 | 27 | 73 | 90.5 | 852 | |
| **ML320** | | | | | | | | | | | | | | | |
| 3.0 (155 kw) | 2005.07-2011.07 | 7AT | F | L | SUV 4WD OM 642.940;OM 642.820 | | GDS85060 | Drive Shaft | | 30 | 37 | 70.2 | 90.5 | 666 | |
| | 2005.07-2011.07 | 7AT | F | R | SUV 4WD OM 642.940;OM 642.820 | | GDS85061 | Drive Shaft | | 30 | 37 | 70.2 | 90.5 | 1004 | |
| | 2005.07-2011.07 | 7AT | F | L | SUV 4WD OM 642.940;OM 642.820 | | GCI85041 | Inner Joint | | 37 | 33 | 45 | 80 | 104.5 | |
| | 2005.07-2011.07 | | F | L/R | SUV 4WD OM 642.940;OM 642.820 | | GCO85015 | Outer Joint | | 30 | 39 | 70.2 | 90.5 | 71 | I |
| | 2005.07-2011.07 | 7AT | R | R | SUV 4WD OM 642.940;OM 642.820 | | GDS83211 | Drive Shaft | | 30 | 37 | 70.3 | 90.5 | 837 | |
| | 2005.07-2011.07 | 7AT | R | R | SUV 4WD OM 642.940;OM 642.820 | | GCO82348 | Outer Joint | | 30 | 33 | 70.3 | 90.5 | 59.5 | I |
| | 2005.07-2011.07 | 7AT | R | R | SUV 4WD OM 642.940;OM 642.820 | | GCI85039 | Inner Joint | | 37 | 33 | 45 | 80 | 101 | |
| 3.0 (165 kw) | 2005.07-2009.07 | 7AT | F | L | SUV 4WD OM 642.940 | | GDS85060 | Drive Shaft | | 30 | 37 | 70.2 | 90.5 | 666 | |
| | 2005.07-2009.07 | 7AT | F | R | SUV 4WD OM 642.940 | | GDS85061 | Drive Shaft | | 30 | 37 | 70.2 | 90.5 | 1004 | |
| | 2005.07-2009.07 | 7AT | F | L | SUV 4WD OM 642.940 | Date from:2008.06,Chassis no. from:A423094,For vehicles without bad road version | GCI85041 | Inner Joint | | 37 | 33 | 45 | 80 | 104.5 | |
| | 2005.07-2009.07 | 7AT | F | R | SUV 4WD OM 642.940 | | GCI85042 | Inner Joint | | 37 | 33 | 45 | 264 | 111 | |
| | 2005.07-2009.07 | AT | F | L/R | SUV 4WD OM 642.940 | not for SA code:430;Type:W/O Off-Road Pack | GCO85007 | Outer Joint | | 30 | 37 | 70.2 | 90.5 | 69 | I |
| | 2005.07-2009.07 | | F | L/R | SUV 4WD OM 642.940 | | GCO85015 | Outer Joint | | 30 | 39 | 70.2 | 90.5 | 71 | I |
| | 2005.07-2009.07 | 7AT | R | L/R | SUV 4WD OM 642.940 | Date from:2006.11,Chassis no. from:A192262,For vehicles without off-road suspension | GDS83211 | Drive Shaft | | 30 | 37 | 70.3 | 90.5 | 837 | |
| | 2005.07-2009.07 | 7AT | R | L/R | SUV 4WD OM 642.940 | Date From:2006.11,Chassis no. from:A192262,For vehicles without off-road suspension | GCO82348 | Outer Joint | | 30 | 33 | 70.3 | 90.5 | 59.5 | I |

Technical Specifications

| | YEAR | TRANSM. | F/R | L/R | BODY STYLE & DRIVE TYPE & ENGINE | REMARKS | G-AP Ref. | PRODUCT | ABS | Technical Specifications A | B | C | H | L | P |
|---|---|---|---|---|---|---|---|---|---|---|---|---|---|---|---|
| **MERCEDES-BENZ** | | | | | | | | | | | | | | | |
| **ML320** | | | | | | | | | | | | | | | |
| 3.0 (165 kw) | 2005.07-2009.07 | 7AT | R | L/R | SUV 4WD OM 642.940 | Date from:2006.11,Chassis no. from:A192262,For vehicles without off-road suspension | GCI85039 | Inner Joint | | 37 | 33 | 45 | 80 | 101 | |
| 3.2 (160 kw) | 1998.02-2003.04 | AT | F | L/R | SUV 4WD 112942 | | GCO35016 | Outer Joint | 48W | 30 | 26 | 79.1 | 89 | 60.5 | I |
| | 1998.02-2003.04 | MT | F | L | SUV 4WD 112942 | | GDS35027 | Drive Shaft | 48W | 30 | 37 | 79.1 | 89 | 630 | |
| | 1998.02-2003.04 | MT | F | R | SUV 4WD 112942 | | GDS35018 | Drive Shaft | 48W | 30 | 37 | 79.1 | 89 | 963 | |
| | 1998.02-2003.04 | MT | F | L/R | SUV 4WD 112942 | | GCO35052 | Outer Joint | | 30 | 26 | 79.1 | 89 | 60.5 | I |
| | 1998.02-2003.04 | MT | F | L | SUV 4WD 112942 | | GCI35039 | Inner Joint | | 37 | 26 | 45 | 83 | 117.5 | |
| | 1998.02-2003.04 | 5AT | R | L/R | SUV 4WD 112942 | | GDS35019 | Drive Shaft | 48W | 30 | 32 | 79.1 | 89 | 792 | |
| **ML350** | | | | | | | | | | | | | | | |
| 3.0 (155 kw) | 2009.09-2011.12 | 7AT | F | L | SUV 4WD OM 642.820 | | GCI85041 | Inner Joint | | 37 | 33 | 45 | 80 | 104.5 | |
| | 2009.09-2011.12 | CVT/7AT | F | L | SUV 4WD OM 642.820 | | GDS85060 | Drive Shaft | | 30 | 37 | 70.2 | 90.5 | 666 | |
| | 2009.09-2011.12 | CVT/7AT | F | R | SUV 4WD OM 642.820 | | GDS85061 | Drive Shaft | | 30 | 37 | 70.2 | 90.5 | 1004 | |
| | 2009.09-2011.12 | CVT/7AT | F | R | SUV 4WD OM 642.820 | | GCI85042 | Inner Joint | | 37 | 33 | 45 | 264 | 111 | |
| | 2009.09-2011.12 | | F | L/R | SUV 4WD OM 642.820 | | GCO85015 | Outer Joint | | 30 | 39 | 70.2 | 90.5 | 71 | I |
| | 2009.09-2011.12 | 7AT | R | L/R | SUV 4WD OM 642.820 | | GDS83211 | Drive Shaft | | 30 | 37 | 70.3 | 90.5 | 837 | |
| | 2009.09-2011.12 | 7AT | R | L/R | SUV 4WD OM 642.820 | | GCO82348 | Outer Joint | | 30 | 33 | 70.3 | 90.5 | 59.5 | I |
| | 2009.09-2011.12 | 7AT | R | L/R | SUV 4WD OM 642.820 | | GCI85039 | Inner Joint | | 37 | 33 | 45 | 80 | 101 | |
| 3.0 (165 kw) | 2009.07-2011.12 | 7AT | F | L | SUV 4WD OM 642.940 | | GDS85060 | Drive Shaft | | 30 | 37 | 70.2 | 90.5 | 666 | |
| | 2009.07-2011.12 | 7AT | F | R | SUV 4WD OM 642.940 | | GDS85061 | Drive Shaft | | 30 | 37 | 70.2 | 90.5 | 1004 | |
| | 2009.07-2011.12 | 7AT | F | L | SUV 4WD OM 642.940 | For vehicles without bad road version | GCI85041 | Inner Joint | | 37 | 33 | 45 | 80 | 104.5 | |
| | 2009.07-2011.12 | 7AT | F | R | SUV 4WD OM 642.940 | | GCI85042 | Inner Joint | | 37 | 33 | 45 | 264 | 111 | |
| | 2009.07-2011.12 | AT | F | L/R | SUV 4WD OM 642.940 | not for SA code:430;Type:W/O Off-Road Pack | GCO85007 | Outer Joint | | 30 | 37 | 70.2 | 90.5 | 69 | I |
| | 2009.07-2011.12 | | F | L/R | SUV 4WD OM 642.940 | | GCO85015 | Outer Joint | | 30 | 39 | 70.2 | 90.5 | 71 | I |
| | 2009.07-2011.12 | 7AT | R | L/R | SUV 4WD OM 642.940 | For vehicles without off-road suspension | GDS83211 | Drive Shaft | | 30 | 37 | 70.3 | 90.5 | 837 | |
| | 2009.07-2011.12 | 7AT | R | L/R | SUV 4WD OM 642.940 | For vehicles without off-road suspension | GCO82348 | Outer Joint | | 30 | 33 | 70.3 | 90.5 | 59.5 | I |
| | 2009.07-2011.12 | 7AT | R | L/R | SUV 4WD OM 642.940 | For vehicles without off-road suspension | GCI85039 | Inner Joint | | 37 | 33 | 45 | 80 | 101 | |
| 3.0 (170 kw) | 2010.02-2011.12 | 7AT | F | L | SUV 4WD OM 642.820 | | GDS85060 | Drive Shaft | | 30 | 37 | 70.2 | 90.5 | 666 | |
| | 2010.02-2011.12 | 7AT | F | R | SUV 4WD OM 642.820 | | GDS85061 | Drive Shaft | | 30 | 37 | 70.2 | 90.5 | 1004 | |
| | 2010.02-2011.12 | 7AT | F | L | SUV 4WD OM 642.820 | | GCI85041 | Inner Joint | | 37 | 33 | 45 | 80 | 104.5 | |
| | 2010.02-2011.12 | 7AT | F | R | SUV 4WD OM 642.820 | | GCI85042 | Inner Joint | | 37 | 33 | 45 | 264 | 111 | |
| | 2010.02-2011.12 | AT | F | L/R | SUV 4WD OM 642.820 | not for SA code:430;Type:W/O Off-Road Pack | GCO85007 | Outer Joint | | 30 | 37 | 70.2 | 90.5 | 69 | I |
| | 2010.02-2011.12 | | F | L/R | SUV 4WD OM 642.820 | | GCO85015 | Outer Joint | | 30 | 39 | 70.2 | 90.5 | 71 | I |
| | 2010.02-2011.12 | 7AT | R | L/R | SUV 4WD OM 642.820 | | GDS83211 | Drive Shaft | | 30 | 37 | 70.3 | 90.5 | 837 | |
| | 2010.02-2011.12 | 7AT | R | L/R | SUV 4WD OM 642.820 | | GCO82348 | Outer Joint | | 30 | 33 | 70.3 | 90.5 | 59.5 | I |
| | 2010.02-2011.12 | 7AT | R | L/R | SUV 4WD OM 642.820 | | GCI85039 | Inner Joint | | 37 | 33 | 45 | 80 | 101 | |
| 3.0 (190 kw) | 2011.06-2015.02 | 7AT | F | L | SUV 4WD OM 642.826;OM 642.864 | Date to:2014.07,For vehicles without off-road suspension | GDS35089 | Drive Shaft | | 30 | 37 | 73 | 92.5 | 673 | |
| | 2011.06-2015.02 | 7AT | F | L | SUV 4WD OM 642.826;OM 642.864 | Date to:2014.08,For vehicles with off-road suspension | GDS82456 | Drive Shaft | | 30 | 37 | 73 | 92 | 672 | |
| | 2011.06-2015.02 | 7AT | F | L | SUV 4WD OM 642.826;OM 642.864 | Date from:2014.09,For vehicles with off-road suspension | GDS84205 | Drive Shaft | | 30 | 37 | 73 | 92 | 672 | |
| | 2011.06-2015.02 | 7AT | F | R | SUV 4WD OM 642.826;OM 642.864 | For vehicles without off-road suspension | GDS35088 | Drive Shaft | | 30 | 37 | 73 | 92.5 | 1015 | |
| | 2011.06-2015.02 | 7AT | F | R | SUV 4WD OM 642.826;OM 642.864 | For vehicles with off-road suspension | GDS35113 | Drive Shaft | | 30 | 37 | 73 | 92 | 1017 | |
| | 2011.06-2015.02 | 7AT | F | L | SUV 4WD OM 642.826;OM 642.864 | Date to:2014.08,For vehicles with off-road suspension | GCO35073 | Outer Joint | | 30 | 39 | 73 | 92 | 71 | I |
| | 2011.06-2015.02 | 7AT | F | L | SUV 4WD OM 642.826;OM 642.864 | Date from:2014.09,For vehicles with off-road suspension | GCO82731 | Outer Joint | | 30 | 39 | 73 | 92 | 71 | I |
| | 2011.06-2015.02 | 7AT | F | R | SUV 4WD OM 642.826;OM 642.864 | For vehicles with off-road suspension | GCO35073 | Outer Joint | | 30 | 39 | 73 | 92 | 71 | I |
| | 2011.06-2015.02 | 7AT | F | L/R | SUV 4WD OM 642.826;OM 642.864 | For vehicles without off-road suspension | GCO35059 | Outer Joint | | 30 | 37 | 73 | 92.5 | 66 | I |
| | 2011.06-2015.02 | 7AT | F | L | SUV 4WD OM 642.826;OM 642.864 | Date To:2014.07,For vehicles without off-road suspension | GCI35057 | Inner Joint | | 37 | 33 | 45 | 80 | 104.5 | |
| | 2011.06-2015.02 | 7AT | F | L | SUV 4WD OM 642.826;OM 642.864 | Date to:2014.08,For vehicles with off-road suspension | GCI81822 | Inner Joint | | 37 | 26 | 44.95 | 79.5 | 107 | |
| | 2011.06-2015.02 | 7AT | F | L | SUV 4WD OM 642.826;OM 642.864 | Date from:2014.09,For vehicles with off-road suspension | GCI82640 | Inner Joint | | 37 | 26 | 44.95 | 79.5 | 107 | |
| | 2011.06-2015.02 | 7AT | F | R | SUV 4WD OM 642.826;OM 642.864 | For vehicles with off-road suspension | GCI35073 | Inner Joint | | 37 | 26 | 45 | 263 | 113 | |
| | 2011.06-2015.02 | 7AT | F | R | SUV 4WD OM 642.826;OM 642.864 | For vehicles without off-road suspension | GCI85042 | Inner Joint | | 37 | 33 | 45 | 264 | 111 | |
| | 2011.06-2015.02 | AT | F | L/R | SUV 4WD OM 642.826;OM 642.864 | not for SA code:430;Type:W/O Off-Road Pack | GCO85007 | Outer Joint | | 30 | 37 | 70.2 | 90.5 | 69 | I |
| | 2011.06-2015.02 | 7AT | R | L/R | SUV 4WD OM 642.826;OM 642.864 | | GDS35090 | Drive Shaft | | 30 | 27 | 73 | 90.5 | 841 | |
| | 2011.06-2015.02 | 7AT | R | L/R | SUV 4WD OM 642.826;OM 642.864 | For vehicles with bad road version | GDS35121 | Drive Shaft | | 30 | 30 | 73 | 90 | 846 | |
| 3.5 (200 kw) | 2005.02-2011.12 | 7AT | F | L | SUV 4WD M 272.967 | | GDS85060 | Drive Shaft | | 30 | 37 | 70.2 | 90.5 | 666 | |
| | 2005.02-2011.12 | 7AT | F | R | SUV 4WD M 272.967 | | GDS85061 | Drive Shaft | | 30 | 37 | 70.2 | 90.5 | 1004 | |
| | 2005.02-2011.12 | 7AT | F | L | SUV 4WD M 272.967 | Date from:2008.06,Chassis no. from:A423064,For vehicles without bad road version | GCI85041 | Inner Joint | | 37 | 33 | 45 | 80 | 104.5 | |
| | 2005.02-2011.12 | 7AT | F | R | SUV 4WD M 272.967 | | GCI85042 | Inner Joint | | 37 | 33 | 45 | 264 | 111 | |
| | 2005.02-2011.12 | AT | F | L/R | SUV 4WD M 272.967 | not for SA code:430;Type:W/O Off-Road Pack | GCO85007 | Outer Joint | | 30 | 37 | 70.2 | 90.5 | 69 | I |
| | 2005.02-2011.12 | | F | L/R | SUV 4WD M 272.967 | | GCO85015 | Outer Joint | | 30 | 39 | 70.2 | 90.5 | 71 | I |
| | 2005.02-2011.12 | 7AT | R | L/R | SUV 4WD M 272.967 | Date from:2006.11,Chassis no. from:A192262,For vehicles without off-road suspension | GDS83211 | Drive Shaft | | 30 | 37 | 70.3 | 90.5 | 837 | |
| | 2005.02-2011.12 | 7AT | R | L/R | SUV 4WD M 272.967 | Date From:2006.11,Chassis no. from:A192262,For vehicles without off-road suspension | GCO82348 | Outer Joint | | 30 | 33 | 70.3 | 90.5 | 59.5 | I |
| | 2005.02-2011.12 | 7AT | R | L/R | SUV 4WD M 272.967 | Date From:2006.11,Chassis no. from:A192262,For vehicles without off-road suspension | GCI85039 | Inner Joint | | 37 | 33 | 45 | 80 | 101 | |
| 3.5 (225 kw) | 2011.06-2015.12 | 7AT | F | L | SUV 4WD M 276.955 | Date to:2014.07,For vehicles without off-road suspension | GDS35089 | Drive Shaft | | 30 | 37 | 73 | 92.5 | 673 | |
| | 2011.06-2015.12 | 7AT | F | L | SUV 4WD M 276.955 | Date to:2014.08,For vehicles with off-road suspension | GDS82456 | Drive Shaft | | 30 | 37 | 73 | 92 | 672 | |
| | 2011.06-2015.12 | 7AT | F | L | SUV 4WD M 276.955 | Date from:2014.09,For vehicles with off-road suspension | GDS84205 | Drive Shaft | | 30 | 37 | 73 | 92 | 672 | |
| | 2011.06-2015.12 | 7AT | F | R | SUV 4WD M 276.955 | For vehicles without off-road suspension | GDS35088 | Drive Shaft | | 30 | 37 | 73 | 92.5 | 1015 | |
| | 2011.06-2015.12 | 7AT | F | R | SUV 4WD M 276.955 | For vehicles with off-road suspension | GDS35113 | Drive Shaft | | 30 | 37 | 73 | 92 | 1017 | |

| | YEAR | TRANSM. | F/R | L/R | BODY STYLE & DRIVE TYPE & ENGINE | REMARKS | G-AP Ref. | PRODUCT | ABS | Technical Specifications A | B | C | H | L | P |
|---|---|---|---|---|---|---|---|---|---|---|---|---|---|---|---|
| **MERCEDES-BENZ** | | | | | | | | | | | | | | | |
| **ML350** | | | | | | | | | | | | | | | |
| 3.5 (225 kw) | 2011.06-2015.12 | 7AT | F | L | SUV 4WD M 276.955 | Date from:2014.09,For vehicles with off-road suspension | GCO82731 | Outer Joint | | 30 | 39 | 73 | 92 | 71 | I |
| | 2011.06-2015.12 | 7AT | F | L/R | SUV 4WD M 276.955 | Date to:2014.08,For vehicles with off-road suspension | GCO35073 | Outer Joint | | 30 | 39 | 73 | 92 | 71 | I |
| | 2011.06-2015.12 | 7AT | F | L/R | SUV 4WD M 276.955 | | GCO85015 | Outer Joint | | 30 | 39 | 70.2 | 90.5 | 71 | I |
| | 2011.06-2015.12 | 7AT | F | L | SUV 4WD M 276.955 | Date to:2014.08,For vehicles with off-road suspension | GCI81822 | Inner Joint | | 37 | 26 | 44.95 | 79.5 | 107 | |
| | 2011.06-2015.12 | 7AT | F | L | SUV 4WD M 276.955 | Date from:2014.09,For vehicles with off-road suspension | GCI82640 | Inner Joint | | 37 | 26 | 44.95 | 79.5 | 107 | |
| | 2011.06-2015.12 | 7AT | F | L | SUV 4WD M 276.955 | | GCI85041 | Inner Joint | | 37 | 33 | 45 | 80 | 104.5 | |
| | 2011.06-2015.12 | 7AT | F | R | SUV 4WD M 276.955 | Date to:2014.08,For vehicles with off-road suspension | GCI35073 | Inner Joint | | 37 | 26 | 45 | 263 | 113 | |
| | 2011.06-2015.12 | AT | F | L/R | SUV 4WD M 276.955 | | GCO85007 | Outer Joint | | 30 | 37 | 70.2 | 90.5 | 69 | I |
| | 2011.06-2015.12 | 7AT | R | L/R | SUV 4WD M 276.955 | For vehicles with bad road version | GDS35121 | Drive Shaft | | 30 | 30 | 73 | 90 | 846 | |
| | 2011.06-2015.12 | 7AT | R | L/R | SUV 4WD M 276.955 | For vehicles without bad road version | GDS84017 | Drive Shaft | | 30 | 27 | 73 | 90.5 | 852 | |
| 3.7 (173 kw) | 2003.01-2005.12 | AT/MT | F | L/R | SUV 4WD 112970 | | GCO35016 | Outer Joint | 48W | 30 | 26 | 79.1 | 89 | 60.5 | I |
| | 2003.01-2005.12 | MT | F | L | SUV 4WD 112970 | | GDS35027 | Drive Shaft | 48W | 30 | 37 | 79.1 | 89 | 630 | |
| | 2003.01-2005.12 | MT | F | R | SUV 4WD 112970 | | GDS35018 | Drive Shaft | 48W | 30 | 37 | 79.1 | 89 | 963 | |
| | 2003.01-2005.12 | MT | F | L/R | SUV 4WD 112970 | | GCO35052 | Outer Joint | | 30 | 26 | 79.1 | 89 | 60.5 | I |
| | 2003.01-2005.12 | MT | F | L | SUV 4WD 112970 | | GCI35039 | Inner Joint | | 37 | 26 | 45 | 83 | 117.5 | |
| | 2003.01-2005.12 | 5AT | R | L/R | SUV 4WD 112970 | | GDS35019 | Drive Shaft | 48W | 30 | 32 | 79.1 | 89 | 792 | |
| 3.7 (180 kw) | 2002.08-2003.07 | AT | F | L/R | SUV 4WD 112970 | | GCO35016 | Outer Joint | 48W | 30 | 26 | 79.1 | 89 | 60.5 | I |
| | 2002.08-2003.07 | MT | F | L | SUV 4WD 112970 | | GDS35027 | Drive Shaft | 48W | 30 | 37 | 79.1 | 89 | 630 | |
| | 2002.08-2003.07 | MT | F | R | SUV 4WD 112970 | | GDS35018 | Drive Shaft | 48W | 30 | 37 | 79.1 | 89 | 963 | |
| | 2002.08-2003.07 | MT | F | L/R | SUV 4WD 112970 | | GCO35052 | Outer Joint | | 30 | 26 | 79.1 | 89 | 60.5 | I |
| | 2002.08-2003.07 | MT | F | L | SUV 4WD 112970 | | GCI35039 | Inner Joint | | 37 | 26 | 45 | 83 | 117.5 | |
| | 2002.08-2003.07 | 5AT | R | L/R | SUV 4WD 112970 | | GDS35019 | Drive Shaft | 48W | 30 | 32 | 79.1 | 89 | 792 | |
| **ML400** | | | | | | | | | | | | | | | |
| 3.0 (245 kw) | 2013.08-2015.02 | 7AT | F | L | SUV 4WD M 276.821 | Date to:2014.07,For vehicles without off-road suspension | GDS35089 | Drive Shaft | | 30 | 37 | 73 | 92.5 | 673 | |
| | 2013.08-2015.02 | 7AT | F | R | SUV 4WD M 276.821 | For vehicles without off-road suspension | GDS35088 | Drive Shaft | | 30 | 37 | 73 | 92.5 | 1015 | |
| | 2013.08-2015.02 | 7AT | F | L/R | SUV 4WD M 276.821 | For vehicles without off-road suspension | GCO35059 | Outer Joint | | 30 | 37 | 73 | 92.5 | 66 | I |
| | 2013.08-2015.02 | 7AT | F | L | SUV 4WD M 276.821 | Date To:2014.07,For vehicles without off-road suspension | GCI35057 | Inner Joint | | 37 | 33 | 45 | 80 | 104.5 | |
| | 2013.08-2015.02 | 7AT/9AT | F | L | SUV 4WD M 276.821 | Date to:2014.08,For vehicles with off-road suspension | GDS82456 | Drive Shaft | | 30 | 37 | 73 | 92 | 672 | |
| | 2013.08-2015.02 | 7AT/9AT | F | L | SUV 4WD M 276.821 | Date from:2014.09,For vehicles with off-road suspension | GDS84205 | Drive Shaft | | 30 | 37 | 73 | 92 | 672 | |
| | 2013.08-2015.02 | 7AT/9AT | F | L | SUV 4WD M 276.821 | Date To:2014.08,For vehicles with off-road suspension | GCO35073 | Outer Joint | | 30 | 39 | 73 | 92 | 71 | I |
| | 2013.08-2015.02 | 7AT/9AT | F | L | SUV 4WD M 276.821 | Date from:2014.09,For vehicles with off-road suspension | GCO82731 | Outer Joint | | 30 | 39 | 73 | 92 | 71 | I |
| | 2013.08-2015.02 | 7AT/9AT | F | L | SUV 4WD M 276.821 | Date To:2014.08,For vehicles with off-road suspension | GCI81822 | Inner Joint | | 37 | 26 | 44.95 | 79.5 | 107 | |
| | 2013.08-2015.02 | 7AT/9AT | F | L | SUV 4WD M 276.821 | Date from:2014.09,For vehicles with off-road suspension | GCI82640 | Inner Joint | | 37 | 26 | 44.95 | 79.5 | 107 | |
| | 2013.08-2015.02 | AT | F | R | SUV 4WD M 276.821 | For vehicles with off-road suspension | GDS35113 | Drive Shaft | | 30 | 37 | 73 | 92 | 1017 | |
| | 2013.08-2015.02 | AT | F | L/R | SUV 4WD M 276.821 | | GCO85007 | Outer Joint | | 30 | 37 | 70.2 | 90.5 | 69 | I |
| | 2013.08-2015.02 | AT | F | L/R | SUV 4WD M 276.821 | | GCO85015 | Outer Joint | | 30 | 39 | 70.2 | 90.5 | 71 | I |
| | 2013.08-2015.02 | AT | F | L | SUV 4WD M 276.821 | | GCI85041 | Inner Joint | | 37 | 33 | 45 | 80 | 104.5 | |
| | 2013.08-2015.02 | 7AT/9AT | R | R | SUV 4WD M 276.821 | | GDS35090 | Drive Shaft | | 30 | 27 | 73 | 90.5 | 841 | |
| | 2013.08-2015.02 | 7AT/9AT | R | L/R | SUV 4WD M 276.821 | For vehicles with bad road version | GDS35121 | Drive Shaft | | 30 | 30 | 73 | 90 | 846 | |
| 4.0 (184 kw) | 2001.09-2005.07 | AT/MT | F | L/R | SUV 4WD 628963 | | GCO35016 | Outer Joint | 48W | 30 | 26 | 79.1 | 89 | 60.5 | I |
| | 2001.09-2005.07 | MT | F | L | SUV 4WD 628963 | | GDS35027 | Drive Shaft | 48W | 30 | 37 | 79.1 | 89 | 630 | |
| | 2001.09-2005.07 | MT | F | R | SUV 4WD 628963 | | GDS35018 | Drive Shaft | 48W | 30 | 37 | 79.1 | 89 | 963 | |
| | 2001.09-2005.07 | MT | F | L/R | SUV 4WD 628963 | | GCO35052 | Outer Joint | | 30 | 26 | 79.1 | 89 | 60.5 | I |
| | 2001.09-2005.07 | MT | F | L | SUV 4WD 628963 | | GCI35039 | Inner Joint | | 37 | 26 | 45 | 83 | 117.5 | |
| | 2001.09-2005.07 | 5AT | R | L/R | SUV 4WD 628963 | | GDS35019 | Drive Shaft | 48W | 30 | 32 | 79.1 | 89 | 792 | |
| **ML420** | | | | | | | | | | | | | | | |
| 4.0 (225 kw) | 2006.02-2009.09 | 7AT | F | L | SUV 4WD OM 629.912 | | GDS85060 | Drive Shaft | | 30 | 37 | 70.2 | 90.5 | 666 | |
| | 2006.02-2009.09 | 7AT | F | R | SUV 4WD OM 629.912 | | GDS85061 | Drive Shaft | | 30 | 37 | 70.2 | 90.5 | 1004 | |
| | 2006.02-2009.09 | 7AT | F | L | SUV 4WD OM 629.912 | Date from:2008.06,Chassis no. from:A423064,For vehicles without bad road version | GCI85041 | Inner Joint | | 37 | 33 | 45 | 80 | 104.5 | |
| | 2006.02-2009.09 | 7AT | F | R | SUV 4WD OM 629.912 | | GCI85042 | Inner Joint | | 37 | 33 | 45 | 264 | 111 | |
| | 2006.02-2009.09 | AT | F | L/R | SUV 4WD OM 629.912 | not for SA code:430;Type:W/O Off-Road Pack | GCO85007 | Outer Joint | | 30 | 37 | 70.2 | 90.5 | 69 | I |
| | 2006.02-2009.09 | | F | L/R | SUV 4WD OM 629.912 | | GCO85015 | Outer Joint | | 30 | 39 | 70.2 | 90.5 | 71 | I |
| | 2006.02-2009.09 | 7AT | R | L/R | SUV 4WD OM 629.912 | Date from:2006.11,Chassis no. from:A192262,For vehicles without off-road suspension | GDS83211 | Drive Shaft | | 30 | 37 | 70.3 | 90.5 | 837 | |
| | 2006.02-2009.09 | 7AT | R | L/R | SUV 4WD OM 629.912 | Date From:2006.11,Chassis no. from:A192262,For vehicles without off-road suspension | GCO82348 | Outer Joint | | 30 | 33 | 70.3 | 90.5 | 59.5 | I |
| | 2006.02-2009.09 | 7AT | R | L/R | SUV 4WD OM 629.912 | Date from:2006.11,Chassis no. from:A192262,For vehicles without off-road suspension | GCI85039 | Inner Joint | | 37 | 33 | 45 | 80 | 101 | |
| **ML430** | | | | | | | | | | | | | | | |
| 4.3 (200 kw) | 1998.11-2002.08 | AT/MT | F | L/R | SUV 4WD 113942 | | GCO35016 | Outer Joint | 48W | 30 | 26 | 79.1 | 89 | 60.5 | I |
| | 1998.11-2002.08 | MT | F | L | SUV 4WD 113942 | | GDS35027 | Drive Shaft | 48W | 30 | 37 | 79.1 | 89 | 630 | |
| | 1998.11-2002.08 | MT | F | R | SUV 4WD 113942 | | GDS35018 | Drive Shaft | 48W | 30 | 37 | 79.1 | 89 | 963 | |
| | 1998.11-2002.08 | MT | F | L/R | SUV 4WD 113942 | | GCO35052 | Outer Joint | | 30 | 26 | 79.1 | 89 | 60.5 | I |
| | 1998.11-2002.08 | MT | F | L | SUV 4WD 113942 | | GCI35039 | Inner Joint | | 37 | 26 | 45 | 83 | 117.5 | |
| | 1998.11-2002.08 | 5AT | R | L/R | SUV 4WD 113942 | | GDS35019 | Drive Shaft | 48W | 30 | 32 | 79.1 | 89 | 792 | |
| **ML450** | | | | | | | | | | | | | | | |
| 4.0 (225 kw) | 2009.09-2011.12 | 7AT | F | L | SUV 4WD OM 629.912 | | GDS85060 | Drive Shaft | | 30 | 37 | 70.2 | 90.5 | 666 | |
| | 2009.09-2011.12 | 7AT | F | R | SUV 4WD OM 629.912 | | GDS85061 | Drive Shaft | | 30 | 37 | 70.2 | 90.5 | 1004 | |

| | YEAR | TRANSM. | F/R | L/R | BODY STYLE & DRIVE TYPE & ENGINE | REMARKS | G-AP Ref. | PRODUCT | ABS | Technical Specifications A | B | C | H | L | P |
|---|---|---|---|---|---|---|---|---|---|---|---|---|---|---|---|
| **MERCEDES-BENZ** | | | | | | | | | | | | | | | |
| **ML450** | | | | | | | | | | | | | | | |
| 4.0 (225 kw) | 2009.09-2011.12 | 7AT | F | L | SUV 4WD OM 629.912 | For vehicles without bad road version | GCI85041 | Inner Joint | | 37 | 33 | 45 | 80 | 104.5 | |
| | 2009.09-2011.12 | AT | F | L/R | SUV 4WD OM 629.912 | not for SA code:430;Type:W/O Off-Road Pack | GCO85007 | Outer Joint | | 30 | 37 | 70.2 | 90.5 | 69 | I |
| | 2009.09-2011.12 | AT | F | R | SUV 4WD OM 629.912 | | GCI85042 | Inner Joint | | 37 | 33 | 45 | 264 | 111 | |
| | 2009.09-2011.12 | | F | L/R | SUV 4WD OM 629.912 | | GCO85015 | Outer Joint | | 30 | 39 | 70.2 | 90.5 | 71 | I |
| | 2009.09-2011.12 | 7AT | R | L/R | SUV 4WD OM 629.912 | For vehicles without off-road suspension | GDS83211 | Drive Shaft | | 30 | 37 | 70.3 | 90.5 | 837 | |
| | 2009.09-2011.12 | 7AT | R | L/R | SUV 4WD OM 629.912 | For vehicles without off-road suspension | GCO82348 | Outer Joint | | 30 | 33 | 70.3 | 90.5 | 59.5 | I |
| | 2009.09-2011.12 | 7AT | R | L/R | SUV 4WD OM 629.912 | For vehicles without off-road suspension | GCI85039 | Inner Joint | | 37 | 33 | 45 | 80 | 101 | |
| **ML500** | | | | | | | | | | | | | | | |
| 4.7 (300 kw) | 2012.02-2015.02 | 7AT | F | L | SUV 4WD M 278.928 | Date to:2014.07,For vehicles without off-road suspension | GDS35089 | Drive Shaft | | 30 | 37 | 73 | 92.5 | 673 | |
| | 2012.02-2015.02 | 7AT | F | L | SUV 4WD M 278.928 | Date to:2014.08,For vehicles with off-road suspension | GDS82456 | Drive Shaft | | 30 | 37 | 73 | 92 | 672 | |
| | 2012.02-2015.02 | 7AT | F | R | SUV 4WD M 278.928 | For vehicles without off-road suspension | GDS35088 | Drive Shaft | | 30 | 37 | 73 | 92.5 | 1015 | |
| | 2012.02-2015.02 | 7AT | F | R | SUV 4WD M 278.928 | For vehicles with off-road suspension | GDS35113 | Drive Shaft | | 30 | 37 | 73 | 92 | 1017 | |
| | 2012.02-2015.02 | 7AT | F | L/R | SUV 4WD M 278.928 | Date To:2014.08,For vehicles with off-road suspension | GCO35073 | Outer Joint | | 30 | 39 | 73 | 92 | 71 | I |
| | 2012.02-2015.02 | 7AT | F | L | SUV 4WD M 278.928 | Date To:2014.07,For vehicles without off-road suspension | GCI35057 | Inner Joint | | 37 | 33 | 45 | 80 | 104.5 | |
| | 2012.02-2015.02 | 7AT | F | L | SUV 4WD M 278.928 | Date To:2014.08,For vehicles with off-road suspension | GCI81822 | Inner Joint | | 37 | 26 | 44.95 | 79.5 | 107 | |
| | 2012.02-2015.02 | 7AT | F | R | SUV 4WD M 278.928 | For vehicles with off-road suspension | GCI35073 | Inner Joint | | 37 | 26 | 45 | 263 | 113 | |
| | 2012.02-2015.02 | 7AT | F | R | SUV 4WD M 278.928 | For vehicles without off-road suspension | GCI85042 | Inner Joint | | 37 | 33 | 45 | 264 | 111 | |
| | 2012.02-2015.02 | 7AT/9AT | F | L | SUV 4WD M 278.928 | Date from:2014.09,For vehicles with off-road suspension | GDS84205 | Drive Shaft | | 30 | 37 | 73 | 92 | 672 | |
| | 2012.02-2015.02 | 7AT/9AT | F | L | SUV 4WD M 278.928 | Date from:2014.09,For vehicles with off-road suspension | GCO82731 | Outer Joint | | 30 | 39 | 73 | 92 | 71 | I |
| | 2012.02-2015.02 | 7AT/9AT | F | L | SUV 4WD M 278.928 | Date from:2014.09,For vehicles with off-road suspension | GCI82640 | Inner Joint | | 37 | 26 | 44.95 | 79.5 | 107 | |
| | 2012.02-2015.02 | AT | F | L/R | SUV 4WD M 278.928 | | GCO85007 | Outer Joint | | 30 | 37 | 70.2 | 90.5 | 69 | I |
| | 2012.02-2015.02 | AT | F | L/R | SUV 4WD M 278.928 | | GCO85015 | Outer Joint | | 30 | 39 | 70.2 | 90.5 | 71 | I |
| | 2012.02-2015.02 | AT | F | L | SUV 4WD M 278.928 | | GCI85041 | Inner Joint | | 37 | 33 | 45 | 80 | 104.5 | |
| | 2012.02-2015.02 | 7AT/9AT | R | L/R | SUV 4WD M 278.928 | | GDS35090 | Drive Shaft | | 30 | 27 | 73 | 90.5 | 841 | |
| | 2012.02-2015.02 | 7AT/9AT | R | L/R | SUV 4WD M 278.928 | For vehicles with bad road version | GDS35121 | Drive Shaft | | 30 | 30 | 73 | 90 | 846 | |
| 5.0 (215 kw) | 2001.09-2005.06 | AT/MT | F | L/R | SUV 4WD 113965 | | GCO35016 | Outer Joint | 48W | 30 | 26 | 79.1 | 89 | 60.5 | I |
| | 2001.09-2005.06 | MT | F | L | SUV 4WD 113965 | | GDS35027 | Drive Shaft | 48W | 30 | 37 | 79.1 | 89 | 630 | |
| | 2001.09-2005.06 | MT | F | R | SUV 4WD 113965 | | GDS35018 | Drive Shaft | 48W | 30 | 37 | 79.1 | 89 | 963 | |
| | 2001.09-2005.06 | MT | F | L/R | SUV 4WD 113965 | | GCO35052 | Outer Joint | | 30 | 26 | 79.1 | 89 | 60.5 | I |
| | 2001.09-2005.06 | MT | F | L | SUV 4WD 113965 | | GCI35039 | Inner Joint | | 37 | 26 | 45 | 83 | 117.5 | |
| | 2001.09-2005.06 | 5AT | R | L/R | SUV 4WD 113965 | | GDS35019 | Drive Shaft | 48W | 30 | 32 | 79.1 | 89 | 792 | |
| 5.0 (225 kw) | 2005.07-2011.12 | 7AT | F | L | SUV 4WD M 113.964 | | GDS85060 | Drive Shaft | | 30 | 37 | 70.2 | 90.5 | 666 | |
| | 2005.07-2011.12 | 7AT | F | R | SUV 4WD M 113.964 | | GDS85061 | Drive Shaft | | 30 | 37 | 70.2 | 90.5 | 1004 | |
| | 2005.07-2011.12 | AT | F | L/R | SUV 4WD M 113.964 | not for SA code:430;Type:W/O Off-Road Pack | GCO85007 | Outer Joint | | 30 | 37 | 70.2 | 90.5 | 69 | I |
| | 2005.07-2011.12 | | F | L/R | SUV 4WD M 113.964 | | GCO85015 | Outer Joint | | 30 | 39 | 70.2 | 90.5 | 71 | I |
| | 2005.07-2011.12 | 7AT | R | L/R | SUV 4WD M 113.964 | Date from:2006.11,Chassis no. from:A192262,For vehicles without off-road suspension | GDS83211 | Drive Shaft | | 30 | 37 | 70.3 | 90.5 | 837 | |
| | 2005.07-2011.12 | 7AT | R | L/R | SUV 4WD M 113.964 | Date From:2006.11,Chassis no. from:A192262,For vehicles without off-road suspension | GCO82348 | Outer Joint | | 30 | 33 | 70.3 | 90.5 | 59.5 | I |
| | 2005.07-2011.12 | 7AT | R | L/R | SUV 4WD M 113.964 | Date from:2006.11,Chassis no. from:A192262,For vehicles without off-road suspension | GCI85039 | Inner Joint | | 37 | 33 | 45 | 80 | 101 | |
| 5.5 (285 kw) | 2007.12-2011.12 | 7AT | F | L | SUV 4WD M 273.963 | | GDS85060 | Drive Shaft | | 30 | 37 | 70.2 | 90.5 | 666 | |
| | 2007.12-2011.12 | 7AT | F | R | SUV 4WD M 273.963 | | GDS85061 | Drive Shaft | | 30 | 37 | 70.2 | 90.5 | 1004 | |
| | 2007.12-2011.12 | 7AT | F | L | SUV 4WD M 273.963 | Date from:2008.06,Chassis no. from:A423084,For vehicles without bad road version | GCI85041 | Inner Joint | | 37 | 33 | 45 | 80 | 104.5 | |
| | 2007.12-2011.12 | 7AT | F | R | SUV 4WD M 273.963 | | GCI85042 | Inner Joint | | 37 | 33 | 45 | 264 | 111 | |
| | 2007.12-2011.12 | AT | F | L/R | SUV 4WD M 273.963 | not for SA code:430;Type:W/O Off-Road Pack | GCO85007 | Outer Joint | | 30 | 37 | 70.2 | 90.5 | 69 | I |
| | 2007.12-2011.12 | | F | L/R | SUV 4WD M 273.963 | | GCO85015 | Outer Joint | | 30 | 39 | 70.2 | 90.5 | 71 | I |
| | 2007.12-2011.12 | 7AT | R | L/R | SUV 4WD M 273.963 | For vehicles without off-road suspension | GDS83211 | Drive Shaft | | 30 | 37 | 70.3 | 90.5 | 837 | |
| | 2007.12-2011.12 | 7AT | R | L/R | SUV 4WD M 273.963 | For vehicles without off-road suspension | GCO82348 | Outer Joint | | 30 | 33 | 70.3 | 90.5 | 59.5 | I |
| | 2007.12-2011.12 | 7AT | R | L/R | SUV 4WD M 273.963 | For vehicles without off-road suspension | GCI85039 | Inner Joint | | 37 | 33 | 45 | 80 | 101 | |
| **ML55 AMG** | | | | | | | | | | | | | | | |
| 5.4 (255 kw) | 1999.06-2005.07 | AT/MT | F | L/R | SUV 4WD 113981 | | GCO35016 | Outer Joint | 48W | 30 | 26 | 79.1 | 89 | 60.5 | I |
| | 1999.06-2005.07 | MT | F | L | SUV 4WD 113981 | | GDS35027 | Drive Shaft | 48W | 30 | 37 | 79.1 | 89 | 630 | |
| | 1999.06-2005.07 | MT | F | R | SUV 4WD 113981 | | GDS35018 | Drive Shaft | 48W | 30 | 37 | 79.1 | 89 | 963 | |
| | 1999.06-2005.07 | MT | F | L/R | SUV 4WD 113981 | | GCO35052 | Outer Joint | | 30 | 26 | 79.1 | 89 | 60.5 | I |
| | 1999.06-2005.07 | MT | F | L | SUV 4WD 113981 | | GCI35039 | Inner Joint | | 37 | 26 | 45 | 83 | 117.5 | |
| | 1999.06-2005.07 | 5AT | R | L/R | SUV 4WD 113981 | | GDS35019 | Drive Shaft | 48W | 30 | 32 | 79.1 | 89 | 792 | |
| **ML63 AMG** | | | | | | | | | | | | | | | |
| 5.5 (386 kw) | 2011.11-2015.02 | 7AT | F | L | SUV 4WD M 157.982 | Date to:2014.08 | GDS82456 | Drive Shaft | | 30 | 37 | 73 | 92 | 672 | |
| | 2011.11-2015.02 | 7AT | F | L | SUV 4WD M 157.982 | Date from:2014.09 | GDS84205 | Drive Shaft | | 30 | 37 | 73 | 92 | 672 | |
| | 2011.11-2015.02 | 7AT | F | R | SUV 4WD M 157.982 | | GDS35113 | Drive Shaft | | 30 | 37 | 73 | 92 | 1017 | |
| | 2011.11-2015.02 | 7AT | F | L | SUV 4WD M 157.982 | Date to:2014.08 | GCO35073 | Outer Joint | | 30 | 39 | 73 | 92 | 71 | I |
| | 2011.11-2015.02 | 7AT | F | L | SUV 4WD M 157.982 | Date from:2014.09 | GCO82731 | Outer Joint | | 30 | 39 | 73 | 92 | 71 | I |
| | 2011.11-2015.02 | 7AT | F | R | SUV 4WD M 157.982 | | GCO35073 | Outer Joint | | 30 | 39 | 73 | 92 | 71 | I |
| | 2011.11-2015.02 | 7AT | F | L | SUV 4WD M 157.982 | Date to:2014.08 | GCI81822 | Inner Joint | | 37 | 26 | 44.95 | 79.5 | 107 | |
| | 2011.11-2015.02 | 7AT | F | L | SUV 4WD M 157.982 | Date from:2014.09 | GCI82640 | Inner Joint | | 37 | 26 | 44.95 | 79.5 | 107 | |
| | 2011.11-2015.02 | 7AT | R | L/R | SUV 4WD M 157.982 | | GDS35121 | Drive Shaft | | 30 | 30 | 73 | 90 | 846 | |
| 5.5 (410 kw) | 2011.11-2015.02 | 7AT | F | L | SUV 4WD M 157.982 | Date to:2014.08 | GDS82456 | Drive Shaft | | 30 | 37 | 73 | 92 | 672 | |

| | YEAR | TRANSM. | F/R | L/R | BODY STYLE & DRIVE TYPE & ENGINE | REMARKS | G-AP Ref. | PRODUCT | ABS | Technical Specifications A | B | C | H | L | P |
|---|---|---|---|---|---|---|---|---|---|---|---|---|---|---|---|
| **MERCEDES-BENZ** | | | | | | | | | | | | | | | |
| **ML63 AMG** | | | | | | | | | | | | | | | |
| 5.5 (410 kw) | 2011.11-2015.02 | 7AT | F | L | SUV 4WD M 157.982 | Date from:2014.09 | GDS84205 | Drive Shaft | | 30 | 37 | 73 | 92 | 672 | |
| | 2011.11-2015.02 | 7AT | F | R | SUV 4WD M 157.982 | | GDS35113 | Drive Shaft | | 30 | 37 | 73 | 92 | 1017 | |
| | 2011.11-2015.02 | 7AT | F | L | SUV 4WD M 157.982 | Date to:2014.08 | GCO35073 | Outer Joint | | 30 | 39 | 73 | 92 | 71 | I |
| | 2011.11-2015.02 | 7AT | F | L | SUV 4WD M 157.982 | Date from:2014.09 | GCO82731 | Outer Joint | | 30 | 39 | 73 | 92 | 71 | I |
| | 2011.11-2015.02 | 7AT | F | R | SUV 4WD M 157.982 | | GCO35073 | Outer Joint | | 30 | 39 | 73 | 92 | 71 | I |
| | 2011.11-2015.02 | 7AT | F | L | SUV 4WD M 157.982 | Date to:2014.08 | GCI81822 | Inner Joint | | 37 | 26 | 44.95 | 79.5 | 107 | |
| | 2011.11-2015.02 | 7AT | F | L | SUV 4WD M 157.982 | Date from:2014.09 | GCI82640 | Inner Joint | | 37 | 26 | 44.95 | 79.5 | 107 | |
| | 2011.11-2015.02 | 7AT | F | R | SUV 4WD M 157.982 | | GCI35073 | Inner Joint | | 37 | 26 | 45 | 263 | 113 | |
| | 2011.11-2015.02 | 7AT | R | L/R | SUV 4WD M 157.982 | | GDS35121 | Drive Shaft | | 30 | 30 | 73 | 90 | 846 | |
| 6.2 (375 kw) | 2006.01-2011.12 | 7AT | F | L | SUV 4WD M 156.980 | For vehicles without off-road suspension | GDS35103 | Drive Shaft | | 30 | 37 | 70.2 | 90 | 666 | |
| | 2006.01-2011.12 | 7AT | F | L | SUV 4WD M 156.980 | For vehicles with off-road suspension | GDS85060 | Drive Shaft | | 30 | 37 | 70.2 | 90.5 | 666 | |
| | 2006.01-2011.12 | 7AT | F | R | SUV 4WD M 156.980 | | GDS85061 | Drive Shaft | | 30 | 37 | 70.2 | 90.5 | 1004 | |
| | 2006.01-2011.12 | 7AT | F | R | SUV 4WD M 156.980 | | GCI85042 | Inner Joint | | 37 | 33 | 45 | 264 | 111 | |
| | 2006.01-2011.12 | AT | F | L/R | SUV 4WD M 156.980 | not for SA code:430;Type:W/O Off-Road Pack | GCO85007 | Outer Joint | | 30 | 37 | 70.2 | 90.5 | 69 | I |
| | 2006.01-2011.12 | | F | L/R | SUV 4WD M 156.980 | | GCO85015 | Outer Joint | | 30 | 39 | 70.2 | 90.5 | 71 | I |
| | 2006.01-2011.12 | AT | R | L | SUV 4WD M 156.980 | | GCI85039 | Inner Joint | | 37 | 33 | 45 | 80 | 101 | |
| 6.3 (375 kw) | 2006.09-2011.12 | 7AT | F | L | SUV 4WD M 156.980 | For vehicles without bad road version | GDS35103 | Drive Shaft | | 30 | 37 | 70.2 | 90 | 666 | |
| | 2006.09-2011.12 | 7AT | F | L | SUV 4WD M 156.980 | For vehicles with bad road version | GDS85060 | Drive Shaft | | 30 | 37 | 70.2 | 90.5 | 666 | |
| | 2006.09-2011.12 | 7AT | F | R | SUV 4WD M 156.980 | | GDS85061 | Drive Shaft | | 30 | 37 | 70.2 | 90.5 | 1004 | |
| | 2006.09-2011.12 | 7AT | F | L | SUV 4WD M 156.980 | | GCO35070 | Outer Joint | | 30 | 37 | 70.2 | 90 | 66.5 | I |
| | 2006.09-2011.12 | 7AT | F | L | SUV 4WD M 156.980 | | GCI85039 | Inner Joint | | 37 | 33 | 45 | 80 | 101 | |
| **R280** | | | | | | | | | | | | | | | |
| 3.0 (140 kw) | 2006.05-2012.12 | 7AT | F | L | MPV 4WD OM 642.950 | | GDS85068 | Drive Shaft | | 30 | 37 | 70.2 | 90.5 | 682 | |
| | 2006.05-2012.12 | 7AT | F | R | MPV 4WD OM 642.950 | | GDS81561 | Drive Shaft | | 30 | 37 | 70.2 | 90 | 1018 | |
| | 2006.05-2012.12 | 7AT | F | R | MPV 4WD OM 642.950 | | GCI81410 | Inner Joint | | 37 | 33 | 45 | 263 | 109 | |
| | 2006.05-2012.12 | AT/MT | F | L/R | MPV 4WD OM 642.950 | Date from:2007.01 | GCO85007 | Outer Joint | | 30 | 37 | 70.2 | 90.5 | 69 | I |
| | 2006.05-2012.12 | 7AT | R | L/R | MPV 4WD OM 642.950 | | GDS35063 | Drive Shaft | | 30 | 37 | 70.2 | 90.5 | 852 | |
| 3.0 (170 kw) | 2007.05-2011.12 | 7AT | F | L | MPV 4WD M 272.945 | | GDS85068 | Drive Shaft | | 30 | 37 | 70.2 | 90.5 | 682 | |
| | 2007.05-2011.12 | 7AT | F | R | MPV 4WD M 272.945 | | GDS81561 | Drive Shaft | | 30 | 37 | 70.2 | 90 | 1018 | |
| | 2007.05-2011.12 | 7AT | F | R | MPV 4WD M 272.945 | | GCO35070 | Outer Joint | | 30 | 37 | 70.2 | 90 | 66.5 | I |
| | 2007.05-2011.12 | 7AT | F | R | MPV 4WD M 272.945 | | GCI81410 | Inner Joint | | 37 | 33 | 45 | 263 | 109 | |
| | 2007.05-2011.12 | 7AT | R | L/R | MPV 4WD M 272.945 | | GDS35063 | Drive Shaft | | 30 | 37 | 70.2 | 90.5 | 852 | |
| **R300** | | | | | | | | | | | | | | | |
| 3.0 (140 kw) | 2009.07-2012.12 | AT/MT | F | L | MPV 4WD OM 642.950 | | GDS85068 | Drive Shaft | | 30 | 37 | 70.2 | 90.5 | 682 | |
| | 2009.07-2012.12 | AT/MT | F | R | MPV 4WD OM 642.950 | | GDS81561 | Drive Shaft | | 30 | 37 | 70.2 | 90 | 1018 | |
| | 2009.07-2012.12 | AT/MT | F | L/R | MPV 4WD OM 642.950 | | GCO85007 | Outer Joint | | 30 | 37 | 70.2 | 90.5 | 69 | I |
| | 2009.07-2012.12 | AT/MT | F | R | MPV 4WD OM 642.950 | | GCI81410 | Inner Joint | | 37 | 33 | 45 | 263 | 109 | |
| | 2009.07-2012.12 | 7AT | R | L/R | MPV 4WD OM 642.950 | | GDS35063 | Drive Shaft | | 30 | 37 | 70.2 | 90.5 | 852 | |
| 3.0 (170 kw) | 2009.07-2011.12 | 7AT | F | L | MPV 4WD M 272.945 | Date to:2011.07;Diver Pos:For right-hand drive vehicles;Chassis no. to:137866 | GDS85068 | Drive Shaft | | 30 | 37 | 70.2 | 90.5 | 682 | |
| | 2009.07-2011.12 | 7AT | F | R | MPV 4WD M 272.945 | Date from:2010.09,Chassis no. from:119948 | GDS81561 | Drive Shaft | | 30 | 37 | 70.2 | 90 | 1018 | |
| | 2009.07-2011.12 | 7AT | F | R | MPV 4WD M 272.945 | Date to:2011.07;Chassis no. to:137866 | GDS85077 | Drive Shaft | | 30 | 37 | 70.2 | 90.5 | 1024 | |
| | 2009.07-2011.12 | 7AT | F | R | MPV 4WD M 272.945 | Date from:2010.09,Chassis no. from:119948 | GCO35070 | Outer Joint | | 30 | 37 | 70.2 | 90 | 66.5 | I |
| | 2009.07-2011.12 | 7AT | F | L/R | MPV 4WD M 272.945 | Date to:2011.07;Chassis no. to:137866 | GCO85007 | Outer Joint | | 30 | 37 | 70.2 | 90.5 | 69 | I |
| | 2009.07-2011.12 | 7AT | F | L | MPV 4WD M 272.945 | Date to:2011.07;Chassis no. to:137866;For right-hand drive vehicles | GCI85039 | Inner Joint | | 37 | 33 | 45 | 80 | 101 | |
| | 2009.07-2011.12 | 7AT | F | R | MPV 4WD M 272.945 | Date from:2010.09,Chassis no. from:119948 | GCI81410 | Inner Joint | | 37 | 33 | 45 | 263 | 109 | |
| | 2009.07-2011.12 | 7AT | F | R | MPV 4WD M 272.945 | Date to:2011.07;Chassis no. to:137866 | GCI85042 | Inner Joint | | 37 | 33 | 45 | 264 | 111 | |
| | 2009.07-2011.12 | 7AT | R | L/R | MPV 4WD M 272.945 | | GDS35063 | Drive Shaft | | 30 | 37 | 70.2 | 90.5 | 852 | |
| | 2009.07-2011.12 | 7AT | R | L | MPV 4WD M 272.945 | | GCI85039 | Inner Joint | | 37 | 33 | 45 | 80 | 101 | |
| **R320** | | | | | | | | | | | | | | | |
| 3.0 (155 kw) | 2006.01-2012.12 | AT | F | L | MPV 4WD OM 642.950;OM 642.870 | | GDS85068 | Drive Shaft | | 30 | 37 | 70.2 | 90.5 | 682 | |
| | 2006.01-2012.12 | AT | F | R | MPV 4WD OM 642.950;OM 642.870 | | GDS81561 | Drive Shaft | | 30 | 37 | 70.2 | 90 | 1018 | |
| | 2006.01-2012.12 | AT | F | R | MPV 4WD OM 642.950;OM 642.870 | | GCI81410 | Inner Joint | | 37 | 33 | 45 | 263 | 109 | |
| | 2006.01-2012.12 | AT/MT | F | L/R | MPV 4WD OM 642.950;OM 642.870 | | GCO85007 | Outer Joint | | 30 | 37 | 70.2 | 90.5 | 69 | I |
| | 2006.01-2012.12 | 7AT | R | L/R | MPV 4WD OM 642.950;OM 642.870 | | GDS35063 | Drive Shaft | | 30 | 37 | 70.2 | 90.5 | 852 | |
| 3.0 (165 kw) | 2006.01-2010.07 | 7AT | F | L | MPV 4WD OM 642.950 | | GDS85068 | Drive Shaft | | 30 | 37 | 70.2 | 90.5 | 682 | |
| | 2006.01-2010.07 | 7AT | F | R | MPV 4WD OM 642.950 | | GDS81561 | Drive Shaft | | 30 | 37 | 70.2 | 90 | 1018 | |
| | 2006.01-2010.07 | 7AT | F | R | MPV 4WD OM 642.950 | | GCI81410 | Inner Joint | | 37 | 33 | 45 | 263 | 109 | |
| | 2006.01-2010.07 | AT/MT | F | L/R | MPV 4WD OM 642.950 | | GCO85007 | Outer Joint | | 30 | 37 | 70.2 | 90.5 | 69 | I |
| | 2006.01-2010.07 | 7AT | R | L/R | MPV 4WD OM 642.950 | | GDS35063 | Drive Shaft | | 30 | 37 | 70.2 | 90.5 | 852 | |
| | 2006.01-2010.07 | 7AT | R | L/R | MPV 4WD OM 642.950 | | GCI85039 | Inner Joint | | 37 | 33 | 45 | 80 | 101 | |
| **R350** | | | | | | | | | | | | | | | |
| 3.0 (155 kw) | 2006.01-2014.12 | AT/MT | F | L | MPV 4WD OM 642.950;OM 642.870 | | GDS85068 | Drive Shaft | | 30 | 37 | 70.2 | 90.5 | 682 | |
| | 2006.01-2014.12 | AT/MT | F | R | MPV 4WD OM 642.950;OM 642.870 | | GDS81561 | Drive Shaft | | 30 | 37 | 70.2 | 90 | 1018 | |
| | 2006.01-2014.12 | AT/MT | F | L/R | MPV 4WD OM 642.950;OM 642.870 | | GCO85007 | Outer Joint | | 30 | 37 | 70.2 | 90.5 | 69 | I |
| | 2006.01-2014.12 | AT/MT | F | R | MPV 4WD OM 642.950;OM 642.870 | | GCI81410 | Inner Joint | | 37 | 33 | 45 | 263 | 109 | |

| | YEAR | TRANSM. | F/R | L/R | BODY STYLE & DRIVE TYPE & ENGINE | REMARKS | G-AP Ref. | PRODUCT | ABS | Technical Specifications A | B | C | H | L | P |
|---|---|---|---|---|---|---|---|---|---|---|---|---|---|---|---|
| **MERCEDES-BENZ** | | | | | | | | | | | | | | | |
| **R350** | | | | | | | | | | | | | | | |
| 3.0 (155 kw) | 2006.01-2014.12 | 7AT | R | L/R | MPV 4WD OM 642.950;OM 642.870 | | GDS35063 | Drive Shaft | | 30 | 37 | 70.2 | 90.5 | 852 | |
| 3.0 (165 kw) | 2009.07-2012.12 | 7AT | F | L | MPV 4WD OM 642.950 | Date to:2011.07;Driver Pos:For right-hand drive vehicles;Chassis no. to:137866 | GDS85068 | Drive Shaft | | 30 | 37 | 70.2 | 90.5 | 682 | |
| | 2009.07-2012.12 | 7AT | F | R | MPV 4WD OM 642.950 | Date from:2010.09,Chassis no. from:119948 | GDS81561 | Drive Shaft | | 30 | 37 | 70.2 | 90 | 1018 | |
| | 2009.07-2012.12 | 7AT | F | R | MPV 4WD OM 642.950 | Date to:2011.07;Chassis no. to:137866 | GDS85077 | Drive Shaft | | 30 | 37 | 70.2 | 90.5 | 1024 | |
| | 2009.07-2012.12 | 7AT | F | L | MPV 4WD OM 642.950 | Date to:2011.07,Chassis no. to:137866,For right-hand drive vehicles | GCI85039 | Inner Joint | | 37 | 33 | 45 | 80 | 101 | |
| | 2009.07-2012.12 | 7AT | F | R | MPV 4WD OM 642.950 | Date from:2010.09,Chassis no. from:119948 | GCI81410 | Inner Joint | | 37 | 33 | 45 | 263 | 109 | |
| | 2009.07-2012.12 | 7AT | F | R | MPV 4WD OM 642.950 | Date to:2011.07;Chassis no. to:137866 | GCI85042 | Inner Joint | | 37 | 33 | 45 | 264 | 111 | |
| | 2009.07-2012.12 | 7AT | R | L/R | MPV 4WD OM 642.950 | | GDS35063 | Drive Shaft | | 30 | 37 | 70.2 | 90.5 | 852 | |
| | 2009.07-2012.12 | 7AT | R | L | MPV 4WD OM 642.950 | | GCI85039 | Inner Joint | | 37 | 33 | 45 | 80 | 101 | |
| 3.0 (195 kw) | 2010.08-2014.12 | 7AT | F | L | MPV 4WD OM 642.872 | | GDS85068 | Drive Shaft | | 30 | 37 | 70.2 | 90.5 | 682 | |
| | 2010.08-2014.12 | 7AT | F | R | MPV 4WD OM 642.872 | | GDS81561 | Drive Shaft | | 30 | 37 | 70.2 | 90 | 1018 | |
| | 2010.08-2014.12 | 7AT | F | R | MPV 4WD OM 642.872 | | GCI81410 | Inner Joint | | 37 | 33 | 45 | 263 | 109 | |
| | 2010.08-2014.12 | AT/MT | F | L/R | MPV 4WD OM 642.872 | | GCO85007 | Outer Joint | | 30 | 37 | 70.2 | 90.5 | 69 | I |
| | 2010.08-2014.12 | 7AT | R | L/R | MPV 4WD OM 642.872 | | GDS35063 | Drive Shaft | | 30 | 37 | 70.2 | 90.5 | 852 | |
| 3.5 (200 kw) | 2005.08-2012.12 | 7AT | F | L | MPV 4WD M 272.967 | | GDS85068 | Drive Shaft | | 30 | 37 | 70.2 | 90.5 | 682 | |
| | 2005.08-2012.12 | 7AT | F | R | MPV 4WD M 272.967 | | GDS81561 | Drive Shaft | | 30 | 37 | 70.2 | 90 | 1018 | |
| | 2005.08-2012.12 | 7AT | F | R | MPV 4WD M 272.967 | | GCI81410 | Inner Joint | | 37 | 33 | 45 | 263 | 109 | |
| | 2005.08-2012.12 | AT/MT | F | L/R | MPV 4WD M 272.967 | | GCO85007 | Outer Joint | | 30 | 37 | 70.2 | 90.5 | 69 | I |
| | 2005.08-2012.12 | 7AT | R | L/R | MPV 4WD M 272.967 | | GDS35063 | Drive Shaft | | 30 | 37 | 70.2 | 90.5 | 852 | |
| 3.5 (225 kw) | 2011.10-2014.12 | 7AT | F | L | MPV 4WD M 276.958 | | GDS85068 | Drive Shaft | | 30 | 37 | 70.2 | 90.5 | 682 | |
| | 2011.10-2014.12 | 7AT | F | R | MPV 4WD M 276.958 | | GDS81561 | Drive Shaft | | 30 | 37 | 70.2 | 90 | 1018 | |
| | 2011.10-2014.12 | 7AT | F | R | MPV 4WD M 276.958 | | GCI81410 | Inner Joint | | 37 | 33 | 45 | 263 | 109 | |
| | 2011.10-2014.12 | AT/MT | F | L/R | MPV 4WD M 276.958 | | GCO85007 | Outer Joint | | 30 | 37 | 70.2 | 90.5 | 69 | I |
| | 2011.10-2014.12 | 7AT | R | L/R | MPV 4WD M 276.958 | | GDS35063 | Drive Shaft | | 30 | 37 | 70.2 | 90.5 | 852 | |
| **R500** | | | | | | | | | | | | | | | |
| 5.0 (225 kw) | 2005.08-2014.12 | 7AT | F | L | MPV 4WD M 113.960;M 113.971 | | GDS85068 | Drive Shaft | | 30 | 37 | 70.2 | 90.5 | 682 | |
| | 2005.08-2014.12 | 7AT | F | R | MPV 4WD M 113.960;M 113.971 | | GDS81561 | Drive Shaft | | 30 | 37 | 70.2 | 90 | 1018 | |
| | 2005.08-2014.12 | 7AT | F | R | MPV 4WD M 113.960;M 113.971 | | GCI81410 | Inner Joint | | 37 | 33 | 45 | 263 | 109 | |
| | 2005.08-2014.12 | AT/MT | F | L/R | MPV 4WD M 113.960;M 113.971 | | GCO85007 | Outer Joint | | 30 | 37 | 70.2 | 90.5 | 69 | I |
| | 2005.08-2014.12 | 7AT | R | L/R | MPV 4WD M 113.960;M 113.971 | | GDS35063 | Drive Shaft | | 30 | 37 | 70.2 | 90.5 | 852 | |
| 5.5 (285 kw) | 2007.05-2014.12 | 7AT | F | L | MPV 4WD M 273.963 | | GDS85068 | Drive Shaft | | 30 | 37 | 70.2 | 90.5 | 682 | |
| | 2007.05-2014.12 | 7AT | F | R | MPV 4WD M 273.963 | | GDS81561 | Drive Shaft | | 30 | 37 | 70.2 | 90 | 1018 | |
| | 2007.05-2014.12 | 7AT | F | R | MPV 4WD M 273.963 | | GCI81410 | Inner Joint | | 37 | 33 | 45 | 263 | 109 | |
| | 2007.05-2014.12 | AT/MT | F | L/R | MPV 4WD M 273.963 | | GCO85007 | Outer Joint | | 30 | 37 | 70.2 | 90.5 | 69 | I |
| | 2007.05-2014.12 | 7AT | R | L/R | MPV 4WD M 273.963 | | GDS35063 | Drive Shaft | | 30 | 37 | 70.2 | 90.5 | 852 | |
| **R63 AMG** | | | | | | | | | | | | | | | |
| 6.2 (375 kw) | 2006.02-2010.12 | 7AT | F | L | MPV 4WD M 156.980 | | GDS85068 | Drive Shaft | | 30 | 37 | 70.2 | 90.5 | 682 | |
| | 2006.02-2010.12 | 7AT | F | R | MPV 4WD M 156.980 | | GDS81561 | Drive Shaft | | 30 | 37 | 70.2 | 90 | 1018 | |
| | 2006.02-2010.12 | 7AT | F | R | MPV 4WD M 156.980 | | GCI81410 | Inner Joint | | 37 | 33 | 45 | 263 | 109 | |
| | 2006.02-2010.12 | AT/MT | F | L/R | MPV 4WD M 156.980 | | GCO85007 | Outer Joint | | 30 | 37 | 70.2 | 90.5 | 69 | I |
| **S250** | | | | | | | | | | | | | | | |
| 2.2 (150 kw) | 2011.01-2013.12 | 7AT | R | L/R | Saloon RWD OM 651.961 | | GDS35120 | Drive Shaft | 48NS | 27 | 30 | 68 | 82 | 800 | |
| **S280** | | | | | | | | | | | | | | | |
| 2.8 (150 kw) | 1999.02-2005.08 | 5AT | R | L/R | Saloon RWD 112922 | | GDS35105 | Drive Shaft | 48W | 27 | 27 | 67 | 78 | 786 | |
| 3.0 (170 kw) | 2006.08-2013.12 | 7AT | R | L/R | Saloon RWD M 272.946 | | GDS35119 | Drive Shaft | 48NS | 27 | 27 | 68 | 82 | 803 | |
| **S300** | | | | | | | | | | | | | | | |
| 3.0 (170 kw) | 2006.08-2013.12 | 7AT | R | L/R | Saloon RWD M 272.946 | | GDS35119 | Drive Shaft | 48NS | 27 | 27 | 68 | 82 | 803 | |
| **S320** | | | | | | | | | | | | | | | |
| 3.0 (155 kw) | 2005.10-2013.12 | 7AT | F | L | Saloon 4WD OM 642.932 | | GDS81662 | Drive Shaft | | 30 | 34 | 71 | 56.5 | 533 | |
| | 2005.10-2013.12 | 7AT | F | R | Saloon 4WD OM 642.932 | | GDS81663 | Drive Shaft | | 30 | 27 | 71 | 56.5 | 563 | |
| | 2005.10-2013.12 | 7AT | F | L/R | Saloon 4WD OM 642.932 | | GCO81466 | Outer Joint | | 30 | 25 | 71 | 56.5 | 52 | I |
| | 2005.10-2013.12 | 7AT | F | L | Saloon 4WD OM 642.932 | | GCI81451 | Inner Joint | | 34 | 27 | 37.5 | | 141 | |
| | 2005.10-2013.12 | 7AT | F | R | Saloon 4WD OM 642.932 | | GCI81452 | Inner Joint | | 27 | 27 | 38 | 62 | 110 | |
| | 2005.10-2013.12 | AT/MT | F | L | Saloon 4WD OM 642.932 | | GDS81696 | Intermediate Shaft | | 34 | 27 | | | 504.5 | |
| | 2005.10-2013.12 | 7AT | R | L/R | Saloon 4WD OM 642.932 | | GDS35119 | Drive Shaft | 48NS | 27 | 27 | 68 | 82 | 803 | |
| | 2005.10-2013.12 | AT | R | L/R | Saloon RWD OM 642.930 | | GDS35120 | Drive Shaft | 48NS | 27 | 30 | 68 | 82 | 800 | |
| 3.0 (173 kw) | 2005.12-2009.06 | 7AT | R | L/R | Saloon RWD OM 642.930 | | GDS35120 | Drive Shaft | 48NS | 27 | 30 | 68 | 82 | 800 | |
| | 2006.10-2013.12 | 7AT | F | L | Saloon 4WD OM 642.932 | | GDS81662 | Drive Shaft | | 30 | 34 | 71 | 56.5 | 533 | |
| | 2006.10-2013.12 | 7AT | F | R | Saloon 4WD OM 642.932 | | GDS81663 | Drive Shaft | | 30 | 27 | 71 | 56.5 | 563 | |
| | 2006.10-2013.12 | 7AT | F | L/R | Saloon 4WD OM 642.932 | | GCO81466 | Outer Joint | | 30 | 25 | 71 | 56.5 | 52 | I |
| | 2006.10-2013.12 | 7AT | F | L | Saloon 4WD OM 642.932 | | GCI81451 | Inner Joint | | 34 | 27 | 37.5 | | 141 | |
| | 2006.10-2013.12 | 7AT | F | R | Saloon 4WD OM 642.932 | | GCI81452 | Inner Joint | | 27 | 27 | 38 | 62 | 110 | |
| | 2006.10-2013.12 | AT/MT | F | L | Saloon 4WD OM 642.932 | | GDS81696 | Intermediate Shaft | | 34 | 27 | | | 504.5 | |
| | 2006.10-2013.12 | 7AT | R | L/R | Saloon 4WD OM 642.932 | | GDS35119 | Drive Shaft | 48NS | 27 | 27 | 68 | 82 | 803 | |

| | YEAR | TRANSM. | F/R | L/R | BODY STYLE & DRIVE TYPE & ENGINE | REMARKS | G-AP Ref. | PRODUCT | ABS | Technical Specifications A | B | C | H | L | P |
|---|---|---|---|---|---|---|---|---|---|---|---|---|---|---|---|
| **MERCEDES-BENZ** **S350** | | | | | | | | | | | | | | | |
| 2.9 (183 kw) | 2018.07-2020.07 | 9AT | F | L | Saloon 4WD OM 656.929 | | GDS56186 | Drive Shaft | | 30 | 27 | 71 | 56 | 545 | |
| | 2018.07-2020.07 | 9AT | F | R | Saloon 4WD OM 656.929 | | GDS84534 | Drive Shaft | | 30 | 27 | 71 | 56 | 581 | |
| | 2018.07-2020.07 | 9AT | F | L/R | Saloon 4WD OM 656.929 | | GCO82353 | Outer Joint | | 30 | 25 | 71 | 56 | 53.5 | I |
| | 2018.07-2020.07 | 9AT | F | L | Saloon 4WD OM 656.929 | | GCI82159 | Inner Joint | | 27 | 24 | 41 | | 136.5 | |
| | 2018.07-2020.07 | 9AT | F | R | Saloon 4WD OM 656.929 | | GCI82185 | Inner Joint | | 27 | 24 | 38 | 62 | 106 | |
| 2.9 (210 kw) | 2017.05-2020.07 | 9AT | F | L | Saloon 4WD OM 656.929 | | GDS56186 | Drive Shaft | | 30 | 27 | 71 | 56 | 545 | |
| | 2017.05-2020.07 | 9AT | F | R | Saloon 4WD OM 656.929 | | GDS84534 | Drive Shaft | | 30 | 27 | 71 | 56 | 581 | |
| | 2017.05-2020.07 | 9AT | F | L/R | Saloon 4WD OM 656.929 | | GCO82353 | Outer Joint | | 30 | 25 | 71 | 56 | 53.5 | I |
| | 2017.05-2020.07 | 9AT | F | L | Saloon 4WD OM 656.929 | | GCI82159 | Inner Joint | | 27 | 24 | 41 | | 136.5 | |
| | 2017.05-2020.07 | 9AT | F | R | Saloon 4WD OM 656.929 | | GCI82185 | Inner Joint | | 27 | 24 | 38 | 62 | 106 | |
| 3.0 (155 kw) | 2009.01-2010.12 | 7AT | F | L | Saloon 4WD OM 642.932 | | GDS81662 | Drive Shaft | | 30 | 34 | 71 | 56.5 | 533 | |
| | 2009.01-2010.12 | 7AT | F | R | Saloon 4WD OM 642.932 | | GDS81663 | Drive Shaft | | 30 | 27 | 71 | 56.5 | 563 | |
| | 2009.01-2010.12 | 7AT | F | L/R | Saloon 4WD OM 642.932 | | GCO81466 | Outer Joint | | 30 | 25 | 71 | 56.5 | 52 | I |
| | 2009.01-2010.12 | 7AT | F | L | Saloon 4WD OM 642.932 | | GCI81451 | Inner Joint | | 34 | 27 | 37.5 | | 141 | |
| | 2009.01-2010.12 | 7AT | F | R | Saloon 4WD OM 642.932 | | GCI81452 | Inner Joint | | 27 | 27 | 38 | 62 | 110 | |
| | 2009.01-2010.12 | AT/MT | F | L | Saloon 4WD OM 642.932 | | GDS81696 | Intermediate Shaft | | 34 | 27 | | | 504.5 | |
| | 2009.01-2010.12 | 7AT | R | L/R | Saloon 4WD OM 642.932 | | GDS35119 | Drive Shaft | 48NS | 27 | 27 | 68 | 82 | 803 | |
| | 2009.06-2013.12 | 7AT | R | L/R | Saloon RWD OM 642.930 | | GDS35120 | Drive Shaft | 48NS | 27 | 30 | 68 | 82 | 800 | |
| 3.0 (173 kw) | 2009.06-2013.07 | 7AT | F | L | Saloon 4WD OM 642.932 | | GDS81662 | Drive Shaft | | 30 | 34 | 71 | 56.5 | 533 | |
| | 2009.06-2013.07 | 7AT | F | R | Saloon 4WD OM 642.932 | | GDS81663 | Drive Shaft | | 30 | 27 | 71 | 56.5 | 563 | |
| | 2009.06-2013.07 | 7AT | F | L/R | Saloon 4WD OM 642.932 | | GCO81466 | Outer Joint | | 30 | 25 | 71 | 56.5 | 52 | I |
| | 2009.06-2013.07 | 7AT | F | L | Saloon 4WD OM 642.932 | | GCI81451 | Inner Joint | | 34 | 27 | 37.5 | | 141 | |
| | 2009.06-2013.07 | 7AT | F | R | Saloon 4WD OM 642.932 | | GCI81452 | Inner Joint | | 27 | 27 | 38 | 62 | 110 | |
| | 2009.06-2013.07 | 7AT | R | L/R | Saloon 4WD OM 642.932 | | GDS35119 | Drive Shaft | 48NS | 27 | 27 | 68 | 82 | 803 | |
| | 2009.06-2013.12 | 7AT | R | L/R | Saloon RWD OM 642.930 | | GDS35120 | Drive Shaft | 48NS | 27 | 30 | 68 | 82 | 800 | |
| 3.0 (185 kw) | 2014.02-2017.05 | 7AT/9AT | F | R | Saloon 4WD OM 642.867 | | GDS84534 | Drive Shaft | | 30 | 27 | 71 | 56 | 581 | |
| | 2014.02-2017.05 | 7AT/9AT | F | L/R | Saloon 4WD OM 642.867 | | GCO82353 | Outer Joint | | 30 | 25 | 71 | 56 | 53.5 | I |
| | 2014.02-2017.05 | 7AT/9AT | F | R | Saloon 4WD OM 642.867 | | GCI82185 | Inner Joint | | 27 | 24 | 38 | 62 | 106 | |
| | 2014.02-2017.05 | AT | F | L | Saloon 4WD OM 642.867 | | GDS56186 | Drive Shaft | | 30 | 27 | 71 | 56 | 545 | |
| | 2014.02-2017.05 | AT | F | L | Saloon 4WD OM 642.867 | | GCI82159 | Inner Joint | | 27 | 24 | 41 | | 136.5 | |
| 3.0 (190 kw) | 2011.04-2013.12 | 7AT | F | L | Saloon 4WD OM 642.868 | | GDS81662 | Drive Shaft | | 30 | 34 | 71 | 56.5 | 533 | |
| | 2011.04-2013.12 | 7AT | F | R | Saloon 4WD OM 642.868 | | GDS81663 | Drive Shaft | | 30 | 27 | 71 | 56.5 | 563 | |
| | 2011.04-2013.12 | 7AT | F | L/R | Saloon 4WD OM 642.868 | | GCO81466 | Outer Joint | | 30 | 25 | 71 | 56.5 | 52 | I |
| | 2011.04-2013.12 | 7AT | F | L | Saloon 4WD OM 642.868 | | GCI81451 | Inner Joint | | 34 | 27 | 37.5 | | 141 | |
| | 2011.04-2013.12 | 7AT | F | R | Saloon 4WD OM 642.868 | | GCI81452 | Inner Joint | | 27 | 27 | 38 | 62 | 110 | |
| | 2011.04-2013.12 | AT/MT | F | L | Saloon 4WD OM 642.868 | | GDS81696 | Intermediate Shaft | | 34 | 27 | | | 504.5 | |
| | 2011.04-2013.12 | 7AT | R | L/R | Saloon 4WD OM 642.868 | | GDS35119 | Drive Shaft | 48NS | 27 | 27 | 68 | 82 | 803 | |
| | 2011.04-2013.12 | 7AT | R | L/R | Saloon RWD OM 642.862 | | GDS35127 | Drive Shaft | 48NS | 27 | 30 | 68 | 82 | 796 | |
| | 2014.02-2017.05 | 7AT | F | L | Saloon 4WD OM 642.861;OM 642.867 | | GDS56186 | Drive Shaft | | 30 | 27 | 71 | 56 | 545 | |
| | 2014.02-2017.05 | 7AT | F | R | Saloon 4WD OM 642.861;OM 642.867 | | GDS84534 | Drive Shaft | | 30 | 27 | 71 | 56 | 581 | |
| | 2014.02-2017.05 | 7AT | F | L | Saloon 4WD OM 642.861;OM 642.867 | | GCI82159 | Inner Joint | | 27 | 24 | 41 | | 136.5 | |
| | 2014.02-2017.05 | 7AT | F | R | Saloon 4WD OM 642.861;OM 642.867 | | GCI82185 | Inner Joint | | 27 | 24 | 38 | 62 | 106 | |
| | 2014.02-2017.05 | 7AT/9AT | F | L/R | Saloon 4WD OM 642.861;OM 642.867 | | GCO82353 | Outer Joint | | 30 | 25 | 71 | 56 | 53.5 | I |
| 3.5 (200 kw) | 2005.10-2013.12 | 7AT | R | L/R | Saloon RWD M 272.965 | | GDS35119 | Drive Shaft | 48NS | 27 | 27 | 68 | 82 | 803 | |
| | 2008.02-2013.12 | 7AT | F | L | Saloon 4WD M 272.975 | | GDS81662 | Drive Shaft | | 30 | 34 | 71 | 56.5 | 533 | |
| | 2008.02-2013.12 | 7AT | F | R | Saloon 4WD M 272.975 | | GDS81663 | Drive Shaft | | 30 | 27 | 71 | 56.5 | 563 | |
| | 2008.02-2013.12 | 7AT | F | L/R | Saloon 4WD M 272.975 | | GCO81466 | Outer Joint | | 30 | 25 | 71 | 56.5 | 52 | I |
| | 2008.02-2013.12 | 7AT | F | L | Saloon 4WD M 272.975 | | GCI81451 | Inner Joint | | 34 | 27 | 37.5 | | 141 | |
| | 2008.02-2013.12 | 7AT | F | R | Saloon 4WD M 272.975 | | GCI81452 | Inner Joint | | 27 | 27 | 38 | 62 | 110 | |
| | 2008.02-2013.12 | AT/MT | F | L | Saloon 4WD M 272.975 | | GDS81696 | Intermediate Shaft | | 34 | 27 | | | 504.5 | |
| | 2008.02-2013.12 | 7AT | R | L/R | Saloon 4WD M 272.975 | | GDS35119 | Drive Shaft | 48NS | 27 | 27 | 68 | 82 | 803 | |
| 3.5 (225 kw) | 2011.04-2013.12 | 7AT | F | L | Saloon 4WD M 276.950 | | GDS81662 | Drive Shaft | | 30 | 34 | 71 | 56.5 | 533 | |
| | 2011.04-2013.12 | 7AT | F | R | Saloon 4WD M 276.950 | | GDS81663 | Drive Shaft | | 30 | 27 | 71 | 56.5 | 563 | |
| | 2011.04-2013.12 | 7AT | F | L/R | Saloon 4WD M 276.950 | | GCO81466 | Outer Joint | | 30 | 25 | 71 | 56.5 | 52 | I |
| | 2011.04-2013.12 | 7AT | F | L | Saloon 4WD M 276.950 | | GCI81451 | Inner Joint | | 34 | 27 | 37.5 | | 141 | |
| | 2011.04-2013.12 | 7AT | F | R | Saloon 4WD M 276.950 | | GCI81452 | Inner Joint | | 27 | 27 | 38 | 62 | 110 | |
| | 2011.04-2013.12 | AT/MT | F | L | Saloon 4WD M 276.950 | | GDS81696 | Intermediate Shaft | | 34 | 27 | | | 504.5 | |
| | 2011.04-2013.12 | 7AT | R | L/R | Saloon 4WD M 276.950 | | GDS35119 | Drive Shaft | 48NS | 27 | 27 | 68 | 82 | 803 | |
| | 2011.04-2013.12 | 7AT | R | L/R | Saloon RWD M 276.950 | | GDS35119 | Drive Shaft | 48NS | 27 | 27 | 68 | 82 | 803 | |
| 3.7 (180 kw) | 2002.09-2005.12 | 5AT | R | L/R | Saloon RWD 112972 | Without flange | GDS35105 | Drive Shaft | 48W | 27 | 27 | 67 | 78 | 786 | |
| | 2003.02-2005.08 | 5AT | F | L | Saloon 4WD 112975 | | GDS82326 | Drive Shaft | 48W | 35 | 34 | 66.6 | 42 | 511 | |
| | 2003.02-2005.08 | 5AT | F | R | Saloon 4WD 112975 | Date from:2004.05,Chassis no. from:A428628 | GDS57486 | Drive Shaft | 48W | 35 | 24 | 66.6 | 42 | 530 | |
| | 2003.02-2005.08 | 5AT | F | L/R | Saloon 4WD 112975 | | GCO35064 | Outer Joint | 48W | 35 | 27 | 66.6 | 42 | 53 | I |
| | 2003.02-2005.08 | 5AT | F | L | Saloon 4WD 112975 | | GCI35059 | Inner Joint | | 34 | 27 | 37.5 | | 140 | |
| | 2003.02-2005.08 | 5AT | F | R | Saloon 4WD 112975 | Date From:2004.05,Chassis no. from:A428628 | GCI35061 | Inner Joint | | 24 | 27 | 37.97 | 55.5 | 104 | |

| | YEAR | TRANSM. | F/R | L/R | BODY STYLE & DRIVE TYPE & ENGINE | REMARKS | G-AP Ref. | PRODUCT | ABS | Technical Specifications A | B | C | H | L | P |
|---|---|---|---|---|---|---|---|---|---|---|---|---|---|---|---|
| **MERCEDES-BENZ** | | | | | | | | | | | | | | | |
| **S350** | | | | | | | | | | | | | | | |
| 3.7 (180 kw) | 2003.02-2005.08 | 5AT | R | L/R | Saloon 4WD 112975 | Without flange | GDS35105 | Drive Shaft | 48W | 27 | 27 | 67 | 78 | 786 | |
| **S400** | | | | | | | | | | | | | | | |
| 2.9 (250 kw) | 2017.05-2020.07 | 9AT | F | L | Saloon 4WD OM 656.929 | | GDS56186 | Drive Shaft | | 30 | 27 | 71 | 56 | 545 | |
| | 2017.05-2020.07 | 9AT | F | R | Saloon 4WD OM 656.929 | | GDS84534 | Drive Shaft | | 30 | 27 | 71 | 56 | 581 | |
| | 2017.05-2020.07 | 9AT | F | L/R | Saloon 4WD OM 656.929 | | GCO82353 | Outer Joint | | 30 | 25 | 71 | 56 | 53.5 | I |
| | 2017.05-2020.07 | 9AT | F | L | Saloon 4WD OM 656.929 | | GCI82159 | Inner Joint | | 27 | 24 | 41 | | 136.5 | |
| | 2017.05-2020.07 | 9AT | F | R | Saloon 4WD OM 656.929 | | GCI82185 | Inner Joint | | 27 | 24 | 38 | 62 | 106 | |
| 3.0 (245 kw) | 2014.11-2017.05 | 7AT | F | L | Saloon 4WD M 276.824 | | GDS56186 | Drive Shaft | | 30 | 27 | 71 | 56 | 545 | |
| | 2014.11-2017.05 | 7AT | F | R | Saloon 4WD M 276.824 | | GDS84534 | Drive Shaft | | 30 | 27 | 71 | 56 | 581 | |
| | 2014.11-2017.05 | 7AT | F | L/R | Saloon 4WD M 276.824 | | GCO82353 | Outer Joint | | 30 | 25 | 71 | 56 | 53.5 | I |
| | 2014.11-2017.05 | 7AT | F | L | Saloon 4WD M 276.824 | | GCI82159 | Inner Joint | | 27 | 24 | 41 | | 136.5 | |
| | 2014.11-2017.05 | 7AT | F | R | Saloon 4WD M 276.824 | | GCI82185 | Inner Joint | | 27 | 24 | 38 | 62 | 106 | |
| 3.0 (270 kw) | 2015.10-2020.07 | 7AT | F | L | Coupe 4WD M 276.824 | | GDS56186 | Drive Shaft | | 30 | 27 | 71 | 56 | 545 | |
| | 2015.10-2020.07 | 7AT | F | R | Coupe 4WD M 276.824 | | GDS84534 | Drive Shaft | | 30 | 27 | 71 | 56 | 581 | |
| | 2015.10-2020.07 | 7AT | F | L/R | Coupe 4WD M 276.824 | | GCO82353 | Outer Joint | | 30 | 25 | 71 | 56 | 53.5 | I |
| | 2015.10-2020.07 | 7AT | F | L | Coupe 4WD M 276.824 | | GCI82159 | Inner Joint | | 27 | 24 | 41 | | 136.5 | |
| | 2015.10-2020.07 | 7AT | F | R | Coupe 4WD M 276.824 | | GCI82185 | Inner Joint | | 27 | 24 | 38 | 62 | 106 | |
| 3.5 (205 kw) | 2009.01-2013.12 | 7AT | R | L/R | Saloon RWD M 272.974 | Date to:2010.03,Chassis no. to:A349099 | GDS35119 | Drive Shaft | 48NS | 27 | 27 | 68 | 82 | 803 | |
| | 2009.01-2013.12 | 7AT | R | L/R | Saloon RWD M 272.974 | Date from:2010.04,Chassis no. from:A349100 | GDS35120 | Drive Shaft | 48NS | 27 | 30 | 68 | 82 | 800 | |
| **S400 Maybach** | | | | | | | | | | | | | | | |
| 3.0 (245 kw) | 2015.01-2017.05 | 9AT | F | L | Saloon 4WD M 276.824 | | GDS56186 | Drive Shaft | | 30 | 27 | 71 | 56 | 545 | |
| | 2015.01-2017.05 | 9AT | F | R | Saloon 4WD M 276.824 | | GDS84534 | Drive Shaft | | 30 | 27 | 71 | 56 | 581 | |
| | 2015.01-2017.05 | 9AT | F | L/R | Saloon 4WD M 276.824 | | GCO82353 | Outer Joint | | 30 | 25 | 71 | 56 | 53.5 | I |
| | 2015.01-2017.05 | 9AT | F | L | Saloon 4WD M 276.824 | | GCI82159 | Inner Joint | | 27 | 24 | 41 | | 136.5 | |
| | 2015.01-2017.05 | 9AT | F | R | Saloon 4WD M 276.824 | | GCI82185 | Inner Joint | | 27 | 24 | 38 | 62 | 106 | |
| **S420** | | | | | | | | | | | | | | | |
| 4.0 (235 kw) | 2006.10-2009.12 | 7AT | R | L/R | Saloon RWD OM 629.911 | | GDS35127 | Drive Shaft | 48NS | 27 | 30 | 68 | 82 | 796 | |
| 4.2 (205 kw) | 1993.01-1998.10 | AT | R | | Saloon RWD 119971/119981 | | GDS35009 | Drive Shaft | 48T | | | | | 665 | |
| **S430** | | | | | | | | | | | | | | | |
| 4.3 (205 kw) | 2002.09-2005.08 | 5AT | F | L | Saloon 4WD 113948 | | GDS82326 | Drive Shaft | 48W | 35 | 34 | 66.6 | 42 | 511 | |
| | 2002.09-2005.08 | 5AT | F | R | Saloon 4WD 113948 | Date from:2004.05,Chassis no. from:A428628 | GDS57486 | Drive Shaft | 48W | 35 | 24 | 66.6 | 42 | 530 | |
| | 2002.09-2005.08 | 5AT | F | L/R | Saloon 4WD 113948 | | GCO35064 | Outer Joint | 48W | 35 | 27 | 66.6 | 42 | 53 | I |
| | 2002.09-2005.08 | 5AT | F | L | Saloon 4WD 113948 | | GCI35059 | Inner Joint | | 34 | 27 | 37.5 | | 140 | |
| | 2002.09-2005.08 | 5AT | F | R | Saloon 4WD 113948 | Date From:2004.05,Chassis no. from:A428628 | GCI35061 | Inner Joint | | 24 | 27 | 37.97 | 55.5 | 104 | |
| | 2002.09-2005.08 | 5AT | R | L/R | Saloon 4WD 113948 | Without flange | GDS35105 | Drive Shaft | 48W | 27 | 27 | 67 | 78 | 786 | |
| **S450** | | | | | | | | | | | | | | | |
| 3.0 (270 kw) | 2015.12-2020.07 | 9AT | F | L | Coupe 4WD M 276.824 | | GDS56186 | Drive Shaft | | 30 | 27 | 71 | 56 | 545 | |
| | 2015.12-2020.07 | 9AT | F | R | Coupe 4WD M 276.824 | | GDS84534 | Drive Shaft | | 30 | 27 | 71 | 56 | 581 | |
| | 2015.12-2020.07 | 9AT | F | L/R | Coupe 4WD M 276.824 | | GCO82353 | Outer Joint | | 30 | 25 | 71 | 56 | 53.5 | I |
| | 2015.12-2020.07 | 9AT | F | L | Coupe 4WD M 276.824 | | GCI82159 | Inner Joint | | 27 | 24 | 41 | | 136.5 | |
| | 2015.12-2020.07 | 9AT | F | R | Coupe 4WD M 276.824 | | GCI82185 | Inner Joint | | 27 | 24 | 38 | 62 | 106 | |
| | 2017.02-2020.07 | 9AT | F | L | Saloon 4WD M 276.824 | | GDS56186 | Drive Shaft | | 30 | 27 | 71 | 56 | 545 | |
| | 2017.02-2020.07 | 9AT | F | R | Saloon 4WD M 276.824 | | GDS84534 | Drive Shaft | | 30 | 27 | 71 | 56 | 581 | |
| | 2017.02-2020.07 | 9AT | F | L/R | Saloon 4WD M 276.824 | | GCO82353 | Outer Joint | | 30 | 25 | 71 | 56 | 53.5 | I |
| | 2017.02-2020.07 | 9AT | F | L | Saloon 4WD M 276.824 | | GCI82159 | Inner Joint | | 27 | 24 | 41 | | 136.5 | |
| | 2017.02-2020.07 | 9AT | F | R | Saloon 4WD M 276.824 | | GCI82185 | Inner Joint | | 27 | 24 | 38 | 62 | 106 | |
| | 2017.07-2020.07 | 9AT | F | L | Saloon 4WD M 256.930 | | GDS56186 | Drive Shaft | | 30 | 27 | 71 | 56 | 545 | |
| | 2017.07-2020.07 | 9AT | F | R | Saloon 4WD M 256.930 | | GDS84534 | Drive Shaft | | 30 | 27 | 71 | 56 | 581 | |
| | 2017.07-2020.07 | 9AT | F | L/R | Saloon 4WD M 256.930 | | GCO82353 | Outer Joint | | 30 | 25 | 71 | 56 | 53.5 | I |
| | 2017.07-2020.07 | 9AT | F | L | Saloon 4WD M 256.930 | | GCI82159 | Inner Joint | | 27 | 24 | 41 | | 136.5 | |
| | 2017.07-2020.07 | 9AT | F | R | Saloon 4WD M 256.930 | | GCI82185 | Inner Joint | | 27 | 24 | 38 | 62 | 106 | |
| 4.0 (235 kw) | 2009.01-2013.12 | 7AT | R | L/R | Saloon RWD OM 629.911 | | GDS35127 | Drive Shaft | 48NS | 27 | 30 | 68 | 82 | 796 | |
| 4.7 (250 kw) | 2005.12-2013.12 | 7AT | F | L | Saloon 4WD M 273.924 | | GDS81662 | Drive Shaft | | 30 | 34 | 71 | 56.5 | 533 | |
| | 2005.12-2013.12 | 7AT | F | R | Saloon 4WD M 273.924 | | GDS81663 | Drive Shaft | | 30 | 27 | 71 | 56.5 | 563 | |
| | 2005.12-2013.12 | 7AT | F | L/R | Saloon 4WD M 273.924 | | GCO81466 | Outer Joint | | 30 | 25 | 71 | 56.5 | 52 | I |
| | 2005.12-2013.12 | 7AT | F | L | Saloon 4WD M 273.924 | | GCI81451 | Inner Joint | | 34 | 27 | 37.5 | | 141 | |
| | 2005.12-2013.12 | 7AT | F | R | Saloon 4WD M 273.924 | | GCI81452 | Inner Joint | | 27 | 27 | 38 | 62 | 110 | |
| | 2005.12-2013.12 | AT/MT | F | L | Saloon 4WD M 273.924 | | GDS81696 | Intermediate Shaft | | 34 | 27 | | | 504.5 | |
| | 2005.12-2013.12 | 7AT | R | L/R | Saloon 4WD M 273.924 | | GDS35119 | Drive Shaft | 48NS | 27 | 27 | 68 | 82 | 803 | |
| | 2005.12-2013.12 | 7AT | R | L/R | Saloon RWD M 273.922 | | GDS35120 | Drive Shaft | 48NS | 27 | 30 | 68 | 82 | 800 | |
| **S450 Maybach** | | | | | | | | | | | | | | | |
| 3.0 (270 kw) | 2017.09-2020.07 | 9AT | F | L | Saloon 4WD M 276.824 | | GDS56186 | Drive Shaft | | 30 | 27 | 71 | 56 | 545 | |
| | 2017.09-2020.07 | 9AT | F | R | Saloon 4WD M 276.824 | | GDS84534 | Drive Shaft | | 30 | 27 | 71 | 56 | 581 | |
| | 2017.09-2020.07 | 9AT | F | L/R | Saloon 4WD M 276.824 | | GCO82353 | Outer Joint | | 30 | 25 | 71 | 56 | 53.5 | I |
| | 2017.09-2020.07 | 9AT | F | L | Saloon 4WD M 276.824 | | GCI82159 | Inner Joint | | 27 | 24 | 41 | | 136.5 | |

| | YEAR | TRANSM. | F/R | L/R | BODY STYLE & DRIVE TYPE & ENGINE | REMARKS | G-AP Ref. | PRODUCT | ABS | Technical Specifications A | B | C | H | L | P |
|---|---|---|---|---|---|---|---|---|---|---|---|---|---|---|---|
| **MERCEDES-BENZ** | | | | | | | | | | | | | | | |
| **S450 Maybach** | | | | | | | | | | | | | | | |
| 3.0 (270 kw) | 2017.09-2020.07 | 9AT | F | R | Saloon 4WD M 276.824 | | GCI82185 | Inner Joint | | 27 | 24 | 38 | 62 | 106 | |
| **S500** | | | | | | | | | | | | | | | |
| 4.7 (320 kw) | 2011.03-2013.12 | 7AT | F | L | Saloon 4WD M 278.932 | | GDS81662 | Drive Shaft | | 30 | 34 | 71 | 56.5 | 533 | |
| | 2011.03-2013.12 | 7AT | F | R | Saloon 4WD M 278.932 | | GDS81663 | Drive Shaft | | 30 | 27 | 71 | 56.5 | 563 | |
| | 2011.03-2013.12 | 7AT | F | L/R | Saloon 4WD M 278.932 | | GCO81466 | Outer Joint | | 30 | 25 | 71 | 56.5 | 52 | I |
| | 2011.03-2013.12 | 7AT | F | L | Saloon 4WD M 278.932 | | GCI81451 | Inner Joint | | 34 | 27 | 37.5 | | 141 | |
| | 2011.03-2013.12 | 7AT | F | R | Saloon 4WD M 278.932 | | GCI81452 | Inner Joint | | 27 | 27 | 38 | 62 | 110 | |
| | 2011.03-2013.12 | AT/MT | F | L | Saloon 4WD M 278.932 | | GDS81696 | Intermediate Shaft | | 34 | 27 | | | 504.5 | |
| | 2011.03-2013.12 | 7AT | R | L/R | Saloon 4WD M 278.932 | | GDS35119 | Drive Shaft | 48NS | 27 | 27 | 68 | 82 | 803 | |
| | 2011.04-2013.12 | 7AT | R | L/R | Saloon RWD M 278.932 | | GDS35127 | Drive Shaft | 48NS | 27 | 30 | 68 | 82 | 796 | |
| | 2013.09-2017.05 | 7AT | F | L | Saloon 4WD M 278.929 | | GDS56186 | Drive Shaft | | 30 | 27 | 71 | 56 | 545 | |
| | 2013.09-2017.05 | 7AT | F | R | Saloon 4WD M 278.929 | | GDS84534 | Drive Shaft | | 30 | 27 | 71 | 56 | 581 | |
| | 2013.09-2017.05 | 7AT | F | L/R | Saloon 4WD M 278.929 | | GCO82353 | Outer Joint | | 30 | 25 | 71 | 56 | 53.5 | I |
| | 2013.09-2017.05 | 7AT | F | L | Saloon 4WD M 278.929 | | GCI82159 | Inner Joint | | 27 | 24 | 41 | | 136.5 | |
| | 2013.09-2017.05 | 7AT | F | R | Saloon 4WD M 278.929 | | GCI82185 | Inner Joint | | 27 | 24 | 38 | 62 | 106 | |
| 4.7 (335 kw) | 2013.05-2017.05 | 7AT | F | L | Saloon 4WD M 278.929 | | GDS56186 | Drive Shaft | | 30 | 27 | 71 | 56 | 545 | |
| | 2013.05-2017.05 | 7AT | F | R | Saloon 4WD M 278.929 | | GDS84534 | Drive Shaft | | 30 | 27 | 71 | 56 | 581 | |
| | 2013.05-2017.05 | 7AT | F | L | Saloon 4WD M 278.929 | | GCI82159 | Inner Joint | | 27 | 24 | 41 | | 136.5 | |
| | 2013.05-2017.05 | 7AT | F | R | Saloon 4WD M 278.929 | | GCI82185 | Inner Joint | | 27 | 24 | 38 | 62 | 106 | |
| | 2013.05-2017.05 | 7AT/9AT | F | L/R | Saloon 4WD M 278.929 | | GCO82353 | Outer Joint | | 30 | 25 | 71 | 56 | 53.5 | I |
| | 2014.04-2017.10 | 7AT | F | L | Coupe 4WD M 278.929 | | GDS56186 | Drive Shaft | | 30 | 27 | 71 | 56 | 545 | |
| | 2014.04-2017.10 | 7AT | F | R | Coupe 4WD M 278.929 | | GDS84534 | Drive Shaft | | 30 | 27 | 71 | 56 | 581 | |
| | 2014.04-2017.10 | 7AT | F | L | Coupe 4WD M 278.929 | | GCI82159 | Inner Joint | | 27 | 24 | 41 | | 136.5 | |
| | 2014.04-2017.10 | 7AT | F | R | Coupe 4WD M 278.929 | | GCI82185 | Inner Joint | | 27 | 24 | 38 | 62 | 106 | |
| | 2014.04-2017.10 | 7AT/9AT | F | L/R | Coupe 4WD M 278.929 | | GCO82353 | Outer Joint | | 30 | 25 | 71 | 56 | 53.5 | I |
| 5.0 (225 kw) | 2002.09-2005.08 | SAT | F | L | Saloon 4WD 113966 | | GDS82326 | Drive Shaft | 48W | 35 | 34 | 66.6 | 42 | 511 | |
| | 2002.09-2005.08 | SAT | F | R | Saloon 4WD 113966 | Date from:2004.05,Chassis no. from:A428628 | GDS57486 | Drive Shaft | 48W | 35 | 24 | 66.6 | 42 | 530 | |
| | 2002.09-2005.08 | SAT | F | L/R | Saloon 4WD 113966 | | GCO35064 | Outer Joint | 48W | 35 | 27 | 66.6 | 42 | 53 | I |
| | 2002.09-2005.08 | SAT | F | L | Saloon 4WD 113966 | | GCI35059 | Inner Joint | | 34 | 27 | 37.5 | | 140 | |
| | 2002.09-2005.08 | SAT | F | R | Saloon 4WD 113966 | Date From:2004.05,Chassis no. from:A428628 | GCI35061 | Inner Joint | | 24 | 27 | 37.97 | 55.5 | 104 | |
| | 2002.09-2005.08 | SAT | R | L/R | Saloon 4WD 113966 | Without flange | GDS35105 | Drive Shaft | 48W | 27 | 27 | 67 | 78 | 786 | |
| 5.5 (285 kw) | 2005.10-2013.12 | 7AT | F | L | Saloon 4WD M 273.961;M 273.968 | | GDS81662 | Drive Shaft | | 30 | 34 | 71 | 56.5 | 533 | |
| | 2005.10-2013.12 | 7AT | F | R | Saloon 4WD M 273.961;M 273.968 | | GDS81663 | Drive Shaft | | 30 | 27 | 71 | 56.5 | 563 | |
| | 2005.10-2013.12 | 7AT | F | L/R | Saloon 4WD M 273.961;M 273.968 | | GCO81466 | Outer Joint | | 30 | 25 | 71 | 56.5 | 52 | I |
| | 2005.10-2013.12 | 7AT | F | L | Saloon 4WD M 273.961;M 273.968 | | GCI81451 | Inner Joint | | 34 | 27 | 37.5 | | 141 | |
| | 2005.10-2013.12 | 7AT | F | R | Saloon 4WD M 273.961;M 273.968 | | GCI81452 | Inner Joint | | 27 | 27 | 38 | 62 | 110 | |
| | 2005.10-2013.12 | AT/MT | F | L | Saloon 4WD M 273.961;M 273.968 | | GDS81696 | Intermediate Shaft | | 34 | 27 | | | 504.5 | |
| | 2005.10-2013.12 | 7AT | R | L/R | Saloon 4WD M 273.961;M 273.968 | | GDS35119 | Drive Shaft | 48NS | 27 | 27 | 68 | 82 | 803 | |
| | 2005.10-2013.12 | 7AT | R | L/R | Saloon RWD M 273.961 | | GDS35120 | Drive Shaft | 48NS | 27 | 30 | 68 | 82 | 800 | |
| **S500 Maybach** | | | | | | | | | | | | | | | |
| 4.7 (335 kw) | 2015.04-2017.05 | 7AT/9AT | F | L/R | Saloon 4WD M 278.929 | | GCO82353 | Outer Joint | | 30 | 25 | 71 | 56 | 53.5 | I |
| | 2015.04-2017.05 | 9AT | F | L | Saloon 4WD M 278.929 | | GDS56186 | Drive Shaft | | 30 | 27 | 71 | 56 | 545 | |
| | 2015.04-2017.05 | 9AT | F | R | Saloon 4WD M 278.929 | | GDS84534 | Drive Shaft | | 30 | 27 | 71 | 56 | 581 | |
| | 2015.04-2017.05 | 9AT | F | L | Saloon 4WD M 278.929 | | GCI82159 | Inner Joint | | 27 | 24 | 41 | | 136.5 | |
| | 2015.04-2017.05 | 9AT | F | R | Saloon 4WD M 278.929 | | GCI82185 | Inner Joint | | 27 | 24 | 38 | 62 | 106 | |
| **S550** | | | | | | | | | | | | | | | |
| 4.6 (320 kw) | 2011.09-2013.12 | 7AT | R | L/R | Saloon RWD M 278.932 | | GDS35127 | Drive Shaft | 48NS | 27 | 30 | 68 | 82 | 796 | |
| **S560** | | | | | | | | | | | | | | | |
| 4.0 (345 kw) | 2017.05-2020.07 | 9AT | F | L | Saloon 4WD M 176.980 | | GDS56186 | Drive Shaft | | 30 | 27 | 71 | 56 | 545 | |
| | 2017.05-2020.07 | 9AT | F | R | Saloon 4WD M 176.980 | | GDS84534 | Drive Shaft | | 30 | 27 | 71 | 56 | 581 | |
| | 2017.05-2020.07 | 9AT | F | L/R | Saloon 4WD M 176.980 | | GCO82353 | Outer Joint | | 30 | 25 | 71 | 56 | 53.5 | I |
| | 2017.05-2020.07 | 9AT | F | L | Saloon 4WD M 176.980 | | GCI82159 | Inner Joint | | 27 | 24 | 41 | | 136.5 | |
| | 2017.05-2020.07 | 9AT | F | R | Saloon 4WD M 176.980 | | GCI82185 | Inner Joint | | 27 | 24 | 38 | 62 | 106 | |
| | 2017.10-2020.07 | 9AT | F | L | Coupe 4WD M 176.980 | | GDS56186 | Drive Shaft | | 30 | 27 | 71 | 56 | 545 | |
| | 2017.10-2020.07 | 9AT | F | R | Coupe 4WD M 176.980 | | GDS84534 | Drive Shaft | | 30 | 27 | 71 | 56 | 581 | |
| | 2017.10-2020.07 | 9AT | F | L/R | Coupe 4WD M 176.980 | | GCO82353 | Outer Joint | | 30 | 25 | 71 | 56 | 53.5 | I |
| | 2017.10-2020.07 | 9AT | F | L | Coupe 4WD M 176.980 | | GCI82159 | Inner Joint | | 27 | 24 | 41 | | 136.5 | |
| | 2017.10-2020.07 | 9AT | F | R | Coupe 4WD M 176.980 | | GCI82185 | Inner Joint | | 27 | 24 | 38 | 62 | 106 | |
| **S560 Maybach** | | | | | | | | | | | | | | | |
| 4.0 (345 kw) | 2017.07-2020.07 | 9AT | F | L | Saloon 4WD M 176.980 | | GDS56186 | Drive Shaft | | 30 | 27 | 71 | 56 | 545 | |
| | 2017.07-2020.07 | 9AT | F | R | Saloon 4WD M 176.980 | | GDS84534 | Drive Shaft | | 30 | 27 | 71 | 56 | 581 | |
| | 2017.07-2020.07 | 9AT | F | L/R | Saloon 4WD M 176.980 | | GCO82353 | Outer Joint | | 30 | 25 | 71 | 56 | 53.5 | I |
| | 2017.07-2020.07 | 9AT | F | L | Saloon 4WD M 176.980 | | GCI82159 | Inner Joint | | 27 | 24 | 41 | | 136.5 | |
| | 2017.07-2020.07 | 9AT | F | R | Saloon 4WD M 176.980 | | GCI82185 | Inner Joint | | 27 | 24 | 38 | 62 | 106 | |

| | YEAR | TRANSM. | F/R | L/R | BODY STYLE & DRIVE TYPE & ENGINE | REMARKS | G-AP Ref. | PRODUCT | ABS | Technical Specifications A | B | C | H | L | P |
|---|---|---|---|---|---|---|---|---|---|---|---|---|---|---|---|
| **MERCEDES-BENZ** | | | | | | | | | | | | | | | |
| **S600** | | | | | | | | | | | | | | | |
| 6.0 (290 kw) | 1991.09-1998.10 | AT | R | | Saloon RWD 120980/120982 | | GDS35009 | Drive Shaft | 48T | | | | | 665 | |
| **S63 AMG** | | | | | | | | | | | | | | | |
| 4.0 (450 kw) | 2017.05-2020.07 | 9AT | F | L/R | Saloon 4WD M 177.980 | | GCO82353 | Outer Joint | | 30 | 25 | 71 | 56 | 53.5 | I |
| | 2017.10-2020.07 | 9AT | F | L/R | Coupe 4WD M 177.980 | | GCO82353 | Outer Joint | | 30 | 25 | 71 | 56 | 53.5 | I |
| 5.5 (430 kw) | 2013.05-2017.05 | 7AT | F | L/R | Saloon 4WD M 157.985 | | GCO82353 | Outer Joint | | 30 | 25 | 71 | 56 | 53.5 | I |
| | 2014.04-2017.10 | 7AT | F | L/R | Coupe 4WD M 157.985 | | GCO82353 | Outer Joint | | 30 | 25 | 71 | 56 | 53.5 | I |
| | 2015.12-2017.10 | 7AT | F | L/R | Convertible 4WD M 157.985 | | GCO82353 | Outer Joint | | 30 | 25 | 71 | 56 | 53.5 | I |
| **SL350** | | | | | | | | | | | | | | | |
| 3.5 (225 kw) | 2012.02-2014.04 | 7AT | R | L/R | Convertible RWD M 276.954 | | GDS35119 | Drive Shaft | 48NS | 27 | 27 | 68 | 82 | 803 | |
| 3.7 (180 kw) | 2003.03-2012.01 | | R | L | Convertible RWD M 112.973 | | GDS35128 | Drive Shaft | 48NS | 27 | 27 | 63 | 75 | 767 | |
| | 2003.03-2012.01 | | R | R | Convertible RWD M 112.973 | | GDS35108 | Drive Shaft | 48NS | 27 | 27 | 63 | 75 | 767 | |
| **SL400** | | | | | | | | | | | | | | | |
| 3.0 (245 kw) | 2014.04-2016.03 | 7AT | R | L/R | Convertible RWD M 276.825 | | GDS35119 | Drive Shaft | 48NS | 27 | 27 | 68 | 82 | 803 | |
| 3.0 (270 kw) | 2016.01-2020.04 | 7AT | R | L/R | Convertible RWD M 276.825 | | GDS35119 | Drive Shaft | 48NS | 27 | 27 | 68 | 82 | 803 | |
| **SL500** | | | | | | | | | | | | | | | |
| 4.7 (320 kw) | 2012.01-2020.04 | 7AT | R | L/R | Convertible RWD M 278.927 | | GDS35127 | Drive Shaft | 48NS | 27 | 30 | 68 | 82 | 796 | |
| 4.7 (335 kw) | 2015.04-2020.04 | 7AT/9AT | R | L/R | Convertible RWD M 278.927 | | GDS35127 | Drive Shaft | 48NS | 27 | 30 | 68 | 82 | 796 | |
| **SL63 AMG** | | | | | | | | | | | | | | | |
| 5.5 (395 kw) | 2012.01-2019.05 | 7AT | R | L/R | Convertible RWD M 157.983 | | GDS35119 | Drive Shaft | 48NS | 27 | 27 | 68 | 82 | 803 | |
| 5.5 (415 kw) | 2012.01-2019.05 | 7AT | R | L/R | Convertible RWD M 157.983 | | GDS35119 | Drive Shaft | 48NS | 27 | 27 | 68 | 82 | 803 | |
| 5.5 (420 kw) | 2018.07-2019.05 | 7AT | R | L/R | Convertible RWD M 157.983 | | GDS35119 | Drive Shaft | 48NS | 27 | 27 | 68 | 82 | 803 | |
| 5.5 (430 kw) | 2014.04-2019.05 | 7AT | R | L/R | Convertible RWD M 157.983 | | GDS35119 | Drive Shaft | 48NS | 27 | 27 | 68 | 82 | 803 | |
| 6.2 (386 kw) | 2008.03-2012.01 | AT | R | L/R | Convertible RWD M 156.981 | | GDS35129 | Drive Shaft | 48NS | 27 | 30 | | 72 | 763 | |
| **SLK200** | | | | | | | | | | | | | | | |
| 1.8 (120 kw) | 2004.03-2011.02 | AT | R | L/R | Convertible RWD M 271.944 | | GDS35132 | Drive Shaft | 48NS | 25 | 27 | 64.9 | 70 | 766 | |
| 1.8 (135 kw) | 2008.01-2011.02 | 5AT/6MT | R | L/R | Convertible RWD M 271.954 | | GDS35132 | Drive Shaft | 48NS | 25 | 27 | 64.9 | 70 | 766 | |
| 2.0 (100 kw) | 1996.09-1999.09 | 5AT/5MT | R | L/R | Cabriolet RWD 111946 | | GDS35007 | Drive Shaft | | | | | | 630 | |
| | 1996.09-1999.09 | | R | L/R | Cabriolet RWD 111946 | | GCI35006 | Inner Joint | | | 25 | | | 26 | |
| 2.0 (120 kw) | 1999.10-2003.09 | | R | L/R | Cabriolet RWD 111958 | | GCI35006 | Inner Joint | | | 25 | | | 26 | |
| 2.0 (141 kw) | 1996.10-2000.03 | 6MT | R | L/R | Cabriolet RWD 111943 | | GCI99143 | Inner Joint | | | 27 | | | 28 | |
| **SLK230** | | | | | | | | | | | | | | | |
| 2.3 (142 kw) | 1996.09-2000.12 | 5AT/5MT | R | L/R | Cabriolet RWD 111973 | | GCI99143 | Inner Joint | | | 27 | | | 28 | |
| 2.3 (145 kw) | 1999.10-2004.01 | 5AT/6MT | R | L/R | Cabriolet RWD 111983 | | GCI99143 | Inner Joint | | | 27 | | | 28 | |
| **SLK250** | | | | | | | | | | | | | | | |
| 2.2 (150 kw) | 2012.01- | AT | R | L | Convertible RWD OM 651.980 | | GDS35107 | Drive Shaft | 48NS | 27 | 27 | 68 | 72 | 777 | |
| | 2012.01- | AT | R | R | Convertible RWD OM 651.980 | | GDS35112 | Drive Shaft | 48NS | 27 | 27 | 68 | 72 | 777 | |
| **SLK280** | | | | | | | | | | | | | | | |
| 3.0 (170 kw) | 2005.01-2011.02 | 7AT/6MT | R | L/R | Convertible RWD M 272.942 | | GDS35132 | Drive Shaft | 48NS | 25 | 27 | 64.9 | 70 | 766 | |
| **SLK300** | | | | | | | | | | | | | | | |
| 3.0 (170 kw) | 2009.04-2011.02 | 7AT/6MT | R | L/R | Convertible RWD M 272.942 | | GDS35132 | Drive Shaft | 48NS | 25 | 27 | 64.9 | 70 | 766 | |
| **SLK32 AMG** | | | | | | | | | | | | | | | |
| 3.2 (260 kw) | 2000.04-2004.01 | 5AT | R | L/R | Cabriolet RWD 112960 | | GCI99143 | Inner Joint | | | 27 | | | 28 | |
| **SLK320** | | | | | | | | | | | | | | | |
| 3.2 (160 kw) | 1999.10-2004.01 | 5AT/5MT/6MT | R | L/R | Cabriolet RWD 112947 | | GCI99143 | Inner Joint | | | 27 | | | 28 | |
| **SLK350** | | | | | | | | | | | | | | | |
| 3.5 (225 kw) | 2011.02- | 7AT | R | L | Convertible RWD M 276.956 | | GDS35107 | Drive Shaft | 48NS | 27 | 27 | 68 | 72 | 777 | |
| | 2011.02- | 7AT | R | R | Convertible RWD M 276.956 | | GDS35112 | Drive Shaft | 48NS | 27 | 27 | 68 | 72 | 777 | |
| **SLK55 AMG** | | | | | | | | | | | | | | | |
| 5.5 (310 kw) | 2012.01- | 7AT | R | L | Convertible RWD M 152.980 | | GDS35107 | Drive Shaft | 48NS | 27 | 27 | 68 | 72 | 777 | |
| | 2012.01- | 7AT | R | R | Convertible RWD M 152.980 | | GDS35112 | Drive Shaft | 48NS | 27 | 27 | 68 | 72 | 777 | |
| **Sprinter 208D** | | | | | | | | | | | | | | | |
| 2.3 (58 kw) | 1995.01-2000.04 | 4AT/5MT | R | L/R | Platform/Chassis RWD OM 601.943 | | GDS83407 | Drive Shaft | | 26 | | 62 | 124 | 626 | |
| | 1995.02-2000.04 | 4AT/5MT | R | L/R | Bus RWD OM 601.943 | | GDS83407 | Drive Shaft | | 26 | | 62 | 124 | 626 | |
| | 1995.02-2000.04 | 4AT/5MT | R | L/R | Van RWD OM 601.943 | | GDS83407 | Drive Shaft | | 26 | | 62 | 124 | 626 | |
| 2.3 (60 kw) | 1996.10-2000.04 | 4AT/5MT | R | L/R | Van RWD OM 601.943 | | GDS83407 | Drive Shaft | | 26 | | 62 | 124 | 626 | |
| **Sprinter 210D** | | | | | | | | | | | | | | | |
| 2.9 (75 kw) | 1997.01-2000.04 | 4AT/5MT | R | L/R | Van RWD OM 602.980 | | GDS83407 | Drive Shaft | | 26 | | 62 | 124 | 626 | |
| | 1997.03-2000.04 | 4AT/5MT | R | L/R | Bus RWD OM 602.980 | | GDS83407 | Drive Shaft | | 26 | | 62 | 124 | 626 | |
| **Sprinter 211D** | | | | | | | | | | | | | | | |
| 2.0 (84 kw) | 2021.10- | 6MT | F | L | Platform/Chassis FWD OM 654.920 | | GDS84518 | Drive Shaft | | 37 | 41 | 65 | | 657 | |
| | 2021.10- | 6MT | F | R | Platform/Chassis FWD OM 654.920 | | GDS84517 | Drive Shaft | | 37 | 41 | 65 | | 999 | |
| | 2021.10- | 6MT | F | L | Platform/Chassis FWD OM 654.920 | | GCI82830 | Inner Joint | | 41 | 29 | 44 | 72.5 | 135.5 | |
| | 2021.10- | 6MT | F | R | Platform/Chassis FWD OM 654.920 | | GCI82829 | Inner Joint | | 41 | 29 | 38 | 435.5 | 115 | |
| | 2021.10- | 6MT/9AT | F | L/R | Platform/Chassis FWD OM 654.920 | | GCO82856 | Outer Joint | | 37 | 31 | 65 | | 91.5 | I |
| | 2021.10- | 9AT | F | L | Platform/Chassis FWD OM 654.920 | | GDS84516 | Drive Shaft | | 37 | 42 | 65 | | 642 | |

| | YEAR | TRANSM. | F/R | L/R | BODY STYLE & DRIVE TYPE & ENGINE | REMARKS | G-AP Ref. | PRODUCT | ABS | Technical Specifications A | B | C | H | L | P |
|---|---|---|---|---|---|---|---|---|---|---|---|---|---|---|---|
| **MERCEDES-BENZ** | | | | | | | | | | | | | | | |
| **Sprinter 211D** | | | | | | | | | | | | | | | |
| 2.0 (84 kw) | 2021.10- | 9AT | F | R | Platform/Chassis FWD OM 654.920 | | GDS84515 | Drive Shaft | | 37 | 42 | 65 | | 985 | |
| | 2021.10- | 9AT | F | L | Platform/Chassis FWD OM 654.920 | | GCI82828 | Inner Joint | | 42 | 29 | | 64.5 | 128.5 | |
| | 2021.10- | 9AT | F | R | Platform/Chassis FWD OM 654.920 | | GCI82827 | Inner Joint | | 42 | 29 | 36.45 | 421 | 115 | |
| | 2021.10-2025.05 | 6MT | F | L | Van FWD OM 654.920 | | GDS84518 | Drive Shaft | | 37 | 41 | 65 | | 657 | |
| | 2021.10-2025.05 | 6MT | F | R | Van FWD OM 654.920 | | GDS84517 | Drive Shaft | | 37 | 41 | 65 | | 999 | |
| | 2021.10-2025.05 | 6MT | F | L | Van FWD OM 654.920 | | GCI82830 | Inner Joint | | 41 | 29 | 44 | 72.5 | 135.5 | |
| | 2021.10-2025.05 | 6MT | F | R | Van FWD OM 654.920 | | GCI82829 | Inner Joint | | 41 | 29 | 38 | 435.5 | 115 | |
| | 2021.10-2025.05 | 6MT/9AT | F | L/R | Van FWD OM 654.920 | | GCO82856 | Outer Joint | | 37 | 31 | 65 | | 91.5 | I |
| | 2021.10-2025.05 | 9AT | F | L | Van FWD OM 654.920 | | GDS84516 | Drive Shaft | | 37 | 42 | 65 | | 642 | |
| | 2021.10-2025.05 | 9AT | F | R | Van FWD OM 654.920 | | GDS84515 | Drive Shaft | | 37 | 42 | 65 | | 985 | |
| | 2021.10-2025.05 | 9AT | F | L | Van FWD OM 654.920 | | GCI82828 | Inner Joint | | 42 | 29 | | 64.5 | 128.5 | |
| | 2021.10-2025.05 | 9AT | F | R | Van FWD OM 654.920 | | GCI82827 | Inner Joint | | 42 | 29 | 36.45 | 421 | 115 | |
| 2.2 (84 kw) | 2018.02-2021.12 | 6MT | F | L | Platform/Chassis FWD OM 651.950 | | GDS84518 | Drive Shaft | | 37 | 41 | 65 | | 657 | |
| | 2018.02-2021.12 | 6MT | F | R | Platform/Chassis FWD OM 651.950 | | GDS84517 | Drive Shaft | | 37 | 41 | 65 | | 999 | |
| | 2018.02-2021.12 | 6MT | F | L | Platform/Chassis FWD OM 651.950 | | GCI82830 | Inner Joint | | 41 | 29 | 44 | 72.5 | 135.5 | |
| | 2018.02-2021.12 | 6MT | F | R | Platform/Chassis FWD OM 651.950 | | GCI82829 | Inner Joint | | 41 | 29 | 38 | 435.5 | 115 | |
| | 2018.02-2021.12 | 6MT/9AT | F | L/R | Platform/Chassis FWD OM 651.950 | | GCO82856 | Outer Joint | | 37 | 31 | 65 | | 91.5 | I |
| | 2018.02-2021.12 | 9AT | F | L | Platform/Chassis FWD OM 651.950 | | GDS84516 | Drive Shaft | | 37 | 42 | 65 | | 642 | |
| | 2018.02-2021.12 | 9AT | F | R | Platform/Chassis FWD OM 651.950 | | GDS84515 | Drive Shaft | | 37 | 42 | 65 | | 985 | |
| | 2018.02-2021.12 | 9AT | F | L | Platform/Chassis FWD OM 651.950 | | GCI82828 | Inner Joint | | 42 | 29 | | 64.5 | 128.5 | |
| | 2018.02-2021.12 | 9AT | F | R | Platform/Chassis FWD OM 651.950 | | GCI82827 | Inner Joint | | 42 | 29 | 36.45 | 421 | 115 | |
| | 2018.02-2021.12 | 6MT | F | L | Van FWD OM 651.950;OM 651.958 | | GDS84518 | Drive Shaft | | 37 | 41 | 65 | | 657 | |
| | 2018.02-2021.12 | 6MT | F | R | Van FWD OM 651.950;OM 651.958 | | GDS84517 | Drive Shaft | | 37 | 41 | 65 | | 999 | |
| | 2018.02-2021.12 | 6MT | F | L | Van FWD OM 651.950;OM 651.958 | | GCI82830 | Inner Joint | | 41 | 29 | 44 | 72.5 | 135.5 | |
| | 2018.02-2021.12 | 6MT | F | R | Van FWD OM 651.950;OM 651.958 | | GCI82829 | Inner Joint | | 41 | 29 | 38 | 435.5 | 115 | |
| | 2018.02-2021.12 | 6MT/9AT | F | L/R | Van FWD OM 651.950;OM 651.958 | | GCO82856 | Outer Joint | | 37 | 31 | 65 | | 91.5 | I |
| | 2018.02-2021.12 | 9AT | F | L | Van FWD OM 651.950;OM 651.958 | | GDS84516 | Drive Shaft | | 37 | 42 | 65 | | 642 | |
| | 2018.02-2021.12 | 9AT | F | R | Van FWD OM 651.950;OM 651.958 | | GDS84515 | Drive Shaft | | 37 | 42 | 65 | | 985 | |
| | 2018.02-2021.12 | 9AT | F | L | Van FWD OM 651.950;OM 651.958 | | GCI82828 | Inner Joint | | 42 | 29 | | 64.5 | 128.5 | |
| | 2018.02-2021.12 | 9AT | F | R | Van FWD OM 651.950;OM 651.958 | | GCI82827 | Inner Joint | | 42 | 29 | 36.45 | 421 | 115 | |
| **Sprinter 212D** | | | | | | | | | | | | | | | |
| 2.9 (90 kw) | 1995.02-2000.04 | 4AT/5MT | R | L/R | Bus RWD OM 602.980 (02.95-.) | | GDS83407 | Drive Shaft | | 26 | | 62 | 124 | 626 | |
| | 1995.02-2000.04 | 4AT/5MT | R | L/R | Platform/Chassis RWD OM 602.980 (02.95-.) | | GDS83407 | Drive Shaft | | 26 | | 62 | 124 | 626 | |
| | 1995.02-2000.04 | 4AT/5MT | R | L/R | Van RWD OM 602.980 (02.95-.) | | GDS83407 | Drive Shaft | | 26 | | 62 | 124 | 626 | |
| **Sprinter 214** | | | | | | | | | | | | | | | |
| 2.3 (105 kw) | 1995.02-2006.05 | 4AT/5AT/6AT/5MT | R | L/R | Bus RWD M 111.979, M 111.984 | | GDS83407 | Drive Shaft | | 26 | | 62 | 124 | 626 | |
| | 1995.02-2006.05 | 4AT/5AT/6AT/5MT | R | L/R | Van RWD M 111.979, M 111.984 | | GDS83407 | Drive Shaft | | 26 | | 62 | 124 | 626 | |
| **Sprinter 214D** | | | | | | | | | | | | | | | |
| 2.2 (105 kw) | 2018.02-2021.12 | 6MT | F | L | Platform/Chassis FWD OM 651.950;OM 651.958 | | GDS84518 | Drive Shaft | | 37 | 41 | 65 | | 657 | |
| | 2018.02-2021.12 | 6MT | F | R | Platform/Chassis FWD OM 651.950;OM 651.958 | | GDS84517 | Drive Shaft | | 37 | 41 | 65 | | 999 | |
| | 2018.02-2021.12 | 6MT | F | L | Platform/Chassis FWD OM 651.950;OM 651.958 | | GCI82830 | Inner Joint | | 41 | 29 | 44 | 72.5 | 135.5 | |
| | 2018.02-2021.12 | 6MT | F | R | Platform/Chassis FWD OM 651.950;OM 651.958 | | GCI82829 | Inner Joint | | 41 | 29 | 38 | 435.5 | 115 | |
| | 2018.02-2021.12 | 6MT/9AT | F | L/R | Platform/Chassis FWD OM 651.950;OM 651.958 | | GCO82856 | Outer Joint | | 37 | 31 | 65 | | 91.5 | I |
| | 2018.02-2021.12 | 9AT | F | L | Platform/Chassis FWD OM 651.950;OM 651.958 | | GDS84516 | Drive Shaft | | 37 | 42 | 65 | | 642 | |
| | 2018.02-2021.12 | 9AT | F | R | Platform/Chassis FWD OM 651.950;OM 651.958 | | GDS84515 | Drive Shaft | | 37 | 42 | 65 | | 985 | |
| | 2018.02-2021.12 | 9AT | F | L | Platform/Chassis FWD OM 651.950;OM 651.958 | | GCI82828 | Inner Joint | | 42 | 29 | | 64.5 | 128.5 | |
| | 2018.02-2021.12 | 9AT | F | R | Platform/Chassis FWD OM 651.950;OM 651.958 | | GCI82827 | Inner Joint | | 42 | 29 | 36.45 | 421 | 115 | |
| | 2018.02-2021.12 | 6MT | F | L | Van FWD OM 651.950;OM 651.958 | | GDS84518 | Drive Shaft | | 37 | 41 | 65 | | 657 | |
| | 2018.02-2021.12 | 6MT | F | R | Van FWD OM 651.950;OM 651.958 | | GDS84517 | Drive Shaft | | 37 | 41 | 65 | | 999 | |
| | 2018.02-2021.12 | 6MT | F | L | Van FWD OM 651.950;OM 651.958 | | GCI82830 | Inner Joint | | 41 | 29 | 44 | 72.5 | 135.5 | |
| | 2018.02-2021.12 | 6MT | F | R | Van FWD OM 651.950;OM 651.958 | | GCI82829 | Inner Joint | | 41 | 29 | 38 | 435.5 | 115 | |
| | 2018.02-2021.12 | 6MT/9AT | F | L/R | Van FWD OM 651.950;OM 651.958 | | GCO82856 | Outer Joint | | 37 | 31 | 65 | | 91.5 | I |
| | 2018.02-2021.12 | 9AT | F | L | Van FWD OM 651.950;OM 651.958 | | GDS84516 | Drive Shaft | | 37 | 42 | 65 | | 642 | |
| | 2018.02-2021.12 | 9AT | F | R | Van FWD OM 651.950;OM 651.958 | | GDS84515 | Drive Shaft | | 37 | 42 | 65 | | 985 | |
| | 2018.02-2021.12 | 9AT | F | L | Van FWD OM 651.950;OM 651.958 | | GCI82828 | Inner Joint | | 42 | 29 | | 64.5 | 128.5 | |
| | 2018.02-2021.12 | 9AT | F | R | Van FWD OM 651.950;OM 651.958 | | GCI82827 | Inner Joint | | 42 | 29 | 36.45 | 421 | 115 | |
| **Sprinter 215D** | | | | | | | | | | | | | | | |
| 2.0 (110 kw) | 2021.10- | 6MT | F | L | Platform/Chassis FWD OM 654.920 | | GDS84518 | Drive Shaft | | 37 | 41 | 65 | | 657 | |
| | 2021.10- | 6MT | F | R | Platform/Chassis FWD OM 654.920 | | GDS84517 | Drive Shaft | | 37 | 41 | 65 | | 999 | |
| | 2021.10- | 6MT | F | L | Platform/Chassis FWD OM 654.920 | | GCI82830 | Inner Joint | | 41 | 29 | 44 | 72.5 | 135.5 | |
| | 2021.10- | 6MT | F | R | Platform/Chassis FWD OM 654.920 | | GCI82829 | Inner Joint | | 41 | 29 | 38 | 435.5 | 115 | |
| | 2021.10- | 6MT/9AT | F | L/R | Platform/Chassis FWD OM 654.920 | | GCO82856 | Outer Joint | | 37 | 31 | 65 | | 91.5 | I |
| | 2021.10- | 9AT | F | L | Platform/Chassis FWD OM 654.920 | | GDS84516 | Drive Shaft | | 37 | 42 | 65 | | 642 | |
| | 2021.10- | 9AT | F | R | Platform/Chassis FWD OM 654.920 | | GDS84515 | Drive Shaft | | 37 | 42 | 65 | | 985 | |
| | 2021.10- | 9AT | F | L | Platform/Chassis FWD OM 654.920 | | GCI82828 | Inner Joint | | 42 | 29 | | 64.5 | 128.5 | |

| | YEAR | TRANSM. | F/R | L/R | BODY STYLE & DRIVE TYPE & ENGINE | REMARKS | G-AP Ref. | PRODUCT | ABS | Technical Specifications A | B | C | H | L | P |
|---|---|---|---|---|---|---|---|---|---|---|---|---|---|---|---|
| **MERCEDES-BENZ** | | | | | | | | | | | | | | | |
| **Sprinter 215D** | | | | | | | | | | | | | | | |
| 2.0 (110 kw) | 2021.10- | 9AT | F | R | Platform/Chassis FWD OM 654.920 | | GCI82827 | Inner Joint | | 42 | 29 | 36.45 | 421 | 115 | |
| | 2021.10-2025.05 | 6MT | F | L | Van FWD OM 654.920 | | GDS84518 | Drive Shaft | | 37 | 41 | 65 | | 657 | |
| | 2021.10-2025.05 | 6MT | F | R | Van FWD OM 654.920 | | GDS84517 | Drive Shaft | | 37 | 41 | 65 | | 999 | |
| | 2021.10-2025.05 | 6MT | F | L | Van FWD OM 654.920 | | GCI82830 | Inner Joint | | 41 | 29 | 44 | 72.5 | 135.5 | |
| | 2021.10-2025.05 | 6MT | F | R | Van FWD OM 654.920 | | GCI82829 | Inner Joint | | 41 | 29 | 38 | 435.5 | 115 | |
| | 2021.10-2025.05 | 6MT/9AT | F | L/R | Van FWD OM 654.920 | | GCO82856 | Outer Joint | | 37 | 31 | 65 | | 91.5 | I |
| | 2021.10-2025.05 | 9AT | F | L | Van FWD OM 654.920 | | GDS84516 | Drive Shaft | | 37 | 42 | 65 | | 642 | |
| | 2021.10-2025.05 | 9AT | F | R | Van FWD OM 654.920 | | GDS84515 | Drive Shaft | | 37 | 42 | 65 | | 985 | |
| | 2021.10-2025.05 | 9AT | F | L | Van FWD OM 654.920 | | GCI82828 | Inner Joint | | 42 | 29 | | 64.5 | 128.5 | |
| | 2021.10-2025.05 | 9AT | F | R | Van FWD OM 654.920 | | GCI82827 | Inner Joint | | 42 | 29 | 36.45 | 421 | 115 | |
| **Sprinter 308D** | | | | | | | | | | | | | | | |
| 2.1 (60 kw) | 2000.04-2006.05 | 6AT/5MT | R | L/R | Platform/Chassis RWD OM 611.987 | | GDS83407 | Drive Shaft | | 26 | | 62 | 124 | 626 | |
| | 2000.04-2006.05 | 5AT/6AT/5MT | R | L/R | Van RWD OM 611.987 | | GDS83407 | Drive Shaft | | 26 | | 62 | 124 | 626 | |
| **Sprinter 310D** | | | | | | | | | | | | | | | |
| 2.9 (75 kw) | 1997.05-2002.08 | 5MT | F | L/R | Bus 4WD OM 602.980 | | GDS83407 | Drive Shaft | | 26 | | 62 | 124 | 626 | |
| | 1997.05-2002.08 | 5MT | F | L/R | Bus 4WD OM 602.980 | | GCO35034 | Outer Joint | | 26 | 28 | 62 | 124 | 62 | O |
| | 1997.05-2002.08 | 5MT | F | L/R | Bus 4WD OM 602.980 | | GCI35020 | Inner Joint | | | 28 | | | 32 | |
| | 1997.06-2000.04 | 5MT | F | L/R | Van 4WD OM 602.980 | | GDS83407 | Drive Shaft | | 26 | | 62 | 124 | 626 | |
| | 1997.06-2000.04 | 5MT | F | L/R | Van 4WD OM 602.980 | | GCO35034 | Outer Joint | | 26 | 28 | 62 | 124 | 62 | O |
| | 1997.06-2000.04 | 5MT | F | L/R | Van 4WD OM 602.980 | | GCI35020 | Inner Joint | | | 28 | | | 32 | |
| **Sprinter 311D** | | | | | | | | | | | | | | | |
| 2.0 (84 kw) | 2021.10- | 6MT | F | L | Platform/Chassis FWD OM 654.920 | | GDS84518 | Drive Shaft | | 37 | 41 | 65 | | 657 | |
| | 2021.10- | 6MT | F | R | Platform/Chassis FWD OM 654.920 | | GDS84517 | Drive Shaft | | 37 | 41 | 65 | | 999 | |
| | 2021.10- | 6MT | F | L | Platform/Chassis FWD OM 654.920 | | GCI82830 | Inner Joint | | 41 | 29 | 44 | 72.5 | 135.5 | |
| | 2021.10- | 6MT | F | R | Platform/Chassis FWD OM 654.920 | | GCI82829 | Inner Joint | | 41 | 29 | 38 | 435.5 | 115 | |
| | 2021.10- | 6MT/9AT | F | L/R | Platform/Chassis FWD OM 654.920 | | GCO82856 | Outer Joint | | 37 | 31 | 65 | | 91.5 | I |
| | 2021.10- | 9AT | F | L | Platform/Chassis FWD OM 654.920 | | GDS84516 | Drive Shaft | | 37 | 42 | 65 | | 642 | |
| | 2021.10- | 9AT | F | R | Platform/Chassis FWD OM 654.920 | | GDS84515 | Drive Shaft | | 37 | 42 | 65 | | 985 | |
| | 2021.10- | 9AT | F | L | Platform/Chassis FWD OM 654.920 | | GCI82828 | Inner Joint | | 42 | 29 | | 64.5 | 128.5 | |
| | 2021.10- | 9AT | F | R | Platform/Chassis FWD OM 654.920 | | GCI82827 | Inner Joint | | 42 | 29 | 36.45 | 421 | 115 | |
| | 2021.10-2025.05 | 6MT | F | L | Van FWD OM 654.920 | | GDS84518 | Drive Shaft | | 37 | 41 | 65 | | 657 | |
| | 2021.10-2025.05 | 6MT | F | R | Van FWD OM 654.920 | | GDS84517 | Drive Shaft | | 37 | 41 | 65 | | 999 | |
| | 2021.10-2025.05 | 6MT | F | L | Van FWD OM 654.920 | | GCI82830 | Inner Joint | | 41 | 29 | 44 | 72.5 | 135.5 | |
| | 2021.10-2025.05 | 6MT | F | R | Van FWD OM 654.920 | | GCI82829 | Inner Joint | | 41 | 29 | 38 | 435.5 | 115 | |
| | 2021.10-2025.05 | 6MT/9AT | F | L/R | Van FWD OM 654.920 | | GCO82856 | Outer Joint | | 37 | 31 | 65 | | 91.5 | I |
| | 2021.10-2025.05 | 9AT | F | L | Van FWD OM 654.920 | | GDS84516 | Drive Shaft | | 37 | 42 | 65 | | 642 | |
| | 2021.10-2025.05 | 9AT | F | R | Van FWD OM 654.920 | | GDS84515 | Drive Shaft | | 37 | 42 | 65 | | 985 | |
| | 2021.10-2025.05 | 9AT | F | L | Van FWD OM 654.920 | | GCI82828 | Inner Joint | | 42 | 29 | | 64.5 | 128.5 | |
| | 2021.10-2025.05 | 9AT | F | R | Van FWD OM 654.920 | | GCI82827 | Inner Joint | | 42 | 29 | 36.45 | 421 | 115 | |
| 2.1 (80 kw) | 2000.04-2006.05 | 6AT/5MT | F | L/R | Platform/Chassis 4WD OM 611.981 | | GDS83407 | Drive Shaft | | 26 | | 62 | 124 | 626 | |
| | 2000.04-2006.05 | MT | F | L/R | Platform/Chassis 4WD OM 611.981 | | GCO35034 | Outer Joint | | 26 | 28 | 62 | 124 | 62 | O |
| | 2000.04-2006.05 | | F | L/R | Platform/Chassis 4WD OM 611.981 | | GCI35020 | Inner Joint | | | 28 | | | 32 | |
| | 2000.04-2006.05 | 5AT/6AT/5MT | R | L/R | Platform/Chassis RWD OM 611.981 | | GDS83407 | Drive Shaft | | 26 | | 62 | 124 | 626 | |
| | 2000.04-2006.05 | 5AT/6AT/5MT | R | L/R | Van RWD OM 611.981 | | GDS83407 | Drive Shaft | | 26 | | 62 | 124 | 626 | |
| | 2002.08-2006.05 | 6AT/5MT | F | L/R | Bus 4WD OM 611.981 | | GDS83407 | Drive Shaft | | 26 | | 62 | 124 | 626 | |
| | 2002.08-2006.05 | MT | F | L/R | Bus 4WD OM 611.981 | | GCO35034 | Outer Joint | | 26 | 28 | 62 | 124 | 62 | O |
| | 2002.08-2006.05 | | F | L/R | Bus 4WD OM 611.981 | | GCI35020 | Inner Joint | | | 28 | | | 32 | |
| | 2002.08-2006.05 | 6AT/5MT | F | L/R | Van 4WD OM 611.981 | | GDS83407 | Drive Shaft | | 26 | | 62 | 124 | 626 | |
| | 2002.08-2006.05 | MT | F | L/R | Van 4WD OM 611.981 | | GCO35034 | Outer Joint | | 26 | 28 | 62 | 124 | 62 | O |
| | 2002.08-2006.05 | | F | L/R | Van 4WD OM 611.981 | | GCI35020 | Inner Joint | | | 28 | | | 32 | |
| 2.2 (80 kw) | 2008.02-2009.12 | 5AT/6MT | F | L/R | Bus 4WD OM 646.985 | | GDS99290 | Drive Shaft | | 30 | | 66 | 108.5 | 690 | |
| | 2008.02-2009.12 | 5AT/6MT | F | L/R | Bus 4WD OM 646.985 | | GCO35041 | Outer Joint | | 30 | 28 | 66 | 108.5 | 66 | M |
| | 2008.02-2009.12 | 5AT/6MT | F | L/R | Bus 4WD OM 646.985 | | GCI48002 | Inner Joint | | | 28 | | | 32 | |
| | 2008.02-2009.12 | 5AT/6MT | F | L/R | Platform/Chassis 4WD OM 646.985 | | GDS99290 | Drive Shaft | | 30 | | 66 | 108.5 | 690 | |
| | 2008.02-2009.12 | 5AT/6MT | F | L/R | Platform/Chassis 4WD OM 646.985 | | GCO35041 | Outer Joint | | 30 | 28 | 66 | 108.5 | 66 | M |
| | 2008.02-2009.12 | 5AT/6MT | F | L/R | Platform/Chassis 4WD OM 646.985 | | GCI48002 | Inner Joint | | | 28 | | | 32 | |
| | 2008.02-2009.12 | 5AT/6MT | F | L/R | Van 4WD OM 646.985 | | GDS99290 | Drive Shaft | | 30 | | 66 | 108.5 | 690 | |
| | 2008.02-2009.12 | 5AT/6MT | F | L/R | Van 4WD OM 646.985 | | GCO35041 | Outer Joint | | 30 | 28 | 66 | 108.5 | 66 | M |
| | 2008.02-2009.12 | 5AT/6MT | F | L/R | Van 4WD OM 646.985 | | GCI48002 | Inner Joint | | | 28 | | | 32 | |
| | 2008.02-2009.12 | 5AT/6MT | F | L | Van 4WD OM 646.985 | | GDS82923 | Stub Axle-Flange | | 26 | | | | 336.5 | |
| 2.2 (84 kw) | 2018.02-2021.12 | 6MT | F | L | Platform/Chassis FWD OM 651.950;OM 651.958 | | GDS84518 | Drive Shaft | | 37 | 41 | 65 | | 657 | |
| | 2018.02-2021.12 | 6MT | F | R | Platform/Chassis FWD OM 651.950;OM 651.958 | | GDS84517 | Drive Shaft | | 37 | 41 | 65 | | 999 | |
| | 2018.02-2021.12 | 6MT | F | L | Platform/Chassis FWD OM 651.950;OM 651.958 | | GCI82830 | Inner Joint | | 41 | 29 | 44 | 72.5 | 135.5 | |
| | 2018.02-2021.12 | 6MT | F | R | Platform/Chassis FWD OM 651.950;OM 651.958 | | GCI82829 | Inner Joint | | 41 | 29 | 38 | 435.5 | 115 | |
| | 2018.02-2021.12 | 6MT/9AT | F | L/R | Platform/Chassis FWD OM 651.950;OM 651.958 | | GCO82856 | Outer Joint | | 37 | 31 | 65 | | 91.5 | I |

| | YEAR | TRANSM. | F/R | L/R | BODY STYLE & DRIVE TYPE & ENGINE | REMARKS | G-AP Ref. | PRODUCT | ABS | Technical Specifications A | B | C | H | L | P |
|---|---|---|---|---|---|---|---|---|---|---|---|---|---|---|---|
| **MERCEDES-BENZ** | | | | | | | | | | | | | | | |
| **Sprinter 311D** | | | | | | | | | | | | | | | |
| 2.2 (84 kw) | 2018.02-2021.12 | 9AT | F | L | Platform/Chassis FWD OM 651.950;OM 651.958 | | GDS84516 | Drive Shaft | | 37 | 42 | 65 | | 642 | |
| | 2018.02-2021.12 | 9AT | F | R | Platform/Chassis FWD OM 651.950;OM 651.958 | | GDS84515 | Drive Shaft | | 37 | 42 | 65 | | 985 | |
| | 2018.02-2021.12 | 9AT | F | L | Platform/Chassis FWD OM 651.950;OM 651.958 | | GCI82828 | Inner Joint | | 42 | 29 | | 64.5 | 128.5 | |
| | 2018.02-2021.12 | 9AT | F | R | Platform/Chassis FWD OM 651.950;OM 651.958 | | GCI82827 | Inner Joint | | 42 | 29 | 36.45 | 421 | 115 | |
| | 2018.02-2021.12 | 6MT | F | L | Van FWD OM 651.950;OM 651.958 | | GDS84518 | Drive Shaft | | 37 | 41 | 65 | | 657 | |
| | 2018.02-2021.12 | 6MT | F | R | Van FWD OM 651.950;OM 651.958 | | GDS84517 | Drive Shaft | | 37 | 41 | 65 | | 999 | |
| | 2018.02-2021.12 | 6MT | F | L | Van FWD OM 651.950;OM 651.958 | | GCI82830 | Inner Joint | | 41 | 29 | 44 | 72.5 | 135.5 | |
| | 2018.02-2021.12 | 6MT | F | R | Van FWD OM 651.950;OM 651.958 | | GCI82829 | Inner Joint | | 41 | 29 | 38 | 435.5 | 115 | |
| | 2018.02-2021.12 | 6MT/9AT | F | L/R | Van FWD OM 651.950;OM 651.958 | | GCO82856 | Outer Joint | | 37 | 31 | 65 | | 91.5 | I |
| | 2018.02-2021.12 | 9AT | F | L | Van FWD OM 651.950;OM 651.958 | | GDS84516 | Drive Shaft | | 37 | 42 | 65 | | 642 | |
| | 2018.02-2021.12 | 9AT | F | R | Van FWD OM 651.950;OM 651.958 | | GDS84515 | Drive Shaft | | 37 | 42 | 65 | | 985 | |
| | 2018.02-2021.12 | 9AT | F | L | Van FWD OM 651.950;OM 651.958 | | GCI82828 | Inner Joint | | 42 | 29 | | 64.5 | 128.5 | |
| | 2018.02-2021.12 | 9AT | F | R | Van FWD OM 651.950;OM 651.958 | | GCI82827 | Inner Joint | | 42 | 29 | 36.45 | 421 | 115 | |
| **Sprinter 312D** | | | | | | | | | | | | | | | |
| 2.9 (90 kw) | 1995.02-2000.04 | 4AT/5MT | R | L/R | Platform/Chassis RWD OM 602.980 (02.95-.) | | GDS83407 | Drive Shaft | | 26 | | 62 | 124 | 626 | |
| | 1997.05-2002.08 | 4AT/5MT | F | L/R | Bus 4WD OM 602.980 (05.97-.) | | GDS83407 | Drive Shaft | | 26 | | 62 | 124 | 626 | |
| | 1997.05-2002.08 | | F | L/R | Bus 4WD OM 602.980 (05.97-.) | | GCO35034 | Outer Joint | | 26 | 28 | 62 | 124 | 62 | O |
| | 1997.05-2002.08 | | F | L/R | Bus 4WD OM 602.980 (05.97-.) | | GCI35020 | Inner Joint | | | 28 | | | 32 | |
| | 1997.05-2002.08 | 4AT/5MT | F | L/R | Van 4WD OM 602.980 | | GDS83407 | Drive Shaft | | 26 | | 62 | 124 | 626 | |
| | 1997.05-2002.08 | 4AT/5MT | F | L/R | Van 4WD OM 602.980 | | GCO35034 | Outer Joint | | 26 | 28 | 62 | 124 | 62 | O |
| | 1997.05-2002.08 | 4AT/5MT | F | L/R | Van 4WD OM 602.980 | | GCI35020 | Inner Joint | | | 28 | | | 32 | |
| **Sprinter 313D** | | | | | | | | | | | | | | | |
| 2.1 (95 kw) | 2000.04-2006.05 | 6AT/5MT | F | L/R | Platform/Chassis 4WD OM 611.981 | | GDS83407 | Drive Shaft | | 26 | | 62 | 124 | 626 | |
| | 2000.04-2006.05 | MT | F | L/R | Platform/Chassis 4WD OM 611.981 | | GCO35034 | Outer Joint | | 26 | 28 | 62 | 124 | 62 | O |
| | 2000.04-2006.05 | | F | L/R | Platform/Chassis 4WD OM 611.981 | | GCI35020 | Inner Joint | | | 28 | | | 32 | |
| | 2000.04-2006.05 | 5AT/6AT/5MT | R | L/R | Platform/Chassis RWD OM 611.981 | | GDS83407 | Drive Shaft | | 26 | | 62 | 124 | 626 | |
| | 2000.04-2006.05 | 5AT/6AT/5MT | R | L/R | Van RWD OM 611.981 | | GDS83407 | Drive Shaft | | 26 | | 62 | 124 | 626 | |
| | 2002.08-2006.05 | 6AT/5MT | F | L/R | Bus 4WD OM 611.981 | | GDS83407 | Drive Shaft | | 26 | | 62 | 124 | 626 | |
| | 2002.08-2006.05 | MT | F | L/R | Bus 4WD OM 611.981 | | GCO35034 | Outer Joint | | 26 | 28 | 62 | 124 | 62 | O |
| | 2002.08-2006.05 | | F | L/R | Bus 4WD OM 611.981 | | GCI35020 | Inner Joint | | | 28 | | | 32 | |
| | 2002.08-2006.05 | 6AT/5MT | F | L/R | Van 4WD OM 611.981 | | GDS83407 | Drive Shaft | | 26 | | 62 | 124 | 626 | |
| | 2002.08-2006.05 | MT | F | L/R | Van 4WD OM 611.981 | | GCO35034 | Outer Joint | | 26 | 28 | 62 | 124 | 62 | O |
| | 2002.08-2006.05 | | F | L/R | Van 4WD OM 611.981 | | GCI35020 | Inner Joint | | | 28 | | | 32 | |
| 2.2 (95 kw) | 2006.06-2016.12 | 5AT/7AT/6MT | F | L/R | Platform/Chassis 4WD OM 651.957;OM 651.955;OM 651.956 | | GDS99290 | Drive Shaft | | 30 | | 66 | 108.5 | 690 | |
| | 2006.06-2016.12 | 5AT/7AT/6MT | F | L/R | Platform/Chassis 4WD OM 651.957;OM 651.955;OM 651.956 | | GCO35041 | Outer Joint | | 30 | 28 | 66 | 108.5 | 66 | M |
| | 2006.06-2016.12 | 5AT/7AT/6MT | F | L/R | Platform/Chassis 4WD OM 651.957;OM 651.955;OM 651.956 | | GCI48002 | Inner Joint | | | 28 | | | 32 | |
| | 2009.03-2016.12 | 5AT/7AT/6MT | F | L/R | Van 4WD OM 651.957;OM 651.955;OM 651.956 | | GDS99290 | Drive Shaft | | 30 | | 66 | 108.5 | 690 | |
| | 2009.03-2016.12 | 5AT/7AT/6MT | F | L/R | Van 4WD OM 651.957;OM 651.955;OM 651.956 | | GCO35041 | Outer Joint | | 30 | 28 | 66 | 108.5 | 66 | M |
| | 2009.03-2016.12 | 5AT/7AT/6MT | F | L/R | Van 4WD OM 651.957;OM 651.955;OM 651.956 | | GCI48002 | Inner Joint | | | 28 | | | 32 | |
| | 2009.03-2016.12 | 5AT/7AT/6MT | F | L | Van 4WD OM 651.957;OM 651.955;OM 651.956 | | GDS82923 | Stub Axle-Flange | | 26 | | | | 336.5 | |
| | 2011.08-2016.12 | 5AT/7AT/6MT | F | L/R | Bus 4WD OM 651.957;OM 651.955;OM 651.956 | | GDS99290 | Drive Shaft | | 30 | | 66 | 108.5 | 690 | |
| | 2011.08-2016.12 | 5AT/7AT/6MT | F | L/R | Bus 4WD OM 651.957;OM 651.955;OM 651.956 | | GCO35041 | Outer Joint | | 30 | 28 | 66 | 108.5 | 66 | M |
| | 2011.08-2016.12 | 5AT/7AT/6MT | F | L/R | Bus 4WD OM 651.957;OM 651.955;OM 651.956 | | GCI48002 | Inner Joint | | | 28 | | | 32 | |
| **Sprinter 314** | | | | | | | | | | | | | | | |
| 2.3 (105 kw) | 1995.02-2006.05 | 6AT/5MT | F | L/R | Bus 4WD M 111.979 (.-04.00), M 111.984 (04.00-.) | | GDS83407 | Drive Shaft | | 26 | | 62 | 124 | 626 | |
| | 1995.02-2006.05 | MT | F | L/R | Bus 4WD M 111.979 (.-04.00), M 111.984 (04.00-.) | | GCO35034 | Outer Joint | | 26 | 28 | 62 | 124 | 62 | O |
| | 1995.02-2006.05 | | F | L/R | Bus 4WD M 111.979 (.-04.00), M 111.984 (04.00-.) | | GCI35020 | Inner Joint | | | 28 | | | 32 | |
| | 1995.02-2006.05 | 6AT/5MT | F | L/R | Platform/Chassis 4WD M 111.979 (.-04.00), M 111.984 (04.00-.) | | GDS83407 | Drive Shaft | | 26 | | 62 | 124 | 626 | |
| | 1995.02-2006.05 | MT | F | L/R | Platform/Chassis 4WD M 111.979 (.-04.00), M 111.984 (04.00-.) | | GCO35034 | Outer Joint | | 26 | 28 | 62 | 124 | 62 | O |
| | 1995.02-2006.05 | | F | L/R | Platform/Chassis 4WD M 111.979 (.-04.00), M 111.984 (04.00-.) | | GCI35020 | Inner Joint | | | 28 | | | 32 | |
| | 1995.02-2006.05 | 6AT/5MT | F | L/R | Van 4WD M 111.979 (.-04.00), M 111.984 (04.00-.) | | GDS83407 | Drive Shaft | | 26 | | 62 | 124 | 626 | |
| | 1995.02-2006.05 | MT | F | L/R | Van 4WD M 111.979 (.-04.00), M 111.984 (04.00-.) | | GCO35034 | Outer Joint | | 26 | 28 | 62 | 124 | 62 | O |
| | 1995.02-2006.05 | | F | L/R | Van 4WD M 111.979 (.-04.00), M 111.984 (04.00-.) | | GCI35020 | Inner Joint | | | 28 | | | 32 | |
| **Sprinter 314D** | | | | | | | | | | | | | | | |
| 2.2 (105 kw) | 2016.05-2018.12 | 5AT/6MT | F | L/R | Bus 4WD OM 651.955;OM 651.956 | | GDS99290 | Drive Shaft | | 30 | | 66 | 108.5 | 690 | |
| | 2016.05-2018.12 | 5AT/6MT | F | L/R | Bus 4WD OM 651.955;OM 651.956 | | GCO35041 | Outer Joint | | 30 | 28 | 66 | 108.5 | 66 | M |
| | 2016.05-2018.12 | 5AT/6MT | F | L/R | Bus 4WD OM 651.955;OM 651.956 | | GCI48002 | Inner Joint | | | 28 | | | 32 | |
| | 2016.05-2018.12 | 7AT/6MT | F | L/R | Platform/Chassis 4WD OM 651.955;OM 651.956 | | GDS99290 | Drive Shaft | | 30 | | 66 | 108.5 | 690 | |
| | 2016.05-2018.12 | 7AT/6MT | F | L/R | Platform/Chassis 4WD OM 651.955;OM 651.956 | | GCO35041 | Outer Joint | | 30 | 28 | 66 | 108.5 | 66 | M |
| | 2016.05-2018.12 | 7AT/6MT | F | L/R | Platform/Chassis 4WD OM 651.955;OM 651.956 | | GCI48002 | Inner Joint | | | 28 | | | 32 | |
| | 2016.05-2018.12 | 6MT | F | L/R | Van 4WD OM 651.955;OM 651.956 | | GDS99290 | Drive Shaft | | 30 | | 66 | 108.5 | 690 | |
| | 2016.05-2018.12 | 6MT | F | L/R | Van 4WD OM 651.955;OM 651.956 | | GCO35041 | Outer Joint | | 30 | 28 | 66 | 108.5 | 66 | M |
| | 2016.05-2018.12 | 6MT | F | L/R | Van 4WD OM 651.955;OM 651.956 | | GCI48002 | Inner Joint | | | 28 | | | 32 | |
| | 2018.02-2021.12 | 6MT | F | L | Platform/Chassis FWD OM 651.950;OM 651.958 | | GDS84518 | Drive Shaft | | 37 | 41 | 65 | | 657 | |
| | 2018.02-2021.12 | 6MT | F | R | Platform/Chassis FWD OM 651.950;OM 651.958 | | GDS84517 | Drive Shaft | | 37 | 41 | 65 | | 999 | |

| | YEAR | TRANSM. | F/R | L/R | BODY STYLE & DRIVE TYPE & ENGINE | REMARKS | G-AP Ref. | PRODUCT | ABS | Technical Specifications A | B | C | H | L | P |
|---|---|---|---|---|---|---|---|---|---|---|---|---|---|---|---|
| **MERCEDES-BENZ** | | | | | | | | | | | | | | | |
| **Sprinter 314D** | | | | | | | | | | | | | | | |
| 2.2 (105 kw) | 2018.02-2021.12 | 6MT | F | L | Platform/Chassis FWD OM 651.950;OM 651.958 | | GCI82830 | Inner Joint | | 41 | 29 | 44 | 72.5 | 135.5 | |
| | 2018.02-2021.12 | 6MT | F | R | Platform/Chassis FWD OM 651.950;OM 651.958 | | GCI82829 | Inner Joint | | 41 | 29 | 38 | 435.5 | 115 | |
| | 2018.02-2021.12 | 6MT/9AT | F | L/R | Platform/Chassis FWD OM 651.950;OM 651.958 | | GCO82856 | Outer Joint | | 37 | 31 | 65 | | 91.5 | I |
| | 2018.02-2021.12 | 9AT | F | L | Platform/Chassis FWD OM 651.950;OM 651.958 | | GDS84516 | Drive Shaft | | 37 | 42 | 65 | | 642 | |
| | 2018.02-2021.12 | 9AT | F | R | Platform/Chassis FWD OM 651.950;OM 651.958 | | GDS84515 | Drive Shaft | | 37 | 42 | 65 | | 985 | |
| | 2018.02-2021.12 | 9AT | F | L | Platform/Chassis FWD OM 651.950;OM 651.958 | | GCI82828 | Inner Joint | | 42 | 29 | | 64.5 | 128.5 | |
| | 2018.02-2021.12 | 9AT | F | R | Platform/Chassis FWD OM 651.950;OM 651.958 | | GCI82827 | Inner Joint | | 42 | 29 | 36.45 | 421 | 115 | |
| | 2018.02-2021.12 | 6MT | F | L | Van FWD OM 651.950;OM 651.958 | | GDS84518 | Drive Shaft | | 37 | 41 | 65 | | 657 | |
| | 2018.02-2021.12 | 6MT | F | R | Van FWD OM 651.950;OM 651.958 | | GDS84517 | Drive Shaft | | 37 | 41 | 65 | | 999 | |
| | 2018.02-2021.12 | 6MT | F | L | Van FWD OM 651.950;OM 651.958 | | GCI82830 | Inner Joint | | 41 | 29 | 44 | 72.5 | 135.5 | |
| | 2018.02-2021.12 | 6MT | F | R | Van FWD OM 651.950;OM 651.958 | | GCI82829 | Inner Joint | | 41 | 29 | 38 | 435.5 | 115 | |
| | 2018.02-2021.12 | 6MT/9AT | F | L/R | Van FWD OM 651.950;OM 651.958 | | GCO82856 | Outer Joint | | 37 | 31 | 65 | | 91.5 | I |
| | 2018.02-2021.12 | 9AT | F | L | Van FWD OM 651.950;OM 651.958 | | GDS84516 | Drive Shaft | | 37 | 42 | 65 | | 642 | |
| | 2018.02-2021.12 | 9AT | F | R | Van FWD OM 651.950;OM 651.958 | | GDS84515 | Drive Shaft | | 37 | 42 | 65 | | 985 | |
| | 2018.02-2021.12 | 9AT | F | L | Van FWD OM 651.950;OM 651.958 | | GCI82828 | Inner Joint | | 42 | 29 | | 64.5 | 128.5 | |
| | 2018.02-2021.12 | 9AT | F | R | Van FWD OM 651.950;OM 651.958 | | GCI82827 | Inner Joint | | 42 | 29 | 36.45 | 421 | 115 | |
| | 2019.01-2021.12 | 6MT | F | L/R | Bus 4WD OM 651.958 | For SA code:A4M | GDS56708 | Drive Shaft | | 37 | 37 | 65 | | 586 | |
| | 2019.01-2021.12 | 6MT | F | L/R | Bus 4WD OM 651.958 | For SA code:ZG1/ZG3 | GDS99290 | Drive Shaft | | 30 | | 66 | 108.5 | 690 | |
| | 2019.01-2021.12 | 6MT | F | L/R | Bus 4WD OM 651.958 | For SA code:ZG1/ZG3 | GCO35041 | Outer Joint | | 30 | 28 | 66 | 108.5 | 66 | M |
| | 2019.01-2021.12 | 6MT | F | L/R | Bus 4WD OM 651.958 | For SA code:ZG1/ZG3 | GCI48002 | Inner Joint | | | 28 | | | 32 | |
| | 2019.01-2021.12 | 6MT | F | L/R | Bus 4WD OM 651.958 | For SA code:A4M | GCI83449 | Inner Joint | | 37 | 28 | 34.5 | 67.5 | 104 | |
| | 2019.01-2021.12 | 6MT | F | L/R | Platform/Chassis 4WD OM 651.958 | For SA code:A4M | GDS56708 | Drive Shaft | | 37 | 37 | 65 | | 586 | |
| | 2019.01-2021.12 | 6MT | F | L/R | Platform/Chassis 4WD OM 651.958 | For SA code:ZG1/ZG3 | GDS99290 | Drive Shaft | | 30 | | 66 | 108.5 | 690 | |
| | 2019.01-2021.12 | 6MT | F | L/R | Platform/Chassis 4WD OM 651.958 | For SA code:ZG1/ZG3 | GCO35041 | Outer Joint | | 30 | 28 | 66 | 108.5 | 66 | M |
| | 2019.01-2021.12 | 6MT | F | L/R | Platform/Chassis 4WD OM 651.958 | For SA code:ZG1/ZG3 | GCI48002 | Inner Joint | | | 28 | | | 32 | |
| | 2019.01-2021.12 | 6MT | F | L/R | Platform/Chassis 4WD OM 651.958 | For SA code:A4M | GCI83449 | Inner Joint | | 37 | 28 | 34.5 | 67.5 | 104 | |
| | 2019.01-2021.12 | 6MT | F | L/R | Van 4WD OM 651.958 | For SA code:A4M | GDS56708 | Drive Shaft | | 37 | 37 | 65 | | 586 | |
| | 2019.01-2021.12 | 6MT | F | L/R | Van 4WD OM 651.958 | For SA code:A4M | GCI83449 | Inner Joint | | 37 | 28 | 34.5 | 67.5 | 104 | |
| | 2019.01-2021.12 | 7AT/6MT | F | L/R | Van 4WD OM 651.958 | For SA code:ZG1/ZG3 | GDS99290 | Drive Shaft | | 30 | | 66 | 108.5 | 690 | |
| | 2019.01-2021.12 | 7AT/6MT | F | L/R | Van 4WD OM 651.958 | For SA code:ZG1/ZG3 | GCO35041 | Outer Joint | | 30 | 28 | 66 | 108.5 | 66 | M |
| | 2019.01-2021.12 | 7AT/6MT | F | L/R | Van 4WD OM 651.958 | For SA code:ZG1/ZG3 | GCI48002 | Inner Joint | | | 28 | | | 32 | |
| **Sprinter 315D** | | | | | | | | | | | | | | | |
| 2.0 (110 kw) | 2020.06- | 6MT | F | L | Platform/Chassis FWD OM 654.920 | | GDS84518 | Drive Shaft | | 37 | 41 | 65 | | 657 | |
| | 2020.06- | 6MT | F | R | Platform/Chassis FWD OM 654.920 | | GDS84517 | Drive Shaft | | 37 | 41 | 65 | | 999 | |
| | 2020.06- | 6MT | F | L | Platform/Chassis FWD OM 654.920 | | GCI82830 | Inner Joint | | 41 | 29 | 44 | 72.5 | 135.5 | |
| | 2020.06- | 6MT | F | R | Platform/Chassis FWD OM 654.920 | | GCI82829 | Inner Joint | | 41 | 29 | 38 | 435.5 | 115 | |
| | 2020.06- | 6MT/9AT | F | L/R | Platform/Chassis FWD OM 654.920 | | GCO82856 | Outer Joint | | 37 | 31 | 65 | | 91.5 | I |
| | 2020.06- | 9AT | F | L | Platform/Chassis FWD OM 654.920 | | GDS84516 | Drive Shaft | | 37 | 42 | 65 | | 642 | |
| | 2020.06- | 9AT | F | R | Platform/Chassis FWD OM 654.920 | | GDS84515 | Drive Shaft | | 37 | 42 | 65 | | 985 | |
| | 2020.06- | 9AT | F | L | Platform/Chassis FWD OM 654.920 | | GCI82828 | Inner Joint | | 42 | 29 | | 64.5 | 128.5 | |
| | 2020.06- | 9AT | F | R | Platform/Chassis FWD OM 654.920 | | GCI82827 | Inner Joint | | 42 | 29 | 36.45 | 421 | 115 | |
| | 2021.10- | 6MT | F | L | Platform/Chassis FWD OM 654.920 | | GDS84518 | Drive Shaft | | 37 | 41 | 65 | | 657 | |
| | 2021.10- | 6MT | F | R | Platform/Chassis FWD OM 654.920 | | GDS84517 | Drive Shaft | | 37 | 41 | 65 | | 999 | |
| | 2021.10- | 9AT | F | L | Platform/Chassis FWD OM 654.920 | | GDS84516 | Drive Shaft | | 37 | 42 | 65 | | 642 | |
| | 2021.10- | 9AT | F | R | Platform/Chassis FWD OM 654.920 | | GDS84515 | Drive Shaft | | 37 | 42 | 65 | | 985 | |
| | 2021.10- | 9AT | F | L | Platform/Chassis FWD OM 654.920 | | GCI82828 | Inner Joint | | 42 | 29 | | 64.5 | 128.5 | |
| | 2021.10- | 9AT | F | R | Platform/Chassis FWD OM 654.920 | | GCI82827 | Inner Joint | | 42 | 29 | 36.45 | 421 | 115 | |
| | 2021.10-2025.05 | 6MT | F | L | Van FWD OM 654.920 | | GDS84518 | Drive Shaft | | 37 | 41 | 65 | | 657 | |
| | 2021.10-2025.05 | 6MT | F | R | Van FWD OM 654.920 | | GDS84517 | Drive Shaft | | 37 | 41 | 65 | | 999 | |
| | 2021.10-2025.05 | 6MT | F | L | Van FWD OM 654.920 | | GCI82830 | Inner Joint | | 41 | 29 | 44 | 72.5 | 135.5 | |
| | 2021.10-2025.05 | 6MT | F | R | Van FWD OM 654.920 | | GCI82829 | Inner Joint | | 41 | 29 | 38 | 435.5 | 115 | |
| | 2021.10-2025.05 | 6MT/9AT | F | L/R | Van FWD OM 654.920 | | GCO82856 | Outer Joint | | 37 | 31 | 65 | | 91.5 | I |
| | 2021.10-2025.05 | 9AT | F | L | Van FWD OM 654.920 | | GDS84516 | Drive Shaft | | 37 | 42 | 65 | | 642 | |
| | 2021.10-2025.05 | 9AT | F | R | Van FWD OM 654.920 | | GDS84515 | Drive Shaft | | 37 | 42 | 65 | | 985 | |
| | 2021.10-2025.05 | 9AT | F | L | Van FWD OM 654.920 | | GCI82828 | Inner Joint | | 42 | 29 | | 64.5 | 128.5 | |
| | 2021.10-2025.05 | 9AT | F | R | Van FWD OM 654.920 | | GCI82827 | Inner Joint | | 42 | 29 | 36.45 | 421 | 115 | |
| 2.2 (110 kw) | 2008.02-2009.12 | 5AT/6MT | F | L/R | Bus 4WD OM 646.990;OM 646.986;OM 646.989 | | GDS99290 | Drive Shaft | | 30 | | 66 | 108.5 | 690 | |
| | 2008.02-2009.12 | 5AT/6MT | F | L/R | Bus 4WD OM 646.990;OM 646.986;OM 646.989 | | GCO35041 | Outer Joint | | 30 | 28 | 66 | 108.5 | 66 | M |
| | 2008.02-2009.12 | 5AT/6MT | F | L/R | Bus 4WD OM 646.990;OM 646.986;OM 646.989 | | GCI48002 | Inner Joint | | | 28 | | | 32 | |
| | 2008.02-2009.12 | 5AT/6MT | F | L/R | Platform/Chassis 4WD OM 646.990;OM 646.986;OM 646.989 | | GDS99290 | Drive Shaft | | 30 | | 66 | 108.5 | 690 | |
| | 2008.02-2009.12 | 5AT/6MT | F | L/R | Platform/Chassis 4WD OM 646.990;OM 646.986;OM 646.989 | | GCO35041 | Outer Joint | | 30 | 28 | 66 | 108.5 | 66 | M |
| | 2008.02-2009.12 | 5AT/6MT | F | L/R | Platform/Chassis 4WD OM 646.990;OM 646.986;OM 646.989 | | GCI48002 | Inner Joint | | | 28 | | | 32 | |
| | 2008.02-2009.12 | 5AT/6MT | F | L/R | Van 4WD OM 646.990;OM 646.986;OM 646.989 | | GDS99290 | Drive Shaft | | 30 | | 66 | 108.5 | 690 | |
| | 2008.02-2009.12 | 5AT/6MT | F | L/R | Van 4WD OM 646.990;OM 646.986;OM 646.989 | | GCO35041 | Outer Joint | | 30 | 28 | 66 | 108.5 | 66 | M |
| | 2008.02-2009.12 | 5AT/6MT | F | L/R | Van 4WD OM 646.990;OM 646.986;OM 646.989 | | GCI48002 | Inner Joint | | | 28 | | | 32 | |

| | YEAR | TRANSM. | F/R | L/R | BODY STYLE & DRIVE TYPE & ENGINE | REMARKS | G-AP Ref. | PRODUCT | ABS | Technical Specifications A | B | C | H | L | P |
|---|---|---|---|---|---|---|---|---|---|---|---|---|---|---|---|
| **MERCEDES-BENZ** | | | | | | | | | | | | | | | |
| **Sprinter 315D** | | | | | | | | | | | | | | | |
| 2.2 (110 kw) | 2008.02-2009.12 | 5AT/6MT | F | L | Van 4WD OM 646.990;OM 646.986;OM 646.989 | | GDS82923 | Stub Axle-Flange | | 26 | | | | 336.5 | |
| **Sprinter 316D** | | | | | | | | | | | | | | | |
| 2.2 (120 kw) | 2009.03-2018.12 | 5AT/7AT/6MT | F | L/R | Platform/Chassis 4WD OM 651.957;OM 651.955;OM 651.956 | | GDS99290 | Drive Shaft | | 30 | | 66 | 108.5 | 690 | |
| | 2009.03-2018.12 | 5AT/7AT/6MT | F | L/R | Platform/Chassis 4WD OM 651.957;OM 651.955;OM 651.956 | | GCO35041 | Outer Joint | | 30 | 28 | 66 | 108.5 | 66 | M |
| | 2009.03-2018.12 | 5AT/7AT/6MT | F | L/R | Platform/Chassis 4WD OM 651.957;OM 651.955;OM 651.956 | | GCI48002 | Inner Joint | | | 28 | | | 32 | |
| | 2009.03-2018.12 | 5AT/7AT/6MT | F | L/R | Van 4WD OM 651.957;OM 651.955;OM 651.956 | | GDS99290 | Drive Shaft | | 30 | | 66 | 108.5 | 690 | |
| | 2009.03-2018.12 | 5AT/7AT/6MT | F | L/R | Van 4WD OM 651.957;OM 651.955;OM 651.956 | | GCO35041 | Outer Joint | | 30 | 28 | 66 | 108.5 | 66 | M |
| | 2009.03-2018.12 | 5AT/7AT/6MT | F | L/R | Van 4WD OM 651.957;OM 651.955;OM 651.956 | | GCI48002 | Inner Joint | | | 28 | | | 32 | |
| | 2011.08-2018.12 | 5AT/7AT/6MT | F | L/R | Bus 4WD OM 651.957;OM 651.955;OM 651.956 | | GDS99290 | Drive Shaft | | 30 | | 66 | 108.5 | 690 | |
| | 2011.08-2018.12 | 5AT/7AT/6MT | F | L/R | Bus 4WD OM 651.957;OM 651.955;OM 651.956 | | GCO35041 | Outer Joint | | 30 | 28 | 66 | 108.5 | 66 | M |
| | 2011.08-2018.12 | 5AT/7AT/6MT | F | L/R | Bus 4WD OM 651.957;OM 651.955;OM 651.956 | | GCI48002 | Inner Joint | | | 28 | | | 32 | |
| | 2019.01-2021.12 | 6MT | F | L/R | Bus 4WD OM 651.958 | For SA code:A4M | GDS56708 | Drive Shaft | | 37 | 37 | 65 | | 586 | |
| | 2019.01-2021.12 | 6MT | F | L/R | Bus 4WD OM 651.958 | For SA code:A4M | GCI83449 | Inner Joint | | 37 | 28 | 34.5 | 67.5 | 104 | |
| | 2019.01-2021.12 | 7AT/6MT | F | L/R | Bus 4WD OM 651.958 | For SA code:ZG1/ZG3 | GDS99290 | Drive Shaft | | 30 | | 66 | 108.5 | 690 | |
| | 2019.01-2021.12 | 7AT/6MT | F | L/R | Bus 4WD OM 651.958 | For SA code:ZG1/ZG3 | GCO35041 | Outer Joint | | 30 | 28 | 66 | 108.5 | 66 | M |
| | 2019.01-2021.12 | 7AT/6MT | F | L/R | Bus 4WD OM 651.958 | For SA code:ZG1/ZG3 | GCI48002 | Inner Joint | | | 28 | | | 32 | |
| | 2019.01-2021.12 | 6MT | F | L/R | Platform/Chassis 4WD OM 651.958 | For SA code:A4M | GDS56708 | Drive Shaft | | 37 | 37 | 65 | | 586 | |
| | 2019.01-2021.12 | 6MT | F | L/R | Platform/Chassis 4WD OM 651.958 | For SA code:A4M | GCI83449 | Inner Joint | | 37 | 28 | 34.5 | 67.5 | 104 | |
| | 2019.01-2021.12 | 7AT/6MT | F | L/R | Platform/Chassis 4WD OM 651.958 | For SA code:ZG1/ZG3 | GDS99290 | Drive Shaft | | 30 | | 66 | 108.5 | 690 | |
| | 2019.01-2021.12 | 7AT/6MT | F | L/R | Platform/Chassis 4WD OM 651.958 | For SA code:ZG1/ZG3 | GCO35041 | Outer Joint | | 30 | 28 | 66 | 108.5 | 66 | M |
| | 2019.01-2021.12 | 7AT/6MT | F | L/R | Platform/Chassis 4WD OM 651.958 | For SA code:ZG1/ZG3 | GCI48002 | Inner Joint | | | 28 | | | 32 | |
| | 2019.01-2021.12 | 6MT | F | L/R | Van 4WD OM 651.958 | For SA code:A4M | GDS56708 | Drive Shaft | | 37 | 37 | 65 | | 586 | |
| | 2019.01-2021.12 | 6MT | F | L/R | Van 4WD OM 651.958 | For SA code:A4M | GCI83449 | Inner Joint | | 37 | 28 | 34.5 | 67.5 | 104 | |
| | 2019.01-2021.12 | 7AT/6MT | F | L/R | Van 4WD OM 651.958 | For SA code:ZG1/ZG3 | GDS99290 | Drive Shaft | | 30 | | 66 | 108.5 | 690 | |
| | 2019.01-2021.12 | 7AT/6MT | F | L/R | Van 4WD OM 651.958 | For SA code:ZG1/ZG3 | GCO35041 | Outer Joint | | 30 | 28 | 66 | 108.5 | 66 | M |
| | 2019.01-2021.12 | 7AT/6MT | F | L/R | Van 4WD OM 651.958 | For SA code:ZG1/ZG3 | GCI48002 | Inner Joint | | | 28 | | | 32 | |
| 2.7 (115 kw) | 2000.04-2006.05 | 5AT/6AT/5MT | R | L/R | Platform/Chassis RWD OM 612.981, OM 647.981 | | GDS83407 | Drive Shaft | | 26 | | 62 | 124 | 626 | |
| | 2000.04-2006.05 | 5AT/6AT/5MT | R | L/R | Van RWD OM 612.981, OM 647.981 | | GDS83407 | Drive Shaft | | 26 | | 62 | 124 | 626 | |
| | 2001.02-2006.05 | 6AT/5MT | F | L/R | Van 4WD OM 612.981, OM 647.981 | | GDS83407 | Drive Shaft | | 26 | | 62 | 124 | 626 | |
| | 2001.02-2006.05 | MT | F | L/R | Van 4WD OM 612.981, OM 647.981 | | GCO35034 | Outer Joint | | 26 | 28 | 62 | 124 | 62 | O |
| | 2001.02-2006.05 | | F | L/R | Van 4WD OM 612.981, OM 647.981 | | GCI35020 | Inner Joint | | | 28 | | | 32 | |
| | 2002.08-2006.05 | 6AT/5MT | F | L/R | Bus 4WD OM 612.981, OM 647.981 | | GDS83407 | Drive Shaft | | 26 | | 62 | 124 | 626 | |
| | 2002.08-2006.05 | MT | F | L/R | Bus 4WD OM 612.981, OM 647.981 | | GCO35034 | Outer Joint | | 26 | 28 | 62 | 124 | 62 | O |
| | 2002.08-2006.05 | | F | L/R | Bus 4WD OM 612.981, OM 647.981 | | GCI35020 | Inner Joint | | | 28 | | | 32 | |
| | 2002.08-2006.05 | 5AT/5MT | F | L/R | Platform/Chassis 4WD OM 612.981, OM 647.981 | | GDS83407 | Drive Shaft | | 26 | | 62 | 124 | 626 | |
| | 2002.08-2006.05 | MT | F | L/R | Platform/Chassis 4WD OM 612.981, OM 647.981 | | GCO35034 | Outer Joint | | 26 | 28 | 62 | 124 | 62 | O |
| | 2002.08-2006.05 | | F | L/R | Platform/Chassis 4WD OM 612.981, OM 647.981 | | GCI35020 | Inner Joint | | | 28 | | | 32 | |
| **Sprinter 317D** | | | | | | | | | | | | | | | |
| 2.0 (125 kw) | 2020.06- | 6MT | F | L | Platform/Chassis FWD OM 654.920 | | GDS84518 | Drive Shaft | | 37 | 41 | 65 | | 657 | |
| | 2020.06- | 6MT | F | R | Platform/Chassis FWD OM 654.920 | | GDS84517 | Drive Shaft | | 37 | 41 | 65 | | 999 | |
| | 2020.06- | 6MT | F | L/R | Platform/Chassis FWD OM 654.920 | | GCO82856 | Outer Joint | | 37 | 31 | 65 | | 91.5 | I |
| | 2020.06- | 6MT | F | L | Platform/Chassis FWD OM 654.920 | | GCI82830 | Inner Joint | | 41 | 29 | 44 | 72.5 | 135.5 | |
| | 2020.06- | 6MT | F | R | Platform/Chassis FWD OM 654.920 | | GCI82829 | Inner Joint | | 41 | 29 | 38 | 435.5 | 115 | |
| | 2020.06- | 9AT | F | L | Platform/Chassis FWD OM 654.920 | | GDS84516 | Drive Shaft | | 37 | 42 | 65 | | 642 | |
| | 2020.06- | 9AT | F | R | Platform/Chassis FWD OM 654.920 | | GDS84515 | Drive Shaft | | 37 | 42 | 65 | | 985 | |
| | 2020.06- | 9AT | F | L | Platform/Chassis FWD OM 654.920 | | GCI82828 | Inner Joint | | 42 | 29 | | 64.5 | 128.5 | |
| | 2020.06- | 9AT | F | R | Platform/Chassis FWD OM 654.920 | | GCI82827 | Inner Joint | | 42 | 29 | 36.45 | 421 | 115 | |
| | 2022.03-2025.05 | 9AT | F | L | Van FWD OM 654.920 | | GDS84516 | Drive Shaft | | 37 | 42 | 65 | | 642 | |
| | 2022.03-2025.05 | 9AT | F | R | Van FWD OM 654.920 | | GDS84515 | Drive Shaft | | 37 | 42 | 65 | | 985 | |
| | 2022.03-2025.05 | 9AT | F | L | Van FWD OM 654.920 | | GCI82828 | Inner Joint | | 42 | 29 | | 64.5 | 128.5 | |
| | 2022.03-2025.05 | 9AT | F | R | Van FWD OM 654.920 | | GCI82827 | Inner Joint | | 42 | 29 | 36.45 | 421 | 115 | |
| | 2024.02- | 6MT | F | L | Platform/Chassis FWD OM 654.920 | | GDS84518 | Drive Shaft | | 37 | 41 | 65 | | 657 | |
| | 2024.02- | 6MT | F | R | Platform/Chassis FWD OM 654.920 | | GDS84517 | Drive Shaft | | 37 | 41 | 65 | | 999 | |
| | 2024.02- | 9AT | F | L | Platform/Chassis FWD OM 654.920 | | GDS84516 | Drive Shaft | | 37 | 42 | 65 | | 642 | |
| | 2024.02- | 9AT | F | R | Platform/Chassis FWD OM 654.920 | | GDS84515 | Drive Shaft | | 37 | 42 | 65 | | 985 | |
| | 2024.02- | 9AT | F | L | Platform/Chassis FWD OM 654.920 | | GCI82828 | Inner Joint | | 42 | 29 | | 64.5 | 128.5 | |
| | 2024.02- | 9AT | F | R | Platform/Chassis FWD OM 654.920 | | GCI82827 | Inner Joint | | 42 | 29 | 36.45 | 421 | 115 | |
| 2.2 (125 kw) | 2018.02-2021.12 | 6MT | F | L | Platform/Chassis FWD OM 651.958 | | GDS84518 | Drive Shaft | | 37 | 41 | 65 | | 657 | |
| | 2018.02-2021.12 | 6MT | F | R | Platform/Chassis FWD OM 651.958 | | GDS84517 | Drive Shaft | | 37 | 41 | 65 | | 999 | |
| | 2018.02-2021.12 | 6MT | F | L/R | Platform/Chassis FWD OM 651.958 | | GCO82856 | Outer Joint | | 37 | 31 | 65 | | 91.5 | I |
| | 2018.02-2021.12 | 6MT | F | L | Platform/Chassis FWD OM 651.958 | | GCI82830 | Inner Joint | | 41 | 29 | 44 | 72.5 | 135.5 | |
| | 2018.02-2021.12 | 6MT | F | R | Platform/Chassis FWD OM 651.958 | | GCI82829 | Inner Joint | | 41 | 29 | 38 | 435.5 | 115 | |
| **Sprinter 318D** | | | | | | | | | | | | | | | |
| 2.2 (130 kw) | 2018.02-2021.12 | 6MT | F | L | Platform/Chassis FWD OM 651.958 | | GDS84518 | Drive Shaft | | 37 | 41 | 65 | | 657 | |
| | 2018.02-2021.12 | 6MT | F | R | Platform/Chassis FWD OM 651.958 | | GDS84517 | Drive Shaft | | 37 | 41 | 65 | | 999 | |

| | YEAR | TRANSM. | F/R | L/R | BODY STYLE & DRIVE TYPE & ENGINE | REMARKS | G-AP Ref. | PRODUCT | ABS | Technical Specifications A | B | C | H | L | P |
|---|---|---|---|---|---|---|---|---|---|---|---|---|---|---|---|
| **MERCEDES-BENZ** | | | | | | | | | | | | | | | |
| **Sprinter 318D** | | | | | | | | | | | | | | | |
| 2.2 (130 kw) | 2018.02-2021.12 | 6MT | F | L/R | Platform/Chassis FWD OM 651.958 | | GCO82856 | Outer Joint | | 37 | 31 | 65 | | 91.5 | I |
| | 2018.02-2021.12 | 6MT | F | L | Platform/Chassis FWD OM 651.958 | | GCI82830 | Inner Joint | | 41 | 29 | 44 | 72.5 | 135.5 | |
| | 2018.02-2021.12 | 6MT | F | R | Platform/Chassis FWD OM 651.958 | | GCI82829 | Inner Joint | | 41 | 29 | 38 | 435.5 | 115 | |
| 3.0 (135 kw) | 2008.02-2009.12 | 5AT/6MT | F | L/R | Bus 4WD OM 642.992;OM 642.993;OM 642.896;OM 642.986 | | GDS99290 | Drive Shaft | | 30 | | 66 | 108.5 | 690 | |
| | 2008.02-2009.12 | 5AT/6MT | F | L/R | Bus 4WD OM 642.992;OM 642.993;OM 642.896;OM 642.986 | | GCO35041 | Outer Joint | | 30 | 28 | 66 | 108.5 | 66 | M |
| | 2008.02-2009.12 | 5AT/6MT | F | L/R | Bus 4WD OM 642.992;OM 642.993;OM 642.896;OM 642.986 | | GCI48002 | Inner Joint | | | 28 | | | 32 | |
| | 2008.02-2009.12 | 5AT/6MT | F | L/R | Platform/Chassis 4WD OM 642.992;OM 642.993;OM 642.896 | | GDS99290 | Drive Shaft | | 30 | | 66 | 108.5 | 690 | |
| | 2008.02-2009.12 | 5AT/6MT | F | L/R | Platform/Chassis 4WD OM 642.992;OM 642.993;OM 642.896 | | GCO35041 | Outer Joint | | 30 | 28 | 66 | 108.5 | 66 | M |
| | 2008.02-2009.12 | 5AT/6MT | F | L/R | Platform/Chassis 4WD OM 642.992;OM 642.993;OM 642.896 | | GCI48002 | Inner Joint | | | 28 | | | 32 | |
| | 2008.02-2009.12 | 5AT/6MT | F | L/R | Van 4WD OM 642.992;OM 642.993;OM 642.896;OM 642.986 | | GDS99290 | Drive Shaft | | 30 | | 66 | 108.5 | 690 | |
| | 2008.02-2009.12 | 5AT/6MT | F | L/R | Van 4WD OM 642.992;OM 642.993;OM 642.896;OM 642.986 | | GCO35041 | Outer Joint | | 30 | 28 | 66 | 108.5 | 66 | M |
| | 2008.02-2009.12 | 5AT/6MT | F | L/R | Van 4WD OM 642.992;OM 642.993;OM 642.896;OM 642.986 | | GCI48002 | Inner Joint | | | 28 | | | 32 | |
| | 2008.02-2009.12 | 5AT/6MT | F | L | Van 4WD OM 642.992;OM 642.993;OM 642.896;OM 642.986 | | GDS82923 | Stub Axle-Flange | | 26 | | | | 336.5 | |
| **Sprinter 319D** | | | | | | | | | | | | | | | |
| 2.0 (140 kw) | 2021.10- | 6MT | F | L/R | Bus 4WD OM 654.920 | For SA code:A4M | GDS56708 | Drive Shaft | | 37 | 37 | 65 | | 586 | |
| | 2021.10- | 6MT | F | L/R | Bus 4WD OM 654.920 | For SA code:ZG1/ZG3 | GDS99290 | Drive Shaft | | 30 | | 66 | 108.5 | 690 | |
| | 2021.10- | 6MT | F | L/R | Bus 4WD OM 654.920 | For SA code:ZG1/ZG3 | GCO35041 | Outer Joint | | 30 | 28 | 66 | 108.5 | 66 | M |
| | 2021.10- | 6MT | F | L/R | Bus 4WD OM 654.920 | For SA code:ZG1/ZG3 | GCI48002 | Inner Joint | | | 28 | | | 32 | |
| | 2021.10- | 6MT | F | L/R | Bus 4WD OM 654.920 | For SA code:A4M | GCI83449 | Inner Joint | | 37 | 28 | 34.5 | 67.5 | 104 | |
| | 2021.10- | 6MT | F | L/R | Platform/Chassis 4WD OM 654.920 | For SA code:A4M | GDS56708 | Drive Shaft | | 37 | 37 | 65 | | 586 | |
| | 2021.10- | 6MT | F | L/R | Platform/Chassis 4WD OM 654.920 | For SA code:ZG1/ZG3 | GDS99290 | Drive Shaft | | 30 | | 66 | 108.5 | 690 | |
| | 2021.10- | 6MT | F | L/R | Platform/Chassis 4WD OM 654.920 | For SA code:ZG1/ZG3 | GCO35041 | Outer Joint | | 30 | 28 | 66 | 108.5 | 66 | M |
| | 2021.10- | 6MT | F | L/R | Platform/Chassis 4WD OM 654.920 | For SA code:ZG1/ZG3 | GCI48002 | Inner Joint | | | 28 | | | 32 | |
| | 2021.10- | 6MT | F | L/R | Platform/Chassis 4WD OM 654.920 | For SA code:A4M | GCI83449 | Inner Joint | | 37 | 28 | 34.5 | 67.5 | 104 | |
| | 2021.10- | 6MT | F | L/R | Van 4WD OM 654.920 | For SA code:A4M | GDS56708 | Drive Shaft | | 37 | 37 | 65 | | 586 | |
| | 2021.10- | 6MT | F | L/R | Van 4WD OM 654.920 | For SA code:ZG1/ZG3 | GDS99290 | Drive Shaft | | 30 | | 66 | 108.5 | 690 | |
| | 2021.10- | 6MT | F | L/R | Van 4WD OM 654.920 | For SA code:ZG1/ZG3 | GCO35041 | Outer Joint | | 30 | 28 | 66 | 108.5 | 66 | M |
| | 2021.10- | 6MT | F | L/R | Van 4WD OM 654.920 | For SA code:ZG1/ZG3 | GCI48002 | Inner Joint | | | 28 | | | 32 | |
| | 2021.10- | 6MT | F | L/R | Van 4WD OM 654.920 | For SA code:A4M | GCI83449 | Inner Joint | | 37 | 28 | 34.5 | 67.5 | 104 | |
| 3.0 (140 kw) | 2009.03-2018.12 | 5AT/7AT/6MT | F | L/R | Bus 4WD OM 642.992;OM 642.896;OM 642.898;OM 642.986 | | GDS99290 | Drive Shaft | | 30 | | 66 | 108.5 | 690 | |
| | 2009.03-2018.12 | 5AT/7AT/6MT | F | L/R | Bus 4WD OM 642.992;OM 642.896;OM 642.898;OM 642.986 | | GCO35041 | Outer Joint | | 30 | 28 | 66 | 108.5 | 66 | M |
| | 2009.03-2018.12 | 5AT/7AT/6MT | F | L/R | Bus 4WD OM 642.992;OM 642.896;OM 642.898;OM 642.986 | | GCI48002 | Inner Joint | | | 28 | | | 32 | |
| | 2009.03-2018.12 | 5AT/7AT/6MT | F | L/R | Platform/Chassis 4WD OM 642.992;OM 642.896;OM 642.898 | | GDS99290 | Drive Shaft | | 30 | | 66 | 108.5 | 690 | |
| | 2009.03-2018.12 | 5AT/7AT/6MT | F | L/R | Platform/Chassis 4WD OM 642.992;OM 642.896;OM 642.898 | | GCO35041 | Outer Joint | | 30 | 28 | 66 | 108.5 | 66 | M |
| | 2009.03-2018.12 | 5AT/7AT/6MT | F | L/R | Platform/Chassis 4WD OM 642.992;OM 642.896;OM 642.898 | | GCI48002 | Inner Joint | | | 28 | | | 32 | |
| | 2009.03-2018.12 | 5AT/7AT/6MT | F | L/R | Van 4WD OM 642.992;OM 642.896;OM 642.898;OM 642.986 | | GDS99290 | Drive Shaft | | 30 | | 66 | 108.5 | 690 | |
| | 2009.03-2018.12 | 5AT/7AT/6MT | F | L/R | Van 4WD OM 642.992;OM 642.896;OM 642.898;OM 642.986 | | GCO35041 | Outer Joint | | 30 | 28 | 66 | 108.5 | 66 | M |
| | 2009.03-2018.12 | 5AT/7AT/6MT | F | L/R | Van 4WD OM 642.992;OM 642.896;OM 642.898;OM 642.986 | | GCI48002 | Inner Joint | | | 28 | | | 32 | |
| | 2019.01-2021.12 | 6MT | F | L/R | Bus 4WD OM 642.899 | For SA code:A4M | GDS56708 | Drive Shaft | | 37 | 37 | 65 | | 586 | |
| | 2019.01-2021.12 | 6MT | F | L/R | Bus 4WD OM 642.899 | For SA code:A4M | GCI83449 | Inner Joint | | 37 | 28 | 34.5 | 67.5 | 104 | |
| | 2019.01-2021.12 | 7AT/6MT | F | L/R | Bus 4WD OM 642.899 | For SA code:ZG1/ZG3 | GDS99290 | Drive Shaft | | 30 | | 66 | 108.5 | 690 | |
| | 2019.01-2021.12 | 7AT/6MT | F | L/R | Bus 4WD OM 642.899 | For SA code:ZG1/ZG3 | GCO35041 | Outer Joint | | 30 | 28 | 66 | 108.5 | 66 | M |
| | 2019.01-2021.12 | 7AT/6MT | F | L/R | Bus 4WD OM 642.899 | For SA code:ZG1/ZG3 | GCI48002 | Inner Joint | | | 28 | | | 32 | |
| | 2019.01-2021.12 | 6MT | F | L/R | Platform/Chassis 4WD OM 642.899 | For SA code:A4M | GDS56708 | Drive Shaft | | 37 | 37 | 65 | | 586 | |
| | 2019.01-2021.12 | 6MT | F | L/R | Platform/Chassis 4WD OM 642.899 | For SA code:A4M | GCI83449 | Inner Joint | | 37 | 28 | 34.5 | 67.5 | 104 | |
| | 2019.01-2021.12 | 7AT/6MT | F | L/R | Platform/Chassis 4WD OM 642.899 | For SA code:ZG1/ZG3 | GDS99290 | Drive Shaft | | 30 | | 66 | 108.5 | 690 | |
| | 2019.01-2021.12 | 7AT/6MT | F | L/R | Platform/Chassis 4WD OM 642.899 | For SA code:ZG1/ZG3 | GCO35041 | Outer Joint | | 30 | 28 | 66 | 108.5 | 66 | M |
| | 2019.01-2021.12 | 7AT/6MT | F | L/R | Platform/Chassis 4WD OM 642.899 | For SA code:ZG1/ZG3 | GCI48002 | Inner Joint | | | 28 | | | 32 | |
| | 2019.01-2021.12 | 6MT | F | L/R | Van 4WD OM 642.899 | For SA code:A4M | GDS56708 | Drive Shaft | | 37 | 37 | 65 | | 586 | |
| | 2019.01-2021.12 | 6MT | F | L/R | Van 4WD OM 642.899 | For SA code:A4M | GCI83449 | Inner Joint | | 37 | 28 | 34.5 | 67.5 | 104 | |
| | 2019.01-2021.12 | 7AT/6MT | F | L/R | Van 4WD OM 642.899 | For SA code:ZG1/ZG3 | GDS99290 | Drive Shaft | | 30 | | 66 | 108.5 | 690 | |
| | 2019.01-2021.12 | 7AT/6MT | F | L/R | Van 4WD OM 642.899 | For SA code:ZG1/ZG3 | GCO35041 | Outer Joint | | 30 | 28 | 66 | 108.5 | 66 | M |
| | 2019.01-2021.12 | 7AT/6MT | F | L/R | Van 4WD OM 642.899 | For SA code:ZG1/ZG3 | GCI48002 | Inner Joint | | | 28 | | | 32 | |
| **Sprinter 410D** | | | | | | | | | | | | | | | |
| 2.9 (75 kw) | 1997.05-2006.05 | 5MT | R | L/R | Platform/Chassis 4WD OM 602.980 | | GDS83407 | Drive Shaft | | 26 | | 62 | 124 | 626 | |
| | 1997.05-2006.05 | 5MT | R | L/R | Platform/Chassis 4WD OM 602.980 | | GCO35034 | Outer Joint | | 26 | 28 | 62 | 124 | 62 | O |
| | 1997.05-2006.05 | 5MT | R | L/R | Platform/Chassis 4WD OM 602.980 | | GCI35020 | Inner Joint | | | 28 | | | 32 | |
| | 1997.05-2006.05 | 5MT | F | L/R | Van 4WD OM 602.980 | | GDS83407 | Drive Shaft | | 26 | | 62 | 124 | 626 | |
| | 1997.05-2006.05 | 5MT | F | L/R | Van 4WD OM 602.980 | | GCO35034 | Outer Joint | | 26 | 28 | 62 | 124 | 62 | O |
| | 1997.05-2006.05 | 5MT | F | L/R | Van 4WD OM 602.980 | | GCI35020 | Inner Joint | | | 28 | | | 32 | |
| **Sprinter 411D** | | | | | | | | | | | | | | | |
| 2.1 (80 kw) | 2000.04-2006.05 | 6AT/5MT | F | L/R | Platform/Chassis 4WD OM 611.981 | | GDS83407 | Drive Shaft | | 26 | | 62 | 124 | 626 | |
| | 2000.04-2006.05 | MT | F | L/R | Platform/Chassis 4WD OM 611.981 | | GCO35034 | Outer Joint | | 26 | 28 | 62 | 124 | 62 | O |
| | 2000.04-2006.05 | MT | F | L/R | Platform/Chassis 4WD OM 611.981 | | GCI35020 | Inner Joint | | | 28 | | | 32 | |
| | 2000.04-2006.05 | 6AT/5MT | F | L/R | Van 4WD OM 611.981 | | GDS83407 | Drive Shaft | | 26 | | 62 | 124 | 626 | |

| | YEAR | TRANSM. | F/R | L/R | BODY STYLE & DRIVE TYPE & ENGINE | REMARKS | G-AP Ref. | PRODUCT | ABS | Technical Specifications A | B | C | H | L | P |
|---|---|---|---|---|---|---|---|---|---|---|---|---|---|---|---|
| **MERCEDES-BENZ** | | | | | | | | | | | | | | | |
| **Sprinter 411D** | | | | | | | | | | | | | | | |
| 2.1 (80 kw) | 2000.04-2006.05 | MT | F | L/R | Van 4WD OM 611.981 | | GCO35034 | Outer Joint | | 26 | 28 | 62 | 124 | 62 | O |
| | 2000.04-2006.05 | | F | L/R | Van 4WD OM 611.981 | | GCI35020 | Inner Joint | | | 28 | | | 32 | |
| 2.2 (84 kw) | 2018.02-2021.12 | 6MT | F | L | Platform/Chassis FWD OM 651.950;OM 651.958 | | GDS84518 | Drive Shaft | | 37 | 41 | 65 | | 657 | |
| | 2018.02-2021.12 | 6MT | F | R | Platform/Chassis FWD OM 651.950;OM 651.958 | | GDS84517 | Drive Shaft | | 37 | 41 | 65 | | 999 | |
| | 2018.02-2021.12 | 9AT | F | L | Platform/Chassis FWD OM 651.950;OM 651.958 | | GDS84516 | Drive Shaft | | 37 | 42 | 65 | | 642 | |
| | 2018.02-2021.12 | 9AT | F | R | Platform/Chassis FWD OM 651.950;OM 651.958 | | GDS84515 | Drive Shaft | | 37 | 42 | 65 | | 985 | |
| | 2018.02-2021.12 | 9AT | F | L | Platform/Chassis FWD OM 651.950;OM 651.958 | | GCI82828 | Inner Joint | | 42 | 29 | | 64.5 | 128.5 | |
| | 2018.02-2021.12 | 9AT | F | R | Platform/Chassis FWD OM 651.950;OM 651.958 | | GCI82827 | Inner Joint | | 42 | 29 | 36.45 | 421 | 115 | |
| | 2018.02-2021.12 | 6MT | F | L | Van FWD OM 651.950;OM 651.958 | | GDS84518 | Drive Shaft | | 37 | 41 | 65 | | 657 | |
| | 2018.02-2021.12 | 6MT | F | R | Van FWD OM 651.950;OM 651.958 | | GDS84517 | Drive Shaft | | 37 | 41 | 65 | | 999 | |
| | 2018.02-2021.12 | 6MT | F | L | Van FWD OM 651.950;OM 651.958 | | GCI82830 | Inner Joint | | 41 | 29 | 44 | 72.5 | 135.5 | |
| | 2018.02-2021.12 | 6MT | F | R | Van FWD OM 651.950;OM 651.958 | | GCI82829 | Inner Joint | | 41 | 29 | 38 | 435.5 | 115 | |
| | 2018.02-2021.12 | 6MT/9AT | F | L/R | Van FWD OM 651.950;OM 651.958 | | GCO82856 | Outer Joint | | 37 | 31 | 65 | | 91.5 | I |
| | 2018.02-2021.12 | 9AT | F | L | Van FWD OM 651.950;OM 651.958 | | GDS84516 | Drive Shaft | | 37 | 42 | 65 | | 642 | |
| | 2018.02-2021.12 | 9AT | F | R | Van FWD OM 651.950;OM 651.958 | | GDS84515 | Drive Shaft | | 37 | 42 | 65 | | 985 | |
| | 2018.02-2021.12 | 9AT | F | L | Van FWD OM 651.950;OM 651.958 | | GCI82828 | Inner Joint | | 42 | 29 | | 64.5 | 128.5 | |
| | 2018.02-2021.12 | 9AT | F | R | Van FWD OM 651.950;OM 651.958 | | GCI82827 | Inner Joint | | 42 | 29 | 36.45 | 421 | 115 | |
| **Sprinter 412D** | | | | | | | | | | | | | | | |
| 2.9 (85 kw) | 1997.05-2006.05 | MT | F | L/R | Platform/Chassis 4WD OM 602.980 | | GCO35034 | Outer Joint | | 26 | 28 | 62 | 124 | 62 | O |
| | 1997.05-2006.05 | | F | L/R | Platform/Chassis 4WD OM 602.980 | | GCI35020 | Inner Joint | | | 28 | | | 32 | |
| | 1997.05-2006.05 | 5MT | R | L/R | Platform/Chassis 4WD OM 602.980 | | GDS83407 | Drive Shaft | | 26 | | 62 | 124 | 626 | |
| | 1997.05-2006.05 | 5MT | F | L/R | Van 4WD OM 602.980 | | GDS83407 | Drive Shaft | | 26 | | 62 | 124 | 626 | |
| | 1997.05-2006.05 | MT | R | L/R | Van 4WD OM 602.980 | | GCO35034 | Outer Joint | | 26 | 28 | 62 | 124 | 62 | O |
| | 1997.05-2006.05 | | R | L/R | Van 4WD OM 602.980 | | GCI35020 | Inner Joint | | | 28 | | | 32 | |
| 2.9 (90 kw) | 1996.02-2006.05 | 4AT/5MT | R | L/R | Platform/Chassis RWD OM 602.980 (02.96-.) | | GDS83407 | Drive Shaft | | 26 | | 62 | 124 | 626 | |
| | 1997.05-2006.05 | MT | F | L/R | Platform/Chassis 4WD OM 602.980 (05.97-.) | | GCO35034 | Outer Joint | | 26 | 28 | 62 | 124 | 62 | O |
| | 1997.05-2006.05 | | F | L/R | Platform/Chassis 4WD OM 602.980 (05.97-.) | | GCI35020 | Inner Joint | | | 28 | | | 32 | |
| | 1997.05-2006.05 | 5MT | R | L/R | Platform/Chassis 4WD OM 602.980 (05.97-.) | | GDS83407 | Drive Shaft | | 26 | | 62 | 124 | 626 | |
| | 1997.05-2006.05 | 4AT/5MT | F | L/R | Van 4WD OM 602.980 (05.97-.) | | GDS83407 | Drive Shaft | | 26 | | 62 | 124 | 626 | |
| | 1997.05-2006.05 | MT | R | L/R | Van 4WD OM 602.980 (05.97-.) | | GCO35034 | Outer Joint | | 26 | 28 | 62 | 124 | 62 | O |
| | 1997.05-2006.05 | | R | L/R | Van 4WD OM 602.980 (05.97-.) | | GCI35020 | Inner Joint | | | 28 | | | 32 | |
| **Sprinter 413D** | | | | | | | | | | | | | | | |
| 2.1 (95 kw) | 2000.04-2006.05 | 6AT/5MT | F | L/R | Platform/Chassis 4WD OM 611.981 | | GDS83407 | Drive Shaft | | 26 | | 62 | 124 | 626 | |
| | 2000.04-2006.05 | MT | F | L/R | Platform/Chassis 4WD OM 611.981 | | GCO35034 | Outer Joint | | 26 | 28 | 62 | 124 | 62 | O |
| | 2000.04-2006.05 | | F | L/R | Platform/Chassis 4WD OM 611.981 | | GCI35020 | Inner Joint | | | 28 | | | 32 | |
| | 2000.04-2006.05 | 5AT/6AT/5MT | R | L/R | Platform/Chassis RWD OM 611.981 | | GDS83407 | Drive Shaft | | 26 | | 62 | 124 | 626 | |
| | 2000.04-2006.05 | 6AT/5MT | F | L/R | Van 4WD OM 611.981 | | GDS83407 | Drive Shaft | | 26 | | 62 | 124 | 626 | |
| | 2000.04-2006.05 | MT | F | L/R | Van 4WD OM 611.981 | | GCO35034 | Outer Joint | | 26 | 28 | 62 | 124 | 62 | O |
| | 2000.04-2006.05 | | F | L/R | Van 4WD OM 611.981 | | GCI35020 | Inner Joint | | | 28 | | | 32 | |
| **Sprinter 414** | | | | | | | | | | | | | | | |
| 2.3 (105 kw) | 1997.05-2006.05 | 6AT/5MT | F | L/R | Platform/Chassis 4WD M 111.979, M 111.984 | | GDS83407 | Drive Shaft | | 26 | | 62 | 124 | 626 | |
| | 1997.05-2006.05 | MT | F | L/R | Platform/Chassis 4WD M 111.979, M 111.984 | | GCO35034 | Outer Joint | | 26 | 28 | 62 | 124 | 62 | O |
| | 1997.05-2006.05 | | F | L/R | Platform/Chassis 4WD M 111.979, M 111.984 | | GCI35020 | Inner Joint | | | 28 | | | 32 | |
| | 1997.05-2006.05 | 6AT/5MT | F | L/R | Van 4WD M 111.979, M 111.984 | | GDS83407 | Drive Shaft | | 26 | | 62 | 124 | 626 | |
| | 1997.05-2006.05 | MT | F | L/R | Van 4WD M 111.979, M 111.984 | | GCO35034 | Outer Joint | | 26 | 28 | 62 | 124 | 62 | O |
| | 1997.05-2006.05 | | F | L/R | Van 4WD M 111.979, M 111.984 | | GCI35020 | Inner Joint | | | 28 | | | 32 | |
| **Sprinter 414D** | | | | | | | | | | | | | | | |
| 2.2 (105 kw) | 2016.05-2018.12 | 6MT | F | L/R | Van 4WD OM 651.955;OM 651.956 | | GDS99290 | Drive Shaft | | 30 | | 66 | 108.5 | 690 | |
| | 2016.05-2018.12 | 6MT | F | L/R | Van 4WD OM 651.955;OM 651.956 | | GCO35041 | Outer Joint | | 30 | 28 | 66 | 108.5 | 66 | M |
| | 2016.05-2018.12 | 6MT | F | L/R | Van 4WD OM 651.955;OM 651.956 | | GCI48002 | Inner Joint | | | 28 | | | 32 | |
| | 2018.02-2021.12 | 6MT | F | L | Platform/Chassis FWD OM 651.950;OM 651.958 | | GDS84518 | Drive Shaft | | 37 | 41 | 65 | | 657 | |
| | 2018.02-2021.12 | 6MT | F | R | Platform/Chassis FWD OM 651.950;OM 651.958 | | GDS84517 | Drive Shaft | | 37 | 41 | 65 | | 999 | |
| | 2018.02-2021.12 | 6MT | F | L | Platform/Chassis FWD OM 651.950;OM 651.958 | | GCI82830 | Inner Joint | | 41 | 29 | 44 | 72.5 | 135.5 | |
| | 2018.02-2021.12 | 6MT | F | R | Platform/Chassis FWD OM 651.950;OM 651.958 | | GCI82829 | Inner Joint | | 41 | 29 | 38 | 435.5 | 115 | |
| | 2018.02-2021.12 | 6MT/9AT | F | L/R | Platform/Chassis FWD OM 651.950;OM 651.958 | | GCO82856 | Outer Joint | | 37 | 31 | 65 | | 91.5 | I |
| | 2018.02-2021.12 | 9AT | F | L | Platform/Chassis FWD OM 651.950;OM 651.958 | | GDS84516 | Drive Shaft | | 37 | 42 | 65 | | 642 | |
| | 2018.02-2021.12 | 9AT | F | R | Platform/Chassis FWD OM 651.950;OM 651.958 | | GDS84515 | Drive Shaft | | 37 | 42 | 65 | | 985 | |
| | 2018.02-2021.12 | 9AT | F | L | Platform/Chassis FWD OM 651.950;OM 651.958 | | GCI82828 | Inner Joint | | 42 | 29 | | 64.5 | 128.5 | |
| | 2018.02-2021.12 | 9AT | F | R | Platform/Chassis FWD OM 651.950;OM 651.958 | | GCI82827 | Inner Joint | | 42 | 29 | 36.45 | 421 | 115 | |
| | 2018.02-2021.12 | 6MT | F | L | Van FWD OM 651.958 | | GDS84518 | Drive Shaft | | 37 | 41 | 65 | | 657 | |
| | 2018.02-2021.12 | 6MT | F | R | Van FWD OM 651.958 | | GDS84517 | Drive Shaft | | 37 | 41 | 65 | | 999 | |
| | 2018.02-2021.12 | 6MT | F | L | Van FWD OM 651.958 | | GCI82830 | Inner Joint | | 41 | 29 | 44 | 72.5 | 135.5 | |
| | 2018.02-2021.12 | 6MT | F | R | Van FWD OM 651.958 | | GCI82829 | Inner Joint | | 41 | 29 | 38 | 435.5 | 115 | |
| | 2018.02-2021.12 | 6MT/9AT | F | L/R | Van FWD OM 651.958 | | GCO82856 | Outer Joint | | 37 | 31 | 65 | | 91.5 | I |
| | 2018.02-2021.12 | 9AT | F | L | Van FWD OM 651.958 | | GDS84516 | Drive Shaft | | 37 | 42 | 65 | | 642 | |

| | YEAR | TRANSM. | F/R | L/R | BODY STYLE & DRIVE TYPE & ENGINE | REMARKS | G-AP Ref. | PRODUCT | ABS | Technical Specifications A | B | C | H | L | P |
|---|---|---|---|---|---|---|---|---|---|---|---|---|---|---|---|
| **MERCEDES-BENZ** | | | | | | | | | | | | | | | |
| **Sprinter 414D** | | | | | | | | | | | | | | | |
| 2.2 (105 kw) | 2018.02-2021.12 | 9AT | F | R | Van FWD OM 651.958 | | GDS84515 | Drive Shaft | | 37 | 42 | 65 | | 985 | |
| | 2018.02-2021.12 | 9AT | F | L | Van FWD OM 651.958 | | GCI82828 | Inner Joint | | 42 | 29 | | 64.5 | 128.5 | |
| | 2018.02-2021.12 | 9AT | F | R | Van FWD OM 651.958 | | GCI82827 | Inner Joint | | 42 | 29 | 36.45 | 421 | 115 | |
| | 2019.01-2021.12 | 6MT | F | L/R | Platform/Chassis 4WD OM 651.958 | For SA code:A4M | GDS56708 | Drive Shaft | | 37 | 37 | 65 | | 586 | |
| | 2019.01-2021.12 | 6MT | F | L/R | Platform/Chassis 4WD OM 651.958 | For SA code:ZG1/ZG3 | GDS99290 | Drive Shaft | | 30 | | 66 | 108.5 | 690 | |
| | 2019.01-2021.12 | 6MT | F | L/R | Platform/Chassis 4WD OM 651.958 | For SA code:ZG1/ZG3 | GCO35041 | Outer Joint | | 30 | 28 | 66 | 108.5 | 66 | M |
| | 2019.01-2021.12 | 6MT | F | L/R | Platform/Chassis 4WD OM 651.958 | For SA code:ZG1/ZG3 | GCI48002 | Inner Joint | | | 28 | | | 32 | |
| | 2019.01-2021.12 | 6MT | F | L/R | Platform/Chassis 4WD OM 651.958 | For SA code:A4M | GCI83449 | Inner Joint | | 37 | 28 | 34.5 | 67.5 | 104 | |
| | 2019.01-2021.12 | 6MT | F | L/R | Van 4WD OM 651.958 | For SA code:A4M | GDS56708 | Drive Shaft | | 37 | 37 | 65 | | 586 | |
| | 2019.01-2021.12 | 6MT | F | L/R | Van 4WD OM 651.958 | For SA code:ZG1/ZG3 | GDS99290 | Drive Shaft | | 30 | | 66 | 108.5 | 690 | |
| | 2019.01-2021.12 | 6MT | F | L/R | Van 4WD OM 651.958 | For SA code:ZG1/ZG3 | GCO35041 | Outer Joint | | 30 | 28 | 66 | 108.5 | 66 | M |
| | 2019.01-2021.12 | 6MT | F | L/R | Van 4WD OM 651.958 | For SA code:ZG1/ZG3 | GCI48002 | Inner Joint | | | 28 | | | 32 | |
| | 2019.01-2021.12 | 6MT | F | L/R | Van 4WD OM 651.958 | For SA code:A4M | GCI83449 | Inner Joint | | 37 | 28 | 34.5 | 67.5 | 104 | |
| 2.9 (90 kw) | 1997.05-2006.05 | 4AT/5MT | F | L/R | Van 4WD OM 602.980 | | GDS83407 | Drive Shaft | | 26 | | 62 | 124 | 626 | |
| | 1997.05-2006.05 | MT | R | L/R | Van 4WD OM 602.980 | | GCO35034 | Outer Joint | | 26 | 28 | 62 | 124 | 62 | O |
| | 1997.05-2006.05 | | R | L/R | Van 4WD OM 602.980 | | GCI35020 | Inner Joint | | | 28 | | | 32 | |
| **Sprinter 415D** | | | | | | | | | | | | | | | |
| 2.0 (110 kw) | 2020.06- | 6MT | F | L | Platform/Chassis FWD OM 654.920 | | GDS84518 | Drive Shaft | | 37 | 41 | 65 | | 657 | |
| | 2020.06- | 6MT | F | R | Platform/Chassis FWD OM 654.920 | | GDS84517 | Drive Shaft | | 37 | 41 | 65 | | 999 | |
| | 2020.06- | 6MT | F | L | Platform/Chassis FWD OM 654.920 | | GCI82830 | Inner Joint | | 41 | 29 | 44 | 72.5 | 135.5 | |
| | 2020.06- | 6MT | F | R | Platform/Chassis FWD OM 654.920 | | GCI82829 | Inner Joint | | 41 | 29 | 38 | 435.5 | 115 | |
| | 2020.06- | 6MT/9AT | F | L/R | Platform/Chassis FWD OM 654.920 | | GCO82856 | Outer Joint | | 37 | 31 | 65 | | 91.5 | I |
| | 2020.06- | 9AT | F | L | Platform/Chassis FWD OM 654.920 | | GDS84516 | Drive Shaft | | 37 | 42 | 65 | | 642 | |
| | 2020.06- | 9AT | F | R | Platform/Chassis FWD OM 654.920 | | GDS84515 | Drive Shaft | | 37 | 42 | 65 | | 985 | |
| | 2020.06- | 9AT | F | L | Platform/Chassis FWD OM 654.920 | | GCI82828 | Inner Joint | | 42 | 29 | | 64.5 | 128.5 | |
| | 2020.06- | 9AT | F | R | Platform/Chassis FWD OM 654.920 | | GCI82827 | Inner Joint | | 42 | 29 | 36.45 | 421 | 115 | |
| | 2021.10- | 6MT | F | L | Platform/Chassis FWD OM 654.920 | | GDS84518 | Drive Shaft | | 37 | 41 | 65 | | 657 | |
| | 2021.10- | 6MT | F | R | Platform/Chassis FWD OM 654.920 | | GDS84517 | Drive Shaft | | 37 | 41 | 65 | | 999 | |
| | 2021.10- | 9AT | F | L | Platform/Chassis FWD OM 654.920 | | GDS84516 | Drive Shaft | | 37 | 42 | 65 | | 642 | |
| | 2021.10- | 9AT | F | R | Platform/Chassis FWD OM 654.920 | | GDS84515 | Drive Shaft | | 37 | 42 | 65 | | 985 | |
| | 2021.10- | 9AT | F | L | Platform/Chassis FWD OM 654.920 | | GCI82828 | Inner Joint | | 42 | 29 | | 64.5 | 128.5 | |
| | 2021.10- | 9AT | F | R | Platform/Chassis FWD OM 654.920 | | GCI82827 | Inner Joint | | 42 | 29 | 36.45 | 421 | 115 | |
| | 2021.10-2025.05 | 6MT | F | L | Van FWD OM 654.920 | | GDS84518 | Drive Shaft | | 37 | 41 | 65 | | 657 | |
| | 2021.10-2025.05 | 6MT | F | R | Van FWD OM 654.920 | | GDS84517 | Drive Shaft | | 37 | 41 | 65 | | 999 | |
| | 2021.10-2025.05 | 6MT | F | L/R | Van FWD OM 654.920 | | GCO82856 | Outer Joint | | 37 | 31 | 65 | | 91.5 | I |
| | 2021.10-2025.05 | 6MT | F | L | Van FWD OM 654.920 | | GCI82830 | Inner Joint | | 41 | 29 | 44 | 72.5 | 135.5 | |
| | 2021.10-2025.05 | 6MT | F | R | Van FWD OM 654.920 | | GCI82829 | Inner Joint | | 41 | 29 | 38 | 435.5 | 115 | |
| **Sprinter 416D** | | | | | | | | | | | | | | | |
| 2.2 (120 kw) | 2013.11-2018.12 | 7AT/6MT | F | L/R | Van 4WD OM 651.957;OM 651.955;OM 651.956 | | GDS99290 | Drive Shaft | | 30 | | 66 | 108.5 | 690 | |
| | 2013.11-2018.12 | 7AT/6MT | F | L/R | Van 4WD OM 651.957;OM 651.955;OM 651.956 | | GCO35041 | Outer Joint | | 30 | 28 | 66 | 108.5 | 66 | M |
| | 2013.11-2018.12 | 7AT/6MT | F | L/R | Van 4WD OM 651.957;OM 651.955;OM 651.956 | | GCI48002 | Inner Joint | | | 28 | | | 32 | |
| | 2019.01-2021.12 | 6MT | F | L/R | Platform/Chassis 4WD OM 651.958 | For SA code:A4M | GDS56708 | Drive Shaft | | 37 | 37 | 65 | | 586 | |
| | 2019.01-2021.12 | 6MT | F | L/R | Platform/Chassis 4WD OM 651.958 | For SA code:A4M | GCI83449 | Inner Joint | | 37 | 28 | 34.5 | 67.5 | 104 | |
| | 2019.01-2021.12 | 7AT/6MT | F | L/R | Platform/Chassis 4WD OM 651.958 | For SA code:ZG1/ZG3 | GDS99290 | Drive Shaft | | 30 | | 66 | 108.5 | 690 | |
| | 2019.01-2021.12 | 7AT/6MT | F | L/R | Platform/Chassis 4WD OM 651.958 | For SA code:ZG1/ZG3 | GCO35041 | Outer Joint | | 30 | 28 | 66 | 108.5 | 66 | M |
| | 2019.01-2021.12 | 7AT/6MT | F | L/R | Platform/Chassis 4WD OM 651.958 | For SA code:ZG1/ZG3 | GCI48002 | Inner Joint | | | 28 | | | 32 | |
| | 2019.01-2021.12 | 6MT | F | L/R | Van 4WD OM 651.958 | For SA code:A4M | GDS56708 | Drive Shaft | | 37 | 37 | 65 | | 586 | |
| | 2019.01-2021.12 | 6MT | F | L/R | Van 4WD OM 651.958 | For SA code:A4M | GCI83449 | Inner Joint | | 37 | 28 | 34.5 | 67.5 | 104 | |
| | 2019.01-2021.12 | 7AT/6MT | F | L/R | Van 4WD OM 651.958 | For SA code:ZG1/ZG3 | GDS99290 | Drive Shaft | | 30 | | 66 | 108.5 | 690 | |
| | 2019.01-2021.12 | 7AT/6MT | F | L/R | Van 4WD OM 651.958 | For SA code:ZG1/ZG3 | GCO35041 | Outer Joint | | 30 | 28 | 66 | 108.5 | 66 | M |
| | 2019.01-2021.12 | 7AT/6MT | F | L/R | Van 4WD OM 651.958 | For SA code:ZG1/ZG3 | GCI48002 | Inner Joint | | | 28 | | | 32 | |
| 2.7 (115 kw) | 2000.04-2006.05 | 6AT/5MT | F | L/R | Platform/Chassis 4WD OM 612.981, OM 647.981 | | GDS83407 | Drive Shaft | | 26 | | 62 | 124 | 626 | |
| | 2000.04-2006.05 | 6AT/5MT | F | L/R | Platform/Chassis 4WD OM 612.981, OM 647.981 | | GCO35034 | Outer Joint | | 26 | 28 | 62 | 124 | 62 | O |
| | 2000.04-2006.05 | 6AT/5MT | F | L/R | Platform/Chassis 4WD OM 612.981, OM 647.981 | | GCI35020 | Inner Joint | | | 28 | | | 32 | |
| | 2000.04-2006.05 | 6AT/5MT | F | L/R | Van 4WD OM 612.981, OM 647.981 | | GDS83407 | Drive Shaft | | 26 | | 62 | 124 | 626 | |
| | 2000.04-2006.05 | 6AT/5MT | F | L/R | Van 4WD OM 612.981, OM 647.981 | | GCO35034 | Outer Joint | | 26 | 28 | 62 | 124 | 62 | O |
| | 2000.04-2006.05 | 6AT/5MT | F | L/R | Van 4WD OM 612.981, OM 647.981 | | GCI35020 | Inner Joint | | | 28 | | | 32 | |
| **Sprinter 417D** | | | | | | | | | | | | | | | |
| 2.0 (125 kw) | 2020.06- | 6MT | F | L | Platform/Chassis FWD OM 654.920 | | GDS84518 | Drive Shaft | | 37 | 41 | 65 | | 657 | |
| | 2020.06- | 6MT | F | R | Platform/Chassis FWD OM 654.920 | | GDS84517 | Drive Shaft | | 37 | 41 | 65 | | 999 | |
| | 2020.06- | 6MT | F | L/R | Platform/Chassis FWD OM 654.920 | | GCO82856 | Outer Joint | | 37 | 31 | 65 | | 91.5 | I |
| | 2020.06- | 6MT | F | L | Platform/Chassis FWD OM 654.920 | | GCI82830 | Inner Joint | | 41 | 29 | 44 | 72.5 | 135.5 | |
| | 2020.06- | 6MT | F | R | Platform/Chassis FWD OM 654.920 | | GCI82829 | Inner Joint | | 41 | 29 | 38 | 435.5 | 115 | |
| | 2020.06- | 9AT | F | L | Platform/Chassis FWD OM 654.920 | | GDS84516 | Drive Shaft | | 37 | 42 | 65 | | 642 | |
| | 2020.06- | 9AT | F | R | Platform/Chassis FWD OM 654.920 | | GDS84515 | Drive Shaft | | 37 | 42 | 65 | | 985 | |

| | YEAR | TRANSM. | F/R | L/R | BODY STYLE & DRIVE TYPE & ENGINE | REMARKS | G-AP Ref. | PRODUCT | ABS | Technical Specifications A | B | C | H | L | P |
|---|---|---|---|---|---|---|---|---|---|---|---|---|---|---|---|
| **MERCEDES-BENZ** | | | | | | | | | | | | | | | |
| **Sprinter 417D** | | | | | | | | | | | | | | | |
| 2.0 (125 kw) | 2020.06- | 9AT | F | L | Platform/Chassis FWD OM 654.920 | | GCI82828 | Inner Joint | | 42 | 29 | | 64.5 | 128.5 | |
| | 2020.06- | 9AT | F | R | Platform/Chassis FWD OM 654.920 | | GCI82827 | Inner Joint | | 42 | 29 | 36.45 | 421 | 115 | |
| | 2024.02- | 6MT | F | L | Platform/Chassis FWD OM 654.920 | | GDS84518 | Drive Shaft | | 37 | 41 | 65 | | 657 | |
| | 2024.02- | 6MT | F | R | Platform/Chassis FWD OM 654.920 | | GDS84517 | Drive Shaft | | 37 | 41 | 65 | | 999 | |
| | 2024.02- | 9AT | F | L | Platform/Chassis FWD OM 654.920 | | GDS84516 | Drive Shaft | | 37 | 42 | 65 | | 642 | |
| | 2024.02- | 9AT | F | R | Platform/Chassis FWD OM 654.920 | | GDS84515 | Drive Shaft | | 37 | 42 | 65 | | 985 | |
| | 2024.02- | 9AT | F | L | Platform/Chassis FWD OM 654.920 | | GCI82828 | Inner Joint | | 42 | 29 | | 64.5 | 128.5 | |
| | 2024.02- | 9AT | F | R | Platform/Chassis FWD OM 654.920 | | GCI82827 | Inner Joint | | 42 | 29 | 36.45 | 421 | 115 | |
| 2.2 (125 kw) | 2018.02-2021.12 | 6MT | F | L | Platform/Chassis FWD OM 651.958 | | GDS84518 | Drive Shaft | | 37 | 41 | 65 | | 657 | |
| | 2018.02-2021.12 | 6MT | F | R | Platform/Chassis FWD OM 651.958 | | GDS84517 | Drive Shaft | | 37 | 41 | 65 | | 999 | |
| | 2018.02-2021.12 | 6MT | F | L/R | Platform/Chassis FWD OM 651.958 | | GCO82856 | Outer Joint | | 37 | 31 | 65 | | 91.5 | I |
| | 2018.02-2021.12 | 6MT | F | L | Platform/Chassis FWD OM 651.958 | | GCI82830 | Inner Joint | | 41 | 29 | 44 | 72.5 | 135.5 | |
| | 2018.02-2021.12 | 6MT | F | R | Platform/Chassis FWD OM 651.958 | | GCI82829 | Inner Joint | | 41 | 29 | 38 | 435.5 | 115 | |
| **Sprinter 418D** | | | | | | | | | | | | | | | |
| 2.2 (130 kw) | 2018.02-2021.12 | 6MT | F | L | Platform/Chassis FWD OM 651.958 | | GDS84518 | Drive Shaft | | 37 | 41 | 65 | | 657 | |
| | 2018.02-2021.12 | 6MT | F | R | Platform/Chassis FWD OM 651.958 | | GDS84517 | Drive Shaft | | 37 | 41 | 65 | | 999 | |
| | 2018.02-2021.12 | 6MT | F | L | Platform/Chassis FWD OM 651.958 | | GCI82830 | Inner Joint | | 41 | 29 | 44 | 72.5 | 135.5 | |
| | 2018.02-2021.12 | 6MT | F | R | Platform/Chassis FWD OM 651.958 | | GCI82829 | Inner Joint | | 41 | 29 | 38 | 435.5 | 115 | |
| | 2018.02-2021.12 | 6MT/9AT | F | L/R | Platform/Chassis FWD OM 651.958 | | GCO82856 | Outer Joint | | 37 | 31 | 65 | | 91.5 | I |
| | 2018.02-2021.12 | 9AT | F | L | Platform/Chassis FWD OM 651.958 | | GDS84516 | Drive Shaft | | 37 | 42 | 65 | | 642 | |
| | 2018.02-2021.12 | 9AT | F | R | Platform/Chassis FWD OM 651.958 | | GDS84515 | Drive Shaft | | 37 | 42 | 65 | | 985 | |
| | 2018.02-2021.12 | 9AT | F | L | Platform/Chassis FWD OM 651.958 | | GCI82828 | Inner Joint | | 42 | 29 | | 64.5 | 128.5 | |
| | 2018.02-2021.12 | 9AT | F | R | Platform/Chassis FWD OM 651.958 | | GCI82827 | Inner Joint | | 42 | 29 | 36.45 | 421 | 115 | |
| **Sprinter 419D** | | | | | | | | | | | | | | | |
| 2.0 (140 kw) | 2021.10- | 6MT | F | L/R | Platform/Chassis 4WD OM 654.920 | For SA code:A4M | GDS56708 | Drive Shaft | | 37 | 37 | 65 | | 586 | |
| | 2021.10- | 6MT | F | L/R | Platform/Chassis 4WD OM 654.920 | For SA code:ZG1/ZG3 | GDS99290 | Drive Shaft | | 30 | | 66 | 108.5 | 690 | |
| | 2021.10- | 6MT | F | L/R | Platform/Chassis 4WD OM 654.920 | For SA code:ZG1/ZG3 | GCO35041 | Outer Joint | | 30 | 28 | 66 | 108.5 | 66 | M |
| | 2021.10- | 6MT | F | L/R | Platform/Chassis 4WD OM 654.920 | For SA code:ZG1/ZG3 | GCI48002 | Inner Joint | | | 28 | | | 32 | |
| | 2021.10- | 6MT | F | L/R | Platform/Chassis 4WD OM 654.920 | For SA code:A4M | GCI83449 | Inner Joint | | 37 | 28 | 34.5 | 67.5 | 104 | |
| | 2021.10- | 6MT | F | L/R | Van 4WD OM 654.920 | For SA code:A4M | GDS56708 | Drive Shaft | | 37 | 37 | 65 | | 586 | |
| | 2021.10- | 6MT | F | L/R | Van 4WD OM 654.920 | For SA code:ZG1/ZG3 | GDS99290 | Drive Shaft | | 30 | | 66 | 108.5 | 690 | |
| | 2021.10- | 6MT | F | L/R | Van 4WD OM 654.920 | For SA code:ZG1/ZG3 | GCO35041 | Outer Joint | | 30 | 28 | 66 | 108.5 | 66 | M |
| | 2021.10- | 6MT | F | L/R | Van 4WD OM 654.920 | For SA code:ZG1/ZG3 | GCI48002 | Inner Joint | | | 28 | | | 32 | |
| | 2021.10- | 6MT | F | L/R | Van 4WD OM 654.920 | For SA code:A4M | GCI83449 | Inner Joint | | 37 | 28 | 34.5 | 67.5 | 104 | |
| 3.0 (140 kw) | 2019.01-2021.12 | 6MT | F | L/R | Platform/Chassis 4WD OM 642.899 | For SA code:A4M | GDS56708 | Drive Shaft | | 37 | 37 | 65 | | 586 | |
| | 2019.01-2021.12 | 6MT | F | L/R | Platform/Chassis 4WD OM 642.899 | For SA code:A4M | GCI83449 | Inner Joint | | 37 | 28 | 34.5 | 67.5 | 104 | |
| | 2019.01-2021.12 | 7AT/6MT | F | L/R | Platform/Chassis 4WD OM 642.899 | For SA code:ZG1/ZG3 | GDS99290 | Drive Shaft | | 30 | | 66 | 108.5 | 690 | |
| | 2019.01-2021.12 | 7AT/6MT | F | L/R | Platform/Chassis 4WD OM 642.899 | For SA code:ZG1/ZG3 | GCO35041 | Outer Joint | | 30 | 28 | 66 | 108.5 | 66 | M |
| | 2019.01-2021.12 | 7AT/6MT | F | L/R | Platform/Chassis 4WD OM 642.899 | For SA code:ZG1/ZG3 | GCI48002 | Inner Joint | | | 28 | | | 32 | |
| | 2019.01-2021.12 | 6MT | F | L/R | Van 4WD OM 642.899 | For SA code:A4M | GDS56708 | Drive Shaft | | 37 | 37 | 65 | | 586 | |
| | 2019.01-2021.12 | 6MT | F | L/R | Van 4WD OM 642.899 | For SA code:A4M | GCI83449 | Inner Joint | | 37 | 28 | 34.5 | 67.5 | 104 | |
| | 2019.01-2021.12 | 7AT/6MT | F | L/R | Van 4WD OM 642.899 | For SA code:ZG1/ZG3 | GDS99290 | Drive Shaft | | 30 | | 66 | 108.5 | 690 | |
| | 2019.01-2021.12 | 7AT/6MT | F | L/R | Van 4WD OM 642.899 | For SA code:ZG1/ZG3 | GCO35041 | Outer Joint | | 30 | 28 | 66 | 108.5 | 66 | M |
| | 2019.01-2021.12 | 7AT/6MT | F | L/R | Van 4WD OM 642.899 | For SA code:ZG1/ZG3 | GCI48002 | Inner Joint | | | 28 | | | 32 | |
| **Sprinter 511D** | | | | | | | | | | | | | | | |
| 2.2 (80 kw) | 2006.06-2009.12 | 5AT/6MT | F | L/R | Platform/Chassis 4WD OM 646.985 | | GDS99290 | Drive Shaft | | 30 | | 66 | 108.5 | 690 | |
| | 2006.06-2009.12 | 5AT/6MT | F | L/R | Platform/Chassis 4WD OM 646.985 | | GCO35041 | Outer Joint | | 30 | 28 | 66 | 108.5 | 66 | M |
| | 2006.06-2009.12 | 5AT/6MT | F | L/R | Platform/Chassis 4WD OM 646.985 | | GCI48002 | Inner Joint | | | 28 | | | 32 | |
| | 2006.06-2009.12 | 5AT/6MT | F | L/R | Van 4WD OM 646.985 | | GDS99290 | Drive Shaft | | 30 | | 66 | 108.5 | 690 | |
| | 2006.06-2009.12 | 5AT/6MT | F | L/R | Van 4WD OM 646.985 | | GCO35041 | Outer Joint | | 30 | 28 | 66 | 108.5 | 66 | M |
| | 2006.06-2009.12 | 5AT/6MT | F | L/R | Van 4WD OM 646.985 | | GCI48002 | Inner Joint | | | 28 | | | 32 | |
| | 2006.06-2009.12 | 6MT | F | L | Van 4WD OM 646.985 | | GDS82923 | Stub Axle-Flange | | 26 | | | | 336.5 | |
| **Sprinter 513D** | | | | | | | | | | | | | | | |
| 2.2 (95 kw) | 2009.03-2016.12 | 5AT/6MT | F | L/R | Van 4WD OM 651.957;OM 651.955;OM 651.956 | | GDS99290 | Drive Shaft | | 30 | | 66 | 108.5 | 690 | |
| | 2009.03-2016.12 | 5AT/6MT | F | L/R | Van 4WD OM 651.957;OM 651.955;OM 651.956 | | GCO35041 | Outer Joint | | 30 | 28 | 66 | 108.5 | 66 | M |
| | 2009.03-2016.12 | 5AT/6MT | F | L/R | Van 4WD OM 651.957;OM 651.955;OM 651.956 | | GCI48002 | Inner Joint | | | 28 | | | 32 | |
| | 2011.05-2016.12 | 5AT/7AT/6MT | F | L/R | Platform/Chassis 4WD OM 651.957;OM 651.955;OM 651.956 | | GDS99290 | Drive Shaft | | 30 | | 66 | 108.5 | 690 | |
| | 2011.05-2016.12 | 5AT/7AT/6MT | F | L/R | Platform/Chassis 4WD OM 651.957;OM 651.955;OM 651.956 | | GCO35041 | Outer Joint | | 30 | 28 | 66 | 108.5 | 66 | M |
| | 2011.05-2016.12 | 5AT/7AT/6MT | F | L/R | Platform/Chassis 4WD OM 651.957;OM 651.955;OM 651.956 | | GCI48002 | Inner Joint | | | 28 | | | 32 | |
| **Sprinter 514D** | | | | | | | | | | | | | | | |
| 2.2 (105 kw) | 2016.05-2018.12 | 5AT/6MT | F | L/R | Platform/Chassis 4WD OM 651.955;OM 651.956 | | GDS99290 | Drive Shaft | | 30 | | 66 | 108.5 | 690 | |
| | 2016.05-2018.12 | 5AT/6MT | F | L/R | Platform/Chassis 4WD OM 651.955;OM 651.956 | | GCO35041 | Outer Joint | | 30 | 28 | 66 | 108.5 | 66 | M |
| | 2016.05-2018.12 | 5AT/6MT | F | L/R | Platform/Chassis 4WD OM 651.955;OM 651.956 | | GCI48002 | Inner Joint | | | 28 | | | 32 | |
| | 2016.05-2018.12 | 6MT | F | L/R | Van 4WD OM 651.955;OM 651.956 | | GDS99290 | Drive Shaft | | 30 | | 66 | 108.5 | 690 | |
| | 2016.05-2018.12 | 6MT | F | L/R | Van 4WD OM 651.955;OM 651.956 | | GCO35041 | Outer Joint | | 30 | 28 | 66 | 108.5 | 66 | M |

| | YEAR | TRANSM. | F/R | L/R | BODY STYLE & DRIVE TYPE & ENGINE | REMARKS | G-AP Ref. | PRODUCT | ABS | Technical Specifications A | B | C | H | L | P |
|---|---|---|---|---|---|---|---|---|---|---|---|---|---|---|---|
| **MERCEDES-BENZ** | | | | | | | | | | | | | | | |
| **Sprinter 514D** | | | | | | | | | | | | | | | |
| 2.2 (105 kw) | 2016.05-2018.12 | 6MT | F | L/R | Van 4WD OM 651.955;OM 651.956 | | GCI48002 | Inner Joint | | | 28 | | | 32 | |
| **Sprinter 515D** | | | | | | | | | | | | | | | |
| 2.2 (110 kw) | 2006.06-2009.12 | 5AT/6MT | F | L/R | Platform/Chassis 4WD OM 646.990;OM 646.986;OM 646.989 | | GDS99290 | Drive Shaft | | 30 | | 66 | 108.5 | 690 | |
| | 2006.06-2009.12 | 5AT/6MT | F | L/R | Platform/Chassis 4WD OM 646.990;OM 646.986;OM 646.989 | | GCO35041 | Outer Joint | | 30 | 28 | 66 | 108.5 | 66 | M |
| | 2006.06-2009.12 | 5AT/6MT | F | L/R | Platform/Chassis 4WD OM 646.990;OM 646.986;OM 646.989 | | GCI48002 | Inner Joint | | | 28 | | | 32 | |
| | 2006.06-2009.12 | 5AT/6MT | F | L/R | Van 4WD OM 646.990;OM 646.986;OM 646.989 | | GDS99290 | Drive Shaft | | 30 | | 66 | 108.5 | 690 | |
| | 2006.06-2009.12 | 5AT/6MT | F | L/R | Van 4WD OM 646.990;OM 646.986;OM 646.989 | | GCO35041 | Outer Joint | | 30 | 28 | 66 | 108.5 | 66 | M |
| | 2006.06-2009.12 | 5AT/6MT | F | L/R | Van 4WD OM 646.990;OM 646.986;OM 646.989 | | GCI48002 | Inner Joint | | | 28 | | | 32 | |
| | 2006.06-2009.12 | 5AT/6MT | F | L | Van 4WD OM 646.990;OM 646.986;OM 646.989 | | GDS82923 | Stub Axle-Flange | | 26 | | | | 336.5 | |
| **Sprinter 516D** | | | | | | | | | | | | | | | |
| 2.2 (120 kw) | 2009.03-2018.12 | 5AT/7AT/6MT | F | L/R | Platform/Chassis 4WD OM 651.957;OM 651.955;OM 651.956 | | GDS99290 | Drive Shaft | | 30 | | 66 | 108.5 | 690 | |
| | 2009.03-2018.12 | 5AT/7AT/6MT | F | L/R | Platform/Chassis 4WD OM 651.957;OM 651.955;OM 651.956 | | GCO35041 | Outer Joint | | 30 | 28 | 66 | 108.5 | 66 | M |
| | 2009.03-2018.12 | 5AT/7AT/6MT | F | L/R | Platform/Chassis 4WD OM 651.957;OM 651.955;OM 651.956 | | GCI48002 | Inner Joint | | | 28 | | | 32 | |
| | 2009.03-2018.12 | 5AT/7AT/6MT | F | L/R | Van 4WD OM 651.957;OM 651.955;OM 651.956 | | GDS99290 | Drive Shaft | | 30 | | 66 | 108.5 | 690 | |
| | 2009.03-2018.12 | 5AT/7AT/6MT | F | L/R | Van 4WD OM 651.957;OM 651.955;OM 651.956 | | GCO35041 | Outer Joint | | 30 | 28 | 66 | 108.5 | 66 | M |
| | 2009.03-2018.12 | 5AT/7AT/6MT | F | L/R | Van 4WD OM 651.957;OM 651.955;OM 651.956 | | GCI48002 | Inner Joint | | | 28 | | | 32 | |
| | 2019.01-2021.12 | 6MT | F | L/R | Platform/Chassis 4WD OM 651.958 | For SA code:A4M | GDS56708 | Drive Shaft | | 37 | 37 | 65 | | 586 | |
| | 2019.01-2021.12 | 6MT | F | L/R | Platform/Chassis 4WD OM 651.958 | For SA code:A4M | GCI83449 | Inner Joint | | 37 | 28 | 34.5 | 67.5 | 104 | |
| | 2019.01-2021.12 | 7AT/6MT | F | L/R | Platform/Chassis 4WD OM 651.958 | For SA code:ZG1/ZG3 | GDS99290 | Drive Shaft | | 30 | | 66 | 108.5 | 690 | |
| | 2019.01-2021.12 | 7AT/6MT | F | L/R | Platform/Chassis 4WD OM 651.958 | For SA code:ZG1/ZG3 | GCO35041 | Outer Joint | | 30 | 28 | 66 | 108.5 | 66 | M |
| | 2019.01-2021.12 | 7AT/6MT | F | L/R | Platform/Chassis 4WD OM 651.958 | For SA code:ZG1/ZG3 | GCI48002 | Inner Joint | | | 28 | | | 32 | |
| | 2019.01-2021.12 | 6MT | F | L/R | Van 4WD OM 651.958 | For SA code:A4M | GDS56708 | Drive Shaft | | 37 | 37 | 65 | | 586 | |
| | 2019.01-2021.12 | 6MT | F | L/R | Van 4WD OM 651.958 | For SA code:A4M | GCI83449 | Inner Joint | | 37 | 28 | 34.5 | 67.5 | 104 | |
| | 2019.01-2021.12 | 7AT/6MT | F | L/R | Van 4WD OM 651.958 | For SA code:ZG1/ZG3 | GDS99290 | Drive Shaft | | 30 | | 66 | 108.5 | 690 | |
| | 2019.01-2021.12 | 7AT/6MT | F | L/R | Van 4WD OM 651.958 | For SA code:ZG1/ZG3 | GCO35041 | Outer Joint | | 30 | 28 | 66 | 108.5 | 66 | M |
| | 2019.01-2021.12 | 7AT/6MT | F | L/R | Van 4WD OM 651.958 | For SA code:ZG1/ZG3 | GCI48002 | Inner Joint | | | 28 | | | 32 | |
| **Sprinter 518D** | | | | | | | | | | | | | | | |
| 3.0 (135 kw) | 2006.06-2009.12 | 5AT/6MT | F | L/R | Platform/Chassis 4WD OM 642.992;OM 642.993;OM 642.896;OM 642.986 | | GDS99290 | Drive Shaft | | 30 | | 66 | 108.5 | 690 | |
| | 2006.06-2009.12 | 5AT/6MT | F | L/R | Platform/Chassis 4WD OM 642.992;OM 642.993;OM 642.896;OM 642.986 | | GCO35041 | Outer Joint | | 30 | 28 | 66 | 108.5 | 66 | M |
| | 2006.06-2009.12 | 5AT/6MT | F | L/R | Platform/Chassis 4WD OM 642.992;OM 642.993;OM 642.896;OM 642.986 | | GCI48002 | Inner Joint | | | 28 | | | 32 | |
| | 2006.06-2016.12 | 5AT | F | L | Van 4WD OM 642.992;OM 642.993;OM 642.896;OM 642.986 | | GDS82923 | Stub Axle-Flange | | 26 | | | | 336.5 | |
| | 2006.06-2016.12 | 5AT/6MT | F | L/R | Van 4WD OM 642.992;OM 642.993;OM 642.896;OM 642.986 | | GDS99290 | Drive Shaft | | 30 | | 66 | 108.5 | 690 | |
| | 2006.06-2016.12 | 5AT/6MT | F | L/R | Van 4WD OM 642.992;OM 642.993;OM 642.896;OM 642.986 | | GCO35041 | Outer Joint | | 30 | 28 | 66 | 108.5 | 66 | M |
| | 2006.06-2016.12 | 5AT/6MT | F | L/R | Van 4WD OM 642.992;OM 642.993;OM 642.896;OM 642.986 | | GCI48002 | Inner Joint | | | 28 | | | 32 | |
| **Sprinter 519D** | | | | | | | | | | | | | | | |
| 2.0 (140 kw) | 2021.10- | 6MT | F | L/R | Platform/Chassis 4WD OM 654.920 | For SA code:A4M | GDS56708 | Drive Shaft | | 37 | 37 | 65 | | 586 | |
| | 2021.10- | 6MT | F | L/R | Platform/Chassis 4WD OM 654.920 | For SA code:ZG1/ZG3 | GDS99290 | Drive Shaft | | 30 | | 66 | 108.5 | 690 | |
| | 2021.10- | 6MT | F | L/R | Platform/Chassis 4WD OM 654.920 | For SA code:ZG1/ZG3 | GCO35041 | Outer Joint | | 30 | 28 | 66 | 108.5 | 66 | M |
| | 2021.10- | 6MT | F | L/R | Platform/Chassis 4WD OM 654.920 | For SA code:ZG1/ZG3 | GCI48002 | Inner Joint | | | 28 | | | 32 | |
| | 2021.10- | 6MT | F | L/R | Platform/Chassis 4WD OM 654.920 | For SA code:A4M | GCI83449 | Inner Joint | | 37 | 28 | 34.5 | 67.5 | 104 | |
| | 2021.10- | 6MT | F | L/R | Van 4WD OM 654.920 | For SA code:A4M | GDS56708 | Drive Shaft | | 37 | 37 | 65 | | 586 | |
| | 2021.10- | 6MT | F | L/R | Van 4WD OM 654.920 | For SA code:ZG1/ZG3 | GDS99290 | Drive Shaft | | 30 | | 66 | 108.5 | 690 | |
| | 2021.10- | 6MT | F | L/R | Van 4WD OM 654.920 | For SA code:ZG1/ZG3 | GCO35041 | Outer Joint | | 30 | 28 | 66 | 108.5 | 66 | M |
| | 2021.10- | 6MT | F | L/R | Van 4WD OM 654.920 | For SA code:ZG1/ZG3 | GCI48002 | Inner Joint | | | 28 | | | 32 | |
| | 2021.10- | 6MT | F | L/R | Van 4WD OM 654.920 | For SA code:A4M | GCI83449 | Inner Joint | | 37 | 28 | 34.5 | 67.5 | 104 | |
| 3.0 (140 kw) | 2009.03-2018.12 | 5AT/7AT/6MT | F | L/R | Platform/Chassis 4WD OM 642.992;OM 642.896;OM 642.898;OM 642.986 | | GDS99290 | Drive Shaft | | 30 | | 66 | 108.5 | 690 | |
| | 2009.03-2018.12 | 5AT/7AT/6MT | F | L/R | Platform/Chassis 4WD OM 642.992;OM 642.896;OM 642.898;OM 642.986 | | GCO35041 | Outer Joint | | 30 | 28 | 66 | 108.5 | 66 | M |
| | 2009.03-2018.12 | 5AT/7AT/6MT | F | L/R | Platform/Chassis 4WD OM 642.992;OM 642.896;OM 642.898;OM 642.986 | | GCI48002 | Inner Joint | | | 28 | | | 32 | |
| | 2009.03-2018.12 | 5AT/7AT/6MT | F | L/R | Van 4WD OM 642.992;OM 642.896;OM 642.898;OM 642.986 | | GDS99290 | Drive Shaft | | 30 | | 66 | 108.5 | 690 | |
| | 2009.03-2018.12 | 5AT/7AT/6MT | F | L/R | Van 4WD OM 642.992;OM 642.896;OM 642.898;OM 642.986 | | GCO35041 | Outer Joint | | 30 | 28 | 66 | 108.5 | 66 | M |
| | 2009.03-2018.12 | 5AT/7AT/6MT | F | L/R | Van 4WD OM 642.992;OM 642.896;OM 642.898;OM 642.986 | | GCI48002 | Inner Joint | | | 28 | | | 32 | |
| | 2019.01-2021.12 | 6MT | F | L/R | Platform/Chassis 4WD OM 642.899 | For SA code:A4M | GDS56708 | Drive Shaft | | 37 | 37 | 65 | | 586 | |
| | 2019.01-2021.12 | 6MT | F | L/R | Platform/Chassis 4WD OM 642.899 | For SA code:A4M | GCI83449 | Inner Joint | | 37 | 28 | 34.5 | 67.5 | 104 | |
| | 2019.01-2021.12 | 7AT/6MT | F | L/R | Platform/Chassis 4WD OM 642.899 | For SA code:ZG1/ZG3 | GDS99290 | Drive Shaft | | 30 | | 66 | 108.5 | 690 | |
| | 2019.01-2021.12 | 7AT/6MT | F | L/R | Platform/Chassis 4WD OM 642.899 | For SA code:ZG1/ZG3 | GCO35041 | Outer Joint | | 30 | 28 | 66 | 108.5 | 66 | M |
| | 2019.01-2021.12 | 7AT/6MT | F | L/R | Platform/Chassis 4WD OM 642.899 | For SA code:ZG1/ZG3 | GCI48002 | Inner Joint | | | 28 | | | 32 | |
| | 2019.01-2021.12 | 6MT | F | L/R | Van 4WD OM 642.899 | For SA code:A4M | GDS56708 | Drive Shaft | | 37 | 37 | 65 | | 586 | |
| | 2019.01-2021.12 | 6MT | F | L/R | Van 4WD OM 642.899 | For SA code:A4M | GCI83449 | Inner Joint | | 37 | 28 | 34.5 | 67.5 | 104 | |
| | 2019.01-2021.12 | 7AT/6MT | F | L/R | Van 4WD OM 642.899 | For SA code:ZG1/ZG3 | GDS99290 | Drive Shaft | | 30 | | 66 | 108.5 | 690 | |
| | 2019.01-2021.12 | 7AT/6MT | F | L/R | Van 4WD OM 642.899 | For SA code:ZG1/ZG3 | GCO35041 | Outer Joint | | 30 | 28 | 66 | 108.5 | 66 | M |
| | 2019.01-2021.12 | 7AT/6MT | F | L/R | Van 4WD OM 642.899 | For SA code:ZG1/ZG3 | GCI48002 | Inner Joint | | | 28 | | | 32 | |
| **T 160** | | | | | | | | | | | | | | | |
| 1.3 (75 kw) | 2022.05- | 6MT | F | L | MPV FWD 200.731 | For vehicles without electric parking brake | GDS57637 | Drive Shaft | | 25 | 26 | 53 | 88.5 | 700 | |
| | 2022.05- | 6MT | F | L | MPV FWD 200.731 | For vehicles with electric parking brake | GDS58047 | Drive Shaft | | 29 | 26 | 60 | 95.5 | 705 | |
| | 2022.05- | 6MT | F | R | MPV FWD 200.731 | For vehicles without electric parking brake | GDS57941 | Drive Shaft | | 25 | 26 | 53 | 88.5 | 948 | |

| | YEAR | TRANSM. | F/R | L/R | BODY STYLE & DRIVE TYPE & ENGINE | REMARKS | G-AP Ref. | PRODUCT | ABS | Technical Specifications A | B | C | H | L | P |
|---|---|---|---|---|---|---|---|---|---|---|---|---|---|---|---|
| **MERCEDES-BENZ** | | | | | | | | | | | | | | | |
| **T 160** | | | | | | | | | | | | | | | |
| 1.3 (75 kw) | 2022.05- | 6MT | F | R | MPV FWD 200.731 | For vehicles with electric parking brake | GDS58079 | Drive Shaft | | 29 | 26 | 60 | 95.5 | 955 | |
| | 2022.05- | 6MT | F | L/R | MPV FWD 200.731 | For vehicles without electric parking brake | GCO83588 | Outer Joint | | 25 | 24 | 53 | 88.5 | 61 | I |
| | 2022.05- | 6MT | F | L/R | MPV FWD 200.731 | For vehicles with electric parking brake | GCO83811 | Outer Joint | | 29 | 24 | 60 | 95.5 | 61 | I |
| | 2022.05- | 6MT | F | L | MPV FWD 200.731 | For vehicles with electric parking brake | GCI83418 | Inner Joint | | 26 | 24 | 40 | 64 | 114 | |
| | 2022.05- | 6MT | F | L | MPV FWD 200.731 | For vehicles without electric parking brake | GCI83782 | Inner Joint | | 26 | 24 | 40 | 64 | 114 | |
| | 2022.05- | 6MT | F | R | MPV FWD 200.731 | For vehicles without electric parking brake | GCI83949 | Inner Joint | | 26 | 24 | 33 | 346 | 105 | |
| **T 160D** | | | | | | | | | | | | | | | |
| 1.5 (70 kw) | 2022.05- | 6MT | F | L | MPV FWD OM 608.915 (K9K) | For vehicles without electric parking brake | GDS57637 | Drive Shaft | | 25 | 26 | 53 | 88.5 | 700 | |
| | 2022.05- | 6MT | F | L | MPV FWD OM 608.915 (K9K) | For vehicles with electric parking brake | GDS58047 | Drive Shaft | | 29 | 26 | 60 | 95.5 | 705 | |
| | 2022.05- | 6MT | F | R | MPV FWD OM 608.915 (K9K) | For vehicles without electric parking brake | GDS57834 | Drive Shaft | | 25 | 26 | 53 | 88.5 | 946 | |
| | 2022.05- | 6MT | F | R | MPV FWD OM 608.915 (K9K) | For vehicles with electric parking brake | GDS58073 | Drive Shaft | | 29 | 26 | 60 | 95.5 | 951 | |
| | 2022.05- | 6MT | F | L | MPV FWD OM 608.915 (K9K) | For vehicles without electric parking brake | GCO83588 | Outer Joint | | 25 | 24 | 53 | 88.5 | 61 | I |
| | 2022.05- | 6MT | F | L | MPV FWD OM 608.915 (K9K) | For vehicles with electric parking brake | GCI83418 | Inner Joint | | 26 | 24 | 40 | 64 | 114 | |
| | 2022.05- | 6MT | F | L | MPV FWD OM 608.915 (K9K) | For vehicles without electric parking brake | GCI83782 | Inner Joint | | 26 | 24 | 40 | 64 | 114 | |
| | 2022.05- | 6MT | F | R | MPV FWD OM 608.915 (K9K) | For vehicles without electric parking brake | GCI83417 | Inner Joint | | 26 | 24 | 33 | 330 | 105 | |
| | 2022.05- | 6MT | F | R | MPV FWD OM 608.915 (K9K) | For vehicles with electric parking brake | GCI84005 | Inner Joint | | 26 | 24 | 33 | 330 | 103 | |
| | 2022.05- | 6MT/7DCT | F | L/R | MPV FWD OM 608.915 (K9K) | For vehicles with electric parking brake | GCO83811 | Outer Joint | | 29 | 24 | 60 | 95.5 | 61 | I |
| | 2022.05- | 7DCT | F | L | MPV FWD OM 608.915 (K9K) | For vehicles with electric parking brake | GDS58074 | Drive Shaft | | 29 | 27 | 60 | 95.5 | 651 | |
| | 2022.05- | 7DCT | F | L | MPV FWD OM 608.915 (K9K) | For vehicles without electric parking brake | GDS58093 | Drive Shaft | | 25 | 27 | 53 | 88.5 | 642 | |
| | 2022.05- | 7DCT | F | R | MPV FWD OM 608.915 (K9K) | For vehicles without electric parking brake | GDS57712 | Drive Shaft | | 25 | 27 | 53 | 88.5 | 1000 | |
| | 2022.05- | 7DCT | F | R | MPV FWD OM 608.915 (K9K) | For vehicles with electric parking brake | GDS58075 | Drive Shaft | | 29 | 27 | 60 | 95.5 | 1007 | |
| | 2022.05- | 7DCT | F | L | MPV FWD OM 608.915 (K9K) | For vehicles with electric parking brake | GCI84006 | Inner Joint | | 27 | 24 | 40 | 65.5 | 113.5 | |
| | 2022.05- | 7DCT | F | R | MPV FWD OM 608.915 (K9K) | For vehicles with electric parking brake | GCI83825 | Inner Joint | | 27 | 24 | 40 | 384.5 | 105 | |
| **T 180** | | | | | | | | | | | | | | | |
| 1.3 (96 kw) | 2022.05- | 6MT | F | L | MPV FWD 200.731 | For vehicles without electric parking brake | GDS57637 | Drive Shaft | | 25 | 26 | 53 | 88.5 | 700 | |
| | 2022.05- | 6MT | F | L | MPV FWD 200.731 | For vehicles with electric parking brake | GDS58047 | Drive Shaft | | 29 | 26 | 60 | 95.5 | 705 | |
| | 2022.05- | 6MT | F | R | MPV FWD 200.731 | For vehicles without electric parking brake | GDS57941 | Drive Shaft | | 25 | 26 | 53 | 88.5 | 948 | |
| | 2022.05- | 6MT | F | R | MPV FWD 200.731 | For vehicles with electric parking brake | GDS58079 | Drive Shaft | | 29 | 26 | 60 | 95.5 | 955 | |
| | 2022.05- | 6MT | F | L/R | MPV FWD 200.731 | For vehicles without electric parking brake | GCO83588 | Outer Joint | | 25 | 24 | 53 | 88.5 | 61 | I |
| | 2022.05- | 6MT | F | L | MPV FWD 200.731 | For vehicles with electric parking brake | GCI83418 | Inner Joint | | 26 | 24 | 40 | 64 | 114 | |
| | 2022.05- | 6MT | F | L | MPV FWD 200.731 | For vehicles without electric parking brake | GCI83782 | Inner Joint | | 26 | 24 | 40 | 64 | 114 | |
| | 2022.05- | 6MT | F | R | MPV FWD 200.731 | For vehicles without electric parking brake | GCI83949 | Inner Joint | | 26 | 24 | 33 | 346 | 105 | |
| | 2022.05- | 6MT/7DCT | F | L/R | MPV FWD 200.731 | For vehicles with electric parking brake | GCO83811 | Outer Joint | | 29 | 24 | 60 | 95.5 | 61 | I |
| | 2022.05- | 7DCT | F | L | MPV FWD 200.731 | For vehicles with electric parking brake | GDS58074 | Drive Shaft | | 29 | 27 | 60 | 95.5 | 651 | |
| | 2022.05- | 7DCT | F | L | MPV FWD 200.731 | For vehicles without electric parking brake | GDS58093 | Drive Shaft | | 25 | 27 | 53 | 88.5 | 642 | |
| | 2022.05- | 7DCT | F | R | MPV FWD 200.731 | For vehicles with electric parking brake | GDS57958 | Drive Shaft | | 29 | 27 | 60 | 95.5 | 1009 | |
| | 2022.05- | 7DCT | F | R | MPV FWD 200.731 | For vehicles without electric parking brake | GDS58078 | Drive Shaft | | 25 | 27 | 53 | 88.5 | 1003 | |
| | 2022.05- | 7DCT | F | L | MPV FWD 200.731 | For vehicles with electric parking brake | GCI84006 | Inner Joint | | 27 | 24 | 40 | 65.5 | 113.5 | |
| | 2022.05- | 7DCT | F | R | MPV FWD 200.731 | For vehicles with electric parking brake | GCI83962 | Inner Joint | | 27 | 24 | 32.5 | 400 | 104 | |
| **T 180D** | | | | | | | | | | | | | | | |
| 1.5 (85 kw) | 2022.05- | 6MT | F | L | MPV FWD OM 608.915 (K9K) | For vehicles without electric parking brake | GDS58049 | Drive Shaft | | 25 | 27 | 53 | 88.5 | 686 | |
| | 2022.05- | 6MT | F | L | MPV FWD OM 608.915 (K9K) | For vehicles with electric parking brake | GDS58243 | Drive Shaft | | 29 | 27 | 60 | 95.5 | 695 | |
| | 2022.05- | 6MT | F | R | MPV FWD OM 608.915 (K9K) | For vehicles with electric parking brake | GDS58046 | Drive Shaft | | 29 | 27 | 60 | 95.5 | 960 | |
| | 2022.05- | 6MT | F | R | MPV FWD OM 608.915 (K9K) | For vehicles without electric parking brake | GDS58048 | Drive Shaft | | 25 | 27 | 53 | 88.5 | 953 | |
| | 2022.05- | 6MT | F | L/R | MPV FWD OM 608.915 (K9K) | For vehicles without electric parking brake | GCO83588 | Outer Joint | | 25 | 24 | 53 | 88.5 | 61 | I |
| | 2022.05- | 6MT | F | L | MPV FWD OM 608.915 (K9K) | For vehicles without electric parking brake | GCI83989 | Inner Joint | | 27 | 24 | 39.95 | 67 | 114 | |
| | 2022.05- | 6MT | F | R | MPV FWD OM 608.915 (K9K) | For vehicles without electric parking brake | GCI83988 | Inner Joint | | 27 | 24 | 33 | 339 | 103.5 | |
| | 2022.05- | 6MT/7DCT | F | L/R | MPV FWD OM 608.915 (K9K) | For vehicles with electric parking brake | GCO83811 | Outer Joint | | 29 | 24 | 60 | 95.5 | 61 | I |
| | 2022.05- | 7DCT | F | L | MPV FWD OM 608.915 (K9K) | For vehicles with electric parking brake | GDS58074 | Drive Shaft | | 29 | 27 | 60 | 95.5 | 651 | |
| | 2022.05- | 7DCT | F | L | MPV FWD OM 608.915 (K9K) | For vehicles without electric parking brake | GDS58093 | Drive Shaft | | 25 | 27 | 53 | 88.5 | 642 | |
| | 2022.05- | 7DCT | F | R | MPV FWD OM 608.915 (K9K) | For vehicles without electric parking brake | GDS57712 | Drive Shaft | | 25 | 27 | 53 | 88.5 | 1000 | |
| | 2022.05- | 7DCT | F | R | MPV FWD OM 608.915 (K9K) | For vehicles with electric parking brake | GDS58075 | Drive Shaft | | 29 | 27 | 60 | 95.5 | 1007 | |
| | 2022.05- | 7DCT | F | L | MPV FWD OM 608.915 (K9K) | For vehicles with electric parking brake | GCI84006 | Inner Joint | | 27 | 24 | 40 | 65.5 | 113.5 | |
| | 2022.05- | 7DCT | F | R | MPV FWD OM 608.915 (K9K) | For vehicles with electric parking brake | GCI83825 | Inner Joint | | 27 | 24 | 40 | 384.5 | 105 | |
| **V200** | | | | | | | | | | | | | | | |
| 2.0 (95 kw) | 1997.02-2003.07 | AT/MT | F | L/R | Bus FWD M 111.948, M 111.950 | | GDS35002 | Drive Shaft | 48W | 27 | | 59.8 | 99 | 531 | |
| | 1997.02-2003.07 | AT/MT | F | L/R | Bus FWD M 111.948, M 111.950 | | GDS35016 | Drive Shaft | | 27 | | 59.8 | 99 | 531 | |
| | 1997.02-2003.07 | AT/MT | F | L/R | Bus FWD M 111.948, M 111.950 | | GCO35001 | Outer Joint | 48W | 27 | 27 | 59.8 | 99 | 63 | I |
| | 1997.02-2003.07 | AT/MT | F | L/R | Bus FWD M 111.948, M 111.950 | | GCO35007 | Outer Joint | | 27 | 27 | 59.8 | 99 | 63 | I |
| | 1997.02-2003.07 | AT/MT | F | L/R | Bus FWD M 111.948, M 111.950 | | GCI48002 | Inner Joint | | | 28 | | | 32 | |
| 2.2 (75 kw) | 1999.03-2003.07 | 4AT/5MT | F | L/R | Bus FWD OM 611.980 | | GDS35003 | Drive Shaft | 48W | 27 | | 71.5 | 99 | 506 | |
| | 1999.03-2003.07 | 4AT/5MT | F | L/R | Bus FWD OM 611.980 | | GCO35002 | Outer Joint | 48W | 27 | 36 | 71.5 | 99 | 68 | I |
| | 1999.03-2003.07 | 4AT/5MT | F | L/R | Bus FWD OM 611.980 | | GCI35001 | Inner Joint | | | 30 | | | 36.2 | |
| | 1999.03-2003.07 | AT/MT | F | L/R | Bus FWD OM 611.980 | | GDS35011 | Drive Shaft | | 27 | | 71.5 | 99 | 506 | |
| | 1999.03-2003.07 | AT/MT | F | L/R | Bus FWD OM 611.980 | | GCO35008 | Outer Joint | | 27 | 36 | 71.5 | 99 | 68 | I |

| | YEAR | TRANSM. | F/R | L/R | BODY STYLE & DRIVE TYPE & ENGINE | REMARKS | G-AP Ref. | PRODUCT | ABS | Technical Specifications A | B | C | H | L | P |
|---|---|---|---|---|---|---|---|---|---|---|---|---|---|---|---|
| **MERCEDES-BENZ** | | | | | | | | | | | | | | | |
| **V200** | | | | | | | | | | | | | | | |
| 2.2 (75 kw) | 1999.03-2003.07 | 4AT/5MT | F | L/R | Van FWD OM 611.980 | | GDS35003 | Drive Shaft | 48W | 27 | | 71.5 | 99 | 506 | |
| | 1999.03-2003.07 | 4AT/5MT | F | L/R | Van FWD OM 611.980 | | GCO35002 | Outer Joint | 48W | 27 | 36 | 71.5 | 99 | 68 | I |
| 2.2 (100 kw) | 2014.03- | 7AT | R | L/R | Bus RWD OM 651.950 | Date to:2015.04,For SA code:XMF,Manufacturer:IFA,Date from:2015.05,Manufacturer:IFA | GDS35121 | Drive Shaft | | 30 | 30 | 73 | 90 | 846 | |
| | 2014.03- | 7AT | R | L/R | Bus RWD OM 651.950 | Date form:2015.09,Date to:2019.04,Manufacturer:Neapco | GDS57577 | Drive Shaft | | 30 | 30 | 73 | 90 | 851 | |
| | 2014.03- | 7AT | R | L/R | Bus RWD OM 651.950 | Date to:2019.04,Date form:2019.05,For SA code:VQ1/VQ8/Y03/Y04 | GCO83616 | Outer Joint | | 30 | 31 | 73 | 90 | 70.5 | M |
| | 2014.03- | 7AT | R | L/R | Bus RWD OM 651.950 | Date to:2019.04 | GCI83784 | Inner Joint | | 30 | 31 | 47 | 83 | 92.5 | |
| | 2014.03- | 7AT/6MT | R | L/R | Bus RWD OM 651.950 | | GDS58339 | Drive Shaft | | 30 | 30 | 73 | 90 | 849 | |
| | 2014.03- | 7AT/6MT | R | L/R | Bus RWD OM 651.950 | Date form:2019.05,For SA code:VQ1/VQ8/Y03/Y04 | GCI84070 | Inner Joint | | 30 | 31 | 47 | 83.5 | 93 | |
| | 2015.04- | 7AT | F | L/R | Bus 4WD OM 651.950 | No Facelift | GDS84138 | Drive Shaft | | 30 | 24 | 66 | 98.5 | 694 | |
| | 2015.04- | 7AT | F | L/R | Bus 4WD OM 651.950 | No Facelift | GCO82369 | Outer Joint | | 30 | 31 | 66 | 98.5 | 70 | M |
| | 2015.04- | 7AT | F | L/R | Bus 4WD OM 651.950 | | GCI82604 | Inner Joint | | 24 | 33 | 37.9 | 70.5 | 112 | |
| | 2015.04- | 7AT | R | L/R | Bus 4WD OM 651.950 | Manufacturer:IFA | GDS35121 | Drive Shaft | | 30 | 30 | 73 | 90 | 846 | |
| | 2015.04- | 7AT | R | L/R | Bus 4WD OM 651.950 | Date form:2019.05,For SA code:VQ1/VQ8/Y03/Y04 | GCI84070 | Inner Joint | | 30 | 31 | 47 | 83.5 | 93 | |
| **V220** | | | | | | | | | | | | | | | |
| 2.0 (120 kw) | 2019.03- | 9AT | F | L/R | Bus 4WD OM 654.920 | No Facelift | GDS84138 | Drive Shaft | | 30 | 24 | 66 | 98.5 | 694 | |
| | 2019.03- | 9AT | F | L/R | Bus 4WD OM 654.920 | No Facelift | GCO82369 | Outer Joint | | 30 | 31 | 66 | 98.5 | 70 | M |
| | 2019.03- | 9AT | F | L/R | Bus 4WD OM 654.920 | | GCI82604 | Inner Joint | | 24 | 33 | 37.9 | 70.5 | 112 | |
| | 2019.03- | 9AT | R | L/R | Bus 4WD OM 654.920 | Manufacturer:IFA | GDS35121 | Drive Shaft | | 30 | 30 | 73 | 90 | 846 | |
| | 2019.03- | 9AT | R | L/R | Bus 4WD OM 654.920 | Date form:2019.05,For SA code:VQ1/VQ8/Y03/Y04 | GCI84070 | Inner Joint | | 30 | 31 | 47 | 83.5 | 93 | |
| | 2019.03- | 9AT | R | L/R | Bus RWD OM 654.920 | Date to:2015.04,For SA code:XMF,Manufacturer:IFA,Date from:2015.05,Manufacturer:IFA | GDS35121 | Drive Shaft | | 30 | 30 | 73 | 90 | 846 | |
| | 2019.03- | 9AT | R | L/R | Bus RWD OM 654.920 | Date to:2019.04,Manufacturer:Neapco | GDS57577 | Drive Shaft | | 30 | 30 | 73 | 90 | 851 | |
| | 2019.03- | 9AT | R | L/R | Bus RWD OM 654.920 | | GDS58339 | Drive Shaft | | 30 | 30 | 73 | 90 | 849 | |
| | 2019.03- | 9AT | R | L/R | Bus RWD OM 654.920 | Date to:2019.04,Date form:2019.05,For SA code:VQ1/VQ8/Y03/Y04 | GCO83616 | Outer Joint | | 30 | 31 | 73 | 90 | 70.5 | M |
| | 2019.03- | 9AT | R | L/R | Bus RWD OM 654.920 | Date to:2019.04 | GCI83784 | Inner Joint | | 30 | 31 | 47 | 83 | 92.5 | |
| | 2019.03- | 9AT | R | L/R | Bus RWD OM 654.920 | Date form:2019.05,For SA code:VQ1/VQ8/Y03/Y04 | GCI84070 | Inner Joint | | 30 | 31 | 47 | 83.5 | 93 | |
| 2.2 (90 kw) | 1999.02-2003.07 | 4AT/5MT | F | L/R | Van FWD OM 611.980 | | GDS35003 | Drive Shaft | 48W | 27 | | 71.5 | 99 | 506 | |
| | 1999.02-2003.07 | 4AT/5MT | F | L/R | Van FWD OM 611.980 | | GCO35002 | Outer Joint | 48W | 27 | 36 | 71.5 | 99 | 68 | I |
| | 1999.03-2003.07 | 4AT/5MT | F | L/R | Bus FWD OM 611.980 | | GDS35003 | Drive Shaft | 48W | 27 | | 71.5 | 99 | 506 | |
| | 1999.03-2003.07 | 4AT/5MT | F | L/R | Bus FWD OM 611.980 | | GCO35002 | Outer Joint | 48W | 27 | 36 | 71.5 | 99 | 68 | I |
| | 1999.03-2003.07 | 4AT/5MT | F | L/R | Bus FWD OM 611.980 | | GCI35001 | Inner Joint | | | 30 | | | 36.2 | |
| | 1999.03-2003.07 | AT/MT | F | L/R | Bus FWD OM 611.980 | | GDS35011 | Drive Shaft | | 27 | | 71.5 | 99 | 506 | |
| | 1999.03-2003.07 | AT/MT | F | L/R | Bus FWD OM 611.980 | | GCO35008 | Outer Joint | | 27 | 36 | 71.5 | 99 | 68 | I |
| 2.2 (120 kw) | 2014.03- | 7AT | R | L/R | Bus RWD OM 651.950 | Date to:2015.04,For SA code:XMF,Manufacturer:IFA,Date from:2015.05,Manufacturer:IFA | GDS35121 | Drive Shaft | | 30 | 30 | 73 | 90 | 846 | |
| | 2014.03- | 7AT | R | L/R | Bus RWD OM 651.950 | Date form:2015.09,Date to:2019.04,Manufacturer:Neapco | GDS57577 | Drive Shaft | | 30 | 30 | 73 | 90 | 851 | |
| | 2014.03- | 7AT | R | L/R | Bus RWD OM 651.950 | Date to:2019.04,Date form:2019.05,For SA code:VQ1/VQ8/Y03/Y04 | GCO83616 | Outer Joint | | 30 | 31 | 73 | 90 | 70.5 | M |
| | 2014.03- | 7AT | R | L/R | Bus RWD OM 651.950 | Date to:2019.04 | GCI83784 | Inner Joint | | 30 | 31 | 47 | 83 | 92.5 | |
| | 2014.03- | 7AT/6MT | R | L/R | Bus RWD OM 651.950 | | GDS58339 | Drive Shaft | | 30 | 30 | 73 | 90 | 849 | |
| | 2014.03- | 7AT/6MT | R | L/R | Bus RWD OM 651.950 | Date form:2019.05,For SA code:VQ1/VQ8/Y03/Y04 | GCI84070 | Inner Joint | | 30 | 31 | 47 | 83.5 | 93 | |
| | 2015.03- | 7AT | F | L/R | Bus 4WD OM 651.950 | No Facelift | GDS84138 | Drive Shaft | | 30 | 24 | 66 | 98.5 | 694 | |
| | 2015.03- | 7AT | F | L/R | Bus 4WD OM 651.950 | No Facelift | GCO82369 | Outer Joint | | 30 | 31 | 66 | 98.5 | 70 | M |
| | 2015.03- | 7AT | F | L/R | Bus 4WD OM 651.950 | | GCI82604 | Inner Joint | | 24 | 33 | 37.9 | 70.5 | 112 | |
| | 2015.03- | 7AT | R | L/R | Bus 4WD OM 651.950 | Manufacturer:IFA | GDS35121 | Drive Shaft | | 30 | 30 | 73 | 90 | 846 | |
| | 2015.03- | 7AT | R | L/R | Bus 4WD OM 651.950 | Date form:2019.05,For SA code:VQ1/VQ8/Y03/Y04 | GCI84070 | Inner Joint | | 30 | 31 | 47 | 83.5 | 93 | |
| **V230** | | | | | | | | | | | | | | | |
| 2.3 (72 kw) | 1996.08-1999.02 | 4AT/5MT | F | L/R | Van FWD OM 601.970 | | GDS35002 | Drive Shaft | 48W | 27 | | 59.8 | 99 | 531 | |
| | 1996.08-1999.02 | 4AT/5MT | F | L/R | Van FWD OM 601.970 | | GDS35016 | Drive Shaft | | 27 | | 59.8 | 99 | 531 | |
| | 1996.08-1999.02 | 4AT/5MT | F | L/R | Van FWD OM 601.970 | | GCO35001 | Outer Joint | 48W | 27 | 27 | 59.8 | 99 | 63 | I |
| | 1996.08-1999.02 | | F | L/R | Van FWD OM 601.970 | | GCI48002 | Inner Joint | | | 28 | | | 32 | |
| | 1996.09-2003.07 | AT/MT | F | L/R | Bus FWD OM 601.970 (09.96-.) | | GDS35002 | Drive Shaft | 48W | 27 | | 59.8 | 99 | 531 | |
| | 1996.09-2003.07 | AT/MT | F | L/R | Bus FWD OM 601.970 (09.96-.) | | GDS35016 | Drive Shaft | | 27 | | 59.8 | 99 | 531 | |
| | 1996.09-2003.07 | AT/MT | F | L/R | Bus FWD OM 601.970 (09.96-.) | | GCO35001 | Outer Joint | 48W | 27 | 27 | 59.8 | 99 | 63 | I |
| | 1996.09-2003.07 | AT/MT | F | L/R | Bus FWD OM 601.970 (09.96-.) | | GCO35007 | Outer Joint | | 27 | 27 | 59.8 | 99 | 63 | I |
| | 1996.09-2003.07 | AT/MT | F | L/R | Bus FWD OM 601.970 (09.96-.) | | GCI48002 | Inner Joint | | | 28 | | | 32 | |
| 2.3 (105 kw) | 1996.08-2003.07 | 4AT/5MT | F | L/R | Van FWD M 111.978, M 111.980 | | GDS35002 | Drive Shaft | 48W | 27 | | 59.8 | 99 | 531 | |
| | 1996.08-2003.07 | 4AT/5MT | F | L/R | Van FWD M 111.978, M 111.980 | | GDS35016 | Drive Shaft | | 27 | | 59.8 | 99 | 531 | |
| | 1996.08-2003.07 | 4AT/5MT | F | L/R | Van FWD M 111.978, M 111.980 | | GCO35001 | Outer Joint | 48W | 27 | 27 | 59.8 | 99 | 63 | I |
| | 1996.08-2003.07 | | F | L/R | Van FWD M 111.978, M 111.980 | | GCI48002 | Inner Joint | | | 28 | | | 32 | |
| | 1996.10-2003.07 | AT/MT | F | L/R | Bus FWD M 111.978, M 111.980 | | GDS35002 | Drive Shaft | 48W | 27 | | 59.8 | 99 | 531 | |
| | 1996.10-2003.07 | AT/MT | F | L/R | Bus FWD M 111.978, M 111.980 | | GDS35016 | Drive Shaft | | 27 | | 59.8 | 99 | 531 | |
| | 1996.10-2003.07 | AT/MT | F | L/R | Bus FWD M 111.978, M 111.980 | | GCO35001 | Outer Joint | 48W | 27 | 27 | 59.8 | 99 | 63 | I |
| | 1996.10-2003.07 | AT/MT | F | L/R | Bus FWD M 111.978, M 111.980 | | GCO35007 | Outer Joint | | 27 | 27 | 59.8 | 99 | 63 | I |
| | 1996.10-2003.07 | AT/MT | F | L/R | Bus FWD M 111.978, M 111.980 | | GCI48002 | Inner Joint | | | 28 | | | 32 | |
| **V250** | | | | | | | | | | | | | | | |
| 2.0 (140 kw) | 2019.03- | 9AT | F | L/R | Bus 4WD OM 654.920 | No Facelift | GDS84138 | Drive Shaft | | 30 | 24 | 66 | 98.5 | 694 | |
| | 2019.03- | 9AT | F | L/R | Bus 4WD OM 654.920 | No Facelift | GCO82369 | Outer Joint | | 30 | 31 | 66 | 98.5 | 70 | M |

| | YEAR | TRANSM. | F/R | L/R | BODY STYLE & DRIVE TYPE & ENGINE | REMARKS | G-AP Ref. | PRODUCT | ABS | Technical Specifications A | B | C | H | L | P |
|---|---|---|---|---|---|---|---|---|---|---|---|---|---|---|---|
| **MERCEDES-BENZ** | | | | | | | | | | | | | | | |
| **V250** | | | | | | | | | | | | | | | |
| 2.0 (140 kw) | 2019.03- | 9AT | F | L/R | Bus 4WD OM 654.920 | | GCI82604 | Inner Joint | | 24 | 33 | 37.9 | 70.5 | 112 | |
| | 2019.03- | 9AT | R | L/R | Bus 4WD OM 654.920 | Manufacturer:IFA | GDS35121 | Drive Shaft | | 30 | 30 | 73 | 90 | 846 | |
| | 2019.03- | 9AT | R | L/R | Bus 4WD OM 654.920 | Date form:2019.05,For SA code:VQ1/VQ8/Y03/Y04 | GCI84070 | Inner Joint | | 30 | 31 | 47 | 83.5 | 93 | |
| | 2019.03- | 9AT | R | L/R | Bus RWD OM 654.920 | [illegible] | GDS35121 | Drive Shaft | | 30 | 30 | 73 | 90 | 846 | |
| | 2019.03- | 9AT | R | L/R | Bus RWD OM 654.920 | Date to:2019.04,Manufacturer:Neapco | GDS57577 | Drive Shaft | | 30 | 30 | 73 | 90 | 851 | |
| | 2019.03- | 9AT | R | L/R | Bus RWD OM 654.920 | ..... | GDS58339 | Drive Shaft | | 30 | 30 | 73 | 90 | 849 | |
| | 2019.03- | 9AT | R | L/R | Bus RWD OM 654.920 | Date to:2019.04,Date form:2019.05,For SA code:VQ1/VQ8/Y03/Y04 | GCO83616 | Outer Joint | | 30 | 31 | 73 | 90 | 70.5 | M |
| | 2019.03- | 9AT | R | L/R | Bus RWD OM 654.920 | Date to:2019.04 | GCI83784 | Inner Joint | | 30 | 31 | 47 | 83 | 92.5 | |
| | 2019.03- | 9AT | R | L/R | Bus RWD OM 654.920 | Date form:2019.05,For SA code:VQ1/VQ8/Y03/Y04 | GCI84070 | Inner Joint | | 30 | 31 | 47 | 83.5 | 93 | |
| 2.2 (140 kw) | 2014.03- | 7AT | R | L/R | Bus RWD OM 651.950 | Date to:2020.04,For SA code:XM7,Manufacturer:IFA,Date form:2020.05,Manufacturer:IFA | GDS35121 | Drive Shaft | | 30 | 30 | 73 | 90 | 846 | |
| | 2014.03- | 7AT | R | L/R | Bus RWD OM 651.950 | Date form:2015.09,Date to:2019.04,Manufacturer:Neapco | GDS57577 | Drive Shaft | | 30 | 30 | 73 | 90 | 851 | |
| | 2014.03- | 7AT | R | L/R | Bus RWD OM 651.950 | ..... | GDS58339 | Drive Shaft | | 30 | 30 | 73 | 90 | 849 | |
| | 2014.03- | 7AT | R | L/R | Bus RWD OM 651.950 | Date to:2019.04,Date form:2019.05,For SA code:VQ1/VQ8/Y03/Y04 | GCO83616 | Outer Joint | | 30 | 31 | 73 | 90 | 70.5 | M |
| | 2014.03- | 7AT | R | L/R | Bus RWD OM 651.950 | Date to:2019.04 | GCI83784 | Inner Joint | | 30 | 31 | 47 | 83 | 92.5 | |
| | 2014.03- | 7AT | R | L/R | Bus RWD OM 651.950 | Date form:2019.05,For SA code:VQ1/VQ8/Y03/Y04 | GCI84070 | Inner Joint | | 30 | 31 | 47 | 83.5 | 93 | |
| | 2014.12- | 7AT | F | L/R | Bus 4WD OM 651.950 | No Facelift | GDS84138 | Drive Shaft | | 30 | 24 | 66 | 98.5 | 694 | |
| | 2014.12- | 7AT | F | L/R | Bus 4WD OM 651.950 | No Facelift | GCO82369 | Outer Joint | | 30 | 31 | 66 | 98.5 | 70 | M |
| | 2014.12- | 7AT | F | L/R | Bus 4WD OM 651.950 | | GCI82604 | Inner Joint | | 24 | 33 | 37.9 | 70.5 | 112 | |
| | 2014.12- | 7AT | R | L/R | Bus 4WD OM 651.950 | Manufacturer:IFA | GDS35121 | Drive Shaft | | 30 | 30 | 73 | 90 | 846 | |
| | 2014.12- | 7AT | R | L/R | Bus 4WD OM 651.950 | Date form:2019.05,For SA code:VQ1/VQ8/Y03/Y04 | GCI84070 | Inner Joint | | 30 | 31 | 47 | 83.5 | 93 | |
| **V280** | | | | | | | | | | | | | | | |
| 2.8 (128 kw) | 1997.07-2003.07 | 4AT/5MT | F | L/R | Van FWD M 104.900 | | GCO35002 | Outer Joint | 48W | 27 | 36 | 71.5 | 99 | 68 | I |
| | 1997.08-2003.07 | 4AT/5MT | F | L/R | Bus FWD M 104.900 (08.97-.) | | GCO35002 | Outer Joint | 48W | 27 | 36 | 71.5 | 99 | 68 | I |
| | 1997.08-2003.07 | 5MT | F | L/R | Bus FWD M 104.900 (08.97-.) | | GDS35002 | Drive Shaft | 48W | 27 | | 59.8 | 99 | 531 | |
| **V300** | | | | | | | | | | | | | | | |
| 2.0 (174 kw) | 2021.01- | 9AT | F | L/R | Bus 4WD OM 654.920 | | GDS84138 | Drive Shaft | | 30 | 24 | 66 | 98.5 | 694 | |
| | 2021.01- | 9AT | R | L/R | Bus 4WD OM 654.920 | Manufacturer:IFA | GDS35121 | Drive Shaft | | 30 | 30 | 73 | 90 | 846 | |
| | 2021.01- | 9AT | R | L/R | Bus RWD OM 654.920 | [illegible] | GDS35121 | Drive Shaft | | 30 | 30 | 73 | 90 | 846 | |
| 2.0 (176 kw) | 2019.03-2020.12 | 9AT | F | L/R | Bus 4WD OM 654.920 | No Facelift | GDS84138 | Drive Shaft | | 30 | 24 | 66 | 98.5 | 694 | |
| | 2019.03-2020.12 | 9AT | F | L/R | Bus 4WD OM 654.920 | No Facelift | GCO82369 | Outer Joint | | 30 | 31 | 66 | 98.5 | 70 | M |
| | 2019.03-2020.12 | 9AT | F | L/R | Bus 4WD OM 654.920 | | GCI82604 | Inner Joint | | 24 | 33 | 37.9 | 70.5 | 112 | |
| | 2019.03-2020.12 | 9AT | R | L/R | Bus 4WD OM 654.920 | Manufacturer:IFA | GDS35121 | Drive Shaft | | 30 | 30 | 73 | 90 | 846 | |
| | 2019.03-2020.12 | 9AT | R | L/R | Bus 4WD OM 654.920 | Date form:2019.05,For SA code:VQ1/VQ8/Y03/Y04 | GCI84070 | Inner Joint | | 30 | 31 | 47 | 83.5 | 93 | |
| | 2019.03-2020.12 | 9AT | R | L/R | Bus RWD OM 654.920 | For SA code:XM7,Manufacturer:IFA,For SA code:VQ1/VQ8/Y03/Y04,Manufacturer:IFA | GDS35121 | Drive Shaft | | 30 | 30 | 73 | 90 | 846 | |
| | 2019.03-2020.12 | 9AT | R | L/R | Bus RWD OM 654.920 | Date to:2019.04,Manufacturer:Neapco | GDS57577 | Drive Shaft | | 30 | 30 | 73 | 90 | 851 | |
| | 2019.03-2020.12 | 9AT | R | L/R | Bus RWD OM 654.920 | ..... | GDS58339 | Drive Shaft | | 30 | 30 | 73 | 90 | 849 | |
| | 2019.03-2020.12 | 9AT | R | L/R | Bus RWD OM 654.920 | Date to:2019.04,Date form:2019.05,For SA code:VQ1/VQ8/Y03/Y04 | GCO83616 | Outer Joint | | 30 | 31 | 73 | 90 | 70.5 | M |
| | 2019.03-2020.12 | 9AT | R | L/R | Bus RWD OM 654.920 | Date to:2019.04 | GCI83784 | Inner Joint | | 30 | 31 | 47 | 83 | 92.5 | |
| | 2019.03-2020.12 | 9AT | R | L/R | Bus RWD OM 654.920 | Date form:2019.05,For SA code:VQ1/VQ8/Y03/Y04 | GCI84070 | Inner Joint | | 30 | 31 | 47 | 83.5 | 93 | |
| **Vaneo** | | | | | | | | | | | | | | | |
| 1.6 (60 kw) | 2002.02-2005.07 | AT/MT | F | L/R | MPV FWD M 166.961 | | GCO35004 | Outer Joint | 48W | 24 | 27 | 57 | 67.5 | 56 | I |
| | 2002.02-2005.07 | MT | F | L | MPV FWD M 166.961 | | GDS35037 | Drive Shaft | 48W | 24 | 22 | 57 | 67.5 | 572 | |
| | 2002.02-2005.07 | MT | F | R | MPV FWD M 166.961 | | GDS56737 | Drive Shaft | 48W | 24 | 22 | 57 | 67.5 | 958 | |
| | 2002.02-2005.07 | MT | F | L/R | MPV FWD M 166.961 | | GCO35023 | Outer Joint | 48W | 24 | 27 | 57 | 67.5 | 58 | I |
| | 2002.02-2005.07 | MT | F | R | MPV FWD M 166.961 | | GCI35011 | Inner Joint | | 22 | 27 | 36 | 459 | 81 | |
| | 2002.02-2005.07 | | F | | MPV FWD M 166.961 | | GCO35003 | Outer Joint | 48W | 24 | 27 | 57 | 67.5 | 50 | I |
| 1.6 (75 kw) | 2002.02-2005.07 | 5AT | F | L | MPV FWD M 166.961 | Date from:2003.02;Chassis no. from:N224095 | GDS35021 | Drive Shaft | 48W | 24 | 22 | 57 | 67.5 | 561 | |
| | 2002.02-2005.07 | 5AT | F | R | MPV FWD M 166.961 | | GDS35023 | Drive Shaft | 48W | 24 | 22 | 57 | 67.5 | 965 | |
| | 2002.02-2005.07 | AT/MT | F | L/R | MPV FWD M 166.961 | | GCO35004 | Outer Joint | 48W | 24 | 27 | 57 | 67.5 | 56 | I |
| | 2002.02-2005.07 | MT | F | L | MPV FWD M 166.961 | | GDS35037 | Drive Shaft | 48W | 24 | 22 | 57 | 67.5 | 572 | |
| | 2002.02-2005.07 | MT | F | R | MPV FWD M 166.961 | | GDS56737 | Drive Shaft | 48W | 24 | 22 | 57 | 67.5 | 958 | |
| | 2002.02-2005.07 | MT | F | L/R | MPV FWD M 166.961 | | GCO35023 | Outer Joint | 48W | 24 | 27 | 57 | 67.5 | 58 | I |
| | 2002.02-2005.07 | MT | F | R | MPV FWD M 166.961 | | GCI35011 | Inner Joint | | 22 | 27 | 36 | 459 | 81 | |
| | 2002.02-2005.07 | | F | | MPV FWD M 166.961 | | GCO35003 | Outer Joint | 48W | 24 | 27 | 57 | 67.5 | 50 | I |
| 1.7 (55 kw) | 2002.02-2005.07 | AT/MT | F | L/R | MPV FWD OM 668.914 | | GCO35004 | Outer Joint | 48W | 24 | 27 | 57 | 67.5 | 56 | I |
| | 2002.02-2005.07 | MT | F | L | MPV FWD OM 668.914 | | GDS35037 | Drive Shaft | 48W | 24 | 22 | 57 | 67.5 | 572 | |
| | 2002.02-2005.07 | MT | F | R | MPV FWD OM 668.914 | | GDS56737 | Drive Shaft | 48W | 24 | 22 | 57 | 67.5 | 958 | |
| | 2002.02-2005.07 | MT | F | L/R | MPV FWD OM 668.914 | | GCO35023 | Outer Joint | 48W | 24 | 27 | 57 | 67.5 | 58 | I |
| | 2002.02-2005.07 | MT | F | R | MPV FWD OM 668.914 | | GCI35011 | Inner Joint | | 22 | 27 | 36 | 459 | 81 | |
| | 2002.02-2005.07 | | F | | MPV FWD OM 668.914 | | GCO35003 | Outer Joint | 48W | 24 | 27 | 57 | 67.5 | 50 | I |
| 1.7 (67 kw) | 2002.02-2005.07 | 5AT | F | L | MPV FWD OM 668.914 | | GDS35021 | Drive Shaft | 48W | 24 | 22 | 57 | 67.5 | 561 | |
| | 2002.02-2005.07 | 5AT | F | R | MPV FWD OM 668.914 | | GDS35023 | Drive Shaft | 48W | 24 | 22 | 57 | 67.5 | 965 | |
| | 2002.02-2005.07 | AT/MT | F | L/R | MPV FWD OM 668.914 | | GCO35004 | Outer Joint | 48W | 24 | 27 | 57 | 67.5 | 56 | I |
| | 2002.02-2005.07 | MT | F | L | MPV FWD OM 668.914 | | GDS35037 | Drive Shaft | 48W | 24 | 22 | 57 | 67.5 | 572 | |
| | 2002.02-2005.07 | MT | F | R | MPV FWD OM 668.914 | | GDS56737 | Drive Shaft | 48W | 24 | 22 | 57 | 67.5 | 958 | |

| | YEAR | TRANSM. | F/R | L/R | BODY STYLE & DRIVE TYPE & ENGINE | REMARKS | G-AP Ref. | PRODUCT | ABS | Technical Specifications A | B | C | H | L | P |
|---|---|---|---|---|---|---|---|---|---|---|---|---|---|---|---|
| **MERCEDES-BENZ** | | | | | | | | | | | | | | | |
| **Vaneo** | | | | | | | | | | | | | | | |
| 1.7 (67 kw) | 2002.02-2005.07 | MT | F | L/R | MPV FWD OM 668.914 | | GCO35023 | Outer Joint | 48W | 24 | 27 | 57 | 67.5 | 58 | I |
| | 2002.02-2005.07 | MT | F | R | MPV FWD OM 668.914 | | GCI35011 | Inner Joint | | 22 | 27 | 36 | 459 | 81 | |
| | 2002.02-2005.07 | | F | | MPV FWD OM 668.914 | | GCO35003 | Outer Joint | 48W | 24 | 27 | 57 | 67.5 | 50 | I |
| 1.9 (92 kw) | 2002.02-2005.07 | 5AT | F | L | MPV FWD M 166.991 | Date from:2003.02;Chassis no. from:N224095 | GDS35021 | Drive Shaft | 48W | 24 | 22 | 57 | 67.5 | 561 | |
| | 2002.02-2005.07 | 5AT | F | R | MPV FWD M 166.991 | | GDS35023 | Drive Shaft | 48W | 24 | 22 | 57 | 67.5 | 965 | |
| | 2002.02-2005.07 | AT/MT | F | L/R | MPV FWD M 166.991 | | GCO35004 | Outer Joint | 48W | 24 | 27 | 57 | 67.5 | 56 | I |
| | 2002.02-2005.07 | MT | F | L | MPV FWD M 166.991 | | GDS35037 | Drive Shaft | 48W | 24 | 22 | 57 | 67.5 | 572 | |
| | 2002.02-2005.07 | MT | F | R | MPV FWD M 166.991 | | GDS56737 | Drive Shaft | 48W | 24 | 22 | 57 | 67.5 | 958 | |
| | 2002.02-2005.07 | MT | F | L/R | MPV FWD M 166.991 | | GCO35023 | Outer Joint | 48W | 24 | 27 | 57 | 67.5 | 58 | I |
| | 2002.02-2005.07 | MT | F | R | MPV FWD M 166.991 | | GCI35011 | Inner Joint | | 22 | 27 | 36 | 459 | 81 | |
| | 2002.02-2005.07 | | F | | MPV FWD M 166.991 | | GCO35003 | Outer Joint | 48W | 24 | 27 | 57 | 67.5 | 50 | I |
| **Viano** | | | | | | | | | | | | | | | |
| 2.2 (70 kw) | 2010.09- | 5AT/6MT | R | L/R | Bus RWD OM 651.940 | For SA code:XM0 | GCI83462 | Inner Joint | | 26 | 37 | 45 | 83 | 96 | |
| | 2010.09- | 6MT | R | L/R | Bus RWD OM 651.940 | | GDS35022 | Drive Shaft | | 30 | 26 | 70 | 94.5 | 853 | |
| | 2010.09- | 6MT | R | L/R | Bus RWD OM 651.940 | For SA code:XM0 | GDS56736 | Drive Shaft | | 30 | 26 | 70 | 99.5 | 865 | |
| 2.2 (80 kw) | 2003.09- | 5AT/6MT | R | L/R | Bus RWD OM 646.982 | Date to:2011.06;Chassis no. to:3673614;For SA code:UB5;UB1;UB3;UB5;UB7;YU0;YU1;YU2;YU3;YU4;YU5;YU6;YU7;YU8;YU9;YU10;YU11;YU12;YU13;YU14;YU15;YU16;YU17;YU18;YU19;YU20;YU21;YU22;YU23;YU24;YU25;YU26;YU27;YU28;YU29;YU30;YU31;YU32;YU33;YU34;YU35;YU36;YU37;YU38;YU39;YU40;YU41;YU42;YU43;YU44;YU45;YU46;YU47;YU48;YU49;YU50;YU51;YU52;YU53;YU54;YU55;YU56;YU57;YU58;YU59;YU60;YU61;YU62;YU63;YU64;YU65;YU66;YU67;YU68;YU69;YU70;YU71;YU72;YU73;YU74;YU75;YU76;YU77;YU78;YU79;YU80;YU81;YU82;YU83;YU84;YU85;YU86;YU87;YU88;YU89;YU90;YU91;YU92;YU93;YU94;YU95;YU96;YU97;YU98;YU99;YU100;YU101;YU102;YU103;YU104;YU105;YU106;YU107;YU108;YU109;YU110;YU111;YU112;YU113;YU114;YU115;YU116;YU117;YU118;YU119;YU120;YU121;YU122;YU123;YU124;YU125;YU126;YU127;YU128;YU129;YU130;YU131;YU132;YU133;YU134;YU135;YU136;YU137;YU138;YU139;YU140;YU141;YU142;YU143;YU144;YU145;YU146;YU147;YU148;YU149;YU150;YU151;YU152;YU153;YU154;YU155;YU156;YU157;YU158;YU159;YU160;YU161;YU162;YU163;YU164;YU165;YU166;YU167;YU168;YU169;YU170;YU171;YU172;YU173;YU174;YU175;YU176;YU177;YU178;YU179;YU180;YU181;YU182;YU183;YU184;YU185;YU186;YU187;YU188;YU189;YU190;YU191;YU192;YU193;YU194;YU195;YU196;YU197;YU198;YU199;YU200;YU201;YU202;YU203;YU204;YU205;YU206;YU207;YU208;YU209;YU210;YU211;YU212;YU213;YU214;YU215;YU216;YU217;YU218;YU219;YU220;YU221;YU222;YU223;YU224;YU225;YU226;YU227;YU228;YU229;YU230;YU231;YU232;YU233;YU234;YU235;YU236;YU237;YU238;YU239;YU240;YU241;YU242;YU243;YU244;YU245;YU246;YU247;YU248;YU249;YU250;YU251;YU252;YU253;YU254;YU255;YU256;YU257;YU258;YU259;YU260;YU261;YU262;YU263;YU264;YU265;YU266;YU267;YU268;YU269;YU270;YU271;YU272;YU273;YU274;YU275;YU276;YU277;YU278;YU279;YU280;YU281;YU282;YU283;YU284;YU285;YU286;YU287;YU288;YU289;YU290;YU291;YU292;YU293;YU294;YU295;YU296;YU297;YU298;YU299;YU300;YU301;YU302;YU303;YU304;YU305;YU306;YU307;YU308;YU309;YU310;YU311;YU312;YU313;YU314;YU315;YU316;YU317;YU318;YU319;YU320;YU321;YU322;YU323;YU324;YU325;YU326;YU327;YU328;YU329;YU330;YU331;YU332;YU333;YU334;YU335;YU336;YU337;YU338;YU339;YU340;YU341;YU342;YU343;YU344;YU345;YU346;YU347;YU348;YU349;YU350;YU351;YU352;YU353;YU354;YU355;YU356;YU357;YU358;YU359;YU360;YU361;YU362;YU363;YU364;YU365;YU366;YU367;YU368;YU369;YU370;YU371;YU372;YU373;YU374;YU375;YU376;YU377;YU378;YU379;YU380;YU381;YU382;YU383;YU384;YU385;YU386;YU387;YU388;YU389;YU390;YU391;YU392;YU393;YU394;YU395;YU396;YU397;YU398;YU399;YU400;YU401;YU402;YU403;YU404;YU405;YU406;YU407;YU408;YU409;YU410;YU411;YU412;YU413;YU414;YU415;YU416;YU417;YU418;YU419;YU420;YU421;YU422;YU423;YU424;YU425;YU426;YU427;YU428;YU429;YU430;YU431;YU432;YU433;YU434;YU435;YU436;YU437;YU438;YU439;YU440;YU441;YU442;YU443;YU444;YU445;YU446;YU447;YU448;YU449;YU450;YU451;YU452;YU453;YU454;YU455;YU456;YU457;YU458;YU459;YU460;YU461;YU462;YU463;YU464;YU465;YU466;YU467;YU468;YU469;YU470;YU471;YU472;YU473;YU474;YU475;YU476;YU477;YU478;YU479;YU480;YU481;YU482;YU483;YU484;YU485;YU486;YU487;YU488;YU489;YU490;YU491;YU492;YU493;YU494;YU495;YU496;YU497;YU498;YU499;YU500;YU501;YU502;YU503;YU504;YU505;YU506;YU507;YU508;YU509;YU510;YU511;YU512;YU513;YU514;YU515;YU516;YU517;YU518;YU519;YU520;YU521;YU522;YU523;YU524;YU525;YU526;YU527;YU528;YU529;YU530;YU531;YU532;YU533;YU534;YU535;YU536;YU537;YU538;YU539;YU540;YU541;YU542;YU543;YU544;YU545;YU546;YU547;YU548;YU549;YU550;YU551;YU552;YU553;YU554;YU555;YU556;YU557;YU558;YU559;YU560;YU561;YU562;YU563;YU564;YU565;YU566;YU567;YU568;YU569;YU570;YU571;YU572;YU573;YU574;YU575;YU576;YU577;YU578;YU579;YU580;YU581;YU582;YU583;YU584;YU585;YU586;YU587;YU588;YU589;YU590;YU591;YU592;YU593;YU594;YU595;YU596;YU597;YU598;YU599;YU600;YU601;YU602;YU603;YU604;YU605;YU606;YU607;YU608;YU609;YU610;YU611;YU612;YU613;YU614;YU615;YU616;YU617;YU618;YU619;YU620;YU621;YU622;YU623;YU624;YU625;YU626;YU627;YU628;YU629;YU630;YU631;YU632;YU633;YU634;YU635;YU636;YU637;YU638;YU639;YU640;YU641;YU642;YU643;YU644;YU645;YU646;YU647;YU648;YU649;YU650;YU651;YU652;YU653;YU654;YU655;YU656;YU657;YU658;YU659;YU660;YU661;YU662;YU663;YU664;YU665;YU666;YU667;YU668;YU669;YU670;YU671;YU672;YU673;YU674;YU675;YU676;YU677;YU678;YU679;YU680;YU681;YU682;YU683;YU684;YU685;YU686;YU687;YU688;YU689;YU690;YU691;YU692;YU693;YU694;YU695;YU696;YU697;YU698;YU699;YU700;YU701;YU702;YU703;YU704;YU705;YU706;YU707;YU708;YU709;YU710;YU711;YU712;YU713;YU714;YU715;YU716;YU717;YU718;YU719;YU720;YU721;YU722;YU723;YU724;YU725;YU726;YU727;YU728;YU729;YU730;YU731;YU732;YU733;YU734;YU735;YU736;YU737;YU738;YU739;YU740;YU741;YU742;YU743;YU744;YU745;YU746;YU747;YU748;YU749;YU750;YU751;YU752;YU753;YU754;YU755;YU756;YU757;YU758;YU759;YU760;YU761;YU762;YU763;YU764;YU765;YU766;YU767;YU768;YU769;YU770;YU771;YU772;YU773;YU774;YU775;YU776;YU777;YU778;YU779;YU780;YU781;YU782;YU783;YU784;YU785;YU786;YU787;YU788;YU789;YU790;YU791;YU792;YU793;YU794;YU795;YU796;YU797;YU798;YU799;YU800;YU801;YU802;YU803;YU804;YU805;YU806;YU807;YU808;YU809;YU810;YU811;YU812;YU813;YU814;YU815;YU816;YU817;YU818;YU819;YU820;YU821;YU822;YU823;YU824;YU825;YU826;YU827;YU828;YU829;YU830;YU831;YU832;YU833;YU834;YU835;YU836;YU837;YU838;YU839;YU840;YU841;YU842;YU843;YU844;YU845;YU846;YU847;YU848;YU849;YU850;YU851;YU852;YU853;YU854;YU855;YU856;YU857;YU858;YU859;YU860;YU861;YU862;YU863;YU864;YU865;YU866;YU867;YU868;YU869;YU870;YU871;YU872;YU873;YU874;YU875;YU876;YU877;YU878;YU879;YU880;YU881;YU882;YU883;YU884;YU885;YU886;YU887;YU888;YU889;YU890;YU891;YU892;YU893;YU894;YU895;YU896;YU897;YU898;YU899;YU900;YU901;YU902;YU903;YU904;YU905;YU906;YU907;YU908;YU909;YU910;YU911;YU912;YU913;YU914;YU915;YU916;YU917;YU918;YU919;YU920;YU921;YU922;YU923;YU924;YU925;YU926;YU927;YU928;YU929;YU930;YU931;YU932;YU933;YU934;YU935;YU936;YU937;YU938;YU939;YU940;YU941;YU942;YU943;YU944;YU945;YU946;YU947;YU948;YU949;YU950;YU951;YU952;YU953;YU954;YU955;YU956;YU957;YU958;YU959;YU960;YU961;YU962;YU963;YU964;YU965;YU966;YU967;YU968;YU969;YU970;YU971;YU972;YU973;YU974;YU975;YU976;YU977;YU978;YU979;YU980;YU981;YU982;YU983;YU984;YU985;YU986;YU987;YU988;YU989;YU990;YU991;YU992;YU993;YU994;YU995;YU996;YU997;YU998;YU999;YU1000;YU1001;YU1002;YU1003;YU1004;YU1005;YU1006;YU1007;YU1008;YU1009;YU1010;YU1011;YU1012;YU1013;YU1014;YU1015;YU1016;YU1017;YU1018;YU1019;YU1020;YU1021;YU1022;YU1023;YU1024;YU1025;YU1026;YU1027;YU1028;YU1029;YU1030;YU1031;YU1032;YU1033;YU1034;YU1035;YU1036;YU1037;YU1038;YU1039;YU1040;YU1041;YU1042;YU1043;YU1044;YU1045;YU1046;YU1047;YU1048;YU1049;YU1050;YU1051;YU1052;YU1053;YU1054;YU1055;YU1056;YU1057;YU1058;YU1059;YU1060;YU1061;YU1062;YU1063;YU1064;YU1065;YU1066;YU1067;YU1068;YU1069;YU1070;YU1071;YU1072;YU1073;YU1074;YU1075;YU1076;YU1077;YU1078;YU1079;YU1080;YU1081;YU1082;YU1083;YU1084;YU1085;YU1086;YU1087;YU1088;YU1089;YU1090;YU1091;YU1092;YU1093;YU1094;YU1095;YU1096;YU1097;YU1098;YU1099;YU1100;YU1101;YU1102;YU1103;YU1104;YU1105;YU1106;YU1107;YU1108;YU1109;YU1110;YU1111;YU1112;YU1113;YU1114;YU1115;YU1116;YU1117;YU1118;YU1119;YU1120;YU1121;YU1122;YU1123;YU1124;YU1125;YU1126;YU1127;YU1128;YU1129;YU1130;YU1131;YU1132;YU1133;YU1134;YU1135;YU1136;YU1137;YU1138;YU1139;YU1140;YU1141;YU1142;YU1143;YU1144;YU1145;YU1146;YU1147;YU1148;YU1149;YU1150;YU1151;YU1152;YU1153;YU1154;YU1155;YU1156;YU1157;YU1158;YU1159;YU1160;YU1161;YU1162;YU1163;YU1164;YU1165;YU1166;YU1167;YU1168;YU1169;YU1170;YU1171;YU1172;YU1173;YU1174;YU1175;YU1176;YU1177;YU1178;YU1179;YU1180;YU1181;YU1182;YU1183;YU1184;YU1185;YU1186;YU1187;YU1188;YU1189;YU1190;YU1191;YU1192;YU1193;YU1194;YU1195;YU1196;YU1197;YU1198;YU1199;YU1200;YU1201;YU1202;YU1203;YU1204;YU1205;YU1206;YU1207;YU1208;YU1209;YU1210;YU1211;YU1212;YU1213;YU1214;YU1215;YU1216;YU1217;YU1218;YU1219;YU1220;YU1221;YU1222;YU1223;YU1224;YU1225;YU1226;YU1227;YU1228;YU1229;YU1230;YU1231;YU1232;YU1233;YU1234;YU1235;YU1236;YU1237;YU1238;YU1239;YU1240;YU1241;YU1242;YU1243;YU1244;YU1245;YU1246;YU1247;YU1248;YU1249;YU1250;YU1251;YU1252;YU1253;YU1254;YU1255;YU1256;YU1257;YU1258;YU1259;YU1260;YU1261;YU1262;YU1263;YU1264;YU1265;YU1266;YU1267;YU1268;YU1269;YU1270;YU1271;YU1272;YU1273;YU1274;YU1275;YU1276;YU1277;YU1278;YU1279;YU1280;YU1281;YU1282;YU1283;YU1284;YU1285;YU1286;YU1287;YU1288;YU1289;YU1290;YU1291;YU1292;YU1293;YU1294;YU1295;YU1296;YU1297;YU1298;YU1299;YU1300;YU1301;YU1302;YU1303;YU1304;YU1305;YU1306;YU1307;YU1308;YU1309;YU1310;YU1311;YU1312;YU1313;YU1314;YU1315;YU1316;YU1317;YU1318;YU1319;YU1320;YU1321;YU1322;YU1323;YU1324;YU1325;YU1326;YU1327;YU1328;YU1329;YU1330;YU1331;YU1332;YU1333;YU1334;YU1335;YU1336;YU1337;YU1338;YU1339;YU1340;YU1341;YU1342;YU1343;YU1344;YU1345;YU1346;YU1347;YU1348;YU1349;YU1350;YU1351;YU1352;YU1353;YU1354;YU1355;YU1356;YU1357;YU1358;YU1359;YU1360;YU1361;YU1362;YU1363;YU1364;YU1365;YU1366;YU1367;YU1368;YU1369;YU1370;YU1371;YU1372;YU1373;YU1374;YU1375;YU1376;YU1377;YU1378;YU1379;YU1380;YU1381;YU1382;YU1383;YU1384;YU1385;YU1386;YU1387;YU1388;YU1389;YU1390;YU1391;YU1392;YU1393;YU1394;YU1395;YU1396;YU1397;YU1398;YU1399;YU1400;YU1401;YU1402;YU1403;YU1404;YU1405;YU1406;YU1407;YU1408;YU1409;YU1410;YU1411;YU1412;YU1413;YU1414;YU1415;YU1416;YU1417;YU1418;YU1419;YU1420;YU1421;YU1422;YU1423;YU1424;YU1425;YU1426;YU1427;YU1428;YU1429;YU1430;YU1431;YU1432;YU1433;YU1434;YU1435;YU1436;YU1437;YU1438;YU1439;YU1440;YU1441;YU1442;YU1443;YU1444;YU1445;YU1446;YU1447;YU1448;YU1449;YU1450;YU1451;YU1452;YU1453;YU1454;YU1455;YU1456;YU1457;YU1458;YU1459;YU1460;YU1461;YU1462;YU1463;YU1464;YU1465;YU1466;YU1467;YU1468;YU1469;YU1470;YU1471;YU1472;YU1473;YU1474;YU1475;YU1476;YU1477;YU1478;YU1479;YU1480;YU1481;YU1482;YU1483;YU1484;YU1485;YU1486;YU1487;YU1488;YU1489;YU1490;YU1491;YU1492;YU1493;YU1494;YU1495;YU1496;YU1497;YU1498;YU1499;YU1500;YU1501;YU1502;YU1503;YU1504;YU1505;YU1506;YU1507;YU1508;YU1509;YU1510;YU1511;YU1512;YU1513;YU1514;YU1515;YU1516;YU1517;YU1518;YU1519;YU1520;YU1521;YU1522;YU1523;YU1524;YU1525;YU1526;YU1527;YU1528;YU1529;YU1530;YU1531;YU1532;YU1533;YU1534;YU1535;YU1536;YU1537;YU1538;YU1539;YU1540;YU1541;YU1542;YU1543;YU1544;YU1545;YU1546;YU1547;YU1548;YU1549;YU1550;YU1551;YU1552;YU1553;YU1554;YU1555;YU1556;YU1557;YU1558;YU1559;YU1560;YU1561;YU1562;YU1563;YU1564;YU1565;YU1566;YU1567;YU1568;YU1569;YU1570;YU1571;YU1572;YU1573;YU1574;YU1575;YU1576;YU1577;YU1578;YU1579;YU1580;YU1581;YU1582;YU1583;YU1584;YU1585;YU1586;YU1587;YU1588;YU1589;YU1590;YU1591;YU1592;YU1593;YU1594;YU1595;YU1596;YU1597;YU1598;YU1599;YU1600;YU1601;YU1602;YU1603;YU1604;YU1605;YU1606;YU1607;YU1608;YU1609;YU1610;YU1611;YU1612;YU1613;YU1614;YU1615;YU1616;YU1617;YU1618;YU1619;YU1620;YU1621;YU1622;YU1623;YU1624;YU1625;YU1626;YU1627;YU1628;YU1629;YU1630;YU1631;YU1632;YU1633;YU1634;YU1635;YU1636;YU1637;YU1638;YU1639;YU1640;YU1641;YU1642;YU1643;YU1644;YU1645;YU1646;YU1647;YU1648;YU1649;YU1650;YU1651;YU1652;YU1653;YU1654;YU1655;YU1656;YU1657;YU1658;YU1659;YU1660;YU1661;YU1662;YU1663;YU1664;YU1665;YU1666;YU1667;YU1668;YU1669;YU1670;YU1671;YU1672;YU1673;YU1674;YU1675;YU1676;YU1677;YU1678;YU1679;YU1680;YU1681;YU1682;YU1683;YU1684;YU1685;YU1686;YU1687;YU1688;YU1689;YU1690;YU1691;YU1692;YU1693;YU1694;YU1695;YU1696;YU1697;YU1698;YU1699;YU1700;YU1701;YU1702;YU1703;YU1704;YU1705;YU1706;YU1707;YU1708;YU1709;YU1710;YU1711;YU1712;YU1713;YU1714;YU1715;YU1716;YU1717;YU1718;YU1719;YU1720;YU1721;YU1722;YU1723;YU1724;YU1725;YU1726;YU1727;YU1728;YU1729;YU1730;YU1731;YU1732;YU1733;YU1734;YU1735;YU1736;YU1737;YU1738;YU1739;YU1740;YU1741;YU1742;YU1743;YU1744;YU1745;YU1746;YU1747;YU1748;YU1749;YU1750;YU1751;YU1752;YU1753;YU1754;YU1755;YU1756;YU1757;YU1758;YU1759;YU1760;YU1761;YU1762;YU1763;YU1764;YU1765;YU1766;YU1767;YU1768;YU1769;YU1770;YU1771;YU1772;YU1773;YU1774;YU1775;YU1776;YU1777;YU1778;YU1779;YU1780;YU1781;YU1782;YU1783;YU1784;YU1785;YU1786;YU1787;YU1788;YU1789;YU1790;YU1791;YU1792;YU1793;YU1794;YU1795;YU1796;YU1797;YU1798;YU1799;YU1800;YU1801;YU1802;YU1803;YU1804;YU1805;YU1806;YU1807;YU1808;YU1809;YU1810;YU1811;YU1812;YU1813;YU1814;YU1815;YU1816;YU1817;YU1818;YU1819;YU1820;YU1821;YU1822;YU1823;YU1824;YU1825;YU1826;YU1827;YU1828;YU1829;YU1830;YU1831;YU1832;YU1833;YU1834;YU1835;YU1836;YU1837;YU1838;YU1839;YU1840;YU1841;YU1842;YU1843;YU1844;YU1845;YU1846;YU1847;YU1848;YU1849;YU1850;YU1851;YU1852;YU1853;YU1854;YU1855;YU1856;YU1857;YU1858;YU1859;YU1860;YU1861;YU1862;YU1863;YU1864;YU1865;YU1866;YU1867;YU1868;YU1869;YU1870;YU1871;YU1872;YU1873;YU1874;YU1875;YU1876;YU1877;YU1878;YU1879;YU1880;YU1881;YU1882;YU1883;YU1884;YU1885;YU1886;YU1887;YU1888;YU1889;YU1890;YU1891;YU1892;YU1893;YU1894;YU1895;YU1896;YU1897;YU1898;YU1899;YU1900;YU1901;YU1902;YU1903;YU1904;YU1905;YU1906;YU1907;YU1908;YU1909;YU1910;YU1911;YU1912;YU1913;YU1914;YU1915;YU1916;YU1917;YU1918;YU1919;YU1920;YU1921;YU1922;YU1923;YU1924;YU1925;YU1926;YU1927;YU1928;YU1929;YU1930;YU1931;YU1932;YU1933;YU1934;YU1935;YU1936;YU1937;YU1938;YU1939;YU1940;YU1941;YU1942;YU1943;YU1944;YU1945;YU1946;YU1947;YU1948;YU1949;YU1950;YU1951;YU1952;YU1953;YU1954;YU1955;YU1956;YU1957;YU1958;YU1959;YU1960;YU1961;YU1962;YU1963;YU1964;YU1965;YU1966;YU1967;YU1968;YU1969;YU1970;YU1971;YU1972;YU1973;YU1974;YU1975;YU1976;YU1977;YU1978;YU1979;YU1980;YU1981;YU1982;YU1983;YU1984;YU1985;YU1986;YU1987;YU1988;YU1989;YU1990;YU1991;YU1992;YU1993;YU1994;YU1995;YU1996;YU1997;YU1998;YU1999;YU2000;YU2001;YU2002;YU2003;YU2004;YU2005;YU2006;YU2007;YU2008;YU2009;YU2010;YU2011;YU2012;YU2013;YU2014;YU2015;YU2016;YU2017;YU2018;YU2019;YU2020;YU2021;YU2022;YU2023;YU2024;YU2025;YU2026;YU2027;YU2028;YU2029;YU2030;YU2031;YU2032;YU2033;YU2034;YU2035;YU2036;YU2037;YU2038;YU2039;YU2040;YU2041;YU2042;YU2043;YU2044;YU2045;YU2046;YU2047;YU2048;YU2049;YU2050;YU2051;YU2052;YU2053;YU2054;YU2055;YU2056;YU2057;YU2058;YU2059;YU2060;YU2061;YU2062;YU2063;YU2064;YU2065;YU2066;YU2067;YU2068;YU2069;YU2070;YU2071;YU2072;YU2073;YU2074;YU2075;YU2076;YU2077;YU2078;YU2079;YU2080;YU2081;YU2082;YU2083;YU2084;YU2085;YU2086;YU2087;YU2088;YU2089;YU2090;YU2091;YU2092;YU2093;YU2094;YU2095;YU2096;YU2097;YU2098;YU2099;YU2100;YU2101;YU2102;YU2103;YU2104;YU2105;YU2106;YU2107;YU2108;YU2109;YU2110;YU2111;YU2112;YU2113;YU2114;YU2115;YU2116;YU2117;YU2118;YU2119;YU2120;YU2121;YU2122;YU2123;YU2124;YU2125;YU2126;YU2127;YU2128;YU2129;YU2130;YU2131;YU2132;YU2133;YU2134;YU2135;YU2136;YU2137;YU2138;YU2139;YU2140;YU2141;YU2142;YU2143;YU2144;YU2145;YU2146;YU2147;YU2148;YU2149;YU2150;YU2151;YU2152;YU2153;YU2154;YU2155;YU2156;YU2157;YU2158;YU2159;YU2160;YU2161;YU2162;YU2163;YU2164;YU2165;YU2166;YU2167;YU2168;YU2169;YU2170;YU2171;YU2172;YU2173;YU2174;YU2175;YU2176;YU2177;YU2178;YU2179;YU2180;YU2181;YU2182;YU2183;YU2184;YU2185;YU2186;YU2187;YU2188;YU2189;YU2190;YU2191;YU2192;YU2193;YU2194;YU2195;YU2196;YU2197;YU2198;YU2199;YU2200;YU2201;YU2202;YU2203;YU2204;YU2205;YU2206;YU2207;YU2208;YU2209;YU2210;YU2211;YU2212;YU2213;YU2214;YU2215;YU2216;YU2217;YU2218;YU2219;YU2220;YU2221;YU2222;YU2223;YU2224;YU2225;YU2226;YU2227;YU2228;YU2229;YU2230;YU2231;YU2232;YU2233;YU2234;YU2235;YU2236;YU2237;YU2238;YU2239;YU2240;YU2241;YU2242;YU2243;YU2244;YU2245;YU2246;YU2247;YU2248;YU2249;YU2250;YU2251;YU2252;YU2253;YU2254;YU2255;YU2256;YU2257;YU2258;YU2259;YU2260;YU2261;YU2262;YU2263;YU2264;YU2265;YU2266;YU2267;YU2268;YU2269;YU2270;YU2271;YU2272;YU2273;YU2274;YU2275;YU2276;YU2277;YU2278;YU2279;YU2280;YU2281;YU2282;YU2283;YU2284;YU2285;YU2286;YU2287;YU2288;YU2289;YU2290;YU2291;YU2292;YU2293;YU2294;YU2295;YU2296;YU2297;YU2298;YU2299;YU2300;YU2301;YU2302;YU2303;YU2304;YU2305;YU2306;YU2307;YU2308;YU2309;YU2310;YU2311;YU2312;YU2313;YU2314;YU2315;YU2316;YU2317;YU2318;YU2319;YU2320;YU2321;YU2322;YU2323;YU2324;YU2325;YU2326;YU2327;YU2328;YU2329;YU2330;YU2331;YU2332;YU2333;YU2334;YU2335;YU2336;YU2337;YU2338;YU2339;YU2340;YU2341;YU2342;YU2343;YU2344;YU2345;YU2346;YU2347;YU2348;YU2349;YU2350;YU2351;YU2352;YU2353;YU2354;YU2355;YU2356;YU2357;YU2358;YU2359;YU2360;YU2361;YU2362;YU2363;YU2364;YU2365;YU2366;YU2367;YU2368;YU2369;YU2370;YU2371;YU2372;YU2373;YU2374;YU2375;YU2376;YU2377;YU2378;YU2379;YU2380;YU2381;YU2382;YU2383;YU2384;YU2385;YU2386;YU2387;YU2388;YU2389;YU2390;YU2391;YU2392;YU2393;YU2394;YU2395;YU2396;YU2397;YU2398;YU2399;YU2400;YU2401;YU2402;YU2403;YU2404;YU2405;YU2406;YU2407;YU2408;YU2409;YU2410;YU2411;YU2412;YU2413;YU2414;YU2415;YU2416;YU2417;YU2418;YU2419;YU2420;YU2421;YU2422;YU2423;YU2424;YU2425;YU2426;YU2427;YU2428;YU2429;YU2430;YU2431;YU2432;YU2433;YU2434;YU2435;YU2436;YU2437;YU2438;YU2439;YU2440;YU2441;YU2442;YU2443;YU2444;YU2445;YU2446;YU2447;YU2448;YU2449;YU2450;YU2451;YU2452;YU2453;YU2454;YU2455;YU2456;YU2457;YU2458;YU2459;YU2460;YU2461;YU2462;YU2463;YU2464;YU2465;YU2466;YU2467;YU2468;YU2469;YU2470;YU2471;YU2472;YU2473;YU2474;YU2475;YU2476;YU2477;YU2478;YU2479;YU2480;YU2481;YU2482;YU2483;YU2484;YU2485;YU2486;YU2487;YU2488;YU2489;YU2490;YU2491;YU2492;YU2493;YU2494;YU2495;YU2496;YU2497;YU2498;YU2499;YU2500;YU2501;YU2502;YU2503;YU2504;YU2505;YU2506;YU2507;YU2508;YU2509;YU2510;YU2511;YU2512;YU2513;YU2514;YU2515;YU2516;YU2517;YU2518;YU2519;YU2520;YU2521;YU2522;YU2523;YU2524;YU2525;YU2526;YU2527;YU2528;YU2529;YU2530;YU2531;YU2532;YU2533;YU2534;YU2535;YU2536;YU2537;YU2538;YU2539;YU2540;YU2541;YU2542;YU2543;YU2544;YU2545;YU2546;YU2547;YU2548;YU2549;YU2550;YU2551;YU2552;YU2553;YU2554;YU2555;YU2556;YU2557;YU2558;YU2559;YU2560;YU2561;YU2562;YU2563;YU2564;YU2565;YU2566;YU2567;YU2568;YU2569;YU2570;YU2571;YU2572;YU2573;YU2574;YU2575;YU2576;YU2577;YU2578;YU2579;YU2580;YU2581;YU2582;YU2583;YU2584;YU2585;YU2586;YU2587;YU2588;YU2589;YU2590;YU2591;YU2592;YU2593;YU2594;YU2595;YU2596;YU2597;YU2598;YU2599;YU2600;YU2601;YU2602;YU2603;YU2604;YU2605;YU2606;YU2607;YU2608;YU2609;YU2610;YU2611;YU2612;YU2613;YU2614;YU2615;YU2616;YU2617;YU2618;YU2619;YU2620;YU2621;YU2622;YU2623;YU2624;YU2625;YU2626;YU2627;YU2628;YU2629;YU2630;YU2631;YU2632;YU2633;YU2634;YU2635;YU2636;YU2637;YU2638;YU2639;YU2640;YU2641;YU2642;YU2643;YU2644;YU2645;YU2646;YU2647;YU2648;YU2649;YU2650;YU2651;YU2652;YU2653;YU2654;YU2655;YU2656;YU2657;YU2658;YU2659;YU2660;YU2661;YU2662;YU2663;YU2664;YU2665;YU2666;YU2667;YU2668;YU2669;YU2670;YU2671;YU2672;YU2673;YU2674;YU2675;YU2676;YU2677;YU2678;YU2679;YU2680;YU2681;YU2682;YU2683;YU2684;YU2685;YU2686;YU2687;YU2688;YU2689;YU2690;YU2691;YU2692;YU2693;YU2694;YU2695;YU2696;YU2697;YU2698;YU2699;YU2700;YU2701;YU2702;YU2703;YU2704;YU2705;YU2706;YU2707;YU2708;YU2709;YU2710;YU2711;YU2712;YU2713;YU2714;YU2715;YU2716;YU2717;YU2718;YU2719;YU2720;YU2721;YU2722;YU2723;YU2724;YU2725;YU2726;YU2727;YU2728;YU2729;YU2730;YU2731;YU2732;YU2733;YU2734;YU2735;YU2736;YU2737;YU2738;YU2739;YU2740;YU2741;YU2742;YU2743;YU2744;YU2745;YU2746;YU2747;YU2748;YU2749;YU2750;YU2751;YU2752;YU2753;YU2754;YU2755;YU2756;YU2757;YU2758;YU2759;YU2760;YU2761;YU2762;YU2763;YU2764;YU2765;YU2766;YU2767;YU2768;YU2769;YU2770;YU2771;YU2772;YU2773;YU2774;YU2775;YU2776;YU2777;YU2778;YU2779;YU2780;YU2781;YU2782;YU2783;YU2784;YU2785;YU2786;YU2787;YU2788;YU2789;YU2790;YU2791;YU2792;YU2793;YU2794;YU2795;YU2796;YU2797;YU2798;YU2799;YU2800;YU2801;YU2802;YU2803;YU2804;YU2805;YU2806;YU2807;YU2808;YU2809;YU2810;YU2811;YU2812;YU2813;YU2814;YU2815;YU2816;YU2817;YU2818;YU2819;YU2820;YU2821;YU2822;YU2823;YU2824;YU2825;YU2826;YU2827;YU2828;YU2829;YU2830;YU2831;YU2832;YU2833;YU2834;YU2835;YU2836;YU2837;YU2838;YU2839;YU2840;YU2841;YU2842;YU2843;YU2844;YU2845;YU2846;YU2847;YU2848;YU2849;YU2850;YU2851;YU2852;YU2853;YU2854;YU2855;YU2856;YU2857;YU2858;YU2859;YU2860;YU2861;YU2862;YU2863;YU2864;YU2865;YU2866;YU2867;YU2868;YU2869;YU2870;YU2871;YU2872;YU2873;YU2874;YU2875;YU2876;YU2877;YU2878;YU2879;YU2880;YU2881;YU2882;YU2883;YU2884;YU2885;YU2886;YU2887;YU2888;YU2889;YU2890;YU2891;YU2892;YU2893;YU2894;YU2895;YU2896;YU2897;YU2898;YU2899;YU2900;YU2901;YU2902;YU2903;YU2904;YU2905;YU2906;YU2907;YU2908;YU2909;YU2910;YU2911;YU2912;YU2913;YU2914;YU2915;YU2916;YU2917;YU2918;YU2919;YU2920;YU2921;YU2922;YU2923;YU2924;YU2925;YU2926;YU2927;YU2928;YU2929;YU2930;YU2931;YU2932;YU2933;YU2934;YU2935;YU2936;YU2937;YU2938;YU2939;YU2940;YU2941;YU2942;YU2943;YU2944;YU2945;YU2946;YU2947;YU2948;YU2949;YU2950;YU2951;YU2952;YU2953;YU2954;YU2955;YU2956;YU2957;YU2958;YU2959;YU2960;YU2961;YU2962;YU2963;YU2964;YU2965;YU2966;YU2967;YU2968;YU2969;YU2970;YU2971;YU2972;YU2973;YU2974;YU2975;YU2976;YU2977;YU2978;YU2979;YU2980;YU2981;YU2982;YU2983;YU2984;YU2985;YU2986;YU2987;YU2988;YU2989;YU2990;YU2991;YU2992;YU2993;YU2994;YU2995;YU2996;YU2997;YU2998;YU2999;YU3000;YU3001;YU3002;YU3003;YU3004;YU3005;YU3006;YU3007;YU3008;YU3009;YU3010;YU3011;YU3012;YU3013;YU3014;YU3015;YU3016;YU3017;YU3018;YU3019;YU3020;YU3021;YU3022;YU3023;YU3024;YU3025;YU3026;YU3027;YU3028;YU3029;YU3030;YU3031;YU3032;YU3033;YU3034;YU3035;YU3036;YU3037;YU3038;YU3039;YU3040;YU3041;YU3042;YU3043;YU3044;YU3045;YU3046;YU3047;YU3048;YU3049;YU3050;YU3051;YU3052;YU3053;YU3054;YU3055;YU3056;YU3057;YU3058;YU3059;YU3060;YU3061;YU3062;YU3063;YU3064;YU3065;YU3066;YU3067;YU3068;YU3069;YU3070;YU3071;YU3072;YU3073;YU3074;YU3075;YU3076;YU3077;YU3078;YU3079;YU3080;YU3081;YU3082;YU3083;YU3084;YU3085;YU3086;YU3087;YU3088;YU3089;YU3090;YU3091;YU3092;YU3093;YU3094;YU3095;YU3096;YU3097;YU3098;YU3099;YU3100;YU3101;YU3102;YU3103;YU3104;YU3105;YU3106

| | YEAR | TRANSM. | F/R | L/R | BODY STYLE & DRIVE TYPE & ENGINE | REMARKS | G-AP Ref. | PRODUCT | ABS | Technical Specifications A | B | C | H | L | P |
|---|---|---|---|---|---|---|---|---|---|---|---|---|---|---|---|
| **MERCEDES-BENZ** | | | | | | | | | | | | | | | |
| **Viano** | | | | | | | | | | | | | | | |
| 3.0 (165 kw) | 2010.07- | 5AT/6MT | R | L/R | Bus RWD OM 642.890 | | GCI83462 | Inner Joint | | 26 | 37 | 45 | 83 | 96 | |
| 3.2 (140 kw) | 2003.09- | 5AT | R | L/R | Bus RWD M 112.951 | Date to:2011.06,Chassis no. to:3673614;For SA code:U60/U61/U63/U65/U71/U51/U52/U54/U55/U59/VP9/ZK7 | GDS35059 | Drive Shaft | | 30 | 26 | 70 | 94.5 | 860 | |
| | 2003.09- | 5AT | R | L/R | Bus RWD M 112.951 | Date to:2011.06,Chassis no. to:3673614;Not for SA code:U60/U61/U63/U65/U71/U51/U52/U54/U55/U59/VP9/ZK7/XM0 | GDS35093 | Drive Shaft | | 30 | 26 | 70 | 99.5 | 865 | |
| | 2003.09- | 5AT | R | L/R | Bus RWD M 112.951 | Date from:2011.07,Chassis no. from:3673415;For SA code:XM0 | GDS56736 | Drive Shaft | | 30 | 26 | 70 | 99.5 | 865 | |
| | 2003.09- | 5AT | R | L/R | Bus RWD M 112.951 | | GCO35069 | Outer Joint | | 30 | 37 | 70 | 99.5 | 62.5 | I |
| | 2003.09- | 5AT | R | L/R | Bus RWD M 112.951 | Date to:2011.06,Chassis no. to:3673614 | GCI35069 | Inner Joint | | 26 | 37 | 45 | 83 | 96 | |
| | 2003.09- | 5AT | R | L/R | Bus RWD M 112.951 | Date from:2011.07,Chassis no. from:3673415;For SA code:XM0 | GCI83462 | Inner Joint | | 26 | 37 | 45 | 83 | 96 | |
| | 2003.09- | MT | R | L/R | Bus RWD M 112.951 | | GDS35022 | Drive Shaft | | 30 | 26 | 70 | 94.5 | 853 | |
| 3.2 (160 kw) | 2003.09- | 5AT | R | L/R | Bus RWD M 112.951 | Date to:2011.06,Chassis no. to:3673614;For SA code:U60/U61/U63/U65/U71/U51/U52/U54/U55/U59/VP9/ZK7 | GDS35059 | Drive Shaft | | 30 | 26 | 70 | 94.5 | 860 | |
| | 2003.09- | 5AT | R | L/R | Bus RWD M 112.951 | Date to:2011.06,Chassis no. to:3673614;Not for SA code:U60/U61/U63/U65/U71/U51/U52/U54/U55/U59/VP9/ZK7/XM0 | GDS35093 | Drive Shaft | | 30 | 26 | 70 | 99.5 | 865 | |
| | 2003.09- | 5AT | R | L/R | Bus RWD M 112.951 | Date from:2011.07,Chassis no. from:3673415;For SA code:XM0 | GDS56736 | Drive Shaft | | 30 | 26 | 70 | 99.5 | 865 | |
| | 2003.09- | 5AT | R | L/R | Bus RWD M 112.951 | | GCO35024 | Outer Joint | | 30 | 36 | 70 | 94.5 | 68 | I |
| | 2003.09- | 5AT | R | L/R | Bus RWD M 112.951 | | GCO35069 | Outer Joint | | 30 | 37 | 70 | 99.5 | 62.5 | I |
| | 2003.09- | 5AT | R | L/R | Bus RWD M 112.951 | Date to:2011.06,Chassis no. to:3673614 | GCI35069 | Inner Joint | | 26 | 37 | 45 | 83 | 96 | |
| | 2003.09- | 5AT | R | L/R | Bus RWD M 112.951 | Date from:2011.07,Chassis no. from:3673415;For SA code:XM0 | GCI83462 | Inner Joint | | 26 | 37 | 45 | 83 | 96 | |
| | 2003.09- | MT | R | L/R | Bus RWD M 112.951 | Date to:2005.12 | GDS35022 | Drive Shaft | | 30 | 26 | 70 | 94.5 | 853 | |
| | 2003.09- | | R | L/R | Bus RWD M 112.951 | | GCO35036 | Outer Joint | | 30 | 37 | 70 | 94.5 | 61 | I |
| 3.5 (190 kw) | 2007.09- | 5AT | R | L/R | Bus RWD M 272.978 | | GDS35093 | Drive Shaft | | 30 | 26 | 70 | 99.5 | 865 | |
| | 2007.09- | 5AT | R | L/R | Bus RWD M 272.978 | Date From:2011.07,Chassis no. from:3673415;For SA code:XM0 | GDS56736 | Drive Shaft | | 30 | 26 | 70 | 99.5 | 865 | |
| | 2007.09- | 5AT | R | L/R | Bus RWD M 272.978 | | GCO35069 | Outer Joint | | 30 | 37 | 70 | 99.5 | 62.5 | I |
| | 2007.09- | 5AT | R | L/R | Bus RWD M 272.978 | Date to:2011.06,Chassis no. to:3673614 | GCI35069 | Inner Joint | | 26 | 37 | 45 | 83 | 96 | |
| | 2007.09- | 5AT | R | L/R | Bus RWD M 272.978 | Date from:2011.07,Chassis no. from:3673415;For SA code:XM0 | GCI83462 | Inner Joint | | 26 | 37 | 45 | 83 | 96 | |
| 3.7 (165 kw) | 2004.06-2007.07 | 5AT | R | L/R | Bus RWD M 112.976 | For SA code:U60/U61/U63/U65/U71/U51/U52/U54/U55/U59/VP9/ZK7 | GDS35059 | Drive Shaft | | 30 | 26 | 70 | 94.5 | 860 | |
| | 2004.06-2007.07 | 5AT | R | L/R | Bus RWD M 112.976 | Not for SA code:U60/U61/U63/U65/U71/U51/U52/U54/U55/U59/VP9/ZK7/XM0 | GDS35093 | Drive Shaft | | 30 | 26 | 70 | 99.5 | 865 | |
| | 2004.06-2007.07 | 5AT | R | L/R | Bus RWD M 112.976 | For SA code:XM0 | GDS56736 | Drive Shaft | | 30 | 26 | 70 | 99.5 | 865 | |
| | 2004.06-2007.07 | 5AT | R | L/R | Bus RWD M 112.976 | For SA code:U60/U61/U63/U65/U71/U51/U52/U54/U55/U59/VP9/ZK7 | GCI35069 | Inner Joint | | 26 | 37 | 45 | 83 | 96 | |
| | 2004.06-2007.07 | 5AT | R | L/R | Bus RWD M 112.976 | For SA code:XM0 | GCI83462 | Inner Joint | | 26 | 37 | 45 | 83 | 96 | |
| | 2004.06-2007.07 | AT | R | L/R | Bus RWD M 112.976 | | GCO35069 | Outer Joint | | 30 | 37 | 70 | 99.5 | 62.5 | I |
| 3.7 (170 kw) | 2004.06- | 5AT | R | L/R | Bus RWD M 112.976 | For SA code:U60/U61/U63/U65/U71/U51/U52/U54/U55/U59/VP9/ZK7 | GDS35059 | Drive Shaft | | 30 | 26 | 70 | 94.5 | 860 | |
| | 2004.06- | 5AT | R | L/R | Bus RWD M 112.976 | Not for SA code:U60/U61/U63/U65/U71/U51/U52/U54/U55/U59/VP9/ZK7/XM0 | GDS35093 | Drive Shaft | | 30 | 26 | 70 | 99.5 | 865 | |
| | 2004.06- | 5AT | R | L/R | Bus RWD M 112.976 | For SA code:XM0 | GDS56736 | Drive Shaft | | 30 | 26 | 70 | 99.5 | 865 | |
| | 2004.06- | 5AT | R | L/R | Bus RWD M 112.976 | | GCO35024 | Outer Joint | | 30 | 36 | 70 | 94.5 | 68 | I |
| | 2004.06- | 5AT | R | L/R | Bus RWD M 112.976 | Date to:2005.02,Chassis no. to:126151 | GCO35069 | Outer Joint | | 30 | 37 | 70 | 99.5 | 62.5 | I |
| | 2004.06- | 5AT | R | L/R | Bus RWD M 112.976 | For SA code:U60/U61/U63/U65/U71/U51/U52/U54/U55/U59/VP9/ZK7 | GCI35069 | Inner Joint | | 26 | 37 | 45 | 83 | 96 | |
| | 2004.06- | 5AT | R | L/R | Bus RWD M 112.976 | For SA code:XM0 | GCI83462 | Inner Joint | | 26 | 37 | 45 | 83 | 96 | |
| | 2004.06- | | R | L/R | Bus RWD M 112.976 | | GCO35036 | Outer Joint | | 30 | 37 | 70 | 94.5 | 61 | I |
| **Vito 108** | | | | | | | | | | | | | | | |
| 2.2 (60 kw) | 1999.03-2003.07 | 5MT | F | L/R | Bus FWD OM 611.980 | | GDS35003 | Drive Shaft | 48W | 27 | | 71.5 | 99 | 506 | |
| | 1999.03-2003.07 | 5MT | F | L/R | Bus FWD OM 611.980 | | GCO35002 | Outer Joint | 48W | 27 | 36 | 71.5 | 99 | 68 | I |
| | 1999.03-2003.07 | 5MT | F | L/R | Bus FWD OM 611.980 | | GCI35001 | Inner Joint | | | 30 | | | 36.2 | |
| | 1999.03-2003.07 | AT/MT | F | L/R | Bus FWD OM 611.980 | | GCO35008 | Outer Joint | | 27 | 36 | 71.5 | 99 | 68 | I |
| | 1999.03-2003.07 | 5MT | F | L/R | Van FWD OM 611.980 | | GDS35003 | Drive Shaft | 48W | 27 | | 71.5 | 99 | 506 | |
| | 1999.03-2003.07 | 5MT | F | L/R | Van FWD OM 611.980 | | GCO35002 | Outer Joint | 48W | 27 | 36 | 71.5 | 99 | 68 | I |
| | 1999.03-2003.07 | 5MT | F | L/R | Van FWD OM 611.980 | | GCI35001 | Inner Joint | | | 30 | | | 36.2 | |
| | 1999.03-2003.07 | AT/MT | F | L/R | Van FWD OM 611.980 | | GDS35011 | Drive Shaft | | 27 | | 71.5 | 99 | 506 | |
| | 1999.03-2003.07 | AT/MT | F | L/R | Van FWD OM 611.980 | | GCO35008 | Outer Joint | | 27 | 36 | 71.5 | 99 | 68 | I |
| 2.3 (58 kw) | 1996.02-2003.07 | 5MT | F | L/R | Bus FWD OM 601.942 | | GDS35002 | Drive Shaft | 48W | 27 | | 59.8 | 99 | 531 | |
| | 1996.02-2003.07 | 5MT | F | L/R | Bus FWD OM 601.942 | | GDS35016 | Drive Shaft | | 27 | | 59.8 | 99 | 531 | |
| | 1996.02-2003.07 | 5MT | F | L/R | Bus FWD OM 601.942 | | GCO35001 | Outer Joint | 48W | 27 | 27 | 59.8 | 99 | 63 | I |
| | 1996.02-2003.07 | 5MT | F | L/R | Bus FWD OM 601.942 | | GCO35007 | Outer Joint | | 27 | 27 | 59.8 | 99 | 63 | I |
| | 1996.02-2003.07 | 5MT | F | L/R | Bus FWD OM 601.942 | | GCI48002 | Inner Joint | | | 28 | | | 32 | |
| | 1997.03-2003.07 | 5MT | F | L/R | Van FWD OM 601.942 | | GDS35002 | Drive Shaft | 48W | 27 | | 59.8 | 99 | 531 | |
| | 1997.03-2003.07 | 5MT | F | L/R | Van FWD OM 601.942 | | GDS35016 | Drive Shaft | | 27 | | 59.8 | 99 | 531 | |
| | 1997.03-2003.07 | 5MT | F | L/R | Van FWD OM 601.942 | | GCO35001 | Outer Joint | 48W | 27 | 27 | 59.8 | 99 | 63 | I |
| | 1997.03-2003.07 | 5MT | F | L/R | Van FWD OM 601.942 | | GCO35007 | Outer Joint | | 27 | 27 | 59.8 | 99 | 63 | I |
| | 1997.03-2003.07 | 5MT | F | L/R | Van FWD OM 601.942 | | GCI48002 | Inner Joint | | | 28 | | | 32 | |
| **Vito 109** | | | | | | | | | | | | | | | |
| 1.6 (65 kw) | 2014.10- | 6MT | F | L | Bus FWD OM 622.951 | | GDS83139 | Drive Shaft | | 30 | 39 | 66 | 98.5 | 699 | |
| | 2014.10- | 6MT | F | R | Bus FWD OM 622.951 | | GDS83138 | Drive Shaft | | 30 | 39 | 66 | 98.5 | 1023 | |
| | 2014.10- | 6MT | F | R | Bus FWD OM 622.951 | | GDS83200 | Drive Shaft | | 30 | 39 | 66 | 98.5 | 1020 | |
| | 2014.10- | 6MT | F | L/R | Bus FWD OM 622.951 | | GCO82369 | Outer Joint | | 30 | 31 | 66 | 98.5 | 70 | M |
| | 2014.10- | 6MT | F | R | Bus FWD OM 622.951 | Date to:2015.02 | GCI82214 | Inner Joint | | 39 | 29 | 29.97 | 368 | 105 | |
| | 2014.10- | 6MT | F | R | Bus FWD OM 622.951 | Date from:2015.03 | GCI82438 | Inner Joint | | 39 | 31 | 29.97 | 368 | 101.5 | |
| | 2014.10- | 6MT | F | L | Van FWD OM 622.951 | | GDS83139 | Drive Shaft | | 30 | 39 | 66 | 98.5 | 699 | |
| | 2014.10- | 6MT | F | R | Van FWD OM 622.951 | | GDS83138 | Drive Shaft | | 30 | 39 | 66 | 98.5 | 1023 | |

| | YEAR | TRANSM. | F/R | L/R | BODY STYLE & DRIVE TYPE & ENGINE | REMARKS | G-AP Ref. | PRODUCT | ABS | Technical Specifications A | B | C | H | L | P |
|---|---|---|---|---|---|---|---|---|---|---|---|---|---|---|---|
| **MERCEDES-BENZ** | | | | | | | | | | | | | | | |
| **Vito 109** | | | | | | | | | | | | | | | |
| 1.6 (65 kw) | 2014.10- | 6MT | F | R | Van FWD OM 622.951 | | GDS83200 | Drive Shaft | | 30 | 39 | 66 | 98.5 | 1020 | |
| | 2014.10- | 6MT | F | L/R | Van FWD OM 622.951 | | GCO82369 | Outer Joint | | 30 | 31 | 66 | 98.5 | 70 | M |
| | 2014.10- | 6MT | F | R | Van FWD OM 622.951 | Date to:2015.02 | GCI82214 | Inner Joint | | 39 | 29 | 29.97 | 368 | 105 | |
| | 2014.10- | 6MT | F | R | Van FWD OM 622.951 | Date from:2015.03 | GCI82438 | Inner Joint | | 39 | 31 | 29.97 | 368 | 101.5 | |
| 2.2 (65 kw) | 2003.09- | 6MT | R | L/R | Bus RWD OM 646.983 | [illegible] | GDS35022 | Drive Shaft | | 30 | 26 | 70 | 94.5 | 853 | |
| | 2003.09- | 6MT | R | L/R | Bus RWD OM 646.983 | For SA code:U60/U61/U63/U65/U71/US1/US2/US3/US4/US5/US8/US9/VP9/ZK7 | GDS35059 | Drive Shaft | | 30 | 26 | 70 | 94.5 | 860 | |
| | 2003.09- | 6MT | R | L/R | Bus RWD OM 646.983 | For SA code:XM0 | GDS56736 | Drive Shaft | | 30 | 26 | 70 | 99.5 | 865 | |
| | 2003.09- | 6MT | R | L/R | Bus RWD OM 646.983 | | GCO35024 | Outer Joint | | 30 | 36 | 70 | 94.5 | 68 | I |
| | 2003.09- | 6MT | R | L/R | Bus RWD OM 646.983 | For SA code:U60/U61/U63/U65/U71/US1/US2/US3/US4/US5/US8/US9/VP9/ZK7 | GCI35069 | Inner Joint | | 26 | 37 | 45 | 83 | 96 | |
| | 2003.09- | 6MT | R | L/R | Bus RWD OM 646.983 | For SA code:XM0 | GCI83462 | Inner Joint | | 26 | 37 | 45 | 83 | 96 | |
| | 2003.09- | 6MT | R | L/R | Bus RWD OM 646.983 | For SA code:U60/U61/U63/U65/U71/US1/US2/US4/US5/US9/VP9 | GCI99177 | Inner Joint | | 26 | 28 | 45 | 83.5 | 107.2 | |
| | 2003.09- | | R | L/R | Bus RWD OM 646.983 | | GCO35036 | Outer Joint | | 30 | 37 | 70 | 94.5 | 61 | I |
| | 2003.09-2006.07 | 6MT | R | L/R | Van RWD OM 646.983 | [illegible] | GDS35022 | Drive Shaft | | 30 | 26 | 70 | 94.5 | 853 | |
| | 2003.09-2006.07 | 6MT | R | L/R | Van RWD OM 646.983 | For SA code:U60/U61/U63/U65/U71/US1/US2/US3/US4/US5/US8/US9/VP9/ZK7 | GDS35059 | Drive Shaft | | 30 | 26 | 70 | 94.5 | 860 | |
| | 2003.09-2006.07 | 6MT | R | L/R | Van RWD OM 646.983 | For SA code:XM0 | GDS56736 | Drive Shaft | | 30 | 26 | 70 | 99.5 | 865 | |
| | 2003.09-2006.07 | 6MT | R | L/R | Van RWD OM 646.983 | | GCO35024 | Outer Joint | | 30 | 36 | 70 | 94.5 | 68 | I |
| | 2003.09-2006.07 | 6MT | R | L/R | Van RWD OM 646.983 | For SA code:XM0 | GCI83462 | Inner Joint | | 26 | 37 | 45 | 83 | 96 | |
| | 2003.09-2006.07 | 6MT | R | L/R | Van RWD OM 646.983 | For SA code:U60/U61/U63/U65/U71/US1/US2/US4/US5/US9/VP9 | GCI99177 | Inner Joint | | 26 | 28 | 45 | 83.5 | 107.2 | |
| | 2003.09-2006.07 | | R | L/R | Van RWD OM 646.983 | | GCO35036 | Outer Joint | | 30 | 37 | 70 | 94.5 | 61 | I |
| 2.2 (70 kw) | 2006.08-2014.08 | 6MT | R | L/R | Van RWD OM 646.981;OM 646.980 | [illegible] | GDS35022 | Drive Shaft | | 30 | 26 | 70 | 94.5 | 853 | |
| | 2006.08-2014.08 | 6MT | R | L/R | Van RWD OM 646.981;OM 646.980 | Date to:2011.06;Chassis no. to:3673914;For SA code:U60/U61/U63/U65/U71/US1/US2/US3/US4/US5/US8/US9/VP9/ZK7 | GDS35059 | Drive Shaft | | 30 | 26 | 70 | 94.5 | 860 | |
| | 2006.08-2014.08 | 6MT | R | L/R | Van RWD OM 646.981;OM 646.980 | Date from:2011.07;Chassis no. from:3673415;For SA code:XM0 | GDS56736 | Drive Shaft | | 30 | 26 | 70 | 99.5 | 865 | |
| | 2006.08-2014.08 | 6MT | R | L/R | Van RWD OM 646.981;OM 646.980 | | GCO35024 | Outer Joint | | 30 | 36 | 70 | 94.5 | 68 | I |
| | 2006.08-2014.08 | 6MT | R | L/R | Van RWD OM 646.981;OM 646.980 | Date from:2011.07;Chassis no. from:3673415;For SA code:XM0 | GCI83462 | Inner Joint | | 26 | 37 | 45 | 83 | 96 | |
| | 2006.08-2014.08 | 6MT | R | L/R | Van RWD OM 646.981;OM 646.980 | Date to:2011.06;Chassis no. to:3673914;For SA code:U60/U61/U63/U65/U71/US1/US2/US4/US5/US9/VP9 | GCI99177 | Inner Joint | | 26 | 28 | 45 | 83.5 | 107.2 | |
| | 2006.08-2014.08 | | R | L/R | Van RWD OM 646.981;OM 646.980 | | GCO35036 | Outer Joint | | 30 | 37 | 70 | 94.5 | 61 | I |
| | 2006.09- | 6MT | R | L/R | Bus RWD OM 646.981;OM 646.980 | Date to:2011.06;Chassis no. to:3673914;Use for SA code:U60/U61/U63/U65/U71/US1/US2/US3/US4/US5/US8/US9/VP9/ZK7/J4M | GDS35022 | Drive Shaft | | 30 | 26 | 70 | 94.5 | 853 | |
| | 2006.09- | 6MT | R | L/R | Bus RWD OM 646.981;OM 646.980 | Date to:2011.06;Chassis no. to:3673914;For SA code:U60/U61/U63/U65/U71/US1/US2/US3/US4/US5/US8/US9/VP9/ZK7 | GDS35059 | Drive Shaft | | 30 | 26 | 70 | 94.5 | 860 | |
| | 2006.09- | 6MT | R | L/R | Bus RWD OM 646.981;OM 646.980 | Date from:2011.07;Chassis no. from:3673415;For SA code:XM0 | GDS56736 | Drive Shaft | | 30 | 26 | 70 | 99.5 | 865 | |
| | 2006.09- | 6MT | R | L/R | Bus RWD OM 646.981;OM 646.980 | | GCO35024 | Outer Joint | | 30 | 36 | 70 | 94.5 | 68 | I |
| | 2006.09- | 6MT | R | L/R | Bus RWD OM 646.981;OM 646.980 | Date to:2011.06;Chassis no. to:3673914;For SA code:U60/U61/U63/U65/U71/US1/US2/US3/US4/US5/US8/US9/VP9/ZK7 | GCI35069 | Inner Joint | | 26 | 37 | 45 | 83 | 96 | |
| | 2006.09- | 6MT | R | L/R | Bus RWD OM 646.981;OM 646.980 | Date from:2011.07;Chassis no. from:3673415;For SA code:XM0 | GCI83462 | Inner Joint | | 26 | 37 | 45 | 83 | 96 | |
| | 2006.09- | 6MT | R | L/R | Bus RWD OM 646.981;OM 646.980 | Date to:2011.06;Chassis no. to:3673914;For SA code:U60/U61/U63/U65/U71/US1/US2/US4/US5/US9/VP9 | GCI99177 | Inner Joint | | 26 | 28 | 45 | 83.5 | 107.2 | |
| | 2006.09- | | R | L/R | Bus RWD OM 646.981;OM 646.980 | | GCO35036 | Outer Joint | | 30 | 37 | 70 | 94.5 | 61 | I |
| | 2007.09-2014.08 | 6MT | F | L/R | Bus 4WD OM 646.981 | | GDS35084 | Drive Shaft | | 30 | | 66 | 96.5 | 652 | |
| | 2007.09-2014.08 | 6MT | R | L/R | Bus 4WD OM 646.981 | | GDS35022 | Drive Shaft | | 30 | 26 | 70 | 94.5 | 853 | |
| | 2007.09-2014.08 | 6MT | R | L/R | Bus 4WD OM 646.981 | | GCO35024 | Outer Joint | | 30 | 36 | 70 | 94.5 | 68 | I |
| | 2007.09-2014.08 | MT | R | L/R | Bus 4WD OM 646.981 | | GCI35069 | Inner Joint | | 26 | 37 | 45 | 83 | 96 | |
| | 2007.09-2014.08 | MT | R | L/R | Bus 4WD OM 646.981 | Date to:2014.08 | GCI99177 | Inner Joint | | 26 | 28 | 45 | 83.5 | 107.2 | |
| | 2007.09-2014.08 | | R | L/R | Bus 4WD OM 646.981 | | GCO35036 | Outer Joint | | 30 | 37 | 70 | 94.5 | 61 | I |
| **Vito 110** | | | | | | | | | | | | | | | |
| 1.7 (75 kw) | 2019.09- | 6MT | F | L | Bus FWD OM 622.851 | | GDS83139 | Drive Shaft | | 30 | 39 | 66 | 98.5 | 699 | |
| | 2019.09- | 6MT | F | R | Bus FWD OM 622.851 | | GDS83138 | Drive Shaft | | 30 | 39 | 66 | 98.5 | 1023 | |
| | 2019.09- | 6MT | F | R | Bus FWD OM 622.851 | | GDS83200 | Drive Shaft | | 30 | 39 | 66 | 98.5 | 1020 | |
| | 2019.09- | 6MT | F | L/R | Bus FWD OM 622.851 | | GCO82369 | Outer Joint | | 30 | 31 | 66 | 98.5 | 70 | M |
| | 2019.09- | 6MT | F | R | Bus FWD OM 622.851 | | GCI82438 | Inner Joint | | 39 | 31 | 29.97 | 368 | 101.5 | |
| | 2019.09- | 6MT | F | L | Van FWD OM 622.851 | | GDS83139 | Drive Shaft | | 30 | 39 | 66 | 98.5 | 699 | |
| | 2019.09- | 6MT | F | R | Van FWD OM 622.851 | | GDS83138 | Drive Shaft | | 30 | 39 | 66 | 98.5 | 1023 | |
| | 2019.09- | 6MT | F | R | Van FWD OM 622.851 | | GDS83200 | Drive Shaft | | 30 | 39 | 66 | 98.5 | 1020 | |
| | 2019.09- | 6MT | F | L/R | Van FWD OM 622.851 | | GCO82369 | Outer Joint | | 30 | 31 | 66 | 98.5 | 70 | M |
| | 2019.09- | 6MT | F | R | Van FWD OM 622.851 | | GCI82438 | Inner Joint | | 39 | 31 | 29.97 | 368 | 101.5 | |
| 2.0 (75 kw) | 2021.10- | 9AT | R | L/R | Van RWD OM 654.920 | [illegible] | GDS35121 | Drive Shaft | | 30 | 30 | 73 | 90 | 846 | |
| | 2021.10- | 9AT | R | L/R | Van RWD OM 654.920 | For SA code:Y03/Y04,Date to:2023.09;For SA code:XM7/E11/E13 | GDS58339 | Drive Shaft | | 30 | 30 | 73 | 90 | 849 | |
| | 2021.10- | AT/MT | R | L/R | Van RWD OM 654.920 | For SA code:Y03/Y04 | GCO83616 | Outer Joint | | 30 | 31 | 73 | 90 | 70.5 | M |
| | 2021.10- | AT/MT | R | L/R | Van RWD OM 654.920 | For SA code:Y03/Y04 | GCI84070 | Inner Joint | | 30 | 31 | 47 | 83.5 | 93 | |
| 2.2 (70 kw) | 2010.09-2014.08 | 6MT | R | L/R | Bus RWD OM 651.940 | | GDS35022 | Drive Shaft | | 30 | 26 | 70 | 94.5 | 853 | |
| | 2010.09-2014.08 | 6MT | R | L/R | Bus RWD OM 651.940 | For SA code:XM0 | GDS56736 | Drive Shaft | | 30 | 26 | 70 | 99.5 | 865 | |
| | 2010.09-2014.08 | 6MT | R | L/R | Bus RWD OM 651.940 | | GCO35024 | Outer Joint | | 30 | 36 | 70 | 94.5 | 68 | I |
| | 2010.09-2014.08 | 6MT | R | L/R | Bus RWD OM 651.940 | For SA code:XM0 | GCI83462 | Inner Joint | | 26 | 37 | 45 | 83 | 96 | |
| | 2010.09-2014.08 | 6MT | R | L/R | Bus RWD OM 651.940 | | GCI99177 | Inner Joint | | 26 | 28 | 45 | 83.5 | 107.2 | |
| | 2010.09-2014.08 | | R | L/R | Bus RWD OM 651.940 | | GCO35036 | Outer Joint | | 30 | 37 | 70 | 94.5 | 61 | I |
| | 2010.09-2014.08 | 6MT | R | L/R | Van RWD OM 651.940 | | GDS35022 | Drive Shaft | | 30 | 26 | 70 | 94.5 | 853 | |
| | 2010.09-2014.08 | 6MT | R | L/R | Van RWD OM 651.940 | For SA code:XM0 | GDS56736 | Drive Shaft | | 30 | 26 | 70 | 99.5 | 865 | |
| | 2010.09-2014.08 | 6MT | R | L/R | Van RWD OM 651.940 | | GCO35024 | Outer Joint | | 30 | 36 | 70 | 94.5 | 68 | I |
| | 2010.09-2014.08 | 6MT | R | L/R | Van RWD OM 651.940 | For SA code:XM0 | GCI83462 | Inner Joint | | 26 | 37 | 45 | 83 | 96 | |

| | YEAR | TRANSM. | F/R | L/R | BODY STYLE & DRIVE TYPE & ENGINE | REMARKS | G-AP Ref. | PRODUCT | ABS | Technical Specifications A | B | C | H | L | P |
|---|---|---|---|---|---|---|---|---|---|---|---|---|---|---|---|
| **MERCEDES-BENZ** | | | | | | | | | | | | | | | |
| **Vito 110** | | | | | | | | | | | | | | | |
| 2.2 (70 kw) | 2010.09-2014.08 | 6MT | R | L/R | Van RWD OM 651.940 | | GCI99177 | Inner Joint | | 26 | 28 | 45 | 83.5 | 107.2 | |
| | 2010.09-2014.08 | | R | L/R | Van RWD OM 651.940 | | GCO35036 | Outer Joint | | 30 | 37 | 70 | 94.5 | 61 | I |
| 2.2 (75 kw) | 1999.03-2003.07 | 4AT/5MT | F | L/R | Bus FWD OM 611.980 | | GDS35003 | Drive Shaft | 48W | 27 | | 71.5 | 99 | 506 | |
| | 1999.03-2003.07 | 4AT/5MT | F | L/R | Bus FWD OM 611.980 | | GCO35002 | Outer Joint | 48W | 27 | 36 | 71.5 | 99 | 68 | I |
| | 1999.03-2003.07 | 4AT/5MT | F | L/R | Bus FWD OM 611.980 | | GCI35001 | Inner Joint | | | 30 | | | 36.2 | |
| | 1999.03-2003.07 | AT/MT | F | L/R | Bus FWD OM 611.980 | | GDS35011 | Drive Shaft | | 27 | | 71.5 | 99 | 506 | |
| | 1999.03-2003.07 | MT | F | L/R | Bus FWD OM 611.980 | | GCO35008 | Outer Joint | | 27 | 36 | 71.5 | 99 | 68 | I |
| | 1999.03-2003.07 | 5MT | F | L/R | Van FWD OM 611.980 | | GDS35003 | Drive Shaft | 48W | 27 | | 71.5 | 99 | 506 | |
| | 1999.03-2003.07 | 5MT | F | L/R | Van FWD OM 611.980 | | GCO35002 | Outer Joint | 48W | 27 | 36 | 71.5 | 99 | 68 | I |
| | 1999.03-2003.07 | 5MT | F | L/R | Van FWD OM 611.980 | | GCI35001 | Inner Joint | | | 30 | | | 36.2 | |
| | 1999.03-2003.07 | AT/MT | F | L/R | Van FWD OM 611.980 | | GDS35011 | Drive Shaft | | 27 | | 71.5 | 99 | 506 | |
| | 1999.03-2003.07 | AT/MT | F | L/R | Van FWD OM 611.980 | | GCO35008 | Outer Joint | | 27 | 36 | 71.5 | 99 | 68 | I |
| 2.3 (72 kw) | 1996.02-2003.07 | AT/MT | F | L/R | Bus FWD OM 601.970 (02.96-.) | | GDS35002 | Drive Shaft | 48W | 27 | | 59.8 | 99 | 531 | |
| | 1996.02-2003.07 | AT/MT | F | L/R | Bus FWD OM 601.970 (02.96-.) | | GDS35016 | Drive Shaft | | 27 | | 59.8 | 99 | 531 | |
| | 1996.02-2003.07 | AT/MT | F | L/R | Bus FWD OM 601.970 (02.96-.) | | GCO35001 | Outer Joint | 48W | 27 | 27 | 59.8 | 99 | 63 | I |
| | 1996.02-2003.07 | AT/MT | F | L/R | Bus FWD OM 601.970 (02.96-.) | | GCO35007 | Outer Joint | | 27 | 27 | 59.8 | 99 | 63 | I |
| | 1996.02-2003.07 | AT/MT | F | L/R | Bus FWD OM 601.970 (02.96-.) | | GCI48002 | Inner Joint | | | 28 | | | 32 | |
| | 1997.03-2003.07 | 5MT | F | L/R | Van FWD OM 601.970 | | GDS35002 | Drive Shaft | 48W | 27 | | 59.8 | 99 | 531 | |
| | 1997.03-2003.07 | 5MT | F | L/R | Van FWD OM 601.970 | | GDS35016 | Drive Shaft | | 27 | | 59.8 | 99 | 531 | |
| | 1997.03-2003.07 | 5MT | F | L/R | Van FWD OM 601.970 | | GCO35001 | Outer Joint | 48W | 27 | 27 | 59.8 | 99 | 63 | I |
| | 1997.03-2003.07 | 5MT | F | L/R | Van FWD OM 601.970 | | GCO35007 | Outer Joint | | 27 | 27 | 59.8 | 99 | 63 | I |
| | 1997.03-2003.07 | 5MT | F | L/R | Van FWD OM 601.970 | | GCI48002 | Inner Joint | | | 28 | | | 32 | |
| **Vito 111** | | | | | | | | | | | | | | | |
| 1.6 (84 kw) | 2014.10- | 6MT | F | L | Bus FWD OM 622.951 | | GDS83139 | Drive Shaft | | 30 | 39 | 66 | 98.5 | 699 | |
| | 2014.10- | 6MT | F | R | Bus FWD OM 622.951 | | GDS83138 | Drive Shaft | | 30 | 39 | 66 | 98.5 | 1023 | |
| | 2014.10- | 6MT | F | R | Bus FWD OM 622.951 | | GDS83200 | Drive Shaft | | 30 | 39 | 66 | 98.5 | 1020 | |
| | 2014.10- | 6MT | F | L/R | Bus FWD OM 622.951 | | GCO82369 | Outer Joint | | 30 | 31 | 66 | 98.5 | 70 | M |
| | 2014.10- | 6MT | F | R | Bus FWD OM 622.951 | Date to:2015.02 | GCI82214 | Inner Joint | | 39 | 29 | 29.97 | 368 | 105 | |
| | 2014.10- | 6MT | F | R | Bus FWD OM 622.951 | Date from:2015.03 | GCI82438 | Inner Joint | | 39 | 31 | 29.97 | 368 | 101.5 | |
| | 2014.10- | 6MT | F | L | Van FWD OM 622.951 | | GDS83139 | Drive Shaft | | 30 | 39 | 66 | 98.5 | 699 | |
| | 2014.10- | 6MT | F | R | Van FWD OM 622.951 | | GDS83138 | Drive Shaft | | 30 | 39 | 66 | 98.5 | 1023 | |
| | 2014.10- | 6MT | F | R | Van FWD OM 622.951 | | GDS83200 | Drive Shaft | | 30 | 39 | 66 | 98.5 | 1020 | |
| | 2014.10- | 6MT | F | L/R | Van FWD OM 622.951 | | GCO82369 | Outer Joint | | 30 | 31 | 66 | 98.5 | 70 | M |
| | 2014.10- | 6MT | F | R | Van FWD OM 622.951 | Date to:2015.02 | GCI82214 | Inner Joint | | 39 | 29 | 29.97 | 368 | 105 | |
| | 2014.10- | 6MT | F | R | Van FWD OM 622.951 | Date from:2015.03 | GCI82438 | Inner Joint | | 39 | 31 | 29.97 | 368 | 101.5 | |
| 2.2 (80 kw) | 2003.09- | 6MT | R | L/R | Bus RWD OM 646.982 | For SA code:U60/U61/U63/U65/U71/US1/US2/US3/US4/US5/US8/US9/VP9/ZK7 | GDS35059 | Drive Shaft | | 30 | 26 | 70 | 94.5 | 860 | |
| | 2003.09- | 6MT | R | L/R | Bus RWD OM 646.982 | For SA code:XM0 | GDS56736 | Drive Shaft | | 30 | 26 | 70 | 99.5 | 865 | |
| | 2003.09- | 6MT | R | L/R | Bus RWD OM 646.982 | | GCO35024 | Outer Joint | | 30 | 36 | 70 | 94.5 | 68 | I |
| | 2003.09- | 6MT | R | L/R | Bus RWD OM 646.982 | Chassis no. from:126152 | GCO35069 | Outer Joint | | 30 | 37 | 70 | 99.5 | 62.5 | I |
| | 2003.09- | 6MT | R | L/R | Bus RWD OM 646.982 | For SA code:U60/U61/U63/U65/U71/US1/US2/US3/US4/US5/US8/US9/VP9/ZK7 | GCI35069 | Inner Joint | | 26 | 37 | 45 | 83 | 96 | |
| | 2003.09- | 6MT | R | L/R | Bus RWD OM 646.982 | For SA code:XM0 | GCI83462 | Inner Joint | | 26 | 37 | 45 | 83 | 96 | |
| | 2003.09- | 6MT | R | L/R | Bus RWD OM 646.982 | For SA code:U60/U61/U63/U65/U71/US1/US2/US4/US5/US9/VP9 | GCI99177 | Inner Joint | | 26 | 28 | 45 | 83.5 | 107.2 | |
| | 2003.09- | AT/MT | R | L/R | Bus RWD OM 646.982 | ---------- | GDS35022 | Drive Shaft | | 30 | 26 | 70 | 94.5 | 853 | |
| | 2003.09- | | R | L/R | Bus RWD OM 646.982 | | GCO35036 | Outer Joint | | 30 | 37 | 70 | 94.5 | 61 | I |
| | 2003.09-2007.08 | 5AT/6MT | R | L/R | Van RWD OM 646.982 | Not for SA code:U60/U61/U63/U65/U71/US1/US2/US3/US4/US5/US8/US9/VP9/ZK7,XM0 | GDS35022 | Drive Shaft | | 30 | 26 | 70 | 94.5 | 853 | |
| | 2003.09-2007.08 | 5AT/6MT | R | L/R | Van RWD OM 646.982 | For SA code:U60/U61/U63/U65/U71/US1/US2/US3/US4/US5/US8/US9/VP9/ZK7 | GDS35059 | Drive Shaft | | 30 | 26 | 70 | 94.5 | 860 | |
| | 2003.09-2007.08 | 5AT/6MT | R | L/R | Van RWD OM 646.982 | For SA code:XM0 | GDS56736 | Drive Shaft | | 30 | 26 | 70 | 99.5 | 865 | |
| | 2003.09-2007.08 | 5AT/6MT | R | L/R | Van RWD OM 646.982 | | GCO35024 | Outer Joint | | 30 | 36 | 70 | 94.5 | 68 | I |
| | 2003.09-2007.08 | 5AT/6MT | R | L/R | Van RWD OM 646.982 | For Modelcode:639605 | GCO35069 | Outer Joint | | 30 | 37 | 70 | 99.5 | 62.5 | I |
| | 2003.09-2007.08 | 5AT/6MT | R | L/R | Van RWD OM 646.982 | For SA code:U60/U61/U63/U65/U71/US1/US2/US3/US4/US5/US8/US9/VP9/ZK7 | GCI35069 | Inner Joint | | 26 | 37 | 45 | 83 | 96 | |
| | 2003.09-2007.08 | 5AT/6MT | R | L/R | Van RWD OM 646.982 | For SA code:XM0 | GCI83462 | Inner Joint | | 26 | 37 | 45 | 83 | 96 | |
| | 2003.09-2007.08 | 5AT/6MT | R | L/R | Van RWD OM 646.982 | For SA code:U60/U61/U63/U65/U71/US1/US2/US4/US5/US9/VP9 | GCI99177 | Inner Joint | | 26 | 28 | 45 | 83.5 | 107.2 | |
| | 2003.09-2007.08 | | R | L/R | Van RWD OM 646.982 | | GCO35036 | Outer Joint | | 30 | 37 | 70 | 94.5 | 61 | I |
| | 2007.09-2014.08 | 5AT/6MT | F | L/R | Bus 4WD OM 646.982 | | GDS35084 | Drive Shaft | | 30 | | 66 | 96.5 | 652 | |
| | 2007.09-2014.08 | 5AT/6MT | R | L/R | Bus 4WD OM 646.982 | | GDS35022 | Drive Shaft | | 30 | 26 | 70 | 94.5 | 853 | |
| | 2007.09-2014.08 | 5AT/6MT | R | L/R | Bus 4WD OM 646.982 | | GCO35024 | Outer Joint | | 30 | 36 | 70 | 94.5 | 68 | I |
| | 2007.09-2014.08 | AT/MT | R | L/R | Bus 4WD OM 646.982 | Date to:2008.07 | GCI99177 | Inner Joint | | 26 | 28 | 45 | 83.5 | 107.2 | |
| | 2007.09-2014.08 | MT | R | L/R | Bus 4WD OM 646.982 | | GCI35069 | Inner Joint | | 26 | 37 | 45 | 83 | 96 | |
| | 2007.09-2014.08 | | R | L/R | Bus 4WD OM 646.982 | | GCO35036 | Outer Joint | | 30 | 37 | 70 | 94.5 | 61 | I |
| | 2007.09-2014.08 | | R | | Bus 4WD OM 646.982 | | GCO35028 | Outer Joint | | 30 | 36 | 70 | 95 | 68 | I |
| | 2007.09-2014.08 | 5AT/6MT | F | L/R | Van 4WD OM 646.982 | | GDS35084 | Drive Shaft | | 30 | | 66 | 96.5 | 652 | |
| | 2007.09-2014.08 | 5AT/6MT | R | L/R | Van 4WD OM 646.982 | | GDS35022 | Drive Shaft | | 30 | 26 | 70 | 94.5 | 853 | |
| | 2007.09-2014.08 | 5AT/6MT | R | L/R | Van 4WD OM 646.982 | | GCO35024 | Outer Joint | | 30 | 36 | 70 | 94.5 | 68 | I |
| | 2007.09-2014.08 | AT/MT | R | L/R | Van 4WD OM 646.982 | Date to:2008.07 | GCI99177 | Inner Joint | | 26 | 28 | 45 | 83.5 | 107.2 | |
| | 2007.09-2014.08 | MT | R | L/R | Van 4WD OM 646.982 | | GCI35069 | Inner Joint | | 26 | 37 | 45 | 83 | 96 | |

| | YEAR | TRANSM. | F/R | L/R | BODY STYLE & DRIVE TYPE & ENGINE | REMARKS | G-AP Ref. | PRODUCT | ABS | Technical Specifications A | B | C | H | L | P |
|---|---|---|---|---|---|---|---|---|---|---|---|---|---|---|---|
| **MERCEDES-BENZ** | | | | | | | | | | | | | | | |
| **Vito 111** | | | | | | | | | | | | | | | |
| 2.2 (80 kw) | 2007.09-2014.08 | | R | L/R | Van 4WD OM 646.982 | | GCO35036 | Outer Joint | | 30 | 37 | 70 | 94.5 | 61 | I |
| 2.2 (85 kw) | 2007.09- | 6MT | R | L/R | Bus RWD OM 646.980 | [illegible] | GDS35022 | Drive Shaft | | 30 | 26 | 70 | 94.5 | 853 | |
| | 2007.09- | 6MT | R | L/R | Bus RWD OM 646.980 | [illegible] | GDS35059 | Drive Shaft | | 30 | 26 | 70 | 94.5 | 860 | |
| | 2007.09- | 6MT | R | L/R | Bus RWD OM 646.980 | Date from:2011.07,Chassis no.. from:3673415;For SA code:XM0 | GDS56736 | Drive Shaft | | 30 | 26 | 70 | 99.5 | 865 | |
| | 2007.09- | 6MT | R | L/R | Bus RWD OM 646.980 | | GCO35024 | Outer Joint | | 30 | 36 | 70 | 94.5 | 68 | I |
| | 2007.09- | 6MT | R | L/R | Bus RWD OM 646.980 | Date from:2011.07,Chassis no.. from:3673415;For SA code:XM0 | GCI83462 | Inner Joint | | 26 | 37 | 45 | 83 | 96 | |
| | 2007.09- | 6MT | R | L/R | Bus RWD OM 646.980 | [illegible] | GCI99177 | Inner Joint | | 26 | 28 | 45 | 83.5 | 107.2 | |
| | 2007.09- | | R | L/R | Bus RWD OM 646.980 | | GCO35036 | Outer Joint | | 30 | 37 | 70 | 94.5 | 61 | I |
| | 2007.09-2014.08 | 5AT/6MT | R | L/R | Van RWD OM 646.982;OM 646.980 | [illegible] | GDS35022 | Drive Shaft | | 30 | 26 | 70 | 94.5 | 853 | |
| | 2007.09-2014.08 | 5AT/6MT | R | L/R | Van RWD OM 646.982;OM 646.980 | [illegible] | GDS35059 | Drive Shaft | | 30 | 26 | 70 | 94.5 | 860 | |
| | 2007.09-2014.08 | 5AT/6MT | R | L/R | Van RWD OM 646.982;OM 646.980 | Date from:2011.07,Chassis no.. from:3673415;For SA code:XM0 | GDS56736 | Drive Shaft | | 30 | 26 | 70 | 99.5 | 865 | |
| | 2007.09-2014.08 | 5AT/6MT | R | L/R | Van RWD OM 646.982;OM 646.980 | | GCO35024 | Outer Joint | | 30 | 36 | 70 | 94.5 | 68 | I |
| | 2007.09-2014.08 | 5AT/6MT | R | L/R | Van RWD OM 646.982;OM 646.980 | Date from:2011.07,Chassis no.. from:3673415;For SA code:XM0 | GCI83462 | Inner Joint | | 26 | 37 | 45 | 83 | 96 | |
| | 2007.09-2014.08 | 5AT/6MT | R | L/R | Van RWD OM 646.982;OM 646.980 | [illegible] | GCI99177 | Inner Joint | | 26 | 28 | 45 | 83.5 | 107.2 | |
| | 2007.09-2014.08 | | R | L/R | Van RWD OM 646.982;OM 646.980 | | GCO35036 | Outer Joint | | 30 | 37 | 70 | 94.5 | 61 | I |
| **Vito 112** | | | | | | | | | | | | | | | |
| 2.2 (90 kw) | 1999.03-2003.07 | 4AT/5MT | F | L/R | Bus FWD OM 611.980 | | GDS35003 | Drive Shaft | 48W | 27 | | 71.5 | 99 | 506 | |
| | 1999.03-2003.07 | 4AT/5MT | F | L/R | Bus FWD OM 611.980 | | GCO35002 | Outer Joint | 48W | 27 | 36 | 71.5 | 99 | 68 | I |
| | 1999.03-2003.07 | 4AT/5MT | F | L/R | Bus FWD OM 611.980 | | GCI35001 | Inner Joint | | | 30 | | | 36.2 | |
| | 1999.03-2003.07 | AT/MT | F | L/R | Bus FWD OM 611.980 | | GDS35011 | Drive Shaft | | 27 | | 71.5 | 99 | 506 | |
| | 1999.03-2003.07 | MT | F | L/R | Bus FWD OM 611.980 | | GCO35008 | Outer Joint | | 27 | 36 | 71.5 | 99 | 68 | I |
| | 1999.03-2003.07 | 5MT | F | L/R | Van FWD OM 611.980 | | GDS35003 | Drive Shaft | 48W | 27 | | 71.5 | 99 | 506 | |
| | 1999.03-2003.07 | 5MT | F | L/R | Van FWD OM 611.980 | | GCO35002 | Outer Joint | 48W | 27 | 36 | 71.5 | 99 | 68 | I |
| | 1999.03-2003.07 | 5MT | F | L/R | Van FWD OM 611.980 | | GCI35001 | Inner Joint | | | 30 | | | 36.2 | |
| | 1999.03-2003.07 | AT/MT | F | L/R | Van FWD OM 611.980 | | GDS35011 | Drive Shaft | | 27 | | 71.5 | 99 | 506 | |
| | 1999.03-2003.07 | AT/MT | F | L/R | Van FWD OM 611.980 | | GCO35008 | Outer Joint | | 27 | 36 | 71.5 | 99 | 68 | I |
| **Vito 113** | | | | | | | | | | | | | | | |
| 2.0 (95 kw) | 1996.02-2003.07 | AT/MT | F | L/R | Bus FWD M 111.948, M 111.950 | | GDS35002 | Drive Shaft | 48W | 27 | | 59.8 | 99 | 531 | |
| | 1996.02-2003.07 | AT/MT | F | L/R | Bus FWD M 111.948, M 111.950 | | GDS35016 | Drive Shaft | | 27 | | 59.8 | 99 | 531 | |
| | 1996.02-2003.07 | AT/MT | F | L/R | Bus FWD M 111.948, M 111.950 | | GCO35001 | Outer Joint | 48W | 27 | 27 | 59.8 | 99 | 63 | I |
| | 1996.02-2003.07 | AT/MT | F | L/R | Bus FWD M 111.948, M 111.950 | | GCO35007 | Outer Joint | | 27 | 27 | 59.8 | 99 | 63 | I |
| | 1996.02-2003.07 | AT/MT | F | L/R | Bus FWD M 111.948, M 111.950 | | GCI48002 | Inner Joint | | | 28 | | | 32 | |
| | 1997.03-2003.07 | 5MT | F | L/R | Van FWD M 111.948, M 111.950 | | GDS35002 | Drive Shaft | 48W | 27 | | 59.8 | 99 | 531 | |
| | 1997.03-2003.07 | 5MT | F | L/R | Van FWD M 111.948, M 111.950 | | GDS35016 | Drive Shaft | | 27 | | 59.8 | 99 | 531 | |
| | 1997.03-2003.07 | 5MT | F | L/R | Van FWD M 111.948, M 111.950 | | GCO35001 | Outer Joint | 48W | 27 | 27 | 59.8 | 99 | 63 | I |
| | 1997.03-2003.07 | 5MT | F | L/R | Van FWD M 111.948, M 111.950 | | GCO35007 | Outer Joint | | 27 | 27 | 59.8 | 99 | 63 | I |
| | 1997.03-2003.07 | 5MT | F | L/R | Van FWD M 111.948, M 111.950 | | GCI48002 | Inner Joint | | | 28 | | | 32 | |
| 2.2 (100 kw) | 2010.09- | 5AT/6MT | R | L/R | Bus RWD OM 651.940 | | GDS35022 | Drive Shaft | | 30 | 26 | 70 | 94.5 | 853 | |
| | 2010.09- | 5AT/6MT | R | L/R | Bus RWD OM 651.940 | For SA code:XM0 | GDS56736 | Drive Shaft | | 30 | 26 | 70 | 99.5 | 865 | |
| | 2010.09- | 5AT/6MT | R | L/R | Bus RWD OM 651.940 | | GCO35024 | Outer Joint | | 30 | 36 | 70 | 94.5 | 68 | I |
| | 2010.09- | 5AT/6MT | R | L/R | Bus RWD OM 651.940 | For SA code:XM0 | GCI83462 | Inner Joint | | 26 | 37 | 45 | 83 | 96 | |
| | 2010.09- | 5AT/6MT | R | L/R | Bus RWD OM 651.940 | | GCI99177 | Inner Joint | | 26 | 28 | 45 | 83.5 | 107.2 | |
| | 2010.09-2014.08 | 5AT | F | L/R | Bus 4WD OM 651.940 | | GDS56452 | Drive Shaft | | 30 | | 66 | 98.5 | 620 | |
| | 2010.09-2014.08 | 5AT | F | L/R | Bus 4WD OM 651.940 | | GCO83299 | Outer Joint | | 30 | 28 | 66 | 98.5 | 61.5 | M |
| | 2010.09-2014.08 | 5AT | F | L/R | Bus 4WD OM 651.940 | | GCI83314 | Inner Joint | | | 28 | | | 35.2 | |
| | 2010.09-2014.08 | 5AT | R | L/R | Bus 4WD OM 651.940 | | GDS35022 | Drive Shaft | | 30 | 26 | 70 | 94.5 | 853 | |
| | 2010.09-2014.08 | 5AT | F | L/R | Van 4WD OM 651.940 | | GDS56452 | Drive Shaft | | 30 | | 66 | 98.5 | 620 | |
| | 2010.09-2014.08 | 5AT | F | L/R | Van 4WD OM 651.940 | | GCO83299 | Outer Joint | | 30 | 28 | 66 | 98.5 | 61.5 | M |
| | 2010.09-2014.08 | 5AT | F | L/R | Van 4WD OM 651.940 | | GCI83314 | Inner Joint | | | 28 | | | 35.2 | |
| | 2010.09-2014.08 | 5AT | R | L/R | Van 4WD OM 651.940 | | GDS35022 | Drive Shaft | | 30 | 26 | 70 | 94.5 | 853 | |
| | 2010.09-2014.08 | 5AT/6MT | R | L/R | Van RWD OM 651.940 | Not For SA code:XM0 | GDS35022 | Drive Shaft | | 30 | 26 | 70 | 94.5 | 853 | |
| | 2010.09-2014.08 | 5AT/6MT | R | L/R | Van RWD OM 651.940 | For SA code:XM0 | GDS56736 | Drive Shaft | | 30 | 26 | 70 | 99.5 | 865 | |
| | 2010.09-2014.08 | 5AT/6MT | R | L/R | Van RWD OM 651.940 | | GCO35024 | Outer Joint | | 30 | 36 | 70 | 94.5 | 68 | I |
| | 2010.09-2014.08 | 5AT/6MT | R | L/R | Van RWD OM 651.940 | For SA code:XM0 | GCI83462 | Inner Joint | | 26 | 37 | 45 | 83 | 96 | |
| | 2010.09-2014.08 | 5AT/6MT | R | L/R | Van RWD OM 651.940 | | GCI99177 | Inner Joint | | 26 | 28 | 45 | 83.5 | 107.2 | |
| **Vito 114** | | | | | | | | | | | | | | | |
| 1.7 (100 kw) | 2019.09- | 6MT | F | L | Bus FWD OM 622.851 | | GDS83139 | Drive Shaft | | 30 | 39 | 66 | 98.5 | 699 | |
| | 2019.09- | 6MT | F | R | Bus FWD OM 622.851 | | GDS83138 | Drive Shaft | | 30 | 39 | 66 | 98.5 | 1023 | |
| | 2019.09- | 6MT | F | R | Bus FWD OM 622.851 | | GDS83200 | Drive Shaft | | 30 | 39 | 66 | 98.5 | 1020 | |
| | 2019.09- | 6MT | F | L/R | Bus FWD OM 622.851 | | GCO82369 | Outer Joint | | 30 | 31 | 66 | 98.5 | 70 | M |
| | 2019.09- | 6MT | F | R | Bus FWD OM 622.851 | | GCI82438 | Inner Joint | | 39 | 31 | 29.97 | 368 | 101.5 | |
| | 2019.09- | 6MT | F | L | Van FWD OM 622.851 | | GDS83139 | Drive Shaft | | 30 | 39 | 66 | 98.5 | 699 | |
| | 2019.09- | 6MT | F | R | Van FWD OM 622.851 | | GDS83138 | Drive Shaft | | 30 | 39 | 66 | 98.5 | 1023 | |
| | 2019.09- | 6MT | F | R | Van FWD OM 622.851 | | GDS83200 | Drive Shaft | | 30 | 39 | 66 | 98.5 | 1020 | |
| | 2019.09- | 6MT | F | L/R | Van FWD OM 622.851 | | GCO82369 | Outer Joint | | 30 | 31 | 66 | 98.5 | 70 | M |

| | YEAR | TRANSM. | F/R | L/R | BODY STYLE & DRIVE TYPE & ENGINE | REMARKS | G-AP Ref. | PRODUCT | ABS | A | B | C | H | L | P |
|---|---|---|---|---|---|---|---|---|---|---|---|---|---|---|---|
| **MERCEDES-BENZ** | | | | | | | | | | | | | | | |
| **Vito 114** | | | | | | | | | | | | | | | |
| 1.7 (100 kw) | 2019.09- | 6MT | F | R | Van FWD OM 622.851 | | GCI82438 | Inner Joint | | 39 | 31 | 29.97 | 368 | 101.5 | |
| 2.0 (100 kw) | 2019.03- | 9AT | F | L/R | Bus 4WD OM 654.920 | No Facelift | GDS84138 | Drive Shaft | | 30 | 24 | 66 | 98.5 | 694 | |
| | 2019.03- | 9AT | F | L/R | Bus 4WD OM 654.920 | No Facelift | GCO82369 | Outer Joint | | 30 | 31 | 66 | 98.5 | 70 | M |
| | 2019.03- | 9AT | F | L/R | Bus 4WD OM 654.920 | | GCI82604 | Inner Joint | | 24 | 33 | 37.9 | 70.5 | 112 | |
| | 2019.03- | 9AT | R | L/R | Bus 4WD OM 654.920 | Manufacturer:IFA | GDS35121 | Drive Shaft | | 30 | 30 | 73 | 90 | 846 | |
| | 2019.03- | 9AT | R | L/R | Bus RWD OM 654.920 | Date to:2025.04,For SA code:XM7,Manufacturer:IFA;Date from:2025.05,Manufacturer:IFA;For SA code:VQ1/VQ8/Y03/Y04,Manufacturer:IFA | GDS35121 | Drive Shaft | | 30 | 30 | 73 | 90 | 846 | |
| | 2019.03- | 9AT | R | L/R | Bus RWD OM 654.920 | Date to:2019.04,Manufacturer:Neapco | GDS57577 | Drive Shaft | | 30 | 30 | 73 | 90 | 851 | |
| | 2019.03- | 9AT | R | L/R | Bus RWD OM 654.920 | Date form:2019.05,Date to:2023.09,For SA code:Y03/Y04;For SA code:XM7/EI1/EI3/VQ1/ZE9/VQ8/Y03/Y04 | GDS58339 | Drive Shaft | | 30 | 30 | 73 | 90 | 849 | |
| | 2019.03- | 9AT | R | L/R | Bus RWD OM 654.920 | Date to:2019.04,Date form:2019.05,For SA code:Y03/Y04 | GCO83616 | Outer Joint | | 30 | 31 | 73 | 90 | 70.5 | M |
| | 2019.03- | 9AT | R | L/R | Bus RWD OM 654.920 | Date to:2019.04 | GCI83784 | Inner Joint | | 30 | 31 | 47 | 83 | 92.5 | |
| | 2019.03- | 9AT | R | L/R | Bus RWD OM 654.920 | Date form:2019.05,For SA code:Y03/Y04 | GCI84070 | Inner Joint | | 30 | 31 | 47 | 83.5 | 93 | |
| | 2019.03- | 9AT | F | L/R | Van 4WD OM 654.920 | for OE No.:4473306400,For SA code:XM0/XM8 | GDS84138 | Drive Shaft | | 30 | 24 | 66 | 98.5 | 694 | |
| | 2019.03- | 9AT | R | L/R | Van 4WD OM 654.920 | Manufacturer:IFA | GDS35121 | Drive Shaft | | 30 | 30 | 73 | 90 | 846 | |
| | 2019.03- | 9AT | R | L/R | Van RWD OM 654.920 | Date to:2025.04,For SA code:XM7,Manufacturer:IFA;Date from:2025.05,Manufacturer:IFA;For SA code:VQ1/VQ8/Y03/Y04,Manufacturer:IFA | GDS35121 | Drive Shaft | | 30 | 30 | 73 | 90 | 846 | |
| | 2019.03- | 9AT | R | L/R | Van RWD OM 654.920 | Date to:2019.04,Manufacturer:Neapco | GDS57577 | Drive Shaft | | 30 | 30 | 73 | 90 | 851 | |
| | 2019.03- | 9AT | R | L/R | Van RWD OM 654.920 | Date to:2019.04,Date form:2019.05,For SA code:Y03/Y04 | GCO83616 | Outer Joint | | 30 | 31 | 73 | 90 | 70.5 | M |
| | 2019.03- | 9AT | R | L/R | Van RWD OM 654.920 | Date to:2019.04 | GCI83784 | Inner Joint | | 30 | 31 | 47 | 83 | 92.5 | |
| | 2019.03- | 9AT/6MT | R | L/R | Van RWD OM 654.920 | Date form:2019.05,Date to:2023.09,For SA code:Y03/Y04;For SA code:XM7/EI1/EI3/VQ1/ZE9/VQ8/Y03/Y04 | GDS58339 | Drive Shaft | | 30 | 30 | 73 | 90 | 849 | |
| | 2019.03- | 9AT/6MT | R | L/R | Van RWD OM 654.920 | Date form:2019.05,For SA code:Y03/Y04 | GCI84070 | Inner Joint | | 30 | 31 | 47 | 83.5 | 93 | |
| | 2020.04- | 9AT | F | L/R | Van 4WD OM 654.920 | No Facelift | GDS84138 | Drive Shaft | | 30 | 24 | 66 | 98.5 | 694 | |
| | 2020.04- | 9AT | F | L/R | Van 4WD OM 654.920 | No Facelift | GCO82369 | Outer Joint | | 30 | 31 | 66 | 98.5 | 70 | M |
| | 2020.04- | 9AT | F | L/R | Van 4WD OM 654.920 | | GCI82604 | Inner Joint | | 24 | 33 | 37.9 | 70.5 | 112 | |
| | 2020.04- | 9AT | R | L/R | Van 4WD OM 654.920 | Manufacturer:IFA | GDS35121 | Drive Shaft | | 30 | 30 | 73 | 90 | 846 | |
| | 2020.04- | 7AT | R | L/R | Van RWD OM 654.920 | Date to:2019.04 | GCO83616 | Outer Joint | | 30 | 31 | 73 | 90 | 70.5 | M |
| | 2020.04- | 9AT | R | L/R | Van RWD OM 654.920 | Date to:2025.04,For SA code:XM7,Manufacturer:IFA;Date from:2025.05,Manufacturer:IFA;For SA code:VQ1/VQ8/Y03/Y04,Manufacturer:IFA | GDS35121 | Drive Shaft | | 30 | 30 | 73 | 90 | 846 | |
| | 2020.04- | 9AT | R | L/R | Van RWD OM 654.920 | Date to:2019.04,Manufacturer:Neapco | GDS57577 | Drive Shaft | | 30 | 30 | 73 | 90 | 851 | |
| | 2020.04- | 9AT/6MT | R | L/R | Van RWD OM 654.920 | | GCI83784 | Inner Joint | | 30 | 31 | 47 | 83 | 92.5 | |
| 2.2 (100 kw) | 2014.10- | 7AT | R | L/R | Bus RWD OM 651.950 | Date to:2025.04,For SA code:XM7,Manufacturer:IFA;Date from:2025.05,Manufacturer:IFA | GDS35121 | Drive Shaft | | 30 | 30 | 73 | 90 | 846 | |
| | 2014.10- | 7AT | R | L/R | Bus RWD OM 651.950 | Date to:2019.04,Manufacturer:Neapco | GDS57577 | Drive Shaft | | 30 | 30 | 73 | 90 | 851 | |
| | 2014.10- | 7AT | R | L/R | Bus RWD OM 651.950 | Date to:2019.04,Date form:2019.05,For SA code:Y03/Y04 | GCO83616 | Outer Joint | | 30 | 31 | 73 | 90 | 70.5 | M |
| | 2014.10- | 7AT | R | L/R | Bus RWD OM 651.950 | Date to:2019.04 | GCI83784 | Inner Joint | | 30 | 31 | 47 | 83 | 92.5 | |
| | 2014.10- | 7AT/6MT | R | L/R | Bus RWD OM 651.950 | Date form:2019.05,Date to:2023.09,For SA code:Y03/Y04;For SA code:XM7/EI1/EI3/VQ1/ZE9/VQ8/Y03/Y04 | GDS58339 | Drive Shaft | | 30 | 30 | 73 | 90 | 849 | |
| | 2014.10- | 7AT/6MT | R | L/R | Bus RWD OM 651.950 | Date form:2019.05,For SA code:Y03/Y04 | GCI84070 | Inner Joint | | 30 | 31 | 47 | 83.5 | 93 | |
| | 2014.10- | 7AT | R | L/R | Van RWD OM 651.950 | Date to:2025.04,For SA code:XM7,Manufacturer:IFA;Date from:2025.05,Manufacturer:IFA | GDS35121 | Drive Shaft | | 30 | 30 | 73 | 90 | 846 | |
| | 2014.10- | 7AT | R | L/R | Van RWD OM 651.950 | Date to:2019.04,Manufacturer:Neapco | GDS57577 | Drive Shaft | | 30 | 30 | 73 | 90 | 851 | |
| | 2014.10- | 7AT | R | L/R | Van RWD OM 651.950 | Date to:2019.04,Date form:2019.05,For SA code:Y03/Y04 | GCO83616 | Outer Joint | | 30 | 31 | 73 | 90 | 70.5 | M |
| | 2014.10- | 7AT | R | L/R | Van RWD OM 651.950 | Date to:2019.04 | GCO83616 | Outer Joint | | 30 | 31 | 73 | 90 | 70.5 | M |
| | 2014.10- | 7AT | R | L/R | Van RWD OM 651.950 | Date to:2019.04 | GCI83784 | Inner Joint | | 30 | 31 | 47 | 83 | 92.5 | |
| | 2014.10- | 7AT/6MT | R | L/R | Van RWD OM 651.950 | Date form:2019.05,Date to:2023.09,For SA code:Y03/Y04;For SA code:XM7/EI1/EI3/VQ1/ZE9/VQ8/Y03/Y04 | GDS58339 | Drive Shaft | | 30 | 30 | 73 | 90 | 849 | |
| | 2014.10- | 7AT/6MT | R | L/R | Van RWD OM 651.950 | | GCI83784 | Inner Joint | | 30 | 31 | 47 | 83 | 92.5 | |
| | 2014.10- | 7AT/6MT | R | L/R | Van RWD OM 651.950 | Date form:2019.05,For SA code:Y03/Y04 | GCI84070 | Inner Joint | | 30 | 31 | 47 | 83.5 | 93 | |
| | 2015.07- | 7AT | F | L/R | Bus 4WD OM 651.950 | No Facelift | GDS84138 | Drive Shaft | | 30 | 24 | 66 | 98.5 | 694 | |
| | 2015.07- | 7AT | F | L/R | Bus 4WD OM 651.950 | No Facelift | GCO82369 | Outer Joint | | 30 | 31 | 66 | 98.5 | 70 | M |
| | 2015.07- | 7AT | F | L/R | Bus 4WD OM 651.950 | | GCI82604 | Inner Joint | | 24 | 33 | 37.9 | 70.5 | 112 | |
| | 2015.07- | 7AT | R | L/R | Bus 4WD OM 651.950 | Manufacturer:IFA | GDS35121 | Drive Shaft | | 30 | 30 | 73 | 90 | 846 | |
| | 2015.07- | 7AT | F | L/R | Van 4WD OM 651.950 | No Facelift | GDS84138 | Drive Shaft | | 30 | 24 | 66 | 98.5 | 694 | |
| | 2015.07- | 7AT | F | L/R | Van 4WD OM 651.950 | for OE No.:4473306400,For SA code:XM0/XM8 | GDS84138 | Drive Shaft | | 30 | 24 | 66 | 98.5 | 694 | |
| | 2015.07- | 7AT | F | L/R | Van 4WD OM 651.950 | No Facelift | GCO82369 | Outer Joint | | 30 | 31 | 66 | 98.5 | 70 | M |
| | 2015.07- | 7AT | F | L/R | Van 4WD OM 651.950 | | GCI82604 | Inner Joint | | 24 | 33 | 37.9 | 70.5 | 112 | |
| | 2015.07- | 7AT | R | L/R | Van 4WD OM 651.950 | Manufacturer:IFA | GDS35121 | Drive Shaft | | 30 | 30 | 73 | 90 | 846 | |
| 2.3 (105 kw) | 1996.12-2003.07 | AT/MT | F | L/R | Bus FWD M 111.978, M 111.980 | | GDS35002 | Drive Shaft | 48W | 27 | | 59.8 | 99 | 531 | |
| | 1996.12-2003.07 | AT/MT | F | L/R | Bus FWD M 111.978, M 111.980 | | GDS35016 | Drive Shaft | | 27 | | 59.8 | 99 | 531 | |
| | 1996.12-2003.07 | AT/MT | F | L/R | Bus FWD M 111.978, M 111.980 | | GCO35001 | Outer Joint | 48W | 27 | 27 | 59.8 | 99 | 63 | I |
| | 1996.12-2003.07 | AT/MT | F | L/R | Bus FWD M 111.978, M 111.980 | | GCO35007 | Outer Joint | | 27 | 27 | 59.8 | 99 | 63 | I |
| | 1996.12-2003.07 | AT/MT | F | L/R | Bus FWD M 111.978, M 111.980 | | GCI48002 | Inner Joint | | | 28 | | | 32 | |
| | 1997.03-2003.07 | AT/MT | F | L/R | Van FWD M 111.978, M 111.980 | | GDS35002 | Drive Shaft | 48W | 27 | | 59.8 | 99 | 531 | |
| | 1997.03-2003.07 | AT/MT | F | L/R | Van FWD M 111.978, M 111.980 | | GDS35016 | Drive Shaft | | 27 | | 59.8 | 99 | 531 | |
| | 1997.03-2003.07 | AT/MT | F | L/R | Van FWD M 111.978, M 111.980 | | GCO35001 | Outer Joint | 48W | 27 | 27 | 59.8 | 99 | 63 | I |
| | 1997.03-2003.07 | AT/MT | F | L/R | Van FWD M 111.978, M 111.980 | | GCO35007 | Outer Joint | | 27 | 27 | 59.8 | 99 | 63 | I |
| | 1997.03-2003.07 | AT/MT | F | L/R | Van FWD M 111.978, M 111.980 | | GCI48002 | Inner Joint | | | 28 | | | 32 | |
| **Vito 115** | | | | | | | | | | | | | | | |
| 2.2 (110 kw) | 2003.09- | 5AT/6MT | R | L/R | Bus RWD OM 646.982;OM 646.980 | Date to:2011.06,Chassis no. to:3673614,For SA code:U60/U61/U63/U65/U71/US1/US2/US3/US4/US5/US8/US9/VP9/ZK7 | GDS35059 | Drive Shaft | | 30 | 26 | 70 | 94.5 | 860 | |
| | 2003.09- | 5AT/6MT | R | L/R | Bus RWD OM 646.982;OM 646.980 | Date to:2011.06,Chassis no. to:3673614,Not for SA code:U60/U61/U63/U65/U71/US1/US2/US3/US4/US5/US8/US9/VP9/ZK7,XM0 | GDS35093 | Drive Shaft | | 30 | 26 | 70 | 99.5 | 865 | |
| | 2003.09- | 5AT/6MT | R | L/R | Bus RWD OM 646.982;OM 646.980 | Date from:2011.07,Chassis no. from:3673415;For SA code:XM0 | GDS56736 | Drive Shaft | | 30 | 26 | 70 | 99.5 | 865 | |
| | 2003.09- | 5AT/6MT | R | L/R | Bus RWD OM 646.982;OM 646.980 | | GCO35024 | Outer Joint | | 30 | 36 | 70 | 94.5 | 68 | I |

Technical Specifications

| | YEAR | TRANSM. | F/R | L/R | BODY STYLE & DRIVE TYPE & ENGINE | REMARKS | G-AP Ref. | PRODUCT | ABS | Technical Specifications | | | | | |
|---|---|---|---|---|---|---|---|---|---|---|---|---|---|---|---|
| | | | | | | | | | | A | B | C | H | L | P |
| **MERCEDES-BENZ** | | | | | | | | | | | | | | | |
| **Vito 115** | | | | | | | | | | | | | | | |
| 2.2 (110 kw) | 2003.09- | 5AT/6MT | R | L/R | Bus RWD OM 646.982;OM 646.980 | | GCO35069 | Outer Joint | | 30 | 37 | 70 | 99.5 | 62.5 | I |
| | 2003.09- | 5AT/6MT | R | L/R | Bus RWD OM 646.982;OM 646.980 | Date to:2011.06,Chassis no. to:3673614 | GCI35069 | Inner Joint | | 26 | 37 | 45 | 83 | 96 | |
| | 2003.09- | 5AT/6MT | R | L/R | Bus RWD OM 646.982;OM 646.980 | Date from:2011.07,Chassis no. from:3673415;For SA code:XM0 | GCI83462 | Inner Joint | | 26 | 37 | 45 | 83 | 96 | |
| | 2003.09- | | R | L/R | Bus RWD OM 646.982;OM 646.980 | | GCO35036 | Outer Joint | | 30 | 37 | 70 | 94.5 | 61 | I |
| | 2003.09- | | R | | Bus RWD OM 646.982;OM 646.980 | | GCO35028 | Outer Joint | | 30 | 36 | 70 | 95 | 68 | I |
| | 2003.09-2014.08 | 5AT/6MT | R | L/R | Van RWD OM 646.982;OM 646.980 | Date to:2011.06,Chassis no. to:3673614;For SA code:XM0;XM8;XMP;XM2 | GDS35059 | Drive Shaft | | 30 | 26 | 70 | 94.5 | 860 | |
| | 2003.09-2014.08 | 5AT/6MT | R | L/R | Van RWD OM 646.982;OM 646.980 | Date to:2011.06,Chassis no. to:3673614;For SA code:XM0;XM8;XMP;XM2;XM3 | GDS35093 | Drive Shaft | | 30 | 26 | 70 | 99.5 | 865 | |
| | 2003.09-2014.08 | 5AT/6MT | R | L/R | Van RWD OM 646.982;OM 646.980 | Date from:2011.07,Chassis no. from:3673415;For SA code:XM0 | GDS56736 | Drive Shaft | | 30 | 26 | 70 | 99.5 | 865 | |
| | 2003.09-2014.08 | 5AT/6MT | R | L/R | Van RWD OM 646.982;OM 646.980 | | GCO35024 | Outer Joint | | 30 | 36 | 70 | 94.5 | 68 | I |
| | 2003.09-2014.08 | 5AT/6MT | R | L/R | Van RWD OM 646.982;OM 646.980 | 8 balls | GCO35069 | Outer Joint | | 30 | 37 | 70 | 99.5 | 62.5 | I |
| | 2003.09-2014.08 | 5AT/6MT | R | L/R | Van RWD OM 646.982;OM 646.980 | Date to:2011.06,Chassis no. to:3673614 | GCI35069 | Inner Joint | | 26 | 37 | 45 | 83 | 96 | |
| | 2003.09-2014.08 | 5AT/6MT | R | L/R | Van RWD OM 646.982;OM 646.980 | Date from:2011.07,Chassis no. from:3673415;For SA code:XM0 | GCI83462 | Inner Joint | | 26 | 37 | 45 | 83 | 96 | |
| | 2003.09-2014.08 | | R | L/R | Van RWD OM 646.982;OM 646.980 | 6 balls | GCO35036 | Outer Joint | | 30 | 37 | 70 | 94.5 | 61 | I |
| | 2006.07-2014.08 | 5AT/6MT | F | L/R | Van 4WD OM 646.982 | | GDS35084 | Drive Shaft | | 30 | | 66 | 96.5 | 652 | |
| | 2006.07-2014.08 | 5AT/6MT | R | L/R | Van 4WD OM 646.982 | | GDS35022 | Drive Shaft | | 30 | 26 | 70 | 94.5 | 853 | |
| | 2006.07-2014.08 | 5AT/6MT | R | L/R | Van 4WD OM 646.982 | Thread Size:M28x1.5 | GCO35024 | Outer Joint | | 30 | 36 | 70 | 94.5 | 68 | I |
| | 2006.07-2014.08 | 5AT/6MT | R | L/R | Van 4WD OM 646.982 | | GCI99177 | Inner Joint | | 26 | 28 | 45 | 83.5 | 107.2 | |
| | 2006.07-2014.08 | MT | R | L/R | Van 4WD OM 646.982 | | GCI35069 | Inner Joint | | 26 | 37 | 45 | 83 | 96 | |
| | 2007.09-2014.08 | AT/MT | F | L/R | Bus 4WD OM 646.982 | | GDS35084 | Drive Shaft | | 30 | | 66 | 96.5 | 652 | |
| | 2007.09-2014.08 | AT/MT | R | L/R | Bus 4WD OM 646.982 | | GDS35022 | Drive Shaft | | 30 | 26 | 70 | 94.5 | 853 | |
| | 2007.09-2014.08 | AT/MT | R | L/R | Bus 4WD OM 646.982 | Date to:2008.07 | GCI99177 | Inner Joint | | 26 | 28 | 45 | 83.5 | 107.2 | |
| | 2007.09-2014.08 | MT | R | L/R | Bus 4WD OM 646.982 | | GCI35069 | Inner Joint | | 26 | 37 | 45 | 83 | 96 | |
| | 2007.09-2014.08 | | R | | Bus 4WD OM 646.982 | | GCO35028 | Outer Joint | | 30 | 36 | 70 | 95 | 68 | I |
| **Vito 116** | | | | | | | | | | | | | | | |
| 2.0 (120 kw) | 2019.03- | 9AT | F | L/R | Bus 4WD OM 654.920 | No Facelift | GDS84138 | Drive Shaft | | 30 | 24 | 66 | 98.5 | 694 | |
| | 2019.03- | 9AT | F | L/R | Bus 4WD OM 654.920 | No Facelift | GCO82369 | Outer Joint | | 30 | 31 | 66 | 98.5 | 70 | M |
| | 2019.03- | 9AT | F | L/R | Bus 4WD OM 654.920 | | GCI82604 | Inner Joint | | 24 | 33 | 37.9 | 70.5 | 112 | |
| | 2019.03- | 9AT | R | L/R | Bus 4WD OM 654.920 | Manufacturer:IFA | GDS35121 | Drive Shaft | | 30 | 30 | 73 | 90 | 846 | |
| | 2019.03- | 9AT | R | L/R | Bus RWD OM 654.920 | Date from:2019.05,Date to:2022.08,For SA code:Y03/Y04;For SA code:XM7;XM1;XM2;XM3;XM4;XM5;XM6;XM8;XMP;XMR;XMS;XMT;XMU;XMV;XMW;XMX;XMY;XMZ;XN0;XN1;XN2;XN3;XN4;XN5;XN6;XN7;XN8;XN9;XNA;XNB;XNC;XND;XNE;XNF;XNG;XNH;XNJ;XNK;XNL;XNM;XNN;XNP;XNQ;XNR;XNS;XNT;XNU;XNV;XNW;XNX;XNY;XNZ;XP0;XP1;XP2;XP3;XP4;XP5;XP6;XP7;XP8;XP9;XPA;XPB;XPC;XPD;XPE;XPF;XPG;XPH;XPJ;XPK;XPL;XPM;XPN;XPP;XPQ;XPR;XPS;XPT;XPU;XPV;XPW;XPX;XPY;XPZ;XQ0;XQ1;XQ2;XQ3;XQ4;XQ5;XQ6;XQ7;XQ8;XQ9;XQA;XQB;XQC;XQD;XQE;XQF;XQG;XQH;XQJ;XQK;XQL;XQM;XQN;XQP;XQQ;XQR;XQS;XQT;XQU;XQV;XQW;XQX;XQY;XQZ;XR0;XR1;XR2;XR3;XR4;XR5;XR6;XR7;XR8;XR9;XRA;XRB;XRC;XRD;XRE;XRF;XRG;XRH;XRJ;XRK;XRL;XRM;XRN;XRP;XRQ;XRR;XRS;XRT;XRU;XRV;XRW;XRX;XRY;XRZ;XS0;XS1;XS2;XS3;XS4;XS5;XS6;XS7;XS8;XS9;XSA;XSB;XSC;XSD;XSE;XSF;XSG;XSH;XSJ;XSK;XSL;XSM;XSN;XSP;XSQ;XSR;XSS;XST;XSU;XSV;XSW;XSX;XSY;XSZ;XT0;XT1;XT2;XT3;XT4;XT5;XT6;XT7;XT8;XT9;XTA;XTB;XTC;XTD;XTE;XTF;XTG;XTH;XTJ;XTK;XTL;XTM;XTN;XTP;XTQ;XTR;XTS;XTT;XTU;XTV;XTW;XTX;XTY;XTZ;XU0;XU1;XU2;XU3;XU4;XU5;XU6;XU7;XU8;XU9;XUA;XUB;XUC;XUD;XUE;XUF;XUG;XUH;XUJ;XUK;XUL;XUM;XUN;XUP;XUQ;XUR;XUS;XUT;XUU;XUV;XUW;XUX;XUY;XUZ;XV0;XV1;XV2;XV3;XV4;XV5;XV6;XV7;XV8;XV9;XVA;XVB;XVC;XVD;XVE;XVF;XVG;XVH;XVJ;XVK;XVL;XVM;XVN;XVP;XVQ;XVR;XVS;XVT;XVU;XVV;XVW;XVX;XVY;XVZ;XW0;XW1;XW2;XW3;XW4;XW5;XW6;XW7;XW8;XW9;XWA;XWB;XWC;XWD;XWE;XWF;XWG;XWH;XWJ;XWK;XWL;XWM;XWN;XWP;XWQ;XWR;XWS;XWT;XWU;XWV;XWW;XWX;XWY;XWZ;XX0;XX1;XX2;XX3;XX4;XX5;XX6;XX7;XX8;XX9;XXA;XXB;XXC;XXD;XXE;XXF;XXG;XXH;XXJ;XXK;XXL;XXM;XXN;XXP;XXQ;XXR;XXS;XXT;XXU;XXV;XXW;XXX;XXY;XXZ;XY0;XY1;XY2;XY3;XY4;XY5;XY6;XY7;XY8;XY9;XYA;XYB;XYC;XYD;XYE;XYF;XYG;XYH;XYJ;XYK;XYL;XYM;XYN;XYP;XYQ;XYR;XYS;XYT;XYU;XYV;XYW;XYX;XYY;XYZ;XZ0;XZ1;XZ2;XZ3;XZ4;XZ5;XZ6;XZ7;XZ8;XZ9;XZA;XZB;XZC;XZD;XZE;XZF;XZG;XZH;XZJ;XZK;XZL;XZM;XZN;XZP;XZQ;XZR;XZS;XZT;XZU;XZV;XZW;XZX;XZY;XZZ | GDS35121 | Drive Shaft | | 30 | 30 | 73 | 90 | 846 | |
| | 2019.03- | 9AT | R | L/R | Bus RWD OM 654.920 | Date to:2019.04,Manufacturer:Neapco | GDS57577 | Drive Shaft | | 30 | 30 | 73 | 90 | 851 | |
| | 2019.03- | 9AT | R | L/R | Bus RWD OM 654.920 | Date from:2019.05,Date to:2022.08,For SA code:Y03/Y04;For SA code:XM7;XM1;XM2;XM3;XM4;XM5;XM6;XM8;XMP;XMR;XMS;XMT;XMU;XMV;XMW;XMX;XMY;XMZ;XN0;XN1;XN2;XN3;XN4;XN5;XN6;XN7;XN8;XN9;XNA;XNB;XNC;XND;XNE;XNF;XNG;XNH;XNJ;XNK;XNL;XNM;XNN;XNP;XNQ;XNR;XNS;XNT;XNU;XNV;XNW;XNX;XNY;XNZ;XP0;XP1;XP2;XP3;XP4;XP5;XP6;XP7;XP8;XP9;XPA;XPB;XPC;XPD;XPE;XPF;XPG;XPH;XPJ;XPK;XPL;XPM;XPN;XPP;XPQ;XPR;XPS;XPT;XPU;XPV;XPW;XPX;XPY;XPZ;XQ0;XQ1;XQ2;XQ3;XQ4;XQ5;XQ6;XQ7;XQ8;XQ9;XQA;XQB;XQC;XQD;XQE;XQF;XQG;XQH;XQJ;XQK;XQL;XQM;XQN;XQP;XQQ;XQR;XQS;XQT;XQU;XQV;XQW;XQX;XQY;XQZ;XR0;XR1;XR2;XR3;XR4;XR5;XR6;XR7;XR8;XR9;XRA;XRB;XRC;XRD;XRE;XRF;XRG;XRH;XRJ;XRK;XRL;XRM;XRN;XRP;XRQ;XRR;XRS;XRT;XRU;XRV;XRW;XRX;XRY;XRZ;XS0;XS1;XS2;XS3;XS4;XS5;XS6;XS7;XS8;XS9;XSA;XSB;XSC;XSD;XSE;XSF;XSG;XSH;XSJ;XSK;XSL;XSM;XSN;XSP;XSQ;XSR;XSS;XST;XSU;XSV;XSW;XSX;XSY;XSZ;XT0;XT1;XT2;XT3;XT4;XT5;XT6;XT7;XT8;XT9;XTA;XTB;XTC;XTD;XTE;XTF;XTG;XTH;XTJ;XTK;XTL;XTM;XTN;XTP;XTQ;XTR;XTS;XTT;XTU;XTV;XTW;XTX;XTY;XTZ;XU0;XU1;XU2;XU3;XU4;XU5;XU6;XU7;XU8;XU9;XUA;XUB;XUC;XUD;XUE;XUF;XUG;XUH;XUJ;XUK;XUL;XUM;XUN;XUP;XUQ;XUR;XUS;XUT;XUU;XUV;XUW;XUX;XUY;XUZ;XV0;XV1;XV2;XV3;XV4;XV5;XV6;XV7;XV8;XV9;XVA;XVB;XVC;XVD;XVE;XVF;XVG;XVH;XVJ;XVK;XVL;XVM;XVN;XVP;XVQ;XVR;XVS;XVT;XVU;XVV;XVW;XVX;XVY;XVZ;XW0;XW1;XW2;XW3;XW4;XW5;XW6;XW7;XW8;XW9;XWA;XWB;XWC;XWD;XWE;XWF;XWG;XWH;XWJ;XWK;XWL;XWM;XWN;XWP;XWQ;XWR;XWS;XWT;XWU;XWV;XWW;XWX;XWY;XWZ;XX0;XX1;XX2;XX3;XX4;XX5;XX6;XX7;XX8;XX9;XXA;XXB;XXC;XXD;XXE;XXF;XXG;XXH;XXJ;XXK;XXL;XXM;XXN;XXP;XXQ;XXR;XXS;XXT;XXU;XXV;XXW;XXX;XXY;XXZ;XY0;XY1;XY2;XY3;XY4;XY5;XY6;XY7;XY8;XY9;XYA;XYB;XYC;XYD;XYE;XYF;XYG;XYH;XYJ;XYK;XYL;XYM;XYN;XYP;XYQ;XYR;XYS;XYT;XYU;XYV;XYW;XYX;XYY;XYZ;XZ0;XZ1;XZ2;XZ3;XZ4;XZ5;XZ6;XZ7;XZ8;XZ9;XZA;XZB;XZC;XZD;XZE;XZF;XZG;XZH;XZJ;XZK;XZL;XZM;XZN;XZP;XZQ;XZR;XZS;XZT;XZU;XZV;XZW;XZX;XZY;XZZ | GDS58339 | Drive Shaft | | 30 | 30 | 73 | 90 | 849 | |
| | 2019.03- | 9AT | R | L/R | Bus RWD OM 654.920 | Date to:2019.04,Date form:2019.05,For SA code:Y03/Y04 | GCO83616 | Outer Joint | | 30 | 31 | 73 | 90 | 70.5 | M |
| | 2019.03- | 9AT | R | L/R | Bus RWD OM 654.920 | Date to:2019.04 | GCI83784 | Inner Joint | | 30 | 31 | 47 | 83 | 92.5 | |
| | 2019.03- | 9AT | R | L/R | Bus RWD OM 654.920 | Date form:2019.05,For SA code:Y03/Y04 | GCI84070 | Inner Joint | | 30 | 31 | 47 | 83.5 | 93 | |
| | 2019.03- | 9AT | F | L/R | Van 4WD OM 654.920 | No Facelift | GDS84138 | Drive Shaft | | 30 | 24 | 66 | 98.5 | 694 | |
| | 2019.03- | 9AT | F | L/R | Van 4WD OM 654.920 | No Facelift | GCO82369 | Outer Joint | | 30 | 31 | 66 | 98.5 | 70 | M |
| | 2019.03- | 9AT | F | L/R | Van 4WD OM 654.920 | | GCI82604 | Inner Joint | | 24 | 33 | 37.9 | 70.5 | 112 | |
| | 2019.03- | 9AT | R | L/R | Van 4WD OM 654.920 | Manufacturer:IFA | GDS35121 | Drive Shaft | | 30 | 30 | 73 | 90 | 846 | |
| | 2019.03- | 9AT | R | L/R | Van RWD OM 654.920 | Date from:2019.05,Date to:2022.08,For SA code:Y03/Y04;For SA code:XM7;XM1;XM2;XM3;XM4;XM5;XM6;XM8;XMP;XMR;XMS;XMT;XMU;XMV;XMW;XMX;XMY;XMZ;XN0;XN1;XN2;XN3;XN4;XN5;XN6;XN7;XN8;XN9;XNA;XNB;XNC;XND;XNE;XNF;XNG;XNH;XNJ;XNK;XNL;XNM;XNN;XNP;XNQ;XNR;XNS;XNT;XNU;XNV;XNW;XNX;XNY;XNZ;XP0;XP1;XP2;XP3;XP4;XP5;XP6;XP7;XP8;XP9;XPA;XPB;XPC;XPD;XPE;XPF;XPG;XPH;XPJ;XPK;XPL;XPM;XPN;XPP;XPQ;XPR;XPS;XPT;XPU;XPV;XPW;XPX;XPY;XPZ;XQ0;XQ1;XQ2;XQ3;XQ4;XQ5;XQ6;XQ7;XQ8;XQ9;XQA;XQB;XQC;XQD;XQE;XQF;XQG;XQH;XQJ;XQK;XQL;XQM;XQN;XQP;XQQ;XQR;XQS;XQT;XQU;XQV;XQW;XQX;XQY;XQZ;XR0;XR1;XR2;XR3;XR4;XR5;XR6;XR7;XR8;XR9;XRA;XRB;XRC;XRD;XRE;XRF;XRG;XRH;XRJ;XRK;XRL;XRM;XRN;XRP;XRQ;XRR;XRS;XRT;XRU;XRV;XRW;XRX;XRY;XRZ;XS0;XS1;XS2;XS3;XS4;XS5;XS6;XS7;XS8;XS9;XSA;XSB;XSC;XSD;XSE;XSF;XSG;XSH;XSJ;XSK;XSL;XSM;XSN;XSP;XSQ;XSR;XSS;XST;XSU;XSV;XSW;XSX;XSY;XSZ;XT0;XT1;XT2;XT3;XT4;XT5;XT6;XT7;XT8;XT9;XTA;XTB;XTC;XTD;XTE;XTF;XTG;XTH;XTJ;XTK;XTL;XTM;XTN;XTP;XTQ;XTR;XTS;XTT;XTU;XTV;XTW;XTX;XTY;XTZ;XU0;XU1;XU2;XU3;XU4;XU5;XU6;XU7;XU8;XU9;XUA;XUB;XUC;XUD;XUE;XUF;XUG;XUH;XUJ;XUK;XUL;XUM;XUN;XUP;XUQ;XUR;XUS;XUT;XUU;XUV;XUW;XUX;XUY;XUZ;XV0;XV1;XV2;XV3;XV4;XV5;XV6;XV7;XV8;XV9;XVA;XVB;XVC;XVD;XVE;XVF;XVG;XVH;XVJ;XVK;XVL;XVM;XVN;XVP;XVQ;XVR;XVS;XVT;XVU;XVV;XVW;XVX;XVY;XVZ;XW0;XW1;XW2;XW3;XW4;XW5;XW6;XW7;XW8;XW9;XWA;XWB;XWC;XWD;XWE;XWF;XWG;XWH;XWJ;XWK;XWL;XWM;XWN;XWP;XWQ;XWR;XWS;XWT;XWU;XWV;XWW;XWX;XWY;XWZ;XX0;XX1;XX2;XX3;XX4;XX5;XX6;XX7;XX8;XX9;XXA;XXB;XXC;XXD;XXE;XXF;XXG;XXH;XXJ;XXK;XXL;XXM;XXN;XXP;XXQ;XXR;XXS;XXT;XXU;XXV;XXW;XXX;XXY;XXZ;XY0;XY1;XY2;XY3;XY4;XY5;XY6;XY7;XY8;XY9;XYA;XYB;XYC;XYD;XYE;XYF;XYG;XYH;XYJ;XYK;XYL;XYM;XYN;XYP;XYQ;XYR;XYS;XYT;XYU;XYV;XYW;XYX;XYY;XYZ;XZ0;XZ1;XZ2;XZ3;XZ4;XZ5;XZ6;XZ7;XZ8;XZ9;XZA;XZB;XZC;XZD;XZE;XZF;XZG;XZH;XZJ;XZK;XZL;XZM;XZN;XZP;XZQ;XZR;XZS;XZT;XZU;XZV;XZW;XZX;XZY;XZZ | GDS35121 | Drive Shaft | | 30 | 30 | 73 | 90 | 846 | |
| | 2019.03- | 9AT | R | L/R | Van RWD OM 654.920 | Date to:2019.04,Manufacturer:Neapco | GDS57577 | Drive Shaft | | 30 | 30 | 73 | 90 | 851 | |
| | 2019.03- | 9AT | R | L/R | Van RWD OM 654.920 | Date from:2019.05,Date to:2022.08,For SA code:Y03/Y04;For SA code:XM7;XM1;XM2;XM3;XM4;XM5;XM6;XM8;XMP;XMR;XMS;XMT;XMU;XMV;XMW;XMX;XMY;XMZ;XN0;XN1;XN2;XN3;XN4;XN5;XN6;XN7;XN8;XN9;XNA;XNB;XNC;XND;XNE;XNF;XNG;XNH;XNJ;XNK;XNL;XNM;XNN;XNP;XNQ;XNR;XNS;XNT;XNU;XNV;XNW;XNX;XNY;XNZ;XP0;XP1;XP2;XP3;XP4;XP5;XP6;XP7;XP8;XP9;XPA;XPB;XPC;XPD;XPE;XPF;XPG;XPH;XPJ;XPK;XPL;XPM;XPN;XPP;XPQ;XPR;XPS;XPT;XPU;XPV;XPW;XPX;XPY;XPZ;XQ0;XQ1;XQ2;XQ3;XQ4;XQ5;XQ6;XQ7;XQ8;XQ9;XQA;XQB;XQC;XQD;XQE;XQF;XQG;XQH;XQJ;XQK;XQL;XQM;XQN;XQP;XQQ;XQR;XQS;XQT;XQU;XQV;XQW;XQX;XQY;XQZ;XR0;XR1;XR2;XR3;XR4;XR5;XR6;XR7;XR8;XR9;XRA;XRB;XRC;XRD;XRE;XRF;XRG;XRH;XRJ;XRK;XRL;XRM;XRN;XRP;XRQ;XRR;XRS;XRT;XRU;XRV;XRW;XRX;XRY;XRZ;XS0;XS1;XS2;XS3;XS4;XS5;XS6;XS7;XS8;XS9;XSA;XSB;XSC;XSD;XSE;XSF;XSG;XSH;XSJ;XSK;XSL;XSM;XSN;XSP;XSQ;XSR;XSS;XST;XSU;XSV;XSW;XSX;XSY;XSZ;XT0;XT1;XT2;XT3;XT4;XT5;XT6;XT7;XT8;XT9;XTA;XTB;XTC;XTD;XTE;XTF;XTG;XTH;XTJ;XTK;XTL;XTM;XTN;XTP;XTQ;XTR;XTS;XTT;XTU;XTV;XTW;XTX;XTY;XTZ;XU0;XU1;XU2;XU3;XU4;XU5;XU6;XU7;XU8;XU9;XUA;XUB;XUC;XUD;XUE;XUF;XUG;XUH;XUJ;XUK;XUL;XUM;XUN;XUP;XUQ;XUR;XUS;XUT;XUU;XUV;XUW;XUX;XUY;XUZ;XV0;XV1;XV2;XV3;XV4;XV5;XV6;XV7;XV8;XV9;XVA;XVB;XVC;XVD;XVE;XVF;XVG;XVH;XVJ;XVK;XVL;XVM;XVN;XVP;XVQ;XVR;XVS;XVT;XVU;XVV;XVW;XVX;XVY;XVZ;XW0;XW1;XW2;XW3;XW4;XW5;XW6;XW7;XW8;XW9;XWA;XWB;XWC;XWD;XWE;XWF;XWG;XWH;XWJ;XWK;XWL;XWM;XWN;XWP;XWQ;XWR;XWS;XWT;XWU;XWV;XWW;XWX;XWY;XWZ;XX0;XX1;XX2;XX3;XX4;XX5;XX6;XX7;XX8;XX9;XXA;XXB;XXC;XXD;XXE;XXF;XXG;XXH;XXJ;XXK;XXL;XXM;XXN;XXP;XXQ;XXR;XXS;XXT;XXU;XXV;XXW;XXX;XXY;XXZ;XY0;XY1;XY2;XY3;XY4;XY5;XY6;XY7;XY8;XY9;XYA;XYB;XYC;XYD;XYE;XYF;XYG;XYH;XYJ;XYK;XYL;XYM;XYN;XYP;XYQ;XYR;XYS;XYT;XYU;XYV;XYW;XYX;XYY;XYZ;XZ0;XZ1;XZ2;XZ3;XZ4;XZ5;XZ6;XZ7;XZ8;XZ9;XZA;XZB;XZC;XZD;XZE;XZF;XZG;XZH;XZJ;XZK;XZL;XZM;XZN;XZP;XZQ;XZR;XZS;XZT;XZU;XZV;XZW;XZX;XZY;XZZ | GDS58339 | Drive Shaft | | 30 | 30 | 73 | 90 | 849 | |
| | 2019.03- | 9AT | R | L/R | Van RWD OM 654.920 | Date to:2019.04,Date form:2019.05,For SA code:Y03/Y04 | GCO83616 | Outer Joint | | 30 | 31 | 73 | 90 | 70.5 | M |
| | 2019.03- | 9AT | R | L/R | Van RWD OM 654.920 | Date to:2019.04 | GCI83784 | Inner Joint | | 30 | 31 | 47 | 83 | 92.5 | |
| | 2019.03- | 9AT/6MT | R | L/R | Van RWD OM 654.920 | Date form:2019.05,For SA code:Y03/Y04 | GCI84070 | Inner Joint | | 30 | 31 | 47 | 83.5 | 93 | |
| | 2020.04- | 9AT | F | L/R | Van 4WD OM 654.920 | for OE No.:4473306400,For SA code:XM0/XM8 | GDS84138 | Drive Shaft | | 30 | 24 | 66 | 98.5 | 694 | |
| | 2020.04- | 9AT | R | L/R | Van 4WD OM 654.920 | Manufacturer:IFA | GDS35121 | Drive Shaft | | 30 | 30 | 73 | 90 | 846 | |
| | 2020.04- | 7AT | R | L/R | Van RWD OM 654.920 | Date to:2019.04 | GCO83616 | Outer Joint | | 30 | 31 | 73 | 90 | 70.5 | M |
| | 2020.04- | 9AT | R | L/R | Van RWD OM 654.920 | Date from:2019.05,Date to:2022.08,For SA code:Y03/Y04;For SA code:XM7;XM1;XM2;XM3;XM4;XM5;XM6;XM8;XMP;XMR;XMS;XMT;XMU;XMV;XMW;XMX;XMY;XMZ;XN0;XN1;XN2;XN3;XN4;XN5;XN6;XN7;XN8;XN9;XNA;XNB;XNC;XND;XNE;XNF;XNG;XNH;XNJ;XNK;XNL;XNM;XNN;XNP;XNQ;XNR;XNS;XNT;XNU;XNV;XNW;XNX;XNY;XNZ;XP0;XP1;XP2;XP3;XP4;XP5;XP6;XP7;XP8;XP9;XPA;XPB;XPC;XPD;XPE;XPF;XPG;XPH;XPJ;XPK;XPL;XPM;XPN;XPP;XPQ;XPR;XPS;XPT;XPU;XPV;XPW;XPX;XPY;XPZ;XQ0;XQ1;XQ2;XQ3;XQ4;XQ5;XQ6;XQ7;XQ8;XQ9;XQA;XQB;XQC;XQD;XQE;XQF;XQG;XQH;XQJ;XQK;XQL;XQM;XQN;XQP;XQQ;XQR;XQS;XQT;XQU;XQV;XQW;XQX;XQY;XQZ;XR0;XR1;XR2;XR3;XR4;XR5;XR6;XR7;XR8;XR9;XRA;XRB;XRC;XRD;XRE;XRF;XRG;XRH;XRJ;XRK;XRL;XRM;XRN;XRP;XRQ;XRR;XRS;XRT;XRU;XRV;XRW;XRX;XRY;XRZ;XS0;XS1;XS2;XS3;XS4;XS5;XS6;XS7;XS8;XS9;XSA;XSB;XSC;XSD;XSE;XSF;XSG;XSH;XSJ;XSK;XSL;XSM;XSN;XSP;XSQ;XSR;XSS;XST;XSU;XSV;XSW;XSX;XSY;XSZ;XT0;XT1;XT2;XT3;XT4;XT5;XT6;XT7;XT8;XT9;XTA;XTB;XTC;XTD;XTE;XTF;XTG;XTH;XTJ;XTK;XTL;XTM;XTN;XTP;XTQ;XTR;XTS;XTT;XTU;XTV;XTW;XTX;XTY;XTZ;XU0;XU1;XU2;XU3;XU4;XU5;XU6;XU7;XU8;XU9;XUA;XUB;XUC;XUD;XUE;XUF;XUG;XUH;XUJ;XUK;XUL;XUM;XUN;XUP;XUQ;XUR;XUS;XUT;XUU;XUV;XUW;XUX;XUY;XUZ;XV0;XV1;XV2;XV3;XV4;XV5;XV6;XV7;XV8;XV9;XVA;XVB;XVC;XVD;XVE;XVF;XVG;XVH;XVJ;XVK;XVL;XVM;XVN;XVP;XVQ;XVR;XVS;XVT;XVU;XVV;XVW;XVX;XVY;XVZ;XW0;XW1;XW2;XW3;XW4;XW5;XW6;XW7;XW8;XW9;XWA;XWB;XWC;XWD;XWE;XWF;XWG;XWH;XWJ;XWK;XWL;XWM;XWN;XWP;XWQ;XWR;XWS;XWT;XWU;XWV;XWW;XWX;XWY;XWZ;XX0;XX1;XX2;XX3;XX4;XX5;XX6;XX7;XX8;XX9;XXA;XXB;XXC;XXD;XXE;XXF;XXG;XXH;XXJ;XXK;XXL;XXM;XXN;XXP;XXQ;XXR;XXS;XXT;XXU;XXV;XXW;XXX;XXY;XXZ;XY0;XY1;XY2;XY3;XY4;XY5;XY6;XY7;XY8;XY9;XYA;XYB;XYC;XYD;XYE;XYF;XYG;XYH;XYJ;XYK;XYL;XYM;XYN;XYP;XYQ;XYR;XYS;XYT;XYU;XYV;XYW;XYX;XYY;XYZ;XZ0;XZ1;XZ2;XZ3;XZ4;XZ5;XZ6;XZ7;XZ8;XZ9;XZA;XZB;XZC;XZD;XZE;XZF;XZG;XZH;XZJ;XZK;XZL;XZM;XZN;XZP;XZQ;XZR;XZS;XZT;XZU;XZV;XZW;XZX;XZY;XZZ | GDS35121 | Drive Shaft | | 30 | 30 | 73 | 90 | 846 | |
| | 2020.04- | 9AT | R | L/R | Van RWD OM 654.920 | Date to:2019.04,Manufacturer:Neapco | GDS57577 | Drive Shaft | | 30 | 30 | 73 | 90 | 851 | |
| | 2020.04- | 9AT/6MT | R | L/R | Van RWD OM 654.920 | | GCI83784 | Inner Joint | | 30 | 31 | 47 | 83 | 92.5 | |
| 2.2 (120 kw) | 2010.09- | 5AT/6MT | R | L/R | Bus RWD OM 651.940 | | GDS35022 | Drive Shaft | | 30 | 26 | 70 | 94.5 | 853 | |
| | 2010.09- | 5AT/6MT | R | L/R | Bus RWD OM 651.940 | For SA code:XM0 | GDS56736 | Drive Shaft | | 30 | 26 | 70 | 99.5 | 865 | |
| | 2010.09- | 5AT/6MT | R | L/R | Bus RWD OM 651.940 | | GCO35024 | Outer Joint | | 30 | 36 | 70 | 94.5 | 68 | I |
| | 2010.09- | 5AT/6MT | R | L/R | Bus RWD OM 651.940 | For SA code:XM0 | GCI83462 | Inner Joint | | 26 | 37 | 45 | 83 | 96 | |
| | 2010.09- | 5AT/6MT | R | L/R | Bus RWD OM 651.940 | | GCI99177 | Inner Joint | | 26 | 28 | 45 | 83.5 | 107.2 | |
| | 2010.09-2014.08 | 5AT | F | L/R | Bus 4WD OM 651.940 | | GDS56452 | Drive Shaft | | 30 | | 66 | 98.5 | 620 | |
| | 2010.09-2014.08 | 5AT | F | L/R | Bus 4WD OM 651.940 | | GCO83299 | Outer Joint | | 30 | 28 | 66 | 98.5 | 61.5 | M |
| | 2010.09-2014.08 | 5AT | F | L/R | Bus 4WD OM 651.940 | | GCI83314 | Inner Joint | | | 28 | | | 35.2 | |
| | 2010.09-2014.08 | 5AT | R | L/R | Bus 4WD OM 651.940 | | GDS35022 | Drive Shaft | | 30 | 26 | 70 | 94.5 | 853 | |
| | 2010.09-2014.08 | 5AT | F | L/R | Van 4WD OM 651.940 | | GDS56452 | Drive Shaft | | 30 | | 66 | 98.5 | 620 | |
| | 2010.09-2014.08 | 5AT | F | L/R | Van 4WD OM 651.940 | | GCO83299 | Outer Joint | | 30 | 28 | 66 | 98.5 | 61.5 | M |
| | 2010.09-2014.08 | 5AT | F | L/R | Van 4WD OM 651.940 | | GCI83314 | Inner Joint | | | 28 | | | 35.2 | |
| | 2010.09-2014.08 | 5AT | R | L/R | Van 4WD OM 651.940 | | GDS35022 | Drive Shaft | | 30 | 26 | 70 | 94.5 | 853 | |
| | 2010.09-2014.08 | 5AT/6MT | R | L/R | Van RWD OM 651.940 | Not For SA code:XM0 | GDS35022 | Drive Shaft | | 30 | 26 | 70 | 94.5 | 853 | |
| | 2010.09-2014.08 | 5AT/6MT | R | L/R | Van RWD OM 651.940 | For SA code:XM0 | GDS56736 | Drive Shaft | | 30 | 26 | 70 | 99.5 | 865 | |

| | YEAR | TRANSM. | F/R | L/R | BODY STYLE & DRIVE TYPE & ENGINE | REMARKS | G-AP Ref. | PRODUCT | ABS | Technical Specifications | | | | | |
|---|---|---|---|---|---|---|---|---|---|---|---|---|---|---|---|
| | | | | | | | | | | A | B | C | H | L | P |
| **MERCEDES-BENZ** | | | | | | | | | | | | | | | |
| **Vito 116** | | | | | | | | | | | | | | | |
| 2.2 (120 kw) | 2010.09-2014.08 | 5AT/6MT | R | L/R | Van RWD OM 651.940 | | GCO35024 | Outer Joint | | 30 | 36 | 70 | 94.5 | 68 | I |
| | 2010.09-2014.08 | 5AT/6MT | R | L/R | Van RWD OM 651.940 | For SA code:XM0 | GCI83462 | Inner Joint | | 26 | 37 | 45 | 83 | 96 | |
| | 2010.09-2014.08 | 5AT/6MT | R | L/R | Van RWD OM 651.940 | | GCI99177 | Inner Joint | | 26 | 28 | 45 | 83.5 | 107.2 | |
| | 2010.09-2014.08 | | R | L/R | Van RWD OM 651.940 | | GCO35036 | Outer Joint | | 30 | 37 | 70 | 94.5 | 61 | I |
| | 2014.10- | 7AT | R | L/R | Bus RWD OM 651.950 | Date to:2020.04,For SA code:XM7,Manufacturer:IFA,Date from:2020.05,Manufacturer:IFA | GDS35121 | Drive Shaft | | 30 | 30 | 73 | 90 | 846 | |
| | 2014.10- | 7AT | R | L/R | Bus RWD OM 651.950 | Date to:2019.04,Manufacturer:Neapco | GDS57577 | Drive Shaft | | 30 | 30 | 73 | 90 | 851 | |
| | 2014.10- | 7AT | R | L/R | Bus RWD OM 651.950 | Date to:2019.04,Date form:2019.05,For SA code:Y03/Y04 | GCO83616 | Outer Joint | | 30 | 31 | 73 | 90 | 70.5 | M |
| | 2014.10- | 7AT | R | L/R | Bus RWD OM 651.950 | Date to:2019.04 | GCI83784 | Inner Joint | | 30 | 31 | 47 | 83 | 92.5 | |
| | 2014.10- | 7AT/6MT | R | L/R | Bus RWD OM 651.950 | Date from:2019.03,Date to:2023.08,For SA code:Y03/Y04,For SA code:XM7/B01B03/VQ1/2B9/VQ8/YG3/Y02 | GDS58339 | Drive Shaft | | 30 | 30 | 73 | 90 | 849 | |
| | 2014.10- | 7AT/6MT | R | L/R | Bus RWD OM 651.950 | Date form:2019.05,For SA code:Y03/Y04 | GCI84070 | Inner Joint | | 30 | 31 | 47 | 83.5 | 93 | |
| | 2014.10- | 7AT | R | L/R | Van RWD OM 651.950 | Date to:2020.04,For SA code:XM7,Manufacturer:IFA,Date from:2020.05,Manufacturer:IFA | GDS35121 | Drive Shaft | | 30 | 30 | 73 | 90 | 846 | |
| | 2014.10- | 7AT | R | L/R | Van RWD OM 651.950 | Date to:2019.04,Manufacturer:Neapco | GDS57577 | Drive Shaft | | 30 | 30 | 73 | 90 | 851 | |
| | 2014.10- | 7AT | R | L/R | Van RWD OM 651.950 | Date to:2019.04,Date form:2019.05,For SA code:Y03/Y04 | GCO83616 | Outer Joint | | 30 | 31 | 73 | 90 | 70.5 | M |
| | 2014.10- | 7AT | R | L/R | Van RWD OM 651.950 | Date to:2019.04 | GCO83616 | Outer Joint | | 30 | 31 | 73 | 90 | 70.5 | M |
| | 2014.10- | 7AT | R | L/R | Van RWD OM 651.950 | Date to:2019.04 | GCI83784 | Inner Joint | | 30 | 31 | 47 | 83 | 92.5 | |
| | 2014.10- | 7AT/6MT | R | L/R | Van RWD OM 651.950 | Date from:2019.03,Date to:2023.08,For SA code:Y03/Y04,For SA code:XM7/B01B03/VQ1/2B9/VQ8/YG3/Y02 | GDS58339 | Drive Shaft | | 30 | 30 | 73 | 90 | 849 | |
| | 2014.10- | 7AT/6MT | R | L/R | Van RWD OM 651.950 | | GCI83784 | Inner Joint | | 30 | 31 | 47 | 83 | 92.5 | |
| | 2014.10- | 7AT/6MT | R | L/R | Van RWD OM 651.950 | Date form:2019.05,For SA code:Y03/Y04 | GCI84070 | Inner Joint | | 30 | 31 | 47 | 83.5 | 93 | |
| | 2015.07- | 7AT | F | L/R | Bus 4WD OM 651.950 | No Facelift | GDS84138 | Drive Shaft | | 30 | 24 | 66 | 98.5 | 694 | |
| | 2015.07- | 7AT | F | L/R | Bus 4WD OM 651.950 | No Facelift | GCO82369 | Outer Joint | | 30 | 31 | 66 | 98.5 | 70 | M |
| | 2015.07- | 7AT | F | L/R | Bus 4WD OM 651.950 | | GCI82604 | Inner Joint | | 24 | 33 | 37.9 | 70.5 | 112 | |
| | 2015.07- | 7AT | R | L/R | Bus 4WD OM 651.950 | Manufacturer:IFA | GDS35121 | Drive Shaft | | 30 | 30 | 73 | 90 | 846 | |
| | 2015.07- | 7AT | F | L/R | Van 4WD OM 651.950 | No Facelift | GDS84138 | Drive Shaft | | 30 | 24 | 66 | 98.5 | 694 | |
| | 2015.07- | 7AT | F | L/R | Van 4WD OM 651.950 | for OE No.:4473306400,For SA code:XM0/XM8 | GDS84138 | Drive Shaft | | 30 | 24 | 66 | 98.5 | 694 | |
| | 2015.07- | 7AT | F | L/R | Van 4WD OM 651.950 | No Facelift | GCO82369 | Outer Joint | | 30 | 31 | 66 | 98.5 | 70 | M |
| | 2015.07- | 7AT | F | L/R | Van 4WD OM 651.950 | | GCI82604 | Inner Joint | | 24 | 33 | 37.9 | 70.5 | 112 | |
| | 2015.07- | 7AT | R | L/R | Van 4WD OM 651.950 | Manufacturer:IFA | GDS35121 | Drive Shaft | | 30 | 30 | 73 | 90 | 846 | |
| **Vito 119** | | | | | | | | | | | | | | | |
| 2.0 (140 kw) | 2019.03- | 9AT | F | L/R | Bus 4WD OM 654.920 | No Facelift | GDS84138 | Drive Shaft | | 30 | 24 | 66 | 98.5 | 694 | |
| | 2019.03- | 9AT | F | L/R | Bus 4WD OM 654.920 | No Facelift | GCO82369 | Outer Joint | | 30 | 31 | 66 | 98.5 | 70 | M |
| | 2019.03- | 9AT | F | L/R | Bus 4WD OM 654.920 | | GCI82604 | Inner Joint | | 24 | 33 | 37.9 | 70.5 | 112 | |
| | 2019.03- | 9AT | R | L/R | Bus 4WD OM 654.920 | Manufacturer:IFA | GDS35121 | Drive Shaft | | 30 | 30 | 73 | 90 | 846 | |
| | 2019.03- | 9AT | R | L/R | Bus RWD OM 654.920 | Date to:2020.04,For SA code:XM7,Manufacturer:IFA,Date from:2020.05,Manufacturer:IFA | GDS35121 | Drive Shaft | | 30 | 30 | 73 | 90 | 846 | |
| | 2019.03- | 9AT | R | L/R | Bus RWD OM 654.920 | Date to:2019.04,Manufacturer:Neapco | GDS57577 | Drive Shaft | | 30 | 30 | 73 | 90 | 851 | |
| | 2019.03- | 9AT | R | L/R | Bus RWD OM 654.920 | Date from:2019.03,Date to:2023.08,For SA code:Y03/Y04,For SA code:XM7/B01B03/VQ1/2B9/VQ8/YG3/Y02 | GDS58339 | Drive Shaft | | 30 | 30 | 73 | 90 | 849 | |
| | 2019.03- | 9AT | R | L/R | Bus RWD OM 654.920 | Date to:2019.04,Date form:2019.05,For SA code:Y03/Y04 | GCO83616 | Outer Joint | | 30 | 31 | 73 | 90 | 70.5 | M |
| | 2019.03- | 9AT | R | L/R | Bus RWD OM 654.920 | Date to:2019.04 | GCI83784 | Inner Joint | | 30 | 31 | 47 | 83 | 92.5 | |
| | 2019.03- | 9AT | R | L/R | Bus RWD OM 654.920 | Date form:2019.05,For SA code:Y03/Y04 | GCI84070 | Inner Joint | | 30 | 31 | 47 | 83.5 | 93 | |
| | 2019.03- | 9AT | F | L/R | Van 4WD OM 654.920 | No Facelift | GDS84138 | Drive Shaft | | 30 | 24 | 66 | 98.5 | 694 | |
| | 2019.03- | 9AT | F | L/R | Van 4WD OM 654.920 | No Facelift | GCO82369 | Outer Joint | | 30 | 31 | 66 | 98.5 | 70 | M |
| | 2019.03- | 9AT | F | L/R | Van 4WD OM 654.920 | | GCI82604 | Inner Joint | | 24 | 33 | 37.9 | 70.5 | 112 | |
| | 2019.03- | 9AT | R | L/R | Van 4WD OM 654.920 | Manufacturer:IFA | GDS35121 | Drive Shaft | | 30 | 30 | 73 | 90 | 846 | |
| | 2019.03- | 9AT | R | L/R | Van RWD OM 654.920 | Date to:2020.04,For SA code:XM7,Manufacturer:IFA,Date from:2020.05,Manufacturer:IFA | GDS35121 | Drive Shaft | | 30 | 30 | 73 | 90 | 846 | |
| | 2019.03- | 9AT | R | L/R | Van RWD OM 654.920 | Date to:2019.04,Manufacturer:Neapco | GDS57577 | Drive Shaft | | 30 | 30 | 73 | 90 | 851 | |
| | 2019.03- | 9AT | R | L/R | Van RWD OM 654.920 | Date from:2019.03,Date to:2023.08,For SA code:Y03/Y04,For SA code:XM7/B01B03/VQ1/2B9/VQ8/YG3/Y02 | GDS58339 | Drive Shaft | | 30 | 30 | 73 | 90 | 849 | |
| | 2019.03- | 9AT | R | L/R | Van RWD OM 654.920 | Date to:2019.04,Date form:2019.05,For SA code:Y03/Y04 | GCO83616 | Outer Joint | | 30 | 31 | 73 | 90 | 70.5 | M |
| | 2019.03- | 9AT | R | L/R | Van RWD OM 654.920 | Date to:2019.04 | GCI83784 | Inner Joint | | 30 | 31 | 47 | 83 | 92.5 | |
| | 2019.03- | 9AT | R | L/R | Van RWD OM 654.920 | Date form:2019.05,For SA code:Y03/Y04 | GCI84070 | Inner Joint | | 30 | 31 | 47 | 83.5 | 93 | |
| | 2020.04- | 9AT | F | L/R | Van 4WD OM 654.920 | for OE No.:4473306400,For SA code:XM0/XM8 | GDS84138 | Drive Shaft | | 30 | 24 | 66 | 98.5 | 694 | |
| | 2020.04- | 9AT | R | L/R | Van 4WD OM 654.920 | Manufacturer:IFA | GDS35121 | Drive Shaft | | 30 | 30 | 73 | 90 | 846 | |
| | 2020.04- | 7AT | R | L/R | Van RWD OM 654.920 | Date to:2019.04 | GCO83616 | Outer Joint | | 30 | 31 | 73 | 90 | 70.5 | M |
| | 2020.04- | 9AT | R | L/R | Van RWD OM 654.920 | Date to:2020.04,For SA code:XM7,Manufacturer:IFA,Date from:2020.05,Manufacturer:IFA | GDS35121 | Drive Shaft | | 30 | 30 | 73 | 90 | 846 | |
| | 2020.04- | 9AT | R | L/R | Van RWD OM 654.920 | Date to:2019.04,Manufacturer:Neapco | GDS57577 | Drive Shaft | | 30 | 30 | 73 | 90 | 851 | |
| | 2020.04- | 9AT | R | L/R | Van RWD OM 654.920 | | GCI83784 | Inner Joint | | 30 | 31 | 47 | 83 | 92.5 | |
| 2.2 (140 kw) | 2014.10- | 7AT | R | L/R | Bus RWD OM 651.950 | Date to:2020.04,For SA code:XM7,Manufacturer:IFA,Date from:2020.05,Manufacturer:IFA | GDS35121 | Drive Shaft | | 30 | 30 | 73 | 90 | 846 | |
| | 2014.10- | 7AT | R | L/R | Bus RWD OM 651.950 | Date to:2019.04,Manufacturer:Neapco | GDS57577 | Drive Shaft | | 30 | 30 | 73 | 90 | 851 | |
| | 2014.10- | 7AT | R | L/R | Bus RWD OM 651.950 | Date from:2019.03,Date to:2023.08,For SA code:Y03/Y04,For SA code:XM7/B01B03/VQ1/2B9/VQ8/YG3/Y02 | GDS58339 | Drive Shaft | | 30 | 30 | 73 | 90 | 849 | |
| | 2014.10- | 7AT | R | L/R | Bus RWD OM 651.950 | Date to:2019.04,Date form:2019.05,For SA code:Y03/Y04 | GCO83616 | Outer Joint | | 30 | 31 | 73 | 90 | 70.5 | M |
| | 2014.10- | 7AT | R | L/R | Bus RWD OM 651.950 | Date to:2019.04 | GCI83784 | Inner Joint | | 30 | 31 | 47 | 83 | 92.5 | |
| | 2014.10- | 7AT | R | L/R | Bus RWD OM 651.950 | Date form:2019.05,For SA code:Y03/Y04 | GCI84070 | Inner Joint | | 30 | 31 | 47 | 83.5 | 93 | |
| | 2014.10- | 7AT | R | L/R | Van RWD OM 651.950 | Date to:2020.04,For SA code:XM7,Manufacturer:IFA,Date from:2020.05,Manufacturer:IFA | GDS35121 | Drive Shaft | | 30 | 30 | 73 | 90 | 846 | |
| | 2014.10- | 7AT | R | L/R | Van RWD OM 651.950 | Date to:2019.04,Manufacturer:Neapco | GDS57577 | Drive Shaft | | 30 | 30 | 73 | 90 | 851 | |
| | 2014.10- | 7AT | R | L/R | Van RWD OM 651.950 | Date from:2019.03,Date to:2023.08,For SA code:Y03/Y04,For SA code:XM7/B01B03/VQ1/2B9/VQ8/YG3/Y02 | GDS58339 | Drive Shaft | | 30 | 30 | 73 | 90 | 849 | |
| | 2014.10- | 7AT | R | L/R | Van RWD OM 651.950 | Date to:2019.04,Date form:2019.05,For SA code:Y03/Y04 | GCO83616 | Outer Joint | | 30 | 31 | 73 | 90 | 70.5 | M |
| | 2014.10- | 7AT | R | L/R | Van RWD OM 651.950 | Date to:2019.04 | GCO83616 | Outer Joint | | 30 | 31 | 73 | 90 | 70.5 | M |

| | YEAR | TRANSM. | F/R | L/R | BODY STYLE & DRIVE TYPE & ENGINE | REMARKS | G-AP Ref. | PRODUCT | ABS | Technical Specifications A | B | C | H | L | P |
|---|---|---|---|---|---|---|---|---|---|---|---|---|---|---|---|
| **MERCEDES-BENZ** | | | | | | | | | | | | | | | |
| **Vito 119** | | | | | | | | | | | | | | | |
| 2.2 (140 kw) | 2014.10- | 7AT | R | L/R | Van RWD OM 651.950 | Date to:2019.04 | GCI83784 | Inner Joint | | 30 | 31 | 47 | 83 | 92.5 | |
| | 2014.10- | 7AT | R | L/R | Van RWD OM 651.950 | | GCI83784 | Inner Joint | | 30 | 31 | 47 | 83 | 92.5 | |
| | 2014.10- | 7AT | R | L/R | Van RWD OM 651.950 | Date form:2019.05,For SA code:Y03/Y04 | GCI84070 | Inner Joint | | 30 | 31 | 47 | 83.5 | 93 | |
| | 2014.12- | 7AT | F | L/R | Bus 4WD OM 651.950 | No Facelift | GDS84138 | Drive Shaft | | 30 | 24 | 66 | 98.5 | 694 | |
| | 2014.12- | 7AT | F | L/R | Bus 4WD OM 651.950 | No Facelift | GCO82369 | Outer Joint | | 30 | 31 | 66 | 98.5 | 70 | M |
| | 2014.12- | 7AT | F | L/R | Bus 4WD OM 651.950 | | GCI82604 | Inner Joint | | 24 | 33 | 37.9 | 70.5 | 112 | |
| | 2014.12- | 7AT | R | L/R | Bus 4WD OM 651.950 | Manufacturer:IFA | GDS35121 | Drive Shaft | | 30 | 30 | 73 | 90 | 846 | |
| | 2015.07- | 7AT | F | L/R | Van 4WD OM 651.950 | No Facelift | GDS84138 | Drive Shaft | | 30 | 24 | 66 | 98.5 | 694 | |
| | 2015.07- | 7AT | F | L/R | Van 4WD OM 651.950 | for OE No.:4473306400,For SA code:XM0/XM8 | GDS84138 | Drive Shaft | | 30 | 24 | 66 | 98.5 | 694 | |
| | 2015.07- | 7AT | F | L/R | Van 4WD OM 651.950 | No Facelift | GCO82369 | Outer Joint | | 30 | 31 | 66 | 98.5 | 70 | M |
| | 2015.07- | 7AT | F | L/R | Van 4WD OM 651.950 | | GCI82604 | Inner Joint | | 24 | 33 | 37.9 | 70.5 | 112 | |
| | 2015.07- | 7AT | R | L/R | Van 4WD OM 651.950 | Manufacturer:IFA | GDS35121 | Drive Shaft | | 30 | 30 | 73 | 90 | 846 | |
| 3.2 (140 kw) | 2003.09- | 5AT | R | L/R | Bus RWD M 112.951 | For SA code:U60/U61/U63/U65/U71/U51/U52/U54/U55/U59/VP9/ZK7 | GDS35059 | Drive Shaft | | 30 | 26 | 70 | 94.5 | 860 | |
| | 2003.09- | 5AT | R | L/R | Bus RWD M 112.951 | Not for SA code:U60/U61/U63/U65/U71/U51/U52/U54/U55/U59/VP9/ZK7,XM0 | GDS35093 | Drive Shaft | | 30 | 26 | 70 | 99.5 | 865 | |
| | 2003.09- | 5AT | R | L/R | Bus RWD M 112.951 | For SA code:XM0 | GDS56736 | Drive Shaft | | 30 | 26 | 70 | 99.5 | 865 | |
| | 2003.09- | 5AT | R | L/R | Bus RWD M 112.951 | | GCO35069 | Outer Joint | | 30 | 37 | 70 | 99.5 | 62.5 | I |
| | 2003.09- | 5AT | R | L/R | Bus RWD M 112.951 | For SA code:U60/U61/U63/U65/U71/U51/U52/U54/U55/U59/VP9/ZK7 | GCI35069 | Inner Joint | | 26 | 37 | 45 | 83 | 96 | |
| | 2003.09- | 5AT | R | L/R | Bus RWD M 112.951 | For SA code:XM0 | GCI83462 | Inner Joint | | 26 | 37 | 45 | 83 | 96 | |
| | 2003.09-2008.07 | 5AT | R | L/R | Van RWD M 112.951 | For SA code:U60/U61/U63/U65/U71/U51/U52/U54/U55/U59/VP9/ZK7 | GDS35059 | Drive Shaft | | 30 | 26 | 70 | 94.5 | 860 | |
| | 2003.09-2008.07 | 5AT | R | L/R | Van RWD M 112.951 | Not for SA code:U60/U61/U63/U65/U71/U51/U52/U54/U55/U59/VP9/ZK7,XM0 | GDS35093 | Drive Shaft | | 30 | 26 | 70 | 99.5 | 865 | |
| | 2003.09-2008.07 | 5AT | R | L/R | Van RWD M 112.951 | For SA code:XM0 | GDS56736 | Drive Shaft | | 30 | 26 | 70 | 99.5 | 865 | |
| | 2003.09-2008.07 | 5AT | R | L/R | Van RWD M 112.951 | | GCO35069 | Outer Joint | | 30 | 37 | 70 | 99.5 | 62.5 | I |
| | 2003.09-2008.07 | 5AT | R | L/R | Van RWD M 112.951 | For SA code:U60/U61/U63/U65/U71/U51/U52/U54/U55/U59/VP9/ZK7 | GCI35069 | Inner Joint | | 26 | 37 | 45 | 83 | 96 | |
| | 2003.09-2008.07 | 5AT | R | L/R | Van RWD M 112.951 | For SA code:XM0 | GCI83462 | Inner Joint | | 26 | 37 | 45 | 83 | 96 | |
| **Vito 120** | | | | | | | | | | | | | | | |
| 3.0 (150 kw) | 2006.03-2014.08 | 5AT | R | L/R | Van RWD OM 642.990 | Date to:2011.06,Chassis no. to:3673614,For SA code:U60/U61/U63/U65/U71/U51/U52/U54/U55/U59/VP9/ZK7 | GDS35059 | Drive Shaft | | 30 | 26 | 70 | 94.5 | 860 | |
| | 2006.03-2014.08 | 5AT | R | L/R | Van RWD OM 642.990 | Date to:2011.06,Chassis no. to:3673614,for SA code:U60/U61/U63/U65/U71/U51/U52/U54/U55/U59/VP9/ZK7,XM0 | GDS35093 | Drive Shaft | | 30 | 26 | 70 | 99.5 | 865 | |
| | 2006.03-2014.08 | 5AT | R | L/R | Van RWD OM 642.990 | Date from:2011.07,Chassis no. from:3673615,For SA code:XM0 | GDS56736 | Drive Shaft | | 30 | 26 | 70 | 99.5 | 865 | |
| | 2006.03-2014.08 | 5AT | R | L/R | Van RWD OM 642.990 | | GCO35069 | Outer Joint | | 30 | 37 | 70 | 99.5 | 62.5 | I |
| | 2006.03-2014.08 | 5AT | R | L/R | Van RWD OM 642.990 | Date to:2011.06,Chassis no. to:3673614 | GCI35069 | Inner Joint | | 26 | 37 | 45 | 83 | 96 | |
| | 2006.03-2014.08 | 5AT | R | L/R | Van RWD OM 642.990 | Date from:2011.07,Chassis no. from:3673615,For SA code:XM0 | GCI83462 | Inner Joint | | 26 | 37 | 45 | 83 | 96 | |
| | 2006.07- | 5AT | R | L/R | Bus RWD OM 642.990 | Date to:2011.06,Chassis no. to:3673614,For SA code:U60/U61/U63/U65/U71/U51/U52/U54/U55/U59/VP9/ZK7 | GDS35059 | Drive Shaft | | 30 | 26 | 70 | 94.5 | 860 | |
| | 2006.07- | 5AT | R | L/R | Bus RWD OM 642.990 | Date to:2011.06,Chassis no. to:3673614,for SA code:U60/U61/U63/U65/U71/U51/U52/U54/U55/U59/VP9/ZK7,XM0 | GDS35093 | Drive Shaft | | 30 | 26 | 70 | 99.5 | 865 | |
| | 2006.07- | 5AT | R | L/R | Bus RWD OM 642.990 | Date from:2011.07,Chassis no. from:3673615,For SA code:XM0 | GDS56736 | Drive Shaft | | 30 | 26 | 70 | 99.5 | 865 | |
| | 2006.07- | 5AT | R | L/R | Bus RWD OM 642.990 | | GCO35069 | Outer Joint | | 30 | 37 | 70 | 99.5 | 62.5 | I |
| | 2006.07- | 5AT | R | L/R | Bus RWD OM 642.990 | Date to:2011.06,Chassis no. to:3673614 | GCI35069 | Inner Joint | | 26 | 37 | 45 | 83 | 96 | |
| | 2006.07- | 5AT | R | L/R | Bus RWD OM 642.990 | Date from:2011.07,Chassis no. from:3673615,For SA code:XM0 | GCI83462 | Inner Joint | | 26 | 37 | 45 | 83 | 96 | |
| **Vito 122** | | | | | | | | | | | | | | | |
| 3.0 (165 kw) | 2010.09- | 5AT | R | L/R | Bus RWD OM 642.890 | Date to:2011.06,Chassis no. to:3673614,For SA code:U60/U61/U63/U65/U71/U51/U52/U54/U55/U59/VP9/ZK7 | GDS35059 | Drive Shaft | | 30 | 26 | 70 | 94.5 | 860 | |
| | 2010.09- | 5AT | R | L/R | Bus RWD OM 642.890 | Date to:2011.06,Chassis no. to:3673614,for SA code:U60/U61/U63/U65/U71/U51/U52/U54/U55/U59/VP9/ZK7,XM0 | GDS35093 | Drive Shaft | | 30 | 26 | 70 | 99.5 | 865 | |
| | 2010.09- | 5AT | R | L/R | Bus RWD OM 642.890 | Date from:2011.07,Chassis no. from:3673615,For SA code:XM0 | GDS56736 | Drive Shaft | | 30 | 26 | 70 | 99.5 | 865 | |
| | 2010.09- | 5AT | R | L/R | Bus RWD OM 642.890 | | GCO35069 | Outer Joint | | 30 | 37 | 70 | 99.5 | 62.5 | I |
| | 2010.09- | 5AT | R | L/R | Bus RWD OM 642.890 | Date to:2011.06,Chassis no. to:3673614 | GCI35069 | Inner Joint | | 26 | 37 | 45 | 83 | 96 | |
| | 2010.09- | 5AT | R | L/R | Bus RWD OM 642.890 | Date from:2011.07,Chassis no. from:3673615,For SA code:XM0 | GCI83462 | Inner Joint | | 26 | 37 | 45 | 83 | 96 | |
| | 2010.09-2014.08 | 5AT | R | L/R | Van RWD OM 642.890 | Date to:2011.06,Chassis no. to:3673614,For SA code:U60/U61/U63/U65/U71/U51/U52/U54/U55/U59/VP9/ZK7 | GDS35059 | Drive Shaft | | 30 | 26 | 70 | 94.5 | 860 | |
| | 2010.09-2014.08 | 5AT | R | L/R | Van RWD OM 642.890 | Date to:2011.06,Chassis no. to:3673614,for SA code:U60/U61/U63/U65/U71/U51/U52/U54/U55/U59/VP9/ZK7,XM0 | GDS35093 | Drive Shaft | | 30 | 26 | 70 | 99.5 | 865 | |
| | 2010.09-2014.08 | 5AT | R | L/R | Van RWD OM 642.890 | Date from:2011.07,Chassis no. from:3673615,For SA code:XM0 | GDS56736 | Drive Shaft | | 30 | 26 | 70 | 99.5 | 865 | |
| | 2010.09-2014.08 | 5AT | R | L/R | Van RWD OM 642.890 | | GCO35069 | Outer Joint | | 30 | 37 | 70 | 99.5 | 62.5 | I |
| | 2010.09-2014.08 | 5AT | R | L/R | Van RWD OM 642.890 | Date to:2011.06,Chassis no. to:3673614 | GCI35069 | Inner Joint | | 26 | 37 | 45 | 83 | 96 | |
| | 2010.09-2014.08 | 5AT | R | L/R | Van RWD OM 642.890 | Date from:2011.07,Chassis no. from:3673615,For SA code:XM0 | GCI83462 | Inner Joint | | 26 | 37 | 45 | 83 | 96 | |
| 3.2 (160 kw) | 2003.09- | 5AT | R | L/R | Bus RWD M 112.951 | For SA code:U60/U61/U63/U65/U71/U51/U52/U54/U55/U59/VP9/ZK7 | GDS35059 | Drive Shaft | | 30 | 26 | 70 | 94.5 | 860 | |
| | 2003.09- | 5AT | R | L/R | Bus RWD M 112.951 | Not for SA code:U60/U61/U63/U65/U71/U51/U52/U54/U55/U59/VP9/ZK7,XM0 | GDS35093 | Drive Shaft | | 30 | 26 | 70 | 99.5 | 865 | |
| | 2003.09- | 5AT | R | L/R | Bus RWD M 112.951 | For SA code:XM0 | GDS56736 | Drive Shaft | | 30 | 26 | 70 | 99.5 | 865 | |
| | 2003.09- | 5AT | R | L/R | Bus RWD M 112.951 | | GCO35069 | Outer Joint | | 30 | 37 | 70 | 99.5 | 62.5 | I |
| | 2003.09- | 5AT | R | L/R | Bus RWD M 112.951 | For SA code:U60/U61/U63/U65/U71/U51/U52/U54/U55/U59/VP9/ZK7 | GCI35069 | Inner Joint | | 26 | 37 | 45 | 83 | 96 | |
| | 2003.09- | 5AT | R | L/R | Bus RWD M 112.951 | For SA code:XM0 | GCI83462 | Inner Joint | | 26 | 37 | 45 | 83 | 96 | |
| | 2003.09-2004.09 | 5AT | R | L/R | Van RWD M 112.951 | For SA code:U60/U61/U63/U65/U71/U51/U52/U54/U55/U59/VP9/ZK7 | GDS35059 | Drive Shaft | | 30 | 26 | 70 | 94.5 | 860 | |
| | 2003.09-2004.09 | 5AT | R | L/R | Van RWD M 112.951 | Not for SA code:U60/U61/U63/U65/U71/U51/U52/U54/U55/U59/VP9/ZK7,XM0 | GDS35093 | Drive Shaft | | 30 | 26 | 70 | 99.5 | 865 | |
| | 2003.09-2004.09 | 5AT | R | L/R | Van RWD M 112.951 | For SA code:XM0 | GDS56736 | Drive Shaft | | 30 | 26 | 70 | 99.5 | 865 | |
| | 2003.09-2004.09 | 5AT | R | L/R | Van RWD M 112.951 | | GCO35069 | Outer Joint | | 30 | 37 | 70 | 99.5 | 62.5 | I |
| | 2003.09-2004.09 | 5AT | R | L/R | Van RWD M 112.951 | For SA code:U60/U61/U63/U65/U71/U51/U52/U54/U55/U59/VP9/ZK7 | GCI35069 | Inner Joint | | 26 | 37 | 45 | 83 | 96 | |
| | 2003.09-2004.09 | 5AT | R | L/R | Van RWD M 112.951 | For SA code:XM0 | GCI83462 | Inner Joint | | 26 | 37 | 45 | 83 | 96 | |
| **Vito 123** | | | | | | | | | | | | | | | |
| 3.7 (165 kw) | 2004.06-2008.07 | 5AT | R | L/R | Bus RWD M 112.976 | For SA code:U60/U61/U63/U65/U71/U51/U52/U54/U55/U59/VP9/ZK7 | GDS35059 | Drive Shaft | | 30 | 26 | 70 | 94.5 | 860 | |
| | 2004.06-2008.07 | 5AT | R | L/R | Bus RWD M 112.976 | Not for SA code:U60/U61/U63/U65/U71/U51/U52/U54/U55/U59/VP9/ZK7,XM0 | GDS35093 | Drive Shaft | | 30 | 26 | 70 | 99.5 | 865 | |

| | YEAR | TRANSM. | F/R | L/R | BODY STYLE & DRIVE TYPE & ENGINE | REMARKS | G-AP Ref. | PRODUCT | ABS | Technical Specifications | | | | | |
|---|---|---|---|---|---|---|---|---|---|---|---|---|---|---|---|
| | | | | | | | | | | A | B | C | H | L | P |
| **MERCEDES-BENZ** | | | | | | | | | | | | | | | |
| **Vito 123** | | | | | | | | | | | | | | | |
| 3.7 (165 kw) | 2004.06-2008.07 | 5AT | R | L/R | Bus RWD M 112.976 | For SA code:XM0 | GDS56736 | Drive Shaft | | 30 | 26 | 70 | 99.5 | 865 | |
| | 2004.06-2008.07 | 5AT | R | L/R | Bus RWD M 112.976 | For SA code:U6D/U61/U63/U65/U71/U51/US2/US4/US5/US9/VP9/ZK7 | GCI35069 | Inner Joint | | 26 | 37 | 45 | 83 | 96 | |
| | 2004.06-2008.07 | 5AT | R | L/R | Bus RWD M 112.976 | For SA code:XM0 | GCI83462 | Inner Joint | | 26 | 37 | 45 | 83 | 96 | |
| | 2004.06-2008.07 | AT | R | L/R | Bus RWD M 112.976 | | GCO35069 | Outer Joint | | 30 | 37 | 70 | 99.5 | 62.5 | I |
| | 2004.06-2008.07 | 5AT | R | L/R | Van RWD M 112.976 | For SA code:U6D/U61/U63/U65/U71/U51/US2/US4/US5/US9/VP9/ZK7 | GDS35059 | Drive Shaft | | 30 | 26 | 70 | 94.5 | 860 | |
| | 2004.06-2008.07 | 5AT | R | L/R | Van RWD M 112.976 | Not for SA code:U60/U61/U63/U65/U71/U51/US2/U54/US5/US9/VP9/ZK7,XM0 | GDS35093 | Drive Shaft | | 30 | 26 | 70 | 99.5 | 865 | |
| | 2004.06-2008.07 | 5AT | R | L/R | Van RWD M 112.976 | For SA code:XM0 | GDS56736 | Drive Shaft | | 30 | 26 | 70 | 99.5 | 865 | |
| | 2004.06-2008.07 | 5AT | R | L/R | Van RWD M 112.976 | | GCO35069 | Outer Joint | | 30 | 37 | 70 | 99.5 | 62.5 | I |
| | 2004.06-2008.07 | 5AT | R | L/R | Van RWD M 112.976 | For SA code:U6D/U61/U63/U65/U71/U51/US2/US4/US5/US9/VP9/ZK7 | GCI35069 | Inner Joint | | 26 | 37 | 45 | 83 | 96 | |
| | 2004.06-2008.07 | 5AT | R | L/R | Van RWD M 112.976 | For SA code:XM0 | GCI83462 | Inner Joint | | 26 | 37 | 45 | 83 | 96 | |
| 3.7 (170 kw) | 2004.06-2008.07 | 5AT | R | L/R | Bus RWD M 112.976 | For SA code:U6D/U61/U63/U65/U71/U51/US2/US4/US5/US9/VP9/ZK7 | GDS35059 | Drive Shaft | | 30 | 26 | 70 | 94.5 | 860 | |
| | 2004.06-2008.07 | 5AT | R | L/R | Bus RWD M 112.976 | Not for SA code:U60/U61/U63/U65/U71/U51/US2/U54/US5/US9/VP9/ZK7,XM0 | GDS35093 | Drive Shaft | | 30 | 26 | 70 | 99.5 | 865 | |
| | 2004.06-2008.07 | 5AT | R | L/R | Bus RWD M 112.976 | For SA code:XM0 | GDS56736 | Drive Shaft | | 30 | 26 | 70 | 99.5 | 865 | |
| | 2004.06-2008.07 | 5AT | R | L/R | Bus RWD M 112.976 | | GCO35069 | Outer Joint | | 30 | 37 | 70 | 99.5 | 62.5 | I |
| | 2004.06-2008.07 | 5AT | R | L/R | Bus RWD M 112.976 | For SA code:U6D/U61/U63/U65/U71/U51/US2/US4/US5/US9/VP9/ZK7 | GCI35069 | Inner Joint | | 26 | 37 | 45 | 83 | 96 | |
| | 2004.06-2008.07 | 5AT | R | L/R | Bus RWD M 112.976 | For SA code:XM0 | GCI83462 | Inner Joint | | 26 | 37 | 45 | 83 | 96 | |
| | 2004.06-2008.07 | 5AT | R | L/R | Van RWD M 112.976 | For SA code:U6D/U61/U63/U65/U71/U51/US2/US4/US5/US9/VP9/ZK7 | GDS35059 | Drive Shaft | | 30 | 26 | 70 | 94.5 | 860 | |
| | 2004.06-2008.07 | 5AT | R | L/R | Van RWD M 112.976 | Not for SA code:U60/U61/U63/U65/U71/U51/US2/U54/US5/US9/VP9/ZK7,XM0 | GDS35093 | Drive Shaft | | 30 | 26 | 70 | 99.5 | 865 | |
| | 2004.06-2008.07 | 5AT | R | L/R | Van RWD M 112.976 | For SA code:XM0 | GDS56736 | Drive Shaft | | 30 | 26 | 70 | 99.5 | 865 | |
| | 2004.06-2008.07 | 5AT | R | L/R | Van RWD M 112.976 | | GCO35069 | Outer Joint | | 30 | 37 | 70 | 99.5 | 62.5 | I |
| | 2004.06-2008.07 | 5AT | R | L/R | Van RWD M 112.976 | For SA code:U6D/U61/U63/U65/U71/U51/US2/US4/US5/US9/VP9/ZK7 | GCI35069 | Inner Joint | | 26 | 37 | 45 | 83 | 96 | |
| | 2004.06-2008.07 | 5AT | R | L/R | Van RWD M 112.976 | For SA code:XM0 | GCI83462 | Inner Joint | | 26 | 37 | 45 | 83 | 96 | |
| **Vito 124** | | | | | | | | | | | | | | | |
| 2.0 (174 kw) | 2021.01- | 9AT | F | L/R | Bus 4WD OM 654.920 | | GDS84138 | Drive Shaft | | 30 | 24 | 66 | 98.5 | 694 | |
| | 2021.01- | 9AT | F | L/R | Bus 4WD OM 654.920 | No Facelift | GCO82369 | Outer Joint | | 30 | 31 | 66 | 98.5 | 70 | M |
| | 2021.01- | 9AT | F | L/R | Bus 4WD OM 654.920 | | GCI82604 | Inner Joint | | 24 | 33 | 37.9 | 70.5 | 112 | |
| | 2021.01- | 9AT | R | L/R | Bus 4WD OM 654.920 | Manufacturer:IFA | GDS35121 | Drive Shaft | | 30 | 30 | 73 | 90 | 846 | |
| | 2021.01- | 9AT | R | L/R | Bus RWD OM 654.920 | Date to:2021.04;For SA code:XM7/ZE9/VQ8/Y03/Y04;Manufacturer:IFA | GDS35121 | Drive Shaft | | 30 | 30 | 73 | 90 | 846 | |
| | 2021.01- | 9AT | R | L/R | Bus RWD OM 654.920 | For SA code:Y03/Y04,Date to:2023.09;For SA code:XM7/EI1/EI3 | GDS58339 | Drive Shaft | | 30 | 30 | 73 | 90 | 849 | |
| | 2021.01- | 9AT | R | L/R | Bus RWD OM 654.920 | For SA code:Y03/Y04 | GCO83616 | Outer Joint | | 30 | 31 | 73 | 90 | 70.5 | M |
| | 2021.01- | 9AT | R | L/R | Bus RWD OM 654.920 | For SA code:Y03/Y04 | GCI84070 | Inner Joint | | 30 | 31 | 47 | 83.5 | 93 | |
| | 2021.01- | 9AT | F | L/R | Van 4WD OM 654.920 | | GDS84138 | Drive Shaft | | 30 | 24 | 66 | 98.5 | 694 | |
| | 2021.01- | 9AT | F | L/R | Van 4WD OM 654.920 | No Facelift | GCO82369 | Outer Joint | | 30 | 31 | 66 | 98.5 | 70 | M |
| | 2021.01- | 9AT | F | L/R | Van 4WD OM 654.920 | | GCI82604 | Inner Joint | | 24 | 33 | 37.9 | 70.5 | 112 | |
| | 2021.01- | 9AT | R | L/R | Van 4WD OM 654.920 | Manufacturer:IFA | GDS35121 | Drive Shaft | | 30 | 30 | 73 | 90 | 846 | |
| | 2021.01- | 9AT | R | L/R | Van RWD OM 654.920 | Date to:2021.04;For SA code:XM7/ZE9/VQ8/Y03/Y04;Manufacturer:IFA | GDS35121 | Drive Shaft | | 30 | 30 | 73 | 90 | 846 | |
| | 2021.01- | 9AT | R | L/R | Van RWD OM 654.920 | For SA code:Y03/Y04,Date to:2023.09;For SA code:XM7/EI1/EI3 | GDS58339 | Drive Shaft | | 30 | 30 | 73 | 90 | 849 | |
| | 2021.01- | 9AT | R | L/R | Van RWD OM 654.920 | For SA code:Y03/Y04 | GCO83616 | Outer Joint | | 30 | 31 | 73 | 90 | 70.5 | M |
| | 2021.01- | 9AT | R | L/R | Van RWD OM 654.920 | For SA code:Y03/Y04 | GCI84070 | Inner Joint | | 30 | 31 | 47 | 83.5 | 93 | |
| 2.0 (176 kw) | 2020.04- | 9AT | F | L/R | Bus 4WD OM 654.920 | | GDS84138 | Drive Shaft | | 30 | 24 | 66 | 98.5 | 694 | |
| | 2020.04- | 9AT | F | L/R | Bus 4WD OM 654.920 | No Facelift | GCO82369 | Outer Joint | | 30 | 31 | 66 | 98.5 | 70 | M |
| | 2020.04- | 9AT | F | L/R | Bus 4WD OM 654.920 | | GCI82604 | Inner Joint | | 24 | 33 | 37.9 | 70.5 | 112 | |
| | 2020.04- | 9AT | R | L/R | Bus 4WD OM 654.920 | Manufacturer:IFA | GDS35121 | Drive Shaft | | 30 | 30 | 73 | 90 | 846 | |
| | 2020.04-2020.12 | 9AT | R | L/R | Bus RWD OM 654.920 | For SA code:XM7,Manufacturer:IFA;For SA code:VQ1/VQ8/Y03/Y04,Manufacturer:IFA | GDS35121 | Drive Shaft | | 30 | 30 | 73 | 90 | 846 | |
| | 2020.04-2020.12 | 9AT | R | L/R | Bus RWD OM 654.920 | For SA code:Y03/Y04/XM7/EI1/EI3/VQ1/ZE9/VQ8/Y03/Y04 | GDS58339 | Drive Shaft | | 30 | 30 | 73 | 90 | 849 | |
| | 2020.04-2020.12 | 9AT | R | L/R | Bus RWD OM 654.920 | For SA code:Y03/Y04 | GCO83616 | Outer Joint | | 30 | 31 | 73 | 90 | 70.5 | M |
| | 2020.04-2020.12 | 9AT | R | L/R | Bus RWD OM 654.920 | For SA code:Y03/Y04 | GCI84070 | Inner Joint | | 30 | 31 | 47 | 83.5 | 93 | |
| | 2020.04-2020.12 | 9AT | F | L/R | Van 4WD OM 654.920 | | GDS84138 | Drive Shaft | | 30 | 24 | 66 | 98.5 | 694 | |
| | 2020.04-2020.12 | 9AT | F | L/R | Van 4WD OM 654.920 | No Facelift | GCO82369 | Outer Joint | | 30 | 31 | 66 | 98.5 | 70 | M |
| | 2020.04-2020.12 | 9AT | F | L/R | Van 4WD OM 654.920 | | GCI82604 | Inner Joint | | 24 | 33 | 37.9 | 70.5 | 112 | |
| | 2020.04-2020.12 | 9AT | R | L/R | Van 4WD OM 654.920 | Manufacturer:IFA | GDS35121 | Drive Shaft | | 30 | 30 | 73 | 90 | 846 | |
| | 2020.04-2020.12 | 9AT | R | L/R | Van RWD OM 654.920 | For SA code:XM7,Manufacturer:IFA;For SA code:VQ1/VQ8/Y03/Y04,Manufacturer:IFA | GDS35121 | Drive Shaft | | 30 | 30 | 73 | 90 | 846 | |
| | 2020.04-2020.12 | 9AT | R | L/R | Van RWD OM 654.920 | For SA code:Y03/Y04;For SA code:XM7/EI1/EI3/VQ1/ZE9/VQ8/Y03/Y04 | GDS58339 | Drive Shaft | | 30 | 30 | 73 | 90 | 849 | |
| | 2020.04-2020.12 | 9AT | R | L/R | Van RWD OM 654.920 | For SA code:Y03/Y04 | GCO83616 | Outer Joint | | 30 | 31 | 73 | 90 | 70.5 | M |
| | 2020.04-2020.12 | 9AT | R | L/R | Van RWD OM 654.920 | For SA code:Y03/Y04 | GCI84070 | Inner Joint | | 30 | 31 | 47 | 83.5 | 93 | |
| **Vito 126** | | | | | | | | | | | | | | | |
| 3.5 (190 kw) | 2007.09- | 5AT/5MT | R | L/R | Bus RWD M 272.978 | | GDS35093 | Drive Shaft | | 30 | 26 | 70 | 99.5 | 865 | |
| | 2007.09- | 5AT/5MT | R | L/R | Bus RWD M 272.978 | Date From:2011.07,Chassis no. from:3673415;For SA code:XM0 | GDS56736 | Drive Shaft | | 30 | 26 | 70 | 99.5 | 865 | |
| | 2007.09- | 5AT/5MT | R | L/R | Bus RWD M 272.978 | | GCO35069 | Outer Joint | | 30 | 37 | 70 | 99.5 | 62.5 | I |
| | 2007.09- | 5AT/5MT | R | L/R | Bus RWD M 272.978 | Date to:2011.06,Chassis no. to:3673614 | GCI35069 | Inner Joint | | 26 | 37 | 45 | 83 | 96 | |
| | 2007.09- | 5AT/5MT | R | L/R | Bus RWD M 272.978 | Date from:2011.07,Chassis no. from:3673415;For SA code:XM0 | GCI83462 | Inner Joint | | 26 | 37 | 45 | 83 | 96 | |
| | 2007.09-2014.08 | 5AT | R | L/R | Van RWD M 272.978 | Date from:2011.07,Chassis no. from:3673415;For SA code:XM0 | GCI83462 | Inner Joint | | 26 | 37 | 45 | 83 | 96 | |
| | 2007.09-2014.08 | 5AT/5MT | R | L/R | Van RWD M 272.978 | | GDS35093 | Drive Shaft | | 30 | 26 | 70 | 99.5 | 865 | |
| | 2007.09-2014.08 | 5AT/5MT | R | L/R | Van RWD M 272.978 | Date to:2011.06,Chassis no. to:3673614 | GCI35069 | Inner Joint | | 26 | 37 | 45 | 83 | 96 | |
| | 2007.09-2014.08 | AT | R | L/R | Van RWD M 272.978 | | GCO35069 | Outer Joint | | 30 | 37 | 70 | 99.5 | 62.5 | I |

| | YEAR | TRANSM. | F/R | L/R | BODY STYLE & DRIVE TYPE & ENGINE | REMARKS | G-AP Ref. | PRODUCT | ABS | Technical Specifications A | B | C | H | L | P |
|---|---|---|---|---|---|---|---|---|---|---|---|---|---|---|---|
| **MERCEDES-BENZ** | | | | | | | | | | | | | | | |
| **Vito 126** | | | | | | | | | | | | | | | |
| 3.5 (190 kw) | 2007.09-2014.08 | | R | L/R | Van RWD M 272.978 | Date From:2011.07,Chassis no. from:367345;For SA code:XM0 | GDS56736 | Drive Shaft | | 30 | 26 | 70 | 99.5 | 865 | |
| **X220** | | | | | | | | | | | | | | | |
| 2.3 (120 kw) | 2017.09-2020.05 | 6MT | F | L/R | Pickup 4WD OM 699.300;OM 699.302;OM 699.304 | | GDS56374 | Drive Shaft | | 32 | 30 | 67.3 | 123.5 | 677 | |
| | 2017.09-2020.05 | 6MT | F | L/R | Pickup 4WD OM 699.300;OM 699.302;OM 699.304 | | GCO83269 | Outer Joint | | 32 | 27 | 67.3 | 123.5 | 67.5 | M |
| | 2017.09-2020.05 | 6MT | F | L/R | Pickup 4WD OM 699.300;OM 699.302;OM 699.304 | | GCI83273 | Inner Joint | | 30 | 26 | 39 | 61.5 | 131.5 | |
| **X250** | | | | | | | | | | | | | | | |
| 2.3 (140 kw) | 2017.09- | 7AT/6MT | F | L/R | Platform/Chassis 4WD OM 699.301;OM 699.303;OM 699.305 | | GDS56374 | Drive Shaft | | 32 | 30 | 67.3 | 123.5 | 677 | |
| | 2017.09- | 7AT/6MT | F | L/R | Platform/Chassis 4WD OM 699.301;OM 699.303;OM 699.305 | | GCO83269 | Outer Joint | | 32 | 27 | 67.3 | 123.5 | 67.5 | M |
| | 2017.09- | 7AT/6MT | F | L/R | Platform/Chassis 4WD OM 699.301;OM 699.303;OM 699.305 | | GCI83273 | Inner Joint | | 30 | 26 | 39 | 61.5 | 131.5 | |
| | 2017.09-2020.05 | 7AT/6MT | F | L/R | Pickup 4WD OM 699.301;OM 699.303;OM 699.305 | | GDS56374 | Drive Shaft | | 32 | 30 | 67.3 | 123.5 | 677 | |
| | 2017.09-2020.05 | 7AT/6MT | F | L/R | Pickup 4WD OM 699.301;OM 699.303;OM 699.305 | | GCO83269 | Outer Joint | | 32 | 27 | 67.3 | 123.5 | 67.5 | M |
| | 2017.09-2020.05 | 7AT/6MT | F | L/R | Pickup 4WD OM 699.301;OM 699.303;OM 699.305 | | GCI83273 | Inner Joint | | 30 | 26 | 39 | 61.5 | 131.5 | |
| **X350** | | | | | | | | | | | | | | | |
| 3.0 (190 kw) | 2018.07-2020.05 | 7AT | F | L/R | Pickup 4WD OM 642.889 | | GDS56374 | Drive Shaft | | 32 | 30 | 67.3 | 123.5 | 677 | |
| | 2018.07-2020.05 | 7AT | F | L/R | Pickup 4WD OM 642.889 | | GCO83269 | Outer Joint | | 32 | 27 | 67.3 | 123.5 | 67.5 | M |
| | 2018.07-2020.05 | 7AT | F | L/R | Pickup 4WD OM 642.889 | | GCI83273 | Inner Joint | | 30 | 26 | 39 | 61.5 | 131.5 | |
| **MG** | | | | | | | | | | | | | | | |
| **Express** | | | | | | | | | | | | | | | |
| 1.4 (76 kw) | 2003.03-2005.05 | MT | F | L | Hatchback Van FWD 14 K4F | Chassis no. to:567941 | GDS51043 | Drive Shaft | 43T | 26 | 22 | 49 | 78.8 | 642 | |
| | 2003.03-2005.05 | MT | F | L/R | Hatchback Van FWD 14 K4F | | GCO51003 | Outer Joint | 43T | 26 | 22 | 49 | 78.8 | 55 | I |
| 1.8 (86 kw) | 2003.03-2005.05 | CVT | F | L | Hatchback Van FWD 18 K4F | | GDS51019 | Drive Shaft | 43T | 26 | 23 | 49 | 78.8 | 630.5 | |
| | 2003.03-2005.05 | MT | F | L/R | Hatchback Van FWD 18 K4F | | GCO51003 | Outer Joint | 43T | 26 | 22 | 49 | 78.8 | 55 | I |
| 1.8 (118 kw) | 2003.03-2005.05 | CVT | F | L | Hatchback Van FWD 18 K4K | | GDS51019 | Drive Shaft | 43T | 26 | 23 | 49 | 78.8 | 630.5 | |
| 2.0 (74 kw) | 2003.03-2005.05 | MT | F | L/R | Hatchback Van FWD 20 T2N | | GCO51005 | Outer Joint | | 26 | 32 | 49 | 78 | 68.5 | I |
| | 2003.03-2005.05 | MT | F | L/R | Hatchback Van FWD 20 T2N | | GCO51007 | Outer Joint | 43T | 26 | 32 | 49 | 78 | 68.5 | I |
| 2.0 (83 kw) | 2003.03-2005.05 | 5MT | F | L/R | Hatchback Van FWD 20 T2N | | GCO51005 | Outer Joint | | 26 | 32 | 49 | 78 | 68.5 | I |
| | 2003.03-2005.05 | 5MT | F | L/R | Hatchback Van FWD 20 T2N | | GCO51007 | Outer Joint | 43T | 26 | 32 | 49 | 78 | 68.5 | I |
| **Marvel R** | | | | | | | | | | | | | | | |
| EV (132 kw) | 2021.02- | ET | R | L | SUV RWD | | GDS56379 | Drive Shaft | | 30 | 27 | 52.5 | 94.5 | 845 | |
| | 2021.02- | ET | R | R | SUV RWD | | GDS56380 | Drive Shaft | | 30 | 27 | 52.5 | 94.5 | 871 | |
| | 2021.02- | ET | R | L/R | SUV RWD | | GCO88046 | Outer Joint | | 30 | 26 | 52.5 | 94.5 | 65.5 | M |
| | 2021.02- | ET | R | L/R | SUV RWD | | GCI83278 | Inner Joint | | 27 | 26 | 34.7 | 88 | 91 | |
| EV (212 kw) | 2021.02- | ET | F | L | SUV 4WD | | GDS57753 | Drive Shaft | | 30 | 27 | 59 | 97 | 794 | |
| | 2021.02- | ET | F | R | SUV 4WD | | GDS56552 | Drive Shaft | | 30 | 27 | 59 | 97 | 890 | |
| | 2021.02- | ET | F | L/R | SUV 4WD | | GCO83698 | Outer Joint | | 30 | 32 | 59 | 97 | 56 | I |
| | 2021.02- | ET | F | L/R | SUV 4WD | | GCI83367 | Inner Joint | | 27 | 24 | 45 | 60.5 | 109.5 | |
| | 2021.02- | ET | R | L | SUV 4WD | | GDS56379 | Drive Shaft | | 30 | 27 | 52.5 | 94.5 | 845 | |
| | 2021.02- | ET | R | R | SUV 4WD | | GDS56380 | Drive Shaft | | 30 | 27 | 52.5 | 94.5 | 871 | |
| | 2021.02- | ET | R | L/R | SUV 4WD | | GCO88046 | Outer Joint | | 30 | 26 | 52.5 | 94.5 | 65.5 | M |
| | 2021.02- | ET | R | L/R | SUV 4WD | | GCI83278 | Inner Joint | | 27 | 26 | 34.7 | 88 | 91 | |
| **MG 3** | | | | | | | | | | | | | | | |
| 1.3 (65 kw) | 2011.04- | 5MT | F | L/R | Hatchback FWD 13S4F;G13D | Date from:2017.08 | GCO83201 | Outer Joint | | 25 | 23 | 53.6 | 80 | 56 | I |
| | 2011.04- | 5MT/5AMT | F | L | Hatchback FWD 13S4F;G13D | Date to:2017.07 | GDS57658 | Drive Shaft | | 25 | 22 | 53.7 | 84.5 | 669 | |
| | 2011.04- | 5MT/5AMT | F | R | Hatchback FWD 13S4F;G13D | Date to:2017.07 | GDS57657 | Drive Shaft | | 25 | 22 | 53.7 | 84.5 | 885 | |
| | 2011.04- | 5MT/5AMT | F | L/R | Hatchback FWD 13S4F;G13D | Date to:2017.07 | GCO83669 | Outer Joint | | 25 | 22 | 53.7 | 84.5 | 58 | M |
| | 2011.04- | 5MT/5AMT | F | L/R | Hatchback FWD 13S4F;G13D | Date to:2017.07 | GCI83798 | Inner Joint | | 22 | 22 | 35 | 56 | 96.5 | |
| 1.5 (78 kw) | 2016.07- | 5MT/5AMT | F | L | Hatchback FWD 15S4U;15S4G;G15D | | GDS57658 | Drive Shaft | | 25 | 22 | 53.7 | 84.5 | 669 | |
| | 2016.07- | 5MT/5AMT | F | R | Hatchback FWD 15S4U;15S4G;G15D | | GDS57657 | Drive Shaft | | 25 | 22 | 53.7 | 84.5 | 885 | |
| | 2016.07- | 5MT/5AMT | F | L/R | Hatchback FWD 15S4U;15S4G;G15D | | GCO83669 | Outer Joint | | 25 | 22 | 53.7 | 84.5 | 58 | M |
| | 2016.07- | 5MT/5AMT | F | L/R | Hatchback FWD 15S4U;15S4G;G15D | | GCI83798 | Inner Joint | | 22 | 22 | 35 | 56 | 96.5 | |
| 1.5 (80 kw) | 2011.04- | 4AT | F | L | Hatchback FWD 15S4U;G15D | Model year from:2016 | GDS83900 | Drive Shaft | | 25 | 23 | 53.6 | 80 | 647 | |
| | 2011.04- | 4AT | F | R | Hatchback FWD 15S4U;G15D | Model year from:2016 | GDS83802 | Drive Shaft | | 25 | 23 | 53.6 | 80 | 893 | |
| | 2011.04- | 4AT | F | L/R | Hatchback FWD 15S4U;G15D | Model year from:2016 | GCO83201 | Outer Joint | | 25 | 23 | 53.6 | 80 | 56 | I |
| | 2011.04- | 5MT/5AMT | F | L | Hatchback FWD 15S4U;G15D | Model year to:2015 | GDS57658 | Drive Shaft | | 25 | 22 | 53.7 | 84.5 | 669 | |
| | 2011.04- | 5MT/5AMT | F | R | Hatchback FWD 15S4U;G15D | Model year to:2015 | GDS57657 | Drive Shaft | | 25 | 22 | 53.7 | 84.5 | 885 | |
| | 2011.04- | 5MT/5AMT | F | L/R | Hatchback FWD 15S4U;G15D | Model year to:2015 | GCO83669 | Outer Joint | | 25 | 22 | 53.7 | 84.5 | 58 | M |
| | 2011.04- | 5MT/5AMT | F | L/R | Hatchback FWD 15S4U;G15D | Model year to:2015 | GCI83798 | Inner Joint | | 22 | 22 | 35 | 56 | 96.5 | |
| 1.5 (82 kw) | 2018.06- | 4AT | F | L | Hatchback FWD 15S4C | For Engine code:15S4C | GDS83900 | Drive Shaft | | 25 | 23 | 53.6 | 80 | 647 | |
| | 2018.06- | 4AT | F | R | Hatchback FWD 15S4C | For Engine code:15S4C | GDS83802 | Drive Shaft | | 25 | 23 | 53.6 | 80 | 893 | |
| | 2018.06- | 4AT | F | L/R | Hatchback FWD 15S4C | For Engine code:15S4C | GCO83201 | Outer Joint | | 25 | 23 | 53.6 | 80 | 56 | I |
| **MG 350** | | | | | | | | | | | | | | | |
| 1.5 (78 kw) | 2011.01- | 4AT | F | L | Saloon FWD 15S4U;G15D | Model year to:2013 | GDS82192 | Drive Shaft | 48T | 25 | 22 | 52 | 90.5 | 654 | |
| | 2011.01- | 4AT | F | R | Saloon FWD 15S4U;G15D | Model year to:2013 | GDS82193 | Drive Shaft | 48T | 25 | 22 | 52 | 90.5 | 961 | |
| | 2011.01- | 5MT | F | L | Saloon FWD 15S4U;G15D | Trans. code:SH78Z | GDS82194 | Drive Shaft | 48T | 25 | 25 | 52 | 90.5 | 672 | |
| | 2011.01- | 5MT | F | L | Saloon FWD 15S4U;G15D | Trans. code:SH63P | GDS82197 | Drive Shaft | 48T | 25 | 22 | 52 | 90.5 | 675 | |

| | YEAR | TRANSM. | F/R | L/R | BODY STYLE & DRIVE TYPE & ENGINE | REMARKS | G-AP Ref. | PRODUCT | ABS | Technical Specifications A | B | C | H | L | P |
|---|---|---|---|---|---|---|---|---|---|---|---|---|---|---|---|
| **MG** | | | | | | | | | | | | | | | |
| **MG 350** | | | | | | | | | | | | | | | |
| 1.5 (78 kw) | 2011.01- | 5MT | F | R | Saloon FWD 15S4U;G15D | Trans. code:SH78Z | GDS82195 | Drive Shaft | 48T | 25 | 25 | 52 | 90.5 | 942 | |
| | 2011.01- | 5MT | F | R | Saloon FWD 15S4U;G15D | Trans. code:SH63P | GDS82196 | Drive Shaft | 48T | 25 | 22 | 52 | 90.5 | 948 | |
| | 2011.01- | 5MT | F | L/R | Saloon FWD 15S4U;G15D | Trans. code:SH63P | GCO81695 | Outer Joint | 48T | 25 | 23 | 52 | 90.5 | 56 | I |
| | 2011.01- | 5MT | F | L/R | Saloon FWD 15S4U;G15D | Trans. code:SH63P,Manufactured:QC | GCI81665 | Inner Joint | | 23 | 22 | 34 | 83 | 83 | |
| | 2011.01- | 5MT | F | L/R | Saloon FWD 15S4U;G15D | Trans. code:SH63P,Manufactured:SDS | GCI83798 | Inner Joint | | 22 | 22 | 35 | 56 | 96.5 | |
| **MG 4** | | | | | | | | | | | | | | | |
| EV (125 kw) | 2022.07- | ET | R | L | SUV RWD TZ180XS0951 | | GDS56399 | Drive Shaft | | 36 | 34 | 61 | 94.5 | 689 | |
| | 2022.07- | ET | R | R | SUV RWD TZ180XS0951 | | GDS56398 | Drive Shaft | | 36 | 27 | 61 | 94.5 | 644 | |
| | 2022.07- | ET | R | L/R | SUV RWD TZ180XS0951 | | GCO83280 | Outer Joint | | 36 | 24 | 61 | 94.5 | 62 | M |
| | 2022.07- | ET | R | L | SUV RWD TZ180XS0951 | | GCI83289 | Inner Joint | | 34 | 23 | 35 | 58.5 | 107 | |
| | 2022.07- | ET | R | R | SUV RWD TZ180XS0951 | | GCI83288 | Inner Joint | | 27 | 23 | 47 | | 119 | |
| EV (150 kw) | 2022.07- | ET | R | L | SUV RWD TZ180XS0951 | | GDS56399 | Drive Shaft | | 36 | 34 | 61 | 94.5 | 689 | |
| | 2022.07- | ET | R | R | SUV RWD TZ180XS0951 | | GDS56398 | Drive Shaft | | 36 | 27 | 61 | 94.5 | 644 | |
| | 2022.07- | ET | R | L/R | SUV RWD TZ180XS0951 | | GCO83280 | Outer Joint | | 36 | 24 | 61 | 94.5 | 62 | M |
| | 2022.07- | ET | R | L | SUV RWD TZ180XS0951 | | GCI83289 | Inner Joint | | 34 | 23 | 35 | 58.5 | 107 | |
| | 2022.07- | ET | R | R | SUV RWD TZ180XS0951 | | GCI83288 | Inner Joint | | 27 | 23 | 47 | | 119 | |
| EV (180 kw) | 2022.07- | ET | R | L | SUV RWD TZ204XS1351 | | GDS56399 | Drive Shaft | | 36 | 34 | 61 | 94.5 | 689 | |
| | 2022.07- | ET | R | R | SUV RWD TZ204XS1351 | | GDS56398 | Drive Shaft | | 36 | 27 | 61 | 94.5 | 644 | |
| | 2022.07- | ET | R | L/R | SUV RWD TZ204XS1351 | | GCO83280 | Outer Joint | | 36 | 24 | 61 | 94.5 | 62 | M |
| | 2022.07- | ET | R | L | SUV RWD TZ204XS1351 | | GCI83289 | Inner Joint | | 34 | 23 | 35 | 58.5 | 107 | |
| | 2022.07- | ET | R | R | SUV RWD TZ204XS1351 | | GCI83288 | Inner Joint | | 27 | 23 | 47 | | 119 | |
| EV (320 kw) | 2023.07- | ET | F | L | SUV 4WD TZ180XS0951, TZ204XS1351 | | GDS57697 | Drive Shaft | | 36 | 34 | 59.5 | 94.5 | 709 | |
| | 2023.07- | ET | F | R | SUV 4WD TZ180XS0951, TZ204XS1351 | | GDS57698 | Drive Shaft | | 36 | 27 | 59.5 | 94.5 | 644 | |
| | 2023.07- | ET | F | L/R | SUV 4WD TZ180XS0951, TZ204XS1351 | | GCO83695 | Outer Joint | | 36 | 28 | 59.5 | 94.5 | 69 | I |
| | 2023.07- | ET | F | L | SUV 4WD TZ180XS0951, TZ204XS1351 | | GCI83807 | Inner Joint | | 34 | 27 | 35 | 58.5 | 111 | |
| | 2023.07- | ET | F | R | SUV 4WD TZ180XS0951, TZ204XS1351 | | GCI83808 | Inner Joint | | 27 | 27 | 47 | | 126.5 | |
| | 2023.07- | ET | F | R | SUV 4WD TZ180XS0951, TZ204XS1351 | | GDS87110 | Intermediate Shaft | | 27 | 34 | | | 322 | |
| | 2023.07- | ET | R | L | SUV 4WD TZ180XS0951, TZ204XS1351 | | GDS57613 | Drive Shaft | | 38 | 27 | 66 | 94.5 | 702 | |
| | 2023.07- | ET | R | R | SUV 4WD TZ180XS0951, TZ204XS1351 | | GDS57614 | Drive Shaft | | 38 | 27 | 66 | 94.5 | 625 | |
| | 2023.07- | ET | R | L/R | SUV 4WD TZ180XS0951, TZ204XS1351 | | GCO83638 | Outer Joint | | 38 | 27 | 66 | 94.5 | 69 | M |
| | 2023.07- | ET | R | L | SUV 4WD TZ180XS0951, TZ204XS1351 | | GCI83768 | Inner Joint | | 27 | 27 | 35 | 68 | 111 | |
| | 2023.07- | ET | R | R | SUV 4WD TZ180XS0951, TZ204XS1351 | | GCI83769 | Inner Joint | | 27 | 27 | 47 | | 126.5 | |
| **MG 5** | | | | | | | | | | | | | | | |
| 1.5 (78 kw) | 2012.03- | 4AT | F | L | Hatchback FWD 15S4U;G15D | | GDS82200 | Drive Shaft | 48T | 25 | 23 | 52 | 90.5 | 656 | |
| | 2012.03- | 4AT | F | R | Hatchback FWD 15S4U;G15D | | GDS82201 | Drive Shaft | 48T | 25 | 23 | 52 | 90.5 | 956 | |
| | 2012.03- | 4AT/5MT | F | L/R | Hatchback FWD 15S4U;G15D | | GCO81695 | Outer Joint | 48T | 25 | 23 | 52 | 90.5 | 56 | I |
| | 2012.03- | 4AT/5MT | F | L/R | Hatchback FWD 15S4U;G15D | | GCI83798 | Inner Joint | | 22 | 22 | 35 | 56 | 96.5 | |
| | 2012.03- | 5MT | F | L | Hatchback FWD 15S4U;G15D | | GDS82197 | Drive Shaft | 48T | 25 | 22 | 52 | 90.5 | 675 | |
| | 2012.03- | 5MT | F | R | Hatchback FWD 15S4U;G15D | | GDS82196 | Drive Shaft | 48T | 25 | 22 | 52 | 90.5 | 948 | |
| EV (115 kw) | 2020.10- | ET | F | L | Estate FWD TZ204XS1152 | | GDS57623 | Drive Shaft | | 36 | 27 | 62 | 94.5 | 644 | |
| | 2020.10- | ET | F | R | Estate FWD TZ204XS1152 | | GDS56087 | Drive Shaft | | 36 | 27 | 62 | 94.5 | 587 | |
| | 2020.10- | ET | F | L/R | Estate FWD TZ204XS1152 | | GCO83639 | Outer Joint | | 36 | 35 | 62 | 94.5 | 63.5 | I |
| | 2020.10- | ET | F | L | Estate FWD TZ204XS1152 | | GCI83771 | Inner Joint | | 27 | 34 | 45 | 57 | 117 | |
| | 2020.10- | ET | F | R | Estate FWD TZ204XS1152 | | GCI82910 | Inner Joint | | 27 | 34 | 48 | | 126 | |
| EV (130 kw) | 2020.10- | ET | F | L | Estate FWD TZ204XS1152 | | GDS57623 | Drive Shaft | | 36 | 27 | 62 | 94.5 | 644 | |
| | 2020.10- | ET | F | R | Estate FWD TZ204XS1152 | | GDS56087 | Drive Shaft | | 36 | 27 | 62 | 94.5 | 587 | |
| | 2020.10- | ET | F | L/R | Estate FWD TZ204XS1152 | | GCO83639 | Outer Joint | | 36 | 35 | 62 | 94.5 | 63.5 | I |
| | 2020.10- | ET | F | L | Estate FWD TZ204XS1152 | | GCI83771 | Inner Joint | | 27 | 34 | 45 | 57 | 117 | |
| | 2020.10- | ET | F | R | Estate FWD TZ204XS1152 | | GCI82910 | Inner Joint | | 27 | 34 | 48 | | 126 | |
| **MG F** | | | | | | | | | | | | | | | |
| 1.8 (88 kw) | 1995.04-2002.02 | MT | R | L | Cabriolet RWD 18K4F | | GDS51035 | Drive Shaft | 42T | 25 | 29 | 50 | 82 | 567.5 | |
| | 1995.04-2002.02 | MT | R | L/R | Cabriolet RWD 18K4F | | GCO51010 | Outer Joint | | 25 | 22 | 50 | 82 | 56 | I |
| | 1995.04-2002.02 | MT | R | L/R | Cabriolet RWD 18K4F | | GCO99242 | Outer Joint | 42T | 25 | 22 | 50 | 82 | 56 | I |
| 1.8 (107 kw) | 1995.04-2000.09 | MT | R | L | Cabriolet RWD 18K4K | | GDS51035 | Drive Shaft | 42T | 25 | 29 | 50 | 82 | 567.5 | |
| | 1995.04-2000.09 | MT | R | L/R | Cabriolet RWD 18K4K | | GCO99242 | Outer Joint | 42T | 25 | 22 | 50 | 82 | 56 | I |
| 1.8 (118 kw) | 2001.10-2002.03 | 5MT | R | L | Cabriolet RWD 18K4K | | GDS51035 | Drive Shaft | 42T | 25 | 29 | 50 | 82 | 567.5 | |
| | 2001.10-2002.03 | 5MT | R | L/R | Cabriolet RWD 18K4K | | GCO51010 | Outer Joint | | 25 | 22 | 50 | 82 | 56 | I |
| | 2001.10-2002.03 | 5MT | R | L/R | Cabriolet RWD 18K4K | | GCO99242 | Outer Joint | 42T | 25 | 22 | 50 | 82 | 56 | I |
| **MG GS** | | | | | | | | | | | | | | | |
| 1.5 (122 kw) | 2016.05- | 7AT/6MT | F | L/R | SUV FWD 15E4E;G15DT | | GCO82058 | Outer Joint | 48T | 36 | 26 | 62 | 87 | 64 | M |
| | 2016.05- | 7DCT | F | R | SUV FWD 15E4E;G15DT | | GDS57642 | Drive Shaft | 48T | 36 | 27 | 62 | 87 | 610 | |
| | 2016.05- | 7DCT | F | R | SUV FWD 15E4E;G15DT | | GCI83787 | Inner Joint | | 27 | 26 | 47 | | 123.5 | |
| 2.0 (162 kw) | 2016.09- | 6DCT | F | R | SUV 4WD 20L4E | Model year to:2018 | GDS57628 | Drive Shaft | 48T | 36 | 27 | 62 | 87 | 587 | |
| | 2016.09- | 6DCT | F | L/R | SUV 4WD 20L4E | Model year to:2018 | GCO82058 | Outer Joint | 48T | 36 | 26 | 62 | 87 | 64 | M |
| | 2016.09- | 6DCT | F | R | SUV 4WD 20L4E | Model year to:2018 | GCI83776 | Inner Joint | | 27 | 26 | 47 | | 123.5 | |

| | YEAR | TRANSM. | F/R | L/R | BODY STYLE & DRIVE TYPE & ENGINE | REMARKS | G-AP Ref. | PRODUCT | ABS | Technical Specifications A | B | C | H | L | P |
|---|---|---|---|---|---|---|---|---|---|---|---|---|---|---|---|
| **MG** | | | | | | | | | | | | | | | |
| **MG GS** | | | | | | | | | | | | | | | |
| 2.0 (162 kw) | 2016.09- | 6DCT | F | R | SUV FWD 20L4E | Model year to:2018 | GDS57628 | Drive Shaft | 48T | 36 | 27 | 62 | 87 | 587 | |
| | 2016.09- | 6DCT | F | L/R | SUV FWD 20L4E | Model year to:2018 | GCO82058 | Outer Joint | 48T | 36 | 26 | 62 | 87 | 64 | M |
| | 2016.09- | 6DCT | F | R | SUV FWD 20L4E | Model year to:2018 | GCI83776 | Inner Joint | | 27 | 26 | 47 | | 123.5 | |
| **MG HS** | | | | | | | | | | | | | | | |
| 1.5 (119 kw) | 2018.09- | 7DCT | F | L | SUV FWD 15E4E | | GDS84153 | Drive Shaft | 48T | 36 | 34 | 62 | 87 | 632 | |
| | 2018.09- | 7DCT | F | R | SUV FWD 15E4E | | GDS84154 | Drive Shaft | 48T | 36 | 34 | 62 | 87 | 956 | |
| | 2018.09- | 7DCT | F | L | SUV FWD 15E4E | | GCI82610 | Inner Joint | | 34 | 25 | 30.5 | 72.5 | 87 | |
| | 2018.09- | 7DCT | F | R | SUV FWD 15E4E | | GCI82611 | Inner Joint | | 34 | 25 | 30.5 | 72.5 | 106.5 | |
| 1.5 (125 kw) | 2024.04- | 7DCT | F | L/R | SUV FWD 15FDE, GS61 | | GCO83808 | Outer Joint | | 36 | 26 | 56 | 94.5 | 65 | M |
| | 2024.04- | 7DCT | F | L | SUV FWD 15FDE, GS61 | | GCI83975 | Inner Joint | | 27 | 26 | | 69 | 84.5 | |
| | 2024.04- | 7DCT | F | R | SUV FWD 15FDE, GS61 | | GCI83957 | Inner Joint | | 27 | 26 | 47 | | 119.5 | |
| 1.5 (190 kw) | 2020.12- | 10AT | F | L | SUV FWD 15E4E | | GDS84583 | Drive Shaft | 48T | 36 | 27 | 62 | 87 | 686 | |
| | 2020.12- | 10AT | F | R | SUV FWD 15E4E | | GDS84585 | Drive Shaft | 48T | 36 | 27 | 58.5 | 87 | 938 | |
| **MG S5** | | | | | | | | | | | | | | | |
| EV (125 kw) | 2025.03- | ET | R | L | SUV RWD TZ180XS0951 | | GDS57613 | Drive Shaft | | 38 | 27 | 66 | 94.5 | 702 | |
| | 2025.03- | ET | R | R | SUV RWD TZ180XS0951 | | GDS57614 | Drive Shaft | | 38 | 27 | 66 | 94.5 | 625 | |
| | 2025.03- | ET | R | L/R | SUV RWD TZ180XS0951 | | GCO83638 | Outer Joint | | 38 | 27 | 66 | 94.5 | 69 | M |
| | 2025.03- | ET | R | L | SUV RWD TZ180XS0951 | | GCI83768 | Inner Joint | | 27 | 27 | 35 | 68 | 111 | |
| | 2025.03- | ET | R | R | SUV RWD TZ180XS0951 | | GCI83769 | Inner Joint | | 27 | 27 | 47 | | 126.5 | |
| EV (170 kw) | 2025.03- | ET | R | L | SUV RWD TZ204XS1351 | | GDS57613 | Drive Shaft | | 38 | 27 | 66 | 94.5 | 702 | |
| | 2025.03- | ET | R | R | SUV RWD TZ204XS1351 | | GDS57614 | Drive Shaft | | 38 | 27 | 66 | 94.5 | 625 | |
| | 2025.03- | ET | R | L/R | SUV RWD TZ204XS1351 | | GCO83638 | Outer Joint | | 38 | 27 | 66 | 94.5 | 69 | M |
| | 2025.03- | ET | R | L | SUV RWD TZ204XS1351 | | GCI83768 | Inner Joint | | 27 | 27 | 35 | 68 | 111 | |
| | 2025.03- | ET | R | R | SUV RWD TZ204XS1351 | | GCI83769 | Inner Joint | | 27 | 27 | 47 | | 126.5 | |
| **MG TF** | | | | | | | | | | | | | | | |
| 1.6 (85 kw) | 2002.03-2009.12 | 5MT | R | L | Convertible RWD 16 K4F | | GDS51035 | Drive Shaft | 42T | 25 | 29 | 50 | 82 | 567.5 | |
| | 2002.03-2009.12 | 5MT | R | L/R | Convertible RWD 16 K4F | | GCO51010 | Outer Joint | | 25 | 22 | 50 | 82 | 56 | I |
| | 2002.03-2009.12 | 5MT | R | L/R | Convertible RWD 16 K4F | | GCO99242 | Outer Joint | 42T | 25 | 22 | 50 | 82 | 56 | I |
| 1.8 (88 kw) | 2002.03-2009.12 | CVT | R | L | Convertible RWD 18 K4F | | GDS51035 | Drive Shaft | 42T | 25 | 29 | 50 | 82 | 567.5 | |
| | 2002.03-2009.12 | CVT | R | L/R | Convertible RWD 18 K4F | | GCO51010 | Outer Joint | | 25 | 22 | 50 | 82 | 56 | I |
| | 2002.03-2009.12 | CVT | R | L/R | Convertible RWD 18 K4F | | GCO99242 | Outer Joint | 42T | 25 | 22 | 50 | 82 | 56 | I |
| 1.8 (100 kw) | 2002.03-2009.12 | MT | R | L | Convertible RWD 18 K4F | | GDS51035 | Drive Shaft | 42T | 25 | 29 | 50 | 82 | 567.5 | |
| 1.8 (118 kw) | 2002.03-2009.12 | MT | R | L | Convertible RWD 18 K4K | | GDS51035 | Drive Shaft | 42T | 25 | 29 | 50 | 82 | 567.5 | |
| | 2002.03-2009.12 | MT | R | L/R | Convertible RWD 18 K4K | | GCO99242 | Outer Joint | 42T | 25 | 22 | 50 | 82 | 56 | I |
| **MG ZR** | | | | | | | | | | | | | | | |
| 1.4 (76 kw) | 2001.06-2005.04 | 5MT | F | L/R | Hatchback FWD 14 K4F | | GCO23010 | Outer Joint | | 26 | 22 | 49 | 78.8 | 55 | I |
| | 2001.06-2005.04 | 5MT | F | L/R | Hatchback FWD 14 K4F | | GCO51003 | Outer Joint | 43T | 26 | 22 | 49 | 78.8 | 55 | I |
| | 2001.06-2005.04 | MT | F | L | Hatchback FWD 14 K4F | Trans. code:IB5 | GDS51001 | Drive Shaft | | 26 | 22 | 49 | 78.8 | 642 | |
| | 2001.06-2005.04 | MT | F | L | Hatchback FWD 14 K4F | Trans. code:R65 | GDS51021 | Drive Shaft | 43T | 26 | 23 | 49 | 78.8 | 632 | |
| | 2001.06-2005.04 | MT | F | L | Hatchback FWD 14 K4F | Chassis no. to:567941 | GDS51043 | Drive Shaft | 43T | 26 | 22 | 49 | 78.8 | 642 | |
| | 2001.06-2005.04 | MT | F | R | Hatchback FWD 14 K4F | Trans. code:IB5 | GDS51010 | Drive Shaft | | 26 | 22 | 49 | 78.8 | 877 | |
| | 2001.06-2005.04 | MT | F | R | Hatchback FWD 14 K4F | Trans. code:R65 | GDS51020 | Drive Shaft | 43T | 26 | 23 | 49 | 78.8 | 903 | |
| 1.8 (86 kw) | 2001.06-2005.04 | CVT | F | L | Hatchback FWD 18 K4F | | GDS51019 | Drive Shaft | 43T | 26 | 23 | 49 | 78.8 | 630.5 | |
| | 2001.06-2005.04 | CVT | F | R | Hatchback FWD 18 K4F | | GDS51018 | Drive Shaft | 43T | 26 | 23 | 49 | 78.8 | 887 | |
| | 2001.06-2005.04 | CVT | F | L/R | Hatchback FWD 18 K4F | | GCO51003 | Outer Joint | 43T | 26 | 22 | 49 | 78.8 | 55 | I |
| 1.8 (118 kw) | 2001.06-2005.04 | AT | F | L | Hatchback FWD 18 K4K | | GDS51019 | Drive Shaft | 43T | 26 | 23 | 49 | 78.8 | 630.5 | |
| | 2001.06-2005.04 | AT | F | R | Hatchback FWD 18 K4K | | GDS51018 | Drive Shaft | 43T | 26 | 23 | 49 | 78.8 | 887 | |
| | 2001.06-2005.04 | AT | F | L/R | Hatchback FWD 18 K4K | | GCO51003 | Outer Joint | 43T | 26 | 22 | 49 | 78.8 | 55 | I |
| | 2001.06-2005.04 | MT | F | L/R | Hatchback FWD 18 K4K | | GCO23010 | Outer Joint | | 26 | 22 | 49 | 78.8 | 55 | I |
| 2.0 (74 kw) | 2001.06-2005.04 | 5MT | F | L/R | Hatchback FWD 20 T2N | | GCO51005 | Outer Joint | | 26 | 32 | 49 | 78 | 68.5 | I |
| | 2001.06-2005.04 | 5MT | F | L/R | Hatchback FWD 20 T2N | | GCO51007 | Outer Joint | 43T | 26 | 32 | 49 | 78 | 68.5 | I |
| | 2001.06-2005.04 | MT | F | L/R | Hatchback FWD 20 T2N | | GCO51007 | Outer Joint | 43T | 26 | 32 | 49 | 78 | 68.5 | I |
| 2.0 (83 kw) | 2002.12-2005.04 | 5MT | F | L/R | Hatchback FWD 20 T2N | | GCO51005 | Outer Joint | | 26 | 32 | 49 | 78 | 68.5 | I |
| | 2002.12-2005.04 | 5MT | F | L/R | Hatchback FWD 20 T2N | | GCO51007 | Outer Joint | 43T | 26 | 32 | 49 | 78 | 68.5 | I |
| | 2002.12-2005.04 | | F | L/R | Hatchback FWD 20 T2N | | GCO51007 | Outer Joint | 43T | 26 | 32 | 49 | 78 | 68.5 | I |
| **MG ZS** | | | | | | | | | | | | | | | |
| 1.0 (82 kw) | 2017.10- | 6AT | F | L | SUV FWD 10E4E;G10DT | | GDS57653 | Drive Shaft | | 25 | 26 | 52 | 95 | 650 | |
| | 2017.10- | 6AT | F | R | SUV FWD 10E4E;G10DT | | GDS57652 | Drive Shaft | | 25 | 26 | 52 | 95 | 898 | |
| | 2017.10- | 6AT | F | L/R | SUV FWD 10E4E;G10DT | | GCO83664 | Outer Joint | | 25 | 22 | 52 | 95 | 56 | M |
| | 2017.10- | 6AT | F | L/R | SUV FWD 10E4E;G10DT | | GCI83793 | Inner Joint | | 26 | 22 | 31 | 73 | 84.5 | |
| 1.6 (79 kw) | 2003.07-2005.04 | | F | L/R | Hatchback FWD 16 K4F | | GCO51004 | Outer Joint | 43T | 26 | 22 | 55 | 77.5 | 55.5 | I |
| | 2003.07-2005.04 | | F | L/R | Saloon FWD 16 K4F | | GCO51004 | Outer Joint | 43T | 26 | 22 | 55 | 77.5 | 55.5 | I |
| 1.6 (82 kw) | 2001.11-2005.10 | 5MT | F | L/R | Hatchback FWD 16 K4F | | GCO51004 | Outer Joint | 43T | 26 | 22 | 55 | 77.5 | 55.5 | I |
| 1.8 (86 kw) | 2001.07-2005.04 | CVT/5MT | F | L/R | Saloon FWD 18 K4F | | GCO51004 | Outer Joint | 43T | 26 | 22 | 55 | 77.5 | 55.5 | I |
| | 2001.07-2005.04 | CVT/5MT | F | L/R | Saloon FWD 18 K4F | | GCO51018 | Outer Joint | | 26 | 22 | 55 | 77.5 | 55.5 | I |

| | YEAR | TRANSM. | F/R | L/R | BODY STYLE & DRIVE TYPE & ENGINE | REMARKS | G-AP Ref. | PRODUCT | ABS | Technical Specifications A | B | C | H | L | P |
|---|---|---|---|---|---|---|---|---|---|---|---|---|---|---|---|
| **MG** | | | | | | | | | | | | | | | |
| **MG ZS** | | | | | | | | | | | | | | | |
| 1.8 (86 kw) | 2001.07-2005.10 | CVT/5MT | F | L/R | Hatchback FWD 18 K4F | | GCO51004 | Outer Joint | 43T | 26 | 22 | 55 | 77.5 | 55.5 | I |
| | 2001.07-2005.10 | CVT/5MT | F | L/R | Hatchback FWD 18 K4F | | GCO51018 | Outer Joint | | 26 | 22 | 55 | 77.5 | 55.5 | I |
| 2.0 (74 kw) | 2004.01-2005.04 | MT | F | L/R | Saloon FWD 20 T2N | | GCO51008 | Outer Joint | | 26 | 32 | 55 | 78 | 68.5 | I |
| | 2004.01-2005.04 | | F | L/R | Saloon FWD 20 T2N | | GCO23002 | Outer Joint | 43T | 26 | 32 | 55 | 78 | 68.5 | I |
| | 2004.01-2005.10 | MT | F | L/R | Hatchback FWD 20 T2N | | GCO51008 | Outer Joint | | 26 | 32 | 55 | 78 | 68.5 | I |
| | 2004.01-2005.10 | | F | L/R | Hatchback FWD 20 T2N | | GCO23002 | Outer Joint | 43T | 26 | 32 | 55 | 78 | 68.5 | I |
| 2.0 (83 kw) | 2004.01-2005.04 | MT | F | L/R | Saloon FWD 20 T2N | | GCO51008 | Outer Joint | | 26 | 32 | 55 | 78 | 68.5 | I |
| | 2004.01-2005.04 | | F | L/R | Saloon FWD 20 T2N | | GCO23002 | Outer Joint | 43T | 26 | 32 | 55 | 78 | 68.5 | I |
| | 2004.01-2005.10 | MT | F | L/R | Hatchback FWD 20 T2N | | GCO51008 | Outer Joint | | 26 | 32 | 55 | 78 | 68.5 | I |
| | 2004.01-2005.10 | | F | L/R | Hatchback FWD 20 T2N | | GCO23002 | Outer Joint | 43T | 26 | 32 | 55 | 78 | 68.5 | I |
| 2.5 (130 kw) | 2001.07-2005.04 | | F | L/R | Saloon FWD 25 K4F | | GCO23002 | Outer Joint | 43T | 26 | 32 | 55 | 78 | 68.5 | I |
| | 2001.07-2005.10 | | F | L/R | Hatchback FWD 25 K4F | | GCO23002 | Outer Joint | 43T | 26 | 32 | 55 | 78 | 68.5 | I |
| EV (105 kw) | 2019.03- | ET | F | L | SUV FWD TZ204XS105K02;TZ204XS1481 | Model year to:2021 | GDS56375 | Drive Shaft | | 36 | 27 | 59.5 | 94.5 | 693 | |
| | 2019.03- | ET | F | L | SUV FWD TZ204XS105K02;TZ204XS1481 | Model year from:2021 | GDS56561 | Drive Shaft | | 36 | 27 | 59.5 | 94.5 | 618 | |
| | 2019.03- | ET | F | R | SUV FWD TZ204XS105K02;TZ204XS1481 | Model year to:2021 | GDS56376 | Drive Shaft | | 36 | 27 | 59.5 | 94.5 | 884 | |
| | 2019.03- | ET | F | R | SUV FWD TZ204XS105K02;TZ204XS1481 | Model year from:2021 | GDS56560 | Drive Shaft | | 36 | 27 | 59.5 | 94.5 | 572 | |
| | 2019.03- | ET | F | L/R | SUV FWD TZ204XS105K02;TZ204XS1481 | Model year to:2021 | GCO83270 | Outer Joint | | 36 | 25 | 59.5 | 94.5 | 61.5 | M |
| | 2019.03- | ET | F | L/R | SUV FWD TZ204XS105K02;TZ204XS1481 | Model year from:2021 | GCO83341 | Outer Joint | | 36 | 28 | 59.5 | 94.5 | 65 | M |
| | 2019.03- | ET | F | L | SUV FWD TZ204XS105K02;TZ204XS1481 | Model year to:2021 | GCI83274 | Inner Joint | | 27 | 32 | 34.7 | 100 | 86 | |
| | 2019.03- | ET | F | L | SUV FWD TZ204XS105K02;TZ204XS1481 | Model year from:2021 | GCI83373 | Inner Joint | | 27 | 28 | 45 | 57 | 113 | |
| | 2019.03- | ET | F | R | SUV FWD TZ204XS105K02;TZ204XS1481 | Model year to:2021 | GCI83275 | Inner Joint | | 27 | 25 | 34.7 | 111 | 86.5 | |
| | 2019.03- | ET | F | R | SUV FWD TZ204XS105K02;TZ204XS1481 | Model year from:2021 | GCI83372 | Inner Joint | | 27 | 28 | 45 | | 124.5 | |
| EV (115 kw) | 2021.11- | ET | F | L | SUV FWD TZ204XS1152 | | GDS56561 | Drive Shaft | | 36 | 27 | 59.5 | 94.5 | 618 | |
| | 2021.11- | ET | F | R | SUV FWD TZ204XS1152 | | GDS56560 | Drive Shaft | | 36 | 27 | 59.5 | 94.5 | 572 | |
| | 2021.11- | ET | F | L/R | SUV FWD TZ204XS1152 | | GCO83341 | Outer Joint | | 36 | 28 | 59.5 | 94.5 | 65 | M |
| | 2021.11- | ET | F | L | SUV FWD TZ204XS1152 | | GCI83373 | Inner Joint | | 27 | 28 | 45 | 57 | 113 | |
| | 2021.11- | ET | F | R | SUV FWD TZ204XS1152 | | GCI83372 | Inner Joint | | 27 | 28 | 45 | | 124.5 | |
| EV (130 kw) | 2021.11- | ET | F | L | SUV FWD TZ204XS105K02, TZ204XS1152 | | GDS56561 | Drive Shaft | | 36 | 27 | 59.5 | 94.5 | 618 | |
| | 2021.11- | ET | F | R | SUV FWD TZ204XS105K02, TZ204XS1152 | | GDS56560 | Drive Shaft | | 36 | 27 | 59.5 | 94.5 | 572 | |
| | 2021.11- | ET | F | L/R | SUV FWD TZ204XS105K02, TZ204XS1152 | | GCO83341 | Outer Joint | | 36 | 28 | 59.5 | 94.5 | 65 | M |
| | 2021.11- | ET | F | L | SUV FWD TZ204XS105K02, TZ204XS1152 | | GCI83373 | Inner Joint | | 27 | 28 | 45 | 57 | 113 | |
| | 2021.11- | ET | F | R | SUV FWD TZ204XS105K02, TZ204XS1152 | | GCI83372 | Inner Joint | | 27 | 28 | 45 | | 124.5 | |
| **MG ZT** | | | | | | | | | | | | | | | |
| 1.8 (88 kw) | 2003.01-2005.07 | AT/MT | F | L/R | Saloon FWD 18 K4F | | GCO51011 | Outer Joint | | 28 | 23 | 57.8 | 83.5 | 62 | M |
| 1.8 (118 kw) | 2003.01-2005.07 | AT/MT | F | L/R | Saloon FWD 18 K4G | | GCO99151 | Outer Joint | | 28 | 24 | 57.8 | 83.5 | 62 | M |
| 2.0 (85 kw) | 2002.06-2003.09 | AT/MT | F | L/R | Saloon FWD 204D2 | | GCO99151 | Outer Joint | | 28 | 24 | 57.8 | 83.5 | 62 | M |
| 2.0 (96 kw) | 2002.11-2005.07 | AT/MT | F | L/R | Saloon FWD 204D2 | | GCO99151 | Outer Joint | | 28 | 24 | 57.8 | 83.5 | 62 | M |
| 2.5 (118 kw) | 2001.06-2005.07 | AT/MT | F | L/R | Saloon FWD 25 K4F | | GCO99151 | Outer Joint | | 28 | 24 | 57.8 | 83.5 | 62 | M |
| 2.5 (130 kw) | 2002.02-2005.10 | AT/MT | F | L/R | Saloon FWD 25 K4F | | GCO99151 | Outer Joint | | 28 | 24 | 57.8 | 83.5 | 62 | M |
| 2.5 (140 kw) | 2001.06-2005.07 | AT/MT | F | L/R | Saloon FWD 25 K4F | | GCO99151 | Outer Joint | | 28 | 24 | 57.8 | 83.5 | 62 | M |
| **MG ZT-T** | | | | | | | | | | | | | | | |
| 1.8 (88 kw) | 2003.01-2005.07 | AT/MT | F | L/R | Estate FWD 18 K4F | | GCO51011 | Outer Joint | | 28 | 23 | 57.8 | 83.5 | 62 | M |
| 1.8 (118 kw) | 2003.01-2005.07 | AT/MT | F | L/R | Estate FWD 18 K4G | | GCO99151 | Outer Joint | | 28 | 24 | 57.8 | 83.5 | 62 | M |
| 2.0 (85 kw) | 2002.06-2005.07 | AT/MT | F | L/R | Estate FWD 204D2 | | GCO99151 | Outer Joint | | 28 | 24 | 57.8 | 83.5 | 62 | M |
| 2.0 (96 kw) | 2002.11-2005.07 | AT/MT | F | L/R | Estate FWD 204D2 | | GCO99151 | Outer Joint | | 28 | 24 | 57.8 | 83.5 | 62 | M |
| 2.5 (118 kw) | 2001.10-2005.07 | AT/MT | F | L/R | Estate FWD 25 K4F | | GCO99151 | Outer Joint | | 28 | 24 | 57.8 | 83.5 | 62 | M |
| 2.5 (130 kw) | 2002.02-2005.10 | AT/MT | F | L/R | Estate FWD 25 K4F | | GCO99151 | Outer Joint | | 28 | 24 | 57.8 | 83.5 | 62 | M |
| 2.5 (140 kw) | 2001.10-2005.07 | AT/MT | F | L/R | Estate FWD 25 K4F | | GCO99151 | Outer Joint | | 28 | 24 | 57.8 | 83.5 | 62 | M |
| **MG (SAIC)** | | | | | | | | | | | | | | | |
| **MG 3** | | | | | | | | | | | | | | | |
| 1.3 (68 kw) | 2012.11- | 5MT | F | L/R | Hatchback FWD 13S4F | Model year from:2017,Model year to:2018 | GCO83201 | Outer Joint | | 25 | 23 | 53.6 | 80 | 56 | I |
| 1.5 (86 kw) | 2017.08- | 4AMT | F | L | Hatchback FWD 15S4C | Model year to:2018 | GDS83900 | Drive Shaft | | 25 | 23 | 53.6 | 80 | 647 | |
| | 2017.08- | 4AMT | F | R | Hatchback FWD 15S4C | Model year to:2018 | GDS83802 | Drive Shaft | | 25 | 23 | 53.6 | 80 | 893 | |
| | 2017.08- | 4AMT | F | L/R | Hatchback FWD 15S4C | Model year to:2018 | GCO83201 | Outer Joint | | 25 | 23 | 53.6 | 80 | 56 | I |
| | 2017.08- | 4AMT | F | L/R | Hatchback FWD 15S4C | Model year to:2018 | GCI83193 | Inner Joint | | 23 | 22 | 34 | 56.5 | 110 | |
| **MG 5** | | | | | | | | | | | | | | | |
| 1.5 (80 kw) | 2012.03-2017.12 | 4AT | F | L | Hatchback FWD 15S4U | Model year to:2015 | GDS82192 | Drive Shaft | 48T | 25 | 22 | 52 | 90.5 | 654 | |
| | 2012.03-2017.12 | 4AT | F | L | Hatchback FWD 15S4U | For model year:2015 | GDS82200 | Drive Shaft | 48T | 25 | 23 | 52 | 90.5 | 656 | |
| | 2012.03-2017.12 | 4AT | F | R | Hatchback FWD 15S4U | Model year to:2015 | GDS82193 | Drive Shaft | 48T | 25 | 22 | 52 | 90.5 | 961 | |
| | 2012.03-2017.12 | 4AT | F | R | Hatchback FWD 15S4U | For model year:2015 | GDS82201 | Drive Shaft | 48T | 25 | 23 | 52 | 90.5 | 956 | |
| | 2012.03-2017.12 | 4AT | F | L/R | Hatchback FWD 15S4U | Transmission:5MT,Model year to:2014;Transmission:4ATC,Model year to:2015;Bellows Material:Neoprene | GCO81697 | Outer Joint | 48T | 25 | 22 | 52 | 90.5 | 58 | M |
| | 2012.03-2017.12 | 5MT | F | L | Hatchback FWD 15S4U | Model year to:2015 | GDS82194 | Drive Shaft | 48T | 25 | 25 | 52 | 90.5 | 672 | |
| | 2012.03-2017.12 | 5MT | F | R | Hatchback FWD 15S4U | Model year to:2015 | GDS82195 | Drive Shaft | 48T | 25 | 25 | 52 | 90.5 | 942 | |
| | 2012.03-2017.12 | 5MT | F | L/R | Hatchback FWD 15S4U | Model year to:2015 | GCO81695 | Outer Joint | 48T | 25 | 23 | 52 | 90.5 | 56 | I |
| | 2012.03-2017.12 | 5MT | F | L | Hatchback FWD 15S4U | Model year to:2015 | GCI81667 | Inner Joint | | 22 | 22 | 35 | 55.5 | 102.5 | |

| | YEAR | TRANSM. | F/R | L/R | BODY STYLE & DRIVE TYPE & ENGINE | REMARKS | G-AP Ref. | PRODUCT | ABS | Technical Specifications A | B | C | H | L | P |
|---|---|---|---|---|---|---|---|---|---|---|---|---|---|---|---|
| **MG (SAIC)** | | | | | | | | | | | | | | | |
| **MG 5** | | | | | | | | | | | | | | | |
| 1.5 (80 kw) | 2012.03-2017.12 | 5MT | F | R | Hatchback FWD 15S4U | Model year to:2015 | GCI81666 | Inner Joint | | 22 | 22 | 35 | 55.5 | 102.5 | |
| 1.5 (88 kw) | 2020.11- | 5MT | F | L | Saloon FWD 15S4C | | GDS57654 | Drive Shaft | | 36 | 22 | 59.5 | 94 | 673 | |
| | 2020.11- | 5MT | F | R | Saloon FWD 15S4C | | GDS57655 | Drive Shaft | | 36 | 22 | 59.5 | 94 | 937 | |
| | 2020.11- | 5MT | F | L/R | Saloon FWD 15S4C | | GCI83796 | Inner Joint | | 22 | 22 | 35 | 56 | 103 | |
| | 2020.11- | CVT | F | L | Saloon FWD 15S4C | | GDS84149 | Drive Shaft | | 36 | 25 | 59.5 | 94 | 664 | |
| | 2020.11- | CVT | F | R | Saloon FWD 15S4C | Model year to:2023 | GDS84148 | Drive Shaft | | 36 | 25 | 59.5 | 94 | 947 | |
| | 2020.11- | CVT | F | L/R | Saloon FWD 15S4C | | GCO82706 | Outer Joint | | 36 | 22 | 59.5 | 94 | 55 | I |
| | 2020.11- | CVT | F | L/R | Saloon FWD 15S4C | | GCI82608 | Inner Joint | | 25 | 22 | 41 | 63 | 107 | |
| 1.5 (95 kw) | 2012.03-2017.12 | 6AT | F | L | Hatchback FWD 15S4G | | GDS57920 | Drive Shaft | 48T | 30 | 26 | 60.6 | 91 | 634 | |
| | 2012.03-2017.12 | 6AT | F | R | Hatchback FWD 15S4G | | GDS57986 | Drive Shaft | 48T | 30 | 26 | 60.6 | 91 | 954 | |
| | 2012.03-2017.12 | 6AT | F | L/R | Hatchback FWD 15S4G | | GCO83787 | Outer Joint | 48T | 30 | 24 | 60.6 | 91 | 63.5 | M |
| | 2012.03-2017.12 | 6AT | F | L | Hatchback FWD 15S4G | | GCI83925 | Inner Joint | | 26 | 24 | 31 | 73 | 92 | |
| | 2012.03-2017.12 | 6AT | F | R | Hatchback FWD 15S4G | | GCI83976 | Inner Joint | | 26 | 24 | 31 | 424 | 84.5 | |
| | 2023.05- | CVT | F | R | Saloon FWD 15FCD | | GDS84148 | Drive Shaft | | 36 | 25 | 59.5 | 94 | 947 | |
| | 2023.05- | CVT | F | L/R | Saloon FWD 15FCD | | GCO82706 | Outer Joint | | 36 | 22 | 59.5 | 94 | 55 | I |
| | 2023.05- | CVT | F | R | Saloon FWD 15FCD | | GCI82608 | Inner Joint | | 25 | 22 | 41 | 63 | 107 | |
| 1.5 (127 kw) | 2020.11- | 7DCT | F | L | Saloon FWD 15C4E | Model year to:2022 | GDS84616 | Drive Shaft | | 36 | 27 | 62 | 94.5 | 650 | |
| | 2020.11- | 7DCT | F | R | Saloon FWD 15C4E | Model year to:2022 | GDS84615 | Drive Shaft | | 36 | 27 | 62 | 94.5 | 586 | |
| | 2020.11- | 7DCT | F | L/R | Saloon FWD 15C4E | Model year to:2022 | GCO82903 | Outer Joint | | 36 | 35 | 62 | 94.5 | 63.5 | I |
| | 2020.11- | 7DCT | F | L | Saloon FWD 15C4E | Model year to:2022 | GCI82893 | Inner Joint | | 27 | 34 | 33 | 69 | 83.5 | |
| | 2020.11- | 7DCT | F | R | Saloon FWD 15C4E | Model year to:2022 | GCI82892 | Inner Joint | | 27 | 34 | 47 | | 117.5 | |
| | 2020.11- | 7DCT | F | R | Saloon FWD 15C4E | | GDS87104 | Intermediate Shaft | | 27 | 27 | | | 380 | |
| 1.5 (133 kw) | 2022.04- | 7DCT | F | R | Saloon FWD 15C4E | | GDS87104 | Intermediate Shaft | | 27 | 27 | | | 380 | |
| | 2023.07- | 7DCT | F | R | Saloon FWD 15C4E | | GDS87104 | Intermediate Shaft | | 27 | 27 | | | 380 | |
| **MG 6** | | | | | | | | | | | | | | | |
| 1.5 (124 kw) | 2017.11-2021.12 | 6MT | F | L | Hatchback FWD 15E4E | | GDS57629 | Drive Shaft | | 36 | 27 | 59.5 | 94.5 | 655 | |
| | 2017.11-2021.12 | 6MT | F | L | Hatchback FWD 15E4E | | GCI83777 | Inner Joint | | 27 | 24 | 45 | 57.5 | 110 | |
| | 2017.11-2021.12 | 6MT | F | R | Hatchback FWD 15E4E | Date to:2020.07 | GDS87088 | Intermediate Shaft | | 27 | 27 | | | 404 | |
| | 2017.11-2021.12 | 6MT/7DCT | F | R | Hatchback FWD 15E4E | Model year to:2020 | GDS56434 | Drive Shaft | | 36 | 27 | 59.5 | 94.5 | 587 | |
| | 2017.11-2021.12 | 6MT/7DCT | F | L/R | Hatchback FWD 15E4E | Model year to:2020 | GCO83292 | Outer Joint | | 36 | 32 | 59.5 | 94.5 | 58.5 | I |
| | 2017.11-2021.12 | 6MT/7DCT | F | R | Hatchback FWD 15E4E | Model year to:2020 | GCI82644 | Inner Joint | | 27 | 24 | 48.5 | | 117.5 | |
| | 2017.11-2021.12 | 7DCT | F | L | Hatchback FWD 15E4E | Model year to:2020 | GDS56744 | Drive Shaft | | 36 | 34 | 59.5 | 94.5 | 650 | |
| | 2017.11-2021.12 | 7DCT | F | L | Hatchback FWD 15E4E | Model year to:2020 | GCI82612 | Inner Joint | | 34 | 24 | 30.5 | 72 | 83 | |
| | 2017.11-2021.12 | 7DCT | F | R | Hatchback FWD 15E4E | Date to:2020.07 | GDS87089 | Intermediate Shaft | | 27 | 34 | | | 384 | |
| 1.5 (133 kw) | 2020.07- | 6MT | F | L | Hatchback FWD 15C4E | Model year to:2021 | GDS57629 | Drive Shaft | | 36 | 27 | 59.5 | 94.5 | 655 | |
| | 2020.07- | 6MT | F | R | Hatchback FWD 15C4E | Model year to:2021 | GDS56434 | Drive Shaft | | 36 | 27 | 59.5 | 94.5 | 587 | |
| | 2020.07- | 6MT | F | L/R | Hatchback FWD 15C4E | Model year to:2021 | GCO83292 | Outer Joint | | 36 | 32 | 59.5 | 94.5 | 58.5 | I |
| | 2020.07- | 6MT | F | L | Hatchback FWD 15C4E | Model year to:2021 | GCI83777 | Inner Joint | | 27 | 24 | 45 | 57.5 | 110 | |
| | 2020.07- | 6MT | F | R | Hatchback FWD 15C4E | Model year to:2021 | GCI82644 | Inner Joint | | 27 | 24 | 48.5 | | 117.5 | |
| | 2020.07- | 6MT | F | R | Hatchback FWD 15C4E | | GDS87088 | Intermediate Shaft | | 27 | 27 | | | 404 | |
| | 2020.07- | 7DCT | F | R | Hatchback FWD 15C4E | Data to:2025.04 | GDS87104 | Intermediate Shaft | | 27 | 27 | | | 380 | |
| **MG 6 Pro** | | | | | | | | | | | | | | | |
| 1.5 (133 kw) | 2021.08- | 7DCT | F | L | Hatchback FWD 15C4E | | GDS57624 | Drive Shaft | | 36 | 27 | 62 | 94.5 | 648 | |
| | 2021.08- | 7DCT | F | R | Hatchback FWD 15C4E | | GDS84615 | Drive Shaft | | 36 | 27 | 62 | 94.5 | 586 | |
| | 2021.08- | 7DCT | F | R | Hatchback FWD 15C4E | | GCO82903 | Outer Joint | | 36 | 35 | 62 | 94.5 | 63.5 | I |
| | 2021.08- | 7DCT | F | L | Hatchback FWD 15C4E | | GCI82893 | Inner Joint | | 27 | 34 | 33 | 69 | 83.5 | |
| | 2021.08- | 7DCT | F | R | Hatchback FWD 15C4E | | GCI82892 | Inner Joint | | 27 | 34 | 47 | | 117.5 | |
| **MG 7** | | | | | | | | | | | | | | | |
| 1.5 (138 kw) | 2023.03- | 7DCT | F | L | Hatchback FWD 15FDE | | GDS57985 | Drive Shaft | | 36 | 27 | 56 | 94.5 | 654 | |
| | 2023.03- | 7DCT | F | R | Hatchback FWD 15FDE | | GDS57995 | Drive Shaft | | 36 | 27 | 56 | 94.5 | 583 | |
| | 2023.03- | 7DCT | F | L/R | Hatchback FWD 15FDE | | GCO83808 | Outer Joint | | 36 | 26 | 56 | 94.5 | 65 | M |
| | 2023.03- | 7DCT | F | L | Hatchback FWD 15FDE | | GCI83975 | Inner Joint | | 27 | 26 | | 69 | 84.5 | |
| | 2023.03- | 7DCT | F | R | Hatchback FWD 15FDE | | GCI83957 | Inner Joint | | 27 | 26 | 47 | | 119.5 | |
| | 2023.03- | 7DCT | F | R | Hatchback FWD 15FDE | | GDS87124 | Intermediate Shaft | | 27 | 27 | | | 416 | |
| 2.0 (192 kw) | 2023.03- | 9AT | F | L | Hatchback FWD 20A4E | | GDS57948 | Drive Shaft | | 36 | 31 | 56 | 94.5 | 639 | |
| | 2023.03- | 9AT | F | R | Hatchback FWD 20A4E | for Trophy | GDS57947 | Drive Shaft | | 36 | 27 | 56 | 94.5 | 675 | |
| | 2023.03- | 9AT | F | R | Hatchback FWD 20A4E | not for Trophy | GDS57949 | Drive Shaft | | 36 | 27 | 56 | 94.5 | 600 | |
| | 2023.03- | 9AT | F | L/R | Hatchback FWD 20A4E | | GCO83808 | Outer Joint | | 36 | 26 | 56 | 94.5 | 65 | M |
| | 2023.03- | 9AT | F | L | Hatchback FWD 20A4E | | GCI83956 | Inner Joint | | 31 | 26 | 36.2 | 52 | 105.5 | |
| | 2023.03- | 9AT | F | R | Hatchback FWD 20A4E | for Trophy | GCI83955 | Inner Joint | | 27 | 26 | 47 | | 124 | |
| | 2023.03- | 9AT | F | R | Hatchback FWD 20A4E | not for Trophy | GCI83957 | Inner Joint | | 27 | 26 | 47 | | 119.5 | |
| **MG GS** | | | | | | | | | | | | | | | |
| 1.5 (124 kw) | 2015.03- | 7DCT | F | R | SUV 4WD 15E4E, LFV | Engine code:15E4E | GDS57642 | Drive Shaft | 48T | 36 | 27 | 62 | 87 | 610 | |
| | 2015.03- | 7DCT | F | R | SUV 4WD 15E4E, LFV | Engine code:15E4E | GCO82058 | Outer Joint | 48T | 36 | 26 | 62 | 87 | 64 | M |
| | 2015.03- | 7DCT | F | R | SUV 4WD 15E4E, LFV | Engine code:15E4E | GCI83787 | Inner Joint | | 27 | 26 | 47 | | 123.5 | |

| | YEAR | TRANSM. | F/R | L/R | BODY STYLE & DRIVE TYPE & ENGINE | REMARKS | G-AP Ref. | PRODUCT | ABS | Technical Specifications A | B | C | H | L | P |
|---|---|---|---|---|---|---|---|---|---|---|---|---|---|---|---|
| **MG (SAIC)** | | | | | | | | | | | | | | | |
| **MG GS** | | | | | | | | | | | | | | | |
| 1.5 (124 kw) | 2015.03-2020.12 | 7DCT | F | R | SUV FWD 15E4E, LFV | Engine code:15E4E | GDS57642 | Drive Shaft | 48T | 36 | 27 | 62 | 87 | 610 | |
| | 2015.03-2020.12 | 7DCT | F | L/R | SUV FWD 15E4E, LFV | Engine code:15E4E | GCO82058 | Outer Joint | 48T | 36 | 26 | 62 | 87 | 64 | M |
| | 2015.03-2020.12 | 7DCT | F | R | SUV FWD 15E4E, LFV | Engine code:15E4E | GCI83787 | Inner Joint | | 27 | 26 | 47 | | 123.5 | |
| **MG GT** | | | | | | | | | | | | | | | |
| 1.5 (80 kw) | 2016.06- | 4AT | F | L | Saloon FWD 15S4C | Model year to:2018 | GDS82200 | Drive Shaft | 48T | 25 | 23 | 52 | 90.5 | 656 | |
| | 2016.06- | 4AT | F | R | Saloon FWD 15S4C | Model year to:2018 | GDS82201 | Drive Shaft | 48T | 25 | 23 | 52 | 90.5 | 956 | |
| | 2016.06- | 5MT | F | L | Saloon FWD 15S4C | Model year to:2018 | GDS82194 | Drive Shaft | 48T | 25 | 25 | 52 | 90.5 | 672 | |
| | 2016.06- | 5MT | F | R | Saloon FWD 15S4C | Model year to:2018 | GDS82195 | Drive Shaft | 48T | 25 | 25 | 52 | 90.5 | 942 | |
| | 2016.06- | 5MT | F | L/R | Saloon FWD 15S4C | Model year to:2018 | GCO81695 | Outer Joint | 48T | 25 | 23 | 52 | 90.5 | 56 | I |
| | 2016.06- | 5MT | F | L | Saloon FWD 15S4C | Model year to:2018 | GCI81666 | Inner Joint | | 22 | 22 | 35 | 55.5 | 102.5 | |
| | 2016.06- | 5MT | F | R | Saloon FWD 15S4C | Model year to:2018 | GCI81667 | Inner Joint | | 22 | 22 | 35 | 55.5 | 102.5 | |
| 1.5 (95 kw) | 2014.11-2020.12 | 6AT | F | L | Saloon FWD 15S4G | | GDS57920 | Drive Shaft | 48T | 30 | 26 | 60.6 | 91 | 634 | |
| | 2014.11-2020.12 | 6AT | F | R | Saloon FWD 15S4G | | GDS57986 | Drive Shaft | 48T | 30 | 26 | 60.6 | 91 | 954 | |
| | 2014.11-2020.12 | 6AT | F | L/R | Saloon FWD 15S4G | | GCO83787 | Outer Joint | 48T | 30 | 24 | 60.6 | 91 | 63.5 | M |
| | 2014.11-2020.12 | 6AT | F | L | Saloon FWD 15S4G | | GCI83925 | Inner Joint | | 26 | 24 | 31 | 73 | 92 | |
| | 2014.11-2020.12 | 6AT | F | R | Saloon FWD 15S4G | | GCI83976 | Inner Joint | | 26 | 24 | 31 | 424 | 84.5 | |
| **MG HS** | | | | | | | | | | | | | | | |
| 1.5 (124 kw) | 2018.09- | 7DCT | F | L | SUV FWD 15E4E | for Manufacuturer:QC | GDS84153 | Drive Shaft | 48T | 36 | 34 | 62 | 87 | 632 | |
| | 2018.09- | 7DCT | F | L | SUV FWD 15E4E | for Manufacuturer:SDS | GDS84155 | Drive Shaft | 48T | 36 | 34 | 62 | 87 | 633 | |
| | 2018.09- | 7DCT | F | R | SUV FWD 15E4E | for Manufacuturer:SDS | GDS84147 | Drive Shaft | 48T | 36 | 27 | 62 | 87 | 611 | |
| | 2018.09- | 7DCT | F | R | SUV FWD 15E4E | for Manufacuturer:QC | GDS84154 | Drive Shaft | 48T | 36 | 34 | 62 | 87 | 956 | |
| | 2018.09- | 7DCT | F | L/R | SUV FWD 15E4E | | GCO82058 | Outer Joint | 48T | 36 | 26 | 62 | 87 | 64 | M |
| | 2018.09- | 7DCT | F | L | SUV FWD 15E4E | TJ | GCI82610 | Inner Joint | | 34 | 25 | 30.5 | 72.5 | 87 | |
| | 2018.09- | 7DCT | F | L | SUV FWD 15E4E | PTJ | GCI82612 | Inner Joint | | 34 | 24 | 30.5 | 72 | 83 | |
| | 2018.09- | 7DCT | F | R | SUV FWD 15E4E | TJ | GCI82611 | Inner Joint | | 34 | 25 | 30.5 | 72.5 | 106.5 | |
| | 2018.09- | 7DCT | F | R | SUV FWD 15E4E | PTJ | GCI82644 | Inner Joint | | 27 | 24 | 48.5 | | 117.5 | |
| | 2018.09- | 7DCT | F | R | SUV FWD 15E4E | Model year for:2019 | GDS87089 | Intermediate Shaft | | 27 | 34 | | | 384 | |
| 2.0 (170 kw) | 2018.09- | 6DCT | F | L | SUV 4WD 20L4E | | GDS57625 | Drive Shaft | 48T | 36 | 27 | 62 | 87 | 637 | |
| | 2018.09- | 6DCT | F | R | SUV 4WD 20L4E | | GDS57645 | Drive Shaft | 48T | 36 | 27 | 62 | 87 | 585 | |
| | 2018.09- | 6DCT | F | L/R | SUV 4WD 20L4E | | GCO82058 | Outer Joint | 48T | 36 | 26 | 62 | 87 | 64 | M |
| | 2018.09- | 6DCT | F | L | SUV 4WD 20L4E | | GCI83773 | Inner Joint | | 27 | 26 | 34.7 | 65 | 107.5 | |
| | 2018.09- | 6DCT | F | R | SUV 4WD 20L4E | | GCI83789 | Inner Joint | | 27 | 26 | 47 | | 119.5 | |
| | 2018.09- | 6DCT | F | L | SUV FWD 20L4E | | GDS57625 | Drive Shaft | 48T | 36 | 27 | 62 | 87 | 637 | |
| | 2018.09- | 6DCT | F | R | SUV FWD 20L4E | | GDS57645 | Drive Shaft | 48T | 36 | 27 | 62 | 87 | 585 | |
| | 2018.09- | 6DCT | F | L/R | SUV FWD 20L4E | | GCO82058 | Outer Joint | 48T | 36 | 26 | 62 | 87 | 64 | M |
| | 2018.09- | 6DCT | F | L | SUV FWD 20L4E | | GCI83773 | Inner Joint | | 27 | 26 | 34.7 | 65 | 107.5 | |
| | 2018.09- | 6DCT | F | R | SUV FWD 20L4E | | GCI83789 | Inner Joint | | 27 | 26 | 47 | | 119.5 | |
| **MG ZS** | | | | | | | | | | | | | | | |
| 1.5 (88 kw) | 2017.03- | 4AT | F | L | SUV FWD 15S4C | | GDS84152 | Drive Shaft | | 25 | 23 | 52 | 95 | 666 | |
| | 2017.03- | 4AT | F | R | SUV FWD 15S4C | | GDS84151 | Drive Shaft | | 25 | 23 | 52 | 95 | 914 | |
| | 2017.03- | 4AT | F | L/R | SUV FWD 15S4C | | GCO82707 | Outer Joint | | 25 | 22 | 52 | 95 | 56 | M |
| | 2017.03- | 4AT/5MT | F | L/R | SUV FWD 15S4C | | GCI82609 | Inner Joint | | 23 | 22 | 34 | 56.5 | 110 | |
| | 2017.03- | CVT | F | L | SUV FWD 15S4C | | GDS58258 | Drive Shaft | | 25 | 25 | 52 | 95 | 658 | |
| | 2017.03- | CVT | F | R | SUV FWD 15S4C | | GDS58257 | Drive Shaft | | 25 | 25 | 52 | 95 | 909 | |
| | 2017.03- | CVT | F | L/R | SUV FWD 15S4C | | GCO83871 | Outer Joint | | 25 | 22 | 52 | 95 | 56 | I |
| | 2017.03- | CVT | F | L/R | SUV FWD 15S4C | | GCI82608 | Inner Joint | | 25 | 22 | 41 | 63 | 107 | |
| EV (110 kw) | 2019.03- | ET | F | L | SUV FWD TZ204XS105K02 | Model year to:2021 | GDS56375 | Drive Shaft | | 36 | 27 | 59.5 | 94.5 | 693 | |
| | 2019.03- | ET | F | R | SUV FWD TZ204XS105K02 | Model year to:2021 | GDS56376 | Drive Shaft | | 36 | 27 | 59.5 | 94.5 | 884 | |
| | 2019.03- | ET | F | L/R | SUV FWD TZ204XS105K02 | Model year to:2021 | GCO83270 | Outer Joint | | 36 | 25 | 59.5 | 94.5 | 61.5 | M |
| | 2019.03- | ET | F | L | SUV FWD TZ204XS105K02 | Model year to:2021 | GCI83274 | Inner Joint | | 27 | 32 | 34.7 | 100 | 86 | |
| | 2019.03- | ET | F | R | SUV FWD TZ204XS105K02 | Model year to:2021 | GCI83275 | Inner Joint | | 27 | 25 | 34.7 | 111 | 86.5 | |
| **Mulan** | | | | | | | | | | | | | | | |
| EV (125 kw) | 2022.09-2023.08 | ET | R | L | Hatchback RWD TZ180XS0951 | | GDS56399 | Drive Shaft | | 36 | 34 | 61 | 94.5 | 689 | |
| | 2022.09-2023.08 | ET | R | R | Hatchback RWD TZ180XS0951 | | GDS56398 | Drive Shaft | | 36 | 27 | 61 | 94.5 | 644 | |
| | 2022.09-2023.08 | ET | R | L/R | Hatchback RWD TZ180XS0951 | | GCO83280 | Outer Joint | | 36 | 24 | 61 | 94.5 | 62 | M |
| | 2022.09-2023.08 | ET | R | L | Hatchback RWD TZ180XS0951 | | GCI83289 | Inner Joint | | 34 | 23 | 35 | 58.5 | 107 | |
| | 2022.09-2023.08 | ET | R | R | Hatchback RWD TZ180XS0951 | | GCI83288 | Inner Joint | | 27 | 23 | 47 | | 119 | |
| EV (150 kw) | 2022.09-2023.08 | ET | R | L | Hatchback RWD TZ180XS0951 | | GDS56399 | Drive Shaft | | 36 | 34 | 61 | 94.5 | 689 | |
| | 2022.09-2023.08 | ET | R | R | Hatchback RWD TZ180XS0951 | | GDS56398 | Drive Shaft | | 36 | 27 | 61 | 94.5 | 644 | |
| | 2022.09-2023.08 | ET | R | L/R | Hatchback RWD TZ180XS0951 | | GCO83280 | Outer Joint | | 36 | 24 | 61 | 94.5 | 62 | M |
| | 2022.09-2023.08 | ET | R | L | Hatchback RWD TZ180XS0951 | | GCI83289 | Inner Joint | | 34 | 23 | 35 | 58.5 | 107 | |
| | 2022.09-2023.08 | ET | R | R | Hatchback RWD TZ180XS0951 | | GCI83288 | Inner Joint | | 27 | 23 | 47 | | 119 | |
| EV (315 kw) | 2022.09-2023.08 | ET | F | L | Hatchback 4WD TZ180XS0951/TZ204XS1351 | | GDS57697 | Drive Shaft | | 36 | 34 | 59.5 | 94.5 | 709 | |
| | 2022.09-2023.08 | ET | F | R | Hatchback 4WD TZ180XS0951/TZ204XS1351 | | GDS57698 | Drive Shaft | | 36 | 27 | 59.5 | 94.5 | 644 | |
| | 2022.09-2023.08 | ET | F | L/R | Hatchback 4WD TZ180XS0951/TZ204XS1351 | | GCO83695 | Outer Joint | | 36 | 28 | 59.5 | 94.5 | 69 | I |

| | YEAR | TRANSM. | F/R | L/R | BODY STYLE & DRIVE TYPE & ENGINE | REMARKS | G-AP Ref. | PRODUCT | ABS | Technical Specifications A | B | C | H | L | P |
|---|---|---|---|---|---|---|---|---|---|---|---|---|---|---|---|
| **MG (SAIC)** | | | | | | | | | | | | | | | |
| **Mulan** | | | | | | | | | | | | | | | |
| EV (315 kw) | 2022.09-2023.08 | ET | F | L | Hatchback 4WD TZ180XS0951/TZ204XS1351 | | GCI83807 | Inner Joint | | 34 | 27 | 35 | 58.5 | 111 | |
| | 2022.09-2023.08 | ET | F | R | Hatchback 4WD TZ180XS0951/TZ204XS1351 | | GCI83808 | Inner Joint | | 27 | 27 | 47 | | 126.5 | |
| | 2022.09-2023.08 | ET | R | L | Hatchback 4WD TZ180XS0951/TZ204XS1351 | | GDS57613 | Drive Shaft | | 38 | 27 | 66 | 94.5 | 702 | |
| | 2022.09-2023.08 | ET | R | R | Hatchback 4WD TZ180XS0951/TZ204XS1351 | | GDS57614 | Drive Shaft | | 38 | 27 | 66 | 94.5 | 625 | |
| | 2022.09-2023.08 | ET | R | L/R | Hatchback 4WD TZ180XS0951/TZ204XS1351 | | GCO83638 | Outer Joint | | 38 | 27 | 66 | 94.5 | 69 | M |
| | 2022.09-2023.08 | ET | R | L | Hatchback 4WD TZ180XS0951/TZ204XS1351 | | GCI83768 | Inner Joint | | 27 | 27 | 35 | 68 | 111 | |
| | 2022.09-2023.08 | ET | R | R | Hatchback 4WD TZ180XS0951/TZ204XS1351 | | GCI83769 | Inner Joint | | 27 | 27 | 47 | | 126.5 | |
| **Pilot** | | | | | | | | | | | | | | | |
| 1.5 (127 kw) | 2020.10- | 7DCT | F | R | SUV FWD 15C4E | Model year to:2022 | GCI82892 | Inner Joint | | 27 | 34 | 47 | | 117.5 | |
| | 2020.10- | 7DCT | F | R | SUV FWD 15C4E | | GDS87104 | Intermediate Shaft | | 27 | 27 | | | 380 | |
| 2.0 (170 kw) | 2020.10- | 6DCT | F | L | SUV 4WD 20L4E | | GDS57625 | Drive Shaft | 48T | 36 | 27 | 62 | 87 | 637 | |
| | 2020.10- | 6DCT | F | R | SUV 4WD 20L4E | | GDS57645 | Drive Shaft | 48T | 36 | 27 | 62 | 87 | 585 | |
| | 2020.10- | 6DCT | F | L/R | SUV 4WD 20L4E | | GCO82058 | Outer Joint | 48T | 36 | 26 | 62 | 87 | 64 | M |
| | 2020.10- | 6DCT | F | L | SUV 4WD 20L4E | | GCI83773 | Inner Joint | | 27 | 26 | 34.7 | 65 | 107.5 | |
| | 2020.10- | 6DCT | F | R | SUV 4WD 20L4E | | GCI83789 | Inner Joint | | 27 | 26 | 47 | | 119.5 | |
| | 2020.10- | 6DCT | F | L | SUV FWD 20L4E | | GDS57625 | Drive Shaft | 48T | 36 | 27 | 62 | 87 | 637 | |
| | 2020.10- | 6DCT | F | R | SUV FWD 20L4E | | GDS57645 | Drive Shaft | 48T | 36 | 27 | 62 | 87 | 585 | |
| | 2020.10- | 6DCT | F | L/R | SUV FWD 20L4E | | GCO82058 | Outer Joint | 48T | 36 | 26 | 62 | 87 | 64 | M |
| | 2020.10- | 6DCT | F | L | SUV FWD 20L4E | | GCI83773 | Inner Joint | | 27 | 26 | 34.7 | 65 | 107.5 | |
| | 2020.10- | 6DCT | F | R | SUV FWD 20L4E | | GCI83789 | Inner Joint | | 27 | 26 | 47 | | 119.5 | |
| **RX5** | | | | | | | | | | | | | | | |
| 1.5 (124 kw) | 2018.09- | 7DCT | F | L | SUV FWD 15E4E | for Manufacuturer:QC | GDS84153 | Drive Shaft | 48T | 36 | 34 | 62 | 87 | 632 | |
| | 2018.09- | 7DCT | F | L | SUV FWD 15E4E | for Manufacuturer:SDS | GDS84155 | Drive Shaft | 48T | 36 | 34 | 62 | 87 | 633 | |
| | 2018.09- | 7DCT | F | R | SUV FWD 15E4E | for Manufacuturer:SDS | GDS84147 | Drive Shaft | 48T | 36 | 27 | 62 | 87 | 611 | |
| | 2018.09- | 7DCT | F | R | SUV FWD 15E4E | for Manufacuturer:QC | GDS84154 | Drive Shaft | 48T | 36 | 34 | 62 | 87 | 956 | |
| | 2018.09- | 7DCT | F | L/R | SUV FWD 15E4E | | GCO82058 | Outer Joint | 48T | 36 | 26 | 62 | 87 | 64 | M |
| | 2018.09- | 7DCT | F | L | SUV FWD 15E4E | TJ | GCI82610 | Inner Joint | | 34 | 25 | 30.5 | 72.5 | 87 | |
| | 2018.09- | 7DCT | F | L | SUV FWD 15E4E | PTJ | GCI82612 | Inner Joint | | 34 | 24 | 30.5 | 72 | 83 | |
| | 2018.09- | 7DCT | F | R | SUV FWD 15E4E | TJ | GCI82611 | Inner Joint | | 34 | 25 | 30.5 | 72.5 | 106.5 | |
| | 2018.09- | 7DCT | F | R | SUV FWD 15E4E | PTJ | GCI82644 | Inner Joint | | 27 | 24 | 48.5 | | 117.5 | |
| **MINI** | | | | | | | | | | | | | | | |
| **Mini Clubman** | | | | | | | | | | | | | | | |
| 1.4 (70 kw) | 2009.03-2010.02 | 6AT | F | R | Estate FWD N12 B14 A | Outer teeth of transm.side:26 | GDS85086 | Drive Shaft | | 26 | 26 | 54 | 75.5 | 877 | |
| | 2009.03-2010.02 | 6AT | F | L | Estate FWD N12 B14 A | | GCI85012 | Inner Joint | | 26 | 32 | 31 | 65 | 93 | |
| | 2009.03-2010.02 | AT | F | L | Estate FWD N12 B14 A | | GDS85024 | Drive Shaft | | 26 | 26 | 54 | 75.5 | 604 | |
| | 2009.03-2010.02 | AT | F | L | Estate FWD N12 B14 A | | GDS85131 | Drive Shaft | | 26 | 26 | 54 | 75.5 | 589 | |
| | 2009.03-2010.02 | AT/MT/6MT | F | L/R | Estate FWD N12 B14 A | | GCO85009 | Outer Joint | | 26 | 24 | 54 | 75.5 | 65.5 | M |
| | 2009.03-2010.02 | MT | F | L | Estate FWD N12 B14 A | | GDS85041 | Drive Shaft | | 26 | 33 | 54 | 75.5 | 619 | |
| | 2009.03-2010.02 | MT | F | R | Estate FWD N12 B14 A | Outer teeth of transm.side:33 | GDS85045 | Drive Shaft | | 26 | 33 | 54 | 75.5 | 901 | |
| 1.5 (75 kw) | 2015.11-2024.01 | 6AT | F | L | Estate FWD B38 A15 A | | GDS83712 | Drive Shaft | | 31 | 26 | 56 | | 541 | |
| | 2015.11-2024.01 | 6AT | F | R | Estate FWD B38 A15 A | | GDS83713 | Drive Shaft | | 31 | 26 | 56 | | 905 | |
| | 2015.11-2024.01 | 6AT | F | L/R | Estate FWD B38 A15 A | | GCO82471 | Outer Joint | | 31 | 26 | 56 | | 73.5 | M |
| | 2015.11-2024.01 | 6AT | F | L | Estate FWD B38 A15 A | | GCI82347 | Inner Joint | | 26 | 32 | 31 | 65 | 92 | |
| | 2015.11-2024.01 | 6AT | F | R | Estate FWD B38 A15 A | | GCI82348 | Inner Joint | | 26 | 32 | 31 | 388 | 88 | |
| | 2015.11-2024.01 | 6MT | F | L | Estate FWD B38 A15 A | Chassis number:LU91/LU92 | GDS82631 | Drive Shaft | | 31 | 34 | 56 | | 563 | |
| | 2015.11-2024.01 | 6MT | F | R | Estate FWD B38 A15 A | Chassis number:LU91/LU92 | GDS82632 | Drive Shaft | | 31 | 34 | 56 | | 920 | |
| | 2015.11-2024.01 | 6MT | F | L/R | Estate FWD B38 A15 A | Chassis number:LU91/LU92 | GCO81683 | Outer Joint | | 31 | 33 | 56 | | 71 | M |
| | 2015.11-2024.01 | 6MT | F | L | Estate FWD B38 A15 A | Chassis number:LU91/LU92 | GCI81758 | Inner Joint | | 34 | 33 | 35 | 54.5 | 96 | |
| | 2015.11-2024.01 | 6MT | F | R | Estate FWD B38 A15 A | Chassis number:LU91/LU92 | GCI81917 | Inner Joint | | 34 | 33 | 35 | 401 | 83 | |
| | 2015.11-2024.01 | 7DCT | F | L | Estate FWD B38 A15 A | | GDS84222 | Drive Shaft | | 31 | 27 | 56 | | 547 | |
| | 2015.11-2024.01 | 7DCT | F | R | Estate FWD B38 A15 A | | GDS84221 | Drive Shaft | | 31 | 27 | 56 | | 938 | |
| | 2015.11-2024.01 | 7DCT | F | L/R | Estate FWD B38 A15 A | | GCO82738 | Outer Joint | | 31 | 26 | 56 | | 73.5 | M |
| | 2015.11-2024.01 | 7DCT | F | L | Estate FWD B38 A15 A | | GCI82649 | Inner Joint | | 27 | 32 | 35 | 58 | 102 | |
| | 2015.11-2024.01 | 7DCT | F | R | Estate FWD B38 A15 A | | GCI82648 | Inner Joint | | 27 | 32 | 35 | 420 | 89 | |
| 1.5 (85 kw) | 2015.11-2024.01 | 6AT | F | L | Estate FWD B37 C15 A | | GDS83712 | Drive Shaft | | 31 | 26 | 56 | | 541 | |
| | 2015.11-2024.01 | 6AT | F | R | Estate FWD B37 C15 A | | GDS83713 | Drive Shaft | | 31 | 26 | 56 | | 905 | |
| | 2015.11-2024.01 | 6AT | F | L/R | Estate FWD B37 C15 A | | GCO82471 | Outer Joint | | 31 | 26 | 56 | | 73.5 | M |
| | 2015.11-2024.01 | 6AT | F | L | Estate FWD B37 C15 A | | GCI82347 | Inner Joint | | 26 | 32 | 31 | 65 | 92 | |
| | 2015.11-2024.01 | 6AT | F | R | Estate FWD B37 C15 A | | GCI82348 | Inner Joint | | 26 | 32 | 31 | 388 | 88 | |
| | 2015.11-2024.01 | 6MT | F | L | Estate FWD B37 C15 A | | GDS84525 | Drive Shaft | | 31 | 37 | 56 | | 548 | |
| | 2015.11-2024.01 | 6MT | F | R | Estate FWD B37 C15 A | | GDS84526 | Drive Shaft | | 31 | 37 | 56 | | 929 | |
| | 2015.11-2024.01 | 6MT | F | L/R | Estate FWD B37 C15 A | | GCO81811 | Outer Joint | | 31 | 33 | 56 | | 70 | I |
| | 2015.11-2024.01 | 6MT | F | L | Estate FWD B37 C15 A | | GCI82835 | Inner Joint | | 37 | 33 | 35 | 58 | 108.5 | |
| | 2015.11-2024.01 | 6MT | F | R | Estate FWD B37 C15 A | | GCI82836 | Inner Joint | | 37 | 33 | 35 | 414 | 103.5 | |
| | 2015.11-2024.01 | 7DCT | F | L | Estate FWD B37 C15 A | | GDS84222 | Drive Shaft | | 31 | 27 | 56 | | 547 | |

| | YEAR | TRANSM. | F/R | L/R | BODY STYLE & DRIVE TYPE & ENGINE | REMARKS | G-AP Ref. | PRODUCT | ABS | Technical Specifications A | B | C | H | L | P |
|---|---|---|---|---|---|---|---|---|---|---|---|---|---|---|---|
| **MINI**<br>**Mini Clubman** | | | | | | | | | | | | | | | |
| 1.5 (85 kw) | 2015.11-2024.01 | 7DCT | F | R | Estate FWD B37 C15 A | | GDS84221 | Drive Shaft | | 31 | 27 | 56 | | 938 | |
| | 2015.11-2024.01 | 7DCT | F | L/R | Estate FWD B37 C15 A | | GCO82738 | Outer Joint | | 31 | 26 | 56 | | 73.5 | M |
| | 2015.11-2024.01 | 7DCT | F | L | Estate FWD B37 C15 A | | GCI82649 | Inner Joint | | 27 | 32 | 35 | 58 | 102 | |
| | 2015.11-2024.01 | 7DCT | F | R | Estate FWD B37 C15 A | | GCI82648 | Inner Joint | | 27 | 32 | 35 | 420 | 89 | |
| 1.5 (100 kw) | 2015.07-2024.02 | 6AT | F | L | Estate FWD B38 A15 A;B36 A15 A | | GDS83712 | Drive Shaft | | 31 | 26 | 56 | | 541 | |
| | 2015.07-2024.02 | 6AT | F | R | Estate FWD B38 A15 A;B36 A15 A | | GDS83713 | Drive Shaft | | 31 | 26 | 56 | | 905 | |
| | 2015.07-2024.02 | 6AT | F | L/R | Estate FWD B38 A15 A;B36 A15 A | | GCO82471 | Outer Joint | | 31 | 26 | 56 | | 73.5 | M |
| | 2015.07-2024.02 | 6AT | F | L | Estate FWD B38 A15 A;B36 A15 A | | GCI82347 | Inner Joint | | 26 | 32 | 31 | 65 | 92 | |
| | 2015.07-2024.02 | 6AT | F | R | Estate FWD B38 A15 A;B36 A15 A | | GCI82348 | Inner Joint | | 26 | 32 | 31 | 388 | 88 | |
| | 2015.07-2024.02 | 6MT | F | L | Estate FWD B38 A15 A;B36 A15 A | For Engine code B38A15A;Chassis number:LN31-LN32;For Engine code B38A15A | GDS82631 | Drive Shaft | | 31 | 34 | 56 | | 563 | |
| | 2015.07-2024.02 | 6MT | F | R | Estate FWD B38 A15 A;B36 A15 A | For Engine code B38A15A;Chassis number:LN31-LN32;For Engine code B38A15A | GDS82632 | Drive Shaft | | 31 | 34 | 56 | | 920 | |
| | 2015.07-2024.02 | 6MT | F | L/R | Estate FWD B38 A15 A;B36 A15 A | For Engine code B38A15A;Chassis number:LN31-LN32;For Engine code B38A15A | GCO81683 | Outer Joint | | 31 | 33 | 56 | | 71 | M |
| | 2015.07-2024.02 | 6MT | F | L | Estate FWD B38 A15 A;B36 A15 A | For Engine code B38A15A;Chassis number:LN31-LN32;For Engine code B38A15A | GCI81758 | Inner Joint | | 34 | 33 | 35 | 54.5 | 96 | |
| | 2015.07-2024.02 | 6MT | F | R | Estate FWD B38 A15 A;B36 A15 A | For Engine code B38A15A;Chassis number:LN31-LN32;For Engine code B38A15A | GCI81917 | Inner Joint | | 34 | 33 | 35 | 401 | 83 | |
| | 2015.07-2024.02 | 7DCT | F | L | Estate FWD B38 A15 A;B36 A15 A | | GDS84222 | Drive Shaft | | 31 | 27 | 56 | | 547 | |
| | 2015.07-2024.02 | 7DCT | F | R | Estate FWD B38 A15 A;B36 A15 A | | GDS84221 | Drive Shaft | | 31 | 27 | 56 | | 938 | |
| | 2015.07-2024.02 | 7DCT | F | L/R | Estate FWD B38 A15 A;B36 A15 A | | GCO82738 | Outer Joint | | 31 | 26 | 56 | | 73.5 | M |
| | 2015.07-2024.02 | 7DCT | F | L | Estate FWD B38 A15 A;B36 A15 A | | GCI82649 | Inner Joint | | 27 | 32 | 35 | 58 | 102 | |
| | 2015.07-2024.02 | 7DCT | F | R | Estate FWD B38 A15 A;B36 A15 A | | GCI82648 | Inner Joint | | 27 | 32 | 35 | 420 | 89 | |
| 1.6 (66 kw) | 2010.03-2014.06 | 6MT | F | L | Estate FWD N47 C16 A | | GDS85063 | Drive Shaft | | 26 | 34 | 54 | 75.5 | 590 | |
| | 2010.03-2014.06 | 6MT | F | R | Estate FWD N47 C16 A | | GDS85071 | Drive Shaft | | 26 | 34 | 54 | 75.5 | 918 | |
| | 2010.03-2014.06 | 6MT | F | L | Estate FWD N47 C16 A | | GCO85008 | Outer Joint | | 26 | 26 | 54 | 75.5 | 70 | M |
| | 2010.03-2014.06 | 6MT | F | R | Estate FWD N47 C16 A | | GCI85077 | Inner Joint | | 34 | 32 | 35 | 397 | 90 | |
| 1.6 (72 kw) | 2010.03-2014.06 | 6AT | F | R | Estate FWD N16 B16 A | Outer teeth of transm.side:26 | GDS85086 | Drive Shaft | | 26 | 26 | 54 | 75.5 | 877 | |
| | 2010.03-2014.06 | 6AT | F | L | Estate FWD N16 B16 A | | GCI85012 | Inner Joint | | 26 | 32 | 31 | 65 | 93 | |
| | 2010.03-2014.06 | AT | F | L | Estate FWD N16 B16 A | | GDS85024 | Drive Shaft | | 26 | 26 | 54 | 75.5 | 604 | |
| | 2010.03-2014.06 | AT/MT/6MT | F | L/R | Estate FWD N16 B16 A | | GCO85009 | Outer Joint | | 26 | 24 | 54 | 75.5 | 65.5 | M |
| | 2010.03-2014.06 | MT | F | L | Estate FWD N16 B16 A | | GDS85041 | Drive Shaft | | 26 | 33 | 54 | 75.5 | 619 | |
| | 2010.03-2014.06 | MT | F | R | Estate FWD N16 B16 A | Outer teeth of transm.side:33 | GDS85045 | Drive Shaft | | 26 | 33 | 54 | 75.5 | 901 | |
| 1.6 (80 kw) | 2007.10-2010.02 | 6MT | F | R | Estate FWD 9HZ (DV6TED4) | | GCI85077 | Inner Joint | | 34 | 32 | 35 | 397 | 90 | |
| | 2007.10-2010.02 | AT | F | L | Estate FWD 9HZ (DV6TED4) | | GDS85131 | Drive Shaft | | 26 | 26 | 54 | 75.5 | 589 | |
| | 2007.10-2010.02 | AT | F | R | Estate FWD 9HZ (DV6TED4) | | GDS85130 | Drive Shaft | | 26 | 26 | 54 | 75.5 | 895 | |
| | 2007.10-2010.02 | AT | F | L | Estate FWD 9HZ (DV6TED4) | | GCI85012 | Inner Joint | | 26 | 32 | 31 | 65 | 93 | |
| | 2007.10-2010.02 | AT/MT/6MT | F | L/R | Estate FWD 9HZ (DV6TED4) | | GCO85008 | Outer Joint | | 26 | 26 | 54 | 75.5 | 70 | M |
| | 2007.10-2010.02 | MT | F | L | Estate FWD 9HZ (DV6TED4) | | GDS85063 | Drive Shaft | | 26 | 34 | 54 | 75.5 | 590 | |
| | 2007.10-2010.02 | MT | F | R | Estate FWD 9HZ (DV6TED4) | | GDS85071 | Drive Shaft | | 26 | 34 | 54 | 75.5 | 918 | |
| 1.6 (82 kw) | 2010.03-2014.06 | 6AT/6MT | F | L | Estate FWD N47 C16 A | | GDS85063 | Drive Shaft | | 26 | 34 | 54 | 75.5 | 590 | |
| | 2010.03-2014.06 | 6AT/6MT | F | R | Estate FWD N47 C16 A | | GDS85071 | Drive Shaft | | 26 | 34 | 54 | 75.5 | 918 | |
| | 2010.03-2014.06 | 6MT | F | L | Estate FWD N47 C16 A | | GCO85008 | Outer Joint | | 26 | 26 | 54 | 75.5 | 70 | M |
| | 2010.03-2014.06 | AT | F | L | Estate FWD N47 C16 A | | GDS85131 | Drive Shaft | | 26 | 26 | 54 | 75.5 | 589 | |
| | 2010.03-2014.06 | AT | F | L | Estate FWD N47 C16 A | | GCI85012 | Inner Joint | | 26 | 32 | 31 | 65 | 93 | |
| 1.6 (85 kw) | 2010.03-2014.06 | 6AT | F | R | Estate FWD N16 B16 A | Outer teeth of transm.side:26 | GDS85086 | Drive Shaft | | 26 | 26 | 54 | 75.5 | 877 | |
| | 2010.03-2014.06 | 6AT | F | L | Estate FWD N16 B16 A | | GCI85012 | Inner Joint | | 26 | 32 | 31 | 65 | 93 | |
| | 2010.03-2014.06 | AT | F | L | Estate FWD N16 B16 A | | GDS85024 | Drive Shaft | | 26 | 26 | 54 | 75.5 | 604 | |
| | 2010.03-2014.06 | AT | F | L | Estate FWD N16 B16 A | | GDS85131 | Drive Shaft | | 26 | 26 | 54 | 75.5 | 589 | |
| | 2010.03-2014.06 | AT/MT/6MT | F | L/R | Estate FWD N16 B16 A | | GCO85009 | Outer Joint | | 26 | 24 | 54 | 75.5 | 65.5 | M |
| | 2010.03-2014.06 | MT | F | L | Estate FWD N16 B16 A | | GDS85041 | Drive Shaft | | 26 | 33 | 54 | 75.5 | 619 | |
| | 2010.03-2014.06 | MT | F | R | Estate FWD N16 B16 A | Outer teeth of transm.side:33 | GDS85045 | Drive Shaft | | 26 | 33 | 54 | 75.5 | 901 | |
| | 2010.03-2014.06 | | F | | Estate FWD N16 B16 A | | GCO85008 | Outer Joint | | 26 | 26 | 54 | 75.5 | 70 | M |
| 1.6 (88 kw) | 2007.10-2013.12 | 6AT | F | L | Estate FWD N12 B16 A;N16 B16 A | | GDS85024 | Drive Shaft | | 26 | 26 | 54 | 75.5 | 604 | |
| | 2007.10-2013.12 | 6AT | F | R | Estate FWD N12 B16 A;N16 B16 A | | GDS85086 | Drive Shaft | | 26 | 26 | 54 | 75.5 | 877 | |
| | 2007.10-2013.12 | 6AT | F | L/R | Estate FWD N12 B16 A;N16 B16 A | | GCO85008 | Outer Joint | | 26 | 26 | 54 | 75.5 | 70 | M |
| | 2007.10-2013.12 | 6AT | F | L | Estate FWD N12 B16 A;N16 B16 A | | GCI85012 | Inner Joint | | 26 | 32 | 31 | 65 | 93 | |
| | 2007.10-2013.12 | 6MT | F | L | Estate FWD N12 B16 A;N16 B16 A | | GDS85041 | Drive Shaft | | 26 | 33 | 54 | 75.5 | 619 | |
| | 2007.10-2013.12 | 6MT | F | R | Estate FWD N12 B16 A;N16 B16 A | | GDS85045 | Drive Shaft | | 26 | 33 | 54 | 75.5 | 901 | |
| | 2007.10-2013.12 | 6MT | F | L/R | Estate FWD N12 B16 A;N16 B16 A | | GCO85009 | Outer Joint | | 26 | 24 | 54 | 75.5 | 65.5 | M |
| 1.6 (90 kw) | 2010.03-2014.06 | 6AT | F | R | Estate FWD N16 B16 A | Outer teeth of transm.side:26 | GDS85086 | Drive Shaft | | 26 | 26 | 54 | 75.5 | 877 | |
| | 2010.03-2014.06 | 6AT | F | L | Estate FWD N16 B16 A | | GCI85012 | Inner Joint | | 26 | 32 | 31 | 65 | 93 | |
| | 2010.03-2014.06 | AT | F | L | Estate FWD N16 B16 A | | GDS85024 | Drive Shaft | | 26 | 26 | 54 | 75.5 | 604 | |
| | 2010.03-2014.06 | AT | F | L | Estate FWD N16 B16 A | | GDS85131 | Drive Shaft | | 26 | 26 | 54 | 75.5 | 589 | |
| | 2010.03-2014.06 | AT/MT/6MT | F | L/R | Estate FWD N16 B16 A | | GCO85009 | Outer Joint | | 26 | 24 | 54 | 75.5 | 65.5 | M |
| | 2010.03-2014.06 | MT | F | L | Estate FWD N16 B16 A | | GDS85041 | Drive Shaft | | 26 | 33 | 54 | 75.5 | 619 | |
| | 2010.03-2014.06 | MT | F | R | Estate FWD N16 B16 A | Outer teeth of transm.side:33 | GDS85045 | Drive Shaft | | 26 | 33 | 54 | 75.5 | 901 | |
| | 2010.03-2014.06 | | F | | Estate FWD N16 B16 A | | GCO85008 | Outer Joint | | 26 | 26 | 54 | 75.5 | 70 | M |
| 1.6 (120 kw) | 2007.10-2014.06 | 6AT | F | R | Estate FWD N18 B16 A;N14 B16 AB | Outer teeth of transm.side:26 | GDS85086 | Drive Shaft | | 26 | 26 | 54 | 75.5 | 877 | |

| | YEAR | TRANSM. | F/R | L/R | BODY STYLE & DRIVE TYPE & ENGINE | REMARKS | G-AP Ref. | PRODUCT | ABS | Technical Specifications | | | | | |
|---|---|---|---|---|---|---|---|---|---|---|---|---|---|---|---|
| | | | | | | | | | | A | B | C | H | L | P |
| **MINI**<br>**Mini Clubman** | | | | | | | | | | | | | | | |
| 1.6 (120 kw) | 2007.10-2014.06 | 6AT | F | L | Estate FWD N18 B16 A;N14 B16 AB | | GCI85012 | Inner Joint | | 26 | 32 | 31 | 65 | 93 | |
| | 2007.10-2014.06 | 6MT | F | R | Estate FWD N18 B16 A;N14 B16 AB | | GCI85077 | Inner Joint | | 34 | 32 | 35 | 397 | 90 | |
| | 2007.10-2014.06 | AT | F | L | Estate FWD N18 B16 A;N14 B16 AB | | GDS85024 | Drive Shaft | | 26 | 26 | 54 | 75.5 | 604 | |
| | 2007.10-2014.06 | AT | F | L | Estate FWD N18 B16 A;N14 B16 AB | | GDS85131 | Drive Shaft | | 26 | 26 | 54 | 75.5 | 589 | |
| | 2007.10-2014.06 | AT/MT/6MT | F | L/R | Estate FWD N18 B16 A;N14 B16 AB | | GCO85008 | Outer Joint | | 26 | 26 | 54 | 75.5 | 70 | M |
| | 2007.10-2014.06 | MT | F | L | Estate FWD N18 B16 A;N14 B16 AB | | GDS85063 | Drive Shaft | | 26 | 34 | 54 | 75.5 | 590 | |
| | 2007.10-2014.06 | MT | F | R | Estate FWD N18 B16 A;N14 B16 AB | Outer teeth of transm.side:34 | GDS85071 | Drive Shaft | | 26 | 34 | 54 | 75.5 | 918 | |
| 1.6 (128 kw) | 2007.08-2010.07 | 6AT | F | R | Estate FWD N14 B16 A;N14 B16 AB | Outer teeth of transm.side:26 | GDS85086 | Drive Shaft | | 26 | 26 | 54 | 75.5 | 877 | |
| | 2007.08-2010.07 | 6AT | F | L | Estate FWD N14 B16 A;N14 B16 AB | | GCI85012 | Inner Joint | | 26 | 32 | 31 | 65 | 93 | |
| | 2007.08-2010.07 | 6MT | F | R | Estate FWD N14 B16 A;N14 B16 AB | | GCI85077 | Inner Joint | | 34 | 32 | 35 | 397 | 90 | |
| | 2007.08-2010.07 | AT | F | L | Estate FWD N14 B16 A;N14 B16 AB | | GDS85024 | Drive Shaft | | 26 | 26 | 54 | 75.5 | 604 | |
| | 2007.08-2010.07 | AT | F | L | Estate FWD N14 B16 A;N14 B16 AB | | GDS85131 | Drive Shaft | | 26 | 26 | 54 | 75.5 | 589 | |
| | 2007.08-2010.07 | AT/MT/6MT | F | L/R | Estate FWD N14 B16 A;N14 B16 AB | | GCO85008 | Outer Joint | | 26 | 26 | 54 | 75.5 | 70 | M |
| | 2007.08-2010.07 | MT | F | L | Estate FWD N14 B16 A;N14 B16 AB | | GDS85063 | Drive Shaft | | 26 | 34 | 54 | 75.5 | 590 | |
| | 2007.08-2010.07 | MT | F | R | Estate FWD N14 B16 A;N14 B16 AB | Outer teeth of transm.side:34 | GDS85071 | Drive Shaft | | 26 | 34 | 54 | 75.5 | 918 | |
| 1.6 (135 kw) | 2010.03-2014.06 | 6AT | F | R | Estate FWD N18 B16 A | Outer teeth of transm.side:26 | GDS85086 | Drive Shaft | | 26 | 26 | 54 | 75.5 | 877 | |
| | 2010.03-2014.06 | 6AT | F | L | Estate FWD N18 B16 A | | GCI85012 | Inner Joint | | 26 | 32 | 31 | 65 | 93 | |
| | 2010.03-2014.06 | 6MT | F | R | Estate FWD N18 B16 A | | GCI85077 | Inner Joint | | 34 | 32 | 35 | 397 | 90 | |
| | 2010.03-2014.06 | AT | F | L | Estate FWD N18 B16 A | | GDS85024 | Drive Shaft | | 26 | 26 | 54 | 75.5 | 604 | |
| | 2010.03-2014.06 | AT | F | L | Estate FWD N18 B16 A | | GDS85131 | Drive Shaft | | 26 | 26 | 54 | 75.5 | 589 | |
| | 2010.03-2014.06 | AT/MT/6MT | F | L/R | Estate FWD N18 B16 A | | GCO85008 | Outer Joint | | 26 | 26 | 54 | 75.5 | 70 | M |
| | 2010.03-2014.06 | MT | F | L | Estate FWD N18 B16 A | | GDS85063 | Drive Shaft | | 26 | 34 | 54 | 75.5 | 590 | |
| | 2010.03-2014.06 | MT | F | R | Estate FWD N18 B16 A | Outer teeth of transm.side:34 | GDS85071 | Drive Shaft | | 26 | 34 | 54 | 75.5 | 918 | |
| 1.6 (141 kw) | 2008.10-2010.02 | 6AT | F | R | Estate FWD N14 B16 AB | | GDS85086 | Drive Shaft | | 26 | 26 | 54 | 75.5 | 877 | |
| | 2008.10-2010.02 | AT | F | L | Estate FWD N14 B16 AB | | GDS85131 | Drive Shaft | | 26 | 26 | 54 | 75.5 | 589 | |
| | 2008.10-2010.02 | AT | F | L | Estate FWD N14 B16 AB | | GCI85012 | Inner Joint | | 26 | 32 | 31 | 65 | 93 | |
| | 2008.10-2010.02 | AT/MT/6MT | F | L/R | Estate FWD N14 B16 AB | | GCO85008 | Outer Joint | | 26 | 26 | 54 | 75.5 | 70 | M |
| | 2008.10-2010.02 | MT | F | L | Estate FWD N14 B16 AB | | GDS85063 | Drive Shaft | | 26 | 34 | 54 | 75.5 | 590 | |
| | 2008.10-2010.02 | MT | F | R | Estate FWD N14 B16 AB | | GDS85071 | Drive Shaft | | 26 | 34 | 54 | 75.5 | 918 | |
| | 2008.10-2010.02 | MT | F | R | Estate FWD N14 B16 AB | | GCI85077 | Inner Joint | | 34 | 32 | 35 | 397 | 90 | |
| 1.6 (147 kw) | 2010.03-2014.06 | 6AT | F | R | Estate FWD N18 B16 A | Outer teeth of transm.side:26 | GDS85086 | Drive Shaft | | 26 | 26 | 54 | 75.5 | 877 | |
| | 2010.03-2014.06 | 6AT | F | L | Estate FWD N18 B16 A | | GCI85012 | Inner Joint | | 26 | 32 | 31 | 65 | 93 | |
| | 2010.03-2014.06 | 6MT | F | R | Estate FWD N18 B16 A | | GCI85077 | Inner Joint | | 34 | 32 | 35 | 397 | 90 | |
| | 2010.03-2014.06 | AT | F | L | Estate FWD N18 B16 A | | GDS85024 | Drive Shaft | | 26 | 26 | 54 | 75.5 | 604 | |
| | 2010.03-2014.06 | AT | F | L | Estate FWD N18 B16 A | | GDS85131 | Drive Shaft | | 26 | 26 | 54 | 75.5 | 589 | |
| | 2010.03-2014.06 | AT/MT/6MT | F | L/R | Estate FWD N18 B16 A | | GCO85008 | Outer Joint | | 26 | 26 | 54 | 75.5 | 70 | M |
| | 2010.03-2014.06 | MT | F | L | Estate FWD N18 B16 A | | GDS85063 | Drive Shaft | | 26 | 34 | 54 | 75.5 | 590 | |
| | 2010.03-2014.06 | MT | F | R | Estate FWD N18 B16 A | Outer teeth of transm.side:34 | GDS85071 | Drive Shaft | | 26 | 34 | 54 | 75.5 | 918 | |
| 1.6 (155 kw) | 2007.11-2014.06 | 6AT | F | L | Estate FWD N14 B16 C;N18 B16 C | | GDS85024 | Drive Shaft | | 26 | 26 | 54 | 75.5 | 604 | |
| | 2007.11-2014.06 | 6AT | F | R | Estate FWD N14 B16 C;N18 B16 C | Outer teeth of transm.side:26 | GDS85086 | Drive Shaft | | 26 | 26 | 54 | 75.5 | 877 | |
| | 2007.11-2014.06 | 6AT | F | L | Estate FWD N14 B16 C;N18 B16 C | | GCI85012 | Inner Joint | | 26 | 32 | 31 | 65 | 93 | |
| | 2007.11-2014.06 | 6AT/6MT | F | L | Estate FWD N14 B16 C;N18 B16 C | | GDS85063 | Drive Shaft | | 26 | 34 | 54 | 75.5 | 590 | |
| | 2007.11-2014.06 | 6AT/6MT | F | R | Estate FWD N14 B16 C;N18 B16 C | Outer teeth of transm.side:34 | GDS85071 | Drive Shaft | | 26 | 34 | 54 | 75.5 | 918 | |
| | 2007.11-2014.06 | 6MT | F | R | Estate FWD N14 B16 C;N18 B16 C | | GCI85077 | Inner Joint | | 34 | 32 | 35 | 397 | 90 | |
| | 2007.11-2014.06 | AT/MT/6MT | F | L/R | Estate FWD N14 B16 C;N18 B16 C | | GCO85008 | Outer Joint | | 26 | 26 | 54 | 75.5 | 70 | M |
| 2.0 (82 kw) | 2011.02-2014.06 | 6AT | F | L | Estate FWD N47 C20 A | | GDS85131 | Drive Shaft | | 26 | 26 | 54 | 75.5 | 589 | |
| | 2011.02-2014.06 | 6AT | F | R | Estate FWD N47 C20 A | | GDS85130 | Drive Shaft | | 26 | 26 | 54 | 75.5 | 895 | |
| | 2011.02-2014.06 | AT | F | L | Estate FWD N47 C20 A | | GCI85012 | Inner Joint | | 26 | 32 | 31 | 65 | 93 | |
| | 2011.02-2014.06 | AT/MT | F | L/R | Estate FWD N47 C20 A | | GCO85008 | Outer Joint | | 26 | 26 | 54 | 75.5 | 70 | M |
| | 2011.02-2014.06 | MT | F | L | Estate FWD N47 C20 A | | GDS85063 | Drive Shaft | | 26 | 34 | 54 | 75.5 | 590 | |
| | 2011.02-2014.06 | MT | F | R | Estate FWD N47 C20 A | | GDS85071 | Drive Shaft | | 26 | 34 | 54 | 75.5 | 918 | |
| 2.0 (100 kw) | 2011.02-2014.06 | 6MT | F | L | Estate FWD N47 C20 A | | GCO85008 | Outer Joint | | 26 | 26 | 54 | 75.5 | 70 | M |
| | 2011.02-2014.06 | AT | F | L | Estate FWD N47 C20 A | | GDS85131 | Drive Shaft | | 26 | 26 | 54 | 75.5 | 589 | |
| | 2011.02-2014.06 | AT | F | R | Estate FWD N47 C20 A | | GDS85130 | Drive Shaft | | 26 | 26 | 54 | 75.5 | 895 | |
| | 2011.02-2014.06 | AT | F | L | Estate FWD N47 C20 A | | GCI85012 | Inner Joint | | 26 | 32 | 31 | 65 | 93 | |
| | 2011.02-2014.06 | MT | F | L | Estate FWD N47 C20 A | | GDS85063 | Drive Shaft | | 26 | 34 | 54 | 75.5 | 590 | |
| | 2011.02-2014.06 | MT | F | R | Estate FWD N47 C20 A | | GDS85071 | Drive Shaft | | 26 | 34 | 54 | 75.5 | 918 | |
| | 2014.12-2019.07 | 6MT | F | L | Estate FWD B47 C20 A;B47 C20 B | | GDS56905 | Drive Shaft | | 31 | 37 | 56 | | 546 | |
| | 2014.12-2019.07 | 6MT | F | R | Estate FWD B47 C20 A;B47 C20 B | | GDS56579 | Drive Shaft | | 31 | 37 | 56 | | 931 | |
| | 2014.12-2019.07 | 6MT | F | L/R | Estate FWD B47 C20 A;B47 C20 B | | GCO83263 | Outer Joint | | 31 | 26 | 56 | | 73.5 | M |
| | 2014.12-2019.07 | 6MT | F | L | Estate FWD B47 C20 A;B47 C20 B | | GCI83553 | Inner Joint | | 37 | 32 | 35 | 58 | 102 | |
| | 2014.12-2019.07 | 6MT | F | R | Estate FWD B47 C20 A;B47 C20 B | | GCI83386 | Inner Joint | | 37 | 32 | 35 | 450 | 90 | |
| | 2014.12-2019.07 | 8AT | F | L | Estate FWD B47 C20 A;B47 C20 B | For Engine code:B47C20A,Diameter:25mm | GDS82177 | Drive Shaft | | 31 | 28 | 56 | | 538 | |
| | 2014.12-2019.07 | 8AT | F | R | Estate FWD B47 C20 A;B47 C20 B | | GDS84087 | Drive Shaft | | 31 | 28 | 56 | | 904 | |
| | 2014.12-2019.07 | 8AT | F | L/R | Estate FWD B47 C20 A;B47 C20 B | For Engine code:B47C20A | GCO81684 | Outer Joint | | 31 | 28 | 56 | | 77 | M |

| | YEAR | TRANSM. | F/R | L/R | BODY STYLE & DRIVE TYPE & ENGINE | REMARKS | G-AP Ref. | PRODUCT | ABS | Technical Specifications A | B | C | H | L | P |
|---|---|---|---|---|---|---|---|---|---|---|---|---|---|---|---|
| **MINI** **Mini Clubman** | | | | | | | | | | | | | | | |
| 2.0 (100 kw) | 2014.12-2019.07 | 8AT | F | L | Estate FWD B47 C20 A;B47 C20 B | For Engine code:B47C20A,Diameter:25mm | GCI81659 | Inner Joint | | 28 | 28 | 33 | 66 | 93.5 | |
| | 2014.12-2019.07 | 8AT | F | R | Estate FWD B47 C20 A;B47 C20 B | For Engine Code:B47C20A | GCI82517 | Inner Joint | | 28 | 28 | 33 | 425 | 106.5 | |
| 2.0 (105 kw) | 2011.02-2014.06 | 6AT/6MT | F | L | Estate FWD N47 C20 A | | GDS85131 | Drive Shaft | | 26 | 26 | 54 | 75.5 | 589 | |
| | 2011.02-2014.06 | 6AT/6MT | F | R | Estate FWD N47 C20 A | | GDS85130 | Drive Shaft | | 26 | 26 | 54 | 75.5 | 895 | |
| | 2011.02-2014.06 | 6MT | F | L | Estate FWD N47 C20 A | | GDS85063 | Drive Shaft | | 26 | 34 | 54 | 75.5 | 590 | |
| | 2011.02-2014.06 | 6MT | F | R | Estate FWD N47 C20 A | | GDS85071 | Drive Shaft | | 26 | 34 | 54 | 75.5 | 918 | |
| | 2011.02-2014.06 | 6MT | F | L | Estate FWD N47 C20 A | | GCO85008 | Outer Joint | | 26 | 26 | 54 | 75.5 | 70 | M |
| | 2011.02-2014.06 | AT | F | L | Estate FWD N47 C20 A | | GCI85012 | Inner Joint | | 26 | 32 | 31 | 65 | 93 | |
| 2.0 (110 kw) | 2015.07-2024.02 | 6MT | F | L | Estate FWD B47 C20 A;B47 C20 B | | GDS56905 | Drive Shaft | | 31 | 37 | 56 | | 546 | |
| | 2015.07-2024.02 | 6MT | F | R | Estate FWD B47 C20 A;B47 C20 B | | GDS56579 | Drive Shaft | | 31 | 37 | 56 | | 931 | |
| | 2015.07-2024.02 | 6MT | F | L/R | Estate FWD B47 C20 A;B47 C20 B | | GCO83263 | Outer Joint | | 31 | 26 | 56 | | 73.5 | M |
| | 2015.07-2024.02 | 6MT | F | L | Estate FWD B47 C20 A;B47 C20 B | | GCI83553 | Inner Joint | | 37 | 32 | 35 | 58 | 102 | |
| | 2015.07-2024.02 | 6MT | F | R | Estate FWD B47 C20 A;B47 C20 B | | GCI83386 | Inner Joint | | 37 | 32 | 35 | 450 | 90 | |
| | 2015.07-2024.02 | 8AT | F | L | Estate FWD B47 C20 A;B47 C20 B | For Engine Code:B47C20A | GDS82177 | Drive Shaft | | 31 | 28 | 56 | | 538 | |
| | 2015.07-2024.02 | 8AT | F | R | Estate FWD B47 C20 A;B47 C20 B | | GDS84087 | Drive Shaft | | 31 | 28 | 56 | | 904 | |
| | 2015.07-2024.02 | 8AT | F | L/R | Estate FWD B47 C20 A;B47 C20 B | For Engine Code:B47C20A | GCO81684 | Outer Joint | | 31 | 28 | 56 | | 77 | M |
| | 2015.07-2024.02 | 8AT | F | L | Estate FWD B47 C20 A;B47 C20 B | For Engine Code:B47C20A | GCI81659 | Inner Joint | | 28 | 28 | 33 | 66 | 93.5 | |
| | 2015.07-2024.02 | 8AT | F | R | Estate FWD B47 C20 A;B47 C20 B | For Engine Code:B47C20A | GCI82517 | Inner Joint | | 28 | 28 | 33 | 425 | 106.5 | |
| 2.0 (120 kw) | 2014.11- | 6MT | F | L | Estate FWD B48 A20 A;B48 A20 F | | GDS56905 | Drive Shaft | | 31 | 37 | 56 | | 546 | |
| | 2014.11- | 6MT | F | R | Estate FWD B48 A20 A;B48 A20 F | | GDS56579 | Drive Shaft | | 31 | 37 | 56 | | 931 | |
| | 2014.11- | 6MT | F | L/R | Estate FWD B48 A20 A;B48 A20 F | | GCO83263 | Outer Joint | | 31 | 26 | 56 | | 73.5 | M |
| | 2014.11- | 6MT | F | L | Estate FWD B48 A20 A;B48 A20 F | | GCI83553 | Inner Joint | | 37 | 32 | 35 | 58 | 102 | |
| | 2014.11- | 6MT | F | R | Estate FWD B48 A20 A;B48 A20 F | | GCI83386 | Inner Joint | | 37 | 32 | 35 | 450 | 90 | |
| | 2014.11- | 7DCT | F | L | Estate FWD B48 A20 A;B48 A20 F | | GDS84222 | Drive Shaft | | 31 | 27 | 56 | | 547 | |
| | 2014.11- | 7DCT | F | R | Estate FWD B48 A20 A;B48 A20 F | | GDS84223 | Drive Shaft | | 31 | 27 | 56 | | 936 | |
| | 2014.11- | 7DCT | F | L/R | Estate FWD B48 A20 A;B48 A20 F | | GCO82738 | Outer Joint | | 31 | 26 | 56 | | 73.5 | M |
| | 2014.11- | 7DCT | F | L | Estate FWD B48 A20 A;B48 A20 F | | GCI82649 | Inner Joint | | 27 | 32 | 35 | 58 | 102 | |
| | 2014.11- | 7DCT | F | R | Estate FWD B48 A20 A;B48 A20 F | | GCI82650 | Inner Joint | | 27 | 32 | 35 | 456 | 89 | |
| | 2014.11- | 8AT | F | L | Estate FWD B48 A20 A;B48 A20 F | Diameter:25mm | GDS82177 | Drive Shaft | | 31 | 28 | 56 | | 538 | |
| | 2014.11- | 8AT | F | R | Estate FWD B48 A20 A;B48 A20 F | | GDS84087 | Drive Shaft | | 31 | 28 | 56 | | 904 | |
| | 2014.11- | 8AT | F | L/R | Estate FWD B48 A20 A;B48 A20 F | | GCO81684 | Outer Joint | | 31 | 28 | 56 | | 77 | M |
| | 2014.11- | 8AT | F | L | Estate FWD B48 A20 A;B48 A20 F | Diameter:25mm | GCI81659 | Inner Joint | | 28 | 28 | 33 | 66 | 93.5 | |
| | 2014.11- | 8AT | F | R | Estate FWD B48 A20 A;B48 A20 F | | GCI82517 | Inner Joint | | 28 | 28 | 33 | 425 | 106.5 | |
| | 2015.02-2019.07 | 8AT | F | L | Estate FWD B47 C20 A;B47 C20 B | For Engine code:B47C20A,Diameter:25mm | GDS82177 | Drive Shaft | | 31 | 28 | 56 | | 538 | |
| | 2015.02-2019.07 | 8AT | F | R | Estate FWD B47 C20 A;B47 C20 B | | GDS84087 | Drive Shaft | | 31 | 28 | 56 | | 904 | |
| | 2015.02-2019.07 | 8AT | F | L/R | Estate FWD B47 C20 A;B47 C20 B | For Engine code:B47C20A | GCO81684 | Outer Joint | | 31 | 28 | 56 | | 77 | M |
| | 2015.02-2019.07 | 8AT | F | L | Estate FWD B47 C20 A;B47 C20 B | For Engine code:B47C20A,Diameter:25mm | GCI81659 | Inner Joint | | 28 | 28 | 33 | 66 | 93.5 | |
| | 2015.02-2019.07 | 8AT | F | R | Estate FWD B47 C20 A;B47 C20 B | For Engine Code:B47C20A | GCI82517 | Inner Joint | | 28 | 28 | 33 | 425 | 106.5 | |
| | 2015.04- | 8AT | F | L | Estate 4WD B48 A20 A | Diameter:25mm | GDS82177 | Drive Shaft | | 31 | 28 | 56 | | 538 | |
| | 2015.04- | 8AT | F | L/R | Estate 4WD B48 A20 A | | GCO81684 | Outer Joint | | 31 | 28 | 56 | | 77 | M |
| | 2015.04- | 8AT | F | L | Estate 4WD B48 A20 A | Diameter:25mm | GCI81659 | Inner Joint | | 28 | 28 | 33 | 66 | 93.5 | |
| | 2015.04- | 8AT/6MT | F | R | Estate 4WD B48 A20 A | | GDS82633 | Drive Shaft | | 31 | 35 | 56 | | 499 | |
| | 2015.04- | 8AT/6MT | F | R | Estate 4WD B48 A20 A | | GCI81924 | Inner Joint | | 35 | 28 | 44.5 | | 126 | |
| | 2015.04- | 8AT/6MT | R | L/R | Estate 4WD B48 A20 A | | GDS82176 | Drive Shaft | | 31 | 27 | 56 | | 731 | |
| | 2015.04- | 8AT/6MT | R | L/R | Estate 4WD B48 A20 A | | GCO81685 | Outer Joint | | 31 | 30 | 56 | | 61.5 | I |
| | 2015.04- | 8AT/6MT | R | L/R | Estate 4WD B48 A20 A | | GCI81658 | Inner Joint | | 27 | 30 | 43.7 | 87 | 100 | |
| | 2015.04-2019.07 | 8AT | F | L | Estate 4WD B47 C20 A;B47 C20 B | For Engine code:B47C20A,Diameter:25mm | GDS82177 | Drive Shaft | | 31 | 28 | 56 | | 538 | |
| | 2015.04-2019.07 | 8AT | F | R | Estate 4WD B47 C20 A;B47 C20 B | For Engine code:B47C20A | GDS82633 | Drive Shaft | | 31 | 35 | 56 | | 499 | |
| | 2015.04-2019.07 | 8AT | F | L/R | Estate 4WD B47 C20 A;B47 C20 B | For Engine code:B47C20A | GCO81684 | Outer Joint | | 31 | 28 | 56 | | 77 | M |
| | 2015.04-2019.07 | 8AT | F | L | Estate 4WD B47 C20 A;B47 C20 B | For Engine code:B47C20A,Diameter:25mm | GCI81659 | Inner Joint | | 28 | 28 | 33 | 66 | 93.5 | |
| | 2015.04-2019.07 | 8AT | F | R | Estate 4WD B47 C20 A;B47 C20 B | For Engine code:B47C20A | GCI81924 | Inner Joint | | 35 | 28 | 44.5 | | 126 | |
| | 2015.04-2019.07 | 8AT | R | L/R | Estate 4WD B47 C20 A;B47 C20 B | | GDS82176 | Drive Shaft | | 31 | 27 | 56 | | 731 | |
| | 2015.04-2019.07 | 8AT | R | L/R | Estate 4WD B47 C20 A;B47 C20 B | | GCO81685 | Outer Joint | | 31 | 30 | 56 | | 61.5 | I |
| | 2015.04-2019.07 | 8AT | R | L/R | Estate 4WD B47 C20 A;B47 C20 B | | GCI81658 | Inner Joint | | 27 | 30 | 43.7 | 87 | 100 | |
| 2.0 (131 kw) | 2020.11- | 8AT | R | L/R | Estate 4WD B46 A20 A;B48 A20 F | | GDS82176 | Drive Shaft | | 31 | 27 | 56 | | 731 | |
| | 2020.11- | 8AT | R | L/R | Estate 4WD B46 A20 A;B48 A20 F | | GCO81685 | Outer Joint | | 31 | 30 | 56 | | 61.5 | I |
| | 2020.11- | 8AT | R | L/R | Estate 4WD B46 A20 A;B48 A20 F | | GCI81658 | Inner Joint | | 27 | 30 | 43.7 | 87 | 100 | |
| | 2020.11- | 6MT | F | L | Estate FWD B48 A20 A;B46 A20 A;B48 A20 F | | GDS56905 | Drive Shaft | | 31 | 37 | 56 | | 546 | |
| | 2020.11- | 6MT | F | R | Estate FWD B48 A20 A;B46 A20 A;B48 A20 F | | GDS56579 | Drive Shaft | | 31 | 37 | 56 | | 931 | |
| | 2020.11- | 6MT | F | L/R | Estate FWD B48 A20 A;B46 A20 A;B48 A20 F | | GCO83263 | Outer Joint | | 31 | 26 | 56 | | 73.5 | M |
| | 2020.11- | 6MT | F | L | Estate FWD B48 A20 A;B46 A20 A;B48 A20 F | | GCI83553 | Inner Joint | | 37 | 32 | 35 | 58 | 102 | |
| | 2020.11- | 6MT | F | R | Estate FWD B48 A20 A;B46 A20 A;B48 A20 F | | GCI83386 | Inner Joint | | 37 | 32 | 35 | 450 | 90 | |
| | 2020.11- | 7DCT | F | L | Estate FWD B48 A20 A;B46 A20 A;B48 A20 F | | GDS84222 | Drive Shaft | | 31 | 27 | 56 | | 547 | |
| | 2020.11- | 7DCT | F | R | Estate FWD B48 A20 A;B46 A20 A;B48 A20 F | | GDS84223 | Drive Shaft | | 31 | 27 | 56 | | 936 | |
| | 2020.11- | 7DCT | F | L/R | Estate FWD B48 A20 A;B46 A20 A;B48 A20 F | | GCO82738 | Outer Joint | | 31 | 26 | 56 | | 73.5 | M |

| | YEAR | TRANSM. | F/R | L/R | BODY STYLE & DRIVE TYPE & ENGINE | REMARKS | G-AP Ref. | PRODUCT | ABS | Technical Specifications | | | | | |
|---|---|---|---|---|---|---|---|---|---|---|---|---|---|---|---|
| | | | | | | | | | | A | B | C | H | L | P |
| **MINI**<br>**Mini Clubman** | | | | | | | | | | | | | | | |
| 2.0 (131 kw) | 2020.11- | 7DCT | F | L | Estate FWD B48 A20 A;B46 A20 A;B48 A20 F | | GCI82649 | Inner Joint | | 27 | 32 | 35 | 58 | 102 | |
| | 2020.11- | 7DCT | F | R | Estate FWD B48 A20 A;B46 A20 A;B48 A20 F | | GCI82650 | Inner Joint | | 27 | 32 | 35 | 456 | 89 | |
| 2.0 (140 kw) | 2015.02-2024.01 | 8AT | F | L | Estate FWD B47 C20 A;B47 C20 B | For Engine code:B47C20A,Diameter:25mm | GDS82177 | Drive Shaft | | 31 | 28 | 56 | | 538 | |
| | 2015.02-2024.01 | 8AT | F | R | Estate FWD B47 C20 A;B47 C20 B | | GDS84087 | Drive Shaft | | 31 | 28 | 56 | | 904 | |
| | 2015.02-2024.01 | 8AT | F | L/R | Estate FWD B47 C20 A;B47 C20 B | For Engine code:B47C20A | GCO81684 | Outer Joint | | 31 | 28 | 56 | | 77 | M |
| | 2015.02-2024.01 | 8AT | F | L | Estate FWD B47 C20 A;B47 C20 B | For Engine code:B47C20A,Diameter:25mm | GCI81659 | Inner Joint | | 28 | 28 | 33 | 66 | 93.5 | |
| | 2015.02-2024.01 | 8AT | F | R | Estate FWD B47 C20 A;B47 C20 B | For Engine Code:B47C20A | GCI82517 | Inner Joint | | 28 | 28 | 33 | 425 | 106.5 | |
| | 2016.03-2024.01 | 8AT | F | L | Estate 4WD B47 C20 A;B47 C20 B | For Engine code:B47C20A,Diameter:25mm | GDS82177 | Drive Shaft | | 31 | 28 | 56 | | 538 | |
| | 2016.03-2024.01 | 8AT | F | R | Estate 4WD B47 C20 A;B47 C20 B | For Engine code:B47C20A | GDS82633 | Drive Shaft | | 31 | 35 | 56 | | 499 | |
| | 2016.03-2024.01 | 8AT | F | L/R | Estate 4WD B47 C20 A;B47 C20 B | For Engine code:B47C20A | GCO81684 | Outer Joint | | 31 | 28 | 56 | | 77 | M |
| | 2016.03-2024.01 | 8AT | F | L | Estate 4WD B47 C20 A;B47 C20 B | For Engine code:B47C20A,Diameter:25mm | GCI81659 | Inner Joint | | 28 | 28 | 33 | 66 | 93.5 | |
| | 2016.03-2024.01 | 8AT | F | R | Estate 4WD B47 C20 A;B47 C20 B | For Engine code:B47C20A | GCI81924 | Inner Joint | | 35 | 28 | 44.5 | | 126 | |
| | 2016.03-2024.01 | 8AT | R | L/R | Estate 4WD B47 C20 A;B47 C20 B | | GDS82176 | Drive Shaft | | 31 | 27 | 56 | | 731 | |
| | 2016.03-2024.01 | 8AT | R | L/R | Estate 4WD B47 C20 A;B47 C20 B | | GCO81685 | Outer Joint | | 31 | 30 | 56 | | 61.5 | I |
| | 2016.03-2024.01 | 8AT | R | L/R | Estate 4WD B47 C20 A;B47 C20 B | | GCI81658 | Inner Joint | | 27 | 30 | 43.7 | 87 | 100 | |
| 2.0 (141 kw) | 2014.11- | 6MT | F | L | Estate FWD B48 A20 A;B46 A20 A;B48 A20 F | | GDS56905 | Drive Shaft | | 31 | 37 | 56 | | 546 | |
| | 2014.11- | 6MT | F | R | Estate FWD B48 A20 A;B46 A20 A;B48 A20 F | | GDS56579 | Drive Shaft | | 31 | 37 | 56 | | 931 | |
| | 2014.11- | 6MT | F | L/R | Estate FWD B48 A20 A;B46 A20 A;B48 A20 F | | GCO83263 | Outer Joint | | 31 | 26 | 56 | | 73.5 | M |
| | 2014.11- | 6MT | F | L | Estate FWD B48 A20 A;B46 A20 A;B48 A20 F | | GCI83553 | Inner Joint | | 37 | 32 | 35 | 58 | 102 | |
| | 2014.11- | 6MT | F | R | Estate FWD B48 A20 A;B46 A20 A;B48 A20 F | | GCI83386 | Inner Joint | | 37 | 32 | 35 | 450 | 90 | |
| | 2014.11- | 7DCT | F | L | Estate FWD B48 A20 A;B46 A20 A;B48 A20 F | | GDS84222 | Drive Shaft | | 31 | 27 | 56 | | 547 | |
| | 2014.11- | 7DCT | F | R | Estate FWD B48 A20 A;B46 A20 A;B48 A20 F | | GDS84223 | Drive Shaft | | 31 | 27 | 56 | | 936 | |
| | 2014.11- | 7DCT | F | L/R | Estate FWD B48 A20 A;B46 A20 A;B48 A20 F | | GCO82738 | Outer Joint | | 31 | 26 | 56 | | 73.5 | M |
| | 2014.11- | 7DCT | F | L | Estate FWD B48 A20 A;B46 A20 A;B48 A20 F | | GCI82649 | Inner Joint | | 27 | 32 | 35 | 58 | 102 | |
| | 2014.11- | 7DCT | F | R | Estate FWD B48 A20 A;B46 A20 A;B48 A20 F | | GCI82650 | Inner Joint | | 27 | 32 | 35 | 456 | 89 | |
| | 2014.11- | 8AT | F | L | Estate FWD B48 A20 A;B46 A20 A;B48 A20 F | | GDS82177 | Drive Shaft | | 31 | 28 | 56 | | 538 | |
| | 2014.11- | 8AT | F | R | Estate FWD B48 A20 A;B46 A20 A;B48 A20 F | | GDS84087 | Drive Shaft | | 31 | 28 | 56 | | 904 | |
| | 2014.11- | 8AT | F | L/R | Estate FWD B48 A20 A;B46 A20 A;B48 A20 F | | GCO81684 | Outer Joint | | 31 | 28 | 56 | | 77 | M |
| | 2014.11- | 8AT | F | L | Estate FWD B48 A20 A;B46 A20 A;B48 A20 F | | GCI81659 | Inner Joint | | 28 | 28 | 33 | 66 | 93.5 | |
| | 2014.11- | 8AT | F | R | Estate FWD B48 A20 A;B46 A20 A;B48 A20 F | | GCI82517 | Inner Joint | | 28 | 28 | 33 | 425 | 106.5 | |
| | 2016.03-2024.01 | 8AT | F | L | Estate 4WD B48 A20 A | Diameter:25mm | GDS82177 | Drive Shaft | | 31 | 28 | 56 | | 538 | |
| | 2016.03-2024.01 | 8AT | F | L/R | Estate 4WD B48 A20 A | | GCO81684 | Outer Joint | | 31 | 28 | 56 | | 77 | M |
| | 2016.03-2024.01 | 8AT | F | L | Estate 4WD B48 A20 A | Diameter:25mm | GCI81659 | Inner Joint | | 28 | 28 | 33 | 66 | 93.5 | |
| | 2016.03-2024.01 | 8AT/6MT | F | R | Estate 4WD B48 A20 A | | GDS82633 | Drive Shaft | | 31 | 35 | 56 | | 499 | |
| | 2016.03-2024.01 | 8AT/6MT | F | R | Estate 4WD B48 A20 A | | GCI81924 | Inner Joint | | 35 | 28 | 44.5 | | 126 | |
| | 2016.03-2024.01 | 8AT/6MT | R | L/R | Estate 4WD B48 A20 A | | GDS82176 | Drive Shaft | | 31 | 27 | 56 | | 731 | |
| | 2016.03-2024.01 | 8AT/6MT | R | L/R | Estate 4WD B48 A20 A | | GCO81685 | Outer Joint | | 31 | 30 | 56 | | 61.5 | I |
| | 2016.03-2024.01 | 8AT/6MT | R | L/R | Estate 4WD B48 A20 A | | GCI81658 | Inner Joint | | 27 | 30 | 43.7 | 87 | 100 | |
| 2.0 (155 kw) | 2014.11- | 8AT | F | L | Estate 4WD B48 A20 A | Diameter:25mm | GDS82177 | Drive Shaft | | 31 | 28 | 56 | | 538 | |
| | 2014.11- | 8AT | F | L/R | Estate 4WD B48 A20 A | | GCO81684 | Outer Joint | | 31 | 28 | 56 | | 77 | M |
| | 2014.11- | 8AT | F | L | Estate 4WD B48 A20 A | Diameter:25mm | GCI81659 | Inner Joint | | 28 | 28 | 33 | 66 | 93.5 | |
| | 2014.11- | 8AT/6MT | F | R | Estate 4WD B48 A20 A | | GDS82633 | Drive Shaft | | 31 | 35 | 56 | | 499 | |
| | 2014.11- | 8AT/6MT | F | R | Estate 4WD B48 A20 A | | GCI81924 | Inner Joint | | 35 | 28 | 44.5 | | 126 | |
| | 2014.11- | 8AT/6MT | R | L/R | Estate 4WD B48 A20 A | | GDS82176 | Drive Shaft | | 31 | 27 | 56 | | 731 | |
| | 2014.11- | 8AT/6MT | R | L/R | Estate 4WD B48 A20 A | | GCO81685 | Outer Joint | | 31 | 30 | 56 | | 61.5 | I |
| | 2014.11- | 8AT/6MT | R | L/R | Estate 4WD B48 A20 A | | GCI81658 | Inner Joint | | 27 | 30 | 43.7 | 87 | 100 | |
| | 2014.11-2018.06 | 6MT | F | L | Estate FWD B48 A20 A;B46 A20 A;B48 A20 F | | GDS56905 | Drive Shaft | | 31 | 37 | 56 | | 546 | |
| | 2014.11-2018.06 | 6MT | F | R | Estate FWD B48 A20 A;B46 A20 A;B48 A20 F | | GDS56579 | Drive Shaft | | 31 | 37 | 56 | | 931 | |
| | 2014.11-2018.06 | 6MT | F | L/R | Estate FWD B48 A20 A;B46 A20 A;B48 A20 F | | GCO83263 | Outer Joint | | 31 | 26 | 56 | | 73.5 | M |
| | 2014.11-2018.06 | 6MT | F | L | Estate FWD B48 A20 A;B46 A20 A;B48 A20 F | | GCI83553 | Inner Joint | | 37 | 32 | 35 | 58 | 102 | |
| | 2014.11-2018.06 | 6MT | F | R | Estate FWD B48 A20 A;B46 A20 A;B48 A20 F | | GCI83386 | Inner Joint | | 37 | 32 | 35 | 450 | 90 | |
| | 2014.11-2018.06 | 7DCT | F | L | Estate FWD B48 A20 A;B46 A20 A;B48 A20 F | | GDS84222 | Drive Shaft | | 31 | 27 | 56 | | 547 | |
| | 2014.11-2018.06 | 7DCT | F | R | Estate FWD B48 A20 A;B46 A20 A;B48 A20 F | | GDS84223 | Drive Shaft | | 31 | 27 | 56 | | 936 | |
| | 2014.11-2018.06 | 7DCT | F | L/R | Estate FWD B48 A20 A;B46 A20 A;B48 A20 F | | GCO82738 | Outer Joint | | 31 | 26 | 56 | | 73.5 | M |
| | 2014.11-2018.06 | 7DCT | F | L | Estate FWD B48 A20 A;B46 A20 A;B48 A20 F | | GCI82649 | Inner Joint | | 27 | 32 | 35 | 58 | 102 | |
| | 2014.11-2018.06 | 7DCT | F | R | Estate FWD B48 A20 A;B46 A20 A;B48 A20 F | | GCI82650 | Inner Joint | | 27 | 32 | 35 | 456 | 89 | |
| | 2014.11-2018.06 | 8AT | F | L | Estate FWD B48 A20 A;B46 A20 A;B48 A20 F | Diameter:25mm | GDS82177 | Drive Shaft | | 31 | 28 | 56 | | 538 | |
| | 2014.11-2018.06 | 8AT | F | R | Estate FWD B48 A20 A;B46 A20 A;B48 A20 F | | GDS84087 | Drive Shaft | | 31 | 28 | 56 | | 904 | |
| | 2014.11-2018.06 | 8AT | F | L/R | Estate FWD B48 A20 A;B46 A20 A;B48 A20 F | | GCO81684 | Outer Joint | | 31 | 28 | 56 | | 77 | M |
| | 2014.11-2018.06 | 8AT | F | L | Estate FWD B48 A20 A;B46 A20 A;B48 A20 F | Diameter:25mm | GCI81659 | Inner Joint | | 28 | 28 | 33 | 66 | 93.5 | |
| | 2014.11-2018.06 | 8AT | F | R | Estate FWD B48 A20 A;B46 A20 A;B48 A20 F | | GCI82517 | Inner Joint | | 28 | 28 | 33 | 425 | 106.5 | |
| 2.0 (170 kw) | 2016.11-2019.06 | 6MT | F | R | Estate 4WD B48 A20 B | | GCO81684 | Outer Joint | | 31 | 28 | 56 | | 77 | M |
| | 2016.11-2019.06 | 8AT | F | L | Estate 4WD B48 A20 B | Diameter:25mm | GDS82177 | Drive Shaft | | 31 | 28 | 56 | | 538 | |
| | 2016.11-2019.06 | 8AT | F | L/R | Estate 4WD B48 A20 B | | GCO81684 | Outer Joint | | 31 | 28 | 56 | | 77 | M |
| | 2016.11-2019.06 | 8AT | F | L | Estate 4WD B48 A20 B | Diameter:25mm | GCI81659 | Inner Joint | | 28 | 28 | 33 | 66 | 93.5 | |

| | YEAR | TRANSM. | F/R | L/R | BODY STYLE & DRIVE TYPE & ENGINE | REMARKS | G-AP Ref. | PRODUCT | ABS | Technical Specifications A | B | C | H | L | P |
|---|---|---|---|---|---|---|---|---|---|---|---|---|---|---|---|
| **MINI** | | | | | | | | | | | | | | | |
| **Mini Clubman** | | | | | | | | | | | | | | | |
| 2.0 (170 kw) | 2016.11-2019.06 | 8AT/6MT | F | R | Estate 4WD B48 A20 B | | GDS82633 | Drive Shaft | | 31 | 35 | 56 | | 499 | |
| | 2016.11-2019.06 | 8AT/6MT | F | R | Estate 4WD B48 A20 B | | GCI81924 | Inner Joint | | 35 | 28 | 44.5 | | 126 | |
| | 2016.11-2019.06 | 8AT/6MT | R | L/R | Estate 4WD B48 A20 B | | GDS82176 | Drive Shaft | | 31 | 27 | 56 | | 731 | |
| | 2016.11-2019.06 | 8AT/6MT | R | L/R | Estate 4WD B48 A20 B | | GCO81685 | Outer Joint | | 31 | 30 | 56 | | 61.5 | I |
| | 2016.11-2019.06 | 8AT/6MT | R | L/R | Estate 4WD B48 A20 B | | GCI81658 | Inner Joint | | 27 | 30 | 43.7 | 87 | 100 | |
| 2.0 (225 kw) | 2019.07- | 8AT | R | L/R | Estate 4WD B48 A20 E | | GDS82176 | Drive Shaft | | 31 | 27 | 56 | | 731 | |
| | 2019.07- | 8AT | R | L/R | Estate 4WD B48 A20 E | | GCO81685 | Outer Joint | | 31 | 30 | 56 | | 61.5 | I |
| | 2019.07- | 8AT | R | L/R | Estate 4WD B48 A20 E | | GCI81658 | Inner Joint | | 27 | 30 | 43.7 | 87 | 100 | |
| **Mini Clubvan** | | | | | | | | | | | | | | | |
| 1.6 (72 kw) | 2012.12-2014.06 | 6AT | F | R | Estate Van FWD N16 B16 A | Outer teeth of transm.side:26 | GDS85086 | Drive Shaft | | 26 | 26 | 54 | 75.5 | 877 | |
| | 2012.12-2014.06 | 6AT | F | L | Estate Van FWD N16 B16 A | | GCI85012 | Inner Joint | | 26 | 32 | 31 | 65 | 93 | |
| | 2012.12-2014.06 | 6MT | F | L/R | Estate Van FWD N16 B16 A | | GCO85009 | Outer Joint | | 26 | 24 | 54 | 75.5 | 65.5 | M |
| | 2012.12-2014.06 | AT | F | L | Estate Van FWD N16 B16 A | | GDS85024 | Drive Shaft | | 26 | 26 | 54 | 75.5 | 604 | |
| | 2012.12-2014.06 | MT | F | L | Estate Van FWD N16 B16 A | | GDS85041 | Drive Shaft | | 26 | 33 | 54 | 75.5 | 619 | |
| | 2012.12-2014.06 | MT | F | R | Estate Van FWD N16 B16 A | Outer teeth of transm.side:33 | GDS85045 | Drive Shaft | | 26 | 33 | 54 | 75.5 | 901 | |
| 1.6 (82 kw) | 2012.12-2014.06 | AT/MT | F | L/R | Estate Van FWD N47 C16 A | Date from:2013.01 | GCO85008 | Outer Joint | | 26 | 26 | 54 | 75.5 | 70 | M |
| | 2012.12-2014.06 | MT | F | L | Estate Van FWD N47 C16 A | | GDS85063 | Drive Shaft | | 26 | 34 | 54 | 75.5 | 590 | |
| | 2012.12-2014.06 | MT | F | R | Estate Van FWD N47 C16 A | | GDS85071 | Drive Shaft | | 26 | 34 | 54 | 75.5 | 918 | |
| | 2012.12-2014.06 | MT | F | R | Estate Van FWD N47 C16 A | | GCI85077 | Inner Joint | | 34 | 32 | 35 | 397 | 90 | |
| 1.6 (90 kw) | 2012.12-2014.06 | 6AT | F | R | Estate Van FWD N16 B16 A | Outer teeth of transm.side:26 | GDS85086 | Drive Shaft | | 26 | 26 | 54 | 75.5 | 877 | |
| | 2012.12-2014.06 | 6AT | F | L | Estate Van FWD N16 B16 A | | GCI85012 | Inner Joint | | 26 | 32 | 31 | 65 | 93 | |
| | 2012.12-2014.06 | 6MT | F | L/R | Estate Van FWD N16 B16 A | | GCO85009 | Outer Joint | | 26 | 24 | 54 | 75.5 | 65.5 | M |
| | 2012.12-2014.06 | AT | F | L | Estate Van FWD N16 B16 A | | GDS85024 | Drive Shaft | | 26 | 26 | 54 | 75.5 | 604 | |
| | 2012.12-2014.06 | MT | F | L | Estate Van FWD N16 B16 A | | GDS85041 | Drive Shaft | | 26 | 33 | 54 | 75.5 | 619 | |
| | 2012.12-2014.06 | MT | F | R | Estate Van FWD N16 B16 A | Outer teeth of transm.side:33 | GDS85045 | Drive Shaft | | 26 | 33 | 54 | 75.5 | 901 | |
| 2.0 (82 kw) | 2012.12-2014.06 | AT | F | L | Estate Van FWD N47 C20 A | | GDS85131 | Drive Shaft | | 26 | 26 | 54 | 75.5 | 589 | |
| | 2012.12-2014.06 | AT | F | R | Estate Van FWD N47 C20 A | | GDS85130 | Drive Shaft | | 26 | 26 | 54 | 75.5 | 895 | |
| | 2012.12-2014.06 | AT | F | L | Estate Van FWD N47 C20 A | | GCI85012 | Inner Joint | | 26 | 32 | 31 | 65 | 93 | |
| | 2012.12-2014.06 | AT/MT | F | L/R | Estate Van FWD N47 C20 A | Date from:2013.01 | GCO85008 | Outer Joint | | 26 | 26 | 54 | 75.5 | 70 | M |
| | 2012.12-2014.06 | MT | F | L | Estate Van FWD N47 C20 A | Date from:2013.01 | GDS85063 | Drive Shaft | | 26 | 34 | 54 | 75.5 | 590 | |
| | 2012.12-2014.06 | MT | F | R | Estate Van FWD N47 C20 A | | GDS85071 | Drive Shaft | | 26 | 34 | 54 | 75.5 | 918 | |
| **Mini Cooper** | | | | | | | | | | | | | | | |
| 1.5 (85 kw) | 2013.12- | 6AT | F | L | Hatchback FWD B37 C15 A | | GDS82382 | Drive Shaft | | 31 | 26 | 56 | | 500 | |
| | 2013.12- | 6AT | F | R | Hatchback FWD B37 C15 A | | GDS82380 | Drive Shaft | | 31 | 26 | 56 | | 868 | |
| | 2013.12- | 6AT | F | L | Hatchback FWD B37 C15 A | | GCI81756 | Inner Joint | | 26 | 33 | 31 | 65 | 91.5 | |
| | 2013.12- | 6MT | F | L | Hatchback FWD B37 C15 A | | GDS57953 | Drive Shaft | | 31 | 37 | 56 | | 505 | |
| | 2013.12- | 6MT | F | R | Hatchback FWD B37 C15 A | | GDS56851 | Drive Shaft | | 31 | 37 | 56 | | 892 | |
| | 2013.12- | 6MT | F | L | Hatchback FWD B37 C15 A | | GCI82835 | Inner Joint | | 37 | 33 | 35 | 58 | 108.5 | |
| | 2013.12- | 6MT | F | R | Hatchback FWD B37 C15 A | | GCI82836 | Inner Joint | | 37 | 33 | 35 | 414 | 103.5 | |
| | 2013.12- | 6MT/6AT | F | L/R | Hatchback FWD B37 C15 A | | GCO81811 | Outer Joint | | 31 | 33 | 56 | | 70 | I |
| | 2013.12- | 7DCT | F | L | Hatchback FWD B37 C15 A | | GDS58224 | Drive Shaft | | 31 | 27 | 56 | | 509 | |
| | 2013.12- | 7DCT | F | R | Hatchback FWD B37 C15 A | | GDS58225 | Drive Shaft | | 31 | 27 | 56 | | 901 | |
| | 2013.12- | 7DCT | F | L/R | Hatchback FWD B37 C15 A | | GCO83263 | Outer Joint | | 31 | 26 | 56 | | 73.5 | M |
| | 2013.12- | 7DCT | F | L | Hatchback FWD B37 C15 A | | GCI82649 | Inner Joint | | 27 | 32 | 35 | 58 | 102 | |
| | 2013.12- | 7DCT | F | R | Hatchback FWD B37 C15 A | | GCI82648 | Inner Joint | | 27 | 32 | 35 | 420 | 89 | |
| | 2014.07- | 6AT | F | L | Hatchback FWD B37 C15 A | | GDS82382 | Drive Shaft | | 31 | 26 | 56 | | 500 | |
| | 2014.07- | 6AT | F | R | Hatchback FWD B37 C15 A | | GDS82380 | Drive Shaft | | 31 | 26 | 56 | | 868 | |
| | 2014.07- | 6AT | F | L | Hatchback FWD B37 C15 A | | GCI81756 | Inner Joint | | 26 | 33 | 31 | 65 | 91.5 | |
| | 2014.07- | 6MT | F | L | Hatchback FWD B37 C15 A | | GDS57953 | Drive Shaft | | 31 | 37 | 56 | | 505 | |
| | 2014.07- | 6MT | F | R | Hatchback FWD B37 C15 A | | GDS56851 | Drive Shaft | | 31 | 37 | 56 | | 892 | |
| | 2014.07- | 6MT | F | R | Hatchback FWD B37 C15 A | | GCO81811 | Outer Joint | | 31 | 33 | 56 | | 70 | I |
| | 2014.07- | 6MT | F | L | Hatchback FWD B37 C15 A | | GCI82835 | Inner Joint | | 37 | 33 | 35 | 58 | 108.5 | |
| | 2014.07- | 6MT | F | R | Hatchback FWD B37 C15 A | | GCI82836 | Inner Joint | | 37 | 33 | 35 | 414 | 103.5 | |
| | 2015.11- | 6AT | F | L | Convertible FWD B37 C15 A | | GDS82382 | Drive Shaft | | 31 | 26 | 56 | | 500 | |
| | 2015.11- | 6AT | F | R | Convertible FWD B37 C15 A | | GDS82380 | Drive Shaft | | 31 | 26 | 56 | | 868 | |
| | 2015.11- | 6AT | F | L | Convertible FWD B37 C15 A | | GCI81756 | Inner Joint | | 26 | 33 | 31 | 65 | 91.5 | |
| | 2015.11- | 6MT | F | L | Convertible FWD B37 C15 A | | GDS57953 | Drive Shaft | | 31 | 37 | 56 | | 505 | |
| | 2015.11- | 6MT | F | R | Convertible FWD B37 C15 A | | GDS56851 | Drive Shaft | | 31 | 37 | 56 | | 892 | |
| | 2015.11- | 6MT | F | L | Convertible FWD B37 C15 A | | GCI82835 | Inner Joint | | 37 | 33 | 35 | 58 | 108.5 | |
| | 2015.11- | 6MT | F | R | Convertible FWD B37 C15 A | | GCI82836 | Inner Joint | | 37 | 33 | 35 | 414 | 103.5 | |
| | 2015.11- | 6MT/6AT | F | L/R | Convertible FWD B37 C15 A | | GCO81811 | Outer Joint | | 31 | 33 | 56 | | 70 | I |
| | 2015.11- | 7DCT | F | L | Convertible FWD B37 C15 A | | GDS58224 | Drive Shaft | | 31 | 27 | 56 | | 509 | |
| | 2015.11- | 7DCT | F | R | Convertible FWD B37 C15 A | | GDS58225 | Drive Shaft | | 31 | 27 | 56 | | 901 | |
| | 2015.11- | 7DCT | F | L/R | Convertible FWD B37 C15 A | | GCO83263 | Outer Joint | | 31 | 26 | 56 | | 73.5 | M |
| | 2015.11- | 7DCT | F | L | Convertible FWD B37 C15 A | | GCI82649 | Inner Joint | | 27 | 32 | 35 | 58 | 102 | |

| | YEAR | TRANSM. | F/R | L/R | BODY STYLE & DRIVE TYPE & ENGINE | REMARKS | G-AP Ref. | PRODUCT | ABS | Technical Specifications | | | | | |
|---|---|---|---|---|---|---|---|---|---|---|---|---|---|---|---|
| | | | | | | | | | | A | B | C | H | L | P |
| **MINI**<br>**Mini Cooper** | | | | | | | | | | | | | | | |
| 1.5 (85 kw) | 2015.11- | 7DCT | F | R | Convertible FWD B37 C15 A | | GCI82648 | Inner Joint | | 27 | 32 | 35 | 420 | 89 | |
| 1.5 (100 kw) | 2013.12- | 6AT | F | L | Hatchback FWD B38 A15 A;B36 A15 A;B38 A15 F | | GDS82382 | Drive Shaft | | 31 | 26 | 56 | | 500 | |
| | 2013.12- | 6AT | F | R | Hatchback FWD B38 A15 A;B36 A15 A;B38 A15 F | | GDS82380 | Drive Shaft | | 31 | 26 | 56 | | 868 | |
| | 2013.12- | 6AT | F | L/R | Hatchback FWD B38 A15 A;B36 A15 A;B38 A15 F | | GCO81811 | Outer Joint | | 31 | 33 | 56 | | 70 | I |
| | 2013.12- | 6AT | F | L | Hatchback FWD B38 A15 A;B36 A15 A;B38 A15 F | | GCI81756 | Inner Joint | | 26 | 33 | 31 | 65 | 91.5 | |
| | 2013.12- | 6MT | F | L | Hatchback FWD B38 A15 A;B36 A15 A;B38 A15 F | | GDS82381 | Drive Shaft | | 31 | 34 | 56 | | 527 | |
| | 2013.12- | 6MT | F | R | Hatchback FWD B38 A15 A;B36 A15 A;B38 A15 F | | GDS82174 | Drive Shaft | | 31 | 34 | 56 | | 882 | |
| | 2013.12- | 6MT | F | L/R | Hatchback FWD B38 A15 A;B36 A15 A;B38 A15 F | | GCO81683 | Outer Joint | | 31 | 33 | 56 | | 71 | M |
| | 2013.12- | 6MT | F | L | Hatchback FWD B38 A15 A;B36 A15 A;B38 A15 F | | GCI81758 | Inner Joint | | 34 | 33 | 35 | 54.5 | 96 | |
| | 2013.12- | 6MT | F | R | Hatchback FWD B38 A15 A;B36 A15 A;B38 A15 F | | GCI81917 | Inner Joint | | 34 | 33 | 35 | 401 | 83 | |
| | 2013.12- | 7DCT | F | L | Hatchback FWD B38 A15 A;B36 A15 A;B38 A15 F | | GDS58224 | Drive Shaft | | 31 | 27 | 56 | | 509 | |
| | 2013.12- | 7DCT | F | R | Hatchback FWD B38 A15 A;B36 A15 A;B38 A15 F | | GDS58225 | Drive Shaft | | 31 | 27 | 56 | | 901 | |
| | 2013.12- | 7DCT | F | L/R | Hatchback FWD B38 A15 A;B36 A15 A;B38 A15 F | | GCO83263 | Outer Joint | | 31 | 26 | 56 | | 73.5 | M |
| | 2013.12- | 7DCT | F | L | Hatchback FWD B38 A15 A;B36 A15 A;B38 A15 F | | GCI82649 | Inner Joint | | 27 | 32 | 35 | 58 | 102 | |
| | 2013.12- | 7DCT | F | R | Hatchback FWD B38 A15 A;B36 A15 A;B38 A15 F | | GCI82648 | Inner Joint | | 27 | 32 | 35 | 420 | 89 | |
| | 2014.07- | 6AT | F | L | Hatchback FWD B38 A15 A;B36 A15 A;B38 A15 F | | GDS82382 | Drive Shaft | | 31 | 26 | 56 | | 500 | |
| | 2014.07- | 6AT | F | R | Hatchback FWD B38 A15 A;B36 A15 A;B38 A15 F | | GDS82380 | Drive Shaft | | 31 | 26 | 56 | | 868 | |
| | 2014.07- | 6AT | F | L/R | Hatchback FWD B38 A15 A;B36 A15 A;B38 A15 F | | GCO81811 | Outer Joint | | 31 | 33 | 56 | | 70 | I |
| | 2014.07- | 6AT | F | L | Hatchback FWD B38 A15 A;B36 A15 A;B38 A15 F | | GCI81756 | Inner Joint | | 26 | 33 | 31 | 65 | 91.5 | |
| | 2014.07- | 6MT | F | L | Hatchback FWD B38 A15 A;B36 A15 A;B38 A15 F | | GDS82381 | Drive Shaft | | 31 | 34 | 56 | | 527 | |
| | 2014.07- | 6MT | F | R | Hatchback FWD B38 A15 A;B36 A15 A;B38 A15 F | | GDS82174 | Drive Shaft | | 31 | 34 | 56 | | 882 | |
| | 2014.07- | 6MT | F | L/R | Hatchback FWD B38 A15 A;B36 A15 A;B38 A15 F | | GCO81683 | Outer Joint | | 31 | 33 | 56 | | 71 | M |
| | 2014.07- | 6MT | F | L | Hatchback FWD B38 A15 A;B36 A15 A;B38 A15 F | | GCI81758 | Inner Joint | | 34 | 33 | 35 | 54.5 | 96 | |
| | 2014.07- | 6MT | F | R | Hatchback FWD B38 A15 A;B36 A15 A;B38 A15 F | | GCI81917 | Inner Joint | | 34 | 33 | 35 | 401 | 83 | |
| | 2015.11- | 6AT | F | L | Convertible FWD B38 A15 A;B36 A15 A;B38 A15 F | | GDS82382 | Drive Shaft | | 31 | 26 | 56 | | 500 | |
| | 2015.11- | 6AT | F | R | Convertible FWD B38 A15 A;B36 A15 A;B38 A15 F | | GDS82380 | Drive Shaft | | 31 | 26 | 56 | | 868 | |
| | 2015.11- | 6AT | F | L/R | Convertible FWD B38 A15 A;B36 A15 A;B38 A15 F | | GCO81811 | Outer Joint | | 31 | 33 | 56 | | 70 | I |
| | 2015.11- | 6AT | F | L | Convertible FWD B38 A15 A;B36 A15 A;B38 A15 F | | GCI81756 | Inner Joint | | 26 | 33 | 31 | 65 | 91.5 | |
| | 2015.11- | 6MT | F | L | Convertible FWD B38 A15 A;B36 A15 A;B38 A15 F | | GDS82381 | Drive Shaft | | 31 | 34 | 56 | | 527 | |
| | 2015.11- | 6MT | F | R | Convertible FWD B38 A15 A;B36 A15 A;B38 A15 F | | GDS82174 | Drive Shaft | | 31 | 34 | 56 | | 882 | |
| | 2015.11- | 6MT | F | L/R | Convertible FWD B38 A15 A;B36 A15 A;B38 A15 F | | GCO81683 | Outer Joint | | 31 | 33 | 56 | | 71 | M |
| | 2015.11- | 6MT | F | L | Convertible FWD B38 A15 A;B36 A15 A;B38 A15 F | | GCI81758 | Inner Joint | | 34 | 33 | 35 | 54.5 | 96 | |
| | 2015.11- | 6MT | F | R | Convertible FWD B38 A15 A;B36 A15 A;B38 A15 F | | GCI81917 | Inner Joint | | 34 | 33 | 35 | 401 | 83 | |
| | 2015.11- | 7DCT | F | L | Convertible FWD B38 A15 A;B36 A15 A;B38 A15 F | | GDS58224 | Drive Shaft | | 31 | 27 | 56 | | 509 | |
| | 2015.11- | 7DCT | F | R | Convertible FWD B38 A15 A;B36 A15 A;B38 A15 F | Date to:2021.02,Date from:2021.03,For left-hand drive vehicles | GDS58225 | Drive Shaft | | 31 | 27 | 56 | | 901 | |
| | 2015.11- | 7DCT | F | R | Convertible FWD B38 A15 A;B36 A15 A;B38 A15 F | Date from:2021.03,For right-hand drive vehicles | GDS84221 | Drive Shaft | | 31 | 27 | 56 | | 938 | |
| | 2015.11- | 7DCT | F | L/R | Convertible FWD B38 A15 A;B36 A15 A;B38 A15 F | | GCO83263 | Outer Joint | | 31 | 26 | 56 | | 73.5 | M |
| | 2015.11- | 7DCT | F | L | Convertible FWD B38 A15 A;B36 A15 A;B38 A15 F | | GCI82649 | Inner Joint | | 27 | 32 | 35 | 58 | 102 | |
| | 2015.11- | 7DCT | F | R | Convertible FWD B38 A15 A;B36 A15 A;B38 A15 F | | GCI82648 | Inner Joint | | 27 | 32 | 35 | 420 | 89 | |
| 1.6 (80 kw) | 2006.11-2010.09 | 6MT | F | R | Hatchback FWD 9HZ (DV6TED4);W16 D16 (9HZ) | | GCI85077 | Inner Joint | | 34 | 32 | 35 | 397 | 90 | |
| | 2006.11-2010.09 | AT | F | L | Hatchback FWD 9HZ (DV6TED4);W16 D16 (9HZ) | | GDS85131 | Drive Shaft | | 26 | 26 | 54 | 75.5 | 589 | |
| | 2006.11-2010.09 | AT | F | R | Hatchback FWD 9HZ (DV6TED4);W16 D16 (9HZ) | | GDS85130 | Drive Shaft | | 26 | 26 | 54 | 75.5 | 895 | |
| | 2006.11-2010.09 | AT | F | L | Hatchback FWD 9HZ (DV6TED4);W16 D16 (9HZ) | | GCI85012 | Inner Joint | | 26 | 32 | 31 | 65 | 93 | |
| | 2006.11-2010.09 | AT/MT | F | L/R | Hatchback FWD 9HZ (DV6TED4);W16 D16 (9HZ) | | GCO85008 | Outer Joint | | 26 | 26 | 54 | 75.5 | 70 | M |
| | 2006.11-2010.09 | MT | F | L | Hatchback FWD 9HZ (DV6TED4);W16 D16 (9HZ) | | GDS85063 | Drive Shaft | | 26 | 34 | 54 | 75.5 | 590 | |
| | 2006.11-2010.09 | MT | F | R | Hatchback FWD 9HZ (DV6TED4);W16 D16 (9HZ) | | GDS85071 | Drive Shaft | | 26 | 34 | 54 | 75.5 | 918 | |
| 1.6 (82 kw) | 2009.05-2013.11 | 6MT | F | L | Convertible FWD N47 C16 A | | GDS85063 | Drive Shaft | | 26 | 34 | 54 | 75.5 | 590 | |
| | 2009.05-2013.11 | 6MT | F | R | Convertible FWD N47 C16 A | | GDS85071 | Drive Shaft | | 26 | 34 | 54 | 75.5 | 918 | |
| | 2009.05-2013.11 | 6MT | F | R | Convertible FWD N47 C16 A | | GCI85077 | Inner Joint | | 34 | 32 | 35 | 397 | 90 | |
| | 2009.05-2013.11 | AT/MT | F | L/R | Convertible FWD N47 C16 A | | GCO85008 | Outer Joint | | 26 | 26 | 54 | 75.5 | 70 | M |
| | 2010.06-2013.11 | 6AT/6MT | F | L | Hatchback FWD N47 C16 A | | GDS85063 | Drive Shaft | | 26 | 34 | 54 | 75.5 | 590 | |
| | 2010.06-2013.11 | 6AT/6MT | F | R | Hatchback FWD N47 C16 A | | GDS85071 | Drive Shaft | | 26 | 34 | 54 | 75.5 | 918 | |
| | 2010.06-2013.11 | AT | F | L | Hatchback FWD N47 C16 A | | GDS85131 | Drive Shaft | | 26 | 26 | 54 | 75.5 | 589 | |
| | 2010.06-2013.11 | AT | F | L | Hatchback FWD N47 C16 A | | GCI85012 | Inner Joint | | 26 | 32 | 31 | 65 | 93 | |
| | 2010.06-2013.11 | AT/MT | F | L/R | Hatchback FWD N47 C16 A | | GCO85008 | Outer Joint | | 26 | 26 | 54 | 75.5 | 70 | M |
| 1.6 (85 kw) | 2001.06-2006.09 | 5MT | F | L | Hatchback FWD W10 B16 A | Date from:2004.08 | GDS85053 | Drive Shaft | | 26 | 33 | 53.5 | 76 | 588 | |
| | 2001.06-2006.09 | 5MT | F | L | Hatchback FWD W10 B16 A | Date to:2004.07;Inner teeth of tranm.side:30 | GDS99285 | Drive Shaft | | 26 | 22 | 53.5 | 76 | 616 | |
| | 2001.06-2006.09 | CVT | F | L | Hatchback FWD W10 B16 A | | GDS99288 | Drive Shaft | | 26 | 23 | 53.5 | 76 | 617 | |
| | 2001.06-2006.09 | CVT | F | R | Hatchback FWD W10 B16 A | | GDS81066 | Drive Shaft | | 26 | 23 | 53.5 | 76 | 894 | |
| | 2001.06-2006.09 | MT | F | L | Hatchback FWD W10 B16 A | Date to:2004.07;Inner teeth of tranm.side:21 | GDS38005 | Drive Shaft | | 26 | 22 | 53.5 | 76 | 616 | |
| | 2001.06-2006.09 | MT | F | R | Hatchback FWD W10 B16 A | Date to:2004.07;without Rim protector | GDS38003 | Drive Shaft | | 26 | 22 | 53.5 | 76 | 886 | |
| | 2001.06-2006.09 | MT | F | R | Hatchback FWD W10 B16 A | Date from:2004.08;without Rim protector | GDS85025 | Drive Shaft | | 26 | 33 | 53.5 | 76 | 924 | |
| | 2001.06-2006.09 | MT | F | R | Hatchback FWD W10 B16 A | Date to:2004.07 | GCO38002 | Outer Joint | | 26 | 21 | 53.5 | 76 | 61 | M |
| | 2001.06-2006.09 | MT | F | L | Hatchback FWD W10 B16 A | Date from:2004.08 | GCI85044 | Inner Joint | | 33 | 22 | 34.9 | 58 | 106 | |
| | 2001.06-2006.09 | MT | F | R | Hatchback FWD W10 B16 A | Date to:2004.07 | GCI38004 | Inner Joint | | 22 | 21 | 36 | 332 | 96 | |

| | YEAR | TRANSM. | F/R | L/R | BODY STYLE & DRIVE TYPE & ENGINE | REMARKS | G-AP Ref. | PRODUCT | ABS | Technical Specifications | | | | | |
|---|---|---|---|---|---|---|---|---|---|---|---|---|---|---|---|
| | | | | | | | | | | A | B | C | H | L | P |
| **MINI**<br>**Mini Cooper** | | | | | | | | | | | | | | | |
| 1.6 (85 kw) | 2004.04-2008.07 | 5MT | F | L | Convertible FWD W10 B16 A | | GDS85053 | Drive Shaft | | 26 | 33 | 53.5 | 76 | 588 | |
| | 2004.04-2008.07 | CVT | F | L | Convertible FWD W10 B16 A | | GDS99288 | Drive Shaft | | 26 | 23 | 53.5 | 76 | 617 | |
| | 2004.04-2008.07 | CVT | F | R | Convertible FWD W10 B16 A | | GDS81066 | Drive Shaft | | 26 | 23 | 53.5 | 76 | 894 | |
| | 2004.04-2008.07 | CVT/5MT | F | L/R | Convertible FWD W10 B16 A | | GCO38002 | Outer Joint | | 26 | 21 | 53.5 | 76 | 61 | M |
| | 2004.04-2008.07 | MT | F | R | Convertible FWD W10 B16 A | without Rim protector | GDS85025 | Drive Shaft | | 26 | 33 | 53.5 | 76 | 924 | |
| | 2004.04-2008.07 | MT | F | L | Convertible FWD W10 B16 A | | GCI85044 | Inner Joint | | 33 | 22 | 34.9 | 58 | 106 | |
| | 2006.09-2013.11 | 6AT | F | L | Hatchback FWD N12 B16 A;N16 B16 A | | GDS85024 | Drive Shaft | | 26 | 26 | 54 | 75.5 | 604 | |
| | 2006.09-2013.11 | 6AT | F | R | Hatchback FWD N12 B16 A;N16 B16 A | | GDS85086 | Drive Shaft | | 26 | 26 | 54 | 75.5 | 877 | |
| | 2006.09-2013.11 | 6AT | F | L | Hatchback FWD N12 B16 A;N16 B16 A | | GCI85012 | Inner Joint | | 26 | 32 | 31 | 65 | 93 | |
| | 2006.09-2013.11 | 6MT | F | L | Hatchback FWD N12 B16 A;N16 B16 A | | GDS85041 | Drive Shaft | | 26 | 33 | 54 | 75.5 | 619 | |
| | 2006.09-2013.11 | 6MT | F | R | Hatchback FWD N12 B16 A;N16 B16 A | | GDS85045 | Drive Shaft | | 26 | 33 | 54 | 75.5 | 901 | |
| | 2006.09-2013.11 | 6MT | F | L/R | Hatchback FWD N12 B16 A;N16 B16 A | | GCO85009 | Outer Joint | | 26 | 24 | 54 | 75.5 | 65.5 | M |
| | 2006.09-2013.11 | AT | F | L | Hatchback FWD N12 B16 A;N16 B16 A | Date from:2010.01 | GDS85131 | Drive Shaft | | 26 | 26 | 54 | 75.5 | 589 | |
| | 2006.09-2013.11 | AT | F | L | Hatchback FWD N12 B16 A;N16 B16 A | Date from:2010.01 | GCO85008 | Outer Joint | | 26 | 26 | 54 | 75.5 | 70 | M |
| | 2008.12-2015.06 | AT | F | L | Convertible FWD N12 B16 A;N16 B16 A | | GDS85024 | Drive Shaft | | 26 | 26 | 54 | 75.5 | 604 | |
| | 2008.12-2015.06 | AT | F | L | Convertible FWD N12 B16 A;N16 B16 A | | GDS85131 | Drive Shaft | | 26 | 26 | 54 | 75.5 | 589 | |
| | 2008.12-2015.06 | AT | F | R | Convertible FWD N12 B16 A;N16 B16 A | | GDS85086 | Drive Shaft | | 26 | 26 | 54 | 75.5 | 877 | |
| | 2008.12-2015.06 | AT | F | | Convertible FWD N12 B16 A;N16 B16 A | | GCO85008 | Outer Joint | | 26 | 26 | 54 | 75.5 | 70 | M |
| | 2008.12-2015.06 | AT | F | L | Convertible FWD N12 B16 A;N16 B16 A | | GCI85012 | Inner Joint | | 26 | 32 | 31 | 65 | 93 | |
| | 2008.12-2015.06 | AT/MT | F | L/R | Convertible FWD N12 B16 A;N16 B16 A | | GCO85009 | Outer Joint | | 26 | 24 | 54 | 75.5 | 65.5 | M |
| | 2008.12-2015.06 | MT | F | L | Convertible FWD N12 B16 A;N16 B16 A | | GDS85041 | Drive Shaft | | 26 | 33 | 54 | 75.5 | 619 | |
| | 2008.12-2015.06 | MT | F | R | Convertible FWD N12 B16 A;N16 B16 A | | GDS85045 | Drive Shaft | | 26 | 33 | 54 | 75.5 | 901 | |
| 1.6 (88 kw) | 2006.10-2012.02 | 6AT | F | L | Hatchback FWD N12 B16 A;N16 B16 A | | GDS85024 | Drive Shaft | | 26 | 26 | 54 | 75.5 | 604 | |
| | 2006.10-2012.02 | 6AT | F | R | Hatchback FWD N12 B16 A;N16 B16 A | | GDS85086 | Drive Shaft | | 26 | 26 | 54 | 75.5 | 877 | |
| | 2006.10-2012.02 | 6AT | F | L | Hatchback FWD N12 B16 A;N16 B16 A | | GCI85012 | Inner Joint | | 26 | 32 | 31 | 65 | 93 | |
| | 2006.10-2012.02 | 6MT | F | L | Hatchback FWD N12 B16 A;N16 B16 A | | GDS85041 | Drive Shaft | | 26 | 33 | 54 | 75.5 | 619 | |
| | 2006.10-2012.02 | 6MT | F | R | Hatchback FWD N12 B16 A;N16 B16 A | | GDS85045 | Drive Shaft | | 26 | 33 | 54 | 75.5 | 901 | |
| | 2006.10-2012.02 | 6MT | F | L/R | Hatchback FWD N12 B16 A;N16 B16 A | | GCO85009 | Outer Joint | | 26 | 24 | 54 | 75.5 | 65.5 | M |
| | 2006.10-2012.02 | AT | F | L | Hatchback FWD N12 B16 A;N16 B16 A | | GDS85131 | Drive Shaft | | 26 | 26 | 54 | 75.5 | 589 | |
| | 2006.10-2012.02 | AT | F | | Hatchback FWD N12 B16 A;N16 B16 A | | GCO85008 | Outer Joint | | 26 | 26 | 54 | 75.5 | 70 | M |
| | 2006.10-2012.02 | | F | L/R | Hatchback FWD N12 B16 A;N16 B16 A | | GCO38002 | Outer Joint | | 26 | 21 | 53.5 | 76 | 61 | M |
| | 2008.12-2010.07 | 6AT | F | L | Convertible FWD N12 B16 A | | GDS85024 | Drive Shaft | | 26 | 26 | 54 | 75.5 | 604 | |
| | 2008.12-2010.07 | 6AT | F | R | Convertible FWD N12 B16 A | | GDS85086 | Drive Shaft | | 26 | 26 | 54 | 75.5 | 877 | |
| | 2008.12-2010.07 | 6AT | F | L | Convertible FWD N12 B16 A | | GCI85012 | Inner Joint | | 26 | 32 | 31 | 65 | 93 | |
| | 2008.12-2010.07 | 6MT | F | L | Convertible FWD N12 B16 A | | GDS85041 | Drive Shaft | | 26 | 33 | 54 | 75.5 | 619 | |
| | 2008.12-2010.07 | 6MT | F | R | Convertible FWD N12 B16 A | | GDS85045 | Drive Shaft | | 26 | 33 | 54 | 75.5 | 901 | |
| | 2008.12-2010.07 | 6MT | F | L/R | Convertible FWD N12 B16 A | | GCO85009 | Outer Joint | | 26 | 24 | 54 | 75.5 | 65.5 | M |
| 1.6 (90 kw) | 2009.09-2013.11 | 6AT | F | L | Hatchback FWD N12 B16 A;N16 B16 A | | GDS85024 | Drive Shaft | | 26 | 26 | 54 | 75.5 | 604 | |
| | 2009.09-2013.11 | 6AT | F | R | Hatchback FWD N12 B16 A;N16 B16 A | | GDS85086 | Drive Shaft | | 26 | 26 | 54 | 75.5 | 877 | |
| | 2009.09-2013.11 | 6AT | F | L | Hatchback FWD N12 B16 A;N16 B16 A | | GCI85012 | Inner Joint | | 26 | 32 | 31 | 65 | 93 | |
| | 2009.09-2013.11 | 6MT | F | L | Hatchback FWD N12 B16 A;N16 B16 A | | GDS85041 | Drive Shaft | | 26 | 33 | 54 | 75.5 | 619 | |
| | 2009.09-2013.11 | 6MT | F | R | Hatchback FWD N12 B16 A;N16 B16 A | | GDS85045 | Drive Shaft | | 26 | 33 | 54 | 75.5 | 901 | |
| | 2009.09-2013.11 | 6MT | F | L/R | Hatchback FWD N12 B16 A;N16 B16 A | | GCO85009 | Outer Joint | | 26 | 24 | 54 | 75.5 | 65.5 | M |
| | 2010.03-2015.06 | 6AT | F | L | Convertible FWD N16 B16 A | | GDS85024 | Drive Shaft | | 26 | 26 | 54 | 75.5 | 604 | |
| | 2010.03-2015.06 | 6AT | F | R | Convertible FWD N16 B16 A | | GDS85086 | Drive Shaft | | 26 | 26 | 54 | 75.5 | 877 | |
| | 2010.03-2015.06 | 6AT | F | L | Convertible FWD N16 B16 A | | GCI85012 | Inner Joint | | 26 | 32 | 31 | 65 | 93 | |
| | 2010.03-2015.06 | 6MT | F | L | Convertible FWD N16 B16 A | | GDS85041 | Drive Shaft | | 26 | 33 | 54 | 75.5 | 619 | |
| | 2010.03-2015.06 | 6MT | F | R | Convertible FWD N16 B16 A | | GDS85045 | Drive Shaft | | 26 | 33 | 54 | 75.5 | 901 | |
| | 2010.03-2015.06 | 6MT | F | L/R | Convertible FWD N16 B16 A | | GCO85009 | Outer Joint | | 26 | 24 | 54 | 75.5 | 65.5 | M |
| 1.6 (120 kw) | 2002.03-2006.09 | 6MT | F | L | Hatchback FWD W11 B16 A | | GDS38001 | Drive Shaft | | 26 | 34 | 53.5 | 74 | 590 | |
| | 2002.03-2006.09 | 6MT | F | R | Hatchback FWD W11 B16 A | | GDS38002 | Drive Shaft | | 26 | 34 | 53.5 | 74 | 917 | |
| | 2002.03-2006.09 | 6MT | F | L/R | Hatchback FWD W11 B16 A | | GCO38003 | Outer Joint | | 26 | 23 | 53.5 | 74 | 63.5 | M |
| | 2002.03-2006.09 | 6MT | F | L | Hatchback FWD W11 B16 A | | GCI38001 | Inner Joint | | 34 | 23 | 40 | 54 | 97 | |
| | 2002.03-2006.09 | 6MT | F | R | Hatchback FWD W11 B16 A | | GCI38002 | Inner Joint | | 34 | 23 | 36 | 333 | 145 | |
| | 2004.07-2007.11 | 6MT | F | L | Convertible FWD W11 B16 A | | GDS38001 | Drive Shaft | | 26 | 34 | 53.5 | 74 | 590 | |
| | 2004.07-2007.11 | 6MT | F | L/R | Convertible FWD W11 B16 A | | GCO38003 | Outer Joint | | 26 | 23 | 53.5 | 74 | 63.5 | M |
| | 2004.07-2007.11 | AT | F | L | Convertible FWD W11 B16 A | | GDS85131 | Drive Shaft | | 26 | 26 | 54 | 75.5 | 589 | |
| | 2004.07-2007.11 | MT | F | R | Convertible FWD W11 B16 A | | GDS38002 | Drive Shaft | | 26 | 34 | 53.5 | 74 | 917 | |
| | 2004.07-2007.11 | MT | F | L | Convertible FWD W11 B16 A | | GCI38001 | Inner Joint | | 34 | 23 | 40 | 54 | 97 | |
| | 2004.07-2007.11 | MT | F | R | Convertible FWD W11 B16 A | | GCI38002 | Inner Joint | | 34 | 23 | 36 | 333 | 145 | |
| | 2004.07-2007.11 | | F | L | Convertible FWD W11 B16 A | | GCO38001 | Outer Joint | | 26 | 23 | 53.5 | 76 | 64 | M |
| | 2007.10-2015.06 | 6MT | F | R | Convertible FWD N14 B16 A;N18 B16 A | | GCI85077 | Inner Joint | | 34 | 32 | 35 | 397 | 90 | |
| | 2007.10-2015.06 | AT | F | L | Convertible FWD N14 B16 A;N18 B16 A | | GDS85024 | Drive Shaft | | 26 | 26 | 54 | 75.5 | 604 | |
| | 2007.10-2015.06 | AT | F | R | Convertible FWD N14 B16 A;N18 B16 A | Outer teeth of transm.side:26 | GDS85086 | Drive Shaft | | 26 | 26 | 54 | 75.5 | 877 | |
| | 2007.10-2015.06 | AT | F | L | Convertible FWD N14 B16 A;N18 B16 A | | GCI85012 | Inner Joint | | 26 | 32 | 31 | 65 | 93 | |

| | YEAR | TRANSM. | F/R | L/R | BODY STYLE & DRIVE TYPE & ENGINE | REMARKS | G-AP Ref. | PRODUCT | ABS | Technical Specifications A | B | C | H | L | P |
|---|---|---|---|---|---|---|---|---|---|---|---|---|---|---|---|
| **MINI** **Mini Cooper** | | | | | | | | | | | | | | | |
| 1.6 (120 kw) | 2007.10-2015.06 | MT | F | L | Convertible FWD N14 B16 A;N18 B16 A | | GDS85063 | Drive Shaft | | 26 | 34 | 54 | 75.5 | 590 | |
| | 2007.10-2015.06 | MT | F | R | Convertible FWD N14 B16 A;N18 B16 A | Outer teeth of transm.side:34 | GDS85071 | Drive Shaft | | 26 | 34 | 54 | 75.5 | 918 | |
| | 2007.10-2015.06 | MT | F | L/R | Convertible FWD N14 B16 A;N18 B16 A | | GCO85008 | Outer Joint | | 26 | 26 | 54 | 75.5 | 70 | M |
| | 2010.03-2013.11 | 6MT | F | R | Hatchback FWD N18 B16 A | | GCI85077 | Inner Joint | | 34 | 32 | 35 | 397 | 90 | |
| | 2010.03-2013.11 | AT | F | L | Hatchback FWD N18 B16 A | | GDS85024 | Drive Shaft | | 26 | 26 | 54 | 75.5 | 604 | |
| | 2010.03-2013.11 | AT | F | R | Hatchback FWD N18 B16 A | | GDS85086 | Drive Shaft | | 26 | 26 | 54 | 75.5 | 877 | |
| | 2010.03-2013.11 | AT | F | L | Hatchback FWD N18 B16 A | | GCI85012 | Inner Joint | | 26 | 32 | 31 | 65 | 93 | |
| | 2010.03-2013.11 | AT/MT | F | L/R | Hatchback FWD N18 B16 A | | GCO85008 | Outer Joint | | 26 | 26 | 54 | 75.5 | 70 | M |
| | 2010.03-2013.11 | MT | F | L | Hatchback FWD N18 B16 A | | GDS85063 | Drive Shaft | | 26 | 34 | 54 | 75.5 | 590 | |
| | 2010.03-2013.11 | MT | F | R | Hatchback FWD N18 B16 A | | GDS85071 | Drive Shaft | | 26 | 34 | 54 | 75.5 | 918 | |
| 1.6 (125 kw) | 2004.07-2006.09 | 6MT | F | L | Hatchback FWD W11 B16 A | | GDS38001 | Drive Shaft | | 26 | 34 | 53.5 | 74 | 590 | |
| | 2004.07-2006.09 | AT | F | L | Hatchback FWD W11 B16 A | | GDS85131 | Drive Shaft | | 26 | 26 | 54 | 75.5 | 589 | |
| | 2004.07-2006.09 | AT | F | L/R | Hatchback FWD W11 B16 A | | GCO85008 | Outer Joint | | 26 | 26 | 54 | 75.5 | 70 | M |
| | 2004.07-2006.09 | MT | F | R | Hatchback FWD W11 B16 A | | GDS38002 | Drive Shaft | | 26 | 34 | 53.5 | 74 | 917 | |
| | 2004.07-2006.09 | MT | F | L/R | Hatchback FWD W11 B16 A | | GCO38003 | Outer Joint | | 26 | 23 | 53.5 | 74 | 63.5 | M |
| | 2004.07-2006.09 | MT | F | L | Hatchback FWD W11 B16 A | | GCI38001 | Inner Joint | | 34 | 23 | 40 | 54 | 97 | |
| | 2004.07-2006.09 | MT | F | R | Hatchback FWD W11 B16 A | | GCI38002 | Inner Joint | | 34 | 23 | 36 | 333 | 145 | |
| | 2004.07-2008.07 | 6MT | F | L | Convertible FWD W11 B16 A | | GDS38001 | Drive Shaft | | 26 | 34 | 53.5 | 74 | 590 | |
| | 2004.07-2008.07 | AT | F | L | Convertible FWD W11 B16 A | | GDS85131 | Drive Shaft | | 26 | 26 | 54 | 75.5 | 589 | |
| | 2004.07-2008.07 | AT | F | L/R | Convertible FWD W11 B16 A | | GCO85008 | Outer Joint | | 26 | 26 | 54 | 75.5 | 70 | M |
| | 2004.07-2008.07 | MT | F | R | Convertible FWD W11 B16 A | | GDS38002 | Drive Shaft | | 26 | 34 | 53.5 | 74 | 917 | |
| | 2004.07-2008.07 | MT | F | L/R | Convertible FWD W11 B16 A | | GCO38003 | Outer Joint | | 26 | 23 | 53.5 | 74 | 63.5 | M |
| | 2004.07-2008.07 | MT | F | L | Convertible FWD W11 B16 A | | GCI38001 | Inner Joint | | 34 | 23 | 40 | 54 | 97 | |
| | 2004.07-2008.07 | MT | F | R | Convertible FWD W11 B16 A | | GCI38002 | Inner Joint | | 34 | 23 | 36 | 333 | 145 | |
| 1.6 (128 kw) | 2006.10-2010.02 | 6AT | F | L | Hatchback FWD N14 B16 A;N14 B16 AB | | GDS85024 | Drive Shaft | | 26 | 26 | 54 | 75.5 | 604 | |
| | 2006.10-2010.02 | 6AT | F | R | Hatchback FWD N14 B16 A;N14 B16 AB | | GDS85086 | Drive Shaft | | 26 | 26 | 54 | 75.5 | 877 | |
| | 2006.10-2010.02 | 6AT | F | L | Hatchback FWD N14 B16 A;N14 B16 AB | | GCI85012 | Inner Joint | | 26 | 32 | 31 | 65 | 93 | |
| | 2006.10-2010.02 | 6MT | F | L | Hatchback FWD N14 B16 A;N14 B16 AB | | GDS85063 | Drive Shaft | | 26 | 34 | 54 | 75.5 | 590 | |
| | 2006.10-2010.02 | 6MT | F | R | Hatchback FWD N14 B16 A;N14 B16 AB | | GDS85071 | Drive Shaft | | 26 | 34 | 54 | 75.5 | 918 | |
| | 2006.10-2010.02 | 6MT | F | L/R | Hatchback FWD N14 B16 A;N14 B16 AB | | GCO85008 | Outer Joint | | 26 | 26 | 54 | 75.5 | 70 | M |
| | 2006.10-2010.02 | 6MT | F | R | Hatchback FWD N14 B16 A;N14 B16 AB | | GCI85077 | Inner Joint | | 34 | 32 | 35 | 397 | 90 | |
| | 2006.10-2010.02 | MT | F | L/R | Hatchback FWD N14 B16 A;N14 B16 AB | | GCO38003 | Outer Joint | | 26 | 23 | 53.5 | 74 | 63.5 | M |
| | 2008.12-2010.07 | 6MT | F | R | Convertible FWD N14 B16 A;N14 B16 AB | | GCI85077 | Inner Joint | | 34 | 32 | 35 | 397 | 90 | |
| | 2008.12-2010.07 | AT | F | L | Convertible FWD N14 B16 A;N14 B16 AB | | GDS85024 | Drive Shaft | | 26 | 26 | 54 | 75.5 | 604 | |
| | 2008.12-2010.07 | AT | F | L | Convertible FWD N14 B16 A;N14 B16 AB | | GDS85131 | Drive Shaft | | 26 | 26 | 54 | 75.5 | 589 | |
| | 2008.12-2010.07 | AT | F | R | Convertible FWD N14 B16 A;N14 B16 AB | | GDS85086 | Drive Shaft | | 26 | 26 | 54 | 75.5 | 877 | |
| | 2008.12-2010.07 | AT | F | L | Convertible FWD N14 B16 A;N14 B16 AB | | GCI85012 | Inner Joint | | 26 | 32 | 31 | 65 | 93 | |
| | 2008.12-2010.07 | AT/MT | F | L/R | Convertible FWD N14 B16 A;N14 B16 AB | | GCO85008 | Outer Joint | | 26 | 26 | 54 | 75.5 | 70 | M |
| | 2008.12-2010.07 | MT | F | L | Convertible FWD N14 B16 A;N14 B16 AB | | GDS85063 | Drive Shaft | | 26 | 34 | 54 | 75.5 | 590 | |
| | 2008.12-2010.07 | MT | F | R | Convertible FWD N14 B16 A;N14 B16 AB | | GDS85071 | Drive Shaft | | 26 | 34 | 54 | 75.5 | 918 | |
| 1.6 (135 kw) | 2010.02-2015.06 | 6AT | F | L | Convertible FWD N18 B16 A | | GDS85024 | Drive Shaft | | 26 | 26 | 54 | 75.5 | 604 | |
| | 2010.02-2015.06 | 6AT | F | R | Convertible FWD N18 B16 A | | GDS85086 | Drive Shaft | | 26 | 26 | 54 | 75.5 | 877 | |
| | 2010.02-2015.06 | 6AT | F | L | Convertible FWD N18 B16 A | | GCI85012 | Inner Joint | | 26 | 32 | 31 | 65 | 93 | |
| | 2010.02-2015.06 | 6MT | F | L | Convertible FWD N18 B16 A | | GDS85063 | Drive Shaft | | 26 | 34 | 54 | 75.5 | 590 | |
| | 2010.02-2015.06 | 6MT | F | R | Convertible FWD N18 B16 A | | GDS85071 | Drive Shaft | | 26 | 34 | 54 | 75.5 | 918 | |
| | 2010.02-2015.06 | 6MT | F | L/R | Convertible FWD N18 B16 A | | GCO85008 | Outer Joint | | 26 | 26 | 54 | 75.5 | 70 | M |
| | 2010.02-2015.06 | 6MT | F | R | Convertible FWD N18 B16 A | | GCI85077 | Inner Joint | | 34 | 32 | 35 | 397 | 90 | |
| | 2010.03-2013.11 | 6AT | F | L | Hatchback FWD N18 B16 A | | GDS85024 | Drive Shaft | | 26 | 26 | 54 | 75.5 | 604 | |
| | 2010.03-2013.11 | 6AT | F | R | Hatchback FWD N18 B16 A | | GDS85086 | Drive Shaft | | 26 | 26 | 54 | 75.5 | 877 | |
| | 2010.03-2013.11 | 6AT | F | L | Hatchback FWD N18 B16 A | | GCI85012 | Inner Joint | | 26 | 32 | 31 | 65 | 93 | |
| | 2010.03-2013.11 | 6MT | F | L | Hatchback FWD N18 B16 A | | GDS85063 | Drive Shaft | | 26 | 34 | 54 | 75.5 | 590 | |
| | 2010.03-2013.11 | 6MT | F | R | Hatchback FWD N18 B16 A | | GDS85071 | Drive Shaft | | 26 | 34 | 54 | 75.5 | 918 | |
| | 2010.03-2013.11 | 6MT | F | L/R | Hatchback FWD N18 B16 A | | GCO85008 | Outer Joint | | 26 | 26 | 54 | 75.5 | 70 | M |
| | 2010.03-2013.11 | 6MT | F | R | Hatchback FWD N18 B16 A | | GCI85077 | Inner Joint | | 34 | 32 | 35 | 397 | 90 | |
| 1.6 (141 kw) | 2006.11-2010.02 | 6AT | F | L | Hatchback FWD N14 B16 A;N14 B16 AB | | GDS85024 | Drive Shaft | | 26 | 26 | 54 | 75.5 | 604 | |
| | 2006.11-2010.02 | 6AT | F | R | Hatchback FWD N14 B16 A;N14 B16 AB | | GDS85086 | Drive Shaft | | 26 | 26 | 54 | 75.5 | 877 | |
| | 2006.11-2010.02 | 6MT | F | L | Hatchback FWD N14 B16 A;N14 B16 AB | | GDS85063 | Drive Shaft | | 26 | 34 | 54 | 75.5 | 590 | |
| | 2006.11-2010.02 | 6MT | F | R | Hatchback FWD N14 B16 A;N14 B16 AB | | GDS85071 | Drive Shaft | | 26 | 34 | 54 | 75.5 | 918 | |
| | 2006.11-2010.02 | 6MT | F | R | Hatchback FWD N14 B16 A;N14 B16 AB | | GCI85077 | Inner Joint | | 34 | 32 | 35 | 397 | 90 | |
| | 2006.11-2010.02 | AT/MT | F | L/R | Hatchback FWD N14 B16 A;N14 B16 AB | | GCO85008 | Outer Joint | | 26 | 26 | 54 | 75.5 | 70 | M |
| | 2008.04-2010.07 | 6MT | F | R | Convertible FWD N14 B16 A;N14 B16 AB | | GCI85077 | Inner Joint | | 34 | 32 | 35 | 397 | 90 | |
| | 2008.04-2010.07 | AT | F | L | Convertible FWD N14 B16 A;N14 B16 AB | | GDS85024 | Drive Shaft | | 26 | 26 | 54 | 75.5 | 604 | |
| | 2008.04-2010.07 | AT | F | R | Convertible FWD N14 B16 A;N14 B16 AB | Outer teeth of transm.side:26 | GDS85086 | Drive Shaft | | 26 | 26 | 54 | 75.5 | 877 | |
| | 2008.04-2010.07 | AT | F | L | Convertible FWD N14 B16 A;N14 B16 AB | | GCI85012 | Inner Joint | | 26 | 32 | 31 | 65 | 93 | |
| | 2008.04-2010.07 | AT/MT | F | L/R | Convertible FWD N14 B16 A;N14 B16 AB | | GCO85008 | Outer Joint | | 26 | 26 | 54 | 75.5 | 70 | M |

| | YEAR | TRANSM. | F/R | L/R | BODY STYLE & DRIVE TYPE & ENGINE | REMARKS | G-AP Ref. | PRODUCT | ABS | Technical Specifications A | B | C | H | L | P |
|---|---|---|---|---|---|---|---|---|---|---|---|---|---|---|---|
| **MINI** **Mini Cooper** | | | | | | | | | | | | | | | |
| 1.6 (141 kw) | 2008.04-2010.07 | MT | F | L | Convertible FWD N14 B16 A;N14 B16 AB | | GDS85063 | Drive Shaft | | 26 | 34 | 54 | 75.5 | 590 | |
| | 2008.04-2010.07 | MT | F | R | Convertible FWD N14 B16 A;N14 B16 AB | Outer teeth of transm.side:34 | GDS85071 | Drive Shaft | | 26 | 34 | 54 | 75.5 | 918 | |
| 1.6 (147 kw) | 2010.02-2015.06 | 6MT | F | R | Convertible FWD N18 B16 A | | GCI85077 | Inner Joint | | 34 | 32 | 35 | 397 | 90 | |
| | 2010.02-2015.06 | AT | F | L | Convertible FWD N18 B16 A | | GDS85024 | Drive Shaft | | 26 | 26 | 54 | 75.5 | 604 | |
| | 2010.02-2015.06 | AT | F | L | Convertible FWD N18 B16 A | | GDS85131 | Drive Shaft | | 26 | 26 | 54 | 75.5 | 589 | |
| | 2010.02-2015.06 | AT | F | R | Convertible FWD N18 B16 A | | GDS85086 | Drive Shaft | | 26 | 26 | 54 | 75.5 | 877 | |
| | 2010.02-2015.06 | AT | F | L | Convertible FWD N18 B16 A | | GCI85012 | Inner Joint | | 26 | 32 | 31 | 65 | 93 | |
| | 2010.02-2015.06 | AT/MT | F | L/R | Convertible FWD N18 B16 A | | GCO85008 | Outer Joint | | 26 | 26 | 54 | 75.5 | 70 | M |
| | 2010.02-2015.06 | MT | F | L | Convertible FWD N18 B16 A | | GDS85063 | Drive Shaft | | 26 | 34 | 54 | 75.5 | 590 | |
| | 2010.02-2015.06 | MT | F | R | Convertible FWD N18 B16 A | | GDS85071 | Drive Shaft | | 26 | 34 | 54 | 75.5 | 918 | |
| | 2011.10-2013.11 | 6MT | F | R | Hatchback FWD N18 B16 A | | GCI85077 | Inner Joint | | 34 | 32 | 35 | 397 | 90 | |
| | 2011.10-2013.11 | AT | F | L | Hatchback FWD N18 B16 A | | GDS85024 | Drive Shaft | | 26 | 26 | 54 | 75.5 | 604 | |
| | 2011.10-2013.11 | AT | F | L | Hatchback FWD N18 B16 A | | GDS85131 | Drive Shaft | | 26 | 26 | 54 | 75.5 | 589 | |
| | 2011.10-2013.11 | AT | F | R | Hatchback FWD N18 B16 A | | GDS85086 | Drive Shaft | | 26 | 26 | 54 | 75.5 | 877 | |
| | 2011.10-2013.11 | AT | F | L | Hatchback FWD N18 B16 A | | GCI85012 | Inner Joint | | 26 | 32 | 31 | 65 | 93 | |
| | 2011.10-2013.11 | MT | F | L | Hatchback FWD N18 B16 A | | GDS85063 | Drive Shaft | | 26 | 34 | 54 | 75.5 | 590 | |
| | 2011.10-2013.11 | MT | F | R | Hatchback FWD N18 B16 A | | GDS85071 | Drive Shaft | | 26 | 34 | 54 | 75.5 | 918 | |
| | 2011.10-2013.11 | MT | F | L/R | Hatchback FWD N18 B16 A | | GCO85008 | Outer Joint | | 26 | 26 | 54 | 75.5 | 70 | M |
| 1.6 (149 kw) | 2003.11-2005.06 | 6MT | F | L | Hatchback FWD W11 B16 A | | GDS38001 | Drive Shaft | | 26 | 34 | 53.5 | 74 | 590 | |
| | 2003.11-2005.06 | MT | F | R | Hatchback FWD W11 B16 A | | GDS38002 | Drive Shaft | | 26 | 34 | 53.5 | 74 | 917 | |
| | 2003.11-2005.06 | MT | F | L | Hatchback FWD W11 B16 A | | GCI38001 | Inner Joint | | 34 | 23 | 40 | 54 | 97 | |
| | 2003.11-2005.06 | MT | F | R | Hatchback FWD W11 B16 A | | GCI38002 | Inner Joint | | 34 | 23 | 36 | 333 | 145 | |
| | 2003.11-2005.06 | | F | L | Hatchback FWD W11 B16 A | | GCO38001 | Outer Joint | | 26 | 23 | 53.5 | 76 | 64 | M |
| | 2003.11-2005.06 | | F | L/R | Hatchback FWD W11 B16 A | | GCO38003 | Outer Joint | | 26 | 23 | 53.5 | 74 | 63.5 | M |
| 1.6 (155 kw) | 2003.11-2006.09 | 6MT | F | L | Hatchback FWD W11 B16 A | | GDS38001 | Drive Shaft | | 26 | 34 | 53.5 | 74 | 590 | |
| | 2003.11-2006.09 | AT | F | L | Hatchback FWD W11 B16 A | | GDS85131 | Drive Shaft | | 26 | 26 | 54 | 75.5 | 589 | |
| | 2003.11-2006.09 | MT | F | R | Hatchback FWD W11 B16 A | | GDS38002 | Drive Shaft | | 26 | 34 | 53.5 | 74 | 917 | |
| | 2003.11-2006.09 | MT | F | L/R | Hatchback FWD W11 B16 A | | GCO38003 | Outer Joint | | 26 | 23 | 53.5 | 74 | 63.5 | M |
| | 2003.11-2006.09 | MT | F | L | Hatchback FWD W11 B16 A | | GCI38001 | Inner Joint | | 34 | 23 | 40 | 54 | 97 | |
| | 2003.11-2006.09 | MT | F | R | Hatchback FWD W11 B16 A | | GCI38002 | Inner Joint | | 34 | 23 | 36 | 333 | 145 | |
| | 2003.11-2006.09 | | F | L | Hatchback FWD W11 B16 A | | GCO38001 | Outer Joint | | 26 | 23 | 53.5 | 76 | 64 | M |
| | 2004.07-2007.11 | 6MT | F | L | Convertible FWD W11 B16 A | | GDS38001 | Drive Shaft | | 26 | 34 | 53.5 | 74 | 590 | |
| | 2004.07-2007.11 | MT | F | R | Convertible FWD W11 B16 A | | GDS38002 | Drive Shaft | | 26 | 34 | 53.5 | 74 | 917 | |
| | 2004.07-2007.11 | MT | F | L/R | Convertible FWD W11 B16 A | | GCO38003 | Outer Joint | | 26 | 23 | 53.5 | 74 | 63.5 | M |
| | 2004.07-2007.11 | MT | F | L | Convertible FWD W11 B16 A | | GCI38001 | Inner Joint | | 34 | 23 | 40 | 54 | 97 | |
| | 2004.07-2007.11 | MT | F | R | Convertible FWD W11 B16 A | | GCI38002 | Inner Joint | | 34 | 23 | 36 | 333 | 145 | |
| | 2004.07-2007.11 | | F | L | Convertible FWD W11 B16 A | | GCO38001 | Outer Joint | | 26 | 23 | 53.5 | 76 | 64 | M |
| | 2007.11-2013.11 | 6AT | F | L | Hatchback FWD N14 B16 C;N18 B16 C | | GDS85024 | Drive Shaft | | 26 | 26 | 54 | 75.5 | 604 | |
| | 2007.11-2013.11 | 6AT | F | R | Hatchback FWD N14 B16 C;N18 B16 C | | GDS85086 | Drive Shaft | | 26 | 26 | 54 | 75.5 | 877 | |
| | 2007.11-2013.11 | 6MT | F | L | Hatchback FWD N14 B16 C;N18 B16 C | | GDS85063 | Drive Shaft | | 26 | 34 | 54 | 75.5 | 590 | |
| | 2007.11-2013.11 | 6MT | F | R | Hatchback FWD N14 B16 C;N18 B16 C | | GDS85071 | Drive Shaft | | 26 | 34 | 54 | 75.5 | 918 | |
| | 2007.11-2013.11 | 6MT | F | R | Hatchback FWD N14 B16 C;N18 B16 C | | GCI85077 | Inner Joint | | 34 | 32 | 35 | 397 | 90 | |
| | 2007.11-2013.11 | AT | F | L | Hatchback FWD N14 B16 C;N18 B16 C | | GDS85131 | Drive Shaft | | 26 | 26 | 54 | 75.5 | 589 | |
| | 2007.11-2013.11 | AT | F | L | Hatchback FWD N14 B16 C;N18 B16 C | | GCI85012 | Inner Joint | | 26 | 32 | 31 | 65 | 93 | |
| | 2007.11-2013.11 | AT/MT | F | L/R | Hatchback FWD N14 B16 C;N18 B16 C | | GCO85008 | Outer Joint | | 26 | 26 | 54 | 75.5 | 70 | M |
| | 2008.08-2015.05 | 6AT | F | L | Convertible FWD N14 B16 C;N18 B16 C | | GDS85024 | Drive Shaft | | 26 | 26 | 54 | 75.5 | 604 | |
| | 2008.08-2015.05 | 6AT | F | R | Convertible FWD N14 B16 C;N18 B16 C | | GDS85086 | Drive Shaft | | 26 | 26 | 54 | 75.5 | 877 | |
| | 2008.08-2015.05 | 6MT | F | L | Convertible FWD N14 B16 C;N18 B16 C | | GDS85063 | Drive Shaft | | 26 | 34 | 54 | 75.5 | 590 | |
| | 2008.08-2015.05 | 6MT | F | R | Convertible FWD N14 B16 C;N18 B16 C | | GDS85071 | Drive Shaft | | 26 | 34 | 54 | 75.5 | 918 | |
| | 2008.08-2015.05 | 6MT | F | R | Convertible FWD N14 B16 C;N18 B16 C | | GCI85077 | Inner Joint | | 34 | 32 | 35 | 397 | 90 | |
| | 2008.08-2015.05 | AT | F | L | Convertible FWD N14 B16 C;N18 B16 C | | GDS85131 | Drive Shaft | | 26 | 26 | 54 | 75.5 | 589 | |
| | 2008.08-2015.05 | AT | F | L | Convertible FWD N14 B16 C;N18 B16 C | | GCI85012 | Inner Joint | | 26 | 32 | 31 | 65 | 93 | |
| | 2008.08-2015.05 | AT/MT/6AT/6MT | F | L/R | Convertible FWD N14 B16 C;N18 B16 C | | GCO85008 | Outer Joint | | 26 | 26 | 54 | 75.5 | 70 | M |
| 1.6 (160 kw) | 2006.03-2006.09 | 6MT | F | L | Hatchback FWD W11 B16 A | | GDS38001 | Drive Shaft | | 26 | 34 | 53.5 | 74 | 590 | |
| | 2006.03-2006.09 | MT | F | R | Hatchback FWD W11 B16 A | | GDS38002 | Drive Shaft | | 26 | 34 | 53.5 | 74 | 917 | |
| | 2006.03-2006.09 | MT | F | L/R | Hatchback FWD W11 B16 A | | GCO38003 | Outer Joint | | 26 | 23 | 53.5 | 74 | 63.5 | M |
| | 2006.03-2006.09 | MT | F | L | Hatchback FWD W11 B16 A | | GCI38001 | Inner Joint | | 34 | 23 | 40 | 54 | 97 | |
| | 2006.03-2006.09 | MT | F | R | Hatchback FWD W11 B16 A | | GCI38002 | Inner Joint | | 34 | 23 | 36 | 333 | 145 | |
| | 2006.03-2006.09 | | F | L | Hatchback FWD W11 B16 A | | GCO38001 | Outer Joint | | 26 | 23 | 53.5 | 76 | 64 | M |
| | 2012.09-2013.11 | 6AT | F | L | Hatchback FWD N14 B16 C;N18 B16 C | | GDS85024 | Drive Shaft | | 26 | 26 | 54 | 75.5 | 604 | |
| | 2012.09-2013.11 | 6AT | F | R | Hatchback FWD N14 B16 C;N18 B16 C | Outer teeth of transm.side:26 | GDS85086 | Drive Shaft | | 26 | 26 | 54 | 75.5 | 877 | |
| | 2012.09-2013.11 | 6MT | F | L | Hatchback FWD N14 B16 C;N18 B16 C | | GDS85063 | Drive Shaft | | 26 | 34 | 54 | 75.5 | 590 | |
| | 2012.09-2013.11 | 6MT | F | R | Hatchback FWD N14 B16 C;N18 B16 C | Outer teeth of transm.side:34 | GDS85071 | Drive Shaft | | 26 | 34 | 54 | 75.5 | 918 | |
| | 2012.09-2013.11 | 6MT | F | R | Hatchback FWD N14 B16 C;N18 B16 C | | GCI85077 | Inner Joint | | 34 | 32 | 35 | 397 | 90 | |
| | 2012.09-2013.11 | AT | F | L | Hatchback FWD N14 B16 C;N18 B16 C | | GCI85012 | Inner Joint | | 26 | 32 | 31 | 65 | 93 | |

| | YEAR | TRANSM. | F/R | L/R | BODY STYLE & DRIVE TYPE & ENGINE | REMARKS | G-AP Ref. | PRODUCT | ABS | Technical Specifications A | B | C | H | L | P |
|---|---|---|---|---|---|---|---|---|---|---|---|---|---|---|---|
| **MINI** **Mini Cooper** | | | | | | | | | | | | | | | |
| 1.6 (160 kw) | 2012.09-2013.11 | AT/MT | F | L/R | Hatchback FWD N14 B16 C;N18 B16 C | | GCO85008 | Outer Joint | | 26 | 26 | 54 | 75.5 | 70 | M |
| 2.0 (82 kw) | 2011.02-2013.11 | 6AT | F | L | Hatchback FWD N47 C20 A | | GDS85131 | Drive Shaft | | 26 | 26 | 54 | 75.5 | 589 | |
| | 2011.02-2013.11 | 6AT | F | R | Hatchback FWD N47 C20 A | | GDS85130 | Drive Shaft | | 26 | 26 | 54 | 75.5 | 895 | |
| | 2011.02-2013.11 | AT | F | L | Hatchback FWD N47 C20 A | | GCI85012 | Inner Joint | | 26 | 32 | 31 | 65 | 93 | |
| | 2011.02-2013.11 | AT/MT | F | L/R | Hatchback FWD N47 C20 A | | GCO85008 | Outer Joint | | 26 | 26 | 54 | 75.5 | 70 | M |
| | 2011.02-2013.11 | MT | F | L | Hatchback FWD N47 C20 A | | GDS85063 | Drive Shaft | | 26 | 34 | 54 | 75.5 | 590 | |
| | 2011.02-2013.11 | MT | F | R | Hatchback FWD N47 C20 A | | GDS85071 | Drive Shaft | | 26 | 34 | 54 | 75.5 | 918 | |
| | 2011.02-2015.05 | 6AT | F | L | Convertible FWD N47 C20 A | | GDS85131 | Drive Shaft | | 26 | 26 | 54 | 75.5 | 589 | |
| | 2011.02-2015.05 | 6AT | F | R | Convertible FWD N47 C20 A | | GDS85130 | Drive Shaft | | 26 | 26 | 54 | 75.5 | 895 | |
| | 2011.02-2015.05 | 6AT | F | L | Convertible FWD N47 C20 A | | GCI85012 | Inner Joint | | 26 | 32 | 31 | 65 | 93 | |
| | 2011.02-2015.05 | 6AT | F | R | Convertible FWD N47 C20 A | | GCI85085 | Inner Joint | | 26 | 32 | 31 | 360 | 89 | |
| | 2011.02-2015.05 | AT/MT | F | L/R | Convertible FWD N47 C20 A | | GCO85008 | Outer Joint | | 26 | 26 | 54 | 75.5 | 70 | M |
| | 2011.02-2015.05 | MT | F | L | Convertible FWD N47 C20 A | | GDS85063 | Drive Shaft | | 26 | 34 | 54 | 75.5 | 590 | |
| 2.0 (100 kw) | 2011.01-2015.05 | AT | F | L | Convertible FWD N47 C20 A | | GDS85131 | Drive Shaft | | 26 | 26 | 54 | 75.5 | 589 | |
| | 2011.01-2015.05 | AT | F | R | Convertible FWD N47 C20 A | | GDS85130 | Drive Shaft | | 26 | 26 | 54 | 75.5 | 895 | |
| | 2011.01-2015.05 | AT | F | L | Convertible FWD N47 C20 A | | GCI85012 | Inner Joint | | 26 | 32 | 31 | 65 | 93 | |
| | 2011.01-2015.05 | AT | F | R | Convertible FWD N47 C20 A | | GCI85085 | Inner Joint | | 26 | 32 | 31 | 360 | 89 | |
| | 2011.01-2015.05 | AT/MT | F | L/R | Convertible FWD N47 C20 A | | GCO85008 | Outer Joint | | 26 | 26 | 54 | 75.5 | 70 | M |
| | 2011.01-2015.05 | MT | F | L | Convertible FWD N47 C20 A | | GDS85063 | Drive Shaft | | 26 | 34 | 54 | 75.5 | 590 | |
| | 2011.01-2015.05 | MT | F | R | Convertible FWD N47 C20 A | | GDS85071 | Drive Shaft | | 26 | 34 | 54 | 75.5 | 918 | |
| | 2011.02-2013.11 | AT | F | L | Hatchback FWD N47 C20 A | | GDS85131 | Drive Shaft | | 26 | 26 | 54 | 75.5 | 589 | |
| | 2011.02-2013.11 | AT | F | R | Hatchback FWD N47 C20 A | | GDS85130 | Drive Shaft | | 26 | 26 | 54 | 75.5 | 895 | |
| | 2011.02-2013.11 | AT | F | L | Hatchback FWD N47 C20 A | | GCI85012 | Inner Joint | | 26 | 32 | 31 | 65 | 93 | |
| | 2011.02-2013.11 | AT | F | R | Hatchback FWD N47 C20 A | | GCI85085 | Inner Joint | | 26 | 32 | 31 | 360 | 89 | |
| | 2011.02-2013.11 | AT/MT | F | L/R | Hatchback FWD N47 C20 A | | GCO85008 | Outer Joint | | 26 | 26 | 54 | 75.5 | 70 | M |
| | 2011.02-2013.11 | MT | F | L | Hatchback FWD N47 C20 A | | GDS85063 | Drive Shaft | | 26 | 34 | 54 | 75.5 | 590 | |
| | 2011.02-2013.11 | MT | F | R | Hatchback FWD N47 C20 A | | GDS85071 | Drive Shaft | | 26 | 34 | 54 | 75.5 | 918 | |
| 2.0 (105 kw) | 2009.06-2015.05 | AT | F | L | Convertible FWD N47 C20 A | | GDS85131 | Drive Shaft | | 26 | 26 | 54 | 75.5 | 589 | |
| | 2009.06-2015.05 | AT | F | R | Convertible FWD N47 C20 A | | GDS85130 | Drive Shaft | | 26 | 26 | 54 | 75.5 | 895 | |
| | 2009.06-2015.05 | AT | F | L | Convertible FWD N47 C20 A | | GCI85012 | Inner Joint | | 26 | 32 | 31 | 65 | 93 | |
| | 2009.06-2015.05 | AT | F | R | Convertible FWD N47 C20 A | | GCI85085 | Inner Joint | | 26 | 32 | 31 | 360 | 89 | |
| | 2009.06-2015.05 | MT | F | L | Convertible FWD N47 C20 A | | GDS85063 | Drive Shaft | | 26 | 34 | 54 | 75.5 | 590 | |
| | 2009.06-2015.05 | MT | F | R | Convertible FWD N47 C20 A | | GDS85071 | Drive Shaft | | 26 | 34 | 54 | 75.5 | 918 | |
| | 2009.06-2015.05 | MT | F | L/R | Convertible FWD N47 C20 A | | GCO85008 | Outer Joint | | 26 | 26 | 54 | 75.5 | 70 | M |
| | 2011.02-2013.11 | AT | F | L | Hatchback FWD N47 C20 A | | GDS85131 | Drive Shaft | | 26 | 26 | 54 | 75.5 | 589 | |
| | 2011.02-2013.11 | AT | F | R | Hatchback FWD N47 C20 A | | GDS85130 | Drive Shaft | | 26 | 26 | 54 | 75.5 | 895 | |
| | 2011.02-2013.11 | AT | F | L | Hatchback FWD N47 C20 A | | GCI85012 | Inner Joint | | 26 | 32 | 31 | 65 | 93 | |
| | 2011.02-2013.11 | AT | F | R | Hatchback FWD N47 C20 A | | GCI85085 | Inner Joint | | 26 | 32 | 31 | 360 | 89 | |
| | 2011.02-2013.11 | AT/MT | F | L/R | Hatchback FWD N47 C20 A | | GCO85008 | Outer Joint | | 26 | 26 | 54 | 75.5 | 70 | M |
| | 2011.02-2013.11 | MT | F | L | Hatchback FWD N47 C20 A | | GDS85063 | Drive Shaft | | 26 | 34 | 54 | 75.5 | 590 | |
| | 2011.02-2013.11 | MT | F | R | Hatchback FWD N47 C20 A | | GDS85071 | Drive Shaft | | 26 | 34 | 54 | 75.5 | 918 | |
| 2.0 (120 kw) | 2013.09- | 6AT | F | L | Hatchback FWD B47 C20 A;B47 C20 B | | GDS56356 | Drive Shaft | | 31 | 26 | 56 | | 507 | |
| | 2013.09- | 6AT | F | R | Hatchback FWD B47 C20 A;B47 C20 B | | GDS57818 | Drive Shaft | | 31 | 26 | 56 | | 866 | |
| | 2013.09- | 6AT | F | L/R | Hatchback FWD B47 C20 A;B47 C20 B | | GCO83263 | Outer Joint | | 31 | 26 | 56 | | 73.5 | M |
| | 2013.09- | 6AT | F | L | Hatchback FWD B47 C20 A;B47 C20 B | | GCI83261 | Inner Joint | | 26 | 32 | 31 | 65 | 92 | |
| | 2013.09- | 6AT | F | R | Hatchback FWD B47 C20 A;B47 C20 B | | GCI83873 | Inner Joint | | 26 | 32 | 31 | 425 | 90 | |
| | 2013.09- | 6MT | F | R | Hatchback FWD B47 C20 A;B47 C20 B | | GDS56836 | Drive Shaft | | 31 | 37 | 56 | | 892 | |
| | 2013.09- | 6AT | F | L | Hatchback FWD B48 A20 A;B46 A20 A | | GDS56356 | Drive Shaft | | 31 | 26 | 56 | | 507 | |
| | 2013.09- | 6AT | F | R | Hatchback FWD B48 A20 A;B46 A20 A | | GDS57818 | Drive Shaft | | 31 | 26 | 56 | | 866 | |
| | 2013.09- | 6AT | F | L/R | Hatchback FWD B48 A20 A;B46 A20 A | | GCO83263 | Outer Joint | | 31 | 26 | 56 | | 73.5 | M |
| | 2013.09- | 6AT | F | R | Hatchback FWD B48 A20 A;B46 A20 A | | GCI83873 | Inner Joint | | 26 | 32 | 31 | 425 | 90 | |
| | 2013.09- | 6MT | F | L | Hatchback FWD B48 A20 A;B46 A20 A | | GDS56556 | Drive Shaft | | 31 | 37 | 56 | | 506 | |
| | 2013.09- | 6MT | F | R | Hatchback FWD B48 A20 A;B46 A20 A | | GDS56836 | Drive Shaft | | 31 | 37 | 56 | | 892 | |
| | 2013.09- | 6MT | F | L | Hatchback FWD B48 A20 A;B46 A20 A | | GCI82835 | Inner Joint | | 37 | 33 | 35 | 58 | 108.5 | |
| | 2013.09- | 6MT | F | R | Hatchback FWD B48 A20 A;B46 A20 A | | GCI83518 | Inner Joint | | 37 | 33 | 35 | 450.5 | 103.5 | |
| | 2013.09- | 7DCT | F | L | Hatchback FWD B48 A20 A;B46 A20 A | | GDS58224 | Drive Shaft | | 31 | 27 | 56 | | 509 | |
| | 2014.06- | 6AT | F | L | Hatchback FWD B47 C20 A;B47 C20 B | | GDS56356 | Drive Shaft | | 31 | 26 | 56 | | 507 | |
| | 2014.06- | 6AT | F | R | Hatchback FWD B47 C20 A;B47 C20 B | | GDS57818 | Drive Shaft | | 31 | 26 | 56 | | 866 | |
| | 2014.06- | 6AT | F | L/R | Hatchback FWD B47 C20 A;B47 C20 B | | GCO83263 | Outer Joint | | 31 | 26 | 56 | | 73.5 | M |
| | 2014.06- | 6AT | F | L | Hatchback FWD B47 C20 A;B47 C20 B | | GCI83261 | Inner Joint | | 26 | 32 | 31 | 65 | 92 | |
| | 2014.06- | 6AT | F | R | Hatchback FWD B47 C20 A;B47 C20 B | | GCI83873 | Inner Joint | | 26 | 32 | 31 | 425 | 90 | |
| | 2014.06- | 6MT | F | R | Hatchback FWD B47 C20 A;B47 C20 B | | GDS56836 | Drive Shaft | | 31 | 37 | 56 | | 892 | |
| | 2014.11- | 6AT | F | L | Convertible FWD B48 A20 A;B46 A20 A | | GDS56356 | Drive Shaft | | 31 | 26 | 56 | | 507 | |
| | 2014.11- | 6AT | F | R | Convertible FWD B48 A20 A;B46 A20 A | | GDS57818 | Drive Shaft | | 31 | 26 | 56 | | 866 | |
| | 2014.11- | 6AT | F | L/R | Convertible FWD B48 A20 A;B46 A20 A | | GCO83263 | Outer Joint | | 31 | 26 | 56 | | 73.5 | M |

| | YEAR | TRANSM. | F/R | L/R | BODY STYLE & DRIVE TYPE & ENGINE | REMARKS | G-AP Ref. | PRODUCT | ABS | Technical Specifications A | B | C | H | L | P |
|---|---|---|---|---|---|---|---|---|---|---|---|---|---|---|---|
| **MINI**<br>**Mini Cooper** | | | | | | | | | | | | | | | |
| 2.0 (120 kw) | 2014.11- | 6AT | F | L | Convertible FWD B48 A20 A;B46 A20 A | | GCI83261 | Inner Joint | | 26 | 32 | 31 | 65 | 92 | |
| | 2014.11- | 6AT | F | R | Convertible FWD B48 A20 A;B46 A20 A | | GCI83873 | Inner Joint | | 26 | 32 | 31 | 425 | 90 | |
| | 2014.11- | 6MT | F | L | Convertible FWD B48 A20 A;B46 A20 A | | GDS56556 | Drive Shaft | | 31 | 37 | 56 | | 506 | |
| | 2014.11- | 6MT | F | R | Convertible FWD B48 A20 A;B46 A20 A | | GDS56836 | Drive Shaft | | 31 | 37 | 56 | | 892 | |
| | 2014.11- | 6MT | F | L/R | Convertible FWD B48 A20 A;B46 A20 A | | GCO81811 | Outer Joint | | 31 | 33 | 56 | | 70 | I |
| | 2014.11- | 6MT | F | L | Convertible FWD B48 A20 A;B46 A20 A | | GCI82835 | Inner Joint | | 37 | 33 | 35 | 58 | 108.5 | |
| | 2014.11- | 6MT | F | R | Convertible FWD B48 A20 A;B46 A20 A | | GCI83518 | Inner Joint | | 37 | 33 | 35 | 450.5 | 103.5 | |
| | 2014.11- | 7DCT | F | L | Convertible FWD B48 A20 A;B46 A20 A | | GDS58224 | Drive Shaft | | 31 | 27 | 56 | | 509 | |
| | 2014.11- | 6AT | F | L | Hatchback FWD B48 A20 A;B46 A20 A | | GDS56356 | Drive Shaft | | 31 | 26 | 56 | | 507 | |
| | 2014.11- | 6AT | F | R | Hatchback FWD B48 A20 A;B46 A20 A | | GDS57818 | Drive Shaft | | 31 | 26 | 56 | | 866 | |
| | 2014.11- | 6AT | F | L/R | Hatchback FWD B48 A20 A;B46 A20 A | | GCO83263 | Outer Joint | | 31 | 26 | 56 | | 73.5 | M |
| | 2014.11- | 6AT | F | L | Hatchback FWD B48 A20 A;B46 A20 A | | GCI83261 | Inner Joint | | 26 | 32 | 31 | 65 | 92 | |
| | 2014.11- | 6AT | F | R | Hatchback FWD B48 A20 A;B46 A20 A | | GCI83873 | Inner Joint | | 26 | 32 | 31 | 425 | 90 | |
| | 2014.11- | 6MT | F | L | Hatchback FWD B48 A20 A;B46 A20 A | | GDS56556 | Drive Shaft | | 31 | 37 | 56 | | 506 | |
| | 2014.11- | 6MT | F | R | Hatchback FWD B48 A20 A;B46 A20 A | | GDS56836 | Drive Shaft | | 31 | 37 | 56 | | 892 | |
| | 2014.11- | 6MT | F | L/R | Hatchback FWD B48 A20 A;B46 A20 A | | GCO81811 | Outer Joint | | 31 | 33 | 56 | | 70 | I |
| | 2014.11- | 6MT | F | L | Hatchback FWD B48 A20 A;B46 A20 A | | GCI82835 | Inner Joint | | 37 | 33 | 35 | 58 | 108.5 | |
| | 2014.11- | 6MT | F | R | Hatchback FWD B48 A20 A;B46 A20 A | | GCI83518 | Inner Joint | | 37 | 33 | 35 | 450.5 | 103.5 | |
| | 2014.11- | 7DCT | F | L | Hatchback FWD B48 A20 A;B46 A20 A | | GDS58224 | Drive Shaft | | 31 | 27 | 56 | | 509 | |
| | 2015.05-2019.07 | 6AT | F | L | Convertible FWD B47 C20 A;B47 C20 B | | GDS56356 | Drive Shaft | | 31 | 26 | 56 | | 507 | |
| | 2015.05-2019.07 | 6AT | F | R | Convertible FWD B47 C20 A;B47 C20 B | | GDS57818 | Drive Shaft | | 31 | 26 | 56 | | 866 | |
| | 2015.05-2019.07 | 6AT | F | L/R | Convertible FWD B47 C20 A;B47 C20 B | | GCO83263 | Outer Joint | | 31 | 26 | 56 | | 73.5 | M |
| | 2015.05-2019.07 | 6AT | F | L | Convertible FWD B47 C20 A;B47 C20 B | | GCI83261 | Inner Joint | | 26 | 32 | 31 | 65 | 92 | |
| | 2015.05-2019.07 | 6AT | F | R | Convertible FWD B47 C20 A;B47 C20 B | | GCI83873 | Inner Joint | | 26 | 32 | 31 | 425 | 90 | |
| 2.0 (125 kw) | 2014.06- | 6AT | F | L | Hatchback FWD B47 C20 A;B47 C20 B | | GDS56356 | Drive Shaft | | 31 | 26 | 56 | | 507 | |
| | 2014.06- | 6AT | F | R | Hatchback FWD B47 C20 A;B47 C20 B | | GDS57818 | Drive Shaft | | 31 | 26 | 56 | | 866 | |
| | 2014.06- | 6AT | F | L/R | Hatchback FWD B47 C20 A;B47 C20 B | | GCO83263 | Outer Joint | | 31 | 26 | 56 | | 73.5 | M |
| | 2014.06- | 6AT | F | L | Hatchback FWD B47 C20 A;B47 C20 B | | GCI83261 | Inner Joint | | 26 | 32 | 31 | 65 | 92 | |
| | 2014.06- | 6AT | F | R | Hatchback FWD B47 C20 A;B47 C20 B | | GCI83873 | Inner Joint | | 26 | 32 | 31 | 425 | 90 | |
| | 2014.06- | 6MT | F | R | Hatchback FWD B47 C20 A;B47 C20 B | | GDS56836 | Drive Shaft | | 31 | 37 | 56 | | 892 | |
| | 2014.07- | 6AT | F | L | Hatchback FWD B47 C20 A;B47 C20 B | | GDS56356 | Drive Shaft | | 31 | 26 | 56 | | 507 | |
| | 2014.07- | 6AT | F | R | Hatchback FWD B47 C20 A;B47 C20 B | | GDS57818 | Drive Shaft | | 31 | 26 | 56 | | 866 | |
| | 2014.07- | 6AT | F | L/R | Hatchback FWD B47 C20 A;B47 C20 B | | GCO83263 | Outer Joint | | 31 | 26 | 56 | | 73.5 | M |
| | 2014.07- | 6AT | F | L | Hatchback FWD B47 C20 A;B47 C20 B | | GCI83261 | Inner Joint | | 26 | 32 | 31 | 65 | 92 | |
| | 2014.07- | 6AT | F | R | Hatchback FWD B47 C20 A;B47 C20 B | | GCI83873 | Inner Joint | | 26 | 32 | 31 | 425 | 90 | |
| | 2014.07- | 6MT | F | R | Hatchback FWD B47 C20 A;B47 C20 B | | GDS56836 | Drive Shaft | | 31 | 37 | 56 | | 892 | |
| | 2016.03- | 6AT | F | L | Convertible FWD B47 C20 A;B47 C20 B | | GDS56356 | Drive Shaft | | 31 | 26 | 56 | | 507 | |
| | 2016.03- | 6AT | F | R | Convertible FWD B47 C20 A;B47 C20 B | | GDS57818 | Drive Shaft | | 31 | 26 | 56 | | 866 | |
| | 2016.03- | 6AT | F | L/R | Convertible FWD B47 C20 A;B47 C20 B | | GCO83263 | Outer Joint | | 31 | 26 | 56 | | 73.5 | M |
| | 2016.03- | 6AT | F | L | Convertible FWD B47 C20 A;B47 C20 B | | GCI83261 | Inner Joint | | 26 | 32 | 31 | 65 | 92 | |
| | 2016.03- | 6AT | F | R | Convertible FWD B47 C20 A;B47 C20 B | | GCI83873 | Inner Joint | | 26 | 32 | 31 | 425 | 90 | |
| 2.0 (131 kw) | 2020.11- | 6MT | F | L | Convertible FWD B48 A20 A;B48 A20 F | | GDS56556 | Drive Shaft | | 31 | 37 | 56 | | 506 | |
| | 2020.11- | 6MT | F | R | Convertible FWD B48 A20 A;B48 A20 F | | GDS56836 | Drive Shaft | | 31 | 37 | 56 | | 892 | |
| | 2020.11- | 6MT | F | L/R | Convertible FWD B48 A20 A;B48 A20 F | | GCO81811 | Outer Joint | | 31 | 33 | 56 | | 70 | I |
| | 2020.11- | 6MT | F | L | Convertible FWD B48 A20 A;B48 A20 F | | GCI82835 | Inner Joint | | 37 | 33 | 35 | 58 | 108.5 | |
| | 2020.11- | 6MT | F | R | Convertible FWD B48 A20 A;B48 A20 F | | GCI83518 | Inner Joint | | 37 | 33 | 35 | 450.5 | 103.5 | |
| | 2020.11- | 7DCT | F | L | Convertible FWD B48 A20 A;B48 A20 F | | GDS58224 | Drive Shaft | | 31 | 27 | 56 | | 509 | |
| | 2020.11- | 6MT | F | L | Hatchback FWD B48 A20 A;B48 A20 F | | GDS56556 | Drive Shaft | | 31 | 37 | 56 | | 506 | |
| | 2020.11- | 6MT | F | R | Hatchback FWD B48 A20 A;B48 A20 F | | GDS56836 | Drive Shaft | | 31 | 37 | 56 | | 892 | |
| | 2020.11- | 6MT | F | L/R | Hatchback FWD B48 A20 A;B48 A20 F | | GCO81811 | Outer Joint | | 31 | 33 | 56 | | 70 | I |
| | 2020.11- | 6MT | F | L | Hatchback FWD B48 A20 A;B48 A20 F | | GCI82835 | Inner Joint | | 37 | 33 | 35 | 58 | 108.5 | |
| | 2020.11- | 6MT | F | R | Hatchback FWD B48 A20 A;B48 A20 F | | GCI83518 | Inner Joint | | 37 | 33 | 35 | 450.5 | 103.5 | |
| | 2020.11- | 7DCT | F | L | Hatchback FWD B48 A20 A;B48 A20 F | | GDS58224 | Drive Shaft | | 31 | 27 | 56 | | 509 | |
| 2.0 (141 kw) | 2013.12- | 6AT | F | L | Hatchback FWD B48 A20 A;B46 A20 A;B48 A20 F | | GDS56356 | Drive Shaft | | 31 | 26 | 56 | | 507 | |
| | 2013.12- | 6AT | F | R | Hatchback FWD B48 A20 A;B46 A20 A;B48 A20 F | | GDS57818 | Drive Shaft | | 31 | 26 | 56 | | 866 | |
| | 2013.12- | 6AT | F | L/R | Hatchback FWD B48 A20 A;B46 A20 A;B48 A20 F | | GCO83263 | Outer Joint | | 31 | 26 | 56 | | 73.5 | M |
| | 2013.12- | 6AT | F | L | Hatchback FWD B48 A20 A;B46 A20 A;B48 A20 F | | GCI83261 | Inner Joint | | 26 | 32 | 31 | 65 | 92 | |
| | 2013.12- | 6AT | F | R | Hatchback FWD B48 A20 A;B46 A20 A;B48 A20 F | | GCI83873 | Inner Joint | | 26 | 32 | 31 | 425 | 90 | |
| | 2013.12- | 6MT | F | L | Hatchback FWD B48 A20 A;B46 A20 A;B48 A20 F | | GDS56556 | Drive Shaft | | 31 | 37 | 56 | | 506 | |
| | 2013.12- | 6MT | F | R | Hatchback FWD B48 A20 A;B46 A20 A;B48 A20 F | | GDS56836 | Drive Shaft | | 31 | 37 | 56 | | 892 | |
| | 2013.12- | 6MT | F | L/R | Hatchback FWD B48 A20 A;B46 A20 A;B48 A20 F | | GCO81811 | Outer Joint | | 31 | 33 | 56 | | 70 | I |
| | 2013.12- | 6MT | F | L | Hatchback FWD B48 A20 A;B46 A20 A;B48 A20 F | | GCI82835 | Inner Joint | | 37 | 33 | 35 | 58 | 108.5 | |
| | 2013.12- | 6MT | F | R | Hatchback FWD B48 A20 A;B46 A20 A;B48 A20 F | | GCI83518 | Inner Joint | | 37 | 33 | 35 | 450.5 | 103.5 | |
| | 2013.12- | 7DCT | F | L | Hatchback FWD B48 A20 A;B46 A20 A;B48 A20 F | | GDS58224 | Drive Shaft | | 31 | 27 | 56 | | 509 | |
| | 2014.07- | 6AT | F | L | Hatchback FWD B48 A20 A;B46 A20 A | | GDS56356 | Drive Shaft | | 31 | 26 | 56 | | 507 | |

| | YEAR | TRANSM. | F/R | L/R | BODY STYLE & DRIVE TYPE & ENGINE | REMARKS | G-AP Ref. | PRODUCT | ABS | Technical Specifications A | B | C | H | L | P |
|---|---|---|---|---|---|---|---|---|---|---|---|---|---|---|---|
| **MINI** **Mini Cooper** | | | | | | | | | | | | | | | |
| 2.0 (141 kw) | 2014.07- | 6AT | F | R | Hatchback FWD B48 A20 A;B46 A20 A | | GDS57818 | Drive Shaft | | 31 | 26 | 56 | | 866 | |
| | 2014.07- | 6AT | F | L/R | Hatchback FWD B48 A20 A;B46 A20 A | | GCO83263 | Outer Joint | | 31 | 26 | 56 | | 73.5 | M |
| | 2014.07- | 6AT | F | R | Hatchback FWD B48 A20 A;B46 A20 A | | GCI83873 | Inner Joint | | 26 | 32 | 31 | 425 | 90 | |
| | 2014.07- | 6MT | F | L | Hatchback FWD B48 A20 A;B46 A20 A | | GDS56556 | Drive Shaft | | 31 | 37 | 56 | | 506 | |
| | 2014.07- | 6MT | F | R | Hatchback FWD B48 A20 A;B46 A20 A | | GDS56836 | Drive Shaft | | 31 | 37 | 56 | | 892 | |
| | 2014.07- | 6MT | F | L | Hatchback FWD B48 A20 A;B46 A20 A | | GCI82835 | Inner Joint | | 37 | 33 | 35 | 58 | 108.5 | |
| | 2014.07- | 6MT | F | R | Hatchback FWD B48 A20 A;B46 A20 A | | GCI83518 | Inner Joint | | 37 | 33 | 35 | 450.5 | 103.5 | |
| | 2014.07- | 7DCT | F | L | Hatchback FWD B48 A20 A;B46 A20 A | | GDS58224 | Drive Shaft | | 31 | 27 | 56 | | 509 | |
| | 2015.11- | 6AT | F | L | Convertible FWD B48 A20 A;B46 A20 A;B48 A20 F | | GDS56356 | Drive Shaft | | 31 | 26 | 56 | | 507 | |
| | 2015.11- | 6AT | F | R | Convertible FWD B48 A20 A;B46 A20 A;B48 A20 F | | GDS57818 | Drive Shaft | | 31 | 26 | 56 | | 866 | |
| | 2015.11- | 6AT | F | L/R | Convertible FWD B48 A20 A;B46 A20 A;B48 A20 F | | GCO83263 | Outer Joint | | 31 | 26 | 56 | | 73.5 | M |
| | 2015.11- | 6AT | F | L | Convertible FWD B48 A20 A;B46 A20 A;B48 A20 F | | GCI83261 | Inner Joint | | 26 | 32 | 31 | 65 | 92 | |
| | 2015.11- | 6AT | F | R | Convertible FWD B48 A20 A;B46 A20 A;B48 A20 F | | GCI83873 | Inner Joint | | 26 | 32 | 31 | 425 | 90 | |
| | 2015.11- | 6MT | F | L | Convertible FWD B48 A20 A;B46 A20 A;B48 A20 F | | GDS56556 | Drive Shaft | | 31 | 37 | 56 | | 506 | |
| | 2015.11- | 6MT | F | R | Convertible FWD B48 A20 A;B46 A20 A;B48 A20 F | | GDS56836 | Drive Shaft | | 31 | 37 | 56 | | 892 | |
| | 2015.11- | 6MT | F | L/R | Convertible FWD B48 A20 A;B46 A20 A;B48 A20 F | | GCO81811 | Outer Joint | | 31 | 33 | 56 | | 70 | I |
| | 2015.11- | 6MT | F | L | Convertible FWD B48 A20 A;B46 A20 A;B48 A20 F | | GCI82835 | Inner Joint | | 37 | 33 | 35 | 58 | 108.5 | |
| | 2015.11- | 6MT | F | R | Convertible FWD B48 A20 A;B46 A20 A;B48 A20 F | | GCI83518 | Inner Joint | | 37 | 33 | 35 | 450.5 | 103.5 | |
| | 2015.11- | 7DCT | F | L | Convertible FWD B48 A20 A;B46 A20 A;B48 A20 F | | GDS58224 | Drive Shaft | | 31 | 27 | 56 | | 509 | |
| 2.0 (155 kw) | 2013.12- | 6AT | F | L | Hatchback FWD B48 A20 A;B46 A20 A | | GDS56356 | Drive Shaft | | 31 | 26 | 56 | | 507 | |
| | 2013.12- | 6AT | F | R | Hatchback FWD B48 A20 A;B46 A20 A | | GDS57818 | Drive Shaft | | 31 | 26 | 56 | | 866 | |
| | 2013.12- | 6AT | F | L/R | Hatchback FWD B48 A20 A;B46 A20 A | | GCO83263 | Outer Joint | | 31 | 26 | 56 | | 73.5 | M |
| | 2013.12- | 6AT | F | L | Hatchback FWD B48 A20 A;B46 A20 A | | GCI83261 | Inner Joint | | 26 | 32 | 31 | 65 | 92 | |
| | 2013.12- | 6AT | F | R | Hatchback FWD B48 A20 A;B46 A20 A | | GCI83873 | Inner Joint | | 26 | 32 | 31 | 425 | 90 | |
| | 2013.12- | 6MT | F | L | Hatchback FWD B48 A20 A;B46 A20 A | | GDS56556 | Drive Shaft | | 31 | 37 | 56 | | 506 | |
| | 2013.12- | 6MT | F | R | Hatchback FWD B48 A20 A;B46 A20 A | | GDS56836 | Drive Shaft | | 31 | 37 | 56 | | 892 | |
| | 2013.12- | 6MT | F | L/R | Hatchback FWD B48 A20 A;B46 A20 A | | GCO81811 | Outer Joint | | 31 | 33 | 56 | | 70 | I |
| | 2013.12- | 6MT | F | L | Hatchback FWD B48 A20 A;B46 A20 A | | GCI82835 | Inner Joint | | 37 | 33 | 35 | 58 | 108.5 | |
| | 2013.12- | 6MT | F | R | Hatchback FWD B48 A20 A;B46 A20 A | | GCI83518 | Inner Joint | | 37 | 33 | 35 | 450.5 | 103.5 | |
| | 2013.12- | 7DCT | F | L | Hatchback FWD B48 A20 A;B46 A20 A | | GDS58224 | Drive Shaft | | 31 | 27 | 56 | | 509 | |
| | 2014.07- | 6AT | F | L | Hatchback FWD B48 A20 A;B46 A20 A | | GDS56356 | Drive Shaft | | 31 | 26 | 56 | | 507 | |
| | 2014.07- | 6AT | F | R | Hatchback FWD B48 A20 A;B46 A20 A | | GDS57818 | Drive Shaft | | 31 | 26 | 56 | | 866 | |
| | 2014.07- | 6AT | F | L/R | Hatchback FWD B48 A20 A;B46 A20 A | | GCO83263 | Outer Joint | | 31 | 26 | 56 | | 73.5 | M |
| | 2014.07- | 6AT | F | R | Hatchback FWD B48 A20 A;B46 A20 A | | GCI83873 | Inner Joint | | 26 | 32 | 31 | 425 | 90 | |
| | 2014.07- | 6MT | F | L | Hatchback FWD B48 A20 A;B46 A20 A | | GDS56556 | Drive Shaft | | 31 | 37 | 56 | | 506 | |
| | 2014.07- | 6MT | F | R | Hatchback FWD B48 A20 A;B46 A20 A | | GDS56836 | Drive Shaft | | 31 | 37 | 56 | | 892 | |
| | 2014.07- | 6MT | F | L | Hatchback FWD B48 A20 A;B46 A20 A | | GCI82835 | Inner Joint | | 37 | 33 | 35 | 58 | 108.5 | |
| | 2014.07- | 6MT | F | R | Hatchback FWD B48 A20 A;B46 A20 A | | GCI83518 | Inner Joint | | 37 | 33 | 35 | 450.5 | 103.5 | |
| | 2014.07- | 7DCT | F | L | Hatchback FWD B48 A20 A;B46 A20 A | | GDS58224 | Drive Shaft | | 31 | 27 | 56 | | 509 | |
| | 2015.11- | 6AT | F | L | Convertible FWD B48 A20 A;B46 A20 A | | GDS56356 | Drive Shaft | | 31 | 26 | 56 | | 507 | |
| | 2015.11- | 6AT | F | R | Convertible FWD B48 A20 A;B46 A20 A | | GDS57818 | Drive Shaft | | 31 | 26 | 56 | | 866 | |
| | 2015.11- | 6AT | F | L/R | Convertible FWD B48 A20 A;B46 A20 A | | GCO83263 | Outer Joint | | 31 | 26 | 56 | | 73.5 | M |
| | 2015.11- | 6AT | F | L | Convertible FWD B48 A20 A;B46 A20 A | | GCI83261 | Inner Joint | | 26 | 32 | 31 | 65 | 92 | |
| | 2015.11- | 6AT | F | R | Convertible FWD B48 A20 A;B46 A20 A | | GCI83873 | Inner Joint | | 26 | 32 | 31 | 425 | 90 | |
| | 2015.11- | 6MT | F | L | Convertible FWD B48 A20 A;B46 A20 A | | GDS56556 | Drive Shaft | | 31 | 37 | 56 | | 506 | |
| | 2015.11- | 6MT | F | R | Convertible FWD B48 A20 A;B46 A20 A | | GDS56836 | Drive Shaft | | 31 | 37 | 56 | | 892 | |
| | 2015.11- | 6MT | F | L/R | Convertible FWD B48 A20 A;B46 A20 A | | GCO81811 | Outer Joint | | 31 | 33 | 56 | | 70 | I |
| | 2015.11- | 6MT | F | L | Convertible FWD B48 A20 A;B46 A20 A | | GCI82835 | Inner Joint | | 37 | 33 | 35 | 58 | 108.5 | |
| | 2015.11- | 6MT | F | R | Convertible FWD B48 A20 A;B46 A20 A | | GCI83518 | Inner Joint | | 37 | 33 | 35 | 450.5 | 103.5 | |
| | 2015.11- | 7DCT | F | L | Convertible FWD B48 A20 A;B46 A20 A | | GDS58224 | Drive Shaft | | 31 | 27 | 56 | | 509 | |
| 2.0 (170 kw) | 2015.03- | 6AT | F | L | Hatchback FWD B48 A20 B;B46 A20 B | | GDS56356 | Drive Shaft | | 31 | 26 | 56 | | 507 | |
| | 2015.03- | 6AT | F | R | Hatchback FWD B48 A20 B;B46 A20 B | | GDS57818 | Drive Shaft | | 31 | 26 | 56 | | 866 | |
| | 2015.03- | 6AT | F | L/R | Hatchback FWD B48 A20 B;B46 A20 B | | GCO83263 | Outer Joint | | 31 | 26 | 56 | | 73.5 | M |
| | 2015.03- | 6AT | F | L | Hatchback FWD B48 A20 B;B46 A20 B | | GCI83261 | Inner Joint | | 26 | 32 | 31 | 65 | 92 | |
| | 2015.03- | 6AT | F | R | Hatchback FWD B48 A20 B;B46 A20 B | | GCI83873 | Inner Joint | | 26 | 32 | 31 | 425 | 90 | |
| | 2015.03- | 6MT | F | R | Hatchback FWD B48 A20 B;B46 A20 B | | GDS56836 | Drive Shaft | | 31 | 37 | 56 | | 892 | |
| | 2016.03- | 6AT | F | L | Convertible FWD B48 A20 B;B46 A20 B | | GDS56356 | Drive Shaft | | 31 | 26 | 56 | | 507 | |
| | 2016.03- | 6AT | F | R | Convertible FWD B48 A20 B;B46 A20 B | | GDS57818 | Drive Shaft | | 31 | 26 | 56 | | 866 | |
| | 2016.03- | 6AT | F | L/R | Convertible FWD B48 A20 B;B46 A20 B | | GCO83263 | Outer Joint | | 31 | 26 | 56 | | 73.5 | M |
| | 2016.03- | 6AT | F | L | Convertible FWD B48 A20 B;B46 A20 B | | GCI83261 | Inner Joint | | 26 | 32 | 31 | 65 | 92 | |
| | 2016.03- | 6AT | F | R | Convertible FWD B48 A20 B;B46 A20 B | | GCI83873 | Inner Joint | | 26 | 32 | 31 | 425 | 90 | |
| | 2016.03- | 6MT | F | R | Convertible FWD B48 A20 B;B46 A20 B | | GDS56836 | Drive Shaft | | 31 | 37 | 56 | | 892 | |
| EV (135 kw) | 2019.11- | ET | F | L | Hatchback FWD IB1P25B | | GDS57610 | Drive Shaft | | 31 | 27 | 56 | | 758 | |
| | 2019.11- | ET | F | R | Hatchback FWD IB1P25B | | GDS56194 | Drive Shaft | | 31 | 27 | 56 | | 653 | |
| | 2019.11- | ET | F | L/R | Hatchback FWD IB1P25B | | GCO82738 | Outer Joint | | 31 | 26 | 56 | | 73.5 | M |

| | YEAR | TRANSM. | F/R | L/R | BODY STYLE & DRIVE TYPE & ENGINE | REMARKS | G-AP Ref. | PRODUCT | ABS | Technical Specifications A | B | C | H | L | P |
|---|---|---|---|---|---|---|---|---|---|---|---|---|---|---|---|
| **MINI** | | | | | | | | | | | | | | | |
| **Mini Cooper** | | | | | | | | | | | | | | | |
| EV (135 kw) | 2019.11- | ET | F | L | Hatchback FWD IB1P25B | | GCI83767 | Inner Joint | | 27 | 32 | 43.95 | 191 | 69.5 | |
| | 2019.11- | ET | F | R | Hatchback FWD IB1P25B | | GCI83190 | Inner Joint | | 27 | 32 | 43.95 | 53.5 | 98 | |
| | 2023.04- | ET | F | L | Convertible FWD IB1P25B | | GDS57610 | Drive Shaft | | 31 | 27 | 56 | | 758 | |
| | 2023.04- | ET | F | R | Convertible FWD IB1P25B | | GDS56194 | Drive Shaft | | 31 | 27 | 56 | | 653 | |
| | 2023.04- | ET | F | L/R | Convertible FWD IB1P25B | | GCO82738 | Outer Joint | | 31 | 26 | 56 | | 73.5 | M |
| | 2023.04- | ET | F | L | Convertible FWD IB1P25B | | GCI83767 | Inner Joint | | 27 | 32 | 43.95 | 191 | 69.5 | |
| | 2023.04- | ET | F | R | Convertible FWD IB1P25B | | GCI83190 | Inner Joint | | 27 | 32 | 43.95 | 53.5 | 98 | |
| **Mini Countryman** | | | | | | | | | | | | | | | |
| 1.5 (75 kw) | 2017.07- | 6AT | F | L | Estate FWD B38 A15 A | | GDS83712 | Drive Shaft | | 31 | 26 | 56 | | 541 | |
| | 2017.07- | 6AT | F | R | Estate FWD B38 A15 A | | GDS83713 | Drive Shaft | | 31 | 26 | 56 | | 905 | |
| | 2017.07- | 6AT | F | L/R | Estate FWD B38 A15 A | | GCO82471 | Outer Joint | | 31 | 26 | 56 | | 73.5 | M |
| | 2017.07- | 6AT | F | L | Estate FWD B38 A15 A | | GCI82347 | Inner Joint | | 26 | 32 | 31 | 65 | 92 | |
| | 2017.07- | 6AT | F | R | Estate FWD B38 A15 A | | GCI82348 | Inner Joint | | 26 | 32 | 31 | 388 | 88 | |
| | 2017.07- | 6MT | F | R | Estate FWD B38 A15 A | | GDS82632 | Drive Shaft | | 31 | 34 | 56 | | 920 | |
| | 2017.07- | 7DCT | F | L | Estate FWD B38 A15 A | | GDS84222 | Drive Shaft | | 31 | 27 | 56 | | 547 | |
| | 2017.07- | 7DCT | F | R | Estate FWD B38 A15 A | | GDS84221 | Drive Shaft | | 31 | 27 | 56 | | 938 | |
| | 2017.07- | 7DCT | F | L/R | Estate FWD B38 A15 A | | GCO82738 | Outer Joint | | 31 | 26 | 56 | | 73.5 | M |
| | 2017.07- | 7DCT | F | L | Estate FWD B38 A15 A | | GCI82649 | Inner Joint | | 27 | 32 | 35 | 58 | 102 | |
| | 2017.07- | 7DCT | F | R | Estate FWD B38 A15 A | | GCI82648 | Inner Joint | | 27 | 32 | 35 | 420 | 89 | |
| 1.5 (85 kw) | 2017.07- | 6MT | F | L | Estate FWD B37 C15 A | | GDS84525 | Drive Shaft | | 31 | 37 | 56 | | 548 | |
| | 2017.07- | 6MT | F | R | Estate FWD B37 C15 A | | GDS84526 | Drive Shaft | | 31 | 37 | 56 | | 929 | |
| | 2017.07- | 6MT | F | L/R | Estate FWD B37 C15 A | | GCO81811 | Outer Joint | | 31 | 33 | 56 | | 70 | I |
| | 2017.07- | 6MT | F | L | Estate FWD B37 C15 A | | GCI82835 | Inner Joint | | 37 | 33 | 35 | 58 | 108.5 | |
| | 2017.07- | 6MT | F | R | Estate FWD B37 C15 A | | GCI82836 | Inner Joint | | 37 | 33 | 35 | 414 | 103.5 | |
| | 2017.07- | 7DCT | F | L | Estate FWD B37 C15 A | | GDS84222 | Drive Shaft | | 31 | 27 | 56 | | 547 | |
| | 2017.07- | 7DCT | F | R | Estate FWD B37 C15 A | | GDS84221 | Drive Shaft | | 31 | 27 | 56 | | 938 | |
| | 2017.07- | 7DCT | F | L/R | Estate FWD B37 C15 A | | GCO82738 | Outer Joint | | 31 | 26 | 56 | | 73.5 | M |
| | 2017.07- | 7DCT | F | L | Estate FWD B37 C15 A | | GCI82649 | Inner Joint | | 27 | 32 | 35 | 58 | 102 | |
| | 2017.07- | 7DCT | F | R | Estate FWD B37 C15 A | | GCI82648 | Inner Joint | | 27 | 32 | 35 | 420 | 89 | |
| 1.5 (100 kw) | 2016.10- | 8AT | F | L | Estate 4WD B38 A15 A;B38 A15 F | | GDS57867 | Drive Shaft | | 31 | 28 | 56 | | 540 | |
| | 2016.10- | 8AT | F | R | Estate 4WD B38 A15 A;B38 A15 F | | GDS57868 | Drive Shaft | | 31 | 35 | 56 | | 499 | |
| | 2016.10- | 8AT | F | L/R | Estate 4WD B38 A15 A;B38 A15 F | | GCO81683 | Outer Joint | | 31 | 33 | 56 | | 71 | M |
| | 2016.10- | 8AT | F | L | Estate 4WD B38 A15 A;B38 A15 F | | GCI81659 | Inner Joint | | 28 | 28 | 33 | 66 | 93.5 | |
| | 2016.10- | 8AT | F | R | Estate 4WD B38 A15 A;B38 A15 F | | GCI81924 | Inner Joint | | 35 | 28 | 44.5 | | 126 | |
| | 2016.10- | 8AT/6MT | R | L/R | Estate 4WD B38 A15 A;B38 A15 F | | GDS82176 | Drive Shaft | | 31 | 27 | 56 | | 731 | |
| | 2016.10- | 8AT/6MT | R | L/R | Estate 4WD B38 A15 A;B38 A15 F | | GCO81685 | Outer Joint | | 31 | 30 | 56 | | 61.5 | I |
| | 2016.10- | 8AT/6MT | R | L/R | Estate 4WD B38 A15 A;B38 A15 F | | GCI81658 | Inner Joint | | 27 | 30 | 43.7 | 87 | 100 | |
| | 2016.10- | 6AT | F | L | Estate FWD B38 A15 A;B36 A15 A;B38 A15 F | | GDS83712 | Drive Shaft | | 31 | 26 | 56 | | 541 | |
| | 2016.10- | 6AT | F | R | Estate FWD B38 A15 A;B36 A15 A;B38 A15 F | | GDS83713 | Drive Shaft | | 31 | 26 | 56 | | 905 | |
| | 2016.10- | 6AT | F | L/R | Estate FWD B38 A15 A;B36 A15 A;B38 A15 F | | GCO82471 | Outer Joint | | 31 | 26 | 56 | | 73.5 | M |
| | 2016.10- | 6AT | F | L | Estate FWD B38 A15 A;B36 A15 A;B38 A15 F | | GCI82347 | Inner Joint | | 26 | 32 | 31 | 65 | 92 | |
| | 2016.10- | 6AT | F | R | Estate FWD B38 A15 A;B36 A15 A;B38 A15 F | | GCI82348 | Inner Joint | | 26 | 32 | 31 | 388 | 88 | |
| | 2016.10- | 6MT | F | R | Estate FWD B38 A15 A;B36 A15 A;B38 A15 F | | GDS82632 | Drive Shaft | | 31 | 34 | 56 | | 920 | |
| | 2016.10- | 7DCT | F | L | Estate FWD B38 A15 A;B36 A15 A;B38 A15 F | | GDS84222 | Drive Shaft | | 31 | 27 | 56 | | 547 | |
| | 2016.10- | 7DCT | F | R | Estate FWD B38 A15 A;B36 A15 A;B38 A15 F | | GDS84221 | Drive Shaft | | 31 | 27 | 56 | | 938 | |
| | 2016.10- | 7DCT | F | L/R | Estate FWD B38 A15 A;B36 A15 A;B38 A15 F | | GCO82738 | Outer Joint | | 31 | 26 | 56 | | 73.5 | M |
| | 2016.10- | 7DCT | F | L | Estate FWD B38 A15 A;B36 A15 A;B38 A15 F | | GCI82649 | Inner Joint | | 27 | 32 | 35 | 58 | 102 | |
| | 2016.10- | 7DCT | F | R | Estate FWD B38 A15 A;B36 A15 A;B38 A15 F | | GCI82648 | Inner Joint | | 27 | 32 | 35 | 420 | 89 | |
| 1.5 (162 kw) | 2020.07- | 6AT | F | L | Estate 4WD B38 A15 A;IA1 | | GDS83712 | Drive Shaft | | 31 | 26 | 56 | | 541 | |
| | 2020.07- | 6AT | F | R | Estate 4WD B38 A15 A;IA1 | | GDS83713 | Drive Shaft | | 31 | 26 | 56 | | 905 | |
| | 2020.07- | 6AT | F | L/R | Estate 4WD B38 A15 A;IA1 | | GCO82471 | Outer Joint | | 31 | 26 | 56 | | 73.5 | M |
| | 2020.07- | 6AT | F | L | Estate 4WD B38 A15 A;IA1 | | GCI82347 | Inner Joint | | 26 | 32 | 31 | 65 | 92 | |
| | 2020.07- | 6AT | F | R | Estate 4WD B38 A15 A;IA1 | | GCI82348 | Inner Joint | | 26 | 32 | 31 | 388 | 88 | |
| | 2020.07- | 6AT | R | L | Estate 4WD B38 A15 A;IA1 | | GDS56104 | Drive Shaft | | 31 | 25 | 56 | | 752 | |
| | 2020.07- | 6AT | R | R | Estate 4WD B38 A15 A;IA1 | | GDS56103 | Drive Shaft | | 31 | 25 | 56 | | 703 | |
| | 2020.07- | 6AT | R | L/R | Estate 4WD B38 A15 A;IA1 | | GCO81685 | Outer Joint | | 31 | 30 | 56 | | 61.5 | I |
| | 2020.07- | 6AT | R | L | Estate 4WD B38 A15 A;IA1 | | GCI82921 | Inner Joint | | 25 | 30 | 39.95 | 59 | 96.5 | |
| | 2020.07- | 6AT | R | R | Estate 4WD B38 A15 A;IA1 | | GCI82920 | Inner Joint | | 25 | 30 | 39.95 | 74.5 | 99.5 | |
| 1.5 (165 kw) | 2017.01- | 6AT | F | L | Estate 4WD B38 A15 A;IA1 | | GDS83712 | Drive Shaft | | 31 | 26 | 56 | | 541 | |
| | 2017.01- | 6AT | F | R | Estate 4WD B38 A15 A;IA1 | | GDS83713 | Drive Shaft | | 31 | 26 | 56 | | 905 | |
| | 2017.01- | 6AT | F | L/R | Estate 4WD B38 A15 A;IA1 | | GCO82471 | Outer Joint | | 31 | 26 | 56 | | 73.5 | M |
| | 2017.01- | 6AT | F | L | Estate 4WD B38 A15 A;IA1 | | GCI82347 | Inner Joint | | 26 | 32 | 31 | 65 | 92 | |
| | 2017.01- | 6AT | F | R | Estate 4WD B38 A15 A;IA1 | | GCI82348 | Inner Joint | | 26 | 32 | 31 | 388 | 88 | |
| | 2017.01- | 6AT | R | L | Estate 4WD B38 A15 A;IA1 | | GDS56104 | Drive Shaft | | 31 | 25 | 56 | | 752 | |
| | 2017.01- | 6AT | R | R | Estate 4WD B38 A15 A;IA1 | | GDS56103 | Drive Shaft | | 31 | 25 | 56 | | 703 | |

| | YEAR | TRANSM. | F/R | L/R | BODY STYLE & DRIVE TYPE & ENGINE | REMARKS | G-AP Ref. | PRODUCT | ABS | Technical Specifications A | B | C | H | L | P |
|---|---|---|---|---|---|---|---|---|---|---|---|---|---|---|---|
| **MINI** **Mini Countryman** | | | | | | | | | | | | | | | |
| 1.5 (165 kw) | 2017.01- | 6AT | R | L/R | Estate 4WD B38 A15 A;IA1 | | GCO81685 | Outer Joint | | 31 | 30 | 56 | | 61.5 | I |
| | 2017.01- | 6AT | R | L | Estate 4WD B38 A15 A;IA1 | | GCI82921 | Inner Joint | | 25 | 30 | 39.95 | 59 | 96.5 | |
| | 2017.01- | 6AT | R | R | Estate 4WD B38 A15 A;IA1 | | GCI82920 | Inner Joint | | 25 | 30 | 39.95 | 74.5 | 99.5 | |
| 1.6 (66 kw) | 2010.08-2016.10 | 6MT | F | L | Estate FWD N47 C16 A | | GDS85132 | Drive Shaft | | 26 | 34 | 52 | 80 | 622 | |
| | 2010.08-2016.10 | 6MT | F | L | Estate FWD N47 C16 A | | GCI85072 | Inner Joint | | 34 | 23 | 35 | 54.5 | 98 | |
| | 2010.08-2016.10 | MT | F | R | Estate FWD N47 C16 A | | GDS85128 | Drive Shaft | | 26 | 34 | 52 | 80 | 949 | |
| | 2010.08-2016.10 | MT | F | R | Estate FWD N47 C16 A | | GCI85084 | Inner Joint | | 34 | 23 | 35 | 396.5 | 84.5 | |
| | 2010.08-2016.10 | MT/6MT | F | L/R | Estate FWD N47 C16 A | | GCO85023 | Outer Joint | | 26 | 25 | 52 | 80 | 63.5 | M |
| 1.6 (72 kw) | 2010.08-2016.10 | 6AT | F | L | Estate FWD N16 B16 A | | GDS83442 | Drive Shaft | | 26 | 26 | 51.9 | 80 | 631 | |
| | 2010.08-2016.10 | 6AT | F | R | Estate FWD N16 B16 A | | GDS84622 | Drive Shaft | | 26 | 26 | 51.9 | 80 | 904 | |
| | 2010.08-2016.10 | 6AT | F | L/R | Estate FWD N16 B16 A | | GCO85022 | Outer Joint | | 26 | 23 | 51.9 | 80 | 60 | M |
| | 2010.08-2016.10 | 6AT | F | L | Estate FWD N16 B16 A | | GCI82216 | Inner Joint | | 26 | 22 | 31 | 65 | 90.5 | |
| | 2010.08-2016.10 | 6AT | F | R | Estate FWD N16 B16 A | | GCI82895 | Inner Joint | | 26 | 22 | 31 | 342 | 98.5 | |
| | 2010.08-2016.10 | 6MT | F | R | Estate FWD N16 B16 A | | GDS85129 | Drive Shaft | | 26 | 33 | 51.9 | 80 | 923 | |
| | 2010.08-2016.10 | MT | F | L | Estate FWD N16 B16 A | | GDS85126 | Drive Shaft | | 26 | 33 | 51.9 | 80 | 643 | |
| | 2010.08-2016.10 | MT | F | L | Estate FWD N16 B16 A | | GCI85070 | Inner Joint | | 33 | 23 | 35 | 56 | 97.5 | |
| | 2010.08-2016.10 | MT | F | R | Estate FWD N16 B16 A | | GCI85071 | Inner Joint | | 33 | 23 | 35 | 351.5 | 82.5 | |
| 1.6 (82 kw) | 2010.08-2016.10 | 6MT | F | L | Estate 4WD N47 C16 A | | GDS85132 | Drive Shaft | | 26 | 34 | 52 | 80 | 622 | |
| | 2010.08-2016.10 | 6MT | F | L/R | Estate 4WD N47 C16 A | | GCO85023 | Outer Joint | | 26 | 25 | 52 | 80 | 63.5 | M |
| | 2010.08-2016.10 | 6MT | F | L | Estate 4WD N47 C16 A | | GCI85072 | Inner Joint | | 34 | 23 | 35 | 54.5 | 98 | |
| | 2010.08-2016.10 | 6MT | F | R | Estate 4WD N47 C16 A | | GCI81893 | Inner Joint | | 35 | 23 | 41.95 | | 121 | |
| | 2010.08-2016.10 | 6MT | R | L | Estate 4WD N47 C16 A | | GDS85127 | Drive Shaft | | 26 | 27 | 51.6 | 80 | 809 | |
| | 2010.08-2016.10 | 6MT | R | R | Estate 4WD N47 C16 A | | GDS56800 | Drive Shaft | | 26 | 27 | 51.6 | 80 | 777 | |
| | 2010.08-2016.10 | 6MT | R | L/R | Estate 4WD N47 C16 A | | GCO85021 | Outer Joint | | 26 | 20 | 51.6 | 80 | 55.5 | M |
| | 2010.08-2016.10 | 6MT | R | L/R | Estate 4WD N47 C16 A | | GCI85069 | Inner Joint | | 27 | 20 | 43.95 | 53.5 | 96 | |
| | 2010.08-2016.10 | 6MT | F | L | Estate FWD N47 C16 A | | GDS85132 | Drive Shaft | | 26 | 34 | 52 | 80 | 622 | |
| | 2010.08-2016.10 | 6MT | F | L | Estate FWD N47 C16 A | | GCI85072 | Inner Joint | | 34 | 23 | 35 | 54.5 | 98 | |
| | 2010.08-2016.10 | MT | F | R | Estate FWD N47 C16 A | | GDS85128 | Drive Shaft | | 26 | 34 | 52 | 80 | 949 | |
| | 2010.08-2016.10 | MT | F | R | Estate FWD N47 C16 A | | GCI85084 | Inner Joint | | 34 | 23 | 35 | 396.5 | 84.5 | |
| | 2010.08-2016.10 | MT/6MT | F | L/R | Estate FWD N47 C16 A | | GCO85023 | Outer Joint | | 26 | 25 | 52 | 80 | 63.5 | M |
| 1.6 (85 kw) | 2010.08-2016.10 | 6AT | F | L | Estate FWD N16 B16 A | | GDS83442 | Drive Shaft | | 26 | 26 | 51.9 | 80 | 631 | |
| | 2010.08-2016.10 | 6AT | F | R | Estate FWD N16 B16 A | | GDS84622 | Drive Shaft | | 26 | 26 | 51.9 | 80 | 904 | |
| | 2010.08-2016.10 | 6AT | F | L/R | Estate FWD N16 B16 A | | GCO85022 | Outer Joint | | 26 | 23 | 51.9 | 80 | 60 | M |
| | 2010.08-2016.10 | 6AT | F | L | Estate FWD N16 B16 A | | GCI82216 | Inner Joint | | 26 | 22 | 31 | 65 | 90.5 | |
| | 2010.08-2016.10 | 6AT | F | R | Estate FWD N16 B16 A | | GCI82895 | Inner Joint | | 26 | 22 | 31 | 342 | 98.5 | |
| | 2010.08-2016.10 | 6MT | F | R | Estate FWD N16 B16 A | | GDS85129 | Drive Shaft | | 26 | 33 | 51.9 | 80 | 923 | |
| | 2010.08-2016.10 | MT | F | L | Estate FWD N16 B16 A | | GDS85126 | Drive Shaft | | 26 | 33 | 51.9 | 80 | 643 | |
| | 2010.08-2016.10 | MT | F | L | Estate FWD N16 B16 A | | GCI85070 | Inner Joint | | 33 | 23 | 35 | 56 | 97.5 | |
| | 2010.08-2016.10 | MT | F | R | Estate FWD N16 B16 A | | GCI85071 | Inner Joint | | 33 | 23 | 35 | 351.5 | 82.5 | |
| 1.6 (88 kw) | 2010.08-2016.10 | 6AT | F | L | Estate FWD N16 B16 A | | GDS83442 | Drive Shaft | | 26 | 26 | 51.9 | 80 | 631 | |
| | 2010.08-2016.10 | 6AT | F | R | Estate FWD N16 B16 A | | GDS84622 | Drive Shaft | | 26 | 26 | 51.9 | 80 | 904 | |
| | 2010.08-2016.10 | 6AT | F | L/R | Estate FWD N16 B16 A | | GCO85022 | Outer Joint | | 26 | 23 | 51.9 | 80 | 60 | M |
| | 2010.08-2016.10 | 6AT | F | L | Estate FWD N16 B16 A | | GCI82216 | Inner Joint | | 26 | 22 | 31 | 65 | 90.5 | |
| | 2010.08-2016.10 | 6AT | F | R | Estate FWD N16 B16 A | | GCI82895 | Inner Joint | | 26 | 22 | 31 | 342 | 98.5 | |
| | 2010.08-2016.10 | 6MT | F | L | Estate FWD N16 B16 A | | GDS85126 | Drive Shaft | | 26 | 33 | 51.9 | 80 | 643 | |
| | 2010.08-2016.10 | 6MT | F | R | Estate FWD N16 B16 A | | GDS85129 | Drive Shaft | | 26 | 33 | 51.9 | 80 | 923 | |
| 1.6 (90 kw) | 2010.08-2016.10 | 6AT | F | L | Estate FWD N16 B16 A | | GDS83442 | Drive Shaft | | 26 | 26 | 51.9 | 80 | 631 | |
| | 2010.08-2016.10 | 6AT | F | R | Estate FWD N16 B16 A | | GDS84622 | Drive Shaft | | 26 | 26 | 51.9 | 80 | 904 | |
| | 2010.08-2016.10 | 6AT | F | L/R | Estate FWD N16 B16 A | | GCO85022 | Outer Joint | | 26 | 23 | 51.9 | 80 | 60 | M |
| | 2010.08-2016.10 | 6AT | F | L | Estate FWD N16 B16 A | | GCI82216 | Inner Joint | | 26 | 22 | 31 | 65 | 90.5 | |
| | 2010.08-2016.10 | 6AT | F | R | Estate FWD N16 B16 A | | GCI82895 | Inner Joint | | 26 | 22 | 31 | 342 | 98.5 | |
| | 2010.08-2016.10 | 6MT | F | R | Estate FWD N16 B16 A | | GDS85129 | Drive Shaft | | 26 | 33 | 51.9 | 80 | 923 | |
| | 2010.08-2016.10 | 6MT | F | L | Estate FWD N16 B16 A | | GCI85070 | Inner Joint | | 33 | 23 | 35 | 56 | 97.5 | |
| | 2010.08-2016.10 | 6MT | F | R | Estate FWD N16 B16 A | | GCI85071 | Inner Joint | | 33 | 23 | 35 | 351.5 | 82.5 | |
| | 2010.08-2016.10 | MT | F | L | Estate FWD N16 B16 A | | GDS85126 | Drive Shaft | | 26 | 33 | 51.9 | 80 | 643 | |
| | 2012.11-2016.10 | 6AT | F | R | Estate 4WD N16 B16 A | For Engine code:N18B16A | GDS81772 | Drive Shaft | | 26 | 35 | 52 | 80 | 593 | |
| | 2012.11-2016.10 | 6AT/6MT | F | L/R | Estate 4WD N16 B16 A | For Enginecode:N16B16A/N18B16A | GCO85023 | Outer Joint | | 26 | 25 | 52 | 80 | 63.5 | M |
| | 2012.11-2016.10 | 6MT | F | L | Estate 4WD N16 B16 A | For Engine code:N16B16A | GDS85132 | Drive Shaft | | 26 | 34 | 52 | 80 | 622 | |
| | 2012.11-2016.10 | 6MT | F | L | Estate 4WD N16 B16 A | For Engine code:N16B16A | GCI85072 | Inner Joint | | 34 | 23 | 35 | 54.5 | 98 | |
| | 2012.11-2016.10 | 6AT/6MT | R | L | Estate 4WD N16 B16 A | | GDS85127 | Drive Shaft | | 26 | 27 | 51.6 | 80 | 809 | |
| | 2012.11-2016.10 | 6AT/6MT | R | R | Estate 4WD N16 B16 A | | GDS56800 | Drive Shaft | | 26 | 27 | 51.6 | 80 | 777 | |
| | 2012.11-2016.10 | 6AT/6MT | R | R | Estate 4WD N16 B16 A | | GCI85069 | Inner Joint | | 27 | 20 | 43.95 | 53.5 | 96 | |
| | 2012.11-2016.10 | 6AT/6MT | F | L | Estate 4WD N18 B16 A | For Engine Code:N18B16A | GDS81771 | Drive Shaft | | 26 | 26 | 52 | 80 | 634 | |
| | 2012.11-2016.10 | 6AT/6MT | F | L | Estate 4WD N18 B16 A | For Engine Code:N16B16A | GDS85132 | Drive Shaft | | 26 | 34 | 52 | 80 | 622 | |
| | 2012.11-2016.10 | 6AT/6MT | F | R | Estate 4WD N18 B16 A | For Engine Code:N18B16A | GDS81772 | Drive Shaft | | 26 | 35 | 52 | 80 | 593 | |

| | YEAR | TRANSM. | F/R | L/R | BODY STYLE & DRIVE TYPE & ENGINE | REMARKS | G-AP Ref. | PRODUCT | ABS | Technical Specifications | | | | | |
|---|---|---|---|---|---|---|---|---|---|---|---|---|---|---|---|
| | | | | | | | | | | A | B | C | H | L | P |
| **MINI**<br>**Mini Countryman** | | | | | | | | | | | | | | | |
| 1.6 (90 kw) | 2012.11-2016.10 | 6AT/6MT | F | L/R | Estate 4WD N18 B16 A | For Enginecode:N16B16A/N18B16A | GCO85023 | Outer Joint | | 26 | 25 | 52 | 80 | 63.5 | M |
| | 2012.11-2016.10 | 6AT/6MT | F | L | Estate 4WD N18 B16 A | For Engine Code:N16B16A | GCI85072 | Inner Joint | | 34 | 23 | 35 | 54.5 | 98 | |
| | 2012.11-2016.10 | 6AT/6MT | F | R | Estate 4WD N18 B16 A | For Engine Code:N16B16A | GCI81893 | Inner Joint | | 35 | 23 | 41.95 | | 121 | |
| | 2012.11-2016.10 | MT | F | L | Estate 4WD N18 B16 A | | GCO85023 | Outer Joint | | 26 | 25 | 52 | 80 | 63.5 | M |
| | 2012.11-2016.10 | 6AT/6MT | R | L | Estate 4WD N18 B16 A | | GDS85127 | Drive Shaft | | 26 | 27 | 51.6 | 80 | 809 | |
| | 2012.11-2016.10 | 6AT/6MT | R | R | Estate 4WD N18 B16 A | | GDS56800 | Drive Shaft | | 26 | 27 | 51.6 | 80 | 777 | |
| | 2012.11-2016.10 | 6AT/6MT | R | L/R | Estate 4WD N18 B16 A | | GCO85021 | Outer Joint | | 26 | 20 | 51.6 | 80 | 55.5 | M |
| | 2012.11-2016.10 | 6AT/6MT | R | L/R | Estate 4WD N18 B16 A | | GCI85069 | Inner Joint | | 27 | 20 | 43.95 | 53.5 | 96 | |
| 1.6 (120 kw) | 2010.08-2016.10 | 6AT | F | L | Estate 4WD N18 B16 A | | GDS81771 | Drive Shaft | | 26 | 26 | 52 | 80 | 634 | |
| | 2010.08-2016.10 | 6AT | F | R | Estate 4WD N18 B16 A | | GDS81772 | Drive Shaft | | 26 | 35 | 52 | 80 | 593 | |
| | 2010.08-2016.10 | 6MT | F | L | Estate 4WD N18 B16 A | | GDS85132 | Drive Shaft | | 26 | 34 | 52 | 80 | 622 | |
| | 2010.08-2016.10 | 6MT | F | L | Estate 4WD N18 B16 A | | GCI85072 | Inner Joint | | 34 | 23 | 35 | 54.5 | 98 | |
| | 2010.08-2016.10 | 6MT | F | R | Estate 4WD N18 B16 A | | GCI81893 | Inner Joint | | 35 | 23 | 41.95 | | 121 | |
| | 2010.08-2016.10 | MT/6AT/6MT | F | L/R | Estate 4WD N18 B16 A | | GCO85023 | Outer Joint | | 26 | 25 | 52 | 80 | 63.5 | M |
| | 2010.08-2016.10 | 6AT/6MT | R | L | Estate 4WD N18 B16 A | | GDS85127 | Drive Shaft | | 26 | 27 | 51.6 | 80 | 809 | |
| | 2010.08-2016.10 | 6AT/6MT | R | R | Estate 4WD N18 B16 A | | GDS56800 | Drive Shaft | | 26 | 27 | 51.6 | 80 | 777 | |
| | 2010.08-2016.10 | 6AT/6MT | R | L/R | Estate 4WD N18 B16 A | | GCO85021 | Outer Joint | | 26 | 20 | 51.6 | 80 | 55.5 | M |
| | 2010.08-2016.10 | 6AT/6MT | R | L/R | Estate 4WD N18 B16 A | | GCI85069 | Inner Joint | | 27 | 20 | 43.95 | 53.5 | 96 | |
| | 2010.08-2016.10 | 6AT | F | L | Estate FWD N18 B16 A | | GDS81771 | Drive Shaft | | 26 | 26 | 52 | 80 | 634 | |
| | 2010.08-2016.10 | 6AT | F | L | Estate FWD N18 B16 A | | GCO85023 | Outer Joint | | 26 | 25 | 52 | 80 | 63.5 | M |
| | 2010.08-2016.10 | 6MT | F | L | Estate FWD N18 B16 A | | GDS85132 | Drive Shaft | | 26 | 34 | 52 | 80 | 622 | |
| | 2010.08-2016.10 | 6MT | F | L | Estate FWD N18 B16 A | | GCI85072 | Inner Joint | | 34 | 23 | 35 | 54.5 | 98 | |
| | 2010.08-2016.10 | MT | F | R | Estate FWD N18 B16 A | | GDS85128 | Drive Shaft | | 26 | 34 | 52 | 80 | 949 | |
| | 2010.08-2016.10 | MT | F | R | Estate FWD N18 B16 A | | GCI85084 | Inner Joint | | 34 | 23 | 35 | 396.5 | 84.5 | |
| | 2010.08-2016.10 | MT/6MT | F | L/R | Estate FWD N18 B16 A | | GCO85023 | Outer Joint | | 26 | 25 | 52 | 80 | 63.5 | M |
| 1.6 (135 kw) | 2010.08-2016.10 | 6AT | F | L | Estate 4WD N18 B16 A | | GDS81771 | Drive Shaft | | 26 | 26 | 52 | 80 | 634 | |
| | 2010.08-2016.10 | 6AT | F | R | Estate 4WD N18 B16 A | | GDS81772 | Drive Shaft | | 26 | 35 | 52 | 80 | 593 | |
| | 2010.08-2016.10 | 6MT | F | L | Estate 4WD N18 B16 A | | GDS85132 | Drive Shaft | | 26 | 34 | 52 | 80 | 622 | |
| | 2010.08-2016.10 | 6MT | F | L | Estate 4WD N18 B16 A | | GCI85072 | Inner Joint | | 34 | 23 | 35 | 54.5 | 98 | |
| | 2010.08-2016.10 | 6MT | F | R | Estate 4WD N18 B16 A | | GCI81893 | Inner Joint | | 35 | 23 | 41.95 | | 121 | |
| | 2010.08-2016.10 | 6MT/6AT | F | L/R | Estate 4WD N18 B16 A | | GCO85023 | Outer Joint | | 26 | 25 | 52 | 80 | 63.5 | M |
| | 2010.08-2016.10 | 6AT/6MT | R | L | Estate 4WD N18 B16 A | | GDS85127 | Drive Shaft | | 26 | 27 | 51.6 | 80 | 809 | |
| | 2010.08-2016.10 | 6AT/6MT | R | R | Estate 4WD N18 B16 A | | GDS56800 | Drive Shaft | | 26 | 27 | 51.6 | 80 | 777 | |
| | 2010.08-2016.10 | 6AT/6MT | R | L/R | Estate 4WD N18 B16 A | | GCO85021 | Outer Joint | | 26 | 20 | 51.6 | 80 | 55.5 | M |
| | 2010.08-2016.10 | 6AT/6MT | R | L/R | Estate 4WD N18 B16 A | | GCI85069 | Inner Joint | | 27 | 20 | 43.95 | 53.5 | 96 | |
| | 2010.08-2016.10 | 6AT | F | L | Estate FWD N18 B16 A | | GDS81771 | Drive Shaft | | 26 | 26 | 52 | 80 | 634 | |
| | 2010.08-2016.10 | 6AT | F | L | Estate FWD N18 B16 A | | GCO85023 | Outer Joint | | 26 | 25 | 52 | 80 | 63.5 | M |
| | 2010.08-2016.10 | 6MT | F | L | Estate FWD N18 B16 A | | GDS85132 | Drive Shaft | | 26 | 34 | 52 | 80 | 622 | |
| | 2010.08-2016.10 | 6MT | F | L | Estate FWD N18 B16 A | | GCI85072 | Inner Joint | | 34 | 23 | 35 | 54.5 | 98 | |
| | 2010.08-2016.10 | MT | F | R | Estate FWD N18 B16 A | | GDS85128 | Drive Shaft | | 26 | 34 | 52 | 80 | 949 | |
| | 2010.08-2016.10 | MT | F | R | Estate FWD N18 B16 A | | GCI85084 | Inner Joint | | 34 | 23 | 35 | 396.5 | 84.5 | |
| | 2010.08-2016.10 | MT/6MT | F | L/R | Estate FWD N18 B16 A | | GCO85023 | Outer Joint | | 26 | 25 | 52 | 80 | 63.5 | M |
| 1.6 (140 kw) | 2014.07-2016.10 | 6AT | F | L | Estate 4WD N18 B16 A | | GDS81771 | Drive Shaft | | 26 | 26 | 52 | 80 | 634 | |
| | 2014.07-2016.10 | 6AT | F | R | Estate 4WD N18 B16 A | | GDS81772 | Drive Shaft | | 26 | 35 | 52 | 80 | 593 | |
| | 2014.07-2016.10 | 6AT/6MT | F | L/R | Estate 4WD N18 B16 A | | GCO85023 | Outer Joint | | 26 | 25 | 52 | 80 | 63.5 | M |
| | 2014.07-2016.10 | 6MT | F | L | Estate 4WD N18 B16 A | | GDS85132 | Drive Shaft | | 26 | 34 | 52 | 80 | 622 | |
| | 2014.07-2016.10 | 6MT | F | L | Estate 4WD N18 B16 A | | GCI85072 | Inner Joint | | 34 | 23 | 35 | 54.5 | 98 | |
| | 2014.07-2016.10 | 6MT | F | R | Estate 4WD N18 B16 A | | GCI81893 | Inner Joint | | 35 | 23 | 41.95 | | 121 | |
| | 2014.07-2016.10 | 6AT/6MT | R | L | Estate 4WD N18 B16 A | | GDS85127 | Drive Shaft | | 26 | 27 | 51.6 | 80 | 809 | |
| | 2014.07-2016.10 | 6AT/6MT | R | R | Estate 4WD N18 B16 A | | GDS56800 | Drive Shaft | | 26 | 27 | 51.6 | 80 | 777 | |
| | 2014.07-2016.10 | 6AT/6MT | R | L/R | Estate 4WD N18 B16 A | | GCO85021 | Outer Joint | | 26 | 20 | 51.6 | 80 | 55.5 | M |
| | 2014.07-2016.10 | 6AT/6MT | R | L/R | Estate 4WD N18 B16 A | | GCI85069 | Inner Joint | | 27 | 20 | 43.95 | 53.5 | 96 | |
| | 2014.07-2016.10 | 6AT | F | L | Estate FWD N18 B16 A | | GDS81771 | Drive Shaft | | 26 | 26 | 52 | 80 | 634 | |
| | 2014.07-2016.10 | 6AT | F | L | Estate FWD N18 B16 A | | GCO85023 | Outer Joint | | 26 | 25 | 52 | 80 | 63.5 | M |
| | 2014.07-2016.10 | 6MT | F | L | Estate FWD N18 B16 A | | GDS85132 | Drive Shaft | | 26 | 34 | 52 | 80 | 622 | |
| | 2014.07-2016.10 | 6MT | F | L | Estate FWD N18 B16 A | | GCI85072 | Inner Joint | | 34 | 23 | 35 | 54.5 | 98 | |
| | 2014.07-2016.10 | MT | F | R | Estate FWD N18 B16 A | | GDS85128 | Drive Shaft | | 26 | 34 | 52 | 80 | 949 | |
| | 2014.07-2016.10 | MT | F | R | Estate FWD N18 B16 A | | GCI85084 | Inner Joint | | 34 | 23 | 35 | 396.5 | 84.5 | |
| | 2014.07-2016.10 | MT/6MT | F | L/R | Estate FWD N18 B16 A | | GCO85023 | Outer Joint | | 26 | 25 | 52 | 80 | 63.5 | M |
| 1.6 (147 kw) | 2010.08-2016.10 | 6AT | F | L | Estate FWD N18 B16 A | | GDS81771 | Drive Shaft | | 26 | 26 | 52 | 80 | 634 | |
| | 2010.08-2016.10 | 6AT | F | L | Estate FWD N18 B16 A | | GCO85023 | Outer Joint | | 26 | 25 | 52 | 80 | 63.5 | M |
| | 2010.08-2016.10 | 6MT | F | L | Estate FWD N18 B16 A | | GDS85132 | Drive Shaft | | 26 | 34 | 52 | 80 | 622 | |
| | 2010.08-2016.10 | 6MT | F | L | Estate FWD N18 B16 A | | GCI85072 | Inner Joint | | 34 | 23 | 35 | 54.5 | 98 | |
| | 2010.08-2016.10 | MT | F | R | Estate FWD N18 B16 A | | GDS85128 | Drive Shaft | | 26 | 34 | 52 | 80 | 949 | |
| | 2010.08-2016.10 | MT | F | R | Estate FWD N18 B16 A | | GCI85084 | Inner Joint | | 34 | 23 | 35 | 396.5 | 84.5 | |

| | YEAR | TRANSM. | F/R | L/R | BODY STYLE & DRIVE TYPE & ENGINE | REMARKS | G-AP Ref. | PRODUCT | ABS | Technical Specifications A | B | C | H | L | P |
|---|---|---|---|---|---|---|---|---|---|---|---|---|---|---|---|
| **MINI** | | | | | | | | | | | | | | | |
| **Mini Countryman** | | | | | | | | | | | | | | | |
| 1.6 (147 kw) | 2010.08-2016.10 | MT/6MT | F | L/R | Estate FWD N18 B16 A | | GCO85023 | Outer Joint | | 26 | 25 | 52 | 80 | 63.5 | M |
| 1.6 (160 kw) | 2012.11-2016.10 | 6AT | F | L | Estate 4WD N18 B16 C | | GDS81771 | Drive Shaft | | 26 | 26 | 52 | 80 | 634 | |
| | 2012.11-2016.10 | 6AT | F | R | Estate 4WD N18 B16 C | | GDS81772 | Drive Shaft | | 26 | 35 | 52 | 80 | 593 | |
| | 2012.11-2016.10 | 6AT/6MT | F | L/R | Estate 4WD N18 B16 C | | GCO85023 | Outer Joint | | 26 | 25 | 52 | 80 | 63.5 | M |
| | 2012.11-2016.10 | 6MT | F | L | Estate 4WD N18 B16 C | | GDS85132 | Drive Shaft | | 26 | 34 | 52 | 80 | 622 | |
| | 2012.11-2016.10 | 6MT | F | L | Estate 4WD N18 B16 C | | GCI85072 | Inner Joint | | 34 | 23 | 35 | 54.5 | 98 | |
| | 2012.11-2016.10 | 6MT | F | R | Estate 4WD N18 B16 C | | GCI81893 | Inner Joint | | 35 | 23 | 41.95 | | 121 | |
| | 2012.11-2016.10 | MT | F | L | Estate 4WD N18 B16 C | | GCO85023 | Outer Joint | | 26 | 25 | 52 | 80 | 63.5 | M |
| | 2012.11-2016.10 | AT/MT | R | L | Estate 4WD N18 B16 C | | GDS85127 | Drive Shaft | | 26 | 27 | 51.6 | 80 | 809 | |
| | 2012.11-2016.10 | AT/MT | R | R | Estate 4WD N18 B16 C | | GDS56800 | Drive Shaft | | 26 | 27 | 51.6 | 80 | 777 | |
| | 2012.11-2016.10 | AT/MT | R | L/R | Estate 4WD N18 B16 C | | GCO85021 | Outer Joint | | 26 | 20 | 51.6 | 80 | 55.5 | M |
| | 2012.11-2016.10 | AT/MT | R | L/R | Estate 4WD N18 B16 C | | GCI85069 | Inner Joint | | 27 | 20 | 43.95 | 53.5 | 96 | |
| 2.0 (82 kw) | 2011.03-2016.10 | 6AT | F | L | Estate 4WD N47 C20 A | | GDS56726 | Drive Shaft | | 26 | 26 | 52 | 80 | 620 | |
| | 2011.03-2016.10 | 6AT | F | R | Estate 4WD N47 C20 A | | GDS81772 | Drive Shaft | | 26 | 35 | 52 | 80 | 593 | |
| | 2011.03-2016.10 | 6AT | F | L | Estate 4WD N47 C20 A | | GCI81508 | Inner Joint | | 26 | 24 | 31 | 65 | 92 | |
| | 2011.03-2016.10 | AT | F | R | Estate 4WD N47 C20 A | | GCO85023 | Outer Joint | | 26 | 25 | 52 | 80 | 63.5 | M |
| | 2011.03-2016.10 | MT | F | L | Estate 4WD N47 C20 A | | GDS85132 | Drive Shaft | | 26 | 34 | 52 | 80 | 622 | |
| | 2011.03-2016.10 | MT | F | R | Estate 4WD N47 C20 A | | GDS85128 | Drive Shaft | | 26 | 34 | 52 | 80 | 949 | |
| | 2011.03-2016.10 | MT | F | L | Estate 4WD N47 C20 A | | GCI85072 | Inner Joint | | 34 | 23 | 35 | 54.5 | 98 | |
| | 2011.03-2016.10 | MT | F | R | Estate 4WD N47 C20 A | | GCI85084 | Inner Joint | | 34 | 23 | 35 | 396.5 | 84.5 | |
| | 2011.03-2016.10 | MT/6AT | F | L/R | Estate 4WD N47 C20 A | | GCO85023 | Outer Joint | | 26 | 25 | 52 | 80 | 63.5 | M |
| | 2011.03-2016.10 | 6AT | R | L | Estate 4WD N47 C20 A | | GDS85127 | Drive Shaft | | 26 | 27 | 51.6 | 80 | 809 | |
| | 2011.03-2016.10 | 6AT | R | R | Estate 4WD N47 C20 A | | GDS56800 | Drive Shaft | | 26 | 27 | 51.6 | 80 | 777 | |
| | 2011.03-2016.10 | 6AT | R | L/R | Estate 4WD N47 C20 A | | GCO85021 | Outer Joint | | 26 | 20 | 51.6 | 80 | 55.5 | M |
| | 2011.03-2016.10 | 6AT | R | L/R | Estate 4WD N47 C20 A | | GCI85069 | Inner Joint | | 27 | 20 | 43.95 | 53.5 | 96 | |
| | 2011.03-2016.10 | 6AT | F | L | Estate FWD N47 C20 A | | GDS56726 | Drive Shaft | | 26 | 26 | 52 | 80 | 620 | |
| | 2011.03-2016.10 | 6AT | F | R | Estate FWD N47 C20 A | | GDS56772 | Drive Shaft | | 26 | 26 | 52 | 80 | 929 | |
| | 2011.03-2016.10 | 6AT | F | L | Estate FWD N47 C20 A | | GCI81508 | Inner Joint | | 26 | 24 | 31 | 65 | 92 | |
| | 2011.03-2016.10 | 6AT | F | R | Estate FWD N47 C20 A | | GCI83483 | Inner Joint | | 26 | 24 | 31 | 361.5 | 104 | |
| | 2011.03-2016.10 | MT | F | L | Estate FWD N47 C20 A | | GDS85132 | Drive Shaft | | 26 | 34 | 52 | 80 | 622 | |
| | 2011.03-2016.10 | MT | F | R | Estate FWD N47 C20 A | | GDS85128 | Drive Shaft | | 26 | 34 | 52 | 80 | 949 | |
| | 2011.03-2016.10 | MT | F | L | Estate FWD N47 C20 A | | GCI85072 | Inner Joint | | 34 | 23 | 35 | 54.5 | 98 | |
| | 2011.03-2016.10 | MT | F | R | Estate FWD N47 C20 A | | GCI85084 | Inner Joint | | 34 | 23 | 35 | 396.5 | 84.5 | |
| | 2011.03-2016.10 | MT/6AT | F | L/R | Estate FWD N47 C20 A | | GCO85023 | Outer Joint | | 26 | 25 | 52 | 80 | 63.5 | M |
| 2.0 (100 kw) | 2011.03-2016.10 | 6AT | F | L | Estate 4WD N47 C20 A | | GDS56726 | Drive Shaft | | 26 | 26 | 52 | 80 | 620 | |
| | 2011.03-2016.10 | 6AT | F | R | Estate 4WD N47 C20 A | | GDS81772 | Drive Shaft | | 26 | 35 | 52 | 80 | 593 | |
| | 2011.03-2016.10 | 6AT | F | L | Estate 4WD N47 C20 A | | GCI81508 | Inner Joint | | 26 | 24 | 31 | 65 | 92 | |
| | 2011.03-2016.10 | 6MT | F | L | Estate 4WD N47 C20 A | | GDS85132 | Drive Shaft | | 26 | 34 | 52 | 80 | 622 | |
| | 2011.03-2016.10 | 6MT | F | L | Estate 4WD N47 C20 A | | GCI85072 | Inner Joint | | 34 | 23 | 35 | 54.5 | 98 | |
| | 2011.03-2016.10 | 6MT | F | R | Estate 4WD N47 C20 A | | GCI81893 | Inner Joint | | 35 | 23 | 41.95 | | 121 | |
| | 2011.03-2016.10 | AT | F | R | Estate 4WD N47 C20 A | | GCO85023 | Outer Joint | | 26 | 25 | 52 | 80 | 63.5 | M |
| | 2011.03-2016.10 | MT/6AT/6MT | F | L/R | Estate 4WD N47 C20 A | | GCO85023 | Outer Joint | | 26 | 25 | 52 | 80 | 63.5 | M |
| | 2011.03-2016.10 | 6AT/6MT | R | L | Estate 4WD N47 C20 A | | GDS85127 | Drive Shaft | | 26 | 27 | 51.6 | 80 | 809 | |
| | 2011.03-2016.10 | 6AT/6MT | R | R | Estate 4WD N47 C20 A | | GDS56800 | Drive Shaft | | 26 | 27 | 51.6 | 80 | 777 | |
| | 2011.03-2016.10 | 6AT/6MT | R | L/R | Estate 4WD N47 C20 A | | GCO85021 | Outer Joint | | 26 | 20 | 51.6 | 80 | 55.5 | M |
| | 2011.03-2016.10 | 6AT/6MT | R | L/R | Estate 4WD N47 C20 A | | GCI85069 | Inner Joint | | 27 | 20 | 43.95 | 53.5 | 96 | |
| | 2011.03-2016.10 | 6AT | F | L | Estate FWD N47 C20 A | | GDS56726 | Drive Shaft | | 26 | 26 | 52 | 80 | 620 | |
| | 2011.03-2016.10 | 6AT | F | R | Estate FWD N47 C20 A | | GDS56772 | Drive Shaft | | 26 | 26 | 52 | 80 | 929 | |
| | 2011.03-2016.10 | 6AT | F | L | Estate FWD N47 C20 A | | GCI81508 | Inner Joint | | 26 | 24 | 31 | 65 | 92 | |
| | 2011.03-2016.10 | 6AT | F | R | Estate FWD N47 C20 A | | GCI83483 | Inner Joint | | 26 | 24 | 31 | 361.5 | 104 | |
| | 2011.03-2016.10 | 6MT | F | L | Estate FWD N47 C20 A | | GDS85132 | Drive Shaft | | 26 | 34 | 52 | 80 | 622 | |
| | 2011.03-2016.10 | 6MT | F | L | Estate FWD N47 C20 A | | GCI85072 | Inner Joint | | 34 | 23 | 35 | 54.5 | 98 | |
| | 2011.03-2016.10 | MT | F | R | Estate FWD N47 C20 A | | GDS85128 | Drive Shaft | | 26 | 34 | 52 | 80 | 949 | |
| | 2011.03-2016.10 | MT | F | R | Estate FWD N47 C20 A | | GCI85084 | Inner Joint | | 34 | 23 | 35 | 396.5 | 84.5 | |
| | 2011.03-2016.10 | MT/6AT | F | L/R | Estate FWD N47 C20 A | | GCO85023 | Outer Joint | | 26 | 25 | 52 | 80 | 63.5 | M |
| | 2016.10- | 6MT | F | R | Estate 4WD B47 C20 A;B47 C20 B | | GCO81684 | Outer Joint | | 31 | 28 | 56 | | 77 | M |
| | 2016.10- | 8AT | F | L | Estate 4WD B47 C20 A;B47 C20 B | Diameter:25mm | GDS82177 | Drive Shaft | | 31 | 28 | 56 | | 538 | |
| | 2016.10- | 8AT | F | L/R | Estate 4WD B47 C20 A;B47 C20 B | | GCO81684 | Outer Joint | | 31 | 28 | 56 | | 77 | M |
| | 2016.10- | 8AT | F | L | Estate 4WD B47 C20 A;B47 C20 B | Diameter:25mm | GCI81659 | Inner Joint | | 28 | 28 | 33 | 66 | 93.5 | |
| | 2016.10- | 8AT/6MT | F | R | Estate 4WD B47 C20 A;B47 C20 B | | GDS82633 | Drive Shaft | | 31 | 35 | 56 | | 499 | |
| | 2016.10- | 8AT/6MT | F | R | Estate 4WD B47 C20 A;B47 C20 B | | GCI81924 | Inner Joint | | 35 | 28 | 44.5 | | 126 | |
| | 2016.10- | 8AT/6MT | R | L/R | Estate 4WD B47 C20 A;B47 C20 B | | GDS82176 | Drive Shaft | | 31 | 27 | 56 | | 731 | |
| | 2016.10- | 8AT/6MT | R | L/R | Estate 4WD B47 C20 A;B47 C20 B | | GCO81685 | Outer Joint | | 31 | 30 | 56 | | 61.5 | I |
| | 2016.10- | 8AT/6MT | R | L/R | Estate 4WD B47 C20 A;B47 C20 B | | GCI81658 | Inner Joint | | 27 | 30 | 43.7 | 87 | 100 | |
| | 2016.10- | 6MT | F | L | Estate FWD B47 C20 A;B47 C20 B | | GDS56905 | Drive Shaft | | 31 | 37 | 56 | | 546 | |

| | YEAR | TRANSM. | F/R | L/R | BODY STYLE & DRIVE TYPE & ENGINE | REMARKS | G-AP Ref. | PRODUCT | ABS | Technical Specifications | | | | | |
|---|---|---|---|---|---|---|---|---|---|---|---|---|---|---|---|
| | | | | | | | | | | A | B | C | H | L | P |
| **MINI**<br>**Mini Countryman** | | | | | | | | | | | | | | | |
| 2.0 (100 kw) | 2016.10- | 6MT | F | R | Estate FWD B47 C20 A;B47 C20 B | | GDS56579 | Drive Shaft | | 31 | 37 | 56 | | 931 | |
| | 2016.10- | 6MT | F | L/R | Estate FWD B47 C20 A;B47 C20 B | | GCO83263 | Outer Joint | | 31 | 26 | 56 | | 73.5 | M |
| | 2016.10- | 6MT | F | L | Estate FWD B47 C20 A;B47 C20 B | | GCI83553 | Inner Joint | | 37 | 32 | 35 | 58 | 102 | |
| | 2016.10- | 6MT | F | R | Estate FWD B47 C20 A;B47 C20 B | | GCI83386 | Inner Joint | | 37 | 32 | 35 | 450 | 90 | |
| | 2016.10- | 8AT | F | L | Estate FWD B47 C20 A;B47 C20 B | Diameter:25mm | GDS82177 | Drive Shaft | | 31 | 28 | 56 | | 538 | |
| | 2016.10- | 8AT | F | R | Estate FWD B47 C20 A;B47 C20 B | | GDS84087 | Drive Shaft | | 31 | 28 | 56 | | 904 | |
| | 2016.10- | 8AT | F | L/R | Estate FWD B47 C20 A;B47 C20 B | | GCO81684 | Outer Joint | | 31 | 28 | 56 | | 77 | M |
| | 2016.10- | 8AT | F | L | Estate FWD B47 C20 A;B47 C20 B | Diameter:25mm | GCI81659 | Inner Joint | | 28 | 28 | 33 | 66 | 93.5 | |
| | 2016.10- | 8AT | F | R | Estate FWD B47 C20 A;B47 C20 B | | GCI82517 | Inner Joint | | 28 | 28 | 33 | 425 | 106.5 | |
| 2.0 (105 kw) | 2011.03-2016.10 | 6AT | F | L | Estate 4WD N47 C20 A | | GDS56726 | Drive Shaft | | 26 | 26 | 52 | 80 | 620 | |
| | 2011.03-2016.10 | 6AT | F | R | Estate 4WD N47 C20 A | | GDS81772 | Drive Shaft | | 26 | 35 | 52 | 80 | 593 | |
| | 2011.03-2016.10 | 6AT | F | L | Estate 4WD N47 C20 A | | GCI81508 | Inner Joint | | 26 | 24 | 31 | 65 | 92 | |
| | 2011.03-2016.10 | 6AT/6MT | F | L/R | Estate 4WD N47 C20 A | | GCO85023 | Outer Joint | | 26 | 25 | 52 | 80 | 63.5 | M |
| | 2011.03-2016.10 | 6MT | F | L | Estate 4WD N47 C20 A | | GDS85132 | Drive Shaft | | 26 | 34 | 52 | 80 | 622 | |
| | 2011.03-2016.10 | 6MT | F | L | Estate 4WD N47 C20 A | | GCI85072 | Inner Joint | | 34 | 23 | 35 | 54.5 | 98 | |
| | 2011.03-2016.10 | 6MT | F | R | Estate 4WD N47 C20 A | | GCI81893 | Inner Joint | | 35 | 23 | 41.95 | | 121 | |
| | 2011.03-2016.10 | 6AT/6MT | R | L | Estate 4WD N47 C20 A | | GDS85127 | Drive Shaft | | 26 | 27 | 51.6 | 80 | 809 | |
| | 2011.03-2016.10 | 6AT/6MT | R | R | Estate 4WD N47 C20 A | | GDS56800 | Drive Shaft | | 26 | 27 | 51.6 | 80 | 777 | |
| | 2011.03-2016.10 | 6AT/6MT | R | L/R | Estate 4WD N47 C20 A | | GCO85021 | Outer Joint | | 26 | 20 | 51.6 | 80 | 55.5 | M |
| | 2011.03-2016.10 | 6AT/6MT | R | L/R | Estate 4WD N47 C20 A | | GCI85069 | Inner Joint | | 27 | 20 | 43.95 | 53.5 | 96 | |
| | 2011.03-2016.10 | 6AT | F | L | Estate FWD N47 C20 A | | GDS56726 | Drive Shaft | | 26 | 26 | 52 | 80 | 620 | |
| | 2011.03-2016.10 | 6AT | F | R | Estate FWD N47 C20 A | | GDS56772 | Drive Shaft | | 26 | 26 | 52 | 80 | 929 | |
| | 2011.03-2016.10 | 6AT | F | L | Estate FWD N47 C20 A | | GCI81508 | Inner Joint | | 26 | 24 | 31 | 65 | 92 | |
| | 2011.03-2016.10 | 6AT | F | R | Estate FWD N47 C20 A | | GCI83483 | Inner Joint | | 26 | 24 | 31 | 361.5 | 104 | |
| | 2011.03-2016.10 | 6MT | F | L | Estate FWD N47 C20 A | | GDS85132 | Drive Shaft | | 26 | 34 | 52 | 80 | 622 | |
| | 2011.03-2016.10 | 6MT | F | L | Estate FWD N47 C20 A | | GCI85072 | Inner Joint | | 34 | 23 | 35 | 54.5 | 98 | |
| | 2011.03-2016.10 | MT | F | R | Estate FWD N47 C20 A | | GDS85128 | Drive Shaft | | 26 | 34 | 52 | 80 | 949 | |
| | 2011.03-2016.10 | MT | F | R | Estate FWD N47 C20 A | | GCI85084 | Inner Joint | | 34 | 23 | 35 | 396.5 | 84.5 | |
| | 2011.03-2016.10 | MT/6AT | F | L/R | Estate FWD N47 C20 A | | GCO85023 | Outer Joint | | 26 | 25 | 52 | 80 | 63.5 | M |
| 2.0 (110 kw) | 2016.10- | 6MT | F | R | Estate 4WD B47 C20 A;B47 C20 B | Date to:2020.06 | GDS82633 | Drive Shaft | | 31 | 35 | 56 | | 499 | |
| | 2016.10- | 6MT | F | R | Estate 4WD B47 C20 A;B47 C20 B | Date to:2020.06 | GCI81924 | Inner Joint | | 35 | 28 | 44.5 | | 126 | |
| | 2016.10- | 8AT | F | L | Estate 4WD B47 C20 A;B47 C20 B | For Engine code:B47C20A,Diameter:25mm | GDS82177 | Drive Shaft | | 31 | 28 | 56 | | 538 | |
| | 2016.10- | 8AT | F | R | Estate 4WD B47 C20 A;B47 C20 B | Date from:2020.07,For Engine code:B47C20A | GDS82633 | Drive Shaft | | 31 | 35 | 56 | | 499 | |
| | 2016.10- | 8AT | F | L | Estate 4WD B47 C20 A;B47 C20 B | For Engine code:B47C20A | GCO81684 | Outer Joint | | 31 | 28 | 56 | | 77 | M |
| | 2016.10- | 8AT | F | L | Estate 4WD B47 C20 A;B47 C20 B | For Engine code:B47C20A,Diameter:25mm | GCI81659 | Inner Joint | | 28 | 28 | 33 | 66 | 93.5 | |
| | 2016.10- | 8AT | F | R | Estate 4WD B47 C20 A;B47 C20 B | Date from:2020.07,For Engine code:B47C20A | GCI81924 | Inner Joint | | 35 | 28 | 44.5 | | 126 | |
| | 2016.10- | 8AT/6MT | F | R | Estate 4WD B47 C20 A;B47 C20 B | Date to:2020.06;Date from:2020.07,For Engine code:B47C20A | GCO81684 | Outer Joint | | 31 | 28 | 56 | | 77 | M |
| | 2016.10- | 8AT/6MT | R | L/R | Estate 4WD B47 C20 A;B47 C20 B | | GDS82176 | Drive Shaft | | 31 | 27 | 56 | | 731 | |
| | 2016.10- | 8AT/6MT | R | L/R | Estate 4WD B47 C20 A;B47 C20 B | | GCO81685 | Outer Joint | | 31 | 30 | 56 | | 61.5 | I |
| | 2016.10- | 8AT/6MT | R | L/R | Estate 4WD B47 C20 A;B47 C20 B | | GCI81658 | Inner Joint | | 27 | 30 | 43.7 | 87 | 100 | |
| | 2016.10- | 6MT | F | L | Estate FWD B47 C20 A;B47 C20 B | | GDS56905 | Drive Shaft | | 31 | 37 | 56 | | 546 | |
| | 2016.10- | 6MT | F | R | Estate FWD B47 C20 A;B47 C20 B | | GDS56579 | Drive Shaft | | 31 | 37 | 56 | | 931 | |
| | 2016.10- | 6MT | F | L/R | Estate FWD B47 C20 A;B47 C20 B | | GCO83263 | Outer Joint | | 31 | 26 | 56 | | 73.5 | M |
| | 2016.10- | 6MT | F | L | Estate FWD B47 C20 A;B47 C20 B | | GCI83553 | Inner Joint | | 37 | 32 | 35 | 58 | 102 | |
| | 2016.10- | 6MT | F | R | Estate FWD B47 C20 A;B47 C20 B | | GCI83386 | Inner Joint | | 37 | 32 | 35 | 450 | 90 | |
| | 2016.10- | 8AT | F | L | Estate FWD B47 C20 A;B47 C20 B | For Engine Code:B47C20A | GDS82177 | Drive Shaft | | 31 | 28 | 56 | | 538 | |
| | 2016.10- | 8AT | F | R | Estate FWD B47 C20 A;B47 C20 B | | GDS84087 | Drive Shaft | | 31 | 28 | 56 | | 904 | |
| | 2016.10- | 8AT | F | L/R | Estate FWD B47 C20 A;B47 C20 B | For Engine Code:B47C20A | GCO81684 | Outer Joint | | 31 | 28 | 56 | | 77 | M |
| | 2016.10- | 8AT | F | L | Estate FWD B47 C20 A;B47 C20 B | For Engine Code:B47C20A | GCI81659 | Inner Joint | | 28 | 28 | 33 | 66 | 93.5 | |
| | 2016.10- | 8AT | F | R | Estate FWD B47 C20 A;B47 C20 B | For Engine Code:B47C20A | GCI82517 | Inner Joint | | 28 | 28 | 33 | 425 | 106.5 | |
| 2.0 (120 kw) | 2016.10- | 8AT | F | L | Estate 4WD B47 C20 A;B47 C20 B | Diameter:25mm | GDS82177 | Drive Shaft | | 31 | 28 | 56 | | 538 | |
| | 2016.10- | 8AT | F | R | Estate 4WD B47 C20 A;B47 C20 B | | GDS82633 | Drive Shaft | | 31 | 35 | 56 | | 499 | |
| | 2016.10- | 8AT | F | L/R | Estate 4WD B47 C20 A;B47 C20 B | | GCO81684 | Outer Joint | | 31 | 28 | 56 | | 77 | M |
| | 2016.10- | 8AT | F | L | Estate 4WD B47 C20 A;B47 C20 B | Diameter:25mm | GCI81659 | Inner Joint | | 28 | 28 | 33 | 66 | 93.5 | |
| | 2016.10- | 8AT | F | R | Estate 4WD B47 C20 A;B47 C20 B | | GCI81924 | Inner Joint | | 35 | 28 | 44.5 | | 126 | |
| | 2016.10- | 8AT | R | L/R | Estate 4WD B47 C20 A;B47 C20 B | | GDS82176 | Drive Shaft | | 31 | 27 | 56 | | 731 | |
| | 2016.10- | 8AT | R | L/R | Estate 4WD B47 C20 A;B47 C20 B | | GCO81685 | Outer Joint | | 31 | 30 | 56 | | 61.5 | I |
| | 2016.10- | 8AT | R | L/R | Estate 4WD B47 C20 A;B47 C20 B | | GCI81658 | Inner Joint | | 27 | 30 | 43.7 | 87 | 100 | |
| | 2016.10- | 8AT | F | L | Estate 4WD B48 A20 A;B46 A20 A | Date to:2019.06,Diameter:25mm | GDS82177 | Drive Shaft | | 31 | 28 | 56 | | 538 | |
| | 2016.10- | 8AT | F | L/R | Estate 4WD B48 A20 A;B46 A20 A | Date to:2019.06 | GCO81684 | Outer Joint | | 31 | 28 | 56 | | 77 | M |
| | 2016.10- | 8AT | F | L | Estate 4WD B48 A20 A;B46 A20 A | Date to:2019.06,Diameter:25mm | GCI81659 | Inner Joint | | 28 | 28 | 33 | 66 | 93.5 | |
| | 2016.10- | 8AT/6MT | F | R | Estate 4WD B48 A20 A;B46 A20 A | Date to:2019.06 | GDS82633 | Drive Shaft | | 31 | 35 | 56 | | 499 | |
| | 2016.10- | 8AT/6MT | F | R | Estate 4WD B48 A20 A;B46 A20 A | Date to:2019.06 | GCI81924 | Inner Joint | | 35 | 28 | 44.5 | | 126 | |
| | 2016.10- | 8AT/6MT | R | L/R | Estate 4WD B48 A20 A;B46 A20 A | | GDS82176 | Drive Shaft | | 31 | 27 | 56 | | 731 | |
| | 2016.10- | 8AT/6MT | R | L/R | Estate 4WD B48 A20 A;B46 A20 A | | GCO81685 | Outer Joint | | 31 | 30 | 56 | | 61.5 | I |

| | YEAR | TRANSM. | F/R | L/R | BODY STYLE & DRIVE TYPE & ENGINE | REMARKS | G-AP Ref. | PRODUCT | ABS | Technical Specifications | | | | | |
|---|---|---|---|---|---|---|---|---|---|---|---|---|---|---|---|
| | | | | | | | | | | A | B | C | H | L | P |
| **MINI**<br>**Mini Countryman** | | | | | | | | | | | | | | | |
| 2.0 (120 kw) | 2016.10- | 8AT/6MT | R | L/R | Estate 4WD B48 A20 A;B46 A20 A | | GCI81658 | Inner Joint | | 27 | 30 | 43.7 | 87 | 100 | |
| | 2016.10- | 8AT | F | L | Estate FWD B47 C20 A;B47 C20 B | Diameter:25mm | GDS82177 | Drive Shaft | | 31 | 28 | 56 | | 538 | |
| | 2016.10- | 8AT | F | R | Estate FWD B47 C20 A;B47 C20 B | | GDS84087 | Drive Shaft | | 31 | 28 | 56 | | 904 | |
| | 2016.10- | 8AT | F | L/R | Estate FWD B47 C20 A;B47 C20 B | | GCO81684 | Outer Joint | | 31 | 28 | 56 | | 77 | M |
| | 2016.10- | 8AT | F | L | Estate FWD B47 C20 A;B47 C20 B | Diameter:25mm | GCI81659 | Inner Joint | | 28 | 28 | 33 | 66 | 93.5 | |
| | 2016.10- | 8AT | F | R | Estate FWD B47 C20 A;B47 C20 B | | GCI82517 | Inner Joint | | 28 | 28 | 33 | 425 | 106.5 | |
| | 2016.10- | 6MT | F | L | Estate FWD B48 A20 A;B46 A20 A | | GDS56905 | Drive Shaft | | 31 | 37 | 56 | | 546 | |
| | 2016.10- | 6MT | F | R | Estate FWD B48 A20 A;B46 A20 A | | GDS56579 | Drive Shaft | | 31 | 37 | 56 | | 931 | |
| | 2016.10- | 6MT | F | L/R | Estate FWD B48 A20 A;B46 A20 A | | GCO83263 | Outer Joint | | 31 | 26 | 56 | | 73.5 | M |
| | 2016.10- | 6MT | F | L | Estate FWD B48 A20 A;B46 A20 A | | GCI83553 | Inner Joint | | 37 | 32 | 35 | 58 | 102 | |
| | 2016.10- | 6MT | F | R | Estate FWD B48 A20 A;B46 A20 A | | GCI83386 | Inner Joint | | 37 | 32 | 35 | 450 | 90 | |
| | 2016.10- | 8AT | F | L | Estate FWD B48 A20 A;B46 A20 A | Diameter:25mm | GDS82177 | Drive Shaft | | 31 | 28 | 56 | | 538 | |
| | 2016.10- | 8AT | F | R | Estate FWD B48 A20 A;B46 A20 A | | GDS84087 | Drive Shaft | | 31 | 28 | 56 | | 904 | |
| | 2016.10- | 8AT | F | L/R | Estate FWD B48 A20 A;B46 A20 A | | GCO81684 | Outer Joint | | 31 | 28 | 56 | | 77 | M |
| | 2016.10- | 8AT | F | L | Estate FWD B48 A20 A;B46 A20 A | Diameter:25mm | GCI81659 | Inner Joint | | 28 | 28 | 33 | 66 | 93.5 | |
| | 2016.10- | 8AT | F | R | Estate FWD B48 A20 A;B46 A20 A | | GCI82517 | Inner Joint | | 28 | 28 | 33 | 425 | 106.5 | |
| | 2023.11- | 7DCT | F | L | Estate FWD B47 C20 B | For vehicles with Adaptive Drive | GDS57952 | Drive Shaft | | 37 | 27 | 65 | | 538 | |
| | 2023.11- | 7DCT | F | R | Estate FWD B47 C20 B | | GDS58044 | Drive Shaft | | 37 | 27 | 65 | | 932 | |
| | 2023.11- | 7DCT | F | L/R | Estate FWD B47 C20 B | For vehicles with Adaptive Drive | GCO83810 | Outer Joint | | 37 | 28 | 65 | | 76.5 | M |
| | 2023.11- | 7DCT | F | L | Estate FWD B47 C20 B | For vehicles with Adaptive Drive | GCI83960 | Inner Joint | | 27 | 29 | 35 | 73 | 114 | |
| | 2023.11- | 7DCT | F | R | Estate FWD B47 C20 B | | GCI83986 | Inner Joint | | 27 | 29 | 35 | 456 | 114 | |
| 2.0 (131 kw) | 2020.07- | 8AT | R | L/R | Estate 4WD B48 A20 A;B46 A20 A;B48 A20 F | | GDS82176 | Drive Shaft | | 31 | 27 | 56 | | 731 | |
| | 2020.07- | 8AT | R | L/R | Estate 4WD B48 A20 A;B46 A20 A;B48 A20 F | | GCO81685 | Outer Joint | | 31 | 30 | 56 | | 61.5 | I |
| | 2020.07- | 8AT | R | L/R | Estate 4WD B48 A20 A;B46 A20 A;B48 A20 F | | GCI81658 | Inner Joint | | 27 | 30 | 43.7 | 87 | 100 | |
| | 2020.07- | 6MT | F | L | Estate FWD B48 A20 A;B46 A20 A;B48 A20 F | | GDS56905 | Drive Shaft | | 31 | 37 | 56 | | 546 | |
| | 2020.07- | 6MT | F | R | Estate FWD B48 A20 A;B46 A20 A;B48 A20 F | | GDS56579 | Drive Shaft | | 31 | 37 | 56 | | 931 | |
| | 2020.07- | 6MT | F | L/R | Estate FWD B48 A20 A;B46 A20 A;B48 A20 F | | GCO83263 | Outer Joint | | 31 | 26 | 56 | | 73.5 | M |
| | 2020.07- | 6MT | F | L | Estate FWD B48 A20 A;B46 A20 A;B48 A20 F | | GCI83553 | Inner Joint | | 37 | 32 | 35 | 58 | 102 | |
| | 2020.07- | 6MT | F | R | Estate FWD B48 A20 A;B46 A20 A;B48 A20 F | | GCI83386 | Inner Joint | | 37 | 32 | 35 | 450 | 90 | |
| | 2020.07- | 7DCT | F | L | Estate FWD B48 A20 A;B46 A20 A;B48 A20 F | | GDS84222 | Drive Shaft | | 31 | 27 | 56 | | 547 | |
| | 2020.07- | 7DCT | F | R | Estate FWD B48 A20 A;B46 A20 A;B48 A20 F | | GDS84223 | Drive Shaft | | 31 | 27 | 56 | | 936 | |
| | 2020.07- | 7DCT | F | L/R | Estate FWD B48 A20 A;B46 A20 A;B48 A20 F | | GCO82738 | Outer Joint | | 31 | 26 | 56 | | 73.5 | M |
| | 2020.07- | 7DCT | F | L | Estate FWD B48 A20 A;B46 A20 A;B48 A20 F | | GCI82649 | Inner Joint | | 27 | 32 | 35 | 58 | 102 | |
| | 2020.07- | 7DCT | F | R | Estate FWD B48 A20 A;B46 A20 A;B48 A20 F | | GCI82650 | Inner Joint | | 27 | 32 | 35 | 456 | 89 | |
| 2.0 (140 kw) | 2016.10- | 8AT | F | L | Estate 4WD B47 C20 A;B47 C20 B | For Engine code:B47C20A,Diameter:25mm | GDS82177 | Drive Shaft | | 31 | 28 | 56 | | 538 | |
| | 2016.10- | 8AT | F | R | Estate 4WD B47 C20 A;B47 C20 B | For Engine code:B47C20A | GDS82633 | Drive Shaft | | 31 | 35 | 56 | | 499 | |
| | 2016.10- | 8AT | F | L/R | Estate 4WD B47 C20 A;B47 C20 B | For Engine code:B47C20A | GCO81684 | Outer Joint | | 31 | 28 | 56 | | 77 | M |
| | 2016.10- | 8AT | F | L | Estate 4WD B47 C20 A;B47 C20 B | For Engine code:B47C20A,Diameter:25mm | GCI81659 | Inner Joint | | 28 | 28 | 33 | 66 | 93.5 | |
| | 2016.10- | 8AT | F | R | Estate 4WD B47 C20 A;B47 C20 B | For Engine code:B47C20A | GCI81924 | Inner Joint | | 35 | 28 | 44.5 | | 126 | |
| | 2016.10- | 8AT | R | L/R | Estate 4WD B47 C20 A;B47 C20 B | | GDS82176 | Drive Shaft | | 31 | 27 | 56 | | 731 | |
| | 2016.10- | 8AT | R | L/R | Estate 4WD B47 C20 A;B47 C20 B | | GCO81685 | Outer Joint | | 31 | 30 | 56 | | 61.5 | I |
| | 2016.10- | 8AT | R | L/R | Estate 4WD B47 C20 A;B47 C20 B | | GCI81658 | Inner Joint | | 27 | 30 | 43.7 | 87 | 100 | |
| | 2016.10- | 8AT | F | L | Estate FWD B47 C20 A;B47 C20 B | For Engine code:B47C20A,Diameter:25mm | GDS82177 | Drive Shaft | | 31 | 28 | 56 | | 538 | |
| | 2016.10- | 8AT | F | R | Estate FWD B47 C20 A;B47 C20 B | | GDS84087 | Drive Shaft | | 31 | 28 | 56 | | 904 | |
| | 2016.10- | 8AT | F | L/R | Estate FWD B47 C20 A;B47 C20 B | For Engine code:B47C20A | GCO81684 | Outer Joint | | 31 | 28 | 56 | | 77 | M |
| | 2016.10- | 8AT | F | L | Estate FWD B47 C20 A;B47 C20 B | For Engine code:B47C20A,Diameter:25mm | GCI81659 | Inner Joint | | 28 | 28 | 33 | 66 | 93.5 | |
| | 2016.10- | 8AT | F | R | Estate FWD B47 C20 A;B47 C20 B | Date To:2020.06 | GCI82517 | Inner Joint | | 28 | 28 | 33 | 425 | 106.5 | |
| 2.0 (141 kw) | 2016.10- | 8AT | F | L | Estate 4WD B48 A20 A;B46 A20 A | Date to:2019.06,Diameter:25mm | GDS82177 | Drive Shaft | | 31 | 28 | 56 | | 538 | |
| | 2016.10- | 8AT | F | L/R | Estate 4WD B48 A20 A;B46 A20 A | Date to:2019.06 | GCO81684 | Outer Joint | | 31 | 28 | 56 | | 77 | M |
| | 2016.10- | 8AT | F | L | Estate 4WD B48 A20 A;B46 A20 A | Date to:2019.06,Diameter:25mm | GCI81659 | Inner Joint | | 28 | 28 | 33 | 66 | 93.5 | |
| | 2016.10- | 8AT/6MT | F | R | Estate 4WD B48 A20 A;B46 A20 A | Date to:2019.06 | GDS82633 | Drive Shaft | | 31 | 35 | 56 | | 499 | |
| | 2016.10- | 8AT/6MT | F | R | Estate 4WD B48 A20 A;B46 A20 A | Date to:2019.06 | GCI81924 | Inner Joint | | 35 | 28 | 44.5 | | 126 | |
| | 2016.10- | 8AT/6MT | R | L/R | Estate 4WD B48 A20 A;B46 A20 A | | GDS82176 | Drive Shaft | | 31 | 27 | 56 | | 731 | |
| | 2016.10- | 8AT/6MT | R | L/R | Estate 4WD B48 A20 A;B46 A20 A | | GCO81685 | Outer Joint | | 31 | 30 | 56 | | 61.5 | I |
| | 2016.10- | 8AT/6MT | R | L/R | Estate 4WD B48 A20 A;B46 A20 A | | GCI81658 | Inner Joint | | 27 | 30 | 43.7 | 87 | 100 | |
| | 2016.10- | 6MT | F | L | Estate FWD B48 A20 A;B46 A20 A | | GDS56905 | Drive Shaft | | 31 | 37 | 56 | | 546 | |
| | 2016.10- | 6MT | F | R | Estate FWD B48 A20 A;B46 A20 A | | GDS56579 | Drive Shaft | | 31 | 37 | 56 | | 931 | |
| | 2016.10- | 6MT | F | L/R | Estate FWD B48 A20 A;B46 A20 A | | GCO83263 | Outer Joint | | 31 | 26 | 56 | | 73.5 | M |
| | 2016.10- | 6MT | F | L | Estate FWD B48 A20 A;B46 A20 A | | GCI83553 | Inner Joint | | 37 | 32 | 35 | 58 | 102 | |
| | 2016.10- | 6MT | F | R | Estate FWD B48 A20 A;B46 A20 A | | GCI83386 | Inner Joint | | 37 | 32 | 35 | 450 | 90 | |
| | 2016.10- | 7DCT | F | L | Estate FWD B48 A20 A;B46 A20 A | | GDS84222 | Drive Shaft | | 31 | 27 | 56 | | 547 | |
| | 2016.10- | 7DCT | F | R | Estate FWD B48 A20 A;B46 A20 A | | GDS84223 | Drive Shaft | | 31 | 27 | 56 | | 936 | |
| | 2016.10- | 7DCT | F | L/R | Estate FWD B48 A20 A;B46 A20 A | | GCO82738 | Outer Joint | | 31 | 26 | 56 | | 73.5 | M |
| | 2016.10- | 7DCT | F | L | Estate FWD B48 A20 A;B46 A20 A | | GCI82649 | Inner Joint | | 27 | 32 | 35 | 58 | 102 | |
| | 2016.10- | 7DCT | F | R | Estate FWD B48 A20 A;B46 A20 A | | GCI82650 | Inner Joint | | 27 | 32 | 35 | 456 | 89 | |

| | YEAR | TRANSM. | F/R | L/R | BODY STYLE & DRIVE TYPE & ENGINE | REMARKS | G-AP Ref. | PRODUCT | ABS | Technical Specifications A | B | C | H | L | P |
|---|---|---|---|---|---|---|---|---|---|---|---|---|---|---|---|
| **MINI** | | | | | | | | | | | | | | | |
| **Mini Countryman** | | | | | | | | | | | | | | | |
| 2.0 (141 kw) | 2016.10- | 8AT | F | L | Estate FWD B48 A20 A;B46 A20 A | | GDS82177 | Drive Shaft | | 31 | 28 | 56 | | 538 | |
| | 2016.10- | 8AT | F | R | Estate FWD B48 A20 A;B46 A20 A | | GDS84087 | Drive Shaft | | 31 | 28 | 56 | | 904 | |
| | 2016.10- | 8AT | F | L/R | Estate FWD B48 A20 A;B46 A20 A | | GCO81684 | Outer Joint | | 31 | 28 | 56 | | 77 | M |
| | 2016.10- | 8AT | F | L | Estate FWD B48 A20 A;B46 A20 A | | GCI81659 | Inner Joint | | 28 | 28 | 33 | 66 | 93.5 | |
| | 2016.10- | 8AT | F | R | Estate FWD B48 A20 A;B46 A20 A | | GCI82517 | Inner Joint | | 28 | 28 | 33 | 425 | 106.5 | |
| 2.0 (160 kw) | 2023.11- | 7DCT | F | L | Estate 4WD B48 A20 P | For vehicles with Adaptive Drive | GDS57952 | Drive Shaft | | 37 | 27 | 65 | | 538 | |
| | 2023.11- | 7DCT | F | R | Estate 4WD B48 A20 P | | GDS58026 | Drive Shaft | | 37 | 35 | 65 | | 495 | |
| | 2023.11- | 7DCT | F | L/R | Estate 4WD B48 A20 P | For vehicles with Adaptive Drive | GCO83810 | Outer Joint | | 37 | 28 | 65 | | 76.5 | M |
| | 2023.11- | 7DCT | F | L | Estate 4WD B48 A20 P | For vehicles with Adaptive Drive | GCI83960 | Inner Joint | | 27 | 29 | 35 | 73 | 114 | |
| | 2023.11- | 7DCT | F | R | Estate 4WD B48 A20 P | | GCI83983 | Inner Joint | | 35 | 29 | 44.8 | | 133.5 | |
| 2.0 (170 kw) | 2017.03-2019.06 | 8AT | F | L | Estate 4WD B48 A20 B | Diameter:25mm | GDS82177 | Drive Shaft | | 31 | 28 | 56 | | 538 | |
| | 2017.03-2019.06 | 8AT | F | L/R | Estate 4WD B48 A20 B | | GCO81684 | Outer Joint | | 31 | 28 | 56 | | 77 | M |
| | 2017.03-2019.06 | 8AT | F | L | Estate 4WD B48 A20 B | Diameter:25mm | GCI81659 | Inner Joint | | 28 | 28 | 33 | 66 | 93.5 | |
| | 2017.03-2019.06 | 8AT/6MT | F | R | Estate 4WD B48 A20 B | | GDS82633 | Drive Shaft | | 31 | 35 | 56 | | 499 | |
| | 2017.03-2019.06 | 8AT/6MT | F | R | Estate 4WD B48 A20 B | | GCI81924 | Inner Joint | | 35 | 28 | 44.5 | | 126 | |
| | 2017.03-2019.06 | 8AT/6MT | R | L/R | Estate 4WD B48 A20 B | | GDS82176 | Drive Shaft | | 31 | 27 | 56 | | 731 | |
| | 2017.03-2019.06 | 8AT/6MT | R | L/R | Estate 4WD B48 A20 B | | GCO81685 | Outer Joint | | 31 | 30 | 56 | | 61.5 | I |
| | 2017.03-2019.06 | 8AT/6MT | R | L/R | Estate 4WD B48 A20 B | | GCI81658 | Inner Joint | | 27 | 30 | 43.7 | 87 | 100 | |
| 2.0 (221 kw) | 2023.11- | 7DCT | F | L | Estate 4WD B48 A20 H | | GDS57952 | Drive Shaft | | 37 | 27 | 65 | | 538 | |
| | 2023.11- | 7DCT | F | R | Estate 4WD B48 A20 H | | GDS58026 | Drive Shaft | | 37 | 35 | 65 | | 495 | |
| | 2023.11- | 7DCT | F | L/R | Estate 4WD B48 A20 H | | GCO83810 | Outer Joint | | 37 | 28 | 65 | | 76.5 | M |
| | 2023.11- | 7DCT | F | L | Estate 4WD B48 A20 H | | GCI83960 | Inner Joint | | 27 | 29 | 35 | 73 | 114 | |
| | 2023.11- | 7DCT | F | R | Estate 4WD B48 A20 H | | GCI83983 | Inner Joint | | 35 | 29 | 44.8 | | 133.5 | |
| EV (150 kw) | 2024.03- | ET | F | L | Estate FWD HB0 | | GDS57978 | Drive Shaft | | 37 | 27 | 65 | | 584 | |
| | 2024.03- | ET | F | R | Estate FWD HB0 | | GDS57926 | Drive Shaft | | 37 | 27 | 65 | | 890 | |
| | 2024.03- | ET | F | L/R | Estate FWD HB0 | | GCO83795 | Outer Joint | | 37 | 26 | 65 | | 74 | M |
| | 2024.03- | ET | F | L | Estate FWD HB0 | | GCI83973 | Inner Joint | | 27 | 32 | 43.9 | 70 | 104.5 | |
| | 2024.03- | ET | F | R | Estate FWD HB0 | | GCI83935 | Inner Joint | | 27 | 32 | 43.9 | 393 | 88 | |
| EV (230 kw) | 2024.03- | ET | F | L | Estate 4WD XE2 | | GDS57978 | Drive Shaft | | 37 | 27 | 65 | | 584 | |
| | 2024.03- | ET | F | R | Estate 4WD XE2 | | GDS57926 | Drive Shaft | | 37 | 27 | 65 | | 890 | |
| | 2024.03- | ET | F | L/R | Estate 4WD XE2 | | GCO83795 | Outer Joint | | 37 | 26 | 65 | | 74 | M |
| | 2024.03- | ET | F | L | Estate 4WD XE2 | | GCI83973 | Inner Joint | | 27 | 32 | 43.9 | 70 | 104.5 | |
| | 2024.03- | ET | F | R | Estate 4WD XE2 | | GCI83935 | Inner Joint | | 27 | 32 | 43.9 | 393 | 88 | |
| **Mini Coupe** | | | | | | | | | | | | | | | |
| 1.6 (85 kw) | 2010.12-2015.04 | AT | F | L | Coupe FWD N16 B16 A | | GDS85024 | Drive Shaft | | 26 | 26 | 54 | 75.5 | 604 | |
| | 2010.12-2015.04 | AT | F | R | Coupe FWD N16 B16 A | Outer teeth of transm.side:26 | GDS85086 | Drive Shaft | | 26 | 26 | 54 | 75.5 | 877 | |
| | 2010.12-2015.04 | AT | F | L | Coupe FWD N16 B16 A | | GCI85012 | Inner Joint | | 26 | 32 | 31 | 65 | 93 | |
| | 2010.12-2015.04 | MT | F | L | Coupe FWD N16 B16 A | | GDS85041 | Drive Shaft | | 26 | 33 | 54 | 75.5 | 619 | |
| | 2010.12-2015.04 | MT | F | R | Coupe FWD N16 B16 A | Outer teeth of transm.side:33 | GDS85045 | Drive Shaft | | 26 | 33 | 54 | 75.5 | 901 | |
| | 2010.12-2015.04 | MT | F | L/R | Coupe FWD N16 B16 A | | GCO85009 | Outer Joint | | 26 | 24 | 54 | 75.5 | 65.5 | M |
| 1.6 (88 kw) | 2014.10-2015.05 | 6MT | F | L/R | Coupe FWD N16 B16 A | | GCO85009 | Outer Joint | | 26 | 24 | 54 | 75.5 | 65.5 | M |
| | 2014.10-2015.05 | AT | F | L | Coupe FWD N16 B16 A | | GDS85024 | Drive Shaft | | 26 | 26 | 54 | 75.5 | 604 | |
| | 2014.10-2015.05 | AT | F | R | Coupe FWD N16 B16 A | | GDS85086 | Drive Shaft | | 26 | 26 | 54 | 75.5 | 877 | |
| | 2014.10-2015.05 | MT | F | L | Coupe FWD N16 B16 A | | GDS85041 | Drive Shaft | | 26 | 33 | 54 | 75.5 | 619 | |
| | 2014.10-2015.05 | MT | F | R | Coupe FWD N16 B16 A | | GDS85045 | Drive Shaft | | 26 | 33 | 54 | 75.5 | 901 | |
| 1.6 (90 kw) | 2010.12-2015.04 | AT | F | L | Coupe FWD N16 B16 A | | GDS85024 | Drive Shaft | | 26 | 26 | 54 | 75.5 | 604 | |
| | 2010.12-2015.04 | AT | F | R | Coupe FWD N16 B16 A | | GDS85086 | Drive Shaft | | 26 | 26 | 54 | 75.5 | 877 | |
| | 2010.12-2015.04 | AT | F | L | Coupe FWD N16 B16 A | | GCI85012 | Inner Joint | | 26 | 32 | 31 | 65 | 93 | |
| | 2010.12-2015.04 | MT | F | L | Coupe FWD N16 B16 A | | GDS85041 | Drive Shaft | | 26 | 33 | 54 | 75.5 | 619 | |
| | 2010.12-2015.04 | MT | F | R | Coupe FWD N16 B16 A | | GDS85045 | Drive Shaft | | 26 | 33 | 54 | 75.5 | 901 | |
| | 2010.12-2015.04 | MT | F | L | Coupe FWD N16 B16 A | | GCO85009 | Outer Joint | | 26 | 24 | 54 | 75.5 | 65.5 | M |
| 1.6 (120 kw) | 2010.12-2015.04 | AT | F | L | Coupe FWD N18 B16 A | | GDS85024 | Drive Shaft | | 26 | 26 | 54 | 75.5 | 604 | |
| | 2010.12-2015.04 | AT | F | R | Coupe FWD N18 B16 A | Outer teeth of transm.side:26 | GDS85086 | Drive Shaft | | 26 | 26 | 54 | 75.5 | 877 | |
| | 2010.12-2015.04 | AT | F | L | Coupe FWD N18 B16 A | | GCI85012 | Inner Joint | | 26 | 32 | 31 | 65 | 93 | |
| | 2010.12-2015.04 | MT | F | L | Coupe FWD N18 B16 A | | GDS85063 | Drive Shaft | | 26 | 34 | 54 | 75.5 | 590 | |
| | 2010.12-2015.04 | MT | F | R | Coupe FWD N18 B16 A | Outer teeth of transm.side:34 | GDS85071 | Drive Shaft | | 26 | 34 | 54 | 75.5 | 918 | |
| | 2010.12-2015.04 | MT | F | L/R | Coupe FWD N18 B16 A | | GCO85008 | Outer Joint | | 26 | 26 | 54 | 75.5 | 70 | M |
| | 2010.12-2015.04 | MT | F | R | Coupe FWD N18 B16 A | | GCI85077 | Inner Joint | | 34 | 32 | 35 | 397 | 90 | |
| 1.6 (135 kw) | 2010.12-2015.04 | AT | F | L | Coupe FWD N14 B16 A;N18 B16 A | | GDS85024 | Drive Shaft | | 26 | 26 | 54 | 75.5 | 604 | |
| | 2010.12-2015.04 | AT | F | R | Coupe FWD N14 B16 A;N18 B16 A | Outer teeth of transm.side:26 | GDS85086 | Drive Shaft | | 26 | 26 | 54 | 75.5 | 877 | |
| | 2010.12-2015.04 | AT | F | L | Coupe FWD N14 B16 A;N18 B16 A | | GCI85012 | Inner Joint | | 26 | 32 | 31 | 65 | 93 | |
| | 2010.12-2015.04 | AT/MT | F | L/R | Coupe FWD N14 B16 A;N18 B16 A | | GCO85008 | Outer Joint | | 26 | 26 | 54 | 75.5 | 70 | M |
| | 2010.12-2015.04 | MT | F | L | Coupe FWD N14 B16 A;N18 B16 A | | GDS85063 | Drive Shaft | | 26 | 34 | 54 | 75.5 | 590 | |
| | 2010.12-2015.04 | MT | F | R | Coupe FWD N14 B16 A;N18 B16 A | Outer teeth of transm.side:34 | GDS85071 | Drive Shaft | | 26 | 34 | 54 | 75.5 | 918 | |
| | 2010.12-2015.04 | MT | F | R | Coupe FWD N14 B16 A;N18 B16 A | | GCI85077 | Inner Joint | | 34 | 32 | 35 | 397 | 90 | |

| | YEAR | TRANSM. | F/R | L/R | BODY STYLE & DRIVE TYPE & ENGINE | REMARKS | G-AP Ref. | PRODUCT | ABS | Technical Specifications A | B | C | H | L | P |
|---|---|---|---|---|---|---|---|---|---|---|---|---|---|---|---|
| **MINI** | | | | | | | | | | | | | | | |
| **Mini Coupe** | | | | | | | | | | | | | | | |
| 1.6 (147 kw) | 2010.12-2015.04 | AT | F | L | Coupe FWD N18 B16 A | | GDS85024 | Drive Shaft | | 26 | 26 | 54 | 75.5 | 604 | |
| | 2010.12-2015.04 | AT | F | R | Coupe FWD N18 B16 A | Outer teeth of transm.side:26 | GDS85086 | Drive Shaft | | 26 | 26 | 54 | 75.5 | 877 | |
| | 2010.12-2015.04 | AT | F | L | Coupe FWD N18 B16 A | | GCI85012 | Inner Joint | | 26 | 32 | 31 | 65 | 93 | |
| | 2010.12-2015.04 | MT | F | L | Coupe FWD N18 B16 A | | GDS85063 | Drive Shaft | | 26 | 34 | 54 | 75.5 | 590 | |
| | 2010.12-2015.04 | MT | F | R | Coupe FWD N18 B16 A | Outer teeth of transm.side:34 | GDS85071 | Drive Shaft | | 26 | 34 | 54 | 75.5 | 918 | |
| | 2010.12-2015.04 | MT | F | L/R | Coupe FWD N18 B16 A | | GCO85008 | Outer Joint | | 26 | 26 | 54 | 75.5 | 70 | M |
| | 2010.12-2015.04 | MT | F | R | Coupe FWD N18 B16 A | | GCI85077 | Inner Joint | | 34 | 32 | 35 | 397 | 90 | |
| 1.6 (155 kw) | 2010.12-2015.05 | 6AT | F | L | Coupe FWD N14 B16 C;N18 B16 C | | GDS85024 | Drive Shaft | | 26 | 26 | 54 | 75.5 | 604 | |
| | 2010.12-2015.05 | 6AT | F | R | Coupe FWD N14 B16 C;N18 B16 C | | GDS85086 | Drive Shaft | | 26 | 26 | 54 | 75.5 | 877 | |
| | 2010.12-2015.05 | 6AT/6MT | F | L/R | Coupe FWD N14 B16 C;N18 B16 C | | GCO85008 | Outer Joint | | 26 | 26 | 54 | 75.5 | 70 | M |
| | 2010.12-2015.05 | 6AT/6MT | F | R | Coupe FWD N14 B16 C;N18 B16 C | | GCI85077 | Inner Joint | | 34 | 32 | 35 | 397 | 90 | |
| | 2010.12-2015.05 | 6MT | F | L | Coupe FWD N14 B16 C;N18 B16 C | | GDS85063 | Drive Shaft | | 26 | 34 | 54 | 75.5 | 590 | |
| | 2010.12-2015.05 | 6MT | F | R | Coupe FWD N14 B16 C;N18 B16 C | | GDS85071 | Drive Shaft | | 26 | 34 | 54 | 75.5 | 918 | |
| 2.0 (100 kw) | 2010.12-2015.05 | AT | F | L | Coupe FWD N47 C20 A | | GDS85131 | Drive Shaft | | 26 | 26 | 54 | 75.5 | 589 | |
| | 2010.12-2015.05 | AT | F | R | Coupe FWD N47 C20 A | | GDS85130 | Drive Shaft | | 26 | 26 | 54 | 75.5 | 895 | |
| | 2010.12-2015.05 | AT | F | L | Coupe FWD N47 C20 A | | GCI85012 | Inner Joint | | 26 | 32 | 31 | 65 | 93 | |
| | 2010.12-2015.05 | AT | F | R | Coupe FWD N47 C20 A | | GCI85085 | Inner Joint | | 26 | 32 | 31 | 360 | 89 | |
| | 2010.12-2015.05 | MT | F | L | Coupe FWD N47 C20 A | | GDS85063 | Drive Shaft | | 26 | 34 | 54 | 75.5 | 590 | |
| | 2010.12-2015.05 | MT | F | R | Coupe FWD N47 C20 A | | GDS85071 | Drive Shaft | | 26 | 34 | 54 | 75.5 | 918 | |
| | 2010.12-2015.05 | MT | F | L | Coupe FWD N47 C20 A | | GCO85008 | Outer Joint | | 26 | 26 | 54 | 75.5 | 70 | M |
| 2.0 (105 kw) | 2010.12-2015.05 | AT | F | L | Coupe FWD N47 C20 A | | GDS85131 | Drive Shaft | | 26 | 26 | 54 | 75.5 | 589 | |
| | 2010.12-2015.05 | AT | F | R | Coupe FWD N47 C20 A | | GDS85130 | Drive Shaft | | 26 | 26 | 54 | 75.5 | 895 | |
| | 2010.12-2015.05 | AT | F | L | Coupe FWD N47 C20 A | | GCI85012 | Inner Joint | | 26 | 32 | 31 | 65 | 93 | |
| | 2010.12-2015.05 | AT | F | R | Coupe FWD N47 C20 A | | GCI85085 | Inner Joint | | 26 | 32 | 31 | 360 | 89 | |
| | 2010.12-2015.05 | MT | F | L | Coupe FWD N47 C20 A | | GDS85063 | Drive Shaft | | 26 | 34 | 54 | 75.5 | 590 | |
| | 2010.12-2015.05 | MT | F | R | Coupe FWD N47 C20 A | | GDS85071 | Drive Shaft | | 26 | 34 | 54 | 75.5 | 918 | |
| | 2010.12-2015.05 | MT | F | L | Coupe FWD N47 C20 A | | GCO85008 | Outer Joint | | 26 | 26 | 54 | 75.5 | 70 | M |
| **Mini One** | | | | | | | | | | | | | | | |
| 1.2 (55 kw) | 2014.07-2017.10 | 6MT | F | L | Hatchback FWD B38 A12 A | | GDS82381 | Drive Shaft | | 31 | 34 | 56 | | 527 | |
| | 2014.07-2017.10 | 6MT | F | R | Hatchback FWD B38 A12 A | | GDS82174 | Drive Shaft | | 31 | 34 | 56 | | 882 | |
| | 2014.07-2017.10 | 6MT | F | L/R | Hatchback FWD B38 A12 A | | GCO81683 | Outer Joint | | 31 | 33 | 56 | | 71 | M |
| | 2014.07-2017.10 | 6MT | F | L | Hatchback FWD B38 A12 A | | GCI81758 | Inner Joint | | 34 | 33 | 35 | 54.5 | 96 | |
| | 2014.07-2017.10 | 6MT | F | R | Hatchback FWD B38 A12 A | | GCI81917 | Inner Joint | | 34 | 33 | 35 | 401 | 83 | |
| | 2014.11-2017.10 | 6MT | F | L | Hatchback FWD B38 A12 A | | GDS82381 | Drive Shaft | | 31 | 34 | 56 | | 527 | |
| | 2014.11-2017.10 | 6MT | F | R | Hatchback FWD B38 A12 A | | GDS82174 | Drive Shaft | | 31 | 34 | 56 | | 882 | |
| 1.2 (75 kw) | 2014.04-2017.10 | 6AT | F | L | Hatchback FWD B38 A12 A | | GDS82382 | Drive Shaft | | 31 | 26 | 56 | | 500 | |
| | 2014.04-2017.10 | 6AT | F | R | Hatchback FWD B38 A12 A | | GDS82380 | Drive Shaft | | 31 | 26 | 56 | | 868 | |
| | 2014.04-2017.10 | 6AT | F | L/R | Hatchback FWD B38 A12 A | | GCO81811 | Outer Joint | | 31 | 33 | 56 | | 70 | I |
| | 2014.04-2017.10 | 6AT | F | L | Hatchback FWD B38 A12 A | | GCI81756 | Inner Joint | | 26 | 33 | 31 | 65 | 91.5 | |
| | 2014.04-2017.10 | 6MT | F | L | Hatchback FWD B38 A12 A | | GDS82381 | Drive Shaft | | 31 | 34 | 56 | | 527 | |
| | 2014.04-2017.10 | 6MT | F | R | Hatchback FWD B38 A12 A | | GDS82174 | Drive Shaft | | 31 | 34 | 56 | | 882 | |
| | 2014.04-2017.10 | 6MT | F | L/R | Hatchback FWD B38 A12 A | | GCO81683 | Outer Joint | | 31 | 33 | 56 | | 71 | M |
| | 2014.04-2017.10 | 6MT | F | L | Hatchback FWD B38 A12 A | | GCI81758 | Inner Joint | | 34 | 33 | 35 | 54.5 | 96 | |
| | 2014.04-2017.10 | 6MT | F | R | Hatchback FWD B38 A12 A | | GCI81917 | Inner Joint | | 34 | 33 | 35 | 401 | 83 | |
| | 2014.05-2017.10 | 6AT | F | L | Hatchback FWD B38 A12 A | | GDS82382 | Drive Shaft | | 31 | 26 | 56 | | 500 | |
| | 2014.05-2017.10 | 6AT | F | R | Hatchback FWD B38 A12 A | | GDS82380 | Drive Shaft | | 31 | 26 | 56 | | 868 | |
| | 2014.05-2017.10 | 6AT | F | L | Hatchback FWD B38 A12 A | | GCI81756 | Inner Joint | | 26 | 33 | 31 | 65 | 91.5 | |
| | 2014.05-2017.10 | 6MT | F | L | Hatchback FWD B38 A12 A | | GDS82381 | Drive Shaft | | 31 | 34 | 56 | | 527 | |
| | 2014.05-2017.10 | 6MT | F | R | Hatchback FWD B38 A12 A | | GDS82174 | Drive Shaft | | 31 | 34 | 56 | | 882 | |
| | 2016.03-2017.10 | 6MT | F | L | Convertible FWD B38 A12 A | | GDS82381 | Drive Shaft | | 31 | 34 | 56 | | 527 | |
| | 2016.03-2017.10 | 6MT | F | R | Convertible FWD B38 A12 A | | GDS82174 | Drive Shaft | | 31 | 34 | 56 | | 882 | |
| | 2016.03-2017.10 | 6MT | F | L/R | Convertible FWD B38 A12 A | | GCO81683 | Outer Joint | | 31 | 33 | 56 | | 71 | M |
| | 2016.03-2017.10 | 6MT | F | L | Convertible FWD B38 A12 A | | GCI81758 | Inner Joint | | 34 | 33 | 35 | 54.5 | 96 | |
| | 2016.03-2017.10 | 6MT | F | R | Convertible FWD B38 A12 A | | GCI81917 | Inner Joint | | 34 | 33 | 35 | 401 | 83 | |
| | 2016.03-2017.10 | AT | F | L | Convertible FWD B38 A12 A | Date from:2016.01 | GDS82382 | Drive Shaft | | 31 | 26 | 56 | | 500 | |
| | 2016.03-2017.10 | AT | F | L | Convertible FWD B38 A12 A | Date from:2016.01 | GCI81756 | Inner Joint | | 26 | 33 | 31 | 65 | 91.5 | |
| 1.4 (55 kw) | 2003.04-2006.09 | 5MT | F | L | Hatchback FWD W10 B14 A | Date From:2004.08 | GDS85053 | Drive Shaft | | 26 | 33 | 53.5 | 76 | 588 | |
| | 2003.04-2006.09 | 5MT | F | L | Hatchback FWD W10 B14 A | Date To:2004.07 | GDS99285 | Drive Shaft | | 26 | 22 | 53.5 | 76 | 616 | |
| | 2003.04-2006.09 | 5MT | F | R | Hatchback FWD W10 B14 A | Date To:2004.07 | GDS38003 | Drive Shaft | | 26 | 22 | 53.5 | 76 | 886 | |
| | 2003.04-2006.09 | 5MT | F | R | Hatchback FWD W10 B14 A | Date from:2004.08 | GDS85025 | Drive Shaft | | 26 | 33 | 53.5 | 76 | 924 | |
| | 2003.04-2006.09 | 5MT | F | R | Hatchback FWD W10 B14 A | | GCO38002 | Outer Joint | | 26 | 21 | 53.5 | 76 | 61 | M |
| | 2003.04-2006.09 | MT | F | L/R | Hatchback FWD W10 B14 A | Date to:2004.07 | GCO38003 | Outer Joint | | 26 | 23 | 53.5 | 74 | 63.5 | M |
| | 2003.04-2006.09 | MT | F | R | Hatchback FWD W10 B14 A | Date to:2004.07 | GCI38004 | Inner Joint | | 22 | 21 | 36 | 332 | 96 | |
| | 2003.06-2006.09 | AT/MT | F | L/R | Hatchback FWD 1ND | | GCO38003 | Outer Joint | | 26 | 23 | 53.5 | 74 | 63.5 | M |
| | 2003.06-2006.09 | MT | F | L | Hatchback FWD 1ND | | GDS38001 | Drive Shaft | | 26 | 34 | 53.5 | 74 | 590 | |

| | YEAR | TRANSM. | F/R | L/R | BODY STYLE & DRIVE TYPE & ENGINE | REMARKS | G-AP Ref. | PRODUCT | ABS | Technical Specifications | | | | | |
|---|---|---|---|---|---|---|---|---|---|---|---|---|---|---|---|
| | | | | | | | | | | A | B | C | H | L | P |
| **MINI**<br>**Mini One** | | | | | | | | | | | | | | | |
| 1.4 (55 kw) | 2003.06-2006.09 | MT | F | R | Hatchback FWD 1ND | | GDS81067 | Drive Shaft | | 26 | 34 | 53.5 | 74 | 916 | |
| | 2003.06-2006.09 | MT | F | L | Hatchback FWD 1ND | | GCI38001 | Inner Joint | | 34 | 23 | 40 | 54 | 97 | |
| | 2003.06-2006.09 | | F | L/R | Hatchback FWD 1ND | | GCO38001 | Outer Joint | | 26 | 23 | 53.5 | 76 | 64 | M |
| | 2009.03-2010.03 | 6MT | F | L | Hatchback FWD N12 B14 A | | GDS85041 | Drive Shaft | | 26 | 33 | 54 | 75.5 | 619 | |
| | 2009.03-2010.03 | 6MT | F | R | Hatchback FWD N12 B14 A | | GDS85045 | Drive Shaft | | 26 | 33 | 54 | 75.5 | 901 | |
| | 2009.03-2010.03 | AT | F | L | Hatchback FWD N12 B14 A | | GDS85024 | Drive Shaft | | 26 | 26 | 54 | 75.5 | 604 | |
| | 2009.03-2010.03 | AT | F | R | Hatchback FWD N12 B14 A | Outer teeth of transm.side:26 | GDS85086 | Drive Shaft | | 26 | 26 | 54 | 75.5 | 877 | |
| | 2009.03-2010.03 | AT | F | L | Hatchback FWD N12 B14 A | | GCI85012 | Inner Joint | | 26 | 32 | 31 | 65 | 93 | |
| | 2009.03-2010.03 | AT/MT | F | L/R | Hatchback FWD N12 B14 A | | GCO85009 | Outer Joint | | 26 | 24 | 54 | 75.5 | 65.5 | M |
| | 2009.03-2010.03 | MT | F | L | Hatchback FWD N12 B14 A | | GDS85041 | Drive Shaft | | 26 | 33 | 54 | 75.5 | 619 | |
| | 2009.03-2010.03 | MT | F | R | Hatchback FWD N12 B14 A | Outer teeth of transm.side:33 | GDS85045 | Drive Shaft | | 26 | 33 | 54 | 75.5 | 901 | |
| 1.4 (65 kw) | 2003.06-2006.09 | AT/MT | F | L/R | Hatchback FWD W17 D14 (1ND) | | GCO38003 | Outer Joint | | 26 | 23 | 53.5 | 74 | 63.5 | M |
| | 2003.06-2006.09 | MT | F | L | Hatchback FWD W17 D14 (1ND) | | GDS38001 | Drive Shaft | | 26 | 34 | 53.5 | 74 | 590 | |
| | 2003.06-2006.09 | MT | F | R | Hatchback FWD W17 D14 (1ND) | | GDS81067 | Drive Shaft | | 26 | 34 | 53.5 | 74 | 916 | |
| | 2003.06-2006.09 | MT | F | L | Hatchback FWD W17 D14 (1ND) | | GCI38001 | Inner Joint | | 34 | 23 | 40 | 54 | 97 | |
| | 2003.06-2006.09 | | F | L | Hatchback FWD W17 D14 (1ND) | | GCO38001 | Outer Joint | | 26 | 23 | 53.5 | 76 | 64 | M |
| 1.4 (70 kw) | 2006.11-2010.03 | 6AT | F | L | Hatchback FWD N12 B14 A | | GDS85024 | Drive Shaft | | 26 | 26 | 54 | 75.5 | 604 | |
| | 2006.11-2010.03 | 6AT | F | R | Hatchback FWD N12 B14 A | | GDS85086 | Drive Shaft | | 26 | 26 | 54 | 75.5 | 877 | |
| | 2006.11-2010.03 | 6AT | F | L | Hatchback FWD N12 B14 A | | GCI85012 | Inner Joint | | 26 | 32 | 31 | 65 | 93 | |
| | 2006.11-2010.03 | 6MT | F | L | Hatchback FWD N12 B14 A | | GDS85041 | Drive Shaft | | 26 | 33 | 54 | 75.5 | 619 | |
| | 2006.11-2010.03 | 6MT | F | R | Hatchback FWD N12 B14 A | | GDS85045 | Drive Shaft | | 26 | 33 | 54 | 75.5 | 901 | |
| | 2006.11-2010.03 | AT | F | L | Hatchback FWD N12 B14 A | | GDS85131 | Drive Shaft | | 26 | 26 | 54 | 75.5 | 589 | |
| | 2006.11-2010.03 | AT | F | L | Hatchback FWD N12 B14 A | | GCO85008 | Outer Joint | | 26 | 26 | 54 | 75.5 | 70 | M |
| | 2006.11-2010.03 | MT | F | L/R | Hatchback FWD N12 B14 A | | GCO38002 | Outer Joint | | 26 | 21 | 53.5 | 76 | 61 | M |
| | 2006.11-2010.03 | MT | F | L/R | Hatchback FWD N12 B14 A | | GCO85009 | Outer Joint | | 26 | 24 | 54 | 75.5 | 65.5 | M |
| 1.5 (55 kw) | 2017.11- | 6MT | F | L | Hatchback FWD B38 A15 A | | GDS82381 | Drive Shaft | | 31 | 34 | 56 | | 527 | |
| | 2017.11- | 6MT | F | R | Hatchback FWD B38 A15 A | | GDS82174 | Drive Shaft | | 31 | 34 | 56 | | 882 | |
| | 2017.11- | 6MT | F | L/R | Hatchback FWD B38 A15 A | | GCO81683 | Outer Joint | | 31 | 33 | 56 | | 71 | M |
| | 2017.11- | 6MT | F | L | Hatchback FWD B38 A15 A | | GCI81758 | Inner Joint | | 34 | 33 | 35 | 54.5 | 96 | |
| | 2017.11- | 6MT | F | R | Hatchback FWD B38 A15 A | | GCI81917 | Inner Joint | | 34 | 33 | 35 | 401 | 83 | |
| 1.5 (70 kw) | 2014.03- | 6AT/6MT | F | L | Hatchback FWD B37 C15 A | | GDS82381 | Drive Shaft | | 31 | 34 | 56 | | 527 | |
| | 2014.03- | 6AT/6MT | F | R | Hatchback FWD B37 C15 A | | GDS82174 | Drive Shaft | | 31 | 34 | 56 | | 882 | |
| | 2014.03- | 6AT/6MT | F | L/R | Hatchback FWD B37 C15 A | | GCO81683 | Outer Joint | | 31 | 33 | 56 | | 71 | M |
| | 2014.03- | 6AT/6MT | F | L | Hatchback FWD B37 C15 A | | GCI81758 | Inner Joint | | 34 | 33 | 35 | 54.5 | 96 | |
| | 2014.03- | 6AT/6MT | F | R | Hatchback FWD B37 C15 A | | GCI81917 | Inner Joint | | 34 | 33 | 35 | 401 | 83 | |
| | 2014.11- | 6MT | F | L | Hatchback FWD B37 C15 A | | GDS82381 | Drive Shaft | | 31 | 34 | 56 | | 527 | |
| | 2014.11- | 6MT | F | R | Hatchback FWD B37 C15 A | | GDS82174 | Drive Shaft | | 31 | 34 | 56 | | 882 | |
| 1.5 (75 kw) | 2017.11- | 6MT | F | L | Convertible FWD B38 A15 A | | GDS82381 | Drive Shaft | | 31 | 34 | 56 | | 527 | |
| | 2017.11- | 6MT | F | R | Convertible FWD B38 A15 A | | GDS82174 | Drive Shaft | | 31 | 34 | 56 | | 882 | |
| | 2017.11- | 6MT | F | L/R | Convertible FWD B38 A15 A | | GCO81683 | Outer Joint | | 31 | 33 | 56 | | 71 | M |
| | 2017.11- | 6MT | F | L | Convertible FWD B38 A15 A | | GCI81758 | Inner Joint | | 34 | 33 | 35 | 54.5 | 96 | |
| | 2017.11- | 6MT | F | R | Convertible FWD B38 A15 A | | GCI81917 | Inner Joint | | 34 | 33 | 35 | 401 | 83 | |
| | 2017.11- | 6MT | F | L | Hatchback FWD B38 A15 A | | GDS82381 | Drive Shaft | | 31 | 34 | 56 | | 527 | |
| | 2017.11- | 6MT | F | R | Hatchback FWD B38 A15 A | | GDS82174 | Drive Shaft | | 31 | 34 | 56 | | 882 | |
| | 2017.11- | 6MT | F | L/R | Hatchback FWD B38 A15 A | | GCO81683 | Outer Joint | | 31 | 33 | 56 | | 71 | M |
| | 2017.11- | 6MT | F | L | Hatchback FWD B38 A15 A | | GCI81758 | Inner Joint | | 34 | 33 | 35 | 54.5 | 96 | |
| | 2017.11- | 7AT/6MT | F | R | Hatchback FWD B38 A15 A | | GCI81917 | Inner Joint | | 34 | 33 | 35 | 401 | 83 | |
| | 2017.11- | 7DCT | F | L | Hatchback FWD B38 A15 A | | GDS58224 | Drive Shaft | | 31 | 27 | 56 | | 509 | |
| | 2017.11- | 7DCT | F | R | Hatchback FWD B38 A15 A | Date to:2021.02;Date from:2021.03;For left-hand drive vehicles | GDS58225 | Drive Shaft | | 31 | 27 | 56 | | 901 | |
| | 2017.11- | 7DCT | F | R | Hatchback FWD B38 A15 A | Date from:2021.03,Modelcode:F55 | GDS84221 | Drive Shaft | | 31 | 27 | 56 | | 938 | |
| | 2017.11- | 7DCT | F | L/R | Hatchback FWD B38 A15 A | | GCO83263 | Outer Joint | | 31 | 26 | 56 | | 73.5 | M |
| | 2017.11- | 7DCT | F | L | Hatchback FWD B38 A15 A | | GCI82649 | Inner Joint | | 27 | 32 | 35 | 58 | 102 | |
| | 2017.11- | 7DCT | F | R | Hatchback FWD B38 A15 A | | GCI82648 | Inner Joint | | 27 | 32 | 35 | 420 | 89 | |
| 1.6 (55 kw) | 2010.03-2013.11 | 6MT | F | L | Hatchback FWD N16 B16 A | | GDS85041 | Drive Shaft | | 26 | 33 | 54 | 75.5 | 619 | |
| | 2010.03-2013.11 | 6MT | F | R | Hatchback FWD N16 B16 A | | GDS85045 | Drive Shaft | | 26 | 33 | 54 | 75.5 | 901 | |
| | 2010.03-2013.11 | AT/MT | F | L/R | Hatchback FWD N16 B16 A | | GCO85009 | Outer Joint | | 26 | 24 | 54 | 75.5 | 65.5 | M |
| 1.6 (66 kw) | 2001.06-2006.09 | 5MT | F | L | Hatchback FWD W10 B16 A | Date from:2004.08 | GDS85053 | Drive Shaft | | 26 | 33 | 53.5 | 76 | 588 | |
| | 2001.06-2006.09 | 5MT | F | L | Hatchback FWD W10 B16 A | Date to:2004.07;Inner teeth of tranm.side:30 | GDS99285 | Drive Shaft | | 26 | 22 | 53.5 | 76 | 616 | |
| | 2001.06-2006.09 | CVT | F | L | Hatchback FWD W10 B16 A | | GDS99288 | Drive Shaft | | 26 | 23 | 53.5 | 76 | 617 | |
| | 2001.06-2006.09 | CVT | F | R | Hatchback FWD W10 B16 A | | GDS81066 | Drive Shaft | | 26 | 23 | 53.5 | 76 | 894 | |
| | 2001.06-2006.09 | MT | F | L | Hatchback FWD W10 B16 A | Date to:2004.07;Inner teeth of tranm.side:21 | GDS38005 | Drive Shaft | | 26 | 22 | 53.5 | 76 | 616 | |
| | 2001.06-2006.09 | MT | F | R | Hatchback FWD W10 B16 A | Date to:2004.07;without Rim protector | GDS38003 | Drive Shaft | | 26 | 22 | 53.5 | 76 | 886 | |
| | 2001.06-2006.09 | MT | F | R | Hatchback FWD W10 B16 A | Date from:2004.08;without Rim protector | GDS85025 | Drive Shaft | | 26 | 33 | 53.5 | 76 | 924 | |
| | 2001.06-2006.09 | MT | F | R | Hatchback FWD W10 B16 A | Date to:2004.07 | GCO38002 | Outer Joint | | 26 | 21 | 53.5 | 76 | 61 | M |
| | 2001.06-2006.09 | MT | F | L | Hatchback FWD W10 B16 A | Date from:2004.08 | GCI85044 | Inner Joint | | 33 | 22 | 34.9 | 58 | 106 | |

| | YEAR | TRANSM. | F/R | L/R | BODY STYLE & DRIVE TYPE & ENGINE | REMARKS | G-AP Ref. | PRODUCT | ABS | Technical Specifications A | B | C | H | L | P |
|---|---|---|---|---|---|---|---|---|---|---|---|---|---|---|---|
| **MINI** | | | | | | | | | | | | | | | |
| **Mini One** | | | | | | | | | | | | | | | |
| 1.6 (66 kw) | 2001.06-2006.09 | MT | F | R | Hatchback FWD W10 B16 A | Date to:2004.07 | GCI38004 | Inner Joint | | 22 | 21 | 36 | 332 | 96 | |
| | 2004.07-2007.11 | 5MT | F | L | Convertible FWD W10 B16 A | | GDS85053 | Drive Shaft | | 26 | 33 | 53.5 | 76 | 588 | |
| | 2004.07-2007.11 | CVT | F | R | Convertible FWD W10 B16 A | | GDS81066 | Drive Shaft | | 26 | 23 | 53.5 | 76 | 894 | |
| | 2004.07-2007.11 | CVT | F | L/R | Convertible FWD W10 B16 A | | GCO38002 | Outer Joint | | 26 | 21 | 53.5 | 76 | 61 | M |
| | 2004.07-2007.11 | MT | F | R | Convertible FWD W10 B16 A | | GDS85025 | Drive Shaft | | 26 | 33 | 53.5 | 76 | 924 | |
| | 2004.07-2007.11 | MT | F | L | Convertible FWD W10 B16 A | | GCI85044 | Inner Joint | | 33 | 22 | 34.9 | 58 | 106 | |
| | 2009.06-2010.07 | 6MT | F | L | Hatchback FWD 9HZ (DV6TED4) | | GDS85063 | Drive Shaft | | 26 | 34 | 54 | 75.5 | 590 | |
| | 2009.06-2010.07 | 6MT | F | R | Hatchback FWD 9HZ (DV6TED4) | | GDS85071 | Drive Shaft | | 26 | 34 | 54 | 75.5 | 918 | |
| | 2009.06-2010.07 | 6MT | F | R | Hatchback FWD 9HZ (DV6TED4) | | GCI85077 | Inner Joint | | 34 | 32 | 35 | 397 | 90 | |
| | 2009.06-2010.07 | AT/MT | F | L/R | Hatchback FWD 9HZ (DV6TED4) | | GCO85008 | Outer Joint | | 26 | 26 | 54 | 75.5 | 70 | M |
| | 2010.07-2013.11 | 6MT | F | L | Hatchback FWD N47 C16 A | | GDS85063 | Drive Shaft | | 26 | 34 | 54 | 75.5 | 590 | |
| | 2010.07-2013.11 | 6MT | F | R | Hatchback FWD N47 C16 A | | GDS85071 | Drive Shaft | | 26 | 34 | 54 | 75.5 | 918 | |
| | 2010.07-2013.11 | 6MT | F | R | Hatchback FWD N47 C16 A | | GCI85077 | Inner Joint | | 34 | 32 | 35 | 397 | 90 | |
| | 2010.07-2013.11 | AT/MT | F | L/R | Hatchback FWD N47 C16 A | | GCO85008 | Outer Joint | | 26 | 26 | 54 | 75.5 | 70 | M |
| 1.6 (72 kw) | 2009.09-2015.06 | AT | F | L | Convertible FWD N16 B16 A | | GDS85024 | Drive Shaft | | 26 | 26 | 54 | 75.5 | 604 | |
| | 2009.09-2015.06 | AT | F | R | Convertible FWD N16 B16 A | Outer teeth of transm.side:26 | GDS85086 | Drive Shaft | | 26 | 26 | 54 | 75.5 | 877 | |
| | 2009.09-2015.06 | AT | F | L | Convertible FWD N16 B16 A | | GCI85012 | Inner Joint | | 26 | 32 | 31 | 65 | 93 | |
| | 2009.09-2015.06 | AT/MT | F | L/R | Convertible FWD N16 B16 A | | GCO85009 | Outer Joint | | 26 | 24 | 54 | 75.5 | 65.5 | M |
| | 2009.09-2015.06 | MT | F | L | Convertible FWD N16 B16 A | | GDS85041 | Drive Shaft | | 26 | 33 | 54 | 75.5 | 619 | |
| | 2009.09-2015.06 | MT | F | R | Convertible FWD N16 B16 A | Outer teeth of transm.side:33 | GDS85045 | Drive Shaft | | 26 | 33 | 54 | 75.5 | 901 | |
| | 2010.03-2013.11 | AT | F | L | Hatchback FWD N16 B16 A | | GDS85024 | Drive Shaft | | 26 | 26 | 54 | 75.5 | 604 | |
| | 2010.03-2013.11 | AT | F | R | Hatchback FWD N16 B16 A | Outer teeth of transm.side:26 | GDS85086 | Drive Shaft | | 26 | 26 | 54 | 75.5 | 877 | |
| | 2010.03-2013.11 | AT | F | L | Hatchback FWD N16 B16 A | | GCI85012 | Inner Joint | | 26 | 32 | 31 | 65 | 93 | |
| | 2010.03-2013.11 | AT/MT | F | L/R | Hatchback FWD N16 B16 A | | GCO85009 | Outer Joint | | 26 | 24 | 54 | 75.5 | 65.5 | M |
| | 2010.03-2013.11 | MT | F | L | Hatchback FWD N16 B16 A | | GDS85041 | Drive Shaft | | 26 | 33 | 54 | 75.5 | 619 | |
| | 2010.03-2013.11 | MT | F | R | Hatchback FWD N16 B16 A | Outer teeth of transm.side:33 | GDS85045 | Drive Shaft | | 26 | 33 | 54 | 75.5 | 901 | |
| **Mini Paceman** | | | | | | | | | | | | | | | |
| 1.6 (82 kw) | 2012.04-2016.09 | 6AT/6MT | F | L | Coupe 4WD N47 C16 A | | GDS85132 | Drive Shaft | | 26 | 34 | 52 | 80 | 622 | |
| | 2012.04-2016.09 | 6AT/6MT | F | L | Coupe 4WD N47 C16 A | | GCI85072 | Inner Joint | | 34 | 23 | 35 | 54.5 | 98 | |
| | 2012.04-2016.09 | 6AT/6MT | F | R | Coupe 4WD N47 C16 A | | GCI81893 | Inner Joint | | 35 | 23 | 41.95 | | 121 | |
| | 2012.04-2016.09 | MT | F | L/R | Coupe 4WD N47 C16 A | | GCO85023 | Outer Joint | | 26 | 25 | 52 | 80 | 63.5 | M |
| | 2012.04-2016.09 | 6AT/6MT | R | L | Coupe 4WD N47 C16 A | | GDS85127 | Drive Shaft | | 26 | 27 | 51.6 | 80 | 809 | |
| | 2012.04-2016.09 | 6AT/6MT | R | R | Coupe 4WD N47 C16 A | | GDS56800 | Drive Shaft | | 26 | 27 | 51.6 | 80 | 777 | |
| | 2012.04-2016.09 | 6AT/6MT | R | L/R | Coupe 4WD N47 C16 A | | GCO85021 | Outer Joint | | 26 | 20 | 51.6 | 80 | 55.5 | M |
| | 2012.04-2016.09 | 6AT/6MT | R | L/R | Coupe 4WD N47 C16 A | | GCI85069 | Inner Joint | | 27 | 20 | 43.95 | 53.5 | 96 | |
| | 2012.04-2016.09 | 6MT | F | L | Coupe FWD N47 C16 A | | GDS85132 | Drive Shaft | | 26 | 34 | 52 | 80 | 622 | |
| | 2012.04-2016.09 | 6MT | F | L | Coupe FWD N47 C16 A | | GCI85072 | Inner Joint | | 34 | 23 | 35 | 54.5 | 98 | |
| | 2012.04-2016.09 | MT | F | R | Coupe FWD N47 C16 A | | GDS85128 | Drive Shaft | | 26 | 34 | 52 | 80 | 949 | |
| | 2012.04-2016.09 | MT | F | R | Coupe FWD N47 C16 A | | GCI85084 | Inner Joint | | 34 | 23 | 35 | 396.5 | 84.5 | |
| | 2012.04-2016.09 | MT/6MT | F | L/R | Coupe FWD N47 C16 A | | GCO85023 | Outer Joint | | 26 | 25 | 52 | 80 | 63.5 | M |
| 1.6 (85 kw) | 2013.07-2016.09 | 6AT/6MT | F | L | Coupe 4WD N16 B16 A | | GDS85132 | Drive Shaft | | 26 | 34 | 52 | 80 | 622 | |
| | 2013.07-2016.09 | 6AT/6MT | F | L | Coupe 4WD N16 B16 A | | GCI85072 | Inner Joint | | 34 | 23 | 35 | 54.5 | 98 | |
| | 2013.07-2016.09 | 6AT/6MT | F | R | Coupe 4WD N16 B16 A | | GCI81893 | Inner Joint | | 35 | 23 | 41.95 | | 121 | |
| | 2013.07-2016.09 | AT/MT | F | L/R | Coupe 4WD N16 B16 A | | GCO85023 | Outer Joint | | 26 | 25 | 52 | 80 | 63.5 | M |
| | 2013.07-2016.09 | AT/MT | R | L | Coupe 4WD N16 B16 A | | GDS85127 | Drive Shaft | | 26 | 27 | 51.6 | 80 | 809 | |
| | 2013.07-2016.09 | AT/MT | R | R | Coupe 4WD N16 B16 A | | GDS56800 | Drive Shaft | | 26 | 27 | 51.6 | 80 | 777 | |
| | 2013.07-2016.09 | AT/MT | R | L/R | Coupe 4WD N16 B16 A | | GCO85021 | Outer Joint | | 26 | 20 | 51.6 | 80 | 55.5 | M |
| | 2013.07-2016.09 | AT/MT | R | L/R | Coupe 4WD N16 B16 A | | GCI85069 | Inner Joint | | 27 | 20 | 43.95 | 53.5 | 96 | |
| 1.6 (88 kw) | 2012.04-2016.09 | 6AT | F | L | Coupe FWD N16 B16 A | | GDS83442 | Drive Shaft | | 26 | 26 | 51.9 | 80 | 631 | |
| | 2012.04-2016.09 | 6AT | F | R | Coupe FWD N16 B16 A | | GDS84622 | Drive Shaft | | 26 | 26 | 51.9 | 80 | 904 | |
| | 2012.04-2016.09 | 6AT | F | L/R | Coupe FWD N16 B16 A | | GCO85022 | Outer Joint | | 26 | 23 | 51.9 | 80 | 60 | M |
| | 2012.04-2016.09 | 6AT | F | L | Coupe FWD N16 B16 A | | GCI82216 | Inner Joint | | 26 | 22 | 31 | 65 | 90.5 | |
| | 2012.04-2016.09 | 6AT | F | R | Coupe FWD N16 B16 A | | GCI82895 | Inner Joint | | 26 | 22 | 31 | 342 | 98.5 | |
| | 2012.04-2016.09 | MT | F | L | Coupe FWD N16 B16 A | | GDS85126 | Drive Shaft | | 26 | 33 | 51.9 | 80 | 643 | |
| | 2012.04-2016.09 | MT | F | R | Coupe FWD N16 B16 A | | GDS85129 | Drive Shaft | | 26 | 33 | 51.9 | 80 | 923 | |
| | 2012.04-2016.09 | MT | F | L | Coupe FWD N16 B16 A | | GCI85070 | Inner Joint | | 33 | 23 | 35 | 56 | 97.5 | |
| | 2012.04-2016.09 | MT | F | R | Coupe FWD N16 B16 A | | GCI85071 | Inner Joint | | 33 | 23 | 35 | 351.5 | 82.5 | |
| 1.6 (90 kw) | 2012.04-2016.09 | 6MT | F | R | Coupe FWD N16 B16 A | | GDS85129 | Drive Shaft | | 26 | 33 | 51.9 | 80 | 923 | |
| | 2012.04-2016.09 | AT | F | L | Coupe FWD N16 B16 A | | GDS83442 | Drive Shaft | | 26 | 26 | 51.9 | 80 | 631 | |
| | 2012.04-2016.09 | AT | F | R | Coupe FWD N16 B16 A | | GDS84622 | Drive Shaft | | 26 | 26 | 51.9 | 80 | 904 | |
| | 2012.04-2016.09 | AT | F | L/R | Coupe FWD N16 B16 A | | GCO85022 | Outer Joint | | 26 | 23 | 51.9 | 80 | 60 | M |
| | 2012.04-2016.09 | AT | F | L | Coupe FWD N16 B16 A | | GCI82216 | Inner Joint | | 26 | 22 | 31 | 65 | 90.5 | |
| | 2012.04-2016.09 | AT | F | R | Coupe FWD N16 B16 A | | GCI82895 | Inner Joint | | 26 | 22 | 31 | 342 | 98.5 | |
| | 2012.04-2016.09 | MT | F | L | Coupe FWD N16 B16 A | | GDS85126 | Drive Shaft | | 26 | 33 | 51.9 | 80 | 643 | |
| | 2012.04-2016.09 | MT | F | L | Coupe FWD N16 B16 A | | GCI85070 | Inner Joint | | 33 | 23 | 35 | 56 | 97.5 | |

| | YEAR | TRANSM. | F/R | L/R | BODY STYLE & DRIVE TYPE & ENGINE | REMARKS | G-AP Ref. | PRODUCT | ABS | Technical Specifications | | | | | |
|---|---|---|---|---|---|---|---|---|---|---|---|---|---|---|---|
| | | | | | | | | | | A | B | C | H | L | P |
| **MINI**<br>**Mini Paceman** | | | | | | | | | | | | | | | |
| 1.6 (90 kw) | 2012.04-2016.09 | MT | F | R | Coupe FWD N16 B16 A | | GCI85071 | Inner Joint | | 33 | 23 | 35 | 351.5 | 82.5 | |
| | 2012.11-2016.09 | 6AT | F | R | Coupe 4WD N18 B16 A | For Engine code:N18B16A | GDS81772 | Drive Shaft | | 26 | 35 | 52 | 80 | 593 | |
| | 2012.11-2016.09 | 6AT/6MT | F | L | Coupe 4WD N18 B16 A | For Engine code:N16B16A | GDS85132 | Drive Shaft | | 26 | 34 | 52 | 80 | 622 | |
| | 2012.11-2016.09 | 6MT | F | L | Coupe 4WD N18 B16 A | For Engine code:N16B16A | GCI85072 | Inner Joint | | 34 | 23 | 35 | 54.5 | 98 | |
| | 2012.11-2016.09 | AT/MT | F | L/R | Coupe 4WD N18 B16 A | For Enginecode:N16B16A/N18B16A | GCO85023 | Outer Joint | | 26 | 25 | 52 | 80 | 63.5 | M |
| | 2012.11-2016.09 | 6AT/6MT | R | L | Coupe 4WD N18 B16 A | | GDS85127 | Drive Shaft | | 26 | 27 | 51.6 | 80 | 809 | |
| | 2012.11-2016.09 | 6AT/6MT | R | R | Coupe 4WD N18 B16 A | | GCI85069 | Inner Joint | | 27 | 20 | 43.95 | 53.5 | 96 | |
| | 2012.11-2016.09 | AT/MT | R | R | Coupe 4WD N18 B16 A | | GDS56800 | Drive Shaft | | 26 | 27 | 51.6 | 80 | 777 | |
| | 2013.07-2016.09 | 6AT/6MT | F | L | Coupe 4WD N16 B16 A | For Engine Code:N18B16A | GDS81771 | Drive Shaft | | 26 | 26 | 52 | 80 | 634 | |
| | 2013.07-2016.09 | 6AT/6MT | F | L | Coupe 4WD N16 B16 A | For Engine Code:N16B16A | GDS85132 | Drive Shaft | | 26 | 34 | 52 | 80 | 622 | |
| | 2013.07-2016.09 | 6AT/6MT | F | R | Coupe 4WD N16 B16 A | For Engine Code:N18B16A | GDS81772 | Drive Shaft | | 26 | 35 | 52 | 80 | 593 | |
| | 2013.07-2016.09 | 6AT/6MT | F | L | Coupe 4WD N16 B16 A | For Engine Code:N16B16A | GCI85072 | Inner Joint | | 34 | 23 | 35 | 54.5 | 98 | |
| | 2013.07-2016.09 | 6AT/6MT | F | R | Coupe 4WD N16 B16 A | For Engine Code:N16B16A | GCI81893 | Inner Joint | | 35 | 23 | 41.95 | | 121 | |
| | 2013.07-2016.09 | AT/MT | F | L/R | Coupe 4WD N16 B16 A | | GCO85023 | Outer Joint | | 26 | 25 | 52 | 80 | 63.5 | M |
| | 2013.07-2016.09 | AT/MT | R | L | Coupe 4WD N16 B16 A | | GDS85127 | Drive Shaft | | 26 | 27 | 51.6 | 80 | 809 | |
| | 2013.07-2016.09 | AT/MT | R | R | Coupe 4WD N16 B16 A | | GDS56800 | Drive Shaft | | 26 | 27 | 51.6 | 80 | 777 | |
| | 2013.07-2016.09 | AT/MT | R | L/R | Coupe 4WD N16 B16 A | | GCO85021 | Outer Joint | | 26 | 20 | 51.6 | 80 | 55.5 | M |
| | 2013.07-2016.09 | AT/MT | R | L/R | Coupe 4WD N16 B16 A | | GCI85069 | Inner Joint | | 27 | 20 | 43.95 | 53.5 | 96 | |
| 1.6 (120 kw) | 2012.03-2016.09 | 6AT | F | L | Coupe 4WD N18 B16 A | | GDS81771 | Drive Shaft | | 26 | 26 | 52 | 80 | 634 | |
| | 2012.03-2016.09 | 6AT | F | R | Coupe 4WD N18 B16 A | | GDS81772 | Drive Shaft | | 26 | 35 | 52 | 80 | 593 | |
| | 2012.03-2016.09 | 6MT | F | L | Coupe 4WD N18 B16 A | | GDS85132 | Drive Shaft | | 26 | 34 | 52 | 80 | 622 | |
| | 2012.03-2016.09 | 6MT | F | L | Coupe 4WD N18 B16 A | | GCI85072 | Inner Joint | | 34 | 23 | 35 | 54.5 | 98 | |
| | 2012.03-2016.09 | 6MT | F | R | Coupe 4WD N18 B16 A | | GCI81893 | Inner Joint | | 35 | 23 | 41.95 | | 121 | |
| | 2012.03-2016.09 | AT/MT | F | L/R | Coupe 4WD N18 B16 A | | GCO85023 | Outer Joint | | 26 | 25 | 52 | 80 | 63.5 | M |
| | 2012.03-2016.09 | AT/MT | R | L | Coupe 4WD N18 B16 A | | GDS85127 | Drive Shaft | | 26 | 27 | 51.6 | 80 | 809 | |
| | 2012.03-2016.09 | AT/MT | R | R | Coupe 4WD N18 B16 A | | GDS56800 | Drive Shaft | | 26 | 27 | 51.6 | 80 | 777 | |
| | 2012.03-2016.09 | AT/MT | R | L/R | Coupe 4WD N18 B16 A | | GCO85021 | Outer Joint | | 26 | 20 | 51.6 | 80 | 55.5 | M |
| | 2012.03-2016.09 | AT/MT | R | L/R | Coupe 4WD N18 B16 A | | GCI85069 | Inner Joint | | 27 | 20 | 43.95 | 53.5 | 96 | |
| | 2014.01-2016.09 | 6AT | F | L | Coupe FWD N18 B16 A | | GDS81771 | Drive Shaft | | 26 | 26 | 52 | 80 | 634 | |
| | 2014.01-2016.09 | 6MT | F | L | Coupe FWD N18 B16 A | | GDS85132 | Drive Shaft | | 26 | 34 | 52 | 80 | 622 | |
| | 2014.01-2016.09 | 6MT | F | L | Coupe FWD N18 B16 A | | GCI85072 | Inner Joint | | 34 | 23 | 35 | 54.5 | 98 | |
| | 2014.01-2016.09 | AT | F | L | Coupe FWD N18 B16 A | | GCO85023 | Outer Joint | | 26 | 25 | 52 | 80 | 63.5 | M |
| | 2014.01-2016.09 | MT | F | R | Coupe FWD N18 B16 A | | GDS85128 | Drive Shaft | | 26 | 34 | 52 | 80 | 949 | |
| | 2014.01-2016.09 | MT | F | L/R | Coupe FWD N18 B16 A | | GCO85023 | Outer Joint | | 26 | 25 | 52 | 80 | 63.5 | M |
| | 2014.01-2016.09 | MT | F | R | Coupe FWD N18 B16 A | | GCI85084 | Inner Joint | | 34 | 23 | 35 | 396.5 | 84.5 | |
| 1.6 (135 kw) | 2012.03-2016.09 | 6AT | F | L | Coupe 4WD N18 B16 A | | GDS81771 | Drive Shaft | | 26 | 26 | 52 | 80 | 634 | |
| | 2012.03-2016.09 | 6AT | F | R | Coupe 4WD N18 B16 A | | GDS81772 | Drive Shaft | | 26 | 35 | 52 | 80 | 593 | |
| | 2012.03-2016.09 | 6MT | F | L | Coupe 4WD N18 B16 A | | GDS85132 | Drive Shaft | | 26 | 34 | 52 | 80 | 622 | |
| | 2012.03-2016.09 | 6MT | F | L | Coupe 4WD N18 B16 A | | GCI85072 | Inner Joint | | 34 | 23 | 35 | 54.5 | 98 | |
| | 2012.03-2016.09 | 6MT | F | R | Coupe 4WD N18 B16 A | | GCI81893 | Inner Joint | | 35 | 23 | 41.95 | | 121 | |
| | 2012.03-2016.09 | AT/MT | F | L/R | Coupe 4WD N18 B16 A | | GCO85023 | Outer Joint | | 26 | 25 | 52 | 80 | 63.5 | M |
| | 2012.03-2016.09 | 6AT/6MT | R | L | Coupe 4WD N18 B16 A | | GDS85127 | Drive Shaft | | 26 | 27 | 51.6 | 80 | 809 | |
| | 2012.03-2016.09 | 6AT/6MT | R | R | Coupe 4WD N18 B16 A | | GDS56800 | Drive Shaft | | 26 | 27 | 51.6 | 80 | 777 | |
| | 2012.03-2016.09 | 6AT/6MT | R | L/R | Coupe 4WD N18 B16 A | | GCO85021 | Outer Joint | | 26 | 20 | 51.6 | 80 | 55.5 | M |
| | 2012.03-2016.09 | 6AT/6MT | R | L/R | Coupe 4WD N18 B16 A | | GCI85069 | Inner Joint | | 27 | 20 | 43.95 | 53.5 | 96 | |
| | 2012.11-2016.10 | 6AT | F | L | Coupe FWD N18 B16 A | | GDS81771 | Drive Shaft | | 26 | 26 | 52 | 80 | 634 | |
| | 2012.11-2016.10 | 6MT | F | L | Coupe FWD N18 B16 A | | GDS85132 | Drive Shaft | | 26 | 34 | 52 | 80 | 622 | |
| | 2012.11-2016.10 | 6MT | F | L | Coupe FWD N18 B16 A | | GCI85072 | Inner Joint | | 34 | 23 | 35 | 54.5 | 98 | |
| | 2012.11-2016.10 | AT | F | L | Coupe FWD N18 B16 A | | GCO85023 | Outer Joint | | 26 | 25 | 52 | 80 | 63.5 | M |
| | 2012.11-2016.10 | MT | F | R | Coupe FWD N18 B16 A | | GDS85128 | Drive Shaft | | 26 | 34 | 52 | 80 | 949 | |
| | 2012.11-2016.10 | MT | F | L/R | Coupe FWD N18 B16 A | | GCO85023 | Outer Joint | | 26 | 25 | 52 | 80 | 63.5 | M |
| | 2012.11-2016.10 | MT | F | R | Coupe FWD N18 B16 A | | GCI85084 | Inner Joint | | 34 | 23 | 35 | 396.5 | 84.5 | |
| 1.6 (140 kw) | 2012.03-2016.09 | 6AT | F | L | Coupe 4WD N18 B16 A | | GDS81771 | Drive Shaft | | 26 | 26 | 52 | 80 | 634 | |
| | 2012.03-2016.09 | 6AT | F | R | Coupe 4WD N18 B16 A | | GDS81772 | Drive Shaft | | 26 | 35 | 52 | 80 | 593 | |
| | 2012.03-2016.09 | 6MT | F | L | Coupe 4WD N18 B16 A | | GDS85132 | Drive Shaft | | 26 | 34 | 52 | 80 | 622 | |
| | 2012.03-2016.09 | 6MT | F | L | Coupe 4WD N18 B16 A | | GCI85072 | Inner Joint | | 34 | 23 | 35 | 54.5 | 98 | |
| | 2012.03-2016.09 | 6MT | F | R | Coupe 4WD N18 B16 A | | GCI81893 | Inner Joint | | 35 | 23 | 41.95 | | 121 | |
| | 2012.03-2016.09 | AT/MT | F | L/R | Coupe 4WD N18 B16 A | | GCO85023 | Outer Joint | | 26 | 25 | 52 | 80 | 63.5 | M |
| | 2012.03-2016.09 | AT/MT | R | L | Coupe 4WD N18 B16 A | | GDS85127 | Drive Shaft | | 26 | 27 | 51.6 | 80 | 809 | |
| | 2012.03-2016.09 | AT/MT | R | R | Coupe 4WD N18 B16 A | | GDS56800 | Drive Shaft | | 26 | 27 | 51.6 | 80 | 777 | |
| | 2012.03-2016.09 | AT/MT | R | L/R | Coupe 4WD N18 B16 A | | GCO85021 | Outer Joint | | 26 | 20 | 51.6 | 80 | 55.5 | M |
| | 2012.03-2016.09 | AT/MT | R | L/R | Coupe 4WD N18 B16 A | | GCI85069 | Inner Joint | | 27 | 20 | 43.95 | 53.5 | 96 | |
| | 2014.07-2016.09 | 6AT | F | L | Coupe FWD N18 B16 A | | GDS81771 | Drive Shaft | | 26 | 26 | 52 | 80 | 634 | |
| | 2014.07-2016.09 | 6MT | F | L | Coupe FWD N18 B16 A | | GDS85132 | Drive Shaft | | 26 | 34 | 52 | 80 | 622 | |
| | 2014.07-2016.09 | 6MT | F | L | Coupe FWD N18 B16 A | | GCI85072 | Inner Joint | | 34 | 23 | 35 | 54.5 | 98 | |

| | YEAR | TRANSM. | F/R | L/R | BODY STYLE & DRIVE TYPE & ENGINE | REMARKS | G-AP Ref. | PRODUCT | ABS | Technical Specifications A | B | C | H | L | P |
|---|---|---|---|---|---|---|---|---|---|---|---|---|---|---|---|
| **MINI** | | | | | | | | | | | | | | | |
| **Mini Paceman** | | | | | | | | | | | | | | | |
| 1.6 (140 kw) | 2014.07-2016.09 | AT | F | L | Coupe FWD N18 B16 A | | GCO85023 | Outer Joint | | 26 | 25 | 52 | 80 | 63.5 | M |
| | 2014.07-2016.09 | MT | F | R | Coupe FWD N18 B16 A | | GDS85128 | Drive Shaft | | 26 | 34 | 52 | 80 | 949 | |
| | 2014.07-2016.09 | MT | F | L/R | Coupe FWD N18 B16 A | | GCO85023 | Outer Joint | | 26 | 25 | 52 | 80 | 63.5 | M |
| | 2014.07-2016.09 | MT | F | R | Coupe FWD N18 B16 A | | GCI85084 | Inner Joint | | 34 | 23 | 35 | 396.5 | 84.5 | |
| 1.6 (160 kw) | 2013.03-2016.10 | 6AT | F | L | Coupe 4WD N18 B16 C | | GDS81771 | Drive Shaft | | 26 | 26 | 52 | 80 | 634 | |
| | 2013.03-2016.10 | 6AT | F | R | Coupe 4WD N18 B16 C | | GDS81772 | Drive Shaft | | 26 | 35 | 52 | 80 | 593 | |
| | 2013.03-2016.10 | 6AT/6MT | F | L/R | Coupe 4WD N18 B16 C | | GCO85023 | Outer Joint | | 26 | 25 | 52 | 80 | 63.5 | M |
| | 2013.03-2016.10 | 6MT | F | L | Coupe 4WD N18 B16 C | | GDS85132 | Drive Shaft | | 26 | 34 | 52 | 80 | 622 | |
| | 2013.03-2016.10 | 6MT | F | L | Coupe 4WD N18 B16 C | | GCI85072 | Inner Joint | | 34 | 23 | 35 | 54.5 | 98 | |
| | 2013.03-2016.10 | 6MT | F | R | Coupe 4WD N18 B16 C | | GCI81893 | Inner Joint | | 35 | 23 | 41.95 | | 121 | |
| | 2013.03-2016.10 | MT | F | L | Coupe 4WD N18 B16 C | | GCO85023 | Outer Joint | | 26 | 25 | 52 | 80 | 63.5 | M |
| | 2013.03-2016.10 | 6AT/6MT | R | L | Coupe 4WD N18 B16 C | | GDS85127 | Drive Shaft | | 26 | 27 | 51.6 | 80 | 809 | |
| | 2013.03-2016.10 | 6AT/6MT | R | R | Coupe 4WD N18 B16 C | | GDS56800 | Drive Shaft | | 26 | 27 | 51.6 | 80 | 777 | |
| | 2013.03-2016.10 | 6AT/6MT | R | L/R | Coupe 4WD N18 B16 C | | GCO85021 | Outer Joint | | 26 | 20 | 51.6 | 80 | 55.5 | M |
| | 2013.03-2016.10 | 6AT/6MT | R | L/R | Coupe 4WD N18 B16 C | | GCI85069 | Inner Joint | | 27 | 20 | 43.95 | 53.5 | 96 | |
| 2.0 (82 kw) | 2012.03-2016.09 | 6AT | F | L | Coupe 4WD N47 C20 A | | GDS56726 | Drive Shaft | | 26 | 26 | 52 | 80 | 620 | |
| | 2012.03-2016.09 | 6AT | F | R | Coupe 4WD N47 C20 A | | GDS81772 | Drive Shaft | | 26 | 35 | 52 | 80 | 593 | |
| | 2012.03-2016.09 | 6AT | F | L/R | Coupe 4WD N47 C20 A | | GCO85023 | Outer Joint | | 26 | 25 | 52 | 80 | 63.5 | M |
| | 2012.03-2016.09 | 6AT | F | L | Coupe 4WD N47 C20 A | | GCI81508 | Inner Joint | | 26 | 24 | 31 | 65 | 92 | |
| | 2012.03-2016.09 | 6AT | R | L | Coupe 4WD N47 C20 A | | GDS85127 | Drive Shaft | | 26 | 27 | 51.6 | 80 | 809 | |
| | 2012.03-2016.09 | 6AT | R | R | Coupe 4WD N47 C20 A | | GDS56800 | Drive Shaft | | 26 | 27 | 51.6 | 80 | 777 | |
| | 2012.03-2016.09 | 6AT | R | L/R | Coupe 4WD N47 C20 A | | GCO85021 | Outer Joint | | 26 | 20 | 51.6 | 80 | 55.5 | M |
| | 2012.03-2016.09 | 6AT | R | L/R | Coupe 4WD N47 C20 A | | GCI85069 | Inner Joint | | 27 | 20 | 43.95 | 53.5 | 96 | |
| | 2012.07-2016.09 | 6AT | F | L | Coupe FWD N47 C20 A | | GDS56726 | Drive Shaft | | 26 | 26 | 52 | 80 | 620 | |
| | 2012.07-2016.09 | 6AT | F | R | Coupe FWD N47 C20 A | | GDS56772 | Drive Shaft | | 26 | 26 | 52 | 80 | 929 | |
| | 2012.07-2016.09 | 6AT | F | L/R | Coupe FWD N47 C20 A | | GCO85023 | Outer Joint | | 26 | 25 | 52 | 80 | 63.5 | M |
| | 2012.07-2016.09 | 6AT | F | L | Coupe FWD N47 C20 A | | GCI81508 | Inner Joint | | 26 | 24 | 31 | 65 | 92 | |
| | 2012.07-2016.09 | 6AT | F | R | Coupe FWD N47 C20 A | | GCI83483 | Inner Joint | | 26 | 24 | 31 | 361.5 | 104 | |
| 2.0 (100 kw) | 2012.04-2016.09 | 6AT | F | R | Coupe 4WD N47 C20 A | | GDS81772 | Drive Shaft | | 26 | 35 | 52 | 80 | 593 | |
| | 2012.04-2016.09 | 6MT | F | L | Coupe 4WD N47 C20 A | | GDS85132 | Drive Shaft | | 26 | 34 | 52 | 80 | 622 | |
| | 2012.04-2016.09 | 6MT | F | L | Coupe 4WD N47 C20 A | | GCI85072 | Inner Joint | | 34 | 23 | 35 | 54.5 | 98 | |
| | 2012.04-2016.09 | 6MT | F | R | Coupe 4WD N47 C20 A | | GCI81893 | Inner Joint | | 35 | 23 | 41.95 | | 121 | |
| | 2012.04-2016.09 | AT | F | L | Coupe 4WD N47 C20 A | | GDS56726 | Drive Shaft | | 26 | 26 | 52 | 80 | 620 | |
| | 2012.04-2016.09 | AT | F | L | Coupe 4WD N47 C20 A | | GCI81508 | Inner Joint | | 26 | 24 | 31 | 65 | 92 | |
| | 2012.04-2016.09 | AT/MT | F | L/R | Coupe 4WD N47 C20 A | | GCO85023 | Outer Joint | | 26 | 25 | 52 | 80 | 63.5 | M |
| | 2012.04-2016.09 | AT/MT | R | L | Coupe 4WD N47 C20 A | | GDS85127 | Drive Shaft | | 26 | 27 | 51.6 | 80 | 809 | |
| | 2012.04-2016.09 | AT/MT | R | R | Coupe 4WD N47 C20 A | | GDS56800 | Drive Shaft | | 26 | 27 | 51.6 | 80 | 777 | |
| | 2012.04-2016.09 | AT/MT | R | L/R | Coupe 4WD N47 C20 A | | GCO85021 | Outer Joint | | 26 | 20 | 51.6 | 80 | 55.5 | M |
| | 2012.04-2016.09 | AT/MT | R | L/R | Coupe 4WD N47 C20 A | | GCI85069 | Inner Joint | | 27 | 20 | 43.95 | 53.5 | 96 | |
| 2.0 (105 kw) | 2012.03-2016.09 | 6MT | F | L | Coupe FWD N47 C20 A | | GDS85132 | Drive Shaft | | 26 | 34 | 52 | 80 | 622 | |
| | 2012.03-2016.09 | 6MT | F | L | Coupe FWD N47 C20 A | | GCI85072 | Inner Joint | | 34 | 23 | 35 | 54.5 | 98 | |
| | 2012.03-2016.09 | AT | F | L | Coupe FWD N47 C20 A | | GDS56726 | Drive Shaft | | 26 | 26 | 52 | 80 | 620 | |
| | 2012.03-2016.09 | AT | F | R | Coupe FWD N47 C20 A | | GDS56772 | Drive Shaft | | 26 | 26 | 52 | 80 | 929 | |
| | 2012.03-2016.09 | AT | F | L | Coupe FWD N47 C20 A | | GCI81508 | Inner Joint | | 26 | 24 | 31 | 65 | 92 | |
| | 2012.03-2016.09 | AT | F | R | Coupe FWD N47 C20 A | | GCI83483 | Inner Joint | | 26 | 24 | 31 | 361.5 | 104 | |
| | 2012.03-2016.09 | AT/MT | F | L/R | Coupe FWD N47 C20 A | | GCO85023 | Outer Joint | | 26 | 25 | 52 | 80 | 63.5 | M |
| | 2012.03-2016.09 | MT | F | R | Coupe FWD N47 C20 A | | GDS85128 | Drive Shaft | | 26 | 34 | 52 | 80 | 949 | |
| | 2012.03-2016.09 | MT | F | R | Coupe FWD N47 C20 A | | GCI85084 | Inner Joint | | 34 | 23 | 35 | 396.5 | 84.5 | |
| | 2012.04-2016.09 | 6AT | F | R | Coupe 4WD N47 C20 A | | GDS81772 | Drive Shaft | | 26 | 35 | 52 | 80 | 593 | |
| | 2012.04-2016.09 | 6MT | F | L | Coupe 4WD N47 C20 A | | GDS85132 | Drive Shaft | | 26 | 34 | 52 | 80 | 622 | |
| | 2012.04-2016.09 | 6MT | F | L | Coupe 4WD N47 C20 A | | GCI85072 | Inner Joint | | 34 | 23 | 35 | 54.5 | 98 | |
| | 2012.04-2016.09 | 6MT | F | R | Coupe 4WD N47 C20 A | | GCI81893 | Inner Joint | | 35 | 23 | 41.95 | | 121 | |
| | 2012.04-2016.09 | AT | F | L | Coupe 4WD N47 C20 A | | GDS56726 | Drive Shaft | | 26 | 26 | 52 | 80 | 620 | |
| | 2012.04-2016.09 | AT | F | L | Coupe 4WD N47 C20 A | | GCI81508 | Inner Joint | | 26 | 24 | 31 | 65 | 92 | |
| | 2012.04-2016.09 | AT/MT | F | L/R | Coupe 4WD N47 C20 A | | GCO85023 | Outer Joint | | 26 | 25 | 52 | 80 | 63.5 | M |
| | 2012.04-2016.09 | 6AT/6MT | R | L | Coupe 4WD N47 C20 A | | GDS85127 | Drive Shaft | | 26 | 27 | 51.6 | 80 | 809 | |
| | 2012.04-2016.09 | 6AT/6MT | R | R | Coupe 4WD N47 C20 A | | GDS56800 | Drive Shaft | | 26 | 27 | 51.6 | 80 | 777 | |
| | 2012.04-2016.09 | 6AT/6MT | R | L/R | Coupe 4WD N47 C20 A | | GCO85021 | Outer Joint | | 26 | 20 | 51.6 | 80 | 55.5 | M |
| | 2012.04-2016.09 | 6AT/6MT | R | L/R | Coupe 4WD N47 C20 A | | GCI85069 | Inner Joint | | 27 | 20 | 43.95 | 53.5 | 96 | |
| **Mini Roadster** | | | | | | | | | | | | | | | |
| 1.6 (85 kw) | 2011.11-2015.04 | AT | F | L | Convertible FWD N16 B16 A | | GDS85024 | Drive Shaft | | 26 | 26 | 54 | 75.5 | 604 | |
| | 2011.11-2015.04 | AT | F | R | Convertible FWD N16 B16 A | Outer teeth of transm.side:26 | GDS85086 | Drive Shaft | | 26 | 26 | 54 | 75.5 | 877 | |
| | 2011.11-2015.04 | AT | F | L | Convertible FWD N16 B16 A | | GCI85012 | Inner Joint | | 26 | 32 | 31 | 65 | 93 | |
| | 2011.11-2015.04 | MT | F | L | Convertible FWD N16 B16 A | | GDS85041 | Drive Shaft | | 26 | 33 | 54 | 75.5 | 619 | |
| | 2011.11-2015.04 | MT | F | R | Convertible FWD N16 B16 A | Outer teeth of transm.side:33 | GDS85045 | Drive Shaft | | 26 | 33 | 54 | 75.5 | 901 | |

| | YEAR | TRANSM. | F/R | L/R | BODY STYLE & DRIVE TYPE & ENGINE | REMARKS | G-AP Ref. | PRODUCT | ABS | Technical Specifications A | B | C | H | L | P |
|---|---|---|---|---|---|---|---|---|---|---|---|---|---|---|---|
| **MINI** | | | | | | | | | | | | | | | |
| **Mini Roadster** | | | | | | | | | | | | | | | |
| 1.6 (85 kw) | 2011.11-2015.04 | MT | F | L/R | Convertible FWD N16 B16 A | | GCO85009 | Outer Joint | | 26 | 24 | 54 | 75.5 | 65.5 | M |
| | 2011.11-2015.04 | | F | | Convertible FWD N16 B16 A | | GCO85008 | Outer Joint | | 26 | 26 | 54 | 75.5 | 70 | M |
| 1.6 (90 kw) | 2011.11-2015.04 | AT | F | L | Convertible FWD N16 B16 A | | GDS85024 | Drive Shaft | | 26 | 26 | 54 | 75.5 | 604 | |
| | 2011.11-2015.04 | AT | F | R | Convertible FWD N16 B16 A | | GDS85086 | Drive Shaft | | 26 | 26 | 54 | 75.5 | 877 | |
| | 2011.11-2015.04 | AT | F | L | Convertible FWD N16 B16 A | | GCI85012 | Inner Joint | | 26 | 32 | 31 | 65 | 93 | |
| | 2011.11-2015.04 | MT | F | L | Convertible FWD N16 B16 A | | GDS85041 | Drive Shaft | | 26 | 33 | 54 | 75.5 | 619 | |
| | 2011.11-2015.04 | MT | F | R | Convertible FWD N16 B16 A | | GDS85045 | Drive Shaft | | 26 | 33 | 54 | 75.5 | 901 | |
| | 2011.11-2015.04 | MT | F | L/R | Convertible FWD N16 B16 A | | GCO85009 | Outer Joint | | 26 | 24 | 54 | 75.5 | 65.5 | M |
| 1.6 (120 kw) | 2011.11-2015.04 | AT | F | L | Convertible FWD N18 B16 A | | GDS85024 | Drive Shaft | | 26 | 26 | 54 | 75.5 | 604 | |
| | 2011.11-2015.04 | AT | F | R | Convertible FWD N18 B16 A | Outer teeth of transm.side:26 | GDS85086 | Drive Shaft | | 26 | 26 | 54 | 75.5 | 877 | |
| | 2011.11-2015.04 | AT | F | L | Convertible FWD N18 B16 A | | GCI85012 | Inner Joint | | 26 | 32 | 31 | 65 | 93 | |
| | 2011.11-2015.04 | MT | F | L | Convertible FWD N18 B16 A | | GDS85063 | Drive Shaft | | 26 | 34 | 54 | 75.5 | 590 | |
| | 2011.11-2015.04 | MT | F | R | Convertible FWD N18 B16 A | Outer teeth of transm.side:34 | GDS85071 | Drive Shaft | | 26 | 34 | 54 | 75.5 | 918 | |
| | 2011.11-2015.04 | MT | F | L/R | Convertible FWD N18 B16 A | | GCO85008 | Outer Joint | | 26 | 26 | 54 | 75.5 | 70 | M |
| | 2011.11-2015.04 | MT | F | R | Convertible FWD N18 B16 A | | GCI85077 | Inner Joint | | 34 | 32 | 35 | 397 | 90 | |
| 1.6 (135 kw) | 2011.11-2015.04 | AT | F | L | Convertible FWD N18 B16 A | | GDS85024 | Drive Shaft | | 26 | 26 | 54 | 75.5 | 604 | |
| | 2011.11-2015.04 | AT | F | R | Convertible FWD N18 B16 A | Outer teeth of transm.side:26 | GDS85086 | Drive Shaft | | 26 | 26 | 54 | 75.5 | 877 | |
| | 2011.11-2015.04 | AT | F | L | Convertible FWD N18 B16 A | | GCI85012 | Inner Joint | | 26 | 32 | 31 | 65 | 93 | |
| | 2011.11-2015.04 | AT/MT | F | L/R | Convertible FWD N18 B16 A | | GCO85008 | Outer Joint | | 26 | 26 | 54 | 75.5 | 70 | M |
| | 2011.11-2015.04 | MT | F | L | Convertible FWD N18 B16 A | | GDS85063 | Drive Shaft | | 26 | 34 | 54 | 75.5 | 590 | |
| | 2011.11-2015.04 | MT | F | R | Convertible FWD N18 B16 A | Outer teeth of transm.side:34 | GDS85071 | Drive Shaft | | 26 | 34 | 54 | 75.5 | 918 | |
| | 2011.11-2015.04 | MT | F | R | Convertible FWD N18 B16 A | | GCI85077 | Inner Joint | | 34 | 32 | 35 | 397 | 90 | |
| 1.6 (147 kw) | 2011.11-2015.04 | AT | F | L | Convertible FWD N18 B16 A | | GDS85024 | Drive Shaft | | 26 | 26 | 54 | 75.5 | 604 | |
| | 2011.11-2015.04 | AT | F | R | Convertible FWD N18 B16 A | Outer teeth of transm.side:26 | GDS85086 | Drive Shaft | | 26 | 26 | 54 | 75.5 | 877 | |
| | 2011.11-2015.04 | AT | F | L | Convertible FWD N18 B16 A | | GCI85012 | Inner Joint | | 26 | 32 | 31 | 65 | 93 | |
| | 2011.11-2015.04 | MT | F | L | Convertible FWD N18 B16 A | | GDS85063 | Drive Shaft | | 26 | 34 | 54 | 75.5 | 590 | |
| | 2011.11-2015.04 | MT | F | R | Convertible FWD N18 B16 A | Outer teeth of transm.side:34 | GDS85071 | Drive Shaft | | 26 | 34 | 54 | 75.5 | 918 | |
| | 2011.11-2015.04 | MT | F | L/R | Convertible FWD N18 B16 A | | GCO85008 | Outer Joint | | 26 | 26 | 54 | 75.5 | 70 | M |
| | 2011.11-2015.04 | MT | F | R | Convertible FWD N18 B16 A | | GCI85077 | Inner Joint | | 34 | 32 | 35 | 397 | 90 | |
| 1.6 (155 kw) | 2011.11-2015.04 | 6AT | F | L | Convertible FWD N14 B16 C;N18 B16 C | | GDS85024 | Drive Shaft | | 26 | 26 | 54 | 75.5 | 604 | |
| | 2011.11-2015.04 | 6AT | F | R | Convertible FWD N14 B16 C;N18 B16 C | | GDS85086 | Drive Shaft | | 26 | 26 | 54 | 75.5 | 877 | |
| | 2011.11-2015.04 | 6AT/6MT | F | L/R | Convertible FWD N14 B16 C;N18 B16 C | | GCO85008 | Outer Joint | | 26 | 26 | 54 | 75.5 | 70 | M |
| | 2011.11-2015.04 | 6AT/6MT | F | R | Convertible FWD N14 B16 C;N18 B16 C | | GCI85077 | Inner Joint | | 34 | 32 | 35 | 397 | 90 | |
| | 2011.11-2015.04 | 6MT | F | L | Convertible FWD N14 B16 C;N18 B16 C | | GDS85063 | Drive Shaft | | 26 | 34 | 54 | 75.5 | 590 | |
| | 2011.11-2015.04 | 6MT | F | R | Convertible FWD N14 B16 C;N18 B16 C | | GDS85071 | Drive Shaft | | 26 | 34 | 54 | 75.5 | 918 | |
| 2.0 (100 kw) | 2011.11-2015.04 | AT | F | L | Convertible FWD N47 C20 A | | GDS85131 | Drive Shaft | | 26 | 26 | 54 | 75.5 | 589 | |
| | 2011.11-2015.04 | AT | F | R | Convertible FWD N47 C20 A | | GDS85130 | Drive Shaft | | 26 | 26 | 54 | 75.5 | 895 | |
| | 2011.11-2015.04 | AT | F | L | Convertible FWD N47 C20 A | | GCI85012 | Inner Joint | | 26 | 32 | 31 | 65 | 93 | |
| | 2011.11-2015.04 | AT | F | R | Convertible FWD N47 C20 A | | GCI85085 | Inner Joint | | 26 | 32 | 31 | 360 | 89 | |
| | 2011.11-2015.04 | MT | F | L | Convertible FWD N47 C20 A | | GDS85063 | Drive Shaft | | 26 | 34 | 54 | 75.5 | 590 | |
| | 2011.11-2015.04 | MT | F | R | Convertible FWD N47 C20 A | | GDS85071 | Drive Shaft | | 26 | 34 | 54 | 75.5 | 918 | |
| | 2011.11-2015.04 | MT | F | L | Convertible FWD N47 C20 A | | GCO85008 | Outer Joint | | 26 | 26 | 54 | 75.5 | 70 | M |
| 2.0 (105 kw) | 2011.11-2015.04 | AT | F | L | Convertible FWD N47 C20 A | | GDS85131 | Drive Shaft | | 26 | 26 | 54 | 75.5 | 589 | |
| | 2011.11-2015.04 | AT | F | R | Convertible FWD N47 C20 A | | GDS85130 | Drive Shaft | | 26 | 26 | 54 | 75.5 | 895 | |
| | 2011.11-2015.04 | AT | F | L | Convertible FWD N47 C20 A | | GCI85012 | Inner Joint | | 26 | 32 | 31 | 65 | 93 | |
| | 2011.11-2015.04 | AT | F | R | Convertible FWD N47 C20 A | | GCI85085 | Inner Joint | | 26 | 32 | 31 | 360 | 89 | |
| | 2011.11-2015.04 | MT | F | L | Convertible FWD N47 C20 A | | GDS85063 | Drive Shaft | | 26 | 34 | 54 | 75.5 | 590 | |
| | 2011.11-2015.04 | MT | F | R | Convertible FWD N47 C20 A | | GDS85071 | Drive Shaft | | 26 | 34 | 54 | 75.5 | 918 | |
| | 2011.11-2015.04 | MT | F | L | Convertible FWD N47 C20 A | | GCO85008 | Outer Joint | | 26 | 26 | 54 | 75.5 | 70 | M |
| **MITSUBISHI** | | | | | | | | | | | | | | | |
| **Airtrek** | | | | | | | | | | | | | | | |
| 2.0 (177 kw) | 2002.01-2006.10 | AT/MT | F | | SUV 4WD 4G63-T/C (DOHC 16V) | for left-hand drive vehicles,Date From:2003.02,Date To:2005.06 | GCO39176 | Outer Joint | 43T | 25 | 29 | 57 | 95 | 58 | M |
| | 2002.01-2006.10 | AT/MT | F | | SUV 4WD 4G63-T/C (DOHC 16V) | for left-hand drive vehicles,Date From:2003.02,Date To:2004.02 | GCI99019 | Inner Joint | | 26 | 29 | 41 | | 140 | |
| | 2002.01-2006.10 | AT/MT | R | | SUV 4WD 4G63-T/C (DOHC 16V) | for left-hand drive vehicles,Date From:2002.10,Date To:2004.02 | GCO39252 | Outer Joint | 43T | 25 | 29 | 57 | 95 | 71 | I |
| **ASX** | | | | | | | | | | | | | | | |
| 1.6 (84 kw) | 2015.07- | MT | R | L | SUV 4WD 9HD | | GDS81824 | Drive Shaft | | 25 | 23 | 48 | 106 | 753 | |
| | 2015.07- | MT | R | R | SUV 4WD 9HD | | GDS81823 | Drive Shaft | | 25 | 23 | 48 | 106 | 835 | |
| | 2015.07- | MT | R | L/R | SUV 4WD 9HD | | GCO81538 | Outer Joint | | 25 | 26 | 48 | 106 | 51 | I |
| | 2015.07- | MT | R | L/R | SUV 4WD 9HD | | GCI39050 | Inner Joint | | 23 | 26 | 35 | 64 | 96 | |
| 1.6 (85 kw) | 2010.05- | 5MT | F | L | SUV FWD 4A92 | | GDS81934 | Drive Shaft | | 28 | 27 | 59.5 | 94.5 | 669 | |
| | 2010.05- | 5MT | F | R | SUV FWD 4A92 | | GDS81933 | Drive Shaft | | 28 | 27 | 59.5 | 94.5 | 952 | |
| | 2010.05- | 5MT | F | L/R | SUV FWD 4A92 | | GCO81634 | Outer Joint | | 28 | 33 | 59.5 | 94.5 | 61.5 | I |
| | 2010.05- | 5MT | F | L/R | SUV FWD 4A92 | | GCI39038 | Inner Joint | | 27 | 32 | 41 | 62.5 | 88 | |
| 1.6 (86 kw) | 2010.06- | 5MT | F | L | SUV FWD 4A92 | Date from:2012.07,Type:H-LINE/INFORM:Date from:2013.02,Country Version:Russia | GDS81934 | Drive Shaft | | 28 | 27 | 59.5 | 94.5 | 669 | |
| | 2010.06- | 5MT | F | L | SUV FWD 4A92 | | GDS81934 | Drive Shaft | | 28 | 27 | 59.5 | 94.5 | 669 | |

| | YEAR | TRANSM. | F/R | L/R | BODY STYLE & DRIVE TYPE & ENGINE | REMARKS | G-AP Ref. | PRODUCT | ABS | Technical Specifications A | B | C | H | L | P |
|---|---|---|---|---|---|---|---|---|---|---|---|---|---|---|---|
| **MITSUBISHI** | | | | | | | | | | | | | | | |
| **ASX** | | | | | | | | | | | | | | | |
| 1.6 (86 kw) | 2010.06- | 5MT | F | R | SUV FWD 4A92 | Date from:2012.07;Date to:2017.10;Type:H-LINE/INFORM;Date from:2013.02;Country Version:Russia | GDS81933 | Drive Shaft | | 28 | 27 | 59.5 | 94.5 | 952 | |
| | 2010.06- | 5MT | F | R | SUV FWD 4A92 | | GDS81933 | Drive Shaft | | 28 | 27 | 59.5 | 94.5 | 952 | |
| | 2010.06- | 5MT | F | L/R | SUV FWD 4A92 | Date from:2012.07;Type:H-LINE/INFORM;Date from:2013.02;Country Version:Russia | GCO81634 | Outer Joint | | 28 | 33 | 59.5 | 94.5 | 61.5 | I |
| | 2010.06- | 5MT | F | L/R | SUV FWD 4A92 | | GCO81634 | Outer Joint | | 28 | 33 | 59.5 | 94.5 | 61.5 | I |
| | 2010.06- | 5MT | F | L/R | SUV FWD 4A92 | Non-Original design | GCI39038 | Inner Joint | | 27 | 32 | 41 | 62.5 | 88 | |
| | 2010.06- | 5MT | F | L/R | SUV FWD 4A92 | | GCI39038 | Inner Joint | | 27 | 32 | 41 | 62.5 | 88 | |
| 1.8 (85 kw) | 2010.06- | 6MT | F | L | SUV 4WD 4N13 | | GDS81941 | Drive Shaft | | 28 | 24 | 59.6 | 95 | 631 | |
| | 2010.06- | 6MT | F | R | SUV 4WD 4N13 | | GDS81940 | Drive Shaft | | 28 | 24 | 59.6 | 95 | 993 | |
| | 2010.06- | MT | F | L/R | SUV 4WD 4N13 | | GCO39137 | Outer Joint | | 28 | 37 | 59.5 | 94.5 | 71.5 | I |
| | 2010.06- | | F | L | SUV 4WD 4N13 | | GCI81553 | Inner Joint | | 24 | 36 | 50 | 67 | 116 | |
| | 2010.06- | | F | R | SUV 4WD 4N13 | | GCI81552 | Inner Joint | | 24 | 36 | 50 | 280.5 | 129 | |
| | 2010.06- | 6MT | R | L | SUV 4WD 4N13 | | GDS81824 | Drive Shaft | | 25 | 23 | 48 | 106 | 753 | |
| | 2010.06- | 6MT | R | R | SUV 4WD 4N13 | | GDS81823 | Drive Shaft | | 25 | 23 | 48 | 106 | 835 | |
| | 2010.06- | 6MT | R | L/R | SUV 4WD 4N13 | Date From:2012.06 | GCO81538 | Outer Joint | | 25 | 26 | 48 | 106 | 51 | I |
| | 2010.06- | 6MT | R | L/R | SUV 4WD 4N13 | | GCI39050 | Inner Joint | | 23 | 26 | 35 | 64 | 96 | |
| | 2010.06- | 6MT | F | L | SUV FWD 4N13 | | GDS81941 | Drive Shaft | | 28 | 24 | 59.6 | 95 | 631 | |
| | 2010.06- | MT | F | L | SUV FWD 4N13 | | GCI59140 | Inner Joint | | 24 | 36 | 50 | 67 | 116 | |
| | 2010.06- | | F | L | SUV FWD 4N13 | | GCO39137 | Outer Joint | | 28 | 37 | 59.5 | 94.5 | 71.5 | I |
| | 2010.06- | | F | L | SUV FWD 4N13 | | GCI81553 | Inner Joint | | 24 | 36 | 50 | 67 | 116 | |
| | 2010.06- | | F | R | SUV FWD 4N13 | | GCI81552 | Inner Joint | | 24 | 36 | 50 | 280.5 | 129 | |
| 1.8 (102 kw) | 2010.02- | AT | F | L | SUV FWD 4B10 | 6 balls | GDS39121 | Drive Shaft | | 28 | 27 | 59.5 | 95 | 649.5 | |
| | 2010.02- | AT | F | R | SUV FWD 4B10 | | GDS39120 | Drive Shaft | | 28 | 27 | 59.5 | 95 | 965 | |
| | 2010.02- | CVT | F | L | SUV FWD 4B10 | 8 balls | GDS83135 | Drive Shaft | | 28 | 27 | 59.5 | 94.5 | 650 | |
| | 2010.02- | CVT | F | R | SUV FWD 4B10 | Date to:2013.06 | GDS56128 | Drive Shaft | | 28 | 27 | 59.5 | 94.5 | 967 | |
| | 2010.02- | CVT | F | L/R | SUV FWD 4B10 | Date to:2013.06 | GCO81634 | Outer Joint | | 28 | 33 | 59.5 | 94.5 | 61.5 | I |
| | 2010.02- | CVT | F | L | SUV FWD 4B10 | TJ | GCI41056 | Inner Joint | | 27 | 33 | 40 | 62 | 112 | |
| | 2010.02- | CVT | F | L | SUV FWD 4B10 | PTJ | GCI81252 | Inner Joint | | 27 | 33 | 40 | 62 | 110 | |
| | 2010.02- | | F | R | SUV FWD 4B10 | | GCI39040 | Inner Joint | | 27 | 33 | 40 | 62 | 99 | |
| 1.8 (110 kw) | 2010.06- | 6MT | F | L | SUV 4WD 4N13 | Date to:2012.06 | GDS81941 | Drive Shaft | | 28 | 24 | 59.6 | 95 | 631 | |
| | 2010.06- | 6MT | F | R | SUV 4WD 4N13 | Date to:2012.06 | GDS81940 | Drive Shaft | | 28 | 24 | 59.6 | 95 | 993 | |
| | 2010.06- | 6MT | F | L | SUV 4WD 4N13 | Date to:2012.06 | GCO39137 | Outer Joint | | 28 | 37 | 59.5 | 94.5 | 71.5 | I |
| | 2010.06- | 6MT | F | L/R | SUV 4WD 4N13 | Date to:2012.06 | GCO81567 | Outer Joint | | 28 | 37 | 59.6 | 95 | 72.5 | I |
| | 2010.06- | 6MT | F | L | SUV 4WD 4N13 | | GCI81553 | Inner Joint | | 24 | 36 | 50 | 67 | 116 | |
| | 2010.06- | 6MT | F | R | SUV 4WD 4N13 | | GCI81552 | Inner Joint | | 24 | 36 | 50 | 280.5 | 129 | |
| | 2010.06- | MT | F | L | SUV 4WD 4N13 | | GCI59140 | Inner Joint | | 24 | 36 | 50 | 67 | 116 | |
| | 2010.06- | 6MT | R | L | SUV 4WD 4N13 | | GDS81824 | Drive Shaft | | 25 | 23 | 48 | 106 | 753 | |
| | 2010.06- | 6MT | R | R | SUV 4WD 4N13 | | GDS81823 | Drive Shaft | | 25 | 23 | 48 | 106 | 835 | |
| | 2010.06- | 6MT | R | L/R | SUV 4WD 4N13 | | GCI39050 | Inner Joint | | 23 | 26 | 35 | 64 | 96 | |
| | 2010.06- | 6MT | F | L | SUV FWD 4N13 | Date to:2012.06 | GDS81941 | Drive Shaft | | 28 | 24 | 59.6 | 95 | 631 | |
| | 2010.06- | 6MT | F | L | SUV FWD 4N13 | Date to:2012.06 | GCO39137 | Outer Joint | | 28 | 37 | 59.5 | 94.5 | 71.5 | I |
| | 2010.06- | 6MT | F | L | SUV FWD 4N13 | Date to:2012.06 | GCO81567 | Outer Joint | | 28 | 37 | 59.6 | 95 | 72.5 | I |
| | 2010.06- | 6MT | F | L | SUV FWD 4N13 | | GCI81553 | Inner Joint | | 24 | 36 | 50 | 67 | 116 | |
| | 2010.06- | 6MT | F | R | SUV FWD 4N13 | | GCI81552 | Inner Joint | | 24 | 36 | 50 | 280.5 | 129 | |
| 2.0 (110 kw) | 2010.06- | 5MT | F | L | SUV 4WD 4B11;4J11 | Date to:2012.08;Date from:2013.03,Date to:2017.06 | GDS82701 | Drive Shaft | | 28 | 24 | 59.6 | 95 | 635 | |
| | 2010.06- | 5MT | F | L | SUV 4WD 4B11;4J11 | Date to:2012.08 | GCI81207 | Inner Joint | | 24 | 35 | 50 | 67.5 | 111 | |
| | 2010.06- | 5MT/CVT | F | L/R | SUV 4WD 4B11;4J11 | Transmission:5MT;Date from:2012.09;Date to:2013.02;Transmission:CVT;Date to:2017.06;Model:For H line/invite/invite/invite/invite | GCO81634 | Outer Joint | | 28 | 33 | 59.5 | 94.5 | 61.5 | I |
| | 2010.06- | CVT | F | R | SUV 4WD 4B11;4J11 | Date from:2013.03,Date to:2017.06 | GDS83134 | Drive Shaft | | 28 | 27 | 59.5 | 94.5 | 969 | |
| | 2010.06- | CVT/5MT | F | L | SUV 4WD 4B11;4J11 | Transmission:5MT;Date from:2012.09;Date to:2013.03;Transmission:5MT;Date from:2017.07;Transmission:CVT | GDS83135 | Drive Shaft | | 28 | 27 | 59.5 | 94.5 | 650 | |
| | 2010.06- | CVT/5MT | F | R | SUV 4WD 4B11;4J11 | 6 balls | GCO39117 | Outer Joint | | 28 | 35 | 59.5 | 95 | 65 | I |
| | 2010.06- | CVT/5MT | F | L | SUV 4WD 4B11;4J11 | Transmission:5MT,Date from:2012.09;Transmission:CVT | GCI41056 | Inner Joint | | 27 | 33 | 40 | 62 | 112 | |
| | 2010.06- | CVT/5MT | F | L | SUV 4WD 4B11;4J11 | Transmission:5MT,Date from:2012.09;Transmission:CVT | GCI81252 | Inner Joint | | 27 | 33 | 40 | 62 | 110 | |
| | 2010.06- | CVT/5MT | F | R | SUV 4WD 4B11;4J11 | Transmission:5MT,Date from:2012.09;Transmission:CVT | GCI81083 | Inner Joint | | 27 | 35 | 50 | 255.5 | 120 | |
| | 2010.06- | CVT/5MT | R | L | SUV 4WD 4B11;4J11 | Model:For H line/inform/invite/M line | GDS81824 | Drive Shaft | | 25 | 23 | 48 | 106 | 753 | |
| | 2010.06- | CVT/5MT | R | R | SUV 4WD 4B11;4J11 | Date to:2013.02,Model:For H line/inform/invite | GDS81823 | Drive Shaft | | 25 | 23 | 48 | 106 | 835 | |
| | 2010.06- | 5MT | F | L | SUV FWD 4B11;4J11 | For Modelcode:GA2W,Date to:2017.06;For Modelcode:GA9W | GDS82701 | Drive Shaft | | 28 | 24 | 59.6 | 95 | 635 | |
| | 2010.06- | 5MT | F | R | SUV FWD 4B11;4J11 | For Modelcode:GA2W,Date from:2013.03,Date to:2017.06;For Modelcode:GA9W | GDS56617 | Drive Shaft | | 28 | 24 | 59.6 | 95 | 988 | |
| | 2010.06- | 5MT | F | R | SUV FWD 4B11;4J11 | For Modelcode:GA2W,Date to:2012.08 | GDS83606 | Drive Shaft | | 28 | 24 | 59.5 | 95 | 989 | |
| | 2010.06- | 5MT | F | L/R | SUV FWD 4B11;4J11 | For Modelcode:GA2W,Date from:2013.03,Date to:2017.06;For Modelcode:GA9W | GCO82124 | Outer Joint | | 28 | 35 | 59.6 | 95 | 65 | I |
| | 2010.06- | 5MT | F | L/R | SUV FWD 4B11;4J11 | Date to:2012.08,For Modelcode:GA2W | GCO82438 | Outer Joint | | 28 | 35 | 59.5 | 95 | 65 | I |
| | 2010.06- | 5MT | F | L | SUV FWD 4B11;4J11 | Date to:2012.08;For Modelcode:GA2W;Date from:2013.03;Date to:2017.06;For Modelcode:GA9W;For Modelcode:GA9W | GCI81207 | Inner Joint | | 24 | 35 | 50 | 67.5 | 111 | |
| | 2010.06- | 5MT | F | R | SUV FWD 4B11;4J11 | For Modelcode:GA2W,Date to:2012.08;For Modelcode:GA9W | GCI81206 | Inner Joint | | 24 | 35 | 40 | 96 | 104.5 | |
| | 2010.06- | CVT | F | L | SUV FWD 4B11;4J11 | | GDS83135 | Drive Shaft | | 28 | 27 | 59.5 | 94.5 | 650 | |
| | 2010.06- | CVT | F | R | SUV FWD 4B11;4J11 | For Modelcode:GA2W,Date from:2013.03,Date to:2017.06 | GDS83134 | Drive Shaft | | 28 | 27 | 59.5 | 94.5 | 969 | |
| | 2010.06- | CVT | F | R | SUV FWD 4B11;4J11 | | GCO39117 | Outer Joint | | 28 | 35 | 59.5 | 95 | 65 | I |
| | 2010.06- | CVT | F | L/R | SUV FWD 4B11;4J11 | Date to:2017.06,For Modelcode:GA2W | GCO81634 | Outer Joint | | 28 | 33 | 59.5 | 94.5 | 61.5 | I |

| | YEAR | TRANSM. | F/R | L/R | BODY STYLE & DRIVE TYPE & ENGINE | REMARKS | G-AP Ref. | PRODUCT | ABS | Technical Specifications A | B | C | H | L | P |
|---|---|---|---|---|---|---|---|---|---|---|---|---|---|---|---|
| **MITSUBISHI** | | | | | | | | | | | | | | | |
| **ASX** | | | | | | | | | | | | | | | |
| 2.0 (110 kw) | 2010.06- | CVT | F | L | SUV FWD 4B11;4J11 | | GCI41056 | Inner Joint | | 27 | 33 | 40 | 62 | 112 | |
| | 2010.06- | CVT | F | L | SUV FWD 4B11;4J11 | | GCI81252 | Inner Joint | | 27 | 33 | 40 | 62 | 110 | |
| | 2010.06- | CVT | F | R | SUV FWD 4B11;4J11 | | GCI81083 | Inner Joint | | 27 | 35 | 50 | 255.5 | 120 | |
| 2.2 (110 kw) | 2013.04- | AT | F | L | SUV 4WD 4N14 | | GDS81935 | Drive Shaft | | 28 | 30 | 59.6 | 95 | 643 | |
| | 2013.04- | AT | F | R | SUV 4WD 4N14 | | GDS81936 | Drive Shaft | | 28 | 30 | 59.6 | 95 | 982 | |
| | 2013.04- | AT | F | L/R | SUV 4WD 4N14 | | GCO81567 | Outer Joint | | 28 | 37 | 59.6 | 95 | 72.5 | I |
| | 2013.04- | AT | F | L | SUV 4WD 4N14 | | GCI39093 | Inner Joint | | 30 | 36 | 43 | 61 | 117.5 | |
| | 2013.04- | AT | F | R | SUV 4WD 4N14 | | GCI81550 | Inner Joint | | 30 | 36 | 50 | 268.5 | 129 | |
| | 2013.04- | AT | R | L | SUV 4WD 4N14 | | GDS81824 | Drive Shaft | | 25 | 23 | 48 | 106 | 753 | |
| | 2013.04- | AT | R | R | SUV 4WD 4N14 | | GDS81823 | Drive Shaft | | 25 | 23 | 48 | 106 | 835 | |
| | 2013.04- | AT | R | L/R | SUV 4WD 4N14 | | GCO81538 | Outer Joint | | 25 | 26 | 48 | 106 | 51 | I |
| | 2013.04- | AT | R | L/R | SUV 4WD 4N14 | | GCI39050 | Inner Joint | | 23 | 26 | 35 | 64 | 96 | |
| **ASX Van** | | | | | | | | | | | | | | | |
| 1.8 (110 kw) | 2010.06- | 6MT | F | L | SUV Van 4WD 4N13 | | GDS81941 | Drive Shaft | | 28 | 24 | 59.6 | 95 | 631 | |
| | 2010.06- | 6MT | F | R | SUV Van 4WD 4N13 | | GDS81940 | Drive Shaft | | 28 | 24 | 59.6 | 95 | 993 | |
| | 2010.06- | 6MT | F | L/R | SUV Van 4WD 4N13 | Date to:2012.05 | GCO39137 | Outer Joint | | 28 | 37 | 59.5 | 94.5 | 71.5 | I |
| | 2010.06- | | F | L | SUV Van 4WD 4N13 | | GCI81553 | Inner Joint | | 24 | 36 | 50 | 67 | 116 | |
| | 2010.06- | | F | R | SUV Van 4WD 4N13 | | GCI81552 | Inner Joint | | 24 | 36 | 50 | 280.5 | 129 | |
| | 2010.06- | 6MT | R | L | SUV Van 4WD 4N13 | | GDS81824 | Drive Shaft | | 25 | 23 | 48 | 106 | 753 | |
| | 2010.06- | 6MT | R | R | SUV Van 4WD 4N13 | | GDS81823 | Drive Shaft | | 25 | 23 | 48 | 106 | 835 | |
| | 2010.06- | 6MT | R | L/R | SUV Van 4WD 4N13 | Date From:2012.06 | GCO81538 | Outer Joint | | 25 | 26 | 48 | 106 | 51 | I |
| | 2010.06- | 6MT | R | L/R | SUV Van 4WD 4N13 | | GCI39050 | Inner Joint | | 23 | 26 | 35 | 64 | 96 | |
| **Attrage** | | | | | | | | | | | | | | | |
| 1.2 (57 kw) | 2014.07- | 5MT | F | L | Saloon FWD 3A92 | | GDS83117 | Drive Shaft | | 24 | 23 | 47 | 90 | 660 | |
| | 2014.07- | 5MT | F | R | Saloon FWD 3A92 | | GDS83413 | Drive Shaft | | 24 | 23 | 47 | 90 | 865 | |
| | 2014.07- | 5MT | F | L/R | Saloon FWD 3A92 | | GCO41423 | Outer Joint | | 24 | 29 | 47 | 90 | 55 | I |
| | 2014.07- | 5MT | F | L/R | Saloon FWD 3A92 | | GCI82136 | Inner Joint | | 23 | 28 | 34 | 60.5 | 85 | |
| | 2014.07- | CVT | F | L | Saloon FWD 3A92 | | GDS41578 | Drive Shaft | | 24 | 25 | 47 | 90 | 657 | |
| | 2014.07- | CVT | F | R | Saloon FWD 3A92 | | GDS41579 | Drive Shaft | | 24 | 25 | 47 | 90 | 857 | |
| | 2014.07- | CVT | F | L/R | Saloon FWD 3A92 | | GCO41421 | Outer Joint | | 24 | 26 | 47 | 90 | 54.5 | I |
| 1.2 (59 kw) | 2013.10- | AT/CVT | F | L | Saloon FWD 3A92 | | GDS41578 | Drive Shaft | | 24 | 25 | 47 | 90 | 657 | |
| | 2013.10- | CVT | F | R | Saloon FWD 3A92 | | GDS41579 | Drive Shaft | | 24 | 25 | 47 | 90 | 857 | |
| | 2013.10- | CVT | F | L/R | Saloon FWD 3A92 | | GCO41421 | Outer Joint | | 24 | 26 | 47 | 90 | 54.5 | I |
| | 2013.10- | MT | F | L | Saloon FWD 3A92 | | GDS83117 | Drive Shaft | | 24 | 23 | 47 | 90 | 660 | |
| | 2013.10- | MT | F | R | Saloon FWD 3A92 | | GDS83413 | Drive Shaft | | 24 | 23 | 47 | 90 | 865 | |
| | 2013.10- | MT | F | L/R | Saloon FWD 3A92 | | GCO41423 | Outer Joint | | 24 | 29 | 47 | 90 | 55 | I |
| | 2013.10- | MT | F | L/R | Saloon FWD 3A92 | | GCI82136 | Inner Joint | | 23 | 28 | 34 | 60.5 | 85 | |
| **Carisma** | | | | | | | | | | | | | | | |
| 1.3 (55 kw) | 2000.09-2004.10 | 5MT | F | L | Saloon FWD 4G13S | | GDS62004 | Drive Shaft | 43T | 25 | 30 | 54 | 95 | 628.7 | |
| | 2000.09-2004.10 | 5MT | F | R | Saloon FWD 4G13S | | GCO39021 | Outer Joint | | 25 | 29 | 54 | 94.5 | 64.5 | O |
| | 2000.09-2004.10 | | F | R | Saloon FWD 4G13S | | GCO39007 | Outer Joint | 43T | 25 | 23 | 54 | 95 | 60 | I |
| 1.3 (60 kw) | 2002.01-2003.12 | 5MT | F | L | Saloon FWD 4G13S | | GDS62004 | Drive Shaft | 43T | 25 | 30 | 54 | 95 | 628.7 | |
| | 2002.01-2003.12 | 5MT | F | R | Saloon FWD 4G13S | | GCO39021 | Outer Joint | | 25 | 29 | 54 | 94.5 | 64.5 | O |
| | 2002.01-2003.12 | | F | R | Saloon FWD 4G13S | | GCO39007 | Outer Joint | 43T | 25 | 23 | 54 | 95 | 60 | I |
| 1.6 (66 kw) | 1995.07-2000.05 | AT | F | L | Hatchback FWD 4G92 | Date from:1999.03 | GDS39142 | Drive Shaft | 43T | 25 | 25 | 54 | 95.5 | 618 | |
| | 1995.07-2000.05 | AT | F | L/R | Hatchback FWD 4G92 | Date to:1999.02 | GCO39021 | Outer Joint | | 25 | 29 | 54 | 94.5 | 64.5 | O |
| | 1995.07-2000.05 | AT | F | L/R | Hatchback FWD 4G92 | Date to:1999.02 | GCO39022 | Outer Joint | 43T | 25 | 29 | 54 | 94.5 | 64.5 | O |
| | 1995.07-2000.05 | AT | F | L/R | Hatchback FWD 4G92 | Date from:1999.03 | GCO39024 | Outer Joint | 43T | 25 | 23 | 54 | 95.5 | 64 | M |
| | 1995.07-2000.05 | AT/MT | F | L/R | Hatchback FWD 4G92 | Date from:1999.06;Date to:2000.05 | GCO39007 | Outer Joint | 43T | 25 | 23 | 54 | 95 | 60 | I |
| | 1995.07-2000.05 | AT/MT | F | L/R | Hatchback FWD 4G92 | Date from:1999.06;Date to:2000.05 | GCO39098 | Outer Joint | | 25 | 23 | 54 | 95 | 60 | I |
| | 1995.07-2000.05 | MT | F | L | Hatchback FWD 4G92 | Date from:1999.03 | GDS62004 | Drive Shaft | 43T | 25 | 30 | 54 | 95 | 628.7 | |
| | 1995.07-2000.05 | MT | F | R | Hatchback FWD 4G92 | | GCO99230 | Outer Joint | 43T | 25 | 29 | 54 | 95 | 60 | O |
| | 1996.06-2000.09 | 5MT | F | R | Saloon FWD 4G92 | | GCO99230 | Outer Joint | 43T | 25 | 29 | 54 | 95 | 60 | O |
| | 1996.06-2000.09 | AT | F | L | Saloon FWD 4G92 | Date from:1999.03 | GDS39142 | Drive Shaft | 43T | 25 | 25 | 54 | 95.5 | 618 | |
| | 1996.06-2000.09 | AT | F | L | Saloon FWD 4G92 | Date To:1999.02 | GCO39022 | Outer Joint | 43T | 25 | 29 | 54 | 94.5 | 64.5 | O |
| | 1996.06-2000.09 | AT | F | L/R | Saloon FWD 4G92 | Date From:1999.03 | GCO39024 | Outer Joint | 43T | 25 | 23 | 54 | 95.5 | 64 | M |
| | 1996.06-2000.09 | AT/MT | F | L/R | Saloon FWD 4G92 | Date from:1999.06;Date to:2000.09 | GCO39007 | Outer Joint | 43T | 25 | 23 | 54 | 95 | 60 | I |
| | 1996.06-2000.09 | AT/MT | F | L/R | Saloon FWD 4G92 | Date To:1999.02 | GCO39021 | Outer Joint | | 25 | 29 | 54 | 94.5 | 64.5 | O |
| | 1996.06-2000.09 | AT/MT | F | L/R | Saloon FWD 4G92 | Date from:1999.06;Date to:2000.09 | GCO39098 | Outer Joint | | 25 | 23 | 54 | 95 | 60 | I |
| | 1996.06-2000.09 | MT | F | L | Saloon FWD 4G92 | Date from:1999.03 | GDS62004 | Drive Shaft | 43T | 25 | 30 | 54 | 95 | 628.7 | |
| 1.6 (70 kw) | 1998.12-2004.10 | 5MT | F | L | Hatchback FWD 4G92 | | GDS62004 | Drive Shaft | 43T | 25 | 30 | 54 | 95 | 628.7 | |
| | 1998.12-2004.10 | AT/MT | F | L/R | Hatchback FWD 4G92 | Date from:1999.06;Date to:2004.10 | GCO39007 | Outer Joint | 43T | 25 | 23 | 54 | 95 | 60 | I |
| | 1998.12-2004.10 | AT/MT | F | L/R | Hatchback FWD 4G92 | Date to:1999.02 | GCO39021 | Outer Joint | | 25 | 29 | 54 | 94.5 | 64.5 | O |
| | 1998.12-2004.10 | AT/MT | F | L/R | Hatchback FWD 4G92 | Date to:1999.02 | GCO39022 | Outer Joint | 43T | 25 | 29 | 54 | 94.5 | 64.5 | O |
| | 1998.12-2004.10 | AT/MT | F | L/R | Hatchback FWD 4G92 | Date from:1999.06;Date to:2004.10 | GCO39098 | Outer Joint | | 25 | 23 | 54 | 95 | 60 | I |

| | YEAR | TRANSM. | F/R | L/R | BODY STYLE & DRIVE TYPE & ENGINE | REMARKS | G-AP Ref. | PRODUCT | ABS | Technical Specifications A | B | C | H | L | P |
|---|---|---|---|---|---|---|---|---|---|---|---|---|---|---|---|
| **MITSUBISHI** | | | | | | | | | | | | | | | |
| **Carisma** | | | | | | | | | | | | | | | |
| 1.6 (70 kw) | 1998.12-2004.10 | | F | R | Hatchback FWD 4G92 | | GCO99230 | Outer Joint | 43T | 25 | 29 | 54 | 95 | 60 | O |
| | 1998.12-2004.10 | 5MT | F | L | Saloon FWD 4G92 | date from:2001.07 | GDS62004 | Drive Shaft | 43T | 25 | 30 | 54 | 95 | 628.7 | |
| | 1998.12-2004.10 | AT/MT | F | L/R | Saloon FWD 4G92 | Date from:1999.06;Date to:2004.10 | GCO39007 | Outer Joint | 43T | 25 | 23 | 54 | 95 | 60 | I |
| | 1998.12-2004.10 | AT/MT | F | L/R | Saloon FWD 4G92 | Date to:1999.02 | GCO39021 | Outer Joint | | 25 | 29 | 54 | 94.5 | 64.5 | O |
| | 1998.12-2004.10 | AT/MT | F | L/R | Saloon FWD 4G92 | Date to:1999.02 | GCO39022 | Outer Joint | 43T | 25 | 29 | 54 | 94.5 | 64.5 | O |
| | 1998.12-2004.10 | AT/MT | F | L/R | Saloon FWD 4G92 | Date from:1999.06;Date to:2004.10 | GCO39098 | Outer Joint | | 25 | 23 | 54 | 95 | 60 | I |
| | 1998.12-2004.10 | | F | R | Saloon FWD 4G92 | | GCO99230 | Outer Joint | 43T | 25 | 29 | 54 | 95 | 60 | O |
| 1.6 (73 kw) | 1997.08-2004.10 | 5MT | F | L | Hatchback FWD 4G92 | | GDS62004 | Drive Shaft | 43T | 25 | 30 | 54 | 95 | 628.7 | |
| | 1997.08-2004.10 | 5MT | F | R | Hatchback FWD 4G92 | Date To:1999.02 | GCO99230 | Outer Joint | 43T | 25 | 29 | 54 | 95 | 60 | O |
| | 1997.08-2004.10 | AT/MT | F | L/R | Hatchback FWD 4G92 | Date from:1999.06;Date to:2004.10 | GCO39007 | Outer Joint | 43T | 25 | 23 | 54 | 95 | 60 | I |
| | 1997.08-2004.10 | AT/MT | F | L/R | Hatchback FWD 4G92 | Date from:1999.06;Date to:2004.10 | GCO39098 | Outer Joint | | 25 | 23 | 54 | 95 | 60 | I |
| | 1997.08-2004.10 | MT | F | R | Hatchback FWD 4G92 | Date To:1999.02 | GCO39021 | Outer Joint | | 25 | 29 | 54 | 94.5 | 64.5 | O |
| | 1997.08-2004.10 | MT | F | L/R | Hatchback FWD 4G92 | Date To:1999.02 | GCO39022 | Outer Joint | 43T | 25 | 29 | 54 | 94.5 | 64.5 | O |
| | 1997.08-2004.10 | 5MT | F | R | Saloon FWD 4G92 | Date To:1999.02 | GCO99230 | Outer Joint | 43T | 25 | 29 | 54 | 95 | 60 | O |
| | 1997.08-2004.10 | AT | F | L | Saloon FWD 4G92 | Date from:1999.03 | GDS39142 | Drive Shaft | 43T | 25 | 25 | 54 | 95.5 | 618 | |
| | 1997.08-2004.10 | AT | F | L | Saloon FWD 4G92 | Date To:1999.02 | GCO39022 | Outer Joint | 43T | 25 | 29 | 54 | 94.5 | 64.5 | O |
| | 1997.08-2004.10 | AT | F | R | Saloon FWD 4G92 | Date To:1999.02 | GCO39021 | Outer Joint | | 25 | 29 | 54 | 94.5 | 64.5 | O |
| | 1997.08-2004.10 | AT | F | L/R | Saloon FWD 4G92 | | GCO39024 | Outer Joint | 43T | 25 | 23 | 54 | 95.5 | 64 | M |
| | 1997.08-2004.10 | AT/MT | F | L/R | Saloon FWD 4G92 | Date from:1999.06;Date to:2004.10 | GCO39007 | Outer Joint | 43T | 25 | 23 | 54 | 95 | 60 | I |
| | 1997.08-2004.10 | AT/MT | F | L/R | Saloon FWD 4G92 | Date from:1999.06;Date to:2004.10 | GCO39098 | Outer Joint | | 25 | 23 | 54 | 95 | 60 | I |
| | 1997.08-2004.10 | MT | F | L | Saloon FWD 4G92 | | GDS62004 | Drive Shaft | 43T | 25 | 30 | 54 | 95 | 628.7 | |
| | 1997.08-2004.10 | MT | F | L | Saloon FWD 4G92 | Date To:1999.02 | GCO39021 | Outer Joint | | 25 | 29 | 54 | 94.5 | 64.5 | O |
| 1.6 (76 kw) | 1999.06-2004.10 | AT | F | L | Hatchback FWD 4G92 | Date from:1999.03 | GDS39142 | Drive Shaft | 43T | 25 | 25 | 54 | 95.5 | 618 | |
| | 1999.06-2004.10 | AT | F | L/R | Hatchback FWD 4G92 | Date from:1999.03 | GCO39024 | Outer Joint | 43T | 25 | 23 | 54 | 95.5 | 64 | M |
| | 1999.06-2004.10 | MT | F | L | Hatchback FWD 4G92 | | GDS62004 | Drive Shaft | 43T | 25 | 30 | 54 | 95 | 628.7 | |
| | 1999.06-2004.10 | MT | F | L | Hatchback FWD 4G92 | Date from:1999.03 | GCO39021 | Outer Joint | | 25 | 29 | 54 | 94.5 | 64.5 | O |
| | 1999.06-2004.10 | | F | R | Hatchback FWD 4G92 | Date To:2001.06 | GCO39007 | Outer Joint | 43T | 25 | 23 | 54 | 95 | 60 | I |
| | 1999.06-2004.10 | | F | | Hatchback FWD 4G92 | | GCO99230 | Outer Joint | 43T | 25 | 29 | 54 | 95 | 60 | O |
| | 1999.06-2004.10 | AT | F | L | Saloon FWD 4G92 | Date from:1999.03 | GDS39142 | Drive Shaft | 43T | 25 | 25 | 54 | 95.5 | 618 | |
| | 1999.06-2004.10 | AT | F | L/R | Saloon FWD 4G92 | Date from:1999.03 | GCO39024 | Outer Joint | 43T | 25 | 23 | 54 | 95.5 | 64 | M |
| | 1999.06-2004.10 | MT | F | L | Saloon FWD 4G92 | | GDS62004 | Drive Shaft | 43T | 25 | 30 | 54 | 95 | 628.7 | |
| | 1999.06-2004.10 | MT | F | L | Saloon FWD 4G92 | Date from:1999.03 | GCO39021 | Outer Joint | | 25 | 29 | 54 | 94.5 | 64.5 | O |
| | 1999.06-2004.10 | | F | R | Saloon FWD 4G92 | Date To:2001.06 | GCO39007 | Outer Joint | 43T | 25 | 23 | 54 | 95 | 60 | I |
| 1.8 (85 kw) | 1995.07-2006.06 | AT | F | L/R | Hatchback FWD 4G93 | | GCO39024 | Outer Joint | 43T | 25 | 23 | 54 | 95.5 | 64 | M |
| | 1995.07-2006.06 | AT/MT | F | L/R | Hatchback FWD 4G93 | | GCO39021 | Outer Joint | | 25 | 29 | 54 | 94.5 | 64.5 | O |
| | 1995.07-2006.06 | AT/MT | F | L/R | Hatchback FWD 4G93 | | GCO39022 | Outer Joint | 43T | 25 | 29 | 54 | 94.5 | 64.5 | O |
| | 1995.07-2006.06 | | F | R | Hatchback FWD 4G93 | Date To:1999.02 | GCO99230 | Outer Joint | 43T | 25 | 29 | 54 | 95 | 60 | O |
| | 1996.09-2006.06 | 4AT/5MT | F | R | Saloon FWD 4G93 | | GCO99230 | Outer Joint | 43T | 25 | 29 | 54 | 95 | 60 | O |
| | 1996.09-2006.06 | AT | F | L/R | Saloon FWD 4G93 | | GCO39024 | Outer Joint | 43T | 25 | 23 | 54 | 95.5 | 64 | M |
| | 1996.09-2006.06 | AT/MT | F | L/R | Saloon FWD 4G93 | | GCO39021 | Outer Joint | | 25 | 29 | 54 | 94.5 | 64.5 | O |
| | 1996.09-2006.06 | AT/MT | F | L/R | Saloon FWD 4G93 | | GCO39022 | Outer Joint | 43T | 25 | 29 | 54 | 94.5 | 64.5 | O |
| 1.8 (90 kw) | 1999.08-2004.10 | AT | F | L/R | Hatchback FWD 4G93DOHCB | | GCO39024 | Outer Joint | 43T | 25 | 23 | 54 | 95.5 | 64 | M |
| | 1999.08-2004.10 | MT | F | L | Hatchback FWD 4G93DOHCB | | GDS39142 | Drive Shaft | 43T | 25 | 25 | 54 | 95.5 | 618 | |
| | 1999.08-2004.10 | | F | | Hatchback FWD 4G93DOHCB | | GCO39021 | Outer Joint | | 25 | 29 | 54 | 94.5 | 64.5 | O |
| | 1999.08-2004.10 | AT | F | L/R | Saloon FWD 4G93DOHCB | | GCO39024 | Outer Joint | 43T | 25 | 23 | 54 | 95.5 | 64 | M |
| | 1999.08-2004.10 | MT | F | L | Saloon FWD 4G93DOHCB | | GDS39142 | Drive Shaft | 43T | 25 | 25 | 54 | 95.5 | 618 | |
| | 1999.08-2004.10 | | F | | Saloon FWD 4G93DOHCB | | GCO39021 | Outer Joint | | 25 | 29 | 54 | 94.5 | 64.5 | O |
| 1.8 (92 kw) | 1997.08-2004.10 | 5MT | F | R | Hatchback FWD 4G93DOHCB | Date To:1999.02 | GCO99230 | Outer Joint | 43T | 25 | 29 | 54 | 95 | 60 | O |
| | 1997.08-2004.10 | AT | F | L/R | Hatchback FWD 4G93DOHCB | Date To:1999.02 | GCO39021 | Outer Joint | | 25 | 29 | 54 | 94.5 | 64.5 | O |
| | 1997.08-2004.10 | AT | F | L/R | Hatchback FWD 4G93DOHCB | Date To:1999.02 | GCO39022 | Outer Joint | 43T | 25 | 29 | 54 | 94.5 | 64.5 | O |
| | 1997.08-2004.10 | MT | F | L | Hatchback FWD 4G93DOHCB | | GDS39142 | Drive Shaft | 43T | 25 | 25 | 54 | 95.5 | 618 | |
| | 1997.08-2004.10 | MT | F | L | Hatchback FWD 4G93DOHCB | Date To:1999.02 | GCO39007 | Outer Joint | 43T | 25 | 23 | 54 | 95 | 60 | I |
| | 1997.08-2004.10 | MT | F | L/R | Hatchback FWD 4G93DOHCB | Date from:1989.03 | GCO39024 | Outer Joint | 43T | 25 | 23 | 54 | 95.5 | 64 | M |
| | 1997.08-2004.10 | MT | F | L/R | Hatchback FWD 4G93DOHCB | Date To:1999.02 | GCO39098 | Outer Joint | | 25 | 23 | 54 | 95 | 60 | I |
| | 1997.08-2004.10 | 5MT | F | R | Saloon FWD 4G93DOHCB | Date To:1999.02 | GCO99230 | Outer Joint | 43T | 25 | 29 | 54 | 95 | 60 | O |
| | 1997.08-2004.10 | AT | F | L/R | Saloon FWD 4G93DOHCB | Date To:1999.02 | GCO39021 | Outer Joint | | 25 | 29 | 54 | 94.5 | 64.5 | O |
| | 1997.08-2004.10 | AT | F | L/R | Saloon FWD 4G93DOHCB | Date To:1999.02 | GCO39022 | Outer Joint | 43T | 25 | 29 | 54 | 94.5 | 64.5 | O |
| | 1997.08-2004.10 | MT | F | L | Saloon FWD 4G93DOHCB | Date To:1999.02 | GCO39007 | Outer Joint | 43T | 25 | 23 | 54 | 95 | 60 | I |
| | 1997.08-2004.10 | MT | F | L/R | Saloon FWD 4G93DOHCB | Date from:1999.03 | GCO39024 | Outer Joint | 43T | 25 | 23 | 54 | 95.5 | 64 | M |
| | 1997.08-2004.10 | MT | F | L/R | Saloon FWD 4G93DOHCB | Date To:1999.02 | GCO39098 | Outer Joint | | 25 | 23 | 54 | 95 | 60 | I |
| | 1997.08-2004.10 | | F | L | Saloon FWD 4G93DOHCB | Date From:1999.03 | GDS39142 | Drive Shaft | 43T | 25 | 25 | 54 | 95.5 | 618 | |
| 1.8 (103 kw) | 1995.07-2004.10 | MT | F | L/R | Hatchback FWD 4G93DOHC | Date from:1997.05,Date to:1999.02 | GCO39007 | Outer Joint | 43T | 25 | 23 | 54 | 95 | 60 | I |
| | 1995.07-2004.10 | MT | F | L/R | Hatchback FWD 4G93DOHC | Date to:1996.04 | GCO39021 | Outer Joint | | 25 | 29 | 54 | 94.5 | 64.5 | O |
| | 1995.07-2004.10 | MT | F | L/R | Hatchback FWD 4G93DOHC | Date to:1996.04,Date from:1996.05,Date to:1997.04 | GCO39022 | Outer Joint | 43T | 25 | 29 | 54 | 94.5 | 64.5 | O |
| | 1995.07-2004.10 | MT | F | L/R | Hatchback FWD 4G93DOHC | Date from:1999.03 | GCO39024 | Outer Joint | 43T | 25 | 23 | 54 | 95.5 | 64 | M |

| | YEAR | TRANSM. | F/R | L/R | BODY STYLE & DRIVE TYPE & ENGINE | REMARKS | G-AP Ref. | PRODUCT | ABS | Technical Specifications A | B | C | H | L | P |
|---|---|---|---|---|---|---|---|---|---|---|---|---|---|---|---|
| **MITSUBISHI** | | | | | | | | | | | | | | | |
| **Carisma** | | | | | | | | | | | | | | | |
| 1.8 (103 kw) | 1995.07-2004.10 | MT | F | L/R | Hatchback FWD 4G93DOHC | Date from:1997.05,Date to:1999.02 | GCO39098 | Outer Joint | | 25 | 23 | 54 | 95 | 60 | I |
| | 1995.07-2004.10 | | F | L | Hatchback FWD 4G93DOHC | Date From:1999.03 | GDS39142 | Drive Shaft | 43T | 25 | 25 | 54 | 95.5 | 618 | |
| | 1995.07-2004.10 | | F | R | Hatchback FWD 4G93DOHC | Date To:1999.02 | GCO99230 | Outer Joint | 43T | 25 | 29 | 54 | 95 | 60 | O |
| 1.9 (66 kw) | 1996.06-2000.08 | 5MT | F | R | Hatchback FWD F8QT | | GCO99230 | Outer Joint | 43T | 25 | 29 | 54 | 95 | 60 | O |
| | 1996.06-2000.08 | AT/MT | F | L | Hatchback FWD F8QT | | GCO39021 | Outer Joint | | 25 | 29 | 54 | 94.5 | 64.5 | O |
| | 1996.06-2000.08 | AT/MT | F | L | Hatchback FWD F8QT | | GCO39022 | Outer Joint | 43T | 25 | 29 | 54 | 94.5 | 64.5 | O |
| | 1996.06-2000.08 | MT | F | L | Hatchback FWD F8QT | | GDS39142 | Drive Shaft | 43T | 25 | 25 | 54 | 95.5 | 618 | |
| | 1996.06-2000.08 | 5MT | F | R | Saloon FWD F8QT | | GCO99230 | Outer Joint | 43T | 25 | 29 | 54 | 95 | 60 | O |
| | 1996.06-2000.08 | AT/MT | F | L | Saloon FWD F8QT | | GCO39021 | Outer Joint | | 25 | 29 | 54 | 94.5 | 64.5 | O |
| | 1996.06-2000.08 | AT/MT | F | L | Saloon FWD F8QT | | GCO39022 | Outer Joint | 43T | 25 | 29 | 54 | 94.5 | 64.5 | O |
| 1.9 (75 kw) | 2000.09-2004.10 | AT/MT | F | L/R | Hatchback FWD F9Q | | GCO39084 | Outer Joint | 43T | 26 | 33 | 54 | 95 | 60 | M |
| | 2000.09-2004.10 | MT | F | R | Hatchback FWD F9Q | | GDS62073 | Drive Shaft | 43T | 26 | 26 | 54 | 95 | 960 | |
| | 2000.09-2004.10 | AT/MT | F | L/R | Saloon FWD F9Q | | GCO39084 | Outer Joint | 43T | 26 | 33 | 54 | 95 | 60 | M |
| | 2000.09-2004.10 | MT | F | R | Saloon FWD F9Q | | GDS62073 | Drive Shaft | 43T | 26 | 26 | 54 | 95 | 960 | |
| 1.9 (85 kw) | 2000.09-2004.10 | AT/MT | F | L/R | Hatchback FWD F9Q | | GCO39084 | Outer Joint | 43T | 26 | 33 | 54 | 95 | 60 | M |
| | 2000.09-2004.10 | MT | F | R | Hatchback FWD F9Q | | GDS62073 | Drive Shaft | 43T | 26 | 26 | 54 | 95 | 960 | |
| | 2000.09-2004.10 | AT/MT | F | L/R | Saloon FWD F9Q | | GCO39084 | Outer Joint | 43T | 26 | 33 | 54 | 95 | 60 | M |
| | 2000.09-2004.10 | MT | F | R | Saloon FWD F9Q | | GDS62073 | Drive Shaft | 43T | 26 | 26 | 54 | 95 | 960 | |
| 2.0 (206 kw) | 2000.09-2004.10 | | F | L/R | Saloon 4WD 4G63DOHC | | GCO39064 | Outer Joint | 43T | 25 | 30 | 54 | 95 | 60.5 | M |
| **Challenger** | | | | | | | | | | | | | | | |
| 2.5 (83 kw) | 1998.08-1998.10 | MT | F | L | Terrain cab wagon closed 4WD 4D56T | Date from:1998.08 | GCI99083 | Inner Joint | | 28 | 26 | 34.7 | 90.5 | 90.5 | |
| | 1998.08-1998.10 | MT | F | R | Terrain cab wagon closed 4WD 4D56T | Date from:1998.08 | GCI75004 | Inner Joint | | | 26 | | | 62.5 | |
| **Chariot** | | | | | | | | | | | | | | | |
| 1.8 (90 kw) | 1991.10-1998.10 | AT/MT | F | L/R | MPV FWD 4G93 | | GCO39036 | Outer Joint | | 25 | 23 | 54 | 96 | 64.5 | M |
| | 1991.10-1998.10 | | F | L/R | MPV FWD 4G93 | | GCO39017 | Outer Joint | 43T | 25 | 23 | 54 | 95.5 | 63.5 | I |
| | 1991.10-1998.10 | | F | | MPV FWD 4G93 | Date To:1998.07 | GCI39005 | Inner Joint | | 25 | 30 | 35 | 62.8 | 92.5 | |
| **Colt** | | | | | | | | | | | | | | | |
| 1.1 (55 kw) | 2004.10-2012.06 | 5MT | F | L | Hatchback FWD 3A91 | | GDS85058 | Drive Shaft | | 25 | 33 | 54 | 98 | 624 | |
| | 2004.10-2012.06 | 5MT | F | L/R | Hatchback FWD 3A91 | | GCO17048 | Outer Joint | | 25 | 21 | 54 | 98 | 59 | I |
| | 2004.10-2012.06 | 5MT | F | L/R | Hatchback FWD 3A91 | | GCI85031 | Inner Joint | | 33 | 21 | 34.9 | 58 | 111.5 | |
| | 2004.10-2012.06 | AT/MT | F | R | Hatchback FWD 3A91 | Date From:2005.01 | GDS85083 | Drive Shaft | | 25 | 33 | 54 | 98 | 916 | |
| | 2004.10-2012.06 | 5MT | F | L | Hatchback FWD 3A91;M 134.910 (3A91) | | GDS85058 | Drive Shaft | | 25 | 33 | 54 | 98 | 624 | |
| | 2004.10-2012.06 | 5MT | F | L/R | Hatchback FWD 3A91;M 134.910 (3A91) | | GCO17048 | Outer Joint | | 25 | 21 | 54 | 98 | 59 | I |
| | 2004.10-2012.06 | 5MT | F | L/R | Hatchback FWD 3A91;M 134.910 (3A91) | For Modelcode:Z31A | GCI85031 | Inner Joint | | 33 | 21 | 34.9 | 58 | 111.5 | |
| | 2004.10-2012.06 | AT/MT | F | R | Hatchback FWD 3A91;M 134.910 (3A91) | | GDS85083 | Drive Shaft | | 25 | 33 | 54 | 98 | 916 | |
| 1.3 (55 kw) | 1996.05-2000.09 | AT/MT | F | L/R | Hatchback FWD 4G13M | | GCO15003 | Outer Joint | | 25 | 22 | 54 | 95 | 59.8 | I |
| | 1996.05-2000.09 | | F | L/R | Hatchback FWD 4G13M | | GCO39008 | Outer Joint | 43T | 25 | 29 | 54 | 95 | 58 | I |
| | 1996.05-2000.09 | | F | L/R | Hatchback FWD 4G13M | | GCO39119 | Outer Joint | 43T | 25 | 21 | 54 | 95 | 51 | I |
| | 1996.05-2000.09 | | F | L/R | Hatchback FWD 4G13M | | GCO39121 | Outer Joint | | 25 | 21 | 54 | 95 | 51 | I |
| | 1996.05-2000.09 | | F | L/R | Hatchback FWD 4G13M | Driver Pos:For right-hand drive vehicles | GCO39149 | Outer Joint | | 25 | 22 | 54 | 96 | 59 | M |
| | 1996.05-2000.09 | | F | | Hatchback FWD 4G13M | | GCO39120 | Outer Joint | 43T | 25 | 22 | 54 | 94 | 61 | I |
| | 1996.05-2000.09 | | F | R | Hatchback FWD 4G13M | Driver Pos:For right-hand drive vehicles | GCI39029 | Inner Joint | | 25 | 22 | 41 | 62.5 | 90.5 | |
| 1.3 (60 kw) | 2000.09-2005.07 | MT | F | L/R | Hatchback FWD 4G13S | | GCO39008 | Outer Joint | 43T | 25 | 29 | 54 | 95 | 58 | I |
| | 2000.09-2005.07 | | F | | Hatchback FWD 4G13S | | GCO39119 | Outer Joint | 43T | 25 | 21 | 54 | 95 | 51 | I |
| | 2000.09-2005.07 | | F | | Hatchback FWD 4G13S | | GCO39120 | Outer Joint | 43T | 25 | 22 | 54 | 94 | 61 | I |
| | 2000.09-2005.07 | | F | | Hatchback FWD 4G13S | | GCO39121 | Outer Joint | | 25 | 21 | 54 | 95 | 51 | I |
| 1.3 (70 kw) | 2004.06-2012.06 | 5MT | F | L | Hatchback FWD 4A90 | | GDS85058 | Drive Shaft | | 25 | 33 | 54 | 98 | 624 | |
| | 2004.06-2012.06 | 5MT | F | L/R | Hatchback FWD 4A90 | | GCO17048 | Outer Joint | | 25 | 21 | 54 | 98 | 59 | I |
| | 2004.06-2012.06 | 5MT | F | L/R | Hatchback FWD 4A90 | | GCI85031 | Inner Joint | | 33 | 21 | 34.9 | 58 | 111.5 | |
| | 2004.06-2012.06 | AT/MT | F | R | Hatchback FWD 4A90 | Date From:2005.01 | GDS85083 | Drive Shaft | | 25 | 33 | 54 | 98 | 916 | |
| | 2004.06-2012.06 | 6AT | F | L/R | Hatchback FWD 4A90;M 135.930 (4A90) | Date from:2004.09,Date to:2010.01 | GCO39177 | Outer Joint | | 25 | 21 | 55 | 97 | 57 | M |
| | 2004.06-2012.06 | 6AT/5MT | F | L | Hatchback FWD 4A90;M 135.930 (4A90) | | GDS85058 | Drive Shaft | | 25 | 33 | 54 | 98 | 624 | |
| | 2004.06-2012.06 | 6AT/5MT | F | R | Hatchback FWD 4A90;M 135.930 (4A90) | | GDS85083 | Drive Shaft | | 25 | 33 | 54 | 98 | 916 | |
| | 2004.06-2012.06 | 6AT/5MT | F | L/R | Hatchback FWD 4A90;M 135.930 (4A90) | | GCO17048 | Outer Joint | | 25 | 21 | 54 | 98 | 59 | I |
| | 2004.06-2012.06 | 6AT/5MT | F | L/R | Hatchback FWD 4A90;M 135.930 (4A90) | | GCI85031 | Inner Joint | | 33 | 21 | 34.9 | 58 | 111.5 | |
| | 2008.10-2012.06 | 5MT | F | L | Hatchback FWD 4A90 | | GDS85058 | Drive Shaft | | 25 | 33 | 54 | 98 | 624 | |
| | 2008.10-2012.06 | 5MT | F | L | Hatchback FWD 4A90 | | GCI85031 | Inner Joint | | 33 | 21 | 34.9 | 58 | 111.5 | |
| | 2008.10-2012.06 | AT/MT | F | R | Hatchback FWD 4A90 | Date From:2009.01 | GDS85083 | Drive Shaft | | 25 | 33 | 54 | 98 | 916 | |
| | 2008.10-2012.06 | | F | L/R | Hatchback FWD 4A90 | | GCO17048 | Outer Joint | | 25 | 21 | 54 | 98 | 59 | I |
| 1.5 (50 kw) | 2004.08-2012.06 | 5MT | F | R | Hatchback FWD OM 639.939 | | GDS39324 | Drive Shaft | | 25 | 34 | 53 | 97 | 911 | |
| | 2004.08-2012.06 | MT | F | L/R | Hatchback FWD OM 639.939 | | GCO39146 | Outer Joint | | 25 | 23 | 53 | 97 | 61 | M |
| 1.5 (69 kw) | 1995.11-2000.05 | | F | R | Hatchback FWD 4G15M | | GCO39149 | Outer Joint | | 25 | 22 | 54 | 96 | 59 | M |
| | 1995.11-2000.05 | | F | R | Hatchback FWD 4G15M | | GCI39029 | Inner Joint | | 25 | 22 | 41 | 62.5 | 90.5 | |
| 1.5 (70 kw) | 2004.08-2012.06 | 5MT | F | R | Hatchback FWD OM 639.939 | | GDS39324 | Drive Shaft | | 25 | 34 | 53 | 97 | 911 | |
| | 2004.08-2012.06 | MT | F | L/R | Hatchback FWD OM 639.939 | | GCO39146 | Outer Joint | | 25 | 23 | 53 | 97 | 61 | M |

| | YEAR | TRANSM. | F/R | L/R | BODY STYLE & DRIVE TYPE & ENGINE | REMARKS | G-AP Ref. | PRODUCT | ABS | Technical Specifications A | B | C | H | L | P |
|---|---|---|---|---|---|---|---|---|---|---|---|---|---|---|---|
| **MITSUBISHI** | | | | | | | | | | | | | | | |
| **Colt** | | | | | | | | | | | | | | | |
| 1.5 (70 kw) | 2004.08-2012.06 | 5MT | F | R | Hatchback Van FWD OM 639.939 | | GDS39324 | Drive Shaft | | 25 | 34 | 53 | 97 | 911 | |
| | 2004.08-2012.06 | | F | L | Hatchback Van FWD OM 639.939 | | GCO39146 | Outer Joint | | 25 | 23 | 53 | 97 | 61 | M |
| 1.5 (80 kw) | 2004.06-2012.06 | 5MT | F | L | Hatchback FWD 4A91;M 135.950 (4A91) | | GDS85058 | Drive Shaft | | 25 | 33 | 54 | 98 | 624 | |
| | 2004.06-2012.06 | 5MT | F | L/R | Hatchback FWD 4A91;M 135.950 (4A91) | | GCO17048 | Outer Joint | | 25 | 21 | 54 | 98 | 59 | I |
| | 2004.06-2012.06 | 5MT | F | L | Hatchback FWD 4A91;M 135.950 (4A91) | | GCI85031 | Inner Joint | | 33 | 21 | 34.9 | 58 | 111.5 | |
| | 2004.06-2012.06 | AT | F | | Hatchback FWD 4A91;M 135.950 (4A91) | for right-hand drive vehicles,Date From:2004.12,Date To:2010.03 | GCO39177 | Outer Joint | | 25 | 21 | 55 | 97 | 57 | M |
| | 2004.06-2012.06 | AT/MT | F | R | Hatchback FWD 4A91;M 135.950 (4A91) | | GDS85083 | Drive Shaft | | 25 | 33 | 54 | 98 | 916 | |
| 1.5 (81 kw) | 1995.09-2003.09 | | F | | Hatchback FWD 4G15 (16V) | | GCO39120 | Outer Joint | 43T | 25 | 22 | 54 | 94 | 61 | I |
| 1.5 (110 kw) | 2005.03-2012.06 | | F | R | Hatchback FWD 4G15-T (DOHC 16V) | | GCO39229 | Outer Joint | | 25 | 23 | 52.5 | 96.5 | 58 | M |
| 1.5 (132 kw) | 2010.02-2012.06 | AT | F | | Hatchback FWD | | GCI81416 | Inner Joint | | 25 | 29 | 41 | 63 | 86.5 | |
| | 2010.02-2012.06 | MT | F | | Hatchback FWD | Date To:2010.06 | GCO17048 | Outer Joint | | 25 | 21 | 54 | 98 | 59 | I |
| | 2010.02-2012.06 | | F | R | Hatchback FWD | | GCO39229 | Outer Joint | | 25 | 23 | 52.5 | 96.5 | 58 | M |
| 1.6 (66 kw) | 1994.02-1996.04 | AT/MT | F | L/R | Hatchback FWD 4G92 | | GCO39036 | Outer Joint | | 25 | 23 | 54 | 96 | 64.5 | M |
| | 1994.02-1996.04 | | F | | Hatchback FWD 4G92 | | GCO39007 | Outer Joint | 43T | 25 | 23 | 54 | 95 | 60 | I |
| | 1996.05-2000.09 | 4AT/5MT | F | L/R | Hatchback FWD 4G92 | | GCI39023 | Inner Joint | | 25 | 23 | 41 | 62.5 | 87.5 | |
| | 1996.05-2000.09 | AT/MT | F | L/R | Hatchback FWD 4G92 | | GCO39036 | Outer Joint | | 25 | 23 | 54 | 96 | 64.5 | M |
| | 1996.05-2000.09 | | F | L/R | Hatchback FWD 4G92 | inner teeth of wheel side:30 | GCO39004 | Outer Joint | 43T | 25 | 30 | 54 | 95 | 60 | I |
| | 1996.05-2000.09 | | F | L/R | Hatchback FWD 4G92 | inner teeth of wheel side:23 | GCO39007 | Outer Joint | 43T | 25 | 23 | 54 | 95 | 60 | I |
| 1.6 (76 kw) | 2000.09-2003.09 | 4AT/5MT | F | L/R | Hatchback FWD 4G92 | | GCI39023 | Inner Joint | | 25 | 23 | 41 | 62.5 | 87.5 | |
| | 2000.09-2003.09 | AT/MT | F | L/R | Hatchback FWD 4G92 | | GCO39004 | Outer Joint | 43T | 25 | 30 | 54 | 95 | 60 | I |
| | 2000.09-2003.09 | | F | | Hatchback FWD 4G92 | Date To:2003.06 | GCI39057 | Inner Joint | | 25 | 30 | 41 | 61.5 | 95 | |
| 1.6 (83 kw) | 1992.04-1996.04 | AT/MT | F | L/R | Hatchback FWD 4G92 | | GCO39036 | Outer Joint | | 25 | 23 | 54 | 96 | 64.5 | M |
| **Colt CZC** | | | | | | | | | | | | | | | |
| 1.5 (80 kw) | 2006.05-2009.07 | 5MT | F | L | Convertible FWD 4A91;M 135.950 (4A91) | | GDS85058 | Drive Shaft | | 25 | 33 | 54 | 98 | 624 | |
| | 2006.05-2009.07 | 5MT | F | R | Convertible FWD 4A91;M 135.950 (4A91) | | GDS85083 | Drive Shaft | | 25 | 33 | 54 | 98 | 916 | |
| | 2006.05-2009.07 | 5MT | F | L | Convertible FWD 4A91;M 135.950 (4A91) | | GCO17048 | Outer Joint | | 25 | 21 | 54 | 98 | 59 | I |
| | 2006.05-2009.07 | 5MT | F | L/R | Convertible FWD 4A91;M 135.950 (4A91) | | GCO39177 | Outer Joint | | 25 | 21 | 55 | 97 | 57 | M |
| | 2006.05-2009.07 | 5MT | F | L/R | Convertible FWD 4A91;M 135.950 (4A91) | | GCI85031 | Inner Joint | | 33 | 21 | 34.9 | 58 | 111.5 | |
| 1.5 (110 kw) | 2006.05-2009.07 | AT | F | | Convertible FWD 4G15-T (DOHC 16V) | | GCO39177 | Outer Joint | | 25 | 21 | 55 | 97 | 57 | M |
| | 2006.05-2009.07 | | F | R | Convertible FWD 4G15-T (DOHC 16V) | | GCO39229 | Outer Joint | | 25 | 23 | 52.5 | 96.5 | 58 | M |
| **Colt/Mirage** | | | | | | | | | | | | | | | |
| 1.3 (68 kw) | 2004.10-2012.06 | AT | F | | Hatchback FWD 4A90 | Date To:2010.04 | GCO39177 | Outer Joint | | 25 | 21 | 55 | 97 | 57 | M |
| | 2004.10-2012.06 | AT/MT | F | R | Hatchback FWD 4A90 | Date From:2005.01 | GDS85083 | Drive Shaft | | 25 | 33 | 54 | 98 | 916 | |
| | 2004.10-2012.06 | MT | F | L | Hatchback FWD 4A90 | Date from:2005.01 | GDS85058 | Drive Shaft | | 25 | 33 | 54 | 98 | 624 | |
| **Delica Space Gear** | | | | | | | | | | | | | | | |
| 2.8 (103 kw) | 1994.01-2006.12 | AT | F | L | Bus 4WD 4M40-T | Date from:1994.03,Date to:1997.05 | GCI39049 | Inner Joint | | 25 | 25 | 32 | 89 | 81.5 | |
| | 1994.01-2006.12 | AT | F | R | Bus 4WD 4M40-T | Date from:1994.03,Date to:1997.05 | GCI39061 | Inner Joint | | | 25 | | | 68.6 | |
| | 1994.01-2006.12 | AT/MT | F | L | Bus 4WD 4M40-T | Date from:1994.03,Date to:1998.04 | GCI99083 | Inner Joint | | 28 | 26 | 34.7 | 90.5 | 90.5 | |
| | 1994.01-2006.12 | AT/MT | F | R | Bus 4WD 4M40-T | Date from:1994.03,Date to:1998.04 | GCI75004 | Inner Joint | | | 26 | | | 62.5 | |
| **Diamante** | | | | | | | | | | | | | | | |
| 2.5 (125 kw) | 2003.09-2005.11 | | F | | Saloon FWD 6A13 | | GCO39025 | Outer Joint | | 27 | 25 | 60 | 97 | 68.5 | M |
| 2.5 (147 kw) | 1999.09-2004.08 | | F | | Saloon FWD 6G73 | | GCO39025 | Outer Joint | | 27 | 25 | 60 | 97 | 68.5 | M |
| **Eclipse** | | | | | | | | | | | | | | | |
| 2.0 (107 kw) | 1995.12-1999.04 | 5MT | F | R | Coupe FWD 4G63DOHC | | GCI39005 | Inner Joint | | 25 | 30 | 35 | 62.8 | 92.5 | |
| | 1995.12-1999.04 | AT/MT | F | L/R | Coupe FWD 4G63DOHC | | GCO39002 | Outer Joint | | 25 | 23 | 54 | 96 | 60 | M |
| | 1995.12-1999.04 | | F | L/R | Coupe FWD 4G63DOHC | | GCO39017 | Outer Joint | 43T | 25 | 23 | 54 | 95.5 | 63.5 | I |
| 2.0 (157 kw) | 1995.08-1999.04 | 4AT/5MT | F | L/R | Cabriolet FWD 4G63DOHC | | GCO39017 | Outer Joint | 43T | 25 | 23 | 54 | 95.5 | 63.5 | I |
| | 1995.08-1999.04 | 4AT/5MT | F | R | Cabriolet FWD 4G63DOHC | | GCI39005 | Inner Joint | | 25 | 30 | 35 | 62.8 | 92.5 | |
| | 1995.08-1999.04 | 4AT/5MT | F | R | Coupe FWD 4G63DOHC | | GCI39005 | Inner Joint | | 25 | 30 | 35 | 62.8 | 92.5 | |
| | 1995.08-1999.04 | | F | L | Coupe FWD 4G63DOHC | | GCO39017 | Outer Joint | 43T | 25 | 23 | 54 | 95.5 | 63.5 | I |
| 2.4 (106 kw) | 1999.05-2005.03 | AT/MT | F | | Cabriolet FWD 4G64S | | GCI81580 | Inner Joint | | 27 | 30 | 41 | 62.5 | 83 | |
| 2.4 (110 kw) | 1999.05-2005.03 | AT/MT | F | | Cabriolet FWD 4G64S | | GCI81580 | Inner Joint | | 27 | 30 | 41 | 62.5 | 83 | |
| | 1999.05-2005.12 | AT/MT | F | | Coupe FWD 4G64S | | GCI81580 | Inner Joint | | 27 | 30 | 41 | 62.5 | 83 | |
| | 1999.05-2005.12 | | F | | Coupe FWD 4G64S | | GCI81580 | Inner Joint | | 27 | 30 | 41 | 62.5 | 83 | |
| 2.4 (120 kw) | 2005.04-2012.12 | AT | F | | Coupe FWD 4G69 | Date From:2008.08 | GCI39038 | Inner Joint | | 27 | 32 | 41 | 62.5 | 88 | |
| **Eclipse Cross** | | | | | | | | | | | | | | | |
| 1.5 (110 kw) | 2017.10- | CVT | F | L | SUV 4WD 4B40 | | GDS56081 | Drive Shaft | | 28 | 27 | 59.6 | 95 | 651 | |
| | 2017.10- | CVT | F | R | SUV 4WD 4B40 | | GDS56080 | Drive Shaft | | 28 | 27 | 59.6 | 95 | 969 | |
| | 2017.10- | CVT | F | L/R | SUV 4WD 4B40 | | GCO82915 | Outer Joint | | 28 | 37 | 59.6 | 95 | 72.5 | I |
| | 2017.10- | CVT | F | L | SUV 4WD 4B40 | | GCI82907 | Inner Joint | | 27 | 36 | 40 | 62 | 113 | |
| | 2017.10- | CVT | F | R | SUV 4WD 4B40 | | GCI82906 | Inner Joint | | 27 | 36 | 50 | 255.5 | 128.5 | |
| | 2017.10- | CVT | R | L | SUV 4WD 4B40 | | GDS81824 | Drive Shaft | | 25 | 23 | 48 | 106 | 753 | |
| | 2017.10- | CVT | R | L/R | SUV 4WD 4B40 | | GCI39050 | Inner Joint | | 23 | 26 | 35 | 64 | 96 | |
| | 2017.10- | CVT | F | L | SUV FWD 4B40 | | GDS56081 | Drive Shaft | | 28 | 27 | 59.6 | 95 | 651 | |
| | 2017.10- | CVT | F | R | SUV FWD 4B40 | | GDS56602 | Drive Shaft | | 28 | 27 | 59.6 | 95 | 965 | |

| | YEAR | TRANSM. | F/R | L/R | BODY STYLE & DRIVE TYPE & ENGINE | REMARKS | G-AP Ref. | PRODUCT | ABS | Technical Specifications A | B | C | H | L | P |
|---|---|---|---|---|---|---|---|---|---|---|---|---|---|---|---|
| **MITSUBISHI** | | | | | | | | | | | | | | | |
| **Eclipse Cross** | | | | | | | | | | | | | | | |
| 1.5 (110 kw) | 2017.10- | CVT | F | L/R | SUV FWD 4B40 | | GCO82915 | Outer Joint | | 28 | 37 | 59.6 | 95 | 72.5 | I |
| | 2017.10- | CVT | F | L | SUV FWD 4B40 | | GCI82907 | Inner Joint | | 27 | 36 | 40 | 62 | 113 | |
| | 2017.10- | CVT | F | R | SUV FWD 4B40 | | GCI83398 | Inner Joint | | 27 | 36 | 40 | 303.5 | 142.5 | |
| 1.5 (112 kw) | 2017.10- | CVT | F | L | SUV 4WD 4B40 | | GDS56081 | Drive Shaft | | 28 | 27 | 59.6 | 95 | 651 | |
| | 2017.10- | CVT | F | R | SUV 4WD 4B40 | | GDS56080 | Drive Shaft | | 28 | 27 | 59.6 | 95 | 969 | |
| | 2017.10- | CVT | F | L/R | SUV 4WD 4B40 | | GCO82915 | Outer Joint | | 28 | 37 | 59.6 | 95 | 72.5 | I |
| | 2017.10- | CVT | F | L | SUV 4WD 4B40 | | GCI82907 | Inner Joint | | 27 | 36 | 40 | 62 | 113 | |
| | 2017.10- | CVT | F | R | SUV 4WD 4B40 | | GCI82906 | Inner Joint | | 27 | 36 | 50 | 255.5 | 128.5 | |
| | 2017.10- | CVT | R | L | SUV 4WD 4B40 | | GDS81824 | Drive Shaft | | 25 | 23 | 48 | 106 | 753 | |
| | 2017.10- | CVT | R | L/R | SUV 4WD 4B40 | | GCI39050 | Inner Joint | | 23 | 26 | 35 | 64 | 96 | |
| 1.5 (120 kw) | 2017.10- | CVT | F | L | SUV 4WD 4B40 | | GDS56081 | Drive Shaft | | 28 | 27 | 59.6 | 95 | 651 | |
| | 2017.10- | CVT | F | R | SUV 4WD 4B40 | | GDS56080 | Drive Shaft | | 28 | 27 | 59.6 | 95 | 969 | |
| | 2017.10- | CVT | F | L/R | SUV 4WD 4B40 | | GCO82915 | Outer Joint | | 28 | 37 | 59.6 | 95 | 72.5 | I |
| | 2017.10- | CVT | F | L | SUV 4WD 4B40 | | GCI82907 | Inner Joint | | 27 | 36 | 40 | 62 | 113 | |
| | 2017.10- | CVT | F | R | SUV 4WD 4B40 | | GCI82906 | Inner Joint | | 27 | 36 | 50 | 255.5 | 128.5 | |
| | 2017.10- | CVT | R | L | SUV 4WD 4B40 | | GDS81824 | Drive Shaft | | 25 | 23 | 48 | 106 | 753 | |
| | 2017.10- | CVT | R | L | SUV 4WD 4B40 | | GCO81538 | Outer Joint | | 25 | 26 | 48 | 106 | 51 | I |
| | 2017.10- | CVT | R | L/R | SUV 4WD 4B40 | | GCI39050 | Inner Joint | | 23 | 26 | 35 | 64 | 96 | |
| | 2017.10- | 6MT | F | L | SUV FWD 4B40 | | GDS84383 | Drive Shaft | | 28 | 24 | 59.6 | 95 | 678 | |
| | 2017.10- | 6MT | F | R | SUV FWD 4B40 | | GDS84561 | Drive Shaft | | 28 | 24 | 59.6 | 95 | 938 | |
| | 2017.10- | 6MT | F | L/R | SUV FWD 4B40 | | GCO82795 | Outer Joint | | 28 | 35 | 59.6 | 95 | 65 | I |
| | 2017.10- | 6MT | F | L | SUV FWD 4B40 | | GCI81207 | Inner Joint | | 24 | 35 | 50 | 67.5 | 111 | |
| | 2017.10- | 6MT | F | R | SUV FWD 4B40 | | GCI82861 | Inner Joint | | 24 | 35 | 40 | 315 | 127 | |
| | 2017.10- | CVT | F | L | SUV FWD 4B40 | | GDS56081 | Drive Shaft | | 28 | 27 | 59.6 | 95 | 651 | |
| | 2017.10- | CVT | F | R | SUV FWD 4B40 | | GDS56602 | Drive Shaft | | 28 | 27 | 59.6 | 95 | 965 | |
| | 2017.10- | CVT | F | L/R | SUV FWD 4B40 | | GCO82915 | Outer Joint | | 28 | 37 | 59.6 | 95 | 72.5 | I |
| | 2017.10- | CVT | F | L | SUV FWD 4B40 | | GCI82907 | Inner Joint | | 27 | 36 | 40 | 62 | 113 | |
| | 2017.10- | CVT | F | R | SUV FWD 4B40 | | GCI83398 | Inner Joint | | 27 | 36 | 40 | 303.5 | 142.5 | |
| 2.2 (109 kw) | 2019.03- | 8AT | R | L | SUV 4WD 4N14 | | GDS81824 | Drive Shaft | | 25 | 23 | 48 | 106 | 753 | |
| | 2019.03- | 8AT | R | L | SUV 4WD 4N14 | | GCO81538 | Outer Joint | | 25 | 26 | 48 | 106 | 51 | I |
| | 2019.03- | 8AT | R | L/R | SUV 4WD 4N14 | | GCI39050 | Inner Joint | | 23 | 26 | 35 | 64 | 96 | |
| 2.4 (138 kw) | 2021.01- | CVT | F | L | SUV 4WD 4B12 | | GDS56868 | Drive Shaft | | 28 | 27 | 59.6 | 94.5 | 671 | |
| | 2021.01- | CVT | F | R | SUV 4WD 4B12 | | GDS56867 | Drive Shaft | | 28 | 27 | 59.6 | 94.5 | 949 | |
| | 2021.01- | CVT | F | L/R | SUV 4WD 4B12 | | GCO83462 | Outer Joint | | 28 | 32 | 59.6 | 94.5 | 59.5 | I |
| | 2021.01- | CVT | F | L/R | SUV 4WD 4B12 | | GCI81511 | Inner Joint | | 27 | 32 | 41 | 62.5 | 89 | |
| | 2021.01- | CVT | R | L/R | SUV 4WD 4B12 | | GCI81548 | Inner Joint | | 23 | 24 | 35 | 50 | 88 | |
| **Galant** | | | | | | | | | | | | | | | |
| 1.8 (85 kw) | 1992.11-1996.09 | AT/MT | F | L/R | Hatchback FWD 4G93 | inner teeth of wheel side:24 | GCO39019 | Outer Joint | | 25 | 24 | 54 | 94.5 | 62 | M |
| | 1992.11-1996.09 | AT/MT | F | L/R | Hatchback FWD 4G93 | inner teeth of wheel side:24 | GCO39020 | Outer Joint | 43T | 25 | 24 | 54 | 94.5 | 62 | M |
| | 1992.11-1996.09 | AT/MT | F | | Hatchback FWD 4G93 | | GCI39010 | Inner Joint | | 25 | 24 | 35 | 62.8 | 92.5 | |
| | 1992.11-1996.09 | | F | | Hatchback FWD 4G93 | inner teeth of wheel side:30 | GCO39064 | Outer Joint | 43T | 25 | 30 | 54 | 95 | 60.5 | M |
| | 1992.11-1996.09 | AT/MT | F | L/R | Saloon FWD 4G93 | | GCO39019 | Outer Joint | | 25 | 24 | 54 | 94.5 | 62 | M |
| | 1992.11-1996.09 | AT/MT | F | L/R | Saloon FWD 4G93 | | GCO39020 | Outer Joint | 43T | 25 | 24 | 54 | 94.5 | 62 | M |
| | 1992.11-1996.09 | AT/MT | F | | Saloon FWD 4G93 | | GCI39010 | Inner Joint | | 25 | 24 | 35 | 62.8 | 92.5 | |
| | 1992.11-1996.09 | | F | | Saloon FWD 4G93 | | GCO39064 | Outer Joint | 43T | 25 | 30 | 54 | 95 | 60.5 | M |
| 1.8 (93 kw) | 1992.11-1996.09 | AT/MT | F | L | Hatchback FWD 4G93 | | GCO39002 | Outer Joint | | 25 | 23 | 54 | 96 | 60 | M |
| | 1992.11-1996.09 | AT/MT | F | R | Hatchback FWD 4G93 | | GCO39036 | Outer Joint | | 25 | 23 | 54 | 96 | 64.5 | M |
| | 1992.11-1996.09 | AT/MT | F | | Hatchback FWD 4G93 | | GCI39010 | Inner Joint | | 25 | 24 | 35 | 62.8 | 92.5 | |
| | 1992.11-1996.09 | | F | | Hatchback FWD 4G93 | inner teeth of wheel side:24 | GCO39020 | Outer Joint | 43T | 25 | 24 | 54 | 94.5 | 62 | M |
| | 1992.11-1996.09 | | F | | Hatchback FWD 4G93 | inner teeth of wheel side:30 | GCO39064 | Outer Joint | 43T | 25 | 30 | 54 | 95 | 60.5 | M |
| | 1992.11-1996.09 | AT/MT | F | L | Saloon FWD 4G93 | | GCO39002 | Outer Joint | | 25 | 23 | 54 | 96 | 60 | M |
| | 1992.11-1996.09 | AT/MT | F | R | Saloon FWD 4G93 | | GCO39036 | Outer Joint | | 25 | 23 | 54 | 96 | 64.5 | M |
| | 1992.11-1996.09 | AT/MT | F | | Saloon FWD 4G93 | | GCI39010 | Inner Joint | | 25 | 24 | 35 | 62.8 | 92.5 | |
| | 1992.11-1996.09 | | F | | Saloon FWD 4G93 | inner teeth of wheel side:24 | GCO39020 | Outer Joint | 43T | 25 | 24 | 54 | 94.5 | 62 | M |
| | 1992.11-1996.09 | | F | | Saloon FWD 4G93 | inner teeth of wheel side:30 | GCO39064 | Outer Joint | 43T | 25 | 30 | 54 | 95 | 60.5 | M |
| 2.0 (66 kw) | 1992.11-1996.09 | AT/MT | F | L/R | Hatchback FWD 4D68T | inner teeth of wheel side:24 | GCO39019 | Outer Joint | | 25 | 24 | 54 | 94.5 | 62 | M |
| | 1992.11-1996.09 | AT/MT | F | L/R | Hatchback FWD 4D68T | | GCO39020 | Outer Joint | 43T | 25 | 24 | 54 | 94.5 | 62 | M |
| | 1992.11-1996.09 | AT/MT | F | | Hatchback FWD 4D68T | | GCI39010 | Inner Joint | | 25 | 24 | 35 | 62.8 | 92.5 | |
| | 1992.11-1996.09 | AT/MT | F | L/R | Saloon FWD 4D68T | inner teeth of wheel side:24 | GCO39019 | Outer Joint | | 25 | 24 | 54 | 94.5 | 62 | M |
| | 1992.11-1996.09 | AT/MT | F | L/R | Saloon FWD 4D68T | | GCO39020 | Outer Joint | 43T | 25 | 24 | 54 | 94.5 | 62 | M |
| | 1992.11-1996.09 | AT/MT | F | | Saloon FWD 4D68T | | GCI39010 | Inner Joint | | 25 | 24 | 35 | 62.8 | 92.5 | |
| | 1996.10-2001.07 | 5MT | F | R | Saloon FWD 4D68T | | GDS39119 | Drive Shaft | 43T | 25 | 25 | 54 | 95.5 | 946 | |
| | 1996.10-2001.07 | 5MT | F | L/R | Saloon FWD 4D68T | | GCO39005 | Outer Joint | 43T | 25 | 33 | 54 | 95.5 | 65 | I |
| | 1996.10-2001.07 | AT/MT | F | L/R | Saloon FWD 4D68T | | GCO39020 | Outer Joint | 43T | 25 | 24 | 54 | 94.5 | 62 | M |
| 2.0 (98 kw) | 2001.08-2003.05 | 5MT | F | R | Saloon FWD 4G63S | | GDS39119 | Drive Shaft | 43T | 25 | 25 | 54 | 95.5 | 946 | |

| | YEAR | TRANSM. | F/R | L/R | BODY STYLE & DRIVE TYPE & ENGINE | REMARKS | G-AP Ref. | PRODUCT | ABS | Technical Specifications A | B | C | H | L | P |
|---|---|---|---|---|---|---|---|---|---|---|---|---|---|---|---|
| **MITSUBISHI** | | | | | | | | | | | | | | | |
| **Galant** | | | | | | | | | | | | | | | |
| 2.0 (98 kw) | 2001.08-2003.05 | 5MT | F | L/R | Saloon FWD 4G63S | | GCO39005 | Outer Joint | 43T | 25 | 33 | 54 | 95.5 | 65 | I |
| | 2001.08-2003.05 | MT | F | L/R | Saloon FWD 4G63S | | GCO39020 | Outer Joint | 43T | 25 | 24 | 54 | 94.5 | 62 | M |
| 2.0 (100 kw) | 1992.11-1996.09 | AT/MT | F | | Saloon FWD 4G63S | | GCI39010 | Inner Joint | | 25 | 24 | 35 | 62.8 | 92.5 | |
| | 1996.10-2001.07 | AT/MT | F | R | Saloon FWD 4G63S | | GCO39005 | Outer Joint | 43T | 25 | 33 | 54 | 95.5 | 65 | I |
| | 1996.10-2001.07 | AT/MT | F | L/R | Saloon FWD 4G63S | | GCO39019 | Outer Joint | | 25 | 24 | 54 | 94.5 | 62 | M |
| | 1996.10-2001.07 | AT/MT | F | L/R | Saloon FWD 4G63S | | GCO39020 | Outer Joint | 43T | 25 | 24 | 54 | 94.5 | 62 | M |
| | 1996.10-2001.07 | MT | F | L | Saloon FWD 4G63S | | GDS39118 | Drive Shaft | 43T | 25 | 25 | 54 | 95.5 | 642 | |
| | 1996.10-2001.07 | MT | F | R | Saloon FWD 4G63S | | GDS39119 | Drive Shaft | 43T | 25 | 25 | 54 | 95.5 | 946 | |
| | 1996.10-2001.07 | MT | F | L | Saloon FWD 4G63S | Date from:1997.08,Date to:1997.11 | GCI39028 | Inner Joint | | 25 | 23 | 41 | 62.5 | 90.5 | |
| | 1996.10-2001.07 | | F | | Saloon FWD 4G63S | Date from:1996.10 | GCI39057 | Inner Joint | | 25 | 30 | 41 | 61.5 | 95 | |
| 2.0 (101 kw) | 1992.11-1996.08 | AT/MT | F | L/R | Saloon FWD 4G63S | | GCO39019 | Outer Joint | | 25 | 24 | 54 | 94.5 | 62 | M |
| | 1992.11-1996.08 | AT/MT | F | L/R | Saloon FWD 4G63S | | GCO39020 | Outer Joint | 43T | 25 | 24 | 54 | 94.5 | 62 | M |
| | 1992.11-1996.08 | AT/MT | F | | Saloon FWD 4G63S | | GCI39010 | Inner Joint | | 25 | 24 | 35 | 62.8 | 92.5 | |
| | 1992.11-1996.09 | AT/MT | F | L/R | Hatchback 4WD 4G63S | inner teeth of wheel side:24 | GCO39019 | Outer Joint | | 25 | 24 | 54 | 94.5 | 62 | M |
| | 1992.11-1996.09 | AT/MT | F | L/R | Hatchback 4WD 4G63S | | GCO39020 | Outer Joint | 43T | 25 | 24 | 54 | 94.5 | 62 | M |
| | 1992.11-1996.09 | MT | F | | Hatchback 4WD 4G63S | for right-hand drive vehicles/for left-hand drive vehicles,Model year to:199411 | GCO39009 | Outer Joint | | 25 | 30 | 54 | 95 | 60.5 | M |
| | 1992.11-1996.09 | MT | F | | Hatchback 4WD 4G63S | for right-hand drive vehicles/for left-hand drive vehicles,Model year to:199505 | GCI39005 | Inner Joint | | 25 | 30 | 35 | 62.8 | 92.5 | |
| | 1992.11-1996.09 | AT/MT | F | L/R | Hatchback FWD 4G63S | | GCO39019 | Outer Joint | | 25 | 24 | 54 | 94.5 | 62 | M |
| | 1992.11-1996.09 | AT/MT | F | L/R | Hatchback FWD 4G63S | | GCO39020 | Outer Joint | 43T | 25 | 24 | 54 | 94.5 | 62 | M |
| | 1992.11-1996.09 | AT/MT | F | | Hatchback FWD 4G63S | | GCI39010 | Inner Joint | | 25 | 24 | 35 | 62.8 | 92.5 | |
| | 1992.11-1996.09 | AT/MT | F | L/R | Saloon 4WD 4G63S | | GCO39019 | Outer Joint | | 25 | 24 | 54 | 94.5 | 62 | M |
| | 1992.11-1996.09 | AT/MT | F | L/R | Saloon 4WD 4G63S | | GCO39020 | Outer Joint | 43T | 25 | 24 | 54 | 94.5 | 62 | M |
| | 1992.11-1996.09 | MT | F | | Saloon 4WD 4G63S | for right-hand drive vehicles/for left-hand drive vehicles,Date to:1994.11 | GCO39009 | Outer Joint | | 25 | 30 | 54 | 95 | 60.5 | M |
| | 1992.11-1996.09 | MT | F | | Saloon 4WD 4G63S | for right-hand drive vehicles/for left-hand drive vehicles,Date to:1994.11 | GCI39005 | Inner Joint | | 25 | 30 | 35 | 62.8 | 92.5 | |
| 2.0 (110 kw) | 1992.11-1996.09 | AT/MT | F | L/R | Hatchback FWD 6A12 | | GCO39002 | Outer Joint | | 25 | 23 | 54 | 96 | 60 | M |
| | 1992.11-1996.09 | | F | L/R | Hatchback FWD 6A12 | | GCO39017 | Outer Joint | 43T | 25 | 23 | 54 | 95.5 | 63.5 | I |
| | 1992.11-1996.09 | | F | | Hatchback FWD 6A12 | | GCO39064 | Outer Joint | 43T | 25 | 30 | 54 | 95 | 60.5 | M |
| | 1992.11-1996.09 | AT/MT | F | L/R | Saloon FWD 6A12 | | GCO39002 | Outer Joint | | 25 | 23 | 54 | 96 | 60 | M |
| | 1992.11-1996.09 | | F | L/R | Saloon FWD 6A12 | | GCO39017 | Outer Joint | 43T | 25 | 23 | 54 | 95.5 | 63.5 | I |
| | 1992.11-1996.09 | | F | | Saloon FWD 6A12 | | GCO39064 | Outer Joint | 43T | 25 | 30 | 54 | 95 | 60.5 | M |
| 2.4 (106 kw) | 2001.08-2003.05 | AT | F | L | Saloon FWD 4G64DOHCB | | GCO39005 | Outer Joint | 43T | 25 | 33 | 54 | 95.5 | 65 | I |
| | 2001.08-2003.05 | AT | F | R | Saloon FWD 4G64DOHCB | | GCO39150 | Outer Joint | 43T | 25 | 24 | 54 | 96 | 59 | M |
| | 2001.08-2003.05 | AT | F | | Saloon FWD 4G64DOHCB | Date to:2003.07;type:SRJEL9M | GCO39075 | Outer Joint | 43T | 25 | 32 | 54 | 95.5 | 63.5 | I |
| | 2001.08-2003.05 | AT | F | | Saloon FWD 4G64DOHCB | | GCI81580 | Inner Joint | | 27 | 30 | 41 | 62.5 | 83 | |
| | 2001.08-2003.05 | MT | F | R | Saloon FWD 4G64DOHCB | | GDS39119 | Drive Shaft | 43T | 25 | 25 | 54 | 95.5 | 946 | |
| | 2001.08-2003.05 | MT | F | L/R | Saloon FWD 4G64DOHCB | | GCO39020 | Outer Joint | 43T | 25 | 24 | 54 | 94.5 | 62 | M |
| 2.4 (110 kw) | 1999.03-2001.07 | AT | F | L | Saloon FWD 4G64DOHCB | inner teeth of wheel side:33 | GCO39005 | Outer Joint | 43T | 25 | 33 | 54 | 95.5 | 65 | I |
| | 1999.03-2001.07 | AT | F | R | Saloon FWD 4G64DOHCB | inner teeth of wheel side:24 | GCO39150 | Outer Joint | 43T | 25 | 24 | 54 | 96 | 59 | M |
| | 1999.03-2001.07 | AT | F | | Saloon FWD 4G64DOHCB | Type:SRJEL9M | GCO39075 | Outer Joint | 43T | 25 | 32 | 54 | 95.5 | 63.5 | I |
| | 1999.03-2001.07 | AT | F | | Saloon FWD 4G64DOHCB | | GCI81580 | Inner Joint | | 27 | 30 | 41 | 62.5 | 83 | |
| | 1999.03-2001.07 | MT | F | R | Saloon FWD 4G64DOHCB | | GDS39119 | Drive Shaft | 43T | 25 | 25 | 54 | 95.5 | 946 | |
| | 1999.03-2001.07 | MT | F | L/R | Saloon FWD 4G64DOHCB | inner teeth of wheel side:24 | GCO39020 | Outer Joint | 43T | 25 | 24 | 54 | 94.5 | 62 | M |
| 2.4 (116 kw) | 2003.10- | 5AT | F | L | Saloon FWD 4G69 | | GDS39206 | Drive Shaft | 43T | 25 | 27 | 57 | 95 | 671 | |
| | 2003.10- | 5AT | F | R | Saloon FWD 4G69 | | GDS39207 | Drive Shaft | 43T | 25 | 27 | 57 | 95 | 994 | |
| | 2003.10- | AT | F | | Saloon FWD 4G69 | Date From:2003.11 | GCI39038 | Inner Joint | | 27 | 32 | 41 | 62.5 | 88 | |
| 2.4 (118 kw) | 2004.12- | AT | F | | Saloon FWD 4G69 | | GCI39038 | Inner Joint | | 27 | 32 | 41 | 62.5 | 88 | |
| 2.4 (121 kw) | 2003.10- | AT | F | | Saloon 4WD 4G69 | Date From:2003.11 | GCI39038 | Inner Joint | | 27 | 32 | 41 | 62.5 | 88 | |
| | 2003.10- | AT | F | | Saloon FWD 4G69 | Date From:2003.11 | GCI39038 | Inner Joint | | 27 | 32 | 41 | 62.5 | 88 | |
| 2.5 (118 kw) | 1996.10-2004.10 | 5MT | F | L/R | Saloon FWD 6A13DOHC | | GCO39005 | Outer Joint | 43T | 25 | 33 | 54 | 95.5 | 65 | I |
| | 1996.10-2004.10 | | F | L/R | Saloon FWD 6A13DOHC | | GCO39150 | Outer Joint | 43T | 25 | 24 | 54 | 96 | 59 | M |
| 2.5 (120 kw) | 1996.09-2001.12 | | F | R | Saloon FWD 6A13DOHC | | GCO39005 | Outer Joint | 43T | 25 | 33 | 54 | 95.5 | 65 | I |
| | 1996.09-2001.12 | | F | L/R | Saloon FWD 6A13DOHC | | GCO39150 | Outer Joint | 43T | 25 | 24 | 54 | 96 | 59 | M |
| 2.5 (151 kw) | 1999.05-2003.05 | 5MT | F | L/R | Saloon FWD 6A13DOHC | | GCO39005 | Outer Joint | 43T | 25 | 33 | 54 | 95.5 | 65 | I |
| | 1999.05-2003.05 | | F | L/R | Saloon FWD 6A13DOHC | | GCO39150 | Outer Joint | 43T | 25 | 24 | 54 | 96 | 59 | M |
| **Galant Estate/Wagon** | | | | | | | | | | | | | | | |
| 2.0 (66 kw) | 1996.10-2001.07 | 5MT | F | R | Estate FWD 4D68T | | GDS39119 | Drive Shaft | 43T | 25 | 25 | 54 | 95.5 | 946 | |
| | 1996.10-2001.07 | 5MT | F | L/R | Estate FWD 4D68T | | GCO39005 | Outer Joint | 43T | 25 | 33 | 54 | 95.5 | 65 | I |
| | 1996.10-2001.07 | AT/MT | F | L/R | Estate FWD 4D68T | | GCO39020 | Outer Joint | 43T | 25 | 24 | 54 | 94.5 | 62 | M |
| 2.0 (98 kw) | 2001.08-2002.09 | 5MT | F | R | Estate FWD 4G63S | | GDS39119 | Drive Shaft | 43T | 25 | 25 | 54 | 95.5 | 946 | |
| | 2001.08-2002.09 | 5MT | F | L/R | Estate FWD 4G63S | | GCO39005 | Outer Joint | 43T | 25 | 33 | 54 | 95.5 | 65 | I |
| | 2001.08-2002.09 | MT | F | L/R | Estate FWD 4G63S | | GCO39020 | Outer Joint | 43T | 25 | 24 | 54 | 94.5 | 62 | M |
| | 2001.08-2002.09 | | F | | Estate FWD 4G63S | Date To:2002.09,Type:LRJESL6/LRJESR6 | GCI39057 | Inner Joint | | 25 | 30 | 41 | 61.5 | 95 | |
| 2.0 (100 kw) | 1996.10-2001.07 | AT/MT | F | R | Estate FWD 4G63S | inner teeth of wheel side:33 | GCO39005 | Outer Joint | 43T | 25 | 33 | 54 | 95.5 | 65 | I |
| | 1996.10-2001.07 | AT/MT | F | L/R | Estate FWD 4G63S | | GCO39019 | Outer Joint | | 25 | 24 | 54 | 94.5 | 62 | M |
| | 1996.10-2001.07 | AT/MT | F | L/R | Estate FWD 4G63S | inner teeth of wheel side:24 | GCO39020 | Outer Joint | 43T | 25 | 24 | 54 | 94.5 | 62 | M |

| | YEAR | TRANSM. | F/R | L/R | BODY STYLE & DRIVE TYPE & ENGINE | REMARKS | G-AP Ref. | PRODUCT | ABS | Technical Specifications A | B | C | H | L | P |
|---|---|---|---|---|---|---|---|---|---|---|---|---|---|---|---|
| **MITSUBISHI** | | | | | | | | | | | | | | | |
| **Galant Estate/Wagon** | | | | | | | | | | | | | | | |
| 2.0 (100 kw) | 1996.10-2001.07 | AT/MT | F | | Estate FWD 4G63S | Date from:1996.10,Date to:1997.11 | GCI39057 | Inner Joint | | 25 | 30 | 41 | 61.5 | 95 | |
| | 1996.10-2001.07 | MT | F | L | Estate FWD 4G63S | | GDS39118 | Drive Shaft | 43T | 25 | 25 | 54 | 95.5 | 642 | |
| | 1996.10-2001.07 | MT | F | R | Estate FWD 4G63S | | GDS39119 | Drive Shaft | 43T | 25 | 25 | 54 | 95.5 | 946 | |
| | 1996.10-2001.07 | MT | F | L | Estate FWD 4G63S | Date from:1997.08,Date to:1997.11 | GCI39028 | Inner Joint | | 25 | 23 | 41 | 62.5 | 90.5 | |
| 2.4 (106 kw) | 1999.10-2003.10 | AT | F | L | Estate FWD 4G64DOHCB | | GCO39005 | Outer Joint | 43T | 25 | 33 | 54 | 95.5 | 65 | I |
| | 1999.10-2003.10 | AT | F | R | Estate FWD 4G64DOHCB | | GCO39150 | Outer Joint | 43T | 25 | 24 | 54 | 96 | 59 | M |
| | 1999.10-2003.10 | MT | F | R | Estate FWD 4G64DOHCB | | GDS39119 | Drive Shaft | 43T | 25 | 25 | 54 | 95.5 | 946 | |
| | 1999.10-2003.10 | MT | F | L/R | Estate FWD 4G64DOHCB | | GCO39020 | Outer Joint | 43T | 25 | 24 | 54 | 94.5 | 62 | M |
| 2.4 (110 kw) | 1999.03-2001.07 | AT | F | L | Estate FWD 4G64DOHCB | | GCO39005 | Outer Joint | 43T | 25 | 33 | 54 | 95.5 | 65 | I |
| | 1999.03-2001.07 | AT | F | R | Estate FWD 4G64DOHCB | | GCO39150 | Outer Joint | 43T | 25 | 24 | 54 | 96 | 59 | M |
| | 1999.03-2001.07 | MT | F | R | Estate FWD 4G64DOHCB | | GDS39119 | Drive Shaft | 43T | 25 | 25 | 54 | 95.5 | 946 | |
| | 1999.03-2001.07 | MT | F | L/R | Estate FWD 4G64DOHCB | Date to:2001.12 | GCO39020 | Outer Joint | 43T | 25 | 24 | 54 | 94.5 | 62 | M |
| 2.5 (118 kw) | 1999.10-2003.10 | AT | F | L/R | Estate FWD 6A13DOHC | inner teeth of wheel side:24 | GCO39020 | Outer Joint | 43T | 25 | 24 | 54 | 94.5 | 62 | M |
| | 1999.10-2003.10 | MT | F | L | Estate FWD 6A13DOHC | inner teeth of wheel side:33 | GCO39005 | Outer Joint | 43T | 25 | 33 | 54 | 95.5 | 65 | I |
| | 1999.10-2003.10 | | F | R | Estate FWD 6A13DOHC | inner teeth of wheel side:24 | GCO39150 | Outer Joint | 43T | 25 | 24 | 54 | 96 | 59 | M |
| 2.5 (120 kw) | 1996.09-2001.12 | AT | F | L/R | Estate FWD 6A13DOHC | | GCO39020 | Outer Joint | 43T | 25 | 24 | 54 | 94.5 | 62 | M |
| | 1996.09-2001.12 | | F | R | Estate FWD 6A13DOHC | | GCO39005 | Outer Joint | 43T | 25 | 33 | 54 | 95.5 | 65 | I |
| | 1996.09-2001.12 | | F | L/R | Estate FWD 6A13DOHC | | GCO39150 | Outer Joint | 43T | 25 | 24 | 54 | 96 | 59 | M |
| **Galloper** | | | | | | | | | | | | | | | |
| 2.5 (65 kw) | 1999.09-2002.08 | 5MT | F | L | Terrain cab wagon closed 4WD 4D56 | | GDS39114 | Drive Shaft | | 28 | 28 | 56 | 154 | 612.5 | |
| | 1999.09-2002.08 | 5MT | F | L/R | Terrain cab wagon closed 4WD 4D56 | | GCO39027 | Outer Joint | | 28 | 25 | 56 | 154.1 | 62 | M |
| 2.5 (73 kw) | 1997.11-2002.08 | 5MT | F | L | Terrain cab wagon closed 4WD 4D56 | | GDS39114 | Drive Shaft | | 28 | 28 | 56 | 154 | 612.5 | |
| | 1997.11-2002.08 | 5MT | F | L/R | Terrain cab wagon closed 4WD 4D56 | | GCO39027 | Outer Joint | | 28 | 25 | 56 | 154.1 | 62 | M |
| **Grandis** | | | | | | | | | | | | | | | |
| 2.0 (100 kw) | 2005.09-2010.03 | MT | F | L/R | MPV FWD BSY | | GCO51028 | Outer Joint | | 28 | 37 | 60 | 89.5 | 66.5 | I |
| | 2005.09-2010.03 | MT | F | L | MPV FWD BSY | | GCI81553 | Inner Joint | | 24 | 36 | 50 | 67 | 116 | |
| 2.0 (103 kw) | 2007.02-2010.03 | MT | F | L/R | MPV FWD BWC | | GCO51028 | Outer Joint | | 28 | 37 | 60 | 89.5 | 66.5 | I |
| | 2007.02-2010.03 | | F | L | MPV FWD BWC | | GCI81553 | Inner Joint | | 24 | 36 | 50 | 67 | 116 | |
| 2.4 (121 kw) | 2004.04-2011.12 | AT | F | R | MPV FWD 4G69 | For vehicles with Height-Adjustable Suspension | GCO39161 | Outer Joint | | 28 | 26 | 60 | 89 | 63 | M |
| | 2004.04-2011.12 | AT | F | | MPV FWD 4G69 | Date To:2010.12 | GCO39180 | Outer Joint | | 28 | 26 | 60 | 89 | 66 | I |
| | 2004.04-2011.12 | AT | F | L/R | MPV FWD 4G69 | For vehicles without Height-Adjustable Suspension | GCI39054 | Inner Joint | | 27 | 24 | 41 | 63.5 | 107 | |
| | 2004.04-2011.12 | MT | F | L/R | MPV FWD 4G69 | | GCO39134 | Outer Joint | | 28 | 26 | 60 | 89 | 63 | M |
| | 2004.04-2011.12 | | F | | MPV FWD 4G69 | | GCO39135 | Outer Joint | | 28 | 33 | 60 | 89 | 63 | M |
| 2.4 (130 kw) | 2004.04-2011.12 | AT | F | L | MPV FWD 4G69 | | GCO39134 | Outer Joint | | 28 | 26 | 60 | 89 | 63 | M |
| | 2004.04-2011.12 | AT | F | R | MPV FWD 4G69 | For vehicles without Height-Adjustable Suspension | GCO39134 | Outer Joint | | 28 | 26 | 60 | 89 | 63 | M |
| | 2004.04-2011.12 | AT | F | R | MPV FWD 4G69 | For vehicles with Height-Adjustable Suspension | GCO39161 | Outer Joint | | 28 | 26 | 60 | 89 | 63 | M |
| | 2004.04-2011.12 | AT | F | L/R | MPV FWD 4G69 | | GCI39054 | Inner Joint | | 27 | 24 | 41 | 63.5 | 107 | |
| **L200** | | | | | | | | | | | | | | | |
| 2.2 (110 kw) | 2019.07- | 6AT/6MT | F | L | Pickup 4WD 4N14 | | GCO39159 | Outer Joint | 47T | 30 | 35 | 69 | 98 | 66.5 | I |
| | 2019.07- | 6AT/6MT | F | R | Pickup 4WD 4N14 | | GCO39166 | Outer Joint | 47T | 30 | 33 | 69 | 98 | 66.5 | I |
| | 2019.07- | MT/6AT | F | L | Pickup 4WD 4N14 | | GDS39163 | Drive Shaft | 47T | 30 | 28 | 69 | 98 | 594 | |
| | 2019.07- | MT/6AT | F | R | Pickup 4WD 4N14 | | GDS39164 | Drive Shaft | 47T | 30 | | 69 | 98 | 492 | |
| | 2019.07- | | F | L | Pickup 4WD 4N14 | | GCI39037 | Inner Joint | | 28 | 33 | 34.7 | 90.5 | 81.5 | |
| | 2019.07- | | F | R | Pickup 4WD 4N14 | | GCI39036 | Inner Joint | | | 33 | | | 62.5 | |
| 2.4 (97 kw) | 1996.09-2004.08 | 5MT | F | L | Pickup 4WD 4G64S | Date To:2002.08 | GDS39007 | Drive Shaft | | 28 | 25 | 56 | 154 | 616 | |
| | 1996.09-2004.08 | 5MT | F | R | Pickup 4WD 4G64S | Date To:2002.08 | GDS39006 | Drive Shaft | | 28 | | 56 | 154 | 538 | |
| | 1996.09-2004.08 | 5MT | F | L/R | Pickup 4WD 4G64S | Original design | GCO39018 | Outer Joint | | 28 | 25 | 56 | 154 | 62 | M |
| | 1996.09-2004.08 | 5MT | F | L/R | Pickup 4WD 4G64S | Non-Original design | GCO39027 | Outer Joint | | 28 | 25 | 56 | 154.1 | 62 | M |
| | 1996.09-2004.08 | 5MT | F | L | Pickup 4WD 4G64S | | GCI39049 | Inner Joint | | 25 | 25 | 32 | 89 | 81.5 | |
| | 1996.09-2004.08 | 5MT | F | R | Pickup 4WD 4G64S | Date To:1997.08 | GCI39061 | Inner Joint | | | 25 | | | 68.6 | |
| | 1996.09-2004.08 | 5MT | F | R | Pickup 4WD 4G64S | Date From:1997.09 | GCI75004 | Inner Joint | | | 26 | | | 62.5 | |
| | 1996.09-2004.08 | 5MT | F | R | Pickup 4WD 4G64S | Date To:2002.08 | GCI99092 | Inner Joint | | | 26 | | | 68.6 | |
| 2.4 (113 kw) | 2015.09- | AT/MT | F | R | Pickup 4WD 4N15 | | GDS39148 | Drive Shaft | 47T | 30 | | 69 | 98 | 492 | |
| | 2015.09- | AT/MT | F | L/R | Pickup 4WD 4N15 | | GCO39294 | Outer Joint | | 30 | 33 | 69 | 98 | 66.5 | I |
| | 2015.09- | MT | F | L | Pickup 4WD 4N15 | | GDS39163 | Drive Shaft | 47T | 30 | 28 | 69 | 98 | 594 | |
| | 2015.09- | MT | F | R | Pickup 4WD 4N15 | | GDS39164 | Drive Shaft | 47T | 30 | | 69 | 98 | 492 | |
| | 2015.09- | MT | F | L | Pickup 4WD 4N15 | | GCO39159 | Outer Joint | 47T | 30 | 35 | 69 | 98 | 66.5 | I |
| | 2015.09- | MT | F | R | Pickup 4WD 4N15 | | GCO39166 | Outer Joint | 47T | 30 | 33 | 69 | 98 | 66.5 | I |
| | 2015.09- | MT | F | L | Pickup 4WD 4N15 | | GCI39037 | Inner Joint | | 28 | 33 | 34.7 | 90.5 | 81.5 | |
| | 2015.09- | MT | F | R | Pickup 4WD 4N15 | | GCI39036 | Inner Joint | | | 33 | | | 62.5 | |
| 2.4 (133 kw) | 2014.11- | AT/MT | F | L | Pickup 4WD 4N15 | | GDS39163 | Drive Shaft | 47T | 30 | 28 | 69 | 98 | 594 | |
| | 2014.11- | AT/MT | F | R | Pickup 4WD 4N15 | Date from:2015.01;Inner teeth of wheel side:33 | GDS39148 | Drive Shaft | 47T | 30 | | 69 | 98 | 492 | |
| | 2014.11- | AT/MT | F | R | Pickup 4WD 4N15 | Inner teeth of wheel side:35 | GDS39164 | Drive Shaft | 47T | 30 | | 69 | 98 | 492 | |
| | 2014.11- | AT/MT | F | L | Pickup 4WD 4N15 | | GCO39159 | Outer Joint | 47T | 30 | 35 | 69 | 98 | 66.5 | I |
| | 2014.11- | AT/MT | F | R | Pickup 4WD 4N15 | | GCO39166 | Outer Joint | 47T | 30 | 33 | 69 | 98 | 66.5 | I |

| | YEAR | TRANSM. | F/R | L/R | BODY STYLE & DRIVE TYPE & ENGINE | REMARKS | G-AP Ref. | PRODUCT | ABS | Technical Specifications A | B | C | H | L | P |
|---|---|---|---|---|---|---|---|---|---|---|---|---|---|---|---|
| **MITSUBISHI** | | | | | | | | | | | | | | | |
| **L200** | | | | | | | | | | | | | | | |
| 2.4 (133 kw) | 2014.11- | AT/MT | F | L/R | Pickup 4WD 4N15 | Date from:2015.01 | GCO39294 | Outer Joint | | 30 | 33 | 69 | 98 | 66.5 | I |
| | 2014.11- | AT/MT | F | L | Pickup 4WD 4N15 | | GCI39037 | Inner Joint | | 28 | 33 | 34.7 | 90.5 | 81.5 | |
| | 2014.11- | AT/MT | F | R | Pickup 4WD 4N15 | | GCI39036 | Inner Joint | | | 33 | | | 62.5 | |
| 2.5 (51 kw) | 1987.12-1996.08 | 5MT | F | L | Pickup 4WD 4D56 | | GDS39036 | Drive Shaft | | 28 | 25 | 56 | 155.5 | 592 | |
| | 1987.12-1996.08 | MT | F | L/R | Pickup 4WD 4D56 | | GCO39027 | Outer Joint | | 28 | 25 | 56 | 154.1 | 62 | M |
| | 1987.12-1996.08 | MT | F | L | Pickup 4WD 4D56 | | GCI39049 | Inner Joint | | 25 | 25 | 32 | 89 | 81.5 | |
| | 1987.12-1996.08 | MT | F | R | Pickup 4WD 4D56 | | GCI39061 | Inner Joint | | | 25 | | | 68.6 | |
| 2.5 (55 kw) | 2011.08-2015.12 | MT | F | L | Pickup 4WD | | GDS39163 | Drive Shaft | 47T | 30 | 28 | 69 | 98 | 594 | |
| | 2011.08-2015.12 | MT | F | R | Pickup 4WD | | GDS39104 | Drive Shaft | | 30 | | 69 | 98 | 492 | |
| | 2011.08-2015.12 | MT | F | R | Pickup 4WD | | GDS39148 | Drive Shaft | 47T | 30 | | 69 | 98 | 492 | |
| | 2011.08-2015.12 | MT | F | R | Pickup 4WD | | GDS39164 | Drive Shaft | 47T | 30 | | 69 | 98 | 492 | |
| | 2011.08-2015.12 | MT | F | L/R | Pickup 4WD | | GCO39159 | Outer Joint | 47T | 30 | 35 | 69 | 98 | 66.5 | I |
| | 2011.08-2015.12 | MT | F | L/R | Pickup 4WD | | GCO39166 | Outer Joint | 47T | 30 | 33 | 69 | 98 | 66.5 | I |
| | 2011.08-2015.12 | MT | F | L | Pickup 4WD | | GCI39037 | Inner Joint | | 28 | 33 | 34.7 | 90.5 | 81.5 | |
| | 2011.08-2015.12 | MT | F | R | Pickup 4WD | | GCI39036 | Inner Joint | | | 33 | | | 62.5 | |
| 2.5 (64 kw) | 1987.12-1996.08 | 5MT | F | L | Pickup 4WD 4D56 | | GDS39036 | Drive Shaft | | 28 | 25 | 56 | 155.5 | 592 | |
| | 1987.12-1996.08 | MT | F | L/R | Pickup 4WD 4D56 | | GCO39027 | Outer Joint | | 28 | 25 | 56 | 154.1 | 62 | M |
| | 1987.12-1996.08 | MT | F | L | Pickup 4WD 4D56 | | GCI39049 | Inner Joint | | 25 | 25 | 32 | 89 | 81.5 | |
| | 1987.12-1996.08 | MT | F | R | Pickup 4WD 4D56 | | GCI39061 | Inner Joint | | | 25 | | | 68.6 | |
| 2.5 (73 kw) | 1996.06-2007.12 | MT | F | L | Pickup 4WD 4D56-TD | Date to:2002.08 | GDS39007 | Drive Shaft | | 28 | 25 | 56 | 154 | 616 | |
| | 1996.06-2007.12 | MT | F | R | Pickup 4WD 4D56-TD | Date to:2002.08 | GDS39006 | Drive Shaft | | 28 | | 56 | 154 | 538 | |
| | 1996.06-2007.12 | MT | F | L/R | Pickup 4WD 4D56-TD | Date to:2002.08 | GCO39018 | Outer Joint | | 28 | 25 | 56 | 154 | 62 | M |
| | 1996.06-2007.12 | MT | F | L/R | Pickup 4WD 4D56-TD | Date From:2002.09 | GCO39027 | Outer Joint | | 28 | 25 | 56 | 154.1 | 62 | M |
| | 1996.06-2007.12 | MT | F | L | Pickup 4WD 4D56-TD | DOJ | GCI39049 | Inner Joint | | 25 | 25 | 32 | 89 | 81.5 | |
| | 1996.06-2007.12 | MT | F | R | Pickup 4WD 4D56-TD | Date To:1997.08 | GCI39061 | Inner Joint | | | 25 | | | 68.6 | |
| | 1996.06-2007.12 | MT | F | R | Pickup 4WD 4D56-TD | Date From:1997.09;DOJ | GCI75004 | Inner Joint | | | 26 | | | 62.5 | |
| | 1996.06-2007.12 | MT | F | R | Pickup 4WD 4D56-TD | Date To:2002.08;TJ | GCI99092 | Inner Joint | | | 26 | | | 68.6 | |
| 2.5 (74 kw) | 2001.08-2005.09 | MT | F | L | Pickup 4WD 4D56 | Date To:2002.08 | GDS39007 | Drive Shaft | | 28 | 25 | 56 | 154 | 616 | |
| | 2001.08-2005.09 | MT | F | R | Pickup 4WD 4D56 | Date To:2002.08 | GDS39006 | Drive Shaft | | 28 | | 56 | 154 | 538 | |
| | 2001.08-2005.09 | MT | F | L/R | Pickup 4WD 4D56 | Original design | GCO39018 | Outer Joint | | 28 | 25 | 56 | 154 | 62 | M |
| | 2001.08-2005.09 | MT | F | L/R | Pickup 4WD 4D56 | Non-Original design | GCO39027 | Outer Joint | | 28 | 25 | 56 | 154.1 | 62 | M |
| | 2001.08-2005.09 | MT | F | L | Pickup 4WD 4D56 | | GCI39049 | Inner Joint | | 25 | 25 | 32 | 89 | 81.5 | |
| | 2001.08-2005.09 | MT | F | R | Pickup 4WD 4D56 | | GCI75004 | Inner Joint | | | 26 | | | 62.5 | |
| | 2001.08-2005.09 | MT | F | R | Pickup 4WD 4D56 | Date To:2002.08 | GCI99092 | Inner Joint | | | 26 | | | 68.6 | |
| 2.5 (85 kw) | 2001.09-2007.12 | 5MT | F | L | Pickup 4WD 4D56-T | Date To:2002.08 | GDS39007 | Drive Shaft | | 28 | 25 | 56 | 154 | 616 | |
| | 2001.09-2007.12 | 5MT | F | R | Pickup 4WD 4D56-T | Date To:2002.08 | GDS39006 | Drive Shaft | | 28 | | 56 | 154 | 538 | |
| | 2001.09-2007.12 | 5MT | F | L/R | Pickup 4WD 4D56-T | Original design | GCO39018 | Outer Joint | | 28 | 25 | 56 | 154 | 62 | M |
| | 2001.09-2007.12 | 5MT | F | L/R | Pickup 4WD 4D56-T | Non-Original design | GCO39027 | Outer Joint | | 28 | 25 | 56 | 154.1 | 62 | M |
| | 2001.09-2007.12 | 5MT | F | L | Pickup 4WD 4D56-T | DOJ | GCI39049 | Inner Joint | | 25 | 25 | 32 | 89 | 81.5 | |
| | 2001.09-2007.12 | 5MT | F | R | Pickup 4WD 4D56-T | DOJ | GCI75004 | Inner Joint | | | 26 | | | 62.5 | |
| | 2001.09-2007.12 | 5MT | F | R | Pickup 4WD 4D56-T | Date To:2002.08;TJ | GCI99092 | Inner Joint | | | 26 | | | 68.6 | |
| 2.5 (98 kw) | 2001.08-2005.11 | MT | F | L | Pickup 4WD 4D56 | | GDS39007 | Drive Shaft | | 28 | 25 | 56 | 154 | 616 | |
| | 2001.08-2005.11 | MT | F | R | Pickup 4WD 4D56 | | GDS39006 | Drive Shaft | | 28 | | 56 | 154 | 538 | |
| | 2001.08-2005.11 | MT | F | L/R | Pickup 4WD 4D56 | | GCO39018 | Outer Joint | | 28 | 25 | 56 | 154 | 62 | M |
| | 2001.08-2005.11 | MT | F | R | Pickup 4WD 4D56 | | GCI99092 | Inner Joint | | | 26 | | | 68.6 | |
| | 2007.04-2015.12 | 5MT | F | L | Pickup 4WD 4D56-T/C (DOHC 16V) | | GDS39163 | Drive Shaft | 47T | 30 | 28 | 69 | 98 | 594 | |
| | 2007.04-2015.12 | 5MT | F | R | Pickup 4WD 4D56-T/C (DOHC 16V) | | GDS39148 | Drive Shaft | 47T | 30 | | 69 | 98 | 492 | |
| | 2007.04-2015.12 | 5MT | F | R | Pickup 4WD 4D56-T/C (DOHC 16V) | | GDS39164 | Drive Shaft | 47T | 30 | | 69 | 98 | 492 | |
| | 2007.04-2015.12 | 5MT | F | L/R | Pickup 4WD 4D56-T/C (DOHC 16V) | | GCO39159 | Outer Joint | 47T | 30 | 35 | 69 | 98 | 66.5 | I |
| | 2007.04-2015.12 | 5MT | F | L/R | Pickup 4WD 4D56-T/C (DOHC 16V) | | GCO39166 | Outer Joint | 47T | 30 | 33 | 69 | 98 | 66.5 | I |
| | 2007.04-2015.12 | 5MT | F | L | Pickup 4WD 4D56-T/C (DOHC 16V) | | GCI39037 | Inner Joint | | 28 | 33 | 34.7 | 90.5 | 81.5 | |
| | 2007.04-2015.12 | 5MT | F | R | Pickup 4WD 4D56-T/C (DOHC 16V) | | GCI39036 | Inner Joint | | | 33 | | | 62.5 | |
| | 2007.04-2015.12 | | F | R | Pickup 4WD 4D56-T/C (DOHC 16V) | | GDS39104 | Drive Shaft | | 30 | | 69 | 98 | 492 | |
| 2.5 (100 kw) | 2005.11-2015.12 | 4AT/5MT | F | L | Pickup 4WD 4D56-T/C (DOHC 16V) | | GDS39163 | Drive Shaft | 47T | 30 | 28 | 69 | 98 | 594 | |
| | 2005.11-2015.12 | 4AT/5MT | F | R | Pickup 4WD 4D56-T/C (DOHC 16V) | For vehicles without ABS | GDS39104 | Drive Shaft | | 30 | | 69 | 98 | 492 | |
| | 2005.11-2015.12 | 4AT/5MT | F | R | Pickup 4WD 4D56-T/C (DOHC 16V) | For vehicles with ABS | GDS39164 | Drive Shaft | 47T | 30 | | 69 | 98 | 492 | |
| | 2005.11-2015.12 | 4AT/5MT | F | L/R | Pickup 4WD 4D56-T/C (DOHC 16V) | | GCO39159 | Outer Joint | 47T | 30 | 35 | 69 | 98 | 66.5 | I |
| | 2005.11-2015.12 | 4AT/5MT | F | L/R | Pickup 4WD 4D56-T/C (DOHC 16V) | | GCO39294 | Outer Joint | | 30 | 33 | 69 | 98 | 66.5 | I |
| | 2005.11-2015.12 | 4AT/5MT | F | L | Pickup 4WD 4D56-T/C (DOHC 16V) | | GCI39037 | Inner Joint | | 28 | 33 | 34.7 | 90.5 | 81.5 | |
| | 2005.11-2015.12 | 4AT/5MT | F | R | Pickup 4WD 4D56-T/C (DOHC 16V) | | GCI39036 | Inner Joint | | | 33 | | | 62.5 | |
| 2.5 (103 kw) | 2010.04-2015.12 | 5MT | F | L | Pickup 4WD 4D56-HP | | GDS39163 | Drive Shaft | 47T | 30 | 28 | 69 | 98 | 594 | |
| | 2010.04-2015.12 | 5MT | F | R | Pickup 4WD 4D56-HP | | GDS39164 | Drive Shaft | 47T | 30 | | 69 | 98 | 492 | |
| | 2010.04-2015.12 | 5MT | F | R | Pickup 4WD 4D56-HP | | GDS39322 | Drive Shaft | 47T | 30 | | 69 | 98 | 491 | |
| | 2010.04-2015.12 | 5MT | F | R | Pickup 4WD 4D56-HP | | GCO39371 | Outer Joint | 47T | 30 | 35 | 69 | 98 | 66.5 | I |
| | 2010.04-2015.12 | 5MT | F | L/R | Pickup 4WD 4D56-HP | | GCO39159 | Outer Joint | 47T | 30 | 35 | 69 | 98 | 66.5 | I |

| | YEAR | TRANSM. | F/R | L/R | BODY STYLE & DRIVE TYPE & ENGINE | REMARKS | G-AP Ref. | PRODUCT | ABS | Technical Specifications A | B | C | H | L | P |
|---|---|---|---|---|---|---|---|---|---|---|---|---|---|---|---|
| **MITSUBISHI** | | | | | | | | | | | | | | | |
| **L200** | | | | | | | | | | | | | | | |
| 2.5 (103 kw) | 2010.04-2015.12 | 5MT | F | L | Pickup 4WD 4D56-HP | | GCI39037 | Inner Joint | | 28 | 33 | 34.7 | 90.5 | 81.5 | |
| | 2010.04-2015.12 | 5MT | F | R | Pickup 4WD 4D56-HP | | GCI39036 | Inner Joint | | | 33 | | | 62.5 | |
| 2.5 (123 kw) | 2007.10-2015.12 | 4AT/5MT | F | L | Pickup 4WD 4D56-T/C (DOHC 16V) | | GDS39163 | Drive Shaft | 47T | 30 | 28 | 69 | 98 | 594 | |
| | 2007.10-2015.12 | 4AT/5MT | F | R | Pickup 4WD 4D56-T/C (DOHC 16V) | | GDS39148 | Drive Shaft | 47T | 30 | | 69 | 98 | 492 | |
| | 2007.10-2015.12 | 4AT/5MT | F | R | Pickup 4WD 4D56-T/C (DOHC 16V) | | GDS39164 | Drive Shaft | 47T | 30 | | 69 | 98 | 492 | |
| | 2007.10-2015.12 | 4AT/5MT | F | L/R | Pickup 4WD 4D56-T/C (DOHC 16V) | | GCO39159 | Outer Joint | 47T | 30 | 35 | 69 | 98 | 66.5 | I |
| | 2007.10-2015.12 | 4AT/5MT | F | L/R | Pickup 4WD 4D56-T/C (DOHC 16V) | | GCO39166 | Outer Joint | 47T | 30 | 33 | 69 | 98 | 66.5 | I |
| | 2007.10-2015.12 | 4AT/5MT | F | L/R | Pickup 4WD 4D56-T/C (DOHC 16V) | | GCO39294 | Outer Joint | | 30 | 33 | 69 | 98 | 66.5 | I |
| | 2007.10-2015.12 | 4AT/5MT | F | L | Pickup 4WD 4D56-T/C (DOHC 16V) | | GCI39037 | Inner Joint | | 28 | 33 | 34.7 | 90.5 | 81.5 | |
| | 2007.10-2015.12 | 4AT/5MT | F | R | Pickup 4WD 4D56-T/C (DOHC 16V) | | GCI39036 | Inner Joint | | | 33 | | | 62.5 | |
| | 2007.10-2015.12 | | F | R | Pickup 4WD 4D56-T/C (DOHC 16V) | | GDS39104 | Drive Shaft | | 30 | | 69 | 98 | 492 | |
| 2.5 (131 kw) | 2009.09-2015.12 | 5MT | F | L | Platform/Chassis 4WD 4D56-T/C (DOHC 16V) | | GDS39163 | Drive Shaft | 47T | 30 | 28 | 69 | 98 | 594 | |
| | 2009.09-2015.12 | 5MT | F | R | Platform/Chassis 4WD 4D56-T/C (DOHC 16V) | | GDS39148 | Drive Shaft | 47T | 30 | | 69 | 98 | 492 | |
| | 2009.09-2015.12 | 5MT | F | R | Platform/Chassis 4WD 4D56-T/C (DOHC 16V) | | GDS39164 | Drive Shaft | 47T | 30 | | 69 | 98 | 492 | |
| | 2009.09-2015.12 | 5MT | F | L/R | Platform/Chassis 4WD 4D56-T/C (DOHC 16V) | | GCO39159 | Outer Joint | 47T | 30 | 35 | 69 | 98 | 66.5 | I |
| | 2009.09-2015.12 | 5MT | F | L/R | Platform/Chassis 4WD 4D56-T/C (DOHC 16V) | | GCO39166 | Outer Joint | 47T | 30 | 33 | 69 | 98 | 66.5 | I |
| | 2009.09-2015.12 | 5MT | F | L | Platform/Chassis 4WD 4D56-T/C (DOHC 16V) | | GCI39037 | Inner Joint | | 28 | 33 | 34.7 | 90.5 | 81.5 | |
| | 2009.09-2015.12 | 5MT | F | R | Platform/Chassis 4WD 4D56-T/C (DOHC 16V) | | GCI39036 | Inner Joint | | | 33 | | | 62.5 | |
| | 2009.09-2015.12 | | F | R | Platform/Chassis 4WD 4D56-T/C (DOHC 16V) | | GDS39104 | Drive Shaft | | 30 | | 69 | 98 | 492 | |
| | 2010.04-2015.12 | 4AT/5AT/5MT | F | L | Pickup 4WD 4D56-T/C (DOHC 16V) | Inner teeth:35,6 balls | GDS39163 | Drive Shaft | 47T | 30 | 28 | 69 | 98 | 594 | |
| | 2010.04-2015.12 | 4AT/5AT/5MT | F | R | Pickup 4WD 4D56-T/C (DOHC 16V) | Inner teeth:33,6 balls | GDS39148 | Drive Shaft | 47T | 30 | | 69 | 98 | 492 | |
| | 2010.04-2015.12 | 4AT/5AT/5MT | F | R | Pickup 4WD 4D56-T/C (DOHC 16V) | Inner teeth:35,6 balls | GDS39164 | Drive Shaft | 47T | 30 | | 69 | 98 | 492 | |
| | 2010.04-2015.12 | 4AT/5AT/5MT | F | L/R | Pickup 4WD 4D56-T/C (DOHC 16V) | | GCO39159 | Outer Joint | 47T | 30 | 35 | 69 | 98 | 66.5 | I |
| | 2010.04-2015.12 | 4AT/5AT/5MT | F | L/R | Pickup 4WD 4D56-T/C (DOHC 16V) | | GCO39166 | Outer Joint | 47T | 30 | 33 | 69 | 98 | 66.5 | I |
| | 2010.04-2015.12 | 4AT/5AT/5MT | F | L | Pickup 4WD 4D56-T/C (DOHC 16V) | | GCI39037 | Inner Joint | | 28 | 33 | 34.7 | 90.5 | 81.5 | |
| | 2010.04-2015.12 | 4AT/5AT/5MT | F | R | Pickup 4WD 4D56-T/C (DOHC 16V) | | GCI39036 | Inner Joint | | | 33 | | | 62.5 | |
| | 2010.04-2015.12 | 5AT | F | R | Pickup 4WD 4D56-T/C (DOHC 16V) | 8 balls | GDS39322 | Drive Shaft | 47T | 30 | | 69 | 98 | 491 | |
| | 2010.04-2015.12 | | F | R | Pickup 4WD 4D56-T/C (DOHC 16V) | | GDS39104 | Drive Shaft | | 30 | | 69 | 98 | 492 | |
| **L200 Triton** | | | | | | | | | | | | | | | |
| 2.5 (94 kw) | 2010.04-2015.12 | 5MT | F | L | Pickup 4WD 4D56 (16V) | | GDS39163 | Drive Shaft | 47T | 30 | 28 | 69 | 98 | 594 | |
| | 2010.04-2015.12 | 5MT | F | R | Pickup 4WD 4D56 (16V) | | GDS39164 | Drive Shaft | 47T | 30 | | 69 | 98 | 492 | |
| | 2010.04-2015.12 | 5MT | F | R | Pickup 4WD 4D56 (16V) | | GDS39322 | Drive Shaft | 47T | 30 | | 69 | 98 | 491 | |
| | 2010.04-2015.12 | 5MT | F | R | Pickup 4WD 4D56 (16V) | | GCO39371 | Outer Joint | 47T | 30 | 35 | 69 | 98 | 66.5 | I |
| | 2010.04-2015.12 | 5MT | F | L/R | Pickup 4WD 4D56 (16V) | | GCO39159 | Outer Joint | 47T | 30 | 35 | 69 | 98 | 66.5 | I |
| | 2010.04-2015.12 | 5MT | F | L | Pickup 4WD 4D56 (16V) | | GCI39037 | Inner Joint | | 28 | 33 | 34.7 | 90.5 | 81.5 | |
| | 2010.04-2015.12 | 5MT | F | R | Pickup 4WD 4D56 (16V) | | GCI39036 | Inner Joint | | | 33 | | | 62.5 | |
| **L200/Triton** | | | | | | | | | | | | | | | |
| 2.4 (94 kw) | 2009.09-2012.12 | 5MT | F | L | Pickup 4WD 4G64 | | GDS84632 | Drive Shaft | | 30 | 28 | 69 | 98 | 593 | |
| | 2009.09-2012.12 | 5MT | F | R | Pickup 4WD 4G64 | | GDS84631 | Drive Shaft | | 30 | | 69 | 98 | 491 | |
| | 2009.09-2012.12 | 5MT | F | L/R | Pickup 4WD 4G64 | | GCO39372 | Outer Joint | | 30 | 35 | 69 | 98 | 66.5 | I |
| | 2009.09-2012.12 | 5MT | F | L | Pickup 4WD 4G64 | | GCI39037 | Inner Joint | | 28 | 33 | 34.7 | 90.5 | 81.5 | |
| | 2009.09-2012.12 | 5MT | F | R | Pickup 4WD 4G64 | | GCI39036 | Inner Joint | | | 33 | | | 62.5 | |
| **L200/Triton/Hunter** | | | | | | | | | | | | | | | |
| 2.8 (71 kw) | 2005.05-2015.12 | 5MT | F | L | Pickup 4WD 4M40-A | | GDS84632 | Drive Shaft | | 30 | 28 | 69 | 98 | 593 | |
| | 2005.05-2015.12 | 5MT | F | R | Pickup 4WD 4M40-A | | GDS84631 | Drive Shaft | | 30 | | 69 | 98 | 491 | |
| | 2005.05-2015.12 | 5MT | F | L/R | Pickup 4WD 4M40-A | | GCO39372 | Outer Joint | | 30 | 35 | 69 | 98 | 66.5 | I |
| | 2005.05-2015.12 | 5MT | F | L | Pickup 4WD 4M40-A | | GCI39037 | Inner Joint | | 28 | 33 | 34.7 | 90.5 | 81.5 | |
| | 2005.05-2015.12 | 5MT | F | R | Pickup 4WD 4M40-A | | GCI39036 | Inner Joint | | | 33 | | | 62.5 | |
| **L200/Triton/L200 Sportero** | | | | | | | | | | | | | | | |
| 2.4 (97 kw) | 2014.11- | 5MT | F | L | Pickup 4WD 4G64 (16V) | | GDS84632 | Drive Shaft | | 30 | 28 | 69 | 98 | 593 | |
| | 2014.11- | 5MT | F | R | Pickup 4WD 4G64 (16V) | | GDS84631 | Drive Shaft | | 30 | | 69 | 98 | 491 | |
| | 2014.11- | 5MT | F | L/R | Pickup 4WD 4G64 (16V) | | GCO39372 | Outer Joint | | 30 | 35 | 69 | 98 | 66.5 | I |
| | 2014.11- | 5MT | F | L | Pickup 4WD 4G64 (16V) | | GCI39037 | Inner Joint | | 28 | 33 | 34.7 | 90.5 | 81.5 | |
| | 2014.11- | 5MT | F | R | Pickup 4WD 4G64 (16V) | | GCI39036 | Inner Joint | | | 33 | | | 62.5 | |
| **L300** | | | | | | | | | | | | | | | |
| 2.0 (65 kw) | 1986.12-2004.05 | MT | F | L | Bus 4WD 4G63 (SOHC 8V) | Date to:2003.05 | GCI39049 | Inner Joint | | 25 | 25 | 32 | 89 | 81.5 | |
| | 1986.12-2004.05 | MT | F | R | Bus 4WD 4G63 (SOHC 8V) | Date to:2003.05 | GCI39061 | Inner Joint | | | 25 | | | 68.6 | |
| 2.0 (66 kw) | 1986.11-2004.05 | MT | F | L | Bus 4WD 4G63 (SOHC 8V) | Date to:2003.05 | GCI39049 | Inner Joint | | 25 | 25 | 32 | 89 | 81.5 | |
| | 1986.11-2004.05 | MT | F | R | Bus 4WD 4G63 (SOHC 8V) | Date to:2003.05 | GCI39061 | Inner Joint | | | 25 | | | 68.6 | |
| 2.4 (82 kw) | 1986.08-2004.05 | AT | F | L | Bus 4WD 4G64 (8V) | Date from:1991.08,Date to:1994.03 | GCI39049 | Inner Joint | | 25 | 25 | 32 | 89 | 81.5 | |
| | 1986.08-2004.05 | MT | F | R | Bus 4WD 4G64 (8V) | for left-hand drive vehicles,Date from:1991.07,Date to:1994.05 | GCI39061 | Inner Joint | | | 25 | | | 68.6 | |
| 2.5 (64 kw) | 1987.12-2004.05 | AT | F | L | Bus 4WD 4D56-T (11.88-.) | Date to:1999.06 | GCI39049 | Inner Joint | | 25 | 25 | 32 | 89 | 81.5 | |
| | 1987.12-2004.05 | MT | F | R | Bus 4WD 4D56-T (11.88-.) | for left-hand drive vehicles,Date from:1993.06,Date to:1997.08 | GCI39061 | Inner Joint | | | 25 | | | 68.6 | |

| | YEAR | TRANSM. | F/R | L/R | BODY STYLE & DRIVE TYPE & ENGINE | REMARKS | G-AP Ref. | PRODUCT | ABS | Technical Specifications A | B | C | H | L | P |
|---|---|---|---|---|---|---|---|---|---|---|---|---|---|---|---|
| **MITSUBISHI** | | | | | | | | | | | | | | | |
| **L400** | | | | | | | | | | | | | | | |
| 2.4 (94 kw) | 1996.09-2005.06 | 5MT | F | L | Bus 4WD 4G64 (16V) | | GCI99083 | Inner Joint | | 28 | 26 | 34.7 | 90.5 | 90.5 | |
| | 1996.09-2005.06 | 5MT | F | R | Bus 4WD 4G64 (16V) | | GCI39061 | Inner Joint | | | 25 | | | 68.6 | |
| | 1996.09-2005.06 | 5MT | F | R | Bus 4WD 4G64 (16V) | | GCI75004 | Inner Joint | | | 26 | | | 62.5 | |
| | 1996.09-2005.06 | AT | F | L | Bus 4WD 4G64 (16V) | Date to:1997.05 | GCI39049 | Inner Joint | | 25 | 25 | 32 | 89 | 81.5 | |
| | 1996.09-2005.06 | | F | L | Bus 4WD 4G64 (16V) | Date To:1997.07 | GCI39006 | Inner Joint | | 28 | 25 | 34.7 | 90.5 | 90.5 | |
| 2.5 (64 kw) | 1996.09-2005.06 | MT | F | L | Van 4WD 4D56-T | for left-hand drive vehicles,Date to:2003.05 | GCI39049 | Inner Joint | | 25 | 25 | 32 | 89 | 81.5 | |
| | 1996.09-2005.06 | MT | F | L | Van 4WD 4D56-T | for left-hand drive vehicles,Date to:2002.05 | GCI99083 | Inner Joint | | 28 | 26 | 34.7 | 90.5 | 90.5 | |
| | 1996.09-2005.06 | MT | F | R | Van 4WD 4D56-T | for left-hand drive vehicles,Date to:2003.05 | GCI39061 | Inner Joint | | | 25 | | | 68.6 | |
| | 1996.09-2005.06 | MT | F | R | Van 4WD 4D56-T | for left-hand drive vehicles,Date to:2002.05 | GCI75004 | Inner Joint | | | 26 | | | 62.5 | |
| 2.5 (73 kw) | 1995.05-2000.05 | 5MT | F | L | Bus 4WD 4D56-TD (05.95-.) | | GCI99083 | Inner Joint | | 28 | 26 | 34.7 | 90.5 | 90.5 | |
| | 1995.05-2000.05 | | F | R | Bus 4WD 4D56-TD (05.95-.) | | GCI75004 | Inner Joint | | | 26 | | | 62.5 | |
| **Lancer** | | | | | | | | | | | | | | | |
| 1.3 (55 kw) | 1995.06-2003.08 | | F | L/R | Saloon FWD 4G13M | | GCO39008 | Outer Joint | 43T | 25 | 29 | 54 | 95 | 58 | I |
| | 1995.06-2003.08 | | F | L/R | Saloon FWD 4G13M | | GCO39119 | Outer Joint | 43T | 25 | 21 | 54 | 95 | 51 | I |
| | 1995.06-2003.08 | | F | L/R | Saloon FWD 4G13M | | GCO39121 | Outer Joint | | 25 | 21 | 54 | 95 | 51 | I |
| | 1995.06-2003.08 | | F | L/R | Saloon FWD 4G13M | Driver Pos:For right-hand drive vehicles | GCO39149 | Outer Joint | | 25 | 22 | 54 | 96 | 59 | M |
| | 1995.06-2003.08 | | F | | Saloon FWD 4G13M | | GCO39120 | Outer Joint | 43T | 25 | 22 | 54 | 94 | 61 | I |
| | 1995.06-2003.08 | | F | R | Saloon FWD 4G13M | Driver Pos:For right-hand drive vehicles | GCI39029 | Inner Joint | | 25 | 22 | 41 | 62.5 | 90.5 | |
| 1.3 (60 kw) | 2003.09-2013.12 | 5MT | F | L | Saloon FWD 4G13 (SOHC 16V) | | GDS39228 | Drive Shaft | 43T | 25 | 25 | 57 | 94.5 | 616 | |
| | 2003.09-2013.12 | 5MT | F | R | Saloon FWD 4G13 (SOHC 16V) | | GDS39173 | Drive Shaft | 43T | 25 | 25 | 57 | 94.5 | 941 | |
| | 2003.09-2013.12 | 5MT | F | L | Saloon FWD 4G13 (SOHC 16V) | | GCO39200 | Outer Joint | 43T | 25 | 30 | 57 | 94.5 | 60 | I |
| | 2003.09-2013.12 | 5MT | F | R | Saloon FWD 4G13 (SOHC 16V) | | GCO39182 | Outer Joint | 43T | 25 | 29 | 57 | 94.5 | 58 | I |
| | 2003.09-2013.12 | 5MT | F | L | Saloon FWD 4G13 (SOHC 16V) | | GCI39074 | Inner Joint | | 25 | 30 | 41 | 63 | 97 | |
| | 2003.09-2013.12 | 5MT | F | R | Saloon FWD 4G13 (SOHC 16V) | | GCI99089 | Inner Joint | | 25 | 29 | 41 | 62.5 | 87 | |
| | 2003.09-2013.12 | MT | F | L/R | Saloon FWD 4G13 (SOHC 16V) | Date to:2011.03,For Modelcode:CS1A | GCI39057 | Inner Joint | | 25 | 30 | 41 | 61.5 | 95 | |
| 1.5 (69 kw) | 1996.07-2003.08 | | F | R | Saloon FWD 4G15M | | GCO39149 | Outer Joint | | 25 | 22 | 54 | 96 | 59 | M |
| | 1996.07-2003.08 | | F | R | Saloon FWD 4G15M | | GCI39029 | Inner Joint | | 25 | 22 | 41 | 62.5 | 90.5 | |
| 1.5 (80 kw) | 2008.06- | 5MT | F | R | Saloon FWD 4A91 | Date from:2011.09 | GCO81409 | Outer Joint | | 28 | 30 | 59.5 | 94.5 | 57.5 | I |
| | 2008.06- | AT | F | L | Saloon FWD 4A91 | | GDS81574 | Drive Shaft | | 28 | 25 | 59.5 | 94.5 | 666 | |
| | 2008.06- | AT | F | R | Saloon FWD 4A91 | | GDS81575 | Drive Shaft | | 28 | 25 | 59.5 | 94.5 | 946 | |
| | 2008.06- | AT | F | R | Saloon FWD 4A91 | Date from:2010.09,Date to:2011.08 | GCO81409 | Outer Joint | | 28 | 30 | 59.5 | 94.5 | 57.5 | I |
| | 2008.06- | AT | F | L/R | Saloon FWD 4A91 | | GCI81416 | Inner Joint | | 25 | 29 | 41 | 63 | 86.5 | |
| | 2008.06- | MT | F | L/R | Saloon FWD 4A91 | Date to:2010.12 | GCO15011 | Outer Joint | | 28 | 30 | 59.5 | 95 | 57.5 | I |
| | 2010.02- | 5MT | F | L | Saloon FWD 4A91 | | GDS81574 | Drive Shaft | | 28 | 25 | 59.5 | 94.5 | 666 | |
| | 2010.02- | 5MT | F | R | Saloon FWD 4A91 | | GDS81575 | Drive Shaft | | 28 | 25 | 59.5 | 94.5 | 946 | |
| | 2010.02- | 5MT | F | R | Saloon FWD 4A91 | Date from:2011.09 | GCO81409 | Outer Joint | | 28 | 30 | 59.5 | 94.5 | 57.5 | I |
| | 2010.02- | 5MT | F | L/R | Saloon FWD 4A91 | Date to:2010.12 | GCO15011 | Outer Joint | | 28 | 30 | 59.5 | 95 | 57.5 | I |
| | 2010.02- | 5MT | F | L/R | Saloon FWD 4A91 | Date from:2011.08 | GCI81416 | Inner Joint | | 25 | 29 | 41 | 63 | 86.5 | |
| 1.6 (66 kw) | 1995.09-2003.08 | AT/MT | F | L/R | Saloon FWD 4G92 | | GCO39064 | Outer Joint | 43T | 25 | 30 | 54 | 95 | 60.5 | M |
| | 1995.09-2003.08 | MT/AT | F | L/R | Saloon FWD 4G92 | Date to:2000.09 | GCI39057 | Inner Joint | | 25 | 30 | 41 | 61.5 | 95 | |
| 1.6 (72 kw) | 2003.09-2013.12 | AT | F | R | Saloon FWD 4G18 (SOHC 16V) | | GDS39173 | Drive Shaft | 43T | 25 | 25 | 57 | 94.5 | 941 | |
| | 2003.09-2013.12 | AT | F | R | Saloon FWD 4G18 (SOHC 16V) | | GCI99089 | Inner Joint | | 25 | 29 | 41 | 62.5 | 87 | |
| | 2003.09-2013.12 | AT/CVT | F | L/R | Saloon FWD 4G18 (SOHC 16V) | Transmission:ATDate from:2008.08,Date to:2013.06;Transmission:CVTDate from:2005.07,Date to:2008.08 | GCO39141 | Outer Joint | 43T | 25 | 22 | 57 | 95 | 60.5 | M |
| | 2003.09-2013.12 | AT/MT | F | L | Saloon FWD 4G18 (SOHC 16V) | | GDS39228 | Drive Shaft | 43T | 25 | 25 | 57 | 94.5 | 616 | |
| | 2003.09-2013.12 | CVT | F | L/R | Saloon FWD 4G18 (SOHC 16V) | Date to:2009.08 | GCO39114 | Outer Joint | 43T | 25 | 23 | 57 | 95 | 60.5 | M |
| | 2003.09-2013.12 | MT | F | R | Saloon FWD 4G18 (SOHC 16V) | | GDS39174 | Drive Shaft | 43T | 25 | 25 | 57 | 94.5 | 940 | |
| 1.6 (86 kw) | 2010.05- | 4AT | F | L | Saloon FWD 4A92 | Date to:2011.04 | GDS81934 | Drive Shaft | | 28 | 27 | 59.5 | 94.5 | 669 | |
| | 2010.05- | 5MT | F | L | Saloon FWD 4A92 | | GDS81934 | Drive Shaft | | 28 | 27 | 59.5 | 94.5 | 669 | |
| | 2010.05- | AT | F | L | Saloon FWD 4A92 | Date from:2011.05 | GDS84619 | Drive Shaft | | 28 | 25 | 59.5 | 94.5 | 663 | |
| | 2010.05- | AT | F | R | Saloon FWD 4A92 | Date from:2011.05 | GDS81575 | Drive Shaft | | 28 | 25 | 59.5 | 94.5 | 946 | |
| | 2010.05- | AT | F | R | Saloon FWD 4A92 | Date from:2011.05 | GCO81409 | Outer Joint | | 28 | 30 | 59.5 | 94.5 | 57.5 | I |
| | 2010.05- | AT | F | L | Saloon FWD 4A92 | Date from:2011.05 | GCI39074 | Inner Joint | | 25 | 30 | 41 | 63 | 97 | |
| | 2010.05- | AT | F | R | Saloon FWD 4A92 | | GCI81416 | Inner Joint | | 25 | 29 | 41 | 63 | 86.5 | |
| | 2010.05- | MT | F | L/R | Saloon FWD 4A92 | Date From:2010.07,Date To:2011.09 | GCO39113 | Outer Joint | | 28 | 33 | 59.5 | 95 | 61.5 | I |
| | 2010.05- | MT | F | L/R | Saloon FWD 4A92 | | GCI39038 | Inner Joint | | 27 | 32 | 41 | 62.5 | 88 | |
| 1.8 (85 kw) | 2010.05- | 6MT | F | L | Saloon FWD 4N13 | | GCI81207 | Inner Joint | | 24 | 35 | 50 | 67.5 | 111 | |
| | 2010.05- | AT | F | L/R | Saloon FWD 4N13 | For Model code:CY3A | GCI39040 | Inner Joint | | 27 | 33 | 40 | 62 | 99 | |
| | 2010.05- | AT/MT | F | L/R | Saloon FWD 4N13 | For Model code:CY3A | GCO39113 | Outer Joint | | 28 | 33 | 59.5 | 95 | 61.5 | I |
| | 2010.05- | MT | F | R | Saloon FWD 4N13 | | GCI59205 | Inner Joint | | 24 | 33 | 40 | 95.5 | 84 | |
| 1.8 (91 kw) | 2003.09-2007.03 | 4AT | F | L | Saloon FWD 4G93 (GDI) | | GCO39200 | Outer Joint | 43T | 25 | 30 | 57 | 94.5 | 60 | I |
| | 2003.09-2007.03 | 4AT | F | L | Saloon FWD 4G93 (GDI) | | GCI39074 | Inner Joint | | 25 | 30 | 41 | 63 | 97 | |
| | 2003.09-2007.03 | 4AT | F | R | Saloon FWD 4G93 (GDI) | | GCI39057 | Inner Joint | | 25 | 30 | 41 | 61.5 | 95 | |
| 1.8 (103 kw) | 2009.03- | 5MT | F | L | Saloon FWD 4B10 | Date to:2010.08 | GDS39229 | Drive Shaft | | 28 | 24 | 59.5 | 95 | 633 | |
| | 2009.03- | AT | F | L | Saloon FWD 4B10 | | GDS39121 | Drive Shaft | | 28 | 27 | 59.5 | 95 | 649.5 | |
| | 2009.03- | AT | F | R | Saloon FWD 4B10 | | GDS39120 | Drive Shaft | | 28 | 27 | 59.5 | 95 | 965 | |

| | YEAR | TRANSM. | F/R | L/R | BODY STYLE & DRIVE TYPE & ENGINE | REMARKS | G-AP Ref. | PRODUCT | ABS | Technical Specifications A | B | C | H | L | P |
|---|---|---|---|---|---|---|---|---|---|---|---|---|---|---|---|
| **MITSUBISHI** | | | | | | | | | | | | | | | |
| **Lancer** | | | | | | | | | | | | | | | |
| 1.8 (103 kw) | 2009.03- | AT | F | | Saloon FWD 4B10 | | GCI39040 | Inner Joint | | 27 | 33 | 40 | 62 | 99 | |
| | 2009.03- | AT/MT | F | | Saloon FWD 4B10 | | GCO39113 | Outer Joint | | 28 | 33 | 59.5 | 95 | 61.5 | I |
| | 2009.03- | MT | F | L | Saloon FWD 4B10 | | GCI82095 | Inner Joint | | 24 | 33 | 50 | 67 | 98 | |
| | 2009.03- | MT | F | R | Saloon FWD 4B10 | | GCI59205 | Inner Joint | | 24 | 33 | 40 | 95.5 | 84 | |
| | 2010.05- | AT | F | R | Saloon FWD 4B10 | | GDS39120 | Drive Shaft | | 28 | 27 | 59.5 | 95 | 965 | |
| | 2010.05- | CVT | F | L | Saloon FWD 4B10 | | GDS39121 | Drive Shaft | | 28 | 27 | 59.5 | 95 | 649.5 | |
| | 2010.05- | CVT | F | L/R | Saloon FWD 4B10 | | GCO39113 | Outer Joint | | 28 | 33 | 59.5 | 95 | 61.5 | I |
| | 2010.05- | CVT | F | L/R | Saloon FWD 4B10 | | GCI39040 | Inner Joint | | 27 | 33 | 40 | 62 | 99 | |
| | 2010.05- | CVT/MT | F | R | Saloon FWD 4B10 | | GDS39230 | Drive Shaft | | 28 | 24 | 59.5 | 95 | 980 | |
| | 2010.05- | MT | F | L | Saloon FWD 4B10 | | GCI82095 | Inner Joint | | 24 | 33 | 50 | 67 | 98 | |
| | 2010.05- | MT | F | R | Saloon FWD 4B10 | | GCI59205 | Inner Joint | | 24 | 33 | 40 | 95.5 | 84 | |
| 1.8 (105 kw) | 2008.02- | AT | F | R | Saloon FWD 4B10 | | GDS39120 | Drive Shaft | | 28 | 27 | 59.5 | 95 | 965 | |
| | 2008.02- | CVT | F | L | Saloon FWD 4B10 | | GDS39121 | Drive Shaft | | 28 | 27 | 59.5 | 95 | 649.5 | |
| | 2008.02- | CVT | F | L/R | Saloon FWD 4B10 | | GCO39113 | Outer Joint | | 28 | 33 | 59.5 | 95 | 61.5 | I |
| | 2008.02- | CVT | F | L/R | Saloon FWD 4B10 | | GCI39040 | Inner Joint | | 27 | 33 | 40 | 62 | 99 | |
| | 2008.02- | CVT/5MT | F | R | Saloon FWD 4B10 | | GDS39230 | Drive Shaft | | 28 | 24 | 59.5 | 95 | 980 | |
| | 2008.02- | MT | F | L | Saloon FWD 4B10 | Date to:2010.08 | GDS39229 | Drive Shaft | | 28 | 24 | 59.5 | 95 | 633 | |
| | 2008.02- | MT | F | L | Saloon FWD 4B10 | | GCI82095 | Inner Joint | | 24 | 33 | 50 | 67 | 98 | |
| | 2008.02- | MT | F | R | Saloon FWD 4B10 | | GCI59205 | Inner Joint | | 24 | 33 | 40 | 95.5 | 84 | |
| | 2010.01- | 5MT | F | L | Saloon FWD 4B10 | Date to:2010.08 | GDS39229 | Drive Shaft | | 28 | 24 | 59.5 | 95 | 633 | |
| | 2010.01- | AT | F | L | Saloon FWD 4B10 | | GDS39121 | Drive Shaft | | 28 | 27 | 59.5 | 95 | 649.5 | |
| | 2010.01- | AT | F | R | Saloon FWD 4B10 | | GDS39120 | Drive Shaft | | 28 | 27 | 59.5 | 95 | 965 | |
| | 2010.01- | CVT | F | L | Saloon FWD 4B10 | | GDS39121 | Drive Shaft | | 28 | 27 | 59.5 | 95 | 649.5 | |
| | 2010.01- | CVT | F | R | Saloon FWD 4B10 | | GDS39120 | Drive Shaft | | 28 | 27 | 59.5 | 95 | 965 | |
| | 2010.01- | CVT | F | L/R | Saloon FWD 4B10 | | GCO39113 | Outer Joint | | 28 | 33 | 59.5 | 95 | 61.5 | I |
| | 2010.01- | CVT | F | L/R | Saloon FWD 4B10 | | GCI39040 | Inner Joint | | 27 | 33 | 40 | 62 | 99 | |
| | 2010.01- | MT | F | L/R | Saloon FWD 4B10 | Date to:2010.08 | GCO39113 | Outer Joint | | 28 | 33 | 59.5 | 95 | 61.5 | I |
| | 2010.01- | MT | F | L | Saloon FWD 4B10 | | GCI82095 | Inner Joint | | 24 | 33 | 50 | 67 | 98 | |
| | 2010.01- | | F | R | Saloon FWD 4B10 | | GCI59205 | Inner Joint | | 24 | 33 | 40 | 95.5 | 84 | |
| | 2010.01- | | F | L/R | Saloon FWD 4B10 | | GCI39040 | Inner Joint | | 27 | 33 | 40 | 62 | 99 | |
| 1.8 (110 kw) | 2009.11- | 5MT | F | L | Saloon FWD 4B10 | Date From:2010.09 | GDS83099 | Drive Shaft | | 28 | 24 | 59.5 | 94.5 | 633 | |
| | 2009.11- | 5MT | F | L | Saloon FWD 4B10 | Date From:2010.09 | GCI82095 | Inner Joint | | 24 | 33 | 50 | 67 | 98 | |
| | 2009.11- | MT | F | L/R | Saloon FWD 4B10 | Date from:2010.09 | GCO81634 | Outer Joint | | 28 | 33 | 59.5 | 94.5 | 61.5 | I |
| | 2009.11- | MT | F | R | Saloon FWD 4B10 | | GCI59205 | Inner Joint | | 24 | 33 | 40 | 95.5 | 84 | |
| | 2009.11- | | F | L | Saloon FWD 4B10 | Date From:2010.09 | GDS39229 | Drive Shaft | | 28 | 24 | 59.5 | 95 | 633 | |
| | 2009.11- | | F | R | Saloon FWD 4B10 | Date From:2010.09 | GDS39230 | Drive Shaft | | 28 | 24 | 59.5 | 95 | 980 | |
| | 2009.11- | | F | L | Saloon FWD 4B10 | Date to:2010.08 | GCO39113 | Outer Joint | | 28 | 33 | 59.5 | 95 | 61.5 | I |
| | 2009.11- | | F | R | Saloon FWD 4B10 | | GCO39113 | Outer Joint | | 28 | 33 | 59.5 | 95 | 61.5 | I |
| | 2010.06- | 6MT | F | L | Saloon FWD 4N13 | | GCI81207 | Inner Joint | | 24 | 35 | 50 | 67.5 | 111 | |
| 1.8 (141 kw) | 1992.11-1996.07 | MT | F | L/R | Saloon 4WD 4G93T | Vehicle Production Country:Japan | GCO39036 | Outer Joint | | 25 | 23 | 54 | 96 | 64.5 | M |
| | 1992.11-1996.07 | | F | | Saloon 4WD 4G93T | Date From:1993.12,Date To:1995.08 | GCO39009 | Outer Joint | | 25 | 30 | 54 | 95 | 60.5 | M |
| | 1992.11-1996.07 | | F | | Saloon 4WD 4G93T | | GCO39064 | Outer Joint | 43T | 25 | 30 | 54 | 95 | 60.5 | M |
| | 1992.11-1996.07 | | F | | Saloon 4WD 4G93T | Date From:1993.12,Date To:1995.08 | GCI39005 | Inner Joint | | 25 | 30 | 35 | 62.8 | 92.5 | |
| 2.0 (99 kw) | 2003.01-2007.07 | 4AT | F | L | Saloon FWD 4G63DOHC | Date from:2005.09 | GDS39228 | Drive Shaft | 43T | 25 | 25 | 57 | 94.5 | 616 | |
| | 2003.01-2007.07 | 4AT | F | L/R | Saloon FWD 4G63DOHC | for left-hand drive vehicles,Date from:2005,09,Date to:2011.03 | GCI39057 | Inner Joint | | 25 | 30 | 41 | 61.5 | 95 | |
| | 2003.01-2007.07 | 4AT/5MT | F | L | Saloon FWD 4G63DOHC | Transmission:4AT,Date to:2005.08;Transmission:5MT | GDS39300 | Drive Shaft | 43T | 25 | 27 | 57 | 94.5 | 617 | |
| | 2003.01-2007.07 | 4AT/5MT | F | R | Saloon FWD 4G63DOHC | Transmission:4AT,Date to:2005.08;Transmission:5MT | GDS39282 | Drive Shaft | 43T | 25 | 27 | 57 | 94.5 | 940 | |
| | 2003.01-2007.07 | 4AT/5MT | F | R | Saloon FWD 4G63DOHC | Transmission:4AT,Date to:2005.08;Transmission:5MT | GCO39200 | Outer Joint | 43T | 25 | 30 | 57 | 94.5 | 60 | I |
| | 2003.01-2007.07 | 4AT/5MT | F | L/R | Saloon FWD 4G63DOHC | Transmission:4AT,Date from:2003.01,Date to:2005.08;Transmission:5MT,Date from:2003.01,Date to:2005.08 | GCO39176 | Outer Joint | 43T | 25 | 29 | 57 | 95 | 58 | M |
| | 2003.01-2007.07 | 4AT/5MT | F | R | Saloon FWD 4G63DOHC | Transmission:4AT,Date to:2005.08;Transmission:5MT | GCI39115 | Inner Joint | | 27 | 30 | 41 | 62.5 | 88 | |
| | 2003.01-2007.07 | AT | F | R | Saloon FWD 4G63DOHC | Date from:2005.08 | GDS39174 | Drive Shaft | 43T | 25 | 25 | 57 | 94.5 | 940 | |
| | 2003.01-2007.07 | AT | F | L/R | Saloon FWD 4G63DOHC | | GCO39148 | Outer Joint | | 25 | 30 | 57 | 95 | 60.5 | M |
| | 2003.01-2007.07 | AT | F | L | Saloon FWD 4G63DOHC | Date to:2005.08 | GCI24102 | Inner Joint | | 27 | 30 | 41 | 62.5 | 97 | |
| | 2003.01-2007.07 | MT | F | L | Saloon FWD 4G63DOHC | | GCI24102 | Inner Joint | | 27 | 30 | 41 | 62.5 | 97 | |
| 2.0 (103 kw) | 2008.01- | 6MT | F | L | Saloon FWD BKD;BWC | | GDS81941 | Drive Shaft | | 28 | 24 | 59.6 | 95 | 631 | |
| | 2008.01- | 6MT | F | L | Saloon FWD BKD;BWC | Date to:2009.04 | GCO39137 | Outer Joint | | 28 | 37 | 59.5 | 94.5 | 71.5 | I |
| | 2008.01- | 6MT | F | L | Saloon FWD BKD;BWC | Date from:2009.05 | GCI81207 | Inner Joint | | 24 | 35 | 50 | 67.5 | 111 | |
| | 2008.01- | 6MT | F | L | Saloon FWD BKD;BWC | Date to:2009.04 | GCI81553 | Inner Joint | | 24 | 36 | 50 | 67 | 116 | |
| 2.0 (108 kw) | 2009.01- | CVT | F | L | Saloon FWD 4B11 | | GDS39121 | Drive Shaft | | 28 | 27 | 59.5 | 95 | 649.5 | |
| | 2009.01- | CVT | F | R | Saloon FWD 4B11 | | GDS39120 | Drive Shaft | | 28 | 27 | 59.5 | 95 | 965 | |
| | 2009.01- | CVT | F | L | Saloon FWD 4B11 | Date from:2010.09 | GCO39178 | Outer Joint | | 28 | 33 | 59.6 | 94.5 | 61.5 | I |
| | 2009.01- | CVT | F | L/R | Saloon FWD 4B11 | | GCO39113 | Outer Joint | | 28 | 33 | 59.5 | 95 | 61.5 | I |
| | 2009.01- | CVT | F | L/R | Saloon FWD 4B11 | | GCI39040 | Inner Joint | | 27 | 33 | 40 | 62 | 99 | |
| 2.0 (113 kw) | 2007.03- | AT/CVT | F | L | Saloon 4WD 4B11 | | GCI51034 | Inner Joint | | 27 | 35 | 40 | 62 | 113 | |
| | 2007.03- | CVT | F | L | Saloon 4WD 4B11 | | GDS82991 | Drive Shaft | | 28 | 27 | 59.6 | 95 | 651 | |

| | YEAR | TRANSM. | F/R | L/R | BODY STYLE & DRIVE TYPE & ENGINE | REMARKS | G-AP Ref. | PRODUCT | ABS | Technical Specifications A | B | C | H | L | P |
|---|---|---|---|---|---|---|---|---|---|---|---|---|---|---|---|
| **MITSUBISHI** | | | | | | | | | | | | | | | |
| **Lancer** | | | | | | | | | | | | | | | |
| 2.0 (113 kw) | 2007.03- | CVT | F | R | Saloon 4WD 4B11 | Date from:2010.09 | GDS83134 | Drive Shaft | | 28 | 27 | 59.5 | 94.5 | 969 | |
| | 2007.03- | CVT | F | L | Saloon 4WD 4B11 | | GCO39117 | Outer Joint | | 28 | 35 | 59.5 | 95 | 65 | I |
| | 2007.03- | CVT | F | R | Saloon 4WD 4B11 | Date to:2010.08 | GCO39117 | Outer Joint | | 28 | 35 | 59.5 | 95 | 65 | I |
| | 2007.03- | CVT | F | R | Saloon 4WD 4B11 | Date from:2010.09;6 balls | GCO39178 | Outer Joint | | 28 | 33 | 59.6 | 94.5 | 61.5 | I |
| | 2007.03- | CVT | F | L/R | Saloon 4WD 4B11 | Date from:2010.09 | GCO81634 | Outer Joint | | 28 | 33 | 59.5 | 94.5 | 61.5 | I |
| | 2007.03- | CVT | F | R | Saloon 4WD 4B11 | | GCI81083 | Inner Joint | | 27 | 35 | 50 | 255.5 | 120 | |
| | 2007.03- | MT | F | L | Saloon 4WD 4B11 | | GDS82701 | Drive Shaft | | 28 | 24 | 59.6 | 95 | 635 | |
| | 2007.03- | MT | F | L | Saloon 4WD 4B11 | | GCI81207 | Inner Joint | | 24 | 35 | 50 | 67.5 | 111 | |
| | 2007.03- | CVT/5MT | R | L | Saloon 4WD 4B11 | | GDS81824 | Drive Shaft | | 25 | 23 | 48 | 106 | 753 | |
| | 2007.03- | CVT/5MT | R | R | Saloon 4WD 4B11 | | GDS81823 | Drive Shaft | | 25 | 23 | 48 | 106 | 835 | |
| | 2007.03- | CVT/5MT | R | L/R | Saloon 4WD 4B11 | | GCI39050 | Inner Joint | | 23 | 26 | 35 | 64 | 96 | |
| | 2007.04- | CVT | F | L | Saloon FWD 4B11 | | GDS39121 | Drive Shaft | | 28 | 27 | 59.5 | 95 | 649.5 | |
| | 2007.04- | CVT | F | R | Saloon FWD 4B11 | | GDS39120 | Drive Shaft | | 28 | 27 | 59.5 | 95 | 965 | |
| | 2007.04- | CVT | F | L | Saloon FWD 4B11 | Date from:2010.09 | GCO39178 | Outer Joint | | 28 | 33 | 59.6 | 94.5 | 61.5 | I |
| | 2007.04- | CVT | F | L/R | Saloon FWD 4B11 | | GCI39040 | Inner Joint | | 27 | 33 | 40 | 62 | 99 | |
| | 2007.04- | MT | F | L | Saloon FWD 4B11 | | GDS83099 | Drive Shaft | | 28 | 24 | 59.5 | 94.5 | 633 | |
| | 2007.04- | MT | F | R | Saloon FWD 4B11 | | GDS39230 | Drive Shaft | | 28 | 24 | 59.5 | 95 | 980 | |
| | 2007.04- | MT | F | L/R | Saloon FWD 4B11 | Date from:2010.09 | GCO81634 | Outer Joint | | 28 | 33 | 59.5 | 94.5 | 61.5 | I |
| | 2007.04- | MT | F | L | Saloon FWD 4B11 | | GCI82095 | Inner Joint | | 24 | 33 | 50 | 67 | 98 | |
| | 2007.04- | MT | F | R | Saloon FWD 4B11 | | GCI59205 | Inner Joint | | 24 | 33 | 40 | 95.5 | 84 | |
| | 2007.04- | MT/CVT | F | L/R | Saloon FWD 4B11 | 6 balls | GCO39113 | Outer Joint | | 28 | 33 | 59.5 | 95 | 61.5 | I |
| | 2007.10-2013.12 | CVT | F | L | Saloon FWD 4B11 | | GDS39121 | Drive Shaft | | 28 | 27 | 59.5 | 95 | 649.5 | |
| | 2007.10-2013.12 | CVT | F | R | Saloon FWD 4B11 | | GDS39120 | Drive Shaft | | 28 | 27 | 59.5 | 95 | 965 | |
| | 2007.10-2013.12 | CVT | F | R | Saloon FWD 4B11 | Date from:2010.09 | GCO39113 | Outer Joint | | 28 | 33 | 59.5 | 95 | 61.5 | I |
| | 2007.10-2013.12 | CVT | F | R | Saloon FWD 4B11 | Date from:2010.09 | GCI39040 | Inner Joint | | 27 | 33 | 40 | 62 | 99 | |
| | 2007.10-2013.12 | MT | F | L | Saloon FWD 4B11 | Date to:2010.08 | GDS39229 | Drive Shaft | | 28 | 24 | 59.5 | 95 | 633 | |
| | 2007.10-2013.12 | MT | F | L | Saloon FWD 4B11 | Date from:2010.09 | GDS83099 | Drive Shaft | | 28 | 24 | 59.5 | 94.5 | 633 | |
| 2.0 (177 kw) | 2008.10- | AT | F | | Saloon 4WD 4B11-T/C (DOHC 16V) | Date to:2011.08 | GCI39040 | Inner Joint | | 27 | 33 | 40 | 62 | 99 | |
| | 2008.10- | | F | L/R | Saloon 4WD 4B11-T/C (DOHC 16V) | | GCO39178 | Outer Joint | | 28 | 33 | 59.6 | 94.5 | 61.5 | I |
| | 2008.10- | | F | | Saloon 4WD 4B11-T/C (DOHC 16V) | Date To:2012.06 | GCO39113 | Outer Joint | | 28 | 33 | 59.5 | 95 | 61.5 | I |
| | 2008.10- | | F | | Saloon 4WD 4B11-T/C (DOHC 16V) | Date To:2011.08 | GCO39117 | Outer Joint | | 28 | 35 | 59.5 | 95 | 65 | I |
| | 2008.10- | | F | | Saloon 4WD 4B11-T/C (DOHC 16V) | Date To:2011.08 | GCO51033 | Outer Joint | | 25 | 26 | 48 | 106.5 | 49 | I |
| | 2008.10- | | F | | Saloon 4WD 4B11-T/C (DOHC 16V) | Date to:2011.08 | GCO81538 | Outer Joint | | 25 | 26 | 48 | 106 | 51 | I |
| | 2008.10- | | F | L | Saloon 4WD 4B11-T/C (DOHC 16V) | Date To:2010.06 | GCI51034 | Inner Joint | | 27 | 35 | 40 | 62 | 113 | |
| | 2008.10- | | F | R | Saloon 4WD 4B11-T/C (DOHC 16V) | | GCI59205 | Inner Joint | | 24 | 33 | 40 | 95.5 | 84 | |
| | 2008.10- | | R | | Saloon 4WD 4B11-T/C (DOHC 16V) | Date To:2011.08 | GCI39050 | Inner Joint | | 23 | 26 | 35 | 64 | 96 | |
| 2.4 (125 kw) | 2008.10- | | F | | Saloon FWD 4B12 | Date From:2011.10 | GCO81538 | Outer Joint | | 25 | 26 | 48 | 106 | 51 | I |
| **Lancer Station Wagon** | | | | | | | | | | | | | | | |
| 1.8 (88 kw) | 1995.03-2003.10 | MT | F | | Estate FWD 4G93 (SOHC 16V) | Date From:1998.06,Date To:2002.12 | GCO39009 | Outer Joint | | 25 | 30 | 54 | 95 | 60.5 | M |
| 2.0 (65 kw) | 1995.03-2003.10 | AT/MT | F | | Estate FWD 4D68 T | Date From:1995.09,Date To:2002.08 | GCI39005 | Inner Joint | | 25 | 30 | 35 | 62.8 | 92.5 | |
| **Lancer Cargo** | | | | | | | | | | | | | | | |
| 1.6 (72 kw) | 2003.09-2008.06 | AT | F | R | Estate Van FWD 4G18 (SOHC 16V) | | GDS39173 | Drive Shaft | 43T | 25 | 25 | 57 | 94.5 | 941 | |
| | 2003.09-2008.06 | AT | F | R | Estate Van FWD 4G18 (SOHC 16V) | | GCO39182 | Outer Joint | 43T | 25 | 29 | 57 | 94.5 | 58 | I |
| | 2003.09-2008.06 | AT | F | R | Estate Van FWD 4G18 (SOHC 16V) | | GCI99089 | Inner Joint | | 25 | 29 | 41 | 62.5 | 87 | |
| | 2003.09-2008.06 | AT/MT | F | L | Estate Van FWD 4G18 (SOHC 16V) | | GDS39228 | Drive Shaft | 43T | 25 | 25 | 57 | 94.5 | 616 | |
| | 2003.09-2008.06 | MT | F | R | Estate Van FWD 4G18 (SOHC 16V) | | GDS39174 | Drive Shaft | 43T | 25 | 25 | 57 | 94.5 | 940 | |
| | 2003.09-2008.06 | MT | F | L/R | Estate Van FWD 4G18 (SOHC 16V) | | GCO39200 | Outer Joint | 43T | 25 | 30 | 57 | 94.5 | 60 | I |
| | 2003.09-2008.06 | MT | F | L/R | Estate Van FWD 4G18 (SOHC 16V) | | GCI39074 | Inner Joint | | 25 | 30 | 41 | 63 | 97 | |
| 2.0 (99 kw) | 2003.09-2008.06 | MT | F | L | Estate Van FWD 4G63 (DOHC 16V) | | GDS39300 | Drive Shaft | 43T | 25 | 27 | 57 | 94.5 | 617 | |
| | 2003.09-2008.06 | MT | F | R | Estate Van FWD 4G63 (DOHC 16V) | | GDS39282 | Drive Shaft | 43T | 25 | 27 | 57 | 94.5 | 940 | |
| | 2003.09-2008.06 | MT | F | R | Estate Van FWD 4G63 (DOHC 16V) | | GCO39200 | Outer Joint | 43T | 25 | 30 | 57 | 94.5 | 60 | I |
| | 2003.09-2008.06 | MT | F | L | Estate Van FWD 4G63 (DOHC 16V) | | GCI24102 | Inner Joint | | 27 | 30 | 41 | 62.5 | 97 | |
| **Lancer Cedia** | | | | | | | | | | | | | | | |
| 1.6 (77 kw) | 2000.06-2003.08 | 5MT | F | L | Saloon FWD 4G18 | | GDS39228 | Drive Shaft | 43T | 25 | 25 | 57 | 94.5 | 616 | |
| | 2000.06-2003.08 | 5MT | F | R | Saloon FWD 4G18 | | GDS39174 | Drive Shaft | 43T | 25 | 25 | 57 | 94.5 | 940 | |
| **Lancer Estate/Wagon** | | | | | | | | | | | | | | | |
| 1.6 (72 kw) | 2003.09-2008.10 | AT | F | R | Estate FWD 4G18 (SOHC 16V) | | GDS39173 | Drive Shaft | 43T | 25 | 25 | 57 | 94.5 | 941 | |
| | 2003.09-2008.10 | AT | F | L | Estate FWD 4G18 (SOHC 16V) | | GCO39200 | Outer Joint | 43T | 25 | 30 | 57 | 94.5 | 60 | I |
| | 2003.09-2008.10 | AT | F | R | Estate FWD 4G18 (SOHC 16V) | | GCO39182 | Outer Joint | 43T | 25 | 29 | 57 | 94.5 | 58 | I |
| | 2003.09-2008.10 | AT | F | R | Estate FWD 4G18 (SOHC 16V) | | GCI99089 | Inner Joint | | 25 | 29 | 41 | 62.5 | 87 | |
| | 2003.09-2008.10 | AT/MT | F | L | Estate FWD 4G18 (SOHC 16V) | | GDS39228 | Drive Shaft | 43T | 25 | 25 | 57 | 94.5 | 616 | |
| | 2003.09-2008.10 | AT/MT | F | L | Estate FWD 4G18 (SOHC 16V) | | GCI39074 | Inner Joint | | 25 | 30 | 41 | 63 | 97 | |
| | 2003.09-2008.10 | AT/MT | F | L/R | Estate FWD 4G18 (SOHC 16V) | Date to:2008.06,For Modelcode:CS3W | GCI39057 | Inner Joint | | 25 | 30 | 41 | 61.5 | 95 | |
| | 2003.09-2008.10 | MT | F | R | Estate FWD 4G18 (SOHC 16V) | | GDS39174 | Drive Shaft | 43T | 25 | 25 | 57 | 94.5 | 940 | |
| | 2003.09-2008.10 | MT | F | L/R | Estate FWD 4G18 (SOHC 16V) | | GCO39200 | Outer Joint | 43T | 25 | 30 | 57 | 94.5 | 60 | I |

| | YEAR | TRANSM. | F/R | L/R | BODY STYLE & DRIVE TYPE & ENGINE | REMARKS | G-AP Ref. | PRODUCT | ABS | Technical Specifications A | B | C | H | L | P |
|---|---|---|---|---|---|---|---|---|---|---|---|---|---|---|---|
| **MITSUBISHI** | | | | | | | | | | | | | | | |
| **Lancer Estate/Wagon** | | | | | | | | | | | | | | | |
| 1.6 (83 kw) | 1992.12-2003.10 | AT/MT | F | L/R | Estate 4WD 4G92 | | GCO39009 | Outer Joint | | 25 | 30 | 54 | 95 | 60.5 | M |
| | 1992.12-2003.10 | AT/MT | F | L/R | Estate FWD 4G92 | | GCO39009 | Outer Joint | | 25 | 30 | 54 | 95 | 60.5 | M |
| | 1992.12-2003.10 | AT/MT | F | L/R | Estate FWD 4G92 | | GCO39036 | Outer Joint | | 25 | 23 | 54 | 96 | 64.5 | M |
| 2.0 (50 kw) | 1992.06-1998.08 | AT/MT | F | L/R | Estate FWD 4D68 | | GCO39036 | Outer Joint | | 25 | 23 | 54 | 96 | 64.5 | M |
| | 1992.06-1998.08 | AT/MT | F | | Estate FWD 4D68 | Date from:1994.08,Date to:2002.08 | GCI39005 | Inner Joint | | 25 | 30 | 35 | 62.8 | 92.5 | |
| | 1992.06-1998.08 | | F | | Estate FWD 4D68 | | GCO39020 | Outer Joint | 43T | 25 | 24 | 54 | 94.5 | 62 | M |
| 2.0 (99 kw) | 2003.09-2007.12 | 5MT | F | L | Estate FWD 4G63 (DOHC 16V) | | GDS39300 | Drive Shaft | 43T | 25 | 27 | 57 | 94.5 | 617 | |
| | 2003.09-2007.12 | 5MT | F | R | Estate FWD 4G63 (DOHC 16V) | | GDS39282 | Drive Shaft | 43T | 25 | 27 | 57 | 94.5 | 940 | |
| | 2003.09-2007.12 | 5MT | F | L | Estate FWD 4G63 (DOHC 16V) | | GCI24102 | Inner Joint | | 27 | 30 | 41 | 62.5 | 97 | |
| | 2003.09-2007.12 | AT/MT | F | L/R | Estate FWD 4G63 (DOHC 16V) | | GCO39200 | Outer Joint | 43T | 25 | 30 | 57 | 94.5 | 60 | I |
| | 2003.09-2007.12 | MT | F | | Estate FWD 4G63 (DOHC 16V) | | GCO39176 | Outer Joint | 43T | 25 | 29 | 57 | 95 | 58 | M |
| **Lancer Evolution** | | | | | | | | | | | | | | | |
| 2.0 (195 kw) | 2004.03-2005.07 | 5MT/6MT | F | L | Saloon 4WD 4G63-T/C (DOHC 16V) | | GDS39216 | Drive Shaft | 43T | 27 | 26 | 60 | 97 | 559 | |
| | 2004.03-2005.07 | 5MT/6MT | F | R | Saloon 4WD 4G63-T/C (DOHC 16V) | | GDS83417 | Drive Shaft | 43T | 27 | 26 | 60 | 97 | 638 | |
| | 2004.03-2005.07 | 5MT/6MT | F | R | Saloon 4WD 4G63-T/C (DOHC 16V) | | GCO82367 | Outer Joint | 43T | 27 | 32 | 60 | 97 | 60 | I |
| | 2004.03-2005.07 | 5MT/6MT | F | L/R | Saloon 4WD 4G63-T/C (DOHC 16V) | | GCO39168 | Outer Joint | 43T | 27 | 32 | 60 | 97 | 60 | I |
| | 2004.03-2005.07 | 5MT/6MT | F | R | Saloon 4WD 4G63-T/C (DOHC 16V) | | GCI39060 | Inner Joint | | 26 | 32 | 41 | | 116 | |
| 2.0 (198 kw) | 1995.08-1996.07 | MT | F | L/R | Saloon 4WD 4G63DOHC | Vehicle Production Country:Japan | GCO39020 | Outer Joint | 43T | 25 | 24 | 54 | 94.5 | 62 | M |
| | 1995.08-1996.07 | MT | F | | Saloon 4WD 4G63DOHC | Date To:1995.08 | GCO39009 | Outer Joint | | 25 | 30 | 54 | 95 | 60.5 | M |
| | 1995.08-1996.07 | MT | F | | Saloon 4WD 4G63DOHC | Date To:1995.08 | GCI39005 | Inner Joint | | 25 | 30 | 35 | 62.8 | 92.5 | |
| 2.0 (206 kw) | 2001.01-2003.01 | 5MT/6MT | F | R | Saloon 4WD 4G63-T/C (DOHC 16V) | | GDS83417 | Drive Shaft | 43T | 27 | 26 | 60 | 97 | 638 | |
| | 2001.01-2003.01 | 5MT/6MT | F | L/R | Saloon 4WD 4G63-T/C (DOHC 16V) | | GCI39060 | Inner Joint | | 26 | 32 | 41 | | 116 | |
| | 2001.01-2003.01 | MT/5MT/6MT | F | L | Saloon 4WD 4G63-T/C (DOHC 16V) | | GDS39216 | Drive Shaft | 43T | 27 | 26 | 60 | 97 | 559 | |
| | 2001.01-2003.01 | | F | | Saloon 4WD 4G63-T/C (DOHC 16V) | | GCO39119 | Outer Joint | 43T | 25 | 21 | 54 | 95 | 51 | I |
| | 2001.01-2003.01 | | F | | Saloon 4WD 4G63-T/C (DOHC 16V) | | GCO39121 | Outer Joint | | 25 | 21 | 54 | 95 | 51 | I |
| | 2005.01-2007.09 | 6MT | F | L | Saloon 4WD 4G63-T/C (DOHC 16V) | | GDS39216 | Drive Shaft | 43T | 27 | 26 | 60 | 97 | 559 | |
| | 2005.01-2007.09 | 6MT | F | R | Saloon 4WD 4G63-T/C (DOHC 16V) | | GDS83417 | Drive Shaft | 43T | 27 | 26 | 60 | 97 | 638 | |
| | 2005.01-2007.09 | 6MT | F | R | Saloon 4WD 4G63-T/C (DOHC 16V) | | GCO82367 | Outer Joint | 43T | 27 | 32 | 60 | 97 | 60 | I |
| | 2005.01-2007.09 | 6MT | F | L/R | Saloon 4WD 4G63-T/C (DOHC 16V) | | GCO39168 | Outer Joint | 43T | 27 | 32 | 60 | 97 | 60 | I |
| | 2005.01-2007.09 | 6MT | F | R | Saloon 4WD 4G63-T/C (DOHC 16V) | | GCI39060 | Inner Joint | | 26 | 32 | 41 | | 116 | |
| | 2005.01-2007.09 | MT | F | | Saloon 4WD 4G63-T/C (DOHC 16V) | | GDS39282 | Drive Shaft | 43T | 25 | 27 | 57 | 94.5 | 940 | |
| | 2005.01-2007.09 | MT | F | R | Saloon 4WD 4G63-T/C (DOHC 16V) | | GCI39115 | Inner Joint | | 27 | 30 | 41 | 62.5 | 88 | |
| | 2007.10-2008.10 | MT | F | L | Saloon 4WD 4B11-T/C (DOHC 16V) | | GCO39211 | Outer Joint | | 28 | 33 | 60 | 89 | 60 | I |
| 2.0 (213 kw) | 2005.08-2006.09 | 5MT | F | L | Saloon 4WD 4G63-T/C (DOHC 16V) | | GDS39216 | Drive Shaft | 43T | 27 | 26 | 60 | 97 | 559 | |
| | 2005.08-2006.09 | 5MT | F | R | Saloon 4WD 4G63-T/C (DOHC 16V) | | GDS83417 | Drive Shaft | 43T | 27 | 26 | 60 | 97 | 638 | |
| | 2005.08-2006.09 | 5MT | F | R | Saloon 4WD 4G63-T/C (DOHC 16V) | | GCO82367 | Outer Joint | 43T | 27 | 32 | 60 | 97 | 60 | I |
| | 2005.08-2006.09 | 5MT | F | L/R | Saloon 4WD 4G63-T/C (DOHC 16V) | | GCO39168 | Outer Joint | 43T | 27 | 32 | 60 | 97 | 60 | I |
| | 2005.08-2006.09 | 5MT | F | R | Saloon 4WD 4G63-T/C (DOHC 16V) | | GCI39060 | Inner Joint | | 26 | 32 | 41 | | 116 | |
| 2.0 (217 kw) | 2008.06-2015.12 | AT/MT | F | L | Saloon 4WD 4B11-T/C (DOHC 16V) | | GCO39211 | Outer Joint | | 28 | 33 | 60 | 89 | 60 | I |
| 2.0 (221 kw) | 2008.06-2015.03 | 5MT/6MT | F | L/R | Saloon 4WD 4B11-T/C (DOHC 16V) | | GCO39211 | Outer Joint | | 28 | 33 | 60 | 89 | 60 | I |
| 2.0 (225 kw) | 2003.04-2004.04 | 6MT | F | L | Saloon 4WD 4G63-T/C (DOHC 16V) | | GDS39216 | Drive Shaft | 43T | 27 | 26 | 60 | 97 | 559 | |
| | 2003.04-2004.04 | 6MT | F | R | Saloon 4WD 4G63-T/C (DOHC 16V) | | GDS83417 | Drive Shaft | 43T | 27 | 26 | 60 | 97 | 638 | |
| | 2003.04-2004.04 | 6MT | F | R | Saloon 4WD 4G63-T/C (DOHC 16V) | | GCO82367 | Outer Joint | 43T | 27 | 32 | 60 | 97 | 60 | I |
| | 2003.04-2004.04 | 6MT | F | L/R | Saloon 4WD 4G63-T/C (DOHC 16V) | | GCO39168 | Outer Joint | 43T | 27 | 32 | 60 | 97 | 60 | I |
| | 2003.04-2004.04 | 6MT | F | R | Saloon 4WD 4G63-T/C (DOHC 16V) | | GCI39060 | Inner Joint | | 26 | 32 | 41 | | 116 | |
| 2.0 (227 kw) | 2003.04-2004.04 | 6MT | F | L | Saloon 4WD 4G63-T/C (DOHC 16V) | | GDS39216 | Drive Shaft | 43T | 27 | 26 | 60 | 97 | 559 | |
| | 2003.04-2004.04 | 6MT | F | R | Saloon 4WD 4G63-T/C (DOHC 16V) | | GDS83417 | Drive Shaft | 43T | 27 | 26 | 60 | 97 | 638 | |
| | 2003.04-2004.04 | 6MT | F | R | Saloon 4WD 4G63-T/C (DOHC 16V) | | GCO82367 | Outer Joint | 43T | 27 | 32 | 60 | 97 | 60 | I |
| | 2003.04-2004.04 | 6MT | F | L/R | Saloon 4WD 4G63-T/C (DOHC 16V) | | GCO39168 | Outer Joint | 43T | 27 | 32 | 60 | 97 | 60 | I |
| | 2003.04-2004.04 | 6MT | F | R | Saloon 4WD 4G63-T/C (DOHC 16V) | | GCI39060 | Inner Joint | | 26 | 32 | 41 | | 116 | |
| | 2005.06-2006.12 | 6MT | F | L | Saloon 4WD 4G63-T/C (DOHC 16V) | | GDS39216 | Drive Shaft | 43T | 27 | 26 | 60 | 97 | 559 | |
| | 2005.06-2006.12 | 6MT | F | R | Saloon 4WD 4G63-T/C (DOHC 16V) | | GDS83417 | Drive Shaft | 43T | 27 | 26 | 60 | 97 | 638 | |
| | 2005.06-2006.12 | 6MT | F | R | Saloon 4WD 4G63-T/C (DOHC 16V) | | GCO82367 | Outer Joint | 43T | 27 | 32 | 60 | 97 | 60 | I |
| | 2005.06-2006.12 | 6MT | F | L/R | Saloon 4WD 4G63-T/C (DOHC 16V) | | GCO39168 | Outer Joint | 43T | 27 | 32 | 60 | 97 | 60 | I |
| | 2005.06-2006.12 | 6MT | F | R | Saloon 4WD 4G63-T/C (DOHC 16V) | | GCI39060 | Inner Joint | | 26 | 32 | 41 | | 116 | |
| 2.0 (242 kw) | 2008.03-2015.06 | AT/MT | F | L | Saloon 4WD 4B11-FQ30 | | GCO39211 | Outer Joint | | 28 | 33 | 60 | 89 | 60 | I |
| 2.0 (243 kw) | 2004.04-2006.08 | 6MT | F | L | Saloon 4WD 4G63-T/C (DOHC 16V) | | GDS39216 | Drive Shaft | 43T | 27 | 26 | 60 | 97 | 559 | |
| | 2004.04-2006.08 | 6MT | F | R | Saloon 4WD 4G63-T/C (DOHC 16V) | | GDS83417 | Drive Shaft | 43T | 27 | 26 | 60 | 97 | 638 | |
| | 2004.04-2006.08 | 6MT | F | R | Saloon 4WD 4G63-T/C (DOHC 16V) | | GCO82367 | Outer Joint | 43T | 27 | 32 | 60 | 97 | 60 | I |
| | 2004.04-2006.08 | 6MT | F | L/R | Saloon 4WD 4G63-T/C (DOHC 16V) | | GCO39168 | Outer Joint | 43T | 27 | 32 | 60 | 97 | 60 | I |
| | 2004.04-2006.08 | 6MT | F | R | Saloon 4WD 4G63-T/C (DOHC 16V) | | GCI39060 | Inner Joint | | 26 | 32 | 41 | | 116 | |
| 2.0 (246 kw) | 2003.10-2006.08 | 6MT | F | L | Saloon 4WD 4G63-T/C (DOHC 16V) | | GDS39216 | Drive Shaft | 43T | 27 | 26 | 60 | 97 | 559 | |
| | 2003.10-2006.08 | 6MT | F | R | Saloon 4WD 4G63-T/C (DOHC 16V) | | GDS83417 | Drive Shaft | 43T | 27 | 26 | 60 | 97 | 638 | |
| | 2003.10-2006.08 | 6MT | F | R | Saloon 4WD 4G63-T/C (DOHC 16V) | | GCO82367 | Outer Joint | 43T | 27 | 32 | 60 | 97 | 60 | I |
| | 2003.10-2006.08 | 6MT | F | L/R | Saloon 4WD 4G63-T/C (DOHC 16V) | | GCO39168 | Outer Joint | 43T | 27 | 32 | 60 | 97 | 60 | I |

| | YEAR | TRANSM. | F/R | L/R | BODY STYLE & DRIVE TYPE & ENGINE | REMARKS | G-AP Ref. | PRODUCT | ABS | Technical Specifications A | B | C | H | L | P |
|---|---|---|---|---|---|---|---|---|---|---|---|---|---|---|---|
| **MITSUBISHI** | | | | | | | | | | | | | | | |
| **Lancer Evolution** | | | | | | | | | | | | | | | |
| 2.0 (246 kw) | 2003.10-2006.08 | 6MT | F | R | Saloon 4WD 4G63-T/C (DOHC 16V) | | GCI39060 | Inner Joint | | 26 | 32 | 41 | | 116 | |
| 2.0 (255 kw) | 2004.04-2005.03 | 6MT | F | L | Saloon 4WD 4G63-T/C (DOHC 16V) | | GDS39216 | Drive Shaft | 43T | 27 | 26 | 60 | 97 | 559 | |
| | 2004.04-2005.03 | 6MT | F | R | Saloon 4WD 4G63-T/C (DOHC 16V) | | GDS83417 | Drive Shaft | 43T | 27 | 26 | 60 | 97 | 638 | |
| | 2004.04-2005.03 | 6MT | F | R | Saloon 4WD 4G63-T/C (DOHC 16V) | | GCO82367 | Outer Joint | 43T | 27 | 32 | 60 | 97 | 60 | I |
| | 2004.04-2005.03 | 6MT | F | L/R | Saloon 4WD 4G63-T/C (DOHC 16V) | | GCO39168 | Outer Joint | 43T | 27 | 32 | 60 | 97 | 60 | I |
| | 2004.04-2005.03 | 6MT | F | R | Saloon 4WD 4G63-T/C (DOHC 16V) | | GCI39060 | Inner Joint | | 26 | 32 | 41 | | 116 | |
| 2.0 (257 kw) | 2005.06-2007.12 | 6MT | F | L | Saloon 4WD 4G63-T/C (DOHC 16V) | | GDS39216 | Drive Shaft | 43T | 27 | 26 | 60 | 97 | 559 | |
| | 2005.06-2007.12 | 6MT | F | R | Saloon 4WD 4G63-T/C (DOHC 16V) | | GDS83417 | Drive Shaft | 43T | 27 | 26 | 60 | 97 | 638 | |
| | 2005.06-2007.12 | 6MT | F | R | Saloon 4WD 4G63-T/C (DOHC 16V) | | GCO82367 | Outer Joint | 43T | 27 | 32 | 60 | 97 | 60 | I |
| | 2005.06-2007.12 | 6MT | F | L/R | Saloon 4WD 4G63-T/C (DOHC 16V) | | GCO39168 | Outer Joint | 43T | 27 | 32 | 60 | 97 | 60 | I |
| | 2005.06-2007.12 | 6MT | F | R | Saloon 4WD 4G63-T/C (DOHC 16V) | | GCI39060 | Inner Joint | | 26 | 32 | 41 | | 116 | |
| | 2011.10- | MT | F | L | Saloon 4WD | | GCO39211 | Outer Joint | | 28 | 33 | 60 | 89 | 60 | I |
| 2.0 (264 kw) | 2008.03-2015.06 | AT/MT | F | L | Saloon 4WD 4B11-FQ60 | | GCO39211 | Outer Joint | | 28 | 33 | 60 | 89 | 60 | I |
| 2.0 (269 kw) | 2006.07-2008.10 | 6MT | F | L | Saloon 4WD 4G63-T/C (DOHC 16V) | | GDS39216 | Drive Shaft | 43T | 27 | 26 | 60 | 97 | 559 | |
| | 2006.07-2008.10 | 6MT | F | R | Saloon 4WD 4G63-T/C (DOHC 16V) | | GDS83417 | Drive Shaft | 43T | 27 | 26 | 60 | 97 | 638 | |
| | 2006.07-2008.10 | 6MT | F | R | Saloon 4WD 4G63-T/C (DOHC 16V) | | GCO82367 | Outer Joint | 43T | 27 | 32 | 60 | 97 | 60 | I |
| | 2006.07-2008.10 | 6MT | F | L/R | Saloon 4WD 4G63-T/C (DOHC 16V) | | GCO39168 | Outer Joint | 43T | 27 | 32 | 60 | 97 | 60 | I |
| | 2006.07-2008.10 | 6MT | F | R | Saloon 4WD 4G63-T/C (DOHC 16V) | | GCI39060 | Inner Joint | | 26 | 32 | 41 | | 116 | |
| 2.0 (273 kw) | 2006.07-2007.12 | 6MT | F | L | Saloon 4WD 4G63-T/C (DOHC 16V) | | GDS39216 | Drive Shaft | 43T | 27 | 26 | 60 | 97 | 559 | |
| | 2006.07-2007.12 | 6MT | F | R | Saloon 4WD 4G63-T/C (DOHC 16V) | | GDS83417 | Drive Shaft | 43T | 27 | 26 | 60 | 97 | 638 | |
| | 2006.07-2007.12 | 6MT | F | R | Saloon 4WD 4G63-T/C (DOHC 16V) | | GCO82367 | Outer Joint | 43T | 27 | 32 | 60 | 97 | 60 | I |
| | 2006.07-2007.12 | 6MT | F | L/R | Saloon 4WD 4G63-T/C (DOHC 16V) | | GCO39168 | Outer Joint | 43T | 27 | 32 | 60 | 97 | 60 | I |
| | 2006.07-2007.12 | 6MT | F | R | Saloon 4WD 4G63-T/C (DOHC 16V) | | GCI39060 | Inner Joint | | 26 | 32 | 41 | | 116 | |
| 2.0 (296 kw) | 2009.06- | MT | F | L | Saloon 4WD | | GCO39211 | Outer Joint | | 28 | 33 | 60 | 89 | 60 | I |
| 2.0 (301 kw) | 2009.05-2010.12 | MT | F | L | Saloon 4WD 4B11-T/C (DOHC 16V) | | GCO39211 | Outer Joint | | 28 | 33 | 60 | 89 | 60 | I |
| 2.0 (302 kw) | 2004.10-2006.08 | 6MT | F | L | Saloon 4WD 4G63-T/C (DOHC 16V) | | GDS39216 | Drive Shaft | 43T | 27 | 26 | 60 | 97 | 559 | |
| | 2004.10-2006.08 | 6MT | F | R | Saloon 4WD 4G63-T/C (DOHC 16V) | | GDS83417 | Drive Shaft | 43T | 27 | 26 | 60 | 97 | 638 | |
| | 2004.10-2006.08 | 6MT | F | R | Saloon 4WD 4G63-T/C (DOHC 16V) | | GCO82367 | Outer Joint | 43T | 27 | 32 | 60 | 97 | 60 | I |
| | 2004.10-2006.08 | 6MT | F | L/R | Saloon 4WD 4G63-T/C (DOHC 16V) | | GCO39168 | Outer Joint | 43T | 27 | 32 | 60 | 97 | 60 | I |
| | 2004.10-2006.08 | 6MT | F | R | Saloon 4WD 4G63-T/C (DOHC 16V) | | GCI39060 | Inner Joint | | 26 | 32 | 41 | | 116 | |
| **Lancer Fortis** | | | | | | | | | | | | | | | |
| 2.0 (115 kw) | 2007.09- | | F | | Saloon FWD 4B11 | Date To:2011.08 | GCO81538 | Outer Joint | | 25 | 26 | 48 | 106 | 51 | I |
| **Lancer Sportback** | | | | | | | | | | | | | | | |
| 1.5 (80 kw) | 2008.06- | AT | F | L | Hatchback FWD 4A91 | Date to:2009.02 | GDS81574 | Drive Shaft | | 28 | 25 | 59.5 | 94.5 | 666 | |
| | 2008.06- | AT | F | R | Hatchback FWD 4A91 | | GDS81575 | Drive Shaft | | 28 | 25 | 59.5 | 94.5 | 946 | |
| | 2008.06- | AT | F | L/R | Hatchback FWD 4A91 | Date to:2009.02 | GCI81416 | Inner Joint | | 25 | 29 | 41 | 63 | 86.5 | |
| | 2008.06- | AT/MT | F | L/R | Hatchback FWD 4A91 | | GCO15011 | Outer Joint | | 28 | 30 | 59.5 | 95 | 57.5 | I |
| | 2010.03- | MT | F | L/R | Hatchback FWD 4A91 | | GCO15011 | Outer Joint | | 28 | 30 | 59.5 | 95 | 57.5 | I |
| 1.6 (86 kw) | 2010.05- | 5MT | F | L | Hatchback FWD 4A92 | | GDS81934 | Drive Shaft | | 28 | 27 | 59.5 | 94.5 | 669 | |
| | 2010.05- | 5MT | F | L | Hatchback FWD 4A92 | | GCO81634 | Outer Joint | | 28 | 33 | 59.5 | 94.5 | 61.5 | I |
| | 2010.05- | 5MT | F | L/R | Hatchback FWD 4A92 | | GCI39038 | Inner Joint | | 27 | 32 | 41 | 62.5 | 88 | |
| | 2010.05- | MT | F | | Hatchback FWD 4A92 | Date From:2010.07,Date To:2011.09 | GCO39113 | Outer Joint | | 28 | 33 | 59.5 | 95 | 61.5 | I |
| 1.8 (85 kw) | 2010.05- | 6MT | F | L | Hatchback FWD 4N13 | | GCI81207 | Inner Joint | | 24 | 35 | 50 | 67.5 | 111 | |
| | 2010.05- | AT | F | L/R | Hatchback FWD 4N13 | | GCI39040 | Inner Joint | | 27 | 33 | 40 | 62 | 99 | |
| | 2010.05- | AT/MT | F | L/R | Hatchback FWD 4N13 | | GCO39113 | Outer Joint | | 28 | 33 | 59.5 | 95 | 61.5 | I |
| | 2010.05- | MT | F | R | Hatchback FWD 4N13 | | GCI59205 | Inner Joint | | 24 | 33 | 40 | 95.5 | 84 | |
| 1.8 (103 kw) | 2009.03- | 5MT | F | L | Hatchback FWD 4B10 | Date From:2010.09 | GDS83099 | Drive Shaft | | 28 | 24 | 59.5 | 94.5 | 633 | |
| | 2009.03- | 5MT | F | L | Hatchback FWD 4B10 | Date From:2010.09 | GCI82095 | Inner Joint | | 24 | 33 | 50 | 67 | 98 | |
| | 2009.03- | AT | F | L | Hatchback FWD 4B10 | | GDS39121 | Drive Shaft | | 28 | 27 | 59.5 | 95 | 649.5 | |
| | 2009.03- | AT | F | R | Hatchback FWD 4B10 | | GDS39120 | Drive Shaft | | 28 | 27 | 59.5 | 95 | 965 | |
| | 2009.03- | AT | F | | Hatchback FWD 4B10 | | GCI39040 | Inner Joint | | 27 | 33 | 40 | 62 | 99 | |
| | 2009.03- | CVT | F | L | Hatchback FWD 4B10 | | GDS39121 | Drive Shaft | | 28 | 27 | 59.5 | 95 | 649.5 | |
| | 2009.03- | CVT | F | R | Hatchback FWD 4B10 | | GDS39120 | Drive Shaft | | 28 | 27 | 59.5 | 95 | 965 | |
| | 2009.03- | CVT | F | L/R | Hatchback FWD 4B10 | Date from:2010.09 | GCO39178 | Outer Joint | | 28 | 33 | 59.6 | 94.5 | 61.5 | I |
| | 2009.03- | CVT | F | L/R | Hatchback FWD 4B10 | | GCI39040 | Inner Joint | | 27 | 33 | 40 | 62 | 99 | |
| | 2009.03- | MT | F | L | Hatchback FWD 4B10 | | GDS39229 | Drive Shaft | | 28 | 24 | 59.5 | 95 | 633 | |
| | 2009.03- | MT | F | L | Hatchback FWD 4B10 | | GDS83099 | Drive Shaft | | 28 | 24 | 59.5 | 94.5 | 633 | |
| | 2009.03- | MT | F | R | Hatchback FWD 4B10 | | GDS39230 | Drive Shaft | | 28 | 24 | 59.5 | 95 | 980 | |
| | 2009.03- | MT | F | L/R | Hatchback FWD 4B10 | Date to:2010.08 | GCO39113 | Outer Joint | | 28 | 33 | 59.5 | 95 | 61.5 | I |
| | 2009.03- | MT | F | L/R | Hatchback FWD 4B10 | Date from:2010.09 | GCO81634 | Outer Joint | | 28 | 33 | 59.5 | 94.5 | 61.5 | I |
| | 2009.03- | MT | F | L | Hatchback FWD 4B10 | | GCI82095 | Inner Joint | | 24 | 33 | 50 | 67 | 98 | |
| | 2009.03- | MT | F | R | Hatchback FWD 4B10 | | GCI59205 | Inner Joint | | 24 | 33 | 40 | 95.5 | 84 | |
| | 2009.03- | MT/CVT | F | L/R | Hatchback FWD 4B10 | 6 balls | GCO39113 | Outer Joint | | 28 | 33 | 59.5 | 95 | 61.5 | I |
| | 2009.03- | | F | L | Hatchback FWD 4B10 | Date From:2010.09 | GDS39229 | Drive Shaft | | 28 | 24 | 59.5 | 95 | 633 | |
| | 2009.03- | | F | R | Hatchback FWD 4B10 | Date From:2010.09 | GDS39230 | Drive Shaft | | 28 | 24 | 59.5 | 95 | 980 | |

| | YEAR | TRANSM. | F/R | L/R | BODY STYLE & DRIVE TYPE & ENGINE | REMARKS | G-AP Ref. | PRODUCT | ABS | Technical Specifications A | B | C | H | L | P |
|---|---|---|---|---|---|---|---|---|---|---|---|---|---|---|---|
| **MITSUBISHI** | | | | | | | | | | | | | | | |
| **Lancer Sportback** | | | | | | | | | | | | | | | |
| 1.8 (103 kw) | 2009.03- | | F | R | Hatchback FWD 4B10 | | GCI59205 | Inner Joint | | 24 | 33 | 40 | 95.5 | 84 | |
| 1.8 (105 kw) | 2008.06- | CVT | F | R | Hatchback FWD 4B10 | | GDS39120 | Drive Shaft | | 28 | 27 | 59.5 | 95 | 965 | |
| | 2008.06- | CVT | F | L/R | Hatchback FWD 4B10 | Date from:2010.09 | GCO39178 | Outer Joint | | 28 | 33 | 59.6 | 94.5 | 61.5 | I |
| | 2008.06- | CVT | F | L/R | Hatchback FWD 4B10 | | GCI39040 | Inner Joint | | 27 | 33 | 40 | 62 | 99 | |
| | 2008.06- | MT | F | L | Hatchback FWD 4B10 | Date from:2010.09;6 balls | GDS39229 | Drive Shaft | | 28 | 24 | 59.5 | 95 | 633 | |
| | 2008.06- | MT | F | L | Hatchback FWD 4B10 | Date from:2010.09;8 balls | GDS83099 | Drive Shaft | | 28 | 24 | 59.5 | 94.5 | 633 | |
| | 2008.06- | MT | F | R | Hatchback FWD 4B10 | | GDS39230 | Drive Shaft | | 28 | 24 | 59.5 | 95 | 980 | |
| | 2008.06- | MT | F | L/R | Hatchback FWD 4B10 | Date from:2010.09 | GCO81634 | Outer Joint | | 28 | 33 | 59.5 | 94.5 | 61.5 | I |
| | 2008.06- | MT | F | L | Hatchback FWD 4B10 | | GCI82095 | Inner Joint | | 24 | 33 | 50 | 67 | 98 | |
| | 2008.06- | MT | F | R | Hatchback FWD 4B10 | | GCI59205 | Inner Joint | | 24 | 33 | 40 | 95.5 | 84 | |
| | 2008.06- | MT/CVT | F | L | Hatchback FWD 4B10 | Transmission:MT,Date to:2010.08;Transmission:CVT | GDS39121 | Drive Shaft | | 28 | 27 | 59.5 | 95 | 649.5 | |
| | 2008.06- | MT/CVT | F | L/R | Hatchback FWD 4B10 | 6 balls | GCO39113 | Outer Joint | | 28 | 33 | 59.5 | 95 | 61.5 | I |
| | 2010.02- | 5MT | F | L | Hatchback FWD 4B10 | Date From:2010.09 | GDS83099 | Drive Shaft | | 28 | 24 | 59.5 | 94.5 | 633 | |
| | 2010.02- | 5MT | F | L | Hatchback FWD 4B10 | Date From:2010.09 | GCI82095 | Inner Joint | | 24 | 33 | 50 | 67 | 98 | |
| | 2010.02- | AT | F | L | Hatchback FWD 4B10 | | GDS39121 | Drive Shaft | | 28 | 27 | 59.5 | 95 | 649.5 | |
| | 2010.02- | AT | F | R | Hatchback FWD 4B10 | | GDS39120 | Drive Shaft | | 28 | 27 | 59.5 | 95 | 965 | |
| | 2010.02- | AT | F | | Hatchback FWD 4B10 | | GCI39040 | Inner Joint | | 27 | 33 | 40 | 62 | 99 | |
| | 2010.02- | MT | F | L/R | Hatchback FWD 4B10 | Date to:2010.08 | GCO39113 | Outer Joint | | 28 | 33 | 59.5 | 95 | 61.5 | I |
| | 2010.02- | MT | F | L/R | Hatchback FWD 4B10 | Date from:2010.09 | GCO81634 | Outer Joint | | 28 | 33 | 59.5 | 94.5 | 61.5 | I |
| | 2010.02- | | F | L | Hatchback FWD 4B10 | Date From:2010.09 | GDS39229 | Drive Shaft | | 28 | 24 | 59.5 | 95 | 633 | |
| | 2010.02- | | F | R | Hatchback FWD 4B10 | Date From:2010.09 | GDS39230 | Drive Shaft | | 28 | 24 | 59.5 | 95 | 980 | |
| | 2010.02- | | F | R | Hatchback FWD 4B10 | | GCI59205 | Inner Joint | | 24 | 33 | 40 | 95.5 | 84 | |
| 1.8 (110 kw) | 2010.06- | 6MT | F | L | Hatchback FWD 4N13 | | GCI81207 | Inner Joint | | 24 | 35 | 50 | 67.5 | 111 | |
| 2.0 (103 kw) | 2008.06- | 6MT | F | L | Hatchback FWD BKD;BWC | | GDS81941 | Drive Shaft | | 28 | 24 | 59.6 | 95 | 631 | |
| | 2008.06- | 6MT | F | L | Hatchback FWD BKD;BWC | Date to:2009.04 | GCO39137 | Outer Joint | | 28 | 37 | 59.5 | 94.5 | 71.5 | I |
| | 2008.06- | 6MT | F | L | Hatchback FWD BKD;BWC | Date from:2009.05 | GCI81207 | Inner Joint | | 24 | 35 | 50 | 67.5 | 111 | |
| | 2008.06- | 6MT | F | L | Hatchback FWD BKD;BWC | Date to:2009.04 | GCI81553 | Inner Joint | | 24 | 36 | 50 | 67 | 116 | |
| 2.0 (177 kw) | 2008.10- | AT | F | L/R | Hatchback 4WD 4B11-T/C (DOHC 16V) | Date From:2008.11,Date To:2009.11 | GCO39117 | Outer Joint | | 28 | 35 | 59.5 | 95 | 65 | I |
| | 2008.10- | AT | F | | Hatchback 4WD 4B11-T/C (DOHC 16V) | Date From:2008.11,Date To:2009.11 | GCO51033 | Outer Joint | | 25 | 26 | 48 | 106.5 | 49 | I |
| | 2008.10- | AT | F | | Hatchback 4WD 4B11-T/C (DOHC 16V) | Date from:2008.11,Date to:2009.11 | GCO81538 | Outer Joint | | 25 | 26 | 48 | 106 | 51 | I |
| | 2008.10- | AT | F | L | Hatchback 4WD 4B11-T/C (DOHC 16V) | Date from:2008.11,Date to:2009.11 | GCI51034 | Inner Joint | | 27 | 35 | 40 | 62 | 113 | |
| | 2008.10- | AT | F | | Hatchback 4WD 4B11-T/C (DOHC 16V) | Date From:2010.07 | GCI39040 | Inner Joint | | 27 | 33 | 40 | 62 | 99 | |
| | 2008.10- | | F | L/R | Hatchback 4WD 4B11-T/C (DOHC 16V) | | GCO39178 | Outer Joint | | 28 | 33 | 59.6 | 94.5 | 61.5 | I |
| | 2008.10- | | F | | Hatchback 4WD 4B11-T/C (DOHC 16V) | Date To:2011.09 | GCO39113 | Outer Joint | | 28 | 33 | 59.5 | 95 | 61.5 | I |
| | 2008.10- | AT | R | | Hatchback 4WD 4B11-T/C (DOHC 16V) | Date From:2008.11,Date To:2009.11 | GCI39050 | Inner Joint | | 23 | 26 | 35 | 64 | 96 | |
| **Lancer/Lancer /Virage** | | | | | | | | | | | | | | | |
| 2.0 (92 kw) | 2003.09-2013.12 | AT/MT | F | L/R | Saloon FWD 4G94 (GDI) | Date from:2006.01 | GCO39200 | Outer Joint | 43T | 25 | 30 | 57 | 94.5 | 60 | I |
| **Lancer/Lancer Fortis/Galant Fortis** | | | | | | | | | | | | | | | |
| 2.4 (125 kw) | 2011.09- | | F | | Saloon 4WD 4B12 | Date From:2011.10 | GCO81538 | Outer Joint | | 25 | 26 | 48 | 106 | 51 | I |
| **Lancer/Libero** | | | | | | | | | | | | | | | |
| 1.3 (55 kw) | 1992.06-1996.12 | AT/MT | F | L/R | Saloon FWD 4G13 (12V) | | GCO39011 | Outer Joint | | 25 | 22 | 54 | 96 | 59 | M |
| **Mirage** | | | | | | | | | | | | | | | |
| 1.2 (56 kw) | 2014.01- | | F | L | Hatchback FWD 3A92 | | GDS41578 | Drive Shaft | | 24 | 25 | 47 | 90 | 657 | |
| | 2014.01- | | F | R | Hatchback FWD 3A92 | | GDS41579 | Drive Shaft | | 24 | 25 | 47 | 90 | 857 | |
| | 2014.01- | | F | L/R | Hatchback FWD 3A92 | | GCO41421 | Outer Joint | | 24 | 26 | 47 | 90 | 54.5 | I |
| 1.2 (57 kw) | 2012.01- | 5MT | F | L | Hatchback FWD 3A92 | | GDS41586 | Drive Shaft | | 24 | 23 | 47 | 90 | 656 | |
| | 2012.01- | 5MT | F | R | Hatchback FWD 3A92 | | GDS41587 | Drive Shaft | | 24 | 23 | 47 | 90 | 857 | |
| | 2012.01- | 5MT | F | R | Hatchback FWD 3A92 | | GCO41423 | Outer Joint | | 24 | 29 | 47 | 90 | 55 | I |
| | 2012.01- | CVT | F | L | Hatchback FWD 3A92 | | GDS41578 | Drive Shaft | | 24 | 25 | 47 | 90 | 657 | |
| | 2012.01- | CVT | F | R | Hatchback FWD 3A92 | | GDS41579 | Drive Shaft | | 24 | 25 | 47 | 90 | 857 | |
| | 2012.01- | CVT | F | L/R | Hatchback FWD 3A92 | | GCO41421 | Outer Joint | | 24 | 26 | 47 | 90 | 54.5 | I |
| | 2012.01- | MT | F | L/R | Hatchback FWD 3A92 | | GCI41226 | Inner Joint | | 23 | 26 | 34 | 60.5 | 91.5 | |
| 1.3 (55 kw) | 1995.09-2003.07 | AT/MT | F | | Hatchback FWD 4G13P | Date From:1995.11,Date To:2000.05 | GCO39008 | Outer Joint | 43T | 25 | 29 | 54 | 95 | 58 | I |
| | 1995.09-2003.07 | | F | | Hatchback FWD 4G13P | | GCO39119 | Outer Joint | 43T | 25 | 21 | 54 | 95 | 51 | I |
| | 1995.09-2003.07 | | F | | Hatchback FWD 4G13P | | GCO39120 | Outer Joint | 43T | 25 | 22 | 54 | 94 | 61 | I |
| | 1995.09-2003.07 | | F | | Hatchback FWD 4G13P | | GCO39121 | Outer Joint | | 25 | 21 | 54 | 95 | 51 | I |
| 1.5 (81 kw) | 1995.09-1999.08 | | F | | Coupe FWD 4G15 (16V) | | GCO39120 | Outer Joint | 43T | 25 | 22 | 54 | 94 | 61 | I |
| | 1995.09-2000.12 | | F | | Saloon FWD 4G15DOHC | | GCO39120 | Outer Joint | 43T | 25 | 22 | 54 | 94 | 61 | I |
| 1.6 (84 kw) | 1999.09-2003.07 | 4AT | F | L/R | Hatchback FWD 4G92 | | GCI39023 | Inner Joint | | 25 | 23 | 41 | 62.5 | 87.5 | |
| | 1999.09-2003.07 | 4AT | F | L/R | Hatchback FWD 4G92 | | GCI39074 | Inner Joint | | 25 | 30 | 41 | 63 | 97 | |
| | 1999.09-2003.07 | | F | | Hatchback FWD 4G92 | | GCI39057 | Inner Joint | | 25 | 30 | 41 | 61.5 | 95 | |
| **Mirage G4** | | | | | | | | | | | | | | | |
| 1.2 (57 kw) | 2014.07- | 5MT | F | L | Saloon FWD 3A92 | | GDS83117 | Drive Shaft | | 24 | 23 | 47 | 90 | 660 | |
| | 2014.07- | 5MT | F | R | Saloon FWD 3A92 | | GDS83413 | Drive Shaft | | 24 | 23 | 47 | 90 | 865 | |
| | 2014.07- | 5MT | F | L/R | Saloon FWD 3A92 | | GCO41423 | Outer Joint | | 24 | 29 | 47 | 90 | 55 | I |

| | YEAR | TRANSM. | F/R | L/R | BODY STYLE & DRIVE TYPE & ENGINE | REMARKS | G-AP Ref. | PRODUCT | ABS | Technical Specifications A | B | C | H | L | P |
|---|---|---|---|---|---|---|---|---|---|---|---|---|---|---|---|
| **MITSUBISHI** | | | | | | | | | | | | | | | |
| **Mirage G4** | | | | | | | | | | | | | | | |
| 1.2 (57 kw) | 2014.07- | 5MT | F | L/R | Saloon FWD 3A92 | | GCI82136 | Inner Joint | | 23 | 28 | 34 | 60.5 | 85 | |
| | 2014.07- | CVT | F | L | Saloon FWD 3A92 | | GDS41578 | Drive Shaft | | 24 | 25 | 47 | 90 | 657 | |
| | 2014.07- | CVT | F | R | Saloon FWD 3A92 | | GDS41579 | Drive Shaft | | 24 | 25 | 47 | 90 | 857 | |
| | 2014.07- | CVT | F | L/R | Saloon FWD 3A92 | | GCO41421 | Outer Joint | | 24 | 26 | 47 | 90 | 54.5 | I |
| **Mirage/Space Star** | | | | | | | | | | | | | | | |
| 1.0 (52 kw) | 2012.05- | 5MT | F | L/R | Hatchback FWD 3A90 | | GCO41423 | Outer Joint | | 24 | 29 | 47 | 90 | 55 | I |
| | 2012.05- | 5MT | F | L/R | Hatchback FWD 3A90 | | GCI41226 | Inner Joint | | 23 | 26 | 34 | 60.5 | 91.5 | |
| | 2012.05- | CVT | F | L | Hatchback FWD 3A90 | Date from:2015.03,Date to:2019.10 | GDS41578 | Drive Shaft | | 24 | 25 | 47 | 90 | 657 | |
| | 2012.05- | CVT | F | R | Hatchback FWD 3A90 | Date from:2015.03,Date to:2019.10 | GDS41579 | Drive Shaft | | 24 | 25 | 47 | 90 | 857 | |
| | 2012.05- | CVT/5MT | F | L | Hatchback FWD 3A90 | Model:Space Star,Transmission:CVT,Date to:2015.02,Date from:2019.11,Model:Mirage,only for Transmission:5MT | GDS41586 | Drive Shaft | | 24 | 23 | 47 | 90 | 656 | |
| | 2012.05- | CVT/5MT | F | R | Hatchback FWD 3A90 | Model:Space Star,Transmission:CVT,Date to:2015.02,Date from:2019.11,Model:Mirage,only for Transmission:5MT | GDS41587 | Drive Shaft | | 24 | 23 | 47 | 90 | 857 | |
| 1.2 (57 kw) | 2012.07- | 5MT | F | L | Hatchback FWD 3A92 | | GDS41586 | Drive Shaft | | 24 | 23 | 47 | 90 | 656 | |
| | 2012.07- | 5MT | F | R | Hatchback FWD 3A92 | | GDS41587 | Drive Shaft | | 24 | 23 | 47 | 90 | 857 | |
| | 2012.07- | 5MT | F | R | Hatchback FWD 3A92 | | GCO41423 | Outer Joint | | 24 | 29 | 47 | 90 | 55 | I |
| | 2012.07- | 5MT | F | L/R | Hatchback FWD 3A92 | | GCI41226 | Inner Joint | | 23 | 26 | 34 | 60.5 | 91.5 | |
| | 2012.07- | CVT | F | L | Hatchback FWD 3A92 | | GDS41578 | Drive Shaft | | 24 | 25 | 47 | 90 | 657 | |
| | 2012.07- | CVT | F | R | Hatchback FWD 3A92 | | GDS41579 | Drive Shaft | | 24 | 25 | 47 | 90 | 857 | |
| | 2012.07- | CVT | F | L/R | Hatchback FWD 3A92 | | GCO41421 | Outer Joint | | 24 | 26 | 47 | 90 | 54.5 | I |
| 1.2 (59 kw) | 2012.10- | CVT | F | L | Hatchback FWD 3A92 | | GDS41578 | Drive Shaft | | 24 | 25 | 47 | 90 | 657 | |
| | 2012.10- | CVT | F | R | Hatchback FWD 3A92 | | GDS41579 | Drive Shaft | | 24 | 25 | 47 | 90 | 857 | |
| | 2012.10- | CVT | F | L | Hatchback FWD 3A92 | | GCO41421 | Outer Joint | | 24 | 26 | 47 | 90 | 54.5 | I |
| | 2012.10- | MT | F | L | Hatchback FWD 3A92 | | GDS41586 | Drive Shaft | | 24 | 23 | 47 | 90 | 656 | |
| | 2012.10- | MT | F | R | Hatchback FWD 3A92 | | GDS41587 | Drive Shaft | | 24 | 23 | 47 | 90 | 857 | |
| | 2012.10- | MT | F | L/R | Hatchback FWD 3A92 | | GCO41423 | Outer Joint | | 24 | 29 | 47 | 90 | 55 | I |
| | 2012.10- | MT | F | L/R | Hatchback FWD 3A92 | | GCI41226 | Inner Joint | | 23 | 26 | 34 | 60.5 | 91.5 | |
| **Montero** | | | | | | | | | | | | | | | |
| 3.2 (121 kw) | 2008.11- | 5AT | F | L | SUV 4WD 4M41 | | GDS81421 | Drive Shaft | 50T | 30 | 28 | 69.2 | 98.5 | 603 | |
| | 2008.11- | 5AT | F | R | SUV 4WD 4M41 | | GDS39261 | Drive Shaft | 50T | 30 | | 69.2 | 98.5 | 519 | |
| | 2008.11- | | F | L/R | SUV 4WD 4M41 | | GCO39207 | Outer Joint | 50T | 30 | 36 | 69.2 | 98.5 | 67.5 | I |
| | 2008.11- | | F | R | SUV 4WD 4M41 | | GCI39121 | Inner Joint | | | 35 | | | 80 | |
| | 2008.11- | 5AT | R | L | SUV 4WD 4M41 | With differential lock | GDS83944 | Drive Shaft | 50T | 33 | 33 | 72 | 107.5 | 804 | |
| | 2008.11- | 5AT | R | R | SUV 4WD 4M41 | With differential lock | GDS83945 | Drive Shaft | 50T | 33 | 33 | 72 | 107.5 | 833 | |
| | 2008.11- | 5AT | R | L/R | SUV 4WD 4M41 | Without differential lock | GDS83886 | Drive Shaft | 50T | 33 | 33 | 72 | 107.5 | 819 | |
| | 2008.11- | 5AT | R | L/R | SUV 4WD 4M41 | | GCO82518 | Outer Joint | 50T | 33 | 43 | 72 | 107.5 | 87 | I |
| | 2008.11- | 5AT | R | L | SUV 4WD 4M41 | With differential lock | GCI82430 | Inner Joint | | 33 | 43 | 55 | 70 | 122 | |
| | 2008.11- | 5AT | R | R | SUV 4WD 4M41 | With differential lock | GCI82431 | Inner Joint | | 33 | 43 | 55 | 99 | 122 | |
| | 2008.11- | 5AT | R | L/R | SUV 4WD 4M41 | Without differential lock | GCI82396 | Inner Joint | | 33 | 43 | 55 | 85 | 122 | |
| 3.8 (172 kw) | 2012.06- | | F | R | SUV 4WD 6G75 | | GCI39121 | Inner Joint | | | 35 | | | 80 | |
| **Montero/Pajero/Shogun** | | | | | | | | | | | | | | | |
| 2.5 (73 kw) | 1990.12-2000.04 | AT | F | L/R | Open Off-Road Vehicle 4WD 4D56-TD (05.91-.) | | GCO39015 | Outer Joint | | 27 | 27 | 60 | 97 | 68.5 | M |
| | 1990.12-2000.04 | MT | F | L | Open Off-Road Vehicle 4WD 4D56-TD (05.91-.) | | GDS39007 | Drive Shaft | | 28 | 25 | 56 | 154 | 616 | |
| | 1990.12-2000.04 | MT | F | R | Open Off-Road Vehicle 4WD 4D56-TD (05.91-.) | | GDS39006 | Drive Shaft | | 28 | | 56 | 154 | 538 | |
| | 1990.12-2000.04 | MT | F | L/R | Open Off-Road Vehicle 4WD 4D56-TD (05.91-.) | | GCO39018 | Outer Joint | | 28 | 25 | 56 | 154 | 62 | M |
| | 1990.12-2000.04 | MT | F | L/R | Open Off-Road Vehicle 4WD 4D56-TD (05.91-.) | | GCO39027 | Outer Joint | | 28 | 25 | 56 | 154.1 | 62 | M |
| | 1990.12-2000.04 | MT | F | L | Open Off-Road Vehicle 4WD 4D56-TD (05.91-.) | | GCI39049 | Inner Joint | | 25 | 25 | 32 | 89 | 81.5 | |
| | 1990.12-2000.04 | MT | F | R | Open Off-Road Vehicle 4WD 4D56-TD (05.91-.) | | GCI39061 | Inner Joint | | | 25 | | | 68.6 | |
| | 1990.12-2000.04 | MT | F | R | Open Off-Road Vehicle 4WD 4D56-TD (05.91-.) | | GCI75004 | Inner Joint | | | 26 | | | 62.5 | |
| | 1990.12-2000.04 | MT | F | R | Open Off-Road Vehicle 4WD 4D56-TD (05.91-.) | | GCI99092 | Inner Joint | | | 26 | | | 68.6 | |
| | 1991.03-1999.08 | AT | F | L/R | Open Off-Road Vehicle 4WD 4D56-T | | GCO39015 | Outer Joint | | 27 | 27 | 60 | 97 | 68.5 | M |
| | 1991.03-1999.08 | MT | F | L | Open Off-Road Vehicle 4WD 4D56-T | | GDS39007 | Drive Shaft | | 28 | 25 | 56 | 154 | 616 | |
| | 1991.03-1999.08 | MT | F | R | Open Off-Road Vehicle 4WD 4D56-T | | GDS39006 | Drive Shaft | | 28 | | 56 | 154 | 538 | |
| | 1991.03-1999.08 | MT | F | L/R | Open Off-Road Vehicle 4WD 4D56-T | | GCO39018 | Outer Joint | | 28 | 25 | 56 | 154 | 62 | M |
| | 1991.03-1999.08 | MT | F | L/R | Open Off-Road Vehicle 4WD 4D56-T | | GCO39027 | Outer Joint | | 28 | 25 | 56 | 154.1 | 62 | M |
| | 1991.03-1999.08 | MT | F | L | Open Off-Road Vehicle 4WD 4D56-T | | GCI39049 | Inner Joint | | 25 | 25 | 32 | 89 | 81.5 | |
| | 1991.03-1999.08 | MT | F | R | Open Off-Road Vehicle 4WD 4D56-T | | GCI39061 | Inner Joint | | | 25 | | | 68.6 | |
| | 1991.03-1999.08 | MT | F | R | Open Off-Road Vehicle 4WD 4D56-T | | GCI75004 | Inner Joint | | | 26 | | | 62.5 | |
| | 1991.03-1999.08 | MT | F | R | Open Off-Road Vehicle 4WD 4D56-T | | GCI99092 | Inner Joint | | | 26 | | | 68.6 | |
| 2.8 (92 kw) | 1994.06-1999.10 | AT | F | R | Closed Off-Road Vehicle 4WD 4M40-T | Date from:1996.03,Date to:1997.03,For Modelcode:V26WG | GCI39061 | Inner Joint | | | 25 | | | 68.6 | |
| | 1994.06-1999.10 | AT/MT | F | R | Closed Off-Road Vehicle 4WD 4M40-T | Transmission:AT,For Modelcode:V26WV,V26W,Transmission:MT,Date from:1996.02,For Modelcode:V26WG | GCI75004 | Inner Joint | | | 26 | | | 62.5 | |
| 3.0 (130 kw) | 1997.06-1999.10 | AT | F | L | Closed Off-Road Vehicle 4WD 6G72 (SOHC 24V) | | GCI39049 | Inner Joint | | 25 | 25 | 32 | 89 | 81.5 | |
| | 1997.06-1999.10 | MT | F | L | Closed Off-Road Vehicle 4WD 6G72 (SOHC 24V) | | GDS39007 | Drive Shaft | | 28 | 25 | 56 | 154 | 616 | |
| | 1997.06-1999.10 | MT | F | R | Closed Off-Road Vehicle 4WD 6G72 (SOHC 24V) | | GDS39006 | Drive Shaft | | 28 | | 56 | 154 | 538 | |
| | 1997.06-1999.10 | MT | F | L/R | Closed Off-Road Vehicle 4WD 6G72 (SOHC 24V) | | GCO39018 | Outer Joint | | 28 | 25 | 56 | 154 | 62 | M |
| | 1997.06-1999.10 | MT | F | R | Closed Off-Road Vehicle 4WD 6G72 (SOHC 24V) | | GCI99092 | Inner Joint | | | 26 | | | 68.6 | |
| 3.0 (133 kw) | 1994.06-1997.05 | AT | F | L | Closed Off-Road Vehicle 4WD 6G72 (SOHC 24V) | | GCI39049 | Inner Joint | | 25 | 25 | 32 | 89 | 81.5 | |

| | YEAR | TRANSM. | F/R | L/R | BODY STYLE & DRIVE TYPE & ENGINE | REMARKS | G-AP Ref. | PRODUCT | ABS | Technical Specifications A | B | C | H | L | P |
|---|---|---|---|---|---|---|---|---|---|---|---|---|---|---|---|
| **MITSUBISHI** | | | | | | | | | | | | | | | |
| **Montero/Pajero/Shogun** | | | | | | | | | | | | | | | |
| 3.0 (133 kw) | 1994.06-1997.05 | AT | F | R | Closed Off-Road Vehicle 4WD 6G72 (SOHC 24V) | | GCI39061 | Inner Joint | | | 25 | | | 68.6 | |
| | 1994.06-1997.05 | AT/MT | F | R | Closed Off-Road Vehicle 4WD 6G72 (SOHC 24V) | | GCI75004 | Inner Joint | | | 26 | | | 62.5 | |
| | 1994.06-1997.05 | MT | F | L | Closed Off-Road Vehicle 4WD 6G72 (SOHC 24V) | | GDS39007 | Drive Shaft | | 28 | 25 | 56 | 154 | 616 | |
| | 1994.06-1997.05 | MT | F | R | Closed Off-Road Vehicle 4WD 6G72 (SOHC 24V) | | GDS39006 | Drive Shaft | | 28 | | 56 | 154 | 538 | |
| | 1994.06-1997.05 | MT | F | L/R | Closed Off-Road Vehicle 4WD 6G72 (SOHC 24V) | | GCO39018 | Outer Joint | | 28 | 25 | 56 | 154 | 62 | M |
| | 1994.06-1997.05 | MT | F | R | Closed Off-Road Vehicle 4WD 6G72 (SOHC 24V) | | GCI99092 | Inner Joint | | | 26 | | | 68.6 | |
| 3.8 (160 kw) | 2002.09-2006.12 | AT/MT | R | | Closed Off-Road Vehicle 4WD 6G75 | Trainer Type:AT;Production Date From:2002.12 Trainer Type:MT;Production Date From:2002.09 | GCI41195 | Inner Joint | | | 43 | | | 84 | |
| **Outlander** | | | | | | | | | | | | | | | |
| 2.0 (100 kw) | 2003.05-2006.10 | 5MT | F | R | SUV 4WD 4G63 (DOHC 16V) | Date to:2003.09 | GDS83418 | Drive Shaft | 43T | 25 | 26 | 57 | 94.5 | 660 | |
| | 2003.05-2006.10 | 5MT | F | R | SUV 4WD 4G63 (DOHC 16V) | Date to:2003.09 | GCO39182 | Outer Joint | 43T | 25 | 29 | 57 | 94.5 | 58 | I |
| | 2003.05-2006.10 | 5MT | F | R | SUV 4WD 4G63 (DOHC 16V) | Date to:2003.09 | GCI82208 | Inner Joint | | 26 | 29 | 41 | | 127 | |
| | 2003.05-2006.10 | AT/MT | F | L/R | SUV 4WD 4G63 (DOHC 16V) | | GCO39112 | Outer Joint | 43T | 25 | 29 | 57 | 94.5 | 57 | I |
| | 2003.05-2006.10 | AT/MT | F | L/R | SUV 4WD 4G63 (DOHC 16V) | Date from:2003.09 | GCO39176 | Outer Joint | 43T | 25 | 29 | 57 | 95 | 58 | M |
| | 2003.05-2006.10 | 5MT | R | L/R | SUV 4WD 4G63 (DOHC 16V) | | GCO39252 | Outer Joint | 43T | 25 | 29 | 57 | 95 | 71 | I |
| | 2003.05-2006.10 | 4AT | F | L | SUV FWD 4G63 (DOHC 16V) | | GDS39286 | Drive Shaft | 43T | 25 | 27 | 57 | 95 | 632 | |
| | 2003.05-2006.10 | 4AT | F | R | SUV FWD 4G63 (DOHC 16V) | | GDS39146 | Drive Shaft | 43T | 25 | 28 | 57 | 94.5 | 678 | |
| | 2003.05-2006.10 | 4AT | F | L | SUV FWD 4G63 (DOHC 16V) | | GCI39094 | Inner Joint | | 27 | 33 | 41 | 62.5 | 103.5 | |
| | 2003.05-2006.10 | 4AT/5MT | F | L/R | SUV FWD 4G63 (DOHC 16V) | | GCO39143 | Outer Joint | 43T | 25 | 33 | 57 | 95 | 60.5 | I |
| | 2003.05-2006.10 | AT/MT | F | L/R | SUV FWD 4G63 (DOHC 16V) | | GCO39112 | Outer Joint | 43T | 25 | 29 | 57 | 94.5 | 57 | I |
| 2.0 (103 kw) | 2007.02-2012.11 | 6MT | F | L | SUV 4WD BSY | | GDS81941 | Drive Shaft | | 28 | 24 | 59.6 | 95 | 631 | |
| | 2007.02-2012.11 | 6MT | F | L/R | SUV 4WD BSY | | GCO39137 | Outer Joint | | 28 | 37 | 59.5 | 94.5 | 71.5 | I |
| | 2007.02-2012.11 | MT | F | R | SUV 4WD BSY | | GDS51046 | Drive Shaft | | 28 | 24 | 59.5 | 94.5 | 989 | |
| | 2007.02-2012.11 | MT | F | L/R | SUV 4WD BSY | | GCO39117 | Outer Joint | | 28 | 35 | 59.5 | 95 | 65 | I |
| | 2007.02-2012.11 | | F | L | SUV 4WD BSY | | GCI81553 | Inner Joint | | 24 | 36 | 50 | 67 | 116 | |
| | 2007.02-2012.11 | 6MT | R | L | SUV 4WD BSY | Date to:2009.08 | GDS39169 | Drive Shaft | | 27 | 23 | 58 | 94.5 | 754.5 | |
| | 2007.02-2012.11 | 6MT | R | L | SUV 4WD BSY | Date from:2009.09 | GDS81824 | Drive Shaft | | 25 | 23 | 48 | 106 | 753 | |
| | 2007.02-2012.11 | 6MT | R | R | SUV 4WD BSY | Date from:2009.09 | GDS81823 | Drive Shaft | | 25 | 23 | 48 | 106 | 835 | |
| | 2007.02-2012.11 | 6MT | R | L/R | SUV 4WD BSY | | GCI39050 | Inner Joint | | 23 | 26 | 35 | 64 | 96 | |
| | 2007.02-2012.11 | AT/MT | R | L/R | SUV 4WD BSY | Date From:2009.06,Date To:2010.06 | GCO51033 | Outer Joint | | 25 | 26 | 48 | 106.5 | 49 | I |
| | 2007.02-2012.11 | AT/MT/CVT | R | L/R | SUV 4WD BSY | Date to:2009.08 | GCO39175 | Outer Joint | | 27 | 26 | 58 | 94.5 | 52.5 | I |
| 2.0 (107 kw) | 2012.10-2022.12 | CVT | F | L | SUV 4WD 4B11 | Date to:2019.12 | GDS82991 | Drive Shaft | | 28 | 27 | 59.6 | 95 | 651 | |
| | 2012.10-2022.12 | CVT | F | L | SUV 4WD 4B11 | Date from:2020.01 | GDS83135 | Drive Shaft | | 28 | 27 | 59.5 | 94.5 | 650 | |
| | 2012.10-2022.12 | CVT | F | L/R | SUV 4WD 4B11 | | GCO82124 | Outer Joint | | 28 | 35 | 59.6 | 95 | 65 | I |
| | 2012.10-2022.12 | CVT | F | L | SUV 4WD 4B11 | | GCI51034 | Inner Joint | | 27 | 35 | 40 | 62 | 113 | |
| | 2012.10-2022.12 | CVT | F | R | SUV 4WD 4B11 | | GCI81083 | Inner Joint | | 27 | 35 | 50 | 255.5 | 120 | |
| | 2012.10-2022.12 | CVT | R | L | SUV 4WD 4B11 | | GDS81824 | Drive Shaft | | 25 | 23 | 48 | 106 | 753 | |
| | 2012.10-2022.12 | CVT | R | R | SUV 4WD 4B11 | | GDS81823 | Drive Shaft | | 25 | 23 | 48 | 106 | 835 | |
| | 2012.10-2022.12 | CVT | R | L/R | SUV 4WD 4B11 | | GCO81538 | Outer Joint | | 25 | 26 | 48 | 106 | 51 | I |
| | 2012.10-2022.12 | CVT | R | L/R | SUV 4WD 4B11 | | GCI39050 | Inner Joint | | 23 | 26 | 35 | 64 | 96 | |
| | 2012.10-2022.12 | CVT | F | L | SUV 4WD 4J11 | Date to:2019.12 | GDS82991 | Drive Shaft | | 28 | 27 | 59.6 | 95 | 651 | |
| | 2012.10-2022.12 | CVT | F | L | SUV 4WD 4J11 | Date from:2020.01 | GDS83135 | Drive Shaft | | 28 | 27 | 59.5 | 94.5 | 650 | |
| | 2012.10-2022.12 | CVT | F | L/R | SUV 4WD 4J11 | | GCO82124 | Outer Joint | | 28 | 35 | 59.6 | 95 | 65 | I |
| | 2012.10-2022.12 | CVT | F | L | SUV 4WD 4J11 | | GCI51034 | Inner Joint | | 27 | 35 | 40 | 62 | 113 | |
| | 2012.10-2022.12 | CVT | F | R | SUV 4WD 4J11 | | GCI81083 | Inner Joint | | 27 | 35 | 50 | 255.5 | 120 | |
| | 2012.10-2022.12 | AT/CVT | R | L | SUV 4WD 4J11 | | GDS81824 | Drive Shaft | | 25 | 23 | 48 | 106 | 753 | |
| | 2012.10-2022.12 | AT/CVT | R | R | SUV 4WD 4J11 | | GDS81823 | Drive Shaft | | 25 | 23 | 48 | 106 | 835 | |
| | 2012.10-2022.12 | AT/CVT | R | L/R | SUV 4WD 4J11 | | GCI39050 | Inner Joint | | 23 | 26 | 35 | 64 | 96 | |
| | 2012.10-2022.12 | CVT | R | L/R | SUV 4WD 4J11 | | GCO81538 | Outer Joint | | 25 | 26 | 48 | 106 | 51 | I |
| | 2012.10-2022.12 | CVT | F | L | SUV FWD 4B11 | | GDS82991 | Drive Shaft | | 28 | 27 | 59.6 | 95 | 651 | |
| | 2012.10-2022.12 | CVT | F | R | SUV FWD 4B11 | | GDS57597 | Drive Shaft | | 28 | 27 | 59.6 | 95 | 965 | |
| | 2012.10-2022.12 | CVT | F | L/R | SUV FWD 4B11 | | GCO82124 | Outer Joint | | 28 | 35 | 59.6 | 95 | 65 | I |
| | 2012.10-2022.12 | CVT | F | L/R | SUV FWD 4B11 | | GCI51034 | Inner Joint | | 27 | 35 | 40 | 62 | 113 | |
| | 2012.10-2022.12 | 5MT | F | L | SUV FWD 4J11 | | GDS82701 | Drive Shaft | | 28 | 24 | 59.6 | 95 | 635 | |
| | 2012.10-2022.12 | 5MT | F | L | SUV FWD 4J11 | | GCI81207 | Inner Joint | | 24 | 35 | 50 | 67.5 | 111 | |
| | 2012.10-2022.12 | 5MT | F | R | SUV FWD 4J11 | | GCI81206 | Inner Joint | | 24 | 35 | 40 | 96 | 104.5 | |
| | 2012.10-2022.12 | AT/CVT | F | R | SUV FWD 4J11 | | GCI51034 | Inner Joint | | 27 | 35 | 40 | 62 | 113 | |
| | 2012.10-2022.12 | CVT | F | L | SUV FWD 4J11 | | GDS82991 | Drive Shaft | | 28 | 27 | 59.6 | 95 | 651 | |
| | 2012.10-2022.12 | CVT | F | R | SUV FWD 4J11 | | GDS57597 | Drive Shaft | | 28 | 27 | 59.6 | 95 | 965 | |
| | 2012.10-2022.12 | CVT | F | L/R | SUV FWD 4J11 | | GCO82124 | Outer Joint | | 28 | 35 | 59.6 | 95 | 65 | I |
| 2.0 (108 kw) | 2006.11-2012.11 | AT | F | L | SUV 4WD 4B11 | Date From:2007.01 | GDS82991 | Drive Shaft | | 28 | 27 | 59.6 | 95 | 651 | |
| | 2006.11-2012.11 | AT | F | L/R | SUV 4WD 4B11 | | GCO39117 | Outer Joint | | 28 | 35 | 59.5 | 95 | 65 | I |
| | 2006.11-2012.11 | AT | F | | SUV 4WD 4B11 | Date from:2009.06 | GCO81538 | Outer Joint | | 25 | 26 | 48 | 106 | 51 | I |
| | 2006.11-2012.11 | CVT | F | R | SUV 4WD 4B11 | | GCI81083 | Inner Joint | | 27 | 35 | 50 | 255.5 | 120 | |
| | 2006.11-2012.11 | CVT | R | L | SUV 4WD 4B11 | | GDS81824 | Drive Shaft | | 25 | 23 | 48 | 106 | 753 | |
| | 2006.11-2012.11 | CVT | R | R | SUV 4WD 4B11 | | GDS81823 | Drive Shaft | | 25 | 23 | 48 | 106 | 835 | |

| | YEAR | TRANSM. | F/R | L/R | BODY STYLE & DRIVE TYPE & ENGINE | REMARKS | G-AP Ref. | PRODUCT | ABS | Technical Specifications | | | | | |
|---|---|---|---|---|---|---|---|---|---|---|---|---|---|---|---|
| | | | | | | | | | | A | B | C | H | L | P |
| **MITSUBISHI** | | | | | | | | | | | | | | | |
| **Outlander** | | | | | | | | | | | | | | | |
| 2.0 (108 kw) | 2006.11-2012.11 | CVT | R | L/R | SUV 4WD 4B11 | | GCI39050 | Inner Joint | | 23 | 26 | 35 | 64 | 96 | |
| | 2006.11-2012.11 | AT | F | R | SUV FWD 4B11 | | GDS39120 | Drive Shaft | | 28 | 27 | 59.5 | 95 | 965 | |
| | 2006.11-2012.11 | AT/CVT | F | L/R | SUV FWD 4B11 | | GCI51034 | Inner Joint | | 27 | 35 | 40 | 62 | 113 | |
| | 2006.11-2012.11 | AT/MT | F | L/R | SUV FWD 4B11 | 6 balls | GCO39117 | Outer Joint | | 28 | 35 | 59.5 | 95 | 65 | I |
| | 2006.11-2012.11 | CVT | F | L | SUV FWD 4B11 | | GDS82991 | Drive Shaft | | 28 | 27 | 59.6 | 95 | 651 | |
| | 2006.11-2012.11 | CVT | F | R | SUV FWD 4B11 | | GCO39178 | Outer Joint | | 28 | 33 | 59.6 | 94.5 | 61.5 | I |
| | 2006.11-2012.11 | MT | F | L | SUV FWD 4B11 | | GDS82701 | Drive Shaft | | 28 | 24 | 59.6 | 95 | 635 | |
| | 2006.11-2012.11 | MT | F | R | SUV FWD 4B11 | | GDS83606 | Drive Shaft | | 28 | 24 | 59.5 | 95 | 989 | |
| | 2006.11-2012.11 | MT | F | R | SUV FWD 4B11 | 8 balls | GCO82438 | Outer Joint | | 28 | 35 | 59.5 | 95 | 65 | I |
| | 2006.11-2012.11 | MT | F | L | SUV FWD 4B11 | | GCI81207 | Inner Joint | | 24 | 35 | 50 | 67.5 | 111 | |
| | 2006.11-2012.11 | MT | F | R | SUV FWD 4B11 | | GCI81206 | Inner Joint | | 24 | 35 | 40 | 96 | 104.5 | |
| 2.0 (110 kw) | 2012.08-2022.12 | CVT | F | L | SUV 4WD 4J11 | Date to:2019.12 | GDS82991 | Drive Shaft | | 28 | 27 | 59.6 | 95 | 651 | |
| | 2012.08-2022.12 | CVT | F | L | SUV 4WD 4J11 | Date from:2020.01 | GDS83135 | Drive Shaft | | 28 | 27 | 59.5 | 94.5 | 650 | |
| | 2012.08-2022.12 | CVT | F | L/R | SUV 4WD 4J11 | | GCO82124 | Outer Joint | | 28 | 35 | 59.6 | 95 | 65 | I |
| | 2012.08-2022.12 | CVT | F | L | SUV 4WD 4J11 | | GCI51034 | Inner Joint | | 27 | 35 | 40 | 62 | 113 | |
| | 2012.08-2022.12 | CVT | F | R | SUV 4WD 4J11 | | GCI81083 | Inner Joint | | 27 | 35 | 50 | 255.5 | 120 | |
| | 2012.08-2022.12 | CVT | R | L | SUV 4WD 4J11 | | GDS81824 | Drive Shaft | | 25 | 23 | 48 | 106 | 753 | |
| | 2012.08-2022.12 | CVT | R | R | SUV 4WD 4J11 | | GDS81823 | Drive Shaft | | 25 | 23 | 48 | 106 | 835 | |
| | 2012.08-2022.12 | CVT | R | L/R | SUV 4WD 4J11 | | GCI39050 | Inner Joint | | 23 | 26 | 35 | 64 | 96 | |
| | 2012.08-2022.12 | | R | L/R | SUV 4WD 4J11 | | GCO81538 | Outer Joint | | 25 | 26 | 48 | 106 | 51 | I |
| | 2012.08-2022.12 | 5MT | F | L | SUV FWD 4J11 | | GDS82701 | Drive Shaft | | 28 | 24 | 59.6 | 95 | 635 | |
| | 2012.08-2022.12 | 5MT | F | L/R | SUV FWD 4J11 | | GCO82124 | Outer Joint | | 28 | 35 | 59.6 | 95 | 65 | I |
| | 2012.08-2022.12 | 5MT | F | L | SUV FWD 4J11 | | GCI81207 | Inner Joint | | 24 | 35 | 50 | 67.5 | 111 | |
| | 2012.08-2022.12 | 5MT | F | R | SUV FWD 4J11 | | GCI81206 | Inner Joint | | 24 | 35 | 40 | 96 | 104.5 | |
| | 2012.08-2022.12 | CVT | F | L | SUV FWD 4J11 | | GDS82991 | Drive Shaft | | 28 | 27 | 59.6 | 95 | 651 | |
| | 2012.08-2022.12 | CVT | F | R | SUV FWD 4J11 | | GDS57597 | Drive Shaft | | 28 | 27 | 59.6 | 95 | 965 | |
| | 2012.08-2022.12 | CVT | F | L/R | SUV FWD 4J11 | | GCI51034 | Inner Joint | | 27 | 35 | 40 | 62 | 113 | |
| 2.0 (112 kw) | 2013.04-2022.12 | CVT | F | L | SUV FWD 4J11 | | GDS82991 | Drive Shaft | | 28 | 27 | 59.6 | 95 | 651 | |
| | 2013.04-2022.12 | CVT | F | R | SUV FWD 4J11 | | GDS57597 | Drive Shaft | | 28 | 27 | 59.6 | 95 | 965 | |
| | 2013.04-2022.12 | CVT | F | L/R | SUV FWD 4J11 | | GCO82124 | Outer Joint | | 28 | 35 | 59.6 | 95 | 65 | I |
| | 2013.04-2022.12 | CVT | F | L/R | SUV FWD 4J11 | | GCI51034 | Inner Joint | | 27 | 35 | 40 | 62 | 113 | |
| 2.0 (147 kw) | 2014.01-2021.12 | CVT | F | L | SUV 4WD 4B11;S61;Y61 | | GDS81785 | Drive Shaft | | 28 | 27 | 59.6 | 94.5 | 671 | |
| | 2014.01-2021.12 | CVT | F | R | SUV 4WD 4B11;S61;Y61 | | GDS81786 | Drive Shaft | | 28 | 27 | 59.6 | 94.5 | 949 | |
| | 2014.01-2021.12 | CVT | F | L/R | SUV 4WD 4B11;S61;Y61 | | GCO81524 | Outer Joint | | 28 | 32 | 59.6 | 94.5 | 59.5 | I |
| | 2014.01-2021.12 | CVT | F | L/R | SUV 4WD 4B11;S61;Y61 | | GCI81511 | Inner Joint | | 27 | 32 | 41 | 62.5 | 89 | |
| | 2014.01-2021.12 | CVT | R | L | SUV 4WD 4B11;S61;Y61 | | GDS81929 | Drive Shaft | | 25 | 23 | 48 | 106 | 876 | |
| | 2014.01-2021.12 | CVT | R | R | SUV 4WD 4B11;S61;Y61 | | GDS81930 | Drive Shaft | | 25 | 23 | 48 | 106 | 710 | |
| | 2014.01-2021.12 | CVT | R | L/R | SUV 4WD 4B11;S61;Y61 | | GCO81565 | Outer Joint | | 25 | 24 | 48 | 106 | 39 | I |
| | 2014.01-2021.12 | CVT | R | L/R | SUV 4WD 4B11;S61;Y61 | | GCI81548 | Inner Joint | | 23 | 24 | 35 | 50 | 88 | |
| | 2017.09-2021.12 | CVT | F | L | SUV 4WD 4B11;S61;Y61 | | GDS81785 | Drive Shaft | | 28 | 27 | 59.6 | 94.5 | 671 | |
| | 2017.09-2021.12 | CVT | F | R | SUV 4WD 4B11;S61;Y61 | | GDS81786 | Drive Shaft | | 28 | 27 | 59.6 | 94.5 | 949 | |
| | 2017.09-2021.12 | CVT | F | L/R | SUV 4WD 4B11;S61;Y61 | | GCI81511 | Inner Joint | | 27 | 32 | 41 | 62.5 | 89 | |
| | 2017.09-2021.12 | CVT | R | L | SUV 4WD 4B11;S61;Y61 | | GDS81929 | Drive Shaft | | 25 | 23 | 48 | 106 | 876 | |
| | 2017.09-2021.12 | CVT | R | R | SUV 4WD 4B11;S61;Y61 | Date to:2018.02 | GDS81930 | Drive Shaft | | 25 | 23 | 48 | 106 | 710 | |
| | 2017.09-2021.12 | CVT | R | L/R | SUV 4WD 4B11;S61;Y61 | | GCI81548 | Inner Joint | | 23 | 24 | 35 | 50 | 88 | |
| 2.0 (148 kw) | 2004.04-2006.10 | AT/MT | F | L/R | SUV 4WD 4G63-T/C (DOHC 16V) | | GCO39112 | Outer Joint | 43T | 25 | 29 | 57 | 94.5 | 57 | I |
| | 2004.04-2006.10 | AT/MT | F | | SUV 4WD 4G63-T/C (DOHC 16V) | for left-hand drive vehicles,Date To:2005.06 | GCO39176 | Outer Joint | 43T | 25 | 29 | 57 | 95 | 58 | M |
| | 2004.04-2006.10 | MT | F | | SUV 4WD 4G63-T/C (DOHC 16V) | for left-hand drive vehicles | GCI99019 | Inner Joint | | 26 | 29 | 41 | | 140 | |
| | 2004.04-2006.10 | MT | R | | SUV 4WD 4G63-T/C (DOHC 16V) | for left-hand drive vehicles | GCO39252 | Outer Joint | 43T | 25 | 29 | 57 | 95 | 71 | I |
| 2.2 (103 kw) | 2010.09-2012.11 | 6MT | F | L | SUV 4WD 4N14 | | GDS81941 | Drive Shaft | | 28 | 24 | 59.6 | 95 | 631 | |
| | 2010.09-2012.11 | 6MT | F | R | SUV 4WD 4N14 | | GDS81940 | Drive Shaft | | 28 | 24 | 59.6 | 95 | 993 | |
| | 2010.09-2012.11 | | F | L | SUV 4WD 4N14 | | GCO39137 | Outer Joint | | 28 | 37 | 59.5 | 94.5 | 71.5 | I |
| | 2010.09-2012.11 | | F | L | SUV 4WD 4N14 | | GCI81553 | Inner Joint | | 24 | 36 | 50 | 67 | 116 | |
| | 2010.09-2012.11 | | F | R | SUV 4WD 4N14 | | GCI81552 | Inner Joint | | 24 | 36 | 50 | 280.5 | 129 | |
| | 2010.09-2012.11 | 6MT | R | L | SUV 4WD 4N14 | For vehicles with 3rd seating row | GDS39169 | Drive Shaft | | 27 | 23 | 58 | 94.5 | 754.5 | |
| | 2010.09-2012.11 | 6MT | R | L | SUV 4WD 4N14 | For vehicles without 3rd seating row | GDS81824 | Drive Shaft | | 25 | 23 | 48 | 106 | 753 | |
| | 2010.09-2012.11 | 6MT | R | R | SUV 4WD 4N14 | For vehicles without 3rd seating row | GDS81823 | Drive Shaft | | 25 | 23 | 48 | 106 | 835 | |
| | 2010.09-2012.11 | 6MT | R | L/R | SUV 4WD 4N14 | | GCI39050 | Inner Joint | | 23 | 26 | 35 | 64 | 96 | |
| | 2010.09-2012.11 | | R | L/R | SUV 4WD 4N14 | For vehicles with 3rd seating row | GCO39175 | Outer Joint | | 27 | 26 | 58 | 94.5 | 52.5 | I |
| 2.2 (110 kw) | 2012.08-2022.12 | 6AT | F | L | SUV 4WD 4N14 | | GDS81935 | Drive Shaft | | 28 | 30 | 59.6 | 95 | 643 | |
| | 2012.08-2022.12 | 6AT | F | R | SUV 4WD 4N14 | | GDS81936 | Drive Shaft | | 28 | 30 | 59.6 | 95 | 982 | |
| | 2012.08-2022.12 | 6AT | F | L | SUV 4WD 4N14 | | GCI39093 | Inner Joint | | 30 | 36 | 43 | 61 | 117.5 | |
| | 2012.08-2022.12 | 6AT | F | R | SUV 4WD 4N14 | | GCI81550 | Inner Joint | | 30 | 36 | 50 | 268.5 | 129 | |
| | 2012.08-2022.12 | 6AT/6MT | F | L/R | SUV 4WD 4N14 | | GCO81567 | Outer Joint | | 28 | 37 | 59.6 | 95 | 72.5 | I |
| | 2012.08-2022.12 | 6MT | F | L | SUV 4WD 4N14 | | GDS81941 | Drive Shaft | | 28 | 24 | 59.6 | 95 | 631 | |

| | YEAR | TRANSM. | F/R | L/R | BODY STYLE & DRIVE TYPE & ENGINE | REMARKS | G-AP Ref. | PRODUCT | ABS | Technical Specifications | | | | | |
|---|---|---|---|---|---|---|---|---|---|---|---|---|---|---|---|
| | | | | | | | | | | A | B | C | H | L | P |
| **MITSUBISHI** | | | | | | | | | | | | | | | |
| **Outlander** | | | | | | | | | | | | | | | |
| 2.2 (110 kw) | 2012.08-2022.12 | 6MT | F | R | SUV 4WD 4N14 | | GDS81940 | Drive Shaft | | 28 | 24 | 59.6 | 95 | 993 | |
| | 2012.08-2022.12 | 6MT | F | L | SUV 4WD 4N14 | | GCI81553 | Inner Joint | | 24 | 36 | 50 | 67 | 116 | |
| | 2012.08-2022.12 | 6MT | F | R | SUV 4WD 4N14 | | GCI81552 | Inner Joint | | 24 | 36 | 50 | 280.5 | 129 | |
| | 2012.08-2022.12 | 6AT/6MT | R | L | SUV 4WD 4N14 | | GDS81824 | Drive Shaft | | 25 | 23 | 48 | 106 | 753 | |
| | 2012.08-2022.12 | 6AT/6MT | R | R | SUV 4WD 4N14 | | GDS81823 | Drive Shaft | | 25 | 23 | 48 | 106 | 835 | |
| | 2012.08-2022.12 | 6AT/6MT | R | L/R | SUV 4WD 4N14 | | GCO81538 | Outer Joint | | 25 | 26 | 48 | 106 | 51 | I |
| | 2012.08-2022.12 | 6AT/6MT | R | L/R | SUV 4WD 4N14 | | GCI39050 | Inner Joint | | 23 | 26 | 35 | 64 | 96 | |
| | 2012.08-2022.12 | 6MT | F | L | SUV FWD 4N14 | | GDS81941 | Drive Shaft | | 28 | 24 | 59.6 | 95 | 631 | |
| | 2012.08-2022.12 | 6MT | F | L | SUV FWD 4N14 | | GCO81567 | Outer Joint | | 28 | 37 | 59.6 | 95 | 72.5 | I |
| | 2012.08-2022.12 | | F | L | SUV FWD 4N14 | | GCI81553 | Inner Joint | | 24 | 36 | 50 | 67 | 116 | |
| 2.2 (115 kw) | 2007.08-2012.11 | 6AT/6MT | F | L | SUV 4WD 4HN;4HK | | GDS81941 | Drive Shaft | | 28 | 24 | 59.6 | 95 | 631 | |
| | 2007.08-2012.11 | 6AT/6MT | F | R | SUV 4WD 4HN;4HK | | GDS81940 | Drive Shaft | | 28 | 24 | 59.6 | 95 | 993 | |
| | 2007.08-2012.11 | MT | F | L/R | SUV 4WD 4HN;4HK | | GCO39117 | Outer Joint | | 28 | 35 | 59.5 | 95 | 65 | I |
| | 2007.08-2012.11 | MT | F | L/R | SUV 4WD 4HN;4HK | Date to:2010.06 | GCO39137 | Outer Joint | | 28 | 37 | 59.5 | 94.5 | 71.5 | I |
| | 2007.08-2012.11 | MT | F | | SUV 4WD 4HN;4HK | Date From:2010.07 | GCO51033 | Outer Joint | | 25 | 26 | 48 | 106.5 | 49 | I |
| | 2007.08-2012.11 | MT | F | | SUV 4WD 4HN;4HK | Date from:2010.07 | GCO81538 | Outer Joint | | 25 | 26 | 48 | 106 | 51 | I |
| | 2007.08-2012.11 | MT | F | L | SUV 4WD 4HN;4HK | | GCI59140 | Inner Joint | | 24 | 36 | 50 | 67 | 116 | |
| | 2007.08-2012.11 | | F | L | SUV 4WD 4HN;4HK | | GCI81553 | Inner Joint | | 24 | 36 | 50 | 67 | 116 | |
| | 2007.08-2012.11 | | F | R | SUV 4WD 4HN;4HK | | GCI81552 | Inner Joint | | 24 | 36 | 50 | 280.5 | 129 | |
| | 2007.08-2012.11 | 6AT/6MT | R | L | SUV 4WD 4HN;4HK | | GDS39169 | Drive Shaft | | 27 | 23 | 58 | 94.5 | 754.5 | |
| | 2007.08-2012.11 | 6AT/6MT | R | L/R | SUV 4WD 4HN;4HK | | GCI39050 | Inner Joint | | 23 | 26 | 35 | 64 | 96 | |
| | 2007.08-2012.11 | AT/MT/CVT | R | L/R | SUV 4WD 4HN;4HK | | GCO39175 | Outer Joint | | 27 | 26 | 58 | 94.5 | 52.5 | I |
| 2.2 (130 kw) | 2006.11-2012.11 | 6MT | F | L | SUV 4WD 4N14 | | GDS81941 | Drive Shaft | | 28 | 24 | 59.6 | 95 | 631 | |
| | 2006.11-2012.11 | 6MT | F | R | SUV 4WD 4N14 | | GDS81940 | Drive Shaft | | 28 | 24 | 59.6 | 95 | 993 | |
| | 2006.11-2012.11 | 6MT | F | L/R | SUV 4WD 4N14 | | GCO39137 | Outer Joint | | 28 | 37 | 59.5 | 94.5 | 71.5 | I |
| | 2006.11-2012.11 | 6MT | F | L | SUV 4WD 4N14 | | GCI81553 | Inner Joint | | 24 | 36 | 50 | 67 | 116 | |
| | 2006.11-2012.11 | MT | F | L/R | SUV 4WD 4N14 | | GCO39117 | Outer Joint | | 28 | 35 | 59.5 | 95 | 65 | I |
| | 2006.11-2012.11 | MT | F | L | SUV 4WD 4N14 | | GCI59140 | Inner Joint | | 24 | 36 | 50 | 67 | 116 | |
| | 2006.11-2012.11 | | F | R | SUV 4WD 4N14 | | GCI81552 | Inner Joint | | 24 | 36 | 50 | 280.5 | 129 | |
| | 2006.11-2012.11 | 6MT | R | L | SUV 4WD 4N14 | For vehicles with 3rd seating row | GDS39169 | Drive Shaft | | 27 | 23 | 58 | 94.5 | 754.5 | |
| | 2006.11-2012.11 | 6MT | R | L | SUV 4WD 4N14 | For vehicles without 3rd seating row | GDS81824 | Drive Shaft | | 25 | 23 | 48 | 106 | 753 | |
| | 2006.11-2012.11 | 6MT | R | R | SUV 4WD 4N14 | For vehicles without 3rd seating row | GDS81823 | Drive Shaft | | 25 | 23 | 48 | 106 | 835 | |
| | 2006.11-2012.11 | 6MT | R | L/R | SUV 4WD 4N14 | For vehicles with 3rd seating row | GCO39175 | Outer Joint | | 27 | 26 | 58 | 94.5 | 52.5 | I |
| | 2006.11-2012.11 | 6MT | R | L/R | SUV 4WD 4N14 | | GCI39050 | Inner Joint | | 23 | 26 | 35 | 64 | 96 | |
| | 2006.11-2012.11 | 6MT | F | L | SUV FWD 4N14 | | GDS81941 | Drive Shaft | | 28 | 24 | 59.6 | 95 | 631 | |
| | 2006.11-2012.11 | 6MT | F | R | SUV FWD 4N14 | | GDS81940 | Drive Shaft | | 28 | 24 | 59.6 | 95 | 993 | |
| | 2006.11-2012.11 | 6MT | F | L/R | SUV FWD 4N14 | | GCO39137 | Outer Joint | | 28 | 37 | 59.5 | 94.5 | 71.5 | I |
| | 2006.11-2012.11 | MT | F | L | SUV FWD 4N14 | | GCI59140 | Inner Joint | | 24 | 36 | 50 | 67 | 116 | |
| | 2006.11-2012.11 | | F | L | SUV FWD 4N14 | | GCI81553 | Inner Joint | | 24 | 36 | 50 | 67 | 116 | |
| | 2006.11-2012.11 | | F | R | SUV FWD 4N14 | | GCI81552 | Inner Joint | | 24 | 36 | 50 | 280.5 | 129 | |
| 2.2 (132 kw) | 2015.05-2022.12 | 6AT/6MT | F | L | SUV 4WD 4N14 | | GCI39093 | Inner Joint | | 30 | 36 | 43 | 61 | 117.5 | |
| | 2015.05-2022.12 | 6AT/6MT | F | L | SUV 4WD 4N14 | | GCI81553 | Inner Joint | | 24 | 36 | 50 | 67 | 116 | |
| | 2015.05-2022.12 | 6AT/6MT | F | R | SUV 4WD 4N14 | | GCI81550 | Inner Joint | | 30 | 36 | 50 | 268.5 | 129 | |
| | 2015.05-2022.12 | 6AT/6MT | F | R | SUV 4WD 4N14 | | GCI81552 | Inner Joint | | 24 | 36 | 50 | 280.5 | 129 | |
| | 2015.05-2022.12 | AT | F | L | SUV 4WD 4N14 | | GDS81935 | Drive Shaft | | 28 | 30 | 59.6 | 95 | 643 | |
| | 2015.05-2022.12 | AT | F | R | SUV 4WD 4N14 | | GDS81936 | Drive Shaft | | 28 | 30 | 59.6 | 95 | 982 | |
| | 2015.05-2022.12 | AT/MT | F | L/R | SUV 4WD 4N14 | | GCO81567 | Outer Joint | | 28 | 37 | 59.6 | 95 | 72.5 | I |
| | 2015.05-2022.12 | MT | F | L | SUV 4WD 4N14 | | GDS81941 | Drive Shaft | | 28 | 24 | 59.6 | 95 | 631 | |
| | 2015.05-2022.12 | MT | F | R | SUV 4WD 4N14 | | GDS81940 | Drive Shaft | | 28 | 24 | 59.6 | 95 | 993 | |
| | 2015.05-2022.12 | AT/MT | R | L | SUV 4WD 4N14 | | GDS81824 | Drive Shaft | | 25 | 23 | 48 | 106 | 753 | |
| | 2015.05-2022.12 | AT/MT | R | R | SUV 4WD 4N14 | | GDS81823 | Drive Shaft | | 25 | 23 | 48 | 106 | 835 | |
| | 2015.05-2022.12 | AT/MT | R | L/R | SUV 4WD 4N14 | | GCO81538 | Outer Joint | | 25 | 26 | 48 | 106 | 51 | I |
| | 2015.05-2022.12 | AT/MT | R | L/R | SUV 4WD 4N14 | | GCI39050 | Inner Joint | | 23 | 26 | 35 | 64 | 96 | |
| 2.4 (102 kw) | 2003.02-2006.10 | AT | F | | SUV 4WD 4G64 | Date From:2003.09,Date To:2004.02 | GCO39176 | Outer Joint | 43T | 25 | 29 | 57 | 95 | 58 | M |
| | 2003.02-2006.10 | AT | F | | SUV 4WD 4G64 | Date From:2003.09 | GCI99019 | Inner Joint | | 26 | 29 | 41 | | 140 | |
| | 2003.02-2006.10 | AT/MT | F | L/R | SUV 4WD 4G64 | Date from:2004.01 | GCO39112 | Outer Joint | 43T | 25 | 29 | 57 | 94.5 | 57 | I |
| | 2003.02-2006.10 | AT | R | | SUV 4WD 4G64 | Date From:2003.09 | GCO39252 | Outer Joint | 43T | 25 | 29 | 57 | 95 | 71 | I |
| 2.4 (118 kw) | 2001.03-2006.12 | AT | F | | SUV FWD 4G69 | Date From:2005.06,Date To:2006.10 | GCO39143 | Outer Joint | 43T | 25 | 33 | 57 | 95 | 60.5 | I |
| | 2001.03-2006.12 | AT/MT | F | L/R | SUV FWD 4G69 | Date from:2004.01 | GCO39112 | Outer Joint | 43T | 25 | 29 | 57 | 94.5 | 57 | I |
| | 2003.11-2007.09 | 4AT/5MT | F | R | SUV 4WD 4G69 | | GDS83418 | Drive Shaft | 43T | 25 | 26 | 57 | 94.5 | 660 | |
| | 2003.11-2007.09 | 4AT/5MT | F | R | SUV 4WD 4G69 | GrooveType:Inner | GCO39182 | Outer Joint | 43T | 25 | 29 | 57 | 94.5 | 58 | I |
| | 2003.11-2007.09 | 4AT/5MT | F | R | SUV 4WD 4G69 | | GCI82208 | Inner Joint | | 26 | 29 | 41 | | 127 | |
| | 2003.11-2007.09 | AT | F | | SUV 4WD 4G69 | Date From:2005.06 | GCO39143 | Outer Joint | 43T | 25 | 33 | 57 | 95 | 60.5 | I |
| | 2003.11-2007.09 | AT/MT | F | L/R | SUV 4WD 4G69 | GrooveType:Middle | GCO39176 | Outer Joint | 43T | 25 | 29 | 57 | 95 | 58 | M |
| | 2003.11-2007.09 | | R | L/R | SUV 4WD 4G69 | | GCO39252 | Outer Joint | 43T | 25 | 29 | 57 | 95 | 71 | I |

| | YEAR | TRANSM. | F/R | L/R | BODY STYLE & DRIVE TYPE & ENGINE | REMARKS | G-AP Ref. | PRODUCT | ABS | Technical Specifications A | B | C | H | L | P |
|---|---|---|---|---|---|---|---|---|---|---|---|---|---|---|---|
| **MITSUBISHI** **Outlander** | | | | | | | | | | | | | | | |
| 2.4 (119 kw) | 2003.05-2007.09 | 4AT/5MT | F | R | SUV 4WD 4G69 | | GDS83418 | Drive Shaft | 43T | 25 | 26 | 57 | 94.5 | 660 | |
| | 2003.05-2007.09 | 4AT/5MT | F | R | SUV 4WD 4G69 | GrooveType:Inner | GCO39182 | Outer Joint | 43T | 25 | 29 | 57 | 94.5 | 58 | I |
| | 2003.05-2007.09 | 4AT/5MT | F | R | SUV 4WD 4G69 | | GCI82208 | Inner Joint | | 26 | 29 | 41 | | 127 | |
| | 2003.05-2007.09 | AT | F | | SUV 4WD 4G69 | Date From:2005.06 | GCO39143 | Outer Joint | 43T | 25 | 33 | 57 | 95 | 60.5 | I |
| | 2003.05-2007.09 | AT/MT | F | L/R | SUV 4WD 4G69 | GrooveType:Middle | GCO39176 | Outer Joint | 43T | 25 | 29 | 57 | 95 | 58 | M |
| | 2003.05-2007.09 | | R | L/R | SUV 4WD 4G69 | | GCO39252 | Outer Joint | 43T | 25 | 29 | 57 | 95 | 71 | I |
| 2.4 (123 kw) | 2012.10-2022.12 | CVT | F | L | SUV 4WD 4B12 | Date to:2019.12 | GDS82991 | Drive Shaft | | 28 | 27 | 59.6 | 95 | 651 | |
| | 2012.10-2022.12 | CVT | F | L | SUV 4WD 4B12 | Date from:2020.01 | GDS83135 | Drive Shaft | | 28 | 27 | 59.5 | 94.5 | 650 | |
| | 2012.10-2022.12 | CVT | F | R | SUV 4WD 4B12 | | GDS84346 | Drive Shaft | | 28 | 27 | 59.6 | 95 | 971 | |
| | 2012.10-2022.12 | CVT | F | L/R | SUV 4WD 4B12 | | GCO82124 | Outer Joint | | 28 | 35 | 59.6 | 95 | 65 | I |
| | 2012.10-2022.12 | CVT | F | L | SUV 4WD 4B12 | | GCI51034 | Inner Joint | | 27 | 35 | 40 | 62 | 113 | |
| | 2012.10-2022.12 | CVT | F | R | SUV 4WD 4B12 | | GCI81083 | Inner Joint | | 27 | 35 | 50 | 255.5 | 120 | |
| | 2012.10-2022.12 | | F | L | SUV 4WD 4B12 | | GCI51034 | Inner Joint | | 27 | 35 | 40 | 62 | 113 | |
| | 2012.10-2022.12 | | F | R | SUV 4WD 4B12 | | GCI81083 | Inner Joint | | 27 | 35 | 50 | 255.5 | 120 | |
| | 2012.10-2022.12 | CVT | R | L | SUV 4WD 4B12 | | GDS81824 | Drive Shaft | | 25 | 23 | 48 | 106 | 753 | |
| | 2012.10-2022.12 | CVT | R | L | SUV 4WD 4B12 | Date from:2019.03 | GDS81824 | Drive Shaft | | 25 | 23 | 48 | 106 | 753 | |
| | 2012.10-2022.12 | CVT | R | R | SUV 4WD 4B12 | | GDS81823 | Drive Shaft | | 25 | 23 | 48 | 106 | 835 | |
| | 2012.10-2022.12 | CVT | R | R | SUV 4WD 4B12 | Date to:2016.03 | GDS81823 | Drive Shaft | | 25 | 23 | 48 | 106 | 835 | |
| | 2012.10-2022.12 | CVT | R | L/R | SUV 4WD 4B12 | | GCO81538 | Outer Joint | | 25 | 26 | 48 | 106 | 51 | I |
| | 2012.10-2022.12 | CVT | R | L/R | SUV 4WD 4B12 | | GCI39050 | Inner Joint | | 23 | 26 | 35 | 64 | 96 | |
| | 2012.10-2022.12 | | R | L/R | SUV 4WD 4B12 | Date to:2016.03 | GCO81538 | Outer Joint | | 25 | 26 | 48 | 106 | 51 | I |
| | 2012.10-2022.12 | | R | L/R | SUV 4WD 4B12 | Date to:2019.03 | GCI39050 | Inner Joint | | 23 | 26 | 35 | 64 | 96 | |
| 2.4 (124 kw) | 2012.08- | | F | | SUV FWD 4B12, 4J12 | | GCO81538 | Outer Joint | | 25 | 26 | 48 | 106 | 51 | I |
| | 2012.10-2022.12 | CVT | F | L | SUV 4WD 4J12 | Date to:2019.12 | GDS82991 | Drive Shaft | | 28 | 27 | 59.6 | 95 | 651 | |
| | 2012.10-2022.12 | CVT | F | L | SUV 4WD 4J12 | Date from:2020.01 | GDS83135 | Drive Shaft | | 28 | 27 | 59.5 | 94.5 | 650 | |
| | 2012.10-2022.12 | | F | | SUV 4WD 4J12 | | GCO81538 | Outer Joint | | 25 | 26 | 48 | 106 | 51 | I |
| | 2012.10-2022.12 | CVT | R | L | SUV 4WD 4J12 | Date from:2019.03 | GDS81824 | Drive Shaft | | 25 | 23 | 48 | 106 | 753 | |
| | 2012.10-2022.12 | CVT | R | R | SUV 4WD 4J12 | Date to:2016.03 | GDS81823 | Drive Shaft | | 25 | 23 | 48 | 106 | 835 | |
| 2.4 (125 kw) | 2006.11-2012.11 | 5MT | F | L | SUV FWD 4B12 | Date from:2007.12 | GDS82701 | Drive Shaft | | 28 | 24 | 59.6 | 95 | 635 | |
| | 2006.11-2012.11 | 5MT | F | L | SUV FWD 4B12 | | GCI81207 | Inner Joint | | 24 | 35 | 50 | 67.5 | 111 | |
| | 2006.11-2012.11 | AT | F | L | SUV FWD 4B12 | | GCI51034 | Inner Joint | | 27 | 35 | 40 | 62 | 113 | |
| | 2006.11-2012.11 | AT/MT | F | L/R | SUV FWD 4B12 | | GCO39117 | Outer Joint | | 28 | 35 | 59.5 | 95 | 65 | I |
| | 2007.09-2012.11 | AT | F | L | SUV 4WD 4B12 | | GDS82991 | Drive Shaft | | 28 | 27 | 59.6 | 95 | 651 | |
| | 2007.09-2012.11 | AT | F | R | SUV 4WD 4B12 | | GCI81083 | Inner Joint | | 27 | 35 | 50 | 255.5 | 120 | |
| | 2007.09-2012.11 | AT/MT | F | L/R | SUV 4WD 4B12 | | GCO39117 | Outer Joint | | 28 | 35 | 59.5 | 95 | 65 | I |
| | 2007.09-2012.11 | AT/MT | F | L | SUV 4WD 4B12 | | GCI51034 | Inner Joint | | 27 | 35 | 40 | 62 | 113 | |
| | 2007.09-2012.11 | CVT | F | L/R | SUV 4WD 4B12 | | GCO39117 | Outer Joint | | 28 | 35 | 59.5 | 95 | 65 | I |
| | 2007.09-2012.11 | CVT/5MT | F | L | SUV 4WD 4B12 | | GCI51034 | Inner Joint | | 27 | 35 | 40 | 62 | 113 | |
| | 2007.09-2012.11 | CVT/5MT | F | R | SUV 4WD 4B12 | Date to:2008.06 | GCI81083 | Inner Joint | | 27 | 35 | 50 | 255.5 | 120 | |
| | 2007.09-2012.11 | MT | F | L | SUV 4WD 4B12 | | GDS82701 | Drive Shaft | | 28 | 24 | 59.6 | 95 | 635 | |
| | 2007.09-2012.11 | MT | F | L | SUV 4WD 4B12 | | GCI81207 | Inner Joint | | 24 | 35 | 50 | 67.5 | 111 | |
| | 2007.09-2012.11 | | F | | SUV 4WD 4B12 | Date from:2009.09 | GCO81538 | Outer Joint | | 25 | 26 | 48 | 106 | 51 | I |
| | 2007.09-2012.11 | 5MT/CVT | R | L | SUV 4WD 4B12 | Date to:2009.08 | GDS39169 | Drive Shaft | | 27 | 23 | 58 | 94.5 | 754.5 | |
| | 2007.09-2012.11 | 5MT/CVT | R | L | SUV 4WD 4B12 | Date from:2009.09 | GDS81824 | Drive Shaft | | 25 | 23 | 48 | 106 | 753 | |
| | 2007.09-2012.11 | 5MT/CVT | R | R | SUV 4WD 4B12 | Date from:2009.09 | GDS81823 | Drive Shaft | | 25 | 23 | 48 | 106 | 835 | |
| | 2007.09-2012.11 | AT | R | L/R | SUV 4WD 4B12 | for left-hand drive vehicles,Date From:2009.09 | GCO51033 | Outer Joint | | 25 | 26 | 48 | 106.5 | 49 | I |
| | 2007.09-2012.11 | AT/MT | R | L/R | SUV 4WD 4B12 | Date to:2009.08 | GCO39175 | Outer Joint | | 27 | 26 | 58 | 94.5 | 52.5 | I |
| | 2007.09-2012.11 | AT/MT | R | L/R | SUV 4WD 4B12 | | GCI39050 | Inner Joint | | 23 | 26 | 35 | 64 | 96 | |
| | 2007.09-2012.11 | AT/MT/CVT | R | L/R | SUV 4WD 4B12 | Date to:2009.08 | GCO39175 | Outer Joint | | 27 | 26 | 58 | 94.5 | 52.5 | I |
| | 2007.09-2012.11 | CVT | R | L | SUV 4WD 4B12 | Date from:2009.09 | GDS81824 | Drive Shaft | | 25 | 23 | 48 | 106 | 753 | |
| | 2007.09-2012.11 | CVT | R | R | SUV 4WD 4B12 | Date from:2009.09 | GDS81823 | Drive Shaft | | 25 | 23 | 48 | 106 | 835 | |
| | 2007.09-2012.11 | CVT/5MT | R | L/R | SUV 4WD 4B12 | | GCI39050 | Inner Joint | | 23 | 26 | 35 | 64 | 96 | |
| 2.4 (153 kw) | 2018.09-2022.12 | CVT | F | L | SUV 4WD 4B12 | Without Equipment code:B41 | GDS56868 | Drive Shaft | | 28 | 27 | 59.6 | 94.5 | 671 | |
| | 2018.09-2022.12 | CVT | F | L | SUV 4WD 4B12 | Equipment code:B41 | GDS81785 | Drive Shaft | | 28 | 27 | 59.6 | 94.5 | 671 | |
| | 2018.09-2022.12 | CVT | F | R | SUV 4WD 4B12 | Date to:2019.11,Without Equipment code:B41 | GDS56867 | Drive Shaft | | 28 | 27 | 59.6 | 94.5 | 949 | |
| | 2018.09-2022.12 | CVT | F | R | SUV 4WD 4B12 | Equipment code:B41 | GDS81786 | Drive Shaft | | 28 | 27 | 59.6 | 94.5 | 949 | |
| | 2018.09-2022.12 | CVT | F | L/R | SUV 4WD 4B12 | | GCO83462 | Outer Joint | | 28 | 32 | 59.6 | 94.5 | 59.5 | I |
| | 2018.09-2022.12 | CVT | F | L/R | SUV 4WD 4B12 | | GCI81511 | Inner Joint | | 27 | 32 | 41 | 62.5 | 89 | |
| | 2018.09-2022.12 | CVT | R | L/R | SUV 4WD 4B12 | | GCI81548 | Inner Joint | | 23 | 24 | 35 | 50 | 88 | |
| 2.4 (165 kw) | 2019.09-2022.12 | CVT | F | L | SUV 4WD 4B12 | Without Equipment code:B41 | GDS56868 | Drive Shaft | | 28 | 27 | 59.6 | 94.5 | 671 | |
| | 2019.09-2022.12 | CVT | F | L | SUV 4WD 4B12 | Equipment code:B41 | GDS81785 | Drive Shaft | | 28 | 27 | 59.6 | 94.5 | 671 | |
| | 2019.09-2022.12 | CVT | F | R | SUV 4WD 4B12 | Date to:2019.11,Without Equipment code:B41 | GDS56867 | Drive Shaft | | 28 | 27 | 59.6 | 94.5 | 949 | |
| | 2019.09-2022.12 | CVT | F | R | SUV 4WD 4B12 | Equipment code:B41 | GDS81786 | Drive Shaft | | 28 | 27 | 59.6 | 94.5 | 949 | |
| | 2019.09-2022.12 | CVT | F | L/R | SUV 4WD 4B12 | | GCO83462 | Outer Joint | | 28 | 32 | 59.6 | 94.5 | 59.5 | I |
| | 2019.09-2022.12 | CVT | F | L/R | SUV 4WD 4B12 | | GCI81511 | Inner Joint | | 27 | 32 | 41 | 62.5 | 89 | |

| | YEAR | TRANSM. | F/R | L/R | BODY STYLE & DRIVE TYPE & ENGINE | REMARKS | G-AP Ref. | PRODUCT | ABS | Technical Specifications A | B | C | H | L | P |
|---|---|---|---|---|---|---|---|---|---|---|---|---|---|---|---|
| **MITSUBISHI** | | | | | | | | | | | | | | | |
| **Outlander** | | | | | | | | | | | | | | | |
| 2.4 (165 kw) | 2019.09-2022.12 | CVT | R | L/R | SUV 4WD 4B12 | | GCI81548 | Inner Joint | | 23 | 24 | 35 | 50 | 88 | |
| 3.0 (162 kw) | 2006.11-2012.11 | AT | F | | SUV 4WD 6B31 | | GCO81538 | Outer Joint | | 25 | 26 | 48 | 106 | 51 | I |
| | 2006.11-2012.11 | CVT/6AT | F | L | SUV 4WD 6B31 | | GDS39287 | Drive Shaft | | 28 | 30 | 59.5 | 94.5 | 637 | |
| | 2006.11-2012.11 | CVT/6AT | F | L/R | SUV 4WD 6B31 | | GCO39137 | Outer Joint | | 28 | 37 | 59.5 | 94.5 | 71.5 | I |
| | 2006.11-2012.11 | | F | L | SUV 4WD 6B31 | | GCI39093 | Inner Joint | | 30 | 36 | 43 | 61 | 117.5 | |
| | 2006.11-2012.11 | | F | R | SUV 4WD 6B31 | | GCI81550 | Inner Joint | | 30 | 36 | 50 | 268.5 | 129 | |
| | 2006.11-2012.11 | 6AT/CVT | R | L | SUV 4WD 6B31 | | GDS39169 | Drive Shaft | | 27 | 23 | 58 | 94.5 | 754.5 | |
| | 2006.11-2012.11 | AT/MT/CVT | R | L/R | SUV 4WD 6B31 | | GCO39175 | Outer Joint | | 27 | 26 | 58 | 94.5 | 52.5 | I |
| | 2006.11-2012.11 | CVT/6AT | R | L/R | SUV 4WD 6B31 | | GCI39050 | Inner Joint | | 23 | 26 | 35 | 64 | 96 | |
| 3.0 (164 kw) | 2006.11-2013.12 | AT | F | L | SUV 4WD 6B31 | | GDS39287 | Drive Shaft | | 28 | 30 | 59.5 | 94.5 | 637 | |
| | 2006.11-2013.12 | AT | F | R | SUV 4WD 6B31 | | GCO39137 | Outer Joint | | 28 | 37 | 59.5 | 94.5 | 71.5 | I |
| | 2006.11-2013.12 | AT | F | | SUV 4WD 6B31 | Date from:2009.09 | GCO81538 | Outer Joint | | 25 | 26 | 48 | 106 | 51 | I |
| | 2006.11-2013.12 | | F | L | SUV 4WD 6B31 | | GCI39093 | Inner Joint | | 30 | 36 | 43 | 61 | 117.5 | |
| | 2006.11-2013.12 | | F | R | SUV 4WD 6B31 | | GCI81550 | Inner Joint | | 30 | 36 | 50 | 268.5 | 129 | |
| | 2006.11-2013.12 | AT | R | L | SUV 4WD 6B31 | | GDS39169 | Drive Shaft | | 27 | 23 | 58 | 94.5 | 754.5 | |
| | 2006.11-2013.12 | AT | R | L/R | SUV 4WD 6B31 | | GCO39175 | Outer Joint | | 27 | 26 | 58 | 94.5 | 52.5 | I |
| | 2006.11-2013.12 | AT | R | L/R | SUV 4WD 6B31 | | GCI39050 | Inner Joint | | 23 | 26 | 35 | 64 | 96 | |
| 3.0 (165 kw) | 2012.10-2022.12 | 6AT | F | R | SUV 4WD 6B31 | | GDS81936 | Drive Shaft | | 28 | 30 | 59.6 | 95 | 982 | |
| | 2012.10-2022.12 | 6AT | F | R | SUV 4WD 6B31 | | GCO81567 | Outer Joint | | 28 | 37 | 59.6 | 95 | 72.5 | I |
| | 2012.10-2022.12 | 6AT | F | L | SUV 4WD 6B31 | | GCI39093 | Inner Joint | | 30 | 36 | 43 | 61 | 117.5 | |
| | 2012.10-2022.12 | 6AT | F | R | SUV 4WD 6B31 | | GCI81550 | Inner Joint | | 30 | 36 | 50 | 268.5 | 129 | |
| | 2012.10-2022.12 | 6AT | R | L | SUV 4WD 6B31 | | GDS81824 | Drive Shaft | | 25 | 23 | 48 | 106 | 753 | |
| | 2012.10-2022.12 | 6AT | R | R | SUV 4WD 6B31 | | GDS81823 | Drive Shaft | | 25 | 23 | 48 | 106 | 835 | |
| | 2012.10-2022.12 | 6AT | R | L/R | SUV 4WD 6B31 | | GCO81538 | Outer Joint | | 25 | 26 | 48 | 106 | 51 | I |
| | 2012.10-2022.12 | 6AT | R | L/R | SUV 4WD 6B31 | | GCI39050 | Inner Joint | | 23 | 26 | 35 | 64 | 96 | |
| 3.0 (167 kw) | 2012.08-2022.12 | 6AT | F | R | SUV 4WD 6B31 | Not For OPC:A90 | GDS81936 | Drive Shaft | | 28 | 30 | 59.6 | 95 | 982 | |
| | 2012.08-2022.12 | 6AT | F | R | SUV 4WD 6B31 | Date to:2015.01,Equipment code:A90 | GDS84620 | Drive Shaft | | 28 | 28 | 59.6 | 95 | 630 | |
| | 2012.08-2022.12 | 6AT | F | R | SUV 4WD 6B31 | | GCO81567 | Outer Joint | | 28 | 37 | 59.6 | 95 | 72.5 | I |
| | 2012.08-2022.12 | 6AT | F | R | SUV 4WD 6B31 | | GCI81550 | Inner Joint | | 30 | 36 | 50 | 268.5 | 129 | |
| | 2012.08-2022.12 | 6AT | F | R | SUV 4WD 6B31 | Date to:2015.01,Equipment code:A90 | GCI82894 | Inner Joint | | 28 | 36 | 41 | | 139 | |
| | 2012.08-2022.12 | | F | L | SUV 4WD 6B31 | | GCI39093 | Inner Joint | | 30 | 36 | 43 | 61 | 117.5 | |
| | 2012.08-2022.12 | 6AT | R | L | SUV 4WD 6B31 | | GDS81824 | Drive Shaft | | 25 | 23 | 48 | 106 | 753 | |
| | 2012.08-2022.12 | 6AT | R | R | SUV 4WD 6B31 | | GDS81823 | Drive Shaft | | 25 | 23 | 48 | 106 | 835 | |
| | 2012.08-2022.12 | 6AT | R | L/R | SUV 4WD 6B31 | | GCO81538 | Outer Joint | | 25 | 26 | 48 | 106 | 51 | I |
| | 2012.08-2022.12 | 6AT | R | L/R | SUV 4WD 6B31 | | GCI39050 | Inner Joint | | 23 | 26 | 35 | 64 | 96 | |
| 3.0 (169 kw) | 2010.09-2012.12 | AT | F | L | SUV 4WD 6B31 | | GDS39287 | Drive Shaft | | 28 | 30 | 59.5 | 94.5 | 637 | |
| | 2010.09-2012.12 | AT | F | R | SUV 4WD 6B31 | | GCO39137 | Outer Joint | | 28 | 37 | 59.5 | 94.5 | 71.5 | I |
| | 2010.09-2012.12 | | F | | SUV 4WD 6B31 | for left-hand drive vehicles,Production Date From:2009.09 | GCO81538 | Outer Joint | | 25 | 26 | 48 | 106 | 51 | I |
| | 2010.09-2012.12 | | F | L | SUV 4WD 6B31 | | GCI39093 | Inner Joint | | 30 | 36 | 43 | 61 | 117.5 | |
| | 2010.09-2012.12 | | F | R | SUV 4WD 6B31 | | GCI81550 | Inner Joint | | 30 | 36 | 50 | 268.5 | 129 | |
| | 2010.09-2012.12 | AT | R | L | SUV 4WD 6B31 | | GDS39169 | Drive Shaft | | 27 | 23 | 58 | 94.5 | 754.5 | |
| | 2010.09-2012.12 | AT | R | L/R | SUV 4WD 6B31 | | GCO39175 | Outer Joint | | 27 | 26 | 58 | 94.5 | 52.5 | I |
| | 2010.09-2012.12 | AT | R | L/R | SUV 4WD 6B31 | | GCI39050 | Inner Joint | | 23 | 26 | 35 | 64 | 96 | |
| | 2014.03-2022.12 | 6AT | F | R | SUV 4WD 6B31 | | GDS81936 | Drive Shaft | | 28 | 30 | 59.6 | 95 | 982 | |
| | 2014.03-2022.12 | 6AT | F | R | SUV 4WD 6B31 | | GCO81567 | Outer Joint | | 28 | 37 | 59.6 | 95 | 72.5 | I |
| | 2014.03-2022.12 | | F | L | SUV 4WD 6B31 | | GCI39093 | Inner Joint | | 30 | 36 | 43 | 61 | 117.5 | |
| | 2014.03-2022.12 | | F | R | SUV 4WD 6B31 | | GCI81550 | Inner Joint | | 30 | 36 | 50 | 268.5 | 129 | |
| | 2014.03-2022.12 | 6AT | R | L | SUV 4WD 6B31 | | GDS81824 | Drive Shaft | | 25 | 23 | 48 | 106 | 753 | |
| | 2014.03-2022.12 | 6AT | R | R | SUV 4WD 6B31 | | GDS81823 | Drive Shaft | | 25 | 23 | 48 | 106 | 835 | |
| | 2014.03-2022.12 | 6AT | R | L/R | SUV 4WD 6B31 | | GCI39050 | Inner Joint | | 23 | 26 | 35 | 64 | 96 | |
| | 2014.03-2022.12 | AT | R | L/R | SUV 4WD 6B31 | | GCO81538 | Outer Joint | | 25 | 26 | 48 | 106 | 51 | I |
| **Outlander Van** | | | | | | | | | | | | | | | |
| 2.0 (103 kw) | 2006.12-2010.06 | 6MT | F | L | SUV Van 4WD BSY | | GDS81941 | Drive Shaft | | 28 | 24 | 59.6 | 95 | 631 | |
| | 2006.12-2010.06 | 6MT | F | R | SUV Van 4WD BSY | | GDS51046 | Drive Shaft | | 28 | 24 | 59.5 | 94.5 | 989 | |
| | 2006.12-2010.06 | 6MT | F | L | SUV Van 4WD BSY | | GCO81567 | Outer Joint | | 28 | 37 | 59.6 | 95 | 72.5 | I |
| | 2006.12-2010.06 | 6MT | F | R | SUV Van 4WD BSY | | GCO39137 | Outer Joint | | 28 | 37 | 59.5 | 94.5 | 71.5 | I |
| | 2006.12-2010.06 | 6MT | F | L | SUV Van 4WD BSY | | GCI81553 | Inner Joint | | 24 | 36 | 50 | 67 | 116 | |
| | 2006.12-2010.06 | 6MT | R | L | SUV Van 4WD BSY | Date from:2009.09 | GDS81824 | Drive Shaft | | 25 | 23 | 48 | 106 | 753 | |
| | 2006.12-2010.06 | 6MT | R | R | SUV Van 4WD BSY | Date from:2009.09 | GDS81823 | Drive Shaft | | 25 | 23 | 48 | 106 | 835 | |
| | 2006.12-2010.06 | 6MT | R | L/R | SUV Van 4WD BSY | Date from:2009.09 | GCO81538 | Outer Joint | | 25 | 26 | 48 | 106 | 51 | I |
| | 2006.12-2010.06 | 6MT | R | L/R | SUV Van 4WD BSY | | GCI39050 | Inner Joint | | 23 | 26 | 35 | 64 | 96 | |
| 2.2 (110 kw) | 2013.04- | 6AT | F | L | SUV Van 4WD 4N14 | | GDS81935 | Drive Shaft | | 28 | 30 | 59.6 | 95 | 643 | |
| | 2013.04- | 6AT | F | L | SUV Van 4WD 4N14 | | GCI39093 | Inner Joint | | 30 | 36 | 43 | 61 | 117.5 | |
| | 2013.04- | 6AT | F | R | SUV Van 4WD 4N14 | | GCI81550 | Inner Joint | | 30 | 36 | 50 | 268.5 | 129 | |
| | 2013.04- | 6AT/6MT | F | L/R | SUV Van 4WD 4N14 | | GCO81567 | Outer Joint | | 28 | 37 | 59.6 | 95 | 72.5 | I |

| | YEAR | TRANSM. | F/R | L/R | BODY STYLE & DRIVE TYPE & ENGINE | REMARKS | G-AP Ref. | PRODUCT | ABS | Technical Specifications A | B | C | H | L | P |
|---|---|---|---|---|---|---|---|---|---|---|---|---|---|---|---|
| **MITSUBISHI** | | | | | | | | | | | | | | | |
| **Outlander Van** | | | | | | | | | | | | | | | |
| 2.2 (110 kw) | 2013.04- | 6MT | F | L | SUV Van 4WD 4N14 | | GDS81941 | Drive Shaft | | 28 | 24 | 59.6 | 95 | 631 | |
| | 2013.04- | 6MT | F | R | SUV Van 4WD 4N14 | Date to:2017.08 | GDS81940 | Drive Shaft | | 28 | 24 | 59.6 | 95 | 993 | |
| | 2013.04- | 6MT | F | L | SUV Van 4WD 4N14 | | GCI81553 | Inner Joint | | 24 | 36 | 50 | 67 | 116 | |
| | 2013.04- | 6MT | F | R | SUV Van 4WD 4N14 | | GCI81552 | Inner Joint | | 24 | 36 | 50 | 280.5 | 129 | |
| | 2013.04- | AT | F | R | SUV Van 4WD 4N14 | | GDS81936 | Drive Shaft | | 28 | 30 | 59.6 | 95 | 982 | |
| | 2013.04- | 6AT/6MT | R | L | SUV Van 4WD 4N14 | | GDS81824 | Drive Shaft | | 25 | 23 | 48 | 106 | 753 | |
| | 2013.04- | 6AT/6MT | R | R | SUV Van 4WD 4N14 | | GDS81823 | Drive Shaft | | 25 | 23 | 48 | 106 | 835 | |
| | 2013.04- | 6AT/6MT | R | L/R | SUV Van 4WD 4N14 | | GCO81538 | Outer Joint | | 25 | 26 | 48 | 106 | 51 | I |
| | 2013.04- | 6AT/6MT | R | L/R | SUV Van 4WD 4N14 | | GCI39050 | Inner Joint | | 23 | 26 | 35 | 64 | 96 | |
| 2.2 (130 kw) | 2010.09-2012.12 | 6MT | F | L | SUV Van 4WD 4N14 | | GDS81941 | Drive Shaft | | 28 | 24 | 59.6 | 95 | 631 | |
| | 2010.09-2012.12 | 6MT | F | R | SUV Van 4WD 4N14 | | GDS81940 | Drive Shaft | | 28 | 24 | 59.6 | 95 | 993 | |
| | 2010.09-2012.12 | 6MT | F | L/R | SUV Van 4WD 4N14 | | GCO81567 | Outer Joint | | 28 | 37 | 59.6 | 95 | 72.5 | I |
| | 2010.09-2012.12 | 6MT | F | L | SUV Van 4WD 4N14 | | GCI81553 | Inner Joint | | 24 | 36 | 50 | 67 | 116 | |
| | 2010.09-2012.12 | 6MT | F | R | SUV Van 4WD 4N14 | | GCI81552 | Inner Joint | | 24 | 36 | 50 | 280.5 | 129 | |
| | 2010.09-2012.12 | 6MT | R | L | SUV Van 4WD 4N14 | For vehicles without 3rd seating row | GDS81824 | Drive Shaft | | 25 | 23 | 48 | 106 | 753 | |
| | 2010.09-2012.12 | 6MT | R | R | SUV Van 4WD 4N14 | For vehicles without 3rd seating row | GDS81823 | Drive Shaft | | 25 | 23 | 48 | 106 | 835 | |
| | 2010.09-2012.12 | 6MT | R | L/R | SUV Van 4WD 4N14 | For vehicles without 3rd seating row | GCO81538 | Outer Joint | | 25 | 26 | 48 | 106 | 51 | I |
| | 2010.09-2012.12 | 6MT | R | L/R | SUV Van 4WD 4N14 | | GCI39050 | Inner Joint | | 23 | 26 | 35 | 64 | 96 | |
| 2.4 (153 kw) | 2018.09- | CVT | F | L | SUV Van 4WD 4B12 | Without Equipment code:B41 | GDS56868 | Drive Shaft | | 28 | 27 | 59.6 | 94.5 | 671 | |
| | 2018.09- | CVT | F | L | SUV Van 4WD 4B12 | Equipment code:B41 | GDS81785 | Drive Shaft | | 28 | 27 | 59.6 | 94.5 | 671 | |
| | 2018.09- | CVT | F | R | SUV Van 4WD 4B12 | Date to:2019.11,Without Equipment code:B41 | GDS56867 | Drive Shaft | | 28 | 27 | 59.6 | 94.5 | 949 | |
| | 2018.09- | CVT | F | R | SUV Van 4WD 4B12 | Equipment code:B41 | GDS81786 | Drive Shaft | | 28 | 27 | 59.6 | 94.5 | 949 | |
| | 2018.09- | CVT | F | L/R | SUV Van 4WD 4B12 | | GCO83462 | Outer Joint | | 28 | 32 | 59.6 | 94.5 | 59.5 | I |
| | 2018.09- | CVT | F | L | SUV Van 4WD 4B12 | | GCI81511 | Inner Joint | | 27 | 32 | 41 | 62.5 | 89 | |
| | 2018.09- | CVT | R | L/R | SUV Van 4WD 4B12 | | GCI81548 | Inner Joint | | 23 | 24 | 35 | 50 | 88 | |
| **Pajero** | | | | | | | | | | | | | | | |
| 2.4 (82 kw) | 1991.03-2000.04 | AT/MT | F | R | Terrain cab wagon closed 4WD 4G64 | Date from:1997.04,Date to:1997.11 | GCI75004 | Inner Joint | | | 26 | | | 62.5 | |
| | 1991.03-2000.04 | MT | F | L | Terrain cab wagon closed 4WD 4G64 | for left-hand drive vehicles,Date to:1994.05 | GCI39049 | Inner Joint | | 25 | 25 | 32 | 89 | 81.5 | |
| | 1991.03-2000.04 | MT | F | L | Terrain cab wagon closed 4WD 4G64 | Date from:1997.04,Date to:1997.11 | GCI99083 | Inner Joint | | 28 | 26 | 34.7 | 90.5 | 90.5 | |
| | 1991.03-2000.04 | MT | F | R | Terrain cab wagon closed 4WD 4G64 | for left-hand drive vehicles,Date to:1994.05 | GCI39061 | Inner Joint | | | 25 | | | 68.6 | |
| | 1991.03-2000.04 | | F | L/R | Terrain cab wagon closed 4WD 4G64 | | GCO39018 | Outer Joint | | 28 | 25 | 56 | 154 | 62 | M |
| | 1991.04-2000.04 | MT | F | L | Terrain cab open 4WD 4G64 | Date to:1994.05 | GCI39049 | Inner Joint | | 25 | 25 | 32 | 89 | 81.5 | |
| | 1991.04-2000.04 | MT | F | L | Terrain cab open 4WD 4G64 | Date from:1997.04,Date to:1997.11 | GCI99083 | Inner Joint | | 28 | 26 | 34.7 | 90.5 | 90.5 | |
| | 1991.04-2000.04 | MT | F | R | Terrain cab open 4WD 4G64 | Date to:1994.05 | GCI39061 | Inner Joint | | | 25 | | | 68.6 | |
| | 1991.04-2000.04 | MT | F | R | Terrain cab open 4WD 4G64 | Date from:1997.03,Date to:1999.11 | GCI75004 | Inner Joint | | | 26 | | | 62.5 | |
| | 1991.04-2000.04 | | F | L/R | Terrain cab open 4WD 4G64 | | GCO39018 | Outer Joint | | 28 | 25 | 56 | 154 | 62 | M |
| 2.5 (73 kw) | 1990.12-1999.10 | AT/MT | F | R | Closed Off-Road Vehicle 4WD 4D56-TD | Transmission:AT,Date to:1997.03,For Mexico,ex:V3W01V4A00,Transmission:MT,Date to:1997.03,For Mexico,ex:V3W | GCI39061 | Inner Joint | | | 25 | | | 68.6 | |
| | 1990.12-1999.10 | AT/MT | F | R | Closed Off-Road Vehicle 4WD 4D56-TD | Transmission:AT,Date from:1997.03,For Mexico,ex:V3W01V4A00,Transmission:MT,Date from:1997.03,For Mexico,ex:V3W | GCI75004 | Inner Joint | | | 26 | | | 62.5 | |
| | 1990.12-1999.10 | MT | F | L | Closed Off-Road Vehicle 4WD 4D56-TD | | GDS39007 | Drive Shaft | | 28 | 25 | 56 | 154 | 616 | |
| | 1990.12-1999.10 | MT | F | R | Closed Off-Road Vehicle 4WD 4D56-TD | | GDS39006 | Drive Shaft | | 28 | | 56 | 154 | 538 | |
| | 1990.12-1999.10 | MT | F | L/R | Closed Off-Road Vehicle 4WD 4D56-TD | | GCO39018 | Outer Joint | | 28 | 25 | 56 | 154 | 62 | M |
| | 1990.12-1999.10 | MT | F | L/R | Closed Off-Road Vehicle 4WD 4D56-TD | | GCO39027 | Outer Joint | | 28 | 25 | 56 | 154.1 | 62 | M |
| | 1990.12-1999.10 | MT | F | L | Closed Off-Road Vehicle 4WD 4D56-TD | | GCI39049 | Inner Joint | | 25 | 25 | 32 | 89 | 81.5 | |
| | 1990.12-1999.10 | MT | F | R | Closed Off-Road Vehicle 4WD 4D56-TD | | GCI99092 | Inner Joint | | | 26 | | | 68.6 | |
| | 2000.04-2006.12 | 5MT | F | L | Closed Off-Road Vehicle 4WD 4D56-T/C (SOHC 8V) | | GCI99084 | Inner Joint | | 28 | 33 | 34.7 | 90.5 | 90.5 | |
| | 2000.04-2006.12 | MT | F | L | Closed Off-Road Vehicle 4WD 4D56-T/C (SOHC 8V) | | GDS39064 | Drive Shaft | 50T | 30 | 28 | 66 | 98 | 600 | |
| | 2000.04-2006.12 | MT | F | R | Closed Off-Road Vehicle 4WD 4D56-T/C (SOHC 8V) | | GDS39095 | Drive Shaft | 50T | 30 | | 66 | 98 | 527 | |
| | 2000.04-2006.12 | MT | F | L/R | Closed Off-Road Vehicle 4WD 4D56-T/C (SOHC 8V) | | GCO39006 | Outer Joint | 50T | 30 | 33 | 66 | 98 | 67 | I |
| | 2000.04-2006.12 | MT | F | L/R | Closed Off-Road Vehicle 4WD 4D56-T/C (SOHC 8V) | | GCO39124 | Outer Joint | 50T | 30 | 33 | 66 | 98 | 67 | I |
| | 2000.04-2006.12 | MT | F | R | Closed Off-Road Vehicle 4WD 4D56-T/C (SOHC 8V) | | GCI99085 | Inner Joint | | | 33 | | | 68.6 | |
| | 2000.04-2006.12 | MT | R | L/R | Closed Off-Road Vehicle 4WD 4D56-T/C (SOHC 8V) | | GDS39243 | Drive Shaft | 50T | 33 | | 72 | 107 | 679 | |
| | 2000.04-2006.12 | MT | R | L/R | Closed Off-Road Vehicle 4WD 4D56-T/C (SOHC 8V) | Transmission side | GCO21048 | Outer Joint | 50T | 33 | 43 | 72 | 107 | 92 | I |
| | 2000.04-2006.12 | MT | R | | Closed Off-Road Vehicle 4WD 4D56-T/C (SOHC 8V) | Date to:2006.08 | GCI41195 | Inner Joint | | | 43 | | | 84 | |
| 2.5 (85 kw) | 2001.09-2006.12 | 5MT | F | L | Closed Off-Road Vehicle 4WD 4D56-T | | GDS39064 | Drive Shaft | 50T | 30 | 28 | 66 | 98 | 600 | |
| | 2001.09-2006.12 | 5MT | F | R | Closed Off-Road Vehicle 4WD 4D56-T | | GDS39095 | Drive Shaft | 50T | 30 | | 66 | 98 | 527 | |
| | 2001.09-2006.12 | 5MT | F | L | Closed Off-Road Vehicle 4WD 4D56-T | | GCI99084 | Inner Joint | | 28 | 33 | 34.7 | 90.5 | 90.5 | |
| | 2001.09-2006.12 | MT | F | L/R | Closed Off-Road Vehicle 4WD 4D56-T | | GCO39006 | Outer Joint | 50T | 30 | 33 | 66 | 98 | 67 | I |
| | 2001.09-2006.12 | MT | F | L/R | Closed Off-Road Vehicle 4WD 4D56-T | | GCO39124 | Outer Joint | 50T | 30 | 33 | 66 | 98 | 67 | I |
| | 2001.09-2006.12 | MT | F | R | Closed Off-Road Vehicle 4WD 4D56-T | | GCI99085 | Inner Joint | | | 33 | | | 68.6 | |
| | 2001.09-2006.12 | 5MT | R | L/R | Closed Off-Road Vehicle 4WD 4D56-T | | GDS39243 | Drive Shaft | 50T | 33 | | 72 | 107 | 679 | |
| | 2001.09-2006.12 | 5MT | R | L/R | Closed Off-Road Vehicle 4WD 4D56-T | | GCO21048 | Outer Joint | 50T | 33 | 43 | 72 | 107 | 92 | I |
| | 2001.09-2006.12 | | R | | Closed Off-Road Vehicle 4WD 4D56-T | Date to:2006.08 | GCI41195 | Inner Joint | | | 43 | | | 84 | |
| 2.6 (76 kw) | 1991.03-1997.10 | AT | F | L | Closed Off-Road Vehicle 4WD 4G54 | | GCI39049 | Inner Joint | | 25 | 25 | 32 | 89 | 81.5 | |
| | 1991.03-1997.10 | AT | F | R | Closed Off-Road Vehicle 4WD 4G54 | | GCI39061 | Inner Joint | | | 25 | | | 68.6 | |
| | 1991.03-1997.10 | MT | F | L/R | Closed Off-Road Vehicle 4WD 4G54 | | GCO39027 | Outer Joint | | 28 | 25 | 56 | 154.1 | 62 | M |

| | YEAR | TRANSM. | F/R | L/R | BODY STYLE & DRIVE TYPE & ENGINE | REMARKS | G-AP Ref. | PRODUCT | ABS | Technical Specifications A | B | C | H | L | P |
|---|---|---|---|---|---|---|---|---|---|---|---|---|---|---|---|
| **MITSUBISHI** **Pajero** | | | | | | | | | | | | | | | |
| 3.0 (110 kw) | 1990.12-1997.12 | AT | F | L | Closed Off-Road Vehicle 4WD 6G72 (SOHC 12V) | | GCI39049 | Inner Joint | | 25 | 25 | 32 | 89 | 81.5 | |
| | 1990.12-1997.12 | AT | F | R | Closed Off-Road Vehicle 4WD 6G72 (SOHC 12V) | | GCI39061 | Inner Joint | | | 25 | | | 68.6 | |
| | 1990.12-1997.12 | MT | F | L | Closed Off-Road Vehicle 4WD 6G72 (SOHC 12V) | | GDS39007 | Drive Shaft | | 28 | 25 | 56 | 154 | 616 | |
| | 1990.12-1997.12 | MT | F | R | Closed Off-Road Vehicle 4WD 6G72 (SOHC 12V) | | GDS39006 | Drive Shaft | | 28 | | 56 | 154 | 538 | |
| | 1990.12-1997.12 | MT | F | L/R | Closed Off-Road Vehicle 4WD 6G72 (SOHC 12V) | | GCO39018 | Outer Joint | | 28 | 25 | 56 | 154 | 62 | M |
| | 1990.12-1997.12 | MT | F | L/R | Closed Off-Road Vehicle 4WD 6G72 (SOHC 12V) | Date From:1991.03 | GCO39027 | Outer Joint | | 28 | 25 | 56 | 154.1 | 62 | M |
| | 1990.12-1997.12 | MT | F | R | Closed Off-Road Vehicle 4WD 6G72 (SOHC 12V) | | GCI75004 | Inner Joint | | | 26 | | | 62.5 | |
| | 1990.12-1997.12 | MT | F | R | Closed Off-Road Vehicle 4WD 6G72 (SOHC 12V) | | GCI99092 | Inner Joint | | | 26 | | | 68.6 | |
| 3.0 (125 kw) | 2001.10-2006.12 | 4AT/5MT | F | L | Open Off-Road Vehicle 4WD 6G72 (SOHC 24V) | | GDS39064 | Drive Shaft | 50T | 30 | 28 | 66 | 98 | 600 | |
| | 2001.10-2006.12 | 4AT/5MT | F | R | Open Off-Road Vehicle 4WD 6G72 (SOHC 24V) | | GDS39095 | Drive Shaft | 50T | 30 | | 66 | 98 | 527 | |
| | 2001.10-2006.12 | 4AT/5MT | F | L | Open Off-Road Vehicle 4WD 6G72 (SOHC 24V) | | GCI99084 | Inner Joint | | 28 | 33 | 34.7 | 90.5 | 90.5 | |
| | 2001.10-2006.12 | 4AT/5MT | F | R | Open Off-Road Vehicle 4WD 6G72 (SOHC 24V) | | GCI99085 | Inner Joint | | | 33 | | | 68.6 | |
| | 2001.10-2006.12 | | F | L/R | Open Off-Road Vehicle 4WD 6G72 (SOHC 24V) | | GCO39006 | Outer Joint | 50T | 30 | 33 | 66 | 98 | 67 | I |
| | 2001.10-2006.12 | | F | L/R | Open Off-Road Vehicle 4WD 6G72 (SOHC 24V) | | GCO39124 | Outer Joint | 50T | 30 | 33 | 66 | 98 | 67 | I |
| | 2001.10-2006.12 | 4AT/5MT | R | L/R | Open Off-Road Vehicle 4WD 6G72 (SOHC 24V) | | GDS39243 | Drive Shaft | 50T | 33 | | 72 | 107 | 679 | |
| | 2001.10-2006.12 | 4AT/5MT | R | L/R | Open Off-Road Vehicle 4WD 6G72 (SOHC 24V) | Transmission side | GCO21048 | Outer Joint | 50T | 33 | 43 | 72 | 107 | 92 | I |
| | 2001.10-2006.12 | MT | R | | Open Off-Road Vehicle 4WD 6G72 (SOHC 24V) | | GCI41195 | Inner Joint | | | 43 | | | 84 | |
| 3.0 (128 kw) | 2014.08- | 5AT | F | L | SUV 4WD 6G72 (SOHC 24V) | | GDS81421 | Drive Shaft | 50T | 30 | 28 | 69.2 | 98.5 | 603 | |
| | 2014.08- | 5AT | F | R | SUV 4WD 6G72 (SOHC 24V) | | GDS39261 | Drive Shaft | 50T | 30 | | 69.2 | 98.5 | 519 | |
| | 2014.08- | 5AT | F | R | SUV 4WD 6G72 (SOHC 24V) | | GCO39374 | Outer Joint | 50T | 30 | 36 | 69.2 | 98.5 | 67.5 | I |
| | 2014.08- | 5AT | F | R | SUV 4WD 6G72 (SOHC 24V) | | GCI39121 | Inner Joint | | | 35 | | | 80 | |
| 3.0 (131 kw) | 2007.02- | 4AT/5AT/5MT | F | R | SUV 4WD 6G72 (SOHC 24V) | | GCO39374 | Outer Joint | 50T | 30 | 36 | 69.2 | 98.5 | 67.5 | I |
| | 2007.02- | 4AT/5AT/5MT | F | R | SUV 4WD 6G72 (SOHC 24V) | | GCI39121 | Inner Joint | | | 35 | | | 80 | |
| | 2007.02- | 4AT/5MT | F | L | SUV 4WD 6G72 (SOHC 24V) | | GDS81421 | Drive Shaft | 50T | 30 | 28 | 69.2 | 98.5 | 603 | |
| | 2007.02- | 4AT/5MT | F | R | SUV 4WD 6G72 (SOHC 24V) | | GDS39261 | Drive Shaft | 50T | 30 | | 69.2 | 98.5 | 519 | |
| | 2007.02- | 4AT/5MT | R | L | SUV 4WD 6G72 (SOHC 24V) | With differential lock | GDS83944 | Drive Shaft | 50T | 33 | 33 | 72 | 107.5 | 804 | |
| | 2007.02- | 4AT/5MT | R | R | SUV 4WD 6G72 (SOHC 24V) | With differential lock | GDS83945 | Drive Shaft | 50T | 33 | 33 | 72 | 107.5 | 833 | |
| | 2007.02- | 4AT/5MT | R | L/R | SUV 4WD 6G72 (SOHC 24V) | Without differential lock | GDS83886 | Drive Shaft | 50T | 33 | 33 | 72 | 107.5 | 819 | |
| | 2007.02- | 4AT/5MT | R | L/R | SUV 4WD 6G72 (SOHC 24V) | | GCO82518 | Outer Joint | 50T | 33 | 43 | 72 | 107.5 | 87 | I |
| | 2007.02- | 4AT/5MT | R | L | SUV 4WD 6G72 (SOHC 24V) | With differential lock | GCI82430 | Inner Joint | | 33 | 43 | 55 | 70 | 122 | |
| | 2007.02- | 4AT/5MT | R | R | SUV 4WD 6G72 (SOHC 24V) | With differential lock | GCI82431 | Inner Joint | | 33 | 43 | 55 | 99 | 122 | |
| | 2007.02- | 4AT/5MT | R | L/R | SUV 4WD 6G72 (SOHC 24V) | Without differential lock | GCI82396 | Inner Joint | | 33 | 43 | 55 | 85 | 122 | |
| 3.2 (118 kw) | 2000.04-2006.12 | 5AT | F | L | Closed Off-Road Vehicle 4WD 4M41 | | GCI99084 | Inner Joint | | 28 | 33 | 34.7 | 90.5 | 90.5 | |
| | 2000.04-2006.12 | 5AT/5MT | F | L | Closed Off-Road Vehicle 4WD 4M41 | | GCO39006 | Outer Joint | 50T | 30 | 33 | 66 | 98 | 67 | I |
| | 2000.04-2006.12 | 5AT/5MT | F | L | Closed Off-Road Vehicle 4WD 4M41 | | GCO39028 | Outer Joint | 50T | 30 | 36 | 66 | 98 | 69 | I |
| | 2000.04-2006.12 | AT | F | L | Closed Off-Road Vehicle 4WD 4M41 | | GDS39064 | Drive Shaft | 50T | 30 | 28 | 66 | 98 | 600 | |
| | 2000.04-2006.12 | AT | F | R | Closed Off-Road Vehicle 4WD 4M41 | TJ | GDS39095 | Drive Shaft | 50T | 30 | | 66 | 98 | 527 | |
| | 2000.04-2006.12 | AT | F | L | Closed Off-Road Vehicle 4WD 4M41 | | GCO39124 | Outer Joint | 50T | 30 | 33 | 66 | 98 | 67 | I |
| | 2000.04-2006.12 | AT | F | R | Closed Off-Road Vehicle 4WD 4M41 | | GCI99085 | Inner Joint | | | 33 | | | 68.6 | |
| | 2000.04-2006.12 | AT/5AT | R | L/R | Closed Off-Road Vehicle 4WD 4M41 | | GDS39243 | Drive Shaft | 50T | 33 | | 72 | 107 | 679 | |
| | 2000.04-2006.12 | AT/5AT | R | L/R | Closed Off-Road Vehicle 4WD 4M41 | Transmission side | GCO21048 | Outer Joint | 50T | 33 | 43 | 72 | 107 | 92 | I |
| | 2000.04-2006.12 | AT/MT | R | | Closed Off-Road Vehicle 4WD 4M41 | Trans:Type:AT Trans:Type:MT;Production Date From:2002.10;Production Date To:2006.06 | GCI41195 | Inner Joint | | | 43 | | | 84 | |
| | 2007.02- | 5AT | F | L/R | SUV 4WD 4M41 | | GCO39207 | Outer Joint | 50T | 30 | 36 | 69.2 | 98.5 | 67.5 | I |
| | 2007.02- | 5AT/5MT | F | L | SUV 4WD 4M41 | For Modelcode:V88W | GDS81421 | Drive Shaft | 50T | 30 | 28 | 69.2 | 98.5 | 603 | |
| | 2007.02- | 5AT/5MT | F | R | SUV 4WD 4M41 | For Modelcode:V88W | GDS39261 | Drive Shaft | 50T | 30 | | 69.2 | 98.5 | 519 | |
| | 2007.02- | AT/MT | F | R | SUV 4WD 4M41 | | GCI39121 | Inner Joint | | | 35 | | | 80 | |
| | 2007.02- | MT | F | L/R | SUV 4WD 4M41 | | GCO39028 | Outer Joint | 50T | 30 | 36 | 66 | 98 | 69 | I |
| | 2007.02- | 5AT/5MT | R | L | SUV 4WD 4M41 | With differential lock | GDS83944 | Drive Shaft | 50T | 33 | 33 | 72 | 107.5 | 804 | |
| | 2007.02- | 5AT/5MT | R | R | SUV 4WD 4M41 | With differential lock | GDS83945 | Drive Shaft | 50T | 33 | 33 | 72 | 107.5 | 833 | |
| | 2007.02- | 5AT/5MT | R | L/R | SUV 4WD 4M41 | Without differential lock | GDS83886 | Drive Shaft | 50T | 33 | 33 | 72 | 107.5 | 819 | |
| | 2007.02- | 5AT/5MT | R | L/R | SUV 4WD 4M41 | | GCO82518 | Outer Joint | 50T | 33 | 43 | 72 | 107.5 | 87 | I |
| | 2007.02- | 5AT/5MT | R | L | SUV 4WD 4M41 | With differential lock | GCI82430 | Inner Joint | | 33 | 43 | 55 | 70 | 122 | |
| | 2007.02- | 5AT/5MT | R | R | SUV 4WD 4M41 | With differential lock | GCI82431 | Inner Joint | | 33 | 43 | 55 | 99 | 122 | |
| | 2007.02- | 5AT/5MT | R | L/R | SUV 4WD 4M41 | Without differential lock | GCI82396 | Inner Joint | | 33 | 43 | 55 | 85 | 122 | |
| 3.2 (121 kw) | 2000.04-2006.10 | 5AT/5MT | F | L | Closed Off-Road Vehicle 4WD 4M41 | | GCI99084 | Inner Joint | | 28 | 33 | 34.7 | 90.5 | 90.5 | |
| | 2000.04-2006.10 | AT | F | L | Closed Off-Road Vehicle 4WD 4M41 | | GDS39064 | Drive Shaft | 50T | 30 | 28 | 66 | 98 | 600 | |
| | 2000.04-2006.10 | AT | F | R | Closed Off-Road Vehicle 4WD 4M41 | | GDS39095 | Drive Shaft | 50T | 30 | | 66 | 98 | 527 | |
| | 2000.04-2006.10 | AT | F | L/R | Closed Off-Road Vehicle 4WD 4M41 | | GCO39006 | Outer Joint | 50T | 30 | 33 | 66 | 98 | 67 | I |
| | 2000.04-2006.10 | AT | F | L/R | Closed Off-Road Vehicle 4WD 4M41 | | GCO39124 | Outer Joint | 50T | 30 | 33 | 66 | 98 | 67 | I |
| | 2000.04-2006.10 | AT | F | R | Closed Off-Road Vehicle 4WD 4M41 | | GCI99085 | Inner Joint | | | 33 | | | 68.6 | |
| | 2000.04-2006.10 | | F | L/R | Closed Off-Road Vehicle 4WD 4M41 | | GCO39028 | Outer Joint | 50T | 30 | 36 | 66 | 98 | 69 | I |
| | 2000.04-2006.10 | AT | R | L/R | Closed Off-Road Vehicle 4WD 4M41 | | GDS39243 | Drive Shaft | 50T | 33 | | 72 | 107 | 679 | |
| | 2000.04-2006.10 | AT | R | L/R | Closed Off-Road Vehicle 4WD 4M41 | Transmission side | GCO21048 | Outer Joint | 50T | 33 | 43 | 72 | 107 | 92 | I |
| | 2000.04-2006.10 | AT | R | | Closed Off-Road Vehicle 4WD 4M41 | | GCI41195 | Inner Joint | | | 43 | | | 84 | |
| | 2000.04-2007.09 | 5AT | F | L | Closed Off-Road Vehicle 4WD 4M41 | | GDS39064 | Drive Shaft | 50T | 30 | 28 | 66 | 98 | 600 | |

| | YEAR | TRANSM. | F/R | L/R | BODY STYLE & DRIVE TYPE & ENGINE | REMARKS | G-AP Ref. | PRODUCT | ABS | Technical Specifications A | B | C | H | L | P |
|---|---|---|---|---|---|---|---|---|---|---|---|---|---|---|---|
| **MITSUBISHI** **Pajero** | | | | | | | | | | | | | | | |
| 3.2 (121 kw) | 2000.04-2007.09 | 5AT | F | L | Closed Off-Road Vehicle 4WD 4M41 | | GCI99084 | Inner Joint | | 28 | 33 | 34.7 | 90.5 | 90.5 | |
| | 2000.04-2007.09 | AT | F | L | Closed Off-Road Vehicle 4WD 4M41 | | GCO39006 | Outer Joint | 50T | 30 | 33 | 66 | 98 | 67 | I |
| | 2000.04-2007.09 | AT | F | L/R | Closed Off-Road Vehicle 4WD 4M41 | | GCO39124 | Outer Joint | 50T | 30 | 33 | 66 | 98 | 67 | I |
| | 2000.04-2007.09 | AT | F | R | Closed Off-Road Vehicle 4WD 4M41 | | GCI99085 | Inner Joint | | | 33 | | | 68.6 | |
| | 2000.04-2007.09 | MT/5AT | F | R | Closed Off-Road Vehicle 4WD 4M41 | | GDS39095 | Drive Shaft | 50T | 30 | | 66 | 98 | 527 | |
| | 2000.04-2007.09 | 5AT | R | L/R | Closed Off-Road Vehicle 4WD 4M41 | | GDS39243 | Drive Shaft | 50T | 33 | | 72 | 107 | 679 | |
| | 2000.04-2007.09 | 5AT | R | L/R | Closed Off-Road Vehicle 4WD 4M41 | Transmission side | GCO21048 | Outer Joint | 50T | 33 | 43 | 72 | 107 | 92 | I |
| | 2000.04-2007.09 | 5AT | R | L/R | Closed Off-Road Vehicle 4WD 4M41 | | GCI41195 | Inner Joint | | | 43 | | | 84 | |
| 3.2 (123 kw) | 2007.02- | AT/MT | F | R | SUV 4WD 4M41 | | GDS39261 | Drive Shaft | 50T | 30 | | 69.2 | 98.5 | 519 | |
| | 2007.02- | AT/MT | F | R | SUV 4WD 4M41 | | GCO39374 | Outer Joint | 50T | 30 | 36 | 69.2 | 98.5 | 67.5 | I |
| | 2007.02- | AT/MT | F | R | SUV 4WD 4M41 | | GCI39121 | Inner Joint | | | 35 | | | 80 | |
| 3.2 (125 kw) | 2006.09- | 5MT | F | L | Closed Off-Road Vehicle 4WD 4M41 | | GDS39064 | Drive Shaft | 50T | 30 | 28 | 66 | 98 | 600 | |
| | 2006.09- | 5MT | F | R | Closed Off-Road Vehicle 4WD 4M41 | | GDS39095 | Drive Shaft | 50T | 30 | | 66 | 98 | 527 | |
| | 2006.09- | 5MT | F | L/R | Closed Off-Road Vehicle 4WD 4M41 | | GCO39028 | Outer Joint | 50T | 30 | 36 | 66 | 98 | 69 | I |
| | 2006.09- | 5MT | F | L | Closed Off-Road Vehicle 4WD 4M41 | | GCI99084 | Inner Joint | | 28 | 33 | 34.7 | 90.5 | 90.5 | |
| | 2006.09- | 5MT | F | R | Closed Off-Road Vehicle 4WD 4M41 | | GCI99085 | Inner Joint | | | 33 | | | 68.6 | |
| | 2007.02- | 5AT | F | L | SUV 4WD 4M41 | For Modelcode:V88W | GDS81421 | Drive Shaft | 50T | 30 | 28 | 69.2 | 98.5 | 603 | |
| | 2007.02- | 5AT | F | R | SUV 4WD 4M41 | For Modelcode:V88W | GDS39261 | Drive Shaft | 50T | 30 | | 69.2 | 98.5 | 519 | |
| | 2007.02- | 5AT | F | R | SUV 4WD 4M41 | | GCI39121 | Inner Joint | | | 35 | | | 80 | |
| | 2007.02- | 5AT/5MT | F | L/R | SUV 4WD 4M41 | | GCO39207 | Outer Joint | 50T | 30 | 36 | 69.2 | 98.5 | 67.5 | I |
| | 2007.02- | MT | F | L/R | SUV 4WD 4M41 | | GCO39028 | Outer Joint | 50T | 30 | 36 | 66 | 98 | 69 | I |
| | 2007.02- | 5AT | R | L | SUV 4WD 4M41 | With differential lock | GDS83944 | Drive Shaft | 50T | 33 | 33 | 72 | 107.5 | 804 | |
| | 2007.02- | 5AT | R | R | SUV 4WD 4M41 | With differential lock | GDS83945 | Drive Shaft | 50T | 33 | 33 | 72 | 107.5 | 833 | |
| | 2007.02- | 5AT | R | L/R | SUV 4WD 4M41 | Without differential lock | GDS83886 | Drive Shaft | 50T | 33 | 33 | 72 | 107.5 | 819 | |
| | 2007.02- | 5AT | R | L/R | SUV 4WD 4M41 | | GCO82518 | Outer Joint | 50T | 33 | 43 | 72 | 107.5 | 87 | I |
| | 2007.02- | 5AT | R | L | SUV 4WD 4M41 | With differential lock | GCI82430 | Inner Joint | | 33 | 43 | 55 | 70 | 122 | |
| | 2007.02- | 5AT | R | R | SUV 4WD 4M41 | With differential lock | GCI82431 | Inner Joint | | 33 | 43 | 55 | 99 | 122 | |
| | 2007.02- | 5AT | R | L/R | SUV 4WD 4M41 | Without differential lock | GCI82396 | Inner Joint | | 33 | 43 | 55 | 85 | 122 | |
| 3.2 (140 kw) | 2007.02- | 5AT | F | L | SUV 4WD 4M41 | For Modelcode:V88W | GDS81421 | Drive Shaft | 50T | 30 | 28 | 69.2 | 98.5 | 603 | |
| | 2007.02- | 5AT | F | R | SUV 4WD 4M41 | For Modelcode:V88W | GDS39261 | Drive Shaft | 50T | 30 | | 69.2 | 98.5 | 519 | |
| | 2007.02- | 5AT | F | L/R | SUV 4WD 4M41 | | GCO39207 | Outer Joint | 50T | 30 | 36 | 69.2 | 98.5 | 67.5 | I |
| | 2007.02- | 5AT | F | R | SUV 4WD 4M41 | | GCI39121 | Inner Joint | | | 35 | | | 80 | |
| | 2007.02- | 5AT | R | L | SUV 4WD 4M41 | With differential lock | GDS83944 | Drive Shaft | 50T | 33 | 33 | 72 | 107.5 | 804 | |
| | 2007.02- | 5AT | R | R | SUV 4WD 4M41 | With differential lock | GDS83945 | Drive Shaft | 50T | 33 | 33 | 72 | 107.5 | 833 | |
| | 2007.02- | 5AT | R | L/R | SUV 4WD 4M41 | Without differential lock | GDS83886 | Drive Shaft | 50T | 33 | 33 | 72 | 107.5 | 819 | |
| | 2007.02- | 5AT | R | L/R | SUV 4WD 4M41 | | GCO82518 | Outer Joint | 50T | 33 | 43 | 72 | 107.5 | 87 | I |
| | 2007.02- | 5AT | R | L | SUV 4WD 4M41 | With differential lock | GCI82430 | Inner Joint | | 33 | 43 | 55 | 70 | 122 | |
| | 2007.02- | 5AT | R | R | SUV 4WD 4M41 | With differential lock | GCI82431 | Inner Joint | | 33 | 43 | 55 | 99 | 122 | |
| | 2007.02- | 5AT | R | L/R | SUV 4WD 4M41 | Without differential lock | GCI82396 | Inner Joint | | 33 | 43 | 55 | 85 | 122 | |
| 3.2 (141 kw) | 2016.10- | 5AT | F | L | SUV 4WD 4M41 | | GDS81421 | Drive Shaft | 50T | 30 | 28 | 69.2 | 98.5 | 603 | |
| | 2016.10- | 5AT | F | R | SUV 4WD 4M41 | | GDS39261 | Drive Shaft | 50T | 30 | | 69.2 | 98.5 | 519 | |
| | 2016.10- | 5AT | F | R | SUV 4WD 4M41 | | GCI39121 | Inner Joint | | | 35 | | | 80 | |
| | 2016.10- | 5AT | R | L | SUV 4WD 4M41 | With differential lock | GDS83944 | Drive Shaft | 50T | 33 | 33 | 72 | 107.5 | 804 | |
| | 2016.10- | 5AT | R | R | SUV 4WD 4M41 | With differential lock | GDS83945 | Drive Shaft | 50T | 33 | 33 | 72 | 107.5 | 833 | |
| | 2016.10- | 5AT | R | L/R | SUV 4WD 4M41 | Without differential lock | GDS83886 | Drive Shaft | 50T | 33 | 33 | 72 | 107.5 | 819 | |
| | 2016.10- | 5AT | R | L/R | SUV 4WD 4M41 | | GCO82518 | Outer Joint | 50T | 33 | 43 | 72 | 107.5 | 87 | I |
| | 2016.10- | 5AT | R | L | SUV 4WD 4M41 | With differential lock | GCI82430 | Inner Joint | | 33 | 43 | 55 | 70 | 122 | |
| | 2016.10- | 5AT | R | R | SUV 4WD 4M41 | With differential lock | GCI82431 | Inner Joint | | 33 | 43 | 55 | 99 | 122 | |
| | 2016.10- | 5AT | R | L/R | SUV 4WD 4M41 | Without differential lock | GCI82396 | Inner Joint | | 33 | 43 | 55 | 85 | 122 | |
| 3.2 (147 kw) | 2009.01- | 5AT | F | R | SUV 4WD 4M41 | | GCI39121 | Inner Joint | | | 35 | | | 80 | |
| | 2009.01- | 5AT/5MT | F | L | SUV 4WD 4M41 | For Modelcode:V88W | GDS81421 | Drive Shaft | 50T | 30 | 28 | 69.2 | 98.5 | 603 | |
| | 2009.01- | 5AT/5MT | F | R | SUV 4WD 4M41 | For Modelcode:V88W | GDS39261 | Drive Shaft | 50T | 30 | | 69.2 | 98.5 | 519 | |
| | 2009.01- | 5AT/5MT | F | R | SUV 4WD 4M41 | | GCO39374 | Outer Joint | 50T | 30 | 36 | 69.2 | 98.5 | 67.5 | I |
| | 2009.01- | | F | L/R | SUV 4WD 4M41 | | GCO39207 | Outer Joint | 50T | 30 | 36 | 69.2 | 98.5 | 67.5 | I |
| | 2009.01- | 5AT/5MT | R | L | SUV 4WD 4M41 | With differential lock | GDS83944 | Drive Shaft | 50T | 33 | 33 | 72 | 107.5 | 804 | |
| | 2009.01- | 5AT/5MT | R | R | SUV 4WD 4M41 | With differential lock | GDS83945 | Drive Shaft | 50T | 33 | 33 | 72 | 107.5 | 833 | |
| | 2009.01- | 5AT/5MT | R | L/R | SUV 4WD 4M41 | Without differential lock | GDS83886 | Drive Shaft | 50T | 33 | 33 | 72 | 107.5 | 819 | |
| | 2009.01- | 5AT/5MT | R | L/R | SUV 4WD 4M41 | | GCO82518 | Outer Joint | 50T | 33 | 43 | 72 | 107.5 | 87 | I |
| | 2009.01- | 5AT/5MT | R | L | SUV 4WD 4M41 | With differential lock | GCI82430 | Inner Joint | | 33 | 43 | 55 | 70 | 122 | |
| | 2009.01- | 5AT/5MT | R | R | SUV 4WD 4M41 | With differential lock | GCI82431 | Inner Joint | | 33 | 43 | 55 | 99 | 122 | |
| | 2009.01- | 5AT/5MT | R | L/R | SUV 4WD 4M41 | Without differential lock | GCI82396 | Inner Joint | | 33 | 43 | 55 | 85 | 122 | |
| 3.5 (139 kw) | 2009.09- | | F | R | Terrain cab wagon closed 4WD 6G74SOHC | | GCI39121 | Inner Joint | | | 35 | | | 80 | |
| 3.5 (143 kw) | 1997.07-1999.10 | MT | F | L | Closed Off-Road Vehicle 4WD 6G74 (DOHC 24V), 6G74 (SOHC 24V) | | GDS39007 | Drive Shaft | | 28 | 25 | 56 | 154 | 616 | |
| | 1997.07-1999.10 | MT | F | R | Closed Off-Road Vehicle 4WD 6G74 (DOHC 24V), 6G74 (SOHC 24V) | | GDS39006 | Drive Shaft | | 28 | | 56 | 154 | 538 | |
| | 1997.07-1999.10 | MT | F | L/R | Closed Off-Road Vehicle 4WD 6G74 (DOHC 24V), 6G74 (SOHC 24V) | | GCO39018 | Outer Joint | | 28 | 25 | 56 | 154 | 62 | M |

| | YEAR | TRANSM. | F/R | L/R | BODY STYLE & DRIVE TYPE & ENGINE | REMARKS | G-AP Ref. | PRODUCT | ABS | Technical Specifications A | B | C | H | L | P |
|---|---|---|---|---|---|---|---|---|---|---|---|---|---|---|---|
| **MITSUBISHI** | | | | | | | | | | | | | | | |
| **Pajero** | | | | | | | | | | | | | | | |
| 3.5 (143 kw) | 1997.07-1999.10 | MT | F | R | Closed Off-Road Vehicle 4WD 6G74 (DOHC 24V), 6G74 (SOHC 24V) | | GCI99092 | Inner Joint | | | 26 | | | 68.6 | |
| 3.5 (149 kw) | 2000.04-2007.01 | 5AT/5MT | F | L | Closed Off-Road Vehicle 4WD 6G74 (DOHC 24V) | | GDS39064 | Drive Shaft | 50T | 30 | 28 | 66 | 98 | 600 | |
| | 2000.04-2007.01 | 5AT/5MT | F | R | Closed Off-Road Vehicle 4WD 6G74 (DOHC 24V) | | GDS39095 | Drive Shaft | 50T | 30 | | 66 | 98 | 527 | |
| | 2000.04-2007.01 | 5AT/5MT | F | L/R | Closed Off-Road Vehicle 4WD 6G74 (DOHC 24V) | | GCO39006 | Outer Joint | 50T | 30 | 33 | 66 | 98 | 67 | I |
| | 2000.04-2007.01 | 5AT/5MT | F | L | Closed Off-Road Vehicle 4WD 6G74 (DOHC 24V) | | GCI99084 | Inner Joint | | 28 | 33 | 34.7 | 90.5 | 90.5 | |
| | 2000.04-2007.01 | 5AT/5MT | F | R | Closed Off-Road Vehicle 4WD 6G74 (DOHC 24V) | | GCI99085 | Inner Joint | | | 33 | | | 68.6 | |
| | 2000.04-2007.01 | 5AT/5MT | R | L/R | Closed Off-Road Vehicle 4WD 6G74 (DOHC 24V) | | GDS39243 | Drive Shaft | 50T | 33 | | 72 | 107 | 679 | |
| | 2000.04-2007.01 | 5AT/5MT | R | L/R | Closed Off-Road Vehicle 4WD 6G74 (DOHC 24V) | | GCO21048 | Outer Joint | 50T | 33 | 43 | 72 | 107 | 92 | I |
| | 2000.04-2007.01 | 5AT/5MT | R | L/R | Closed Off-Road Vehicle 4WD 6G74 (DOHC 24V) | | GCI41195 | Inner Joint | | | 43 | | | 84 | |
| 3.5 (153 kw) | 1994.06-1999.10 | MT | F | L | Closed Off-Road Vehicle 4WD 6G74 (DOHC 24V) | | GDS39007 | Drive Shaft | | 28 | 25 | 56 | 154 | 616 | |
| | 1994.06-1999.10 | MT | F | R | Closed Off-Road Vehicle 4WD 6G74 (DOHC 24V) | | GDS39006 | Drive Shaft | | 28 | | 56 | 154 | 538 | |
| | 1994.06-1999.10 | MT | F | L/R | Closed Off-Road Vehicle 4WD 6G74 (DOHC 24V) | | GCO39018 | Outer Joint | | 28 | 25 | 56 | 154 | 62 | M |
| | 1994.06-1999.10 | MT | F | R | Closed Off-Road Vehicle 4WD 6G74 (DOHC 24V) | | GCI75004 | Inner Joint | | | 26 | | | 62.5 | |
| | 1994.06-1999.10 | MT | F | R | Closed Off-Road Vehicle 4WD 6G74 (DOHC 24V) | | GCI99092 | Inner Joint | | | 26 | | | 68.6 | |
| 3.5 (162 kw) | 2003.09-2006.10 | | F | R | Closed Off-Road Vehicle 4WD 6G74 (DOHC 24V), 6G74 (SOHC 24V) | | GCI99085 | Inner Joint | | | 33 | | | 68.6 | |
| | 2003.09-2006.10 | | R | | Closed Off-Road Vehicle 4WD 6G74 (DOHC 24V), 6G74 (SOHC 24V) | Date to:2006.08 | GCI41195 | Inner Joint | | | 43 | | | 84 | |
| 3.8 (175 kw) | 2009.01- | | F | R | SUV 4WD 6G75 | | GCI39121 | Inner Joint | | | 35 | | | 80 | |
| 3.8 (176 kw) | 2010.02- | | F | R | SUV 4WD 6G75 | | GCI39121 | Inner Joint | | | 35 | | | 80 | |
| 3.8 (182 kw) | 2006.10- | 5AT | F | L | SUV 4WD 6G75 (SOHC 24V) | For Modelcode:V87W | GDS81421 | Drive Shaft | 50T | 30 | 28 | 69.2 | 98.5 | 603 | |
| | 2006.10- | 5AT | F | R | SUV 4WD 6G75 (SOHC 24V) | For Modelcode:V87W | GDS39261 | Drive Shaft | 50T | 30 | | 69.2 | 98.5 | 519 | |
| | 2006.10- | 5AT | F | R | SUV 4WD 6G75 (SOHC 24V) | | GCI39121 | Inner Joint | | | 35 | | | 80 | |
| | 2006.10- | MT | F | L/R | SUV 4WD 6G75 (SOHC 24V) | Date from:2010.01 | GCO39028 | Outer Joint | 50T | 30 | 36 | 66 | 98 | 69 | I |
| | 2006.10- | 5AT | R | L | SUV 4WD 6G75 (SOHC 24V) | With differential lock | GDS83944 | Drive Shaft | 50T | 33 | 33 | 72 | 107.5 | 804 | |
| | 2006.10- | 5AT | R | R | SUV 4WD 6G75 (SOHC 24V) | With differential lock | GDS83945 | Drive Shaft | 50T | 33 | 33 | 72 | 107.5 | 833 | |
| | 2006.10- | 5AT | R | L/R | SUV 4WD 6G75 (SOHC 24V) | Without differential lock | GDS83886 | Drive Shaft | 50T | 33 | 33 | 72 | 107.5 | 819 | |
| | 2006.10- | 5AT | R | L/R | SUV 4WD 6G75 (SOHC 24V) | | GCO82518 | Outer Joint | 50T | 33 | 43 | 72 | 107.5 | 87 | I |
| | 2006.10- | 5AT | R | L | SUV 4WD 6G75 (SOHC 24V) | With differential lock | GCI82430 | Inner Joint | | 33 | 43 | 55 | 70 | 122 | |
| | 2006.10- | 5AT | R | R | SUV 4WD 6G75 (SOHC 24V) | With differential lock | GCI82431 | Inner Joint | | 33 | 43 | 55 | 99 | 122 | |
| | 2006.10- | 5AT | R | L/R | SUV 4WD 6G75 (SOHC 24V) | Without differential lock | GCI82396 | Inner Joint | | 33 | 43 | 55 | 85 | 122 | |
| 3.8 (184 kw) | 2007.02- | 5AT | F | L | SUV 4WD 6G75 | | GDS81421 | Drive Shaft | 50T | 30 | 28 | 69.2 | 98.5 | 603 | |
| | 2007.02- | 5AT | F | L/R | SUV 4WD 6G75 | | GCO39207 | Outer Joint | 50T | 30 | 36 | 69.2 | 98.5 | 67.5 | I |
| | 2007.02- | 5AT | F | R | SUV 4WD 6G75 | | GCI39121 | Inner Joint | | | 35 | | | 80 | |
| | 2007.02- | MT | F | L/R | SUV 4WD 6G75 | | GCO39028 | Outer Joint | 50T | 30 | 36 | 66 | 98 | 69 | I |
| | 2007.02- | 5AT | R | L | SUV 4WD 6G75 | For vehicles without 3rd seating row;With differential lock;For vehicles with 3rd seating row | GDS83944 | Drive Shaft | 50T | 33 | 33 | 72 | 107.5 | 804 | |
| | 2007.02- | 5AT | R | R | SUV 4WD 6G75 | For vehicles without 3rd seating row;With differential lock;For vehicles with 3rd seating row | GDS83945 | Drive Shaft | 50T | 33 | 33 | 72 | 107.5 | 833 | |
| | 2007.02- | 5AT | R | L/R | SUV 4WD 6G75 | For vehicles without 3rd seating row;Without differential lock | GDS83886 | Drive Shaft | 50T | 33 | 33 | 72 | 107.5 | 819 | |
| | 2007.02- | 5AT | R | L/R | SUV 4WD 6G75 | | GCO82518 | Outer Joint | 50T | 33 | 43 | 72 | 107.5 | 87 | I |
| | 2007.02- | 5AT | R | L | SUV 4WD 6G75 | For vehicles without 3rd seating row;With differential lock;For vehicles with 3rd seating row | GCI82430 | Inner Joint | | 33 | 43 | 55 | 70 | 122 | |
| | 2007.02- | 5AT | R | R | SUV 4WD 6G75 | For vehicles without 3rd seating row;With differential lock;For vehicles with 3rd seating row | GCI82431 | Inner Joint | | 33 | 43 | 55 | 99 | 122 | |
| | 2007.02- | 5AT | R | L/R | SUV 4WD 6G75 | For vehicles without 3rd seating row;Without differential lock | GCI82396 | Inner Joint | | 33 | 43 | 55 | 85 | 122 | |
| **Pajero Canvas Top** | | | | | | | | | | | | | | | |
| 2.5 (73 kw) | 2000.04-2006.12 | 5MT | F | L | Open Off-Road Vehicle 4WD 4D56-T | | GDS39064 | Drive Shaft | 50T | 30 | 28 | 66 | 98 | 600 | |
| | 2000.04-2006.12 | 5MT | F | R | Open Off-Road Vehicle 4WD 4D56-T | | GDS39095 | Drive Shaft | 50T | 30 | | 66 | 98 | 527 | |
| | 2000.04-2006.12 | 5MT | F | L | Open Off-Road Vehicle 4WD 4D56-T | | GCI99084 | Inner Joint | | 28 | 33 | 34.7 | 90.5 | 90.5 | |
| | 2000.04-2006.12 | MT | F | L/R | Open Off-Road Vehicle 4WD 4D56-T | | GCO39006 | Outer Joint | 50T | 30 | 33 | 66 | 98 | 67 | I |
| | 2000.04-2006.12 | MT | F | L/R | Open Off-Road Vehicle 4WD 4D56-T | | GCO39124 | Outer Joint | 50T | 30 | 33 | 66 | 98 | 67 | I |
| | 2000.04-2006.12 | MT | F | R | Open Off-Road Vehicle 4WD 4D56-T | | GCI99085 | Inner Joint | | | 33 | | | 68.6 | |
| | 2000.04-2006.12 | 5MT | R | L/R | Open Off-Road Vehicle 4WD 4D56-T | | GDS39243 | Drive Shaft | 50T | 33 | | 72 | 107 | 679 | |
| | 2000.04-2006.12 | 5MT | R | L/R | Open Off-Road Vehicle 4WD 4D56-T | Transmission side | GCO21048 | Outer Joint | 50T | 33 | 43 | 72 | 107 | 92 | I |
| | 2000.04-2006.12 | MT | R | | Open Off-Road Vehicle 4WD 4D56-T | Date to:2006.08 | GCI41195 | Inner Joint | | | 43 | | | 84 | |
| 2.5 (85 kw) | 2001.09-2006.12 | 5MT | F | L | Open Off-Road Vehicle 4WD 4D56-T | | GDS39064 | Drive Shaft | 50T | 30 | 28 | 66 | 98 | 600 | |
| | 2001.09-2006.12 | 5MT | F | R | Open Off-Road Vehicle 4WD 4D56-T | | GDS39095 | Drive Shaft | 50T | 30 | | 66 | 98 | 527 | |
| | 2001.09-2006.12 | 5MT | F | L | Open Off-Road Vehicle 4WD 4D56-T | | GCI99084 | Inner Joint | | 28 | 33 | 34.7 | 90.5 | 90.5 | |
| | 2001.09-2006.12 | MT | F | L/R | Open Off-Road Vehicle 4WD 4D56-T | | GCO39006 | Outer Joint | 50T | 30 | 33 | 66 | 98 | 67 | I |
| | 2001.09-2006.12 | MT | F | L/R | Open Off-Road Vehicle 4WD 4D56-T | | GCO39124 | Outer Joint | 50T | 30 | 33 | 66 | 98 | 67 | I |
| | 2001.09-2006.12 | MT | F | R | Open Off-Road Vehicle 4WD 4D56-T | | GCI99085 | Inner Joint | | | 33 | | | 68.6 | |
| | 2001.09-2006.12 | 5MT | R | L/R | Open Off-Road Vehicle 4WD 4D56-T | | GDS39243 | Drive Shaft | 50T | 33 | | 72 | 107 | 679 | |
| | 2001.09-2006.12 | 5MT | R | L/R | Open Off-Road Vehicle 4WD 4D56-T | Transmission side | GCO21048 | Outer Joint | 50T | 33 | 43 | 72 | 107 | 92 | I |
| | 2001.09-2006.12 | | R | | Open Off-Road Vehicle 4WD 4D56-T | Date to:2006.08 | GCI41195 | Inner Joint | | | 43 | | | 84 | |
| 3.0 (133 kw) | 1994.06-2000.04 | AT | F | L | Open Off-Road Vehicle 4WD 6G72 (SOHC 24V) | | GCI39049 | Inner Joint | | 25 | 25 | 32 | 89 | 81.5 | |
| | 1994.06-2000.04 | AT | F | R | Open Off-Road Vehicle 4WD 6G72 (SOHC 24V) | | GCI39061 | Inner Joint | | | 25 | | | 68.6 | |
| | 1994.06-2000.04 | AT/MT | F | R | Open Off-Road Vehicle 4WD 6G72 (SOHC 24V) | | GCI75004 | Inner Joint | | | 26 | | | 62.5 | |
| | 1994.06-2000.04 | MT | F | L | Open Off-Road Vehicle 4WD 6G72 (SOHC 24V) | | GDS39007 | Drive Shaft | | 28 | 25 | 56 | 154 | 616 | |
| | 1994.06-2000.04 | MT | F | R | Open Off-Road Vehicle 4WD 6G72 (SOHC 24V) | | GDS39006 | Drive Shaft | | 28 | | 56 | 154 | 538 | |
| | 1994.06-2000.04 | MT | F | L/R | Open Off-Road Vehicle 4WD 6G72 (SOHC 24V) | | GCO39018 | Outer Joint | | 28 | 25 | 56 | 154 | 62 | M |

| | YEAR | TRANSM. | F/R | L/R | BODY STYLE & DRIVE TYPE & ENGINE | REMARKS | G-AP Ref. | PRODUCT | ABS | Technical Specifications A | B | C | H | L | P |
|---|---|---|---|---|---|---|---|---|---|---|---|---|---|---|---|
| **MITSUBISHI** | | | | | | | | | | | | | | | |
| **Pajero Canvas Top** | | | | | | | | | | | | | | | |
| 3.0 (133 kw) | 1994.06-2000.04 | MT | F | R | Open Off-Road Vehicle 4WD 6G72 (SOHC 24V) | | GCI99092 | Inner Joint | | | 26 | | | 68.6 | |
| 3.2 (118 kw) | 2001.10-2006.12 | 5MT | F | L | Open Off-Road Vehicle 4WD 4M41 | | GDS39064 | Drive Shaft | 50T | 30 | 28 | 66 | 98 | 600 | |
| | 2001.10-2006.12 | 5MT | F | R | Open Off-Road Vehicle 4WD 4M41 | | GDS39095 | Drive Shaft | 50T | 30 | | 66 | 98 | 527 | |
| | 2001.10-2006.12 | 5MT | F | R | Open Off-Road Vehicle 4WD 4M41 | | GCI99085 | Inner Joint | | | 33 | | | 68.6 | |
| | 2001.10-2006.12 | AT/MT | F | L/R | Open Off-Road Vehicle 4WD 4M41 | | GCO39006 | Outer Joint | 50T | 30 | 33 | 66 | 98 | 67 | I |
| | 2001.10-2006.12 | AT/MT | F | L/R | Open Off-Road Vehicle 4WD 4M41 | | GCO39028 | Outer Joint | 50T | 30 | 36 | 66 | 98 | 69 | I |
| | 2001.10-2006.12 | 5MT | R | L/R | Open Off-Road Vehicle 4WD 4M41 | | GDS39243 | Drive Shaft | 50T | 33 | | 72 | 107 | 679 | |
| | 2001.10-2006.12 | 5MT | R | L/R | Open Off-Road Vehicle 4WD 4M41 | | GCO21048 | Outer Joint | 50T | 33 | 43 | 72 | 107 | 92 | I |
| | 2001.10-2006.12 | AT/MT | R | L/R | Open Off-Road Vehicle 4WD 4M41 | Transmission:X7,For Modelcode:V88W,Transmission:M7,Date from:2002.12,For Modelcode:V98W | GCI41195 | Inner Joint | | | 43 | | | 84 | |
| 3.2 (121 kw) | 2000.04-2006.12 | 5AT | F | L | Open Off-Road Vehicle 4WD 4M41 | | GDS39064 | Drive Shaft | 50T | 30 | 28 | 66 | 98 | 600 | |
| | 2000.04-2006.12 | 5AT | F | R | Open Off-Road Vehicle 4WD 4M41 | TJ | GDS39095 | Drive Shaft | 50T | 30 | | 66 | 98 | 527 | |
| | 2000.04-2006.12 | AT | F | L/R | Open Off-Road Vehicle 4WD 4M41 | | GCO39006 | Outer Joint | 50T | 30 | 33 | 66 | 98 | 67 | I |
| | 2000.04-2006.12 | AT | F | L/R | Open Off-Road Vehicle 4WD 4M41 | | GCO39124 | Outer Joint | 50T | 30 | 33 | 66 | 98 | 67 | I |
| | 2000.04-2006.12 | AT | F | L | Open Off-Road Vehicle 4WD 4M41 | | GCI99084 | Inner Joint | | 28 | 33 | 34.7 | 90.5 | 90.5 | |
| | 2000.04-2006.12 | AT | F | R | Open Off-Road Vehicle 4WD 4M41 | | GCI99085 | Inner Joint | | | 33 | | | 68.6 | |
| | 2000.04-2006.12 | MT | F | L/R | Open Off-Road Vehicle 4WD 4M41 | | GCO39028 | Outer Joint | 50T | 30 | 36 | 66 | 98 | 69 | I |
| | 2000.04-2006.12 | AT/5AT | R | L/R | Open Off-Road Vehicle 4WD 4M41 | | GDS39243 | Drive Shaft | 50T | 33 | | 72 | 107 | 679 | |
| | 2000.04-2006.12 | AT/5AT | R | L/R | Open Off-Road Vehicle 4WD 4M41 | | GCO21048 | Outer Joint | 50T | 33 | 43 | 72 | 107 | 92 | I |
| | 2000.04-2006.12 | AT/MT | R | L/R | Open Off-Road Vehicle 4WD 4M41 | Transmission:X7,For Modelcode:V88W,Transmission:M7,Date from:2002.12,For Modelcode:V98W | GCI41195 | Inner Joint | | | 43 | | | 84 | |
| 3.5 (149 kw) | 2000.04-2006.12 | 5MT | F | L | Open Off-Road Vehicle 4WD 6G74 (GDI) | | GDS39064 | Drive Shaft | 50T | 30 | 28 | 66 | 98 | 600 | |
| | 2000.04-2006.12 | 5MT | F | R | Open Off-Road Vehicle 4WD 6G74 (GDI) | | GDS39095 | Drive Shaft | 50T | 30 | | 66 | 98 | 527 | |
| | 2000.04-2006.12 | 5MT | F | L | Open Off-Road Vehicle 4WD 6G74 (GDI) | | GCI99084 | Inner Joint | | 28 | 33 | 34.7 | 90.5 | 90.5 | |
| | 2000.04-2006.12 | AT | F | L/R | Open Off-Road Vehicle 4WD 6G74 (GDI) | | GCO39006 | Outer Joint | 50T | 30 | 33 | 66 | 98 | 67 | I |
| | 2000.04-2006.12 | MT | F | R | Open Off-Road Vehicle 4WD 6G74 (GDI) | | GCI99085 | Inner Joint | | | 33 | | | 68.6 | |
| | 2000.04-2006.12 | | F | L/R | Open Off-Road Vehicle 4WD 6G74 (GDI) | | GCO39124 | Outer Joint | 50T | 30 | 33 | 66 | 98 | 67 | I |
| | 2000.04-2006.12 | 5MT | R | L/R | Open Off-Road Vehicle 4WD 6G74 (GDI) | | GDS39243 | Drive Shaft | 50T | 33 | | 72 | 107 | 679 | |
| | 2000.04-2006.12 | 5MT | R | L/R | Open Off-Road Vehicle 4WD 6G74 (GDI) | Transmission side | GCO21048 | Outer Joint | 50T | 33 | 43 | 72 | 107 | 92 | I |
| | 2000.04-2006.12 | | R | | Open Off-Road Vehicle 4WD 6G74 (GDI) | Date to:2006.08 | GCI41195 | Inner Joint | | | 43 | | | 84 | |
| **Pajero Classic** | | | | | | | | | | | | | | | |
| 2.5 (85 kw) | 2002.07-2003.10 | MT | F | L | Terrain cab wagon closed 4WD 4D56T | | GDS39007 | Drive Shaft | | 28 | 25 | 56 | 154 | 616 | |
| | 2002.07-2003.10 | MT | F | R | Terrain cab wagon closed 4WD 4D56T | | GDS39006 | Drive Shaft | | 28 | | 56 | 154 | 538 | |
| | 2002.07-2003.10 | MT | F | L/R | Terrain cab wagon closed 4WD 4D56T | | GCO39018 | Outer Joint | | 28 | 25 | 56 | 154 | 62 | M |
| **Pajero Classic/Shogun Classic/Montero Classic** | | | | | | | | | | | | | | | |
| 3.8 (184 kw) | 2006.09- | AT/MT | R | | Closed Off-Road Vehicle 4WD 6G75 | Tuner:Type:EProduction Date To:2006.12 Tuner:Type:KProduction Date From:2006.06,Production Date To:2006.12 | GCI41195 | Inner Joint | | | 43 | | | 84 | |
| **Pajero Pinin** | | | | | | | | | | | | | | | |
| 1.8 (84 kw) | 2001.11-2007.06 | 4AT/5MT | F | L/R | Closed Off-Road Vehicle 4WD 4G93 (SOHC 16V) | | GCO39186 | Outer Joint | 43T | 25 | 32 | 54 | 94.5 | 63.5 | I |
| | 2001.11-2007.06 | 4AT/5MT | F | R | Closed Off-Road Vehicle 4WD 4G93 (SOHC 16V) | | GCI39077 | Inner Joint | | 25 | 29 | 35 | 57.5 | 90.5 | |
| | 2001.11-2007.06 | 5MT | F | L/R | Closed Off-Road Vehicle 4WD 4G93 (SOHC 16V) | | GCO39136 | Outer Joint | | 25 | 29 | 54 | 95 | 57 | I |
| 1.8 (88 kw) | 1999.10-2001.10 | 5MT | F | L | Closed Off-Road Vehicle 4WD 4G93 (GDI) | Date from:2001.09 | GDS39236 | Drive Shaft | 43T | 25 | 25 | 54 | 94.5 | 551 | |
| | 1999.10-2001.10 | 5MT | F | L/R | Closed Off-Road Vehicle 4WD 4G93 (GDI) | Date to:2000.06 | GCO39136 | Outer Joint | | 25 | 29 | 54 | 95 | 57 | I |
| | 1999.10-2001.10 | 5MT | F | L/R | Closed Off-Road Vehicle 4WD 4G93 (GDI) | Date from:2000.07 | GCO39186 | Outer Joint | 43T | 25 | 32 | 54 | 94.5 | 63.5 | I |
| | 1999.10-2001.10 | 5MT | F | R | Closed Off-Road Vehicle 4WD 4G93 (GDI) | | GCI39077 | Inner Joint | | 25 | 29 | 35 | 57.5 | 90.5 | |
| 2.0 (95 kw) | 2000.10-2007.06 | AT | F | L/R | Closed Off-Road Vehicle 4WD 4G94 (GDI) | | GCO39136 | Outer Joint | | 25 | 29 | 54 | 95 | 57 | I |
| | 2000.10-2007.06 | AT | F | L/R | Closed Off-Road Vehicle 4WD 4G94 (GDI) | | GCO39186 | Outer Joint | 43T | 25 | 32 | 54 | 94.5 | 63.5 | I |
| | 2000.10-2007.06 | AT | F | R | Closed Off-Road Vehicle 4WD 4G94 (GDI) | | GCI39077 | Inner Joint | | 25 | 29 | 35 | 57.5 | 90.5 | |
| | 2000.10-2007.06 | AT/MT | F | L | Closed Off-Road Vehicle 4WD 4G94 (GDI) | | GDS39236 | Drive Shaft | 43T | 25 | 25 | 54 | 94.5 | 551 | |
| **Pajero Sport** | | | | | | | | | | | | | | | |
| 2.4 (133 kw) | 2015.08- | 8AT | F | L | Closed Off-Road Vehicle 4WD 4N15 | 6 balls | GDS39163 | Drive Shaft | 47T | 30 | 28 | 69 | 98 | 594 | |
| | 2015.08- | 8AT | F | R | Closed Off-Road Vehicle 4WD 4N15 | 6 balls | GDS39164 | Drive Shaft | 47T | 30 | | 69 | 98 | 492 | |
| | 2015.08- | 8AT/6MT | F | L | Closed Off-Road Vehicle 4WD 4N15 | 8 balls | GDS39321 | Drive Shaft | 47T | 30 | 28 | 69 | 98 | 593 | |
| | 2015.08- | 8AT/6MT | F | R | Closed Off-Road Vehicle 4WD 4N15 | 8 balls | GDS39322 | Drive Shaft | 47T | 30 | | 69 | 98 | 491 | |
| | 2015.08- | 8AT/6MT | F | L | Closed Off-Road Vehicle 4WD 4N15 | | GCI39037 | Inner Joint | | 28 | 33 | 34.7 | 90.5 | 81.5 | |
| | 2015.08- | 8AT/6MT | F | R | Closed Off-Road Vehicle 4WD 4N15 | | GCI39036 | Inner Joint | | | 33 | | | 62.5 | |
| | 2015.08- | AT | F | L/R | Closed Off-Road Vehicle 4WD 4N15 | | GCO39371 | Outer Joint | 47T | 30 | 35 | 69 | 98 | 66.5 | I |
| | 2015.08- | AT | F | L/R | Closed Off-Road Vehicle 4WD 4N15 | | GCO39372 | Outer Joint | | 30 | 35 | 69 | 98 | 66.5 | I |
| 2.5 (73 kw) | 1998.11- | 5MT | F | L | Closed Off-Road Vehicle 4WD 4D56-T | Model:Montero Sport/Pajero Sport/Shogun Sport/Sport Wagon | GDS39114 | Drive Shaft | | 28 | 28 | 56 | 154 | 612.5 | |
| | 1998.11- | 5MT | F | R | Closed Off-Road Vehicle 4WD 4D56-T | Model:Montero Sport/Pajero Sport/Shogun Sport/Sport Wagon | GDS39006 | Drive Shaft | | 28 | | 56 | 154 | 538 | |
| | 1998.11- | 5MT | F | L/R | Closed Off-Road Vehicle 4WD 4D56-T | Original design,Model:Montero Sport/Pajero Sport/Shogun Sport/Sport Wagon | GCO39018 | Outer Joint | | 28 | 25 | 56 | 154 | 62 | M |
| | 1998.11- | 5MT | F | L/R | Closed Off-Road Vehicle 4WD 4D56-T | Non-Original design | GCO39027 | Outer Joint | | 28 | 25 | 56 | 154.1 | 62 | M |
| | 1998.11- | 5MT | F | L | Closed Off-Road Vehicle 4WD 4D56-T | Model:Montero Sport/Pajero Sport/Shogun Sport/Sport Wagon | GCI99083 | Inner Joint | | 28 | 26 | 34.7 | 90.5 | 90.5 | |
| | 1998.11- | 5MT | F | R | Closed Off-Road Vehicle 4WD 4D56-T | Model:Montero Sport/Pajero Sport/Shogun Sport/Sport Wagon | GCI75004 | Inner Joint | | | 26 | | | 62.5 | |
| | 1998.11- | 5MT | F | R | Closed Off-Road Vehicle 4WD 4D56-T | Model:Montero Sport/Pajero Sport/Shogun Sport/Sport Wagon | GCI99092 | Inner Joint | | | 26 | | | 68.6 | |
| 2.5 (85 kw) | 2002.07- | 5MT | F | L | Closed Off-Road Vehicle 4WD 4D56-T | | GDS39114 | Drive Shaft | | 28 | 28 | 56 | 154 | 612.5 | |
| | 2002.07- | 5MT | F | R | Closed Off-Road Vehicle 4WD 4D56-T | | GDS39006 | Drive Shaft | | 28 | | 56 | 154 | 538 | |
| | 2002.07- | 5MT | F | L/R | Closed Off-Road Vehicle 4WD 4D56-T | Original design | GCO39018 | Outer Joint | | 28 | 25 | 56 | 154 | 62 | M |

| | YEAR | TRANSM. | F/R | L/R | BODY STYLE & DRIVE TYPE & ENGINE | REMARKS | G-AP Ref. | PRODUCT | ABS | Technical Specifications A | B | C | H | L | P |
|---|---|---|---|---|---|---|---|---|---|---|---|---|---|---|---|
| **MITSUBISHI** | | | | | | | | | | | | | | | |
| **Pajero Sport** | | | | | | | | | | | | | | | |
| 2.5 (85 kw) | 2002.07- | 5MT | F | L/R | Closed Off-Road Vehicle 4WD 4D56-T | Non-Original design | GCO39027 | Outer Joint | | 28 | 25 | 56 | 154.1 | 62 | M |
| | 2002.07- | 5MT | F | L | Closed Off-Road Vehicle 4WD 4D56-T | TJ | GCI99083 | Inner Joint | | 28 | 26 | 34.7 | 90.5 | 90.5 | |
| | 2002.07- | 5MT | F | R | Closed Off-Road Vehicle 4WD 4D56-T | DOJ | GCI75004 | Inner Joint | | | 26 | | | 62.5 | |
| | 2002.07- | 5MT | F | R | Closed Off-Road Vehicle 4WD 4D56-T | TJ | GCI99092 | Inner Joint | | | 26 | | | 68.6 | |
| 2.5 (98 kw) | 2003.08- | 5MT | F | L | Closed Off-Road Vehicle 4WD 4D56-T | | GDS39114 | Drive Shaft | | 28 | 28 | 56 | 154 | 612.5 | |
| | 2003.08- | 5MT | F | R | Closed Off-Road Vehicle 4WD 4D56-T | | GDS39006 | Drive Shaft | | 28 | | 56 | 154 | 538 | |
| | 2003.08- | 5MT | F | L/R | Closed Off-Road Vehicle 4WD 4D56-T | Original design | GCO39018 | Outer Joint | | 28 | 25 | 56 | 154 | 62 | M |
| | 2003.08- | 5MT | F | L/R | Closed Off-Road Vehicle 4WD 4D56-T | Non-Original design | GCO39027 | Outer Joint | | 28 | 25 | 56 | 154.1 | 62 | M |
| | 2003.08- | 5MT | F | L | Closed Off-Road Vehicle 4WD 4D56-T | | GCI99083 | Inner Joint | | 28 | 26 | 34.7 | 90.5 | 90.5 | |
| | 2003.08- | 5MT | F | R | Closed Off-Road Vehicle 4WD 4D56-T | | GCI75004 | Inner Joint | | | 26 | | | 62.5 | |
| | 2003.08- | 5MT | F | R | Closed Off-Road Vehicle 4WD 4D56-T | | GCI99092 | Inner Joint | | | 26 | | | 68.6 | |
| 2.5 (131 kw) | 2008.07- | 5AT/5MT | F | L | Closed Off-Road Vehicle 4WD 4D56-T/C (DOHC 16V) | 8 balls | GDS39321 | Drive Shaft | 47T | 30 | 28 | 69 | 98 | 593 | |
| | 2008.07- | 5AT/5MT | F | R | Closed Off-Road Vehicle 4WD 4D56-T/C (DOHC 16V) | 8 balls | GDS39322 | Drive Shaft | 47T | 30 | | 69 | 98 | 491 | |
| | 2008.07- | 5AT/5MT | F | L/R | Closed Off-Road Vehicle 4WD 4D56-T/C (DOHC 16V) | | GCO39371 | Outer Joint | 47T | 30 | 35 | 69 | 98 | 66.5 | I |
| | 2008.07- | 5AT/5MT | F | L | Closed Off-Road Vehicle 4WD 4D56-T/C (DOHC 16V) | | GCI39037 | Inner Joint | | 28 | 33 | 34.7 | 90.5 | 81.5 | |
| | 2008.07- | 5AT/5MT | F | R | Closed Off-Road Vehicle 4WD 4D56-T/C (DOHC 16V) | | GCI39036 | Inner Joint | | | 33 | | | 62.5 | |
| | 2008.07- | AT/MT | F | L | Closed Off-Road Vehicle 4WD 4D56-T/C (DOHC 16V) | 6 balls | GDS39163 | Drive Shaft | 47T | 30 | 28 | 69 | 98 | 594 | |
| | 2008.07- | AT/MT | F | R | Closed Off-Road Vehicle 4WD 4D56-T/C (DOHC 16V) | 6 balls | GDS39164 | Drive Shaft | 47T | 30 | | 69 | 98 | 492 | |
| 2.8 (92 kw) | 1998.11-2003.10 | MT | F | L | Closed Off-Road Vehicle 4WD 4M40-T | Date to:2003.08 | GCI39049 | Inner Joint | | 25 | 25 | 32 | 89 | 81.5 | |
| | 1998.11-2003.10 | MT | F | R | Closed Off-Road Vehicle 4WD 4M40-T | Date to:2003.08 | GCI75004 | Inner Joint | | | 26 | | | 62.5 | |
| 3.0 (123 kw) | 2003.03-2009.12 | 4AT/5MT | F | L | Terrain cab wagon closed 4WD 6G72SOHC | | GDS39114 | Drive Shaft | | 28 | 28 | 56 | 154 | 612.5 | |
| | 2003.03-2009.12 | 4AT/5MT | F | L/R | Terrain cab wagon closed 4WD 6G72SOHC | | GCO39027 | Outer Joint | | 28 | 25 | 56 | 154.1 | 62 | M |
| 3.0 (125 kw) | 2000.06- | 4AT/5MT | F | L/R | Closed Off-Road Vehicle 4WD 6G72 (SOHC 24V) | | GCO39027 | Outer Joint | | 28 | 25 | 56 | 154.1 | 62 | M |
| | 2000.06- | AT/MT | F | L | Closed Off-Road Vehicle 4WD 6G72 (SOHC 24V) | | GDS39114 | Drive Shaft | | 28 | 28 | 56 | 154 | 612.5 | |
| 3.0 (130 kw) | 1998.11-2000.10 | 4AT | F | L | Closed Off-Road Vehicle 4WD 6G72 (SOHC 24V) | Model:Montero Sport/Pajero Sport | GDS39114 | Drive Shaft | | 28 | 28 | 56 | 154 | 612.5 | |
| | 1998.11-2000.10 | 4AT/5MT | F | L/R | Closed Off-Road Vehicle 4WD 6G72 (SOHC 24V) | Model:Montero Sport/Pajero Sport | GCO39027 | Outer Joint | | 28 | 25 | 56 | 154.1 | 62 | M |
| | 1998.11-2000.10 | AT | F | L | Closed Off-Road Vehicle 4WD 6G72 (SOHC 24V) | | GDS39007 | Drive Shaft | | 28 | 25 | 56 | 154 | 616 | |
| | 1998.11-2000.10 | AT | F | R | Closed Off-Road Vehicle 4WD 6G72 (SOHC 24V) | | GDS39006 | Drive Shaft | | 28 | | 56 | 154 | 538 | |
| | 1998.11-2000.10 | AT | F | L/R | Closed Off-Road Vehicle 4WD 6G72 (SOHC 24V) | | GCO39018 | Outer Joint | | 28 | 25 | 56 | 154 | 62 | M |
| | 1998.11-2000.10 | AT | F | L | Closed Off-Road Vehicle 4WD 6G72 (SOHC 24V) | | GCI39049 | Inner Joint | | 25 | 25 | 32 | 89 | 81.5 | |
| | 1998.11-2000.10 | AT | F | R | Closed Off-Road Vehicle 4WD 6G72 (SOHC 24V) | | GCI75004 | Inner Joint | | | 26 | | | 62.5 | |
| | 1998.11-2000.10 | AT | F | R | Closed Off-Road Vehicle 4WD 6G72 (SOHC 24V) | | GCI99092 | Inner Joint | | | 26 | | | 68.6 | |
| 3.0 (154 kw) | 2015.08- | 8AT | F | L | Closed Off-Road Vehicle 4WD 6B31 | | GDS39321 | Drive Shaft | 47T | 30 | 28 | 69 | 98 | 593 | |
| | 2015.08- | 8AT | F | R | Closed Off-Road Vehicle 4WD 6B31 | | GDS39322 | Drive Shaft | 47T | 30 | | 69 | 98 | 491 | |
| | 2015.08- | 8AT | F | L/R | Closed Off-Road Vehicle 4WD 6B31 | | GCO39371 | Outer Joint | 47T | 30 | 35 | 69 | 98 | 66.5 | I |
| | 2015.08- | 8AT | F | L | Closed Off-Road Vehicle 4WD 6B31 | | GCI39037 | Inner Joint | | 28 | 33 | 34.7 | 90.5 | 81.5 | |
| | 2015.08- | 8AT | F | R | Closed Off-Road Vehicle 4WD 6B31 | | GCI39036 | Inner Joint | | | 33 | | | 62.5 | |
| | 2015.08- | AT | F | L/R | Closed Off-Road Vehicle 4WD 6B31 | | GCO39372 | Outer Joint | | 30 | 35 | 69 | 98 | 66.5 | I |
| 3.0 (162 kw) | 2008.09- | 5AT | F | L | Closed Off-Road Vehicle 4WD 6B31 | | GDS39321 | Drive Shaft | 47T | 30 | 28 | 69 | 98 | 593 | |
| | 2008.09- | 5AT | F | R | Closed Off-Road Vehicle 4WD 6B31 | | GDS39322 | Drive Shaft | 47T | 30 | | 69 | 98 | 491 | |
| | 2008.09- | 5AT | F | L/R | Closed Off-Road Vehicle 4WD 6B31 | | GCO39371 | Outer Joint | 47T | 30 | 35 | 69 | 98 | 66.5 | I |
| | 2008.09- | 5AT | F | L | Closed Off-Road Vehicle 4WD 6B31 | | GCI39037 | Inner Joint | | 28 | 33 | 34.7 | 90.5 | 81.5 | |
| | 2008.09- | 5AT | F | R | Closed Off-Road Vehicle 4WD 6B31 | | GCI39036 | Inner Joint | | | 33 | | | 62.5 | |
| 3.2 (121 kw) | 2008.07- | 4AT/5MT | F | L | Closed Off-Road Vehicle 4WD 4M41 | Date To:2008.12 | GDS39163 | Drive Shaft | 47T | 30 | 28 | 69 | 98 | 594 | |
| | 2008.07- | 4AT/5MT | F | L | Closed Off-Road Vehicle 4WD 4M41 | Date From:2009.01 | GDS39321 | Drive Shaft | 47T | 30 | 28 | 69 | 98 | 593 | |
| | 2008.07- | 4AT/5MT | F | R | Closed Off-Road Vehicle 4WD 4M41 | Date To:2008.12 | GDS39148 | Drive Shaft | 47T | 30 | | 69 | 98 | 492 | |
| | 2008.07- | 4AT/5MT | F | R | Closed Off-Road Vehicle 4WD 4M41 | Date To:2008.12 | GDS39164 | Drive Shaft | 47T | 30 | | 69 | 98 | 492 | |
| | 2008.07- | 4AT/5MT | F | R | Closed Off-Road Vehicle 4WD 4M41 | Date From:2009.01 | GDS39322 | Drive Shaft | 47T | 30 | | 69 | 98 | 491 | |
| | 2008.07- | 4AT/5MT | F | L/R | Closed Off-Road Vehicle 4WD 4M41 | Date To:2008.12 | GCO39159 | Outer Joint | 47T | 30 | 35 | 69 | 98 | 66.5 | I |
| | 2008.07- | 4AT/5MT | F | L/R | Closed Off-Road Vehicle 4WD 4M41 | Date To:2008.12 | GCO39166 | Outer Joint | 47T | 30 | 33 | 69 | 98 | 66.5 | I |
| | 2008.07- | 4AT/5MT | F | L/R | Closed Off-Road Vehicle 4WD 4M41 | Date From:2009.01 | GCO39371 | Outer Joint | 47T | 30 | 35 | 69 | 98 | 66.5 | I |
| | 2008.07- | 4AT/5MT | F | L | Closed Off-Road Vehicle 4WD 4M41 | | GCI39037 | Inner Joint | | 28 | 33 | 34.7 | 90.5 | 81.5 | |
| | 2008.07- | 4AT/5MT | F | R | Closed Off-Road Vehicle 4WD 4M41 | | GCI39036 | Inner Joint | | | 33 | | | 62.5 | |
| 3.5 (153 kw) | 2008.09- | 4AT | F | L | Closed Off-Road Vehicle 4WD 6G74 (SOHC 24V) | Date to:2009.01 | GDS39163 | Drive Shaft | 47T | 30 | 28 | 69 | 98 | 594 | |
| | 2008.09- | 4AT | F | L | Closed Off-Road Vehicle 4WD 6G74 (SOHC 24V) | Date from:2009.02 | GDS39321 | Drive Shaft | 47T | 30 | 28 | 69 | 98 | 593 | |
| | 2008.09- | 4AT | F | R | Closed Off-Road Vehicle 4WD 6G74 (SOHC 24V) | Date to:2009.01;Inner teeth of wheel side:33 | GDS39148 | Drive Shaft | 47T | 30 | | 69 | 98 | 492 | |
| | 2008.09- | 4AT | F | R | Closed Off-Road Vehicle 4WD 6G74 (SOHC 24V) | Date to:2009.01;Inner teeth of wheel side:35 | GDS39164 | Drive Shaft | 47T | 30 | | 69 | 98 | 492 | |
| | 2008.09- | 4AT | F | R | Closed Off-Road Vehicle 4WD 6G74 (SOHC 24V) | Date from:2009.02 | GDS39322 | Drive Shaft | 47T | 30 | | 69 | 98 | 491 | |
| | 2008.09- | 4AT | F | L/R | Closed Off-Road Vehicle 4WD 6G74 (SOHC 24V) | Date from:2009.02 | GCO39371 | Outer Joint | 47T | 30 | 35 | 69 | 98 | 66.5 | I |
| **Pajero Van** | | | | | | | | | | | | | | | |
| 3.2 (118 kw) | 2006.11- | 5AT | F | L | Closed Off-Road Van 4WD 4M41 | | GCO39207 | Outer Joint | 50T | 30 | 36 | 69.2 | 98.5 | 67.5 | I |
| | 2006.11- | 5AT | F | R | Closed Off-Road Van 4WD 4M41 | | GCI39121 | Inner Joint | | | 35 | | | 80 | |
| | 2006.11- | 5AT/5MT | F | L | Closed Off-Road Van 4WD 4M41 | For Modelcode:V88W/V88V | GDS81421 | Drive Shaft | 50T | 30 | 28 | 69.2 | 98.5 | 603 | |
| | 2006.11- | 5AT/5MT | F | R | Closed Off-Road Van 4WD 4M41 | For Modelcode:V88W/V88V | GDS39261 | Drive Shaft | 50T | 30 | | 69.2 | 98.5 | 519 | |
| | 2006.11- | 5MT | R | L | Closed Off-Road Van 4WD 4M41 | With differential lock | GDS83944 | Drive Shaft | 50T | 33 | 33 | 72 | 107.5 | 804 | |

| | YEAR | TRANSM. | F/R | L/R | BODY STYLE & DRIVE TYPE & ENGINE | REMARKS | G-AP Ref. | PRODUCT | ABS | Technical Specifications A | B | C | H | L | P |
|---|---|---|---|---|---|---|---|---|---|---|---|---|---|---|---|
| **MITSUBISHI** | | | | | | | | | | | | | | | |
| **Pajero Van** | | | | | | | | | | | | | | | |
| 3.2 (118 kw) | 2006.11- | 5MT | R | R | Closed Off-Road Van 4WD 4M41 | With differential lock | GDS83945 | Drive Shaft | 50T | 33 | 33 | 72 | 107.5 | 833 | |
| | 2006.11- | 5MT | R | L/R | Closed Off-Road Van 4WD 4M41 | Without differential lock | GDS83886 | Drive Shaft | 50T | 33 | 33 | 72 | 107.5 | 819 | |
| | 2006.11- | 5MT | R | L/R | Closed Off-Road Van 4WD 4M41 | | GCO82518 | Outer Joint | 50T | 33 | 43 | 72 | 107.5 | 87 | I |
| | 2006.11- | 5MT | R | L | Closed Off-Road Van 4WD 4M41 | With differential lock | GCI82430 | Inner Joint | | 33 | 43 | 55 | 70 | 122 | |
| | 2006.11- | 5MT | R | R | Closed Off-Road Van 4WD 4M41 | With differential lock | GCI82431 | Inner Joint | | 33 | 43 | 55 | 99 | 122 | |
| | 2006.11- | 5MT | R | L/R | Closed Off-Road Van 4WD 4M41 | Without differential lock | GCI82396 | Inner Joint | | 33 | 43 | 55 | 85 | 122 | |
| 3.2 (140 kw) | 2007.02- | 5AT | F | L | Closed Off-Road Van 4WD 4M41 | For Modelcode:V88W | GDS81421 | Drive Shaft | 50T | 30 | 28 | 69.2 | 98.5 | 603 | |
| | 2007.02- | 5AT | F | R | Closed Off-Road Van 4WD 4M41 | For Modelcode:V88W | GDS39261 | Drive Shaft | 50T | 30 | | 69.2 | 98.5 | 519 | |
| | 2007.02- | 5AT | F | R | Closed Off-Road Van 4WD 4M41 | | GCI39121 | Inner Joint | | | 35 | | | 80 | |
| | 2007.02- | 5AT/5MT | F | R | Closed Off-Road Van 4WD 4M41 | | GCO39374 | Outer Joint | 50T | 30 | 36 | 69.2 | 98.5 | 67.5 | I |
| | 2007.02- | | F | L/R | Closed Off-Road Van 4WD 4M41 | | GCO39207 | Outer Joint | 50T | 30 | 36 | 69.2 | 98.5 | 67.5 | I |
| | 2007.02- | 5AT/5MT | R | L | Closed Off-Road Van 4WD 4M41 | With differential lock | GDS83944 | Drive Shaft | 50T | 33 | 33 | 72 | 107.5 | 804 | |
| | 2007.02- | 5AT/5MT | R | R | Closed Off-Road Van 4WD 4M41 | With differential lock | GDS83945 | Drive Shaft | 50T | 33 | 33 | 72 | 107.5 | 833 | |
| | 2007.02- | 5AT/5MT | R | L/R | Closed Off-Road Van 4WD 4M41 | Without differential lock | GDS83886 | Drive Shaft | 50T | 33 | 33 | 72 | 107.5 | 819 | |
| | 2007.02- | 5AT/5MT | R | L/R | Closed Off-Road Van 4WD 4M41 | | GCO82518 | Outer Joint | 50T | 33 | 43 | 72 | 107.5 | 87 | I |
| | 2007.02- | 5AT/5MT | R | L | Closed Off-Road Van 4WD 4M41 | With differential lock | GCI82430 | Inner Joint | | 33 | 43 | 55 | 70 | 122 | |
| | 2007.02- | 5AT/5MT | R | R | Closed Off-Road Van 4WD 4M41 | With differential lock | GCI82431 | Inner Joint | | 33 | 43 | 55 | 99 | 122 | |
| | 2007.02- | 5AT/5MT | R | L/R | Closed Off-Road Van 4WD 4M41 | Without differential lock | GCI82396 | Inner Joint | | 33 | 43 | 55 | 85 | 122 | |
| 3.2 (147 kw) | 2010.01- | 5AT | F | R | Closed Off-Road Van 4WD 4M41 | | GCI39121 | Inner Joint | | | 35 | | | 80 | |
| | 2010.01- | 5AT/5MT | F | L | Closed Off-Road Van 4WD 4M41 | For Modelcode:V88W/V88V | GDS81421 | Drive Shaft | 50T | 30 | 28 | 69.2 | 98.5 | 603 | |
| | 2010.01- | 5AT/5MT | F | R | Closed Off-Road Van 4WD 4M41 | For Modelcode:V88W/V88V | GDS39261 | Drive Shaft | 50T | 30 | | 69.2 | 98.5 | 519 | |
| | 2010.01- | 5AT/5MT | F | L/R | Closed Off-Road Van 4WD 4M41 | | GCO39207 | Outer Joint | 50T | 30 | 36 | 69.2 | 98.5 | 67.5 | I |
| | 2010.01- | 5AT/5MT | R | L | Closed Off-Road Van 4WD 4M41 | With differential lock | GDS83944 | Drive Shaft | 50T | 33 | 33 | 72 | 107.5 | 804 | |
| | 2010.01- | 5AT/5MT | R | R | Closed Off-Road Van 4WD 4M41 | With differential lock | GDS83945 | Drive Shaft | 50T | 33 | 33 | 72 | 107.5 | 833 | |
| | 2010.01- | 5AT/5MT | R | L/R | Closed Off-Road Van 4WD 4M41 | Without differential lock | GDS83886 | Drive Shaft | 50T | 33 | 33 | 72 | 107.5 | 819 | |
| | 2010.01- | 5AT/5MT | R | L/R | Closed Off-Road Van 4WD 4M41 | | GCO82518 | Outer Joint | 50T | 33 | 43 | 72 | 107.5 | 87 | I |
| | 2010.01- | 5AT/5MT | R | L | Closed Off-Road Van 4WD 4M41 | With differential lock | GCI82430 | Inner Joint | | 33 | 43 | 55 | 70 | 122 | |
| | 2010.01- | 5AT/5MT | R | R | Closed Off-Road Van 4WD 4M41 | With differential lock | GCI82431 | Inner Joint | | 33 | 43 | 55 | 99 | 122 | |
| | 2010.01- | 5AT/5MT | R | L/R | Closed Off-Road Van 4WD 4M41 | Without differential lock | GCI82396 | Inner Joint | | 33 | 43 | 55 | 85 | 122 | |
| **Pajero/Shogun/Pajero Canvas/Shogun Canvas** | | | | | | | | | | | | | | | |
| 3.0 (130 kw) | 1994.06-2000.04 | AT | F | L | Open Off-Road Vehicle 4WD 6G72(SOHC) | | GCI39049 | Inner Joint | | 25 | 25 | 32 | 89 | 81.5 | |
| | 1994.06-2000.04 | AT | F | R | Open Off-Road Vehicle 4WD 6G72(SOHC) | Date to:1997.05 | GCI39061 | Inner Joint | | | 25 | | | 68.6 | |
| | 1994.06-2000.04 | AT/MT | F | R | Open Off-Road Vehicle 4WD 6G72(SOHC) | Date from:1996.06 | GCI75004 | Inner Joint | | | 26 | | | 62.5 | |
| | 1994.06-2000.04 | MT | F | L | Open Off-Road Vehicle 4WD 6G72(SOHC) | | GCI99083 | Inner Joint | | 28 | 26 | 34.7 | 90.5 | 90.5 | |
| **Shogun** | | | | | | | | | | | | | | | |
| 3.2 (118 kw) | 2005.05-2007.09 | AT | F | L | Closed Off-Road Vehicle 4WD 4M41 | | GDS39064 | Drive Shaft | 50T | 30 | 28 | 66 | 98 | 600 | |
| | 2005.05-2007.09 | AT | F | R | Closed Off-Road Vehicle 4WD 4M41 | | GDS39095 | Drive Shaft | 50T | 30 | | 66 | 98 | 527 | |
| | 2005.05-2007.09 | AT | F | L | Closed Off-Road Vehicle 4WD 4M41 | | GCO39124 | Outer Joint | 50T | 30 | 33 | 66 | 98 | 67 | I |
| | 2005.05-2007.09 | AT | F | L/R | Closed Off-Road Vehicle 4WD 4M41 | | GCO39006 | Outer Joint | 50T | 30 | 33 | 66 | 98 | 67 | I |
| | 2005.05-2007.09 | AT | F | L | Closed Off-Road Vehicle 4WD 4M41 | | GCI99084 | Inner Joint | | 28 | 33 | 34.7 | 90.5 | 90.5 | |
| | 2005.05-2007.09 | AT | F | R | Closed Off-Road Vehicle 4WD 4M41 | | GCI99085 | Inner Joint | | | 33 | | | 68.6 | |
| | 2005.05-2007.09 | MT | F | L/R | Closed Off-Road Vehicle 4WD 4M41 | | GCO39028 | Outer Joint | 50T | 30 | 36 | 66 | 98 | 69 | I |
| | 2005.05-2007.09 | 5AT/5MT | R | L/R | Closed Off-Road Vehicle 4WD 4M41 | | GDS39243 | Drive Shaft | 50T | 33 | | 72 | 107 | 679 | |
| | 2005.05-2007.09 | 5AT/5MT | R | L/R | Closed Off-Road Vehicle 4WD 4M41 | | GCO21048 | Outer Joint | 50T | 33 | 43 | 72 | 107 | 92 | I |
| | 2005.05-2007.09 | 5AT/5MT | R | L/R | Closed Off-Road Vehicle 4WD 4M41 | | GCI41195 | Inner Joint | | | 43 | | | 84 | |
| **Shogun Sport Van** | | | | | | | | | | | | | | | |
| 2.5 (85 kw) | 1999.12-2008.01 | 5MT | F | L | Van 4WD 4D56-T | | GDS39114 | Drive Shaft | | 28 | 28 | 56 | 154 | 612.5 | |
| | 1999.12-2008.01 | 5MT | F | R | Van 4WD 4D56-T | | GDS39006 | Drive Shaft | | 28 | | 56 | 154 | 538 | |
| | 1999.12-2008.01 | 5MT | F | L/R | Van 4WD 4D56-T | Original design | GCO39018 | Outer Joint | | 28 | 25 | 56 | 154 | 62 | M |
| | 1999.12-2008.01 | 5MT | F | L/R | Van 4WD 4D56-T | Non-Original design | GCO39027 | Outer Joint | | 28 | 25 | 56 | 154.1 | 62 | M |
| | 1999.12-2008.01 | 5MT | F | L | Van 4WD 4D56-T | | GCI99083 | Inner Joint | | 28 | 26 | 34.7 | 90.5 | 90.5 | |
| | 1999.12-2008.01 | 5MT | F | R | Van 4WD 4D56-T | | GCI75004 | Inner Joint | | | 26 | | | 62.5 | |
| | 1999.12-2008.01 | 5MT | F | R | Van 4WD 4D56-T | | GCI99092 | Inner Joint | | | 26 | | | 68.6 | |
| 3.0 (125 kw) | 1999.12-2008.01 | 5MT | F | L | Van 4WD 6G72 (SOHC 24V) | | GDS39114 | Drive Shaft | | 28 | 28 | 56 | 154 | 612.5 | |
| | 1999.12-2008.01 | 5MT | F | L/R | Van 4WD 6G72 (SOHC 24V) | | GCO39027 | Outer Joint | | 28 | 25 | 56 | 154.1 | 62 | M |
| **Sigma** | | | | | | | | | | | | | | | |
| 3.0 (130 kw) | 1990.12-1996.07 | AT/MT | F | L/R | Saloon FWD 6G72 | | GCO39015 | Outer Joint | | 27 | 27 | 60 | 97 | 68.5 | M |
| | 1990.12-1996.07 | | F | | Saloon FWD 6G72 | | GCO39042 | Outer Joint | | 27 | 27 | 60 | 97 | 69 | I |
| 3.0 (151 kw) | 1990.12-1996.07 | AT/MT | F | L/R | Saloon FWD 6G72DOHC | | GCO39015 | Outer Joint | | 27 | 27 | 60 | 97 | 68.5 | M |
| | 1990.12-1996.07 | | F | | Saloon FWD 6G72DOHC | | GCO39042 | Outer Joint | | 27 | 27 | 60 | 97 | 69 | I |
| **Sigma Estate/Wagon** | | | | | | | | | | | | | | | |
| 3.0 (125 kw) | 1993.01-1996.07 | | F | | Estate FWD 6G72 | | GCO39042 | Outer Joint | | 27 | 27 | 60 | 97 | 69 | I |
| **Space Gear** | | | | | | | | | | | | | | | |
| 2.5 (73 kw) | 1995.05-2000.05 | MT | F | L | Bus 4WD 4D56-TD | for left-hand drive vehicles | GCI99083 | Inner Joint | | 28 | 26 | 34.7 | 90.5 | 90.5 | |
| | 1995.05-2000.05 | MT | F | R | Bus 4WD 4D56-TD | for left-hand drive vehicles,Date from:1997.09,Date to:1999.06 | GCI75004 | Inner Joint | | | 26 | | | 62.5 | |

| | YEAR | TRANSM. | F/R | L/R | BODY STYLE & DRIVE TYPE & ENGINE | REMARKS | G-AP Ref. | PRODUCT | ABS | Technical Specifications A | B | C | H | L | P |
|---|---|---|---|---|---|---|---|---|---|---|---|---|---|---|---|
| **MITSUBISHI** | | | | | | | | | | | | | | | |
| **Space Gear** | | | | | | | | | | | | | | | |
| 2.5 (73 kw) | 1995.05-2000.05 | | F | L | Bus 4WD 4D56-TD | Date To:1999.06 | GCI39049 | Inner Joint | | 25 | 25 | 32 | 89 | 81.5 | |
| | 1995.05-2000.05 | | F | R | Bus 4WD 4D56-TD | Date To:1999.06 | GCI39061 | Inner Joint | | | 25 | | | 68.6 | |
| **Space Runner** | | | | | | | | | | | | | | | |
| 1.8 (85 kw) | 1996.06-1999.08 | | F | | MPV 4WD 4G93 (SOHC 16V) | Date To:1997.03 | GCO27008 | Outer Joint | | 27 | 23 | 60 | 95 | 63.5 | M |
| | 1996.06-1999.08 | 4AT/5MT | F | R | MPV FWD 4G93 (SOHC 16V) | | GDS39136 | Drive Shaft | | 25 | 25 | 54 | 95 | 611.2 | |
| | 1996.06-1999.08 | AT/MT | F | L/R | MPV FWD 4G93 (SOHC 16V) | | GCO39002 | Outer Joint | | 25 | 23 | 54 | 96 | 60 | M |
| 1.8 (90 kw) | 1991.06-1999.09 | | F | | MPV 4WD 4G93 | Date From:1994.09,Date To:1997.03 | GCO27008 | Outer Joint | | 27 | 23 | 60 | 95 | 63.5 | M |
| | 1991.06-1999.09 | 4AT/5MT | F | R | MPV FWD 4G93 | | GDS39136 | Drive Shaft | | 25 | 25 | 54 | 95 | 611.2 | |
| | 1991.06-1999.09 | AT/MT | F | L/R | MPV FWD 4G93 | | GCO39002 | Outer Joint | | 25 | 23 | 54 | 96 | 60 | M |
| 2.0 (60 kw) | 1991.06-1999.09 | AT/MT | F | L/R | MPV FWD 4D68T | | GCO39002 | Outer Joint | | 25 | 23 | 54 | 96 | 60 | M |
| | 1991.06-1999.09 | MT | F | | MPV FWD 4D68T | Date To:1999.05 | GCI39005 | Inner Joint | | 25 | 30 | 35 | 62.8 | 92.5 | |
| 2.0 (98 kw) | 2000.05-2002.08 | MT | F | R | MPV FWD 4G63 (SOHC 16V) | | GCI39032 | Inner Joint | | 28 | 25 | 42 | | 118 | |
| 2.4 (108 kw) | 1999.08-2002.08 | MT | F | R | MPV FWD 4G64 (DOHC 16V GDI) | | GCI39032 | Inner Joint | | 28 | 25 | 42 | | 118 | |
| 2.4 (110 kw) | 1999.08-2003.01 | 4AT/5MT | F | R | MPV FWD 4G64 (DOHC 16V GDI) | | GCI39032 | Inner Joint | | 28 | 25 | 42 | | 118 | |
| **Space Star** | | | | | | | | | | | | | | | |
| 1.0 (52 kw) | 2014.04- | MT | F | L | Hatchback FWD 3A90 | | GDS41586 | Drive Shaft | | 24 | 23 | 47 | 90 | 656 | |
| | 2014.04- | MT | F | R | Hatchback FWD 3A90 | | GDS41587 | Drive Shaft | | 24 | 23 | 47 | 90 | 857 | |
| | 2014.04- | MT | F | L/R | Hatchback FWD 3A90 | | GCO41423 | Outer Joint | | 24 | 29 | 47 | 90 | 55 | I |
| | 2014.04- | MT | F | L/R | Hatchback FWD 3A90 | | GCI41226 | Inner Joint | | 23 | 26 | 34 | 60.5 | 91.5 | |
| 1.2 (52 kw) | 2020.08- | 5MT | F | L | Hatchback FWD 3A92 | | GDS41586 | Drive Shaft | | 24 | 23 | 47 | 90 | 656 | |
| | 2020.08- | 5MT | F | R | Hatchback FWD 3A92 | | GDS41587 | Drive Shaft | | 24 | 23 | 47 | 90 | 857 | |
| | 2020.08- | 5MT | F | L/R | Hatchback FWD 3A92 | | GCI41226 | Inner Joint | | 23 | 26 | 34 | 60.5 | 91.5 | |
| | 2020.08- | CVT | F | L | Hatchback FWD 3A92 | | GDS41578 | Drive Shaft | | 24 | 25 | 47 | 90 | 657 | |
| | 2020.08- | CVT | F | R | Hatchback FWD 3A92 | | GDS41579 | Drive Shaft | | 24 | 25 | 47 | 90 | 857 | |
| | 2020.08- | CVT | F | L/R | Hatchback FWD 3A92 | | GCO41421 | Outer Joint | | 24 | 26 | 47 | 90 | 54.5 | I |
| | 2020.08- | MT | F | L | Hatchback FWD 3A92 | | GDS41586 | Drive Shaft | | 24 | 23 | 47 | 90 | 656 | |
| | 2020.08- | MT | F | R | Hatchback FWD 3A92 | | GDS41587 | Drive Shaft | | 24 | 23 | 47 | 90 | 857 | |
| | 2020.08- | MT | F | L/R | Hatchback FWD 3A92 | | GCO41423 | Outer Joint | | 24 | 29 | 47 | 90 | 55 | I |
| | 2020.08- | MT | F | L/R | Hatchback FWD 3A92 | | GCI41226 | Inner Joint | | 23 | 26 | 34 | 60.5 | 91.5 | |
| 1.3 (60 kw) | 2000.09-2004.12 | 5MT | F | L | MPV FWD 4G13S | | GDS62056 | Drive Shaft | 43T | 25 | 30 | 54 | 95 | 640 | |
| | 2000.09-2004.12 | MT | F | R | MPV FWD 4G13S | | GDS39255 | Drive Shaft | 43T | 25 | 23 | 54 | 95 | 816 | |
| | 2000.09-2004.12 | MT | F | L/R | MPV FWD 4G13S | | GCO39102 | Outer Joint | 43T | 25 | 22 | 54 | 95 | 54 | I |
| 1.3 (61 kw) | 1998.12-2004.12 | 5MT | F | L | MPV FWD 4G13S | | GDS62056 | Drive Shaft | 43T | 25 | 30 | 54 | 95 | 640 | |
| | 1998.12-2004.12 | MT | F | R | MPV FWD 4G13S | | GDS39255 | Drive Shaft | 43T | 25 | 23 | 54 | 95 | 816 | |
| | 1998.12-2004.12 | MT | F | L/R | MPV FWD 4G13S | | GCO39102 | Outer Joint | 43T | 25 | 22 | 54 | 95 | 54 | I |
| 1.3 (63 kw) | 1998.06-2000.07 | 5MT | F | L | MPV FWD 4G13S | | GDS62056 | Drive Shaft | 43T | 25 | 30 | 54 | 95 | 640 | |
| | 1998.06-2000.07 | MT | F | R | MPV FWD 4G13S | | GDS39255 | Drive Shaft | 43T | 25 | 23 | 54 | 95 | 816 | |
| | 1998.06-2000.07 | MT | F | L/R | MPV FWD 4G13S | | GCO39102 | Outer Joint | 43T | 25 | 22 | 54 | 95 | 54 | I |
| 1.6 (72 kw) | 2001.04-2004.12 | AT | F | L | MPV FWD 4G18 | Date to:2003.07 | GDS39142 | Drive Shaft | 43T | 25 | 25 | 54 | 95.5 | 618 | |
| | 2001.04-2004.12 | AT | F | L/R | MPV FWD 4G18 | Date to:2003.07 | GCO39024 | Outer Joint | 43T | 25 | 23 | 54 | 95.5 | 64 | M |
| | 2001.04-2004.12 | AT | F | | MPV FWD 4G18 | | GCO39100 | Outer Joint | 43T | 25 | 23 | 54 | 95.5 | 64 | M |
| | 2001.04-2004.12 | MT | F | L | MPV FWD 4G18 | | GDS62056 | Drive Shaft | 43T | 25 | 30 | 54 | 95 | 640 | |
| | 2001.04-2004.12 | MT | F | R | MPV FWD 4G18 | | GDS39255 | Drive Shaft | 43T | 25 | 23 | 54 | 95 | 816 | |
| | 2001.04-2004.12 | MT | F | L/R | MPV FWD 4G18 | | GCO39102 | Outer Joint | 43T | 25 | 22 | 54 | 95 | 54 | I |
| 1.8 (82 kw) | 2002.08-2004.12 | AT | F | L | MPV FWD 4G93 | Date to:2003.07 | GDS39142 | Drive Shaft | 43T | 25 | 25 | 54 | 95.5 | 618 | |
| | 2002.08-2004.12 | AT | F | L/R | MPV FWD 4G93 | Date to:2003.07 | GCO39024 | Outer Joint | 43T | 25 | 23 | 54 | 95.5 | 64 | M |
| | 2002.08-2004.12 | MT | F | L | MPV FWD 4G93 | | GDS62056 | Drive Shaft | 43T | 25 | 30 | 54 | 95 | 640 | |
| | 2002.08-2004.12 | MT | F | R | MPV FWD 4G93 | | GDS39255 | Drive Shaft | 43T | 25 | 23 | 54 | 95 | 816 | |
| | 2002.08-2004.12 | MT | F | L/R | MPV FWD 4G93 | | GCO39102 | Outer Joint | 43T | 25 | 22 | 54 | 95 | 54 | I |
| 1.8 (87 kw) | 1998.06-2004.12 | 5MT | F | L | MPV FWD 4G93DOHCB | | GDS62056 | Drive Shaft | 43T | 25 | 30 | 54 | 95 | 640 | |
| | 1998.06-2004.12 | AT | F | L/R | MPV FWD 4G93DOHCB | | GCO39024 | Outer Joint | 43T | 25 | 23 | 54 | 95.5 | 64 | M |
| | 1998.06-2004.12 | MT | F | R | MPV FWD 4G93DOHCB | | GDS39255 | Drive Shaft | 43T | 25 | 23 | 54 | 95 | 816 | |
| | 1998.06-2004.12 | MT | F | L/R | MPV FWD 4G93DOHCB | | GCO39102 | Outer Joint | 43T | 25 | 22 | 54 | 95 | 54 | I |
| 1.8 (90 kw) | 1998.06-2004.12 | AT | F | L | MPV FWD 4G93DOHCB | Date to:2003.07 | GDS39142 | Drive Shaft | 43T | 25 | 25 | 54 | 95.5 | 618 | |
| | 1998.06-2004.12 | AT | F | L/R | MPV FWD 4G93DOHCB | Date to:2003.07 | GCO39024 | Outer Joint | 43T | 25 | 23 | 54 | 95.5 | 64 | M |
| | 1998.06-2004.12 | MT | F | L | MPV FWD 4G93DOHCB | | GDS62056 | Drive Shaft | 43T | 25 | 30 | 54 | 95 | 640 | |
| | 1998.06-2004.12 | MT | F | R | MPV FWD 4G93DOHCB | | GDS39255 | Drive Shaft | 43T | 25 | 23 | 54 | 95 | 816 | |
| | 1998.06-2004.12 | MT | F | L/R | MPV FWD 4G93DOHCB | | GCO39102 | Outer Joint | 43T | 25 | 22 | 54 | 95 | 54 | I |
| 1.9 (75 kw) | 2000.08-2004.12 | MT | F | R | MPV FWD F9Q | | GDS62073 | Drive Shaft | 43T | 26 | 26 | 54 | 95 | 960 | |
| | 2000.08-2004.12 | MT | F | L/R | MPV FWD F9Q | | GCO39084 | Outer Joint | 43T | 26 | 33 | 54 | 95 | 60 | M |
| 1.9 (85 kw) | 2002.08-2004.12 | MT | F | R | MPV FWD F9Q | | GDS62073 | Drive Shaft | 43T | 26 | 26 | 54 | 95 | 960 | |
| | 2002.08-2004.12 | MT | F | L/R | MPV FWD F9Q | | GCO39084 | Outer Joint | 43T | 26 | 33 | 54 | 95 | 60 | M |
| **Space Wagon** | | | | | | | | | | | | | | | |
| 1.8 (55 kw) | 1991.10-1998.10 | MT | F | | MPV FWD 4D65T | Date To:1992.05 | GCI39005 | Inner Joint | | 25 | 30 | 35 | 62.8 | 92.5 | |
| | 1991.10-1998.10 | | F | L/R | MPV FWD 4D65T | | GCO39017 | Outer Joint | 43T | 25 | 23 | 54 | 95.5 | 63.5 | I |

| | YEAR | TRANSM. | F/R | L/R | BODY STYLE & DRIVE TYPE & ENGINE | REMARKS | G-AP Ref. | PRODUCT | ABS | Technical Specifications A | B | C | H | L | P |
|---|---|---|---|---|---|---|---|---|---|---|---|---|---|---|---|
| **MITSUBISHI** | | | | | | | | | | | | | | | |
| **Space Wagon** | | | | | | | | | | | | | | | |
| 1.8 (90 kw) | 1991.10-1998.10 | AT/MT | F | L/R | MPV 4WD 4G93 (SOHC 16V) | | GCO39036 | Outer Joint | | 25 | 23 | 54 | 96 | 64.5 | M |
| 2.0 (60 kw) | 1992.10-1998.10 | MT | F | L/R | MPV FWD 4D68 T | | GCO39002 | Outer Joint | | 25 | 23 | 54 | 96 | 60 | M |
| | 1992.10-1998.10 | MT | F | | MPV FWD 4D68 T | | GCI39005 | Inner Joint | | 25 | 30 | 35 | 62.8 | 92.5 | |
| | 1992.10-1998.10 | | F | L/R | MPV FWD 4D68 T | | GCO39017 | Outer Joint | 43T | 25 | 23 | 54 | 95.5 | 63.5 | I |
| | 1992.10-1998.10 | | F | | MPV FWD 4D68 T | | GCO39064 | Outer Joint | 43T | 25 | 30 | 54 | 95 | 60.5 | M |
| 2.0 (80 kw) | 1998.12-2002.06 | 5MT | F | L | MPV FWD 4G63S | | GCI39033 | Inner Joint | | 27 | 25 | 41 | 63 | 100 | |
| | 1998.12-2002.06 | 5MT | F | R | MPV FWD 4G63S | | GCI39032 | Inner Joint | | 28 | 25 | 42 | | 118 | |
| 2.0 (98 kw) | 1992.06-2000.11 | AT/MT | F | L/R | MPV FWD 4G63S | | GCO39036 | Outer Joint | | 25 | 23 | 54 | 96 | 64.5 | M |
| | 1992.06-2000.11 | | F | | MPV FWD 4G63S | Date To:1996.05 | GCO39009 | Outer Joint | | 25 | 30 | 54 | 95 | 60.5 | M |
| | 1992.06-2000.11 | | F | | MPV FWD 4G63S | | GCO39016 | Outer Joint | | 25 | 23 | 54 | 95.5 | 63.5 | I |
| | 1992.10-1998.10 | AT/MT | F | L/R | MPV 4WD 4G63 (SOHC 16V) | | GCO39036 | Outer Joint | | 25 | 23 | 54 | 96 | 64.5 | M |
| | 1992.10-1998.10 | | F | | MPV 4WD 4G63 (SOHC 16V) | Date To:1996.05 | GCO39009 | Outer Joint | | 25 | 30 | 54 | 95 | 60.5 | M |
| | 1992.10-1998.10 | | F | | MPV 4WD 4G63 (SOHC 16V) | | GCO39016 | Outer Joint | | 25 | 23 | 54 | 95.5 | 63.5 | I |
| | 1992.10-1998.10 | | F | | MPV 4WD 4G63 (SOHC 16V) | Date To:1996.05 | GCI39005 | Inner Joint | | 25 | 30 | 35 | 62.8 | 92.5 | |
| | 1998.10-2004.01 | AT/MT | F | L/R | MPV FWD 4G63S | inner teeth of wheel side:33 | GCO39005 | Outer Joint | 43T | 25 | 33 | 54 | 95.5 | 65 | I |
| | 1998.10-2004.01 | AT/MT | F | L/R | MPV FWD 4G63S | inner teeth of wheel side:24 | GCO39020 | Outer Joint | 43T | 25 | 24 | 54 | 94.5 | 62 | M |
| | 1998.10-2004.01 | MT | F | L | MPV FWD 4G63S | | GCI39033 | Inner Joint | | 27 | 25 | 41 | 63 | 100 | |
| | 1998.10-2004.01 | MT | F | R | MPV FWD 4G63S | | GCI39032 | Inner Joint | | 28 | 25 | 42 | | 118 | |
| 2.4 (108 kw) | 1998.07-2004.01 | | F | L/R | MPV 4WD 4G64DOHCB | | GCO39078 | Outer Joint | 43T | 25 | 25 | 54 | 95.5 | 63.5 | I |
| | 1998.07-2004.01 | | F | | MPV 4WD 4G64DOHCB | for right-hand drive vehicles/for left-hand drive vehicles,Date To:2002.04 | GCO39004 | Outer Joint | 43T | 25 | 30 | 54 | 95 | 60 | I |
| | 2000.08-2004.12 | 4AT/5MT | F | L | MPV FWD 4G64DOHCB | | GCI39033 | Inner Joint | | 27 | 25 | 41 | 63 | 100 | |
| | 2000.08-2004.12 | MT | F | R | MPV FWD 4G64DOHCB | | GCI39032 | Inner Joint | | 28 | 25 | 42 | | 118 | |
| | 2000.08-2004.12 | | F | L/R | MPV FWD 4G64DOHCB | | GCO39078 | Outer Joint | 43T | 25 | 25 | 54 | 95.5 | 63.5 | I |
| 2.4 (110 kw) | 1998.07-2004.01 | MT | F | L/R | MPV 4WD 4G64DOHCB | | GCO39005 | Outer Joint | 43T | 25 | 33 | 54 | 95.5 | 65 | I |
| | 1998.07-2004.01 | MT | F | | MPV 4WD 4G64DOHCB | for right-hand drive vehicles/for left-hand drive vehicles,Date To:2002.04 | GCO39004 | Outer Joint | 43T | 25 | 30 | 54 | 95 | 60 | I |
| | 1998.07-2004.01 | | F | L/R | MPV 4WD 4G64DOHCB | | GCO39078 | Outer Joint | 43T | 25 | 25 | 54 | 95.5 | 63.5 | I |
| | 1998.07-2004.01 | AT/MT | F | L/R | MPV FWD 4G64DOHCB | | GCO39005 | Outer Joint | 43T | 25 | 33 | 54 | 95.5 | 65 | I |
| | 1998.07-2004.01 | AT/MT | F | L/R | MPV FWD 4G64DOHCB | | GCO39078 | Outer Joint | 43T | 25 | 25 | 54 | 95.5 | 63.5 | I |
| | 1998.07-2004.01 | MT | F | L | MPV FWD 4G64DOHCB | | GCI39033 | Inner Joint | | 27 | 25 | 41 | 63 | 100 | |
| | 1998.07-2004.01 | MT | F | R | MPV FWD 4G64DOHCB | | GCI39032 | Inner Joint | | 28 | 25 | 42 | | 118 | |
| **Strada** | | | | | | | | | | | | | | | |
| 2.8 (92 kw) | 1996.09-2005.11 | 5MT | F | L | Pickup 4WD 4M40T | Date to:2002.08 | GDS39007 | Drive Shaft | | 28 | 25 | 56 | 154 | 616 | |
| | 1996.09-2005.11 | 5MT | F | R | Pickup 4WD 4M40T | Date to:2002.08 | GDS39006 | Drive Shaft | | 28 | | 56 | 154 | 538 | |
| | 1996.09-2005.11 | 5MT | F | L/R | Pickup 4WD 4M40T | Date to:2002.08 | GCO39018 | Outer Joint | | 28 | 25 | 56 | 154 | 62 | M |
| | 1996.09-2005.11 | MT | F | L | Pickup 4WD 4M40T | Date to:2003.08 | GCI39049 | Inner Joint | | 25 | 25 | 32 | 89 | 81.5 | |
| | 1996.09-2005.11 | MT | F | R | Pickup 4WD 4M40T | Date to:2003.08 | GCI75004 | Inner Joint | | | 26 | | | 62.5 | |
| 3.2 (121 kw) | 2007.01-2015.12 | AT/MT | F | L | Pickup 4WD 4M41R | | GDS39163 | Drive Shaft | 47T | 30 | 28 | 69 | 98 | 594 | |
| | 2007.01-2015.12 | AT/MT | F | R | Pickup 4WD 4M41R | | GDS39164 | Drive Shaft | 47T | 30 | | 69 | 98 | 492 | |
| | 2007.01-2015.12 | AT/MT | F | L/R | Pickup 4WD 4M41R | | GCO39159 | Outer Joint | 47T | 30 | 35 | 69 | 98 | 66.5 | I |
| | 2007.01-2015.12 | AT/MT | F | L | Pickup 4WD 4M41R | | GCI39037 | Inner Joint | | 28 | 33 | 34.7 | 90.5 | 81.5 | |
| | 2007.01-2015.12 | AT/MT | F | R | Pickup 4WD 4M41R | | GCI39036 | Inner Joint | | | 33 | | | 62.5 | |
| **Xpander** | | | | | | | | | | | | | | | |
| 1.5 (77 kw) | 2017.08- | 5MT | F | L | MPV FWD 4A91 | | GDS81719 | Drive Shaft | | 28 | 27 | 59.5 | 94.5 | 652 | |
| | 2017.08- | 5MT | F | R | MPV FWD 4A91 | | GDS81720 | Drive Shaft | | 28 | 27 | 59.5 | 94.5 | 956 | |
| | 2017.08- | 5MT | F | L | MPV FWD 4A91 | | GCI81480 | Inner Joint | | 27 | 32 | 41 | 63 | 102 | |
| | 2017.08- | 5MT | F | R | MPV FWD 4A91 | | GCI81481 | Inner Joint | | 27 | 32 | 41 | 371 | 93 | |
| **MITSUBISHI (BJC)** | | | | | | | | | | | | | | | |
| **Outlander** | | | | | | | | | | | | | | | |
| 2.4 (118 kw) | 2005.11-2007.01 | | F | | SUV FWD 4G69-S4M | | GDS39169 | Drive Shaft | | 27 | 23 | 58 | 94.5 | 754.5 | |
| **Pajero Sport** | | | | | | | | | | | | | | | |
| 3.0 (123 kw) | 2003.01-2006.02 | AT | F | L | Closed Off-Road Vehicle 4WD 6G72 | | GDS39095 | Drive Shaft | 50T | 30 | | 66 | 98 | 527 | |
| **MITSUBISHI (GAC)** | | | | | | | | | | | | | | | |
| **Pajero** | | | | | | | | | | | | | | | |
| 3.0 (133 kw) | 2004.12-2006.12 | AT | F | R | SUV 4WD 6G72 | | GDS39095 | Drive Shaft | 50T | 30 | | 66 | 98 | 527 | |
| 3.8 (150 kw) | 2004.12-2005.12 | AT | F | R | SUV 4WD 6G75 | | GDS39095 | Drive Shaft | 50T | 30 | | 66 | 98 | 527 | |
| **MITSUBISHI (SOUEAST)** | | | | | | | | | | | | | | | |
| **Lancer** | | | | | | | | | | | | | | | |
| 1.6 (74 kw) | 2006.05-2017.12 | 4AT/5MT | F | L | Saloon FWD DA4G18 | Transmission:5MT,Model year to:2015;Transmission:4AT,Model year to:2011 | GCI39057 | Inner Joint | | 25 | 30 | 41 | 61.5 | 95 | |
| **Lancer EX** | | | | | | | | | | | | | | | |
| 1.8 (100 kw) | 2009.11- | MT | F | | Saloon FWD 4B10 | | GDS39120 | Drive Shaft | | 28 | 27 | 59.5 | 95 | 965 | |
| **MOSKVICH** | | | | | | | | | | | | | | | |
| **2141** | | | | | | | | | | | | | | | |
| 1.5 (51 kw) | 1989.05-2001.12 | MT | F | L/R | Hatchback FWD 33110 | | GCO40001 | Outer Joint | | 25 | 25 | 53 | 88 | 57.5 | O |

| | YEAR | TRANSM. | F/R | L/R | BODY STYLE & DRIVE TYPE & ENGINE | REMARKS | G-AP Ref. | PRODUCT | ABS | Technical Specifications A | B | C | H | L | P |
|---|---|---|---|---|---|---|---|---|---|---|---|---|---|---|---|
| **MOSKVICH** | | | | | | | | | | | | | | | |
| **3** | | | | | | | | | | | | | | | |
| 1.5 (110 kw) | 2023.03- | CVT | F | L | SUV FWD | | GDS57686 | Drive Shaft | 48T | 27 | 23 | 60 | 95 | 667 | |
| | 2023.03- | CVT | F | R | SUV FWD | | GDS58265 | Drive Shaft | 48T | 27 | 23 | 60 | 95 | 911 | |
| | 2023.03- | CVT | F | L/R | SUV FWD | | GCO83750 | Outer Joint | 48T | 27 | 24 | 60 | 95 | 63.5 | M |
| | 2023.03- | CVT | F | L | SUV FWD | | GCI83805 | Inner Joint | | 23 | 23 | 38 | 64.5 | 102 | |
| | 2023.03- | CVT | F | R | SUV FWD | | GCI84051 | Inner Joint | | 23 | 23 | 38 | 317 | 93.5 | |
| **NISSAN** | | | | | | | | | | | | | | | |
| **100NX** | | | | | | | | | | | | | | | |
| 1.6 (75 kw) | 1992.10-1996.07 | AT | F | L | Coupe FWD GA16DE | | GCI50065 | Inner Joint | | 25 | 25 | 40 | 63 | 101 | |
| | 1992.10-1996.07 | AT/MT | F | L/R | Coupe FWD GA16DE | | GCO41078 | Outer Joint | | 25 | 23 | 55 | 107 | 62 | I |
| | 1992.10-1996.07 | | F | L/R | Coupe FWD GA16DE | | GCO41034 | Outer Joint | 42T | 25 | 23 | 55 | 107 | 61 | I |
| | 1992.10-1996.07 | | F | | Coupe FWD GA16DE | | GCO41118 | Outer Joint | | 25 | 23 | 55 | 107 | 61 | M |
| **350Z** | | | | | | | | | | | | | | | |
| 3.5 (206 kw) | 2003.10-2006.12 | 6MT | R | L | Coupe RWD VQ35DE | | GDS56286 | Drive Shaft | | 29 | | 58 | 111 | 607 | |
| | 2003.10-2006.12 | 6MT | R | R | Coupe RWD VQ35DE | | GDS56285 | Drive Shaft | | 29 | | 58 | 111 | 647 | |
| | 2003.10-2006.12 | 6MT | R | L/R | Coupe RWD VQ35DE | | GCO83242 | Outer Joint | | 29 | 27 | 58 | 111 | 70 | I |
| | 2003.10-2006.12 | 6MT | R | L/R | Coupe RWD VQ35DE | | GCI83227 | Inner Joint | | | 27 | | | 79.5 | |
| | 2005.03-2007.12 | 6MT | R | L | Convertible RWD VQ35DE | | GDS56286 | Drive Shaft | | 29 | | 58 | 111 | 607 | |
| | 2005.03-2007.12 | 6MT | R | R | Convertible RWD VQ35DE | | GDS56285 | Drive Shaft | | 29 | | 58 | 111 | 647 | |
| | 2005.03-2007.12 | 6MT | R | L/R | Convertible RWD VQ35DE | | GCO83242 | Outer Joint | | 29 | 27 | 58 | 111 | 70 | I |
| | 2005.03-2007.12 | 6MT | R | L/R | Convertible RWD VQ35DE | | GCI83227 | Inner Joint | | | 27 | | | 79.5 | |
| 3.5 (214 kw) | 2004.11-2007.01 | 5AT | R | L | Coupe RWD VQ35DE | | GDS56286 | Drive Shaft | | 29 | | 58 | 111 | 607 | |
| | 2004.11-2007.01 | 5AT | R | R | Coupe RWD VQ35DE | | GDS56285 | Drive Shaft | | 29 | | 58 | 111 | 647 | |
| | 2004.11-2007.01 | 5AT | R | L/R | Coupe RWD VQ35DE | | GCO83242 | Outer Joint | | 29 | 27 | 58 | 111 | 70 | I |
| | 2004.11-2007.01 | 5AT | R | L/R | Coupe RWD VQ35DE | | GCI83227 | Inner Joint | | | 27 | | | 79.5 | |
| 3.5 (221 kw) | 2002.09-2008.12 | 6MT | R | L | Coupe RWD VQ35DE | | GDS56286 | Drive Shaft | | 29 | | 58 | 111 | 607 | |
| | 2002.09-2008.12 | 6MT | R | R | Coupe RWD VQ35DE | | GDS56285 | Drive Shaft | | 29 | | 58 | 111 | 647 | |
| | 2002.09-2008.12 | 6MT | R | L/R | Coupe RWD VQ35DE | | GCO83242 | Outer Joint | | 29 | 27 | 58 | 111 | 70 | I |
| | 2002.09-2008.12 | 6MT | R | L/R | Coupe RWD VQ35DE | | GCI83227 | Inner Joint | | | 27 | | | 79.5 | |
| | 2004.11-2007.01 | 6MT | R | L | Convertible RWD VQ35DE | | GDS56286 | Drive Shaft | | 29 | | 58 | 111 | 607 | |
| | 2004.11-2007.01 | 6MT | R | R | Convertible RWD VQ35DE | | GDS56285 | Drive Shaft | | 29 | | 58 | 111 | 647 | |
| | 2004.11-2007.01 | 6MT | R | L/R | Convertible RWD VQ35DE | | GCO83242 | Outer Joint | | 29 | 27 | 58 | 111 | 70 | I |
| | 2004.11-2007.01 | 6MT | R | L/R | Convertible RWD VQ35DE | | GCI83227 | Inner Joint | | | 27 | | | 79.5 | |
| 3.5 (230 kw) | 2005.09-2008.12 | 6MT | R | L | Coupe RWD VQ35HR | | GDS56286 | Drive Shaft | | 29 | | 58 | 111 | 607 | |
| | 2005.09-2008.12 | 6MT | R | R | Coupe RWD VQ35HR | | GDS56285 | Drive Shaft | | 29 | | 58 | 111 | 647 | |
| | 2005.09-2008.12 | 6MT | R | L/R | Coupe RWD VQ35HR | | GCO83242 | Outer Joint | | 29 | 27 | 58 | 111 | 70 | I |
| | 2005.09-2008.12 | 6MT | R | L/R | Coupe RWD VQ35HR | | GCI83227 | Inner Joint | | | 27 | | | 79.5 | |
| | 2005.09-2009.12 | 6MT | R | L | Convertible RWD VQ35HR | | GDS56286 | Drive Shaft | | 29 | | 58 | 111 | 607 | |
| | 2005.09-2009.12 | 6MT | R | R | Convertible RWD VQ35HR | | GDS56285 | Drive Shaft | | 29 | | 58 | 111 | 647 | |
| | 2005.09-2009.12 | 6MT | R | L/R | Convertible RWD VQ35HR | | GCO83242 | Outer Joint | | 29 | 27 | 58 | 111 | 70 | I |
| | 2005.09-2009.12 | 6MT | R | L/R | Convertible RWD VQ35HR | | GCI83227 | Inner Joint | | | 27 | | | 79.5 | |
| **370Z** | | | | | | | | | | | | | | | |
| 3.7 (241 kw) | 2009.06- | 7AT/6MT | R | L/R | Coupe RWD VQ37VHR | | GCO82420 | Outer Joint | | 32 | 35 | 65.5 | 110 | 59 | I |
| | 2010.01- | 7AT/6MT | R | L/R | Convertible RWD VQ37VHR | | GCO82420 | Outer Joint | | 32 | 35 | 65.5 | 110 | 59 | I |
| 3.7 (243 kw) | 2009.06- | 7AT/6MT | R | L/R | Coupe RWD VQ37VHR | | GCO82420 | Outer Joint | | 32 | 35 | 65.5 | 110 | 59 | I |
| | 2009.12- | 7AT/6MT | R | L/R | Convertible RWD VQ37VHR | | GCO82420 | Outer Joint | | 32 | 35 | 65.5 | 110 | 59 | I |
| 3.7 (248 kw) | 2009.04- | 7AT | R | L/R | Coupe RWD VQ37VHR | | GCO82420 | Outer Joint | | 32 | 35 | 65.5 | 110 | 59 | I |
| 3.7 (253 kw) | 2013.06- | MT | R | L/R | Coupe RWD VQ37VHR | | GCO82420 | Outer Joint | | 32 | 35 | 65.5 | 110 | 59 | I |
| | 2013.06- | MT | R | L/R | Coupe RWD VQ37VHR | | GCI82276 | Inner Joint | | | 35 | | | 68 | |
| **AD** | | | | | | | | | | | | | | | |
| 1.5 (82 kw) | 2006.12- | 4AT | F | L/R | Estate Van FWD HR15DE | Model code:Y12 | GCO41303 | Outer Joint | | 25 | 21 | 49 | 95 | 56 | M |
| **AD Van** | | | | | | | | | | | | | | | |
| 1.2 (66 kw) | 2006.12- | 4AT | F | L/R | Estate Van FWD CR12DE | Model code:VY12 | GCO41303 | Outer Joint | | 25 | 21 | 49 | 95 | 56 | M |
| 1.5 (80 kw) | 2006.12- | 4AT | F | L/R | Estate Van FWD HR15DE | Model code:Y12 | GCO41303 | Outer Joint | | 25 | 21 | 49 | 95 | 56 | M |
| **Almera** | | | | | | | | | | | | | | | |
| 1.4 (55 kw) | 1995.07-2000.03 | 5MT | F | L | Hatchback FWD GA14DE | | GDS41035 | Drive Shaft | | 25 | 24 | 55 | 107 | 622 | |
| | 1995.07-2000.03 | 5MT | F | R | Hatchback FWD GA14DE | | GDS41036 | Drive Shaft | | 25 | 24 | 55 | 107 | 908 | |
| | 1995.07-2000.03 | 5MT | F | L/R | Hatchback FWD GA14DE | GrooveType:Inner | GCO41001 | Outer Joint | | 25 | 22 | 55 | 107 | 56 | I |
| | 1995.07-2000.03 | 5MT | F | L/R | Hatchback FWD GA14DE | GrooveType:Inner | GCO41002 | Outer Joint | 42T | 25 | 22 | 55 | 107 | 56 | I |
| | 1995.07-2000.03 | 5MT | F | L/R | Hatchback FWD GA14DE | | GCI41001 | Inner Joint | | 24 | 23 | 40 | 51.7 | 100.4 | |
| | 1995.07-2000.03 | AT/MT | F | | Hatchback FWD GA14DE | | GCO41124 | Outer Joint | 42T | 25 | 22 | 55 | 107 | 57 | M |
| | 1995.07-2000.03 | MT | F | L/R | Hatchback FWD GA14DE | GrooveType:Middle | GCO41159 | Outer Joint | 42T | 25 | 22 | 55 | 107 | 57 | M |
| | 1995.07-2000.03 | | F | L/R | Hatchback FWD GA14DE | | GCI41198 | Inner Joint | | 24 | 23 | 40 | 51.7 | 100.4 | |
| | 1995.07-2000.03 | 5MT | F | L | Saloon FWD GA14DE | | GDS41035 | Drive Shaft | | 25 | 24 | 55 | 107 | 622 | |
| | 1995.07-2000.03 | 5MT | F | R | Saloon FWD GA14DE | | GDS41036 | Drive Shaft | | 25 | 24 | 55 | 107 | 908 | |
| | 1995.07-2000.03 | 5MT | F | L/R | Saloon FWD GA14DE | GrooveType:Inner | GCO41001 | Outer Joint | | 25 | 22 | 55 | 107 | 56 | I |

| | YEAR | TRANSM. | F/R | L/R | BODY STYLE & DRIVE TYPE & ENGINE | REMARKS | G-AP Ref. | PRODUCT | ABS | Technical Specifications A | B | C | H | L | P |
|---|---|---|---|---|---|---|---|---|---|---|---|---|---|---|---|
| **NISSAN** **Almera** | | | | | | | | | | | | | | | |
| 1.4 (55 kw) | 1995.07-2000.03 | 5MT | F | L/R | Saloon FWD GA14DE | GrooveType:Inner | GCO41002 | Outer Joint | 42T | 25 | 22 | 55 | 107 | 56 | I |
| | 1995.07-2000.03 | 5MT | F | L/R | Saloon FWD GA14DE | | GCI41001 | Inner Joint | | 24 | 23 | 40 | 51.7 | 100.4 | |
| | 1995.07-2000.03 | AT/MT | F | | Saloon FWD GA14DE | | GCO41124 | Outer Joint | 42T | 25 | 22 | 55 | 107 | 57 | M |
| | 1995.07-2000.03 | MT | F | L/R | Saloon FWD GA14DE | GrooveType:Middle | GCO41159 | Outer Joint | 42T | 25 | 22 | 55 | 107 | 57 | M |
| | 1995.07-2000.03 | | F | L/R | Saloon FWD GA14DE | | GCI41198 | Inner Joint | | 24 | 23 | 40 | 51.7 | 100.4 | |
| 1.4 (64 kw) | 1995.07-2000.03 | 5MT | F | L | Hatchback FWD GA14DE | | GDS41035 | Drive Shaft | | 25 | 24 | 55 | 107 | 622 | |
| | 1995.07-2000.03 | 5MT | F | R | Hatchback FWD GA14DE | | GDS41036 | Drive Shaft | | 25 | 24 | 55 | 107 | 908 | |
| | 1995.07-2000.03 | 5MT | F | L/R | Hatchback FWD GA14DE | GrooveType:Inner | GCO41001 | Outer Joint | | 25 | 22 | 55 | 107 | 56 | I |
| | 1995.07-2000.03 | 5MT | F | L/R | Hatchback FWD GA14DE | GrooveType:Inner | GCO41002 | Outer Joint | 42T | 25 | 22 | 55 | 107 | 56 | I |
| | 1995.07-2000.03 | 5MT | F | L/R | Hatchback FWD GA14DE | | GCI41001 | Inner Joint | | 24 | 23 | 40 | 51.7 | 100.4 | |
| | 1995.07-2000.03 | MT | F | L/R | Hatchback FWD GA14DE | GrooveType:Middle | GCO41159 | Outer Joint | 42T | 25 | 22 | 55 | 107 | 57 | M |
| | 1995.07-2000.03 | MT | F | | Hatchback FWD GA14DE | | GCO41124 | Outer Joint | 42T | 25 | 22 | 55 | 107 | 57 | M |
| | 1995.07-2000.03 | | F | L/R | Hatchback FWD GA14DE | | GCI41198 | Inner Joint | | 24 | 23 | 40 | 51.7 | 100.4 | |
| | 1995.07-2000.03 | 5MT | F | L | Saloon FWD GA14DE | | GDS41035 | Drive Shaft | | 25 | 24 | 55 | 107 | 622 | |
| | 1995.07-2000.03 | 5MT | F | R | Saloon FWD GA14DE | | GDS41036 | Drive Shaft | | 25 | 24 | 55 | 107 | 908 | |
| | 1995.07-2000.03 | 5MT | F | L/R | Saloon FWD GA14DE | GrooveType:Inner | GCO41001 | Outer Joint | | 25 | 22 | 55 | 107 | 56 | I |
| | 1995.07-2000.03 | 5MT | F | L/R | Saloon FWD GA14DE | GrooveType:Inner | GCO41002 | Outer Joint | 42T | 25 | 22 | 55 | 107 | 56 | I |
| | 1995.07-2000.03 | 5MT | F | L/R | Saloon FWD GA14DE | | GCI41001 | Inner Joint | | 24 | 23 | 40 | 51.7 | 100.4 | |
| | 1995.07-2000.03 | MT | F | L/R | Saloon FWD GA14DE | GrooveType:Middle | GCO41159 | Outer Joint | 42T | 25 | 22 | 55 | 107 | 57 | M |
| | 1995.07-2000.03 | MT | F | | Saloon FWD GA14DE | | GCO41124 | Outer Joint | 42T | 25 | 22 | 55 | 107 | 57 | M |
| | 1995.07-2000.03 | | F | L/R | Saloon FWD GA14DE | | GCI41198 | Inner Joint | | 24 | 23 | 40 | 51.7 | 100.4 | |
| 1.5 (60 kw) | 2003.01-2006.09 | MT | F | L/R | Hatchback FWD K9K 722 | Date from:2003.06 | GCO41052 | Outer Joint | 42T | 25 | 23 | 55 | 96.5 | 63.5 | M |
| | 2003.01-2006.09 | | F | L/R | Hatchback FWD K9K 722 | | GCO41112 | Outer Joint | | 25 | 23 | 55 | 96.5 | 63.5 | M |
| | 2003.01-2006.09 | | F | L/R | Hatchback FWD K9K 722 | | GCO99252 | Outer Joint | 44T | 25 | 23 | 55 | 100.5 | 60 | M |
| | 2003.01-2006.09 | MT | F | L/R | Saloon FWD K9K 722 | Date from:2003.06 | GCO41052 | Outer Joint | 42T | 25 | 23 | 55 | 96.5 | 63.5 | M |
| | 2003.01-2006.09 | | F | L/R | Saloon FWD K9K 722 | | GCO41112 | Outer Joint | | 25 | 23 | 55 | 96.5 | 63.5 | M |
| | 2003.01-2006.09 | | F | L/R | Saloon FWD K9K 722 | | GCO99252 | Outer Joint | 44T | 25 | 23 | 55 | 100.5 | 60 | M |
| 1.5 (66 kw) | 2000.03-2006.11 | 5MT | F | L/R | Hatchback FWD QG15DE | | GCO41048 | Outer Joint | 42T | 25 | 22 | 55 | 100.5 | 58.5 | M |
| | 2000.03-2006.11 | 5MT | F | L/R | Hatchback FWD QG15DE | | GCO41109 | Outer Joint | | 25 | 22 | 55 | 100.5 | 58.5 | M |
| | 2000.03-2006.11 | AT/MT | F | L/R | Hatchback FWD QG15DE | | GCO41211 | Outer Joint | 42T | 25 | 22 | 55 | 107 | 57 | M |
| | 2000.03-2006.11 | AT/MT | F | L/R | Hatchback FWD QG15DE | | GCO41327 | Outer Joint | 42T | 25 | 22 | 55 | 100.5 | 58.5 | M |
| | 2000.03-2006.11 | MT | F | L | Hatchback FWD QG15DE | | GDS41270 | Drive Shaft | 42T | 25 | 24 | 55 | 100.5 | 627 | |
| | 2000.03-2006.11 | MT | F | R | Hatchback FWD QG15DE | | GDS41269 | Drive Shaft | 42T | 25 | 24 | 55 | 100.5 | 909 | |
| | 2000.03-2006.11 | | F | L | Hatchback FWD QG15DE | | GDS41035 | Drive Shaft | | 25 | 24 | 55 | 107 | 622 | |
| | 2000.03-2006.11 | | F | | Hatchback FWD QG15DE | Date From:2000.06,Date To:2000.06 | GCO41002 | Outer Joint | 42T | 25 | 22 | 55 | 107 | 56 | I |
| | 2000.03-2006.11 | | F | | Hatchback FWD QG15DE | Date From:2000.07 | GCO41239 | Outer Joint | | 25 | 22 | 55 | 107 | 57 | M |
| | 2000.03-2006.11 | | F | | Hatchback FWD QG15DE | Date From:2003.02 | GCO41243 | Outer Joint | 44T | 25 | 21 | 55 | 100 | 54 | M |
| | 2000.03-2006.11 | | F | | Hatchback FWD QG15DE | | GCO50139 | Outer Joint | | 25 | 22 | 55 | 100.5 | 58.5 | M |
| | 2000.03-2006.11 | | F | | Hatchback FWD QG15DE | Date From:2000.04,Date To:2000.04 | GCO99252 | Outer Joint | 44T | 25 | 23 | 55 | 100.5 | 60 | M |
| | 2000.03-2006.11 | | F | L | Hatchback FWD QG15DE | | GCI41134 | Inner Joint | | 24 | 22 | 40 | 51.5 | 97 | |
| | 2000.03-2006.11 | | F | | Hatchback FWD QG15DE | Date From:2000.06 | GCI41001 | Inner Joint | | 24 | 23 | 40 | 51.7 | 100.4 | |
| | 2000.03-2006.11 | | F | | Hatchback FWD QG15DE | Date From:2003.04 | GCI41090 | Inner Joint | | 24 | 21 | 40 | 51.5 | 93 | |
| | 2000.07-2006.11 | 5MT | F | L/R | Saloon FWD QG15DE | | GCO41048 | Outer Joint | 42T | 25 | 22 | 55 | 100.5 | 58.5 | M |
| | 2000.07-2006.11 | 5MT | F | L/R | Saloon FWD QG15DE | | GCO41109 | Outer Joint | | 25 | 22 | 55 | 100.5 | 58.5 | M |
| | 2000.07-2006.11 | AT/MT | F | L/R | Saloon FWD QG15DE | | GCO41211 | Outer Joint | 42T | 25 | 22 | 55 | 107 | 57 | M |
| | 2000.07-2006.11 | AT/MT | F | L/R | Saloon FWD QG15DE | | GCO41327 | Outer Joint | 42T | 25 | 22 | 55 | 100.5 | 58.5 | M |
| | 2000.07-2006.11 | MT | F | L | Saloon FWD QG15DE | | GDS41270 | Drive Shaft | 42T | 25 | 24 | 55 | 100.5 | 627 | |
| | 2000.07-2006.11 | MT | F | R | Saloon FWD QG15DE | | GDS41269 | Drive Shaft | 42T | 25 | 24 | 55 | 100.5 | 909 | |
| | 2000.07-2006.11 | | F | L | Saloon FWD QG15DE | | GDS41035 | Drive Shaft | | 25 | 24 | 55 | 107 | 622 | |
| | 2000.07-2006.11 | | F | | Saloon FWD QG15DE | | GCO41002 | Outer Joint | 42T | 25 | 22 | 55 | 107 | 56 | I |
| | 2000.07-2006.11 | | F | | Saloon FWD QG15DE | Date From:2003.02 | GCO41243 | Outer Joint | 44T | 25 | 21 | 55 | 100 | 54 | M |
| | 2000.07-2006.11 | | F | | Saloon FWD QG15DE | | GCO50139 | Outer Joint | | 25 | 22 | 55 | 100.5 | 58.5 | M |
| | 2000.07-2006.11 | | F | L | Saloon FWD QG15DE | | GCI41134 | Inner Joint | | 24 | 22 | 40 | 51.5 | 97 | |
| | 2000.07-2006.11 | | F | | Saloon FWD QG15DE | Date From:2003.04 | GCI41090 | Inner Joint | | 24 | 21 | 40 | 51.5 | 93 | |
| 1.5 (72 kw) | 2002.10-2006.09 | 5MT | F | L | Hatchback FWD QG15DE | Date to:2003.02 | GDS41270 | Drive Shaft | 42T | 25 | 24 | 55 | 100.5 | 627 | |
| | 2002.10-2006.09 | 5MT | F | L | Hatchback FWD QG15DE | Date from:2003.05;Inner teeth of wheel side:21 | GDS41328 | Drive Shaft | 44T | 25 | 24 | 55 | 100 | 627 | |
| | 2002.10-2006.09 | 5MT | F | L | Hatchback FWD QG15DE | Date from:2003.04 | GDS41509 | Drive Shaft | | 25 | 24 | 55 | 100 | 627 | |
| | 2002.10-2006.09 | 5MT | F | R | Hatchback FWD QG15DE | Date to:2003.02 | GDS41269 | Drive Shaft | 42T | 25 | 24 | 55 | 100.5 | 909 | |
| | 2002.10-2006.09 | 5MT | F | R | Hatchback FWD QG15DE | Date from:2003.05;Inner teeth of wheel side:21 | GDS41327 | Drive Shaft | 44T | 25 | 24 | 55 | 100 | 908 | |
| | 2002.10-2006.09 | 5MT | F | R | Hatchback FWD QG15DE | Date from:2003.04 | GDS41510 | Drive Shaft | | 25 | 24 | 55 | 100 | 910 | |
| | 2002.10-2006.09 | 5MT | F | L/R | Hatchback FWD QG15DE | Date to:2003.02 | GCO41048 | Outer Joint | 42T | 25 | 22 | 55 | 100.5 | 58.5 | M |
| | 2002.10-2006.09 | 5MT | F | L/R | Hatchback FWD QG15DE | Date to:2003.04 | GCO41109 | Outer Joint | | 25 | 22 | 55 | 100.5 | 58.5 | M |
| | 2002.10-2006.09 | 5MT | F | L/R | Hatchback FWD QG15DE | Date from:2003.03,Date to:2003.04 | GCO41141 | Outer Joint | 44T | 25 | 22 | 55 | 100.5 | 58.5 | M |
| | 2002.10-2006.09 | 5MT | F | L/R | Hatchback FWD QG15DE | Date from:2003.05 | GCO41243 | Outer Joint | 44T | 25 | 21 | 55 | 100 | 54 | M |
| | 2002.10-2006.09 | 5MT | F | L/R | Hatchback FWD QG15DE | Date from:2003.05 | GCI41090 | Inner Joint | | 24 | 21 | 40 | 51.5 | 93 | |

| | YEAR | TRANSM. | F/R | L/R | BODY STYLE & DRIVE TYPE & ENGINE | REMARKS | G-AP Ref. | PRODUCT | ABS | Technical Specifications A | B | C | H | L | P |
|---|---|---|---|---|---|---|---|---|---|---|---|---|---|---|---|
| **NISSAN** **Almera** | | | | | | | | | | | | | | | |
| 1.5 (72 kw) | 2002.10-2006.09 | AT | F | L/R | Hatchback FWD QG15DE | Date to:2003.03 | GCO41239 | Outer Joint | | 25 | 22 | 55 | 107 | 57 | M |
| | 2002.10-2006.09 | MT | F | L | Hatchback FWD QG15DE | Inner teeth of wheel side:22 | GDS41385 | Drive Shaft | 44T | 25 | 24 | 55 | 100.5 | 627 | |
| | 2002.10-2006.09 | MT | F | R | Hatchback FWD QG15DE | Inner teeth of wheel side:22 | GDS41386 | Drive Shaft | 44T | 25 | 24 | 55 | 100.5 | 909 | |
| | 2002.10-2006.09 | MT | F | L/R | Hatchback FWD QG15DE | | GCO41327 | Outer Joint | 42T | 25 | 22 | 55 | 100.5 | 58.5 | M |
| | 2002.10-2006.09 | MT | F | | Hatchback FWD QG15DE | | GCI41001 | Inner Joint | | 24 | 23 | 40 | 51.7 | 100.4 | |
| | 2002.10-2006.09 | | F | L/R | Hatchback FWD QG15DE | | GCO41159 | Outer Joint | 42T | 25 | 22 | 55 | 107 | 57 | M |
| | 2002.10-2006.09 | | F | L/R | Hatchback FWD QG15DE | Date from:2003.05 | GCO41264 | Outer Joint | | 25 | 21 | 55 | 100 | 54 | M |
| | 2002.10-2006.09 | | F | L/R | Hatchback FWD QG15DE | Date to:2003.04 | GCO50139 | Outer Joint | | 25 | 22 | 55 | 100.5 | 58.5 | M |
| | 2002.10-2006.09 | | F | L | Hatchback FWD QG15DE | Date To:2003.02 | GCI41134 | Inner Joint | | 24 | 22 | 40 | 51.5 | 97 | |
| | 2002.10-2006.09 | 5MT | F | L | Saloon FWD QG15DE | Date to:2003.02 | GDS41270 | Drive Shaft | 42T | 25 | 24 | 55 | 100.5 | 627 | |
| | 2002.10-2006.09 | 5MT | F | L | Saloon FWD QG15DE | Date from:2003.05;Inner teeth of wheel side:21 | GDS41328 | Drive Shaft | 44T | 25 | 24 | 55 | 100 | 627 | |
| | 2002.10-2006.09 | 5MT | F | L | Saloon FWD QG15DE | Date from:2003.04 | GDS41509 | Drive Shaft | | 25 | 24 | 55 | 100 | 627 | |
| | 2002.10-2006.09 | 5MT | F | R | Saloon FWD QG15DE | Date to:2003.02 | GDS41269 | Drive Shaft | 42T | 25 | 24 | 55 | 100.5 | 909 | |
| | 2002.10-2006.09 | 5MT | F | R | Saloon FWD QG15DE | Date from:2003.05;Inner teeth of wheel side:21 | GDS41327 | Drive Shaft | 44T | 25 | 24 | 55 | 100 | 908 | |
| | 2002.10-2006.09 | 5MT | F | R | Saloon FWD QG15DE | Date from:2003.04 | GDS41510 | Drive Shaft | | 25 | 24 | 55 | 100 | 910 | |
| | 2002.10-2006.09 | 5MT | F | L/R | Saloon FWD QG15DE | Date to:2003.02 | GCO41048 | Outer Joint | 42T | 25 | 22 | 55 | 100.5 | 58.5 | M |
| | 2002.10-2006.09 | 5MT | F | L/R | Saloon FWD QG15DE | Date to:2003.04 | GCO41109 | Outer Joint | | 25 | 22 | 55 | 100.5 | 58.5 | M |
| | 2002.10-2006.09 | 5MT | F | L/R | Saloon FWD QG15DE | Date from:2003.03,Date to:2003.04 | GCO41141 | Outer Joint | 44T | 25 | 22 | 55 | 100.5 | 58.5 | M |
| | 2002.10-2006.09 | 5MT | F | L/R | Saloon FWD QG15DE | Date from:2003.05 | GCO41243 | Outer Joint | 44T | 25 | 21 | 55 | 100 | 54 | M |
| | 2002.10-2006.09 | 5MT | F | L/R | Saloon FWD QG15DE | Date from:2003.05 | GCI41090 | Inner Joint | | 24 | 21 | 40 | 51.5 | 93 | |
| | 2002.10-2006.09 | AT | F | | Saloon FWD QG15DE | Date to:2003.03 | GCO41239 | Outer Joint | | 25 | 22 | 55 | 107 | 57 | M |
| | 2002.10-2006.09 | MT | F | L | Saloon FWD QG15DE | Inner teeth of wheel side:22 | GDS41385 | Drive Shaft | 44T | 25 | 24 | 55 | 100.5 | 627 | |
| | 2002.10-2006.09 | MT | F | R | Saloon FWD QG15DE | Inner teeth of wheel side:22 | GDS41386 | Drive Shaft | 44T | 25 | 24 | 55 | 100.5 | 909 | |
| | 2002.10-2006.09 | MT | F | L/R | Saloon FWD QG15DE | | GCO41327 | Outer Joint | 42T | 25 | 22 | 55 | 100.5 | 58.5 | M |
| | 2002.10-2006.09 | MT | F | | Saloon FWD QG15DE | | GCI41001 | Inner Joint | | 24 | 23 | 40 | 51.7 | 100.4 | |
| | 2002.10-2006.09 | | F | L/R | Saloon FWD QG15DE | Date from:2003.05 | GCO41264 | Outer Joint | | 25 | 21 | 55 | 100 | 54 | M |
| | 2002.10-2006.09 | | F | | Saloon FWD QG15DE | | GCO41159 | Outer Joint | 42T | 25 | 22 | 55 | 107 | 57 | M |
| | 2002.10-2006.09 | | F | | Saloon FWD QG15DE | Date to:2003.04 | GCO50139 | Outer Joint | | 25 | 22 | 55 | 100.5 | 58.5 | M |
| | 2002.10-2006.09 | | F | L | Saloon FWD QG15DE | Date to:2003.02 | GCI41134 | Inner Joint | | 24 | 22 | 40 | 51.5 | 97 | |
| 1.5 (77 kw) | 2001.03- | | F | L/R | Saloon FWD GA15DE/QG15DE | | GCO41327 | Outer Joint | 42T | 25 | 22 | 55 | 100.5 | 58.5 | M |
| 1.6 (66 kw) | 1995.07-2000.03 | AT | F | R | Hatchback FWD GA16DE | | GDS41176 | Drive Shaft | 42T | 25 | 25 | 55 | 107 | 915 | |
| | 1995.07-2000.03 | AT | F | | Hatchback FWD GA16DE | | GCO41155 | Outer Joint | 42T | 25 | 23 | 55 | 107 | 61 | M |
| | 1995.07-2000.03 | AT/MT | F | L/R | Hatchback FWD GA16DE | | GCO41003 | Outer Joint | 42T | 25 | 23 | 55 | 107 | 62 | I |
| | 1995.07-2000.03 | AT/MT | F | L/R | Hatchback FWD GA16DE | | GCO41078 | Outer Joint | | 25 | 23 | 55 | 107 | 62 | I |
| | 1995.07-2000.03 | MT | F | L | Hatchback FWD GA16DE | | GDS41041 | Drive Shaft | 42T | 25 | 25 | 55 | 107 | 622 | |
| | 1995.07-2000.03 | MT | F | R | Hatchback FWD GA16DE | | GDS41039 | Drive Shaft | 42T | 25 | 25 | 55 | 107 | 913 | |
| | 1995.07-2000.03 | MT | F | R | Hatchback FWD GA16DE | | GCO41033 | Outer Joint | | 25 | 23 | 55 | 107 | 61 | I |
| | 1995.07-2000.03 | MT | F | L/R | Hatchback FWD GA16DE | | GCO41145 | Outer Joint | 42T | 25 | 23 | 55 | 107 | 62 | I |
| | 1995.07-2000.03 | MT/AT | F | L/R | Hatchback FWD GA16DE | | GCI41123 | Inner Joint | | 25 | 23 | 40 | 63 | 99.5 | |
| | 1995.07-2000.03 | AT | F | R | Saloon FWD GA16DE | | GDS41176 | Drive Shaft | 42T | 25 | 25 | 55 | 107 | 915 | |
| | 1995.07-2000.03 | AT | F | | Saloon FWD GA16DE | | GCO41155 | Outer Joint | 42T | 25 | 23 | 55 | 107 | 61 | M |
| | 1995.07-2000.03 | AT/MT | F | L/R | Saloon FWD GA16DE | Date to:2000.03 | GCO41003 | Outer Joint | 42T | 25 | 23 | 55 | 107 | 62 | I |
| | 1995.07-2000.03 | AT/MT | F | L/R | Saloon FWD GA16DE | Date to:2000.03 | GCO41078 | Outer Joint | | 25 | 23 | 55 | 107 | 62 | I |
| | 1995.07-2000.03 | MT | F | R | Saloon FWD GA16DE | | GDS41039 | Drive Shaft | 42T | 25 | 25 | 55 | 107 | 913 | |
| | 1995.07-2000.03 | MT | F | L/R | Saloon FWD GA16DE | | GCO41033 | Outer Joint | | 25 | 23 | 55 | 107 | 61 | I |
| | 1995.07-2000.03 | MT | F | L/R | Saloon FWD GA16DE | | GCO41034 | Outer Joint | 42T | 25 | 23 | 55 | 107 | 61 | I |
| | 1995.07-2000.03 | MT | F | L/R | Saloon FWD GA16DE | | GCO41145 | Outer Joint | 42T | 25 | 23 | 55 | 107 | 62 | I |
| | 1995.07-2000.03 | MT/AT | F | L/R | Saloon FWD GA16DE | | GCI41123 | Inner Joint | | 25 | 23 | 40 | 63 | 99.5 | |
| | 1995.07-2000.03 | | F | | Saloon FWD GA16DE | | GCO41118 | Outer Joint | | 25 | 23 | 55 | 107 | 61 | M |
| 1.6 (73 kw) | 1995.07-2000.03 | AT | F | R | Hatchback FWD GA16DE | | GDS41176 | Drive Shaft | 42T | 25 | 25 | 55 | 107 | 915 | |
| | 1995.07-2000.03 | AT | F | L/R | Hatchback FWD GA16DE | | GCO41155 | Outer Joint | 42T | 25 | 23 | 55 | 107 | 61 | M |
| | 1995.07-2000.03 | AT/MT | F | L/R | Hatchback FWD GA16DE | | GCO41003 | Outer Joint | 42T | 25 | 23 | 55 | 107 | 62 | I |
| | 1995.07-2000.03 | AT/MT | F | L/R | Hatchback FWD GA16DE | | GCO41078 | Outer Joint | | 25 | 23 | 55 | 107 | 62 | I |
| | 1995.07-2000.03 | MT | F | L | Hatchback FWD GA16DE | | GDS41041 | Drive Shaft | 42T | 25 | 25 | 55 | 107 | 622 | |
| | 1995.07-2000.03 | MT | F | R | Hatchback FWD GA16DE | | GDS41039 | Drive Shaft | 42T | 25 | 25 | 55 | 107 | 913 | |
| | 1995.07-2000.03 | MT | F | L/R | Hatchback FWD GA16DE | | GCO41033 | Outer Joint | | 25 | 23 | 55 | 107 | 61 | I |
| | 1995.07-2000.03 | MT | F | L/R | Hatchback FWD GA16DE | | GCO41118 | Outer Joint | | 25 | 23 | 55 | 107 | 61 | M |
| | 1995.07-2000.03 | MT | F | L/R | Hatchback FWD GA16DE | | GCO41145 | Outer Joint | 42T | 25 | 23 | 55 | 107 | 62 | I |
| | 1995.07-2000.03 | MT/AT | F | L/R | Hatchback FWD GA16DE | | GCI41123 | Inner Joint | | 25 | 23 | 40 | 63 | 99.5 | |
| | 1995.09-2000.07 | AT | F | R | Saloon FWD GA16DE | | GDS41176 | Drive Shaft | 42T | 25 | 25 | 55 | 107 | 915 | |
| | 1995.09-2000.07 | AT | F | | Saloon FWD GA16DE | | GCO41155 | Outer Joint | 42T | 25 | 23 | 55 | 107 | 61 | M |
| | 1995.09-2000.07 | AT/MT | F | L/R | Saloon FWD GA16DE | | GCO41003 | Outer Joint | 42T | 25 | 23 | 55 | 107 | 62 | I |
| | 1995.09-2000.07 | AT/MT | F | L/R | Saloon FWD GA16DE | | GCO41078 | Outer Joint | | 25 | 23 | 55 | 107 | 62 | I |
| | 1995.09-2000.07 | MT | F | L | Saloon FWD GA16DE | | GDS41041 | Drive Shaft | 42T | 25 | 25 | 55 | 107 | 622 | |
| | 1995.09-2000.07 | MT | F | R | Saloon FWD GA16DE | | GDS41039 | Drive Shaft | 42T | 25 | 25 | 55 | 107 | 913 | |

| | YEAR | TRANSM. | F/R | L/R | BODY STYLE & DRIVE TYPE & ENGINE | REMARKS | G-AP Ref. | PRODUCT | ABS | Technical Specifications A | B | C | H | L | P |
|---|---|---|---|---|---|---|---|---|---|---|---|---|---|---|---|
| **NISSAN** **Almera** | | | | | | | | | | | | | | | |
| 1.6 (73 kw) | 1995.09-2000.07 | MT | F | L/R | Saloon FWD GA16DE | | GCO41033 | Outer Joint | | 25 | 23 | 55 | 107 | 61 | I |
| | 1995.09-2000.07 | MT | F | L/R | Saloon FWD GA16DE | | GCO41034 | Outer Joint | 42T | 25 | 23 | 55 | 107 | 61 | I |
| | 1995.09-2000.07 | MT | F | L/R | Saloon FWD GA16DE | | GCO41145 | Outer Joint | 42T | 25 | 23 | 55 | 107 | 62 | I |
| | 1995.09-2000.07 | MT/AT | F | L/R | Saloon FWD GA16DE | | GCI41123 | Inner Joint | | 25 | 23 | 40 | 63 | 99.5 | |
| | 1995.09-2000.07 | | F | | Saloon FWD GA16DE | | GCO41118 | Outer Joint | | 25 | 23 | 55 | 107 | 61 | M |
| 1.6 (75 kw) | 1995.07-2000.03 | AT | F | R | Saloon FWD GA16DE | | GDS41176 | Drive Shaft | 42T | 25 | 25 | 55 | 107 | 915 | |
| | 1995.07-2000.03 | AT | F | | Saloon FWD GA16DE | | GCO41155 | Outer Joint | 42T | 25 | 23 | 55 | 107 | 61 | M |
| | 1995.07-2000.03 | MT | F | L | Saloon FWD GA16DE | | GDS41041 | Drive Shaft | 42T | 25 | 25 | 55 | 107 | 622 | |
| | 1995.07-2000.03 | MT | F | R | Saloon FWD GA16DE | | GDS41039 | Drive Shaft | 42T | 25 | 25 | 55 | 107 | 913 | |
| | 1995.07-2000.03 | MT | F | L/R | Saloon FWD GA16DE | | GCO41033 | Outer Joint | | 25 | 23 | 55 | 107 | 61 | I |
| | 1995.07-2000.03 | MT | F | L/R | Saloon FWD GA16DE | | GCO41034 | Outer Joint | 42T | 25 | 23 | 55 | 107 | 61 | I |
| | 1995.07-2000.03 | MT | F | L/R | Saloon FWD GA16DE | | GCO41145 | Outer Joint | 42T | 25 | 23 | 55 | 107 | 62 | I |
| | 1995.07-2000.03 | MT/AT | F | L/R | Saloon FWD GA16DE | | GCI41123 | Inner Joint | | 25 | 23 | 40 | 63 | 99.5 | |
| | 1995.07-2000.03 | | F | L/R | Saloon FWD GA16DE | | GCO41003 | Outer Joint | 42T | 25 | 23 | 55 | 107 | 62 | I |
| | 1995.07-2000.03 | | F | L/R | Saloon FWD GA16DE | | GCO41078 | Outer Joint | | 25 | 23 | 55 | 107 | 62 | I |
| | 1995.07-2000.03 | | F | | Saloon FWD GA16DE | | GCO41118 | Outer Joint | | 25 | 23 | 55 | 107 | 61 | M |
| | 2012.12- | 4AT/5MT | F | R | Saloon FWD K4M | | GCO99085 | Outer Joint | | 23 | 30 | 49 | 86 | 59 | I |
| | 2012.12- | 5MT | F | R | Saloon FWD K4M | Date to:2015.10 | GDS11016 | Drive Shaft | | 23 | 23 | 49 | 86 | 764 | |
| 1.8 (84 kw) | 2000.01-2002.11 | 4AT/5MT | F | L | Hatchback FWD QG18DE | | GDS41041 | Drive Shaft | 42T | 25 | 25 | 55 | 107 | 622 | |
| | 2000.01-2002.11 | 4AT/5MT | F | R | Hatchback FWD QG18DE | | GDS41526 | Drive Shaft | | 25 | 25 | 55 | 107 | 927 | |
| | 2000.01-2002.11 | 4AT/5MT | F | R | Hatchback FWD QG18DE | | GDS41562 | Drive Shaft | 42T | 25 | 25 | 55 | 107 | 923 | |
| | 2000.01-2002.11 | 4AT/5MT | F | R | Hatchback FWD QG18DE | | GCI41002 | Inner Joint | | 25 | 23 | 40 | 63 | 101 | |
| | 2000.01-2002.11 | AT | F | R | Hatchback FWD QG18DE | Date From:2000.11,Date To:2002.08 | GDS41258 | Drive Shaft | 42T | 25 | 25 | 55 | 107 | 927 | |
| | 2000.01-2002.11 | AT | F | L/R | Hatchback FWD QG18DE | Date to:2002.08 | GCO41003 | Outer Joint | 42T | 25 | 23 | 55 | 107 | 62 | I |
| | 2000.01-2002.11 | AT | F | L/R | Hatchback FWD QG18DE | | GCO41078 | Outer Joint | | 25 | 23 | 55 | 107 | 62 | I |
| | 2000.01-2002.11 | AT | F | L/R | Hatchback FWD QG18DE | Date from:2002.09 | GCO41137 | Outer Joint | 42T | 27 | 35 | 55 | 102 | 69 | I |
| | 2000.01-2002.11 | MT | F | L | Hatchback FWD QG18DE | | GDS41040 | Drive Shaft | | 25 | 25 | 55 | 107 | 622 | |
| | 2000.01-2002.11 | MT | F | L/R | Hatchback FWD QG18DE | | GCO41052 | Outer Joint | 42T | 25 | 23 | 55 | 96.5 | 63.5 | M |
| | 2000.01-2002.11 | MT | F | L/R | Hatchback FWD QG18DE | Date to:2002.08 | GCO41078 | Outer Joint | | 25 | 23 | 55 | 107 | 62 | I |
| | 2000.01-2002.11 | MT | F | L/R | Hatchback FWD QG18DE | Date from:2002.09 | GCO41112 | Outer Joint | | 25 | 23 | 55 | 96.5 | 63.5 | M |
| | 2000.01-2002.11 | | F | L/R | Hatchback FWD QG18DE | | GCO41034 | Outer Joint | 42T | 25 | 23 | 55 | 107 | 61 | I |
| | 2000.07-2002.11 | 4AT/5MT | F | L | Saloon FWD QG18DE | | GDS41041 | Drive Shaft | 42T | 25 | 25 | 55 | 107 | 622 | |
| | 2000.07-2002.11 | 4AT/5MT | F | R | Saloon FWD QG18DE | | GDS41526 | Drive Shaft | | 25 | 25 | 55 | 107 | 927 | |
| | 2000.07-2002.11 | AT | F | R | Saloon FWD QG18DE | Date To:2002.08 | GDS41258 | Drive Shaft | 42T | 25 | 25 | 55 | 107 | 927 | |
| | 2000.07-2002.11 | AT | F | L/R | Saloon FWD QG18DE | Date to:2002.08 | GCO41003 | Outer Joint | 42T | 25 | 23 | 55 | 107 | 62 | I |
| | 2000.07-2002.11 | AT | F | L/R | Saloon FWD QG18DE | | GCO41078 | Outer Joint | | 25 | 23 | 55 | 107 | 62 | I |
| | 2000.07-2002.11 | AT | F | L/R | Saloon FWD QG18DE | Date from:2002.09 | GCO41137 | Outer Joint | 42T | 27 | 35 | 55 | 102 | 69 | I |
| | 2000.07-2002.11 | AT/MT | F | R | Saloon FWD QG18DE | | GDS41562 | Drive Shaft | 42T | 25 | 25 | 55 | 107 | 923 | |
| | 2000.07-2002.11 | AT/MT | F | R | Saloon FWD QG18DE | | GCI41002 | Inner Joint | | 25 | 23 | 40 | 63 | 101 | |
| | 2000.07-2002.11 | MT | F | L | Saloon FWD QG18DE | | GDS41040 | Drive Shaft | | 25 | 25 | 55 | 107 | 622 | |
| | 2000.07-2002.11 | MT | F | L/R | Saloon FWD QG18DE | | GCO41052 | Outer Joint | 42T | 25 | 23 | 55 | 96.5 | 63.5 | M |
| | 2000.07-2002.11 | MT | F | L/R | Saloon FWD QG18DE | Date to:2002.08 | GCO41078 | Outer Joint | | 25 | 23 | 55 | 107 | 62 | I |
| | 2000.07-2002.11 | MT | F | L/R | Saloon FWD QG18DE | Date from:2002.09 | GCO41112 | Outer Joint | | 25 | 23 | 55 | 96.5 | 63.5 | M |
| | 2000.07-2002.11 | | F | L/R | Saloon FWD QG18DE | | GCO41034 | Outer Joint | 42T | 25 | 23 | 55 | 107 | 61 | I |
| 1.8 (85 kw) | 2002.10-2006.09 | 4AT/5MT | F | L | Hatchback FWD QG18DE | Date to:2003.02,For vehicles with ABS | GDS41041 | Drive Shaft | 42T | 25 | 25 | 55 | 107 | 622 | |
| | 2002.10-2006.09 | 4AT/5MT | F | R | Hatchback FWD QG18DE | Date to:2003.02 | GDS41526 | Drive Shaft | | 25 | 25 | 55 | 107 | 927 | |
| | 2002.10-2006.09 | AT | F | L/R | Hatchback FWD QG18DE | | GCO41078 | Outer Joint | | 25 | 23 | 55 | 107 | 62 | I |
| | 2002.10-2006.09 | AT | F | L/R | Hatchback FWD QG18DE | Date from:2002.09 | GCO41137 | Outer Joint | 42T | 27 | 35 | 55 | 102 | 69 | I |
| | 2002.10-2006.09 | MT | F | R | Hatchback FWD QG18DE | Date from:2003.03 | GDS82088 | Drive Shaft | 44T | 25 | 25 | 55 | 100.5 | 912 | |
| | 2002.10-2006.09 | MT | F | L/R | Hatchback FWD QG18DE | | GCO41052 | Outer Joint | 42T | 25 | 23 | 55 | 96.5 | 63.5 | M |
| | 2002.10-2006.09 | MT | F | L/R | Hatchback FWD QG18DE | Date from:2002.09 | GCO41112 | Outer Joint | | 25 | 23 | 55 | 96.5 | 63.5 | M |
| | 2002.10-2006.09 | MT | F | L/R | Hatchback FWD QG18DE | Date from:2003.03 | GCO99252 | Outer Joint | 44T | 25 | 23 | 55 | 100.5 | 60 | M |
| | 2002.10-2006.09 | MT | F | R | Hatchback FWD QG18DE | | GCI41123 | Inner Joint | | 25 | 23 | 40 | 63 | 99.5 | |
| | 2002.10-2006.09 | | F | L | Hatchback FWD QG18DE | Date From:2002.09 | GCO41003 | Outer Joint | 42T | 25 | 23 | 55 | 107 | 62 | I |
| | 2002.10-2006.09 | | F | L/R | Hatchback FWD QG18DE | | GCO41034 | Outer Joint | 42T | 25 | 23 | 55 | 107 | 61 | I |
| | 2002.10-2006.09 | 4AT/5MT | F | L | Saloon FWD QG18DE | Date to:2003.02,For vehicles with ABS | GDS41041 | Drive Shaft | 42T | 25 | 25 | 55 | 107 | 622 | |
| | 2002.10-2006.09 | 4AT/5MT | F | R | Saloon FWD QG18DE | Date to:2003.02 | GDS41526 | Drive Shaft | | 25 | 25 | 55 | 107 | 927 | |
| | 2002.10-2006.09 | AT | F | L/R | Saloon FWD QG18DE | | GCO41078 | Outer Joint | | 25 | 23 | 55 | 107 | 62 | I |
| | 2002.10-2006.09 | AT | F | L/R | Saloon FWD QG18DE | Date from:2002.09 | GCO41137 | Outer Joint | 42T | 27 | 35 | 55 | 102 | 69 | I |
| | 2002.10-2006.09 | MT | F | R | Saloon FWD QG18DE | Date from:2003.03 | GDS82088 | Drive Shaft | 44T | 25 | 25 | 55 | 100.5 | 912 | |
| | 2002.10-2006.09 | MT | F | L/R | Saloon FWD QG18DE | | GCO41052 | Outer Joint | 42T | 25 | 23 | 55 | 96.5 | 63.5 | M |
| | 2002.10-2006.09 | MT | F | L/R | Saloon FWD QG18DE | Date from:2002.09 | GCO41112 | Outer Joint | | 25 | 23 | 55 | 96.5 | 63.5 | M |
| | 2002.10-2006.09 | MT | F | L/R | Saloon FWD QG18DE | Date from:2003.03 | GCO99252 | Outer Joint | 44T | 25 | 23 | 55 | 100.5 | 60 | M |
| | 2002.10-2006.09 | MT | F | R | Saloon FWD QG18DE | | GCI41123 | Inner Joint | | 25 | 23 | 40 | 63 | 99.5 | |
| | 2002.10-2006.09 | | F | L | Saloon FWD QG18DE | Date From:2002.09 | GCO41003 | Outer Joint | 42T | 25 | 23 | 55 | 107 | 62 | I |

| | YEAR | TRANSM. | F/R | L/R | BODY STYLE & DRIVE TYPE & ENGINE | REMARKS | G-AP Ref. | PRODUCT | ABS | Technical Specifications A | B | C | H | L | P |
|---|---|---|---|---|---|---|---|---|---|---|---|---|---|---|---|
| **NISSAN** | | | | | | | | | | | | | | | |
| **Almera** | | | | | | | | | | | | | | | |
| 1.8 (85 kw) | 2002.10-2006.09 | | F | L | Saloon FWD QG18DE | Date From:2002.09 | GCO41034 | Outer Joint | 42T | 25 | 23 | 55 | 107 | 61 | I |
| 2.0 (55 kw) | 1995.07-2000.03 | MT | F | L/R | Hatchback FWD CD20 | Date to:2000.03 | GCO41003 | Outer Joint | 42T | 25 | 23 | 55 | 107 | 62 | I |
| | 1995.07-2000.03 | MT | F | L/R | Hatchback FWD CD20 | Country-spec.Model:Ireland | GCO41008 | Outer Joint | | 25 | 23 | 52.2 | 102 | 62 | I |
| | 1995.07-2000.03 | MT | F | L/R | Hatchback FWD CD20 | Date to:2000.03 | GCO41078 | Outer Joint | | 25 | 23 | 55 | 107 | 62 | I |
| | 1995.07-2000.03 | MT | F | L/R | Hatchback FWD CD20 | | GCO41118 | Outer Joint | | 25 | 23 | 55 | 107 | 61 | M |
| | 1995.07-2000.03 | MT | F | L/R | Hatchback FWD CD20 | Date from:2000.03 | GCO99252 | Outer Joint | 44T | 25 | 23 | 55 | 100.5 | 60 | M |
| | 1995.07-2000.03 | MT | F | L/R | Hatchback FWD CD20 | | GCI41123 | Inner Joint | | 25 | 23 | 40 | 63 | 99.5 | |
| | 1995.07-2000.03 | MT | F | L/R | Saloon FWD CD20 | Date to:2000.03 | GCO41003 | Outer Joint | 42T | 25 | 23 | 55 | 107 | 62 | I |
| | 1995.07-2000.03 | MT | F | L/R | Saloon FWD CD20 | Date to:2000.03 | GCO41078 | Outer Joint | | 25 | 23 | 55 | 107 | 62 | I |
| | 1995.07-2000.03 | MT | F | L/R | Saloon FWD CD20 | | GCO41118 | Outer Joint | | 25 | 23 | 55 | 107 | 61 | M |
| | 1995.07-2000.03 | MT | F | L/R | Saloon FWD CD20 | Date from:2000.03 | GCO99252 | Outer Joint | 44T | 25 | 23 | 55 | 100.5 | 60 | M |
| | 1995.07-2000.03 | MT | F | L/R | Saloon FWD CD20 | | GCI41123 | Inner Joint | | 25 | 23 | 40 | 63 | 99.5 | |
| 2.0 (105 kw) | 1996.07-2000.03 | 5MT | F | L/R | Hatchback FWD SR20DE | | GCO41210 | Outer Joint | 42T | 25 | 23 | 55 | 106 | 61.5 | I |
| | 1996.07-2000.03 | MT | F | L | Hatchback FWD SR20DE | | GDS41041 | Drive Shaft | 42T | 25 | 25 | 55 | 107 | 622 | |
| | 1996.07-2000.03 | MT | F | L/R | Hatchback FWD SR20DE | | GCO41003 | Outer Joint | 42T | 25 | 23 | 55 | 107 | 62 | I |
| | 1996.07-2000.03 | MT | F | L/R | Hatchback FWD SR20DE | | GCO41078 | Outer Joint | | 25 | 23 | 55 | 107 | 62 | I |
| | 1996.07-2000.03 | | F | R | Hatchback FWD SR20DE | | GCO41155 | Outer Joint | 42T | 25 | 23 | 55 | 107 | 61 | M |
| | 1996.07-2000.03 | | F | L/R | Hatchback FWD SR20DE | | GCO41034 | Outer Joint | 42T | 25 | 23 | 55 | 107 | 61 | I |
| 2.2 (81 kw) | 2000.03-2003.04 | 5MT | F | L/R | Hatchback FWD YD22DDT | Date from:2003.03 | GCO41057 | Outer Joint | 44T | 27 | 26 | 55 | 102 | 69 | M |
| | 2000.03-2003.04 | 5MT | F | L/R | Hatchback FWD YD22DDT | Date to:2002.05 | GCO41137 | Outer Joint | 42T | 27 | 35 | 55 | 102 | 69 | I |
| | 2000.03-2003.04 | 5MT | F | L/R | Hatchback FWD YD22DDT | Date from:2002.06,Date to:2002.08 | GCO41236 | Outer Joint | | 27 | 26 | 55 | 102 | 69 | M |
| | 2000.03-2003.04 | 5MT | F | L/R | Hatchback FWD YD22DDT | Date from:2002.09,Date to:2003.02 | GCO41256 | Outer Joint | 42T | 27 | 26 | 55 | 104 | 69 | M |
| | 2000.03-2003.04 | | F | | Hatchback FWD YD22DDT | | GCO41099 | Outer Joint | | 27 | 35 | 55 | 102 | 69 | I |
| | 2000.07-2003.04 | 5MT | F | L/R | Saloon FWD YD22DDT | Date from:2003.03 | GCO41057 | Outer Joint | 44T | 27 | 26 | 55 | 102 | 69 | M |
| | 2000.07-2003.04 | 5MT | F | L/R | Saloon FWD YD22DDT | Date to:2002.05 | GCO41137 | Outer Joint | 42T | 27 | 35 | 55 | 102 | 69 | I |
| | 2000.07-2003.04 | 5MT | F | L/R | Saloon FWD YD22DDT | Date from:2002.06,Date to:2002.08 | GCO41236 | Outer Joint | | 27 | 26 | 55 | 102 | 69 | M |
| | 2000.07-2003.04 | 5MT | F | L/R | Saloon FWD YD22DDT | Date from:2002.09,Date to:2003.02 | GCO41256 | Outer Joint | 42T | 27 | 26 | 55 | 104 | 69 | M |
| | 2000.07-2003.04 | | F | | Saloon FWD YD22DDT | | GCO41099 | Outer Joint | | 27 | 35 | 55 | 102 | 69 | I |
| 2.2 (82 kw) | 2003.09-2006.09 | 5MT | F | L/R | Hatchback FWD YD22DDT | | GCO41057 | Outer Joint | 44T | 27 | 26 | 55 | 102 | 69 | M |
| | 2003.09-2006.09 | 5MT | F | L/R | Hatchback FWD YD22DDT | | GCO41256 | Outer Joint | 42T | 27 | 26 | 55 | 104 | 69 | M |
| | 2003.09-2006.09 | | F | L/R | Hatchback FWD YD22DDT | | GCO41255 | Outer Joint | 44T | 27 | 26 | 55 | 104 | 69 | M |
| | 2003.09-2006.09 | | F | | Hatchback FWD YD22DDT | | GCO41099 | Outer Joint | | 27 | 35 | 55 | 102 | 69 | I |
| | 2003.09-2006.09 | | F | | Hatchback FWD YD22DDT | | GCO41137 | Outer Joint | 42T | 27 | 35 | 55 | 102 | 69 | I |
| | 2003.09-2006.09 | | F | | Hatchback FWD YD22DDT | | GCO41236 | Outer Joint | | 27 | 26 | 55 | 102 | 69 | M |
| | 2003.09-2006.09 | 5MT | F | L/R | Saloon FWD YD22DDT | | GCO41057 | Outer Joint | 44T | 27 | 26 | 55 | 102 | 69 | M |
| | 2003.09-2006.09 | 5MT | F | L/R | Saloon FWD YD22DDT | | GCO41256 | Outer Joint | 42T | 27 | 26 | 55 | 104 | 69 | M |
| | 2003.09-2006.09 | | F | L/R | Saloon FWD YD22DDT | | GCO41255 | Outer Joint | 44T | 27 | 26 | 55 | 104 | 69 | M |
| | 2003.09-2006.09 | | F | | Saloon FWD YD22DDT | | GCO41099 | Outer Joint | | 27 | 35 | 55 | 102 | 69 | I |
| | 2003.09-2006.09 | | F | | Saloon FWD YD22DDT | | GCO41137 | Outer Joint | 42T | 27 | 35 | 55 | 102 | 69 | I |
| | 2003.09-2006.09 | | F | | Saloon FWD YD22DDT | | GCO41236 | Outer Joint | | 27 | 26 | 55 | 102 | 69 | M |
| 2.2 (100 kw) | 2003.09-2006.09 | 5MT | F | L/R | Hatchback FWD YD22DDT | | GCO41256 | Outer Joint | 42T | 27 | 26 | 55 | 104 | 69 | M |
| | 2003.09-2006.09 | 5MT/6MT | F | L/R | Hatchback FWD YD22DDT | | GCO41057 | Outer Joint | 44T | 27 | 26 | 55 | 102 | 69 | M |
| | 2003.09-2006.09 | | F | L/R | Hatchback FWD YD22DDT | | GCO41255 | Outer Joint | 44T | 27 | 26 | 55 | 104 | 69 | M |
| | 2003.09-2006.09 | | F | | Hatchback FWD YD22DDT | | GCO41099 | Outer Joint | | 27 | 35 | 55 | 102 | 69 | I |
| | 2003.09-2006.09 | | F | | Hatchback FWD YD22DDT | | GCO41137 | Outer Joint | 42T | 27 | 35 | 55 | 102 | 69 | I |
| | 2003.09-2006.09 | | F | | Hatchback FWD YD22DDT | | GCO41236 | Outer Joint | | 27 | 26 | 55 | 102 | 69 | M |
| | 2003.09-2006.09 | 5MT | F | L/R | Saloon FWD YD22DDTi | | GCO41256 | Outer Joint | 42T | 27 | 26 | 55 | 104 | 69 | M |
| | 2003.09-2006.09 | 6MT | F | L/R | Saloon FWD YD22DDTi | | GCO41057 | Outer Joint | 44T | 27 | 26 | 55 | 102 | 69 | M |
| | 2003.09-2006.09 | | F | L/R | Saloon FWD YD22DDTi | | GCO41255 | Outer Joint | 44T | 27 | 26 | 55 | 104 | 69 | M |
| | 2003.09-2006.09 | | F | | Saloon FWD YD22DDTi | | GCO41099 | Outer Joint | | 27 | 35 | 55 | 102 | 69 | I |
| | 2003.09-2006.09 | | F | | Saloon FWD YD22DDTi | | GCO41137 | Outer Joint | 42T | 27 | 35 | 55 | 102 | 69 | I |
| | 2003.09-2006.09 | | F | | Saloon FWD YD22DDTi | | GCO41236 | Outer Joint | | 27 | 26 | 55 | 102 | 69 | M |
| **Almera Classic** | | | | | | | | | | | | | | | |
| 1.6 (79 kw) | 2006.03- | AT | F | L | Saloon FWD QG16DE;QG16 | | GDS41298 | Drive Shaft | | 25 | 25 | 55 | 100.5 | 621 | |
| | 2006.03- | AT | F | L | Saloon FWD QG16DE;QG16 | | GDS41445 | Drive Shaft | 42T | 25 | 25 | 55 | 100.5 | 621 | |
| | 2006.03- | AT | F | R | Saloon FWD QG16DE;QG16 | | GDS41444 | Drive Shaft | 42T | 25 | 25 | 55 | 100.5 | 919 | |
| | 2006.03- | AT | F | R | Saloon FWD QG16DE;QG16 | | GDS56502 | Drive Shaft | | 25 | 25 | 55 | 100.5 | 915 | |
| | 2006.03- | AT | F | R | Saloon FWD QG16DE;QG16 | | GCO41327 | Outer Joint | 42T | 25 | 22 | 55 | 100.5 | 58.5 | M |
| | 2006.03- | AT | F | R | Saloon FWD QG16DE;QG16 | | GCO50139 | Outer Joint | | 25 | 22 | 55 | 100.5 | 58.5 | M |
| | 2006.03- | AT | F | L | Saloon FWD QG16DE;QG16 | | GCI50050 | Inner Joint | | 25 | 22 | 40 | 63 | 94 | |
| | 2006.03- | AT | F | R | Saloon FWD QG16DE;QG16 | | GCI17041 | Inner Joint | | 25 | 22 | 40 | 63 | 99.5 | |
| | 2006.03- | MT | F | L | Saloon FWD QG16DE;QG16 | | GDS41442 | Drive Shaft | | 25 | 24 | 55 | 100.5 | 625 | |
| | 2006.03- | MT | F | R | Saloon FWD QG16DE;QG16 | | GDS41443 | Drive Shaft | | 25 | 24 | 55 | 100.5 | 914 | |
| | 2006.03- | MT | F | R | Saloon FWD QG16DE;QG16 | | GCO41048 | Outer Joint | 42T | 25 | 22 | 55 | 100.5 | 58.5 | M |
| | 2006.03- | MT | F | L/R | Saloon FWD QG16DE;QG16 | | GCO50139 | Outer Joint | | 25 | 22 | 55 | 100.5 | 58.5 | M |

| | YEAR | TRANSM. | F/R | L/R | BODY STYLE & DRIVE TYPE & ENGINE | REMARKS | G-AP Ref. | PRODUCT | ABS | Technical Specifications A | B | C | H | L | P |
|---|---|---|---|---|---|---|---|---|---|---|---|---|---|---|---|
| **NISSAN** | | | | | | | | | | | | | | | |
| **Almera Classic** | | | | | | | | | | | | | | | |
| 1.6 (79 kw) | 2006.03- | MT | F | L/R | Saloon FWD QG16DE;QG16 | | GCI41134 | Inner Joint | | 24 | 22 | 40 | 51.5 | 97 | |
| **Almera Tino** | | | | | | | | | | | | | | | |
| 1.8 (84 kw) | 2000.08-2006.02 | 4AT/5MT | F | L/R | MPV FWD QG18DE | Date to:2001.02 | GCO41044 | Outer Joint | 44T | 27 | 23 | 56 | 104 | 60 | I |
| | 2000.08-2006.02 | 4AT/5MT | F | L/R | MPV FWD QG18DE | Date from:2001.03 | GCO41142 | Outer Joint | 44T | 27 | 23 | 56 | 103.5 | 61.5 | M |
| | 2000.08-2006.02 | MT/4AT/5MT | F | L | MPV FWD QG18DE | | GDS41195 | Drive Shaft | 44T | 27 | 25 | 56 | 103.5 | 661 | |
| | 2000.08-2006.02 | MT/4AT/5MT | F | R | MPV FWD QG18DE | | GDS41194 | Drive Shaft | 44T | 27 | 25 | 56 | 103.5 | 948.5 | |
| | 2000.08-2006.02 | | F | L/R | MPV FWD QG18DE | | GCO41055 | Outer Joint | 44T | 27 | 23 | 56 | 102 | 62 | I |
| | 2000.08-2006.02 | | F | | MPV FWD QG18DE | | GCO41054 | Outer Joint | | 27 | 23 | 56 | 103 | 61.5 | M |
| 1.8 (85 kw) | 2002.12-2006.02 | AT | F | L/R | MPV FWD QG18DE | Date from:2003.02 | GCO41142 | Outer Joint | 44T | 27 | 23 | 56 | 103.5 | 61.5 | M |
| | 2002.12-2006.02 | AT | F | | MPV FWD QG18DE | | GCI41089 | Inner Joint | | 25 | 23 | 40 | 63 | 99 | |
| | 2002.12-2006.02 | MT | F | L | MPV FWD QG18DE | | GDS41195 | Drive Shaft | 44T | 27 | 25 | 56 | 103.5 | 661 | |
| | 2002.12-2006.02 | MT | F | R | MPV FWD QG18DE | | GDS41194 | Drive Shaft | 44T | 27 | 25 | 56 | 103.5 | 948.5 | |
| 2.0 (100 kw) | 2000.08-2003.01 | AT | F | L/R | MPV FWD SR20DE | | GCO41142 | Outer Joint | 44T | 27 | 23 | 56 | 103.5 | 61.5 | M |
| | 2000.08-2003.01 | CVT | F | L/R | MPV FWD SR20DE | Date from:2001.02 | GCI41123 | Inner Joint | | 25 | 23 | 40 | 63 | 99.5 | |
| | 2000.08-2003.01 | | F | L/R | MPV FWD SR20DE | Date To:2000.07 | GCO41015 | Outer Joint | 44T | 27 | 27 | 56 | 103 | 69 | I |
| | 2000.08-2003.01 | | F | | MPV FWD SR20DE | | GCO41054 | Outer Joint | | 27 | 23 | 56 | 103 | 61.5 | M |
| | 2000.08-2003.01 | | F | | MPV FWD SR20DE | | GCO41282 | Outer Joint | 44T | 27 | 23 | 56 | 103 | 58.5 | I |
| 2.2 (82 kw) | 2003.09-2006.02 | | F | L/R | MPV FWD YD22DDTi | | GCO41038 | Outer Joint | 44T | 27 | 26 | 56 | 103 | 69 | M |
| | 2003.09-2006.02 | | F | | MPV FWD YD22DDTi | | GCO41236 | Outer Joint | | 27 | 26 | 55 | 102 | 69 | M |
| 2.2 (84 kw) | 2000.08-2006.02 | | F | R | MPV FWD YD22DDTi | Date To:2001.07 | GCO41015 | Outer Joint | 44T | 27 | 27 | 56 | 103 | 69 | I |
| | 2000.08-2006.02 | | F | L/R | MPV FWD YD22DDTi | | GCO41038 | Outer Joint | 44T | 27 | 26 | 56 | 103 | 69 | M |
| 2.2 (100 kw) | 2003.09-2006.02 | MT | F | | MPV FWD YD22DDTi | | GCO41137 | Outer Joint | 42T | 27 | 35 | 55 | 102 | 69 | I |
| | 2003.09-2006.02 | | F | L/R | MPV FWD YD22DDTi | | GCO41038 | Outer Joint | 44T | 27 | 26 | 56 | 103 | 69 | M |
| | 2003.09-2006.02 | | F | | MPV FWD YD22DDTi | | GCO41236 | Outer Joint | | 27 | 26 | 55 | 102 | 69 | M |
| **Altima** | | | | | | | | | | | | | | | |
| 2.4 (112 kw) | 1992.06-1997.05 | | F | | Saloon FWD KA24DE | | GCO41307 | Outer Joint | | 27 | 27 | 56 | 103 | 61.5 | M |
| | 1997.06-2001.08 | AT/MT | F | L/R | Saloon FWD KA24DE | | GCO41091 | Outer Joint | | 27 | 26 | 56 | 103 | 69 | I |
| 2.5 (121 kw) | 2001.08-2006.09 | 4AT | F | L/R | Saloon FWD QR25DE | | GCO41354 | Outer Joint | 44T | 27 | 33 | 56 | 102 | 63 | I |
| 2.5 (127 kw) | 2013.11-2017.04 | CVT | F | L | Saloon FWD QR25DE | | GDS41560 | Drive Shaft | | 32 | 27 | 56 | 102 | 694 | |
| | 2013.11-2017.04 | CVT | F | R | Saloon FWD QR25DE | | GDS41559 | Drive Shaft | | 32 | 27 | 56 | 102 | 989 | |
| | 2013.11-2017.04 | CVT | F | L/R | Saloon FWD QR25DE | | GCO41395 | Outer Joint | | 32 | 24 | 56 | 102 | 63 | M |
| | 2013.11-2017.04 | CVT | F | L | Saloon FWD QR25DE | | GCI41073 | Inner Joint | | 27 | 24 | 40 | 62.5 | 99.5 | |
| | 2013.11-2017.04 | CVT | F | R | Saloon FWD QR25DE | | GCI41196 | Inner Joint | | 27 | 24 | 33 | 406 | 93 | |
| 2.5 (128 kw) | 2006.10-2012.07 | 6MT | F | R | Saloon FWD QR25DE | Date from:2008.07,Date to:2009.09 | GDS41456 | Drive Shaft | | 29 | 29 | 56.1 | 102 | 986 | |
| 2.5 (130 kw) | 2001.08-2006.12 | 4AT | F | L/R | Saloon FWD QR25DE | | GCO41354 | Outer Joint | 44T | 27 | 33 | 56 | 102 | 63 | I |
| 2.5 (131 kw) | 2009.09-2013.06 | 6MT | F | R | Coupe FWD QR25DE | | GDS41456 | Drive Shaft | | 29 | 29 | 56.1 | 102 | 986 | |
| 2.5 (132 kw) | 2013.01- | CVT | F | L | Saloon FWD QR25DE | | GDS41560 | Drive Shaft | | 32 | 27 | 56 | 102 | 694 | |
| | 2013.01- | CVT | F | R | Saloon FWD QR25DE | | GDS41559 | Drive Shaft | | 32 | 27 | 56 | 102 | 989 | |
| | 2013.01- | CVT | F | L/R | Saloon FWD QR25DE | | GCO41395 | Outer Joint | | 32 | 24 | 56 | 102 | 63 | M |
| | 2013.01- | CVT | F | L | Saloon FWD QR25DE | | GCI41073 | Inner Joint | | 27 | 24 | 40 | 62.5 | 99.5 | |
| | 2013.01- | CVT | F | R | Saloon FWD QR25DE | | GCI41196 | Inner Joint | | 27 | 24 | 33 | 406 | 93 | |
| 2.5 (134 kw) | 2012.05- | CVT | F | L | Saloon FWD QR25DE | | GDS41560 | Drive Shaft | | 32 | 27 | 56 | 102 | 694 | |
| | 2012.05- | CVT | F | R | Saloon FWD QR25DE | | GDS41559 | Drive Shaft | | 32 | 27 | 56 | 102 | 989 | |
| | 2012.05- | CVT | F | L/R | Saloon FWD QR25DE | | GCO41395 | Outer Joint | | 32 | 24 | 56 | 102 | 63 | M |
| | 2012.05- | CVT | F | L | Saloon FWD QR25DE | | GCI41073 | Inner Joint | | 27 | 24 | 40 | 62.5 | 99.5 | |
| | 2012.05- | CVT | F | R | Saloon FWD QR25DE | | GCI41196 | Inner Joint | | 27 | 24 | 33 | 406 | 93 | |
| 2.5 (136 kw) | 2012.08- | CVT | F | L | Saloon FWD QR25DE | | GDS41560 | Drive Shaft | | 32 | 27 | 56 | 102 | 694 | |
| | 2012.08- | CVT | F | R | Saloon FWD QR25DE | | GDS41559 | Drive Shaft | | 32 | 27 | 56 | 102 | 989 | |
| | 2012.08- | CVT | F | L/R | Saloon FWD QR25DE | | GCO41395 | Outer Joint | | 32 | 24 | 56 | 102 | 63 | M |
| | 2012.08- | CVT | F | L | Saloon FWD QR25DE | | GCI41073 | Inner Joint | | 27 | 24 | 40 | 62.5 | 99.5 | |
| | 2012.08- | CVT | F | R | Saloon FWD QR25DE | | GCI41196 | Inner Joint | | 27 | 24 | 33 | 406 | 93 | |
| 2.5 (138 kw) | 2010.01-2012.07 | 6MT | F | R | Saloon FWD QR25DE | Date from:2008.07,Date to:2009.09 | GDS41456 | Drive Shaft | | 29 | 29 | 56.1 | 102 | 986 | |
| 3.5 (199 kw) | 2012.11- | CVT | F | L | Saloon FWD VQ35DE | | GDS41561 | Drive Shaft | | 32 | 29 | 56 | 102 | 656 | |
| | 2012.11- | CVT | F | R | Saloon FWD VQ35DE | | GDS83410 | Drive Shaft | | 32 | 29 | 56 | 102 | 1011 | |
| | 2012.11- | CVT | F | R | Saloon FWD VQ35DE | | GCO41331 | Outer Joint | | 32 | 26 | 56 | 102 | 65 | I |
| | 2012.11- | CVT | F | R | Saloon FWD VQ35DE | | GCI82207 | Inner Joint | | 29 | 26 | 33 | 456 | 101.5 | |
| 3.5 (201 kw) | 2012.06- | CVT | F | L | Saloon FWD VQ35DE | | GDS41561 | Drive Shaft | | 32 | 29 | 56 | 102 | 656 | |
| | 2012.06- | CVT | F | R | Saloon FWD VQ35DE | | GDS83410 | Drive Shaft | | 32 | 29 | 56 | 102 | 1011 | |
| | 2012.06- | CVT | F | R | Saloon FWD VQ35DE | | GCO41331 | Outer Joint | | 32 | 26 | 56 | 102 | 65 | I |
| | 2012.06- | CVT | F | R | Saloon FWD VQ35DE | | GCI82207 | Inner Joint | | 29 | 26 | 33 | 456 | 101.5 | |
| **Aprio** | | | | | | | | | | | | | | | |
| 1.6 (76 kw) | 2008.07-2010.12 | MT | F | L/R | Saloon FWD K4M | | GCO41081 | Outer Joint | | 21 | 21 | 55 | 83.5 | 57.5 | M |
| **Armada** | | | | | | | | | | | | | | | |
| 5.6 (236 kw) | 2006.09-2015.12 | AT | F | | Closed Off-Road Vehicle 4WD VK56DE | | GCO41403 | Outer Joint | | 29 | 36 | 67.3 | 117 | 69 | I |
| | 2006.09-2015.12 | AT | F | | Closed Off-Road Vehicle 4WD VK56DE | | GCI41207 | Inner Joint | | | 36 | | | 79.5 | |

| | YEAR | TRANSM. | F/R | L/R | BODY STYLE & DRIVE TYPE & ENGINE | REMARKS | G-AP Ref. | PRODUCT | ABS | Technical Specifications A | B | C | H | L | P |
|---|---|---|---|---|---|---|---|---|---|---|---|---|---|---|---|
| **NISSAN** | | | | | | | | | | | | | | | |
| **Avenir** | | | | | | | | | | | | | | | |
| 1.8 (92 kw) | 1997.11-2005.11 | 4AT | F | L/R | Estate FWD QG18DE | Date from:1998.08,Date to:2005.09 | GCO41107 | Outer Joint | | 27 | 23 | 56 | 104 | 60 | I |
| | 1997.11-2005.11 | | | | Estate FWD QG18DE | | GCI41089 | Inner Joint | | 25 | 23 | 40 | 63 | 99 | |
| 2.0 (66 kw) | 1992.11-1998.08 | AT | F | L | Estate FWD CD20T | Date from:1993.01,Date to:1993.01 | GCI50065 | Inner Joint | | 25 | 25 | 40 | 63 | 101 | |
| 2.0 (107 kw) | 1997.11-2001.08 | AT | F | L/R | Estate 4WD SR20DE | Date from:2000.07,Date to:2002.08 | GCO41184 | Outer Joint | 44T | 27 | 25 | 56 | 103 | 68 | M |
| | 1997.11-2001.08 | AT | F | | Estate 4WD SR20DE | Date from:2000.05,Date to:2000.07 | GCO41015 | Outer Joint | 44T | 27 | 27 | 56 | 103 | 69 | I |
| | 1997.11-2001.08 | AT | F | | Estate 4WD SR20DE | Date from:2000.07,Date to:2002.08 | GCO41282 | Outer Joint | 44T | 27 | 23 | 56 | 103 | 58.5 | I |
| | 1997.11-2001.08 | AT | F | L/R | Estate FWD SR20DE | Date From:2000.11 | GCO41184 | Outer Joint | 44T | 27 | 25 | 56 | 103 | 68 | M |
| | 1997.11-2001.08 | AT | F | | Estate FWD SR20DE | Date From:2000.11 | GCO41282 | Outer Joint | 44T | 27 | 23 | 56 | 103 | 58.5 | I |
| **Bassara** | | | | | | | | | | | | | | | |
| 3.0 (162 kw) | 1999.11-2003.08 | AT | F | R | MPV FWD VQ30DE | | GCI41019 | Inner Joint | | 29 | 27 | 33 | 437.5 | 101 | |
| **Bluebird** | | | | | | | | | | | | | | | |
| 1.8 (92 kw) | 1991.11-1997.03 | | F | | Saloon FWD SR18DE | | GCO41106 | Outer Joint | | 27 | 23 | 56 | 104 | 60 | M |
| | 1998.09-2001.08 | 5MT/4AT | F | L/R | Saloon FWD QG18DE | | GCO41107 | Outer Joint | | 27 | 23 | 56 | 104 | 60 | I |
| 2.0 (56 kw) | 1997.04-2002.05 | AT | F | | Saloon FWD CD20E | | GCO41189 | Outer Joint | 44T | 27 | 23 | 56 | 103 | 58.5 | M |
| 2.0 (107 kw) | 1991.11-2001.08 | 5MT/4AT | F | L/R | Saloon FWD SR20DE | Date from:1996.01 | GCO41107 | Outer Joint | | 27 | 23 | 56 | 104 | 60 | I |
| **Bluebird Sylphy** | | | | | | | | | | | | | | | |
| 1.5 (80 kw) | 2005.09-2012.08 | AT | F | L/R | Saloon 4WD HR15DE | Model code:G11 | GCO41303 | Outer Joint | | 25 | 21 | 49 | 95 | 56 | M |
| **Bluebird Sylphy/Sylphy III/Sentra** | | | | | | | | | | | | | | | |
| 1.6 (85 kw) | 2012.08- | CVT | F | L | Saloon FWD HR16DE | | GDS83412 | Drive Shaft | | 29 | 25 | 56.2 | 102 | 694 | |
| | 2012.08- | CVT | F | R | Saloon FWD HR16DE | | GDS83411 | Drive Shaft | | 29 | 25 | 56.2 | 102 | 940 | |
| | 2012.08- | CVT | F | L/R | Saloon FWD HR16DE | | GCO41399 | Outer Joint | | 29 | 22 | 56.2 | 102 | 59 | M |
| | 2012.08- | CVT | F | L/R | Saloon FWD HR16DE | | GCI41085 | Inner Joint | | 25 | 21 | 40 | 53 | 112 | |
| 1.8 (95 kw) | 2012.08- | CVT | F | L/R | Saloon FWD MRA8DE | | GCO82480 | Outer Joint | | 29 | 23 | 56.3 | 102 | 63 | M |
| 1.8 (96 kw) | 2012.08- | CVT | F | L/R | Saloon FWD MRA8DE | | GCO82480 | Outer Joint | | 29 | 23 | 56.3 | 102 | 63 | M |
| **Camiones** | | | | | | | | | | | | | | | |
| 2.5 (59 kw) | 1996.10-2008.03 | MT | F | | Pickup 4WD TD25 | Date From:1993.10 | GCO41016 | Outer Joint | | 28 | 27 | 50 | 150 | 71 | I |
| | 1996.10-2008.03 | MT | F | | Pickup 4WD TD25 | | GCO41086 | Outer Joint | | 27 | 27 | 50 | 150 | 71 | I |
| **Cefiro** | | | | | | | | | | | | | | | |
| 2.0 (103 kw) | 1994.10-1999.12 | 4AT | F | L | Saloon FWD VQ20DE | | GDS41275 | Drive Shaft | 46T | 29 | 29 | 56 | 103.5 | 632 | |
| | 1994.10-1999.12 | 4AT/5MT | F | L/R | Saloon FWD VQ20DE | Date to:1997.12 | GCO41022 | Outer Joint | 46T | 29 | 27 | 56 | 103.5 | 70.5 | I |
| | 1994.10-1999.12 | 4AT/5MT | F | L/R | Saloon FWD VQ20DE | Date to:1999.09 | GCO41314 | Outer Joint | 46T | 29 | 27 | 56 | 101 | 68 | M |
| | 1994.10-1999.12 | 4AT/5MT | F | L | Saloon FWD VQ20DE | | GCI41062 | Inner Joint | | 29 | 27 | 39 | 65.5 | 114.5 | |
| | 1994.10-1999.12 | 4AT/5MT | F | R | Saloon FWD VQ20DE | DOJ | GCI41096 | Inner Joint | | 29 | 27 | 33 | 436 | 97 | |
| | 1994.10-1999.12 | 4AT/5MT | F | R | Saloon FWD VQ20DE | TJ | GCI41104 | Inner Joint | | 29 | 27 | 33 | 436 | 99 | |
| | 1994.10-1999.12 | 5MT | F | L | Saloon FWD VQ20DE | Date to:1999.09 | GCO41185 | Outer Joint | 44T | 29 | 25 | 56 | 101 | 68 | M |
| | 2000.01-2003.09 | 4AT/5MT | F | R | Saloon FWD VQ20DE | | GCI41104 | Inner Joint | | 29 | 27 | 33 | 436 | 99 | |
| | 2000.01-2003.09 | 5MT | F | L | Saloon FWD VQ20DE | Date to:1999.09 | GCO41185 | Outer Joint | 44T | 29 | 25 | 56 | 101 | 68 | M |
| | 2000.01-2003.09 | AT | F | L/R | Saloon FWD VQ20DE | Date from:2001.02 | GCO41187 | Outer Joint | 44T | 29 | 23 | 56 | 103 | 62 | M |
| | 2000.01-2003.09 | AT | F | L | Saloon FWD VQ20DE | | GCI41062 | Inner Joint | | 29 | 27 | 39 | 65.5 | 114.5 | |
| | 2000.01-2003.09 | MT | F | L | Saloon FWD VQ20DE | | GDS41146 | Drive Shaft | 44T | 29 | 29 | 56 | 103.5 | 640.5 | |
| | 2000.01-2003.09 | MT | F | R | Saloon FWD VQ20DE | | GDS41518 | Drive Shaft | 44T | 29 | 29 | 56 | 103.5 | 967 | |
| | 2000.01-2003.09 | MT | F | R | Saloon FWD VQ20DE | | GCO41138 | Outer Joint | 44T | 29 | 25 | 56 | 103.5 | 70.5 | I |
| | 2000.01-2003.09 | MT | F | L/R | Saloon FWD VQ20DE | Date to:2000.07 | GCO41022 | Outer Joint | 46T | 29 | 27 | 56 | 103.5 | 70.5 | I |
| | 2000.01-2003.09 | MT | F | R | Saloon FWD VQ20DE | | GCI41096 | Inner Joint | | 29 | 27 | 33 | 436 | 97 | |
| | 2000.01-2003.09 | | F | R | Saloon FWD VQ20DE | | GCI41019 | Inner Joint | | 29 | 27 | 33 | 437.5 | 101 | |
| 2.0 (114 kw) | 1994.08-1998.11 | 4AT/5MT | F | L/R | Saloon FWD VQ20DE | | GCO41314 | Outer Joint | 46T | 29 | 27 | 56 | 101 | 68 | M |
| | 1994.08-1998.11 | 4AT/5MT | F | R | Saloon FWD VQ20DE | | GCI41096 | Inner Joint | | 29 | 27 | 33 | 436 | 97 | |
| | 1994.08-1998.11 | | F | L | Saloon FWD VQ20DE | | GDS41275 | Drive Shaft | 46T | 29 | 29 | 56 | 103.5 | 632 | |
| 2.5 (140 kw) | 1994.10-1999.12 | | F | R | Saloon FWD VQ25DE | | GCI41019 | Inner Joint | | 29 | 27 | 33 | 437.5 | 101 | |
| 3.0 (142 kw) | 1994.10-1999.12 | 4AT | F | R | Saloon FWD VQ30DE | | GDS41259 | Drive Shaft | 46T | 29 | 29 | 56 | 103.5 | 970.5 | |
| | 1994.10-1999.12 | 4AT/5MT | F | L | Saloon FWD VQ30DE | | GDS41275 | Drive Shaft | 46T | 29 | 29 | 56 | 103.5 | 632 | |
| | 1994.10-1999.12 | 4AT/5MT | F | L/R | Saloon FWD VQ30DE | | GCO41022 | Outer Joint | 46T | 29 | 27 | 56 | 103.5 | 70.5 | I |
| | 1994.10-1999.12 | | F | R | Saloon FWD VQ30DE | | GCI41019 | Inner Joint | | 29 | 27 | 33 | 437.5 | 101 | |
| 3.0 (147 kw) | 2000.01-2003.09 | 4AT | F | R | Saloon FWD VQ30DE | | GDS41518 | Drive Shaft | 44T | 29 | 29 | 56 | 103.5 | 967 | |
| | 2000.01-2003.09 | 4AT | F | L/R | Saloon FWD VQ30DE | Date to:2000.07 | GCO41022 | Outer Joint | 46T | 29 | 27 | 56 | 103.5 | 70.5 | I |
| | 2000.01-2003.09 | 4AT | F | L/R | Saloon FWD VQ30DE | Date from:2000.08 | GCO41138 | Outer Joint | 44T | 29 | 25 | 56 | 103.5 | 70.5 | I |
| | 2000.01-2003.09 | 4AT/5MT | F | R | Saloon FWD VQ30DE | DOJ | GCI41096 | Inner Joint | | 29 | 27 | 33 | 436 | 97 | |
| | 2000.01-2003.09 | 4AT/5MT | F | R | Saloon FWD VQ30DE | TJ | GCI41104 | Inner Joint | | 29 | 27 | 33 | 436 | 99 | |
| | 2000.01-2003.09 | | F | L | Saloon FWD VQ30DE | | GCO41185 | Outer Joint | 44T | 29 | 25 | 56 | 101 | 68 | M |
| **Cube** | | | | | | | | | | | | | | | |
| 1.3 (55 kw) | 1998.03-2000.08 | | F | | Hatchback FWD CG13DE | | GCO41154 | Outer Joint | 42T | 23 | 19 | 48 | 93 | 53.5 | M |
| 1.3 (63 kw) | 2000.09-2002.12 | | F | | Hatchback 4WD CGA3DE | | GCO41154 | Outer Joint | 42T | 23 | 19 | 48 | 93 | 53.5 | M |
| | 2000.09-2002.12 | | F | | Hatchback FWD CGA3DE | | GCO41154 | Outer Joint | 42T | 23 | 19 | 48 | 93 | 53.5 | M |
| 1.3 (74 kw) | 2000.09-2002.12 | | F | | Hatchback 4WD CGA3DE | | GCO41154 | Outer Joint | 42T | 23 | 19 | 48 | 93 | 53.5 | M |
| | 2000.09-2002.12 | | F | | Hatchback FWD CGA3DE | | GCO41154 | Outer Joint | 42T | 23 | 19 | 48 | 93 | 53.5 | M |

| | YEAR | TRANSM. | F/R | L/R | BODY STYLE & DRIVE TYPE & ENGINE | REMARKS | G-AP Ref. | PRODUCT | ABS | Technical Specifications A | B | C | H | L | P |
|---|---|---|---|---|---|---|---|---|---|---|---|---|---|---|---|
| **NISSAN** | | | | | | | | | | | | | | | |
| **Cube** | | | | | | | | | | | | | | | |
| 1.4 (72 kw) | 2003.01-2009.07 | AT | F | | Hatchback FWD CR14DE | | GCO41304 | Outer Joint | | 25 | 29 | 49 | 95 | 56 | I |
| 1.5 (78 kw) | 2009.10- | 6MT | F | L | Hatchback FWD K9K;K9K 270 | | GCI41112 | Inner Joint | | 26 | 23 | 40 | 64 | 104.5 | |
| 1.5 (80 kw) | 2003.01-2009.03 | AT | F | | Hatchback FWD HR15DE | Date from:2005.05 | GCO41304 | Outer Joint | | 25 | 29 | 49 | 95 | 56 | I |
| 1.5 (81 kw) | 2010.03- | 6MT | F | L | Hatchback FWD K9K;K9K 270 | | GCI41112 | Inner Joint | | 26 | 23 | 40 | 64 | 104.5 | |
| 1.6 (81 kw) | 2009.08- | MT/CVT | F | L | Hatchback FWD HR16DE | | GDS41366 | Drive Shaft | | 25 | 26 | 49.1 | 95 | 658 | |
| | 2009.08- | MT/CVT | F | L/R | Hatchback FWD HR16DE | | GCO41289 | Outer Joint | | 25 | 29 | 49.1 | 94.5 | 53 | I |
| | 2009.08- | MT/CVT | F | L/R | Hatchback FWD HR16DE | | GCO41304 | Outer Joint | | 25 | 29 | 49 | 95 | 56 | I |
| | 2009.08- | MT/CVT | F | L/R | Hatchback FWD HR16DE | | GCI41033 | Inner Joint | | 25 | 29 | 40 | 63.5 | 102 | |
| 1.8 (88 kw) | 2009.09- | AT | F | R | Hatchback FWD MR18DE | | GCI41186 | Inner Joint | | 25 | 22 | 33 | 348 | 90 | |
| 1.8 (91 kw) | 2009.09- | AT | F | R | Hatchback FWD MR18DE | | GCI41186 | Inner Joint | | 25 | 22 | 33 | 348 | 90 | |
| **D21** | | | | | | | | | | | | | | | |
| 2.7 (73 kw) | 1987.08-1998.08 | MT | F | | Pickup 4WD TD27 | Date From:1993.07 | GCO41016 | Outer Joint | | 28 | 27 | 50 | 150 | 71 | I |
| | 1987.08-1998.08 | MT | F | | Pickup 4WD TD27 | | GCO41086 | Outer Joint | | 27 | 27 | 50 | 150 | 71 | I |
| **E-NV200** | | | | | | | | | | | | | | | |
| EV (80 kw) | 2014.05- | ET | F | R | Van FWD EM57 | | GDS84325 | Drive Shaft | | 29 | 27 | 56 | 102 | 871 | |
| **E-NV200 Evalia** | | | | | | | | | | | | | | | |
| EV (80 kw) | 2014.07- | ET | F | R | Bus FWD EM57 | | GDS84325 | Drive Shaft | | 29 | 27 | 56 | 102 | 871 | |
| **Elgrand** | | | | | | | | | | | | | | | |
| 3.0 (113 kw) | 1999.08-2000.08 | AT | F | | MPV 4WD ZD30DDTI | | GCO41016 | Outer Joint | | 28 | 27 | 50 | 150 | 71 | I |
| | 1999.08-2000.08 | AT | F | | MPV 4WD ZD30DDTI | Date From:2000.07 | GCO41100 | Outer Joint | | 28 | 25 | 50 | 150 | 71 | I |
| 3.0 (125 kw) | 1999.08-2002.04 | AT | F | | MPV 4WD | | GCO41016 | Outer Joint | | 28 | 27 | 50 | 150 | 71 | I |
| | 1999.08-2002.04 | AT | F | | MPV 4WD | Date From:2000.07 | GCO41100 | Outer Joint | | 28 | 25 | 50 | 150 | 71 | I |
| 3.2 (110 kw) | 1995.10-2001.08 | AT | F | | MPV 4WD QD32ETI | Date From:1997.05,Date To:1997.05 | GCO41016 | Outer Joint | | 28 | 27 | 50 | 150 | 71 | I |
| 3.3 (125 kw) | 1996.04-2001.08 | AT | F | | MPV 4WD VG33E | Date From:1997.05 | GCO41016 | Outer Joint | | 28 | 27 | 50 | 150 | 71 | I |
| | 1996.04-2001.08 | AT | F | | MPV 4WD VG33E | Date From:2000.07 | GCO41100 | Outer Joint | | 28 | 25 | 50 | 150 | 71 | I |
| 3.5 (177 kw) | 2000.08-2002.04 | AT | F | | MPV 4WD VQ35DE | | GCO41016 | Outer Joint | | 28 | 27 | 50 | 150 | 71 | I |
| | 2000.08-2002.04 | AT | F | | MPV 4WD VQ35DE | | GCO41100 | Outer Joint | | 28 | 25 | 50 | 150 | 71 | I |
| 3.5 (194 kw) | 2010.09- | AT | F | R | MPV FWD VQ35DE | | GCI41208 | Inner Joint | | 29 | 27 | 33 | 459 | 99 | |
| | 2010.09- | CVT | F | L | MPV FWD VQ35DE | | GDS41515 | Drive Shaft | | 32 | 29 | 56.3 | 103 | 670 | |
| 3.5 (206 kw) | 2010.11- | AT | F | R | MPV FWD VQ35DE | | GCI41208 | Inner Joint | | 29 | 27 | 33 | 459 | 99 | |
| **Expert** | | | | | | | | | | | | | | | |
| 1.8 (92 kw) | 1998.10-2004.04 | | F | | Estate FWD QG18DE | | GCO41106 | Outer Joint | | 27 | 23 | 56 | 104 | 60 | M |
| **Frontier** | | | | | | | | | | | | | | | |
| 3.0 (92 kw) | 2000.02-2004.09 | 5MT | F | L/R | Pickup 4WD ZD30 | | GDS41393 | Drive Shaft | | 28 | | 50 | 150 | 570 | |
| | 2000.02-2004.09 | 5MT | F | L/R | Pickup 4WD ZD30 | | GCO41100 | Outer Joint | | 28 | 25 | 50 | 150 | 71 | I |
| | 2000.02-2004.09 | 5MT | F | L/R | Pickup 4WD ZD30 | | GCI41014 | Inner Joint | | | 27 | | | 78 | |
| **Fuga** | | | | | | | | | | | | | | | |
| 3.5 (206 kw) | 2004.10-2007.11 | AT | F | R | Saloon 4WD VQ35DE | | GDS56385 | Drive Shaft | | 27 | 25 | 59 | 102.5 | 609 | |
| | 2004.10-2007.11 | AT | F | R | Saloon 4WD VQ35DE | | GCO83273 | Outer Joint | | 27 | 22 | 59 | 102.5 | 59 | M |
| | 2004.10-2007.11 | AT | F | R | Saloon 4WD VQ35DE | | GCI82256 | Inner Joint | | 25 | 22 | 32 | 90 | 83 | |
| **GT-R** | | | | | | | | | | | | | | | |
| 3.8 (353 kw) | 2008.12- | SAT | F | L/R | Coupe 4WD VR38DETT | | GCO83273 | Outer Joint | | 27 | 22 | 59 | 102.5 | 59 | M |
| | 2008.12- | SAT | F | L | Coupe 4WD VR38DETT | | GCI81178 | Inner Joint | | | 27 | | | 78 | |
| | 2008.12- | SAT | F | R | Coupe 4WD VR38DETT | | GCI82256 | Inner Joint | | 25 | 22 | 32 | 90 | 83 | |
| 3.8 (357 kw) | 2007.12-2010.10 | 6AT | F | L/R | Coupe 4WD VR38DETT | | GCO83273 | Outer Joint | | 27 | 22 | 59 | 102.5 | 59 | M |
| | 2007.12-2010.10 | 6AT | F | L | Coupe 4WD VR38DETT | | GCI81178 | Inner Joint | | | 27 | | | 78 | |
| | 2007.12-2010.10 | 6AT | F | R | Coupe 4WD VR38DETT | | GCI82256 | Inner Joint | | 25 | 22 | 32 | 90 | 83 | |
| 3.8 (390 kw) | 2010.10-2011.09 | 6AT | F | L/R | Coupe 4WD VR38DETT | | GCO83273 | Outer Joint | | 27 | 22 | 59 | 102.5 | 59 | M |
| | 2010.10-2011.09 | 6AT | F | L | Coupe 4WD VR38DETT | | GCI81178 | Inner Joint | | | 27 | | | 78 | |
| | 2010.10-2011.09 | 6AT | F | R | Coupe 4WD VR38DETT | | GCI82256 | Inner Joint | | 25 | 22 | 32 | 90 | 83 | |
| 3.8 (397 kw) | 2012.07- | 6AT | F | L/R | Coupe 4WD VR38DETT | | GCO83273 | Outer Joint | | 27 | 22 | 59 | 102.5 | 59 | M |
| | 2012.07- | 6AT | F | L | Coupe 4WD VR38DETT | | GCI81178 | Inner Joint | | | 27 | | | 78 | |
| | 2012.07- | 6AT | F | R | Coupe 4WD VR38DETT | | GCI82256 | Inner Joint | | 25 | 22 | 32 | 90 | 83 | |
| 3.8 (404 kw) | 2011.10- | 6AT | F | L/R | Coupe 4WD VR38DETT | | GCO83273 | Outer Joint | | 27 | 22 | 59 | 102.5 | 59 | M |
| | 2011.10- | 6AT | F | L | Coupe 4WD VR38DETT | | GCI81178 | Inner Joint | | | 27 | | | 78 | |
| | 2011.10- | 6AT | F | R | Coupe 4WD VR38DETT | | GCI82256 | Inner Joint | | 25 | 22 | 32 | 90 | 83 | |
| 3.8 (408 kw) | 2016.11- | 6AT | F | L/R | Coupe 4WD VR38DETT | | GCO83273 | Outer Joint | | 27 | 22 | 59 | 102.5 | 59 | M |
| | 2016.11- | 6AT | F | L | Coupe 4WD VR38DETT | | GCI81178 | Inner Joint | | | 27 | | | 78 | |
| | 2016.11- | 6AT | F | R | Coupe 4WD VR38DETT | | GCI82256 | Inner Joint | | 25 | 22 | 32 | 90 | 83 | |
| 3.8 (419 kw) | 2016.06- | 6AT | F | L/R | Coupe 4WD VR38DETT | | GCO83273 | Outer Joint | | 27 | 22 | 59 | 102.5 | 59 | M |
| | 2016.06- | 6AT | F | L | Coupe 4WD VR38DETT | | GCI81178 | Inner Joint | | | 27 | | | 78 | |
| | 2016.06- | 6AT | F | R | Coupe 4WD VR38DETT | | GCI82256 | Inner Joint | | 25 | 22 | 32 | 90 | 83 | |
| 3.8 (441 kw) | 2014.07- | 6AT | F | L/R | Coupe 4WD VR38DETT | | GCO83273 | Outer Joint | | 27 | 22 | 59 | 102.5 | 59 | M |
| | 2014.07- | 6AT | F | L | Coupe 4WD VR38DETT | | GCI81178 | Inner Joint | | | 27 | | | 78 | |
| | 2014.07- | 6AT | F | R | Coupe 4WD VR38DETT | | GCI82256 | Inner Joint | | 25 | 22 | 32 | 90 | 83 | |

| | YEAR | TRANSM. | F/R | L/R | BODY STYLE & DRIVE TYPE & ENGINE | REMARKS | G-AP Ref. | PRODUCT | ABS | Technical Specifications A | B | C | H | L | P |
|---|---|---|---|---|---|---|---|---|---|---|---|---|---|---|---|
| **NISSAN** | | | | | | | | | | | | | | | |
| **Hardbody** | | | | | | | | | | | | | | | |
| 3.0 (110 kw) | 2001.11-2005.04 | 5MT | F | L/R | Pickup 4WD ZD30DDT | | GDS41393 | Drive Shaft | | 28 | | 50 | 150 | 570 | |
| | 2001.11-2005.04 | 5MT | F | L/R | Pickup 4WD ZD30DDT | | GCO41100 | Outer Joint | | 28 | 25 | 50 | 150 | 71 | I |
| | 2001.11-2005.04 | 5MT | F | L/R | Pickup 4WD ZD30DDT | | GCI41014 | Inner Joint | | | 27 | | | 78 | |
| **Interstar** | | | | | | | | | | | | | | | |
| 1.9 (60 kw) | 2002.04-2006.08 | 5MT | F | R | Bus FWD F9Q 772;F9Q 774 | | GDS50366 | Drive Shaft | 51T | 28 | 39 | 65 | 96 | 1116 | |
| | 2002.04-2006.08 | MT | F | L | Bus FWD F9Q 772;F9Q 774 | | GDS44005 | Drive Shaft | 51T | 28 | 37 | 65 | 96 | 670 | |
| | 2002.04-2006.08 | MT | F | R | Bus FWD F9Q 772;F9Q 774 | | GDS44021 | Drive Shaft | | 28 | 39 | 65 | 96 | 1126 | |
| | 2002.04-2006.08 | MT | F | L/R | Bus FWD F9Q 772;F9Q 774 | | GCO44026 | Outer Joint | 51T | 28 | 36 | 65 | 96 | 71 | I |
| | 2002.04-2006.08 | 5MT | F | R | Van FWD F9Q 772;F9Q 774 | | GDS50366 | Drive Shaft | 51T | 28 | 39 | 65 | 96 | 1116 | |
| | 2002.04-2006.08 | MT | F | L | Van FWD F9Q 772;F9Q 774 | | GDS44005 | Drive Shaft | 51T | 28 | 37 | 65 | 96 | 670 | |
| | 2002.04-2006.08 | MT | F | R | Van FWD F9Q 772;F9Q 774 | | GDS44021 | Drive Shaft | | 28 | 39 | 65 | 96 | 1126 | |
| | 2002.04-2006.08 | MT | F | L/R | Van FWD F9Q 772;F9Q 774 | | GCO44026 | Outer Joint | 51T | 28 | 36 | 65 | 96 | 71 | I |
| 2.2 (66 kw) | 2002.07- | 5MT | F | R | Van FWD G9T 722 | | GDS50366 | Drive Shaft | 51T | 28 | 39 | 65 | 96 | 1116 | |
| | 2002.07- | MT | F | L | Van FWD G9T 722 | | GDS44005 | Drive Shaft | 51T | 28 | 37 | 65 | 96 | 670 | |
| | 2002.07- | MT | F | L/R | Van FWD G9T 722 | | GCO44026 | Outer Joint | 51T | 28 | 36 | 65 | 96 | 71 | I |
| | 2002.07-2006.08 | 5MT | F | R | Bus FWD G9T 722 | | GDS50366 | Drive Shaft | 51T | 28 | 39 | 65 | 96 | 1116 | |
| | 2002.07-2006.08 | MT | F | L | Bus FWD G9T 722 | | GDS44005 | Drive Shaft | 51T | 28 | 37 | 65 | 96 | 670 | |
| | 2002.07-2006.08 | MT | F | L/R | Bus FWD G9T 722 | | GCO44026 | Outer Joint | 51T | 28 | 36 | 65 | 96 | 71 | I |
| 2.3 (81 kw) | 2021.11-2024.12 | 6MT | F | L | Van FWD M9T 726 | | GDS18247 | Drive Shaft | | 31 | 39 | 70 | 100.5 | 743 | |
| | 2021.11-2024.12 | 6MT | F | R | Van FWD M9T 726 | | GDS57562 | Drive Shaft | | 31 | 39 | 70 | 101 | 1085 | |
| 2.3 (100 kw) | 2021.11-2024.12 | 6MT | F | L | Van FWD M9T 726 | | GDS18247 | Drive Shaft | | 31 | 39 | 70 | 100.5 | 743 | |
| | 2021.11-2024.12 | 6MT | F | R | Van FWD M9T 726 | | GDS57562 | Drive Shaft | | 31 | 39 | 70 | 101 | 1085 | |
| 2.3 (107 kw) | 2021.11-2024.12 | 6MT | F | L | Platform/Chassis FWD M9T 706;M9T 708 | | GDS18247 | Drive Shaft | | 31 | 39 | 70 | 100.5 | 743 | |
| | 2021.11-2024.12 | 6MT | F | R | Platform/Chassis FWD M9T 706;M9T 708 | | GDS57562 | Drive Shaft | | 31 | 39 | 70 | 101 | 1085 | |
| 2.3 (110 kw) | 2021.11-2024.12 | 6AT/6MT | F | L | Van FWD M9T 726 | | GDS18247 | Drive Shaft | | 31 | 39 | 70 | 100.5 | 743 | |
| | 2021.11-2024.12 | 6AT/6MT | F | R | Van FWD M9T 726 | | GDS57562 | Drive Shaft | | 31 | 39 | 70 | 101 | 1085 | |
| 2.3 (120 kw) | 2021.11-2024.12 | 6MT | F | L | Platform/Chassis FWD M9T 708 | | GDS18247 | Drive Shaft | | 31 | 39 | 70 | 100.5 | 743 | |
| | 2021.11-2024.12 | 6MT | F | R | Platform/Chassis FWD M9T 708 | | GDS57562 | Drive Shaft | | 31 | 39 | 70 | 101 | 1085 | |
| | 2022.10- | 6AT/6MT | F | L | Van FWD M9T 708 | | GDS18247 | Drive Shaft | | 31 | 39 | 70 | 100.5 | 743 | |
| 2.3 (132 kw) | 2021.11-2024.12 | 6AT/6MT | F | L | Van FWD M9T 726 | | GDS18247 | Drive Shaft | | 31 | 39 | 70 | 100.5 | 743 | |
| | 2021.11-2024.12 | 6AT/6MT | F | R | Van FWD M9T 726 | | GDS57562 | Drive Shaft | | 31 | 39 | 70 | 101 | 1085 | |
| 2.5 (73 kw) | 2003.11-2006.03 | 5MT | F | R | Bus FWD G9U 720;G9U 750 | | GDS50066 | Drive Shaft | | 28 | 39 | 65 | 96 | 1142 | |
| | 2003.11-2006.03 | 5MT | F | R | Bus FWD G9U 720;G9U 750 | | GDS50366 | Drive Shaft | 51T | 28 | 39 | 65 | 96 | 1116 | |
| | 2003.11-2006.03 | MT | F | L | Bus FWD G9U 720;G9U 750 | | GDS50166 | Drive Shaft | 51T | 28 | 37 | 65 | 96 | 663 | |
| | 2003.11-2006.03 | MT | F | R | Bus FWD G9U 720;G9U 750 | | GDS99151 | Drive Shaft | 51T | 28 | 39 | 65 | 96 | 1144 | |
| | 2003.11-2006.03 | MT | F | L/R | Bus FWD G9U 720;G9U 750 | | GCO44026 | Outer Joint | 51T | 28 | 36 | 65 | 96 | 71 | I |
| | 2003.11-2006.03 | 5MT | F | R | Van FWD G9U 720;G9U 754 | | GDS50066 | Drive Shaft | | 28 | 39 | 65 | 96 | 1142 | |
| | 2003.11-2006.03 | 5MT | F | R | Van FWD G9U 720;G9U 754 | | GDS50366 | Drive Shaft | 51T | 28 | 39 | 65 | 96 | 1116 | |
| | 2003.11-2006.03 | MT | F | L | Van FWD G9U 720;G9U 754 | | GDS50166 | Drive Shaft | 51T | 28 | 37 | 65 | 96 | 663 | |
| | 2003.11-2006.03 | MT | F | R | Van FWD G9U 720;G9U 754 | | GDS99151 | Drive Shaft | 51T | 28 | 39 | 65 | 96 | 1144 | |
| | 2003.11-2006.03 | MT | F | L/R | Van FWD G9U 720;G9U 754 | | GCO44026 | Outer Joint | 51T | 28 | 36 | 65 | 96 | 71 | I |
| | 2003.11-2006.03 | MT | F | R | Van FWD G9U 720;G9U 754 | | GCI50006 | Inner Joint | | 39 | 27 | 30 | 437 | 98 | |
| | 2004.02- | 5MT | F | R | Platform/Chassis FWD G9U 720;G9U 754 | | GDS50366 | Drive Shaft | 51T | 28 | 39 | 65 | 96 | 1116 | |
| | 2004.02- | | F | R | Platform/Chassis FWD G9U 720;G9U 754 | | GCO44026 | Outer Joint | 51T | 28 | 36 | 65 | 96 | 71 | I |
| 2.5 (74 kw) | 2006.04- | 6MT | F | R | Van FWD G9U 720;G9U 754 | | GDS50366 | Drive Shaft | 51T | 28 | 39 | 65 | 96 | 1116 | |
| | 2006.04- | MT | F | L | Van FWD G9U 720;G9U 754 | | GDS99286 | Drive Shaft | 51T | 28 | 39 | 65 | 96 | 700 | |
| | 2006.04- | MT | F | L/R | Van FWD G9U 720;G9U 754 | | GCO44026 | Outer Joint | 51T | 28 | 36 | 65 | 96 | 71 | I |
| | 2006.04- | MT | F | R | Van FWD G9U 720;G9U 754 | | GCI50006 | Inner Joint | | 39 | 27 | 30 | 437 | 98 | |
| | 2006.04-2011.03 | 6MT | F | R | Bus FWD G9U 650 | | GDS50366 | Drive Shaft | 51T | 28 | 39 | 65 | 96 | 1116 | |
| | 2006.04-2011.03 | MT | F | L | Bus FWD G9U 650 | | GDS99286 | Drive Shaft | 51T | 28 | 39 | 65 | 96 | 700 | |
| | 2006.04-2011.03 | MT | F | L/R | Bus FWD G9U 650 | | GCO44026 | Outer Joint | 51T | 28 | 36 | 65 | 96 | 71 | I |
| 2.5 (84 kw) | 2002.04- | 5MT/6MT | F | R | Van FWD G9U 720;G9U 754;G9U 724;G9U 750 | | GDS50066 | Drive Shaft | | 28 | 39 | 65 | 96 | 1142 | |
| | 2002.04- | 5MT/6MT | F | R | Van FWD G9U 720;G9U 754;G9U 724;G9U 750 | | GDS50366 | Drive Shaft | 51T | 28 | 39 | 65 | 96 | 1116 | |
| | 2002.04- | MT | F | L | Van FWD G9U 720;G9U 754;G9U 724;G9U 750 | Trans. code:PK5 | GDS50166 | Drive Shaft | 51T | 28 | 37 | 65 | 96 | 663 | |
| | 2002.04- | MT | F | R | Van FWD G9U 720;G9U 754;G9U 724;G9U 750 | Trans. code:PK5 | GDS99151 | Drive Shaft | 51T | 28 | 39 | 65 | 96 | 1144 | |
| | 2002.04- | MT | F | L/R | Van FWD G9U 720;G9U 754;G9U 724;G9U 750 | Trans. code:PK5 | GCO44026 | Outer Joint | 51T | 28 | 36 | 65 | 96 | 71 | I |
| | 2002.04-2006.08 | 5MT/6MT | F | R | Bus FWD G9U 720;G9U 754;G9U 724;G9U 750 | | GDS50366 | Drive Shaft | 51T | 28 | 39 | 65 | 96 | 1116 | |
| | 2002.04-2006.08 | MT | F | L | Bus FWD G9U 720;G9U 754;G9U 724;G9U 750 | Trans. code:PK5 | GDS50166 | Drive Shaft | 51T | 28 | 37 | 65 | 96 | 663 | |
| | 2002.04-2006.08 | MT | F | R | Bus FWD G9U 720;G9U 754;G9U 724;G9U 750 | | GDS50066 | Drive Shaft | | 28 | 39 | 65 | 96 | 1142 | |
| | 2002.04-2006.08 | MT | F | R | Bus FWD G9U 720;G9U 754;G9U 724;G9U 750 | Trans. code:PK5 | GDS99151 | Drive Shaft | 51T | 28 | 39 | 65 | 96 | 1144 | |
| | 2002.04-2006.08 | MT | F | L/R | Bus FWD G9U 720;G9U 754;G9U 724;G9U 750 | Trans. code:PK5 | GCO44026 | Outer Joint | 51T | 28 | 36 | 65 | 96 | 71 | I |
| | 2002.04-2006.08 | MT | F | R | Bus FWD G9U 720;G9U 754;G9U 724;G9U 750 | | GCI50006 | Inner Joint | | 39 | 27 | 30 | 437 | 98 | |
| | 2003.08- | 6MT | F | R | Platform/Chassis FWD G9U 720;G9U 754;G9U 724;G9U 750 | | GDS50366 | Drive Shaft | 51T | 28 | 39 | 65 | 96 | 1116 | |
| | 2003.08- | MT | F | R | Platform/Chassis FWD G9U 720;G9U 754;G9U 724;G9U 750 | | GDS50066 | Drive Shaft | | 28 | 39 | 65 | 96 | 1142 | |
| | 2003.08- | MT | F | R | Platform/Chassis FWD G9U 720;G9U 754;G9U 724;G9U 750 | | GCI50006 | Inner Joint | | 39 | 27 | 30 | 437 | 98 | |

| | YEAR | TRANSM. | F/R | L/R | BODY STYLE & DRIVE TYPE & ENGINE | REMARKS | G-AP Ref. | PRODUCT | ABS | Technical Specifications A | B | C | H | L | P |
|---|---|---|---|---|---|---|---|---|---|---|---|---|---|---|---|
| **NISSAN** | | | | | | | | | | | | | | | |
| **Interstar** | | | | | | | | | | | | | | | |
| 2.5 (84 kw) | 2003.08- | | F | L/R | Platform/Chassis FWD G9U 720;G9U 754;G9U 724;G9U 750 | | GCO44026 | Outer Joint | 51T | 28 | 36 | 65 | 96 | 71 | I |
| 2.5 (88 kw) | 2006.08- | 6MT/SAT | F | R | Platform/Chassis FWD G9U 650 | | GDS50366 | Drive Shaft | 51T | 28 | 39 | 65 | 96 | 1116 | |
| | 2006.08- | MT | F | L | Platform/Chassis FWD G9U 650 | | GDS99286 | Drive Shaft | 51T | 28 | 39 | 65 | 96 | 700 | |
| | 2006.08- | | F | R | Platform/Chassis FWD G9U 650 | | GCO44026 | Outer Joint | 51T | 28 | 36 | 65 | 96 | 71 | I |
| | 2006.09- | 6MT/SAT | F | R | Van FWD G9U 650 | | GDS50366 | Drive Shaft | 51T | 28 | 39 | 65 | 96 | 1116 | |
| | 2006.09- | MT | F | L | Van FWD G9U 650 | Inner teeth of tranm.side:26 | GDS99286 | Drive Shaft | 51T | 28 | 39 | 65 | 96 | 700 | |
| | 2006.09- | MT | F | L/R | Van FWD G9U 650 | | GCO44026 | Outer Joint | 51T | 28 | 36 | 65 | 96 | 71 | I |
| | 2006.09- | MT | F | R | Van FWD G9U 650 | | GCI50006 | Inner Joint | | 39 | 27 | 30 | 437 | 98 | |
| | 2006.09-2011.03 | 6MT/SAT | F | R | Bus FWD G9U 650 | | GDS50366 | Drive Shaft | 51T | 28 | 39 | 65 | 96 | 1116 | |
| | 2006.09-2011.03 | MT | F | L | Bus FWD G9U 650 | Inner teeth of tranm.side:26 | GDS99286 | Drive Shaft | 51T | 28 | 39 | 65 | 96 | 700 | |
| | 2006.09-2011.03 | MT | F | L/R | Bus FWD G9U 650 | | GCO44026 | Outer Joint | 51T | 28 | 36 | 65 | 96 | 71 | I |
| 2.5 (107 kw) | 2006.08- | 6MT/SAT | F | R | Platform/Chassis FWD G9U 632 | | GDS50366 | Drive Shaft | 51T | 28 | 39 | 65 | 96 | 1116 | |
| | 2006.08- | MT | F | L | Platform/Chassis FWD G9U 632 | | GDS99286 | Drive Shaft | 51T | 28 | 39 | 65 | 96 | 700 | |
| | 2006.08- | | F | R | Platform/Chassis FWD G9U 632 | | GCO44026 | Outer Joint | 51T | 28 | 36 | 65 | 96 | 71 | I |
| | 2006.09- | 6MT/SAT | F | R | Van FWD G9U 632 | | GDS50366 | Drive Shaft | 51T | 28 | 39 | 65 | 96 | 1116 | |
| | 2006.09- | MT | F | L | Van FWD G9U 632 | Inner teeth of tranm.side:26 | GDS99286 | Drive Shaft | 51T | 28 | 39 | 65 | 96 | 700 | |
| | 2006.09- | MT | F | L/R | Van FWD G9U 632 | | GCO44026 | Outer Joint | 51T | 28 | 36 | 65 | 96 | 71 | I |
| | 2006.09-2011.03 | 6MT/SAT | F | R | Bus FWD G9U 632 | | GDS50366 | Drive Shaft | 51T | 28 | 39 | 65 | 96 | 1116 | |
| | 2006.09-2011.03 | MT | F | L | Bus FWD G9U 632 | Inner teeth of tranm.side:26 | GDS99286 | Drive Shaft | 51T | 28 | 39 | 65 | 96 | 700 | |
| | 2006.09-2011.03 | MT | F | L/R | Bus FWD G9U 632 | | GCO44026 | Outer Joint | 51T | 28 | 36 | 65 | 96 | 71 | I |
| 3.0 (100 kw) | 2003.11- | 6MT | F | R | Bus FWD ZD30 | | GDS50366 | Drive Shaft | 51T | 28 | 39 | 65 | 96 | 1116 | |
| | 2003.11- | MT | F | R | Bus FWD ZD30 | | GDS50059 | Drive Shaft | 51T | 28 | 39 | 65 | 96 | 1126 | |
| | 2003.11- | MT | F | L/R | Bus FWD ZD30 | | GCO44026 | Outer Joint | 51T | 28 | 36 | 65 | 96 | 71 | I |
| | 2003.11- | 6MT | F | R | Platform/Chassis FWD ZD30 | | GDS50366 | Drive Shaft | 51T | 28 | 39 | 65 | 96 | 1116 | |
| | 2003.11- | | F | R | Platform/Chassis FWD ZD30 | | GCO44026 | Outer Joint | 51T | 28 | 36 | 65 | 96 | 71 | I |
| | 2003.11- | 6MT | F | R | Van FWD ZD30 | | GDS50366 | Drive Shaft | 51T | 28 | 39 | 65 | 96 | 1116 | |
| | 2003.11- | MT | F | R | Van FWD ZD30 | | GDS50059 | Drive Shaft | 51T | 28 | 39 | 65 | 96 | 1126 | |
| | 2003.11- | MT | F | L/R | Van FWD ZD30 | | GCO44026 | Outer Joint | 51T | 28 | 36 | 65 | 96 | 71 | I |
| **Juke** | | | | | | | | | | | | | | | |
| 1.0 (84 kw) | 2019.08- | 6MT | F | L | SUV FWD HR10DDT | | GDS84246 | Drive Shaft | | 25 | 26 | 53 | 88.5 | 674 | |
| | 2019.08- | 6MT | F | R | SUV FWD HR10DDT | | GDS84245 | Drive Shaft | | 25 | 26 | 53 | 88.5 | 930 | |
| | 2019.08- | 6MT | F | L | SUV FWD HR10DDT | | GCI41191 | Inner Joint | | 26 | 33 | 40 | 64 | 118 | |
| | 2019.08- | 7AT | F | L | SUV FWD HR10DDT | | GDS84243 | Drive Shaft | | 25 | 27 | 53 | 88.5 | 626 | |
| | 2019.08- | 7AT | F | R | SUV FWD HR10DDT | | GDS84236 | Drive Shaft | | 25 | 27 | 53 | 88.5 | 985 | |
| | 2019.08- | 7AT | F | L | SUV FWD HR10DDT | | GCI82655 | Inner Joint | | 27 | 33 | 40 | 65 | 119.5 | |
| | 2019.08- | 7AT | F | R | SUV FWD HR10DDT | | GCI82652 | Inner Joint | | 27 | 33 | 40 | 401 | 101 | |
| | 2019.08- | 7AT/6MT | F | L/R | SUV FWD HR10DDT | | GCO82552 | Outer Joint | | 25 | 33 | 53 | 88.5 | 58 | I |
| 1.0 (86 kw) | 2019.08- | 6MT | F | L | SUV FWD HR10DDT | | GDS84246 | Drive Shaft | | 25 | 26 | 53 | 88.5 | 674 | |
| | 2019.08- | 6MT | F | R | SUV FWD HR10DDT | | GDS84245 | Drive Shaft | | 25 | 26 | 53 | 88.5 | 930 | |
| | 2019.08- | 6MT | F | L | SUV FWD HR10DDT | | GCI41191 | Inner Joint | | 26 | 33 | 40 | 64 | 118 | |
| | 2019.08- | 6MT/7DCT | F | L/R | SUV FWD HR10DDT | | GCO82552 | Outer Joint | | 25 | 33 | 53 | 88.5 | 58 | I |
| | 2019.08- | 7DCT | F | L | SUV FWD HR10DDT | | GDS84243 | Drive Shaft | | 25 | 27 | 53 | 88.5 | 626 | |
| | 2019.08- | 7DCT | F | R | SUV FWD HR10DDT | | GDS84236 | Drive Shaft | | 25 | 27 | 53 | 88.5 | 985 | |
| | 2019.08- | 7DCT | F | L | SUV FWD HR10DDT | | GCI82655 | Inner Joint | | 27 | 33 | 40 | 65 | 119.5 | |
| | 2019.08- | 7DCT | F | R | SUV FWD HR10DDT | | GCI82652 | Inner Joint | | 27 | 33 | 40 | 401 | 101 | |
| 1.2 (85 kw) | 2014.05-2019.12 | MT | F | L | SUV FWD HRA2DDT | | GDS41490 | Drive Shaft | | 29 | 26 | 56.2 | 102.5 | 695 | |
| | 2014.05-2019.12 | MT | F | R | SUV FWD HRA2DDT | | GDS41487 | Drive Shaft | | 29 | 26 | 56.2 | 102.5 | 942 | |
| | 2014.05-2019.12 | MT | F | L/R | SUV FWD HRA2DDT | | GCO41348 | Outer Joint | | 29 | 25 | 56.2 | 102.5 | 65 | M |
| | 2014.05-2019.12 | MT | F | L | SUV FWD HRA2DDT | | GCI41174 | Inner Joint | | 26 | 24 | 40 | 64 | 110 | |
| | 2014.05-2019.12 | MT | F | R | SUV FWD HRA2DDT | | GCI41173 | Inner Joint | | 26 | 24 | 33 | 343 | 99 | |
| 1.5 (81 kw) | 2010.06-2019.12 | 6MT | F | L | SUV FWD K9K 410;K9K 896;K9K 646 | | GDS18361 | Drive Shaft | | 29 | 26 | 56 | 103 | 693 | |
| | 2010.06-2019.12 | 6MT | F | R | SUV FWD K9K 410;K9K 896;K9K 646 | | GDS18414 | Drive Shaft | | 29 | 26 | 56 | 103 | 944 | |
| | 2010.06-2019.12 | 6MT | F | L/R | SUV FWD K9K 410;K9K 896;K9K 646 | | GCO59425 | Outer Joint | | 29 | 26 | 56 | 103 | 69 | M |
| | 2010.06-2019.12 | 6MT | F | R | SUV FWD K9K 410;K9K 896;K9K 646 | | GCI18208 | Inner Joint | | 26 | 26 | 33 | 327 | 99 | |
| | 2010.06-2019.12 | 6MT | F | L | SUV Van FWD K9K 636 | | GDS18361 | Drive Shaft | | 29 | 26 | 56 | 103 | 693 | |
| | 2010.06-2019.12 | 6MT | F | R | SUV Van FWD K9K 636 | | GDS18414 | Drive Shaft | | 29 | 26 | 56 | 103 | 944 | |
| | 2010.06-2019.12 | 6MT | F | L/R | SUV Van FWD K9K 636 | | GCO59425 | Outer Joint | | 29 | 26 | 56 | 103 | 69 | M |
| | 2010.06-2019.12 | 6MT | F | R | SUV Van FWD K9K 636 | | GCI18208 | Inner Joint | | 26 | 26 | 33 | 327 | 99 | |
| 1.5 (84 kw) | 2010.06-2019.12 | CVT | F | L | SUV FWD HR15DE | | GDS41484 | Drive Shaft | | 29 | 25 | 56.2 | 102 | 693 | |
| | 2010.06-2019.12 | CVT | F | R | SUV FWD HR15DE | | GDS41483 | Drive Shaft | | 29 | 25 | 56.2 | 102 | 940 | |
| | 2010.06-2019.12 | CVT | F | L/R | SUV FWD HR15DE | | GCO41399 | Outer Joint | | 29 | 22 | 56.2 | 102 | 59 | M |
| | 2010.06-2019.12 | CVT | F | R | SUV FWD HR15DE | | GCI41179 | Inner Joint | | 25 | 22 | 40 | 53 | 117.5 | |
| 1.6 (69 kw) | 2013.05-2019.12 | AT | F | L/R | SUV FWD HR16DE | | GCO41343 | Outer Joint | | 29 | 22 | 56.2 | 102 | 59 | M |
| | 2013.05-2019.12 | MT | F | L | SUV FWD HR16DE | | GDS82046 | Drive Shaft | | 29 | 26 | 56.2 | 102 | 692 | |
| | 2013.05-2019.12 | MT | F | R | SUV FWD HR16DE | | GDS41428 | Drive Shaft | | 29 | 26 | 56.2 | 102 | 938.5 | |

| | YEAR | TRANSM. | F/R | L/R | BODY STYLE & DRIVE TYPE & ENGINE | REMARKS | G-AP Ref. | PRODUCT | ABS | Technical Specifications | | | | | |
|---|---|---|---|---|---|---|---|---|---|---|---|---|---|---|---|
| | | | | | | | | | | A | B | C | H | L | P |
| **NISSAN** | | | | | | | | | | | | | | | |
| **Juke** | | | | | | | | | | | | | | | |
| 1.6 (69 kw) | 2013.05-2019.12 | MT | F | L/R | SUV FWD HR16DE | | GCO41294 | Outer Joint | | 29 | 24 | 56.2 | 102 | 63 | M |
| | 2013.05-2019.12 | MT | F | L | SUV FWD HR16DE | | GCI81616 | Inner Joint | | 26 | 23 | 40 | 64 | 116 | |
| 1.6 (72 kw) | 2014.08-2019.12 | MT | F | L | SUV FWD HR16DE | | GDS82046 | Drive Shaft | | 29 | 26 | 56.2 | 102 | 692 | |
| | 2014.08-2019.12 | MT | F | R | SUV FWD HR16DE | | GDS41428 | Drive Shaft | | 29 | 26 | 56.2 | 102 | 938.5 | |
| | 2014.08-2019.12 | MT | F | L/R | SUV FWD HR16DE | | GCO41294 | Outer Joint | | 29 | 24 | 56.2 | 102 | 63 | M |
| | 2014.08-2019.12 | MT | F | L | SUV FWD HR16DE | | GCI81616 | Inner Joint | | 26 | 23 | 40 | 64 | 116 | |
| 1.6 (80 kw) | 2018.09-2019.12 | 5MT | F | L | SUV FWD HR16DE | | GDS82046 | Drive Shaft | | 29 | 26 | 56.2 | 102 | 692 | |
| | 2018.09-2019.12 | 5MT | F | L | SUV FWD HR16DE | | GCI81616 | Inner Joint | | 26 | 23 | 40 | 64 | 116 | |
| | 2018.09-2019.12 | MT | F | R | SUV FWD HR16DE | | GDS41428 | Drive Shaft | | 29 | 26 | 56.2 | 102 | 938.5 | |
| | 2018.09-2019.12 | MT | F | L/R | SUV FWD HR16DE | | GCO41294 | Outer Joint | | 29 | 24 | 56.2 | 102 | 63 | M |
| 1.6 (83 kw) | 2018.07-2019.12 | 5MT | F | L | SUV FWD HR16DE | | GDS82046 | Drive Shaft | | 29 | 26 | 56.2 | 102 | 692 | |
| | 2018.07-2019.12 | 5MT | F | R | SUV FWD HR16DE | | GDS41428 | Drive Shaft | | 29 | 26 | 56.2 | 102 | 938.5 | |
| | 2018.07-2019.12 | 5MT | F | L | SUV FWD HR16DE | | GCI81616 | Inner Joint | | 26 | 23 | 40 | 64 | 116 | |
| | 2018.07-2019.12 | CVT | F | L | SUV FWD HR16DE | | GDS41484 | Drive Shaft | | 29 | 25 | 56.2 | 102 | 693 | |
| | 2018.07-2019.12 | CVT | F | R | SUV FWD HR16DE | | GDS41483 | Drive Shaft | | 29 | 25 | 56.2 | 102 | 940 | |
| | 2018.07-2019.12 | CVT | F | L/R | SUV FWD HR16DE | | GCO41343 | Outer Joint | | 29 | 22 | 56.2 | 102 | 59 | M |
| | 2018.07-2019.12 | CVT | F | L | SUV FWD HR16DE | | GCI41179 | Inner Joint | | 25 | 22 | 40 | 53 | 117.5 | |
| | 2018.07-2019.12 | MT | F | L/R | SUV FWD HR16DE | | GCO41294 | Outer Joint | | 29 | 24 | 56.2 | 102 | 63 | M |
| 1.6 (85 kw) | 2012.01-2019.12 | MT | F | L | SUV FWD HR16DE | | GDS82046 | Drive Shaft | | 29 | 26 | 56.2 | 102 | 692 | |
| | 2012.01-2019.12 | MT | F | R | SUV FWD HR16DE | | GDS41428 | Drive Shaft | | 29 | 26 | 56.2 | 102 | 938.5 | |
| | 2012.01-2019.12 | MT | F | L/R | SUV FWD HR16DE | | GCO41294 | Outer Joint | | 29 | 24 | 56.2 | 102 | 63 | M |
| | 2012.01-2019.12 | MT | F | L | SUV FWD HR16DE | | GCI81616 | Inner Joint | | 26 | 23 | 40 | 64 | 116 | |
| 1.6 (86 kw) | 2010.06-2019.12 | 5MT | F | L | SUV FWD HR16DE | | GDS82046 | Drive Shaft | | 29 | 26 | 56.2 | 102 | 692 | |
| | 2010.06-2019.12 | 5MT | F | R | SUV FWD HR16DE | | GDS41428 | Drive Shaft | | 29 | 26 | 56.2 | 102 | 938.5 | |
| | 2010.06-2019.12 | 5MT | F | L | SUV FWD HR16DE | | GCI81616 | Inner Joint | | 26 | 23 | 40 | 64 | 116 | |
| | 2010.06-2019.12 | CVT | F | L | SUV FWD HR16DE | | GDS41484 | Drive Shaft | | 29 | 25 | 56.2 | 102 | 693 | |
| | 2010.06-2019.12 | CVT | F | L | SUV FWD HR16DE | | GDS82462 | Drive Shaft | | 29 | 27 | 56.2 | 102 | 691 | |
| | 2010.06-2019.12 | CVT | F | R | SUV FWD HR16DE | | GDS41483 | Drive Shaft | | 29 | 25 | 56.2 | 102 | 940 | |
| | 2010.06-2019.12 | CVT | F | L | SUV FWD HR16DE | | GCO81560 | Outer Joint | | 29 | 24 | 56.2 | 102 | 63 | M |
| | 2010.06-2019.12 | CVT | F | L/R | SUV FWD HR16DE | Bellows Material:Thermoplastic | GCO41279 | Outer Joint | | 29 | 22 | 56.2 | 102 | 59 | M |
| | 2010.06-2019.12 | CVT | F | L/R | SUV FWD HR16DE | Bellows Material:Neoprene | GCO41343 | Outer Joint | | 29 | 22 | 56.2 | 102 | 59 | M |
| | 2010.06-2019.12 | CVT | F | L/R | SUV FWD HR16DE | Bellows Material:Neoprene | GCO41399 | Outer Joint | | 29 | 22 | 56.2 | 102 | 59 | M |
| | 2010.06-2019.12 | CVT | F | L | SUV FWD HR16DE | | GCI81827 | Inner Joint | | 27 | 23 | 40 | 62 | 106.5 | |
| | 2010.06-2019.12 | CVT | F | L/R | SUV FWD HR16DE | | GCI41179 | Inner Joint | | 25 | 22 | 40 | 53 | 117.5 | |
| | 2010.06-2019.12 | MT | F | L/R | SUV FWD HR16DE | | GCO41294 | Outer Joint | | 29 | 24 | 56.2 | 102 | 63 | M |
| | 2013.03-2019.12 | 5MT | F | L | SUV Van FWD HR16DE | | GDS82046 | Drive Shaft | | 29 | 26 | 56.2 | 102 | 692 | |
| | 2013.03-2019.12 | 5MT | F | R | SUV Van FWD HR16DE | | GDS41428 | Drive Shaft | | 29 | 26 | 56.2 | 102 | 938.5 | |
| | 2013.03-2019.12 | 5MT | F | L | SUV Van FWD HR16DE | | GCI81616 | Inner Joint | | 26 | 23 | 40 | 64 | 116 | |
| | 2013.03-2019.12 | CVT | F | L | SUV Van FWD HR16DE | | GDS41484 | Drive Shaft | | 29 | 25 | 56.2 | 102 | 693 | |
| | 2013.03-2019.12 | CVT | F | R | SUV Van FWD HR16DE | | GDS41483 | Drive Shaft | | 29 | 25 | 56.2 | 102 | 940 | |
| | 2013.03-2019.12 | CVT | F | L | SUV Van FWD HR16DE | | GCI41179 | Inner Joint | | 25 | 22 | 40 | 53 | 117.5 | |
| 1.6 (105 kw) | 2019.08- | ET | F | L | SUV FWD HR16DE | | GDS57528 | Drive Shaft | | 25 | 26 | 53 | 88.5 | 685 | |
| | 2019.08- | ET | F | R | SUV FWD HR16DE | | GDS57527 | Drive Shaft | | 25 | 26 | 53 | 88.5 | 932 | |
| | 2019.08- | ET | F | L/R | SUV FWD HR16DE | | GCO83588 | Outer Joint | | 25 | 24 | 53 | 88.5 | 61 | I |
| | 2019.08- | ET | F | L | SUV FWD HR16DE | | GCI83730 | Inner Joint | | 26 | 24 | 39.95 | 64.5 | 122 | |
| | 2019.08- | ET | F | R | SUV FWD HR16DE | | GCI83729 | Inner Joint | | 26 | 24 | 33 | 330 | 112 | |
| 1.6 (140 kw) | 2010.06-2019.12 | CVT | F | L | SUV 4WD MR16DDT | | GCO41251 | Outer Joint | | 29 | 24 | 56 | 103 | 62 | M |
| | 2010.06-2019.12 | CVT/6MT | F | L | SUV 4WD MR16DDT | | GDS82462 | Drive Shaft | | 29 | 27 | 56.2 | 102 | 691 | |
| | 2010.06-2019.12 | CVT/6MT | F | R | SUV 4WD MR16DDT | | GDS82461 | Drive Shaft | | 29 | 27 | 56.2 | 102 | 940 | |
| | 2010.06-2019.12 | CVT/6MT | F | L/R | SUV 4WD MR16DDT | | GCO81560 | Outer Joint | | 29 | 24 | 56.2 | 102 | 63 | M |
| | 2010.06-2019.12 | CVT/6MT | F | L | SUV 4WD MR16DDT | | GCI81827 | Inner Joint | | 27 | 23 | 40 | 62 | 106.5 | |
| | 2010.06-2019.12 | CVT/6MT | F | R | SUV 4WD MR16DDT | | GCI81826 | Inner Joint | | 27 | 23 | 39 | 327 | 96 | |
| | 2010.06-2019.12 | MT | F | L | SUV 4WD MR16DDT | | GDS18362 | Drive Shaft | | 29 | 26 | 56 | 103 | 684 | |
| | 2010.06-2019.12 | MT | F | R | SUV 4WD MR16DDT | | GDS18365 | Drive Shaft | | 29 | 26 | 56 | 103 | 950 | |
| | 2010.06-2019.12 | CVT/6MT | R | L/R | SUV 4WD MR16DDT | | GDS82463 | Drive Shaft | 48T | 25 | 21 | 56 | 110 | 649 | |
| | 2010.06-2019.12 | CVT/6MT | R | L/R | SUV 4WD MR16DDT | | GCI81828 | Inner Joint | | 21 | 29 | 38 | 61 | 98 | |
| | 2010.06-2019.12 | 6MT | F | L | SUV FWD MR16DDT | | GDS18362 | Drive Shaft | | 29 | 26 | 56 | 103 | 684 | |
| | 2010.06-2019.12 | 6MT | F | R | SUV FWD MR16DDT | | GDS18365 | Drive Shaft | | 29 | 26 | 56 | 103 | 950 | |
| | 2010.06-2019.12 | CVT | F | L | SUV FWD MR16DDT | Date to:2014.04 | GDS82462 | Drive Shaft | | 29 | 27 | 56.2 | 102 | 691 | |
| | 2010.06-2019.12 | CVT | F | R | SUV FWD MR16DDT | Date to:2014.04 | GDS82461 | Drive Shaft | | 29 | 27 | 56.2 | 102 | 940 | |
| | 2010.06-2019.12 | CVT/6MT | F | L/R | SUV FWD MR16DDT | Date from:2013.12 | GCO41214 | Outer Joint | | 29 | 35 | 56.1 | 102 | 59 | I |
| | 2010.06-2019.12 | CVT/6MT | F | L/R | SUV FWD MR16DDT | | GCO59425 | Outer Joint | | 29 | 26 | 56 | 103 | 69 | M |
| | 2013.03-2019.12 | 6MT | F | L | SUV Van FWD MR16DDT | | GDS18362 | Drive Shaft | | 29 | 26 | 56 | 103 | 684 | |
| | 2013.03-2019.12 | 6MT | F | R | SUV Van FWD MR16DDT | | GDS18365 | Drive Shaft | | 29 | 26 | 56 | 103 | 950 | |
| | 2013.03-2019.12 | 6MT | F | L/R | SUV Van FWD MR16DDT | | GCO59425 | Outer Joint | | 29 | 26 | 56 | 103 | 69 | M |

| | YEAR | TRANSM. | F/R | L/R | BODY STYLE & DRIVE TYPE & ENGINE | REMARKS | G-AP Ref. | PRODUCT | ABS | Technical Specifications A | B | C | H | L | P |
|---|---|---|---|---|---|---|---|---|---|---|---|---|---|---|---|
| **NISSAN** | | | | | | | | | | | | | | | |
| **Juke** | | | | | | | | | | | | | | | |
| 1.6 (147 kw) | 2012.11-2019.12 | 6MT | F | L/R | SUV 4WD MR16DDT | | GCO41214 | Outer Joint | | 29 | 35 | 56.1 | 102 | 59 | I |
| | 2012.11-2019.12 | AT/CVT | F | L | SUV 4WD MR16DDT | | GDS82462 | Drive Shaft | | 29 | 27 | 56.2 | 102 | 691 | |
| | 2012.11-2019.12 | AT/CVT | F | L | SUV 4WD MR16DDT | | GCI81827 | Inner Joint | | 27 | 23 | 40 | 62 | 106.5 | |
| | 2012.11-2019.12 | CVT | F | L | SUV 4WD MR16DDT | | GCO41251 | Outer Joint | | 29 | 24 | 56 | 103 | 62 | M |
| | 2012.11-2019.12 | CVT | F | L/R | SUV 4WD MR16DDT | | GCO81560 | Outer Joint | | 29 | 24 | 56.2 | 102 | 63 | M |
| | 2012.11-2019.12 | MT | F | L | SUV 4WD MR16DDT | | GDS18362 | Drive Shaft | | 29 | 26 | 56 | 103 | 684 | |
| | 2012.11-2019.12 | MT | F | R | SUV 4WD MR16DDT | | GDS18365 | Drive Shaft | | 29 | 26 | 56 | 103 | 950 | |
| | 2012.11-2019.12 | MT | F | R | SUV 4WD MR16DDT | | GDS82461 | Drive Shaft | | 29 | 27 | 56.2 | 102 | 940 | |
| | 2012.11-2019.12 | MT | F | R | SUV 4WD MR16DDT | | GCI81826 | Inner Joint | | 27 | 23 | 39 | 327 | 96 | |
| | 2012.11-2019.12 | AT/CVT | R | L/R | SUV 4WD MR16DDT | | GDS82463 | Drive Shaft | 48T | 25 | 21 | 56 | 110 | 649 | |
| | 2012.11-2019.12 | AT/CVT | R | L/R | SUV 4WD MR16DDT | | GCI81828 | Inner Joint | | 21 | 29 | 38 | 61 | 98 | |
| | 2012.11-2019.12 | 6MT | F | L/R | SUV FWD MR16DDT | | GCO41214 | Outer Joint | | 29 | 35 | 56.1 | 102 | 59 | I |
| | 2012.11-2019.12 | CVT | F | L | SUV FWD MR16DDT | | GDS82462 | Drive Shaft | | 29 | 27 | 56.2 | 102 | 691 | |
| | 2012.11-2019.12 | CVT | F | R | SUV FWD MR16DDT | | GDS82461 | Drive Shaft | | 29 | 27 | 56.2 | 102 | 940 | |
| 1.6 (157 kw) | 2014.08-2019.12 | AT/CVT | F | L | SUV 4WD MR16DDT | | GDS82462 | Drive Shaft | | 29 | 27 | 56.2 | 102 | 691 | |
| | 2014.08-2019.12 | AT/CVT | F | R | SUV 4WD MR16DDT | | GDS82461 | Drive Shaft | | 29 | 27 | 56.2 | 102 | 940 | |
| | 2014.08-2019.12 | AT/CVT | F | L | SUV 4WD MR16DDT | | GCI81827 | Inner Joint | | 27 | 23 | 40 | 62 | 106.5 | |
| | 2014.08-2019.12 | AT/CVT | F | R | SUV 4WD MR16DDT | | GCI81826 | Inner Joint | | 27 | 23 | 39 | 327 | 96 | |
| | 2014.08-2019.12 | CVT | F | L | SUV 4WD MR16DDT | | GCO41251 | Outer Joint | | 29 | 24 | 56 | 103 | 62 | M |
| | 2014.08-2019.12 | CVT | F | L/R | SUV 4WD MR16DDT | | GCO81560 | Outer Joint | | 29 | 24 | 56.2 | 102 | 63 | M |
| | 2014.08-2019.12 | AT/CVT | R | L/R | SUV 4WD MR16DDT | | GDS82463 | Drive Shaft | 48T | 25 | 21 | 56 | 110 | 649 | |
| | 2014.08-2019.12 | AT/CVT | R | L/R | SUV 4WD MR16DDT | | GCI81828 | Inner Joint | | 21 | 29 | 38 | 61 | 98 | |
| 1.6 (160 kw) | 2014.08-2019.12 | 6MT | F | R | SUV FWD MR16DDT | | GDS81238 | Drive Shaft | | 29 | 27 | 56 | 103 | 939 | |
| | 2014.08-2019.12 | 6MT | F | R | SUV FWD MR16DDT | | GCI81146 | Inner Joint | | 27 | 26 | 33 | 322 | 107 | |
| | 2014.08-2019.12 | MT | F | L/R | SUV FWD MR16DDT | | GCO41214 | Outer Joint | | 29 | 35 | 56.1 | 102 | 59 | I |
| **Kicks** | | | | | | | | | | | | | | | |
| 1.6 (84 kw) | 2017.01- | CVT | F | L | SUV FWD HR16DE | Model code:P15B/P15BB | GDS83569 | Drive Shaft | | 25 | 25 | 50 | 94.5 | 662 | |
| | 2017.01- | CVT | F | R | SUV FWD HR16DE | Model code:P15B/P15BB | GDS83568 | Drive Shaft | | 25 | 25 | 50 | 94.5 | 947 | |
| | 2017.01- | CVT | F | L/R | SUV FWD HR16DE | Model code:P15B/P15BB | GCO82424 | Outer Joint | | 25 | 22 | 50 | 94.5 | 59 | M |
| | 2017.01- | CVT | F | L/R | SUV FWD HR16DE | Model code:P15B/P15BB | GCI82278 | Inner Joint | | 25 | 21 | 40 | 53 | 108 | |
| **Kubistar** | | | | | | | | | | | | | | | |
| 1.2 (44 kw) | 2003.08- | MT | F | R | Van FWD D7F 764 | | GDS99072 | Drive Shaft | 44T | 21 | 23 | 57 | 84.5 | 720 | |
| | 2003.08- | MT | F | L/R | Van FWD D7F 764 | | GCO50069 | Outer Joint | 44T | 23 | 30 | 57.5 | 86.5 | 58.5 | I |
| 1.2 (55 kw) | 2006.04- | MT | F | R | Van FWD D4F 712 | | GDS99072 | Drive Shaft | 44T | 21 | 23 | 57 | 84.5 | 720 | |
| | 2006.04- | MT | F | L/R | Van FWD D4F 712 | | GCO50069 | Outer Joint | 44T | 23 | 30 | 57.5 | 86.5 | 58.5 | I |
| 1.5 (45 kw) | 2005.08-2009.10 | MT | F | L | Van FWD K9K 710;K9K 714 | | GDS50004 | Drive Shaft | 26T | 21 | | 57 | 84.5 | 625.7 | |
| | 2005.08-2009.10 | MT | F | L | Van FWD K9K 710;K9K 714 | | GDS50177 | Drive Shaft | | 21 | | 57 | 84.5 | 625.7 | |
| | 2005.08-2009.10 | MT | F | R | Van FWD K9K 710;K9K 714 | | GDS50146 | Drive Shaft | | 21 | 23 | 57 | 84.5 | 732.5 | |
| | 2005.08-2009.10 | MT | F | R | Van FWD K9K 710;K9K 714 | | GDS50250 | Drive Shaft | 26T | 21 | 23 | 57 | 84.5 | 732.5 | |
| | 2005.08-2009.10 | MT | F | R | Van FWD K9K 710;K9K 714 | | GDS50364 | Drive Shaft | 44T | 23 | 26 | 57.5 | 86.5 | 866 | |
| | 2005.08-2009.10 | MT | F | R | Van FWD K9K 710;K9K 714 | | GDS99072 | Drive Shaft | 44T | 21 | 23 | 57 | 84.5 | 720 | |
| | 2005.08-2009.10 | MT | F | L/R | Van FWD K9K 710;K9K 714 | | GCO50069 | Outer Joint | 44T | 23 | 30 | 57.5 | 86.5 | 58.5 | I |
| | 2005.08-2009.10 | MT | F | R | Van FWD K9K 710;K9K 714 | | GCI99169 | Inner Joint | | 26 | 30 | 33 | 326 | 95 | |
| 1.5 (48 kw) | 2003.08- | 5MT | F | L | Van FWD K9K 704 | For vehicles without heavy duty suspension,For vehicles without ABS | GDS50514 | Drive Shaft | 44T | 23 | 26 | 57.5 | 86.5 | 606 | |
| | 2003.08- | 5MT | F | R | Van FWD K9K 704 | For vehicles without heavy duty suspension,For vehicles without ABS | GDS50263 | Drive Shaft | 44T | 21 | 23 | 52.2 | 85.5 | 723.5 | |
| | 2003.08- | MT | F | L/R | Van FWD K9K 704 | | GCO50069 | Outer Joint | 44T | 23 | 30 | 57.5 | 86.5 | 58.5 | I |
| 1.5 (50 kw) | 2005.09-2009.10 | MT | F | L | Van FWD K9K 700;K9K 716 | | GDS50004 | Drive Shaft | 26T | 21 | | 57 | 84.5 | 625.7 | |
| | 2005.09-2009.10 | MT | F | L | Van FWD K9K 700;K9K 716 | | GDS50177 | Drive Shaft | | 21 | | 57 | 84.5 | 625.7 | |
| | 2005.09-2009.10 | MT | F | R | Van FWD K9K 700;K9K 716 | | GDS50146 | Drive Shaft | | 21 | 23 | 57 | 84.5 | 732.5 | |
| | 2005.09-2009.10 | MT | F | R | Van FWD K9K 700;K9K 716 | | GDS50250 | Drive Shaft | 26T | 21 | 23 | 57 | 84.5 | 732.5 | |
| | 2005.09-2009.10 | MT | F | R | Van FWD K9K 700;K9K 716 | | GDS50364 | Drive Shaft | 44T | 23 | 26 | 57.5 | 86.5 | 866 | |
| | 2005.09-2009.10 | MT | F | R | Van FWD K9K 700;K9K 716 | | GDS99072 | Drive Shaft | 44T | 21 | 23 | 57 | 84.5 | 720 | |
| | 2005.09-2009.10 | MT | F | R | Van FWD K9K 700;K9K 716 | | GCI99169 | Inner Joint | | 26 | 30 | 33 | 326 | 95 | |
| 1.5 (60 kw) | 2003.08-2009.10 | MT | F | L | Van FWD K9K 722 | | GDS50261 | Drive Shaft | 44T | 23 | | 57.5 | 86.5 | 630 | |
| | 2003.08-2009.10 | MT | F | L/R | Van FWD K9K 722 | | GCO50069 | Outer Joint | 44T | 23 | 30 | 57.5 | 86.5 | 58.5 | I |
| 1.6 (70 kw) | 2003.08-2009.10 | MT | F | L | Van FWD K4M 752 | Date To:2005.12,For vehicles without heavy duty suspension | GDS50514 | Drive Shaft | 44T | 23 | 26 | 57.5 | 86.5 | 606 | |
| **Latio** | | | | | | | | | | | | | | | |
| 1.2 (58 kw) | 2011.09- | CVT | F | L | Saloon FWD HR12DE | | GDS41337 | Drive Shaft | | 25 | 25 | 49.1 | 94.5 | 699 | |
| | 2011.09- | CVT | F | L/R | Saloon FWD HR12DE | | GCO41289 | Outer Joint | | 25 | 29 | 49.1 | 94.5 | 53 | I |
| **Latio Saloon (C11)** | | | | | | | | | | | | | | | |
| 1.5 (80 kw) | 2004.11- | AT | F | L/R | Saloon FWD HR15DE | Model code:C11/SC11 | GCO41303 | Outer Joint | | 25 | 21 | 49 | 95 | 56 | M |
| **Leaf** | | | | | | | | | | | | | | | |
| EV (80 kw) | 2010.11-2017.12 | ET | F | L | Hatchback FWD EM61;EM57 | Vehicle Production Country:Japan | GDS41493 | Drive Shaft | | 29 | 25 | 56.2 | 102 | 758 | |
| | 2010.11-2017.12 | ET | F | L | Hatchback FWD EM61;EM57 | Vehicle Production Country:Great Britain | GDS84118 | Drive Shaft | | 29 | 27 | 56.2 | 102.5 | 757 | |
| | 2010.11-2017.12 | ET | F | R | Hatchback FWD EM61;EM57 | Vehicle Production Country:Japan | GDS41494 | Drive Shaft | | 29 | 25 | 56.2 | 102 | 871 | |

| | YEAR | TRANSM. | F/R | L/R | BODY STYLE & DRIVE TYPE & ENGINE | REMARKS | G-AP Ref. | PRODUCT | ABS | Technical Specifications A | B | C | H | L | P |
|---|---|---|---|---|---|---|---|---|---|---|---|---|---|---|---|
| **NISSAN** | | | | | | | | | | | | | | | |
| **Leaf** | | | | | | | | | | | | | | | |
| EV (80 kw) | 2010.11-2017.12 | ET | F | R | Hatchback FWD EM61;EM57 | Vehicle Production Country:Great Britain | GDS84301 | Drive Shaft | | 29 | 27 | 56.2 | 102.5 | 873 | |
| | 2010.11-2017.12 | ET | F | L | Hatchback FWD EM61;EM57 | Vehicle Production Country:Great Britain | GCO82703 | Outer Joint | | 29 | 24 | 56.2 | 102.5 | 63 | M |
| | 2010.11-2017.12 | ET | F | L/R | Hatchback FWD EM61;EM57 | Vehicle Production Country:Japan | GCO41294 | Outer Joint | | 29 | 24 | 56.2 | 102 | 63 | M |
| | 2010.11-2017.12 | ET | F | L | Hatchback FWD EM61;EM57 | Vehicle Production Country:Japan | GCI41175 | Inner Joint | | 25 | 24 | 40 | 63 | 105.5 | |
| | 2010.11-2017.12 | ET | F | L | Hatchback FWD EM61;EM57 | Vehicle Production Country:Great Britain | GCI81922 | Inner Joint | | 27 | 24 | 40 | 62 | 108.5 | |
| | 2010.11-2017.12 | ET | F | R | Hatchback FWD EM61;EM57 | | GCI41176 | Inner Joint | | 25 | 24 | 33 | 188 | 93 | |
| EV (110 kw) | 2017.08- | ET | F | L | Hatchback FWD EM57 | AAR | GDS84118 | Drive Shaft | | 29 | 27 | 56.2 | 102.5 | 757 | |
| | 2017.08- | ET | F | R | Hatchback FWD EM57 | AAR | GDS84301 | Drive Shaft | | 29 | 27 | 56.2 | 102.5 | 873 | |
| | 2017.08- | ET | F | L/R | Hatchback FWD EM57 | | GCO82703 | Outer Joint | | 29 | 24 | 56.2 | 102.5 | 63 | M |
| | 2017.08- | ET | F | L | Hatchback FWD EM57 | | GCI81922 | Inner Joint | | 27 | 24 | 40 | 62 | 108.5 | |
| | 2017.08- | ET | F | R | Hatchback FWD EM57 | | GCI82518 | Inner Joint | | 27 | 24 | 33 | 187 | 99 | |
| EV (160 kw) | 2019.01- | ET | F | L | Hatchback FWD EM57 | Date from:2019.02 | GDS56351 | Drive Shaft | | 29 | 27 | 56 | 102 | 754 | |
| | 2019.01- | ET | F | L | Hatchback FWD EM57 | Date To:2019.01 | GDS84118 | Drive Shaft | | 29 | 27 | 56.2 | 102.5 | 757 | |
| | 2019.01- | ET | F | R | Hatchback FWD EM57 | Date to:2009.01 | GDS84301 | Drive Shaft | | 29 | 27 | 56.2 | 102.5 | 873 | |
| | 2019.01- | ET | F | R | Hatchback FWD EM57 | Date from:2019.02 | GDS84325 | Drive Shaft | | 29 | 27 | 56 | 102 | 871 | |
| | 2019.01- | ET | F | L/R | Hatchback FWD EM57 | Date To:2019.01 | GCO82703 | Outer Joint | | 29 | 24 | 56.2 | 102.5 | 63 | M |
| | 2019.01- | ET | F | L/R | Hatchback FWD EM57 | Date from:2019.02 | GCO82784 | Outer Joint | | 29 | 33 | 56 | 102 | 57 | I |
| | 2019.01- | ET | F | L | Hatchback FWD EM57 | Date from:2019.02 | GCI81700 | Inner Joint | | 27 | 33 | 40 | 62.5 | 112 | |
| | 2019.01- | ET | F | L | Hatchback FWD EM57 | Date To:2019.01 | GCI81922 | Inner Joint | | 27 | 24 | 40 | 62 | 108.5 | |
| | 2019.01- | ET | F | R | Hatchback FWD EM57 | Date to:2009.01 | GCI82518 | Inner Joint | | 27 | 24 | 33 | 187 | 99 | |
| | 2019.01- | ET | F | R | Hatchback FWD EM57 | Date from:2019.02 | GCI82711 | Inner Joint | | 27 | 33 | 33 | 187 | 107 | |
| **March** | | | | | | | | | | | | | | | |
| 1.2 (58 kw) | 2010.05- | AT | F | L | Hatchback FWD HR12DE | | GDS41488 | Drive Shaft | | 25 | 25 | 49 | 95 | 702 | |
| | 2010.05- | AT | F | R | Hatchback FWD HR12DE | | GDS41485 | Drive Shaft | | 25 | 25 | 49 | 95 | 859 | |
| | 2010.05- | AT | F | L/R | Hatchback FWD HR12DE | Date from:2010.07 | GCO41304 | Outer Joint | | 25 | 29 | 49 | 95 | 56 | I |
| | 2010.05- | AT | F | L/R | Hatchback FWD HR12DE | | GCI18111 | Inner Joint | | 25 | 20 | 40 | 53 | 110.5 | |
| 1.2 (59 kw) | 2010.05- | 4AT | F | R | Hatchback 4WD HR12DE | | GCI41210 | Inner Joint | | 25 | 20 | 40 | 63 | 99.5 | |
| 1.2 (66 kw) | 2007.01-2010.06 | AT/MT | F | L/R | Hatchback FWD CR12DE | | GCO41188 | Outer Joint | | 25 | 22 | 49 | 95 | 56 | M |
| 1.2 (81 kw) | 2005.08-2010.06 | AT/MT | F | L/R | Hatchback FWD CR12DE | | GCO41188 | Outer Joint | | 25 | 22 | 49 | 95 | 56 | M |
| 1.4 (71 kw) | 2007.01-2010.06 | AT | F | L/R | Hatchback 4WD CR14DE | | GCO41188 | Outer Joint | | 25 | 22 | 49 | 95 | 56 | M |
| **Maxima** | | | | | | | | | | | | | | | |
| 2.5 (140 kw) | 1994.10-1999.12 | AT | F | L/R | Saloon FWD VQ25DE | Date to:1999.12 | GCO41021 | Outer Joint | | 29 | 27 | 56 | 103.5 | 70.5 | I |
| | 1994.10-1999.12 | AT/MT | F | L/R | Saloon FWD VQ25DE | | GCO41022 | Outer Joint | 46T | 29 | 27 | 56 | 103.5 | 70.5 | I |
| | 1994.10-1999.12 | | F | | Saloon FWD VQ25DE | | GCO41157 | Outer Joint | 46T | 29 | 27 | 56 | 103.5 | 70.5 | I |
| | 1994.10-1999.12 | | F | R | Saloon FWD VQ25DE | | GCI41019 | Inner Joint | | 29 | 27 | 33 | 437.5 | 101 | |
| | 1997.10-2000.12 | AT/MT | F | L/R | Estate FWD VQ25DE | Date to:1999.12 | GCO41021 | Outer Joint | | 29 | 27 | 56 | 103.5 | 70.5 | I |
| | 1997.10-2000.12 | | F | | Estate FWD VQ25DE | | GCO41157 | Outer Joint | 46T | 29 | 27 | 56 | 103.5 | 70.5 | I |
| | 1997.10-2000.12 | | F | R | Estate FWD VQ25DE | | GCI41019 | Inner Joint | | 29 | 27 | 33 | 437.5 | 101 | |
| 3.0 (142 kw) | 1997.10-2000.12 | | F | | Estate FWD VQ30DE | | GCO41036 | Outer Joint | | 29 | 27 | 56 | 101 | 68 | M |
| | 1997.10-2000.12 | | F | | Estate FWD VQ30DE | | GCO41157 | Outer Joint | 46T | 29 | 27 | 56 | 103.5 | 70.5 | I |
| | 1997.10-2000.12 | | F | R | Estate FWD VQ30DE | | GCI41019 | Inner Joint | | 29 | 27 | 33 | 437.5 | 101 | |
| 3.0 (157 kw) | 1999.12-2003.11 | | F | R | Saloon FWD VQ30DE | | GCI41019 | Inner Joint | | 29 | 27 | 33 | 437.5 | 101 | |
| 3.5 (214 kw) | 2008.09- | CVT | F | L/R | Saloon FWD VQ35DE | | GCO41366 | Outer Joint | | 32 | 27 | 56 | 102 | 67.5 | M |
| 3.5 (216 kw) | 2008.09- | CVT | F | L/R | Saloon FWD VQ35DE | | GCO41366 | Outer Joint | | 32 | 27 | 56 | 102 | 67.5 | M |
| 3.5 (221 kw) | 2016.01- | CVT | F | L | Saloon FWD VQ35DE | | GDS41561 | Drive Shaft | | 32 | 29 | 56 | 102 | 656 | |
| | 2016.01- | CVT | F | R | Saloon FWD VQ35DE | | GDS83410 | Drive Shaft | | 32 | 29 | 56 | 102 | 1011 | |
| | 2016.01- | CVT | F | R | Saloon FWD VQ35DE | | GCO41331 | Outer Joint | | 32 | 26 | 56 | 102 | 65 | I |
| | 2016.01- | CVT | F | R | Saloon FWD VQ35DE | | GCI82207 | Inner Joint | | 29 | 26 | 33 | 456 | 101.5 | |
| 3.5 (223 kw) | 2016.01- | CVT | F | L | Saloon FWD VQ35DE | | GDS41561 | Drive Shaft | | 32 | 29 | 56 | 102 | 656 | |
| | 2016.01- | CVT | F | R | Saloon FWD VQ35DE | | GDS83410 | Drive Shaft | | 32 | 29 | 56 | 102 | 1011 | |
| | 2016.01- | CVT | F | R | Saloon FWD VQ35DE | | GCO41331 | Outer Joint | | 32 | 26 | 56 | 102 | 65 | I |
| | 2016.01- | CVT | F | R | Saloon FWD VQ35DE | | GCI82207 | Inner Joint | | 29 | 26 | 33 | 456 | 101.5 | |
| **Maxima QX** | | | | | | | | | | | | | | | |
| 2.0 (103 kw) | 1997.10-2000.12 | | F | | Estate FWD VQ20DE | | GCO41036 | Outer Joint | | 29 | 27 | 56 | 101 | 68 | M |
| | 1997.10-2000.12 | | F | | Estate FWD VQ20DE | | GCO41157 | Outer Joint | 46T | 29 | 27 | 56 | 103.5 | 70.5 | I |
| | 1997.10-2000.12 | | F | R | Estate FWD VQ20DE | | GCI41019 | Inner Joint | | 29 | 27 | 33 | 437.5 | 101 | |
| | 2000.03-2003.11 | 4AT/5MT | F | R | Saloon FWD VQ20DE | DOJ | GCI41096 | Inner Joint | | 29 | 27 | 33 | 436 | 97 | |
| | 2000.03-2003.11 | 4AT/5MT | F | R | Saloon FWD VQ20DE | TJ | GCI41104 | Inner Joint | | 29 | 27 | 33 | 436 | 99 | |
| | 2000.03-2003.11 | AT | F | L/R | Saloon FWD VQ20DE | Date to:2001.01 | GCO41138 | Outer Joint | 44T | 29 | 25 | 56 | 103.5 | 70.5 | I |
| | 2000.03-2003.11 | AT | F | L/R | Saloon FWD VQ20DE | Date from:2001.02 | GCO41187 | Outer Joint | 44T | 29 | 23 | 56 | 103 | 62 | M |
| | 2000.03-2003.11 | AT/4AT | F | L | Saloon FWD VQ20DE | | GCI41062 | Inner Joint | | 29 | 27 | 39 | 65.5 | 114.5 | |
| | 2000.03-2003.11 | AT/MT | F | L/R | Saloon FWD VQ20DE | | GCO41021 | Outer Joint | | 29 | 27 | 56 | 103.5 | 70.5 | I |
| | 2000.03-2003.11 | AT/MT | F | L/R | Saloon FWD VQ20DE | | GCO41022 | Outer Joint | 46T | 29 | 27 | 56 | 103.5 | 70.5 | I |
| | 2000.03-2003.11 | AT/MT | F | L/R | Saloon FWD VQ20DE | | GCO41149 | Outer Joint | 46T | 29 | 27 | 56 | 103.5 | 71 | I |
| | 2000.03-2003.11 | MT | F | L | Saloon FWD VQ20DE | | GDS41146 | Drive Shaft | 44T | 29 | 29 | 56 | 103.5 | 640.5 | |

| | YEAR | TRANSM. | F/R | L/R | BODY STYLE & DRIVE TYPE & ENGINE | REMARKS | G-AP Ref. | PRODUCT | ABS | Technical Specifications A | B | C | H | L | P |
|---|---|---|---|---|---|---|---|---|---|---|---|---|---|---|---|
| **NISSAN** | | | | | | | | | | | | | | | |
| **Maxima QX** | | | | | | | | | | | | | | | |
| 2.0 (103 kw) | 2000.03-2003.11 | MT | F | R | Saloon FWD VQ20DE | | GDS41518 | Drive Shaft | 44T | 29 | 29 | 56 | 103.5 | 967 | |
| | 2000.03-2003.11 | MT | F | L | Saloon FWD VQ20DE | | GCO41185 | Outer Joint | 44T | 29 | 25 | 56 | 101 | 68 | M |
| | 2000.03-2003.11 | MT | F | L/R | Saloon FWD VQ20DE | Date from:2000.08 | GCO41138 | Outer Joint | 44T | 29 | 25 | 56 | 103.5 | 70.5 | I |
| | 2000.03-2003.11 | MT | F | L/R | Saloon FWD VQ20DE | Date to:2000.06 | GCO41152 | Outer Joint | 44T | 29 | 27 | 56 | 103.5 | 70.5 | I |
| | 2000.03-2003.11 | | F | L/R | Saloon FWD VQ20DE | | GCO41157 | Outer Joint | 46T | 29 | 27 | 56 | 103.5 | 70.5 | I |
| | 2000.03-2003.11 | | F | L/R | Saloon FWD VQ20DE | Date to:2000.08,for modelcode:CA33 | GCO41314 | Outer Joint | 46T | 29 | 27 | 56 | 101 | 68 | M |
| 3.0 (147 kw) | 2000.03-2003.11 | 4AT/5MT | F | R | Saloon FWD VQ30DE | | GDS41518 | Drive Shaft | 44T | 29 | 29 | 56 | 103.5 | 967 | |
| | 2000.03-2003.11 | 4AT/5MT | F | R | Saloon FWD VQ30DE | DOJ | GCI41096 | Inner Joint | | 29 | 27 | 33 | 436 | 97 | |
| | 2000.03-2003.11 | 4AT/5MT | F | R | Saloon FWD VQ30DE | TJ | GCI41104 | Inner Joint | | 29 | 27 | 33 | 436 | 99 | |
| | 2000.03-2003.11 | AT/MT | F | L/R | Saloon FWD VQ30DE | Date to:2003.08 | GCO41021 | Outer Joint | | 29 | 27 | 56 | 103.5 | 70.5 | I |
| | 2000.03-2003.11 | MT | F | L/R | Saloon FWD VQ30DE | Date to:2000.07 | GCO41022 | Outer Joint | 46T | 29 | 27 | 56 | 103.5 | 70.5 | I |
| | 2000.03-2003.11 | MT | F | L/R | Saloon FWD VQ30DE | Date to:2000.06 | GCO41152 | Outer Joint | 44T | 29 | 27 | 56 | 103.5 | 70.5 | I |
| | 2000.03-2003.11 | | F | L | Saloon FWD VQ30DE | | GCO41157 | Outer Joint | 46T | 29 | 27 | 56 | 103.5 | 70.5 | I |
| | 2000.03-2003.11 | | F | L | Saloon FWD VQ30DE | | GCO41185 | Outer Joint | 44T | 29 | 25 | 56 | 101 | 68 | M |
| | 2000.03-2003.11 | | F | L/R | Saloon FWD VQ30DE | | GCO41314 | Outer Joint | 46T | 29 | 27 | 56 | 101 | 68 | M |
| **Maxima/Maxima QX** | | | | | | | | | | | | | | | |
| 2.0 (103 kw) | 1995.02-2000.08 | 4AT | F | L | Saloon FWD VQ20DE | | GDS41275 | Drive Shaft | 46T | 29 | 29 | 56 | 103.5 | 632 | |
| | 1995.02-2000.08 | 4AT/5MT | F | R | Saloon FWD VQ20DE | Date to:1999.09 | GDS41259 | Drive Shaft | 46T | 29 | 29 | 56 | 103.5 | 970.5 | |
| | 1995.02-2000.08 | 4AT/5MT | F | R | Saloon FWD VQ20DE | Date from:1999.10 | GDS41518 | Drive Shaft | 44T | 29 | 29 | 56 | 103.5 | 967 | |
| | 1995.02-2000.08 | 4AT/5MT | F | L/R | Saloon FWD VQ20DE | | GCO41022 | Outer Joint | 46T | 29 | 27 | 56 | 103.5 | 70.5 | I |
| | 1995.02-2000.08 | 4AT/5MT | F | L/R | Saloon FWD VQ20DE | Date to:1999.09 | GCO41314 | Outer Joint | 46T | 29 | 27 | 56 | 101 | 68 | M |
| | 1995.02-2000.08 | 4AT/5MT | F | R | Saloon FWD VQ20DE | DOJ | GCI41096 | Inner Joint | | 29 | 27 | 33 | 436 | 97 | |
| | 1995.02-2000.08 | 4AT/5MT | F | R | Saloon FWD VQ20DE | TJ | GCI41104 | Inner Joint | | 29 | 27 | 33 | 436 | 99 | |
| | 1995.02-2000.08 | AT | F | L/R | Saloon FWD VQ20DE | | GCO41152 | Outer Joint | 44T | 29 | 27 | 56 | 103.5 | 70.5 | I |
| | 1995.02-2000.08 | AT | F | | Saloon FWD VQ20DE | | GCO41185 | Outer Joint | 44T | 29 | 25 | 56 | 101 | 68 | M |
| | 1995.02-2000.08 | AT/4AT | F | L | Saloon FWD VQ20DE | | GCI41062 | Inner Joint | | 29 | 27 | 39 | 65.5 | 114.5 | |
| | 1995.02-2000.08 | AT/MT | F | L/R | Saloon FWD VQ20DE | | GCO41021 | Outer Joint | | 29 | 27 | 56 | 103.5 | 70.5 | I |
| | 1995.02-2000.08 | | F | | Saloon FWD VQ20DE | for Modelcode:A32 | GCO41036 | Outer Joint | | 29 | 27 | 56 | 101 | 68 | M |
| | 1995.02-2000.08 | | F | | Saloon FWD VQ20DE | | GCO41157 | Outer Joint | 46T | 29 | 27 | 56 | 103.5 | 70.5 | I |
| 3.0 (142 kw) | 1995.01-2000.08 | AT | F | L | Saloon FWD VQ30DE | | GCI41062 | Inner Joint | | 29 | 27 | 39 | 65.5 | 114.5 | |
| | 1995.01-2000.08 | AT/MT | F | L/R | Saloon FWD VQ30DE | | GCO41021 | Outer Joint | | 29 | 27 | 56 | 103.5 | 70.5 | I |
| | 1995.01-2000.08 | AT/MT | F | L/R | Saloon FWD VQ30DE | | GCO41022 | Outer Joint | 46T | 29 | 27 | 56 | 103.5 | 70.5 | I |
| | 1995.01-2000.08 | MT | F | L/R | Saloon FWD VQ30DE | | GCO41152 | Outer Joint | 44T | 29 | 27 | 56 | 103.5 | 70.5 | I |
| | 1995.01-2000.08 | | F | L/R | Saloon FWD VQ30DE | | GCO41036 | Outer Joint | | 29 | 27 | 56 | 101 | 68 | M |
| | 1995.01-2000.08 | | F | L/R | Saloon FWD VQ30DE | | GCO41157 | Outer Joint | 46T | 29 | 27 | 56 | 103.5 | 70.5 | I |
| | 1995.01-2000.08 | | F | R | Saloon FWD VQ30DE | | GCI41019 | Inner Joint | | 29 | 27 | 33 | 437.5 | 101 | |
| **Micra** | | | | | | | | | | | | | | | |
| 1.0 (40 kw) | 1992.08-2000.07 | AT/MT | F | L | Hatchback FWD CG10DE | Date from:1998.01;Inner teeth of tranm.side:22,DOJ | GDS41156 | Drive Shaft | | 23 | 24 | 48 | 93 | 594.5 | |
| | 1992.08-2000.07 | AT/MT | F | R | Hatchback FWD CG10DE | Date from:1998.04;Inner teeth of tranm.side:24 | GDS41193 | Drive Shaft | | 23 | 24 | 48 | 93 | 840 | |
| | 1992.08-2000.07 | AT/MT | F | L/R | Hatchback FWD CG10DE | | GCO41020 | Outer Joint | 42T | 23 | 19 | 48 | 93 | 53.5 | M |
| | 1992.08-2000.07 | AT/MT | F | L/R | Hatchback FWD CG10DE | Type:Micra;Date from:1998.03,Type:March | GCO41040 | Outer Joint | | 23 | 19 | 48 | 93 | 53.5 | I |
| | 1992.08-2000.07 | AT/MT | F | L/R | Hatchback FWD CG10DE | Type:Micra;Date from:1998.03,Type:March | GCO41058 | Outer Joint | 42T | 23 | 19 | 48 | 93 | 53.5 | I |
| | 1992.08-2000.07 | AT/MT | F | L/R | Hatchback FWD CG10DE | | GCO41090 | Outer Joint | | 23 | 19 | 48 | 93 | 53.5 | M |
| | 1992.08-2000.07 | AT/MT | F | L/R | Hatchback FWD CG10DE | | GCO41114 | Outer Joint | | 23 | 19 | 48 | 93 | 53.5 | M |
| | 1992.08-2000.07 | AT/MT | F | L/R | Hatchback FWD CG10DE | | GCO41154 | Outer Joint | 42T | 23 | 19 | 48 | 93 | 53.5 | M |
| | 1992.08-2000.07 | AT/MT | F | L/R | Hatchback FWD CG10DE | Date from:1998.01 | GCI41045 | Inner Joint | | 24 | 22 | 40 | 51.5 | 97 | |
| | 1992.08-2000.07 | MT | F | L | Hatchback FWD CG10DE | | GDS41083 | Drive Shaft | | 23 | 21 | 48 | 93 | 608.5 | |
| | 1992.08-2000.07 | MT | F | R | Hatchback FWD CG10DE | Inner teeth of tranm.side:21 | GDS41084 | Drive Shaft | | 23 | 21 | 48 | 93 | 822.5 | |
| | 1992.08-2000.07 | MT/CVT | F | L | Hatchback FWD CG10DE | TJ | GDS41066 | Drive Shaft | | 23 | 24 | 48 | 93 | 596 | |
| 1.0 (44 kw) | 2000.07-2003.02 | AT/MT | F | L | Hatchback FWD CG10DE | | GDS41096 | Drive Shaft | 42T | 23 | 24 | 48 | 93 | 596 | |
| | 2000.07-2003.02 | AT/MT | F | L | Hatchback FWD CG10DE | Inner teeth of tranm.side:22,DOJ | GDS41156 | Drive Shaft | | 23 | 24 | 48 | 93 | 594.5 | |
| | 2000.07-2003.02 | AT/MT | F | L/R | Hatchback FWD CG10DE | Thread Size:M20×1.5 | GCO41020 | Outer Joint | 42T | 23 | 19 | 48 | 93 | 53.5 | M |
| | 2000.07-2003.02 | AT/MT | F | L/R | Hatchback FWD CG10DE | | GCO41058 | Outer Joint | 42T | 23 | 19 | 48 | 93 | 53.5 | I |
| | 2000.07-2003.02 | AT/MT | F | L/R | Hatchback FWD CG10DE | Thread Size:M20×1.5 | GCO41090 | Outer Joint | | 23 | 19 | 48 | 93 | 53.5 | M |
| | 2000.07-2003.02 | AT/MT | F | L/R | Hatchback FWD CG10DE | Thread Size:M18×1.5 | GCO41114 | Outer Joint | | 23 | 19 | 48 | 93 | 53.5 | M |
| | 2000.07-2003.02 | AT/MT | F | L/R | Hatchback FWD CG10DE | Thread Size:M18×1.5 | GCO41154 | Outer Joint | 42T | 23 | 19 | 48 | 93 | 53.5 | M |
| | 2000.07-2003.02 | AT/MT | F | L/R | Hatchback FWD CG10DE | | GCI41045 | Inner Joint | | 24 | 22 | 40 | 51.5 | 97 | |
| | 2000.07-2003.02 | AT/MT/CVT | F | R | Hatchback FWD CG10DE | DOJ | GDS41193 | Drive Shaft | | 23 | 24 | 48 | 93 | 840 | |
| | 2000.07-2003.02 | MT/CVT | F | L | Hatchback FWD CG10DE | Inner teeth of tranm.side:23,TJ | GDS41066 | Drive Shaft | | 23 | 24 | 48 | 93 | 596 | |
| 1.0 (48 kw) | 2003.01-2010.06 | MT | F | L | Hatchback FWD CG10DE | | GDS41451 | Drive Shaft | | 23 | 26 | 49 | 83.5 | 642 | |
| | 2003.01-2010.06 | MT | F | R | Hatchback FWD CG10DE | | GDS41200 | Drive Shaft | | 23 | 26 | 49 | 83.5 | 892 | |
| | 2003.01-2010.06 | MT | F | L/R | Hatchback FWD CG10DE | Date to:2005.05 | GCO41046 | Outer Joint | | 23 | 21 | 49 | 83.5 | 56 | M |
| | 2003.01-2010.06 | MT | F | L | Hatchback FWD CG10DE | | GCI41102 | Inner Joint | | 26 | 21 | 40 | 64.5 | 95.5 | |
| 1.0 (66 kw) | 2023.01- | 5MT | F | L | Hatchback FWD HR10DET | | GDS58317 | Drive Shaft | | 23 | 26 | 49 | 86 | 672 | |
| | 2023.01- | 5MT | F | R | Hatchback FWD HR10DET | | GDS58316 | Drive Shaft | | 23 | 26 | 49 | 86 | 921 | |

| | YEAR | TRANSM. | F/R | L/R | BODY STYLE & DRIVE TYPE & ENGINE | REMARKS | G-AP Ref. | PRODUCT | ABS | Technical Specifications A | B | C | H | L | P |
|---|---|---|---|---|---|---|---|---|---|---|---|---|---|---|---|
| **NISSAN** **Micra** | | | | | | | | | | | | | | | |
| 1.0 (66 kw) | 2023.01- | 5MT | F | L/R | Hatchback FWD HR10DET | | GCO83451 | Outer Joint | | 23 | 29 | 49 | 86 | 59.5 | M |
| | 2023.01- | 5MT | F | L/R | Hatchback FWD HR10DET | | GCI84063 | Inner Joint | | 26 | 29 | 40 | 64 | 93.5 | |
| 1.0 (68 kw) | 2021.01- | 5MT | F | L | Hatchback FWD HR10DET | | GDS58317 | Drive Shaft | | 23 | 26 | 49 | 86 | 672 | |
| | 2021.01- | 5MT | F | R | Hatchback FWD HR10DET | | GDS58316 | Drive Shaft | | 23 | 26 | 49 | 86 | 921 | |
| | 2021.01- | 5MT | F | L/R | Hatchback FWD HR10DET | | GCI84063 | Inner Joint | | 26 | 29 | 40 | 64 | 93.5 | |
| | 2021.01- | CVT | F | L | Hatchback FWD HR10DET | | GDS56842 | Drive Shaft | | 23 | 25 | 49 | 86 | 672 | |
| | 2021.01- | CVT | F | R | Hatchback FWD HR10DET | | GDS56843 | Drive Shaft | | 23 | 25 | 49 | 86 | 921 | |
| | 2021.01- | CVT | F | L/R | Hatchback FWD HR10DET | | GCI83521 | Inner Joint | | 25 | 29 | 40 | 53 | 106.5 | |
| | 2021.01- | CVT/5MT | F | L/R | Hatchback FWD HR10DET | | GCO83451 | Outer Joint | | 23 | 29 | 49 | 86 | 59.5 | M |
| 1.0 (74 kw) | 2018.12- | 5MT | F | L | Hatchback FWD HR10DET | | GDS58317 | Drive Shaft | | 23 | 26 | 49 | 86 | 672 | |
| | 2018.12- | 5MT | F | R | Hatchback FWD HR10DET | | GDS58316 | Drive Shaft | | 23 | 26 | 49 | 86 | 921 | |
| | 2018.12- | 5MT | F | L/R | Hatchback FWD HR10DET | | GCI84063 | Inner Joint | | 26 | 29 | 40 | 64 | 93.5 | |
| | 2018.12- | CVT | F | L | Hatchback FWD HR10DET | | GDS56842 | Drive Shaft | | 23 | 25 | 49 | 86 | 672 | |
| | 2018.12- | CVT | F | R | Hatchback FWD HR10DET | | GDS56843 | Drive Shaft | | 23 | 25 | 49 | 86 | 921 | |
| | 2018.12- | CVT | F | L/R | Hatchback FWD HR10DET | | GCI83521 | Inner Joint | | 25 | 29 | 40 | 53 | 106.5 | |
| | 2018.12- | CVT/5MT | F | L/R | Hatchback FWD HR10DET | | GCO83451 | Outer Joint | | 23 | 29 | 49 | 86 | 59.5 | M |
| 1.2 (48 kw) | 2003.01-2010.06 | AT | F | L | Hatchback FWD CR12DE;CG12DE | | GDS41260 | Drive Shaft | | 23 | 25 | 49 | 83.5 | 654 | |
| | 2003.01-2010.06 | AT | F | R | Hatchback FWD CR12DE;CG12DE | | GDS41261 | Drive Shaft | | 23 | 25 | 49 | 83.5 | 883 | |
| | 2003.01-2010.06 | AT/MT | F | L/R | Hatchback FWD CR12DE;CG12DE | | GCO41046 | Outer Joint | | 23 | 21 | 49 | 83.5 | 56 | M |
| | 2003.01-2010.06 | MT | F | L | Hatchback FWD CR12DE;CG12DE | | GDS41451 | Drive Shaft | | 23 | 26 | 49 | 83.5 | 642 | |
| | 2003.01-2010.06 | MT | F | R | Hatchback FWD CR12DE;CG12DE | | GDS41200 | Drive Shaft | | 23 | 26 | 49 | 83.5 | 892 | |
| | 2003.01-2010.06 | MT | F | L | Hatchback FWD CR12DE;CG12DE | | GCI41102 | Inner Joint | | 26 | 21 | 40 | 64.5 | 95.5 | |
| 1.2 (56 kw) | 2010.05-2020.10 | AT | F | L | Hatchback FWD HR12DE | | GDS41488 | Drive Shaft | | 25 | 25 | 49 | 95 | 702 | |
| | 2010.05-2020.10 | AT | F | R | Hatchback FWD HR12DE | | GDS41485 | Drive Shaft | | 25 | 25 | 49 | 95 | 859 | |
| | 2010.05-2020.10 | AT | F | R | Hatchback FWD HR12DE | | GDS41548 | Drive Shaft | | 25 | 25 | 49 | 95 | 859 | |
| | 2010.05-2020.10 | AT | F | L/R | Hatchback FWD HR12DE | | GCI18111 | Inner Joint | | 25 | 20 | 40 | 53 | 110.5 | |
| | 2010.05-2020.10 | AT | F | L/R | Hatchback FWD HR12DE | | GCI41210 | Inner Joint | | 25 | 20 | 40 | 63 | 99.5 | |
| | 2010.05-2020.10 | MT | F | L | Hatchback FWD HR12DE | | GDS41437 | Drive Shaft | | 25 | 26 | 49 | 95 | 689 | |
| | 2010.05-2020.10 | MT | F | R | Hatchback FWD HR12DE | | GDS41495 | Drive Shaft | | 25 | 26 | 49 | 95 | 870 | |
| | 2010.05-2020.10 | MT | F | L/R | Hatchback FWD HR12DE | | GCI18110 | Inner Joint | | 26 | 20 | 40 | 64.5 | 98 | |
| | 2010.05-2020.10 | MT/CVT | F | L/R | Hatchback FWD HR12DE | | GCO18227 | Outer Joint | | 25 | 20 | 49 | 95 | 55 | M |
| 1.2 (59 kw) | 2002.10-2010.06 | AT | F | L | Hatchback FWD CR12DE | | GDS41260 | Drive Shaft | | 23 | 25 | 49 | 83.5 | 654 | |
| | 2002.10-2010.06 | AT/MT | F | L/R | Hatchback FWD CR12DE | Date to:2005.08 | GCO41046 | Outer Joint | | 23 | 21 | 49 | 83.5 | 56 | M |
| | 2002.10-2010.06 | MT | F | L | Hatchback FWD CR12DE | | GDS41451 | Drive Shaft | | 23 | 26 | 49 | 83.5 | 642 | |
| | 2002.10-2010.06 | MT | F | R | Hatchback FWD CR12DE | | GDS41200 | Drive Shaft | | 23 | 26 | 49 | 83.5 | 892 | |
| | 2002.10-2010.06 | MT | F | L | Hatchback FWD CR12DE | | GCI41102 | Inner Joint | | 26 | 21 | 40 | 64.5 | 95.5 | |
| | 2003.01-2010.06 | AT | F | L | Hatchback FWD CG12DE, CR12DE | | GDS41260 | Drive Shaft | | 23 | 25 | 49 | 83.5 | 654 | |
| | 2003.01-2010.06 | AT | F | R | Hatchback FWD CG12DE, CR12DE | | GDS41261 | Drive Shaft | | 23 | 25 | 49 | 83.5 | 883 | |
| | 2003.01-2010.06 | AT/MT | F | L/R | Hatchback FWD CG12DE, CR12DE | | GCO41046 | Outer Joint | | 23 | 21 | 49 | 83.5 | 56 | M |
| | 2003.01-2010.06 | MT | F | L | Hatchback FWD CG12DE, CR12DE | | GDS41451 | Drive Shaft | | 23 | 26 | 49 | 83.5 | 642 | |
| | 2003.01-2010.06 | MT | F | R | Hatchback FWD CG12DE, CR12DE | | GDS41200 | Drive Shaft | | 23 | 26 | 49 | 83.5 | 892 | |
| | 2003.01-2010.06 | MT | F | L/R | Hatchback FWD CG12DE, CR12DE | | GCI41102 | Inner Joint | | 26 | 21 | 40 | 64.5 | 95.5 | |
| | 2010.05- | CVT | F | L | Hatchback FWD HR12DE | Inner teeth of wheel side:29 | GDS41337 | Drive Shaft | | 25 | 25 | 49.1 | 94.5 | 699 | |
| | 2010.05- | CVT | F | L | Hatchback FWD HR12DE | Inner teeth of wheel side:30 | GDS41488 | Drive Shaft | | 25 | 25 | 49 | 95 | 702 | |
| | 2010.05- | CVT | F | R | Hatchback FWD HR12DE | | GDS41485 | Drive Shaft | | 25 | 25 | 49 | 95 | 859 | |
| | 2010.05- | CVT | F | L/R | Hatchback FWD HR12DE | | GCO41289 | Outer Joint | | 25 | 29 | 49.1 | 94.5 | 53 | I |
| | 2010.05- | CVT | F | L/R | Hatchback FWD HR12DE | | GCI18111 | Inner Joint | | 25 | 20 | 40 | 53 | 110.5 | |
| | 2010.05- | MT | F | L | Hatchback FWD HR12DE | | GDS41437 | Drive Shaft | | 25 | 26 | 49 | 95 | 689 | |
| | 2010.05- | MT | F | R | Hatchback FWD HR12DE | | GDS41495 | Drive Shaft | | 25 | 26 | 49 | 95 | 870 | |
| | 2010.05- | MT | F | L/R | Hatchback FWD HR12DE | | GCI18110 | Inner Joint | | 26 | 20 | 40 | 64.5 | 98 | |
| | 2010.05- | MT/CVT | F | L/R | Hatchback FWD HR12DE | | GCO18227 | Outer Joint | | 25 | 20 | 49 | 95 | 55 | M |
| | 2010.05-2015.09 | CVT | F | L | Hatchback FWD HR12DE | Inner teeth of wheel side:29 | GDS41337 | Drive Shaft | | 25 | 25 | 49.1 | 94.5 | 699 | |
| | 2010.05-2015.09 | CVT | F | L | Hatchback FWD HR12DE | Inner teeth of wheel side:30 | GDS41488 | Drive Shaft | | 25 | 25 | 49 | 95 | 702 | |
| | 2010.05-2015.09 | CVT | F | R | Hatchback FWD HR12DE | | GDS41485 | Drive Shaft | | 25 | 25 | 49 | 95 | 859 | |
| | 2010.05-2015.09 | CVT | F | L/R | Hatchback FWD HR12DE | | GCO41289 | Outer Joint | | 25 | 29 | 49.1 | 94.5 | 53 | I |
| | 2010.05-2015.09 | CVT | F | L/R | Hatchback FWD HR12DE | | GCI18111 | Inner Joint | | 25 | 20 | 40 | 53 | 110.5 | |
| | 2010.05-2015.09 | MT | F | L | Hatchback FWD HR12DE | | GDS41437 | Drive Shaft | | 25 | 26 | 49 | 95 | 689 | |
| | 2010.05-2015.09 | MT | F | R | Hatchback FWD HR12DE | | GDS41495 | Drive Shaft | | 25 | 26 | 49 | 95 | 870 | |
| | 2010.05-2015.09 | MT | F | R | Hatchback FWD HR12DE | | GCO18227 | Outer Joint | | 25 | 20 | 49 | 95 | 55 | M |
| | 2010.05-2015.09 | MT | F | L/R | Hatchback FWD HR12DE | | GCI18110 | Inner Joint | | 26 | 20 | 40 | 64.5 | 98 | |
| | 2010.05-2015.09 | MT/CVT | F | L/R | Hatchback FWD HR12DE | | GCO18227 | Outer Joint | | 25 | 20 | 49 | 95 | 55 | M |
| 1.2 (72 kw) | 2011.03- | CVT | F | R | Hatchback FWD HR12DDR/HR12DR | | GCO41297 | Outer Joint | | 25 | 21 | 49.1 | 94 | 56.5 | M |
| | 2011.03- | MT | F | L | Hatchback FWD HR12DDR/HR12DR | | GDS41546 | Drive Shaft | | 25 | 26 | 49 | 94.5 | 632 | |
| | 2011.03- | MT | F | R | Hatchback FWD HR12DDR/HR12DR | | GDS41547 | Drive Shaft | | 25 | 26 | 49 | 94.5 | 923 | |
| | 2011.03- | MT | F | L/R | Hatchback FWD HR12DDR/HR12DR | | GCO41271 | Outer Joint | | 25 | 22 | 49 | 94.5 | 59.5 | M |

| | YEAR | TRANSM. | F/R | L/R | BODY STYLE & DRIVE TYPE & ENGINE | REMARKS | G-AP Ref. | PRODUCT | ABS | Technical Specifications A | B | C | H | L | P |
|---|---|---|---|---|---|---|---|---|---|---|---|---|---|---|---|
| **NISSAN** | | | | | | | | | | | | | | | |
| **Micra** | | | | | | | | | | | | | | | |
| 1.2 (72 kw) | 2011.03- | MT | F | L/R | Hatchback FWD HR12DDR/HR12DR | | GCI41206 | Inner Joint | | 26 | 21 | 40 | 64 | 95.5 | |
| | 2011.03-2015.10 | CVT | F | L/R | Hatchback FWD HR12DDR;HR12DR | | GCO41297 | Outer Joint | | 25 | 21 | 49.1 | 94 | 56.5 | M |
| | 2011.03-2015.10 | MT | F | L | Hatchback FWD HR12DDR;HR12DR | | GDS41546 | Drive Shaft | | 25 | 26 | 49 | 94.5 | 632 | |
| | 2011.03-2015.10 | MT | F | R | Hatchback FWD HR12DDR;HR12DR | | GDS41547 | Drive Shaft | | 25 | 26 | 49 | 94.5 | 923 | |
| | 2011.03-2015.10 | MT | F | L/R | Hatchback FWD HR12DDR;HR12DR | | GCO41271 | Outer Joint | | 25 | 22 | 49 | 94.5 | 59.5 | M |
| | 2011.03-2015.10 | MT | F | L/R | Hatchback FWD HR12DDR;HR12DR | | GCI41206 | Inner Joint | | 26 | 21 | 40 | 64 | 95.5 | |
| 1.3 (55 kw) | 1992.08-2000.09 | AT/MT | F | L | Hatchback FWD CG13DE | | GDS41156 | Drive Shaft | | 23 | 24 | 48 | 93 | 594.5 | |
| | 1992.08-2000.09 | AT/MT | F | R | Hatchback FWD CG13DE | | GDS41193 | Drive Shaft | | 23 | 24 | 48 | 93 | 840 | |
| | 1992.08-2000.09 | AT/MT | F | L/R | Hatchback FWD CG13DE | | GCO41012 | Outer Joint | | 23 | 22 | 48 | 93 | 56.5 | I |
| | 1992.08-2000.09 | AT/MT | F | L/R | Hatchback FWD CG13DE | Type:Micra/March | GCO41013 | Outer Joint | 42T | 23 | 22 | 48 | 93 | 56.5 | I |
| | 1992.08-2000.09 | AT/MT | F | L | Hatchback FWD CG13DE | | GCI41045 | Inner Joint | | 24 | 22 | 40 | 51.5 | 97 | |
| | 1992.08-2000.09 | MT/CVT | F | L | Hatchback FWD CG13DE | | GDS41066 | Drive Shaft | | 23 | 24 | 48 | 93 | 596 | |
| | 1992.08-2000.09 | | F | | Hatchback FWD CG13DE | | GCO41119 | Outer Joint | | 23 | 22 | 48 | 92.5 | 56.5 | M |
| 1.4 (60 kw) | 2000.09-2003.02 | AT/MT | F | L | Hatchback FWD CGA3DE | | GDS41156 | Drive Shaft | | 23 | 24 | 48 | 93 | 594.5 | |
| | 2000.09-2003.02 | AT/MT | F | R | Hatchback FWD CGA3DE | | GDS41193 | Drive Shaft | | 23 | 24 | 48 | 93 | 840 | |
| | 2000.09-2003.02 | AT/MT | F | L/R | Hatchback FWD CGA3DE | | GCO41013 | Outer Joint | 42T | 23 | 22 | 48 | 93 | 56.5 | I |
| | 2000.09-2003.02 | MT | F | L | Hatchback FWD CGA3DE | | GDS41066 | Drive Shaft | | 23 | 24 | 48 | 93 | 596 | |
| 1.4 (65 kw) | 2003.01-2010.06 | AT | F | L | Hatchback FWD CR14DE | | GDS41260 | Drive Shaft | | 23 | 25 | 49 | 83.5 | 654 | |
| | 2003.01-2010.06 | AT | F | R | Hatchback FWD CR14DE | | GDS41261 | Drive Shaft | | 23 | 25 | 49 | 83.5 | 883 | |
| | 2003.01-2010.06 | AT/MT | F | L/R | Hatchback FWD CR14DE | | GCO41046 | Outer Joint | | 23 | 21 | 49 | 83.5 | 56 | M |
| | 2003.01-2010.06 | MT | F | L | Hatchback FWD CR14DE | | GDS41451 | Drive Shaft | | 23 | 26 | 49 | 83.5 | 642 | |
| | 2003.01-2010.06 | MT | F | R | Hatchback FWD CR14DE | | GDS41200 | Drive Shaft | | 23 | 26 | 49 | 83.5 | 892 | |
| | 2003.01-2010.06 | MT | F | L | Hatchback FWD CR14DE | | GCO41340 | Outer Joint | | 23 | 22 | 49 | 83.5 | 59 | M |
| | 2003.01-2010.06 | MT | F | L/R | Hatchback FWD CR14DE | | GCI41102 | Inner Joint | | 26 | 21 | 40 | 64.5 | 95.5 | |
| 1.5 (48 kw) | 2003.01-2010.06 | MT | F | L | Hatchback FWD K9K 704 | Inner teeth of wheel side:23 | GDS41407 | Drive Shaft | | 23 | 26 | 49 | 83.5 | 646 | |
| | 2003.01-2010.06 | MT | F | L | Hatchback FWD K9K 704 | Inner teeth of wheel side:22 | GDS41451 | Drive Shaft | | 23 | 26 | 49 | 83.5 | 642 | |
| | 2003.01-2010.06 | MT | F | R | Hatchback FWD K9K 704 | Inner teeth of wheel side:22 | GDS41245 | Drive Shaft | | 23 | 26 | 49 | 83.5 | 893 | |
| | 2003.01-2010.06 | MT | F | R | Hatchback FWD K9K 704 | Inner teeth of wheel side:23 | GDS41408 | Drive Shaft | | 23 | 26 | 49 | 83.5 | 897 | |
| | 2003.01-2010.06 | | F | L/R | Hatchback FWD K9K 704 | | GCO41047 | Outer Joint | | 23 | 22 | 49 | 83.5 | 56 | M |
| | 2003.01-2010.06 | | F | L/R | Hatchback FWD K9K 704 | | GCO41119 | Outer Joint | | 23 | 22 | 48 | 92.5 | 56.5 | M |
| 1.5 (50 kw) | 2005.06-2010.06 | MT | F | L | Hatchback FWD K9K 708 | | GDS41451 | Drive Shaft | | 23 | 26 | 49 | 83.5 | 642 | |
| | 2005.06-2010.06 | MT | F | R | Hatchback FWD K9K 708 | | GDS41245 | Drive Shaft | | 23 | 26 | 49 | 83.5 | 893 | |
| | 2005.06-2010.06 | MT | F | R | Hatchback FWD K9K 708 | | GDS41408 | Drive Shaft | | 23 | 26 | 49 | 83.5 | 897 | |
| | 2005.06-2010.06 | | F | L | Hatchback FWD K9K 708 | | GDS41407 | Drive Shaft | | 23 | 26 | 49 | 83.5 | 646 | |
| | 2005.06-2010.06 | | F | L/R | Hatchback FWD K9K 708 | | GCO41047 | Outer Joint | | 23 | 22 | 49 | 83.5 | 56 | M |
| | 2005.06-2010.06 | | F | | Hatchback FWD K9K 708 | | GCO41119 | Outer Joint | | 23 | 22 | 48 | 92.5 | 56.5 | M |
| 1.5 (60 kw) | 2003.09-2010.06 | 5MT | F | L | Hatchback FWD K9K 722 | | GDS41407 | Drive Shaft | | 23 | 26 | 49 | 83.5 | 646 | |
| | 2003.09-2010.06 | 5MT | F | R | Hatchback FWD K9K 722 | | GDS41408 | Drive Shaft | | 23 | 26 | 49 | 83.5 | 897 | |
| | 2003.09-2010.06 | 5MT | F | L/R | Hatchback FWD K9K 722 | Date to:2005.04 | GCO41047 | Outer Joint | | 23 | 22 | 49 | 83.5 | 56 | M |
| | 2003.09-2010.06 | 5MT | F | L/R | Hatchback FWD K9K 722 | Date from:2005.05 | GCO41244 | Outer Joint | | 23 | 23 | 49 | 83.5 | 59 | M |
| | 2003.09-2010.06 | MT | F | L | Hatchback FWD K9K 722 | | GDS41451 | Drive Shaft | | 23 | 26 | 49 | 83.5 | 642 | |
| | 2003.09-2010.06 | | F | R | Hatchback FWD K9K 722 | | GDS41245 | Drive Shaft | | 23 | 26 | 49 | 83.5 | 893 | |
| | 2003.09-2010.06 | | F | | Hatchback FWD K9K 722 | | GCO41119 | Outer Joint | | 23 | 22 | 48 | 92.5 | 56.5 | M |
| 1.5 (63 kw) | 2005.06-2010.06 | 5MT | F | L | Hatchback FWD K9K 276 | Inner teeth of wheel side:23 | GDS41407 | Drive Shaft | | 23 | 26 | 49 | 83.5 | 646 | |
| | 2005.06-2010.06 | 5MT | F | R | Hatchback FWD K9K 276 | Inner teeth of wheel side:23 | GDS41408 | Drive Shaft | | 23 | 26 | 49 | 83.5 | 897 | |
| | 2005.06-2010.06 | 5MT | F | L/R | Hatchback FWD K9K 276 | Inner teeth of wheel side:23 | GCO41244 | Outer Joint | | 23 | 23 | 49 | 83.5 | 59 | M |
| | 2005.06-2010.06 | MT | F | L | Hatchback FWD K9K 276 | Inner teeth of wheel side:22 | GDS41451 | Drive Shaft | | 23 | 26 | 49 | 83.5 | 642 | |
| | 2005.06-2010.06 | MT | F | R | Hatchback FWD K9K 276 | Inner teeth of wheel side:22 | GDS41245 | Drive Shaft | | 23 | 26 | 49 | 83.5 | 893 | |
| | 2005.06-2010.06 | MT | F | L | Hatchback FWD K9K 276 | Inner teeth of wheel side:21 | GCO41046 | Outer Joint | | 23 | 21 | 49 | 83.5 | 56 | M |
| | 2005.06-2010.06 | MT | F | R | Hatchback FWD K9K 276 | Inner teeth of wheel side:22 | GCO41047 | Outer Joint | | 23 | 22 | 49 | 83.5 | 56 | M |
| | 2005.06-2010.06 | MT | F | L | Hatchback FWD K9K 276 | Inner teeth of tranm.side:21 | GCI41102 | Inner Joint | | 26 | 21 | 40 | 64.5 | 95.5 | |
| 1.5 (74 kw) | 2011.01- | 4AT | F | L | Hatchback FWD HR15DE | | GDS41379 | Drive Shaft | | 25 | 25 | 49.1 | 94 | 632 | |
| | 2011.01- | 4AT | F | R | Hatchback FWD HR15DE | | GDS41380 | Drive Shaft | | 25 | 25 | 49.1 | 94 | 928 | |
| | 2011.01- | 4AT | F | L/R | Hatchback FWD HR15DE | | GCO41297 | Outer Joint | | 25 | 21 | 49.1 | 94 | 56.5 | M |
| | 2011.01- | 4AT | F | L/R | Hatchback FWD HR15DE | | GCI41098 | Inner Joint | | 25 | 21 | 40 | 63 | 95.5 | |
| 1.6 (81 kw) | 2005.05-2010.06 | 5MT | F | L | Hatchback FWD HR16DE | | GDS41451 | Drive Shaft | | 23 | 26 | 49 | 83.5 | 642 | |
| | 2005.05-2010.06 | 5MT | F | R | Hatchback FWD HR16DE | | GDS41200 | Drive Shaft | | 23 | 26 | 49 | 83.5 | 892 | |
| | 2005.05-2010.06 | 5MT | F | R | Hatchback FWD HR16DE | | GCO41340 | Outer Joint | | 23 | 22 | 49 | 83.5 | 59 | M |
| | 2005.05-2010.06 | 5MT | F | L | Hatchback FWD HR16DE | | GCI41102 | Inner Joint | | 26 | 21 | 40 | 64.5 | 95.5 | |
| | 2005.05-2010.06 | AT | F | L | Hatchback FWD HR16DE | | GDS41260 | Drive Shaft | | 23 | 25 | 49 | 83.5 | 654 | |
| | 2005.05-2010.06 | | F | L/R | Hatchback FWD HR16DE | | GCO41047 | Outer Joint | | 23 | 22 | 49 | 83.5 | 56 | M |
| | 2005.05-2010.06 | | F | | Hatchback FWD HR16DE | | GCO41119 | Outer Joint | | 23 | 22 | 48 | 92.5 | 56.5 | M |
| **Micra CC** | | | | | | | | | | | | | | | |
| 1.4 (65 kw) | 2005.08-2009.01 | 5MT | F | L/R | Convertible FWD CR14DE | | GCO41046 | Outer Joint | | 23 | 21 | 49 | 83.5 | 56 | M |
| | 2005.08-2009.01 | AT | F | L | Convertible FWD CR14DE | | GDS41260 | Drive Shaft | | 23 | 25 | 49 | 83.5 | 654 | |

| | YEAR | TRANSM. | F/R | L/R | BODY STYLE & DRIVE TYPE & ENGINE | REMARKS | G-AP Ref. | PRODUCT | ABS | Technical Specifications A | B | C | H | L | P |
|---|---|---|---|---|---|---|---|---|---|---|---|---|---|---|---|
| **NISSAN** | | | | | | | | | | | | | | | |
| **Micra CC** | | | | | | | | | | | | | | | |
| 1.4 (65 kw) | 2005.08-2009.01 | MT | F | L | Convertible FWD CR14DE | | GDS41451 | Drive Shaft | | 23 | 26 | 49 | 83.5 | 642 | |
| | 2005.08-2009.01 | MT | F | R | Convertible FWD CR14DE | | GDS41200 | Drive Shaft | | 23 | 26 | 49 | 83.5 | 892 | |
| | 2005.08-2009.01 | MT | F | L | Convertible FWD CR14DE | | GCI41102 | Inner Joint | | 26 | 21 | 40 | 64.5 | 95.5 | |
| 1.6 (81 kw) | 2005.08-2010.06 | 4AT/5MT | F | L | Convertible FWD HR16DE | | GDS41451 | Drive Shaft | | 23 | 26 | 49 | 83.5 | 642 | |
| | 2005.08-2010.06 | 4AT/5MT | F | R | Convertible FWD HR16DE | | GDS41200 | Drive Shaft | | 23 | 26 | 49 | 83.5 | 892 | |
| | 2005.08-2010.06 | 4AT/5MT | F | R | Convertible FWD HR16DE | Date to:2010.06 | GCO41340 | Outer Joint | | 23 | 22 | 49 | 83.5 | 59 | M |
| | 2005.08-2010.06 | 4AT/5MT | F | L | Convertible FWD HR16DE | | GCI41102 | Inner Joint | | 26 | 21 | 40 | 64.5 | 95.5 | |
| | 2005.08-2010.06 | AT | F | L | Convertible FWD HR16DE | | GDS41260 | Drive Shaft | | 23 | 25 | 49 | 83.5 | 654 | |
| | 2005.08-2010.06 | | F | L/R | Convertible FWD HR16DE | | GCO41047 | Outer Joint | | 23 | 22 | 49 | 83.5 | 56 | M |
| | 2005.08-2010.06 | | F | | Convertible FWD HR16DE | | GCO41119 | Outer Joint | | 23 | 22 | 48 | 92.5 | 56.5 | M |
| **Micra III/March** | | | | | | | | | | | | | | | |
| 1.2 (80 kw) | 2003.10-2005.07 | AT/MT | F | L/R | Hatchback FWD CR12DE | | GCO41188 | Outer Joint | | 25 | 22 | 49 | 95 | 56 | M |
| 1.4 (72 kw) | 2007.03-2010.06 | AT | F | L/R | Hatchback FWD CR14DE | | GCO41188 | Outer Joint | | 25 | 22 | 49 | 95 | 56 | M |
| **Micra IV/March/March Active** | | | | | | | | | | | | | | | |
| 1.2 (57 kw) | 2013.01- | AT | F | L | Hatchback FWD HR12DE | | GDS41488 | Drive Shaft | | 25 | 25 | 49 | 95 | 702 | |
| | 2013.01- | AT | F | R | Hatchback FWD HR12DE | | GDS41485 | Drive Shaft | | 25 | 25 | 49 | 95 | 859 | |
| | 2013.01- | AT | F | L/R | Hatchback FWD HR12DE | | GCI18111 | Inner Joint | | 25 | 20 | 40 | 53 | 110.5 | |
| | 2013.01- | MT | F | L | Hatchback FWD HR12DE | | GDS41437 | Drive Shaft | | 25 | 26 | 49 | 95 | 689 | |
| | 2013.01- | MT | F | R | Hatchback FWD HR12DE | | GDS41495 | Drive Shaft | | 25 | 26 | 49 | 95 | 870 | |
| | 2013.01- | MT | F | L/R | Hatchback FWD HR12DE | | GCI18110 | Inner Joint | | 26 | 20 | 40 | 64.5 | 98 | |
| | 2013.01- | MT/AT | F | L/R | Hatchback FWD HR12DE | | GCO18227 | Outer Joint | | 25 | 20 | 49 | 95 | 55 | M |
| **Murano** | | | | | | | | | | | | | | | |
| 2.5 (140 kw) | 2010.01-2014.09 | 6AT | F | L | SUV 4WD YD25DDTi | | GCI41135 | Inner Joint | | 30 | 29 | 34 | 76 | 97 | |
| | 2010.01-2014.09 | 6AT | R | L/R | SUV 4WD YD25DDTi | | GDS41544 | Drive Shaft | | 29 | 21 | 58 | 109.5 | 835 | |
| | 2010.01-2014.09 | 6AT | R | L/R | SUV 4WD YD25DDTi | | GCO41413 | Outer Joint | | 29 | 24 | 58 | 109.5 | 38.5 | I |
| | 2010.01-2014.09 | 6AT | R | L/R | SUV 4WD YD25DDTi | | GCI57111 | Inner Joint | | 21 | 24 | 38 | 61 | 91 | |
| | 2013.03-2014.09 | 6AT | F | L | SUV Van 4WD YD25DDTi | | GCI41135 | Inner Joint | | 30 | 29 | 34 | 76 | 97 | |
| | 2013.03-2014.09 | 6AT | R | L/R | SUV Van 4WD YD25DDTi | | GDS41544 | Drive Shaft | | 29 | 21 | 58 | 109.5 | 835 | |
| | 2013.03-2014.09 | 6AT | R | L/R | SUV Van 4WD YD25DDTi | | GCO41413 | Outer Joint | | 29 | 24 | 58 | 109.5 | 38.5 | I |
| | 2013.03-2014.09 | 6AT | R | L/R | SUV Van 4WD YD25DDTi | | GCI57111 | Inner Joint | | 21 | 24 | 38 | 61 | 91 | |
| 3.5 (170 kw) | 2006.01-2008.09 | AT | F | R | SUV 4WD VQ35DE | | GDS41588 | Intermediate Shaft | | 30 | 29 | | | 480 | |
| | 2006.01-2008.09 | CVT | F | L | SUV 4WD VQ35DE | | GDS41516 | Drive Shaft | | 29 | 29 | 56 | 102.5 | 673 | |
| | 2006.01-2008.09 | CVT | F | L/R | SUV 4WD VQ35DE | | GCO41232 | Outer Joint | | 29 | 36 | 56 | 102.5 | 70 | I |
| | 2006.01-2008.09 | CVT | F | L/R | SUV 4WD VQ35DE | | GCO41245 | Outer Joint | | 29 | 36 | 56 | 102 | 69.5 | I |
| | 2006.01-2008.09 | CVT | F | L | SUV 4WD VQ35DE | | GCI41187 | Inner Joint | | 29 | 36 | 39 | 65.5 | 124.5 | |
| | 2006.01-2008.09 | CVT | F | R | SUV 4WD VQ35DE | | GCI81299 | Inner Joint | | 30 | 36 | 50 | | 136.5 | |
| | 2006.01-2008.09 | CVT | R | L/R | SUV 4WD VQ35DE | | GDS41544 | Drive Shaft | | 29 | 21 | 58 | 109.5 | 835 | |
| | 2006.01-2008.09 | CVT | R | L/R | SUV 4WD VQ35DE | | GCO41413 | Outer Joint | | 29 | 24 | 58 | 109.5 | 38.5 | I |
| | 2006.01-2008.09 | CVT | R | L/R | SUV 4WD VQ35DE | | GCI57111 | Inner Joint | | 21 | 24 | 38 | 61 | 91 | |
| 3.5 (172 kw) | 2003.08-2007.10 | CVT | F | L | SUV FWD VQ35DE | | GDS41516 | Drive Shaft | | 29 | 29 | 56 | 102.5 | 673 | |
| | 2003.08-2007.10 | CVT | F | L | SUV FWD VQ35DE | | GCO41232 | Outer Joint | | 29 | 36 | 56 | 102.5 | 70 | I |
| | 2003.08-2008.09 | AT | F | R | SUV 4WD VQ35DE | | GDS41588 | Intermediate Shaft | | 30 | 29 | | | 480 | |
| | 2003.08-2008.09 | CVT | F | L | SUV 4WD VQ35DE | | GDS41516 | Drive Shaft | | 29 | 29 | 56 | 102.5 | 673 | |
| | 2003.08-2008.09 | CVT | F | L/R | SUV 4WD VQ35DE | | GCO41232 | Outer Joint | | 29 | 36 | 56 | 102.5 | 70 | I |
| | 2003.08-2008.09 | CVT | F | L | SUV 4WD VQ35DE | Date from:2005.04 | GCI41187 | Inner Joint | | 29 | 36 | 39 | 65.5 | 124.5 | |
| | 2003.08-2008.09 | CVT | F | R | SUV 4WD VQ35DE | Date from:2005.04 | GCI81299 | Inner Joint | | 30 | 36 | 50 | | 136.5 | |
| | 2003.08-2008.09 | CVT | R | L/R | SUV 4WD VQ35DE | | GDS41544 | Drive Shaft | | 29 | 21 | 58 | 109.5 | 835 | |
| | 2003.08-2008.09 | CVT | R | L/R | SUV 4WD VQ35DE | | GCO41413 | Outer Joint | | 29 | 24 | 58 | 109.5 | 38.5 | I |
| | 2003.08-2008.09 | CVT | R | L/R | SUV 4WD VQ35DE | | GCI57111 | Inner Joint | | 21 | 24 | 38 | 61 | 91 | |
| 3.5 (180 kw) | 2004.11-2008.06 | AT | F | R | SUV 4WD VQ35DE | | GDS41588 | Intermediate Shaft | | 30 | 29 | | | 480 | |
| | 2004.11-2008.06 | CVT | F | L | SUV 4WD VQ35DE | | GDS41516 | Drive Shaft | | 29 | 29 | 56 | 102.5 | 673 | |
| | 2004.11-2008.06 | CVT | F | L/R | SUV 4WD VQ35DE | | GCO41232 | Outer Joint | | 29 | 36 | 56 | 102.5 | 70 | I |
| | 2004.11-2008.06 | CVT | F | L/R | SUV 4WD VQ35DE | | GCO41245 | Outer Joint | | 29 | 36 | 56 | 102 | 69.5 | I |
| | 2004.11-2008.06 | CVT | F | L | SUV 4WD VQ35DE | Date from:2005.04 | GCI41187 | Inner Joint | | 29 | 36 | 39 | 65.5 | 124.5 | |
| | 2004.11-2008.06 | CVT | F | R | SUV 4WD VQ35DE | Date from:2005.04 | GCI81299 | Inner Joint | | 30 | 36 | 50 | | 136.5 | |
| | 2004.11-2008.06 | CVT | R | L/R | SUV 4WD VQ35DE | | GDS41544 | Drive Shaft | | 29 | 21 | 58 | 109.5 | 835 | |
| | 2004.11-2008.06 | CVT | R | L/R | SUV 4WD VQ35DE | | GCO41413 | Outer Joint | | 29 | 24 | 58 | 109.5 | 38.5 | I |
| | 2004.11-2008.06 | CVT | R | L/R | SUV 4WD VQ35DE | | GCI57111 | Inner Joint | | 21 | 24 | 38 | 61 | 91 | |
| 3.5 (183 kw) | 2010.12-2014.09 | CVT | F | L | SUV 4WD VQ35DE | | GDS41515 | Drive Shaft | | 32 | 29 | 56.3 | 103 | 670 | |
| | 2010.12-2014.09 | CVT | F | R | SUV 4WD VQ35DE | | GDS41511 | Drive Shaft | | 32 | 29 | 56.3 | 103 | 1033 | |
| | 2010.12-2014.09 | CVT | F | L/R | SUV 4WD VQ35DE | | GCO41232 | Outer Joint | | 29 | 36 | 56 | 102.5 | 70 | I |
| | 2010.12-2014.09 | CVT | F | L/R | SUV 4WD VQ35DE | | GCO41400 | Outer Joint | | 32 | 27 | 56.3 | 103 | 68 | M |
| | 2010.12-2014.09 | CVT | F | L | SUV 4WD VQ35DE | | GCI41183 | Inner Joint | | 29 | 27 | 39 | 65.5 | 115 | |
| | 2010.12-2014.09 | CVT | F | R | SUV 4WD VQ35DE | | GCI81300 | Inner Joint | | 29 | 27 | 50 | | 122.5 | |
| | 2010.12-2014.09 | CVT | R | L/R | SUV 4WD VQ35DE | | GDS41544 | Drive Shaft | | 29 | 21 | 58 | 109.5 | 835 | |

| | YEAR | TRANSM. | F/R | L/R | BODY STYLE & DRIVE TYPE & ENGINE | REMARKS | G-AP Ref. | PRODUCT | ABS | Technical Specifications A | B | C | H | L | P |
|---|---|---|---|---|---|---|---|---|---|---|---|---|---|---|---|
| **NISSAN** | | | | | | | | | | | | | | | |
| **Murano** | | | | | | | | | | | | | | | |
| 3.5 (183 kw) | 2010.12-2014.09 | CVT | R | L/R | SUV 4WD VQ35DE | | GCO41413 | Outer Joint | | 29 | 24 | 58 | 109.5 | 38.5 | I |
| | 2010.12-2014.09 | CVT | R | L/R | SUV 4WD VQ35DE | | GCI57111 | Inner Joint | | 21 | 24 | 38 | 61 | 91 | |
| 3.5 (188 kw) | 2008.10-2014.09 | CVT | F | L | SUV 4WD VQ35DE | | GDS41515 | Drive Shaft | | 32 | 29 | 56.3 | 103 | 670 | |
| | 2008.10-2014.09 | CVT | F | R | SUV 4WD VQ35DE | | GDS41511 | Drive Shaft | | 32 | 29 | 56.3 | 103 | 1033 | |
| | 2008.10-2014.09 | CVT | F | R | SUV 4WD VQ35DE | | GCO41400 | Outer Joint | | 32 | 27 | 56.3 | 103 | 68 | M |
| | 2008.10-2014.09 | CVT | F | L | SUV 4WD VQ35DE | | GCI41183 | Inner Joint | | 29 | 27 | 39 | 65.5 | 115 | |
| | 2008.10-2014.09 | CVT | F | R | SUV 4WD VQ35DE | | GCI81300 | Inner Joint | | 29 | 27 | 50 | | 122.5 | |
| | 2008.10-2014.09 | | F | L/R | SUV 4WD VQ35DE | | GCO41232 | Outer Joint | | 29 | 36 | 56 | 102.5 | 70 | I |
| | 2008.10-2014.09 | CVT | R | L/R | SUV 4WD VQ35DE | | GDS41544 | Drive Shaft | | 29 | 21 | 58 | 109.5 | 835 | |
| | 2008.10-2014.09 | CVT | R | L/R | SUV 4WD VQ35DE | | GCO41413 | Outer Joint | | 29 | 24 | 58 | 109.5 | 38.5 | I |
| | 2008.10-2014.09 | CVT | R | L/R | SUV 4WD VQ35DE | | GCI57111 | Inner Joint | | 21 | 24 | 38 | 61 | 91 | |
| | 2013.03-2014.09 | CVT | F | L | SUV Van 4WD VQ35DE | | GDS41515 | Drive Shaft | | 32 | 29 | 56.3 | 103 | 670 | |
| | 2013.03-2014.09 | CVT | F | R | SUV Van 4WD VQ35DE | | GDS41511 | Drive Shaft | | 32 | 29 | 56.3 | 103 | 1033 | |
| | 2013.03-2014.09 | CVT | F | L/R | SUV Van 4WD VQ35DE | | GCO41400 | Outer Joint | | 32 | 27 | 56.3 | 103 | 68 | M |
| | 2013.03-2014.09 | CVT | F | L | SUV Van 4WD VQ35DE | | GCI41183 | Inner Joint | | 29 | 27 | 39 | 65.5 | 115 | |
| | 2013.03-2014.09 | CVT | F | R | SUV Van 4WD VQ35DE | | GCI81300 | Inner Joint | | 29 | 27 | 50 | | 122.5 | |
| | 2013.03-2014.09 | CVT | R | L/R | SUV Van 4WD VQ35DE | | GDS41544 | Drive Shaft | | 29 | 21 | 58 | 109.5 | 835 | |
| 3.5 (191 kw) | 2009.12-2014.09 | CVT | F | L | SUV 4WD VQ35;VQ35DE | | GDS41515 | Drive Shaft | | 32 | 29 | 56.3 | 103 | 670 | |
| | 2009.12-2014.09 | CVT | F | R | SUV 4WD VQ35;VQ35DE | | GDS41511 | Drive Shaft | | 32 | 29 | 56.3 | 103 | 1033 | |
| | 2009.12-2014.09 | CVT | F | R | SUV 4WD VQ35;VQ35DE | | GCO41400 | Outer Joint | | 32 | 27 | 56.3 | 103 | 68 | M |
| | 2009.12-2014.09 | CVT | F | L | SUV 4WD VQ35;VQ35DE | | GCI41183 | Inner Joint | | 29 | 27 | 39 | 65.5 | 115 | |
| | 2009.12-2014.09 | CVT | F | R | SUV 4WD VQ35;VQ35DE | | GCI81300 | Inner Joint | | 29 | 27 | 50 | | 122.5 | |
| | 2009.12-2014.09 | | F | L/R | SUV 4WD VQ35;VQ35DE | | GCO41232 | Outer Joint | | 29 | 36 | 56 | 102.5 | 70 | I |
| | 2009.12-2014.09 | CVT | R | L/R | SUV 4WD VQ35;VQ35DE | | GDS41544 | Drive Shaft | | 29 | 21 | 58 | 109.5 | 835 | |
| | 2009.12-2014.09 | CVT | R | L/R | SUV 4WD VQ35;VQ35DE | | GCO41413 | Outer Joint | | 29 | 24 | 58 | 109.5 | 38.5 | I |
| | 2009.12-2014.09 | CVT | R | L/R | SUV 4WD VQ35;VQ35DE | | GCI57111 | Inner Joint | | 21 | 24 | 38 | 61 | 91 | |
| | 2011.01-2014.09 | CVT | F | L | SUV FWD VQ35;VQ35DE | | GDS41515 | Drive Shaft | | 32 | 29 | 56.3 | 103 | 670 | |
| | 2011.01-2014.09 | CVT | F | R | SUV FWD VQ35;VQ35DE | | GDS41511 | Drive Shaft | | 32 | 29 | 56.3 | 103 | 1033 | |
| | 2011.01-2014.09 | CVT | F | L/R | SUV FWD VQ35;VQ35DE | | GCO41400 | Outer Joint | | 32 | 27 | 56.3 | 103 | 68 | M |
| | 2011.01-2014.09 | CVT | F | L | SUV FWD VQ35;VQ35DE | | GCI41183 | Inner Joint | | 29 | 27 | 39 | 65.5 | 115 | |
| | 2011.01-2014.09 | CVT | F | R | SUV FWD VQ35;VQ35DE | | GCI81300 | Inner Joint | | 29 | 27 | 50 | | 122.5 | |
| 3.5 (195 kw) | 2007.11-2014.09 | CVT | F | L | SUV 4WD VQ35DE | | GDS41515 | Drive Shaft | | 32 | 29 | 56.3 | 103 | 670 | |
| | 2007.11-2014.09 | CVT | F | R | SUV 4WD VQ35DE | | GDS41511 | Drive Shaft | | 32 | 29 | 56.3 | 103 | 1033 | |
| | 2007.11-2014.09 | CVT | F | R | SUV 4WD VQ35DE | | GCO41400 | Outer Joint | | 32 | 27 | 56.3 | 103 | 68 | M |
| | 2007.11-2014.09 | CVT | F | L | SUV 4WD VQ35DE | | GCI41183 | Inner Joint | | 29 | 27 | 39 | 65.5 | 115 | |
| | 2007.11-2014.09 | CVT | F | R | SUV 4WD VQ35DE | | GCI81300 | Inner Joint | | 29 | 27 | 50 | | 122.5 | |
| | 2007.11-2014.09 | | F | L/R | SUV 4WD VQ35DE | | GCO41232 | Outer Joint | | 29 | 36 | 56 | 102.5 | 70 | I |
| | 2007.11-2014.09 | CVT | R | L/R | SUV 4WD VQ35DE | | GDS41544 | Drive Shaft | | 29 | 21 | 58 | 109.5 | 835 | |
| | 2007.11-2014.09 | CVT | R | L/R | SUV 4WD VQ35DE | | GCO41413 | Outer Joint | | 29 | 24 | 58 | 109.5 | 38.5 | I |
| | 2007.11-2014.09 | CVT | R | L/R | SUV 4WD VQ35DE | | GCI57111 | Inner Joint | | 21 | 24 | 38 | 61 | 91 | |
| | 2007.11-2014.09 | CVT | F | L | SUV FWD VQ35DE | | GDS41515 | Drive Shaft | | 32 | 29 | 56.3 | 103 | 670 | |
| | 2007.11-2014.09 | CVT | F | R | SUV FWD VQ35DE | | GDS41511 | Drive Shaft | | 32 | 29 | 56.3 | 103 | 1033 | |
| | 2007.11-2014.09 | CVT | F | R | SUV FWD VQ35DE | | GCO41400 | Outer Joint | | 32 | 27 | 56.3 | 103 | 68 | M |
| | 2007.11-2014.09 | CVT | F | L | SUV FWD VQ35DE | | GCI41183 | Inner Joint | | 29 | 27 | 39 | 65.5 | 115 | |
| | 2007.11-2014.09 | CVT | F | R | SUV FWD VQ35DE | | GCI81300 | Inner Joint | | 29 | 27 | 50 | | 122.5 | |
| | 2007.11-2014.09 | | F | L/R | SUV FWD VQ35DE | | GCO41232 | Outer Joint | | 29 | 36 | 56 | 102.5 | 70 | I |
| 3.5 (198 kw) | 2008.09-2010.12 | CVT | F | L | SUV 4WD VQ35DE | | GDS41515 | Drive Shaft | | 32 | 29 | 56.3 | 103 | 670 | |
| | 2008.09-2010.12 | CVT | F | R | SUV 4WD VQ35DE | | GDS41511 | Drive Shaft | | 32 | 29 | 56.3 | 103 | 1033 | |
| | 2008.09-2010.12 | CVT | F | L/R | SUV 4WD VQ35DE | | GCO41400 | Outer Joint | | 32 | 27 | 56.3 | 103 | 68 | M |
| | 2008.09-2010.12 | CVT | F | L | SUV 4WD VQ35DE | | GCI41183 | Inner Joint | | 29 | 27 | 39 | 65.5 | 115 | |
| | 2008.09-2010.12 | CVT | F | R | SUV 4WD VQ35DE | | GCI81300 | Inner Joint | | 29 | 27 | 50 | | 122.5 | |
| | 2008.09-2010.12 | CVT | R | L/R | SUV 4WD VQ35DE | | GDS41544 | Drive Shaft | | 29 | 21 | 58 | 109.5 | 835 | |
| | 2008.09-2010.12 | CVT | R | L/R | SUV 4WD VQ35DE | | GCI57111 | Inner Joint | | 21 | 24 | 38 | 61 | 91 | |
| **Navara** | | | | | | | | | | | | | | | |
| 2.4 (87 kw) | 1998.02-2001.10 | MT | R | L/R | Pickup 4WD KA24E | | GDS82924 | Drive Shaft | | | 29 | | | 787 | |
| 2.5 (76 kw) | 1998.05-2001.10 | MT | F | L/R | Pickup 4WD TD25TI | | GDS41057 | Drive Shaft | | 28 | | 50 | 150 | 570.5 | |
| | 1998.05-2001.10 | MT | F | L/R | Pickup 4WD TD25TI | | GCO41016 | Outer Joint | | 28 | 27 | 50 | 150 | 71 | I |
| | 1998.05-2001.10 | MT | F | L/R | Pickup 4WD TD25TI | | GCO41100 | Outer Joint | | 28 | 25 | 50 | 150 | 71 | I |
| 2.5 (98 kw) | 2001.11- | 5MT | F | L/R | Pickup 4WD YD25DDTi | | GDS41393 | Drive Shaft | | 28 | | 50 | 150 | 570 | |
| | 2001.11- | 5MT | F | L/R | Pickup 4WD YD25DDTi | angular | GCI41014 | Inner Joint | | | 27 | | | 78 | |
| | 2001.11- | 5MT | F | L/R | Pickup 4WD YD25DDTi | round | GCI81497 | Inner Joint | | | 27 | | | 75 | |
| | 2001.11- | AT/5MT | F | L/R | Pickup 4WD YD25DDTi | | GCO41100 | Outer Joint | | 28 | 25 | 50 | 150 | 71 | I |
| | 2001.11- | AT/MT | F | L/R | Pickup 4WD YD25DDTi | | GDS41057 | Drive Shaft | | 28 | | 50 | 150 | 570.5 | |
| | 2002.02- | 5MT | F | L/R | Platform/Chassis 4WD YD25DDTi | | GDS41393 | Drive Shaft | | 28 | | 50 | 150 | 570 | |
| | 2002.02- | 5MT | F | L/R | Platform/Chassis 4WD YD25DDTi | | GCI81497 | Inner Joint | | | 27 | | | 75 | |

| | YEAR | TRANSM. | F/R | L/R | BODY STYLE & DRIVE TYPE & ENGINE | REMARKS | G-AP Ref. | PRODUCT | ABS | Technical Specifications A | B | C | H | L | P |
|---|---|---|---|---|---|---|---|---|---|---|---|---|---|---|---|
| **NISSAN** | | | | | | | | | | | | | | | |
| **Navara** | | | | | | | | | | | | | | | |
| 2.5 (98 kw) | 2002.02- | AT/MT | F | L/R | Platform/Chassis 4WD YD25DDTi | | GCO41100 | Outer Joint | | 28 | 25 | 50 | 150 | 71 | I |
| 2.5 (106 kw) | 2005.07- | AT/MT | R | L/R | Pickup RWD YD25DDTi | | GDS61349 | Drive Shaft | | | 32 | | 716 | 811.5 | |
| | 2007.01- | AT | F | L/R | Pickup 4WD YD25DDTi | | GCO41257 | Outer Joint | | 29 | 26 | 67 | 115.5 | 62 | M |
| | 2007.01- | AT | F | L/R | Pickup 4WD YD25DDTi | | GCI41075 | Inner Joint | | 27 | 26 | 39 | 61.5 | 133 | |
| | 2007.01- | MT | F | L/R | Pickup 4WD YD25DDTi | | GDS41262 | Drive Shaft | | 29 | 27 | 67 | 115 | 634 | |
| | 2007.01- | MT | F | L/R | Pickup 4WD YD25DDTi | | GCO41240 | Outer Joint | | 29 | 27 | 67 | 115 | 63 | M |
| | 2008.08- | AT | F | | Platform/Chassis 4WD YD25DDTi | | GCO41257 | Outer Joint | | 29 | 26 | 67 | 115.5 | 62 | M |
| | 2008.08- | AT | F | L/R | Platform/Chassis 4WD YD25DDTi | | GCI41075 | Inner Joint | | 27 | 26 | 39 | 61.5 | 133 | |
| | 2008.08- | MT | F | L/R | Platform/Chassis 4WD YD25DDTi | | GDS41262 | Drive Shaft | | 29 | 27 | 67 | 115 | 634 | |
| | 2008.08- | MT | F | L/R | Platform/Chassis 4WD YD25DDTi | | GCO41240 | Outer Joint | | 29 | 27 | 67 | 115 | 63 | M |
| 2.5 (120 kw) | 2014.07- | AT/MT | F | L | Pickup 4WD YD25DDTI | Date from:2015.02,Date to:2017.04 | GDS41574 | Drive Shaft | | 29 | 30 | 67.1 | 125 | 643 | |
| | 2014.07- | AT/MT | F | R | Pickup 4WD YD25DDTI | Date from:2017.04,Date to:2018.07 | GDS41574 | Drive Shaft | | 29 | 30 | 67.1 | 125 | 643 | |
| | 2014.07- | AT/MT | F | R | Pickup 4WD YD25DDTI | Date from:2015.02,Date to:2017.04 | GDS56386 | Drive Shaft | | 29 | 30 | 67 | 125 | 641 | |
| | 2014.07- | AT/MT | F | L | Pickup 4WD YD25DDTI | Date from:2015.02,Date to:2017.04 | GCO41270 | Outer Joint | | 29 | 36 | 67.1 | 125 | 60.5 | I |
| | 2014.07- | AT/MT | F | R | Pickup 4WD YD25DDTI | Date from:2017.04,Date to:2018.07 | GCO41270 | Outer Joint | | 29 | 36 | 67.1 | 125 | 60.5 | I |
| | 2014.07- | AT/MT | F | R | Pickup 4WD YD25DDTI | Date from:2015.02,Date to:2017.04 | GCO83274 | Outer Joint | | 29 | 36 | 67 | 125 | 60 | I |
| | 2014.07- | AT/MT | F | L | Pickup 4WD YD25DDTI | Date from:2015.02,Date to:2017.04 | GCI41220 | Inner Joint | | 30 | 35 | 39 | 62 | 129.5 | |
| | 2014.07- | AT/MT | F | R | Pickup 4WD YD25DDTI | Date from:2017.04,Date to:2018.07 | GCI41220 | Inner Joint | | 30 | 35 | 39 | 62 | 129.5 | |
| | 2014.07- | AT/MT | F | R | Pickup 4WD YD25DDTI | Date from:2015.02,Date to:2017.04 | GCI83280 | Inner Joint | | 30 | 35 | 39 | 62 | 130 | |
| 2.5 (126 kw) | 2006.10- | AT | F | L/R | Pickup 4WD YD25DDTi | | GCO41257 | Outer Joint | | 29 | 26 | 67 | 115.5 | 62 | M |
| | 2006.10- | AT/MT | F | L/R | Pickup 4WD YD25DDTi | | GDS41262 | Drive Shaft | | 29 | 27 | 67 | 115 | 634 | |
| | 2006.10- | AT/MT | F | L/R | Pickup 4WD YD25DDTi | | GCI41075 | Inner Joint | | 27 | 26 | 39 | 61.5 | 133 | |
| | 2006.10- | MT | F | L/R | Pickup 4WD YD25DDTi | | GCO41240 | Outer Joint | | 29 | 27 | 67 | 115 | 63 | M |
| | 2006.10- | AT/MT | R | L/R | Pickup 4WD YD25DDTi | | GDS61349 | Drive Shaft | | | 32 | | 716 | 811.5 | |
| | 2008.08- | 5AT/6MT | F | L/R | Platform/Chassis 4WD YD25DDTi | | GDS41262 | Drive Shaft | | 29 | 27 | 67 | 115 | 634 | |
| | 2008.08- | AT | F | | Platform/Chassis 4WD YD25DDTi | | GCO41257 | Outer Joint | | 29 | 26 | 67 | 115.5 | 62 | M |
| | 2008.08- | 5AT/6MT | R | L/R | Platform/Chassis 4WD YD25DDTi | | GDS61349 | Drive Shaft | | | 32 | | 716 | 811.5 | |
| 2.5 (128 kw) | 2005.07- | 5AT/6MT | F | L/R | Pickup 4WD YD25DDTi | | GCO41257 | Outer Joint | | 29 | 26 | 67 | 115.5 | 62 | M |
| | 2005.07- | AT/MT | F | L/R | Pickup 4WD YD25DDTi | For European | GDS41262 | Drive Shaft | | 29 | 27 | 67 | 115 | 634 | |
| | 2005.07- | AT/MT | F | L/R | Pickup 4WD YD25DDTi | | GCO41270 | Outer Joint | | 29 | 36 | 67.1 | 125 | 60.5 | I |
| | 2005.07- | AT/MT | F | L/R | Pickup 4WD YD25DDTi | For European | GCI41075 | Inner Joint | | 27 | 26 | 39 | 61.5 | 133 | |
| | 2005.07- | AT/MT | F | L/R | Pickup 4WD YD25DDTi | | GCI41100 | Inner Joint | | 27 | 35 | 39 | 63 | 131.5 | |
| | 2005.07- | MT | F | L/R | Pickup 4WD YD25DDTi | | GCO41231 | Outer Joint | | 29 | 36 | 68 | 122.5 | 60 | M |
| | 2005.07- | MT | F | L/R | Pickup 4WD YD25DDTi | | GCO41240 | Outer Joint | | 29 | 27 | 67 | 115 | 63 | M |
| | 2005.07- | AT/MT | R | L/R | Pickup 4WD YD25DDTi | | GDS61349 | Drive Shaft | | | 32 | | 716 | 811.5 | |
| | 2005.12- | AT/MT | R | L/R | Pickup RWD YD25DDTI | | GDS61349 | Drive Shaft | | | 32 | | 716 | 811.5 | |
| 2.5 (140 kw) | 2009.12- | AT | F | L/R | Pickup 4WD YD25DDTi | | GCO41257 | Outer Joint | | 29 | 26 | 67 | 115.5 | 62 | M |
| | 2009.12- | AT/MT | F | L/R | Pickup 4WD YD25DDTi | | GDS41262 | Drive Shaft | | 29 | 27 | 67 | 115 | 634 | |
| | 2009.12- | AT/MT | F | L/R | Pickup 4WD YD25DDTi | | GCI41075 | Inner Joint | | 27 | 26 | 39 | 61.5 | 133 | |
| | 2009.12- | MT | F | L/R | Pickup 4WD YD25DDTi | | GCO41240 | Outer Joint | | 29 | 27 | 67 | 115 | 63 | M |
| | 2009.12- | AT/MT | R | L/R | Pickup 4WD YD25DDTi | | GDS61349 | Drive Shaft | | | 32 | | 716 | 811.5 | |
| | 2010.03- | 5AT | F | L/R | Platform/Chassis 4WD YD25DDTi | | GDS41262 | Drive Shaft | | 29 | 27 | 67 | 115 | 634 | |
| | 2010.03- | MT | F | L/R | Platform/Chassis 4WD YD25DDTi | | GCO41240 | Outer Joint | | 29 | 27 | 67 | 115 | 63 | M |
| | 2010.03- | | F | L/R | Platform/Chassis 4WD YD25DDTi | | GCO41257 | Outer Joint | | 29 | 26 | 67 | 115.5 | 62 | M |
| | 2010.03- | | F | L/R | Platform/Chassis 4WD YD25DDTi | | GCI41075 | Inner Joint | | 27 | 26 | 39 | 61.5 | 133 | |
| | 2010.03- | AT/MT | R | L/R | Platform/Chassis 4WD YD25DDTi | | GDS61349 | Drive Shaft | | | 32 | | 716 | 811.5 | |
| 2.7 (63 kw) | 1990.01-1997.04 | MT | F | | Pickup 4WD TD27 | Date From:1993.07 | GCO41016 | Outer Joint | | 28 | 27 | 50 | 150 | 71 | I |
| | 1990.01-1997.04 | MT | F | | Pickup 4WD TD27 | | GCO41086 | Outer Joint | | 27 | 27 | 50 | 150 | 71 | I |
| 3.0 (170 kw) | 2010.02- | 7AT | F | L/R | Pickup 4WD V9X | | GCO41273 | Outer Joint | | 29 | 36 | 67 | 115.5 | 62 | I |
| | 2010.02- | AT/MT | F | L/R | Pickup 4WD V9X | | GDS41262 | Drive Shaft | | 29 | 27 | 67 | 115 | 634 | |
| | 2010.02- | MT | F | L/R | Pickup 4WD V9X | | GCO41240 | Outer Joint | | 29 | 27 | 67 | 115 | 63 | M |
| | 2010.02- | AT/MT | R | L/R | Pickup 4WD V9X | | GDS61349 | Drive Shaft | | | 32 | | 716 | 811.5 | |
| | 2010.03- | AT | F | L/R | Platform/Chassis 4WD V9X | | GDS41262 | Drive Shaft | | 29 | 27 | 67 | 115 | 634 | |
| | 2010.03- | AT | F | | Platform/Chassis 4WD V9X | Date From:2010.05 | GCO41273 | Outer Joint | | 29 | 36 | 67 | 115.5 | 62 | I |
| | 2010.03- | AT | F | L | Platform/Chassis 4WD V9X | Date from:2010.05 | GCI41100 | Inner Joint | | 27 | 35 | 39 | 63 | 131.5 | |
| | 2010.03- | MT | F | L/R | Platform/Chassis 4WD V9X | | GCO41240 | Outer Joint | | 29 | 27 | 67 | 115 | 63 | M |
| | 2010.03- | AT/MT | R | L/R | Platform/Chassis 4WD V9X | | GDS61349 | Drive Shaft | | | 32 | | 716 | 811.5 | |
| **Navara Np300** | | | | | | | | | | | | | | | |
| 2.3 (120 kw) | 2015.01- | 6MT | F | L/R | Pickup 4WD YS23DDT | Date to:2019.04 | GDS56386 | Drive Shaft | | 29 | 30 | 67 | 125 | 641 | |
| | 2015.01- | 6MT | F | L/R | Pickup 4WD YS23DDT | Date to:2019.04 | GCO83274 | Outer Joint | | 29 | 36 | 67 | 125 | 60 | I |
| | 2015.01- | 6MT | F | L/R | Pickup 4WD YS23DDT | Date to:2019.04 | GCI83280 | Inner Joint | | 30 | 35 | 39 | 62 | 130 | |
| | 2015.01- | AT/MT | F | L | Pickup 4WD YS23DDT | Date from:2015.02,Date to:2017.04 | GDS41574 | Drive Shaft | | 29 | 30 | 67.1 | 125 | 643 | |
| | 2015.01- | AT/MT | F | R | Pickup 4WD YS23DDT | Date from:2017.04,Date to:2018.07 | GDS41574 | Drive Shaft | | 29 | 30 | 67.1 | 125 | 643 | |
| | 2015.01- | AT/MT | F | R | Pickup 4WD YS23DDT | Date from:2015.02,Date to:2017.04 | GDS56386 | Drive Shaft | | 29 | 30 | 67 | 125 | 641 | |
| | 2015.01- | AT/MT | F | L | Pickup 4WD YS23DDT | Date from:2015.02,Date to:2017.04 | GCO41270 | Outer Joint | | 29 | 36 | 67.1 | 125 | 60.5 | I |

| | YEAR | TRANSM. | F/R | L/R | BODY STYLE & DRIVE TYPE & ENGINE | REMARKS | G-AP Ref. | PRODUCT | ABS | Technical Specifications A | B | C | H | L | P |
|---|---|---|---|---|---|---|---|---|---|---|---|---|---|---|---|
| **NISSAN** | | | | | | | | | | | | | | | |
| **Navara Np300** | | | | | | | | | | | | | | | |
| 2.3 (120 kw) | 2015.01- | AT/MT | F | R | Pickup 4WD YS23DDT | Date from:2017.04,Date to:2018.07 | GCO41270 | Outer Joint | | 29 | 36 | 67.1 | 125 | 60.5 | I |
| | 2015.01- | AT/MT | F | R | Pickup 4WD YS23DDT | Date from:2015.02,Date to:2017.04 | GCO83274 | Outer Joint | | 29 | 36 | 67 | 125 | 60 | I |
| | 2015.01- | AT/MT | F | L | Pickup 4WD YS23DDT | Date from:2015.02,Date to:2017.04 | GCI41220 | Inner Joint | | 30 | 35 | 39 | 62 | 129.5 | |
| | 2015.01- | AT/MT | F | R | Pickup 4WD YS23DDT | Date from:2017.04,Date to:2018.07 | GCI41220 | Inner Joint | | 30 | 35 | 39 | 62 | 129.5 | |
| | 2015.01- | AT/MT | F | R | Pickup 4WD YS23DDT | Date from:2015.02,Date to:2017.04 | GCI83280 | Inner Joint | | 30 | 35 | 39 | 62 | 130 | |
| | 2015.01- | 6MT | F | L/R | Platform/Chassis 4WD YS23DDT | Date to:2019.04 | GDS56386 | Drive Shaft | | 29 | 30 | 67 | 125 | 641 | |
| | 2015.01- | 6MT | F | L/R | Platform/Chassis 4WD YS23DDT | Date to:2019.04 | GCO83274 | Outer Joint | | 29 | 36 | 67 | 125 | 60 | I |
| | 2015.01- | 6MT | F | L/R | Platform/Chassis 4WD YS23DDT | Date to:2019.04 | GCI83280 | Inner Joint | | 30 | 35 | 39 | 62 | 130 | |
| | 2015.01- | AT/MT | F | L | Platform/Chassis 4WD YS23DDT | Date from:2015.02,Date to:2017.04 | GDS41574 | Drive Shaft | | 29 | 30 | 67.1 | 125 | 643 | |
| | 2015.01- | AT/MT | F | R | Platform/Chassis 4WD YS23DDT | Date from:2017.04,Date to:2018.07 | GDS41574 | Drive Shaft | | 29 | 30 | 67.1 | 125 | 643 | |
| | 2015.01- | AT/MT | F | R | Platform/Chassis 4WD YS23DDT | Date from:2015.02,Date to:2017.04 | GDS56386 | Drive Shaft | | 29 | 30 | 67 | 125 | 641 | |
| | 2015.01- | AT/MT | F | L | Platform/Chassis 4WD YS23DDT | Date from:2015.02,Date to:2017.04 | GCO41270 | Outer Joint | | 29 | 36 | 67.1 | 125 | 60.5 | I |
| | 2015.01- | AT/MT | F | R | Platform/Chassis 4WD YS23DDT | Date from:2017.04,Date to:2018.07 | GCO41270 | Outer Joint | | 29 | 36 | 67.1 | 125 | 60.5 | I |
| | 2015.01- | AT/MT | F | R | Platform/Chassis 4WD YS23DDT | Date from:2015.02,Date to:2017.04 | GCO83274 | Outer Joint | | 29 | 36 | 67 | 125 | 60 | I |
| | 2015.01- | AT/MT | F | L | Platform/Chassis 4WD YS23DDT | Date from:2015.02,Date to:2017.04 | GCI41220 | Inner Joint | | 30 | 35 | 39 | 62 | 129.5 | |
| | 2015.01- | AT/MT | F | R | Platform/Chassis 4WD YS23DDT | Date from:2017.04,Date to:2018.07 | GCI41220 | Inner Joint | | 30 | 35 | 39 | 62 | 129.5 | |
| | 2015.01- | AT/MT | F | R | Platform/Chassis 4WD YS23DDT | Date from:2015.02,Date to:2017.04 | GCI83280 | Inner Joint | | 30 | 35 | 39 | 62 | 130 | |
| 2.3 (140 kw) | 2015.10- | 7AT/6MT | F | L/R | Pickup 4WD YS23DDTT | Date to:2019.04 | GDS56386 | Drive Shaft | | 29 | 30 | 67 | 125 | 641 | |
| | 2015.10- | 7AT/6MT | F | L/R | Pickup 4WD YS23DDTT | Date to:2019.04 | GCO83274 | Outer Joint | | 29 | 36 | 67 | 125 | 60 | I |
| | 2015.10- | 7AT/6MT | F | L/R | Pickup 4WD YS23DDTT | Date to:2019.04 | GCI83280 | Inner Joint | | 30 | 35 | 39 | 62 | 130 | |
| | 2015.10- | AT/MT | F | L | Pickup 4WD YS23DDTT | Date to:2017.04 | GDS41574 | Drive Shaft | | 29 | 30 | 67.1 | 125 | 643 | |
| | 2015.10- | AT/MT | F | R | Pickup 4WD YS23DDTT | Date from:2017.04,Date to:2018.07 | GDS41574 | Drive Shaft | | 29 | 30 | 67.1 | 125 | 643 | |
| | 2015.10- | AT/MT | F | R | Pickup 4WD YS23DDTT | Date to:2017.04 | GDS56386 | Drive Shaft | | 29 | 30 | 67 | 125 | 641 | |
| | 2015.10- | AT/MT | F | L | Pickup 4WD YS23DDTT | Date to:2017.04 | GCO41270 | Outer Joint | | 29 | 36 | 67.1 | 125 | 60.5 | I |
| | 2015.10- | AT/MT | F | R | Pickup 4WD YS23DDTT | Date from:2017.04,Date to:2018.07 | GCO41270 | Outer Joint | | 29 | 36 | 67.1 | 125 | 60.5 | I |
| | 2015.10- | AT/MT | F | R | Pickup 4WD YS23DDTT | Date to:2017.04 | GCO83274 | Outer Joint | | 29 | 36 | 67 | 125 | 60 | I |
| | 2015.10- | AT/MT | F | L | Pickup 4WD YS23DDTT | Date to:2017.04 | GCI41220 | Inner Joint | | 30 | 35 | 39 | 62 | 129.5 | |
| | 2015.10- | AT/MT | F | R | Pickup 4WD YS23DDTT | Date from:2017.04,Date to:2018.07 | GCI41220 | Inner Joint | | 30 | 35 | 39 | 62 | 129.5 | |
| | 2015.10- | AT/MT | F | R | Pickup 4WD YS23DDTT | Date to:2017.04 | GCI83280 | Inner Joint | | 30 | 35 | 39 | 62 | 130 | |
| 2.5 (140 kw) | 2014.07- | AT/MT | F | L | Pickup 4WD YD25DDTi | Date from:2015.02,Date to:2017.04 | GDS41574 | Drive Shaft | | 29 | 30 | 67.1 | 125 | 643 | |
| | 2014.07- | AT/MT | F | R | Pickup 4WD YD25DDTi | Date from:2017.04,Date to:2018.07 | GDS41574 | Drive Shaft | | 29 | 30 | 67.1 | 125 | 643 | |
| | 2014.07- | AT/MT | F | R | Pickup 4WD YD25DDTi | Date from:2015.02,Date to:2017.04 | GDS56386 | Drive Shaft | | 29 | 30 | 67 | 125 | 641 | |
| | 2014.07- | AT/MT | F | L | Pickup 4WD YD25DDTi | Date from:2015.02,Date to:2017.04 | GCO41270 | Outer Joint | | 29 | 36 | 67.1 | 125 | 60.5 | I |
| | 2014.07- | AT/MT | F | R | Pickup 4WD YD25DDTi | Date from:2017.04,Date to:2018.07 | GCO41270 | Outer Joint | | 29 | 36 | 67.1 | 125 | 60.5 | I |
| | 2014.07- | AT/MT | F | R | Pickup 4WD YD25DDTi | Date from:2015.02,Date to:2017.04 | GCO83274 | Outer Joint | | 29 | 36 | 67 | 125 | 60 | I |
| | 2014.07- | AT/MT | F | L | Pickup 4WD YD25DDTi | Date from:2015.02,Date to:2017.04 | GCI41220 | Inner Joint | | 30 | 35 | 39 | 62 | 129.5 | |
| | 2014.07- | AT/MT | F | R | Pickup 4WD YD25DDTi | Date from:2017.04,Date to:2018.07 | GCI41220 | Inner Joint | | 30 | 35 | 39 | 62 | 129.5 | |
| | 2014.07- | AT/MT | F | R | Pickup 4WD YD25DDTi | Date from:2015.02,Date to:2017.04 | GCI83280 | Inner Joint | | 30 | 35 | 39 | 62 | 130 | |
| **Note** | | | | | | | | | | | | | | | |
| 1.2 (56 kw) | 2015.03-2016.12 | CVT | F | L/R | MPV FWD HR12DE | Model code:E12 | GCO41303 | Outer Joint | | 25 | 21 | 49 | 95 | 56 | M |
| | 2015.03-2016.12 | MT | F | L | MPV FWD HR12DE | | GDS41437 | Drive Shaft | | 25 | 26 | 49 | 95 | 689 | |
| | 2015.03-2016.12 | MT | F | R | MPV FWD HR12DE | | GDS41495 | Drive Shaft | | 25 | 26 | 49 | 95 | 870 | |
| | 2015.03-2016.12 | MT | F | L/R | MPV FWD HR12DE | | GCO18227 | Outer Joint | | 25 | 20 | 49 | 95 | 55 | M |
| | 2015.03-2016.12 | MT | F | L/R | MPV FWD HR12DE | | GCI18110 | Inner Joint | | 26 | 20 | 40 | 64.5 | 98 | |
| 1.2 (58 kw) | 2012.08- | CVT | F | L | MPV FWD HR12DE | | GDS41337 | Drive Shaft | | 25 | 25 | 49.1 | 94.5 | 699 | |
| | 2012.08- | CVT | F | L/R | MPV FWD HR12DE | Model code:E12 | GCO41303 | Outer Joint | | 25 | 21 | 49 | 95 | 56 | M |
| 1.2 (59 kw) | 2012.08- | CVT | F | L/R | MPV 4WD HR12DE | Model code:E12 | GCO41303 | Outer Joint | | 25 | 21 | 49 | 95 | 56 | M |
| | 2012.08-2016.12 | CVT | F | L/R | MPV FWD HR12DE | Date from:2014.10,For Modelcode:E12 | GCO41271 | Outer Joint | | 25 | 22 | 49 | 94.5 | 59.5 | M |
| | 2012.08-2016.12 | CVT | F | L/R | MPV FWD HR12DE | For Modelcode:E12 | GCO41303 | Outer Joint | | 25 | 21 | 49 | 95 | 56 | M |
| | 2012.08-2016.12 | MT | F | L | MPV FWD HR12DE | | GDS41437 | Drive Shaft | | 25 | 26 | 49 | 95 | 689 | |
| | 2012.08-2016.12 | MT | F | R | MPV FWD HR12DE | | GDS41495 | Drive Shaft | | 25 | 26 | 49 | 95 | 870 | |
| | 2012.08-2016.12 | MT | F | L/R | MPV FWD HR12DE | | GCO18227 | Outer Joint | | 25 | 20 | 49 | 95 | 55 | M |
| | 2012.08-2016.12 | MT | F | L/R | MPV FWD HR12DE | | GCI18110 | Inner Joint | | 26 | 20 | 40 | 64.5 | 98 | |
| 1.2 (72 kw) | 2012.08- | CVT | F | L/R | MPV FWD HR12DDR;HR12DR | model code: E12 | GCO41303 | Outer Joint | | 25 | 21 | 49 | 95 | 56 | M |
| | 2012.08- | MT | F | L/R | MPV FWD HR12DDR;HR12DR | | GCO18227 | Outer Joint | | 25 | 20 | 49 | 95 | 55 | M |
| 1.4 (65 kw) | 2006.01-2013.08 | 4AT/5MT | F | L | MPV FWD CR14DE | | GDS41451 | Drive Shaft | | 23 | 26 | 49 | 83.5 | 642 | |
| | 2006.01-2013.08 | 4AT/5MT | F | R | MPV FWD CR14DE | | GDS41200 | Drive Shaft | | 23 | 26 | 49 | 83.5 | 892 | |
| | 2006.01-2013.08 | 4AT/5MT | F | L | MPV FWD CR14DE | | GCO41340 | Outer Joint | | 23 | 22 | 49 | 83.5 | 59 | M |
| | 2006.01-2013.08 | 4AT/5MT | F | L | MPV FWD CR14DE | | GCI41102 | Inner Joint | | 26 | 21 | 40 | 64.5 | 95.5 | |
| | 2006.01-2013.08 | 5MT | F | L | MPV FWD CR14DE | | GDS41451 | Drive Shaft | | 23 | 26 | 49 | 83.5 | 642 | |
| | 2006.01-2013.08 | 5MT | F | R | MPV FWD CR14DE | | GDS41200 | Drive Shaft | | 23 | 26 | 49 | 83.5 | 892 | |
| | 2006.01-2013.08 | 5MT | F | L | MPV FWD CR14DE | Thread Size:M20×1.5 | GCO41047 | Outer Joint | | 23 | 22 | 49 | 83.5 | 56 | M |
| | 2006.01-2013.08 | 5MT | F | L/R | MPV FWD CR14DE | | GCO41046 | Outer Joint | | 23 | 21 | 49 | 83.5 | 56 | M |
| | 2006.01-2013.08 | 5MT | F | L/R | MPV FWD CR14DE | Thread Size:M18×1.5 | GCO41119 | Outer Joint | | 23 | 22 | 48 | 92.5 | 56.5 | M |
| | 2006.01-2013.08 | 5MT | F | L/R | MPV FWD CR14DE | Thread Size:M20×1.5 | GCO41340 | Outer Joint | | 23 | 22 | 49 | 83.5 | 59 | M |

| | YEAR | TRANSM. | F/R | L/R | BODY STYLE & DRIVE TYPE & ENGINE | REMARKS | G-AP Ref. | PRODUCT | ABS | Technical Specifications A | B | C | H | L | P |
|---|---|---|---|---|---|---|---|---|---|---|---|---|---|---|---|
| **NISSAN** | | | | | | | | | | | | | | | |
| **Note** | | | | | | | | | | | | | | | |
| 1.4 (65 kw) | 2006.01-2013.08 | 5MT | F | L/R | MPV FWD CR14DE | | GCI41102 | Inner Joint | | 26 | 21 | 40 | 64.5 | 95.5 | |
| | 2006.01-2013.08 | | F | L/R | MPV FWD CR14DE | | GCO41047 | Outer Joint | | 23 | 22 | 49 | 83.5 | 56 | M |
| 1.5 (50 kw) | 2006.03-2012.06 | 5MT | F | L | MPV FWD K9K 700 | | GDS41407 | Drive Shaft | | 23 | 26 | 49 | 83.5 | 646 | |
| | 2006.03-2012.06 | 5MT | F | R | MPV FWD K9K 700 | Not for Exhaust Emis:Euro 5 | GDS41408 | Drive Shaft | | 23 | 26 | 49 | 83.5 | 897 | |
| | 2006.03-2012.06 | 5MT | F | R | MPV FWD K9K 700 | Exhaust Emis:Euro 5 | GDS50625 | Drive Shaft | | 23 | 26 | 49 | 83.5 | 893 | |
| | 2006.03-2012.06 | 6MT | F | L | MPV FWD K9K 700 | | GDS41453 | Drive Shaft | | 23 | 26 | 49 | 83.5 | 645 | |
| | 2006.03-2012.06 | 6MT | F | R | MPV FWD K9K 700 | | GDS41452 | Drive Shaft | | 23 | 26 | 49 | 83.5 | 895 | |
| | 2006.03-2012.06 | 6MT | F | R | MPV FWD K9K 700 | | GCO41341 | Outer Joint | | 23 | 24 | 49 | 83.5 | 63 | M |
| | 2006.03-2012.06 | 6MT | F | L | MPV FWD K9K 700 | | GCI41143 | Inner Joint | | 26 | 24 | 40 | 64 | 106 | |
| | 2006.03-2012.06 | 6MT | F | R | MPV FWD K9K 700 | | GCI41142 | Inner Joint | | 26 | 24 | 33 | 327 | 93 | |
| | 2006.03-2012.06 | MT | F | L | MPV FWD K9K 700 | | GDS41451 | Drive Shaft | | 23 | 26 | 49 | 83.5 | 642 | |
| | 2006.03-2012.06 | | F | L/R | MPV FWD K9K 700 | | GCO41244 | Outer Joint | | 23 | 23 | 49 | 83.5 | 59 | M |
| 1.5 (63 kw) | 2006.03-2012.06 | 5MT | F | L | MPV FWD K9K 276;K9K 400 | Inner teeth of wheel side:23 | GDS41407 | Drive Shaft | | 23 | 26 | 49 | 83.5 | 646 | |
| | 2006.03-2012.06 | 5MT | F | R | MPV FWD K9K 276;K9K 400 | Not for Exhaust Emis:Euro 5 | GDS41408 | Drive Shaft | | 23 | 26 | 49 | 83.5 | 897 | |
| | 2006.03-2012.06 | 5MT | F | R | MPV FWD K9K 276;K9K 400 | Exhaust Emis:Euro 5 | GDS50625 | Drive Shaft | | 23 | 26 | 49 | 83.5 | 893 | |
| | 2006.03-2012.06 | 6MT | F | L | MPV FWD K9K 276;K9K 400 | Inner teeth of wheel side:24 | GDS41453 | Drive Shaft | | 23 | 26 | 49 | 83.5 | 645 | |
| | 2006.03-2012.06 | 6MT | F | R | MPV FWD K9K 276;K9K 400 | Inner teeth of wheel side:24 | GDS41452 | Drive Shaft | | 23 | 26 | 49 | 83.5 | 895 | |
| | 2006.03-2012.06 | 6MT | F | L | MPV FWD K9K 276;K9K 400 | | GCI41143 | Inner Joint | | 26 | 24 | 40 | 64 | 106 | |
| | 2006.03-2012.06 | 6MT | F | R | MPV FWD K9K 276;K9K 400 | | GCI41142 | Inner Joint | | 26 | 24 | 33 | 327 | 93 | |
| | 2006.03-2012.06 | MT | F | L | MPV FWD K9K 276;K9K 400 | Inner teeth of wheel side:22 | GDS41451 | Drive Shaft | | 23 | 26 | 49 | 83.5 | 642 | |
| | 2006.03-2012.06 | MT | F | L | MPV FWD K9K 276;K9K 400 | | GCO41340 | Outer Joint | | 23 | 22 | 49 | 83.5 | 59 | M |
| | 2006.03-2012.06 | MT | F | L/R | MPV FWD K9K 276;K9K 400 | | GCO41244 | Outer Joint | | 23 | 23 | 49 | 83.5 | 59 | M |
| | 2006.03-2012.06 | MT | F | L | MPV FWD K9K 276;K9K 400 | | GCI41102 | Inner Joint | | 26 | 21 | 40 | 64.5 | 95.5 | |
| | 2011.01-2012.09 | 5MT | F | L | Box Body/MPV FWD K9K 276 | | GDS41407 | Drive Shaft | | 23 | 26 | 49 | 83.5 | 646 | |
| | 2011.01-2012.09 | 5MT | F | R | Box Body/MPV FWD K9K 276 | Not for Exhaust Emis:Euro 5 | GDS41408 | Drive Shaft | | 23 | 26 | 49 | 83.5 | 897 | |
| | 2011.01-2012.09 | 5MT | F | R | Box Body/MPV FWD K9K 276 | Exhaust Emis:Euro 5 | GDS50625 | Drive Shaft | | 23 | 26 | 49 | 83.5 | 893 | |
| | 2011.01-2012.09 | 5MT | F | L/R | Box Body/MPV FWD K9K 276 | | GCO41244 | Outer Joint | | 23 | 23 | 49 | 83.5 | 59 | M |
| 1.5 (66 kw) | 2010.09-2012.06 | 5MT | F | L | MPV FWD K9K 276;K9K 400 | Inner teeth of wheel side:23 | GDS41407 | Drive Shaft | | 23 | 26 | 49 | 83.5 | 646 | |
| | 2010.09-2012.06 | 5MT | F | R | MPV FWD K9K 276;K9K 400 | Exhaust Emis:Euro 5 | GDS50625 | Drive Shaft | | 23 | 26 | 49 | 83.5 | 893 | |
| | 2010.09-2012.06 | 5MT | F | L/R | MPV FWD K9K 276;K9K 400 | | GCO41244 | Outer Joint | | 23 | 23 | 49 | 83.5 | 59 | M |
| | 2010.09-2012.06 | MT | F | L | MPV FWD K9K 276;K9K 400 | Inner teeth of wheel side:22 | GDS41451 | Drive Shaft | | 23 | 26 | 49 | 83.5 | 642 | |
| | 2010.09-2012.06 | | F | R | MPV FWD K9K 276;K9K 400 | Not for Exhaust Emis:Euro 5 | GDS41408 | Drive Shaft | | 23 | 26 | 49 | 83.5 | 897 | |
| | 2013.06-2016.12 | MT | F | L | MPV FWD K9K 608;K9K 892 | | GDS41492 | Drive Shaft | | 25 | 26 | 49.15 | 94.5 | 635 | |
| | 2013.06-2016.12 | MT | F | R | MPV FWD K9K 608;K9K 892 | | GDS41491 | Drive Shaft | | 25 | 26 | 49.15 | 94.5 | 926 | |
| | 2013.06-2016.12 | MT | F | L/R | MPV FWD K9K 608;K9K 892 | | GCO41217 | Outer Joint | | 25 | 23 | 49.15 | 94.5 | 63 | M |
| | 2013.06-2016.12 | MT | F | L | MPV FWD K9K 608;K9K 892 | | GCI41084 | Inner Joint | | 26 | 23 | 40 | 64.5 | 109.5 | |
| 1.5 (76 kw) | 2008.07-2012.06 | 5MT | F | R | MPV FWD K9K 288 | Not for Exhaust Emis:Euro 5 | GDS41408 | Drive Shaft | | 23 | 26 | 49 | 83.5 | 897 | |
| | 2008.07-2012.06 | 5MT | F | R | MPV FWD K9K 288 | Exhaust Emis:Euro 5 | GDS50625 | Drive Shaft | | 23 | 26 | 49 | 83.5 | 893 | |
| | 2008.07-2012.06 | 6MT | F | L | MPV FWD K9K 288 | Date to:2010.12 | GDS41453 | Drive Shaft | | 23 | 26 | 49 | 83.5 | 645 | |
| | 2008.07-2012.06 | 6MT | F | R | MPV FWD K9K 288 | Date to:2010.12 | GDS41452 | Drive Shaft | | 23 | 26 | 49 | 83.5 | 895 | |
| | 2008.07-2012.06 | 6MT | F | R | MPV FWD K9K 288 | Date to:2010.12 | GCO41341 | Outer Joint | | 23 | 24 | 49 | 83.5 | 63 | M |
| | 2008.07-2012.06 | 6MT | F | L | MPV FWD K9K 288 | Date to:2010.12 | GCI41143 | Inner Joint | | 26 | 24 | 40 | 64 | 106 | |
| | 2008.07-2012.06 | 6MT | F | R | MPV FWD K9K 288 | Date to:2010.12 | GCI41142 | Inner Joint | | 26 | 24 | 33 | 327 | 93 | |
| | 2008.07-2012.06 | MT | F | L | MPV FWD K9K 288 | Date to:2010.12 | GDS41407 | Drive Shaft | | 23 | 26 | 49 | 83.5 | 646 | |
| | 2008.07-2012.06 | MT | F | L | MPV FWD K9K 288 | | GDS41451 | Drive Shaft | | 23 | 26 | 49 | 83.5 | 642 | |
| | 2008.07-2012.06 | | F | L/R | MPV FWD K9K 288 | | GCO41244 | Outer Joint | | 23 | 23 | 49 | 83.5 | 59 | M |
| 1.5 (80 kw) | 2006.01-2010.12 | AT | F | L/R | MPV 4WD HR15DE | Model code:E11 | GCO41303 | Outer Joint | | 25 | 21 | 49 | 95 | 56 | M |
| 1.6 (81 kw) | 2006.03-2012.06 | 4AT/5AT/5MT | F | L/R | MPV FWD HR16DE | | GCO41046 | Outer Joint | | 23 | 21 | 49 | 83.5 | 56 | M |
| | 2006.03-2012.06 | 4AT/5AT/5MT | F | L/R | MPV FWD HR16DE | Thread Size:M20×1.5 | GCO41047 | Outer Joint | | 23 | 22 | 49 | 83.5 | 56 | M |
| | 2006.03-2012.06 | 4AT/5AT/5MT | F | L/R | MPV FWD HR16DE | Thread Size:M18×1.5 | GCO41119 | Outer Joint | | 23 | 22 | 48 | 92.5 | 56.5 | M |
| | 2006.03-2012.06 | AT | F | L | MPV FWD HR16DE | Inner teeth of wheel side:21 | GDS41260 | Drive Shaft | | 23 | 25 | 49 | 83.5 | 654 | |
| | 2006.03-2012.06 | AT | F | L | MPV FWD HR16DE | Inner teeth of wheel side:22 | GDS41409 | Drive Shaft | | 23 | 25 | 49 | 83.5 | 647 | |
| | 2006.03-2012.06 | AT | F | R | MPV FWD HR16DE | | GDS41261 | Drive Shaft | | 23 | 25 | 49 | 83.5 | 883 | |
| | 2006.03-2012.06 | MT | F | L | MPV FWD HR16DE | | GDS41451 | Drive Shaft | | 23 | 26 | 49 | 83.5 | 642 | |
| | 2006.03-2012.06 | MT | F | R | MPV FWD HR16DE | | GDS41200 | Drive Shaft | | 23 | 26 | 49 | 83.5 | 892 | |
| | 2006.03-2012.06 | MT | F | L/R | MPV FWD HR16DE | Date from:2007.12,For Modelcode:E11;Thread Size:M22×1.5 | GCO41271 | Outer Joint | | 25 | 22 | 49 | 94.5 | 59.5 | M |
| | 2006.03-2012.06 | MT | F | L/R | MPV FWD HR16DE | Thread Size:M20×1.5 | GCO41340 | Outer Joint | | 23 | 22 | 49 | 83.5 | 59 | M |
| | 2006.03-2012.06 | MT | F | L/R | MPV FWD HR16DE | | GCI41102 | Inner Joint | | 26 | 21 | 40 | 64.5 | 95.5 | |
| **NP300** | | | | | | | | | | | | | | | |
| 2.3 (116 kw) | 2015.07- | AT/MT | F | L | Pickup 4WD YS23DDT | Date to:2017.04 | GDS41574 | Drive Shaft | | 29 | 30 | 67.1 | 125 | 643 | |
| | 2015.07- | AT/MT | F | R | Pickup 4WD YS23DDT | Date from:2017.04,Date to:2018.07 | GDS41574 | Drive Shaft | | 29 | 30 | 67.1 | 125 | 643 | |
| | 2015.07- | AT/MT | F | R | Pickup 4WD YS23DDT | Date to:2017.04 | GDS56386 | Drive Shaft | | 29 | 30 | 67 | 125 | 641 | |
| | 2015.07- | AT/MT | F | L | Pickup 4WD YS23DDT | Date to:2017.04 | GCO41270 | Outer Joint | | 29 | 36 | 67.1 | 125 | 60.5 | I |
| | 2015.07- | AT/MT | F | R | Pickup 4WD YS23DDT | Date from:2017.04,Date to:2018.07 | GCO41270 | Outer Joint | | 29 | 36 | 67.1 | 125 | 60.5 | I |
| | 2015.07- | AT/MT | F | R | Pickup 4WD YS23DDT | Date to:2017.04 | GCO83274 | Outer Joint | | 29 | 36 | 67 | 125 | 60 | I |

| | YEAR | TRANSM. | F/R | L/R | BODY STYLE & DRIVE TYPE & ENGINE | REMARKS | G-AP Ref. | PRODUCT | ABS | Technical Specifications A | B | C | H | L | P |
|---|---|---|---|---|---|---|---|---|---|---|---|---|---|---|---|
| **NISSAN** | | | | | | | | | | | | | | | |
| **NP300** | | | | | | | | | | | | | | | |
| 2.3 (116 kw) | 2015.07- | AT/MT | F | L | Pickup 4WD YS23DDT | Date to:2017.04 | GCI41220 | Inner Joint | | 30 | 35 | 39 | 62 | 129.5 | |
| | 2015.07- | AT/MT | F | R | Pickup 4WD YS23DDT | Date from:2017.04,Date to:2018.07 | GCI41220 | Inner Joint | | 30 | 35 | 39 | 62 | 129.5 | |
| | 2015.07- | AT/MT | F | R | Pickup 4WD YS23DDT | Date to:2017.04 | GCI83280 | Inner Joint | | 30 | 35 | 39 | 62 | 130 | |
| 2.5 (98 kw) | 2008.04- | 5AT/5MT | F | L/R | Pickup 4WD YD25DDTi | | GDS41393 | Drive Shaft | | 28 | | 50 | 150 | 570 | |
| | 2008.04- | 5AT/5MT | F | L/R | Pickup 4WD YD25DDTi | | GCI41014 | Inner Joint | | | 27 | | | 78 | |
| | 2008.04- | MT | F | L/R | Pickup 4WD YD25DDTi | | GCO41100 | Outer Joint | | 28 | 25 | 50 | 150 | 71 | I |
| | 2008.04- | MT | F | L/R | Pickup 4WD YD25DDTi | | GCI81497 | Inner Joint | | | 27 | | | 75 | |
| **NV200** | | | | | | | | | | | | | | | |
| 1.5 (63 kw) | 2010.02- | 5MT | F | L | Van FWD K9K 608;K9K 400;K9K 628 | | GDS41497 | Drive Shaft | | 29 | 26 | 56.2 | 102 | 666 | |
| | 2010.02- | 5MT | F | L/R | Van FWD K9K 608;K9K 400;K9K 628 | | GCO41294 | Outer Joint | | 29 | 24 | 56.2 | 102 | 63 | M |
| | 2010.02- | 5MT | F | L | Van FWD K9K 608;K9K 400;K9K 628 | | GCI41084 | Inner Joint | | 26 | 23 | 40 | 64.5 | 109.5 | |
| | 2010.02- | MT | F | R | Van FWD K9K 608;K9K 400;K9K 628 | | GDS41466 | Drive Shaft | | 29 | 26 | 56.2 | 102 | 914 | |
| | 2010.02- | MT | F | R | Van FWD K9K 608;K9K 400;K9K 628 | | GCI41159 | Inner Joint | | 26 | 23 | 33 | 326.5 | 91 | |
| | 2010.02- | | F | L | Van FWD K9K 608;K9K 400;K9K 628 | | GCO81560 | Outer Joint | | 29 | 24 | 56.2 | 102 | 63 | M |
| 1.5 (66 kw) | 2011.04- | 5MT | F | L | Van FWD K9K 892 | | GDS41497 | Drive Shaft | | 29 | 26 | 56.2 | 102 | 666 | |
| | 2011.04- | 5MT | F | L/R | Van FWD K9K 892 | | GCO41294 | Outer Joint | | 29 | 24 | 56.2 | 102 | 63 | M |
| | 2011.04- | 5MT | F | L | Van FWD K9K 892 | | GCI41084 | Inner Joint | | 26 | 23 | 40 | 64.5 | 109.5 | |
| | 2011.04- | MT | F | R | Van FWD K9K 892 | | GDS41466 | Drive Shaft | | 29 | 26 | 56.2 | 102 | 914 | |
| | 2011.04- | MT | F | L | Van FWD K9K 892 | | GCO81560 | Outer Joint | | 29 | 24 | 56.2 | 102 | 63 | M |
| | 2011.04- | MT | F | R | Van FWD K9K 892 | | GCI41159 | Inner Joint | | 26 | 23 | 33 | 326.5 | 91 | |
| 1.5 (78 kw) | 2010.07-2013.10 | 6MT | F | R | Van FWD K9K | | GDS41466 | Drive Shaft | | 29 | 26 | 56.2 | 102 | 914 | |
| | 2010.07-2013.10 | 6MT | F | L | Van FWD K9K | Date to:2011.12 | GCI41112 | Inner Joint | | 26 | 23 | 40 | 64 | 104.5 | |
| 1.5 (81 kw) | 2011.04- | 6MT | F | R | Van FWD K9K 636;K9K 646 | | GCO41348 | Outer Joint | | 29 | 25 | 56.2 | 102.5 | 65 | M |
| | 2011.04- | MT | F | L | Van FWD K9K 636;K9K 646 | | GDS41497 | Drive Shaft | | 29 | 26 | 56.2 | 102 | 666 | |
| | 2011.04- | MT | F | L | Van FWD K9K 636;K9K 646 | | GCO41294 | Outer Joint | | 29 | 24 | 56.2 | 102 | 63 | M |
| | 2011.04- | MT | F | L | Van FWD K9K 636;K9K 646 | | GCI41084 | Inner Joint | | 26 | 23 | 40 | 64.5 | 109.5 | |
| 1.6 (81 kw) | 2010.02- | 4AT | F | R | Van FWD HR16DE | | GDS81498 | Drive Shaft | | 29 | 25 | 56.2 | 102 | 910 | |
| | 2010.02- | 5MT | F | L | Van FWD HR16DE | | GDS41497 | Drive Shaft | | 29 | 26 | 56.2 | 102 | 666 | |
| | 2010.02- | 5MT | F | L | Van FWD HR16DE | | GCO41294 | Outer Joint | | 29 | 24 | 56.2 | 102 | 63 | M |
| | 2010.02- | 5MT | F | L | Van FWD HR16DE | | GCI41084 | Inner Joint | | 26 | 23 | 40 | 64.5 | 109.5 | |
| | 2010.02- | | F | L | Van FWD HR16DE | | GCO81560 | Outer Joint | | 29 | 24 | 56.2 | 102 | 63 | M |
| 2.0 (98 kw) | 2013.09- | AT | F | L | Van FWD MR20DD | | GDS56086 | Drive Shaft | | 29 | 27 | 56.3 | 102 | 692 | |
| | 2013.09- | AT | F | R | Van FWD MR20DD | | GDS83940 | Drive Shaft | | 29 | 27 | 56.3 | 102 | 940 | |
| | 2013.09- | AT | F | L/R | Van FWD MR20DD | | GCO82480 | Outer Joint | | 29 | 23 | 56.3 | 102 | 63 | M |
| | 2013.09- | AT | F | R | Van FWD MR20DD | | GCI41082 | Inner Joint | | 27 | 23 | 33 | 321 | 92 | |
| **NV200 Evalia** | | | | | | | | | | | | | | | |
| 1.5 (63 kw) | 2010.07- | MT | F | L | Bus FWD K9K 608;K9K 400;K9K 628 | | GDS41497 | Drive Shaft | | 29 | 26 | 56.2 | 102 | 666 | |
| | 2010.07- | MT | F | R | Bus FWD K9K 608;K9K 400;K9K 628 | | GDS41466 | Drive Shaft | | 29 | 26 | 56.2 | 102 | 914 | |
| | 2010.07- | MT | F | L/R | Bus FWD K9K 608;K9K 400;K9K 628 | | GCO41294 | Outer Joint | | 29 | 24 | 56.2 | 102 | 63 | M |
| | 2010.07- | MT | F | L | Bus FWD K9K 608;K9K 400;K9K 628 | | GCI41084 | Inner Joint | | 26 | 23 | 40 | 64.5 | 109.5 | |
| | 2010.07- | MT | F | R | Bus FWD K9K 608;K9K 400;K9K 628 | | GCI41159 | Inner Joint | | 26 | 23 | 33 | 326.5 | 91 | |
| | 2010.07- | | F | L | Bus FWD K9K 608;K9K 400;K9K 628 | | GCO81560 | Outer Joint | | 29 | 24 | 56.2 | 102 | 63 | M |
| 1.5 (66 kw) | 2011.04- | 5MT | F | L | Bus FWD K9K 892 | | GDS41497 | Drive Shaft | | 29 | 26 | 56.2 | 102 | 666 | |
| | 2011.04- | MT | F | R | Bus FWD K9K 892 | | GDS41466 | Drive Shaft | | 29 | 26 | 56.2 | 102 | 914 | |
| | 2011.04- | MT | F | L/R | Bus FWD K9K 892 | | GCO41294 | Outer Joint | | 29 | 24 | 56.2 | 102 | 63 | M |
| | 2011.04- | MT | F | R | Bus FWD K9K 892 | | GCI41159 | Inner Joint | | 26 | 23 | 33 | 326.5 | 91 | |
| | 2011.04- | MT/5MT | F | L | Bus FWD K9K 892 | | GCI41084 | Inner Joint | | 26 | 23 | 40 | 64.5 | 109.5 | |
| | 2011.04- | | F | L | Bus FWD K9K 892 | | GCO81560 | Outer Joint | | 29 | 24 | 56.2 | 102 | 63 | M |
| 1.5 (80 kw) | 2012.01- | 5MT | F | L | Bus FWD HR15DE | | GDS41497 | Drive Shaft | | 29 | 26 | 56.2 | 102 | 666 | |
| | 2012.01- | 5MT | F | L | Bus FWD HR15DE | | GCO41294 | Outer Joint | | 29 | 24 | 56.2 | 102 | 63 | M |
| | 2012.01- | 5MT | F | L | Bus FWD HR15DE | | GCI41084 | Inner Joint | | 26 | 23 | 40 | 64.5 | 109.5 | |
| 1.5 (81 kw) | 2011.04- | 5MT/6MT | F | R | Bus FWD K9K 636;K9K 646 | | GCO41348 | Outer Joint | | 29 | 25 | 56.2 | 102.5 | 65 | M |
| | 2011.04- | MT | F | L | Bus FWD K9K 636;K9K 646 | | GDS41497 | Drive Shaft | | 29 | 26 | 56.2 | 102 | 666 | |
| | 2011.04- | MT | F | R | Bus FWD K9K 636;K9K 646 | | GDS41466 | Drive Shaft | | 29 | 26 | 56.2 | 102 | 914 | |
| | 2011.04- | MT | F | L | Bus FWD K9K 636;K9K 646 | | GCO41294 | Outer Joint | | 29 | 24 | 56.2 | 102 | 63 | M |
| | 2011.04- | MT | F | L | Bus FWD K9K 636;K9K 646 | | GCI41084 | Inner Joint | | 26 | 23 | 40 | 64.5 | 109.5 | |
| 1.6 (81 kw) | 2010.07- | MT | F | L | Bus FWD HR16DE | | GDS41497 | Drive Shaft | | 29 | 26 | 56.2 | 102 | 666 | |
| | 2010.07- | MT | F | L | Bus FWD HR16DE | | GCO41294 | Outer Joint | | 29 | 24 | 56.2 | 102 | 63 | M |
| | 2010.07- | MT | F | L | Bus FWD HR16DE | | GCI41084 | Inner Joint | | 26 | 23 | 40 | 64.5 | 109.5 | |
| | 2010.07- | | F | L | Bus FWD HR16DE | | GCO81560 | Outer Joint | | 29 | 24 | 56.2 | 102 | 63 | M |
| **NV300** | | | | | | | | | | | | | | | |
| 1.6 (70 kw) | 2016.09- | 6MT | F | L | Bus FWD R9M 413 | | GDS82548 | Drive Shaft | | 29 | 39 | 60 | 95.5 | 694 | |
| | 2016.09- | 6MT | F | R | Bus FWD R9M 413 | | GDS18445 | Drive Shaft | | 29 | 39 | 60 | 96 | 1020 | |
| | 2016.09- | MT | F | L | Bus FWD R9M 413 | | GCO81973 | Outer Joint | | 29 | 28 | 60 | 95.5 | 68.5 | I |
| | 2016.09- | MT | F | R | Bus FWD R9M 413 | Date from:2017.01 | GCO18327 | Outer Joint | | 29 | 28 | 60 | 96 | 69 | I |

| | YEAR | TRANSM. | F/R | L/R | BODY STYLE & DRIVE TYPE & ENGINE | REMARKS | G-AP Ref. | PRODUCT | ABS | Technical Specifications A | B | C | H | L | P |
|---|---|---|---|---|---|---|---|---|---|---|---|---|---|---|---|
| **NISSAN** **NV300** | | | | | | | | | | | | | | | |
| 1.6 (70 kw) | 2016.09- | MT | F | L | Bus FWD R9M 413 | | GCI18247 | Inner Joint | | 39 | 27 | 39 | 74 | 108.5 | |
| | 2016.09- | MT | F | R | Bus FWD R9M 413 | Date from:2017.01 | GCI81567 | Inner Joint | | 39 | 27 | 30 | 367.5 | 92 | |
| | 2016.09- | 6MT | F | L | Van FWD R9M 413;R9M 415 | | GDS82548 | Drive Shaft | | 29 | 39 | 60 | 95.5 | 694 | |
| | 2016.09- | 6MT | F | R | Van FWD R9M 413;R9M 415 | | GDS18445 | Drive Shaft | | 29 | 39 | 60 | 96 | 1020 | |
| | 2016.09- | MT | F | L | Van FWD R9M 413;R9M 415 | | GCO81973 | Outer Joint | | 29 | 28 | 60 | 95.5 | 68.5 | I |
| | 2016.09- | MT | F | R | Van FWD R9M 413;R9M 415 | Date from:2017.01 | GCO18327 | Outer Joint | | 29 | 28 | 60 | 96 | 69 | I |
| | 2016.09- | MT | F | L | Van FWD R9M 413;R9M 415 | | GCI18247 | Inner Joint | | 39 | 27 | 39 | 74 | 108.5 | |
| | 2016.09- | MT | F | R | Van FWD R9M 413;R9M 415 | Date from:2017.01 | GCI81567 | Inner Joint | | 39 | 27 | 30 | 367.5 | 92 | |
| 1.6 (89 kw) | 2016.09- | 6MT | F | L | Bus FWD R9M 413;R9M 415 | | GDS82548 | Drive Shaft | | 29 | 39 | 60 | 95.5 | 694 | |
| | 2016.09- | 6MT | F | R | Bus FWD R9M 413;R9M 415 | | GDS18445 | Drive Shaft | | 29 | 39 | 60 | 96 | 1020 | |
| | 2016.09- | 6MT | F | L | Van FWD R9M 413;R9M 415 | | GDS82548 | Drive Shaft | | 29 | 39 | 60 | 95.5 | 694 | |
| | 2016.09- | 6MT | F | R | Van FWD R9M 413;R9M 415 | | GDS18445 | Drive Shaft | | 29 | 39 | 60 | 96 | 1020 | |
| | 2016.09- | MT | F | L | Van FWD R9M 413;R9M 415 | | GCO81973 | Outer Joint | | 29 | 28 | 60 | 95.5 | 68.5 | I |
| | 2016.09- | MT | F | R | Van FWD R9M 413;R9M 415 | Date from:2017.01 | GCO18327 | Outer Joint | | 29 | 28 | 60 | 96 | 69 | I |
| | 2016.09- | MT | F | L | Van FWD R9M 413;R9M 415 | | GCI18247 | Inner Joint | | 39 | 27 | 39 | 74 | 108.5 | |
| | 2016.09- | MT | F | R | Van FWD R9M 413;R9M 415 | Date from:2017.01 | GCI81567 | Inner Joint | | 39 | 27 | 30 | 367.5 | 92 | |
| 1.6 (92 kw) | 2016.09- | 6MT | F | L | Bus FWD R9M 452 | | GDS82548 | Drive Shaft | | 29 | 39 | 60 | 95.5 | 694 | |
| | 2016.09- | 6MT | F | R | Bus FWD R9M 452 | | GDS18445 | Drive Shaft | | 29 | 39 | 60 | 96 | 1020 | |
| | 2016.09- | MT | F | L | Bus FWD R9M 452 | | GCO81973 | Outer Joint | | 29 | 28 | 60 | 95.5 | 68.5 | I |
| | 2016.09- | MT | F | R | Bus FWD R9M 452 | Date from:2017.01 | GCO18327 | Outer Joint | | 29 | 28 | 60 | 96 | 69 | I |
| | 2016.09- | MT | F | L | Bus FWD R9M 452 | | GCI18247 | Inner Joint | | 39 | 27 | 39 | 74 | 108.5 | |
| | 2016.09- | MT | F | R | Bus FWD R9M 452 | Date from:2017.01 | GCI81567 | Inner Joint | | 39 | 27 | 30 | 367.5 | 92 | |
| | 2016.09- | 6MT | F | L | Platform/Chassis FWD R9M 452 | | GDS82548 | Drive Shaft | | 29 | 39 | 60 | 95.5 | 694 | |
| | 2016.09- | 6MT | F | R | Platform/Chassis FWD R9M 452 | | GDS18445 | Drive Shaft | | 29 | 39 | 60 | 96 | 1020 | |
| | 2016.09- | MT | F | L | Platform/Chassis FWD R9M 452 | | GCO81973 | Outer Joint | | 29 | 28 | 60 | 95.5 | 68.5 | I |
| | 2016.09- | MT | F | R | Platform/Chassis FWD R9M 452 | Date from:2017.01 | GCO18327 | Outer Joint | | 29 | 28 | 60 | 96 | 69 | I |
| | 2016.09- | MT | F | L | Platform/Chassis FWD R9M 452 | | GCI18247 | Inner Joint | | 39 | 27 | 39 | 74 | 108.5 | |
| | 2016.09- | MT | F | R | Platform/Chassis FWD R9M 452 | Date from:2017.01 | GCI81567 | Inner Joint | | 39 | 27 | 30 | 367.5 | 92 | |
| | 2016.09- | 6MT | F | L | Van FWD R9M 452 | | GDS82548 | Drive Shaft | | 29 | 39 | 60 | 95.5 | 694 | |
| | 2016.09- | 6MT | F | R | Van FWD R9M 452 | | GDS18445 | Drive Shaft | | 29 | 39 | 60 | 96 | 1020 | |
| | 2016.09- | MT | F | L | Van FWD R9M 452 | | GCO81973 | Outer Joint | | 29 | 28 | 60 | 95.5 | 68.5 | I |
| | 2016.09- | MT | F | R | Van FWD R9M 452 | Date from:2017.01 | GCO18327 | Outer Joint | | 29 | 28 | 60 | 96 | 69 | I |
| | 2016.09- | MT | F | L | Van FWD R9M 452 | | GCI18247 | Inner Joint | | 39 | 27 | 39 | 74 | 108.5 | |
| | 2016.09- | MT | F | R | Van FWD R9M 452 | Date from:2017.01 | GCI81567 | Inner Joint | | 39 | 27 | 30 | 367.5 | 92 | |
| 1.6 (107 kw) | 2016.09- | 6MT | F | L | Bus FWD R9M 452 | | GDS82548 | Drive Shaft | | 29 | 39 | 60 | 95.5 | 694 | |
| | 2016.09- | 6MT | F | R | Bus FWD R9M 452 | | GDS18445 | Drive Shaft | | 29 | 39 | 60 | 96 | 1020 | |
| | 2016.09- | MT | F | L | Bus FWD R9M 452 | | GCO81973 | Outer Joint | | 29 | 28 | 60 | 95.5 | 68.5 | I |
| | 2016.09- | MT | F | R | Bus FWD R9M 452 | Date from:2017.01 | GCO18327 | Outer Joint | | 29 | 28 | 60 | 96 | 69 | I |
| | 2016.09- | MT | F | L | Bus FWD R9M 452 | | GCI18247 | Inner Joint | | 39 | 27 | 39 | 74 | 108.5 | |
| | 2016.09- | MT | F | R | Bus FWD R9M 452 | Date from:2017.01 | GCI81567 | Inner Joint | | 39 | 27 | 30 | 367.5 | 92 | |
| | 2016.09- | 6MT | F | L | Platform/Chassis FWD R9M 452 | | GDS82548 | Drive Shaft | | 29 | 39 | 60 | 95.5 | 694 | |
| | 2016.09- | 6MT | F | R | Platform/Chassis FWD R9M 452 | | GDS18445 | Drive Shaft | | 29 | 39 | 60 | 96 | 1020 | |
| | 2016.09- | MT | F | L | Platform/Chassis FWD R9M 452 | | GCO81973 | Outer Joint | | 29 | 28 | 60 | 95.5 | 68.5 | I |
| | 2016.09- | MT | F | R | Platform/Chassis FWD R9M 452 | Date from:2017.01 | GCO18327 | Outer Joint | | 29 | 28 | 60 | 96 | 69 | I |
| | 2016.09- | MT | F | L | Platform/Chassis FWD R9M 452 | | GCI18247 | Inner Joint | | 39 | 27 | 39 | 74 | 108.5 | |
| | 2016.09- | MT | F | R | Platform/Chassis FWD R9M 452 | Date from:2017.01 | GCI81567 | Inner Joint | | 39 | 27 | 30 | 367.5 | 92 | |
| | 2016.09- | 6MT | F | L | Van FWD R9M 452 | | GDS82548 | Drive Shaft | | 29 | 39 | 60 | 95.5 | 694 | |
| | 2016.09- | 6MT | F | R | Van FWD R9M 452 | | GDS18445 | Drive Shaft | | 29 | 39 | 60 | 96 | 1020 | |
| | 2016.09- | MT | F | L | Van FWD R9M 452 | | GCO81973 | Outer Joint | | 29 | 28 | 60 | 95.5 | 68.5 | I |
| | 2016.09- | MT | F | R | Van FWD R9M 452 | Date from:2017.01 | GCO18327 | Outer Joint | | 29 | 28 | 60 | 96 | 69 | I |
| | 2016.09- | MT | F | L | Van FWD R9M 452 | | GCI18247 | Inner Joint | | 39 | 27 | 39 | 74 | 108.5 | |
| | 2016.09- | MT | F | R | Van FWD R9M 452 | Date from:2017.01 | GCI81567 | Inner Joint | | 39 | 27 | 30 | 367.5 | 92 | |
| 2.0 (81 kw) | 2021.05- | 6MT | F | L | Bus FWD M9R 714 | | GDS82548 | Drive Shaft | | 29 | 39 | 60 | 95.5 | 694 | |
| | 2021.05- | 6MT | F | L | Van FWD M9R 714 | | GDS82548 | Drive Shaft | | 29 | 39 | 60 | 95.5 | 694 | |
| 2.0 (88 kw) | 2019.07- | 6MT | F | L | Bus FWD M9R 710 | | GDS82548 | Drive Shaft | | 29 | 39 | 60 | 95.5 | 694 | |
| | 2019.07- | 6MT | F | L | Bus FWD M9R 710 | | GCO81973 | Outer Joint | | 29 | 28 | 60 | 95.5 | 68.5 | I |
| | 2019.07- | 6MT | F | L | Bus FWD M9R 710 | | GCI18247 | Inner Joint | | 39 | 27 | 39 | 74 | 108.5 | |
| | 2019.07- | 6MT | F | L | Van FWD M9R 710 | | GDS82548 | Drive Shaft | | 29 | 39 | 60 | 95.5 | 694 | |
| | 2019.07- | 6MT | F | L | Van FWD M9R 710 | | GCO81973 | Outer Joint | | 29 | 28 | 60 | 95.5 | 68.5 | I |
| | 2019.07- | 6MT | F | L | Van FWD M9R 710 | | GCI18247 | Inner Joint | | 39 | 27 | 39 | 74 | 108.5 | |
| 2.0 (107 kw) | 2019.07- | 6DCT | F | R | Bus FWD M9R 710 | | GDS57578 | Drive Shaft | | 29 | 28 | 60 | 95.5 | 1005 | |
| | 2019.07- | 6MT | F | L | Bus FWD M9R 710 | | GDS82548 | Drive Shaft | | 29 | 39 | 60 | 95.5 | 694 | |
| | 2019.07- | 6MT | F | L | Bus FWD M9R 710 | | GCO81973 | Outer Joint | | 29 | 28 | 60 | 95.5 | 68.5 | I |
| | 2019.07- | 6MT | F | L | Bus FWD M9R 710 | | GCI18247 | Inner Joint | | 39 | 27 | 39 | 74 | 108.5 | |
| | 2019.07- | 6DCT | F | R | Platform/Chassis FWD M9R 710 | | GDS57578 | Drive Shaft | | 29 | 28 | 60 | 95.5 | 1005 | |

| | YEAR | TRANSM. | F/R | L/R | BODY STYLE & DRIVE TYPE & ENGINE | REMARKS | G-AP Ref. | PRODUCT | ABS | Technical Specifications A | B | C | H | L | P |
|---|---|---|---|---|---|---|---|---|---|---|---|---|---|---|---|
| **NISSAN** | | | | | | | | | | | | | | | |
| **NV300** | | | | | | | | | | | | | | | |
| 2.0 (107 kw) | 2019.07- | 6MT | F | L | Platform/Chassis FWD M9R 710 | | GDS82548 | Drive Shaft | | 29 | 39 | 60 | 95.5 | 694 | |
| | 2019.07- | 6MT | F | L | Platform/Chassis FWD M9R 710 | | GCO81973 | Outer Joint | | 29 | 28 | 60 | 95.5 | 68.5 | I |
| | 2019.07- | 6MT | F | L | Platform/Chassis FWD M9R 710 | | GCI18247 | Inner Joint | | 39 | 27 | 39 | 74 | 108.5 | |
| | 2019.07- | 6DCT | F | R | Van FWD M9R 710 | | GDS57578 | Drive Shaft | | 29 | 28 | 60 | 95.5 | 1005 | |
| | 2019.07- | 6MT | F | L | Van FWD M9R 710 | | GDS82548 | Drive Shaft | | 29 | 39 | 60 | 95.5 | 694 | |
| | 2019.07- | 6MT | F | L | Van FWD M9R 710 | | GCO81973 | Outer Joint | | 29 | 28 | 60 | 95.5 | 68.5 | I |
| | 2019.07- | 6MT | F | L | Van FWD M9R 710 | | GCI18247 | Inner Joint | | 39 | 27 | 39 | 74 | 108.5 | |
| 2.0 (110 kw) | 2021.05- | 6DCT | F | R | Bus FWD M9R 714 | | GDS57578 | Drive Shaft | | 29 | 28 | 60 | 95.5 | 1005 | |
| | 2021.05- | 6MT | F | L | Bus FWD M9R 714 | | GDS82548 | Drive Shaft | | 29 | 39 | 60 | 95.5 | 694 | |
| | 2021.05- | 6DCT | F | R | Van FWD M9R 714 | | GDS57578 | Drive Shaft | | 29 | 28 | 60 | 95.5 | 1005 | |
| | 2021.05- | 6MT | F | L | Van FWD M9R 714 | | GDS82548 | Drive Shaft | | 29 | 39 | 60 | 95.5 | 694 | |
| 2.0 (125 kw) | 2019.07- | 6DCT | F | R | Bus FWD M9R 710;M9R 714 | | GDS57578 | Drive Shaft | | 29 | 28 | 60 | 95.5 | 1005 | |
| | 2019.07- | 6DCT | F | R | Platform/Chassis FWD M9R 710 | | GDS57578 | Drive Shaft | | 29 | 28 | 60 | 95.5 | 1005 | |
| | 2019.07- | 6MT | F | L | Platform/Chassis FWD M9R 710 | | GDS82548 | Drive Shaft | | 29 | 39 | 60 | 95.5 | 694 | |
| | 2019.07- | 6MT | F | L | Platform/Chassis FWD M9R 710 | | GCO81973 | Outer Joint | | 29 | 28 | 60 | 95.5 | 68.5 | I |
| | 2019.07- | 6MT | F | L | Platform/Chassis FWD M9R 710 | | GCI18247 | Inner Joint | | 39 | 27 | 39 | 74 | 108.5 | |
| | 2019.07- | 6DCT | F | R | Van FWD M9R 710 | | GDS57578 | Drive Shaft | | 29 | 28 | 60 | 95.5 | 1005 | |
| | 2019.07- | 6MT | F | L | Van FWD M9R 710 | | GDS82548 | Drive Shaft | | 29 | 39 | 60 | 95.5 | 694 | |
| | 2019.07- | 6MT | F | L | Van FWD M9R 710 | | GCO81973 | Outer Joint | | 29 | 28 | 60 | 95.5 | 68.5 | I |
| | 2019.07- | 6MT | F | L | Van FWD M9R 710 | | GCI18247 | Inner Joint | | 39 | 27 | 39 | 74 | 108.5 | |
| **NV400** | | | | | | | | | | | | | | | |
| 2.3 (74 kw) | 2011.11-2016.09 | 6MT | F | L | Bus FWD M9T 670;M9T 672;M9T 676;M9T 870 | | GDS18247 | Drive Shaft | | 31 | 39 | 70 | 100.5 | 743 | |
| | 2011.11-2016.09 | 6MT | F | R | Bus FWD M9T 670;M9T 672;M9T 676;M9T 870 | Date to:2014.01 | GDS18248 | Drive Shaft | | 31 | 39 | 70 | 100.5 | 1075 | |
| | 2011.11-2016.09 | 6MT | F | L/R | Bus FWD M9T 670;M9T 672;M9T 676;M9T 870 | | GCO50132 | Outer Joint | | 31 | 27 | 70 | 100.5 | 63.5 | I |
| | 2011.11-2016.09 | 6MT | F | L | Bus FWD M9T 670;M9T 672;M9T 676;M9T 870 | | GCI50045 | Inner Joint | | 39 | 27 | 39 | 74 | 109 | |
| | 2011.11-2016.09 | 6MT | F | R | Bus FWD M9T 670;M9T 672;M9T 676;M9T 870 | | GCI50046 | Inner Joint | | 39 | 27 | 30 | 364 | 87 | |
| | 2011.11-2016.09 | 6MT | F | L | Platform/Chassis FWD M9T 670;M9T 672;M9T 676;M9T 870 | | GDS18247 | Drive Shaft | | 31 | 39 | 70 | 100.5 | 743 | |
| | 2011.11-2016.09 | 6MT | F | R | Platform/Chassis FWD M9T 670;M9T 672;M9T 676;M9T 870 | Date to:2014.01 | GDS18248 | Drive Shaft | | 31 | 39 | 70 | 100.5 | 1075 | |
| | 2011.11-2016.09 | 6MT | F | L/R | Platform/Chassis FWD M9T 670;M9T 672;M9T 676;M9T 870 | | GCO50132 | Outer Joint | | 31 | 27 | 70 | 100.5 | 63.5 | I |
| | 2011.11-2016.09 | 6MT | F | L | Platform/Chassis FWD M9T 670;M9T 672;M9T 676;M9T 870 | | GCI50045 | Inner Joint | | 39 | 27 | 39 | 74 | 109 | |
| | 2011.11-2016.09 | 6MT | F | R | Platform/Chassis FWD M9T 670;M9T 672;M9T 676;M9T 870 | | GCI50046 | Inner Joint | | 39 | 27 | 30 | 364 | 87 | |
| | 2011.11-2016.09 | 6MT | F | L | Van FWD M9T 670;M9T 672;M9T 676;M9T 870 | | GDS18247 | Drive Shaft | | 31 | 39 | 70 | 100.5 | 743 | |
| | 2011.11-2016.09 | 6MT | F | R | Van FWD M9T 670;M9T 672;M9T 676;M9T 870 | Date to:2014.01 | GDS18248 | Drive Shaft | | 31 | 39 | 70 | 100.5 | 1075 | |
| | 2011.11-2016.09 | 6MT | F | L/R | Van FWD M9T 670;M9T 672;M9T 676;M9T 870 | | GCO50132 | Outer Joint | | 31 | 27 | 70 | 100.5 | 63.5 | I |
| | 2011.11-2016.09 | 6MT | F | L | Van FWD M9T 670;M9T 672;M9T 676;M9T 870 | | GCI50045 | Inner Joint | | 39 | 27 | 39 | 74 | 109 | |
| | 2011.11-2016.09 | 6MT | F | R | Van FWD M9T 670;M9T 672;M9T 676;M9T 870 | | GCI50046 | Inner Joint | | 39 | 27 | 30 | 364 | 87 | |
| 2.3 (81 kw) | 2014.06-2022.12 | 6MT | F | L | Bus FWD M9T 870;M9T 704 | | GDS18247 | Drive Shaft | | 31 | 39 | 70 | 100.5 | 743 | |
| | 2014.06-2022.12 | 6MT | F | L/R | Bus FWD M9T 870;M9T 704 | | GCO50132 | Outer Joint | | 31 | 27 | 70 | 100.5 | 63.5 | I |
| | 2014.06-2022.12 | 6MT | F | L | Bus FWD M9T 870;M9T 704 | | GCI50045 | Inner Joint | | 39 | 27 | 39 | 74 | 109 | |
| | 2014.06-2022.12 | 6MT | F | R | Bus FWD M9T 870;M9T 704 | | GCI50046 | Inner Joint | | 39 | 27 | 30 | 364 | 87 | |
| | 2014.06-2022.12 | MT | F | R | Bus FWD M9T 870;M9T 704 | | GDS18248 | Drive Shaft | | 31 | 39 | 70 | 100.5 | 1075 | |
| | 2014.06-2022.12 | 6MT | F | L | Platform/Chassis FWD M9T 870;M9T 704 | | GDS18247 | Drive Shaft | | 31 | 39 | 70 | 100.5 | 743 | |
| | 2014.06-2022.12 | 6MT | F | R | Platform/Chassis FWD M9T 870;M9T 704 | Date to:2019.12 | GDS18515 | Drive Shaft | | 31 | 39 | 70 | 101 | 1077 | |
| | 2014.06-2022.12 | 6MT | F | R | Platform/Chassis FWD M9T 870;M9T 704 | Date from:2020.01 | GDS57562 | Drive Shaft | | 31 | 39 | 70 | 101 | 1085 | |
| | 2014.06-2022.12 | 6MT | F | L | Platform/Chassis FWD M9T 870;M9T 704 | | GCO50132 | Outer Joint | | 31 | 27 | 70 | 100.5 | 63.5 | I |
| | 2014.06-2022.12 | 6MT | F | L | Platform/Chassis FWD M9T 870;M9T 704 | | GCI50045 | Inner Joint | | 39 | 27 | 39 | 74 | 109 | |
| | 2014.06-2022.12 | 6MT | F | L | Van FWD M9T 870;M9T 704 | | GDS18247 | Drive Shaft | | 31 | 39 | 70 | 100.5 | 743 | |
| | 2014.06-2022.12 | 6MT | F | R | Van FWD M9T 870;M9T 704 | | GDS18248 | Drive Shaft | | 31 | 39 | 70 | 100.5 | 1075 | |
| | 2014.06-2022.12 | 6MT | F | L/R | Van FWD M9T 870;M9T 704 | | GCO50132 | Outer Joint | | 31 | 27 | 70 | 100.5 | 63.5 | I |
| | 2014.06-2022.12 | 6MT | F | L | Van FWD M9T 870;M9T 704 | | GCI50045 | Inner Joint | | 39 | 27 | 39 | 74 | 109 | |
| | 2014.06-2022.12 | 6MT | F | R | Van FWD M9T 870;M9T 704 | | GCI50046 | Inner Joint | | 39 | 27 | 30 | 364 | 87 | |
| 2.3 (92 kw) | 2011.11-2016.09 | 6MT | F | L | Bus FWD M9T 670;M9T 672;M9T 676;M9T 680;M9T 880;M9T 870;M9T 872;M9T 882 | | GDS18247 | Drive Shaft | | 31 | 39 | 70 | 100.5 | 743 | |
| | 2011.11-2016.09 | 6MT | F | R | Bus FWD M9T 670;M9T 672;M9T 676;M9T 680;M9T 880;M9T 870;M9T 872;M9T 882 | Date to:2014.01 | GDS18248 | Drive Shaft | | 31 | 39 | 70 | 100.5 | 1075 | |
| | 2011.11-2016.09 | 6MT | F | L/R | Bus FWD M9T 670;M9T 672;M9T 676;M9T 680;M9T 880;M9T 870;M9T 872;M9T 882 | | GCO50132 | Outer Joint | | 31 | 27 | 70 | 100.5 | 63.5 | I |
| | 2011.11-2016.09 | 6MT | F | L | Bus FWD M9T 670;M9T 672;M9T 676;M9T 680;M9T 880;M9T 870;M9T 872;M9T 882 | | GCI50045 | Inner Joint | | 39 | 27 | 39 | 74 | 109 | |
| | 2011.11-2016.09 | 6MT | F | R | Bus FWD M9T 670;M9T 672;M9T 676;M9T 680;M9T 880;M9T 870;M9T 872;M9T 882 | | GCI50046 | Inner Joint | | 39 | 27 | 30 | 364 | 87 | |
| | 2011.11-2016.09 | 6MT | F | L | Platform/Chassis FWD M9T 670;M9T 672;M9T 676;M9T 680;M9T 880;M9T 870;M9T 872;M9T 882 | | GDS18247 | Drive Shaft | | 31 | 39 | 70 | 100.5 | 743 | |
| | 2011.11-2016.09 | 6MT | F | R | Platform/Chassis FWD M9T 670;M9T 672;M9T 676;M9T 680;M9T 880;M9T 870;M9T 872;M9T 882 | Date to:2014.01 | GDS18248 | Drive Shaft | | 31 | 39 | 70 | 100.5 | 1075 | |
| | 2011.11-2016.09 | 6MT | F | L/R | Platform/Chassis FWD M9T 670;M9T 672;M9T 676;M9T 680;M9T 880;M9T 870;M9T 872;M9T 882 | | GCO50132 | Outer Joint | | 31 | 27 | 70 | 100.5 | 63.5 | I |
| | 2011.11-2016.09 | 6MT | F | L | Platform/Chassis FWD M9T 670;M9T 672;M9T 676;M9T 680;M9T 880;M9T 870;M9T 872;M9T 882 | | GCI50045 | Inner Joint | | 39 | 27 | 39 | 74 | 109 | |
| | 2011.11-2016.09 | 6MT | F | R | Platform/Chassis FWD M9T 670;M9T 672;M9T 676;M9T 680;M9T 880;M9T 870;M9T 872;M9T 882 | | GCI50046 | Inner Joint | | 39 | 27 | 30 | 364 | 87 | |
| | 2011.11-2016.09 | 6AT/6MT | F | L | Van FWD M9T 670;M9T 672;M9T 676;M9T 680;M9T 880;M9T 870;M9T 872;M9T 882 | | GDS18247 | Drive Shaft | | 31 | 39 | 70 | 100.5 | 743 | |
| | 2011.11-2016.09 | 6AT/6MT | F | R | Van FWD M9T 670;M9T 672;M9T 676;M9T 680;M9T 880;M9T 870;M9T 872;M9T 882 | Date to:2014.01 | GDS18248 | Drive Shaft | | 31 | 39 | 70 | 100.5 | 1075 | |
| | 2011.11-2016.09 | 6AT/6MT | F | L/R | Van FWD M9T 670;M9T 672;M9T 676;M9T 680;M9T 880;M9T 870;M9T 872;M9T 882 | | GCO50132 | Outer Joint | | 31 | 27 | 70 | 100.5 | 63.5 | I |
| | 2011.11-2016.09 | 6AT/6MT | F | L | Van FWD M9T 670;M9T 672;M9T 676;M9T 680;M9T 880;M9T 870;M9T 872;M9T 882 | | GCI50045 | Inner Joint | | 39 | 27 | 39 | 74 | 109 | |

| | YEAR | TRANSM. | F/R | L/R | BODY STYLE & DRIVE TYPE & ENGINE | REMARKS | G-AP Ref. | PRODUCT | ABS | Technical Specifications A | B | C | H | L | P |
|---|---|---|---|---|---|---|---|---|---|---|---|---|---|---|---|
| **NISSAN** | | | | | | | | | | | | | | | |
| **NV400** | | | | | | | | | | | | | | | |
| 2.3 (92 kw) | 2011.11-2016.09 | 6AT/6MT | F | R | Van FWD M9T 670;M9T 672;M9T 676;M9T 680;M9T 880;M9T 870;M9T 872;M9T 882 | | GCI50046 | Inner Joint | | 39 | 27 | 30 | 364 | 87 | |
| 2.3 (96 kw) | 2016.09-2022.12 | 6MT | F | L | Platform/Chassis FWD M9T 704 | | GDS18247 | Drive Shaft | | 31 | 39 | 70 | 100.5 | 743 | |
| | 2016.09-2022.12 | 6MT | F | R | Platform/Chassis FWD M9T 704 | Date to:2019.12 | GDS18515 | Drive Shaft | | 31 | 39 | 70 | 101 | 1077 | |
| | 2016.09-2022.12 | 6MT | F | R | Platform/Chassis FWD M9T 704 | Date from:2020.01 | GDS57562 | Drive Shaft | | 31 | 39 | 70 | 101 | 1085 | |
| | 2016.09-2022.12 | 6MT | F | L | Platform/Chassis FWD M9T 704 | | GCO50132 | Outer Joint | | 31 | 27 | 70 | 100.5 | 63.5 | I |
| | 2016.09-2022.12 | 6MT | F | L | Platform/Chassis FWD M9T 704 | | GCI50045 | Inner Joint | | 39 | 27 | 39 | 74 | 109 | |
| | 2016.09-2022.12 | 6MT | F | L | Van FWD M9T 704 | | GDS18247 | Drive Shaft | | 31 | 39 | 70 | 100.5 | 743 | |
| | 2016.09-2022.12 | 6MT | F | L/R | Van FWD M9T 704 | | GCO50132 | Outer Joint | | 31 | 27 | 70 | 100.5 | 63.5 | I |
| | 2016.09-2022.12 | 6MT | F | L | Van FWD M9T 704 | | GCI50045 | Inner Joint | | 39 | 27 | 39 | 74 | 109 | |
| | 2016.09-2022.12 | 6MT | F | R | Van FWD M9T 704 | | GCI50046 | Inner Joint | | 39 | 27 | 30 | 364 | 87 | |
| 2.3 (100 kw) | 2014.06-2016.09 | 6MT | F | L | Bus FWD M9T 702 | | GDS18247 | Drive Shaft | | 31 | 39 | 70 | 100.5 | 743 | |
| | 2014.06-2016.09 | 6MT | F | R | Bus FWD M9T 702 | | GDS18248 | Drive Shaft | | 31 | 39 | 70 | 100.5 | 1075 | |
| | 2014.06-2016.09 | 6MT | F | L/R | Bus FWD M9T 702 | | GCO50132 | Outer Joint | | 31 | 27 | 70 | 100.5 | 63.5 | I |
| | 2014.06-2016.09 | 6MT | F | L | Bus FWD M9T 702 | | GCI50045 | Inner Joint | | 39 | 27 | 39 | 74 | 109 | |
| | 2014.06-2016.09 | 6MT | F | R | Bus FWD M9T 702 | | GCI50046 | Inner Joint | | 39 | 27 | 30 | 364 | 87 | |
| | 2014.06-2022.12 | 6MT | F | L | Platform/Chassis FWD M9T 702;M9T 716 | | GDS18247 | Drive Shaft | | 31 | 39 | 70 | 100.5 | 743 | |
| | 2014.06-2022.12 | 6MT | F | R | Platform/Chassis FWD M9T 702;M9T 716 | Date to:2019.12 | GDS18515 | Drive Shaft | | 31 | 39 | 70 | 101 | 1077 | |
| | 2014.06-2022.12 | 6MT | F | R | Platform/Chassis FWD M9T 702;M9T 716 | Date from:2020.01 | GDS57562 | Drive Shaft | | 31 | 39 | 70 | 101 | 1085 | |
| | 2014.06-2022.12 | 6MT | F | L | Platform/Chassis FWD M9T 702;M9T 716 | | GCO50132 | Outer Joint | | 31 | 27 | 70 | 100.5 | 63.5 | I |
| | 2014.06-2022.12 | 6MT | F | L | Platform/Chassis FWD M9T 702;M9T 716 | | GCI50045 | Inner Joint | | 39 | 27 | 39 | 74 | 109 | |
| | 2014.06-2022.12 | MT | F | L | Van FWD M9T 702;M9T 716 | | GDS18247 | Drive Shaft | | 31 | 39 | 70 | 100.5 | 743 | |
| | 2014.06-2022.12 | MT | F | R | Van FWD M9T 702;M9T 716 | | GDS18248 | Drive Shaft | | 31 | 39 | 70 | 100.5 | 1075 | |
| | 2014.06-2022.12 | MT | F | L/R | Van FWD M9T 702;M9T 716 | | GCO50132 | Outer Joint | | 31 | 27 | 70 | 100.5 | 63.5 | I |
| | 2014.06-2022.12 | MT | F | L | Van FWD M9T 702;M9T 716 | | GCI50045 | Inner Joint | | 39 | 27 | 39 | 74 | 109 | |
| | 2014.06-2022.12 | MT | F | R | Van FWD M9T 702;M9T 716 | | GCI50046 | Inner Joint | | 39 | 27 | 30 | 364 | 87 | |
| 2.3 (107 kw) | 2011.11-2022.12 | 6MT | F | L | Bus FWD M9T 678;M9T 680;M9T 706;M9T 708 | Date to:2019.07 | GDS18247 | Drive Shaft | | 31 | 39 | 70 | 100.5 | 743 | |
| | 2011.11-2022.12 | 6MT | F | R | Bus FWD M9T 678;M9T 680;M9T 706;M9T 708 | Date to:2014.01 | GDS18248 | Drive Shaft | | 31 | 39 | 70 | 100.5 | 1075 | |
| | 2011.11-2022.12 | 6MT | F | L/R | Bus FWD M9T 678;M9T 680;M9T 706;M9T 708 | Date To:2014.01 | GCO50132 | Outer Joint | | 31 | 27 | 70 | 100.5 | 63.5 | I |
| | 2011.11-2022.12 | 6MT | F | L | Bus FWD M9T 678;M9T 680;M9T 706;M9T 708 | Date To:2019.07 | GCI50045 | Inner Joint | | 39 | 27 | 39 | 74 | 109 | |
| | 2011.11-2022.12 | 6MT | F | R | Bus FWD M9T 678;M9T 680;M9T 706;M9T 708 | Date To:2014.01 | GCI50046 | Inner Joint | | 39 | 27 | 30 | 364 | 87 | |
| | 2011.11-2022.12 | 6MT | F | L | Platform/Chassis FWD M9T 678;M9T 680;M9T 706 | Date to:2019.07 | GDS18247 | Drive Shaft | | 31 | 39 | 70 | 100.5 | 743 | |
| | 2011.11-2022.12 | 6MT | F | R | Platform/Chassis FWD M9T 678;M9T 680;M9T 706 | Date to:2014.01 | GDS18248 | Drive Shaft | | 31 | 39 | 70 | 100.5 | 1075 | |
| | 2011.11-2022.12 | 6MT | F | L/R | Platform/Chassis FWD M9T 678;M9T 680;M9T 706 | Date To:2014.01 | GCO50132 | Outer Joint | | 31 | 27 | 70 | 100.5 | 63.5 | I |
| | 2011.11-2022.12 | 6MT | F | L | Platform/Chassis FWD M9T 678;M9T 680;M9T 706 | Date To:2019.07 | GCI50045 | Inner Joint | | 39 | 27 | 39 | 74 | 109 | |
| | 2011.11-2022.12 | 6MT | F | R | Platform/Chassis FWD M9T 678;M9T 680;M9T 706 | Date To:2014.01 | GCI50046 | Inner Joint | | 39 | 27 | 30 | 364 | 87 | |
| | 2011.11-2022.12 | 6AT/6MT | F | L | Van FWD M9T 678;M9T 680;M9T 706 | Date to:2019.07 | GDS18247 | Drive Shaft | | 31 | 39 | 70 | 100.5 | 743 | |
| | 2011.11-2022.12 | 6AT/6MT | F | R | Van FWD M9T 678;M9T 680;M9T 706 | Date to:2014.01 | GDS18248 | Drive Shaft | | 31 | 39 | 70 | 100.5 | 1075 | |
| | 2011.11-2022.12 | 6AT/6MT | F | L/R | Van FWD M9T 678;M9T 680;M9T 706 | Date To:2014.01 | GCO50132 | Outer Joint | | 31 | 27 | 70 | 100.5 | 63.5 | I |
| | 2011.11-2022.12 | 6AT/6MT | F | L | Van FWD M9T 678;M9T 680;M9T 706 | Date To:2019.07 | GCI50045 | Inner Joint | | 39 | 27 | 39 | 74 | 109 | |
| | 2011.11-2022.12 | 6AT/6MT | F | R | Van FWD M9T 678;M9T 680;M9T 706 | Date To:2014.01 | GCI50046 | Inner Joint | | 39 | 27 | 30 | 364 | 87 | |
| 2.3 (110 kw) | 2014.02-2022.12 | MT | F | L | Bus FWD M9T 880;M9T 716 | | GDS18247 | Drive Shaft | | 31 | 39 | 70 | 100.5 | 743 | |
| | 2014.02-2022.12 | MT | F | R | Bus FWD M9T 880;M9T 716 | | GDS18248 | Drive Shaft | | 31 | 39 | 70 | 100.5 | 1075 | |
| | 2014.02-2022.12 | MT | F | L/R | Bus FWD M9T 880;M9T 716 | | GCO50132 | Outer Joint | | 31 | 27 | 70 | 100.5 | 63.5 | I |
| | 2014.02-2022.12 | MT | F | L | Bus FWD M9T 880;M9T 716 | | GCI50045 | Inner Joint | | 39 | 27 | 39 | 74 | 109 | |
| | 2014.02-2022.12 | MT | F | R | Bus FWD M9T 880;M9T 716 | | GCI50046 | Inner Joint | | 39 | 27 | 30 | 364 | 87 | |
| | 2014.02-2022.12 | MT | F | L | Van FWD M9T 880;M9T 716 | | GDS18247 | Drive Shaft | | 31 | 39 | 70 | 100.5 | 743 | |
| | 2014.02-2022.12 | MT | F | R | Van FWD M9T 880;M9T 716 | | GDS18248 | Drive Shaft | | 31 | 39 | 70 | 100.5 | 1075 | |
| | 2014.02-2022.12 | MT | F | L/R | Van FWD M9T 880;M9T 716 | | GCO50132 | Outer Joint | | 31 | 27 | 70 | 100.5 | 63.5 | I |
| | 2014.02-2022.12 | MT | F | L | Van FWD M9T 880;M9T 716 | | GCI50045 | Inner Joint | | 39 | 27 | 39 | 74 | 109 | |
| | 2014.02-2022.12 | MT | F | R | Van FWD M9T 880;M9T 716 | | GCI50046 | Inner Joint | | 39 | 27 | 30 | 364 | 87 | |
| | 2014.08-2022.12 | MT | F | L | Platform/Chassis FWD M9T 880;M9T 716 | | GDS18247 | Drive Shaft | | 31 | 39 | 70 | 100.5 | 743 | |
| | 2014.08-2022.12 | MT | F | L | Platform/Chassis FWD M9T 880;M9T 716 | | GCO50132 | Outer Joint | | 31 | 27 | 70 | 100.5 | 63.5 | I |
| | 2014.08-2022.12 | MT | F | L | Platform/Chassis FWD M9T 880;M9T 716 | | GCI50045 | Inner Joint | | 39 | 27 | 39 | 74 | 109 | |
| 2.3 (120 kw) | 2014.06-2016.06 | 6MT | F | L | Platform/Chassis FWD M9T 702 | | GDS18247 | Drive Shaft | | 31 | 39 | 70 | 100.5 | 743 | |
| | 2014.06-2016.06 | 6MT | F | R | Platform/Chassis FWD M9T 702 | Date to:2019.12 | GDS18515 | Drive Shaft | | 31 | 39 | 70 | 101 | 1077 | |
| | 2014.06-2016.06 | 6MT | F | R | Platform/Chassis FWD M9T 702 | Date from:2020.01 | GDS57562 | Drive Shaft | | 31 | 39 | 70 | 101 | 1085 | |
| | 2014.06-2016.06 | 6MT | F | L | Platform/Chassis FWD M9T 702 | | GCO50132 | Outer Joint | | 31 | 27 | 70 | 100.5 | 63.5 | I |
| | 2014.06-2016.06 | 6MT | F | L | Platform/Chassis FWD M9T 702 | | GCI50045 | Inner Joint | | 39 | 27 | 39 | 74 | 109 | |
| | 2014.06-2016.09 | 6MT | F | L | Bus FWD M9T 702 | | GDS18247 | Drive Shaft | | 31 | 39 | 70 | 100.5 | 743 | |
| | 2014.06-2016.09 | 6MT | F | R | Bus FWD M9T 702 | | GDS18248 | Drive Shaft | | 31 | 39 | 70 | 100.5 | 1075 | |
| | 2014.06-2016.09 | 6MT | F | L/R | Bus FWD M9T 702 | | GCO50132 | Outer Joint | | 31 | 27 | 70 | 100.5 | 63.5 | I |
| | 2014.06-2016.09 | 6MT | F | L | Bus FWD M9T 702 | | GCI50045 | Inner Joint | | 39 | 27 | 39 | 74 | 109 | |
| | 2014.06-2016.09 | 6MT | F | R | Bus FWD M9T 702 | | GCI50046 | Inner Joint | | 39 | 27 | 30 | 364 | 87 | |
| | 2014.06-2016.09 | 6MT | F | L | Van FWD M9T 702 | | GDS18247 | Drive Shaft | | 31 | 39 | 70 | 100.5 | 743 | |
| | 2014.06-2016.09 | 6MT | F | R | Van FWD M9T 702 | | GDS18248 | Drive Shaft | | 31 | 39 | 70 | 100.5 | 1075 | |

| | YEAR | TRANSM. | F/R | L/R | BODY STYLE & DRIVE TYPE & ENGINE | REMARKS | G-AP Ref. | PRODUCT | ABS | Technical Specifications A | B | C | H | L | P |
|---|---|---|---|---|---|---|---|---|---|---|---|---|---|---|---|
| **NISSAN** | | | | | | | | | | | | | | | |
| **NV400** | | | | | | | | | | | | | | | |
| 2.3 (120 kw) | 2014.06-2016.09 | 6MT | F | L/R | Van FWD M9T 702 | | GCO50132 | Outer Joint | | 31 | 27 | 70 | 100.5 | 63.5 | I |
| | 2014.06-2016.09 | 6MT | F | L | Van FWD M9T 702 | | GCI50045 | Inner Joint | | 39 | 27 | 39 | 74 | 109 | |
| | 2014.06-2016.09 | 6MT | F | R | Van FWD M9T 702 | | GCI50046 | Inner Joint | | 39 | 27 | 30 | 364 | 87 | |
| 2.3 (125 kw) | 2015.07-2022.12 | 6MT | F | L | Bus FWD M9T 706 | | GDS18247 | Drive Shaft | | 31 | 39 | 70 | 100.5 | 743 | |
| | 2015.07-2022.12 | 6MT | F | L/R | Bus FWD M9T 706 | | GCO50132 | Outer Joint | | 31 | 27 | 70 | 100.5 | 63.5 | I |
| | 2015.07-2022.12 | 6MT | F | L | Bus FWD M9T 706 | | GCI50045 | Inner Joint | | 39 | 27 | 39 | 74 | 109 | |
| | 2015.07-2022.12 | 6MT | F | R | Bus FWD M9T 706 | | GCI50046 | Inner Joint | | 39 | 27 | 30 | 364 | 87 | |
| | 2016.06-2022.12 | 6MT | F | L | Platform/Chassis FWD M9T 706 | | GDS18247 | Drive Shaft | | 31 | 39 | 70 | 100.5 | 743 | |
| | 2016.06-2022.12 | 6MT | F | R | Platform/Chassis FWD M9T 706 | Date to:2019.12 | GDS18515 | Drive Shaft | | 31 | 39 | 70 | 101 | 1077 | |
| | 2016.06-2022.12 | 6MT | F | R | Platform/Chassis FWD M9T 706 | Date from:2020.01 | GDS57562 | Drive Shaft | | 31 | 39 | 70 | 101 | 1085 | |
| | 2016.06-2022.12 | 6MT | F | L | Platform/Chassis FWD M9T 706 | | GCO50132 | Outer Joint | | 31 | 27 | 70 | 100.5 | 63.5 | I |
| | 2016.06-2022.12 | 6MT | F | L | Platform/Chassis FWD M9T 706 | | GCI50045 | Inner Joint | | 39 | 27 | 39 | 74 | 109 | |
| | 2016.09-2022.12 | 6MT | F | L | Van FWD M9T 706 | | GDS18247 | Drive Shaft | | 31 | 39 | 70 | 100.5 | 743 | |
| | 2016.09-2022.12 | 6MT | F | L/R | Van FWD M9T 706 | | GCO50132 | Outer Joint | | 31 | 27 | 70 | 100.5 | 63.5 | I |
| | 2016.09-2022.12 | 6MT | F | L | Van FWD M9T 706 | | GCI50045 | Inner Joint | | 39 | 27 | 39 | 74 | 109 | |
| | 2016.09-2022.12 | 6MT | F | R | Van FWD M9T 706 | | GCI50046 | Inner Joint | | 39 | 27 | 30 | 364 | 87 | |
| 2.3 (132 kw) | 2020.01-2022.12 | 6AT | F | L | Bus FWD M9T 716 | | GDS18247 | Drive Shaft | | 31 | 39 | 70 | 100.5 | 743 | |
| | 2020.01-2022.12 | 6AT | F | R | Bus FWD M9T 716 | Date to:2019.12 | GDS18515 | Drive Shaft | | 31 | 39 | 70 | 101 | 1077 | |
| | 2020.01-2022.12 | 6AT | F | R | Bus FWD M9T 716 | Date from:2020.01 | GDS57562 | Drive Shaft | | 31 | 39 | 70 | 101 | 1085 | |
| | 2020.01-2022.12 | 6AT/6MT | F | L | Platform/Chassis FWD M9T 716 | | GDS18247 | Drive Shaft | | 31 | 39 | 70 | 100.5 | 743 | |
| | 2020.01-2022.12 | 6AT/6MT | F | R | Platform/Chassis FWD M9T 716 | Date to:2019.12 | GDS18515 | Drive Shaft | | 31 | 39 | 70 | 101 | 1077 | |
| | 2020.01-2022.12 | 6AT/6MT | F | R | Platform/Chassis FWD M9T 716 | Date from:2020.01 | GDS57562 | Drive Shaft | | 31 | 39 | 70 | 101 | 1085 | |
| | 2020.01-2022.12 | 6AT/6MT | F | L | Van FWD M9T 716 | | GDS18247 | Drive Shaft | | 31 | 39 | 70 | 100.5 | 743 | |
| | 2020.01-2022.12 | 6AT/6MT | F | R | Van FWD M9T 716 | Date to:2019.12 | GDS18515 | Drive Shaft | | 31 | 39 | 70 | 101 | 1077 | |
| | 2020.01-2022.12 | 6AT/6MT | F | R | Van FWD M9T 716 | Date from:2020.01 | GDS57562 | Drive Shaft | | 31 | 39 | 70 | 101 | 1085 | |
| **Pathfinder** | | | | | | | | | | | | | | | |
| 2.5 (120 kw) | 2005.01- | AT | F | L/R | SUV 4WD YD25DDTi | | GCO41257 | Outer Joint | | 29 | 26 | 67 | 115.5 | 62 | M |
| | 2005.01- | AT | F | L/R | SUV 4WD YD25DDTi | | GCI41075 | Inner Joint | | 27 | 26 | 39 | 61.5 | 133 | |
| | 2005.01- | AT/MT | F | L/R | SUV 4WD YD25DDTi | | GDS41262 | Drive Shaft | | 29 | 27 | 67 | 115 | 634 | |
| | 2005.01- | MT | F | L/R | SUV 4WD YD25DDTi | | GCO41240 | Outer Joint | | 29 | 27 | 67 | 115 | 63 | M |
| | 2005.01- | 5AT/6MT | R | L/R | SUV 4WD YD25DDTi | | GDS41416 | Drive Shaft | | 32 | | 67 | 118.5 | 658 | |
| | 2005.01- | AT/MT | R | L/R | SUV 4WD YD25DDTi | | GCI18226 | Inner Joint | | | 30 | | | 97.5 | |
| | 2005.01- | MT | R | L/R | SUV 4WD YD25DDTi | | GCO41408 | Outer Joint | | 32 | 29 | 67 | 118.5 | 69 | M |
| 2.5 (126 kw) | 2006.10- | AT | F | L/R | SUV 4WD YD25DDTi | | GCO41257 | Outer Joint | | 29 | 26 | 67 | 115.5 | 62 | M |
| | 2006.10- | AT | F | L/R | SUV 4WD YD25DDTi | | GCI41075 | Inner Joint | | 27 | 26 | 39 | 61.5 | 133 | |
| | 2006.10- | AT/MT | F | L/R | SUV 4WD YD25DDTi | | GDS41262 | Drive Shaft | | 29 | 27 | 67 | 115 | 634 | |
| | 2006.10- | MT | F | L/R | SUV 4WD YD25DDTi | | GCO41240 | Outer Joint | | 29 | 27 | 67 | 115 | 63 | M |
| | 2006.10- | 5AT/6MT | R | L/R | SUV 4WD YD25DDTi | | GDS41416 | Drive Shaft | | 32 | | 67 | 118.5 | 658 | |
| | 2006.10- | MT | R | L/R | SUV 4WD YD25DDTi | | GCO41408 | Outer Joint | | 32 | 29 | 67 | 118.5 | 69 | M |
| 2.5 (128 kw) | 2005.01-2010.01 | AT | F | L/R | SUV 4WD YD25DDTi | | GCO41257 | Outer Joint | | 29 | 26 | 67 | 115.5 | 62 | M |
| | 2005.01-2010.01 | AT | F | L/R | SUV 4WD YD25DDTi | | GCI41075 | Inner Joint | | 27 | 26 | 39 | 61.5 | 133 | |
| | 2005.01-2010.01 | AT/MT | F | L/R | SUV 4WD YD25DDTi | | GDS41262 | Drive Shaft | | 29 | 27 | 67 | 115 | 634 | |
| | 2005.01-2010.01 | MT | F | L/R | SUV 4WD YD25DDTi | | GCO41240 | Outer Joint | | 29 | 27 | 67 | 115 | 63 | M |
| | 2005.01-2010.01 | 5AT/6MT | R | L/R | SUV 4WD YD25DDTi | | GDS41416 | Drive Shaft | | 32 | | 67 | 118.5 | 658 | |
| | 2005.01-2010.01 | MT | R | L/R | SUV 4WD YD25DDTi | | GCO41408 | Outer Joint | | 32 | 29 | 67 | 118.5 | 69 | M |
| | 2005.01-2010.01 | 5AT/6MT | R | L/R | SUV RWD YD25DDTi | | GDS41416 | Drive Shaft | | 32 | | 67 | 118.5 | 658 | |
| | 2005.01-2010.01 | MT | R | L/R | SUV RWD YD25DDTi | | GCO41408 | Outer Joint | | 32 | 29 | 67 | 118.5 | 69 | M |
| 2.5 (140 kw) | 2010.08- | AT | F | L/R | SUV 4WD YD25DDTi | | GCO41257 | Outer Joint | | 29 | 26 | 67 | 115.5 | 62 | M |
| | 2010.08- | AT | F | L/R | SUV 4WD YD25DDTi | | GCI41075 | Inner Joint | | 27 | 26 | 39 | 61.5 | 133 | |
| | 2010.08- | AT/MT | F | L/R | SUV 4WD YD25DDTi | | GDS41262 | Drive Shaft | | 29 | 27 | 67 | 115 | 634 | |
| | 2010.08- | MT | F | L/R | SUV 4WD YD25DDTi | | GCO41240 | Outer Joint | | 29 | 27 | 67 | 115 | 63 | M |
| | 2010.08- | 5AT/6MT | R | L/R | SUV 4WD YD25DDTi | | GDS41416 | Drive Shaft | | 32 | | 67 | 118.5 | 658 | |
| | 2010.08- | MT | R | L/R | SUV 4WD YD25DDTi | | GCO41408 | Outer Joint | | 32 | 29 | 67 | 118.5 | 69 | M |
| | 2013.03-2014.08 | AT/MT | F | L/R | SUV Van 4WD YD25DDTi | | GDS41262 | Drive Shaft | | 29 | 27 | 67 | 115 | 634 | |
| | 2013.03-2014.08 | MT | F | L/R | SUV Van 4WD YD25DDTi | | GCO41240 | Outer Joint | | 29 | 27 | 67 | 115 | 63 | M |
| | 2013.03-2014.08 | 5AT/6MT | R | L/R | SUV Van 4WD YD25DDTi | | GDS41416 | Drive Shaft | | 32 | | 67 | 118.5 | 658 | |
| | 2013.03-2014.08 | MT | R | L/R | SUV Van 4WD YD25DDTi | | GCO41408 | Outer Joint | | 32 | 29 | 67 | 118.5 | 69 | M |
| 2.7 (96 kw) | 1995.09-2004.12 | MT | F | L/R | Closed Off-Road Vehicle 4WD TD27ETi | Date to:2003.10 | GCO41016 | Outer Joint | | 28 | 27 | 50 | 150 | 71 | I |
| 3.0 (170 kw) | 2010.08- | AT/MT | F | L/R | SUV 4WD V9X | | GDS41262 | Drive Shaft | | 29 | 27 | 67 | 115 | 634 | |
| | 2010.08- | AT/MT | F | L/R | SUV 4WD V9X | | GCO41273 | Outer Joint | | 29 | 36 | 67 | 115.5 | 62 | I |
| | 2010.08- | AT/MT | F | L/R | SUV 4WD V9X | | GCI41075 | Inner Joint | | 27 | 26 | 39 | 61.5 | 133 | |
| | 2010.08- | 7AT | R | L/R | SUV 4WD V9X | | GDS41416 | Drive Shaft | | 32 | | 67 | 118.5 | 658 | |
| | 2010.08- | AT/MT | R | L/R | SUV 4WD V9X | | GCO41408 | Outer Joint | | 32 | 29 | 67 | 118.5 | 69 | M |
| | 2013.03-2014.08 | 7AT | F | L/R | SUV Van 4WD V9X | | GDS41262 | Drive Shaft | | 29 | 27 | 67 | 115 | 634 | |
| | 2013.03-2014.08 | 7AT | F | L/R | SUV Van 4WD V9X | | GCO41273 | Outer Joint | | 29 | 36 | 67 | 115.5 | 62 | I |

| | YEAR | TRANSM. | F/R | L/R | BODY STYLE & DRIVE TYPE & ENGINE | REMARKS | G-AP Ref. | PRODUCT | ABS | Technical Specifications A | B | C | H | L | P |
|---|---|---|---|---|---|---|---|---|---|---|---|---|---|---|---|
| **NISSAN** | | | | | | | | | | | | | | | |
| **Pathfinder** | | | | | | | | | | | | | | | |
| 3.0 (170 kw) | 2013.03-2014.08 | 7AT | F | L/R | SUV Van 4WD V9X | | GCI41075 | Inner Joint | | 27 | 26 | 39 | 61.5 | 133 | |
| | 2013.03-2014.08 | 7AT | R | L/R | SUV Van 4WD V9X | | GDS41416 | Drive Shaft | | 32 | | 67 | 118.5 | 658 | |
| | 2013.03-2014.08 | 7AT | R | L/R | SUV Van 4WD V9X | | GCO41408 | Outer Joint | | 32 | 29 | 67 | 118.5 | 69 | M |
| 3.2 (110 kw) | 1995.09-2004.12 | MT | F | L/R | Closed Off-Road Vehicle 4WD QD32ETi | Date from:1998.04;Date to:2003.10 | GCO41016 | Outer Joint | | 28 | 27 | 50 | 150 | 71 | I |
| 3.3 (110 kw) | 1995.12-2000.10 | 4AT/5MT | F | L/R | Terrain cab wagon closed 4WD VG33E | | GDS41178 | Drive Shaft | | 28 | | 50 | 150 | 522 | |
| | 1995.12-2000.10 | AT | F | L/R | Terrain cab wagon closed 4WD VG33E | | GCI81497 | Inner Joint | | | 27 | | | 75 | |
| | 1995.12-2000.10 | AT/MT | F | L/R | Terrain cab wagon closed 4WD VG33E | | GCO41016 | Outer Joint | | 28 | 27 | 50 | 150 | 71 | I |
| 3.3 (125 kw) | 1997.09-2004.12 | 4AT/5MT | F | L/R | Closed Off-Road Vehicle 4WD VG33E | | GDS41178 | Drive Shaft | | 28 | | 50 | 150 | 522 | |
| | 1997.09-2004.12 | 4AT/5MT | F | L/R | Closed Off-Road Vehicle 4WD VG33E | | GCI81497 | Inner Joint | | | 27 | | | 75 | |
| | 1997.09-2004.12 | MT | F | L/R | Closed Off-Road Vehicle 4WD VG33E | | GCO41016 | Outer Joint | | 28 | 27 | 50 | 150 | 71 | I |
| 3.5 (162 kw) | 2000.02-2004.12 | 4AT | F | L/R | Terrain cab wagon closed 4WD VQ35DE | | GDS41178 | Drive Shaft | | 28 | | 50 | 150 | 522 | |
| | 2000.02-2004.12 | 4AT | F | L/R | Terrain cab wagon closed 4WD VQ35DE | | GCI81497 | Inner Joint | | | 27 | | | 75 | |
| | 2000.02-2004.12 | | F | L/R | Terrain cab wagon closed 4WD VQ35DE | | GCO41016 | Outer Joint | | 28 | 27 | 50 | 150 | 71 | I |
| | 2000.02-2004.12 | | F | L/R | Terrain cab wagon closed 4WD VQ35DE | | GCO41100 | Outer Joint | | 28 | 25 | 50 | 150 | 71 | I |
| 4.0 (198 kw) | 2005.09- | 5AT | F | L | SUV 4WD VQ40DE | | GDS41566 | Drive Shaft | | 29 | 27 | 67 | 115.5 | 635 | |
| | 2005.09- | 5AT | F | L/R | SUV 4WD VQ40DE | | GDS41262 | Drive Shaft | | 29 | 27 | 67 | 115 | 634 | |
| | 2005.09- | AT | F | | SUV 4WD VQ40DE | | GCO41273 | Outer Joint | | 29 | 36 | 67 | 115.5 | 62 | I |
| | 2005.09- | AT | F | L | SUV 4WD VQ40DE | | GCI41100 | Inner Joint | | 27 | 35 | 39 | 63 | 131.5 | |
| | 2005.09- | | F | L/R | SUV 4WD VQ40DE | | GCO41257 | Outer Joint | | 29 | 26 | 67 | 115.5 | 62 | M |
| | 2005.09- | | F | L/R | SUV 4WD VQ40DE | | GCI41075 | Inner Joint | | 27 | 26 | 39 | 61.5 | 133 | |
| | 2005.09- | 5AT | R | L/R | SUV 4WD VQ40DE | | GDS41416 | Drive Shaft | | 32 | | 67 | 118.5 | 658 | |
| | 2005.09- | AT | R | | SUV 4WD VQ40DE | | GCO41404 | Outer Joint | | 32 | 37 | 67.3 | 117.5 | 61.5 | I |
| | 2005.09- | AT | R | R | SUV 4WD VQ40DE | | GCI41209 | Inner Joint | | | 37 | | | 87.4 | |
| | 2005.09- | | R | L/R | SUV 4WD VQ40DE | | GCO41408 | Outer Joint | | 32 | 29 | 67 | 118.5 | 69 | M |
| **Patrol** | | | | | | | | | | | | | | | |
| 3.0 (118 kw) | 2007.09- | 5MT/4AT | F | L | Platform/Chassis 4WD ZD30DDTi | | GDS41221 | Drive Shaft | | 31 | 31 | 60 | 162.5 | 1115 | |
| | 2007.09- | 5MT/4AT | F | R | Platform/Chassis 4WD ZD30DDTi | | GDS41179 | Drive Shaft | | 31 | 31 | 60 | 162.5 | 617 | |
| | 2007.09- | | F | L/R | Platform/Chassis 4WD ZD30DDTi | | GCO41053 | Outer Joint | | 31 | 28 | 60 | 162.5 | 66 | I |
| 5.6 (233 kw) | 2010.04- | AT | F | L/R | Closed Off-Road Vehicle 4WD VK56DE | Date To:2011.07 | GCI41203 | Inner Joint | | 31 | 40 | 43 | 79.5 | 134 | |
| | 2010.04- | 5AT/7AT | R | L/R | Closed Off-Road Vehicle 4WD VK56DE | | GCI41195 | Inner Joint | | | 43 | | | 84 | |
| 5.6 (298 kw) | 2010.04- | 7AT | F | L/R | Closed Off-Road Vehicle 4WD VK56VD | | GDS41568 | Drive Shaft | | 32 | 31 | 67.2 | 123.5 | 709 | |
| | 2010.04- | 7AT | F | L/R | Closed Off-Road Vehicle 4WD VK56VD | | GCO41324 | Outer Joint | | 32 | 43 | 67.2 | 123.5 | 74.5 | I |
| | 2010.04- | 7AT | F | L/R | Closed Off-Road Vehicle 4WD VK56VD | | GCI41203 | Inner Joint | | 31 | 40 | 43 | 79.5 | 134 | |
| | 2010.04- | 7AT | R | L/R | Closed Off-Road Vehicle 4WD VK56VD | | GDS41565 | Drive Shaft | | 34 | | 67.2 | 123.5 | 709 | |
| | 2010.04- | 7AT | R | L/R | Closed Off-Road Vehicle 4WD VK56VD | | GCO41393 | Outer Joint | | 34 | 43 | 67.2 | 123.5 | 74.5 | I |
| | 2010.04- | 7AT | R | L/R | Closed Off-Road Vehicle 4WD VK56VD | | GCI41195 | Inner Joint | | | 43 | | | 84 | |
| 5.6 (315 kw) | 2016.10- | AT | R | L/R | Closed Off-Road Vehicle 4WD VK56VD | | GCI41195 | Inner Joint | | | 43 | | | 84 | |
| **Patrol 260 (Ebro)** | | | | | | | | | | | | | | | |
| 2.7 (73 kw) | 1998.05-2001.06 | 5MT | F | L/R | Terrain cab wagon closed 4WD TD27T | | GCO41241 | Outer Joint | | 29 | 27 | 55 | 158 | 57 | I |
| 3.2 (70 kw) | 1998.05-2001.04 | 5MT | F | L/R | Terrain cab wagon closed 4WD SD33 | | GCO41241 | Outer Joint | | 29 | 27 | 55 | 158 | 57 | I |
| **Patrol GR** | | | | | | | | | | | | | | | |
| 2.8 (85 kw) | 1988.09-1997.06 | MT | F | L/R | Closed Off-Road Vehicle 4WD RD28T | | GCO41026 | Outer Joint | | 31 | 27 | 60 | 160.5 | 57 | M |
| 2.8 (95 kw) | 1997.06-2000.05 | 5MT | F | L | Terrain cab wagon closed 4WD RD28Ti | | GDS41221 | Drive Shaft | | 31 | 31 | 60 | 162.5 | 1115 | |
| | 1997.06-2000.05 | 5MT | F | R | Terrain cab wagon closed 4WD RD28Ti | | GDS41179 | Drive Shaft | | 31 | 31 | 60 | 162.5 | 617 | |
| | 1997.06-2000.05 | 5MT | F | L/R | Terrain cab wagon closed 4WD RD28Ti | | GCO41053 | Outer Joint | | 31 | 28 | 60 | 162.5 | 66 | I |
| 4.2 (92 kw) | 1988.11-1997.08 | MT | F | L/R | Terrain cab wagon closed 4WD TD42 | | GCO41026 | Outer Joint | | 31 | 27 | 60 | 160.5 | 57 | M |
| 4.2 (107 kw) | 1997.06-2000.02 | | F | L | Terrain cab wagon closed 4WD TD42T | | GDS41221 | Drive Shaft | | 31 | 31 | 60 | 162.5 | 1115 | |
| | 1997.06-2000.02 | | F | R | Terrain cab wagon closed 4WD TD42T | | GDS41179 | Drive Shaft | | 31 | 31 | 60 | 162.5 | 617 | |
| 4.2 (121 kw) | 1988.11-1998.03 | MT | F | L/R | Terrain cab wagon closed 4WD TB42/TB42E | | GCO41026 | Outer Joint | | 31 | 27 | 60 | 160.5 | 57 | M |
| 4.8 (180 kw) | 2000.03- | 5AT | F | L | Terrain cab wagon closed 4WD TB48DE | | GDS41221 | Drive Shaft | | 31 | 31 | 60 | 162.5 | 1115 | |
| | 2000.03- | 5AT | F | R | Terrain cab wagon closed 4WD TB48DE | | GDS41179 | Drive Shaft | | 31 | 31 | 60 | 162.5 | 617 | |
| | 2000.03- | 5AT | F | L/R | Terrain cab wagon closed 4WD TB48DE | | GCO41053 | Outer Joint | | 31 | 28 | 60 | 162.5 | 66 | I |
| **Patrol GR Wagon** | | | | | | | | | | | | | | | |
| 2.8 (96 kw) | 1997.10-2000.02 | 5MT | F | L | Closed Off-Road Vehicle 4WD RD28Ti | | GDS41221 | Drive Shaft | | 31 | 31 | 60 | 162.5 | 1115 | |
| | 1997.10-2000.02 | 5MT | F | R | Closed Off-Road Vehicle 4WD RD28Ti | | GDS41179 | Drive Shaft | | 31 | 31 | 60 | 162.5 | 617 | |
| | 1997.10-2000.02 | 5MT | F | L/R | Closed Off-Road Vehicle 4WD RD28Ti | | GCO41053 | Outer Joint | | 31 | 28 | 60 | 162.5 | 66 | I |
| 3.0 (116 kw) | 2000.05- | 4AT/5MT | F | L | Closed Off-Road Vehicle 4WD ZD30DDTi | | GDS41221 | Drive Shaft | | 31 | 31 | 60 | 162.5 | 1115 | |
| | 2000.05- | 4AT/5MT | F | R | Closed Off-Road Vehicle 4WD ZD30DDTi | | GDS41179 | Drive Shaft | | 31 | 31 | 60 | 162.5 | 617 | |
| | 2000.05- | 4AT/5MT | F | L/R | Closed Off-Road Vehicle 4WD ZD30DDTi | | GCO41053 | Outer Joint | | 31 | 28 | 60 | 162.5 | 66 | I |
| 3.0 (118 kw) | 2000.05- | 4AT/5MT | F | L | Closed Off-Road Vehicle 4WD ZD30DDTi | | GDS41221 | Drive Shaft | | 31 | 31 | 60 | 162.5 | 1115 | |
| | 2000.05- | 4AT/5MT | F | R | Closed Off-Road Vehicle 4WD ZD30DDTi | | GDS41179 | Drive Shaft | | 31 | 31 | 60 | 162.5 | 617 | |
| | 2000.05- | 4AT/5MT | F | L/R | Closed Off-Road Vehicle 4WD ZD30DDTi | | GCO41053 | Outer Joint | | 31 | 28 | 60 | 162.5 | 66 | I |
| **Pick Up** | | | | | | | | | | | | | | | |
| 2.5 (98 kw) | 2002.03- | 5MT | F | L/R | Pickup 4WD YD25DDTi | | GDS41393 | Drive Shaft | | 28 | | 50 | 150 | 570 | |
| | 2002.03- | 5MT | F | L/R | Pickup 4WD YD25DDTi | | GCO41100 | Outer Joint | | 28 | 25 | 50 | 150 | 71 | I |

| | YEAR | TRANSM. | F/R | L/R | BODY STYLE & DRIVE TYPE & ENGINE | REMARKS | G-AP Ref. | PRODUCT | ABS | Technical Specifications A | B | C | H | L | P |
|---|---|---|---|---|---|---|---|---|---|---|---|---|---|---|---|
| **NISSAN** | | | | | | | | | | | | | | | |
| **Pick Up** | | | | | | | | | | | | | | | |
| 2.5 (98 kw) | 2002.03- | 5MT | F | L/R | Pickup 4WD YD25DDTi | | GCI41014 | Inner Joint | | | 27 | | | 78 | |
| 2.7 (73 kw) | 1987.09-1996.12 | | F | | Pickup 4WD TD27T | Date From:1992.08 | GCO41016 | Outer Joint | | 28 | 27 | 50 | 150 | 71 | I |
| | 1987.09-1996.12 | | F | | Pickup 4WD TD27T | | GCO41086 | Outer Joint | | 27 | 27 | 50 | 150 | 71 | I |
| **Pick Up (D22)** | | | | | | | | | | | | | | | |
| 2.5 (61 kw) | 1998.02-2001.10 | AT/MT | F | L/R | Pickup 4WD TD25 | | GCO41100 | Outer Joint | | 28 | 25 | 50 | 150 | 71 | I |
| 3.2 (76 kw) | 1997.02-2005.04 | AT/MT | F | L/R | Pickup 4WD QD32 | | GDS41057 | Drive Shaft | | 28 | | 50 | 150 | 570.5 | |
| | 1997.02-2005.04 | AT/MT | F | L/R | Pickup 4WD QD32 | | GCO41100 | Outer Joint | | 28 | 25 | 50 | 150 | 71 | I |
| | 1997.02-2005.04 | | F | | Pickup 4WD QD32 | | GCO41016 | Outer Joint | | 28 | 27 | 50 | 150 | 71 | I |
| **Pick Up (King Cab)** | | | | | | | | | | | | | | | |
| 2.4 (88 kw) | 1998.02-2001.10 | AT/MT | F | L/R | Pickup 4WD KA24E | | GCO41100 | Outer Joint | | 28 | 25 | 50 | 150 | 71 | I |
| | 1998.02-2001.10 | MT | F | L/R | Pickup 4WD KA24E | Date from:2000.09 | GDS41057 | Drive Shaft | | 28 | | 50 | 150 | 570.5 | |
| | 1998.02-2001.10 | MT | F | L/R | Pickup 4WD KA24E | Date to:2000.08 | GCO41016 | Outer Joint | | 28 | 27 | 50 | 150 | 71 | I |
| | 1998.02-2001.10 | MT | F | L/R | Pickup 4WD KA24E | Date from:2000.09 | GCI41014 | Inner Joint | | | 27 | | | 78 | |
| | 1998.02-2001.10 | MT | R | L/R | Pickup 4WD KA24E | Date to:2001.11 | GDS82924 | Drive Shaft | | | 29 | | | 787 | |
| | 1998.02-2001.10 | AT/MT | R | L/R | Pickup RWD KA24E | | GCO41100 | Outer Joint | | 28 | 25 | 50 | 150 | 71 | I |
| 2.4 (93 kw) | 1992.05-1998.01 | 5MT | F | L/R | Pickup 4WD KA24E | Date From:1993.10,For Engine Code:KA24E,Trans. code:SS | GDS41178 | Drive Shaft | | 28 | | 50 | 150 | 522 | |
| | 1992.05-1998.01 | MT | F | | Pickup 4WD KA24E | Date From:1993.07 | GCO41016 | Outer Joint | | 28 | 27 | 50 | 150 | 71 | I |
| | 1992.05-1998.01 | MT | F | | Pickup 4WD KA24E | | GCO41086 | Outer Joint | | 27 | 27 | 50 | 150 | 71 | I |
| 2.4 (98 kw) | 2001.11-2005.04 | MT | F | L/R | Pickup 4WD KA24DE | Date from:2000.09 | GDS41057 | Drive Shaft | | 28 | | 50 | 150 | 570.5 | |
| | 2001.11-2005.04 | MT | F | L/R | Pickup 4WD KA24DE | Date from:2000.09 | GCO41100 | Outer Joint | | 28 | 25 | 50 | 150 | 71 | I |
| | 2001.11-2005.04 | MT | F | L/R | Pickup 4WD KA24DE | Date from:2000.09 | GCI41014 | Inner Joint | | | 27 | | | 78 | |
| 2.5 (59 kw) | 1987.08-1998.02 | AT/MT | F | L/R | Pickup 4WD TD25 | | GCO41086 | Outer Joint | | 27 | 27 | 50 | 150 | 71 | I |
| | 1987.08-1998.02 | MT | F | | Pickup 4WD TD25 | Date From:1993.10 | GCO41016 | Outer Joint | | 28 | 27 | 50 | 150 | 71 | I |
| | 1987.08-1998.02 | | F | | Pickup 4WD TD25 | | GCO41178 | Outer Joint | | 26 | 27 | 50 | 147.5 | 64 | I |
| 2.5 (61 kw) | 1996.03-1998.02 | 5MT | F | L/R | Pickup 4WD TD25 | | GDS41178 | Drive Shaft | | 28 | | 50 | 150 | 522 | |
| | 1996.03-1998.02 | MT | F | | Pickup 4WD TD25 | | GCO41016 | Outer Joint | | 28 | 27 | 50 | 150 | 71 | I |
| | 1996.03-1998.02 | | F | | Pickup 4WD TD25 | | GCO41178 | Outer Joint | | 26 | 27 | 50 | 147.5 | 64 | I |
| | 1998.02-2001.10 | AT/MT | R | L/R | Pickup RWD TD25 | | GCO41100 | Outer Joint | | 28 | 25 | 50 | 150 | 71 | I |
| 2.5 (76 kw) | 1998.05-2001.10 | AT/MT | F | L/R | Pickup 4WD TD25TI | | GCO41100 | Outer Joint | | 28 | 25 | 50 | 150 | 71 | I |
| | 1998.05-2001.10 | MT | F | L/R | Pickup 4WD TD25TI | | GDS41057 | Drive Shaft | | 28 | | 50 | 150 | 570.5 | |
| | 1998.05-2001.10 | MT | F | L/R | Pickup 4WD TD25TI | Date to:2000.08 | GCO41016 | Outer Joint | | 28 | 27 | 50 | 150 | 71 | I |
| **Pick Up/Datsun** | | | | | | | | | | | | | | | |
| 2.7 (73 kw) | 1987.08-1998.02 | MT | F | | Pickup 4WD TD27(08.87-) | Date From:1993.07 | GCO41016 | Outer Joint | | 28 | 27 | 50 | 150 | 71 | I |
| | 1987.08-1998.02 | MT | F | | Pickup 4WD TD27(08.87-) | | GCO41086 | Outer Joint | | 27 | 27 | 50 | 150 | 71 | I |
| **Pixo** | | | | | | | | | | | | | | | |
| 1.0 (50 kw) | 2009.03- | MT | F | L | Hatchback FWD K10 B | | GDS57211 | Drive Shaft | 43T | 23 | 22 | 49 | 81 | 662 | |
| | 2009.03- | MT | F | R | Hatchback FWD K10 B | | GDS57124 | Drive Shaft | 43T | 23 | 22 | 49 | 81 | 819.5 | |
| | 2009.03- | MT | F | L/R | Hatchback FWD K10 B | | GCO57112 | Outer Joint | 43T | 23 | 19 | 49 | 81 | 56.5 | I |
| **Presage** | | | | | | | | | | | | | | | |
| 3.0 (162 kw) | 2001.08-2003.06 | | F | R | MPV FWD VQ30DE | | GCI41019 | Inner Joint | | 29 | 27 | 33 | 437.5 | 101 | |
| **Primastar** | | | | | | | | | | | | | | | |
| 1.9 (60 kw) | 2001.03- | 5MT | F | R | Bus FWD F9Q 762 | | GDS44013 | Drive Shaft | | 27 | 39 | 56.5 | 93.5 | 1020 | |
| | 2001.03- | AT/MT | F | L/R | Bus FWD F9Q 762 | | GCO18105 | Outer Joint | | 27 | 26 | 56.5 | 93.5 | 64 | M |
| | 2002.07-2006.08 | 5MT | F | R | Platform/Chassis FWD F9Q 762 | | GDS44013 | Drive Shaft | | 27 | 39 | 56.5 | 93.5 | 1020 | |
| | 2002.09- | 5MT | F | R | Van FWD F9Q 762 | | GDS44013 | Drive Shaft | | 27 | 39 | 56.5 | 93.5 | 1020 | |
| | 2002.09- | AT/MT | F | L/R | Van FWD F9Q 762 | | GCO18105 | Outer Joint | | 27 | 26 | 56.5 | 93.5 | 64 | M |
| 1.9 (74 kw) | 2001.03- | 6MT | F | R | Bus FWD F9Q 760 | | GDS44013 | Drive Shaft | | 27 | 39 | 56.5 | 93.5 | 1020 | |
| | 2001.03- | AT/MT | F | L/R | Bus FWD F9Q 760 | | GCO18105 | Outer Joint | | 27 | 26 | 56.5 | 93.5 | 64 | M |
| | 2002.07-2006.08 | 6MT | F | R | Platform/Chassis FWD F9Q 760 | | GDS44013 | Drive Shaft | | 27 | 39 | 56.5 | 93.5 | 1020 | |
| | 2002.09- | 6MT | F | R | Van FWD F9Q 760 | | GDS44013 | Drive Shaft | | 27 | 39 | 56.5 | 93.5 | 1020 | |
| | 2002.09- | AT/MT | F | L/R | Van FWD F9Q 760 | | GCO18105 | Outer Joint | | 27 | 26 | 56.5 | 93.5 | 64 | M |
| 2.0 (66 kw) | 2006.09- | 6MT | F | R | Bus FWD M9R 782;M9R 630;M9R 786;M9R 692 | | GDS18271 | Drive Shaft | | 27 | 39 | 56.6 | 94 | 1013 | |
| | 2006.09- | 6MT | F | R | Bus FWD M9R 782;M9R 630;M9R 786;M9R 692 | | GCI50046 | Inner Joint | | 39 | 27 | 30 | 364 | 87 | |
| | 2006.09- | AT/MT | F | L | Bus FWD M9R 782;M9R 630;M9R 786;M9R 692 | | GDS60022 | Drive Shaft | | 27 | 39 | 56.6 | 94 | 694 | |
| | 2006.09- | 6MT | F | R | Van FWD M9R 782;M9R 630;M9R 786;M9R 692 | | GDS18271 | Drive Shaft | | 27 | 39 | 56.6 | 94 | 1013 | |
| | 2006.09- | 6MT | F | R | Van FWD M9R 782;M9R 630;M9R 786;M9R 692 | | GCI50046 | Inner Joint | | 39 | 27 | 30 | 364 | 87 | |
| | 2006.09- | AT/MT | F | L | Van FWD M9R 782;M9R 630;M9R 786;M9R 692 | | GDS60022 | Drive Shaft | | 27 | 39 | 56.6 | 94 | 694 | |
| 2.0 (81 kw) | 2021.11- | 6MT | F | L | Bus FWD M9R 714;M9R717 | | GDS82548 | Drive Shaft | | 29 | 39 | 60 | 95.5 | 694 | |
| | 2021.11- | 6MT | F | L | Van FWD M9R 714;M9R717 | | GDS82548 | Drive Shaft | | 29 | 39 | 60 | 95.5 | 694 | |
| 2.0 (84 kw) | 2006.09- | 6MT | F | R | Bus FWD M9R 780;M9R 630;M9R 786;M9R 692 | | GDS18271 | Drive Shaft | | 27 | 39 | 56.6 | 94 | 1013 | |
| | 2006.09- | 6MT | F | R | Bus FWD M9R 780;M9R 630;M9R 786;M9R 692 | | GCI50046 | Inner Joint | | 39 | 27 | 30 | 364 | 87 | |
| | 2006.09- | AT/MT | F | L | Bus FWD M9R 780;M9R 630;M9R 786;M9R 692 | | GDS60022 | Drive Shaft | | 27 | 39 | 56.6 | 94 | 694 | |
| | 2006.09- | 6MT | F | R | Van FWD M9R 780;M9R 630;M9R 786;M9R 692 | | GDS18271 | Drive Shaft | | 27 | 39 | 56.6 | 94 | 1013 | |
| | 2006.09- | SAT/6MT | F | L | Van FWD M9R 780;M9R 630;M9R 786;M9R 692 | | GDS60022 | Drive Shaft | | 27 | 39 | 56.6 | 94 | 694 | |
| | 2006.09- | SAT/6MT | F | L | Van FWD M9R 780;M9R 630;M9R 786;M9R 692 | | GCO60005 | Outer Joint | | 27 | 36 | 56.6 | 94 | 71 | I |

| | YEAR | TRANSM. | F/R | L/R | BODY STYLE & DRIVE TYPE & ENGINE | REMARKS | G-AP Ref. | PRODUCT | ABS | Technical Specifications A | B | C | H | L | P |
|---|---|---|---|---|---|---|---|---|---|---|---|---|---|---|---|
| **NISSAN** | | | | | | | | | | | | | | | |
| **Primastar** | | | | | | | | | | | | | | | |
| 2.0 (86 kw) | 2006.04- | 6MT | F | R | Bus FWD F4R 820 | | GDS44013 | Drive Shaft | | 27 | 39 | 56.5 | 93.5 | 1020 | |
| | 2006.04- | 6MT | F | R | Van FWD F4R 820 | | GDS44013 | Drive Shaft | | 27 | 39 | 56.5 | 93.5 | 1020 | |
| 2.0 (88 kw) | 2001.03-2006.08 | 6MT | F | R | Bus FWD F4R 720;F4R 722 | | GDS44013 | Drive Shaft | | 27 | 39 | 56.5 | 93.5 | 1020 | |
| | 2001.03-2006.08 | AT/MT | F | L/R | Bus FWD F4R 720;F4R 722 | | GCO18105 | Outer Joint | | 27 | 26 | 56.5 | 93.5 | 64 | M |
| | 2002.07-2006.08 | 6MT | F | R | Platform/Chassis FWD F4R 720 | | GDS44013 | Drive Shaft | | 27 | 39 | 56.5 | 93.5 | 1020 | |
| | 2003.02- | 6MT | F | R | Van FWD F4R 720;F4R 722 | | GDS44013 | Drive Shaft | | 27 | 39 | 56.5 | 93.5 | 1020 | |
| | 2003.02- | AT/MT | F | L/R | Van FWD F4R 720;F4R 722 | | GCO18105 | Outer Joint | | 27 | 26 | 56.5 | 93.5 | 64 | M |
| 2.0 (96 kw) | 2021.11- | 6MT | F | L | Van FWD M9R 714;M9R717 | | GDS82548 | Drive Shaft | | 29 | 39 | 60 | 95.5 | 694 | |
| 2.0 (110 kw) | 2021.11- | 6DCT | F | R | Bus FWD M9R 714;M9R717 | | GDS57578 | Drive Shaft | | 29 | 28 | 60 | 95.5 | 1005 | |
| | 2021.11- | 6MT | F | L | Bus FWD M9R 714;M9R717 | | GDS82548 | Drive Shaft | | 29 | 39 | 60 | 95.5 | 694 | |
| | 2021.11- | 6DCT | F | R | Van FWD M9R 714;M9R717 | | GDS57578 | Drive Shaft | | 29 | 28 | 60 | 95.5 | 1005 | |
| | 2021.11- | 6MT | F | L | Van FWD M9R 714;M9R717 | | GDS82548 | Drive Shaft | | 29 | 39 | 60 | 95.5 | 694 | |
| 2.0 (125 kw) | 2021.11- | 6DCT | F | R | Bus FWD M9R 714;M9R717 | | GDS57578 | Drive Shaft | | 29 | 28 | 60 | 95.5 | 1005 | |
| | 2021.11- | 6DCT | F | R | Van FWD M9R 714;M9R717 | | GDS57578 | Drive Shaft | | 29 | 28 | 60 | 95.5 | 1005 | |
| | 2021.11- | 6MT | F | L | Van FWD M9R 714;M9R717 | | GDS82548 | Drive Shaft | | 29 | 39 | 60 | 95.5 | 694 | |
| 2.5 (84 kw) | 2008.09- | 6MT | F | L | Bus FWD G9U 630 | | GDS50557 | Drive Shaft | | 27 | 37 | 56.5 | 92 | 634 | |
| | 2008.09- | 6MT | F | R | Bus FWD G9U 630 | | GDS18301 | Drive Shaft | | 27 | 39 | 56.6 | 94 | 1045 | |
| | 2008.09- | 6MT | F | L | Van FWD G9U 630 | | GDS50557 | Drive Shaft | | 27 | 37 | 56.5 | 92 | 634 | |
| | 2008.09- | 6MT | F | R | Van FWD G9U 630 | | GDS18301 | Drive Shaft | | 27 | 39 | 56.6 | 94 | 1045 | |
| 2.5 (99 kw) | 2002.07-2006.08 | 6MT | F | L | Platform/Chassis FWD G9U 730 | | GDS50557 | Drive Shaft | | 27 | 37 | 56.5 | 92 | 634 | |
| | 2002.07-2006.08 | 6MT | F | R | Platform/Chassis FWD G9U 730 | | GDS18301 | Drive Shaft | | 27 | 39 | 56.6 | 94 | 1045 | |
| | 2003.07- | 6MT | F | R | Bus FWD G9U 730 | | GDS18301 | Drive Shaft | | 27 | 39 | 56.6 | 94 | 1045 | |
| | 2003.07- | AT/MT | F | L | Bus FWD G9U 730 | | GDS50557 | Drive Shaft | | 27 | 37 | 56.5 | 92 | 634 | |
| | 2003.07- | AT/MT | F | L/R | Bus FWD G9U 730 | | GCO50080 | Outer Joint | | 27 | 37 | 56.5 | 92 | 73 | I |
| | 2003.07- | AT/MT | F | R | Bus FWD G9U 730 | | GCI50097 | Inner Joint | | 39 | 35 | 30 | 409 | 90 | |
| | 2003.07- | 6MT | F | R | Van FWD G9U 730 | | GDS18301 | Drive Shaft | | 27 | 39 | 56.6 | 94 | 1045 | |
| | 2003.07- | AT/MT | F | L | Van FWD G9U 730 | | GDS50557 | Drive Shaft | | 27 | 37 | 56.5 | 92 | 634 | |
| | 2003.07- | AT/MT | F | L/R | Van FWD G9U 730 | | GCO50080 | Outer Joint | | 27 | 37 | 56.5 | 92 | 73 | I |
| | 2003.07- | AT/MT | F | R | Van FWD G9U 730 | | GCI50097 | Inner Joint | | 39 | 35 | 30 | 409 | 90 | |
| 2.5 (107 kw) | 2006.04- | 6MT | F | L | Platform/Chassis FWD G9U 630 | | GDS50557 | Drive Shaft | | 27 | 37 | 56.5 | 92 | 634 | |
| | 2006.04- | 6MT | F | R | Platform/Chassis FWD G9U 630 | | GDS18301 | Drive Shaft | | 27 | 39 | 56.6 | 94 | 1045 | |
| | 2006.09- | AT/MT | F | L | Bus FWD G9U 630 | | GDS50557 | Drive Shaft | | 27 | 37 | 56.5 | 92 | 634 | |
| | 2006.09- | AT/MT | F | R | Bus FWD G9U 630 | | GDS18301 | Drive Shaft | | 27 | 39 | 56.6 | 94 | 1045 | |
| | 2006.09- | AT/MT | F | L | Van FWD G9U 630 | | GDS50557 | Drive Shaft | | 27 | 37 | 56.5 | 92 | 634 | |
| | 2006.09- | AT/MT | F | R | Van FWD G9U 630 | | GDS18301 | Drive Shaft | | 27 | 39 | 56.6 | 94 | 1045 | |
| **Primera** | | | | | | | | | | | | | | | |
| 1.6 (66 kw) | 1990.06-1996.01 | AT/MT | F | L | Hatchback FWD GA16DS | | GDS41001 | Drive Shaft | 42T | 27 | 25 | 56 | 103.5 | 638 | |
| | 1990.06-1996.01 | AT/MT | F | L | Hatchback FWD GA16DS | | GDS41094 | Drive Shaft | | 27 | 25 | 56 | 103.5 | 640 | |
| | 1990.06-1996.01 | AT/MT | F | R | Hatchback FWD GA16DS | | GDS41004 | Drive Shaft | | 27 | 25 | 56 | 103.5 | 922 | |
| | 1990.06-1996.01 | AT/MT | F | R | Hatchback FWD GA16DS | | GDS41005 | Drive Shaft | 42T | 27 | 25 | 56 | 103.5 | 922 | |
| | 1990.06-1996.01 | AT/MT | F | L | Hatchback FWD GA16DS | | GCO41018 | Outer Joint | | 27 | 23 | 56 | 99 | 60 | I |
| | 1990.06-1996.01 | MT | F | L/R | Hatchback FWD GA16DS | Vehicle Production Country:Great Britain | GCO41009 | Outer Joint | | 27 | 22 | 56 | 103.5 | 61.4 | I |
| | 1990.06-1996.01 | MT | F | L/R | Hatchback FWD GA16DS | Vehicle Production Country:Great Britain | GCO41010 | Outer Joint | 42T | 27 | 22 | 56 | 103.5 | 61.4 | I |
| | 1990.06-1996.01 | | F | | Hatchback FWD GA16DS | | GCO41017 | Outer Joint | | 27 | 22 | 56 | 103 | 61.5 | M |
| | 1990.06-1996.01 | | F | | Hatchback FWD GA16DS | | GCO99203 | Outer Joint | | 27 | 22 | 56 | 103.5 | 61.4 | M |
| | 1990.06-1996.01 | AT/MT | F | L | Saloon FWD GA16DS | | GDS41001 | Drive Shaft | 42T | 27 | 25 | 56 | 103.5 | 638 | |
| | 1990.06-1996.01 | AT/MT | F | L | Saloon FWD GA16DS | | GDS41094 | Drive Shaft | | 27 | 25 | 56 | 103.5 | 640 | |
| | 1990.06-1996.01 | AT/MT | F | R | Saloon FWD GA16DS | | GDS41005 | Drive Shaft | 42T | 27 | 25 | 56 | 103.5 | 922 | |
| | 1990.06-1996.01 | AT/MT | F | L | Saloon FWD GA16DS | | GCO41018 | Outer Joint | | 27 | 23 | 56 | 99 | 60 | I |
| | 1990.06-1996.01 | MT | F | L/R | Saloon FWD GA16DS | Vehicle Production Country:Great Britain | GCO41009 | Outer Joint | | 27 | 22 | 56 | 103.5 | 61.4 | I |
| | 1990.06-1996.01 | MT | F | L/R | Saloon FWD GA16DS | Vehicle Production Country:Great Britain | GCO41010 | Outer Joint | 42T | 27 | 22 | 56 | 103.5 | 61.4 | I |
| | 1990.06-1996.01 | | F | | Saloon FWD GA16DS | | GCO41017 | Outer Joint | | 27 | 22 | 56 | 103 | 61.5 | M |
| | 1990.06-1996.01 | | F | | Saloon FWD GA16DS | | GCO99203 | Outer Joint | | 27 | 22 | 56 | 103.5 | 61.4 | M |
| | 1996.09-2001.12 | 5MT | F | L | Saloon FWD GA16DE | | GDS41003 | Drive Shaft | 44T | 27 | 25 | 56 | 103.5 | 645 | |
| | 1996.09-2001.12 | MT | F | L | Saloon FWD GA16DE | | GDS41019 | Drive Shaft | 44T | 27 | 25 | 56 | 103.5 | 643.5 | |
| | 1996.09-2001.12 | MT | F | R | Saloon FWD GA16DE | | GDS41201 | Drive Shaft | 44T | 27 | 25 | 56 | 103.5 | 917 | |
| | 1996.09-2001.12 | MT | F | L | Saloon FWD GA16DE | | GCO41030 | Outer Joint | 44T | 27 | 22 | 56 | 103.5 | 61.5 | I |
| | 1996.09-2001.12 | MT | F | L/R | Saloon FWD GA16DE | | GCO41029 | Outer Joint | | 27 | 22 | 56 | 103.5 | 61.5 | I |
| | 1996.09-2001.12 | MT | F | L | Saloon FWD GA16DE | | GCI99179 | Inner Joint | | 25 | 22 | 40 | 63 | 100 | |
| | 1996.09-2002.07 | 5MT | F | L | Hatchback FWD GA16DE | | GDS41003 | Drive Shaft | 44T | 27 | 25 | 56 | 103.5 | 645 | |
| | 1996.09-2002.07 | MT | F | L | Hatchback FWD GA16DE | | GDS41019 | Drive Shaft | 44T | 27 | 25 | 56 | 103.5 | 643.5 | |
| | 1996.09-2002.07 | MT | F | R | Hatchback FWD GA16DE | | GDS41201 | Drive Shaft | 44T | 27 | 25 | 56 | 103.5 | 917 | |
| | 1996.09-2002.07 | MT | F | L | Hatchback FWD GA16DE | | GCO41030 | Outer Joint | 44T | 27 | 22 | 56 | 103.5 | 61.5 | I |
| | 1996.09-2002.07 | MT | F | L/R | Hatchback FWD GA16DE | | GCO41029 | Outer Joint | | 27 | 22 | 56 | 103.5 | 61.5 | I |
| | 1996.09-2002.07 | MT | F | L | Hatchback FWD GA16DE | | GCI99179 | Inner Joint | | 25 | 22 | 40 | 63 | 100 | |

| | YEAR | TRANSM. | F/R | L/R | BODY STYLE & DRIVE TYPE & ENGINE | REMARKS | G-AP Ref. | PRODUCT | ABS | Technical Specifications A | B | C | H | L | P |
|---|---|---|---|---|---|---|---|---|---|---|---|---|---|---|---|
| **NISSAN** **Primera** | | | | | | | | | | | | | | | |
| 1.6 (71 kw) | 1990.06-1996.01 | AT/MT | F | R | Saloon FWD GA16DS | | GDS41004 | Drive Shaft | | 27 | 25 | 56 | 103.5 | 922 | |
| | 1990.06-1996.01 | AT/MT | F | L | Saloon FWD GA16DS | Date from:1991.01 | GCO41018 | Outer Joint | | 27 | 23 | 56 | 99 | 60 | I |
| | 1990.06-1996.01 | MT | F | L | Saloon FWD GA16DS | | GDS41094 | Drive Shaft | | 27 | 25 | 56 | 103.5 | 640 | |
| | 1990.06-1996.01 | MT | F | L/R | Saloon FWD GA16DS | Vehicle Production Country:Great Britain | GCO41009 | Outer Joint | | 27 | 22 | 56 | 103.5 | 61.4 | I |
| | 1990.06-1996.01 | MT | F | L/R | Saloon FWD GA16DS | Vehicle Production Country:Great Britain | GCO41010 | Outer Joint | 42T | 27 | 22 | 56 | 103.5 | 61.4 | I |
| | 1990.06-1996.01 | | F | | Saloon FWD GA16DS | | GCO41017 | Outer Joint | | 27 | 22 | 56 | 103 | 61.5 | M |
| | 1990.06-1996.01 | | F | | Saloon FWD GA16DS | | GCO99203 | Outer Joint | | 27 | 22 | 56 | 103.5 | 61.4 | M |
| 1.6 (73 kw) | 1996.09-2000.10 | 5MT | F | L | Saloon FWD GA16DE | angular | GDS41003 | Drive Shaft | 44T | 27 | 25 | 56 | 103.5 | 645 | |
| | 1996.09-2000.10 | MT | F | L | Saloon FWD GA16DE | round | GDS41019 | Drive Shaft | 44T | 27 | 25 | 56 | 103.5 | 643.5 | |
| | 1996.09-2000.10 | MT | F | R | Saloon FWD GA16DE | | GDS41201 | Drive Shaft | 44T | 27 | 25 | 56 | 103.5 | 917 | |
| | 1996.09-2000.10 | MT | F | L/R | Saloon FWD GA16DE | | GCO41029 | Outer Joint | | 27 | 22 | 56 | 103.5 | 61.5 | I |
| | 1996.09-2000.10 | MT | F | L/R | Saloon FWD GA16DE | | GCO41030 | Outer Joint | 44T | 27 | 22 | 56 | 103.5 | 61.5 | I |
| | 1996.09-2000.10 | MT | F | L | Saloon FWD GA16DE | round | GCI99179 | Inner Joint | | 25 | 22 | 40 | 63 | 100 | |
| | 1996.09-2002.07 | 5MT | F | L | Hatchback FWD GA16DE/QG16DE | angular | GDS41003 | Drive Shaft | 44T | 27 | 25 | 56 | 103.5 | 645 | |
| | 1996.09-2002.07 | MT | F | L | Hatchback FWD GA16DE/QG16DE | round | GDS41019 | Drive Shaft | 44T | 27 | 25 | 56 | 103.5 | 643.5 | |
| | 1996.09-2002.07 | MT | F | R | Hatchback FWD GA16DE/QG16DE | | GDS41201 | Drive Shaft | 44T | 27 | 25 | 56 | 103.5 | 917 | |
| | 1996.09-2002.07 | MT | F | L | Hatchback FWD GA16DE/QG16DE | | GCO41030 | Outer Joint | 44T | 27 | 22 | 56 | 103.5 | 61.5 | I |
| | 1996.09-2002.07 | MT | F | L/R | Hatchback FWD GA16DE/QG16DE | | GCO41029 | Outer Joint | | 27 | 22 | 56 | 103.5 | 61.5 | I |
| | 1996.09-2002.07 | MT | F | L | Hatchback FWD GA16DE/QG16DE | round | GCI99179 | Inner Joint | | 25 | 22 | 40 | 63 | 100 | |
| 1.6 (75 kw) | 1993.06-1996.01 | AT/MT | F | L | Hatchback FWD GA16DE | | GDS41094 | Drive Shaft | | 27 | 25 | 56 | 103.5 | 640 | |
| | 1993.06-1996.01 | AT/MT | F | R | Hatchback FWD GA16DE | | GDS41004 | Drive Shaft | | 27 | 25 | 56 | 103.5 | 922 | |
| | 1993.06-1996.01 | MT | F | L/R | Hatchback FWD GA16DE | Vehicle Production Country:Great Britain | GCO41009 | Outer Joint | | 27 | 22 | 56 | 103.5 | 61.4 | I |
| | 1993.06-1996.01 | MT | F | L/R | Hatchback FWD GA16DE | Vehicle Production Country:Great Britain | GCO41010 | Outer Joint | 42T | 27 | 22 | 56 | 103.5 | 61.4 | I |
| | 1993.06-1996.01 | | F | L | Hatchback FWD GA16DE | | GDS41001 | Drive Shaft | 42T | 27 | 25 | 56 | 103.5 | 638 | |
| | 1993.06-1996.01 | | F | R | Hatchback FWD GA16DE | | GDS41005 | Drive Shaft | 42T | 27 | 25 | 56 | 103.5 | 922 | |
| | 1993.06-1996.01 | | F | | Hatchback FWD GA16DE | | GCO41017 | Outer Joint | | 27 | 22 | 56 | 103 | 61.5 | M |
| | 1993.06-1996.01 | | F | | Hatchback FWD GA16DE | | GCO99203 | Outer Joint | | 27 | 22 | 56 | 103.5 | 61.4 | M |
| | 1993.06-1996.01 | AT/MT | F | L | Saloon FWD GA16DE | | GDS41001 | Drive Shaft | 42T | 27 | 25 | 56 | 103.5 | 638 | |
| | 1993.06-1996.01 | AT/MT | F | L | Saloon FWD GA16DE | | GDS41094 | Drive Shaft | | 27 | 25 | 56 | 103.5 | 640 | |
| | 1993.06-1996.01 | AT/MT | F | R | Saloon FWD GA16DE | | GDS41004 | Drive Shaft | | 27 | 25 | 56 | 103.5 | 922 | |
| | 1993.06-1996.01 | AT/MT | F | L/R | Saloon FWD GA16DE | | GCO41009 | Outer Joint | | 27 | 22 | 56 | 103.5 | 61.4 | I |
| | 1993.06-1996.01 | MT | F | L/R | Saloon FWD GA16DE | | GCO41010 | Outer Joint | 42T | 27 | 22 | 56 | 103.5 | 61.4 | I |
| | 1993.06-1996.01 | | F | | Saloon FWD GA16DE | | GCO99203 | Outer Joint | | 27 | 22 | 56 | 103.5 | 61.4 | M |
| 1.6 (78 kw) | 1996.06-2001.12 | AT/MT | F | L | Saloon FWD QG16DE | | GDS41003 | Drive Shaft | 44T | 27 | 25 | 56 | 103.5 | 645 | |
| | 1996.06-2001.12 | AT/MT | F | R | Saloon FWD QG16DE | | GDS41201 | Drive Shaft | 44T | 27 | 25 | 56 | 103.5 | 917 | |
| | 1996.06-2001.12 | AT/MT | F | L/R | Saloon FWD QG16DE | Date to:2000.12 | GCO41028 | Outer Joint | 44T | 27 | 32 | 56 | 103 | 68.5 | I |
| | 1996.06-2001.12 | AT/MT | F | L/R | Saloon FWD QG16DE | Date from:2001.02 | GCO41142 | Outer Joint | 44T | 27 | 23 | 56 | 103.5 | 61.5 | M |
| | 1996.06-2001.12 | MT | F | L | Saloon FWD QG16DE | | GDS41019 | Drive Shaft | 44T | 27 | 25 | 56 | 103.5 | 643.5 | |
| | 1996.06-2001.12 | MT | F | L | Saloon FWD QG16DE | | GCI99179 | Inner Joint | | 25 | 22 | 40 | 63 | 100 | |
| | 1996.06-2001.12 | | F | | Saloon FWD QG16DE | | GCO41338 | Outer Joint | | 27 | 23 | 56 | 103 | 61.5 | M |
| | 2000.09-2002.07 | AT/MT | F | L | Hatchback FWD QG16DE | | GDS41003 | Drive Shaft | 44T | 27 | 25 | 56 | 103.5 | 645 | |
| | 2000.09-2002.07 | AT/MT | F | R | Hatchback FWD QG16DE | | GDS41201 | Drive Shaft | 44T | 27 | 25 | 56 | 103.5 | 917 | |
| | 2000.09-2002.07 | AT/MT | F | L/R | Hatchback FWD QG16DE | Date to:2000.12 | GCO41028 | Outer Joint | 44T | 27 | 32 | 56 | 103 | 68.5 | I |
| | 2000.09-2002.07 | AT/MT | F | L/R | Hatchback FWD QG16DE | Date from:2001.02 | GCO41142 | Outer Joint | 44T | 27 | 23 | 56 | 103.5 | 61.5 | M |
| | 2000.09-2002.07 | MT | F | L | Hatchback FWD QG16DE | | GDS41019 | Drive Shaft | 44T | 27 | 25 | 56 | 103.5 | 643.5 | |
| | 2000.09-2002.07 | MT | F | R | Hatchback FWD QG16DE | Date to:2001.02;For Engine code:QG16DE | GDS41201 | Drive Shaft | 44T | 27 | 25 | 56 | 103.5 | 917 | |
| | 2000.09-2002.07 | MT | F | L/R | Hatchback FWD QG16DE | Date to:2001.02;For Engine code:QG16DE | GCO41028 | Outer Joint | 44T | 27 | 32 | 56 | 103 | 68.5 | I |
| | 2000.09-2002.07 | MT | F | L/R | Hatchback FWD QG16DE | Date from:2001.03;For Engine code:QG16DE | GCO41142 | Outer Joint | 44T | 27 | 23 | 56 | 103.5 | 61.5 | M |
| | 2000.09-2002.07 | MT | F | L | Hatchback FWD QG16DE | | GCI99179 | Inner Joint | | 25 | 22 | 40 | 63 | 100 | |
| | 2000.09-2002.07 | | F | | Hatchback FWD QG16DE | | GCO41029 | Outer Joint | | 27 | 22 | 56 | 103.5 | 61.5 | I |
| | 2002.03-2008.08 | MT | F | L/R | Saloon FWD QG16DE | | GCO41142 | Outer Joint | 44T | 27 | 23 | 56 | 103.5 | 61.5 | M |
| | 2002.07-2008.08 | MT | F | L/R | Hatchback FWD QG16DE | | GCO41142 | Outer Joint | 44T | 27 | 23 | 56 | 103.5 | 61.5 | M |
| 1.6 (80 kw) | 2002.01-2006.04 | | F | L/R | Saloon FWD QG16DE | | GCO41142 | Outer Joint | 44T | 27 | 23 | 56 | 103.5 | 61.5 | M |
| | 2002.07-2006.04 | | F | L/R | Hatchback FWD QG16DE | | GCO41142 | Outer Joint | 44T | 27 | 23 | 56 | 103.5 | 61.5 | M |
| 1.8 (84 kw) | 1999.08-2001.12 | 5MT | F | R | Saloon FWD QG18DE | For vehicles with ABS | GDS41201 | Drive Shaft | 44T | 27 | 25 | 56 | 103.5 | 917 | |
| | 1999.08-2001.12 | AT/MT | F | L | Saloon FWD QG18DE | | GDS41003 | Drive Shaft | 44T | 27 | 25 | 56 | 103.5 | 645 | |
| | 1999.08-2001.12 | AT/MT | F | R | Saloon FWD QG18DE | | GDS41201 | Drive Shaft | 44T | 27 | 25 | 56 | 103.5 | 917 | |
| | 1999.08-2001.12 | AT/MT | F | L/R | Saloon FWD QG18DE | Date to:2000.12 | GCO41028 | Outer Joint | 44T | 27 | 32 | 56 | 103 | 68.5 | I |
| | 1999.08-2001.12 | AT/MT | F | L/R | Saloon FWD QG18DE | Date from:2001.02 | GCO41142 | Outer Joint | 44T | 27 | 23 | 56 | 103.5 | 61.5 | M |
| | 1999.08-2001.12 | MT | F | L | Saloon FWD QG18DE | | GDS41019 | Drive Shaft | 44T | 27 | 25 | 56 | 103.5 | 643.5 | |
| | 1999.08-2001.12 | MT | F | L/R | Saloon FWD QG18DE | Date to:2001.02 | GCO41028 | Outer Joint | 44T | 27 | 32 | 56 | 103 | 68.5 | I |
| | 1999.08-2001.12 | MT | F | L/R | Saloon FWD QG18DE | Date from:2001.03 | GCO41142 | Outer Joint | 44T | 27 | 23 | 56 | 103.5 | 61.5 | M |
| | 1999.08-2001.12 | MT | F | L | Saloon FWD QG18DE | | GCI99179 | Inner Joint | | 25 | 22 | 40 | 63 | 100 | |
| | 1999.08-2002.07 | 5MT | F | R | Hatchback FWD QG18DE | For vehicles with ABS | GDS41201 | Drive Shaft | 44T | 27 | 25 | 56 | 103.5 | 917 | |
| | 1999.08-2002.07 | AT/MT | F | L | Hatchback FWD QG18DE | | GDS41003 | Drive Shaft | 44T | 27 | 25 | 56 | 103.5 | 645 | |

| | YEAR | TRANSM. | F/R | L/R | BODY STYLE & DRIVE TYPE & ENGINE | REMARKS | G-AP Ref. | PRODUCT | ABS | Technical Specifications A | B | C | H | L | P |
|---|---|---|---|---|---|---|---|---|---|---|---|---|---|---|---|
| **NISSAN** **Primera** | | | | | | | | | | | | | | | |
| 1.8 (84 kw) | 1999.08-2002.07 | AT/MT | F | R | Hatchback FWD QG18DE | | GDS41201 | Drive Shaft | 44T | 27 | 25 | 56 | 103.5 | 917 | |
| | 1999.08-2002.07 | AT/MT | F | L/R | Hatchback FWD QG18DE | Date to:2001.02 | GCO41028 | Outer Joint | 44T | 27 | 32 | 56 | 103 | 68.5 | I |
| | 1999.08-2002.07 | AT/MT | F | L/R | Hatchback FWD QG18DE | Date from:2001.03 | GCO41142 | Outer Joint | 44T | 27 | 23 | 56 | 103.5 | 61.5 | M |
| | 1999.08-2002.07 | MT | F | L | Hatchback FWD QG18DE | | GDS41019 | Drive Shaft | 44T | 27 | 25 | 56 | 103.5 | 643.5 | |
| | 1999.08-2002.07 | MT | F | L/R | Hatchback FWD QG18DE | Date to:2001.02 | GCO41028 | Outer Joint | 44T | 27 | 32 | 56 | 103 | 68.5 | I |
| | 1999.08-2002.07 | MT | F | L/R | Hatchback FWD QG18DE | Date from:2001.03 | GCO41142 | Outer Joint | 44T | 27 | 23 | 56 | 103.5 | 61.5 | M |
| | 1999.08-2002.07 | MT | F | L | Hatchback FWD QG18DE | | GCI99179 | Inner Joint | | 25 | 22 | 40 | 63 | 100 | |
| 1.8 (85 kw) | 2002.03- | MT | F | L | Saloon FWD QG18DE | | GDS56131 | Drive Shaft | 44T | 27 | 25 | 56 | 103.5 | 651 | |
| | 2002.03- | MT | F | R | Saloon FWD QG18DE | | GDS41392 | Drive Shaft | 44T | 27 | 25 | 56 | 103.5 | 961 | |
| | 2002.03- | MT | F | L/R | Saloon FWD QG18DE | | GCO41142 | Outer Joint | 44T | 27 | 23 | 56 | 103.5 | 61.5 | M |
| | 2002.03- | MT | F | L/R | Saloon FWD QG18DE | | GCI41123 | Inner Joint | | 25 | 23 | 40 | 63 | 99.5 | |
| | 2002.03-2008.10 | AT | F | | Saloon FWD QG18DE | | GCO41282 | Outer Joint | 44T | 27 | 23 | 56 | 103 | 58.5 | I |
| | 2002.03-2008.10 | AT | F | | Saloon FWD QG18DE | | GCI41089 | Inner Joint | | 25 | 23 | 40 | 63 | 99 | |
| | 2002.03-2008.10 | AT/MT | F | L | Saloon FWD QG18DE | | GCI99179 | Inner Joint | | 25 | 22 | 40 | 63 | 100 | |
| | 2002.03-2008.10 | MT | F | L | Saloon FWD QG18DE | | GDS56131 | Drive Shaft | 44T | 27 | 25 | 56 | 103.5 | 651 | |
| | 2002.03-2008.10 | MT | F | R | Saloon FWD QG18DE | | GDS41392 | Drive Shaft | 44T | 27 | 25 | 56 | 103.5 | 961 | |
| | 2002.03-2008.10 | MT | F | L/R | Saloon FWD QG18DE | Date to:2005.08 | GCO41142 | Outer Joint | 44T | 27 | 23 | 56 | 103.5 | 61.5 | M |
| | 2002.07-2008.10 | AT | F | | Hatchback FWD QG18DE | | GCO41282 | Outer Joint | 44T | 27 | 23 | 56 | 103 | 58.5 | I |
| | 2002.07-2008.10 | AT | F | | Hatchback FWD QG18DE | | GCI41089 | Inner Joint | | 25 | 23 | 40 | 63 | 99 | |
| | 2002.07-2008.10 | MT | F | L | Hatchback FWD QG18DE | | GDS56131 | Drive Shaft | 44T | 27 | 25 | 56 | 103.5 | 651 | |
| | 2002.07-2008.10 | MT | F | R | Hatchback FWD QG18DE | | GDS41392 | Drive Shaft | 44T | 27 | 25 | 56 | 103.5 | 961 | |
| | 2002.07-2008.10 | MT | F | L/R | Hatchback FWD QG18DE | Date to:2005.08 | GCO41142 | Outer Joint | 44T | 27 | 23 | 56 | 103.5 | 61.5 | M |
| 1.9 (85 kw) | 2002.08-2007.10 | | F | L/R | Hatchback FWD F9Q | | GCO41050 | Outer Joint | 44T | 27 | 35 | 56 | 103 | 69 | I |
| | 2002.08-2007.10 | | F | L/R | Saloon FWD F9Q | | GCO41050 | Outer Joint | 44T | 27 | 35 | 56 | 103 | 69 | I |
| 1.9 (88 kw) | 2003.04-2007.10 | AT/MT | F | L/R | Hatchback FWD F9Q | | GCO41050 | Outer Joint | 44T | 27 | 35 | 56 | 103 | 69 | I |
| | 2003.04-2007.10 | AT/MT | F | L/R | Saloon FWD F9Q | | GCO41050 | Outer Joint | 44T | 27 | 35 | 56 | 103 | 69 | I |
| 2.0 (55 kw) | 1991.01-1996.01 | AT | F | L/R | Hatchback FWD CD20 | Vehicle Production Country:Great Britain | GCO41006 | Outer Joint | | 27 | 32 | 56 | 103.5 | 68.5 | I |
| | 1991.01-1996.01 | AT | F | L/R | Hatchback FWD CD20 | Vehicle Production Country:Great Britain | GCO41007 | Outer Joint | 42T | 27 | 32 | 56 | 103.5 | 68.5 | I |
| | 1991.01-1996.01 | AT/MT | F | R | Hatchback FWD CD20 | Date from:1992.01 | GDS41130 | Drive Shaft | 42T | 27 | 25 | 56 | 103.5 | 962.5 | |
| | 1991.01-1996.01 | AT/MT | F | R | Hatchback FWD CD20 | Date From:1992.01 | GDS83071 | Drive Shaft | | 27 | 25 | 56 | 103.5 | 962.5 | |
| | 1991.01-1996.01 | MT | F | L | Hatchback FWD CD20 | | GCO41018 | Outer Joint | | 27 | 23 | 56 | 99 | 60 | I |
| | 1991.01-1996.01 | MT | F | L/R | Hatchback FWD CD20 | Vehicle Production Country:Great Britain | GCO41009 | Outer Joint | | 27 | 22 | 56 | 103.5 | 61.4 | I |
| | 1991.01-1996.01 | MT | F | L/R | Hatchback FWD CD20 | Vehicle Production Country:Great Britain | GCO41010 | Outer Joint | 42T | 27 | 22 | 56 | 103.5 | 61.4 | I |
| | 1991.01-1996.01 | MT | F | L/R | Hatchback FWD CD20 | Vehicle Production Country:Japan | GCO41163 | Outer Joint | | 27 | 25 | 56 | 103 | 66.5 | I |
| | 1991.01-1996.01 | | F | | Hatchback FWD CD20 | | GCO41017 | Outer Joint | | 27 | 22 | 56 | 103 | 61.5 | M |
| | 1991.01-1996.01 | | F | | Hatchback FWD CD20 | | GCO41019 | Outer Joint | 42T | 27 | 23 | 56 | 99 | 60 | I |
| | 1991.01-1996.01 | | F | | Hatchback FWD CD20 | | GCO99203 | Outer Joint | | 27 | 22 | 56 | 103.5 | 61.4 | M |
| | 1991.01-1996.01 | AT | F | L/R | Saloon FWD CD20 | Vehicle Production Country:Great Britain | GCO41006 | Outer Joint | | 27 | 32 | 56 | 103.5 | 68.5 | I |
| | 1991.01-1996.01 | AT | F | L/R | Saloon FWD CD20 | Vehicle Production Country:Great Britain | GCO41007 | Outer Joint | 42T | 27 | 32 | 56 | 103.5 | 68.5 | I |
| | 1991.01-1996.01 | AT/MT | F | R | Saloon FWD CD20 | Date from:1992.01 | GDS41130 | Drive Shaft | 42T | 27 | 25 | 56 | 103.5 | 962.5 | |
| | 1991.01-1996.01 | AT/MT | F | R | Saloon FWD CD20 | Date From:1992.01 | GDS83071 | Drive Shaft | | 27 | 25 | 56 | 103.5 | 962.5 | |
| | 1991.01-1996.01 | MT | F | L | Saloon FWD CD20 | | GCO41018 | Outer Joint | | 27 | 23 | 56 | 99 | 60 | I |
| | 1991.01-1996.01 | MT | F | L/R | Saloon FWD CD20 | Vehicle Production Country:Great Britain | GCO41009 | Outer Joint | | 27 | 22 | 56 | 103.5 | 61.4 | I |
| | 1991.01-1996.01 | MT | F | L/R | Saloon FWD CD20 | Vehicle Production Country:Great Britain | GCO41010 | Outer Joint | 42T | 27 | 22 | 56 | 103.5 | 61.4 | I |
| | 1991.01-1996.01 | MT | F | L/R | Saloon FWD CD20 | Vehicle Production Country:Japan | GCO41163 | Outer Joint | | 27 | 25 | 56 | 103 | 66.5 | I |
| | 1991.01-1996.01 | | F | | Saloon FWD CD20 | | GCO41017 | Outer Joint | | 27 | 22 | 56 | 103 | 61.5 | M |
| | 1991.01-1996.01 | | F | | Saloon FWD CD20 | | GCO41019 | Outer Joint | 42T | 27 | 23 | 56 | 99 | 60 | I |
| | 1991.01-1996.01 | | F | | Saloon FWD CD20 | | GCO99203 | Outer Joint | | 27 | 22 | 56 | 103.5 | 61.4 | M |
| 2.0 (66 kw) | 1996.09-2001.12 | 5MT | F | L | Saloon FWD CD20T | | GDS41081 | Drive Shaft | 44T | 27 | 25 | 56 | 103 | 608 | |
| | 1996.09-2001.12 | 5MT | F | R | Saloon FWD CD20T | DOJ | GDS41206 | Drive Shaft | 44T | 27 | 25 | 56 | 103 | 954 | |
| | 1996.09-2001.12 | AT/MT | F | L/R | Saloon FWD CD20T | | GCO41028 | Outer Joint | 44T | 27 | 32 | 56 | 103 | 68.5 | I |
| | 1996.09-2001.12 | AT/MT | F | L/R | Saloon FWD CD20T | | GCO41139 | Outer Joint | 44T | 27 | 32 | 56 | 102 | 69 | M |
| | 1996.09-2002.07 | 5MT | F | L | Hatchback FWD CD20T | | GDS41081 | Drive Shaft | 44T | 27 | 25 | 56 | 103 | 608 | |
| | 1996.09-2002.07 | 5MT | F | R | Hatchback FWD CD20T | DOJ | GDS41206 | Drive Shaft | 44T | 27 | 25 | 56 | 103 | 954 | |
| | 1996.09-2002.07 | AT/MT | F | L/R | Hatchback FWD CD20T | | GCO41028 | Outer Joint | 44T | 27 | 32 | 56 | 103 | 68.5 | I |
| | 1996.09-2002.07 | AT/MT | F | L/R | Hatchback FWD CD20T | | GCO41139 | Outer Joint | 44T | 27 | 32 | 56 | 102 | 69 | M |
| 2.0 (85 kw) | 1990.06-1996.01 | AT | F | L/R | Hatchback FWD SR20DI | Vehicle Production Country:Great Britain | GCO41006 | Outer Joint | | 27 | 32 | 56 | 103.5 | 68.5 | I |
| | 1990.06-1996.01 | AT | F | L/R | Hatchback FWD SR20DI | Vehicle Production Country:Great Britain | GCO41007 | Outer Joint | 42T | 27 | 32 | 56 | 103.5 | 68.5 | I |
| | 1990.06-1996.01 | AT/MT | F | L | Hatchback FWD SR20DI | | GDS41280 | Drive Shaft | 42T | 27 | 25 | 56 | 103.5 | 618 | |
| | 1990.06-1996.01 | AT/MT | F | R | Hatchback FWD SR20DI | | GDS41024 | Drive Shaft | 42T | 27 | 25 | 56 | 103.5 | 940 | |
| | 1990.06-1996.01 | MT | F | L/R | Hatchback FWD SR20DI | Vehicle Production Country:Great Britain | GCO41010 | Outer Joint | 42T | 27 | 22 | 56 | 103.5 | 61.4 | I |
| | 1990.06-1996.01 | MT | F | L/R | Hatchback FWD SR20DI | Vehicle Production Country:Japan | GCO41163 | Outer Joint | | 27 | 25 | 56 | 103 | 66.5 | I |
| | 1990.06-1996.01 | | F | L | Hatchback FWD SR20DI | | GCI50065 | Inner Joint | | 25 | 25 | 40 | 63 | 101 | |
| | 1990.06-1996.01 | AT | F | L/R | Saloon FWD SR20DI | Vehicle Production Country:Great Britain | GCO41006 | Outer Joint | | 27 | 32 | 56 | 103.5 | 68.5 | I |
| | 1990.06-1996.01 | AT | F | L/R | Saloon FWD SR20DI | Vehicle Production Country:Great Britain | GCO41007 | Outer Joint | 42T | 27 | 32 | 56 | 103.5 | 68.5 | I |

| | YEAR | TRANSM. | F/R | L/R | BODY STYLE & DRIVE TYPE & ENGINE | REMARKS | G-AP Ref. | PRODUCT | ABS | Technical Specifications A | B | C | H | L | P |
|---|---|---|---|---|---|---|---|---|---|---|---|---|---|---|---|
| **NISSAN** **Primera** | | | | | | | | | | | | | | | |
| 2.0 (85 kw) | 1990.06-1996.01 | AT/MT | F | L | Saloon FWD SR20DI | | GDS41280 | Drive Shaft | 42T | 27 | 25 | 56 | 103.5 | 618 | |
| | 1990.06-1996.01 | AT/MT | F | R | Saloon FWD SR20DI | | GDS41024 | Drive Shaft | 42T | 27 | 25 | 56 | 103.5 | 940 | |
| | 1990.06-1996.01 | MT | F | L/R | Saloon FWD SR20DI | Vehicle Production Country:Great Britain | GCO41010 | Outer Joint | 42T | 27 | 22 | 56 | 103.5 | 61.4 | I |
| | 1990.06-1996.01 | MT | F | L/R | Saloon FWD SR20DI | Vehicle Production Country:Japan | GCO41163 | Outer Joint | | 27 | 25 | 56 | 103 | 66.5 | I |
| | 1990.06-1996.01 | | F | | Saloon FWD SR20DI | | GCO41062 | Outer Joint | 44T | 27 | 25 | 56 | 103 | 70.5 | I |
| | 1990.06-1996.01 | | F | L | Saloon FWD SR20DI | | GCI50065 | Inner Joint | | 25 | 25 | 40 | 63 | 101 | |
| | 1991.04-1996.06 | AT | F | L/R | Hatchback 4WD SR20DI | Vehicle Production Country:Great Britain | GCO41006 | Outer Joint | | 27 | 32 | 56 | 103.5 | 68.5 | I |
| | 1991.04-1996.06 | AT | F | L/R | Hatchback 4WD SR20DI | Vehicle Production Country:Great Britain | GCO41007 | Outer Joint | 42T | 27 | 32 | 56 | 103.5 | 68.5 | I |
| | 1991.04-1996.06 | AT/MT | F | L | Hatchback 4WD SR20DI | | GDS41280 | Drive Shaft | 42T | 27 | 25 | 56 | 103.5 | 618 | |
| | 1991.04-1996.06 | MT | F | L/R | Hatchback 4WD SR20DI | Vehicle Production Country:Great Britain | GCO41009 | Outer Joint | | 27 | 22 | 56 | 103.5 | 61.4 | I |
| | 1991.04-1996.06 | MT | F | L/R | Hatchback 4WD SR20DI | Vehicle Production Country:Great Britain | GCO41010 | Outer Joint | 42T | 27 | 22 | 56 | 103.5 | 61.4 | I |
| | 1991.04-1996.06 | MT | F | L/R | Hatchback 4WD SR20DI | Vehicle Production Country:Japan | GCO41163 | Outer Joint | | 27 | 25 | 56 | 103 | 66.5 | I |
| | 1991.04-1996.06 | | F | R | Hatchback 4WD SR20DI | | GDS41024 | Drive Shaft | 42T | 27 | 25 | 56 | 103.5 | 940 | |
| | 1991.04-1996.06 | | F | | Hatchback 4WD SR20DI | | GCO41023 | Outer Joint | | 27 | 23 | 56 | 103 | 61.5 | M |
| | 1991.04-1996.06 | AT | F | L/R | Saloon 4WD SR20DI | Vehicle Production Country:Great Britain | GCO41006 | Outer Joint | | 27 | 32 | 56 | 103.5 | 68.5 | I |
| | 1991.04-1996.06 | AT | F | L/R | Saloon 4WD SR20DI | Vehicle Production Country:Great Britain | GCO41007 | Outer Joint | 42T | 27 | 32 | 56 | 103.5 | 68.5 | I |
| | 1991.04-1996.06 | AT/MT | F | L | Saloon 4WD SR20DI | | GDS41280 | Drive Shaft | 42T | 27 | 25 | 56 | 103.5 | 618 | |
| | 1991.04-1996.06 | MT | F | L/R | Saloon 4WD SR20DI | Vehicle Production Country:Great Britain | GCO41009 | Outer Joint | | 27 | 22 | 56 | 103.5 | 61.4 | I |
| | 1991.04-1996.06 | MT | F | L/R | Saloon 4WD SR20DI | Vehicle Production Country:Great Britain | GCO41010 | Outer Joint | 42T | 27 | 22 | 56 | 103.5 | 61.4 | I |
| | 1991.04-1996.06 | MT | F | L/R | Saloon 4WD SR20DI | Vehicle Production Country:Japan | GCO41163 | Outer Joint | | 27 | 25 | 56 | 103 | 66.5 | I |
| | 1991.04-1996.06 | | F | R | Saloon 4WD SR20DI | | GDS41024 | Drive Shaft | 42T | 27 | 25 | 56 | 103.5 | 940 | |
| | 1991.04-1996.06 | | F | | Saloon 4WD SR20DI | | GCO41023 | Outer Joint | | 27 | 23 | 56 | 103 | 61.5 | M |
| | 1991.04-1996.06 | | F | | Saloon 4WD SR20DI | | GCO41062 | Outer Joint | 44T | 27 | 25 | 56 | 103 | 70.5 | I |
| | 1996.09-2001.12 | 4AT/5MT | F | L | Saloon FWD SR20DEL | | GCI41028 | Inner Joint | | 25 | 32 | 40 | 63 | 108 | |
| | 1996.09-2001.12 | AT/MT | F | L | Saloon FWD SR20DEL | | GDS41025 | Drive Shaft | 44T | 27 | 25 | 56 | 103 | 619 | |
| | 1996.09-2001.12 | AT/MT | F | R | Saloon FWD SR20DEL | | GDS41002 | Drive Shaft | 44T | 27 | 25 | 56 | 103 | 938 | |
| | 1996.09-2001.12 | AT/MT | F | L/R | Saloon FWD SR20DEL | | GCO41028 | Outer Joint | 44T | 27 | 32 | 56 | 103 | 68.5 | I |
| | 1996.09-2001.12 | MT | F | | Saloon FWD SR20DEL | | GCO41139 | Outer Joint | 44T | 27 | 32 | 56 | 102 | 69 | M |
| | 1996.09-2001.12 | | F | | Saloon FWD SR20DEL | | GCO41024 | Outer Joint | 42T | 27 | 23 | 56 | 103 | 61.5 | M |
| | 1996.09-2001.12 | | F | | Saloon FWD SR20DEL | | GCO41043 | Outer Joint | 44T | 27 | 23 | 56 | 104 | 60 | M |
| | 1996.09-2001.12 | | F | | Saloon FWD SR20DEL | | GCO41054 | Outer Joint | | 27 | 23 | 56 | 103 | 61.5 | M |
| | 1996.09-2001.12 | | F | | Saloon FWD SR20DEL | | GCO41106 | Outer Joint | | 27 | 23 | 56 | 104 | 60 | M |
| | 1996.09-2001.12 | | F | | Saloon FWD SR20DEL | Date From:1997.03 | GCI41089 | Inner Joint | | 25 | 23 | 40 | 63 | 99 | |
| | 1996.09-2002.07 | 4AT/5MT | F | L | Hatchback FWD SR20DEL | | GCI41028 | Inner Joint | | 25 | 32 | 40 | 63 | 108 | |
| | 1996.09-2002.07 | AT/MT | F | L | Hatchback FWD SR20DEL | | GDS41025 | Drive Shaft | 44T | 27 | 25 | 56 | 103 | 619 | |
| | 1996.09-2002.07 | AT/MT | F | R | Hatchback FWD SR20DEL | | GDS41002 | Drive Shaft | 44T | 27 | 25 | 56 | 103 | 938 | |
| | 1996.09-2002.07 | AT/MT | F | L/R | Hatchback FWD SR20DEL | | GCO41028 | Outer Joint | 44T | 27 | 32 | 56 | 103 | 68.5 | I |
| | 1996.09-2002.07 | MT | F | | Hatchback FWD SR20DEL | | GCO41139 | Outer Joint | 44T | 27 | 32 | 56 | 102 | 69 | M |
| | 1996.09-2002.07 | | F | | Hatchback FWD SR20DEL | | GCO41024 | Outer Joint | 42T | 27 | 23 | 56 | 103 | 61.5 | M |
| | 1996.09-2002.07 | | F | | Hatchback FWD SR20DEL | | GCO41043 | Outer Joint | 44T | 27 | 23 | 56 | 104 | 60 | M |
| | 1996.09-2002.07 | | F | | Hatchback FWD SR20DEL | | GCO41054 | Outer Joint | | 27 | 23 | 56 | 103 | 61.5 | M |
| | 1996.09-2002.07 | | F | | Hatchback FWD SR20DEL | | GCO41106 | Outer Joint | | 27 | 23 | 56 | 104 | 60 | M |
| | 1996.09-2002.07 | | F | | Hatchback FWD SR20DEL | Date From:1997.03 | GCI41089 | Inner Joint | | 25 | 23 | 40 | 63 | 99 | |
| 2.0 (92 kw) | 1991.01-1996.12 | MT | F | L | Hatchback FWD SR20DE | | GDS41280 | Drive Shaft | 42T | 27 | 25 | 56 | 103.5 | 618 | |
| | 1991.01-1996.12 | MT | F | R | Hatchback FWD SR20DE | | GDS41024 | Drive Shaft | 42T | 27 | 25 | 56 | 103.5 | 940 | |
| | 1991.01-1996.12 | | F | L/R | Hatchback FWD SR20DE | | GCO41006 | Outer Joint | | 27 | 32 | 56 | 103.5 | 68.5 | I |
| | 1991.01-1996.12 | AT/MT | F | L | Saloon FWD SR20DE | | GDS41280 | Drive Shaft | 42T | 27 | 25 | 56 | 103.5 | 618 | |
| | 1991.01-1996.12 | AT/MT | F | R | Saloon FWD SR20DE | | GDS41024 | Drive Shaft | 42T | 27 | 25 | 56 | 103.5 | 940 | |
| | 1991.01-1996.12 | AT/MT | F | L/R | Saloon FWD SR20DE | | GCO41006 | Outer Joint | | 27 | 32 | 56 | 103.5 | 68.5 | I |
| | 1991.01-1996.12 | AT/MT | F | L/R | Saloon FWD SR20DE | | GCO41062 | Outer Joint | 44T | 27 | 25 | 56 | 103 | 70.5 | I |
| | 1991.01-1996.12 | AT/MT | F | L/R | Saloon FWD SR20DE | | GCO41305 | Outer Joint | | 27 | 25 | 56 | 103 | 61.5 | M |
| 2.0 (96 kw) | 1996.06-2001.12 | 4AT/5MT | F | L | Saloon FWD SR20DE | | GDS41025 | Drive Shaft | 44T | 27 | 25 | 56 | 103 | 619 | |
| | 1996.06-2001.12 | 4AT/5MT | F | R | Saloon FWD SR20DE | | GDS41002 | Drive Shaft | 44T | 27 | 25 | 56 | 103 | 938 | |
| | 1996.06-2001.12 | 4AT/5MT | F | R | Saloon FWD SR20DE | | GCO41028 | Outer Joint | 44T | 27 | 32 | 56 | 103 | 68.5 | I |
| | 1996.06-2001.12 | 4AT/5MT | F | L/R | Saloon FWD SR20DE | | GCO41024 | Outer Joint | 42T | 27 | 23 | 56 | 103 | 61.5 | M |
| | 1996.06-2001.12 | 4AT/5MT | F | L/R | Saloon FWD SR20DE | | GCO41043 | Outer Joint | 44T | 27 | 23 | 56 | 104 | 60 | M |
| | 1996.06-2001.12 | 4AT/5MT | F | L/R | Saloon FWD SR20DE | | GCO41054 | Outer Joint | | 27 | 23 | 56 | 103 | 61.5 | M |
| | 1996.06-2001.12 | 4AT/5MT | F | L/R | Saloon FWD SR20DE | | GCO41106 | Outer Joint | | 27 | 23 | 56 | 104 | 60 | M |
| | 1996.06-2001.12 | 4AT/5MT | F | L/R | Saloon FWD SR20DE | | GCO41139 | Outer Joint | 44T | 27 | 32 | 56 | 102 | 69 | M |
| | 1996.06-2001.12 | 4AT/5MT | F | L | Saloon FWD SR20DE | | GCI41028 | Inner Joint | | 25 | 32 | 40 | 63 | 108 | |
| | 1996.06-2001.12 | 4AT/5MT | F | L/R | Saloon FWD SR20DE | Date from:1997.03 | GCI41089 | Inner Joint | | 25 | 23 | 40 | 63 | 99 | |
| | 1996.09-2002.07 | 4AT/5MT | F | L | Hatchback FWD SR20DE | | GDS41025 | Drive Shaft | 44T | 27 | 25 | 56 | 103 | 619 | |
| | 1996.09-2002.07 | 4AT/5MT | F | R | Hatchback FWD SR20DE | | GDS41002 | Drive Shaft | 44T | 27 | 25 | 56 | 103 | 938 | |
| | 1996.09-2002.07 | AT/MT | F | L | Hatchback FWD SR20DE | | GDS41025 | Drive Shaft | 44T | 27 | 25 | 56 | 103 | 619 | |
| | 1996.09-2002.07 | AT/MT | F | R | Hatchback FWD SR20DE | | GCO41028 | Outer Joint | 44T | 27 | 32 | 56 | 103 | 68.5 | I |

| | YEAR | TRANSM. | F/R | L/R | BODY STYLE & DRIVE TYPE & ENGINE | REMARKS | G-AP Ref. | PRODUCT | ABS | Technical Specifications A | B | C | H | L | P |
|---|---|---|---|---|---|---|---|---|---|---|---|---|---|---|---|
| **NISSAN** **Primera** | | | | | | | | | | | | | | | |
| 2.0 (96 kw) | 1996.09-2002.07 | MT | F | L/R | Hatchback FWD SR20DE | | GCO41139 | Outer Joint | 44T | 27 | 32 | 56 | 102 | 69 | M |
| | 1996.09-2002.07 | MT | F | | Hatchback FWD SR20DE | | GCO41139 | Outer Joint | 44T | 27 | 32 | 56 | 102 | 69 | M |
| | 1996.09-2002.07 | MT/AT | F | R | Hatchback FWD SR20DE | | GDS41002 | Drive Shaft | 44T | 27 | 25 | 56 | 103 | 938 | |
| | 1996.09-2002.07 | | F | | Hatchback FWD SR20DE | | GCO41024 | Outer Joint | 42T | 27 | 23 | 56 | 103 | 61.5 | M |
| | 1996.09-2002.07 | | F | | Hatchback FWD SR20DE | | GCO41043 | Outer Joint | 44T | 27 | 23 | 56 | 104 | 60 | M |
| | 1996.09-2002.07 | | F | | Hatchback FWD SR20DE | | GCO41054 | Outer Joint | | 27 | 23 | 56 | 103 | 61.5 | M |
| | 1996.09-2002.07 | | F | | Hatchback FWD SR20DE | | GCO41106 | Outer Joint | | 27 | 23 | 56 | 104 | 60 | M |
| | 1996.09-2002.07 | | F | L | Hatchback FWD SR20DE | | GCI41028 | Inner Joint | | 25 | 32 | 40 | 63 | 108 | |
| | 1996.09-2002.07 | | F | | Hatchback FWD SR20DE | Date From:1997.03 | GCI41089 | Inner Joint | | 25 | 23 | 40 | 63 | 99 | |
| 2.0 (103 kw) | 1999.08-2001.12 | CVT | F | R | Saloon FWD SR20DE | Date from:2000.12;inner teeth of wheel side:25 | GCO41184 | Outer Joint | 44T | 27 | 25 | 56 | 103 | 68 | M |
| | 1999.08-2001.12 | CVT | F | L/R | Saloon FWD SR20DE | Date from:2000.12;inner teeth of wheel side:23 | GCO41142 | Outer Joint | 44T | 27 | 23 | 56 | 103.5 | 61.5 | M |
| | 1999.08-2001.12 | CVT | F | L/R | Saloon FWD SR20DE | Date to:2000.11 | GCO41306 | Outer Joint | | 27 | 25 | 56 | 103 | 61.5 | M |
| | 1999.08-2001.12 | MT | F | L | Saloon FWD SR20DE | | GDS41025 | Drive Shaft | 44T | 27 | 25 | 56 | 103 | 619 | |
| | 1999.08-2001.12 | MT | F | R | Saloon FWD SR20DE | Inner teeth of tranm.side:25 | GDS41002 | Drive Shaft | 44T | 27 | 25 | 56 | 103 | 938 | |
| | 1999.08-2001.12 | MT | F | L/R | Saloon FWD SR20DE | inner teeth of wheel side:32 | GCO41028 | Outer Joint | 44T | 27 | 32 | 56 | 103 | 68.5 | I |
| | 1999.08-2001.12 | MT | F | | Saloon FWD SR20DE | inner teeth of wheel side:32 | GCO41139 | Outer Joint | 44T | 27 | 32 | 56 | 102 | 69 | M |
| | 1999.08-2001.12 | | F | | Saloon FWD SR20DE | | GCO41043 | Outer Joint | 44T | 27 | 23 | 56 | 104 | 60 | M |
| | 1999.08-2001.12 | | F | | Saloon FWD SR20DE | | GCO41054 | Outer Joint | | 27 | 23 | 56 | 103 | 61.5 | M |
| | 1999.08-2001.12 | | F | | Saloon FWD SR20DE | | GCO41176 | Outer Joint | | 27 | 23 | 56 | 104 | 63 | I |
| | 1999.08-2001.12 | | F | L | Saloon FWD SR20DE | | GCI41028 | Inner Joint | | 25 | 32 | 40 | 63 | 108 | |
| | 1999.08-2002.07 | CVT | F | R | Hatchback FWD SR20DE | Date from:2000.12 | GCO41184 | Outer Joint | 44T | 27 | 25 | 56 | 103 | 68 | M |
| | 1999.08-2002.07 | CVT | F | L/R | Hatchback FWD SR20DE | Date from:2000.12 | GCO41054 | Outer Joint | | 27 | 23 | 56 | 103 | 61.5 | M |
| | 1999.08-2002.07 | CVT | F | L/R | Hatchback FWD SR20DE | Date from:2000.12 | GCO41142 | Outer Joint | 44T | 27 | 23 | 56 | 103.5 | 61.5 | M |
| | 1999.08-2002.07 | CVT | F | L/R | Hatchback FWD SR20DE | Date to:2000.11 | GCO41306 | Outer Joint | | 27 | 25 | 56 | 103 | 61.5 | M |
| | 1999.08-2002.07 | MT | F | L | Hatchback FWD SR20DE | | GDS41025 | Drive Shaft | 44T | 27 | 25 | 56 | 103 | 619 | |
| | 1999.08-2002.07 | MT | F | R | Hatchback FWD SR20DE | Inner teeth of tranm.side:25 | GDS41002 | Drive Shaft | 44T | 27 | 25 | 56 | 103 | 938 | |
| | 1999.08-2002.07 | MT | F | L/R | Hatchback FWD SR20DE | | GCO41028 | Outer Joint | 44T | 27 | 32 | 56 | 103 | 68.5 | I |
| | 1999.08-2002.07 | MT | F | | Hatchback FWD SR20DE | | GCO41139 | Outer Joint | 44T | 27 | 32 | 56 | 102 | 69 | M |
| | 1999.08-2002.07 | | F | | Hatchback FWD SR20DE | | GCO41043 | Outer Joint | 44T | 27 | 23 | 56 | 104 | 60 | M |
| | 1999.08-2002.07 | | F | | Hatchback FWD SR20DE | | GCO41338 | Outer Joint | | 27 | 23 | 56 | 103 | 61.5 | M |
| | 1999.08-2002.07 | | F | L | Hatchback FWD SR20DE | | GCI41028 | Inner Joint | | 25 | 32 | 40 | 63 | 108 | |
| | 2002.03-2008.10 | CVT | F | L | Saloon FWD QR20DE | | GDS41019 | Drive Shaft | 44T | 27 | 25 | 56 | 103.5 | 643.5 | |
| | 2002.03-2008.10 | CVT | F | L/R | Saloon FWD QR20DE | | GCO41049 | Outer Joint | 44T | 27 | 24 | 56 | 103 | 63 | M |
| | 2002.03-2008.10 | CVT | F | L/R | Saloon FWD QR20DE | | GCO41184 | Outer Joint | 44T | 27 | 25 | 56 | 103 | 68 | M |
| | 2002.03-2008.10 | CVT | F | L/R | Saloon FWD QR20DE | | GCO41282 | Outer Joint | 44T | 27 | 23 | 56 | 103 | 58.5 | I |
| | 2002.03-2008.10 | CVT | F | L/R | Saloon FWD QR20DE | | GCO41339 | Outer Joint | 44T | 27 | 24 | 56 | 103 | 61.5 | M |
| | 2002.03-2008.10 | CVT | F | L | Saloon FWD QR20DE | | GCI41067 | Inner Joint | | 25 | 24 | 40 | 63 | 105.5 | |
| | 2002.03-2008.10 | CVT | F | L | Saloon FWD QR20DE | | GCI99179 | Inner Joint | | 25 | 22 | 40 | 63 | 100 | |
| | 2002.03-2008.10 | MT | F | L | Saloon FWD QR20DE | Date To:2004.06 | GDS41214 | Drive Shaft | 44T | 27 | 29 | 56 | 103 | 613 | |
| | 2002.03-2008.10 | MT | F | R | Saloon FWD QR20DE | Date To:2004.06 | GDS41215 | Drive Shaft | 44T | 27 | 29 | 56 | 103 | 988 | |
| | 2002.03-2008.10 | MT | F | R | Saloon FWD QR20DE | Date From:2004.07 | GDS41576 | Drive Shaft | 44T | 27 | 29 | 56 | 103 | 988 | |
| | 2002.03-2008.10 | MT | F | L/R | Saloon FWD QR20DE | | GCO41038 | Outer Joint | 44T | 27 | 26 | 56 | 103 | 69 | M |
| | 2002.03-2008.10 | MT | F | L/R | Saloon FWD QR20DE | Date From:2004.07 | GCO41049 | Outer Joint | 44T | 27 | 24 | 56 | 103 | 63 | M |
| | 2002.03-2008.10 | MT | F | R | Saloon FWD QR20DE | Date From:2004.07 | GCI41217 | Inner Joint | | 29 | 24 | 33 | 374.5 | 88.5 | |
| | 2002.07-2008.10 | CVT | F | L | Hatchback FWD QR20DE | | GDS41019 | Drive Shaft | 44T | 27 | 25 | 56 | 103.5 | 643.5 | |
| | 2002.07-2008.10 | CVT | F | L/R | Hatchback FWD QR20DE | | GCO41049 | Outer Joint | 44T | 27 | 24 | 56 | 103 | 63 | M |
| | 2002.07-2008.10 | CVT | F | L/R | Hatchback FWD QR20DE | | GCO41184 | Outer Joint | 44T | 27 | 25 | 56 | 103 | 68 | M |
| | 2002.07-2008.10 | CVT | F | L/R | Hatchback FWD QR20DE | | GCO41282 | Outer Joint | 44T | 27 | 23 | 56 | 103 | 58.5 | I |
| | 2002.07-2008.10 | CVT | F | L/R | Hatchback FWD QR20DE | | GCO41339 | Outer Joint | 44T | 27 | 24 | 56 | 103 | 61.5 | M |
| | 2002.07-2008.10 | CVT | F | L | Hatchback FWD QR20DE | | GCI41067 | Inner Joint | | 25 | 24 | 40 | 63 | 105.5 | |
| | 2002.07-2008.10 | CVT | F | L | Hatchback FWD QR20DE | | GCI99179 | Inner Joint | | 25 | 22 | 40 | 63 | 100 | |
| | 2002.07-2008.10 | MT | F | L | Hatchback FWD QR20DE | Date To:2004.06 | GDS41214 | Drive Shaft | 44T | 27 | 29 | 56 | 103 | 613 | |
| | 2002.07-2008.10 | MT | F | R | Hatchback FWD QR20DE | Date To:2004.06 | GDS41215 | Drive Shaft | 44T | 27 | 29 | 56 | 103 | 988 | |
| | 2002.07-2008.10 | MT | F | R | Hatchback FWD QR20DE | Date From:2004.07 | GDS41576 | Drive Shaft | 44T | 27 | 29 | 56 | 103 | 988 | |
| | 2002.07-2008.10 | MT | F | L/R | Hatchback FWD QR20DE | | GCO41038 | Outer Joint | 44T | 27 | 26 | 56 | 103 | 69 | M |
| | 2002.07-2008.10 | MT | F | L/R | Hatchback FWD QR20DE | Date From:2004.07 | GCO41049 | Outer Joint | 44T | 27 | 24 | 56 | 103 | 63 | M |
| | 2002.07-2008.10 | MT | F | R | Hatchback FWD QR20DE | Date From:2004.07 | GCI41217 | Inner Joint | | 29 | 24 | 33 | 374.5 | 88.5 | |
| 2.0 (105 kw) | 1996.06-2002.01 | 5MT | F | L | Saloon FWD SR20DE | | GDS41025 | Drive Shaft | 44T | 27 | 25 | 56 | 103 | 619 | |
| | 1996.06-2002.01 | 5MT | F | R | Saloon FWD SR20DE | | GDS41002 | Drive Shaft | 44T | 27 | 25 | 56 | 103 | 938 | |
| | 1996.06-2002.01 | MT | F | L/R | Saloon FWD SR20DE | | GCO41028 | Outer Joint | 44T | 27 | 32 | 56 | 103 | 68.5 | I |
| | 1996.06-2002.01 | | F | L | Saloon FWD SR20DE | | GCI41028 | Inner Joint | | 25 | 32 | 40 | 63 | 108 | |
| 2.0 (110 kw) | 1990.06-1996.01 | MT | F | L | Hatchback FWD SR20DE | | GDS41280 | Drive Shaft | 42T | 27 | 25 | 56 | 103.5 | 618 | |
| | 1990.06-1996.01 | MT | F | R | Hatchback FWD SR20DE | | GDS41024 | Drive Shaft | 42T | 27 | 25 | 56 | 103.5 | 940 | |
| | 1990.06-1996.01 | MT | F | L/R | Hatchback FWD SR20DE | vehicle production country:great britain | GCO41006 | Outer Joint | | 27 | 32 | 56 | 103.5 | 68.5 | I |
| | 1990.06-1996.01 | MT | F | L/R | Hatchback FWD SR20DE | Vehicle Production Country:Great Britain | GCO41007 | Outer Joint | 42T | 27 | 32 | 56 | 103.5 | 68.5 | I |

| | YEAR | TRANSM. | F/R | L/R | BODY STYLE & DRIVE TYPE & ENGINE | REMARKS | G-AP Ref. | PRODUCT | ABS | Technical Specifications A | B | C | H | L | P |
|---|---|---|---|---|---|---|---|---|---|---|---|---|---|---|---|
| **NISSAN** | | | | | | | | | | | | | | | |
| **Primera** | | | | | | | | | | | | | | | |
| 2.0 (110 kw) | 1990.06-1996.01 | MT | F | L/R | Hatchback FWD SR20DE | vehicle production country:japan | GCO41163 | Outer Joint | | 27 | 25 | 56 | 103 | 66.5 | I |
| | 1990.06-1996.01 | AT/MT | F | L | Saloon FWD SR20DE | | GDS41280 | Drive Shaft | 42T | 27 | 25 | 56 | 103.5 | 618 | |
| | 1990.06-1996.01 | AT/MT | F | R | Saloon FWD SR20DE | | GDS41024 | Drive Shaft | 42T | 27 | 25 | 56 | 103.5 | 940 | |
| | 1990.06-1996.01 | MT | F | L/R | Saloon FWD SR20DE | Vehicle Production Country:Great Britain | GCO41006 | Outer Joint | | 27 | 32 | 56 | 103.5 | 68.5 | I |
| | 1990.06-1996.01 | MT | F | L/R | Saloon FWD SR20DE | Vehicle Production Country:Great Britain | GCO41007 | Outer Joint | 42T | 27 | 32 | 56 | 103.5 | 68.5 | I |
| | 1990.06-1996.01 | MT | F | L/R | Saloon FWD SR20DE | Vehicle Production Country:Japan | GCO41163 | Outer Joint | | 27 | 25 | 56 | 103 | 66.5 | I |
| | 1990.06-1996.01 | | F | | Saloon FWD SR20DE | | GCO41305 | Outer Joint | | 27 | 25 | 56 | 103 | 61.5 | M |
| | 1996.09-2001.12 | 5MT | F | L | Saloon FWD SR20DEH | | GDS41025 | Drive Shaft | 44T | 27 | 25 | 56 | 103 | 619 | |
| | 1996.09-2001.12 | 5MT | F | R | Saloon FWD SR20DEH | | GDS41002 | Drive Shaft | 44T | 27 | 25 | 56 | 103 | 938 | |
| | 1996.09-2001.12 | 5MT | F | R | Saloon FWD SR20DEH | | GCO41028 | Outer Joint | 44T | 27 | 32 | 56 | 103 | 68.5 | I |
| | 1996.09-2001.12 | 5MT | F | L/R | Saloon FWD SR20DEH | | GCO41024 | Outer Joint | 42T | 27 | 23 | 56 | 103 | 61.5 | M |
| | 1996.09-2001.12 | 5MT | F | L/R | Saloon FWD SR20DEH | | GCO41043 | Outer Joint | 44T | 27 | 23 | 56 | 104 | 60 | M |
| | 1996.09-2001.12 | 5MT | F | L/R | Saloon FWD SR20DEH | | GCO41054 | Outer Joint | | 27 | 23 | 56 | 103 | 61.5 | M |
| | 1996.09-2001.12 | 5MT | F | L/R | Saloon FWD SR20DEH | | GCO41106 | Outer Joint | | 27 | 23 | 56 | 104 | 60 | M |
| | 1996.09-2001.12 | 5MT | F | L/R | Saloon FWD SR20DEH | | GCO41139 | Outer Joint | 44T | 27 | 32 | 56 | 102 | 69 | M |
| | 1996.09-2001.12 | 5MT | F | L | Saloon FWD SR20DEH | | GCI41028 | Inner Joint | | 25 | 32 | 40 | 63 | 108 | |
| | 1996.09-2001.12 | 5MT | F | L/R | Saloon FWD SR20DEH | Date from:1997.03 | GCI41089 | Inner Joint | | 25 | 23 | 40 | 63 | 99 | |
| | 1996.09-2002.07 | 5MT | F | L | Hatchback FWD SR20DEH | | GDS41025 | Drive Shaft | 44T | 27 | 25 | 56 | 103 | 619 | |
| | 1996.09-2002.07 | 5MT | F | R | Hatchback FWD SR20DEH | | GDS41002 | Drive Shaft | 44T | 27 | 25 | 56 | 103 | 938 | |
| | 1996.09-2002.07 | AT/MT | F | R | Hatchback FWD SR20DEH | | GCO41028 | Outer Joint | 44T | 27 | 32 | 56 | 103 | 68.5 | I |
| | 1996.09-2002.07 | MT | F | | Hatchback FWD SR20DEH | | GCO41139 | Outer Joint | 44T | 27 | 32 | 56 | 102 | 69 | M |
| | 1996.09-2002.07 | | F | | Hatchback FWD SR20DEH | | GCO41024 | Outer Joint | 42T | 27 | 23 | 56 | 103 | 61.5 | M |
| | 1996.09-2002.07 | | F | | Hatchback FWD SR20DEH | | GCO41043 | Outer Joint | 44T | 27 | 23 | 56 | 104 | 60 | M |
| | 1996.09-2002.07 | | F | | Hatchback FWD SR20DEH | | GCO41054 | Outer Joint | | 27 | 23 | 56 | 103 | 61.5 | M |
| | 1996.09-2002.07 | | F | | Hatchback FWD SR20DEH | | GCO41106 | Outer Joint | | 27 | 23 | 56 | 104 | 60 | M |
| | 1996.09-2002.07 | | F | | Hatchback FWD SR20DEH | | GCO41338 | Outer Joint | | 27 | 23 | 56 | 103 | 61.5 | M |
| | 1996.09-2002.07 | | F | L | Hatchback FWD SR20DEH | | GCI41028 | Inner Joint | | 25 | 32 | 40 | 63 | 108 | |
| | 1996.09-2002.07 | | F | | Hatchback FWD SR20DEH | Date From:1997.03 | GCI41089 | Inner Joint | | 25 | 23 | 40 | 63 | 99 | |
| 2.0 (112 kw) | 1990.09-1996.01 | MT | F | L | Hatchback FWD SR20DE | | GDS41280 | Drive Shaft | 42T | 27 | 25 | 56 | 103.5 | 618 | |
| | 1990.09-1996.01 | MT | F | R | Hatchback FWD SR20DE | | GDS41024 | Drive Shaft | 42T | 27 | 25 | 56 | 103.5 | 940 | |
| 2.0 (140 kw) | 1996.06-1999.05 | | F | | Saloon FWD SR20VE | | GCO41106 | Outer Joint | | 27 | 23 | 56 | 104 | 60 | M |
| 2.2 (93 kw) | 2002.03-2007.05 | 6MT | F | L | Saloon FWD YD22DDT | | GDS41214 | Drive Shaft | 44T | 27 | 29 | 56 | 103 | 613 | |
| | 2002.03-2007.05 | 6MT | F | R | Saloon FWD YD22DDT | | GDS41215 | Drive Shaft | 44T | 27 | 29 | 56 | 103 | 988 | |
| | 2002.03-2007.05 | 6MT | F | L/R | Saloon FWD YD22DDT | | GCO41038 | Outer Joint | 44T | 27 | 26 | 56 | 103 | 69 | M |
| | 2002.07-2007.05 | 6MT | F | L | Hatchback FWD YD22DDT | | GDS41214 | Drive Shaft | 44T | 27 | 29 | 56 | 103 | 613 | |
| | 2002.07-2007.05 | 6MT | F | R | Hatchback FWD YD22DDT | | GDS41215 | Drive Shaft | 44T | 27 | 29 | 56 | 103 | 988 | |
| | 2002.07-2007.05 | 6MT | F | L/R | Hatchback FWD YD22DDT | | GCO41038 | Outer Joint | 44T | 27 | 26 | 56 | 103 | 69 | M |
| 2.2 (102 kw) | 2003.04- | 6MT | F | L | Hatchback FWD YD22DDT | | GDS41214 | Drive Shaft | 44T | 27 | 29 | 56 | 103 | 613 | |
| | 2003.04- | 6MT | F | R | Hatchback FWD YD22DDT | | GDS41215 | Drive Shaft | 44T | 27 | 29 | 56 | 103 | 988 | |
| | 2003.04- | 6MT | F | L/R | Hatchback FWD YD22DDT | | GCO41038 | Outer Joint | 44T | 27 | 26 | 56 | 103 | 69 | M |
| | 2003.04-2006.04 | 6MT | F | L | Saloon FWD YD22DDT | | GDS41214 | Drive Shaft | 44T | 27 | 29 | 56 | 103 | 613 | |
| | 2003.04-2006.04 | 6MT | F | R | Saloon FWD YD22DDT | | GDS41215 | Drive Shaft | 44T | 27 | 29 | 56 | 103 | 988 | |
| | 2003.04-2006.04 | 6MT | F | L/R | Saloon FWD YD22DDT | | GCO41038 | Outer Joint | 44T | 27 | 26 | 56 | 103 | 69 | M |
| **Primera Estate/Wagon** | | | | | | | | | | | | | | | |
| 1.6 (66 kw) | 1990.07-1998.03 | AT | F | L | Estate FWD GA16DE/GA16DS | Date from:1993.01,Date to:1993.01 | GCI50065 | Inner Joint | | 25 | 25 | 40 | 63 | 101 | |
| | 1990.07-1998.03 | AT/MT | F | R | Estate FWD GA16DE/GA16DS | | GDS41004 | Drive Shaft | | 27 | 25 | 56 | 103.5 | 922 | |
| | 1990.07-1998.03 | AT/MT | F | L/R | Estate FWD GA16DE/GA16DS | Date to:1993.12 | GCO41042 | Outer Joint | 44T | 27 | 23 | 56 | 103.5 | 61.4 | I |
| | 1990.07-1998.03 | MT | F | L | Estate FWD GA16DE/GA16DS | Date to:1993.12 | GDS41094 | Drive Shaft | | 27 | 25 | 56 | 103.5 | 640 | |
| | 1990.07-1998.03 | | F | | Estate FWD GA16DE/GA16DS | | GCO41019 | Outer Joint | 42T | 27 | 23 | 56 | 99 | 60 | I |
| | 1990.07-1998.03 | | F | | Estate FWD GA16DE/GA16DS | Date From:1993.01 | GCO41024 | Outer Joint | 42T | 27 | 23 | 56 | 103 | 61.5 | M |
| | 1990.07-1998.03 | | F | | Estate FWD GA16DE/GA16DS | | GCO41176 | Outer Joint | | 27 | 23 | 56 | 104 | 63 | I |
| | 1998.04-2001.12 | 5MT | F | L | Estate FWD GA16DE | | GDS41003 | Drive Shaft | 44T | 27 | 25 | 56 | 103.5 | 645 | |
| | 1998.04-2001.12 | 5MT | F | R | Estate FWD GA16DE | | GCO41029 | Outer Joint | | 27 | 22 | 56 | 103.5 | 61.5 | I |
| | 1998.04-2001.12 | MT | F | L | Estate FWD GA16DE | | GDS41019 | Drive Shaft | 44T | 27 | 25 | 56 | 103.5 | 643.5 | |
| | 1998.04-2001.12 | MT | F | R | Estate FWD GA16DE | | GDS41201 | Drive Shaft | 44T | 27 | 25 | 56 | 103.5 | 917 | |
| | 1998.04-2001.12 | MT | F | L | Estate FWD GA16DE | | GCO41030 | Outer Joint | 44T | 27 | 22 | 56 | 103.5 | 61.5 | I |
| | 1998.04-2001.12 | MT | F | L | Estate FWD GA16DE | | GCI99179 | Inner Joint | | 25 | 22 | 40 | 63 | 100 | |
| 1.6 (73 kw) | 1998.04-2001.12 | 5MT | F | L | Estate FWD GA16DE | | GDS41003 | Drive Shaft | 44T | 27 | 25 | 56 | 103.5 | 645 | |
| | 1998.04-2001.12 | 5MT | F | R | Estate FWD GA16DE | | GCO41029 | Outer Joint | | 27 | 22 | 56 | 103.5 | 61.5 | I |
| | 1998.04-2001.12 | MT | F | L | Estate FWD GA16DE | | GDS41019 | Drive Shaft | 44T | 27 | 25 | 56 | 103.5 | 643.5 | |
| | 1998.04-2001.12 | MT | F | R | Estate FWD GA16DE | | GDS41201 | Drive Shaft | 44T | 27 | 25 | 56 | 103.5 | 917 | |
| | 1998.04-2001.12 | MT | F | L | Estate FWD GA16DE | | GCO41030 | Outer Joint | 44T | 27 | 22 | 56 | 103.5 | 61.5 | I |
| | 1998.04-2001.12 | MT | F | L/R | Estate FWD GA16DE | | GCO41142 | Outer Joint | 44T | 27 | 23 | 56 | 103.5 | 61.5 | M |
| | 1998.04-2001.12 | MT | F | L | Estate FWD GA16DE | | GCI99179 | Inner Joint | | 25 | 22 | 40 | 63 | 100 | |
| 1.6 (75 kw) | 1991.02-1998.03 | AT/MT | F | L/R | Estate FWD GA16DE | Date from:1994.01 | GCO41018 | Outer Joint | | 27 | 23 | 56 | 99 | 60 | I |

| | YEAR | TRANSM. | F/R | L/R | BODY STYLE & DRIVE TYPE & ENGINE | REMARKS | G-AP Ref. | PRODUCT | ABS | Technical Specifications A | B | C | H | L | P |
|---|---|---|---|---|---|---|---|---|---|---|---|---|---|---|---|
| **NISSAN** **Primera Estate/Wagon** | | | | | | | | | | | | | | | |
| 1.6 (75 kw) | 1991.02-1998.03 | MT | F | L | Estate FWD GA16DE | | GDS41001 | Drive Shaft | 42T | 27 | 25 | 56 | 103.5 | 638 | |
| | 1991.02-1998.03 | MT | F | | Estate FWD GA16DE | Date From:1993.04 | GCO41023 | Outer Joint | | 27 | 23 | 56 | 103 | 61.5 | M |
| | 1991.02-1998.03 | MT | F | | Estate FWD GA16DE | Date From:1993.04 | GCO41024 | Outer Joint | 42T | 27 | 23 | 56 | 103 | 61.5 | M |
| | 1991.02-1998.03 | MT | F | | Estate FWD GA16DE | Date From:1993.04 | GCI41089 | Inner Joint | | 25 | 23 | 40 | 63 | 99 | |
| | 1991.02-1998.03 | | F | | Estate FWD GA16DE | | GCO41019 | Outer Joint | 42T | 27 | 23 | 56 | 99 | 60 | I |
| | 1991.02-1998.03 | | F | | Estate FWD GA16DE | | GCO41042 | Outer Joint | 44T | 27 | 23 | 56 | 103.5 | 61.4 | I |
| | 1991.02-1998.03 | | F | | Estate FWD GA16DE | | GCO41176 | Outer Joint | | 27 | 23 | 56 | 104 | 63 | I |
| 1.6 (80 kw) | 2002.01-2006.04 | | F | L/R | Estate FWD QG16DE | | GCO41142 | Outer Joint | 44T | 27 | 23 | 56 | 103.5 | 61.5 | M |
| 1.8 (84 kw) | 1999.08-2001.12 | AT/MT | F | L/R | Estate FWD QG18DE | Date to:2000.12 | GCO41028 | Outer Joint | 44T | 27 | 32 | 56 | 103 | 68.5 | I |
| | 1999.08-2001.12 | AT/MT | F | L/R | Estate FWD QG18DE | Date from:2001.02 | GCO41142 | Outer Joint | 44T | 27 | 23 | 56 | 103.5 | 61.5 | M |
| | 1999.08-2001.12 | MT | F | L | Estate FWD QG18DE | | GDS41003 | Drive Shaft | 44T | 27 | 25 | 56 | 103.5 | 645 | |
| | 1999.08-2001.12 | MT | F | L | Estate FWD QG18DE | | GDS41019 | Drive Shaft | 44T | 27 | 25 | 56 | 103.5 | 643.5 | |
| | 1999.08-2001.12 | MT | F | R | Estate FWD QG18DE | | GDS41201 | Drive Shaft | 44T | 27 | 25 | 56 | 103.5 | 917 | |
| | 1999.08-2001.12 | MT | F | L/R | Estate FWD QG18DE | Date to:2001.01 | GCO41028 | Outer Joint | 44T | 27 | 32 | 56 | 103 | 68.5 | I |
| | 1999.08-2001.12 | MT | F | L/R | Estate FWD QG18DE | | GCO41139 | Outer Joint | 44T | 27 | 32 | 56 | 102 | 69 | M |
| | 1999.08-2001.12 | MT | F | L/R | Estate FWD QG18DE | Date from:2001.02 | GCO41142 | Outer Joint | 44T | 27 | 23 | 56 | 103.5 | 61.5 | M |
| | 1999.08-2001.12 | MT | F | L | Estate FWD QG18DE | | GCI99179 | Inner Joint | | 25 | 22 | 40 | 63 | 100 | |
| | 1999.08-2001.12 | | F | | Estate FWD QG18DE | | GCO41139 | Outer Joint | 44T | 27 | 32 | 56 | 102 | 69 | M |
| 1.8 (85 kw) | 2002.03-2007.05 | AT | F | | Estate FWD QG18DE | | GCO41282 | Outer Joint | 44T | 27 | 23 | 56 | 103 | 58.5 | I |
| | 2002.03-2007.05 | MT | F | L | Estate FWD QG18DE | | GDS56131 | Drive Shaft | 44T | 27 | 25 | 56 | 103.5 | 651 | |
| | 2002.03-2007.05 | MT | F | R | Estate FWD QG18DE | | GDS41392 | Drive Shaft | 44T | 27 | 25 | 56 | 103.5 | 961 | |
| | 2002.03-2007.05 | MT | F | L/R | Estate FWD QG18DE | Date to: 2005.08 | GCO41142 | Outer Joint | 44T | 27 | 23 | 56 | 103.5 | 61.5 | M |
| | 2002.03-2007.05 | MT | F | L/R | Estate FWD QG18DE | | GCI41123 | Inner Joint | | 25 | 23 | 40 | 63 | 99.5 | |
| 1.9 (85 kw) | 2002.08-2007.10 | | F | L/R | Estate FWD F9Q | | GCO41050 | Outer Joint | 44T | 27 | 35 | 56 | 103 | 69 | I |
| 1.9 (88 kw) | 2003.04- | | F | L/R | Estate FWD F9Q | | GCO41050 | Outer Joint | 44T | 27 | 35 | 56 | 103 | 69 | I |
| 2.0 (66 kw) | 1998.04-2001.12 | 5MT | F | L | Estate FWD CD20T | | GDS41081 | Drive Shaft | 44T | 27 | 25 | 56 | 103 | 608 | |
| | 1998.04-2001.12 | 5MT | F | R | Estate FWD CD20T | | GDS41206 | Drive Shaft | 44T | 27 | 25 | 56 | 103 | 954 | |
| | 1998.04-2001.12 | | F | L/R | Estate FWD CD20T | | GCO41028 | Outer Joint | 44T | 27 | 32 | 56 | 103 | 68.5 | I |
| 2.0 (85 kw) | 1990.07-1998.03 | AT/MT | F | L | Estate FWD SR20DI | | GDS41280 | Drive Shaft | 42T | 27 | 25 | 56 | 103.5 | 618 | |
| | 1990.07-1998.03 | AT/MT | F | L/R | Estate FWD SR20DI | | GCO41011 | Outer Joint | | 27 | 25 | 56 | 103 | 66 | I |
| | 1990.07-1998.03 | | F | R | Estate FWD SR20DI | | GDS41024 | Drive Shaft | 42T | 27 | 25 | 56 | 103.5 | 940 | |
| | 1990.07-1998.03 | | F | | Estate FWD SR20DI | | GCO41305 | Outer Joint | | 27 | 25 | 56 | 103 | 61.5 | M |
| | 1996.06-2001.12 | AT/MT | F | L/R | Estate FWD SR20DE | | GCO41028 | Outer Joint | 44T | 27 | 32 | 56 | 103 | 68.5 | I |
| | 1996.06-2001.12 | MT | F | L | Estate FWD SR20DE | | GDS41025 | Drive Shaft | 44T | 27 | 25 | 56 | 103 | 619 | |
| | 1996.06-2001.12 | MT | F | R | Estate FWD SR20DE | | GDS41002 | Drive Shaft | 44T | 27 | 25 | 56 | 103 | 938 | |
| | 1996.06-2001.12 | MT | F | | Estate FWD SR20DE | | GCO41139 | Outer Joint | 44T | 27 | 32 | 56 | 102 | 69 | M |
| | 1996.06-2001.12 | | F | | Estate FWD SR20DE | | GCO41024 | Outer Joint | 42T | 27 | 23 | 56 | 103 | 61.5 | M |
| | 1996.06-2001.12 | | F | | Estate FWD SR20DE | | GCO41043 | Outer Joint | 44T | 27 | 23 | 56 | 104 | 60 | M |
| | 1996.06-2001.12 | | F | | Estate FWD SR20DE | | GCO41054 | Outer Joint | | 27 | 23 | 56 | 103 | 61.5 | M |
| | 1996.06-2001.12 | | F | | Estate FWD SR20DE | | GCO41106 | Outer Joint | | 27 | 23 | 56 | 104 | 60 | M |
| | 1996.06-2001.12 | | F | | Estate FWD SR20DE | | GCO41338 | Outer Joint | | 27 | 23 | 56 | 103 | 61.5 | M |
| | 1996.06-2001.12 | | F | L | Estate FWD SR20DE | | GCI41028 | Inner Joint | | 25 | 32 | 40 | 63 | 108 | |
| | 1996.06-2001.12 | | F | | Estate FWD SR20DE | Date From:1997.03 | GCI41089 | Inner Joint | | 25 | 23 | 40 | 63 | 99 | |
| 2.0 (96 kw) | 1998.04-2001.12 | 4AT/5MT | F | L | Estate FWD SR20DE | | GDS41025 | Drive Shaft | 44T | 27 | 25 | 56 | 103 | 619 | |
| | 1998.04-2001.12 | 4AT/5MT | F | R | Estate FWD SR20DE | | GDS41002 | Drive Shaft | 44T | 27 | 25 | 56 | 103 | 938 | |
| | 1998.04-2001.12 | | F | R | Estate FWD SR20DE | | GCO41028 | Outer Joint | 44T | 27 | 32 | 56 | 103 | 68.5 | I |
| | 1998.04-2001.12 | | F | | Estate FWD SR20DE | | GCO41054 | Outer Joint | | 27 | 23 | 56 | 103 | 61.5 | M |
| | 1998.04-2001.12 | | F | | Estate FWD SR20DE | | GCO41106 | Outer Joint | | 27 | 23 | 56 | 104 | 60 | M |
| | 1998.04-2001.12 | | F | | Estate FWD SR20DE | | GCO41338 | Outer Joint | | 27 | 23 | 56 | 103 | 61.5 | M |
| | 1998.04-2001.12 | | F | L | Estate FWD SR20DE | | GCI41028 | Inner Joint | | 25 | 32 | 40 | 63 | 108 | |
| 2.0 (103 kw) | 1999.08-2001.12 | CVT | F | R | Estate FWD SR20DE | Date from:2000.12 | GCO41184 | Outer Joint | 44T | 27 | 25 | 56 | 103 | 68 | M |
| | 1999.08-2001.12 | CVT | F | L/R | Estate FWD SR20DE | Date from:2000.12 | GCO41142 | Outer Joint | 44T | 27 | 23 | 56 | 103.5 | 61.5 | M |
| | 1999.08-2001.12 | CVT | F | L/R | Estate FWD SR20DE | Date to:2000.11 | GCO41306 | Outer Joint | | 27 | 25 | 56 | 103 | 61.5 | M |
| | 1999.08-2001.12 | MT | F | L | Estate FWD SR20DE | | GDS41025 | Drive Shaft | 44T | 27 | 25 | 56 | 103 | 619 | |
| | 1999.08-2001.12 | MT | F | R | Estate FWD SR20DE | Inner teeth of tranm.side:25 | GDS41002 | Drive Shaft | 44T | 27 | 25 | 56 | 103 | 938 | |
| | 1999.08-2001.12 | MT | F | R | Estate FWD SR20DE | | GCO41028 | Outer Joint | 44T | 27 | 32 | 56 | 103 | 68.5 | I |
| | 1999.08-2001.12 | MT | F | | Estate FWD SR20DE | | GCO41139 | Outer Joint | 44T | 27 | 32 | 56 | 102 | 69 | M |
| | 1999.08-2001.12 | | F | | Estate FWD SR20DE | | GCO41043 | Outer Joint | 44T | 27 | 23 | 56 | 104 | 60 | M |
| | 1999.08-2001.12 | | F | | Estate FWD SR20DE | | GCO41054 | Outer Joint | | 27 | 23 | 56 | 103 | 61.5 | M |
| | 1999.08-2001.12 | | F | | Estate FWD SR20DE | | GCO41338 | Outer Joint | | 27 | 23 | 56 | 103 | 61.5 | M |
| | 1999.08-2001.12 | | F | L | Estate FWD SR20DE | | GCI41028 | Inner Joint | | 25 | 32 | 40 | 63 | 108 | |
| | 2002.03- | CVT | F | L | Estate FWD QR20DE | | GDS41019 | Drive Shaft | 44T | 27 | 25 | 56 | 103.5 | 643.5 | |
| | 2002.03- | CVT | F | L/R | Estate FWD QR20DE | | GCO41049 | Outer Joint | 44T | 27 | 24 | 56 | 103 | 63 | M |
| | 2002.03- | CVT | F | L/R | Estate FWD QR20DE | | GCO41184 | Outer Joint | 44T | 27 | 25 | 56 | 103 | 68 | M |
| | 2002.03- | CVT | F | L/R | Estate FWD QR20DE | | GCO41282 | Outer Joint | 44T | 27 | 23 | 56 | 103 | 58.5 | I |

| | YEAR | TRANSM. | F/R | L/R | BODY STYLE & DRIVE TYPE & ENGINE | REMARKS | G-AP Ref. | PRODUCT | ABS | Technical Specifications A | B | C | H | L | P |
|---|---|---|---|---|---|---|---|---|---|---|---|---|---|---|---|
| **NISSAN** | | | | | | | | | | | | | | | |
| **Primera Estate/Wagon** | | | | | | | | | | | | | | | |
| 2.0 (103 kw) | 2002.03- | CVT | F | L/R | Estate FWD QR20DE | | GCO41339 | Outer Joint | 44T | 27 | 24 | 56 | 103 | 61.5 | M |
| | 2002.03- | CVT | F | L | Estate FWD QR20DE | | GCI41067 | Inner Joint | | 25 | 24 | 40 | 63 | 105.5 | |
| | 2002.03- | CVT | F | L | Estate FWD QR20DE | | GCI99179 | Inner Joint | | 25 | 22 | 40 | 63 | 100 | |
| | 2002.03- | MT | F | L | Estate FWD QR20DE | Date To:2004.06 | GDS41214 | Drive Shaft | 44T | 27 | 29 | 56 | 103 | 613 | |
| | 2002.03- | MT | F | R | Estate FWD QR20DE | Date To:2004.06 | GDS41215 | Drive Shaft | 44T | 27 | 29 | 56 | 103 | 988 | |
| | 2002.03- | MT | F | R | Estate FWD QR20DE | Date From:2004.07 | GDS41576 | Drive Shaft | 44T | 27 | 29 | 56 | 103 | 988 | |
| | 2002.03- | MT | F | L/R | Estate FWD QR20DE | | GCO41038 | Outer Joint | 44T | 27 | 26 | 56 | 103 | 69 | M |
| | 2002.03- | MT | F | L/R | Estate FWD QR20DE | Date From:2004.07 | GCO41049 | Outer Joint | 44T | 27 | 24 | 56 | 103 | 63 | M |
| | 2002.03- | MT | F | R | Estate FWD QR20DE | Date From:2004.07 | GCI41217 | Inner Joint | | 29 | 24 | 33 | 374.5 | 88.5 | |
| 2.0 (140 kw) | 1996.06-1999.05 | | F | | Estate FWD SR20VE | | GCO41106 | Outer Joint | | 27 | 23 | 56 | 104 | 60 | M |
| 2.2 (93 kw) | 2002.03-2003.04 | 6MT | F | L | Estate FWD YD22DDT | | GDS41214 | Drive Shaft | 44T | 27 | 29 | 56 | 103 | 613 | |
| | 2002.03-2003.04 | 6MT | F | R | Estate FWD YD22DDT | | GDS41215 | Drive Shaft | 44T | 27 | 29 | 56 | 103 | 988 | |
| | 2002.03-2003.04 | 6MT | F | L/R | Estate FWD YD22DDT | | GCO41038 | Outer Joint | 44T | 27 | 26 | 56 | 103 | 69 | M |
| 2.2 (102 kw) | 2003.04- | 6MT | F | L | Estate FWD YD22DDT | | GDS41214 | Drive Shaft | 44T | 27 | 29 | 56 | 103 | 613 | |
| | 2003.04- | 6MT | F | R | Estate FWD YD22DDT | | GDS41215 | Drive Shaft | 44T | 27 | 29 | 56 | 103 | 988 | |
| | 2003.04- | 6MT | F | L/R | Estate FWD YD22DDT | | GCO41038 | Outer Joint | 44T | 27 | 26 | 56 | 103 | 69 | M |
| **Pulsar** | | | | | | | | | | | | | | | |
| 1.5 (77 kw) | 2001.03- | | F | L/R | Hatchback FWD QG15DE | | GCO41327 | Outer Joint | 42T | 25 | 22 | 55 | 100.5 | 58.5 | M |
| 1.5 (81 kw) | 2014.10- | MT | F | L | Hatchback FWD K9K | | GDS41489 | Drive Shaft | | 29 | 26 | 56.2 | 102.5 | 693 | |
| | 2014.10- | MT | F | R | Hatchback FWD K9K | | GDS41486 | Drive Shaft | | 29 | 26 | 56.2 | 102.5 | 943 | |
| | 2014.10- | MT | F | L/R | Hatchback FWD K9K | | GCO41348 | Outer Joint | | 29 | 25 | 56.2 | 102.5 | 65 | M |
| | 2014.10- | MT | F | L | Hatchback FWD K9K | | GCI41143 | Inner Joint | | 26 | 24 | 40 | 64 | 106 | |
| | 2014.10- | MT | F | R | Hatchback FWD K9K | | GCI41142 | Inner Joint | | 26 | 24 | 33 | 327 | 93 | |
| 1.6 (83 kw) | 2000.07-2003.02 | 4AT | F | L | Saloon FWD QG16DE | | GDS41041 | Drive Shaft | 42T | 25 | 25 | 55 | 107 | 622 | |
| | 2000.07-2003.02 | 4AT | F | L | Saloon FWD QG16DE | | GCO41003 | Outer Joint | 42T | 25 | 23 | 55 | 107 | 62 | I |
| | 2000.07-2003.02 | 4AT | F | L | Saloon FWD QG16DE | | GCI41002 | Inner Joint | | 25 | 23 | 40 | 63 | 101 | |
| | 2000.07-2003.02 | 5MT | F | L | Saloon FWD QG16DE | | GDS41527 | Drive Shaft | 42T | 25 | 24 | 55 | 107.5 | 632 | |
| | 2000.07-2003.02 | 5MT | F | R | Saloon FWD QG16DE | | GDS41525 | Drive Shaft | 42T | 25 | 24 | 55 | 107.5 | 922 | |
| | 2000.07-2003.02 | 5MT | F | L/R | Saloon FWD QG16DE | | GCI41198 | Inner Joint | | 24 | 23 | 40 | 51.7 | 100.4 | |
| 1.6 (140 kw) | 2015.02- | MT | F | L | Hatchback FWD MR16DDT | | GDS83977 | Drive Shaft | | 29 | 26 | 56.2 | 102.5 | 684 | |
| | 2015.02- | MT | F | R | Hatchback FWD MR16DDT | | GDS83674 | Drive Shaft | | 29 | 26 | 56.2 | 102.5 | 950 | |
| | 2015.02- | MT | F | L/R | Hatchback FWD MR16DDT | | GCO41348 | Outer Joint | | 29 | 25 | 56.2 | 102.5 | 65 | M |
| | 2015.02- | MT | F | L | Hatchback FWD MR16DDT | | GCI41143 | Inner Joint | | 26 | 24 | 40 | 64 | 106 | |
| | 2015.02- | MT | F | R | Hatchback FWD MR16DDT | | GCI82328 | Inner Joint | | 26 | 24 | 33 | 343 | 96 | |
| 1.8 (94 kw) | 2002.01- | 4AT/5MT | F | L | Saloon FWD QG18DE | | GDS41041 | Drive Shaft | 42T | 25 | 25 | 55 | 107 | 622 | |
| | 2002.01- | 4AT/5MT | F | R | Saloon FWD QG18DE | | GDS41562 | Drive Shaft | 42T | 25 | 25 | 55 | 107 | 923 | |
| | 2002.01- | 4AT/5MT | F | L/R | Saloon FWD QG18DE | | GCO41003 | Outer Joint | 42T | 25 | 23 | 55 | 107 | 62 | I |
| | 2002.01- | 4AT/5MT | F | L/R | Saloon FWD QG18DE | | GCI41002 | Inner Joint | | 25 | 23 | 40 | 63 | 101 | |
| **Qashqai** | | | | | | | | | | | | | | | |
| 1.2 (85 kw) | 2013.11-2018.08 | 6MT | F | L | SUV FWD HRA2DDT | Date to:2015.01,For Modelcode:J11E | GDS81767 | Drive Shaft | | 29 | 26 | 62 | 102.5 | 699 | |
| | 2013.11-2018.08 | 6MT | F | R | SUV FWD HRA2DDT | For Modelcode:J11E | GDS82173 | Drive Shaft | | 29 | 26 | 62 | 102.5 | 947 | |
| | 2013.11-2018.08 | 6MT | F | L/R | SUV FWD HRA2DDT | | GCO81520 | Outer Joint | | 29 | 26 | 62 | 102.5 | 60 | I |
| | 2013.11-2018.08 | 6MT | F | L | SUV FWD HRA2DDT | Date to:2015.01,For Modelcode:J11E | GCI81505 | Inner Joint | | 26 | 26 | 40 | 64 | 112 | |
| | 2013.11-2018.08 | 6MT | F | R | SUV FWD HRA2DDT | For Modelcode:J11E | GCI81687 | Inner Joint | | 26 | 26 | 33 | 343 | 107 | |
| | 2013.11-2018.08 | CVT | F | L | SUV FWD HRA2DDT | For Modelcode:J11E | GDS82226 | Drive Shaft | | 29 | 25 | 62 | 102 | 708 | |
| | 2013.11-2018.08 | CVT | F | R | SUV FWD HRA2DDT | For Modelcode:J11E | GDS82225 | Drive Shaft | | 29 | 25 | 62 | 102 | 938 | |
| | 2013.11-2018.08 | CVT | F | L/R | SUV FWD HRA2DDT | | GCO81741 | Outer Joint | | 29 | 25 | 62 | 102 | 57.5 | I |
| | 2013.11-2018.08 | CVT | F | L | SUV FWD HRA2DDT | For Modelcode:J11E | GCI81686 | Inner Joint | | 25 | 23 | 40 | 53 | 120 | |
| | 2013.11-2018.08 | CVT | F | R | SUV FWD HRA2DDT | For Modelcode:J11E | GCI81685 | Inner Joint | | 25 | 23 | 33 | 334.5 | 104.5 | |
| 1.3 (103 kw) | 2018.08-2021.04 | 6MT | F | L | SUV FWD HR13DDT | | GDS56784 | Drive Shaft | | 29 | 26 | 62 | 102 | 700 | |
| | 2018.08-2021.04 | 6MT | F | R | SUV FWD HR13DDT | | GDS56783 | Drive Shaft | | 29 | 26 | 62 | 102 | 948 | |
| | 2018.08-2021.04 | 6MT | F | L/R | SUV FWD HR13DDT | | GCO81741 | Outer Joint | | 29 | 25 | 62 | 102 | 57.5 | I |
| | 2018.08-2021.04 | 6MT | F | L | SUV FWD HR13DDT | | GCI83488 | Inner Joint | | 26 | 24 | 40 | 64 | 116 | |
| | 2018.08-2021.04 | 6MT | F | R | SUV FWD HR13DDT | | GCI83487 | Inner Joint | | 26 | 24 | 33 | 345.5 | 107.5 | |
| 1.3 (116 kw) | 2020.10-2021.04 | 7DCT | F | L | SUV FWD HR13DDT | | GDS83656 | Drive Shaft | | 29 | 27 | 62 | 102 | 643 | |
| | 2020.10-2021.04 | 7DCT | F | R | SUV FWD HR13DDT | | GDS84260 | Drive Shaft | | 29 | 27 | 62 | 102 | 1009 | |
| | 2020.10-2021.04 | 7DCT | F | L/R | SUV FWD HR13DDT | | GCO81741 | Outer Joint | | 29 | 25 | 62 | 102 | 57.5 | I |
| | 2020.10-2021.04 | 7DCT | F | L | SUV FWD HR13DDT | | GCI82312 | Inner Joint | | 27 | 26 | 40 | 65 | 123.5 | |
| | 2020.10-2021.04 | 7DCT | F | R | SUV FWD HR13DDT | | GCI82663 | Inner Joint | | 27 | 26 | 40 | 400 | 94.5 | |
| | 2021.04- | CVT | F | L | SUV 4WD HR13DDT | | GDS56918 | Drive Shaft | | 29 | 29 | 62 | 98.5 | 708 | |
| | 2021.04- | CVT | F | L/R | SUV 4WD HR13DDT | | GCO83476 | Outer Joint | | 29 | 26 | 62 | 98.5 | 60 | I |
| | 2021.04- | CVT | F | L | SUV 4WD HR13DDT | | GCI75036 | Inner Joint | | 29 | 26 | 39 | 65.5 | 114 | |
| | 2021.04- | CVT | F | L | SUV FWD HR13DDT | | GDS56918 | Drive Shaft | | 29 | 29 | 62 | 98.5 | 708 | |
| | 2021.04- | CVT | F | R | SUV FWD HR13DDT | | GDS56923 | Drive Shaft | | 29 | 29 | 62 | 98.5 | 957 | |
| | 2021.04- | CVT | F | L/R | SUV FWD HR13DDT | | GCO83476 | Outer Joint | | 29 | 26 | 62 | 98.5 | 60 | I |

| | YEAR | TRANSM. | F/R | L/R | BODY STYLE & DRIVE TYPE & ENGINE | REMARKS | G-AP Ref. | PRODUCT | ABS | Technical Specifications | | | | | |
|---|---|---|---|---|---|---|---|---|---|---|---|---|---|---|---|
| | | | | | | | | | | A | B | C | H | L | P |
| **NISSAN** **Qashqai** | | | | | | | | | | | | | | | |
| 1.3 (116 kw) | 2021.04- | CVT | F | L | SUV FWD HR13DDT | | GCI75036 | Inner Joint | | 29 | 26 | 39 | 65.5 | 114 | |
| | 2021.04- | CVT | F | R | SUV FWD HR13DDT | | GCI83562 | Inner Joint | | 29 | 26 | | 348 | 99 | |
| 1.3 (118 kw) | 2018.08-2021.04 | 6MT | F | L | SUV FWD HR13DDT | | GDS56784 | Drive Shaft | | 29 | 26 | 62 | 102 | 700 | |
| | 2018.08-2021.04 | 6MT | F | R | SUV FWD HR13DDT | | GDS56783 | Drive Shaft | | 29 | 26 | 62 | 102 | 948 | |
| | 2018.08-2021.04 | 6MT | F | L/R | SUV FWD HR13DDT | | GCO81741 | Outer Joint | | 29 | 25 | 62 | 102 | 57.5 | I |
| | 2018.08-2021.04 | 6MT | F | L | SUV FWD HR13DDT | | GCI83488 | Inner Joint | | 26 | 24 | 40 | 64 | 116 | |
| | 2018.08-2021.04 | 6MT | F | R | SUV FWD HR13DDT | | GCI83487 | Inner Joint | | 26 | 24 | 33 | 345.5 | 107.5 | |
| | 2018.08-2021.04 | 7DCT | F | L | SUV FWD HR13DDT | | GDS83656 | Drive Shaft | | 29 | 27 | 62 | 102 | 643 | |
| | 2018.08-2021.04 | 7DCT | F | R | SUV FWD HR13DDT | | GDS84260 | Drive Shaft | | 29 | 27 | 62 | 102 | 1009 | |
| | 2018.08-2021.04 | 7DCT | F | L | SUV FWD HR13DDT | | GCO82317 | Outer Joint | | 29 | 25 | 62 | 102.5 | 57.5 | I |
| | 2018.08-2021.04 | 7DCT | F | L | SUV FWD HR13DDT | | GCI82312 | Inner Joint | | 27 | 26 | 40 | 65 | 123.5 | |
| | 2018.08-2021.04 | 7DCT | F | R | SUV FWD HR13DDT | | GCI82663 | Inner Joint | | 27 | 26 | 40 | 400 | 94.5 | |
| 1.5 (76 kw) | 2008.08-2010.01 | 6MT | F | L | SUV FWD K9K 292, K9K 282 | | GDS41329 | Drive Shaft | | 29 | 26 | 56.1 | 102 | 692 | |
| | 2008.08-2010.01 | 6MT | F | R | SUV FWD K9K 292, K9K 282 | | GDS41330 | Drive Shaft | | 29 | 26 | 56.1 | 102 | 941 | |
| | 2008.08-2010.01 | 6MT | F | L | SUV FWD K9K 292, K9K 282 | | GCO81540 | Outer Joint | | 29 | 35 | 56 | 102.5 | 59 | I |
| | 2008.08-2010.01 | MT | F | L/R | SUV FWD K9K 292, K9K 282 | | GCO41214 | Outer Joint | | 29 | 35 | 56.1 | 102 | 59 | I |
| | 2008.08-2010.01 | MT | F | R | SUV FWD K9K 292, K9K 282 | | GCI41092 | Inner Joint | | 26 | 35 | 33 | 326.5 | 111.5 | |
| | 2008.08-2010.01 | | F | L | SUV FWD K9K 292, K9K 282 | | GCI41091 | Inner Joint | | 26 | 35 | 40 | 64 | 125 | |
| | 2008.08-2010.01 | | F | L | SUV FWD K9K 292, K9K 282 | | GCI41103 | Inner Joint | | 26 | 30 | 40 | 64 | 113 | |
| 1.5 (78 kw) | 2006.11-2013.11 | 6MT | F | L | SUV FWD K9K 292, K9K 282 | | GDS41329 | Drive Shaft | | 29 | 26 | 56.1 | 102 | 692 | |
| | 2006.11-2013.11 | 6MT | F | R | SUV FWD K9K 292, K9K 282 | | GDS41330 | Drive Shaft | | 29 | 26 | 56.1 | 102 | 941 | |
| | 2006.11-2013.11 | 6MT | F | L | SUV FWD K9K 292, K9K 282 | 8 balls | GCO81540 | Outer Joint | | 29 | 35 | 56 | 102.5 | 59 | I |
| | 2006.11-2013.11 | 6MT | F | L/R | SUV FWD K9K 292, K9K 282 | 6 balls | GCO41214 | Outer Joint | | 29 | 35 | 56.1 | 102 | 59 | I |
| | 2006.11-2013.11 | MT | F | L | SUV FWD K9K 292, K9K 282 | | GCI41091 | Inner Joint | | 26 | 35 | 40 | 64 | 125 | |
| | 2006.11-2013.11 | MT | F | R | SUV FWD K9K 292, K9K 282 | | GCI41092 | Inner Joint | | 26 | 35 | 33 | 326.5 | 111.5 | |
| 1.5 (81 kw) | 2010.01-2013.12 | 6MT | F | L | SUV FWD K9K 430 | | GDS41329 | Drive Shaft | | 29 | 26 | 56.1 | 102 | 692 | |
| | 2010.01-2013.12 | 6MT | F | R | SUV FWD K9K 430 | | GDS41330 | Drive Shaft | | 29 | 26 | 56.1 | 102 | 941 | |
| | 2010.01-2013.12 | 6MT | F | L/R | SUV FWD K9K 430 | 6 balls | GCO41214 | Outer Joint | | 29 | 35 | 56.1 | 102 | 59 | I |
| | 2010.01-2013.12 | 6MT | F | L/R | SUV FWD K9K 430 | 8 balls | GCO81540 | Outer Joint | | 29 | 35 | 56 | 102.5 | 59 | I |
| | 2010.01-2013.12 | 6MT | F | L | SUV FWD K9K 430 | | GCI41091 | Inner Joint | | 26 | 35 | 40 | 64 | 125 | |
| | 2010.01-2013.12 | MT | F | R | SUV FWD K9K 430 | | GCI41092 | Inner Joint | | 26 | 35 | 33 | 326.5 | 111.5 | |
| | 2013.03-2014.04 | 6MT | F | L | SUV Van FWD K9K | | GDS41329 | Drive Shaft | | 29 | 26 | 56.1 | 102 | 692 | |
| | 2013.03-2014.04 | 6MT | F | R | SUV Van FWD K9K | | GDS41330 | Drive Shaft | | 29 | 26 | 56.1 | 102 | 941 | |
| | 2013.03-2014.04 | 6MT | F | L | SUV Van FWD K9K | | GCO81540 | Outer Joint | | 29 | 35 | 56 | 102.5 | 59 | I |
| | 2013.03-2014.04 | 6MT | F | R | SUV Van FWD K9K | | GCO41214 | Outer Joint | | 29 | 35 | 56.1 | 102 | 59 | I |
| | 2013.03-2014.04 | 6MT | F | L | SUV Van FWD K9K | | GCI41091 | Inner Joint | | 26 | 35 | 40 | 64 | 125 | |
| | 2013.11-2018.08 | 6MT | F | L | SUV FWD K9K 636;K9K 646 | Exhaust Emis Nm:Ext. Euro 6 | GDS81767 | Drive Shaft | | 29 | 26 | 62 | 102.5 | 699 | |
| | 2013.11-2018.08 | 6MT | F | L | SUV FWD K9K 636;K9K 646 | Exhaust Emis Nm:Euro 6 | GDS83917 | Drive Shaft | | 29 | 27 | 62 | 102.5 | 686 | |
| | 2013.11-2018.08 | 6MT | F | R | SUV FWD K9K 636;K9K 646 | Exhaust Emis Nm:Ext. Euro 6 | GDS83212 | Drive Shaft | | 29 | 26 | 62 | 102.5 | 950 | |
| | 2013.11-2018.08 | 6MT | F | R | SUV FWD K9K 636;K9K 646 | Exhaust Emis Nm:Euro 6 | GDS83912 | Drive Shaft | | 29 | 27 | 62 | 102.5 | 968 | |
| | 2013.11-2018.08 | 6MT | F | L/R | SUV FWD K9K 636;K9K 646 | | GCO81520 | Outer Joint | | 29 | 26 | 62 | 102.5 | 60 | I |
| | 2013.11-2018.08 | 6MT | F | L | SUV FWD K9K 636;K9K 646 | Exhaust Emis Nm:Ext. Euro 6 | GCI81505 | Inner Joint | | 26 | 26 | 40 | 64 | 112 | |
| | 2013.11-2018.08 | 6MT | F | L | SUV FWD K9K 636;K9K 646 | Exhaust Emis Nm:Euro 6 | GCI82421 | Inner Joint | | 27 | 26 | 39.95 | 67 | 106.5 | |
| | 2013.11-2018.08 | 6MT | F | R | SUV FWD K9K 636;K9K 646 | Exhaust Emis Nm:Ext. Euro 6 | GCI82177 | Inner Joint | | 26 | 26 | 33 | 327 | 99 | |
| | 2013.11-2018.08 | 6MT | F | R | SUV FWD K9K 636;K9K 646 | Exhaust Emis Nm:Euro 6 | GCI82418 | Inner Joint | | 27 | 26 | 33 | 340 | 99 | |
| | 2015.05-2018.08 | 6MT | F | L | SUV Van FWD K9K 646 | Exhaust Emis Nm:Euro 5 | GDS81767 | Drive Shaft | | 29 | 26 | 62 | 102.5 | 699 | |
| | 2015.05-2018.08 | 6MT | F | L | SUV Van FWD K9K 646 | Exhaust Emis Nm:Euro 6 | GDS83917 | Drive Shaft | | 29 | 27 | 62 | 102.5 | 686 | |
| | 2015.05-2018.08 | 6MT | F | R | SUV Van FWD K9K 646 | Exhaust Emis Nm:Euro 5 | GDS83212 | Drive Shaft | | 29 | 26 | 62 | 102.5 | 950 | |
| | 2015.05-2018.08 | 6MT | F | R | SUV Van FWD K9K 646 | Exhaust Emis Nm:Euro 6 | GDS83912 | Drive Shaft | | 29 | 27 | 62 | 102.5 | 968 | |
| | 2015.05-2018.08 | 6MT | F | L/R | SUV Van FWD K9K 646 | Exhaust Emis Nm:Euro 6 | GCO81520 | Outer Joint | | 29 | 26 | 62 | 102.5 | 60 | I |
| | 2015.05-2018.08 | 6MT | F | L | SUV Van FWD K9K 646 | Exhaust Emis Nm:Euro 6 | GCI82421 | Inner Joint | | 27 | 26 | 39.95 | 67 | 106.5 | |
| | 2015.05-2018.08 | 6MT | F | R | SUV Van FWD K9K 646 | Exhaust Emis Nm:Euro 6 | GCI82418 | Inner Joint | | 27 | 26 | 33 | 340 | 99 | |
| 1.5 (85 kw) | 2018.06-2020.09 | 6MT | F | L | SUV FWD K9K 872 | Exhaust Emis Nm:Ext. Euro 6 | GDS81767 | Drive Shaft | | 29 | 26 | 62 | 102.5 | 699 | |
| | 2018.06-2020.09 | 6MT | F | L | SUV FWD K9K 872 | Exhaust Emis Nm:Euro 6 | GDS83917 | Drive Shaft | | 29 | 27 | 62 | 102.5 | 686 | |
| | 2018.06-2020.09 | 6MT | F | R | SUV FWD K9K 872 | Exhaust Emis Nm:Ext. Euro 6 | GDS83212 | Drive Shaft | | 29 | 26 | 62 | 102.5 | 950 | |
| | 2018.06-2020.09 | 6MT | F | R | SUV FWD K9K 872 | Exhaust Emis Nm:Euro 6 | GDS83912 | Drive Shaft | | 29 | 27 | 62 | 102.5 | 968 | |
| | 2018.06-2020.09 | 6MT | F | L/R | SUV FWD K9K 872 | | GCO81520 | Outer Joint | | 29 | 26 | 62 | 102.5 | 60 | I |
| | 2018.06-2020.09 | 6MT | F | L | SUV FWD K9K 872 | Exhaust Emis Nm:Ext. Euro 6 | GCI81505 | Inner Joint | | 26 | 26 | 40 | 64 | 112 | |
| | 2018.06-2020.09 | 6MT | F | L | SUV FWD K9K 872 | Exhaust Emis Nm:Euro 6 | GCI82421 | Inner Joint | | 27 | 26 | 39.95 | 67 | 106.5 | |
| | 2018.06-2020.09 | 6MT | F | R | SUV FWD K9K 872 | Exhaust Emis Nm:Ext. Euro 6 | GCI82177 | Inner Joint | | 26 | 26 | 33 | 327 | 99 | |
| | 2018.06-2020.09 | 6MT | F | R | SUV FWD K9K 872 | Exhaust Emis Nm:Euro 6 | GCI82418 | Inner Joint | | 27 | 26 | 33 | 340 | 99 | |
| | 2018.06-2020.09 | 7DCT | F | L | SUV FWD K9K 872 | | GDS83656 | Drive Shaft | | 29 | 27 | 62 | 102 | 643 | |
| | 2018.06-2020.09 | 7DCT | F | R | SUV FWD K9K 872 | | GDS83914 | Drive Shaft | | 29 | 27 | 62 | 102.5 | 1012 | |
| | 2018.06-2020.09 | 7DCT | F | L/R | SUV FWD K9K 872 | | GCO82317 | Outer Joint | | 29 | 25 | 62 | 102.5 | 57.5 | I |
| | 2018.06-2020.09 | 7DCT | F | L | SUV FWD K9K 872 | | GCI82312 | Inner Joint | | 27 | 26 | 40 | 65 | 123.5 | |

| | YEAR | TRANSM. | F/R | L/R | BODY STYLE & DRIVE TYPE & ENGINE | REMARKS | G-AP Ref. | PRODUCT | ABS | Technical Specifications A | B | C | H | L | P |
|---|---|---|---|---|---|---|---|---|---|---|---|---|---|---|---|
| **NISSAN** **Qashqai** | | | | | | | | | | | | | | | |
| 1.5 (85 kw) | 2018.06-2020.09 | 7DCT | F | R | SUV FWD K9K 872 | | GCI82419 | Inner Joint | | 27 | 26 | 40 | 385 | 94.5 | |
| | 2018.06-2020.09 | 6MT | F | L | SUV Van FWD K9K 872 | Exhaust Emis Nm:Euro 5 | GDS81767 | Drive Shaft | | 29 | 26 | 62 | 102.5 | 699 | |
| | 2018.06-2020.09 | 6MT | F | L | SUV Van FWD K9K 872 | Exhaust Emis Nm:Euro 6 | GDS83917 | Drive Shaft | | 29 | 27 | 62 | 102.5 | 686 | |
| | 2018.06-2020.09 | 6MT | F | R | SUV Van FWD K9K 872 | Exhaust Emis Nm:Euro 5 | GDS83212 | Drive Shaft | | 29 | 26 | 62 | 102.5 | 950 | |
| | 2018.06-2020.09 | 6MT | F | R | SUV Van FWD K9K 872 | Exhaust Emis Nm:Euro 6 | GDS83912 | Drive Shaft | | 29 | 27 | 62 | 102.5 | 968 | |
| | 2018.06-2020.09 | 6MT | F | L/R | SUV Van FWD K9K 872 | Exhaust Emis Nm:Euro 6 | GCO81520 | Outer Joint | | 29 | 26 | 62 | 102.5 | 60 | I |
| | 2018.06-2020.09 | 6MT | F | L | SUV Van FWD K9K 872 | Exhaust Emis Nm:Euro 6 | GCI82421 | Inner Joint | | 27 | 26 | 39.95 | 67 | 106.5 | |
| | 2018.06-2020.09 | 6MT | F | R | SUV Van FWD K9K 872 | Exhaust Emis Nm:Euro 6 | GCI82418 | Inner Joint | | 27 | 26 | 33 | 340 | 99 | |
| | 2018.06-2020.09 | 7DCT | F | L | SUV Van FWD K9K 872 | | GDS83656 | Drive Shaft | | 29 | 27 | 62 | 102 | 643 | |
| | 2018.06-2020.09 | 7DCT | F | R | SUV Van FWD K9K 872 | | GDS83914 | Drive Shaft | | 29 | 27 | 62 | 102.5 | 1012 | |
| | 2018.06-2020.09 | 7DCT | F | L/R | SUV Van FWD K9K 872 | | GCO82317 | Outer Joint | | 29 | 25 | 62 | 102.5 | 57.5 | I |
| | 2018.06-2020.09 | 7DCT | F | L | SUV Van FWD K9K 872 | | GCI82312 | Inner Joint | | 27 | 26 | 40 | 65 | 123.5 | |
| | 2018.06-2020.09 | 7DCT | F | R | SUV Van FWD K9K 872 | | GCI82419 | Inner Joint | | 27 | 26 | 40 | 385 | 94.5 | |
| 1.5 (140 kw) | 2022.09-2025.07 | AT | F | L | SUV FWD KR15DDT | | GDS56920 | Drive Shaft | | 29 | 27 | 62 | 98.5 | 823 | |
| | 2022.09-2025.07 | AT | F | R | SUV FWD KR15DDT | | GDS56919 | Drive Shaft | | 29 | 27 | 62 | 98.5 | 849 | |
| | 2022.09-2025.07 | AT | F | L/R | SUV FWD KR15DDT | | GCO83477 | Outer Joint | | 29 | 25 | 62 | 98.5 | 57.5 | I |
| | 2022.09-2025.07 | AT | F | L/R | SUV FWD KR15DDT | | GCI83559 | Inner Joint | | 27 | 25 | 40 | 62.5 | 107 | |
| 1.5 (151 kw) | 2025.07- | CVT | F | L | SUV FWD ZR15DDTE | | GDS56920 | Drive Shaft | | 29 | 27 | 62 | 98.5 | 823 | |
| 1.6 (84 kw) | 2007.02-2013.12 | AT | F | L | SUV FWD HR16DE | | GDS41326 | Drive Shaft | | 29 | 25 | 56 | 102 | 694 | |
| | 2007.02-2013.12 | AT | F | R | SUV FWD HR16DE | | GDS41325 | Drive Shaft | | 29 | 25 | 56 | 102 | 941 | |
| | 2007.02-2013.12 | CVT/5MT | F | L | SUV FWD HR16DE | | GDS41300 | Drive Shaft | | 29 | 26 | 56 | 102 | 691 | |
| | 2007.02-2013.12 | CVT/5MT | F | R | SUV FWD HR16DE | | GDS41301 | Drive Shaft | | 29 | 26 | 56 | 102 | 940 | |
| | 2007.02-2013.12 | CVT/5MT | F | L/R | SUV FWD HR16DE | | GCO41286 | Outer Joint | | 29 | 33 | 56 | 102 | 57.5 | I |
| | 2007.02-2013.12 | CVT/5MT | F | L | SUV FWD HR16DE | TJ | GCI41103 | Inner Joint | | 26 | 30 | 40 | 64 | 113 | |
| 1.6 (86 kw) | 2010.11-2013.12 | 5MT | F | L | SUV FWD HR16DE | | GDS41300 | Drive Shaft | | 29 | 26 | 56 | 102 | 691 | |
| | 2010.11-2013.12 | 5MT | F | R | SUV FWD HR16DE | | GDS41301 | Drive Shaft | | 29 | 26 | 56 | 102 | 940 | |
| | 2010.11-2013.12 | 5MT | F | L/R | SUV FWD HR16DE | | GCO41286 | Outer Joint | | 29 | 33 | 56 | 102 | 57.5 | I |
| | 2010.11-2013.12 | 5MT | F | L | SUV FWD HR16DE | | GCI41103 | Inner Joint | | 26 | 30 | 40 | 64 | 113 | |
| | 2010.11-2013.12 | CVT | F | L | SUV FWD HR16DE | | GDS41326 | Drive Shaft | | 29 | 25 | 56 | 102 | 694 | |
| | 2010.11-2013.12 | CVT | F | R | SUV FWD HR16DE | | GDS41325 | Drive Shaft | | 29 | 25 | 56 | 102 | 941 | |
| | 2010.11-2013.12 | MT | F | L | SUV FWD HR16DE | | GDS41300 | Drive Shaft | | 29 | 26 | 56 | 102 | 691 | |
| | 2010.11-2013.12 | MT | F | R | SUV FWD HR16DE | | GDS41301 | Drive Shaft | | 29 | 26 | 56 | 102 | 940 | |
| | 2010.11-2013.12 | MT | F | L | SUV FWD HR16DE | TJ | GCI41103 | Inner Joint | | 26 | 30 | 40 | 64 | 113 | |
| | 2010.11-2013.12 | MT | F | R | SUV FWD HR16DE | TJ | GCI41157 | Inner Joint | | 26 | 30 | 33 | 321.5 | 104.5 | |
| | 2010.11-2013.12 | MT/CVT | F | L/R | SUV FWD HR16DE | | GCO41286 | Outer Joint | | 29 | 33 | 56 | 102 | 57.5 | I |
| | 2013.03-2014.04 | 5MT | F | L | SUV Van FWD HR16DE | | GDS41300 | Drive Shaft | | 29 | 26 | 56 | 102 | 691 | |
| | 2013.03-2014.04 | 5MT | F | R | SUV Van FWD HR16DE | | GDS41301 | Drive Shaft | | 29 | 26 | 56 | 102 | 940 | |
| | 2013.03-2014.04 | 5MT | F | L | SUV Van FWD HR16DE | TJ | GCI41103 | Inner Joint | | 26 | 30 | 40 | 64 | 113 | |
| | 2013.03-2014.04 | CVT | F | L | SUV Van FWD HR16DE | | GDS41326 | Drive Shaft | | 29 | 25 | 56 | 102 | 694 | |
| | 2013.03-2014.04 | CVT | F | R | SUV Van FWD HR16DE | | GDS41325 | Drive Shaft | | 29 | 25 | 56 | 102 | 941 | |
| | 2013.03-2014.04 | CVT/5MT | F | L/R | SUV Van FWD HR16DE | | GCO41286 | Outer Joint | | 29 | 33 | 56 | 102 | 57.5 | I |
| 1.6 (96 kw) | 2011.10-2013.12 | 6MT | F | L | SUV 4WD R9M | | GDS41481 | Drive Shaft | | 29 | 29 | 56 | 102 | 615 | |
| | 2011.10-2013.12 | 6MT | F | R | SUV 4WD R9M | | GDS41441 | Drive Shaft | | 29 | 29 | 56 | 102 | 1009 | |
| | 2011.10-2013.12 | 6MT | F | L | SUV 4WD R9M | | GCI41076 | Inner Joint | | 29 | 29 | 39 | 65.5 | 116 | |
| | 2011.10-2013.12 | 6MT | F | R | SUV 4WD R9M | | GCI41131 | Inner Joint | | 29 | 29 | 33 | 481 | 100 | |
| | 2011.10-2013.12 | | F | L/R | SUV 4WD R9M | | GCO41249 | Outer Joint | | 29 | 36 | 56 | 102 | 72 | I |
| | 2011.10-2013.12 | 6MT | R | L/R | SUV 4WD R9M | | GDS41538 | Drive Shaft | 48T | 25 | 21 | 56 | 110.5 | 801 | |
| | 2011.10-2013.12 | 6MT | R | L/R | SUV 4WD R9M | | GCO41285 | Outer Joint | 48T | 25 | 24 | 56 | 110.5 | 38.5 | I |
| | 2011.10-2013.12 | 6MT | R | L/R | SUV 4WD R9M | | GCI57111 | Inner Joint | | 21 | 24 | 38 | 61 | 91 | |
| | 2011.10-2013.12 | 6MT | F | L | SUV FWD R9M | AAR | GDS41577 | Drive Shaft | | 29 | 29 | 56 | 102 | 650 | |
| | 2011.10-2013.12 | 6MT | F | R | SUV FWD R9M | | GDS41299 | Drive Shaft | | 29 | 29 | 56 | 102 | 979 | |
| | 2011.10-2013.12 | 6MT | F | L/R | SUV FWD R9M | | GCO41249 | Outer Joint | | 29 | 36 | 56 | 102 | 72 | I |
| | 2011.10-2013.12 | 6MT | F | L | SUV FWD R9M | TJ | GCI41076 | Inner Joint | | 29 | 29 | 39 | 65.5 | 116 | |
| | 2011.10-2013.12 | 6MT | F | L | SUV FWD R9M | AAR | GCI41192 | Inner Joint | | 29 | 29 | 39 | 65.5 | 116 | |
| | 2011.10-2013.12 | AT/MT | F | L | SUV FWD R9M | TJ | GDS41286 | Drive Shaft | | 29 | 29 | 56 | 102 | 649 | |
| | 2013.03-2014.04 | 6MT | F | L | SUV Van 4WD R9M | | GDS41481 | Drive Shaft | | 29 | 29 | 56 | 102 | 615 | |
| | 2013.03-2014.04 | 6MT | F | R | SUV Van 4WD R9M | | GDS41441 | Drive Shaft | | 29 | 29 | 56 | 102 | 1009 | |
| | 2013.03-2014.04 | 6MT | F | L/R | SUV Van 4WD R9M | | GCO41249 | Outer Joint | | 29 | 36 | 56 | 102 | 72 | I |
| | 2013.03-2014.04 | 6MT | F | L | SUV Van 4WD R9M | | GCI41076 | Inner Joint | | 29 | 29 | 39 | 65.5 | 116 | |
| | 2013.03-2014.04 | 6MT | R | L/R | SUV Van 4WD R9M | | GDS41538 | Drive Shaft | 48T | 25 | 21 | 56 | 110.5 | 801 | |
| | 2013.03-2014.04 | 6MT | R | L/R | SUV Van 4WD R9M | | GCO41285 | Outer Joint | 48T | 25 | 24 | 56 | 110.5 | 38.5 | I |
| | 2013.03-2014.04 | 6MT | R | L/R | SUV Van 4WD R9M | | GCI57111 | Inner Joint | | 21 | 24 | 38 | 61 | 91 | |
| | 2013.03-2014.04 | 6MT | F | L | SUV Van FWD R9M | TJ | GDS41286 | Drive Shaft | | 29 | 29 | 56 | 102 | 649 | |
| | 2013.03-2014.04 | 6MT | F | L | SUV Van FWD R9M | AAR | GDS41577 | Drive Shaft | | 29 | 29 | 56 | 102 | 650 | |
| | 2013.03-2014.04 | 6MT | F | R | SUV Van FWD R9M | | GDS41299 | Drive Shaft | | 29 | 29 | 56 | 102 | 979 | |

| | YEAR | TRANSM. | F/R | L/R | BODY STYLE & DRIVE TYPE & ENGINE | REMARKS | G-AP Ref. | PRODUCT | ABS | Technical Specifications A | B | C | H | L | P |
|---|---|---|---|---|---|---|---|---|---|---|---|---|---|---|---|
| **NISSAN** **Qashqai** | | | | | | | | | | | | | | | |
| 1.6 (96 kw) | 2013.03-2014.04 | 6MT | F | L/R | SUV Van FWD R9M | | GCO41249 | Outer Joint | | 29 | 36 | 56 | 102 | 72 | I |
| | 2013.03-2014.04 | 6MT | F | L | SUV Van FWD R9M | | GCI41076 | Inner Joint | | 29 | 29 | 39 | 65.5 | 116 | |
| | 2013.11-2018.08 | 6MT | F | L | SUV 4WD R9M | | GDS83621 | Drive Shaft | | 29 | 29 | 62 | 102 | 622 | |
| | 2013.11-2018.08 | 6MT | F | R | SUV 4WD R9M | | GDS83620 | Drive Shaft | | 29 | 29 | 62 | 102 | 1019 | |
| | 2013.11-2018.08 | 6MT | F | L/R | SUV 4WD R9M | | GCO81974 | Outer Joint | | 29 | 28 | 62 | 102 | 68 | I |
| | 2013.11-2018.08 | 6MT | F | L | SUV 4WD R9M | | GCI41192 | Inner Joint | | 29 | 29 | 39 | 65.5 | 116 | |
| | 2013.11-2018.08 | 6MT | F | R | SUV 4WD R9M | | GCI82324 | Inner Joint | | 29 | 29 | 33 | 478.5 | 103.5 | |
| | 2013.11-2018.08 | 6MT | R | L/R | SUV 4WD R9M | | GDS41538 | Drive Shaft | 48T | 25 | 21 | 56 | 110.5 | 801 | |
| | 2013.11-2018.08 | 6MT | R | L/R | SUV 4WD R9M | | GCO41285 | Outer Joint | 48T | 25 | 24 | 56 | 110.5 | 38.5 | I |
| | 2013.11-2018.08 | 6MT | R | L/R | SUV 4WD R9M | | GCI57111 | Inner Joint | | 21 | 24 | 38 | 61 | 91 | |
| | 2013.11-2018.08 | 6MT | F | L | SUV FWD R9M | | GDS82448 | Drive Shaft | | 29 | 39 | 62 | 102 | 672 | |
| | 2013.11-2018.08 | 6MT | F | R | SUV FWD R9M | | GDS82449 | Drive Shaft | | 29 | 39 | 62 | 102 | 972 | |
| | 2013.11-2018.08 | 6MT | F | L | SUV FWD R9M | For Modelcode:J11E | GCI81820 | Inner Joint | | 39 | 29 | 39 | 67 | 116 | |
| | 2013.11-2018.08 | 6MT | F | R | SUV FWD R9M | For Modelcode:J11E | GCI81819 | Inner Joint | | 39 | 29 | 33 | 435 | 103 | |
| | 2013.11-2018.08 | CVT | F | L | SUV FWD R9M | For Modelcode:J11E | GDS83151 | Drive Shaft | | 29 | 29 | 62 | 102 | 670 | |
| | 2013.11-2018.08 | CVT | F | R | SUV FWD R9M | For Modelcode:J11E | GDS83150 | Drive Shaft | | 29 | 29 | 62 | 102 | 968 | |
| | 2013.11-2018.08 | CVT | F | L/R | SUV FWD R9M | | GCO81974 | Outer Joint | | 29 | 28 | 62 | 102 | 68 | I |
| | 2013.11-2018.08 | CVT | F | L | SUV FWD R9M | For Modelcode:J11E | GCI41192 | Inner Joint | | 29 | 29 | 39 | 65.5 | 116 | |
| | 2013.11-2018.08 | CVT | F | R | SUV FWD R9M | For Modelcode:J11E | GCI82162 | Inner Joint | | 29 | 29 | 33 | 427.5 | 103.5 | |
| 1.6 (120 kw) | 2014.02-2018.08 | MT | F | L/R | SUV FWD MR16DDT | | GCO81520 | Outer Joint | | 29 | 26 | 62 | 102.5 | 60 | I |
| 1.7 (110 kw) | 2019.01-2020.09 | 6MT | F | L | SUV 4WD R9N 401 | | GDS83621 | Drive Shaft | | 29 | 29 | 62 | 102 | 622 | |
| | 2019.01-2020.09 | 6MT | F | R | SUV 4WD R9N 401 | | GDS83620 | Drive Shaft | | 29 | 29 | 62 | 102 | 1019 | |
| | 2019.01-2020.09 | CVT | F | L | SUV 4WD R9N 401 | | GDS83151 | Drive Shaft | | 29 | 29 | 62 | 102 | 670 | |
| | 2019.01-2020.09 | CVT | F | L | SUV 4WD R9N 401 | | GCO81974 | Outer Joint | | 29 | 28 | 62 | 102 | 68 | I |
| | 2019.01-2020.09 | CVT | F | L | SUV 4WD R9N 401 | | GCI41192 | Inner Joint | | 29 | 29 | 39 | 65.5 | 116 | |
| | 2019.01-2020.09 | CVT/6MT | R | L/R | SUV 4WD R9N 401 | | GDS41538 | Drive Shaft | 48T | 25 | 21 | 56 | 110.5 | 801 | |
| | 2019.01-2020.09 | | R | L/R | SUV 4WD R9N 401 | | GCO41285 | Outer Joint | 48T | 25 | 24 | 56 | 110.5 | 38.5 | I |
| | 2019.01-2020.09 | | R | L/R | SUV 4WD R9N 401 | | GCI57111 | Inner Joint | | 21 | 24 | 38 | 61 | 91 | |
| | 2019.01-2020.09 | 6MT | F | L | SUV FWD R9N 401 | | GCO81974 | Outer Joint | | 29 | 28 | 62 | 102 | 68 | I |
| 2.0 (102 kw) | 2007.02-2013.12 | AT | F | L | SUV 4WD MR20DE | | GDS41542 | Drive Shaft | | 29 | 27 | 56.1 | 102 | 690 | |
| | 2007.02-2013.12 | AT | F | R | SUV 4WD MR20DE | | GDS81220 | Drive Shaft | | 29 | 27 | 56.1 | 102 | 942 | |
| | 2007.02-2013.12 | AT/MT | F | L/R | SUV 4WD MR20DE | | GCO41214 | Outer Joint | | 29 | 35 | 56.1 | 102 | 59 | I |
| | 2007.02-2013.12 | CVT | F | L | SUV 4WD MR20DE | | GCI41108 | Inner Joint | | 27 | 33 | 40 | 107 | 114 | |
| | 2007.02-2013.12 | CVT | F | R | SUV 4WD MR20DE | | GCI41170 | Inner Joint | | 27 | 33 | 33 | 367 | 109.5 | |
| | 2007.02-2013.12 | MT | F | L | SUV 4WD MR20DE | | GDS82512 | Drive Shaft | | 29 | 29 | 56 | 102.5 | 620 | |
| | 2007.02-2013.12 | MT | F | R | SUV 4WD MR20DE | | GDS41461 | Drive Shaft | | 29 | 29 | 56.1 | 102 | 1002 | |
| | 2007.02-2013.12 | 6MT/CVT | R | L/R | SUV 4WD MR20DE | | GCI57111 | Inner Joint | | 21 | 24 | 38 | 61 | 91 | |
| | 2007.02-2013.12 | AT/MT | R | L/R | SUV 4WD MR20DE | | GDS41538 | Drive Shaft | 48T | 25 | 21 | 56 | 110.5 | 801 | |
| | 2007.02-2013.12 | 6MT | F | R | SUV FWD MR20DE | | GDS81419 | Drive Shaft | | 29 | 26 | 56.1 | 102 | 949 | |
| | 2007.02-2013.12 | CVT | F | L | SUV FWD MR20DE | | GDS41400 | Drive Shaft | | 29 | 27 | 56.1 | 102 | 689 | |
| | 2007.02-2013.12 | CVT | F | R | SUV FWD MR20DE | | GDS41478 | Drive Shaft | | 29 | 27 | 56 | 102.5 | 943 | |
| | 2007.02-2013.12 | CVT | F | R | SUV FWD MR20DE | | GCO41402 | Outer Joint | | 29 | 35 | 56 | 102.5 | 59 | I |
| | 2007.02-2013.12 | CVT | F | L | SUV FWD MR20DE | | GCI41168 | Inner Joint | | 27 | 33 | 40 | 62.5 | 118 | |
| | 2007.02-2013.12 | CVT | F | R | SUV FWD MR20DE | | GCI41167 | Inner Joint | | 27 | 33 | 33 | 322 | 109.5 | |
| | 2007.02-2013.12 | CVT/6MT | F | L/R | SUV FWD MR20DE | 6 balls | GCO41214 | Outer Joint | | 29 | 35 | 56.1 | 102 | 59 | I |
| | 2007.02-2013.12 | MT | F | L | SUV FWD MR20DE | | GDS81760 | Drive Shaft | | 29 | 26 | 56 | 102.5 | 684 | |
| | 2007.02-2013.12 | MT | F | L | SUV FWD MR20DE | | GCO81540 | Outer Joint | | 29 | 35 | 56 | 102.5 | 59 | I |
| | 2007.02-2013.12 | MT | F | L | SUV FWD MR20DE | | GCI41166 | Inner Joint | | 26 | 33 | 40 | 64 | 123 | |
| 2.0 (104 kw) | 2007.02-2013.12 | 6MT | F | L | SUV 4WD MR20DE | | GDS82512 | Drive Shaft | | 29 | 29 | 56 | 102.5 | 620 | |
| | 2007.02-2013.12 | 6MT | F | R | SUV 4WD MR20DE | | GDS41461 | Drive Shaft | | 29 | 29 | 56.1 | 102 | 1002 | |
| | 2007.02-2013.12 | AT/MT | F | L/R | SUV 4WD MR20DE | | GCO41214 | Outer Joint | | 29 | 35 | 56.1 | 102 | 59 | I |
| | 2007.02-2013.12 | CVT | F | L | SUV 4WD MR20DE | | GDS41542 | Drive Shaft | | 29 | 27 | 56.1 | 102 | 690 | |
| | 2007.02-2013.12 | CVT | F | R | SUV 4WD MR20DE | | GDS81220 | Drive Shaft | | 29 | 27 | 56.1 | 102 | 942 | |
| | 2007.02-2013.12 | CVT | F | L | SUV 4WD MR20DE | TJ | GCI41108 | Inner Joint | | 27 | 33 | 40 | 107 | 114 | |
| | 2007.02-2013.12 | CVT | F | L | SUV 4WD MR20DE | PTJ | GCI41181 | Inner Joint | | 27 | 33 | 40 | 107 | 118 | |
| | 2007.02-2013.12 | CVT | F | R | SUV 4WD MR20DE | | GCI41170 | Inner Joint | | 27 | 33 | 33 | 367 | 109.5 | |
| | 2007.02-2013.12 | MT | F | L | SUV 4WD MR20DE | | GCI41205 | Inner Joint | | 29 | 33 | 39 | 65.5 | 122 | |
| | 2007.02-2013.12 | 6MT/CVT | R | L/R | SUV 4WD MR20DE | | GDS41538 | Drive Shaft | 48T | 25 | 21 | 56 | 110.5 | 801 | |
| | 2007.02-2013.12 | 6MT/CVT | R | L/R | SUV 4WD MR20DE | | GCO41285 | Outer Joint | 48T | 25 | 24 | 56 | 110.5 | 38.5 | I |
| | 2007.02-2013.12 | 6MT/CVT | R | L/R | SUV 4WD MR20DE | | GCI57111 | Inner Joint | | 21 | 24 | 38 | 61 | 91 | |
| | 2007.02-2013.12 | 6MT | F | L | SUV FWD MR20DE | Trans. code:F6 | GCI41191 | Inner Joint | | 26 | 33 | 40 | 64 | 118 | |
| | 2007.02-2013.12 | CVT | F | L | SUV FWD MR20DE | | GDS41400 | Drive Shaft | | 29 | 27 | 56.1 | 102 | 689 | |
| | 2007.02-2013.12 | CVT | F | R | SUV FWD MR20DE | | GDS41478 | Drive Shaft | | 29 | 27 | 56 | 102.5 | 943 | |
| | 2007.02-2013.12 | CVT | F | R | SUV FWD MR20DE | | GCO41402 | Outer Joint | | 29 | 35 | 56 | 102.5 | 59 | I |
| | 2007.02-2013.12 | CVT | F | L | SUV FWD MR20DE | | GCI41168 | Inner Joint | | 27 | 33 | 40 | 62.5 | 118 | |

| | YEAR | TRANSM. | F/R | L/R | BODY STYLE & DRIVE TYPE & ENGINE | REMARKS | G-AP Ref. | PRODUCT | ABS | Technical Specifications | | | | | |
|---|---|---|---|---|---|---|---|---|---|---|---|---|---|---|---|
| | | | | | | | | | | A | B | C | H | L | P |
| **NISSAN** | | | | | | | | | | | | | | | |
| **Qashqai** | | | | | | | | | | | | | | | |
| 2.0 (104 kw) | 2007.02-2013.12 | CVT | F | R | SUV FWD MR20DE | | GCI41167 | Inner Joint | | 27 | 33 | 33 | 322 | 109.5 | |
| | 2007.02-2013.12 | MT | F | L | SUV FWD MR20DE | | GDS81760 | Drive Shaft | | 29 | 26 | 56 | 102.5 | 684 | |
| | 2007.02-2013.12 | MT | F | R | SUV FWD MR20DE | | GDS81419 | Drive Shaft | | 29 | 26 | 56.1 | 102 | 949 | |
| | 2007.02-2013.12 | MT | F | L | SUV FWD MR20DE | 8 balls | GCO81540 | Outer Joint | | 29 | 35 | 56 | 102.5 | 59 | I |
| | 2007.02-2013.12 | MT | F | L | SUV FWD MR20DE | | GCI41166 | Inner Joint | | 26 | 33 | 40 | 64 | 123 | |
| | 2007.02-2013.12 | MT/CVT | F | L/R | SUV FWD MR20DE | 6 balls | GCO41214 | Outer Joint | | 29 | 35 | 56.1 | 102 | 59 | I |
| | 2013.03-2014.04 | 6MT | F | L | SUV Van 4WD MR20DE | | GDS82512 | Drive Shaft | | 29 | 29 | 56 | 102.5 | 620 | |
| | 2013.03-2014.04 | 6MT | F | R | SUV Van 4WD MR20DE | | GDS41461 | Drive Shaft | | 29 | 29 | 56.1 | 102 | 1002 | |
| | 2013.03-2014.04 | 6MT | F | L | SUV Van 4WD MR20DE | | GCI41205 | Inner Joint | | 29 | 33 | 39 | 65.5 | 122 | |
| | 2013.03-2014.04 | CVT | F | L | SUV Van 4WD MR20DE | | GDS41542 | Drive Shaft | | 29 | 27 | 56.1 | 102 | 690 | |
| | 2013.03-2014.04 | CVT | F | R | SUV Van 4WD MR20DE | | GDS81220 | Drive Shaft | | 29 | 27 | 56.1 | 102 | 942 | |
| | 2013.03-2014.04 | CVT | F | L/R | SUV Van 4WD MR20DE | | GCO81540 | Outer Joint | | 29 | 35 | 56 | 102.5 | 59 | I |
| | 2013.03-2014.04 | CVT | F | L | SUV Van 4WD MR20DE | | GCI41181 | Inner Joint | | 27 | 33 | 40 | 107 | 118 | |
| | 2013.03-2014.04 | CVT | F | R | SUV Van 4WD MR20DE | | GCI41170 | Inner Joint | | 27 | 33 | 33 | 367 | 109.5 | |
| | 2013.03-2014.04 | CVT/6MT | F | L/R | SUV Van 4WD MR20DE | | GCO41214 | Outer Joint | | 29 | 35 | 56.1 | 102 | 59 | I |
| | 2013.03-2014.04 | CVT/6MT | R | L/R | SUV Van 4WD MR20DE | | GDS41538 | Drive Shaft | 48T | 25 | 21 | 56 | 110.5 | 801 | |
| | 2013.03-2014.04 | CVT/6MT | R | L/R | SUV Van 4WD MR20DE | | GCO41285 | Outer Joint | 48T | 25 | 24 | 56 | 110.5 | 38.5 | I |
| | 2013.03-2014.04 | CVT/6MT | R | L/R | SUV Van 4WD MR20DE | | GCI57111 | Inner Joint | | 21 | 24 | 38 | 61 | 91 | |
| | 2013.03-2014.04 | 6MT | F | L | SUV Van FWD MR20DE | | GCI41166 | Inner Joint | | 26 | 33 | 40 | 64 | 123 | |
| | 2013.03-2014.04 | CVT | F | L | SUV Van FWD MR20DE | | GDS41400 | Drive Shaft | | 29 | 27 | 56.1 | 102 | 689 | |
| | 2013.03-2014.04 | CVT | F | R | SUV Van FWD MR20DE | | GDS41478 | Drive Shaft | | 29 | 27 | 56 | 102.5 | 943 | |
| | 2013.03-2014.04 | CVT | F | R | SUV Van FWD MR20DE | | GCO41402 | Outer Joint | | 29 | 35 | 56 | 102.5 | 59 | I |
| | 2013.03-2014.04 | CVT | F | L | SUV Van FWD MR20DE | | GCI41168 | Inner Joint | | 27 | 33 | 40 | 62.5 | 118 | |
| | 2013.03-2014.04 | CVT | F | R | SUV Van FWD MR20DE | | GCI41167 | Inner Joint | | 27 | 33 | 33 | 322 | 109.5 | |
| | 2013.03-2014.04 | CVT/6MT | F | R | SUV Van FWD MR20DE | | GCO41214 | Outer Joint | | 29 | 35 | 56.1 | 102 | 59 | I |
| | 2013.03-2014.04 | CVT/MT | F | L | SUV Van FWD MR20DE | | GDS81760 | Drive Shaft | | 29 | 26 | 56 | 102.5 | 684 | |
| | 2013.03-2014.04 | CVT/MT | F | R | SUV Van FWD MR20DE | | GDS81419 | Drive Shaft | | 29 | 26 | 56.1 | 102 | 949 | |
| | 2013.03-2014.04 | MT | F | L | SUV Van FWD MR20DE | | GCO81540 | Outer Joint | | 29 | 35 | 56 | 102.5 | 59 | I |
| 2.0 (106 kw) | 2013.12-2021.04 | CVT | F | L/R | SUV 4WD MR20DD | Model code:J11E | GCO81520 | Outer Joint | | 29 | 26 | 62 | 102.5 | 60 | I |
| | 2013.12-2021.04 | CVT | F | L | SUV 4WD MR20DD | For Modelcode:J11E | GCI41199 | Inner Joint | | 27 | 26 | 40 | 62.5 | 107 | |
| | 2013.12-2021.04 | CVT | R | L/R | SUV 4WD MR20DD | Model code:J11E | GDS41538 | Drive Shaft | 48T | 25 | 21 | 56 | 110.5 | 801 | |
| | 2013.12-2021.04 | CVT | R | L/R | SUV 4WD MR20DD | Model code:J11R | GDS82990 | Drive Shaft | 48T | 25 | 21 | 56 | 110.5 | 818 | |
| | 2013.12-2021.04 | CVT | R | L/R | SUV 4WD MR20DD | | GCO41285 | Outer Joint | 48T | 25 | 24 | 56 | 110.5 | 38.5 | I |
| | 2013.12-2021.04 | CVT | R | L/R | SUV 4WD MR20DD | | GCI57111 | Inner Joint | | 21 | 24 | 38 | 61 | 91 | |
| | 2014.06-2021.04 | CVT | F | L | SUV FWD MR20DD | For Modelcode:J11E | GCO81520 | Outer Joint | | 29 | 26 | 62 | 102.5 | 60 | I |
| | 2014.06-2021.04 | CVT | F | L | SUV FWD MR20DD | For Modelcode:J11E | GCI41199 | Inner Joint | | 27 | 26 | 40 | 62.5 | 107 | |
| 2.0 (110 kw) | 2007.02-2013.12 | AT | F | L | SUV 4WD M9R, M1D | | GDS41365 | Drive Shaft | | 29 | 30 | 56 | 102 | 650 | |
| | 2007.02-2013.12 | AT | F | R | SUV 4WD M9R, M1D | | GDS41475 | Drive Shaft | | 29 | 30 | 56 | 102 | 971 | |
| | 2007.02-2013.12 | AT | F | L | SUV 4WD M9R, M1D | | GCI41135 | Inner Joint | | 30 | 29 | 34 | 76 | 97 | |
| | 2007.02-2013.12 | AT/MT | F | L/R | SUV 4WD M9R, M1D | | GCO41249 | Outer Joint | | 29 | 36 | 56 | 102 | 72 | I |
| | 2007.02-2013.12 | MT | F | L | SUV 4WD M9R, M1D | | GDS41481 | Drive Shaft | | 29 | 29 | 56 | 102 | 615 | |
| | 2007.02-2013.12 | MT | F | R | SUV 4WD M9R, M1D | DOJ | GDS41441 | Drive Shaft | | 29 | 29 | 56 | 102 | 1009 | |
| | 2007.02-2013.12 | MT | F | R | SUV 4WD M9R, M1D | TJ | GDS41482 | Drive Shaft | | 29 | 29 | 56 | 102 | 1009 | |
| | 2007.02-2013.12 | MT | F | L | SUV 4WD M9R, M1D | | GCI41076 | Inner Joint | | 29 | 29 | 39 | 65.5 | 116 | |
| | 2007.02-2013.12 | MT | F | R | SUV 4WD M9R, M1D | DOJ | GCI41131 | Inner Joint | | 29 | 29 | 33 | 481 | 100 | |
| | 2007.02-2013.12 | MT | F | R | SUV 4WD M9R, M1D | TJ | GCI81064 | Inner Joint | | 29 | 29 | 33 | 482.5 | 99.5 | |
| | 2007.02-2013.12 | AT/MT | R | L/R | SUV 4WD M9R, M1D | | GDS41538 | Drive Shaft | 48T | 25 | 21 | 56 | 110.5 | 801 | |
| | 2007.02-2013.12 | AT/MT | R | L/R | SUV 4WD M9R, M1D | | GCO41285 | Outer Joint | 48T | 25 | 24 | 56 | 110.5 | 38.5 | I |
| | 2007.02-2013.12 | AT/MT | R | L/R | SUV 4WD M9R, M1D | | GCI57111 | Inner Joint | | 21 | 24 | 38 | 61 | 91 | |
| | 2007.02-2013.12 | 6MT | F | L | SUV FWD M9R, M1D | AAR | GDS41577 | Drive Shaft | | 29 | 29 | 56 | 102 | 650 | |
| | 2007.02-2013.12 | 6MT | F | R | SUV FWD M9R, M1D | | GDS41299 | Drive Shaft | | 29 | 29 | 56 | 102 | 979 | |
| | 2007.02-2013.12 | 6MT | F | L | SUV FWD M9R, M1D | | GCO41249 | Outer Joint | | 29 | 36 | 56 | 102 | 72 | I |
| | 2007.02-2013.12 | 6MT | F | L | SUV FWD M9R, M1D | | GCI41076 | Inner Joint | | 29 | 29 | 39 | 65.5 | 116 | |
| | 2007.02-2013.12 | 6MT | F | L | SUV FWD M9R, M1D | AAR | GCI41192 | Inner Joint | | 29 | 29 | 39 | 65.5 | 116 | |
| | 2007.02-2013.12 | AT/MT | F | L | SUV FWD M9R, M1D | TJ | GDS41286 | Drive Shaft | | 29 | 29 | 56 | 102 | 649 | |
| | 2013.03-2014.04 | 6AT | F | L/R | SUV Van 4WD M9R | | GCO41249 | Outer Joint | | 29 | 36 | 56 | 102 | 72 | I |
| | 2013.03-2014.04 | 6AT | F | L | SUV Van 4WD M9R | | GCI41135 | Inner Joint | | 30 | 29 | 34 | 76 | 97 | |
| | 2013.03-2014.04 | AT | F | L | SUV Van 4WD M9R | | GDS41365 | Drive Shaft | | 29 | 30 | 56 | 102 | 650 | |
| | 2013.03-2014.04 | AT | F | R | SUV Van 4WD M9R | | GDS41475 | Drive Shaft | | 29 | 30 | 56 | 102 | 971 | |
| | 2013.03-2014.04 | MT | F | L | SUV Van 4WD M9R | | GDS41481 | Drive Shaft | | 29 | 29 | 56 | 102 | 615 | |
| | 2013.03-2014.04 | MT | F | R | SUV Van 4WD M9R | | GDS41441 | Drive Shaft | | 29 | 29 | 56 | 102 | 1009 | |
| | 2013.03-2014.04 | MT | F | L | SUV Van 4WD M9R | | GCI41076 | Inner Joint | | 29 | 29 | 39 | 65.5 | 116 | |
| | 2013.03-2014.04 | 6AT | R | L/R | SUV Van 4WD M9R | | GDS41538 | Drive Shaft | 48T | 25 | 21 | 56 | 110.5 | 801 | |
| | 2013.03-2014.04 | 6AT | R | L/R | SUV Van 4WD M9R | | GCO41285 | Outer Joint | 48T | 25 | 24 | 56 | 110.5 | 38.5 | I |
| | 2013.03-2014.04 | 6AT | R | L/R | SUV Van 4WD M9R | | GCI57111 | Inner Joint | | 21 | 24 | 38 | 61 | 91 | |

| | YEAR | TRANSM. | F/R | L/R | BODY STYLE & DRIVE TYPE & ENGINE | REMARKS | G-AP Ref. | PRODUCT | ABS | Technical Specifications A | B | C | H | L | P |
|---|---|---|---|---|---|---|---|---|---|---|---|---|---|---|---|
| **NISSAN** | | | | | | | | | | | | | | | |
| **Qashqai +2** | | | | | | | | | | | | | | | |
| 1.5 (81 kw) | 2013.03-2013.11 | | F | L | SUV Van FWD K9K | | GDS41329 | Drive Shaft | | 29 | 26 | 56.1 | 102 | 692 | |
| | 2013.03-2013.11 | | F | R | SUV Van FWD K9K | | GDS41330 | Drive Shaft | | 29 | 26 | 56.1 | 102 | 941 | |
| | 2013.03-2013.11 | | F | L/R | SUV Van FWD K9K | | GCO41214 | Outer Joint | | 29 | 35 | 56.1 | 102 | 59 | I |
| | 2013.03-2013.11 | | F | L | SUV Van FWD K9K | | GCI41091 | Inner Joint | | 26 | 35 | 40 | 64 | 125 | |
| 1.6 (86 kw) | 2013.03-2013.11 | | F | L | SUV Van FWD HR16DE | | GDS41300 | Drive Shaft | | 29 | 26 | 56 | 102 | 691 | |
| | 2013.03-2013.11 | | F | R | SUV Van FWD HR16DE | | GDS41301 | Drive Shaft | | 29 | 26 | 56 | 102 | 940 | |
| | 2013.03-2013.11 | | F | L/R | SUV Van FWD HR16DE | | GCO41286 | Outer Joint | | 29 | 33 | 56 | 102 | 57.5 | I |
| | 2013.03-2013.11 | | F | L | SUV Van FWD HR16DE | | GCI41103 | Inner Joint | | 26 | 30 | 40 | 64 | 113 | |
| 1.6 (96 kw) | 2013.03-2013.11 | 6MT | F | L | SUV Van 4WD R9M | | GCI41076 | Inner Joint | | 29 | 29 | 39 | 65.5 | 116 | |
| | 2013.03-2013.11 | 6MT | F | R | SUV Van 4WD R9M | | GCI41131 | Inner Joint | | 29 | 29 | 33 | 481 | 100 | |
| | 2013.03-2013.11 | | F | L | SUV Van 4WD R9M | | GDS41481 | Drive Shaft | | 29 | 29 | 56 | 102 | 615 | |
| | 2013.03-2013.11 | | F | R | SUV Van 4WD R9M | | GDS41441 | Drive Shaft | | 29 | 29 | 56 | 102 | 1009 | |
| | 2013.03-2013.11 | | F | L/R | SUV Van 4WD R9M | | GCO41249 | Outer Joint | | 29 | 36 | 56 | 102 | 72 | I |
| | 2013.03-2013.11 | 6MT | R | L/R | SUV Van 4WD R9M | | GCI57111 | Inner Joint | | 21 | 24 | 38 | 61 | 91 | |
| | 2013.03-2013.11 | | R | L/R | SUV Van 4WD R9M | | GDS41538 | Drive Shaft | 48T | 25 | 21 | 56 | 110.5 | 801 | |
| | 2013.03-2013.11 | | R | L/R | SUV Van 4WD R9M | | GCO41285 | Outer Joint | 48T | 25 | 24 | 56 | 110.5 | 38.5 | I |
| | 2013.03-2013.11 | | F | L | SUV Van FWD R9M | TJ | GDS41286 | Drive Shaft | | 29 | 29 | 56 | 102 | 649 | |
| | 2013.03-2013.11 | | F | L | SUV Van FWD R9M | AAR | GDS41577 | Drive Shaft | | 29 | 29 | 56 | 102 | 650 | |
| | 2013.03-2013.11 | | F | R | SUV Van FWD R9M | | GDS41299 | Drive Shaft | | 29 | 29 | 56 | 102 | 979 | |
| | 2013.03-2013.11 | | F | L/R | SUV Van FWD R9M | | GCO41249 | Outer Joint | | 29 | 36 | 56 | 102 | 72 | I |
| | 2013.03-2013.11 | | F | L | SUV Van FWD R9M | | GCI41076 | Inner Joint | | 29 | 29 | 39 | 65.5 | 116 | |
| 2.0 (103 kw) | 2010.01-2014.07 | 6MT | F | L | SUV 4WD MR20DE | | GDS82512 | Drive Shaft | | 29 | 29 | 56 | 102.5 | 620 | |
| | 2010.01-2014.07 | 6MT | F | L | SUV 4WD MR20DE | | GCI41205 | Inner Joint | | 29 | 33 | 39 | 65.5 | 122 | |
| | 2010.01-2014.07 | 6MT/CVT | F | L/R | SUV 4WD MR20DE | | GCO41214 | Outer Joint | | 29 | 35 | 56.1 | 102 | 59 | I |
| | 2010.01-2014.07 | CVT | F | R | SUV 4WD MR20DE | | GDS81220 | Drive Shaft | | 29 | 27 | 56.1 | 102 | 942 | |
| | 2010.01-2014.07 | CVT | F | L | SUV 4WD MR20DE | | GCI41181 | Inner Joint | | 27 | 33 | 40 | 107 | 118 | |
| | 2010.01-2014.07 | CVT | F | R | SUV 4WD MR20DE | | GCI41170 | Inner Joint | | 27 | 33 | 33 | 367 | 109.5 | |
| | 2010.01-2014.07 | 6MT/CVT | R | L/R | SUV 4WD MR20DE | | GCI57111 | Inner Joint | | 21 | 24 | 38 | 61 | 91 | |
| | 2010.01-2014.07 | CVT/6MT | R | L/R | SUV 4WD MR20DE | | GCO41285 | Outer Joint | 48T | 25 | 24 | 56 | 110.5 | 38.5 | I |
| 2.0 (104 kw) | 2008.08-2014.04 | 6MT | F | L | SUV Van 4WD MR20DE | | GDS82512 | Drive Shaft | | 29 | 29 | 56 | 102.5 | 620 | |
| | 2008.08-2014.04 | 6MT | F | L | SUV Van 4WD MR20DE | | GCI41205 | Inner Joint | | 29 | 33 | 39 | 65.5 | 122 | |
| | 2008.08-2014.04 | 6MT/CVT | F | L/R | SUV Van 4WD MR20DE | | GCO41214 | Outer Joint | | 29 | 35 | 56.1 | 102 | 59 | I |
| | 2008.08-2014.04 | CVT | F | R | SUV Van 4WD MR20DE | | GDS81220 | Drive Shaft | | 29 | 27 | 56.1 | 102 | 942 | |
| | 2008.08-2014.04 | CVT | F | L | SUV Van 4WD MR20DE | | GCI41181 | Inner Joint | | 27 | 33 | 40 | 107 | 118 | |
| | 2008.08-2014.04 | CVT | F | R | SUV Van 4WD MR20DE | | GCI41170 | Inner Joint | | 27 | 33 | 33 | 367 | 109.5 | |
| | 2008.08-2014.04 | 6MT/CVT | R | L/R | SUV Van 4WD MR20DE | | GCI57111 | Inner Joint | | 21 | 24 | 38 | 61 | 91 | |
| | 2008.08-2014.04 | CVT/6MT | R | L/R | SUV Van 4WD MR20DE | | GCO41285 | Outer Joint | 48T | 25 | 24 | 56 | 110.5 | 38.5 | I |
| | 2013.03-2013.11 | 6MT | F | L | SUV Van FWD MR20DE | | GDS81760 | Drive Shaft | | 29 | 26 | 56 | 102.5 | 684 | |
| | 2013.03-2013.11 | 6MT | F | R | SUV Van FWD MR20DE | | GDS81419 | Drive Shaft | | 29 | 26 | 56.1 | 102 | 949 | |
| | 2013.03-2013.11 | | F | L/R | SUV Van FWD MR20DE | | GCO41214 | Outer Joint | | 29 | 35 | 56.1 | 102 | 59 | I |
| | 2013.03-2013.11 | | F | L | SUV Van FWD MR20DE | | GCI41166 | Inner Joint | | 26 | 33 | 40 | 64 | 123 | |
| 2.0 (110 kw) | 2013.03-2013.11 | 6AT | F | L | SUV Van 4WD M9R | | GDS41365 | Drive Shaft | | 29 | 30 | 56 | 102 | 650 | |
| | 2013.03-2013.11 | 6AT | F | R | SUV Van 4WD M9R | | GDS41475 | Drive Shaft | | 29 | 30 | 56 | 102 | 971 | |
| | 2013.03-2013.11 | 6AT | F | L | SUV Van 4WD M9R | | GCI41135 | Inner Joint | | 30 | 29 | 34 | 76 | 97 | |
| | 2013.03-2013.11 | | F | L/R | SUV Van 4WD M9R | | GCO41249 | Outer Joint | | 29 | 36 | 56 | 102 | 72 | I |
| | 2013.03-2013.11 | 6AT | R | L/R | SUV Van 4WD M9R | | GDS41538 | Drive Shaft | 48T | 25 | 21 | 56 | 110.5 | 801 | |
| | 2013.03-2013.11 | 6AT/6MT | R | L/R | SUV Van 4WD M9R | | GCI57111 | Inner Joint | | 21 | 24 | 38 | 61 | 91 | |
| | 2013.03-2013.11 | | R | L/R | SUV Van 4WD M9R | | GCO41285 | Outer Joint | 48T | 25 | 24 | 56 | 110.5 | 38.5 | I |
| **Qashqai +2/Dualis** | | | | | | | | | | | | | | | |
| 1.5 (76 kw) | 2008.08-2010.01 | | F | L | SUV FWD K9K 282, K9K 292 | | GDS41329 | Drive Shaft | | 29 | 26 | 56.1 | 102 | 692 | |
| | 2008.08-2010.01 | | F | R | SUV FWD K9K 282, K9K 292 | | GDS41330 | Drive Shaft | | 29 | 26 | 56.1 | 102 | 941 | |
| | 2008.08-2010.01 | | F | L/R | SUV FWD K9K 282, K9K 292 | | GCO41214 | Outer Joint | | 29 | 35 | 56.1 | 102 | 59 | I |
| | 2008.08-2010.01 | | F | L | SUV FWD K9K 282, K9K 292 | | GCI41091 | Inner Joint | | 26 | 35 | 40 | 64 | 125 | |
| 1.5 (78 kw) | 2008.08-2013.11 | | F | L | SUV FWD K9K 282, K9K 292 | | GDS41329 | Drive Shaft | | 29 | 26 | 56.1 | 102 | 692 | |
| | 2008.08-2013.11 | | F | R | SUV FWD K9K 282, K9K 292 | | GDS41330 | Drive Shaft | | 29 | 26 | 56.1 | 102 | 941 | |
| | 2008.08-2013.11 | | F | L/R | SUV FWD K9K 282, K9K 292 | | GCO41214 | Outer Joint | | 29 | 35 | 56.1 | 102 | 59 | I |
| | 2008.08-2013.11 | | F | L | SUV FWD K9K 282, K9K 292 | | GCI41091 | Inner Joint | | 26 | 35 | 40 | 64 | 125 | |
| 1.5 (81 kw) | 2010.02-2013.11 | | F | L | SUV FWD K9K 430 | | GDS41329 | Drive Shaft | | 29 | 26 | 56.1 | 102 | 692 | |
| | 2010.02-2013.11 | | F | R | SUV FWD K9K 430 | | GDS41330 | Drive Shaft | | 29 | 26 | 56.1 | 102 | 941 | |
| | 2010.02-2013.11 | | F | L/R | SUV FWD K9K 430 | | GCO41214 | Outer Joint | | 29 | 35 | 56.1 | 102 | 59 | I |
| | 2010.02-2013.11 | | F | L | SUV FWD K9K 430 | | GCI41091 | Inner Joint | | 26 | 35 | 40 | 64 | 125 | |
| 1.6 (84 kw) | 2007.02-2013.12 | | F | L | SUV FWD HR16DE | | GDS41300 | Drive Shaft | | 29 | 26 | 56 | 102 | 691 | |
| | 2007.02-2013.12 | | F | R | SUV FWD HR16DE | | GDS41301 | Drive Shaft | | 29 | 26 | 56 | 102 | 940 | |
| | 2007.02-2013.12 | | F | L/R | SUV FWD HR16DE | | GCO41286 | Outer Joint | | 29 | 33 | 56 | 102 | 57.5 | I |
| | 2007.02-2013.12 | | F | L | SUV FWD HR16DE | | GCI41103 | Inner Joint | | 26 | 30 | 40 | 64 | 113 | |

| | YEAR | TRANSM. | F/R | L/R | BODY STYLE & DRIVE TYPE & ENGINE | REMARKS | G-AP Ref. | PRODUCT | ABS | Technical Specifications A | B | C | H | L | P |
|---|---|---|---|---|---|---|---|---|---|---|---|---|---|---|---|
| **NISSAN** | | | | | | | | | | | | | | | |
| **Qashqai +2/Dualis** | | | | | | | | | | | | | | | |
| 1.6 (86 kw) | 2010.02-2013.11 | | F | L | SUV FWD HR16DE | | GDS41300 | Drive Shaft | | 29 | 26 | 56 | 102 | 691 | |
| | 2010.02-2013.11 | | F | R | SUV FWD HR16DE | | GDS41301 | Drive Shaft | | 29 | 26 | 56 | 102 | 940 | |
| | 2010.02-2013.11 | | F | L/R | SUV FWD HR16DE | | GCO41286 | Outer Joint | | 29 | 33 | 56 | 102 | 57.5 | I |
| | 2010.02-2013.11 | | F | L | SUV FWD HR16DE | | GCI41103 | Inner Joint | | 26 | 30 | 40 | 64 | 113 | |
| 1.6 (96 kw) | 2011.07-2013.11 | 6MT | F | L | SUV 4WD R9M | | GCI41076 | Inner Joint | | 29 | 29 | 39 | 65.5 | 116 | |
| | 2011.07-2013.11 | 6MT | F | R | SUV 4WD R9M | | GCI41131 | Inner Joint | | 29 | 29 | 33 | 481 | 100 | |
| | 2011.07-2013.11 | | F | L | SUV 4WD R9M | | GDS41481 | Drive Shaft | | 29 | 29 | 56 | 102 | 615 | |
| | 2011.07-2013.11 | | F | R | SUV 4WD R9M | | GDS41441 | Drive Shaft | | 29 | 29 | 56 | 102 | 1009 | |
| | 2011.07-2013.11 | | F | L/R | SUV 4WD R9M | | GCO41249 | Outer Joint | | 29 | 36 | 56 | 102 | 72 | I |
| | 2011.07-2013.11 | 6MT | R | L/R | SUV 4WD R9M | | GCI57111 | Inner Joint | | 21 | 24 | 38 | 61 | 91 | |
| | 2011.07-2013.11 | | R | L/R | SUV 4WD R9M | | GDS41538 | Drive Shaft | 48T | 25 | 21 | 56 | 110.5 | 801 | |
| | 2011.07-2013.11 | | R | L/R | SUV 4WD R9M | | GCO41285 | Outer Joint | 48T | 25 | 24 | 56 | 110.5 | 38.5 | I |
| | 2011.07-2013.11 | | F | L | SUV FWD R9M | TJ | GDS41286 | Drive Shaft | | 29 | 29 | 56 | 102 | 649 | |
| | 2011.07-2013.11 | | F | L | SUV FWD R9M | AAR | GDS41577 | Drive Shaft | | 29 | 29 | 56 | 102 | 650 | |
| | 2011.07-2013.11 | | F | R | SUV FWD R9M | | GDS41299 | Drive Shaft | | 29 | 29 | 56 | 102 | 979 | |
| | 2011.07-2013.11 | | F | L/R | SUV FWD R9M | | GCO41249 | Outer Joint | | 29 | 36 | 56 | 102 | 72 | I |
| | 2011.07-2013.11 | | F | L | SUV FWD R9M | | GCI41076 | Inner Joint | | 29 | 29 | 39 | 65.5 | 116 | |
| 2.0 (102 kw) | 2007.02-2013.12 | 6MT | F | L | SUV FWD MR20DE | | GDS81760 | Drive Shaft | | 29 | 26 | 56 | 102.5 | 684 | |
| | 2007.02-2013.12 | 6MT | F | R | SUV FWD MR20DE | | GDS81419 | Drive Shaft | | 29 | 26 | 56.1 | 102 | 949 | |
| | 2007.02-2013.12 | | F | L/R | SUV FWD MR20DE | | GCO41214 | Outer Joint | | 29 | 35 | 56.1 | 102 | 59 | I |
| | 2007.02-2013.12 | | F | L | SUV FWD MR20DE | | GCI41166 | Inner Joint | | 26 | 33 | 40 | 64 | 123 | |
| 2.0 (103 kw) | 2010.01-2014.07 | 6MT | F | L | SUV FWD MR20DE | | GDS81760 | Drive Shaft | | 29 | 26 | 56 | 102.5 | 684 | |
| | 2010.01-2014.07 | 6MT | F | R | SUV FWD MR20DE | | GDS81419 | Drive Shaft | | 29 | 26 | 56.1 | 102 | 949 | |
| | 2010.01-2014.07 | | F | L/R | SUV FWD MR20DE | | GCO41214 | Outer Joint | | 29 | 35 | 56.1 | 102 | 59 | I |
| | 2010.01-2014.07 | | F | L | SUV FWD MR20DE | | GCI41166 | Inner Joint | | 26 | 33 | 40 | 64 | 123 | |
| 2.0 (104 kw) | 2008.08-2014.04 | 6MT | F | L | SUV 4WD MR20DE | | GDS82512 | Drive Shaft | | 29 | 29 | 56 | 102.5 | 620 | |
| | 2008.08-2014.04 | 6MT | F | R | SUV 4WD MR20DE | | GDS41461 | Drive Shaft | | 29 | 29 | 56.1 | 102 | 1002 | |
| | 2008.08-2014.04 | 6MT | F | L | SUV 4WD MR20DE | | GCI41205 | Inner Joint | | 29 | 33 | 39 | 65.5 | 122 | |
| | 2008.08-2014.04 | 6MT/CVT | F | L/R | SUV 4WD MR20DE | | GCO41214 | Outer Joint | | 29 | 35 | 56.1 | 102 | 59 | I |
| | 2008.08-2014.04 | CVT | F | L | SUV 4WD MR20DE | | GDS41542 | Drive Shaft | | 29 | 27 | 56.1 | 102 | 690 | |
| | 2008.08-2014.04 | CVT | F | R | SUV 4WD MR20DE | | GDS81220 | Drive Shaft | | 29 | 27 | 56.1 | 102 | 942 | |
| | 2008.08-2014.04 | CVT | F | L | SUV 4WD MR20DE | | GCI41181 | Inner Joint | | 27 | 33 | 40 | 107 | 118 | |
| | 2008.08-2014.04 | CVT | F | R | SUV 4WD MR20DE | | GCI41170 | Inner Joint | | 27 | 33 | 33 | 367 | 109.5 | |
| | 2008.08-2014.04 | 6MT/CVT | R | L/R | SUV 4WD MR20DE | | GCI57111 | Inner Joint | | 21 | 24 | 38 | 61 | 91 | |
| | 2008.08-2014.04 | AT/MT | R | L/R | SUV 4WD MR20DE | | GDS41538 | Drive Shaft | 48T | 25 | 21 | 56 | 110.5 | 801 | |
| | 2008.08-2014.04 | AT/MT | R | L/R | SUV 4WD MR20DE | | GCO41285 | Outer Joint | 48T | 25 | 24 | 56 | 110.5 | 38.5 | I |
| | 2008.08-2014.04 | 6MT | F | L | SUV FWD MR20DE | | GDS81760 | Drive Shaft | | 29 | 26 | 56 | 102.5 | 684 | |
| | 2008.08-2014.04 | 6MT | F | R | SUV FWD MR20DE | | GDS81419 | Drive Shaft | | 29 | 26 | 56.1 | 102 | 949 | |
| | 2008.08-2014.04 | | F | L/R | SUV FWD MR20DE | | GCO41214 | Outer Joint | | 29 | 35 | 56.1 | 102 | 59 | I |
| | 2008.08-2014.04 | | F | L | SUV FWD MR20DE | | GCI41166 | Inner Joint | | 26 | 33 | 40 | 64 | 123 | |
| 2.0 (110 kw) | 2008.08-2013.11 | 6AT | F | L | SUV 4WD M9R | | GDS41365 | Drive Shaft | | 29 | 30 | 56 | 102 | 650 | |
| | 2008.08-2013.11 | 6AT | F | R | SUV 4WD M9R | | GDS41475 | Drive Shaft | | 29 | 30 | 56 | 102 | 971 | |
| | 2008.08-2013.11 | 6AT | F | L | SUV 4WD M9R | | GCI41135 | Inner Joint | | 30 | 29 | 34 | 76 | 97 | |
| | 2008.08-2013.11 | 6MT | F | L | SUV 4WD M9R | | GDS41481 | Drive Shaft | | 29 | 29 | 56 | 102 | 615 | |
| | 2008.08-2013.11 | 6MT | F | R | SUV 4WD M9R | | GDS41441 | Drive Shaft | | 29 | 29 | 56 | 102 | 1009 | |
| | 2008.08-2013.11 | 6MT | F | L | SUV 4WD M9R | | GCI41076 | Inner Joint | | 29 | 29 | 39 | 65.5 | 116 | |
| | 2008.08-2013.11 | 6MT | F | R | SUV 4WD M9R | | GCI41131 | Inner Joint | | 29 | 29 | 33 | 481 | 100 | |
| | 2008.08-2013.11 | | F | L/R | SUV 4WD M9R | | GCO41249 | Outer Joint | | 29 | 36 | 56 | 102 | 72 | I |
| | 2008.08-2013.11 | 6AT/6MT | R | L/R | SUV 4WD M9R | | GDS41538 | Drive Shaft | 48T | 25 | 21 | 56 | 110.5 | 801 | |
| | 2008.08-2013.11 | 6AT/6MT | R | L/R | SUV 4WD M9R | | GCI57111 | Inner Joint | | 21 | 24 | 38 | 61 | 91 | |
| | 2008.08-2013.11 | | R | L/R | SUV 4WD M9R | | GCO41285 | Outer Joint | 48T | 25 | 24 | 56 | 110.5 | 38.5 | I |
| | 2008.08-2013.11 | | F | L | SUV FWD M9R | TJ | GDS41286 | Drive Shaft | | 29 | 29 | 56 | 102 | 649 | |
| | 2008.08-2013.11 | | F | L | SUV FWD M9R | AAR | GDS41577 | Drive Shaft | | 29 | 29 | 56 | 102 | 650 | |
| | 2008.08-2013.11 | | F | R | SUV FWD M9R | | GDS41299 | Drive Shaft | | 29 | 29 | 56 | 102 | 979 | |
| | 2008.08-2013.11 | | F | L/R | SUV FWD M9R | | GCO41249 | Outer Joint | | 29 | 36 | 56 | 102 | 72 | I |
| | 2008.08-2013.11 | | F | L | SUV FWD M9R | | GCI41076 | Inner Joint | | 29 | 29 | 39 | 65.5 | 116 | |
| **Qashqai+2** | | | | | | | | | | | | | | | |
| 2.0 (103 kw) | 2010.01-2014.04 | AT/CVT | F | L | SUV 4WD MR20DE | | GDS41542 | Drive Shaft | | 29 | 27 | 56.1 | 102 | 690 | |
| | 2010.01-2014.04 | AT/CVT | F | R | SUV 4WD MR20DE | | GDS81220 | Drive Shaft | | 29 | 27 | 56.1 | 102 | 942 | |
| | 2010.01-2014.04 | CVT | F | L | SUV 4WD MR20DE | | GCO41214 | Outer Joint | | 29 | 35 | 56.1 | 102 | 59 | I |
| | 2010.01-2014.04 | CVT | F | L | SUV 4WD MR20DE | | GCI41108 | Inner Joint | | 27 | 33 | 40 | 107 | 114 | |
| | 2010.01-2014.04 | CVT | F | L | SUV 4WD MR20DE | | GCI41181 | Inner Joint | | 27 | 33 | 40 | 107 | 118 | |
| | 2010.01-2014.04 | CVT | F | R | SUV 4WD MR20DE | | GCI41170 | Inner Joint | | 27 | 33 | 33 | 367 | 109.5 | |
| | 2010.01-2014.04 | MT | F | L | SUV 4WD MR20DE | | GDS82512 | Drive Shaft | | 29 | 29 | 56 | 102.5 | 620 | |
| | 2010.01-2014.04 | MT | F | R | SUV 4WD MR20DE | | GDS41461 | Drive Shaft | | 29 | 29 | 56.1 | 102 | 1002 | |

| | YEAR | TRANSM. | F/R | L/R | BODY STYLE & DRIVE TYPE & ENGINE | REMARKS | G-AP Ref. | PRODUCT | ABS | Technical Specifications A | B | C | H | L | P |
|---|---|---|---|---|---|---|---|---|---|---|---|---|---|---|---|
| **NISSAN** | | | | | | | | | | | | | | | |
| **Qashqai+2** | | | | | | | | | | | | | | | |
| 2.0 (103 kw) | 2010.01-2014.04 | MT | F | L/R | SUV 4WD MR20DE | | GCO41214 | Outer Joint | | 29 | 35 | 56.1 | 102 | 59 | I |
| | 2010.01-2014.04 | MT | F | L | SUV 4WD MR20DE | | GCI41205 | Inner Joint | | 29 | 33 | 39 | 65.5 | 122 | |
| | 2010.01-2014.04 | MT/CVT | R | L/R | SUV 4WD MR20DE | | GDS41538 | Drive Shaft | 48T | 25 | 21 | 56 | 110.5 | 801 | |
| | 2010.01-2014.04 | MT/CVT | R | L/R | SUV 4WD MR20DE | | GCI57111 | Inner Joint | | 21 | 24 | 38 | 61 | 91 | |
| | 2010.01-2014.04 | | R | L/R | SUV 4WD MR20DE | | GCO41285 | Outer Joint | 48T | 25 | 24 | 56 | 110.5 | 38.5 | I |
| | 2010.01-2014.04 | 6MT | F | L | SUV FWD MR20DE | | GCI41166 | Inner Joint | | 26 | 33 | 40 | 64 | 123 | |
| | 2010.01-2014.04 | CVT | F | L | SUV FWD MR20DE | | GDS41400 | Drive Shaft | | 29 | 27 | 56.1 | 102 | 689 | |
| | 2010.01-2014.04 | CVT | F | R | SUV FWD MR20DE | | GDS41478 | Drive Shaft | | 29 | 27 | 56 | 102.5 | 943 | |
| | 2010.01-2014.04 | CVT | F | R | SUV FWD MR20DE | | GCO41402 | Outer Joint | | 29 | 35 | 56 | 102.5 | 59 | I |
| | 2010.01-2014.04 | CVT | F | L | SUV FWD MR20DE | | GCI41168 | Inner Joint | | 27 | 33 | 40 | 62.5 | 118 | |
| | 2010.01-2014.04 | CVT | F | R | SUV FWD MR20DE | | GCI41167 | Inner Joint | | 27 | 33 | 33 | 322 | 109.5 | |
| | 2010.01-2014.04 | MT | F | L | SUV FWD MR20DE | | GDS81760 | Drive Shaft | | 29 | 26 | 56 | 102.5 | 684 | |
| | 2010.01-2014.04 | MT | F | R | SUV FWD MR20DE | | GDS81419 | Drive Shaft | | 29 | 26 | 56.1 | 102 | 949 | |
| | 2010.01-2014.04 | MT | F | L | SUV FWD MR20DE | Date From:2010.02,6 balls | GCO41214 | Outer Joint | | 29 | 35 | 56.1 | 102 | 59 | I |
| | 2010.01-2014.04 | MT | F | L | SUV FWD MR20DE | Date From:2010.02,8 balls | GCO81540 | Outer Joint | | 29 | 35 | 56 | 102.5 | 59 | I |
| **Quest** | | | | | | | | | | | | | | | |
| 3.5 (176 kw) | 2003.06-2010.09 | AT | F | | MPV FWD VQ35DE | | GCO41352 | Outer Joint | | 29 | 36 | 56 | 102 | 73 | I |
| | 2003.06-2010.09 | AT | F | L | MPV FWD VQ35DE | | GCI99109 | Inner Joint | | 26 | 26 | 31 | 68 | 87 | |
| **Safari** | | | | | | | | | | | | | | | |
| 4.5 (147 kw) | 1997.06- | | F | L | Closed Off-Road Vehicle 4WD TB45E | | GDS41221 | Drive Shaft | | 31 | 31 | 60 | 162.5 | 1115 | |
| | 1997.06- | | F | R | Closed Off-Road Vehicle 4WD TB45E | | GDS41179 | Drive Shaft | | 31 | 31 | 60 | 162.5 | 617 | |
| **Sentra** | | | | | | | | | | | | | | | |
| 1.6 (85 kw) | 2013.05- | CVT | F | L | Saloon FWD HR16DE | | GDS83412 | Drive Shaft | | 29 | 25 | 56.2 | 102 | 694 | |
| | 2013.05- | CVT | F | R | Saloon FWD HR16DE | | GDS83411 | Drive Shaft | | 29 | 25 | 56.2 | 102 | 940 | |
| | 2013.05- | CVT | F | L/R | Saloon FWD HR16DE | | GCO41399 | Outer Joint | | 29 | 22 | 56.2 | 102 | 59 | M |
| | 2013.05- | CVT | F | L/R | Saloon FWD HR16DE | | GCI41085 | Inner Joint | | 25 | 21 | 40 | 53 | 112 | |
| 2.0 (107 kw) | 2000.01-2006.06 | | F | | Saloon FWD SR20DE | | GCO41092 | Outer Joint | | 25 | 32 | 55 | 105 | 62 | I |
| 2.5 (132 kw) | 2006.09-2012.12 | 6MT | F | L/R | Saloon FWD QR25DE | | GCO81540 | Outer Joint | | 29 | 35 | 56 | 102.5 | 59 | I |
| | 2006.09-2012.12 | 6MT | F | L | Saloon FWD QR25DE | | GCI41205 | Inner Joint | | 29 | 33 | 39 | 65.5 | 122 | |
| **Sentra (USA)** | | | | | | | | | | | | | | | |
| 2.0 (104 kw) | 2006.10-2012.12 | CVT | F | R | Saloon FWD MR20DE | | GCO41345 | Outer Joint | | 29 | 24 | 56.2 | 102 | 63 | M |
| | 2006.10-2012.12 | CVT | F | R | Saloon FWD MR20DE | | GCI41101 | Inner Joint | | 27 | 24 | 33 | 321 | 92 | |
| | 2006.10-2012.12 | MT | F | L | Saloon FWD MR20DE | | GDS83729 | Drive Shaft | | 29 | 26 | 56.2 | 102 | 674 | |
| | 2006.10-2012.12 | MT | F | R | Saloon FWD MR20DE | | GDS83730 | Drive Shaft | | 29 | 26 | 56.2 | 102 | 940 | |
| | 2006.10-2012.12 | MT | F | L/R | Saloon FWD MR20DE | | GCO41345 | Outer Joint | | 29 | 24 | 56.2 | 102 | 63 | M |
| | 2006.10-2012.12 | MT | F | L | Saloon FWD MR20DE | | GCI41126 | Inner Joint | | 26 | 24 | 40 | 64 | 104.5 | |
| | 2006.10-2012.12 | MT | F | R | Saloon FWD MR20DE | | GCI82328 | Inner Joint | | 26 | 24 | 33 | 343 | 96 | |
| **Serena** | | | | | | | | | | | | | | | |
| 1.6 (71 kw) | 1993.02-2001.09 | AT/MT | R | L/R | MPV RWD GA16DE | | GCO41018 | Outer Joint | | 27 | 23 | 56 | 99 | 60 | I |
| 2.0 (49 kw) | 1991.06-2001.09 | AT/MT | R | L/R | MPV RWD LD20 | | GCO41018 | Outer Joint | | 27 | 23 | 56 | 99 | 60 | I |
| 2.0 (67 kw) | 1991.06-1996.09 | AT/MT | R | L/R | MPV 4WD CD20T | Date from:1992.01 | GCO41018 | Outer Joint | | 27 | 23 | 56 | 99 | 60 | I |
| | 1991.06-1996.09 | AT/MT | R | L/R | MPV RWD CD20T (09.96-.) | Date from:1992.01 | GCO41018 | Outer Joint | | 27 | 23 | 56 | 99 | 60 | I |
| 2.0 (93 kw) | 1992.07-2001.09 | AT/MT | R | L/R | MPV RWD SR20DE | | GCO41018 | Outer Joint | | 27 | 23 | 56 | 99 | 60 | I |
| 2.0 (107 kw) | 1999.06-2005.05 | AT | F | L/R | MPV FWD SR20DE | | GCO41184 | Outer Joint | 44T | 27 | 25 | 56 | 103 | 68 | M |
| | 1999.06-2005.05 | AT | F | | MPV FWD SR20DE | | GCO41282 | Outer Joint | 44T | 27 | 23 | 56 | 103 | 58.5 | I |
| | 1999.06-2005.05 | | F | | MPV FWD SR20DE | | GCO39248 | Outer Joint | 44T | 27 | 35 | 56 | 103 | 68 | I |
| | 2000.09-2005.05 | AT | F | L/R | MPV 4WD SR20DE | Date To:2001.12 | GCO41184 | Outer Joint | 44T | 27 | 25 | 56 | 103 | 68 | M |
| | 2000.09-2005.05 | AT | F | | MPV 4WD SR20DE | Date To:2001.12 | GCO41282 | Outer Joint | 44T | 27 | 23 | 56 | 103 | 58.5 | I |
| 2.0 (108 kw) | 2010.11-2016.07 | CVT | F | L/R | MPV FWD MR20DD | | GCO82480 | Outer Joint | | 29 | 23 | 56.3 | 102 | 63 | M |
| 2.0 (110 kw) | 2016.08- | CVT | F | L/R | MPV FWD MR20DD | | GCO82480 | Outer Joint | | 29 | 23 | 56.3 | 102 | 63 | M |
| 2.3 (55 kw) | 1994.10-2001.09 | AT/MT | R | L/R | MPV RWD LD23 | | GCO41018 | Outer Joint | | 27 | 23 | 56 | 99 | 60 | I |
| 2.5 (110 kw) | 1999.06-2005.05 | AT | F | L/R | MPV 4WD YD25DDTI | Date To:2001.12 | GCO41184 | Outer Joint | 44T | 27 | 25 | 56 | 103 | 68 | M |
| | 1999.06-2005.05 | AT | F | | MPV 4WD YD25DDTI | Date To:2000.07 | GCO41015 | Outer Joint | 44T | 27 | 27 | 56 | 103 | 69 | I |
| | 1999.06-2005.05 | AT | F | | MPV 4WD YD25DDTI | Date from:2000.07,Date to:2001.12 | GCO41282 | Outer Joint | 44T | 27 | 23 | 56 | 103 | 58.5 | I |
| | 1999.06-2005.05 | AT | F | L | MPV 4WD YD25DDTI | Date To:2001.12 | GCI41062 | Inner Joint | | 29 | 27 | 39 | 65.5 | 114.5 | |
| | 1999.06-2005.05 | AT | F | L/R | MPV FWD YD25DDTI | Date To:2001.12 | GCO41184 | Outer Joint | 44T | 27 | 25 | 56 | 103 | 68 | M |
| | 1999.06-2005.05 | AT | F | | MPV FWD YD25DDTI | Date To:2000.07 | GCO41015 | Outer Joint | 44T | 27 | 27 | 56 | 103 | 69 | I |
| | 1999.06-2005.05 | AT | F | | MPV FWD YD25DDTI | Date from:2000.07,Date to:2001.12 | GCO41282 | Outer Joint | 44T | 27 | 23 | 56 | 103 | 58.5 | I |
| | 1999.06-2005.05 | AT | F | L | MPV FWD YD25DDTI | Date To:2001.12 | GCI41062 | Inner Joint | | 29 | 27 | 39 | 65.5 | 114.5 | |
| **Skyline** | | | | | | | | | | | | | | | |
| 2.5 (140 kw) | 1993.07-1998.05 | MT | F | R | Coupe 4WD RB25DE | | GDS81278 | Drive Shaft | 46T | 27 | 25 | 56 | 107 | 595 | |
| | 1993.07-1998.05 | MT | F | R | Saloon 4WD RB25DE | | GDS81278 | Drive Shaft | 46T | 27 | 25 | 56 | 107 | 595 | |
| **Sunny** | | | | | | | | | | | | | | | |
| 1.5 (73 kw) | 2011.08- | | F | L | Saloon FWD HR15DE | | GDS41546 | Drive Shaft | | 25 | 26 | 49 | 94.5 | 632 | |
| | 2011.08- | | F | R | Saloon FWD HR15DE | | GDS41547 | Drive Shaft | | 25 | 26 | 49 | 94.5 | 923 | |

| | YEAR | TRANSM. | F/R | L/R | BODY STYLE & DRIVE TYPE & ENGINE | REMARKS | G-AP Ref. | PRODUCT | ABS | Technical Specifications A | B | C | H | L | P |
|---|---|---|---|---|---|---|---|---|---|---|---|---|---|---|---|
| **NISSAN** | | | | | | | | | | | | | | | |
| **Sunny** | | | | | | | | | | | | | | | |
| 1.5 (73 kw) | 2011.08- | | F | L/R | Saloon FWD HR15DE | | GCI41206 | Inner Joint | | 26 | 21 | 40 | 64 | 95.5 | |
| 1.5 (77 kw) | 1997.09-2000.03 | | F | L/R | Saloon 4WD QG15DE | | GCO41034 | Outer Joint | 42T | 25 | 23 | 55 | 107 | 61 | I |
| 1.6 (75 kw) | 2000.04-2003.09 | 5MT | F | L | Saloon FWD QG16DE | | GDS41527 | Drive Shaft | 42T | 25 | 24 | 55 | 107.5 | 632 | |
| | 2000.04-2003.09 | 5MT | F | R | Saloon FWD QG16DE | | GDS41525 | Drive Shaft | 42T | 25 | 24 | 55 | 107.5 | 922 | |
| | 2000.04-2003.09 | 5MT | F | L/R | Saloon FWD QG16DE | | GCI41198 | Inner Joint | | 24 | 23 | 40 | 51.7 | 100.4 | |
| 1.7 (40 kw) | 1990.11-2000.03 | AT | F | L | Estate Van FWD CD17 | | GCI50065 | Inner Joint | | 25 | 25 | 40 | 63 | 101 | |
| | 1990.11-2000.03 | MT | F | L/R | Estate Van FWD CD17 | Model:Sunny Van | GCO41001 | Outer Joint | | 25 | 22 | 55 | 107 | 56 | I |
| | 1990.11-2000.03 | MT | F | L/R | Estate Van FWD CD17 | | GCO41033 | Outer Joint | | 25 | 23 | 55 | 107 | 61 | I |
| | 1990.11-2000.03 | MT | F | L/R | Estate Van FWD CD17 | | GCI41001 | Inner Joint | | 24 | 23 | 40 | 51.7 | 100.4 | |
| **Sunny Estate/Wagon** | | | | | | | | | | | | | | | |
| 1.6 (66 kw) | 1990.11-2000.03 | AT/MT | F | L/R | Estate FWD GA16DE/GA16DS | | GCO41078 | Outer Joint | | 25 | 23 | 55 | 107 | 62 | I |
| | 1990.11-2000.03 | | F | L/R | Estate FWD GA16DE/GA16DS | | GCO41034 | Outer Joint | 42T | 25 | 23 | 55 | 107 | 61 | I |
| | 1990.11-2000.03 | | F | | Estate FWD GA16DE/GA16DS | | GCO41068 | Outer Joint | | 25 | 23 | 52.2 | 107 | 62.5 | I |
| 1.6 (75 kw) | 1992.10-2000.03 | AT/MT | F | L/R | Estate 4WD GA16DE | | GCO41003 | Outer Joint | 42T | 25 | 23 | 55 | 107 | 62 | I |
| | 1992.10-2000.03 | AT/MT | F | L/R | Estate 4WD GA16DE | | GCO41078 | Outer Joint | | 25 | 23 | 55 | 107 | 62 | I |
| | 1992.10-2000.03 | MT | F | | Estate 4WD GA16DE | | GCO41033 | Outer Joint | | 25 | 23 | 55 | 107 | 61 | I |
| | 1992.10-2000.03 | | F | L/R | Estate 4WD GA16DE | | GCO41034 | Outer Joint | 42T | 25 | 23 | 55 | 107 | 61 | I |
| | 1992.10-2000.03 | AT | | | Estate 4WD GA16DE | | GCI41089 | Inner Joint | | 25 | 23 | 40 | 63 | 99 | |
| | 1994.04-2000.03 | MT | F | | Estate FWD GA16DE | | GCO41033 | Outer Joint | | 25 | 23 | 55 | 107 | 61 | I |
| | 1994.04-2000.03 | AT | | | Estate FWD GA16DE | | GCI41089 | Inner Joint | | 25 | 23 | 40 | 63 | 99 | |
| 2.0 (55 kw) | 1991.06-2000.03 | AT | F | L/R | Estate FWD CD20 | | GCO41033 | Outer Joint | | 25 | 23 | 55 | 107 | 61 | I |
| | 1991.06-2000.03 | AT | F | L | Estate FWD CD20 | Date from:1993.08,Date to:1996.05 | GCI50065 | Inner Joint | | 25 | 25 | 40 | 63 | 101 | |
| | 1991.06-2000.03 | AT/MT | F | | Estate FWD CD20 | | GCO41124 | Outer Joint | 42T | 25 | 22 | 55 | 107 | 57 | M |
| | 1991.06-2000.03 | MT | F | L/R | Estate FWD CD20 | | GCO41001 | Outer Joint | | 25 | 22 | 55 | 107 | 56 | I |
| | 1991.06-2000.03 | MT | F | L/R | Estate FWD CD20 | GrooveType:Inner | GCO41002 | Outer Joint | 42T | 25 | 22 | 55 | 107 | 56 | I |
| **Sunny EX** | | | | | | | | | | | | | | | |
| 1.6 (87 kw) | 2002.08-2013.04 | 4AT/5MT | F | L | Saloon FWD QG16DE | | GDS41527 | Drive Shaft | 42T | 25 | 24 | 55 | 107.5 | 632 | |
| | 2002.08-2013.04 | 4AT/5MT | F | R | Saloon FWD QG16DE | Date from:2003.03 | GDS41525 | Drive Shaft | 42T | 25 | 24 | 55 | 107.5 | 922 | |
| | 2002.08-2013.04 | 4AT/5MT | F | R | Saloon FWD QG16DE | Date to:2003.02 | GDS41562 | Drive Shaft | 42T | 25 | 25 | 55 | 107 | 923 | |
| **Sunny Neo** | | | | | | | | | | | | | | | |
| 1.6 (81 kw) | 2000.08-2006.08 | 4AT | F | L | Saloon FWD QG16DE | | GDS41041 | Drive Shaft | 42T | 25 | 25 | 55 | 107 | 622 | |
| | 2000.08-2006.08 | 4AT | F | R | Saloon FWD QG16DE | | GDS41526 | Drive Shaft | | 25 | 25 | 55 | 107 | 927 | |
| | 2000.08-2006.08 | 5MT | F | L | Saloon FWD QG16DE | | GDS41527 | Drive Shaft | 42T | 25 | 24 | 55 | 107.5 | 632 | |
| | 2000.08-2006.08 | 5MT | F | R | Saloon FWD QG16DE | | GDS41525 | Drive Shaft | 42T | 25 | 24 | 55 | 107.5 | 922 | |
| 1.8 (94 kw) | 2000.01-2006.06 | 4AT/5MT | F | L | Saloon FWD QG18DE | | GDS41041 | Drive Shaft | 42T | 25 | 25 | 55 | 107 | 622 | |
| | 2000.01-2006.06 | 4AT/5MT | F | R | Saloon FWD QG18DE | | GDS41562 | Drive Shaft | 42T | 25 | 25 | 55 | 107 | 923 | |
| | 2000.01-2006.06 | 4AT/5MT | F | L/R | Saloon FWD QG18DE | | GCO41003 | Outer Joint | 42T | 25 | 23 | 55 | 107 | 62 | I |
| | 2000.01-2006.06 | 4AT/5MT | F | L/R | Saloon FWD QG18DE | | GCI41002 | Inner Joint | | 25 | 23 | 40 | 63 | 101 | |
| **Sunny Van** | | | | | | | | | | | | | | | |
| 1.6 (66 kw) | 1992.10-2000.03 | AT | F | | Estate Van FWD GA16DS | | GCI41089 | Inner Joint | | 25 | 23 | 40 | 63 | 99 | |
| | 1992.10-2000.03 | AT/MT | F | L/R | Estate Van FWD GA16DS | | GCO41078 | Outer Joint | | 25 | 23 | 55 | 107 | 62 | I |
| | 1992.10-2000.03 | MT | F | | Estate Van FWD GA16DS | | GCO41033 | Outer Joint | | 25 | 23 | 55 | 107 | 61 | I |
| | 1992.10-2000.03 | | F | L/R | Estate Van FWD GA16DS | | GCO41034 | Outer Joint | 42T | 25 | 23 | 55 | 107 | 61 | I |
| 1.6 (75 kw) | 1992.11-1996.04 | AT/MT | F | L/R | Estate Van FWD GA16DE | | GCO41078 | Outer Joint | | 25 | 23 | 55 | 107 | 62 | I |
| | 1992.11-1996.04 | | F | L/R | Estate Van FWD GA16DE | | GCO41034 | Outer Joint | 42T | 25 | 23 | 55 | 107 | 61 | I |
| **Sunny/Pulsar** | | | | | | | | | | | | | | | |
| 1.6 (70 kw) | 1992.09-1996.12 | AT | F | L | Saloon FWD GA16DE | | GCI50065 | Inner Joint | | 25 | 25 | 40 | 63 | 101 | |
| **Sylphy** | | | | | | | | | | | | | | | |
| 1.5 (80 kw) | 2005.09-2012.08 | AT | F | L/R | Saloon FWD HR15DE | Model code:G11 | GCO41303 | Outer Joint | | 25 | 21 | 49 | 95 | 56 | M |
| 1.6 (85 kw) | 2013.01- | CVT | F | L | Saloon FWD HR16DECNG | | GDS83412 | Drive Shaft | | 29 | 25 | 56.2 | 102 | 694 | |
| | 2013.01- | CVT | F | R | Saloon FWD HR16DECNG | | GDS83411 | Drive Shaft | | 29 | 25 | 56.2 | 102 | 940 | |
| | 2013.01- | CVT | F | L/R | Saloon FWD HR16DECNG | | GCO41399 | Outer Joint | | 29 | 22 | 56.2 | 102 | 59 | M |
| | 2013.01- | CVT | F | L/R | Saloon FWD HR16DECNG | | GCI41085 | Inner Joint | | 25 | 21 | 40 | 53 | 112 | |
| **Teana** | | | | | | | | | | | | | | | |
| 2.0 (100 kw) | 2013.09- | CVT | F | L | Saloon FWD MR20DE | | GDS82628 | Drive Shaft | | 32 | 27 | 56 | 102 | 702 | |
| | 2013.09- | CVT | F | R | Saloon FWD MR20DE | | GDS82629 | Drive Shaft | | 32 | 27 | 56 | 102 | 980 | |
| | 2013.09- | CVT | F | L/R | Saloon FWD MR20DE | | GCO41395 | Outer Joint | | 32 | 24 | 56 | 102 | 63 | M |
| | 2013.09- | CVT | F | L | Saloon FWD MR20DE | | GCI41073 | Inner Joint | | 27 | 24 | 40 | 62.5 | 99.5 | |
| | 2013.09- | CVT | F | R | Saloon FWD MR20DE | | GCI41101 | Inner Joint | | 27 | 24 | 33 | 321 | 92 | |
| | 2014.01- | CVT | F | L | Saloon FWD MR20DE | | GDS82628 | Drive Shaft | | 32 | 27 | 56 | 102 | 702 | |
| | 2014.01- | CVT | F | R | Saloon FWD MR20DE | | GDS82629 | Drive Shaft | | 32 | 27 | 56 | 102 | 980 | |
| | 2014.01- | CVT | F | L/R | Saloon FWD MR20DE | | GCO41395 | Outer Joint | | 32 | 24 | 56 | 102 | 63 | M |
| | 2014.01- | CVT | F | L | Saloon FWD MR20DE | | GCI41073 | Inner Joint | | 27 | 24 | 40 | 62.5 | 99.5 | |
| | 2014.01- | CVT | F | R | Saloon FWD MR20DE | | GCI41101 | Inner Joint | | 27 | 24 | 33 | 321 | 92 | |
| 2.3 (127 kw) | 2003.10-2008.06 | AT | F | L/R | Saloon FWD VQ23DE | | GCO41251 | Outer Joint | | 29 | 24 | 56 | 103 | 62 | M |

| | YEAR | TRANSM. | F/R | L/R | BODY STYLE & DRIVE TYPE & ENGINE | REMARKS | G-AP Ref. | PRODUCT | ABS | Technical Specifications A | B | C | H | L | P |
|---|---|---|---|---|---|---|---|---|---|---|---|---|---|---|---|
| **NISSAN** | | | | | | | | | | | | | | | |
| **Teana** | | | | | | | | | | | | | | | |
| 2.3 (127 kw) | 2003.10-2008.06 | AT | F | L | Saloon FWD VQ23DE | | GCI41062 | Inner Joint | | 29 | 27 | 39 | 65.5 | 114.5 | |
| | 2003.10-2008.06 | AT | F | R | Saloon FWD VQ23DE | | GCI41019 | Inner Joint | | 29 | 27 | 33 | 437.5 | 101 | |
| | 2003.10-2008.06 | AT | F | R | Saloon FWD VQ23DE | Date from:2004.09,Date to:2004.09 | GCI41104 | Inner Joint | | 29 | 27 | 33 | 436 | 99 | |
| 2.5 (123 kw) | 2008.06-2012.12 | CVT | F | R | Saloon 4WD QR25DE | | GCO41252 | Outer Joint | | 29 | 26 | 56 | 101 | 68 | M |
| | 2008.06-2012.12 | CVT | R | L/R | Saloon 4WD QR25DE | | GCI57111 | Inner Joint | | 21 | 24 | 38 | 61 | 91 | |
| 2.5 (127 kw) | 2014.01- | CVT | F | L | Saloon FWD QR25DE | | GDS82626 | Drive Shaft | | 32 | 27 | 56 | 102 | 690 | |
| | 2014.01- | CVT | F | R | Saloon FWD QR25DE | | GDS82627 | Drive Shaft | | 32 | 27 | 56 | 102 | 984 | |
| | 2014.01- | CVT | F | L/R | Saloon FWD QR25DE | | GCO41395 | Outer Joint | | 32 | 24 | 56 | 102 | 63 | M |
| | 2014.01- | CVT | F | L | Saloon FWD QR25DE | | GCI81922 | Inner Joint | | 27 | 24 | 40 | 62 | 108.5 | |
| | 2014.01- | CVT | F | R | Saloon FWD QR25DE | | GCI81923 | Inner Joint | | 27 | 24 | 33 | 405 | 101 | |
| 2.5 (134 kw) | 2008.07-2013.09 | CVT | F | L | Saloon FWD VQ25DE | | GDS41377 | Drive Shaft | | 29 | 27 | 56.2 | 102 | 646 | |
| | 2008.07-2013.09 | CVT | F | R | Saloon FWD VQ25DE | | GDS41378 | Drive Shaft | | 29 | 27 | 56.2 | 102 | 992 | |
| | 2008.07-2013.09 | CVT | F | L/R | Saloon FWD VQ25DE | | GCO41250 | Outer Joint | | 29 | 25 | 56 | 101 | 68 | M |
| | 2008.07-2013.09 | CVT | F | L/R | Saloon FWD VQ25DE | | GCO41251 | Outer Joint | | 29 | 24 | 56 | 103 | 62 | M |
| | 2008.07-2013.09 | CVT | F | L/R | Saloon FWD VQ25DE | | GCO41294 | Outer Joint | | 29 | 24 | 56.2 | 102 | 63 | M |
| | 2008.07-2013.09 | CVT | F | L | Saloon FWD VQ25DE | | GCI41073 | Inner Joint | | 27 | 24 | 40 | 62.5 | 99.5 | |
| | 2008.07-2013.09 | CVT | F | R | Saloon FWD VQ25DE | | GCI41054 | Inner Joint | | 27 | 24 | 33 | 435 | 94 | |
| 3.5 (170 kw) | 2003.10-2008.09 | | F | | Saloon FWD VQ35DE | | GCO41250 | Outer Joint | | 29 | 25 | 56 | 101 | 68 | M |
| 3.5 (183 kw) | 2008.07-2013.09 | CVT | F | L | Saloon FWD VQ35DE | | GDS41533 | Drive Shaft | | 32 | 29 | 56.3 | 103 | 637 | |
| | 2008.07-2013.09 | CVT | F | L/R | Saloon FWD VQ35DE | | GCO41222 | Outer Joint | | 32 | 27 | 56 | 102.5 | 67.5 | M |
| | 2008.07-2013.09 | CVT | F | L/R | Saloon FWD VQ35DE | | GCO41232 | Outer Joint | | 29 | 36 | 56 | 102.5 | 70 | I |
| | 2008.07-2013.09 | CVT | F | L/R | Saloon FWD VQ35DE | | GCO41250 | Outer Joint | | 29 | 25 | 56 | 101 | 68 | M |
| | 2008.07-2013.09 | CVT | F | L/R | Saloon FWD VQ35DE | | GCO41400 | Outer Joint | | 32 | 27 | 56.3 | 103 | 68 | M |
| | 2008.07-2013.09 | CVT | F | L | Saloon FWD VQ35DE | | GCI41183 | Inner Joint | | 29 | 27 | 39 | 65.5 | 115 | |
| | 2008.07-2013.09 | CVT | F | R | Saloon FWD VQ35DE | | GCI41208 | Inner Joint | | 29 | 27 | 33 | 459 | 99 | |
| | 2014.01- | CVT | F | L | Saloon FWD VQ35DE | | GDS41561 | Drive Shaft | | 32 | 29 | 56 | 102 | 656 | |
| | 2014.01- | CVT | F | R | Saloon FWD VQ35DE | | GDS83410 | Drive Shaft | | 32 | 29 | 56 | 102 | 1011 | |
| | 2014.01- | CVT | F | R | Saloon FWD VQ35DE | | GCO41331 | Outer Joint | | 32 | 26 | 56 | 102 | 65 | I |
| | 2014.01- | CVT | F | R | Saloon FWD VQ35DE | | GCI82207 | Inner Joint | | 29 | 26 | 33 | 456 | 101.5 | |
| 3.5 (185 kw) | 2009.01-2011.03 | AT | F | R | Saloon FWD VQ35DE | | GCI41208 | Inner Joint | | 29 | 27 | 33 | 459 | 99 | |
| **Terrano** | | | | | | | | | | | | | | | |
| 1.6 (75 kw) | 2014.03- | 6MT | F | L | SUV 4WD K4M690;K4M606 | | GDS50587 | Drive Shaft | | 25 | 26 | 52.6 | 89 | 700 | |
| | 2014.03- | 6MT | F | R | SUV 4WD K4M690;K4M606 | | GDS58296 | Drive Shaft | | 25 | 26 | 52.6 | 89 | 952 | |
| | 2014.03- | 6MT | F | L/R | SUV 4WD K4M690;K4M606 | | GCO50157 | Outer Joint | | 25 | 33 | 52.6 | 89 | 60 | I |
| | 2014.03- | 6MT | F | L | SUV 4WD K4M690;K4M606 | | GCI41191 | Inner Joint | | 26 | 33 | 40 | 64 | 118 | |
| | 2014.03- | 6MT | F | L | SUV 4WD K4M690;K4M606 | | GCI50105 | Inner Joint | | 27 | 33 | 40 | 70.5 | 111 | |
| | 2014.03- | 6MT | F | R | SUV 4WD K4M690;K4M606 | | GCI84053 | Inner Joint | | 26 | 33 | 33 | 350 | 106 | |
| | 2014.03- | 6MT | R | L/R | SUV 4WD K4M690;K4M606 | | GDS58337 | Drive Shaft | 48T | 25 | 21 | 52.7 | 88.5 | 827 | |
| | 2014.03- | 6MT | R | L/R | SUV 4WD K4M690;K4M606 | | GCO83877 | Outer Joint | 48T | 25 | 20 | 52.7 | 88.5 | 53 | M |
| | 2014.03- | 6MT | R | L/R | SUV 4WD K4M690;K4M606 | | GCI84068 | Inner Joint | | 21 | 20 | 37.95 | 60.5 | 100.5 | |
| | 2014.03- | 5MT | F | L | SUV FWD K4M690;K4M606 | | GDS50587 | Drive Shaft | | 25 | 26 | 52.6 | 89 | 700 | |
| | 2014.03- | 5MT | F | R | SUV FWD K4M690;K4M606 | | GDS58296 | Drive Shaft | | 25 | 26 | 52.6 | 89 | 952 | |
| | 2014.03- | 5MT | F | L/R | SUV FWD K4M690;K4M606 | | GCO50157 | Outer Joint | | 25 | 33 | 52.6 | 89 | 60 | I |
| | 2014.03- | 5MT | F | L | SUV FWD K4M690;K4M606 | | GCI41191 | Inner Joint | | 26 | 33 | 40 | 64 | 118 | |
| | 2014.03- | 5MT | F | R | SUV FWD K4M690;K4M606 | | GCI84053 | Inner Joint | | 26 | 33 | 33 | 350 | 106 | |
| 1.6 (84 kw) | 2015.12- | 6MT | F | L | SUV 4WD H4M | | GDS50587 | Drive Shaft | | 25 | 26 | 52.6 | 89 | 700 | |
| | 2015.12- | 6MT | F | R | SUV 4WD H4M | | GDS58296 | Drive Shaft | | 25 | 26 | 52.6 | 89 | 952 | |
| | 2015.12- | 6MT | F | L/R | SUV 4WD H4M | For Europe | GCO50157 | Outer Joint | | 25 | 33 | 52.6 | 89 | 60 | I |
| | 2015.12- | 6MT | F | L | SUV 4WD H4M | | GCI41191 | Inner Joint | | 26 | 33 | 40 | 64 | 118 | |
| | 2015.12- | 6MT | F | L | SUV 4WD H4M | | GCI50105 | Inner Joint | | 27 | 33 | 40 | 70.5 | 111 | |
| | 2015.12- | 6MT | F | R | SUV 4WD H4M | For Europe | GCI84053 | Inner Joint | | 26 | 33 | 33 | 350 | 106 | |
| | 2015.12- | 6MT | R | L/R | SUV 4WD H4M | | GDS58337 | Drive Shaft | 48T | 25 | 21 | 52.7 | 88.5 | 827 | |
| | 2015.12- | 6MT | R | L/R | SUV 4WD H4M | | GCO83877 | Outer Joint | 48T | 25 | 20 | 52.7 | 88.5 | 53 | M |
| | 2015.12- | 6MT | R | L/R | SUV 4WD H4M | | GCI84068 | Inner Joint | | 21 | 20 | 37.95 | 60.5 | 100.5 | |
| | 2015.12- | 5MT | F | L | SUV FWD H4M | | GDS50587 | Drive Shaft | | 25 | 26 | 52.6 | 89 | 700 | |
| | 2015.12- | 5MT | F | R | SUV FWD H4M | | GDS58296 | Drive Shaft | | 25 | 26 | 52.6 | 89 | 952 | |
| | 2015.12- | 5MT | F | L | SUV FWD H4M | | GCI41191 | Inner Joint | | 26 | 33 | 40 | 64 | 118 | |
| | 2015.12- | 5MT | F | R | SUV FWD H4M | | GCI84053 | Inner Joint | | 26 | 33 | 33 | 350 | 106 | |
| 2.0 (98 kw) | 2014.03- | 6MT | F | L | SUV 4WD F4R | | GDS50587 | Drive Shaft | | 25 | 26 | 52.6 | 89 | 700 | |
| | 2014.03- | 6MT | F | R | SUV 4WD F4R | | GDS58296 | Drive Shaft | | 25 | 26 | 52.6 | 89 | 952 | |
| | 2014.03- | 6MT | F | L/R | SUV 4WD F4R | For Europe | GCO50157 | Outer Joint | | 25 | 33 | 52.6 | 89 | 60 | I |
| | 2014.03- | 6MT | F | L | SUV 4WD F4R | | GCI41191 | Inner Joint | | 26 | 33 | 40 | 64 | 118 | |
| | 2014.03- | 6MT | F | R | SUV 4WD F4R | For Europe | GCI84053 | Inner Joint | | 26 | 33 | 33 | 350 | 106 | |
| | 2014.03- | 6MT | R | L/R | SUV 4WD F4R | | GDS58337 | Drive Shaft | 48T | 25 | 21 | 52.7 | 88.5 | 827 | |
| | 2014.03- | 6MT | R | L/R | SUV 4WD F4R | | GCO83877 | Outer Joint | 48T | 25 | 20 | 52.7 | 88.5 | 53 | M |

| | YEAR | TRANSM. | F/R | L/R | BODY STYLE & DRIVE TYPE & ENGINE | REMARKS | G-AP Ref. | PRODUCT | ABS | Technical Specifications A | B | C | H | L | P |
|---|---|---|---|---|---|---|---|---|---|---|---|---|---|---|---|
| **NISSAN** | | | | | | | | | | | | | | | |
| **Terrano** | | | | | | | | | | | | | | | |
| 2.0 (98 kw) | 2014.03- | 6MT | R | L/R | SUV 4WD F4R | | GCI84068 | Inner Joint | | 21 | 20 | 37.95 | 60.5 | 100.5 | |
| | 2014.03- | 4AT | F | L | SUV FWD F4R | | GDS50587 | Drive Shaft | | 25 | 26 | 52.6 | 89 | 700 | |
| | 2014.03- | 4AT | F | R | SUV FWD F4R | | GDS58296 | Drive Shaft | | 25 | 26 | 52.6 | 89 | 952 | |
| | 2014.03- | 4AT | F | L | SUV FWD F4R | | GCI41191 | Inner Joint | | 26 | 33 | 40 | 64 | 118 | |
| | 2014.03- | 4AT | F | R | SUV FWD F4R | | GCI84053 | Inner Joint | | 26 | 33 | 33 | 350 | 106 | |
| | 2014.03- | 4AT | R | L/R | SUV FWD F4R | | GDS58337 | Drive Shaft | 48T | 25 | 21 | 52.7 | 88.5 | 827 | |
| | 2014.03- | 4AT | R | L/R | SUV FWD F4R | | GCO83877 | Outer Joint | 48T | 25 | 20 | 52.7 | 88.5 | 53 | M |
| | 2014.03- | 4AT | R | L/R | SUV FWD F4R | | GCI84068 | Inner Joint | | 21 | 20 | 37.95 | 60.5 | 100.5 | |
| 2.0 (105 kw) | 2015.12- | 4AT/6MT | F | L | SUV 4WD F4R | | GDS50587 | Drive Shaft | | 25 | 26 | 52.6 | 89 | 700 | |
| | 2015.12- | 4AT/6MT | F | R | SUV 4WD F4R | | GDS58296 | Drive Shaft | | 25 | 26 | 52.6 | 89 | 952 | |
| | 2015.12- | 4AT/6MT | F | L/R | SUV 4WD F4R | For Europe | GCO50157 | Outer Joint | | 25 | 33 | 52.6 | 89 | 60 | I |
| | 2015.12- | 4AT/6MT | F | L | SUV 4WD F4R | | GCI41191 | Inner Joint | | 26 | 33 | 40 | 64 | 118 | |
| | 2015.12- | 4AT/6MT | F | R | SUV 4WD F4R | For Europe | GCI84053 | Inner Joint | | 26 | 33 | 33 | 350 | 106 | |
| | 2015.12- | 4AT/6MT | R | L/R | SUV 4WD F4R | | GDS58337 | Drive Shaft | 48T | 25 | 21 | 52.7 | 88.5 | 827 | |
| | 2015.12- | 6MT | R | L/R | SUV 4WD F4R | | GCO83877 | Outer Joint | 48T | 25 | 20 | 52.7 | 88.5 | 53 | M |
| | 2015.12- | 6MT | R | L/R | SUV 4WD F4R | | GCI84068 | Inner Joint | | 21 | 20 | 37.95 | 60.5 | 100.5 | |
| 2.7 (73 kw) | 1989.02-1996.02 | AT/MT | F | L/R | Terrain cab wagon closed 4WD TD27T | | GDS41055 | Drive Shaft | | 27 | | 50 | 150 | 520 | |
| | 1989.02-1996.02 | AT/MT | F | L/R | Terrain cab wagon closed 4WD TD27T | Date from:1992.08 | GCO41016 | Outer Joint | | 28 | 27 | 50 | 150 | 71 | I |
| | 1989.02-1996.02 | AT/MT | F | L/R | Terrain cab wagon closed 4WD TD27T | | GCO41086 | Outer Joint | | 27 | 27 | 50 | 150 | 71 | I |
| | 1989.02-1996.02 | AT/MT | F | L/R | Terrain cab wagon closed 4WD TD27T | | GCO41178 | Outer Joint | | 26 | 27 | 50 | 147.5 | 64 | I |
| 2.7 (74 kw) | 1993.02-2002.01 | MT | F | L/R | Closed Off-Road Vehicle 4WD TD27T | | GDS41055 | Drive Shaft | | 27 | | 50 | 150 | 520 | |
| | 1993.02-2002.01 | MT | F | L/R | Closed Off-Road Vehicle 4WD TD27T | | GCO41016 | Outer Joint | | 28 | 27 | 50 | 150 | 71 | I |
| 3.0 (125 kw) | 1999.02-2004.12 | AT/MT | F | L/R | Terrain cab wagon closed 4WD ZD30DDTI | | GDS41055 | Drive Shaft | | 27 | | 50 | 150 | 520 | |
| **Terrano II** | | | | | | | | | | | | | | | |
| 2.4 (85 kw) | 1996.05-2002.01 | AT/MT | F | L/R | Terrain cab wagon closed 4WD KA24E | | GDS41055 | Drive Shaft | | 27 | | 50 | 150 | 520 | |
| | 1996.05-2002.01 | MT | F | L/R | Terrain cab wagon closed 4WD KA24E | | GCO41016 | Outer Joint | | 28 | 27 | 50 | 150 | 71 | I |
| | 1996.05-2002.01 | MT | F | L/R | Terrain cab wagon closed 4WD KA24E | | GCO41025 | Outer Joint | | 27 | 32 | 50 | 150 | 68.5 | I |
| 2.4 (87 kw) | 1996.05-2005.11 | AT/MT | F | L/R | Terrain cab wagon closed 4WD KA24E | | GDS41055 | Drive Shaft | | 27 | | 50 | 150 | 520 | |
| | 1996.05-2005.11 | MT | F | L/R | Terrain cab wagon closed 4WD KA24E | Date to:2005.11 | GCO41025 | Outer Joint | | 27 | 32 | 50 | 150 | 68.5 | I |
| 2.4 (91 kw) | 1993.02-1997.12 | MT | F | L/R | Terrain cab wagon closed 4WD KA24E | | GDS41055 | Drive Shaft | | 27 | | 50 | 150 | 520 | |
| | 1993.02-1997.12 | MT | F | L/R | Terrain cab wagon closed 4WD KA24E | | GCO41016 | Outer Joint | | 28 | 27 | 50 | 150 | 71 | I |
| | 1993.02-1997.12 | MT | F | L/R | Terrain cab wagon closed 4WD KA24E | | GCO41025 | Outer Joint | | 27 | 32 | 50 | 150 | 68.5 | I |
| 2.7 (92 kw) | 1996.01-2006.12 | AT | F | L/R | Terrain cab wagon closed 4WD TD27T/TD27TI | | GCO41086 | Outer Joint | | 27 | 27 | 50 | 150 | 71 | I |
| | 1996.01-2006.12 | AT/MT | F | L/R | Terrain cab wagon closed 4WD TD27T/TD27TI | | GDS41055 | Drive Shaft | | 27 | | 50 | 150 | 520 | |
| | 1996.01-2006.12 | AT/MT | F | L/R | Terrain cab wagon closed 4WD TD27T/TD27TI | | GCI41014 | Inner Joint | | | 27 | | | 78 | |
| | 1996.01-2006.12 | MT | F | L/R | Terrain cab wagon closed 4WD TD27T/TD27TI | Date to:2006.12 | GCO41025 | Outer Joint | | 27 | 32 | 50 | 150 | 68.5 | I |
| 3.0 (113 kw) | 2002.03-2006.04 | AT/MT | F | L/R | Terrain cab wagon closed 4WD ZD30 | | GDS41055 | Drive Shaft | | 27 | | 50 | 150 | 520 | |
| | 2002.03-2006.04 | MT | F | L/R | Terrain cab wagon closed 4WD ZD30 | Date to:2006.04 | GCO41025 | Outer Joint | | 27 | 32 | 50 | 150 | 68.5 | I |
| 3.3 (125 kw) | 1992.10-1997.10 | AT/MT | F | L/R | Closed Off-Road Vehicle 4WD VG33E | | GCO41016 | Outer Joint | | 28 | 27 | 50 | 150 | 71 | I |
| **Terrano II Van** | | | | | | | | | | | | | | | |
| 2.7 (92 kw) | 1998.06-2007.09 | AT/MT | F | L/R | Van 4WD TD27TI | | GDS41055 | Drive Shaft | | 27 | | 50 | 150 | 520 | |
| 3.0 (113 kw) | 2003.04-2007.09 | AT/MT | F | L/R | Van 4WD ZD30, ZD30Ti | | GDS41055 | Drive Shaft | | 27 | | 50 | 150 | 520 | |
| | 2003.04-2007.09 | | F | L/R | Van 4WD ZD30, ZD30Ti | Date to:2006.04 | GCO41025 | Outer Joint | | 27 | 32 | 50 | 150 | 68.5 | I |
| **Terrano Regulus** | | | | | | | | | | | | | | | |
| 3.0 (125 kw) | 1997.10-2003.06 | AT | F | | Terrain cab wagon closed 4WD ZD30DDTI | | GCO41016 | Outer Joint | | 28 | 27 | 50 | 150 | 71 | I |
| | 1997.10-2003.06 | AT | F | | Terrain cab wagon closed 4WD ZD30DDTI | Date From:2000.07 | GCO41100 | Outer Joint | | 28 | 25 | 50 | 150 | 71 | I |
| **Terrano/Mistral** | | | | | | | | | | | | | | | |
| 3.3 (125 kw) | 1992.10-2004.12 | AT/MT | F | L/R | Closed Off-Road Vehicle FWD VG33E | | GDS41055 | Drive Shaft | | 27 | | 50 | 150 | 520 | |
| **Tiida** | | | | | | | | | | | | | | | |
| 1.5 (76 kw) | 2007.03-2013.06 | 6MT | F | L | Hatchback FWD K9K | | GCI41117 | Inner Joint | | 25 | 22 | 40 | 63 | 98.5 | |
| 1.5 (78 kw) | 2007.09-2011.12 | 6MT | F | L | Hatchback FWD K9K;K9K 278 | | GCI41117 | Inner Joint | | 25 | 22 | 40 | 63 | 98.5 | |
| | 2007.09-2011.12 | | F | | Hatchback FWD K9K;K9K 278 | | GCO41233 | Outer Joint | | 25 | 24 | 49.1 | 95 | 61 | M |
| | 2007.09-2012.12 | 6MT | F | L | Saloon FWD K9K;K9K 278 | | GCI41117 | Inner Joint | | 25 | 22 | 40 | 63 | 98.5 | |
| | 2007.09-2012.12 | | F | | Saloon FWD K9K;K9K 278 | | GCO41233 | Outer Joint | | 25 | 24 | 49.1 | 95 | 61 | M |
| 1.5 (80 kw) | 2004.05-2007.02 | AT | F | L/R | Hatchback 4WD HR15DE | Model code:C11/SC11 | GCO41303 | Outer Joint | | 25 | 21 | 49 | 95 | 56 | M |
| | 2004.05-2012.08 | AT | F | L/R | Hatchback FWD HR15DE | Model code:C11/SC11 | GCO41303 | Outer Joint | | 25 | 21 | 49 | 95 | 56 | M |
| 1.6 (81 kw) | 2007.09-2011.12 | 4AT | F | L | Hatchback FWD HR16DE | | GDS41553 | Drive Shaft | | 25 | 25 | 49 | 94.5 | 657 | |
| | 2007.09-2011.12 | 4AT | F | L | Hatchback FWD HR16DE | | GCI41201 | Inner Joint | | 25 | 22 | 40 | 62.5 | 98.5 | |
| | 2007.09-2011.12 | 4AT | F | L/R | Hatchback FWD HR16DE | | GCI41117 | Inner Joint | | 25 | 22 | 40 | 63 | 98.5 | |
| | 2007.09-2011.12 | 4AT/5MT | F | L/R | Hatchback FWD HR16DE | | GCO41167 | Outer Joint | | 25 | 22 | 49 | 94 | 56 | M |
| | 2007.09-2011.12 | 4AT/5MT | F | L/R | Hatchback FWD HR16DE | | GCO41217 | Outer Joint | | 25 | 23 | 49.15 | 94.5 | 63 | M |
| | 2007.09-2011.12 | 4AT/5MT | F | L/R | Hatchback FWD HR16DE | | GCO41271 | Outer Joint | | 25 | 22 | 49 | 94.5 | 59.5 | M |
| | 2007.09-2011.12 | 5MT | F | L | Hatchback FWD HR16DE | | GDS41554 | Drive Shaft | | 25 | 26 | 49 | 94.5 | 658 | |
| | 2007.09-2011.12 | 5MT | F | R | Hatchback FWD HR16DE | | GDS83414 | Drive Shaft | | 25 | 26 | 49 | 94.5 | 904 | |
| | 2007.09-2011.12 | 5MT | F | L | Hatchback FWD HR16DE | | GCI41202 | Inner Joint | | 26 | 22 | 40 | 64 | 98 | |

| | YEAR | TRANSM. | F/R | L/R | BODY STYLE & DRIVE TYPE & ENGINE | REMARKS | G-AP Ref. | PRODUCT | ABS | Technical Specifications A | B | C | H | L | P |
|---|---|---|---|---|---|---|---|---|---|---|---|---|---|---|---|
| **NISSAN** | | | | | | | | | | | | | | | |
| **Tiida** | | | | | | | | | | | | | | | |
| 1.6 (81 kw) | 2007.09-2011.12 | AT | F | L/R | Hatchback FWD HR16DE | | GCO41304 | Outer Joint | | 25 | 29 | 49 | 95 | 56 | I |
| | 2007.09-2012.12 | 4AT | F | L | Saloon FWD HR16DE | | GDS41553 | Drive Shaft | | 25 | 25 | 49 | 94.5 | 657 | |
| | 2007.09-2012.12 | 4AT | F | L | Saloon FWD HR16DE | | GCI41201 | Inner Joint | | 25 | 22 | 40 | 62.5 | 98.5 | |
| | 2007.09-2012.12 | 4AT | F | L/R | Saloon FWD HR16DE | | GCI41117 | Inner Joint | | 25 | 22 | 40 | 63 | 98.5 | |
| | 2007.09-2012.12 | 4AT/5MT | F | L/R | Saloon FWD HR16DE | | GCO41167 | Outer Joint | | 25 | 22 | 49 | 94 | 56 | M |
| | 2007.09-2012.12 | 4AT/5MT | F | L/R | Saloon FWD HR16DE | Date to:2010.03 | GCO41217 | Outer Joint | | 25 | 23 | 49.15 | 94.5 | 63 | M |
| | 2007.09-2012.12 | 4AT/5MT | F | L/R | Saloon FWD HR16DE | Date to:2010.03 | GCO41271 | Outer Joint | | 25 | 22 | 49 | 94.5 | 59.5 | M |
| | 2007.09-2012.12 | 5MT | F | L | Saloon FWD HR16DE | | GDS41554 | Drive Shaft | | 25 | 26 | 49 | 94.5 | 658 | |
| | 2007.09-2012.12 | 5MT | F | R | Saloon FWD HR16DE | | GDS83414 | Drive Shaft | | 25 | 26 | 49 | 94.5 | 904 | |
| | 2007.09-2012.12 | 5MT | F | L | Saloon FWD HR16DE | Date to:2010.03 | GCI41202 | Inner Joint | | 26 | 22 | 40 | 64 | 98 | |
| | 2007.09-2012.12 | AT | F | L/R | Saloon FWD HR16DE | | GCO41304 | Outer Joint | | 25 | 29 | 49 | 95 | 56 | I |
| 1.6 (85 kw) | 2012.11- | CVT | F | L | Hatchback FWD HR16DE | | GDS83412 | Drive Shaft | | 29 | 25 | 56.2 | 102 | 694 | |
| | 2012.11- | CVT | F | R | Hatchback FWD HR16DE | | GDS83411 | Drive Shaft | | 29 | 25 | 56.2 | 102 | 940 | |
| | 2012.11- | CVT | F | L/R | Hatchback FWD HR16DE | | GCO41399 | Outer Joint | | 29 | 22 | 56.2 | 102 | 59 | M |
| | 2012.11- | CVT | F | L/R | Hatchback FWD HR16DE | | GCI41085 | Inner Joint | | 25 | 21 | 40 | 53 | 112 | |
| 1.8 (78 kw) | 2007.01-2011.06 | 6MT | F | L | Hatchback FWD MR18DE | | GCO41167 | Outer Joint | | 25 | 22 | 49 | 94 | 56 | M |
| | 2007.01-2011.06 | 6MT | F | L/R | Hatchback FWD MR18DE | | GCO41217 | Outer Joint | | 25 | 23 | 49.15 | 94.5 | 63 | M |
| | 2007.01-2011.06 | AT | F | L | Saloon FWD MR18DE | Date From:2010.04 | GCO41217 | Outer Joint | | 25 | 23 | 49.15 | 94.5 | 63 | M |
| 1.8 (81 kw) | 2004.05-2007.02 | AT | F | R | Hatchback 4WD HR18DE | | GCI41133 | Inner Joint | | 25 | 23 | 33 | 335 | 101 | |
| | 2004.05-2007.02 | AT | F | R | Hatchback FWD HR18DE | | GCI41133 | Inner Joint | | 25 | 23 | 33 | 335 | 101 | |
| 1.8 (93 kw) | 2004.09-2011.12 | 4AT/6MT | F | L/R | Hatchback FWD MR18DE | Date to:2010.03 | GCO41167 | Outer Joint | | 25 | 22 | 49 | 94 | 56 | M |
| | 2004.09-2011.12 | 4AT/6MT | F | L/R | Hatchback FWD MR18DE | Date from:2010.04 | GCO41217 | Outer Joint | | 25 | 23 | 49.15 | 94.5 | 63 | M |
| | 2004.09-2011.12 | | F | | Hatchback FWD MR18DE | | GCO41234 | Outer Joint | | 25 | 23 | 49.1 | 92 | 57 | M |
| | 2004.09-2011.12 | | F | | Hatchback FWD MR18DE | | GCO41271 | Outer Joint | | 25 | 22 | 49 | 94.5 | 59.5 | M |
| | 2007.09-2012.12 | 4AT/6MT | F | L/R | Saloon FWD MR18DE | | GCO41217 | Outer Joint | | 25 | 23 | 49.15 | 94.5 | 63 | M |
| | 2007.09-2012.12 | | F | | Saloon FWD MR18DE | | GCO41234 | Outer Joint | | 25 | 23 | 49.1 | 92 | 57 | M |
| | 2007.09-2012.12 | | F | | Saloon FWD MR18DE | | GCO41271 | Outer Joint | | 25 | 22 | 49 | 94.5 | 59.5 | M |
| **Tiida Latio** | | | | | | | | | | | | | | | |
| 1.5 (76 kw) | 2007.01-2012.12 | MT | F | | Saloon FWD K9K/K9K 278 | Date from:2007.02 | GCI41117 | Inner Joint | | 25 | 22 | 40 | 63 | 98.5 | |
| 1.5 (80 kw) | 2007.03-2013.06 | AT | F | L/R | Saloon 4WD HR15DE | Model code:C11/SC11 | GCO41303 | Outer Joint | | 25 | 21 | 49 | 95 | 56 | M |
| **Tiida/Tiida Latio** | | | | | | | | | | | | | | | |
| 1.5 (80 kw) | 2004.10-2012.10 | AT | F | L/R | Saloon FWD HR15DE | Model code:C11/SC11 | GCO41303 | Outer Joint | | 25 | 21 | 49 | 95 | 56 | M |
| **Tino** | | | | | | | | | | | | | | | |
| 1.8 (88 kw) | 1998.12-2003.02 | 5MT | F | L/R | MPV FWD QG18DE | Date from:2000.05 | GCO41107 | Outer Joint | | 27 | 23 | 56 | 104 | 60 | I |
| **Titan** | | | | | | | | | | | | | | | |
| 5.6 (227 kw) | 2003.10-2007.12 | AT | F | | Pickup 4WD VK56DE | | GCO41403 | Outer Joint | | 29 | 36 | 67.3 | 117 | 69 | I |
| | 2003.10-2007.12 | AT | F | | Pickup 4WD VK56DE | | GCI41207 | Inner Joint | | | 36 | | | 79.5 | |
| | 2004.01-2006.12 | AT | F | | Pickup 4WD VK56DE | | GCO41403 | Outer Joint | | 29 | 36 | 67.3 | 117 | 69 | I |
| | 2004.01-2006.12 | AT | F | | Pickup 4WD VK56DE | | GCI41207 | Inner Joint | | | 36 | | | 79.5 | |
| 5.6 (236 kw) | 2008.01- | AT | F | | Pickup 4WD VK56DE | | GCO41403 | Outer Joint | | 29 | 36 | 67.3 | 117 | 69 | I |
| | 2008.01- | AT | F | | Pickup 4WD VK56DE | | GCI41207 | Inner Joint | | | 36 | | | 79.5 | |
| **Vanette Serena** | | | | | | | | | | | | | | | |
| 2.0 (56 kw) | 1991.06-2001.09 | AT/MT | R | L/R | MPV RWD CD20 | Date from:1992.01 | GCO41018 | Outer Joint | | 27 | 23 | 56 | 99 | 60 | I |
| **Versa** | | | | | | | | | | | | | | | |
| 1.6 (81 kw) | 2008.09-2013.06 | AT | F | L | Saloon FWD HR16DE | | GDS41553 | Drive Shaft | | 25 | 25 | 49 | 94.5 | 657 | |
| | 2008.09-2013.06 | MT | F | L | Saloon FWD HR16DE | | GDS41554 | Drive Shaft | | 25 | 26 | 49 | 94.5 | 658 | |
| | 2008.09-2013.06 | MT | F | R | Saloon FWD HR16DE | | GDS83414 | Drive Shaft | | 25 | 26 | 49 | 94.5 | 904 | |
| **Wingroad** | | | | | | | | | | | | | | | |
| 1.5 (80 kw) | 2005.11- | 4AT | F | L/R | Estate 4WD HR15DE | Model code:Y12 | GCO41303 | Outer Joint | | 25 | 21 | 49 | 95 | 56 | M |
| | 2005.11- | 4AT | F | L/R | Estate FWD HR15DE | Model code:Y12 | GCO41303 | Outer Joint | | 25 | 21 | 49 | 95 | 56 | M |
| **Wingroad/AD Wagon** | | | | | | | | | | | | | | | |
| 1.2 (59 kw) | 2005.11- | 4AT | F | L/R | Estate FWD CR12DE | Model code:VY12 | GCO41303 | Outer Joint | | 25 | 21 | 49 | 95 | 56 | M |
| **X-Trail** | | | | | | | | | | | | | | | |
| 1.3 (116 kw) | 2021.06- | 7AT | F | L/R | SUV FWD HR13DDT | | GCO81748 | Outer Joint | | 29 | 35 | 62 | 102.5 | 60 | I |
| 1.3 (118 kw) | 2019.04- | 7AT | F | L/R | SUV FWD HR13DDT | | GCO81748 | Outer Joint | | 29 | 35 | 62 | 102.5 | 60 | I |
| 1.5 (120 kw) | 2022.09- | CVT | F | L | SUV FWD KR15DDT | | GDS56761 | Drive Shaft | | 29 | 29 | 62 | 98.5 | 711 | |
| | 2022.09- | CVT | F | R | SUV FWD KR15DDT | | GDS56913 | Drive Shaft | | 29 | 29 | 62 | 98.5 | 947 | |
| | 2022.09- | CVT | F | L/R | SUV FWD KR15DDT | | GCO83428 | Outer Joint | | 29 | 35 | 62 | 98.5 | 60 | I |
| | 2022.09- | CVT | F | L | SUV FWD KR15DDT | | GCI83479 | Inner Joint | | 29 | 35 | 39 | 65.5 | 123.5 | |
| | 2022.09- | CVT | F | R | SUV FWD KR15DDT | | GCI83557 | Inner Joint | | 29 | 35 | 33 | 351.5 | 111.5 | |
| 1.6 (96 kw) | 2014.04- | 6MT | F | L | SUV 4WD R9M | For Modelcode:T32 | GDS57378 | Drive Shaft | | 29 | 29 | 62 | 102.5 | 632 | |
| | 2014.04- | 6MT | F | R | SUV 4WD R9M | For Modelcode:T32 | GDS58328 | Drive Shaft | | 29 | 29 | 62 | 102.5 | 1030 | |
| | 2014.04- | 6MT | F | L/R | SUV 4WD R9M | For Modelcode:T32R/T32RR | GCO81974 | Outer Joint | | 29 | 28 | 62 | 102 | 68 | I |
| | 2014.04- | 6MT | F | L/R | SUV 4WD R9M | For Modelcode:T32 | GCO83436 | Outer Joint | | 29 | 37 | 62 | 102.5 | 64.5 | I |
| | 2014.04- | 6MT | F | L | SUV 4WD R9M | For Modelcode:T32 | GCI41187 | Inner Joint | | 29 | 36 | 39 | 65.5 | 124.5 | |

| | YEAR | TRANSM. | F/R | L/R | BODY STYLE & DRIVE TYPE & ENGINE | REMARKS | G-AP Ref. | PRODUCT | ABS | Technical Specifications | | | | | |
|---|---|---|---|---|---|---|---|---|---|---|---|---|---|---|---|
| | | | | | | | | | | A | B | C | H | L | P |
| **NISSAN** **X-Trail** | | | | | | | | | | | | | | | |
| 1.6 (96 kw) | 2014.04- | 6MT | F | R | SUV 4WD R9M | For Modelcode:T32 | GCI84067 | Inner Joint | | 29 | 36 | 33 | 478 | 113 | |
| | 2014.04- | 6MT | R | L/R | SUV 4WD R9M | Date to:2014.12,For Modelcode:T32,Date from:2015.01,For Modelcode:T32/RT32RR | GDS82990 | Drive Shaft | 48T | 25 | 21 | 56 | 110.5 | 818 | |
| | 2014.04- | 6MT | R | L/R | SUV 4WD R9M | For Modelcode:T32/T32R/T32RR | GCO41285 | Outer Joint | 48T | 25 | 24 | 56 | 110.5 | 38.5 | I |
| | 2014.04- | 6MT | R | L/R | SUV 4WD R9M | Date to:2014.12,For Modelcode:T32 | GCI57111 | Inner Joint | | 21 | 24 | 38 | 61 | 91 | |
| | 2014.04- | 6MT | F | L | SUV FWD R9M | | GDS56791 | Drive Shaft | | 29 | 29 | 62 | 102.5 | 671 | |
| | 2014.04- | 6MT | F | R | SUV FWD R9M | | GDS56792 | Drive Shaft | | 29 | 29 | 62 | 102.5 | 998 | |
| | 2014.04- | 6MT | F | L/R | SUV FWD R9M | | GCO83436 | Outer Joint | | 29 | 37 | 62 | 102.5 | 64.5 | I |
| | 2014.04- | 6MT | F | R | SUV FWD R9M | | GCI83493 | Inner Joint | | 29 | 36 | 33 | 449 | 113 | |
| | 2014.04- | CVT | F | L | SUV FWD R9M | | GDS58133 | Drive Shaft | | 29 | 29 | 62 | 102.5 | 685 | |
| | 2014.04- | CVT | F | R | SUV FWD R9M | | GDS58132 | Drive Shaft | | 29 | 29 | 62 | 102.5 | 978 | |
| | 2014.04- | CVT | F | R | SUV FWD R9M | | GCI84025 | Inner Joint | | 29 | 36 | 33 | 429 | 113 | |
| | 2014.04- | CVT/6MT | F | L | SUV FWD R9M | | GCI41187 | Inner Joint | | 29 | 36 | 39 | 65.5 | 124.5 | |
| | 2014.04- | 6MT | F | L | SUV Van 4WD R9M | For Modelcode:T32 | GDS57378 | Drive Shaft | | 29 | 29 | 62 | 102.5 | 632 | |
| | 2014.04- | 6MT | F | R | SUV Van 4WD R9M | For Modelcode:T32 | GDS58328 | Drive Shaft | | 29 | 29 | 62 | 102.5 | 1030 | |
| | 2014.04- | 6MT | F | L/R | SUV Van 4WD R9M | For Modelcode:T32 | GCO83436 | Outer Joint | | 29 | 37 | 62 | 102.5 | 64.5 | I |
| | 2014.04- | 6MT | F | L | SUV Van 4WD R9M | For Modelcode:T32 | GCI41187 | Inner Joint | | 29 | 36 | 39 | 65.5 | 124.5 | |
| | 2014.04- | 6MT | F | R | SUV Van 4WD R9M | For Modelcode:T32 | GCI84067 | Inner Joint | | 29 | 36 | 33 | 478 | 113 | |
| | 2014.04- | 6MT | R | L/R | SUV Van 4WD R9M | For Modelcode:T32 | GDS82990 | Drive Shaft | 48T | 25 | 21 | 56 | 110.5 | 818 | |
| | 2014.04- | 6MT | F | L | SUV Van FWD R9M | | GDS56791 | Drive Shaft | | 29 | 29 | 62 | 102.5 | 671 | |
| | 2014.04- | 6MT | F | R | SUV Van FWD R9M | | GDS56792 | Drive Shaft | | 29 | 29 | 62 | 102.5 | 998 | |
| | 2014.04- | 6MT | F | L/R | SUV Van FWD R9M | | GCO83436 | Outer Joint | | 29 | 37 | 62 | 102.5 | 64.5 | I |
| | 2014.04- | 6MT | F | R | SUV Van FWD R9M | | GCI83493 | Inner Joint | | 29 | 36 | 33 | 449 | 113 | |
| | 2014.04- | CVT | F | L | SUV Van FWD R9M | | GDS58133 | Drive Shaft | | 29 | 29 | 62 | 102.5 | 685 | |
| | 2014.04- | CVT | F | R | SUV Van FWD R9M | | GDS58132 | Drive Shaft | | 29 | 29 | 62 | 102.5 | 978 | |
| | 2014.04- | CVT | F | R | SUV Van FWD R9M | | GCI84025 | Inner Joint | | 29 | 36 | 33 | 429 | 113 | |
| | 2014.04- | CVT/6MT | F | L | SUV Van FWD R9M | | GCI41187 | Inner Joint | | 29 | 36 | 39 | 65.5 | 124.5 | |
| 1.6 (120 kw) | 2015.06- | 6MT | F | L | SUV FWD MR16DDT | | GDS56864 | Drive Shaft | | 29 | 26 | 62 | 102.5 | 704 | |
| | 2015.06- | 6MT | F | L/R | SUV FWD MR16DDT | | GCO81748 | Outer Joint | | 29 | 35 | 62 | 102.5 | 60 | I |
| | 2015.06- | 6MT | F | L | SUV FWD MR16DDT | | GCI83532 | Inner Joint | | 26 | 33 | 40 | 64 | 119.5 | |
| 1.7 (96 kw) | 2019.04- | 6MT | F | L | SUV 4WD R9N | | GDS57378 | Drive Shaft | | 29 | 29 | 62 | 102.5 | 632 | |
| | 2019.04- | 6MT | F | R | SUV 4WD R9N | | GDS58328 | Drive Shaft | | 29 | 29 | 62 | 102.5 | 1030 | |
| | 2019.04- | 6MT | F | L/R | SUV 4WD R9N | | GCO83436 | Outer Joint | | 29 | 37 | 62 | 102.5 | 64.5 | I |
| | 2019.04- | 6MT | F | L | SUV 4WD R9N | | GCI41187 | Inner Joint | | 29 | 36 | 39 | 65.5 | 124.5 | |
| | 2019.04- | 6MT | F | R | SUV 4WD R9N | | GCI84067 | Inner Joint | | 29 | 36 | 33 | 478 | 113 | |
| | 2019.04- | 6MT | R | L/R | SUV 4WD R9N | | GDS82990 | Drive Shaft | 48T | 25 | 21 | 56 | 110.5 | 818 | |
| | 2019.04- | 6MT | R | L/R | SUV 4WD R9N | | GCO41285 | Outer Joint | 48T | 25 | 24 | 56 | 110.5 | 38.5 | I |
| | 2019.04- | 6MT | R | L/R | SUV 4WD R9N | | GCI57111 | Inner Joint | | 21 | 24 | 38 | 61 | 91 | |
| | 2019.04- | 6MT | F | L | SUV FWD R9N | | GDS56791 | Drive Shaft | | 29 | 29 | 62 | 102.5 | 671 | |
| | 2019.04- | 6MT | F | R | SUV FWD R9N | | GDS56792 | Drive Shaft | | 29 | 29 | 62 | 102.5 | 998 | |
| | 2019.04- | 6MT | F | L/R | SUV FWD R9N | | GCO83436 | Outer Joint | | 29 | 37 | 62 | 102.5 | 64.5 | I |
| | 2019.04- | 6MT | F | L | SUV FWD R9N | | GCI41187 | Inner Joint | | 29 | 36 | 39 | 65.5 | 124.5 | |
| | 2019.04- | 6MT | F | R | SUV FWD R9N | | GCI83493 | Inner Joint | | 29 | 36 | 33 | 449 | 113 | |
| 1.7 (110 kw) | 2019.04- | 6MT | F | L | SUV 4WD R9N | | GDS57378 | Drive Shaft | | 29 | 29 | 62 | 102.5 | 632 | |
| | 2019.04- | 6MT | F | R | SUV 4WD R9N | | GDS58328 | Drive Shaft | | 29 | 29 | 62 | 102.5 | 1030 | |
| | 2019.04- | 6MT | F | R | SUV 4WD R9N | | GCI84067 | Inner Joint | | 29 | 36 | 33 | 478 | 113 | |
| | 2019.04- | CVT | F | L | SUV 4WD R9N | | GDS58133 | Drive Shaft | | 29 | 29 | 62 | 102.5 | 685 | |
| | 2019.04- | CVT/6MT | F | L/R | SUV 4WD R9N | | GCO83436 | Outer Joint | | 29 | 37 | 62 | 102.5 | 64.5 | I |
| | 2019.04- | CVT/6MT | F | L | SUV 4WD R9N | | GCI41187 | Inner Joint | | 29 | 36 | 39 | 65.5 | 124.5 | |
| | 2019.04- | CVT/6MT | R | L/R | SUV 4WD R9N | | GDS82990 | Drive Shaft | 48T | 25 | 21 | 56 | 110.5 | 818 | |
| | 2019.04- | CVT/6MT | R | L/R | SUV 4WD R9N | | GCO41285 | Outer Joint | 48T | 25 | 24 | 56 | 110.5 | 38.5 | I |
| | 2019.04- | CVT/6MT | R | L/R | SUV 4WD R9N | | GCI57111 | Inner Joint | | 21 | 24 | 38 | 61 | 91 | |
| | 2019.04- | 6MT | F | L | SUV FWD R9N | | GDS56791 | Drive Shaft | | 29 | 29 | 62 | 102.5 | 671 | |
| | 2019.04- | 6MT | F | R | SUV FWD R9N | | GDS56792 | Drive Shaft | | 29 | 29 | 62 | 102.5 | 998 | |
| | 2019.04- | 6MT | F | L/R | SUV FWD R9N | | GCO83436 | Outer Joint | | 29 | 37 | 62 | 102.5 | 64.5 | I |
| | 2019.04- | 6MT | F | R | SUV FWD R9N | | GCI83493 | Inner Joint | | 29 | 36 | 33 | 449 | 113 | |
| | 2019.04- | CVT | F | L | SUV FWD R9N | | GDS58133 | Drive Shaft | | 29 | 29 | 62 | 102.5 | 685 | |
| | 2019.04- | CVT | F | R | SUV FWD R9N | | GDS58132 | Drive Shaft | | 29 | 29 | 62 | 102.5 | 978 | |
| | 2019.04- | CVT | F | R | SUV FWD R9N | | GCI84025 | Inner Joint | | 29 | 36 | 33 | 429 | 113 | |
| | 2019.04- | CVT/6MT | F | L | SUV FWD R9N | | GCI41187 | Inner Joint | | 29 | 36 | 39 | 65.5 | 124.5 | |
| 1.7 (120 kw) | 2019.04- | CVT | F | L | SUV 4WD R9N | | GDS58133 | Drive Shaft | | 29 | 29 | 62 | 102.5 | 685 | |
| | 2019.04- | CVT | F | L/R | SUV 4WD R9N | | GCO83436 | Outer Joint | | 29 | 37 | 62 | 102.5 | 64.5 | I |
| | 2019.04- | CVT | F | L | SUV 4WD R9N | | GCI41187 | Inner Joint | | 29 | 36 | 39 | 65.5 | 124.5 | |
| | 2019.04- | CVT | R | L/R | SUV 4WD R9N | | GDS82990 | Drive Shaft | 48T | 25 | 21 | 56 | 110.5 | 818 | |
| | 2019.04- | CVT | R | L/R | SUV 4WD R9N | | GCO41285 | Outer Joint | 48T | 25 | 24 | 56 | 110.5 | 38.5 | I |
| | 2019.04- | CVT | R | L/R | SUV 4WD R9N | | GCI57111 | Inner Joint | | 21 | 24 | 38 | 61 | 91 | |

| | YEAR | TRANSM. | F/R | L/R | BODY STYLE & DRIVE TYPE & ENGINE | REMARKS | G-AP Ref. | PRODUCT | ABS | Technical Specifications | | | | | |
|---|---|---|---|---|---|---|---|---|---|---|---|---|---|---|---|
| | | | | | | | | | | A | B | C | H | L | P |
| **NISSAN** | | | | | | | | | | | | | | | |
| **X-Trail** | | | | | | | | | | | | | | | |
| 1.7 (120 kw) | 2019.04- | CVT | F | L | SUV FWD R9N | | GDS58133 | Drive Shaft | | 29 | 29 | 62 | 102.5 | 685 | |
| | 2019.04- | CVT | F | R | SUV FWD R9N | | GDS58132 | Drive Shaft | | 29 | 29 | 62 | 102.5 | 978 | |
| | 2019.04- | CVT | F | L/R | SUV FWD R9N | | GCO83436 | Outer Joint | | 29 | 37 | 62 | 102.5 | 64.5 | I |
| | 2019.04- | CVT | F | L | SUV FWD R9N | | GCI41187 | Inner Joint | | 29 | 36 | 39 | 65.5 | 124.5 | |
| | 2019.04- | CVT | F | R | SUV FWD R9N | | GCI84025 | Inner Joint | | 29 | 36 | 33 | 429 | 113 | |
| 2.0 (101 kw) | 2007.06-2013.11 | CVT | F | L | SUV 4WD MR20DE | | GDS41542 | Drive Shaft | | 29 | 27 | 56.1 | 102 | 690 | |
| | 2007.06-2013.11 | CVT | F | R | SUV 4WD MR20DE | | GDS81220 | Drive Shaft | | 29 | 27 | 56.1 | 102 | 942 | |
| | 2007.06-2013.11 | CVT | F | L/R | SUV 4WD MR20DE | Date from:2008.01 | GCO41214 | Outer Joint | | 29 | 35 | 56.1 | 102 | 59 | I |
| | 2007.06-2013.11 | CVT | F | L | SUV 4WD MR20DE | | GCI41108 | Inner Joint | | 27 | 33 | 40 | 107 | 114 | |
| | 2007.06-2013.11 | CVT | F | R | SUV 4WD MR20DE | Date from:2011.08,for Model code:T31N | GCI41167 | Inner Joint | | 27 | 33 | 33 | 322 | 109.5 | |
| | 2007.06-2013.11 | CVT | F | R | SUV 4WD MR20DE | Date from:2010.07,for Model code:T31 | GCI41170 | Inner Joint | | 27 | 33 | 33 | 367 | 109.5 | |
| | 2007.06-2013.11 | CVT | R | L/R | SUV 4WD MR20DE | | GDS41538 | Drive Shaft | 48T | 25 | 21 | 56 | 110.5 | 801 | |
| | 2007.06-2013.11 | CVT | R | L/R | SUV 4WD MR20DE | | GCO41285 | Outer Joint | 48T | 25 | 24 | 56 | 110.5 | 38.5 | I |
| | 2007.06-2013.11 | CVT | R | L/R | SUV 4WD MR20DE | | GCI57111 | Inner Joint | | 21 | 24 | 38 | 61 | 91 | |
| 2.0 (102 kw) | 2008.06-2014.02 | CVT | F | L | SUV FWD MR20DE | | GDS41400 | Drive Shaft | | 29 | 27 | 56.1 | 102 | 689 | |
| | 2008.06-2014.02 | CVT | F | R | SUV FWD MR20DE | | GDS41524 | Drive Shaft | | 29 | 27 | 56.1 | 102 | 941 | |
| 2.0 (103 kw) | 2001.07-2013.01 | AT | F | L | SUV 4WD QR20DE | | GDS41522 | Drive Shaft | 44T | 29 | 29 | 56 | 103.5 | 645 | |
| | 2001.07-2013.01 | AT | F | L/R | SUV 4WD QR20DE | | GCO41185 | Outer Joint | 44T | 29 | 25 | 56 | 101 | 68 | M |
| | 2001.07-2013.01 | AT/MT | F | R | SUV 4WD QR20DE | For Left-Hand Drive | GDS41474 | Drive Shaft | 44T | 29 | | 56 | 103.5 | 547 | |
| | 2001.07-2013.01 | AT/MT | F | R | SUV 4WD QR20DE | For Right-Hand Drive | GDS99198 | Drive Shaft | 44T | 29 | | 56 | 103.5 | 655 | |
| | 2001.07-2013.01 | AT/MT | F | L/R | SUV 4WD QR20DE | | GCO41138 | Outer Joint | 44T | 29 | 25 | 56 | 103.5 | 70.5 | I |
| | 2001.07-2013.01 | AT/MT | F | L | SUV 4WD QR20DE | | GCI75036 | Inner Joint | | 29 | 26 | 39 | 65.5 | 114 | |
| | 2001.07-2013.01 | AT/MT | F | R | SUV 4WD QR20DE | | GCI41068 | Inner Joint | | | 26 | | | 81 | |
| | 2001.07-2013.01 | MT | F | L | SUV 4WD QR20DE | | GDS41523 | Drive Shaft | 44T | 29 | 29 | 56 | 103.5 | 617 | |
| | 2001.07-2013.01 | MT | F | L | SUV 4WD QR20DE | | GCI41007 | Inner Joint | | 29 | 27 | 39 | 65.5 | 120.7 | |
| | 2001.07-2013.01 | 4AT/5MT | R | L/R | SUV 4WD QR20DE | | GDS41534 | Drive Shaft | 44T | 29 | 21 | 58 | 109.5 | 791 | |
| | 2001.07-2013.01 | 4AT/5MT | R | L/R | SUV 4WD QR20DE | | GCI57111 | Inner Joint | | 21 | 24 | 38 | 61 | 91 | |
| | 2001.07-2013.01 | MT | F | L | SUV FWD QR20DE | | GDS41523 | Drive Shaft | 44T | 29 | 29 | 56 | 103.5 | 617 | |
| | 2001.07-2013.01 | MT | F | R | SUV FWD QR20DE | | GDS41474 | Drive Shaft | 44T | 29 | | 56 | 103.5 | 547 | |
| | 2001.07-2013.01 | MT | F | R | SUV FWD QR20DE | Date From:2005.03 | GDS99198 | Drive Shaft | 44T | 29 | | 56 | 103.5 | 655 | |
| | 2001.07-2013.01 | MT | F | R | SUV FWD QR20DE | | GCO41138 | Outer Joint | 44T | 29 | 25 | 56 | 103.5 | 70.5 | I |
| | 2001.07-2013.01 | MT | F | L | SUV FWD QR20DE | | GCI41007 | Inner Joint | | 29 | 27 | 39 | 65.5 | 120.7 | |
| | 2001.07-2013.01 | MT | F | L | SUV FWD QR20DE | | GCI75036 | Inner Joint | | 29 | 26 | 39 | 65.5 | 114 | |
| | 2008.06-2013.11 | AT | F | L | SUV 4WD MR20DE | | GCI41108 | Inner Joint | | 27 | 33 | 40 | 107 | 114 | |
| | 2008.06-2013.11 | AT | F | R | SUV 4WD MR20DE | Date from:2011.08 | GCI41167 | Inner Joint | | 27 | 33 | 33 | 322 | 109.5 | |
| | 2008.06-2013.11 | AT | F | R | SUV 4WD MR20DE | Date from:2010.07 | GCI41170 | Inner Joint | | 27 | 33 | 33 | 367 | 109.5 | |
| | 2008.06-2013.11 | AT/MT | F | L/R | SUV 4WD MR20DE | 6 balls | GCO41214 | Outer Joint | | 29 | 35 | 56.1 | 102 | 59 | I |
| | 2008.06-2013.11 | MT | F | L | SUV 4WD MR20DE | | GDS82512 | Drive Shaft | | 29 | 29 | 56 | 102.5 | 620 | |
| | 2008.06-2013.11 | MT | F | R | SUV 4WD MR20DE | | GDS41461 | Drive Shaft | | 29 | 29 | 56.1 | 102 | 1002 | |
| | 2008.06-2013.11 | MT | F | L/R | SUV 4WD MR20DE | 8 balls | GCO81540 | Outer Joint | | 29 | 35 | 56 | 102.5 | 59 | I |
| | 2008.06-2013.11 | MT | F | L | SUV 4WD MR20DE | | GCI41205 | Inner Joint | | 29 | 33 | 39 | 65.5 | 122 | |
| | 2008.06-2013.11 | MT | R | L/R | SUV 4WD MR20DE | | GDS41538 | Drive Shaft | 48T | 25 | 21 | 56 | 110.5 | 801 | |
| | 2008.06-2013.11 | MT | R | L/R | SUV 4WD MR20DE | | GCO41285 | Outer Joint | 48T | 25 | 24 | 56 | 110.5 | 38.5 | I |
| | 2008.06-2013.11 | MT | R | L/R | SUV 4WD MR20DE | | GCI57111 | Inner Joint | | 21 | 24 | 38 | 61 | 91 | |
| | 2008.06-2013.11 | AT | F | R | SUV FWD MR20DE | Date from:2010.07 | GCI41167 | Inner Joint | | 27 | 33 | 33 | 322 | 109.5 | |
| | 2008.06-2013.11 | AT/MT | F | L/R | SUV FWD MR20DE | | GCO41214 | Outer Joint | | 29 | 35 | 56.1 | 102 | 59 | I |
| | 2008.06-2013.11 | MT | F | L/R | SUV FWD MR20DE | | GCO81540 | Outer Joint | | 29 | 35 | 56 | 102.5 | 59 | I |
| 2.0 (104 kw) | 2007.03-2013.11 | AT | F | L/R | SUV FWD MR20DE | Date from:2008.01 | GCO41214 | Outer Joint | | 29 | 35 | 56.1 | 102 | 59 | I |
| | 2007.03-2013.11 | AT | F | R | SUV FWD MR20DE | Date from:2010.07 | GCI41167 | Inner Joint | | 27 | 33 | 33 | 322 | 109.5 | |
| | 2007.03-2013.11 | MT | F | L | SUV FWD MR20DE | 6 balls | GCO41214 | Outer Joint | | 29 | 35 | 56.1 | 102 | 59 | I |
| | 2007.03-2013.11 | MT | F | L | SUV FWD MR20DE | 8 balls | GCO81540 | Outer Joint | | 29 | 35 | 56 | 102.5 | 59 | I |
| | 2007.06-2013.11 | 6MT | F | L | SUV 4WD MR20DE | | GDS82512 | Drive Shaft | | 29 | 29 | 56 | 102.5 | 620 | |
| | 2007.06-2013.11 | 6MT | F | L | SUV 4WD MR20DE | | GCI41205 | Inner Joint | | 29 | 33 | 39 | 65.5 | 122 | |
| | 2007.06-2013.11 | CVT | F | L | SUV 4WD MR20DE | | GDS41542 | Drive Shaft | | 29 | 27 | 56.1 | 102 | 690 | |
| | 2007.06-2013.11 | CVT | F | R | SUV 4WD MR20DE | | GDS81220 | Drive Shaft | | 29 | 27 | 56.1 | 102 | 942 | |
| | 2007.06-2013.11 | CVT | F | L/R | SUV 4WD MR20DE | Thread Size:M22×1.5 | GCO41311 | Outer Joint | | 29 | 35 | 56 | 102.5 | 59 | I |
| | 2007.06-2013.11 | CVT | F | L | SUV 4WD MR20DE | for Model code:T31/T31R/T31Z;TJ | GCI41108 | Inner Joint | | 27 | 33 | 40 | 107 | 114 | |
| | 2007.06-2013.11 | CVT | F | L | SUV 4WD MR20DE | PTJ | GCI41181 | Inner Joint | | 27 | 33 | 40 | 107 | 118 | |
| | 2007.06-2013.11 | CVT | F | R | SUV 4WD MR20DE | Date from:2011.08,for Model code:T31N;PTJ | GCI41167 | Inner Joint | | 27 | 33 | 33 | 322 | 109.5 | |
| | 2007.06-2013.11 | CVT | F | R | SUV 4WD MR20DE | Date from:2010.07,for Model code:T31R;PTJ | GCI41170 | Inner Joint | | 27 | 33 | 33 | 367 | 109.5 | |
| | 2007.06-2013.11 | MT | F | R | SUV 4WD MR20DE | | GDS41461 | Drive Shaft | | 29 | 29 | 56.1 | 102 | 1002 | |
| | 2007.06-2013.11 | MT | F | L/R | SUV 4WD MR20DE | 8 balls | GCO81540 | Outer Joint | | 29 | 35 | 56 | 102.5 | 59 | I |
| | 2007.06-2013.11 | MT/CVT | F | L/R | SUV 4WD MR20DE | 6 balls | GCO41214 | Outer Joint | | 29 | 35 | 56.1 | 102 | 59 | I |
| | 2007.06-2013.11 | MT/CVT | R | L/R | SUV 4WD MR20DE | | GDS41538 | Drive Shaft | 48T | 25 | 21 | 56 | 110.5 | 801 | |
| | 2007.06-2013.11 | MT/CVT | R | L/R | SUV 4WD MR20DE | | GCO41285 | Outer Joint | 48T | 25 | 24 | 56 | 110.5 | 38.5 | I |

| | YEAR | TRANSM. | F/R | L/R | BODY STYLE & DRIVE TYPE & ENGINE | REMARKS | G-AP Ref. | PRODUCT | ABS | Technical Specifications A | B | C | H | L | P |
|---|---|---|---|---|---|---|---|---|---|---|---|---|---|---|---|
| **NISSAN** **X-Trail** | | | | | | | | | | | | | | | |
| 2.0 (104 kw) | 2007.06-2013.11 | MT/CVT | R | L/R | SUV 4WD MR20DE | | GCI57111 | Inner Joint | | 21 | 24 | 38 | 61 | 91 | |
| 2.0 (106 kw) | 2014.02- | 6MT | F | L | SUV FWD MR20DD | | GDS56864 | Drive Shaft | | 29 | 26 | 62 | 102.5 | 704 | |
| | 2014.02- | 6MT | F | L | SUV FWD MR20DD | Modelcode:T32 | GCI83532 | Inner Joint | | 26 | 33 | 40 | 64 | 119.5 | |
| | 2014.02- | CVT | F | L | SUV FWD MR20DD | Modelcode:T32 | GDS82428 | Drive Shaft | | 29 | 27 | 62 | 102.5 | 710 | |
| | 2014.02- | CVT | F | R | SUV FWD MR20DD | Modelcode:T32 | GDS83163 | Drive Shaft | | 29 | 27 | 62 | 102.5 | 963 | |
| | 2014.02- | CVT | F | L | SUV FWD MR20DD | | GCI81700 | Inner Joint | | 27 | 33 | 40 | 62.5 | 112 | |
| | 2014.02- | CVT | F | R | SUV FWD MR20DD | Modelcode:T32 | GCI82149 | Inner Joint | | 27 | 33 | 33 | 357 | 107 | |
| | 2014.02- | CVT/6MT | F | L/R | SUV FWD MR20DD | For Modelcode:T32R | GCO81520 | Outer Joint | | 29 | 26 | 62 | 102.5 | 60 | I |
| | 2014.02- | CVT/6MT | F | L/R | SUV FWD MR20DD | For Modelcode:T32 | GCO81748 | Outer Joint | | 29 | 35 | 62 | 102.5 | 60 | I |
| | 2014.09- | CVT | F | R | SUV 4WD MR20DD | Date from:2019.05 | GDS56088 | Drive Shaft | | 29 | 27 | 62 | 102.5 | 962 | |
| | 2014.09- | CVT | F | R | SUV 4WD MR20DD | Date from:2019.05 | GCO82030 | Outer Joint | | 29 | 33 | 62 | 102.5 | 57.5 | I |
| | 2014.09- | CVT | F | L/R | SUV 4WD MR20DD | Model code:T32R/T32RR | GCO81520 | Outer Joint | | 29 | 26 | 62 | 102.5 | 60 | I |
| | 2014.09- | CVT | F | L/R | SUV 4WD MR20DD | Model code:T32 | GCO81748 | Outer Joint | | 29 | 35 | 62 | 102.5 | 60 | I |
| | 2014.09- | CVT | F | L | SUV 4WD MR20DD | | GCI41199 | Inner Joint | | 27 | 26 | 40 | 62.5 | 107 | |
| | 2014.09- | CVT | F | L | SUV 4WD MR20DD | | GCI81700 | Inner Joint | | 27 | 33 | 40 | 62.5 | 112 | |
| | 2014.09- | CVT | F | R | SUV 4WD MR20DD | For Modelcode:T32 | GCI81800 | Inner Joint | | 27 | 33 | 33 | 357 | 107 | |
| | 2014.09- | CVT | R | L/R | SUV 4WD MR20DD | | GDS82990 | Drive Shaft | 48T | 25 | 21 | 56 | 110.5 | 818 | |
| | 2014.09- | CVT | R | L/R | SUV 4WD MR20DD | | GCO41285 | Outer Joint | 48T | 25 | 24 | 56 | 110.5 | 38.5 | I |
| | 2014.09- | CVT | R | L/R | SUV 4WD MR20DD | | GCI57111 | Inner Joint | | 21 | 24 | 38 | 61 | 91 | |
| 2.0 (108 kw) | 2013.12- | CVT | F | R | SUV 4WD MR20DD | Date from:2019.05 | GDS56088 | Drive Shaft | | 29 | 27 | 62 | 102.5 | 962 | |
| | 2013.12- | CVT | F | R | SUV 4WD MR20DD | Date from:2019.05 | GCO82030 | Outer Joint | | 29 | 33 | 62 | 102.5 | 57.5 | I |
| 2.0 (110 kw) | 2001.09-2013.01 | AT | F | L | SUV 4WD QR20DE | | GDS41522 | Drive Shaft | 44T | 29 | 29 | 56 | 103.5 | 645 | |
| | 2001.09-2013.01 | AT | F | L/R | SUV 4WD QR20DE | | GCO41185 | Outer Joint | 44T | 29 | 25 | 56 | 101 | 68 | M |
| | 2001.09-2013.01 | AT/MT | F | R | SUV 4WD QR20DE | For Left-Hand Drive | GDS41474 | Drive Shaft | 44T | 29 | | 56 | 103.5 | 547 | |
| | 2001.09-2013.01 | AT/MT | F | R | SUV 4WD QR20DE | For Right-Hand Drive | GDS99198 | Drive Shaft | 44T | 29 | | 56 | 103.5 | 655 | |
| | 2001.09-2013.01 | AT/MT | F | L/R | SUV 4WD QR20DE | | GCO41138 | Outer Joint | 44T | 29 | 25 | 56 | 103.5 | 70.5 | I |
| | 2001.09-2013.01 | AT/MT | F | L | SUV 4WD QR20DE | | GCI75036 | Inner Joint | | 29 | 26 | 39 | 65.5 | 114 | |
| | 2001.09-2013.01 | AT/MT | F | R | SUV 4WD QR20DE | | GCI41068 | Inner Joint | | | 26 | | | 81 | |
| | 2001.09-2013.01 | MT | F | L | SUV 4WD QR20DE | TJ | GDS41127 | Drive Shaft | 44T | 29 | 29 | 56 | 103.5 | 619 | |
| | 2001.09-2013.01 | MT | F | L | SUV 4WD QR20DE | AAR | GDS41523 | Drive Shaft | 44T | 29 | 29 | 56 | 103.5 | 617 | |
| | 2001.09-2013.01 | AT/MT | R | L/R | SUV 4WD QR20DE | | GDS41534 | Drive Shaft | 44T | 29 | 21 | 58 | 109.5 | 791 | |
| | 2001.09-2013.01 | AT/MT | R | L/R | SUV 4WD QR20DE | | GCI57111 | Inner Joint | | 21 | 24 | 38 | 61 | 91 | |
| | 2001.09-2013.01 | MT | F | L | SUV FWD QR20DE | | GDS41523 | Drive Shaft | 44T | 29 | 29 | 56 | 103.5 | 617 | |
| | 2001.09-2013.01 | MT | F | R | SUV FWD QR20DE | | GDS41474 | Drive Shaft | 44T | 29 | | 56 | 103.5 | 547 | |
| | 2001.09-2013.01 | MT | F | R | SUV FWD QR20DE | Date From:2005.03 | GDS99198 | Drive Shaft | 44T | 29 | | 56 | 103.5 | 655 | |
| | 2001.09-2013.01 | MT | F | R | SUV FWD QR20DE | | GCO41138 | Outer Joint | 44T | 29 | 25 | 56 | 103.5 | 70.5 | I |
| | 2001.09-2013.01 | MT | F | L | SUV FWD QR20DE | | GCI75036 | Inner Joint | | 29 | 26 | 39 | 65.5 | 114 | |
| | 2007.06-2013.11 | AT | F | L | SUV 4WD M9R | | GDS41365 | Drive Shaft | | 29 | 30 | 56 | 102 | 650 | |
| | 2007.06-2013.11 | AT | F | L | SUV 4WD M9R | | GDS41521 | Drive Shaft | | 29 | 27 | 56.1 | 102 | 667 | |
| | 2007.06-2013.11 | AT | F | R | SUV 4WD M9R | | GDS41475 | Drive Shaft | | 29 | 30 | 56 | 102 | 971 | |
| | 2007.06-2013.11 | AT | F | L | SUV 4WD M9R | | GCO41214 | Outer Joint | | 29 | 35 | 56.1 | 102 | 59 | I |
| | 2007.06-2013.11 | AT | F | L | SUV 4WD M9R | | GCI41135 | Inner Joint | | 30 | 29 | 34 | 76 | 97 | |
| | 2007.06-2013.11 | AT | F | L | SUV 4WD M9R | | GCI41181 | Inner Joint | | 27 | 33 | 40 | 107 | 118 | |
| | 2007.06-2013.11 | AT/MT | F | L/R | SUV 4WD M9R | | GCO41249 | Outer Joint | | 29 | 36 | 56 | 102 | 72 | I |
| | 2007.06-2013.11 | MT | F | L | SUV 4WD M9R | | GDS41481 | Drive Shaft | | 29 | 29 | 56 | 102 | 615 | |
| | 2007.06-2013.11 | MT | F | R | SUV 4WD M9R | | GDS41482 | Drive Shaft | | 29 | 29 | 56 | 102 | 1009 | |
| | 2007.06-2013.11 | MT | F | L | SUV 4WD M9R | | GCI41076 | Inner Joint | | 29 | 29 | 39 | 65.5 | 116 | |
| | 2007.06-2013.11 | MT | F | R | SUV 4WD M9R | | GCI81064 | Inner Joint | | 29 | 29 | 33 | 482.5 | 99.5 | |
| | 2007.06-2013.11 | AT/MT | R | L/R | SUV 4WD M9R | | GDS41538 | Drive Shaft | 48T | 25 | 21 | 56 | 110.5 | 801 | |
| | 2007.06-2013.11 | AT/MT | R | L/R | SUV 4WD M9R | | GCO41285 | Outer Joint | 48T | 25 | 24 | 56 | 110.5 | 38.5 | I |
| | 2007.06-2013.11 | AT/MT | R | L/R | SUV 4WD M9R | | GCI57111 | Inner Joint | | 21 | 24 | 38 | 61 | 91 | |
| | 2007.06-2013.11 | 6MT | F | L | SUV FWD M9R | Outer teeth of tranm.side:29 | GDS41481 | Drive Shaft | | 29 | 29 | 56 | 102 | 615 | |
| | 2007.06-2013.11 | MT | F | R | SUV FWD M9R | | GDS41482 | Drive Shaft | | 29 | 29 | 56 | 102 | 1009 | |
| | 2007.06-2013.11 | MT | F | L/R | SUV FWD M9R | | GCO41249 | Outer Joint | | 29 | 36 | 56 | 102 | 72 | I |
| | 2007.06-2013.11 | MT | F | L | SUV FWD M9R | | GCI41076 | Inner Joint | | 29 | 29 | 39 | 65.5 | 116 | |
| | 2007.06-2013.11 | | F | L | SUV FWD M9R | Outer teeth of tranm.side:30 | GDS41365 | Drive Shaft | | 29 | 30 | 56 | 102 | 650 | |
| | 2007.06-2013.11 | | F | R | SUV FWD M9R | Outer teeth of tranm.side:30 | GDS41475 | Drive Shaft | | 29 | 30 | 56 | 102 | 971 | |
| | 2011.01-2014.02 | 6MT | F | R | SUV Van FWD M9R | | GDS41482 | Drive Shaft | | 29 | 29 | 56 | 102 | 1009 | |
| | 2011.01-2014.02 | 6MT | F | L/R | SUV Van FWD M9R | | GCO41249 | Outer Joint | | 29 | 36 | 56 | 102 | 72 | I |
| | 2011.01-2014.02 | 6MT | F | R | SUV Van FWD M9R | | GCI81064 | Inner Joint | | 29 | 29 | 33 | 482.5 | 99.5 | |
| | 2013.01-2014.02 | 6AT/6MT | F | L/R | SUV Van 4WD M9R | | GCO41249 | Outer Joint | | 29 | 36 | 56 | 102 | 72 | I |
| | 2013.01-2014.02 | AT | F | L | SUV Van 4WD M9R | | GDS41365 | Drive Shaft | | 29 | 30 | 56 | 102 | 650 | |
| | 2013.01-2014.02 | AT | F | R | SUV Van 4WD M9R | | GDS41475 | Drive Shaft | | 29 | 30 | 56 | 102 | 971 | |
| | 2013.01-2014.02 | MT | F | L | SUV Van 4WD M9R | | GDS41481 | Drive Shaft | | 29 | 29 | 56 | 102 | 615 | |
| | 2013.01-2014.02 | MT | F | R | SUV Van 4WD M9R | | GDS41482 | Drive Shaft | | 29 | 29 | 56 | 102 | 1009 | |

| | YEAR | TRANSM. | F/R | L/R | BODY STYLE & DRIVE TYPE & ENGINE | REMARKS | G-AP Ref. | PRODUCT | ABS | Technical Specifications | | | | | |
|---|---|---|---|---|---|---|---|---|---|---|---|---|---|---|---|
| | | | | | | | | | | A | B | C | H | L | P |
| **NISSAN** | | | | | | | | | | | | | | | |
| **X-Trail** | | | | | | | | | | | | | | | |
| 2.0 (110 kw) | 2013.01-2014.02 | MT | F | L/R | SUV Van 4WD M9R | | GCI81064 | Inner Joint | | 29 | 29 | 33 | 482.5 | 99.5 | |
| | 2013.01-2014.02 | 6AT/6MT | R | L/R | SUV Van 4WD M9R | | GDS41538 | Drive Shaft | 48T | 25 | 21 | 56 | 110.5 | 801 | |
| | 2013.01-2014.02 | 6AT/6MT | R | L/R | SUV Van 4WD M9R | | GCO41285 | Outer Joint | 48T | 25 | 24 | 56 | 110.5 | 38.5 | I |
| | 2013.01-2014.02 | 6AT/6MT | R | L/R | SUV Van 4WD M9R | | GCI57111 | Inner Joint | | 21 | 24 | 38 | 61 | 91 | |
| 2.0 (127 kw) | 2007.06-2013.11 | 6AT/6MT | F | L | SUV 4WD M9R 760 | | GDS41481 | Drive Shaft | | 29 | 29 | 56 | 102 | 615 | |
| | 2007.06-2013.11 | 6AT/6MT | F | R | SUV 4WD M9R 760 | | GDS41482 | Drive Shaft | | 29 | 29 | 56 | 102 | 1009 | |
| | 2007.06-2013.11 | 6AT/6MT | F | L/R | SUV 4WD M9R 760 | | GCO41249 | Outer Joint | | 29 | 36 | 56 | 102 | 72 | I |
| | 2007.06-2013.11 | 6AT/6MT | F | L | SUV 4WD M9R 760 | | GCI41076 | Inner Joint | | 29 | 29 | 39 | 65.5 | 116 | |
| | 2007.06-2013.11 | 6MT | F | R | SUV 4WD M9R 760 | | GCI81064 | Inner Joint | | 29 | 29 | 33 | 482.5 | 99.5 | |
| | 2007.06-2013.11 | AT | F | L | SUV 4WD M9R 760 | | GCO41214 | Outer Joint | | 29 | 35 | 56.1 | 102 | 59 | I |
| | 2007.06-2013.11 | 6AT/6MT | R | L/R | SUV 4WD M9R 760 | | GDS41538 | Drive Shaft | 48T | 25 | 21 | 56 | 110.5 | 801 | |
| | 2007.06-2013.11 | 6AT/6MT | R | L/R | SUV 4WD M9R 760 | | GCO41285 | Outer Joint | 48T | 25 | 24 | 56 | 110.5 | 38.5 | I |
| | 2007.06-2013.11 | 6AT/6MT | R | L/R | SUV 4WD M9R 760 | | GCI57111 | Inner Joint | | 21 | 24 | 38 | 61 | 91 | |
| | 2013.03-2014.02 | 6MT | F | L | SUV Van 4WD M9R 760 | | GDS41481 | Drive Shaft | | 29 | 29 | 56 | 102 | 615 | |
| | 2013.03-2014.02 | 6MT | F | R | SUV Van 4WD M9R 760 | | GDS41482 | Drive Shaft | | 29 | 29 | 56 | 102 | 1009 | |
| | 2013.03-2014.02 | 6MT | F | L/R | SUV Van 4WD M9R 760 | | GCO41249 | Outer Joint | | 29 | 36 | 56 | 102 | 72 | I |
| | 2013.03-2014.02 | 6MT | F | L/R | SUV Van 4WD M9R 760 | | GCI81064 | Inner Joint | | 29 | 29 | 33 | 482.5 | 99.5 | |
| | 2013.03-2014.02 | 6MT | R | L/R | SUV Van 4WD M9R 760 | | GDS41538 | Drive Shaft | 48T | 25 | 21 | 56 | 110.5 | 801 | |
| | 2013.03-2014.02 | 6MT | R | L/R | SUV Van 4WD M9R 760 | | GCO41285 | Outer Joint | 48T | 25 | 24 | 56 | 110.5 | 38.5 | I |
| | 2013.03-2014.02 | 6MT | R | L/R | SUV Van 4WD M9R 760 | | GCI57111 | Inner Joint | | 21 | 24 | 38 | 61 | 91 | |
| 2.0 (130 kw) | 2009.10-2013.11 | AT | F | R | SUV 4WD M9R 760 | | GDS41475 | Drive Shaft | | 29 | 30 | 56 | 102 | 971 | |
| | 2009.10-2013.11 | MT | F | L | SUV 4WD M9R 760 | | GDS41481 | Drive Shaft | | 29 | 29 | 56 | 102 | 615 | |
| | 2009.10-2013.11 | MT | F | R | SUV 4WD M9R 760 | | GDS41482 | Drive Shaft | | 29 | 29 | 56 | 102 | 1009 | |
| | 2009.10-2013.11 | MT | F | L/R | SUV 4WD M9R 760 | | GCO41249 | Outer Joint | | 29 | 36 | 56 | 102 | 72 | I |
| | 2009.10-2013.11 | MT | F | L | SUV 4WD M9R 760 | | GCI41076 | Inner Joint | | 29 | 29 | 39 | 65.5 | 116 | |
| | 2009.10-2013.11 | MT | F | R | SUV 4WD M9R 760 | | GCI81064 | Inner Joint | | 29 | 29 | 33 | 482.5 | 99.5 | |
| | 2009.10-2013.11 | MT | R | L/R | SUV 4WD M9R 760 | | GDS41538 | Drive Shaft | 48T | 25 | 21 | 56 | 110.5 | 801 | |
| | 2009.10-2013.11 | MT | R | L/R | SUV 4WD M9R 760 | | GCI57111 | Inner Joint | | 21 | 24 | 38 | 61 | 91 | |
| | 2009.10-2013.11 | | R | L/R | SUV 4WD M9R 760 | | GCO41285 | Outer Joint | 48T | 25 | 24 | 56 | 110.5 | 38.5 | I |
| | 2016.10- | 6MT | F | L | SUV 4WD M9R | | GDS57378 | Drive Shaft | | 29 | 29 | 62 | 102.5 | 632 | |
| | 2016.10- | 6MT | F | R | SUV 4WD M9R | | GDS58328 | Drive Shaft | | 29 | 29 | 62 | 102.5 | 1030 | |
| | 2016.10- | 6MT | F | R | SUV 4WD M9R | | GCI84067 | Inner Joint | | 29 | 36 | 33 | 478 | 113 | |
| | 2016.10- | CVT/6MT | F | L/R | SUV 4WD M9R | | GCO83436 | Outer Joint | | 29 | 37 | 62 | 102.5 | 64.5 | I |
| | 2016.10- | CVT/6MT | F | L | SUV 4WD M9R | | GCI41187 | Inner Joint | | 29 | 36 | 39 | 65.5 | 124.5 | |
| | 2016.10- | CVT/6MT | R | L/R | SUV 4WD M9R | | GDS82990 | Drive Shaft | 48T | 25 | 21 | 56 | 110.5 | 818 | |
| | 2016.10- | CVT/6MT | R | L/R | SUV 4WD M9R | | GCO41285 | Outer Joint | 48T | 25 | 24 | 56 | 110.5 | 38.5 | I |
| | 2016.10- | CVT/6MT | R | L/R | SUV 4WD M9R | | GCI57111 | Inner Joint | | 21 | 24 | 38 | 61 | 91 | |
| | 2016.10- | CVT | F | L/R | SUV FWD M9R | | GCO83436 | Outer Joint | | 29 | 37 | 62 | 102.5 | 64.5 | I |
| 2.0 (206 kw) | 2001.06-2013.01 | AT | F | | SUV 4WD SR20VET | | GCO41185 | Outer Joint | 44T | 29 | 25 | 56 | 101 | 68 | M |
| | 2001.06-2013.01 | AT | F | R | SUV 4WD SR20VET | | GCI41068 | Inner Joint | | | 26 | | | 81 | |
| | 2001.06-2013.01 | AT | R | | SUV 4WD SR20VET | | GCI57111 | Inner Joint | | 21 | 24 | 38 | 61 | 91 | |
| 2.2 (84 kw) | 2001.06-2004.09 | 6MT | F | L | SUV FWD YD22ETI | | GCI75036 | Inner Joint | | 29 | 26 | 39 | 65.5 | 114 | |
| | 2001.06-2004.09 | MT | F | L | SUV FWD YD22ETI | TJ | GDS41127 | Drive Shaft | 44T | 29 | 29 | 56 | 103.5 | 619 | |
| | 2001.06-2004.09 | MT | F | L | SUV FWD YD22ETI | AAR | GDS41523 | Drive Shaft | 44T | 29 | 29 | 56 | 103.5 | 617 | |
| | 2001.06-2004.09 | MT | F | R | SUV FWD YD22ETI | | GDS41474 | Drive Shaft | 44T | 29 | | 56 | 103.5 | 547 | |
| | 2001.06-2004.09 | 6MT | R | L/R | SUV FWD YD22ETI | | GCI57111 | Inner Joint | | 21 | 24 | 38 | 61 | 91 | |
| | 2001.06-2004.09 | MT | R | L/R | SUV FWD YD22ETI | | GDS41534 | Drive Shaft | 44T | 29 | 21 | 58 | 109.5 | 791 | |
| | 2001.07-2005.10 | 6MT | F | L | SUV 4WD YD22DDTi;YD22ETI | | GDS41523 | Drive Shaft | 44T | 29 | 29 | 56 | 103.5 | 617 | |
| | 2001.07-2005.10 | 6MT | F | R | SUV 4WD YD22DDTi;YD22ETI | | GDS41474 | Drive Shaft | 44T | 29 | | 56 | 103.5 | 547 | |
| | 2001.07-2005.10 | 6MT | F | L/R | SUV 4WD YD22DDTi;YD22ETI | | GCO41138 | Outer Joint | 44T | 29 | 25 | 56 | 103.5 | 70.5 | I |
| | 2001.07-2005.10 | 6MT | F | L | SUV 4WD YD22DDTi;YD22ETI | | GCI75036 | Inner Joint | | 29 | 26 | 39 | 65.5 | 114 | |
| | 2001.07-2005.10 | 6MT | F | R | SUV 4WD YD22DDTi;YD22ETI | | GCI41068 | Inner Joint | | | 26 | | | 81 | |
| | 2001.07-2005.10 | MT | F | L | SUV 4WD YD22DDTi;YD22ETI | | GCI41007 | Inner Joint | | 29 | 27 | 39 | 65.5 | 120.7 | |
| | 2001.07-2005.10 | 6MT | R | L/R | SUV 4WD YD22DDTi;YD22ETI | | GDS41534 | Drive Shaft | 44T | 29 | 21 | 58 | 109.5 | 791 | |
| | 2001.07-2005.10 | 6MT | R | L/R | SUV 4WD YD22DDTi;YD22ETI | | GCI57111 | Inner Joint | | 21 | 24 | 38 | 61 | 91 | |
| | 2004.10-2013.01 | 5MT/6MT | F | L | SUV FWD YD22DDTi;YD22ETI | AAR | GDS41523 | Drive Shaft | 44T | 29 | 29 | 56 | 103.5 | 617 | |
| | 2004.10-2013.01 | 5MT/6MT | F | R | SUV FWD YD22DDTi;YD22ETI | | GDS41474 | Drive Shaft | 44T | 29 | | 56 | 103.5 | 547 | |
| | 2004.10-2013.01 | 5MT/6MT | F | L | SUV FWD YD22DDTi;YD22ETI | | GCO41138 | Outer Joint | 44T | 29 | 25 | 56 | 103.5 | 70.5 | I |
| | 2004.10-2013.01 | 5MT/6MT | F | L | SUV FWD YD22DDTi;YD22ETI | | GCI75036 | Inner Joint | | 29 | 26 | 39 | 65.5 | 114 | |
| | 2004.10-2013.01 | MT | F | L | SUV FWD YD22DDTi;YD22ETI | TJ | GDS41127 | Drive Shaft | 44T | 29 | 29 | 56 | 103.5 | 619 | |
| | 2004.10-2013.01 | 5MT/6MT | R | L/R | SUV FWD YD22DDTi;YD22ETI | | GDS41534 | Drive Shaft | 44T | 29 | 21 | 58 | 109.5 | 791 | |
| | 2004.10-2013.01 | 5MT/6MT | R | L/R | SUV FWD YD22DDTi;YD22ETI | | GCI57111 | Inner Joint | | 21 | 24 | 38 | 61 | 91 | |
| 2.2 (100 kw) | 2001.06-2008.12 | 6AT/6MT | F | L | SUV 4WD YD22DDTi;YD22ETI | AAR | GDS41523 | Drive Shaft | 44T | 29 | 29 | 56 | 103.5 | 617 | |
| | 2001.06-2008.12 | 6AT/6MT | F | R | SUV 4WD YD22DDTi;YD22ETI | | GDS41474 | Drive Shaft | 44T | 29 | | 56 | 103.5 | 547 | |
| | 2001.06-2008.12 | 6AT/6MT | F | L/R | SUV 4WD YD22DDTi;YD22ETI | | GCO41138 | Outer Joint | 44T | 29 | 25 | 56 | 103.5 | 70.5 | I |

| | YEAR | TRANSM. | F/R | L/R | BODY STYLE & DRIVE TYPE & ENGINE | REMARKS | G-AP Ref. | PRODUCT | ABS | Technical Specifications A | B | C | H | L | P |
|---|---|---|---|---|---|---|---|---|---|---|---|---|---|---|---|
| **NISSAN** | | | | | | | | | | | | | | | |
| **X-Trail** | | | | | | | | | | | | | | | |
| 2.2 (100 kw) | 2001.06-2008.12 | 6AT/6MT | F | L | SUV 4WD YD22DDTi;YD22ETI | | GCI75036 | Inner Joint | | 29 | 26 | 39 | 65.5 | 114 | |
| | 2001.06-2008.12 | 6AT/6MT | F | R | SUV 4WD YD22DDTi;YD22ETI | | GCI41068 | Inner Joint | | | 26 | | | 81 | |
| | 2001.06-2008.12 | MT | F | L | SUV 4WD YD22DDTi;YD22ETI | TJ | GDS41127 | Drive Shaft | 44T | 29 | 29 | 56 | 103.5 | 619 | |
| | 2001.06-2008.12 | 6AT/6MT | R | L/R | SUV 4WD YD22DDTi;YD22ETI | | GDS41534 | Drive Shaft | 44T | 29 | 21 | 58 | 109.5 | 791 | |
| | 2001.06-2008.12 | 6AT/6MT | R | L/R | SUV 4WD YD22DDTi;YD22ETI | | GCI57111 | Inner Joint | | 21 | 24 | 38 | 61 | 91 | |
| | 2003.12-2013.01 | 5MT | F | L | SUV FWD YD22DDTi;YD22ETI | | GDS41523 | Drive Shaft | 44T | 29 | 29 | 56 | 103.5 | 617 | |
| | 2003.12-2013.01 | 5MT | F | R | SUV FWD YD22DDTi;YD22ETI | | GDS41474 | Drive Shaft | 44T | 29 | | 56 | 103.5 | 547 | |
| | 2003.12-2013.01 | 5MT | F | L/R | SUV FWD YD22DDTi;YD22ETI | | GCO41138 | Outer Joint | 44T | 29 | 25 | 56 | 103.5 | 70.5 | I |
| | 2003.12-2013.01 | MT | F | | SUV FWD YD22DDTi;YD22ETI | Date from:2005.02 | GCO41185 | Outer Joint | 44T | 29 | 25 | 56 | 101 | 68 | M |
| | 2003.12-2013.01 | MT | F | L | SUV FWD YD22DDTi;YD22ETI | | GCI41007 | Inner Joint | | 29 | 27 | 39 | 65.5 | 120.7 | |
| | 2003.12-2013.01 | MT | F | R | SUV FWD YD22DDTi;YD22ETI | Date from:2005.02 | GCI41068 | Inner Joint | | | 26 | | | 81 | |
| | 2003.12-2013.01 | | F | L | SUV FWD YD22DDTi;YD22ETI | | GCI75036 | Inner Joint | | 29 | 26 | 39 | 65.5 | 114 | |
| | 2003.12-2013.01 | MT | R | L/R | SUV FWD YD22DDTi;YD22ETI | | GDS41534 | Drive Shaft | 44T | 29 | 21 | 58 | 109.5 | 791 | |
| 2.5 (121 kw) | 2002.09-2013.01 | AT | F | L | SUV 4WD QR25DE | | GDS41522 | Drive Shaft | 44T | 29 | 29 | 56 | 103.5 | 645 | |
| | 2002.09-2013.01 | AT | F | R | SUV 4WD QR25DE | GrooveType:Middle | GCO41185 | Outer Joint | 44T | 29 | 25 | 56 | 101 | 68 | M |
| | 2002.09-2013.01 | AT/MT | F | R | SUV 4WD QR25DE | | GDS41474 | Drive Shaft | 44T | 29 | | 56 | 103.5 | 547 | |
| | 2002.09-2013.01 | AT/MT | F | L/R | SUV 4WD QR25DE | GrooveType:Inner | GCO41138 | Outer Joint | 44T | 29 | 25 | 56 | 103.5 | 70.5 | I |
| | 2002.09-2013.01 | AT/MT | F | L | SUV 4WD QR25DE | | GCI75036 | Inner Joint | | 29 | 26 | 39 | 65.5 | 114 | |
| | 2002.09-2013.01 | AT/MT | F | R | SUV 4WD QR25DE | | GCI41068 | Inner Joint | | | 26 | | | 81 | |
| | 2002.09-2013.01 | MT | F | L | SUV 4WD QR25DE | | GDS41523 | Drive Shaft | 44T | 29 | 29 | 56 | 103.5 | 617 | |
| | 2002.09-2013.01 | MT | F | L | SUV 4WD QR25DE | | GCI41007 | Inner Joint | | 29 | 27 | 39 | 65.5 | 120.7 | |
| | 2002.09-2013.01 | AT/MT | R | L/R | SUV 4WD QR25DE | | GDS41534 | Drive Shaft | 44T | 29 | 21 | 58 | 109.5 | 791 | |
| | 2002.09-2013.01 | AT/MT | R | L/R | SUV 4WD QR25DE | | GCI57111 | Inner Joint | | 21 | 24 | 38 | 61 | 91 | |
| 2.5 (124 kw) | 2007.06-2013.11 | CVT | F | L | SUV 4WD QR25DE | | GDS41521 | Drive Shaft | | 29 | 27 | 56.1 | 102 | 667 | |
| | 2007.06-2013.11 | CVT | F | R | SUV 4WD QR25DE | | GDS41399 | Drive Shaft | | 29 | 27 | 56.1 | 102 | 966 | |
| | 2007.06-2013.11 | CVT | F | L/R | SUV 4WD QR25DE | | GCO41214 | Outer Joint | | 29 | 35 | 56.1 | 102 | 59 | I |
| | 2007.06-2013.11 | CVT | F | L | SUV 4WD QR25DE | PTJ | GCI41181 | Inner Joint | | 27 | 33 | 40 | 107 | 118 | |
| | 2007.06-2013.11 | MT | F | L | SUV 4WD QR25DE | | GDS82464 | Drive Shaft | | 29 | 29 | 56 | 102.5 | 605 | |
| | 2007.06-2013.11 | MT | F | R | SUV 4WD QR25DE | | GDS83726 | Drive Shaft | | 29 | 29 | 56 | 102.5 | 1018 | |
| | 2007.06-2013.11 | MT | F | L/R | SUV 4WD QR25DE | 8 balls,Bellows Material:Neoprene | GCO81540 | Outer Joint | | 29 | 35 | 56 | 102.5 | 59 | I |
| | 2007.06-2013.11 | MT | F | L | SUV 4WD QR25DE | PTJ | GCI81829 | Inner Joint | | 29 | 35 | 39 | 65.5 | 123.5 | |
| | 2007.06-2013.11 | MT | F | R | SUV 4WD QR25DE | PTJ | GCI81640 | Inner Joint | | 29 | 35 | 33 | 491 | 111 | |
| | 2007.06-2013.11 | MT/CVT | R | L/R | SUV 4WD QR25DE | | GDS41538 | Drive Shaft | 48T | 25 | 21 | 56 | 110.5 | 801 | |
| | 2007.06-2013.11 | MT/CVT | R | L/R | SUV 4WD QR25DE | | GCO41285 | Outer Joint | 48T | 25 | 24 | 56 | 110.5 | 38.5 | I |
| | 2007.06-2013.11 | MT/CVT | R | L/R | SUV 4WD QR25DE | | GCI57111 | Inner Joint | | 21 | 24 | 38 | 61 | 91 | |
| | 2015.01- | CVT | F | R | SUV FWD QR25DE | | GDS82250 | Drive Shaft | | 29 | 27 | 62 | 102.5 | 987 | |
| | 2015.01- | CVT | F | L/R | SUV FWD QR25DE | | GCO81748 | Outer Joint | | 29 | 35 | 62 | 102.5 | 60 | I |
| | 2015.01- | CVT | F | R | SUV FWD QR25DE | | GCI81701 | Inner Joint | | 27 | 33 | 33 | 406 | 106 | |
| 2.5 (126 kw) | 2013.12- | CVT | F | L | SUV 4WD QR25DE | For Modelcode:T32,Date to:2017.11 | GDS82249 | Drive Shaft | | 29 | 27 | 62 | 102.5 | 686 | |
| | 2013.12- | CVT | F | R | SUV 4WD QR25DE | Modelcode:T32/T32R,Date To:2017.11 | GDS82248 | Drive Shaft | | 29 | 27 | 62 | 102.5 | 987 | |
| | 2013.12- | CVT | F | L/R | SUV 4WD QR25DE | Model code:T32R/T32R | GCO81520 | Outer Joint | | 29 | 26 | 62 | 102.5 | 60 | I |
| | 2013.12- | CVT | F | L/R | SUV 4WD QR25DE | Model code:T32 | GCO81748 | Outer Joint | | 29 | 35 | 62 | 102.5 | 60 | I |
| | 2013.12- | CVT | F | L | SUV 4WD QR25DE | | GCI81700 | Inner Joint | | 27 | 33 | 40 | 62.5 | 112 | |
| | 2013.12- | CVT | F | R | SUV 4WD QR25DE | Model code:T32 | GCI81699 | Inner Joint | | 27 | 33 | 33 | 406 | 106 | |
| | 2013.12- | CVT | R | L/R | SUV 4WD QR25DE | | GDS82990 | Drive Shaft | 48T | 25 | 21 | 56 | 110.5 | 818 | |
| | 2013.12- | CVT | R | L/R | SUV 4WD QR25DE | | GCO41285 | Outer Joint | 48T | 25 | 24 | 56 | 110.5 | 38.5 | I |
| | 2013.12- | CVT | R | L/R | SUV 4WD QR25DE | | GCI57111 | Inner Joint | | 21 | 24 | 38 | 61 | 91 | |
| | 2013.12- | CVT | F | L/R | SUV FWD QR25DE | | GCO81748 | Outer Joint | | 29 | 35 | 62 | 102.5 | 60 | I |
| | 2013.12- | CVT | F | L | SUV FWD QR25DE | | GCI81700 | Inner Joint | | 27 | 33 | 40 | 62.5 | 112 | |
| 2.5 (127 kw) | 2013.10- | CVT | F | R | SUV FWD QR25DE | | GDS82250 | Drive Shaft | | 29 | 27 | 62 | 102.5 | 987 | |
| | 2013.10- | CVT | F | L/R | SUV FWD QR25DE | | GCO81748 | Outer Joint | | 29 | 35 | 62 | 102.5 | 60 | I |
| | 2013.10- | CVT | F | R | SUV FWD QR25DE | | GCI81701 | Inner Joint | | 27 | 33 | 33 | 406 | 106 | |
| 2.5 (132 kw) | 2002.11-2013.01 | 5MT | F | L/R | SUV 4WD QR25DE | | GCO41138 | Outer Joint | 44T | 29 | 25 | 56 | 103.5 | 70.5 | I |
| | 2002.11-2013.01 | MT | F | L | SUV 4WD QR25DE | TJ | GDS41127 | Drive Shaft | 44T | 29 | 29 | 56 | 103.5 | 619 | |
| | 2002.11-2013.01 | MT | F | L | SUV 4WD QR25DE | AAR | GDS41523 | Drive Shaft | 44T | 29 | 29 | 56 | 103.5 | 617 | |
| | 2002.11-2013.01 | MT | F | R | SUV 4WD QR25DE | | GDS41474 | Drive Shaft | 44T | 29 | | 56 | 103.5 | 547 | |
| | 2002.11-2013.01 | MT | F | L | SUV 4WD QR25DE | | GCI75036 | Inner Joint | | 29 | 26 | 39 | 65.5 | 114 | |
| | 2002.11-2013.01 | 5MT | R | L/R | SUV 4WD QR25DE | | GDS41534 | Drive Shaft | 44T | 29 | 21 | 58 | 109.5 | 791 | |
| | 2002.11-2013.01 | | R | L/R | SUV 4WD QR25DE | For Modelcode:T32/T32R/T32RR | GCI57111 | Inner Joint | | 21 | 24 | 38 | 61 | 91 | |
| | 2007.09-2014.07 | MT | F | L | SUV 4WD QR25DE | | GDS82464 | Drive Shaft | | 29 | 29 | 56 | 102.5 | 605 | |
| | 2007.09-2014.07 | MT | F | R | SUV 4WD QR25DE | | GDS83726 | Drive Shaft | | 29 | 29 | 56 | 102.5 | 1018 | |
| | 2007.09-2014.07 | 4AT/5MT | R | L/R | SUV 4WD QR25DE | | GDS41538 | Drive Shaft | 48T | 25 | 21 | 56 | 110.5 | 801 | |
| 2.5 (134 kw) | 2001.09-2007.02 | 4AT/5MT | F | L/R | SUV 4WD QR25DE | | GCO41138 | Outer Joint | 44T | 29 | 25 | 56 | 103.5 | 70.5 | I |
| | 2001.09-2007.02 | AT | F | L | SUV 4WD QR25DE | | GDS41522 | Drive Shaft | 44T | 29 | 29 | 56 | 103.5 | 645 | |
| | 2001.09-2007.02 | AT | F | R | SUV 4WD QR25DE | | GDS41474 | Drive Shaft | 44T | 29 | | 56 | 103.5 | 547 | |

| | YEAR | TRANSM. | F/R | L/R | BODY STYLE & DRIVE TYPE & ENGINE | REMARKS | G-AP Ref. | PRODUCT | ABS | Technical Specifications A | B | C | H | L | P |
|---|---|---|---|---|---|---|---|---|---|---|---|---|---|---|---|
| **NISSAN** | | | | | | | | | | | | | | | |
| **X-Trail** | | | | | | | | | | | | | | | |
| 2.5 (134 kw) | 2001.09-2007.02 | AT | F | L/R | SUV 4WD QR25DE | | GCO41185 | Outer Joint | 44T | 29 | 25 | 56 | 101 | 68 | M |
| | 2001.09-2007.02 | AT | F | R | SUV 4WD QR25DE | | GCI41068 | Inner Joint | | | 26 | | | 81 | |
| | 2001.09-2007.02 | AT/MT | F | L | SUV 4WD QR25DE | | GCI75036 | Inner Joint | | 29 | 26 | 39 | 65.5 | 114 | |
| | 2001.09-2007.02 | MT | F | L | SUV 4WD QR25DE | | GDS41523 | Drive Shaft | 44T | 29 | 29 | 56 | 103.5 | 617 | |
| | 2001.09-2007.02 | 4AT/5MT | R | L/R | SUV 4WD QR25DE | | GDS41534 | Drive Shaft | 44T | 29 | 21 | 58 | 109.5 | 791 | |
| | 2001.09-2007.02 | | R | L/R | SUV 4WD QR25DE | For Modelcode:T32/T32R/T32RR | GCI57111 | Inner Joint | | 21 | 24 | 38 | 61 | 91 | |
| **Xterra** | | | | | | | | | | | | | | | |
| 4.0 (198 kw) | 2005.01- | 5AT | F | L | SUV 4WD VQ40DE | | GDS41566 | Drive Shaft | | 29 | 27 | 67 | 115.5 | 635 | |
| **NISSAN (DFAC)** | | | | | | | | | | | | | | | |
| **Qashqai** | | | | | | | | | | | | | | | |
| 1.6 (81 kw) | 2008.11-2010.12 | AT | F | L | SUV FWD HR16DE | | GDS41326 | Drive Shaft | | 29 | 25 | 56 | 102 | 694 | |
| | 2008.11-2010.12 | AT | F | R | SUV FWD HR16DE | | GDS41325 | Drive Shaft | | 29 | 25 | 56 | 102 | 941 | |
| 1.6 (89 kw) | 2011.01-2015.12 | AT | F | L | SUV FWD HR16DE | | GDS41326 | Drive Shaft | | 29 | 25 | 56 | 102 | 694 | |
| | 2011.01-2015.12 | AT | F | R | SUV FWD HR16DE | | GDS41325 | Drive Shaft | | 29 | 25 | 56 | 102 | 941 | |
| 2.0 (102 kw) | 2008.03-2011.12 | CVT | F | R | SUV 4WD MR20DE | Transmission:6CVT,Model year to:2010 | GCI41170 | Inner Joint | | 27 | 33 | 33 | 367 | 109.5 | |
| | 2008.03-2011.12 | CVT | F | L | SUV FWD MR20DE | Transmission:6CVT,Model year to:2010 | GCI41168 | Inner Joint | | 27 | 33 | 40 | 62.5 | 118 | |
| 2.0 (106 kw) | 2010.01-2015.12 | CVT | F | L | SUV FWD MR20DE | Transmission:6CVT,Model year from:2011 | GCI41168 | Inner Joint | | 27 | 33 | 40 | 62.5 | 118 | |
| | 2011.01-2015.12 | CVT | F | R | SUV 4WD MR20DE | Transmission:6CVT,Model year to:2014 | GCI41170 | Inner Joint | | 27 | 33 | 33 | 367 | 109.5 | |
| **Teana** | | | | | | | | | | | | | | | |
| 2.3 (127 kw) | 2004.09-2008.06 | AT | F | R | Saloon FWD VQ 23 DE | | GCI41019 | Inner Joint | | 29 | 27 | 33 | 437.5 | 101 | |
| **Tiida** | | | | | | | | | | | | | | | |
| 1.6 (80 kw) | 2005.07- | AT | F | L | Hatchback FWD HR16DE | | GDS41202 | Drive Shaft | | 25 | 25 | 49 | 94 | 660 | |
| | 2005.07- | AT | F | R | Hatchback FWD HR16DE | | GDS41203 | Drive Shaft | | 25 | 25 | 49 | 94 | 903 | |
| 1.6 (93 kw) | 2011.05-2015.12 | AT | F | R | Hatchback FWD HR16DE | | GDS41203 | Drive Shaft | | 25 | 25 | 49 | 94 | 903 | |
| 1.6 (140 kw) | 2011.06-2015.12 | | F | L | Hatchback FWD MR16 | | GDS41203 | Drive Shaft | | 25 | 25 | 49 | 94 | 903 | |
| **Tiida Latio** | | | | | | | | | | | | | | | |
| 1.6 (80 kw) | 2005.04- | AT | F | L | Saloon FWD HR16DE | | GDS41202 | Drive Shaft | | 25 | 25 | 49 | 94 | 660 | |
| | 2005.04- | AT | F | R | Saloon FWD HR16DE | | GDS41203 | Drive Shaft | | 25 | 25 | 49 | 94 | 903 | |
| **OPEL** | | | | | | | | | | | | | | | |
| **Adam** | | | | | | | | | | | | | | | |
| 1.0 (66 kw) | 2014.07-2018.11 | 6MT | F | L | Hatchback FWD B 10 XFL;D 10 XFL | Chassis no. to:F6058502 | GDS57709 | Drive Shaft | | 22 | 25 | 51 | 79 | 605 | |
| | 2014.07-2018.11 | 6MT | F | L | Hatchback FWD B 10 XFL;D 10 XFL | Chassis no. to:F6058502 | GCO17070 | Outer Joint | | 22 | 22 | 51 | 79 | 57.5 | M |
| | 2014.07-2018.11 | 6MT | F | L/R | Hatchback FWD B 10 XFL;D 10 XFL | Chassis no. from:F6058503 | GCO81547 | Outer Joint | | 25 | 22 | 51 | 84 | 57 | M |
| | 2014.07-2018.11 | 6MT | F | L | Hatchback FWD B 10 XFL;D 10 XFL | Chassis no. to:F6058502 | GCI83814 | Inner Joint | | 25 | 22 | 34.9 | 57 | 103 | |
| 1.0 (85 kw) | 2014.07-2018.11 | 6MT | F | L | Hatchback FWD B 10 XFT;D 10 XFT | Chassis no. to:F6058502 | GDS57709 | Drive Shaft | | 22 | 25 | 51 | 79 | 605 | |
| | 2014.07-2018.11 | 6MT | F | L | Hatchback FWD B 10 XFT;D 10 XFT | Chassis no. to:F6058502 | GCO17070 | Outer Joint | | 22 | 22 | 51 | 79 | 57.5 | M |
| | 2014.07-2018.11 | 6MT | F | L/R | Hatchback FWD B 10 XFT;D 10 XFT | Chassis no. from:F6058503 | GCO81547 | Outer Joint | | 25 | 22 | 51 | 84 | 57 | M |
| | 2014.07-2018.11 | 6MT | F | L | Hatchback FWD B 10 XFT;D 10 XFT | Chassis no. to:F6058502 | GCI83814 | Inner Joint | | 25 | 22 | 34.9 | 57 | 103 | |
| 1.2 (51 kw) | 2012.10-2019.05 | 5MT | F | L | Hatchback FWD A 12 XEL;B 12 XEL;D 12 XEL | | GDS44079 | Drive Shaft | | 22 | 22 | 51 | 79.5 | 615 | |
| | 2012.10-2019.05 | 5MT | F | L | Hatchback FWD A 12 XEL;B 12 XEL;D 12 XEL | | GDS60023 | Drive Shaft | | 22 | 22 | 51.2 | 79.5 | 615 | |
| | 2012.10-2019.05 | 5MT | F | R | Hatchback FWD A 12 XEL;B 12 XEL;D 12 XEL | | GDS44078 | Drive Shaft | | 22 | 22 | 51 | 79.5 | 918 | |
| | 2012.10-2019.05 | 5MT | F | L/R | Hatchback FWD A 12 XEL;B 12 XEL;D 12 XEL | | GCO17089 | Outer Joint | | 22 | 20 | 51 | 79.5 | 51 | M |
| 1.4 (64 kw) | 2012.10-2019.05 | 5AT/5MT | F | L/R | Hatchback FWD A 14 XEL;B 14 XEL;D 14 XEL | | GCO17014 | Outer Joint | | 22 | 21 | 51 | 79.5 | 54 | M |
| | 2012.10-2019.05 | 5AT/5MT | F | L/R | Hatchback FWD A 14 XEL;B 14 XEL;D 14 XEL | | GCO17052 | Outer Joint | | 22 | 21 | 51.2 | 79.5 | 54 | M |
| | 2012.10-2019.05 | 5AT/5MT | F | L/R | Hatchback FWD A 14 XEL;B 14 XEL;D 14 XEL | | GCO17089 | Outer Joint | | 22 | 20 | 51 | 79.5 | 51 | M |
| | 2012.10-2019.05 | 5MT/5AMT | F | L | Hatchback FWD A 14 XEL;B 14 XEL;D 14 XEL | | GDS44079 | Drive Shaft | | 22 | 22 | 51 | 79.5 | 615 | |
| | 2012.10-2019.05 | 5MT/5AMT | F | R | Hatchback FWD A 14 XEL;B 14 XEL;D 14 XEL | | GDS44078 | Drive Shaft | | 22 | 22 | 51 | 79.5 | 918 | |
| | 2012.10-2019.05 | 5MT/5AMT | F | L/R | Hatchback FWD A 14 XEL;B 14 XEL;D 14 XEL | | GCI44013 | Inner Joint | | 22 | 21 | 35 | 57.5 | 93 | |
| | 2013.07-2018.11 | 5MT | F | L | Hatchback FWD A 14 XEL;B 14 XEL;D 14 XEL | | GDS44079 | Drive Shaft | | 22 | 22 | 51 | 79.5 | 615 | |
| | 2013.07-2018.11 | 5MT | F | R | Hatchback FWD A 14 XEL;B 14 XEL;D 14 XEL | | GDS44078 | Drive Shaft | | 22 | 22 | 51 | 79.5 | 918 | |
| | 2013.07-2018.11 | 5MT | F | L/R | Hatchback FWD A 14 XEL;B 14 XEL;D 14 XEL | | GCO17014 | Outer Joint | | 22 | 21 | 51 | 79.5 | 54 | M |
| | 2013.07-2018.11 | 5MT | F | L/R | Hatchback FWD A 14 XEL;B 14 XEL;D 14 XEL | | GCO17052 | Outer Joint | | 22 | 21 | 51.2 | 79.5 | 54 | M |
| | 2013.07-2018.11 | 5MT | F | L/R | Hatchback FWD A 14 XEL;B 14 XEL;D 14 XEL | | GCO17089 | Outer Joint | | 22 | 20 | 51 | 79.5 | 51 | M |
| | 2013.07-2018.11 | 5MT | F | L/R | Hatchback FWD A 14 XEL;B 14 XEL;D 14 XEL | | GCI44013 | Inner Joint | | 22 | 21 | 35 | 57.5 | 93 | |
| 1.4 (74 kw) | 2012.10-2019.05 | 5MT | F | L | Hatchback FWD A 14 XER;B 14 XER;D 14 XER | | GDS44079 | Drive Shaft | | 22 | 22 | 51 | 79.5 | 615 | |
| | 2012.10-2019.05 | 5MT | F | R | Hatchback FWD A 14 XER;B 14 XER;D 14 XER | | GDS44078 | Drive Shaft | | 22 | 22 | 51 | 79.5 | 918 | |
| | 2012.10-2019.05 | 5MT | F | L/R | Hatchback FWD A 14 XER;B 14 XER;D 14 XER | | GCO17014 | Outer Joint | | 22 | 21 | 51 | 79.5 | 54 | M |
| | 2012.10-2019.05 | 5MT | F | L/R | Hatchback FWD A 14 XER;B 14 XER;D 14 XER | | GCO17052 | Outer Joint | | 22 | 21 | 51.2 | 79.5 | 54 | M |
| | 2012.10-2019.05 | 5MT | F | L/R | Hatchback FWD A 14 XER;B 14 XER;D 14 XER | | GCO17089 | Outer Joint | | 22 | 20 | 51 | 79.5 | 51 | M |
| | 2012.10-2019.05 | 5MT | F | L/R | Hatchback FWD A 14 XER;B 14 XER;D 14 XER | | GCI44013 | Inner Joint | | 22 | 21 | 35 | 57.5 | 93 | |
| 1.4 (110 kw) | 2014.11-2019.05 | 6MT | F | L | Hatchback FWD B 14 NEH;D 14 NEH | | GDS17070 | Drive Shaft | | 25 | 25 | 51 | 84.5 | 576 | |
| | 2014.11-2019.05 | 6MT | F | R | Hatchback FWD B 14 NEH;D 14 NEH | | GDS84125 | Drive Shaft | | 25 | 25 | 51 | 84.5 | 948 | |
| | 2014.11-2019.05 | 6MT | F | L/R | Hatchback FWD B 14 NEH;D 14 NEH | | GCO17053 | Outer Joint | | 25 | 23 | 51 | 84.5 | 60 | M |
| | 2014.11-2019.05 | 6MT | F | L/R | Hatchback FWD B 14 NEH;D 14 NEH | | GCI44014 | Inner Joint | | 25 | 23 | 34.9 | 57.5 | 102 | |

| | YEAR | TRANSM. | F/R | L/R | BODY STYLE & DRIVE TYPE & ENGINE | REMARKS | G-AP Ref. | PRODUCT | ABS | Technical Specifications A | B | C | H | L | P |
|---|---|---|---|---|---|---|---|---|---|---|---|---|---|---|---|
| **OPEL** | | | | | | | | | | | | | | | |
| **Agila** | | | | | | | | | | | | | | | |
| 1.0 (43 kw) | 2000.09-2007.12 | MT | F | L | Hatchback FWD Z 10 XE | | GDS57087 | Drive Shaft | 43T | 23 | 22 | 49 | 78 | 638 | |
| | 2000.09-2007.12 | MT | F | R | Hatchback FWD Z 10 XE | | GDS44043 | Drive Shaft | 43T | 23 | 22 | 49 | 78 | 853 | |
| | 2000.09-2007.12 | MT | F | L/R | Hatchback FWD Z 10 XE | | GCO44001 | Outer Joint | 43T | 23 | 20 | 49 | 78 | 61 | M |
| | 2000.09-2007.12 | MT | F | L | Hatchback FWD Z 10 XE | | GCI57092 | Inner Joint | | 22 | 20 | 35 | 47 | 83 | |
| | 2000.09-2007.12 | MT | F | R | Hatchback FWD Z 10 XE | | GCI44019 | Inner Joint | | 22 | 20 | 30 | 54 | 123 | |
| 1.0 (44 kw) | 2003.08-2007.12 | MT | F | L | Hatchback FWD Z 10 XEP | | GDS57087 | Drive Shaft | 43T | 23 | 22 | 49 | 78 | 638 | |
| | 2003.08-2007.12 | MT | F | R | Hatchback FWD Z 10 XEP | | GDS44043 | Drive Shaft | 43T | 23 | 22 | 49 | 78 | 853 | |
| | 2003.08-2007.12 | MT | F | L/R | Hatchback FWD Z 10 XEP | | GCO44001 | Outer Joint | 43T | 23 | 20 | 49 | 78 | 61 | M |
| | 2003.08-2007.12 | MT | F | L | Hatchback FWD Z 10 XEP | | GCI57092 | Inner Joint | | 22 | 20 | 35 | 47 | 83 | |
| | 2003.08-2007.12 | MT | F | R | Hatchback FWD Z 10 XEP | | GCI44019 | Inner Joint | | 22 | 20 | 30 | 54 | 123 | |
| 1.0 (48 kw) | 2008.04-2011.06 | 5MT | F | L | Hatchback FWD K10B | | GDS57222 | Drive Shaft | | 25 | 22 | 49 | 81.5 | 641 | |
| | 2008.04-2011.06 | 5MT | F | R | Hatchback FWD K10B | | GDS57221 | Drive Shaft | | 25 | 22 | 49 | 81.5 | 882 | |
| | 2008.04-2011.06 | 5MT | F | L/R | Hatchback FWD K10B | | GCO44085 | Outer Joint | | 25 | 20 | 49 | 81.5 | 61 | M |
| | 2008.04-2011.06 | 5MT | F | L/R | Hatchback FWD K10B | | GCI57105 | Inner Joint | | 22 | 19 | 40 | 56.5 | 92 | |
| | 2010.01-2011.06 | 5MT | F | L | Hatchback FWD K10B | | GDS57222 | Drive Shaft | | 25 | 22 | 49 | 81.5 | 641 | |
| | 2010.01-2011.06 | 5MT | F | R | Hatchback FWD K10B | | GDS57221 | Drive Shaft | | 25 | 22 | 49 | 81.5 | 882 | |
| | 2010.01-2011.06 | 5MT | F | L/R | Hatchback FWD K10B | Date to:2010.07 | GCO44085 | Outer Joint | | 25 | 20 | 49 | 81.5 | 61 | M |
| | 2010.01-2011.06 | MT | F | L | Hatchback FWD K10B | | GDS57296 | Drive Shaft | | 25 | 22 | 49 | 81.5 | 641 | |
| | 2010.01-2011.06 | MT | F | L | Hatchback FWD K10B | | GCI57156 | Inner Joint | | 22 | 19 | 40 | 57 | 97.5 | |
| 1.0 (50 kw) | 2011.07-2014.07 | MT | F | L | Hatchback FWD K10B | | GDS57222 | Drive Shaft | | 25 | 22 | 49 | 81.5 | 641 | |
| | 2011.07-2014.07 | MT | F | R | Hatchback FWD K10B | | GDS57221 | Drive Shaft | | 25 | 22 | 49 | 81.5 | 882 | |
| | 2011.07-2014.07 | MT | F | R | Hatchback FWD K10B | | GCO44085 | Outer Joint | | 25 | 20 | 49 | 81.5 | 61 | M |
| | 2011.07-2014.07 | MT | F | R | Hatchback FWD K10B | | GCI57105 | Inner Joint | | 22 | 19 | 40 | 56.5 | 92 | |
| 1.2 (55 kw) | 2000.09-2007.12 | 5MT | F | L | Hatchback FWD Z 12 XE | | GDS83210 | Drive Shaft | 43T | 23 | 22 | 49 | 78 | 606 | |
| | 2000.09-2007.12 | 5MT | F | R | Hatchback FWD Z 12 XE | | GDS44043 | Drive Shaft | 43T | 23 | 22 | 49 | 78 | 853 | |
| | 2000.09-2007.12 | 5MT | F | L/R | Hatchback FWD Z 12 XE | | GCO44001 | Outer Joint | 43T | 23 | 20 | 49 | 78 | 61 | M |
| | 2000.09-2007.12 | 5MT | F | L | Hatchback FWD Z 12 XE | | GCI57092 | Inner Joint | | 22 | 20 | 35 | 47 | 83 | |
| | 2000.09-2007.12 | 5MT | F | R | Hatchback FWD Z 12 XE | | GCI44019 | Inner Joint | | 22 | 20 | 30 | 54 | 123 | |
| 1.2 (59 kw) | 2004.07-2007.12 | 5MT | F | L | Hatchback FWD Z 12 XEP | | GDS83922 | Drive Shaft | 43T | 23 | 22 | 49 | 78 | 600 | |
| | 2004.07-2007.12 | 5MT | F | R | Hatchback FWD Z 12 XEP | | GDS84079 | Drive Shaft | 43T | 23 | 22 | 49 | 78 | 864 | |
| | 2004.07-2007.12 | 5MT | F | L | Hatchback FWD Z 12 XEP | | GCI44013 | Inner Joint | | 22 | 21 | 35 | 57.5 | 93 | |
| | 2004.07-2007.12 | AT/MT | F | L/R | Hatchback FWD Z 12 XEP | | GCO44001 | Outer Joint | 43T | 23 | 20 | 49 | 78 | 61 | M |
| 1.2 (63 kw) | 2008.04-2010.10 | 5MT | F | L | Hatchback FWD K12B | | GDS57222 | Drive Shaft | | 25 | 22 | 49 | 81.5 | 641 | |
| | 2008.04-2010.10 | 5MT | F | R | Hatchback FWD K12B | | GDS57221 | Drive Shaft | | 25 | 22 | 49 | 81.5 | 882 | |
| | 2008.04-2010.10 | 5MT | F | L/R | Hatchback FWD K12B | Date to:2010.07 | GCO44085 | Outer Joint | | 25 | 20 | 49 | 81.5 | 61 | M |
| | 2008.04-2010.10 | MT | F | L | Hatchback FWD K12B | | GDS57296 | Drive Shaft | | 25 | 22 | 49 | 81.5 | 641 | |
| | 2008.04-2010.10 | MT | F | L | Hatchback FWD K12B | | GCI57156 | Inner Joint | | 22 | 19 | 40 | 57 | 97.5 | |
| | 2008.04-2012.10 | 5AT | F | L/R | Hatchback FWD K12B | | GCO57103 | Outer Joint | | 25 | 28 | 49 | 82 | 61 | I |
| | 2008.04-2012.10 | 5MT | F | L | Hatchback FWD K12B | | GDS57222 | Drive Shaft | | 25 | 22 | 49 | 81.5 | 641 | |
| | 2008.04-2012.10 | 5MT | F | R | Hatchback FWD K12B | | GDS57221 | Drive Shaft | | 25 | 22 | 49 | 81.5 | 882 | |
| | 2008.04-2012.10 | 5MT | F | L/R | Hatchback FWD K12B | | GCO44085 | Outer Joint | | 25 | 20 | 49 | 81.5 | 61 | M |
| | 2008.04-2012.10 | 5MT | F | L/R | Hatchback FWD K12B | | GCI57105 | Inner Joint | | 22 | 19 | 40 | 56.5 | 92 | |
| 1.2 (69 kw) | 2010.04-2014.10 | 5AT | F | L/R | Hatchback FWD K12B | | GCO57103 | Outer Joint | | 25 | 28 | 49 | 82 | 61 | I |
| | 2010.04-2014.10 | 5MT | F | L | Hatchback FWD K12B | | GDS57222 | Drive Shaft | | 25 | 22 | 49 | 81.5 | 641 | |
| | 2010.04-2014.10 | 5MT | F | R | Hatchback FWD K12B | | GDS57221 | Drive Shaft | | 25 | 22 | 49 | 81.5 | 882 | |
| | 2010.04-2014.10 | 5MT | F | L/R | Hatchback FWD K12B | | GCO44085 | Outer Joint | | 25 | 20 | 49 | 81.5 | 61 | M |
| | 2010.04-2014.10 | 5MT | F | L/R | Hatchback FWD K12B | | GCI57105 | Inner Joint | | 22 | 19 | 40 | 56.5 | 92 | |
| 1.3 (51 kw) | 2003.08-2007.12 | 5MT | F | L/R | Hatchback FWD Z 13 DT | | GCO44080 | Outer Joint | 43T | 25 | 21 | 49 | 76 | 66.5 | M |
| 1.3 (55 kw) | 2008.04-2010.04 | 5MT | F | L | Hatchback FWD Z 13 DTJ;D13A | | GDS57223 | Drive Shaft | | 25 | 26 | 49 | 81.5 | 629 | |
| | 2008.04-2010.04 | 5MT | F | R | Hatchback FWD Z 13 DTJ;D13A | | GDS57197 | Drive Shaft | | 25 | 22 | 49 | 81.5 | 614 | |
| | 2008.04-2010.04 | 5MT | F | L/R | Hatchback FWD Z 13 DTJ;D13A | | GCO57100 | Outer Joint | | 25 | 21 | 49 | 82.5 | 64 | M |
| **Ampera** | | | | | | | | | | | | | | | |
| 1.4 (111 kw) | 2011.11-2015.03 | ET | F | L | Hatchback FWD A 14 XFL | | GDS83771 | Drive Shaft | | 30 | 34 | 52.3 | 94 | 508 | |
| | 2011.11-2015.03 | ET | F | R | Hatchback FWD A 14 XFL | | GDS57907 | Drive Shaft | | 30 | 34 | 52.3 | 94 | 512 | |
| | 2011.11-2015.03 | ET | F | L/R | Hatchback FWD A 14 XFL | | GCO81171 | Outer Joint | | 30 | 23 | 52.3 | 94 | 59.5 | M |
| | 2011.11-2015.03 | ET | F | L | Hatchback FWD A 14 XFL | | GCI82371 | Inner Joint | | 34 | 24 | 35 | | 131.5 | |
| | 2011.11-2015.03 | ET | F | R | Hatchback FWD A 14 XFL | | GCI83915 | Inner Joint | | 34 | 24 | 38 | | 136 | |
| **Ampera e** | | | | | | | | | | | | | | | |
| EV (150 kw) | 2017.05-2019.03 | ET | F | L/R | Hatchback FWD 1ET25 | | GDS57646 | Drive Shaft | | 33 | 34 | 59 | 94.5 | 555 | |
| | 2017.05-2019.03 | ET | F | L/R | Hatchback FWD 1ET25 | | GCO83662 | Outer Joint | | 33 | 31 | 59 | 94.5 | 60 | M |
| | 2017.05-2019.03 | ET | F | L/R | Hatchback FWD 1ET25 | | GCI83790 | Inner Joint | | 34 | 31 | | 44.5 | 90.5 | |
| **Antara** | | | | | | | | | | | | | | | |
| 2.0 (93 kw) | 2007.03-2011.12 | 5MT | F | L | SUV 4WD Z 20 S;Z 20 DM | | GDS88093 | Drive Shaft | | 30 | 27 | 54 | 105.5 | 618.5 | |
| | 2007.03-2011.12 | 5MT | F | R | SUV 4WD Z 20 S;Z 20 DM | | GDS88094 | Drive Shaft | | 30 | 27 | 54 | 105.5 | 542 | |
| | 2007.03-2011.12 | 5MT | F | L/R | SUV 4WD Z 20 S;Z 20 DM | | GCO22009 | Outer Joint | | 30 | 34 | 54 | 105.5 | 64.5 | O |

| | YEAR | TRANSM. | F/R | L/R | BODY STYLE & DRIVE TYPE & ENGINE | REMARKS | G-AP Ref. | PRODUCT | ABS | Technical Specifications | | | | | |
|---|---|---|---|---|---|---|---|---|---|---|---|---|---|---|---|
| | | | | | | | | | | A | B | C | H | L | P |
| **OPEL** | | | | | | | | | | | | | | | |
| **Antara** | | | | | | | | | | | | | | | |
| 2.0 (93 kw) | 2007.03-2011.12 | 5MT | F | R | SUV 4WD Z 20 S;Z 20 DM | | GCI88035 | Inner Joint | | 27 | 34 | 43.3 | | 128 | |
| | 2007.03-2011.12 | MT | F | L | SUV 4WD Z 20 S;Z 20 DM | | GCI88034 | Inner Joint | | 27 | 34 | 35 | 68.5 | 111.5 | |
| | 2007.03-2011.12 | 5MT | R | L | SUV 4WD Z 20 S;Z 20 DM | | GDS44107 | Drive Shaft | | 30 | 34 | 55 | 105.5 | 756 | |
| | 2007.03-2011.12 | 5MT | R | R | SUV 4WD Z 20 S;Z 20 DM | | GDS44106 | Drive Shaft | | 30 | 34 | 55 | 105.5 | 859 | |
| | 2007.03-2011.12 | 5MT | R | L/R | SUV 4WD Z 20 S;Z 20 DM | | GCO21047 | Outer Joint | | 30 | 22 | 55 | 105.5 | 53.5 | O |
| | 2007.03-2011.12 | 5MT | R | L/R | SUV 4WD Z 20 S;Z 20 DM | | GCI12009 | Inner Joint | | 34 | 22 | 35 | 56.5 | 111.5 | |
| | 2008.09-2011.12 | 5MT | F | L | SUV FWD Z 20 DM | | GDS88093 | Drive Shaft | | 30 | 27 | 54 | 105.5 | 618.5 | |
| | 2008.09-2011.12 | 5MT | F | R | SUV FWD Z 20 DM | | GDS88094 | Drive Shaft | | 30 | 27 | 54 | 105.5 | 542 | |
| | 2008.09-2011.12 | 5MT | F | L/R | SUV FWD Z 20 DM | | GCO22009 | Outer Joint | | 30 | 34 | 54 | 105.5 | 64.5 | O |
| | 2008.09-2011.12 | 5MT | F | R | SUV FWD Z 20 DM | | GCI88035 | Inner Joint | | 27 | 34 | 43.3 | | 128 | |
| | 2008.09-2011.12 | MT | F | L | SUV FWD Z 20 DM | | GCI88034 | Inner Joint | | 27 | 34 | 35 | 68.5 | 111.5 | |
| 2.0 (110 kw) | 2006.08-2011.12 | 5AT/5MT | F | L/R | SUV 4WD Z 20 DMH | | GCO22009 | Outer Joint | | 30 | 34 | 54 | 105.5 | 64.5 | O |
| | 2006.08-2011.12 | 5AT/5MT | F | R | SUV 4WD Z 20 DMH | | GCI88035 | Inner Joint | | 27 | 34 | 43.3 | | 128 | |
| | 2006.08-2011.12 | AT | F | L | SUV 4WD Z 20 DMH | | GDS22008 | Drive Shaft | | 30 | 27 | 54 | 105.5 | 629.5 | |
| | 2006.08-2011.12 | AT | F | R | SUV 4WD Z 20 DMH | | GDS22009 | Drive Shaft | | 30 | 27 | 54 | 105.5 | 551 | |
| | 2006.08-2011.12 | AT | F | L | SUV 4WD Z 20 DMH | | GCI21023 | Inner Joint | | 27 | 34 | 35 | 104 | 87 | |
| | 2006.08-2011.12 | MT | F | L | SUV 4WD Z 20 DMH | | GDS88093 | Drive Shaft | | 30 | 27 | 54 | 105.5 | 618.5 | |
| | 2006.08-2011.12 | MT | F | R | SUV 4WD Z 20 DMH | | GDS88094 | Drive Shaft | | 30 | 27 | 54 | 105.5 | 542 | |
| | 2006.08-2011.12 | MT | F | L | SUV 4WD Z 20 DMH | | GCI88034 | Inner Joint | | 27 | 34 | 35 | 68.5 | 111.5 | |
| | 2006.08-2011.12 | 5AT/5MT | R | L | SUV 4WD Z 20 DMH | | GDS44107 | Drive Shaft | | 30 | 34 | 55 | 105.5 | 756 | |
| | 2006.08-2011.12 | 5AT/5MT | R | R | SUV 4WD Z 20 DMH | | GDS44106 | Drive Shaft | | 30 | 34 | 55 | 105.5 | 859 | |
| | 2006.08-2011.12 | 5AT/5MT | R | L/R | SUV 4WD Z 20 DMH | | GCO21047 | Outer Joint | | 30 | 22 | 55 | 105.5 | 53.5 | O |
| | 2006.08-2011.12 | 5AT/5MT | R | L/R | SUV 4WD Z 20 DMH | | GCI12009 | Inner Joint | | 34 | 22 | 35 | 56.5 | 111.5 | |
| | 2006.08-2011.12 | 5AT/5MT | F | L/R | SUV FWD Z 20 DMH | | GCO22009 | Outer Joint | | 30 | 34 | 54 | 105.5 | 64.5 | O |
| | 2006.08-2011.12 | 5AT/5MT | F | R | SUV FWD Z 20 DMH | | GCI88035 | Inner Joint | | 27 | 34 | 43.3 | | 128 | |
| | 2006.08-2011.12 | AT | F | L | SUV FWD Z 20 DMH | | GDS22008 | Drive Shaft | | 30 | 27 | 54 | 105.5 | 629.5 | |
| | 2006.08-2011.12 | AT | F | R | SUV FWD Z 20 DMH | | GDS22009 | Drive Shaft | | 30 | 27 | 54 | 105.5 | 551 | |
| | 2006.08-2011.12 | AT | F | L | SUV FWD Z 20 DMH | | GCI21023 | Inner Joint | | 27 | 34 | 35 | 104 | 87 | |
| | 2006.08-2011.12 | MT | F | L | SUV FWD Z 20 DMH | | GDS88093 | Drive Shaft | | 30 | 27 | 54 | 105.5 | 618.5 | |
| | 2006.08-2011.12 | MT | F | R | SUV FWD Z 20 DMH | | GDS88094 | Drive Shaft | | 30 | 27 | 54 | 105.5 | 542 | |
| | 2006.08-2011.12 | MT | F | L | SUV FWD Z 20 DMH | | GCI88034 | Inner Joint | | 27 | 34 | 35 | 68.5 | 111.5 | |
| 2.0 (125 kw) | 2016.01-2017.08 | 6MT | R | R | SUV 4WD B 20 DTH | | GDS44106 | Drive Shaft | | 30 | 34 | 55 | 105.5 | 859 | |
| | 2016.01-2017.08 | MT | R | L | SUV 4WD B 20 DTH | | GDS44107 | Drive Shaft | | 30 | 34 | 55 | 105.5 | 756 | |
| | 2016.01-2017.08 | MT | R | L/R | SUV 4WD B 20 DTH | | GCO21047 | Outer Joint | | 30 | 22 | 55 | 105.5 | 53.5 | O |
| | 2016.01-2017.08 | MT | R | L/R | SUV 4WD B 20 DTH | | GCI12009 | Inner Joint | | 34 | 22 | 35 | 56.5 | 111.5 | |
| | 2016.01-2017.08 | AT | F | R | SUV FWD B 20 DTH | | GDS83816 | Drive Shaft | | 30 | 27 | 56 | 105 | 546 | |
| | 2016.01-2017.08 | AT | F | R | SUV FWD B 20 DTH | | GCO81163 | Outer Joint | | 30 | 34 | 56 | 105 | 64.5 | M |
| | 2016.01-2017.08 | AT | F | R | SUV FWD B 20 DTH | | GCI82378 | Inner Joint | | 27 | 34 | 42 | | 134 | |
| 2.2 (120 kw) | 2010.12-2015.12 | 6AT | F | L | SUV 4WD A 22 DM | | GDS83815 | Drive Shaft | | 30 | 34 | 56 | 105 | 666 | |
| | 2010.12-2015.12 | 6AT | F | R | SUV 4WD A 22 DM | | GDS83816 | Drive Shaft | | 30 | 27 | 56 | 105 | 546 | |
| | 2010.12-2015.12 | 6AT | F | L/R | SUV 4WD A 22 DM | | GCO81163 | Outer Joint | | 30 | 34 | 56 | 105 | 64.5 | M |
| | 2010.12-2015.12 | 6AT | F | L | SUV 4WD A 22 DM | | GCI21041 | Inner Joint | | 34 | 34 | 35 | 138 | 92 | |
| | 2010.12-2015.12 | 6AT | F | R | SUV 4WD A 22 DM | | GCI82378 | Inner Joint | | 27 | 34 | 42 | | 134 | |
| | 2010.12-2015.12 | 6AT/6MT | R | L | SUV 4WD A 22 DM | | GDS44107 | Drive Shaft | | 30 | 34 | 55 | 105.5 | 756 | |
| | 2010.12-2015.12 | 6AT/6MT | R | R | SUV 4WD A 22 DM | | GDS44106 | Drive Shaft | | 30 | 34 | 55 | 105.5 | 859 | |
| | 2010.12-2015.12 | 6AT/6MT | R | L/R | SUV 4WD A 22 DM | | GCO21047 | Outer Joint | | 30 | 22 | 55 | 105.5 | 53.5 | O |
| | 2010.12-2015.12 | 6AT/6MT | R | L/R | SUV 4WD A 22 DM | | GCI12009 | Inner Joint | | 34 | 22 | 35 | 56.5 | 111.5 | |
| | 2010.12-2015.12 | 6AT | F | L | SUV FWD A 22 DM | | GDS83815 | Drive Shaft | | 30 | 34 | 56 | 105 | 666 | |
| | 2010.12-2015.12 | 6AT | F | R | SUV FWD A 22 DM | | GDS83816 | Drive Shaft | | 30 | 27 | 56 | 105 | 546 | |
| | 2010.12-2015.12 | 6AT | F | L/R | SUV FWD A 22 DM | | GCO81163 | Outer Joint | | 30 | 34 | 56 | 105 | 64.5 | M |
| | 2010.12-2015.12 | 6AT | F | L | SUV FWD A 22 DM | | GCI21041 | Inner Joint | | 34 | 34 | 35 | 138 | 92 | |
| | 2010.12-2015.12 | 6AT | F | R | SUV FWD A 22 DM | | GCI82378 | Inner Joint | | 27 | 34 | 42 | | 134 | |
| 2.2 (135 kw) | 2010.12-2015.12 | 6AT | F | L | SUV 4WD A 22 DMH | | GDS83815 | Drive Shaft | | 30 | 34 | 56 | 105 | 666 | |
| | 2010.12-2015.12 | 6AT | F | R | SUV 4WD A 22 DMH | | GDS83816 | Drive Shaft | | 30 | 27 | 56 | 105 | 546 | |
| | 2010.12-2015.12 | 6AT | F | L/R | SUV 4WD A 22 DMH | | GCO81163 | Outer Joint | | 30 | 34 | 56 | 105 | 64.5 | M |
| | 2010.12-2015.12 | 6AT | F | L | SUV 4WD A 22 DMH | | GCI21041 | Inner Joint | | 34 | 34 | 35 | 138 | 92 | |
| | 2010.12-2015.12 | 6AT | F | R | SUV 4WD A 22 DMH | | GCI82378 | Inner Joint | | 27 | 34 | 42 | | 134 | |
| | 2010.12-2015.12 | 6AT/6MT | R | L | SUV 4WD A 22 DMH | | GDS44107 | Drive Shaft | | 30 | 34 | 55 | 105.5 | 756 | |
| | 2010.12-2015.12 | 6AT/6MT | R | R | SUV 4WD A 22 DMH | | GDS44106 | Drive Shaft | | 30 | 34 | 55 | 105.5 | 859 | |
| | 2010.12-2015.12 | 6AT/6MT | R | L/R | SUV 4WD A 22 DMH | | GCO21047 | Outer Joint | | 30 | 22 | 55 | 105.5 | 53.5 | O |
| | 2010.12-2015.12 | 6AT/6MT | R | L/R | SUV 4WD A 22 DMH | | GCI12009 | Inner Joint | | 34 | 22 | 35 | 56.5 | 111.5 | |
| 2.4 (103 kw) | 2006.08-2010.12 | 5AT/5MT | F | L/R | SUV 4WD Z 24 XE | | GCO22009 | Outer Joint | | 30 | 34 | 54 | 105.5 | 64.5 | O |
| | 2006.08-2010.12 | 5AT/5MT | F | R | SUV 4WD Z 24 XE | | GCI88035 | Inner Joint | | 27 | 34 | 43.3 | | 128 | |
| | 2006.08-2010.12 | AT | F | L | SUV 4WD Z 24 XE | | GDS22008 | Drive Shaft | | 30 | 27 | 54 | 105.5 | 629.5 | |
| | 2006.08-2010.12 | AT | F | R | SUV 4WD Z 24 XE | | GDS22009 | Drive Shaft | | 30 | 27 | 54 | 105.5 | 551 | |

| | YEAR | TRANSM. | F/R | L/R | BODY STYLE & DRIVE TYPE & ENGINE | REMARKS | G-AP Ref. | PRODUCT | ABS | Technical Specifications | | | | | |
|---|---|---|---|---|---|---|---|---|---|---|---|---|---|---|---|
| | | | | | | | | | | A | B | C | H | L | P |
| **OPEL** | | | | | | | | | | | | | | | |
| **Antara** | | | | | | | | | | | | | | | |
| 2.4 (103 kw) | 2006.08-2010.12 | AT | F | L | SUV 4WD Z 24 XE | | GCI21023 | Inner Joint | | 27 | 34 | 35 | 104 | 87 | |
| | 2006.08-2010.12 | MT | F | L | SUV 4WD Z 24 XE | | GDS88093 | Drive Shaft | | 30 | 27 | 54 | 105.5 | 618.5 | |
| | 2006.08-2010.12 | MT | F | R | SUV 4WD Z 24 XE | | GDS88094 | Drive Shaft | | 30 | 27 | 54 | 105.5 | 542 | |
| | 2006.08-2010.12 | MT | F | L | SUV 4WD Z 24 XE | | GCI88034 | Inner Joint | | 27 | 34 | 35 | 68.5 | 111.5 | |
| | 2006.08-2010.12 | 5AT/5MT | R | L | SUV 4WD Z 24 XE | | GDS44107 | Drive Shaft | | 30 | 34 | 55 | 105.5 | 756 | |
| | 2006.08-2010.12 | 5AT/5MT | R | R | SUV 4WD Z 24 XE | | GDS44106 | Drive Shaft | | 30 | 34 | 55 | 105.5 | 859 | |
| | 2006.08-2010.12 | 5AT/5MT | R | L/R | SUV 4WD Z 24 XE | | GCO21047 | Outer Joint | | 30 | 22 | 55 | 105.5 | 53.5 | O |
| | 2006.08-2010.12 | 5AT/5MT | R | L/R | SUV 4WD Z 24 XE | | GCI12009 | Inner Joint | | 34 | 22 | 35 | 56.5 | 111.5 | |
| | 2006.08-2011.12 | 5AT/5MT | F | L/R | SUV 4WD Z 24 XE | | GCO22009 | Outer Joint | | 30 | 34 | 54 | 105.5 | 64.5 | O |
| | 2006.08-2011.12 | 5AT/5MT | F | R | SUV 4WD Z 24 XE | | GCI88035 | Inner Joint | | 27 | 34 | 43.3 | | 128 | |
| | 2006.08-2011.12 | AT | F | L | SUV 4WD Z 24 XE | | GDS22008 | Drive Shaft | | 30 | 27 | 54 | 105.5 | 629.5 | |
| | 2006.08-2011.12 | AT | F | R | SUV 4WD Z 24 XE | | GDS22009 | Drive Shaft | | 30 | 27 | 54 | 105.5 | 551 | |
| | 2006.08-2011.12 | AT | F | L | SUV 4WD Z 24 XE | | GCI21023 | Inner Joint | | 27 | 34 | 35 | 104 | 87 | |
| | 2006.08-2011.12 | MT | F | L | SUV 4WD Z 24 XE | | GDS88093 | Drive Shaft | | 30 | 27 | 54 | 105.5 | 618.5 | |
| | 2006.08-2011.12 | MT | F | R | SUV 4WD Z 24 XE | | GDS88094 | Drive Shaft | | 30 | 27 | 54 | 105.5 | 542 | |
| | 2006.08-2011.12 | MT | F | L | SUV 4WD Z 24 XE | | GCI88034 | Inner Joint | | 27 | 34 | 35 | 68.5 | 111.5 | |
| | 2006.08-2011.12 | 5AT/5MT | R | L | SUV 4WD Z 24 XE | | GDS44107 | Drive Shaft | | 30 | 34 | 55 | 105.5 | 756 | |
| | 2006.08-2011.12 | 5AT/5MT | R | R | SUV 4WD Z 24 XE | | GDS44106 | Drive Shaft | | 30 | 34 | 55 | 105.5 | 859 | |
| | 2006.08-2011.12 | 5AT/5MT | R | L/R | SUV 4WD Z 24 XE | | GCO21047 | Outer Joint | | 30 | 22 | 55 | 105.5 | 53.5 | O |
| | 2006.08-2011.12 | 5AT/5MT | R | L/R | SUV 4WD Z 24 XE | | GCI12009 | Inner Joint | | 34 | 22 | 35 | 56.5 | 111.5 | |
| | 2008.09-2011.12 | 5MT | F | L | SUV FWD Z 24 XE | | GDS88093 | Drive Shaft | | 30 | 27 | 54 | 105.5 | 618.5 | |
| | 2008.09-2011.12 | 5MT | F | R | SUV FWD Z 24 XE | | GDS88094 | Drive Shaft | | 30 | 27 | 54 | 105.5 | 542 | |
| | 2008.09-2011.12 | 5MT | F | L/R | SUV FWD Z 24 XE | | GCO22009 | Outer Joint | | 30 | 34 | 54 | 105.5 | 64.5 | O |
| | 2008.09-2011.12 | 5MT | F | R | SUV FWD Z 24 XE | | GCI88035 | Inner Joint | | 27 | 34 | 43.3 | | 128 | |
| | 2008.09-2011.12 | MT | F | L | SUV FWD Z 24 XE | | GCI88034 | Inner Joint | | 27 | 34 | 35 | 68.5 | 111.5 | |
| | 2008.10-2010.08 | AT | F | L | SUV FWD Z 24 XE | | GDS22008 | Drive Shaft | | 30 | 27 | 54 | 105.5 | 629.5 | |
| | 2008.10-2010.08 | AT | F | R | SUV FWD Z 24 XE | | GDS22009 | Drive Shaft | | 30 | 27 | 54 | 105.5 | 551 | |
| | 2008.10-2010.08 | AT | F | L | SUV FWD Z 24 XE | | GCI21023 | Inner Joint | | 27 | 34 | 35 | 104 | 87 | |
| | 2008.10-2010.08 | AT/MT | F | L/R | SUV FWD Z 24 XE | | GCO22009 | Outer Joint | | 30 | 34 | 54 | 105.5 | 64.5 | O |
| | 2008.10-2010.08 | AT/MT | F | R | SUV FWD Z 24 XE | | GCI88035 | Inner Joint | | 27 | 34 | 43.3 | | 128 | |
| | 2008.10-2010.08 | MT | F | L | SUV FWD Z 24 XE | | GDS88093 | Drive Shaft | | 30 | 27 | 54 | 105.5 | 618.5 | |
| | 2008.10-2010.08 | MT | F | R | SUV FWD Z 24 XE | | GDS88094 | Drive Shaft | | 30 | 27 | 54 | 105.5 | 542 | |
| | 2008.10-2010.08 | MT | F | L | SUV FWD Z 24 XE | | GCI88034 | Inner Joint | | 27 | 34 | 35 | 68.5 | 111.5 | |
| 2.4 (104 kw) | 2006.08-2011.12 | AT | F | L | SUV 4WD Z 24 XE | | GDS22008 | Drive Shaft | | 30 | 27 | 54 | 105.5 | 629.5 | |
| | 2006.08-2011.12 | AT | F | R | SUV 4WD Z 24 XE | | GDS22009 | Drive Shaft | | 30 | 27 | 54 | 105.5 | 551 | |
| | 2006.08-2011.12 | AT | F | L | SUV 4WD Z 24 XE | | GCI21023 | Inner Joint | | 27 | 34 | 35 | 104 | 87 | |
| | 2006.08-2011.12 | AT/MT | F | L/R | SUV 4WD Z 24 XE | | GCO22009 | Outer Joint | | 30 | 34 | 54 | 105.5 | 64.5 | O |
| | 2006.08-2011.12 | AT/MT | F | R | SUV 4WD Z 24 XE | | GCI88035 | Inner Joint | | 27 | 34 | 43.3 | | 128 | |
| | 2006.08-2011.12 | MT | F | L | SUV 4WD Z 24 XE | | GDS88093 | Drive Shaft | | 30 | 27 | 54 | 105.5 | 618.5 | |
| | 2006.08-2011.12 | MT | F | R | SUV 4WD Z 24 XE | | GDS88094 | Drive Shaft | | 30 | 27 | 54 | 105.5 | 542 | |
| | 2006.08-2011.12 | MT | F | L | SUV 4WD Z 24 XE | | GCI88034 | Inner Joint | | 27 | 34 | 35 | 68.5 | 111.5 | |
| | 2006.08-2011.12 | 5AT/5MT | R | R | SUV 4WD Z 24 XE | | GDS44106 | Drive Shaft | | 30 | 34 | 55 | 105.5 | 859 | |
| | 2006.08-2011.12 | AT/MT | R | L | SUV 4WD Z 24 XE | | GDS44107 | Drive Shaft | | 30 | 34 | 55 | 105.5 | 756 | |
| | 2006.08-2011.12 | AT/MT | R | L/R | SUV 4WD Z 24 XE | | GCO21047 | Outer Joint | | 30 | 22 | 55 | 105.5 | 53.5 | O |
| | 2006.08-2011.12 | AT/MT | R | L/R | SUV 4WD Z 24 XE | | GCI12009 | Inner Joint | | 34 | 22 | 35 | 56.5 | 111.5 | |
| 2.4 (123 kw) | 2010.12-2015.02 | 6AT | F | L | SUV 4WD A 24 XE;A 24 XF | | GDS86075 | Drive Shaft | | 30 | 34 | 56 | 105 | 655 | |
| | 2010.12-2015.02 | 6AT/6MT | F | R | SUV 4WD A 24 XE;A 24 XF | | GDS86076 | Drive Shaft | | 30 | 27 | 56 | 105 | 550 | |
| | 2010.12-2015.02 | AT/MT | F | L/R | SUV 4WD A 24 XE;A 24 XF | | GCO81163 | Outer Joint | | 30 | 34 | 56 | 105 | 64.5 | M |
| | 2010.12-2015.02 | 6AT/6MT | R | R | SUV 4WD A 24 XE;A 24 XF | | GDS44106 | Drive Shaft | | 30 | 34 | 55 | 105.5 | 859 | |
| | 2010.12-2015.02 | AT/MT | R | L | SUV 4WD A 24 XE;A 24 XF | | GDS44107 | Drive Shaft | | 30 | 34 | 55 | 105.5 | 756 | |
| | 2010.12-2015.02 | AT/MT | R | L/R | SUV 4WD A 24 XE;A 24 XF | | GCO21047 | Outer Joint | | 30 | 22 | 55 | 105.5 | 53.5 | O |
| | 2010.12-2015.02 | AT/MT | R | L/R | SUV 4WD A 24 XE;A 24 XF | | GCI12009 | Inner Joint | | 34 | 22 | 35 | 56.5 | 111.5 | |
| | 2010.12-2015.02 | 6AT | F | L | SUV FWD A 24 XE;A 24 XF | | GDS86075 | Drive Shaft | | 30 | 34 | 56 | 105 | 655 | |
| | 2010.12-2015.02 | 6AT/6MT | F | R | SUV FWD A 24 XE;A 24 XF | | GDS86076 | Drive Shaft | | 30 | 27 | 56 | 105 | 550 | |
| | 2010.12-2015.02 | AT/MT | F | L/R | SUV FWD A 24 XE;A 24 XF | | GCO81163 | Outer Joint | | 30 | 34 | 56 | 105 | 64.5 | M |
| | 2010.12-2015.02 | MT | F | R | SUV FWD A 24 XE;A 24 XF | | GCO22009 | Outer Joint | | 30 | 34 | 54 | 105.5 | 64.5 | O |
| 3.0 (183 kw) | 2013.07-2014.12 | 6AT | F | L | SUV 4WD A 30 XH;A 30 XF | | GDS83815 | Drive Shaft | | 30 | 34 | 56 | 105 | 666 | |
| | 2013.07-2014.12 | 6AT | F | R | SUV 4WD A 30 XH;A 30 XF | | GDS83816 | Drive Shaft | | 30 | 27 | 56 | 105 | 546 | |
| | 2013.07-2014.12 | 6AT | F | L/R | SUV 4WD A 30 XH;A 30 XF | | GCO81163 | Outer Joint | | 30 | 34 | 56 | 105 | 64.5 | M |
| | 2013.07-2014.12 | 6AT | F | L | SUV 4WD A 30 XH;A 30 XF | | GCI21041 | Inner Joint | | 34 | 34 | 35 | 138 | 92 | |
| | 2013.07-2014.12 | 6AT | F | R | SUV 4WD A 30 XH;A 30 XF | | GCI82378 | Inner Joint | | 27 | 34 | 42 | | 134 | |
| | 2013.07-2014.12 | 6AT | R | L | SUV 4WD A 30 XH;A 30 XF | | GDS44107 | Drive Shaft | | 30 | 34 | 55 | 105.5 | 756 | |
| | 2013.07-2014.12 | 6AT | R | R | SUV 4WD A 30 XH;A 30 XF | | GDS44106 | Drive Shaft | | 30 | 34 | 55 | 105.5 | 859 | |
| | 2013.07-2014.12 | 6AT | R | L/R | SUV 4WD A 30 XH;A 30 XF | | GCO21047 | Outer Joint | | 30 | 22 | 55 | 105.5 | 53.5 | O |
| | 2013.07-2014.12 | 6AT | R | L/R | SUV 4WD A 30 XH;A 30 XF | | GCI12009 | Inner Joint | | 34 | 22 | 35 | 56.5 | 111.5 | |

| | YEAR | TRANSM. | F/R | L/R | BODY STYLE & DRIVE TYPE & ENGINE | REMARKS | G-AP Ref. | PRODUCT | ABS | Technical Specifications A | B | C | H | L | P |
|---|---|---|---|---|---|---|---|---|---|---|---|---|---|---|---|
| **OPEL** | | | | | | | | | | | | | | | |
| **Antara** | | | | | | | | | | | | | | | |
| 3.0 (190 kw) | 2010.11-2015.12 | 6AT | F | L | SUV 4WD A 30 XH;A 30 XF | | GDS83815 | Drive Shaft | | 30 | 34 | 56 | 105 | 666 | |
| | 2010.11-2015.12 | 6AT | F | R | SUV 4WD A 30 XH;A 30 XF | | GDS83816 | Drive Shaft | | 30 | 27 | 56 | 105 | 546 | |
| | 2010.11-2015.12 | 6AT | F | L/R | SUV 4WD A 30 XH;A 30 XF | | GCO81163 | Outer Joint | | 30 | 34 | 56 | 105 | 64.5 | M |
| | 2010.11-2015.12 | 6AT | F | L | SUV 4WD A 30 XH;A 30 XF | | GCI21041 | Inner Joint | | 34 | 34 | 35 | 138 | 92 | |
| | 2010.11-2015.12 | 6AT | F | R | SUV 4WD A 30 XH;A 30 XF | | GCI82378 | Inner Joint | | 27 | 34 | 42 | | 134 | |
| | 2010.11-2015.12 | | F | | SUV 4WD A 30 XH;A 30 XF | | GCO22009 | Outer Joint | | 30 | 34 | 54 | 105.5 | 64.5 | O |
| | 2010.11-2015.12 | 6AT | R | L | SUV 4WD A 30 XH;A 30 XF | | GDS44107 | Drive Shaft | | 30 | 34 | 55 | 105.5 | 756 | |
| | 2010.11-2015.12 | 6AT | R | R | SUV 4WD A 30 XH;A 30 XF | | GDS44106 | Drive Shaft | | 30 | 34 | 55 | 105.5 | 859 | |
| | 2010.11-2015.12 | 6AT | R | L/R | SUV 4WD A 30 XH;A 30 XF | | GCO21047 | Outer Joint | | 30 | 22 | 55 | 105.5 | 53.5 | O |
| | 2010.11-2015.12 | 6AT | R | L/R | SUV 4WD A 30 XH;A 30 XF | | GCI12009 | Inner Joint | | 34 | 22 | 35 | 56.5 | 111.5 | |
| 3.2 (167 kw) | 2006.08-2011.12 | 5AT | F | L | SUV 4WD Z 32 SEE | | GDS22008 | Drive Shaft | | 30 | 27 | 54 | 105.5 | 629.5 | |
| | 2006.08-2011.12 | 5AT | F | R | SUV 4WD Z 32 SEE | | GDS22009 | Drive Shaft | | 30 | 27 | 54 | 105.5 | 551 | |
| | 2006.08-2011.12 | 5AT | F | L/R | SUV 4WD Z 32 SEE | | GCO22009 | Outer Joint | | 30 | 34 | 54 | 105.5 | 64.5 | O |
| | 2006.08-2011.12 | 5AT | F | L | SUV 4WD Z 32 SEE | | GCI21023 | Inner Joint | | 27 | 34 | 35 | 104 | 87 | |
| | 2006.08-2011.12 | 5AT | F | R | SUV 4WD Z 32 SEE | | GCI88035 | Inner Joint | | 27 | 34 | 43.3 | | 128 | |
| | 2006.08-2011.12 | 5AT | R | L | SUV 4WD Z 32 SEE | | GDS44107 | Drive Shaft | | 30 | 34 | 55 | 105.5 | 756 | |
| | 2006.08-2011.12 | 5AT | R | R | SUV 4WD Z 32 SEE | | GDS44106 | Drive Shaft | | 30 | 34 | 55 | 105.5 | 859 | |
| | 2006.08-2011.12 | 5AT | R | L/R | SUV 4WD Z 32 SEE | | GCO21047 | Outer Joint | | 30 | 22 | 55 | 105.5 | 53.5 | O |
| | 2006.08-2011.12 | 5AT | R | L/R | SUV 4WD Z 32 SEE | | GCI12009 | Inner Joint | | 34 | 22 | 35 | 56.5 | 111.5 | |
| **Arena** | | | | | | | | | | | | | | | |
| 1.9 (44 kw) | 1998.03-2001.08 | MT | F | L/R | Bus FWD F8Q 600, F8Q 606 | Date from:1998.03;Date to:2001.04 | GDS44006 | Drive Shaft | | 25 | 27 | 56.3 | 110.5 | 713.5 | |
| | 1998.03-2001.08 | MT | F | L/R | Van FWD F8Q 600, F8Q 606 | Date from:1998.03;Date to:2001.04 | GDS44006 | Drive Shaft | | 25 | 27 | 56.3 | 110.5 | 713.5 | |
| 2.5 (55 kw) | 1998.03-2001.08 | MT | F | L/R | Bus FWD S8U 758, S8U 780, S8U 782 | Date from:1998.03;Date to:2001.04 | GDS44006 | Drive Shaft | | 25 | 27 | 56.3 | 110.5 | 713.5 | |
| | 1998.03-2001.08 | MT | F | L/R | Van FWD S8U 758, S8U 780, S8U 782 | Date from:1998.03;Date to:2001.04 | GDS44006 | Drive Shaft | | 25 | 27 | 56.3 | 110.5 | 713.5 | |
| **Astra** | | | | | | | | | | | | | | | |
| 1.0 (66 kw) | 2018.06-2019.08 | 5MT | F | L | Estate FWD D 10 XFL | | GDS83854 | Drive Shaft | | 33 | 22 | 52.3 | 94 | 637 | |
| | 2018.06-2019.08 | 5MT | F | R | Estate FWD D 10 XFL | | GDS83853 | Drive Shaft | | 33 | 22 | 52.3 | 94 | 956 | |
| | 2018.06-2019.08 | 5MT | F | L/R | Estate FWD D 10 XFL | | GCO81640 | Outer Joint | | 33 | 22 | 52.3 | 94 | 55 | M |
| | 2018.06-2019.08 | 5MT | F | L | Hatchback FWD D 10 XFL | | GDS83854 | Drive Shaft | | 33 | 22 | 52.3 | 94 | 637 | |
| | 2018.06-2019.08 | 5MT | F | R | Hatchback FWD D 10 XFL | | GDS83853 | Drive Shaft | | 33 | 22 | 52.3 | 94 | 956 | |
| | 2018.06-2019.08 | 5MT | F | L/R | Hatchback FWD D 10 XFL | | GCO81640 | Outer Joint | | 33 | 22 | 52.3 | 94 | 55 | M |
| 1.0 (77 kw) | 2015.06-2019.08 | 5MT/6MT | F | L/R | Hatchback FWD B 10 XFL;D 10 XFL | | GCO81640 | Outer Joint | | 33 | 22 | 52.3 | 94 | 55 | M |
| | 2015.06-2019.08 | 5MT/6MT | F | L | Hatchback FWD B 10 XFL;D 10 XFL | Chassis no. to:H8999999/HG999999,EXC.RPO ABW | GCI81613 | Inner Joint | | 22 | 23 | 35 | 57.5 | 104.5 | |
| | 2015.06-2019.08 | 5MT/6MT/5AMT | F | L | Hatchback FWD B 10 XFL;D 10 XFL | Chassis no. to:H8999999/HG999999,EXC.RPO ABW | GDS82041 | Drive Shaft | | 33 | 22 | 52.3 | 94 | 643 | |
| | 2015.06-2019.08 | 5MT/6MT/5AMT | F | L | Hatchback FWD B 10 XFL;D 10 XFL | Chassis no. to:H8999999/HG999999,FOR RPO ABW;Chassis no. from:J8000001/J5000001 | GDS83854 | Drive Shaft | | 33 | 22 | 52.3 | 94 | 637 | |
| | 2015.06-2019.08 | 5MT/6MT/5AMT | F | R | Hatchback FWD B 10 XFL;D 10 XFL | Chassis no. to:H8999999/HG999999,FOR RPO ABW;Chassis no. from:J8000001/J5000001 | GDS83853 | Drive Shaft | | 33 | 22 | 52.3 | 94 | 956 | |
| | 2018.05-2019.08 | 5MT | F | L | Estate Van FWD D 10 XFL | | GDS83854 | Drive Shaft | | 33 | 22 | 52.3 | 94 | 637 | |
| | 2018.05-2019.08 | 5MT | F | R | Estate Van FWD D 10 XFL | | GDS83853 | Drive Shaft | | 33 | 22 | 52.3 | 94 | 956 | |
| | 2018.05-2019.08 | 5MT | F | L/R | Estate Van FWD D 10 XFL | | GCO81640 | Outer Joint | | 33 | 22 | 52.3 | 94 | 55 | M |
| | 2018.06-2019.08 | 5MT | F | L/R | Estate FWD B 10 XFL;D 10 XFL | | GCO81640 | Outer Joint | | 33 | 22 | 52.3 | 94 | 55 | M |
| | 2018.06-2019.08 | 5MT | F | L | Estate FWD B 10 XFL;D 10 XFL | Chassis no. to:H8999999/HG999999,EXC.RPO ABW | GCI81613 | Inner Joint | | 22 | 23 | 35 | 57.5 | 104.5 | |
| | 2018.06-2019.08 | 5MT/5AMT | F | L | Estate FWD B 10 XFL;D 10 XFL | Chassis no. to:H8999999/HG999999,EXC.RPO ABW | GDS82041 | Drive Shaft | | 33 | 22 | 52.3 | 94 | 643 | |
| | 2018.06-2019.08 | 5MT/5AMT | F | L | Estate FWD B 10 XFL;D 10 XFL | Chassis no. to:H8999999/HG999999,FOR RPO ABW;Chassis no. from:J8000001/J5000001 | GDS83854 | Drive Shaft | | 33 | 22 | 52.3 | 94 | 637 | |
| | 2018.06-2019.08 | 5MT/5AMT | F | R | Estate FWD B 10 XFL;D 10 XFL | Chassis no. to:H8999999/HG999999,FOR RPO ABW;Chassis no. from:J8000001/J5000001 | GDS83853 | Drive Shaft | | 33 | 22 | 52.3 | 94 | 956 | |
| 1.2 (48 kw) | 1998.03-2000.08 | 5MT | F | L/R | Estate FWD X12XE | | GCI60001 | Inner Joint | | 22 | 28 | 34.9 | 57.5 | 96.5 | |
| | 1998.03-2000.08 | AT/MT | F | L/R | Estate FWD X12XE | | GCO44012 | Outer Joint | | 33 | 28 | 52 | 104 | 54.5 | O |
| | 1998.03-2000.08 | | F | R | Estate FWD X12XE | | GDS44082 | Drive Shaft | | 33 | 34 | 55 | 104 | 663 | |
| | 1998.03-2000.08 | 5MT | F | L/R | Hatchback FWD X12XE | | GCI60001 | Inner Joint | | 22 | 28 | 34.9 | 57.5 | 96.5 | |
| | 1998.03-2000.08 | AT/MT | F | L/R | Hatchback FWD X12XE | | GCO44012 | Outer Joint | | 33 | 28 | 52 | 104 | 54.5 | O |
| | 1998.03-2000.08 | | F | R | Hatchback FWD X12XE | | GDS44082 | Drive Shaft | | 33 | 34 | 55 | 104 | 663 | |
| | 1998.03-2000.08 | 5MT | F | L/R | Saloon FWD X12XE | | GCI60001 | Inner Joint | | 22 | 28 | 34.9 | 57.5 | 96.5 | |
| | 1998.03-2000.08 | AT/MT | F | L/R | Saloon FWD X12XE | | GCO44012 | Outer Joint | | 33 | 28 | 52 | 104 | 54.5 | O |
| | 1998.03-2000.08 | | F | R | Saloon FWD X12XE | | GDS44082 | Drive Shaft | | 33 | 34 | 55 | 104 | 663 | |
| 1.2 (55 kw) | 2000.09-2004.07 | 5MT | F | L/R | Estate FWD Z12XE | | GCI60001 | Inner Joint | | 22 | 28 | 34.9 | 57.5 | 96.5 | |
| | 2000.09-2004.07 | AT/MT | F | L/R | Estate FWD Z12XE | | GCO44012 | Outer Joint | | 33 | 28 | 52 | 104 | 54.5 | O |
| | 2000.09-2004.07 | | F | R | Estate FWD Z12XE | | GDS44082 | Drive Shaft | | 33 | 34 | 55 | 104 | 663 | |
| | 2000.09-2005.01 | 5MT | F | L/R | Hatchback FWD Z12XE | | GCI60001 | Inner Joint | | 22 | 28 | 34.9 | 57.5 | 96.5 | |
| | 2000.09-2005.01 | AT/MT | F | L/R | Hatchback FWD Z12XE | | GCO44012 | Outer Joint | | 33 | 28 | 52 | 104 | 54.5 | O |
| | 2000.09-2005.01 | | F | R | Hatchback FWD Z12XE | | GDS44082 | Drive Shaft | | 33 | 34 | 55 | 104 | 663 | |
| | 2000.09-2005.01 | 5MT | F | L/R | Saloon FWD Z12XE | | GCI60001 | Inner Joint | | 22 | 28 | 34.9 | 57.5 | 96.5 | |
| | 2000.09-2005.01 | AT/MT | F | L/R | Saloon FWD Z12XE | | GCO44012 | Outer Joint | | 33 | 28 | 52 | 104 | 54.5 | O |
| | 2000.09-2005.01 | | F | R | Saloon FWD Z12XE | | GDS44082 | Drive Shaft | | 33 | 34 | 55 | 104 | 663 | |
| 1.2 (59 kw) | 2005.08-2010.10 | 5MT | F | L | Hatchback FWD Z 12 XEP | | GDS44028 | Drive Shaft | | 33 | 22 | 53 | 95 | 590 | |
| | 2005.08-2010.10 | 5MT | F | R | Hatchback FWD Z 12 XEP | | GDS44030 | Drive Shaft | | 33 | 22 | 53 | 95 | 952 | |
| | 2005.08-2010.10 | | F | L/R | Hatchback FWD Z 12 XEP | | GCO44003 | Outer Joint | | 33 | 22 | 53 | 95 | 54.5 | M |

| | YEAR | TRANSM. | F/R | L/R | BODY STYLE & DRIVE TYPE & ENGINE | REMARKS | G-AP Ref. | PRODUCT | ABS | Technical Specifications A | B | C | H | L | P |
|---|---|---|---|---|---|---|---|---|---|---|---|---|---|---|---|
| **OPEL** | | | | | | | | | | | | | | | |
| **Astra** | | | | | | | | | | | | | | | |
| 1.2 (59 kw) | 2005.08-2010.10 | | F | L | Hatchback FWD Z 12 XEP | | GCI21014 | Inner Joint | | 22 | 22 | 35 | 57.5 | 105.5 | |
| 1.2 (81 kw) | 2021.10- | 6MT | F | L | Estate FWD HNP (EB2ADT) | | GDS83616 | Drive Shaft | | 28 | 24 | 58.5 | 92.5 | 681 | |
| | 2021.10- | 6MT | F | R | Estate FWD HNP (EB2ADT) | | GDS84457 | Drive Shaft | | 28 | 24 | 58.5 | 92.5 | 921 | |
| | 2021.10- | 6MT | F | R | Estate FWD HNP (EB2ADT) | | GCO81397 | Outer Joint | | 28 | 34 | 58.5 | 92.5 | 56 | I |
| | 2021.10- | 6MT | F | R | Estate FWD HNP (EB2ADT) | | GCI82769 | Inner Joint | | 24 | 34 | 40 | 61 | 103 | |
| | 2021.10- | 6MT | F | L | Hatchback FWD HNP (EB2ADT) | | GDS83616 | Drive Shaft | | 28 | 24 | 58.5 | 92.5 | 681 | |
| | 2021.10- | 6MT | F | R | Hatchback FWD HNP (EB2ADT) | | GDS84457 | Drive Shaft | | 28 | 24 | 58.5 | 92.5 | 921 | |
| | 2021.10- | 6MT | F | R | Hatchback FWD HNP (EB2ADT) | | GCO81397 | Outer Joint | | 28 | 34 | 58.5 | 92.5 | 56 | I |
| | 2021.10- | 6MT | F | R | Hatchback FWD HNP (EB2ADT) | | GCI82769 | Inner Joint | | 24 | 34 | 40 | 61 | 103 | |
| 1.2 (96 kw) | 2021.10- | 6MT | F | L | Estate FWD HNS (EB2ADTS) | | GDS83616 | Drive Shaft | | 28 | 24 | 58.5 | 92.5 | 681 | |
| | 2021.10- | 6MT | F | R | Estate FWD HNS (EB2ADTS) | | GDS84457 | Drive Shaft | | 28 | 24 | 58.5 | 92.5 | 921 | |
| | 2021.10- | 6MT | F | R | Estate FWD HNS (EB2ADTS) | | GCO81397 | Outer Joint | | 28 | 34 | 58.5 | 92.5 | 56 | I |
| | 2021.10- | 6MT | F | R | Estate FWD HNS (EB2ADTS) | | GCI82769 | Inner Joint | | 24 | 34 | 40 | 61 | 103 | |
| | 2021.10- | 8AT | F | L | Estate FWD HNS (EB2ADTS) | | GDS84579 | Drive Shaft | | 28 | 37 | 58.5 | 92.5 | 641 | |
| | 2021.10- | 8AT | F | L/R | Estate FWD HNS (EB2ADTS) | | GCO82273 | Outer Joint | | 28 | 34 | 58.5 | 92.5 | 56 | I |
| | 2021.10- | 6MT | F | L | Hatchback FWD HNS (EB2ADTS) | | GDS83616 | Drive Shaft | | 28 | 24 | 58.5 | 92.5 | 681 | |
| | 2021.10- | 6MT | F | R | Hatchback FWD HNS (EB2ADTS) | | GDS84457 | Drive Shaft | | 28 | 24 | 58.5 | 92.5 | 921 | |
| | 2021.10- | 6MT | F | R | Hatchback FWD HNS (EB2ADTS) | | GCO81397 | Outer Joint | | 28 | 34 | 58.5 | 92.5 | 56 | I |
| | 2021.10- | 6MT | F | R | Hatchback FWD HNS (EB2ADTS) | | GCI82769 | Inner Joint | | 24 | 34 | 40 | 61 | 103 | |
| | 2021.10- | 8AT | F | L | Hatchback FWD HNS (EB2ADTS) | | GDS84579 | Drive Shaft | | 28 | 37 | 58.5 | 92.5 | 641 | |
| | 2021.10- | 8AT | F | L/R | Hatchback FWD HNS (EB2ADTS) | | GCO82273 | Outer Joint | | 28 | 34 | 58.5 | 92.5 | 56 | I |
| 1.2 (100 kw) | 2023.10- | 6DCT | F | R | Hatchback FWD HPY (EB2LTDH2) | | GDS83109 | Drive Shaft | | 28 | 37 | 58.5 | 92.5 | 933 | |
| | 2023.10- | 6DCT | F | R | Hatchback FWD HPY (EB2LTDH2) | | GCO82273 | Outer Joint | | 28 | 34 | 58.5 | 92.5 | 56 | I |
| | 2023.10- | 6DCT | F | R | Hatchback FWD HPY (EB2LTDH2) | | GCI82118 | Inner Joint | | 37 | 34 | | 290 | 88 | |
| 1.2 (107 kw) | 2025.04- | 6DCT | F | R | Estate FWD | | GDS83109 | Drive Shaft | | 28 | 37 | 58.5 | 92.5 | 933 | |
| | 2025.04- | 6DCT | F | R | Estate FWD | | GCI82118 | Inner Joint | | 37 | 34 | | 290 | 88 | |
| | 2025.04- | 6DCT | F | R | Hatchback FWD | | GDS83109 | Drive Shaft | | 28 | 37 | 58.5 | 92.5 | 933 | |
| | 2025.04- | 6DCT | F | R | Hatchback FWD | | GCI82118 | Inner Joint | | 37 | 34 | | 290 | 88 | |
| 1.3 (66 kw) | 2005.08-2010.10 | 6MT | F | L | Estate FWD Z 13 DTH | | GCI44008 | Inner Joint | | 25 | 25 | 34.9 | 57.5 | 113.2 | |
| | 2005.08-2010.10 | AT/MT | F | L | Estate FWD Z 13 DTH | | GDS60020 | Drive Shaft | | 33 | 25 | 52.5 | 94 | 561 | |
| | 2005.08-2010.10 | AT/MT | F | L/R | Estate FWD Z 13 DTH | | GCO44028 | Outer Joint | | 33 | 24 | 53 | 93.5 | 63.5 | M |
| | 2005.08-2010.10 | MT | F | L | Estate FWD Z 13 DTH | | GCI21018 | Inner Joint | | 25 | 34 | 35 | 58 | 116 | |
| | 2005.08-2010.10 | SAT/5MT/6MT | F | L | Estate FWD Z 13 DTH | | GDS44052 | Drive Shaft | | 33 | 25 | 53 | 93.5 | 573 | |
| | 2005.08-2010.10 | SAT/5MT/6MT | F | R | Estate FWD Z 13 DTH | | GDS44051 | Drive Shaft | | 33 | 34 | 53 | 93.5 | 570 | |
| | 2005.08-2010.10 | | F | R | Estate FWD Z 13 DTH | | GCI44005 | Inner Joint | | 34 | 25 | 35 | | 130.2 | |
| | 2005.08-2010.10 | | F | R | Estate FWD Z 13 DTH | | GCI44011 | Inner Joint | | 34 | 25 | 37.5 | | 130.2 | |
| | 2005.08-2010.10 | SAT/5MT/6MT | F | L | Hatchback FWD Z 13 DTH | | GDS44052 | Drive Shaft | | 33 | 25 | 53 | 93.5 | 573 | |
| | 2005.08-2010.10 | SAT/5MT/6MT | F | R | Hatchback FWD Z 13 DTH | | GDS44051 | Drive Shaft | | 33 | 34 | 53 | 93.5 | 570 | |
| | 2005.08-2010.10 | SAT/5MT/6MT | F | L/R | Hatchback FWD Z 13 DTH | | GCO44028 | Outer Joint | | 33 | 24 | 53 | 93.5 | 63.5 | M |
| | 2005.08-2010.10 | SAT/5MT/6MT | F | L | Hatchback FWD Z 13 DTH | | GCI44008 | Inner Joint | | 25 | 25 | 34.9 | 57.5 | 113.2 | |
| | 2005.08-2010.10 | SAT/5MT/6MT | F | R | Hatchback FWD Z 13 DTH | | GCI44005 | Inner Joint | | 34 | 25 | 35 | | 130.2 | |
| | 2007.02-2010.10 | 6MT | F | L | Saloon FWD Z 13 DTH | | GCI44008 | Inner Joint | | 25 | 25 | 34.9 | 57.5 | 113.2 | |
| | 2007.02-2010.10 | AT/MT | F | L | Saloon FWD Z 13 DTH | | GDS44052 | Drive Shaft | | 33 | 25 | 53 | 93.5 | 573 | |
| | 2007.02-2010.10 | AT/MT | F | R | Saloon FWD Z 13 DTH | | GDS44051 | Drive Shaft | | 33 | 34 | 53 | 93.5 | 570 | |
| | 2007.02-2010.10 | AT/MT | F | L/R | Saloon FWD Z 13 DTH | | GCO44028 | Outer Joint | | 33 | 24 | 53 | 93.5 | 63.5 | M |
| | 2007.02-2010.10 | | F | R | Saloon FWD Z 13 DTH | | GCI44005 | Inner Joint | | 34 | 25 | 35 | | 130.2 | |
| | 2007.02-2010.10 | | F | R | Saloon FWD Z 13 DTH | | GCI44011 | Inner Joint | | 34 | 25 | 37.5 | | 130.2 | |
| 1.3 (70 kw) | 2009.12-2015.10 | 5MT | F | L | Hatchback FWD A 13 DTE | | GDS83209 | Drive Shaft | | 33 | 22 | 52.5 | 94 | 619 | |
| | 2009.12-2015.10 | 5MT | F | R | Hatchback FWD A 13 DTE | | GDS84082 | Drive Shaft | | 33 | 22 | 52.3 | 94 | 983 | |
| | 2009.12-2015.10 | 5MT | F | L/R | Hatchback FWD A 13 DTE | with Rim protector | GCO44088 | Outer Joint | | 33 | 23 | 52.3 | 94 | 59.5 | M |
| | 2009.12-2015.10 | 5MT | F | L/R | Hatchback FWD A 13 DTE | without Rim protector | GCO88047 | Outer Joint | | 33 | 23 | 52.5 | 94 | 59.5 | M |
| | 2009.12-2015.10 | 5MT | F | L | Hatchback FWD A 13 DTE | | GCI99026 | Inner Joint | | 22 | 25 | 35 | 57 | 111.7 | |
| | 2009.12-2015.10 | 5MT | F | R | Hatchback FWD A 13 DTE | | GCI44017 | Inner Joint | | 22 | 23 | 35 | 57.5 | 116 | |
| | 2010.10-2014.10 | 5MT | F | L | Estate FWD A 13 DTE | | GDS83209 | Drive Shaft | | 33 | 22 | 52.5 | 94 | 619 | |
| | 2010.10-2014.10 | 5MT | F | R | Estate FWD A 13 DTE | | GDS84082 | Drive Shaft | | 33 | 22 | 52.3 | 94 | 983 | |
| | 2010.10-2014.10 | 5MT | F | L/R | Estate FWD A 13 DTE | with Rim protector | GCO44088 | Outer Joint | | 33 | 23 | 52.3 | 94 | 59.5 | M |
| | 2010.10-2014.10 | 5MT | F | L/R | Estate FWD A 13 DTE | without Rim protector | GCO88047 | Outer Joint | | 33 | 23 | 52.5 | 94 | 59.5 | M |
| | 2010.10-2014.10 | 5MT | F | L | Estate FWD A 13 DTE | | GCI99026 | Inner Joint | | 22 | 25 | 35 | 57 | 111.7 | |
| | 2010.10-2014.10 | 5MT | F | R | Estate FWD A 13 DTE | | GCI44017 | Inner Joint | | 22 | 23 | 35 | 57.5 | 116 | |
| | 2012.06-2015.10 | 5MT | F | L | Saloon FWD A 13 DTE | | GDS83209 | Drive Shaft | | 33 | 22 | 52.5 | 94 | 619 | |
| | 2012.06-2015.10 | 5MT | F | R | Saloon FWD A 13 DTE | | GDS84082 | Drive Shaft | | 33 | 22 | 52.3 | 94 | 983 | |
| | 2012.06-2015.10 | 5MT | F | L/R | Saloon FWD A 13 DTE | with Rim protector | GCO44088 | Outer Joint | | 33 | 23 | 52.3 | 94 | 59.5 | M |
| | 2012.06-2015.10 | 5MT | F | L/R | Saloon FWD A 13 DTE | without Rim protector | GCO88047 | Outer Joint | | 33 | 23 | 52.5 | 94 | 59.5 | M |
| | 2012.06-2015.10 | 5MT | F | L | Saloon FWD A 13 DTE | | GCI99026 | Inner Joint | | 22 | 25 | 35 | 57 | 111.7 | |
| | 2012.06-2015.10 | 5MT | F | R | Saloon FWD A 13 DTE | | GCI44017 | Inner Joint | | 22 | 23 | 35 | 57.5 | 116 | |

| | YEAR | TRANSM. | F/R | L/R | BODY STYLE & DRIVE TYPE & ENGINE | REMARKS | G-AP Ref. | PRODUCT | ABS | Technical Specifications A | B | C | H | L | P |
|---|---|---|---|---|---|---|---|---|---|---|---|---|---|---|---|
| **OPEL** | | | | | | | | | | | | | | | |
| **Astra** | | | | | | | | | | | | | | | |
| 1.4 (44 kw) | 1991.09-1998.01 | MT | F | L | Hatchback FWD C14NZ/X14NZ | Chassis no. to:P-2732833 | GDS44002 | Drive Shaft | 29T | 22 | 22 | 52 | 95 | 585 | |
| | 1991.09-1998.01 | MT | F | R | Hatchback FWD C14NZ/X14NZ | Chassis no. to:P-2732833 | GDS60002 | Drive Shaft | 29T | 22 | 22 | 52 | 95 | 926 | |
| | 1991.09-1998.01 | MT | F | L/R | Hatchback FWD C14NZ/X14NZ | Chassis no. to:P-2732833 | GCO44051 | Outer Joint | 29T | 22 | 22 | 52 | 95 | 50 | O |
| | 1991.09-1998.01 | MT | F | L/R | Hatchback FWD C14NZ/X14NZ | | GCI44004 | Inner Joint | | 22 | 22 | 34.95 | 57.5 | 103 | |
| | 1991.09-1998.02 | MT | F | L | Estate FWD C14NZ/X14NZ | Chassis no. to:P-2732833 | GDS44002 | Drive Shaft | 29T | 22 | 22 | 52 | 95 | 585 | |
| | 1991.09-1998.02 | MT | F | R | Estate FWD C14NZ/X14NZ | Chassis no. to:P-2732833 | GDS60002 | Drive Shaft | 29T | 22 | 22 | 52 | 95 | 926 | |
| | 1991.09-1998.02 | MT | F | L/R | Estate FWD C14NZ/X14NZ | Date from:1994.01 | GCO44007 | Outer Joint | 29T | 22 | 22 | 52 | 94.5 | 50 | O |
| | 1991.09-1998.02 | MT | F | L/R | Estate FWD C14NZ/X14NZ | | GCO44041 | Outer Joint | | 22 | 22 | 52 | 95 | 50 | O |
| | 1991.09-1998.02 | MT | F | L/R | Estate FWD C14NZ/X14NZ | Chassis no. to:P-2732833 | GCO44051 | Outer Joint | 29T | 22 | 22 | 52 | 95 | 50 | O |
| | 1991.09-1998.02 | MT | F | L/R | Estate FWD C14NZ/X14NZ | | GCI44004 | Inner Joint | | 22 | 22 | 34.95 | 57.5 | 103 | |
| | 1991.09-1998.02 | | F | | Estate FWD C14NZ/X14NZ | | GCO44023 | Outer Joint | | 22 | 22 | 52 | 95 | 50 | O |
| | 1991.09-1998.09 | MT | F | L | Saloon FWD C14NZ/X14NZ | Chassis no. to:P-2732833 | GDS44002 | Drive Shaft | 29T | 22 | 22 | 52 | 95 | 585 | |
| | 1991.09-1998.09 | MT | F | R | Saloon FWD C14NZ/X14NZ | Chassis no. to:P-2732833 | GDS60002 | Drive Shaft | 29T | 22 | 22 | 52 | 95 | 926 | |
| | 1991.09-1998.09 | MT | F | L/R | Saloon FWD C14NZ/X14NZ | Date from:1994.01 | GCO44007 | Outer Joint | 29T | 22 | 22 | 52 | 94.5 | 50 | O |
| | 1991.09-1998.09 | MT | F | L/R | Saloon FWD C14NZ/X14NZ | | GCO44041 | Outer Joint | | 22 | 22 | 52 | 95 | 50 | O |
| | 1991.09-1998.09 | MT | F | L/R | Saloon FWD C14NZ/X14NZ | Chassis no. to:P-2732833 | GCO44051 | Outer Joint | 29T | 22 | 22 | 52 | 95 | 50 | O |
| | 1991.09-1998.09 | MT | F | L/R | Saloon FWD C14NZ/X14NZ | | GCI44004 | Inner Joint | | 22 | 22 | 34.95 | 57.5 | 103 | |
| | 1991.09-1998.09 | | F | | Saloon FWD C14NZ/X14NZ | | GCO44023 | Outer Joint | | 22 | 22 | 52 | 95 | 50 | O |
| 1.4 (55 kw) | 2004.04-2004.10 | 5MT | F | L | Hatchback FWD Z 14 XEL | | GDS44028 | Drive Shaft | | 33 | 22 | 53 | 95 | 590 | |
| | 2004.04-2004.10 | 5MT | F | R | Hatchback FWD Z 14 XEL | | GDS44030 | Drive Shaft | | 33 | 22 | 53 | 95 | 952 | |
| | 2004.04-2004.10 | | F | L/R | Hatchback FWD Z 14 XEL | | GCO44003 | Outer Joint | | 33 | 22 | 53 | 95 | 54.5 | M |
| | 2004.04-2004.10 | | F | L | Hatchback FWD Z 14 XEL | | GCI21014 | Inner Joint | | 22 | 22 | 35 | 57.5 | 105.5 | |
| | 2004.08-2010.10 | 5MT | F | L | Estate FWD Z 14 XEL | | GDS44028 | Drive Shaft | | 33 | 22 | 53 | 95 | 590 | |
| | 2004.08-2010.10 | 5MT | F | R | Estate FWD Z 14 XEL | | GDS44030 | Drive Shaft | | 33 | 22 | 53 | 95 | 952 | |
| | 2004.08-2010.10 | | F | L/R | Estate FWD Z 14 XEL | | GCO44003 | Outer Joint | | 33 | 22 | 53 | 95 | 54.5 | M |
| | 2004.08-2010.10 | | F | L | Estate FWD Z 14 XEL | | GCI21014 | Inner Joint | | 22 | 22 | 35 | 57.5 | 105.5 | |
| 1.4 (64 kw) | 2009.12-2015.10 | 5MT | F | L | Hatchback FWD A 14 XEL | | GDS44064 | Drive Shaft | | 33 | 22 | 53 | 95 | 618 | |
| | 2009.12-2015.10 | 5MT | F | R | Hatchback FWD A 14 XEL | | GDS44065 | Drive Shaft | | 33 | 22 | 53 | 95 | 983 | |
| | 2009.12-2015.10 | AT | F | L/R | Hatchback FWD A 14 XEL | | GCO88047 | Outer Joint | | 33 | 23 | 52.5 | 94 | 59.5 | M |
| | 2009.12-2015.10 | MT | F | L/R | Hatchback FWD A 14 XEL | | GCI44004 | Inner Joint | | 22 | 22 | 34.95 | 57.5 | 103 | |
| | 2009.12-2015.10 | | F | L/R | Hatchback FWD A 14 XEL | | GCO44003 | Outer Joint | | 33 | 22 | 53 | 95 | 54.5 | M |
| | 2009.12-2015.10 | | F | L | Hatchback FWD A 14 XEL | Date To:2015.10 | GCI21014 | Inner Joint | | 22 | 22 | 35 | 57.5 | 105.5 | |
| | 2010.10-2015.10 | 5MT | F | L | Estate FWD A 14 XEL | | GDS44064 | Drive Shaft | | 33 | 22 | 53 | 95 | 618 | |
| | 2010.10-2015.10 | 5MT | F | R | Estate FWD A 14 XEL | | GDS44065 | Drive Shaft | | 33 | 22 | 53 | 95 | 983 | |
| | 2010.10-2015.10 | | F | L/R | Estate FWD A 14 XEL | | GCO44003 | Outer Joint | | 33 | 22 | 53 | 95 | 54.5 | M |
| | 2010.10-2015.10 | | F | L | Estate FWD A 14 XEL | | GCI21014 | Inner Joint | | 22 | 22 | 35 | 57.5 | 105.5 | |
| | 2014.01-2015.10 | MT | F | L | Saloon FWD A 14 XEL | | GDS44064 | Drive Shaft | | 33 | 22 | 53 | 95 | 618 | |
| | 2014.01-2015.10 | MT | F | R | Saloon FWD A 14 XEL | | GDS44065 | Drive Shaft | | 33 | 22 | 53 | 95 | 983 | |
| | 2014.01-2015.10 | MT | F | L/R | Saloon FWD A 14 XEL | | GCI21014 | Inner Joint | | 22 | 22 | 35 | 57.5 | 105.5 | |
| | 2014.01-2015.10 | | F | L/R | Saloon FWD A 14 XEL | | GCO44003 | Outer Joint | | 33 | 22 | 53 | 95 | 54.5 | M |
| 1.4 (66 kw) | 1996.09-1998.02 | AT/MT | F | R | Estate FWD X14XE | | GDS50209 | Drive Shaft | | 27 | 39 | 56.5 | 92 | 1014 | |
| | 1996.09-1998.02 | AT/MT | F | R | Estate FWD X14XE | | GDS60019 | Drive Shaft | | 22 | 22 | 52 | 95 | 926 | |
| | 1996.09-1998.02 | AT/MT | F | L/R | Estate FWD X14XE | Date from:1996.09 | GCO44007 | Outer Joint | 29T | 22 | 22 | 52 | 94.5 | 50 | O |
| | 1996.09-1998.02 | AT/MT | F | R | Estate FWD X14XE | | GCI50097 | Inner Joint | | 39 | 35 | 30 | 409 | 90 | |
| | 1996.09-1998.02 | | F | | Estate FWD X14XE | | GCO44023 | Outer Joint | | 22 | 22 | 52 | 95 | 50 | O |
| | 1996.09-1998.02 | AT/MT | F | R | Hatchback FWD X14XE | | GDS50209 | Drive Shaft | | 27 | 39 | 56.5 | 92 | 1014 | |
| | 1996.09-1998.02 | AT/MT | F | R | Hatchback FWD X14XE | | GDS60019 | Drive Shaft | | 22 | 22 | 52 | 95 | 926 | |
| | 1996.09-1998.02 | AT/MT | F | L/R | Hatchback FWD X14XE | | GCO44007 | Outer Joint | 29T | 22 | 22 | 52 | 94.5 | 50 | O |
| | 1996.09-1998.02 | AT/MT | F | R | Hatchback FWD X14XE | | GCI50097 | Inner Joint | | 39 | 35 | 30 | 409 | 90 | |
| | 1996.09-1998.02 | | F | | Hatchback FWD X14XE | | GCO44023 | Outer Joint | | 22 | 22 | 52 | 95 | 50 | O |
| | 1996.09-1998.02 | AT/MT | F | R | Saloon FWD X14XE | | GDS50209 | Drive Shaft | | 27 | 39 | 56.5 | 92 | 1014 | |
| | 1996.09-1998.02 | AT/MT | F | R | Saloon FWD X14XE | | GDS60019 | Drive Shaft | | 22 | 22 | 52 | 95 | 926 | |
| | 1996.09-1998.02 | AT/MT | F | L/R | Saloon FWD X14XE | Date from:1996.09;Date to:1998.02 | GCO44007 | Outer Joint | 29T | 22 | 22 | 52 | 94.5 | 50 | O |
| | 1996.09-1998.02 | AT/MT | F | R | Saloon FWD X14XE | | GCI50097 | Inner Joint | | 39 | 35 | 30 | 409 | 90 | |
| | 1996.09-1998.02 | | F | | Saloon FWD X14XE | | GCO44023 | Outer Joint | | 22 | 22 | 52 | 95 | 50 | O |
| | 1998.02-2005.01 | 4AT/5MT | F | L | Hatchback FWD X14XE/Z14XE | | GDS60013 | Drive Shaft | | 33 | 22 | 52 | 103 | 595 | |
| | 1998.02-2005.01 | 4AT/5MT | F | R | Hatchback FWD X14XE/Z14XE | | GDS44033 | Drive Shaft | | 33 | 22 | 52 | 103 | 950.5 | |
| | 1998.02-2005.01 | 4AT/5MT | F | L/R | Hatchback FWD X14XE/Z14XE | | GCO44009 | Outer Joint | | 33 | 22 | 52 | 103 | 50.5 | O |
| | 1998.02-2005.01 | 4AT/5MT | F | L/R | Hatchback FWD X14XE/Z14XE | | GCO44030 | Outer Joint | | 33 | 22 | 52 | 103 | 50.5 | O |
| | 1998.02-2005.01 | 4AT/5MT | F | L/R | Hatchback FWD X14XE/Z14XE | | GCI44004 | Inner Joint | | 22 | 22 | 34.95 | 57.5 | 103 | |
| | 1998.02-2005.01 | AT/MT | F | L | Hatchback FWD X14XE/Z14XE | | GDS60013 | Drive Shaft | | 33 | 22 | 52 | 103 | 595 | |
| | 1998.02-2005.01 | AT/MT | F | R | Hatchback FWD X14XE/Z14XE | | GDS44033 | Drive Shaft | | 33 | 22 | 52 | 103 | 950.5 | |
| | 1998.02-2005.01 | AT/MT | F | L/R | Hatchback FWD X14XE/Z14XE | | GCO44009 | Outer Joint | | 33 | 22 | 52 | 103 | 50.5 | O |
| | 1998.02-2005.01 | AT/MT | F | L/R | Hatchback FWD X14XE/Z14XE | | GCO44030 | Outer Joint | | 33 | 22 | 52 | 103 | 50.5 | O |
| | 1998.02-2005.01 | AT/MT | F | L/R | Hatchback FWD X14XE/Z14XE | | GCI44004 | Inner Joint | | 22 | 22 | 34.95 | 57.5 | 103 | |

| | YEAR | TRANSM. | F/R | L/R | BODY STYLE & DRIVE TYPE & ENGINE | REMARKS | G-AP Ref. | PRODUCT | ABS | Technical Specifications A | B | C | H | L | P |
|---|---|---|---|---|---|---|---|---|---|---|---|---|---|---|---|
| **OPEL** | | | | | | | | | | | | | | | |
| **Astra** | | | | | | | | | | | | | | | |
| 1.4 (66 kw) | 1998.03-2004.07 | 4AT/5MT | F | L | Estate FWD X14XE/Z14XE | | GDS60013 | Drive Shaft | | 33 | 22 | 52 | 103 | 595 | |
| | 1998.03-2004.07 | 4AT/5MT | F | R | Estate FWD X14XE/Z14XE | | GDS44033 | Drive Shaft | | 33 | 22 | 52 | 103 | 950.5 | |
| | 1998.03-2004.07 | AT/MT | F | L | Estate FWD X14XE/Z14XE | | GDS60013 | Drive Shaft | | 33 | 22 | 52 | 103 | 595 | |
| | 1998.03-2004.07 | AT/MT | F | R | Estate FWD X14XE/Z14XE | | GDS44033 | Drive Shaft | | 33 | 22 | 52 | 103 | 950.5 | |
| | 1998.03-2004.07 | AT/MT | F | L/R | Estate FWD X14XE/Z14XE | | GCO44009 | Outer Joint | | 33 | 22 | 52 | 103 | 50.5 | O |
| | 1998.03-2004.07 | AT/MT | F | L/R | Estate FWD X14XE/Z14XE | | GCO44011 | Outer Joint | 29T | 33 | 22 | 52 | 103 | 50.5 | O |
| | 1998.03-2004.07 | AT/MT | F | L/R | Estate FWD X14XE/Z14XE | | GCO44030 | Outer Joint | | 33 | 22 | 52 | 103 | 50.5 | O |
| | 1998.03-2004.07 | AT/MT | F | L/R | Estate FWD X14XE/Z14XE | | GCI44004 | Inner Joint | | 22 | 22 | 34.95 | 57.5 | 103 | |
| | 1998.03-2004.07 | MT | F | L | Estate FWD X14XE/Z14XE | | GCI21014 | Inner Joint | | 22 | 22 | 35 | 57.5 | 105.5 | |
| | 1998.03-2004.07 | | F | L/R | Estate FWD X14XE/Z14XE | | GCO44009 | Outer Joint | | 33 | 22 | 52 | 103 | 50.5 | O |
| | 1998.03-2005.01 | 4AT/5MT | F | L | Saloon FWD X14XE/Z14XE | | GDS60013 | Drive Shaft | | 33 | 22 | 52 | 103 | 595 | |
| | 1998.03-2005.01 | 4AT/5MT | F | R | Saloon FWD X14XE/Z14XE | | GDS44033 | Drive Shaft | | 33 | 22 | 52 | 103 | 950.5 | |
| | 1998.03-2005.01 | 4AT/5MT | F | L/R | Saloon FWD X14XE/Z14XE | | GCO44009 | Outer Joint | | 33 | 22 | 52 | 103 | 50.5 | O |
| | 1998.03-2005.01 | 4AT/5MT | F | L/R | Saloon FWD X14XE/Z14XE | | GCO44030 | Outer Joint | | 33 | 22 | 52 | 103 | 50.5 | O |
| | 1998.03-2005.01 | 4AT/5MT | F | L/R | Saloon FWD X14XE/Z14XE | | GCI44004 | Inner Joint | | 22 | 22 | 34.95 | 57.5 | 103 | |
| | 1998.03-2005.01 | AT/MT | F | L | Saloon FWD X14XE/Z14XE | | GDS60013 | Drive Shaft | | 33 | 22 | 52 | 103 | 595 | |
| | 1998.03-2005.01 | AT/MT | F | R | Saloon FWD X14XE/Z14XE | | GDS44033 | Drive Shaft | | 33 | 22 | 52 | 103 | 950.5 | |
| | 1998.03-2005.01 | AT/MT | F | L/R | Saloon FWD X14XE/Z14XE | | GCO44009 | Outer Joint | | 33 | 22 | 52 | 103 | 50.5 | O |
| | 1998.03-2005.01 | AT/MT | F | L/R | Saloon FWD X14XE/Z14XE | | GCO44030 | Outer Joint | | 33 | 22 | 52 | 103 | 50.5 | O |
| | 1998.03-2005.01 | AT/MT | F | L/R | Saloon FWD X14XE/Z14XE | | GCI44004 | Inner Joint | | 22 | 22 | 34.95 | 57.5 | 103 | |
| | 2003.09-2009.11 | 5MT | F | L | Saloon FWD Z14XEP | | GDS60013 | Drive Shaft | | 33 | 22 | 52 | 103 | 595 | |
| | 2003.09-2009.11 | 5MT | F | R | Saloon FWD Z14XEP | | GDS44033 | Drive Shaft | | 33 | 22 | 52 | 103 | 950.5 | |
| | 2003.09-2009.11 | | F | L/R | Saloon FWD Z14XEP | | GCO44009 | Outer Joint | | 33 | 22 | 52 | 103 | 50.5 | O |
| | 2003.09-2009.11 | | F | L/R | Saloon FWD Z14XEP | | GCO44030 | Outer Joint | | 33 | 22 | 52 | 103 | 50.5 | O |
| | 2003.09-2009.11 | | F | L/R | Saloon FWD Z14XEP | | GCI44004 | Inner Joint | | 22 | 22 | 34.95 | 57.5 | 103 | |
| | 2003.09-2009.12 | 5MT | F | L | Hatchback FWD Z14XEP | | GDS60013 | Drive Shaft | | 33 | 22 | 52 | 103 | 595 | |
| | 2003.09-2009.12 | 5MT | F | R | Hatchback FWD Z14XEP | | GDS44033 | Drive Shaft | | 33 | 22 | 52 | 103 | 950.5 | |
| | 2003.09-2009.12 | 5MT | F | L/R | Hatchback FWD Z14XEP | | GCO44009 | Outer Joint | | 33 | 22 | 52 | 103 | 50.5 | O |
| | 2003.09-2009.12 | 5MT | F | L/R | Hatchback FWD Z14XEP | | GCO44030 | Outer Joint | | 33 | 22 | 52 | 103 | 50.5 | O |
| | 2003.09-2009.12 | 5MT | F | L/R | Hatchback FWD Z14XEP | | GCI44004 | Inner Joint | | 22 | 22 | 34.95 | 57.5 | 103 | |
| | 2004.03-2010.10 | 5MT | F | L | Hatchback FWD Z 14 XEP | | GDS44028 | Drive Shaft | | 33 | 22 | 53 | 95 | 590 | |
| | 2004.03-2010.10 | 5MT | F | R | Hatchback FWD Z 14 XEP | | GDS44030 | Drive Shaft | | 33 | 22 | 53 | 95 | 952 | |
| | 2004.03-2010.10 | 5MT | F | L/R | Hatchback FWD Z 14 XEP | | GCO44003 | Outer Joint | | 33 | 22 | 53 | 95 | 54.5 | M |
| | 2004.03-2010.10 | 5MT | F | L/R | Hatchback FWD Z 14 XEP | | GCI21014 | Inner Joint | | 22 | 22 | 35 | 57.5 | 105.5 | |
| | 2004.08-2010.10 | 5MT | F | L | Estate FWD Z 14 XEP | | GDS44028 | Drive Shaft | | 33 | 22 | 53 | 95 | 590 | |
| | 2004.08-2010.10 | 5MT | F | R | Estate FWD Z 14 XEP | | GDS44030 | Drive Shaft | | 33 | 22 | 53 | 95 | 952 | |
| | 2004.08-2010.10 | 5MT | F | L/R | Estate FWD Z 14 XEP | | GCO44003 | Outer Joint | | 33 | 22 | 53 | 95 | 54.5 | M |
| | 2004.08-2010.10 | 5MT | F | L/R | Estate FWD Z 14 XEP | | GCI21014 | Inner Joint | | 22 | 22 | 35 | 57.5 | 105.5 | |
| | 2007.02-2010.06 | 5MT | F | L | Saloon FWD Z 14 XEP | | GDS44028 | Drive Shaft | | 33 | 22 | 53 | 95 | 590 | |
| | 2007.02-2010.06 | 5MT | F | R | Saloon FWD Z 14 XEP | | GDS44030 | Drive Shaft | | 33 | 22 | 53 | 95 | 952 | |
| | 2007.02-2010.06 | 5MT | F | L/R | Saloon FWD Z 14 XEP | | GCI21014 | Inner Joint | | 22 | 22 | 35 | 57.5 | 105.5 | |
| | 2007.02-2010.06 | | F | L/R | Saloon FWD Z 14 XEP | | GCO44003 | Outer Joint | | 33 | 22 | 53 | 95 | 54.5 | M |
| | 2009.08-2010.10 | 5MT | F | L | Estate FWD Z 14 XEP | | GDS44028 | Drive Shaft | | 33 | 22 | 53 | 95 | 590 | |
| | 2009.08-2010.10 | 5MT | F | R | Estate FWD Z 14 XEP | | GDS44030 | Drive Shaft | | 33 | 22 | 53 | 95 | 952 | |
| | 2009.08-2010.10 | | F | L/R | Estate FWD Z 14 XEP | | GCO44003 | Outer Joint | | 33 | 22 | 53 | 95 | 54.5 | M |
| | 2009.08-2010.10 | | F | L | Estate FWD Z 14 XEP | | GCI21014 | Inner Joint | | 22 | 22 | 35 | 57.5 | 105.5 | |
| | 2009.08-2010.10 | 5MT | F | L | Hatchback FWD Z 14 XEP | | GDS44028 | Drive Shaft | | 33 | 22 | 53 | 95 | 590 | |
| | 2009.08-2010.10 | 5MT | F | R | Hatchback FWD Z 14 XEP | | GDS44030 | Drive Shaft | | 33 | 22 | 53 | 95 | 952 | |
| | 2009.08-2010.10 | | F | L/R | Hatchback FWD Z 14 XEP | Date To:2009.12 | GCO44003 | Outer Joint | | 33 | 22 | 53 | 95 | 54.5 | M |
| | 2009.08-2010.10 | | F | L | Hatchback FWD Z 14 XEP | Date To:2009.12 | GCI21014 | Inner Joint | | 22 | 22 | 35 | 57.5 | 105.5 | |
| 1.4 (74 kw) | 2009.12-2015.10 | 5MT | F | L | Hatchback FWD A 14 XER;B 14 XER | | GDS44064 | Drive Shaft | | 33 | 22 | 53 | 95 | 618 | |
| | 2009.12-2015.10 | 5MT | F | R | Hatchback FWD A 14 XER;B 14 XER | | GDS44065 | Drive Shaft | | 33 | 22 | 53 | 95 | 983 | |
| | 2009.12-2015.10 | 5MT | F | L/R | Hatchback FWD A 14 XER;B 14 XER | | GCO44003 | Outer Joint | | 33 | 22 | 53 | 95 | 54.5 | M |
| | 2009.12-2015.10 | 5MT | F | L/R | Hatchback FWD A 14 XER;B 14 XER | | GCI21014 | Inner Joint | | 22 | 22 | 35 | 57.5 | 105.5 | |
| | 2010.10-2015.10 | 5MT | F | L | Estate FWD A 14 XER;B 14 XER | | GDS44064 | Drive Shaft | | 33 | 22 | 53 | 95 | 618 | |
| | 2010.10-2015.10 | 5MT | F | R | Estate FWD A 14 XER;B 14 XER | | GDS44065 | Drive Shaft | | 33 | 22 | 53 | 95 | 983 | |
| | 2010.10-2015.10 | 5MT | F | L/R | Estate FWD A 14 XER;B 14 XER | | GCO44003 | Outer Joint | | 33 | 22 | 53 | 95 | 54.5 | M |
| | 2010.10-2015.10 | 5MT | F | L/R | Estate FWD A 14 XER;B 14 XER | | GCI21014 | Inner Joint | | 22 | 22 | 35 | 57.5 | 105.5 | |
| | 2012.06-2015.10 | AT | F | L/R | Saloon FWD A 14 XER;B 14 XER | | GCO88047 | Outer Joint | | 33 | 23 | 52.5 | 94 | 59.5 | M |
| | 2012.06-2015.10 | MT | F | L | Saloon FWD A 14 XER;B 14 XER | | GDS44064 | Drive Shaft | | 33 | 22 | 53 | 95 | 618 | |
| | 2012.06-2015.10 | MT | F | R | Saloon FWD A 14 XER;B 14 XER | | GDS44065 | Drive Shaft | | 33 | 22 | 53 | 95 | 983 | |
| | 2012.06-2015.10 | MT | F | L | Saloon FWD A 14 XER;B 14 XER | Date to:2015.10 | GCI21014 | Inner Joint | | 22 | 22 | 35 | 57.5 | 105.5 | |
| | 2012.06-2015.10 | MT | F | L/R | Saloon FWD A 14 XER;B 14 XER | | GCI44004 | Inner Joint | | 22 | 22 | 34.95 | 57.5 | 103 | |
| | 2012.06-2015.10 | | F | L/R | Saloon FWD A 14 XER;B 14 XER | | GCO44003 | Outer Joint | | 33 | 22 | 53 | 95 | 54.5 | M |
| | 2015.06-2018.08 | 5MT | F | L | Hatchback FWD B 14 XE | | GDS82041 | Drive Shaft | | 33 | 22 | 52.3 | 94 | 643 | |

| | YEAR | TRANSM. | F/R | L/R | BODY STYLE & DRIVE TYPE & ENGINE | REMARKS | G-AP Ref. | PRODUCT | ABS | Technical Specifications A | B | C | H | L | P |
|---|---|---|---|---|---|---|---|---|---|---|---|---|---|---|---|
| **OPEL** | | | | | | | | | | | | | | | |
| **Astra** | | | | | | | | | | | | | | | |
| 1.4 (74 kw) | 2015.06-2018.08 | 5MT | F | L/R | Hatchback FWD B 14 XE | | GCO81640 | Outer Joint | | 33 | 22 | 52.3 | 94 | 55 | M |
| | 2015.06-2018.08 | 5MT | F | L | Hatchback FWD B 14 XE | | GCI81613 | Inner Joint | | 22 | 23 | 35 | 57.5 | 104.5 | |
| | 2016.04-2018.05 | 5MT | F | L | Estate FWD B 14 XE | | GDS82041 | Drive Shaft | | 33 | 22 | 52.3 | 94 | 643 | |
| | 2016.04-2018.05 | 5MT | F | L/R | Estate FWD B 14 XE | | GCO81640 | Outer Joint | | 33 | 22 | 52.3 | 94 | 55 | M |
| | 2016.04-2018.05 | 5MT | F | L | Estate FWD B 14 XE | | GCI81613 | Inner Joint | | 22 | 23 | 35 | 57.5 | 104.5 | |
| 1.4 (81 kw) | 2017.08-2018.05 | 6MT | F | L | Estate FWD B 14 XNT | | GDS82395 | Drive Shaft | | 33 | 25 | 52.2 | 94 | 621 | |
| | 2017.08-2018.05 | 6MT | F | R | Estate FWD B 14 XNT | | GDS82396 | Drive Shaft | | 33 | 25 | 52.2 | 94 | 976 | |
| | 2017.08-2018.05 | 6MT | F | L/R | Estate FWD B 14 XNT | | GCO81814 | Outer Joint | | 33 | 24 | 52.2 | 94 | 64 | M |
| | 2017.08-2018.05 | 6MT | F | L/R | Estate FWD B 14 XNT | | GCI81767 | Inner Joint | | 25 | 24 | 34.9 | 57 | 109 | |
| | 2017.10-2018.05 | 6MT | F | L | Hatchback FWD B 14 XNT | | GDS82395 | Drive Shaft | | 33 | 25 | 52.2 | 94 | 621 | |
| | 2017.10-2018.05 | 6MT | F | R | Hatchback FWD B 14 XNT | | GDS82396 | Drive Shaft | | 33 | 25 | 52.2 | 94 | 976 | |
| | 2017.10-2018.05 | 6MT | F | L/R | Hatchback FWD B 14 XNT | | GCO81814 | Outer Joint | | 33 | 24 | 52.2 | 94 | 64 | M |
| | 2017.10-2018.05 | 6MT | F | L/R | Hatchback FWD B 14 XNT | | GCI81767 | Inner Joint | | 25 | 24 | 34.9 | 57 | 109 | |
| 1.4 (88 kw) | 2010.10-2015.10 | 6MT | F | L | Estate FWD A 14 NEL;B 14 NEL | | GDS82083 | Drive Shaft | | 33 | 25 | 53 | 93.5 | 596 | |
| | 2010.10-2015.10 | 6MT | F | R | Estate FWD A 14 NEL;B 14 NEL | Chassis no. to:C0/C1111453/C3/C8060456/CG110884 | GDS21109 | Drive Shaft | | 33 | 34 | 53 | 93.5 | 588 | |
| | 2010.10-2015.10 | 6MT | F | R | Estate FWD A 14 NEL;B 14 NEL | Chassis no. from:C0/C1111454/C3/C8090457/CG110885 | GDS56692 | Drive Shaft | | 33 | 25 | 53 | 94 | 996 | |
| | 2010.10-2015.10 | 6MT | F | L/R | Estate FWD A 14 NEL;B 14 NEL | | GCO44028 | Outer Joint | | 33 | 24 | 53 | 93.5 | 63.5 | M |
| | 2010.10-2015.10 | 6MT | F | L | Estate FWD A 14 NEL;B 14 NEL | Chassis no. to:C0/C1111453/C3/C8090456/CG110884 | GCI44008 | Inner Joint | | 25 | 25 | 34.9 | 57.5 | 113.2 | |
| | 2010.10-2015.10 | 6MT | F | R | Estate FWD A 14 NEL;B 14 NEL | Chassis no. to:C0/C1111453/C3/C8090456/CG110884 | GCI44005 | Inner Joint | | 34 | 25 | 35 | | 130.2 | |
| | 2010.10-2015.10 | 6MT | F | L | Hatchback FWD A 14 NEL;B 14 NEL | | GDS82083 | Drive Shaft | | 33 | 25 | 53 | 93.5 | 596 | |
| | 2010.10-2015.10 | 6MT | F | R | Hatchback FWD A 14 NEL;B 14 NEL | Chassis no. to:C0/C111453/C3/C8060456/CG110884 | GDS21109 | Drive Shaft | | 33 | 34 | 53 | 93.5 | 588 | |
| | 2010.10-2015.10 | 6MT | F | R | Hatchback FWD A 14 NEL;B 14 NEL | Chassis no. from:C0/C1111454/C3/C8090457/CG110885 | GDS56692 | Drive Shaft | | 33 | 25 | 53 | 94 | 996 | |
| | 2010.10-2015.10 | 6MT | F | L/R | Hatchback FWD A 14 NEL;B 14 NEL | | GCO44028 | Outer Joint | | 33 | 24 | 53 | 93.5 | 63.5 | M |
| | 2010.10-2015.10 | 6MT | F | L | Hatchback FWD A 14 NEL;B 14 NEL | Chassis no. to:C0/C1111453/C3/C8090456/CG110884 | GCI44008 | Inner Joint | | 25 | 25 | 34.9 | 57.5 | 113.2 | |
| | 2010.10-2015.10 | 6MT | F | R | Hatchback FWD A 14 NEL;B 14 NEL | Chassis no. to:C0/C1111453/C3/C8090456/CG110884 | GCI44005 | Inner Joint | | 34 | 25 | 35 | | 130.2 | |
| | 2010.10-2015.10 | 6MT | F | L/R | Hatchback FWD A 14 NEL;B 14 NEL | Chassis no. from:C0/C1111454/C3/C8090457/CG110885 | GCI44008 | Inner Joint | | 25 | 25 | 34.9 | 57.5 | 113.2 | |
| | 2012.06-2015.10 | 6MT | F | L | Saloon FWD A 14 NEL;B 14 NEL | | GDS82083 | Drive Shaft | | 33 | 25 | 53 | 93.5 | 596 | |
| | 2012.06-2015.10 | 6MT | F | R | Saloon FWD A 14 NEL;B 14 NEL | Chassis no. to:C0/C1033260/C3/C8028481/CG040398 | GDS21109 | Drive Shaft | | 33 | 34 | 53 | 93.5 | 588 | |
| | 2012.06-2015.10 | 6MT | F | R | Saloon FWD A 14 NEL;B 14 NEL | Chassis no. from:C0/C1033261/C3/C8028482/CG040399 | GDS56692 | Drive Shaft | | 33 | 25 | 53 | 94 | 996 | |
| | 2012.06-2015.10 | 6MT | F | L/R | Saloon FWD A 14 NEL;B 14 NEL | | GCO44028 | Outer Joint | | 33 | 24 | 53 | 93.5 | 63.5 | M |
| | 2012.06-2015.10 | 6MT | F | L/R | Saloon FWD A 14 NEL;B 14 NEL | | GCI44008 | Inner Joint | | 25 | 25 | 34.9 | 57.5 | 113.2 | |
| | 2012.06-2015.10 | AT | F | | Saloon FWD A 14 NEL;B 14 NEL | | GCO88047 | Outer Joint | | 33 | 23 | 52.5 | 94 | 59.5 | M |
| | 2012.06-2015.10 | MT | F | L | Saloon FWD A 14 NEL;B 14 NEL | Date to:2015.10 | GCI21014 | Inner Joint | | 22 | 22 | 35 | 57.5 | 105.5 | |
| | 2012.06-2015.10 | MT | F | R | Saloon FWD A 14 NEL;B 14 NEL | | GCI44005 | Inner Joint | | 34 | 25 | 35 | | 130.2 | |
| 1.4 (92 kw) | 2015.06-2019.08 | 6MT | F | L | Hatchback FWD B 14 XFL;D 14 XFL | | GDS82395 | Drive Shaft | | 33 | 25 | 52.2 | 94 | 621 | |
| | 2015.06-2019.08 | 6MT | F | R | Hatchback FWD B 14 XFL;D 14 XFL | Trans. code:M22 | GDS58213 | Drive Shaft | | 33 | 25 | 52.2 | 94 | 961 | |
| | 2015.06-2019.08 | 6MT | F | R | Hatchback FWD B 14 XFL;D 14 XFL | Trans. code:M23 | GDS82396 | Drive Shaft | | 33 | 25 | 52.2 | 94 | 976 | |
| | 2015.06-2019.08 | 6MT | F | L/R | Hatchback FWD B 14 XFL;D 14 XFL | For RPO/POC:M60/MGW;Trans. code:M32 | GCO81814 | Outer Joint | | 33 | 24 | 52.2 | 94 | 64 | M |
| | 2015.06-2019.08 | 6MT | F | L/R | Hatchback FWD B 14 XFL;D 14 XFL | For RPO/POC:M60/MGW;Trans. code:M32 | GCI81767 | Inner Joint | | 25 | 24 | 34.9 | 57 | 109 | |
| | 2016.04-2019.08 | 6MT | F | L | Estate FWD B 14 XFL;D 14 XFL | | GDS82395 | Drive Shaft | | 33 | 25 | 52.2 | 94 | 621 | |
| | 2016.04-2019.08 | 6MT | F | R | Estate FWD B 14 XFL;D 14 XFL | Trans. code:M22 | GDS58213 | Drive Shaft | | 33 | 25 | 52.2 | 94 | 961 | |
| | 2016.04-2019.08 | 6MT | F | R | Estate FWD B 14 XFL;D 14 XFL | Trans. code:M23 | GDS82396 | Drive Shaft | | 33 | 25 | 52.2 | 94 | 976 | |
| | 2016.04-2019.08 | 6MT | F | L/R | Estate FWD B 14 XFL;D 14 XFL | | GCO81814 | Outer Joint | | 33 | 24 | 52.2 | 94 | 64 | M |
| | 2016.04-2019.08 | 6MT | F | L/R | Estate FWD B 14 XFL;D 14 XFL | | GCI81767 | Inner Joint | | 25 | 24 | 34.9 | 57 | 109 | |
| 1.4 (103 kw) | 2009.12-2015.10 | 6AT | F | L | Hatchback FWD A 14 NET;B 14 NET | | GDS82389 | Drive Shaft | | 33 | 34 | 52.5 | 94 | 641 | |
| | 2009.12-2015.10 | 6AT | F | R | Hatchback FWD A 14 NET;B 14 NET | | GDS88077 | Drive Shaft | | 33 | 34 | 52.5 | 94 | 951 | |
| | 2009.12-2015.10 | 6AT | F | L/R | Hatchback FWD A 14 NET;B 14 NET | with Rim protector | GCO44088 | Outer Joint | | 33 | 23 | 52.3 | 94 | 59.5 | M |
| | 2009.12-2015.10 | 6AT | F | L | Hatchback FWD A 14 NET;B 14 NET | | GCI81774 | Inner Joint | | 34 | 23 | 35 | 136.5 | 84.5 | |
| | 2009.12-2015.10 | 6AT | F | R | Hatchback FWD A 14 NET;B 14 NET | | GCI88030 | Inner Joint | | 34 | 23 | 35 | 56 | 107.5 | |
| | 2009.12-2015.10 | 6AT | F | R | Hatchback FWD A 14 NET;B 14 NET | | GCI88054 | Inner Joint | | 34 | 23 | 37.5 | | 121.5 | |
| | 2009.12-2015.10 | 6MT | F | L | Hatchback FWD A 14 NET;B 14 NET | | GDS82083 | Drive Shaft | | 33 | 25 | 53 | 93.5 | 596 | |
| | 2009.12-2015.10 | 6MT | F | R | Hatchback FWD A 14 NET;B 14 NET | Chassis no. to:C0/C111453/C3/C8060456/CG110884 | GDS21109 | Drive Shaft | | 33 | 34 | 53 | 93.5 | 588 | |
| | 2009.12-2015.10 | 6MT | F | R | Hatchback FWD A 14 NET;B 14 NET | Chassis no. from:C0/C1111454/C3/C8090457/CG110885 | GDS56692 | Drive Shaft | | 33 | 25 | 53 | 94 | 996 | |
| | 2009.12-2015.10 | 6MT | F | L/R | Hatchback FWD A 14 NET;B 14 NET | | GCO44028 | Outer Joint | | 33 | 24 | 53 | 93.5 | 63.5 | M |
| | 2009.12-2015.10 | 6MT | F | L | Hatchback FWD A 14 NET;B 14 NET | Chassis no. to:C0/C1111453/C3/C8090456/CG110884 | GCI44008 | Inner Joint | | 25 | 25 | 34.9 | 57.5 | 113.2 | |
| | 2009.12-2015.10 | 6MT | F | R | Hatchback FWD A 14 NET;B 14 NET | Chassis no. to:C0/C1111453/C3/C8090456/CG110884 | GCI44005 | Inner Joint | | 34 | 25 | 35 | | 130.2 | |
| | 2009.12-2015.10 | 6MT | F | L/R | Hatchback FWD A 14 NET;B 14 NET | Chassis no. from:C0/C1111454/C3/C8090457/CG110885 | GCI44008 | Inner Joint | | 25 | 25 | 34.9 | 57.5 | 113.2 | |
| | 2009.12-2015.10 | AT | F | L/R | Hatchback FWD A 14 NET;B 14 NET | without Rim protector | GCO88047 | Outer Joint | | 33 | 23 | 52.5 | 94 | 59.5 | M |
| | 2010.10-2015.10 | 6AT | F | L | Estate FWD A 14 NET;B 14 NET | | GDS82389 | Drive Shaft | | 33 | 34 | 52.5 | 94 | 641 | |
| | 2010.10-2015.10 | 6AT | F | R | Estate FWD A 14 NET;B 14 NET | | GDS88077 | Drive Shaft | | 33 | 34 | 52.5 | 94 | 951 | |
| | 2010.10-2015.10 | 6AT | F | L/R | Estate FWD A 14 NET;B 14 NET | | GCO44088 | Outer Joint | | 33 | 23 | 52.3 | 94 | 59.5 | M |
| | 2010.10-2015.10 | 6AT | F | L | Estate FWD A 14 NET;B 14 NET | | GCI81774 | Inner Joint | | 34 | 23 | 35 | 136.5 | 84.5 | |
| | 2010.10-2015.10 | 6AT | F | R | Estate FWD A 14 NET;B 14 NET | | GCI88030 | Inner Joint | | 34 | 23 | 35 | 56 | 107.5 | |
| | 2010.10-2015.10 | 6AT | F | R | Estate FWD A 14 NET;B 14 NET | | GCI88054 | Inner Joint | | 34 | 23 | 37.5 | | 121.5 | |
| | 2010.10-2015.10 | 6MT | F | L | Estate FWD A 14 NET;B 14 NET | | GDS82083 | Drive Shaft | | 33 | 25 | 53 | 93.5 | 596 | |

| | YEAR | TRANSM. | F/R | L/R | BODY STYLE & DRIVE TYPE & ENGINE | REMARKS | G-AP Ref. | PRODUCT | ABS | Technical Specifications A | B | C | H | L | P |
|---|---|---|---|---|---|---|---|---|---|---|---|---|---|---|---|
| **OPEL** | | | | | | | | | | | | | | | |
| **Astra** | | | | | | | | | | | | | | | |
| 1.4 (103 kw) | 2010.10-2015.10 | 6MT | F | R | Estate FWD A 14 NET;B 14 NET | Chassis no. to:C0/C1111453/C3/C8060456/CG110884 | GDS21109 | Drive Shaft | | 33 | 34 | 53 | 93.5 | 588 | |
| | 2010.10-2015.10 | 6MT | F | R | Estate FWD A 14 NET;B 14 NET | Chassis no. from:C0/C1111454/C3/C8090457/CG110885 | GDS56692 | Drive Shaft | | 33 | 25 | 53 | 94 | 996 | |
| | 2010.10-2015.10 | 6MT | F | L/R | Estate FWD A 14 NET;B 14 NET | | GCO44028 | Outer Joint | | 33 | 24 | 53 | 93.5 | 63.5 | M |
| | 2010.10-2015.10 | 6MT | F | L | Estate FWD A 14 NET;B 14 NET | Chassis no. to:C0/C1111453/C3/C8090456/CG110884 | GCI44008 | Inner Joint | | 25 | 25 | 34.9 | 57.5 | 113.2 | |
| | 2010.10-2015.10 | 6MT | F | R | Estate FWD A 14 NET;B 14 NET | Chassis no. to:C0/C1111453/C3/C8090456/CG110884 | GCI44005 | Inner Joint | | 34 | 25 | 35 | | 130.2 | |
| | 2010.10-2015.10 | 6MT | F | L/R | Estate FWD A 14 NET;B 14 NET | Chassis no. from:C0/C1111454/C3/C8090457/CG110885 | GCI44008 | Inner Joint | | 25 | 25 | 34.9 | 57.5 | 113.2 | |
| | 2011.12-2015.10 | 6MT | F | L | Estate FWD A 14 NET | | GDS82083 | Drive Shaft | | 33 | 25 | 53 | 93.5 | 596 | |
| | 2011.12-2015.10 | 6MT | F | R | Estate FWD A 14 NET | Chassis no. to:C0/C1033260/C3/C8028481/CG040398 | GDS21109 | Drive Shaft | | 33 | 34 | 53 | 93.5 | 588 | |
| | 2011.12-2015.10 | 6MT | F | R | Estate FWD A 14 NET | Chassis no. from:C0/C1033261/C3/C8028482/CG040399 | GDS56692 | Drive Shaft | | 33 | 25 | 53 | 94 | 996 | |
| | 2011.12-2015.10 | 6MT | F | L/R | Estate FWD A 14 NET | | GCO44028 | Outer Joint | | 33 | 24 | 53 | 93.5 | 63.5 | M |
| | 2011.12-2015.10 | 6MT | F | L | Estate FWD A 14 NET | Chassis no. to:C0/C1111453/C3/C8090456/CG110884 | GCI44008 | Inner Joint | | 25 | 25 | 34.9 | 57.5 | 113.2 | |
| | 2011.12-2015.10 | 6MT | F | R | Estate FWD A 14 NET | Chassis no. to:C0/C1111453/C3/C8090456/CG110884 | GCI44005 | Inner Joint | | 34 | 25 | 35 | | 130.2 | |
| | 2011.12-2015.10 | AT | F | L/R | Estate FWD A 14 NET | | GCO88047 | Outer Joint | | 33 | 23 | 52.5 | 94 | 59.5 | M |
| | 2012.01-2015.10 | 6MT | F | L | Hatchback FWD A 14 NET | | GDS82083 | Drive Shaft | | 33 | 25 | 53 | 93.5 | 596 | |
| | 2012.01-2015.10 | 6MT | F | R | Hatchback FWD A 14 NET | Chassis no. to:C0/C1033260/C3/C8028481/CG040398 | GDS21109 | Drive Shaft | | 33 | 34 | 53 | 93.5 | 588 | |
| | 2012.01-2015.10 | 6MT | F | R | Hatchback FWD A 14 NET | Chassis no. from:C0/C1033261/C3/C8028482/CG040399 | GDS56692 | Drive Shaft | | 33 | 25 | 53 | 94 | 996 | |
| | 2012.01-2015.10 | 6MT | F | L/R | Hatchback FWD A 14 NET | | GCO44028 | Outer Joint | | 33 | 24 | 53 | 93.5 | 63.5 | M |
| | 2012.01-2015.10 | 6MT | F | R | Hatchback FWD A 14 NET | Chassis no. to:C0/C1111453/C3/C8090456/CG110884 | GCI44005 | Inner Joint | | 34 | 25 | 35 | | 130.2 | |
| | 2012.01-2015.10 | 6MT | F | L/R | Hatchback FWD A 14 NET | Chassis no. from:C0/C1111454/C3/C8090457/CG110885 | GCI44008 | Inner Joint | | 25 | 25 | 34.9 | 57.5 | 113.2 | |
| | 2012.01-2015.10 | AT | F | L/R | Hatchback FWD A 14 NET | | GCO88047 | Outer Joint | | 33 | 23 | 52.5 | 94 | 59.5 | M |
| | 2012.06-2018.06 | 6AT | F | L | Saloon FWD A 14 NET;B 14 NET | | GDS82389 | Drive Shaft | | 33 | 34 | 52.5 | 94 | 641 | |
| | 2012.06-2018.06 | 6AT | F | R | Saloon FWD A 14 NET;B 14 NET | | GDS88077 | Drive Shaft | | 33 | 34 | 52.5 | 94 | 951 | |
| | 2012.06-2018.06 | 6AT | F | L/R | Saloon FWD A 14 NET;B 14 NET | | GCO44088 | Outer Joint | | 33 | 23 | 52.3 | 94 | 59.5 | M |
| | 2012.06-2018.06 | 6AT | F | L | Saloon FWD A 14 NET;B 14 NET | | GCI81774 | Inner Joint | | 34 | 23 | 35 | 136.5 | 84.5 | |
| | 2012.06-2018.06 | 6AT | F | R | Saloon FWD A 14 NET;B 14 NET | | GCI88030 | Inner Joint | | 34 | 23 | 35 | 56 | 107.5 | |
| | 2012.06-2018.06 | 6AT | F | R | Saloon FWD A 14 NET;B 14 NET | | GCI88054 | Inner Joint | | 34 | 23 | 37.5 | | 121.5 | |
| | 2012.06-2018.06 | 6MT | F | L | Saloon FWD A 14 NET;B 14 NET | | GDS82083 | Drive Shaft | | 33 | 25 | 53 | 93.5 | 596 | |
| | 2012.06-2018.06 | 6MT | F | R | Saloon FWD A 14 NET;B 14 NET | Chassis no. to:C0/C1111453/C3/C8060456/CG110884 | GDS21109 | Drive Shaft | | 33 | 34 | 53 | 93.5 | 588 | |
| | 2012.06-2018.06 | 6MT | F | R | Saloon FWD A 14 NET;B 14 NET | Chassis no. from:C0/C1111454/C3/C8090457/CG110885 | GDS56692 | Drive Shaft | | 33 | 25 | 53 | 94 | 996 | |
| | 2012.06-2018.06 | 6MT | F | L/R | Saloon FWD A 14 NET;B 14 NET | | GCO44028 | Outer Joint | | 33 | 24 | 53 | 93.5 | 63.5 | M |
| | 2012.06-2018.06 | 6MT | F | L | Saloon FWD A 14 NET;B 14 NET | Chassis no. to:C0/C1111453/C3/C8090456/CG110884 | GCI44008 | Inner Joint | | 25 | 25 | 34.9 | 57.5 | 113.2 | |
| | 2012.06-2018.06 | 6MT | F | R | Saloon FWD A 14 NET;B 14 NET | Chassis no. to:C0/C1111453/C3/C8090456/CG110884 | GCI44005 | Inner Joint | | 34 | 25 | 35 | | 130.2 | |
| | 2012.06-2018.06 | 6MT | F | L/R | Saloon FWD A 14 NET;B 14 NET | Chassis no. from:C0/C1111454/C3/C8090457/CG110885 | GCI44008 | Inner Joint | | 25 | 25 | 34.9 | 57.5 | 113.2 | |
| | 2014.07-2018.06 | 6MT | F | L | Saloon FWD A 14 NET;B 14 NET | | GDS82083 | Drive Shaft | | 33 | 25 | 53 | 93.5 | 596 | |
| | 2014.07-2018.06 | 6MT | F | R | Saloon FWD A 14 NET;B 14 NET | Chassis no. to:C0/C1033260/C3/C8028481/CG040398 | GDS21109 | Drive Shaft | | 33 | 34 | 53 | 93.5 | 588 | |
| | 2014.07-2018.06 | 6MT | F | R | Saloon FWD A 14 NET;B 14 NET | Chassis no. from:C0/C1033261/C3/C8028482/CG040399 | GDS56692 | Drive Shaft | | 33 | 25 | 53 | 94 | 996 | |
| | 2014.07-2018.06 | 6MT | F | L/R | Saloon FWD A 14 NET;B 14 NET | | GCO44028 | Outer Joint | | 33 | 24 | 53 | 93.5 | 63.5 | M |
| | 2014.07-2018.06 | 6MT | F | R | Saloon FWD A 14 NET;B 14 NET | Chassis no. to:C0/C1111453/C3/C8090456/CG110884 | GCI44005 | Inner Joint | | 34 | 25 | 35 | | 130.2 | |
| | 2014.07-2018.06 | 6MT | F | L/R | Saloon FWD A 14 NET;B 14 NET | Chassis no. from:C0/C1111454/C3/C8090457/CG110885 | GCI44008 | Inner Joint | | 25 | 25 | 34.9 | 57.5 | 113.2 | |
| | 2014.07-2018.06 | AT | F | | Saloon FWD A 14 NET;B 14 NET | | GCO88047 | Outer Joint | | 33 | 23 | 52.5 | 94 | 59.5 | M |
| 1.4 (110 kw) | 2015.10-2019.08 | 6AT | F | L | Hatchback FWD B 14 XFT;D 14 XFT | | GDS82000 | Drive Shaft | | 33 | 22 | 52.3 | 94 | 655 | |
| | 2015.10-2019.08 | 6AT | F | R | Hatchback FWD B 14 XFT;D 14 XFT | | GDS82790 | Drive Shaft | | 33 | 22 | 52.3 | 94 | 935 | |
| | 2015.10-2019.08 | 6AT | F | L/R | Hatchback FWD B 14 XFT;D 14 XFT | | GCO44088 | Outer Joint | | 33 | 23 | 52.3 | 94 | 59.5 | M |
| | 2015.10-2019.08 | 6AT | F | L | Hatchback FWD B 14 XFT;D 14 XFT | | GCI81210 | Inner Joint | | 22 | 23 | 35 | 131.5 | 84.5 | |
| | 2015.10-2019.08 | 6AT | F | R | Hatchback FWD B 14 XFT;D 14 XFT | | GCI81411 | Inner Joint | | 22 | 23 | 35 | 57.5 | 102 | |
| | 2015.10-2019.08 | 6MT | F | L | Hatchback FWD B 14 XFT;D 14 XFT | | GDS82395 | Drive Shaft | | 33 | 25 | 52.2 | 94 | 621 | |
| | 2015.10-2019.08 | 6MT | F | R | Hatchback FWD B 14 XFT;D 14 XFT | Trans. code:M22 | GDS58213 | Drive Shaft | | 33 | 25 | 52.2 | 94 | 961 | |
| | 2015.10-2019.08 | 6MT | F | R | Hatchback FWD B 14 XFT;D 14 XFT | Trans. code:M23 | GDS82396 | Drive Shaft | | 33 | 25 | 52.2 | 94 | 976 | |
| | 2015.10-2019.08 | 6MT | F | L/R | Hatchback FWD B 14 XFT;D 14 XFT | For RPO/POC:M60/MGW;Trans. code:M32 | GCO81814 | Outer Joint | | 33 | 24 | 52.2 | 94 | 64 | M |
| | 2015.10-2019.08 | 6MT | F | L/R | Hatchback FWD B 14 XFT;D 14 XFT | For RPO/POC:M60/MGW;Trans. code:M32 | GCI81767 | Inner Joint | | 25 | 24 | 34.9 | 57 | 109 | |
| | 2016.04-2019.08 | 6AT | F | L | Estate FWD B 14 XFT;D 14 XFT | | GDS82000 | Drive Shaft | | 33 | 22 | 52.3 | 94 | 655 | |
| | 2016.04-2019.08 | 6AT | F | R | Estate FWD B 14 XFT;D 14 XFT | | GDS82790 | Drive Shaft | | 33 | 22 | 52.3 | 94 | 935 | |
| | 2016.04-2019.08 | 6AT | F | L/R | Estate FWD B 14 XFT;D 14 XFT | | GCO44088 | Outer Joint | | 33 | 23 | 52.3 | 94 | 59.5 | M |
| | 2016.04-2019.08 | 6AT | F | L | Estate FWD B 14 XFT;D 14 XFT | | GCI81210 | Inner Joint | | 22 | 23 | 35 | 131.5 | 84.5 | |
| | 2016.04-2019.08 | 6AT | F | R | Estate FWD B 14 XFT;D 14 XFT | | GCI81411 | Inner Joint | | 22 | 23 | 35 | 57.5 | 102 | |
| | 2016.04-2019.08 | 6MT | F | L | Estate FWD B 14 XFT;D 14 XFT | | GDS82395 | Drive Shaft | | 33 | 25 | 52.2 | 94 | 621 | |
| | 2016.04-2019.08 | 6MT | F | R | Estate FWD B 14 XFT;D 14 XFT | Trans. code:M22 | GDS58213 | Drive Shaft | | 33 | 25 | 52.2 | 94 | 961 | |
| | 2016.04-2019.08 | 6MT | F | R | Estate FWD B 14 XFT;D 14 XFT | Trans. code:M23 | GDS82396 | Drive Shaft | | 33 | 25 | 52.2 | 94 | 976 | |
| | 2016.04-2019.08 | 6MT | F | L/R | Estate FWD B 14 XFT;D 14 XFT | | GCO81814 | Outer Joint | | 33 | 24 | 52.2 | 94 | 64 | M |
| | 2016.04-2019.08 | 6MT | F | L/R | Estate FWD B 14 XFT;D 14 XFT | | GCI81767 | Inner Joint | | 25 | 24 | 34.9 | 57 | 109 | |
| | 2018.06-2021.09 | 6AT | F | L | Estate Van FWD D 14 XFT | | GDS82000 | Drive Shaft | | 33 | 22 | 52.3 | 94 | 655 | |
| | 2018.06-2021.09 | 6AT | F | R | Estate Van FWD D 14 XFT | | GDS82790 | Drive Shaft | | 33 | 22 | 52.3 | 94 | 935 | |
| | 2018.06-2021.09 | 6AT | F | L/R | Estate Van FWD D 14 XFT | | GCO44088 | Outer Joint | | 33 | 23 | 52.3 | 94 | 59.5 | M |
| | 2018.06-2021.09 | 6AT | F | L | Estate Van FWD D 14 XFT | | GCI81210 | Inner Joint | | 22 | 23 | 35 | 131.5 | 84.5 | |
| | 2018.06-2021.09 | 6AT | F | R | Estate Van FWD D 14 XFT | | GCI81411 | Inner Joint | | 22 | 23 | 35 | 57.5 | 102 | |

| | YEAR | TRANSM. | F/R | L/R | BODY STYLE & DRIVE TYPE & ENGINE | REMARKS | G-AP Ref. | PRODUCT | ABS | Technical Specifications | | | | | |
|---|---|---|---|---|---|---|---|---|---|---|---|---|---|---|---|
| | | | | | | | | | | A | B | C | H | L | P |
| **OPEL** | | | | | | | | | | | | | | | |
| **Astra** | | | | | | | | | | | | | | | |
| 1.4 (110 kw) | 2018.06-2021.09 | 6MT | F | L | Estate Van FWD D 14 XFT | Trans. code:M32/M22 | GDS82395 | Drive Shaft | | 33 | 25 | 52.2 | 94 | 621 | |
| | 2018.06-2021.09 | 6MT | F | R | Estate Van FWD D 14 XFT | Trans. code:M22 | GDS58213 | Drive Shaft | | 33 | 25 | 52.2 | 94 | 961 | |
| | 2018.06-2021.09 | 6MT | F | R | Estate Van FWD D 14 XFT | Trans. code:M32 | GDS82396 | Drive Shaft | | 33 | 25 | 52.2 | 94 | 976 | |
| | 2018.06-2021.09 | 6MT | F | L/R | Estate Van FWD D 14 XFT | | GCO81814 | Outer Joint | | 33 | 24 | 52.2 | 94 | 64 | M |
| | 2018.06-2021.09 | 6MT | F | L/R | Estate Van FWD D 14 XFT | Trans. code:M32/M22 | GCI81767 | Inner Joint | | 25 | 24 | 34.9 | 57 | 109 | |
| 1.5 (96 kw) | 2021.10- | 6MT | F | L | Estate FWD YHZ (DV5RC) | | GDS84550 | Drive Shaft | | 28 | 37 | 58.5 | 92.5 | 663 | |
| | 2021.10- | 6MT | F | R | Estate FWD YHZ (DV5RC) | | GDS84336 | Drive Shaft | | 28 | 37 | 58.5 | 92.5 | 930 | |
| | 2021.10- | 6MT | F | L | Estate FWD YHZ (DV5RC) | | GCI82301 | Inner Joint | | 37 | 34 | 40 | 65.5 | 89.5 | |
| | 2021.10- | 6MT | F | R | Estate FWD YHZ (DV5RC) | | GCI82300 | Inner Joint | | 37 | 34 | 31.9 | 302 | 88 | |
| | 2021.10- | 6MT/8AT | F | L/R | Estate FWD YHZ (DV5RC) | | GCO82273 | Outer Joint | | 28 | 34 | 58.5 | 92.5 | 56 | I |
| | 2021.10- | 8AT | F | L | Estate FWD YHZ (DV5RC) | | GDS84579 | Drive Shaft | | 28 | 37 | 58.5 | 92.5 | 641 | |
| | 2021.10- | 6MT | F | L | Hatchback FWD YHZ (DV5RC) | | GDS84550 | Drive Shaft | | 28 | 37 | 58.5 | 92.5 | 663 | |
| | 2021.10- | 6MT | F | R | Hatchback FWD YHZ (DV5RC) | | GDS84336 | Drive Shaft | | 28 | 37 | 58.5 | 92.5 | 930 | |
| | 2021.10- | 6MT | F | L | Hatchback FWD YHZ (DV5RC) | | GCI82301 | Inner Joint | | 37 | 34 | 40 | 65.5 | 89.5 | |
| | 2021.10- | 6MT | F | R | Hatchback FWD YHZ (DV5RC) | | GCI82300 | Inner Joint | | 37 | 34 | 31.9 | 302 | 88 | |
| | 2021.10- | 6MT/8AT | F | L/R | Hatchback FWD YHZ (DV5RC) | | GCO82273 | Outer Joint | | 28 | 34 | 58.5 | 92.5 | 56 | I |
| | 2021.10- | 8AT | F | L | Hatchback FWD YHZ (DV5RC) | | GDS84579 | Drive Shaft | | 28 | 37 | 58.5 | 92.5 | 641 | |
| 1.6 (52 kw) | 1993.05-1996.08 | 4AT/5MT | F | L | Estate FWD X16SZ | | GDS44002 | Drive Shaft | 29T | 22 | 22 | 52 | 95 | 585 | |
| | 1993.05-1996.08 | 4AT/5MT | F | R | Estate FWD X16SZ | | GDS60002 | Drive Shaft | 29T | 22 | 22 | 52 | 95 | 926 | |
| | 1993.05-1996.08 | AT/MT | F | L/R | Estate FWD X16SZ | | GCO44007 | Outer Joint | 29T | 22 | 22 | 52 | 94.5 | 50 | O |
| | 1993.05-1996.08 | MT | F | L/R | Estate FWD X16SZ | | GCO44041 | Outer Joint | | 22 | 22 | 52 | 95 | 50 | O |
| | 1993.05-1996.08 | MT | F | L/R | Estate FWD X16SZ | | GCO44051 | Outer Joint | 29T | 22 | 22 | 52 | 95 | 50 | O |
| | 1993.05-1996.08 | MT | F | L/R | Estate FWD X16SZ | | GCI44004 | Inner Joint | | 22 | 22 | 34.95 | 57.5 | 103 | |
| | 1993.05-1996.08 | | F | | Estate FWD X16SZ | | GCO44023 | Outer Joint | | 22 | 22 | 52 | 95 | 50 | O |
| | 1994.09-1996.08 | AT/MT | F | L/R | Hatchback FWD X16SZ | Date from:1994.09;,M20×1 | GCO44007 | Outer Joint | 29T | 22 | 22 | 52 | 94.5 | 50 | O |
| | 1994.09-1996.08 | AT/MT | F | L/R | Hatchback FWD X16SZ | M20×1.5 | GCO44023 | Outer Joint | | 22 | 22 | 52 | 95 | 50 | O |
| | 1994.09-1996.08 | MT | F | L/R | Hatchback FWD X16SZ | M20×1 | GCO44041 | Outer Joint | | 22 | 22 | 52 | 95 | 50 | O |
| | 1994.09-1996.08 | MT | F | L/R | Hatchback FWD X16SZ | Date from:1994.09 | GCI44004 | Inner Joint | | 22 | 22 | 34.95 | 57.5 | 103 | |
| | 1994.09-1996.08 | AT/MT | F | L/R | Saloon FWD X16SZ | Date from:1994.09 | GCO44007 | Outer Joint | 29T | 22 | 22 | 52 | 94.5 | 50 | O |
| | 1994.09-1996.08 | MT | F | R | Saloon FWD X16SZ | | GDS60002 | Drive Shaft | 29T | 22 | 22 | 52 | 95 | 926 | |
| | 1994.09-1996.08 | MT | F | L/R | Saloon FWD X16SZ | | GCO44041 | Outer Joint | | 22 | 22 | 52 | 95 | 50 | O |
| | 1994.09-1996.08 | MT | F | L/R | Saloon FWD X16SZ | | GCO44051 | Outer Joint | 29T | 22 | 22 | 52 | 95 | 50 | O |
| | 1994.09-1996.08 | MT | F | L/R | Saloon FWD X16SZ | Date from:1994.09 | GCI44004 | Inner Joint | | 22 | 22 | 34.95 | 57.5 | 103 | |
| | 1994.09-1996.08 | | F | | Saloon FWD X16SZ | | GCO44023 | Outer Joint | | 22 | 22 | 52 | 95 | 50 | O |
| 1.6 (55 kw) | 1998.02-2000.09 | 4AT/5MT | F | L | Estate FWD X16SZR | | GDS60013 | Drive Shaft | | 33 | 22 | 52 | 103 | 595 | |
| | 1998.02-2000.09 | 4AT/5MT | F | R | Estate FWD X16SZR | | GDS44033 | Drive Shaft | | 33 | 22 | 52 | 103 | 950.5 | |
| | 1998.02-2000.09 | 4AT/5MT | F | L/R | Estate FWD X16SZR | M20×1.5 | GCO44009 | Outer Joint | | 33 | 22 | 52 | 103 | 50.5 | O |
| | 1998.02-2000.09 | 4AT/5MT | F | L/R | Estate FWD X16SZR | M20×1 | GCO44011 | Outer Joint | 29T | 33 | 22 | 52 | 103 | 50.5 | O |
| | 1998.02-2000.09 | 4AT/5MT | F | L/R | Estate FWD X16SZR | M20×1 | GCO44030 | Outer Joint | | 33 | 22 | 52 | 103 | 50.5 | O |
| | 1998.02-2000.09 | 4AT/5MT | F | L/R | Estate FWD X16SZR | | GCI44004 | Inner Joint | | 22 | 22 | 34.95 | 57.5 | 103 | |
| | 1998.03-2000.08 | 4AT/5MT | F | L | Hatchback FWD X16SZR | | GDS60013 | Drive Shaft | | 33 | 22 | 52 | 103 | 595 | |
| | 1998.03-2000.08 | 4AT/5MT | F | R | Hatchback FWD X16SZR | | GDS44033 | Drive Shaft | | 33 | 22 | 52 | 103 | 950.5 | |
| | 1998.03-2000.08 | 4AT/5MT | F | L/R | Hatchback FWD X16SZR | M20×1.5 | GCO44009 | Outer Joint | | 33 | 22 | 52 | 103 | 50.5 | O |
| | 1998.03-2000.08 | 4AT/5MT | F | L/R | Hatchback FWD X16SZR | M20×1 | GCO44011 | Outer Joint | 29T | 33 | 22 | 52 | 103 | 50.5 | O |
| | 1998.03-2000.08 | 4AT/5MT | F | L/R | Hatchback FWD X16SZR | M20×1 | GCO44030 | Outer Joint | | 33 | 22 | 52 | 103 | 50.5 | O |
| | 1998.03-2000.08 | 4AT/5MT | F | L/R | Hatchback FWD X16SZR | | GCI44004 | Inner Joint | | 22 | 22 | 34.95 | 57.5 | 103 | |
| | 1998.03-2000.08 | 4AT/5MT | F | L | Saloon FWD X16SZR | | GDS60013 | Drive Shaft | | 33 | 22 | 52 | 103 | 595 | |
| | 1998.03-2000.08 | 4AT/5MT | F | R | Saloon FWD X16SZR | | GDS44033 | Drive Shaft | | 33 | 22 | 52 | 103 | 950.5 | |
| | 1998.03-2000.08 | AT/MT | F | L/R | Saloon FWD X16SZR | | GCO44011 | Outer Joint | 29T | 33 | 22 | 52 | 103 | 50.5 | O |
| | 1998.03-2000.08 | AT/MT | F | L/R | Saloon FWD X16SZR | | GCO44030 | Outer Joint | | 33 | 22 | 52 | 103 | 50.5 | O |
| | 1998.03-2000.08 | AT/MT | F | L/R | Saloon FWD X16SZR | | GCI44004 | Inner Joint | | 22 | 22 | 34.95 | 57.5 | 103 | |
| | 1998.03-2000.08 | MT | F | L | Saloon FWD X16SZR | | GCI21014 | Inner Joint | | 22 | 22 | 35 | 57.5 | 105.5 | |
| | 1998.03-2000.08 | | F | L/R | Saloon FWD X16SZR | | GCO44009 | Outer Joint | | 33 | 22 | 52 | 103 | 50.5 | O |
| 1.6 (62 kw) | 2000.09-2004.07 | 4AT/5MT | F | L | Estate FWD Z16SE | | GDS60013 | Drive Shaft | | 33 | 22 | 52 | 103 | 595 | |
| | 2000.09-2004.07 | 4AT/5MT | F | R | Estate FWD Z16SE | | GDS44033 | Drive Shaft | | 33 | 22 | 52 | 103 | 950.5 | |
| | 2000.09-2004.07 | 4AT/5MT | F | L/R | Estate FWD Z16SE | | GCO44009 | Outer Joint | | 33 | 22 | 52 | 103 | 50.5 | O |
| | 2000.09-2004.07 | 4AT/5MT | F | L/R | Estate FWD Z16SE | | GCO44030 | Outer Joint | | 33 | 22 | 52 | 103 | 50.5 | O |
| | 2000.09-2004.07 | 4AT/5MT | F | L/R | Estate FWD Z16SE | | GCI44004 | Inner Joint | | 22 | 22 | 34.95 | 57.5 | 103 | |
| | 2000.09-2005.01 | 4AT/5MT | F | L | Hatchback FWD Z16SE | | GDS60013 | Drive Shaft | | 33 | 22 | 52 | 103 | 595 | |
| | 2000.09-2005.01 | 4AT/5MT | F | R | Hatchback FWD Z16SE | | GDS44033 | Drive Shaft | | 33 | 22 | 52 | 103 | 950.5 | |
| | 2000.09-2005.01 | 4AT/5MT | F | L/R | Hatchback FWD Z16SE | | GCO44009 | Outer Joint | | 33 | 22 | 52 | 103 | 50.5 | O |
| | 2000.09-2005.01 | 4AT/5MT | F | L/R | Hatchback FWD Z16SE | | GCO44030 | Outer Joint | | 33 | 22 | 52 | 103 | 50.5 | O |
| | 2000.09-2005.01 | 4AT/5MT | F | L/R | Hatchback FWD Z16SE | | GCI44004 | Inner Joint | | 22 | 22 | 34.95 | 57.5 | 103 | |
| | 2000.09-2005.01 | 4AT/5MT | F | L | Saloon FWD Z16SE | | GDS60013 | Drive Shaft | | 33 | 22 | 52 | 103 | 595 | |
| | 2000.09-2005.01 | 4AT/5MT | F | R | Saloon FWD Z16SE | | GDS44033 | Drive Shaft | | 33 | 22 | 52 | 103 | 950.5 | |

| | YEAR | TRANSM. | F/R | L/R | BODY STYLE & DRIVE TYPE & ENGINE | REMARKS | G-AP Ref. | PRODUCT | ABS | Technical Specifications A | B | C | H | L | P |
|---|---|---|---|---|---|---|---|---|---|---|---|---|---|---|---|
| **OPEL** | | | | | | | | | | | | | | | |
| **Astra** | | | | | | | | | | | | | | | |
| 1.6 (62 kw) | 2000.09-2005.01 | 4AT/5MT | F | L/R | Saloon FWD Z16SE | | GCO44009 | Outer Joint | | 33 | 22 | 52 | 103 | 50.5 | O |
| | 2000.09-2005.01 | 4AT/5MT | F | L/R | Saloon FWD Z16SE | | GCO44030 | Outer Joint | | 33 | 22 | 52 | 103 | 50.5 | O |
| | 2000.09-2005.01 | 4AT/5MT | F | L/R | Saloon FWD Z16SE | | GCI44004 | Inner Joint | | 22 | 22 | 34.95 | 57.5 | 103 | |
| 1.6 (70 kw) | 2015.10-2018.05 | 6MT | F | L | Hatchback FWD B 16 DTE | | GDS82395 | Drive Shaft | | 33 | 25 | 52.2 | 94 | 621 | |
| | 2015.10-2018.05 | 6MT | F | R | Hatchback FWD B 16 DTE | | GDS83852 | Drive Shaft | | 33 | 25 | 52.2 | 94 | 976 | |
| | 2015.10-2018.05 | 6MT | F | L | Hatchback FWD B 16 DTE | | GCO81814 | Outer Joint | | 33 | 24 | 52.2 | 94 | 64 | M |
| | 2015.10-2018.05 | 6MT | F | L | Hatchback FWD B 16 DTE | | GCI81767 | Inner Joint | | 25 | 24 | 34.9 | 57 | 109 | |
| | 2016.04-2018.05 | 6MT | F | L | Estate FWD B 16 DTE | | GDS82395 | Drive Shaft | | 33 | 25 | 52.2 | 94 | 621 | |
| | 2016.04-2018.05 | 6MT | F | R | Estate FWD B 16 DTE | | GDS83852 | Drive Shaft | | 33 | 25 | 52.2 | 94 | 976 | |
| | 2016.04-2018.05 | 6MT | F | L | Estate FWD B 16 DTE | | GCO81814 | Outer Joint | | 33 | 24 | 52.2 | 94 | 64 | M |
| | 2016.04-2018.05 | 6MT | F | L | Estate FWD B 16 DTE | | GCI81767 | Inner Joint | | 25 | 24 | 34.9 | 57 | 109 | |
| 1.6 (71 kw) | 2003.03-2004.07 | 5MT | F | L | Estate FWD Z16YNG | | GDS60013 | Drive Shaft | | 33 | 22 | 52 | 103 | 595 | |
| | 2003.03-2004.07 | 5MT | F | R | Estate FWD Z16YNG | | GDS44033 | Drive Shaft | | 33 | 22 | 52 | 103 | 950.5 | |
| | 2003.03-2004.07 | AT/MT | F | L/R | Estate FWD Z16YNG | | GCO44011 | Outer Joint | 29T | 33 | 22 | 52 | 103 | 50.5 | O |
| | 2003.03-2004.07 | AT/MT | F | L/R | Estate FWD Z16YNG | | GCI44004 | Inner Joint | | 22 | 22 | 34.95 | 57.5 | 103 | |
| | 2003.03-2004.07 | MT | F | R | Estate FWD Z16YNG | | GDS60035 | Drive Shaft | | 33 | 22 | 52 | 109 | 961 | |
| | 2003.03-2004.07 | MT | F | R | Estate FWD Z16YNG | | GCI99026 | Inner Joint | | 22 | 25 | 35 | 57 | 111.7 | |
| | 2003.03-2004.07 | | F | L/R | Estate FWD Z16YNG | | GCO44009 | Outer Joint | | 33 | 22 | 52 | 103 | 50.5 | O |
| | 2003.03-2004.07 | | F | L/R | Estate FWD Z16YNG | | GCO44030 | Outer Joint | | 33 | 22 | 52 | 103 | 50.5 | O |
| | 2003.03-2004.07 | | F | L | Estate FWD Z16YNG | | GCI21014 | Inner Joint | | 22 | 22 | 35 | 57.5 | 105.5 | |
| 1.6 (74 kw) | 1994.08-1998.01 | AT/MT | F | R | Estate FWD X16XEL | | GDS50209 | Drive Shaft | | 27 | 39 | 56.5 | 92 | 1014 | |
| | 1994.08-1998.01 | AT/MT | F | R | Estate FWD X16XEL | | GDS60019 | Drive Shaft | | 22 | 22 | 52 | 95 | 926 | |
| | 1994.08-1998.01 | AT/MT | F | L/R | Estate FWD X16XEL | | GCO44007 | Outer Joint | 29T | 22 | 22 | 52 | 94.5 | 50 | O |
| | 1994.08-1998.01 | AT/MT | F | L/R | Estate FWD X16XEL | | GCO44023 | Outer Joint | | 22 | 22 | 52 | 95 | 50 | O |
| | 1994.08-1998.01 | AT/MT | F | R | Estate FWD X16XEL | | GCI50097 | Inner Joint | | 39 | 35 | 30 | 409 | 90 | |
| | 1994.08-1998.01 | AT/MT | F | L/R | Estate FWD X16XEL | | GCI44004 | Inner Joint | | 22 | 22 | 34.95 | 57.5 | 103 | |
| | 1994.08-1998.01 | MT | F | L | Estate FWD X16XEL | | GDS44002 | Drive Shaft | 29T | 22 | 22 | 52 | 95 | 585 | |
| | 1994.08-1998.01 | MT | F | R | Estate FWD X16XEL | | GDS60002 | Drive Shaft | 29T | 22 | 22 | 52 | 95 | 926 | |
| | 1994.08-1998.09 | AT/MT | F | R | Saloon FWD X16XEL | | GDS50209 | Drive Shaft | | 27 | 39 | 56.5 | 92 | 1014 | |
| | 1994.08-1998.09 | AT/MT | F | R | Saloon FWD X16XEL | | GDS60019 | Drive Shaft | | 22 | 22 | 52 | 95 | 926 | |
| | 1994.08-1998.09 | AT/MT | F | L/R | Saloon FWD X16XEL | | GCO44007 | Outer Joint | 29T | 22 | 22 | 52 | 94.5 | 50 | O |
| | 1994.08-1998.09 | AT/MT | F | L/R | Saloon FWD X16XEL | | GCO44023 | Outer Joint | | 22 | 22 | 52 | 95 | 50 | O |
| | 1994.08-1998.09 | AT/MT | F | R | Saloon FWD X16XEL | | GCI50097 | Inner Joint | | 39 | 35 | 30 | 409 | 90 | |
| | 1994.08-1998.09 | AT/MT | F | L/R | Saloon FWD X16XEL | | GCI44004 | Inner Joint | | 22 | 22 | 34.95 | 57.5 | 103 | |
| | 1994.08-1998.09 | MT | F | L | Saloon FWD X16XEL | | GDS44002 | Drive Shaft | 29T | 22 | 22 | 52 | 95 | 585 | |
| | 1994.08-1998.09 | MT | F | R | Saloon FWD X16XEL | | GDS60002 | Drive Shaft | 29T | 22 | 22 | 52 | 95 | 926 | |
| | 1994.09-1998.02 | AT/MT | F | R | Hatchback FWD X16XEL | | GDS50209 | Drive Shaft | | 27 | 39 | 56.5 | 92 | 1014 | |
| | 1994.09-1998.02 | AT/MT | F | R | Hatchback FWD X16XEL | | GDS60019 | Drive Shaft | | 22 | 22 | 52 | 95 | 926 | |
| | 1994.09-1998.02 | AT/MT | F | L/R | Hatchback FWD X16XEL | | GCO44007 | Outer Joint | 29T | 22 | 22 | 52 | 94.5 | 50 | O |
| | 1994.09-1998.02 | AT/MT | F | L/R | Hatchback FWD X16XEL | | GCO44023 | Outer Joint | | 22 | 22 | 52 | 95 | 50 | O |
| | 1994.09-1998.02 | AT/MT | F | R | Hatchback FWD X16XEL | | GCI50097 | Inner Joint | | 39 | 35 | 30 | 409 | 90 | |
| | 1994.09-1998.02 | AT/MT | F | L/R | Hatchback FWD X16XEL | | GCI44004 | Inner Joint | | 22 | 22 | 34.95 | 57.5 | 103 | |
| | 1994.09-1998.02 | MT | F | L | Hatchback FWD X16XEL | | GDS44002 | Drive Shaft | 29T | 22 | 22 | 52 | 95 | 585 | |
| | 1994.09-1998.02 | MT | F | R | Hatchback FWD X16XEL | | GDS60002 | Drive Shaft | 29T | 22 | 22 | 52 | 95 | 926 | |
| | 1998.02-2005.01 | AT/MT | F | L | Hatchback FWD X16XEL/Z16XE | | GDS60013 | Drive Shaft | | 33 | 22 | 52 | 103 | 595 | |
| | 1998.02-2005.01 | AT/MT | F | R | Hatchback FWD X16XEL/Z16XE | | GDS44033 | Drive Shaft | | 33 | 22 | 52 | 103 | 950.5 | |
| | 1998.02-2005.01 | AT/MT | F | L/R | Hatchback FWD X16XEL/Z16XE | | GCO44009 | Outer Joint | | 33 | 22 | 52 | 103 | 50.5 | O |
| | 1998.02-2005.01 | AT/MT | F | L/R | Hatchback FWD X16XEL/Z16XE | | GCO44030 | Outer Joint | | 33 | 22 | 52 | 103 | 50.5 | O |
| | 1998.02-2005.01 | AT/MT | F | L/R | Hatchback FWD X16XEL/Z16XE | | GCI44004 | Inner Joint | | 22 | 22 | 34.95 | 57.5 | 103 | |
| | 1998.03-2004.07 | 4AT/5MT | F | L | Estate FWD X16XEL/Z16XE | | GDS60013 | Drive Shaft | | 33 | 22 | 52 | 103 | 595 | |
| | 1998.03-2004.07 | 4AT/5MT | F | R | Estate FWD X16XEL/Z16XE | | GDS44033 | Drive Shaft | | 33 | 22 | 52 | 103 | 950.5 | |
| | 1998.03-2004.07 | 4AT/5MT | F | L/R | Estate FWD X16XEL/Z16XE | M20×1.5 | GCO44009 | Outer Joint | | 33 | 22 | 52 | 103 | 50.5 | O |
| | 1998.03-2004.07 | 4AT/5MT | F | L/R | Estate FWD X16XEL/Z16XE | M20×1 | GCO44030 | Outer Joint | | 33 | 22 | 52 | 103 | 50.5 | O |
| | 1998.03-2004.07 | 4AT/5MT | F | L/R | Estate FWD X16XEL/Z16XE | | GCI44004 | Inner Joint | | 22 | 22 | 34.95 | 57.5 | 103 | |
| | 1998.03-2004.07 | AT/MT | F | L | Estate FWD X16XEL/Z16XE | | GDS60013 | Drive Shaft | | 33 | 22 | 52 | 103 | 595 | |
| | 1998.03-2004.07 | AT/MT | F | R | Estate FWD X16XEL/Z16XE | | GDS44033 | Drive Shaft | | 33 | 22 | 52 | 103 | 950.5 | |
| | 1998.03-2004.07 | | F | L/R | Estate FWD X16XEL/Z16XE | | GCO44009 | Outer Joint | | 33 | 22 | 52 | 103 | 50.5 | O |
| | 1998.03-2004.07 | | F | L/R | Estate FWD X16XEL/Z16XE | | GCO44030 | Outer Joint | | 33 | 22 | 52 | 103 | 50.5 | O |
| | 1998.03-2004.07 | | F | L/R | Estate FWD X16XEL/Z16XE | | GCI44004 | Inner Joint | | 22 | 22 | 34.95 | 57.5 | 103 | |
| | 1998.03-2005.01 | 4AT/5MT | F | L | Hatchback FWD X16XEL/Z16XE | | GDS60013 | Drive Shaft | | 33 | 22 | 52 | 103 | 595 | |
| | 1998.03-2005.01 | 4AT/5MT | F | R | Hatchback FWD X16XEL/Z16XE | | GDS44033 | Drive Shaft | | 33 | 22 | 52 | 103 | 950.5 | |
| | 1998.03-2005.01 | AT/MT | F | L | Hatchback FWD X16XEL/Z16XE | | GCI21014 | Inner Joint | | 22 | 22 | 35 | 57.5 | 105.5 | |
| | 1998.03-2005.01 | | F | L/R | Hatchback FWD X16XEL/Z16XE | | GCO44009 | Outer Joint | | 33 | 22 | 52 | 103 | 50.5 | O |
| | 1998.03-2005.01 | | F | L/R | Hatchback FWD X16XEL/Z16XE | | GCO44030 | Outer Joint | | 33 | 22 | 52 | 103 | 50.5 | O |
| | 1998.03-2005.01 | | F | | Hatchback FWD X16XEL/Z16XE | | GCO44010 | Outer Joint | 29T | 33 | 22 | 52 | 103 | 50.5 | O |

| | YEAR | TRANSM. | F/R | L/R | BODY STYLE & DRIVE TYPE & ENGINE | REMARKS | G-AP Ref. | PRODUCT | ABS | Technical Specifications A | B | C | H | L | P |
|---|---|---|---|---|---|---|---|---|---|---|---|---|---|---|---|
| **OPEL** | | | | | | | | | | | | | | | |
| **Astra** | | | | | | | | | | | | | | | |
| 1.6 (74 kw) | 1998.03-2005.01 | | F | L/R | Hatchback FWD X16XEL/Z16XE | | GCI44004 | Inner Joint | | 22 | 22 | 34.95 | 57.5 | 103 | |
| | 1998.03-2005.01 | 4AT/5MT | F | L | Saloon FWD X16XEL/Z16XE | | GDS60013 | Drive Shaft | | 33 | 22 | 52 | 103 | 595 | |
| | 1998.03-2005.01 | 4AT/5MT | F | R | Saloon FWD X16XEL/Z16XE | | GDS44033 | Drive Shaft | | 33 | 22 | 52 | 103 | 950.5 | |
| | 1998.03-2005.01 | AT/MT | F | L | Saloon FWD X16XEL/Z16XE | | GCI21014 | Inner Joint | | 22 | 22 | 35 | 57.5 | 105.5 | |
| | 1998.03-2005.01 | | F | L/R | Saloon FWD X16XEL/Z16XE | | GCO44009 | Outer Joint | | 33 | 22 | 52 | 103 | 50.5 | O |
| | 1998.03-2005.01 | | F | L/R | Saloon FWD X16XEL/Z16XE | | GCO44030 | Outer Joint | | 33 | 22 | 52 | 103 | 50.5 | O |
| | 1998.03-2005.01 | | F | | Saloon FWD X16XEL/Z16XE | | GCO44010 | Outer Joint | 29T | 33 | 22 | 52 | 103 | 50.5 | O |
| | 1998.03-2005.01 | | F | L/R | Saloon FWD X16XEL/Z16XE | | GCI44004 | Inner Joint | | 22 | 22 | 34.95 | 57.5 | 103 | |
| | 1998.09-2005.01 | 4AT/5MT | F | L | Saloon FWD X16XEL/Z16XE | | GDS60013 | Drive Shaft | | 33 | 22 | 52 | 103 | 595 | |
| | 1998.09-2005.01 | 4AT/5MT | F | R | Saloon FWD X16XEL/Z16XE | | GDS44033 | Drive Shaft | | 33 | 22 | 52 | 103 | 950.5 | |
| | 1998.09-2005.01 | 4AT/5MT | F | L/R | Saloon FWD X16XEL/Z16XE | M20×1.5 | GCO44009 | Outer Joint | | 33 | 22 | 52 | 103 | 50.5 | O |
| | 1998.09-2005.01 | 4AT/5MT | F | L/R | Saloon FWD X16XEL/Z16XE | M20×1 | GCO44030 | Outer Joint | | 33 | 22 | 52 | 103 | 50.5 | O |
| | 1998.09-2005.01 | 4AT/5MT | F | L/R | Saloon FWD X16XEL/Z16XE | | GCI44004 | Inner Joint | | 22 | 22 | 34.95 | 57.5 | 103 | |
| 1.6 (76 kw) | 2002.06-2004.07 | 5MT | F | L | Estate FWD Z16XEP | | GDS60013 | Drive Shaft | | 33 | 22 | 52 | 103 | 595 | |
| | 2002.06-2004.07 | 5MT | F | R | Estate FWD Z16XEP | | GDS44033 | Drive Shaft | | 33 | 22 | 52 | 103 | 950.5 | |
| | 2002.06-2004.07 | AT/MT | F | L | Estate FWD Z16XEP | | GDS60013 | Drive Shaft | | 33 | 22 | 52 | 103 | 595 | |
| | 2002.06-2004.07 | AT/MT | F | R | Estate FWD Z16XEP | | GDS44033 | Drive Shaft | | 33 | 22 | 52 | 103 | 950.5 | |
| | 2002.06-2004.07 | AT/MT | F | L/R | Estate FWD Z16XEP | | GCO44009 | Outer Joint | | 33 | 22 | 52 | 103 | 50.5 | O |
| | 2002.06-2004.07 | AT/MT | F | L/R | Estate FWD Z16XEP | | GCO44011 | Outer Joint | 29T | 33 | 22 | 52 | 103 | 50.5 | O |
| | 2002.06-2004.07 | AT/MT | F | L/R | Estate FWD Z16XEP | | GCO44030 | Outer Joint | | 33 | 22 | 52 | 103 | 50.5 | O |
| | 2002.06-2004.07 | AT/MT | F | L/R | Estate FWD Z16XEP | | GCI44004 | Inner Joint | | 22 | 22 | 34.95 | 57.5 | 103 | |
| | 2002.06-2004.07 | MT | F | L | Estate FWD Z16XEP | Date to:2004.07 | GCI21014 | Inner Joint | | 22 | 22 | 35 | 57.5 | 105.5 | |
| | 2002.06-2004.07 | | F | L/R | Estate FWD Z16XEP | | GCO44009 | Outer Joint | | 33 | 22 | 52 | 103 | 50.5 | O |
| | 2002.06-2004.07 | | F | L/R | Estate FWD Z16XEP | | GCO44030 | Outer Joint | | 33 | 22 | 52 | 103 | 50.5 | O |
| | 2002.06-2004.07 | | F | | Estate FWD Z16XEP | | GCO44010 | Outer Joint | 29T | 33 | 22 | 52 | 103 | 50.5 | O |
| | 2002.06-2004.07 | | F | L/R | Estate FWD Z16XEP | | GCI44004 | Inner Joint | | 22 | 22 | 34.95 | 57.5 | 103 | |
| | 2002.11-2005.01 | 5MT | F | L | Hatchback FWD Z16XEP | | GDS60013 | Drive Shaft | | 33 | 22 | 52 | 103 | 595 | |
| | 2002.11-2005.01 | 5MT | F | R | Hatchback FWD Z16XEP | | GDS44033 | Drive Shaft | | 33 | 22 | 52 | 103 | 950.5 | |
| | 2002.11-2005.01 | AT/MT | F | L/R | Hatchback FWD Z16XEP | Date from:2003.01 | GCO44011 | Outer Joint | 29T | 33 | 22 | 52 | 103 | 50.5 | O |
| | 2002.11-2005.01 | AT/MT | F | L/R | Hatchback FWD Z16XEP | Date to:2007.06 | GCO44030 | Outer Joint | | 33 | 22 | 52 | 103 | 50.5 | O |
| | 2002.11-2005.01 | AT/MT | F | L/R | Hatchback FWD Z16XEP | Date from:2003.01 | GCI44004 | Inner Joint | | 22 | 22 | 34.95 | 57.5 | 103 | |
| | 2002.11-2005.01 | MT | F | L | Hatchback FWD Z16XEP | Date to:2007.06 | GCI21014 | Inner Joint | | 22 | 22 | 35 | 57.5 | 105.5 | |
| | 2002.11-2005.01 | | F | L/R | Hatchback FWD Z16XEP | | GCO44009 | Outer Joint | | 33 | 22 | 52 | 103 | 50.5 | O |
| | 2002.11-2005.01 | | F | | Hatchback FWD Z16XEP | | GCO44010 | Outer Joint | 29T | 33 | 22 | 52 | 103 | 50.5 | O |
| | 2002.11-2005.01 | 5MT | F | L | Saloon FWD Z16XEP | | GDS60013 | Drive Shaft | | 33 | 22 | 52 | 103 | 595 | |
| | 2002.11-2005.01 | 5MT | F | R | Saloon FWD Z16XEP | | GDS44033 | Drive Shaft | | 33 | 22 | 52 | 103 | 950.5 | |
| | 2002.11-2005.01 | AT/MT | F | L/R | Saloon FWD Z16XEP | Date to:2005.12 | GCO44011 | Outer Joint | 29T | 33 | 22 | 52 | 103 | 50.5 | O |
| | 2002.11-2005.01 | AT/MT | F | L/R | Saloon FWD Z16XEP | Date to:2005.01 | GCO44030 | Outer Joint | | 33 | 22 | 52 | 103 | 50.5 | O |
| | 2002.11-2005.01 | AT/MT | F | L/R | Saloon FWD Z16XEP | Date to:2005.12 | GCI44004 | Inner Joint | | 22 | 22 | 34.95 | 57.5 | 103 | |
| | 2002.11-2005.01 | MT | F | L | Saloon FWD Z16XEP | Date to:2005.01 | GCI21014 | Inner Joint | | 22 | 22 | 35 | 57.5 | 105.5 | |
| | 2002.11-2005.01 | | F | L/R | Saloon FWD Z16XEP | | GCO44009 | Outer Joint | | 33 | 22 | 52 | 103 | 50.5 | O |
| | 2002.11-2005.01 | | F | | Saloon FWD Z16XEP | | GCO44010 | Outer Joint | 29T | 33 | 22 | 52 | 103 | 50.5 | O |
| | 2002.11-2007.06 | AT/MT | F | L | Hatchback FWD Z16XEP | | GDS60013 | Drive Shaft | | 33 | 22 | 52 | 103 | 595 | |
| | 2002.11-2007.06 | AT/MT | F | R | Hatchback FWD Z16XEP | | GDS44033 | Drive Shaft | | 33 | 22 | 52 | 103 | 950.5 | |
| | 2002.11-2007.06 | AT/MT | F | L/R | Hatchback FWD Z16XEP | | GCO44009 | Outer Joint | | 33 | 22 | 52 | 103 | 50.5 | O |
| | 2002.11-2007.06 | | F | L/R | Hatchback FWD Z16XEP | | GCO44030 | Outer Joint | | 33 | 22 | 52 | 103 | 50.5 | O |
| | 2002.11-2007.06 | | F | L/R | Hatchback FWD Z16XEP | | GCI44004 | Inner Joint | | 22 | 22 | 34.95 | 57.5 | 103 | |
| 1.6 (77 kw) | 2004.03-2010.10 | 5MT/SAT | F | L | Hatchback FWD Z 16 XEP;Z 16 XE1 | | GDS44028 | Drive Shaft | | 33 | 22 | 53 | 95 | 590 | |
| | 2004.03-2010.10 | 5MT/SAT | F | R | Hatchback FWD Z 16 XEP;Z 16 XE1 | | GDS44030 | Drive Shaft | | 33 | 22 | 53 | 95 | 952 | |
| | 2004.03-2010.10 | 5MT/SAT | F | L/R | Hatchback FWD Z 16 XEP;Z 16 XE1 | | GCO44003 | Outer Joint | | 33 | 22 | 53 | 95 | 54.5 | M |
| | 2004.03-2010.10 | 5MT/SAT | F | L/R | Hatchback FWD Z 16 XEP;Z 16 XE1 | | GCI21014 | Inner Joint | | 22 | 22 | 35 | 57.5 | 105.5 | |
| | 2004.08-2010.10 | 5MT/SAT | F | L | Estate FWD Z 16 XEP;Z 16 XE1 | | GDS44028 | Drive Shaft | | 33 | 22 | 53 | 95 | 590 | |
| | 2004.08-2010.10 | 5MT/SAT | F | R | Estate FWD Z 16 XEP;Z 16 XE1 | | GDS44030 | Drive Shaft | | 33 | 22 | 53 | 95 | 952 | |
| | 2004.08-2010.10 | 5MT/SAT | F | L/R | Estate FWD Z 16 XEP;Z 16 XE1 | | GCO44003 | Outer Joint | | 33 | 22 | 53 | 95 | 54.5 | M |
| | 2004.08-2010.10 | 5MT/SAT | F | L/R | Estate FWD Z 16 XEP;Z 16 XE1 | | GCI21014 | Inner Joint | | 22 | 22 | 35 | 57.5 | 105.5 | |
| | 2007.02-2010.06 | 5MT | F | L | Saloon FWD Z 16 XEP | | GDS44028 | Drive Shaft | | 33 | 22 | 53 | 95 | 590 | |
| | 2007.02-2010.06 | 5MT | F | R | Saloon FWD Z 16 XEP | | GDS44030 | Drive Shaft | | 33 | 22 | 53 | 95 | 952 | |
| | 2007.02-2010.06 | 5MT | F | L/R | Saloon FWD Z 16 XEP | | GCO44003 | Outer Joint | | 33 | 22 | 53 | 95 | 54.5 | M |
| | 2007.02-2010.06 | 5MT | F | L/R | Saloon FWD Z 16 XEP | | GCI21014 | Inner Joint | | 22 | 22 | 35 | 57.5 | 105.5 | |
| 1.6 (81 kw) | 2014.02-2015.10 | 6MT | F | L | Estate FWD B 16 DTL | | GDS21076 | Drive Shaft | | 30 | 25 | 52.5 | 94 | 601 | |
| | 2014.02-2015.10 | 6MT | F | R | Estate FWD B 16 DTL | | GDS21032 | Drive Shaft | | 30 | 27 | 53.8 | 94.5 | 605 | |
| | 2014.02-2015.10 | 6MT | F | L/R | Estate FWD B 16 DTL | | GCO17051 | Outer Joint | | 30 | 26 | 53.8 | 94.5 | 65.5 | M |
| | 2014.02-2015.10 | 6MT | F | L/R | Estate FWD B 16 DTL | | GCO21049 | Outer Joint | | 30 | 26 | 52.5 | 94 | 65.5 | M |
| | 2014.02-2015.10 | 6MT | F | L/R | Estate FWD B 16 DTL | | GCO88046 | Outer Joint | | 30 | 26 | 52.5 | 94.5 | 65.5 | M |
| | 2014.02-2015.10 | 6MT | F | R | Estate FWD B 16 DTL | | GCI21030 | Inner Joint | | 27 | 26 | 35 | 78 | 112.5 | |

| | YEAR | TRANSM. | F/R | L/R | BODY STYLE & DRIVE TYPE & ENGINE | REMARKS | G-AP Ref. | PRODUCT | ABS | Technical Specifications A | B | C | H | L | P |
|---|---|---|---|---|---|---|---|---|---|---|---|---|---|---|---|
| **OPEL** | | | | | | | | | | | | | | | |
| **Astra** | | | | | | | | | | | | | | | |
| 1.6 (81 kw) | 2014.02-2015.10 | 6MT | F | L | Hatchback FWD B 16 DTL | | GDS21076 | Drive Shaft | | 30 | 25 | 52.5 | 94 | 601 | |
| | 2014.02-2015.10 | 6MT | F | R | Hatchback FWD B 16 DTL | | GDS21032 | Drive Shaft | | 30 | 27 | 53.8 | 94.5 | 605 | |
| | 2014.02-2015.10 | 6MT | F | L/R | Hatchback FWD B 16 DTL | | GCO17051 | Outer Joint | | 30 | 26 | 53.8 | 94.5 | 65.5 | M |
| | 2014.02-2015.10 | 6MT | F | L/R | Hatchback FWD B 16 DTL | | GCO21049 | Outer Joint | | 30 | 26 | 52.5 | 94 | 65.5 | M |
| | 2014.02-2015.10 | 6MT | F | L/R | Hatchback FWD B 16 DTL | | GCO88046 | Outer Joint | | 30 | 26 | 52.5 | 94.5 | 65.5 | M |
| | 2014.02-2015.10 | 6MT | F | R | Hatchback FWD B 16 DTL | | GCI21030 | Inner Joint | | 27 | 26 | 35 | 78 | 112.5 | |
| | 2014.04-2018.06 | 6MT | F | R | Saloon FWD B 16 DTL | | GDS21032 | Drive Shaft | | 30 | 27 | 53.8 | 94.5 | 605 | |
| | 2014.04-2018.06 | 6MT | F | L/R | Saloon FWD B 16 DTL | | GCO17051 | Outer Joint | | 30 | 26 | 53.8 | 94.5 | 65.5 | M |
| | 2014.04-2018.06 | 6MT | F | L/R | Saloon FWD B 16 DTL | | GCO21049 | Outer Joint | | 30 | 26 | 52.5 | 94 | 65.5 | M |
| | 2014.04-2018.06 | 6MT | F | L/R | Saloon FWD B 16 DTL | | GCO88046 | Outer Joint | | 30 | 26 | 52.5 | 94.5 | 65.5 | M |
| | 2014.04-2018.06 | 6MT | F | R | Saloon FWD B 16 DTL | | GCI21030 | Inner Joint | | 27 | 26 | 35 | 78 | 112.5 | |
| | 2014.04-2018.06 | MT | F | L | Saloon FWD B 16 DTL | | GDS21076 | Drive Shaft | | 30 | 25 | 52.5 | 94 | 601 | |
| | 2015.06-2019.08 | 6MT | F | L | Hatchback FWD B 16 DTE;B 16 DTU;D 16 DTN;D 16 DTI;D 16 DTL | | GDS82395 | Drive Shaft | | 33 | 25 | 52.2 | 94 | 621 | |
| | 2015.06-2019.08 | 6MT | F | R | Hatchback FWD B 16 DTE;B 16 DTU;D 16 DTN;D 16 DTI;D 16 DTL | For Engine code:B16DTE | GDS83852 | Drive Shaft | | 33 | 25 | 52.2 | 94 | 976 | |
| | 2015.06-2019.08 | 6MT | F | L | Hatchback FWD B 16 DTE;B 16 DTU;D 16 DTN;D 16 DTI;D 16 DTL | | GCO81814 | Outer Joint | | 33 | 24 | 52.2 | 94 | 64 | M |
| | 2015.06-2019.08 | 6MT | F | L | Hatchback FWD B 16 DTE;B 16 DTU;D 16 DTN;D 16 DTI;D 16 DTL | | GCI81767 | Inner Joint | | 25 | 24 | 34.9 | 57 | 109 | |
| | 2016.04-2019.08 | 6MT | F | L | Estate FWD B 16 DTE;B 16 DTU;D 16 DTN;D 16 DTI | | GDS82395 | Drive Shaft | | 33 | 25 | 52.2 | 94 | 621 | |
| | 2016.04-2019.08 | 6MT | F | R | Estate FWD B 16 DTE;B 16 DTU;D 16 DTN;D 16 DTI | For Engine code:B16DTE | GDS83852 | Drive Shaft | | 33 | 25 | 52.2 | 94 | 976 | |
| | 2016.04-2019.08 | 6MT | F | L | Estate FWD B 16 DTE;B 16 DTU;D 16 DTN;D 16 DTI | For Engine code:B16DTE;For RPO/POC:MZ4;Trans. code:M32 | GCO81814 | Outer Joint | | 33 | 24 | 52.2 | 94 | 64 | M |
| | 2016.04-2019.08 | 6MT | F | L | Estate FWD B 16 DTE;B 16 DTU;D 16 DTN;D 16 DTI | For Engine code:B16DTE;For RPO/POC:MZ4;Trans. code:M32 | GCI81767 | Inner Joint | | 25 | 24 | 34.9 | 57 | 109 | |
| 1.6 (85 kw) | 2006.11-2009.09 | 5AT/5MT | F | L | Hatchback FWD Z 16 XER;A 16 XER | | GDS44028 | Drive Shaft | | 33 | 22 | 53 | 95 | 590 | |
| | 2006.11-2009.09 | 5AT/5MT | F | R | Hatchback FWD Z 16 XER;A 16 XER | | GDS44030 | Drive Shaft | | 33 | 22 | 53 | 95 | 952 | |
| | 2006.11-2009.09 | 5AT/5MT | F | L/R | Hatchback FWD Z 16 XER;A 16 XER | | GCO44003 | Outer Joint | | 33 | 22 | 53 | 95 | 54.5 | M |
| | 2006.11-2009.09 | 5AT/5MT | F | L/R | Hatchback FWD Z 16 XER;A 16 XER | | GCI21014 | Inner Joint | | 22 | 22 | 35 | 57.5 | 105.5 | |
| | 2006.11-2010.10 | 5AT/5MT | F | L | Estate FWD Z 16 XER;A 16 XER | | GDS44028 | Drive Shaft | | 33 | 22 | 53 | 95 | 590 | |
| | 2006.11-2010.10 | 5AT/5MT | F | R | Estate FWD Z 16 XER;A 16 XER | | GDS44030 | Drive Shaft | | 33 | 22 | 53 | 95 | 952 | |
| | 2006.11-2010.10 | 5AT/5MT | F | L/R | Estate FWD Z 16 XER;A 16 XER | | GCO44003 | Outer Joint | | 33 | 22 | 53 | 95 | 54.5 | M |
| | 2006.11-2010.10 | 5AT/5MT | F | L/R | Estate FWD Z 16 XER;A 16 XER | | GCI21014 | Inner Joint | | 22 | 22 | 35 | 57.5 | 105.5 | |
| | 2008.09-2010.06 | 5MT | F | L | Saloon FWD Z 16 XER | | GDS44028 | Drive Shaft | | 33 | 22 | 53 | 95 | 590 | |
| | 2008.09-2010.06 | 5MT | F | R | Saloon FWD Z 16 XER | | GDS44030 | Drive Shaft | | 33 | 22 | 53 | 95 | 952 | |
| | 2008.09-2010.06 | 5MT | F | L/R | Saloon FWD Z 16 XER | | GCO44003 | Outer Joint | | 33 | 22 | 53 | 95 | 54.5 | M |
| | 2008.09-2010.06 | 5MT | F | L/R | Saloon FWD Z 16 XER | | GCI21014 | Inner Joint | | 22 | 22 | 35 | 57.5 | 105.5 | |
| | 2009.08-2010.10 | 5MT | F | L | Estate FWD Z 16 XER | | GDS44028 | Drive Shaft | | 33 | 22 | 53 | 95 | 590 | |
| | 2009.08-2010.10 | 5MT | F | R | Estate FWD Z 16 XER | | GDS44030 | Drive Shaft | | 33 | 22 | 53 | 95 | 952 | |
| | 2009.08-2010.10 | | F | L/R | Estate FWD Z 16 XER | | GCO44003 | Outer Joint | | 33 | 22 | 53 | 95 | 54.5 | M |
| | 2009.08-2010.10 | | F | L | Estate FWD Z 16 XER | Date To:2010.06 | GCI21014 | Inner Joint | | 22 | 22 | 35 | 57.5 | 105.5 | |
| | 2009.12-2015.10 | 5MT | F | L | Hatchback FWD A 16 XER;B 16 XER | | GDS44064 | Drive Shaft | | 33 | 22 | 53 | 95 | 618 | |
| | 2009.12-2015.10 | 5MT | F | R | Hatchback FWD A 16 XER;B 16 XER | | GDS44065 | Drive Shaft | | 33 | 22 | 53 | 95 | 983 | |
| | 2009.12-2015.10 | 5MT | F | L/R | Hatchback FWD A 16 XER;B 16 XER | | GCO44003 | Outer Joint | | 33 | 22 | 53 | 95 | 54.5 | M |
| | 2009.12-2015.10 | 5MT | F | L/R | Hatchback FWD A 16 XER;B 16 XER | | GCI21014 | Inner Joint | | 22 | 22 | 35 | 57.5 | 105.5 | |
| | 2009.12-2015.10 | 5MT | F | L/R | Hatchback FWD A 16 XER;B 16 XER | | GCI44004 | Inner Joint | | 22 | 22 | 34.95 | 57.5 | 103 | |
| | 2009.12-2015.10 | 6AT | F | L | Hatchback FWD A 16 XER;B 16 XER | Date from:2013.01,Chassis no. from:D000000/1D1000001/D3000001/D4000001/1D0000001 | GDS81619 | Drive Shaft | | 33 | 22 | 52.3 | 94 | 633 | |
| | 2009.12-2015.10 | 6AT | F | L | Hatchback FWD A 16 XER;B 16 XER | Date to:2012.12,Chassis no. to:C0999999/C1999999/C3999999/C4999999/C0999999 | GDS82389 | Drive Shaft | | 33 | 34 | 52.5 | 94 | 641 | |
| | 2009.12-2015.10 | 6AT | F | R | Hatchback FWD A 16 XER;B 16 XER | Date from:2013.01,Chassis no. from:D000000/1D1000001/E3000001/D4000001/D0000001/AAR | GDS81620 | Drive Shaft | | 33 | 22 | 52.3 | 94 | 958 | |
| | 2009.12-2015.10 | 6AT | F | R | Hatchback FWD A 16 XER;B 16 XER | Date to:2012.12 | GDS88077 | Drive Shaft | | 33 | 34 | 52.5 | 94 | 951 | |
| | 2009.12-2015.10 | 6AT | F | L/R | Hatchback FWD A 16 XER;B 16 XER | with Rim protector | GCO44088 | Outer Joint | | 33 | 23 | 52.3 | 94 | 59.5 | M |
| | 2009.12-2015.10 | 6AT | F | L/R | Hatchback FWD A 16 XER;B 16 XER | without Rim protector | GCO88047 | Outer Joint | | 33 | 23 | 52.5 | 94 | 59.5 | M |
| | 2009.12-2015.10 | 6AT | F | L | Hatchback FWD A 16 XER;B 16 XER | Date from:2013.01,Chassis no. from:D000000/1D1000001/D3000001/D4000001/1D0000001 | GCI81210 | Inner Joint | | 22 | 23 | 35 | 131.5 | 84.5 | |
| | 2009.12-2015.10 | 6AT | F | L | Hatchback FWD A 16 XER;B 16 XER | Date to:2012.12 | GCI81774 | Inner Joint | | 34 | 23 | 35 | 136.5 | 84.5 | |
| | 2009.12-2015.10 | 6AT | F | R | Hatchback FWD A 16 XER;B 16 XER | Date from:2013.01,TJ | GCI21029 | Inner Joint | | 22 | 23 | 35 | 57.5 | 102.5 | |
| | 2009.12-2015.10 | 6AT | F | R | Hatchback FWD A 16 XER;B 16 XER | Date from:2013.01,AAR | GCI81411 | Inner Joint | | 22 | 23 | 35 | 57.5 | 102 | |
| | 2009.12-2015.10 | 6AT | F | R | Hatchback FWD A 16 XER;B 16 XER | Date to:2012.12,Chassis no. to:C0999999/C1999999/C3999999/C4999999/C0999999 | GCI88030 | Inner Joint | | 34 | 23 | 35 | 56 | 107.5 | |
| | 2010.10-2015.10 | 5MT | F | L | Estate FWD A 16 XER;B 16 XER | | GDS44064 | Drive Shaft | | 33 | 22 | 53 | 95 | 618 | |
| | 2010.10-2015.10 | 5MT | F | R | Estate FWD A 16 XER;B 16 XER | | GDS44065 | Drive Shaft | | 33 | 22 | 53 | 95 | 983 | |
| | 2010.10-2015.10 | 5MT | F | L/R | Estate FWD A 16 XER;B 16 XER | | GCO44003 | Outer Joint | | 33 | 22 | 53 | 95 | 54.5 | M |
| | 2010.10-2015.10 | 5MT | F | L/R | Estate FWD A 16 XER;B 16 XER | | GCI21014 | Inner Joint | | 22 | 22 | 35 | 57.5 | 105.5 | |
| | 2010.10-2015.10 | 5MT | F | L/R | Estate FWD A 16 XER;B 16 XER | | GCI44004 | Inner Joint | | 22 | 22 | 34.95 | 57.5 | 103 | |
| | 2010.10-2015.10 | 6AT | F | L | Estate FWD A 16 XER;B 16 XER | Date from:2013.01,Chassis no. from:D000000/1D1000001/D3000001/D4000001/1D0000001 | GDS81619 | Drive Shaft | | 33 | 22 | 52.3 | 94 | 633 | |
| | 2010.10-2015.10 | 6AT | F | L | Estate FWD A 16 XER;B 16 XER | Date to:2012.12,Chassis no. to:C0999999/C1999999/C3999999/C4999999/C0999999 | GDS82389 | Drive Shaft | | 33 | 34 | 52.5 | 94 | 641 | |
| | 2010.10-2015.10 | 6AT | F | R | Estate FWD A 16 XER;B 16 XER | Date from:2013.01,Chassis no. from:D000000/1D1000001/D3000001/D4000001/1D0000001 | GDS81620 | Drive Shaft | | 33 | 22 | 52.3 | 94 | 958 | |
| | 2010.10-2015.10 | 6AT | F | R | Estate FWD A 16 XER;B 16 XER | Date to:2012.12 | GDS88077 | Drive Shaft | | 33 | 34 | 52.5 | 94 | 951 | |
| | 2010.10-2015.10 | 6AT | F | L/R | Estate FWD A 16 XER;B 16 XER | with Rim protector | GCO44088 | Outer Joint | | 33 | 23 | 52.3 | 94 | 59.5 | M |
| | 2010.10-2015.10 | 6AT | F | L/R | Estate FWD A 16 XER;B 16 XER | without Rim protector | GCO88047 | Outer Joint | | 33 | 23 | 52.5 | 94 | 59.5 | M |
| | 2010.10-2015.10 | 6AT | F | L | Estate FWD A 16 XER;B 16 XER | Date from:2013.01,Chassis no. from:D000000/1D1000001/D3000001/D4000001/1D0000001 | GCI81210 | Inner Joint | | 22 | 23 | 35 | 131.5 | 84.5 | |
| | 2010.10-2015.10 | 6AT | F | L | Estate FWD A 16 XER;B 16 XER | Date to:2012.12 | GCI81774 | Inner Joint | | 34 | 23 | 35 | 136.5 | 84.5 | |

| | YEAR | TRANSM. | F/R | L/R | BODY STYLE & DRIVE TYPE & ENGINE | REMARKS | G-AP Ref. | PRODUCT | ABS | Technical Specifications A | B | C | H | L | P |
|---|---|---|---|---|---|---|---|---|---|---|---|---|---|---|---|
| **OPEL** | | | | | | | | | | | | | | | |
| **Astra** | | | | | | | | | | | | | | | |
| 1.6 (85 kw) | 2010.10-2015.10 | 6AT | F | R | Estate FWD A 16 XER;B 16 XER | Date from:2013.01,TJ | GCI21029 | Inner Joint | | 22 | 23 | 35 | 57.5 | 102.5 | |
| | 2010.10-2015.10 | 6AT | F | R | Estate FWD A 16 XER;B 16 XER | Date from:2013.01,AAR | GCI81411 | Inner Joint | | 22 | 23 | 35 | 57.5 | 102 | |
| | 2010.10-2015.10 | 6AT | F | R | Estate FWD A 16 XER;B 16 XER | Date to:2012.12,Chassis no. to:C0999999/C1999999/C3999999/C8999999/CG999999 | GCI88030 | Inner Joint | | 34 | 23 | 35 | 56 | 107.5 | |
| | 2012.06-2018.06 | 5MT | F | L | Saloon FWD A 16 XER;B 16 XER | | GDS44064 | Drive Shaft | | 33 | 22 | 53 | 95 | 618 | |
| | 2012.06-2018.06 | 5MT | F | R | Saloon FWD A 16 XER;B 16 XER | | GDS44065 | Drive Shaft | | 33 | 22 | 53 | 95 | 983 | |
| | 2012.06-2018.06 | 5MT | F | L/R | Saloon FWD A 16 XER;B 16 XER | | GCO44003 | Outer Joint | | 33 | 22 | 53 | 95 | 54.5 | M |
| | 2012.06-2018.06 | 5MT | F | L/R | Saloon FWD A 16 XER;B 16 XER | | GCI21014 | Inner Joint | | 22 | 22 | 35 | 57.5 | 105.5 | |
| | 2012.06-2018.06 | 5MT | F | L/R | Saloon FWD A 16 XER;B 16 XER | | GCI44004 | Inner Joint | | 22 | 22 | 34.95 | 57.5 | 103 | |
| | 2012.06-2018.06 | 6AT | F | L | Saloon FWD A 16 XER;B 16 XER | Date from:2013.01,Chassis no. from:D0000001/D1000001/D3000001/D8000001/DG000001 | GDS81619 | Drive Shaft | | 33 | 22 | 52.3 | 94 | 633 | |
| | 2012.06-2018.06 | 6AT | F | L | Saloon FWD A 16 XER;B 16 XER | Date to:2012.12,Chassis no. to:C0999999/C1999999/C3999999/C8999999/CG999999 | GDS82389 | Drive Shaft | | 33 | 34 | 52.5 | 94 | 641 | |
| | 2012.06-2018.06 | 6AT | F | R | Saloon FWD A 16 XER;B 16 XER | Date from:2013.01,Chassis no. from:D0000001/D1000001/D3000001/D8000001/DG000001 | GDS81620 | Drive Shaft | | 33 | 22 | 52.3 | 94 | 958 | |
| | 2012.06-2018.06 | 6AT | F | R | Saloon FWD A 16 XER;B 16 XER | Date to:2012.12 | GDS88077 | Drive Shaft | | 33 | 34 | 52.5 | 94 | 951 | |
| | 2012.06-2018.06 | 6AT | F | L/R | Saloon FWD A 16 XER;B 16 XER | with Rim protector | GCO44088 | Outer Joint | | 33 | 23 | 52.3 | 94 | 59.5 | M |
| | 2012.06-2018.06 | 6AT | F | L/R | Saloon FWD A 16 XER;B 16 XER | without Rim protector | GCO88047 | Outer Joint | | 33 | 23 | 52.5 | 94 | 59.5 | M |
| | 2012.06-2018.06 | 6AT | F | L | Saloon FWD A 16 XER;B 16 XER | Date from:2013.01,Chassis no. from:D0000001/D1000001/D3000001/D8000001/DG000001 | GCI81210 | Inner Joint | | 22 | 23 | 35 | 131.5 | 84.5 | |
| | 2012.06-2018.06 | 6AT | F | L | Saloon FWD A 16 XER;B 16 XER | Date to:2012.12 | GCI81774 | Inner Joint | | 34 | 23 | 35 | 136.5 | 84.5 | |
| | 2012.06-2018.06 | 6AT | F | R | Saloon FWD A 16 XER;B 16 XER | Date from:2013.01,TJ | GCI21029 | Inner Joint | | 22 | 23 | 35 | 57.5 | 102.5 | |
| | 2012.06-2018.06 | 6AT | F | R | Saloon FWD A 16 XER;B 16 XER | Date from:2013.01,AAR | GCI81411 | Inner Joint | | 22 | 23 | 35 | 57.5 | 102 | |
| | 2012.06-2018.06 | 6AT | F | R | Saloon FWD A 16 XER;B 16 XER | Date to:2012.12,Chassis no. to:C0999999/C1999999/C3999999/C8999999/CG999999 | GCI88030 | Inner Joint | | 34 | 23 | 35 | 56 | 107.5 | |
| 1.6 (100 kw) | 2013.11-2015.10 | 6MT | F | L | Estate FWD B 16 DTH | | GDS21076 | Drive Shaft | | 30 | 25 | 52.5 | 94 | 601 | |
| | 2013.11-2015.10 | 6MT | F | R | Estate FWD B 16 DTH | | GDS21032 | Drive Shaft | | 30 | 27 | 53.8 | 94.5 | 605 | |
| | 2013.11-2015.10 | 6MT | F | L/R | Estate FWD B 16 DTH | | GCO17051 | Outer Joint | | 30 | 26 | 53.8 | 94.5 | 65.5 | M |
| | 2013.11-2015.10 | 6MT | F | L/R | Estate FWD B 16 DTH | | GCO21049 | Outer Joint | | 30 | 26 | 52.5 | 94 | 65.5 | M |
| | 2013.11-2015.10 | 6MT | F | L/R | Estate FWD B 16 DTH | | GCO88046 | Outer Joint | | 30 | 26 | 52.5 | 94.5 | 65.5 | M |
| | 2013.11-2015.10 | 6MT | F | R | Estate FWD B 16 DTH | | GCI21030 | Inner Joint | | 27 | 26 | 35 | 78 | 112.5 | |
| | 2013.11-2015.10 | 6MT | F | R | Hatchback FWD B 16 DTH | | GDS21032 | Drive Shaft | | 30 | 27 | 53.8 | 94.5 | 605 | |
| | 2013.11-2015.10 | 6MT | F | L/R | Hatchback FWD B 16 DTH | | GCO17051 | Outer Joint | | 30 | 26 | 53.8 | 94.5 | 65.5 | M |
| | 2013.11-2015.10 | 6MT | F | L/R | Hatchback FWD B 16 DTH | | GCO21049 | Outer Joint | | 30 | 26 | 52.5 | 94 | 65.5 | M |
| | 2013.11-2015.10 | 6MT | F | L/R | Hatchback FWD B 16 DTH | | GCO88046 | Outer Joint | | 30 | 26 | 52.5 | 94.5 | 65.5 | M |
| | 2013.11-2015.10 | 6MT | F | R | Hatchback FWD B 16 DTH | | GCI21030 | Inner Joint | | 27 | 26 | 35 | 78 | 112.5 | |
| | 2013.11-2015.10 | MT | F | L | Hatchback FWD B 16 DTH | | GDS21076 | Drive Shaft | | 30 | 25 | 52.5 | 94 | 601 | |
| | 2014.01-2018.06 | 6AT | F | L | Saloon FWD B 16 DTH | | GDS61137 | Drive Shaft | | 30 | 34 | 52.5 | 94.5 | 640 | |
| | 2014.01-2018.06 | 6AT | F | R | Saloon FWD B 16 DTH | | GDS61138 | Drive Shaft | | 30 | 27 | 52.5 | 94.5 | 598 | |
| | 2014.01-2018.06 | 6AT/6MT | F | L/R | Saloon FWD B 16 DTH | | GCO17051 | Outer Joint | | 30 | 26 | 53.8 | 94.5 | 65.5 | M |
| | 2014.01-2018.06 | 6AT/6MT | F | L/R | Saloon FWD B 16 DTH | | GCO21049 | Outer Joint | | 30 | 26 | 52.5 | 94 | 65.5 | M |
| | 2014.01-2018.06 | 6AT/6MT | F | L/R | Saloon FWD B 16 DTH | | GCO88046 | Outer Joint | | 30 | 26 | 52.5 | 94.5 | 65.5 | M |
| | 2014.01-2018.06 | 6MT | F | R | Saloon FWD B 16 DTH | | GDS21032 | Drive Shaft | | 30 | 27 | 53.8 | 94.5 | 605 | |
| | 2014.01-2018.06 | 6MT | F | R | Saloon FWD B 16 DTH | | GCI21030 | Inner Joint | | 27 | 26 | 35 | 78 | 112.5 | |
| | 2014.01-2018.06 | MT | F | L | Saloon FWD B 16 DTH | | GDS21076 | Drive Shaft | | 30 | 25 | 52.5 | 94 | 601 | |
| | 2015.06-2019.08 | 6AT | F | L | Hatchback FWD B 16 DTH;D 16 DTH | | GDS82393 | Drive Shaft | | 33 | 34 | 52.3 | 94 | 661 | |
| | 2015.06-2019.08 | 6AT | F | R | Hatchback FWD B 16 DTH;D 16 DTH | | GDS82394 | Drive Shaft | | 33 | 34 | 52.3 | 94 | 928 | |
| | 2015.06-2019.08 | 6AT | F | L/R | Hatchback FWD B 16 DTH;D 16 DTH | | GCO44088 | Outer Joint | | 33 | 23 | 52.3 | 94 | 59.5 | M |
| | 2015.06-2019.08 | 6AT | F | L | Hatchback FWD B 16 DTH;D 16 DTH | | GCI81774 | Inner Joint | | 34 | 23 | 35 | 136.5 | 84.5 | |
| | 2015.06-2019.08 | 6AT | F | R | Hatchback FWD B 16 DTH;D 16 DTH | | GCI81780 | Inner Joint | | 34 | 23 | 35 | 56 | 106.5 | |
| | 2015.06-2019.08 | 6MT | F | L | Hatchback FWD B 16 DTH;D 16 DTH | | GDS58211 | Drive Shaft | | 33 | 25 | 52.2 | 94 | 621 | |
| | 2015.06-2019.08 | 6MT | F | R | Hatchback FWD B 16 DTH;D 16 DTH | | GDS58212 | Drive Shaft | | 33 | 25 | 52.2 | 94 | 976 | |
| | 2015.06-2019.08 | 6MT | F | L/R | Hatchback FWD B 16 DTH;D 16 DTH | | GCO83865 | Outer Joint | | 33 | 25 | 52.2 | 94 | 64 | M |
| | 2016.04-2019.08 | 6AT | F | L | Estate FWD B 16 DTH;D 16 DTH | | GDS82393 | Drive Shaft | | 33 | 34 | 52.3 | 94 | 661 | |
| | 2016.04-2019.08 | 6AT | F | R | Estate FWD B 16 DTH;D 16 DTH | | GDS82394 | Drive Shaft | | 33 | 34 | 52.3 | 94 | 928 | |
| | 2016.04-2019.08 | 6AT | F | L/R | Estate FWD B 16 DTH;D 16 DTH | For RPO/POC:MNP | GCO44088 | Outer Joint | | 33 | 23 | 52.3 | 94 | 59.5 | M |
| | 2016.04-2019.08 | 6AT | F | R | Estate FWD B 16 DTH;D 16 DTH | | GCI81780 | Inner Joint | | 34 | 23 | 35 | 56 | 106.5 | |
| | 2016.04-2019.08 | 6MT | F | L | Estate FWD B 16 DTH;D 16 DTH | | GDS58211 | Drive Shaft | | 33 | 25 | 52.2 | 94 | 621 | |
| | 2016.04-2019.08 | 6MT | F | R | Estate FWD B 16 DTH;D 16 DTH | | GDS58212 | Drive Shaft | | 33 | 25 | 52.2 | 94 | 976 | |
| | 2016.04-2019.08 | 6MT | F | L/R | Estate FWD B 16 DTH;D 16 DTH | | GCO83865 | Outer Joint | | 33 | 25 | 52.2 | 94 | 64 | M |
| | 2018.04-2019.08 | 6AT | F | L | Hatchback Van FWD D 16 DTH | For RPO/POC:MNP | GDS82393 | Drive Shaft | | 33 | 34 | 52.3 | 94 | 661 | |
| | 2018.04-2019.08 | 6AT | F | R | Hatchback Van FWD D 16 DTH | For RPO/POC:MNP | GDS82394 | Drive Shaft | | 33 | 34 | 52.3 | 94 | 928 | |
| | 2018.04-2019.08 | 6AT | F | L/R | Hatchback Van FWD D 16 DTH | For RPO/POC:MNP | GCO44088 | Outer Joint | | 33 | 23 | 52.3 | 94 | 59.5 | M |
| | 2018.04-2019.08 | 6AT | F | L | Hatchback Van FWD D 16 DTH | For RPO/POC:MNP | GCI81774 | Inner Joint | | 34 | 23 | 35 | 136.5 | 84.5 | |
| | 2018.04-2019.08 | 6AT | F | R | Hatchback Van FWD D 16 DTH | For RPO/POC:MNP | GCI81780 | Inner Joint | | 34 | 23 | 35 | 56 | 106.5 | |
| | 2018.04-2019.08 | 6MT | F | L | Hatchback Van FWD D 16 DTH | | GDS58211 | Drive Shaft | | 33 | 25 | 52.2 | 94 | 621 | |
| | 2018.04-2019.08 | 6MT | F | R | Hatchback Van FWD D 16 DTH | | GDS58212 | Drive Shaft | | 33 | 25 | 52.2 | 94 | 976 | |
| | 2018.04-2019.08 | 6MT | F | L/R | Hatchback Van FWD D 16 DTH | | GCO83865 | Outer Joint | | 33 | 25 | 52.2 | 94 | 64 | M |
| 1.6 (110 kw) | 2018.07-2019.02 | 6MT | F | L | Estate FWD D 16 DTR | | GDS58211 | Drive Shaft | | 33 | 25 | 52.2 | 94 | 621 | |
| | 2018.07-2019.02 | 6MT | F | R | Estate FWD D 16 DTR | | GDS58212 | Drive Shaft | | 33 | 25 | 52.2 | 94 | 976 | |
| | 2018.07-2019.02 | 6MT | F | L/R | Estate FWD D 16 DTR | | GCO83865 | Outer Joint | | 33 | 25 | 52.2 | 94 | 64 | M |

| | YEAR | TRANSM. | F/R | L/R | BODY STYLE & DRIVE TYPE & ENGINE | REMARKS | G-AP Ref. | PRODUCT | ABS | Technical Specifications A | B | C | H | L | P |
|---|---|---|---|---|---|---|---|---|---|---|---|---|---|---|---|
| **OPEL** | | | | | | | | | | | | | | | |
| **Astra** | | | | | | | | | | | | | | | |
| 1.6 (110 kw) | 2018.07-2019.02 | 6MT | F | L | Hatchback FWD D 16 DTR | | GDS58211 | Drive Shaft | | 33 | 25 | 52.2 | 94 | 621 | |
| | 2018.07-2019.02 | 6MT | F | R | Hatchback FWD D 16 DTR | | GDS58212 | Drive Shaft | | 33 | 25 | 52.2 | 94 | 976 | |
| | 2018.07-2019.02 | 6MT | F | L/R | Hatchback FWD D 16 DTR | | GCO83865 | Outer Joint | | 33 | 25 | 52.2 | 94 | 64 | M |
| 1.6 (118 kw) | 2015.11-2018.05 | 6MT | F | L/R | Hatchback FWD B 16 DTR | | GCO83865 | Outer Joint | | 33 | 25 | 52.2 | 94 | 64 | M |
| | 2016.04-2018.05 | 6MT | F | L/R | Estate FWD B 16 DTR | | GCO83865 | Outer Joint | | 33 | 25 | 52.2 | 94 | 64 | M |
| 1.6 (125 kw) | 2012.06-2015.10 | 6AT | F | L | Saloon FWD A 16 XHT;B 16 SHL | | GDS61137 | Drive Shaft | | 30 | 34 | 52.5 | 94.5 | 640 | |
| | 2012.06-2015.10 | 6AT | F | R | Saloon FWD A 16 XHT;B 16 SHL | | GDS61138 | Drive Shaft | | 30 | 27 | 52.5 | 94.5 | 598 | |
| | 2012.06-2015.10 | 6AT/6MT | F | L/R | Saloon FWD A 16 XHT;B 16 SHL | | GCO17051 | Outer Joint | | 30 | 26 | 53.8 | 94.5 | 65.5 | M |
| | 2012.06-2015.10 | 6AT/6MT | F | L/R | Saloon FWD A 16 XHT;B 16 SHL | | GCO21049 | Outer Joint | | 30 | 26 | 52.5 | 94 | 65.5 | M |
| | 2012.06-2015.10 | 6AT/6MT | F | L/R | Saloon FWD A 16 XHT;B 16 SHL | | GCO88046 | Outer Joint | | 30 | 26 | 52.5 | 94.5 | 65.5 | M |
| | 2012.06-2015.10 | 6MT | F | R | Saloon FWD A 16 XHT;B 16 SHL | | GDS21032 | Drive Shaft | | 30 | 27 | 53.8 | 94.5 | 605 | |
| | 2012.06-2015.10 | 6MT | F | R | Saloon FWD A 16 XHT;B 16 SHL | | GCI21030 | Inner Joint | | 27 | 26 | 35 | 78 | 112.5 | |
| | 2012.06-2015.10 | MT | F | L | Saloon FWD A 16 XHT;B 16 SHL | | GDS21076 | Drive Shaft | | 30 | 25 | 52.5 | 94 | 601 | |
| | 2012.12-2015.10 | 6AT | F | L | Estate FWD A 16 XHT;B 16 SHL | | GDS61137 | Drive Shaft | | 30 | 34 | 52.5 | 94.5 | 640 | |
| | 2012.12-2015.10 | 6AT | F | R | Estate FWD A 16 XHT;B 16 SHL | | GDS61138 | Drive Shaft | | 30 | 27 | 52.5 | 94.5 | 598 | |
| | 2012.12-2015.10 | 6AT/6MT | F | L/R | Estate FWD A 16 XHT;B 16 SHL | | GCO17051 | Outer Joint | | 30 | 26 | 53.8 | 94.5 | 65.5 | M |
| | 2012.12-2015.10 | 6AT/6MT | F | L/R | Estate FWD A 16 XHT;B 16 SHL | | GCO21049 | Outer Joint | | 30 | 26 | 52.5 | 94 | 65.5 | M |
| | 2012.12-2015.10 | 6AT/6MT | F | L/R | Estate FWD A 16 XHT;B 16 SHL | | GCO88046 | Outer Joint | | 30 | 26 | 52.5 | 94.5 | 65.5 | M |
| | 2012.12-2015.10 | 6MT | F | L | Estate FWD A 16 XHT;B 16 SHL | | GDS21076 | Drive Shaft | | 30 | 25 | 52.5 | 94 | 601 | |
| | 2012.12-2015.10 | 6MT | F | R | Estate FWD A 16 XHT;B 16 SHL | | GDS21032 | Drive Shaft | | 30 | 27 | 53.8 | 94.5 | 605 | |
| | 2012.12-2015.10 | 6MT | F | R | Estate FWD A 16 XHT;B 16 SHL | | GCI21030 | Inner Joint | | 27 | 26 | 35 | 78 | 112.5 | |
| | 2012.12-2015.10 | 6AT | F | L | Hatchback FWD A 16 XHT;B 16 SHL | | GDS61137 | Drive Shaft | | 30 | 34 | 52.5 | 94.5 | 640 | |
| | 2012.12-2015.10 | 6AT | F | R | Hatchback FWD A 16 XHT;B 16 SHL | | GDS61138 | Drive Shaft | | 30 | 27 | 52.5 | 94.5 | 598 | |
| | 2012.12-2015.10 | 6AT/6MT | F | L/R | Hatchback FWD A 16 XHT;B 16 SHL | | GCO17051 | Outer Joint | | 30 | 26 | 53.8 | 94.5 | 65.5 | M |
| | 2012.12-2015.10 | 6AT/6MT | F | L/R | Hatchback FWD A 16 XHT;B 16 SHL | | GCO21049 | Outer Joint | | 30 | 26 | 52.5 | 94 | 65.5 | M |
| | 2012.12-2015.10 | 6AT/6MT | F | L/R | Hatchback FWD A 16 XHT;B 16 SHL | | GCO88046 | Outer Joint | | 30 | 26 | 52.5 | 94.5 | 65.5 | M |
| | 2012.12-2015.10 | 6MT | F | R | Hatchback FWD A 16 XHT;B 16 SHL | | GDS21032 | Drive Shaft | | 30 | 27 | 53.8 | 94.5 | 605 | |
| | 2012.12-2015.10 | 6MT | F | R | Hatchback FWD A 16 XHT;B 16 SHL | | GCI21030 | Inner Joint | | 27 | 26 | 35 | 78 | 112.5 | |
| | 2012.12-2015.10 | MT | F | L | Hatchback FWD A 16 XHT;B 16 SHL | | GDS21076 | Drive Shaft | | 30 | 25 | 52.5 | 94 | 601 | |
| 1.6 (132 kw) | 2007.02-2010.10 | MT | F | L/R | Estate FWD Z 16 LET;A 16 LET | | GCO44028 | Outer Joint | | 33 | 24 | 53 | 93.5 | 63.5 | M |
| | 2007.02-2010.10 | | F | L/R | Estate FWD Z 16 LET;A 16 LET | | GCI44005 | Inner Joint | | 34 | 25 | 35 | | 130.2 | |
| | 2007.02-2010.10 | MT | F | L/R | Hatchback FWD Z 16 LET;A 16 LET | | GCO44028 | Outer Joint | | 33 | 24 | 53 | 93.5 | 63.5 | M |
| | 2007.02-2010.10 | | F | L/R | Hatchback FWD Z 16 LET;A 16 LET | | GCI44005 | Inner Joint | | 34 | 25 | 35 | | 130.2 | |
| | 2009.12-2015.10 | 6MT | F | L | Hatchback 4WD A16LET | Number of Doors:3 | GDS83226 | Drive Shaft | | 30 | 25 | 52.5 | 94 | 623 | |
| | 2009.12-2015.10 | 6MT | F | L/R | Hatchback 4WD A16LET | | GCO17051 | Outer Joint | | 30 | 26 | 53.8 | 94.5 | 65.5 | M |
| | 2009.12-2015.10 | MT | F | L | Hatchback 4WD A16LET | Number of Doors:5 | GDS21076 | Drive Shaft | | 30 | 25 | 52.5 | 94 | 601 | |
| | 2009.12-2015.10 | MT | F | R | Hatchback 4WD A16LET | Number of Doors:5 | GDS21074 | Drive Shaft | | 30 | 34 | 52.5 | 94 | 589 | |
| | 2009.12-2015.10 | 6AT | F | L | Hatchback FWD A 16 LET | | GDS61137 | Drive Shaft | | 30 | 34 | 52.5 | 94.5 | 640 | |
| | 2009.12-2015.10 | 6AT | F | R | Hatchback FWD A 16 LET | | GDS61138 | Drive Shaft | | 30 | 27 | 52.5 | 94.5 | 598 | |
| | 2009.12-2015.10 | 6AT/6MT | F | L/R | Hatchback FWD A 16 LET | | GCO17051 | Outer Joint | | 30 | 26 | 53.8 | 94.5 | 65.5 | M |
| | 2009.12-2015.10 | 6AT/6MT | F | L/R | Hatchback FWD A 16 LET | | GCO21049 | Outer Joint | | 30 | 26 | 52.5 | 94 | 65.5 | M |
| | 2009.12-2015.10 | 6AT/6MT | F | L/R | Hatchback FWD A 16 LET | | GCO88046 | Outer Joint | | 30 | 26 | 52.5 | 94.5 | 65.5 | M |
| | 2009.12-2015.10 | 6MT | F | R | Hatchback FWD A 16 LET | | GDS21074 | Drive Shaft | | 30 | 34 | 52.5 | 94 | 589 | |
| | 2009.12-2015.10 | 6MT | F | R | Hatchback FWD A 16 LET | | GDS83228 | Drive Shaft | | 30 | 25 | 52.5 | 94 | 996 | |
| | 2009.12-2015.10 | MT | F | L | Hatchback FWD A 16 LET | | GDS21076 | Drive Shaft | | 30 | 25 | 52.5 | 94 | 601 | |
| | 2010.10-2015.10 | 6AT | F | L | Estate FWD A 16 LET | | GDS61137 | Drive Shaft | | 30 | 34 | 52.5 | 94.5 | 640 | |
| | 2010.10-2015.10 | 6AT | F | R | Estate FWD A 16 LET | | GDS61138 | Drive Shaft | | 30 | 27 | 52.5 | 94.5 | 598 | |
| | 2010.10-2015.10 | 6AT/6MT | F | L/R | Estate FWD A 16 LET | | GCO17051 | Outer Joint | | 30 | 26 | 53.8 | 94.5 | 65.5 | M |
| | 2010.10-2015.10 | 6AT/6MT | F | L/R | Estate FWD A 16 LET | | GCO21049 | Outer Joint | | 30 | 26 | 52.5 | 94 | 65.5 | M |
| | 2010.10-2015.10 | 6AT/6MT | F | L/R | Estate FWD A 16 LET | | GCO88046 | Outer Joint | | 30 | 26 | 52.5 | 94.5 | 65.5 | M |
| | 2010.10-2015.10 | 6MT | F | R | Estate FWD A 16 LET | | GDS21074 | Drive Shaft | | 30 | 34 | 52.5 | 94 | 589 | |
| | 2010.10-2015.10 | 6MT | F | R | Estate FWD A 16 LET | | GDS83228 | Drive Shaft | | 30 | 25 | 52.5 | 94 | 996 | |
| | 2010.10-2015.10 | MT | F | L | Estate FWD A 16 LET | | GDS21076 | Drive Shaft | | 30 | 25 | 52.5 | 94 | 601 | |
| | 2012.06-2013.10 | 6AT | F | L | Saloon FWD A 16 LET | | GDS61137 | Drive Shaft | | 30 | 34 | 52.5 | 94.5 | 640 | |
| | 2012.06-2013.10 | 6AT | F | R | Saloon FWD A 16 LET | | GDS61138 | Drive Shaft | | 30 | 27 | 52.5 | 94.5 | 598 | |
| | 2012.06-2013.10 | 6AT | F | L | Saloon FWD A 16 LET | | GCI86021 | Inner Joint | | 34 | 26 | 35 | 136.5 | 87 | |
| | 2012.06-2013.10 | 6AT | F | R | Saloon FWD A 16 LET | | GCI21016 | Inner Joint | | 27 | 26 | 35 | 78.5 | 112 | |
| | 2012.06-2013.10 | 6AT/6MT | F | L/R | Saloon FWD A 16 LET | | GCO17051 | Outer Joint | | 30 | 26 | 53.8 | 94.5 | 65.5 | M |
| | 2012.06-2013.10 | 6AT/6MT | F | L/R | Saloon FWD A 16 LET | | GCO21049 | Outer Joint | | 30 | 26 | 52.5 | 94 | 65.5 | M |
| | 2012.06-2013.10 | 6AT/6MT | F | L/R | Saloon FWD A 16 LET | | GCO88046 | Outer Joint | | 30 | 26 | 52.5 | 94.5 | 65.5 | M |
| | 2012.06-2013.10 | 6MT | F | R | Saloon FWD A 16 LET | | GDS21074 | Drive Shaft | | 30 | 34 | 52.5 | 94 | 589 | |
| | 2012.06-2013.10 | 6MT | F | R | Saloon FWD A 16 LET | | GDS83228 | Drive Shaft | | 30 | 25 | 52.5 | 94 | 996 | |
| | 2012.06-2013.10 | MT | F | L | Saloon FWD A 16 LET | | GDS21076 | Drive Shaft | | 30 | 25 | 52.5 | 94 | 601 | |
| | 2012.06-2013.10 | MT | F | R | Saloon FWD A 16 LET | | GCI88026 | Inner Joint | | 34 | 26 | 37.5 | | 100 | |
| 1.6 (147 kw) | 2015.11-2019.02 | 6AT | F | L | Hatchback FWD B 16 SHT;D 16 SHT | | GDS82393 | Drive Shaft | | 33 | 34 | 52.3 | 94 | 661 | |

| | YEAR | TRANSM. | F/R | L/R | BODY STYLE & DRIVE TYPE & ENGINE | REMARKS | G-AP Ref. | PRODUCT | ABS | Technical Specifications A | B | C | H | L | P |
|---|---|---|---|---|---|---|---|---|---|---|---|---|---|---|---|
| **OPEL** | | | | | | | | | | | | | | | |
| **Astra** | | | | | | | | | | | | | | | |
| 1.6 (147 kw) | 2015.11-2019.02 | 6AT | F | R | Hatchback FWD B 16 SHT;D 16 SHT | | GDS82394 | Drive Shaft | | 33 | 34 | 52.3 | 94 | 928 | |
| | 2015.11-2019.02 | 6AT | F | L/R | Hatchback FWD B 16 SHT;D 16 SHT | | GCO44088 | Outer Joint | | 33 | 23 | 52.3 | 94 | 59.5 | M |
| | 2015.11-2019.02 | 6AT | F | L | Hatchback FWD B 16 SHT;D 16 SHT | | GCI81774 | Inner Joint | | 34 | 23 | 35 | 136.5 | 84.5 | |
| | 2015.11-2019.02 | 6AT | F | R | Hatchback FWD B 16 SHT;D 16 SHT | | GCI81780 | Inner Joint | | 34 | 23 | 35 | 56 | 106.5 | |
| | 2015.11-2019.02 | 6MT | F | L | Hatchback FWD B 16 SHT;D 16 SHT | | GDS82395 | Drive Shaft | | 33 | 25 | 52.2 | 94 | 621 | |
| | 2015.11-2019.02 | 6MT | F | L | Hatchback FWD B 16 SHT;D 16 SHT | | GCO81814 | Outer Joint | | 33 | 24 | 52.2 | 94 | 64 | M |
| | 2015.11-2019.02 | 6MT | F | L | Hatchback FWD B 16 SHT;D 16 SHT | | GCI81767 | Inner Joint | | 25 | 24 | 34.9 | 57 | 109 | |
| | 2016.04-2019.02 | 6AT | F | L | Estate FWD B 16 SHT;D 16 SHT | | GDS82393 | Drive Shaft | | 33 | 34 | 52.3 | 94 | 661 | |
| | 2016.04-2019.02 | 6AT | F | R | Estate FWD B 16 SHT;D 16 SHT | | GDS82394 | Drive Shaft | | 33 | 34 | 52.3 | 94 | 928 | |
| | 2016.04-2019.02 | 6AT | F | L/R | Estate FWD B 16 SHT;D 16 SHT | | GCO44088 | Outer Joint | | 33 | 23 | 52.3 | 94 | 59.5 | M |
| | 2016.04-2019.02 | 6AT | F | L | Estate FWD B 16 SHT;D 16 SHT | | GCI81774 | Inner Joint | | 34 | 23 | 35 | 136.5 | 84.5 | |
| | 2016.04-2019.02 | 6AT | F | R | Estate FWD B 16 SHT;D 16 SHT | | GCI81780 | Inner Joint | | 34 | 23 | 35 | 56 | 106.5 | |
| | 2016.04-2019.02 | 6MT | F | L | Estate FWD B 16 SHT;D 16 SHT | | GDS82395 | Drive Shaft | | 33 | 25 | 52.2 | 94 | 621 | |
| | 2016.04-2019.02 | 6MT | F | L/R | Estate FWD B 16 SHT;D 16 SHT | | GCO81814 | Outer Joint | | 33 | 24 | 52.2 | 94 | 64 | M |
| | 2016.04-2019.02 | 6MT | F | L | Estate FWD B 16 SHT;D 16 SHT | | GCI81767 | Inner Joint | | 25 | 24 | 34.9 | 57 | 109 | |
| 1.7 (44 kw) | 1992.07-1998.01 | 5MT | F | L | Hatchback FWD 17DR | Chassis no. from:P2733478/P5273485/P8202126 | GDS44002 | Drive Shaft | 29T | 22 | 22 | 52 | 95 | 585 | |
| | 1992.07-1998.01 | 5MT | F | R | Hatchback FWD 17DR | Chassis no. from:P2733478/P5273485/P8202126 | GDS60002 | Drive Shaft | 29T | 22 | 22 | 52 | 95 | 926 | |
| | 1992.07-1998.01 | AT/MT | F | L/R | Hatchback FWD 17DR | Date from:1994.01 | GCO44007 | Outer Joint | 29T | 22 | 22 | 52 | 94.5 | 50 | O |
| | 1992.07-1998.01 | AT/MT | F | L/R | Hatchback FWD 17DR | Chassis no. to:P-2732833 | GCO44056 | Outer Joint | 29T | 33 | 25 | 52 | 109 | 61 | O |
| | 1992.07-1998.01 | MT | F | L/R | Hatchback FWD 17DR | | GCI44004 | Inner Joint | | 22 | 22 | 34.95 | 57.5 | 103 | |
| | 1992.07-1998.01 | | F | | Hatchback FWD 17DR | | GCO44023 | Outer Joint | | 22 | 22 | 52 | 95 | 50 | O |
| 1.7 (50 kw) | 1994.09-1998.02 | AT/MT | F | R | Estate FWD X17DTL | Chassis no. from:N-500001 | GDS44059 | Drive Shaft | 29T | 33 | 34 | 52 | 109 | 938 | |
| | 1994.09-1998.02 | AT/MT | F | L/R | Estate FWD X17DTL | Chassis no. from:N500001 | GCO44056 | Outer Joint | 29T | 33 | 25 | 52 | 109 | 61 | O |
| | 1994.09-1998.02 | AT/MT | F | L/R | Estate FWD X17DTL | Chassis no. from:N-500001 | GCI44002 | Inner Joint | | 34 | 25 | 35 | 56.2 | 114.8 | |
| | 1994.09-1998.02 | MT | F | L | Estate FWD X17DTL | Chassis no. from:N-500001 | GDS44011 | Drive Shaft | 29T | 33 | 34 | 52 | 109 | 594.5 | |
| | 1994.09-1998.02 | | F | | Estate FWD X17DTL | | GCO88003 | Outer Joint | | 33 | 25 | 52 | 109 | 61 | O |
| | 1994.09-1998.02 | AT/MT | F | L | Hatchback FWD X17DTL | | GDS44011 | Drive Shaft | 29T | 33 | 34 | 52 | 109 | 594.5 | |
| | 1994.09-1998.02 | AT/MT | F | R | Hatchback FWD X17DTL | | GDS44059 | Drive Shaft | 29T | 33 | 34 | 52 | 109 | 938 | |
| | 1994.09-1998.02 | AT/MT | F | L/R | Hatchback FWD X17DTL | Chassis no. from:N500001 | GCO44056 | Outer Joint | 29T | 33 | 25 | 52 | 109 | 61 | O |
| | 1994.09-1998.02 | AT/MT | F | L/R | Hatchback FWD X17DTL | | GCI44002 | Inner Joint | | 34 | 25 | 35 | 56.2 | 114.8 | |
| | 1994.09-1998.02 | | F | | Hatchback FWD X17DTL | | GCO88003 | Outer Joint | | 33 | 25 | 52 | 109 | 61 | O |
| | 1994.09-1998.02 | AT/MT | F | L | Saloon FWD X17DTL | | GDS44011 | Drive Shaft | 29T | 33 | 34 | 52 | 109 | 594.5 | |
| | 1994.09-1998.02 | AT/MT | F | R | Saloon FWD X17DTL | | GDS44059 | Drive Shaft | 29T | 33 | 34 | 52 | 109 | 938 | |
| | 1994.09-1998.02 | AT/MT | F | L/R | Saloon FWD X17DTL | Date to:1998.02;Chassis no. from:N500001 | GCO44056 | Outer Joint | 29T | 33 | 25 | 52 | 109 | 61 | O |
| | 1994.09-1998.02 | AT/MT | F | L/R | Saloon FWD X17DTL | | GCI44002 | Inner Joint | | 34 | 25 | 35 | 56.2 | 114.8 | |
| | 1994.09-1998.02 | | F | | Saloon FWD X17DTL | | GCO88003 | Outer Joint | | 33 | 25 | 52 | 109 | 61 | O |
| | 1998.03-2000.08 | 5MT | F | L | Estate FWD X17DTL | | GDS60013 | Drive Shaft | | 33 | 22 | 52 | 103 | 595 | |
| | 1998.03-2000.08 | 5MT | F | R | Estate FWD X17DTL | | GDS44033 | Drive Shaft | | 33 | 22 | 52 | 103 | 950.5 | |
| | 1998.03-2000.08 | AT/MT | F | L/R | Estate FWD X17DTL | | GCO44011 | Outer Joint | 29T | 33 | 22 | 52 | 103 | 50.5 | O |
| | 1998.03-2000.08 | AT/MT | F | L/R | Estate FWD X17DTL | | GCO44030 | Outer Joint | | 33 | 22 | 52 | 103 | 50.5 | O |
| | 1998.03-2000.08 | AT/MT | F | L/R | Estate FWD X17DTL | | GCI44004 | Inner Joint | | 22 | 22 | 34.95 | 57.5 | 103 | |
| | 1998.03-2000.08 | MT | F | L | Estate FWD X17DTL | | GCI21014 | Inner Joint | | 22 | 22 | 35 | 57.5 | 105.5 | |
| | 1998.03-2000.08 | | F | L/R | Estate FWD X17DTL | | GCO44009 | Outer Joint | | 33 | 22 | 52 | 103 | 50.5 | O |
| | 1998.03-2000.08 | 5MT | F | L | Hatchback FWD X17DTL | | GDS60013 | Drive Shaft | | 33 | 22 | 52 | 103 | 595 | |
| | 1998.03-2000.08 | 5MT | F | R | Hatchback FWD X17DTL | | GDS44033 | Drive Shaft | | 33 | 22 | 52 | 103 | 950.5 | |
| | 1998.03-2000.08 | AT/MT | F | L/R | Hatchback FWD X17DTL | | GCO44011 | Outer Joint | 29T | 33 | 22 | 52 | 103 | 50.5 | O |
| | 1998.03-2000.08 | AT/MT | F | L/R | Hatchback FWD X17DTL | | GCO44030 | Outer Joint | | 33 | 22 | 52 | 103 | 50.5 | O |
| | 1998.03-2000.08 | AT/MT | F | L/R | Hatchback FWD X17DTL | | GCI44004 | Inner Joint | | 22 | 22 | 34.95 | 57.5 | 103 | |
| | 1998.03-2000.08 | MT | F | L | Hatchback FWD X17DTL | | GCI21014 | Inner Joint | | 22 | 22 | 35 | 57.5 | 105.5 | |
| | 1998.03-2000.08 | | F | L/R | Hatchback FWD X17DTL | | GCO44009 | Outer Joint | | 33 | 22 | 52 | 103 | 50.5 | O |
| | 1998.03-2000.08 | 5MT | F | L | Saloon FWD X17DTL | | GDS60013 | Drive Shaft | | 33 | 22 | 52 | 103 | 595 | |
| | 1998.03-2000.08 | 5MT | F | R | Saloon FWD X17DTL | | GDS44033 | Drive Shaft | | 33 | 22 | 52 | 103 | 950.5 | |
| | 1998.03-2000.08 | AT/MT | F | L/R | Saloon FWD X17DTL | | GCO44011 | Outer Joint | 29T | 33 | 22 | 52 | 103 | 50.5 | O |
| | 1998.03-2000.08 | AT/MT | F | L/R | Saloon FWD X17DTL | | GCO44030 | Outer Joint | | 33 | 22 | 52 | 103 | 50.5 | O |
| | 1998.03-2000.08 | AT/MT | F | L/R | Saloon FWD X17DTL | | GCI44004 | Inner Joint | | 22 | 22 | 34.95 | 57.5 | 103 | |
| | 1998.03-2000.08 | MT | F | L | Saloon FWD X17DTL | | GCI21014 | Inner Joint | | 22 | 22 | 35 | 57.5 | 105.5 | |
| | 1998.03-2000.08 | | F | L/R | Saloon FWD X17DTL | | GCO44009 | Outer Joint | | 33 | 22 | 52 | 103 | 50.5 | O |
| 1.7 (55 kw) | 1999.08-2004.07 | 4AT/5MT | F | L | Estate FWD Y17DT | | GDS60013 | Drive Shaft | | 33 | 22 | 52 | 103 | 595 | |
| | 1999.08-2004.07 | 4AT/5MT | F | R | Estate FWD Y17DT | | GDS60035 | Drive Shaft | | 33 | 22 | 52 | 109 | 961 | |
| | 1999.08-2004.07 | MT | F | R | Estate FWD Y17DT | | GCO44049 | Outer Joint | | 33 | 25 | 52 | 109 | 61 | O |
| | 1999.08-2004.07 | MT | F | L/R | Estate FWD Y17DT | | GCO44006 | Outer Joint | 29T | 33 | 25 | 52 | 103.5 | 61 | O |
| | 1999.08-2004.07 | | F | L/R | Estate FWD Y17DT | | GCI99026 | Inner Joint | | 22 | 25 | 35 | 57 | 111.7 | |
| | 1999.08-2004.09 | 4AT/5MT | F | L | Hatchback FWD Y17DT | | GDS60013 | Drive Shaft | | 33 | 22 | 52 | 103 | 595 | |
| | 1999.08-2004.09 | 4AT/5MT | F | R | Hatchback FWD Y17DT | | GDS60035 | Drive Shaft | | 33 | 22 | 52 | 109 | 961 | |
| | 1999.08-2004.09 | 4AT/5MT | F | L/R | Hatchback FWD Y17DT | | GCI99026 | Inner Joint | | 22 | 25 | 35 | 57 | 111.7 | |

| | YEAR | TRANSM. | F/R | L/R | BODY STYLE & DRIVE TYPE & ENGINE | REMARKS | G-AP Ref. | PRODUCT | ABS | Technical Specifications A | B | C | H | L | P |
|---|---|---|---|---|---|---|---|---|---|---|---|---|---|---|---|
| **OPEL** | | | | | | | | | | | | | | | |
| **Astra** | | | | | | | | | | | | | | | |
| 1.7 (55 kw) | 1999.08-2004.09 | MT | F | R | Hatchback FWD Y17DT | | GCO44049 | Outer Joint | | 33 | 25 | 52 | 109 | 61 | O |
| | 1999.08-2004.09 | MT | F | L/R | Hatchback FWD Y17DT | | GCO44006 | Outer Joint | 29T | 33 | 25 | 52 | 103.5 | 61 | O |
| | 2000.09-2004.09 | 4AT/5MT | F | R | Saloon FWD Y17DT | | GDS60035 | Drive Shaft | | 33 | 22 | 52 | 109 | 961 | |
| | 2000.09-2004.09 | MT | F | R | Saloon FWD Y17DT | | GCO44049 | Outer Joint | | 33 | 25 | 52 | 109 | 61 | O |
| | 2000.09-2004.09 | | F | L | Saloon FWD Y17DT | | GDS60013 | Drive Shaft | | 33 | 22 | 52 | 103 | 595 | |
| | 2000.09-2004.09 | | F | L/R | Saloon FWD Y17DT | | GCO44006 | Outer Joint | 29T | 33 | 25 | 52 | 103.5 | 61 | O |
| | 2000.09-2004.09 | | F | L/R | Saloon FWD Y17DT | | GCI99026 | Inner Joint | | 22 | 25 | 35 | 57 | 111.7 | |
| 1.7 (59 kw) | 2003.04-2004.07 | 5MT | F | R | Estate FWD Z17DTL | | GDS60035 | Drive Shaft | | 33 | 22 | 52 | 109 | 961 | |
| | 2003.04-2004.07 | AT/MT | F | L/R | Estate FWD Z17DTL | | GCO44011 | Outer Joint | 29T | 33 | 22 | 52 | 103 | 50.5 | O |
| | 2003.04-2004.07 | AT/MT | F | L/R | Estate FWD Z17DTL | | GCO44030 | Outer Joint | | 33 | 22 | 52 | 103 | 50.5 | O |
| | 2003.04-2004.07 | MT | F | R | Estate FWD Z17DTL | | GCO44049 | Outer Joint | | 33 | 25 | 52 | 109 | 61 | O |
| | 2003.04-2004.07 | MT | F | R | Estate FWD Z17DTL | Date to:2004.07 | GCI99026 | Inner Joint | | 22 | 25 | 35 | 57 | 111.7 | |
| | 2003.04-2004.07 | | F | L | Estate FWD Z17DTL | | GDS60013 | Drive Shaft | | 33 | 22 | 52 | 103 | 595 | |
| | 2003.04-2004.07 | | F | L/R | Estate FWD Z17DTL | | GCO44006 | Outer Joint | 29T | 33 | 25 | 52 | 103.5 | 61 | O |
| | 2003.04-2004.07 | | F | L/R | Estate FWD Z17DTL | | GCI44004 | Inner Joint | | 22 | 22 | 34.95 | 57.5 | 103 | |
| | 2003.04-2005.01 | 5MT | F | R | Hatchback FWD Z17DTL | | GDS60035 | Drive Shaft | | 33 | 22 | 52 | 109 | 961 | |
| | 2003.04-2005.01 | AT/MT | F | L/R | Hatchback FWD Z17DTL | | GCO44011 | Outer Joint | 29T | 33 | 22 | 52 | 103 | 50.5 | O |
| | 2003.04-2005.01 | AT/MT | F | L/R | Hatchback FWD Z17DTL | | GCO44030 | Outer Joint | | 33 | 22 | 52 | 103 | 50.5 | O |
| | 2003.04-2005.01 | MT | F | R | Hatchback FWD Z17DTL | | GCO44049 | Outer Joint | | 33 | 25 | 52 | 109 | 61 | O |
| | 2003.04-2005.01 | MT | F | R | Hatchback FWD Z17DTL | Date to:2005.01 | GCI99026 | Inner Joint | | 22 | 25 | 35 | 57 | 111.7 | |
| | 2003.04-2005.01 | | F | L | Hatchback FWD Z17DTL | | GDS60013 | Drive Shaft | | 33 | 22 | 52 | 103 | 595 | |
| | 2003.04-2005.01 | | F | L/R | Hatchback FWD Z17DTL | | GCO44006 | Outer Joint | 29T | 33 | 25 | 52 | 103.5 | 61 | O |
| | 2003.04-2005.01 | | F | L/R | Hatchback FWD Z17DTL | | GCI44004 | Inner Joint | | 22 | 22 | 34.95 | 57.5 | 103 | |
| | 2003.04-2005.01 | 5MT | F | R | Saloon FWD Z17DTL | | GDS60035 | Drive Shaft | | 33 | 22 | 52 | 109 | 961 | |
| | 2003.04-2005.01 | AT/MT | F | L/R | Saloon FWD Z17DTL | Date to:2005.12 | GCO44011 | Outer Joint | 29T | 33 | 22 | 52 | 103 | 50.5 | O |
| | 2003.04-2005.01 | AT/MT | F | L/R | Saloon FWD Z17DTL | Date to:2005.12 | GCO44030 | Outer Joint | | 33 | 22 | 52 | 103 | 50.5 | O |
| | 2003.04-2005.01 | MT | F | R | Saloon FWD Z17DTL | | GCO44049 | Outer Joint | | 33 | 25 | 52 | 109 | 61 | O |
| | 2003.04-2005.01 | MT | F | R | Saloon FWD Z17DTL | Date to:2005.01 | GCI99026 | Inner Joint | | 22 | 25 | 35 | 57 | 111.7 | |
| | 2003.04-2005.01 | | F | L | Saloon FWD Z17DTL | | GDS60013 | Drive Shaft | | 33 | 22 | 52 | 103 | 595 | |
| | 2003.04-2005.01 | | F | L/R | Saloon FWD Z17DTL | | GCO44006 | Outer Joint | 29T | 33 | 25 | 52 | 103.5 | 61 | O |
| | 2003.04-2005.01 | | F | L/R | Saloon FWD Z17DTL | | GCI44004 | Inner Joint | | 22 | 22 | 34.95 | 57.5 | 103 | |
| | 2004.03-2010.10 | 5MT | F | L | Hatchback FWD Z 17 DTL | | GDS21063 | Drive Shaft | | 33 | 22 | 53 | 93.5 | 586 | |
| | 2004.03-2010.10 | 5MT | F | R | Hatchback FWD Z 17 DTL | | GDS21055 | Drive Shaft | | 33 | 22 | 53 | 93.5 | 950 | |
| | 2004.03-2010.10 | 6MT | F | R | Hatchback FWD Z 17 DTL | | GDS82858 | Intermediate Shaft | | 34 | 25 | | | 445 | |
| | 2004.03-2010.10 | MT | F | L/R | Hatchback FWD Z 17 DTL | Date to:2009.12 | GCO44028 | Outer Joint | | 33 | 24 | 53 | 93.5 | 63.5 | M |
| | 2004.03-2010.10 | | F | R | Hatchback FWD Z 17 DTL | | GCI44005 | Inner Joint | | 34 | 25 | 35 | | 130.2 | |
| | 2004.03-2010.10 | | F | L/R | Hatchback FWD Z 17 DTL | | GCI99026 | Inner Joint | | 22 | 25 | 35 | 57 | 111.7 | |
| | 2004.08-2010.10 | 5MT | F | L | Estate FWD Z 17 DTL | | GDS21063 | Drive Shaft | | 33 | 22 | 53 | 93.5 | 586 | |
| | 2004.08-2010.10 | 5MT | F | R | Estate FWD Z 17 DTL | | GDS21055 | Drive Shaft | | 33 | 22 | 53 | 93.5 | 950 | |
| | 2004.08-2010.10 | 6MT | F | R | Estate FWD Z 17 DTL | | GDS82858 | Intermediate Shaft | | 34 | 25 | | | 445 | |
| | 2004.08-2010.10 | MT | F | L/R | Estate FWD Z 17 DTL | Date to:2006.08 | GCO44028 | Outer Joint | | 33 | 24 | 53 | 93.5 | 63.5 | M |
| | 2004.08-2010.10 | | F | R | Estate FWD Z 17 DTL | | GCI44005 | Inner Joint | | 34 | 25 | 35 | | 130.2 | |
| | 2004.08-2010.10 | | F | L/R | Estate FWD Z 17 DTL | | GCI99026 | Inner Joint | | 22 | 25 | 35 | 57 | 111.7 | |
| 1.7 (60 kw) | 1991.09-1998.02 | 5MT | F | L/R | Estate FWD 17TD | | GCO88003 | Outer Joint | | 33 | 25 | 52 | 109 | 61 | O |
| | 1991.09-1998.02 | AT/MT | F | L/R | Estate FWD 17TD | | GCO44056 | Outer Joint | 29T | 33 | 25 | 52 | 109 | 61 | O |
| | 1991.09-1998.02 | MT | F | L | Estate FWD 17TD | | GDS44011 | Drive Shaft | 29T | 33 | 34 | 52 | 109 | 594.5 | |
| | 1991.09-1998.02 | MT | F | R | Estate FWD 17TD | | GDS44059 | Drive Shaft | 29T | 33 | 34 | 52 | 109 | 938 | |
| | 1991.09-1998.02 | MT | F | L/R | Estate FWD 17TD | | GCI44002 | Inner Joint | | 34 | 25 | 35 | 56.2 | 114.8 | |
| | 1991.09-1998.02 | AT/MT | F | L/R | Hatchback FWD 17TD | | GCO44056 | Outer Joint | 29T | 33 | 25 | 52 | 109 | 61 | O |
| | 1991.09-1998.02 | MT | F | L | Hatchback FWD 17TD | | GDS44011 | Drive Shaft | 29T | 33 | 34 | 52 | 109 | 594.5 | |
| | 1991.09-1998.02 | MT | F | R | Hatchback FWD 17TD | | GDS44059 | Drive Shaft | 29T | 33 | 34 | 52 | 109 | 938 | |
| | 1991.09-1998.02 | MT | F | L/R | Hatchback FWD 17TD | | GCI44002 | Inner Joint | | 34 | 25 | 35 | 56.2 | 114.8 | |
| | 1991.09-1998.02 | | F | | Hatchback FWD 17TD | | GCO88003 | Outer Joint | | 33 | 25 | 52 | 109 | 61 | O |
| | 1991.09-1998.02 | AT/MT | F | L/R | Saloon FWD 17TD | Date to:1998.02 | GCO44056 | Outer Joint | 29T | 33 | 25 | 52 | 109 | 61 | O |
| | 1991.09-1998.02 | MT | F | L | Saloon FWD 17TD | | GDS44011 | Drive Shaft | 29T | 33 | 34 | 52 | 109 | 594.5 | |
| | 1991.09-1998.02 | MT | F | R | Saloon FWD 17TD | | GDS44059 | Drive Shaft | 29T | 33 | 34 | 52 | 109 | 938 | |
| | 1991.09-1998.02 | MT | F | L/R | Saloon FWD 17TD | Date to:1998.02 | GCI44002 | Inner Joint | | 34 | 25 | 35 | 56.2 | 114.8 | |
| | 1991.09-1998.02 | | F | | Saloon FWD 17TD | | GCO88003 | Outer Joint | | 33 | 25 | 52 | 109 | 61 | O |
| 1.7 (74 kw) | 2004.03-2010.10 | 5MT | F | L | Hatchback FWD Z 17 DTH | | GDS44029 | Drive Shaft | | 33 | 34 | 53 | 93.5 | 594 | |
| | 2004.03-2010.10 | 5MT | F | L | Hatchback FWD Z 17 DTH | | GCI44002 | Inner Joint | | 34 | 25 | 35 | 56.2 | 114.8 | |
| | 2004.03-2010.10 | 5MT/6MT | F | R | Hatchback FWD Z 17 DTH | | GDS44031 | Drive Shaft | | 33 | 34 | 53 | 93.5 | 559 | |
| | 2004.03-2010.10 | 5MT/6MT | F | L/R | Hatchback FWD Z 17 DTH | | GCO44028 | Outer Joint | | 33 | 24 | 53 | 93.5 | 63.5 | M |
| | 2004.03-2010.10 | 5MT/6MT | F | R | Hatchback FWD Z 17 DTH | | GCI44005 | Inner Joint | | 34 | 25 | 35 | | 130.2 | |
| | 2004.03-2010.10 | 6MT | F | L | Hatchback FWD Z 17 DTH | | GDS44052 | Drive Shaft | | 33 | 25 | 53 | 93.5 | 573 | |
| | 2004.03-2010.10 | 6MT | F | L | Hatchback FWD Z 17 DTH | | GCI44008 | Inner Joint | | 25 | 25 | 34.9 | 57.5 | 113.2 | |

| | YEAR | TRANSM. | F/R | L/R | BODY STYLE & DRIVE TYPE & ENGINE | REMARKS | G-AP Ref. | PRODUCT | ABS | Technical Specifications A | B | C | H | L | P |
|---|---|---|---|---|---|---|---|---|---|---|---|---|---|---|---|
| **OPEL** | | | | | | | | | | | | | | | |
| **Astra** | | | | | | | | | | | | | | | |
| 1.7 (74 kw) | 2004.03-2010.10 | 6MT | F | R | Hatchback FWD Z 17 DTH | | GDS82858 | Intermediate Shaft | | 34 | 25 | | | 445 | |
| | 2004.08-2010.10 | 5MT | F | L | Estate FWD Z 17 DTH | | GDS44029 | Drive Shaft | | 33 | 34 | 53 | 93.5 | 594 | |
| | 2004.08-2010.10 | 5MT | F | L | Estate FWD Z 17 DTH | | GCI44002 | Inner Joint | | 34 | 25 | 35 | 56.2 | 114.8 | |
| | 2004.08-2010.10 | 5MT/6MT | F | R | Estate FWD Z 17 DTH | | GDS44031 | Drive Shaft | | 33 | 34 | 53 | 93.5 | 559 | |
| | 2004.08-2010.10 | 5MT/6MT | F | L/R | Estate FWD Z 17 DTH | | GCO44028 | Outer Joint | | 33 | 24 | 53 | 93.5 | 63.5 | M |
| | 2004.08-2010.10 | 5MT/6MT | F | R | Estate FWD Z 17 DTH | | GCI44005 | Inner Joint | | 34 | 25 | 35 | | 130.2 | |
| | 2004.08-2010.10 | 6MT | F | L | Estate FWD Z 17 DTH | | GDS44052 | Drive Shaft | | 33 | 25 | 53 | 93.5 | 573 | |
| | 2004.08-2010.10 | 6MT | F | L | Estate FWD Z 17 DTH | | GCI44008 | Inner Joint | | 25 | 25 | 34.9 | 57.5 | 113.2 | |
| | 2004.08-2010.10 | 6MT | F | R | Estate FWD Z 17 DTH | | GDS82858 | Intermediate Shaft | | 34 | 25 | | | 445 | |
| | 2007.02-2010.10 | 5MT | F | L | Saloon FWD Z 17 DTH | | GDS44029 | Drive Shaft | | 33 | 34 | 53 | 93.5 | 594 | |
| | 2007.02-2010.10 | 5MT | F | L | Saloon FWD Z 17 DTH | | GCI44002 | Inner Joint | | 34 | 25 | 35 | 56.2 | 114.8 | |
| | 2007.02-2010.10 | 5MT/6MT | F | R | Saloon FWD Z 17 DTH | | GDS44031 | Drive Shaft | | 33 | 34 | 53 | 93.5 | 559 | |
| | 2007.02-2010.10 | 5MT/6MT | F | L/R | Saloon FWD Z 17 DTH | | GCO44028 | Outer Joint | | 33 | 24 | 53 | 93.5 | 63.5 | M |
| | 2007.02-2010.10 | 5MT/6MT | F | R | Saloon FWD Z 17 DTH | | GCI44005 | Inner Joint | | 34 | 25 | 35 | | 130.2 | |
| | 2007.02-2010.10 | 6MT | F | L | Saloon FWD Z 17 DTH | | GDS44052 | Drive Shaft | | 33 | 25 | 53 | 93.5 | 573 | |
| | 2007.02-2010.10 | 6MT | F | L | Saloon FWD Z 17 DTH | | GCI44008 | Inner Joint | | 25 | 25 | 34.9 | 57.5 | 113.2 | |
| | 2007.02-2010.10 | 6MT | F | R | Saloon FWD Z 17 DTH | | GDS82858 | Intermediate Shaft | | 34 | 25 | | | 445 | |
| | 2010.10-2015.10 | 6MT | F | L | Estate FWD A 17 DTL;A 17 DTN | | GDS21076 | Drive Shaft | | 30 | 25 | 52.5 | 94 | 601 | |
| | 2010.10-2015.10 | 6MT | F | R | Estate FWD A 17 DTL;A 17 DTN | Chassis no. from:D0/D1109965/D3/D8061302/DG | GDS83136 | Drive Shaft | | 30 | 25 | 52.5 | 94 | 993 | |
| | 2010.10-2015.10 | 6MT | F | L/R | Estate FWD A 17 DTL;A 17 DTN | Chassis no. to:D0/D1109964/D3/D8061301/DG | GCO17051 | Outer Joint | | 30 | 26 | 53.8 | 94.5 | 65.5 | M |
| | 2010.10-2015.10 | 6MT | F | L/R | Estate FWD A 17 DTL;A 17 DTN | Chassis no. from:D0/D1109965/D3/D8061302 | GCO21038 | Outer Joint | | 30 | 24 | 52 | 94 | 64 | M |
| | 2010.10-2015.10 | 6MT | F | L/R | Estate FWD A 17 DTL;A 17 DTN | Chassis no. to:D0/D1109964/D3/D8061301/DG | GCO21049 | Outer Joint | | 30 | 26 | 52.5 | 94 | 65.5 | M |
| | 2010.10-2015.10 | 6MT | F | L/R | Estate FWD A 17 DTL;A 17 DTN | Chassis no. to:D0/D1109964/D3/D8061301/DG | GCO88046 | Outer Joint | | 30 | 26 | 52.5 | 94.5 | 65.5 | M |
| | 2010.10-2015.10 | 6MT | F | L/R | Estate FWD A 17 DTL;A 17 DTN | | GCI44008 | Inner Joint | | 25 | 25 | 34.9 | 57.5 | 113.2 | |
| | 2012.06-2015.10 | 6MT | F | L | Saloon FWD A 17 DTL | | GDS21076 | Drive Shaft | | 30 | 25 | 52.5 | 94 | 601 | |
| | 2012.06-2015.10 | 6MT | F | R | Saloon FWD A 17 DTL | Chassis no. from:D0/D1109965/D3/D8061302/DG | GDS83136 | Drive Shaft | | 30 | 25 | 52.5 | 94 | 993 | |
| | 2012.06-2015.10 | 6MT | F | L/R | Saloon FWD A 17 DTL | Chassis no. to:D0/D1109964/D3/D8061301/DG | GCO17051 | Outer Joint | | 30 | 26 | 53.8 | 94.5 | 65.5 | M |
| | 2012.06-2015.10 | 6MT | F | L/R | Saloon FWD A 17 DTL | Chassis no. from:D0/D1109965/D3/D8061302 | GCO21038 | Outer Joint | | 30 | 24 | 52 | 94 | 64 | M |
| | 2012.06-2015.10 | 6MT | F | L/R | Saloon FWD A 17 DTL | Chassis no. to:D0/D1109964/D3/D8061301/DG | GCO21049 | Outer Joint | | 30 | 26 | 52.5 | 94 | 65.5 | M |
| | 2012.06-2015.10 | 6MT | F | L/R | Saloon FWD A 17 DTL | Chassis no. to:D0/D1109964/D3/D8061301/DG | GCO88046 | Outer Joint | | 30 | 26 | 52.5 | 94.5 | 65.5 | M |
| | 2012.06-2015.10 | 6MT | F | L/R | Saloon FWD A 17 DTL | Chassis no. from:D0/D1109965/D3/D8061302/DG | GCI44008 | Inner Joint | | 25 | 25 | 34.9 | 57.5 | 113.2 | |
| 1.7 (81 kw) | 2007.02-2010.06 | 5AT | F | L | Saloon FWD Z 17 DTJ | | GDS44029 | Drive Shaft | | 33 | 34 | 53 | 93.5 | 594 | |
| | 2007.02-2010.06 | 5AT | F | R | Saloon FWD Z 17 DTJ | | GCI44005 | Inner Joint | | 34 | 25 | 35 | | 130.2 | |
| | 2007.02-2010.06 | 5MT | F | L | Saloon FWD Z 17 DTJ | | GDS21051 | Drive Shaft | | 33 | 25 | 52.5 | 94 | 579 | |
| | 2007.02-2010.06 | 5MT | F | R | Saloon FWD Z 17 DTJ | | GDS44099 | Drive Shaft | | 33 | 34 | 52.5 | 94 | 563 | |
| | 2007.02-2010.06 | 6MT | F | R | Saloon FWD Z 17 DTJ | | GDS82858 | Intermediate Shaft | | 34 | 25 | | | 445 | |
| | 2007.02-2010.06 | AT/MT | F | L/R | Saloon FWD Z 17 DTJ | Date from:2008.01 | GCO44027 | Outer Joint | | 33 | 26 | 52.5 | 94 | 65.5 | M |
| | 2007.02-2010.06 | MT | F | L | Saloon FWD Z 17 DTJ | Date to:2010.06 | GCI99186 | Inner Joint | | 25 | 28 | 34.9 | 57.5 | 111 | |
| | 2007.02-2010.06 | MT | F | R | Saloon FWD Z 17 DTJ | Date to:2010.06 | GCI44016 | Inner Joint | | 34 | 28 | 37.5 | | 129.2 | |
| | 2007.04-2009.09 | 5AT | F | R | Hatchback FWD A 17 DTJ;Z 17 DTJ | | GCI44005 | Inner Joint | | 34 | 25 | 35 | | 130.2 | |
| | 2007.04-2009.09 | 5MT/6MT | F | L | Hatchback FWD A 17 DTJ;Z 17 DTJ | | GDS21051 | Drive Shaft | | 33 | 25 | 52.5 | 94 | 579 | |
| | 2007.04-2009.09 | 5MT/6MT | F | R | Hatchback FWD A 17 DTJ;Z 17 DTJ | | GDS44099 | Drive Shaft | | 33 | 34 | 52.5 | 94 | 563 | |
| | 2007.04-2009.09 | 6MT | F | R | Hatchback FWD A 17 DTJ;Z 17 DTJ | | GDS82858 | Intermediate Shaft | | 34 | 25 | | | 445 | |
| | 2007.04-2009.09 | AT/MT | F | L/R | Hatchback FWD A 17 DTJ;Z 17 DTJ | Date from:2008.01 | GCO44027 | Outer Joint | | 33 | 26 | 52.5 | 94 | 65.5 | M |
| | 2007.04-2009.09 | MT | F | L | Hatchback FWD A 17 DTJ;Z 17 DTJ | Date to:2010.10 | GCI99186 | Inner Joint | | 25 | 28 | 34.9 | 57.5 | 111 | |
| | 2007.04-2009.09 | MT | F | R | Hatchback FWD A 17 DTJ;Z 17 DTJ | Date to:2010.10 | GCI44016 | Inner Joint | | 34 | 28 | 37.5 | | 129.2 | |
| | 2008.12-2010.10 | 5AT | F | R | Estate FWD A 17 DTJ;Z 17 DTJ | | GCI44005 | Inner Joint | | 34 | 25 | 35 | | 130.2 | |
| | 2008.12-2010.10 | 5MT/6MT | F | L | Estate FWD A 17 DTJ;Z 17 DTJ | | GDS21051 | Drive Shaft | | 33 | 25 | 52.5 | 94 | 579 | |
| | 2008.12-2010.10 | 5MT/6MT | F | R | Estate FWD A 17 DTJ;Z 17 DTJ | | GDS44099 | Drive Shaft | | 33 | 34 | 52.5 | 94 | 563 | |
| | 2008.12-2010.10 | 6MT | F | R | Estate FWD A 17 DTJ;Z 17 DTJ | | GDS82858 | Intermediate Shaft | | 34 | 25 | | | 445 | |
| | 2008.12-2010.10 | AT/MT | F | L/R | Estate FWD A 17 DTJ;Z 17 DTJ | Date from:2008.01 | GCO44027 | Outer Joint | | 33 | 26 | 52.5 | 94 | 65.5 | M |
| | 2008.12-2010.10 | MT | F | L | Estate FWD A 17 DTJ;Z 17 DTJ | Date to:2012.12 | GCI99186 | Inner Joint | | 25 | 28 | 34.9 | 57.5 | 111 | |
| | 2008.12-2010.10 | MT | F | R | Estate FWD A 17 DTJ;Z 17 DTJ | Date to:2012.12 | GCI44016 | Inner Joint | | 34 | 28 | 37.5 | | 129.2 | |
| | 2009.09-2015.10 | 6MT | F | L | Hatchback FWD A 17 DTJ;A 17 DTC;A 17 DTE | Chassis no. to:D0/D1109964/D3/D8061301/DG | GDS21076 | Drive Shaft | | 30 | 25 | 52.5 | 94 | 601 | |
| | 2009.09-2015.10 | 6MT | F | R | Hatchback FWD A 17 DTJ;A 17 DTC;A 17 DTE | Chassis no. to:D0/D1109964/D3/D8061301/DG | GDS21074 | Drive Shaft | | 30 | 34 | 52.5 | 94 | 589 | |
| | 2009.09-2015.10 | 6MT | F | R | Hatchback FWD A 17 DTJ;A 17 DTC;A 17 DTE | | GDS83136 | Drive Shaft | | 30 | 25 | 52.5 | 94 | 993 | |
| | 2009.09-2015.10 | 6MT | F | L | Hatchback FWD A 17 DTJ;A 17 DTC;A 17 DTE | For Engine code:A17DTC/A17DTJ,Chassis no. to:D0/D1109964/D3/D8061301/DG | GCO88046 | Outer Joint | | 30 | 26 | 52.5 | 94.5 | 65.5 | M |
| | 2009.09-2015.10 | 6MT | F | L/R | Hatchback FWD A 17 DTJ;A 17 DTC;A 17 DTE | For Engine code:A17DTC/A17DTJ,Chassis no. to:D0/D1109964/D3/D8061301/DG | GCO17051 | Outer Joint | | 30 | 26 | 53.8 | 94.5 | 65.5 | M |
| | 2009.09-2015.10 | 6MT | F | L/R | Hatchback FWD A 17 DTJ;A 17 DTC;A 17 DTE | For Engine code:A17DTC/A17DTJ,Chassis no. from:D0/D1109965/D3/D8061302 | GCO21038 | Outer Joint | | 30 | 24 | 52 | 94 | 64 | M |
| | 2009.09-2015.10 | 6MT | F | L/R | Hatchback FWD A 17 DTJ;A 17 DTC;A 17 DTE | For Engine code:A17DTC/A17DTJ,Chassis no. to:D0/D1109964/D3/D8061301/DG | GCO21049 | Outer Joint | | 30 | 26 | 52.5 | 94 | 65.5 | M |
| | 2009.09-2015.10 | 6MT | F | R | Hatchback FWD A 17 DTJ;A 17 DTC;A 17 DTE | Chassis no. to:D0/D1109964/D3/D8061301/DG | GCI88026 | Inner Joint | | 34 | 26 | 37.5 | | 100 | |
| | 2009.09-2015.10 | 6MT | F | L/R | Hatchback FWD A 17 DTJ;A 17 DTC;A 17 DTE | Chassis no. from:D0/D1109965/D3/D8061302/DG | GCI44008 | Inner Joint | | 25 | 25 | 34.9 | 57.5 | 113.2 | |
| | 2010.10-2015.10 | 6MT | F | L | Estate FWD A 17 DTJ;A 17 DTC;A 17 DTE | For Engine code:A17DTC/A17DTJ,Chassis no. to:D0/D1109964/D3/D8061301/DG | GDS21076 | Drive Shaft | | 30 | 25 | 52.5 | 94 | 601 | |
| | 2010.10-2015.10 | 6MT | F | R | Estate FWD A 17 DTJ;A 17 DTC;A 17 DTE | For Engine code:A17DTE | GDS21074 | Drive Shaft | | 30 | 34 | 52.5 | 94 | 589 | |
| | 2010.10-2015.10 | 6MT | F | R | Estate FWD A 17 DTJ;A 17 DTC;A 17 DTE | | GDS83136 | Drive Shaft | | 30 | 25 | 52.5 | 94 | 993 | |

| | YEAR | TRANSM. | F/R | L/R | BODY STYLE & DRIVE TYPE & ENGINE | REMARKS | G-AP Ref. | PRODUCT | ABS | Technical Specifications A | B | C | H | L | P |
|---|---|---|---|---|---|---|---|---|---|---|---|---|---|---|---|
| **OPEL** | | | | | | | | | | | | | | | |
| **Astra** | | | | | | | | | | | | | | | |
| 1.7 (81 kw) | 2010.10-2015.10 | 6MT | F | L | Estate FWD A 17 DTJ;A 17 DTC;A 17 DTE | For Enginecode:A17DTC/A17DTJ,Chassis no. to:D0/D1109964/D3/D8061301/DG | GCO88046 | Outer Joint | | 30 | 26 | 52.5 | 94.5 | 65.5 | M |
| | 2010.10-2015.10 | 6MT | F | L/R | Estate FWD A 17 DTJ;A 17 DTC;A 17 DTE | For Engine code:A17DTC/A17DTJ,Chassis no. to:D0/D1109964/D3/D8061301/DG | GCO17051 | Outer Joint | | 30 | 26 | 53.8 | 94.5 | 65.5 | M |
| | 2010.10-2015.10 | 6MT | F | L/R | Estate FWD A 17 DTJ;A 17 DTC;A 17 DTE | For Engine code:A17DTC/A17DTJ,Chassis no. from:D0/D1109965/D3/D8061302 | GCO21038 | Outer Joint | | 30 | 24 | 52 | 94 | 64 | M |
| | 2010.10-2015.10 | 6MT | F | L/R | Estate FWD A 17 DTJ;A 17 DTC;A 17 DTE | For Engine code:A17DTC/A17DTJ,Chassis no. to:D0/D1109964/D3/D8061301/DG | GCO21049 | Outer Joint | | 30 | 26 | 52.5 | 94 | 65.5 | M |
| | 2010.10-2015.10 | 6MT | F | L/R | Estate FWD A 17 DTJ;A 17 DTC;A 17 DTE | For Engine code:A17DTC/A17DTJ,Chassis no. from:D0/D1109965/D3/D8061302/DG | GCI44008 | Inner Joint | | 25 | 25 | 34.9 | 57.5 | 113.2 | |
| | 2012.06-2015.10 | 6MT | F | R | Saloon FWD A 17 DTJ;A 17 DTC;A 17 DTE | [illegible] | GDS83136 | Drive Shaft | | 30 | 25 | 52.5 | 94 | 993 | |
| | 2012.06-2015.10 | 6MT | F | R | Saloon FWD A 17 DTJ;A 17 DTC;A 17 DTE | For Engine code:A17DTE,Chassis no. to:D0/D1110089/D3/D8061301/DG | GDS83228 | Drive Shaft | | 30 | 25 | 52.5 | 94 | 996 | |
| | 2012.06-2015.10 | 6MT | F | L | Saloon FWD A 17 DTJ;A 17 DTC;A 17 DTE | For Enginecode:A17DTC/A17DTJ,Chassis no. to:D0/D1109964/D3/D8061301/DG | GCO88046 | Outer Joint | | 30 | 26 | 52.5 | 94.5 | 65.5 | M |
| | 2012.06-2015.10 | 6MT | F | L/R | Saloon FWD A 17 DTJ;A 17 DTC;A 17 DTE | For Engine code:A17DTC/A17DTJ,Chassis no. to:D0/D1109964/D3/D8061301/DG | GCO17051 | Outer Joint | | 30 | 26 | 53.8 | 94.5 | 65.5 | M |
| | 2012.06-2015.10 | 6MT | F | L/R | Saloon FWD A 17 DTJ;A 17 DTC;A 17 DTE | For Engine code:A17DTC/A17DTJ,Chassis no. from:D0/D1109965/D3/D8061302 | GCO21038 | Outer Joint | | 30 | 24 | 52 | 94 | 64 | M |
| | 2012.06-2015.10 | 6MT | F | L/R | Saloon FWD A 17 DTJ;A 17 DTC;A 17 DTE | For Engine code:A17DTC/A17DTJ,Chassis no. to:D0/D1109964/D3/D8061301/DG | GCO21049 | Outer Joint | | 30 | 26 | 52.5 | 94 | 65.5 | M |
| | 2012.06-2015.10 | 6MT | F | R | Saloon FWD A 17 DTJ;A 17 DTC;A 17 DTE | For Engine code:A17DTC/A17DTJ,Chassis no. from:D0/D1109965/D3/D8061302/DG | GCI88026 | Inner Joint | | 34 | 26 | 37.5 | | 100 | |
| | 2012.06-2015.10 | 6MT | F | L/R | Saloon FWD A 17 DTJ;A 17 DTC;A 17 DTE | For Engine code:A17DTC/A17DTJ,Chassis no. from:D0/D1109965/D3/D8061302/DG | GCI44008 | Inner Joint | | 25 | 25 | 34.9 | 57.5 | 113.2 | |
| | 2012.06-2015.10 | MT | F | R | Saloon FWD A 17 DTJ;A 17 DTC;A 17 DTE | Trans. code:A 17 DTC/A 17 DTJ | GDS21074 | Drive Shaft | | 30 | 34 | 52.5 | 94 | 589 | |
| | 2012.06-2015.10 | | F | L | Saloon FWD A 17 DTJ;A 17 DTC;A 17 DTE | For Engine Code:A17DTC/A17DTJ | GDS21076 | Drive Shaft | | 30 | 25 | 52.5 | 94 | 601 | |
| 1.7 (92 kw) | 2007.04-2009.09 | 6MT | F | L | Hatchback FWD Z 17 DTR;A 17 DTR | | GDS21051 | Drive Shaft | | 33 | 25 | 52.5 | 94 | 579 | |
| | 2007.04-2009.09 | 6MT | F | R | Hatchback FWD Z 17 DTR;A 17 DTR | | GDS44099 | Drive Shaft | | 33 | 34 | 52.5 | 94 | 563 | |
| | 2007.04-2009.09 | 6MT | F | R | Hatchback FWD Z 17 DTR;A 17 DTR | | GDS82858 | Intermediate Shaft | | 34 | 25 | | | 445 | |
| | 2007.04-2009.09 | AT/MT | F | L/R | Hatchback FWD Z 17 DTR;A 17 DTR | Date from:2008.01 | GCO44027 | Outer Joint | | 33 | 26 | 52.5 | 94 | 65.5 | M |
| | 2007.04-2009.09 | MT | F | L | Hatchback FWD Z 17 DTR;A 17 DTR | Date to:2011.12 | GCI99186 | Inner Joint | | 25 | 28 | 34.9 | 57.5 | 111 | |
| | 2007.04-2009.09 | MT | F | R | Hatchback FWD Z 17 DTR;A 17 DTR | Date to:2011.12 | GCI44016 | Inner Joint | | 34 | 28 | 37.5 | | 129.2 | |
| | 2007.04-2009.09 | | F | | Hatchback FWD Z 17 DTR;A 17 DTR | | GCO99024 | Outer Joint | | 33 | 26 | 52.5 | 94 | 65.5 | M |
| | 2007.04-2009.09 | | F | R | Hatchback FWD Z 17 DTR;A 17 DTR | | GCI44005 | Inner Joint | | 34 | 25 | 35 | | 130.2 | |
| | 2007.04-2010.10 | 6MT | F | L | Estate FWD Z 17 DTR;A 17 DTR | | GDS21051 | Drive Shaft | | 33 | 25 | 52.5 | 94 | 579 | |
| | 2007.04-2010.10 | 6MT | F | R | Estate FWD Z 17 DTR;A 17 DTR | | GDS44099 | Drive Shaft | | 33 | 34 | 52.5 | 94 | 563 | |
| | 2007.04-2010.10 | 6MT | F | R | Estate FWD Z 17 DTR;A 17 DTR | | GDS82858 | Intermediate Shaft | | 34 | 25 | | | 445 | |
| | 2007.04-2010.10 | AT/MT | F | L/R | Estate FWD Z 17 DTR;A 17 DTR | Date from:2008.01 | GCO44027 | Outer Joint | | 33 | 26 | 52.5 | 94 | 65.5 | M |
| | 2007.04-2010.10 | MT | F | L | Estate FWD Z 17 DTR;A 17 DTR | Date to:2012.12 | GCI99186 | Inner Joint | | 25 | 28 | 34.9 | 57.5 | 111 | |
| | 2007.04-2010.10 | MT | F | R | Estate FWD Z 17 DTR;A 17 DTR | Date to:2012.12 | GCI44016 | Inner Joint | | 34 | 28 | 37.5 | | 129.2 | |
| | 2007.04-2010.10 | | F | | Estate FWD Z 17 DTR;A 17 DTR | | GCO99024 | Outer Joint | | 33 | 26 | 52.5 | 94 | 65.5 | M |
| | 2007.04-2010.10 | | F | R | Estate FWD Z 17 DTR;A 17 DTR | | GCI44005 | Inner Joint | | 34 | 25 | 35 | | 130.2 | |
| | 2009.12-2015.10 | 6MT | F | L | Hatchback FWD A 17 DTR | | GDS21076 | Drive Shaft | | 30 | 25 | 52.5 | 94 | 601 | |
| | 2009.12-2015.10 | 6MT | F | R | Hatchback FWD A 17 DTR | Chassis no. from:D0/D1109965/D3/D8061302/DG | GDS83136 | Drive Shaft | | 30 | 25 | 52.5 | 94 | 993 | |
| | 2009.12-2015.10 | 6MT | F | L/R | Hatchback FWD A 17 DTR | Chassis no. to:D0/D1109964/D3/D8061301/DG | GCO17051 | Outer Joint | | 30 | 26 | 53.8 | 94.5 | 65.5 | M |
| | 2009.12-2015.10 | 6MT | F | L/R | Hatchback FWD A 17 DTR | Chassis no. from:D0/D1109965/D3/D8061302 | GCO21038 | Outer Joint | | 30 | 24 | 52 | 94 | 64 | M |
| | 2009.12-2015.10 | 6MT | F | L/R | Hatchback FWD A 17 DTR | Chassis no. to:D0/D1109964/D3/D8061301/DG | GCO21049 | Outer Joint | | 30 | 26 | 52.5 | 94 | 65.5 | M |
| | 2009.12-2015.10 | 6MT | F | L/R | Hatchback FWD A 17 DTR | Chassis no. to:D0/D1109964/D3/D8061301/DG | GCO88046 | Outer Joint | | 30 | 26 | 52.5 | 94.5 | 65.5 | M |
| | 2009.12-2015.10 | 6MT | F | L/R | Hatchback FWD A 17 DTR | Chassis no. from:D0/D1109965/D3/D8061302/DG | GCI44008 | Inner Joint | | 25 | 25 | 34.9 | 57.5 | 113.2 | |
| | 2010.10-2015.10 | 6MT | F | L | Estate FWD A 17 DTR | | GDS21076 | Drive Shaft | | 30 | 25 | 52.5 | 94 | 601 | |
| | 2010.10-2015.10 | 6MT | F | R | Estate FWD A 17 DTR | Chassis no. from:D0/D1109965/D3/D8061302/DG | GDS83136 | Drive Shaft | | 30 | 25 | 52.5 | 94 | 993 | |
| | 2010.10-2015.10 | 6MT | F | L/R | Estate FWD A 17 DTR | Chassis no. to:D0/D1109964/D3/D8061301/DG | GCO17051 | Outer Joint | | 30 | 26 | 53.8 | 94.5 | 65.5 | M |
| | 2010.10-2015.10 | 6MT | F | L/R | Estate FWD A 17 DTR | Chassis no. from:D0/D1109965/D3/D8061302 | GCO21038 | Outer Joint | | 30 | 24 | 52 | 94 | 64 | M |
| | 2010.10-2015.10 | 6MT | F | L/R | Estate FWD A 17 DTR | Chassis no. to:D0/D1109964/D3/D8061301/DG | GCO21049 | Outer Joint | | 30 | 26 | 52.5 | 94 | 65.5 | M |
| | 2010.10-2015.10 | 6MT | F | L/R | Estate FWD A 17 DTR | Chassis no. to:D0/D1109964/D3/D8061301/DG | GCO88046 | Outer Joint | | 30 | 26 | 52.5 | 94.5 | 65.5 | M |
| | 2010.10-2015.10 | 6MT | F | L/R | Estate FWD A 17 DTR | Chassis no. from:D0/D1109965/D3/D8061302/DG | GCI44008 | Inner Joint | | 25 | 25 | 34.9 | 57.5 | 113.2 | |
| 1.7 (96 kw) | 2010.10-2015.10 | 6MT | F | L | Estate FWD A 17 DTS;A 17 DTF | For Engine code:A17DTS,Chassis no. to:D0/D1109964/D3/D8061301/DG | GDS21076 | Drive Shaft | | 30 | 25 | 52.5 | 94 | 601 | |
| | 2010.10-2015.10 | 6MT | F | R | Estate FWD A 17 DTS;A 17 DTF | For Engine code:A17DTF | GDS21074 | Drive Shaft | | 30 | 34 | 52.5 | 94 | 589 | |
| | 2010.10-2015.10 | 6MT | F | R | Estate FWD A 17 DTS;A 17 DTF | [illegible] | GDS83136 | Drive Shaft | | 30 | 25 | 52.5 | 94 | 993 | |
| | 2010.10-2015.10 | 6MT | F | L | Estate FWD A 17 DTS;A 17 DTF | For Enginecode:A17DTS,Chassis no. to:D0/D1109964/D3/D8061301/DG | GCO88046 | Outer Joint | | 30 | 26 | 52.5 | 94.5 | 65.5 | M |
| | 2010.10-2015.10 | 6MT | F | L/R | Estate FWD A 17 DTS;A 17 DTF | For Engine code:A17DTS,Chassis no. to:D0/D1109964/D3/D8061301/DG | GCO17051 | Outer Joint | | 30 | 26 | 53.8 | 94.5 | 65.5 | M |
| | 2010.10-2015.10 | 6MT | F | L/R | Estate FWD A 17 DTS;A 17 DTF | For Engine code:A17DTS,Chassis no. from:D0/D1109965/D3/D8061302 | GCO21038 | Outer Joint | | 30 | 24 | 52 | 94 | 64 | M |
| | 2010.10-2015.10 | 6MT | F | L/R | Estate FWD A 17 DTS;A 17 DTF | For Engine code:A17DTS,Chassis no. to:D0/D1109964/D3/D8061301/DG | GCO21049 | Outer Joint | | 30 | 26 | 52.5 | 94 | 65.5 | M |
| | 2010.10-2015.10 | 6MT | F | L/R | Estate FWD A 17 DTS;A 17 DTF | For Engine code:A17DTS,Chassis no. from:D0/D1109965/D3/D8061302/DG | GCI44008 | Inner Joint | | 25 | 25 | 34.9 | 57.5 | 113.2 | |
| | 2011.07-2015.10 | 6MT | F | L | Hatchback FWD A 17 DTS;A 17 DTF | | GDS21076 | Drive Shaft | | 30 | 25 | 52.5 | 94 | 601 | |
| | 2011.07-2015.10 | 6MT | F | R | Hatchback FWD A 17 DTS;A 17 DTF | [illegible] | GDS83136 | Drive Shaft | | 30 | 25 | 52.5 | 94 | 993 | |
| | 2011.07-2015.10 | 6MT | F | R | Hatchback FWD A 17 DTS;A 17 DTF | For Engine code:A17DTF,Chassis no. to:D0/D1110089/D3/D8061301/DG | GDS83228 | Drive Shaft | | 30 | 25 | 52.5 | 94 | 996 | |
| | 2011.07-2015.10 | 6MT | F | L | Hatchback FWD A 17 DTS;A 17 DTF | For Enginecode:A17DTS,Chassis no. to:D0/D1109964/D3/D8061301/DG | GCO88046 | Outer Joint | | 30 | 26 | 52.5 | 94.5 | 65.5 | M |
| | 2011.07-2015.10 | 6MT | F | L/R | Hatchback FWD A 17 DTS;A 17 DTF | For Engine code:A17DTS,Chassis no. to:D0/D1109964/D3/D8061301/DG | GCO17051 | Outer Joint | | 30 | 26 | 53.8 | 94.5 | 65.5 | M |
| | 2011.07-2015.10 | 6MT | F | L/R | Hatchback FWD A 17 DTS;A 17 DTF | For Engine code:A17DTS,Chassis no. from:D0/D1109965/D3/D8061302 | GCO21038 | Outer Joint | | 30 | 24 | 52 | 94 | 64 | M |
| | 2011.07-2015.10 | 6MT | F | L/R | Hatchback FWD A 17 DTS;A 17 DTF | For Engine code:A17DTS,Chassis no. to:D0/D1109964/D3/D8061301/DG | GCO21049 | Outer Joint | | 30 | 26 | 52.5 | 94 | 65.5 | M |
| | 2011.07-2015.10 | 6MT | F | R | Hatchback FWD A 17 DTS;A 17 DTF | For Engine code:A17DTS,Chassis no. from:D0/D1109965/D3/D8061302/DG | GCI88026 | Inner Joint | | 34 | 26 | 37.5 | | 100 | |
| | 2011.07-2015.10 | 6MT | F | L/R | Hatchback FWD A 17 DTS;A 17 DTF | For Engine code:A17DTS,Chassis no. from:D0/D1109965/D3/D8061302/DG | GCI44008 | Inner Joint | | 25 | 25 | 34.9 | 57.5 | 113.2 | |
| | 2012.06-2015.10 | 6MT | F | R | Saloon FWD A 17 DTS;A 17 DTF | [illegible] | GDS83136 | Drive Shaft | | 30 | 25 | 52.5 | 94 | 993 | |
| | 2012.06-2015.10 | 6MT | F | R | Saloon FWD A 17 DTS;A 17 DTF | For Engine code:A17DTF,Chassis no. to:D0/D1110089/D3/D8061301/DG | GDS83228 | Drive Shaft | | 30 | 25 | 52.5 | 94 | 996 | |
| | 2012.06-2015.10 | 6MT | F | L | Saloon FWD A 17 DTS;A 17 DTF | For Enginecode:A17DTS,Chassis no. to:D0/D1109964/D3/D8061301/DG | GCO88046 | Outer Joint | | 30 | 26 | 52.5 | 94.5 | 65.5 | M |

| | YEAR | TRANSM. | F/R | L/R | BODY STYLE & DRIVE TYPE & ENGINE | REMARKS | G-AP Ref. | PRODUCT | ABS | Technical Specifications A | B | C | H | L | P |
|---|---|---|---|---|---|---|---|---|---|---|---|---|---|---|---|
| **OPEL** | | | | | | | | | | | | | | | |
| **Astra** | | | | | | | | | | | | | | | |
| 1.7 (96 kw) | 2012.06-2015.10 | 6MT | F | L/R | Saloon FWD A 17 DTS;A 17 DTF | For Engine code:A17DTS,Chassis no. to:D0/D1109964/D3/D8061301-DG | GCO17051 | Outer Joint | | 30 | 26 | 53.8 | 94.5 | 65.5 | M |
| | 2012.06-2015.10 | 6MT | F | L/R | Saloon FWD A 17 DTS;A 17 DTF | For Engine code:A17DTS,Chassis no. from:D0/D1109965/D3/D8061302 | GCO21038 | Outer Joint | | 30 | 24 | 52 | 94 | 64 | M |
| | 2012.06-2015.10 | 6MT | F | L/R | Saloon FWD A 17 DTS;A 17 DTF | For Engine code:A17DTS,Chassis no. to:D0/D1109964/D3/D8061301-DG | GCO21049 | Outer Joint | | 30 | 26 | 52.5 | 94 | 65.5 | M |
| | 2012.06-2015.10 | 6MT | F | R | Saloon FWD A 17 DTS;A 17 DTF | For Engine code:A17DTS,Chassis no. from:D0/D1109965/D3/D8061302-DG | GCI88026 | Inner Joint | | 34 | 26 | 37.5 | | 100 | |
| | 2012.06-2015.10 | 6MT | F | L/R | Saloon FWD A 17 DTS;A 17 DTF | For Engine code:A17DTS,Chassis no. from:D0/D1109965/D3/D8061302-DG | GCI44008 | Inner Joint | | 25 | 25 | 34.9 | 57.5 | 113.2 | |
| | 2012.06-2015.10 | MT | F | R | Saloon FWD A 17 DTS;A 17 DTF | | GDS21074 | Drive Shaft | | 30 | 34 | 52.5 | 94 | 589 | |
| | 2012.06-2015.10 | | F | L | Saloon FWD A 17 DTS;A 17 DTF | For Engine Code:A17DTC/A17DTJ | GDS21076 | Drive Shaft | | 30 | 25 | 52.5 | 94 | 601 | |
| 1.8 (82 kw) | 1995.09-1996.09 | | F | | Saloon FWD 18SE | | GCO88003 | Outer Joint | | 33 | 25 | 52 | 109 | 61 | O |
| 1.8 (85 kw) | 1994.07-1998.01 | AT/MT | F | R | Estate FWD C18XEL/X18XE | Chassis no. from:N-500001 | GDS44059 | Drive Shaft | 29T | 33 | 34 | 52 | 109 | 938 | |
| | 1994.07-1998.01 | MT | F | L | Estate FWD C18XEL/X18XE | Chassis no. from:N-500001 | GDS44011 | Drive Shaft | 29T | 33 | 34 | 52 | 109 | 594.5 | |
| | 1994.07-1998.01 | MT | F | L/R | Estate FWD C18XEL/X18XE | | GCI44002 | Inner Joint | | 34 | 25 | 35 | 56.2 | 114.8 | |
| | 1994.07-1998.01 | | F | | Estate FWD C18XEL/X18XE | | GCO88003 | Outer Joint | | 33 | 25 | 52 | 109 | 61 | O |
| | 1994.09-1998.01 | AT/MT | F | L | Hatchback FWD C18SEL/C18XEL/X18XE | | GDS44011 | Drive Shaft | 29T | 33 | 34 | 52 | 109 | 594.5 | |
| | 1994.09-1998.01 | AT/MT | F | R | Hatchback FWD C18SEL/C18XEL/X18XE | | GDS44059 | Drive Shaft | 29T | 33 | 34 | 52 | 109 | 938 | |
| | 1994.09-1998.01 | MT | F | L/R | Hatchback FWD C18SEL/C18XEL/X18XE | | GCI44002 | Inner Joint | | 34 | 25 | 35 | 56.2 | 114.8 | |
| | 1994.09-1998.01 | | F | | Hatchback FWD C18SEL/C18XEL/X18XE | | GCO88003 | Outer Joint | | 33 | 25 | 52 | 109 | 61 | O |
| | 1994.11-1998.09 | AT/MT | F | L | Saloon FWD C18SEL/C18XEL/X18XE | | GDS44011 | Drive Shaft | 29T | 33 | 34 | 52 | 109 | 594.5 | |
| | 1994.11-1998.09 | AT/MT | F | R | Saloon FWD C18SEL/C18XEL/X18XE | | GDS44059 | Drive Shaft | 29T | 33 | 34 | 52 | 109 | 938 | |
| | 1994.11-1998.09 | MT | F | L/R | Saloon FWD C18SEL/C18XEL/X18XE | | GCI44002 | Inner Joint | | 34 | 25 | 35 | 56.2 | 114.8 | |
| | 1994.11-1998.09 | | F | | Saloon FWD C18SEL/C18XEL/X18XE | | GCO88003 | Outer Joint | | 33 | 25 | 52 | 109 | 61 | O |
| | 1998.03-2000.08 | 4AT/5MT | F | R | Estate FWD X18XE1 | | GDS60035 | Drive Shaft | | 33 | 22 | 52 | 109 | 961 | |
| | 1998.03-2000.08 | AT/MT | F | L/R | Estate FWD X18XE1 | | GCO44006 | Outer Joint | 29T | 33 | 25 | 52 | 103.5 | 61 | O |
| | 1998.03-2000.08 | | F | L | Estate FWD X18XE1 | | GDS60013 | Drive Shaft | | 33 | 22 | 52 | 103 | 595 | |
| | 1998.03-2000.08 | | F | L/R | Estate FWD X18XE1 | | GCO44049 | Outer Joint | | 33 | 25 | 52 | 109 | 61 | O |
| | 1998.03-2000.08 | | F | L/R | Estate FWD X18XE1 | | GCI99026 | Inner Joint | | 22 | 25 | 35 | 57 | 111.7 | |
| | 1998.03-2000.08 | 4AT/5MT | F | R | Hatchback FWD X18XE1 | | GDS60035 | Drive Shaft | | 33 | 22 | 52 | 109 | 961 | |
| | 1998.03-2000.08 | AT/MT | F | L/R | Hatchback FWD X18XE1 | | GCO44006 | Outer Joint | 29T | 33 | 25 | 52 | 103.5 | 61 | O |
| | 1998.03-2000.08 | | F | L | Hatchback FWD X18XE1 | | GDS60013 | Drive Shaft | | 33 | 22 | 52 | 103 | 595 | |
| | 1998.03-2000.08 | | F | L/R | Hatchback FWD X18XE1 | | GCO44049 | Outer Joint | | 33 | 25 | 52 | 109 | 61 | O |
| | 1998.03-2000.08 | | F | L/R | Hatchback FWD X18XE1 | | GCI99026 | Inner Joint | | 22 | 25 | 35 | 57 | 111.7 | |
| | 1998.03-2000.08 | 4AT/5MT | F | L | Saloon FWD X18XE1 | | GDS60013 | Drive Shaft | | 33 | 22 | 52 | 103 | 595 | |
| | 1998.03-2000.08 | 4AT/5MT | F | R | Saloon FWD X18XE1 | | GDS60035 | Drive Shaft | | 33 | 22 | 52 | 109 | 961 | |
| | 1998.03-2000.08 | AT/MT | F | L/R | Saloon FWD X18XE1 | | GCO44006 | Outer Joint | 29T | 33 | 25 | 52 | 103.5 | 61 | O |
| | 1998.03-2000.08 | | F | L/R | Saloon FWD X18XE1 | | GCO44049 | Outer Joint | | 33 | 25 | 52 | 109 | 61 | O |
| | 1998.03-2000.08 | | F | L/R | Saloon FWD X18XE1 | | GCI99026 | Inner Joint | | 22 | 25 | 35 | 57 | 111.7 | |
| 1.8 (92 kw) | 1998.10-2005.01 | 4AT/5MT | F | R | Saloon FWD Z18XE | | GDS60035 | Drive Shaft | | 33 | 22 | 52 | 109 | 961 | |
| | 1998.10-2005.01 | MT | F | R | Saloon FWD Z18XE | | GCO44049 | Outer Joint | | 33 | 25 | 52 | 109 | 61 | O |
| | 1998.10-2005.01 | | F | L | Saloon FWD Z18XE | | GDS60013 | Drive Shaft | | 33 | 22 | 52 | 103 | 595 | |
| | 1998.10-2005.01 | | F | L/R | Saloon FWD Z18XE | | GCO44006 | Outer Joint | 29T | 33 | 25 | 52 | 103.5 | 61 | O |
| | 1998.10-2005.01 | | F | L/R | Saloon FWD Z18XE | | GCI99026 | Inner Joint | | 22 | 25 | 35 | 57 | 111.7 | |
| | 2000.09-2004.07 | 4AT/5MT | F | R | Estate FWD Z18XE | | GDS60035 | Drive Shaft | | 33 | 22 | 52 | 109 | 961 | |
| | 2000.09-2004.07 | MT | F | R | Estate FWD Z18XE | | GCO44049 | Outer Joint | | 33 | 25 | 52 | 109 | 61 | O |
| | 2000.09-2004.07 | | F | L | Estate FWD Z18XE | | GDS60013 | Drive Shaft | | 33 | 22 | 52 | 103 | 595 | |
| | 2000.09-2004.07 | | F | L/R | Estate FWD Z18XE | | GCO44006 | Outer Joint | 29T | 33 | 25 | 52 | 103.5 | 61 | O |
| | 2000.09-2004.07 | | F | L/R | Estate FWD Z18XE | | GCI99026 | Inner Joint | | 22 | 25 | 35 | 57 | 111.7 | |
| | 2000.09-2005.01 | 4AT/5MT | F | R | Hatchback FWD Z18XE | | GDS60035 | Drive Shaft | | 33 | 22 | 52 | 109 | 961 | |
| | 2000.09-2005.01 | MT | F | R | Hatchback FWD Z18XE | | GCO44049 | Outer Joint | | 33 | 25 | 52 | 109 | 61 | O |
| | 2000.09-2005.01 | | F | L | Hatchback FWD Z18XE | | GDS60013 | Drive Shaft | | 33 | 22 | 52 | 103 | 595 | |
| | 2000.09-2005.01 | | F | L/R | Hatchback FWD Z18XE | | GCO44006 | Outer Joint | 29T | 33 | 25 | 52 | 103.5 | 61 | O |
| | 2000.09-2005.01 | | F | L/R | Hatchback FWD Z18XE | | GCI99026 | Inner Joint | | 22 | 25 | 35 | 57 | 111.7 | |
| | 2004.01-2010.10 | 4AT | F | L | Hatchback FWD Z 18 XE | | GDS44097 | Drive Shaft | | 33 | 22 | 53 | 93.5 | 588 | |
| | 2004.01-2010.10 | 4AT | F | R | Hatchback FWD Z 18 XE | | GDS44098 | Drive Shaft | | 33 | 22 | 53 | 93.5 | 950 | |
| | 2004.01-2010.10 | 5MT | F | L | Hatchback FWD Z 18 XE | | GDS21063 | Drive Shaft | | 33 | 22 | 53 | 93.5 | 586 | |
| | 2004.01-2010.10 | 5MT | F | R | Hatchback FWD Z 18 XE | | GDS21055 | Drive Shaft | | 33 | 22 | 53 | 93.5 | 950 | |
| | 2004.01-2010.10 | 5MT | F | L | Hatchback FWD Z 18 XE | | GCI99026 | Inner Joint | | 22 | 25 | 35 | 57 | 111.7 | |
| | 2004.01-2010.10 | AT/MT | F | L/R | Hatchback FWD Z 18 XE | Date to:2010.06 | GCO44028 | Outer Joint | | 33 | 24 | 53 | 93.5 | 63.5 | M |
| | 2004.08-2010.10 | 4AT | F | L | Estate FWD Z 18 XE | | GDS44097 | Drive Shaft | | 33 | 22 | 53 | 93.5 | 588 | |
| | 2004.08-2010.10 | 4AT | F | R | Estate FWD Z 18 XE | | GDS44098 | Drive Shaft | | 33 | 22 | 53 | 93.5 | 950 | |
| | 2004.08-2010.10 | 5MT | F | L | Estate FWD Z 18 XE | | GDS21063 | Drive Shaft | | 33 | 22 | 53 | 93.5 | 586 | |
| | 2004.08-2010.10 | 5MT | F | R | Estate FWD Z 18 XE | | GDS21055 | Drive Shaft | | 33 | 22 | 53 | 93.5 | 950 | |
| | 2004.08-2010.10 | 5MT | F | L | Estate FWD Z 18 XE | | GCI99026 | Inner Joint | | 22 | 25 | 35 | 57 | 111.7 | |
| | 2004.08-2010.10 | AT/MT | F | L/R | Estate FWD Z 18 XE | Date to:2006.11 | GCO44028 | Outer Joint | | 33 | 24 | 53 | 93.5 | 63.5 | M |
| 1.8 (103 kw) | 2005.11-2010.10 | 4AT | F | L | Estate FWD Z 18 XER;A 18 XER | | GDS44097 | Drive Shaft | | 33 | 22 | 53 | 93.5 | 588 | |
| | 2005.11-2010.10 | 4AT | F | R | Estate FWD Z 18 XER;A 18 XER | | GDS44098 | Drive Shaft | | 33 | 22 | 53 | 93.5 | 950 | |
| | 2005.11-2010.10 | 5MT | F | L | Estate FWD Z 18 XER;A 18 XER | | GDS21063 | Drive Shaft | | 33 | 22 | 53 | 93.5 | 586 | |

| | YEAR | TRANSM. | F/R | L/R | BODY STYLE & DRIVE TYPE & ENGINE | REMARKS | G-AP Ref. | PRODUCT | ABS | Technical Specifications A | B | C | H | L | P |
|---|---|---|---|---|---|---|---|---|---|---|---|---|---|---|---|
| **OPEL** | | | | | | | | | | | | | | | |
| **Astra** | | | | | | | | | | | | | | | |
| 1.8 (103 kw) | 2005.11-2010.10 | 5MT | F | R | Estate FWD Z 18 XER;A 18 XER | | GDS21055 | Drive Shaft | | 33 | 22 | 53 | 93.5 | 950 | |
| | 2005.11-2010.10 | 5MT | F | L | Estate FWD Z 18 XER;A 18 XER | | GCI99026 | Inner Joint | | 22 | 25 | 35 | 57 | 111.7 | |
| | 2005.11-2010.10 | AT/MT | F | L/R | Estate FWD Z 18 XER;A 18 XER | | GCO44028 | Outer Joint | | 33 | 24 | 53 | 93.5 | 63.5 | M |
| | 2006.01-2010.10 | 4AT | F | L | Hatchback FWD Z 18 XER;A 18 XER | | GDS44097 | Drive Shaft | | 33 | 22 | 53 | 93.5 | 588 | |
| | 2006.01-2010.10 | 4AT | F | R | Hatchback FWD Z 18 XER;A 18 XER | | GDS44098 | Drive Shaft | | 33 | 22 | 53 | 93.5 | 950 | |
| | 2006.01-2010.10 | 5MT | F | L | Hatchback FWD Z 18 XER;A 18 XER | | GDS21063 | Drive Shaft | | 33 | 22 | 53 | 93.5 | 586 | |
| | 2006.01-2010.10 | 5MT | F | R | Hatchback FWD Z 18 XER;A 18 XER | | GDS21055 | Drive Shaft | | 33 | 22 | 53 | 93.5 | 950 | |
| | 2006.01-2010.10 | 5MT | F | L | Hatchback FWD Z 18 XER;A 18 XER | | GCI99026 | Inner Joint | | 22 | 25 | 35 | 57 | 111.7 | |
| | 2006.01-2010.10 | MT | F | L/R | Hatchback FWD Z 18 XER;A 18 XER | | GCO44028 | Outer Joint | | 33 | 24 | 53 | 93.5 | 63.5 | M |
| | 2007.02-2010.06 | 5MT | F | L | Saloon FWD Z 18 XER;A 18 XER | | GCI99026 | Inner Joint | | 22 | 25 | 35 | 57 | 111.7 | |
| | 2007.02-2010.06 | AT | F | L | Saloon FWD Z 18 XER;A 18 XER | Date to:2010.06 | GDS44097 | Drive Shaft | | 33 | 22 | 53 | 93.5 | 588 | |
| | 2007.02-2010.06 | AT | F | R | Saloon FWD Z 18 XER;A 18 XER | Date to:2010.06 | GDS44098 | Drive Shaft | | 33 | 22 | 53 | 93.5 | 950 | |
| | 2007.02-2010.06 | AT/MT | F | L/R | Saloon FWD Z 18 XER;A 18 XER | Date to:2011.12 | GCO44028 | Outer Joint | | 33 | 24 | 53 | 93.5 | 63.5 | M |
| | 2007.02-2010.06 | MT | F | L | Saloon FWD Z 18 XER;A 18 XER | Date to:2011.12 | GDS21063 | Drive Shaft | | 33 | 22 | 53 | 93.5 | 586 | |
| | 2007.02-2010.06 | MT | F | R | Saloon FWD Z 18 XER;A 18 XER | Date to:2011.12 | GDS21055 | Drive Shaft | | 33 | 22 | 53 | 93.5 | 950 | |
| 1.9 (74 kw) | 2005.09-2010.10 | 6MT | F | L | Estate FWD Z 19 DTL | Date from:2007.08,Chassis no. from:7202524275042829780076587G/8B000001 | GDS21051 | Drive Shaft | | 33 | 25 | 52.5 | 94 | 579 | |
| | 2005.09-2010.10 | 6MT | F | L | Estate FWD Z 19 DTL | Date to:2007.07,Chassis no. to:7202524175042281780076577G | GDS21073 | Drive Shaft | | 33 | 25 | 52.5 | 94 | 578 | |
| | 2005.09-2010.10 | 6MT | F | R | Estate FWD Z 19 DTL | | GDS21056 | Drive Shaft | | 33 | 34 | 52.5 | 94 | 595 | |
| | 2005.09-2010.10 | 6MT | F | L/R | Estate FWD Z 19 DTL | | GCO44027 | Outer Joint | | 33 | 26 | 52.5 | 94 | 65.5 | M |
| | 2005.09-2010.10 | 6MT | F | R | Estate FWD Z 19 DTL | Date from:2007.08,Chassis no. from:7202524275042829780076587G/8B000001 | GCI44016 | Inner Joint | | 34 | 28 | 37.5 | | 129.2 | |
| | 2005.09-2010.10 | 6MT | F | R | Estate FWD Z 19 DTL | Date to:2007.07,Chassis no. to:7202524175043819780076577G | GCI99187 | Inner Joint | | 34 | 34 | 37.5 | | 124 | |
| | 2005.09-2010.10 | AT | F | L | Estate FWD Z 19 DTL | Chassis no. from:72024736 | GDS21111 | Drive Shaft | | 33 | 27 | 52.5 | 94 | 562 | |
| | 2005.09-2010.10 | AT | F | L | Estate FWD Z 19 DTL | Chassis no. to:72024735 | GDS60034 | Drive Shaft | | 33 | 27 | 52.5 | 94 | 564 | |
| | 2005.09-2010.10 | AT | F | R | Estate FWD Z 19 DTL | | GDS21110 | Drive Shaft | | 33 | 27 | 52.5 | 94 | 576 | |
| | 2005.09-2010.10 | MT | F | L | Estate FWD Z 19 DTL | | GCI21018 | Inner Joint | | 25 | 34 | 35 | 58 | 116 | |
| | 2005.09-2010.10 | MT | F | L | Estate FWD Z 19 DTL | | GCI99186 | Inner Joint | | 25 | 28 | 34.9 | 57.5 | 111 | |
| | 2005.09-2010.10 | | F | | Estate FWD Z 19 DTL | | GCO99024 | Outer Joint | | 33 | 26 | 52.5 | 94 | 65.5 | M |
| | 2005.09-2010.10 | 6MT | F | L | Hatchback FWD Z 19 DTL | Date from:2007.08 | GDS21051 | Drive Shaft | | 33 | 25 | 52.5 | 94 | 579 | |
| | 2005.09-2010.10 | 6MT | F | L | Hatchback FWD Z 19 DTL | Date to:2007.07 | GDS21073 | Drive Shaft | | 33 | 25 | 52.5 | 94 | 578 | |
| | 2005.09-2010.10 | 6MT | F | R | Hatchback FWD Z 19 DTL | | GDS21056 | Drive Shaft | | 33 | 34 | 52.5 | 94 | 595 | |
| | 2005.09-2010.10 | 6MT | F | R | Hatchback FWD Z 19 DTL | Date to:2007.07,Chassis no. to:7202524175043819780076577G | GCI99187 | Inner Joint | | 34 | 34 | 37.5 | | 124 | |
| | 2005.09-2010.10 | AT | F | L | Hatchback FWD Z 19 DTL | Chassis no. from:72024736 | GDS21111 | Drive Shaft | | 33 | 27 | 52.5 | 94 | 562 | |
| | 2005.09-2010.10 | AT | F | L | Hatchback FWD Z 19 DTL | Chassis no. to:72024735 | GDS60034 | Drive Shaft | | 33 | 27 | 52.5 | 94 | 564 | |
| | 2005.09-2010.10 | AT | F | R | Hatchback FWD Z 19 DTL | | GDS21110 | Drive Shaft | | 33 | 27 | 52.5 | 94 | 576 | |
| | 2005.09-2010.10 | MT | F | L/R | Hatchback FWD Z 19 DTL | | GCO44027 | Outer Joint | | 33 | 26 | 52.5 | 94 | 65.5 | M |
| | 2005.09-2010.10 | MT | F | L | Hatchback FWD Z 19 DTL | | GCI21018 | Inner Joint | | 25 | 34 | 35 | 58 | 116 | |
| | 2005.09-2010.10 | MT | F | L | Hatchback FWD Z 19 DTL | | GCI99186 | Inner Joint | | 25 | 28 | 34.9 | 57.5 | 111 | |
| | 2005.09-2010.10 | | F | | Hatchback FWD Z 19 DTL | | GCO99024 | Outer Joint | | 33 | 26 | 52.5 | 94 | 65.5 | M |
| 1.9 (88 kw) | 2004.04-2010.10 | 5MT/6MT | F | L | Hatchback FWD Z 19 DTJ | Date from:2007.08,Chassis no. from:7202524275042829780076587G/8B000001 | GDS21051 | Drive Shaft | | 33 | 25 | 52.5 | 94 | 579 | |
| | 2004.04-2010.10 | 5MT/6MT | F | L | Hatchback FWD Z 19 DTJ | Date to:2007.07,Chassis no. to:7202524175042281780076577G | GDS21073 | Drive Shaft | | 33 | 25 | 52.5 | 94 | 578 | |
| | 2004.04-2010.10 | 5MT/6MT | F | R | Hatchback FWD Z 19 DTJ | | GDS21056 | Drive Shaft | | 33 | 34 | 52.5 | 94 | 595 | |
| | 2004.04-2010.10 | 5MT/6MT | F | L/R | Hatchback FWD Z 19 DTJ | | GCO44027 | Outer Joint | | 33 | 26 | 52.5 | 94 | 65.5 | M |
| | 2004.04-2010.10 | 5MT/6MT | F | L | Hatchback FWD Z 19 DTJ | | GCI21018 | Inner Joint | | 25 | 34 | 35 | 58 | 116 | |
| | 2004.04-2010.10 | 5MT/6MT | F | L | Hatchback FWD Z 19 DTJ | | GCI99186 | Inner Joint | | 25 | 28 | 34.9 | 57.5 | 111 | |
| | 2004.04-2010.10 | 5MT/6MT | F | R | Hatchback FWD Z 19 DTJ | Date from:2007.08,Chassis no. from:7202524275042829780076587G/8B000001 | GCI44016 | Inner Joint | | 34 | 28 | 37.5 | | 129.2 | |
| | 2004.04-2010.10 | 5MT/6MT | F | R | Hatchback FWD Z 19 DTJ | | GCI99187 | Inner Joint | | 34 | 34 | 37.5 | | 124 | |
| | 2004.06-2010.10 | 5AT | F | L | Hatchback FWD Z 19 DT | Date from:2007.08 | GDS21111 | Drive Shaft | | 33 | 27 | 52.5 | 94 | 562 | |
| | 2004.06-2010.10 | 5AT | F | L | Hatchback FWD Z 19 DT | Date to:2007.07 | GDS60034 | Drive Shaft | | 33 | 27 | 52.5 | 94 | 564 | |
| | 2004.06-2010.10 | 5AT | F | R | Hatchback FWD Z 19 DT | | GDS21110 | Drive Shaft | | 33 | 27 | 52.5 | 94 | 576 | |
| | 2004.06-2010.10 | 5AT | F | L | Hatchback FWD Z 19 DT | Date from:2007.08,Chassis no. from:7202473675495819780231837G/8B000001 | GCI86015 | Inner Joint | | 27 | 26 | 35 | 78.5 | 109.5 | |
| | 2004.06-2010.10 | 5AT | F | L/R | Hatchback FWD Z 19 DT | | GCI21016 | Inner Joint | | 27 | 26 | 35 | 78.5 | 112 | |
| | 2004.06-2010.10 | 6MT | F | L | Hatchback FWD Z 19 DT | Date from:2007.08 | GDS21051 | Drive Shaft | | 33 | 25 | 52.5 | 94 | 579 | |
| | 2004.06-2010.10 | 6MT | F | L | Hatchback FWD Z 19 DT | Date to:2007.07 | GDS21073 | Drive Shaft | | 33 | 25 | 52.5 | 94 | 578 | |
| | 2004.06-2010.10 | 6MT | F | R | Hatchback FWD Z 19 DT | | GDS21056 | Drive Shaft | | 33 | 34 | 52.5 | 94 | 595 | |
| | 2004.06-2010.10 | 6MT | F | L | Hatchback FWD Z 19 DT | | GCI21018 | Inner Joint | | 25 | 34 | 35 | 58 | 116 | |
| | 2004.06-2010.10 | 6MT | F | L | Hatchback FWD Z 19 DT | | GCI99186 | Inner Joint | | 25 | 28 | 34.9 | 57.5 | 111 | |
| | 2004.06-2010.10 | 6MT | F | R | Hatchback FWD Z 19 DT | Chassis no. from:72025242/75043820/78007658/7G/8B000001 | GCI44016 | Inner Joint | | 34 | 28 | 37.5 | | 129.2 | |
| | 2004.06-2010.10 | 6MT | F | R | Hatchback FWD Z 19 DT | | GCI99187 | Inner Joint | | 34 | 34 | 37.5 | | 124 | |
| | 2004.06-2010.10 | 6MT/5AT | F | L/R | Hatchback FWD Z 19 DT | | GCO44027 | Outer Joint | | 33 | 26 | 52.5 | 94 | 65.5 | M |
| | 2004.08-2010.10 | 5MT/6MT | F | L | Estate FWD Z 19 DTJ | Date from:2007.08,Chassis no. from:7202524275042829780076587G/8B000001 | GDS21051 | Drive Shaft | | 33 | 25 | 52.5 | 94 | 579 | |
| | 2004.08-2010.10 | 5MT/6MT | F | L | Estate FWD Z 19 DTJ | Date to:2007.07,Chassis no. to:7202524175042281780076577G | GDS21073 | Drive Shaft | | 33 | 25 | 52.5 | 94 | 578 | |
| | 2004.08-2010.10 | 5MT/6MT | F | R | Estate FWD Z 19 DTJ | | GDS21056 | Drive Shaft | | 33 | 34 | 52.5 | 94 | 595 | |
| | 2004.08-2010.10 | 5MT/6MT | F | L/R | Estate FWD Z 19 DTJ | | GCO44027 | Outer Joint | | 33 | 26 | 52.5 | 94 | 65.5 | M |
| | 2004.08-2010.10 | 5MT/6MT | F | R | Estate FWD Z 19 DTJ | Date from:2007.08,Chassis no. from:7202524275042829780076587G/8B000001 | GCI44016 | Inner Joint | | 34 | 28 | 37.5 | | 129.2 | |
| | 2004.08-2010.10 | 5MT/6MT | F | R | Estate FWD Z 19 DTJ | Date to:2007.07,Chassis no. to:7202524175043819780076577G | GCI99187 | Inner Joint | | 34 | 34 | 37.5 | | 124 | |

| | YEAR | TRANSM. | F/R | L/R | BODY STYLE & DRIVE TYPE & ENGINE | REMARKS | G-AP Ref. | PRODUCT | ABS | Technical Specifications A | B | C | H | L | P |
|---|---|---|---|---|---|---|---|---|---|---|---|---|---|---|---|
| **OPEL** | | | | | | | | | | | | | | | |
| **Astra** | | | | | | | | | | | | | | | |
| 1.9 (88 kw) | 2004.08-2010.10 | AT | F | L | Estate FWD Z 19 DTJ | Chassis no. from:72024736 | GDS21111 | Drive Shaft | | 33 | 27 | 52.5 | 94 | 562 | |
| | 2004.08-2010.10 | AT | F | L | Estate FWD Z 19 DTJ | Chassis no. to:72024735 | GDS60034 | Drive Shaft | | 33 | 27 | 52.5 | 94 | 564 | |
| | 2004.08-2010.10 | AT | F | R | Estate FWD Z 19 DTJ | | GDS21110 | Drive Shaft | | 33 | 27 | 52.5 | 94 | 576 | |
| | 2004.08-2010.10 | MT | F | L | Estate FWD Z 19 DTJ | | GCI21018 | Inner Joint | | 25 | 34 | 35 | 58 | 116 | |
| | 2004.08-2010.10 | MT | F | L | Estate FWD Z 19 DTJ | | GCI99186 | Inner Joint | | 25 | 28 | 34.9 | 57.5 | 111 | |
| | 2004.08-2010.10 | | F | | Estate FWD Z 19 DTJ | | GCO99024 | Outer Joint | | 33 | 26 | 52.5 | 94 | 65.5 | M |
| | 2005.09-2010.10 | 5MT | F | R | Estate FWD Z 19 DT | Date to:2007.07,Chassis no. to:72025241/75043819/78007657/7G | GCI99187 | Inner Joint | | 34 | 34 | 37.5 | | 124 | |
| | 2005.09-2010.10 | 6AT | F | L | Estate FWD Z 19 DT | Chassis no. from:72024736/75049581/78023183/8B000001 | GDS21111 | Drive Shaft | | 33 | 27 | 52.5 | 94 | 562 | |
| | 2005.09-2010.10 | 6AT | F | L | Estate FWD Z 19 DT | Chassis no. to:72024735/75049580/78023182,Date to:2007.07 | GDS60034 | Drive Shaft | | 33 | 27 | 52.5 | 94 | 564 | |
| | 2005.09-2010.10 | 6AT | F | R | Estate FWD Z 19 DT | | GDS21110 | Drive Shaft | | 33 | 27 | 52.5 | 94 | 576 | |
| | 2005.09-2010.10 | 6AT | F | L | Estate FWD Z 19 DT | Date from:2007.08,Chassis no. from:72024736/75049581/78023183/7G/8B000001 | GCI86015 | Inner Joint | | 27 | 26 | 35 | 78.5 | 109.5 | |
| | 2005.09-2010.10 | 6MT | F | L | Estate FWD Z 19 DT | Date from:2007.08 | GDS21051 | Drive Shaft | | 33 | 25 | 52.5 | 94 | 579 | |
| | 2005.09-2010.10 | 6MT | F | L | Estate FWD Z 19 DT | Date to:2007.07 | GDS21073 | Drive Shaft | | 33 | 25 | 52.5 | 94 | 578 | |
| | 2005.09-2010.10 | 6MT | F | R | Estate FWD Z 19 DT | | GDS21056 | Drive Shaft | | 33 | 34 | 52.5 | 94 | 595 | |
| | 2005.09-2010.10 | MT | F | L/R | Estate FWD Z 19 DT | | GCO44027 | Outer Joint | | 33 | 26 | 52.5 | 94 | 65.5 | M |
| | 2005.09-2010.10 | MT | F | L | Estate FWD Z 19 DT | Date to:2010.06 | GCI21018 | Inner Joint | | 25 | 34 | 35 | 58 | 116 | |
| | 2005.09-2010.10 | MT | F | L | Estate FWD Z 19 DT | Date to:2010.06 | GCI99186 | Inner Joint | | 25 | 28 | 34.9 | 57.5 | 111 | |
| | 2005.09-2010.10 | | F | | Estate FWD Z 19 DT | | GCO99024 | Outer Joint | | 33 | 26 | 52.5 | 94 | 65.5 | M |
| 1.9 (110 kw) | 2004.09-2010.10 | 6MT | F | L | Estate FWD Z 19 DTH | Date from:2007.08 | GDS21035 | Drive Shaft | | 30 | 25 | 53.8 | 94.5 | 581 | |
| | 2004.09-2010.10 | 6MT | F | L | Estate FWD Z 19 DTH | Date to:2007.07 | GDS21071 | Drive Shaft | | 30 | 25 | 53.8 | 94.5 | 576 | |
| | 2004.09-2010.10 | 6MT | F | R | Estate FWD Z 19 DTH | Date to:2007.07 | GDS21062 | Drive Shaft | | 30 | 34 | 53.8 | 94.5 | 595 | |
| | 2004.09-2010.10 | 6MT | F | R | Estate FWD Z 19 DTH | Date from:2007.08,Chassis no. from:72024736/75041476/78008876 | GDS82084 | Drive Shaft | | 30 | 34 | 53.8 | 94.5 | 598 | |
| | 2004.09-2010.10 | 6MT | F | R | Estate FWD Z 19 DTH | Date to:2007.07,Chassis no. to:72024735/75041475/78008875/7G | GCI99187 | Inner Joint | | 34 | 34 | 37.5 | | 124 | |
| | 2004.09-2010.10 | MT | F | L/R | Estate FWD Z 19 DTH | | GCO17051 | Outer Joint | | 30 | 26 | 53.8 | 94.5 | 65.5 | M |
| | 2004.09-2010.10 | MT | F | L | Estate FWD Z 19 DTH | | GCI21018 | Inner Joint | | 25 | 34 | 35 | 58 | 116 | |
| | 2004.09-2010.10 | MT | F | L | Estate FWD Z 19 DTH | | GCI99186 | Inner Joint | | 25 | 28 | 34.9 | 57.5 | 111 | |
| | 2004.09-2010.10 | | F | R | Estate FWD Z 19 DTH | Date To:2007.07,Chassis no. to:72024735/75041475/78008875/7G | GDS21056 | Drive Shaft | | 33 | 34 | 52.5 | 94 | 595 | |
| | 2004.09-2010.10 | 6MT | F | L | Hatchback FWD Z 19 DTH | Date from:2007.08 | GDS21035 | Drive Shaft | | 30 | 25 | 53.8 | 94.5 | 581 | |
| | 2004.09-2010.10 | 6MT | F | L | Hatchback FWD Z 19 DTH | Date to:2007.07 | GDS21071 | Drive Shaft | | 30 | 25 | 53.8 | 94.5 | 576 | |
| | 2004.09-2010.10 | 6MT | F | R | Hatchback FWD Z 19 DTH | Date to:2007.07 | GDS21062 | Drive Shaft | | 30 | 34 | 53.8 | 94.5 | 595 | |
| | 2004.09-2010.10 | 6MT | F | R | Hatchback FWD Z 19 DTH | Date from:2007.08,Chassis no. from:72024736/75041476/78008876 | GDS82084 | Drive Shaft | | 30 | 34 | 53.8 | 94.5 | 598 | |
| | 2004.09-2010.10 | 6MT | F | R | Hatchback FWD Z 19 DTH | Date to:2007.07,Chassis no. to:72024735/75041475/78008875/7G | GCI99187 | Inner Joint | | 34 | 34 | 37.5 | | 124 | |
| | 2004.09-2010.10 | MT | F | L/R | Hatchback FWD Z 19 DTH | | GCO17051 | Outer Joint | | 30 | 26 | 53.8 | 94.5 | 65.5 | M |
| | 2004.09-2010.10 | MT | F | L | Hatchback FWD Z 19 DTH | | GCI21018 | Inner Joint | | 25 | 34 | 35 | 58 | 116 | |
| | 2004.09-2010.10 | MT | F | L | Hatchback FWD Z 19 DTH | | GCI99186 | Inner Joint | | 25 | 28 | 34.9 | 57.5 | 111 | |
| | 2004.09-2010.10 | | F | R | Hatchback FWD Z 19 DTH | Date To:2007.07,Chassis no. to:72024735/75041475/78008875/7G | GDS21056 | Drive Shaft | | 33 | 34 | 52.5 | 94 | 595 | |
| 2.0 (60 kw) | 1998.03-2004.07 | 4AT/5MT | F | L | Estate FWD X20DTL/Y20DTL | | GDS44038 | Drive Shaft | 29T | 33 | 34 | 52 | 103.5 | 595 | |
| | 1998.03-2004.07 | 4AT/5MT | F | L | Estate FWD X20DTL/Y20DTL | | GDS44044 | Drive Shaft | | 33 | 34 | 52 | 103.5 | 595 | |
| | 1998.03-2004.07 | 4AT/5MT | F | R | Estate FWD X20DTL/Y20DTL | | GDS44039 | Drive Shaft | 29T | 33 | 34 | 52 | 103.5 | 959 | |
| | 1998.03-2004.07 | 4AT/5MT | F | R | Estate FWD X20DTL/Y20DTL | | GDS88011 | Drive Shaft | | 33 | 34 | 52 | 104 | 959 | |
| | 1998.03-2004.07 | 4AT/5MT | F | L/R | Estate FWD X20DTL/Y20DTL | | GCO44006 | Outer Joint | 29T | 33 | 25 | 52 | 103.5 | 61 | O |
| | 1998.03-2004.07 | 4AT/5MT | F | L/R | Estate FWD X20DTL/Y20DTL | | GCO44032 | Outer Joint | | 33 | 25 | 52 | 103.5 | 61 | O |
| | 1998.03-2004.07 | 4AT/5MT | F | L/R | Estate FWD X20DTL/Y20DTL | | GCI44002 | Inner Joint | | 34 | 25 | 35 | 56.2 | 114.8 | |
| | 1998.03-2005.01 | 4AT/5MT | F | L | Hatchback FWD X20DTL/Y20DTL | | GDS44038 | Drive Shaft | 29T | 33 | 34 | 52 | 103.5 | 595 | |
| | 1998.03-2005.01 | 4AT/5MT | F | L | Hatchback FWD X20DTL/Y20DTL | | GDS44044 | Drive Shaft | | 33 | 34 | 52 | 103.5 | 595 | |
| | 1998.03-2005.01 | 4AT/5MT | F | R | Hatchback FWD X20DTL/Y20DTL | | GDS44039 | Drive Shaft | 29T | 33 | 34 | 52 | 103.5 | 959 | |
| | 1998.03-2005.01 | 4AT/5MT | F | R | Hatchback FWD X20DTL/Y20DTL | | GDS88011 | Drive Shaft | | 33 | 34 | 52 | 104 | 959 | |
| | 1998.03-2005.01 | 4AT/5MT | F | L/R | Hatchback FWD X20DTL/Y20DTL | | GCO44006 | Outer Joint | 29T | 33 | 25 | 52 | 103.5 | 61 | O |
| | 1998.03-2005.01 | 4AT/5MT | F | L/R | Hatchback FWD X20DTL/Y20DTL | | GCO44032 | Outer Joint | | 33 | 25 | 52 | 103.5 | 61 | O |
| | 1998.03-2005.01 | 4AT/5MT | F | L/R | Hatchback FWD X20DTL/Y20DTL | | GCI44002 | Inner Joint | | 34 | 25 | 35 | 56.2 | 114.8 | |
| | 1998.09-2005.01 | 4AT | F | L | Saloon FWD X20DTL/Y20DTL | | GDS44044 | Drive Shaft | | 33 | 34 | 52 | 103.5 | 595 | |
| | 1998.09-2005.01 | 4AT | F | R | Saloon FWD X20DTL/Y20DTL | | GDS44039 | Drive Shaft | 29T | 33 | 34 | 52 | 103.5 | 959 | |
| | 1998.09-2005.01 | 4AT | F | R | Saloon FWD X20DTL/Y20DTL | | GDS88011 | Drive Shaft | | 33 | 34 | 52 | 104 | 959 | |
| | 1998.09-2005.01 | 4AT | F | L | Saloon FWD X20DTL/Y20DTL | | GCO44032 | Outer Joint | | 33 | 25 | 52 | 103.5 | 61 | O |
| | 1998.09-2005.01 | AT/MT | F | L/R | Saloon FWD X20DTL/Y20DTL | | GCO44006 | Outer Joint | 29T | 33 | 25 | 52 | 103.5 | 61 | O |
| | 1998.09-2005.01 | AT/MT | F | L/R | Saloon FWD X20DTL/Y20DTL | | GCO44049 | Outer Joint | | 33 | 25 | 52 | 109 | 61 | O |
| | 1998.09-2005.01 | | F | L/R | Saloon FWD X20DTL/Y20DTL | | GCI44002 | Inner Joint | | 34 | 25 | 35 | 56.2 | 114.8 | |
| 2.0 (74 kw) | 1998.02-2005.01 | 4AT/5MT | F | L | Hatchback FWD Y20DTH | | GDS44038 | Drive Shaft | 29T | 33 | 34 | 52 | 103.5 | 595 | |
| | 1998.02-2005.01 | 4AT/5MT | F | L | Hatchback FWD Y20DTH | | GDS44044 | Drive Shaft | | 33 | 34 | 52 | 103.5 | 595 | |
| | 1998.02-2005.01 | 4AT/5MT | F | R | Hatchback FWD Y20DTH | | GDS44039 | Drive Shaft | 29T | 33 | 34 | 52 | 103.5 | 959 | |
| | 1998.02-2005.01 | 4AT/5MT | F | R | Hatchback FWD Y20DTH | | GDS88011 | Drive Shaft | | 33 | 34 | 52 | 104 | 959 | |
| | 1998.02-2005.01 | 4AT/5MT | F | L/R | Hatchback FWD Y20DTH | | GCO44006 | Outer Joint | 29T | 33 | 25 | 52 | 103.5 | 61 | O |
| | 1998.02-2005.01 | 4AT/5MT | F | L/R | Hatchback FWD Y20DTH | | GCO44032 | Outer Joint | | 33 | 25 | 52 | 103.5 | 61 | O |
| | 1998.02-2005.01 | 4AT/5MT | F | L/R | Hatchback FWD Y20DTH | | GCI44002 | Inner Joint | | 34 | 25 | 35 | 56.2 | 114.8 | |
| | 1999.08-2005.01 | 4AT/5MT | F | L | Saloon FWD Y20DTH | | GDS44038 | Drive Shaft | 29T | 33 | 34 | 52 | 103.5 | 595 | |

| | YEAR | TRANSM. | F/R | L/R | BODY STYLE & DRIVE TYPE & ENGINE | REMARKS | G-AP Ref. | PRODUCT | ABS | Technical Specifications | | | | | |
|---|---|---|---|---|---|---|---|---|---|---|---|---|---|---|---|
| | | | | | | | | | | A | B | C | H | L | P |
| **OPEL** | | | | | | | | | | | | | | | |
| **Astra** | | | | | | | | | | | | | | | |
| 2.0 (74 kw) | 1999.08-2005.01 | 4AT/5MT | F | L | Saloon FWD Y20DTH | | GDS44044 | Drive Shaft | | 33 | 34 | 52 | 103.5 | 595 | |
| | 1999.08-2005.01 | 4AT/5MT | F | R | Saloon FWD Y20DTH | | GDS44039 | Drive Shaft | 29T | 33 | 34 | 52 | 103.5 | 959 | |
| | 1999.08-2005.01 | 4AT/5MT | F | R | Saloon FWD Y20DTH | | GDS88011 | Drive Shaft | | 33 | 34 | 52 | 104 | 959 | |
| | 1999.08-2005.01 | 4AT/5MT | F | L/R | Saloon FWD Y20DTH | | GCO44006 | Outer Joint | 29T | 33 | 25 | 52 | 103.5 | 61 | O |
| | 1999.08-2005.01 | 4AT/5MT | F | L/R | Saloon FWD Y20DTH | | GCO44032 | Outer Joint | | 33 | 25 | 52 | 103.5 | 61 | O |
| | 1999.08-2005.01 | 4AT/5MT | F | L/R | Saloon FWD Y20DTH | | GCI44002 | Inner Joint | | 34 | 25 | 35 | 56.2 | 114.8 | |
| | 2000.09-2004.07 | 4AT/5MT | F | L | Estate FWD Y20DTH | | GDS44038 | Drive Shaft | 29T | 33 | 34 | 52 | 103.5 | 595 | |
| | 2000.09-2004.07 | 4AT/5MT | F | L | Estate FWD Y20DTH | | GDS44044 | Drive Shaft | | 33 | 34 | 52 | 103.5 | 595 | |
| | 2000.09-2004.07 | 4AT/5MT | F | R | Estate FWD Y20DTH | | GDS44039 | Drive Shaft | 29T | 33 | 34 | 52 | 103.5 | 959 | |
| | 2000.09-2004.07 | 4AT/5MT | F | R | Estate FWD Y20DTH | | GDS88011 | Drive Shaft | | 33 | 34 | 52 | 104 | 959 | |
| | 2000.09-2004.07 | 4AT/5MT | F | L/R | Estate FWD Y20DTH | | GCO44006 | Outer Joint | 29T | 33 | 25 | 52 | 103.5 | 61 | O |
| | 2000.09-2004.07 | 4AT/5MT | F | L/R | Estate FWD Y20DTH | | GCO44032 | Outer Joint | | 33 | 25 | 52 | 103.5 | 61 | O |
| | 2000.09-2004.07 | 4AT/5MT | F | L/R | Estate FWD Y20DTH | | GCI44002 | Inner Joint | | 34 | 25 | 35 | 56.2 | 114.8 | |
| 2.0 (85 kw) | 1991.09-1998.01 | AT/MT | F | L/R | Hatchback FWD C20NE | | GCO44056 | Outer Joint | 29T | 33 | 25 | 52 | 109 | 61 | O |
| | 1991.09-1998.01 | MT | F | L | Hatchback FWD C20NE | | GDS44011 | Drive Shaft | 29T | 33 | 34 | 52 | 109 | 594.5 | |
| | 1991.09-1998.01 | MT | F | R | Hatchback FWD C20NE | | GDS44059 | Drive Shaft | 29T | 33 | 34 | 52 | 109 | 938 | |
| | 1991.09-1998.01 | MT | F | L/R | Hatchback FWD C20NE | | GCI44002 | Inner Joint | | 34 | 25 | 35 | 56.2 | 114.8 | |
| | 1991.09-1998.01 | | F | | Hatchback FWD C20NE | | GCO88003 | Outer Joint | | 33 | 25 | 52 | 109 | 61 | O |
| 2.0 (96 kw) | 2014.01-2015.10 | 6AT | F | L | Estate FWD A 20 DTH | | GDS83986 | Drive Shaft | | 30 | 27 | 52.5 | 94 | 591 | |
| | 2014.01-2015.10 | 6AT | F | R | Estate FWD A 20 DTH | | GDS61138 | Drive Shaft | | 30 | 27 | 52.5 | 94.5 | 598 | |
| | 2014.01-2015.10 | 6AT | F | L/R | Estate FWD A 20 DTH | | GCO17051 | Outer Joint | | 30 | 26 | 53.8 | 94.5 | 65.5 | M |
| | 2014.01-2015.10 | 6AT | F | L/R | Estate FWD A 20 DTH | | GCO21049 | Outer Joint | | 30 | 26 | 52.5 | 94 | 65.5 | M |
| | 2014.01-2015.10 | 6AT | F | L/R | Estate FWD A 20 DTH | | GCO88046 | Outer Joint | | 30 | 26 | 52.5 | 94.5 | 65.5 | M |
| | 2014.01-2015.10 | 6AT | F | L | Estate FWD A 20 DTH | | GCI86015 | Inner Joint | | 27 | 26 | 35 | 78.5 | 109.5 | |
| 2.0 (100 kw) | 1994.09-1998.02 | AT/MT | F | L | Hatchback FWD X20XEV | | GDS44011 | Drive Shaft | 29T | 33 | 34 | 52 | 109 | 594.5 | |
| | 1994.09-1998.02 | AT/MT | F | L/R | Hatchback FWD X20XEV | | GCO44056 | Outer Joint | 29T | 33 | 25 | 52 | 109 | 61 | O |
| | 1994.09-1998.02 | AT/MT | F | L | Hatchback FWD X20XEV | | GCI44002 | Inner Joint | | 34 | 25 | 35 | 56.2 | 114.8 | |
| | 1994.09-1998.02 | | F | | Hatchback FWD X20XEV | | GCO88003 | Outer Joint | | 33 | 25 | 52 | 109 | 61 | O |
| | 1995.09-1998.02 | AT/MT | F | L/R | Estate FWD X20XEV | | GCO44056 | Outer Joint | 29T | 33 | 25 | 52 | 109 | 61 | O |
| | 1995.09-1998.02 | AT/MT | F | L | Estate FWD X20XEV | Chassis no. from:N500001 | GCI44002 | Inner Joint | | 34 | 25 | 35 | 56.2 | 114.8 | |
| | 1995.09-1998.02 | MT | F | L | Estate FWD X20XEV | Chassis no. from:N500001 | GDS44011 | Drive Shaft | 29T | 33 | 34 | 52 | 109 | 594.5 | |
| | 1995.09-1998.02 | | F | | Estate FWD X20XEV | | GCO88003 | Outer Joint | | 33 | 25 | 52 | 109 | 61 | O |
| | 1996.09-1998.02 | AT/MT | F | L | Saloon FWD X20XEV | | GDS44011 | Drive Shaft | 29T | 33 | 34 | 52 | 109 | 594.5 | |
| | 1996.09-1998.02 | AT/MT | F | L/R | Saloon FWD X20XEV | | GCO44056 | Outer Joint | 29T | 33 | 25 | 52 | 109 | 61 | O |
| | 1996.09-1998.02 | | F | | Saloon FWD X20XEV | | GCO88003 | Outer Joint | | 33 | 25 | 52 | 109 | 61 | O |
| | 1998.03-2004.07 | 4AT/5MT | F | L | Estate FWD X20XEV | | GDS44044 | Drive Shaft | | 33 | 34 | 52 | 103.5 | 595 | |
| | 1998.03-2004.07 | 4AT/5MT | F | R | Estate FWD X20XEV | | GDS88011 | Drive Shaft | | 33 | 34 | 52 | 104 | 959 | |
| | 1998.03-2004.07 | 4AT/5MT | F | L | Estate FWD X20XEV | | GCO44032 | Outer Joint | | 33 | 25 | 52 | 103.5 | 61 | O |
| | 1998.03-2004.07 | AT/MT | F | L/R | Estate FWD X20XEV | | GCO44006 | Outer Joint | 29T | 33 | 25 | 52 | 103.5 | 61 | O |
| | 1998.03-2004.07 | AT/MT | F | L/R | Estate FWD X20XEV | | GCO44049 | Outer Joint | | 33 | 25 | 52 | 109 | 61 | O |
| | 1998.03-2004.07 | | F | L/R | Estate FWD X20XEV | | GCI44002 | Inner Joint | | 34 | 25 | 35 | 56.2 | 114.8 | |
| | 1998.03-2004.07 | 4AT/5MT | F | L | Hatchback FWD X20XEV | | GDS44044 | Drive Shaft | | 33 | 34 | 52 | 103.5 | 595 | |
| | 1998.03-2004.07 | 4AT/5MT | F | R | Hatchback FWD X20XEV | | GDS88011 | Drive Shaft | | 33 | 34 | 52 | 104 | 959 | |
| | 1998.03-2004.07 | 4AT/5MT | F | L | Hatchback FWD X20XEV | | GCO44032 | Outer Joint | | 33 | 25 | 52 | 103.5 | 61 | O |
| | 1998.03-2004.07 | AT/MT | F | L/R | Hatchback FWD X20XEV | Date to:2004.07 | GCO44006 | Outer Joint | 29T | 33 | 25 | 52 | 103.5 | 61 | O |
| | 1998.03-2004.07 | AT/MT | F | L/R | Hatchback FWD X20XEV | | GCO44049 | Outer Joint | | 33 | 25 | 52 | 109 | 61 | O |
| | 1998.03-2004.07 | | F | L/R | Hatchback FWD X20XEV | | GCI44002 | Inner Joint | | 34 | 25 | 35 | 56.2 | 114.8 | |
| | 1998.03-2005.01 | 4AT/5MT | F | L | Saloon FWD X20XEV | | GDS44044 | Drive Shaft | | 33 | 34 | 52 | 103.5 | 595 | |
| | 1998.03-2005.01 | 4AT/5MT | F | R | Saloon FWD X20XEV | | GDS88011 | Drive Shaft | | 33 | 34 | 52 | 104 | 959 | |
| | 1998.03-2005.01 | 4AT/5MT | F | L | Saloon FWD X20XEV | | GCO44032 | Outer Joint | | 33 | 25 | 52 | 103.5 | 61 | O |
| | 1998.03-2005.01 | AT/MT | F | L/R | Saloon FWD X20XEV | | GCO44006 | Outer Joint | 29T | 33 | 25 | 52 | 103.5 | 61 | O |
| | 1998.03-2005.01 | AT/MT | F | L/R | Saloon FWD X20XEV | | GCO44049 | Outer Joint | | 33 | 25 | 52 | 109 | 61 | O |
| | 1998.03-2005.01 | | F | L/R | Saloon FWD X20XEV | | GCI44002 | Inner Joint | | 34 | 25 | 35 | 56.2 | 114.8 | |
| 2.0 (110 kw) | 1991.09-1998.02 | MT | F | L | Hatchback FWD C20XE | | GDS44011 | Drive Shaft | 29T | 33 | 34 | 52 | 109 | 594.5 | |
| | 1991.09-1998.02 | MT | F | R | Hatchback FWD C20XE | | GDS44059 | Drive Shaft | 29T | 33 | 34 | 52 | 109 | 938 | |
| | 1991.09-1998.02 | MT | F | L/R | Hatchback FWD C20XE | | GCO44056 | Outer Joint | 29T | 33 | 25 | 52 | 109 | 61 | O |
| | 1991.09-1998.02 | MT | F | L/R | Hatchback FWD C20XE | | GCI44002 | Inner Joint | | 34 | 25 | 35 | 56.2 | 114.8 | |
| | 1991.09-1998.02 | | F | | Hatchback FWD C20XE | | GCO88003 | Outer Joint | | 33 | 25 | 52 | 109 | 61 | O |
| | 1993.03-1998.01 | MT | F | L | Estate FWD C20XE | | GDS44011 | Drive Shaft | 29T | 33 | 34 | 52 | 109 | 594.5 | |
| | 1993.03-1998.01 | MT | F | R | Estate FWD C20XE | | GDS44059 | Drive Shaft | 29T | 33 | 34 | 52 | 109 | 938 | |
| | 1993.03-1998.01 | MT | F | L/R | Estate FWD C20XE | | GCO44056 | Outer Joint | 29T | 33 | 25 | 52 | 109 | 61 | O |
| | 1993.03-1998.01 | MT | F | L/R | Estate FWD C20XE | | GCI44002 | Inner Joint | | 34 | 25 | 35 | 56.2 | 114.8 | |
| | 1993.03-1998.01 | | F | | Estate FWD C20XE | | GCO88003 | Outer Joint | | 33 | 25 | 52 | 109 | 61 | O |
| 2.0 (118 kw) | 1999.10-2000.08 | 6MT | F | L | Hatchback FWD X20XER | | GDS44044 | Drive Shaft | | 33 | 34 | 52 | 103.5 | 595 | |
| | 1999.10-2000.08 | 6MT | F | L | Hatchback FWD X20XER | | GCO44032 | Outer Joint | | 33 | 25 | 52 | 103.5 | 61 | O |

| | YEAR | TRANSM. | F/R | L/R | BODY STYLE & DRIVE TYPE & ENGINE | REMARKS | G-AP Ref. | PRODUCT | ABS | Technical Specifications A | B | C | H | L | P |
|---|---|---|---|---|---|---|---|---|---|---|---|---|---|---|---|
| **OPEL** | | | | | | | | | | | | | | | |
| **Astra** | | | | | | | | | | | | | | | |
| 2.0 (118 kw) | 1999.10-2000.08 | AT/MT | F | L/R | Hatchback FWD X20XER | Date to:2000.08 | GCO44006 | Outer Joint | 29T | 33 | 25 | 52 | 103.5 | 61 | O |
| | 1999.10-2000.08 | MT | F | R | Hatchback FWD X20XER | | GCO44049 | Outer Joint | | 33 | 25 | 52 | 109 | 61 | O |
| | 1999.10-2000.08 | | F | R | Hatchback FWD X20XER | | GCI44011 | Inner Joint | | 34 | 25 | 37.5 | | 130.2 | |
| | 1999.10-2000.08 | | F | L/R | Hatchback FWD X20XER | Date To:2000.08 | GCI44002 | Inner Joint | | 34 | 25 | 35 | 56.2 | 114.8 | |
| | 2009.09-2015.10 | 6AT | F | L | Hatchback FWD A 20 DTH | Chassis no. from:C0/C1033261/C3/C8028482/CG040399 | GDS83986 | Drive Shaft | | 30 | 27 | 52.5 | 94 | 591 | |
| | 2009.09-2015.10 | 6AT | F | R | Hatchback FWD A 20 DTH | | GDS61138 | Drive Shaft | | 30 | 27 | 52.5 | 94.5 | 598 | |
| | 2009.09-2015.10 | 6AT | F | L | Hatchback FWD A 20 DTH | | GCI86015 | Inner Joint | | 27 | 26 | 35 | 78.5 | 109.5 | |
| | 2009.09-2015.10 | 6AT/6MT | F | L/R | Hatchback FWD A 20 DTH | | GCO17051 | Outer Joint | | 30 | 26 | 53.8 | 94.5 | 65.5 | M |
| | 2009.09-2015.10 | 6AT/6MT | F | L/R | Hatchback FWD A 20 DTH | | GCO21049 | Outer Joint | | 30 | 26 | 52.5 | 94 | 65.5 | M |
| | 2009.09-2015.10 | 6AT/6MT | F | L/R | Hatchback FWD A 20 DTH | | GCO88046 | Outer Joint | | 30 | 26 | 52.5 | 94.5 | 65.5 | M |
| | 2009.09-2015.10 | 6MT | F | L | Hatchback FWD A 20 DTH | | GDS21075 | Drive Shaft | | 30 | 27 | 52.5 | 94 | 602 | |
| | 2009.09-2015.10 | 6MT | F | R | Hatchback FWD A 20 DTH | | GDS21032 | Drive Shaft | | 30 | 27 | 53.8 | 94.5 | 605 | |
| | 2009.09-2015.10 | 6MT | F | L/R | Hatchback FWD A 20 DTH | | GCI21030 | Inner Joint | | 27 | 26 | 35 | 78 | 112.5 | |
| | 2009.09-2015.10 | MT | F | L | Hatchback FWD A 20 DTH | | GDS21036 | Drive Shaft | | 30 | 27 | 55.4 | 100 | 602 | |
| | 2010.10-2015.10 | 6AT | F | L | Estate FWD A 20 DTH | Chassis no. from:C0/C1033261/C3/C8028482/CG040399 | GDS83986 | Drive Shaft | | 30 | 27 | 52.5 | 94 | 591 | |
| | 2010.10-2015.10 | 6AT | F | R | Estate FWD A 20 DTH | | GDS61138 | Drive Shaft | | 30 | 27 | 52.5 | 94.5 | 598 | |
| | 2010.10-2015.10 | 6AT | F | L | Estate FWD A 20 DTH | | GCI86015 | Inner Joint | | 27 | 26 | 35 | 78.5 | 109.5 | |
| | 2010.10-2015.10 | 6AT/6MT | F | L/R | Estate FWD A 20 DTH | | GCO17051 | Outer Joint | | 30 | 26 | 53.8 | 94.5 | 65.5 | M |
| | 2010.10-2015.10 | 6AT/6MT | F | L/R | Estate FWD A 20 DTH | | GCO21049 | Outer Joint | | 30 | 26 | 52.5 | 94 | 65.5 | M |
| | 2010.10-2015.10 | 6AT/6MT | F | L/R | Estate FWD A 20 DTH | | GCO88046 | Outer Joint | | 30 | 26 | 52.5 | 94.5 | 65.5 | M |
| | 2010.10-2015.10 | 6MT | F | L | Estate FWD A 20 DTH | | GDS21075 | Drive Shaft | | 30 | 27 | 52.5 | 94 | 602 | |
| | 2010.10-2015.10 | 6MT | F | R | Estate FWD A 20 DTH | | GDS21032 | Drive Shaft | | 30 | 27 | 53.8 | 94.5 | 605 | |
| | 2010.10-2015.10 | 6MT | F | L/R | Estate FWD A 20 DTH | | GCI21030 | Inner Joint | | 27 | 26 | 35 | 78 | 112.5 | |
| | 2010.10-2015.10 | MT | F | L | Estate FWD A 20 DTH | | GDS21036 | Drive Shaft | | 30 | 27 | 55.4 | 100 | 602 | |
| 2.0 (121 kw) | 2011.06-2015.10 | 6AT | F | L | Hatchback FWD A 20 DTH | Chassis no. from:C0/C1033261/C3/C8028482/CG040399 | GDS83986 | Drive Shaft | | 30 | 27 | 52.5 | 94 | 591 | |
| | 2011.06-2015.10 | 6AT | F | R | Hatchback FWD A 20 DTH | | GDS61138 | Drive Shaft | | 30 | 27 | 52.5 | 94.5 | 598 | |
| | 2011.06-2015.10 | 6AT | F | L | Hatchback FWD A 20 DTH | | GCI86015 | Inner Joint | | 27 | 26 | 35 | 78.5 | 109.5 | |
| | 2011.06-2015.10 | 6AT/6MT | F | L/R | Hatchback FWD A 20 DTH | | GCO17051 | Outer Joint | | 30 | 26 | 53.8 | 94.5 | 65.5 | M |
| | 2011.06-2015.10 | 6AT/6MT | F | L/R | Hatchback FWD A 20 DTH | | GCO21049 | Outer Joint | | 30 | 26 | 52.5 | 94 | 65.5 | M |
| | 2011.06-2015.10 | 6AT/6MT | F | L/R | Hatchback FWD A 20 DTH | | GCO88046 | Outer Joint | | 30 | 26 | 52.5 | 94.5 | 65.5 | M |
| | 2011.06-2015.10 | 6MT | F | L | Hatchback FWD A 20 DTH | | GDS21075 | Drive Shaft | | 30 | 27 | 52.5 | 94 | 602 | |
| | 2011.06-2015.10 | 6MT | F | R | Hatchback FWD A 20 DTH | | GDS21032 | Drive Shaft | | 30 | 27 | 53.8 | 94.5 | 605 | |
| | 2011.06-2015.10 | 6MT | F | L/R | Hatchback FWD A 20 DTH | | GCI21030 | Inner Joint | | 27 | 26 | 35 | 78 | 112.5 | |
| | 2011.06-2015.10 | MT | F | L | Hatchback FWD A 20 DTH | | GDS21036 | Drive Shaft | | 30 | 27 | 55.4 | 100 | 602 | |
| | 2011.08-2015.10 | 6AT | F | L | Estate FWD A 20 DTH | Chassis no. from:C0/C1033261/C3/C8028482/CG040399 | GDS83986 | Drive Shaft | | 30 | 27 | 52.5 | 94 | 591 | |
| | 2011.08-2015.10 | 6AT | F | R | Estate FWD A 20 DTH | | GDS61138 | Drive Shaft | | 30 | 27 | 52.5 | 94.5 | 598 | |
| | 2011.08-2015.10 | 6AT | F | L | Estate FWD A 20 DTH | | GCI86015 | Inner Joint | | 27 | 26 | 35 | 78.5 | 109.5 | |
| | 2011.08-2015.10 | 6AT/6MT | F | L/R | Estate FWD A 20 DTH | | GCO17051 | Outer Joint | | 30 | 26 | 53.8 | 94.5 | 65.5 | M |
| | 2011.08-2015.10 | 6AT/6MT | F | L/R | Estate FWD A 20 DTH | | GCO21049 | Outer Joint | | 30 | 26 | 52.5 | 94 | 65.5 | M |
| | 2011.08-2015.10 | 6AT/6MT | F | L/R | Estate FWD A 20 DTH | | GCO88046 | Outer Joint | | 30 | 26 | 52.5 | 94.5 | 65.5 | M |
| | 2011.08-2015.10 | 6MT | F | L | Estate FWD A 20 DTH | | GDS21075 | Drive Shaft | | 30 | 27 | 52.5 | 94 | 602 | |
| | 2011.08-2015.10 | 6MT | F | R | Estate FWD A 20 DTH | | GDS21032 | Drive Shaft | | 30 | 27 | 53.8 | 94.5 | 605 | |
| | 2011.08-2015.10 | 6MT | F | L/R | Estate FWD A 20 DTH | | GCI21030 | Inner Joint | | 27 | 26 | 35 | 78 | 112.5 | |
| | 2011.08-2015.10 | MT | F | L | Estate FWD A 20 DTH | | GDS21036 | Drive Shaft | | 30 | 27 | 55.4 | 100 | 602 | |
| | 2011.08-2015.10 | MT | F | L | Estate FWD A 20 DTH | | GCI21030 | Inner Joint | | 27 | 26 | 35 | 78 | 112.5 | |
| 2.0 (125 kw) | 2004.03-2010.10 | 5MT | F | R | Hatchback FWD Z 20 LEL | | GDS21056 | Drive Shaft | | 33 | 34 | 52.5 | 94 | 595 | |
| | 2004.03-2010.10 | 5MT | F | R | Hatchback FWD Z 20 LEL | | GCI99187 | Inner Joint | | 34 | 34 | 37.5 | | 124 | |
| | 2004.03-2010.10 | AT/MT | F | L/R | Hatchback FWD Z 20 LEL | | GCO44027 | Outer Joint | | 33 | 26 | 52.5 | 94 | 65.5 | M |
| | 2004.03-2010.10 | | F | | Hatchback FWD Z 20 LEL | | GCO99024 | Outer Joint | | 33 | 26 | 52.5 | 94 | 65.5 | M |
| | 2004.08-2010.10 | 5MT | F | R | Estate FWD Z 20 LEL | | GDS21056 | Drive Shaft | | 33 | 34 | 52.5 | 94 | 595 | |
| | 2004.08-2010.10 | 5MT | F | R | Estate FWD Z 20 LEL | | GCI99187 | Inner Joint | | 34 | 34 | 37.5 | | 124 | |
| | 2004.08-2010.10 | AT/MT | F | L/R | Estate FWD Z 20 LEL | | GCO44027 | Outer Joint | | 33 | 26 | 52.5 | 94 | 65.5 | M |
| | 2004.08-2010.10 | | F | | Estate FWD Z 20 LEL | | GCO99024 | Outer Joint | | 33 | 26 | 52.5 | 94 | 65.5 | M |
| 2.0 (141 kw) | 2002.06-2004.01 | 5MT | F | R | Hatchback FWD Z20LET | | GDS44082 | Drive Shaft | | 33 | 34 | 55 | 104 | 663 | |
| | 2002.06-2004.01 | MT | F | L | Hatchback FWD Z20LET | | GDS44025 | Drive Shaft | | 33 | 34 | 55 | 104 | 593 | |
| | 2002.06-2004.01 | MT | F | L/R | Hatchback FWD Z20LET | | GCO99061 | Outer Joint | | 33 | 35 | 55 | 104 | 67.5 | I |
| | 2002.06-2004.01 | MT | F | L | Hatchback FWD Z20LET | | GCI44018 | Inner Joint | | 34 | 35 | 35 | 56 | 119.5 | |
| | 2002.06-2004.01 | | F | L | Hatchback FWD Z20LET | | GCO44065 | Outer Joint | 29T | 33 | 35 | 55 | 104 | 67.5 | I |
| | 2003.03-2004.07 | 5MT | F | R | Estate FWD Z20LET | | GDS44082 | Drive Shaft | | 33 | 34 | 55 | 104 | 663 | |
| | 2003.03-2004.07 | MT | F | L | Estate FWD Z20LET | | GDS44025 | Drive Shaft | | 33 | 34 | 55 | 104 | 593 | |
| | 2003.03-2004.07 | MT | F | L/R | Estate FWD Z20LET | | GCO99061 | Outer Joint | | 33 | 35 | 55 | 104 | 67.5 | I |
| | 2003.03-2004.07 | MT | F | L | Estate FWD Z20LET | | GCI44018 | Inner Joint | | 34 | 35 | 35 | 56 | 119.5 | |
| | 2003.03-2004.07 | | F | L | Estate FWD Z20LET | | GCO44065 | Outer Joint | 29T | 33 | 35 | 55 | 104 | 67.5 | I |
| 2.0 (147 kw) | 2002.09-2004.01 | 5MT | F | R | Hatchback FWD Z20LET | | GDS44082 | Drive Shaft | | 33 | 34 | 55 | 104 | 663 | |
| | 2002.09-2004.01 | MT | F | L | Hatchback FWD Z20LET | | GDS44025 | Drive Shaft | | 33 | 34 | 55 | 104 | 593 | |

| | YEAR | TRANSM. | F/R | L/R | BODY STYLE & DRIVE TYPE & ENGINE | REMARKS | G-AP Ref. | PRODUCT | ABS | Technical Specifications A | B | C | H | L | P |
|---|---|---|---|---|---|---|---|---|---|---|---|---|---|---|---|
| **OPEL** | | | | | | | | | | | | | | | |
| **Astra** | | | | | | | | | | | | | | | |
| 2.0 (147 kw) | 2002.09-2004.01 | MT | F | L/R | Hatchback FWD Z20LET | | GCO99061 | Outer Joint | | 33 | 35 | 55 | 104 | 67.5 | I |
| | 2002.09-2004.01 | MT | F | L | Hatchback FWD Z20LET | | GCI44018 | Inner Joint | | 34 | 35 | 35 | 56 | 119.5 | |
| | 2002.09-2004.01 | | F | L | Hatchback FWD Z20LET | | GCO44065 | Outer Joint | 29T | 33 | 35 | 55 | 104 | 67.5 | I |
| | 2002.09-2004.07 | 5MT | F | R | Estate FWD Z20LET | | GDS44082 | Drive Shaft | | 33 | 34 | 55 | 104 | 663 | |
| | 2002.09-2004.07 | MT | F | L | Estate FWD Z20LET | | GDS44025 | Drive Shaft | | 33 | 34 | 55 | 104 | 593 | |
| | 2002.09-2004.07 | MT | F | L/R | Estate FWD Z20LET | | GCO99061 | Outer Joint | | 33 | 35 | 55 | 104 | 67.5 | I |
| | 2002.09-2004.07 | MT | F | L | Estate FWD Z20LET | | GCI44018 | Inner Joint | | 34 | 35 | 35 | 56 | 119.5 | |
| | 2002.09-2004.07 | | F | L | Estate FWD Z20LET | | GCO44065 | Outer Joint | 29T | 33 | 35 | 55 | 104 | 67.5 | I |
| | 2004.09-2010.10 | 5MT/6MT | F | R | Estate FWD Z 20 LER | | GDS21056 | Drive Shaft | | 33 | 34 | 52.5 | 94 | 595 | |
| | 2004.09-2010.10 | 5MT/6MT | F | R | Estate FWD Z 20 LER | | GCI99187 | Inner Joint | | 34 | 34 | 37.5 | | 124 | |
| | 2004.09-2010.10 | AT/MT | F | L/R | Estate FWD Z 20 LER | | GCO44027 | Outer Joint | | 33 | 26 | 52.5 | 94 | 65.5 | M |
| | 2004.09-2010.10 | | F | | Estate FWD Z 20 LER | | GCO99024 | Outer Joint | | 33 | 26 | 52.5 | 94 | 65.5 | M |
| | 2004.09-2010.10 | 6MT | F | R | Hatchback FWD Z 20 LER | | GDS21056 | Drive Shaft | | 33 | 34 | 52.5 | 94 | 595 | |
| | 2004.09-2010.10 | 6MT | F | R | Hatchback FWD Z 20 LER | | GCI99187 | Inner Joint | | 34 | 34 | 37.5 | | 124 | |
| | 2004.09-2010.10 | AT/MT | F | L/R | Hatchback FWD Z 20 LER | | GCO44027 | Outer Joint | | 33 | 26 | 52.5 | 94 | 65.5 | M |
| | 2004.09-2010.10 | | F | | Hatchback FWD Z 20 LER | | GCO99024 | Outer Joint | | 33 | 26 | 52.5 | 94 | 65.5 | M |
| 2.0 (177 kw) | 2005.03-2010.10 | 6MT | F | R | Hatchback FWD Z 20 LEH | Date to:2007.07 | GDS21062 | Drive Shaft | | 30 | 34 | 53.8 | 94.5 | 595 | |
| | 2005.03-2010.10 | 6MT | F | R | Hatchback FWD Z 20 LEH | Date from:2007.08,Chassis no. from:72/75041476/78 | GDS82084 | Drive Shaft | | 30 | 34 | 53.8 | 94.5 | 598 | |
| | 2005.03-2010.10 | 6MT | F | R | Hatchback FWD Z 20 LEH | Date from:2007.08,Chassis no. from:72/75041476/78 | GCI44016 | Inner Joint | | 34 | 28 | 37.5 | | 129.2 | |
| | 2005.03-2010.10 | 6MT | F | R | Hatchback FWD Z 20 LEH | Date to:2007.07 | GCI99187 | Inner Joint | | 34 | 34 | 37.5 | | 124 | |
| | 2005.03-2010.10 | | F | R | Hatchback FWD Z 20 LEH | Date to:2007.07,Chassis no. to:72/,Chassis no. to:75041476,Chassis no. to:78/,Chassis no. to:79/ | GDS21056 | Drive Shaft | | 33 | 34 | 52.5 | 94 | 595 | |
| | 2005.03-2010.10 | | F | L/R | Hatchback FWD Z 20 LEH | | GCO17051 | Outer Joint | | 30 | 26 | 53.8 | 94.5 | 65.5 | M |
| 2.2 (92 kw) | 2002.09-2004.07 | 5MT | F | R | Estate FWD Y22DTR | | GDS44101 | Drive Shaft | | 33 | 27 | 52 | 103.5 | 623 | |
| | 2002.09-2004.07 | AT/5MT | F | L | Estate FWD Y22DTR | | GDS44058 | Drive Shaft | 29T | 33 | 27 | 55 | 104 | 586 | |
| | 2002.09-2005.01 | 5MT | F | R | Hatchback FWD Y22DTR | | GDS44101 | Drive Shaft | | 33 | 27 | 52 | 103.5 | 623 | |
| | 2002.09-2005.01 | AT/5MT | F | L | Hatchback FWD Y22DTR | | GDS44058 | Drive Shaft | 29T | 33 | 27 | 55 | 104 | 586 | |
| | 2002.09-2005.01 | 5MT | F | R | Saloon FWD Y22DTR | | GDS44101 | Drive Shaft | | 33 | 27 | 52 | 103.5 | 623 | |
| | 2002.09-2005.01 | AT/5MT | F | L | Saloon FWD Y22DTR | | GDS44058 | Drive Shaft | 29T | 33 | 27 | 55 | 104 | 586 | |
| | 2002.09-2005.01 | MT | F | R | Saloon FWD Y22DTR | | GCO44049 | Outer Joint | | 33 | 25 | 52 | 109 | 61 | O |
| 2.2 (108 kw) | 2000.09-2004.03 | 4AT/5MT | F | L | Hatchback FWD Z22SE | | GDS44044 | Drive Shaft | | 33 | 34 | 52 | 103.5 | 595 | |
| | 2000.09-2004.03 | 4AT/5MT | F | R | Hatchback FWD Z22SE | | GDS88011 | Drive Shaft | | 33 | 34 | 52 | 104 | 959 | |
| | 2000.09-2004.03 | 4AT/5MT | F | L | Hatchback FWD Z22SE | | GCO44032 | Outer Joint | | 33 | 25 | 52 | 103.5 | 61 | O |
| | 2000.09-2004.03 | MT | F | R | Hatchback FWD Z22SE | | GCO44049 | Outer Joint | | 33 | 25 | 52 | 109 | 61 | O |
| | 2000.09-2004.03 | | F | L/R | Hatchback FWD Z22SE | | GCO44006 | Outer Joint | 29T | 33 | 25 | 52 | 103.5 | 61 | O |
| | 2000.09-2004.03 | | F | L/R | Hatchback FWD Z22SE | | GCI44002 | Inner Joint | | 34 | 25 | 35 | 56.2 | 114.8 | |
| | 2000.09-2004.07 | 4AT/5MT | F | L | Estate FWD Z22SE | | GDS44044 | Drive Shaft | | 33 | 34 | 52 | 103.5 | 595 | |
| | 2000.09-2004.07 | 4AT/5MT | F | R | Estate FWD Z22SE | | GDS88011 | Drive Shaft | | 33 | 34 | 52 | 104 | 959 | |
| | 2000.09-2004.07 | 4AT/5MT | F | L | Estate FWD Z22SE | | GCO44032 | Outer Joint | | 33 | 25 | 52 | 103.5 | 61 | O |
| | 2000.09-2004.07 | MT | F | R | Estate FWD Z22SE | | GCO44049 | Outer Joint | | 33 | 25 | 52 | 109 | 61 | O |
| | 2000.09-2004.07 | | F | L/R | Estate FWD Z22SE | | GCO44006 | Outer Joint | 29T | 33 | 25 | 52 | 103.5 | 61 | O |
| | 2000.09-2004.07 | | F | L/R | Estate FWD Z22SE | | GCI44002 | Inner Joint | | 34 | 25 | 35 | 56.2 | 114.8 | |
| | 2000.09-2005.01 | 4AT/5MT | F | L | Saloon FWD Z22SE | | GDS44044 | Drive Shaft | | 33 | 34 | 52 | 103.5 | 595 | |
| | 2000.09-2005.01 | 4AT/5MT | F | R | Saloon FWD Z22SE | | GDS88011 | Drive Shaft | | 33 | 34 | 52 | 104 | 959 | |
| | 2000.09-2005.01 | 4AT/5MT | F | L | Saloon FWD Z22SE | | GCO44032 | Outer Joint | | 33 | 25 | 52 | 103.5 | 61 | O |
| | 2000.09-2005.01 | MT | F | R | Saloon FWD Z22SE | | GCO44049 | Outer Joint | | 33 | 25 | 52 | 109 | 61 | O |
| | 2000.09-2005.01 | | F | L/R | Saloon FWD Z22SE | | GCO44006 | Outer Joint | 29T | 33 | 25 | 52 | 103.5 | 61 | O |
| | 2000.09-2005.01 | | F | L/R | Saloon FWD Z22SE | | GCI44002 | Inner Joint | | 34 | 25 | 35 | 56.2 | 114.8 | |
| **Astra Cabrio** | | | | | | | | | | | | | | | |
| 1.4 (60 kw) | 1993.05-2001.03 | AT/MT | F | R | Cabriolet FWD C14SE | | GDS50209 | Drive Shaft | | 27 | 39 | 56.5 | 92 | 1014 | |
| | 1993.05-2001.03 | AT/MT | F | R | Cabriolet FWD C14SE | | GDS60019 | Drive Shaft | | 22 | 22 | 52 | 95 | 926 | |
| | 1993.05-2001.03 | AT/MT | F | R | Cabriolet FWD C14SE | | GCI50097 | Inner Joint | | 39 | 35 | 30 | 409 | 90 | |
| | 1993.05-2001.03 | MT | F | L | Cabriolet FWD C14SE | Chassis no. to:P-2732833 | GDS44002 | Drive Shaft | 29T | 22 | 22 | 52 | 95 | 585 | |
| | 1993.05-2001.03 | MT | F | R | Cabriolet FWD C14SE | Chassis no. to:P-2732833 | GDS60002 | Drive Shaft | 29T | 22 | 22 | 52 | 95 | 926 | |
| | 1993.05-2001.03 | MT | F | L/R | Cabriolet FWD C14SE | Date from:1994.01 | GCO44007 | Outer Joint | 29T | 22 | 22 | 52 | 94.5 | 50 | O |
| | 1993.05-2001.03 | MT | F | L/R | Cabriolet FWD C14SE | | GCO44041 | Outer Joint | | 22 | 22 | 52 | 95 | 50 | O |
| | 1993.05-2001.03 | MT | F | L/R | Cabriolet FWD C14SE | Chassis no. to:P-2732833 | GCO44051 | Outer Joint | 29T | 22 | 22 | 52 | 95 | 50 | O |
| | 1993.05-2001.03 | MT | F | L/R | Cabriolet FWD C14SE | | GCI44004 | Inner Joint | | 22 | 22 | 34.95 | 57.5 | 103 | |
| 1.4 (66 kw) | 1996.09-2001.01 | AT/MT | F | R | Cabriolet FWD X14XE | | GDS50209 | Drive Shaft | | 27 | 39 | 56.5 | 92 | 1014 | |
| | 1996.09-2001.01 | AT/MT | F | R | Cabriolet FWD X14XE | | GDS60019 | Drive Shaft | | 22 | 22 | 52 | 95 | 926 | |
| | 1996.09-2001.01 | AT/MT | F | L/R | Cabriolet FWD X14XE | Date from:1996.09 | GCO44007 | Outer Joint | 29T | 22 | 22 | 52 | 94.5 | 50 | O |
| | 1996.09-2001.01 | AT/MT | F | R | Cabriolet FWD X14XE | | GCI50097 | Inner Joint | | 39 | 35 | 30 | 409 | 90 | |
| | 1996.09-2001.01 | MT | F | R | Cabriolet FWD X14XE | | GDS60002 | Drive Shaft | 29T | 22 | 22 | 52 | 95 | 926 | |
| | 1996.09-2001.01 | MT | F | L/R | Cabriolet FWD X14XE | | GCO44041 | Outer Joint | | 22 | 22 | 52 | 95 | 50 | O |
| | 1996.09-2001.01 | MT | F | L/R | Cabriolet FWD X14XE | | GCO44051 | Outer Joint | 29T | 22 | 22 | 52 | 95 | 50 | O |
| | 1996.09-2001.01 | MT | F | L/R | Cabriolet FWD X14XE | | GCI44004 | Inner Joint | | 22 | 22 | 34.95 | 57.5 | 103 | |

| | YEAR | TRANSM. | F/R | L/R | BODY STYLE & DRIVE TYPE & ENGINE | REMARKS | G-AP Ref. | PRODUCT | ABS | Technical Specifications A | B | C | H | L | P |
|---|---|---|---|---|---|---|---|---|---|---|---|---|---|---|---|
| **OPEL** | | | | | | | | | | | | | | | |
| **Astra Cabrio** | | | | | | | | | | | | | | | |
| 1.4 (66 kw) | 2005.10-2011.12 | 5MT | F | L/R | Cabriolet FWD Z14XEP | | GCO44003 | Outer Joint | | 33 | 22 | 53 | 95 | 54.5 | M |
| | 2005.10-2011.12 | 5MT | F | L/R | Cabriolet FWD Z14XEP | | GCI21014 | Inner Joint | | 22 | 22 | 35 | 57.5 | 105.5 | |
| 1.6 (52 kw) | 1993.09-1996.08 | AT/MT | F | L/R | Cabriolet FWD X16SZ | Date from:1993.09 | GCO44007 | Outer Joint | 29T | 22 | 22 | 52 | 94.5 | 50 | O |
| | 1993.09-1996.08 | MT | F | R | Cabriolet FWD X16SZ | | GDS60002 | Drive Shaft | 29T | 22 | 22 | 52 | 95 | 926 | |
| | 1993.09-1996.08 | MT | F | L/R | Cabriolet FWD X16SZ | | GCO44041 | Outer Joint | | 22 | 22 | 52 | 95 | 50 | O |
| | 1993.09-1996.08 | MT | F | L/R | Cabriolet FWD X16SZ | | GCO44051 | Outer Joint | 29T | 22 | 22 | 52 | 95 | 50 | O |
| | 1993.09-1996.08 | MT | F | L/R | Cabriolet FWD X16SZ | Date from:1993.09 | GCI44004 | Inner Joint | | 22 | 22 | 34.95 | 57.5 | 103 | |
| | 1993.09-1996.08 | | F | | Cabriolet FWD X16SZ | | GCO44023 | Outer Joint | | 22 | 22 | 52 | 95 | 50 | O |
| | 1993.09-1996.08 | | F | | Cabriolet FWD X16SZ | | GCO44068 | Outer Joint | 29T | 22 | 30 | 52 | 94.5 | 55 | I |
| 1.6 (55 kw) | 1994.09-2001.03 | AT | F | L/R | Cabriolet FWD 16LZ2/X16SZR | | GCO44068 | Outer Joint | 29T | 22 | 30 | 52 | 94.5 | 55 | I |
| | 1994.09-2001.03 | AT/MT | F | L/R | Cabriolet FWD 16LZ2/X16SZR | | GCO44007 | Outer Joint | 29T | 22 | 22 | 52 | 94.5 | 50 | O |
| | 1994.09-2001.03 | MT | F | R | Cabriolet FWD 16LZ2/X16SZR | | GDS60002 | Drive Shaft | 29T | 22 | 22 | 52 | 95 | 926 | |
| | 1994.09-2001.03 | MT | F | L/R | Cabriolet FWD 16LZ2/X16SZR | | GCO44041 | Outer Joint | | 22 | 22 | 52 | 95 | 50 | O |
| | 1994.09-2001.03 | MT | F | L/R | Cabriolet FWD 16LZ2/X16SZR | | GCO44051 | Outer Joint | 29T | 22 | 22 | 52 | 95 | 50 | O |
| | 1994.09-2001.03 | MT | F | L/R | Cabriolet FWD 16LZ2/X16SZR | | GCI44004 | Inner Joint | | 22 | 22 | 34.95 | 57.5 | 103 | |
| 1.6 (74 kw) | 2001.02-2004.01 | 5MT | F | L | Cabriolet FWD Z16XE | | GDS60013 | Drive Shaft | | 33 | 22 | 52 | 103 | 595 | |
| | 2001.02-2004.01 | 5MT | F | R | Cabriolet FWD Z16XE | | GDS44033 | Drive Shaft | | 33 | 22 | 52 | 103 | 950.5 | |
| | 2001.02-2004.01 | AT/MT | F | L/R | Cabriolet FWD Z16XE | | GCO44011 | Outer Joint | 29T | 33 | 22 | 52 | 103 | 50.5 | O |
| | 2001.02-2004.01 | AT/MT | F | L/R | Cabriolet FWD Z16XE | | GCO44030 | Outer Joint | | 33 | 22 | 52 | 103 | 50.5 | O |
| | 2001.02-2004.01 | AT/MT | F | L/R | Cabriolet FWD Z16XE | | GCI44004 | Inner Joint | | 22 | 22 | 34.95 | 57.5 | 103 | |
| | 2001.02-2004.01 | MT | F | L | Cabriolet FWD Z16XE | Date to:2004.01 | GCI21014 | Inner Joint | | 22 | 22 | 35 | 57.5 | 105.5 | |
| | 2001.02-2004.01 | | F | L/R | Cabriolet FWD Z16XE | | GCO44009 | Outer Joint | | 33 | 22 | 52 | 103 | 50.5 | O |
| | 2001.02-2004.01 | | F | | Cabriolet FWD Z16XE | | GCO44010 | Outer Joint | 29T | 33 | 22 | 52 | 103 | 50.5 | O |
| 1.6 (76 kw) | 2003.10-2005.09 | 5MT | F | L | Cabriolet FWD Z16XEP | | GDS60013 | Drive Shaft | | 33 | 22 | 52 | 103 | 595 | |
| | 2003.10-2005.09 | 5MT | F | R | Cabriolet FWD Z16XEP | | GDS44033 | Drive Shaft | | 33 | 22 | 52 | 103 | 950.5 | |
| | 2003.10-2005.09 | AT/MT | F | L/R | Cabriolet FWD Z16XEP | | GCO44011 | Outer Joint | 29T | 33 | 22 | 52 | 103 | 50.5 | O |
| | 2003.10-2005.09 | AT/MT | F | L/R | Cabriolet FWD Z16XEP | Date from:2003.10 | GCO44030 | Outer Joint | | 33 | 22 | 52 | 103 | 50.5 | O |
| | 2003.10-2005.09 | AT/MT | F | L/R | Cabriolet FWD Z16XEP | | GCI44004 | Inner Joint | | 22 | 22 | 34.95 | 57.5 | 103 | |
| | 2003.10-2005.09 | MT | F | L | Cabriolet FWD Z16XEP | Date from:2003.10 | GCI21014 | Inner Joint | | 22 | 22 | 35 | 57.5 | 105.5 | |
| | 2003.10-2005.09 | | F | | Cabriolet FWD Z16XEP | | GCO44010 | Outer Joint | 29T | 33 | 22 | 52 | 103 | 50.5 | O |
| 1.6 (77 kw) | 2005.09-2010.10 | MT | F | L/R | Convertible FWD Z 16 XEP;Z 16 XE1 | Date to:2009.12 | GCO44003 | Outer Joint | | 33 | 22 | 53 | 95 | 54.5 | M |
| | 2005.09-2010.10 | MT | F | L | Convertible FWD Z 16 XEP;Z 16 XE1 | Date to:2009.12 | GCI21014 | Inner Joint | | 22 | 22 | 35 | 57.5 | 105.5 | |
| | 2005.09-2010.10 | SAT/5MT | F | L | Convertible FWD Z 16 XEP;Z 16 XE1 | | GDS44028 | Drive Shaft | | 33 | 22 | 53 | 95 | 590 | |
| | 2005.09-2010.10 | SAT/5MT | F | R | Convertible FWD Z 16 XEP;Z 16 XE1 | | GDS44030 | Drive Shaft | | 33 | 22 | 53 | 95 | 952 | |
| 1.6 (85 kw) | 2006.12-2010.10 | SAT/5MT | F | L | Convertible FWD Z 16 XER | | GDS44028 | Drive Shaft | | 33 | 22 | 53 | 95 | 590 | |
| | 2006.12-2010.10 | SAT/5MT | F | R | Convertible FWD Z 16 XER | | GDS44030 | Drive Shaft | | 33 | 22 | 53 | 95 | 952 | |
| | 2006.12-2010.10 | | F | L/R | Convertible FWD Z 16 XER | | GCO44003 | Outer Joint | | 33 | 22 | 53 | 95 | 54.5 | M |
| | 2006.12-2010.10 | | F | L | Convertible FWD Z 16 XER | | GCI21014 | Inner Joint | | 22 | 22 | 35 | 57.5 | 105.5 | |
| 1.6 (132 kw) | 2007.02-2010.10 | | F | L/R | Convertible FWD Z 16 LET;A 16 LET | | GCO44028 | Outer Joint | | 33 | 24 | 53 | 93.5 | 63.5 | M |
| | 2007.02-2010.10 | | F | L/R | Convertible FWD Z 16 LET;A 16 LET | | GCI44005 | Inner Joint | | 34 | 25 | 35 | | 130.2 | |
| 1.8 (85 kw) | 1994.09-2001.01 | 5MT | F | L | Cabriolet FWD C18XEL/X18XE | Date to:1998.12 | GDS44011 | Drive Shaft | 29T | 33 | 34 | 52 | 109 | 594.5 | |
| | 1994.09-2001.01 | 5MT | F | R | Cabriolet FWD C18XEL/X18XE | Date to:1998.12 | GDS44059 | Drive Shaft | 29T | 33 | 34 | 52 | 109 | 938 | |
| | 1994.09-2001.01 | 5MT | F | L/R | Cabriolet FWD C18XEL/X18XE | Date to:1998.12 | GCO44056 | Outer Joint | 29T | 33 | 25 | 52 | 109 | 61 | O |
| | 1994.09-2001.01 | MT | F | L/R | Cabriolet FWD C18XEL/X18XE | | GCI44002 | Inner Joint | | 34 | 25 | 35 | 56.2 | 114.8 | |
| 1.8 (92 kw) | 2001.02-2005.09 | 5MT | F | R | Cabriolet FWD Z18XE | | GDS60035 | Drive Shaft | | 33 | 22 | 52 | 109 | 961 | |
| | 2001.02-2005.09 | MT | F | R | Cabriolet FWD Z18XE | | GCO44049 | Outer Joint | | 33 | 25 | 52 | 109 | 61 | O |
| | 2001.02-2005.09 | | F | L | Cabriolet FWD Z18XE | | GDS60013 | Drive Shaft | | 33 | 22 | 52 | 103 | 595 | |
| | 2001.02-2005.09 | | F | L/R | Cabriolet FWD Z18XE | | GCO44006 | Outer Joint | 29T | 33 | 25 | 52 | 103.5 | 61 | O |
| | 2001.02-2005.09 | | F | L/R | Cabriolet FWD Z18XE | | GCI99026 | Inner Joint | | 22 | 25 | 35 | 57 | 111.7 | |
| | 2005.09-2010.10 | 5MT | F | L | Convertible FWD Z 18 XE | | GDS21063 | Drive Shaft | | 33 | 22 | 53 | 93.5 | 586 | |
| | 2005.09-2010.10 | 5MT | F | R | Convertible FWD Z 18 XE | | GDS21055 | Drive Shaft | | 33 | 22 | 53 | 93.5 | 950 | |
| | 2005.09-2010.10 | 5MT | F | L | Convertible FWD Z 18 XE | | GCI99026 | Inner Joint | | 22 | 25 | 35 | 57 | 111.7 | |
| | 2005.09-2010.10 | AT | F | L | Convertible FWD Z 18 XE | Date to:2006.08 | GDS44097 | Drive Shaft | | 33 | 22 | 53 | 93.5 | 588 | |
| | 2005.09-2010.10 | AT | F | R | Convertible FWD Z 18 XE | Date to:2006.08 | GDS44098 | Drive Shaft | | 33 | 22 | 53 | 93.5 | 950 | |
| | 2005.09-2010.10 | AT/MT | F | L/R | Convertible FWD Z 18 XE | Date to:2006.08 | GCO44028 | Outer Joint | | 33 | 24 | 53 | 93.5 | 63.5 | M |
| 1.8 (103 kw) | 2005.09-2010.10 | 4AT | F | L | Convertible FWD Z 18 XER;A 18 XER | | GDS44097 | Drive Shaft | | 33 | 22 | 53 | 93.5 | 588 | |
| | 2005.09-2010.10 | 4AT | F | R | Convertible FWD Z 18 XER;A 18 XER | | GDS44098 | Drive Shaft | | 33 | 22 | 53 | 93.5 | 950 | |
| | 2005.09-2010.10 | 4AT/5MT | F | L/R | Convertible FWD Z 18 XER;A 18 XER | | GCO44028 | Outer Joint | | 33 | 24 | 53 | 93.5 | 63.5 | M |
| | 2005.09-2010.10 | 5MT | F | L | Convertible FWD Z 18 XER;A 18 XER | | GDS21063 | Drive Shaft | | 33 | 22 | 53 | 93.5 | 586 | |
| | 2005.09-2010.10 | 5MT | F | R | Convertible FWD Z 18 XER;A 18 XER | | GDS21055 | Drive Shaft | | 33 | 22 | 53 | 93.5 | 950 | |
| | 2005.09-2010.10 | 5MT | F | L/R | Convertible FWD Z 18 XER;A 18 XER | | GCI99026 | Inner Joint | | 22 | 25 | 35 | 57 | 111.7 | |
| 1.9 (110 kw) | 2005.09-2010.10 | 6MT | F | L | Convertible FWD Z 19 DTH | Date from:2007.08 | GDS21035 | Drive Shaft | | 30 | 25 | 53.8 | 94.5 | 581 | |
| | 2005.09-2010.10 | 6MT | F | L | Convertible FWD Z 19 DTH | Date to:2007.07 | GDS21071 | Drive Shaft | | 30 | 25 | 53.8 | 94.5 | 576 | |
| | 2005.09-2010.10 | 6MT | F | R | Convertible FWD Z 19 DTH | Date to:2007.07 | GDS21062 | Drive Shaft | | 30 | 34 | 53.8 | 94.5 | 595 | |
| | 2005.09-2010.10 | 6MT | F | R | Convertible FWD Z 19 DTH | Date from:2007.08,Chassis no. from:72024736/75041476/78008876 | GDS82084 | Drive Shaft | | 30 | 34 | 53.8 | 94.5 | 598 | |

| | YEAR | TRANSM. | F/R | L/R | BODY STYLE & DRIVE TYPE & ENGINE | REMARKS | G-AP Ref. | PRODUCT | ABS | Technical Specifications A | B | C | H | L | P |
|---|---|---|---|---|---|---|---|---|---|---|---|---|---|---|---|
| **OPEL** | | | | | | | | | | | | | | | |
| **Astra Cabrio** | | | | | | | | | | | | | | | |
| 1.9 (110 kw) | 2005.09-2010.10 | 6MT | F | R | Convertible FWD Z 19 DTH | Date to:2007.07;Chassis no. to:72024735/75041475/78008875/7G | GCI99187 | Inner Joint | | 34 | 34 | 37.5 | | 124 | |
| | 2005.09-2010.10 | MT | F | L/R | Convertible FWD Z 19 DTH | Date from:2005.12 | GCO17051 | Outer Joint | | 30 | 26 | 53.8 | 94.5 | 65.5 | M |
| | 2005.09-2010.10 | MT | F | L | Convertible FWD Z 19 DTH | Date from:2005.12 | GCI21018 | Inner Joint | | 25 | 34 | 35 | 58 | 116 | |
| | 2005.09-2010.10 | MT | F | L | Convertible FWD Z 19 DTH | Date from:2005.12 | GCI99186 | Inner Joint | | 25 | 28 | 34.9 | 57.5 | 111 | |
| | 2005.09-2010.10 | | F | R | Convertible FWD Z 19 DTH | Date To:2007.07;Chassis no. to:72024735/75041475/78008875/7G | GDS21056 | Drive Shaft | | 33 | 34 | 52.5 | 94 | 595 | |
| 2.0 (125 kw) | 2005.09-2010.10 | 6MT | F | R | Convertible FWD Z 20 LEL | | GDS21056 | Drive Shaft | | 33 | 34 | 52.5 | 94 | 595 | |
| | 2005.09-2010.10 | 6MT | F | R | Convertible FWD Z 20 LEL | | GCI99187 | Inner Joint | | 34 | 34 | 37.5 | | 124 | |
| | 2005.09-2010.10 | | F | L/R | Convertible FWD Z 20 LEL | | GCO44027 | Outer Joint | | 33 | 26 | 52.5 | 94 | 65.5 | M |
| | 2005.09-2010.10 | | F | | Convertible FWD Z 20 LEL | | GCO99024 | Outer Joint | | 33 | 26 | 52.5 | 94 | 65.5 | M |
| 2.0 (141 kw) | 2002.03-2005.10 | 5MT | F | R | Cabriolet FWD Z20LET | | GDS44082 | Drive Shaft | | 33 | 34 | 55 | 104 | 663 | |
| | 2002.03-2005.10 | MT | F | L | Cabriolet FWD Z20LET | | GDS44025 | Drive Shaft | | 33 | 34 | 55 | 104 | 593 | |
| | 2002.03-2005.10 | MT | F | L/R | Cabriolet FWD Z20LET | | GCO99061 | Outer Joint | | 33 | 35 | 55 | 104 | 67.5 | I |
| | 2002.03-2005.10 | MT | F | L | Cabriolet FWD Z20LET | | GCI44018 | Inner Joint | | 34 | 35 | 35 | 56 | 119.5 | |
| | 2002.03-2005.10 | | F | L | Cabriolet FWD Z20LET | | GCO44065 | Outer Joint | 29T | 33 | 35 | 55 | 104 | 67.5 | I |
| 2.0 (147 kw) | 2002.11-2005.10 | 5MT | F | R | Cabriolet FWD Z20LET | | GDS44082 | Drive Shaft | | 33 | 34 | 55 | 104 | 663 | |
| | 2002.11-2005.10 | MT | F | L | Cabriolet FWD Z20LET | | GDS44025 | Drive Shaft | | 33 | 34 | 55 | 104 | 593 | |
| | 2002.11-2005.10 | MT | F | L/R | Cabriolet FWD Z20LET | | GCO99061 | Outer Joint | | 33 | 35 | 55 | 104 | 67.5 | I |
| | 2002.11-2005.10 | MT | F | L | Cabriolet FWD Z20LET | | GCI44018 | Inner Joint | | 34 | 35 | 35 | 56 | 119.5 | |
| | 2002.11-2005.10 | | F | L | Cabriolet FWD Z20LET | | GCO44065 | Outer Joint | 29T | 33 | 35 | 55 | 104 | 67.5 | I |
| | 2005.09-2010.10 | 5MT/6MT | F | R | Convertible FWD Z 20 LER | | GDS21056 | Drive Shaft | | 33 | 34 | 52.5 | 94 | 595 | |
| | 2005.09-2010.10 | 5MT/6MT | F | R | Convertible FWD Z 20 LER | | GCI99187 | Inner Joint | | 34 | 34 | 37.5 | | 124 | |
| | 2005.09-2010.10 | | F | L/R | Convertible FWD Z 20 LER | | GCO44027 | Outer Joint | | 33 | 26 | 52.5 | 94 | 65.5 | M |
| | 2005.09-2010.10 | | F | | Convertible FWD Z 20 LER | | GCO99024 | Outer Joint | | 33 | 26 | 52.5 | 94 | 65.5 | M |
| 2.2 (92 kw) | 2003.03-2005.09 | 5MT | F | L | Cabriolet FWD Y22DTR | | GDS44058 | Drive Shaft | 29T | 33 | 27 | 55 | 104 | 586 | |
| | 2003.03-2005.09 | 5MT | F | R | Cabriolet FWD Y22DTR | | GDS44101 | Drive Shaft | | 33 | 27 | 52 | 103.5 | 623 | |
| | 2003.03-2005.09 | MT | F | R | Cabriolet FWD Y22DTR | | GCO44049 | Outer Joint | | 33 | 25 | 52 | 109 | 61 | O |
| 2.2 (108 kw) | 2001.02-2005.09 | 4AT/5MT | F | L | Cabriolet FWD Z22SE | | GDS44044 | Drive Shaft | | 33 | 34 | 52 | 103.5 | 595 | |
| | 2001.02-2005.09 | 4AT/5MT | F | R | Cabriolet FWD Z22SE | | GDS88011 | Drive Shaft | | 33 | 34 | 52 | 104 | 959 | |
| | 2001.02-2005.09 | 4AT/5MT | F | L | Cabriolet FWD Z22SE | | GCO44032 | Outer Joint | | 33 | 25 | 52 | 103.5 | 61 | O |
| | 2001.02-2005.09 | MT | F | R | Cabriolet FWD Z22SE | | GCO44049 | Outer Joint | | 33 | 25 | 52 | 109 | 61 | O |
| | 2001.02-2005.09 | | F | L/R | Cabriolet FWD Z22SE | | GCO44006 | Outer Joint | 29T | 33 | 25 | 52 | 103.5 | 61 | O |
| | 2001.02-2005.09 | | F | L/R | Cabriolet FWD Z22SE | | GCI44002 | Inner Joint | | 34 | 25 | 35 | 56.2 | 114.8 | |
| **Astra Classic** | | | | | | | | | | | | | | | |
| 1.3 (66 kw) | 2009.01-2014.05 | 6MT | F | L | Hatchback FWD Z 13 DTH | | GDS44052 | Drive Shaft | | 33 | 25 | 53 | 93.5 | 573 | |
| | 2009.01-2014.05 | 6MT | F | R | Hatchback FWD Z 13 DTH | | GDS44051 | Drive Shaft | | 33 | 34 | 53 | 93.5 | 570 | |
| | 2009.01-2014.05 | 6MT | F | L/R | Hatchback FWD Z 13 DTH | | GCO44028 | Outer Joint | | 33 | 24 | 53 | 93.5 | 63.5 | M |
| | 2009.01-2014.05 | 6MT | F | L | Hatchback FWD Z 13 DTH | | GCI44008 | Inner Joint | | 25 | 25 | 34.9 | 57.5 | 113.2 | |
| | 2009.01-2014.05 | 6MT | F | R | Hatchback FWD Z 13 DTH | | GCI44005 | Inner Joint | | 34 | 25 | 35 | | 130.2 | |
| 1.4 (44 kw) | 1998.03-2002.08 | AT/MT | F | R | Estate FWD X14NZ | | GDS60002 | Drive Shaft | 29T | 22 | 22 | 52 | 95 | 926 | |
| | 1998.03-2002.08 | AT/MT | F | L/R | Estate FWD X14NZ | Date to:2002.08 | GCI44004 | Inner Joint | | 22 | 22 | 34.95 | 57.5 | 103 | |
| | 1998.03-2002.08 | MT | F | L/R | Estate FWD X14NZ | Date to:2002.08 | GCO44007 | Outer Joint | 29T | 22 | 22 | 52 | 94.5 | 50 | O |
| | 1998.03-2002.08 | | F | | Estate FWD X14NZ | | GCO44083 | Outer Joint | 29T | 22 | 29 | 52.1 | 97.5 | 62.5 | O |
| | 1998.03-2002.08 | AT/MT | F | R | Hatchback FWD X14NZ | | GDS60002 | Drive Shaft | 29T | 22 | 22 | 52 | 95 | 926 | |
| | 1998.03-2002.08 | AT/MT | F | L/R | Hatchback FWD X14NZ | | GCI44004 | Inner Joint | | 22 | 22 | 34.95 | 57.5 | 103 | |
| | 1998.03-2002.08 | MT | F | L/R | Hatchback FWD X14NZ | | GCO44007 | Outer Joint | 29T | 22 | 22 | 52 | 94.5 | 50 | O |
| | 1998.03-2002.08 | | F | | Hatchback FWD X14NZ | | GCO44083 | Outer Joint | 29T | 22 | 29 | 52.1 | 97.5 | 62.5 | O |
| | 1998.03-2002.08 | AT/MT | F | R | Saloon FWD X14NZ | | GDS60002 | Drive Shaft | 29T | 22 | 22 | 52 | 95 | 926 | |
| | 1998.03-2002.08 | AT/MT | F | L/R | Saloon FWD X14NZ | | GCI44004 | Inner Joint | | 22 | 22 | 34.95 | 57.5 | 103 | |
| | 1998.03-2002.08 | MT | F | L/R | Saloon FWD X14NZ | | GCO44007 | Outer Joint | 29T | 22 | 22 | 52 | 94.5 | 50 | O |
| | 1998.03-2002.08 | | F | | Saloon FWD X14NZ | | GCO44083 | Outer Joint | 29T | 22 | 29 | 52.1 | 97.5 | 62.5 | O |
| 1.4 (66 kw) | 2004.05-2009.07 | 4AT/5MT | F | L | Hatchback FWD Z14XE | | GDS60013 | Drive Shaft | | 33 | 22 | 52 | 103 | 595 | |
| | 2004.05-2009.07 | 4AT/5MT | F | R | Hatchback FWD Z14XE | | GDS44033 | Drive Shaft | | 33 | 22 | 52 | 103 | 950.5 | |
| | 2004.05-2009.07 | 4AT/5MT | F | L/R | Hatchback FWD Z14XE | | GCO44030 | Outer Joint | | 33 | 22 | 52 | 103 | 50.5 | O |
| | 2004.05-2009.07 | 4AT/5MT | F | L/R | Hatchback FWD Z14XE | | GCI21014 | Inner Joint | | 22 | 22 | 35 | 57.5 | 105.5 | |
| | 2004.05-2009.07 | 4AT/5MT | F | L/R | Hatchback FWD Z14XE | | GCI44004 | Inner Joint | | 22 | 22 | 34.95 | 57.5 | 103 | |
| | 2004.05-2009.07 | | F | L/R | Hatchback FWD Z14XE | | GCO44009 | Outer Joint | | 33 | 22 | 52 | 103 | 50.5 | O |
| | 2004.05-2009.07 | 4AT/5MT | F | L | Saloon FWD Z14XE | | GDS60013 | Drive Shaft | | 33 | 22 | 52 | 103 | 595 | |
| | 2004.05-2009.07 | 4AT/5MT | F | R | Saloon FWD Z14XE | | GDS44033 | Drive Shaft | | 33 | 22 | 52 | 103 | 950.5 | |
| | 2004.05-2009.07 | | F | L/R | Saloon FWD Z14XE | | GCO44009 | Outer Joint | | 33 | 22 | 52 | 103 | 50.5 | O |
| | 2004.05-2009.07 | | F | L/R | Saloon FWD Z14XE | | GCO44030 | Outer Joint | | 33 | 22 | 52 | 103 | 50.5 | O |
| | 2004.05-2009.07 | | F | L/R | Saloon FWD Z14XE | | GCI44004 | Inner Joint | | 22 | 22 | 34.95 | 57.5 | 103 | |
| | 2004.07-2007.09 | 4AT/5MT | F | L | Estate FWD Z14XE | | GDS60013 | Drive Shaft | | 33 | 22 | 52 | 103 | 595 | |
| | 2004.07-2007.09 | 4AT/5MT | F | R | Estate FWD Z14XE | | GDS44033 | Drive Shaft | | 33 | 22 | 52 | 103 | 950.5 | |
| | 2004.07-2007.09 | | F | L/R | Estate FWD Z14XE | | GCO44009 | Outer Joint | | 33 | 22 | 52 | 103 | 50.5 | O |
| | 2004.07-2007.09 | | F | L/R | Estate FWD Z14XE | | GCO44030 | Outer Joint | | 33 | 22 | 52 | 103 | 50.5 | O |

| | YEAR | TRANSM. | F/R | L/R | BODY STYLE & DRIVE TYPE & ENGINE | REMARKS | G-AP Ref. | PRODUCT | ABS | Technical Specifications A | B | C | H | L | P |
|---|---|---|---|---|---|---|---|---|---|---|---|---|---|---|---|
| **OPEL** **Astra Classic** | | | | | | | | | | | | | | | |
| 1.4 (66 kw) | 2004.07-2007.09 | | F | L/R | Estate FWD Z14XE | | GCI44004 | Inner Joint | | 22 | 22 | 34.95 | 57.5 | 103 | |
| | 2007.10-2009.07 | 5MT | F | L | Estate FWD Z14XEP | | GDS60013 | Drive Shaft | | 33 | 22 | 52 | 103 | 595 | |
| | 2007.10-2009.07 | 5MT | F | R | Estate FWD Z14XEP | | GDS44033 | Drive Shaft | | 33 | 22 | 52 | 103 | 950.5 | |
| | 2007.10-2009.07 | | F | L/R | Estate FWD Z14XEP | | GCO44009 | Outer Joint | | 33 | 22 | 52 | 103 | 50.5 | O |
| | 2007.10-2009.07 | | F | L/R | Estate FWD Z14XEP | | GCO44030 | Outer Joint | | 33 | 22 | 52 | 103 | 50.5 | O |
| | 2007.10-2009.07 | | F | L | Estate FWD Z14XEP | | GCI21014 | Inner Joint | | 22 | 22 | 35 | 57.5 | 105.5 | |
| | 2007.10-2009.07 | | F | L/R | Estate FWD Z14XEP | | GCI44004 | Inner Joint | | 22 | 22 | 34.95 | 57.5 | 103 | |
| | 2009.01-2014.05 | 5MT | F | L | Estate FWD Z 14 XEP | | GDS44028 | Drive Shaft | | 33 | 22 | 53 | 95 | 590 | |
| | 2009.01-2014.05 | 5MT | F | R | Estate FWD Z 14 XEP | | GDS44030 | Drive Shaft | | 33 | 22 | 53 | 95 | 952 | |
| | 2009.01-2014.05 | 5MT | F | L/R | Estate FWD Z 14 XEP | | GCO44003 | Outer Joint | | 33 | 22 | 53 | 95 | 54.5 | M |
| | 2009.01-2014.05 | 5MT | F | L/R | Estate FWD Z 14 XEP | | GCI21014 | Inner Joint | | 22 | 22 | 35 | 57.5 | 105.5 | |
| | 2009.01-2014.05 | 5AT/5MT | F | L | Hatchback FWD Z 14 XEP | | GDS44028 | Drive Shaft | | 33 | 22 | 53 | 95 | 590 | |
| | 2009.01-2014.05 | 5AT/5MT | F | R | Hatchback FWD Z 14 XEP | | GDS44030 | Drive Shaft | | 33 | 22 | 53 | 95 | 952 | |
| | 2009.01-2014.05 | 5AT/5MT | F | L/R | Hatchback FWD Z 14 XEP | | GCO44003 | Outer Joint | | 33 | 22 | 53 | 95 | 54.5 | M |
| | 2009.01-2014.05 | 5AT/5MT | F | L/R | Hatchback FWD Z 14 XEP | | GCI21014 | Inner Joint | | 22 | 22 | 35 | 57.5 | 105.5 | |
| 1.6 (55 kw) | 1998.03-2002.08 | AT/MT | F | R | Estate FWD X16SZR | | GDS60002 | Drive Shaft | 29T | 22 | 22 | 52 | 95 | 926 | |
| | 1998.03-2002.08 | AT/MT | F | L/R | Estate FWD X16SZR | Date to:2002.08 | GCI44004 | Inner Joint | | 22 | 22 | 34.95 | 57.5 | 103 | |
| | 1998.03-2002.08 | MT | F | L/R | Estate FWD X16SZR | Date to:2002.08 | GCO44007 | Outer Joint | 29T | 22 | 22 | 52 | 94.5 | 50 | O |
| | 1998.03-2002.08 | | F | L/R | Estate FWD X16SZR | Chassis no. to:YG039153 | GCO44083 | Outer Joint | 29T | 22 | 29 | 52.1 | 97.5 | 62.5 | O |
| | 1998.03-2002.08 | | F | | Estate FWD X16SZR | | GCO44068 | Outer Joint | 29T | 22 | 30 | 52 | 94.5 | 55 | I |
| | 1998.03-2002.08 | AT/MT | F | R | Hatchback FWD X16SZR | | GDS60002 | Drive Shaft | 29T | 22 | 22 | 52 | 95 | 926 | |
| | 1998.03-2002.08 | AT/MT | F | L/R | Hatchback FWD X16SZR | | GCI44004 | Inner Joint | | 22 | 22 | 34.95 | 57.5 | 103 | |
| | 1998.03-2002.08 | MT | F | L/R | Hatchback FWD X16SZR | | GCO44007 | Outer Joint | 29T | 22 | 22 | 52 | 94.5 | 50 | O |
| | 1998.03-2002.08 | | F | L/R | Hatchback FWD X16SZR | Chassis no. to:YG039153 | GCO44083 | Outer Joint | 29T | 22 | 29 | 52.1 | 97.5 | 62.5 | O |
| | 1998.03-2002.08 | AT/MT | F | R | Saloon FWD X16SZR | | GDS60002 | Drive Shaft | 29T | 22 | 22 | 52 | 95 | 926 | |
| | 1998.03-2002.08 | AT/MT | F | L/R | Saloon FWD X16SZR | | GCI44004 | Inner Joint | | 22 | 22 | 34.95 | 57.5 | 103 | |
| | 1998.03-2002.08 | MT | F | L/R | Saloon FWD X16SZR | | GCO44007 | Outer Joint | 29T | 22 | 22 | 52 | 94.5 | 50 | O |
| | 1998.03-2002.08 | | F | | Saloon FWD X16SZR | | GCO44083 | Outer Joint | 29T | 22 | 29 | 52.1 | 97.5 | 62.5 | O |
| 1.6 (74 kw) | 1998.03-2002.08 | AT/MT | F | R | Estate FWD X16XEL | | GDS60002 | Drive Shaft | 29T | 22 | 22 | 52 | 95 | 926 | |
| | 1998.03-2002.08 | AT/MT | F | L/R | Estate FWD X16XEL | Date to:2002.08 | GCI44004 | Inner Joint | | 22 | 22 | 34.95 | 57.5 | 103 | |
| | 1998.03-2002.08 | MT | F | L/R | Estate FWD X16XEL | Date to:2002.08 | GCO44007 | Outer Joint | 29T | 22 | 22 | 52 | 94.5 | 50 | O |
| | 1998.03-2002.08 | | F | L/R | Estate FWD X16XEL | Chassis no. to:YG039153 | GCO44083 | Outer Joint | 29T | 22 | 29 | 52.1 | 97.5 | 62.5 | O |
| | 1998.03-2002.08 | AT/MT | F | R | Hatchback FWD X16XEL | | GDS60002 | Drive Shaft | 29T | 22 | 22 | 52 | 95 | 926 | |
| | 1998.03-2002.08 | AT/MT | F | L/R | Hatchback FWD X16XEL | | GCI44004 | Inner Joint | | 22 | 22 | 34.95 | 57.5 | 103 | |
| | 1998.03-2002.08 | MT | F | L/R | Hatchback FWD X16XEL | | GCO44007 | Outer Joint | 29T | 22 | 22 | 52 | 94.5 | 50 | O |
| | 1998.03-2002.08 | | F | | Hatchback FWD X16XEL | | GCO44083 | Outer Joint | 29T | 22 | 29 | 52.1 | 97.5 | 62.5 | O |
| | 1998.03-2002.08 | AT/MT | F | R | Saloon FWD X16XEL | | GDS60002 | Drive Shaft | 29T | 22 | 22 | 52 | 95 | 926 | |
| | 1998.03-2002.08 | AT/MT | F | L/R | Saloon FWD X16XEL | | GCI44004 | Inner Joint | | 22 | 22 | 34.95 | 57.5 | 103 | |
| | 1998.03-2002.08 | MT | F | L/R | Saloon FWD X16XEL | | GCO44007 | Outer Joint | 29T | 22 | 22 | 52 | 94.5 | 50 | O |
| | 1998.03-2002.08 | | F | | Saloon FWD X16XEL | | GCO44083 | Outer Joint | 29T | 22 | 29 | 52.1 | 97.5 | 62.5 | O |
| | 2004.03-2008.01 | 4AT/5MT | F | L | Saloon FWD Z16XE | | GDS60013 | Drive Shaft | | 33 | 22 | 52 | 103 | 595 | |
| | 2004.03-2008.01 | 4AT/5MT | F | R | Saloon FWD Z16XE | | GDS44033 | Drive Shaft | | 33 | 22 | 52 | 103 | 950.5 | |
| | 2004.03-2008.01 | 4AT/5MT | F | L/R | Saloon FWD Z16XE | | GCO44030 | Outer Joint | | 33 | 22 | 52 | 103 | 50.5 | O |
| | 2004.03-2008.01 | 4AT/5MT | F | L/R | Saloon FWD Z16XE | | GCI21014 | Inner Joint | | 22 | 22 | 35 | 57.5 | 105.5 | |
| | 2004.03-2008.01 | 4AT/5MT | F | L/R | Saloon FWD Z16XE | | GCI44004 | Inner Joint | | 22 | 22 | 34.95 | 57.5 | 103 | |
| | 2004.03-2008.01 | | F | L/R | Saloon FWD Z16XE | | GCO44009 | Outer Joint | | 33 | 22 | 52 | 103 | 50.5 | O |
| | 2004.05-2006.02 | 5MT | F | L | Hatchback FWD Z16XE | | GDS60013 | Drive Shaft | | 33 | 22 | 52 | 103 | 595 | |
| | 2004.05-2006.02 | 5MT | F | R | Hatchback FWD Z16XE | | GDS44033 | Drive Shaft | | 33 | 22 | 52 | 103 | 950.5 | |
| | 2004.05-2006.02 | MT | F | L/R | Hatchback FWD Z16XE | | GCI44004 | Inner Joint | | 22 | 22 | 34.95 | 57.5 | 103 | |
| | 2004.05-2006.02 | | F | L/R | Hatchback FWD Z16XE | | GCO44009 | Outer Joint | | 33 | 22 | 52 | 103 | 50.5 | O |
| | 2004.05-2006.02 | | F | L/R | Hatchback FWD Z16XE | | GCO44030 | Outer Joint | | 33 | 22 | 52 | 103 | 50.5 | O |
| | 2004.06-2006.02 | 4AT/5MT | F | L | Estate FWD Z16XE | | GDS60013 | Drive Shaft | | 33 | 22 | 52 | 103 | 595 | |
| | 2004.06-2006.02 | 4AT/5MT | F | R | Estate FWD Z16XE | | GDS44033 | Drive Shaft | | 33 | 22 | 52 | 103 | 950.5 | |
| | 2004.06-2006.02 | 4AT/5MT | F | L/R | Estate FWD Z16XE | | GCO44030 | Outer Joint | | 33 | 22 | 52 | 103 | 50.5 | O |
| | 2004.06-2006.02 | 4AT/5MT | F | L/R | Estate FWD Z16XE | | GCI21014 | Inner Joint | | 22 | 22 | 35 | 57.5 | 105.5 | |
| | 2004.06-2006.02 | 4AT/5MT | F | L/R | Estate FWD Z16XE | | GCI44004 | Inner Joint | | 22 | 22 | 34.95 | 57.5 | 103 | |
| | 2004.06-2006.02 | | F | L/R | Estate FWD Z16XE | | GCO44009 | Outer Joint | | 33 | 22 | 52 | 103 | 50.5 | O |
| 1.6 (76 kw) | 2006.02-2009.07 | 4AT/5MT | F | L | Estate FWD Z16XEP | | GDS60013 | Drive Shaft | | 33 | 22 | 52 | 103 | 595 | |
| | 2006.02-2009.07 | 4AT/5MT | F | R | Estate FWD Z16XEP | | GDS44033 | Drive Shaft | | 33 | 22 | 52 | 103 | 950.5 | |
| | 2006.02-2009.07 | | F | L/R | Estate FWD Z16XEP | | GCO44009 | Outer Joint | | 33 | 22 | 52 | 103 | 50.5 | O |
| | 2006.02-2009.07 | | F | L/R | Estate FWD Z16XEP | | GCO44030 | Outer Joint | | 33 | 22 | 52 | 103 | 50.5 | O |
| | 2006.02-2009.07 | | F | L/R | Estate FWD Z16XEP | | GCI44004 | Inner Joint | | 22 | 22 | 34.95 | 57.5 | 103 | |
| | 2006.03-2008.06 | 4AT/5MT | F | L | Hatchback FWD Z16XEP | | GDS60013 | Drive Shaft | | 33 | 22 | 52 | 103 | 595 | |
| | 2006.03-2008.06 | 4AT/5MT | F | R | Hatchback FWD Z16XEP | | GDS44033 | Drive Shaft | | 33 | 22 | 52 | 103 | 950.5 | |
| | 2006.03-2008.06 | | F | L/R | Hatchback FWD Z16XEP | | GCO44009 | Outer Joint | | 33 | 22 | 52 | 103 | 50.5 | O |

| | YEAR | TRANSM. | F/R | L/R | BODY STYLE & DRIVE TYPE & ENGINE | REMARKS | G-AP Ref. | PRODUCT | ABS | Technical Specifications A | B | C | H | L | P |
|---|---|---|---|---|---|---|---|---|---|---|---|---|---|---|---|
| **OPEL** **Astra Classic** | | | | | | | | | | | | | | | |
| 1.6 (76 kw) | 2006.03-2008.06 | | F | L/R | Hatchback FWD Z16XEP | | GCO44030 | Outer Joint | | 33 | 22 | 52 | 103 | 50.5 | O |
| | 2006.03-2008.06 | | F | L/R | Hatchback FWD Z16XEP | | GCI44004 | Inner Joint | | 22 | 22 | 34.95 | 57.5 | 103 | |
| 1.6 (85 kw) | 2006.12-2014.05 | 5AT/5MT | F | L | Estate FWD Z 16 XER | | GDS44028 | Drive Shaft | | 33 | 22 | 53 | 95 | 590 | |
| | 2006.12-2014.05 | 5AT/5MT | F | R | Estate FWD Z 16 XER | | GDS44030 | Drive Shaft | | 33 | 22 | 53 | 95 | 952 | |
| | 2006.12-2014.05 | 5AT/5MT | F | L/R | Estate FWD Z 16 XER | | GCO44003 | Outer Joint | | 33 | 22 | 53 | 95 | 54.5 | M |
| | 2006.12-2014.05 | 5AT/5MT | F | L/R | Estate FWD Z 16 XER | | GCI21014 | Inner Joint | | 22 | 22 | 35 | 57.5 | 105.5 | |
| | 2009.01- | 5AT/5MT | F | L | Hatchback FWD Z 16 XER | | GDS44028 | Drive Shaft | | 33 | 22 | 53 | 95 | 590 | |
| | 2009.01- | 5AT/5MT | F | R | Hatchback FWD Z 16 XER | | GDS44030 | Drive Shaft | | 33 | 22 | 53 | 95 | 952 | |
| | 2009.01- | 5AT/5MT | F | L/R | Hatchback FWD Z 16 XER | | GCO44003 | Outer Joint | | 33 | 22 | 53 | 95 | 54.5 | M |
| | 2009.01- | 5AT/5MT | F | L/R | Hatchback FWD Z 16 XER | | GCI21014 | Inner Joint | | 22 | 22 | 35 | 57.5 | 105.5 | |
| | 2009.01-2014.05 | 5AT/5MT | F | L | Saloon FWD Z 16 XER | | GDS44028 | Drive Shaft | | 33 | 22 | 53 | 95 | 590 | |
| | 2009.01-2014.05 | 5AT/5MT | F | R | Saloon FWD Z 16 XER | | GDS44030 | Drive Shaft | | 33 | 22 | 53 | 95 | 952 | |
| | 2009.01-2014.05 | 5AT/5MT | F | L/R | Saloon FWD Z 16 XER | | GCO44003 | Outer Joint | | 33 | 22 | 53 | 95 | 54.5 | M |
| | 2009.01-2014.05 | 5AT/5MT | F | L/R | Saloon FWD Z 16 XER | | GCI21014 | Inner Joint | | 22 | 22 | 35 | 57.5 | 105.5 | |
| 1.7 (59 kw) | 2004.05-2009.07 | 4AT/5MT | F | R | Estate FWD Z17DTL | | GDS60035 | Drive Shaft | | 33 | 22 | 52 | 109 | 961 | |
| | 2004.05-2009.07 | | F | L | Estate FWD Z17DTL | | GDS60013 | Drive Shaft | | 33 | 22 | 52 | 103 | 595 | |
| | 2004.05-2009.07 | | F | L/R | Estate FWD Z17DTL | | GCO44006 | Outer Joint | 29T | 33 | 25 | 52 | 103.5 | 61 | O |
| | 2004.05-2009.07 | | F | L/R | Estate FWD Z17DTL | | GCO44049 | Outer Joint | | 33 | 25 | 52 | 109 | 61 | O |
| | 2004.05-2009.07 | | F | L/R | Estate FWD Z17DTL | | GCI99026 | Inner Joint | | 22 | 25 | 35 | 57 | 111.7 | |
| | 2004.06-2009.07 | 4AT/5MT | F | L | Hatchback FWD Z17DTL | | GDS60013 | Drive Shaft | | 33 | 22 | 52 | 103 | 595 | |
| | 2004.06-2009.07 | 4AT/5MT | F | R | Hatchback FWD Z17DTL | | GDS60035 | Drive Shaft | | 33 | 22 | 52 | 109 | 961 | |
| | 2004.06-2009.07 | 4AT/5MT | F | L/R | Hatchback FWD Z17DTL | | GCO44049 | Outer Joint | | 33 | 25 | 52 | 109 | 61 | O |
| | 2004.06-2009.07 | 4AT/5MT | F | L/R | Hatchback FWD Z17DTL | | GCI99026 | Inner Joint | | 22 | 25 | 35 | 57 | 111.7 | |
| 1.7 (81 kw) | 2009.01-2014.05 | 6MT | F | L | Estate FWD Z 17 DTJ | | GDS21051 | Drive Shaft | | 33 | 25 | 52.5 | 94 | 579 | |
| | 2009.01-2014.05 | 6MT | F | R | Estate FWD Z 17 DTJ | | GDS44099 | Drive Shaft | | 33 | 34 | 52.5 | 94 | 563 | |
| | 2009.01-2014.05 | 6MT | F | L/R | Estate FWD Z 17 DTJ | | GCO44027 | Outer Joint | | 33 | 26 | 52.5 | 94 | 65.5 | M |
| | 2009.01-2014.05 | 6MT | F | L | Estate FWD Z 17 DTJ | | GCI99186 | Inner Joint | | 25 | 28 | 34.9 | 57.5 | 111 | |
| | 2009.01-2014.05 | 6MT | F | R | Estate FWD Z 17 DTJ | | GCI44016 | Inner Joint | | 34 | 28 | 37.5 | | 129.2 | |
| | 2009.01-2014.05 | 6MT | F | L | Hatchback FWD A 17 DTJ;Z 17 DTJ | | GDS21051 | Drive Shaft | | 33 | 25 | 52.5 | 94 | 579 | |
| | 2009.01-2014.05 | 6MT | F | R | Hatchback FWD A 17 DTJ;Z 17 DTJ | | GDS44099 | Drive Shaft | | 33 | 34 | 52.5 | 94 | 563 | |
| | 2009.01-2014.05 | 6MT | F | L/R | Hatchback FWD A 17 DTJ;Z 17 DTJ | | GCO44027 | Outer Joint | | 33 | 26 | 52.5 | 94 | 65.5 | M |
| | 2009.01-2014.05 | 6MT | F | L | Hatchback FWD A 17 DTJ;Z 17 DTJ | | GCI99186 | Inner Joint | | 25 | 28 | 34.9 | 57.5 | 111 | |
| | 2009.01-2014.05 | 6MT | F | R | Hatchback FWD A 17 DTJ;Z 17 DTJ | | GCI44016 | Inner Joint | | 34 | 28 | 37.5 | | 129.2 | |
| | 2009.01-2014.05 | 6MT | F | L | Saloon FWD Z 17 DTJ | | GDS21051 | Drive Shaft | | 33 | 25 | 52.5 | 94 | 579 | |
| | 2009.01-2014.05 | 6MT | F | R | Saloon FWD Z 17 DTJ | | GDS44099 | Drive Shaft | | 33 | 34 | 52.5 | 94 | 563 | |
| | 2009.01-2014.05 | 6MT | F | L/R | Saloon FWD Z 17 DTJ | | GCO44027 | Outer Joint | | 33 | 26 | 52.5 | 94 | 65.5 | M |
| | 2009.01-2014.05 | 6MT | F | L | Saloon FWD Z 17 DTJ | | GCI99186 | Inner Joint | | 25 | 28 | 34.9 | 57.5 | 111 | |
| | 2009.01-2014.05 | 6MT | F | R | Saloon FWD Z 17 DTJ | | GCI44016 | Inner Joint | | 34 | 28 | 37.5 | | 129.2 | |
| 1.7 (92 kw) | 2009.01-2014.05 | 6MT | F | L | Estate FWD Z 17 DTR;A 17 DTR | | GDS21051 | Drive Shaft | | 33 | 25 | 52.5 | 94 | 579 | |
| | 2009.01-2014.05 | 6MT | F | R | Estate FWD Z 17 DTR;A 17 DTR | | GDS44099 | Drive Shaft | | 33 | 34 | 52.5 | 94 | 563 | |
| | 2009.01-2014.05 | 6MT | F | L/R | Estate FWD Z 17 DTR;A 17 DTR | | GCO44027 | Outer Joint | | 33 | 26 | 52.5 | 94 | 65.5 | M |
| | 2009.01-2014.05 | 6MT | F | L | Estate FWD Z 17 DTR;A 17 DTR | | GCI99186 | Inner Joint | | 25 | 28 | 34.9 | 57.5 | 111 | |
| | 2009.01-2014.05 | 6MT | F | R | Estate FWD Z 17 DTR;A 17 DTR | | GCI44016 | Inner Joint | | 34 | 28 | 37.5 | | 129.2 | |
| | 2009.01-2014.05 | 6MT | F | L | Hatchback FWD Z 17 DTR;A 17 DTR | | GDS21051 | Drive Shaft | | 33 | 25 | 52.5 | 94 | 579 | |
| | 2009.01-2014.05 | 6MT | F | R | Hatchback FWD Z 17 DTR;A 17 DTR | | GDS44099 | Drive Shaft | | 33 | 34 | 52.5 | 94 | 563 | |
| | 2009.01-2014.05 | 6MT | F | L/R | Hatchback FWD Z 17 DTR;A 17 DTR | | GCO44027 | Outer Joint | | 33 | 26 | 52.5 | 94 | 65.5 | M |
| | 2009.01-2014.05 | 6MT | F | L | Hatchback FWD Z 17 DTR;A 17 DTR | | GCI99186 | Inner Joint | | 25 | 28 | 34.9 | 57.5 | 111 | |
| | 2009.01-2014.05 | 6MT | F | R | Hatchback FWD Z 17 DTR;A 17 DTR | | GCI44016 | Inner Joint | | 34 | 28 | 37.5 | | 129.2 | |
| | 2009.01-2014.05 | 6MT | F | L | Saloon FWD Z 17 DTR;A 17 DTR | | GDS21051 | Drive Shaft | | 33 | 25 | 52.5 | 94 | 579 | |
| | 2009.01-2014.05 | 6MT | F | R | Saloon FWD Z 17 DTR;A 17 DTR | | GDS44099 | Drive Shaft | | 33 | 34 | 52.5 | 94 | 563 | |
| | 2009.01-2014.05 | 6MT | F | L | Saloon FWD Z 17 DTR;A 17 DTR | | GCI99186 | Inner Joint | | 25 | 28 | 34.9 | 57.5 | 111 | |
| | 2009.01-2014.05 | 6MT | F | R | Saloon FWD Z 17 DTR;A 17 DTR | | GCI44016 | Inner Joint | | 34 | 28 | 37.5 | | 129.2 | |
| | 2009.01-2014.05 | MT | F | L/R | Saloon FWD Z 17 DTR;A 17 DTR | | GCO44027 | Outer Joint | | 33 | 26 | 52.5 | 94 | 65.5 | M |
| 1.8 (103 kw) | 2007.02-2012.09 | 4AT | F | L | Saloon FWD Z 18 XER | | GDS44097 | Drive Shaft | | 33 | 22 | 53 | 93.5 | 588 | |
| | 2007.02-2012.09 | 4AT | F | R | Saloon FWD Z 18 XER | | GDS44098 | Drive Shaft | | 33 | 22 | 53 | 93.5 | 950 | |
| | 2007.02-2012.09 | 5MT | F | L | Saloon FWD Z 18 XER | | GDS21063 | Drive Shaft | | 33 | 22 | 53 | 93.5 | 586 | |
| | 2007.02-2012.09 | 5MT | F | R | Saloon FWD Z 18 XER | | GDS21055 | Drive Shaft | | 33 | 22 | 53 | 93.5 | 950 | |
| | 2007.02-2012.09 | 5MT | F | L/R | Saloon FWD Z 18 XER | | GCI99026 | Inner Joint | | 22 | 25 | 35 | 57 | 111.7 | |
| | 2007.02-2012.09 | AT/MT | F | L/R | Saloon FWD Z 18 XER | Date From:2012.01 | GCO44028 | Outer Joint | | 33 | 24 | 53 | 93.5 | 63.5 | M |
| | 2012.01-2014.05 | 4AT | F | L | Estate FWD Z 18 XER | | GDS44097 | Drive Shaft | | 33 | 22 | 53 | 93.5 | 588 | |
| | 2012.01-2014.05 | 4AT | F | R | Estate FWD Z 18 XER | | GDS44098 | Drive Shaft | | 33 | 22 | 53 | 93.5 | 950 | |
| | 2012.01-2014.05 | 4AT/5MT | F | L/R | Estate FWD Z 18 XER | | GCO44028 | Outer Joint | | 33 | 24 | 53 | 93.5 | 63.5 | M |
| | 2012.01-2014.05 | 5MT | F | L | Estate FWD Z 18 XER | | GDS21063 | Drive Shaft | | 33 | 22 | 53 | 93.5 | 586 | |
| | 2012.01-2014.05 | 5MT | F | R | Estate FWD Z 18 XER | | GDS21055 | Drive Shaft | | 33 | 22 | 53 | 93.5 | 950 | |
| | 2012.01-2014.05 | 5MT | F | L/R | Estate FWD Z 18 XER | | GCI99026 | Inner Joint | | 22 | 25 | 35 | 57 | 111.7 | |

| | YEAR | TRANSM. | F/R | L/R | BODY STYLE & DRIVE TYPE & ENGINE | REMARKS | G-AP Ref. | PRODUCT | ABS | Technical Specifications A | B | C | H | L | P |
|---|---|---|---|---|---|---|---|---|---|---|---|---|---|---|---|
| **OPEL** | | | | | | | | | | | | | | | |
| **Astra Classic** | | | | | | | | | | | | | | | |
| 1.8 (103 kw) | 2013.02- | 4AT | F | L | Hatchback FWD Z 18 XER | | GDS44097 | Drive Shaft | | 33 | 22 | 53 | 93.5 | 588 | |
| | 2013.02- | 4AT | F | R | Hatchback FWD Z 18 XER | | GDS44098 | Drive Shaft | | 33 | 22 | 53 | 93.5 | 950 | |
| | 2013.02- | 5MT | F | L | Hatchback FWD Z 18 XER | | GDS21063 | Drive Shaft | | 33 | 22 | 53 | 93.5 | 586 | |
| | 2013.02- | 5MT | F | R | Hatchback FWD Z 18 XER | | GDS21055 | Drive Shaft | | 33 | 22 | 53 | 93.5 | 950 | |
| | 2013.02- | 5MT | F | L/R | Hatchback FWD Z 18 XER | | GCI99026 | Inner Joint | | 22 | 25 | 35 | 57 | 111.7 | |
| | 2013.02- | AT/MT | F | L/R | Hatchback FWD Z 18 XER | | GCO44028 | Outer Joint | | 33 | 24 | 53 | 93.5 | 63.5 | M |
| **Astra Coupe** | | | | | | | | | | | | | | | |
| 1.6 (74 kw) | 2000.03-2005.05 | 5MT | F | L | Coupe FWD Z16XE | | GDS60013 | Drive Shaft | | 33 | 22 | 52 | 103 | 595 | |
| | 2000.03-2005.05 | 5MT | F | R | Coupe FWD Z16XE | | GDS44033 | Drive Shaft | | 33 | 22 | 52 | 103 | 950.5 | |
| | 2000.03-2005.05 | | F | L/R | Coupe FWD Z16XE | | GCO44009 | Outer Joint | | 33 | 22 | 52 | 103 | 50.5 | O |
| | 2000.03-2005.05 | | F | L/R | Coupe FWD Z16XE | | GCO44030 | Outer Joint | | 33 | 22 | 52 | 103 | 50.5 | O |
| | 2000.03-2005.05 | | F | | Coupe FWD Z16XE | | GCO44010 | Outer Joint | 29T | 33 | 22 | 52 | 103 | 50.5 | O |
| | 2000.03-2005.05 | | F | L | Coupe FWD Z16XE | | GCI21014 | Inner Joint | | 22 | 22 | 35 | 57.5 | 105.5 | |
| | 2000.03-2005.05 | | F | L/R | Coupe FWD Z16XE | | GCI99026 | Inner Joint | | 22 | 25 | 35 | 57 | 111.7 | |
| 1.6 (76 kw) | 2003.10-2005.05 | 5MT | F | L | Coupe FWD Z16XEP | | GDS60013 | Drive Shaft | | 33 | 22 | 52 | 103 | 595 | |
| | 2003.10-2005.05 | 5MT | F | R | Coupe FWD Z16XEP | | GDS44033 | Drive Shaft | | 33 | 22 | 52 | 103 | 950.5 | |
| | 2003.10-2005.05 | AT/MT | F | L/R | Coupe FWD Z16XEP | | GCO44011 | Outer Joint | 29T | 33 | 22 | 52 | 103 | 50.5 | O |
| | 2003.10-2005.05 | AT/MT | F | L/R | Coupe FWD Z16XEP | Date from:2003.10 | GCO44030 | Outer Joint | | 33 | 22 | 52 | 103 | 50.5 | O |
| | 2003.10-2005.05 | MT | F | L | Coupe FWD Z16XEP | Date from:2003.10 | GCI21014 | Inner Joint | | 22 | 22 | 35 | 57.5 | 105.5 | |
| | 2003.10-2005.05 | | F | L/R | Coupe FWD Z16XEP | | GCI44004 | Inner Joint | | 22 | 22 | 34.95 | 57.5 | 103 | |
| 1.8 (85 kw) | 2000.03-2005.05 | 5MT | F | R | Coupe FWD X18XE1 | | GDS60035 | Drive Shaft | | 33 | 22 | 52 | 109 | 961 | |
| | 2000.03-2005.05 | AT/MT | F | L/R | Coupe FWD X18XE1 | | GCO44006 | Outer Joint | 29T | 33 | 25 | 52 | 103.5 | 61 | O |
| | 2000.03-2005.05 | MT | F | R | Coupe FWD X18XE1 | | GCO44049 | Outer Joint | | 33 | 25 | 52 | 109 | 61 | O |
| | 2000.03-2005.05 | | F | L | Coupe FWD X18XE1 | | GDS60013 | Drive Shaft | | 33 | 22 | 52 | 103 | 595 | |
| | 2000.03-2005.05 | | F | L/R | Coupe FWD X18XE1 | | GCI99026 | Inner Joint | | 22 | 25 | 35 | 57 | 111.7 | |
| 1.8 (92 kw) | 2000.09-2005.05 | 5MT | F | R | Coupe FWD Z18XE | | GDS60035 | Drive Shaft | | 33 | 22 | 52 | 109 | 961 | |
| | 2000.09-2005.05 | MT | F | R | Coupe FWD Z18XE | | GCO44049 | Outer Joint | | 33 | 25 | 52 | 109 | 61 | O |
| | 2000.09-2005.05 | | F | L | Coupe FWD Z18XE | | GDS60013 | Drive Shaft | | 33 | 22 | 52 | 103 | 595 | |
| | 2000.09-2005.05 | | F | L/R | Coupe FWD Z18XE | | GCO44006 | Outer Joint | 29T | 33 | 25 | 52 | 103.5 | 61 | O |
| | 2000.09-2005.05 | | F | L/R | Coupe FWD Z18XE | | GCI99026 | Inner Joint | | 22 | 25 | 35 | 57 | 111.7 | |
| 2.0 (140 kw) | 2000.09-2001.08 | 5MT | F | R | Coupe FWD Z20LET | | GDS44082 | Drive Shaft | | 33 | 34 | 55 | 104 | 663 | |
| | 2000.09-2001.08 | MT | F | L | Coupe FWD Z20LET | | GDS44025 | Drive Shaft | | 33 | 34 | 55 | 104 | 593 | |
| | 2000.09-2001.08 | MT | F | L/R | Coupe FWD Z20LET | | GCO99061 | Outer Joint | | 33 | 35 | 55 | 104 | 67.5 | I |
| | 2000.09-2001.08 | MT | F | L | Coupe FWD Z20LET | | GCI44018 | Inner Joint | | 34 | 35 | 35 | 56 | 119.5 | |
| | 2000.09-2001.08 | | F | L | Coupe FWD Z20LET | | GCO44065 | Outer Joint | 29T | 33 | 35 | 55 | 104 | 67.5 | I |
| 2.0 (141 kw) | 2001.08-2005.05 | 5MT | F | R | Coupe FWD Z20LET | | GDS44082 | Drive Shaft | | 33 | 34 | 55 | 104 | 663 | |
| | 2001.08-2005.05 | MT | F | L | Coupe FWD Z20LET | | GDS44025 | Drive Shaft | | 33 | 34 | 55 | 104 | 593 | |
| | 2001.08-2005.05 | MT | F | L/R | Coupe FWD Z20LET | | GCO99061 | Outer Joint | | 33 | 35 | 55 | 104 | 67.5 | I |
| | 2001.08-2005.05 | MT | F | L | Coupe FWD Z20LET | | GCI44018 | Inner Joint | | 34 | 35 | 35 | 56 | 119.5 | |
| | 2001.08-2005.05 | | F | L | Coupe FWD Z20LET | | GCO44065 | Outer Joint | 29T | 33 | 35 | 55 | 104 | 67.5 | I |
| 2.0 (147 kw) | 2000.07-2005.05 | 5MT | F | R | Coupe FWD Z20LET | | GDS44082 | Drive Shaft | | 33 | 34 | 55 | 104 | 663 | |
| | 2000.07-2005.05 | MT | F | L | Coupe FWD Z20LET | | GDS44025 | Drive Shaft | | 33 | 34 | 55 | 104 | 593 | |
| | 2000.07-2005.05 | MT | F | L/R | Coupe FWD Z20LET | | GCO99061 | Outer Joint | | 33 | 35 | 55 | 104 | 67.5 | I |
| | 2000.07-2005.05 | MT | F | L | Coupe FWD Z20LET | | GCI44018 | Inner Joint | | 34 | 35 | 35 | 56 | 119.5 | |
| | 2000.07-2005.05 | | F | L | Coupe FWD Z20LET | | GCO44065 | Outer Joint | 29T | 33 | 35 | 55 | 104 | 67.5 | I |
| 2.2 (92 kw) | 2003.03-2005.05 | 5MT | F | L | Coupe FWD Y22DTR | | GDS44058 | Drive Shaft | 29T | 33 | 27 | 55 | 104 | 586 | |
| | 2003.03-2005.05 | 5MT | F | R | Coupe FWD Y22DTR | | GDS44101 | Drive Shaft | | 33 | 27 | 52 | 103.5 | 623 | |
| 2.2 (108 kw) | 1999.10-2005.05 | 4AT/5MT | F | L | Coupe FWD Z22SE | | GDS44044 | Drive Shaft | | 33 | 34 | 52 | 103.5 | 595 | |
| | 1999.10-2005.05 | 4AT/5MT | F | R | Coupe FWD Z22SE | | GDS88011 | Drive Shaft | | 33 | 34 | 52 | 104 | 959 | |
| | 1999.10-2005.05 | 4AT/5MT | F | L | Coupe FWD Z22SE | | GCO44032 | Outer Joint | | 33 | 25 | 52 | 103.5 | 61 | O |
| | 1999.10-2005.05 | MT | F | R | Coupe FWD Z22SE | | GCO44049 | Outer Joint | | 33 | 25 | 52 | 109 | 61 | O |
| | 1999.10-2005.05 | | F | L/R | Coupe FWD Z22SE | | GCO44006 | Outer Joint | 29T | 33 | 25 | 52 | 103.5 | 61 | O |
| | 1999.10-2005.05 | | F | L/R | Coupe FWD Z22SE | | GCI44002 | Inner Joint | | 34 | 25 | 35 | 56.2 | 114.8 | |
| **Astra F** | | | | | | | | | | | | | | | |
| 1.4 (60 kw) | 1992.03-1998.01 | MT | F | L | Estate FWD C 14 SE | Chassis no. to:P-2732833 | GDS44002 | Drive Shaft | 29T | 22 | 22 | 52 | 95 | 585 | |
| | 1992.03-1998.01 | MT | F | R | Estate FWD C 14 SE | Chassis no. to:P-2732833 | GDS60002 | Drive Shaft | 29T | 22 | 22 | 52 | 95 | 926 | |
| | 1992.03-1998.01 | MT | F | L/R | Estate FWD C 14 SE | Date from:1994.01 | GCO44007 | Outer Joint | 29T | 22 | 22 | 52 | 94.5 | 50 | O |
| | 1992.03-1998.01 | MT | F | L/R | Estate FWD C 14 SE | | GCO44041 | Outer Joint | | 22 | 22 | 52 | 95 | 50 | O |
| | 1992.03-1998.01 | MT | F | L/R | Estate FWD C 14 SE | Chassis no. to:P-2732833 | GCO44051 | Outer Joint | 29T | 22 | 22 | 52 | 95 | 50 | O |
| | 1992.03-1998.01 | MT | F | L/R | Estate FWD C 14 SE | | GCI44004 | Inner Joint | | 22 | 22 | 34.95 | 57.5 | 103 | |
| | 1992.03-1998.01 | | F | | Estate FWD C 14 SE | | GCO44023 | Outer Joint | | 22 | 22 | 52 | 95 | 50 | O |
| | 1992.03-1998.01 | MT | F | L | Hatchback FWD C 14 SE | Chassis no. to:P-2732833 | GDS44002 | Drive Shaft | 29T | 22 | 22 | 52 | 95 | 585 | |
| | 1992.03-1998.01 | MT | F | R | Hatchback FWD C 14 SE | Chassis no. to:P-2732833 | GDS60002 | Drive Shaft | 29T | 22 | 22 | 52 | 95 | 926 | |
| | 1992.03-1998.01 | MT | F | L/R | Hatchback FWD C 14 SE | Date from:1994.01 | GCO44007 | Outer Joint | 29T | 22 | 22 | 52 | 94.5 | 50 | O |
| | 1992.03-1998.01 | MT | F | L/R | Hatchback FWD C 14 SE | | GCO44041 | Outer Joint | | 22 | 22 | 52 | 95 | 50 | O |

| | YEAR | TRANSM. | F/R | L/R | BODY STYLE & DRIVE TYPE & ENGINE | REMARKS | G-AP Ref. | PRODUCT | ABS | Technical Specifications A | B | C | H | L | P |
|---|---|---|---|---|---|---|---|---|---|---|---|---|---|---|---|
| **OPEL** | | | | | | | | | | | | | | | |
| **Astra F** | | | | | | | | | | | | | | | |
| 1.4 (60 kw) | 1992.03-1998.01 | MT | F | L/R | Hatchback FWD C 14 SE | Chassis no. to:P-2732833 | GCO44051 | Outer Joint | 29T | 22 | 22 | 52 | 95 | 50 | O |
| | 1992.03-1998.01 | MT | F | L/R | Hatchback FWD C 14 SE | | GCI44004 | Inner Joint | | 22 | 22 | 34.95 | 57.5 | 103 | |
| | 1992.03-1998.01 | | F | | Hatchback FWD C 14 SE | | GCO44023 | Outer Joint | | 22 | 22 | 52 | 95 | 50 | O |
| | 1992.03-1998.09 | MT | F | L | Saloon FWD C 14 SE | Chassis no. to:P-2732833 | GDS44002 | Drive Shaft | 29T | 22 | 22 | 52 | 95 | 585 | |
| | 1992.03-1998.09 | MT | F | R | Saloon FWD C 14 SE | Chassis no. to:P-2732833 | GDS60002 | Drive Shaft | 29T | 22 | 22 | 52 | 95 | 926 | |
| | 1992.03-1998.09 | MT | F | L/R | Saloon FWD C 14 SE | Date from:1994.01 | GCO44007 | Outer Joint | 29T | 22 | 22 | 52 | 94.5 | 50 | O |
| | 1992.03-1998.09 | MT | F | L/R | Saloon FWD C 14 SE | | GCO44041 | Outer Joint | | 22 | 22 | 52 | 95 | 50 | O |
| | 1992.03-1998.09 | MT | F | L/R | Saloon FWD C 14 SE | Chassis no. to:P-2732833 | GCO44051 | Outer Joint | 29T | 22 | 22 | 52 | 95 | 50 | O |
| | 1992.03-1998.09 | MT | F | L/R | Saloon FWD C 14 SE | | GCI44004 | Inner Joint | | 22 | 22 | 34.95 | 57.5 | 103 | |
| | 1992.03-1998.09 | | F | | Saloon FWD C 14 SE | | GCO44023 | Outer Joint | | 22 | 22 | 52 | 95 | 50 | O |
| | 1992.09-1998.01 | MT | F | L | Estate FWD 14 SE | Chassis no. to:P-2732833 | GDS44002 | Drive Shaft | 29T | 22 | 22 | 52 | 95 | 585 | |
| | 1992.09-1998.01 | MT | F | R | Estate FWD 14 SE | Chassis no. to:P-2732833 | GDS60002 | Drive Shaft | 29T | 22 | 22 | 52 | 95 | 926 | |
| | 1992.09-1998.01 | MT | F | L/R | Estate FWD 14 SE | Date from:1994.01 | GCO44007 | Outer Joint | 29T | 22 | 22 | 52 | 94.5 | 50 | O |
| | 1992.09-1998.01 | MT | F | L/R | Estate FWD 14 SE | | GCO44041 | Outer Joint | | 22 | 22 | 52 | 95 | 50 | O |
| | 1992.09-1998.01 | MT | F | L/R | Estate FWD 14 SE | Chassis no. to:P-2732833 | GCO44051 | Outer Joint | 29T | 22 | 22 | 52 | 95 | 50 | O |
| | 1992.09-1998.01 | MT | F | L/R | Estate FWD 14 SE | | GCI44004 | Inner Joint | | 22 | 22 | 34.95 | 57.5 | 103 | |
| | 1992.09-1998.01 | | F | | Estate FWD 14 SE | | GCO44023 | Outer Joint | | 22 | 22 | 52 | 95 | 50 | O |
| | 1992.09-1998.01 | MT | F | L | Hatchback FWD 14 SE | Chassis no. to:P-2732833 | GDS44002 | Drive Shaft | 29T | 22 | 22 | 52 | 95 | 585 | |
| | 1992.09-1998.01 | MT | F | R | Hatchback FWD 14 SE | Chassis no. to:P-2732833 | GDS60002 | Drive Shaft | 29T | 22 | 22 | 52 | 95 | 926 | |
| | 1992.09-1998.01 | MT | F | L/R | Hatchback FWD 14 SE | Date from:1994.01 | GCO44007 | Outer Joint | 29T | 22 | 22 | 52 | 94.5 | 50 | O |
| | 1992.09-1998.01 | MT | F | L/R | Hatchback FWD 14 SE | | GCO44041 | Outer Joint | | 22 | 22 | 52 | 95 | 50 | O |
| | 1992.09-1998.01 | MT | F | L/R | Hatchback FWD 14 SE | Chassis no. to:P-2732833 | GCO44051 | Outer Joint | 29T | 22 | 22 | 52 | 95 | 50 | O |
| | 1992.09-1998.01 | MT | F | L/R | Hatchback FWD 14 SE | | GCI44004 | Inner Joint | | 22 | 22 | 34.95 | 57.5 | 103 | |
| | 1992.09-1998.01 | | F | | Hatchback FWD 14 SE | | GCO44023 | Outer Joint | | 22 | 22 | 52 | 95 | 50 | O |
| | 1992.09-1998.09 | MT | F | L | Saloon FWD 14 SE | Chassis no. to:P-2732833 | GDS44002 | Drive Shaft | 29T | 22 | 22 | 52 | 95 | 585 | |
| | 1992.09-1998.09 | MT | F | R | Saloon FWD 14 SE | Chassis no. to:P-2732833 | GDS60002 | Drive Shaft | 29T | 22 | 22 | 52 | 95 | 926 | |
| | 1992.09-1998.09 | MT | F | L/R | Saloon FWD 14 SE | Date from:1994.01 | GCO44007 | Outer Joint | 29T | 22 | 22 | 52 | 94.5 | 50 | O |
| | 1992.09-1998.09 | MT | F | L/R | Saloon FWD 14 SE | | GCO44041 | Outer Joint | | 22 | 22 | 52 | 95 | 50 | O |
| | 1992.09-1998.09 | MT | F | L/R | Saloon FWD 14 SE | Chassis no. to:P-2732833 | GCO44051 | Outer Joint | 29T | 22 | 22 | 52 | 95 | 50 | O |
| | 1992.09-1998.09 | MT | F | L/R | Saloon FWD 14 SE | | GCI44004 | Inner Joint | | 22 | 22 | 34.95 | 57.5 | 103 | |
| | 1992.09-1998.09 | | F | | Saloon FWD 14 SE | | GCO44023 | Outer Joint | | 22 | 22 | 52 | 95 | 50 | O |
| 1.6 (55 kw) | 1991.09-1998.01 | MT | F | L | Estate FWD C 16 NZ (09.91-08.94), X 16 SZR | Chassis no. to:P-2732833 | GDS44002 | Drive Shaft | 29T | 22 | 22 | 52 | 95 | 585 | |
| | 1991.09-1998.01 | MT | F | R | Estate FWD C 16 NZ (09.91-08.94), X 16 SZR | Chassis no. to:P-2732833 | GDS60002 | Drive Shaft | 29T | 22 | 22 | 52 | 95 | 926 | |
| | 1991.09-1998.01 | MT | F | L/R | Estate FWD C 16 NZ (09.91-08.94), X 16 SZR | Chassis no. to:P-2732833 | GCO44051 | Outer Joint | 29T | 22 | 22 | 52 | 95 | 50 | O |
| | 1991.09-1998.01 | MT | F | L/R | Estate FWD C 16 NZ (09.91-08.94), X 16 SZR | | GCI44004 | Inner Joint | | 22 | 22 | 34.95 | 57.5 | 103 | |
| | 1991.09-1998.01 | MT | F | L | Hatchback FWD C 16 NZ (09.91-08.94), X 16 SZR | Chassis no. to:P-2732833 | GDS44002 | Drive Shaft | 29T | 22 | 22 | 52 | 95 | 585 | |
| | 1991.09-1998.01 | MT | F | R | Hatchback FWD C 16 NZ (09.91-08.94), X 16 SZR | Chassis no. to:P-2732833 | GDS60002 | Drive Shaft | 29T | 22 | 22 | 52 | 95 | 926 | |
| | 1991.09-1998.01 | MT | F | L/R | Hatchback FWD C 16 NZ (09.91-08.94), X 16 SZR | Chassis no. to:P-2732833 | GCO44051 | Outer Joint | 29T | 22 | 22 | 52 | 95 | 50 | O |
| | 1991.09-1998.01 | MT | F | L/R | Hatchback FWD C 16 NZ (09.91-08.94), X 16 SZR | | GCI44004 | Inner Joint | | 22 | 22 | 34.95 | 57.5 | 103 | |
| | 1992.03-1998.09 | AT/MT | F | L/R | Saloon FWD C 16 NZ (03.92-08.94), X 16 SZR | Chassis no. from:P-2732834 | GCO44007 | Outer Joint | 29T | 22 | 22 | 52 | 94.5 | 50 | O |
| | 1992.03-1998.09 | MT | F | L | Saloon FWD C 16 NZ (03.92-08.94), X 16 SZR | Chassis no. to:P-2732833 | GDS44002 | Drive Shaft | 29T | 22 | 22 | 52 | 95 | 585 | |
| | 1992.03-1998.09 | MT | F | R | Saloon FWD C 16 NZ (03.92-08.94), X 16 SZR | Chassis no. to:P-2732833 | GDS60002 | Drive Shaft | 29T | 22 | 22 | 52 | 95 | 926 | |
| | 1992.03-1998.09 | MT | F | L/R | Saloon FWD C 16 NZ (03.92-08.94), X 16 SZR | Chassis no. to:P-2732833 | GCO44051 | Outer Joint | 29T | 22 | 22 | 52 | 95 | 50 | O |
| | 1992.03-1998.09 | MT | F | L/R | Saloon FWD C 16 NZ (03.92-08.94), X 16 SZR | Chassis no. to:P-2732833 | GCI44004 | Inner Joint | | 22 | 22 | 34.95 | 57.5 | 103 | |
| | 1995.09-1998.01 | MT | F | L | Estate FWD 16 LZ2, 16 NZR | Chassis no. to:P-2732833 | GDS44002 | Drive Shaft | 29T | 22 | 22 | 52 | 95 | 585 | |
| | 1995.09-1998.01 | MT | F | R | Estate FWD 16 LZ2, 16 NZR | Chassis no. to:P-2732833 | GDS60002 | Drive Shaft | 29T | 22 | 22 | 52 | 95 | 926 | |
| | 1995.09-1998.01 | MT | F | L/R | Estate FWD 16 LZ2, 16 NZR | Chassis no. to:P-2732833 | GCO44051 | Outer Joint | 29T | 22 | 22 | 52 | 95 | 50 | O |
| | 1995.09-1998.01 | MT | F | L/R | Estate FWD 16 LZ2, 16 NZR | | GCI44004 | Inner Joint | | 22 | 22 | 34.95 | 57.5 | 103 | |
| | 1995.09-1998.01 | MT | F | L | Hatchback FWD 16 LZ2, 16 NZR | Chassis no. to:P-2732833 | GDS44002 | Drive Shaft | 29T | 22 | 22 | 52 | 95 | 585 | |
| | 1995.09-1998.01 | MT | F | R | Hatchback FWD 16 LZ2, 16 NZR | Chassis no. to:P-2732833 | GDS60002 | Drive Shaft | 29T | 22 | 22 | 52 | 95 | 926 | |
| | 1995.09-1998.01 | MT | F | L/R | Hatchback FWD 16 LZ2, 16 NZR | Chassis no. to:P-2732833 | GCO44051 | Outer Joint | 29T | 22 | 22 | 52 | 95 | 50 | O |
| | 1995.09-1998.01 | MT | F | L/R | Hatchback FWD 16 LZ2, 16 NZR | | GCI44004 | Inner Joint | | 22 | 22 | 34.95 | 57.5 | 103 | |
| | 1995.09-1998.09 | AT/MT | F | L/R | Saloon FWD 16 LZ2, 16 NZR | Chassis no. from:P-2732834 | GCO44007 | Outer Joint | 29T | 22 | 22 | 52 | 94.5 | 50 | O |
| | 1995.09-1998.09 | MT | F | L | Saloon FWD 16 LZ2, 16 NZR | Chassis no. to:P-2732833 | GDS44002 | Drive Shaft | 29T | 22 | 22 | 52 | 95 | 585 | |
| | 1995.09-1998.09 | MT | F | R | Saloon FWD 16 LZ2, 16 NZR | Chassis no. to:P-2732833 | GDS60002 | Drive Shaft | 29T | 22 | 22 | 52 | 95 | 926 | |
| | 1995.09-1998.09 | MT | F | L/R | Saloon FWD 16 LZ2, 16 NZR | Chassis no. to:P-2732833 | GCO44051 | Outer Joint | 29T | 22 | 22 | 52 | 95 | 50 | O |
| | 1995.09-1998.09 | MT | F | L/R | Saloon FWD 16 LZ2, 16 NZR | Chassis no. to:P-2732833 | GCI44004 | Inner Joint | | 22 | 22 | 34.95 | 57.5 | 103 | |
| **Astra GTC** | | | | | | | | | | | | | | | |
| 1.3 (66 kw) | 2005.04-2010.10 | 6MT | F | L | Hatchback FWD Z 13 DTH | | GCI44008 | Inner Joint | | 25 | 25 | 34.9 | 57.5 | 113.2 | |
| | 2005.04-2010.10 | MT | F | L | Hatchback FWD Z 13 DTH | | GCI21018 | Inner Joint | | 25 | 34 | 35 | 58 | 116 | |
| | 2005.04-2010.10 | SAT/5MT/6MT | F | L | Hatchback FWD Z 13 DTH | | GDS44052 | Drive Shaft | | 33 | 25 | 53 | 93.5 | 573 | |
| | 2005.04-2010.10 | SAT/5MT/6MT | F | R | Hatchback FWD Z 13 DTH | | GDS44051 | Drive Shaft | | 33 | 34 | 53 | 93.5 | 570 | |
| | 2005.04-2010.10 | | F | L | Hatchback FWD Z 13 DTH | | GDS60020 | Drive Shaft | | 33 | 25 | 52.5 | 94 | 561 | |
| | 2005.04-2010.10 | | F | L/R | Hatchback FWD Z 13 DTH | | GCO44028 | Outer Joint | | 33 | 24 | 53 | 93.5 | 63.5 | M |
| | 2005.04-2010.10 | | F | R | Hatchback FWD Z 13 DTH | | GCI44005 | Inner Joint | | 34 | 25 | 35 | | 130.2 | |

| | YEAR | TRANSM. | F/R | L/R | BODY STYLE & DRIVE TYPE & ENGINE | REMARKS | G-AP Ref. | PRODUCT | ABS | Technical Specifications A | B | C | H | L | P |
|---|---|---|---|---|---|---|---|---|---|---|---|---|---|---|---|
| **OPEL** **Astra GTC** | | | | | | | | | | | | | | | |
| 1.3 (66 kw) | 2005.04-2010.10 | | F | R | Hatchback FWD Z 13 DTH | | GCI44011 | Inner Joint | | 34 | 25 | 37.5 | | 130.2 | |
| 1.4 (55 kw) | 2005.03-2010.10 | 5MT | F | L | Hatchback FWD Z 14 XEL | | GDS44028 | Drive Shaft | | 33 | 22 | 53 | 95 | 590 | |
| | 2005.03-2010.10 | 5MT | F | R | Hatchback FWD Z 14 XEL | | GDS44030 | Drive Shaft | | 33 | 22 | 53 | 95 | 952 | |
| | 2005.03-2010.10 | MT | F | L/R | Hatchback FWD Z 14 XEL | | GCO44003 | Outer Joint | | 33 | 22 | 53 | 95 | 54.5 | M |
| | 2005.03-2010.10 | MT | F | L | Hatchback FWD Z 14 XEL | | GCI21014 | Inner Joint | | 22 | 22 | 35 | 57.5 | 105.5 | |
| 1.4 (66 kw) | 2005.03-2010.10 | 5MT | F | L | Hatchback FWD Z 14 XEP | | GDS44028 | Drive Shaft | | 33 | 22 | 53 | 95 | 590 | |
| | 2005.03-2010.10 | 5MT | F | R | Hatchback FWD Z 14 XEP | | GDS44030 | Drive Shaft | | 33 | 22 | 53 | 95 | 952 | |
| | 2005.03-2010.10 | MT | F | L/R | Hatchback FWD Z 14 XEP | | GCO44003 | Outer Joint | | 33 | 22 | 53 | 95 | 54.5 | M |
| | 2005.03-2010.10 | MT | F | L | Hatchback FWD Z 14 XEP | | GCI21014 | Inner Joint | | 22 | 22 | 35 | 57.5 | 105.5 | |
| 1.4 (74 kw) | 2011.10-2013.11 | AT | F | L/R | Hatchback FWD A 14 XER | | GCO88047 | Outer Joint | | 33 | 23 | 52.5 | 94 | 59.5 | M |
| | 2011.10-2013.11 | MT | F | L | Hatchback FWD A 14 XER | | GDS44064 | Drive Shaft | | 33 | 22 | 53 | 95 | 618 | |
| | 2011.10-2013.11 | MT | F | L/R | Hatchback FWD A 14 XER | | GCI44004 | Inner Joint | | 22 | 22 | 34.95 | 57.5 | 103 | |
| | 2011.10-2013.11 | | F | R | Hatchback FWD A 14 XER | | GDS44065 | Drive Shaft | | 33 | 22 | 53 | 95 | 983 | |
| 1.4 (88 kw) | 2011.10-2018.04 | 6MT | F | L | Hatchback FWD A 14 NEL;B 14 NEL | | GDS83226 | Drive Shaft | | 30 | 25 | 52.5 | 94 | 623 | |
| | 2011.10-2018.04 | 6MT | F | R | Hatchback FWD A 14 NEL;B 14 NEL | | GDS83227 | Drive Shaft | | 30 | 25 | 52.5 | 94 | 1018 | |
| | 2011.10-2018.04 | 6MT | F | L/R | Hatchback FWD A 14 NEL;B 14 NEL | | GCO17051 | Outer Joint | | 30 | 26 | 53.8 | 94.5 | 65.5 | M |
| | 2011.10-2018.04 | 6MT | F | L/R | Hatchback FWD A 14 NEL;B 14 NEL | | GCO21049 | Outer Joint | | 30 | 26 | 52.5 | 94 | 65.5 | M |
| | 2011.10-2018.04 | 6MT | F | L/R | Hatchback FWD A 14 NEL;B 14 NEL | | GCO88046 | Outer Joint | | 30 | 26 | 52.5 | 94.5 | 65.5 | M |
| | 2011.10-2018.04 | 6MT | F | L | Hatchback FWD A 14 NEL;B 14 NEL | | GCI82188 | Inner Joint | | 25 | 26 | 34.9 | 57.5 | 108 | |
| | 2011.10-2018.04 | 6MT | F | R | Hatchback FWD A 14 NEL;B 14 NEL | | GCI82194 | Inner Joint | | 34 | 26 | 37.5 | | 124 | |
| | 2011.10-2018.04 | MT | F | R | Hatchback FWD A 14 NEL;B 14 NEL | | GDS21109 | Drive Shaft | | 33 | 34 | 53 | 93.5 | 588 | |
| | 2011.10-2018.04 | MT | F | R | Hatchback FWD A 14 NEL;B 14 NEL | | GCI44005 | Inner Joint | | 34 | 25 | 35 | | 130.2 | |
| 1.4 (103 kw) | 2011.10-2018.04 | 6AT | F | L/R | Hatchback FWD A 14 NET;B 14 NET | | GCO81305 | Outer Joint | | 30 | 23 | 52.3 | 94 | 59.5 | M |
| | 2011.10-2018.04 | 6AT | F | L | Hatchback FWD A 14 NET;B 14 NET | | GCI81774 | Inner Joint | | 34 | 23 | 35 | 136.5 | 84.5 | |
| | 2011.10-2018.04 | 6MT | F | L | Hatchback FWD A 14 NET;B 14 NET | | GDS83226 | Drive Shaft | | 30 | 25 | 52.5 | 94 | 623 | |
| | 2011.10-2018.04 | 6MT | F | R | Hatchback FWD A 14 NET;B 14 NET | | GDS83227 | Drive Shaft | | 30 | 25 | 52.5 | 94 | 1018 | |
| | 2011.10-2018.04 | 6MT | F | L/R | Hatchback FWD A 14 NET;B 14 NET | | GCO17051 | Outer Joint | | 30 | 26 | 53.8 | 94.5 | 65.5 | M |
| | 2011.10-2018.04 | 6MT | F | L/R | Hatchback FWD A 14 NET;B 14 NET | | GCO21049 | Outer Joint | | 30 | 26 | 52.5 | 94 | 65.5 | M |
| | 2011.10-2018.04 | 6MT | F | L/R | Hatchback FWD A 14 NET;B 14 NET | | GCO88046 | Outer Joint | | 30 | 26 | 52.5 | 94.5 | 65.5 | M |
| | 2011.10-2018.04 | 6MT | F | L | Hatchback FWD A 14 NET;B 14 NET | | GCI82188 | Inner Joint | | 25 | 26 | 34.9 | 57.5 | 108 | |
| | 2011.10-2018.04 | 6MT | F | R | Hatchback FWD A 14 NET;B 14 NET | | GCI82194 | Inner Joint | | 34 | 26 | 37.5 | | 124 | |
| | 2011.10-2018.04 | MT | F | R | Hatchback FWD A 14 NET;B 14 NET | | GCI44005 | Inner Joint | | 34 | 25 | 35 | | 130.2 | |
| 1.6 (77 kw) | 2005.03-2010.10 | MT | F | L/R | Hatchback FWD Z 16 XEP;Z 16 XE1 | | GCO44003 | Outer Joint | | 33 | 22 | 53 | 95 | 54.5 | M |
| | 2005.03-2010.10 | MT | F | L | Hatchback FWD Z 16 XEP;Z 16 XE1 | | GCI21014 | Inner Joint | | 22 | 22 | 35 | 57.5 | 105.5 | |
| | 2005.03-2010.10 | MT | F | L/R | Hatchback FWD Z 16 XEP;Z 16 XE1 | | GCI44004 | Inner Joint | | 22 | 22 | 34.95 | 57.5 | 103 | |
| | 2005.03-2010.10 | SAT/5MT | F | L | Hatchback FWD Z 16 XEP;Z 16 XE1 | | GDS44028 | Drive Shaft | | 33 | 22 | 53 | 95 | 590 | |
| | 2005.03-2010.10 | SAT/5MT | F | R | Hatchback FWD Z 16 XEP;Z 16 XE1 | | GDS44030 | Drive Shaft | | 33 | 22 | 53 | 95 | 952 | |
| 1.6 (81 kw) | 2014.07-2018.04 | 6MT | F | L | Hatchback FWD B 16 DTL | | GDS83226 | Drive Shaft | | 30 | 25 | 52.5 | 94 | 623 | |
| | 2014.07-2018.04 | 6MT | F | R | Hatchback FWD B 16 DTL | | GDS21093 | Drive Shaft | | 30 | 27 | 52.5 | 94 | 625 | |
| | 2014.07-2018.04 | 6MT | F | L/R | Hatchback FWD B 16 DTL | | GCO17051 | Outer Joint | | 30 | 26 | 53.8 | 94.5 | 65.5 | M |
| | 2014.07-2018.04 | 6MT | F | L/R | Hatchback FWD B 16 DTL | | GCO21049 | Outer Joint | | 30 | 26 | 52.5 | 94 | 65.5 | M |
| | 2014.07-2018.04 | 6MT | F | L/R | Hatchback FWD B 16 DTL | | GCO88046 | Outer Joint | | 30 | 26 | 52.5 | 94.5 | 65.5 | M |
| | 2014.07-2018.04 | 6MT | F | L | Hatchback FWD B 16 DTL | | GCI82188 | Inner Joint | | 25 | 26 | 34.9 | 57.5 | 108 | |
| | 2014.07-2018.04 | 6MT | F | R | Hatchback FWD B 16 DTL | | GCI21016 | Inner Joint | | 27 | 26 | 35 | 78.5 | 112 | |
| 1.6 (85 kw) | 2006.12-2010.10 | AT/5MT | F | L | Hatchback FWD Z 16 XER | | GDS44028 | Drive Shaft | | 33 | 22 | 53 | 95 | 590 | |
| | 2006.12-2010.10 | AT/5MT | F | R | Hatchback FWD Z 16 XER | | GDS44030 | Drive Shaft | | 33 | 22 | 53 | 95 | 952 | |
| | 2006.12-2010.10 | AT/5MT | F | L/R | Hatchback FWD Z 16 XER | | GCO44003 | Outer Joint | | 33 | 22 | 53 | 95 | 54.5 | M |
| | 2006.12-2010.10 | AT/5MT | F | L/R | Hatchback FWD Z 16 XER | | GCI21014 | Inner Joint | | 22 | 22 | 35 | 57.5 | 105.5 | |
| 1.6 (100 kw) | 2014.07-2018.04 | 6MT | F | L | Hatchback FWD B 16 DTH | | GDS83226 | Drive Shaft | | 30 | 25 | 52.5 | 94 | 623 | |
| | 2014.07-2018.04 | 6MT | F | R | Hatchback FWD B 16 DTH | | GDS21093 | Drive Shaft | | 30 | 27 | 52.5 | 94 | 625 | |
| | 2014.07-2018.04 | 6MT | F | L/R | Hatchback FWD B 16 DTH | | GCO17051 | Outer Joint | | 30 | 26 | 53.8 | 94.5 | 65.5 | M |
| | 2014.07-2018.04 | 6MT | F | L/R | Hatchback FWD B 16 DTH | | GCO21049 | Outer Joint | | 30 | 26 | 52.5 | 94 | 65.5 | M |
| | 2014.07-2018.04 | 6MT | F | L/R | Hatchback FWD B 16 DTH | | GCO88046 | Outer Joint | | 30 | 26 | 52.5 | 94.5 | 65.5 | M |
| | 2014.07-2018.04 | 6MT | F | L | Hatchback FWD B 16 DTH | | GCI82188 | Inner Joint | | 25 | 26 | 34.9 | 57.5 | 108 | |
| | 2014.07-2018.04 | 6MT | F | R | Hatchback FWD B 16 DTH | | GCI21016 | Inner Joint | | 27 | 26 | 35 | 78.5 | 112 | |
| 1.6 (125 kw) | 2012.12-2018.04 | 6AT | F | L | Hatchback FWD A 16 XHT;B 16 SHL | | GDS82258 | Drive Shaft | | 30 | 34 | 52.5 | 94 | 666 | |
| | 2012.12-2018.04 | 6AT | F | L | Hatchback FWD A 16 XHT;B 16 SHL | | GCI86021 | Inner Joint | | 34 | 26 | 35 | 136.5 | 87 | |
| | 2012.12-2018.04 | 6AT/6MT | F | R | Hatchback FWD A 16 XHT;B 16 SHL | | GDS21093 | Drive Shaft | | 30 | 27 | 52.5 | 94 | 625 | |
| | 2012.12-2018.04 | 6AT/6MT | F | L/R | Hatchback FWD A 16 XHT;B 16 SHL | | GCO17051 | Outer Joint | | 30 | 26 | 53.8 | 94.5 | 65.5 | M |
| | 2012.12-2018.04 | 6AT/6MT | F | L/R | Hatchback FWD A 16 XHT;B 16 SHL | | GCO21049 | Outer Joint | | 30 | 26 | 52.5 | 94 | 65.5 | M |
| | 2012.12-2018.04 | 6AT/6MT | F | L/R | Hatchback FWD A 16 XHT;B 16 SHL | | GCO88046 | Outer Joint | | 30 | 26 | 52.5 | 94.5 | 65.5 | M |
| | 2012.12-2018.04 | 6AT/6MT | F | R | Hatchback FWD A 16 XHT;B 16 SHL | | GCI21016 | Inner Joint | | 27 | 26 | 35 | 78.5 | 112 | |
| | 2012.12-2018.04 | 6MT | F | L | Hatchback FWD A 16 XHT;B 16 SHL | | GDS83226 | Drive Shaft | | 30 | 25 | 52.5 | 94 | 623 | |
| | 2012.12-2018.04 | 6MT | F | L | Hatchback FWD A 16 XHT;B 16 SHL | | GCI82188 | Inner Joint | | 25 | 26 | 34.9 | 57.5 | 108 | |
| 1.6 (132 kw) | 2007.02-2010.10 | MT | F | L/R | Hatchback FWD Z 16 LET;A 16 LET | | GCO44028 | Outer Joint | | 33 | 24 | 53 | 93.5 | 63.5 | M |

| | YEAR | TRANSM. | F/R | L/R | BODY STYLE & DRIVE TYPE & ENGINE | REMARKS | G-AP Ref. | PRODUCT | ABS | Technical Specifications A | B | C | H | L | P |
|---|---|---|---|---|---|---|---|---|---|---|---|---|---|---|---|
| **OPEL** | | | | | | | | | | | | | | | |
| **Astra GTC** | | | | | | | | | | | | | | | |
| 1.6 (132 kw) | 2007.02-2010.10 | | F | L/R | Hatchback FWD Z 16 LET;A 16 LET | | GCI44005 | Inner Joint | | 34 | 25 | 35 | | 130.2 | |
| | 2011.10-2013.06 | 6MT | F | L | Hatchback FWD A 16 LET | | GDS83226 | Drive Shaft | | 30 | 25 | 52.5 | 94 | 623 | |
| | 2011.10-2013.06 | 6MT | F | R | Hatchback FWD A 16 LET | | GDS83227 | Drive Shaft | | 30 | 25 | 52.5 | 94 | 1018 | |
| | 2011.10-2013.06 | 6MT | F | L/R | Hatchback FWD A 16 LET | | GCO17051 | Outer Joint | | 30 | 26 | 53.8 | 94.5 | 65.5 | M |
| | 2011.10-2013.06 | 6MT | F | L/R | Hatchback FWD A 16 LET | | GCO21049 | Outer Joint | | 30 | 26 | 52.5 | 94 | 65.5 | M |
| | 2011.10-2013.06 | 6MT | F | L/R | Hatchback FWD A 16 LET | | GCO88046 | Outer Joint | | 30 | 26 | 52.5 | 94.5 | 65.5 | M |
| | 2011.10-2013.06 | 6MT | F | L | Hatchback FWD A 16 LET | | GCI82188 | Inner Joint | | 25 | 26 | 34.9 | 57.5 | 108 | |
| | 2011.10-2013.06 | 6MT | F | R | Hatchback FWD A 16 LET | | GCI82194 | Inner Joint | | 34 | 26 | 37.5 | | 124 | |
| 1.6 (147 kw) | 2013.07-2018.04 | 6MT | F | L | Hatchback FWD A 16 SHT;B 16 SHT | | GDS83226 | Drive Shaft | | 30 | 25 | 52.5 | 94 | 623 | |
| | 2013.07-2018.04 | 6MT | F | R | Hatchback FWD A 16 SHT;B 16 SHT | | GDS21093 | Drive Shaft | | 30 | 27 | 52.5 | 94 | 625 | |
| | 2013.07-2018.04 | 6MT | F | L/R | Hatchback FWD A 16 SHT;B 16 SHT | | GCO17051 | Outer Joint | | 30 | 26 | 53.8 | 94.5 | 65.5 | M |
| | 2013.07-2018.04 | 6MT | F | L/R | Hatchback FWD A 16 SHT;B 16 SHT | | GCO21049 | Outer Joint | | 30 | 26 | 52.5 | 94 | 65.5 | M |
| | 2013.07-2018.04 | 6MT | F | L/R | Hatchback FWD A 16 SHT;B 16 SHT | | GCO88046 | Outer Joint | | 30 | 26 | 52.5 | 94.5 | 65.5 | M |
| | 2013.07-2018.04 | 6MT | F | L | Hatchback FWD A 16 SHT;B 16 SHT | | GCI82188 | Inner Joint | | 25 | 26 | 34.9 | 57.5 | 108 | |
| | 2013.07-2018.04 | 6MT | F | R | Hatchback FWD A 16 SHT;B 16 SHT | | GCI21016 | Inner Joint | | 27 | 26 | 35 | 78.5 | 112 | |
| 1.7 (59 kw) | 2005.03-2010.10 | 5MT | F | L | Hatchback FWD Z 17 DTL | | GDS21063 | Drive Shaft | | 33 | 22 | 53 | 93.5 | 586 | |
| | 2005.03-2010.10 | 5MT | F | R | Hatchback FWD Z 17 DTL | | GDS21055 | Drive Shaft | | 33 | 22 | 53 | 93.5 | 950 | |
| | 2005.03-2010.10 | | F | L/R | Hatchback FWD Z 17 DTL | | GCO44028 | Outer Joint | | 33 | 24 | 53 | 93.5 | 63.5 | M |
| | 2005.03-2010.10 | | F | R | Hatchback FWD Z 17 DTL | | GCI44005 | Inner Joint | | 34 | 25 | 35 | | 130.2 | |
| | 2005.03-2010.10 | | F | L/R | Hatchback FWD Z 17 DTL | | GCI99026 | Inner Joint | | 22 | 25 | 35 | 57 | 111.7 | |
| 1.7 (74 kw) | 2005.03-2010.10 | 5MT | F | L | Hatchback FWD Z 17 DTH | | GDS44029 | Drive Shaft | | 33 | 34 | 53 | 93.5 | 594 | |
| | 2005.03-2010.10 | 5MT | F | L | Hatchback FWD Z 17 DTH | | GCI44002 | Inner Joint | | 34 | 25 | 35 | 56.2 | 114.8 | |
| | 2005.03-2010.10 | 5MT/6MT | F | R | Hatchback FWD Z 17 DTH | | GDS44031 | Drive Shaft | | 33 | 34 | 53 | 93.5 | 559 | |
| | 2005.03-2010.10 | 5MT/6MT | F | R | Hatchback FWD Z 17 DTH | | GCI44005 | Inner Joint | | 34 | 25 | 35 | | 130.2 | |
| | 2005.03-2010.10 | 6MT | F | L | Hatchback FWD Z 17 DTH | | GDS44052 | Drive Shaft | | 33 | 25 | 53 | 93.5 | 573 | |
| | 2005.03-2010.10 | 6MT | F | L | Hatchback FWD Z 17 DTH | | GCI44008 | Inner Joint | | 25 | 25 | 34.9 | 57.5 | 113.2 | |
| | 2005.03-2010.10 | MT | F | L/R | Hatchback FWD Z 17 DTH | Date to:2007.06 | GCO44028 | Outer Joint | | 33 | 24 | 53 | 93.5 | 63.5 | M |
| 1.7 (81 kw) | 2007.02-2010.10 | 5AT | F | R | Hatchback FWD A 17 DTJ;Z 17 DTJ | | GCI44005 | Inner Joint | | 34 | 25 | 35 | | 130.2 | |
| | 2007.02-2010.10 | 5MT/6MT | F | L | Hatchback FWD A 17 DTJ;Z 17 DTJ | | GDS21051 | Drive Shaft | | 33 | 25 | 52.5 | 94 | 579 | |
| | 2007.02-2010.10 | 5MT/6MT | F | R | Hatchback FWD A 17 DTJ;Z 17 DTJ | | GDS44099 | Drive Shaft | | 33 | 34 | 52.5 | 94 | 563 | |
| | 2007.02-2010.10 | AT/MT | F | L/R | Hatchback FWD A 17 DTJ;Z 17 DTJ | Date from:2008.01 | GCO44027 | Outer Joint | | 33 | 26 | 52.5 | 94 | 65.5 | M |
| | 2007.02-2010.10 | MT | F | L | Hatchback FWD A 17 DTJ;Z 17 DTJ | | GCI99186 | Inner Joint | | 25 | 28 | 34.9 | 57.5 | 111 | |
| | 2007.02-2010.10 | MT | F | R | Hatchback FWD A 17 DTJ;Z 17 DTJ | | GCI44016 | Inner Joint | | 34 | 28 | 37.5 | | 129.2 | |
| | 2012.03-2013.10 | 6MT | F | L | Hatchback FWD A 17 DTJ;A 17 DTC;A 17 DTE | For Engine code:A17DTC | GDS83226 | Drive Shaft | | 30 | 25 | 52.5 | 94 | 623 | |
| | 2012.03-2013.10 | 6MT | F | R | Hatchback FWD A 17 DTJ;A 17 DTC;A 17 DTE | For Engine code:A17DTC | GDS83227 | Drive Shaft | | 30 | 25 | 52.5 | 94 | 1018 | |
| | 2012.03-2013.10 | 6MT | F | L/R | Hatchback FWD A 17 DTJ;A 17 DTC;A 17 DTE | | GCO17051 | Outer Joint | | 30 | 26 | 53.8 | 94.5 | 65.5 | M |
| | 2012.03-2013.10 | 6MT | F | L/R | Hatchback FWD A 17 DTJ;A 17 DTC;A 17 DTE | | GCO21049 | Outer Joint | | 30 | 26 | 52.5 | 94 | 65.5 | M |
| | 2012.03-2013.10 | 6MT | F | L/R | Hatchback FWD A 17 DTJ;A 17 DTC;A 17 DTE | | GCO88046 | Outer Joint | | 30 | 26 | 52.5 | 94.5 | 65.5 | M |
| | 2012.03-2013.10 | 6MT | F | L | Hatchback FWD A 17 DTJ;A 17 DTC;A 17 DTE | For Engine code:A17DTC | GCI82188 | Inner Joint | | 25 | 26 | 34.9 | 57.5 | 108 | |
| | 2012.03-2013.10 | 6MT | F | R | Hatchback FWD A 17 DTJ;A 17 DTC;A 17 DTE | For Engine code:A17DTC | GCI82194 | Inner Joint | | 34 | 26 | 37.5 | | 124 | |
| | 2012.03-2013.10 | MT | F | L | Hatchback FWD A 17 DTJ;A 17 DTC;A 17 DTE | | GDS21076 | Drive Shaft | | 30 | 25 | 52.5 | 94 | 601 | |
| | 2012.03-2013.10 | MT | F | R | Hatchback FWD A 17 DTJ;A 17 DTC;A 17 DTE | Trans. code:A 17 DTC/A 17 DTJ | GDS21074 | Drive Shaft | | 30 | 34 | 52.5 | 94 | 589 | |
| 1.7 (92 kw) | 2007.02-2010.10 | 6MT | F | L | Hatchback FWD Z 17 DTR;A 17 DTR | | GDS21051 | Drive Shaft | | 33 | 25 | 52.5 | 94 | 579 | |
| | 2007.02-2010.10 | 6MT | F | R | Hatchback FWD Z 17 DTR;A 17 DTR | | GDS44099 | Drive Shaft | | 33 | 34 | 52.5 | 94 | 563 | |
| | 2007.02-2010.10 | AT/MT | F | L/R | Hatchback FWD Z 17 DTR;A 17 DTR | Date from:2008.01 | GCO44027 | Outer Joint | | 33 | 26 | 52.5 | 94 | 65.5 | M |
| | 2007.02-2010.10 | MT | F | L | Hatchback FWD Z 17 DTR;A 17 DTR | | GCI99186 | Inner Joint | | 25 | 28 | 34.9 | 57.5 | 111 | |
| | 2007.02-2010.10 | MT | F | R | Hatchback FWD Z 17 DTR;A 17 DTR | | GCI44016 | Inner Joint | | 34 | 28 | 37.5 | | 129.2 | |
| | 2007.02-2010.10 | | F | | Hatchback FWD Z 17 DTR;A 17 DTR | | GCO99024 | Outer Joint | | 33 | 26 | 52.5 | 94 | 65.5 | M |
| | 2007.02-2010.10 | | F | R | Hatchback FWD Z 17 DTR;A 17 DTR | | GCI44005 | Inner Joint | | 34 | 25 | 35 | | 130.2 | |
| 1.7 (96 kw) | 2012.03-2014.06 | 6MT | F | L | Hatchback FWD A 17 DTS;A 17 DTF | For Engine code:A17DTS | GDS83226 | Drive Shaft | | 30 | 25 | 52.5 | 94 | 623 | |
| | 2012.03-2014.06 | 6MT | F | R | Hatchback FWD A 17 DTS;A 17 DTF | For Engine code:A17DTS | GDS83227 | Drive Shaft | | 30 | 25 | 52.5 | 94 | 1018 | |
| | 2012.03-2014.06 | 6MT | F | L/R | Hatchback FWD A 17 DTS;A 17 DTF | | GCO17051 | Outer Joint | | 30 | 26 | 53.8 | 94.5 | 65.5 | M |
| | 2012.03-2014.06 | 6MT | F | L/R | Hatchback FWD A 17 DTS;A 17 DTF | | GCO21049 | Outer Joint | | 30 | 26 | 52.5 | 94 | 65.5 | M |
| | 2012.03-2014.06 | 6MT | F | L/R | Hatchback FWD A 17 DTS;A 17 DTF | | GCO88046 | Outer Joint | | 30 | 26 | 52.5 | 94.5 | 65.5 | M |
| | 2012.03-2014.06 | 6MT | F | L | Hatchback FWD A 17 DTS;A 17 DTF | For Engine code:A17DTS | GCI82188 | Inner Joint | | 25 | 26 | 34.9 | 57.5 | 108 | |
| | 2012.03-2014.06 | 6MT | F | R | Hatchback FWD A 17 DTS;A 17 DTF | For Engine code:A17DTS | GCI82194 | Inner Joint | | 34 | 26 | 37.5 | | 124 | |
| | 2012.03-2014.06 | MT | F | L | Hatchback FWD A 17 DTS;A 17 DTF | | GDS21076 | Drive Shaft | | 30 | 25 | 52.5 | 94 | 601 | |
| 1.8 (92 kw) | 2005.03-2010.10 | 4AT | F | L | Hatchback FWD Z 18 XE | | GDS44097 | Drive Shaft | | 33 | 22 | 53 | 93.5 | 588 | |
| | 2005.03-2010.10 | 4AT | F | R | Hatchback FWD Z 18 XE | | GDS44098 | Drive Shaft | | 33 | 22 | 53 | 93.5 | 950 | |
| | 2005.03-2010.10 | 5MT | F | L | Hatchback FWD Z 18 XE | | GDS21063 | Drive Shaft | | 33 | 22 | 53 | 93.5 | 586 | |
| | 2005.03-2010.10 | 5MT | F | R | Hatchback FWD Z 18 XE | | GDS21055 | Drive Shaft | | 33 | 22 | 53 | 93.5 | 950 | |
| | 2005.03-2010.10 | 5MT | F | L/R | Hatchback FWD Z 18 XE | | GCI99026 | Inner Joint | | 22 | 25 | 35 | 57 | 111.7 | |
| | 2005.03-2010.10 | AT/MT | F | L/R | Hatchback FWD Z 18 XE | Date to:2006.11 | GCO44028 | Outer Joint | | 33 | 24 | 53 | 93.5 | 63.5 | M |
| 1.8 (103 kw) | 2006.01-2010.10 | 4AT | F | L | Hatchback FWD Z 18 XER;A 18 XER | | GDS44097 | Drive Shaft | | 33 | 22 | 53 | 93.5 | 588 | |
| | 2006.01-2010.10 | 4AT | F | R | Hatchback FWD Z 18 XER;A 18 XER | | GDS44098 | Drive Shaft | | 33 | 22 | 53 | 93.5 | 950 | |

| | YEAR | TRANSM. | F/R | L/R | BODY STYLE & DRIVE TYPE & ENGINE | REMARKS | G-AP Ref. | PRODUCT | ABS | Technical Specifications | | | | | |
|---|---|---|---|---|---|---|---|---|---|---|---|---|---|---|---|
| | | | | | | | | | | A | B | C | H | L | P |
| **OPEL** | | | | | | | | | | | | | | | |
| **Astra GTC** | | | | | | | | | | | | | | | |
| 1.8 (103 kw) | 2006.01-2010.10 | 4AT/5MT | F | L/R | Hatchback FWD Z 18 XER;A 18 XER | | GCO44028 | Outer Joint | | 33 | 24 | 53 | 93.5 | 63.5 | M |
| | 2006.01-2010.10 | 5MT | F | L | Hatchback FWD Z 18 XER;A 18 XER | | GDS21063 | Drive Shaft | | 33 | 22 | 53 | 93.5 | 586 | |
| | 2006.01-2010.10 | 5MT | F | R | Hatchback FWD Z 18 XER;A 18 XER | | GDS21055 | Drive Shaft | | 33 | 22 | 53 | 93.5 | 950 | |
| | 2006.01-2010.10 | 5MT | F | L/R | Hatchback FWD Z 18 XER;A 18 XER | | GCI99026 | Inner Joint | | 22 | 25 | 35 | 57 | 111.7 | |
| 1.9 (74 kw) | 2006.01-2010.10 | 6MT | F | L | Hatchback FWD Z 19 DTL | Date from:2007.08 | GDS21051 | Drive Shaft | | 33 | 25 | 52.5 | 94 | 579 | |
| | 2006.01-2010.10 | 6MT | F | L | Hatchback FWD Z 19 DTL | Date to:2007.07 | GDS21073 | Drive Shaft | | 33 | 25 | 52.5 | 94 | 578 | |
| | 2006.01-2010.10 | 6MT | F | R | Hatchback FWD Z 19 DTL | | GDS21056 | Drive Shaft | | 33 | 34 | 52.5 | 94 | 595 | |
| | 2006.01-2010.10 | 6MT | F | R | Hatchback FWD Z 19 DTL | Date to:2007.07,Chassis no. to:72025241/75043819/78007657/7G | GCI99187 | Inner Joint | | 34 | 34 | 37.5 | | 124 | |
| | 2006.01-2010.10 | AT | F | L | Hatchback FWD Z 19 DTL | Chassis no. from:72024736 | GDS21111 | Drive Shaft | | 33 | 27 | 52.5 | 94 | 562 | |
| | 2006.01-2010.10 | AT | F | L | Hatchback FWD Z 19 DTL | Chassis no. to:72024735 | GDS60034 | Drive Shaft | | 33 | 27 | 52.5 | 94 | 564 | |
| | 2006.01-2010.10 | AT | F | R | Hatchback FWD Z 19 DTL | | GDS21110 | Drive Shaft | | 33 | 27 | 52.5 | 94 | 576 | |
| | 2006.01-2010.10 | AT | F | L | Hatchback FWD Z 19 DTL | | GCO44027 | Outer Joint | | 33 | 26 | 52.5 | 94 | 65.5 | M |
| | 2006.01-2010.10 | MT | F | L | Hatchback FWD Z 19 DTL | | GCI21018 | Inner Joint | | 25 | 34 | 35 | 58 | 116 | |
| | 2006.01-2010.10 | MT | F | L | Hatchback FWD Z 19 DTL | | GCI99186 | Inner Joint | | 25 | 28 | 34.9 | 57.5 | 111 | |
| | 2006.01-2010.10 | | F | | Hatchback FWD Z 19 DTL | | GCO99024 | Outer Joint | | 33 | 26 | 52.5 | 94 | 65.5 | M |
| 1.9 (88 kw) | 2005.03-2010.10 | 5MT/6MT | F | L | Hatchback FWD Z 19 DTJ | Date from:2007.08 | GDS21051 | Drive Shaft | | 33 | 25 | 52.5 | 94 | 579 | |
| | 2005.03-2010.10 | 5MT/6MT | F | L | Hatchback FWD Z 19 DTJ | Date to:2007.07 | GDS21073 | Drive Shaft | | 33 | 25 | 52.5 | 94 | 578 | |
| | 2005.03-2010.10 | 5MT/6MT | F | R | Hatchback FWD Z 19 DTJ | | GDS21056 | Drive Shaft | | 33 | 34 | 52.5 | 94 | 595 | |
| | 2005.03-2010.10 | 5MT/6MT | F | R | Hatchback FWD Z 19 DTJ | Date to:2007.07,Chassis no. to:72025241/75043819/78007657/7G | GCI99187 | Inner Joint | | 34 | 34 | 37.5 | | 124 | |
| | 2005.03-2010.10 | AT | F | L | Hatchback FWD Z 19 DTJ | Chassis no. from:72024736 | GDS21111 | Drive Shaft | | 33 | 27 | 52.5 | 94 | 562 | |
| | 2005.03-2010.10 | AT | F | L | Hatchback FWD Z 19 DTJ | Chassis no. to:72024735 | GDS60034 | Drive Shaft | | 33 | 27 | 52.5 | 94 | 564 | |
| | 2005.03-2010.10 | AT | F | R | Hatchback FWD Z 19 DTJ | | GDS21110 | Drive Shaft | | 33 | 27 | 52.5 | 94 | 576 | |
| | 2005.03-2010.10 | MT | F | L/R | Hatchback FWD Z 19 DTJ | | GCO44027 | Outer Joint | | 33 | 26 | 52.5 | 94 | 65.5 | M |
| | 2005.03-2010.10 | MT | F | L | Hatchback FWD Z 19 DTJ | | GCI21018 | Inner Joint | | 25 | 34 | 35 | 58 | 116 | |
| | 2005.03-2010.10 | MT | F | L | Hatchback FWD Z 19 DTJ | | GCI99186 | Inner Joint | | 25 | 28 | 34.9 | 57.5 | 111 | |
| | 2005.03-2010.10 | | F | | Hatchback FWD Z 19 DTJ | | GCO99024 | Outer Joint | | 33 | 26 | 52.5 | 94 | 65.5 | M |
| | 2005.09-2010.10 | 5MT | F | L | Hatchback FWD Z 19 DT | Date from:2007.08 | GDS21051 | Drive Shaft | | 33 | 25 | 52.5 | 94 | 579 | |
| | 2005.09-2010.10 | 5MT | F | L | Hatchback FWD Z 19 DT | Date to:2007.07 | GDS21073 | Drive Shaft | | 33 | 25 | 52.5 | 94 | 578 | |
| | 2005.09-2010.10 | 5MT | F | R | Hatchback FWD Z 19 DT | | GDS21056 | Drive Shaft | | 33 | 34 | 52.5 | 94 | 595 | |
| | 2005.09-2010.10 | 5MT | F | R | Hatchback FWD Z 19 DT | Date to:2007.07,Chassis no. to:72025241/75043819/78007657/7G | GCI99187 | Inner Joint | | 34 | 34 | 37.5 | | 124 | |
| | 2005.09-2010.10 | AT | F | L | Hatchback FWD Z 19 DT | Chassis no. from:72024736 | GDS21111 | Drive Shaft | | 33 | 27 | 52.5 | 94 | 562 | |
| | 2005.09-2010.10 | AT | F | L | Hatchback FWD Z 19 DT | Chassis no. to:72024735 | GDS60034 | Drive Shaft | | 33 | 27 | 52.5 | 94 | 564 | |
| | 2005.09-2010.10 | AT | F | R | Hatchback FWD Z 19 DT | | GDS21110 | Drive Shaft | | 33 | 27 | 52.5 | 94 | 576 | |
| | 2005.09-2010.10 | AT | F | L | Hatchback FWD Z 19 DT | | GCO44027 | Outer Joint | | 33 | 26 | 52.5 | 94 | 65.5 | M |
| | 2005.09-2010.10 | MT | F | L | Hatchback FWD Z 19 DT | | GCI21018 | Inner Joint | | 25 | 34 | 35 | 58 | 116 | |
| | 2005.09-2010.10 | MT | F | L | Hatchback FWD Z 19 DT | | GCI99186 | Inner Joint | | 25 | 28 | 34.9 | 57.5 | 111 | |
| | 2005.09-2010.10 | | F | | Hatchback FWD Z 19 DT | | GCO99024 | Outer Joint | | 33 | 26 | 52.5 | 94 | 65.5 | M |
| 1.9 (110 kw) | 2005.03-2010.10 | 6MT | F | L | Hatchback FWD Z 19 DTH | Date from:2007.08 | GDS21035 | Drive Shaft | | 30 | 25 | 53.8 | 94.5 | 581 | |
| | 2005.03-2010.10 | 6MT | F | L | Hatchback FWD Z 19 DTH | Date to:2007.07 | GDS21071 | Drive Shaft | | 30 | 25 | 53.8 | 94.5 | 576 | |
| | 2005.03-2010.10 | 6MT | F | R | Hatchback FWD Z 19 DTH | Date to:2007.07 | GDS21062 | Drive Shaft | | 30 | 34 | 53.8 | 94.5 | 595 | |
| | 2005.03-2010.10 | 6MT | F | R | Hatchback FWD Z 19 DTH | Date from:2007.08,Chassis no. from:72024736/75041476/78008876 | GDS82084 | Drive Shaft | | 30 | 34 | 53.8 | 94.5 | 598 | |
| | 2005.03-2010.10 | 6MT | F | R | Hatchback FWD Z 19 DTH | Date to:2007.07,Chassis no. to:72024735/75041475/78008875/7G | GCI99187 | Inner Joint | | 34 | 34 | 37.5 | | 124 | |
| | 2005.03-2010.10 | MT | F | L/R | Hatchback FWD Z 19 DTH | | GCO17051 | Outer Joint | | 30 | 26 | 53.8 | 94.5 | 65.5 | M |
| | 2005.03-2010.10 | MT | F | L | Hatchback FWD Z 19 DTH | | GCI21018 | Inner Joint | | 25 | 34 | 35 | 58 | 116 | |
| | 2005.03-2010.10 | MT | F | L | Hatchback FWD Z 19 DTH | | GCI99186 | Inner Joint | | 25 | 28 | 34.9 | 57.5 | 111 | |
| | 2005.03-2010.10 | | F | R | Hatchback FWD Z 19 DTH | Date To:2007.07,Chassis no. to:72024735/75041475/78008875/7G | GDS21056 | Drive Shaft | | 33 | 34 | 52.5 | 94 | 595 | |
| 2.0 (96 kw) | 2012.01-2015.10 | 6AT | F | L | Hatchback FWD A 20 DTH | | GDS82388 | Drive Shaft | | 30 | 27 | 52.5 | 94 | 609 | |
| | 2012.01-2015.10 | 6AT | F | R | Hatchback FWD A 20 DTH | | GDS21093 | Drive Shaft | | 30 | 27 | 52.5 | 94 | 625 | |
| | 2012.01-2015.10 | 6AT | F | L/R | Hatchback FWD A 20 DTH | | GCO17051 | Outer Joint | | 30 | 26 | 53.8 | 94.5 | 65.5 | M |
| | 2012.01-2015.10 | 6AT | F | L/R | Hatchback FWD A 20 DTH | | GCO21049 | Outer Joint | | 30 | 26 | 52.5 | 94 | 65.5 | M |
| | 2012.01-2015.10 | 6AT | F | L/R | Hatchback FWD A 20 DTH | | GCO88046 | Outer Joint | | 30 | 26 | 52.5 | 94.5 | 65.5 | M |
| | 2012.01-2015.10 | 6AT | F | L | Hatchback FWD A 20 DTH | | GCI86015 | Inner Joint | | 27 | 26 | 35 | 78.5 | 109.5 | |
| | 2012.01-2015.10 | 6AT | F | R | Hatchback FWD A 20 DTH | | GCI21016 | Inner Joint | | 27 | 26 | 35 | 78.5 | 112 | |
| 2.0 (121 kw) | 2012.01-2015.06 | 6AT | F | L | Hatchback FWD A 20 DTH | | GDS82388 | Drive Shaft | | 30 | 27 | 52.5 | 94 | 609 | |
| | 2012.01-2015.06 | 6AT | F | L | Hatchback FWD A 20 DTH | | GCI86015 | Inner Joint | | 27 | 26 | 35 | 78.5 | 109.5 | |
| | 2012.01-2015.06 | 6AT/6MT | F | R | Hatchback FWD A 20 DTH | | GDS21093 | Drive Shaft | | 30 | 27 | 52.5 | 94 | 625 | |
| | 2012.01-2015.06 | 6AT/6MT | F | L/R | Hatchback FWD A 20 DTH | | GCO17051 | Outer Joint | | 30 | 26 | 53.8 | 94.5 | 65.5 | M |
| | 2012.01-2015.06 | 6AT/6MT | F | L/R | Hatchback FWD A 20 DTH | | GCO21049 | Outer Joint | | 30 | 26 | 52.5 | 94 | 65.5 | M |
| | 2012.01-2015.06 | 6AT/6MT | F | L/R | Hatchback FWD A 20 DTH | | GCO88046 | Outer Joint | | 30 | 26 | 52.5 | 94.5 | 65.5 | M |
| | 2012.01-2015.06 | 6AT/6MT | F | R | Hatchback FWD A 20 DTH | | GCI21016 | Inner Joint | | 27 | 26 | 35 | 78.5 | 112 | |
| 2.0 (125 kw) | 2005.03-2010.10 | 5MT | F | R | Hatchback FWD Z 20 LEL | | GDS21056 | Drive Shaft | | 33 | 34 | 52.5 | 94 | 595 | |
| | 2005.03-2010.10 | 5MT | F | R | Hatchback FWD Z 20 LEL | | GCI99187 | Inner Joint | | 34 | 34 | 37.5 | | 124 | |
| | 2005.03-2010.10 | AT/MT | F | L/R | Hatchback FWD Z 20 LEL | | GCO44027 | Outer Joint | | 33 | 26 | 52.5 | 94 | 65.5 | M |
| | 2005.03-2010.10 | | F | | Hatchback FWD Z 20 LEL | | GCO99024 | Outer Joint | | 33 | 26 | 52.5 | 94 | 65.5 | M |
| 2.0 (143 kw) | 2013.10-2015.06 | 6MT | F | R | Hatchback FWD A 20 DTR | | GDS21093 | Drive Shaft | | 30 | 27 | 52.5 | 94 | 625 | |

| | YEAR | TRANSM. | F/R | L/R | BODY STYLE & DRIVE TYPE & ENGINE | REMARKS | G-AP Ref. | PRODUCT | ABS | Technical Specifications A | B | C | H | L | P |
|---|---|---|---|---|---|---|---|---|---|---|---|---|---|---|---|
| **OPEL** | | | | | | | | | | | | | | | |
| **Astra GTC** | | | | | | | | | | | | | | | |
| 2.0 (143 kw) | 2013.10-2015.06 | 6MT | F | L/R | Hatchback FWD A 20 DTR | | GCO17051 | Outer Joint | | 30 | 26 | 53.8 | 94.5 | 65.5 | M |
| | 2013.10-2015.06 | 6MT | F | L/R | Hatchback FWD A 20 DTR | | GCO21049 | Outer Joint | | 30 | 26 | 52.5 | 94 | 65.5 | M |
| | 2013.10-2015.06 | 6MT | F | L/R | Hatchback FWD A 20 DTR | | GCO88046 | Outer Joint | | 30 | 26 | 52.5 | 94.5 | 65.5 | M |
| | 2013.10-2015.06 | 6MT | F | R | Hatchback FWD A 20 DTR | | GCI21016 | Inner Joint | | 27 | 26 | 35 | 78.5 | 112 | |
| 2.0 (147 kw) | 2005.03-2010.10 | 6MT | F | R | Hatchback FWD Z 20 LER | | GDS21056 | Drive Shaft | | 33 | 34 | 52.5 | 94 | 595 | |
| | 2005.03-2010.10 | 6MT | F | R | Hatchback FWD Z 20 LER | | GCI99187 | Inner Joint | | 34 | 34 | 37.5 | | 124 | |
| | 2005.03-2010.10 | AT/MT | F | L/R | Hatchback FWD Z 20 LER | | GCO44027 | Outer Joint | | 33 | 26 | 52.5 | 94 | 65.5 | M |
| | 2005.03-2010.10 | | F | | Hatchback FWD Z 20 LER | | GCO99024 | Outer Joint | | 33 | 26 | 52.5 | 94 | 65.5 | M |
| 2.0 (177 kw) | 2005.08-2010.10 | 6MT | F | R | Hatchback FWD Z 20 LEH | Date to:2007.07 | GDS21062 | Drive Shaft | | 30 | 34 | 53.8 | 94.5 | 595 | |
| | 2005.08-2010.10 | 6MT | F | R | Hatchback FWD Z 20 LEH | Date from:2007.08,Chassis no. from:72/75041476/78 | GDS82084 | Drive Shaft | | 30 | 34 | 53.8 | 94.5 | 598 | |
| | 2005.08-2010.10 | 6MT | F | R | Hatchback FWD Z 20 LEH | Date from:2007.08,Chassis no. from:72/75041476/78 | GCI44016 | Inner Joint | | 34 | 28 | 37.5 | | 129.2 | |
| | 2005.08-2010.10 | 6MT | F | R | Hatchback FWD Z 20 LEH | Date to:2007.07 | GCI99187 | Inner Joint | | 34 | 34 | 37.5 | | 124 | |
| | 2005.08-2010.10 | | F | R | Hatchback FWD Z 20 LEH | Date To:2007.07;Chassis no. to:72;Chassis no. to:75041476;Chassis no. to:78;Chassis no. to:72 | GDS21056 | Drive Shaft | | 33 | 34 | 52.5 | 94 | 595 | |
| | 2005.08-2010.10 | | F | L/R | Hatchback FWD Z 20 LEH | | GCO17051 | Outer Joint | | 30 | 26 | 53.8 | 94.5 | 65.5 | M |
| 2.0 (206 kw) | 2012.04-2018.04 | 6MT | F | L/R | Hatchback FWD A 20 NFT;B 20 NFT | | GCO21057 | Outer Joint | | 30 | 27 | 59.1 | 94 | 65 | M |
| **Astra Sports Tourer** | | | | | | | | | | | | | | | |
| 1.2 (100 kw) | 2023.10- | 6DCT | F | R | Estate FWD HPY (EB2LTDH2) | | GDS83109 | Drive Shaft | | 28 | 37 | 58.5 | 92.5 | 933 | |
| | 2023.10- | 6DCT | F | R | Estate FWD HPY (EB2LTDH2) | | GCO82273 | Outer Joint | | 28 | 34 | 58.5 | 92.5 | 56 | I |
| | 2023.10- | 6DCT | F | R | Estate FWD HPY (EB2LTDH2) | | GCI82118 | Inner Joint | | 37 | 34 | | 290 | 88 | |
| **Astra Van** | | | | | | | | | | | | | | | |
| 1.2 (48 kw) | 1998.09-2000.08 | 5MT | F | L/R | Estate Van FWD X12XE | | GCI60001 | Inner Joint | | 22 | 28 | 34.9 | 57.5 | 96.5 | |
| | 1998.09-2000.08 | | F | R | Estate Van FWD X12XE | | GDS44082 | Drive Shaft | | 33 | 34 | 55 | 104 | 663 | |
| | 1998.09-2000.08 | | F | L/R | Estate Van FWD X12XE | | GCO44012 | Outer Joint | | 33 | 28 | 52 | 104 | 54.5 | O |
| 1.3 (66 kw) | 2005.08-2010.10 | 6MT | F | L | Estate Van FWD Z 13 DTH | | GDS44052 | Drive Shaft | | 33 | 25 | 53 | 93.5 | 573 | |
| | 2005.08-2010.10 | 6MT | F | R | Estate Van FWD Z 13 DTH | | GDS44051 | Drive Shaft | | 33 | 34 | 53 | 93.5 | 570 | |
| | 2005.08-2010.10 | 6MT | F | L | Estate Van FWD Z 13 DTH | | GCI44008 | Inner Joint | | 25 | 25 | 34.9 | 57.5 | 113.2 | |
| | 2005.08-2010.10 | MT | F | L | Estate Van FWD Z 13 DTH | | GCI21018 | Inner Joint | | 25 | 34 | 35 | 58 | 116 | |
| | 2005.08-2010.10 | | F | L | Estate Van FWD Z 13 DTH | | GDS60020 | Drive Shaft | | 33 | 25 | 52.5 | 94 | 561 | |
| | 2005.08-2010.10 | | F | L/R | Estate Van FWD Z 13 DTH | | GCO44028 | Outer Joint | | 33 | 24 | 53 | 93.5 | 63.5 | M |
| | 2005.08-2010.10 | | F | R | Estate Van FWD Z 13 DTH | | GCI44005 | Inner Joint | | 34 | 25 | 35 | | 130.2 | |
| | 2005.08-2010.10 | | F | R | Estate Van FWD Z 13 DTH | | GCI44011 | Inner Joint | | 34 | 25 | 37.5 | | 130.2 | |
| 1.3 (70 kw) | 2012.10-2015.10 | 5MT | F | L | Estate Van FWD A 13 DTE | | GDS83209 | Drive Shaft | | 33 | 22 | 52.5 | 94 | 619 | |
| | 2012.10-2015.10 | 5MT | F | R | Estate Van FWD A 13 DTE | | GDS84082 | Drive Shaft | | 33 | 22 | 52.3 | 94 | 983 | |
| | 2012.10-2015.10 | 5MT | F | R | Estate Van FWD A 13 DTE | | GCO44088 | Outer Joint | | 33 | 23 | 52.3 | 94 | 59.5 | M |
| | 2012.10-2015.10 | 5MT | F | L | Estate Van FWD A 13 DTE | | GCI99026 | Inner Joint | | 22 | 25 | 35 | 57 | 111.7 | |
| | 2012.10-2015.10 | 5MT | F | R | Estate Van FWD A 13 DTE | | GCI44017 | Inner Joint | | 22 | 23 | 35 | 57.5 | 116 | |
| | 2013.05-2015.10 | 5MT | F | L | Hatchback Van FWD A 13 DTE | | GDS83209 | Drive Shaft | | 33 | 22 | 52.5 | 94 | 619 | |
| | 2013.05-2015.10 | 5MT | F | R | Hatchback Van FWD A 13 DTE | | GDS84082 | Drive Shaft | | 33 | 22 | 52.3 | 94 | 983 | |
| | 2013.05-2015.10 | 5MT | F | R | Hatchback Van FWD A 13 DTE | | GCO44088 | Outer Joint | | 33 | 23 | 52.3 | 94 | 59.5 | M |
| | 2013.05-2015.10 | 5MT | F | L | Hatchback Van FWD A 13 DTE | | GCI99026 | Inner Joint | | 22 | 25 | 35 | 57 | 111.7 | |
| | 2013.05-2015.10 | 5MT | F | R | Hatchback Van FWD A 13 DTE | | GCI44017 | Inner Joint | | 22 | 23 | 35 | 57.5 | 116 | |
| 1.4 (44 kw) | 1991.09-1998.02 | MT | F | L | Estate Van FWD C14NZ | Date to:1998.02;Chassis no. to:P-2732833 | GDS44002 | Drive Shaft | 29T | 22 | 22 | 52 | 95 | 585 | |
| | 1991.09-1998.02 | MT | F | R | Estate Van FWD C14NZ | Date to:1998.02;Chassis no. to:P-2732833 | GDS60002 | Drive Shaft | 29T | 22 | 22 | 52 | 95 | 926 | |
| | 1991.09-1998.02 | MT | F | L/R | Estate Van FWD C14NZ | Date from:1994.01;Date to:1998.02 | GCO44007 | Outer Joint | 29T | 22 | 22 | 52 | 94.5 | 50 | O |
| | 1991.09-1998.02 | MT | F | L/R | Estate Van FWD C14NZ | | GCO44041 | Outer Joint | | 22 | 22 | 52 | 95 | 50 | O |
| | 1991.09-1998.02 | MT | F | L/R | Estate Van FWD C14NZ | Chassis no. to:P-2732833 | GCO44051 | Outer Joint | 29T | 22 | 22 | 52 | 95 | 50 | O |
| | 1991.09-1998.02 | MT | F | L/R | Estate Van FWD C14NZ | Date to:1998.02 | GCI44004 | Inner Joint | | 22 | 22 | 34.95 | 57.5 | 103 | |
| | 1991.09-1998.02 | | F | | Estate Van FWD C14NZ | | GCO44023 | Outer Joint | | 22 | 22 | 52 | 95 | 50 | O |
| 1.4 (66 kw) | 1998.09-2005.04 | 4AT/5MT | F | L | Estate Van FWD X14XE/Z14XE | | GDS60013 | Drive Shaft | | 33 | 22 | 52 | 103 | 595 | |
| | 1998.09-2005.04 | 4AT/5MT | F | R | Estate Van FWD X14XE/Z14XE | | GDS44033 | Drive Shaft | | 33 | 22 | 52 | 103 | 950.5 | |
| | 1998.09-2005.04 | 4AT/5MT | F | L | Estate Van FWD X14XE/Z14XE | | GCI21014 | Inner Joint | | 22 | 22 | 35 | 57.5 | 105.5 | |
| | 1998.09-2005.04 | 4AT/5MT | F | R | Estate Van FWD X14XE/Z14XE | | GCI44004 | Inner Joint | | 22 | 22 | 34.95 | 57.5 | 103 | |
| | 1998.09-2005.04 | | F | L/R | Estate Van FWD X14XE/Z14XE | | GCO44009 | Outer Joint | | 33 | 22 | 52 | 103 | 50.5 | O |
| | 1998.09-2005.04 | | F | L/R | Estate Van FWD X14XE/Z14XE | | GCO44030 | Outer Joint | | 33 | 22 | 52 | 103 | 50.5 | O |
| | 2004.12-2012.12 | 5MT | F | L | Estate Van FWD Z 14 XEP | | GDS44028 | Drive Shaft | | 33 | 22 | 53 | 95 | 590 | |
| | 2004.12-2012.12 | 5MT | F | R | Estate Van FWD Z 14 XEP | | GDS44030 | Drive Shaft | | 33 | 22 | 53 | 95 | 952 | |
| | 2004.12-2012.12 | 5MT | F | L/R | Estate Van FWD Z 14 XEP | | GCI21014 | Inner Joint | | 22 | 22 | 35 | 57.5 | 105.5 | |
| | 2004.12-2012.12 | | F | L/R | Estate Van FWD Z 14 XEP | | GCO44003 | Outer Joint | | 33 | 22 | 53 | 95 | 54.5 | M |
| 1.6 (52 kw) | 1993.02-1996.07 | AT/MT | F | L/R | Estate Van FWD X16SZ | | GCO44007 | Outer Joint | 29T | 22 | 22 | 52 | 94.5 | 50 | O |
| | 1993.02-1996.07 | MT | F | R | Estate Van FWD X16SZ | | GDS60002 | Drive Shaft | 29T | 22 | 22 | 52 | 95 | 926 | |
| | 1993.02-1996.07 | MT | F | L/R | Estate Van FWD X16SZ | | GCO44041 | Outer Joint | | 22 | 22 | 52 | 95 | 50 | O |
| | 1993.02-1996.07 | MT | F | L/R | Estate Van FWD X16SZ | | GCO44051 | Outer Joint | 29T | 22 | 22 | 52 | 95 | 50 | O |
| | 1993.02-1996.07 | MT | F | L/R | Estate Van FWD X16SZ | | GCI44004 | Inner Joint | | 22 | 22 | 34.95 | 57.5 | 103 | |
| | 1993.02-1996.07 | | F | | Estate Van FWD X16SZ | | GCO44023 | Outer Joint | | 22 | 22 | 52 | 95 | 50 | O |
| 1.6 (55 kw) | 1991.10-1998.02 | MT | F | L | Estate Van FWD C16NZ/X16SZR | Chassis no. to:P-2732833 | GDS44002 | Drive Shaft | 29T | 22 | 22 | 52 | 95 | 585 | |

| | YEAR | TRANSM. | F/R | L/R | BODY STYLE & DRIVE TYPE & ENGINE | REMARKS | G-AP Ref. | PRODUCT | ABS | Technical Specifications A | B | C | H | L | P |
|---|---|---|---|---|---|---|---|---|---|---|---|---|---|---|---|
| **OPEL** | | | | | | | | | | | | | | | |
| **Astra Van** | | | | | | | | | | | | | | | |
| 1.6 (55 kw) | 1991.10-1998.02 | MT | F | R | Estate Van FWD C16NZ/X16SZR | | GDS50209 | Drive Shaft | | 27 | 39 | 56.5 | 92 | 1014 | |
| | 1991.10-1998.02 | MT | F | R | Estate Van FWD C16NZ/X16SZR | Chassis no. to:P-2732833 | GDS60002 | Drive Shaft | 29T | 22 | 22 | 52 | 95 | 926 | |
| | 1991.10-1998.02 | MT | F | R | Estate Van FWD C16NZ/X16SZR | | GDS60019 | Drive Shaft | | 22 | 22 | 52 | 95 | 926 | |
| | 1991.10-1998.02 | MT | F | L/R | Estate Van FWD C16NZ/X16SZR | | GCO44041 | Outer Joint | | 22 | 22 | 52 | 95 | 50 | O |
| | 1991.10-1998.02 | MT | F | L/R | Estate Van FWD C16NZ/X16SZR | Chassis no. to:P-2732833 | GCO44051 | Outer Joint | 29T | 22 | 22 | 52 | 95 | 50 | O |
| | 1991.10-1998.02 | MT | F | R | Estate Van FWD C16NZ/X16SZR | | GCI50097 | Inner Joint | | 39 | 35 | 30 | 409 | 90 | |
| | 1991.10-1998.02 | MT | F | L/R | Estate Van FWD C16NZ/X16SZR | | GCI44004 | Inner Joint | | 22 | 22 | 34.95 | 57.5 | 103 | |
| | 1991.10-1998.02 | | F | | Estate Van FWD C16NZ/X16SZR | | GCO44023 | Outer Joint | | 22 | 22 | 52 | 95 | 50 | O |
| | 1998.09-2000.08 | 4AT/5MT | F | L | Estate Van FWD X16SZR | | GDS60013 | Drive Shaft | | 33 | 22 | 52 | 103 | 595 | |
| | 1998.09-2000.08 | 4AT/5MT | F | R | Estate Van FWD X16SZR | | GDS44033 | Drive Shaft | | 33 | 22 | 52 | 103 | 950.5 | |
| | 1998.09-2000.08 | AT/MT | F | L/R | Estate Van FWD X16SZR | | GCO44011 | Outer Joint | 29T | 33 | 22 | 52 | 103 | 50.5 | O |
| | 1998.09-2000.08 | AT/MT | F | L/R | Estate Van FWD X16SZR | | GCO44030 | Outer Joint | | 33 | 22 | 52 | 103 | 50.5 | O |
| | 1998.09-2000.08 | AT/MT | F | L/R | Estate Van FWD X16SZR | | GCI44004 | Inner Joint | | 22 | 22 | 34.95 | 57.5 | 103 | |
| | 1998.09-2000.08 | MT | F | L | Estate Van FWD X16SZR | | GCI21014 | Inner Joint | | 22 | 22 | 35 | 57.5 | 105.5 | |
| | 1998.09-2000.08 | | F | L/R | Estate Van FWD X16SZR | | GCO44009 | Outer Joint | | 33 | 22 | 52 | 103 | 50.5 | O |
| 1.6 (62 kw) | 2000.12-2005.04 | 4AT/5MT | F | L | Estate Van FWD Z16SE | | GDS60013 | Drive Shaft | | 33 | 22 | 52 | 103 | 595 | |
| | 2000.12-2005.04 | 4AT/5MT | F | R | Estate Van FWD Z16SE | | GDS44033 | Drive Shaft | | 33 | 22 | 52 | 103 | 950.5 | |
| | 2000.12-2005.04 | AT/MT | F | L/R | Estate Van FWD Z16SE | Date to:2004.12 | GCO44011 | Outer Joint | 29T | 33 | 22 | 52 | 103 | 50.5 | O |
| | 2000.12-2005.04 | AT/MT | F | L/R | Estate Van FWD Z16SE | Date to:2004.12 | GCO44030 | Outer Joint | | 33 | 22 | 52 | 103 | 50.5 | O |
| | 2000.12-2005.04 | AT/MT | F | L/R | Estate Van FWD Z16SE | Date to:2004.12 | GCI44004 | Inner Joint | | 22 | 22 | 34.95 | 57.5 | 103 | |
| | 2000.12-2005.04 | MT | F | L | Estate Van FWD Z16SE | Date from:2000.12 | GCI21014 | Inner Joint | | 22 | 22 | 35 | 57.5 | 105.5 | |
| | 2000.12-2005.04 | | F | L/R | Estate Van FWD Z16SE | | GCO44009 | Outer Joint | | 33 | 22 | 52 | 103 | 50.5 | O |
| | 2000.12-2005.04 | | F | | Estate Van FWD Z16SE | | GCO44010 | Outer Joint | 29T | 33 | 22 | 52 | 103 | 50.5 | O |
| 1.6 (74 kw) | 1994.08-1998.03 | AT/MT | F | R | Estate Van FWD X16XEL | | GDS50209 | Drive Shaft | | 27 | 39 | 56.5 | 92 | 1014 | |
| | 1994.08-1998.03 | AT/MT | F | R | Estate Van FWD X16XEL | | GDS60019 | Drive Shaft | | 22 | 22 | 52 | 95 | 926 | |
| | 1994.08-1998.03 | AT/MT | F | R | Estate Van FWD X16XEL | | GCI50097 | Inner Joint | | 39 | 35 | 30 | 409 | 90 | |
| | 1994.08-1998.03 | MT | F | | Estate Van FWD X16XEL | | GCO44068 | Outer Joint | 29T | 22 | 30 | 52 | 94.5 | 55 | I |
| | 1994.08-1998.03 | | F | | Estate Van FWD X16XEL | | GCO44023 | Outer Joint | | 22 | 22 | 52 | 95 | 50 | O |
| | 1998.09-2004.01 | 4AT/5MT | F | R | Estate Van FWD C16SEL/Z16XE | | GDS44033 | Drive Shaft | | 33 | 22 | 52 | 103 | 950.5 | |
| | 1998.09-2004.01 | AT/MT | F | L | Estate Van FWD C16SEL/Z16XE | | GDS60013 | Drive Shaft | | 33 | 22 | 52 | 103 | 595 | |
| | 1998.09-2004.01 | | F | L/R | Estate Van FWD C16SEL/Z16XE | | GCO44009 | Outer Joint | | 33 | 22 | 52 | 103 | 50.5 | O |
| | 1998.09-2004.01 | | F | L/R | Estate Van FWD C16SEL/Z16XE | | GCO44030 | Outer Joint | | 33 | 22 | 52 | 103 | 50.5 | O |
| | 1998.09-2004.01 | | F | L/R | Estate Van FWD C16SEL/Z16XE | | GCI44004 | Inner Joint | | 22 | 22 | 34.95 | 57.5 | 103 | |
| 1.6 (76 kw) | 2004.02-2004.11 | 5MT | F | L | Estate Van FWD Z 16 XEP | | GDS44028 | Drive Shaft | | 33 | 22 | 53 | 95 | 590 | |
| | 2004.02-2004.11 | 5MT | F | R | Estate Van FWD Z 16 XEP | | GDS44030 | Drive Shaft | | 33 | 22 | 53 | 95 | 952 | |
| | 2004.02-2004.11 | | F | L/R | Estate Van FWD Z 16 XEP | | GCO44003 | Outer Joint | | 33 | 22 | 53 | 95 | 54.5 | M |
| | 2004.02-2004.11 | | F | L | Estate Van FWD Z 16 XEP | | GCI21014 | Inner Joint | | 22 | 22 | 35 | 57.5 | 105.5 | |
| | 2004.02-2004.11 | 5MT | F | L | Estate Van FWD Z16XEP | | GDS60013 | Drive Shaft | | 33 | 22 | 52 | 103 | 595 | |
| | 2004.02-2004.11 | 5MT | F | R | Estate Van FWD Z16XEP | | GDS44033 | Drive Shaft | | 33 | 22 | 52 | 103 | 950.5 | |
| | 2004.02-2004.11 | | F | L/R | Estate Van FWD Z16XEP | | GCO44009 | Outer Joint | | 33 | 22 | 52 | 103 | 50.5 | O |
| | 2004.02-2004.11 | | F | L/R | Estate Van FWD Z16XEP | | GCO44030 | Outer Joint | | 33 | 22 | 52 | 103 | 50.5 | O |
| | 2004.02-2004.11 | | F | L/R | Estate Van FWD Z16XEP | | GCI44004 | Inner Joint | | 22 | 22 | 34.95 | 57.5 | 103 | |
| 1.6 (81 kw) | 2014.01-2015.10 | 6MT | F | R | Estate Van FWD B 16 DTL | | GDS21032 | Drive Shaft | | 30 | 27 | 53.8 | 94.5 | 605 | |
| | 2014.01-2015.10 | 6MT | F | L/R | Estate Van FWD B 16 DTL | | GCO17051 | Outer Joint | | 30 | 26 | 53.8 | 94.5 | 65.5 | M |
| | 2014.01-2015.10 | 6MT | F | L/R | Estate Van FWD B 16 DTL | | GCO21049 | Outer Joint | | 30 | 26 | 52.5 | 94 | 65.5 | M |
| | 2014.01-2015.10 | 6MT | F | L/R | Estate Van FWD B 16 DTL | | GCO88046 | Outer Joint | | 30 | 26 | 52.5 | 94.5 | 65.5 | M |
| | 2014.01-2015.10 | 6MT | F | R | Estate Van FWD B 16 DTL | | GCI21030 | Inner Joint | | 27 | 26 | 35 | 78 | 112.5 | |
| | 2014.01-2015.10 | MT | F | L | Estate Van FWD B 16 DTL | | GDS21076 | Drive Shaft | | 30 | 25 | 52.5 | 94 | 601 | |
| | 2014.01-2015.10 | 6MT | F | R | Hatchback Van FWD B 16 DTL | | GDS21032 | Drive Shaft | | 30 | 27 | 53.8 | 94.5 | 605 | |
| | 2014.01-2015.10 | 6MT | F | L/R | Hatchback Van FWD B 16 DTL | | GCO17051 | Outer Joint | | 30 | 26 | 53.8 | 94.5 | 65.5 | M |
| | 2014.01-2015.10 | 6MT | F | L/R | Hatchback Van FWD B 16 DTL | | GCO21049 | Outer Joint | | 30 | 26 | 52.5 | 94 | 65.5 | M |
| | 2014.01-2015.10 | 6MT | F | L/R | Hatchback Van FWD B 16 DTL | | GCO88046 | Outer Joint | | 30 | 26 | 52.5 | 94.5 | 65.5 | M |
| | 2014.01-2015.10 | 6MT | F | R | Hatchback Van FWD B 16 DTL | | GCI21030 | Inner Joint | | 27 | 26 | 35 | 78 | 112.5 | |
| | 2014.01-2015.10 | MT | F | L | Hatchback Van FWD B 16 DTL | | GDS21076 | Drive Shaft | | 30 | 25 | 52.5 | 94 | 601 | |
| 1.6 (85 kw) | 2006.10-2010.12 | 5MT/SAT | F | L/R | Estate Van FWD Z 16 XER | | GCI21014 | Inner Joint | | 22 | 22 | 35 | 57.5 | 105.5 | |
| | 2006.10-2010.12 | SAT/5MT | F | L | Estate Van FWD Z 16 XER | | GDS44028 | Drive Shaft | | 33 | 22 | 53 | 95 | 590 | |
| | 2006.10-2010.12 | SAT/5MT | F | R | Estate Van FWD Z 16 XER | | GDS44030 | Drive Shaft | | 33 | 22 | 53 | 95 | 952 | |
| | 2006.10-2010.12 | | F | L/R | Estate Van FWD Z 16 XER | | GCO44003 | Outer Joint | | 33 | 22 | 53 | 95 | 54.5 | M |
| 1.6 (100 kw) | 2013.05-2015.10 | 6AT/6MT | F | L/R | Hatchback Van FWD B 16 DTH | | GCO88046 | Outer Joint | | 30 | 26 | 52.5 | 94.5 | 65.5 | M |
| | 2013.05-2015.10 | 6MT | F | L | Hatchback Van FWD B 16 DTH | | GDS21076 | Drive Shaft | | 30 | 25 | 52.5 | 94 | 601 | |
| | 2013.05-2015.10 | 6MT | F | R | Hatchback Van FWD B 16 DTH | | GDS21032 | Drive Shaft | | 30 | 27 | 53.8 | 94.5 | 605 | |
| | 2013.05-2015.10 | 6MT | F | R | Hatchback Van FWD B 16 DTH | | GCI21030 | Inner Joint | | 27 | 26 | 35 | 78 | 112.5 | |
| | 2013.05-2015.10 | MT | F | L/R | Hatchback Van FWD B 16 DTH | | GCO17051 | Outer Joint | | 30 | 26 | 53.8 | 94.5 | 65.5 | M |
| | 2013.05-2015.10 | MT | F | L/R | Hatchback Van FWD B 16 DTH | | GCO21049 | Outer Joint | | 30 | 26 | 52.5 | 94 | 65.5 | M |
| 1.7 (44 kw) | 1992.07-1999.01 | 5MT | F | L | Estate Van FWD 17DR | Chassis no. from:P2733478/P5273485/P8202126 | GDS44002 | Drive Shaft | 29T | 22 | 22 | 52 | 95 | 585 | |

| | YEAR | TRANSM. | F/R | L/R | BODY STYLE & DRIVE TYPE & ENGINE | REMARKS | G-AP Ref. | PRODUCT | ABS | Technical Specifications | | | | | |
|---|---|---|---|---|---|---|---|---|---|---|---|---|---|---|---|
| | | | | | | | | | | A | B | C | H | L | P |
| **OPEL** | | | | | | | | | | | | | | | |
| **Astra Van** | | | | | | | | | | | | | | | |
| 1.7 (44 kw) | 1992.07-1999.01 | 5MT | F | R | Estate Van FWD 17DR | Chassis no. from:P2733478/P5273485/P8202126 | GDS60002 | Drive Shaft | 29T | 22 | 22 | 52 | 95 | 926 | |
| | 1992.07-1999.01 | AT/MT | F | L/R | Estate Van FWD 17DR | Date from:1994.01 | GCO44007 | Outer Joint | 29T | 22 | 22 | 52 | 94.5 | 50 | O |
| | 1992.07-1999.01 | AT/MT | F | L/R | Estate Van FWD 17DR | Chassis no. to:P-2732833 | GCO44056 | Outer Joint | 29T | 33 | 25 | 52 | 109 | 61 | O |
| | 1992.07-1999.01 | MT | F | L/R | Estate Van FWD 17DR | | GCI44004 | Inner Joint | | 22 | 22 | 34.95 | 57.5 | 103 | |
| | 1992.07-1999.01 | | F | | Estate Van FWD 17DR | | GCO44023 | Outer Joint | | 22 | 22 | 52 | 95 | 50 | O |
| 1.7 (50 kw) | 1994.09-1998.02 | AT/MT | F | L | Estate Van FWD X17DTL | | GDS44011 | Drive Shaft | 29T | 33 | 34 | 52 | 109 | 594.5 | |
| | 1994.09-1998.02 | AT/MT | F | R | Estate Van FWD X17DTL | | GDS44059 | Drive Shaft | 29T | 33 | 34 | 52 | 109 | 938 | |
| | 1994.09-1998.02 | AT/MT | F | L/R | Estate Van FWD X17DTL | Chassis no. from:N500001,Date to:1998.02 | GCO44056 | Outer Joint | 29T | 33 | 25 | 52 | 109 | 61 | O |
| | 1994.09-1998.02 | AT/MT | F | L/R | Estate Van FWD X17DTL | | GCI44002 | Inner Joint | | 34 | 25 | 35 | 56.2 | 114.8 | |
| | 1994.09-1998.02 | | F | | Estate Van FWD X17DTL | | GCO88003 | Outer Joint | | 33 | 25 | 52 | 109 | 61 | O |
| | 1998.09-2000.08 | 5MT | F | L | Estate Van FWD X17DTL | | GDS60013 | Drive Shaft | | 33 | 22 | 52 | 103 | 595 | |
| | 1998.09-2000.08 | 5MT | F | R | Estate Van FWD X17DTL | | GDS44033 | Drive Shaft | | 33 | 22 | 52 | 103 | 950.5 | |
| | 1998.09-2000.08 | AT/MT | F | L/R | Estate Van FWD X17DTL | | GCO44011 | Outer Joint | 29T | 33 | 22 | 52 | 103 | 50.5 | O |
| | 1998.09-2000.08 | AT/MT | F | L/R | Estate Van FWD X17DTL | Date to:2000.08 | GCO44030 | Outer Joint | | 33 | 22 | 52 | 103 | 50.5 | O |
| | 1998.09-2000.08 | AT/MT | F | L/R | Estate Van FWD X17DTL | | GCI44004 | Inner Joint | | 22 | 22 | 34.95 | 57.5 | 103 | |
| | 1998.09-2000.08 | MT | F | L | Estate Van FWD X17DTL | Date to:2000.08 | GCI21014 | Inner Joint | | 22 | 22 | 35 | 57.5 | 105.5 | |
| | 1998.09-2000.08 | | F | L/R | Estate Van FWD X17DTL | | GCO44009 | Outer Joint | | 33 | 22 | 52 | 103 | 50.5 | O |
| 1.7 (55 kw) | 2000.12-2003.06 | 5MT | F | R | Estate Van FWD Y17DT | | GDS60035 | Drive Shaft | | 33 | 22 | 52 | 109 | 961 | |
| | 2000.12-2003.06 | | F | L | Estate Van FWD Y17DT | | GDS60013 | Drive Shaft | | 33 | 22 | 52 | 103 | 595 | |
| | 2000.12-2003.06 | | F | L/R | Estate Van FWD Y17DT | | GCO44006 | Outer Joint | 29T | 33 | 25 | 52 | 103.5 | 61 | O |
| | 2000.12-2003.06 | | F | L/R | Estate Van FWD Y17DT | | GCO44049 | Outer Joint | | 33 | 25 | 52 | 109 | 61 | O |
| | 2000.12-2003.06 | | F | L/R | Estate Van FWD Y17DT | | GCI99026 | Inner Joint | | 22 | 25 | 35 | 57 | 111.7 | |
| 1.7 (59 kw) | 2003.07-2004.11 | 5MT | F | R | Estate Van FWD Z17DTL | | GDS60035 | Drive Shaft | | 33 | 22 | 52 | 109 | 961 | |
| | 2003.07-2004.11 | | F | L | Estate Van FWD Z17DTL | | GDS60013 | Drive Shaft | | 33 | 22 | 52 | 103 | 595 | |
| | 2003.07-2004.11 | | F | L/R | Estate Van FWD Z17DTL | | GCO44006 | Outer Joint | 29T | 33 | 25 | 52 | 103.5 | 61 | O |
| | 2003.07-2004.11 | | F | L/R | Estate Van FWD Z17DTL | | GCO44049 | Outer Joint | | 33 | 25 | 52 | 109 | 61 | O |
| | 2003.07-2004.11 | | F | L/R | Estate Van FWD Z17DTL | | GCI44004 | Inner Joint | | 22 | 22 | 34.95 | 57.5 | 103 | |
| | 2004.12-2007.07 | 5MT | F | L | Estate Van FWD Z 17 DTL | | GDS21063 | Drive Shaft | | 33 | 22 | 53 | 93.5 | 586 | |
| | 2004.12-2007.07 | 5MT | F | R | Estate Van FWD Z 17 DTL | | GDS21055 | Drive Shaft | | 33 | 22 | 53 | 93.5 | 950 | |
| | 2004.12-2007.07 | | F | L/R | Estate Van FWD Z 17 DTL | | GCO44028 | Outer Joint | | 33 | 24 | 53 | 93.5 | 63.5 | M |
| | 2004.12-2007.07 | | F | L/R | Estate Van FWD Z 17 DTL | | GCI99026 | Inner Joint | | 22 | 25 | 35 | 57 | 111.7 | |
| 1.7 (60 kw) | 1992.09-1998.02 | MT | F | L | Estate Van FWD 17TD | Chassis no. to:M-1999999 | GDS44014 | Drive Shaft | 43T | 33 | 34 | 52 | 103.5 | 587 | |
| | 1992.09-1998.02 | | F | R | Estate Van FWD 17TD | Trans. code:F16-F20 | GDS44048 | Drive Shaft | | 33 | 34 | 52 | 109 | 938 | |
| | 1992.09-1998.02 | | F | R | Estate Van FWD 17TD | | GCO88003 | Outer Joint | | 33 | 25 | 52 | 109 | 61 | O |
| 1.7 (74 kw) | 2004.03-2010.10 | 5MT | F | L | Estate Van FWD Z 17 DTH | | GDS44029 | Drive Shaft | | 33 | 34 | 53 | 93.5 | 594 | |
| | 2004.03-2010.10 | 5MT | F | R | Estate Van FWD Z 17 DTH | | GDS44031 | Drive Shaft | | 33 | 34 | 53 | 93.5 | 559 | |
| | 2004.03-2010.10 | 5MT | F | L | Estate Van FWD Z 17 DTH | Date from:2004.12 | GCI44002 | Inner Joint | | 34 | 25 | 35 | 56.2 | 114.8 | |
| | 2004.03-2010.10 | 6MT | F | L | Estate Van FWD Z 17 DTH | Date from:2004.12 | GDS44052 | Drive Shaft | | 33 | 25 | 53 | 93.5 | 573 | |
| | 2004.03-2010.10 | | F | L/R | Estate Van FWD Z 17 DTH | | GCO44028 | Outer Joint | | 33 | 24 | 53 | 93.5 | 63.5 | M |
| | 2004.03-2010.10 | | F | R | Estate Van FWD Z 17 DTH | | GCI44005 | Inner Joint | | 34 | 25 | 35 | | 130.2 | |
| 1.7 (81 kw) | 2007.02-2014.10 | 5AT | F | R | Estate Van FWD A 17 DTJ;Z 17 DTJ | | GCI44005 | Inner Joint | | 34 | 25 | 35 | | 130.2 | |
| | 2007.02-2014.10 | 5MT/6MT | F | L | Estate Van FWD A 17 DTJ;Z 17 DTJ | | GDS21051 | Drive Shaft | | 33 | 25 | 52.5 | 94 | 579 | |
| | 2007.02-2014.10 | 5MT/6MT | F | R | Estate Van FWD A 17 DTJ;Z 17 DTJ | | GDS44099 | Drive Shaft | | 33 | 34 | 52.5 | 94 | 563 | |
| | 2007.02-2014.10 | MT | F | L | Estate Van FWD A 17 DTJ;Z 17 DTJ | | GCI99186 | Inner Joint | | 25 | 28 | 34.9 | 57.5 | 111 | |
| | 2007.02-2014.10 | MT | F | R | Estate Van FWD A 17 DTJ;Z 17 DTJ | | GCI44016 | Inner Joint | | 34 | 28 | 37.5 | | 129.2 | |
| | 2007.02-2014.10 | | F | L/R | Estate Van FWD A 17 DTJ;Z 17 DTJ | | GCO44027 | Outer Joint | | 33 | 26 | 52.5 | 94 | 65.5 | M |
| | 2013.05-2015.10 | 6MT | F | R | Hatchback Van FWD A 17 DTC;A 17 DTE | For Engine code:A17DTE,Chassis no. to:D0/D1110089/D3/D8061301/DG | GDS83136 | Drive Shaft | | 30 | 25 | 52.5 | 94 | 993 | |
| | 2013.05-2015.10 | 6MT | F | R | Hatchback Van FWD A 17 DTC;A 17 DTE | For Engine code:A17DTE,Chassis no. to:D0/D1110089/D3/D8061301/DG | GDS83228 | Drive Shaft | | 30 | 25 | 52.5 | 94 | 996 | |
| | 2013.05-2015.10 | 6MT | F | L | Hatchback Van FWD A 17 DTC;A 17 DTE | For Engine code:A17DTC,Chassis no. to:D0/D1109964/D3/D8061301/DG | GCO88046 | Outer Joint | | 30 | 26 | 52.5 | 94.5 | 65.5 | M |
| | 2013.05-2015.10 | 6MT | F | L/R | Hatchback Van FWD A 17 DTC;A 17 DTE | For Engine code:A17DTC,Chassis no. to:D0/D1109964/D3/D8061301/DG | GCO17051 | Outer Joint | | 30 | 26 | 53.8 | 94.5 | 65.5 | M |
| | 2013.05-2015.10 | 6MT | F | L/R | Hatchback Van FWD A 17 DTC;A 17 DTE | For Engine code:A17DTC,Chassis no. from:D0/D1109965/D3/D8061302 | GCO21038 | Outer Joint | | 30 | 24 | 52 | 94 | 64 | M |
| | 2013.05-2015.10 | 6MT | F | L/R | Hatchback Van FWD A 17 DTC;A 17 DTE | For Engine code:A17DTC,Chassis no. to:D0/D1109964/D3/D8061301/DG | GCO21049 | Outer Joint | | 30 | 26 | 52.5 | 94 | 65.5 | M |
| | 2013.05-2015.10 | 6MT | F | R | Hatchback Van FWD A 17 DTC;A 17 DTE | For Engine code:A17DTC,Chassis no. from:D0/D1109965/D3/D8061302/DG | GCI88026 | Inner Joint | | 34 | 26 | 37.5 | | 100 | |
| | 2013.05-2015.10 | 6MT | F | L/R | Hatchback Van FWD A 17 DTC;A 17 DTE | For Engine code:A17DTC,Chassis no. from:D0/D1109965/D3/D8061302/DG | GCI44008 | Inner Joint | | 25 | 25 | 34.9 | 57.5 | 113.2 | |
| | 2013.05-2015.10 | MT | F | L | Hatchback Van FWD A 17 DTC;A 17 DTE | | GDS21076 | Drive Shaft | | 30 | 25 | 52.5 | 94 | 601 | |
| 1.7 (92 kw) | 2007.02-2010.10 | 6MT | F | L | Estate Van FWD Z 17 DTR;A 17 DTR | | GDS21051 | Drive Shaft | | 33 | 25 | 52.5 | 94 | 579 | |
| | 2007.02-2010.10 | 6MT | F | R | Estate Van FWD Z 17 DTR;A 17 DTR | | GDS44099 | Drive Shaft | | 33 | 34 | 52.5 | 94 | 563 | |
| | 2007.02-2010.10 | MT | F | L | Estate Van FWD Z 17 DTR;A 17 DTR | | GCI99186 | Inner Joint | | 25 | 28 | 34.9 | 57.5 | 111 | |
| | 2007.02-2010.10 | MT | F | R | Estate Van FWD Z 17 DTR;A 17 DTR | | GCI44016 | Inner Joint | | 34 | 28 | 37.5 | | 129.2 | |
| | 2007.02-2010.10 | | F | L/R | Estate Van FWD Z 17 DTR;A 17 DTR | | GCO44027 | Outer Joint | | 33 | 26 | 52.5 | 94 | 65.5 | M |
| | 2007.02-2010.10 | | F | | Estate Van FWD Z 17 DTR;A 17 DTR | | GCO99024 | Outer Joint | | 33 | 26 | 52.5 | 94 | 65.5 | M |
| | 2007.02-2010.10 | | F | R | Estate Van FWD Z 17 DTR;A 17 DTR | | GCI44005 | Inner Joint | | 34 | 25 | 35 | | 130.2 | |
| 1.7 (96 kw) | 2012.10-2015.10 | 6MT | F | R | Estate Van FWD A 17 DTS;A 17 DTF | For Engine code:A17DTF,Chassis no. to:D0/D1110089/D3/D8061301/DG | GDS83136 | Drive Shaft | | 30 | 25 | 52.5 | 94 | 993 | |
| | 2012.10-2015.10 | 6MT | F | R | Estate Van FWD A 17 DTS;A 17 DTF | For Engine code:A17DTF,Chassis no. to:D0/D1110089/D3/D8061301/DG | GDS83228 | Drive Shaft | | 30 | 25 | 52.5 | 94 | 996 | |
| | 2012.10-2015.10 | 6MT | F | L | Estate Van FWD A 17 DTS;A 17 DTF | For Engine code:A17DTS,Chassis no. to:D0/D1109964/D3/D8061301/DG | GCO88046 | Outer Joint | | 30 | 26 | 52.5 | 94.5 | 65.5 | M |

| | YEAR | TRANSM. | F/R | L/R | BODY STYLE & DRIVE TYPE & ENGINE | REMARKS | G-AP Ref. | PRODUCT | ABS | Technical Specifications A | B | C | H | L | P |
|---|---|---|---|---|---|---|---|---|---|---|---|---|---|---|---|
| **OPEL** | | | | | | | | | | | | | | | |
| **Astra Van** | | | | | | | | | | | | | | | |
| 1.7 (96 kw) | 2012.10-2015.10 | 6MT | F | L/R | Estate Van FWD A 17 DTS;A 17 DTF | For Engine code:A17DTS,Chassis no. to:D0/D1109964/D3/D8061301/DG | GCO17051 | Outer Joint | | 30 | 26 | 53.8 | 94.5 | 65.5 | M |
| | 2012.10-2015.10 | 6MT | F | L/R | Estate Van FWD A 17 DTS;A 17 DTF | For Engine code:A17DTS,Chassis no. from:D0/D1109965/D3/D8061302 | GCO21038 | Outer Joint | | 30 | 24 | 52 | 94 | 64 | M |
| | 2012.10-2015.10 | 6MT | F | L/R | Estate Van FWD A 17 DTS;A 17 DTF | For Engine code:A17DTS,Chassis no. to:D0/D1109964/D3/D8061301/DG | GCO21049 | Outer Joint | | 30 | 26 | 52.5 | 94 | 65.5 | M |
| | 2012.10-2015.10 | 6MT | F | R | Estate Van FWD A 17 DTS;A 17 DTF | For Engine code:A17DTS,Chassis no. from:D0/D1109965/D3/D8061302/DG | GCI88026 | Inner Joint | | 34 | 26 | 37.5 | | 100 | |
| | 2012.10-2015.10 | 6MT | F | L/R | Estate Van FWD A 17 DTS;A 17 DTF | For Engine code:A17DTS,Chassis no. from:D0/D1109965/D3/D8061302/DG | GCI44008 | Inner Joint | | 25 | 25 | 34.9 | 57.5 | 113.2 | |
| | 2012.10-2015.10 | MT | F | L | Estate Van FWD A 17 DTS;A 17 DTF | | GDS21076 | Drive Shaft | | 30 | 25 | 52.5 | 94 | 601 | |
| 1.9 (74 kw) | 2005.08-2012.12 | 6MT | F | L | Estate Van FWD Z 19 DTL | Date from:2007.08 | GDS21051 | Drive Shaft | | 33 | 25 | 52.5 | 94 | 579 | |
| | 2005.08-2012.12 | 6MT | F | L | Estate Van FWD Z 19 DTL | Date to:2007.07 | GDS21073 | Drive Shaft | | 33 | 25 | 52.5 | 94 | 578 | |
| | 2005.08-2012.12 | 6MT | F | R | Estate Van FWD Z 19 DTL | | GDS21056 | Drive Shaft | | 33 | 34 | 52.5 | 94 | 595 | |
| | 2005.08-2012.12 | 6MT | F | L | Estate Van FWD Z 19 DTL | Date to:2007.07 | GCI21018 | Inner Joint | | 25 | 34 | 35 | 58 | 116 | |
| | 2005.08-2012.12 | 6MT | F | L | Estate Van FWD Z 19 DTL | Date from:2007.08 | GCI99186 | Inner Joint | | 25 | 28 | 34.9 | 57.5 | 111 | |
| | 2005.08-2012.12 | 6MT | F | R | Estate Van FWD Z 19 DTL | | GCI99187 | Inner Joint | | 34 | 34 | 37.5 | | 124 | |
| | 2005.08-2012.12 | AT | F | L | Estate Van FWD Z 19 DTL | Chassis no. from:72024736 | GDS21111 | Drive Shaft | | 33 | 27 | 52.5 | 94 | 562 | |
| | 2005.08-2012.12 | AT | F | L | Estate Van FWD Z 19 DTL | Chassis no. to:72024735 | GDS60034 | Drive Shaft | | 33 | 27 | 52.5 | 94 | 564 | |
| | 2005.08-2012.12 | | F | L/R | Estate Van FWD Z 19 DTL | | GCO44027 | Outer Joint | | 33 | 26 | 52.5 | 94 | 65.5 | M |
| 1.9 (88 kw) | 2004.08-2010.10 | 6AT/6MT | F | L | Estate Van FWD Z 19 DTJ | Date from:2007.08 | GDS21051 | Drive Shaft | | 33 | 25 | 52.5 | 94 | 579 | |
| | 2004.08-2010.10 | 6AT/6MT | F | L | Estate Van FWD Z 19 DTJ | Date to:2007.07 | GDS21073 | Drive Shaft | | 33 | 25 | 52.5 | 94 | 578 | |
| | 2004.08-2010.10 | 6AT/6MT | F | R | Estate Van FWD Z 19 DTJ | | GDS21056 | Drive Shaft | | 33 | 34 | 52.5 | 94 | 595 | |
| | 2004.08-2010.10 | 6AT/6MT | F | R | Estate Van FWD Z 19 DTJ | Date to:2007.07,Chassis no. to:72025241/75043819/78007657/7G | GCI99187 | Inner Joint | | 34 | 34 | 37.5 | | 124 | |
| | 2004.08-2010.10 | AT | F | L | Estate Van FWD Z 19 DTJ | Chassis no. from:72024736 | GDS21111 | Drive Shaft | | 33 | 27 | 52.5 | 94 | 562 | |
| | 2004.08-2010.10 | AT | F | L | Estate Van FWD Z 19 DTJ | Chassis no. to:72024735 | GDS60034 | Drive Shaft | | 33 | 27 | 52.5 | 94 | 564 | |
| | 2004.08-2010.10 | AT | F | R | Estate Van FWD Z 19 DTJ | | GDS21110 | Drive Shaft | | 33 | 27 | 52.5 | 94 | 576 | |
| | 2004.08-2010.10 | AT | F | L | Estate Van FWD Z 19 DTJ | | GCO44027 | Outer Joint | | 33 | 26 | 52.5 | 94 | 65.5 | M |
| | 2004.08-2010.10 | MT | F | L | Estate Van FWD Z 19 DTJ | | GCI21018 | Inner Joint | | 25 | 34 | 35 | 58 | 116 | |
| | 2004.08-2010.10 | MT | F | L | Estate Van FWD Z 19 DTJ | | GCI99186 | Inner Joint | | 25 | 28 | 34.9 | 57.5 | 111 | |
| | 2004.08-2010.10 | | F | | Estate Van FWD Z 19 DTJ | | GCO99024 | Outer Joint | | 33 | 26 | 52.5 | 94 | 65.5 | M |
| | 2005.09-2010.10 | 6AT | F | L | Estate Van FWD Z 19 DT | Chassis no. from:72024736/75049581/78023183/8B000001 | GDS21111 | Drive Shaft | | 33 | 27 | 52.5 | 94 | 562 | |
| | 2005.09-2010.10 | 6AT | F | L | Estate Van FWD Z 19 DT | Chassis no. to:72024735/75049580/78023182,Date to:2007.07 | GDS60034 | Drive Shaft | | 33 | 27 | 52.5 | 94 | 564 | |
| | 2005.09-2010.10 | 6AT | F | R | Estate Van FWD Z 19 DT | | GDS21110 | Drive Shaft | | 33 | 27 | 52.5 | 94 | 576 | |
| | 2005.09-2010.10 | 6AT | F | L | Estate Van FWD Z 19 DT | Date from:2007.08,Chassis no. from:72024736/75049581/78023183/7G/8B000001 | GCI86015 | Inner Joint | | 27 | 26 | 35 | 78.5 | 109.5 | |
| | 2005.09-2010.10 | 6MT | F | L | Estate Van FWD Z 19 DT | Date from:2007.08 | GDS21051 | Drive Shaft | | 33 | 25 | 52.5 | 94 | 579 | |
| | 2005.09-2010.10 | 6MT | F | L | Estate Van FWD Z 19 DT | Date to:2007.07 | GDS21073 | Drive Shaft | | 33 | 25 | 52.5 | 94 | 578 | |
| | 2005.09-2010.10 | 6MT | F | R | Estate Van FWD Z 19 DT | | GDS21056 | Drive Shaft | | 33 | 34 | 52.5 | 94 | 595 | |
| | 2005.09-2010.10 | 6MT | F | R | Estate Van FWD Z 19 DT | Date to:2007.07,Chassis no. to:72025241/75043819/78007657/7G | GCI99187 | Inner Joint | | 34 | 34 | 37.5 | | 124 | |
| | 2005.09-2010.10 | AT | F | L | Estate Van FWD Z 19 DT | | GCO44027 | Outer Joint | | 33 | 26 | 52.5 | 94 | 65.5 | M |
| | 2005.09-2010.10 | MT | F | L | Estate Van FWD Z 19 DT | Date to:2007.07 | GCI21018 | Inner Joint | | 25 | 34 | 35 | 58 | 116 | |
| | 2005.09-2010.10 | MT | F | L | Estate Van FWD Z 19 DT | Date from:2007.08 | GCI99186 | Inner Joint | | 25 | 28 | 34.9 | 57.5 | 111 | |
| | 2005.09-2010.10 | | F | | Estate Van FWD Z 19 DT | | GCO99024 | Outer Joint | | 33 | 26 | 52.5 | 94 | 65.5 | M |
| 1.9 (110 kw) | 2004.09-2010.10 | 6MT | F | L | Estate Van FWD Z 19 DTH | Date from:2007.08 | GDS21035 | Drive Shaft | | 30 | 25 | 53.8 | 94.5 | 581 | |
| | 2004.09-2010.10 | 6MT | F | L | Estate Van FWD Z 19 DTH | Date to:2007.07 | GDS21071 | Drive Shaft | | 30 | 25 | 53.8 | 94.5 | 576 | |
| | 2004.09-2010.10 | 6MT | F | R | Estate Van FWD Z 19 DTH | Date to:2007.07 | GDS21062 | Drive Shaft | | 30 | 34 | 53.8 | 94.5 | 595 | |
| | 2004.09-2010.10 | 6MT | F | R | Estate Van FWD Z 19 DTH | Date from:2007.08,Chassis no. from:72024736/75041475/78008875 | GDS82084 | Drive Shaft | | 30 | 34 | 53.8 | 94.5 | 598 | |
| | 2004.09-2010.10 | 6MT | F | R | Estate Van FWD Z 19 DTH | Date to:2007.07,Chassis no. to:72024735/75041475/78008875/7G | GCI99187 | Inner Joint | | 34 | 34 | 37.5 | | 124 | |
| | 2004.09-2010.10 | MT | F | L | Estate Van FWD Z 19 DTH | | GCI21018 | Inner Joint | | 25 | 34 | 35 | 58 | 116 | |
| | 2004.09-2010.10 | MT | F | L | Estate Van FWD Z 19 DTH | | GCI99186 | Inner Joint | | 25 | 28 | 34.9 | 57.5 | 111 | |
| | 2004.09-2010.10 | | F | R | Estate Van FWD Z 19 DTH | Date To:2007.07,Chassis no. to:72024735/75041475/78008875/7G | GDS21056 | Drive Shaft | | 33 | 34 | 52.5 | 94 | 595 | |
| | 2004.09-2010.10 | | F | L/R | Estate Van FWD Z 19 DTH | | GCO17051 | Outer Joint | | 30 | 26 | 53.8 | 94.5 | 65.5 | M |
| 2.0 (60 kw) | 1998.09-2005.04 | 4AT | F | R | Estate Van FWD X20DTL/Y20DTL | | GDS88011 | Drive Shaft | | 33 | 34 | 52 | 104 | 959 | |
| | 1998.09-2005.04 | 4AT/5MT | F | L | Estate Van FWD X20DTL/Y20DTL | | GDS44044 | Drive Shaft | | 33 | 34 | 52 | 103.5 | 595 | |
| | 1998.09-2005.04 | 4AT/5MT | F | L | Estate Van FWD X20DTL/Y20DTL | | GCO44032 | Outer Joint | | 33 | 25 | 52 | 103.5 | 61 | O |
| | 1998.09-2005.04 | MT | F | R | Estate Van FWD X20DTL/Y20DTL | | GCO44049 | Outer Joint | | 33 | 25 | 52 | 109 | 61 | O |
| | 1998.09-2005.04 | | F | L/R | Estate Van FWD X20DTL/Y20DTL | | GCO44006 | Outer Joint | 29T | 33 | 25 | 52 | 103.5 | 61 | O |
| | 1998.09-2005.04 | | F | L/R | Estate Van FWD X20DTL/Y20DTL | | GCI44002 | Inner Joint | | 34 | 25 | 35 | 56.2 | 114.8 | |
| 2.0 (74 kw) | 2000.09-2005.04 | 4AT/5MT | F | L | Estate Van FWD Y20DTH | | GDS44044 | Drive Shaft | | 33 | 34 | 52 | 103.5 | 595 | |
| | 2000.09-2005.04 | 4AT/5MT | F | R | Estate Van FWD Y20DTH | | GDS88011 | Drive Shaft | | 33 | 34 | 52 | 104 | 959 | |
| | 2000.09-2005.04 | 4AT/5MT | F | L | Estate Van FWD Y20DTH | | GCO44032 | Outer Joint | | 33 | 25 | 52 | 103.5 | 61 | O |
| | 2000.09-2005.04 | | F | L/R | Estate Van FWD Y20DTH | | GCO44006 | Outer Joint | 29T | 33 | 25 | 52 | 103.5 | 61 | O |
| | 2000.09-2005.04 | | F | L/R | Estate Van FWD Y20DTH | | GCO44049 | Outer Joint | | 33 | 25 | 52 | 109 | 61 | O |
| | 2000.09-2005.04 | | F | L/R | Estate Van FWD Y20DTH | | GCI44002 | Inner Joint | | 34 | 25 | 35 | 56.2 | 114.8 | |
| 2.0 (121 kw) | 2012.10-2015.10 | 6AT | F | L | Estate Van FWD A 20 DTH | Chassis no. from:C0/C1033261/C3/C8028482/CG040399 | GDS83986 | Drive Shaft | | 30 | 27 | 52.5 | 94 | 591 | |
| | 2012.10-2015.10 | 6AT | F | R | Estate Van FWD A 20 DTH | | GDS61138 | Drive Shaft | | 30 | 27 | 52.5 | 94.5 | 598 | |
| | 2012.10-2015.10 | 6AT | F | L | Estate Van FWD A 20 DTH | | GCI86015 | Inner Joint | | 27 | 26 | 35 | 78.5 | 109.5 | |
| | 2012.10-2015.10 | 6AT/6MT | F | L/R | Estate Van FWD A 20 DTH | | GCO17051 | Outer Joint | | 30 | 26 | 53.8 | 94.5 | 65.5 | M |
| | 2012.10-2015.10 | 6AT/6MT | F | L/R | Estate Van FWD A 20 DTH | | GCO21049 | Outer Joint | | 30 | 26 | 52.5 | 94 | 65.5 | M |
| | 2012.10-2015.10 | 6AT/6MT | F | L/R | Estate Van FWD A 20 DTH | | GCO88046 | Outer Joint | | 30 | 26 | 52.5 | 94.5 | 65.5 | M |

| | YEAR | TRANSM. | F/R | L/R | BODY STYLE & DRIVE TYPE & ENGINE | REMARKS | G-AP Ref. | PRODUCT | ABS | Technical Specifications A | B | C | H | L | P |
|---|---|---|---|---|---|---|---|---|---|---|---|---|---|---|---|
| **OPEL** | | | | | | | | | | | | | | | |
| **Astra Van** | | | | | | | | | | | | | | | |
| 2.0 (121 kw) | 2012.10-2015.10 | 6MT | F | L | Estate Van FWD A 20 DTH | | GDS21075 | Drive Shaft | | 30 | 27 | 52.5 | 94 | 602 | |
| | 2012.10-2015.10 | 6MT | F | R | Estate Van FWD A 20 DTH | | GDS21032 | Drive Shaft | | 30 | 27 | 53.8 | 94.5 | 605 | |
| | 2012.10-2015.10 | 6MT | F | L/R | Estate Van FWD A 20 DTH | | GCI21030 | Inner Joint | | 27 | 26 | 35 | 78 | 112.5 | |
| **Calibra** | | | | | | | | | | | | | | | |
| 2.0 (85 kw) | 1989.08-1996.12 | AT/MT | F | L/R | Coupe FWD C20NE | chassis no. from:N-100001,Chassis no. to:P-1999999 | GCO44056 | Outer Joint | 29T | 33 | 25 | 52 | 109 | 61 | O |
| | 1989.08-1996.12 | AT/MT | F | L/R | Coupe FWD C20NE | Chassis no. to:M-1999999 | GCO44057 | Outer Joint | 43T | 33 | 25 | 52 | 109 | 61 | O |
| | 1989.08-1996.12 | MT | F | L | Coupe FWD C20NE | | GDS44011 | Drive Shaft | 29T | 33 | 34 | 52 | 109 | 594.5 | |
| | 1989.08-1996.12 | MT | F | L | Coupe FWD C20NE | | GDS44014 | Drive Shaft | 43T | 33 | 34 | 52 | 103.5 | 587 | |
| | 1989.08-1996.12 | MT | F | R | Coupe FWD C20NE | | GDS44059 | Drive Shaft | 29T | 33 | 34 | 52 | 109 | 938 | |
| | 1989.08-1996.12 | MT | F | L/R | Coupe FWD C20NE | | GCI44002 | Inner Joint | | 34 | 25 | 35 | 56.2 | 114.8 | |
| | 1989.08-1996.12 | | F | R | Coupe FWD C20NE | | GCI44005 | Inner Joint | | 34 | 25 | 35 | | 130.2 | |
| | 1990.06-1997.07 | AT/MT | F | R | Coupe 4WD C20NE | | GDS44059 | Drive Shaft | 29T | 33 | 34 | 52 | 109 | 938 | |
| | 1990.06-1997.07 | MT | F | L | Coupe 4WD C20NE | | GDS44011 | Drive Shaft | 29T | 33 | 34 | 52 | 109 | 594.5 | |
| | 1990.06-1997.07 | MT | F | L | Coupe 4WD C20NE | | GDS44014 | Drive Shaft | 43T | 33 | 34 | 52 | 103.5 | 587 | |
| | 1990.06-1997.07 | MT | F | L/R | Coupe 4WD C20NE | chassis no. from:N-100001,Chassis no. to:P-1999999 | GCO44056 | Outer Joint | 29T | 33 | 25 | 52 | 109 | 61 | O |
| | 1990.06-1997.07 | MT | F | L/R | Coupe 4WD C20NE | Chassis no. to:M-1999999 | GCO44057 | Outer Joint | 43T | 33 | 25 | 52 | 109 | 61 | O |
| | 1990.06-1997.07 | MT | F | L | Coupe 4WD C20NE | | GCI44002 | Inner Joint | | 34 | 25 | 35 | 56.2 | 114.8 | |
| | 1990.06-1997.07 | | F | R | Coupe 4WD C20NE | | GCI44005 | Inner Joint | | 34 | 25 | 35 | | 130.2 | |
| 2.0 (100 kw) | 1994.09-1998.05 | AT/MT | F | L | Coupe 4WD X20XEV | | GDS44011 | Drive Shaft | 29T | 33 | 34 | 52 | 109 | 594.5 | |
| | 1994.09-1998.05 | MT | F | L/R | Coupe 4WD X20XEV | Date from:1994.09 | GCO44056 | Outer Joint | 29T | 33 | 25 | 52 | 109 | 61 | O |
| | 1994.09-1998.05 | MT | F | L/R | Coupe 4WD X20XEV | Date from:1994.09 | GCO44057 | Outer Joint | 43T | 33 | 25 | 52 | 109 | 61 | O |
| | 1994.09-1998.05 | | F | R | Coupe 4WD X20XEV | | GCI44005 | Inner Joint | | 34 | 25 | 35 | | 130.2 | |
| | 1994.09-1998.05 | AT/MT | F | L | Coupe FWD X20XEV | | GDS44011 | Drive Shaft | 29T | 33 | 34 | 52 | 109 | 594.5 | |
| | 1994.09-1998.05 | MT | F | L/R | Coupe FWD X20XEV | Date from:1994.09,Chassis no. from:S1013468/S9000564 | GCO44006 | Outer Joint | 29T | 33 | 25 | 52 | 103.5 | 61 | O |
| | 1994.09-1998.05 | MT | F | L/R | Coupe FWD X20XEV | Date from:1994.09,Chassis no. to:S1013467/S9000563 | GCO44056 | Outer Joint | 29T | 33 | 25 | 52 | 109 | 61 | O |
| | 1994.09-1998.05 | MT | F | L/R | Coupe FWD X20XEV | Date from:1994.09 | GCO44057 | Outer Joint | 43T | 33 | 25 | 52 | 109 | 61 | O |
| | 1994.09-1998.05 | | F | R | Coupe FWD X20XEV | | GCI44005 | Inner Joint | | 34 | 25 | 35 | | 130.2 | |
| 2.0 (150 kw) | 1991.08-1996.08 | AT/MT | F | R | Coupe 4WD C20LET | | GDS44059 | Drive Shaft | 29T | 33 | 34 | 52 | 109 | 938 | |
| | 1991.08-1996.08 | MT | F | L | Coupe 4WD C20LET | | GDS44011 | Drive Shaft | 29T | 33 | 34 | 52 | 109 | 594.5 | |
| | 1991.08-1996.08 | MT | F | L/R | Coupe 4WD C20LET | Date to:1996.08 | GCO44056 | Outer Joint | 29T | 33 | 25 | 52 | 109 | 61 | O |
| | 1991.08-1996.08 | MT | F | L | Coupe 4WD C20LET | Date to:1996.08 | GCI44002 | Inner Joint | | 34 | 25 | 35 | 56.2 | 114.8 | |
| | 1991.08-1996.08 | | F | R | Coupe 4WD C20LET | | GCI44005 | Inner Joint | | 34 | 25 | 35 | | 130.2 | |
| 2.5 (125 kw) | 1993.09-1998.05 | AT/MT | F | L | Coupe FWD C25XE/X25XE | | GDS44011 | Drive Shaft | 29T | 33 | 34 | 52 | 109 | 594.5 | |
| | 1993.09-1998.05 | MT | F | L | Coupe FWD C25XE/X25XE | Date from:1993.09 | GCI44002 | Inner Joint | | 34 | 25 | 35 | 56.2 | 114.8 | |
| | 1993.09-1998.05 | | F | R | Coupe FWD C25XE/X25XE | | GCI44005 | Inner Joint | | 34 | 25 | 35 | | 130.2 | |
| **Campo** | | | | | | | | | | | | | | | |
| 2.3 (72 kw) | 1994.08-1996.09 | MT | F | L/R | Pickup 4WD 4ZD1 | | GCO26002 | Outer Joint | | 17 | 23 | 53 | 144 | 62.5 | M |
| 3.1 (80 kw) | 1992.12-2002.12 | 5MT | F | L/R | Pickup 4WD 4JG2T | | GCO26003 | Outer Joint | | 17 | 26 | 53 | 144 | 70.5 | M |
| **Cascada** | | | | | | | | | | | | | | | |
| 1.4 (88 kw) | 2013.04-2018.04 | 6MT | F | L | Convertible FWD A 14 NEL;B 14 NEL | | GDS83226 | Drive Shaft | | 30 | 25 | 52.5 | 94 | 623 | |
| | 2013.04-2018.04 | 6MT | F | R | Convertible FWD A 14 NEL;B 14 NEL | | GDS83227 | Drive Shaft | | 30 | 25 | 52.5 | 94 | 1018 | |
| | 2013.04-2018.04 | 6MT | F | L/R | Convertible FWD A 14 NEL;B 14 NEL | | GCO17051 | Outer Joint | | 30 | 26 | 53.8 | 94.5 | 65.5 | M |
| | 2013.04-2018.04 | 6MT | F | L/R | Convertible FWD A 14 NEL;B 14 NEL | | GCO21049 | Outer Joint | | 30 | 26 | 52.5 | 94 | 65.5 | M |
| | 2013.04-2018.04 | 6MT | F | L/R | Convertible FWD A 14 NEL;B 14 NEL | | GCO88046 | Outer Joint | | 30 | 26 | 52.5 | 94.5 | 65.5 | M |
| | 2013.04-2018.04 | 6MT | F | L | Convertible FWD A 14 NEL;B 14 NEL | | GCI82188 | Inner Joint | | 25 | 26 | 34.9 | 57.5 | 108 | |
| | 2013.04-2018.04 | 6MT | F | R | Convertible FWD A 14 NEL;B 14 NEL | | GCI82194 | Inner Joint | | 34 | 26 | 37.5 | | 124 | |
| 1.4 (103 kw) | 2013.03-2018.04 | 6MT | F | L | Convertible FWD A 14 NET;B 14 NET | | GDS83226 | Drive Shaft | | 30 | 25 | 52.5 | 94 | 623 | |
| | 2013.03-2018.04 | 6MT | F | R | Convertible FWD A 14 NET;B 14 NET | | GDS83227 | Drive Shaft | | 30 | 25 | 52.5 | 94 | 1018 | |
| | 2013.03-2018.04 | 6MT | F | L/R | Convertible FWD A 14 NET;B 14 NET | | GCO17051 | Outer Joint | | 30 | 26 | 53.8 | 94.5 | 65.5 | M |
| | 2013.03-2018.04 | 6MT | F | L/R | Convertible FWD A 14 NET;B 14 NET | | GCO21049 | Outer Joint | | 30 | 26 | 52.5 | 94 | 65.5 | M |
| | 2013.03-2018.04 | 6MT | F | L/R | Convertible FWD A 14 NET;B 14 NET | | GCO88046 | Outer Joint | | 30 | 26 | 52.5 | 94.5 | 65.5 | M |
| | 2013.03-2018.04 | 6MT | F | L | Convertible FWD A 14 NET;B 14 NET | | GCI82188 | Inner Joint | | 25 | 26 | 34.9 | 57.5 | 108 | |
| | 2013.03-2018.04 | 6MT | F | R | Convertible FWD A 14 NET;B 14 NET | | GCI82194 | Inner Joint | | 34 | 26 | 37.5 | | 124 | |
| 1.6 (100 kw) | 2018.05-2019.04 | 6AT | F | L | Convertible FWD D 16 SHJ | | GDS82258 | Drive Shaft | | 30 | 34 | 52.5 | 94 | 666 | |
| | 2018.05-2019.04 | 6AT | F | L | Convertible FWD D 16 SHJ | | GCI86021 | Inner Joint | | 34 | 26 | 35 | 136.5 | 87 | |
| | 2018.05-2019.04 | 6AT/6MT | F | R | Convertible FWD D 16 SHJ | | GDS21093 | Drive Shaft | | 30 | 27 | 52.5 | 94 | 625 | |
| | 2018.05-2019.04 | 6AT/6MT | F | L/R | Convertible FWD D 16 SHJ | | GCO17051 | Outer Joint | | 30 | 26 | 53.8 | 94.5 | 65.5 | M |
| | 2018.05-2019.04 | 6AT/6MT | F | L/R | Convertible FWD D 16 SHJ | | GCO21049 | Outer Joint | | 30 | 26 | 52.5 | 94 | 65.5 | M |
| | 2018.05-2019.04 | 6AT/6MT | F | L/R | Convertible FWD D 16 SHJ | | GCO88046 | Outer Joint | | 30 | 26 | 52.5 | 94.5 | 65.5 | M |
| | 2018.05-2019.04 | 6AT/6MT | F | R | Convertible FWD D 16 SHJ | | GCI21016 | Inner Joint | | 27 | 26 | 35 | 78.5 | 112 | |
| | 2018.05-2019.04 | 6MT | F | L | Convertible FWD D 16 SHJ | | GDS83226 | Drive Shaft | | 30 | 25 | 52.5 | 94 | 623 | |
| | 2018.05-2019.04 | 6MT | F | L | Convertible FWD D 16 SHJ | | GCI82188 | Inner Joint | | 25 | 26 | 34.9 | 57.5 | 108 | |
| 1.6 (125 kw) | 2013.04-2019.04 | 6AT | F | L | Convertible FWD A 16 XHT;B 16 SHL;D 16 SHL | | GDS82258 | Drive Shaft | | 30 | 34 | 52.5 | 94 | 666 | |
| | 2013.04-2019.04 | 6AT | F | L | Convertible FWD A 16 XHT;B 16 SHL;D 16 SHL | | GCI86021 | Inner Joint | | 34 | 26 | 35 | 136.5 | 87 | |
| | 2013.04-2019.04 | 6AT/6MT | F | R | Convertible FWD A 16 XHT;B 16 SHL;D 16 SHL | | GDS21093 | Drive Shaft | | 30 | 27 | 52.5 | 94 | 625 | |

| | YEAR | TRANSM. | F/R | L/R | BODY STYLE & DRIVE TYPE & ENGINE | REMARKS | G-AP Ref. | PRODUCT | ABS | Technical Specifications A | B | C | H | L | P |
|---|---|---|---|---|---|---|---|---|---|---|---|---|---|---|---|
| **OPEL** | | | | | | | | | | | | | | | |
| **Cascada** | | | | | | | | | | | | | | | |
| 1.6 (125 kw) | 2013.04-2019.04 | 6AT/6MT | F | L/R | Convertible FWD A 16 XHT;B 16 SHL;D 16 SHL | | GCO17051 | Outer Joint | | 30 | 26 | 53.8 | 94.5 | 65.5 | M |
| | 2013.04-2019.04 | 6AT/6MT | F | L/R | Convertible FWD A 16 XHT;B 16 SHL;D 16 SHL | | GCO21049 | Outer Joint | | 30 | 26 | 52.5 | 94 | 65.5 | M |
| | 2013.04-2019.04 | 6AT/6MT | F | L/R | Convertible FWD A 16 XHT;B 16 SHL;D 16 SHL | | GCO88046 | Outer Joint | | 30 | 26 | 52.5 | 94.5 | 65.5 | M |
| | 2013.04-2019.04 | 6AT/6MT | F | R | Convertible FWD A 16 XHT;B 16 SHL;D 16 SHL | | GCI21016 | Inner Joint | | 27 | 26 | 35 | 78.5 | 112 | |
| | 2013.04-2019.04 | 6MT | F | L | Convertible FWD A 16 XHT;B 16 SHL;D 16 SHL | | GDS83226 | Drive Shaft | | 30 | 25 | 52.5 | 94 | 623 | |
| | 2013.04-2019.04 | 6MT | F | L | Convertible FWD A 16 XHT;B 16 SHL;D 16 SHL | | GCI82188 | Inner Joint | | 25 | 26 | 34.9 | 57.5 | 108 | |
| 1.6 (147 kw) | 2013.11-2018.04 | 6MT | F | L | Convertible FWD A 16 SHT;B 16 SHT;D 16 SHT | | GDS83226 | Drive Shaft | | 30 | 25 | 52.5 | 94 | 623 | |
| | 2013.11-2018.04 | 6MT | F | R | Convertible FWD A 16 SHT;B 16 SHT;D 16 SHT | | GDS21093 | Drive Shaft | | 30 | 27 | 52.5 | 94 | 625 | |
| | 2013.11-2018.04 | 6MT | F | L/R | Convertible FWD A 16 SHT;B 16 SHT;D 16 SHT | | GCO17051 | Outer Joint | | 30 | 26 | 53.8 | 94.5 | 65.5 | M |
| | 2013.11-2018.04 | 6MT | F | L/R | Convertible FWD A 16 SHT;B 16 SHT;D 16 SHT | | GCO21049 | Outer Joint | | 30 | 26 | 52.5 | 94 | 65.5 | M |
| | 2013.11-2018.04 | 6MT | F | L/R | Convertible FWD A 16 SHT;B 16 SHT;D 16 SHT | | GCO88046 | Outer Joint | | 30 | 26 | 52.5 | 94.5 | 65.5 | M |
| | 2013.11-2018.04 | 6MT | F | L | Convertible FWD A 16 SHT;B 16 SHT;D 16 SHT | | GCI82188 | Inner Joint | | 25 | 26 | 34.9 | 57.5 | 108 | |
| | 2013.11-2018.04 | 6MT | F | R | Convertible FWD A 16 SHT;B 16 SHT;D 16 SHT | | GCI21016 | Inner Joint | | 27 | 26 | 35 | 78.5 | 112 | |
| 2.0 (121 kw) | 2013.04-2015.06 | 6AT | F | L | Convertible FWD A 20 DTH | | GDS82388 | Drive Shaft | | 30 | 27 | 52.5 | 94 | 609 | |
| | 2013.04-2015.06 | 6AT | F | L/R | Convertible FWD A 20 DTH | | GCO17051 | Outer Joint | | 30 | 26 | 53.8 | 94.5 | 65.5 | M |
| | 2013.04-2015.06 | 6AT | F | L/R | Convertible FWD A 20 DTH | | GCO21049 | Outer Joint | | 30 | 26 | 52.5 | 94 | 65.5 | M |
| | 2013.04-2015.06 | 6AT | F | L/R | Convertible FWD A 20 DTH | | GCO88046 | Outer Joint | | 30 | 26 | 52.5 | 94.5 | 65.5 | M |
| | 2013.04-2015.06 | 6AT | F | L | Convertible FWD A 20 DTH | | GCI86015 | Inner Joint | | 27 | 26 | 35 | 78.5 | 109.5 | |
| | 2013.04-2015.06 | 6AT/6MT | F | R | Convertible FWD A 20 DTH | | GDS21093 | Drive Shaft | | 30 | 27 | 52.5 | 94 | 625 | |
| | 2013.04-2015.06 | 6AT/6MT | F | R | Convertible FWD A 20 DTH | | GCI21016 | Inner Joint | | 27 | 26 | 35 | 78.5 | 112 | |
| | 2013.04-2015.06 | 6MT | F | L/R | Convertible FWD A 20 DTH | | GCO21057 | Outer Joint | | 30 | 27 | 59.1 | 94 | 65 | M |
| 2.0 (125 kw) | 2015.07-2018.04 | 6MT | F | L | Convertible FWD B 20 DTH | | GDS21093 | Drive Shaft | | 30 | 27 | 52.5 | 94 | 625 | |
| | 2015.07-2018.04 | 6MT | F | L/R | Convertible FWD B 20 DTH | | GCO17051 | Outer Joint | | 30 | 26 | 53.8 | 94.5 | 65.5 | M |
| | 2015.07-2018.04 | 6MT | F | L/R | Convertible FWD B 20 DTH | | GCO21049 | Outer Joint | | 30 | 26 | 52.5 | 94 | 65.5 | M |
| | 2015.07-2018.04 | 6MT | F | L/R | Convertible FWD B 20 DTH | | GCO88046 | Outer Joint | | 30 | 26 | 52.5 | 94.5 | 65.5 | M |
| | 2015.07-2018.04 | 6MT | F | L | Convertible FWD B 20 DTH | | GCI21016 | Inner Joint | | 27 | 26 | 35 | 78.5 | 112 | |
| 2.0 (143 kw) | 2013.04-2015.06 | 6MT | F | R | Convertible FWD A 20 DTR | | GDS21093 | Drive Shaft | | 30 | 27 | 52.5 | 94 | 625 | |
| | 2013.04-2015.06 | 6MT | F | R | Convertible FWD A 20 DTR | | GCO88046 | Outer Joint | | 30 | 26 | 52.5 | 94.5 | 65.5 | M |
| | 2013.04-2015.06 | 6MT | F | L/R | Convertible FWD A 20 DTR | | GCO17051 | Outer Joint | | 30 | 26 | 53.8 | 94.5 | 65.5 | M |
| | 2013.04-2015.06 | 6MT | F | L/R | Convertible FWD A 20 DTR | | GCO21049 | Outer Joint | | 30 | 26 | 52.5 | 94 | 65.5 | M |
| | 2013.04-2015.06 | 6MT | F | R | Convertible FWD A 20 DTR | | GCI21016 | Inner Joint | | 27 | 26 | 35 | 78.5 | 112 | |
| **Combo** | | | | | | | | | | | | | | | |
| 1.2 (33 kw) | 1992.11-2001.07 | 5MT | F | L | MPV Van FWD C12NZ/X12SZ | | GDS44001 | Drive Shaft | 29T | 22 | 22 | 52 | 95 | 573 | |
| | 1992.11-2001.07 | 5MT | F | R | MPV Van FWD C12NZ/X12SZ | | GDS60002 | Drive Shaft | 29T | 22 | 22 | 52 | 95 | 926 | |
| | 1992.11-2001.07 | 5MT | F | L/R | MPV Van FWD C12NZ/X12SZ | | GCI44004 | Inner Joint | | 22 | 22 | 34.95 | 57.5 | 103 | |
| | 1992.11-2001.07 | MT | F | L/R | MPV Van FWD C12NZ/X12SZ | Date to:2001.07 | GCO44020 | Outer Joint | 29T | 22 | 28 | 52 | 97.5 | 57.5 | O |
| 1.2 (81 kw) | 2018.06- | 6MT | F | L | MPV FWD D 12 XHL (EB2ADT);F 12 XHL (EB2ADT) | | GDS83616 | Drive Shaft | | 28 | 24 | 58.5 | 92.5 | 681 | |
| | 2018.06- | 6MT | F | R | MPV FWD D 12 XHL (EB2ADT);F 12 XHL (EB2ADT) | | GDS83663 | Drive Shaft | | 28 | 24 | 58.5 | 92.5 | 919 | |
| | 2018.06- | 6MT | F | L/R | MPV FWD D 12 XHL (EB2ADT);F 12 XHL (EB2ADT) | | GCO82273 | Outer Joint | | 28 | 34 | 58.5 | 92.5 | 56 | I |
| | 2018.06- | 6MT | F | L | MPV FWD D 12 XHL (EB2ADT);F 12 XHL (EB2ADT) | | GCI82131 | Inner Joint | | 24 | 34 | 40 | 62 | 89 | |
| | 2018.06- | 6MT | F | R | MPV FWD D 12 XHL (EB2ADT);F 12 XHL (EB2ADT) | | GCI82320 | Inner Joint | | 24 | 34 | 29.8 | 290 | 88 | |
| | 2019.02- | 6MT | F | L | Box Body/MPV FWD D 12 XHL (EB2ADT);F 12 XHL (EB2ADT) | | GDS83616 | Drive Shaft | | 28 | 24 | 58.5 | 92.5 | 681 | |
| | 2019.02- | 6MT | F | R | Box Body/MPV FWD D 12 XHL (EB2ADT);F 12 XHL (EB2ADT) | For left-hand drive vehicles | GDS84457 | Drive Shaft | | 28 | 24 | 58.5 | 92.5 | 921 | |
| | 2019.02- | 6MT | F | L | Box Body/MPV FWD D 12 XHL (EB2ADT);F 12 XHL (EB2ADT) | | GCO82273 | Outer Joint | | 28 | 34 | 58.5 | 92.5 | 56 | I |
| | 2019.02- | 6MT | F | R | Box Body/MPV FWD D 12 XHL (EB2ADT);F 12 XHL (EB2ADT) | | GCO81397 | Outer Joint | | 28 | 34 | 58.5 | 92.5 | 56 | I |
| | 2019.02- | 6MT | F | L | Box Body/MPV FWD D 12 XHL (EB2ADT);F 12 XHL (EB2ADT) | | GCI82131 | Inner Joint | | 24 | 34 | 40 | 62 | 89 | |
| | 2019.02- | 6MT | F | R | Box Body/MPV FWD D 12 XHL (EB2ADT);F 12 XHL (EB2ADT) | For left-hand drive vehicles | GCI82769 | Inner Joint | | 24 | 34 | 40 | 61 | 103 | |
| 1.2 (96 kw) | 2019.07- | 8AT | F | L | MPV FWD F 12 XHT (EB2ADTS) | | GDS84579 | Drive Shaft | | 28 | 37 | 58.5 | 92.5 | 641 | |
| | 2019.07- | 8AT | F | R | MPV FWD F 12 XHT (EB2ADTS) | | GDS84582 | Drive Shaft | | 28 | 37 | 58.5 | 92.5 | 918 | |
| | 2019.07- | 8AT | F | L/R | MPV FWD F 12 XHT (EB2ADTS) | | GCO82273 | Outer Joint | | 28 | 34 | 58.5 | 92.5 | 56 | I |
| | 2019.07- | 8AT | F | L | MPV FWD F 12 XHT (EB2ADTS) | | GCI82119 | Inner Joint | | 37 | 34 | 41.5 | 58.5 | 94 | |
| | 2019.07- | 8AT | F | R | MPV FWD F 12 XHT (EB2ADTS) | | GCI82118 | Inner Joint | | 37 | 34 | | 290 | 88 | |
| | 2019.09- | 8AT | F | L | Box Body/MPV FWD F 12 XHT (EB2ADTS) | | GDS84579 | Drive Shaft | | 28 | 37 | 58.5 | 92.5 | 641 | |
| | 2019.09- | 8AT | F | R | Box Body/MPV FWD F 12 XHT (EB2ADTS) | | GDS84582 | Drive Shaft | | 28 | 37 | 58.5 | 92.5 | 918 | |
| | 2019.09- | 8AT | F | L/R | Box Body/MPV FWD F 12 XHT (EB2ADTS) | | GCO82273 | Outer Joint | | 28 | 34 | 58.5 | 92.5 | 56 | I |
| | 2019.09- | 8AT | F | L | Box Body/MPV FWD F 12 XHT (EB2ADTS) | | GCI82119 | Inner Joint | | 37 | 34 | 41.5 | 58.5 | 94 | |
| | 2019.09- | 8AT | F | R | Box Body/MPV FWD F 12 XHT (EB2ADTS) | | GCI82118 | Inner Joint | | 37 | 34 | | 290 | 88 | |
| 1.3 (51 kw) | 2005.08- | 5MT | F | L | Box Body/MPV FWD Z 13 DT | | GDS44027 | Drive Shaft | 29T | 22 | 22 | 52 | 98 | 580 | |
| | 2005.08- | 5MT | F | L | Box Body/MPV FWD Z 13 DT | | GDS82091 | Drive Shaft | 29T | 22 | 22 | 52 | 97.5 | 580 | |
| | 2005.08- | 5MT | F | R | Box Body/MPV FWD Z 13 DT | for manufacturer:Delphi | GDS44026 | Drive Shaft | 29T | 22 | 22 | 52 | 98 | 930 | |
| | 2005.08- | 5MT | F | R | Box Body/MPV FWD Z 13 DT | | GDS44075 | Drive Shaft | 29T | 22 | 22 | 52 | 97.5 | 926 | |
| | 2005.08- | 5MT | F | R | Box Body/MPV FWD Z 13 DT | | GDS82092 | Drive Shaft | 29T | 22 | 22 | 52 | 97.5 | 930 | |
| | 2005.08- | 5MT | F | L/R | Box Body/MPV FWD Z 13 DT | | GCO44002 | Outer Joint | 29T | 22 | 23 | 52 | 97.5 | 61 | M |
| | 2005.08- | AT/MT | F | L | Box Body/MPV FWD Z 13 DT | | GDS99069 | Drive Shaft | 29T | 22 | 22 | 52 | 97.5 | 584 | |
| | 2005.08- | MT | F | L/R | Box Body/MPV FWD Z 13 DT | | GCO44018 | Outer Joint | | 22 | 28 | 52.2 | 97.5 | 55 | O |

| | YEAR | TRANSM. | F/R | L/R | BODY STYLE & DRIVE TYPE & ENGINE | REMARKS | G-AP Ref. | PRODUCT | ABS | Technical Specifications A | B | C | H | L | P |
|---|---|---|---|---|---|---|---|---|---|---|---|---|---|---|---|
| **OPEL** | | | | | | | | | | | | | | | |
| **Combo** | | | | | | | | | | | | | | | |
| 1.3 (51 kw) | 2005.08- | MT | F | L/R | Box Body/MPV FWD Z 13 DT | | GCO44019 | Outer Joint | 29T | 22 | 28 | 52 | 97.5 | 57.5 | O |
| | 2005.08- | MT | F | L/R | Box Body/MPV FWD Z 13 DT | | GCI44009 | Inner Joint | | 22 | 23 | 35 | 57.5 | 96 | |
| | 2005.08- | | F | L/R | Box Body/MPV FWD Z 13 DT | Date to:2012.01 | GCO44020 | Outer Joint | 29T | 22 | 28 | 52 | 97.5 | 57.5 | O |
| 1.3 (55 kw) | 2005.10-2012.12 | 5MT | F | L | Box Body/MPV FWD Z 13 DTJ | Manufacturer:GKN | GDS44027 | Drive Shaft | 29T | 22 | 22 | 52 | 98 | 580 | |
| | 2005.10-2012.12 | 5MT | F | L | Box Body/MPV FWD Z 13 DTJ | Manufacturer:Delphi | GDS82091 | Drive Shaft | 29T | 22 | 22 | 52 | 97.5 | 580 | |
| | 2005.10-2012.12 | 5MT | F | R | Box Body/MPV FWD Z 13 DTJ | Manufacturer:GKN | GDS44026 | Drive Shaft | 29T | 22 | 22 | 52 | 98 | 930 | |
| | 2005.10-2012.12 | 5MT | F | R | Box Body/MPV FWD Z 13 DTJ | Manufacturer:Delphi | GDS82092 | Drive Shaft | 29T | 22 | 22 | 52 | 97.5 | 930 | |
| | 2005.10-2012.12 | 5MT | F | L/R | Box Body/MPV FWD Z 13 DTJ | Manufacturer:Delphi | GCO44002 | Outer Joint | 29T | 22 | 23 | 52 | 97.5 | 61 | M |
| | 2005.10-2012.12 | 5MT | F | L/R | Box Body/MPV FWD Z 13 DTJ | Manufacturer:Delphi | GCI44009 | Inner Joint | | 22 | 23 | 35 | 57.5 | 96 | |
| 1.3 (59 kw) | 2012.02- | 5MT | F | L | Box Body/MPV FWD A 13 FD | Exhaust Emis:Euro 5 | GDS17078 | Drive Shaft | | 25 | 24 | 51 | 84.5 | 602 | |
| | 2015.03- | 5MT | F | L | MPV FWD A 13 FD | Exhaust Emis:Euro 5 | GDS17078 | Drive Shaft | | 25 | 24 | 51 | 84.5 | 602 | |
| 1.3 (66 kw) | 2012.02- | 5MT | F | L | Box Body/MPV FWD A 13 FD | | GDS17078 | Drive Shaft | | 25 | 24 | 51 | 84.5 | 602 | |
| | 2012.02- | 5MT | F | R | Box Body/MPV FWD A 13 FD | | GDS17079 | Drive Shaft | | 25 | 24 | 51 | 84.5 | 970 | |
| | 2012.02- | 5MT | F | L/R | Box Body/MPV FWD A 13 FD | | GCO17063 | Outer Joint | | 25 | 25 | 51.1 | 84.5 | 61 | M |
| | 2012.02- | 5MT | F | L | Box Body/MPV FWD A 13 FD | | GCI17025 | Inner Joint | | 24 | 24 | 29.7 | 86.5 | 93 | |
| | 2012.02- | 5MT | F | R | Box Body/MPV FWD A 13 FD | | GCI17026 | Inner Joint | | 24 | 24 | 29.7 | 379 | 100.5 | |
| | 2012.02- | 5MT | F | L | MPV FWD A 13 FD | | GDS17078 | Drive Shaft | | 25 | 24 | 51 | 84.5 | 602 | |
| | 2012.02- | 5MT | F | R | MPV FWD A 13 FD | | GDS17079 | Drive Shaft | | 25 | 24 | 51 | 84.5 | 970 | |
| | 2012.02- | 5MT | F | L/R | MPV FWD A 13 FD | | GCO17063 | Outer Joint | | 25 | 25 | 51.1 | 84.5 | 61 | M |
| | 2012.02- | 5MT | F | L | MPV FWD A 13 FD | | GCI17025 | Inner Joint | | 24 | 24 | 29.7 | 86.5 | 93 | |
| 1.3 (70 kw) | 2016.03- | 5MT | F | L | Box Body/MPV FWD A 13 FD | | GDS17078 | Drive Shaft | | 25 | 24 | 51 | 84.5 | 602 | |
| | 2016.03- | 5MT | F | R | Box Body/MPV FWD A 13 FD | | GDS17079 | Drive Shaft | | 25 | 24 | 51 | 84.5 | 970 | |
| | 2016.03- | 5MT | F | L/R | Box Body/MPV FWD A 13 FD | | GCO17063 | Outer Joint | | 25 | 25 | 51.1 | 84.5 | 61 | M |
| | 2016.03- | 5MT | F | L | Box Body/MPV FWD A 13 FD | | GCI17025 | Inner Joint | | 24 | 24 | 29.7 | 86.5 | 93 | |
| | 2016.03- | 5MT | F | L | MPV FWD A 13 FD | | GDS17078 | Drive Shaft | | 25 | 24 | 51 | 84.5 | 602 | |
| | 2016.03- | 5MT | F | R | MPV FWD A 13 FD | | GDS17079 | Drive Shaft | | 25 | 24 | 51 | 84.5 | 970 | |
| | 2016.03- | 5MT | F | L/R | MPV FWD A 13 FD | | GCO17063 | Outer Joint | | 25 | 25 | 51.1 | 84.5 | 61 | M |
| | 2016.03- | 5MT | F | L | MPV FWD A 13 FD | | GCI17025 | Inner Joint | | 24 | 24 | 29.7 | 86.5 | 93 | |
| 1.4 (44 kw) | 1994.07-2001.10 | 5MT | F | L | MPV Van FWD C14NZ/X14SZ | | GDS44001 | Drive Shaft | 29T | 22 | 22 | 52 | 95 | 573 | |
| | 1994.07-2001.10 | 5MT | F | R | MPV Van FWD C14NZ/X14SZ | | GDS60002 | Drive Shaft | 29T | 22 | 22 | 52 | 95 | 926 | |
| | 1994.07-2001.10 | MT | F | L/R | MPV Van FWD C14NZ/X14SZ | | GCO44020 | Outer Joint | 29T | 22 | 28 | 52 | 97.5 | 57.5 | O |
| 1.4 (60 kw) | 1994.07-2001.07 | 5MT | F | L | MPV Van FWD C14SE | | GDS44001 | Drive Shaft | 29T | 22 | 22 | 52 | 95 | 573 | |
| | 1994.07-2001.07 | 5MT | F | R | MPV Van FWD C14SE | | GDS60002 | Drive Shaft | 29T | 22 | 22 | 52 | 95 | 926 | |
| | 1994.07-2001.07 | MT | F | L/R | MPV Van FWD C14SE | | GCO44020 | Outer Joint | 29T | 22 | 28 | 52 | 97.5 | 57.5 | O |
| 1.4 (66 kw) | 1999.08-2001.10 | | F | L | MPV Van FWD X14XE | | GDS44001 | Drive Shaft | 29T | 22 | 22 | 52 | 95 | 573 | |
| | 1999.08-2001.10 | | F | R | MPV Van FWD X14XE | | GDS60002 | Drive Shaft | 29T | 22 | 22 | 52 | 95 | 926 | |
| | 2005.08- | 5MT | F | L | Box Body/MPV FWD Z 14 XEP | | GDS44027 | Drive Shaft | 29T | 22 | 22 | 52 | 98 | 580 | |
| | 2005.08- | 5MT | F | R | Box Body/MPV FWD Z 14 XEP | Chassis no. from:2300000/1/2400000/1/26000001;Date To:2012.12 | GDS44026 | Drive Shaft | 29T | 22 | 22 | 52 | 98 | 930 | |
| | 2005.08- | 5MT | F | R | Box Body/MPV FWD Z 14 XEP | Date to:2012.12 | GDS44075 | Drive Shaft | 29T | 22 | 22 | 52 | 97.5 | 926 | |
| | 2005.08- | 5MT | F | R | Box Body/MPV FWD Z 14 XEP | | GDS99205 | Drive Shaft | | 22 | 22 | 52 | 97.5 | 930 | |
| | 2005.08- | 5MT | F | R | Box Body/MPV FWD Z 14 XEP | Date to:2012.12 | GCI60001 | Inner Joint | | 22 | 28 | 34.9 | 57.5 | 96.5 | |
| | 2005.08- | 5MT | F | L/R | Box Body/MPV FWD Z 14 XEP | | GCI44003 | Inner Joint | | 22 | 28 | 34.95 | 57.5 | 83.5 | |
| | 2005.08- | MT | F | L | Box Body/MPV FWD Z 14 XEP | | GDS99069 | Drive Shaft | 29T | 22 | 22 | 52 | 97.5 | 584 | |
| | 2005.08- | MT | F | R | Box Body/MPV FWD Z 14 XEP | | GCO44043 | Outer Joint | | 22 | 28 | 52 | 97.5 | 57.5 | O |
| | 2005.08- | MT | F | L/R | Box Body/MPV FWD Z 14 XEP | | GCO44018 | Outer Joint | | 22 | 28 | 52.2 | 97.5 | 55 | O |
| | 2005.08- | MT | F | L/R | Box Body/MPV FWD Z 14 XEP | | GCO44019 | Outer Joint | 29T | 22 | 28 | 52 | 97.5 | 57.5 | O |
| | 2005.08- | | F | L/R | Box Body/MPV FWD Z 14 XEP | | GCO44020 | Outer Joint | 29T | 22 | 28 | 52 | 97.5 | 57.5 | O |
| 1.4 (70 kw) | 2012.02- | 5MT | F | L/R | Box Body/MPV FWD A 14 FP | | GCO17026 | Outer Joint | | 25 | 22 | 51 | 84 | 57 | M |
| | 2012.02- | 5MT | F | L/R | Box Body/MPV FWD A 14 FP | | GCI17027 | Inner Joint | | 22 | 22 | 36 | 61.5 | 93.5 | |
| | 2012.02- | 5MT | F | L/R | MPV FWD A 14 FP | | GCO17026 | Outer Joint | | 25 | 22 | 51 | 84 | 57 | M |
| | 2012.02- | 5MT | F | L/R | MPV FWD A 14 FP | | GCI17027 | Inner Joint | | 22 | 22 | 36 | 61.5 | 93.5 | |
| 1.4 (88 kw) | 2012.02- | 6MT | F | L | Box Body/MPV FWD A 14 FC | | GDS17152 | Drive Shaft | | 27 | 25 | 59 | 84.5 | 596 | |
| | 2012.02- | 6MT | F | L/R | Box Body/MPV FWD A 14 FC | | GCO99298 | Outer Joint | | 27 | 26 | 59 | 84.5 | 63 | M |
| | 2012.02- | 6MT | F | R | Box Body/MPV FWD A 14 FC | | GCI18100 | Inner Joint | | 25 | 26 | 29.7 | 434 | 108 | |
| | 2012.02- | 6MT | F | L | MPV FWD A 14 FC | | GDS17152 | Drive Shaft | | 27 | 25 | 59 | 84.5 | 596 | |
| | 2012.02- | 6MT | F | L/R | MPV FWD A 14 FC | | GCO99298 | Outer Joint | | 27 | 26 | 59 | 84.5 | 63 | M |
| | 2012.02- | 6MT | F | R | MPV FWD A 14 FC | | GCI18100 | Inner Joint | | 25 | 26 | 29.7 | 434 | 108 | |
| 1.5 (56 kw) | 2018.06- | 5MT | F | R | MPV FWD D 15 DTL (DV5RE) | | GDS84457 | Drive Shaft | | 28 | 24 | 58.5 | 92.5 | 921 | |
| | 2018.06- | 5MT | F | L | MPV FWD D 15 DTL (DV5RE) | | GCO82273 | Outer Joint | | 28 | 34 | 58.5 | 92.5 | 56 | I |
| | 2018.06- | 5MT | F | R | MPV FWD D 15 DTL (DV5RE) | | GCO81397 | Outer Joint | | 28 | 34 | 58.5 | 92.5 | 56 | I |
| | 2018.06- | 5MT | F | L | MPV FWD D 15 DTL (DV5RE) | | GCI82131 | Inner Joint | | 24 | 34 | 40 | 62 | 89 | |
| | 2018.06- | 5MT | F | R | MPV FWD D 15 DTL (DV5RE) | | GCI82769 | Inner Joint | | 24 | 34 | 40 | 61 | 103 | |
| | 2018.06- | 6MT | F | R | MPV FWD D 15 DTL (DV5RE) | Trans. code:MB6 | GDS83663 | Drive Shaft | | 28 | 24 | 58.5 | 92.5 | 919 | |
| | 2018.06- | 6MT/5MT | F | L | MPV FWD D 15 DTL (DV5RE) | Trans. code:MB6 | GDS83616 | Drive Shaft | | 28 | 24 | 58.5 | 92.5 | 681 | |
| | 2018.08- | 5MT | F | R | Box Body/MPV FWD D 15 DTL (DV5RE) | | GDS84457 | Drive Shaft | | 28 | 24 | 58.5 | 92.5 | 921 | |

| | YEAR | TRANSM. | F/R | L/R | BODY STYLE & DRIVE TYPE & ENGINE | REMARKS | G-AP Ref. | PRODUCT | ABS | Technical Specifications A | B | C | H | L | P |
|---|---|---|---|---|---|---|---|---|---|---|---|---|---|---|---|
| **OPEL** | | | | | | | | | | | | | | | |
| **Combo** | | | | | | | | | | | | | | | |
| 1.5 (56 kw) | 2018.08- | 5MT | F | L | Box Body/MPV FWD D 15 DTL (DV5RE) | | GCO82273 | Outer Joint | | 28 | 34 | 58.5 | 92.5 | 56 | I |
| | 2018.08- | 5MT | F | R | Box Body/MPV FWD D 15 DTL (DV5RE) | | GCO81397 | Outer Joint | | 28 | 34 | 58.5 | 92.5 | 56 | I |
| | 2018.08- | 5MT | F | L | Box Body/MPV FWD D 15 DTL (DV5RE) | | GCI82131 | Inner Joint | | 24 | 34 | 40 | 62 | 89 | |
| | 2018.08- | 5MT | F | R | Box Body/MPV FWD D 15 DTL (DV5RE) | | GCI82769 | Inner Joint | | 24 | 34 | 40 | 61 | 103 | |
| | 2018.08- | 6MT | F | R | Box Body/MPV FWD D 15 DTL (DV5RE) | Trans. code:MB6 | GDS83663 | Drive Shaft | | 28 | 24 | 58.5 | 92.5 | 919 | |
| | 2018.08- | 6MT/5MT | F | L | Box Body/MPV FWD D 15 DTL (DV5RE) | Trans. code:MB6 | GDS83616 | Drive Shaft | | 28 | 24 | 58.5 | 92.5 | 681 | |
| 1.5 (75 kw) | 2018.06- | 5MT | F | L | MPV FWD D 15 DT (DV5RD);YHT (DV5RCF) | | GDS83616 | Drive Shaft | | 28 | 24 | 58.5 | 92.5 | 681 | |
| | 2018.06- | 5MT | F | R | MPV FWD D 15 DT (DV5RD);YHT (DV5RCF) | For left-hand drive vehicles | GDS84457 | Drive Shaft | | 28 | 24 | 58.5 | 92.5 | 921 | |
| | 2018.06- | 5MT | F | L | MPV FWD D 15 DT (DV5RD);YHT (DV5RCF) | | GCO82273 | Outer Joint | | 28 | 34 | 58.5 | 92.5 | 56 | I |
| | 2018.06- | 5MT | F | R | MPV FWD D 15 DT (DV5RD);YHT (DV5RCF) | | GCO81397 | Outer Joint | | 28 | 34 | 58.5 | 92.5 | 56 | I |
| | 2018.06- | 5MT | F | L | MPV FWD D 15 DT (DV5RD);YHT (DV5RCF) | | GCI82131 | Inner Joint | | 24 | 34 | 40 | 62 | 89 | |
| | 2018.06- | 5MT | F | R | MPV FWD D 15 DT (DV5RD);YHT (DV5RCF) | For left-hand drive vehicles | GCI82769 | Inner Joint | | 24 | 34 | 40 | 61 | 103 | |
| | 2018.08- | 5MT | F | R | Box Body/MPV FWD D 15 DT (DV5RD);YHT (DV5RCF) | | GDS84457 | Drive Shaft | | 28 | 24 | 58.5 | 92.5 | 921 | |
| | 2018.08- | 5MT | F | L | Box Body/MPV FWD D 15 DT (DV5RD);YHT (DV5RCF) | | GCO82273 | Outer Joint | | 28 | 34 | 58.5 | 92.5 | 56 | I |
| | 2018.08- | 5MT | F | R | Box Body/MPV FWD D 15 DT (DV5RD);YHT (DV5RCF) | | GCO81397 | Outer Joint | | 28 | 34 | 58.5 | 92.5 | 56 | I |
| | 2018.08- | 5MT | F | L | Box Body/MPV FWD D 15 DT (DV5RD);YHT (DV5RCF) | | GCI82131 | Inner Joint | | 24 | 34 | 40 | 62 | 89 | |
| | 2018.08- | 5MT | F | R | Box Body/MPV FWD D 15 DT (DV5RD);YHT (DV5RCF) | | GCI82769 | Inner Joint | | 24 | 34 | 40 | 61 | 103 | |
| | 2018.08- | 6MT | F | R | Box Body/MPV FWD D 15 DT (DV5RD);YHT (DV5RCF) | Trans. code:MB6 | GDS83663 | Drive Shaft | | 28 | 24 | 58.5 | 92.5 | 919 | |
| | 2018.08- | 6MT/5MT | F | L | Box Body/MPV FWD D 15 DT (DV5RD);YHT (DV5RCF) | Trans. code:MB6 | GDS83616 | Drive Shaft | | 28 | 24 | 58.5 | 92.5 | 681 | |
| 1.5 (96 kw) | 2018.06- | 6MT | F | L | MPV FWD D 15 DTH (DV5RC) | | GDS84170 | Drive Shaft | | 28 | 37 | 58.5 | 92.5 | 670 | |
| | 2018.06- | 6MT | F | R | MPV FWD D 15 DTH (DV5RC) | | GDS84336 | Drive Shaft | | 28 | 37 | 58.5 | 92.5 | 930 | |
| | 2018.06- | 6MT | F | L/R | MPV FWD D 15 DTH (DV5RC) | | GCO82273 | Outer Joint | | 28 | 34 | 58.5 | 92.5 | 56 | I |
| | 2018.06- | 6MT | F | L | MPV FWD D 15 DTH (DV5RC) | | GCI82301 | Inner Joint | | 37 | 34 | 40 | 65.5 | 89.5 | |
| | 2018.06- | 6MT | F | R | MPV FWD D 15 DTH (DV5RC) | | GCI82300 | Inner Joint | | 37 | 34 | 31.9 | 302 | 88 | |
| | 2018.06- | 8AT | F | L | MPV FWD D 15 DTH (DV5RC) | | GDS84579 | Drive Shaft | | 28 | 37 | 58.5 | 92.5 | 641 | |
| | 2018.06- | 8AT | F | R | MPV FWD D 15 DTH (DV5RC) | | GDS84582 | Drive Shaft | | 28 | 37 | 58.5 | 92.5 | 918 | |
| | 2018.06- | 8AT | F | L | MPV FWD D 15 DTH (DV5RC) | | GCI82119 | Inner Joint | | 37 | 34 | 41.5 | 58.5 | 94 | |
| | 2018.06- | 8AT | F | R | MPV FWD D 15 DTH (DV5RC) | | GCI82118 | Inner Joint | | 37 | 34 | | 290 | 88 | |
| | 2018.08- | 6MT | F | L | Box Body/MPV FWD D 15 DTH (DV5RC) | Trans. code:MB6 | GDS83616 | Drive Shaft | | 28 | 24 | 58.5 | 92.5 | 681 | |
| | 2018.08- | 6MT | F | L | Box Body/MPV FWD D 15 DTH (DV5RC) | Trans. code:ML6C | GDS84170 | Drive Shaft | | 28 | 37 | 58.5 | 92.5 | 670 | |
| | 2018.08- | 6MT | F | R | Box Body/MPV FWD D 15 DTH (DV5RC) | Trans. code:ML6C | GDS84336 | Drive Shaft | | 28 | 37 | 58.5 | 92.5 | 930 | |
| | 2018.08- | 6MT | F | R | Box Body/MPV FWD D 15 DTH (DV5RC) | Trans. code:MB6 | GDS84457 | Drive Shaft | | 28 | 24 | 58.5 | 92.5 | 921 | |
| | 2018.08- | 6MT | F | L/R | Box Body/MPV FWD D 15 DTH (DV5RC) | | GCO82273 | Outer Joint | | 28 | 34 | 58.5 | 92.5 | 56 | I |
| | 2018.08- | 6MT | F | L | Box Body/MPV FWD D 15 DTH (DV5RC) | | GCI82301 | Inner Joint | | 37 | 34 | 40 | 65.5 | 89.5 | |
| | 2018.08- | 6MT | F | R | Box Body/MPV FWD D 15 DTH (DV5RC) | Trans. code:ML6C | GCI82300 | Inner Joint | | 37 | 34 | 31.9 | 302 | 88 | |
| | 2018.08- | 6MT | F | R | Box Body/MPV FWD D 15 DTH (DV5RC) | Trans. code:MB6 | GCI82769 | Inner Joint | | 24 | 34 | 40 | 61 | 103 | |
| | 2018.08- | 8AT | F | L | Box Body/MPV FWD D 15 DTH (DV5RC) | | GDS84579 | Drive Shaft | | 28 | 37 | 58.5 | 92.5 | 641 | |
| | 2018.08- | 8AT | F | R | Box Body/MPV FWD D 15 DTH (DV5RC) | | GDS84582 | Drive Shaft | | 28 | 37 | 58.5 | 92.5 | 918 | |
| | 2018.08- | 8AT | F | L | Box Body/MPV FWD D 15 DTH (DV5RC) | | GCI82119 | Inner Joint | | 37 | 34 | 41.5 | 58.5 | 94 | |
| | 2018.08- | 8AT | F | R | Box Body/MPV FWD D 15 DTH (DV5RC) | | GCI82118 | Inner Joint | | 37 | 34 | | 290 | 88 | |
| 1.6 (55 kw) | 2018.06-2021.04 | 5MT | F | L | Box Body/MPV FWD B 16 DTL (DV6FE) | | GDS83616 | Drive Shaft | | 28 | 24 | 58.5 | 92.5 | 681 | |
| | 2018.06-2021.04 | 5MT | F | R | Box Body/MPV FWD B 16 DTL (DV6FE) | | GDS83663 | Drive Shaft | | 28 | 24 | 58.5 | 92.5 | 919 | |
| | 2018.06-2021.04 | 5MT | F | L/R | Box Body/MPV FWD B 16 DTL (DV6FE) | | GCO82273 | Outer Joint | | 28 | 34 | 58.5 | 92.5 | 56 | I |
| | 2018.06-2021.04 | 5MT | F | L | Box Body/MPV FWD B 16 DTL (DV6FE) | | GCI82131 | Inner Joint | | 24 | 34 | 40 | 62 | 89 | |
| | 2018.06-2021.04 | 5MT | F | R | Box Body/MPV FWD B 16 DTL (DV6FE) | | GCI82320 | Inner Joint | | 24 | 34 | 29.8 | 290 | 88 | |
| | 2018.06-2021.04 | 5MT | F | R | Box Body/MPV FWD B 16 DTL (DV6FE) | | GCI82769 | Inner Joint | | 24 | 34 | 40 | 61 | 103 | |
| 1.6 (64 kw) | 2001.10- | 5MT | F | L | Box Body/MPV FWD Z 16 SE | | GDS44027 | Drive Shaft | 29T | 22 | 22 | 52 | 98 | 580 | |
| | 2001.10- | 5MT | F | R | Box Body/MPV FWD Z 16 SE | Chassis no. from:2300000/2400000/2600000;Date To:2004.06 | GDS44026 | Drive Shaft | 29T | 22 | 22 | 52 | 98 | 930 | |
| | 2001.10- | 5MT | F | R | Box Body/MPV FWD Z 16 SE | Date to:2004.06 | GDS44075 | Drive Shaft | 29T | 22 | 22 | 52 | 97.5 | 926 | |
| | 2001.10- | 5MT | F | R | Box Body/MPV FWD Z 16 SE | | GDS99205 | Drive Shaft | | 22 | 22 | 52 | 97.5 | 930 | |
| | 2001.10- | 5MT | F | R | Box Body/MPV FWD Z 16 SE | Date to:2004.06 | GCI60001 | Inner Joint | | 22 | 28 | 34.9 | 57.5 | 96.5 | |
| | 2001.10- | 5MT | F | L/R | Box Body/MPV FWD Z 16 SE | | GCI44003 | Inner Joint | | 22 | 28 | 34.95 | 57.5 | 83.5 | |
| | 2001.10- | AT/MT | F | L | Box Body/MPV FWD Z 16 SE | | GDS99069 | Drive Shaft | 29T | 22 | 22 | 52 | 97.5 | 584 | |
| | 2001.10- | MT | F | R | Box Body/MPV FWD Z 16 SE | | GCO44043 | Outer Joint | | 22 | 28 | 52 | 97.5 | 57.5 | O |
| | 2001.10- | MT | F | L/R | Box Body/MPV FWD Z 16 SE | | GCO44018 | Outer Joint | | 22 | 28 | 52.2 | 97.5 | 55 | O |
| | 2001.10- | MT | F | L/R | Box Body/MPV FWD Z 16 SE | | GCO44019 | Outer Joint | 29T | 22 | 28 | 52 | 97.5 | 57.5 | O |
| | 2001.10- | | F | L/R | Box Body/MPV FWD Z 16 SE | | GCO44020 | Outer Joint | 29T | 22 | 28 | 52 | 97.5 | 57.5 | O |
| 1.6 (66 kw) | 2012.02- | 5AMT | F | L/R | Box Body/MPV FWD A 16 FDL | For vehicles with heavy duty suspension;For increased payload | GCO99298 | Outer Joint | | 27 | 26 | 59 | 84.5 | 63 | M |
| | 2012.02- | 5AT | F | L | Box Body/MPV FWD A 16 FDL | | GCI83548 | Inner Joint | | 24 | 24 | 29.75 | 86.5 | 99.5 | |
| | 2012.02- | MT | F | L | Box Body/MPV FWD A 16 FDL | Shock Absorber System:Normal Suspension | GDS17076 | Drive Shaft | | 25 | 25 | 51 | 84.5 | 596 | |
| | 2012.02- | MT | F | R | Box Body/MPV FWD A 16 FDL | Shock Absorber System:Normal Suspension | GDS17081 | Drive Shaft | | 25 | 25 | 51 | 84.5 | 966.5 | |
| | 2012.02- | MT | F | L/R | Box Body/MPV FWD A 16 FDL | Shock Absorber System:Normal Suspension | GCO82025 | Outer Joint | | 25 | 26 | 51 | 84.5 | 64.5 | M |
| | 2012.02- | MT | F | R | Box Body/MPV FWD A 16 FDL | Shock Absorber System:Normal Suspension | GCI18100 | Inner Joint | | 25 | 26 | 29.7 | 434 | 108 | |
| | 2012.02- | 5AT | F | L | MPV FWD A 16 FDL | | GCI83548 | Inner Joint | | 24 | 24 | 29.75 | 86.5 | 99.5 | |
| | 2012.02- | 6MT | F | L | MPV FWD A 16 FDL | Exhaust Emis:Euro 5;For vehicles with heavy duty suspension;For increased payload | GDS17152 | Drive Shaft | | 27 | 25 | 59 | 84.5 | 596 | |

| | YEAR | TRANSM. | F/R | L/R | BODY STYLE & DRIVE TYPE & ENGINE | REMARKS | G-AP Ref. | PRODUCT | ABS | Technical Specifications A | B | C | H | L | P |
|---|---|---|---|---|---|---|---|---|---|---|---|---|---|---|---|
| **OPEL** | | | | | | | | | | | | | | | |
| **Combo** | | | | | | | | | | | | | | | |
| 1.6 (66 kw) | 2012.02- | 6MT/5AMT | F | L/R | MPV FWD A 16 FDL | For vehicles with heavy duty suspension,For increased payload | GCO99298 | Outer Joint | | 27 | 26 | 59 | 84.5 | 63 | M |
| | 2012.02- | MT | F | L | MPV FWD A 16 FDL | Shock Absorber System:Normal Suspension | GDS17076 | Drive Shaft | | 25 | 25 | 51 | 84.5 | 596 | |
| | 2012.02- | MT | F | R | MPV FWD A 16 FDL | Shock Absorber System:Normal Suspension | GDS17081 | Drive Shaft | | 25 | 25 | 51 | 84.5 | 966.5 | |
| | 2012.02- | MT | F | R | MPV FWD A 16 FDL | Shock Absorber System:Normal Suspension | GCI18100 | Inner Joint | | 25 | 26 | 29.7 | 434 | 108 | |
| 1.6 (68 kw) | 2019.09- | 5MT | F | R | MPV FWD A 16 DT (DV6D);A 16 DT (DV6DR) | | GDS84457 | Drive Shaft | | 28 | 24 | 58.5 | 92.5 | 921 | |
| | 2019.09- | 5MT | F | R | MPV FWD A 16 DT (DV6D);A 16 DT (DV6DR) | | GCI82769 | Inner Joint | | 24 | 34 | 40 | 61 | 103 | |
| | 2019.09- | 6MT | F | R | MPV FWD A 16 DT (DV6D);A 16 DT (DV6DR) | Trans. code:MB6 | GDS83663 | Drive Shaft | | 28 | 24 | 58.5 | 92.5 | 919 | |
| | 2019.09- | 6MT/5MT | F | L | MPV FWD A 16 DT (DV6D);A 16 DT (DV6DR) | Trans. code:MB6 | GDS83616 | Drive Shaft | | 28 | 24 | 58.5 | 92.5 | 681 | |
| 1.6 (69 kw) | 2006.06- | 5MT | F | L | Box Body/MPV FWD Z 16 YNG | | GDS44027 | Drive Shaft | 29T | 22 | 22 | 52 | 98 | 580 | |
| | 2006.06- | 5MT | F | R | Box Body/MPV FWD Z 16 YNG | for manufacturer:Delphi | GDS44026 | Drive Shaft | 29T | 22 | 22 | 52 | 98 | 930 | |
| | 2006.06- | 5MT | F | R | Box Body/MPV FWD Z 16 YNG | | GDS44075 | Drive Shaft | 29T | 22 | 22 | 52 | 97.5 | 926 | |
| | 2006.06- | 5MT | F | R | Box Body/MPV FWD Z 16 YNG | | GDS99205 | Drive Shaft | | 22 | 22 | 52 | 97.5 | 930 | |
| | 2006.06- | MT | F | R | Box Body/MPV FWD Z 16 YNG | | GCO44043 | Outer Joint | | 22 | 28 | 52 | 97.5 | 57.5 | O |
| | 2006.06- | MT | F | L/R | Box Body/MPV FWD Z 16 YNG | Date to:2012.12 | GCO44020 | Outer Joint | 29T | 22 | 28 | 52 | 97.5 | 57.5 | O |
| | 2006.06- | | F | | Box Body/MPV FWD Z 16 YNG | | GCI44009 | Inner Joint | | 22 | 23 | 35 | 57.5 | 96 | |
| 1.6 (70 kw) | 2015.03- | 6MT | F | L/R | MPV FWD A 16 FDL | For vehicles with increased axle load | GCO99298 | Outer Joint | | 27 | 26 | 59 | 84.5 | 63 | M |
| 1.6 (71 kw) | 2005.04- | 5MT | F | L | Box Body/MPV FWD Z 16 YNG | | GDS44027 | Drive Shaft | 29T | 22 | 22 | 52 | 98 | 580 | |
| | 2005.04- | 5MT | F | R | Box Body/MPV FWD Z 16 YNG | | GDS44026 | Drive Shaft | 29T | 22 | 22 | 52 | 98 | 930 | |
| | 2005.04- | 5MT | F | R | Box Body/MPV FWD Z 16 YNG | Date to:2011.12 | GDS44075 | Drive Shaft | 29T | 22 | 22 | 52 | 97.5 | 926 | |
| | 2005.04- | MT | F | L/R | Box Body/MPV FWD Z 16 YNG | Date to:2011.12 | GCO44020 | Outer Joint | 29T | 22 | 28 | 52 | 97.5 | 57.5 | O |
| | 2005.04- | | F | | Box Body/MPV FWD Z 16 YNG | | GCI44009 | Inner Joint | | 22 | 23 | 35 | 57.5 | 96 | |
| 1.6 (73 kw) | 2018.06-2020.04 | 5MT | F | L | Box Body/MPV FWD B 16 DT (DV6FD) | | GDS83616 | Drive Shaft | | 28 | 24 | 58.5 | 92.5 | 681 | |
| | 2018.06-2020.04 | 5MT | F | R | Box Body/MPV FWD B 16 DT (DV6FD) | | GDS83663 | Drive Shaft | | 28 | 24 | 58.5 | 92.5 | 919 | |
| | 2018.06-2020.04 | 5MT | F | L/R | Box Body/MPV FWD B 16 DT (DV6FD) | | GCO82273 | Outer Joint | | 28 | 34 | 58.5 | 92.5 | 56 | I |
| | 2018.06-2020.04 | 5MT | F | L | Box Body/MPV FWD B 16 DT (DV6FD) | | GCI82131 | Inner Joint | | 24 | 34 | 40 | 62 | 89 | |
| | 2018.06-2020.04 | 5MT | F | R | Box Body/MPV FWD B 16 DT (DV6FD) | | GCI82320 | Inner Joint | | 24 | 34 | 29.8 | 290 | 88 | |
| | 2018.06-2020.04 | 5MT | F | R | Box Body/MPV FWD B 16 DT (DV6FD) | | GCI82769 | Inner Joint | | 24 | 34 | 40 | 61 | 103 | |
| 1.6 (74 kw) | 2012.02- | 6MT | F | L | Box Body/MPV FWD A 16 FDH | Exhaust Emis:Euro 5,For vehicles with heavy duty suspension,For increased payload | GDS17152 | Drive Shaft | | 27 | 25 | 59 | 84.5 | 596 | |
| | 2012.02- | 6MT | F | L/R | Box Body/MPV FWD A 16 FDH | For vehicles with heavy duty suspension,For increased payload | GCO99298 | Outer Joint | | 27 | 26 | 59 | 84.5 | 63 | M |
| | 2012.02- | MT | F | L | Box Body/MPV FWD A 16 FDH | Shock Absorber System:Normal Suspension | GDS17076 | Drive Shaft | | 25 | 25 | 51 | 84.5 | 596 | |
| | 2012.02- | MT | F | R | Box Body/MPV FWD A 16 FDH | Shock Absorber System:Normal Suspension | GDS17081 | Drive Shaft | | 25 | 25 | 51 | 84.5 | 966.5 | |
| | 2012.02- | MT | F | R | Box Body/MPV FWD A 16 FDH | Shock Absorber System:Normal Suspension | GCI18100 | Inner Joint | | 25 | 26 | 29.7 | 434 | 108 | |
| 1.6 (77 kw) | 2012.02- | 6MT | F | L | Box Body/MPV FWD A 16 FDH | Exhaust Emis:Euro 5,For vehicles with heavy duty suspension,For increased payload | GDS17152 | Drive Shaft | | 27 | 25 | 59 | 84.5 | 596 | |
| | 2012.02- | 6MT | F | L/R | Box Body/MPV FWD A 16 FDH | For vehicles with heavy duty suspension,For increased payload | GCO99298 | Outer Joint | | 27 | 26 | 59 | 84.5 | 63 | M |
| | 2012.02- | MT | F | L | Box Body/MPV FWD A 16 FDH | Shock Absorber System:Normal Suspension | GDS17076 | Drive Shaft | | 25 | 25 | 51 | 84.5 | 596 | |
| | 2012.02- | MT | F | R | Box Body/MPV FWD A 16 FDH | Shock Absorber System:Normal Suspension | GDS17081 | Drive Shaft | | 25 | 25 | 51 | 84.5 | 966.5 | |
| | 2012.02- | MT | F | R | Box Body/MPV FWD A 16 FDH | Shock Absorber System:Normal Suspension | GCI18100 | Inner Joint | | 25 | 26 | 29.7 | 434 | 108 | |
| | 2012.02- | 6MT | F | L | MPV FWD A 16 FDH | Exhaust Emis:Euro 5,For vehicles with heavy duty suspension,For increased payload | GDS17152 | Drive Shaft | | 27 | 25 | 59 | 84.5 | 596 | |
| | 2012.02- | 6MT | F | L/R | MPV FWD A 16 FDH | For vehicles with heavy duty suspension,For increased payload | GCO99298 | Outer Joint | | 27 | 26 | 59 | 84.5 | 63 | M |
| | 2012.02- | MT | F | L | MPV FWD A 16 FDH | Shock Absorber System:Normal Suspension | GDS17076 | Drive Shaft | | 25 | 25 | 51 | 84.5 | 596 | |
| | 2012.02- | MT | F | R | MPV FWD A 16 FDH | Shock Absorber System:Normal Suspension | GDS17081 | Drive Shaft | | 25 | 25 | 51 | 84.5 | 966.5 | |
| | 2012.02- | MT | F | R | MPV FWD A 16 FDH | Shock Absorber System:Normal Suspension | GCI18100 | Inner Joint | | 25 | 26 | 29.7 | 434 | 108 | |
| 1.6 (88 kw) | 2015.03- | 6MT | F | L/R | MPV FWD A 16 FDL | For vehicles with increased axle load | GCO99298 | Outer Joint | | 27 | 26 | 59 | 84.5 | 63 | M |
| | 2015.04- | 6MT | F | L/R | Box Body/MPV FWD A 16 FDL | For vehicles with increased axle load | GCO99298 | Outer Joint | | 27 | 26 | 59 | 84.5 | 63 | M |
| 1.7 (44 kw) | 1993.08-2001.07 | 5MT | F | L | MPV Van FWD X17D | | GDS44001 | Drive Shaft | 29T | 22 | 22 | 52 | 95 | 573 | |
| | 1993.08-2001.07 | 5MT | F | R | MPV Van FWD X17D | | GDS60002 | Drive Shaft | 29T | 22 | 22 | 52 | 95 | 926 | |
| | 1993.08-2001.07 | MT | F | L/R | MPV Van FWD X17D | | GCO44020 | Outer Joint | 29T | 22 | 28 | 52 | 97.5 | 57.5 | O |
| 1.7 (48 kw) | 2001.10- | 5MT | F | L | Box Body/MPV FWD Y 17 DTL | | GDS44027 | Drive Shaft | 29T | 22 | 22 | 52 | 98 | 580 | |
| | 2001.10- | 5MT | F | R | Box Body/MPV FWD Y 17 DTL | | GDS44026 | Drive Shaft | 29T | 22 | 22 | 52 | 98 | 930 | |
| | 2001.10- | 5MT | F | L/R | Box Body/MPV FWD Y 17 DTL | | GCO44019 | Outer Joint | 29T | 22 | 28 | 52 | 97.5 | 57.5 | O |
| | 2001.10- | 5MT | F | L/R | Box Body/MPV FWD Y 17 DTL | | GCO44020 | Outer Joint | 29T | 22 | 28 | 52 | 97.5 | 57.5 | O |
| | 2001.10- | 5MT | F | L/R | Box Body/MPV FWD Y 17 DTL | | GCI44003 | Inner Joint | | 22 | 28 | 34.95 | 57.5 | 83.5 | |
| 1.7 (55 kw) | 2001.10- | 5MT | F | L | Box Body/MPV FWD Y 17 DT | | GDS44027 | Drive Shaft | 29T | 22 | 22 | 52 | 98 | 580 | |
| | 2001.10- | 5MT | F | L | Box Body/MPV FWD Y 17 DT | | GDS82091 | Drive Shaft | 29T | 22 | 22 | 52 | 97.5 | 580 | |
| | 2001.10- | 5MT | F | R | Box Body/MPV FWD Y 17 DT | for manufacturer:Delphi | GDS44026 | Drive Shaft | 29T | 22 | 22 | 52 | 98 | 930 | |
| | 2001.10- | 5MT | F | R | Box Body/MPV FWD Y 17 DT | | GDS44075 | Drive Shaft | 29T | 22 | 22 | 52 | 97.5 | 926 | |
| | 2001.10- | 5MT | F | R | Box Body/MPV FWD Y 17 DT | | GDS82092 | Drive Shaft | 29T | 22 | 22 | 52 | 97.5 | 930 | |
| | 2001.10- | 5MT | F | L/R | Box Body/MPV FWD Y 17 DT | | GCO44002 | Outer Joint | 29T | 22 | 23 | 52 | 97.5 | 61 | M |
| | 2001.10- | MT | F | L | Box Body/MPV FWD Y 17 DT | | GDS99069 | Drive Shaft | 29T | 22 | 22 | 52 | 97.5 | 584 | |
| | 2001.10- | MT | F | L/R | Box Body/MPV FWD Y 17 DT | | GCO44018 | Outer Joint | | 22 | 28 | 52.2 | 97.5 | 55 | O |
| | 2001.10- | MT | F | L/R | Box Body/MPV FWD Y 17 DT | | GCO44019 | Outer Joint | 29T | 22 | 28 | 52 | 97.5 | 57.5 | O |
| | 2001.10- | MT | F | L/R | Box Body/MPV FWD Y 17 DT | | GCI44009 | Inner Joint | | 22 | 23 | 35 | 57.5 | 96 | |
| 1.7 (74 kw) | 2004.12- | 5MT/6MT | F | L | Box Body/MPV FWD Z 17 DTH | | GDS44032 | Drive Shaft | 29T | 33 | 34 | 52 | 104 | 587.5 | |
| | 2004.12- | 5MT/6MT | F | R | Box Body/MPV FWD Z 17 DTH | | GDS60021 | Drive Shaft | 29T | 33 | 34 | 52 | 104 | 612 | |
| | 2004.12- | 5MT/6MT | F | L/R | Box Body/MPV FWD Z 17 DTH | | GCO44004 | Outer Joint | 29T | 33 | 24 | 52 | 104 | 64 | M |

| | YEAR | TRANSM. | F/R | L/R | BODY STYLE & DRIVE TYPE & ENGINE | REMARKS | G-AP Ref. | PRODUCT | ABS | Technical Specifications A | B | C | H | L | P |
|---|---|---|---|---|---|---|---|---|---|---|---|---|---|---|---|
| **OPEL** | | | | | | | | | | | | | | | |
| **Combo** | | | | | | | | | | | | | | | |
| 1.7 (74 kw) | 2004.12- | 5MT/6MT | F | L | Box Body/MPV FWD Z 17 DTH | | GCI21034 | Inner Joint | | 34 | 24 | 35 | 56.5 | 102 | |
| | 2004.12- | MT | F | R | Box Body/MPV FWD Z 17 DTH | Date to:2012.12 | GCI60003 | Inner Joint | | 34 | 24 | 35.5 | | 117.5 | |
| **Combo Tour** | | | | | | | | | | | | | | | |
| 1.3 (51 kw) | 2004.06-2011.01 | 5MT | F | L | MPV FWD Z 13 DT;Y 13 DT | Manufacturer:GKN | GDS44027 | Drive Shaft | 29T | 22 | 22 | 52 | 98 | 580 | |
| | 2004.06-2011.01 | 5MT | F | L | MPV FWD Z 13 DT;Y 13 DT | Manufacturer:Delphi | GDS82091 | Drive Shaft | 29T | 22 | 22 | 52 | 97.5 | 580 | |
| | 2004.06-2011.01 | 5MT | F | R | MPV FWD Z 13 DT;Y 13 DT | Manufacturer:GKN | GDS44026 | Drive Shaft | 29T | 22 | 22 | 52 | 98 | 930 | |
| | 2004.06-2011.01 | 5MT | F | R | MPV FWD Z 13 DT;Y 13 DT | Manufacturer:Delphi | GDS82092 | Drive Shaft | 29T | 22 | 22 | 52 | 97.5 | 930 | |
| | 2004.06-2011.01 | 5MT | F | L/R | MPV FWD Z 13 DT;Y 13 DT | Manufacturer:Delphi | GCO44002 | Outer Joint | 29T | 22 | 23 | 52 | 97.5 | 61 | M |
| | 2004.06-2011.01 | 5MT | F | L/R | MPV FWD Z 13 DT;Y 13 DT | Manufacturer:Delphi | GCI44009 | Inner Joint | | 22 | 23 | 35 | 57.5 | 96 | |
| 1.3 (55 kw) | 2005.10-2011.12 | 5MT | F | L | MPV FWD Z 13 DTJ | Manufacturer:GKN | GDS44027 | Drive Shaft | 29T | 22 | 22 | 52 | 98 | 580 | |
| | 2005.10-2011.12 | 5MT | F | L | MPV FWD Z 13 DTJ | Manufacturer:Delphi | GDS82091 | Drive Shaft | 29T | 22 | 22 | 52 | 97.5 | 580 | |
| | 2005.10-2011.12 | 5MT | F | R | MPV FWD Z 13 DTJ | Manufacturer:GKN | GDS44026 | Drive Shaft | 29T | 22 | 22 | 52 | 98 | 930 | |
| | 2005.10-2011.12 | 5MT | F | R | MPV FWD Z 13 DTJ | Manufacturer:Delphi | GDS82092 | Drive Shaft | 29T | 22 | 22 | 52 | 97.5 | 930 | |
| | 2005.10-2011.12 | 5MT | F | L/R | MPV FWD Z 13 DTJ | Manufacturer:Delphi | GCO44002 | Outer Joint | 29T | 22 | 23 | 52 | 97.5 | 61 | M |
| | 2005.10-2011.12 | 5MT | F | L/R | MPV FWD Z 13 DTJ | Manufacturer:Delphi | GCI44009 | Inner Joint | | 22 | 23 | 35 | 57.5 | 96 | |
| 1.4 (66 kw) | 2004.10-2011.12 | 5MT | F | L | MPV FWD Z 14 XEP | | GDS44027 | Drive Shaft | 29T | 22 | 22 | 52 | 98 | 580 | |
| | 2004.10-2011.12 | 5MT | F | R | MPV FWD Z 14 XEP | | GDS44026 | Drive Shaft | 29T | 22 | 22 | 52 | 98 | 930 | |
| | 2004.10-2011.12 | 5MT | F | L/R | MPV FWD Z 14 XEP | | GCO44019 | Outer Joint | 29T | 22 | 28 | 52 | 97.5 | 57.5 | O |
| | 2004.10-2011.12 | 5MT | F | L/R | MPV FWD Z 14 XEP | | GCO44020 | Outer Joint | 29T | 22 | 28 | 52 | 97.5 | 57.5 | O |
| | 2004.10-2011.12 | 5MT | F | L/R | MPV FWD Z 14 XEP | | GCI44003 | Inner Joint | | 22 | 28 | 34.95 | 57.5 | 83.5 | |
| 1.6 (64 kw) | 2001.10-2006.09 | 5MT | F | L | MPV FWD Z 16 SE | | GDS44027 | Drive Shaft | 29T | 22 | 22 | 52 | 98 | 580 | |
| | 2001.10-2006.09 | 5MT | F | R | MPV FWD Z 16 SE | for manufacturer:Delphi | GDS44026 | Drive Shaft | 29T | 22 | 22 | 52 | 98 | 930 | |
| | 2001.10-2006.09 | 5MT | F | R | MPV FWD Z 16 SE | | GDS44075 | Drive Shaft | 29T | 22 | 22 | 52 | 97.5 | 926 | |
| | 2001.10-2006.09 | 5MT | F | R | MPV FWD Z 16 SE | | GDS99205 | Drive Shaft | | 22 | 22 | 52 | 97.5 | 930 | |
| | 2001.10-2006.09 | 5MT | F | R | MPV FWD Z 16 SE | | GCI60001 | Inner Joint | | 22 | 28 | 34.9 | 57.5 | 96.5 | |
| | 2001.10-2006.09 | 5MT | F | L/R | MPV FWD Z 16 SE | | GCI44003 | Inner Joint | | 22 | 28 | 34.95 | 57.5 | 83.5 | |
| | 2001.10-2006.09 | AT/MT | F | L | MPV FWD Z 16 SE | | GDS99069 | Drive Shaft | 29T | 22 | 22 | 52 | 97.5 | 584 | |
| | 2001.10-2006.09 | AT/MT | F | L/R | MPV FWD Z 16 SE | | GCO44020 | Outer Joint | 29T | 22 | 28 | 52 | 97.5 | 57.5 | O |
| | 2001.10-2006.09 | MT | F | R | MPV FWD Z 16 SE | | GCO44043 | Outer Joint | | 22 | 28 | 52 | 97.5 | 57.5 | O |
| | 2001.10-2006.09 | MT | F | L/R | MPV FWD Z 16 SE | | GCO44018 | Outer Joint | | 22 | 28 | 52.2 | 97.5 | 55 | O |
| | 2001.10-2006.09 | MT | F | L/R | MPV FWD Z 16 SE | | GCO44019 | Outer Joint | 29T | 22 | 28 | 52 | 97.5 | 57.5 | O |
| 1.6 (69 kw) | 2006.06-2011.12 | 5MT | F | L | MPV FWD Z 16 YNG | | GDS44027 | Drive Shaft | 29T | 22 | 22 | 52 | 98 | 580 | |
| | 2006.06-2011.12 | 5MT | F | R | MPV FWD Z 16 YNG | for manufacturer:Delphi | GDS44026 | Drive Shaft | 29T | 22 | 22 | 52 | 98 | 930 | |
| | 2006.06-2011.12 | 5MT | F | R | MPV FWD Z 16 YNG | | GDS44075 | Drive Shaft | 29T | 22 | 22 | 52 | 97.5 | 926 | |
| | 2006.06-2011.12 | 5MT | F | R | MPV FWD Z 16 YNG | | GDS99205 | Drive Shaft | | 22 | 22 | 52 | 97.5 | 930 | |
| | 2006.06-2011.12 | MT | F | R | MPV FWD Z 16 YNG | | GCO44043 | Outer Joint | | 22 | 28 | 52 | 97.5 | 57.5 | O |
| | 2006.06-2011.12 | MT | F | L/R | MPV FWD Z 16 YNG | | GCO44020 | Outer Joint | 29T | 22 | 28 | 52 | 97.5 | 57.5 | O |
| | 2006.06-2011.12 | | F | | MPV FWD Z 16 YNG | | GCI44009 | Inner Joint | | 22 | 23 | 35 | 57.5 | 96 | |
| 1.6 (71 kw) | 2005.04-2011.01 | 5MT | F | L | MPV FWD Z 16 YNG | | GDS44027 | Drive Shaft | 29T | 22 | 22 | 52 | 98 | 580 | |
| | 2005.04-2011.01 | 5MT | F | R | MPV FWD Z 16 YNG | | GDS44026 | Drive Shaft | 29T | 22 | 22 | 52 | 98 | 930 | |
| | 2005.04-2011.01 | 5MT | F | R | MPV FWD Z 16 YNG | | GDS44075 | Drive Shaft | 29T | 22 | 22 | 52 | 97.5 | 926 | |
| | 2005.04-2011.01 | MT | F | L/R | MPV FWD Z 16 YNG | | GCO44020 | Outer Joint | 29T | 22 | 28 | 52 | 97.5 | 57.5 | O |
| | 2005.04-2011.01 | | F | | MPV FWD Z 16 YNG | | GCI44009 | Inner Joint | | 22 | 23 | 35 | 57.5 | 96 | |
| 1.7 (48 kw) | 2001.10-2004.06 | 5MT | F | L | MPV FWD Y 17 DTL | | GDS44027 | Drive Shaft | 29T | 22 | 22 | 52 | 98 | 580 | |
| | 2001.10-2004.06 | 5MT | F | R | MPV FWD Y 17 DTL | for manufacturer:Delphi | GDS44026 | Drive Shaft | 29T | 22 | 22 | 52 | 98 | 930 | |
| | 2001.10-2004.06 | 5MT | F | R | MPV FWD Y 17 DTL | | GDS44075 | Drive Shaft | 29T | 22 | 22 | 52 | 97.5 | 926 | |
| | 2001.10-2004.06 | 5MT | F | R | MPV FWD Y 17 DTL | | GDS99205 | Drive Shaft | | 22 | 22 | 52 | 97.5 | 930 | |
| | 2001.10-2004.06 | 5MT | F | R | MPV FWD Y 17 DTL | | GCI60001 | Inner Joint | | 22 | 28 | 34.9 | 57.5 | 96.5 | |
| | 2001.10-2004.06 | 5MT | F | L/R | MPV FWD Y 17 DTL | | GCI44003 | Inner Joint | | 22 | 28 | 34.95 | 57.5 | 83.5 | |
| | 2001.10-2004.06 | AT/MT | F | L/R | MPV FWD Y 17 DTL | | GCO44020 | Outer Joint | 29T | 22 | 28 | 52 | 97.5 | 57.5 | O |
| | 2001.10-2004.06 | MT | F | L | MPV FWD Y 17 DTL | | GDS99069 | Drive Shaft | 29T | 22 | 22 | 52 | 97.5 | 584 | |
| | 2001.10-2004.06 | MT | F | R | MPV FWD Y 17 DTL | | GCO44043 | Outer Joint | | 22 | 28 | 52 | 97.5 | 57.5 | O |
| | 2001.10-2004.06 | MT | F | L/R | MPV FWD Y 17 DTL | | GCO44018 | Outer Joint | | 22 | 28 | 52.2 | 97.5 | 55 | O |
| | 2001.10-2004.06 | MT | F | L/R | MPV FWD Y 17 DTL | | GCO44019 | Outer Joint | 29T | 22 | 28 | 52 | 97.5 | 57.5 | O |
| 1.7 (55 kw) | 2001.10-2004.06 | 5MT | F | L | MPV FWD Y 17 DT | | GDS44027 | Drive Shaft | 29T | 22 | 22 | 52 | 98 | 580 | |
| | 2001.10-2004.06 | 5MT | F | L | MPV FWD Y 17 DT | | GDS82091 | Drive Shaft | 29T | 22 | 22 | 52 | 97.5 | 580 | |
| | 2001.10-2004.06 | 5MT | F | R | MPV FWD Y 17 DT | for manufacturer:Delphi | GDS44026 | Drive Shaft | 29T | 22 | 22 | 52 | 98 | 930 | |
| | 2001.10-2004.06 | 5MT | F | R | MPV FWD Y 17 DT | | GDS44075 | Drive Shaft | 29T | 22 | 22 | 52 | 97.5 | 926 | |
| | 2001.10-2004.06 | 5MT | F | R | MPV FWD Y 17 DT | | GDS82092 | Drive Shaft | 29T | 22 | 22 | 52 | 97.5 | 930 | |
| | 2001.10-2004.06 | 5MT | F | L/R | MPV FWD Y 17 DT | | GCO44002 | Outer Joint | 29T | 22 | 23 | 52 | 97.5 | 61 | M |
| | 2001.10-2004.06 | MT | F | L | MPV FWD Y 17 DT | | GDS99069 | Drive Shaft | 29T | 22 | 22 | 52 | 97.5 | 584 | |
| | 2001.10-2004.06 | MT | F | L/R | MPV FWD Y 17 DT | | GCO44018 | Outer Joint | | 22 | 28 | 52.2 | 97.5 | 55 | O |
| | 2001.10-2004.06 | MT | F | L/R | MPV FWD Y 17 DT | | GCO44019 | Outer Joint | 29T | 22 | 28 | 52 | 97.5 | 57.5 | O |
| | 2001.10-2004.06 | MT | F | L/R | MPV FWD Y 17 DT | | GCI44009 | Inner Joint | | 22 | 23 | 35 | 57.5 | 96 | |
| 1.7 (74 kw) | 2004.07-2011.12 | 5MT | F | L | MPV FWD Z 17 DTH | | GDS44032 | Drive Shaft | 29T | 33 | 34 | 52 | 104 | 587.5 | |

| | YEAR | TRANSM. | F/R | L/R | BODY STYLE & DRIVE TYPE & ENGINE | REMARKS | G-AP Ref. | PRODUCT | ABS | Technical Specifications A | B | C | H | L | P |
|---|---|---|---|---|---|---|---|---|---|---|---|---|---|---|---|
| **OPEL** | | | | | | | | | | | | | | | |
| **Combo Tour** | | | | | | | | | | | | | | | |
| 1.7 (74 kw) | 2004.07-2011.12 | 5MT | F | R | MPV FWD Z 17 DTH | | GDS60021 | Drive Shaft | 29T | 33 | 34 | 52 | 104 | 612 | |
| | 2004.07-2011.12 | 5MT | F | L/R | MPV FWD Z 17 DTH | | GCO44004 | Outer Joint | 29T | 33 | 24 | 52 | 104 | 64 | M |
| | 2004.07-2011.12 | 5MT | F | L | MPV FWD Z 17 DTH | | GCI21034 | Inner Joint | | 34 | 24 | 35 | 56.5 | 102 | |
| | 2004.07-2011.12 | MT | F | R | MPV FWD Z 17 DTH | Date to:2011.01 | GCI60003 | Inner Joint | | 34 | 24 | 35.5 | | 117.5 | |
| **Combo-e** | | | | | | | | | | | | | | | |
| EV (100 kw) | 2021.06-2023.10 | ET | F | L | MPV FWD ZKX (ZK01) | | GDS57969 | Drive Shaft | | 28 | 37 | 58.5 | 92.5 | 675 | |
| | 2021.06-2023.10 | ET | F | R | MPV FWD ZKX (ZK01) | | GDS58244 | Drive Shaft | | 28 | 37 | 58.5 | 92.5 | 927 | |
| | 2021.06-2023.10 | ET | F | L | MPV FWD ZKX (ZK01) | | GCO83814 | Outer Joint | | 28 | 34 | 58.5 | 92.5 | 56 | I |
| | 2021.06-2023.10 | ET | F | L | MPV FWD ZKX (ZK01) | | GCI82301 | Inner Joint | | 37 | 34 | 40 | 65.5 | 89.5 | |
| | 2021.07- | ET | F | L | Box Body/MPV FWD ZKX (ZK01) | | GDS57969 | Drive Shaft | | 28 | 37 | 58.5 | 92.5 | 675 | |
| | 2021.07- | ET | F | R | Box Body/MPV FWD ZKX (ZK01) | | GDS58244 | Drive Shaft | | 28 | 37 | 58.5 | 92.5 | 927 | |
| | 2021.07- | ET | F | L | Box Body/MPV FWD ZKX (ZK01) | | GCO83814 | Outer Joint | | 28 | 34 | 58.5 | 92.5 | 56 | I |
| | 2021.07- | ET | F | L | Box Body/MPV FWD ZKX (ZK01) | | GCI82301 | Inner Joint | | 37 | 34 | 40 | 65.5 | 89.5 | |
| | 2023.11- | ET | F | L | Box Body/MPV FWD ZKU (ZK02) | | GDS57969 | Drive Shaft | | 28 | 37 | 58.5 | 92.5 | 675 | |
| | 2023.11- | ET | F | R | Box Body/MPV FWD ZKU (ZK02) | | GDS58244 | Drive Shaft | | 28 | 37 | 58.5 | 92.5 | 927 | |
| | 2023.11- | ET | F | L | Box Body/MPV FWD ZKU (ZK02) | | GCO83814 | Outer Joint | | 28 | 34 | 58.5 | 92.5 | 56 | I |
| | 2023.11- | ET | F | L | Box Body/MPV FWD ZKU (ZK02) | | GCI82301 | Inner Joint | | 37 | 34 | 40 | 65.5 | 89.5 | |
| | 2023.11- | ET | F | L | MPV FWD ZKU (ZK02) | | GDS57969 | Drive Shaft | | 28 | 37 | 58.5 | 92.5 | 675 | |
| | 2023.11- | ET | F | R | MPV FWD ZKU (ZK02) | | GDS58244 | Drive Shaft | | 28 | 37 | 58.5 | 92.5 | 927 | |
| | 2023.11- | ET | F | L | MPV FWD ZKU (ZK02) | | GCO83814 | Outer Joint | | 28 | 34 | 58.5 | 92.5 | 56 | I |
| | 2023.11- | ET | F | L | MPV FWD ZKU (ZK02) | | GCI82301 | Inner Joint | | 37 | 34 | 40 | 65.5 | 89.5 | |
| **Corsa** | | | | | | | | | | | | | | | |
| 1.0 (40 kw) | 1997.02-2000.08 | 5MT | F | L | Hatchback FWD X10XE | Manufacturer:Delphi,Date from:1997.02 | GDS44001 | Drive Shaft | 29T | 22 | 22 | 52 | 95 | 573 | |
| | 1997.02-2000.08 | 5MT | F | L | Hatchback FWD X10XE | Manufacturer:Velcon | GDS44036 | Drive Shaft | 29T | 22 | 22 | 52 | 95 | 565 | |
| | 1997.02-2000.08 | 5MT | F | R | Hatchback FWD X10XE | Manufacturer:Velcon | GDS60002 | Drive Shaft | 29T | 22 | 22 | 52 | 95 | 926 | |
| | 1997.02-2000.08 | 5MT | F | L/R | Hatchback FWD X10XE | Manufacturer:Delphi | GCO44013 | Outer Joint | 29T | 22 | 28 | 52 | 98 | 52 | O |
| | 1997.02-2000.08 | 5MT | F | L/R | Hatchback FWD X10XE | Manufacturer:Velcon | GCO44014 | Outer Joint | 29T | 22 | 28 | 52 | 98 | 60 | I |
| | 1997.02-2000.08 | 5MT | F | L/R | Hatchback FWD X10XE | | GCO44018 | Outer Joint | | 22 | 28 | 52.2 | 97.5 | 55 | O |
| | 1997.02-2000.08 | 5MT | F | L/R | Hatchback FWD X10XE | | GCO44019 | Outer Joint | 29T | 22 | 28 | 52 | 97.5 | 57.5 | O |
| | 1997.02-2000.08 | 5MT | F | L/R | Hatchback FWD X10XE | | GCO44031 | Outer Joint | | 22 | 28 | 52 | 95.5 | 57.5 | I |
| | 1997.02-2000.08 | 5MT | F | L/R | Hatchback FWD X10XE | Manufacturer:Velcon | GCI44004 | Inner Joint | | 22 | 22 | 34.95 | 57.5 | 103 | |
| 1.0 (43 kw) | 2000.09-2003.06 | 5MT/SAT | F | L | Hatchback FWD Z 10 XE | VL | GDS44027 | Drive Shaft | 29T | 22 | 22 | 52 | 98 | 580 | |
| | 2000.09-2003.06 | 5MT/SAT | F | L | Hatchback FWD Z 10 XE | TJ | GDS99069 | Drive Shaft | 29T | 22 | 22 | 52 | 97.5 | 584 | |
| | 2000.09-2003.06 | 5MT/SAT | F | R | Hatchback FWD Z 10 XE | VL | GDS44026 | Drive Shaft | 29T | 22 | 22 | 52 | 98 | 930 | |
| | 2000.09-2003.06 | 5MT/SAT | F | R | Hatchback FWD Z 10 XE | TJ | GDS99157 | Drive Shaft | 29T | 22 | 22 | 52 | 97.5 | 930 | |
| | 2000.09-2003.06 | 5MT/SAT | F | L/R | Hatchback FWD Z 10 XE | | GCO44013 | Outer Joint | 29T | 22 | 28 | 52 | 98 | 52 | O |
| | 2000.09-2003.06 | 5MT/SAT | F | L/R | Hatchback FWD Z 10 XE | | GCI60001 | Inner Joint | | 22 | 28 | 34.9 | 57.5 | 96.5 | |
| 1.0 (44 kw) | 2003.06-2009.12 | 5MT/SAT | F | L | Hatchback FWD Z 10 XEP | VL | GDS44027 | Drive Shaft | 29T | 22 | 22 | 52 | 98 | 580 | |
| | 2003.06-2009.12 | 5MT/SAT | F | L | Hatchback FWD Z 10 XEP | TJ | GDS99069 | Drive Shaft | 29T | 22 | 22 | 52 | 97.5 | 584 | |
| | 2003.06-2009.12 | 5MT/SAT | F | R | Hatchback FWD Z 10 XEP | VL | GDS44026 | Drive Shaft | 29T | 22 | 22 | 52 | 98 | 930 | |
| | 2003.06-2009.12 | 5MT/SAT | F | R | Hatchback FWD Z 10 XEP | TJ | GDS99157 | Drive Shaft | 29T | 22 | 22 | 52 | 97.5 | 930 | |
| | 2003.06-2009.12 | 5MT/SAT | F | L/R | Hatchback FWD Z 10 XEP | | GCO44013 | Outer Joint | 29T | 22 | 28 | 52 | 98 | 52 | O |
| | 2003.06-2009.12 | 5MT/SAT | F | L/R | Hatchback FWD Z 10 XEP | | GCI60001 | Inner Joint | | 22 | 28 | 34.9 | 57.5 | 96.5 | |
| | 2006.07-2010.12 | 5MT | F | L | Hatchback FWD Z 10 XEP | | GDS44079 | Drive Shaft | | 22 | 22 | 51 | 79.5 | 615 | |
| | 2006.07-2010.12 | 5MT | F | R | Hatchback FWD Z 10 XEP | | GDS44078 | Drive Shaft | | 22 | 22 | 51 | 79.5 | 918 | |
| | 2006.07-2010.12 | 5MT | F | L/R | Hatchback FWD Z 10 XEP | Manufacturer:GKN,Chassis no. to:84239420/86099860 | GCO17052 | Outer Joint | | 22 | 21 | 51.2 | 79.5 | 54 | M |
| | 2006.07-2010.12 | 5MT | F | L/R | Hatchback FWD Z 10 XEP | Manufacturer:GKN,Chassis no. from:84239421/86099861 | GCO17089 | Outer Joint | | 22 | 20 | 51 | 79.5 | 51 | M |
| | 2006.07-2010.12 | 5MT | F | L/R | Hatchback FWD Z 10 XEP | Manufacturer:Delphi | GCO99018 | Outer Joint | | 22 | 27 | 51 | 79.5 | 54 | O |
| | 2006.07-2010.12 | 5MT | F | L/R | Hatchback FWD Z 10 XEP | Manufacturer:GKN,Chassis no. to:84239420/86099860 | GCI44013 | Inner Joint | | 22 | 21 | 35 | 57.5 | 93 | |
| | 2006.07-2010.12 | 5MT | F | L/R | Hatchback FWD Z 10 XEP | Manufacturer:Delphi | GCI44020 | Inner Joint | | 22 | 27 | 35 | 57.5 | 92 | |
| 1.0 (48 kw) | 2009.12-2014.08 | 5MT | F | L | Hatchback FWD A 10 XEP | | GDS44079 | Drive Shaft | | 22 | 22 | 51 | 79.5 | 615 | |
| | 2009.12-2014.08 | 5MT | F | L | Hatchback FWD A 10 XEP | | GDS60023 | Drive Shaft | | 22 | 22 | 51.2 | 79.5 | 615 | |
| | 2009.12-2014.08 | 5MT | F | R | Hatchback FWD A 10 XEP | | GDS44078 | Drive Shaft | | 22 | 22 | 51 | 79.5 | 918 | |
| | 2009.12-2014.08 | 5MT | F | L/R | Hatchback FWD A 10 XEP | | GCO17089 | Outer Joint | | 22 | 20 | 51 | 79.5 | 51 | M |
| 1.0 (66 kw) | 2014.09- | 6MT | F | L | Hatchback FWD B 10 XFL;D 10 XFL;F 10 XFL | Chassis no. to:F4168927/F6058386 | GDS57709 | Drive Shaft | | 22 | 25 | 51 | 79 | 605 | |
| | 2014.09- | 6MT | F | L | Hatchback FWD B 10 XFL;D 10 XFL;F 10 XFL | Chassis no. to:F4168927/F6058386 | GCO17070 | Outer Joint | | 22 | 22 | 51 | 79 | 57.5 | M |
| | 2014.09- | 6MT | F | L/R | Hatchback FWD B 10 XFL;D 10 XFL;F 10 XFL | Chassis no. from:F4168928/F6058387 | GCO81547 | Outer Joint | | 25 | 22 | 51 | 84 | 57 | M |
| | 2014.09- | 6MT | F | L | Hatchback FWD B 10 XFL;D 10 XFL;F 10 XFL | Chassis no. to:F4168927/F6058386 | GCI83814 | Inner Joint | | 25 | 22 | 34.9 | 57 | 103 | |
| 1.0 (85 kw) | 2014.09- | 6MT | F | L | Hatchback FWD B 10 XFT;D 10 XFT | Chassis no. to:F4168927/F6058386 | GDS57709 | Drive Shaft | | 22 | 25 | 51 | 79 | 605 | |
| | 2014.09- | 6MT | F | L | Hatchback FWD B 10 XFT;D 10 XFT | Chassis no. to:F4168927/F6058386 | GCO17070 | Outer Joint | | 22 | 22 | 51 | 79 | 57.5 | M |
| | 2014.09- | 6MT | F | L/R | Hatchback FWD B 10 XFT;D 10 XFT | Chassis no. from:F4168928/F6058387 | GCO81547 | Outer Joint | | 25 | 22 | 51 | 84 | 57 | M |
| | 2014.09- | 6MT | F | L | Hatchback FWD B 10 XFT;D 10 XFT | Chassis no. to:F4168927/F6058386 | GCI83814 | Inner Joint | | 25 | 22 | 34.9 | 57 | 103 | |
| 1.2 (33 kw) | 1993.03-2000.09 | 5MT | F | L | Hatchback FWD C12NZ/X12SZ | | GDS44001 | Drive Shaft | 29T | 22 | 22 | 52 | 95 | 573 | |
| | 1993.03-2000.09 | 5MT | F | R | Hatchback FWD C12NZ/X12SZ | | GDS60002 | Drive Shaft | 29T | 22 | 22 | 52 | 95 | 926 | |
| | 1993.03-2000.09 | 5MT | F | L/R | Hatchback FWD C12NZ/X12SZ | | GCO44020 | Outer Joint | 29T | 22 | 28 | 52 | 97.5 | 57.5 | O |

| | YEAR | TRANSM. | F/R | L/R | BODY STYLE & DRIVE TYPE & ENGINE | REMARKS | G-AP Ref. | PRODUCT | ABS | Technical Specifications A | B | C | H | L | P |
|---|---|---|---|---|---|---|---|---|---|---|---|---|---|---|---|
| **OPEL** | | | | | | | | | | | | | | | |
| **Corsa** | | | | | | | | | | | | | | | |
| 1.2 (33 kw) | 1993.03-2000.09 | 5MT | F | L/R | Hatchback FWD C12NZ/X12SZ | | GCI44004 | Inner Joint | | 22 | 22 | 34.95 | 57.5 | 103 | |
| | 1993.04-1997.05 | 4MT/5MT | F | L | Hatchback FWD 12NZ | | GDS44001 | Drive Shaft | 29T | 22 | 22 | 52 | 95 | 573 | |
| | 1993.04-1997.05 | 4MT/5MT | F | R | Hatchback FWD 12NZ | | GDS60002 | Drive Shaft | 29T | 22 | 22 | 52 | 95 | 926 | |
| | 1993.04-1997.05 | 4MT/5MT | F | L/R | Hatchback FWD 12NZ | | GCI44003 | Inner Joint | | 22 | 28 | 34.95 | 57.5 | 83.5 | |
| | 1993.04-1997.05 | AT/MT | F | L/R | Hatchback FWD 12NZ | Date to:1997.12 | GCO44020 | Outer Joint | 29T | 22 | 28 | 52 | 97.5 | 57.5 | O |
| 1.2 (48 kw) | 1998.08-2000.08 | MT | F | L | Hatchback FWD X12XE | | GDS44001 | Drive Shaft | 29T | 22 | 22 | 52 | 95 | 573 | |
| | 1998.08-2000.08 | MT | F | R | Hatchback FWD X12XE | | GDS60002 | Drive Shaft | 29T | 22 | 22 | 52 | 95 | 926 | |
| 1.2 (51 kw) | 2009.12-2014.08 | 5MT | F | L | Hatchback FWD A 12 XEL | | GDS44079 | Drive Shaft | | 22 | 22 | 51 | 79.5 | 615 | |
| | 2009.12-2014.08 | 5MT | F | L | Hatchback FWD A 12 XEL | | GDS60023 | Drive Shaft | | 22 | 22 | 51.2 | 79.5 | 615 | |
| | 2009.12-2014.08 | 5MT | F | R | Hatchback FWD A 12 XEL | | GDS44078 | Drive Shaft | | 22 | 22 | 51 | 79.5 | 918 | |
| | 2009.12-2014.08 | 5MT | F | L/R | Hatchback FWD A 12 XEL | | GCO17089 | Outer Joint | | 22 | 20 | 51 | 79.5 | 51 | M |
| | 2014.09- | MT | F | L | Hatchback FWD B 12 XEL;B 12 XER;D 12 XEL | | GDS44079 | Drive Shaft | | 22 | 22 | 51 | 79.5 | 615 | |
| | 2014.09- | MT | F | R | Hatchback FWD B 12 XEL;B 12 XER;D 12 XEL | | GDS44078 | Drive Shaft | | 22 | 22 | 51 | 79.5 | 918 | |
| | 2014.09- | MT | F | L/R | Hatchback FWD B 12 XEL;B 12 XER;D 12 XEL | | GCO17089 | Outer Joint | | 22 | 20 | 51 | 79.5 | 51 | M |
| 1.2 (55 kw) | 2000.09-2009.12 | 5MT/SAT | F | L | Hatchback FWD Z 12 XE | Chassis no. from:23000001/24000001/26000001 | GDS44027 | Drive Shaft | 29T | 22 | 22 | 52 | 98 | 580 | |
| | 2000.09-2009.12 | 5MT/SAT | F | L | Hatchback FWD Z 12 XE | Chassis no. to:13999999/14999999/16999999 | GDS44095 | Drive Shaft | 29T | 22 | 22 | 52 | 97 | 566 | |
| | 2000.09-2009.12 | 5MT/SAT | F | R | Hatchback FWD Z 12 XE | Chassis no. from:23000001/24000001/26000001 | GDS44026 | Drive Shaft | 29T | 22 | 22 | 52 | 98 | 930 | |
| | 2000.09-2009.12 | 5MT/SAT | F | R | Hatchback FWD Z 12 XE | Chassis no. to:13999999/14999999/16999999 | GDS44096 | Drive Shaft | 29T | 22 | 22 | 52 | 97 | 917 | |
| | 2000.09-2009.12 | 5MT/SAT | F | L/R | Hatchback FWD Z 12 XE | | GCO44013 | Outer Joint | 29T | 22 | 28 | 52 | 98 | 52 | O |
| | 2000.09-2009.12 | 5MT/SAT | F | L/R | Hatchback FWD Z 12 XE | | GCI60001 | Inner Joint | | 22 | 28 | 34.9 | 57.5 | 96.5 | |
| | 2009.09-2011.12 | 5MT | F | L | Hatchback FWD Z 12 XEP | | GDS44079 | Drive Shaft | | 22 | 22 | 51 | 79.5 | 615 | |
| | 2009.09-2011.12 | 5MT | F | R | Hatchback FWD Z 12 XEP | | GDS44078 | Drive Shaft | | 22 | 22 | 51 | 79.5 | 918 | |
| | 2009.09-2011.12 | | F | L/R | Hatchback FWD Z 12 XEP | Chassis no. to:84239420;Chassis no. to:86099860 | GCO17052 | Outer Joint | | 22 | 21 | 51.2 | 79.5 | 54 | M |
| | 2009.09-2011.12 | | F | | Hatchback FWD Z 12 XEP | | GCO17034 | Outer Joint | | 22 | 21 | 51 | 79.5 | 54 | M |
| | 2009.09-2011.12 | | F | | Hatchback FWD Z 12 XEP | | GCO99018 | Outer Joint | | 22 | 27 | 51 | 79.5 | 54 | O |
| | 2009.09-2011.12 | | F | L/R | Hatchback FWD Z 12 XEP | Chassis no. to:84239420;Chassis no. to:86099860 | GCI44013 | Inner Joint | | 22 | 21 | 35 | 57.5 | 93 | |
| | 2009.09-2011.12 | | F | L/R | Hatchback FWD Z 12 XEP | Manufacturer:Delphi | GCI44020 | Inner Joint | | 22 | 27 | 35 | 57.5 | 92 | |
| | 2019.07- | 5MT | F | L | Hatchback FWD F 12 XEL (EB2FAD);HMU (EB2FAMD) | | GDS83112 | Drive Shaft | | 21 | 22 | 48.2 | 85.5 | 671 | |
| | 2019.07- | 5MT | F | R | Hatchback FWD F 12 XEL (EB2FAD);HMU (EB2FAMD) | | GDS83068 | Drive Shaft | | 21 | 22 | 48.2 | 85.5 | 890 | |
| | 2019.07- | 5MT | F | L/R | Hatchback FWD F 12 XEL (EB2FAD);HMU (EB2FAMD) | | GCO82279 | Outer Joint | | 25 | 34 | 55.7 | 84 | 55.5 | I |
| | 2019.07- | 5MT | F | L | Hatchback FWD F 12 XEL (EB2FAD);HMU (EB2FAMD) | | GCI82131 | Inner Joint | | 24 | 34 | 40 | 62 | 89 | |
| | 2019.07- | 5MT | F | R | Hatchback FWD F 12 XEL (EB2FAD);HMU (EB2FAMD) | | GCI82130 | Inner Joint | | 24 | 34 | 29.8 | 291 | 88 | |
| | 2019.07- | 5MT | F | L | Hatchback Van FWD F 12 XEL (EB2FAD) | | GDS83112 | Drive Shaft | | 21 | 22 | 48.2 | 85.5 | 671 | |
| | 2019.07- | 5MT | F | R | Hatchback Van FWD F 12 XEL (EB2FAD) | | GDS83068 | Drive Shaft | | 21 | 22 | 48.2 | 85.5 | 890 | |
| | 2019.07- | 5MT | F | L | Hatchback Van FWD F 12 XEL (EB2FAD) | | GCO82278 | Outer Joint | | 21 | 34 | 48.2 | 85.5 | 56.5 | I |
| | 2019.07- | 5MT | F | R | Hatchback Van FWD F 12 XEL (EB2FAD) | | GCO10143 | Outer Joint | | 21 | 34 | 48.2 | 85.5 | 56.5 | I |
| | 2019.07- | 5MT | F | L | Hatchback Van FWD F 12 XEL (EB2FAD) | | GCI82092 | Inner Joint | | 22 | 34 | 40 | 57.5 | 91 | |
| | 2019.07- | 5MT | F | R | Hatchback Van FWD F 12 XEL (EB2FAD) | | GCI82122 | Inner Joint | | 22 | 34 | 30.05 | 98.5 | 89.5 | |
| 1.2 (59 kw) | 2004.07-2009.12 | 5MT/SAT | F | L | Hatchback FWD Z 12 XEP | VL | GDS44027 | Drive Shaft | 29T | 22 | 22 | 52 | 98 | 580 | |
| | 2004.07-2009.12 | 5MT/SAT | F | L | Hatchback FWD Z 12 XEP | TJ | GDS99069 | Drive Shaft | 29T | 22 | 22 | 52 | 97.5 | 584 | |
| | 2004.07-2009.12 | 5MT/SAT | F | R | Hatchback FWD Z 12 XEP | VL | GDS44026 | Drive Shaft | 29T | 22 | 22 | 52 | 98 | 930 | |
| | 2004.07-2009.12 | 5MT/SAT | F | R | Hatchback FWD Z 12 XEP | TJ | GDS99157 | Drive Shaft | 29T | 22 | 22 | 52 | 97.5 | 930 | |
| | 2004.07-2009.12 | 5MT/SAT | F | L/R | Hatchback FWD Z 12 XEP | | GCO44013 | Outer Joint | 29T | 22 | 28 | 52 | 98 | 52 | O |
| | 2004.07-2009.12 | 5MT/SAT | F | L/R | Hatchback FWD Z 12 XEP | | GCI60001 | Inner Joint | | 22 | 28 | 34.9 | 57.5 | 96.5 | |
| | 2006.07-2014.08 | 5MT/SAT | F | L | Hatchback FWD Z 12 XEP | | GDS44079 | Drive Shaft | | 22 | 22 | 51 | 79.5 | 615 | |
| | 2006.07-2014.08 | 5MT/SAT | F | R | Hatchback FWD Z 12 XEP | | GDS44078 | Drive Shaft | | 22 | 22 | 51 | 79.5 | 918 | |
| | 2006.07-2014.08 | 5MT/SAT | F | L/R | Hatchback FWD Z 12 XEP | Manufacturer:GKN,Chassis no. to:84239420/86099860 | GCO17052 | Outer Joint | | 22 | 21 | 51.2 | 79.5 | 54 | M |
| | 2006.07-2014.08 | 5MT/SAT | F | L/R | Hatchback FWD Z 12 XEP | Manufacturer:GKN,Chassis no. from:84239421/86099861 | GCO17089 | Outer Joint | | 22 | 20 | 51 | 79.5 | 51 | M |
| | 2006.07-2014.08 | 5MT/SAT | F | L/R | Hatchback FWD Z 12 XEP | Manufacturer:Delphi | GCO99018 | Outer Joint | | 22 | 27 | 51 | 79.5 | 54 | O |
| | 2006.07-2014.08 | 5MT/SAT | F | L/R | Hatchback FWD Z 12 XEP | Manufacturer:GKN,Chassis no. to:84239420/86099860 | GCI44013 | Inner Joint | | 22 | 21 | 35 | 57.5 | 93 | |
| | 2006.07-2014.08 | 5MT/SAT | F | L/R | Hatchback FWD Z 12 XEP | Manufacturer:Delphi | GCI44020 | Inner Joint | | 22 | 27 | 35 | 57.5 | 92 | |
| | 2006.08-2014.08 | 5MT/SAT | F | L | Hatchback FWD Z 12 XEP | | GDS44079 | Drive Shaft | | 22 | 22 | 51 | 79.5 | 615 | |
| | 2006.08-2014.08 | 5MT/SAT | F | R | Hatchback FWD Z 12 XEP | | GDS44078 | Drive Shaft | | 22 | 22 | 51 | 79.5 | 918 | |
| | 2006.08-2014.08 | 5MT/SAT | F | L/R | Hatchback FWD Z 12 XEP | Manufacturer:GKN,Chassis no. to:84239420/86099860 | GCO17052 | Outer Joint | | 22 | 21 | 51.2 | 79.5 | 54 | M |
| | 2006.08-2014.08 | 5MT/SAT | F | L/R | Hatchback FWD Z 12 XEP | Manufacturer:GKN,Chassis no. from:84239421/86099861 | GCO17089 | Outer Joint | | 22 | 20 | 51 | 79.5 | 51 | M |
| | 2006.08-2014.08 | 5MT/SAT | F | L/R | Hatchback FWD Z 12 XEP | Manufacturer:Delphi | GCO99018 | Outer Joint | | 22 | 27 | 51 | 79.5 | 54 | O |
| | 2006.08-2014.08 | 5MT/SAT | F | L/R | Hatchback FWD Z 12 XEP | Manufacturer:GKN,Chassis no. to:84239420/86099860 | GCI44013 | Inner Joint | | 22 | 21 | 35 | 57.5 | 93 | |
| | 2006.08-2014.08 | 5MT/SAT | F | L/R | Hatchback FWD Z 12 XEP | Manufacturer:Delphi | GCI44020 | Inner Joint | | 22 | 27 | 35 | 57.5 | 92 | |
| 1.2 (61 kw) | 2011.06-2014.08 | 5MT | F | L | Hatchback FWD A 12 XER | | GDS44079 | Drive Shaft | | 22 | 22 | 51 | 79.5 | 615 | |
| | 2011.06-2014.08 | 5MT | F | R | Hatchback FWD A 12 XER | | GDS44078 | Drive Shaft | | 22 | 22 | 51 | 79.5 | 918 | |
| | 2011.06-2014.08 | AT/MT | F | L/R | Hatchback FWD A 12 XER | | GCO17089 | Outer Joint | | 22 | 20 | 51 | 79.5 | 51 | M |
| | 2011.06-2014.08 | MT | F | L | Hatchback FWD A 12 XER | | GDS60023 | Drive Shaft | | 22 | 22 | 51.2 | 79.5 | 615 | |
| | 2011.06-2014.08 | MT | F | L | Hatchback FWD A 12 XER | | GCI44013 | Inner Joint | | 22 | 21 | 35 | 57.5 | 93 | |
| 1.2 (63 kw) | 2009.12-2014.08 | 5MT | F | L | Hatchback FWD A 12 XER | | GDS44079 | Drive Shaft | | 22 | 22 | 51 | 79.5 | 615 | |
| | 2009.12-2014.08 | 5MT | F | L | Hatchback FWD A 12 XER | | GDS60023 | Drive Shaft | | 22 | 22 | 51.2 | 79.5 | 615 | |

| | YEAR | TRANSM. | F/R | L/R | BODY STYLE & DRIVE TYPE & ENGINE | REMARKS | G-AP Ref. | PRODUCT | ABS | Technical Specifications A | B | C | H | L | P |
|---|---|---|---|---|---|---|---|---|---|---|---|---|---|---|---|
| **OPEL** | | | | | | | | | | | | | | | |
| **Corsa** | | | | | | | | | | | | | | | |
| 1.2 (63 kw) | 2009.12-2014.08 | 5MT | F | R | Hatchback FWD A 12 XER | | GDS44078 | Drive Shaft | | 22 | 22 | 51 | 79.5 | 918 | |
| | 2009.12-2014.08 | 5MT | F | L/R | Hatchback FWD A 12 XER | | GCO17089 | Outer Joint | | 22 | 20 | 51 | 79.5 | 51 | M |
| | 2011.06-2014.08 | 5MT | F | L | Hatchback FWD A 12 XER | | GDS44079 | Drive Shaft | | 22 | 22 | 51 | 79.5 | 615 | |
| | 2011.06-2014.08 | 5MT | F | L | Hatchback FWD A 12 XER | | GDS60023 | Drive Shaft | | 22 | 22 | 51.2 | 79.5 | 615 | |
| | 2011.06-2014.08 | 5MT | F | R | Hatchback FWD A 12 XER | | GDS44078 | Drive Shaft | | 22 | 22 | 51 | 79.5 | 918 | |
| | 2011.06-2014.08 | 5MT | F | L/R | Hatchback FWD A 12 XER | | GCO17089 | Outer Joint | | 22 | 20 | 51 | 79.5 | 51 | M |
| 1.2 (74 kw) | 2019.07- | 6MT | F | L | Hatchback FWD F 12 XHL (EB2ADTD) | | GDS83116 | Drive Shaft | | 25 | 24 | 55.7 | 84 | 655 | |
| | 2019.07- | 6MT | F | R | Hatchback FWD F 12 XHL (EB2ADTD) | | GDS83115 | Drive Shaft | | 25 | 24 | 55.7 | 84 | 880 | |
| | 2019.07- | 6MT | F | L | Hatchback FWD F 12 XHL (EB2ADTD) | | GCI82131 | Inner Joint | | 24 | 34 | 40 | 62 | 89 | |
| | 2019.07- | 6MT | F | R | Hatchback FWD F 12 XHL (EB2ADTD) | | GCI82130 | Inner Joint | | 24 | 34 | 29.8 | 291 | 88 | |
| | 2019.07- | 8AT | F | L | Hatchback FWD F 12 XHL (EB2ADTD) | | GDS83113 | Drive Shaft | | 25 | 37 | 55.7 | 84 | 623 | |
| | 2019.07- | 8AT | F | R | Hatchback FWD F 12 XHL (EB2ADTD) | | GDS83114 | Drive Shaft | | 25 | 37 | 55.7 | 84 | 880 | |
| | 2019.07- | 8AT | F | L | Hatchback FWD F 12 XHL (EB2ADTD) | | GCI82119 | Inner Joint | | 37 | 34 | 41.5 | 58.5 | 94 | |
| | 2019.07- | 8AT | F | R | Hatchback FWD F 12 XHL (EB2ADTD) | | GCI82118 | Inner Joint | | 37 | 34 | | 290 | 88 | |
| | 2019.07- | 8AT/6MT | F | L/R | Hatchback FWD F 12 XHL (EB2ADTD) | | GCO82279 | Outer Joint | | 25 | 34 | 55.7 | 84 | 55.5 | I |
| | 2023.08- | 6AT | F | R | Hatchback FWD HPX (EB2LTEDH2) | | GDS83114 | Drive Shaft | | 25 | 37 | 55.7 | 84 | 880 | |
| | 2023.08- | 6AT | F | R | Hatchback FWD HPX (EB2LTEDH2) | | GCO82279 | Outer Joint | | 25 | 34 | 55.7 | 84 | 55.5 | I |
| | 2023.08- | 6AT | F | R | Hatchback FWD HPX (EB2LTEDH2) | | GCI82118 | Inner Joint | | 37 | 34 | | 290 | 88 | |
| 1.2 (96 kw) | 2019.07- | 8AT | F | L | Hatchback FWD F 12 XHT (EB2ADTS);HNL (EB2ADTSM) | | GDS83113 | Drive Shaft | | 25 | 37 | 55.7 | 84 | 623 | |
| | 2019.07- | 8AT | F | R | Hatchback FWD F 12 XHT (EB2ADTS);HNL (EB2ADTSM) | | GDS83114 | Drive Shaft | | 25 | 37 | 55.7 | 84 | 880 | |
| | 2019.07- | 8AT | F | L/R | Hatchback FWD F 12 XHT (EB2ADTS);HNL (EB2ADTSM) | | GCO82279 | Outer Joint | | 25 | 34 | 55.7 | 84 | 55.5 | I |
| | 2019.07- | 8AT | F | L | Hatchback FWD F 12 XHT (EB2ADTS);HNL (EB2ADTSM) | | GCI82119 | Inner Joint | | 37 | 34 | 41.5 | 58.5 | 94 | |
| | 2019.07- | 8AT | F | R | Hatchback FWD F 12 XHT (EB2ADTS);HNL (EB2ADTSM) | | GCI82118 | Inner Joint | | 37 | 34 | | 290 | 88 | |
| 1.2 (100 kw) | 2024.01- | 8AT | F | L | Hatchback FWD HPY (EB2LTDH2) | | GDS83113 | Drive Shaft | | 25 | 37 | 55.7 | 84 | 623 | |
| | 2024.01- | 8AT | F | R | Hatchback FWD HPY (EB2LTDH2) | | GDS83114 | Drive Shaft | | 25 | 37 | 55.7 | 84 | 880 | |
| | 2024.01- | 8AT | F | L/R | Hatchback FWD HPY (EB2LTDH2) | | GCO82279 | Outer Joint | | 25 | 34 | 55.7 | 84 | 55.5 | I |
| | 2024.01- | 8AT | F | L | Hatchback FWD HPY (EB2LTDH2) | | GCI82119 | Inner Joint | | 37 | 34 | 41.5 | 58.5 | 94 | |
| | 2024.01- | 8AT | F | R | Hatchback FWD HPY (EB2LTDH2) | | GCI82118 | Inner Joint | | 37 | 34 | | 290 | 88 | |
| 1.3 (51 kw) | 2003.06-2009.12 | 5MT | F | L | Hatchback FWD Z 13 DT;Y 13 DT | Manufacturer:GKN | GDS44027 | Drive Shaft | 29T | 22 | 22 | 52 | 98 | 580 | |
| | 2003.06-2009.12 | 5MT | F | L | Hatchback FWD Z 13 DT;Y 13 DT | Manufacturer:Delphi | GDS82091 | Drive Shaft | 29T | 22 | 22 | 52 | 97.5 | 580 | |
| | 2003.06-2009.12 | 5MT | F | R | Hatchback FWD Z 13 DT;Y 13 DT | Manufacturer:GKN | GDS44026 | Drive Shaft | 29T | 22 | 22 | 52 | 98 | 930 | |
| | 2003.06-2009.12 | 5MT | F | R | Hatchback FWD Z 13 DT;Y 13 DT | Manufacturer:Delphi | GDS82092 | Drive Shaft | 29T | 22 | 22 | 52 | 97.5 | 930 | |
| | 2003.06-2009.12 | 5MT | F | L/R | Hatchback FWD Z 13 DT;Y 13 DT | Manufacturer:Delphi | GCO44002 | Outer Joint | 29T | 22 | 23 | 52 | 97.5 | 61 | M |
| | 2003.06-2009.12 | 5MT | F | L/R | Hatchback FWD Z 13 DT;Y 13 DT | Manufacturer:Delphi | GCI44009 | Inner Joint | | 22 | 23 | 35 | 57.5 | 96 | |
| 1.3 (55 kw) | 2006.07-2014.08 | 5MT | F | L | Hatchback FWD Z 13 DTJ;A 13 DTC | | GDS44040 | Drive Shaft | | 25 | 22 | 51 | 84.5 | 616 | |
| | 2006.07-2014.08 | 5MT | F | R | Hatchback FWD Z 13 DTJ;A 13 DTC | For Engine code:Z13DTJ | GDS44042 | Drive Shaft | | 25 | 22 | 51 | 84.5 | 920 | |
| | 2006.07-2014.08 | 5MT | F | R | Hatchback FWD Z 13 DTJ;A 13 DTC | For Engine code:A13DTC | GDS84460 | Drive Shaft | | 25 | 22 | 51 | 84 | 923 | |
| | 2006.07-2014.08 | 5MT | F | L/R | Hatchback FWD Z 13 DTJ;A 13 DTC | For Engine code:Z13DTJ | GCO17053 | Outer Joint | | 25 | 23 | 51 | 84.5 | 60 | M |
| | 2006.07-2014.08 | 5MT | F | L/R | Hatchback FWD Z 13 DTJ;A 13 DTC | For Engine code:A13DTC | GCO81547 | Outer Joint | | 25 | 22 | 51 | 84 | 57 | M |
| | 2006.07-2014.08 | 5MT | F | L | Hatchback FWD Z 13 DTJ;A 13 DTC | For Engine code:Z13DTJ | GCI44009 | Inner Joint | | 22 | 23 | 35 | 57.5 | 96 | |
| | 2006.07-2014.08 | 5MT | F | R | Hatchback FWD Z 13 DTJ;A 13 DTC | For Engine code:Z13DTJ | GCI44017 | Inner Joint | | 22 | 23 | 35 | 57.5 | 116 | |
| | 2014.09- | 5MT | F | L | Hatchback FWD B 13 DTC;B 13 DTN | | GDS82511 | Drive Shaft | | 25 | 22 | 51 | 84 | 607 | |
| | 2014.09- | 5MT | F | R | Hatchback FWD B 13 DTC;B 13 DTN | | GDS84460 | Drive Shaft | | 25 | 22 | 51 | 84 | 923 | |
| | 2014.09- | 5MT | F | L/R | Hatchback FWD B 13 DTC;B 13 DTN | | GCO81547 | Outer Joint | | 25 | 22 | 51 | 84 | 57 | M |
| | 2014.09- | 5MT | F | R | Hatchback FWD B 13 DTC;B 13 DTN | | GCI44013 | Inner Joint | | 22 | 21 | 35 | 57.5 | 93 | |
| 1.3 (66 kw) | 2006.07-2011.06 | 6MT/SAT | F | L | Hatchback FWD Z 13 DTH | | GDS17070 | Drive Shaft | | 25 | 25 | 51 | 84.5 | 576 | |
| | 2006.07-2011.06 | 6MT/SAT | F | R | Hatchback FWD Z 13 DTH | | GDS17071 | Drive Shaft | | 25 | 25 | 51 | 84.5 | 952 | |
| | 2006.07-2011.06 | 6MT/SAT | F | L/R | Hatchback FWD Z 13 DTH | | GCO17053 | Outer Joint | | 25 | 23 | 51 | 84.5 | 60 | M |
| | 2006.07-2011.06 | 6MT/SAT | F | L | Hatchback FWD Z 13 DTH | | GCI44014 | Inner Joint | | 25 | 23 | 34.9 | 57.5 | 102 | |
| | 2006.07-2011.06 | 6MT/SAT | F | R | Hatchback FWD Z 13 DTH | | GCI44012 | Inner Joint | | 25 | 23 | 34.9 | 56.5 | 118 | |
| 1.3 (70 kw) | 2009.06-2014.08 | 5MT | F | L | Hatchback FWD A 13 DTE;Z 13 DTE;A 13 DTR | For Engine code:A13DTE/Z13DTE | GDS44040 | Drive Shaft | | 25 | 22 | 51 | 84.5 | 616 | |
| | 2009.06-2014.08 | 5MT | F | R | Hatchback FWD A 13 DTE;Z 13 DTE;A 13 DTR | For Engine code:A13DTE/Z13DTE | GDS84460 | Drive Shaft | | 25 | 22 | 51 | 84 | 923 | |
| | 2009.06-2014.08 | 5MT | F | L/R | Hatchback FWD A 13 DTE;Z 13 DTE;A 13 DTR | For Engine code:A13DTE/Z13DTE | GCO81547 | Outer Joint | | 25 | 22 | 51 | 84 | 57 | M |
| | 2009.06-2014.08 | 6MT | F | L | Hatchback FWD A 13 DTE;Z 13 DTE;A 13 DTR | For Engine code:A13DTR | GDS17070 | Drive Shaft | | 25 | 25 | 51 | 84.5 | 576 | |
| | 2009.06-2014.08 | 6MT | F | R | Hatchback FWD A 13 DTE;Z 13 DTE;A 13 DTR | For Engine code:A13DTR | GDS17071 | Drive Shaft | | 25 | 25 | 51 | 84.5 | 952 | |
| | 2009.06-2014.08 | 6MT | F | L/R | Hatchback FWD A 13 DTE;Z 13 DTE;A 13 DTR | For Engine code:A13DTR | GCO17053 | Outer Joint | | 25 | 23 | 51 | 84.5 | 60 | M |
| | 2009.06-2014.08 | 6MT | F | L | Hatchback FWD A 13 DTE;Z 13 DTE;A 13 DTR | | GCI44014 | Inner Joint | | 25 | 23 | 34.9 | 57.5 | 102 | |
| | 2009.06-2014.08 | 6MT | F | R | Hatchback FWD A 13 DTE;Z 13 DTE;A 13 DTR | | GCI44012 | Inner Joint | | 25 | 23 | 34.9 | 56.5 | 118 | |
| | 2014.09- | 5AMT | F | L/R | Hatchback FWD B 13 DTE;B 13 DTR | | GCO81547 | Outer Joint | | 25 | 22 | 51 | 84 | 57 | M |
| | 2014.09- | 5MT/5AMT | F | L | Hatchback FWD B 13 DTE;B 13 DTR | | GDS82511 | Drive Shaft | | 25 | 22 | 51 | 84 | 607 | |
| | 2014.09- | 5MT/5AMT | F | R | Hatchback FWD B 13 DTE;B 13 DTR | | GDS84460 | Drive Shaft | | 25 | 22 | 51 | 84 | 923 | |
| | 2014.09- | 5MT/5AMT | F | L/R | Hatchback FWD B 13 DTE;B 13 DTR | | GCI44013 | Inner Joint | | 22 | 21 | 35 | 57.5 | 93 | |
| | 2014.09- | 6MT | F | L/R | Hatchback FWD B 13 DTE;B 13 DTR | | GCO17053 | Outer Joint | | 25 | 23 | 51 | 84.5 | 60 | M |
| 1.4 (40 kw) | 1993.03-1998.08 | 4AT/5MT | F | L | Hatchback FWD C14NZ/X14SZ | | GDS44001 | Drive Shaft | 29T | 22 | 22 | 52 | 95 | 573 | |
| | 1993.03-1998.08 | 4AT/5MT | F | R | Hatchback FWD C14NZ/X14SZ | | GDS60002 | Drive Shaft | 29T | 22 | 22 | 52 | 95 | 926 | |

| | YEAR | TRANSM. | F/R | L/R | BODY STYLE & DRIVE TYPE & ENGINE | REMARKS | G-AP Ref. | PRODUCT | ABS | Technical Specifications A | B | C | H | L | P |
|---|---|---|---|---|---|---|---|---|---|---|---|---|---|---|---|
| **OPEL** | | | | | | | | | | | | | | | |
| **Corsa** | | | | | | | | | | | | | | | |
| 1.4 (40 kw) | 1993.03-1998.08 | 4AT/5MT | F | L/R | Hatchback FWD C14NZ/X14SZ | | GCI44003 | Inner Joint | | 22 | 28 | 34.95 | 57.5 | 83.5 | |
| | 1993.03-1998.08 | | F | L/R | Hatchback FWD C14NZ/X14SZ | | GCO44020 | Outer Joint | 29T | 22 | 28 | 52 | 97.5 | 57.5 | O |
| 1.4 (44 kw) | 1993.04-2000.09 | 4AT/5MT | F | L | Hatchback FWD C14NZ/X14SZ | | GDS44001 | Drive Shaft | 29T | 22 | 22 | 52 | 95 | 573 | |
| | 1993.04-2000.09 | 4AT/5MT | F | R | Hatchback FWD C14NZ/X14SZ | | GDS60002 | Drive Shaft | 29T | 22 | 22 | 52 | 95 | 926 | |
| | 1993.04-2000.09 | 4AT/5MT | F | L/R | Hatchback FWD C14NZ/X14SZ | | GCO44020 | Outer Joint | 29T | 22 | 28 | 52 | 97.5 | 57.5 | O |
| | 1993.04-2000.09 | 4AT/5MT | F | L/R | Hatchback FWD C14NZ/X14SZ | | GCI44004 | Inner Joint | | 22 | 22 | 34.95 | 57.5 | 103 | |
| 1.4 (55 kw) | 2014.09- | 5MT | F | L | Hatchback FWD B 14 XEJ;D 14 XEJ | | GDS44079 | Drive Shaft | | 22 | 22 | 51 | 79.5 | 615 | |
| | 2014.09- | 5MT | F | R | Hatchback FWD B 14 XEJ;D 14 XEJ | | GDS44078 | Drive Shaft | | 22 | 22 | 51 | 79.5 | 918 | |
| | 2014.09- | 5MT | F | L/R | Hatchback FWD B 14 XEJ;D 14 XEJ | | GCO17052 | Outer Joint | | 22 | 21 | 51.2 | 79.5 | 54 | M |
| | 2014.09- | 5MT | F | L/R | Hatchback FWD B 14 XEJ;D 14 XEJ | | GCI44013 | Inner Joint | | 22 | 21 | 35 | 57.5 | 93 | |
| 1.4 (60 kw) | 1993.03-2000.09 | 5MT | F | L | Hatchback FWD C14SE | | GDS44001 | Drive Shaft | 29T | 22 | 22 | 52 | 95 | 573 | |
| | 1993.03-2000.09 | 5MT | F | R | Hatchback FWD C14SE | | GDS60002 | Drive Shaft | 29T | 22 | 22 | 52 | 95 | 926 | |
| | 1993.03-2000.09 | MT | F | L/R | Hatchback FWD C14SE | | GCO44020 | Outer Joint | 29T | 22 | 28 | 52 | 97.5 | 57.5 | O |
| 1.4 (63 kw) | 1997.08-2000.09 | | F | L | Hatchback FWD C14SEL | | GDS44001 | Drive Shaft | 29T | 22 | 22 | 52 | 95 | 573 | |
| | 1997.08-2000.09 | | F | R | Hatchback FWD C14SEL | | GDS60002 | Drive Shaft | 29T | 22 | 22 | 52 | 95 | 926 | |
| 1.4 (64 kw) | 2009.09-2014.08 | 5MT | F | L | Hatchback FWD A 14 XEL | | GDS44079 | Drive Shaft | | 22 | 22 | 51 | 79.5 | 615 | |
| | 2009.09-2014.08 | 5MT | F | L | Hatchback FWD A 14 XEL | | GDS60023 | Drive Shaft | | 22 | 22 | 51.2 | 79.5 | 615 | |
| | 2009.09-2014.08 | 5MT | F | R | Hatchback FWD A 14 XEL | | GDS44078 | Drive Shaft | | 22 | 22 | 51 | 79.5 | 918 | |
| | 2009.09-2014.08 | 5MT | F | R | Hatchback FWD A 14 XEL | Date to:2014.08 | GCO17089 | Outer Joint | | 22 | 20 | 51 | 79.5 | 51 | M |
| | 2009.09-2014.08 | 5MT | F | L/R | Hatchback FWD A 14 XEL | | GCO17052 | Outer Joint | | 22 | 21 | 51.2 | 79.5 | 54 | M |
| | 2009.09-2014.08 | 5MT | F | L/R | Hatchback FWD A 14 XEL | | GCI44013 | Inner Joint | | 22 | 21 | 35 | 57.5 | 93 | |
| | 2009.09-2014.08 | AT/MT | F | L | Hatchback FWD A 14 XEL | | GDS60023 | Drive Shaft | | 22 | 22 | 51.2 | 79.5 | 615 | |
| | 2009.09-2014.08 | | F | L/R | Hatchback FWD A 14 XEL | | GCI44013 | Inner Joint | | 22 | 21 | 35 | 57.5 | 93 | |
| | 2015.11- | AT/MT | F | L | Hatchback FWD B 14 XEL | Date from:2016.01 | GDS44079 | Drive Shaft | | 22 | 22 | 51 | 79.5 | 615 | |
| | 2015.11- | MT | F | R | Hatchback FWD B 14 XEL | | GDS44078 | Drive Shaft | | 22 | 22 | 51 | 79.5 | 918 | |
| | 2015.11- | MT | F | R | Hatchback FWD B 14 XEL | | GCO17089 | Outer Joint | | 22 | 20 | 51 | 79.5 | 51 | M |
| 1.4 (66 kw) | 1994.09-2000.09 | 4AT/5MT | F | L | Hatchback FWD X14XE | | GDS44001 | Drive Shaft | 29T | 22 | 22 | 52 | 95 | 573 | |
| | 1994.09-2000.09 | 4AT/5MT | F | R | Hatchback FWD X14XE | | GDS60002 | Drive Shaft | 29T | 22 | 22 | 52 | 95 | 926 | |
| | 1994.09-2000.09 | 4AT/5MT | F | L/R | Hatchback FWD X14XE | | GCO44020 | Outer Joint | 29T | 22 | 28 | 52 | 97.5 | 57.5 | O |
| | 1998.04-2000.07 | 4AT/5MT | F | L | Estate FWD X14XE | | GDS44001 | Drive Shaft | 29T | 22 | 22 | 52 | 95 | 573 | |
| | 1998.04-2000.07 | 4AT/5MT | F | R | Estate FWD X14XE | | GDS60002 | Drive Shaft | 29T | 22 | 22 | 52 | 95 | 926 | |
| | 1998.04-2000.07 | 4AT/5MT | F | L/R | Estate FWD X14XE | | GCI44003 | Inner Joint | | 22 | 28 | 34.95 | 57.5 | 83.5 | |
| | 1998.04-2000.07 | | F | L/R | Estate FWD X14XE | | GCO44020 | Outer Joint | 29T | 22 | 28 | 52 | 97.5 | 57.5 | O |
| | 2000.09-2009.12 | 4AT/5MT/SAT | F | L | Hatchback FWD Z 14 XE | VL | GDS44027 | Drive Shaft | 29T | 22 | 22 | 52 | 98 | 580 | |
| | 2000.09-2009.12 | 4AT/5MT/SAT | F | L | Hatchback FWD Z 14 XE | Thread Size:M20×1,TJ | GDS82091 | Drive Shaft | 29T | 22 | 22 | 52 | 97.5 | 580 | |
| | 2000.09-2009.12 | 4AT/5MT/SAT | F | L | Hatchback FWD Z 14 XE | Thread Size:M20×1.5,TJ | GDS99069 | Drive Shaft | 29T | 22 | 22 | 52 | 97.5 | 584 | |
| | 2000.09-2009.12 | 4AT/5MT/SAT | F | L | Hatchback FWD Z 14 XE | TJ | GDS99204 | Drive Shaft | | 22 | 22 | 52 | 97.5 | 584 | |
| | 2000.09-2009.12 | 4AT/5MT/SAT | F | R | Hatchback FWD Z 14 XE | VL | GDS44026 | Drive Shaft | 29T | 22 | 22 | 52 | 98 | 930 | |
| | 2000.09-2009.12 | 4AT/5MT/SAT | F | R | Hatchback FWD Z 14 XE | VL | GDS44060 | Drive Shaft | | 22 | 22 | 52 | 98 | 930 | |
| | 2000.09-2009.12 | 4AT/5MT/SAT | F | R | Hatchback FWD Z 14 XE | TJ | GDS44075 | Drive Shaft | 29T | 22 | 22 | 52 | 97.5 | 926 | |
| | 2000.09-2009.12 | 4AT/5MT/SAT | F | R | Hatchback FWD Z 14 XE | TJ | GDS99205 | Drive Shaft | | 22 | 22 | 52 | 97.5 | 930 | |
| | 2000.09-2009.12 | 4AT/5MT/SAT | F | L/R | Hatchback FWD Z 14 XE | | GCO44002 | Outer Joint | 29T | 22 | 23 | 52 | 97.5 | 61 | M |
| | 2000.09-2009.12 | 4AT/5MT/SAT | F | L/R | Hatchback FWD Z 14 XE | with Rim protector | GCO44018 | Outer Joint | | 22 | 28 | 52.2 | 97.5 | 55 | O |
| | 2000.09-2009.12 | 4AT/5MT/SAT | F | L/R | Hatchback FWD Z 14 XE | | GCO44019 | Outer Joint | 29T | 22 | 28 | 52 | 97.5 | 57.5 | O |
| | 2000.09-2009.12 | 4AT/5MT/SAT | F | L/R | Hatchback FWD Z 14 XE | | GCO44020 | Outer Joint | 29T | 22 | 28 | 52 | 97.5 | 57.5 | O |
| | 2000.09-2009.12 | 4AT/5MT/SAT | F | L/R | Hatchback FWD Z 14 XE | without Rim protector | GCO44043 | Outer Joint | | 22 | 28 | 52 | 97.5 | 57.5 | O |
| | 2000.09-2009.12 | 4AT/5MT/SAT | F | L/R | Hatchback FWD Z 14 XE | | GCI44009 | Inner Joint | | 22 | 23 | 35 | 57.5 | 96 | |
| | 2000.09-2009.12 | 4AT/5MT/SAT | F | L/R | Hatchback FWD Z 14 XE | | GCI60001 | Inner Joint | | 22 | 28 | 34.9 | 57.5 | 96.5 | |
| | 2003.06-2009.12 | 5MT | F | L | Hatchback FWD Z 14 XEP | | GDS44027 | Drive Shaft | 29T | 22 | 22 | 52 | 98 | 580 | |
| | 2003.06-2009.12 | 5MT | F | R | Hatchback FWD Z 14 XEP | | GDS44026 | Drive Shaft | 29T | 22 | 22 | 52 | 98 | 930 | |
| | 2003.06-2009.12 | 5MT | F | L/R | Hatchback FWD Z 14 XEP | | GCO44019 | Outer Joint | 29T | 22 | 28 | 52 | 97.5 | 57.5 | O |
| | 2003.06-2009.12 | 5MT | F | L/R | Hatchback FWD Z 14 XEP | | GCO44020 | Outer Joint | 29T | 22 | 28 | 52 | 97.5 | 57.5 | O |
| | 2003.06-2009.12 | 5MT | F | L/R | Hatchback FWD Z 14 XEP | | GCI44003 | Inner Joint | | 22 | 28 | 34.95 | 57.5 | 83.5 | |
| | 2006.07-2014.08 | 4AT/5MT | F | L | Hatchback FWD Z 14 XEP | | GDS44079 | Drive Shaft | | 22 | 22 | 51 | 79.5 | 615 | |
| | 2006.07-2014.08 | 4AT/5MT | F | R | Hatchback FWD Z 14 XEP | | GDS44078 | Drive Shaft | | 22 | 22 | 51 | 79.5 | 918 | |
| | 2006.07-2014.08 | 4AT/5MT | F | L/R | Hatchback FWD Z 14 XEP | | GCO17089 | Outer Joint | | 22 | 20 | 51 | 79.5 | 51 | M |
| | 2006.07-2014.08 | 4AT/5MT | F | L/R | Hatchback FWD Z 14 XEP | | GCI44013 | Inner Joint | | 22 | 21 | 35 | 57.5 | 93 | |
| | 2006.08-2011.12 | AT/MT | F | L | Hatchback FWD Z 14 XEP | | GDS44079 | Drive Shaft | | 22 | 22 | 51 | 79.5 | 615 | |
| | 2006.08-2011.12 | AT/MT | F | L | Hatchback FWD Z 14 XEP | | GDS60023 | Drive Shaft | | 22 | 22 | 51.2 | 79.5 | 615 | |
| | 2006.08-2011.12 | AT/MT | F | R | Hatchback FWD Z 14 XEP | | GDS44078 | Drive Shaft | | 22 | 22 | 51 | 79.5 | 918 | |
| | 2006.08-2011.12 | AT/MT | F | L/R | Hatchback FWD Z 14 XEP | | GCO17014 | Outer Joint | | 22 | 21 | 51 | 79.5 | 54 | M |
| | 2006.08-2011.12 | MT | F | R | Hatchback FWD Z 14 XEP | Date to:2010.12 | GCO17089 | Outer Joint | | 22 | 20 | 51 | 79.5 | 51 | M |
| | 2006.08-2011.12 | | F | L/R | Hatchback FWD Z 14 XEP | Date To:2010.12 | GCO17052 | Outer Joint | | 22 | 21 | 51.2 | 79.5 | 54 | M |
| | 2006.08-2011.12 | | F | L/R | Hatchback FWD Z 14 XEP | | GCI44013 | Inner Joint | | 22 | 21 | 35 | 57.5 | 93 | |
| | 2014.09- | 5MT/5AMT | F | L | Hatchback FWD B 14 XEL;D 14 XEL | | GDS44079 | Drive Shaft | | 22 | 22 | 51 | 79.5 | 615 | |

| | YEAR | TRANSM. | F/R | L/R | BODY STYLE & DRIVE TYPE & ENGINE | REMARKS | G-AP Ref. | PRODUCT | ABS | Technical Specifications A | B | C | H | L | P |
|---|---|---|---|---|---|---|---|---|---|---|---|---|---|---|---|
| **OPEL** | | | | | | | | | | | | | | | |
| **Corsa** | | | | | | | | | | | | | | | |
| 1.4 (66 kw) | 2014.09- | 5MT/5AMT | F | R | Hatchback FWD B 14 XEL;D 14 XEL | | GDS44078 | Drive Shaft | | 22 | 22 | 51 | 79.5 | 918 | |
| | 2014.09- | 5MT/5AMT | F | L/R | Hatchback FWD B 14 XEL;D 14 XEL | | GCO17052 | Outer Joint | | 22 | 21 | 51.2 | 79.5 | 54 | M |
| | 2014.09- | 5MT/5AMT | F | L/R | Hatchback FWD B 14 XEL;D 14 XEL | | GCI44013 | Inner Joint | | 22 | 21 | 35 | 57.5 | 93 | |
| | 2014.09- | 6AT | F | L | Hatchback FWD B 14 XEL;D 14 XEL | | GDS82520 | Drive Shaft | | 22 | 22 | 51 | 79.5 | 641 | |
| | 2014.09- | 6AT | F | R | Hatchback FWD B 14 XEL;D 14 XEL | | GDS82397 | Drive Shaft | | 22 | 22 | 51 | 79.5 | 886 | |
| | 2014.09- | 6AT | F | L/R | Hatchback FWD B 14 XEL;D 14 XEL | | GCO81515 | Outer Joint | | 22 | 23 | 51 | 79.5 | 60 | M |
| | 2014.09- | 6AT | F | L | Hatchback FWD B 14 XEL;D 14 XEL | | GCI81210 | Inner Joint | | 22 | 23 | 35 | 131.5 | 84.5 | |
| | 2014.09- | 6AT | F | R | Hatchback FWD B 14 XEL;D 14 XEL | | GCI81411 | Inner Joint | | 22 | 23 | 35 | 57.5 | 102 | |
| | 2015.03- | 5MT | F | L | Hatchback FWD B 14 XEL | | GDS44079 | Drive Shaft | | 22 | 22 | 51 | 79.5 | 615 | |
| | 2015.03- | 5MT | F | R | Hatchback FWD B 14 XEL | | GDS44078 | Drive Shaft | | 22 | 22 | 51 | 79.5 | 918 | |
| | 2015.03- | 5MT | F | L/R | Hatchback FWD B 14 XEL | | GCO17052 | Outer Joint | | 22 | 21 | 51.2 | 79.5 | 54 | M |
| | 2015.03- | 5MT | F | L/R | Hatchback FWD B 14 XEL | | GCI44013 | Inner Joint | | 22 | 21 | 35 | 57.5 | 93 | |
| 1.4 (74 kw) | 2009.12-2014.08 | 4AT/5MT | F | L | Hatchback FWD A 14 XER | | GDS44079 | Drive Shaft | | 22 | 22 | 51 | 79.5 | 615 | |
| | 2009.12-2014.08 | 4AT/5MT | F | L | Hatchback FWD A 14 XER | | GDS60023 | Drive Shaft | | 22 | 22 | 51.2 | 79.5 | 615 | |
| | 2009.12-2014.08 | 4AT/5MT | F | R | Hatchback FWD A 14 XER | | GDS44078 | Drive Shaft | | 22 | 22 | 51 | 79.5 | 918 | |
| | 2009.12-2014.08 | 4AT/5MT | F | L/R | Hatchback FWD A 14 XER | | GCO17052 | Outer Joint | | 22 | 21 | 51.2 | 79.5 | 54 | M |
| | 2009.12-2014.08 | 4AT/5MT | F | L/R | Hatchback FWD A 14 XER | | GCI44013 | Inner Joint | | 22 | 21 | 35 | 57.5 | 93 | |
| | 2014.09-2019.06 | 6MT | F | L | Hatchback FWD B 14 NEJ;D 14 NEJ | | GDS17070 | Drive Shaft | | 25 | 25 | 51 | 84.5 | 576 | |
| | 2014.09-2019.06 | 6MT | F | R | Hatchback FWD B 14 NEJ;D 14 NEJ | | GDS84125 | Drive Shaft | | 25 | 25 | 51 | 84.5 | 948 | |
| | 2014.09-2019.06 | 6MT | F | L/R | Hatchback FWD B 14 NEJ;D 14 NEJ | | GCO17053 | Outer Joint | | 25 | 23 | 51 | 84.5 | 60 | M |
| | 2014.09-2019.06 | 6MT | F | L/R | Hatchback FWD B 14 NEJ;D 14 NEJ | | GCI44014 | Inner Joint | | 25 | 23 | 34.9 | 57.5 | 102 | |
| 1.4 (88 kw) | 2012.07-2014.08 | 5MT | F | L | Hatchback FWD A 14 NEL | | GDS44040 | Drive Shaft | | 25 | 22 | 51 | 84.5 | 616 | |
| | 2012.07-2014.08 | 5MT | F | R | Hatchback FWD A 14 NEL | | GDS44042 | Drive Shaft | | 25 | 22 | 51 | 84.5 | 920 | |
| | 2012.07-2014.08 | 5MT | F | L/R | Hatchback FWD A 14 NEL | | GCO17053 | Outer Joint | | 25 | 23 | 51 | 84.5 | 60 | M |
| | 2012.07-2014.08 | 5MT | F | L | Hatchback FWD A 14 NEL | | GCI44009 | Inner Joint | | 22 | 23 | 35 | 57.5 | 96 | |
| | 2012.07-2014.08 | 5MT | F | R | Hatchback FWD A 14 NEL | | GCI44017 | Inner Joint | | 22 | 23 | 35 | 57.5 | 116 | |
| 1.4 (110 kw) | 2015.03- | 6MT | F | L | Hatchback FWD B 14 NEH;D 14 NEH | | GDS17070 | Drive Shaft | | 25 | 25 | 51 | 84.5 | 576 | |
| | 2015.03- | 6MT | F | R | Hatchback FWD B 14 NEH;D 14 NEH | | GDS84125 | Drive Shaft | | 25 | 25 | 51 | 84.5 | 948 | |
| | 2015.03- | 6MT | F | L/R | Hatchback FWD B 14 NEH;D 14 NEH | | GCO17053 | Outer Joint | | 25 | 23 | 51 | 84.5 | 60 | M |
| | 2015.03- | 6MT | F | L/R | Hatchback FWD B 14 NEH;D 14 NEH | | GCI44014 | Inner Joint | | 25 | 23 | 34.9 | 57.5 | 102 | |
| 1.5 (37 kw) | 1993.03-2000.09 | 5MT | F | L | Hatchback FWD 15D | | GDS44001 | Drive Shaft | 29T | 22 | 22 | 52 | 95 | 573 | |
| | 1993.03-2000.09 | 5MT | F | R | Hatchback FWD 15D | | GDS60002 | Drive Shaft | 29T | 22 | 22 | 52 | 95 | 926 | |
| | 1993.03-2000.09 | AT/MT | F | L/R | Hatchback FWD 15D | Date from:1996.01 | GCO44007 | Outer Joint | 29T | 22 | 22 | 52 | 94.5 | 50 | O |
| | 1993.03-2000.09 | MT | F | L/R | Hatchback FWD 15D | | GCO44020 | Outer Joint | 29T | 22 | 28 | 52 | 97.5 | 57.5 | O |
| 1.5 (49 kw) | 1993.04-2000.08 | 5MT | F | L | Hatchback FWD 15TD/X15TD | | GDS44001 | Drive Shaft | 29T | 22 | 22 | 52 | 95 | 573 | |
| | 1993.04-2000.08 | 5MT | F | R | Hatchback FWD 15TD/X15TD | | GDS60002 | Drive Shaft | 29T | 22 | 22 | 52 | 95 | 926 | |
| | 1993.04-2000.08 | 5MT | F | L/R | Hatchback FWD 15TD/X15TD | | GCO44020 | Outer Joint | 29T | 22 | 28 | 52 | 97.5 | 57.5 | O |
| 1.5 (75 kw) | 2019.07- | 6MT | F | L | Hatchback FWD D 15 DT (DV5RD);YHT (DV5RCF) | | GDS83116 | Drive Shaft | | 25 | 24 | 55.7 | 84 | 655 | |
| | 2019.07- | 6MT | F | R | Hatchback FWD D 15 DT (DV5RD);YHT (DV5RCF) | | GDS83115 | Drive Shaft | | 25 | 24 | 55.7 | 84 | 880 | |
| | 2019.07- | 6MT | F | L | Hatchback FWD D 15 DT (DV5RD);YHT (DV5RCF) | | GCI82131 | Inner Joint | | 24 | 34 | 40 | 62 | 89 | |
| | 2019.07- | 6MT | F | R | Hatchback FWD D 15 DT (DV5RD);YHT (DV5RCF) | | GCI82130 | Inner Joint | | 24 | 34 | 29.8 | 291 | 88 | |
| | 2019.07- | 8AT | F | L | Hatchback FWD D 15 DT (DV5RD);YHT (DV5RCF) | | GDS83113 | Drive Shaft | | 25 | 37 | 55.7 | 84 | 623 | |
| | 2019.07- | 8AT | F | R | Hatchback FWD D 15 DT (DV5RD);YHT (DV5RCF) | | GDS83114 | Drive Shaft | | 25 | 37 | 55.7 | 84 | 880 | |
| | 2019.07- | 8AT | F | L | Hatchback FWD D 15 DT (DV5RD);YHT (DV5RCF) | | GCI82119 | Inner Joint | | 37 | 34 | 41.5 | 58.5 | 94 | |
| | 2019.07- | 8AT | F | R | Hatchback FWD D 15 DT (DV5RD);YHT (DV5RCF) | | GCI82118 | Inner Joint | | 37 | 34 | | 290 | 88 | |
| | 2019.07- | 8AT/6MT | F | L/R | Hatchback FWD D 15 DT (DV5RD);YHT (DV5RCF) | | GCO82279 | Outer Joint | | 25 | 34 | 55.7 | 84 | 55.5 | I |
| | 2019.07- | 6MT | F | L | Hatchback Van FWD D 15 DT (DV5RD) | | GDS83116 | Drive Shaft | | 25 | 24 | 55.7 | 84 | 655 | |
| | 2019.07- | 6MT | F | R | Hatchback Van FWD D 15 DT (DV5RD) | | GDS83115 | Drive Shaft | | 25 | 24 | 55.7 | 84 | 880 | |
| | 2019.07- | 6MT | F | L/R | Hatchback Van FWD D 15 DT (DV5RD) | | GCO82279 | Outer Joint | | 25 | 34 | 55.7 | 84 | 55.5 | I |
| | 2019.07- | 6MT | F | L | Hatchback Van FWD D 15 DT (DV5RD) | | GCI82131 | Inner Joint | | 24 | 34 | 40 | 62 | 89 | |
| | 2019.07- | 6MT | F | R | Hatchback Van FWD D 15 DT (DV5RD) | | GCI82130 | Inner Joint | | 24 | 34 | 29.8 | 291 | 88 | |
| 1.6 (78 kw) | 1994.11-2000.08 | MT | F | L | Hatchback FWD X16XE | | GDS44027 | Drive Shaft | 29T | 22 | 22 | 52 | 98 | 580 | |
| | 1994.11-2000.08 | MT | F | R | Hatchback FWD X16XE | | GDS44075 | Drive Shaft | 29T | 22 | 22 | 52 | 97.5 | 926 | |
| | 1994.11-2000.08 | MT | F | L/R | Hatchback FWD X16XE | | GCO44007 | Outer Joint | 29T | 22 | 22 | 52 | 94.5 | 50 | O |
| | 1994.11-2000.08 | MT | F | L/R | Hatchback FWD X16XE | | GCI44004 | Inner Joint | | 22 | 22 | 34.95 | 57.5 | 103 | |
| 1.6 (80 kw) | 1993.03-2000.09 | MT | F | L | Hatchback FWD C16XE | | GDS44027 | Drive Shaft | 29T | 22 | 22 | 52 | 98 | 580 | |
| | 1993.03-2000.09 | MT | F | R | Hatchback FWD C16XE | | GDS44075 | Drive Shaft | 29T | 22 | 22 | 52 | 97.5 | 926 | |
| | 1993.03-2000.09 | MT | F | L/R | Hatchback FWD C16XE | | GCO44007 | Outer Joint | 29T | 22 | 22 | 52 | 94.5 | 50 | O |
| | 1993.03-2000.09 | MT | F | L/R | Hatchback FWD C16XE | | GCI44004 | Inner Joint | | 22 | 22 | 34.95 | 57.5 | 103 | |
| 1.6 (110 kw) | 2007.05-2014.08 | 6MT | F | L | Hatchback FWD Z 16 LEL;A 16 LEL | | GDS60025 | Drive Shaft | | 25 | 25 | 51 | 84.5 | 579.5 | |
| | 2007.05-2014.08 | 6MT | F | R | Hatchback FWD Z 16 LEL;A 16 LEL | | GDS60024 | Drive Shaft | | 25 | 34 | 51 | 84.5 | 608 | |
| | 2007.05-2014.08 | 6MT | F | L/R | Hatchback FWD Z 16 LEL;A 16 LEL | | GCO60006 | Outer Joint | | 25 | 35 | 51 | 84.5 | 63 | I |
| | 2007.05-2014.08 | 6MT | F | L | Hatchback FWD Z 16 LEL;A 16 LEL | | GCI60004 | Inner Joint | | 25 | 35 | 34.9 | 57.5 | 113 | |
| | 2007.05-2014.08 | 6MT | F | R | Hatchback FWD Z 16 LEL;A 16 LEL | | GCI60005 | Inner Joint | | 34 | 35 | 37.5 | | 129 | |
| 1.6 (141 kw) | 2006.11-2014.08 | 6MT | F | L | Hatchback FWD Z 16 LER;A 16 LER;B 16 LER | | GDS60025 | Drive Shaft | | 25 | 25 | 51 | 84.5 | 579.5 | |

| | YEAR | TRANSM. | F/R | L/R | BODY STYLE & DRIVE TYPE & ENGINE | REMARKS | G-AP Ref. | PRODUCT | ABS | Technical Specifications A | B | C | H | L | P |
|---|---|---|---|---|---|---|---|---|---|---|---|---|---|---|---|
| **OPEL** | | | | | | | | | | | | | | | |
| **Corsa** | | | | | | | | | | | | | | | |
| 1.6 (141 kw) | 2006.11-2014.08 | 6MT | F | R | Hatchback FWD Z 16 LER;A 16 LER;B 16 LER | | GDS60024 | Drive Shaft | | 25 | 34 | 51 | 84.5 | 608 | |
| | 2006.11-2014.08 | 6MT | F | L/R | Hatchback FWD Z 16 LER;A 16 LER;B 16 LER | | GCO60006 | Outer Joint | | 25 | 35 | 51 | 84.5 | 63 | I |
| | 2006.11-2014.08 | 6MT | F | L | Hatchback FWD Z 16 LER;A 16 LER;B 16 LER | | GCI60004 | Inner Joint | | 25 | 35 | 34.9 | 57.5 | 113 | |
| | 2006.11-2014.08 | 6MT | F | R | Hatchback FWD Z 16 LER;A 16 LER;B 16 LER | | GCI60005 | Inner Joint | | 34 | 35 | 37.5 | | 129 | |
| 1.6 (152 kw) | 2015.03- | 6MT | F | L | Hatchback FWD B 16 LER;B 16 LES | | GCI60004 | Inner Joint | | 25 | 35 | 34.9 | 57.5 | 113 | |
| | 2015.03- | 6MT | F | R | Hatchback FWD B 16 LER;B 16 LES | | GCI60005 | Inner Joint | | 34 | 35 | 37.5 | | 129 | |
| | 2015.03- | MT | F | L | Hatchback FWD B 16 LER;B 16 LES | | GDS60025 | Drive Shaft | | 25 | 25 | 51 | 84.5 | 579.5 | |
| | 2015.03- | MT | F | L/R | Hatchback FWD B 16 LER;B 16 LES | | GCO60006 | Outer Joint | | 25 | 35 | 51 | 84.5 | 63 | I |
| 1.6 (155 kw) | 2011.06-2014.08 | 6MT | F | L | Hatchback FWD A 16 LES | | GDS60025 | Drive Shaft | | 25 | 25 | 51 | 84.5 | 579.5 | |
| | 2011.06-2014.08 | 6MT | F | R | Hatchback FWD A 16 LES | | GDS60024 | Drive Shaft | | 25 | 34 | 51 | 84.5 | 608 | |
| | 2011.06-2014.08 | 6MT | F | L/R | Hatchback FWD A 16 LES | | GCO60006 | Outer Joint | | 25 | 35 | 51 | 84.5 | 63 | I |
| | 2011.06-2014.08 | 6MT | F | L | Hatchback FWD A 16 LES | | GCI60004 | Inner Joint | | 25 | 35 | 34.9 | 57.5 | 113 | |
| | 2011.06-2014.08 | 6MT | F | R | Hatchback FWD A 16 LES | | GCI60005 | Inner Joint | | 34 | 35 | 37.5 | | 129 | |
| 1.7 (44 kw) | 1996.03-2000.08 | 5MT | F | L | Hatchback FWD X17D | | GDS44001 | Drive Shaft | 29T | 22 | 22 | 52 | 95 | 573 | |
| | 1996.03-2000.08 | 5MT | F | R | Hatchback FWD X17D | | GDS60002 | Drive Shaft | 29T | 22 | 22 | 52 | 95 | 926 | |
| | 1996.03-2000.08 | 5MT | F | L/R | Hatchback FWD X17D | | GCO44020 | Outer Joint | 29T | 22 | 28 | 52 | 97.5 | 57.5 | O |
| | 1996.03-2000.08 | 5MT | F | L/R | Hatchback FWD X17D | | GCI44004 | Inner Joint | | 22 | 22 | 34.95 | 57.5 | 103 | |
| | 1999.01-2003.12 | MT | F | L | Estate FWD X17D | | GDS44001 | Drive Shaft | 29T | 22 | 22 | 52 | 95 | 573 | |
| | 1999.01-2003.12 | MT | F | L | Estate FWD X17D | | GDS44036 | Drive Shaft | 29T | 22 | 22 | 52 | 95 | 565 | |
| | 1999.01-2003.12 | MT | F | R | Estate FWD X17D | | GDS60002 | Drive Shaft | 29T | 22 | 22 | 52 | 95 | 926 | |
| | 1999.01-2003.12 | MT | F | L/R | Estate FWD X17D | | GCO44007 | Outer Joint | 29T | 22 | 22 | 52 | 94.5 | 50 | O |
| | 1999.01-2003.12 | MT | F | L/R | Estate FWD X17D | | GCI44004 | Inner Joint | | 22 | 22 | 34.95 | 57.5 | 103 | |
| 1.7 (48 kw) | 2000.09-2009.12 | 5MT | F | L | Hatchback FWD Y 17 DTL | VL | GDS44027 | Drive Shaft | 29T | 22 | 22 | 52 | 98 | 580 | |
| | 2000.09-2009.12 | 5MT | F | L | Hatchback FWD Y 17 DTL | Thread Size:M20×1,TJ | GDS82091 | Drive Shaft | 29T | 22 | 22 | 52 | 97.5 | 580 | |
| | 2000.09-2009.12 | 5MT | F | L | Hatchback FWD Y 17 DTL | Thread Size:M20×1.5,TJ | GDS99069 | Drive Shaft | 29T | 22 | 22 | 52 | 97.5 | 584 | |
| | 2000.09-2009.12 | 5MT | F | L | Hatchback FWD Y 17 DTL | TJ | GDS99204 | Drive Shaft | | 22 | 22 | 52 | 97.5 | 584 | |
| | 2000.09-2009.12 | 5MT | F | R | Hatchback FWD Y 17 DTL | VL | GDS44026 | Drive Shaft | 29T | 22 | 22 | 52 | 98 | 930 | |
| | 2000.09-2009.12 | 5MT | F | R | Hatchback FWD Y 17 DTL | VL | GDS44060 | Drive Shaft | | 22 | 22 | 52 | 98 | 930 | |
| | 2000.09-2009.12 | 5MT | F | R | Hatchback FWD Y 17 DTL | TJ | GDS99205 | Drive Shaft | | 22 | 22 | 52 | 97.5 | 930 | |
| | 2000.09-2009.12 | 5MT | F | L/R | Hatchback FWD Y 17 DTL | | GCO44002 | Outer Joint | 29T | 22 | 23 | 52 | 97.5 | 61 | M |
| | 2000.09-2009.12 | 5MT | F | L/R | Hatchback FWD Y 17 DTL | M20×1.5 | GCO44019 | Outer Joint | 29T | 22 | 28 | 52 | 97.5 | 57.5 | O |
| | 2000.09-2009.12 | 5MT | F | L/R | Hatchback FWD Y 17 DTL | M20×1 | GCO44020 | Outer Joint | 29T | 22 | 28 | 52 | 97.5 | 57.5 | O |
| | 2000.09-2009.12 | 5MT | F | L/R | Hatchback FWD Y 17 DTL | M20×1.5 | GCO44043 | Outer Joint | | 22 | 28 | 52 | 97.5 | 57.5 | O |
| | 2000.09-2009.12 | 5MT | F | L/R | Hatchback FWD Y 17 DTL | | GCI60001 | Inner Joint | | 22 | 28 | 34.9 | 57.5 | 96.5 | |
| 1.7 (55 kw) | 2000.09-2009.12 | 5MT | F | L | Hatchback FWD Y 17 DT | VL | GDS44027 | Drive Shaft | 29T | 22 | 22 | 52 | 98 | 580 | |
| | 2000.09-2009.12 | 5MT | F | L | Hatchback FWD Y 17 DT | Thread Size:M20×1,TJ | GDS82091 | Drive Shaft | 29T | 22 | 22 | 52 | 97.5 | 580 | |
| | 2000.09-2009.12 | 5MT | F | L | Hatchback FWD Y 17 DT | Thread Size:M20×1.5,TJ | GDS99069 | Drive Shaft | 29T | 22 | 22 | 52 | 97.5 | 584 | |
| | 2000.09-2009.12 | 5MT | F | L | Hatchback FWD Y 17 DT | TJ | GDS99204 | Drive Shaft | | 22 | 22 | 52 | 97.5 | 584 | |
| | 2000.09-2009.12 | 5MT | F | R | Hatchback FWD Y 17 DT | VL | GDS44026 | Drive Shaft | 29T | 22 | 22 | 52 | 98 | 930 | |
| | 2000.09-2009.12 | 5MT | F | R | Hatchback FWD Y 17 DT | VL | GDS44060 | Drive Shaft | | 22 | 22 | 52 | 98 | 930 | |
| | 2000.09-2009.12 | 5MT | F | R | Hatchback FWD Y 17 DT | TJ | GDS99157 | Drive Shaft | 29T | 22 | 22 | 52 | 97.5 | 930 | |
| | 2000.09-2009.12 | 5MT | F | R | Hatchback FWD Y 17 DT | TJ | GDS99205 | Drive Shaft | | 22 | 22 | 52 | 97.5 | 930 | |
| | 2000.09-2009.12 | 5MT | F | L/R | Hatchback FWD Y 17 DT | | GCO44002 | Outer Joint | 29T | 22 | 23 | 52 | 97.5 | 61 | M |
| | 2000.09-2009.12 | 5MT | F | L/R | Hatchback FWD Y 17 DT | M20×1.5 | GCO44019 | Outer Joint | 29T | 22 | 28 | 52 | 97.5 | 57.5 | O |
| | 2000.09-2009.12 | 5MT | F | L/R | Hatchback FWD Y 17 DT | M20×1 | GCO44020 | Outer Joint | 29T | 22 | 28 | 52 | 97.5 | 57.5 | O |
| | 2000.09-2009.12 | 5MT | F | L/R | Hatchback FWD Y 17 DT | M20×1.5 | GCO44043 | Outer Joint | | 22 | 28 | 52 | 97.5 | 57.5 | O |
| | 2000.09-2009.12 | 5MT | F | L/R | Hatchback FWD Y 17 DT | | GCI60001 | Inner Joint | | 22 | 28 | 34.9 | 57.5 | 96.5 | |
| 1.7 (74 kw) | 2003.06-2009.12 | 4AT/5AT/5MT | F | L | Hatchback FWD Z 17 DTH | | GDS44032 | Drive Shaft | 29T | 33 | 34 | 52 | 104 | 587.5 | |
| | 2003.06-2009.12 | 4AT/5AT/5MT | F | R | Hatchback FWD Z 17 DTH | | GDS60021 | Drive Shaft | 29T | 33 | 34 | 52 | 104 | 612 | |
| | 2003.06-2009.12 | 4AT/5AT/5MT | F | L/R | Hatchback FWD Z 17 DTH | | GCO44004 | Outer Joint | 29T | 33 | 24 | 52 | 104 | 64 | M |
| | 2003.06-2009.12 | 4AT/5AT/5MT | F | L | Hatchback FWD Z 17 DTH | | GCI21034 | Inner Joint | | 34 | 24 | 35 | 56.5 | 102 | |
| | 2003.06-2009.12 | 4AT/5AT/5MT | F | R | Hatchback FWD Z 17 DTH | | GCI60003 | Inner Joint | | 34 | 24 | 35.5 | | 117.5 | |
| 1.7 (92 kw) | 2006.08-2011.12 | 6MT | F | L | Hatchback FWD Z 17 DTR | | GDS60025 | Drive Shaft | | 25 | 25 | 51 | 84.5 | 579.5 | |
| | 2006.08-2011.12 | 6MT | F | R | Hatchback FWD Z 17 DTR | | GDS84083 | Drive Shaft | | 25 | 34 | 51 | 84.5 | 548 | |
| | 2006.08-2011.12 | 6MT | F | L/R | Hatchback FWD Z 17 DTR | | GCO60006 | Outer Joint | | 25 | 35 | 51 | 84.5 | 63 | I |
| | 2006.08-2011.12 | 6MT | F | L | Hatchback FWD Z 17 DTR | | GCI60004 | Inner Joint | | 25 | 35 | 34.9 | 57.5 | 113 | |
| | 2006.08-2011.12 | 6MT | F | R | Hatchback FWD Z 17 DTR | | GCI60005 | Inner Joint | | 34 | 35 | 37.5 | | 129 | |
| 1.7 (96 kw) | 2009.12-2014.08 | 6MT | F | L | Hatchback FWD A 17 DTS | | GDS60025 | Drive Shaft | | 25 | 25 | 51 | 84.5 | 579.5 | |
| | 2009.12-2014.08 | 6MT | F | R | Hatchback FWD A 17 DTS | | GDS84083 | Drive Shaft | | 25 | 34 | 51 | 84.5 | 548 | |
| | 2009.12-2014.08 | 6MT | F | L/R | Hatchback FWD A 17 DTS | | GCO60006 | Outer Joint | | 25 | 35 | 51 | 84.5 | 63 | I |
| | 2009.12-2014.08 | 6MT | F | L | Hatchback FWD A 17 DTS | | GCI60004 | Inner Joint | | 25 | 35 | 34.9 | 57.5 | 113 | |
| | 2009.12-2014.08 | 6MT | F | R | Hatchback FWD A 17 DTS | | GCI60005 | Inner Joint | | 34 | 35 | 37.5 | | 129 | |
| 1.8 (92 kw) | 2000.09-2009.12 | 5MT | F | L | Hatchback FWD Z 18 XE | | GDS44027 | Drive Shaft | 29T | 22 | 22 | 52 | 98 | 580 | |
| | 2000.09-2009.12 | 5MT | F | L | Hatchback FWD Z 18 XE | Chassis no. from:23000001/24000001/26000001 | GDS82091 | Drive Shaft | 29T | 22 | 22 | 52 | 97.5 | 580 | |
| | 2000.09-2009.12 | 5MT | F | R | Hatchback FWD Z 18 XE | | GDS44026 | Drive Shaft | 29T | 22 | 22 | 52 | 98 | 930 | |

| | YEAR | TRANSM. | F/R | L/R | BODY STYLE & DRIVE TYPE & ENGINE | REMARKS | G-AP Ref. | PRODUCT | ABS | Technical Specifications A | B | C | H | L | P |
|---|---|---|---|---|---|---|---|---|---|---|---|---|---|---|---|
| **OPEL** | | | | | | | | | | | | | | | |
| **Corsa** | | | | | | | | | | | | | | | |
| 1.8 (92 kw) | 2000.09-2009.12 | 5MT | F | R | Hatchback FWD Z 18 XE | Chassis no. from:23000001/24000001/26000001 | GDS44075 | Drive Shaft | 29T | 22 | 22 | 52 | 97.5 | 926 | |
| | 2000.09-2009.12 | 5MT | F | R | Hatchback FWD Z 18 XE | Chassis no. from:23000001/24000001/26000001 | GDS82092 | Drive Shaft | 29T | 22 | 22 | 52 | 97.5 | 930 | |
| | 2000.09-2009.12 | 5MT | F | L/R | Hatchback FWD Z 18 XE | | GCO44002 | Outer Joint | 29T | 22 | 23 | 52 | 97.5 | 61 | M |
| | 2000.09-2009.12 | 5MT | F | L/R | Hatchback FWD Z 18 XE | Chassis no. from:23000001/24000001/26000001 | GCI44009 | Inner Joint | | 22 | 23 | 35 | 57.5 | 96 | |
| | 2000.09-2009.12 | 5MT | F | L/R | Hatchback FWD Z 18 XE | Chassis no. to:13999999/14999999/16999999 | GCI99026 | Inner Joint | | 22 | 25 | 35 | 57 | 111.7 | |
| | 2000.09-2009.12 | MT | F | L | Hatchback FWD Z 18 XE | | GDS99069 | Drive Shaft | 29T | 22 | 22 | 52 | 97.5 | 584 | |
| EV (100 kw) | 2019.07- | ET | F | L | Hatchback FWD ZKX (ZK01) | Date from:2022.07 | GDS57917 | Drive Shaft | | 25 | 24 | 55.7 | 84.5 | 655 | |
| | 2019.07- | ET | F | L | Hatchback FWD ZKX (ZK01) | Date to:2022.06 | GDS84261 | Drive Shaft | | 25 | 24 | 56 | 83.5 | 657 | |
| | 2019.07- | ET | F | R | Hatchback FWD ZKX (ZK01) | Date from:2022.07 | GDS57916 | Drive Shaft | | 25 | 24 | 55.7 | 84.5 | 880 | |
| | 2019.07- | ET | F | R | Hatchback FWD ZKX (ZK01) | Date to:2022.06 | GDS84314 | Drive Shaft | | 25 | 24 | 56 | 83.5 | 886 | |
| | 2019.07- | ET | F | L/R | Hatchback FWD ZKX (ZK01) | Date to:2022.06 | GCO82749 | Outer Joint | | 25 | 23 | 56 | 83.5 | 50 | I |
| | 2019.07- | ET | F | L/R | Hatchback FWD ZKX (ZK01) | Date from:2022.07 | GCO83785 | Outer Joint | | 25 | 34 | 55.7 | 84.5 | 55.5 | I |
| | 2019.07- | ET | F | R | Hatchback FWD ZKX (ZK01) | Date to:2022.06 | GCI10141 | Inner Joint | | 24 | 23 | 29.85 | 291 | 95 | |
| EV (115 kw) | 2023.03- | ET | F | L | Hatchback FWD ZKW (ZK02) | Solid shaft | GDS57917 | Drive Shaft | | 25 | 24 | 55.7 | 84.5 | 655 | |
| | 2023.03- | ET | F | L | Hatchback FWD ZKW (ZK02) | Hollow shaft | GDS84261 | Drive Shaft | | 25 | 24 | 56 | 83.5 | 657 | |
| | 2023.03- | ET | F | R | Hatchback FWD ZKW (ZK02) | Solid shaft | GDS57916 | Drive Shaft | | 25 | 24 | 55.7 | 84.5 | 880 | |
| | 2023.03- | ET | F | R | Hatchback FWD ZKW (ZK02) | Hollow shaft | GDS84314 | Drive Shaft | | 25 | 24 | 56 | 83.5 | 886 | |
| | 2023.03- | ET | F | L/R | Hatchback FWD ZKW (ZK02) | | GCO82749 | Outer Joint | | 25 | 23 | 56 | 83.5 | 50 | I |
| | 2023.03- | ET | F | L/R | Hatchback FWD ZKW (ZK02) | | GCO83785 | Outer Joint | | 25 | 34 | 55.7 | 84.5 | 55.5 | I |
| | 2023.03- | ET | F | R | Hatchback FWD ZKW (ZK02) | | GCI10141 | Inner Joint | | 24 | 23 | 29.85 | 291 | 95 | |
| **Corsa F** | | | | | | | | | | | | | | | |
| 1.2 (81 kw) | 2025.04- | 6DCT | F | R | Hatchback FWD | | GDS83114 | Drive Shaft | | 25 | 37 | 55.7 | 84 | 880 | |
| | 2025.04- | 6DCT | F | R | Hatchback FWD | | GCI82118 | Inner Joint | | 37 | 34 | | 290 | 88 | |
| 1.2 (107 kw) | 2025.04- | 6DCT | F | R | Hatchback FWD HPY (EB2LTDH2) | | GDS83114 | Drive Shaft | | 25 | 37 | 55.7 | 84 | 880 | |
| | 2025.04- | 6DCT | F | R | Hatchback FWD HPY (EB2LTDH2) | | GCI82118 | Inner Joint | | 37 | 34 | | 290 | 88 | |
| **Corsa Van** | | | | | | | | | | | | | | | |
| 1.0 (44 kw) | 2006.08-2014.08 | 5MT | F | L | Hatchback Van FWD A 10 XEP | | GDS44079 | Drive Shaft | | 22 | 22 | 51 | 79.5 | 615 | |
| | 2006.08-2014.08 | 5MT | F | L | Hatchback Van FWD A 10 XEP | | GDS60023 | Drive Shaft | | 22 | 22 | 51.2 | 79.5 | 615 | |
| | 2006.08-2014.08 | 5MT | F | R | Hatchback Van FWD A 10 XEP | | GDS44078 | Drive Shaft | | 22 | 22 | 51 | 79.5 | 918 | |
| | 2006.08-2014.08 | 5MT | F | L/R | Hatchback Van FWD A 10 XEP | | GCO17034 | Outer Joint | | 22 | 21 | 51 | 79.5 | 54 | M |
| | 2006.08-2014.08 | 5MT | F | L/R | Hatchback Van FWD A 10 XEP | | GCO17052 | Outer Joint | | 22 | 21 | 51.2 | 79.5 | 54 | M |
| | 2006.08-2014.08 | 5MT | F | L/R | Hatchback Van FWD A 10 XEP | | GCO99018 | Outer Joint | | 22 | 27 | 51 | 79.5 | 54 | O |
| | 2006.08-2014.08 | AT/MT | F | L/R | Hatchback Van FWD A 10 XEP | Outer teething differential side:21;Manufacturer Restriction:GKN Malte | GCO17014 | Outer Joint | | 22 | 21 | 51 | 79.5 | 54 | M |
| | 2006.08-2014.08 | MT | F | L | Hatchback Van FWD A 10 XEP | Date to:2014.08 | GCO17089 | Outer Joint | | 22 | 20 | 51 | 79.5 | 51 | M |
| | 2006.08-2014.08 | | F | L/R | Hatchback Van FWD A 10 XEP | Chassis no. to:84239420;Chassis no. to:86099860 | GCI44013 | Inner Joint | | 22 | 21 | 35 | 57.5 | 93 | |
| | 2006.08-2014.08 | | F | L/R | Hatchback Van FWD A 10 XEP | Manufacturer:Delphi | GCI44020 | Inner Joint | | 22 | 27 | 35 | 57.5 | 92 | |
| 1.0 (48 kw) | 2010.01-2014.08 | 5MT | F | L | Hatchback Van FWD A 10 XEP | | GDS44079 | Drive Shaft | | 22 | 22 | 51 | 79.5 | 615 | |
| | 2010.01-2014.08 | 5MT | F | R | Hatchback Van FWD A 10 XEP | | GDS44078 | Drive Shaft | | 22 | 22 | 51 | 79.5 | 918 | |
| | 2010.01-2014.08 | MT | F | L | Hatchback Van FWD A 10 XEP | | GDS60023 | Drive Shaft | | 22 | 22 | 51.2 | 79.5 | 615 | |
| | 2010.01-2014.08 | MT | F | L | Hatchback Van FWD A 10 XEP | Date to:2014.08 | GCO17089 | Outer Joint | | 22 | 20 | 51 | 79.5 | 51 | M |
| | 2010.01-2014.08 | MT | F | L | Hatchback Van FWD A 10 XEP | | GCI44013 | Inner Joint | | 22 | 21 | 35 | 57.5 | 93 | |
| 1.2 (33 kw) | 1994.08-2001.12 | 5MT | F | L | Hatchback Van FWD C12NZ | | GDS44001 | Drive Shaft | 29T | 22 | 22 | 52 | 95 | 573 | |
| | 1994.08-2001.12 | 5MT | F | R | Hatchback Van FWD C12NZ | | GDS60002 | Drive Shaft | 29T | 22 | 22 | 52 | 95 | 926 | |
| | 1994.08-2001.12 | 5MT | F | L/R | Hatchback Van FWD C12NZ | M20×1.5 | GCO44019 | Outer Joint | 29T | 22 | 28 | 52 | 97.5 | 57.5 | O |
| | 1994.08-2001.12 | 5MT | F | L/R | Hatchback Van FWD C12NZ | M20×1 | GCO44020 | Outer Joint | 29T | 22 | 28 | 52 | 97.5 | 57.5 | O |
| | 1994.08-2001.12 | 5MT | F | L/R | Hatchback Van FWD C12NZ | | GCI44003 | Inner Joint | | 22 | 28 | 34.95 | 57.5 | 83.5 | |
| 1.2 (51 kw) | 2010.01-2014.08 | 5MT | F | L | Hatchback Van FWD A 12 XEL | | GDS44079 | Drive Shaft | | 22 | 22 | 51 | 79.5 | 615 | |
| | 2010.01-2014.08 | 5MT | F | R | Hatchback Van FWD A 12 XEL | | GDS44078 | Drive Shaft | | 22 | 22 | 51 | 79.5 | 918 | |
| | 2010.01-2014.08 | AT/MT | F | L | Hatchback Van FWD A 12 XEL | | GDS60023 | Drive Shaft | | 22 | 22 | 51.2 | 79.5 | 615 | |
| | 2010.01-2014.08 | AT/MT | F | L | Hatchback Van FWD A 12 XEL | | GCI44013 | Inner Joint | | 22 | 21 | 35 | 57.5 | 93 | |
| | 2010.01-2014.08 | MT | F | L | Hatchback Van FWD A 12 XEL | Date to:2014.08 | GCO17089 | Outer Joint | | 22 | 20 | 51 | 79.5 | 51 | M |
| | 2015.01- | MT | F | L | Hatchback Van FWD B 12 XEL | | GDS44079 | Drive Shaft | | 22 | 22 | 51 | 79.5 | 615 | |
| | 2015.01- | MT | F | R | Hatchback Van FWD B 12 XEL | | GDS44078 | Drive Shaft | | 22 | 22 | 51 | 79.5 | 918 | |
| | 2015.01- | MT | F | L/R | Hatchback Van FWD B 12 XEL | | GCO17089 | Outer Joint | | 22 | 20 | 51 | 79.5 | 51 | M |
| 1.2 (55 kw) | 2000.09-2003.07 | 5MT | F | L | Hatchback Van FWD Z 12 XE | Chassis no. from:23000001/24000001/26000001 | GDS44027 | Drive Shaft | 29T | 22 | 22 | 52 | 98 | 580 | |
| | 2000.09-2003.07 | 5MT | F | L | Hatchback Van FWD Z 12 XE | Chassis no. to:13999999/14999999/16999999 | GDS44095 | Drive Shaft | 29T | 22 | 22 | 52 | 97 | 566 | |
| | 2000.09-2003.07 | 5MT | F | R | Hatchback Van FWD Z 12 XE | Chassis no. from:23000001/24000001/26000001 | GDS44026 | Drive Shaft | 29T | 22 | 22 | 52 | 98 | 930 | |
| | 2000.09-2003.07 | 5MT | F | R | Hatchback Van FWD Z 12 XE | Chassis no. to:13999999/14999999/16999999 | GDS44096 | Drive Shaft | 29T | 22 | 22 | 52 | 97 | 917 | |
| | 2000.09-2003.07 | 5MT | F | L/R | Hatchback Van FWD Z 12 XE | | GCO44013 | Outer Joint | 29T | 22 | 28 | 52 | 98 | 52 | O |
| | 2000.09-2003.07 | 5MT | F | L/R | Hatchback Van FWD Z 12 XE | | GCI60001 | Inner Joint | | 22 | 28 | 34.9 | 57.5 | 96.5 | |
| 1.2 (59 kw) | 2005.07-2006.06 | 5MT | F | L | Hatchback Van FWD Z 12 XEP | VL | GDS44027 | Drive Shaft | 29T | 22 | 22 | 52 | 98 | 580 | |
| | 2005.07-2006.06 | 5MT | F | L | Hatchback Van FWD Z 12 XEP | TJ | GDS99069 | Drive Shaft | 29T | 22 | 22 | 52 | 97.5 | 584 | |
| | 2005.07-2006.06 | 5MT | F | R | Hatchback Van FWD Z 12 XEP | VL | GDS44026 | Drive Shaft | 29T | 22 | 22 | 52 | 98 | 930 | |
| | 2005.07-2006.06 | 5MT | F | R | Hatchback Van FWD Z 12 XEP | TJ | GDS44075 | Drive Shaft | 29T | 22 | 22 | 52 | 97.5 | 926 | |
| | 2005.07-2006.06 | 5MT | F | L/R | Hatchback Van FWD Z 12 XEP | | GCO44013 | Outer Joint | 29T | 22 | 28 | 52 | 98 | 52 | O |

| | YEAR | TRANSM. | F/R | L/R | BODY STYLE & DRIVE TYPE & ENGINE | REMARKS | G-AP Ref. | PRODUCT | ABS | Technical Specifications A | B | C | H | L | P |
|---|---|---|---|---|---|---|---|---|---|---|---|---|---|---|---|
| **OPEL** **Corsa Van** | | | | | | | | | | | | | | | |
| 1.2 (59 kw) | 2005.07-2006.06 | 5MT | F | L/R | Hatchback Van FWD Z 12 XEP | | GCI60001 | Inner Joint | | 22 | 28 | 34.9 | 57.5 | 96.5 | |
| | 2006.08-2014.08 | 5MT | F | L | Hatchback Van FWD Z 12 XEP | | GDS44079 | Drive Shaft | | 22 | 22 | 51 | 79.5 | 615 | |
| | 2006.08-2014.08 | 5MT | F | R | Hatchback Van FWD Z 12 XEP | | GDS44078 | Drive Shaft | | 22 | 22 | 51 | 79.5 | 918 | |
| | 2006.08-2014.08 | 5MT | F | L/R | Hatchback Van FWD Z 12 XEP | | GCO17052 | Outer Joint | | 22 | 21 | 51.2 | 79.5 | 54 | M |
| | 2006.08-2014.08 | 5MT | F | L/R | Hatchback Van FWD Z 12 XEP | | GCO17089 | Outer Joint | | 22 | 20 | 51 | 79.5 | 51 | M |
| | 2006.08-2014.08 | 5MT | F | L/R | Hatchback Van FWD Z 12 XEP | | GCO99018 | Outer Joint | | 22 | 27 | 51 | 79.5 | 54 | O |
| | 2006.08-2014.08 | 5MT | F | L/R | Hatchback Van FWD Z 12 XEP | | GCI44013 | Inner Joint | | 22 | 21 | 35 | 57.5 | 93 | |
| | 2006.08-2014.08 | 5MT | F | L/R | Hatchback Van FWD Z 12 XEP | | GCI44020 | Inner Joint | | 22 | 27 | 35 | 57.5 | 92 | |
| 1.2 (63 kw) | 2010.06-2014.08 | AT/MT | F | L | Hatchback Van FWD A 12 XER | | GDS44079 | Drive Shaft | | 22 | 22 | 51 | 79.5 | 615 | |
| | 2010.06-2014.08 | AT/MT | F | R | Hatchback Van FWD A 12 XER | | GDS44078 | Drive Shaft | | 22 | 22 | 51 | 79.5 | 918 | |
| | 2010.06-2014.08 | MT | F | L | Hatchback Van FWD A 12 XER | | GDS60023 | Drive Shaft | | 22 | 22 | 51.2 | 79.5 | 615 | |
| | 2010.06-2014.08 | MT | F | L | Hatchback Van FWD A 12 XER | Date to:2014.08 | GCO17089 | Outer Joint | | 22 | 20 | 51 | 79.5 | 51 | M |
| | 2010.06-2014.08 | MT | F | L | Hatchback Van FWD A 12 XER | | GCI44013 | Inner Joint | | 22 | 21 | 35 | 57.5 | 93 | |
| 1.3 (51 kw) | 2005.07-2006.06 | 5MT | F | L | Hatchback Van FWD Z 13 DT | | GDS44027 | Drive Shaft | 29T | 22 | 22 | 52 | 98 | 580 | |
| | 2005.07-2006.06 | 5MT | F | L | Hatchback Van FWD Z 13 DT | | GDS82091 | Drive Shaft | 29T | 22 | 22 | 52 | 97.5 | 580 | |
| | 2005.07-2006.06 | 5MT | F | R | Hatchback Van FWD Z 13 DT | Chassis no. from:24000001/26000001 | GDS44026 | Drive Shaft | 29T | 22 | 22 | 52 | 98 | 930 | |
| | 2005.07-2006.06 | 5MT | F | R | Hatchback Van FWD Z 13 DT | | GDS44075 | Drive Shaft | 29T | 22 | 22 | 52 | 97.5 | 926 | |
| | 2005.07-2006.06 | 5MT | F | R | Hatchback Van FWD Z 13 DT | | GDS82092 | Drive Shaft | 29T | 22 | 22 | 52 | 97.5 | 930 | |
| | 2005.07-2006.06 | 5MT | F | R | Hatchback Van FWD Z 13 DT | | GDS99205 | Drive Shaft | | 22 | 22 | 52 | 97.5 | 930 | |
| | 2005.07-2006.06 | AT/MT | F | L | Hatchback Van FWD Z 13 DT | | GDS99069 | Drive Shaft | 29T | 22 | 22 | 52 | 97.5 | 584 | |
| | 2005.07-2006.06 | AT/MT | F | L/R | Hatchback Van FWD Z 13 DT | | GCO44020 | Outer Joint | 29T | 22 | 28 | 52 | 97.5 | 57.5 | O |
| | 2005.07-2006.06 | MT | F | R | Hatchback Van FWD Z 13 DT | | GCO44043 | Outer Joint | | 22 | 28 | 52 | 97.5 | 57.5 | O |
| | 2005.07-2006.06 | MT | F | L/R | Hatchback Van FWD Z 13 DT | | GCO44018 | Outer Joint | | 22 | 28 | 52.2 | 97.5 | 55 | O |
| | 2005.07-2006.06 | MT | F | L/R | Hatchback Van FWD Z 13 DT | | GCO44019 | Outer Joint | 29T | 22 | 28 | 52 | 97.5 | 57.5 | O |
| | 2005.07-2006.06 | MT | F | L/R | Hatchback Van FWD Z 13 DT | | GCI44009 | Inner Joint | | 22 | 23 | 35 | 57.5 | 96 | |
| 1.3 (55 kw) | 2006.07-2014.08 | 5MT | F | L | Hatchback Van FWD Z 13 DTJ;A 13 DTC | | GDS44040 | Drive Shaft | | 25 | 22 | 51 | 84.5 | 616 | |
| | 2006.07-2014.08 | 5MT | F | R | Hatchback Van FWD Z 13 DTJ;A 13 DTC | For Engine code:Z13DTJ | GDS44042 | Drive Shaft | | 25 | 22 | 51 | 84.5 | 920 | |
| | 2006.07-2014.08 | 5MT | F | R | Hatchback Van FWD Z 13 DTJ;A 13 DTC | For Engine code:A13DTC | GDS84460 | Drive Shaft | | 25 | 22 | 51 | 84 | 923 | |
| | 2006.07-2014.08 | 5MT | F | L/R | Hatchback Van FWD Z 13 DTJ;A 13 DTC | For Engine code:Z13DTJ | GCO17053 | Outer Joint | | 25 | 23 | 51 | 84.5 | 60 | M |
| | 2006.07-2014.08 | 5MT | F | L/R | Hatchback Van FWD Z 13 DTJ;A 13 DTC | For Engine code:A13DTC | GCO81547 | Outer Joint | | 25 | 22 | 51 | 84 | 57 | M |
| | 2006.07-2014.08 | 5MT | F | L | Hatchback Van FWD Z 13 DTJ;A 13 DTC | For Engine code:Z13DTJ | GCI44009 | Inner Joint | | 22 | 23 | 35 | 57.5 | 96 | |
| | 2006.07-2014.08 | 5MT | F | R | Hatchback Van FWD Z 13 DTJ;A 13 DTC | For Engine code:Z13DTJ | GCI44017 | Inner Joint | | 22 | 23 | 35 | 57.5 | 116 | |
| | 2015.01- | 5MT | F | R | Hatchback Van FWD B 13 DTC;B 13 DTN | | GDS84460 | Drive Shaft | | 25 | 22 | 51 | 84 | 923 | |
| | 2015.01- | 5MT | F | L/R | Hatchback Van FWD B 13 DTC;B 13 DTN | | GCO81547 | Outer Joint | | 25 | 22 | 51 | 84 | 57 | M |
| | 2015.01- | 5MT | F | R | Hatchback Van FWD B 13 DTC;B 13 DTN | | GCI44013 | Inner Joint | | 22 | 21 | 35 | 57.5 | 93 | |
| | 2015.01- | MT | F | L | Hatchback Van FWD B 13 DTC;B 13 DTN | | GDS82511 | Drive Shaft | | 25 | 22 | 51 | 84 | 607 | |
| 1.3 (66 kw) | 2006.07-2010.06 | 5MT | F | R | Hatchback Van FWD Z 13 DTH | | GDS17071 | Drive Shaft | | 25 | 25 | 51 | 84.5 | 952 | |
| | 2006.07-2010.06 | 5MT | F | L/R | Hatchback Van FWD Z 13 DTH | | GCO17053 | Outer Joint | | 25 | 23 | 51 | 84.5 | 60 | M |
| | 2006.07-2010.06 | 5MT | F | R | Hatchback Van FWD Z 13 DTH | | GCI44012 | Inner Joint | | 25 | 23 | 34.9 | 56.5 | 118 | |
| | 2006.07-2010.06 | 6MT | F | L | Hatchback Van FWD Z 13 DTH | | GDS17070 | Drive Shaft | | 25 | 25 | 51 | 84.5 | 576 | |
| | 2006.07-2010.06 | 6MT | F | L | Hatchback Van FWD Z 13 DTH | | GCI44014 | Inner Joint | | 25 | 23 | 34.9 | 57.5 | 102 | |
| 1.3 (70 kw) | 2009.11-2014.08 | 5MT | F | L | Hatchback Van FWD A 13 DTE;Z 13 DTE;A 13 DTR | For Engine code:A13DTE/Z13DTE | GDS44040 | Drive Shaft | | 25 | 22 | 51 | 84.5 | 616 | |
| | 2009.11-2014.08 | 5MT | F | R | Hatchback Van FWD A 13 DTE;Z 13 DTE;A 13 DTR | For Engine code:A13DTE/Z13DTE | GDS84460 | Drive Shaft | | 25 | 22 | 51 | 84 | 923 | |
| | 2009.11-2014.08 | 5MT | F | L/R | Hatchback Van FWD A 13 DTE;Z 13 DTE;A 13 DTR | For Engine code:A13DTE/Z13DTE | GCO81547 | Outer Joint | | 25 | 22 | 51 | 84 | 57 | M |
| | 2009.11-2014.08 | 6MT | F | L | Hatchback Van FWD A 13 DTE;Z 13 DTE;A 13 DTR | For Engine code:A13DTR | GDS17070 | Drive Shaft | | 25 | 25 | 51 | 84.5 | 576 | |
| | 2009.11-2014.08 | 6MT | F | R | Hatchback Van FWD A 13 DTE;Z 13 DTE;A 13 DTR | For Engine code:A13DTR | GDS17071 | Drive Shaft | | 25 | 25 | 51 | 84.5 | 952 | |
| | 2009.11-2014.08 | 6MT | F | L/R | Hatchback Van FWD A 13 DTE;Z 13 DTE;A 13 DTR | For Engine code:A13DTR | GCO17053 | Outer Joint | | 25 | 23 | 51 | 84.5 | 60 | M |
| | 2009.11-2014.08 | 6MT | F | L | Hatchback Van FWD A 13 DTE;Z 13 DTE;A 13 DTR | | GCI44014 | Inner Joint | | 25 | 23 | 34.9 | 57.5 | 102 | |
| | 2009.11-2014.08 | 6MT | F | R | Hatchback Van FWD A 13 DTE;Z 13 DTE;A 13 DTR | | GCI44012 | Inner Joint | | 25 | 23 | 34.9 | 56.5 | 118 | |
| | 2014.09- | 5AMT | F | L/R | Hatchback Van FWD B 13 DTE;B 13 DTR | | GCO81547 | Outer Joint | | 25 | 22 | 51 | 84 | 57 | M |
| | 2014.09- | 5MT/5AMT | F | R | Hatchback Van FWD B 13 DTE;B 13 DTR | | GDS84460 | Drive Shaft | | 25 | 22 | 51 | 84 | 923 | |
| | 2014.09- | 5MT/5AMT | F | R | Hatchback Van FWD B 13 DTE;B 13 DTR | | GCI44013 | Inner Joint | | 22 | 21 | 35 | 57.5 | 93 | |
| | 2014.09- | 6MT | F | L/R | Hatchback Van FWD B 13 DTE;B 13 DTR | | GCO17053 | Outer Joint | | 25 | 23 | 51 | 84.5 | 60 | M |
| | 2014.09- | MT | F | L | Hatchback Van FWD B 13 DTE;B 13 DTR | | GDS82511 | Drive Shaft | | 25 | 22 | 51 | 84 | 607 | |
| 1.4 (44 kw) | 1994.09-2001.12 | 5MT | F | L | Hatchback Van FWD C14NZ/X14SZ | | GDS44001 | Drive Shaft | 29T | 22 | 22 | 52 | 95 | 573 | |
| | 1994.09-2001.12 | 5MT | F | R | Hatchback Van FWD C14NZ/X14SZ | | GDS60002 | Drive Shaft | 29T | 22 | 22 | 52 | 95 | 926 | |
| | 1994.09-2001.12 | 5MT | F | L/R | Hatchback Van FWD C14NZ/X14SZ | | GCI44003 | Inner Joint | | 22 | 28 | 34.95 | 57.5 | 83.5 | |
| | 1994.09-2001.12 | | F | L/R | Hatchback Van FWD C14NZ/X14SZ | | GCO44020 | Outer Joint | 29T | 22 | 28 | 52 | 97.5 | 57.5 | O |
| 1.4 (55 kw) | 2014.09- | 5MT | F | L/R | Hatchback Van FWD B 14 XEJ | | GCO17052 | Outer Joint | | 22 | 21 | 51.2 | 79.5 | 54 | M |
| | 2014.09- | 5MT | F | L/R | Hatchback Van FWD B 14 XEJ | | GCI44013 | Inner Joint | | 22 | 21 | 35 | 57.5 | 93 | |
| | 2014.09- | AT/MT | F | L/R | Hatchback Van FWD B 14 XEJ | Date from:2015.01 | GCO17014 | Outer Joint | | 22 | 21 | 51 | 79.5 | 54 | M |
| | 2014.09- | MT | F | L | Hatchback Van FWD B 14 XEJ | | GDS44079 | Drive Shaft | | 22 | 22 | 51 | 79.5 | 615 | |
| | 2014.09- | MT | F | R | Hatchback Van FWD B 14 XEJ | | GDS44078 | Drive Shaft | | 22 | 22 | 51 | 79.5 | 918 | |
| | 2014.09- | MT | F | R | Hatchback Van FWD B 14 XEJ | | GCO17089 | Outer Joint | | 22 | 20 | 51 | 79.5 | 51 | M |
| | 2014.09- | MT/6MT | F | L/R | Hatchback Van FWD B 14 XEJ | Date from:2015.01 | GCO17053 | Outer Joint | | 25 | 23 | 51 | 84.5 | 60 | M |

| | YEAR | TRANSM. | F/R | L/R | BODY STYLE & DRIVE TYPE & ENGINE | REMARKS | G-AP Ref. | PRODUCT | ABS | Technical Specifications A | B | C | H | L | P |
|---|---|---|---|---|---|---|---|---|---|---|---|---|---|---|---|
| **OPEL** | | | | | | | | | | | | | | | |
| **Corsa Van** | | | | | | | | | | | | | | | |
| 1.4 (66 kw) | 2003.08-2012.06 | MT | F | R | Hatchback Van FWD Z 14 XEP | | GCO44043 | Outer Joint | | 22 | 28 | 52 | 97.5 | 57.5 | O |
| | 2003.08-2012.06 | Semi-AT | F | L | Hatchback Van FWD Z 14 XEP | | GDS44027 | Drive Shaft | 29T | 22 | 22 | 52 | 98 | 580 | |
| | 2003.08-2012.06 | Semi-AT | F | R | Hatchback Van FWD Z 14 XEP | | GDS44026 | Drive Shaft | 29T | 22 | 22 | 52 | 98 | 930 | |
| | 2003.08-2012.06 | Semi-AT | F | R | Hatchback Van FWD Z 14 XEP | | GDS44075 | Drive Shaft | 29T | 22 | 22 | 52 | 97.5 | 926 | |
| | 2003.08-2012.06 | Semi-AT | F | R | Hatchback Van FWD Z 14 XEP | | GDS99205 | Drive Shaft | | 22 | 22 | 52 | 97.5 | 930 | |
| | 2003.08-2012.06 | Semi-AT | F | R | Hatchback Van FWD Z 14 XEP | | GCI60001 | Inner Joint | | 22 | 28 | 34.9 | 57.5 | 96.5 | |
| | 2003.08-2012.06 | Semi-AT | F | L/R | Hatchback Van FWD Z 14 XEP | | GCI44003 | Inner Joint | | 22 | 28 | 34.95 | 57.5 | 83.5 | |
| | 2003.08-2012.06 | | F | L/R | Hatchback Van FWD Z 14 XEP | | GCO44020 | Outer Joint | 29T | 22 | 28 | 52 | 97.5 | 57.5 | O |
| | 2014.09- | 5MT/5AMT | F | L | Hatchback Van FWD B 14 XEL | | GDS44079 | Drive Shaft | | 22 | 22 | 51 | 79.5 | 615 | |
| | 2014.09- | 5MT/5AMT | F | R | Hatchback Van FWD B 14 XEL | | GDS44078 | Drive Shaft | | 22 | 22 | 51 | 79.5 | 918 | |
| | 2014.09- | 5MT/5AMT | F | L/R | Hatchback Van FWD B 14 XEL | | GCO17052 | Outer Joint | | 22 | 21 | 51.2 | 79.5 | 54 | M |
| | 2014.09- | 5MT/5AMT | F | L/R | Hatchback Van FWD B 14 XEL | | GCI44013 | Inner Joint | | 22 | 21 | 35 | 57.5 | 93 | |
| | 2014.09- | 6AT | F | L | Hatchback Van FWD B 14 XEL | | GDS82520 | Drive Shaft | | 22 | 22 | 51 | 79.5 | 641 | |
| | 2014.09- | 6AT | F | R | Hatchback Van FWD B 14 XEL | | GDS82397 | Drive Shaft | | 22 | 22 | 51 | 79.5 | 886 | |
| | 2014.09- | 6AT | F | L/R | Hatchback Van FWD B 14 XEL | | GCO81515 | Outer Joint | | 22 | 23 | 51 | 79.5 | 60 | M |
| 1.4 (74 kw) | 2012.07-2014.08 | 4AT/5MT | F | L | Hatchback Van FWD A 14 XER | | GDS44079 | Drive Shaft | | 22 | 22 | 51 | 79.5 | 615 | |
| | 2012.07-2014.08 | 4AT/5MT | F | R | Hatchback Van FWD A 14 XER | | GDS44078 | Drive Shaft | | 22 | 22 | 51 | 79.5 | 918 | |
| | 2012.07-2014.08 | 4AT/5MT | F | L/R | Hatchback Van FWD A 14 XER | Inner teeth of wheel side:21 | GCO17052 | Outer Joint | | 22 | 21 | 51.2 | 79.5 | 54 | M |
| | 2012.07-2014.08 | 4AT/5MT | F | L/R | Hatchback Van FWD A 14 XER | Inner teeth of wheel side:20 | GCO17089 | Outer Joint | | 22 | 20 | 51 | 79.5 | 51 | M |
| | 2012.07-2014.08 | 4AT/5MT | F | L/R | Hatchback Van FWD A 14 XER | Inner teeth of tranm.side:21 | GCI44013 | Inner Joint | | 22 | 21 | 35 | 57.5 | 93 | |
| 1.4 (88 kw) | 2012.07-2014.08 | 5MT | F | L | Hatchback Van FWD A 14 NEL | | GDS44040 | Drive Shaft | | 25 | 22 | 51 | 84.5 | 616 | |
| | 2012.07-2014.08 | 5MT | F | R | Hatchback Van FWD A 14 NEL | | GDS44042 | Drive Shaft | | 25 | 22 | 51 | 84.5 | 920 | |
| | 2012.07-2014.08 | 5MT | F | L/R | Hatchback Van FWD A 14 NEL | | GCO17053 | Outer Joint | | 25 | 23 | 51 | 84.5 | 60 | M |
| | 2012.07-2014.08 | 5MT | F | L | Hatchback Van FWD A 14 NEL | | GCI44009 | Inner Joint | | 22 | 23 | 35 | 57.5 | 96 | |
| | 2012.07-2014.08 | 5MT | F | R | Hatchback Van FWD A 14 NEL | | GCI44017 | Inner Joint | | 22 | 23 | 35 | 57.5 | 116 | |
| 1.5 (37 kw) | 1994.09-1997.05 | 5MT | F | L | Hatchback Van FWD 15D/X15D | | GDS44001 | Drive Shaft | 29T | 22 | 22 | 52 | 95 | 573 | |
| | 1994.09-1997.05 | 5MT | F | R | Hatchback Van FWD 15D/X15D | | GDS60002 | Drive Shaft | 29T | 22 | 22 | 52 | 95 | 926 | |
| | 1994.09-1997.05 | 5MT | F | L/R | Hatchback Van FWD 15D/X15D | | GCI44003 | Inner Joint | | 22 | 28 | 34.95 | 57.5 | 83.5 | |
| | 1994.09-1997.05 | | F | L/R | Hatchback Van FWD 15D/X15D | | GCO44020 | Outer Joint | 29T | 22 | 28 | 52 | 97.5 | 57.5 | O |
| 1.6 (141 kw) | 2012.07-2014.08 | 6MT | F | L | Hatchback Van FWD Z 16 LER | | GDS60025 | Drive Shaft | | 25 | 25 | 51 | 84.5 | 579.5 | |
| | 2012.07-2014.08 | 6MT | F | R | Hatchback Van FWD Z 16 LER | | GDS60024 | Drive Shaft | | 25 | 34 | 51 | 84.5 | 608 | |
| | 2012.07-2014.08 | 6MT | F | L/R | Hatchback Van FWD Z 16 LER | | GCO60006 | Outer Joint | | 25 | 35 | 51 | 84.5 | 63 | I |
| | 2012.07-2014.08 | 6MT | F | L | Hatchback Van FWD Z 16 LER | | GCI60004 | Inner Joint | | 25 | 35 | 34.9 | 57.5 | 113 | |
| | 2012.07-2014.08 | 6MT | F | R | Hatchback Van FWD Z 16 LER | | GCI60005 | Inner Joint | | 34 | 35 | 37.5 | | 129 | |
| 1.7 (44 kw) | 1994.08-2001.12 | MT | F | L | Hatchback Van FWD 17D(4EE1)/X17D(4EE1) | | GDS44001 | Drive Shaft | 29T | 22 | 22 | 52 | 95 | 573 | |
| | 1994.08-2001.12 | MT | F | R | Hatchback Van FWD 17D(4EE1)/X17D(4EE1) | | GDS60002 | Drive Shaft | 29T | 22 | 22 | 52 | 95 | 926 | |
| | 1994.08-2001.12 | MT | F | L/R | Hatchback Van FWD 17D(4EE1)/X17D(4EE1) | | GCO44020 | Outer Joint | 29T | 22 | 28 | 52 | 97.5 | 57.5 | O |
| | 1994.08-2001.12 | MT | F | L/R | Hatchback Van FWD 17D(4EE1)/X17D(4EE1) | | GCI44003 | Inner Joint | | 22 | 28 | 34.95 | 57.5 | 83.5 | |
| 1.7 (48 kw) | 2000.09-2003.07 | 5MT | F | L | Hatchback Van FWD Y 17 DTL | Chassis no. from:23000001 | GDS44027 | Drive Shaft | 29T | 22 | 22 | 52 | 98 | 580 | |
| | 2000.09-2003.07 | 5MT | F | L | Hatchback Van FWD Y 17 DTL | Chassis no. to:13999999/14999999/16999999 | GDS82091 | Drive Shaft | 29T | 22 | 22 | 52 | 97.5 | 580 | |
| | 2000.09-2003.07 | 5MT | F | L | Hatchback Van FWD Y 17 DTL | Chassis no. from:23000001 | GDS99204 | Drive Shaft | | 22 | 22 | 52 | 97.5 | 584 | |
| | 2000.09-2003.07 | 5MT | F | R | Hatchback Van FWD Y 17 DTL | Chassis no. from:23000001 | GDS44026 | Drive Shaft | 29T | 22 | 22 | 52 | 98 | 930 | |
| | 2000.09-2003.07 | 5MT | F | R | Hatchback Van FWD Y 17 DTL | Chassis no. to:13999999 | GDS44060 | Drive Shaft | | 22 | 22 | 52 | 98 | 930 | |
| | 2000.09-2003.07 | 5MT | F | R | Hatchback Van FWD Y 17 DTL | Chassis no. from:24000001/26000001 | GDS44075 | Drive Shaft | 29T | 22 | 22 | 52 | 97.5 | 926 | |
| | 2000.09-2003.07 | 5MT | F | R | Hatchback Van FWD Y 17 DTL | Chassis no. from:23000001 | GDS99205 | Drive Shaft | | 22 | 22 | 52 | 97.5 | 930 | |
| | 2000.09-2003.07 | 5MT | F | L | Hatchback Van FWD Y 17 DTL | Chassis no. to:13999999/14999999/16999999 | GCI44009 | Inner Joint | | 22 | 23 | 35 | 57.5 | 96 | |
| | 2000.09-2003.07 | 5MT | F | R | Hatchback Van FWD Y 17 DTL | Chassis no. from:24000001/26000001 | GCI60001 | Inner Joint | | 22 | 28 | 34.9 | 57.5 | 96.5 | |
| | 2000.09-2003.07 | 5MT | F | L/R | Hatchback Van FWD Y 17 DTL | Chassis no. from:23000001 | GCI44003 | Inner Joint | | 22 | 28 | 34.95 | 57.5 | 83.5 | |
| | 2000.09-2003.07 | MT | F | L | Hatchback Van FWD Y 17 DTL | | GDS99069 | Drive Shaft | 29T | 22 | 22 | 52 | 97.5 | 584 | |
| | 2000.09-2003.07 | MT | F | R | Hatchback Van FWD Y 17 DTL | | GCO44043 | Outer Joint | | 22 | 28 | 52 | 97.5 | 57.5 | O |
| | 2000.09-2003.07 | MT | F | L/R | Hatchback Van FWD Y 17 DTL | | GCO44018 | Outer Joint | | 22 | 28 | 52.2 | 97.5 | 55 | O |
| | 2000.09-2003.07 | MT | F | L/R | Hatchback Van FWD Y 17 DTL | | GCO44019 | Outer Joint | 29T | 22 | 28 | 52 | 97.5 | 57.5 | O |
| | 2000.09-2003.07 | MT | F | L/R | Hatchback Van FWD Y 17 DTL | | GCO44020 | Outer Joint | 29T | 22 | 28 | 52 | 97.5 | 57.5 | O |
| 1.7 (55 kw) | 2000.09-2003.07 | 5MT | F | L | Hatchback Van FWD Y 17 DT | Chassis no. from:23000001 | GDS44027 | Drive Shaft | 29T | 22 | 22 | 52 | 98 | 580 | |
| | 2000.09-2003.07 | 5MT | F | L | Hatchback Van FWD Y 17 DT | Chassis no. to:13999999/14999999/16999999 | GDS82091 | Drive Shaft | 29T | 22 | 22 | 52 | 97.5 | 580 | |
| | 2000.09-2003.07 | 5MT | F | L | Hatchback Van FWD Y 17 DT | Chassis no. from:23000001 | GDS99204 | Drive Shaft | | 22 | 22 | 52 | 97.5 | 584 | |
| | 2000.09-2003.07 | 5MT | F | R | Hatchback Van FWD Y 17 DT | Chassis no. from:23000001 | GDS44026 | Drive Shaft | 29T | 22 | 22 | 52 | 98 | 930 | |
| | 2000.09-2003.07 | 5MT | F | R | Hatchback Van FWD Y 17 DT | Chassis no. to:13999999 | GDS44060 | Drive Shaft | | 22 | 22 | 52 | 98 | 930 | |
| | 2000.09-2003.07 | 5MT | F | R | Hatchback Van FWD Y 17 DT | Chassis no. from:24000001/26000001 | GDS44075 | Drive Shaft | 29T | 22 | 22 | 52 | 97.5 | 926 | |
| | 2000.09-2003.07 | 5MT | F | R | Hatchback Van FWD Y 17 DT | Chassis no. from:23000001 | GDS99205 | Drive Shaft | | 22 | 22 | 52 | 97.5 | 930 | |
| | 2000.09-2003.07 | 5MT | F | L | Hatchback Van FWD Y 17 DT | Chassis no. to:13999999/14999999/16999999 | GCI44009 | Inner Joint | | 22 | 23 | 35 | 57.5 | 96 | |
| | 2000.09-2003.07 | 5MT | F | R | Hatchback Van FWD Y 17 DT | Chassis no. from:24000001/26000001 | GCI60001 | Inner Joint | | 22 | 28 | 34.9 | 57.5 | 96.5 | |
| | 2000.09-2003.07 | 5MT | F | L/R | Hatchback Van FWD Y 17 DT | Chassis no. from:23000001 | GCI44003 | Inner Joint | | 22 | 28 | 34.95 | 57.5 | 83.5 | |
| | 2000.09-2003.07 | MT | F | L | Hatchback Van FWD Y 17 DT | | GDS99069 | Drive Shaft | 29T | 22 | 22 | 52 | 97.5 | 584 | |
| | 2000.09-2003.07 | MT | F | R | Hatchback Van FWD Y 17 DT | | GCO44043 | Outer Joint | | 22 | 28 | 52 | 97.5 | 57.5 | O |

| | YEAR | TRANSM. | F/R | L/R | BODY STYLE & DRIVE TYPE & ENGINE | REMARKS | G-AP Ref. | PRODUCT | ABS | Technical Specifications A | B | C | H | L | P |
|---|---|---|---|---|---|---|---|---|---|---|---|---|---|---|---|
| **OPEL** | | | | | | | | | | | | | | | |
| **Corsa Van** | | | | | | | | | | | | | | | |
| 1.7 (55 kw) | 2000.09-2003.07 | MT | F | L/R | Hatchback Van FWD Y 17 DT | | GCO44018 | Outer Joint | | 22 | 28 | 52.2 | 97.5 | 55 | O |
| | 2000.09-2003.07 | MT | F | L/R | Hatchback Van FWD Y 17 DT | | GCO44019 | Outer Joint | 29T | 22 | 28 | 52 | 97.5 | 57.5 | O |
| | 2000.09-2003.07 | MT | F | L/R | Hatchback Van FWD Y 17 DT | | GCO44020 | Outer Joint | 29T | 22 | 28 | 52 | 97.5 | 57.5 | O |
| 1.7 (74 kw) | 2003.08-2012.12 | 5MT | F | L | Hatchback Van FWD Z 17 DTH | | GDS44032 | Drive Shaft | 29T | 33 | 34 | 52 | 104 | 587.5 | |
| | 2003.08-2012.12 | 5MT | F | R | Hatchback Van FWD Z 17 DTH | | GDS60021 | Drive Shaft | 29T | 33 | 34 | 52 | 104 | 612 | |
| | 2003.08-2012.12 | 5MT | F | L/R | Hatchback Van FWD Z 17 DTH | | GCO44004 | Outer Joint | 29T | 33 | 24 | 52 | 104 | 64 | M |
| | 2003.08-2012.12 | 5MT | F | L | Hatchback Van FWD Z 17 DTH | | GCI21034 | Inner Joint | | 34 | 24 | 35 | 56.5 | 102 | |
| | 2003.08-2012.12 | MT | F | R | Hatchback Van FWD Z 17 DTH | Date to:2012.12 | GCI60003 | Inner Joint | | 34 | 24 | 35.5 | | 117.5 | |
| 1.7 (96 kw) | 2012.07-2014.08 | 6MT | F | L | Hatchback Van FWD A 17 DTS | | GDS60025 | Drive Shaft | | 25 | 25 | 51 | 84.5 | 579.5 | |
| | 2012.07-2014.08 | 6MT | F | R | Hatchback Van FWD A 17 DTS | | GDS84083 | Drive Shaft | | 25 | 34 | 51 | 84.5 | 548 | |
| | 2012.07-2014.08 | 6MT | F | L/R | Hatchback Van FWD A 17 DTS | | GCO60006 | Outer Joint | | 25 | 35 | 51 | 84.5 | 63 | I |
| | 2012.07-2014.08 | 6MT | F | L | Hatchback Van FWD A 17 DTS | | GCI60004 | Inner Joint | | 25 | 35 | 34.9 | 57.5 | 113 | |
| | 2012.07-2014.08 | 6MT | F | R | Hatchback Van FWD A 17 DTS | | GCI60005 | Inner Joint | | 34 | 35 | 37.5 | | 129 | |
| **Crossland** | | | | | | | | | | | | | | | |
| 1.5 (81 kw) | 2020.10- | 6MT | F | L | SUV FWD F 15 DT (DV5RCE) | | GDS84007 | Drive Shaft | | 25 | 24 | 58.5 | 79 | 654 | |
| | 2020.10- | 6MT | F | R | SUV FWD F 15 DT (DV5RCE) | | GDS83947 | Drive Shaft | | 25 | 24 | 58.5 | 79 | 878 | |
| **Crossland X** | | | | | | | | | | | | | | | |
| 1.2 (60 kw) | 2017.03- | 5MT | F | L/R | SUV FWD B 12 XE (EB2F);D 12 XE (EB2FA) | | GCO99366 | Outer Joint | | 25 | 34 | 58.5 | 79 | 55 | I |
| | 2017.10- | 5MT | F | L/R | SUV FWD B 12 XE (EB2F) | | GCO99366 | Outer Joint | | 25 | 34 | 58.5 | 79 | 55 | I |
| 1.2 (61 kw) | 2019.07- | 5MT | F | L/R | SUV Van FWD F 12 XE (EB2FA) | | GCO99366 | Outer Joint | | 25 | 34 | 58.5 | 79 | 55 | I |
| 1.2 (81 kw) | 2018.07- | 5MT/6MT | F | L | SUV Van FWD D 12 XHL (EB2ADT);F 12 XHL (EB2ADT) | | GDS84007 | Drive Shaft | | 25 | 24 | 58.5 | 79 | 654 | |
| | 2018.07- | 5MT/6MT | F | R | SUV Van FWD D 12 XHL (EB2ADT);F 12 XHL (EB2ADT) | | GDS83947 | Drive Shaft | | 25 | 24 | 58.5 | 79 | 878 | |
| | 2018.07- | 6AT | F | L | SUV Van FWD D 12 XHL (EB2ADT);F 12 XHL (EB2ADT) | | GDS83614 | Drive Shaft | | 25 | 37 | 58.5 | 79 | 615 | |
| | 2018.07- | 6AT | F | R | SUV Van FWD D 12 XHL (EB2ADT);F 12 XHL (EB2ADT) | | GDS83615 | Drive Shaft | | 25 | 37 | 58.5 | 79 | 880 | |
| | 2018.07- | 6AT | F | L | SUV Van FWD D 12 XHL (EB2ADT);F 12 XHL (EB2ADT) | | GCO10148 | Outer Joint | | 25 | 34 | 58.5 | 79 | 55.5 | I |
| | 2018.07- | 6AT | F | L | SUV Van FWD D 12 XHL (EB2ADT);F 12 XHL (EB2ADT) | | GCO82355 | Outer Joint | | 25 | 34 | 58.5 | 79 | 55.5 | I |
| | 2018.07- | 6AT | F | R | SUV Van FWD D 12 XHL (EB2ADT);F 12 XHL (EB2ADT) | | GCO82351 | Outer Joint | | 25 | 34 | 58.5 | 79 | 55.5 | I |
| | 2018.07- | 6AT | F | L | SUV Van FWD D 12 XHL (EB2ADT);F 12 XHL (EB2ADT) | | GCI82119 | Inner Joint | | 37 | 34 | 41.5 | 58.5 | 94 | |
| | 2018.07- | 6AT | F | R | SUV Van FWD D 12 XHL (EB2ADT);F 12 XHL (EB2ADT) | | GCI82182 | Inner Joint | | 37 | 34 | | 290 | 88 | |
| 1.5 (75 kw) | 2018.06- | 6MT | F | L | SUV FWD D 15 DT (DV5RD) | | GDS84007 | Drive Shaft | | 25 | 24 | 58.5 | 79 | 654 | |
| | 2018.06- | 6MT | F | R | SUV FWD D 15 DT (DV5RD) | | GDS83947 | Drive Shaft | | 25 | 24 | 58.5 | 79 | 878 | |
| | 2018.06- | 6MT | F | L/R | SUV FWD D 15 DT (DV5RD) | | GCO82355 | Outer Joint | | 25 | 34 | 58.5 | 79 | 55.5 | I |
| | 2018.06- | 6MT | F | L | SUV FWD D 15 DT (DV5RD) | | GCI82131 | Inner Joint | | 24 | 34 | 40 | 62 | 89 | |
| | 2018.06- | 6MT | F | R | SUV FWD D 15 DT (DV5RD) | | GCI82374 | Inner Joint | | 24 | 34 | 29.8 | 291 | 88 | |
| | 2018.06- | 6MT | F | L | SUV Van FWD D 15 DT (DV5RD) | | GDS84007 | Drive Shaft | | 25 | 24 | 58.5 | 79 | 654 | |
| | 2018.06- | 6MT | F | R | SUV Van FWD D 15 DT (DV5RD) | | GDS83947 | Drive Shaft | | 25 | 24 | 58.5 | 79 | 878 | |
| | 2018.06- | 6MT | F | L/R | SUV Van FWD D 15 DT (DV5RD) | | GCO82355 | Outer Joint | | 25 | 34 | 58.5 | 79 | 55.5 | I |
| | 2018.06- | 6MT | F | L | SUV Van FWD D 15 DT (DV5RD) | | GCI82131 | Inner Joint | | 24 | 34 | 40 | 62 | 89 | |
| | 2018.06- | 6MT | F | R | SUV Van FWD D 15 DT (DV5RD) | | GCI82374 | Inner Joint | | 24 | 34 | 29.8 | 291 | 88 | |
| 1.6 (73 kw) | 2017.03-2018.05 | 5MT | F | L | SUV FWD B 16 DT (DV6FD);Z 16 DT (DV6FD) | | GDS84007 | Drive Shaft | | 25 | 24 | 58.5 | 79 | 654 | |
| | 2017.03-2018.05 | 5MT | F | R | SUV FWD B 16 DT (DV6FD);Z 16 DT (DV6FD) | | GDS83947 | Drive Shaft | | 25 | 24 | 58.5 | 79 | 878 | |
| | 2017.03-2018.05 | 5MT | F | L/R | SUV FWD B 16 DT (DV6FD);Z 16 DT (DV6FD) | | GCO82355 | Outer Joint | | 25 | 34 | 58.5 | 79 | 55.5 | I |
| | 2017.03-2018.05 | 5MT | F | L | SUV FWD B 16 DT (DV6FD);Z 16 DT (DV6FD) | | GCI82131 | Inner Joint | | 24 | 34 | 40 | 62 | 89 | |
| | 2017.03-2018.05 | 5MT | F | R | SUV FWD B 16 DT (DV6FD);Z 16 DT (DV6FD) | | GCI82374 | Inner Joint | | 24 | 34 | 29.8 | 291 | 88 | |
| 1.6 (85 kw) | 2017.08-2019.04 | 6MT | F | L | SUV FWD B 16 DTH (DV6FC) | | GDS84126 | Drive Shaft | | 25 | 24 | 58.5 | 79 | 644 | |
| | 2017.08-2019.04 | 6MT | F | R | SUV FWD B 16 DTH (DV6FC) | | GDS84129 | Drive Shaft | | 25 | 24 | 58.5 | 79 | 893 | |
| 1.6 (88 kw) | 2017.03-2018.05 | 6MT | F | L | SUV FWD B 16 DTH (DV6FC) | | GDS84126 | Drive Shaft | | 25 | 24 | 58.5 | 79 | 644 | |
| | 2017.03-2018.05 | 6MT | F | R | SUV FWD B 16 DTH (DV6FC) | | GDS84129 | Drive Shaft | | 25 | 24 | 58.5 | 79 | 893 | |
| **Crossland/Crossland X** | | | | | | | | | | | | | | | |
| 1.2 (61 kw) | 2019.07- | 5MT | F | L/R | SUV FWD F 12 XE (EB2FA) | | GCO99366 | Outer Joint | | 25 | 34 | 58.5 | 79 | 55 | I |
| 1.2 (81 kw) | 2017.03- | 5MT/6MT | F | L | SUV FWD B 12 XHL (EB2DT), D 12 XHL (EB2ADT), F 12 XHL (EB2ADT) | | GCI82131 | Inner Joint | | 24 | 34 | 40 | 62 | 89 | |
| | 2017.03- | 5MT/6MT | F | R | SUV FWD B 12 XHL (EB2DT), D 12 XHL (EB2ADT), F 12 XHL (EB2ADT) | | GCI82374 | Inner Joint | | 24 | 34 | 29.8 | 291 | 88 | |
| | 2017.03- | 6AT | F | L | SUV FWD B 12 XHL (EB2DT), D 12 XHL (EB2ADT), F 12 XHL (EB2ADT) | | GDS83614 | Drive Shaft | | 25 | 37 | 58.5 | 79 | 615 | |
| | 2017.03- | 6AT | F | R | SUV FWD B 12 XHL (EB2DT), D 12 XHL (EB2ADT), F 12 XHL (EB2ADT) | | GDS83615 | Drive Shaft | | 25 | 37 | 58.5 | 79 | 880 | |
| | 2017.03- | 6AT | F | R | SUV FWD B 12 XHL (EB2DT), D 12 XHL (EB2ADT), F 12 XHL (EB2ADT) | | GCO82351 | Outer Joint | | 25 | 34 | 58.5 | 79 | 55.5 | I |
| | 2017.03- | 6AT | F | L/R | SUV FWD B 12 XHL (EB2DT), D 12 XHL (EB2ADT), F 12 XHL (EB2ADT) | | GCO82355 | Outer Joint | | 25 | 34 | 58.5 | 79 | 55.5 | I |
| | 2017.03- | 6AT | F | L | SUV FWD B 12 XHL (EB2DT), D 12 XHL (EB2ADT), F 12 XHL (EB2ADT) | | GCI82119 | Inner Joint | | 37 | 34 | 41.5 | 58.5 | 94 | |
| | 2017.03- | 6AT | F | R | SUV FWD B 12 XHL (EB2DT), D 12 XHL (EB2ADT), F 12 XHL (EB2ADT) | | GCI82182 | Inner Joint | | 37 | 34 | | 290 | 88 | |
| | 2017.03- | 6MT | F | L | SUV FWD B 12 XHL (EB2DT), D 12 XHL (EB2ADT), F 12 XHL (EB2ADT) | | GDS84007 | Drive Shaft | | 25 | 24 | 58.5 | 79 | 654 | |
| | 2017.03- | 6MT | F | R | SUV FWD B 12 XHL (EB2DT), D 12 XHL (EB2ADT), F 12 XHL (EB2ADT) | | GDS83947 | Drive Shaft | | 25 | 24 | 58.5 | 79 | 878 | |
| 1.2 (96 kw) | 2017.03- | 6AT | F | L | SUV FWD D 12 XHT (EB2ADTS), B 12 XHT (EB2DTS), F 12 XHT (EB2ADTS) | | GDS83614 | Drive Shaft | | 25 | 37 | 58.5 | 79 | 615 | |
| | 2017.03- | 6AT | F | R | SUV FWD D 12 XHT (EB2ADTS), B 12 XHT (EB2DTS), F 12 XHT (EB2ADTS) | | GDS83615 | Drive Shaft | | 25 | 37 | 58.5 | 79 | 880 | |
| | 2017.03- | 6AT | F | L | SUV FWD D 12 XHT (EB2ADTS), B 12 XHT (EB2DTS), F 12 XHT (EB2ADTS) | | GCO82355 | Outer Joint | | 25 | 34 | 58.5 | 79 | 55.5 | I |
| | 2017.03- | 6AT | F | R | SUV FWD D 12 XHT (EB2ADTS), B 12 XHT (EB2DTS), F 12 XHT (EB2ADTS) | | GCO82351 | Outer Joint | | 25 | 34 | 58.5 | 79 | 55.5 | I |
| | 2017.03- | 6AT | F | L | SUV FWD D 12 XHT (EB2ADTS), B 12 XHT (EB2DTS), F 12 XHT (EB2ADTS) | | GCI82119 | Inner Joint | | 37 | 34 | 41.5 | 58.5 | 94 | |

| | YEAR | TRANSM. | F/R | L/R | BODY STYLE & DRIVE TYPE & ENGINE | REMARKS | G-AP Ref. | PRODUCT | ABS | Technical Specifications A | B | C | H | L | P |
|---|---|---|---|---|---|---|---|---|---|---|---|---|---|---|---|
| **OPEL** | | | | | | | | | | | | | | | |
| **Crossland/Crossland X** | | | | | | | | | | | | | | | |
| 1.2 (96 kw) | 2017.03- | 6AT | F | R | SUV FWD D 12 XHT (EB2ADTS), B 12 XHT (EB2DTS), F 12 XHT (EB2ADTS) | | GCI82182 | Inner Joint | | 37 | 34 | | 290 | 88 | |
| | 2017.03- | 6MT | F | L | SUV FWD D 12 XHT (EB2ADTS), B 12 XHT (EB2DTS), F 12 XHT (EB2ADTS) | | GDS84007 | Drive Shaft | | 25 | 24 | 58.5 | 79 | 654 | |
| | 2017.03- | 6MT | F | L | SUV FWD D 12 XHT (EB2ADTS), B 12 XHT (EB2DTS), F 12 XHT (EB2ADTS) | For Engine code:B12XHT(EB2DTS) | GDS84126 | Drive Shaft | | 25 | 24 | 58.5 | 79 | 644 | |
| | 2017.03- | 6MT | F | R | SUV FWD D 12 XHT (EB2ADTS), B 12 XHT (EB2DTS), F 12 XHT (EB2ADTS) | | GDS83947 | Drive Shaft | | 25 | 24 | 58.5 | 79 | 878 | |
| | 2017.03- | 6MT | F | R | SUV FWD D 12 XHT (EB2ADTS), B 12 XHT (EB2DTS), F 12 XHT (EB2ADTS) | For Engine code:B12XHT(EB2DTS) | GDS84129 | Drive Shaft | | 25 | 24 | 58.5 | 79 | 893 | |
| | 2017.03- | 6MT | F | L/R | SUV FWD D 12 XHT (EB2ADTS), B 12 XHT (EB2DTS), F 12 XHT (EB2ADTS) | | GCO82355 | Outer Joint | | 25 | 34 | 58.5 | 79 | 55.5 | I |
| | 2017.03- | 6MT | F | L | SUV FWD D 12 XHT (EB2ADTS), B 12 XHT (EB2DTS), F 12 XHT (EB2ADTS) | | GCI82131 | Inner Joint | | 24 | 34 | 40 | 62 | 89 | |
| | 2017.03- | 6MT | F | L | SUV FWD D 12 XHT (EB2ADTS), B 12 XHT (EB2DTS), F 12 XHT (EB2ADTS) | For Engine code:B12XHT(EB2DTS) | GCI82181 | Inner Joint | | 24 | 34 | 40 | 52.5 | 90 | |
| | 2017.03- | 6MT | F | R | SUV FWD D 12 XHT (EB2ADTS), B 12 XHT (EB2DTS), F 12 XHT (EB2ADTS) | For Engine code:B12XHT(EB2DTS) | GCI82323 | Inner Joint | | 24 | 34 | 29.8 | 306 | 88 | |
| | 2017.03- | 6MT | F | R | SUV FWD D 12 XHT (EB2ADTS), B 12 XHT (EB2DTS), F 12 XHT (EB2ADTS) | | GCI82374 | Inner Joint | | 24 | 34 | 29.8 | 291 | 88 | |
| 1.5 (88 kw) | 2018.08- | 6AT | F | L | SUV FWD D 15 DTH (DV5RC), F 15 DTH (DV5RCD) | | GDS83614 | Drive Shaft | | 25 | 37 | 58.5 | 79 | 615 | |
| | 2018.08- | 6AT | F | R | SUV FWD D 15 DTH (DV5RC), F 15 DTH (DV5RCD) | | GDS83615 | Drive Shaft | | 25 | 37 | 58.5 | 79 | 880 | |
| | 2018.08- | 6AT | F | L | SUV FWD D 15 DTH (DV5RC), F 15 DTH (DV5RCD) | | GCO82355 | Outer Joint | | 25 | 34 | 58.5 | 79 | 55.5 | I |
| | 2018.08- | 6AT | F | R | SUV FWD D 15 DTH (DV5RC), F 15 DTH (DV5RCD) | | GCO82351 | Outer Joint | | 25 | 34 | 58.5 | 79 | 55.5 | I |
| | 2018.08- | 6AT | F | L | SUV FWD D 15 DTH (DV5RC), F 15 DTH (DV5RCD) | | GCI82119 | Inner Joint | | 37 | 34 | 41.5 | 58.5 | 94 | |
| | 2018.08- | 6AT | F | R | SUV FWD D 15 DTH (DV5RC), F 15 DTH (DV5RCD) | | GCI82182 | Inner Joint | | 37 | 34 | | 290 | 88 | |
| **Frontera** | | | | | | | | | | | | | | | |
| 1.2 (74 kw) | 2024.07- | 6DCT | F | R | SUV FWD HPX(EB2LTEDH2) | | GDS56753 | Drive Shaft | | 25 | 37 | 55.7 | 84 | 911 | |
| | 2024.07- | | F | R | SUV FWD HPX(EB2LTEDH2) | | GCI83474 | Inner Joint | | 37 | 34 | 29.8 | 290 | 99 | |
| 1.2 (81 kw) | 2025.04- | 6DCT | F | R | SUV FWD HPX (EB2LTEDH2) | | GDS56753 | Drive Shaft | | 25 | 37 | 55.7 | 84 | 911 | |
| 1.2 (100 kw) | 2024.07- | 6DCT | F | R | SUV FWD HPY(EB2LTDH2) | | GDS56753 | Drive Shaft | | 25 | 37 | 55.7 | 84 | 911 | |
| | 2024.07- | | F | R | SUV FWD HPY(EB2LTDH2) | | GCI83474 | Inner Joint | | 37 | 34 | 29.8 | 290 | 99 | |
| 1.2 (107 kw) | 2025.04- | 6DCT | F | R | SUV FWD HPY (EB2LTDH2) | | GDS56753 | Drive Shaft | | 25 | 37 | 55.7 | 84 | 911 | |
| 2.0 (85 kw) | 1991.08-1998.08 | MT | F | L/R | Terrain cab open 4WD C20NE/X20SE | | GCO26003 | Outer Joint | | 17 | 26 | 53 | 144 | 70.5 | M |
| 2.2 (85 kw) | 1998.09-2003.12 | MT | F | L/R | Terrain cab wagon closed 4WD X22DTH/Y22DTH | | GCO26004 | Outer Joint | | 17 | 33 | 53 | 144 | 69.5 | I |
| 2.2 (88 kw) | 2002.09-2004.07 | MT | F | L/R | Terrain cab wagon closed 4WD Y22DTH | | GCO26004 | Outer Joint | | 17 | 33 | 53 | 144 | 69.5 | I |
| 2.2 (100 kw) | 1995.03-1998.08 | MT | F | L/R | Terrain cab wagon closed 4WD X22XE | | GCO26004 | Outer Joint | | 17 | 33 | 53 | 144 | 69.5 | I |
| | 1998.09-2004.07 | MT | F | L/R | Terrain cab wagon closed 4WD X22SE/Y22SE | | GCO26004 | Outer Joint | | 17 | 33 | 53 | 144 | 69.5 | I |
| 2.3 (74 kw) | 1992.03-1998.10 | MT | F | L/R | Terrain cab wagon closed 4WD 23DTR | | GCO26004 | Outer Joint | | 17 | 33 | 53 | 144 | 69.5 | I |
| 2.4 (92 kw) | 1992.03-1998.10 | MT | F | L/R | Terrain cab wagon closed 4WD C24NE | | GCO26004 | Outer Joint | | 17 | 33 | 53 | 144 | 69.5 | I |
| 2.5 (85 kw) | 1996.09-1998.08 | MT | F | L/R | Terrain cab open 4WD 25TD | | GCO26004 | Outer Joint | | 17 | 33 | 53 | 144 | 69.5 | I |
| | 1996.09-1998.08 | MT | F | L/R | Terrain cab wagon closed 4WD 25TD | | GCO26004 | Outer Joint | | 17 | 33 | 53 | 144 | 69.5 | I |
| 2.8 (83 kw) | 1995.03-1996.08 | MT | F | L/R | Terrain cab open 4WD 28TD | | GCO26004 | Outer Joint | | 17 | 33 | 53 | 144 | 69.5 | I |
| | 1995.03-1998.08 | MT | F | L/R | Terrain cab wagon closed 4WD 28TD | | GCO26004 | Outer Joint | | 17 | 33 | 53 | 144 | 69.5 | I |
| 3.2 (151 kw) | 1998.09-2004.07 | MT | F | L/R | Terrain cab wagon closed 4WD 6VD1(DOHC)Y32NE | | GCO26004 | Outer Joint | | 17 | 33 | 53 | 144 | 69.5 | I |
| **Grandland X** | | | | | | | | | | | | | | | |
| 1.2 (81 kw) | 2017.06-2021.07 | 6MT | F | L | SUV FWD EB2ADT | | GDS83067 | Drive Shaft | | 28 | 24 | 58.5 | 92.5 | 696 | |
| | 2017.06-2021.07 | 6MT | F | R | SUV FWD EB2ADT | | GDS84363 | Drive Shaft | | 28 | 24 | 58.5 | 92.5 | 933 | |
| | 2017.06-2021.07 | 6MT | F | R | SUV FWD EB2ADT | | GCO82273 | Outer Joint | | 28 | 34 | 58.5 | 92.5 | 56 | I |
| | 2017.06-2021.07 | 6MT | F | R | SUV FWD EB2ADT | | GCI82320 | Inner Joint | | 24 | 34 | 29.8 | 290 | 88 | |
| 1.2 (96 kw) | 2018.04-2021.07 | 6MT | F | L | SUV Van FWD D 12 XHT (EB2ADTS) | | GDS83067 | Drive Shaft | | 28 | 24 | 58.5 | 92.5 | 696 | |
| | 2018.04-2021.07 | 6MT | F | R | SUV Van FWD D 12 XHT (EB2ADTS) | | GDS84363 | Drive Shaft | | 28 | 24 | 58.5 | 92.5 | 933 | |
| | 2018.04-2021.07 | 6MT | F | L | SUV Van FWD D 12 XHT (EB2ADTS) | | GCI82131 | Inner Joint | | 24 | 34 | 40 | 62 | 89 | |
| | 2018.04-2021.07 | 6MT | F | R | SUV Van FWD D 12 XHT (EB2ADTS) | | GCI82320 | Inner Joint | | 24 | 34 | 29.8 | 290 | 88 | |
| | 2018.04-2021.07 | 8AT | F | L | SUV Van FWD D 12 XHT (EB2ADTS) | | GDS83076 | Drive Shaft | | 28 | 37 | 58.5 | 93 | 655 | |
| | 2018.04-2021.07 | 8AT | F | R | SUV Van FWD D 12 XHT (EB2ADTS) | | GDS83077 | Drive Shaft | | 28 | 37 | 58.5 | 93 | 928 | |
| | 2018.04-2021.07 | 8AT | F | L/R | SUV Van FWD D 12 XHT (EB2ADTS) | | GCO10199 | Outer Joint | | 28 | 23 | 58.5 | 93 | 50.5 | I |
| | 2018.04-2021.07 | 8AT | F | L | SUV Van FWD D 12 XHT (EB2ADTS) | | GCI10139 | Inner Joint | | 37 | 23 | 40.3 | 59 | 95 | |
| | 2018.04-2021.07 | 8AT | F | R | SUV Van FWD D 12 XHT (EB2ADTS) | | GCI45038 | Inner Joint | | 37 | 23 | | 284 | 95 | |
| 1.5 (75 kw) | 2018.06-2021.07 | 6MT | F | L | SUV FWD D 15 DT (DV5RD) | | GDS83067 | Drive Shaft | | 28 | 24 | 58.5 | 92.5 | 696 | |
| | 2018.06-2021.07 | 6MT | F | R | SUV FWD D 15 DT (DV5RD) | | GDS84363 | Drive Shaft | | 28 | 24 | 58.5 | 92.5 | 933 | |
| | 2018.06-2021.07 | 6MT | F | L/R | SUV FWD D 15 DT (DV5RD) | | GCO82273 | Outer Joint | | 28 | 34 | 58.5 | 92.5 | 56 | I |
| | 2018.06-2021.07 | 6MT | F | L | SUV FWD D 15 DT (DV5RD) | | GCI82131 | Inner Joint | | 24 | 34 | 40 | 62 | 89 | |
| | 2018.06-2021.07 | 6MT | F | R | SUV FWD D 15 DT (DV5RD) | | GCI82320 | Inner Joint | | 24 | 34 | 29.8 | 290 | 88 | |
| 1.5 (96 kw) | 2018.04-2021.07 | 6AT | F | L | SUV Van FWD D 15 DTH (DV5RC) | | GDS83076 | Drive Shaft | | 28 | 37 | 58.5 | 93 | 655 | |
| | 2018.04-2021.07 | 6AT | F | R | SUV Van FWD D 15 DTH (DV5RC) | | GDS83077 | Drive Shaft | | 28 | 37 | 58.5 | 93 | 928 | |
| | 2018.04-2021.07 | 6AT | F | L/R | SUV Van FWD D 15 DTH (DV5RC) | | GCO10199 | Outer Joint | | 28 | 23 | 58.5 | 93 | 50.5 | I |
| | 2018.04-2021.07 | 6AT | F | L | SUV Van FWD D 15 DTH (DV5RC) | | GCI10139 | Inner Joint | | 37 | 23 | 40.3 | 59 | 95 | |
| | 2018.04-2021.07 | 6AT | F | R | SUV Van FWD D 15 DTH (DV5RC) | | GCI45038 | Inner Joint | | 37 | 23 | | 284 | 95 | |
| | 2018.04-2021.07 | 6MT | F | L | SUV Van FWD D 15 DTH (DV5RC) | | GDS83608 | Drive Shaft | | 28 | 37 | 58.5 | 92.5 | 683 | |
| | 2018.04-2021.07 | 6MT | F | R | SUV Van FWD D 15 DTH (DV5RC) | | GDS83607 | Drive Shaft | | 28 | 37 | 58.5 | 92.5 | 944 | |
| | 2018.04-2021.07 | 6MT | F | L/R | SUV Van FWD D 15 DTH (DV5RC) | | GCO82273 | Outer Joint | | 28 | 34 | 58.5 | 92.5 | 56 | I |
| | 2018.04-2021.07 | 6MT | F | L | SUV Van FWD D 15 DTH (DV5RC) | | GCI82301 | Inner Joint | | 37 | 34 | 40 | 65.5 | 89.5 | |
| | 2018.04-2021.07 | 6MT | F | R | SUV Van FWD D 15 DTH (DV5RC) | | GCI82300 | Inner Joint | | 37 | 34 | 31.9 | 302 | 88 | |
| 1.6 (88 kw) | 2017.06-2021.07 | 6AT | F | L | SUV FWD B 16 DTH (DV6FC) | | GDS83076 | Drive Shaft | | 28 | 37 | 58.5 | 93 | 655 | |

| | YEAR | TRANSM. | F/R | L/R | BODY STYLE & DRIVE TYPE & ENGINE | REMARKS | G-AP Ref. | PRODUCT | ABS | Technical Specifications A | B | C | H | L | P |
|---|---|---|---|---|---|---|---|---|---|---|---|---|---|---|---|
| **OPEL** | | | | | | | | | | | | | | | |
| **Grandland X** | | | | | | | | | | | | | | | |
| 1.6 (88 kw) | 2017.06-2021.07 | 6AT | F | R | SUV FWD B 16 DTH (DV6FC) | | GDS83077 | Drive Shaft | | 28 | 37 | 58.5 | 93 | 928 | |
| | 2017.06-2021.07 | 6AT | F | L/R | SUV FWD B 16 DTH (DV6FC) | | GCO10199 | Outer Joint | | 28 | 23 | 58.5 | 93 | 50.5 | I |
| | 2017.06-2021.07 | 6AT | F | L | SUV FWD B 16 DTH (DV6FC) | | GCI10139 | Inner Joint | | 37 | 23 | 40.3 | 59 | 95 | |
| | 2017.06-2021.07 | 6AT | F | R | SUV FWD B 16 DTH (DV6FC) | | GCI45038 | Inner Joint | | 37 | 23 | | 284 | 95 | |
| | 2017.06-2021.07 | 6MT | F | L | SUV FWD B 16 DTH (DV6FC) | | GDS83608 | Drive Shaft | | 28 | 37 | 58.5 | 92.5 | 683 | |
| | 2017.06-2021.07 | 6MT | F | R | SUV FWD B 16 DTH (DV6FC) | | GDS83607 | Drive Shaft | | 28 | 37 | 58.5 | 92.5 | 944 | |
| | 2017.06-2021.07 | 6MT | F | L/R | SUV FWD B 16 DTH (DV6FC) | | GCO82273 | Outer Joint | | 28 | 34 | 58.5 | 92.5 | 56 | I |
| | 2017.06-2021.07 | 6MT | F | L | SUV FWD B 16 DTH (DV6FC) | | GCI82301 | Inner Joint | | 37 | 34 | 40 | 65.5 | 89.5 | |
| | 2017.06-2021.07 | 6MT | F | R | SUV FWD B 16 DTH (DV6FC) | | GCI82300 | Inner Joint | | 37 | 34 | 31.9 | 302 | 88 | |
| 1.6 (110 kw) | 2019.12-2021.07 | 6AT | F | L | SUV FWD A 16 XHL (EP6FDTMD) | | GDS83076 | Drive Shaft | | 28 | 37 | 58.5 | 93 | 655 | |
| | 2019.12-2021.07 | 6AT | F | R | SUV FWD A 16 XHL (EP6FDTMD) | | GDS83077 | Drive Shaft | | 28 | 37 | 58.5 | 93 | 928 | |
| | 2019.12-2021.07 | 6AT | F | L/R | SUV FWD A 16 XHL (EP6FDTMD) | | GCO10199 | Outer Joint | | 28 | 23 | 58.5 | 93 | 50.5 | I |
| | 2019.12-2021.07 | 6AT | F | L | SUV FWD A 16 XHL (EP6FDTMD) | | GCI10139 | Inner Joint | | 37 | 23 | 40.3 | 59 | 95 | |
| | 2019.12-2021.07 | 6AT | F | R | SUV FWD A 16 XHL (EP6FDTMD) | | GCI45038 | Inner Joint | | 37 | 23 | | 284 | 95 | |
| 1.6 (133 kw) | 2018.09-2021.07 | 8AT | F | L | SUV FWD D 16 XHT (EP6FADTXD) | | GDS83076 | Drive Shaft | | 28 | 37 | 58.5 | 93 | 655 | |
| | 2018.09-2021.07 | 8AT | F | R | SUV FWD D 16 XHT (EP6FADTXD) | | GDS83077 | Drive Shaft | | 28 | 37 | 58.5 | 93 | 928 | |
| | 2018.09-2021.07 | 8AT | F | L/R | SUV FWD D 16 XHT (EP6FADTXD) | | GCO10199 | Outer Joint | | 28 | 23 | 58.5 | 93 | 50.5 | I |
| | 2018.09-2021.07 | 8AT | F | L | SUV FWD D 16 XHT (EP6FADTXD) | | GCI10139 | Inner Joint | | 37 | 23 | 40.3 | 59 | 95 | |
| | 2018.09-2021.07 | 8AT | F | R | SUV FWD D 16 XHT (EP6FADTXD) | | GCI45038 | Inner Joint | | 37 | 23 | | 284 | 95 | |
| 2.0 (130 kw) | 2017.11-2021.07 | 6MT | F | L | SUV FWD D 20 DTH (DW10FC) | | GDS58210 | Drive Shaft | | 28 | 37 | 58.5 | 92 | 667 | |
| | 2017.11-2021.07 | 6MT | F | R | SUV FWD D 20 DTH (DW10FC) | | GDS58209 | Drive Shaft | | 28 | 37 | 58.5 | 92 | 969 | |
| | 2017.11-2021.07 | 6MT | F | L | SUV FWD D 20 DTH (DW10FC) | | GCI82363 | Inner Joint | | 37 | 36 | 40 | 68 | 108 | |
| | 2017.11-2021.07 | 6MT | F | R | SUV FWD D 20 DTH (DW10FC) | | GCI82364 | Inner Joint | | 37 | 36 | 32 | 400 | 108 | |
| | 2017.11-2021.07 | 8AT | F | L | SUV FWD D 20 DTH (DW10FC) | | GDS83646 | Drive Shaft | | 28 | 37 | 58.5 | 92 | 622 | |
| | 2017.11-2021.07 | 8AT | F | R | SUV FWD D 20 DTH (DW10FC) | | GDS83652 | Drive Shaft | | 28 | 37 | 58.5 | 92 | 951 | |
| | 2017.11-2021.07 | 8AT | F | L | SUV FWD D 20 DTH (DW10FC) | | GCI82321 | Inner Joint | | 37 | 36 | 42.5 | 59.5 | 108 | |
| | 2017.11-2021.07 | 8AT | F | R | SUV FWD D 20 DTH (DW10FC) | | GCI82322 | Inner Joint | | 37 | 36 | | 379 | 108.5 | |
| | 2017.11-2021.07 | 8AT/6MT | F | L/R | SUV FWD D 20 DTH (DW10FC) | | GCO82449 | Outer Joint | | 28 | 36 | 58.5 | 92 | 60 | I |
| | 2017.11-2021.07 | 6MT | F | L | SUV Van FWD D 20 DTH (DW10FC) | | GDS58210 | Drive Shaft | | 28 | 37 | 58.5 | 92 | 667 | |
| | 2017.11-2021.07 | 6MT | F | R | SUV Van FWD D 20 DTH (DW10FC) | | GDS58209 | Drive Shaft | | 28 | 37 | 58.5 | 92 | 969 | |
| | 2017.11-2021.07 | 6MT | F | L | SUV Van FWD D 20 DTH (DW10FC) | | GCI82363 | Inner Joint | | 37 | 36 | 40 | 68 | 108 | |
| | 2017.11-2021.07 | 6MT | F | R | SUV Van FWD D 20 DTH (DW10FC) | | GCI82364 | Inner Joint | | 37 | 36 | 32 | 400 | 108 | |
| | 2017.11-2021.07 | 8AT | F | L | SUV Van FWD D 20 DTH (DW10FC) | | GDS83646 | Drive Shaft | | 28 | 37 | 58.5 | 92 | 622 | |
| | 2017.11-2021.07 | 8AT | F | R | SUV Van FWD D 20 DTH (DW10FC) | | GDS83652 | Drive Shaft | | 28 | 37 | 58.5 | 92 | 951 | |
| | 2017.11-2021.07 | 8AT | F | L | SUV Van FWD D 20 DTH (DW10FC) | | GCI82321 | Inner Joint | | 37 | 36 | 42.5 | 59.5 | 108 | |
| | 2017.11-2021.07 | 8AT | F | R | SUV Van FWD D 20 DTH (DW10FC) | | GCI82322 | Inner Joint | | 37 | 36 | | 379 | 108.5 | |
| | 2017.11-2021.07 | 8AT/6MT | F | L/R | SUV Van FWD D 20 DTH (DW10FC) | | GCO82449 | Outer Joint | | 28 | 36 | 58.5 | 92 | 60 | I |
| **Grandland/Grandland X** | | | | | | | | | | | | | | | |
| 1.2 (96 kw) | 2017.06- | 6MT | F | L | SUV FWD D 12 XHT (EB2ADTS), B 12 XHT (EB2DTS), F 12 XHT (EB2ADTS) | For Engine code:D12XHT(EB2ADTS) | GDS83067 | Drive Shaft | | 28 | 24 | 58.5 | 92.5 | 696 | |
| | 2017.06- | 6MT | F | L | SUV FWD D 12 XHT (EB2ADTS), B 12 XHT (EB2DTS), F 12 XHT (EB2ADTS) | For Engine code:B12XHT(EB2DTS) | GDS83617 | Drive Shaft | | 28 | 24 | 58.5 | 92.5 | 688 | |
| | 2017.06- | 6MT | F | R | SUV FWD D 12 XHT (EB2ADTS), B 12 XHT (EB2DTS), F 12 XHT (EB2ADTS) | For Engine code:B12XHT(EB2DTS) | GDS83618 | Drive Shaft | | 28 | 24 | 58.5 | 92.5 | 950 | |
| | 2017.06- | 6MT | F | R | SUV FWD D 12 XHT (EB2ADTS), B 12 XHT (EB2DTS), F 12 XHT (EB2ADTS) | For Engine code:D12XHT(EB2ADTS) | GDS84363 | Drive Shaft | | 28 | 24 | 58.5 | 92.5 | 933 | |
| | 2017.06- | 6MT | F | L | SUV FWD D 12 XHT (EB2ADTS), B 12 XHT (EB2DTS), F 12 XHT (EB2ADTS) | For Engine code:D12XHT(EB2ADTS) | GCI82131 | Inner Joint | | 24 | 34 | 40 | 62 | 89 | |
| | 2017.06- | 6MT | F | L | SUV FWD D 12 XHT (EB2ADTS), B 12 XHT (EB2DTS), F 12 XHT (EB2ADTS) | For Engine code:B12XHT(EB2DTS) | GCI82181 | Inner Joint | | 24 | 34 | 40 | 52.5 | 90 | |
| | 2017.06- | 6MT | F | R | SUV FWD D 12 XHT (EB2ADTS), B 12 XHT (EB2DTS), F 12 XHT (EB2ADTS) | For Engine code:D12XHT(EB2ADTS) | GCI82320 | Inner Joint | | 24 | 34 | 29.8 | 290 | 88 | |
| | 2017.06- | 6MT | F | R | SUV FWD D 12 XHT (EB2ADTS), B 12 XHT (EB2DTS), F 12 XHT (EB2ADTS) | For Engine code:B12XHT(EB2DTS) | GCI82323 | Inner Joint | | 24 | 34 | 29.8 | 306 | 88 | |
| | 2017.06- | 8AT | F | L | SUV FWD D 12 XHT (EB2ADTS), B 12 XHT (EB2DTS), F 12 XHT (EB2ADTS) | | GDS83076 | Drive Shaft | | 28 | 37 | 58.5 | 93 | 655 | |
| | 2017.06- | 8AT | F | R | SUV FWD D 12 XHT (EB2ADTS), B 12 XHT (EB2DTS), F 12 XHT (EB2ADTS) | | GDS83077 | Drive Shaft | | 28 | 37 | 58.5 | 93 | 928 | |
| | 2017.06- | 8AT | F | L/R | SUV FWD D 12 XHT (EB2ADTS), B 12 XHT (EB2DTS), F 12 XHT (EB2ADTS) | 8 balls | GCO10199 | Outer Joint | | 28 | 23 | 58.5 | 93 | 50.5 | I |
| | 2017.06- | 8AT | F | L | SUV FWD D 12 XHT (EB2ADTS), B 12 XHT (EB2DTS), F 12 XHT (EB2ADTS) | | GCI10139 | Inner Joint | | 37 | 23 | 40.3 | 59 | 95 | |
| | 2017.06- | 8AT | F | R | SUV FWD D 12 XHT (EB2ADTS), B 12 XHT (EB2DTS), F 12 XHT (EB2ADTS) | | GCI45038 | Inner Joint | | 37 | 23 | | 284 | 95 | |
| 1.5 (96 kw) | 2018.04- | 6AT/8AT | F | L | SUV FWD D 15 DTH (DV5RC) | | GDS83076 | Drive Shaft | | 28 | 37 | 58.5 | 93 | 655 | |
| | 2018.04- | 6AT/8AT | F | R | SUV FWD D 15 DTH (DV5RC) | | GDS83077 | Drive Shaft | | 28 | 37 | 58.5 | 93 | 928 | |
| | 2018.04- | 6AT/8AT | F | L/R | SUV FWD D 15 DTH (DV5RC) | | GCO10199 | Outer Joint | | 28 | 23 | 58.5 | 93 | 50.5 | I |
| | 2018.04- | 6AT/8AT | F | L | SUV FWD D 15 DTH (DV5RC) | | GCI10139 | Inner Joint | | 37 | 23 | 40.3 | 59 | 95 | |
| | 2018.04- | 6AT/8AT | F | R | SUV FWD D 15 DTH (DV5RC) | | GCI45038 | Inner Joint | | 37 | 23 | | 284 | 95 | |
| | 2018.04- | 6MT | F | L | SUV FWD D 15 DTH (DV5RC) | | GDS83608 | Drive Shaft | | 28 | 37 | 58.5 | 92.5 | 683 | |
| | 2018.04- | 6MT | F | R | SUV FWD D 15 DTH (DV5RC) | | GDS83607 | Drive Shaft | | 28 | 37 | 58.5 | 92.5 | 944 | |
| | 2018.04- | 6MT | F | L/R | SUV FWD D 15 DTH (DV5RC) | | GCO82273 | Outer Joint | | 28 | 34 | 58.5 | 92.5 | 56 | I |
| | 2018.04- | 6MT | F | L | SUV FWD D 15 DTH (DV5RC) | | GCI82301 | Inner Joint | | 37 | 34 | 40 | 65.5 | 89.5 | |
| | 2018.04- | 6MT | F | R | SUV FWD D 15 DTH (DV5RC) | | GCI82300 | Inner Joint | | 37 | 34 | 31.9 | 302 | 88 | |
| **GT** | | | | | | | | | | | | | | | |
| 2.0 (194 kw) | 2007.06-2011.12 | 5MT | R | L | Convertible RWD Z 20 NHH | | GDS87009 | Drive Shaft | | 30 | 27 | 54.5 | 105 | 801 | |
| | 2007.06-2011.12 | 5MT | R | R | Convertible RWD Z 20 NHH | | GDS87010 | Drive Shaft | | 30 | 27 | 54.5 | 105 | 870 | |

| | YEAR | TRANSM. | F/R | L/R | BODY STYLE & DRIVE TYPE & ENGINE | REMARKS | G-AP Ref. | PRODUCT | ABS | Technical Specifications | | | | | |
|---|---|---|---|---|---|---|---|---|---|---|---|---|---|---|---|
| | | | | | | | | | | A | B | C | H | L | P |
| **OPEL** | | | | | | | | | | | | | | | |
| **Insignia** | | | | | | | | | | | | | | | |
| 1.4 (103 kw) | 2011.04-2017.03 | 6MT | F | L | Hatchback FWD A 14 NET;B 14 NET | | GDS21043 | Drive Shaft | | 30 | 25 | 52.5 | 94.5 | 624.5 | |
| | 2011.04-2017.03 | 6MT | F | L/R | Hatchback FWD A 14 NET;B 14 NET | | GCO17051 | Outer Joint | | 30 | 26 | 53.8 | 94.5 | 65.5 | M |
| | 2011.04-2017.03 | 6MT | F | L/R | Hatchback FWD A 14 NET;B 14 NET | | GCO21049 | Outer Joint | | 30 | 26 | 52.5 | 94 | 65.5 | M |
| | 2011.04-2017.03 | 6MT | F | L/R | Hatchback FWD A 14 NET;B 14 NET | | GCO88046 | Outer Joint | | 30 | 26 | 52.5 | 94.5 | 65.5 | M |
| | 2011.04-2017.03 | 6MT | F | L | Saloon FWD A 14 NET;B 14 NET | | GDS21043 | Drive Shaft | | 30 | 25 | 52.5 | 94.5 | 624.5 | |
| | 2011.04-2017.03 | 6MT | F | L/R | Saloon FWD A 14 NET;B 14 NET | | GCO17051 | Outer Joint | | 30 | 26 | 53.8 | 94.5 | 65.5 | M |
| | 2011.04-2017.03 | 6MT | F | L/R | Saloon FWD A 14 NET;B 14 NET | | GCO21049 | Outer Joint | | 30 | 26 | 52.5 | 94 | 65.5 | M |
| | 2011.04-2017.03 | 6MT | F | L/R | Saloon FWD A 14 NET;B 14 NET | | GCO88046 | Outer Joint | | 30 | 26 | 52.5 | 94.5 | 65.5 | M |
| | 2012.07-2017.03 | 6MT | F | L | Hatchback FWD A 14 NET;B 14 NET | | GDS21043 | Drive Shaft | | 30 | 25 | 52.5 | 94.5 | 624.5 | |
| | 2012.07-2017.03 | 6MT | F | L/R | Hatchback FWD A 14 NET;B 14 NET | | GCO17051 | Outer Joint | | 30 | 26 | 53.8 | 94.5 | 65.5 | M |
| | 2012.07-2017.03 | 6MT | F | L/R | Hatchback FWD A 14 NET;B 14 NET | | GCO21049 | Outer Joint | | 30 | 26 | 52.5 | 94 | 65.5 | M |
| | 2012.07-2017.03 | 6MT | F | L/R | Hatchback FWD A 14 NET;B 14 NET | | GCO88046 | Outer Joint | | 30 | 26 | 52.5 | 94.5 | 65.5 | M |
| | 2012.07-2017.03 | 6MT | F | L | Saloon FWD A 14 NET;B 14 NET | | GDS21043 | Drive Shaft | | 30 | 25 | 52.5 | 94.5 | 624.5 | |
| | 2012.07-2017.03 | 6MT | F | L/R | Saloon FWD A 14 NET;B 14 NET | | GCO17051 | Outer Joint | | 30 | 26 | 53.8 | 94.5 | 65.5 | M |
| | 2012.07-2017.03 | 6MT | F | L/R | Saloon FWD A 14 NET;B 14 NET | | GCO21049 | Outer Joint | | 30 | 26 | 52.5 | 94 | 65.5 | M |
| | 2012.07-2017.03 | 6MT | F | L/R | Saloon FWD A 14 NET;B 14 NET | | GCO88046 | Outer Joint | | 30 | 26 | 52.5 | 94.5 | 65.5 | M |
| 1.5 (103 kw) | 2017.03- | 6MT | F | L | Hatchback FWD B 15 SFL;D 15 SFL | | GDS82470 | Drive Shaft | | 30 | 25 | 60.5 | 94.5 | 630 | |
| | 2017.03- | 6MT | F | R | Hatchback FWD B 15 SFL;D 15 SFL | | GDS82471 | Drive Shaft | | 30 | 25 | 60.5 | 94.5 | 990 | |
| | 2017.03- | 6MT | F | L/R | Hatchback FWD B 15 SFL;D 15 SFL | | GCO81945 | Outer Joint | | 30 | 35 | 60.5 | 94.5 | 60 | M |
| | 2017.03- | 6MT | F | L/R | Hatchback FWD B 15 SFL;D 15 SFL | | GCI81831 | Inner Joint | | 25 | 35 | 35 | 57.5 | 130 | |
| 1.5 (121 kw) | 2017.03- | 6AT | F | L | Hatchback FWD B 15 SFT;D 15 SFT | | GDS83622 | Drive Shaft | | 30 | 34 | 60.5 | 94.5 | 677 | |
| | 2017.03- | 6AT | F | L/R | Hatchback FWD B 15 SFT;D 15 SFT | | GCO81945 | Outer Joint | | 30 | 35 | 60.5 | 94.5 | 60 | M |
| | 2017.03- | 6AT | F | L | Hatchback FWD B 15 SFT;D 15 SFT | | GCI82318 | Inner Joint | | 34 | 35 | 35 | 137 | 100.5 | |
| | 2017.03- | 6MT | F | L | Hatchback FWD B 15 SFT;D 15 SFT | | GDS82470 | Drive Shaft | | 30 | 25 | 60.5 | 94.5 | 630 | |
| | 2017.03- | 6MT | F | R | Hatchback FWD B 15 SFT;D 15 SFT | | GDS82471 | Drive Shaft | | 30 | 25 | 60.5 | 94.5 | 990 | |
| | 2017.03- | 6MT | F | L/R | Hatchback FWD B 15 SFT;D 15 SFT | | GCI81831 | Inner Joint | | 25 | 35 | 35 | 57.5 | 130 | |
| 1.6 (81 kw) | 2017.03- | 6MT | F | L | Hatchback FWD B 16 DTE;D 16 DTE;D 16 DTN | | GDS82470 | Drive Shaft | | 30 | 25 | 60.5 | 94.5 | 630 | |
| | 2017.03- | 6MT | F | R | Hatchback FWD B 16 DTE;D 16 DTE;D 16 DTN | | GDS83817 | Drive Shaft | | 30 | 27 | 60.5 | 94.5 | 580 | |
| | 2017.03- | 6MT | F | L/R | Hatchback FWD B 16 DTE;D 16 DTE;D 16 DTN | | GCO81945 | Outer Joint | | 30 | 35 | 60.5 | 94.5 | 60 | M |
| | 2017.03- | 6MT | F | L | Hatchback FWD B 16 DTE;D 16 DTE;D 16 DTN | | GCI81831 | Inner Joint | | 25 | 35 | 35 | 57.5 | 130 | |
| | 2017.03- | 6MT | F | R | Hatchback FWD B 16 DTE;D 16 DTE;D 16 DTN | | GCI82319 | Inner Joint | | 27 | 35 | 42 | | 139 | |
| 1.6 (85 kw) | 2008.07-2017.03 | 6MT | F | L | Hatchback FWD A 16 XER | | GDS21050 | Drive Shaft | | 30 | 25 | 52 | 94 | 622 | |
| | 2008.07-2017.03 | 6MT | F | R | Hatchback FWD A 16 XER | Date to:2011.12;Chassis no. to:B1999999 | GDS21054 | Drive Shaft | | 30 | 25 | 52 | 94 | 1008 | |
| | 2008.07-2017.03 | 6MT | F | L/R | Hatchback FWD A 16 XER | | GCO21038 | Outer Joint | | 30 | 24 | 52 | 94 | 64 | M |
| | 2008.07-2017.03 | 6MT | F | L/R | Hatchback FWD A 16 XER | | GCI44008 | Inner Joint | | 25 | 25 | 34.9 | 57.5 | 113.2 | |
| | 2008.07-2017.03 | 6MT | F | L | Saloon FWD A 16 XER | | GDS21050 | Drive Shaft | | 30 | 25 | 52 | 94 | 622 | |
| | 2008.07-2017.03 | 6MT | F | R | Saloon FWD A 16 XER | Date to:2011.12;Chassis no. to:B1999999 | GDS21054 | Drive Shaft | | 30 | 25 | 52 | 94 | 1008 | |
| | 2008.07-2017.03 | 6MT | F | L/R | Saloon FWD A 16 XER | | GCO21038 | Outer Joint | | 30 | 24 | 52 | 94 | 64 | M |
| | 2008.07-2017.03 | 6MT | F | L/R | Saloon FWD A 16 XER | | GCI44008 | Inner Joint | | 25 | 25 | 34.9 | 57.5 | 113.2 | |
| 1.6 (88 kw) | 2015.07-2017.03 | 6MT | F | L | Hatchback FWD B 16 DTJ | | GDS21043 | Drive Shaft | | 30 | 25 | 52.5 | 94.5 | 624.5 | |
| | 2015.07-2017.03 | 6MT | F | R | Hatchback FWD B 16 DTJ | Chassis no. to:B1999999 | GDS60027 | Drive Shaft | | 30 | 27 | 52.5 | 94.5 | 619 | |
| | 2015.07-2017.03 | 6MT | F | R | Hatchback FWD B 16 DTJ | Chassis no. from:C1000001 | GDS84292 | Drive Shaft | | 30 | 27 | 52.5 | 94 | 618 | |
| | 2015.07-2017.03 | 6MT | F | L/R | Hatchback FWD B 16 DTJ | | GCO17051 | Outer Joint | | 30 | 26 | 53.8 | 94.5 | 65.5 | M |
| | 2015.07-2017.03 | 6MT | F | L/R | Hatchback FWD B 16 DTJ | | GCO21049 | Outer Joint | | 30 | 26 | 52.5 | 94 | 65.5 | M |
| | 2015.07-2017.03 | 6MT | F | L/R | Hatchback FWD B 16 DTJ | | GCO88046 | Outer Joint | | 30 | 26 | 52.5 | 94.5 | 65.5 | M |
| | 2015.07-2017.03 | 6MT | F | R | Hatchback FWD B 16 DTJ | | GCI21030 | Inner Joint | | 27 | 26 | 35 | 78 | 112.5 | |
| | 2015.07-2017.03 | 6MT | F | L | Saloon FWD B 16 DTJ | | GDS21043 | Drive Shaft | | 30 | 25 | 52.5 | 94.5 | 624.5 | |
| | 2015.07-2017.03 | 6MT | F | R | Saloon FWD B 16 DTJ | Chassis no. to:B1999999 | GDS60027 | Drive Shaft | | 30 | 27 | 52.5 | 94.5 | 619 | |
| | 2015.07-2017.03 | 6MT | F | R | Saloon FWD B 16 DTJ | Chassis no. from:C1000001 | GDS84292 | Drive Shaft | | 30 | 27 | 52.5 | 94 | 618 | |
| | 2015.07-2017.03 | 6MT | F | L/R | Saloon FWD B 16 DTJ | | GCO17051 | Outer Joint | | 30 | 26 | 53.8 | 94.5 | 65.5 | M |
| | 2015.07-2017.03 | 6MT | F | L/R | Saloon FWD B 16 DTJ | | GCO21049 | Outer Joint | | 30 | 26 | 52.5 | 94 | 65.5 | M |
| | 2015.07-2017.03 | 6MT | F | L/R | Saloon FWD B 16 DTJ | | GCO88046 | Outer Joint | | 30 | 26 | 52.5 | 94.5 | 65.5 | M |
| | 2015.07-2017.03 | 6MT | F | R | Saloon FWD B 16 DTJ | | GCI21030 | Inner Joint | | 27 | 26 | 35 | 78 | 112.5 | |
| 1.6 (100 kw) | 2015.07-2017.03 | 6AT | F | L | Hatchback FWD B 16 DTH | | GDS82258 | Drive Shaft | | 30 | 34 | 52.5 | 94 | 666 | |
| | 2015.07-2017.03 | 6AT | F | R | Hatchback FWD B 16 DTH | | GDS56650 | Drive Shaft | | 30 | 34 | 52.5 | 94 | 599 | |
| | 2015.07-2017.03 | 6AT | F | R | Hatchback FWD B 16 DTH | | GCI82194 | Inner Joint | | 34 | 26 | 37.5 | | 124 | |
| | 2015.07-2017.03 | 6AT/6MT | F | L/R | Hatchback FWD B 16 DTH | | GCO17051 | Outer Joint | | 30 | 26 | 53.8 | 94.5 | 65.5 | M |
| | 2015.07-2017.03 | 6AT/6MT | F | L/R | Hatchback FWD B 16 DTH | | GCO21049 | Outer Joint | | 30 | 26 | 52.5 | 94 | 65.5 | M |
| | 2015.07-2017.03 | 6AT/6MT | F | L/R | Hatchback FWD B 16 DTH | | GCO88046 | Outer Joint | | 30 | 26 | 52.5 | 94.5 | 65.5 | M |
| | 2015.07-2017.03 | 6MT | F | L | Hatchback FWD B 16 DTH | | GDS21043 | Drive Shaft | | 30 | 25 | 52.5 | 94.5 | 624.5 | |
| | 2015.07-2017.03 | 6MT | F | R | Hatchback FWD B 16 DTH | Chassis no. to:B1999999 | GDS60027 | Drive Shaft | | 30 | 27 | 52.5 | 94.5 | 619 | |
| | 2015.07-2017.03 | 6MT | F | R | Hatchback FWD B 16 DTH | Chassis no. from:C1000001 | GDS84292 | Drive Shaft | | 30 | 27 | 52.5 | 94 | 618 | |
| | 2015.07-2017.03 | 6MT | F | R | Hatchback FWD B 16 DTH | | GCI21030 | Inner Joint | | 27 | 26 | 35 | 78 | 112.5 | |
| | 2015.07-2017.03 | 6AT | F | L | Saloon FWD B 16 DTH | | GDS82258 | Drive Shaft | | 30 | 34 | 52.5 | 94 | 666 | |
| | 2015.07-2017.03 | 6AT | F | R | Saloon FWD B 16 DTH | | GDS56650 | Drive Shaft | | 30 | 34 | 52.5 | 94 | 599 | |

| | YEAR | TRANSM. | F/R | L/R | BODY STYLE & DRIVE TYPE & ENGINE | REMARKS | G-AP Ref. | PRODUCT | ABS | Technical Specifications | | | | | |
|---|---|---|---|---|---|---|---|---|---|---|---|---|---|---|---|
| | | | | | | | | | | A | B | C | H | L | P |
| **OPEL** | | | | | | | | | | | | | | | |
| **Insignia** | | | | | | | | | | | | | | | |
| 1.6 (100 kw) | 2015.07-2017.03 | 6AT | F | L | Saloon FWD B 16 DTH | | GCI86021 | Inner Joint | | 34 | 26 | 35 | 136.5 | 87 | |
| | 2015.07-2017.03 | 6AT | F | R | Saloon FWD B 16 DTH | | GCI82194 | Inner Joint | | 34 | 26 | 37.5 | | 124 | |
| | 2015.07-2017.03 | 6AT/6MT | F | L/R | Saloon FWD B 16 DTH | | GCO17051 | Outer Joint | | 30 | 26 | 53.8 | 94.5 | 65.5 | M |
| | 2015.07-2017.03 | 6AT/6MT | F | L/R | Saloon FWD B 16 DTH | | GCO21049 | Outer Joint | | 30 | 26 | 52.5 | 94 | 65.5 | M |
| | 2015.07-2017.03 | 6AT/6MT | F | L/R | Saloon FWD B 16 DTH | | GCO88046 | Outer Joint | | 30 | 26 | 52.5 | 94.5 | 65.5 | M |
| | 2015.07-2017.03 | 6MT | F | L | Saloon FWD B 16 DTH | | GDS21043 | Drive Shaft | | 30 | 25 | 52.5 | 94.5 | 624.5 | |
| | 2015.07-2017.03 | 6MT | F | R | Saloon FWD B 16 DTH | Chassis no. to:B1999999 | GDS60027 | Drive Shaft | | 30 | 27 | 52.5 | 94.5 | 619 | |
| | 2015.07-2017.03 | 6MT | F | R | Saloon FWD B 16 DTH | Chassis no. from:C1000001 | GDS84292 | Drive Shaft | | 30 | 27 | 52.5 | 94 | 618 | |
| | 2015.07-2017.03 | 6MT | F | R | Saloon FWD B 16 DTH | | GCI21030 | Inner Joint | | 27 | 26 | 35 | 78 | 112.5 | |
| | 2017.03- | 6AT | F | L | Hatchback FWD B 16 DTH;D 16 DTH | | GDS83622 | Drive Shaft | | 30 | 34 | 60.5 | 94.5 | 677 | |
| | 2017.03- | 6AT | F | L | Hatchback FWD B 16 DTH;D 16 DTH | | GCI82318 | Inner Joint | | 34 | 35 | 35 | 137 | 100.5 | |
| | 2017.03- | 6MT | F | L | Hatchback FWD B 16 DTH;D 16 DTH | | GDS82470 | Drive Shaft | | 30 | 25 | 60.5 | 94.5 | 630 | |
| | 2017.03- | 6MT | F | R | Hatchback FWD B 16 DTH;D 16 DTH | | GDS83817 | Drive Shaft | | 30 | 27 | 60.5 | 94.5 | 580 | |
| | 2017.03- | 6MT | F | L | Hatchback FWD B 16 DTH;D 16 DTH | | GCI81831 | Inner Joint | | 25 | 35 | 35 | 57.5 | 130 | |
| | 2017.03- | 6MT | F | R | Hatchback FWD B 16 DTH;D 16 DTH | | GCI82319 | Inner Joint | | 27 | 35 | 42 | | 139 | |
| | 2017.03- | 6MT/6AT | F | L/R | Hatchback FWD B 16 DTH;D 16 DTH | | GCO81945 | Outer Joint | | 30 | 35 | 60.5 | 94.5 | 60 | M |
| 1.6 (125 kw) | 2013.03-2017.03 | 6AT | F | L | Hatchback FWD A 16 XHT;B 16 SHL | | GDS82258 | Drive Shaft | | 30 | 34 | 52.5 | 94 | 666 | |
| | 2013.03-2017.03 | 6AT | F | R | Hatchback FWD A 16 XHT;B 16 SHL | | GDS21045 | Drive Shaft | | 30 | 27 | 52.5 | 94.5 | 615 | |
| | 2013.03-2017.03 | 6AT | F | R | Hatchback FWD A 16 XHT;B 16 SHL | | GDS82085 | Drive Shaft | | 30 | 27 | 52.5 | 94 | 615 | |
| | 2013.03-2017.03 | 6AT | F | L | Hatchback FWD A 16 XHT;B 16 SHL | | GCI86021 | Inner Joint | | 34 | 26 | 35 | 136.5 | 87 | |
| | 2013.03-2017.03 | 6AT | F | R | Hatchback FWD A 16 XHT;B 16 SHL | | GCI86015 | Inner Joint | | 27 | 26 | 35 | 78.5 | 109.5 | |
| | 2013.03-2017.03 | 6AT/6MT | F | L/R | Hatchback FWD A 16 XHT;B 16 SHL | | GCO17051 | Outer Joint | | 30 | 26 | 53.8 | 94.5 | 65.5 | M |
| | 2013.03-2017.03 | 6AT/6MT | F | L/R | Hatchback FWD A 16 XHT;B 16 SHL | | GCO21049 | Outer Joint | | 30 | 26 | 52.5 | 94 | 65.5 | M |
| | 2013.03-2017.03 | 6AT/6MT | F | L/R | Hatchback FWD A 16 XHT;B 16 SHL | | GCO88046 | Outer Joint | | 30 | 26 | 52.5 | 94.5 | 65.5 | M |
| | 2013.03-2017.03 | 6MT | F | L | Hatchback FWD A 16 XHT;B 16 SHL | | GDS21043 | Drive Shaft | | 30 | 25 | 52.5 | 94.5 | 624.5 | |
| | 2013.03-2017.03 | 6MT | F | R | Hatchback FWD A 16 XHT;B 16 SHL | Chassis no. to:B1999999 | GDS60027 | Drive Shaft | | 30 | 27 | 52.5 | 94.5 | 619 | |
| | 2013.03-2017.03 | 6MT | F | R | Hatchback FWD A 16 XHT;B 16 SHL | Chassis no. from:C1000001 | GDS84292 | Drive Shaft | | 30 | 27 | 52.5 | 94 | 618 | |
| | 2013.03-2017.03 | 6MT | F | R | Hatchback FWD A 16 XHT;B 16 SHL | | GCI21030 | Inner Joint | | 27 | 26 | 35 | 78 | 112.5 | |
| | 2013.03-2017.03 | 6AT | F | L | Saloon FWD A 16 XHT;B 16 SHL | | GDS82258 | Drive Shaft | | 30 | 34 | 52.5 | 94 | 666 | |
| | 2013.03-2017.03 | 6AT | F | R | Saloon FWD A 16 XHT;B 16 SHL | | GDS21045 | Drive Shaft | | 30 | 27 | 52.5 | 94.5 | 615 | |
| | 2013.03-2017.03 | 6AT | F | R | Saloon FWD A 16 XHT;B 16 SHL | | GDS82085 | Drive Shaft | | 30 | 27 | 52.5 | 94 | 615 | |
| | 2013.03-2017.03 | 6AT | F | L | Saloon FWD A 16 XHT;B 16 SHL | | GCI86021 | Inner Joint | | 34 | 26 | 35 | 136.5 | 87 | |
| | 2013.03-2017.03 | 6AT | F | R | Saloon FWD A 16 XHT;B 16 SHL | | GCI86015 | Inner Joint | | 27 | 26 | 35 | 78.5 | 109.5 | |
| | 2013.03-2017.03 | 6AT/6MT | F | L/R | Saloon FWD A 16 XHT;B 16 SHL | | GCO17051 | Outer Joint | | 30 | 26 | 53.8 | 94.5 | 65.5 | M |
| | 2013.03-2017.03 | 6AT/6MT | F | L/R | Saloon FWD A 16 XHT;B 16 SHL | | GCO21049 | Outer Joint | | 30 | 26 | 52.5 | 94 | 65.5 | M |
| | 2013.03-2017.03 | 6AT/6MT | F | L/R | Saloon FWD A 16 XHT;B 16 SHL | | GCO88046 | Outer Joint | | 30 | 26 | 52.5 | 94.5 | 65.5 | M |
| | 2013.03-2017.03 | 6MT | F | L | Saloon FWD A 16 XHT;B 16 SHL | | GDS21043 | Drive Shaft | | 30 | 25 | 52.5 | 94.5 | 624.5 | |
| | 2013.03-2017.03 | 6MT | F | R | Saloon FWD A 16 XHT;B 16 SHL | Chassis no. to:B1999999 | GDS60027 | Drive Shaft | | 30 | 27 | 52.5 | 94.5 | 619 | |
| | 2013.03-2017.03 | 6MT | F | R | Saloon FWD A 16 XHT;B 16 SHL | Chassis no. from:C1000001 | GDS84292 | Drive Shaft | | 30 | 27 | 52.5 | 94 | 618 | |
| | 2013.03-2017.03 | 6MT | F | R | Saloon FWD A 16 XHT;B 16 SHL | | GCI21030 | Inner Joint | | 27 | 26 | 35 | 78 | 112.5 | |
| 1.6 (132 kw) | 2008.07-2017.03 | 6MT | F | L/R | Hatchback FWD A 16 LET | | GCO17051 | Outer Joint | | 30 | 26 | 53.8 | 94.5 | 65.5 | M |
| | 2008.07-2017.03 | 6MT | F | L/R | Hatchback FWD A 16 LET | | GCO21049 | Outer Joint | | 30 | 26 | 52.5 | 94 | 65.5 | M |
| | 2008.07-2017.03 | 6MT | F | L/R | Hatchback FWD A 16 LET | | GCO88046 | Outer Joint | | 30 | 26 | 52.5 | 94.5 | 65.5 | M |
| | 2008.07-2017.03 | MT/6MT | F | L | Hatchback FWD A 16 LET | | GDS21043 | Drive Shaft | | 30 | 25 | 52.5 | 94.5 | 624.5 | |
| | 2008.07-2017.03 | 6MT | F | L/R | Saloon FWD A 16 LET | | GCO17051 | Outer Joint | | 30 | 26 | 53.8 | 94.5 | 65.5 | M |
| | 2008.07-2017.03 | 6MT | F | L/R | Saloon FWD A 16 LET | | GCO21049 | Outer Joint | | 30 | 26 | 52.5 | 94 | 65.5 | M |
| | 2008.07-2017.03 | 6MT | F | L/R | Saloon FWD A 16 LET | | GCO88046 | Outer Joint | | 30 | 26 | 52.5 | 94.5 | 65.5 | M |
| | 2008.07-2017.03 | MT/6MT | F | L | Saloon FWD A 16 LET | | GDS21043 | Drive Shaft | | 30 | 25 | 52.5 | 94.5 | 624.5 | |
| 1.6 (147 kw) | 2018.06- | 6AT | F | L | Hatchback FWD D 16 SHT | | GDS83622 | Drive Shaft | | 30 | 34 | 60.5 | 94.5 | 677 | |
| | 2018.06- | 6AT | F | L/R | Hatchback FWD D 16 SHT | | GCO81945 | Outer Joint | | 30 | 35 | 60.5 | 94.5 | 60 | M |
| | 2018.06- | 6AT | F | L | Hatchback FWD D 16 SHT | | GCI82318 | Inner Joint | | 34 | 35 | 35 | 137 | 100.5 | |
| | 2018.06- | 6MT | F | L | Hatchback FWD D 16 SHT | | GDS82470 | Drive Shaft | | 30 | 25 | 60.5 | 94.5 | 630 | |
| | 2018.06- | 6MT | F | L | Hatchback FWD D 16 SHT | | GCI81831 | Inner Joint | | 25 | 35 | 35 | 57.5 | 130 | |
| 1.8 (103 kw) | 2008.07-2017.03 | 6MT | F | L | Hatchback FWD A 18 XER;B 18 XER | | GDS21050 | Drive Shaft | | 30 | 25 | 52 | 94 | 622 | |
| | 2008.07-2017.03 | 6MT | F | L/R | Hatchback FWD A 18 XER;B 18 XER | | GCO21038 | Outer Joint | | 30 | 24 | 52 | 94 | 64 | M |
| | 2008.07-2017.03 | 6MT | F | L/R | Hatchback FWD A 18 XER;B 18 XER | | GCI44008 | Inner Joint | | 25 | 25 | 34.9 | 57.5 | 113.2 | |
| | 2008.07-2017.03 | MT | F | R | Hatchback FWD A 18 XER;B 18 XER | | GDS21054 | Drive Shaft | | 30 | 25 | 52 | 94 | 1008 | |
| | 2008.07-2017.03 | 6MT | F | L | Saloon FWD A 18 XER;B 18 XER | | GDS21050 | Drive Shaft | | 30 | 25 | 52 | 94 | 622 | |
| | 2008.07-2017.03 | 6MT | F | R | Saloon FWD A 18 XER;B 18 XER | Date to:2011.12;Chassis no. to:B1999999 | GDS21054 | Drive Shaft | | 30 | 25 | 52 | 94 | 1008 | |
| | 2008.07-2017.03 | 6MT | F | L/R | Saloon FWD A 18 XER;B 18 XER | | GCO21038 | Outer Joint | | 30 | 24 | 52 | 94 | 64 | M |
| | 2008.07-2017.03 | 6MT | F | L/R | Saloon FWD A 18 XER;B 18 XER | | GCI44008 | Inner Joint | | 25 | 25 | 34.9 | 57.5 | 113.2 | |
| 2.0 (81 kw) | 2008.07-2017.03 | 6MT | F | L | Hatchback FWD A 20 DTC;A 20 DTL | Chassis no. to:D1061030 | GDS60026 | Drive Shaft | | 30 | 25 | 52.5 | 94.5 | 631 | |
| | 2008.07-2017.03 | 6MT | F | R | Hatchback FWD A 20 DTC;A 20 DTL | For car needless intermediate shaft | GDS57620 | Drive Shaft | | 30 | 25 | 52.5 | 94 | 1002 | |
| | 2008.07-2017.03 | 6MT | F | R | Hatchback FWD A 20 DTC;A 20 DTL | For car need intermediate shaft | GDS60027 | Drive Shaft | | 30 | 27 | 52.5 | 94.5 | 619 | |
| | 2008.07-2017.03 | 6MT | F | L/R | Hatchback FWD A 20 DTC;A 20 DTL | For Engine code:A20DTC | GCO17051 | Outer Joint | | 30 | 26 | 53.8 | 94.5 | 65.5 | M |

| | YEAR | TRANSM. | F/R | L/R | BODY STYLE & DRIVE TYPE & ENGINE | REMARKS | G-AP Ref. | PRODUCT | ABS | Technical Specifications | | | | | |
|---|---|---|---|---|---|---|---|---|---|---|---|---|---|---|---|
| | | | | | | | | | | A | B | C | H | L | P |
| **OPEL** | | | | | | | | | | | | | | | |
| **Insignia** | | | | | | | | | | | | | | | |
| 2.0 (81 kw) | 2008.07-2017.03 | 6MT | F | L/R | Hatchback FWD A 20 DTC;A 20 DTL | For Engine code:A20DTL | GCO21038 | Outer Joint | | 30 | 24 | 52 | 94 | 64 | M |
| | 2008.07-2017.03 | 6MT | F | L/R | Hatchback FWD A 20 DTC;A 20 DTL | For Engine code:A20DTC | GCO21049 | Outer Joint | | 30 | 26 | 52.5 | 94 | 65.5 | M |
| | 2008.07-2017.03 | 6MT | F | L/R | Hatchback FWD A 20 DTC;A 20 DTL | For Enginecode:A20DTC | GCO88046 | Outer Joint | | 30 | 26 | 52.5 | 94.5 | 65.5 | M |
| | 2008.07-2017.03 | 6MT | F | L | Hatchback FWD A 20 DTC;A 20 DTL | For Engine code:A20DTL | GCI44008 | Inner Joint | | 25 | 25 | 34.9 | 57.5 | 113.2 | |
| | 2008.07-2017.03 | 6MT | F | R | Hatchback FWD A 20 DTC;A 20 DTL | | GCI21030 | Inner Joint | | 27 | 26 | 35 | 78 | 112.5 | |
| | 2008.07-2017.03 | 6MT | F | L | Saloon FWD A 20 DTC;A 20 DTL | Chassis no. to:D1061030 | GDS60026 | Drive Shaft | | 30 | 25 | 52.5 | 94.5 | 631 | |
| | 2008.07-2017.03 | 6MT | F | R | Saloon FWD A 20 DTC;A 20 DTL | For car needless intermediate shaft | GDS57620 | Drive Shaft | | 30 | 25 | 52.5 | 94 | 1002 | |
| | 2008.07-2017.03 | 6MT | F | R | Saloon FWD A 20 DTC;A 20 DTL | For car need intermediate shaft | GDS60027 | Drive Shaft | | 30 | 27 | 52.5 | 94.5 | 619 | |
| | 2008.07-2017.03 | 6MT | F | L/R | Saloon FWD A 20 DTC;A 20 DTL | For Engine code:A20DTC | GCO17051 | Outer Joint | | 30 | 26 | 53.8 | 94.5 | 65.5 | M |
| | 2008.07-2017.03 | 6MT | F | L/R | Saloon FWD A 20 DTC;A 20 DTL | For Engine code:A20DTL | GCO21038 | Outer Joint | | 30 | 24 | 52 | 94 | 64 | M |
| | 2008.07-2017.03 | 6MT | F | L/R | Saloon FWD A 20 DTC;A 20 DTL | For Engine code:A20DTC | GCO21049 | Outer Joint | | 30 | 26 | 52.5 | 94 | 65.5 | M |
| | 2008.07-2017.03 | 6MT | F | L/R | Saloon FWD A 20 DTC;A 20 DTL | For Enginecode:A20DTC | GCO88046 | Outer Joint | | 30 | 26 | 52.5 | 94.5 | 65.5 | M |
| | 2008.07-2017.03 | 6MT | F | L | Saloon FWD A 20 DTC;A 20 DTL | For Engine code:A20DTL | GCI44008 | Inner Joint | | 25 | 25 | 34.9 | 57.5 | 113.2 | |
| | 2008.07-2017.03 | 6MT | F | R | Saloon FWD A 20 DTC;A 20 DTL | | GCI21030 | Inner Joint | | 27 | 26 | 35 | 78 | 112.5 | |
| 2.0 (88 kw) | 2012.03-2017.03 | 6MT | F | L/R | Hatchback FWD A 20 DTE | Chassis no. to:B1999999 | GDS60027 | Drive Shaft | | 30 | 27 | 52.5 | 94.5 | 619 | |
| | 2012.03-2017.03 | 6MT | F | L/R | Hatchback FWD A 20 DTE | Chassis no. from:C1000001 | GDS84292 | Drive Shaft | | 30 | 27 | 52.5 | 94 | 618 | |
| | 2012.03-2017.03 | 6MT | F | L/R | Hatchback FWD A 20 DTE | | GCO17051 | Outer Joint | | 30 | 26 | 53.8 | 94.5 | 65.5 | M |
| | 2012.03-2017.03 | 6MT | F | L/R | Hatchback FWD A 20 DTE | | GCO21049 | Outer Joint | | 30 | 26 | 52.5 | 94 | 65.5 | M |
| | 2012.03-2017.03 | 6MT | F | L/R | Hatchback FWD A 20 DTE | | GCO88046 | Outer Joint | | 30 | 26 | 52.5 | 94.5 | 65.5 | M |
| | 2012.03-2017.03 | 6MT | F | L/R | Hatchback FWD A 20 DTE | | GCI21030 | Inner Joint | | 27 | 26 | 35 | 78 | 112.5 | |
| | 2012.03-2017.03 | 6MT | F | L/R | Saloon FWD A 20 DTE | Chassis no. to:B1999999 | GDS60027 | Drive Shaft | | 30 | 27 | 52.5 | 94.5 | 619 | |
| | 2012.03-2017.03 | 6MT | F | L/R | Saloon FWD A 20 DTE | Chassis no. from:C1000001 | GDS84292 | Drive Shaft | | 30 | 27 | 52.5 | 94 | 618 | |
| | 2012.03-2017.03 | 6MT | F | L/R | Saloon FWD A 20 DTE | | GCO17051 | Outer Joint | | 30 | 26 | 53.8 | 94.5 | 65.5 | M |
| | 2012.03-2017.03 | 6MT | F | L/R | Saloon FWD A 20 DTE | | GCO21049 | Outer Joint | | 30 | 26 | 52.5 | 94 | 65.5 | M |
| | 2012.03-2017.03 | 6MT | F | L/R | Saloon FWD A 20 DTE | | GCO88046 | Outer Joint | | 30 | 26 | 52.5 | 94.5 | 65.5 | M |
| | 2012.03-2017.03 | 6MT | F | L/R | Saloon FWD A 20 DTE | | GCI21030 | Inner Joint | | 27 | 26 | 35 | 78 | 112.5 | |
| 2.0 (96 kw) | 2008.07-2017.03 | 6AT | F | L/R | Hatchback FWD A 20 DTJ;A 20 DTH;A 20 DT | TJ;without Rim protector | GDS21045 | Drive Shaft | | 30 | 27 | 52.5 | 94.5 | 615 | |
| | 2008.07-2017.03 | 6AT | F | L/R | Hatchback FWD A 20 DTJ;A 20 DTH;A 20 DT | | GDS82085 | Drive Shaft | | 30 | 27 | 52.5 | 94 | 615 | |
| | 2008.07-2017.03 | 6AT | F | L/R | Hatchback FWD A 20 DTJ;A 20 DTH;A 20 DT | TJ | GCI21016 | Inner Joint | | 27 | 26 | 35 | 78.5 | 112 | |
| | 2008.07-2017.03 | 6AT | F | L/R | Hatchback FWD A 20 DTJ;A 20 DTH;A 20 DT | AAR | GCI86015 | Inner Joint | | 27 | 26 | 35 | 78.5 | 109.5 | |
| | 2008.07-2017.03 | 6MT | F | L | Hatchback FWD A 20 DTJ;A 20 DTH;A 20 DT | Chassis no. to:D1061030 | GDS60026 | Drive Shaft | | 30 | 25 | 52.5 | 94.5 | 631 | |
| | 2008.07-2017.03 | 6MT | F | R | Hatchback FWD A 20 DTJ;A 20 DTH;A 20 DT | For car needless intermediate shaft | GDS57620 | Drive Shaft | | 30 | 25 | 52.5 | 94 | 1002 | |
| | 2008.07-2017.03 | 6MT | F | R | Hatchback FWD A 20 DTJ;A 20 DTH;A 20 DT | For car need intermediate shaft | GDS60027 | Drive Shaft | | 30 | 27 | 52.5 | 94.5 | 619 | |
| | 2008.07-2017.03 | 6MT | F | L/R | Hatchback FWD A 20 DTJ;A 20 DTH;A 20 DT | For Engine code:A20DT | GCO21038 | Outer Joint | | 30 | 24 | 52 | 94 | 64 | M |
| | 2008.07-2017.03 | 6MT | F | L | Hatchback FWD A 20 DTJ;A 20 DTH;A 20 DT | For Engine code:A20DT | GCI44008 | Inner Joint | | 25 | 25 | 34.9 | 57.5 | 113.2 | |
| | 2008.07-2017.03 | 6MT | F | R | Hatchback FWD A 20 DTJ;A 20 DTH;A 20 DT | | GCI21030 | Inner Joint | | 27 | 26 | 35 | 78 | 112.5 | |
| | 2008.07-2017.03 | 6MT/6AT | F | L/R | Hatchback FWD A 20 DTJ;A 20 DTH;A 20 DT | Transmission:6MT,For Engine code:A20DTJ | GCO17051 | Outer Joint | | 30 | 26 | 53.8 | 94.5 | 65.5 | M |
| | 2008.07-2017.03 | 6MT/6AT | F | L/R | Hatchback FWD A 20 DTJ;A 20 DTH;A 20 DT | Transmission:6MT,For Engine code:A20DTJ | GCO21049 | Outer Joint | | 30 | 26 | 52.5 | 94 | 65.5 | M |
| | 2008.07-2017.03 | 6MT/6AT | F | L/R | Hatchback FWD A 20 DTJ;A 20 DTH;A 20 DT | Transmission:6MT,For Engine code:A20DTJ | GCO88046 | Outer Joint | | 30 | 26 | 52.5 | 94.5 | 65.5 | M |
| | 2008.07-2017.03 | 6AT | F | L | Saloon FWD A 20 DTJ;A 20 DT | TJ;without Rim protector | GDS21045 | Drive Shaft | | 30 | 27 | 52.5 | 94.5 | 615 | |
| | 2008.07-2017.03 | 6AT | F | L/R | Saloon FWD A 20 DTJ;A 20 DT | | GDS82085 | Drive Shaft | | 30 | 27 | 52.5 | 94 | 615 | |
| | 2008.07-2017.03 | 6AT | F | L/R | Saloon FWD A 20 DTJ;A 20 DT | Transmission:6MT,For Engine code:A20DTJ | GCO88046 | Outer Joint | | 30 | 26 | 52.5 | 94.5 | 65.5 | M |
| | 2008.07-2017.03 | 6AT | F | L/R | Saloon FWD A 20 DTJ;A 20 DT | TJ | GCI21016 | Inner Joint | | 27 | 26 | 35 | 78.5 | 112 | |
| | 2008.07-2017.03 | 6AT | F | L/R | Saloon FWD A 20 DTJ;A 20 DT | AAR | GCI86015 | Inner Joint | | 27 | 26 | 35 | 78.5 | 109.5 | |
| | 2008.07-2017.03 | 6MT | F | L | Saloon FWD A 20 DTJ;A 20 DT | Chassis no. to:D1061030 | GDS60026 | Drive Shaft | | 30 | 25 | 52.5 | 94.5 | 631 | |
| | 2008.07-2017.03 | 6MT | F | R | Saloon FWD A 20 DTJ;A 20 DT | For car needless intermediate shaft | GDS57620 | Drive Shaft | | 30 | 25 | 52.5 | 94 | 1002 | |
| | 2008.07-2017.03 | 6MT | F | R | Saloon FWD A 20 DTJ;A 20 DT | For car need intermediate shaft | GDS60027 | Drive Shaft | | 30 | 27 | 52.5 | 94.5 | 619 | |
| | 2008.07-2017.03 | 6MT | F | L/R | Saloon FWD A 20 DTJ;A 20 DT | For Engine code:A20DT | GCO21038 | Outer Joint | | 30 | 24 | 52 | 94 | 64 | M |
| | 2008.07-2017.03 | 6MT | F | L | Saloon FWD A 20 DTJ;A 20 DT | For Engine code:A20DT | GCI44008 | Inner Joint | | 25 | 25 | 34.9 | 57.5 | 113.2 | |
| | 2008.07-2017.03 | 6MT | F | R | Saloon FWD A 20 DTJ;A 20 DT | | GCI21030 | Inner Joint | | 27 | 26 | 35 | 78 | 112.5 | |
| | 2008.07-2017.03 | 6MT/6AT | F | L/R | Saloon FWD A 20 DTJ;A 20 DT | Transmission:6MT,For Engine code:A20DTJ | GCO17051 | Outer Joint | | 30 | 26 | 53.8 | 94.5 | 65.5 | M |
| | 2008.07-2017.03 | 6MT/6AT | F | L/R | Saloon FWD A 20 DTJ;A 20 DT | Transmission:6MT,For Engine code:A20DTJ | GCO21049 | Outer Joint | | 30 | 26 | 52.5 | 94 | 65.5 | M |
| 2.0 (103 kw) | 2013.06-2017.03 | 6MT | F | L/R | Hatchback FWD A 20 DTE | Chassis no. to:B1999999 | GDS60027 | Drive Shaft | | 30 | 27 | 52.5 | 94.5 | 619 | |
| | 2013.06-2017.03 | 6MT | F | L/R | Hatchback FWD A 20 DTE | Chassis no. from:C1000001 | GDS84292 | Drive Shaft | | 30 | 27 | 52.5 | 94 | 618 | |
| | 2013.06-2017.03 | 6MT | F | L/R | Hatchback FWD A 20 DTE | | GCO17051 | Outer Joint | | 30 | 26 | 53.8 | 94.5 | 65.5 | M |
| | 2013.06-2017.03 | 6MT | F | L/R | Hatchback FWD A 20 DTE | | GCO21049 | Outer Joint | | 30 | 26 | 52.5 | 94 | 65.5 | M |
| | 2013.06-2017.03 | 6MT | F | L/R | Hatchback FWD A 20 DTE | | GCO88046 | Outer Joint | | 30 | 26 | 52.5 | 94.5 | 65.5 | M |
| | 2013.06-2017.03 | 6MT | F | L/R | Hatchback FWD A 20 DTE | | GCI21030 | Inner Joint | | 27 | 26 | 35 | 78 | 112.5 | |
| | 2013.06-2017.03 | 6MT | F | L/R | Saloon FWD A 20 DTE | Chassis no. to:B1999999 | GDS60027 | Drive Shaft | | 30 | 27 | 52.5 | 94.5 | 619 | |
| | 2013.06-2017.03 | 6MT | F | L/R | Saloon FWD A 20 DTE | Chassis no. from:C1000001 | GDS84292 | Drive Shaft | | 30 | 27 | 52.5 | 94 | 618 | |
| | 2013.06-2017.03 | 6MT | F | L/R | Saloon FWD A 20 DTE | | GCO17051 | Outer Joint | | 30 | 26 | 53.8 | 94.5 | 65.5 | M |
| | 2013.06-2017.03 | 6MT | F | L/R | Saloon FWD A 20 DTE | | GCO21049 | Outer Joint | | 30 | 26 | 52.5 | 94 | 65.5 | M |
| | 2013.06-2017.03 | 6MT | F | L/R | Saloon FWD A 20 DTE | | GCO88046 | Outer Joint | | 30 | 26 | 52.5 | 94.5 | 65.5 | M |
| | 2013.06-2017.03 | 6MT | F | L/R | Saloon FWD A 20 DTE | | GCI21030 | Inner Joint | | 27 | 26 | 35 | 78 | 112.5 | |
| 2.0 (118 kw) | 2008.07-2017.03 | 6AT | F | L/R | Hatchback FWD A 20 DTH | TJ;without Rim protector | GDS21045 | Drive Shaft | | 30 | 27 | 52.5 | 94.5 | 615 | |

| | YEAR | TRANSM. | F/R | L/R | BODY STYLE & DRIVE TYPE & ENGINE | REMARKS | G-AP Ref. | PRODUCT | ABS | Technical Specifications | | | | | |
|---|---|---|---|---|---|---|---|---|---|---|---|---|---|---|---|
| | | | | | | | | | | A | B | C | H | L | P |
| **OPEL** | | | | | | | | | | | | | | | |
| **Insignia** | | | | | | | | | | | | | | | |
| 2.0 (118 kw) | 2008.07-2017.03 | 6AT | F | L/R | Hatchback FWD A 20 DTH | | GDS82085 | Drive Shaft | | 30 | 27 | 52.5 | 94 | 615 | |
| | 2008.07-2017.03 | 6AT | F | L/R | Hatchback FWD A 20 DTH | | GCO88046 | Outer Joint | | 30 | 26 | 52.5 | 94.5 | 65.5 | M |
| | 2008.07-2017.03 | 6AT | F | L/R | Hatchback FWD A 20 DTH | TJ | GCI21016 | Inner Joint | | 27 | 26 | 35 | 78.5 | 112 | |
| | 2008.07-2017.03 | 6AT | F | L/R | Hatchback FWD A 20 DTH | AAR | GCI86015 | Inner Joint | | 27 | 26 | 35 | 78.5 | 109.5 | |
| | 2008.07-2017.03 | 6AT/6MT | F | L/R | Hatchback FWD A 20 DTH | | GCO17051 | Outer Joint | | 30 | 26 | 53.8 | 94.5 | 65.5 | M |
| | 2008.07-2017.03 | 6AT/6MT | F | L/R | Hatchback FWD A 20 DTH | | GCO21049 | Outer Joint | | 30 | 26 | 52.5 | 94 | 65.5 | M |
| | 2008.07-2017.03 | 6MT | F | L/R | Hatchback FWD A 20 DTH | Chassis no. to:B1999999 | GDS60027 | Drive Shaft | | 30 | 27 | 52.5 | 94.5 | 619 | |
| | 2008.07-2017.03 | 6MT | F | L/R | Hatchback FWD A 20 DTH | Chassis no. from:C1000001 | GDS84292 | Drive Shaft | | 30 | 27 | 52.5 | 94 | 618 | |
| | 2008.07-2017.03 | 6MT | F | L/R | Hatchback FWD A 20 DTH | | GCI21030 | Inner Joint | | 27 | 26 | 35 | 78 | 112.5 | |
| | 2008.07-2017.03 | 6AT | F | L/R | Saloon FWD A 20 DTH | TJ;without Rim protector | GDS21045 | Drive Shaft | | 30 | 27 | 52.5 | 94.5 | 615 | |
| | 2008.07-2017.03 | 6AT | F | L/R | Saloon FWD A 20 DTH | | GDS82085 | Drive Shaft | | 30 | 27 | 52.5 | 94 | 615 | |
| | 2008.07-2017.03 | 6AT | F | L/R | Saloon FWD A 20 DTH | TJ | GCI21016 | Inner Joint | | 27 | 26 | 35 | 78.5 | 112 | |
| | 2008.07-2017.03 | 6AT | F | L/R | Saloon FWD A 20 DTH | AAR | GCI86015 | Inner Joint | | 27 | 26 | 35 | 78.5 | 109.5 | |
| | 2008.07-2017.03 | 6AT/6MT | F | L/R | Saloon FWD A 20 DTH | | GCO17051 | Outer Joint | | 30 | 26 | 53.8 | 94.5 | 65.5 | M |
| | 2008.07-2017.03 | 6AT/6MT | F | L/R | Saloon FWD A 20 DTH | | GCO21049 | Outer Joint | | 30 | 26 | 52.5 | 94 | 65.5 | M |
| | 2008.07-2017.03 | 6AT/6MT | F | L/R | Saloon FWD A 20 DTH | | GCO88046 | Outer Joint | | 30 | 26 | 52.5 | 94.5 | 65.5 | M |
| | 2008.07-2017.03 | 6MT | F | L/R | Saloon FWD A 20 DTH | Chassis no. to:B1999999 | GDS60027 | Drive Shaft | | 30 | 27 | 52.5 | 94.5 | 619 | |
| | 2008.07-2017.03 | 6MT | F | L/R | Saloon FWD A 20 DTH | Chassis no. from:C1000001 | GDS84292 | Drive Shaft | | 30 | 27 | 52.5 | 94 | 618 | |
| | 2008.07-2017.03 | 6MT | F | L/R | Saloon FWD A 20 DTH | | GCI21030 | Inner Joint | | 27 | 26 | 35 | 78 | 112.5 | |
| | 2010.06-2017.03 | 6AT | F | L/R | Hatchback 4WD A 20 DTH | Date To:2011.12,Chassis no. to:B1999999 | GDS21045 | Drive Shaft | | 30 | 27 | 52.5 | 94.5 | 615 | |
| | 2010.06-2017.03 | 6AT | F | L/R | Hatchback 4WD A 20 DTH | | GDS82085 | Drive Shaft | | 30 | 27 | 52.5 | 94 | 615 | |
| | 2010.06-2017.03 | 6AT | F | L/R | Hatchback 4WD A 20 DTH | | GCI86015 | Inner Joint | | 27 | 26 | 35 | 78.5 | 109.5 | |
| | 2010.06-2017.03 | 6AT/6MT | F | L/R | Hatchback 4WD A 20 DTH | | GCO17051 | Outer Joint | | 30 | 26 | 53.8 | 94.5 | 65.5 | M |
| | 2010.06-2017.03 | 6AT/6MT | F | L/R | Hatchback 4WD A 20 DTH | | GCO21049 | Outer Joint | | 30 | 26 | 52.5 | 94 | 65.5 | M |
| | 2010.06-2017.03 | 6AT/6MT | F | L/R | Hatchback 4WD A 20 DTH | | GCO88046 | Outer Joint | | 30 | 26 | 52.5 | 94.5 | 65.5 | M |
| | 2010.06-2017.03 | 6MT | F | L/R | Hatchback 4WD A 20 DTH | Chassis no. to:B1999999 | GDS60027 | Drive Shaft | | 30 | 27 | 52.5 | 94.5 | 619 | |
| | 2010.06-2017.03 | 6MT | F | L/R | Hatchback 4WD A 20 DTH | Chassis no. from:C1000001 | GDS84292 | Drive Shaft | | 30 | 27 | 52.5 | 94 | 618 | |
| | 2010.06-2017.03 | 6MT | F | L | Hatchback 4WD A 20 DTH | | GCI21030 | Inner Joint | | 27 | 26 | 35 | 78 | 112.5 | |
| | 2010.06-2017.03 | 6AT/6MT | R | L/R | Hatchback 4WD A 20 DTH | With differential lock | GCO81305 | Outer Joint | | 30 | 23 | 52.3 | 94 | 59.5 | M |
| | 2010.06-2017.03 | AT/MT | R | L | Hatchback 4WD A 20 DTH | Differential:With differential lock | GDS82261 | Drive Shaft | | 30 | 34 | 52.3 | 94 | 791 | |
| | 2010.06-2017.03 | AT/MT | R | R | Hatchback 4WD A 20 DTH | | GDS81333 | Drive Shaft | | 30 | 34 | 52.3 | 94 | 842 | |
| | 2010.06-2017.03 | AT/MT | R | L | Hatchback 4WD A 20 DTH | Differential:With differential lock | GCI81196 | Inner Joint | | 34 | 23 | 35 | 113.5 | 110 | |
| | 2010.06-2017.03 | AT/MT | R | R | Hatchback 4WD A 20 DTH | | GCI81197 | Inner Joint | | 34 | 23 | 35 | 82.5 | 109 | |
| | 2010.06-2017.03 | 6AT | F | L/R | Saloon 4WD A 20 DTH | TJ;without Rim protector | GDS21045 | Drive Shaft | | 30 | 27 | 52.5 | 94.5 | 615 | |
| | 2010.06-2017.03 | 6AT | F | L/R | Saloon 4WD A 20 DTH | | GDS82085 | Drive Shaft | | 30 | 27 | 52.5 | 94 | 615 | |
| | 2010.06-2017.03 | 6AT | F | L/R | Saloon 4WD A 20 DTH | | GCO88046 | Outer Joint | | 30 | 26 | 52.5 | 94.5 | 65.5 | M |
| | 2010.06-2017.03 | 6AT | F | L/R | Saloon 4WD A 20 DTH | TJ | GCI21016 | Inner Joint | | 27 | 26 | 35 | 78.5 | 112 | |
| | 2010.06-2017.03 | 6AT | F | L/R | Saloon 4WD A 20 DTH | AAR | GCI86015 | Inner Joint | | 27 | 26 | 35 | 78.5 | 109.5 | |
| | 2010.06-2017.03 | 6AT/6MT | F | L/R | Saloon 4WD A 20 DTH | | GCO17051 | Outer Joint | | 30 | 26 | 53.8 | 94.5 | 65.5 | M |
| | 2010.06-2017.03 | 6AT/6MT | F | L/R | Saloon 4WD A 20 DTH | | GCO21049 | Outer Joint | | 30 | 26 | 52.5 | 94 | 65.5 | M |
| | 2010.06-2017.03 | 6MT | F | L/R | Saloon 4WD A 20 DTH | Chassis no. to:B1999999 | GDS60027 | Drive Shaft | | 30 | 27 | 52.5 | 94.5 | 619 | |
| | 2010.06-2017.03 | 6MT | F | L/R | Saloon 4WD A 20 DTH | Chassis no. from:C1000001 | GDS84292 | Drive Shaft | | 30 | 27 | 52.5 | 94 | 618 | |
| | 2010.06-2017.03 | 6MT | F | L | Saloon 4WD A 20 DTH | | GCI21030 | Inner Joint | | 27 | 26 | 35 | 78 | 112.5 | |
| | 2010.06-2017.03 | 6AT/6MT | R | L | Saloon 4WD A 20 DTH | With differential lock | GDS82261 | Drive Shaft | | 30 | 34 | 52.3 | 94 | 791 | |
| | 2010.06-2017.03 | 6AT/6MT | R | R | Saloon 4WD A 20 DTH | | GDS81333 | Drive Shaft | | 30 | 34 | 52.3 | 94 | 842 | |
| | 2010.06-2017.03 | 6AT/6MT | R | L/R | Saloon 4WD A 20 DTH | With differential lock | GCO81305 | Outer Joint | | 30 | 23 | 52.3 | 94 | 59.5 | M |
| | 2010.06-2017.03 | 6AT/6MT | R | L | Saloon 4WD A 20 DTH | With differential lock | GCI81196 | Inner Joint | | 34 | 23 | 35 | 113.5 | 110 | |
| | 2010.06-2017.03 | 6AT/6MT | R | R | Saloon 4WD A 20 DTH | | GCI81197 | Inner Joint | | 34 | 23 | 35 | 82.5 | 109 | |
| 2.0 (120 kw) | 2013.07-2017.03 | 6AT | F | L/R | Hatchback 4WD A 20 DTH | | GDS82085 | Drive Shaft | | 30 | 27 | 52.5 | 94 | 615 | |
| | 2013.07-2017.03 | 6AT | F | L/R | Hatchback 4WD A 20 DTH | | GCI86015 | Inner Joint | | 27 | 26 | 35 | 78.5 | 109.5 | |
| | 2013.07-2017.03 | 6AT/6MT | F | L/R | Hatchback 4WD A 20 DTH | | GCO17051 | Outer Joint | | 30 | 26 | 53.8 | 94.5 | 65.5 | M |
| | 2013.07-2017.03 | 6AT/6MT | F | L/R | Hatchback 4WD A 20 DTH | | GCO21049 | Outer Joint | | 30 | 26 | 52.5 | 94 | 65.5 | M |
| | 2013.07-2017.03 | 6AT/6MT | F | L/R | Hatchback 4WD A 20 DTH | | GCO88046 | Outer Joint | | 30 | 26 | 52.5 | 94.5 | 65.5 | M |
| | 2013.07-2017.03 | 6MT | F | L/R | Hatchback 4WD A 20 DTH | Chassis no. to:B1999999 | GDS60027 | Drive Shaft | | 30 | 27 | 52.5 | 94.5 | 619 | |
| | 2013.07-2017.03 | 6MT | F | L/R | Hatchback 4WD A 20 DTH | Chassis no. from:C1000001 | GDS84292 | Drive Shaft | | 30 | 27 | 52.5 | 94 | 618 | |
| | 2013.07-2017.03 | 6MT | F | L | Hatchback 4WD A 20 DTH | | GCI21030 | Inner Joint | | 27 | 26 | 35 | 78 | 112.5 | |
| | 2013.07-2017.03 | 6AT/6MT | R | L/R | Hatchback 4WD A 20 DTH | With differential lock | GCO81305 | Outer Joint | | 30 | 23 | 52.3 | 94 | 59.5 | M |
| | 2013.07-2017.03 | AT/MT | R | L | Hatchback 4WD A 20 DTH | Differential:With differential lock | GDS82261 | Drive Shaft | | 30 | 34 | 52.3 | 94 | 791 | |
| | 2013.07-2017.03 | AT/MT | R | R | Hatchback 4WD A 20 DTH | | GDS81333 | Drive Shaft | | 30 | 34 | 52.3 | 94 | 842 | |
| | 2013.07-2017.03 | AT/MT | R | L | Hatchback 4WD A 20 DTH | Differential:With differential lock | GCI81196 | Inner Joint | | 34 | 23 | 35 | 113.5 | 110 | |
| | 2013.07-2017.03 | AT/MT | R | R | Hatchback 4WD A 20 DTH | | GCI81197 | Inner Joint | | 34 | 23 | 35 | 82.5 | 109 | |
| | 2013.07-2017.03 | 6AT | F | R | Hatchback FWD A 20 DTH | | GDS21045 | Drive Shaft | | 30 | 27 | 52.5 | 94.5 | 615 | |
| | 2013.07-2017.03 | 6AT | F | L/R | Hatchback FWD A 20 DTH | | GDS82085 | Drive Shaft | | 30 | 27 | 52.5 | 94 | 615 | |
| | 2013.07-2017.03 | 6AT | F | L/R | Hatchback FWD A 20 DTH | | GCI86015 | Inner Joint | | 27 | 26 | 35 | 78.5 | 109.5 | |
| | 2013.07-2017.03 | 6AT/6MT | F | L | Hatchback FWD A 20 DTH | | GCO88046 | Outer Joint | | 30 | 26 | 52.5 | 94.5 | 65.5 | M |

| | YEAR | TRANSM. | F/R | L/R | BODY STYLE & DRIVE TYPE & ENGINE | REMARKS | G-AP Ref. | PRODUCT | ABS | Technical Specifications A | B | C | H | L | P |
|---|---|---|---|---|---|---|---|---|---|---|---|---|---|---|---|
| **OPEL** | | | | | | | | | | | | | | | |
| **Insignia** | | | | | | | | | | | | | | | |
| 2.0 (120 kw) | 2013.07-2017.03 | 6AT/6MT | F | L/R | Hatchback FWD A 20 DTH | | GCO17051 | Outer Joint | | 30 | 26 | 53.8 | 94.5 | 65.5 | M |
| | 2013.07-2017.03 | 6AT/6MT | F | L/R | Hatchback FWD A 20 DTH | | GCO21049 | Outer Joint | | 30 | 26 | 52.5 | 94 | 65.5 | M |
| | 2013.07-2017.03 | 6MT | F | L/R | Hatchback FWD A 20 DTH | Chassis no. to:B1999999 | GDS60027 | Drive Shaft | | 30 | 27 | 52.5 | 94.5 | 619 | |
| | 2013.07-2017.03 | 6MT | F | L/R | Hatchback FWD A 20 DTH | Chassis no. from:C1000001 | GDS84292 | Drive Shaft | | 30 | 27 | 52.5 | 94 | 618 | |
| | 2013.07-2017.03 | 6MT | F | L/R | Hatchback FWD A 20 DTH | | GCI21030 | Inner Joint | | 27 | 26 | 35 | 78 | 112.5 | |
| | 2013.07-2017.03 | 6AT | F | L/R | Saloon 4WD A 20 DTH | | GDS82085 | Drive Shaft | | 30 | 27 | 52.5 | 94 | 615 | |
| | 2013.07-2017.03 | 6AT | F | L/R | Saloon 4WD A 20 DTH | | GCI86015 | Inner Joint | | 27 | 26 | 35 | 78.5 | 109.5 | |
| | 2013.07-2017.03 | 6AT/6MT | F | L/R | Saloon 4WD A 20 DTH | | GCO17051 | Outer Joint | | 30 | 26 | 53.8 | 94.5 | 65.5 | M |
| | 2013.07-2017.03 | 6AT/6MT | F | L/R | Saloon 4WD A 20 DTH | | GCO21049 | Outer Joint | | 30 | 26 | 52.5 | 94 | 65.5 | M |
| | 2013.07-2017.03 | 6AT/6MT | F | L/R | Saloon 4WD A 20 DTH | | GCO88046 | Outer Joint | | 30 | 26 | 52.5 | 94.5 | 65.5 | M |
| | 2013.07-2017.03 | 6MT | F | L/R | Saloon 4WD A 20 DTH | Chassis no. to:B1999999 | GDS60027 | Drive Shaft | | 30 | 27 | 52.5 | 94.5 | 619 | |
| | 2013.07-2017.03 | 6MT | F | L/R | Saloon 4WD A 20 DTH | Chassis no. from:C1000001 | GDS84292 | Drive Shaft | | 30 | 27 | 52.5 | 94 | 618 | |
| | 2013.07-2017.03 | 6MT | F | L | Saloon 4WD A 20 DTH | | GCI21030 | Inner Joint | | 27 | 26 | 35 | 78 | 112.5 | |
| | 2013.07-2017.03 | 6AT/6MT | R | L/R | Saloon 4WD A 20 DTH | With differential lock | GCO81305 | Outer Joint | | 30 | 23 | 52.3 | 94 | 59.5 | M |
| | 2013.07-2017.03 | AT/MT | R | L | Saloon 4WD A 20 DTH | Differential:With differential lock | GDS82261 | Drive Shaft | | 30 | 34 | 52.3 | 94 | 791 | |
| | 2013.07-2017.03 | AT/MT | R | R | Saloon 4WD A 20 DTH | | GDS81333 | Drive Shaft | | 30 | 34 | 52.3 | 94 | 842 | |
| | 2013.07-2017.03 | AT/MT | R | L | Saloon 4WD A 20 DTH | Differential:With differential lock | GCI81196 | Inner Joint | | 34 | 23 | 35 | 113.5 | 110 | |
| | 2013.07-2017.03 | AT/MT | R | R | Saloon 4WD A 20 DTH | | GCI81197 | Inner Joint | | 34 | 23 | 35 | 82.5 | 109 | |
| | 2013.07-2017.03 | 6AT | F | R | Saloon FWD A 20 DTH | | GDS21045 | Drive Shaft | | 30 | 27 | 52.5 | 94.5 | 615 | |
| | 2013.07-2017.03 | 6AT | F | L/R | Saloon FWD A 20 DTH | | GDS82085 | Drive Shaft | | 30 | 27 | 52.5 | 94 | 615 | |
| | 2013.07-2017.03 | 6AT | F | L/R | Saloon FWD A 20 DTH | | GCI86015 | Inner Joint | | 27 | 26 | 35 | 78.5 | 109.5 | |
| | 2013.07-2017.03 | 6AT/6MT | F | L | Saloon FWD A 20 DTH | | GCO88046 | Outer Joint | | 30 | 26 | 52.5 | 94.5 | 65.5 | M |
| | 2013.07-2017.03 | 6AT/6MT | F | L/R | Saloon FWD A 20 DTH | | GCO17051 | Outer Joint | | 30 | 26 | 53.8 | 94.5 | 65.5 | M |
| | 2013.07-2017.03 | 6AT/6MT | F | L/R | Saloon FWD A 20 DTH | | GCO21049 | Outer Joint | | 30 | 26 | 52.5 | 94 | 65.5 | M |
| | 2013.07-2017.03 | 6MT | F | L/R | Saloon FWD A 20 DTH | Chassis no. to:B1999999 | GDS60027 | Drive Shaft | | 30 | 27 | 52.5 | 94.5 | 619 | |
| | 2013.07-2017.03 | 6MT | F | L/R | Saloon FWD A 20 DTH | Chassis no. from:C1000001 | GDS84292 | Drive Shaft | | 30 | 27 | 52.5 | 94 | 618 | |
| | 2013.07-2017.03 | 6MT | F | L/R | Saloon FWD A 20 DTH | | GCI21030 | Inner Joint | | 27 | 26 | 35 | 78 | 112.5 | |
| 2.0 (125 kw) | 2014.11-2017.03 | 6AT | F | L/R | Hatchback 4WD B 20 DTH | | GCI86015 | Inner Joint | | 27 | 26 | 35 | 78.5 | 109.5 | |
| | 2014.11-2017.03 | 6AT/6MT | F | L/R | Hatchback 4WD B 20 DTH | | GCO17051 | Outer Joint | | 30 | 26 | 53.8 | 94.5 | 65.5 | M |
| | 2014.11-2017.03 | 6AT/6MT | F | L/R | Hatchback 4WD B 20 DTH | | GCO21049 | Outer Joint | | 30 | 26 | 52.5 | 94 | 65.5 | M |
| | 2014.11-2017.03 | 6AT/6MT | F | L/R | Hatchback 4WD B 20 DTH | | GCO88046 | Outer Joint | | 30 | 26 | 52.5 | 94.5 | 65.5 | M |
| | 2014.11-2017.03 | 6MT | F | R | Hatchback 4WD B 20 DTH | | GDS60027 | Drive Shaft | | 30 | 27 | 52.5 | 94.5 | 619 | |
| | 2014.11-2017.03 | 6MT | F | L/R | Hatchback 4WD B 20 DTH | | GCI21030 | Inner Joint | | 27 | 26 | 35 | 78 | 112.5 | |
| | 2014.11-2017.03 | 6AT/6MT | R | L/R | Hatchback 4WD B 20 DTH | With differential lock | GCO81305 | Outer Joint | | 30 | 23 | 52.3 | 94 | 59.5 | M |
| | 2014.11-2017.03 | AT/MT | R | L | Hatchback 4WD B 20 DTH | Differential:With differential lock | GDS82261 | Drive Shaft | | 30 | 34 | 52.3 | 94 | 791 | |
| | 2014.11-2017.03 | AT/MT | R | R | Hatchback 4WD B 20 DTH | | GDS81333 | Drive Shaft | | 30 | 34 | 52.3 | 94 | 842 | |
| | 2014.11-2017.03 | AT/MT | R | L | Hatchback 4WD B 20 DTH | Differential:With differential lock | GCI81196 | Inner Joint | | 34 | 23 | 35 | 113.5 | 110 | |
| | 2014.11-2017.03 | AT/MT | R | R | Hatchback 4WD B 20 DTH | | GCI81197 | Inner Joint | | 34 | 23 | 35 | 82.5 | 109 | |
| | 2014.11-2017.03 | 6AT | F | R | Hatchback FWD B 20 DTH | | GDS21045 | Drive Shaft | | 30 | 27 | 52.5 | 94.5 | 615 | |
| | 2014.11-2017.03 | 6AT | F | L/R | Hatchback FWD B 20 DTH | | GDS82085 | Drive Shaft | | 30 | 27 | 52.5 | 94 | 615 | |
| | 2014.11-2017.03 | 6AT | F | L/R | Hatchback FWD B 20 DTH | | GCI86015 | Inner Joint | | 27 | 26 | 35 | 78.5 | 109.5 | |
| | 2014.11-2017.03 | 6AT/6MT | F | L/R | Hatchback FWD B 20 DTH | | GCO17051 | Outer Joint | | 30 | 26 | 53.8 | 94.5 | 65.5 | M |
| | 2014.11-2017.03 | 6AT/6MT | F | L/R | Hatchback FWD B 20 DTH | | GCO21049 | Outer Joint | | 30 | 26 | 52.5 | 94 | 65.5 | M |
| | 2014.11-2017.03 | 6AT/6MT | F | L/R | Hatchback FWD B 20 DTH | | GCO88046 | Outer Joint | | 30 | 26 | 52.5 | 94.5 | 65.5 | M |
| | 2014.11-2017.03 | 6MT | F | R | Hatchback FWD B 20 DTH | For RPO/POC:GNA,Chassis no. from:C1000001 | GDS84292 | Drive Shaft | | 30 | 27 | 52.5 | 94 | 618 | |
| | 2014.11-2017.03 | 6MT | F | L/R | Hatchback FWD B 20 DTH | | GCI21030 | Inner Joint | | 27 | 26 | 35 | 78 | 112.5 | |
| | 2014.11-2017.03 | MT | F | R | Hatchback FWD B 20 DTH | Chassis no. to:B1999999,For RPO/POC:GNA | GDS60027 | Drive Shaft | | 30 | 27 | 52.5 | 94.5 | 619 | |
| | 2014.11-2017.03 | 6AT | F | L/R | Saloon 4WD B 20 DTH | | GCI86015 | Inner Joint | | 27 | 26 | 35 | 78.5 | 109.5 | |
| | 2014.11-2017.03 | 6AT/6MT | F | L/R | Saloon 4WD B 20 DTH | | GCO17051 | Outer Joint | | 30 | 26 | 53.8 | 94.5 | 65.5 | M |
| | 2014.11-2017.03 | 6AT/6MT | F | L/R | Saloon 4WD B 20 DTH | | GCO21049 | Outer Joint | | 30 | 26 | 52.5 | 94 | 65.5 | M |
| | 2014.11-2017.03 | 6AT/6MT | F | L/R | Saloon 4WD B 20 DTH | | GCO88046 | Outer Joint | | 30 | 26 | 52.5 | 94.5 | 65.5 | M |
| | 2014.11-2017.03 | 6MT | F | R | Saloon 4WD B 20 DTH | | GDS60027 | Drive Shaft | | 30 | 27 | 52.5 | 94.5 | 619 | |
| | 2014.11-2017.03 | 6MT | F | L/R | Saloon 4WD B 20 DTH | | GCI21030 | Inner Joint | | 27 | 26 | 35 | 78 | 112.5 | |
| | 2014.11-2017.03 | 6AT/6MT | R | L/R | Saloon 4WD B 20 DTH | With differential lock | GCO81305 | Outer Joint | | 30 | 23 | 52.3 | 94 | 59.5 | M |
| | 2014.11-2017.03 | AT/MT | R | L | Saloon 4WD B 20 DTH | Differential:With differential lock | GDS82261 | Drive Shaft | | 30 | 34 | 52.3 | 94 | 791 | |
| | 2014.11-2017.03 | AT/MT | R | R | Saloon 4WD B 20 DTH | | GDS81333 | Drive Shaft | | 30 | 34 | 52.3 | 94 | 842 | |
| | 2014.11-2017.03 | AT/MT | R | L | Saloon 4WD B 20 DTH | Differential:With differential lock | GCI81196 | Inner Joint | | 34 | 23 | 35 | 113.5 | 110 | |
| | 2014.11-2017.03 | AT/MT | R | R | Saloon 4WD B 20 DTH | | GCI81197 | Inner Joint | | 34 | 23 | 35 | 82.5 | 109 | |
| | 2014.11-2017.03 | 6AT | F | R | Saloon FWD B 20 DTH | | GDS21045 | Drive Shaft | | 30 | 27 | 52.5 | 94.5 | 615 | |
| | 2014.11-2017.03 | 6AT | F | L/R | Saloon FWD B 20 DTH | | GDS82085 | Drive Shaft | | 30 | 27 | 52.5 | 94 | 615 | |
| | 2014.11-2017.03 | 6AT | F | L/R | Saloon FWD B 20 DTH | | GCI86015 | Inner Joint | | 27 | 26 | 35 | 78.5 | 109.5 | |
| | 2014.11-2017.03 | 6AT/6MT | F | L/R | Saloon FWD B 20 DTH | | GCO17051 | Outer Joint | | 30 | 26 | 53.8 | 94.5 | 65.5 | M |
| | 2014.11-2017.03 | 6AT/6MT | F | L/R | Saloon FWD B 20 DTH | | GCO21049 | Outer Joint | | 30 | 26 | 52.5 | 94 | 65.5 | M |
| | 2014.11-2017.03 | 6AT/6MT | F | L/R | Saloon FWD B 20 DTH | | GCO88046 | Outer Joint | | 30 | 26 | 52.5 | 94.5 | 65.5 | M |
| | 2014.11-2017.03 | 6MT | F | R | Saloon FWD B 20 DTH | For RPO/POC:GNA,Chassis no. from:C1000001 | GDS84292 | Drive Shaft | | 30 | 27 | 52.5 | 94 | 618 | |

| | YEAR | TRANSM. | F/R | L/R | BODY STYLE & DRIVE TYPE & ENGINE | REMARKS | G-AP Ref. | PRODUCT | ABS | Technical Specifications | | | | | |
|---|---|---|---|---|---|---|---|---|---|---|---|---|---|---|---|
| | | | | | | | | | | A | B | C | H | L | P |
| **OPEL** | | | | | | | | | | | | | | | |
| **Insignia** | | | | | | | | | | | | | | | |
| 2.0 (125 kw) | 2014.11-2017.03 | 6MT | F | L/R | Saloon FWD B 20 DTH | | GCI21030 | Inner Joint | | 27 | 26 | 35 | 78 | 112.5 | |
| | 2014.11-2017.03 | MT | F | R | Saloon FWD B 20 DTH | Chassis no. to:B1999999,For RPO/POC:GNA | GDS60027 | Drive Shaft | | 30 | 27 | 52.5 | 94.5 | 619 | |
| | 2017.03- | 6MT | F | L | Hatchback 4WD D 20 DTH | | GDS83818 | Drive Shaft | | 30 | 27 | 60.5 | 94.5 | 615 | |
| | 2017.03- | 6MT | F | R | Hatchback 4WD D 20 DTH | | GDS83653 | Drive Shaft | | 30 | 27 | 60.5 | 94.5 | 559 | |
| | 2017.03- | 6MT | F | L/R | Hatchback 4WD D 20 DTH | | GCO81945 | Outer Joint | | 30 | 35 | 60.5 | 94.5 | 60 | M |
| | 2017.03- | 6MT | F | L | Hatchback 4WD D 20 DTH | | GCI82377 | Inner Joint | | 27 | 35 | 35 | 101 | 100.5 | |
| | 2017.03- | 6MT | F | R | Hatchback 4WD D 20 DTH | | GCI82319 | Inner Joint | | 27 | 35 | 42 | | 139 | |
| | 2017.03- | 6MT | F | L | Hatchback FWD B 20 DTH;D 20 DTH | | GDS83818 | Drive Shaft | | 30 | 27 | 60.5 | 94.5 | 615 | |
| | 2017.03- | 6MT | F | L | Hatchback FWD B 20 DTH;D 20 DTH | | GCI82377 | Inner Joint | | 27 | 35 | 35 | 101 | 100.5 | |
| | 2017.03- | 6MT/8AT | F | L/R | Hatchback FWD B 20 DTH;D 20 DTH | | GCO81945 | Outer Joint | | 30 | 35 | 60.5 | 94.5 | 60 | M |
| | 2017.03- | 6MT/8AT | F | R | Hatchback FWD B 20 DTH;D 20 DTH | | GCI82319 | Inner Joint | | 27 | 35 | 42 | | 139 | |
| | 2017.03- | 8AT | F | L | Hatchback FWD B 20 DTH;D 20 DTH | | GDS56988 | Drive Shaft | | 30 | 27 | 60.5 | 94.5 | 621 | |
| | 2017.03- | 8AT/6MT | F | R | Hatchback FWD B 20 DTH;D 20 DTH | | GDS83927 | Drive Shaft | | 30 | 27 | 60.5 | 94.5 | 595 | |
| | 2020.08- | 9AT | F | R | Hatchback FWD F20SHL | | GDS83653 | Drive Shaft | | 30 | 27 | 60.5 | 94.5 | 559 | |
| | 2020.08- | 9AT | F | L/R | Hatchback FWD F20SHL | | GCO81945 | Outer Joint | | 30 | 35 | 60.5 | 94.5 | 60 | M |
| | 2020.08- | 9AT | F | R | Hatchback FWD F20SHL | | GCI82319 | Inner Joint | | 27 | 35 | 42 | | 139 | |
| 2.0 (128 kw) | 2020.04- | 8AT | F | L | Hatchback 4WD D 20 DTH | | GDS56988 | Drive Shaft | | 30 | 27 | 60.5 | 94.5 | 621 | |
| | 2020.04- | 8AT | F | R | Hatchback 4WD D 20 DTH | | GDS83927 | Drive Shaft | | 30 | 27 | 60.5 | 94.5 | 595 | |
| | 2020.04- | 8AT | F | L/R | Hatchback 4WD D 20 DTH | | GCO81945 | Outer Joint | | 30 | 35 | 60.5 | 94.5 | 60 | M |
| | 2020.04- | 8AT | F | L | Hatchback 4WD D 20 DTH | | GCI82377 | Inner Joint | | 27 | 35 | 35 | 101 | 100.5 | |
| | 2020.04- | 8AT | F | R | Hatchback 4WD D 20 DTH | | GCI82319 | Inner Joint | | 27 | 35 | 42 | | 139 | |
| | 2020.04- | 6MT | F | L | Hatchback FWD D 20 DTH | | GDS83818 | Drive Shaft | | 30 | 27 | 60.5 | 94.5 | 615 | |
| | 2020.04- | 6MT | F | L | Hatchback FWD D 20 DTH | | GCI82377 | Inner Joint | | 27 | 35 | 35 | 101 | 100.5 | |
| | 2020.04- | 6MT/8AT | F | R | Hatchback FWD D 20 DTH | | GDS83927 | Drive Shaft | | 30 | 27 | 60.5 | 94.5 | 595 | |
| | 2020.04- | 6MT/8AT | F | L/R | Hatchback FWD D 20 DTH | | GCO81945 | Outer Joint | | 30 | 35 | 60.5 | 94.5 | 60 | M |
| | 2020.04- | 6MT/8AT | F | R | Hatchback FWD D 20 DTH | | GCI82319 | Inner Joint | | 27 | 35 | 42 | | 139 | |
| | 2020.04- | 8AT | F | L | Hatchback FWD D 20 DTH | | GDS56988 | Drive Shaft | | 30 | 27 | 60.5 | 94.5 | 621 | |
| | 2021.04- | 8AT | F | L | Hatchback 4WD F20DVH | | GDS56988 | Drive Shaft | | 30 | 27 | 60.5 | 94.5 | 621 | |
| | 2021.04- | 8AT | F | R | Hatchback 4WD F20DVH | | GDS83653 | Drive Shaft | | 30 | 27 | 60.5 | 94.5 | 559 | |
| | 2021.04- | 8AT | F | L/R | Hatchback 4WD F20DVH | | GCO81945 | Outer Joint | | 30 | 35 | 60.5 | 94.5 | 60 | M |
| | 2021.04- | 8AT | F | L | Hatchback 4WD F20DVH | | GCI82377 | Inner Joint | | 27 | 35 | 35 | 101 | 100.5 | |
| | 2021.04- | 8AT | F | R | Hatchback 4WD F20DVH | | GCI82319 | Inner Joint | | 27 | 35 | 42 | | 139 | |
| | 2021.04- | 6MT | F | L | Hatchback FWD F20DVH | | GDS82470 | Drive Shaft | | 30 | 25 | 60.5 | 94.5 | 630 | |
| | 2021.04- | 6MT/8AT | F | R | Hatchback FWD F20DVH | | GDS83653 | Drive Shaft | | 30 | 27 | 60.5 | 94.5 | 559 | |
| | 2021.04- | 6MT/8AT | F | L/R | Hatchback FWD F20DVH | | GCO81945 | Outer Joint | | 30 | 35 | 60.5 | 94.5 | 60 | M |
| | 2021.04- | 6MT/8AT | F | R | Hatchback FWD F20DVH | | GCI82319 | Inner Joint | | 27 | 35 | 42 | | 139 | |
| | 2021.04- | 8AT | F | L | Hatchback FWD F20DVH | | GDS56988 | Drive Shaft | | 30 | 27 | 60.5 | 94.5 | 621 | |
| | 2021.04- | 8AT | F | L | Hatchback FWD F20DVH | | GCI82377 | Inner Joint | | 27 | 35 | 35 | 101 | 100.5 | |
| 2.0 (140 kw) | 2008.07-2011.12 | 6AT | F | L/R | Hatchback FWD A 20 DTR | | GDS21045 | Drive Shaft | | 30 | 27 | 52.5 | 94.5 | 615 | |
| | 2008.07-2011.12 | 6AT | F | L/R | Hatchback FWD A 20 DTR | | GDS82085 | Drive Shaft | | 30 | 27 | 52.5 | 94 | 615 | |
| | 2008.07-2011.12 | 6AT | F | L/R | Hatchback FWD A 20 DTR | | GCO17051 | Outer Joint | | 30 | 26 | 53.8 | 94.5 | 65.5 | M |
| | 2008.07-2011.12 | 6AT | F | L/R | Hatchback FWD A 20 DTR | | GCO21049 | Outer Joint | | 30 | 26 | 52.5 | 94 | 65.5 | M |
| | 2008.07-2011.12 | 6AT | F | L/R | Hatchback FWD A 20 DTR | | GCO88046 | Outer Joint | | 30 | 26 | 52.5 | 94.5 | 65.5 | M |
| | 2008.07-2011.12 | 6AT | F | L/R | Hatchback FWD A 20 DTR | | GCI86015 | Inner Joint | | 27 | 26 | 35 | 78.5 | 109.5 | |
| | 2008.07-2011.12 | 6MT | F | L/R | Hatchback FWD A 20 DTR | | GCO21057 | Outer Joint | | 30 | 27 | 59.1 | 94 | 65 | M |
| | 2008.07-2011.12 | AT/MT | F | L/R | Hatchback FWD A 20 DTR | | GDS60027 | Drive Shaft | | 30 | 27 | 52.5 | 94.5 | 619 | |
| | 2008.07-2011.12 | 6AT | F | L/R | Saloon 4WD A 20 DTR | | GDS21045 | Drive Shaft | | 30 | 27 | 52.5 | 94.5 | 615 | |
| | 2008.07-2011.12 | 6AT | F | L/R | Saloon 4WD A 20 DTR | | GDS82085 | Drive Shaft | | 30 | 27 | 52.5 | 94 | 615 | |
| | 2008.07-2011.12 | 6AT/6MT | F | L/R | Saloon 4WD A 20 DTR | | GCO17051 | Outer Joint | | 30 | 26 | 53.8 | 94.5 | 65.5 | M |
| | 2008.07-2011.12 | 6AT/6MT | F | L/R | Saloon 4WD A 20 DTR | | GCO21049 | Outer Joint | | 30 | 26 | 52.5 | 94 | 65.5 | M |
| | 2008.07-2011.12 | 6AT/6MT | F | L/R | Saloon 4WD A 20 DTR | | GCO88046 | Outer Joint | | 30 | 26 | 52.5 | 94.5 | 65.5 | M |
| | 2008.07-2011.12 | 6MT | F | L/R | Saloon 4WD A 20 DTR | For RPO/POC:GNA | GCI21030 | Inner Joint | | 27 | 26 | 35 | 78 | 112.5 | |
| | 2008.07-2011.12 | 6MT/6AT | F | L/R | Saloon 4WD A 20 DTR | Transmission:6MT,For RPO/POC:GNB | GCI86015 | Inner Joint | | 27 | 26 | 35 | 78.5 | 109.5 | |
| | 2008.07-2011.12 | AT/MT | F | L/R | Saloon 4WD A 20 DTR | | GDS60027 | Drive Shaft | | 30 | 27 | 52.5 | 94.5 | 619 | |
| | 2008.07-2011.12 | 6AT/6MT | R | L/R | Saloon 4WD A 20 DTR | With differential lock | GCO81305 | Outer Joint | | 30 | 23 | 52.3 | 94 | 59.5 | M |
| | 2008.07-2011.12 | AT/MT | R | L | Saloon 4WD A 20 DTR | Differential:With differential lock | GDS82261 | Drive Shaft | | 30 | 34 | 52.3 | 94 | 791 | |
| | 2008.07-2011.12 | AT/MT | R | R | Saloon 4WD A 20 DTR | Differential:With differential lock | GDS81333 | Drive Shaft | | 30 | 34 | 52.3 | 94 | 842 | |
| | 2008.07-2011.12 | AT/MT | R | L | Saloon 4WD A 20 DTR | Differential:With differential lock | GCI81196 | Inner Joint | | 34 | 23 | 35 | 113.5 | 110 | |
| | 2008.07-2011.12 | AT/MT | R | R | Saloon 4WD A 20 DTR | Differential:With differential lock | GCI81197 | Inner Joint | | 34 | 23 | 35 | 82.5 | 109 | |
| | 2008.07-2011.12 | 6AT | F | L/R | Saloon FWD A 20 DTR | | GDS21045 | Drive Shaft | | 30 | 27 | 52.5 | 94.5 | 615 | |
| | 2008.07-2011.12 | 6AT | F | L/R | Saloon FWD A 20 DTR | | GDS82085 | Drive Shaft | | 30 | 27 | 52.5 | 94 | 615 | |
| | 2008.07-2011.12 | 6AT | F | L/R | Saloon FWD A 20 DTR | | GCO17051 | Outer Joint | | 30 | 26 | 53.8 | 94.5 | 65.5 | M |
| | 2008.07-2011.12 | 6AT | F | L/R | Saloon FWD A 20 DTR | | GCO21049 | Outer Joint | | 30 | 26 | 52.5 | 94 | 65.5 | M |
| | 2008.07-2011.12 | 6AT | F | L/R | Saloon FWD A 20 DTR | | GCO88046 | Outer Joint | | 30 | 26 | 52.5 | 94.5 | 65.5 | M |
| | 2008.07-2011.12 | 6AT | F | L/R | Saloon FWD A 20 DTR | | GCI86015 | Inner Joint | | 27 | 26 | 35 | 78.5 | 109.5 | |

| | YEAR | TRANSM. | F/R | L/R | BODY STYLE & DRIVE TYPE & ENGINE | REMARKS | G-AP Ref. | PRODUCT | ABS | Technical Specifications | | | | | |
|---|---|---|---|---|---|---|---|---|---|---|---|---|---|---|---|
| | | | | | | | | | | A | B | C | H | L | P |
| **OPEL** | | | | | | | | | | | | | | | |
| **Insignia** | | | | | | | | | | | | | | | |
| 2.0 (140 kw) | 2008.07-2011.12 | 6MT | F | L/R | Saloon FWD A 20 DTR | | GCO21057 | Outer Joint | | 30 | 27 | 59.1 | 94 | 65 | M |
| | 2008.07-2011.12 | AT/MT | F | L/R | Saloon FWD A 20 DTR | | GDS60027 | Drive Shaft | | 30 | 27 | 52.5 | 94.5 | 619 | |
| | 2009.05-2011.12 | 6AT | F | L/R | Hatchback 4WD A 20 DTR | | GDS21045 | Drive Shaft | | 30 | 27 | 52.5 | 94.5 | 615 | |
| | 2009.05-2011.12 | 6AT | F | L/R | Hatchback 4WD A 20 DTR | | GDS82085 | Drive Shaft | | 30 | 27 | 52.5 | 94 | 615 | |
| | 2009.05-2011.12 | 6AT/6MT | F | L/R | Hatchback 4WD A 20 DTR | | GCO88046 | Outer Joint | | 30 | 26 | 52.5 | 94.5 | 65.5 | M |
| | 2009.05-2011.12 | 6MT | F | L/R | Hatchback 4WD A 20 DTR | For RPO/POC:GNA | GCI21030 | Inner Joint | | 27 | 26 | 35 | 78 | 112.5 | |
| | 2009.05-2011.12 | 6MT/6AT | F | L/R | Hatchback 4WD A 20 DTR | Transmission:6MT,For RPO/POC:GNB | GCI86015 | Inner Joint | | 27 | 26 | 35 | 78.5 | 109.5 | |
| | 2009.05-2011.12 | AT/MT | F | L/R | Hatchback 4WD A 20 DTR | | GDS60027 | Drive Shaft | | 30 | 27 | 52.5 | 94.5 | 619 | |
| | 2009.05-2011.12 | MT | F | L/R | Hatchback 4WD A 20 DTR | | GCO17051 | Outer Joint | | 30 | 26 | 53.8 | 94.5 | 65.5 | M |
| | 2009.05-2011.12 | MT | F | L/R | Hatchback 4WD A 20 DTR | | GCO21049 | Outer Joint | | 30 | 26 | 52.5 | 94 | 65.5 | M |
| | 2009.05-2011.12 | AT/MT | R | L | Hatchback 4WD A 20 DTR | Differential:With differential lock | GDS82261 | Drive Shaft | | 30 | 34 | 52.3 | 94 | 791 | |
| | 2009.05-2011.12 | AT/MT | R | R | Hatchback 4WD A 20 DTR | Differential:With differential lock | GDS81333 | Drive Shaft | | 30 | 34 | 52.3 | 94 | 842 | |
| | 2009.05-2011.12 | AT/MT | R | L/R | Hatchback 4WD A 20 DTR | With differential lock | GCO81305 | Outer Joint | | 30 | 23 | 52.3 | 94 | 59.5 | M |
| | 2009.05-2011.12 | AT/MT | R | L | Hatchback 4WD A 20 DTR | Differential:With differential lock | GCI81196 | Inner Joint | | 34 | 23 | 35 | 113.5 | 110 | |
| | 2009.05-2011.12 | AT/MT | R | R | Hatchback 4WD A 20 DTR | Differential:With differential lock | GCI81197 | Inner Joint | | 34 | 23 | 35 | 82.5 | 109 | |
| 2.0 (143 kw) | 2012.01-2017.03 | 6AT | F | R | Hatchback 4WD A 20 DTR | | GDS21045 | Drive Shaft | | 30 | 27 | 52.5 | 94.5 | 615 | |
| | 2012.01-2017.03 | 6AT | F | L/R | Hatchback 4WD A 20 DTR | | GDS82085 | Drive Shaft | | 30 | 27 | 52.5 | 94 | 615 | |
| | 2012.01-2017.03 | 6AT/6MT | F | L/R | Hatchback 4WD A 20 DTR | | GCO17051 | Outer Joint | | 30 | 26 | 53.8 | 94.5 | 65.5 | M |
| | 2012.01-2017.03 | 6AT/6MT | F | L/R | Hatchback 4WD A 20 DTR | | GCO21049 | Outer Joint | | 30 | 26 | 52.5 | 94 | 65.5 | M |
| | 2012.01-2017.03 | 6AT/6MT | F | L/R | Hatchback 4WD A 20 DTR | | GCO88046 | Outer Joint | | 30 | 26 | 52.5 | 94.5 | 65.5 | M |
| | 2012.01-2017.03 | 6MT | F | L/R | Hatchback 4WD A 20 DTR | For RPO/POC:GNA | GCI21030 | Inner Joint | | 27 | 26 | 35 | 78 | 112.5 | |
| | 2012.01-2017.03 | 6MT/6AT | F | L/R | Hatchback 4WD A 20 DTR | Transmission:6MT,For RPO/POC:GNB | GCI86015 | Inner Joint | | 27 | 26 | 35 | 78.5 | 109.5 | |
| | 2012.01-2017.03 | 6AT/6MT | R | L/R | Hatchback 4WD A 20 DTR | With differential lock | GCO81305 | Outer Joint | | 30 | 23 | 52.3 | 94 | 59.5 | M |
| | 2012.01-2017.03 | AT/MT | R | L | Hatchback 4WD A 20 DTR | Differential:With differential lock | GDS82261 | Drive Shaft | | 30 | 34 | 52.3 | 94 | 791 | |
| | 2012.01-2017.03 | AT/MT | R | R | Hatchback 4WD A 20 DTR | | GDS81333 | Drive Shaft | | 30 | 34 | 52.3 | 94 | 842 | |
| | 2012.01-2017.03 | AT/MT | R | L | Hatchback 4WD A 20 DTR | Differential:With differential lock | GCI81196 | Inner Joint | | 34 | 23 | 35 | 113.5 | 110 | |
| | 2012.01-2017.03 | AT/MT | R | R | Hatchback 4WD A 20 DTR | | GCI81197 | Inner Joint | | 34 | 23 | 35 | 82.5 | 109 | |
| | 2012.01-2017.03 | 6AT | F | R | Hatchback FWD A 20 DTR | | GDS21045 | Drive Shaft | | 30 | 27 | 52.5 | 94.5 | 615 | |
| | 2012.01-2017.03 | 6AT | F | L/R | Hatchback FWD A 20 DTR | | GDS82085 | Drive Shaft | | 30 | 27 | 52.5 | 94 | 615 | |
| | 2012.01-2017.03 | 6AT | F | L/R | Hatchback FWD A 20 DTR | | GCO17051 | Outer Joint | | 30 | 26 | 53.8 | 94.5 | 65.5 | M |
| | 2012.01-2017.03 | 6AT | F | L/R | Hatchback FWD A 20 DTR | | GCO21049 | Outer Joint | | 30 | 26 | 52.5 | 94 | 65.5 | M |
| | 2012.01-2017.03 | 6AT | F | L/R | Hatchback FWD A 20 DTR | | GCO88046 | Outer Joint | | 30 | 26 | 52.5 | 94.5 | 65.5 | M |
| | 2012.01-2017.03 | 6AT | F | L/R | Hatchback FWD A 20 DTR | | GCI86015 | Inner Joint | | 27 | 26 | 35 | 78.5 | 109.5 | |
| | 2012.01-2017.03 | 6MT | F | L/R | Hatchback FWD A 20 DTR | | GCO21057 | Outer Joint | | 30 | 27 | 59.1 | 94 | 65 | M |
| | 2012.01-2017.03 | 6AT | F | R | Saloon 4WD A 20 DTR | | GDS21045 | Drive Shaft | | 30 | 27 | 52.5 | 94.5 | 615 | |
| | 2012.01-2017.03 | 6AT | F | L/R | Saloon 4WD A 20 DTR | | GDS82085 | Drive Shaft | | 30 | 27 | 52.5 | 94 | 615 | |
| | 2012.01-2017.03 | 6AT/6MT | F | L/R | Saloon 4WD A 20 DTR | | GCO17051 | Outer Joint | | 30 | 26 | 53.8 | 94.5 | 65.5 | M |
| | 2012.01-2017.03 | 6AT/6MT | F | L/R | Saloon 4WD A 20 DTR | | GCO21049 | Outer Joint | | 30 | 26 | 52.5 | 94 | 65.5 | M |
| | 2012.01-2017.03 | 6AT/6MT | F | L/R | Saloon 4WD A 20 DTR | | GCO88046 | Outer Joint | | 30 | 26 | 52.5 | 94.5 | 65.5 | M |
| | 2012.01-2017.03 | 6MT | F | L/R | Saloon 4WD A 20 DTR | For RPO/POC:GNA | GCI21030 | Inner Joint | | 27 | 26 | 35 | 78 | 112.5 | |
| | 2012.01-2017.03 | 6MT/6AT | F | L/R | Saloon 4WD A 20 DTR | Transmission:6MT,For RPO/POC:GNB | GCI86015 | Inner Joint | | 27 | 26 | 35 | 78.5 | 109.5 | |
| | 2012.01-2017.03 | 6AT/6MT | R | L/R | Saloon 4WD A 20 DTR | With differential lock | GCO81305 | Outer Joint | | 30 | 23 | 52.3 | 94 | 59.5 | M |
| | 2012.01-2017.03 | AT/MT | R | L | Saloon 4WD A 20 DTR | Differential:With differential lock | GDS82261 | Drive Shaft | | 30 | 34 | 52.3 | 94 | 791 | |
| | 2012.01-2017.03 | AT/MT | R | R | Saloon 4WD A 20 DTR | | GDS81333 | Drive Shaft | | 30 | 34 | 52.3 | 94 | 842 | |
| | 2012.01-2017.03 | AT/MT | R | L | Saloon 4WD A 20 DTR | Differential:With differential lock | GCI81196 | Inner Joint | | 34 | 23 | 35 | 113.5 | 110 | |
| | 2012.01-2017.03 | AT/MT | R | R | Saloon 4WD A 20 DTR | | GCI81197 | Inner Joint | | 34 | 23 | 35 | 82.5 | 109 | |
| | 2012.01-2017.03 | 6AT | F | R | Saloon FWD A 20 DTR | | GDS21045 | Drive Shaft | | 30 | 27 | 52.5 | 94.5 | 615 | |
| | 2012.01-2017.03 | 6AT | F | L/R | Saloon FWD A 20 DTR | | GDS82085 | Drive Shaft | | 30 | 27 | 52.5 | 94 | 615 | |
| | 2012.01-2017.03 | 6AT | F | L/R | Saloon FWD A 20 DTR | | GCO17051 | Outer Joint | | 30 | 26 | 53.8 | 94.5 | 65.5 | M |
| | 2012.01-2017.03 | 6AT | F | L/R | Saloon FWD A 20 DTR | | GCO21049 | Outer Joint | | 30 | 26 | 52.5 | 94 | 65.5 | M |
| | 2012.01-2017.03 | 6AT | F | L/R | Saloon FWD A 20 DTR | | GCO88046 | Outer Joint | | 30 | 26 | 52.5 | 94.5 | 65.5 | M |
| | 2012.01-2017.03 | 6AT | F | L/R | Saloon FWD A 20 DTR | | GCI86015 | Inner Joint | | 27 | 26 | 35 | 78.5 | 109.5 | |
| | 2012.01-2017.03 | 6MT | F | L/R | Saloon FWD A 20 DTR | | GCO21057 | Outer Joint | | 30 | 27 | 59.1 | 94 | 65 | M |
| 2.0 (147 kw) | 2020.04- | 9AT | F | R | Hatchback FWD F20SHL | | GDS83653 | Drive Shaft | | 30 | 27 | 60.5 | 94.5 | 559 | |
| | 2020.04- | 9AT | F | L/R | Hatchback FWD F20SHL | | GCO81945 | Outer Joint | | 30 | 35 | 60.5 | 94.5 | 60 | M |
| | 2020.04- | 9AT | F | R | Hatchback FWD F20SHL | | GCI82319 | Inner Joint | | 27 | 35 | 42 | | 139 | |
| 2.0 (162 kw) | 2008.07-2017.03 | 6AT | F | L/R | Hatchback 4WD A 20 NHT | | GDS21045 | Drive Shaft | | 30 | 27 | 52.5 | 94.5 | 615 | |
| | 2008.07-2017.03 | 6AT | F | L/R | Hatchback 4WD A 20 NHT | | GCI86015 | Inner Joint | | 27 | 26 | 35 | 78.5 | 109.5 | |
| | 2008.07-2017.03 | 6AT/6MT | F | L/R | Hatchback 4WD A 20 NHT | | GCO17051 | Outer Joint | | 30 | 26 | 53.8 | 94.5 | 65.5 | M |
| | 2008.07-2017.03 | 6AT/6MT | F | L/R | Hatchback 4WD A 20 NHT | | GCO21049 | Outer Joint | | 30 | 26 | 52.5 | 94 | 65.5 | M |
| | 2008.07-2017.03 | 6AT/6MT | F | L/R | Hatchback 4WD A 20 NHT | | GCO88046 | Outer Joint | | 30 | 26 | 52.5 | 94.5 | 65.5 | M |
| | 2008.07-2017.03 | 6MT | F | L/R | Hatchback 4WD A 20 NHT | Chassis no. to:B1999999 | GDS60027 | Drive Shaft | | 30 | 27 | 52.5 | 94.5 | 619 | |
| | 2008.07-2017.03 | 6MT | F | L/R | Hatchback 4WD A 20 NHT | Chassis no. from:C1000001 | GDS84292 | Drive Shaft | | 30 | 27 | 52.5 | 94 | 618 | |
| | 2008.07-2017.03 | 6MT | F | L/R | Hatchback 4WD A 20 NHT | | GCI21030 | Inner Joint | | 27 | 26 | 35 | 78 | 112.5 | |
| | 2008.07-2017.03 | AT | F | L/R | Hatchback 4WD A 20 NHT | | GDS82085 | Drive Shaft | | 30 | 27 | 52.5 | 94 | 615 | |

| | YEAR | TRANSM. | F/R | L/R | BODY STYLE & DRIVE TYPE & ENGINE | REMARKS | G-AP Ref. | PRODUCT | ABS | Technical Specifications A | B | C | H | L | P |
|---|---|---|---|---|---|---|---|---|---|---|---|---|---|---|---|
| **OPEL** | | | | | | | | | | | | | | | |
| **Insignia** | | | | | | | | | | | | | | | |
| 2.0 (162 kw) | 2008.07-2017.03 | 6AT/6MT | R | L/R | Hatchback 4WD A 20 NHT | For vehicles with electronic ltd slip differential | GCO81305 | Outer Joint | | 30 | 23 | 52.3 | 94 | 59.5 | M |
| | 2008.07-2017.03 | AT/MT | R | L | Hatchback 4WD A 20 NHT | Veh Equip:For vehicles with lectronic ltd slip differential | GDS82261 | Drive Shaft | | 30 | 34 | 52.3 | 94 | 791 | |
| | 2008.07-2017.03 | AT/MT | R | R | Hatchback 4WD A 20 NHT | For vehicles with lectronic ltd slip differential | GDS81333 | Drive Shaft | | 30 | 34 | 52.3 | 94 | 842 | |
| | 2008.07-2017.03 | AT/MT | R | L | Hatchback 4WD A 20 NHT | Veh Equip:For vehicles with lectronic ltd slip differential | GCI81196 | Inner Joint | | 34 | 23 | 35 | 113.5 | 110 | |
| | 2008.07-2017.03 | AT/MT | R | R | Hatchback 4WD A 20 NHT | For vehicles with lectronic ltd slip differential | GCI81197 | Inner Joint | | 34 | 23 | 35 | 82.5 | 109 | |
| | 2008.07-2017.03 | 6AT | F | L/R | Hatchback FWD A 20 NHT;A 20 NFT | | GDS21045 | Drive Shaft | | 30 | 27 | 52.5 | 94.5 | 615 | |
| | 2008.07-2017.03 | 6AT | F | L/R | Hatchback FWD A 20 NHT;A 20 NFT | | GCI86015 | Inner Joint | | 27 | 26 | 35 | 78.5 | 109.5 | |
| | 2008.07-2017.03 | 6AT/6MT | F | L/R | Hatchback FWD A 20 NHT;A 20 NFT | | GCO17051 | Outer Joint | | 30 | 26 | 53.8 | 94.5 | 65.5 | M |
| | 2008.07-2017.03 | 6AT/6MT | F | L/R | Hatchback FWD A 20 NHT;A 20 NFT | | GCO21049 | Outer Joint | | 30 | 26 | 52.5 | 94 | 65.5 | M |
| | 2008.07-2017.03 | 6AT/6MT | F | L/R | Hatchback FWD A 20 NHT;A 20 NFT | | GCO88046 | Outer Joint | | 30 | 26 | 52.5 | 94.5 | 65.5 | M |
| | 2008.07-2017.03 | 6MT | F | L/R | Hatchback FWD A 20 NHT;A 20 NFT | Chassis no. to:B1999999 | GDS60027 | Drive Shaft | | 30 | 27 | 52.5 | 94.5 | 619 | |
| | 2008.07-2017.03 | 6MT | F | L/R | Hatchback FWD A 20 NHT;A 20 NFT | Chassis no. from:C1000001 | GDS84292 | Drive Shaft | | 30 | 27 | 52.5 | 94 | 618 | |
| | 2008.07-2017.03 | 6MT | F | L/R | Hatchback FWD A 20 NHT;A 20 NFT | | GCI21030 | Inner Joint | | 27 | 26 | 35 | 78 | 112.5 | |
| | 2008.07-2017.03 | AT | F | L | Hatchback FWD A 20 NHT;A 20 NFT | | GDS82085 | Drive Shaft | | 30 | 27 | 52.5 | 94 | 615 | |
| | 2008.07-2017.03 | AT | F | R | Hatchback FWD A 20 NHT;A 20 NFT | Date from:2011.01;Chassis no. from:B1000001 | GDS82085 | Drive Shaft | | 30 | 27 | 52.5 | 94 | 615 | |
| | 2008.07-2017.03 | 6AT | F | L/R | Saloon 4WD A 20 NHT | | GDS21045 | Drive Shaft | | 30 | 27 | 52.5 | 94.5 | 615 | |
| | 2008.07-2017.03 | 6AT | F | L/R | Saloon 4WD A 20 NHT | | GCI86015 | Inner Joint | | 27 | 26 | 35 | 78.5 | 109.5 | |
| | 2008.07-2017.03 | 6AT/6MT | F | L/R | Saloon 4WD A 20 NHT | | GCO17051 | Outer Joint | | 30 | 26 | 53.8 | 94.5 | 65.5 | M |
| | 2008.07-2017.03 | 6AT/6MT | F | L/R | Saloon 4WD A 20 NHT | | GCO21049 | Outer Joint | | 30 | 26 | 52.5 | 94 | 65.5 | M |
| | 2008.07-2017.03 | 6AT/6MT | F | L/R | Saloon 4WD A 20 NHT | | GCO88046 | Outer Joint | | 30 | 26 | 52.5 | 94.5 | 65.5 | M |
| | 2008.07-2017.03 | 6MT | F | L/R | Saloon 4WD A 20 NHT | Chassis no. to:B1999999 | GDS60027 | Drive Shaft | | 30 | 27 | 52.5 | 94.5 | 619 | |
| | 2008.07-2017.03 | 6MT | F | L/R | Saloon 4WD A 20 NHT | Chassis no. from:C1000001 | GDS84292 | Drive Shaft | | 30 | 27 | 52.5 | 94 | 618 | |
| | 2008.07-2017.03 | 6MT | F | L/R | Saloon 4WD A 20 NHT | | GCI21030 | Inner Joint | | 27 | 26 | 35 | 78 | 112.5 | |
| | 2008.07-2017.03 | AT | F | L/R | Saloon 4WD A 20 NHT | | GDS82085 | Drive Shaft | | 30 | 27 | 52.5 | 94 | 615 | |
| | 2008.07-2017.03 | 6AT/6MT | R | L/R | Saloon 4WD A 20 NHT | For vehicles with electronic ltd slip differential | GCO81305 | Outer Joint | | 30 | 23 | 52.3 | 94 | 59.5 | M |
| | 2008.07-2017.03 | AT/MT | R | L | Saloon 4WD A 20 NHT | Veh Equip:For vehicles with lectronic ltd slip differential | GDS82261 | Drive Shaft | | 30 | 34 | 52.3 | 94 | 791 | |
| | 2008.07-2017.03 | AT/MT | R | R | Saloon 4WD A 20 NHT | For vehicles with lectronic ltd slip differential | GDS81333 | Drive Shaft | | 30 | 34 | 52.3 | 94 | 842 | |
| | 2008.07-2017.03 | AT/MT | R | L | Saloon 4WD A 20 NHT | Veh Equip:For vehicles with lectronic ltd slip differential | GCI81196 | Inner Joint | | 34 | 23 | 35 | 113.5 | 110 | |
| | 2008.07-2017.03 | AT/MT | R | R | Saloon 4WD A 20 NHT | For vehicles with lectronic ltd slip differential | GCI81197 | Inner Joint | | 34 | 23 | 35 | 82.5 | 109 | |
| | 2008.07-2017.03 | 6AT | F | L/R | Saloon FWD A 20 NFT | | GDS21045 | Drive Shaft | | 30 | 27 | 52.5 | 94.5 | 615 | |
| | 2008.07-2017.03 | 6AT | F | L/R | Saloon FWD A 20 NFT | | GDS82085 | Drive Shaft | | 30 | 27 | 52.5 | 94 | 615 | |
| | 2008.07-2017.03 | 6AT | F | L/R | Saloon FWD A 20 NFT | | GCI86015 | Inner Joint | | 27 | 26 | 35 | 78.5 | 109.5 | |
| | 2008.07-2017.03 | 6AT/6MT | F | L/R | Saloon FWD A 20 NFT | | GCO17051 | Outer Joint | | 30 | 26 | 53.8 | 94.5 | 65.5 | M |
| | 2008.07-2017.03 | 6AT/6MT | F | L/R | Saloon FWD A 20 NFT | | GCO21049 | Outer Joint | | 30 | 26 | 52.5 | 94 | 65.5 | M |
| | 2008.07-2017.03 | 6AT/6MT | F | L/R | Saloon FWD A 20 NFT | | GCO88046 | Outer Joint | | 30 | 26 | 52.5 | 94.5 | 65.5 | M |
| | 2008.07-2017.03 | 6MT | F | L/R | Saloon FWD A 20 NFT | Chassis no. to:B1999999 | GDS60027 | Drive Shaft | | 30 | 27 | 52.5 | 94.5 | 619 | |
| | 2008.07-2017.03 | 6MT | F | L/R | Saloon FWD A 20 NFT | Chassis no. from:C1000001 | GDS84292 | Drive Shaft | | 30 | 27 | 52.5 | 94 | 618 | |
| | 2008.07-2017.03 | 6MT | F | L/R | Saloon FWD A 20 NFT | | GCI21030 | Inner Joint | | 27 | 26 | 35 | 78 | 112.5 | |
| | 2008.07-2017.03 | 6AT | F | L/R | Saloon FWD A 20 NHT;A 20 NFT | | GDS21045 | Drive Shaft | | 30 | 27 | 52.5 | 94.5 | 615 | |
| | 2008.07-2017.03 | 6AT | F | L/R | Saloon FWD A 20 NHT;A 20 NFT | | GCI86015 | Inner Joint | | 27 | 26 | 35 | 78.5 | 109.5 | |
| | 2008.07-2017.03 | 6AT/6MT | F | L/R | Saloon FWD A 20 NHT;A 20 NFT | | GCO17051 | Outer Joint | | 30 | 26 | 53.8 | 94.5 | 65.5 | M |
| | 2008.07-2017.03 | 6AT/6MT | F | L/R | Saloon FWD A 20 NHT;A 20 NFT | | GCO21049 | Outer Joint | | 30 | 26 | 52.5 | 94 | 65.5 | M |
| | 2008.07-2017.03 | 6AT/6MT | F | L/R | Saloon FWD A 20 NHT;A 20 NFT | | GCO88046 | Outer Joint | | 30 | 26 | 52.5 | 94.5 | 65.5 | M |
| | 2008.07-2017.03 | 6MT | F | L/R | Saloon FWD A 20 NHT;A 20 NFT | Chassis no. to:B1999999 | GDS60027 | Drive Shaft | | 30 | 27 | 52.5 | 94.5 | 619 | |
| | 2008.07-2017.03 | 6MT | F | L/R | Saloon FWD A 20 NHT;A 20 NFT | Chassis no. from:C1000001 | GDS84292 | Drive Shaft | | 30 | 27 | 52.5 | 94 | 618 | |
| | 2008.07-2017.03 | 6MT | F | L/R | Saloon FWD A 20 NHT;A 20 NFT | | GCI21030 | Inner Joint | | 27 | 26 | 35 | 78 | 112.5 | |
| | 2008.07-2017.03 | AT | F | L | Saloon FWD A 20 NHT;A 20 NFT | | GDS82085 | Drive Shaft | | 30 | 27 | 52.5 | 94 | 615 | |
| | 2008.07-2017.03 | AT | F | R | Saloon FWD A 20 NHT;A 20 NFT | Date from:2011.01,Chassis no. from:B1000001 | GDS82085 | Drive Shaft | | 30 | 27 | 52.5 | 94 | 615 | |
| | 2010.10-2017.03 | 6AT | F | L/R | Hatchback FWD A 20 NFT | | GDS21045 | Drive Shaft | | 30 | 27 | 52.5 | 94.5 | 615 | |
| | 2010.10-2017.03 | 6AT | F | L/R | Hatchback FWD A 20 NFT | | GDS82085 | Drive Shaft | | 30 | 27 | 52.5 | 94 | 615 | |
| | 2010.10-2017.03 | 6AT | F | L/R | Hatchback FWD A 20 NFT | | GCI86015 | Inner Joint | | 27 | 26 | 35 | 78.5 | 109.5 | |
| | 2010.10-2017.03 | 6AT/6MT | F | L/R | Hatchback FWD A 20 NFT | | GCO17051 | Outer Joint | | 30 | 26 | 53.8 | 94.5 | 65.5 | M |
| | 2010.10-2017.03 | 6AT/6MT | F | L/R | Hatchback FWD A 20 NFT | | GCO21049 | Outer Joint | | 30 | 26 | 52.5 | 94 | 65.5 | M |
| | 2010.10-2017.03 | 6AT/6MT | F | L/R | Hatchback FWD A 20 NFT | | GCO88046 | Outer Joint | | 30 | 26 | 52.5 | 94.5 | 65.5 | M |
| | 2010.10-2017.03 | 6MT | F | L/R | Hatchback FWD A 20 NFT | Chassis no. to:B1999999 | GDS60027 | Drive Shaft | | 30 | 27 | 52.5 | 94.5 | 619 | |
| | 2010.10-2017.03 | 6MT | F | L/R | Hatchback FWD A 20 NFT | Chassis no. from:C1000001 | GDS84292 | Drive Shaft | | 30 | 27 | 52.5 | 94 | 618 | |
| | 2010.10-2017.03 | 6MT | F | L/R | Hatchback FWD A 20 NFT | | GCI21030 | Inner Joint | | 27 | 26 | 35 | 78 | 112.5 | |
| 2.0 (169 kw) | 2020.04- | 9AT | F | R | Hatchback 4WD F20SHT | | GDS83653 | Drive Shaft | | 30 | 27 | 60.5 | 94.5 | 559 | |
| | 2020.04- | 9AT | F | L/R | Hatchback 4WD F20SHT | | GCO81945 | Outer Joint | | 30 | 35 | 60.5 | 94.5 | 60 | M |
| | 2020.04- | 9AT | F | R | Hatchback 4WD F20SHT | | GCI82319 | Inner Joint | | 27 | 35 | 42 | | 139 | |
| 2.0 (184 kw) | 2011.07-2017.03 | 6AT/6MT | F | L/R | Hatchback 4WD A 20 NHT;A 20 NFT;B 20 NHT | | GCO17051 | Outer Joint | | 30 | 26 | 53.8 | 94.5 | 65.5 | M |
| | 2011.07-2017.03 | 6AT/6MT | F | L/R | Hatchback 4WD A 20 NHT;A 20 NFT;B 20 NHT | | GCO21049 | Outer Joint | | 30 | 26 | 52.5 | 94 | 65.5 | M |
| | 2011.07-2017.03 | 6AT/6MT | F | L/R | Hatchback 4WD A 20 NHT;A 20 NFT;B 20 NHT | | GCO88046 | Outer Joint | | 30 | 26 | 52.5 | 94.5 | 65.5 | M |
| | 2011.07-2017.03 | 6MT | F | L/R | Hatchback 4WD A 20 NHT;A 20 NFT;B 20 NHT | Chassis no. to:B1999999,For RPO/POC:MR6 | GDS60027 | Drive Shaft | | 30 | 27 | 52.5 | 94.5 | 619 | |
| | 2011.07-2017.03 | 6MT | F | L/R | Hatchback 4WD A 20 NHT;A 20 NFT;B 20 NHT | For RPO/POC:MR6 | GDS84292 | Drive Shaft | | 30 | 27 | 52.5 | 94 | 618 | |

| | YEAR | TRANSM. | F/R | L/R | BODY STYLE & DRIVE TYPE & ENGINE | REMARKS | G-AP Ref. | PRODUCT | ABS | Technical Specifications A | B | C | H | L | P |
|---|---|---|---|---|---|---|---|---|---|---|---|---|---|---|---|
| **OPEL** | | | | | | | | | | | | | | | |
| **Insignia** | | | | | | | | | | | | | | | |
| 2.0 (184 kw) | 2011.07-2017.03 | 6MT | F | L/R | Hatchback 4WD A 20 NHT;A 20 NFT;B 20 NHT | | GCI21030 | Inner Joint | | 27 | 26 | 35 | 78 | 112.5 | |
| | 2011.07-2017.03 | AT | F | L/R | Hatchback 4WD A 20 NHT;A 20 NFT;B 20 NHT | | GDS21045 | Drive Shaft | | 30 | 27 | 52.5 | 94.5 | 615 | |
| | 2011.07-2017.03 | AT | F | L/R | Hatchback 4WD A 20 NHT;A 20 NFT;B 20 NHT | | GDS82085 | Drive Shaft | | 30 | 27 | 52.5 | 94 | 615 | |
| | 2011.07-2017.03 | AT | F | L/R | Hatchback 4WD A 20 NHT;A 20 NFT;B 20 NHT | | GCI86015 | Inner Joint | | 27 | 26 | 35 | 78.5 | 109.5 | |
| | 2011.07-2017.03 | 6AT/6MT | R | L/R | Hatchback 4WD A 20 NHT;A 20 NFT;B 20 NHT | For vehicles with electronic ltd slip differential | GCO81305 | Outer Joint | | 30 | 23 | 52.3 | 94 | 59.5 | M |
| | 2011.07-2017.03 | AT/MT | R | L | Hatchback 4WD A 20 NHT;A 20 NFT;B 20 NHT | Veh Equip:For vehicles with lectronic ltd slip differential | GDS82261 | Drive Shaft | | 30 | 34 | 52.3 | 94 | 791 | |
| | 2011.07-2017.03 | AT/MT | R | R | Hatchback 4WD A 20 NHT;A 20 NFT;B 20 NHT | | GDS81333 | Drive Shaft | | 30 | 34 | 52.3 | 94 | 842 | |
| | 2011.07-2017.03 | AT/MT | R | L | Hatchback 4WD A 20 NHT;A 20 NFT;B 20 NHT | Veh Equip:For vehicles with lectronic ltd slip differential | GCI81196 | Inner Joint | | 34 | 23 | 35 | 113.5 | 110 | |
| | 2011.07-2017.03 | AT/MT | R | R | Hatchback 4WD A 20 NHT;A 20 NFT;B 20 NHT | | GCI81197 | Inner Joint | | 34 | 23 | 35 | 82.5 | 109 | |
| | 2011.07-2017.03 | 6AT/6MT | F | L/R | Saloon 4WD A 20 NHT;A 20 NFT;B 20 NHT | | GCO17051 | Outer Joint | | 30 | 26 | 53.8 | 94.5 | 65.5 | M |
| | 2011.07-2017.03 | 6AT/6MT | F | L/R | Saloon 4WD A 20 NHT;A 20 NFT;B 20 NHT | | GCO21049 | Outer Joint | | 30 | 26 | 52.5 | 94 | 65.5 | M |
| | 2011.07-2017.03 | 6AT/6MT | F | L/R | Saloon 4WD A 20 NHT;A 20 NFT;B 20 NHT | | GCO88046 | Outer Joint | | 30 | 26 | 52.5 | 94.5 | 65.5 | M |
| | 2011.07-2017.03 | 6MT | F | L/R | Saloon 4WD A 20 NHT;A 20 NFT;B 20 NHT | Chassis no. to:B1999999,For RPO/POC:MR6 | GDS60027 | Drive Shaft | | 30 | 27 | 52.5 | 94.5 | 619 | |
| | 2011.07-2017.03 | 6MT | F | L/R | Saloon 4WD A 20 NHT;A 20 NFT;B 20 NHT | For RPO/POC:MR6 | GDS84292 | Drive Shaft | | 30 | 27 | 52.5 | 94 | 618 | |
| | 2011.07-2017.03 | 6MT | F | L/R | Saloon 4WD A 20 NHT;A 20 NFT;B 20 NHT | | GCI21030 | Inner Joint | | 27 | 26 | 35 | 78 | 112.5 | |
| | 2011.07-2017.03 | AT | F | L/R | Saloon 4WD A 20 NHT;A 20 NFT;B 20 NHT | | GDS21045 | Drive Shaft | | 30 | 27 | 52.5 | 94.5 | 615 | |
| | 2011.07-2017.03 | AT | F | L/R | Saloon 4WD A 20 NHT;A 20 NFT;B 20 NHT | | GDS82085 | Drive Shaft | | 30 | 27 | 52.5 | 94 | 615 | |
| | 2011.07-2017.03 | AT | F | L/R | Saloon 4WD A 20 NHT;A 20 NFT;B 20 NHT | | GCI86015 | Inner Joint | | 27 | 26 | 35 | 78.5 | 109.5 | |
| | 2011.07-2017.03 | 6AT/6MT | R | L/R | Saloon 4WD A 20 NHT;A 20 NFT;B 20 NHT | For vehicles with electronic ltd slip differential | GCO81305 | Outer Joint | | 30 | 23 | 52.3 | 94 | 59.5 | M |
| | 2011.07-2017.03 | AT/MT | R | L | Saloon 4WD A 20 NHT;A 20 NFT;B 20 NHT | Veh Equip:For vehicles with lectronic ltd slip differential | GDS82261 | Drive Shaft | | 30 | 34 | 52.3 | 94 | 791 | |
| | 2011.07-2017.03 | AT/MT | R | R | Saloon 4WD A 20 NHT;A 20 NFT;B 20 NHT | | GDS81333 | Drive Shaft | | 30 | 34 | 52.3 | 94 | 842 | |
| | 2011.07-2017.03 | AT/MT | R | L | Saloon 4WD A 20 NHT;A 20 NFT;B 20 NHT | Veh Equip:For vehicles with lectronic ltd slip differential | GCI81196 | Inner Joint | | 34 | 23 | 35 | 113.5 | 110 | |
| | 2011.07-2017.03 | AT/MT | R | R | Saloon 4WD A 20 NHT;A 20 NFT;B 20 NHT | | GCI81197 | Inner Joint | | 34 | 23 | 35 | 82.5 | 109 | |
| | 2014.04-2017.03 | 6AT/6MT | F | L/R | Hatchback FWD A 20 NHT;B 20 NHT | | GCO17051 | Outer Joint | | 30 | 26 | 53.8 | 94.5 | 65.5 | M |
| | 2014.04-2017.03 | 6AT/6MT | F | L/R | Hatchback FWD A 20 NHT;B 20 NHT | | GCO21049 | Outer Joint | | 30 | 26 | 52.5 | 94 | 65.5 | M |
| | 2014.04-2017.03 | 6AT/6MT | F | L/R | Hatchback FWD A 20 NHT;B 20 NHT | | GCO88046 | Outer Joint | | 30 | 26 | 52.5 | 94.5 | 65.5 | M |
| | 2014.04-2017.03 | 6MT | F | L/R | Hatchback FWD A 20 NHT;B 20 NHT | For RPO/POC:MR6 | GDS84292 | Drive Shaft | | 30 | 27 | 52.5 | 94 | 618 | |
| | 2014.04-2017.03 | 6MT | F | L/R | Hatchback FWD A 20 NHT;B 20 NHT | | GCI21030 | Inner Joint | | 27 | 26 | 35 | 78 | 112.5 | |
| | 2014.04-2017.03 | AT | F | L | Hatchback FWD A 20 NHT;B 20 NHT | | GDS82085 | Drive Shaft | | 30 | 27 | 52.5 | 94 | 615 | |
| | 2014.04-2017.03 | AT | F | L | Hatchback FWD A 20 NHT;B 20 NHT | | GCI86015 | Inner Joint | | 27 | 26 | 35 | 78.5 | 109.5 | |
| | 2014.04-2017.03 | MT | F | L/R | Hatchback FWD A 20 NHT;B 20 NHT | Chassis no. to:B1999999,For RPO/POC:MR6 | GDS60027 | Drive Shaft | | 30 | 27 | 52.5 | 94.5 | 619 | |
| | 2014.04-2017.03 | 6AT/6MT | F | L/R | Saloon FWD A 20 NHT;B 20 NHT | | GCO17051 | Outer Joint | | 30 | 26 | 53.8 | 94.5 | 65.5 | M |
| | 2014.04-2017.03 | 6AT/6MT | F | L/R | Saloon FWD A 20 NHT;B 20 NHT | | GCO21049 | Outer Joint | | 30 | 26 | 52.5 | 94 | 65.5 | M |
| | 2014.04-2017.03 | 6AT/6MT | F | L/R | Saloon FWD A 20 NHT;B 20 NHT | | GCO88046 | Outer Joint | | 30 | 26 | 52.5 | 94.5 | 65.5 | M |
| | 2014.04-2017.03 | 6MT | F | L/R | Saloon FWD A 20 NHT;B 20 NHT | For RPO/POC:MR6 | GDS84292 | Drive Shaft | | 30 | 27 | 52.5 | 94 | 618 | |
| | 2014.04-2017.03 | 6MT | F | L/R | Saloon FWD A 20 NHT;B 20 NHT | | GCI21030 | Inner Joint | | 27 | 26 | 35 | 78 | 112.5 | |
| | 2014.04-2017.03 | AT | F | L | Saloon FWD A 20 NHT;B 20 NHT | | GDS82085 | Drive Shaft | | 30 | 27 | 52.5 | 94 | 615 | |
| | 2014.04-2017.03 | AT | F | L | Saloon FWD A 20 NHT;B 20 NHT | | GCI86015 | Inner Joint | | 27 | 26 | 35 | 78.5 | 109.5 | |
| | 2014.04-2017.03 | MT | F | L/R | Saloon FWD A 20 NHT;B 20 NHT | Chassis no. to:B1999999,For RPO/POC:MR6 | GDS60027 | Drive Shaft | | 30 | 27 | 52.5 | 94.5 | 619 | |
| 2.0 (191 kw) | 2017.03- | 8AT | F | L | Hatchback 4WD B 20 NFT;D 20 NFT | | GDS56988 | Drive Shaft | | 30 | 27 | 60.5 | 94.5 | 621 | |
| | 2017.03- | 8AT | F | R | Hatchback 4WD B 20 NFT;D 20 NFT | | GDS83653 | Drive Shaft | | 30 | 27 | 60.5 | 94.5 | 559 | |
| | 2017.03- | 8AT | F | L/R | Hatchback 4WD B 20 NFT;D 20 NFT | | GCO81945 | Outer Joint | | 30 | 35 | 60.5 | 94.5 | 60 | M |
| | 2017.03- | 8AT | F | L | Hatchback 4WD B 20 NFT;D 20 NFT | | GCI82377 | Inner Joint | | 27 | 35 | 35 | 101 | 100.5 | |
| | 2017.03- | 8AT | F | R | Hatchback 4WD B 20 NFT;D 20 NFT | | GCI82319 | Inner Joint | | 27 | 35 | 42 | | 139 | |
| 2.8 (191 kw) | 2008.07-2017.03 | 6AT | F | L | Hatchback 4WD A 28 NET | Date To:2010.12,Chassis no. to:A1999999 | GDS21045 | Drive Shaft | | 30 | 27 | 52.5 | 94.5 | 615 | |
| | 2008.07-2017.03 | 6AT | F | L | Hatchback 4WD A 28 NET | Date from:2011.01,Chassis no. from:B1000001 | GDS82085 | Drive Shaft | | 30 | 27 | 52.5 | 94 | 615 | |
| | 2008.07-2017.03 | 6AT | F | R | Hatchback 4WD A 28 NET | | GDS21045 | Drive Shaft | | 30 | 27 | 52.5 | 94.5 | 615 | |
| | 2008.07-2017.03 | 6AT | F | L/R | Hatchback 4WD A 28 NET | Date To:2010.12,Chassis no. to:A1999999 | GDS82085 | Drive Shaft | | 30 | 27 | 52.5 | 94 | 615 | |
| | 2008.07-2017.03 | 6AT | F | L/R | Hatchback 4WD A 28 NET | Date from:2010.01,Chassis no. from:A1000001 | GCO17051 | Outer Joint | | 30 | 26 | 53.8 | 94.5 | 65.5 | M |
| | 2008.07-2017.03 | 6AT | F | L/R | Hatchback 4WD A 28 NET | Date from:2010.01,Chassis no. from:A1000001 | GCO21049 | Outer Joint | | 30 | 26 | 52.5 | 94 | 65.5 | M |
| | 2008.07-2017.03 | 6AT | F | L/R | Hatchback 4WD A 28 NET | Date from:2010.01,Chassis no. from:A1000001 | GCO88046 | Outer Joint | | 30 | 26 | 52.5 | 94.5 | 65.5 | M |
| | 2008.07-2017.03 | 6AT | F | L/R | Hatchback 4WD A 28 NET | Date from:2010.01,Chassis no. from:A1000001 | GCI86015 | Inner Joint | | 27 | 26 | 35 | 78.5 | 109.5 | |
| | 2008.07-2017.03 | 6AT/6MT | F | L/R | Hatchback 4WD A 28 NET | Transmission:6AT,Date to:2009.12,Chassis no. to:9199999991999999 | GCO21057 | Outer Joint | | 30 | 27 | 59.1 | 94 | 65 | M |
| | 2008.07-2017.03 | 6AT/6MT | R | L/R | Hatchback 4WD A 28 NET | For vehicles with electronic ltd slip differential | GCO81305 | Outer Joint | | 30 | 23 | 52.3 | 94 | 59.5 | M |
| | 2008.07-2017.03 | AT/MT | R | L | Hatchback 4WD A 28 NET | Veh Equip:For vehicles with lectronic ltd slip differential | GDS82261 | Drive Shaft | | 30 | 34 | 52.3 | 94 | 791 | |
| | 2008.07-2017.03 | AT/MT | R | R | Hatchback 4WD A 28 NET | | GDS81333 | Drive Shaft | | 30 | 34 | 52.3 | 94 | 842 | |
| | 2008.07-2017.03 | AT/MT | R | L | Hatchback 4WD A 28 NET | Veh Equip:For vehicles with lectronic ltd slip differential | GCI81196 | Inner Joint | | 34 | 23 | 35 | 113.5 | 110 | |
| | 2008.07-2017.03 | AT/MT | R | R | Hatchback 4WD A 28 NET | | GCI81197 | Inner Joint | | 34 | 23 | 35 | 82.5 | 109 | |
| | 2008.07-2017.03 | 6AT | F | L | Saloon 4WD A 28 NET | Date To:2010.12,Chassis no. to:A1999999 | GDS21045 | Drive Shaft | | 30 | 27 | 52.5 | 94.5 | 615 | |
| | 2008.07-2017.03 | 6AT | F | L | Saloon 4WD A 28 NET | Date from:2011.01,Chassis no. from:B1000001 | GDS82085 | Drive Shaft | | 30 | 27 | 52.5 | 94 | 615 | |
| | 2008.07-2017.03 | 6AT | F | R | Saloon 4WD A 28 NET | | GDS21045 | Drive Shaft | | 30 | 27 | 52.5 | 94.5 | 615 | |
| | 2008.07-2017.03 | 6AT | F | L/R | Saloon 4WD A 28 NET | Date To:2010.12,Chassis no. to:A1999999 | GDS82085 | Drive Shaft | | 30 | 27 | 52.5 | 94 | 615 | |
| | 2008.07-2017.03 | 6AT | F | L/R | Saloon 4WD A 28 NET | Date from:2010.01,Chassis no. from:A1000001 | GCO17051 | Outer Joint | | 30 | 26 | 53.8 | 94.5 | 65.5 | M |
| | 2008.07-2017.03 | 6AT | F | L/R | Saloon 4WD A 28 NET | Date from:2010.01,Chassis no. from:A1000001 | GCO21049 | Outer Joint | | 30 | 26 | 52.5 | 94 | 65.5 | M |
| | 2008.07-2017.03 | 6AT | F | L/R | Saloon 4WD A 28 NET | Date from:2010.01,Chassis no. from:A1000001 | GCO88046 | Outer Joint | | 30 | 26 | 52.5 | 94.5 | 65.5 | M |

| | YEAR | TRANSM. | F/R | L/R | BODY STYLE & DRIVE TYPE & ENGINE | REMARKS | G-AP Ref. | PRODUCT | ABS | Technical Specifications A | B | C | H | L | P |
|---|---|---|---|---|---|---|---|---|---|---|---|---|---|---|---|
| **OPEL** | | | | | | | | | | | | | | | |
| **Insignia** | | | | | | | | | | | | | | | |
| 2.8 (191 kw) | 2008.07-2017.03 | 6AT | F | L/R | Saloon 4WD A 28 NET | Date from:2010.01,Chassis no. from:A1000001 | GCI86015 | Inner Joint | | 27 | 26 | 35 | 78.5 | 109.5 | |
| | 2008.07-2017.03 | 6AT/6MT | F | L/R | Saloon 4WD A 28 NET | Transmission:6AT,Date to:2009.12,Chassis no. to:S1999999999999999 | GCO21057 | Outer Joint | | 30 | 27 | 59.1 | 94 | 65 | M |
| | 2008.07-2017.03 | 6AT/6MT | R | L/R | Saloon 4WD A 28 NET | For vehicles with electronic ltd slip differential | GCO81305 | Outer Joint | | 30 | 23 | 52.3 | 94 | 59.5 | M |
| | 2008.07-2017.03 | AT/MT | R | L | Saloon 4WD A 28 NET | Veh Equip:For vehicles with lectronic ltd slip differential | GDS82261 | Drive Shaft | | 30 | 34 | 52.3 | 94 | 791 | |
| | 2008.07-2017.03 | AT/MT | R | R | Saloon 4WD A 28 NET | | GDS81333 | Drive Shaft | | 30 | 34 | 52.3 | 94 | 842 | |
| | 2008.07-2017.03 | AT/MT | R | L | Saloon 4WD A 28 NET | Veh Equip:For vehicles with lectronic ltd slip differential | GCI81196 | Inner Joint | | 34 | 23 | 35 | 113.5 | 110 | |
| | 2008.07-2017.03 | AT/MT | R | R | Saloon 4WD A 28 NET | | GCI81197 | Inner Joint | | 34 | 23 | 35 | 82.5 | 109 | |
| 2.8 (239 kw) | 2009.07-2017.03 | 6AT/6MT | F | L/R | Hatchback 4WD A 28 NER;B 28 NER | | GCO21057 | Outer Joint | | 30 | 27 | 59.1 | 94 | 65 | M |
| | 2009.07-2017.03 | 6AT/6MT | R | L/R | Hatchback 4WD A 28 NER;B 28 NER | For vehicles with electronic ltd slip differential | GCO81305 | Outer Joint | | 30 | 23 | 52.3 | 94 | 59.5 | M |
| | 2009.07-2017.03 | AT/MT | R | L | Hatchback 4WD A 28 NER;B 28 NER | Veh Equip:For vehicles with lectronic ltd slip differential | GDS82261 | Drive Shaft | | 30 | 34 | 52.3 | 94 | 791 | |
| | 2009.07-2017.03 | AT/MT | R | R | Hatchback 4WD A 28 NER;B 28 NER | | GDS81333 | Drive Shaft | | 30 | 34 | 52.3 | 94 | 842 | |
| | 2009.07-2017.03 | AT/MT | R | L | Hatchback 4WD A 28 NER;B 28 NER | Veh Equip:For vehicles with lectronic ltd slip differential | GCI81196 | Inner Joint | | 34 | 23 | 35 | 113.5 | 110 | |
| | 2009.07-2017.03 | AT/MT | R | R | Hatchback 4WD A 28 NER;B 28 NER | | GCI81197 | Inner Joint | | 34 | 23 | 35 | 82.5 | 109 | |
| | 2009.07-2017.03 | 6AT/6MT | F | L/R | Saloon 4WD A 28 NER;B 28 NER | | GCO21057 | Outer Joint | | 30 | 27 | 59.1 | 94 | 65 | M |
| | 2009.07-2017.03 | 6AT/6MT | R | L/R | Saloon 4WD A 28 NER;B 28 NER | For vehicles with electronic ltd slip differential | GCO81305 | Outer Joint | | 30 | 23 | 52.3 | 94 | 59.5 | M |
| | 2009.07-2017.03 | AT/MT | R | L | Saloon 4WD A 28 NER;B 28 NER | Veh Equip:For vehicles with lectronic ltd slip differential | GDS82261 | Drive Shaft | | 30 | 34 | 52.3 | 94 | 791 | |
| | 2009.07-2017.03 | AT/MT | R | R | Saloon 4WD A 28 NER;B 28 NER | | GDS81333 | Drive Shaft | | 30 | 34 | 52.3 | 94 | 842 | |
| | 2009.07-2017.03 | AT/MT | R | L | Saloon 4WD A 28 NER;B 28 NER | Veh Equip:For vehicles with lectronic ltd slip differential | GCI81196 | Inner Joint | | 34 | 23 | 35 | 113.5 | 110 | |
| | 2009.07-2017.03 | AT/MT | R | R | Saloon 4WD A 28 NER;B 28 NER | | GCI81197 | Inner Joint | | 34 | 23 | 35 | 82.5 | 109 | |
| **Insignia Country Tourer** | | | | | | | | | | | | | | | |
| 1.5 (121 kw) | 2017.06- | 6AT | F | L | Estate FWD B 15 SFT;D 15 SFT | | GDS83622 | Drive Shaft | | 30 | 34 | 60.5 | 94.5 | 677 | |
| | 2017.06- | 6AT | F | L/R | Estate FWD B 15 SFT;D 15 SFT | | GCO81945 | Outer Joint | | 30 | 35 | 60.5 | 94.5 | 60 | M |
| | 2017.06- | 6AT | F | L | Estate FWD B 15 SFT;D 15 SFT | | GCI82318 | Inner Joint | | 34 | 35 | 35 | 137 | 100.5 | |
| | 2017.06- | 6MT | F | L | Estate FWD B 15 SFT;D 15 SFT | | GDS82470 | Drive Shaft | | 30 | 25 | 60.5 | 94.5 | 630 | |
| | 2017.06- | 6MT | F | R | Estate FWD B 15 SFT;D 15 SFT | | GDS82471 | Drive Shaft | | 30 | 25 | 60.5 | 94.5 | 990 | |
| | 2017.06- | 6MT | F | L/R | Estate FWD B 15 SFT;D 15 SFT | | GCI81831 | Inner Joint | | 25 | 35 | 35 | 57.5 | 130 | |
| 1.6 (88 kw) | 2015.07-2017.03 | 6MT | F | R | Estate FWD B 16 DTJ | Chassis no. to:B1999999 | GDS60027 | Drive Shaft | | 30 | 27 | 52.5 | 94.5 | 619 | |
| | 2015.07-2017.03 | 6MT | F | R | Estate FWD B 16 DTJ | Chassis no. from:C1000001 | GDS84292 | Drive Shaft | | 30 | 27 | 52.5 | 94 | 618 | |
| | 2015.07-2017.03 | 6MT | F | L/R | Estate FWD B 16 DTJ | | GCO17051 | Outer Joint | | 30 | 26 | 53.8 | 94.5 | 65.5 | M |
| | 2015.07-2017.03 | 6MT | F | L/R | Estate FWD B 16 DTJ | | GCO21049 | Outer Joint | | 30 | 26 | 52.5 | 94 | 65.5 | M |
| | 2015.07-2017.03 | 6MT | F | L/R | Estate FWD B 16 DTJ | | GCO88046 | Outer Joint | | 30 | 26 | 52.5 | 94.5 | 65.5 | M |
| | 2015.07-2017.03 | 6MT | F | R | Estate FWD B 16 DTJ | | GCI21030 | Inner Joint | | 27 | 26 | 35 | 78 | 112.5 | |
| | 2015.07-2017.03 | MT | F | L | Estate FWD B 16 DTJ | Date from:2016.01 | GDS21043 | Drive Shaft | | 30 | 25 | 52.5 | 94.5 | 624.5 | |
| 1.6 (100 kw) | 2015.07-2017.03 | 6MT | F | R | Estate FWD B 16 DTH | Chassis no. to:B1999999 | GDS60027 | Drive Shaft | | 30 | 27 | 52.5 | 94.5 | 619 | |
| | 2015.07-2017.03 | 6MT | F | R | Estate FWD B 16 DTH | Chassis no. from:C1000001 | GDS84292 | Drive Shaft | | 30 | 27 | 52.5 | 94 | 618 | |
| | 2015.07-2017.03 | 6MT | F | L/R | Estate FWD B 16 DTH | | GCO17051 | Outer Joint | | 30 | 26 | 53.8 | 94.5 | 65.5 | M |
| | 2015.07-2017.03 | 6MT | F | L/R | Estate FWD B 16 DTH | | GCO21049 | Outer Joint | | 30 | 26 | 52.5 | 94 | 65.5 | M |
| | 2015.07-2017.03 | 6MT | F | L/R | Estate FWD B 16 DTH | | GCO88046 | Outer Joint | | 30 | 26 | 52.5 | 94.5 | 65.5 | M |
| | 2015.07-2017.03 | 6MT | F | R | Estate FWD B 16 DTH | | GCI21030 | Inner Joint | | 27 | 26 | 35 | 78 | 112.5 | |
| | 2015.07-2017.03 | MT | F | L | Estate FWD B 16 DTH | Date from:2016.01 | GDS21043 | Drive Shaft | | 30 | 25 | 52.5 | 94.5 | 624.5 | |
| 1.6 (125 kw) | 2014.07-2017.03 | 6AT | F | L | Estate FWD A 16 XHT;B 16 SHL | | GDS82258 | Drive Shaft | | 30 | 34 | 52.5 | 94 | 666 | |
| | 2014.07-2017.03 | 6AT | F | R | Estate FWD A 16 XHT;B 16 SHL | | GDS21045 | Drive Shaft | | 30 | 27 | 52.5 | 94.5 | 615 | |
| | 2014.07-2017.03 | 6AT | F | R | Estate FWD A 16 XHT;B 16 SHL | | GDS82085 | Drive Shaft | | 30 | 27 | 52.5 | 94 | 615 | |
| | 2014.07-2017.03 | 6AT | F | L | Estate FWD A 16 XHT;B 16 SHL | | GCI86021 | Inner Joint | | 34 | 26 | 35 | 136.5 | 87 | |
| | 2014.07-2017.03 | 6AT | F | R | Estate FWD A 16 XHT;B 16 SHL | | GCI86015 | Inner Joint | | 27 | 26 | 35 | 78.5 | 109.5 | |
| | 2014.07-2017.03 | 6AT/6MT | F | L/R | Estate FWD A 16 XHT;B 16 SHL | | GCO17051 | Outer Joint | | 30 | 26 | 53.8 | 94.5 | 65.5 | M |
| | 2014.07-2017.03 | 6AT/6MT | F | L/R | Estate FWD A 16 XHT;B 16 SHL | | GCO21049 | Outer Joint | | 30 | 26 | 52.5 | 94 | 65.5 | M |
| | 2014.07-2017.03 | 6AT/6MT | F | L/R | Estate FWD A 16 XHT;B 16 SHL | | GCO88046 | Outer Joint | | 30 | 26 | 52.5 | 94.5 | 65.5 | M |
| | 2014.07-2017.03 | 6MT | F | L | Estate FWD A 16 XHT;B 16 SHL | | GDS21043 | Drive Shaft | | 30 | 25 | 52.5 | 94.5 | 624.5 | |
| | 2014.07-2017.03 | 6MT | F | R | Estate FWD A 16 XHT;B 16 SHL | Chassis no. to:B1999999 | GDS60027 | Drive Shaft | | 30 | 27 | 52.5 | 94.5 | 619 | |
| | 2014.07-2017.03 | 6MT | F | R | Estate FWD A 16 XHT;B 16 SHL | Chassis no. from:C1000001 | GDS84292 | Drive Shaft | | 30 | 27 | 52.5 | 94 | 618 | |
| | 2014.07-2017.03 | 6MT | F | R | Estate FWD A 16 XHT;B 16 SHL | | GCI21030 | Inner Joint | | 27 | 26 | 35 | 78 | 112.5 | |
| 1.6 (147 kw) | 2018.06- | 6AT | F | L | Estate FWD D 16 SHT | | GDS83622 | Drive Shaft | | 30 | 34 | 60.5 | 94.5 | 677 | |
| | 2018.06- | 6AT | F | L/R | Estate FWD D 16 SHT | | GCO81945 | Outer Joint | | 30 | 35 | 60.5 | 94.5 | 60 | M |
| | 2018.06- | 6AT | F | L | Estate FWD D 16 SHT | | GCI82318 | Inner Joint | | 34 | 35 | 35 | 137 | 100.5 | |
| | 2018.06- | 6MT | F | L | Estate FWD D 16 SHT | | GDS82470 | Drive Shaft | | 30 | 25 | 60.5 | 94.5 | 630 | |
| | 2018.06- | 6MT | F | L | Estate FWD D 16 SHT | | GCI81831 | Inner Joint | | 25 | 35 | 35 | 57.5 | 130 | |
| 2.0 (88 kw) | 2012.03-2017.03 | 6MT | F | L/R | Estate FWD A 20 DTE | Chassis no. to:B1999999 | GDS60027 | Drive Shaft | | 30 | 27 | 52.5 | 94.5 | 619 | |
| | 2012.03-2017.03 | 6MT | F | L/R | Estate FWD A 20 DTE | Chassis no. from:C1000001 | GDS84292 | Drive Shaft | | 30 | 27 | 52.5 | 94 | 618 | |
| | 2012.03-2017.03 | 6MT | F | L/R | Estate FWD A 20 DTE | | GCO17051 | Outer Joint | | 30 | 26 | 53.8 | 94.5 | 65.5 | M |
| | 2012.03-2017.03 | 6MT | F | L/R | Estate FWD A 20 DTE | | GCO21049 | Outer Joint | | 30 | 26 | 52.5 | 94 | 65.5 | M |
| | 2012.03-2017.03 | 6MT | F | L/R | Estate FWD A 20 DTE | | GCO88046 | Outer Joint | | 30 | 26 | 52.5 | 94.5 | 65.5 | M |
| | 2012.03-2017.03 | 6MT | F | L/R | Estate FWD A 20 DTE | | GCI21030 | Inner Joint | | 27 | 26 | 35 | 78 | 112.5 | |
| 2.0 (96 kw) | 2008.07-2017.03 | 6MT | F | L | Estate FWD A 20 DTJ;A 20 DT | Chassis no. to:D1061030,For Engine code:A20DT/A20DTJ | GDS60026 | Drive Shaft | | 30 | 25 | 52.5 | 94.5 | 631 | |
| | 2008.07-2017.03 | 6MT | F | R | Estate FWD A 20 DTJ;A 20 DT | For Engine code:A20DT/A20DTJ,For car needless intermediate shaft | GDS57620 | Drive Shaft | | 30 | 25 | 52.5 | 94 | 1002 | |

| | YEAR | TRANSM. | F/R | L/R | BODY STYLE & DRIVE TYPE & ENGINE | REMARKS | G-AP Ref. | PRODUCT | ABS | Technical Specifications A | B | C | H | L | P |
|---|---|---|---|---|---|---|---|---|---|---|---|---|---|---|---|
| **OPEL** | | | | | | | | | | | | | | | |
| **Insignia Country Tourer** | | | | | | | | | | | | | | | |
| 2.0 (96 kw) | 2008.07-2017.03 | 6MT | F | L/R | Estate FWD A 20 DTJ;A 20 DT | [illegible] | GDS60027 | Drive Shaft | | 30 | 27 | 52.5 | 94.5 | 619 | |
| | 2008.07-2017.03 | 6MT | F | L/R | Estate FWD A 20 DTJ;A 20 DT | For Engine code:A20DTH,Chassis no. from:C1000001 | GDS84292 | Drive Shaft | | 30 | 27 | 52.5 | 94 | 618 | |
| | 2008.07-2017.03 | 6MT | F | L/R | Estate FWD A 20 DTJ;A 20 DT | For Engine code:A20DTH/A20DTJ | GCO17051 | Outer Joint | | 30 | 26 | 53.8 | 94.5 | 65.5 | M |
| | 2008.07-2017.03 | 6MT | F | L/R | Estate FWD A 20 DTJ;A 20 DT | For Engine code:A20DT | GCO21038 | Outer Joint | | 30 | 24 | 52 | 94 | 64 | M |
| | 2008.07-2017.03 | 6MT | F | L/R | Estate FWD A 20 DTJ;A 20 DT | For Engine code:A20DTH/A20DTJ | GCO21049 | Outer Joint | | 30 | 26 | 52.5 | 94 | 65.5 | M |
| | 2008.07-2017.03 | 6MT | F | L/R | Estate FWD A 20 DTJ;A 20 DT | For Enginecode:A20DTH/A20DTJ | GCO88046 | Outer Joint | | 30 | 26 | 52.5 | 94.5 | 65.5 | M |
| | 2008.07-2017.03 | 6MT | F | L | Estate FWD A 20 DTJ;A 20 DT | For Engine code:A20DT | GCI44008 | Inner Joint | | 25 | 25 | 34.9 | 57.5 | 113.2 | |
| | 2008.07-2017.03 | 6MT | F | L/R | Estate FWD A 20 DTJ;A 20 DT | For Engine code:A20DT;A20DTJ,Front Axle Right;For Engine code:A20DTH,Front axle left and right | GCI21030 | Inner Joint | | 27 | 26 | 35 | 78 | 112.5 | |
| 2.0 (120 kw) | 2013.09-2017.03 | 6AT | F | R | Estate 4WD A 20 DTH | | GDS82085 | Drive Shaft | | 30 | 27 | 52.5 | 94 | 615 | |
| | 2013.09-2017.03 | 6AT | F | L/R | Estate 4WD A 20 DTH | | GCI86015 | Inner Joint | | 27 | 26 | 35 | 78.5 | 109.5 | |
| | 2013.09-2017.03 | 6AT/6MT | F | L/R | Estate 4WD A 20 DTH | | GCO17051 | Outer Joint | | 30 | 26 | 53.8 | 94.5 | 65.5 | M |
| | 2013.09-2017.03 | 6AT/6MT | F | L/R | Estate 4WD A 20 DTH | | GCO21049 | Outer Joint | | 30 | 26 | 52.5 | 94 | 65.5 | M |
| | 2013.09-2017.03 | 6AT/6MT | F | L/R | Estate 4WD A 20 DTH | | GCO88046 | Outer Joint | | 30 | 26 | 52.5 | 94.5 | 65.5 | M |
| | 2013.09-2017.03 | 6MT | F | L/R | Estate 4WD A 20 DTH | Chassis no. to:B1999999 | GDS60027 | Drive Shaft | | 30 | 27 | 52.5 | 94.5 | 619 | |
| | 2013.09-2017.03 | 6MT | F | L/R | Estate 4WD A 20 DTH | Chassis no. from:C1000001 | GDS84292 | Drive Shaft | | 30 | 27 | 52.5 | 94 | 618 | |
| | 2013.09-2017.03 | 6MT | F | L | Estate 4WD A 20 DTH | | GCI21030 | Inner Joint | | 27 | 26 | 35 | 78 | 112.5 | |
| | 2013.09-2017.03 | 6AT/6MT | R | L/R | Estate 4WD A 20 DTH | With differential lock | GCO81305 | Outer Joint | | 30 | 23 | 52.3 | 94 | 59.5 | M |
| | 2013.09-2017.03 | AT/MT | R | L | Estate 4WD A 20 DTH | Differential:With differential lock | GDS82261 | Drive Shaft | | 30 | 34 | 52.3 | 94 | 791 | |
| | 2013.09-2017.03 | AT/MT | R | R | Estate 4WD A 20 DTH | | GDS81333 | Drive Shaft | | 30 | 34 | 52.3 | 94 | 842 | |
| | 2013.09-2017.03 | AT/MT | R | L | Estate 4WD A 20 DTH | Differential:With differential lock | GCI81196 | Inner Joint | | 34 | 23 | 35 | 113.5 | 110 | |
| | 2013.09-2017.03 | AT/MT | R | R | Estate 4WD A 20 DTH | | GCI81197 | Inner Joint | | 34 | 23 | 35 | 82.5 | 109 | |
| | 2014.07-2017.03 | 6AT | F | R | Estate FWD A 20 DTH | | GDS21045 | Drive Shaft | | 30 | 27 | 52.5 | 94.5 | 615 | |
| | 2014.07-2017.03 | 6AT | F | R | Estate FWD A 20 DTH | | GDS82085 | Drive Shaft | | 30 | 27 | 52.5 | 94 | 615 | |
| | 2014.07-2017.03 | 6AT | F | L/R | Estate FWD A 20 DTH | | GCI86015 | Inner Joint | | 27 | 26 | 35 | 78.5 | 109.5 | |
| | 2014.07-2017.03 | 6AT/6MT | F | L | Estate FWD A 20 DTH | | GCO88046 | Outer Joint | | 30 | 26 | 52.5 | 94.5 | 65.5 | M |
| | 2014.07-2017.03 | 6AT/6MT | F | L/R | Estate FWD A 20 DTH | | GCO17051 | Outer Joint | | 30 | 26 | 53.8 | 94.5 | 65.5 | M |
| | 2014.07-2017.03 | 6AT/6MT | F | L/R | Estate FWD A 20 DTH | | GCO21049 | Outer Joint | | 30 | 26 | 52.5 | 94 | 65.5 | M |
| | 2014.07-2017.03 | 6MT | F | L/R | Estate FWD A 20 DTH | Chassis no. to:B1999999 | GDS60027 | Drive Shaft | | 30 | 27 | 52.5 | 94.5 | 619 | |
| | 2014.07-2017.03 | 6MT | F | L/R | Estate FWD A 20 DTH | Chassis no. from:C1000001 | GDS84292 | Drive Shaft | | 30 | 27 | 52.5 | 94 | 618 | |
| | 2014.07-2017.03 | 6MT | F | L/R | Estate FWD A 20 DTH | | GCI21030 | Inner Joint | | 27 | 26 | 35 | 78 | 112.5 | |
| 2.0 (125 kw) | 2014.11-2017.03 | 6AT | F | L/R | Estate 4WD B 20 DTH | | GCI86015 | Inner Joint | | 27 | 26 | 35 | 78.5 | 109.5 | |
| | 2014.11-2017.03 | 6AT/6MT | F | L/R | Estate 4WD B 20 DTH | | GCO17051 | Outer Joint | | 30 | 26 | 53.8 | 94.5 | 65.5 | M |
| | 2014.11-2017.03 | 6AT/6MT | F | L/R | Estate 4WD B 20 DTH | | GCO21049 | Outer Joint | | 30 | 26 | 52.5 | 94 | 65.5 | M |
| | 2014.11-2017.03 | 6AT/6MT | F | L/R | Estate 4WD B 20 DTH | | GCO88046 | Outer Joint | | 30 | 26 | 52.5 | 94.5 | 65.5 | M |
| | 2014.11-2017.03 | 6MT | F | R | Estate 4WD B 20 DTH | | GDS60027 | Drive Shaft | | 30 | 27 | 52.5 | 94.5 | 619 | |
| | 2014.11-2017.03 | 6MT | F | L/R | Estate 4WD B 20 DTH | | GCI21030 | Inner Joint | | 27 | 26 | 35 | 78 | 112.5 | |
| | 2014.11-2017.03 | 6AT/6MT | R | L/R | Estate 4WD B 20 DTH | With differential lock | GCO81305 | Outer Joint | | 30 | 23 | 52.3 | 94 | 59.5 | M |
| | 2014.11-2017.03 | AT/MT | R | L | Estate 4WD B 20 DTH | Differential:With differential lock | GDS82261 | Drive Shaft | | 30 | 34 | 52.3 | 94 | 791 | |
| | 2014.11-2017.03 | AT/MT | R | R | Estate 4WD B 20 DTH | | GDS81333 | Drive Shaft | | 30 | 34 | 52.3 | 94 | 842 | |
| | 2014.11-2017.03 | AT/MT | R | L | Estate 4WD B 20 DTH | Differential:With differential lock | GCI81196 | Inner Joint | | 34 | 23 | 35 | 113.5 | 110 | |
| | 2014.11-2017.03 | AT/MT | R | R | Estate 4WD B 20 DTH | | GCI81197 | Inner Joint | | 34 | 23 | 35 | 82.5 | 109 | |
| | 2014.11-2017.03 | 6AT | F | L | Estate FWD B 20 DTH | | GDS82085 | Drive Shaft | | 30 | 27 | 52.5 | 94 | 615 | |
| | 2014.11-2017.03 | 6AT | F | R | Estate FWD B 20 DTH | | GDS21045 | Drive Shaft | | 30 | 27 | 52.5 | 94.5 | 615 | |
| | 2014.11-2017.03 | 6AT | F | L/R | Estate FWD B 20 DTH | | GCI86015 | Inner Joint | | 27 | 26 | 35 | 78.5 | 109.5 | |
| | 2014.11-2017.03 | 6AT/6MT | F | L/R | Estate FWD B 20 DTH | | GCO17051 | Outer Joint | | 30 | 26 | 53.8 | 94.5 | 65.5 | M |
| | 2014.11-2017.03 | 6AT/6MT | F | L/R | Estate FWD B 20 DTH | | GCO21049 | Outer Joint | | 30 | 26 | 52.5 | 94 | 65.5 | M |
| | 2014.11-2017.03 | 6AT/6MT | F | L/R | Estate FWD B 20 DTH | | GCO88046 | Outer Joint | | 30 | 26 | 52.5 | 94.5 | 65.5 | M |
| | 2014.11-2017.03 | 6MT | F | R | Estate FWD B 20 DTH | Chassis no. to:B1999999 | GDS60027 | Drive Shaft | | 30 | 27 | 52.5 | 94.5 | 619 | |
| | 2014.11-2017.03 | 6MT | F | R | Estate FWD B 20 DTH | For RPO/POC:GNA,Chassis no. from:C1000001 | GDS84292 | Drive Shaft | | 30 | 27 | 52.5 | 94 | 618 | |
| | 2014.11-2017.03 | 6MT | F | L/R | Estate FWD B 20 DTH | | GCI21030 | Inner Joint | | 27 | 26 | 35 | 78 | 112.5 | |
| | 2017.06- | 6MT | F | L | Estate 4WD D 20 DTH | | GDS83818 | Drive Shaft | | 30 | 27 | 60.5 | 94.5 | 615 | |
| | 2017.06- | 6MT | F | R | Estate 4WD D 20 DTH | | GDS83653 | Drive Shaft | | 30 | 27 | 60.5 | 94.5 | 559 | |
| | 2017.06- | 6MT | F | L/R | Estate 4WD D 20 DTH | | GCO81945 | Outer Joint | | 30 | 35 | 60.5 | 94.5 | 60 | M |
| | 2017.06- | 6MT | F | L | Estate 4WD D 20 DTH | | GCI82377 | Inner Joint | | 27 | 35 | 35 | 101 | 100.5 | |
| | 2017.06- | 6MT | F | R | Estate 4WD D 20 DTH | | GCI82319 | Inner Joint | | 27 | 35 | 42 | | 139 | |
| | 2017.06- | 6MT | F | L | Estate FWD D 20 DTH | | GDS83818 | Drive Shaft | | 30 | 27 | 60.5 | 94.5 | 615 | |
| | 2017.06- | 6MT | F | L | Estate FWD D 20 DTH | | GCI82377 | Inner Joint | | 27 | 35 | 35 | 101 | 100.5 | |
| | 2017.06- | 6MT/8AT | F | L/R | Estate FWD D 20 DTH | | GCO81945 | Outer Joint | | 30 | 35 | 60.5 | 94.5 | 60 | M |
| | 2017.06- | 6MT/8AT | F | R | Estate FWD D 20 DTH | | GCI82319 | Inner Joint | | 27 | 35 | 42 | | 139 | |
| | 2017.06- | 8AT | F | L | Estate FWD D 20 DTH | | GDS56988 | Drive Shaft | | 30 | 27 | 60.5 | 94.5 | 621 | |
| | 2017.06- | 8AT/6MT | F | R | Estate FWD D 20 DTH | | GDS83927 | Drive Shaft | | 30 | 27 | 60.5 | 94.5 | 595 | |
| 2.0 (143 kw) | 2013.09-2017.03 | 6AT | F | R | Estate 4WD A 20 DTR | | GDS21045 | Drive Shaft | | 30 | 27 | 52.5 | 94.5 | 615 | |
| | 2013.09-2017.03 | 6AT | F | R | Estate 4WD A 20 DTR | | GDS82085 | Drive Shaft | | 30 | 27 | 52.5 | 94 | 615 | |
| | 2013.09-2017.03 | 6AT | F | L/R | Estate 4WD A 20 DTR | | GCO17051 | Outer Joint | | 30 | 26 | 53.8 | 94.5 | 65.5 | M |
| | 2013.09-2017.03 | 6AT | F | L/R | Estate 4WD A 20 DTR | | GCO21049 | Outer Joint | | 30 | 26 | 52.5 | 94 | 65.5 | M |

| | YEAR | TRANSM. | F/R | L/R | BODY STYLE & DRIVE TYPE & ENGINE | REMARKS | G-AP Ref. | PRODUCT | ABS | Technical Specifications A | B | C | H | L | P |
|---|---|---|---|---|---|---|---|---|---|---|---|---|---|---|---|
| **OPEL** | | | | | | | | | | | | | | | |
| **Insignia Country Tourer** | | | | | | | | | | | | | | | |
| 2.0 (143 kw) | 2013.09-2017.03 | 6AT | F | L/R | Estate 4WD A 20 DTR | | GCO88046 | Outer Joint | | 30 | 26 | 52.5 | 94.5 | 65.5 | M |
| | 2013.09-2017.03 | 6AT | F | L/R | Estate 4WD A 20 DTR | | GCI86015 | Inner Joint | | 27 | 26 | 35 | 78.5 | 109.5 | |
| | 2013.09-2017.03 | 6AT | R | R | Estate 4WD A 20 DTR | | GDS81333 | Drive Shaft | | 30 | 34 | 52.3 | 94 | 842 | |
| | 2013.09-2017.03 | 6AT | R | L/R | Estate 4WD A 20 DTR | With differential lock | GCO81305 | Outer Joint | | 30 | 23 | 52.3 | 94 | 59.5 | M |
| | 2013.09-2017.03 | 6AT | R | R | Estate 4WD A 20 DTR | | GCI81197 | Inner Joint | | 34 | 23 | 35 | 82.5 | 109 | |
| | 2013.09-2017.03 | | R | L | Estate 4WD A 20 DTR | Differential:With differential lock | GDS82261 | Drive Shaft | | 30 | 34 | 52.3 | 94 | 791 | |
| | 2013.09-2017.03 | | R | L | Estate 4WD A 20 DTR | Differential:With differential lock | GCI81196 | Inner Joint | | 34 | 23 | 35 | 113.5 | 110 | |
| 2.0 (184 kw) | 2013.09-2017.03 | 6AT/6MT | F | L/R | Estate 4WD A 20 NHT;A 20 NFT;B 20 NHT | | GCO17051 | Outer Joint | | 30 | 26 | 53.8 | 94.5 | 65.5 | M |
| | 2013.09-2017.03 | 6AT/6MT | F | L/R | Estate 4WD A 20 NHT;A 20 NFT;B 20 NHT | | GCO21049 | Outer Joint | | 30 | 26 | 52.5 | 94 | 65.5 | M |
| | 2013.09-2017.03 | 6AT/6MT | F | L/R | Estate 4WD A 20 NHT;A 20 NFT;B 20 NHT | | GCO88046 | Outer Joint | | 30 | 26 | 52.5 | 94.5 | 65.5 | M |
| | 2013.09-2017.03 | 6MT | F | L/R | Estate 4WD A 20 NHT;A 20 NFT;B 20 NHT | Chassis no. to:B1999999,For RPO/POC:MR6 | GDS60027 | Drive Shaft | | 30 | 27 | 52.5 | 94.5 | 619 | |
| | 2013.09-2017.03 | 6MT | F | L/R | Estate 4WD A 20 NHT;A 20 NFT;B 20 NHT | For RPO/POC:MR6,Chassis no. from:C1000001 | GDS84292 | Drive Shaft | | 30 | 27 | 52.5 | 94 | 618 | |
| | 2013.09-2017.03 | 6MT | F | L/R | Estate 4WD A 20 NHT;A 20 NFT;B 20 NHT | | GCI21030 | Inner Joint | | 27 | 26 | 35 | 78 | 112.5 | |
| | 2013.09-2017.03 | 6AT/6MT | R | L/R | Estate 4WD A 20 NHT;A 20 NFT;B 20 NHT | For vehicles with electronic ltd slip differential | GCO81305 | Outer Joint | | 30 | 23 | 52.3 | 94 | 59.5 | M |
| | 2013.09-2017.03 | AT/MT | R | L | Estate 4WD A 20 NHT;A 20 NFT;B 20 NHT | Veh Equip:For vehicles with lectronic ltd slip differential | GDS82261 | Drive Shaft | | 30 | 34 | 52.3 | 94 | 791 | |
| | 2013.09-2017.03 | AT/MT | R | R | Estate 4WD A 20 NHT;A 20 NFT;B 20 NHT | | GDS81333 | Drive Shaft | | 30 | 34 | 52.3 | 94 | 842 | |
| | 2013.09-2017.03 | AT/MT | R | L | Estate 4WD A 20 NHT;A 20 NFT;B 20 NHT | Veh Equip:For vehicles with lectronic ltd slip differential | GCI81196 | Inner Joint | | 34 | 23 | 35 | 113.5 | 110 | |
| | 2013.09-2017.03 | AT/MT | R | R | Estate 4WD A 20 NHT;A 20 NFT;B 20 NHT | | GCI81197 | Inner Joint | | 34 | 23 | 35 | 82.5 | 109 | |
| 2.0 (191 kw) | 2017.06- | 8AT | F | L | Estate 4WD B 20 NFT;D 20 NFT | | GDS56988 | Drive Shaft | | 30 | 27 | 60.5 | 94.5 | 621 | |
| | 2017.06- | 8AT | F | R | Estate 4WD B 20 NFT;D 20 NFT | | GDS83653 | Drive Shaft | | 30 | 27 | 60.5 | 94.5 | 559 | |
| | 2017.06- | 8AT | F | L/R | Estate 4WD B 20 NFT;D 20 NFT | | GCO81945 | Outer Joint | | 30 | 35 | 60.5 | 94.5 | 60 | M |
| | 2017.06- | 8AT | F | L | Estate 4WD B 20 NFT;D 20 NFT | | GCI82377 | Inner Joint | | 27 | 35 | 35 | 101 | 100.5 | |
| | 2017.06- | 8AT | F | R | Estate 4WD B 20 NFT;D 20 NFT | | GCI82319 | Inner Joint | | 27 | 35 | 42 | | 139 | |
| **Insignia Sports Tourer** | | | | | | | | | | | | | | | |
| 1.4 (103 kw) | 2011.04-2017.03 | 6MT | F | L | Estate FWD A 14 NET;B 14 NET | | GDS21043 | Drive Shaft | | 30 | 25 | 52.5 | 94.5 | 624.5 | |
| | 2011.04-2017.03 | 6MT | F | L/R | Estate FWD A 14 NET;B 14 NET | | GCO17051 | Outer Joint | | 30 | 26 | 53.8 | 94.5 | 65.5 | M |
| | 2011.04-2017.03 | 6MT | F | L/R | Estate FWD A 14 NET;B 14 NET | | GCO21049 | Outer Joint | | 30 | 26 | 52.5 | 94 | 65.5 | M |
| | 2011.04-2017.03 | 6MT | F | L/R | Estate FWD A 14 NET;B 14 NET | | GCO88046 | Outer Joint | | 30 | 26 | 52.5 | 94.5 | 65.5 | M |
| | 2012.09-2017.03 | 6MT | F | L | Estate FWD A 14 NET;B 14 NET | | GDS21043 | Drive Shaft | | 30 | 25 | 52.5 | 94.5 | 624.5 | |
| | 2012.09-2017.03 | 6MT | F | L/R | Estate FWD A 14 NET;B 14 NET | | GCO17051 | Outer Joint | | 30 | 26 | 53.8 | 94.5 | 65.5 | M |
| | 2012.09-2017.03 | 6MT | F | L/R | Estate FWD A 14 NET;B 14 NET | | GCO21049 | Outer Joint | | 30 | 26 | 52.5 | 94 | 65.5 | M |
| | 2012.09-2017.03 | 6MT | F | L/R | Estate FWD A 14 NET;B 14 NET | | GCO88046 | Outer Joint | | 30 | 26 | 52.5 | 94.5 | 65.5 | M |
| 1.5 (103 kw) | 2017.03- | 6MT | F | L | Estate FWD B 15 SFL;D 15 SFL | | GDS82470 | Drive Shaft | | 30 | 25 | 60.5 | 94.5 | 630 | |
| | 2017.03- | 6MT | F | R | Estate FWD B 15 SFL;D 15 SFL | | GDS82471 | Drive Shaft | | 30 | 25 | 60.5 | 94.5 | 990 | |
| | 2017.03- | 6MT | F | L/R | Estate FWD B 15 SFL;D 15 SFL | | GCO81945 | Outer Joint | | 30 | 35 | 60.5 | 94.5 | 60 | M |
| | 2017.03- | 6MT | F | L/R | Estate FWD B 15 SFL;D 15 SFL | | GCI81831 | Inner Joint | | 25 | 35 | 35 | 57.5 | 130 | |
| 1.5 (121 kw) | 2017.03- | 6AT | F | L | Estate FWD B 15 SFT;D 15 SFT | | GDS83622 | Drive Shaft | | 30 | 34 | 60.5 | 94.5 | 677 | |
| | 2017.03- | 6AT | F | L/R | Estate FWD B 15 SFT;D 15 SFT | | GCO81945 | Outer Joint | | 30 | 35 | 60.5 | 94.5 | 60 | M |
| | 2017.03- | 6AT | F | L | Estate FWD B 15 SFT;D 15 SFT | | GCI82318 | Inner Joint | | 34 | 35 | 35 | 137 | 100.5 | |
| | 2017.03- | 6MT | F | L | Estate FWD B 15 SFT;D 15 SFT | | GDS82470 | Drive Shaft | | 30 | 25 | 60.5 | 94.5 | 630 | |
| | 2017.03- | 6MT | F | R | Estate FWD B 15 SFT;D 15 SFT | | GDS82471 | Drive Shaft | | 30 | 25 | 60.5 | 94.5 | 990 | |
| | 2017.03- | 6MT | F | L/R | Estate FWD B 15 SFT;D 15 SFT | | GCI81831 | Inner Joint | | 25 | 35 | 35 | 57.5 | 130 | |
| 1.6 (81 kw) | 2017.03- | 6MT | F | L | Estate FWD B 16 DTE;D 16 DTE;D 16 DTN | | GDS82470 | Drive Shaft | | 30 | 25 | 60.5 | 94.5 | 630 | |
| | 2017.03- | 6MT | F | R | Estate FWD B 16 DTE;D 16 DTE;D 16 DTN | | GDS83817 | Drive Shaft | | 30 | 27 | 60.5 | 94.5 | 580 | |
| | 2017.03- | 6MT | F | L/R | Estate FWD B 16 DTE;D 16 DTE;D 16 DTN | | GCO81945 | Outer Joint | | 30 | 35 | 60.5 | 94.5 | 60 | M |
| | 2017.03- | 6MT | F | L | Estate FWD B 16 DTE;D 16 DTE;D 16 DTN | | GCI81831 | Inner Joint | | 25 | 35 | 35 | 57.5 | 130 | |
| | 2017.03- | 6MT | F | R | Estate FWD B 16 DTE;D 16 DTE;D 16 DTN | | GCI82319 | Inner Joint | | 27 | 35 | 42 | | 139 | |
| 1.6 (85 kw) | 2008.07-2012.06 | 6MT | F | L | Estate FWD A 16 XER | | GDS21050 | Drive Shaft | | 30 | 25 | 52 | 94 | 622 | |
| | 2008.07-2012.06 | 6MT | F | R | Estate FWD A 16 XER | Date to:2011.12;Chassis no. to:B1999999 | GDS21054 | Drive Shaft | | 30 | 25 | 52 | 94 | 1008 | |
| | 2008.07-2012.06 | 6MT | F | L/R | Estate FWD A 16 XER | | GCO21038 | Outer Joint | | 30 | 24 | 52 | 94 | 64 | M |
| | 2008.07-2012.06 | 6MT | F | L/R | Estate FWD A 16 XER | | GCI44008 | Inner Joint | | 25 | 25 | 34.9 | 57.5 | 113.2 | |
| 1.6 (88 kw) | 2015.07-2017.01 | 6MT | F | L | Estate FWD B 16 DTJ | | GDS21043 | Drive Shaft | | 30 | 25 | 52.5 | 94.5 | 624.5 | |
| | 2015.07-2017.01 | 6MT | F | R | Estate FWD B 16 DTJ | Chassis no. to:B1999999 | GDS60027 | Drive Shaft | | 30 | 27 | 52.5 | 94.5 | 619 | |
| | 2015.07-2017.01 | 6MT | F | R | Estate FWD B 16 DTJ | Chassis no. from:C1000001 | GDS84292 | Drive Shaft | | 30 | 27 | 52.5 | 94 | 618 | |
| | 2015.07-2017.01 | 6MT | F | L/R | Estate FWD B 16 DTJ | | GCO17051 | Outer Joint | | 30 | 26 | 53.8 | 94.5 | 65.5 | M |
| | 2015.07-2017.01 | 6MT | F | L/R | Estate FWD B 16 DTJ | | GCO21049 | Outer Joint | | 30 | 26 | 52.5 | 94 | 65.5 | M |
| | 2015.07-2017.01 | 6MT | F | L/R | Estate FWD B 16 DTJ | | GCO88046 | Outer Joint | | 30 | 26 | 52.5 | 94.5 | 65.5 | M |
| | 2015.07-2017.01 | 6MT | F | R | Estate FWD B 16 DTJ | | GCI21030 | Inner Joint | | 27 | 26 | 35 | 78 | 112.5 | |
| 1.6 (100 kw) | 2015.07-2016.12 | 6AT | F | L | Estate FWD B 16 DTH | | GDS82258 | Drive Shaft | | 30 | 34 | 52.5 | 94 | 666 | |
| | 2015.07-2016.12 | 6AT | F | R | Estate FWD B 16 DTH | | GDS56650 | Drive Shaft | | 30 | 34 | 52.5 | 94 | 599 | |
| | 2015.07-2016.12 | 6AT | F | L | Estate FWD B 16 DTH | | GCI86021 | Inner Joint | | 34 | 26 | 35 | 136.5 | 87 | |
| | 2015.07-2016.12 | 6AT | F | R | Estate FWD B 16 DTH | | GCI82194 | Inner Joint | | 34 | 26 | 37.5 | | 124 | |
| | 2015.07-2016.12 | 6AT/6MT | F | L/R | Estate FWD B 16 DTH | | GCO17051 | Outer Joint | | 30 | 26 | 53.8 | 94.5 | 65.5 | M |
| | 2015.07-2016.12 | 6AT/6MT | F | L/R | Estate FWD B 16 DTH | | GCO21049 | Outer Joint | | 30 | 26 | 52.5 | 94 | 65.5 | M |
| | 2015.07-2016.12 | 6AT/6MT | F | L/R | Estate FWD B 16 DTH | | GCO88046 | Outer Joint | | 30 | 26 | 52.5 | 94.5 | 65.5 | M |

| | YEAR | TRANSM. | F/R | L/R | BODY STYLE & DRIVE TYPE & ENGINE | REMARKS | G-AP Ref. | PRODUCT | ABS | Technical Specifications A | B | C | H | L | P |
|---|---|---|---|---|---|---|---|---|---|---|---|---|---|---|---|
| **OPEL** | | | | | | | | | | | | | | | |
| **Insignia Sports Tourer** | | | | | | | | | | | | | | | |
| 1.6 (100 kw) | 2015.07-2016.12 | 6MT | F | L | Estate FWD B 16 DTH | | GDS21043 | Drive Shaft | | 30 | 25 | 52.5 | 94.5 | 624.5 | |
| | 2015.07-2016.12 | 6MT | F | R | Estate FWD B 16 DTH | Chassis no. to:B1999999 | GDS60027 | Drive Shaft | | 30 | 27 | 52.5 | 94.5 | 619 | |
| | 2015.07-2016.12 | 6MT | F | R | Estate FWD B 16 DTH | Chassis no. from:C1000001 | GDS84292 | Drive Shaft | | 30 | 27 | 52.5 | 94 | 618 | |
| | 2015.07-2016.12 | 6MT | F | R | Estate FWD B 16 DTH | | GCI21030 | Inner Joint | | 27 | 26 | 35 | 78 | 112.5 | |
| | 2017.03- | 6AT | F | L | Estate FWD B 16 DTH;D 16 DTH | | GDS83622 | Drive Shaft | | 30 | 34 | 60.5 | 94.5 | 677 | |
| | 2017.03- | 6AT | F | L | Estate FWD B 16 DTH;D 16 DTH | | GCI82318 | Inner Joint | | 34 | 35 | 35 | 137 | 100.5 | |
| | 2017.03- | 6MT | F | L | Estate FWD B 16 DTH;D 16 DTH | | GDS82470 | Drive Shaft | | 30 | 25 | 60.5 | 94.5 | 630 | |
| | 2017.03- | 6MT | F | R | Estate FWD B 16 DTH;D 16 DTH | | GDS83817 | Drive Shaft | | 30 | 27 | 60.5 | 94.5 | 580 | |
| | 2017.03- | 6MT | F | L | Estate FWD B 16 DTH;D 16 DTH | | GCI81831 | Inner Joint | | 25 | 35 | 35 | 57.5 | 130 | |
| | 2017.03- | 6MT | F | R | Estate FWD B 16 DTH;D 16 DTH | | GCI82319 | Inner Joint | | 27 | 35 | 42 | | 139 | |
| | 2017.03- | 6MT/6AT | F | L/R | Estate FWD B 16 DTH;D 16 DTH | | GCO81945 | Outer Joint | | 30 | 35 | 60.5 | 94.5 | 60 | M |
| | 2017.03- | 6AT | F | L | Estate Van FWD B 16 DTH;D 16 DTH | | GDS83622 | Drive Shaft | | 30 | 34 | 60.5 | 94.5 | 677 | |
| | 2017.03- | 6AT | F | L | Estate Van FWD B 16 DTH;D 16 DTH | | GCI82318 | Inner Joint | | 34 | 35 | 35 | 137 | 100.5 | |
| | 2017.03- | 6MT | F | L | Estate Van FWD B 16 DTH;D 16 DTH | | GDS82470 | Drive Shaft | | 30 | 25 | 60.5 | 94.5 | 630 | |
| | 2017.03- | 6MT | F | R | Estate Van FWD B 16 DTH;D 16 DTH | | GDS83817 | Drive Shaft | | 30 | 27 | 60.5 | 94.5 | 580 | |
| | 2017.03- | 6MT | F | L | Estate Van FWD B 16 DTH;D 16 DTH | | GCI81831 | Inner Joint | | 25 | 35 | 35 | 57.5 | 130 | |
| | 2017.03- | 6MT | F | R | Estate Van FWD B 16 DTH;D 16 DTH | | GCI82319 | Inner Joint | | 27 | 35 | 42 | | 139 | |
| | 2017.03- | 6MT/6AT | F | L/R | Estate Van FWD B 16 DTH;D 16 DTH | | GCO81945 | Outer Joint | | 30 | 35 | 60.5 | 94.5 | 60 | M |
| 1.6 (125 kw) | 2013.06-2017.03 | 6AT | F | L | Estate FWD A 16 XHT;B 16 SHL | | GDS82258 | Drive Shaft | | 30 | 34 | 52.5 | 94 | 666 | |
| | 2013.06-2017.03 | 6AT | F | R | Estate FWD A 16 XHT;B 16 SHL | | GDS21045 | Drive Shaft | | 30 | 27 | 52.5 | 94.5 | 615 | |
| | 2013.06-2017.03 | 6AT | F | R | Estate FWD A 16 XHT;B 16 SHL | | GDS82085 | Drive Shaft | | 30 | 27 | 52.5 | 94 | 615 | |
| | 2013.06-2017.03 | 6AT | F | L | Estate FWD A 16 XHT;B 16 SHL | | GCI86021 | Inner Joint | | 34 | 26 | 35 | 136.5 | 87 | |
| | 2013.06-2017.03 | 6AT | F | R | Estate FWD A 16 XHT;B 16 SHL | | GCI86015 | Inner Joint | | 27 | 26 | 35 | 78.5 | 109.5 | |
| | 2013.06-2017.03 | 6AT/6MT | F | L/R | Estate FWD A 16 XHT;B 16 SHL | | GCO17051 | Outer Joint | | 30 | 26 | 53.8 | 94.5 | 65.5 | M |
| | 2013.06-2017.03 | 6AT/6MT | F | L/R | Estate FWD A 16 XHT;B 16 SHL | | GCO21049 | Outer Joint | | 30 | 26 | 52.5 | 94 | 65.5 | M |
| | 2013.06-2017.03 | 6AT/6MT | F | L/R | Estate FWD A 16 XHT;B 16 SHL | | GCO88046 | Outer Joint | | 30 | 26 | 52.5 | 94.5 | 65.5 | M |
| | 2013.06-2017.03 | 6MT | F | L | Estate FWD A 16 XHT;B 16 SHL | | GDS21043 | Drive Shaft | | 30 | 25 | 52.5 | 94.5 | 624.5 | |
| | 2013.06-2017.03 | 6MT | F | R | Estate FWD A 16 XHT;B 16 SHL | Chassis no. to:B1999999 | GDS60027 | Drive Shaft | | 30 | 27 | 52.5 | 94.5 | 619 | |
| | 2013.06-2017.03 | 6MT | F | R | Estate FWD A 16 XHT;B 16 SHL | Chassis no. from:C1000001 | GDS84292 | Drive Shaft | | 30 | 27 | 52.5 | 94 | 618 | |
| | 2013.06-2017.03 | 6MT | F | R | Estate FWD A 16 XHT;B 16 SHL | | GCI21030 | Inner Joint | | 27 | 26 | 35 | 78 | 112.5 | |
| 1.6 (132 kw) | 2009.01-2013.06 | 6MT | F | L/R | Estate FWD A 16 LET | | GCO17051 | Outer Joint | | 30 | 26 | 53.8 | 94.5 | 65.5 | M |
| | 2009.01-2013.06 | 6MT | F | L/R | Estate FWD A 16 LET | | GCO21049 | Outer Joint | | 30 | 26 | 52.5 | 94 | 65.5 | M |
| | 2009.01-2013.06 | 6MT | F | L/R | Estate FWD A 16 LET | | GCO88046 | Outer Joint | | 30 | 26 | 52.5 | 94.5 | 65.5 | M |
| | 2009.01-2013.06 | MT/6MT | F | L | Estate FWD A 16 LET | | GDS21043 | Drive Shaft | | 30 | 25 | 52.5 | 94.5 | 624.5 | |
| 1.6 (147 kw) | 2018.06- | 6AT | F | L | Estate FWD D 16 SHT | | GDS83622 | Drive Shaft | | 30 | 34 | 60.5 | 94.5 | 677 | |
| | 2018.06- | 6AT | F | L/R | Estate FWD D 16 SHT | | GCO81945 | Outer Joint | | 30 | 35 | 60.5 | 94.5 | 60 | M |
| | 2018.06- | 6AT | F | L | Estate FWD D 16 SHT | | GCI82318 | Inner Joint | | 34 | 35 | 35 | 137 | 100.5 | |
| | 2018.06- | 6MT | F | L | Estate FWD D 16 SHT | | GDS82470 | Drive Shaft | | 30 | 25 | 60.5 | 94.5 | 630 | |
| | 2018.06- | 6MT | F | L | Estate FWD D 16 SHT | | GCI81831 | Inner Joint | | 25 | 35 | 35 | 57.5 | 130 | |
| 1.8 (103 kw) | 2008.07-2017.03 | 6MT | F | L | Estate FWD A 18 XER;B 18 XER | | GDS21050 | Drive Shaft | | 30 | 25 | 52 | 94 | 622 | |
| | 2008.07-2017.03 | 6MT | F | R | Estate FWD A 18 XER;B 18 XER | Date to:2011.12;Chassis no. to:B1999999 | GDS21054 | Drive Shaft | | 30 | 25 | 52 | 94 | 1008 | |
| | 2008.07-2017.03 | 6MT | F | L/R | Estate FWD A 18 XER;B 18 XER | | GCO21038 | Outer Joint | | 30 | 24 | 52 | 94 | 64 | M |
| | 2008.07-2017.03 | 6MT | F | L/R | Estate FWD A 18 XER;B 18 XER | | GCI44008 | Inner Joint | | 25 | 25 | 34.9 | 57.5 | 113.2 | |
| 2.0 (81 kw) | 2008.07-2013.06 | 6MT | F | L | Estate FWD A 20 DTC;A 20 DTL | Chassis no. to:D1061030 | GDS60026 | Drive Shaft | | 30 | 25 | 52.5 | 94.5 | 631 | |
| | 2008.07-2013.06 | 6MT | F | R | Estate FWD A 20 DTC;A 20 DTL | For car needless intermediate shaft | GDS57620 | Drive Shaft | | 30 | 25 | 52.5 | 94 | 1002 | |
| | 2008.07-2013.06 | 6MT | F | R | Estate FWD A 20 DTC;A 20 DTL | For car need intermediate shaft | GDS60027 | Drive Shaft | | 30 | 27 | 52.5 | 94.5 | 619 | |
| | 2008.07-2013.06 | 6MT | F | L/R | Estate FWD A 20 DTC;A 20 DTL | For Engine code:A20DTC | GCO17051 | Outer Joint | | 30 | 26 | 53.8 | 94.5 | 65.5 | M |
| | 2008.07-2013.06 | 6MT | F | L/R | Estate FWD A 20 DTC;A 20 DTL | For Engine code:A20DTL | GCO21038 | Outer Joint | | 30 | 24 | 52 | 94 | 64 | M |
| | 2008.07-2013.06 | 6MT | F | L/R | Estate FWD A 20 DTC;A 20 DTL | For Engine code:A20DTC | GCO21049 | Outer Joint | | 30 | 26 | 52.5 | 94 | 65.5 | M |
| | 2008.07-2013.06 | 6MT | F | L/R | Estate FWD A 20 DTC;A 20 DTL | For Enginecode:A20DTC | GCO88046 | Outer Joint | | 30 | 26 | 52.5 | 94.5 | 65.5 | M |
| | 2008.07-2013.06 | 6MT | F | L | Estate FWD A 20 DTC;A 20 DTL | For Engine code:A20DTL | GCI44008 | Inner Joint | | 25 | 25 | 34.9 | 57.5 | 113.2 | |
| | 2008.07-2013.06 | 6MT | F | R | Estate FWD A 20 DTC;A 20 DTL | | GCI21030 | Inner Joint | | 27 | 26 | 35 | 78 | 112.5 | |
| 2.0 (88 kw) | 2012.03-2015.06 | 6MT | F | L/R | Estate FWD A 20 DTE | Chassis no. to:B1999999 | GDS60027 | Drive Shaft | | 30 | 27 | 52.5 | 94.5 | 619 | |
| | 2012.03-2015.06 | 6MT | F | L/R | Estate FWD A 20 DTE | Chassis no. from:C1000001 | GDS84292 | Drive Shaft | | 30 | 27 | 52.5 | 94 | 618 | |
| | 2012.03-2015.06 | 6MT | F | L/R | Estate FWD A 20 DTE | | GCO17051 | Outer Joint | | 30 | 26 | 53.8 | 94.5 | 65.5 | M |
| | 2012.03-2015.06 | 6MT | F | L/R | Estate FWD A 20 DTE | | GCO21049 | Outer Joint | | 30 | 26 | 52.5 | 94 | 65.5 | M |
| | 2012.03-2015.06 | 6MT | F | L/R | Estate FWD A 20 DTE | | GCO88046 | Outer Joint | | 30 | 26 | 52.5 | 94.5 | 65.5 | M |
| | 2012.03-2015.06 | 6MT | F | L/R | Estate FWD A 20 DTE | | GCI21030 | Inner Joint | | 27 | 26 | 35 | 78 | 112.5 | |
| 2.0 (96 kw) | 2008.07-2015.06 | 6AT | F | L/R | Estate FWD A 20 DTJ;A 20 DT | without Rim protector | GDS21045 | Drive Shaft | | 30 | 27 | 52.5 | 94.5 | 615 | |
| | 2008.07-2015.06 | 6AT | F | L/R | Estate FWD A 20 DTJ;A 20 DT | | GDS82085 | Drive Shaft | | 30 | 27 | 52.5 | 94 | 615 | |
| | 2008.07-2015.06 | 6AT | F | L/R | Estate FWD A 20 DTJ;A 20 DT | TJ | GCI21016 | Inner Joint | | 27 | 26 | 35 | 78.5 | 112 | |
| | 2008.07-2015.06 | 6AT | F | L/R | Estate FWD A 20 DTJ;A 20 DT | AAR | GCI86015 | Inner Joint | | 27 | 26 | 35 | 78.5 | 109.5 | |
| | 2008.07-2015.06 | 6MT | F | L | Estate FWD A 20 DTJ;A 20 DT | Chassis no. to:D1061030 | GDS60026 | Drive Shaft | | 30 | 25 | 52.5 | 94.5 | 631 | |
| | 2008.07-2015.06 | 6MT | F | R | Estate FWD A 20 DTJ;A 20 DT | For car needless intermediate shaft | GDS57620 | Drive Shaft | | 30 | 25 | 52.5 | 94 | 1002 | |
| | 2008.07-2015.06 | 6MT | F | R | Estate FWD A 20 DTJ;A 20 DT | For car need intermediate shaft | GDS60027 | Drive Shaft | | 30 | 27 | 52.5 | 94.5 | 619 | |

| | YEAR | TRANSM. | F/R | L/R | BODY STYLE & DRIVE TYPE & ENGINE | REMARKS | G-AP Ref. | PRODUCT | ABS | Technical Specifications A | B | C | H | L | P |
|---|---|---|---|---|---|---|---|---|---|---|---|---|---|---|---|
| **OPEL** | | | | | | | | | | | | | | | |
| **Insignia Sports Tourer** | | | | | | | | | | | | | | | |
| 2.0 (96 kw) | 2008.07-2015.06 | 6MT | F | L/R | Estate FWD A 20 DTJ;A 20 DT | For Engine code:A20DT | GCO21038 | Outer Joint | | 30 | 24 | 52 | 94 | 64 | M |
| | 2008.07-2015.06 | 6MT | F | L | Estate FWD A 20 DTJ;A 20 DT | For Engine code:A20DT | GCI44008 | Inner Joint | | 25 | 25 | 34.9 | 57.5 | 113.2 | |
| | 2008.07-2015.06 | 6MT | F | R | Estate FWD A 20 DTJ;A 20 DT | | GCI21030 | Inner Joint | | 27 | 26 | 35 | 78 | 112.5 | |
| | 2008.07-2015.06 | 6MT/6AT | F | L/R | Estate FWD A 20 DTJ;A 20 DT | Transmission:6MT,For Engine code:A20DTJ | GCO17051 | Outer Joint | | 30 | 26 | 53.8 | 94.5 | 65.5 | M |
| | 2008.07-2015.06 | 6MT/6AT | F | L/R | Estate FWD A 20 DTJ;A 20 DT | Transmission:6MT,For Engine code:A20DTJ | GCO21049 | Outer Joint | | 30 | 26 | 52.5 | 94 | 65.5 | M |
| | 2008.07-2015.06 | 6MT/6AT | F | L/R | Estate FWD A 20 DTJ;A 20 DT | Transmission:6MT,For Engine code:A20DTJ | GCO88046 | Outer Joint | | 30 | 26 | 52.5 | 94.5 | 65.5 | M |
| 2.0 (103 kw) | 2013.07-2015.06 | 6MT | F | L/R | Estate FWD A 20 DTE | Chassis no. to:B1999999 | GDS60027 | Drive Shaft | | 30 | 27 | 52.5 | 94.5 | 619 | |
| | 2013.07-2015.06 | 6MT | F | L/R | Estate FWD A 20 DTE | Chassis no. from:C1000001 | GDS84292 | Drive Shaft | | 30 | 27 | 52.5 | 94 | 618 | |
| | 2013.07-2015.06 | 6MT | F | L/R | Estate FWD A 20 DTE | | GCO17051 | Outer Joint | | 30 | 26 | 53.8 | 94.5 | 65.5 | M |
| | 2013.07-2015.06 | 6MT | F | L/R | Estate FWD A 20 DTE | | GCO21049 | Outer Joint | | 30 | 26 | 52.5 | 94 | 65.5 | M |
| | 2013.07-2015.06 | 6MT | F | L/R | Estate FWD A 20 DTE | | GCO88046 | Outer Joint | | 30 | 26 | 52.5 | 94.5 | 65.5 | M |
| | 2013.07-2015.06 | 6MT | F | L/R | Estate FWD A 20 DTE | | GCI21030 | Inner Joint | | 27 | 26 | 35 | 78 | 112.5 | |
| 2.0 (118 kw) | 2008.07-2015.06 | 6AT | F | L/R | Estate FWD A 20 DTH | TJ;without Rim protector | GDS21045 | Drive Shaft | | 30 | 27 | 52.5 | 94.5 | 615 | |
| | 2008.07-2015.06 | 6AT | F | L/R | Estate FWD A 20 DTH | | GDS82085 | Drive Shaft | | 30 | 27 | 52.5 | 94 | 615 | |
| | 2008.07-2015.06 | 6AT | F | L/R | Estate FWD A 20 DTH | | GCO88046 | Outer Joint | | 30 | 26 | 52.5 | 94.5 | 65.5 | M |
| | 2008.07-2015.06 | 6AT | F | L/R | Estate FWD A 20 DTH | TJ | GCI21016 | Inner Joint | | 27 | 26 | 35 | 78.5 | 112 | |
| | 2008.07-2015.06 | 6AT | F | L/R | Estate FWD A 20 DTH | AAR | GCI86015 | Inner Joint | | 27 | 26 | 35 | 78.5 | 109.5 | |
| | 2008.07-2015.06 | 6AT/6MT | F | L/R | Estate FWD A 20 DTH | | GCO17051 | Outer Joint | | 30 | 26 | 53.8 | 94.5 | 65.5 | M |
| | 2008.07-2015.06 | 6AT/6MT | F | L/R | Estate FWD A 20 DTH | | GCO21049 | Outer Joint | | 30 | 26 | 52.5 | 94 | 65.5 | M |
| | 2008.07-2015.06 | 6MT | F | L/R | Estate FWD A 20 DTH | Chassis no. to:B1999999 | GDS60027 | Drive Shaft | | 30 | 27 | 52.5 | 94.5 | 619 | |
| | 2008.07-2015.06 | 6MT | F | L/R | Estate FWD A 20 DTH | Chassis no. from:C1000001 | GDS84292 | Drive Shaft | | 30 | 27 | 52.5 | 94 | 618 | |
| | 2008.07-2015.06 | 6MT | F | L/R | Estate FWD A 20 DTH | | GCI21030 | Inner Joint | | 27 | 26 | 35 | 78 | 112.5 | |
| | 2010.06-2015.06 | 6AT | F | L/R | Estate 4WD A 20 DTH | without Rim protector | GDS21045 | Drive Shaft | | 30 | 27 | 52.5 | 94.5 | 615 | |
| | 2010.06-2015.06 | 6AT | F | L/R | Estate 4WD A 20 DTH | | GDS82085 | Drive Shaft | | 30 | 27 | 52.5 | 94 | 615 | |
| | 2010.06-2015.06 | 6AT | F | L/R | Estate 4WD A 20 DTH | | GCO88046 | Outer Joint | | 30 | 26 | 52.5 | 94.5 | 65.5 | M |
| | 2010.06-2015.06 | 6AT | F | L/R | Estate 4WD A 20 DTH | TJ | GCI21016 | Inner Joint | | 27 | 26 | 35 | 78.5 | 112 | |
| | 2010.06-2015.06 | 6AT | F | L/R | Estate 4WD A 20 DTH | AAR | GCI86015 | Inner Joint | | 27 | 26 | 35 | 78.5 | 109.5 | |
| | 2010.06-2015.06 | 6AT/6MT | F | L/R | Estate 4WD A 20 DTH | | GCO17051 | Outer Joint | | 30 | 26 | 53.8 | 94.5 | 65.5 | M |
| | 2010.06-2015.06 | 6AT/6MT | F | L/R | Estate 4WD A 20 DTH | | GCO21049 | Outer Joint | | 30 | 26 | 52.5 | 94 | 65.5 | M |
| | 2010.06-2015.06 | 6MT | F | L/R | Estate 4WD A 20 DTH | Chassis no. to:B1999999 | GDS60027 | Drive Shaft | | 30 | 27 | 52.5 | 94.5 | 619 | |
| | 2010.06-2015.06 | 6MT | F | L/R | Estate 4WD A 20 DTH | Chassis no. from:C1000001 | GDS84292 | Drive Shaft | | 30 | 27 | 52.5 | 94 | 618 | |
| | 2010.06-2015.06 | 6MT | F | L | Estate 4WD A 20 DTH | | GCI21030 | Inner Joint | | 27 | 26 | 35 | 78 | 112.5 | |
| | 2010.06-2015.06 | 6AT/6MT | R | L | Estate 4WD A 20 DTH | With differential lock | GDS82261 | Drive Shaft | | 30 | 34 | 52.3 | 94 | 791 | |
| | 2010.06-2015.06 | 6AT/6MT | R | R | Estate 4WD A 20 DTH | | GDS81333 | Drive Shaft | | 30 | 34 | 52.3 | 94 | 842 | |
| | 2010.06-2015.06 | 6AT/6MT | R | L/R | Estate 4WD A 20 DTH | With differential lock | GCO81305 | Outer Joint | | 30 | 23 | 52.3 | 94 | 59.5 | M |
| | 2010.06-2015.06 | 6AT/6MT | R | L | Estate 4WD A 20 DTH | With differential lock | GCI81196 | Inner Joint | | 34 | 23 | 35 | 113.5 | 110 | |
| | 2010.06-2015.06 | 6AT/6MT | R | R | Estate 4WD A 20 DTH | | GCI81197 | Inner Joint | | 34 | 23 | 35 | 82.5 | 109 | |
| 2.0 (120 kw) | 2013.07-2015.06 | 6AT | F | L/R | Estate 4WD A 20 DTH | | GDS82085 | Drive Shaft | | 30 | 27 | 52.5 | 94 | 615 | |
| | 2013.07-2015.06 | 6AT | F | L/R | Estate 4WD A 20 DTH | | GCI86015 | Inner Joint | | 27 | 26 | 35 | 78.5 | 109.5 | |
| | 2013.07-2015.06 | 6AT/6MT | F | L/R | Estate 4WD A 20 DTH | | GCO17051 | Outer Joint | | 30 | 26 | 53.8 | 94.5 | 65.5 | M |
| | 2013.07-2015.06 | 6AT/6MT | F | L/R | Estate 4WD A 20 DTH | | GCO21049 | Outer Joint | | 30 | 26 | 52.5 | 94 | 65.5 | M |
| | 2013.07-2015.06 | 6AT/6MT | F | L/R | Estate 4WD A 20 DTH | | GCO88046 | Outer Joint | | 30 | 26 | 52.5 | 94.5 | 65.5 | M |
| | 2013.07-2015.06 | 6MT | F | L/R | Estate 4WD A 20 DTH | Chassis no. to:B1999999 | GDS60027 | Drive Shaft | | 30 | 27 | 52.5 | 94.5 | 619 | |
| | 2013.07-2015.06 | 6MT | F | L/R | Estate 4WD A 20 DTH | Chassis no. from:C1000001 | GDS84292 | Drive Shaft | | 30 | 27 | 52.5 | 94 | 618 | |
| | 2013.07-2015.06 | 6MT | F | L | Estate 4WD A 20 DTH | | GCI21030 | Inner Joint | | 27 | 26 | 35 | 78 | 112.5 | |
| | 2013.07-2015.06 | 6AT/6MT | R | L/R | Estate 4WD A 20 DTH | With differential lock | GCO81305 | Outer Joint | | 30 | 23 | 52.3 | 94 | 59.5 | M |
| | 2013.07-2015.06 | AT/MT | R | L | Estate 4WD A 20 DTH | Differential:With differential lock | GDS82261 | Drive Shaft | | 30 | 34 | 52.3 | 94 | 791 | |
| | 2013.07-2015.06 | AT/MT | R | R | Estate 4WD A 20 DTH | | GDS81333 | Drive Shaft | | 30 | 34 | 52.3 | 94 | 842 | |
| | 2013.07-2015.06 | AT/MT | R | L | Estate 4WD A 20 DTH | Differential:With differential lock | GCI81196 | Inner Joint | | 34 | 23 | 35 | 113.5 | 110 | |
| | 2013.07-2015.06 | AT/MT | R | R | Estate 4WD A 20 DTH | | GCI81197 | Inner Joint | | 34 | 23 | 35 | 82.5 | 109 | |
| | 2013.07-2015.06 | 6AT | F | R | Estate FWD A 20 DTH | | GDS21045 | Drive Shaft | | 30 | 27 | 52.5 | 94.5 | 615 | |
| | 2013.07-2015.06 | 6AT | F | L/R | Estate FWD A 20 DTH | | GDS82085 | Drive Shaft | | 30 | 27 | 52.5 | 94 | 615 | |
| | 2013.07-2015.06 | 6AT | F | L/R | Estate FWD A 20 DTH | | GCI86015 | Inner Joint | | 27 | 26 | 35 | 78.5 | 109.5 | |
| | 2013.07-2015.06 | 6AT/6MT | F | L | Estate FWD A 20 DTH | | GCO88046 | Outer Joint | | 30 | 26 | 52.5 | 94.5 | 65.5 | M |
| | 2013.07-2015.06 | 6AT/6MT | F | L/R | Estate FWD A 20 DTH | | GCO17051 | Outer Joint | | 30 | 26 | 53.8 | 94.5 | 65.5 | M |
| | 2013.07-2015.06 | 6AT/6MT | F | L/R | Estate FWD A 20 DTH | | GCO21049 | Outer Joint | | 30 | 26 | 52.5 | 94 | 65.5 | M |
| | 2013.07-2015.06 | 6MT | F | L/R | Estate FWD A 20 DTH | Chassis no. to:B1999999 | GDS60027 | Drive Shaft | | 30 | 27 | 52.5 | 94.5 | 619 | |
| | 2013.07-2015.06 | 6MT | F | L/R | Estate FWD A 20 DTH | Chassis no. from:C1000001 | GDS84292 | Drive Shaft | | 30 | 27 | 52.5 | 94 | 618 | |
| | 2013.07-2015.06 | 6MT | F | L/R | Estate FWD A 20 DTH | | GCI21030 | Inner Joint | | 27 | 26 | 35 | 78 | 112.5 | |
| 2.0 (125 kw) | 2014.11-2016.12 | 6AT | F | L/R | Estate 4WD B 20 DTH | | GCI86015 | Inner Joint | | 27 | 26 | 35 | 78.5 | 109.5 | |
| | 2014.11-2016.12 | 6AT/6MT | F | L/R | Estate 4WD B 20 DTH | | GCO17051 | Outer Joint | | 30 | 26 | 53.8 | 94.5 | 65.5 | M |
| | 2014.11-2016.12 | 6AT/6MT | F | L/R | Estate 4WD B 20 DTH | | GCO21049 | Outer Joint | | 30 | 26 | 52.5 | 94 | 65.5 | M |
| | 2014.11-2016.12 | 6AT/6MT | F | L/R | Estate 4WD B 20 DTH | | GCO88046 | Outer Joint | | 30 | 26 | 52.5 | 94.5 | 65.5 | M |
| | 2014.11-2016.12 | 6MT | F | R | Estate 4WD B 20 DTH | | GDS60027 | Drive Shaft | | 30 | 27 | 52.5 | 94.5 | 619 | |
| | 2014.11-2016.12 | 6MT | F | L/R | Estate 4WD B 20 DTH | | GCI21030 | Inner Joint | | 27 | 26 | 35 | 78 | 112.5 | |

| | YEAR | TRANSM. | F/R | L/R | BODY STYLE & DRIVE TYPE & ENGINE | REMARKS | G-AP Ref. | PRODUCT | ABS | Technical Specifications A | B | C | H | L | P |
|---|---|---|---|---|---|---|---|---|---|---|---|---|---|---|---|
| **OPEL** | | | | | | | | | | | | | | | |
| **Insignia Sports Tourer** | | | | | | | | | | | | | | | |
| 2.0 (125 kw) | 2014.11-2016.12 | 6AT/6MT | R | L/R | Estate 4WD B 20 DTH | With differential lock | GCO81305 | Outer Joint | | 30 | 23 | 52.3 | 94 | 59.5 | M |
| | 2014.11-2016.12 | AT/MT | R | L | Estate 4WD B 20 DTH | Differential:With differential lock | GDS82261 | Drive Shaft | | 30 | 34 | 52.3 | 94 | 791 | |
| | 2014.11-2016.12 | AT/MT | R | R | Estate 4WD B 20 DTH | | GDS81333 | Drive Shaft | | 30 | 34 | 52.3 | 94 | 842 | |
| | 2014.11-2016.12 | AT/MT | R | L | Estate 4WD B 20 DTH | Differential:With differential lock | GCI81196 | Inner Joint | | 34 | 23 | 35 | 113.5 | 110 | |
| | 2014.11-2016.12 | AT/MT | R | R | Estate 4WD B 20 DTH | | GCI81197 | Inner Joint | | 34 | 23 | 35 | 82.5 | 109 | |
| | 2014.11-2016.12 | 6AT | F | L/R | Estate FWD B 20 DTH | without Rim protector | GDS21045 | Drive Shaft | | 30 | 27 | 52.5 | 94.5 | 615 | |
| | 2014.11-2016.12 | 6AT | F | L/R | Estate FWD B 20 DTH | | GDS82085 | Drive Shaft | | 30 | 27 | 52.5 | 94 | 615 | |
| | 2014.11-2016.12 | 6AT | F | L/R | Estate FWD B 20 DTH | TJ | GCI21016 | Inner Joint | | 27 | 26 | 35 | 78.5 | 112 | |
| | 2014.11-2016.12 | 6AT | F | L/R | Estate FWD B 20 DTH | AAR | GCI86015 | Inner Joint | | 27 | 26 | 35 | 78.5 | 109.5 | |
| | 2014.11-2016.12 | 6AT/6MT | F | L/R | Estate FWD B 20 DTH | | GCO17051 | Outer Joint | | 30 | 26 | 53.8 | 94.5 | 65.5 | M |
| | 2014.11-2016.12 | 6AT/6MT | F | L/R | Estate FWD B 20 DTH | | GCO21049 | Outer Joint | | 30 | 26 | 52.5 | 94 | 65.5 | M |
| | 2014.11-2016.12 | 6AT/6MT | F | L/R | Estate FWD B 20 DTH | | GCO88046 | Outer Joint | | 30 | 26 | 52.5 | 94.5 | 65.5 | M |
| | 2014.11-2016.12 | 6MT | F | R | Estate FWD B 20 DTH | Chassis no. to:B1999999,For RPO/POC:GNA | GDS60027 | Drive Shaft | | 30 | 27 | 52.5 | 94.5 | 619 | |
| | 2014.11-2016.12 | 6MT | F | R | Estate FWD B 20 DTH | For RPO/POC:GNA,Chassis no. from:C1000001 | GDS84292 | Drive Shaft | | 30 | 27 | 52.5 | 94 | 618 | |
| | 2014.11-2016.12 | 6MT | F | L/R | Estate FWD B 20 DTH | | GCI21030 | Inner Joint | | 27 | 26 | 35 | 78 | 112.5 | |
| | 2017.03- | 6MT | F | L | Estate 4WD D 20 DTH | | GDS83818 | Drive Shaft | | 30 | 27 | 60.5 | 94.5 | 615 | |
| | 2017.03- | 6MT | F | R | Estate 4WD D 20 DTH | | GDS83653 | Drive Shaft | | 30 | 27 | 60.5 | 94.5 | 559 | |
| | 2017.03- | 6MT | F | L/R | Estate 4WD D 20 DTH | | GCO81945 | Outer Joint | | 30 | 35 | 60.5 | 94.5 | 60 | M |
| | 2017.03- | 6MT | F | L | Estate 4WD D 20 DTH | | GCI82377 | Inner Joint | | 27 | 35 | 35 | 101 | 100.5 | |
| | 2017.03- | 6MT | F | R | Estate 4WD D 20 DTH | | GCI82319 | Inner Joint | | 27 | 35 | 42 | | 139 | |
| | 2017.03- | 6MT | F | L | Estate FWD B 20 DTH;D 20 DTH | | GDS83818 | Drive Shaft | | 30 | 27 | 60.5 | 94.5 | 615 | |
| | 2017.03- | 6MT | F | L | Estate FWD B 20 DTH;D 20 DTH | | GCI82377 | Inner Joint | | 27 | 35 | 35 | 101 | 100.5 | |
| | 2017.03- | 6MT/8AT | F | L/R | Estate FWD B 20 DTH;D 20 DTH | | GCO81945 | Outer Joint | | 30 | 35 | 60.5 | 94.5 | 60 | M |
| | 2017.03- | 6MT/8AT | F | R | Estate FWD B 20 DTH;D 20 DTH | | GCI82319 | Inner Joint | | 27 | 35 | 42 | | 139 | |
| | 2017.03- | 8AT | F | L | Estate FWD B 20 DTH;D 20 DTH | | GDS56988 | Drive Shaft | | 30 | 27 | 60.5 | 94.5 | 621 | |
| | 2017.03- | 8AT/6MT | F | R | Estate FWD B 20 DTH;D 20 DTH | | GDS83927 | Drive Shaft | | 30 | 27 | 60.5 | 94.5 | 595 | |
| | 2020.11- | 9AT | F | R | Estate FWD F20SHT | | GDS83653 | Drive Shaft | | 30 | 27 | 60.5 | 94.5 | 559 | |
| | 2020.11- | 9AT | F | L/R | Estate FWD F20SHT | | GCO81945 | Outer Joint | | 30 | 35 | 60.5 | 94.5 | 60 | M |
| | 2020.11- | 9AT | F | R | Estate FWD F20SHT | | GCI82319 | Inner Joint | | 27 | 35 | 42 | | 139 | |
| 2.0 (128 kw) | 2020.04- | 6MT | F | L | Estate FWD F20DVH | | GDS82470 | Drive Shaft | | 30 | 25 | 60.5 | 94.5 | 630 | |
| | 2020.04- | 6MT/8AT | F | R | Estate FWD F20DVH | | GDS83653 | Drive Shaft | | 30 | 27 | 60.5 | 94.5 | 559 | |
| | 2020.04- | 6MT/8AT | F | L/R | Estate FWD F20DVH | | GCO81945 | Outer Joint | | 30 | 35 | 60.5 | 94.5 | 60 | M |
| | 2020.04- | 6MT/8AT | F | R | Estate FWD F20DVH | | GCI82319 | Inner Joint | | 27 | 35 | 42 | | 139 | |
| | 2020.04- | 8AT | F | L | Estate FWD F20DVH | | GDS56988 | Drive Shaft | | 30 | 27 | 60.5 | 94.5 | 621 | |
| | 2020.04- | 8AT | F | L | Estate FWD F20DVH | | GCI82377 | Inner Joint | | 27 | 35 | 35 | 101 | 100.5 | |
| | 2020.11- | 8AT | F | L | Estate 4WD F20DVH | | GDS56988 | Drive Shaft | | 30 | 27 | 60.5 | 94.5 | 621 | |
| | 2020.11- | 8AT | F | R | Estate 4WD F20DVH | | GDS83653 | Drive Shaft | | 30 | 27 | 60.5 | 94.5 | 559 | |
| | 2020.11- | 8AT | F | L/R | Estate 4WD F20DVH | | GCO81945 | Outer Joint | | 30 | 35 | 60.5 | 94.5 | 60 | M |
| | 2020.11- | 8AT | F | L | Estate 4WD F20DVH | | GCI82377 | Inner Joint | | 27 | 35 | 35 | 101 | 100.5 | |
| | 2020.11- | 8AT | F | R | Estate 4WD F20DVH | | GCI82319 | Inner Joint | | 27 | 35 | 42 | | 139 | |
| 2.0 (140 kw) | 2008.07-2017.03 | 6AT | F | L/R | Estate 4WD A 20 DTR | | GDS21045 | Drive Shaft | | 30 | 27 | 52.5 | 94.5 | 615 | |
| | 2008.07-2017.03 | 6AT | F | L/R | Estate 4WD A 20 DTR | | GDS82085 | Drive Shaft | | 30 | 27 | 52.5 | 94 | 615 | |
| | 2008.07-2017.03 | 6AT/6MT | F | L/R | Estate 4WD A 20 DTR | | GCO17051 | Outer Joint | | 30 | 26 | 53.8 | 94.5 | 65.5 | M |
| | 2008.07-2017.03 | 6AT/6MT | F | L/R | Estate 4WD A 20 DTR | | GCO21049 | Outer Joint | | 30 | 26 | 52.5 | 94 | 65.5 | M |
| | 2008.07-2017.03 | 6AT/6MT | F | L/R | Estate 4WD A 20 DTR | | GCO88046 | Outer Joint | | 30 | 26 | 52.5 | 94.5 | 65.5 | M |
| | 2008.07-2017.03 | 6MT | F | L/R | Estate 4WD A 20 DTR | For RPO/POC:GNA | GCI21030 | Inner Joint | | 27 | 26 | 35 | 78 | 112.5 | |
| | 2008.07-2017.03 | 6MT/6AT | F | L/R | Estate 4WD A 20 DTR | Transmission:6MT,For RPO/POC:GNB | GCI86015 | Inner Joint | | 27 | 26 | 35 | 78.5 | 109.5 | |
| | 2008.07-2017.03 | MT | F | L/R | Estate 4WD A 20 DTR | Date to:2011.12 | GDS60027 | Drive Shaft | | 30 | 27 | 52.5 | 94.5 | 619 | |
| | 2008.07-2017.03 | 6AT/6MT | R | L/R | Estate 4WD A 20 DTR | With differential lock | GCO81305 | Outer Joint | | 30 | 23 | 52.3 | 94 | 59.5 | M |
| | 2008.07-2017.03 | AT/MT | R | L | Estate 4WD A 20 DTR | Differential:With differential lock | GDS82261 | Drive Shaft | | 30 | 34 | 52.3 | 94 | 791 | |
| | 2008.07-2017.03 | AT/MT | R | R | Estate 4WD A 20 DTR | Differential:With differential lock | GDS81333 | Drive Shaft | | 30 | 34 | 52.3 | 94 | 842 | |
| | 2008.07-2017.03 | AT/MT | R | L | Estate 4WD A 20 DTR | Differential:With differential lock | GCI81196 | Inner Joint | | 34 | 23 | 35 | 113.5 | 110 | |
| | 2008.07-2017.03 | AT/MT | R | R | Estate 4WD A 20 DTR | Differential:With differential lock | GCI81197 | Inner Joint | | 34 | 23 | 35 | 82.5 | 109 | |
| | 2008.07-2017.03 | 6AT | F | L/R | Estate FWD A 20 DTR | | GDS21045 | Drive Shaft | | 30 | 27 | 52.5 | 94.5 | 615 | |
| | 2008.07-2017.03 | 6AT | F | L/R | Estate FWD A 20 DTR | | GDS82085 | Drive Shaft | | 30 | 27 | 52.5 | 94 | 615 | |
| | 2008.07-2017.03 | 6AT | F | L/R | Estate FWD A 20 DTR | | GCO17051 | Outer Joint | | 30 | 26 | 53.8 | 94.5 | 65.5 | M |
| | 2008.07-2017.03 | 6AT | F | L/R | Estate FWD A 20 DTR | | GCO21049 | Outer Joint | | 30 | 26 | 52.5 | 94 | 65.5 | M |
| | 2008.07-2017.03 | 6AT | F | L/R | Estate FWD A 20 DTR | | GCO88046 | Outer Joint | | 30 | 26 | 52.5 | 94.5 | 65.5 | M |
| | 2008.07-2017.03 | 6AT | F | L/R | Estate FWD A 20 DTR | | GCI86015 | Inner Joint | | 27 | 26 | 35 | 78.5 | 109.5 | |
| | 2008.07-2017.03 | 6MT | F | L/R | Estate FWD A 20 DTR | | GCO21057 | Outer Joint | | 30 | 27 | 59.1 | 94 | 65 | M |
| | 2008.07-2017.03 | AT/MT | F | L/R | Estate FWD A 20 DTR | | GDS60027 | Drive Shaft | | 30 | 27 | 52.5 | 94.5 | 619 | |
| 2.0 (143 kw) | 2012.01-2015.06 | 6AT | F | R | Estate 4WD A 20 DTR | | GDS21045 | Drive Shaft | | 30 | 27 | 52.5 | 94.5 | 615 | |
| | 2012.01-2015.06 | 6AT | F | L/R | Estate 4WD A 20 DTR | | GDS82085 | Drive Shaft | | 30 | 27 | 52.5 | 94 | 615 | |
| | 2012.01-2015.06 | 6AT/6MT | F | L/R | Estate 4WD A 20 DTR | | GCO17051 | Outer Joint | | 30 | 26 | 53.8 | 94.5 | 65.5 | M |
| | 2012.01-2015.06 | 6AT/6MT | F | L/R | Estate 4WD A 20 DTR | | GCO21049 | Outer Joint | | 30 | 26 | 52.5 | 94 | 65.5 | M |

| | YEAR | TRANSM. | F/R | L/R | BODY STYLE & DRIVE TYPE & ENGINE | REMARKS | G-AP Ref. | PRODUCT | ABS | Technical Specifications A | B | C | H | L | P |
|---|---|---|---|---|---|---|---|---|---|---|---|---|---|---|---|
| **OPEL** | | | | | | | | | | | | | | | |
| **Insignia Sports Tourer** | | | | | | | | | | | | | | | |
| 2.0 (143 kw) | 2012.01-2015.06 | 6AT/6MT | F | L/R | Estate 4WD A 20 DTR | | GCO88046 | Outer Joint | | 30 | 26 | 52.5 | 94.5 | 65.5 | M |
| | 2012.01-2015.06 | 6MT | F | L/R | Estate 4WD A 20 DTR | For RPO/POC:GNA | GCI21030 | Inner Joint | | 27 | 26 | 35 | 78 | 112.5 | |
| | 2012.01-2015.06 | 6MT/6AT | F | L/R | Estate 4WD A 20 DTR | Transmission:6MT,For RPO/POC:GNB | GCI86015 | Inner Joint | | 27 | 26 | 35 | 78.5 | 109.5 | |
| | 2012.01-2015.06 | 6AT/6MT | R | L/R | Estate 4WD A 20 DTR | With differential lock | GCO81305 | Outer Joint | | 30 | 23 | 52.3 | 94 | 59.5 | M |
| | 2012.01-2015.06 | AT/MT | R | L | Estate 4WD A 20 DTR | Differential:With differential lock | GDS82261 | Drive Shaft | | 30 | 34 | 52.3 | 94 | 791 | |
| | 2012.01-2015.06 | AT/MT | R | R | Estate 4WD A 20 DTR | | GDS81333 | Drive Shaft | | 30 | 34 | 52.3 | 94 | 842 | |
| | 2012.01-2015.06 | AT/MT | R | L | Estate 4WD A 20 DTR | Differential:With differential lock | GCI81196 | Inner Joint | | 34 | 23 | 35 | 113.5 | 110 | |
| | 2012.01-2015.06 | AT/MT | R | R | Estate 4WD A 20 DTR | | GCI81197 | Inner Joint | | 34 | 23 | 35 | 82.5 | 109 | |
| | 2012.01-2015.06 | 6AT | F | R | Estate FWD A 20 DTR | | GDS21045 | Drive Shaft | | 30 | 27 | 52.5 | 94.5 | 615 | |
| | 2012.01-2015.06 | 6AT | F | L/R | Estate FWD A 20 DTR | | GDS82085 | Drive Shaft | | 30 | 27 | 52.5 | 94 | 615 | |
| | 2012.01-2015.06 | 6AT | F | L/R | Estate FWD A 20 DTR | | GCO17051 | Outer Joint | | 30 | 26 | 53.8 | 94.5 | 65.5 | M |
| | 2012.01-2015.06 | 6AT | F | L/R | Estate FWD A 20 DTR | | GCO21049 | Outer Joint | | 30 | 26 | 52.5 | 94 | 65.5 | M |
| | 2012.01-2015.06 | 6AT | F | L/R | Estate FWD A 20 DTR | | GCO88046 | Outer Joint | | 30 | 26 | 52.5 | 94.5 | 65.5 | M |
| | 2012.01-2015.06 | 6AT | F | L/R | Estate FWD A 20 DTR | | GCI86015 | Inner Joint | | 27 | 26 | 35 | 78.5 | 109.5 | |
| | 2012.01-2015.06 | 6MT | F | L/R | Estate FWD A 20 DTR | | GCO21057 | Outer Joint | | 30 | 27 | 59.1 | 94 | 65 | M |
| 2.0 (147 kw) | 2020.04- | 9AT | F | R | Estate FWD F20SHT | | GDS83653 | Drive Shaft | | 30 | 27 | 60.5 | 94.5 | 559 | |
| | 2020.04- | 9AT | F | L/R | Estate FWD F20SHT | | GCO81945 | Outer Joint | | 30 | 35 | 60.5 | 94.5 | 60 | M |
| | 2020.04- | 9AT | F | R | Estate FWD F20SHT | | GCI82319 | Inner Joint | | 27 | 35 | 42 | | 139 | |
| 2.0 (162 kw) | 2008.07-2011.06 | 6AT | F | L/R | Estate 4WD A 20 NHT | | GDS21045 | Drive Shaft | | 30 | 27 | 52.5 | 94.5 | 615 | |
| | 2008.07-2011.06 | 6AT | F | L/R | Estate 4WD A 20 NHT | | GCI86015 | Inner Joint | | 27 | 26 | 35 | 78.5 | 109.5 | |
| | 2008.07-2011.06 | 6AT/6MT | F | L/R | Estate 4WD A 20 NHT | | GCO17051 | Outer Joint | | 30 | 26 | 53.8 | 94.5 | 65.5 | M |
| | 2008.07-2011.06 | 6AT/6MT | F | L/R | Estate 4WD A 20 NHT | | GCO21049 | Outer Joint | | 30 | 26 | 52.5 | 94 | 65.5 | M |
| | 2008.07-2011.06 | 6AT/6MT | F | L/R | Estate 4WD A 20 NHT | | GCO88046 | Outer Joint | | 30 | 26 | 52.5 | 94.5 | 65.5 | M |
| | 2008.07-2011.06 | 6MT | F | L/R | Estate 4WD A 20 NHT | Chassis no. to:B1999999 | GDS60027 | Drive Shaft | | 30 | 27 | 52.5 | 94.5 | 619 | |
| | 2008.07-2011.06 | 6MT | F | L/R | Estate 4WD A 20 NHT | Chassis no. from:C1000001 | GDS84292 | Drive Shaft | | 30 | 27 | 52.5 | 94 | 618 | |
| | 2008.07-2011.06 | 6MT | F | L/R | Estate 4WD A 20 NHT | | GCI21030 | Inner Joint | | 27 | 26 | 35 | 78 | 112.5 | |
| | 2008.07-2011.06 | AT | F | L/R | Estate 4WD A 20 NHT | | GDS82085 | Drive Shaft | | 30 | 27 | 52.5 | 94 | 615 | |
| | 2008.07-2011.06 | 6AT/6MT | R | L/R | Estate 4WD A 20 NHT | For vehicles with electronic ltd slip differential | GCO81305 | Outer Joint | | 30 | 23 | 52.3 | 94 | 59.5 | M |
| | 2008.07-2011.06 | AT/MT | R | L | Estate 4WD A 20 NHT | Veh Equip:For vehicles with lectronic ltd slip differential | GDS82261 | Drive Shaft | | 30 | 34 | 52.3 | 94 | 791 | |
| | 2008.07-2011.06 | AT/MT | R | R | Estate 4WD A 20 NHT | For vehicles with lectronic ltd slip differential | GDS81333 | Drive Shaft | | 30 | 34 | 52.3 | 94 | 842 | |
| | 2008.07-2011.06 | AT/MT | R | L | Estate 4WD A 20 NHT | Veh Equip:For vehicles with lectronic ltd slip differential | GCI81196 | Inner Joint | | 34 | 23 | 35 | 113.5 | 110 | |
| | 2008.07-2011.06 | AT/MT | R | R | Estate 4WD A 20 NHT | For vehicles with lectronic ltd slip differential | GCI81197 | Inner Joint | | 34 | 23 | 35 | 82.5 | 109 | |
| | 2008.07-2013.06 | 6AT | F | L/R | Estate FWD A 20 NHT;A 20 NFT | | GDS21045 | Drive Shaft | | 30 | 27 | 52.5 | 94.5 | 615 | |
| | 2008.07-2013.06 | 6AT | F | L/R | Estate FWD A 20 NHT;A 20 NFT | | GCI86015 | Inner Joint | | 27 | 26 | 35 | 78.5 | 109.5 | |
| | 2008.07-2013.06 | 6AT/6MT | F | L/R | Estate FWD A 20 NHT;A 20 NFT | | GCO17051 | Outer Joint | | 30 | 26 | 53.8 | 94.5 | 65.5 | M |
| | 2008.07-2013.06 | 6AT/6MT | F | L/R | Estate FWD A 20 NHT;A 20 NFT | | GCO21049 | Outer Joint | | 30 | 26 | 52.5 | 94 | 65.5 | M |
| | 2008.07-2013.06 | 6AT/6MT | F | L/R | Estate FWD A 20 NHT;A 20 NFT | | GCO88046 | Outer Joint | | 30 | 26 | 52.5 | 94.5 | 65.5 | M |
| | 2008.07-2013.06 | 6MT | F | L/R | Estate FWD A 20 NHT;A 20 NFT | Chassis no. to:B1999999 | GDS60027 | Drive Shaft | | 30 | 27 | 52.5 | 94.5 | 619 | |
| | 2008.07-2013.06 | 6MT | F | L/R | Estate FWD A 20 NHT;A 20 NFT | Chassis no. from:C1000001 | GDS84292 | Drive Shaft | | 30 | 27 | 52.5 | 94 | 618 | |
| | 2008.07-2013.06 | 6MT | F | L/R | Estate FWD A 20 NHT;A 20 NFT | | GCI21030 | Inner Joint | | 27 | 26 | 35 | 78 | 112.5 | |
| | 2008.07-2013.06 | AT | F | L/R | Estate FWD A 20 NHT;A 20 NFT | | GDS82085 | Drive Shaft | | 30 | 27 | 52.5 | 94 | 615 | |
| | 2010.09-2011.11 | 6AT | F | L/R | Estate FWD A 20 NFT | | GDS21045 | Drive Shaft | | 30 | 27 | 52.5 | 94.5 | 615 | |
| | 2010.09-2011.11 | 6AT | F | L/R | Estate FWD A 20 NFT | | GDS82085 | Drive Shaft | | 30 | 27 | 52.5 | 94 | 615 | |
| | 2010.09-2011.11 | 6AT | F | L/R | Estate FWD A 20 NFT | | GCI86015 | Inner Joint | | 27 | 26 | 35 | 78.5 | 109.5 | |
| | 2010.09-2011.11 | 6AT/6MT | F | L/R | Estate FWD A 20 NFT | | GCO17051 | Outer Joint | | 30 | 26 | 53.8 | 94.5 | 65.5 | M |
| | 2010.09-2011.11 | 6AT/6MT | F | L/R | Estate FWD A 20 NFT | | GCO21049 | Outer Joint | | 30 | 26 | 52.5 | 94 | 65.5 | M |
| | 2010.09-2011.11 | 6AT/6MT | F | L/R | Estate FWD A 20 NFT | | GCO88046 | Outer Joint | | 30 | 26 | 52.5 | 94.5 | 65.5 | M |
| | 2010.09-2011.11 | 6MT | F | L/R | Estate FWD A 20 NFT | Chassis no. to:B1999999 | GDS60027 | Drive Shaft | | 30 | 27 | 52.5 | 94.5 | 619 | |
| | 2010.09-2011.11 | 6MT | F | L/R | Estate FWD A 20 NFT | Chassis no. from:C1000001 | GDS84292 | Drive Shaft | | 30 | 27 | 52.5 | 94 | 618 | |
| | 2010.09-2011.11 | 6MT | F | L/R | Estate FWD A 20 NFT | | GCI21030 | Inner Joint | | 27 | 26 | 35 | 78 | 112.5 | |
| 2.0 (169 kw) | 2020.04- | 9AT | F | R | Estate 4WD F20SHT | | GDS83653 | Drive Shaft | | 30 | 27 | 60.5 | 94.5 | 559 | |
| | 2020.04- | 9AT | F | L/R | Estate 4WD F20SHT | | GCO81945 | Outer Joint | | 30 | 35 | 60.5 | 94.5 | 60 | M |
| | 2020.04- | 9AT | F | R | Estate 4WD F20SHT | | GCI82319 | Inner Joint | | 27 | 35 | 42 | | 139 | |
| 2.0 (184 kw) | 2011.09-2017.03 | 6AT/6MT | F | L/R | Estate 4WD A 20 NHT;A 20 NFT;B 20 NHT | | GCO17051 | Outer Joint | | 30 | 26 | 53.8 | 94.5 | 65.5 | M |
| | 2011.09-2017.03 | 6AT/6MT | F | L/R | Estate 4WD A 20 NHT;A 20 NFT;B 20 NHT | | GCO21049 | Outer Joint | | 30 | 26 | 52.5 | 94 | 65.5 | M |
| | 2011.09-2017.03 | 6AT/6MT | F | L/R | Estate 4WD A 20 NHT;A 20 NFT;B 20 NHT | | GCO88046 | Outer Joint | | 30 | 26 | 52.5 | 94.5 | 65.5 | M |
| | 2011.09-2017.03 | 6MT | F | L/R | Estate 4WD A 20 NHT;A 20 NFT;B 20 NHT | Chassis no. to:B1999999,For RPO/POC:MR6 | GDS60027 | Drive Shaft | | 30 | 27 | 52.5 | 94.5 | 619 | |
| | 2011.09-2017.03 | 6MT | F | L/R | Estate 4WD A 20 NHT;A 20 NFT;B 20 NHT | For RPO/POC:MR6,Chassis no. from:C1000001 | GDS84292 | Drive Shaft | | 30 | 27 | 52.5 | 94 | 618 | |
| | 2011.09-2017.03 | 6MT | F | L/R | Estate 4WD A 20 NHT;A 20 NFT;B 20 NHT | | GCI21030 | Inner Joint | | 27 | 26 | 35 | 78 | 112.5 | |
| | 2011.09-2017.03 | AT | F | L/R | Estate 4WD A 20 NHT;A 20 NFT;B 20 NHT | | GDS82085 | Drive Shaft | | 30 | 27 | 52.5 | 94 | 615 | |
| | 2011.09-2017.03 | AT | F | L/R | Estate 4WD A 20 NHT;A 20 NFT;B 20 NHT | | GCI86015 | Inner Joint | | 27 | 26 | 35 | 78.5 | 109.5 | |
| | 2011.09-2017.03 | 6AT/6MT | R | L/R | Estate 4WD A 20 NHT;A 20 NFT;B 20 NHT | For vehicles with electronic ltd slip differential | GCO81305 | Outer Joint | | 30 | 23 | 52.3 | 94 | 59.5 | M |
| | 2011.09-2017.03 | AT/MT | R | L | Estate 4WD A 20 NHT;A 20 NFT;B 20 NHT | Veh Equip:For vehicles with lectronic ltd slip differential | GDS82261 | Drive Shaft | | 30 | 34 | 52.3 | 94 | 791 | |
| | 2011.09-2017.03 | AT/MT | R | R | Estate 4WD A 20 NHT;A 20 NFT;B 20 NHT | | GDS81333 | Drive Shaft | | 30 | 34 | 52.3 | 94 | 842 | |
| | 2011.09-2017.03 | AT/MT | R | L | Estate 4WD A 20 NHT;A 20 NFT;B 20 NHT | Veh Equip:For vehicles with lectronic ltd slip differential | GCI81196 | Inner Joint | | 34 | 23 | 35 | 113.5 | 110 | |

| | YEAR | TRANSM. | F/R | L/R | BODY STYLE & DRIVE TYPE & ENGINE | REMARKS | G-AP Ref. | PRODUCT | ABS | Technical Specifications A | B | C | H | L | P |
|---|---|---|---|---|---|---|---|---|---|---|---|---|---|---|---|
| **OPEL** | | | | | | | | | | | | | | | |
| **Insignia Sports Tourer** | | | | | | | | | | | | | | | |
| 2.0 (184 kw) | 2011.09-2017.03 | AT/MT | R | R | Estate 4WD A 20 NHT;A 20 NFT;B 20 NHT | | GCI81197 | Inner Joint | | 34 | 23 | 35 | 82.5 | 109 | |
| | 2014.04-2017.03 | 6AT/6MT | F | L/R | Estate FWD A 20 NHT;B 20 NHT | | GCO17051 | Outer Joint | | 30 | 26 | 53.8 | 94.5 | 65.5 | M |
| | 2014.04-2017.03 | 6AT/6MT | F | L/R | Estate FWD A 20 NHT;B 20 NHT | | GCO21049 | Outer Joint | | 30 | 26 | 52.5 | 94 | 65.5 | M |
| | 2014.04-2017.03 | 6AT/6MT | F | L/R | Estate FWD A 20 NHT;B 20 NHT | | GCO88046 | Outer Joint | | 30 | 26 | 52.5 | 94.5 | 65.5 | M |
| | 2014.04-2017.03 | 6MT | F | L/R | Estate FWD A 20 NHT;B 20 NHT | For RPO/POC:MR6,Chassis no. from:C1000001 | GDS84292 | Drive Shaft | | 30 | 27 | 52.5 | 94 | 618 | |
| | 2014.04-2017.03 | 6MT | F | L/R | Estate FWD A 20 NHT;B 20 NHT | | GCI21030 | Inner Joint | | 27 | 26 | 35 | 78 | 112.5 | |
| | 2014.04-2017.03 | AT | F | L | Estate FWD A 20 NHT;B 20 NHT | Date from:2011.01;Chassis no. from:B1000001 | GDS82085 | Drive Shaft | | 30 | 27 | 52.5 | 94 | 615 | |
| | 2014.04-2017.03 | AT | F | L | Estate FWD A 20 NHT;B 20 NHT | Date from:2011.01;Chassis no. from:B1000001 | GCI86015 | Inner Joint | | 27 | 26 | 35 | 78.5 | 109.5 | |
| | 2014.04-2017.03 | MT | F | L/R | Estate FWD A 20 NHT;B 20 NHT | Chassis no. to:B1999999,For RPO/POC:MR6 | GDS60027 | Drive Shaft | | 30 | 27 | 52.5 | 94.5 | 619 | |
| 2.0 (191 kw) | 2017.03- | 8AT | F | L | Estate 4WD B 20 NFT;D 20 NFT | | GDS56988 | Drive Shaft | | 30 | 27 | 60.5 | 94.5 | 621 | |
| | 2017.03- | 8AT | F | R | Estate 4WD B 20 NFT;D 20 NFT | | GDS83653 | Drive Shaft | | 30 | 27 | 60.5 | 94.5 | 559 | |
| | 2017.03- | 8AT | F | L/R | Estate 4WD B 20 NFT;D 20 NFT | | GCO81945 | Outer Joint | | 30 | 35 | 60.5 | 94.5 | 60 | M |
| | 2017.03- | 8AT | F | L | Estate 4WD B 20 NFT;D 20 NFT | | GCI82377 | Inner Joint | | 27 | 35 | 35 | 101 | 100.5 | |
| | 2017.03- | 8AT | F | R | Estate 4WD B 20 NFT;D 20 NFT | | GCI82319 | Inner Joint | | 27 | 35 | 42 | | 139 | |
| 2.8 (191 kw) | 2008.10-2013.06 | 6AT | F | L | Estate 4WD A 28 NET | Date To:2010.12,Chassis no. to:A1999999 | GDS21045 | Drive Shaft | | 30 | 27 | 52.5 | 94.5 | 615 | |
| | 2008.10-2013.06 | 6AT | F | L | Estate 4WD A 28 NET | Date from:2011.01,Chassis no. from:B1000001 | GDS82085 | Drive Shaft | | 30 | 27 | 52.5 | 94 | 615 | |
| | 2008.10-2013.06 | 6AT | F | R | Estate 4WD A 28 NET | | GDS21045 | Drive Shaft | | 30 | 27 | 52.5 | 94.5 | 615 | |
| | 2008.10-2013.06 | 6AT | F | L/R | Estate 4WD A 28 NET | Date To:2010.12,Chassis no. to:A1999999 | GDS82085 | Drive Shaft | | 30 | 27 | 52.5 | 94 | 615 | |
| | 2008.10-2013.06 | 6AT | F | L/R | Estate 4WD A 28 NET | Date from:2010.01,Chassis no. from:A1000001 | GCO17051 | Outer Joint | | 30 | 26 | 53.8 | 94.5 | 65.5 | M |
| | 2008.10-2013.06 | 6AT | F | L/R | Estate 4WD A 28 NET | Date from:2010.01,Chassis no. from:A1000001 | GCO21049 | Outer Joint | | 30 | 26 | 52.5 | 94 | 65.5 | M |
| | 2008.10-2013.06 | 6AT | F | L/R | Estate 4WD A 28 NET | Date from:2010.01,Chassis no. from:A1000001 | GCO88046 | Outer Joint | | 30 | 26 | 52.5 | 94.5 | 65.5 | M |
| | 2008.10-2013.06 | 6AT | F | L/R | Estate 4WD A 28 NET | Date from:2010.01,Chassis no. from:A1000001 | GCI86015 | Inner Joint | | 27 | 26 | 35 | 78.5 | 109.5 | |
| | 2008.10-2013.06 | 6AT/6MT | F | L/R | Estate 4WD A 28 NET | Transmission:6AT,Date to:2009.12,Chassis no. to:9199999991999999 | GCO21057 | Outer Joint | | 30 | 27 | 59.1 | 94 | 65 | M |
| | 2008.10-2013.06 | 6AT/6MT | R | L/R | Estate 4WD A 28 NET | For vehicles with electronic ltd slip differential | GCO81305 | Outer Joint | | 30 | 23 | 52.3 | 94 | 59.5 | M |
| | 2008.10-2013.06 | AT/MT | R | L | Estate 4WD A 28 NET | Veh Equip:For vehicles with lectronic ltd slip differential | GDS82261 | Drive Shaft | | 30 | 34 | 52.3 | 94 | 791 | |
| | 2008.10-2013.06 | AT/MT | R | R | Estate 4WD A 28 NET | | GDS81333 | Drive Shaft | | 30 | 34 | 52.3 | 94 | 842 | |
| | 2008.10-2013.06 | AT/MT | R | L | Estate 4WD A 28 NET | Veh Equip:For vehicles with lectronic ltd slip differential | GCI81196 | Inner Joint | | 34 | 23 | 35 | 113.5 | 110 | |
| | 2008.10-2013.06 | AT/MT | R | R | Estate 4WD A 28 NET | | GCI81197 | Inner Joint | | 34 | 23 | 35 | 82.5 | 109 | |
| 2.8 (239 kw) | 2009.07-2017.03 | 6AT/6MT | F | L/R | Estate 4WD A 28 NER;B 28 NER | | GCO21057 | Outer Joint | | 30 | 27 | 59.1 | 94 | 65 | M |
| | 2009.07-2017.03 | 6AT/6MT | R | L/R | Estate 4WD A 28 NER;B 28 NER | For vehicles with electronic ltd slip differential | GCO81305 | Outer Joint | | 30 | 23 | 52.3 | 94 | 59.5 | M |
| | 2009.07-2017.03 | AT/MT | R | L | Estate 4WD A 28 NER;B 28 NER | Veh Equip:For vehicles with lectronic ltd slip differential | GDS82261 | Drive Shaft | | 30 | 34 | 52.3 | 94 | 791 | |
| | 2009.07-2017.03 | AT/MT | R | R | Estate 4WD A 28 NER;B 28 NER | | GDS81333 | Drive Shaft | | 30 | 34 | 52.3 | 94 | 842 | |
| | 2009.07-2017.03 | AT/MT | R | L | Estate 4WD A 28 NER;B 28 NER | Veh Equip:For vehicles with lectronic ltd slip differential | GCI81196 | Inner Joint | | 34 | 23 | 35 | 113.5 | 110 | |
| | 2009.07-2017.03 | AT/MT | R | R | Estate 4WD A 28 NER;B 28 NER | | GCI81197 | Inner Joint | | 34 | 23 | 35 | 82.5 | 109 | |
| **Karl** | | | | | | | | | | | | | | | |
| 1.0 (54 kw) | 2015.02-2018.03 | 5MT | F | L | Hatchback FWD B 10 XL | | GDS81616 | Drive Shaft | 48T | 25 | 22 | 52.5 | 92 | 625 | |
| | 2015.02-2018.03 | 5MT | F | R | Hatchback FWD B 10 XL | | GDS81615 | Drive Shaft | 48T | 25 | 22 | 52.5 | 92 | 828 | |
| | 2015.02-2018.03 | 5MT | F | L/R | Hatchback FWD B 10 XL | | GCO81420 | Outer Joint | 48T | 25 | 27 | 52.5 | 92 | 48 | M |
| | 2015.02-2018.03 | 5MT | F | L/R | Hatchback FWD B 10 XL | | GCI81431 | Inner Joint | | 22 | 27 | 35 | 59 | 91.5 | |
| | 2018.01-2019.03 | 5MT | F | L | Hatchback FWD D 10 XE | | GDS81616 | Drive Shaft | 48T | 25 | 22 | 52.5 | 92 | 625 | |
| | 2018.01-2019.03 | 5MT | F | R | Hatchback FWD D 10 XE | | GDS81615 | Drive Shaft | 48T | 25 | 22 | 52.5 | 92 | 828 | |
| | 2018.01-2019.03 | 5MT | F | L/R | Hatchback FWD D 10 XE | | GCO81420 | Outer Joint | 48T | 25 | 27 | 52.5 | 92 | 48 | M |
| | 2018.01-2019.03 | 5MT | F | R | Hatchback FWD D 10 XE | | GCI81431 | Inner Joint | | 22 | 27 | 35 | 59 | 91.5 | |
| 1.0 (55 kw) | 2015.01-2018.03 | 5AT/5MT | F | L | Hatchback FWD B 10 XE | | GDS81616 | Drive Shaft | 48T | 25 | 22 | 52.5 | 92 | 625 | |
| | 2015.01-2018.03 | 5AT/5MT | F | R | Hatchback FWD B 10 XE | | GDS81615 | Drive Shaft | 48T | 25 | 22 | 52.5 | 92 | 828 | |
| | 2015.01-2018.03 | 5AT/5MT | F | L/R | Hatchback FWD B 10 XE | | GCO81420 | Outer Joint | 48T | 25 | 27 | 52.5 | 92 | 48 | M |
| | 2015.01-2018.03 | 5AT/5MT | F | R | Hatchback FWD B 10 XE | | GCI81431 | Inner Joint | | 22 | 27 | 35 | 59 | 91.5 | |
| **Meriva** | | | | | | | | | | | | | | | |
| 1.3 (51 kw) | 2005.04-2010.05 | 5MT | F | L | MPV FWD Z 13 DT;Y 13 DT | | GDS44002 | Drive Shaft | 29T | 22 | 22 | 52 | 95 | 585 | |
| | 2005.04-2010.05 | 5MT | F | L/R | MPV FWD Z 13 DT;Y 13 DT | | GCO44002 | Outer Joint | 29T | 22 | 23 | 52 | 97.5 | 61 | M |
| | 2005.04-2010.05 | MT | F | L | MPV FWD Z 13 DT;Y 13 DT | | GDS99069 | Drive Shaft | 29T | 22 | 22 | 52 | 97.5 | 584 | |
| | 2005.04-2010.05 | | F | R | MPV FWD Z 13 DT;Y 13 DT | | GDS99157 | Drive Shaft | 29T | 22 | 22 | 52 | 97.5 | 930 | |
| | 2005.04-2010.05 | | F | L/R | MPV FWD Z 13 DT;Y 13 DT | | GCI44009 | Inner Joint | | 22 | 23 | 35 | 57.5 | 96 | |
| 1.3 (55 kw) | 2003.09-2010.05 | 5MT | F | L | MPV FWD Z 13 DTJ | VL | GDS44002 | Drive Shaft | 29T | 22 | 22 | 52 | 95 | 585 | |
| | 2003.09-2010.05 | 5MT | F | L | MPV FWD Z 13 DTJ | TJ | GDS99069 | Drive Shaft | 29T | 22 | 22 | 52 | 97.5 | 584 | |
| | 2003.09-2010.05 | 5MT | F | R | MPV FWD Z 13 DTJ | TJ | GDS99157 | Drive Shaft | 29T | 22 | 22 | 52 | 97.5 | 930 | |
| | 2003.09-2010.05 | 5MT | F | L/R | MPV FWD Z 13 DTJ | | GCO44002 | Outer Joint | 29T | 22 | 23 | 52 | 97.5 | 61 | M |
| | 2003.09-2010.05 | 5MT | F | L/R | MPV FWD Z 13 DTJ | | GCO44019 | Outer Joint | 29T | 22 | 28 | 52 | 97.5 | 57.5 | O |
| | 2003.09-2010.05 | 5MT | F | L/R | MPV FWD Z 13 DTJ | | GCI44009 | Inner Joint | | 22 | 23 | 35 | 57.5 | 96 | |
| | 2010.06-2013.10 | 5MT | F | R | MPV FWD A 13 DTC | | GDS44088 | Drive Shaft | | 33 | 22 | 52 | 103.5 | 953 | |
| | 2010.06-2013.10 | 5MT | F | L/R | MPV FWD A 13 DTC | | GCO44093 | Outer Joint | | 33 | 23 | 52 | 103.5 | 60 | M |
| | 2010.06-2013.10 | 5MT | F | R | MPV FWD A 13 DTC | | GCI44017 | Inner Joint | | 22 | 23 | 35 | 57.5 | 116 | |
| 1.3 (70 kw) | 2010.06-2014.11 | 5MT | F | R | MPV FWD A 13 DTE | | GDS44088 | Drive Shaft | | 33 | 22 | 52 | 103.5 | 953 | |
| | 2010.06-2014.11 | 5MT | F | L/R | MPV FWD A 13 DTE | | GCO44093 | Outer Joint | | 33 | 23 | 52 | 103.5 | 60 | M |
| | 2010.06-2014.11 | 5MT | F | R | MPV FWD A 13 DTE | | GCI44017 | Inner Joint | | 22 | 23 | 35 | 57.5 | 116 | |

| | YEAR | TRANSM. | F/R | L/R | BODY STYLE & DRIVE TYPE & ENGINE | REMARKS | G-AP Ref. | PRODUCT | ABS | Technical Specifications A | B | C | H | L | P |
|---|---|---|---|---|---|---|---|---|---|---|---|---|---|---|---|
| **OPEL** | | | | | | | | | | | | | | | |
| **Meriva** | | | | | | | | | | | | | | | |
| 1.3 (70 kw) | 2013.01-2014.11 | 5MT | F | R | Box Body/MPV FWD A 13 DTE | | GDS44088 | Drive Shaft | | 33 | 22 | 52 | 103.5 | 953 | |
| | 2013.01-2014.11 | 5MT | F | L/R | Box Body/MPV FWD A 13 DTE | | GCO44093 | Outer Joint | | 33 | 23 | 52 | 103.5 | 60 | M |
| | 2013.01-2014.11 | 5MT | F | R | Box Body/MPV FWD A 13 DTE | | GCI44017 | Inner Joint | | 22 | 23 | 35 | 57.5 | 116 | |
| 1.4 (66 kw) | 2004.07-2010.05 | 5MT | F | L | MPV FWD Z 14 XEP | | GDS44100 | Drive Shaft | 29T | 22 | 22 | 52 | 97.5 | 590 | |
| | 2004.07-2010.05 | 5MT | F | R | MPV FWD Z 14 XEP | | GDS99157 | Drive Shaft | 29T | 22 | 22 | 52 | 97.5 | 930 | |
| | 2004.07-2010.05 | 5MT | F | L/R | MPV FWD Z 14 XEP | M20×1.5 | GCO44019 | Outer Joint | 29T | 22 | 28 | 52 | 97.5 | 57.5 | O |
| | 2004.07-2010.05 | 5MT | F | L/R | MPV FWD Z 14 XEP | M20×1 | GCO44020 | Outer Joint | 29T | 22 | 28 | 52 | 97.5 | 57.5 | O |
| | 2004.07-2010.05 | 5MT | F | L/R | MPV FWD Z 14 XEP | Manufacturer:GKN | GCI81778 | Inner Joint | | 22 | 22 | 34.95 | 57 | 95 | |
| 1.4 (88 kw) | 2010.06-2017.03 | 5MT | F | L | MPV FWD A 14 NEL;B 14 NEL | | GDS60013 | Drive Shaft | | 33 | 22 | 52 | 103 | 595 | |
| | 2010.06-2017.03 | 5MT | F | R | MPV FWD A 14 NEL;B 14 NEL | | GDS83389 | Drive Shaft | | 33 | 22 | 52 | 103.5 | 962 | |
| | 2010.06-2017.03 | 5MT | F | R | MPV FWD A 14 NEL;B 14 NEL | | GCI44017 | Inner Joint | | 22 | 23 | 35 | 57.5 | 116 | |
| | 2010.06-2017.03 | 6AT | F | L | MPV FWD A 14 NEL;B 14 NEL | | GDS82262 | Drive Shaft | | 33 | 27 | 52 | 103.5 | 575 | |
| | 2010.06-2017.03 | 6AT | F | R | MPV FWD A 14 NEL;B 14 NEL | | GDS82266 | Drive Shaft | | 33 | 34 | 52 | 103.5 | 560 | |
| | 2010.06-2017.03 | 6AT | F | L | MPV FWD A 14 NEL;B 14 NEL | | GCI81705 | Inner Joint | | 27 | 23 | 34.97 | 78.5 | 107 | |
| | 2010.06-2017.03 | 6AT | F | R | MPV FWD A 14 NEL;B 14 NEL | | GCI81706 | Inner Joint | | 34 | 23 | 37.5 | | 121.5 | |
| | 2010.06-2017.03 | 6AT/5MT | F | L/R | MPV FWD A 14 NEL;B 14 NEL | | GCO44093 | Outer Joint | | 33 | 23 | 52 | 103.5 | 60 | M |
| | 2010.06-2017.03 | 6MT | F | L | MPV FWD A 14 NEL;B 14 NEL | | GDS56869 | Drive Shaft | | 33 | 25 | 52 | 103.5 | 587 | |
| | 2010.06-2017.03 | 6MT | F | R | MPV FWD A 14 NEL;B 14 NEL | | GDS56873 | Drive Shaft | | 33 | 34 | 52 | 103.5 | 561 | |
| | 2010.06-2017.03 | 6MT | F | L/R | MPV FWD A 14 NEL;B 14 NEL | | GCO21051 | Outer Joint | | 33 | 24 | 52 | 103.5 | 64 | M |
| | 2010.06-2017.03 | 6MT | F | L | MPV FWD A 14 NEL;B 14 NEL | | GCI44008 | Inner Joint | | 25 | 25 | 34.9 | 57.5 | 113.2 | |
| | 2010.06-2017.03 | 6MT | F | R | MPV FWD A 14 NEL;B 14 NEL | | GCI44005 | Inner Joint | | 34 | 25 | 35 | | 130.2 | |
| | 2011.06-2017.03 | 5MT | F | L | MPV FWD A 14 NEL;B 14 NEL | Transm. code:F17 | GDS60013 | Drive Shaft | | 33 | 22 | 52 | 103 | 595 | |
| | 2011.06-2017.03 | 5MT | F | R | MPV FWD A 14 NEL;B 14 NEL | Trans. code:F17 | GDS83389 | Drive Shaft | | 33 | 22 | 52 | 103.5 | 962 | |
| | 2011.06-2017.03 | 5MT | F | L/R | MPV FWD A 14 NEL;B 14 NEL | M20×1 | GCO44093 | Outer Joint | | 33 | 23 | 52 | 103.5 | 60 | M |
| | 2011.06-2017.03 | 5MT | F | R | MPV FWD A 14 NEL;B 14 NEL | | GCI44017 | Inner Joint | | 22 | 23 | 35 | 57.5 | 116 | |
| | 2011.06-2017.03 | 6AT | F | L | MPV FWD A 14 NEL;B 14 NEL | Transm. code:AF40 | GDS82262 | Drive Shaft | | 33 | 27 | 52 | 103.5 | 575 | |
| | 2011.06-2017.03 | 6AT | F | R | MPV FWD A 14 NEL;B 14 NEL | Transm. code:AF40 | GDS82266 | Drive Shaft | | 33 | 34 | 52 | 103.5 | 560 | |
| 1.4 (103 kw) | 2010.06-2017.03 | 6AT | F | L | MPV FWD A 14 NET;B 14 NET | | GDS82262 | Drive Shaft | | 33 | 27 | 52 | 103.5 | 575 | |
| | 2010.06-2017.03 | 6AT | F | R | MPV FWD A 14 NET;B 14 NET | | GDS82266 | Drive Shaft | | 33 | 34 | 52 | 103.5 | 560 | |
| | 2010.06-2017.03 | 6AT | F | L/R | MPV FWD A 14 NET;B 14 NET | | GCO44093 | Outer Joint | | 33 | 23 | 52 | 103.5 | 60 | M |
| | 2010.06-2017.03 | 6AT | F | L | MPV FWD A 14 NET;B 14 NET | | GCI81705 | Inner Joint | | 27 | 23 | 34.97 | 78.5 | 107 | |
| | 2010.06-2017.03 | 6AT | F | R | MPV FWD A 14 NET;B 14 NET | | GCI81706 | Inner Joint | | 34 | 23 | 37.5 | | 121.5 | |
| | 2010.06-2017.03 | 6MT | F | L | MPV FWD A 14 NET;B 14 NET | | GDS56869 | Drive Shaft | | 33 | 25 | 52 | 103.5 | 587 | |
| | 2010.06-2017.03 | 6MT | F | R | MPV FWD A 14 NET;B 14 NET | | GDS56873 | Drive Shaft | | 33 | 34 | 52 | 103.5 | 561 | |
| | 2010.06-2017.03 | 6MT | F | L/R | MPV FWD A 14 NET;B 14 NET | | GCO21051 | Outer Joint | | 33 | 24 | 52 | 103.5 | 64 | M |
| | 2010.06-2017.03 | 6MT | F | L | MPV FWD A 14 NET;B 14 NET | | GCI44008 | Inner Joint | | 25 | 25 | 34.9 | 57.5 | 113.2 | |
| | 2010.06-2017.03 | 6MT | F | R | MPV FWD A 14 NET;B 14 NET | | GCI44005 | Inner Joint | | 34 | 25 | 35 | | 130.2 | |
| 1.6 (64 kw) | 2003.05-2010.05 | 5MT | F | L | MPV FWD Z 16 SE | Inner teeth of wheel side:22 | GDS44100 | Drive Shaft | 29T | 22 | 22 | 52 | 97.5 | 590 | |
| | 2003.05-2010.05 | 5MT | F | L | MPV FWD Z 16 SE | Inner teeth of wheel side:28 | GDS99069 | Drive Shaft | 29T | 22 | 22 | 52 | 97.5 | 584 | |
| | 2003.05-2010.05 | 5MT | F | R | MPV FWD Z 16 SE | Inner teeth of wheel side:22 | GDS82365 | Drive Shaft | 29T | 22 | 22 | 52 | 97.5 | 941 | |
| | 2003.05-2010.05 | 5MT | F | R | MPV FWD Z 16 SE | Inner teeth of wheel side:28 | GDS99157 | Drive Shaft | 29T | 22 | 22 | 52 | 97.5 | 930 | |
| | 2003.05-2010.05 | 5MT | F | L/R | MPV FWD Z 16 SE | Manufacturer:GKN | GCO44005 | Outer Joint | 29T | 22 | 22 | 52 | 97.5 | 58.5 | M |
| | 2003.05-2010.05 | 5MT | F | L/R | MPV FWD Z 16 SE | Manufacturer:Delphi | GCO44019 | Outer Joint | 29T | 22 | 28 | 52 | 97.5 | 57.5 | O |
| | 2003.05-2010.05 | 5MT | F | L/R | MPV FWD Z 16 SE | Manufacturer:Delphi | GCO44020 | Outer Joint | 29T | 22 | 28 | 52 | 97.5 | 57.5 | O |
| | 2003.05-2010.05 | 5MT | F | L/R | MPV FWD Z 16 SE | Manufacturer:GKN | GCI81778 | Inner Joint | | 22 | 22 | 34.95 | 57 | 95 | |
| 1.6 (70 kw) | 2014.01-2017.01 | 6MT | F | L/R | Box Body/MPV FWD B 16 DTC | | GDS82037 | Drive Shaft | | 33 | 25 | 56 | 103.5 | 583 | |
| | 2014.01-2017.01 | 6MT | F | L/R | Box Body/MPV FWD B 16 DTC | | GCO99024 | Outer Joint | | 33 | 26 | 52.5 | 94 | 65.5 | M |
| | 2014.01-2017.01 | 6MT | F | R | Box Body/MPV FWD B 16 DTC | | GCI21030 | Inner Joint | | 27 | 26 | 35 | 78 | 112.5 | |
| | 2014.01-2017.01 | 6MT | F | L/R | MPV FWD B 16 DTC | | GDS82037 | Drive Shaft | | 33 | 25 | 56 | 103.5 | 583 | |
| | 2014.01-2017.01 | 6MT | F | R | MPV FWD B 16 DTC | | GCI21030 | Inner Joint | | 27 | 26 | 35 | 78 | 112.5 | |
| | 2014.01-2017.01 | MT | F | L/R | MPV FWD B 16 DTC | | GCO99024 | Outer Joint | | 33 | 26 | 52.5 | 94 | 65.5 | M |
| 1.6 (74 kw) | 2003.05-2006.01 | 5MT/SAT | F | L | MPV FWD Z 16 XE | Inner teeth of wheel side:22 | GDS44100 | Drive Shaft | 29T | 22 | 22 | 52 | 97.5 | 590 | |
| | 2003.05-2006.01 | 5MT/SAT | F | L | MPV FWD Z 16 XE | Inner teeth of wheel side:28 | GDS99069 | Drive Shaft | 29T | 22 | 22 | 52 | 97.5 | 584 | |
| | 2003.05-2006.01 | 5MT/SAT | F | R | MPV FWD Z 16 XE | Inner teeth of wheel side:22 | GDS82365 | Drive Shaft | 29T | 22 | 22 | 52 | 97.5 | 941 | |
| | 2003.05-2006.01 | 5MT/SAT | F | R | MPV FWD Z 16 XE | Inner teeth of wheel side:28 | GDS99157 | Drive Shaft | 29T | 22 | 22 | 52 | 97.5 | 930 | |
| | 2003.05-2006.01 | 5MT/SAT | F | L/R | MPV FWD Z 16 XE | Manufacturer:GKN | GCO44005 | Outer Joint | 29T | 22 | 22 | 52 | 97.5 | 58.5 | M |
| | 2003.05-2006.01 | 5MT/SAT | F | L/R | MPV FWD Z 16 XE | Manufacturer:Delphi | GCO44019 | Outer Joint | 29T | 22 | 28 | 52 | 97.5 | 57.5 | O |
| | 2003.05-2006.01 | 5MT/SAT | F | L/R | MPV FWD Z 16 XE | Manufacturer:Delphi | GCO44020 | Outer Joint | 29T | 22 | 28 | 52 | 97.5 | 57.5 | O |
| | 2003.05-2006.01 | SAT/5MT | F | L/R | MPV FWD Z 16 XE | Manufacturer:GKN | GCI81778 | Inner Joint | | 22 | 22 | 34.95 | 57 | 95 | |
| 1.6 (77 kw) | 2006.01-2010.05 | 5MT/SAT | F | L | MPV FWD Z 16 XEP | Inner teeth of wheel side:22 | GDS44100 | Drive Shaft | 29T | 22 | 22 | 52 | 97.5 | 590 | |
| | 2006.01-2010.05 | 5MT/SAT | F | L | MPV FWD Z 16 XEP | Inner teeth of wheel side:28 | GDS99069 | Drive Shaft | 29T | 22 | 22 | 52 | 97.5 | 584 | |
| | 2006.01-2010.05 | 5MT/SAT | F | R | MPV FWD Z 16 XEP | Inner teeth of wheel side:22 | GDS82365 | Drive Shaft | 29T | 22 | 22 | 52 | 97.5 | 941 | |
| | 2006.01-2010.05 | 5MT/SAT | F | R | MPV FWD Z 16 XEP | Inner teeth of wheel side:28 | GDS99157 | Drive Shaft | 29T | 22 | 22 | 52 | 97.5 | 930 | |
| | 2006.01-2010.05 | 5MT/SAT | F | L/R | MPV FWD Z 16 XEP | Manufacturer:GKN | GCO44005 | Outer Joint | 29T | 22 | 22 | 52 | 97.5 | 58.5 | M |
| | 2006.01-2010.05 | 5MT/SAT | F | L/R | MPV FWD Z 16 XEP | Manufacturer:Delphi | GCO44019 | Outer Joint | 29T | 22 | 28 | 52 | 97.5 | 57.5 | O |

| | YEAR | TRANSM. | F/R | L/R | BODY STYLE & DRIVE TYPE & ENGINE | REMARKS | G-AP Ref. | PRODUCT | ABS | Technical Specifications A | B | C | H | L | P |
|---|---|---|---|---|---|---|---|---|---|---|---|---|---|---|---|
| **OPEL** | | | | | | | | | | | | | | | |
| **Meriva** | | | | | | | | | | | | | | | |
| 1.6 (77 kw) | 2006.01-2010.05 | 5MT/SAT | F | L/R | MPV FWD Z 16 XEP | Manufacturer:Delphi | GCO44020 | Outer Joint | 29T | 22 | 28 | 52 | 97.5 | 57.5 | O |
| | 2006.01-2010.05 | SAT/5MT | F | L/R | MPV FWD Z 16 XEP | Manufacturer:GKN | GCI81778 | Inner Joint | | 22 | 22 | 34.95 | 57 | 95 | |
| 1.6 (81 kw) | 2014.03-2017.03 | 6MT | F | L/R | Box Body/MPV FWD B 16 DTL | | GDS82037 | Drive Shaft | | 33 | 25 | 56 | 103.5 | 583 | |
| | 2014.03-2017.03 | 6MT | F | L/R | Box Body/MPV FWD B 16 DTL | | GCO99024 | Outer Joint | | 33 | 26 | 52.5 | 94 | 65.5 | M |
| | 2014.03-2017.03 | 6MT | F | R | Box Body/MPV FWD B 16 DTL | | GCI21030 | Inner Joint | | 27 | 26 | 35 | 78 | 112.5 | |
| | 2014.03-2017.03 | 6MT | F | L/R | MPV FWD B 16 DTL;B 16 DTE;B 16 DTN | | GDS82037 | Drive Shaft | | 33 | 25 | 56 | 103.5 | 583 | |
| | 2014.03-2017.03 | 6MT | F | R | MPV FWD B 16 DTL;B 16 DTE;B 16 DTN | | GCI21030 | Inner Joint | | 27 | 26 | 35 | 78 | 112.5 | |
| | 2014.03-2017.03 | MT | F | L/R | MPV FWD B 16 DTL;B 16 DTE;B 16 DTN | | GCO99024 | Outer Joint | | 33 | 26 | 52.5 | 94 | 65.5 | M |
| 1.6 (100 kw) | 2013.08-2017.01 | 6MT | F | L/R | MPV FWD B 16 DTH | | GDS82037 | Drive Shaft | | 33 | 25 | 56 | 103.5 | 583 | |
| | 2013.08-2017.01 | 6MT | F | R | MPV FWD B 16 DTH | | GCI21030 | Inner Joint | | 27 | 26 | 35 | 78 | 112.5 | |
| | 2013.08-2017.01 | MT | F | L/R | MPV FWD B 16 DTH | | GCO99024 | Outer Joint | | 33 | 26 | 52.5 | 94 | 65.5 | M |
| 1.6 (132 kw) | 2005.09-2010.05 | 6MT | F | R | MPV FWD Z 16 LET | | GDS60021 | Drive Shaft | 29T | 33 | 34 | 52 | 104 | 612 | |
| | 2005.09-2010.05 | 6MT | F | L/R | MPV FWD Z 16 LET | | GCO44004 | Outer Joint | 29T | 33 | 24 | 52 | 104 | 64 | M |
| | 2005.09-2010.05 | MT | F | R | MPV FWD Z 16 LET | | GCI60003 | Inner Joint | | 34 | 24 | 35.5 | | 117.5 | |
| 1.7 (55 kw) | 2003.09-2010.05 | 5MT | F | L | MPV FWD Y 17 DT | VL | GDS44002 | Drive Shaft | 29T | 22 | 22 | 52 | 95 | 585 | |
| | 2003.09-2010.05 | 5MT | F | L | MPV FWD Y 17 DT | TJ | GDS99069 | Drive Shaft | 29T | 22 | 22 | 52 | 97.5 | 584 | |
| | 2003.09-2010.05 | 5MT | F | R | MPV FWD Y 17 DT | TJ | GDS99157 | Drive Shaft | 29T | 22 | 22 | 52 | 97.5 | 930 | |
| | 2003.09-2010.05 | 5MT | F | L/R | MPV FWD Y 17 DT | | GCO44002 | Outer Joint | 29T | 22 | 23 | 52 | 97.5 | 61 | M |
| | 2003.09-2010.05 | 5MT | F | L/R | MPV FWD Y 17 DT | | GCO44019 | Outer Joint | 29T | 22 | 28 | 52 | 97.5 | 57.5 | O |
| | 2003.09-2010.05 | 5MT | F | L/R | MPV FWD Y 17 DT | | GCI44009 | Inner Joint | | 22 | 23 | 35 | 57.5 | 96 | |
| 1.7 (74 kw) | 2003.09-2010.05 | 5MT | F | L | MPV FWD Z 17 DTH;Z 17 DT | | GDS44094 | Drive Shaft | 29T | 33 | 34 | 52 | 104 | 599 | |
| | 2003.09-2010.05 | 5MT | F | L | MPV FWD Z 17 DTH;Z 17 DT | | GCI21034 | Inner Joint | | 34 | 24 | 35 | 56.5 | 102 | |
| | 2003.09-2010.05 | 5MT/6MT | F | R | MPV FWD Z 17 DTH;Z 17 DT | | GDS60021 | Drive Shaft | 29T | 33 | 34 | 52 | 104 | 612 | |
| | 2003.09-2010.05 | 5MT/6MT | F | L/R | MPV FWD Z 17 DTH;Z 17 DT | | GCO44004 | Outer Joint | 29T | 33 | 24 | 52 | 104 | 64 | M |
| | 2010.06-2017.01 | 6AT | F | L | MPV FWD A 17 DT | | GDS82262 | Drive Shaft | | 33 | 27 | 52 | 103.5 | 575 | |
| | 2010.06-2017.01 | 6AT | F | L/R | MPV FWD A 17 DT | | GCO44093 | Outer Joint | | 33 | 23 | 52 | 103.5 | 60 | M |
| | 2010.06-2017.01 | 6AT | F | L | MPV FWD A 17 DT | | GCI81705 | Inner Joint | | 27 | 23 | 34.97 | 78.5 | 107 | |
| | 2013.01-2017.01 | 6AT | F | L | Box Body/MPV FWD A 17 DT | | GDS82262 | Drive Shaft | | 33 | 27 | 52 | 103.5 | 575 | |
| | 2013.01-2017.01 | 6AT | F | L/R | Box Body/MPV FWD A 17 DT | | GCO44093 | Outer Joint | | 33 | 23 | 52 | 103.5 | 60 | M |
| | 2013.01-2017.01 | 6AT | F | L | Box Body/MPV FWD A 17 DT | | GCI81705 | Inner Joint | | 27 | 23 | 34.97 | 78.5 | 107 | |
| 1.7 (81 kw) | 2010.06-2015.06 | 6AT | F | L | MPV FWD A 17 DTC;A 17 DTI | | GDS82262 | Drive Shaft | | 33 | 27 | 52 | 103.5 | 575 | |
| | 2010.06-2015.06 | 6AT | F | L/R | MPV FWD A 17 DTC;A 17 DTI | | GCO44093 | Outer Joint | | 33 | 23 | 52 | 103.5 | 60 | M |
| | 2010.06-2015.06 | 6MT | F | L | MPV FWD A 17 DTC;A 17 DTI | | GDS82037 | Drive Shaft | | 33 | 25 | 56 | 103.5 | 583 | |
| | 2010.06-2015.06 | 6MT | F | R | MPV FWD A 17 DTC;A 17 DTI | | GDS82085 | Drive Shaft | | 30 | 27 | 52.5 | 94 | 615 | |
| | 2010.06-2015.06 | 6MT | F | L/R | MPV FWD A 17 DTC;A 17 DTI | | GCO99024 | Outer Joint | | 33 | 26 | 52.5 | 94 | 65.5 | M |
| | 2010.06-2015.06 | 6MT | F | R | MPV FWD A 17 DTC;A 17 DTI | | GCI88026 | Inner Joint | | 34 | 26 | 37.5 | | 100 | |
| | 2013.01-2013.10 | 6AT | F | L | Box Body/MPV FWD A 17 DTC | | GDS82262 | Drive Shaft | | 33 | 27 | 52 | 103.5 | 575 | |
| | 2013.01-2013.10 | 6AT | F | L/R | Box Body/MPV FWD A 17 DTC | | GCO44093 | Outer Joint | | 33 | 23 | 52 | 103.5 | 60 | M |
| | 2013.01-2013.10 | 6MT | F | L | Box Body/MPV FWD A 17 DTC | | GDS82037 | Drive Shaft | | 33 | 25 | 56 | 103.5 | 583 | |
| | 2013.01-2013.10 | 6MT | F | L/R | Box Body/MPV FWD A 17 DTC | | GCO99024 | Outer Joint | | 33 | 26 | 52.5 | 94 | 65.5 | M |
| 1.7 (92 kw) | 2006.09-2010.05 | 6MT | F | R | MPV FWD Z 17 DTR | | GDS60021 | Drive Shaft | 29T | 33 | 34 | 52 | 104 | 612 | |
| | 2006.09-2010.05 | 6MT | F | L/R | MPV FWD Z 17 DTR | | GCO44004 | Outer Joint | 29T | 33 | 24 | 52 | 104 | 64 | M |
| | 2006.09-2010.05 | MT | F | R | MPV FWD Z 17 DTR | | GCI60003 | Inner Joint | | 34 | 24 | 35.5 | | 117.5 | |
| 1.7 (96 kw) | 2010.06-2013.10 | 6MT | F | L | MPV FWD A 17 DTS | | GDS82037 | Drive Shaft | | 33 | 25 | 56 | 103.5 | 583 | |
| | 2010.06-2013.10 | 6MT | F | R | MPV FWD A 17 DTS | | GDS82085 | Drive Shaft | | 30 | 27 | 52.5 | 94 | 615 | |
| | 2010.06-2013.10 | AT/MT | F | L/R | MPV FWD A 17 DTS | | GCO88047 | Outer Joint | | 33 | 23 | 52.5 | 94 | 59.5 | M |
| | 2010.06-2013.10 | MT | F | R | MPV FWD A 17 DTS | | GCI86015 | Inner Joint | | 27 | 26 | 35 | 78.5 | 109.5 | |
| | 2010.06-2013.10 | | F | | MPV FWD A 17 DTS | | GCO99024 | Outer Joint | | 33 | 26 | 52.5 | 94 | 65.5 | M |
| | 2013.01-2013.10 | 6MT | F | L | Box Body/MPV FWD A 17 DTS | | GDS82037 | Drive Shaft | | 33 | 25 | 56 | 103.5 | 583 | |
| | 2013.01-2013.10 | 6MT | F | L/R | Box Body/MPV FWD A 17 DTS | | GCO99024 | Outer Joint | | 33 | 26 | 52.5 | 94 | 65.5 | M |
| 1.8 (92 kw) | 2003.05-2010.05 | 5MT/SAT | F | L | MPV FWD Z 18 XE | VL | GDS44002 | Drive Shaft | 29T | 22 | 22 | 52 | 95 | 585 | |
| | 2003.05-2010.05 | 5MT/SAT | F | L | MPV FWD Z 18 XE | TJ | GDS99069 | Drive Shaft | 29T | 22 | 22 | 52 | 97.5 | 584 | |
| | 2003.05-2010.05 | 5MT/SAT | F | R | MPV FWD Z 18 XE | TJ | GDS99157 | Drive Shaft | 29T | 22 | 22 | 52 | 97.5 | 930 | |
| | 2003.05-2010.05 | 5MT/SAT | F | L/R | MPV FWD Z 18 XE | | GCO44002 | Outer Joint | 29T | 22 | 23 | 52 | 97.5 | 61 | M |
| | 2003.05-2010.05 | 5MT/SAT | F | L/R | MPV FWD Z 18 XE | | GCO44019 | Outer Joint | 29T | 22 | 28 | 52 | 97.5 | 57.5 | O |
| | 2003.05-2010.05 | 5MT/SAT | F | L/R | MPV FWD Z 18 XE | | GCI44009 | Inner Joint | | 22 | 23 | 35 | 57.5 | 96 | |
| **Mokka** | | | | | | | | | | | | | | | |
| 1.2 (74 kw) | 2020.10- | 6MT | F | L | SUV FWD F 12 XHL (EB2ADTD);HPV (EB2LTED) | | GDS84174 | Drive Shaft | | 25 | 24 | 55.7 | 84 | 685 | |
| | 2020.10- | 6MT | F | R | SUV FWD F 12 XHL (EB2ADTD);HPV (EB2LTED) | | GDS84335 | Drive Shaft | | 25 | 24 | 55.7 | 84 | 910 | |
| | 2020.10- | 6MT | F | L/R | SUV FWD F 12 XHL (EB2ADTD);HPV (EB2LTED) | | GCO82279 | Outer Joint | | 25 | 34 | 55.7 | 84 | 55.5 | I |
| | 2020.10- | 6MT | F | L | SUV FWD F 12 XHL (EB2ADTD);HPV (EB2LTED) | | GCI82131 | Inner Joint | | 24 | 34 | 40 | 62 | 89 | |
| | 2020.10- | 6MT | F | R | SUV FWD F 12 XHL (EB2ADTD);HPV (EB2LTED) | | GCI82130 | Inner Joint | | 24 | 34 | 29.8 | 291 | 88 | |
| 1.2 (96 kw) | 2020.10- | 6MT | F | L | SUV FWD F 12 XHT (EB2ADTS) | | GDS84174 | Drive Shaft | | 25 | 24 | 55.7 | 84 | 685 | |
| | 2020.10- | 6MT | F | R | SUV FWD F 12 XHT (EB2ADTS) | | GDS84335 | Drive Shaft | | 25 | 24 | 55.7 | 84 | 910 | |
| | 2020.10- | 6MT | F | L/R | SUV FWD F 12 XHT (EB2ADTS) | | GCO82279 | Outer Joint | | 25 | 34 | 55.7 | 84 | 55.5 | I |

| | YEAR | TRANSM. | F/R | L/R | BODY STYLE & DRIVE TYPE & ENGINE | REMARKS | G-AP Ref. | PRODUCT | ABS | Technical Specifications A | B | C | H | L | P |
|---|---|---|---|---|---|---|---|---|---|---|---|---|---|---|---|
| **OPEL** | | | | | | | | | | | | | | | |
| **Mokka** | | | | | | | | | | | | | | | |
| 1.2 (96 kw) | 2020.10- | 6MT | F | L | SUV FWD F 12 XHT (EB2ADTS) | | GCI82131 | Inner Joint | | 24 | 34 | 40 | 62 | 89 | |
| | 2020.10- | 6MT | F | R | SUV FWD F 12 XHT (EB2ADTS) | | GCI82130 | Inner Joint | | 24 | 34 | 29.8 | 291 | 88 | |
| | 2020.10- | 8AT | F | L | SUV FWD F 12 XHT (EB2ADTS) | | GDS84557 | Drive Shaft | | 25 | 37 | 56 | 83.5 | 641 | |
| | 2020.10- | 8AT | F | R | SUV FWD F 12 XHT (EB2ADTS) | | GDS84559 | Drive Shaft | | 25 | 37 | 56 | 83.5 | 903 | |
| | 2020.10- | 8AT | F | L/R | SUV FWD F 12 XHT (EB2ADTS) | | GCO82749 | Outer Joint | | 25 | 23 | 56 | 83.5 | 50 | I |
| | 2020.10- | 8AT | F | L | SUV FWD F 12 XHT (EB2ADTS) | | GCI82859 | Inner Joint | | 37 | 24 | 42 | 58.5 | 101.5 | |
| | 2020.10- | 8AT | F | R | SUV FWD F 12 XHT (EB2ADTS) | | GCI82860 | Inner Joint | | 37 | 24 | 29.85 | 285 | 101 | |
| 1.2 (100 kw) | 2022.12- | 6MT | F | L | SUV FWD HPW (EB2LTD) | | GDS84174 | Drive Shaft | | 25 | 24 | 55.7 | 84 | 685 | |
| | 2022.12- | 6MT | F | R | SUV FWD HPW (EB2LTD) | | GDS84335 | Drive Shaft | | 25 | 24 | 55.7 | 84 | 910 | |
| | 2022.12- | 6MT | F | R | SUV FWD HPW (EB2LTD) | | GCI82130 | Inner Joint | | 24 | 34 | 29.8 | 291 | 88 | |
| | 2024.04- | 8AT | F | R | SUV FWD HPY (EB2LTDH2) | | GDS56753 | Drive Shaft | | 25 | 37 | 55.7 | 84 | 911 | |
| | 2024.04- | 8AT | F | L/R | SUV FWD HPY (EB2LTDH2) | | GCO82279 | Outer Joint | | 25 | 34 | 55.7 | 84 | 55.5 | I |
| | 2024.04- | 8AT | F | R | SUV FWD HPY (EB2LTDH2) | | GCI83474 | Inner Joint | | 37 | 34 | 29.8 | 290 | 99 | |
| 1.2 (107 kw) | 2025.04- | 6DCT | F | R | SUV FWD HPY (EB2LTDH2) | | GDS56753 | Drive Shaft | | 25 | 37 | 55.7 | 84 | 911 | |
| 1.5 (81 kw) | 2020.10- | 6MT | F | L | SUV FWD F 15 DT (DV5RCE) | | GDS84174 | Drive Shaft | | 25 | 24 | 55.7 | 84 | 685 | |
| | 2020.10- | 6MT | F | R | SUV FWD F 15 DT (DV5RCE) | | GDS84335 | Drive Shaft | | 25 | 24 | 55.7 | 84 | 910 | |
| | 2020.10- | 6MT | F | L/R | SUV FWD F 15 DT (DV5RCE) | | GCO82279 | Outer Joint | | 25 | 34 | 55.7 | 84 | 55.5 | I |
| | 2020.10- | 6MT | F | L | SUV FWD F 15 DT (DV5RCE) | | GCI82131 | Inner Joint | | 24 | 34 | 40 | 62 | 89 | |
| | 2020.10- | 6MT | F | R | SUV FWD F 15 DT (DV5RCE) | | GCI82130 | Inner Joint | | 24 | 34 | 29.8 | 291 | 88 | |
| 1.7 (96 kw) | 2012.06-2019.12 | 6MT | F | L | SUV 4WD A 17 DTS | | GDS21114 | Drive Shaft | | 25 | 25 | 52.4 | 92 | 603 | |
| | 2012.06-2019.12 | 6MT | F | R | SUV 4WD A 17 DTS | | GDS86065 | Drive Shaft | | 25 | 34 | 52.4 | 92 | 585 | |
| | 2012.06-2019.12 | 6MT | F | L/R | SUV 4WD A 17 DTS | Bellows Material:Neoprene | GCO21059 | Outer Joint | | 25 | 23 | 52.4 | 92 | 61 | I |
| | 2012.06-2019.12 | 6MT | F | L | SUV 4WD A 17 DTS | | GCI86028 | Inner Joint | | 25 | 24 | 34.9 | 57 | 101 | |
| | 2012.06-2019.12 | 6MT | R | L/R | SUV 4WD A 17 DTS | | GDS82614 | Drive Shaft | | 25 | | 60 | 91.5 | 700 | |
| | 2012.06-2019.12 | 6MT | R | L/R | SUV 4WD A 17 DTS | | GCO83590 | Outer Joint | | 25 | 20 | 60 | 91.5 | 58 | M |
| | 2012.06-2019.12 | 6MT | R | L/R | SUV 4WD A 17 DTS | | GCI83731 | Inner Joint | | | 19 | | | 77 | |
| | 2012.06-2019.12 | 6AT | F | L | SUV FWD A 17 DTS | | GDS82044 | Drive Shaft | | 25 | 34 | 52.4 | 92 | 650 | |
| | 2012.06-2019.12 | 6AT | F | L | SUV FWD A 17 DTS | TJ | GCI81612 | Inner Joint | | 34 | 24 | 35 | 136.5 | 78 | |
| | 2012.06-2019.12 | 6AT/6MT | F | R | SUV FWD A 17 DTS | Neoprene;Inner Joint TJ | GDS21094 | Drive Shaft | | 25 | 34 | 52.4 | 92 | 587 | |
| | 2012.06-2019.12 | 6AT/6MT | F | R | SUV FWD A 17 DTS | Transmission:6MT,Date from:2012.08;Transmission:6AT | GDS86065 | Drive Shaft | | 25 | 34 | 52.4 | 92 | 585 | |
| | 2012.06-2019.12 | 6AT/6MT | F | L/R | SUV FWD A 17 DTS | Bellows Material:Neoprene | GCO21059 | Outer Joint | | 25 | 23 | 52.4 | 92 | 61 | I |
| | 2012.06-2019.12 | 6MT | F | L | SUV FWD A 17 DTS | | GDS21114 | Drive Shaft | | 25 | 25 | 52.4 | 92 | 603 | |
| | 2012.06-2019.12 | 6MT | F | L | SUV FWD A 17 DTS | | GCI86028 | Inner Joint | | 25 | 24 | 34.9 | 57 | 101 | |
| 1.8 (103 kw) | 2013.01-2019.12 | 6AT | F | L/R | SUV 4WD A 18 XER | | GCO88077 | Outer Joint | | 25 | 23 | 52.5 | 92 | 59 | M |
| | 2013.01-2019.12 | 6AT | F | R | SUV 4WD A 18 XER | | GCI88071 | Inner Joint | | 34 | 23 | 41 | | 120 | |
| | 2013.01-2019.12 | 6AT | R | L/R | SUV 4WD A 18 XER | | GDS82614 | Drive Shaft | | 25 | | 60 | 91.5 | 700 | |
| | 2013.01-2019.12 | 6AT | R | L/R | SUV 4WD A 18 XER | | GCO83590 | Outer Joint | | 25 | 20 | 60 | 91.5 | 58 | M |
| | 2013.01-2019.12 | 6AT | R | L/R | SUV 4WD A 18 XER | | GCI83731 | Inner Joint | | | 19 | | | 77 | |
| | 2013.01-2019.12 | 5MT | F | L | SUV FWD A 18 XER | | GDS81425 | Drive Shaft | | 25 | 34 | 52.5 | 92 | 625 | |
| | 2013.01-2019.12 | 5MT | F | R | SUV FWD A 18 XER | | GDS81761 | Drive Shaft | | 25 | 34 | 52.5 | 92 | 584 | |
| | 2013.01-2019.12 | 5MT | F | L/R | SUV FWD A 18 XER | Original design | GCO88077 | Outer Joint | | 25 | 23 | 52.5 | 92 | 59 | M |
| | 2013.01-2019.12 | 5MT | F | L | SUV FWD A 18 XER | | GCI88070 | Inner Joint | | 34 | 23 | 35 | 56 | 99.5 | |
| | 2013.01-2019.12 | 5MT | F | R | SUV FWD A 18 XER | | GCI88071 | Inner Joint | | 34 | 23 | 41 | | 120 | |
| EV (100 kw) | 2020.06- | ET | F | L | SUV FWD ZKX (ZK01) | | GDS56582 | Drive Shaft | | 25 | 24 | 56 | 83.5 | 675 | |
| | 2020.06- | ET | F | R | SUV FWD ZKX (ZK01) | | GDS56581 | Drive Shaft | | 25 | 24 | 56 | 83.5 | 902 | |
| | 2020.06- | ET | F | L/R | SUV FWD ZKX (ZK01) | | GCO82749 | Outer Joint | | 25 | 23 | 56 | 83.5 | 50 | I |
| | 2020.06- | ET | F | L | SUV FWD ZKX (ZK01) | | GCI83389 | Inner Joint | | 24 | 23 | 40 | 61.5 | 110.5 | |
| | 2020.06- | ET | F | R | SUV FWD ZKX (ZK01) | | GCI83388 | Inner Joint | | 24 | 23 | 29.8 | 290.5 | 110.5 | |
| EV (115 kw) | 2023.10- | ET | F | L | SUV FWD ZKW (ZK02) | | GDS56582 | Drive Shaft | | 25 | 24 | 56 | 83.5 | 675 | |
| | 2023.10- | ET | F | R | SUV FWD ZKW (ZK02) | | GDS56581 | Drive Shaft | | 25 | 24 | 56 | 83.5 | 902 | |
| EV (207 kw) | 2025.09- | ET | F | L | SUV FWD | | GDS56582 | Drive Shaft | | 25 | 24 | 56 | 83.5 | 675 | |
| | 2025.09- | ET | F | R | SUV FWD | | GDS56581 | Drive Shaft | | 25 | 24 | 56 | 83.5 | 902 | |
| **Mokka X** | | | | | | | | | | | | | | | |
| 1.4 (112 kw) | 2016.06-2019.12 | 6AT | F | L | SUV 4WD B 14 XFT | | GDS82044 | Drive Shaft | | 25 | 34 | 52.4 | 92 | 650 | |
| | 2016.06-2019.12 | 6AT | F | R | SUV 4WD B 14 XFT | | GDS86065 | Drive Shaft | | 25 | 34 | 52.4 | 92 | 585 | |
| | 2016.06-2019.12 | 6AT | F | L/R | SUV 4WD B 14 XFT | Vehicle Production Country:Spain | GCO21059 | Outer Joint | | 25 | 23 | 52.4 | 92 | 61 | I |
| | 2016.06-2019.12 | 6AT | F | L/R | SUV 4WD B 14 XFT | Vehicle Production Country:South Korea | GCO88077 | Outer Joint | | 25 | 23 | 52.5 | 92 | 59 | M |
| | 2016.06-2019.12 | 6AT | F | L | SUV 4WD B 14 XFT | TJ | GCI81612 | Inner Joint | | 34 | 24 | 35 | 136.5 | 78 | |
| | 2016.06-2019.12 | 6AT | R | L/R | SUV 4WD B 14 XFT | | GDS82614 | Drive Shaft | | 25 | | 60 | 91.5 | 700 | |
| | 2016.06-2019.12 | 6AT | R | L/R | SUV 4WD B 14 XFT | | GCO83590 | Outer Joint | | 25 | 20 | 60 | 91.5 | 58 | M |
| | 2016.06-2019.12 | 6AT | R | L/R | SUV 4WD B 14 XFT | | GCI83731 | Inner Joint | | | 19 | | | 77 | |
| 1.6 (81 kw) | 2018.03-2019.12 | 6MT | F | L | SUV 4WD D 16 DTN | | GDS21114 | Drive Shaft | | 25 | 25 | 52.4 | 92 | 603 | |
| | 2018.03-2019.12 | 6MT | F | R | SUV 4WD D 16 DTN | | GDS86065 | Drive Shaft | | 25 | 34 | 52.4 | 92 | 585 | |
| | 2018.03-2019.12 | 6MT | F | L/R | SUV 4WD D 16 DTN | | GCO21059 | Outer Joint | | 25 | 23 | 52.4 | 92 | 61 | I |
| | 2018.03-2019.12 | 6MT | F | L | SUV 4WD D 16 DTN | | GCI86028 | Inner Joint | | 25 | 24 | 34.9 | 57 | 101 | |

| | YEAR | TRANSM. | F/R | L/R | BODY STYLE & DRIVE TYPE & ENGINE | REMARKS | G-AP Ref. | PRODUCT | ABS | Technical Specifications A | B | C | H | L | P |
|---|---|---|---|---|---|---|---|---|---|---|---|---|---|---|---|
| **OPEL** | | | | | | | | | | | | | | | |
| **Mokka X** | | | | | | | | | | | | | | | |
| 1.6 (81 kw) | 2018.03-2019.12 | 6MT | R | L/R | SUV 4WD D 16 DTN | | GDS82614 | Drive Shaft | | 25 | | 60 | 91.5 | 700 | |
| | 2018.03-2019.12 | 6MT | R | L/R | SUV 4WD D 16 DTN | | GCO83590 | Outer Joint | | 25 | 20 | 60 | 91.5 | 58 | M |
| | 2018.03-2019.12 | 6MT | R | L/R | SUV 4WD D 16 DTN | | GCI83731 | Inner Joint | | | 19 | | | 77 | |
| 1.6 (100 kw) | 2018.03- | 6MT | F | L | SUV Van FWD D 16 DTH | | GDS21114 | Drive Shaft | | 25 | 25 | 52.4 | 92 | 603 | |
| | 2018.03- | 6MT | F | R | SUV Van FWD D 16 DTH | | GDS86065 | Drive Shaft | | 25 | 34 | 52.4 | 92 | 585 | |
| | 2018.03- | 6MT | F | L/R | SUV Van FWD D 16 DTH | | GCO21059 | Outer Joint | | 25 | 23 | 52.4 | 92 | 61 | I |
| | 2018.03- | 6MT | F | L | SUV Van FWD D 16 DTH | | GCI86028 | Inner Joint | | 25 | 24 | 34.9 | 57 | 101 | |
| **Mokka/Mokka X** | | | | | | | | | | | | | | | |
| 1.4 (103 kw) | 2012.06-2019.12 | 6MT | F | L | SUV 4WD D 14 NET, B 14 NET, A 14 NET | | GDS21114 | Drive Shaft | | 25 | 25 | 52.4 | 92 | 603 | |
| | 2012.06-2019.12 | 6MT | F | R | SUV 4WD D 14 NET, B 14 NET, A 14 NET | For RPO/POC:MR5 | GDS21094 | Drive Shaft | | 25 | 34 | 52.4 | 92 | 587 | |
| | 2012.06-2019.12 | 6MT | F | R | SUV 4WD D 14 NET, B 14 NET, A 14 NET | For RPO/POC:M7Y | GDS86065 | Drive Shaft | | 25 | 34 | 52.4 | 92 | 585 | |
| | 2012.06-2019.12 | 6MT | F | L/R | SUV 4WD D 14 NET, B 14 NET, A 14 NET | Bellows Material:Neoprene | GCO21059 | Outer Joint | | 25 | 23 | 52.4 | 92 | 61 | I |
| | 2012.06-2019.12 | 6MT | F | L | SUV 4WD D 14 NET, B 14 NET, A 14 NET | | GCI86028 | Inner Joint | | 25 | 24 | 34.9 | 57 | 101 | |
| | 2012.06-2019.12 | 6MT | R | L/R | SUV 4WD D 14 NET, B 14 NET, A 14 NET | | GDS82614 | Drive Shaft | | 25 | | 60 | 91.5 | 700 | |
| | 2012.06-2019.12 | 6MT | R | L/R | SUV 4WD D 14 NET, B 14 NET, A 14 NET | | GCO83590 | Outer Joint | | 25 | 20 | 60 | 91.5 | 58 | M |
| | 2012.06-2019.12 | 6MT | R | L/R | SUV 4WD D 14 NET, B 14 NET, A 14 NET | | GCI83731 | Inner Joint | | | 19 | | | 77 | |
| | 2013.04-2019.12 | 6AT | F | L | SUV FWD D 14 NET, B 14 NET, A 14 NET | | GDS82044 | Drive Shaft | | 25 | 34 | 52.4 | 92 | 650 | |
| | 2013.04-2019.12 | 6AT | F | R | SUV FWD D 14 NET, B 14 NET, A 14 NET | | GDS21094 | Drive Shaft | | 25 | 34 | 52.4 | 92 | 587 | |
| | 2013.04-2019.12 | 6AT | F | R | SUV FWD D 14 NET, B 14 NET, A 14 NET | Chassis no. from HB000001,Vehicle Production Country:Republic of Korea | GDS81761 | Drive Shaft | | 25 | 34 | 52.5 | 92 | 584 | |
| | 2013.04-2019.12 | 6AT | F | L | SUV FWD D 14 NET, B 14 NET, A 14 NET | | GCI81612 | Inner Joint | | 34 | 24 | 35 | 136.5 | 78 | |
| | 2013.04-2019.12 | 6AT/6MT | F | R | SUV FWD D 14 NET, B 14 NET, A 14 NET | | GDS86065 | Drive Shaft | | 25 | 34 | 52.4 | 92 | 585 | |
| | 2013.04-2019.12 | 6AT/6MT | F | L/R | SUV FWD D 14 NET, B 14 NET, A 14 NET | | GCO21059 | Outer Joint | | 25 | 23 | 52.4 | 92 | 61 | I |
| | 2013.04-2019.12 | 6MT | F | L | SUV FWD D 14 NET, B 14 NET, A 14 NET | | GDS21114 | Drive Shaft | | 25 | 25 | 52.4 | 92 | 603 | |
| | 2013.04-2019.12 | 6MT | F | R | SUV FWD D 14 NET, B 14 NET, A 14 NET | For RPO/POC:MR5 | GDS21094 | Drive Shaft | | 25 | 34 | 52.4 | 92 | 587 | |
| | 2013.04-2019.12 | 6MT | F | R | SUV FWD D 14 NET, B 14 NET, A 14 NET | For RPO/POC:M7Y | GDS86065 | Drive Shaft | | 25 | 34 | 52.4 | 92 | 585 | |
| | 2013.04-2019.12 | 6MT | F | L/R | SUV FWD D 14 NET, B 14 NET, A 14 NET | | GCO21059 | Outer Joint | | 25 | 23 | 52.4 | 92 | 61 | I |
| | 2013.04-2019.12 | 6MT | F | L | SUV FWD D 14 NET, B 14 NET, A 14 NET | | GCI86028 | Inner Joint | | 25 | 24 | 34.9 | 57 | 101 | |
| 1.6 (81 kw) | 2015.06-2019.12 | 6MT | F | L | SUV FWD B 16 DTU, B 16 DTN | | GDS21114 | Drive Shaft | | 25 | 25 | 52.4 | 92 | 603 | |
| | 2015.06-2019.12 | 6MT | F | R | SUV FWD B 16 DTU, B 16 DTN | Neoprene;Inner Joint TJ | GDS21094 | Drive Shaft | | 25 | 34 | 52.4 | 92 | 587 | |
| | 2015.06-2019.12 | 6MT | F | R | SUV FWD B 16 DTU, B 16 DTN | | GDS86065 | Drive Shaft | | 25 | 34 | 52.4 | 92 | 585 | |
| | 2015.06-2019.12 | 6MT | F | L/R | SUV FWD B 16 DTU, B 16 DTN | Bellows Material:Neoprene | GCO21059 | Outer Joint | | 25 | 23 | 52.4 | 92 | 61 | I |
| | 2015.06-2019.12 | 6MT | F | L | SUV FWD B 16 DTU, B 16 DTN | | GCI86028 | Inner Joint | | 25 | 24 | 34.9 | 57 | 101 | |
| 1.6 (85 kw) | 2012.06-2019.12 | 5MT | F | L | SUV FWD D 16 XER, A 16 XER, B 16 XER | | GDS81425 | Drive Shaft | | 25 | 34 | 52.5 | 92 | 625 | |
| | 2012.06-2019.12 | 5MT | F | R | SUV FWD D 16 XER, A 16 XER, B 16 XER | | GDS81761 | Drive Shaft | | 25 | 34 | 52.5 | 92 | 584 | |
| | 2012.06-2019.12 | 5MT | F | L/R | SUV FWD D 16 XER, A 16 XER, B 16 XER | | GCO88077 | Outer Joint | | 25 | 23 | 52.5 | 92 | 59 | M |
| | 2012.06-2019.12 | 5MT | F | L | SUV FWD D 16 XER, A 16 XER, B 16 XER | | GCI88070 | Inner Joint | | 34 | 23 | 35 | 56 | 99.5 | |
| | 2012.06-2019.12 | 5MT | F | R | SUV FWD D 16 XER, A 16 XER, B 16 XER | | GCI88071 | Inner Joint | | 34 | 23 | 41 | | 120 | |
| 1.6 (100 kw) | 2015.01-2019.12 | 6MT | F | L | SUV 4WD B 16 DTH, D 16 DTH | | GDS21114 | Drive Shaft | | 25 | 25 | 52.4 | 92 | 603 | |
| | 2015.01-2019.12 | 6MT | F | R | SUV 4WD B 16 DTH, D 16 DTH | | GDS86065 | Drive Shaft | | 25 | 34 | 52.4 | 92 | 585 | |
| | 2015.01-2019.12 | 6MT | F | L/R | SUV 4WD B 16 DTH, D 16 DTH | Bellows Material:Neoprene | GCO21059 | Outer Joint | | 25 | 23 | 52.4 | 92 | 61 | I |
| | 2015.01-2019.12 | 6MT | F | L | SUV 4WD B 16 DTH, D 16 DTH | | GCI86028 | Inner Joint | | 25 | 24 | 34.9 | 57 | 101 | |
| | 2015.01-2019.12 | 6MT | R | L/R | SUV 4WD B 16 DTH, D 16 DTH | | GDS82614 | Drive Shaft | | 25 | | 60 | 91.5 | 700 | |
| | 2015.01-2019.12 | 6MT | R | L/R | SUV 4WD B 16 DTH, D 16 DTH | | GCO83590 | Outer Joint | | 25 | 20 | 60 | 91.5 | 58 | M |
| | 2015.01-2019.12 | 6MT | R | L/R | SUV 4WD B 16 DTH, D 16 DTH | | GCI83731 | Inner Joint | | | 19 | | | 77 | |
| | 2015.01-2019.12 | 6AT | F | L | SUV FWD A 16 DTH, B 16 DTH, D 16 DTH | | GDS86064 | Drive Shaft | | 25 | 34 | 52.4 | 92 | 646 | |
| | 2015.01-2019.12 | 6AT | F | L | SUV FWD A 16 DTH, B 16 DTH, D 16 DTH | | GCI81612 | Inner Joint | | 34 | 24 | 35 | 136.5 | 78 | |
| | 2015.01-2019.12 | 6AT/6MT | F | R | SUV FWD A 16 DTH, B 16 DTH, D 16 DTH | | GDS21094 | Drive Shaft | | 25 | 34 | 52.4 | 92 | 587 | |
| | 2015.01-2019.12 | 6AT/6MT | F | R | SUV FWD A 16 DTH, B 16 DTH, D 16 DTH | | GDS86065 | Drive Shaft | | 25 | 34 | 52.4 | 92 | 585 | |
| | 2015.01-2019.12 | 6AT/6MT | F | L/R | SUV FWD A 16 DTH, B 16 DTH, D 16 DTH | | GCO21059 | Outer Joint | | 25 | 23 | 52.4 | 92 | 61 | I |
| | 2015.01-2019.12 | 6MT | F | L | SUV FWD A 16 DTH, B 16 DTH, D 16 DTH | | GDS21114 | Drive Shaft | | 25 | 25 | 52.4 | 92 | 603 | |
| | 2015.01-2019.12 | 6MT | F | L | SUV FWD A 16 DTH, B 16 DTH, D 16 DTH | | GCI86028 | Inner Joint | | 25 | 24 | 34.9 | 57 | 101 | |
| **Monterey** | | | | | | | | | | | | | | | |
| 3.0 (117 kw) | 1997.09-2000.08 | MT | F | L/R | Terrain cab wagon closed 4WD 4JX1 | | GCO26007 | Outer Joint | | 17 | 25 | 53 | 144 | 70.5 | M |
| 3.1 (84 kw) | 1991.09-1998.07 | AT/MT | F | L/R | Terrain cab wagon closed 4WD 4JG2TC | | GCO26003 | Outer Joint | | 17 | 26 | 53 | 144 | 70.5 | M |
| 3.2 (130 kw) | 1991.08-1998.07 | AT/MT | F | L/R | Terrain cab wagon closed 4WD 6VD1(SOHC) | | GCO26003 | Outer Joint | | 17 | 26 | 53 | 144 | 70.5 | M |
| 3.5 (158 kw) | 1997.09-2000.08 | MT | F | L/R | Terrain cab wagon closed 4WD 6VE1 | | GCO26007 | Outer Joint | | 17 | 25 | 53 | 144 | 70.5 | M |
| **Movano** | | | | | | | | | | | | | | | |
| 1.9 (59 kw) | 2000.09-2001.10 | 5MT | F | L | Bus FWD F9Q 770 | | GDS50010 | Drive Shaft | | 28 | | 67.1 | 93.5 | 669 | |
| | 2000.09-2001.10 | MT | F | L | Bus FWD F9Q 770 | | GDS44005 | Drive Shaft | 51T | 28 | 37 | 65 | 96 | 670 | |
| | 2000.09-2001.10 | MT | F | L | Bus FWD F9Q 770 | | GDS50246 | Drive Shaft | | 28 | 37 | 65 | 96 | 644 | |
| | 2000.09-2001.10 | MT | F | R | Bus FWD F9Q 770 | Trans. code:PF1 | GDS44022 | Drive Shaft | | 28 | 39 | 67.1 | 93.5 | 1147 | |
| | 2000.09-2001.10 | MT | F | R | Bus FWD F9Q 770 | | GDS50060 | Drive Shaft | 51T | 28 | 39 | 65 | 96 | 1126 | |
| | 2000.09-2001.10 | MT | F | L/R | Bus FWD F9Q 770 | Trans. code:PF1/PK5 | GCO44026 | Outer Joint | 51T | 28 | 36 | 65 | 96 | 71 | I |
| | 2000.09-2001.10 | MT | F | L | Van FWD F9Q 770 | | GDS44005 | Drive Shaft | 51T | 28 | 37 | 65 | 96 | 670 | |
| | 2000.09-2001.10 | MT | F | L | Van FWD F9Q 770 | Trans. code:PK5 | GDS50010 | Drive Shaft | | 28 | | 67.1 | 93.5 | 669 | |

| | YEAR | TRANSM. | F/R | L/R | BODY STYLE & DRIVE TYPE & ENGINE | REMARKS | G-AP Ref. | PRODUCT | ABS | Technical Specifications A | B | C | H | L | P |
|---|---|---|---|---|---|---|---|---|---|---|---|---|---|---|---|
| **OPEL** | | | | | | | | | | | | | | | |
| **Movano** | | | | | | | | | | | | | | | |
| 1.9 (59 kw) | 2000.09-2001.10 | MT | F | L | Van FWD F9Q 770 | | GDS50246 | Drive Shaft | | 28 | 37 | 65 | 96 | 644 | |
| | 2000.09-2001.10 | MT | F | R | Van FWD F9Q 770 | Trans. code:PF1 | GDS44022 | Drive Shaft | | 28 | 39 | 67.1 | 93.5 | 1147 | |
| | 2000.09-2001.10 | MT | F | R | Van FWD F9Q 770 | | GDS50060 | Drive Shaft | 51T | 28 | 39 | 65 | 96 | 1126 | |
| 1.9 (60 kw) | 2001.10- | 5MT | F | L | Bus FWD F9Q 772, F9Q 774 | | GDS50010 | Drive Shaft | | 28 | | 67.1 | 93.5 | 669 | |
| | 2001.10- | 5MT | F | L/R | Bus FWD F9Q 772, F9Q 774 | | GCO44026 | Outer Joint | 51T | 28 | 36 | 65 | 96 | 71 | I |
| | 2001.10- | MT | F | L | Bus FWD F9Q 772, F9Q 774 | Date to:2006.09;Trans. code:PK5 | GDS44005 | Drive Shaft | 51T | 28 | 37 | 65 | 96 | 670 | |
| | 2001.10- | MT | F | L | Bus FWD F9Q 772, F9Q 774 | Date to:2006.09;Trans. code:PF1 | GDS50058 | Drive Shaft | 51T | 28 | 37 | 65 | 96 | 644 | |
| | 2001.10- | MT | F | L | Bus FWD F9Q 772, F9Q 774 | | GDS50246 | Drive Shaft | | 28 | 37 | 65 | 96 | 644 | |
| | 2001.10- | MT | F | R | Bus FWD F9Q 772, F9Q 774 | | GDS44021 | Drive Shaft | | 28 | 39 | 65 | 96 | 1126 | |
| | 2001.10- | MT | F | R | Bus FWD F9Q 772, F9Q 774 | | GDS44022 | Drive Shaft | | 28 | 39 | 67.1 | 93.5 | 1147 | |
| | 2001.10- | MT | F | R | Bus FWD F9Q 772, F9Q 774 | | GDS50060 | Drive Shaft | 51T | 28 | 39 | 65 | 96 | 1126 | |
| | 2001.10- | 5MT | F | L | Van FWD F9Q 772, F9Q 774 | | GDS50010 | Drive Shaft | | 28 | | 67.1 | 93.5 | 669 | |
| | 2001.10- | MT | F | L | Van FWD F9Q 772, F9Q 774 | Date to:2006.09;Trans. code:PK5 | GDS44005 | Drive Shaft | 51T | 28 | 37 | 65 | 96 | 670 | |
| | 2001.10- | MT | F | L | Van FWD F9Q 772, F9Q 774 | Date to:2006.09;Trans. code:PF1 | GDS50058 | Drive Shaft | 51T | 28 | 37 | 65 | 96 | 644 | |
| | 2001.10- | MT | F | L | Van FWD F9Q 772, F9Q 774 | | GDS50246 | Drive Shaft | | 28 | 37 | 65 | 96 | 644 | |
| | 2001.10- | MT | F | R | Van FWD F9Q 772, F9Q 774 | | GDS44021 | Drive Shaft | | 28 | 39 | 65 | 96 | 1126 | |
| | 2001.10- | MT | F | R | Van FWD F9Q 772, F9Q 774 | | GDS44022 | Drive Shaft | | 28 | 39 | 67.1 | 93.5 | 1147 | |
| | 2001.10- | MT | F | R | Van FWD F9Q 772, F9Q 774 | | GDS50060 | Drive Shaft | 51T | 28 | 39 | 65 | 96 | 1126 | |
| | 2001.10- | MT | F | L/R | Van FWD F9Q 772, F9Q 774 | Trans. code:PF1/PK5 | GCO44026 | Outer Joint | 51T | 28 | 36 | 65 | 96 | 71 | I |
| 2.2 (66 kw) | 2000.09- | 5MT | F | L | Bus FWD G9T 720, G9T 722, G9T 750 | | GDS50010 | Drive Shaft | | 28 | | 67.1 | 93.5 | 669 | |
| | 2000.09- | 5MT | F | L | Bus FWD G9T 720, G9T 722, G9T 750 | For Engine code:G9T750 | GDS50166 | Drive Shaft | 51T | 28 | 37 | 65 | 96 | 663 | |
| | 2000.09- | 5MT | F | L/R | Bus FWD G9T 720, G9T 722, G9T 750 | | GCO44026 | Outer Joint | 51T | 28 | 36 | 65 | 96 | 71 | I |
| | 2000.09- | MT | F | L | Bus FWD G9T 720, G9T 722, G9T 750 | Date to:2006.09;Trans. code:PF1 | GDS44005 | Drive Shaft | 51T | 28 | 37 | 65 | 96 | 670 | |
| | 2000.09- | MT | F | R | Bus FWD G9T 720, G9T 722, G9T 750 | Date to:2006.09;Trans. code:PF1 | GDS44016 | Drive Shaft | 51T | 28 | 39 | 65 | 96 | 1132 | |
| | 2000.09- | MT | F | R | Bus FWD G9T 720, G9T 722, G9T 750 | Date to:2006.09;Trans. code:PF1 | GDS50214 | Drive Shaft | | 28 | 39 | 65 | 96 | 1132 | |
| | 2000.09- | 5MT | F | L | Platform/Chassis FWD G9T 720, G9T 722, G9T 750 | | GDS50010 | Drive Shaft | | 28 | | 67.1 | 93.5 | 669 | |
| | 2000.09- | 5MT | F | L/R | Platform/Chassis FWD G9T 720, G9T 722, G9T 750 | | GCO44026 | Outer Joint | 51T | 28 | 36 | 65 | 96 | 71 | I |
| | 2000.09- | MT | F | L | Platform/Chassis FWD G9T 720, G9T 722, G9T 750 | Date to:2006.09;Trans. code:PF1 | GDS44005 | Drive Shaft | 51T | 28 | 37 | 65 | 96 | 670 | |
| | 2000.09- | MT | F | R | Platform/Chassis FWD G9T 720, G9T 722, G9T 750 | Date to:2006.09;Trans. code:PF1 | GDS44004 | Drive Shaft | 51T | 28 | 39 | 67.1 | 93.5 | 1118 | |
| | 2000.09- | MT | F | R | Platform/Chassis FWD G9T 720, G9T 722, G9T 750 | Date to:2006.09;Trans. code:PF1 | GDS44016 | Drive Shaft | 51T | 28 | 39 | 65 | 96 | 1132 | |
| | 2000.09- | MT | F | R | Platform/Chassis FWD G9T 720, G9T 722, G9T 750 | Date to:2006.09;Trans. code:PF1 | GDS50214 | Drive Shaft | | 28 | 39 | 65 | 96 | 1132 | |
| | 2000.09- | 5MT | F | L | Van FWD G9T 720, G9T 722, G9T 750 | | GDS50010 | Drive Shaft | | 28 | | 67.1 | 93.5 | 669 | |
| | 2000.09- | 5MT | F | L | Van FWD G9T 720, G9T 722, G9T 750 | For Engine code:G9T750 | GDS50166 | Drive Shaft | 51T | 28 | 37 | 65 | 96 | 663 | |
| | 2000.09- | MT | F | L | Van FWD G9T 720, G9T 722, G9T 750 | Date to:2006.09;Trans. code:PF1 | GDS44005 | Drive Shaft | 51T | 28 | 37 | 65 | 96 | 670 | |
| | 2000.09- | MT | F | R | Van FWD G9T 720, G9T 722, G9T 750 | Date to:2006.09;Trans. code:PF1 | GDS44016 | Drive Shaft | 51T | 28 | 39 | 65 | 96 | 1132 | |
| | 2000.09- | MT | F | R | Van FWD G9T 720, G9T 722, G9T 750 | Date to:2006.09;Trans. code:PF1 | GDS50214 | Drive Shaft | | 28 | 39 | 65 | 96 | 1132 | |
| | 2000.09- | MT | F | L/R | Van FWD G9T 720, G9T 722, G9T 750 | Trans. code:PF1 | GCO44026 | Outer Joint | 51T | 28 | 36 | 65 | 96 | 71 | I |
| 2.2 (88 kw) | 2021.12-2023.10 | 6MT | F | L | Platform/Chassis FWD 4HK (DW12RUE) | | GDS83907 | Drive Shaft | | 35 | 41 | 71.5 | 127 | 822 | |
| | 2021.12-2023.10 | 6MT | F | R | Platform/Chassis FWD 4HK (DW12RUE) | | GDS83906 | Drive Shaft | | 35 | 41 | 71.5 | 127 | 1125 | |
| | 2021.12-2023.10 | 6MT | F | R | Platform/Chassis FWD 4HK (DW12RUE) | | GCI82445 | Inner Joint | | 41 | 29 | 34.85 | 372 | 110 | |
| | 2021.12-2023.10 | | F | L | Van FWD 4HK (DW12RUE) | | GDS83907 | Drive Shaft | | 35 | 41 | 71.5 | 127 | 822 | |
| | 2021.12-2023.10 | | F | R | Van FWD 4HK (DW12RUE) | | GDS83906 | Drive Shaft | | 35 | 41 | 71.5 | 127 | 1125 | |
| | 2021.12-2023.10 | | F | L/R | Van FWD 4HK (DW12RUE) | | GCO17045 | Outer Joint | | 35 | 29 | 71.5 | 127 | 71 | M |
| | 2021.12-2023.10 | | F | L | Van FWD 4HK (DW12RUE) | | GCI17028 | Inner Joint | | 41 | 29 | 43 | 69.5 | 109.5 | |
| | 2021.12-2023.10 | | F | R | Van FWD 4HK (DW12RUE) | | GCI82445 | Inner Joint | | 41 | 29 | 34.85 | 372 | 110 | |
| 2.2 (103 kw) | 2021.12-2023.10 | 6MT | F | L | Platform/Chassis FWD 4HB (DW12RUD) | | GDS56467 | Drive Shaft | | 35 | 41 | 71.5 | 127 | 824 | |
| | 2021.12-2023.10 | 6MT | F | R | Platform/Chassis FWD 4HB (DW12RUD) | | GDS57538 | Drive Shaft | | 35 | 41 | 71.5 | 127 | 1127 | |
| | 2021.12-2023.10 | 6MT | F | L | Platform/Chassis FWD 4HB (DW12RUD) | | GCI17028 | Inner Joint | | 41 | 29 | 43 | 69.5 | 109.5 | |
| | 2021.12-2023.10 | 6MT | F | L | Van FWD 4HB (DW12RUD) | | GDS56467 | Drive Shaft | | 35 | 41 | 71.5 | 127 | 824 | |
| | 2021.12-2023.10 | 6MT | F | R | Van FWD 4HB (DW12RUD) | | GDS57538 | Drive Shaft | | 35 | 41 | 71.5 | 127 | 1127 | |
| | 2021.12-2023.10 | 6MT | F | L | Van FWD 4HB (DW12RUD) | | GCI17028 | Inner Joint | | 41 | 29 | 43 | 69.5 | 109.5 | |
| 2.2 (121 kw) | 2021.12-2023.10 | 6MT | F | L | Platform/Chassis FWD 4HH (DW12RUC) | | GDS56467 | Drive Shaft | | 35 | 41 | 71.5 | 127 | 824 | |
| | 2021.12-2023.10 | 6MT | F | R | Platform/Chassis FWD 4HH (DW12RUC) | | GDS57538 | Drive Shaft | | 35 | 41 | 71.5 | 127 | 1127 | |
| | 2021.12-2023.10 | 6MT | F | L | Platform/Chassis FWD 4HH (DW12RUC) | | GCI17028 | Inner Joint | | 41 | 29 | 43 | 69.5 | 109.5 | |
| | 2021.12-2023.10 | 6MT | F | L | Van FWD 4HH (DW12RUC) | | GDS56467 | Drive Shaft | | 35 | 41 | 71.5 | 127 | 824 | |
| | 2021.12-2023.10 | 6MT | F | R | Van FWD 4HH (DW12RUC) | | GDS57538 | Drive Shaft | | 35 | 41 | 71.5 | 127 | 1127 | |
| | 2021.12-2023.10 | 6MT | F | L | Van FWD 4HH (DW12RUC) | | GCI17028 | Inner Joint | | 41 | 29 | 43 | 69.5 | 109.5 | |
| 2.3 (74 kw) | 2010.05-2015.12 | 6AT/6MT | F | L | Platform/Chassis FWD M9T 670;M9T 676;M9T 672;M9T 870;M9T 876;M9T 890 | | GDS18247 | Drive Shaft | | 31 | 39 | 70 | 100.5 | 743 | |
| | 2010.05-2015.12 | 6AT/6MT | F | R | Platform/Chassis FWD M9T 670;M9T 676;M9T 672;M9T 870;M9T 876;M9T 890 | Date to:2014.02 | GDS18248 | Drive Shaft | | 31 | 39 | 70 | 100.5 | 1075 | |
| | 2010.05-2015.12 | 6AT/6MT | F | L/R | Platform/Chassis FWD M9T 670;M9T 676;M9T 672;M9T 870;M9T 876;M9T 890 | | GCO50132 | Outer Joint | | 31 | 27 | 70 | 100.5 | 63.5 | I |
| | 2010.05-2015.12 | 6AT/6MT | F | L | Platform/Chassis FWD M9T 670;M9T 676;M9T 672;M9T 870;M9T 876;M9T 890 | | GCI50045 | Inner Joint | | 39 | 27 | 39 | 74 | 109 | |
| | 2010.05-2015.12 | 6AT/6MT | F | R | Platform/Chassis FWD M9T 670;M9T 676;M9T 672;M9T 870;M9T 876;M9T 890 | Date to:2014.02 | GCI50046 | Inner Joint | | 39 | 27 | 30 | 364 | 87 | |
| | 2010.05-2015.12 | 6MT | F | R | Platform/Chassis FWD M9T 670;M9T 676;M9T 672;M9T 870;M9T 876;M9T 890 | Date from:2014.03,Date to:2019.07 | GDS18515 | Drive Shaft | | 31 | 39 | 70 | 101 | 1077 | |
| | 2010.05-2015.12 | 6MT | F | R | Platform/Chassis FWD M9T 670;M9T 676;M9T 672;M9T 870;M9T 876;M9T 890 | Date From:2014.03,Date To:2019.07 | GCO18289 | Outer Joint | | 31 | 36 | 70 | 101 | 69 | I |
| | 2010.05-2015.12 | 6MT | F | R | Van FWD M9T 670;M9T 676;M9T 672;M9T 870;M9T 876 | Date to:2014.02 | GDS18248 | Drive Shaft | | 31 | 39 | 70 | 100.5 | 1075 | |

| | YEAR | TRANSM. | F/R | L/R | BODY STYLE & DRIVE TYPE & ENGINE | REMARKS | G-AP Ref. | PRODUCT | ABS | Technical Specifications A | B | C | H | L | P |
|---|---|---|---|---|---|---|---|---|---|---|---|---|---|---|---|
| **OPEL** **Movano** | | | | | | | | | | | | | | | |
| 2.3 (74 kw) | 2010.05-2015.12 | 6MT | F | R | Van FWD M9T 670;M9T 676;M9T 672;M9T 870;M9T 876 | Date from:2014.03,Date to:2019.07 | GDS18515 | Drive Shaft | | 31 | 39 | 70 | 101 | 1077 | |
| | 2010.05-2015.12 | 6MT | F | R | Van FWD M9T 670;M9T 676;M9T 672;M9T 870;M9T 876 | Date From:2014.03,Date To:2019.07 | GCO18289 | Outer Joint | | 31 | 36 | 70 | 101 | 69 | I |
| | 2010.05-2015.12 | MT | F | L | Van FWD M9T 670;M9T 676;M9T 672;M9T 870;M9T 876 | | GDS18247 | Drive Shaft | | 31 | 39 | 70 | 100.5 | 743 | |
| | 2010.05-2015.12 | MT | F | L/R | Van FWD M9T 670;M9T 676;M9T 672;M9T 870;M9T 876 | | GCO50132 | Outer Joint | | 31 | 27 | 70 | 100.5 | 63.5 | I |
| | 2010.05-2015.12 | MT | F | L | Van FWD M9T 670;M9T 676;M9T 672;M9T 870;M9T 876 | | GCI50045 | Inner Joint | | 39 | 27 | 39 | 74 | 109 | |
| | 2010.05-2015.12 | MT | F | R | Van FWD M9T 670;M9T 676;M9T 672;M9T 870;M9T 876 | Date to:2014.02 | GCI50046 | Inner Joint | | 39 | 27 | 30 | 364 | 87 | |
| | 2010.12-2015.12 | 6MT | F | R | Bus FWD M9T 670;M9T 676;M9T 672;M9T 870 | Date to:2014.02 | GDS18248 | Drive Shaft | | 31 | 39 | 70 | 100.5 | 1075 | |
| | 2010.12-2015.12 | 6MT | F | R | Bus FWD M9T 670;M9T 676;M9T 672;M9T 870 | Date from:2014.03,Date to:2019.07 | GDS18515 | Drive Shaft | | 31 | 39 | 70 | 101 | 1077 | |
| | 2010.12-2015.12 | 6MT | F | R | Bus FWD M9T 670;M9T 676;M9T 672;M9T 870 | Date From:2014.03,Date To:2019.07 | GCO18289 | Outer Joint | | 31 | 36 | 70 | 101 | 69 | I |
| | 2010.12-2015.12 | MT | F | L | Bus FWD M9T 670;M9T 676;M9T 672;M9T 870 | | GDS18247 | Drive Shaft | | 31 | 39 | 70 | 100.5 | 743 | |
| | 2010.12-2015.12 | MT | F | L/R | Bus FWD M9T 670;M9T 676;M9T 672;M9T 870 | | GCO50132 | Outer Joint | | 31 | 27 | 70 | 100.5 | 63.5 | I |
| | 2010.12-2015.12 | MT | F | L | Bus FWD M9T 670;M9T 676;M9T 672;M9T 870 | | GCI50045 | Inner Joint | | 39 | 27 | 39 | 74 | 109 | |
| | 2010.12-2015.12 | MT | F | R | Bus FWD M9T 670;M9T 676;M9T 672;M9T 870 | Date to:2014.02 | GCI50046 | Inner Joint | | 39 | 27 | 30 | 364 | 87 | |
| 2.3 (81 kw) | 2014.05-2019.07 | 6MT | F | L | Bus FWD M9T 870;M9T 704 | | GDS18247 | Drive Shaft | | 31 | 39 | 70 | 100.5 | 743 | |
| | 2014.05-2019.07 | 6MT | F | R | Bus FWD M9T 870;M9T 704 | Date To:2019.07 | GDS18515 | Drive Shaft | | 31 | 39 | 70 | 101 | 1077 | |
| | 2014.05-2019.07 | 6MT | F | L | Bus FWD M9T 870;M9T 704 | | GCO50132 | Outer Joint | | 31 | 27 | 70 | 100.5 | 63.5 | I |
| | 2014.05-2019.07 | 6MT | F | R | Bus FWD M9T 870;M9T 704 | Date To:2019.07 | GCO18289 | Outer Joint | | 31 | 36 | 70 | 101 | 69 | I |
| | 2014.05-2019.07 | 6MT | F | L | Bus FWD M9T 870;M9T 704 | | GCI50045 | Inner Joint | | 39 | 27 | 39 | 74 | 109 | |
| | 2014.05-2019.07 | 6MT | F | L | Platform/Chassis FWD M9T 870;M9T 704 | | GDS18247 | Drive Shaft | | 31 | 39 | 70 | 100.5 | 743 | |
| | 2014.05-2019.07 | 6MT | F | R | Platform/Chassis FWD M9T 870;M9T 704 | Date To:2019.07 | GDS18515 | Drive Shaft | | 31 | 39 | 70 | 101 | 1077 | |
| | 2014.05-2019.07 | 6MT | F | L | Platform/Chassis FWD M9T 870;M9T 704 | | GCO50132 | Outer Joint | | 31 | 27 | 70 | 100.5 | 63.5 | I |
| | 2014.05-2019.07 | 6MT | F | R | Platform/Chassis FWD M9T 870;M9T 704 | Date To:2019.07 | GCO18289 | Outer Joint | | 31 | 36 | 70 | 101 | 69 | I |
| | 2014.05-2019.07 | 6MT | F | L | Platform/Chassis FWD M9T 870;M9T 704 | | GCI50045 | Inner Joint | | 39 | 27 | 39 | 74 | 109 | |
| | 2014.05-2019.07 | 6MT | F | L | Van FWD M9T 870;M9T 704 | | GDS18247 | Drive Shaft | | 31 | 39 | 70 | 100.5 | 743 | |
| | 2014.05-2019.07 | 6MT | F | R | Van FWD M9T 870;M9T 704 | Date To:2019.07 | GDS18515 | Drive Shaft | | 31 | 39 | 70 | 101 | 1077 | |
| | 2014.05-2019.07 | 6MT | F | L | Van FWD M9T 870;M9T 704 | | GCO50132 | Outer Joint | | 31 | 27 | 70 | 100.5 | 63.5 | I |
| | 2014.05-2019.07 | 6MT | F | R | Van FWD M9T 870;M9T 704 | Date To:2019.07 | GCO18289 | Outer Joint | | 31 | 36 | 70 | 101 | 69 | I |
| | 2014.05-2019.07 | 6MT | F | L | Van FWD M9T 870;M9T 704 | | GCI50045 | Inner Joint | | 39 | 27 | 39 | 74 | 109 | |
| 2.3 (92 kw) | 2010.05-2015.12 | 6AT/6MT | F | R | Platform/Chassis FWD M9T 670;M9T 676;M9T 680;M9T 672;M9T 880;M9T 870;M9T 876 | Date to:2014.02 | GDS18248 | Drive Shaft | | 31 | 39 | 70 | 100.5 | 1075 | |
| | 2010.05-2015.12 | 6AT/6MT | F | R | Platform/Chassis FWD M9T 670;M9T 676;M9T 680;M9T 672;M9T 880;M9T 870;M9T 876 | Date from:2014.03,Date to:2019.07 | GDS18515 | Drive Shaft | | 31 | 39 | 70 | 101 | 1077 | |
| | 2010.05-2015.12 | 6AT/6MT | F | R | Platform/Chassis FWD M9T 670;M9T 676;M9T 680;M9T 672;M9T 880;M9T 870;M9T 876 | Date From:2014.03,Date To:2019.07 | GCO18289 | Outer Joint | | 31 | 36 | 70 | 101 | 69 | I |
| | 2010.05-2015.12 | MT | F | L | Platform/Chassis FWD M9T 670;M9T 676;M9T 680;M9T 672;M9T 880;M9T 870;M9T 876 | | GDS18247 | Drive Shaft | | 31 | 39 | 70 | 100.5 | 743 | |
| | 2010.05-2015.12 | MT | F | L/R | Platform/Chassis FWD M9T 670;M9T 676;M9T 680;M9T 672;M9T 880;M9T 870;M9T 876 | | GCO50132 | Outer Joint | | 31 | 27 | 70 | 100.5 | 63.5 | I |
| | 2010.05-2015.12 | MT | F | L | Platform/Chassis FWD M9T 670;M9T 676;M9T 680;M9T 672;M9T 880;M9T 870;M9T 876 | | GCI50045 | Inner Joint | | 39 | 27 | 39 | 74 | 109 | |
| | 2010.05-2015.12 | MT | F | R | Platform/Chassis FWD M9T 670;M9T 676;M9T 680;M9T 672;M9T 880;M9T 870;M9T 876 | Date to:2014.02 | GCI50046 | Inner Joint | | 39 | 27 | 30 | 364 | 87 | |
| | 2010.05-2015.12 | 6AT/6MT | F | L | Van FWD M9T 670;M9T 676;M9T 680;M9T 672;M9T 896;M9T 880;M9T 870;M9T 876 | | GDS18247 | Drive Shaft | | 31 | 39 | 70 | 100.5 | 743 | |
| | 2010.05-2015.12 | 6AT/6MT | F | R | Van FWD M9T 670;M9T 676;M9T 680;M9T 672;M9T 896;M9T 880;M9T 870;M9T 876 | Date to:2014.02 | GDS18248 | Drive Shaft | | 31 | 39 | 70 | 100.5 | 1075 | |
| | 2010.05-2015.12 | 6AT/6MT | F | R | Van FWD M9T 670;M9T 676;M9T 680;M9T 672;M9T 896;M9T 880;M9T 870;M9T 876 | Date from:2014.03,Date to:2019.07 | GDS18515 | Drive Shaft | | 31 | 39 | 70 | 101 | 1077 | |
| | 2010.05-2015.12 | 6AT/6MT | F | R | Van FWD M9T 670;M9T 676;M9T 680;M9T 672;M9T 896;M9T 880;M9T 870;M9T 876 | Date From:2014.03,Date To:2019.07 | GCO18289 | Outer Joint | | 31 | 36 | 70 | 101 | 69 | I |
| | 2010.05-2015.12 | 6AT/6MT | F | L/R | Van FWD M9T 670;M9T 676;M9T 680;M9T 672;M9T 896;M9T 880;M9T 870;M9T 876 | | GCO50132 | Outer Joint | | 31 | 27 | 70 | 100.5 | 63.5 | I |
| | 2010.05-2015.12 | 6AT/6MT | F | L | Van FWD M9T 670;M9T 676;M9T 680;M9T 672;M9T 896;M9T 880;M9T 870;M9T 876 | | GCI50045 | Inner Joint | | 39 | 27 | 39 | 74 | 109 | |
| | 2010.05-2015.12 | 6AT/6MT | F | R | Van FWD M9T 670;M9T 676;M9T 680;M9T 672;M9T 896;M9T 880;M9T 870;M9T 876 | Date to:2014.02 | GCI50046 | Inner Joint | | 39 | 27 | 30 | 364 | 87 | |
| | 2010.12-2015.12 | 6AT/6MT | F | L | Bus FWD M9T 670;M9T 676;M9T 680;M9T 672;M9T 880;M9T 870;M9T 876 | | GDS18247 | Drive Shaft | | 31 | 39 | 70 | 100.5 | 743 | |
| | 2010.12-2015.12 | 6AT/6MT | F | R | Bus FWD M9T 670;M9T 676;M9T 680;M9T 672;M9T 880;M9T 870;M9T 876 | Date to:2014.02 | GDS18248 | Drive Shaft | | 31 | 39 | 70 | 100.5 | 1075 | |
| | 2010.12-2015.12 | 6AT/6MT | F | R | Bus FWD M9T 670;M9T 676;M9T 680;M9T 672;M9T 880;M9T 870;M9T 876 | Date from:2014.03,Date to:2019.07 | GDS18515 | Drive Shaft | | 31 | 39 | 70 | 101 | 1077 | |
| | 2010.12-2015.12 | 6AT/6MT | F | R | Bus FWD M9T 670;M9T 676;M9T 680;M9T 672;M9T 880;M9T 870;M9T 876 | Date From:2014.03,Date To:2019.07 | GCO18289 | Outer Joint | | 31 | 36 | 70 | 101 | 69 | I |
| | 2010.12-2015.12 | 6AT/6MT | F | L/R | Bus FWD M9T 670;M9T 676;M9T 680;M9T 672;M9T 880;M9T 870;M9T 876 | | GCO50132 | Outer Joint | | 31 | 27 | 70 | 100.5 | 63.5 | I |
| | 2010.12-2015.12 | 6AT/6MT | F | L | Bus FWD M9T 670;M9T 676;M9T 680;M9T 672;M9T 880;M9T 870;M9T 876 | | GCI50045 | Inner Joint | | 39 | 27 | 39 | 74 | 109 | |
| | 2010.12-2015.12 | 6AT/6MT | F | R | Bus FWD M9T 670;M9T 676;M9T 680;M9T 672;M9T 880;M9T 870;M9T 876 | Date to:2014.02 | GCI50046 | Inner Joint | | 39 | 27 | 30 | 364 | 87 | |
| 2.3 (96 kw) | 2016.11-2021.12 | 6MT | F | L | Platform/Chassis FWD M9T 704 | | GDS18247 | Drive Shaft | | 31 | 39 | 70 | 100.5 | 743 | |
| | 2016.11-2021.12 | 6MT | F | R | Platform/Chassis FWD M9T 704 | Date To:2019.07 | GDS18515 | Drive Shaft | | 31 | 39 | 70 | 101 | 1077 | |
| | 2016.11-2021.12 | 6MT | F | R | Platform/Chassis FWD M9T 704 | Date from:2019.08 | GDS57562 | Drive Shaft | | 31 | 39 | 70 | 101 | 1085 | |
| | 2016.11-2021.12 | 6MT | F | L | Platform/Chassis FWD M9T 704 | | GCO50132 | Outer Joint | | 31 | 27 | 70 | 100.5 | 63.5 | I |
| | 2016.11-2021.12 | 6MT | F | R | Platform/Chassis FWD M9T 704 | Date To:2019.07 | GCO18289 | Outer Joint | | 31 | 36 | 70 | 101 | 69 | I |
| | 2016.11-2021.12 | 6MT | F | L | Platform/Chassis FWD M9T 704 | | GCI50045 | Inner Joint | | 39 | 27 | 39 | 74 | 109 | |
| | 2016.11-2021.12 | 6MT | F | L | Van FWD M9T 704 | | GDS18247 | Drive Shaft | | 31 | 39 | 70 | 100.5 | 743 | |
| | 2016.11-2021.12 | 6MT | F | R | Van FWD M9T 704 | Date To:2019.07 | GDS18515 | Drive Shaft | | 31 | 39 | 70 | 101 | 1077 | |
| | 2016.11-2021.12 | 6MT | F | R | Van FWD M9T 704 | Date from:2019.08 | GDS57562 | Drive Shaft | | 31 | 39 | 70 | 101 | 1085 | |
| | 2016.11-2021.12 | 6MT | F | L | Van FWD M9T 704 | | GCO50132 | Outer Joint | | 31 | 27 | 70 | 100.5 | 63.5 | I |
| | 2016.11-2021.12 | 6MT | F | R | Van FWD M9T 704 | Date To:2019.07 | GCO18289 | Outer Joint | | 31 | 36 | 70 | 101 | 69 | I |
| | 2016.11-2021.12 | 6MT | F | L | Van FWD M9T 704 | | GCI50045 | Inner Joint | | 39 | 27 | 39 | 74 | 109 | |
| 2.3 (100 kw) | 2014.05-2021.12 | 6MT | F | R | Bus FWD M9T 702;M9T 716 | Date from:2019.08 | GDS57562 | Drive Shaft | | 31 | 39 | 70 | 101 | 1085 | |
| | 2014.05-2021.12 | MT | F | L | Bus FWD M9T 702;M9T 716 | | GDS18247 | Drive Shaft | | 31 | 39 | 70 | 100.5 | 743 | |
| | 2014.05-2021.12 | MT | F | R | Bus FWD M9T 702;M9T 716 | Date to:2019.07 | GDS18515 | Drive Shaft | | 31 | 39 | 70 | 101 | 1077 | |
| | 2014.05-2021.12 | MT | F | L | Bus FWD M9T 702;M9T 716 | | GCO50132 | Outer Joint | | 31 | 27 | 70 | 100.5 | 63.5 | I |

| | YEAR | TRANSM. | F/R | L/R | BODY STYLE & DRIVE TYPE & ENGINE | REMARKS | G-AP Ref. | PRODUCT | ABS | Technical Specifications A | B | C | H | L | P |
|---|---|---|---|---|---|---|---|---|---|---|---|---|---|---|---|
| **OPEL** | | | | | | | | | | | | | | | |
| **Movano** | | | | | | | | | | | | | | | |
| 2.3 (100 kw) | 2014.05-2021.12 | MT | F | R | Bus FWD M9T 702;M9T 716 | Date To:2019.07 | GCO18289 | Outer Joint | | 31 | 36 | 70 | 101 | 69 | I |
| | 2014.05-2021.12 | MT | F | L | Bus FWD M9T 702;M9T 716 | | GCI50045 | Inner Joint | | 39 | 27 | 39 | 74 | 109 | |
| | 2014.05-2021.12 | 6MT | F | R | Platform/Chassis FWD M9T 702;M9T 716 | Date from:2019.08 | GDS57562 | Drive Shaft | | 31 | 39 | 70 | 101 | 1085 | |
| | 2014.05-2021.12 | MT | F | L | Platform/Chassis FWD M9T 702;M9T 716 | | GDS18247 | Drive Shaft | | 31 | 39 | 70 | 100.5 | 743 | |
| | 2014.05-2021.12 | MT | F | R | Platform/Chassis FWD M9T 702;M9T 716 | Date to:2019.07 | GDS18515 | Drive Shaft | | 31 | 39 | 70 | 101 | 1077 | |
| | 2014.05-2021.12 | MT | F | L | Platform/Chassis FWD M9T 702;M9T 716 | | GCO50132 | Outer Joint | | 31 | 27 | 70 | 100.5 | 63.5 | I |
| | 2014.05-2021.12 | MT | F | R | Platform/Chassis FWD M9T 702;M9T 716 | Date To:2019.07 | GCO18289 | Outer Joint | | 31 | 36 | 70 | 101 | 69 | I |
| | 2014.05-2021.12 | MT | F | L | Platform/Chassis FWD M9T 702;M9T 716 | | GCI50045 | Inner Joint | | 39 | 27 | 39 | 74 | 109 | |
| | 2014.05-2021.12 | 6MT | F | R | Van FWD M9T 702;M9T 716 | Date from:2019.08 | GDS57562 | Drive Shaft | | 31 | 39 | 70 | 101 | 1085 | |
| | 2014.05-2021.12 | MT | F | L | Van FWD M9T 702;M9T 716 | | GDS18247 | Drive Shaft | | 31 | 39 | 70 | 100.5 | 743 | |
| | 2014.05-2021.12 | MT | F | R | Van FWD M9T 702;M9T 716 | Date to:2019.07 | GDS18515 | Drive Shaft | | 31 | 39 | 70 | 101 | 1077 | |
| | 2014.05-2021.12 | MT | F | L | Van FWD M9T 702;M9T 716 | | GCO50132 | Outer Joint | | 31 | 27 | 70 | 100.5 | 63.5 | I |
| | 2014.05-2021.12 | MT | F | R | Van FWD M9T 702;M9T 716 | Date To:2019.07 | GCO18289 | Outer Joint | | 31 | 36 | 70 | 101 | 69 | I |
| | 2014.05-2021.12 | MT | F | L | Van FWD M9T 702;M9T 716 | | GCI50045 | Inner Joint | | 39 | 27 | 39 | 74 | 109 | |
| 2.3 (107 kw) | 2010.05-2021.12 | 6AT/6MT | F | R | Platform/Chassis FWD M9T 680;M9T 678;M9T 706;M9T 708 | Date to:2014.02 | GDS18248 | Drive Shaft | | 31 | 39 | 70 | 100.5 | 1075 | |
| | 2010.05-2021.12 | 6AT/6MT | F | R | Platform/Chassis FWD M9T 680;M9T 678;M9T 706;M9T 708 | Date from:2014.03,Date to:2019.07 | GDS18515 | Drive Shaft | | 31 | 39 | 70 | 101 | 1077 | |
| | 2010.05-2021.12 | 6AT/6MT | F | R | Platform/Chassis FWD M9T 680;M9T 678;M9T 706;M9T 708 | Date from:2019.08 | GDS57562 | Drive Shaft | | 31 | 39 | 70 | 101 | 1085 | |
| | 2010.05-2021.12 | 6AT/6MT | F | R | Platform/Chassis FWD M9T 680;M9T 678;M9T 706;M9T 708 | Date From:2014.03,Date To:2019.07 | GCO18289 | Outer Joint | | 31 | 36 | 70 | 101 | 69 | I |
| | 2010.05-2021.12 | MT | F | L | Platform/Chassis FWD M9T 680;M9T 678;M9T 706;M9T 708 | | GDS18247 | Drive Shaft | | 31 | 39 | 70 | 100.5 | 743 | |
| | 2010.05-2021.12 | MT | F | L/R | Platform/Chassis FWD M9T 680;M9T 678;M9T 706;M9T 708 | | GCO50132 | Outer Joint | | 31 | 27 | 70 | 100.5 | 63.5 | I |
| | 2010.05-2021.12 | MT | F | L | Platform/Chassis FWD M9T 680;M9T 678;M9T 706;M9T 708 | | GCI50045 | Inner Joint | | 39 | 27 | 39 | 74 | 109 | |
| | 2010.05-2021.12 | MT | F | R | Platform/Chassis FWD M9T 680;M9T 678;M9T 706;M9T 708 | Date to:2014.02 | GCI50046 | Inner Joint | | 39 | 27 | 30 | 364 | 87 | |
| | 2010.05-2021.12 | 6AT/6MT | F | L | Van FWD M9T 680;M9T 678;M9T 880;M9T 706;M9T 708;M9T 878 | | GDS18247 | Drive Shaft | | 31 | 39 | 70 | 100.5 | 743 | |
| | 2010.05-2021.12 | 6AT/6MT | F | R | Van FWD M9T 680;M9T 678;M9T 880;M9T 706;M9T 708;M9T 878 | Date to:2014.02 | GDS18248 | Drive Shaft | | 31 | 39 | 70 | 100.5 | 1075 | |
| | 2010.05-2021.12 | 6AT/6MT | F | R | Van FWD M9T 680;M9T 678;M9T 880;M9T 706;M9T 708;M9T 878 | Date from:2014.03,Date to:2019.07 | GDS18515 | Drive Shaft | | 31 | 39 | 70 | 101 | 1077 | |
| | 2010.05-2021.12 | 6AT/6MT | F | R | Van FWD M9T 680;M9T 678;M9T 880;M9T 706;M9T 708;M9T 878 | Date from:2019.08 | GDS57562 | Drive Shaft | | 31 | 39 | 70 | 101 | 1085 | |
| | 2010.05-2021.12 | 6AT/6MT | F | R | Van FWD M9T 680;M9T 678;M9T 880;M9T 706;M9T 708;M9T 878 | Date From:2014.03,Date To:2019.07 | GCO18289 | Outer Joint | | 31 | 36 | 70 | 101 | 69 | I |
| | 2010.05-2021.12 | 6AT/6MT | F | L/R | Van FWD M9T 680;M9T 678;M9T 880;M9T 706;M9T 708;M9T 878 | | GCO50132 | Outer Joint | | 31 | 27 | 70 | 100.5 | 63.5 | I |
| | 2010.05-2021.12 | 6AT/6MT | F | L | Van FWD M9T 680;M9T 678;M9T 880;M9T 706;M9T 708;M9T 878 | | GCI50045 | Inner Joint | | 39 | 27 | 39 | 74 | 109 | |
| | 2010.05-2021.12 | 6AT/6MT | F | R | Van FWD M9T 680;M9T 678;M9T 880;M9T 706;M9T 708;M9T 878 | Date to:2014.02 | GCI50046 | Inner Joint | | 39 | 27 | 30 | 364 | 87 | |
| | 2010.12-2021.12 | 6AT/6MT | F | R | Bus FWD M9T 680;M9T 678;M9T 706;M9T 708 | Date to:2014.02 | GDS18248 | Drive Shaft | | 31 | 39 | 70 | 100.5 | 1075 | |
| | 2010.12-2021.12 | 6AT/6MT | F | R | Bus FWD M9T 680;M9T 678;M9T 706;M9T 708 | Date from:2014.03,Date to:2019.07 | GDS18515 | Drive Shaft | | 31 | 39 | 70 | 101 | 1077 | |
| | 2010.12-2021.12 | 6AT/6MT | F | R | Bus FWD M9T 680;M9T 678;M9T 706;M9T 708 | Date from:2019.08 | GDS57562 | Drive Shaft | | 31 | 39 | 70 | 101 | 1085 | |
| | 2010.12-2021.12 | 6AT/6MT | F | R | Bus FWD M9T 680;M9T 678;M9T 706;M9T 708 | Date From:2014.03,Date To:2019.07 | GCO18289 | Outer Joint | | 31 | 36 | 70 | 101 | 69 | I |
| | 2010.12-2021.12 | AT/MT | F | L | Bus FWD M9T 680;M9T 678;M9T 706;M9T 708 | | GDS18247 | Drive Shaft | | 31 | 39 | 70 | 100.5 | 743 | |
| | 2010.12-2021.12 | AT/MT | F | L/R | Bus FWD M9T 680;M9T 678;M9T 706;M9T 708 | | GCO50132 | Outer Joint | | 31 | 27 | 70 | 100.5 | 63.5 | I |
| | 2010.12-2021.12 | AT/MT | F | L | Bus FWD M9T 680;M9T 678;M9T 706;M9T 708 | | GCI50045 | Inner Joint | | 39 | 27 | 39 | 74 | 109 | |
| | 2010.12-2021.12 | AT/MT | F | R | Bus FWD M9T 680;M9T 678;M9T 706;M9T 708 | Date to:2014.02 | GCI50046 | Inner Joint | | 39 | 27 | 30 | 364 | 87 | |
| 2.3 (110 kw) | 2013.01-2021.12 | 6AT/6MT | F | R | Bus FWD M9T 880;M9T 716 | Date to:2014.02 | GDS18248 | Drive Shaft | | 31 | 39 | 70 | 100.5 | 1075 | |
| | 2013.01-2021.12 | 6AT/6MT | F | R | Bus FWD M9T 880;M9T 716 | Date from:2014.03,Date to:2019.07 | GDS18515 | Drive Shaft | | 31 | 39 | 70 | 101 | 1077 | |
| | 2013.01-2021.12 | 6AT/6MT | F | R | Bus FWD M9T 880;M9T 716 | Date from:2019.08 | GDS57562 | Drive Shaft | | 31 | 39 | 70 | 101 | 1085 | |
| | 2013.01-2021.12 | 6AT/6MT | F | R | Bus FWD M9T 880;M9T 716 | Date From:2014.03,Date To:2019.07 | GCO18289 | Outer Joint | | 31 | 36 | 70 | 101 | 69 | I |
| | 2013.01-2021.12 | AT/MT | F | L | Bus FWD M9T 880;M9T 716 | | GDS18247 | Drive Shaft | | 31 | 39 | 70 | 100.5 | 743 | |
| | 2013.01-2021.12 | AT/MT | F | L/R | Bus FWD M9T 880;M9T 716 | | GCO50132 | Outer Joint | | 31 | 27 | 70 | 100.5 | 63.5 | I |
| | 2013.01-2021.12 | AT/MT | F | L | Bus FWD M9T 880;M9T 716 | | GCI50045 | Inner Joint | | 39 | 27 | 39 | 74 | 109 | |
| | 2013.01-2021.12 | AT/MT | F | R | Bus FWD M9T 880;M9T 716 | Date to:2014.02 | GCI50046 | Inner Joint | | 39 | 27 | 30 | 364 | 87 | |
| | 2013.01-2021.12 | 6AT/6MT | F | R | Platform/Chassis FWD M9T 880;M9T 716 | Date to:2014.02 | GDS18248 | Drive Shaft | | 31 | 39 | 70 | 100.5 | 1075 | |
| | 2013.01-2021.12 | 6AT/6MT | F | R | Platform/Chassis FWD M9T 880;M9T 716 | Date from:2014.03,Date to:2019.07 | GDS18515 | Drive Shaft | | 31 | 39 | 70 | 101 | 1077 | |
| | 2013.01-2021.12 | 6AT/6MT | F | R | Platform/Chassis FWD M9T 880;M9T 716 | Date from:2019.08 | GDS57562 | Drive Shaft | | 31 | 39 | 70 | 101 | 1085 | |
| | 2013.01-2021.12 | 6AT/6MT | F | R | Platform/Chassis FWD M9T 880;M9T 716 | Date From:2014.03,Date To:2019.07 | GCO18289 | Outer Joint | | 31 | 36 | 70 | 101 | 69 | I |
| | 2013.01-2021.12 | AT/MT | F | L | Platform/Chassis FWD M9T 880;M9T 716 | | GDS18247 | Drive Shaft | | 31 | 39 | 70 | 100.5 | 743 | |
| | 2013.01-2021.12 | AT/MT | F | L/R | Platform/Chassis FWD M9T 880;M9T 716 | | GCO50132 | Outer Joint | | 31 | 27 | 70 | 100.5 | 63.5 | I |
| | 2013.01-2021.12 | AT/MT | F | L | Platform/Chassis FWD M9T 880;M9T 716 | | GCI50045 | Inner Joint | | 39 | 27 | 39 | 74 | 109 | |
| | 2013.01-2021.12 | AT/MT | F | R | Platform/Chassis FWD M9T 880;M9T 716 | Date to:2014.02 | GCI50046 | Inner Joint | | 39 | 27 | 30 | 364 | 87 | |
| | 2013.01-2021.12 | 6AT/6MT | F | R | Van FWD M9T 880;M9T 716 | Date to:2014.02 | GDS18248 | Drive Shaft | | 31 | 39 | 70 | 100.5 | 1075 | |
| | 2013.01-2021.12 | 6AT/6MT | F | R | Van FWD M9T 880;M9T 716 | Date from:2014.03,Date to:2019.07 | GDS18515 | Drive Shaft | | 31 | 39 | 70 | 101 | 1077 | |
| | 2013.01-2021.12 | 6AT/6MT | F | R | Van FWD M9T 880;M9T 716 | Date from:2019.08 | GDS57562 | Drive Shaft | | 31 | 39 | 70 | 101 | 1085 | |
| | 2013.01-2021.12 | 6AT/6MT | F | R | Van FWD M9T 880;M9T 716 | Date From:2014.03,Date To:2019.07 | GCO18289 | Outer Joint | | 31 | 36 | 70 | 101 | 69 | I |
| | 2013.01-2021.12 | AT/MT | F | L | Van FWD M9T 880;M9T 716 | | GDS18247 | Drive Shaft | | 31 | 39 | 70 | 100.5 | 743 | |
| | 2013.01-2021.12 | AT/MT | F | L/R | Van FWD M9T 880;M9T 716 | | GCO50132 | Outer Joint | | 31 | 27 | 70 | 100.5 | 63.5 | I |
| | 2013.01-2021.12 | AT/MT | F | L | Van FWD M9T 880;M9T 716 | | GCI50045 | Inner Joint | | 39 | 27 | 39 | 74 | 109 | |
| | 2013.01-2021.12 | AT/MT | F | R | Van FWD M9T 880;M9T 716 | Date to:2014.02 | GCI50046 | Inner Joint | | 39 | 27 | 30 | 364 | 87 | |
| 2.3 (120 kw) | 2014.05-2021.12 | 6MT | F | R | Bus FWD M9T 702;M9T 708 | Date from:2019.08 | GDS57562 | Drive Shaft | | 31 | 39 | 70 | 101 | 1085 | |
| | 2014.05-2021.12 | MT | F | L | Bus FWD M9T 702;M9T 708 | | GDS18247 | Drive Shaft | | 31 | 39 | 70 | 100.5 | 743 | |
| | 2014.05-2021.12 | MT | F | R | Bus FWD M9T 702;M9T 708 | Date to:2019.07 | GDS18515 | Drive Shaft | | 31 | 39 | 70 | 101 | 1077 | |

| | YEAR | TRANSM. | F/R | L/R | BODY STYLE & DRIVE TYPE & ENGINE | REMARKS | G-AP Ref. | PRODUCT | ABS | Technical Specifications A | B | C | H | L | P |
|---|---|---|---|---|---|---|---|---|---|---|---|---|---|---|---|
| **OPEL** **Movano** | | | | | | | | | | | | | | | |
| 2.3 (120 kw) | 2014.05-2021.12 | MT | F | L | Bus FWD M9T 702;M9T 708 | | GCO50132 | Outer Joint | | 31 | 27 | 70 | 100.5 | 63.5 | I |
| | 2014.05-2021.12 | MT | F | R | Bus FWD M9T 702;M9T 708 | Date To:2019.07 | GCO18289 | Outer Joint | | 31 | 36 | 70 | 101 | 69 | I |
| | 2014.05-2021.12 | MT | F | L | Bus FWD M9T 702;M9T 708 | | GCI50045 | Inner Joint | | 39 | 27 | 39 | 74 | 109 | |
| | 2014.05-2021.12 | 6MT | F | R | Platform/Chassis FWD M9T 702;M9T 708 | Date from:2019.08 | GDS57562 | Drive Shaft | | 31 | 39 | 70 | 101 | 1085 | |
| | 2014.05-2021.12 | MT | F | L | Platform/Chassis FWD M9T 702;M9T 708 | | GDS18247 | Drive Shaft | | 31 | 39 | 70 | 100.5 | 743 | |
| | 2014.05-2021.12 | MT | F | R | Platform/Chassis FWD M9T 702;M9T 708 | Date to:2019.07 | GDS18515 | Drive Shaft | | 31 | 39 | 70 | 101 | 1077 | |
| | 2014.05-2021.12 | MT | F | L | Platform/Chassis FWD M9T 702;M9T 708 | | GCO50132 | Outer Joint | | 31 | 27 | 70 | 100.5 | 63.5 | I |
| | 2014.05-2021.12 | MT | F | R | Platform/Chassis FWD M9T 702;M9T 708 | Date To:2019.07 | GCO18289 | Outer Joint | | 31 | 36 | 70 | 101 | 69 | I |
| | 2014.05-2021.12 | MT | F | L | Platform/Chassis FWD M9T 702;M9T 708 | | GCI50045 | Inner Joint | | 39 | 27 | 39 | 74 | 109 | |
| | 2014.05-2021.12 | 6MT | F | R | Van FWD M9T 702;M9T 708 | Date from:2019.08 | GDS57562 | Drive Shaft | | 31 | 39 | 70 | 101 | 1085 | |
| | 2014.05-2021.12 | MT | F | L | Van FWD M9T 702;M9T 708 | | GDS18247 | Drive Shaft | | 31 | 39 | 70 | 100.5 | 743 | |
| | 2014.05-2021.12 | MT | F | R | Van FWD M9T 702;M9T 708 | Date to:2019.07 | GDS18515 | Drive Shaft | | 31 | 39 | 70 | 101 | 1077 | |
| | 2014.05-2021.12 | MT | F | L | Van FWD M9T 702;M9T 708 | | GCO50132 | Outer Joint | | 31 | 27 | 70 | 100.5 | 63.5 | I |
| | 2014.05-2021.12 | MT | F | R | Van FWD M9T 702;M9T 708 | Date To:2019.07 | GCO18289 | Outer Joint | | 31 | 36 | 70 | 101 | 69 | I |
| | 2014.05-2021.12 | MT | F | L | Van FWD M9T 702;M9T 708 | | GCI50045 | Inner Joint | | 39 | 27 | 39 | 74 | 109 | |
| 2.3 (125 kw) | 2015.05-2021.12 | 6AT/6MT | F | R | Bus FWD M9T 706 | Date from:2019.08 | GDS57562 | Drive Shaft | | 31 | 39 | 70 | 101 | 1085 | |
| | 2015.05-2021.12 | 6MT | F | R | Bus FWD M9T 706 | Date To:2019.07 | GDS18515 | Drive Shaft | | 31 | 39 | 70 | 101 | 1077 | |
| | 2015.05-2021.12 | 6MT | F | R | Bus FWD M9T 706 | Date To:2019.07 | GCO18289 | Outer Joint | | 31 | 36 | 70 | 101 | 69 | I |
| | 2015.05-2021.12 | AT/MT | F | L | Bus FWD M9T 706 | | GDS18247 | Drive Shaft | | 31 | 39 | 70 | 100.5 | 743 | |
| | 2015.05-2021.12 | AT/MT | F | L | Bus FWD M9T 706 | | GCO50132 | Outer Joint | | 31 | 27 | 70 | 100.5 | 63.5 | I |
| | 2015.05-2021.12 | AT/MT | F | L | Bus FWD M9T 706 | | GCI50045 | Inner Joint | | 39 | 27 | 39 | 74 | 109 | |
| | 2016.11-2021.12 | 6AT/6MT | F | R | Platform/Chassis FWD M9T 706 | Date from:2019.08 | GDS57562 | Drive Shaft | | 31 | 39 | 70 | 101 | 1085 | |
| | 2016.11-2021.12 | 6MT | F | R | Platform/Chassis FWD M9T 706 | Date To:2019.07 | GDS18515 | Drive Shaft | | 31 | 39 | 70 | 101 | 1077 | |
| | 2016.11-2021.12 | 6MT | F | R | Platform/Chassis FWD M9T 706 | Date To:2019.07 | GCO18289 | Outer Joint | | 31 | 36 | 70 | 101 | 69 | I |
| | 2016.11-2021.12 | AT/MT | F | L | Platform/Chassis FWD M9T 706 | | GDS18247 | Drive Shaft | | 31 | 39 | 70 | 100.5 | 743 | |
| | 2016.11-2021.12 | AT/MT | F | L | Platform/Chassis FWD M9T 706 | | GCO50132 | Outer Joint | | 31 | 27 | 70 | 100.5 | 63.5 | I |
| | 2016.11-2021.12 | AT/MT | F | L | Platform/Chassis FWD M9T 706 | | GCI50045 | Inner Joint | | 39 | 27 | 39 | 74 | 109 | |
| | 2016.11-2021.12 | 6AT/6MT | F | R | Van FWD M9T 706 | Date from:2019.08 | GDS57562 | Drive Shaft | | 31 | 39 | 70 | 101 | 1085 | |
| | 2016.11-2021.12 | 6MT | F | R | Van FWD M9T 706 | Date To:2019.07 | GDS18515 | Drive Shaft | | 31 | 39 | 70 | 101 | 1077 | |
| | 2016.11-2021.12 | 6MT | F | R | Van FWD M9T 706 | Date To:2019.07 | GCO18289 | Outer Joint | | 31 | 36 | 70 | 101 | 69 | I |
| | 2016.11-2021.12 | AT/MT | F | L | Van FWD M9T 706 | | GDS18247 | Drive Shaft | | 31 | 39 | 70 | 100.5 | 743 | |
| | 2016.11-2021.12 | AT/MT | F | L | Van FWD M9T 706 | | GCO50132 | Outer Joint | | 31 | 27 | 70 | 100.5 | 63.5 | I |
| | 2016.11-2021.12 | AT/MT | F | L | Van FWD M9T 706 | | GCI50045 | Inner Joint | | 39 | 27 | 39 | 74 | 109 | |
| 2.3 (132 kw) | 2019.08-2021.12 | 6AT | F | L | Bus FWD M9T 716 | | GDS18247 | Drive Shaft | | 31 | 39 | 70 | 100.5 | 743 | |
| | 2019.08-2021.12 | 6AT | F | R | Bus FWD M9T 716 | | GDS57562 | Drive Shaft | | 31 | 39 | 70 | 101 | 1085 | |
| | 2019.08-2021.12 | 6AT | F | L/R | Bus FWD M9T 716 | | GCO18289 | Outer Joint | | 31 | 36 | 70 | 101 | 69 | I |
| | 2019.08-2021.12 | 6AT/6MT | F | L | Platform/Chassis FWD M9T 716 | | GDS18247 | Drive Shaft | | 31 | 39 | 70 | 100.5 | 743 | |
| | 2019.08-2021.12 | 6AT/6MT | F | R | Platform/Chassis FWD M9T 716 | | GDS57562 | Drive Shaft | | 31 | 39 | 70 | 101 | 1085 | |
| | 2019.08-2021.12 | 6MT | F | L/R | Platform/Chassis FWD M9T 716 | | GCO18289 | Outer Joint | | 31 | 36 | 70 | 101 | 69 | I |
| | 2019.08-2021.12 | 6AT/6MT | F | L | Van FWD M9T 716 | | GDS18247 | Drive Shaft | | 31 | 39 | 70 | 100.5 | 743 | |
| | 2019.08-2021.12 | 6AT/6MT | F | R | Van FWD M9T 716 | | GDS57562 | Drive Shaft | | 31 | 39 | 70 | 101 | 1085 | |
| | 2019.08-2021.12 | 6MT | F | L/R | Van FWD M9T 716 | | GCO18289 | Outer Joint | | 31 | 36 | 70 | 101 | 69 | I |
| 2.5 (59 kw) | 1998.07-2000.09 | 5MT | F | L | Bus FWD S8U 770, S8U 772 | | GDS50010 | Drive Shaft | | 28 | | 67.1 | 93.5 | 669 | |
| | 1998.07-2000.09 | 5MT | F | R | Bus FWD S8U 770, S8U 772 | | GDS50011 | Drive Shaft | | 28 | 39 | 67.1 | 93.5 | 1118 | |
| | 1998.07-2000.09 | MT | F | L | Bus FWD S8U 770, S8U 772 | Trans. code:PF1 | GDS44005 | Drive Shaft | 51T | 28 | 37 | 65 | 96 | 670 | |
| | 1998.07-2000.09 | MT | F | R | Bus FWD S8U 770, S8U 772 | Trans. code:PF1 | GDS44004 | Drive Shaft | 51T | 28 | 39 | 67.1 | 93.5 | 1118 | |
| | 1998.07-2000.09 | MT | F | R | Bus FWD S8U 770, S8U 772 | | GCI50006 | Inner Joint | | 39 | 27 | 30 | 437 | 98 | |
| | 1998.07-2000.09 | 5MT | F | L | Platform/Chassis FWD S8U 770, S8U 772 | | GDS50010 | Drive Shaft | | 28 | | 67.1 | 93.5 | 669 | |
| | 1998.07-2000.09 | 5MT | F | R | Platform/Chassis FWD S8U 770, S8U 772 | | GDS50011 | Drive Shaft | | 28 | 39 | 67.1 | 93.5 | 1118 | |
| | 1998.07-2000.09 | MT | F | L | Platform/Chassis FWD S8U 770, S8U 772 | Trans. code:PF1 | GDS44005 | Drive Shaft | 51T | 28 | 37 | 65 | 96 | 670 | |
| | 1998.07-2000.09 | MT | F | R | Platform/Chassis FWD S8U 770, S8U 772 | Trans. code:PF1 | GDS44004 | Drive Shaft | 51T | 28 | 39 | 67.1 | 93.5 | 1118 | |
| | 1998.07-2000.09 | MT | F | R | Platform/Chassis FWD S8U 770, S8U 772 | | GCI50006 | Inner Joint | | 39 | 27 | 30 | 437 | 98 | |
| | 1999.01-2000.09 | 5MT | F | L | Van FWD S8U 770, S8U 772 | | GDS50010 | Drive Shaft | | 28 | | 67.1 | 93.5 | 669 | |
| | 1999.01-2000.09 | 5MT | F | R | Van FWD S8U 770, S8U 772 | | GDS50011 | Drive Shaft | | 28 | 39 | 67.1 | 93.5 | 1118 | |
| | 1999.01-2000.09 | MT | F | L | Van FWD S8U 770, S8U 772 | Trans. code:PF1 | GDS44005 | Drive Shaft | 51T | 28 | 37 | 65 | 96 | 670 | |
| | 1999.01-2000.09 | MT | F | R | Van FWD S8U 770, S8U 772 | Trans. code:PF1 | GDS44004 | Drive Shaft | 51T | 28 | 39 | 67.1 | 93.5 | 1118 | |
| | 1999.01-2000.09 | MT | F | R | Van FWD S8U 770, S8U 772 | | GCI50006 | Inner Joint | | 39 | 27 | 30 | 437 | 98 | |
| 2.5 (73 kw) | 2003.10- | 5MT | F | L | Platform/Chassis FWD G9U 754 | | GDS50166 | Drive Shaft | 51T | 28 | 37 | 65 | 96 | 663 | |
| | 2003.10- | MT | F | R | Platform/Chassis FWD G9U 754 | Date from:2004.01 | GDS50366 | Drive Shaft | 51T | 28 | 39 | 65 | 96 | 1116 | |
| | 2003.10- | MT | F | L/R | Platform/Chassis FWD G9U 754 | Date from:2004.01 | GCO44026 | Outer Joint | 51T | 28 | 36 | 65 | 96 | 71 | I |
| | 2003.10- | 5MT | F | L | Van FWD G9U 754 | | GDS50166 | Drive Shaft | 51T | 28 | 37 | 65 | 96 | 663 | |
| | 2003.10- | MT | F | R | Van FWD G9U 754 | Date from:2004.01 | GDS50366 | Drive Shaft | 51T | 28 | 39 | 65 | 96 | 1116 | |
| | 2003.10- | MT | F | L/R | Van FWD G9U 754 | Date from:2004.01 | GCO44026 | Outer Joint | 51T | 28 | 36 | 65 | 96 | 71 | I |
| 2.5 (74 kw) | 2003.10- | 6MT | F | L | Van FWD G9U 650 | | GDS99286 | Drive Shaft | 51T | 28 | 39 | 65 | 96 | 700 | |
| | 2003.10- | 6MT | F | R | Van FWD G9U 650 | | GDS50366 | Drive Shaft | 51T | 28 | 39 | 65 | 96 | 1116 | |

| | YEAR | TRANSM. | F/R | L/R | BODY STYLE & DRIVE TYPE & ENGINE | REMARKS | G-AP Ref. | PRODUCT | ABS | Technical Specifications | | | | | |
|---|---|---|---|---|---|---|---|---|---|---|---|---|---|---|---|
| | | | | | | | | | | A | B | C | H | L | P |
| **OPEL** **Movano** | | | | | | | | | | | | | | | |
| 2.5 (74 kw) | 2003.10- | MT | F | L/R | Van FWD G9U 650 | | GCO44026 | Outer Joint | 51T | 28 | 36 | 65 | 96 | 71 | I |
| | 2003.10- | MT | F | R | Van FWD G9U 650 | | GCI50006 | Inner Joint | | 39 | 27 | 30 | 437 | 98 | |
| | 2006.08- | 6MT | F | L | Platform/Chassis FWD G9U 650 | | GDS99286 | Drive Shaft | 51T | 28 | 39 | 65 | 96 | 700 | |
| | 2006.08- | 6MT | F | R | Platform/Chassis FWD G9U 650 | | GDS50366 | Drive Shaft | 51T | 28 | 39 | 65 | 96 | 1116 | |
| | 2006.08- | 6MT | F | L | Platform/Chassis FWD G9U 650 | | GCO44026 | Outer Joint | 51T | 28 | 36 | 65 | 96 | 71 | I |
| | 2006.08- | 6MT | F | L | Platform/Chassis FWD G9U 650 | | GCI18272 | Inner Joint | | 39 | 26 | 39 | 74 | 116 | |
| | 2007.09- | 6MT | F | L | Bus FWD G9U 650 | | GDS99286 | Drive Shaft | 51T | 28 | 39 | 65 | 96 | 700 | |
| | 2007.09- | 6MT | F | R | Bus FWD G9U 650 | | GDS50366 | Drive Shaft | 51T | 28 | 39 | 65 | 96 | 1116 | |
| | 2007.09- | MT | F | R | Bus FWD G9U 650 | | GCI50006 | Inner Joint | | 39 | 27 | 30 | 437 | 98 | |
| | 2007.09- | | F | L | Bus FWD G9U 650 | | GCO44026 | Outer Joint | 51T | 28 | 36 | 65 | 96 | 71 | I |
| 2.5 (84 kw) | 2001.10- | 5MT/6MT | F | L/R | Bus FWD G9U 720, G9U 724, G9U 750, G9U 754 | | GCO44026 | Outer Joint | 51T | 28 | 36 | 65 | 96 | 71 | I |
| | 2001.10- | MT | F | L | Bus FWD G9U 720, G9U 724, G9U 750, G9U 754 | | GDS44012 | Drive Shaft | | 28 | 37 | 65 | 96 | 663 | |
| | 2001.10- | MT | F | L | Bus FWD G9U 720, G9U 724, G9U 750, G9U 754 | Date to:2006.09;Trans. code:PK5 | GDS50166 | Drive Shaft | 51T | 28 | 37 | 65 | 96 | 663 | |
| | 2001.10- | MT | F | R | Bus FWD G9U 720, G9U 724, G9U 750, G9U 754 | | GDS50066 | Drive Shaft | | 28 | 39 | 65 | 96 | 1142 | |
| | 2001.10- | MT | F | R | Bus FWD G9U 720, G9U 724, G9U 750, G9U 754 | | GDS50249 | Drive Shaft | | 28 | 39 | 65 | 96 | 1144 | |
| | 2001.10- | MT | F | R | Bus FWD G9U 720, G9U 724, G9U 750, G9U 754 | Date to:2006.09;Trans. code:PK5 | GDS99151 | Drive Shaft | 51T | 28 | 39 | 65 | 96 | 1144 | |
| | 2001.10- | MT | F | R | Bus FWD G9U 720, G9U 724, G9U 750, G9U 754 | | GCI50006 | Inner Joint | | 39 | 27 | 30 | 437 | 98 | |
| | 2001.10- | 5MT/6MT | F | L/R | Platform/Chassis FWD G9U 720, G9U 724, G9U 750, G9U 754 | | GCO44026 | Outer Joint | 51T | 28 | 36 | 65 | 96 | 71 | I |
| | 2001.10- | MT | F | L | Platform/Chassis FWD G9U 720, G9U 724, G9U 750, G9U 754 | | GDS44012 | Drive Shaft | | 28 | 37 | 65 | 96 | 663 | |
| | 2001.10- | MT | F | L | Platform/Chassis FWD G9U 720, G9U 724, G9U 750, G9U 754 | Date to:2006.09;Trans. code:PK5 | GDS50166 | Drive Shaft | 51T | 28 | 37 | 65 | 96 | 663 | |
| | 2001.10- | MT | F | R | Platform/Chassis FWD G9U 720, G9U 724, G9U 750, G9U 754 | | GDS50066 | Drive Shaft | | 28 | 39 | 65 | 96 | 1142 | |
| | 2001.10- | MT | F | R | Platform/Chassis FWD G9U 720, G9U 724, G9U 750, G9U 754 | | GDS50249 | Drive Shaft | | 28 | 39 | 65 | 96 | 1144 | |
| | 2001.10- | MT | F | R | Platform/Chassis FWD G9U 720, G9U 724, G9U 750, G9U 754 | Date to:2006.09;Trans. code:PK5 | GDS99151 | Drive Shaft | 51T | 28 | 39 | 65 | 96 | 1144 | |
| | 2001.10- | MT | F | R | Platform/Chassis FWD G9U 720, G9U 724, G9U 750, G9U 754 | | GCI50006 | Inner Joint | | 39 | 27 | 30 | 437 | 98 | |
| | 2001.10- | 5MT/6MT | F | L | Van FWD G9U 720, G9U 724, G9U 750, G9U 754 | | GDS44012 | Drive Shaft | | 28 | 37 | 65 | 96 | 663 | |
| | 2001.10- | 5MT/6MT | F | L | Van FWD G9U 720, G9U 724, G9U 750, G9U 754 | | GDS50166 | Drive Shaft | 51T | 28 | 37 | 65 | 96 | 663 | |
| | 2001.10- | 5MT/6MT | F | R | Van FWD G9U 720, G9U 724, G9U 750, G9U 754 | | GDS50249 | Drive Shaft | | 28 | 39 | 65 | 96 | 1144 | |
| | 2001.10- | 5MT/6MT | F | R | Van FWD G9U 720, G9U 724, G9U 750, G9U 754 | | GDS99151 | Drive Shaft | 51T | 28 | 39 | 65 | 96 | 1144 | |
| | 2001.10- | 5MT/6MT | F | L/R | Van FWD G9U 720, G9U 724, G9U 750, G9U 754 | | GCO44026 | Outer Joint | 51T | 28 | 36 | 65 | 96 | 71 | I |
| 2.5 (88 kw) | 2003.10- | 6AT/6MT | F | L | Van FWD G9U 632, G9U 650 | | GDS99286 | Drive Shaft | 51T | 28 | 39 | 65 | 96 | 700 | |
| | 2003.10- | MT | F | R | Van FWD G9U 632, G9U 650 | | GDS50366 | Drive Shaft | 51T | 28 | 39 | 65 | 96 | 1116 | |
| | 2003.10- | MT | F | L/R | Van FWD G9U 632, G9U 650 | | GCO44026 | Outer Joint | 51T | 28 | 36 | 65 | 96 | 71 | I |
| | 2003.10- | MT | F | R | Van FWD G9U 632, G9U 650 | | GCI50006 | Inner Joint | | 39 | 27 | 30 | 437 | 98 | |
| | 2003.10- | | F | R | Van FWD G9U 632, G9U 650 | | GDS50066 | Drive Shaft | | 28 | 39 | 65 | 96 | 1142 | |
| | 2006.08- | 6AT/6MT | F | L | Bus FWD G9U 632, G9U 650 | | GDS99286 | Drive Shaft | 51T | 28 | 39 | 65 | 96 | 700 | |
| | 2006.08- | MT | F | R | Bus FWD G9U 632, G9U 650 | | GCI50006 | Inner Joint | | 39 | 27 | 30 | 437 | 98 | |
| | 2006.08- | | F | R | Bus FWD G9U 632, G9U 650 | | GDS50066 | Drive Shaft | | 28 | 39 | 65 | 96 | 1142 | |
| | 2006.08- | 6AT/6MT | F | L | Platform/Chassis FWD G9U 632, G9U 650 | | GDS99286 | Drive Shaft | 51T | 28 | 39 | 65 | 96 | 700 | |
| | 2006.08- | 6AT/6MT | F | L | Platform/Chassis FWD G9U 632, G9U 650 | | GCI18272 | Inner Joint | | 39 | 26 | 39 | 74 | 116 | |
| | 2006.08- | | F | R | Platform/Chassis FWD G9U 632, G9U 650 | | GDS50066 | Drive Shaft | | 28 | 39 | 65 | 96 | 1142 | |
| 2.5 (107 kw) | 2003.10- | AT/MT | F | L | Van FWD G9U 632, G9U 650 | | GDS99286 | Drive Shaft | 51T | 28 | 39 | 65 | 96 | 700 | |
| | 2003.10- | MT | F | R | Van FWD G9U 632, G9U 650 | | GDS50366 | Drive Shaft | 51T | 28 | 39 | 65 | 96 | 1116 | |
| | 2003.10- | MT | F | L/R | Van FWD G9U 632, G9U 650 | | GCO44026 | Outer Joint | 51T | 28 | 36 | 65 | 96 | 71 | I |
| | 2003.10- | MT | F | R | Van FWD G9U 632, G9U 650 | | GCI50006 | Inner Joint | | 39 | 27 | 30 | 437 | 98 | |
| | 2003.10- | | F | R | Van FWD G9U 632, G9U 650 | | GDS50066 | Drive Shaft | | 28 | 39 | 65 | 96 | 1142 | |
| | 2006.08- | 6AT/6MT | F | L | Bus FWD G9U 632, G9U 650 | | GDS99286 | Drive Shaft | 51T | 28 | 39 | 65 | 96 | 700 | |
| | 2006.08- | MT | F | R | Bus FWD G9U 632, G9U 650 | | GCI50006 | Inner Joint | | 39 | 27 | 30 | 437 | 98 | |
| | 2006.08- | | F | R | Bus FWD G9U 632, G9U 650 | | GDS50066 | Drive Shaft | | 28 | 39 | 65 | 96 | 1142 | |
| | 2006.08- | 6AT/6MT | F | L | Platform/Chassis FWD G9U 632, G9U 650 | | GDS99286 | Drive Shaft | 51T | 28 | 39 | 65 | 96 | 700 | |
| | 2006.08- | 6AT/6MT | F | R | Platform/Chassis FWD G9U 632, G9U 650 | | GDS50366 | Drive Shaft | 51T | 28 | 39 | 65 | 96 | 1116 | |
| | 2006.08- | 6AT/6MT | F | L | Platform/Chassis FWD G9U 632, G9U 650 | | GCI18272 | Inner Joint | | 39 | 26 | 39 | 74 | 116 | |
| 2.8 (84 kw) | 1998.07-2001.10 | 5MT | F | L | Bus FWD S9W 700, S9W 702 | | GDS50010 | Drive Shaft | | 28 | | 67.1 | 93.5 | 669 | |
| | 1998.07-2001.10 | 5MT | F | R | Bus FWD S9W 700, S9W 702 | | GDS50011 | Drive Shaft | | 28 | 39 | 67.1 | 93.5 | 1118 | |
| | 1998.07-2001.10 | MT | F | L | Bus FWD S9W 700, S9W 702 | Trans. code:PK5 | GDS44005 | Drive Shaft | 51T | 28 | 37 | 65 | 96 | 670 | |
| | 1998.07-2001.10 | MT | F | R | Bus FWD S9W 700, S9W 702 | Trans. code:PK5 | GDS44004 | Drive Shaft | 51T | 28 | 39 | 67.1 | 93.5 | 1118 | |
| | 1998.07-2001.10 | MT | F | R | Bus FWD S9W 700, S9W 702 | | GCI50006 | Inner Joint | | 39 | 27 | 30 | 437 | 98 | |
| | 1998.07-2001.10 | 5MT | F | L | Platform/Chassis FWD S9W 700, S9W 702 | | GDS50010 | Drive Shaft | | 28 | | 67.1 | 93.5 | 669 | |
| | 1998.07-2001.10 | 5MT | F | R | Platform/Chassis FWD S9W 700, S9W 702 | | GDS50011 | Drive Shaft | | 28 | 39 | 67.1 | 93.5 | 1118 | |
| | 1998.07-2001.10 | MT | F | L | Platform/Chassis FWD S9W 700, S9W 702 | Trans. code:PK5 | GDS44005 | Drive Shaft | 51T | 28 | 37 | 65 | 96 | 670 | |
| | 1998.07-2001.10 | MT | F | R | Platform/Chassis FWD S9W 700, S9W 702 | Trans. code:PK5 | GDS44004 | Drive Shaft | 51T | 28 | 39 | 67.1 | 93.5 | 1118 | |
| | 1998.07-2001.10 | MT | F | R | Platform/Chassis FWD S9W 700, S9W 702 | | GCI50006 | Inner Joint | | 39 | 27 | 30 | 437 | 98 | |
| | 1999.01-2001.10 | 5MT | F | L | Van FWD S9W 700, S9W 702 | | GDS50010 | Drive Shaft | | 28 | | 67.1 | 93.5 | 669 | |
| | 1999.01-2001.10 | 5MT | F | R | Van FWD S9W 700, S9W 702 | | GDS50011 | Drive Shaft | | 28 | 39 | 67.1 | 93.5 | 1118 | |
| | 1999.01-2001.10 | MT | F | L | Van FWD S9W 700, S9W 702 | Trans. code:PK5 | GDS44005 | Drive Shaft | 51T | 28 | 37 | 65 | 96 | 670 | |
| | 1999.01-2001.10 | MT | F | R | Van FWD S9W 700, S9W 702 | Trans. code:PK5 | GDS44004 | Drive Shaft | 51T | 28 | 39 | 67.1 | 93.5 | 1118 | |

| | YEAR | TRANSM. | F/R | L/R | BODY STYLE & DRIVE TYPE & ENGINE | REMARKS | G-AP Ref. | PRODUCT | ABS | Technical Specifications A | B | C | H | L | P |
|---|---|---|---|---|---|---|---|---|---|---|---|---|---|---|---|
| **OPEL** | | | | | | | | | | | | | | | |
| **Movano** | | | | | | | | | | | | | | | |
| 2.8 (84 kw) | 1999.01-2001.10 | MT | F | R | Van FWD S9W 700, S9W 702 | | GCI50006 | Inner Joint | | 39 | 27 | 30 | 437 | 98 | |
| 3.0 (100 kw) | 2003.10- | 6MT | F | L/R | Bus FWD ZD3 200, ZD3 202 | | GCO44025 | Outer Joint | | 28 | 36 | 65 | 96 | 71 | I |
| | 2003.10- | MT | F | L | Bus FWD ZD3 200, ZD3 202 | | GDS50057 | Drive Shaft | 51T | 28 | 39 | 65 | 96 | 687 | |
| | 2003.10- | MT | F | R | Bus FWD ZD3 200, ZD3 202 | | GDS50059 | Drive Shaft | 51T | 28 | 39 | 65 | 96 | 1126 | |
| | 2003.10- | 6MT | F | R | Platform/Chassis FWD ZD3 200, ZD3 202 | | GDS50059 | Drive Shaft | 51T | 28 | 39 | 65 | 96 | 1126 | |
| | 2003.10- | MT | F | R | Van FWD ZD3 200, ZD3 202 | | GDS50059 | Drive Shaft | 51T | 28 | 39 | 65 | 96 | 1126 | |
| | 2003.10- | MT | F | L/R | Van FWD ZD3 200, ZD3 202 | | GCO44026 | Outer Joint | 51T | 28 | 36 | 65 | 96 | 71 | I |
| **Movano-e** | | | | | | | | | | | | | | | |
| EV (100 kw) | 2021.12-2023.10 | 6MT | F | L | Van FWD A3H256B42G000 | | GDS56467 | Drive Shaft | | 35 | 41 | 71.5 | 127 | 824 | |
| | 2021.12-2023.10 | 6MT | F | L | Van FWD A3H256B42G000 | | GCI17028 | Inner Joint | | 41 | 29 | 43 | 69.5 | 109.5 | |
| | 2021.12-2023.10 | ET | F | R | Van FWD A3H256B42G000 | | GDS57538 | Drive Shaft | | 35 | 41 | 71.5 | 127 | 1127 | |
| | 2023.04-2023.10 | 6MT | F | L | Platform/Chassis FWD A3H256B42G000 | | GDS56467 | Drive Shaft | | 35 | 41 | 71.5 | 127 | 824 | |
| | 2023.04-2023.10 | 6MT | F | R | Platform/Chassis FWD A3H256B42G000 | | GDS57538 | Drive Shaft | | 35 | 41 | 71.5 | 127 | 1127 | |
| | 2023.04-2023.10 | 6MT | F | L | Platform/Chassis FWD A3H256B42G000 | | GCI17028 | Inner Joint | | 41 | 29 | 43 | 69.5 | 109.5 | |
| **Signum** | | | | | | | | | | | | | | | |
| 1.8 (90 kw) | 2003.05-2005.07 | CVT/5MT | F | L | Hatchback FWD Z 18 XE | Chassis no. from:71009337 | GDS17223 | Drive Shaft | | 30 | 22 | 52 | 94 | 609 | |
| | 2003.05-2005.07 | CVT/5MT | F | L | Hatchback FWD Z 18 XE | Chassis no. to:71009336 | GDS44020 | Drive Shaft | | 30 | 22 | 52.5 | 105 | 617.5 | |
| | 2003.05-2005.07 | CVT/5MT | F | R | Hatchback FWD Z 18 XE | | GDS17040 | Drive Shaft | | 30 | 22 | 52.5 | 105 | 987 | |
| | 2003.05-2005.07 | CVT/5MT | F | L/R | Hatchback FWD Z 18 XE | Chassis no. to:71009336 | GCO17007 | Outer Joint | | 30 | 25 | 52.5 | 105 | 62 | O |
| | 2003.05-2005.07 | CVT/5MT | F | L/R | Hatchback FWD Z 18 XE | Chassis no. from:71009337 | GCO21038 | Outer Joint | | 30 | 24 | 52 | 94 | 64 | M |
| | 2003.05-2005.07 | | F | L/R | Hatchback FWD Z 18 XE | | GCI99026 | Inner Joint | | 22 | 25 | 35 | 57 | 111.7 | |
| 1.8 (103 kw) | 2005.09-2008.12 | SAT/5MT | F | L | Hatchback FWD Z 18 XER | Chassis no. from:71009337 | GDS17223 | Drive Shaft | | 30 | 22 | 52 | 94 | 609 | |
| | 2005.09-2008.12 | SAT/5MT | F | L | Hatchback FWD Z 18 XER | Chassis no. to:71009336 | GDS44020 | Drive Shaft | | 30 | 22 | 52.5 | 105 | 617.5 | |
| | 2005.09-2008.12 | SAT/5MT | F | R | Hatchback FWD Z 18 XER | Chassis no. to:71009336 | GDS17040 | Drive Shaft | | 30 | 22 | 52.5 | 105 | 987 | |
| | 2005.09-2008.12 | SAT/5MT | F | L/R | Hatchback FWD Z 18 XER | Chassis no. to:71009336 | GCO17007 | Outer Joint | | 30 | 25 | 52.5 | 105 | 62 | O |
| | 2005.09-2008.12 | SAT/5MT | F | L/R | Hatchback FWD Z 18 XER | Chassis no. from:71009337 | GCO21038 | Outer Joint | | 30 | 24 | 52 | 94 | 64 | M |
| | 2005.09-2008.12 | SAT/5MT | F | L | Hatchback FWD Z 18 XER | Chassis no. from:71009337 | GCI99026 | Inner Joint | | 22 | 25 | 35 | 57 | 111.7 | |
| 1.9 (74 kw) | 2005.08-2008.02 | 6MT | F | L | Hatchback FWD Z 19 DTL | Trans. code:M32 | GDS21092 | Drive Shaft | | 30 | 25 | 53.8 | 94.5 | 604 | |
| | 2005.08-2008.02 | 6MT | F | R | Hatchback FWD Z 19 DTL | Trans. code:M32 | GDS21053 | Drive Shaft | | 30 | 34 | 53.8 | 94.5 | 617 | |
| | 2005.08-2008.02 | 6MT | F | L/R | Hatchback FWD Z 19 DTL | Trans. code:F40 | GDS21032 | Drive Shaft | | 30 | 27 | 53.8 | 94.5 | 605 | |
| | 2005.08-2008.02 | MT | F | L/R | Hatchback FWD Z 19 DTL | | GDS21036 | Drive Shaft | | 30 | 27 | 55.4 | 100 | 602 | |
| | 2005.08-2008.02 | MT | F | L/R | Hatchback FWD Z 19 DTL | | GCO17051 | Outer Joint | | 30 | 26 | 53.8 | 94.5 | 65.5 | M |
| | 2005.08-2008.02 | MT | F | L | Hatchback FWD Z 19 DTL | | GCI99186 | Inner Joint | | 25 | 28 | 34.9 | 57.5 | 111 | |
| | 2005.08-2008.02 | MT | F | R | Hatchback FWD Z 19 DTL | | GCI44016 | Inner Joint | | 34 | 28 | 37.5 | | 129.2 | |
| 1.9 (88 kw) | 2004.04-2008.02 | 5MT | F | L | Hatchback FWD Z 19 DT | Trans. code:M32 | GDS21092 | Drive Shaft | | 30 | 25 | 53.8 | 94.5 | 604 | |
| | 2004.04-2008.02 | 5MT | F | R | Hatchback FWD Z 19 DT | Trans. code:M32 | GDS21053 | Drive Shaft | | 30 | 34 | 53.8 | 94.5 | 617 | |
| | 2004.04-2008.02 | 5MT | F | L/R | Hatchback FWD Z 19 DT | Trans. code:F40 | GDS21032 | Drive Shaft | | 30 | 27 | 53.8 | 94.5 | 605 | |
| | 2004.04-2008.02 | MT | F | L/R | Hatchback FWD Z 19 DT | | GDS21036 | Drive Shaft | | 30 | 27 | 55.4 | 100 | 602 | |
| | 2004.04-2008.02 | MT | F | L/R | Hatchback FWD Z 19 DT | | GCO17051 | Outer Joint | | 30 | 26 | 53.8 | 94.5 | 65.5 | M |
| | 2004.04-2008.02 | MT | F | L | Hatchback FWD Z 19 DT | | GCI99186 | Inner Joint | | 25 | 28 | 34.9 | 57.5 | 111 | |
| | 2004.04-2008.02 | MT | F | R | Hatchback FWD Z 19 DT | | GCI44016 | Inner Joint | | 34 | 28 | 37.5 | | 129.2 | |
| | 2004.04-2008.02 | MT | F | L/R | Hatchback FWD Z 19 DT | Trans. code:F40 | GCI99138 | Inner Joint | | 27 | 28 | 35 | 78 | 112 | |
| 1.9 (110 kw) | 2004.04-2008.02 | AT | F | L/R | Hatchback FWD Z 19 DTH | | GDS44080 | Drive Shaft | | 30 | 27 | 53.8 | 94.5 | 591 | |
| | 2004.04-2008.02 | AT | F | L/R | Hatchback FWD Z 19 DTH | | GCI21024 | Inner Joint | | 27 | 34 | 35 | 101 | 88 | |
| | 2004.04-2008.02 | AT/MT | F | L/R | Hatchback FWD Z 19 DTH | | GCO17051 | Outer Joint | | 30 | 26 | 53.8 | 94.5 | 65.5 | M |
| | 2004.04-2008.02 | MT | F | L | Hatchback FWD Z 19 DTH | Trans. code:M32 | GDS21092 | Drive Shaft | | 30 | 25 | 53.8 | 94.5 | 604 | |
| | 2004.04-2008.02 | MT | F | R | Hatchback FWD Z 19 DTH | Trans. code:M32 | GDS21053 | Drive Shaft | | 30 | 34 | 53.8 | 94.5 | 617 | |
| | 2004.04-2008.02 | MT | F | L/R | Hatchback FWD Z 19 DTH | Trans. code:F40 | GDS21032 | Drive Shaft | | 30 | 27 | 53.8 | 94.5 | 605 | |
| | 2004.04-2008.02 | MT | F | L/R | Hatchback FWD Z 19 DTH | | GDS21036 | Drive Shaft | | 30 | 27 | 55.4 | 100 | 602 | |
| | 2004.04-2008.02 | MT | F | L | Hatchback FWD Z 19 DTH | | GCI99186 | Inner Joint | | 25 | 28 | 34.9 | 57.5 | 111 | |
| | 2004.04-2008.02 | MT | F | R | Hatchback FWD Z 19 DTH | | GCI44016 | Inner Joint | | 34 | 28 | 37.5 | | 129.2 | |
| | 2004.04-2008.02 | MT | F | L/R | Hatchback FWD Z 19 DTH | Trans. code:F40 | GCI99138 | Inner Joint | | 27 | 28 | 35 | 78 | 112 | |
| 2.0 (74 kw) | 2003.05-2004.04 | 5MT | F | L | Hatchback FWD Y 20 DTH | | GDS60015 | Drive Shaft | | 30 | 34 | 52.5 | 105 | 628 | |
| | 2003.05-2004.04 | 5MT | F | R | Hatchback FWD Y 20 DTH | Chassis no. from:41036716 | GDS21061 | Drive Shaft | | 30 | 34 | 52.5 | 105 | 968 | |
| | 2003.05-2004.04 | 5MT | F | R | Hatchback FWD Y 20 DTH | Chassis no. to:41036715 | GDS60016 | Drive Shaft | | 30 | 34 | 52.5 | 105 | 588 | |
| | 2003.05-2004.04 | 5MT | F | R | Hatchback FWD Y 20 DTH | Chassis no. from:41036716 | GCI44002 | Inner Joint | | 34 | 25 | 35 | 56.2 | 114.8 | |
| | 2003.05-2004.04 | 5MT | F | R | Hatchback FWD Y 20 DTH | Chassis no. to:41036715 | GCI44005 | Inner Joint | | 34 | 25 | 35 | | 130.2 | |
| | 2003.05-2004.04 | MT | F | L/R | Hatchback FWD Y 20 DTH | | GCO17007 | Outer Joint | | 30 | 25 | 52.5 | 105 | 62 | O |
| 2.0 (129 kw) | 2003.05-2008.12 | 6MT | F | L/R | Hatchback FWD Z 20 NET | Inner teeth of wheel side:26 | GDS21032 | Drive Shaft | | 30 | 27 | 53.8 | 94.5 | 605 | |
| | 2003.05-2008.12 | 6MT | F | L/R | Hatchback FWD Z 20 NET | | GCI99138 | Inner Joint | | 27 | 28 | 35 | 78 | 112 | |
| | 2003.05-2008.12 | MT | F | L/R | Hatchback FWD Z 20 NET | Inner teeth of wheel side:28 | GDS21036 | Drive Shaft | | 30 | 27 | 55.4 | 100 | 602 | |
| | 2003.05-2008.12 | MT | F | L/R | Hatchback FWD Z 20 NET | | GCO17051 | Outer Joint | | 30 | 26 | 53.8 | 94.5 | 65.5 | M |
| 2.2 (92 kw) | 2003.05-2004.04 | AT/MT | F | L/R | Hatchback FWD Y 22 DTR | Inner teeth of wheel side:28 | GDS21036 | Drive Shaft | | 30 | 27 | 55.4 | 100 | 602 | |
| | 2003.05-2004.04 | MT | F | L/R | Hatchback FWD Y 22 DTR | | GCO17051 | Outer Joint | | 30 | 26 | 53.8 | 94.5 | 65.5 | M |
| | 2003.05-2004.04 | SAT/5MT | F | L/R | Hatchback FWD Y 22 DTR | Inner teeth of wheel side:26 | GDS21032 | Drive Shaft | | 30 | 27 | 53.8 | 94.5 | 605 | |

| | YEAR | TRANSM. | F/R | L/R | BODY STYLE & DRIVE TYPE & ENGINE | REMARKS | G-AP Ref. | PRODUCT | ABS | Technical Specifications A | B | C | H | L | P |
|---|---|---|---|---|---|---|---|---|---|---|---|---|---|---|---|
| **OPEL** | | | | | | | | | | | | | | | |
| **Signum** | | | | | | | | | | | | | | | |
| 2.2 (92 kw) | 2003.05-2004.04 | SAT/5MT | F | L/R | Hatchback FWD Y 22 DTR | | GCI99138 | Inner Joint | | 27 | 28 | 35 | 78 | 112 | |
| 2.2 (114 kw) | 2003.05-2008.09 | 5MT | F | R | Hatchback FWD Z 22 YH | | GCI44005 | Inner Joint | | 34 | 25 | 35 | | 130.2 | |
| | 2003.05-2008.09 | MT | F | L | Hatchback FWD Z 22 YH | Trans. code:M32 | GDS82090 | Drive Shaft | | 30 | 25 | 52 | 94 | 596 | |
| | 2003.05-2008.09 | MT | F | R | Hatchback FWD Z 22 YH | Trans. code:M32 | GDS82089 | Drive Shaft | | 30 | 34 | 52 | 94 | 577 | |
| | 2003.05-2008.09 | SAT/5MT | F | L | Hatchback FWD Z 22 YH | Chassis no. to:71009336 | GDS60015 | Drive Shaft | | 30 | 34 | 52.5 | 105 | 628 | |
| | 2003.05-2008.09 | SAT/5MT | F | R | Hatchback FWD Z 22 YH | Chassis no. to:71009336 | GDS60016 | Drive Shaft | | 30 | 34 | 52.5 | 105 | 588 | |
| | 2003.05-2008.09 | SAT/5MT | F | L/R | Hatchback FWD Z 22 YH | Chassis no. to:71009336 | GCO17007 | Outer Joint | | 30 | 25 | 52.5 | 105 | 62 | O |
| | 2003.05-2008.09 | SAT/5MT | F | L/R | Hatchback FWD Z 22 YH | Chassis no. from:71009337 | GCO21038 | Outer Joint | | 30 | 24 | 52 | 94 | 64 | M |
| | 2003.05-2008.09 | SAT/5MT | F | L | Hatchback FWD Z 22 YH | | GCI44002 | Inner Joint | | 34 | 25 | 35 | 56.2 | 114.8 | |
| | 2003.05-2008.09 | SAT/5MT | F | L | Hatchback FWD Z 22 YH | Trans. code:M32 | GCI44008 | Inner Joint | | 25 | 25 | 34.9 | 57.5 | 113.2 | |
| 2.8 (169 kw) | 2005.09-2008.12 | 6AT | F | L/R | Hatchback FWD Z 28 NEL | | GCO21057 | Outer Joint | | 30 | 27 | 59.1 | 94 | 65 | M |
| | 2005.09-2008.12 | 6MT | F | L/R | Hatchback FWD Z 28 NEL | | GDS21036 | Drive Shaft | | 30 | 27 | 55.4 | 100 | 602 | |
| | 2005.09-2008.12 | MT | F | L/R | Hatchback FWD Z 28 NEL | | GCO21030 | Outer Joint | | 30 | 28 | 55.4 | 96 | 65 | M |
| 2.8 (184 kw) | 2006.01-2008.12 | 6AT | F | L/R | Hatchback FWD Z 28 NET | | GCO21057 | Outer Joint | | 30 | 27 | 59.1 | 94 | 65 | M |
| | 2006.01-2008.12 | 6MT | F | L/R | Hatchback FWD Z 28 NET | | GDS21036 | Drive Shaft | | 30 | 27 | 55.4 | 100 | 602 | |
| | 2006.01-2008.12 | MT | F | L/R | Hatchback FWD Z 28 NET | | GCO21030 | Outer Joint | | 30 | 28 | 55.4 | 96 | 65 | M |
| 3.0 (130 kw) | 2003.05-2005.07 | AT/MT | F | L/R | Hatchback FWD Y 30 DT | Inner teeth of wheel side:28 | GDS21036 | Drive Shaft | | 30 | 27 | 55.4 | 100 | 602 | |
| | 2003.05-2005.07 | MT | F | L/R | Hatchback FWD Y 30 DT | | GCO17051 | Outer Joint | | 30 | 26 | 53.8 | 94.5 | 65.5 | M |
| | 2003.05-2005.07 | SAT/5MT | F | L/R | Hatchback FWD Y 30 DT | | GCI99138 | Inner Joint | | 27 | 28 | 35 | 78 | 112 | |
| | 2003.05-2005.07 | SAT/6MT | F | L/R | Hatchback FWD Y 30 DT | Inner teeth of wheel side:26 | GDS21032 | Drive Shaft | | 30 | 27 | 53.8 | 94.5 | 605 | |
| 3.0 (135 kw) | 2005.09-2008.12 | 6AT | F | L/R | Hatchback FWD Z 30 DT | | GCO21057 | Outer Joint | | 30 | 27 | 59.1 | 94 | 65 | M |
| | 2005.09-2008.12 | 6MT | F | L/R | Hatchback FWD Z 30 DT | | GDS21036 | Drive Shaft | | 30 | 27 | 55.4 | 100 | 602 | |
| | 2005.09-2008.12 | MT | F | L/R | Hatchback FWD Z 30 DT | | GCO21030 | Outer Joint | | 30 | 28 | 55.4 | 96 | 65 | M |
| 3.2 (155 kw) | 2003.05-2005.07 | AT/MT | F | L/R | Hatchback FWD Z 32 SE | Inner teeth of wheel side:28 | GDS21036 | Drive Shaft | | 30 | 27 | 55.4 | 100 | 602 | |
| | 2003.05-2005.07 | MT | F | L/R | Hatchback FWD Z 32 SE | | GCO17051 | Outer Joint | | 30 | 26 | 53.8 | 94.5 | 65.5 | M |
| | 2003.05-2005.07 | SAT/5MT | F | L/R | Hatchback FWD Z 32 SE | Inner teeth of wheel side:26 | GDS21032 | Drive Shaft | | 30 | 27 | 53.8 | 94.5 | 605 | |
| | 2003.05-2005.07 | SAT/5MT | F | L/R | Hatchback FWD Z 32 SE | | GCI99138 | Inner Joint | | 27 | 28 | 35 | 78 | 112 | |
| **Sintra** | | | | | | | | | | | | | | | |
| 2.2 (104 kw) | 1996.11-1999.09 | | F | | MPV FWD X22XE | | GCO99020 | Outer Joint | | 33 | 25 | 50 | 105 | 61 | O |
| | 1996.11-1999.09 | | F | L/R | MPV FWD X22XE | | GCI44002 | Inner Joint | | 34 | 25 | 35 | 56.2 | 114.8 | |
| **Tigra** | | | | | | | | | | | | | | | |
| 1.3 (51 kw) | 2004.06-2010.12 | 5MT | F | L | Convertible FWD Z 13 DT | | GDS44027 | Drive Shaft | 29T | 22 | 22 | 52 | 98 | 580 | |
| | 2004.06-2010.12 | 5MT | F | R | Convertible FWD Z 13 DT | | GDS44026 | Drive Shaft | 29T | 22 | 22 | 52 | 98 | 930 | |
| | 2004.06-2010.12 | 5MT | F | R | Convertible FWD Z 13 DT | | GDS44075 | Drive Shaft | 29T | 22 | 22 | 52 | 97.5 | 926 | |
| | 2004.06-2010.12 | 5MT | F | R | Convertible FWD Z 13 DT | | GDS99205 | Drive Shaft | | 22 | 22 | 52 | 97.5 | 930 | |
| | 2004.06-2010.12 | 5MT | F | R | Convertible FWD Z 13 DT | | GCI60001 | Inner Joint | | 22 | 28 | 34.9 | 57.5 | 96.5 | |
| | 2004.06-2010.12 | 5MT | F | L/R | Convertible FWD Z 13 DT | | GCI44003 | Inner Joint | | 22 | 28 | 34.95 | 57.5 | 83.5 | |
| | 2004.06-2010.12 | AT/MT | F | L/R | Convertible FWD Z 13 DT | | GCO44020 | Outer Joint | 29T | 22 | 28 | 52 | 97.5 | 57.5 | O |
| | 2004.06-2010.12 | MT | F | L | Convertible FWD Z 13 DT | | GDS99069 | Drive Shaft | 29T | 22 | 22 | 52 | 97.5 | 584 | |
| | 2004.06-2010.12 | MT | F | R | Convertible FWD Z 13 DT | | GCO44043 | Outer Joint | | 22 | 28 | 52 | 97.5 | 57.5 | O |
| | 2004.06-2010.12 | MT | F | L/R | Convertible FWD Z 13 DT | | GCO44019 | Outer Joint | 29T | 22 | 28 | 52 | 97.5 | 57.5 | O |
| 1.4 (63 kw) | 1997.08-2000.12 | 5MT | F | L | Coupe FWD X14XE | | GDS44001 | Drive Shaft | 29T | 22 | 22 | 52 | 95 | 573 | |
| | 1997.08-2000.12 | 5MT | F | R | Coupe FWD X14XE | | GDS60002 | Drive Shaft | 29T | 22 | 22 | 52 | 95 | 926 | |
| | 1997.08-2000.12 | 5MT | F | L/R | Coupe FWD X14XE | | GCI44003 | Inner Joint | | 22 | 28 | 34.95 | 57.5 | 83.5 | |
| | 1997.08-2000.12 | | F | L/R | Coupe FWD X14XE | | GCO44020 | Outer Joint | 29T | 22 | 28 | 52 | 97.5 | 57.5 | O |
| 1.4 (66 kw) | 1994.07-2000.12 | 4AT/5MT | F | L | Coupe FWD X14XE | | GDS44001 | Drive Shaft | 29T | 22 | 22 | 52 | 95 | 573 | |
| | 1994.07-2000.12 | 4AT/5MT | F | R | Coupe FWD X14XE | | GDS60002 | Drive Shaft | 29T | 22 | 22 | 52 | 95 | 926 | |
| | 1994.07-2000.12 | 4AT/5MT | F | L/R | Coupe FWD X14XE | | GCO44020 | Outer Joint | 29T | 22 | 28 | 52 | 97.5 | 57.5 | O |
| | 1994.07-2000.12 | 4AT/5MT | F | L/R | Coupe FWD X14XE | | GCI44003 | Inner Joint | | 22 | 28 | 34.95 | 57.5 | 83.5 | |
| | 1994.07-2000.12 | MT | F | L/R | Coupe FWD X14XE | | GCI44004 | Inner Joint | | 22 | 22 | 34.95 | 57.5 | 103 | |
| | 2004.06-2010.12 | AT/MT | F | L | Convertible FWD Z 14 XEP | TJ | GDS99069 | Drive Shaft | 29T | 22 | 22 | 52 | 97.5 | 584 | |
| | 2004.06-2010.12 | AT/MT | F | L/R | Convertible FWD Z 14 XEP | | GCO44020 | Outer Joint | 29T | 22 | 28 | 52 | 97.5 | 57.5 | O |
| | 2004.06-2010.12 | MT | F | L/R | Convertible FWD Z 14 XEP | | GCO44019 | Outer Joint | 29T | 22 | 28 | 52 | 97.5 | 57.5 | O |
| | 2004.06-2010.12 | SAT/5MT | F | L | Convertible FWD Z 14 XEP | VL | GDS44027 | Drive Shaft | 29T | 22 | 22 | 52 | 98 | 580 | |
| | 2004.06-2010.12 | SAT/5MT | F | R | Convertible FWD Z 14 XEP | VL | GDS44026 | Drive Shaft | 29T | 22 | 22 | 52 | 98 | 930 | |
| | 2004.06-2010.12 | SAT/5MT | F | R | Convertible FWD Z 14 XEP | TJ | GDS44075 | Drive Shaft | 29T | 22 | 22 | 52 | 97.5 | 926 | |
| | 2004.06-2010.12 | SAT/5MT | F | R | Convertible FWD Z 14 XEP | | GCI60001 | Inner Joint | | 22 | 28 | 34.9 | 57.5 | 96.5 | |
| | 2004.06-2010.12 | SAT/5MT | F | L/R | Convertible FWD Z 14 XEP | | GCI44003 | Inner Joint | | 22 | 28 | 34.95 | 57.5 | 83.5 | |
| 1.6 (74 kw) | 1997.08-1998.08 | | F | L/R | Coupe FWD C16SEL | | GCO44007 | Outer Joint | 29T | 22 | 22 | 52 | 94.5 | 50 | O |
| | 1997.08-1998.08 | | F | L/R | Coupe FWD C16SEL | | GCI44004 | Inner Joint | | 22 | 22 | 34.95 | 57.5 | 103 | |
| 1.6 (78 kw) | 1994.07-2000.12 | AT/MT | F | L/R | Coupe FWD X16XE | | GCO44007 | Outer Joint | 29T | 22 | 22 | 52 | 94.5 | 50 | O |
| | 1994.07-2000.12 | MT | F | L/R | Coupe FWD X16XE | | GCI44004 | Inner Joint | | 22 | 22 | 34.95 | 57.5 | 103 | |
| 1.8 (92 kw) | 2004.06-2010.12 | 5MT | F | L | Convertible FWD Z 18 XE | | GDS44027 | Drive Shaft | 29T | 22 | 22 | 52 | 98 | 580 | |
| | 2004.06-2010.12 | 5MT | F | L | Convertible FWD Z 18 XE | | GDS82091 | Drive Shaft | 29T | 22 | 22 | 52 | 97.5 | 580 | |
| | 2004.06-2010.12 | 5MT | F | R | Convertible FWD Z 18 XE | for manufacturer:Delphi | GDS44026 | Drive Shaft | 29T | 22 | 22 | 52 | 98 | 930 | |

| | YEAR | TRANSM. | F/R | L/R | BODY STYLE & DRIVE TYPE & ENGINE | REMARKS | G-AP Ref. | PRODUCT | ABS | Technical Specifications A | B | C | H | L | P |
|---|---|---|---|---|---|---|---|---|---|---|---|---|---|---|---|
| **OPEL** | | | | | | | | | | | | | | | |
| **Tigra** | | | | | | | | | | | | | | | |
| 1.8 (92 kw) | 2004.06-2010.12 | 5MT | F | R | Convertible FWD Z 18 XE | | GDS44075 | Drive Shaft | 29T | 22 | 22 | 52 | 97.5 | 926 | |
| | 2004.06-2010.12 | 5MT | F | R | Convertible FWD Z 18 XE | | GDS82092 | Drive Shaft | 29T | 22 | 22 | 52 | 97.5 | 930 | |
| | 2004.06-2010.12 | 5MT | F | L/R | Convertible FWD Z 18 XE | | GCO44002 | Outer Joint | 29T | 22 | 23 | 52 | 97.5 | 61 | M |
| | 2004.06-2010.12 | MT | F | L | Convertible FWD Z 18 XE | | GDS99069 | Drive Shaft | 29T | 22 | 22 | 52 | 97.5 | 584 | |
| | 2004.06-2010.12 | MT | F | L/R | Convertible FWD Z 18 XE | | GCI44009 | Inner Joint | | 22 | 23 | 35 | 57.5 | 96 | |
| **Vectra** | | | | | | | | | | | | | | | |
| 1.6 (55 kw) | 1995.09-2003.07 | 4AT/5MT | F | L | Hatchback FWD 16LZ2/X16SZR | For Engine Code:16LZ2 | GDS44038 | Drive Shaft | 29T | 33 | 34 | 52 | 103.5 | 595 | |
| | 1995.09-2003.07 | 4AT/5MT | F | L | Hatchback FWD 16LZ2/X16SZR | For Engine code:X16SZR,Chassis no. to:W1285446 | GDS44076 | Drive Shaft | 29T | 22 | 22 | 52 | 95 | 592 | |
| | 1995.09-2003.07 | 4AT/5MT | F | R | Hatchback FWD 16LZ2/X16SZR | For Engine Code:16LZ2 | GDS44039 | Drive Shaft | 29T | 33 | 34 | 52 | 103.5 | 959 | |
| | 1995.09-2003.07 | 4AT/5MT | F | R | Hatchback FWD 16LZ2/X16SZR | For Engine code:X16SZR,Chassis no. to:W1285446 | GDS44077 | Drive Shaft | 29T | 22 | 22 | 52 | 95 | 955 | |
| | 1995.09-2003.07 | 4AT/5MT | F | L/R | Hatchback FWD 16LZ2/X16SZR | For Engine Code:X16SZR,Chassis no. from:W1285447 | GCO44011 | Outer Joint | 29T | 33 | 22 | 52 | 103 | 50.5 | O |
| | 1995.09-2003.07 | 4AT/5MT | F | L/R | Hatchback FWD 16LZ2/X16SZR | For Engine Code:X16SZR,Chassis no. To:W1285446 | GCO44021 | Outer Joint | 29T | 22 | 22 | 52 | 95 | 50 | O |
| | 1995.09-2003.07 | 4AT/5MT | F | L/R | Hatchback FWD 16LZ2/X16SZR | | GCI44002 | Inner Joint | | 34 | 25 | 35 | 56.2 | 114.8 | |
| | 1995.09-2003.07 | MT | F | L/R | Hatchback FWD 16LZ2/X16SZR | Date to:1999.12 | GCO44051 | Outer Joint | 29T | 22 | 22 | 52 | 95 | 50 | O |
| | 1995.09-2003.07 | MT/4AT/5MT | F | L/R | Hatchback FWD 16LZ2/X16SZR | | GCI44004 | Inner Joint | | 22 | 22 | 34.95 | 57.5 | 103 | |
| | 1995.09-2003.07 | | F | L/R | Hatchback FWD 16LZ2/X16SZR | For Engine code:16LZ2 | GCO44006 | Outer Joint | 29T | 33 | 25 | 52 | 103.5 | 61 | O |
| | 1995.09-2003.07 | | F | L/R | Hatchback FWD 16LZ2/X16SZR | For Engine code:X16SZR;Chassis no. to:W1285446 | GCO44007 | Outer Joint | 29T | 22 | 22 | 52 | 94.5 | 50 | O |
| | 1995.09-2003.07 | | F | L/R | Hatchback FWD 16LZ2/X16SZR | For Engine code:16LZ2 | GCO44049 | Outer Joint | | 33 | 25 | 52 | 109 | 61 | O |
| | 1995.09-2003.07 | | F | | Hatchback FWD 16LZ2/X16SZR | | GCO44010 | Outer Joint | 29T | 33 | 22 | 52 | 103 | 50.5 | O |
| | 1995.09-2003.07 | | F | L | Hatchback FWD 16LZ2/X16SZR | Date To:1999.01 | GCI21014 | Inner Joint | | 22 | 22 | 35 | 57.5 | 105.5 | |
| | 1995.10-2002.04 | 4AT/5MT | F | L | Saloon FWD 16LZ2/X16SZR | For Engine Code:16LZ2 | GDS44038 | Drive Shaft | 29T | 33 | 34 | 52 | 103.5 | 595 | |
| | 1995.10-2002.04 | 4AT/5MT | F | L | Saloon FWD 16LZ2/X16SZR | For Engine code:X16SZR,Chassis no. to:W1285446 | GDS44076 | Drive Shaft | 29T | 22 | 22 | 52 | 95 | 592 | |
| | 1995.10-2002.04 | 4AT/5MT | F | R | Saloon FWD 16LZ2/X16SZR | For Engine Code:16LZ2 | GDS44039 | Drive Shaft | 29T | 33 | 34 | 52 | 103.5 | 959 | |
| | 1995.10-2002.04 | 4AT/5MT | F | R | Saloon FWD 16LZ2/X16SZR | For Engine code:X16SZR,Chassis no. to:W1285446 | GDS44077 | Drive Shaft | 29T | 22 | 22 | 52 | 95 | 955 | |
| | 1995.10-2002.04 | 4AT/5MT | F | L/R | Saloon FWD 16LZ2/X16SZR | For Engine Code:X16SZR,Chassis no. from:W1285447 | GCO44011 | Outer Joint | 29T | 33 | 22 | 52 | 103 | 50.5 | O |
| | 1995.10-2002.04 | 4AT/5MT | F | L/R | Saloon FWD 16LZ2/X16SZR | For Engine Code:X16SZR,Chassis no. To:W1285446 | GCO44021 | Outer Joint | 29T | 22 | 22 | 52 | 95 | 50 | O |
| | 1995.10-2002.04 | 4AT/5MT | F | L/R | Saloon FWD 16LZ2/X16SZR | | GCI44002 | Inner Joint | | 34 | 25 | 35 | 56.2 | 114.8 | |
| | 1995.10-2002.04 | 5MT | F | L/R | Saloon FWD 16LZ2/X16SZR | For Engine Code:X16SZR,Chassis no. To:W1285446 | GCO44021 | Outer Joint | 29T | 22 | 22 | 52 | 95 | 50 | O |
| | 1995.10-2002.04 | MT | F | L/R | Saloon FWD 16LZ2/X16SZR | Date to:1999.12 | GCO44051 | Outer Joint | 29T | 22 | 22 | 52 | 95 | 50 | O |
| | 1995.10-2002.04 | MT/4AT/5MT | F | L/R | Saloon FWD 16LZ2/X16SZR | | GCI44004 | Inner Joint | | 22 | 22 | 34.95 | 57.5 | 103 | |
| | 1995.10-2002.04 | | F | L/R | Saloon FWD 16LZ2/X16SZR | For Engine code:16LZ2 | GCO44006 | Outer Joint | 29T | 33 | 25 | 52 | 103.5 | 61 | O |
| | 1995.10-2002.04 | | F | L/R | Saloon FWD 16LZ2/X16SZR | For Engine code:X16SZR;Chassis no. to:W1285446 | GCO44007 | Outer Joint | 29T | 22 | 22 | 52 | 94.5 | 50 | O |
| | 1995.10-2002.04 | | F | L/R | Saloon FWD 16LZ2/X16SZR | For Engine code:16LZ2 | GCO44049 | Outer Joint | | 33 | 25 | 52 | 109 | 61 | O |
| | 1995.10-2002.04 | | F | | Saloon FWD 16LZ2/X16SZR | | GCO44010 | Outer Joint | 29T | 33 | 22 | 52 | 103 | 50.5 | O |
| | 1995.10-2002.04 | | F | L | Saloon FWD 16LZ2/X16SZR | Date To:1999.01 | GCI21014 | Inner Joint | | 22 | 22 | 35 | 57.5 | 105.5 | |
| | 1996.11-2000.06 | 4AT/5MT | F | L | Estate FWD 16LZ2/X16SZR | For Engine Code:16LZ2 | GDS44038 | Drive Shaft | 29T | 33 | 34 | 52 | 103.5 | 595 | |
| | 1996.11-2000.06 | 4AT/5MT | F | L | Estate FWD 16LZ2/X16SZR | For Engine code:X16SZR,Chassis no. to:W1285446 | GDS44076 | Drive Shaft | 29T | 22 | 22 | 52 | 95 | 592 | |
| | 1996.11-2000.06 | 4AT/5MT | F | R | Estate FWD 16LZ2/X16SZR | For Engine Code:16LZ2 | GDS44039 | Drive Shaft | 29T | 33 | 34 | 52 | 103.5 | 959 | |
| | 1996.11-2000.06 | 4AT/5MT | F | R | Estate FWD 16LZ2/X16SZR | For Engine code:X16SZR,Chassis no. to:W1285446 | GDS44077 | Drive Shaft | 29T | 22 | 22 | 52 | 95 | 955 | |
| | 1996.11-2000.06 | 4AT/5MT | F | L/R | Estate FWD 16LZ2/X16SZR | For Engine Code:X16SZR,Chassis no. To:W1285446 | GCO44021 | Outer Joint | 29T | 22 | 22 | 52 | 95 | 50 | O |
| | 1996.11-2000.06 | 4AT/5MT | F | L/R | Estate FWD 16LZ2/X16SZR | | GCI44002 | Inner Joint | | 34 | 25 | 35 | 56.2 | 114.8 | |
| | 1996.11-2000.06 | 5MT | F | L/R | Estate FWD 16LZ2/X16SZR | For Engine Code:X16SZR,Chassis no. To:W1285446 | GCO44021 | Outer Joint | 29T | 22 | 22 | 52 | 95 | 50 | O |
| | 1996.11-2000.06 | AT/MT | F | L/R | Estate FWD 16LZ2/X16SZR | | GCO44007 | Outer Joint | 29T | 22 | 22 | 52 | 94.5 | 50 | O |
| | 1996.11-2000.06 | AT/MT | F | L/R | Estate FWD 16LZ2/X16SZR | Chassis no. from:W1285447;Chassis no. from:W7154259 | GCO44011 | Outer Joint | 29T | 33 | 22 | 52 | 103 | 50.5 | O |
| | 1996.11-2000.06 | MT | F | L/R | Estate FWD 16LZ2/X16SZR | | GCO44010 | Outer Joint | 29T | 33 | 22 | 52 | 103 | 50.5 | O |
| | 1996.11-2000.06 | MT | F | L/R | Estate FWD 16LZ2/X16SZR | Date to:1999.12 | GCO44051 | Outer Joint | 29T | 22 | 22 | 52 | 95 | 50 | O |
| | 1996.11-2000.06 | MT/4AT/5MT | F | L/R | Estate FWD 16LZ2/X16SZR | | GCI44004 | Inner Joint | | 22 | 22 | 34.95 | 57.5 | 103 | |
| | 1996.11-2000.06 | | F | L/R | Estate FWD 16LZ2/X16SZR | For Engine code:16LZ2 | GCO44006 | Outer Joint | 29T | 33 | 25 | 52 | 103.5 | 61 | O |
| | 1996.11-2000.06 | | F | L/R | Estate FWD 16LZ2/X16SZR | For Engine code:16LZ2 | GCO44049 | Outer Joint | | 33 | 25 | 52 | 109 | 61 | O |
| | 1996.11-2000.06 | | F | L | Estate FWD 16LZ2/X16SZR | Date To:1999.01 | GCI21014 | Inner Joint | | 22 | 22 | 35 | 57.5 | 105.5 | |
| 1.6 (74 kw) | 1995.09-2002.07 | 4AT/5MT | F | L | Estate FWD X16XEL/Y16XE/Z16XE | | GDS44076 | Drive Shaft | 29T | 22 | 22 | 52 | 95 | 592 | |
| | 1995.09-2002.07 | 4AT/5MT | F | R | Estate FWD X16XEL/Y16XE/Z16XE | | GDS44077 | Drive Shaft | 29T | 22 | 22 | 52 | 95 | 955 | |
| | 1995.09-2002.07 | 4AT/5MT | F | L/R | Estate FWD X16XEL/Y16XE/Z16XE | Chassis no. To:W1285446 | GCO44021 | Outer Joint | 29T | 22 | 22 | 52 | 95 | 50 | O |
| | 1995.09-2002.07 | AT/MT | F | R | Estate FWD X16XEL/Y16XE/Z16XE | | GDS50209 | Drive Shaft | | 27 | 39 | 56.5 | 92 | 1014 | |
| | 1995.09-2002.07 | AT/MT | F | R | Estate FWD X16XEL/Y16XE/Z16XE | | GDS60019 | Drive Shaft | | 22 | 22 | 52 | 95 | 926 | |
| | 1995.09-2002.07 | AT/MT | F | R | Estate FWD X16XEL/Y16XE/Z16XE | | GCI50097 | Inner Joint | | 39 | 35 | 30 | 409 | 90 | |
| | 1995.09-2002.07 | MT | F | L/R | Estate FWD X16XEL/Y16XE/Z16XE | | GCO44011 | Outer Joint | 29T | 33 | 22 | 52 | 103 | 50.5 | O |
| | 1995.09-2002.07 | MT | F | L/R | Estate FWD X16XEL/Y16XE/Z16XE | Date to:1999.12 | GCO44051 | Outer Joint | 29T | 22 | 22 | 52 | 95 | 50 | O |
| | 1995.09-2002.07 | MT | F | L/R | Estate FWD X16XEL/Y16XE/Z16XE | | GCI44004 | Inner Joint | | 22 | 22 | 34.95 | 57.5 | 103 | |
| | 1995.09-2002.07 | | F | L/R | Estate FWD X16XEL/Y16XE/Z16XE | For Engine code:X16SZR;Chassis no. to:W1285446 | GCO44007 | Outer Joint | 29T | 22 | 22 | 52 | 94.5 | 50 | O |
| | 1995.09-2002.07 | | F | | Estate FWD X16XEL/Y16XE/Z16XE | | GCO44010 | Outer Joint | 29T | 33 | 22 | 52 | 103 | 50.5 | O |
| | 1995.09-2002.07 | | F | L | Estate FWD X16XEL/Y16XE/Z16XE | Date To:1999.01 | GCI21014 | Inner Joint | | 22 | 22 | 35 | 57.5 | 105.5 | |
| | 1995.09-2002.07 | 4AT/5MT | F | L | Hatchback FWD X16XEL/Y16XE/Z16XE | | GDS44076 | Drive Shaft | 29T | 22 | 22 | 52 | 95 | 592 | |
| | 1995.09-2002.07 | 4AT/5MT | F | R | Hatchback FWD X16XEL/Y16XE/Z16XE | | GDS44077 | Drive Shaft | 29T | 22 | 22 | 52 | 95 | 955 | |
| | 1995.09-2002.07 | 4AT/5MT | F | L/R | Hatchback FWD X16XEL/Y16XE/Z16XE | Chassis no. To:W1285446 | GCO44021 | Outer Joint | 29T | 22 | 22 | 52 | 95 | 50 | O |

| | YEAR | TRANSM. | F/R | L/R | BODY STYLE & DRIVE TYPE & ENGINE | REMARKS | G-AP Ref. | PRODUCT | ABS | Technical Specifications A | B | C | H | L | P |
|---|---|---|---|---|---|---|---|---|---|---|---|---|---|---|---|
| **OPEL** | | | | | | | | | | | | | | | |
| **Vectra** | | | | | | | | | | | | | | | |
| 1.6 (74 kw) | 1995.09-2002.07 | AT/MT | F | R | Hatchback FWD X16XEL/Y16XE/Z16XE | | GDS50209 | Drive Shaft | | 27 | 39 | 56.5 | 92 | 1014 | |
| | 1995.09-2002.07 | AT/MT | F | R | Hatchback FWD X16XEL/Y16XE/Z16XE | | GDS60019 | Drive Shaft | | 22 | 22 | 52 | 95 | 926 | |
| | 1995.09-2002.07 | AT/MT | F | L/R | Hatchback FWD X16XEL/Y16XE/Z16XE | Chassis no. to:W1285446;Chassis no. to:W5276835;Chassis no. to:W7154258 | GCO44007 | Outer Joint | 29T | 22 | 22 | 52 | 94.5 | 50 | O |
| | 1995.09-2002.07 | AT/MT | F | L/R | Hatchback FWD X16XEL/Y16XE/Z16XE | Chassis no. from:W1285447;Chassis no. from:W7154259 | GCO44011 | Outer Joint | 29T | 33 | 22 | 52 | 103 | 50.5 | O |
| | 1995.09-2002.07 | AT/MT | F | R | Hatchback FWD X16XEL/Y16XE/Z16XE | | GCI50097 | Inner Joint | | 39 | 35 | 30 | 409 | 90 | |
| | 1995.09-2002.07 | MT | F | L/R | Hatchback FWD X16XEL/Y16XE/Z16XE | Date to:1999.12 | GCO44051 | Outer Joint | 29T | 22 | 22 | 52 | 95 | 50 | O |
| | 1995.09-2002.07 | MT | F | L/R | Hatchback FWD X16XEL/Y16XE/Z16XE | | GCI44004 | Inner Joint | | 22 | 22 | 34.95 | 57.5 | 103 | |
| | 1995.09-2002.07 | | F | | Hatchback FWD X16XEL/Y16XE/Z16XE | | GCO44010 | Outer Joint | 29T | 33 | 22 | 52 | 103 | 50.5 | O |
| | 1995.09-2002.07 | | F | L | Hatchback FWD X16XEL/Y16XE/Z16XE | Date To:1999.01 | GCI21014 | Inner Joint | | 22 | 22 | 35 | 57.5 | 105.5 | |
| | 1995.09-2002.07 | 4AT/5MT | F | L | Saloon FWD X16XEL/Y16XE/Z16XE | | GDS44076 | Drive Shaft | 29T | 22 | 22 | 52 | 95 | 592 | |
| | 1995.09-2002.07 | 4AT/5MT | F | R | Saloon FWD X16XEL/Y16XE/Z16XE | | GDS44077 | Drive Shaft | 29T | 22 | 22 | 52 | 95 | 955 | |
| | 1995.09-2002.07 | 4AT/5MT | F | L/R | Saloon FWD X16XEL/Y16XE/Z16XE | Chassis no. To:W1285446 | GCO44021 | Outer Joint | 29T | 22 | 22 | 52 | 95 | 50 | O |
| | 1995.09-2002.07 | 4AT/5MT | F | L/R | Saloon FWD X16XEL/Y16XE/Z16XE | | GCI21014 | Inner Joint | | 22 | 22 | 35 | 57.5 | 105.5 | |
| | 1995.09-2002.07 | AT/MT | F | R | Saloon FWD X16XEL/Y16XE/Z16XE | | GDS60019 | Drive Shaft | | 22 | 22 | 52 | 95 | 926 | |
| | 1995.09-2002.07 | AT/MT | F | L/R | Saloon FWD X16XEL/Y16XE/Z16XE | Chassis no. to:W1285446;Chassis no. to:W5276835;Chassis no. to:W7154258 | GCO44007 | Outer Joint | 29T | 22 | 22 | 52 | 94.5 | 50 | O |
| | 1995.09-2002.07 | AT/MT | F | L/R | Saloon FWD X16XEL/Y16XE/Z16XE | Chassis no. from:W1285447;Chassis no. from:W7154259 | GCO44011 | Outer Joint | 29T | 33 | 22 | 52 | 103 | 50.5 | O |
| | 1995.09-2002.07 | MT | F | L/R | Saloon FWD X16XEL/Y16XE/Z16XE | Date to:1999.12;Chassis no. To:W1285446 | GCO44051 | Outer Joint | 29T | 22 | 22 | 52 | 95 | 50 | O |
| | 1995.09-2002.07 | MT | F | L/R | Saloon FWD X16XEL/Y16XE/Z16XE | | GCI44004 | Inner Joint | | 22 | 22 | 34.95 | 57.5 | 103 | |
| | 1995.09-2002.07 | | F | | Saloon FWD X16XEL/Y16XE/Z16XE | Chassis no. from:W1285447 | GCO44010 | Outer Joint | 29T | 33 | 22 | 52 | 103 | 50.5 | O |
| | 2002.04-2005.10 | 5MT | F | L | Saloon FWD Z 16 XE | | GDS44020 | Drive Shaft | | 30 | 22 | 52.5 | 105 | 617.5 | |
| | 2002.04-2005.10 | 5MT | F | R | Saloon FWD Z 16 XE | | GDS17040 | Drive Shaft | | 30 | 22 | 52.5 | 105 | 987 | |
| | 2002.04-2005.10 | MT | F | L/R | Saloon FWD Z 16 XE | Date to:2005.09 | GCO17007 | Outer Joint | | 30 | 25 | 52.5 | 105 | 62 | O |
| | 2002.04-2005.10 | | F | L/R | Saloon FWD Z 16 XE | | GCI99026 | Inner Joint | | 22 | 25 | 35 | 57 | 111.7 | |
| | 2005.08-2008.08 | 5MT | F | L | Hatchback FWD Z 16 XE | Chassis no. from:71009337 | GDS17223 | Drive Shaft | | 30 | 22 | 52 | 94 | 609 | |
| | 2005.08-2008.08 | 5MT | F | L | Hatchback FWD Z 16 XE | Chassis no. to:71009336 | GDS44020 | Drive Shaft | | 30 | 22 | 52.5 | 105 | 617.5 | |
| | 2005.08-2008.08 | 5MT | F | R | Hatchback FWD Z 16 XE | Chassis no. to:71009336 | GDS17040 | Drive Shaft | | 30 | 22 | 52.5 | 105 | 987 | |
| | 2005.08-2008.08 | 5MT | F | L/R | Hatchback FWD Z 16 XE | Chassis no. to:71009336 | GCO17007 | Outer Joint | | 30 | 25 | 52.5 | 105 | 62 | O |
| | 2005.08-2008.08 | 5MT | F | L/R | Hatchback FWD Z 16 XE | Chassis no. from:71009337 | GCO21038 | Outer Joint | | 30 | 24 | 52 | 94 | 64 | M |
| | 2005.08-2008.08 | 5MT | F | L | Hatchback FWD Z 16 XE | Chassis no. from:71009337 | GCI99026 | Inner Joint | | 22 | 25 | 35 | 57 | 111.7 | |
| 1.6 (77 kw) | 2005.08-2008.08 | 5MT | F | L | Saloon FWD Z 16 XEP | Chassis no. from:71009337 | GDS17223 | Drive Shaft | | 30 | 22 | 52 | 94 | 609 | |
| | 2005.08-2008.08 | 5MT | F | L | Saloon FWD Z 16 XEP | Chassis no. to:71009336 | GDS44020 | Drive Shaft | | 30 | 22 | 52.5 | 105 | 617.5 | |
| | 2005.08-2008.08 | 5MT | F | R | Saloon FWD Z 16 XEP | Chassis no. to:71009336 | GDS17040 | Drive Shaft | | 30 | 22 | 52.5 | 105 | 987 | |
| | 2005.08-2008.08 | 5MT | F | L/R | Saloon FWD Z 16 XEP | Chassis no. to:71009336 | GCO17007 | Outer Joint | | 30 | 25 | 52.5 | 105 | 62 | O |
| | 2005.08-2008.08 | 5MT | F | L/R | Saloon FWD Z 16 XEP | Chassis no. from:71009337 | GCO21038 | Outer Joint | | 30 | 24 | 52 | 94 | 64 | M |
| | 2005.08-2008.08 | 5MT | F | L | Saloon FWD Z 16 XEP | Chassis no. from:71009337 | GCI99026 | Inner Joint | | 22 | 25 | 35 | 57 | 111.7 | |
| | 2005.12-2008.08 | 5MT | F | L | Estate FWD Z 16 XEP | Chassis no. from:71009337 | GDS17223 | Drive Shaft | | 30 | 22 | 52 | 94 | 609 | |
| | 2005.12-2008.08 | 5MT | F | L | Estate FWD Z 16 XEP | Chassis no. to:71009336 | GDS44020 | Drive Shaft | | 30 | 22 | 52.5 | 105 | 617.5 | |
| | 2005.12-2008.08 | 5MT | F | R | Estate FWD Z 16 XEP | Chassis no. to:71009336 | GDS17040 | Drive Shaft | | 30 | 22 | 52.5 | 105 | 987 | |
| | 2005.12-2008.08 | 5MT | F | L/R | Estate FWD Z 16 XEP | Chassis no. to:71009336 | GCO17007 | Outer Joint | | 30 | 25 | 52.5 | 105 | 62 | O |
| | 2005.12-2008.08 | 5MT | F | L/R | Estate FWD Z 16 XEP | Chassis no. from:71009337 | GCO21038 | Outer Joint | | 30 | 24 | 52 | 94 | 64 | M |
| | 2005.12-2008.08 | 5MT | F | L | Estate FWD Z 16 XEP | Chassis no. from:71009337 | GCI99026 | Inner Joint | | 22 | 25 | 35 | 57 | 111.7 | |
| | 2006.01-2008.08 | 5MT | F | L | Hatchback FWD Z 16 XEP | Chassis no. from:71009337 | GDS17223 | Drive Shaft | | 30 | 22 | 52 | 94 | 609 | |
| | 2006.01-2008.08 | 5MT | F | L | Hatchback FWD Z 16 XEP | Chassis no. to:71009336 | GDS44020 | Drive Shaft | | 30 | 22 | 52.5 | 105 | 617.5 | |
| | 2006.01-2008.08 | 5MT | F | R | Hatchback FWD Z 16 XEP | Chassis no. to:71009336 | GDS17040 | Drive Shaft | | 30 | 22 | 52.5 | 105 | 987 | |
| | 2006.01-2008.08 | 5MT | F | L/R | Hatchback FWD Z 16 XEP | Chassis no. to:71009336 | GCO17007 | Outer Joint | | 30 | 25 | 52.5 | 105 | 62 | O |
| | 2006.01-2008.08 | 5MT | F | L/R | Hatchback FWD Z 16 XEP | Chassis no. from:71009337 | GCO21038 | Outer Joint | | 30 | 24 | 52 | 94 | 64 | M |
| | 2006.01-2008.08 | 5MT | F | L | Hatchback FWD Z 16 XEP | Chassis no. from:71009337 | GCI99026 | Inner Joint | | 22 | 25 | 35 | 57 | 111.7 | |
| 1.7 (60 kw) | 1995.09-1998.12 | 5MT | F | L | Hatchback FWD X17TD | | GDS44038 | Drive Shaft | 29T | 33 | 34 | 52 | 103.5 | 595 | |
| | 1995.09-1998.12 | 5MT | F | R | Hatchback FWD X17TD | | GDS44039 | Drive Shaft | 29T | 33 | 34 | 52 | 103.5 | 959 | |
| | 1995.09-1998.12 | AT/MT | F | L/R | Hatchback FWD X17TD | | GCO44006 | Outer Joint | 29T | 33 | 25 | 52 | 103.5 | 61 | O |
| | 1995.09-1998.12 | MT | F | L/R | Hatchback FWD X17TD | | GCO44049 | Outer Joint | | 33 | 25 | 52 | 109 | 61 | O |
| | 1995.09-1998.12 | | F | L/R | Hatchback FWD X17TD | | GCI44002 | Inner Joint | | 34 | 25 | 35 | 56.2 | 114.8 | |
| | 1995.09-1998.12 | 5MT | F | L | Saloon FWD X17TD | | GDS44038 | Drive Shaft | 29T | 33 | 34 | 52 | 103.5 | 595 | |
| | 1995.09-1998.12 | 5MT | F | R | Saloon FWD X17TD | | GDS44039 | Drive Shaft | 29T | 33 | 34 | 52 | 103.5 | 959 | |
| | 1995.09-1998.12 | AT/MT | F | L/R | Saloon FWD X17TD | | GCO44006 | Outer Joint | 29T | 33 | 25 | 52 | 103.5 | 61 | O |
| | 1995.09-1998.12 | MT | F | L/R | Saloon FWD X17TD | | GCO44049 | Outer Joint | | 33 | 25 | 52 | 109 | 61 | O |
| | 1995.09-1998.12 | | F | L/R | Saloon FWD X17TD | | GCI44002 | Inner Joint | | 34 | 25 | 35 | 56.2 | 114.8 | |
| | 1996.11-1997.12 | 5MT | F | L | Estate FWD X17TD | | GDS44038 | Drive Shaft | 29T | 33 | 34 | 52 | 103.5 | 595 | |
| | 1996.11-1997.12 | 5MT | F | R | Estate FWD X17TD | | GDS44039 | Drive Shaft | 29T | 33 | 34 | 52 | 103.5 | 959 | |
| | 1996.11-1997.12 | MT | F | L/R | Estate FWD X17TD | | GCO44049 | Outer Joint | | 33 | 25 | 52 | 109 | 61 | O |
| | 1996.11-1997.12 | | F | L/R | Estate FWD X17TD | | GCO44006 | Outer Joint | 29T | 33 | 25 | 52 | 103.5 | 61 | O |
| | 1996.11-1997.12 | | F | L/R | Estate FWD X17TD | | GCI44002 | Inner Joint | | 34 | 25 | 35 | 56.2 | 114.8 | |
| 1.8 (81 kw) | 2002.04-2008.07 | 5MT | F | L | Saloon FWD Z 18 XEL | | GDS44020 | Drive Shaft | | 30 | 22 | 52.5 | 105 | 617.5 | |
| | 2002.04-2008.07 | 5MT | F | R | Saloon FWD Z 18 XEL | | GDS17040 | Drive Shaft | | 30 | 22 | 52.5 | 105 | 987 | |
| | 2002.04-2008.07 | MT | F | L/R | Saloon FWD Z 18 XEL | Date to:2003.07 | GCO17007 | Outer Joint | | 30 | 25 | 52.5 | 105 | 62 | O |

| | YEAR | TRANSM. | F/R | L/R | BODY STYLE & DRIVE TYPE & ENGINE | REMARKS | G-AP Ref. | PRODUCT | ABS | Technical Specifications A | B | C | H | L | P |
|---|---|---|---|---|---|---|---|---|---|---|---|---|---|---|---|
| **OPEL** **Vectra** | | | | | | | | | | | | | | | |
| 1.8 (81 kw) | 2002.04-2008.07 | | F | | Saloon FWD Z 18 XEL | | GCO21038 | Outer Joint | | 30 | 24 | 52 | 94 | 64 | M |
| | 2002.04-2008.07 | | F | L/R | Saloon FWD Z 18 XEL | | GCI99026 | Inner Joint | | 22 | 25 | 35 | 57 | 111.7 | |
| | 2002.08-2006.12 | 5MT | F | L | Hatchback FWD Z 18 XEL | | GDS44020 | Drive Shaft | | 30 | 22 | 52.5 | 105 | 617.5 | |
| | 2002.08-2006.12 | 5MT | F | R | Hatchback FWD Z 18 XEL | | GDS17040 | Drive Shaft | | 30 | 22 | 52.5 | 105 | 987 | |
| | 2002.08-2006.12 | | F | L/R | Hatchback FWD Z 18 XEL | Chassis no. to:71009336 | GCO17007 | Outer Joint | | 30 | 25 | 52.5 | 105 | 62 | O |
| | 2002.08-2006.12 | | F | | Hatchback FWD Z 18 XEL | | GCO21038 | Outer Joint | | 30 | 24 | 52 | 94 | 64 | M |
| | 2002.08-2006.12 | | F | L/R | Hatchback FWD Z 18 XEL | | GCI99026 | Inner Joint | | 22 | 25 | 35 | 57 | 111.7 | |
| 1.8 (85 kw) | 1995.10-2000.09 | 4AT/5MT | F | L | Hatchback FWD X18XE | | GDS44038 | Drive Shaft | 29T | 33 | 34 | 52 | 103.5 | 595 | |
| | 1995.10-2000.09 | 4AT/5MT | F | R | Hatchback FWD X18XE | | GDS44039 | Drive Shaft | 29T | 33 | 34 | 52 | 103.5 | 959 | |
| | 1995.10-2000.09 | 4AT/5MT | F | L/R | Hatchback FWD X18XE | | GCO44006 | Outer Joint | 29T | 33 | 25 | 52 | 103.5 | 61 | O |
| | 1995.10-2000.09 | 4AT/5MT | F | L/R | Hatchback FWD X18XE | | GCO44049 | Outer Joint | | 33 | 25 | 52 | 109 | 61 | O |
| | 1995.10-2000.09 | 4AT/5MT | F | L/R | Hatchback FWD X18XE | | GCI44002 | Inner Joint | | 34 | 25 | 35 | 56.2 | 114.8 | |
| | 1995.10-2000.09 | 4AT/5MT | F | L | Hatchback FWD X18XE1/Z18XEL | For Engine Code:X18XE | GDS44038 | Drive Shaft | 29T | 33 | 34 | 52 | 103.5 | 595 | |
| | 1995.10-2000.09 | 4AT/5MT | F | R | Hatchback FWD X18XE1/Z18XEL | For Engine Code:X18XE | GDS44039 | Drive Shaft | 29T | 33 | 34 | 52 | 103.5 | 959 | |
| | 1995.10-2000.09 | AT/MT | F | L/R | Hatchback FWD X18XE1/Z18XEL | | GCO44006 | Outer Joint | 29T | 33 | 25 | 52 | 103.5 | 61 | O |
| | 1995.10-2000.09 | MT | F | L/R | Hatchback FWD X18XE1/Z18XEL | | GCO44049 | Outer Joint | | 33 | 25 | 52 | 109 | 61 | O |
| | 1995.10-2000.09 | | F | L/R | Hatchback FWD X18XE1/Z18XEL | | GCI44002 | Inner Joint | | 34 | 25 | 35 | 56.2 | 114.8 | |
| | 1995.10-2000.09 | 4AT/5MT | F | L | Saloon FWD X18XE | | GDS44038 | Drive Shaft | 29T | 33 | 34 | 52 | 103.5 | 595 | |
| | 1995.10-2000.09 | 4AT/5MT | F | R | Saloon FWD X18XE | | GDS44039 | Drive Shaft | 29T | 33 | 34 | 52 | 103.5 | 959 | |
| | 1995.10-2000.09 | 4AT/5MT | F | L/R | Saloon FWD X18XE | | GCO44006 | Outer Joint | 29T | 33 | 25 | 52 | 103.5 | 61 | O |
| | 1995.10-2000.09 | 4AT/5MT | F | L/R | Saloon FWD X18XE | | GCO44049 | Outer Joint | | 33 | 25 | 52 | 109 | 61 | O |
| | 1995.10-2000.09 | 4AT/5MT | F | L/R | Saloon FWD X18XE | | GCI21011 | Inner Joint | | 34 | 25 | 35 | 56.5 | 114.7 | |
| | 1995.10-2000.09 | 4AT/5MT | F | L | Saloon FWD X18XE1/Z18XEL | for OE number:90512983;for OE number:374261;For Engine code:X18XE | GDS44038 | Drive Shaft | 29T | 33 | 34 | 52 | 103.5 | 595 | |
| | 1995.10-2000.09 | 4AT/5MT | F | R | Saloon FWD X18XE1/Z18XEL | for OE number:90512986;for OE number:374249;For Engine code:X18XE | GDS44039 | Drive Shaft | 29T | 33 | 34 | 52 | 103.5 | 959 | |
| | 1995.10-2000.09 | AT/MT | F | L/R | Saloon FWD X18XE1/Z18XEL | | GCO44006 | Outer Joint | 29T | 33 | 25 | 52 | 103.5 | 61 | O |
| | 1995.10-2000.09 | MT | F | L/R | Saloon FWD X18XE1/Z18XEL | | GCO44049 | Outer Joint | | 33 | 25 | 52 | 109 | 61 | O |
| | 1995.10-2000.09 | | F | L/R | Saloon FWD X18XE1/Z18XEL | | GCI44002 | Inner Joint | | 34 | 25 | 35 | 56.2 | 114.8 | |
| | 1996.11-2000.09 | 4AT/5MT | F | L | Estate FWD X18XE | | GDS44038 | Drive Shaft | 29T | 33 | 34 | 52 | 103.5 | 595 | |
| | 1996.11-2000.09 | 4AT/5MT | F | R | Estate FWD X18XE | | GDS44039 | Drive Shaft | 29T | 33 | 34 | 52 | 103.5 | 959 | |
| | 1996.11-2000.09 | 4AT/5MT | F | L/R | Estate FWD X18XE | | GCO44006 | Outer Joint | 29T | 33 | 25 | 52 | 103.5 | 61 | O |
| | 1996.11-2000.09 | 4AT/5MT | F | L/R | Estate FWD X18XE | | GCO44049 | Outer Joint | | 33 | 25 | 52 | 109 | 61 | O |
| | 1996.11-2000.09 | 4AT/5MT | F | L/R | Estate FWD X18XE | | GCI44002 | Inner Joint | | 34 | 25 | 35 | 56.2 | 114.8 | |
| | 1996.11-2000.09 | 4AT/5MT | F | L | Estate FWD X18XE1/Z18XEL | for OE number:90512983;for OE number:374261;For Engine code:X18XE | GDS44038 | Drive Shaft | 29T | 33 | 34 | 52 | 103.5 | 595 | |
| | 1996.11-2000.09 | 4AT/5MT | F | R | Estate FWD X18XE1/Z18XEL | for OE number:90512986;for OE number:374249;For Engine code:X18XE | GDS44039 | Drive Shaft | 29T | 33 | 34 | 52 | 103.5 | 959 | |
| | 1996.11-2000.09 | AT/MT | F | L/R | Estate FWD X18XE1/Z18XEL | | GCO44006 | Outer Joint | 29T | 33 | 25 | 52 | 103.5 | 61 | O |
| | 1996.11-2000.09 | MT | F | L/R | Estate FWD X18XE1/Z18XEL | | GCO44049 | Outer Joint | | 33 | 25 | 52 | 109 | 61 | O |
| | 1996.11-2000.09 | | F | L/R | Estate FWD X18XE1/Z18XEL | | GCI44002 | Inner Joint | | 34 | 25 | 35 | 56.2 | 114.8 | |
| | 1999.01-2000.09 | 5MT | F | L | Hatchback FWD X18XE | | GDS44038 | Drive Shaft | 29T | 33 | 34 | 52 | 103.5 | 595 | |
| | 1999.01-2000.09 | 5MT | F | R | Hatchback FWD X18XE | | GDS44039 | Drive Shaft | 29T | 33 | 34 | 52 | 103.5 | 959 | |
| | 1999.01-2000.09 | | F | L/R | Hatchback FWD X18XE | | GCO44006 | Outer Joint | 29T | 33 | 25 | 52 | 103.5 | 61 | O |
| | 1999.01-2000.09 | | F | L/R | Hatchback FWD X18XE | | GCO44049 | Outer Joint | | 33 | 25 | 52 | 109 | 61 | O |
| | 1999.01-2000.09 | | F | L/R | Hatchback FWD X18XE | | GCI44002 | Inner Joint | | 34 | 25 | 35 | 56.2 | 114.8 | |
| 1.8 (90 kw) | 2002.04-2008.09 | CVT/5MT | F | L | Saloon FWD Z 18 XE | | GDS44020 | Drive Shaft | | 30 | 22 | 52.5 | 105 | 617.5 | |
| | 2002.04-2008.09 | CVT/5MT | F | R | Saloon FWD Z 18 XE | | GDS17040 | Drive Shaft | | 30 | 22 | 52.5 | 105 | 987 | |
| | 2002.04-2008.09 | MT | F | L/R | Saloon FWD Z 18 XE | Date to:2005.09 | GCO17007 | Outer Joint | | 30 | 25 | 52.5 | 105 | 62 | O |
| | 2002.04-2008.09 | MT | F | | Saloon FWD Z 18 XE | | GCO21038 | Outer Joint | | 30 | 24 | 52 | 94 | 64 | M |
| | 2002.04-2008.09 | | F | L/R | Saloon FWD Z 18 XE | | GCI99026 | Inner Joint | | 22 | 25 | 35 | 57 | 111.7 | |
| | 2002.08-2008.09 | CVT/5MT | F | L | Hatchback FWD Z 18 XE | | GDS44020 | Drive Shaft | | 30 | 22 | 52.5 | 105 | 617.5 | |
| | 2002.08-2008.09 | CVT/5MT | F | R | Hatchback FWD Z 18 XE | | GDS17040 | Drive Shaft | | 30 | 22 | 52.5 | 105 | 987 | |
| | 2002.08-2008.09 | MT | F | L/R | Hatchback FWD Z 18 XE | Date to:2005.09 | GCO17007 | Outer Joint | | 30 | 25 | 52.5 | 105 | 62 | O |
| | 2002.08-2008.09 | | F | | Hatchback FWD Z 18 XE | | GCO21038 | Outer Joint | | 30 | 24 | 52 | 94 | 64 | M |
| | 2002.08-2008.09 | | F | L/R | Hatchback FWD Z 18 XE | | GCI99026 | Inner Joint | | 22 | 25 | 35 | 57 | 111.7 | |
| | 2003.10-2006.09 | CVT/5MT/6MT | F | L | Estate FWD Z 18 XE | | GDS44020 | Drive Shaft | | 30 | 22 | 52.5 | 105 | 617.5 | |
| | 2003.10-2006.09 | CVT/5MT/6MT | F | R | Estate FWD Z 18 XE | | GDS17040 | Drive Shaft | | 30 | 22 | 52.5 | 105 | 987 | |
| | 2003.10-2006.09 | MT | F | L/R | Estate FWD Z 18 XE | Date to:2005.09 | GCO17007 | Outer Joint | | 30 | 25 | 52.5 | 105 | 62 | O |
| | 2003.10-2006.09 | | F | | Estate FWD Z 18 XE | | GCO21038 | Outer Joint | | 30 | 24 | 52 | 94 | 64 | M |
| | 2003.10-2006.09 | | F | L/R | Estate FWD Z 18 XE | | GCI99026 | Inner Joint | | 22 | 25 | 35 | 57 | 111.7 | |
| 1.8 (92 kw) | 2000.07-2002.04 | AT/MT | F | L/R | Saloon FWD Z18XE | | GCO44006 | Outer Joint | 29T | 33 | 25 | 52 | 103.5 | 61 | O |
| | 2000.07-2002.04 | MT | F | L/R | Saloon FWD Z18XE | | GCO44049 | Outer Joint | | 33 | 25 | 52 | 109 | 61 | O |
| | 2000.07-2002.04 | | F | L/R | Saloon FWD Z18XE | | GCI44002 | Inner Joint | | 34 | 25 | 35 | 56.2 | 114.8 | |
| | 2000.07-2003.07 | AT/MT | F | L/R | Estate FWD Z18XE | | GCO44006 | Outer Joint | 29T | 33 | 25 | 52 | 103.5 | 61 | O |
| | 2000.07-2003.07 | MT | F | L/R | Estate FWD Z18XE | | GCO44049 | Outer Joint | | 33 | 25 | 52 | 109 | 61 | O |
| | 2000.07-2003.07 | | F | L/R | Estate FWD Z18XE | | GCI44002 | Inner Joint | | 34 | 25 | 35 | 56.2 | 114.8 | |
| | 2000.07-2003.07 | AT/MT | F | L/R | Hatchback FWD Z18XE | | GCO44006 | Outer Joint | 29T | 33 | 25 | 52 | 103.5 | 61 | O |
| | 2000.07-2003.07 | MT | F | L/R | Hatchback FWD Z18XE | | GCO44049 | Outer Joint | | 33 | 25 | 52 | 109 | 61 | O |

| | YEAR | TRANSM. | F/R | L/R | BODY STYLE & DRIVE TYPE & ENGINE | REMARKS | G-AP Ref. | PRODUCT | ABS | Technical Specifications A | B | C | H | L | P |
|---|---|---|---|---|---|---|---|---|---|---|---|---|---|---|---|
| **OPEL** | | | | | | | | | | | | | | | |
| **Vectra** | | | | | | | | | | | | | | | |
| 1.8 (92 kw) | 2000.07-2003.07 | | F | L/R | Hatchback FWD Z18XE | | GCI44002 | Inner Joint | | 34 | 25 | 35 | 56.2 | 114.8 | |
| 1.8 (103 kw) | 2005.08-2008.08 | 5MT | F | L | Estate FWD Z 18 XER | Chassis no. from:71009337 | GDS17223 | Drive Shaft | | 30 | 22 | 52 | 94 | 609 | |
| | 2005.08-2008.08 | 5MT | F | L | Estate FWD Z 18 XER | Chassis no. to:71009336 | GDS44020 | Drive Shaft | | 30 | 22 | 52.5 | 105 | 617.5 | |
| | 2005.08-2008.08 | 5MT | F | R | Estate FWD Z 18 XER | Chassis no. to:71009336 | GDS17040 | Drive Shaft | | 30 | 22 | 52.5 | 105 | 987 | |
| | 2005.08-2008.08 | 5MT | F | L/R | Estate FWD Z 18 XER | Chassis no. to:71009336 | GCO17007 | Outer Joint | | 30 | 25 | 52.5 | 105 | 62 | O |
| | 2005.08-2008.08 | 5MT | F | L/R | Estate FWD Z 18 XER | Chassis no. from:71009337 | GCO21038 | Outer Joint | | 30 | 24 | 52 | 94 | 64 | M |
| | 2005.08-2008.08 | 5MT | F | L | Estate FWD Z 18 XER | Chassis no. from:71009337 | GCI99026 | Inner Joint | | 22 | 25 | 35 | 57 | 111.7 | |
| | 2005.08-2008.08 | 5MT | F | L | Hatchback FWD Z 18 XER | Chassis no. from:71009337 | GDS17223 | Drive Shaft | | 30 | 22 | 52 | 94 | 609 | |
| | 2005.08-2008.08 | 5MT | F | L | Hatchback FWD Z 18 XER | Chassis no. to:71009336 | GDS44020 | Drive Shaft | | 30 | 22 | 52.5 | 105 | 617.5 | |
| | 2005.08-2008.08 | 5MT | F | R | Hatchback FWD Z 18 XER | Chassis no. to:71009336 | GDS17040 | Drive Shaft | | 30 | 22 | 52.5 | 105 | 987 | |
| | 2005.08-2008.08 | 5MT | F | L/R | Hatchback FWD Z 18 XER | Chassis no. to:71009336 | GCO17007 | Outer Joint | | 30 | 25 | 52.5 | 105 | 62 | O |
| | 2005.08-2008.08 | 5MT | F | L/R | Hatchback FWD Z 18 XER | Chassis no. from:71009337 | GCO21038 | Outer Joint | | 30 | 24 | 52 | 94 | 64 | M |
| | 2005.08-2008.08 | 5MT | F | L | Hatchback FWD Z 18 XER | Chassis no. from:71009337 | GCI99026 | Inner Joint | | 22 | 25 | 35 | 57 | 111.7 | |
| | 2005.08-2008.08 | 5MT | F | L | Saloon FWD Z 18 XER | Chassis no. from:71009337 | GDS17223 | Drive Shaft | | 30 | 22 | 52 | 94 | 609 | |
| | 2005.08-2008.08 | 5MT | F | L | Saloon FWD Z 18 XER | Chassis no. to:71009336 | GDS44020 | Drive Shaft | | 30 | 22 | 52.5 | 105 | 617.5 | |
| | 2005.08-2008.08 | 5MT | F | R | Saloon FWD Z 18 XER | Chassis no. to:71009336 | GDS17040 | Drive Shaft | | 30 | 22 | 52.5 | 105 | 987 | |
| | 2005.08-2008.08 | 5MT | F | L/R | Saloon FWD Z 18 XER | Chassis no. to:71009336 | GCO17007 | Outer Joint | | 30 | 25 | 52.5 | 105 | 62 | O |
| | 2005.08-2008.08 | 5MT | F | L/R | Saloon FWD Z 18 XER | Chassis no. from:71009337 | GCO21038 | Outer Joint | | 30 | 24 | 52 | 94 | 64 | M |
| | 2005.08-2008.08 | 5MT | F | L | Saloon FWD Z 18 XER | Chassis no. from:71009337 | GCI99026 | Inner Joint | | 22 | 25 | 35 | 57 | 111.7 | |
| 1.9 (74 kw) | 2005.06-2008.08 | 6MT | F | L | Estate FWD Z 19 DTL | Trans. code:M32 | GDS21092 | Drive Shaft | | 30 | 25 | 53.8 | 94.5 | 604 | |
| | 2005.06-2008.08 | 6MT | F | R | Estate FWD Z 19 DTL | Trans. code:M32 | GDS21053 | Drive Shaft | | 30 | 34 | 53.8 | 94.5 | 617 | |
| | 2005.06-2008.08 | 6MT | F | L/R | Estate FWD Z 19 DTL | Trans. code:F40 | GDS21032 | Drive Shaft | | 30 | 27 | 53.8 | 94.5 | 605 | |
| | 2005.06-2008.08 | MT | F | L/R | Estate FWD Z 19 DTL | | GCO17051 | Outer Joint | | 30 | 26 | 53.8 | 94.5 | 65.5 | M |
| | 2005.06-2008.08 | MT | F | L | Estate FWD Z 19 DTL | Date to:2008.08 | GCI99186 | Inner Joint | | 25 | 28 | 34.9 | 57.5 | 111 | |
| | 2005.06-2008.08 | MT | F | R | Estate FWD Z 19 DTL | Date to:2008.08 | GCI44016 | Inner Joint | | 34 | 28 | 37.5 | | 129.2 | |
| | 2005.06-2008.08 | 6MT | F | L | Hatchback FWD Z 19 DTL | Trans. code:M32 | GDS21092 | Drive Shaft | | 30 | 25 | 53.8 | 94.5 | 604 | |
| | 2005.06-2008.08 | 6MT | F | R | Hatchback FWD Z 19 DTL | Trans. code:M32 | GDS21053 | Drive Shaft | | 30 | 34 | 53.8 | 94.5 | 617 | |
| | 2005.06-2008.08 | 6MT | F | L/R | Hatchback FWD Z 19 DTL | Trans. code:F40 | GDS21032 | Drive Shaft | | 30 | 27 | 53.8 | 94.5 | 605 | |
| | 2005.06-2008.08 | MT | F | L/R | Hatchback FWD Z 19 DTL | | GCO17051 | Outer Joint | | 30 | 26 | 53.8 | 94.5 | 65.5 | M |
| | 2005.06-2008.08 | MT | F | L | Hatchback FWD Z 19 DTL | Date to:2008.08 | GCI99186 | Inner Joint | | 25 | 28 | 34.9 | 57.5 | 111 | |
| | 2005.06-2008.08 | MT | F | R | Hatchback FWD Z 19 DTL | Date to:2008.08 | GCI44016 | Inner Joint | | 34 | 28 | 37.5 | | 129.2 | |
| | 2005.10-2008.08 | 5MT/6MT | F | L | Saloon FWD Z 19 DTL | Trans. code:M32 | GDS21092 | Drive Shaft | | 30 | 25 | 53.8 | 94.5 | 604 | |
| | 2005.10-2008.08 | 5MT/6MT | F | R | Saloon FWD Z 19 DTL | Trans. code:M32 | GDS21053 | Drive Shaft | | 30 | 34 | 53.8 | 94.5 | 617 | |
| | 2005.10-2008.08 | 5MT/6MT | F | L/R | Saloon FWD Z 19 DTL | Trans. code:F40 | GDS21032 | Drive Shaft | | 30 | 27 | 53.8 | 94.5 | 605 | |
| | 2005.10-2008.08 | MT | F | L/R | Saloon FWD Z 19 DTL | | GCO17051 | Outer Joint | | 30 | 26 | 53.8 | 94.5 | 65.5 | M |
| | 2005.10-2008.08 | MT | F | L | Saloon FWD Z 19 DTL | Date to:2008.08 | GCI99186 | Inner Joint | | 25 | 28 | 34.9 | 57.5 | 111 | |
| | 2005.10-2008.08 | MT | F | R | Saloon FWD Z 19 DTL | Date to:2008.08 | GCI44016 | Inner Joint | | 34 | 28 | 37.5 | | 129.2 | |
| 1.9 (88 kw) | 2004.04-2009.01 | 5MT | F | L | Estate FWD Z 19 DT | Trans. code:M32 | GDS21092 | Drive Shaft | | 30 | 25 | 53.8 | 94.5 | 604 | |
| | 2004.04-2009.01 | 5MT | F | R | Estate FWD Z 19 DT | Trans. code:M32 | GDS21053 | Drive Shaft | | 30 | 34 | 53.8 | 94.5 | 617 | |
| | 2004.04-2009.01 | 5MT | F | L/R | Estate FWD Z 19 DT | Trans. code:F40 | GDS21032 | Drive Shaft | | 30 | 27 | 53.8 | 94.5 | 605 | |
| | 2004.04-2009.01 | MT | F | L/R | Estate FWD Z 19 DT | | GCO17051 | Outer Joint | | 30 | 26 | 53.8 | 94.5 | 65.5 | M |
| | 2004.04-2009.01 | MT | F | L | Estate FWD Z 19 DT | | GCI99186 | Inner Joint | | 25 | 28 | 34.9 | 57.5 | 111 | |
| | 2004.04-2009.01 | MT | F | R | Estate FWD Z 19 DT | | GCI44016 | Inner Joint | | 34 | 28 | 37.5 | | 129.2 | |
| | 2004.04-2009.01 | MT | F | L/R | Estate FWD Z 19 DT | Trans. code:F40 | GCI99138 | Inner Joint | | 27 | 28 | 35 | 78 | 112 | |
| | 2004.04-2009.01 | 5MT/6MT | F | L | Hatchback FWD Z 19 DT | Trans. code:M32 | GDS21092 | Drive Shaft | | 30 | 25 | 53.8 | 94.5 | 604 | |
| | 2004.04-2009.01 | 5MT/6MT | F | R | Hatchback FWD Z 19 DT | Trans. code:M32 | GDS21053 | Drive Shaft | | 30 | 34 | 53.8 | 94.5 | 617 | |
| | 2004.04-2009.01 | 5MT/6MT | F | L/R | Hatchback FWD Z 19 DT | Trans. code:F40 | GDS21032 | Drive Shaft | | 30 | 27 | 53.8 | 94.5 | 605 | |
| | 2004.04-2009.01 | MT | F | L/R | Hatchback FWD Z 19 DT | | GCO17051 | Outer Joint | | 30 | 26 | 53.8 | 94.5 | 65.5 | M |
| | 2004.04-2009.01 | MT | F | L | Hatchback FWD Z 19 DT | Trans. code:M32 | GCI99186 | Inner Joint | | 25 | 28 | 34.9 | 57.5 | 111 | |
| | 2004.04-2009.01 | MT | F | R | Hatchback FWD Z 19 DT | Trans. code:M32 | GCI44016 | Inner Joint | | 34 | 28 | 37.5 | | 129.2 | |
| | 2004.04-2009.01 | MT | F | L/R | Hatchback FWD Z 19 DT | Trans. code:F40 | GCI99138 | Inner Joint | | 27 | 28 | 35 | 78 | 112 | |
| | 2004.04-2009.01 | 5MT | F | L | Saloon FWD Z 19 DT | Trans. code:M32 | GDS21092 | Drive Shaft | | 30 | 25 | 53.8 | 94.5 | 604 | |
| | 2004.04-2009.01 | 5MT | F | R | Saloon FWD Z 19 DT | Trans. code:M32 | GDS21053 | Drive Shaft | | 30 | 34 | 53.8 | 94.5 | 617 | |
| | 2004.04-2009.01 | 5MT | F | L/R | Saloon FWD Z 19 DT | Trans. code:F40 | GDS21032 | Drive Shaft | | 30 | 27 | 53.8 | 94.5 | 605 | |
| | 2004.04-2009.01 | MT | F | L/R | Saloon FWD Z 19 DT | | GCO17051 | Outer Joint | | 30 | 26 | 53.8 | 94.5 | 65.5 | M |
| | 2004.04-2009.01 | MT | F | L | Saloon FWD Z 19 DT | | GCI99186 | Inner Joint | | 25 | 28 | 34.9 | 57.5 | 111 | |
| | 2004.04-2009.01 | MT | F | R | Saloon FWD Z 19 DT | | GCI44016 | Inner Joint | | 34 | 28 | 37.5 | | 129.2 | |
| | 2004.04-2009.01 | MT | F | L/R | Saloon FWD Z 19 DT | Trans. code:F40 | GCI99138 | Inner Joint | | 27 | 28 | 35 | 78 | 112 | |
| 1.9 (110 kw) | 2004.04-2008.08 | AT | F | L/R | Estate FWD Z 19 DTH | | GDS44080 | Drive Shaft | | 30 | 27 | 53.8 | 94.5 | 591 | |
| | 2004.04-2008.08 | AT/MT | F | L/R | Estate FWD Z 19 DTH | | GCO17051 | Outer Joint | | 30 | 26 | 53.8 | 94.5 | 65.5 | M |
| | 2004.04-2008.08 | AT/MT | F | L/R | Estate FWD Z 19 DTH | | GCI21024 | Inner Joint | | 27 | 34 | 35 | 101 | 88 | |
| | 2004.04-2008.08 | MT | F | L | Estate FWD Z 19 DTH | Trans. code:M32 | GDS21092 | Drive Shaft | | 30 | 25 | 53.8 | 94.5 | 604 | |
| | 2004.04-2008.08 | MT | F | R | Estate FWD Z 19 DTH | Trans. code:M32 | GDS21053 | Drive Shaft | | 30 | 34 | 53.8 | 94.5 | 617 | |
| | 2004.04-2008.08 | MT | F | L/R | Estate FWD Z 19 DTH | Trans. code:F40 | GDS21032 | Drive Shaft | | 30 | 27 | 53.8 | 94.5 | 605 | |
| | 2004.04-2008.08 | MT | F | L | Estate FWD Z 19 DTH | Trans. code:M32 | GCI99186 | Inner Joint | | 25 | 28 | 34.9 | 57.5 | 111 | |

| | YEAR | TRANSM. | F/R | L/R | BODY STYLE & DRIVE TYPE & ENGINE | REMARKS | G-AP Ref. | PRODUCT | ABS | Technical Specifications A | B | C | H | L | P |
|---|---|---|---|---|---|---|---|---|---|---|---|---|---|---|---|
| **OPEL** | | | | | | | | | | | | | | | |
| **Vectra** | | | | | | | | | | | | | | | |
| 1.9 (110 kw) | 2004.04-2008.08 | MT | F | R | Estate FWD Z 19 DTH | Trans. code:M32 | GCI44016 | Inner Joint | | 34 | 28 | 37.5 | | 129.2 | |
| | 2004.04-2008.08 | MT | F | L/R | Estate FWD Z 19 DTH | Trans. code:F40 | GCI99138 | Inner Joint | | 27 | 28 | 35 | 78 | 112 | |
| | 2004.04-2008.08 | AT | F | L/R | Hatchback FWD Z 19 DTH | | GDS44080 | Drive Shaft | | 30 | 27 | 53.8 | 94.5 | 591 | |
| | 2004.04-2008.08 | AT/MT | F | L/R | Hatchback FWD Z 19 DTH | | GCO17051 | Outer Joint | | 30 | 26 | 53.8 | 94.5 | 65.5 | M |
| | 2004.04-2008.08 | AT/MT | F | L/R | Hatchback FWD Z 19 DTH | | GCI21024 | Inner Joint | | 27 | 34 | 35 | 101 | 88 | |
| | 2004.04-2008.08 | MT | F | L | Hatchback FWD Z 19 DTH | Trans. code:M32 | GDS21092 | Drive Shaft | | 30 | 25 | 53.8 | 94.5 | 604 | |
| | 2004.04-2008.08 | MT | F | R | Hatchback FWD Z 19 DTH | Trans. code:M32 | GDS21053 | Drive Shaft | | 30 | 34 | 53.8 | 94.5 | 617 | |
| | 2004.04-2008.08 | MT | F | L/R | Hatchback FWD Z 19 DTH | Trans. code:F40 | GDS21032 | Drive Shaft | | 30 | 27 | 53.8 | 94.5 | 605 | |
| | 2004.04-2008.08 | MT | F | L | Hatchback FWD Z 19 DTH | Trans. code:M32 | GCI99186 | Inner Joint | | 25 | 28 | 34.9 | 57.5 | 111 | |
| | 2004.04-2008.08 | MT | F | R | Hatchback FWD Z 19 DTH | Trans. code:M32 | GCI44016 | Inner Joint | | 34 | 28 | 37.5 | | 129.2 | |
| | 2004.04-2008.08 | MT | F | L/R | Hatchback FWD Z 19 DTH | Trans. code:F40 | GCI99138 | Inner Joint | | 27 | 28 | 35 | 78 | 112 | |
| | 2004.04-2008.08 | AT | F | L/R | Saloon FWD Z 19 DTH | | GDS44080 | Drive Shaft | | 30 | 27 | 53.8 | 94.5 | 591 | |
| | 2004.04-2008.08 | AT/MT | F | L/R | Saloon FWD Z 19 DTH | | GDS21036 | Drive Shaft | | 30 | 27 | 55.4 | 100 | 602 | |
| | 2004.04-2008.08 | AT/MT | F | L/R | Saloon FWD Z 19 DTH | | GCO17051 | Outer Joint | | 30 | 26 | 53.8 | 94.5 | 65.5 | M |
| | 2004.04-2008.08 | AT/MT | F | L/R | Saloon FWD Z 19 DTH | | GCI21024 | Inner Joint | | 27 | 34 | 35 | 101 | 88 | |
| | 2004.04-2008.08 | MT | F | L | Saloon FWD Z 19 DTH | Trans. code:M32 | GDS21092 | Drive Shaft | | 30 | 25 | 53.8 | 94.5 | 604 | |
| | 2004.04-2008.08 | MT | F | R | Saloon FWD Z 19 DTH | Trans. code:M32 | GDS21053 | Drive Shaft | | 30 | 34 | 53.8 | 94.5 | 617 | |
| | 2004.04-2008.08 | MT | F | L/R | Saloon FWD Z 19 DTH | Trans. code:F40 | GDS21032 | Drive Shaft | | 30 | 27 | 53.8 | 94.5 | 605 | |
| | 2004.04-2008.08 | MT | F | L | Saloon FWD Z 19 DTH | Date to:2008.08 | GCI99186 | Inner Joint | | 25 | 28 | 34.9 | 57.5 | 111 | |
| | 2004.04-2008.08 | MT | F | R | Saloon FWD Z 19 DTH | Date to:2008.08 | GCI44016 | Inner Joint | | 34 | 28 | 37.5 | | 129.2 | |
| | 2004.04-2008.08 | MT | F | L/R | Saloon FWD Z 19 DTH | Trans. code:F40 | GCI99138 | Inner Joint | | 27 | 28 | 35 | 78 | 112 | |
| 2.0 (60 kw) | 1996.09-2000.06 | 5MT | F | L | Hatchback FWD X20DTL | | GDS44038 | Drive Shaft | 29T | 33 | 34 | 52 | 103.5 | 595 | |
| | 1996.09-2000.06 | 5MT | F | R | Hatchback FWD X20DTL | | GDS44039 | Drive Shaft | 29T | 33 | 34 | 52 | 103.5 | 959 | |
| | 1996.09-2000.06 | AT/MT | F | L/R | Hatchback FWD X20DTL | | GCO44006 | Outer Joint | 29T | 33 | 25 | 52 | 103.5 | 61 | O |
| | 1996.09-2000.06 | MT | F | L/R | Hatchback FWD X20DTL | | GCO44049 | Outer Joint | | 33 | 25 | 52 | 109 | 61 | O |
| | 1996.09-2000.06 | | F | L/R | Hatchback FWD X20DTL | | GCI44002 | Inner Joint | | 34 | 25 | 35 | 56.2 | 114.8 | |
| | 1996.09-2002.04 | 5MT | F | L | Saloon FWD X20DTL | | GDS44038 | Drive Shaft | 29T | 33 | 34 | 52 | 103.5 | 595 | |
| | 1996.09-2002.04 | 5MT | F | R | Saloon FWD X20DTL | | GDS44039 | Drive Shaft | 29T | 33 | 34 | 52 | 103.5 | 959 | |
| | 1996.09-2002.04 | AT/MT | F | L/R | Saloon FWD X20DTL | | GCO44006 | Outer Joint | 29T | 33 | 25 | 52 | 103.5 | 61 | O |
| | 1996.09-2002.04 | MT | F | L/R | Saloon FWD X20DTL | | GCO44049 | Outer Joint | | 33 | 25 | 52 | 109 | 61 | O |
| | 1996.09-2002.04 | | F | L/R | Saloon FWD X20DTL | | GCI44002 | Inner Joint | | 34 | 25 | 35 | 56.2 | 114.8 | |
| | 1996.11-2000.06 | 5MT | F | L | Estate FWD X20DTL | | GDS44038 | Drive Shaft | 29T | 33 | 34 | 52 | 103.5 | 595 | |
| | 1996.11-2000.06 | 5MT | F | R | Estate FWD X20DTL | | GDS44039 | Drive Shaft | 29T | 33 | 34 | 52 | 103.5 | 959 | |
| | 1996.11-2000.06 | AT/MT | F | L/R | Estate FWD X20DTL | | GCO44006 | Outer Joint | 29T | 33 | 25 | 52 | 103.5 | 61 | O |
| | 1996.11-2000.06 | MT | F | L/R | Estate FWD X20DTL | | GCO44049 | Outer Joint | | 33 | 25 | 52 | 109 | 61 | O |
| | 1996.11-2000.06 | | F | L/R | Estate FWD X20DTL | | GCI44002 | Inner Joint | | 34 | 25 | 35 | 56.2 | 114.8 | |
| 2.0 (74 kw) | 1997.05-2002.04 | 5MT | F | L | Saloon FWD X20DTH/Y20DTH | | GDS44038 | Drive Shaft | 29T | 33 | 34 | 52 | 103.5 | 595 | |
| | 1997.05-2002.04 | 5MT | F | R | Saloon FWD X20DTH/Y20DTH | | GDS44039 | Drive Shaft | 29T | 33 | 34 | 52 | 103.5 | 959 | |
| | 1997.05-2002.04 | AT/MT | F | L/R | Saloon FWD X20DTH/Y20DTH | | GCO44006 | Outer Joint | 29T | 33 | 25 | 52 | 103.5 | 61 | O |
| | 1997.05-2002.04 | MT | F | L/R | Saloon FWD X20DTH/Y20DTH | | GCO44049 | Outer Joint | | 33 | 25 | 52 | 109 | 61 | O |
| | 1997.05-2002.04 | | F | L/R | Saloon FWD X20DTH/Y20DTH | | GCI44002 | Inner Joint | | 34 | 25 | 35 | 56.2 | 114.8 | |
| | 1997.05-2003.07 | 5MT | F | L | Estate FWD X20DTH/Y20DTH | | GDS44038 | Drive Shaft | 29T | 33 | 34 | 52 | 103.5 | 595 | |
| | 1997.05-2003.07 | 5MT | F | R | Estate FWD X20DTH/Y20DTH | | GDS44039 | Drive Shaft | 29T | 33 | 34 | 52 | 103.5 | 959 | |
| | 1997.05-2003.07 | AT/MT | F | L/R | Estate FWD X20DTH/Y20DTH | | GCO44006 | Outer Joint | 29T | 33 | 25 | 52 | 103.5 | 61 | O |
| | 1997.05-2003.07 | MT | F | L/R | Estate FWD X20DTH/Y20DTH | | GCO44049 | Outer Joint | | 33 | 25 | 52 | 109 | 61 | O |
| | 1997.05-2003.07 | | F | L/R | Estate FWD X20DTH/Y20DTH | | GCI44002 | Inner Joint | | 34 | 25 | 35 | 56.2 | 114.8 | |
| | 1997.05-2003.07 | 5MT | F | L | Hatchback FWD X20DTH/Y20DTH | | GDS44038 | Drive Shaft | 29T | 33 | 34 | 52 | 103.5 | 595 | |
| | 1997.05-2003.07 | 5MT | F | R | Hatchback FWD X20DTH/Y20DTH | | GDS44039 | Drive Shaft | 29T | 33 | 34 | 52 | 103.5 | 959 | |
| | 1997.05-2003.07 | AT/MT | F | L/R | Hatchback FWD X20DTH/Y20DTH | | GCO44006 | Outer Joint | 29T | 33 | 25 | 52 | 103.5 | 61 | O |
| | 1997.05-2003.07 | MT | F | L/R | Hatchback FWD X20DTH/Y20DTH | | GCO44049 | Outer Joint | | 33 | 25 | 52 | 109 | 61 | O |
| | 1997.05-2003.07 | | F | L/R | Hatchback FWD X20DTH/Y20DTH | | GCI44002 | Inner Joint | | 34 | 25 | 35 | 56.2 | 114.8 | |
| | 2002.04-2006.08 | 5MT | F | L | Saloon FWD Y 20 DTH | | GDS60015 | Drive Shaft | | 30 | 34 | 52.5 | 105 | 628 | |
| | 2002.04-2006.08 | 5MT | F | R | Saloon FWD Y 20 DTH | Chassis no. from:41036716 | GDS21061 | Drive Shaft | | 30 | 34 | 52.5 | 105 | 968 | |
| | 2002.04-2006.08 | 5MT | F | R | Saloon FWD Y 20 DTH | Chassis no. to:41036715 | GDS60016 | Drive Shaft | | 30 | 34 | 52.5 | 105 | 588 | |
| | 2002.04-2006.08 | 5MT | F | R | Saloon FWD Y 20 DTH | Chassis no. from:Y20DTH | GCI44005 | Inner Joint | | 34 | 25 | 35 | | 130.2 | |
| | 2002.04-2006.08 | MT | F | L/R | Saloon FWD Y 20 DTH | Date to:2005.08 | GCO17007 | Outer Joint | | 30 | 25 | 52.5 | 105 | 62 | O |
| | 2002.04-2006.08 | | F | L/R | Saloon FWD Y 20 DTH | | GCI44002 | Inner Joint | | 34 | 25 | 35 | 56.2 | 114.8 | |
| | 2002.08-2005.08 | 5MT | F | L | Hatchback FWD Y 20 DTH | | GDS60015 | Drive Shaft | | 30 | 34 | 52.5 | 105 | 628 | |
| | 2002.08-2005.08 | 5MT | F | R | Hatchback FWD Y 20 DTH | Chassis no. from:41036716 | GDS21061 | Drive Shaft | | 30 | 34 | 52.5 | 105 | 968 | |
| | 2002.08-2005.08 | 5MT | F | R | Hatchback FWD Y 20 DTH | Chassis no. to:41036715 | GDS60016 | Drive Shaft | | 30 | 34 | 52.5 | 105 | 588 | |
| | 2002.08-2005.08 | 5MT | F | R | Hatchback FWD Y 20 DTH | Chassis no. from:Y20DTH | GCI44005 | Inner Joint | | 34 | 25 | 35 | | 130.2 | |
| | 2002.08-2005.08 | MT | F | L/R | Hatchback FWD Y 20 DTH | | GCO17007 | Outer Joint | | 30 | 25 | 52.5 | 105 | 62 | O |
| | 2002.08-2005.08 | | F | L/R | Hatchback FWD Y 20 DTH | | GCI44002 | Inner Joint | | 34 | 25 | 35 | 56.2 | 114.8 | |
| | 2003.10-2005.08 | 5MT | F | L | Estate FWD Y 20 DTH | | GDS60015 | Drive Shaft | | 30 | 34 | 52.5 | 105 | 628 | |
| | 2003.10-2005.08 | 5MT | F | R | Estate FWD Y 20 DTH | Chassis no. from:41036716 | GDS21061 | Drive Shaft | | 30 | 34 | 52.5 | 105 | 968 | |

| | YEAR | TRANSM. | F/R | L/R | BODY STYLE & DRIVE TYPE & ENGINE | REMARKS | G-AP Ref. | PRODUCT | ABS | Technical Specifications A | B | C | H | L | P |
|---|---|---|---|---|---|---|---|---|---|---|---|---|---|---|---|
| **OPEL** | | | | | | | | | | | | | | | |
| **Vectra** | | | | | | | | | | | | | | | |
| 2.0 (74 kw) | 2003.10-2005.08 | 5MT | F | R | Estate FWD Y 20 DTH | Chassis no. to:41036715 | GDS60016 | Drive Shaft | | 30 | 34 | 52.5 | 105 | 588 | |
| | 2003.10-2005.08 | 5MT | F | R | Estate FWD Y 20 DTH | Chassis no. from:Y20DTH | GCI44005 | Inner Joint | | 34 | 25 | 35 | | 130.2 | |
| | 2003.10-2005.08 | MT | F | L/R | Estate FWD Y 20 DTH | | GCO17007 | Outer Joint | | 30 | 25 | 52.5 | 105 | 62 | O |
| | 2003.10-2005.08 | | F | L/R | Estate FWD Y 20 DTH | | GCI44002 | Inner Joint | | 34 | 25 | 35 | 56.2 | 114.8 | |
| 2.0 (82 kw) | 1995.09-2002.02 | 4AT/5MT | F | L | Hatchback FWD 20NEJ | | GDS44038 | Drive Shaft | 29T | 33 | 34 | 52 | 103.5 | 595 | |
| | 1995.09-2002.02 | 4AT/5MT | F | R | Hatchback FWD 20NEJ | | GDS44039 | Drive Shaft | 29T | 33 | 34 | 52 | 103.5 | 959 | |
| | 1995.09-2002.02 | AT/MT | F | L/R | Hatchback FWD 20NEJ | | GCO44006 | Outer Joint | 29T | 33 | 25 | 52 | 103.5 | 61 | O |
| | 1995.09-2002.02 | | F | L/R | Hatchback FWD 20NEJ | | GCO44049 | Outer Joint | | 33 | 25 | 52 | 109 | 61 | O |
| | 1995.09-2002.02 | | F | L/R | Hatchback FWD 20NEJ | | GCI44002 | Inner Joint | | 34 | 25 | 35 | 56.2 | 114.8 | |
| | 1995.09-2002.02 | 4AT/5MT | F | L | Saloon FWD 20NEJ | | GDS44038 | Drive Shaft | 29T | 33 | 34 | 52 | 103.5 | 595 | |
| | 1995.09-2002.02 | 4AT/5MT | F | R | Saloon FWD 20NEJ | | GDS44039 | Drive Shaft | 29T | 33 | 34 | 52 | 103.5 | 959 | |
| | 1995.09-2002.02 | AT/MT | F | L/R | Saloon FWD 20NEJ | | GCO44006 | Outer Joint | 29T | 33 | 25 | 52 | 103.5 | 61 | O |
| | 1995.09-2002.02 | | F | L/R | Saloon FWD 20NEJ | | GCO44049 | Outer Joint | | 33 | 25 | 52 | 109 | 61 | O |
| | 1995.09-2002.02 | | F | L/R | Saloon FWD 20NEJ | | GCI44002 | Inner Joint | | 34 | 25 | 35 | 56.2 | 114.8 | |
| | 1996.11-2002.02 | 4AT/5MT | F | L | Estate FWD 20NEJ | | GDS44038 | Drive Shaft | 29T | 33 | 34 | 52 | 103.5 | 595 | |
| | 1996.11-2002.02 | 4AT/5MT | F | R | Estate FWD 20NEJ | | GDS44039 | Drive Shaft | 29T | 33 | 34 | 52 | 103.5 | 959 | |
| | 1996.11-2002.02 | AT/MT | F | L/R | Estate FWD 20NEJ | | GCO44006 | Outer Joint | 29T | 33 | 25 | 52 | 103.5 | 61 | O |
| | 1996.11-2002.02 | | F | L/R | Estate FWD 20NEJ | | GCO44049 | Outer Joint | | 33 | 25 | 52 | 109 | 61 | O |
| | 1996.11-2002.02 | | F | L/R | Estate FWD 20NEJ | | GCI44002 | Inner Joint | | 34 | 25 | 35 | 56.2 | 114.8 | |
| 2.0 (85 kw) | 2000.07-2003.07 | 5MT | F | L | Estate FWD C20SEL | | GDS44038 | Drive Shaft | 29T | 33 | 34 | 52 | 103.5 | 595 | |
| | 2000.07-2003.07 | 5MT | F | R | Estate FWD C20SEL | | GDS44039 | Drive Shaft | 29T | 33 | 34 | 52 | 103.5 | 959 | |
| | 2000.07-2003.07 | | F | L/R | Estate FWD C20SEL | | GCO44006 | Outer Joint | 29T | 33 | 25 | 52 | 103.5 | 61 | O |
| | 2000.07-2003.07 | | F | L/R | Estate FWD C20SEL | | GCO44049 | Outer Joint | | 33 | 25 | 52 | 109 | 61 | O |
| | 2000.07-2003.07 | | F | L/R | Estate FWD C20SEL | | GCI44002 | Inner Joint | | 34 | 25 | 35 | 56.2 | 114.8 | |
| | 2000.07-2003.07 | 5MT | F | L | Hatchback FWD C20SEL | | GDS44038 | Drive Shaft | 29T | 33 | 34 | 52 | 103.5 | 595 | |
| | 2000.07-2003.07 | 5MT | F | R | Hatchback FWD C20SEL | | GDS44039 | Drive Shaft | 29T | 33 | 34 | 52 | 103.5 | 959 | |
| | 2000.07-2003.07 | | F | L/R | Hatchback FWD C20SEL | | GCO44006 | Outer Joint | 29T | 33 | 25 | 52 | 103.5 | 61 | O |
| | 2000.07-2003.07 | | F | L/R | Hatchback FWD C20SEL | | GCO44049 | Outer Joint | | 33 | 25 | 52 | 109 | 61 | O |
| | 2000.07-2003.07 | | F | L/R | Hatchback FWD C20SEL | | GCI44002 | Inner Joint | | 34 | 25 | 35 | 56.2 | 114.8 | |
| 2.0 (100 kw) | 1995.09-2000.06 | 4AT/5MT | F | L | Hatchback FWD C20SEL/X20XEV | | GDS44038 | Drive Shaft | 29T | 33 | 34 | 52 | 103.5 | 595 | |
| | 1995.09-2000.06 | 4AT/5MT | F | R | Hatchback FWD C20SEL/X20XEV | | GDS44039 | Drive Shaft | 29T | 33 | 34 | 52 | 103.5 | 959 | |
| | 1995.09-2000.06 | AT/MT | F | L/R | Hatchback FWD C20SEL/X20XEV | | GCO44006 | Outer Joint | 29T | 33 | 25 | 52 | 103.5 | 61 | O |
| | 1995.09-2000.06 | MT | F | L/R | Hatchback FWD C20SEL/X20XEV | | GCO44049 | Outer Joint | | 33 | 25 | 52 | 109 | 61 | O |
| | 1995.09-2000.06 | | F | L/R | Hatchback FWD C20SEL/X20XEV | | GCI44002 | Inner Joint | | 34 | 25 | 35 | 56.2 | 114.8 | |
| | 1995.09-2000.06 | 4AT/5MT | F | L | Saloon FWD C20SEL/X20XEV | | GDS44038 | Drive Shaft | 29T | 33 | 34 | 52 | 103.5 | 595 | |
| | 1995.09-2000.06 | 4AT/5MT | F | R | Saloon FWD C20SEL/X20XEV | | GDS44039 | Drive Shaft | 29T | 33 | 34 | 52 | 103.5 | 959 | |
| | 1995.09-2000.06 | AT/MT | F | L/R | Saloon FWD C20SEL/X20XEV | | GCO44006 | Outer Joint | 29T | 33 | 25 | 52 | 103.5 | 61 | O |
| | 1995.09-2000.06 | MT | F | L/R | Saloon FWD C20SEL/X20XEV | | GCO44049 | Outer Joint | | 33 | 25 | 52 | 109 | 61 | O |
| | 1995.09-2000.06 | | F | L/R | Saloon FWD C20SEL/X20XEV | | GCI44002 | Inner Joint | | 34 | 25 | 35 | 56.2 | 114.8 | |
| | 1996.11-2000.06 | 4AT/5MT | F | L | Estate FWD C20SEL/X20XEV | | GDS44038 | Drive Shaft | 29T | 33 | 34 | 52 | 103.5 | 595 | |
| | 1996.11-2000.06 | 4AT/5MT | F | R | Estate FWD C20SEL/X20XEV | | GDS44039 | Drive Shaft | 29T | 33 | 34 | 52 | 103.5 | 959 | |
| | 1996.11-2000.06 | AT/MT | F | L/R | Estate FWD C20SEL/X20XEV | Date to:2000.06 | GCO44006 | Outer Joint | 29T | 33 | 25 | 52 | 103.5 | 61 | O |
| | 1996.11-2000.06 | MT | F | L/R | Estate FWD C20SEL/X20XEV | | GCO44049 | Outer Joint | | 33 | 25 | 52 | 109 | 61 | O |
| | 1996.11-2000.06 | | F | L/R | Estate FWD C20SEL/X20XEV | | GCI44002 | Inner Joint | | 34 | 25 | 35 | 56.2 | 114.8 | |
| 2.0 (129 kw) | 2003.03-2008.08 | 6MT | F | L/R | Hatchback FWD Z 20 NET | Inner teeth of wheel side:26 | GDS21032 | Drive Shaft | | 30 | 27 | 53.8 | 94.5 | 605 | |
| | 2003.03-2008.08 | 6MT | F | L/R | Hatchback FWD Z 20 NET | | GCI99138 | Inner Joint | | 27 | 28 | 35 | 78 | 112 | |
| | 2003.03-2008.08 | MT | F | L/R | Hatchback FWD Z 20 NET | | GCO17051 | Outer Joint | | 30 | 26 | 53.8 | 94.5 | 65.5 | M |
| | 2003.03-2008.08 | | F | L/R | Hatchback FWD Z 20 NET | Inner teeth of wheel side:28 | GDS21036 | Drive Shaft | | 30 | 27 | 55.4 | 100 | 602 | |
| | 2003.03-2008.08 | 6MT | F | L/R | Saloon FWD Z 20 NET | Inner teeth of wheel side:26 | GDS21032 | Drive Shaft | | 30 | 27 | 53.8 | 94.5 | 605 | |
| | 2003.03-2008.08 | 6MT | F | L/R | Saloon FWD Z 20 NET | | GCI99138 | Inner Joint | | 27 | 28 | 35 | 78 | 112 | |
| | 2003.03-2008.08 | MT | F | L/R | Saloon FWD Z 20 NET | | GCO17051 | Outer Joint | | 30 | 26 | 53.8 | 94.5 | 65.5 | M |
| | 2003.03-2008.08 | | F | L/R | Saloon FWD Z 20 NET | Inner teeth of wheel side:28 | GDS21036 | Drive Shaft | | 30 | 27 | 55.4 | 100 | 602 | |
| | 2003.10-2008.08 | 6MT | F | L/R | Estate FWD Z 20 NET | Inner teeth of wheel side:26 | GDS21032 | Drive Shaft | | 30 | 27 | 53.8 | 94.5 | 605 | |
| | 2003.10-2008.08 | 6MT | F | L/R | Estate FWD Z 20 NET | | GCI99138 | Inner Joint | | 27 | 28 | 35 | 78 | 112 | |
| | 2003.10-2008.08 | MT | F | L/R | Estate FWD Z 20 NET | | GCO17051 | Outer Joint | | 30 | 26 | 53.8 | 94.5 | 65.5 | M |
| | 2003.10-2008.08 | | F | L/R | Estate FWD Z 20 NET | Inner teeth of wheel side:28 | GDS21036 | Drive Shaft | | 30 | 27 | 55.4 | 100 | 602 | |
| 2.2 (86 kw) | 2002.04-2004.12 | MT | F | L/R | Saloon FWD Y 22 DTR | Trans. code:F40 | GDS21032 | Drive Shaft | | 30 | 27 | 53.8 | 94.5 | 605 | |
| | 2002.04-2004.12 | MT | F | L/R | Saloon FWD Y 22 DTR | | GCO17051 | Outer Joint | | 30 | 26 | 53.8 | 94.5 | 65.5 | M |
| | 2002.04-2004.12 | MT | F | R | Saloon FWD Y 22 DTR | | GCI99138 | Inner Joint | | 27 | 28 | 35 | 78 | 112 | |
| | 2002.04-2004.12 | | F | L/R | Saloon FWD Y 22 DTR | | GDS21036 | Drive Shaft | | 30 | 27 | 55.4 | 100 | 602 | |
| | 2002.08-2008.06 | MT | F | L/R | Hatchback FWD Y 22 DTR | Inner teeth of wheel side:26 | GDS21032 | Drive Shaft | | 30 | 27 | 53.8 | 94.5 | 605 | |
| | 2002.08-2008.06 | MT | F | L/R | Hatchback FWD Y 22 DTR | | GCO17051 | Outer Joint | | 30 | 26 | 53.8 | 94.5 | 65.5 | M |
| | 2002.08-2008.06 | MT | F | R | Hatchback FWD Y 22 DTR | | GCI99138 | Inner Joint | | 27 | 28 | 35 | 78 | 112 | |
| | 2002.08-2008.06 | | F | L/R | Hatchback FWD Y 22 DTR | Inner teeth of wheel side:28 | GDS21036 | Drive Shaft | | 30 | 27 | 55.4 | 100 | 602 | |
| 2.2 (88 kw) | 2000.09-2002.04 | MT | F | L | Estate FWD Y22DTR | | GDS44058 | Drive Shaft | 29T | 33 | 27 | 55 | 104 | 586 | |

| | YEAR | TRANSM. | F/R | L/R | BODY STYLE & DRIVE TYPE & ENGINE | REMARKS | G-AP Ref. | PRODUCT | ABS | Technical Specifications A | B | C | H | L | P |
|---|---|---|---|---|---|---|---|---|---|---|---|---|---|---|---|
| **OPEL** | | | | | | | | | | | | | | | |
| **Vectra** | | | | | | | | | | | | | | | |
| 2.2 (88 kw) | 2000.09-2002.04 | MT | F | L/R | Estate FWD Y22DTR | | GCO44065 | Outer Joint | 29T | 33 | 35 | 55 | 104 | 67.5 | I |
| | 2000.09-2002.04 | MT | F | L/R | Estate FWD Y22DTR | | GCI99188 | Inner Joint | | 27 | 35 | 35 | 80.5 | 109 | |
| | 2000.09-2002.04 | 5MT | F | L | Hatchback FWD Y22DTR | | GDS44058 | Drive Shaft | 29T | 33 | 27 | 55 | 104 | 586 | |
| | 2000.09-2002.04 | 5MT | F | L/R | Hatchback FWD Y22DTR | | GCO44065 | Outer Joint | 29T | 33 | 35 | 55 | 104 | 67.5 | I |
| | 2000.09-2002.04 | 5MT | F | L/R | Hatchback FWD Y22DTR | | GCI99188 | Inner Joint | | 27 | 35 | 35 | 80.5 | 109 | |
| 2.2 (92 kw) | 2000.07-2002.04 | 5MT | F | L | Saloon FWD Y22DTR | | GDS44058 | Drive Shaft | 29T | 33 | 27 | 55 | 104 | 586 | |
| | 2000.07-2002.04 | 5MT | F | L/R | Saloon FWD Y22DTR | | GCO44065 | Outer Joint | 29T | 33 | 35 | 55 | 104 | 67.5 | I |
| | 2000.07-2002.04 | 5MT | F | L/R | Saloon FWD Y22DTR | | GCI99188 | Inner Joint | | 27 | 35 | 35 | 80.5 | 109 | |
| | 2000.09-2003.07 | 5MT | F | L | Estate FWD Y22DTR | | GDS44058 | Drive Shaft | 29T | 33 | 27 | 55 | 104 | 586 | |
| | 2000.09-2003.07 | 5MT | F | L/R | Estate FWD Y22DTR | | GCO44065 | Outer Joint | 29T | 33 | 35 | 55 | 104 | 67.5 | I |
| | 2000.09-2003.07 | 5MT | F | L/R | Estate FWD Y22DTR | | GCI99188 | Inner Joint | | 27 | 35 | 35 | 80.5 | 109 | |
| | 2000.09-2003.07 | 5MT | F | L/R | Hatchback FWD Y22DTR | | GCI99188 | Inner Joint | | 27 | 35 | 35 | 80.5 | 109 | |
| | 2000.09-2003.07 | SAT/5MT | F | L | Hatchback FWD Y22DTR | | GDS44058 | Drive Shaft | 29T | 33 | 27 | 55 | 104 | 586 | |
| | 2000.09-2003.07 | SAT/5MT | F | L/R | Hatchback FWD Y22DTR | | GCO44065 | Outer Joint | 29T | 33 | 35 | 55 | 104 | 67.5 | I |
| | 2002.04-2004.07 | MT | F | L/R | Saloon FWD Y 22 DTR | | GCO17051 | Outer Joint | | 30 | 26 | 53.8 | 94.5 | 65.5 | M |
| | 2002.04-2004.07 | MT | F | R | Saloon FWD Y 22 DTR | | GCI99138 | Inner Joint | | 27 | 28 | 35 | 78 | 112 | |
| | 2002.04-2004.07 | SAT/5MT | F | L/R | Saloon FWD Y 22 DTR | Inner teeth of wheel side:26 | GDS21032 | Drive Shaft | | 30 | 27 | 53.8 | 94.5 | 605 | |
| | 2002.04-2004.07 | | F | L/R | Saloon FWD Y 22 DTR | Inner teeth of wheel side:28 | GDS21036 | Drive Shaft | | 30 | 27 | 55.4 | 100 | 602 | |
| | 2002.08-2006.07 | 5MT | F | L/R | Hatchback FWD Y 22 DTR | Inner teeth of wheel side:26 | GDS21032 | Drive Shaft | | 30 | 27 | 53.8 | 94.5 | 605 | |
| | 2002.08-2006.07 | MT | F | L/R | Hatchback FWD Y 22 DTR | Date to:2004.07 | GCO17051 | Outer Joint | | 30 | 26 | 53.8 | 94.5 | 65.5 | M |
| | 2002.08-2006.07 | MT | F | R | Hatchback FWD Y 22 DTR | | GCI99138 | Inner Joint | | 27 | 28 | 35 | 78 | 112 | |
| | 2002.08-2006.07 | | F | L/R | Hatchback FWD Y 22 DTR | Inner teeth of wheel side:28 | GDS21036 | Drive Shaft | | 30 | 27 | 55.4 | 100 | 602 | |
| | 2003.10-2005.12 | MT | F | L/R | Estate FWD Y 22 DTR | | GCO17051 | Outer Joint | | 30 | 26 | 53.8 | 94.5 | 65.5 | M |
| | 2003.10-2005.12 | MT | F | R | Estate FWD Y 22 DTR | | GCI99138 | Inner Joint | | 27 | 28 | 35 | 78 | 112 | |
| | 2003.10-2005.12 | SAT/5MT | F | L/R | Estate FWD Y 22 DTR | Inner teeth of wheel side:26 | GDS21032 | Drive Shaft | | 30 | 27 | 53.8 | 94.5 | 605 | |
| | 2003.10-2005.12 | | F | L/R | Estate FWD Y 22 DTR | Inner teeth of wheel side:28 | GDS21036 | Drive Shaft | | 30 | 27 | 55.4 | 100 | 602 | |
| 2.2 (102 kw) | 2000.07-2002.07 | 4AT/5MT | F | L | Estate FWD C22SEL | | GDS44038 | Drive Shaft | 29T | 33 | 34 | 52 | 103.5 | 595 | |
| | 2000.07-2002.07 | 4AT/5MT | F | R | Estate FWD C22SEL | | GDS44039 | Drive Shaft | 29T | 33 | 34 | 52 | 103.5 | 959 | |
| | 2000.07-2002.07 | | F | L/R | Estate FWD C22SEL | | GCO44006 | Outer Joint | 29T | 33 | 25 | 52 | 103.5 | 61 | O |
| | 2000.07-2002.07 | | F | L/R | Estate FWD C22SEL | | GCO44049 | Outer Joint | | 33 | 25 | 52 | 109 | 61 | O |
| | 2000.07-2002.07 | | F | L/R | Estate FWD C22SEL | | GCI44002 | Inner Joint | | 34 | 25 | 35 | 56.2 | 114.8 | |
| | 2000.07-2002.07 | 4AT/5MT | F | L | Hatchback FWD C22SEL | | GDS44038 | Drive Shaft | 29T | 33 | 34 | 52 | 103.5 | 595 | |
| | 2000.07-2002.07 | 4AT/5MT | F | R | Hatchback FWD C22SEL | | GDS44039 | Drive Shaft | 29T | 33 | 34 | 52 | 103.5 | 959 | |
| | 2000.07-2002.07 | | F | L/R | Hatchback FWD C22SEL | | GCO44006 | Outer Joint | 29T | 33 | 25 | 52 | 103.5 | 61 | O |
| | 2000.07-2002.07 | | F | L/R | Hatchback FWD C22SEL | | GCO44049 | Outer Joint | | 33 | 25 | 52 | 109 | 61 | O |
| | 2000.07-2002.07 | | F | L/R | Hatchback FWD C22SEL | | GCI44002 | Inner Joint | | 34 | 25 | 35 | 56.2 | 114.8 | |
| | 2000.07-2002.07 | 4AT/5MT | F | L | Saloon FWD C22SEL | | GDS44038 | Drive Shaft | 29T | 33 | 34 | 52 | 103.5 | 595 | |
| | 2000.07-2002.07 | 4AT/5MT | F | R | Saloon FWD C22SEL | | GDS44039 | Drive Shaft | 29T | 33 | 34 | 52 | 103.5 | 959 | |
| | 2000.07-2002.07 | | F | L/R | Saloon FWD C22SEL | | GCO44006 | Outer Joint | 29T | 33 | 25 | 52 | 103.5 | 61 | O |
| | 2000.07-2002.07 | | F | L/R | Saloon FWD C22SEL | | GCO44049 | Outer Joint | | 33 | 25 | 52 | 109 | 61 | O |
| | 2000.07-2002.07 | | F | L/R | Saloon FWD C22SEL | | GCI44002 | Inner Joint | | 34 | 25 | 35 | 56.2 | 114.8 | |
| 2.2 (108 kw) | 2000.07-2002.07 | 4AT/5MT | F | L | Saloon FWD Z22SE | | GDS44038 | Drive Shaft | 29T | 33 | 34 | 52 | 103.5 | 595 | |
| | 2000.07-2002.07 | 4AT/5MT | F | R | Saloon FWD Z22SE | | GDS44039 | Drive Shaft | 29T | 33 | 34 | 52 | 103.5 | 959 | |
| | 2000.07-2002.07 | | F | L/R | Saloon FWD Z22SE | | GCO44006 | Outer Joint | 29T | 33 | 25 | 52 | 103.5 | 61 | O |
| | 2000.07-2002.07 | | F | L/R | Saloon FWD Z22SE | | GCO44049 | Outer Joint | | 33 | 25 | 52 | 109 | 61 | O |
| | 2000.07-2002.07 | | F | L/R | Saloon FWD Z22SE | | GCI44002 | Inner Joint | | 34 | 25 | 35 | 56.2 | 114.8 | |
| | 2000.07-2003.07 | 4AT/5MT | F | L | Estate FWD Z22SE | | GDS44038 | Drive Shaft | 29T | 33 | 34 | 52 | 103.5 | 595 | |
| | 2000.07-2003.07 | 4AT/5MT | F | R | Estate FWD Z22SE | | GDS44039 | Drive Shaft | 29T | 33 | 34 | 52 | 103.5 | 959 | |
| | 2000.07-2003.07 | | F | L/R | Estate FWD Z22SE | | GCO44006 | Outer Joint | 29T | 33 | 25 | 52 | 103.5 | 61 | O |
| | 2000.07-2003.07 | | F | L/R | Estate FWD Z22SE | | GCO44049 | Outer Joint | | 33 | 25 | 52 | 109 | 61 | O |
| | 2000.07-2003.07 | | F | L/R | Estate FWD Z22SE | | GCI44002 | Inner Joint | | 34 | 25 | 35 | 56.2 | 114.8 | |
| | 2000.07-2003.07 | 4AT/5MT | F | L | Hatchback FWD Z22SE | | GDS44038 | Drive Shaft | 29T | 33 | 34 | 52 | 103.5 | 595 | |
| | 2000.07-2003.07 | 4AT/5MT | F | R | Hatchback FWD Z22SE | | GDS44039 | Drive Shaft | 29T | 33 | 34 | 52 | 103.5 | 959 | |
| | 2000.07-2003.07 | | F | L/R | Hatchback FWD Z22SE | | GCO44006 | Outer Joint | 29T | 33 | 25 | 52 | 103.5 | 61 | O |
| | 2000.07-2003.07 | | F | L/R | Hatchback FWD Z22SE | | GCO44049 | Outer Joint | | 33 | 25 | 52 | 109 | 61 | O |
| | 2000.07-2003.07 | | F | L/R | Hatchback FWD Z22SE | | GCI44002 | Inner Joint | | 34 | 25 | 35 | 56.2 | 114.8 | |
| | 2002.04-2008.12 | 5MT | F | R | Saloon FWD Z 22 SE | | GCI44005 | Inner Joint | | 34 | 25 | 35 | | 130.2 | |
| | 2002.04-2008.12 | MT | F | L/R | Saloon FWD Z 22 SE | Date to:2004.04;Chassis no. to:71009336 | GCO17007 | Outer Joint | | 30 | 25 | 52.5 | 105 | 62 | O |
| | 2002.04-2008.12 | SAT/5MT | F | L | Saloon FWD Z 22 SE | | GDS60015 | Drive Shaft | | 30 | 34 | 52.5 | 105 | 628 | |
| | 2002.04-2008.12 | SAT/5MT | F | R | Saloon FWD Z 22 SE | | GDS60016 | Drive Shaft | | 30 | 34 | 52.5 | 105 | 588 | |
| | 2002.04-2008.12 | SAT/5MT | F | L | Saloon FWD Z 22 SE | Transmission side | GCI44002 | Inner Joint | | 34 | 25 | 35 | 56.2 | 114.8 | |
| | 2002.04-2008.12 | SAT/5MT | F | L | Saloon FWD Z 22 SE | Transmission side | GCI44008 | Inner Joint | | 25 | 25 | 34.9 | 57.5 | 113.2 | |
| | 2002.04-2008.12 | | F | | Saloon FWD Z 22 SE | | GCO21038 | Outer Joint | | 30 | 24 | 52 | 94 | 64 | M |
| | 2002.08-2008.08 | 5MT | F | R | Hatchback FWD Z 22 SE | | GCI44005 | Inner Joint | | 34 | 25 | 35 | | 130.2 | |
| | 2002.08-2008.08 | MT | F | L/R | Hatchback FWD Z 22 SE | Date to:2004.04;Chassis no. to:71009336 | GCO17007 | Outer Joint | | 30 | 25 | 52.5 | 105 | 62 | O |

| | YEAR | TRANSM. | F/R | L/R | BODY STYLE & DRIVE TYPE & ENGINE | REMARKS | G-AP Ref. | PRODUCT | ABS | Technical Specifications | | | | | |
|---|---|---|---|---|---|---|---|---|---|---|---|---|---|---|---|
| | | | | | | | | | | A | B | C | H | L | P |
| **OPEL** | | | | | | | | | | | | | | | |
| **Vectra** | | | | | | | | | | | | | | | |
| 2.2 (108 kw) | 2002.08-2008.08 | SAT/5MT | F | L | Hatchback FWD Z 22 SE | | GDS60015 | Drive Shaft | | 30 | 34 | 52.5 | 105 | 628 | |
| | 2002.08-2008.08 | SAT/5MT | F | R | Hatchback FWD Z 22 SE | | GDS60016 | Drive Shaft | | 30 | 34 | 52.5 | 105 | 588 | |
| | 2002.08-2008.08 | SAT/5MT | F | L | Hatchback FWD Z 22 SE | | GCI44002 | Inner Joint | | 34 | 25 | 35 | 56.2 | 114.8 | |
| | 2002.08-2008.08 | SAT/5MT | F | L | Hatchback FWD Z 22 SE | | GCI44008 | Inner Joint | | 25 | 25 | 34.9 | 57.5 | 113.2 | |
| | 2002.08-2008.08 | | F | | Hatchback FWD Z 22 SE | | GCO21038 | Outer Joint | | 30 | 24 | 52 | 94 | 64 | M |
| 2.2 (114 kw) | 2003.10-2008.08 | 5MT | F | R | Estate FWD Z 22 YH | | GCI44005 | Inner Joint | | 34 | 25 | 35 | | 130.2 | |
| | 2003.10-2008.08 | AT/MT | F | L/R | Estate FWD Z 22 YH | Transmission:AT,Chassis no. to:71009336;Transmission:MT,Chassis no. to:71009336; Trans. code:F23 | GCO17007 | Outer Joint | | 30 | 25 | 52.5 | 105 | 62 | O |
| | 2003.10-2008.08 | MT | F | L | Estate FWD Z 22 YH | Trans. code:F23 | GDS60015 | Drive Shaft | | 30 | 34 | 52.5 | 105 | 628 | |
| | 2003.10-2008.08 | MT | F | R | Estate FWD Z 22 YH | Trans. code:F23 | GDS60016 | Drive Shaft | | 30 | 34 | 52.5 | 105 | 588 | |
| | 2003.10-2008.08 | MT | F | R | Estate FWD Z 22 YH | Trans. code:M32 | GDS82089 | Drive Shaft | | 30 | 34 | 52 | 94 | 577 | |
| | 2003.10-2008.08 | MT | F | L/R | Estate FWD Z 22 YH | Trans. code:M32,Chassis no. from:71009337 | GCO21038 | Outer Joint | | 30 | 24 | 52 | 94 | 64 | M |
| | 2003.10-2008.08 | SAT/5MT | F | L | Estate FWD Z 22 YH | | GCI44002 | Inner Joint | | 34 | 25 | 35 | 56.2 | 114.8 | |
| | 2003.10-2008.08 | SAT/5MT | F | L | Estate FWD Z 22 YH | | GCI44008 | Inner Joint | | 25 | 25 | 34.9 | 57.5 | 113.2 | |
| | 2003.10-2008.08 | 5MT | F | R | Hatchback FWD Z 22 YH | | GCI44005 | Inner Joint | | 34 | 25 | 35 | | 130.2 | |
| | 2003.10-2008.08 | AT | F | L | Hatchback FWD Z 22 YH | | GDS60015 | Drive Shaft | | 30 | 34 | 52.5 | 105 | 628 | |
| | 2003.10-2008.08 | AT/MT | F | L/R | Hatchback FWD Z 22 YH | Transmission:AT,Chassis no. to:71009336;Transmission:MT,Chassis no. to:71009336; Trans. code:F23 | GCO17007 | Outer Joint | | 30 | 25 | 52.5 | 105 | 62 | O |
| | 2003.10-2008.08 | MT | F | L | Hatchback FWD Z 22 YH | Trans. code:F23 | GDS60015 | Drive Shaft | | 30 | 34 | 52.5 | 105 | 628 | |
| | 2003.10-2008.08 | MT | F | R | Hatchback FWD Z 22 YH | Trans. code:F23 | GDS60016 | Drive Shaft | | 30 | 34 | 52.5 | 105 | 588 | |
| | 2003.10-2008.08 | MT | F | R | Hatchback FWD Z 22 YH | Trans. code:M32 | GDS82089 | Drive Shaft | | 30 | 34 | 52 | 94 | 577 | |
| | 2003.10-2008.08 | MT | F | L/R | Hatchback FWD Z 22 YH | Trans. code:M32,Chassis no. from:71009337 | GCO21038 | Outer Joint | | 30 | 24 | 52 | 94 | 64 | M |
| | 2003.10-2008.08 | SAT/5MT | F | L | Hatchback FWD Z 22 YH | | GCI44002 | Inner Joint | | 34 | 25 | 35 | 56.2 | 114.8 | |
| | 2003.10-2008.08 | SAT/5MT | F | L | Hatchback FWD Z 22 YH | | GCI44008 | Inner Joint | | 25 | 25 | 34.9 | 57.5 | 113.2 | |
| | 2003.10-2008.08 | 5MT | F | R | Saloon FWD Z 22 YH | | GCI44005 | Inner Joint | | 34 | 25 | 35 | | 130.2 | |
| | 2003.10-2008.08 | AT | F | L | Saloon FWD Z 22 YH | | GDS60015 | Drive Shaft | | 30 | 34 | 52.5 | 105 | 628 | |
| | 2003.10-2008.08 | AT/MT | F | L/R | Saloon FWD Z 22 YH | Transmission:AT,Chassis no. to:71009336;Transmission:MT,Chassis no. to:71009336; Trans. code:F23 | GCO17007 | Outer Joint | | 30 | 25 | 52.5 | 105 | 62 | O |
| | 2003.10-2008.08 | MT | F | L | Saloon FWD Z 22 YH | Trans. code:F23 | GDS60015 | Drive Shaft | | 30 | 34 | 52.5 | 105 | 628 | |
| | 2003.10-2008.08 | MT | F | R | Saloon FWD Z 22 YH | Trans. code:F23 | GDS60016 | Drive Shaft | | 30 | 34 | 52.5 | 105 | 588 | |
| | 2003.10-2008.08 | MT | F | R | Saloon FWD Z 22 YH | Trans. code:M32 | GDS82089 | Drive Shaft | | 30 | 34 | 52 | 94 | 577 | |
| | 2003.10-2008.08 | MT | F | L/R | Saloon FWD Z 22 YH | Trans. code:M32,Chassis no. from:71009337 | GCO21038 | Outer Joint | | 30 | 24 | 52 | 94 | 64 | M |
| | 2003.10-2008.08 | SAT/5MT | F | L | Saloon FWD Z 22 YH | | GCI44002 | Inner Joint | | 34 | 25 | 35 | 56.2 | 114.8 | |
| | 2003.10-2008.08 | SAT/5MT | F | L | Saloon FWD Z 22 YH | | GCI44008 | Inner Joint | | 25 | 25 | 34.9 | 57.5 | 113.2 | |
| 2.5 (125 kw) | 1995.09-2000.06 | 4AT/5MT | F | L | Saloon FWD X25XE | | GDS44038 | Drive Shaft | 29T | 33 | 34 | 52 | 103.5 | 595 | |
| | 1995.09-2000.06 | 4AT/5MT | F | R | Saloon FWD X25XE | Date to:2000.06 | GDS44039 | Drive Shaft | 29T | 33 | 34 | 52 | 103.5 | 959 | |
| | 1995.09-2000.06 | 4AT/5MT | F | R | Saloon FWD X25XE | | GDS44077 | Drive Shaft | 29T | 22 | 22 | 52 | 95 | 955 | |
| | 1995.09-2000.06 | AT/MT | F | L/R | Saloon FWD X25XE | Date to:2000.06 | GCO44006 | Outer Joint | 29T | 33 | 25 | 52 | 103.5 | 61 | O |
| | 1995.09-2000.06 | | F | L/R | Saloon FWD X25XE | | GCO44049 | Outer Joint | | 33 | 25 | 52 | 109 | 61 | O |
| | 1995.09-2000.06 | | F | L | Saloon FWD X25XE | | GCI44002 | Inner Joint | | 34 | 25 | 35 | 56.2 | 114.8 | |
| | 1995.09-2000.06 | | F | R | Saloon FWD X25XE | | GCI44005 | Inner Joint | | 34 | 25 | 35 | | 130.2 | |
| | 1995.09-2000.09 | 4AT/5MT | F | L | Hatchback FWD X25XE | | GDS44038 | Drive Shaft | 29T | 33 | 34 | 52 | 103.5 | 595 | |
| | 1995.09-2000.09 | 4AT/5MT | F | R | Hatchback FWD X25XE | | GDS44077 | Drive Shaft | 29T | 22 | 22 | 52 | 95 | 955 | |
| | 1995.09-2000.09 | AT/MT | F | L/R | Hatchback FWD X25XE | | GCO44006 | Outer Joint | 29T | 33 | 25 | 52 | 103.5 | 61 | O |
| | 1995.09-2000.09 | | F | L/R | Hatchback FWD X25XE | | GCO44049 | Outer Joint | | 33 | 25 | 52 | 109 | 61 | O |
| | 1995.09-2000.09 | | F | L | Hatchback FWD X25XE | | GCI44002 | Inner Joint | | 34 | 25 | 35 | 56.2 | 114.8 | |
| | 1995.09-2000.09 | | F | R | Hatchback FWD X25XE | | GCI44005 | Inner Joint | | 34 | 25 | 35 | | 130.2 | |
| | 1996.11-2000.09 | 4AT/5MT | F | L | Estate FWD X25XE | | GDS44038 | Drive Shaft | 29T | 33 | 34 | 52 | 103.5 | 595 | |
| | 1996.11-2000.09 | 4AT/5MT | F | R | Estate FWD X25XE | | GDS44039 | Drive Shaft | 29T | 33 | 34 | 52 | 103.5 | 959 | |
| | 1996.11-2000.09 | 4AT/5MT | F | R | Estate FWD X25XE | | GDS44077 | Drive Shaft | 29T | 22 | 22 | 52 | 95 | 955 | |
| | 1996.11-2000.09 | AT/MT | F | L/R | Estate FWD X25XE | | GCO44006 | Outer Joint | 29T | 33 | 25 | 52 | 103.5 | 61 | O |
| | 1996.11-2000.09 | | F | L/R | Estate FWD X25XE | | GCO44049 | Outer Joint | | 33 | 25 | 52 | 109 | 61 | O |
| | 1996.11-2000.09 | | F | L | Estate FWD X25XE | | GCI44002 | Inner Joint | | 34 | 25 | 35 | 56.2 | 114.8 | |
| | 1996.11-2000.09 | | F | R | Estate FWD X25XE | | GCI44005 | Inner Joint | | 34 | 25 | 35 | | 130.2 | |
| 2.5 (143 kw) | 1998.05-2000.09 | 4AT/5MT | F | L | Estate FWD X25XE | | GDS44038 | Drive Shaft | 29T | 33 | 34 | 52 | 103.5 | 595 | |
| | 1998.05-2000.09 | 4AT/5MT | F | R | Estate FWD X25XE | | GDS44077 | Drive Shaft | 29T | 22 | 22 | 52 | 95 | 955 | |
| | 1998.05-2000.09 | | F | L/R | Estate FWD X25XE | | GCO44006 | Outer Joint | 29T | 33 | 25 | 52 | 103.5 | 61 | O |
| | 1998.05-2000.09 | | F | L/R | Estate FWD X25XE | | GCO44049 | Outer Joint | | 33 | 25 | 52 | 109 | 61 | O |
| | 1998.05-2000.09 | | F | L | Estate FWD X25XE | | GCI44002 | Inner Joint | | 34 | 25 | 35 | 56.2 | 114.8 | |
| | 1998.05-2000.09 | | F | R | Estate FWD X25XE | | GCI44005 | Inner Joint | | 34 | 25 | 35 | | 130.2 | |
| | 1998.05-2000.09 | 4AT/5MT | F | L | Saloon FWD X25XE | | GDS44038 | Drive Shaft | 29T | 33 | 34 | 52 | 103.5 | 595 | |
| | 1998.05-2000.09 | 4AT/5MT | F | R | Saloon FWD X25XE | | GDS44077 | Drive Shaft | 29T | 22 | 22 | 52 | 95 | 955 | |
| | 1998.05-2000.09 | | F | L/R | Saloon FWD X25XE | | GCO44006 | Outer Joint | 29T | 33 | 25 | 52 | 103.5 | 61 | O |
| | 1998.05-2000.09 | | F | L/R | Saloon FWD X25XE | | GCO44049 | Outer Joint | | 33 | 25 | 52 | 109 | 61 | O |
| | 1998.05-2000.09 | | F | L | Saloon FWD X25XE | | GCI44002 | Inner Joint | | 34 | 25 | 35 | 56.2 | 114.8 | |
| | 1998.05-2000.09 | | F | R | Saloon FWD X25XE | | GCI44005 | Inner Joint | | 34 | 25 | 35 | | 130.2 | |
| 2.5 (144 kw) | 1999.10-2000.06 | 4AT/5MT | F | L | Hatchback FWD X25XE | | GDS44038 | Drive Shaft | 29T | 33 | 34 | 52 | 103.5 | 595 | |
| | 1999.10-2000.06 | 4AT/5MT | F | R | Hatchback FWD X25XE | | GDS44077 | Drive Shaft | 29T | 22 | 22 | 52 | 95 | 955 | |

| | YEAR | TRANSM. | F/R | L/R | BODY STYLE & DRIVE TYPE & ENGINE | REMARKS | G-AP Ref. | PRODUCT | ABS | Technical Specifications A | B | C | H | L | P |
|---|---|---|---|---|---|---|---|---|---|---|---|---|---|---|---|
| **OPEL** | | | | | | | | | | | | | | | |
| **Vectra** | | | | | | | | | | | | | | | |
| 2.5 (144 kw) | 1999.10-2000.06 | | F | L/R | Hatchback FWD X25XE | | GCO44006 | Outer Joint | 29T | 33 | 25 | 52 | 103.5 | 61 | O |
| | 1999.10-2000.06 | | F | L/R | Hatchback FWD X25XE | | GCO44049 | Outer Joint | | 33 | 25 | 52 | 109 | 61 | O |
| | 1999.10-2000.06 | | F | R | Hatchback FWD X25XE | | GCI44005 | Inner Joint | | 34 | 25 | 35 | | 130.2 | |
| | 1999.10-2000.06 | | F | L/R | Hatchback FWD X25XE | | GCI44002 | Inner Joint | | 34 | 25 | 35 | 56.2 | 114.8 | |
| 2.6 (125 kw) | 2000.07-2002.07 | AT/MT | F | L/R | Saloon FWD Y26SE | | GCO44065 | Outer Joint | 29T | 33 | 35 | 55 | 104 | 67.5 | I |
| | 2000.07-2002.07 | | F | R | Saloon FWD Y26SE | | GCI44005 | Inner Joint | | 34 | 25 | 35 | | 130.2 | |
| | 2000.07-2003.07 | AT/MT | F | L/R | Estate FWD Y26SE | | GCO44065 | Outer Joint | 29T | 33 | 35 | 55 | 104 | 67.5 | I |
| | 2000.07-2003.07 | | F | R | Estate FWD Y26SE | | GCI44005 | Inner Joint | | 34 | 25 | 35 | | 130.2 | |
| | 2000.07-2003.07 | AT/MT | F | L/R | Hatchback FWD Y26SE | | GCO44065 | Outer Joint | 29T | 33 | 35 | 55 | 104 | 67.5 | I |
| | 2000.07-2003.07 | | F | R | Hatchback FWD Y26SE | | GCI44005 | Inner Joint | | 34 | 25 | 35 | | 130.2 | |
| 2.8 (169 kw) | 2005.08-2006.10 | 6AT | F | L/R | Saloon FWD Z 28 NEL | | GCO21057 | Outer Joint | | 30 | 27 | 59.1 | 94 | 65 | M |
| | 2005.08-2006.10 | 6MT | F | L/R | Saloon FWD Z 28 NEL | | GDS21036 | Drive Shaft | | 30 | 27 | 55.4 | 100 | 602 | |
| | 2005.08-2006.10 | MT | F | L/R | Saloon FWD Z 28 NEL | | GCO21030 | Outer Joint | | 30 | 28 | 55.4 | 96 | 65 | M |
| | 2005.08-2008.08 | 6AT | F | L/R | Hatchback FWD Z 28 NEL | | GCO21057 | Outer Joint | | 30 | 27 | 59.1 | 94 | 65 | M |
| | 2005.08-2008.08 | 6MT | F | L/R | Hatchback FWD Z 28 NEL | | GDS21036 | Drive Shaft | | 30 | 27 | 55.4 | 100 | 602 | |
| | 2005.08-2008.08 | MT | F | L/R | Hatchback FWD Z 28 NEL | | GCO21030 | Outer Joint | | 30 | 28 | 55.4 | 96 | 65 | M |
| | 2005.08-2008.10 | 6AT | F | L/R | Estate FWD Z 28 NEL | | GCO21057 | Outer Joint | | 30 | 27 | 59.1 | 94 | 65 | M |
| | 2005.08-2008.10 | 6MT | F | L/R | Estate FWD Z 28 NEL | | GDS21036 | Drive Shaft | | 30 | 27 | 55.4 | 100 | 602 | |
| | 2005.08-2008.10 | MT | F | L/R | Estate FWD Z 28 NEL | | GCO21030 | Outer Joint | | 30 | 28 | 55.4 | 96 | 65 | M |
| 2.8 (184 kw) | 2005.08-2008.08 | 6AT | F | L/R | Estate FWD Z 28 NET | | GCO21057 | Outer Joint | | 30 | 27 | 59.1 | 94 | 65 | M |
| | 2005.08-2008.08 | 6MT | F | L/R | Estate FWD Z 28 NET | | GDS21036 | Drive Shaft | | 30 | 27 | 55.4 | 100 | 602 | |
| | 2005.08-2008.08 | 6MT | F | L/R | Estate FWD Z 28 NET | | GCO21030 | Outer Joint | | 30 | 28 | 55.4 | 96 | 65 | M |
| | 2005.08-2008.08 | 6AT | F | L/R | Hatchback FWD Z 28 NET | | GCO21057 | Outer Joint | | 30 | 27 | 59.1 | 94 | 65 | M |
| | 2005.08-2008.08 | 6MT | F | L/R | Hatchback FWD Z 28 NET | | GDS21036 | Drive Shaft | | 30 | 27 | 55.4 | 100 | 602 | |
| | 2005.08-2008.08 | 6MT | F | L/R | Hatchback FWD Z 28 NET | | GCO21030 | Outer Joint | | 30 | 28 | 55.4 | 96 | 65 | M |
| | 2005.08-2008.08 | 6AT | F | L/R | Saloon FWD Z 28 NET | | GCO21057 | Outer Joint | | 30 | 27 | 59.1 | 94 | 65 | M |
| | 2005.08-2008.08 | 6MT | F | L/R | Saloon FWD Z 28 NET | | GDS21036 | Drive Shaft | | 30 | 27 | 55.4 | 100 | 602 | |
| | 2005.08-2008.08 | 6MT | F | L/R | Saloon FWD Z 28 NET | | GCO21030 | Outer Joint | | 30 | 28 | 55.4 | 96 | 65 | M |
| 2.8 (188 kw) | 2005.08-2006.09 | 6AT | F | L/R | Saloon FWD Z 28 NET | | GCO21057 | Outer Joint | | 30 | 27 | 59.1 | 94 | 65 | M |
| | 2005.08-2006.09 | 6MT | F | L/R | Saloon FWD Z 28 NET | | GDS21036 | Drive Shaft | | 30 | 27 | 55.4 | 100 | 602 | |
| | 2005.08-2006.09 | 6MT | F | L/R | Saloon FWD Z 28 NET | | GCO21030 | Outer Joint | | 30 | 28 | 55.4 | 96 | 65 | M |
| | 2005.08-2008.09 | 6AT | F | L/R | Estate FWD Z 28 NET | | GCO21057 | Outer Joint | | 30 | 27 | 59.1 | 94 | 65 | M |
| | 2005.08-2008.09 | 6MT | F | L/R | Estate FWD Z 28 NET | | GDS21036 | Drive Shaft | | 30 | 27 | 55.4 | 100 | 602 | |
| | 2005.08-2008.09 | 6MT | F | L/R | Estate FWD Z 28 NET | | GCO21030 | Outer Joint | | 30 | 28 | 55.4 | 96 | 65 | M |
| | 2005.08-2008.09 | 6AT | F | L/R | Hatchback FWD Z 28 NET | | GCO21057 | Outer Joint | | 30 | 27 | 59.1 | 94 | 65 | M |
| | 2005.08-2008.09 | 6MT | F | L/R | Hatchback FWD Z 28 NET | | GDS21036 | Drive Shaft | | 30 | 27 | 55.4 | 100 | 602 | |
| | 2005.08-2008.09 | 6MT | F | L/R | Hatchback FWD Z 28 NET | | GCO21030 | Outer Joint | | 30 | 28 | 55.4 | 96 | 65 | M |
| 2.8 (206 kw) | 2006.07-2008.08 | 6AT | F | L/R | Estate FWD Z 28 NET | | GCO21057 | Outer Joint | | 30 | 27 | 59.1 | 94 | 65 | M |
| | 2006.07-2008.08 | 6MT | F | L/R | Estate FWD Z 28 NET | | GDS21036 | Drive Shaft | | 30 | 27 | 55.4 | 100 | 602 | |
| | 2006.07-2008.08 | 6MT | F | L/R | Estate FWD Z 28 NET | | GCO21030 | Outer Joint | | 30 | 28 | 55.4 | 96 | 65 | M |
| | 2006.08-2008.08 | 6AT | F | L/R | Hatchback FWD Z 28 NET | | GCO21057 | Outer Joint | | 30 | 27 | 59.1 | 94 | 65 | M |
| | 2006.08-2008.08 | 6MT | F | L/R | Hatchback FWD Z 28 NET | | GDS21036 | Drive Shaft | | 30 | 27 | 55.4 | 100 | 602 | |
| | 2006.08-2008.08 | 6MT | F | L/R | Hatchback FWD Z 28 NET | | GCO21030 | Outer Joint | | 30 | 28 | 55.4 | 96 | 65 | M |
| | 2006.09-2008.08 | 6AT | F | L/R | Saloon FWD Z 28 NET | | GCO21057 | Outer Joint | | 30 | 27 | 59.1 | 94 | 65 | M |
| | 2006.09-2008.08 | 6MT | F | L/R | Saloon FWD Z 28 NET | | GDS21036 | Drive Shaft | | 30 | 27 | 55.4 | 100 | 602 | |
| | 2006.09-2008.08 | 6MT | F | L/R | Saloon FWD Z 28 NET | | GCO21030 | Outer Joint | | 30 | 28 | 55.4 | 96 | 65 | M |
| 3.0 (130 kw) | 2003.02-2005.07 | 6MT | F | L/R | Saloon FWD Y 30 DT | Inner teeth of wheel side:26 | GDS21032 | Drive Shaft | | 30 | 27 | 53.8 | 94.5 | 605 | |
| | 2003.02-2005.07 | 6MT | F | L/R | Saloon FWD Y 30 DT | | GCI99138 | Inner Joint | | 27 | 28 | 35 | 78 | 112 | |
| | 2003.02-2005.07 | AT/MT | F | L/R | Saloon FWD Y 30 DT | Inner teeth of wheel side:28 | GDS21036 | Drive Shaft | | 30 | 27 | 55.4 | 100 | 602 | |
| | 2003.02-2005.07 | MT | F | L/R | Saloon FWD Y 30 DT | | GCO17051 | Outer Joint | | 30 | 26 | 53.8 | 94.5 | 65.5 | M |
| | 2003.06-2005.07 | 6MT | F | L/R | Hatchback FWD Y 30 DT | Inner teeth of wheel side:26 | GDS21032 | Drive Shaft | | 30 | 27 | 53.8 | 94.5 | 605 | |
| | 2003.06-2005.07 | 6MT | F | L/R | Hatchback FWD Y 30 DT | | GCI99138 | Inner Joint | | 27 | 28 | 35 | 78 | 112 | |
| | 2003.06-2005.07 | AT/MT | F | L/R | Hatchback FWD Y 30 DT | Inner teeth of wheel side:28 | GDS21036 | Drive Shaft | | 30 | 27 | 55.4 | 100 | 602 | |
| | 2003.06-2005.07 | MT | F | L/R | Hatchback FWD Y 30 DT | | GCO17051 | Outer Joint | | 30 | 26 | 53.8 | 94.5 | 65.5 | M |
| | 2003.10-2005.07 | AT/MT | F | L/R | Estate FWD Y 30 DT | Inner teeth of wheel side:28 | GDS21036 | Drive Shaft | | 30 | 27 | 55.4 | 100 | 602 | |
| | 2003.10-2005.07 | MT | F | L/R | Estate FWD Y 30 DT | | GCO17051 | Outer Joint | | 30 | 26 | 53.8 | 94.5 | 65.5 | M |
| | 2003.10-2005.07 | SAT/6MT | F | L/R | Estate FWD Y 30 DT | Inner teeth of wheel side:26 | GDS21032 | Drive Shaft | | 30 | 27 | 53.8 | 94.5 | 605 | |
| | 2003.10-2005.07 | SAT/6MT | F | L/R | Estate FWD Y 30 DT | | GCI99138 | Inner Joint | | 27 | 28 | 35 | 78 | 112 | |
| 3.0 (135 kw) | 2005.08-2008.08 | 6AT | F | L/R | Estate FWD Z 30 DT | | GCO21057 | Outer Joint | | 30 | 27 | 59.1 | 94 | 65 | M |
| | 2005.08-2008.08 | 6MT | F | L/R | Estate FWD Z 30 DT | | GDS21036 | Drive Shaft | | 30 | 27 | 55.4 | 100 | 602 | |
| | 2005.08-2008.08 | MT | F | L/R | Estate FWD Z 30 DT | | GCO21030 | Outer Joint | | 30 | 28 | 55.4 | 96 | 65 | M |
| | 2005.08-2008.08 | 6AT | F | L/R | Hatchback FWD Z 30 DT | | GCO21057 | Outer Joint | | 30 | 27 | 59.1 | 94 | 65 | M |
| | 2005.08-2008.08 | 6MT | F | L/R | Hatchback FWD Z 30 DT | | GDS21036 | Drive Shaft | | 30 | 27 | 55.4 | 100 | 602 | |
| | 2005.08-2008.08 | MT | F | L/R | Hatchback FWD Z 30 DT | | GCO21030 | Outer Joint | | 30 | 28 | 55.4 | 96 | 65 | M |
| | 2005.08-2008.08 | 6AT | F | L/R | Saloon FWD Z 30 DT | | GCO21057 | Outer Joint | | 30 | 27 | 59.1 | 94 | 65 | M |

| | YEAR | TRANSM. | F/R | L/R | BODY STYLE & DRIVE TYPE & ENGINE | REMARKS | G-AP Ref. | PRODUCT | ABS | Technical Specifications A | B | C | H | L | P |
|---|---|---|---|---|---|---|---|---|---|---|---|---|---|---|---|
| **OPEL** | | | | | | | | | | | | | | | |
| **Vectra** | | | | | | | | | | | | | | | |
| 3.0 (135 kw) | 2005.08-2008.08 | 6MT | F | L/R | Saloon FWD Z 30 DT | | GDS21036 | Drive Shaft | | 30 | 27 | 55.4 | 100 | 602 | |
| | 2005.08-2008.08 | MT | F | L/R | Saloon FWD Z 30 DT | | GCO21030 | Outer Joint | | 30 | 28 | 55.4 | 96 | 65 | M |
| 3.2 (155 kw) | 2002.08-2006.07 | AT/MT | F | L/R | Hatchback FWD Z 32 SE | Inner teeth of wheel side:28 | GDS21036 | Drive Shaft | | 30 | 27 | 55.4 | 100 | 602 | |
| | 2002.08-2006.07 | MT | F | L/R | Hatchback FWD Z 32 SE | Date to:2005.07 | GCO17051 | Outer Joint | | 30 | 26 | 53.8 | 94.5 | 65.5 | M |
| | 2002.08-2006.07 | SAT | F | L/R | Hatchback FWD Z 32 SE | | GCI99138 | Inner Joint | | 27 | 28 | 35 | 78 | 112 | |
| | 2002.08-2006.07 | SAT/5MT | F | L/R | Hatchback FWD Z 32 SE | Inner teeth of wheel side:26 | GDS21032 | Drive Shaft | | 30 | 27 | 53.8 | 94.5 | 605 | |
| | 2002.08-2006.07 | AT/MT | F | L/R | Saloon FWD Z 32 SE | Inner teeth of wheel side:28 | GDS21036 | Drive Shaft | | 30 | 27 | 55.4 | 100 | 602 | |
| | 2002.08-2006.07 | MT | F | L/R | Saloon FWD Z 32 SE | Date to:2005.07 | GCO17051 | Outer Joint | | 30 | 26 | 53.8 | 94.5 | 65.5 | M |
| | 2002.08-2006.07 | SAT/5MT | F | L/R | Saloon FWD Z 32 SE | Inner teeth of wheel side:26 | GDS21032 | Drive Shaft | | 30 | 27 | 53.8 | 94.5 | 605 | |
| | 2002.08-2006.07 | SAT/5MT | F | L/R | Saloon FWD Z 32 SE | | GCI99138 | Inner Joint | | 27 | 28 | 35 | 78 | 112 | |
| | 2003.10-2005.07 | AT/MT | F | L/R | Estate FWD Z 32 SE | Inner teeth of wheel side:28 | GDS21036 | Drive Shaft | | 30 | 27 | 55.4 | 100 | 602 | |
| | 2003.10-2005.07 | MT | F | L/R | Estate FWD Z 32 SE | | GCO17051 | Outer Joint | | 30 | 26 | 53.8 | 94.5 | 65.5 | M |
| | 2003.10-2005.07 | SAT/5MT | F | L/R | Estate FWD Z 32 SE | Inner teeth of wheel side:26 | GDS21032 | Drive Shaft | | 30 | 27 | 53.8 | 94.5 | 605 | |
| | 2003.10-2005.07 | SAT/5MT | F | L/R | Estate FWD Z 32 SE | | GCI99138 | Inner Joint | | 27 | 28 | 35 | 78 | 112 | |
| **Vivaro** | | | | | | | | | | | | | | | |
| 0.0 (100 kw) | 2024.10- | AT | F | L | Van FWD ZKU (ZK02) | | GDS57725 | Drive Shaft | | 28 | 37 | 58.5 | 96 | 724 | |
| | 2024.10- | ET | F | R | Van FWD ZKU (ZK02) | | GDS82316 | Drive Shaft | | 28 | 37 | 58.6 | 93 | 974 | |
| | 2024.10- | ET | F | L/R | Van FWD ZKU (ZK02) | | GCO10098 | Outer Joint | | 28 | 39 | 58.6 | 93 | 63 | I |
| 1.5 (75 kw) | 2019.03-2025.04 | 6MT | F | L | Bus FWD D 15 DT (DV5RUCD) | | GDS82315 | Drive Shaft | | 28 | 37 | 58.6 | 93 | 719 | |
| | 2019.03-2025.04 | 6MT | F | R | Bus FWD D 15 DT (DV5RUCD) | | GDS82316 | Drive Shaft | | 28 | 37 | 58.6 | 93 | 974 | |
| | 2019.03-2025.04 | 6MT | F | L/R | Bus FWD D 15 DT (DV5RUCD) | | GCO10098 | Outer Joint | | 28 | 39 | 58.6 | 93 | 63 | I |
| | 2019.03-2025.04 | 6MT | F | R | Bus FWD D 15 DT (DV5RUCD) | | GCI81759 | Inner Joint | | 37 | 34 | 31.9 | 302 | 88 | |
| | 2019.03-2025.04 | 6MT | F | L | Van FWD D 15 DT (DV5RUCD) | | GDS82315 | Drive Shaft | | 28 | 37 | 58.6 | 93 | 719 | |
| | 2019.03-2025.04 | 6MT | F | R | Van FWD D 15 DT (DV5RUCD) | | GDS82316 | Drive Shaft | | 28 | 37 | 58.6 | 93 | 974 | |
| | 2019.03-2025.04 | 6MT | F | L/R | Van FWD D 15 DT (DV5RUCD) | | GCO10098 | Outer Joint | | 28 | 39 | 58.6 | 93 | 63 | I |
| | 2019.03-2025.04 | 6MT | F | R | Van FWD D 15 DT (DV5RUCD) | | GCI81759 | Inner Joint | | 37 | 34 | 31.9 | 302 | 88 | |
| 1.5 (88 kw) | 2019.03- | 6MT | F | L | Van FWD D 15 DTH (DV5RUC) | | GDS82315 | Drive Shaft | | 28 | 37 | 58.6 | 93 | 719 | |
| | 2019.03- | 6MT | F | R | Van FWD D 15 DTH (DV5RUC) | | GDS82316 | Drive Shaft | | 28 | 37 | 58.6 | 93 | 974 | |
| | 2019.03- | 6MT | F | L/R | Van FWD D 15 DTH (DV5RUC) | | GCO10098 | Outer Joint | | 28 | 39 | 58.6 | 93 | 63 | I |
| | 2019.03- | 6MT | F | R | Van FWD D 15 DTH (DV5RUC) | | GCI81759 | Inner Joint | | 37 | 34 | 31.9 | 302 | 88 | |
| | 2019.03-2025.04 | 6MT | F | L | Bus FWD D 15 DTH (DV5RUC) | | GDS82315 | Drive Shaft | | 28 | 37 | 58.6 | 93 | 719 | |
| | 2019.03-2025.04 | 6MT | F | R | Bus FWD D 15 DTH (DV5RUC) | | GDS82316 | Drive Shaft | | 28 | 37 | 58.6 | 93 | 974 | |
| | 2019.03-2025.04 | 6MT | F | L/R | Bus FWD D 15 DTH (DV5RUC) | | GCO10098 | Outer Joint | | 28 | 39 | 58.6 | 93 | 63 | I |
| | 2019.03-2025.04 | 6MT | F | R | Bus FWD D 15 DTH (DV5RUC) | | GCI81759 | Inner Joint | | 37 | 34 | 31.9 | 302 | 88 | |
| 1.6 (66 kw) | 2014.06-2016.12 | 6MT | F | L | Bus FWD R9M 408 | | GDS82548 | Drive Shaft | | 29 | 39 | 60 | 95.5 | 694 | |
| | 2014.06-2016.12 | 6MT | F | R | Bus FWD R9M 408 | | GDS18445 | Drive Shaft | | 29 | 39 | 60 | 96 | 1020 | |
| | 2014.06-2016.12 | MT | F | L | Bus FWD R9M 408 | | GCO81973 | Outer Joint | | 29 | 28 | 60 | 95.5 | 68.5 | I |
| | 2014.06-2016.12 | MT | F | R | Bus FWD R9M 408 | | GCO18327 | Outer Joint | | 29 | 28 | 60 | 96 | 69 | I |
| | 2014.06-2016.12 | MT | F | L | Bus FWD R9M 408 | | GCI18247 | Inner Joint | | 39 | 27 | 39 | 74 | 108.5 | |
| | 2014.06-2016.12 | MT | F | R | Bus FWD R9M 408 | | GCI81567 | Inner Joint | | 39 | 27 | 30 | 367.5 | 92 | |
| | 2014.06-2016.12 | 6MT | F | L | Van FWD R9M 408 | | GDS82548 | Drive Shaft | | 29 | 39 | 60 | 95.5 | 694 | |
| | 2014.06-2016.12 | 6MT | F | R | Van FWD R9M 408 | | GDS18445 | Drive Shaft | | 29 | 39 | 60 | 96 | 1020 | |
| | 2014.06-2016.12 | MT | F | L | Van FWD R9M 408 | | GCO81973 | Outer Joint | | 29 | 28 | 60 | 95.5 | 68.5 | I |
| | 2014.06-2016.12 | MT | F | R | Van FWD R9M 408 | | GCO18327 | Outer Joint | | 29 | 28 | 60 | 96 | 69 | I |
| | 2014.06-2016.12 | MT | F | L | Van FWD R9M 408 | | GCI18247 | Inner Joint | | 39 | 27 | 39 | 74 | 108.5 | |
| | 2014.06-2016.12 | MT | F | R | Van FWD R9M 408 | | GCI81567 | Inner Joint | | 39 | 27 | 30 | 367.5 | 92 | |
| 1.6 (70 kw) | 2015.04-2019.12 | 6MT | F | L | Bus FWD R9M 413;R9M 415 | | GDS82548 | Drive Shaft | | 29 | 39 | 60 | 95.5 | 694 | |
| | 2015.04-2019.12 | 6MT | F | R | Bus FWD R9M 413;R9M 415 | | GDS18445 | Drive Shaft | | 29 | 39 | 60 | 96 | 1020 | |
| | 2015.04-2019.12 | MT | F | L | Bus FWD R9M 413;R9M 415 | | GCO81973 | Outer Joint | | 29 | 28 | 60 | 95.5 | 68.5 | I |
| | 2015.04-2019.12 | MT | F | R | Bus FWD R9M 413;R9M 415 | | GCO18327 | Outer Joint | | 29 | 28 | 60 | 96 | 69 | I |
| | 2015.04-2019.12 | MT | F | L | Bus FWD R9M 413;R9M 415 | | GCI18247 | Inner Joint | | 39 | 27 | 39 | 74 | 108.5 | |
| | 2015.04-2019.12 | MT | F | R | Bus FWD R9M 413;R9M 415 | | GCI81567 | Inner Joint | | 39 | 27 | 30 | 367.5 | 92 | |
| | 2016.03-2019.12 | 6MT | F | L | Van FWD R9M 413;R9M 415 | | GDS82548 | Drive Shaft | | 29 | 39 | 60 | 95.5 | 694 | |
| | 2016.03-2019.12 | 6MT | F | R | Van FWD R9M 413;R9M 415 | | GDS18445 | Drive Shaft | | 29 | 39 | 60 | 96 | 1020 | |
| | 2016.03-2019.12 | 6MT | F | R | Van FWD R9M 413;R9M 415 | | GCO18327 | Outer Joint | | 29 | 28 | 60 | 96 | 69 | I |
| | 2016.03-2019.12 | 6MT | F | R | Van FWD R9M 413;R9M 415 | | GCI81567 | Inner Joint | | 39 | 27 | 30 | 367.5 | 92 | |
| | 2016.03-2019.12 | MT | F | L | Van FWD R9M 413;R9M 415 | | GCO81973 | Outer Joint | | 29 | 28 | 60 | 95.5 | 68.5 | I |
| | 2016.03-2019.12 | MT | F | L | Van FWD R9M 413;R9M 415 | | GCI18247 | Inner Joint | | 39 | 27 | 39 | 74 | 108.5 | |
| 1.6 (85 kw) | 2014.06-2016.12 | 6MT | F | L | Bus FWD R9M 408;R9M 450 | | GDS82548 | Drive Shaft | | 29 | 39 | 60 | 95.5 | 694 | |
| | 2014.06-2016.12 | 6MT | F | R | Bus FWD R9M 408;R9M 450 | | GDS18445 | Drive Shaft | | 29 | 39 | 60 | 96 | 1020 | |
| | 2014.06-2016.12 | MT | F | L | Bus FWD R9M 408;R9M 450 | | GCO81973 | Outer Joint | | 29 | 28 | 60 | 95.5 | 68.5 | I |
| | 2014.06-2016.12 | MT | F | R | Bus FWD R9M 408;R9M 450 | | GCO18327 | Outer Joint | | 29 | 28 | 60 | 96 | 69 | I |
| | 2014.06-2016.12 | MT | F | L | Bus FWD R9M 408;R9M 450 | | GCI18247 | Inner Joint | | 39 | 27 | 39 | 74 | 108.5 | |
| | 2014.06-2016.12 | MT | F | R | Bus FWD R9M 408;R9M 450 | | GCI81567 | Inner Joint | | 39 | 27 | 30 | 367.5 | 92 | |
| | 2014.06-2016.12 | 6MT | F | L | Platform/Chassis FWD R9M 408;R9M 450 | | GDS82548 | Drive Shaft | | 29 | 39 | 60 | 95.5 | 694 | |

| | YEAR | TRANSM. | F/R | L/R | BODY STYLE & DRIVE TYPE & ENGINE | REMARKS | G-AP Ref. | PRODUCT | ABS | Technical Specifications | | | | | |
|---|---|---|---|---|---|---|---|---|---|---|---|---|---|---|---|
| | | | | | | | | | | A | B | C | H | L | P |
| **OPEL** | | | | | | | | | | | | | | | |
| **Vivaro** | | | | | | | | | | | | | | | |
| 1.6 (85 kw) | 2014.06-2016.12 | 6MT | F | R | Platform/Chassis FWD R9M 408;R9M 450 | | GDS18445 | Drive Shaft | | 29 | 39 | 60 | 96 | 1020 | |
| | 2014.06-2016.12 | MT | F | L | Platform/Chassis FWD R9M 408;R9M 450 | | GCO81973 | Outer Joint | | 29 | 28 | 60 | 95.5 | 68.5 | I |
| | 2014.06-2016.12 | MT | F | R | Platform/Chassis FWD R9M 408;R9M 450 | | GCO18327 | Outer Joint | | 29 | 28 | 60 | 96 | 69 | I |
| | 2014.06-2016.12 | MT | F | L | Platform/Chassis FWD R9M 408;R9M 450 | | GCI18247 | Inner Joint | | 39 | 27 | 39 | 74 | 108.5 | |
| | 2014.06-2016.12 | MT | F | R | Platform/Chassis FWD R9M 408;R9M 450 | | GCI81567 | Inner Joint | | 39 | 27 | 30 | 367.5 | 92 | |
| | 2014.06-2016.12 | 6MT | F | L | Van FWD R9M 408;R9M 450 | | GDS82548 | Drive Shaft | | 29 | 39 | 60 | 95.5 | 694 | |
| | 2014.06-2016.12 | 6MT | F | R | Van FWD R9M 408;R9M 450 | | GDS18445 | Drive Shaft | | 29 | 39 | 60 | 96 | 1020 | |
| | 2014.06-2016.12 | MT | F | L | Van FWD R9M 408;R9M 450 | | GCO81973 | Outer Joint | | 29 | 28 | 60 | 95.5 | 68.5 | I |
| | 2014.06-2016.12 | MT | F | R | Van FWD R9M 408;R9M 450 | | GCO18327 | Outer Joint | | 29 | 28 | 60 | 96 | 69 | I |
| | 2014.06-2016.12 | MT | F | L | Van FWD R9M 408;R9M 450 | | GCI18247 | Inner Joint | | 39 | 27 | 39 | 74 | 108.5 | |
| | 2014.06-2016.12 | MT | F | R | Van FWD R9M 408;R9M 450 | | GCI81567 | Inner Joint | | 39 | 27 | 30 | 367.5 | 92 | |
| 1.6 (88 kw) | 2014.06-2019.12 | 6MT | F | L | Bus FWD R9M 450 | | GDS82548 | Drive Shaft | | 29 | 39 | 60 | 95.5 | 694 | |
| | 2014.06-2019.12 | 6MT | F | R | Bus FWD R9M 450 | | GDS18445 | Drive Shaft | | 29 | 39 | 60 | 96 | 1020 | |
| | 2014.06-2019.12 | MT | F | L | Bus FWD R9M 450 | | GCO81973 | Outer Joint | | 29 | 28 | 60 | 95.5 | 68.5 | I |
| | 2014.06-2019.12 | MT | F | R | Bus FWD R9M 450 | | GCO18327 | Outer Joint | | 29 | 28 | 60 | 96 | 69 | I |
| | 2014.06-2019.12 | MT | F | L | Bus FWD R9M 450 | | GCI18247 | Inner Joint | | 39 | 27 | 39 | 74 | 108.5 | |
| | 2014.06-2019.12 | MT | F | R | Bus FWD R9M 450 | | GCI81567 | Inner Joint | | 39 | 27 | 30 | 367.5 | 92 | |
| | 2014.06-2019.12 | 6MT | F | L | Van FWD R9M 450 | | GDS82548 | Drive Shaft | | 29 | 39 | 60 | 95.5 | 694 | |
| | 2014.06-2019.12 | 6MT | F | R | Van FWD R9M 450 | | GDS18445 | Drive Shaft | | 29 | 39 | 60 | 96 | 1020 | |
| | 2014.06-2019.12 | MT | F | L | Van FWD R9M 450 | | GCO81973 | Outer Joint | | 29 | 28 | 60 | 95.5 | 68.5 | I |
| | 2014.06-2019.12 | MT | F | R | Van FWD R9M 450 | | GCO18327 | Outer Joint | | 29 | 28 | 60 | 96 | 69 | I |
| | 2014.06-2019.12 | MT | F | L | Van FWD R9M 450 | | GCI18247 | Inner Joint | | 39 | 27 | 39 | 74 | 108.5 | |
| | 2014.06-2019.12 | MT | F | R | Van FWD R9M 450 | | GCI81567 | Inner Joint | | 39 | 27 | 30 | 367.5 | 92 | |
| | 2015.08-2019.12 | 6MT | F | L | Platform/Chassis FWD R9M 450 | | GDS82548 | Drive Shaft | | 29 | 39 | 60 | 95.5 | 694 | |
| | 2015.08-2019.12 | 6MT | F | R | Platform/Chassis FWD R9M 450 | | GDS18445 | Drive Shaft | | 29 | 39 | 60 | 96 | 1020 | |
| | 2015.08-2019.12 | MT | F | L | Platform/Chassis FWD R9M 450 | | GCO81973 | Outer Joint | | 29 | 28 | 60 | 95.5 | 68.5 | I |
| | 2015.08-2019.12 | MT | F | R | Platform/Chassis FWD R9M 450 | | GCO18327 | Outer Joint | | 29 | 28 | 60 | 96 | 69 | I |
| | 2015.08-2019.12 | MT | F | L | Platform/Chassis FWD R9M 450 | | GCI18247 | Inner Joint | | 39 | 27 | 39 | 74 | 108.5 | |
| | 2015.08-2019.12 | MT | F | R | Platform/Chassis FWD R9M 450 | | GCI81567 | Inner Joint | | 39 | 27 | 30 | 367.5 | 92 | |
| 1.6 (89 kw) | 2016.03-2019.12 | 6MT | F | L | Van FWD R9M 413;R9M 415 | | GDS82548 | Drive Shaft | | 29 | 39 | 60 | 95.5 | 694 | |
| | 2016.03-2019.12 | 6MT | F | R | Van FWD R9M 413;R9M 415 | | GDS18445 | Drive Shaft | | 29 | 39 | 60 | 96 | 1020 | |
| | 2016.03-2019.12 | MT | F | L | Van FWD R9M 413;R9M 415 | | GCO81973 | Outer Joint | | 29 | 28 | 60 | 95.5 | 68.5 | I |
| | 2016.03-2019.12 | MT | F | R | Van FWD R9M 413;R9M 415 | | GCO18327 | Outer Joint | | 29 | 28 | 60 | 96 | 69 | I |
| | 2016.03-2019.12 | MT | F | L | Van FWD R9M 413;R9M 415 | | GCI18247 | Inner Joint | | 39 | 27 | 39 | 74 | 108.5 | |
| | 2016.03-2019.12 | MT | F | R | Van FWD R9M 413;R9M 415 | | GCI81567 | Inner Joint | | 39 | 27 | 30 | 367.5 | 92 | |
| | 2019.01-2019.12 | 6MT | F | L | Bus FWD R9M 415 | | GDS82548 | Drive Shaft | | 29 | 39 | 60 | 95.5 | 694 | |
| | 2019.01-2019.12 | 6MT | F | R | Bus FWD R9M 415 | | GDS18445 | Drive Shaft | | 29 | 39 | 60 | 96 | 1020 | |
| | 2019.01-2019.12 | 6MT | F | L | Bus FWD R9M 415 | | GCO81973 | Outer Joint | | 29 | 28 | 60 | 95.5 | 68.5 | I |
| | 2019.01-2019.12 | 6MT | F | R | Bus FWD R9M 415 | | GCO18327 | Outer Joint | | 29 | 28 | 60 | 96 | 69 | I |
| | 2019.01-2019.12 | 6MT | F | L | Bus FWD R9M 415 | | GCI18247 | Inner Joint | | 39 | 27 | 39 | 74 | 108.5 | |
| | 2019.01-2019.12 | 6MT | F | R | Bus FWD R9M 415 | | GCI81567 | Inner Joint | | 39 | 27 | 30 | 367.5 | 92 | |
| 1.6 (92 kw) | 2015.04-2019.12 | 6MT | F | L | Bus FWD R9M 452 | | GDS82548 | Drive Shaft | | 29 | 39 | 60 | 95.5 | 694 | |
| | 2015.04-2019.12 | 6MT | F | R | Bus FWD R9M 452 | | GDS18445 | Drive Shaft | | 29 | 39 | 60 | 96 | 1020 | |
| | 2015.04-2019.12 | MT | F | L | Bus FWD R9M 452 | | GCO81973 | Outer Joint | | 29 | 28 | 60 | 95.5 | 68.5 | I |
| | 2015.04-2019.12 | MT | F | R | Bus FWD R9M 452 | | GCO18327 | Outer Joint | | 29 | 28 | 60 | 96 | 69 | I |
| | 2015.04-2019.12 | MT | F | L | Bus FWD R9M 452 | | GCI18247 | Inner Joint | | 39 | 27 | 39 | 74 | 108.5 | |
| | 2015.04-2019.12 | MT | F | R | Bus FWD R9M 452 | | GCI81567 | Inner Joint | | 39 | 27 | 30 | 367.5 | 92 | |
| | 2016.03-2019.12 | 6MT | F | L | Van FWD R9M 452 | | GDS82548 | Drive Shaft | | 29 | 39 | 60 | 95.5 | 694 | |
| | 2016.03-2019.12 | 6MT | F | R | Van FWD R9M 452 | | GDS18445 | Drive Shaft | | 29 | 39 | 60 | 96 | 1020 | |
| | 2016.03-2019.12 | 6MT | F | R | Van FWD R9M 452 | | GCO18327 | Outer Joint | | 29 | 28 | 60 | 96 | 69 | I |
| | 2016.03-2019.12 | 6MT | F | R | Van FWD R9M 452 | | GCI81567 | Inner Joint | | 39 | 27 | 30 | 367.5 | 92 | |
| | 2016.03-2019.12 | MT | F | L | Van FWD R9M 452 | | GCO81973 | Outer Joint | | 29 | 28 | 60 | 95.5 | 68.5 | I |
| | 2016.03-2019.12 | MT | F | L | Van FWD R9M 452 | | GCI18247 | Inner Joint | | 39 | 27 | 39 | 74 | 108.5 | |
| | 2016.11-2019.12 | 6MT | F | L | Platform/Chassis FWD R9M 452 | | GDS82548 | Drive Shaft | | 29 | 39 | 60 | 95.5 | 694 | |
| | 2016.11-2019.12 | 6MT | F | R | Platform/Chassis FWD R9M 452 | | GDS18445 | Drive Shaft | | 29 | 39 | 60 | 96 | 1020 | |
| | 2016.11-2019.12 | 6MT | F | R | Platform/Chassis FWD R9M 452 | | GCO18327 | Outer Joint | | 29 | 28 | 60 | 96 | 69 | I |
| | 2016.11-2019.12 | 6MT | F | R | Platform/Chassis FWD R9M 452 | | GCI81567 | Inner Joint | | 39 | 27 | 30 | 367.5 | 92 | |
| | 2016.11-2019.12 | MT | F | L | Platform/Chassis FWD R9M 452 | | GCO81973 | Outer Joint | | 29 | 28 | 60 | 95.5 | 68.5 | I |
| | 2016.11-2019.12 | MT | F | L | Platform/Chassis FWD R9M 452 | | GCI18247 | Inner Joint | | 39 | 27 | 39 | 74 | 108.5 | |
| 1.6 (103 kw) | 2014.06-2016.12 | 6MT | F | L | Bus FWD R9M 450 | | GDS82548 | Drive Shaft | | 29 | 39 | 60 | 95.5 | 694 | |
| | 2014.06-2016.12 | 6MT | F | R | Bus FWD R9M 450 | | GDS18445 | Drive Shaft | | 29 | 39 | 60 | 96 | 1020 | |
| | 2014.06-2016.12 | MT | F | L | Bus FWD R9M 450 | | GCO81973 | Outer Joint | | 29 | 28 | 60 | 95.5 | 68.5 | I |
| | 2014.06-2016.12 | MT | F | R | Bus FWD R9M 450 | | GCO18327 | Outer Joint | | 29 | 28 | 60 | 96 | 69 | I |
| | 2014.06-2016.12 | MT | F | L | Bus FWD R9M 450 | | GCI18247 | Inner Joint | | 39 | 27 | 39 | 74 | 108.5 | |
| | 2014.06-2016.12 | MT | F | R | Bus FWD R9M 450 | | GCI81567 | Inner Joint | | 39 | 27 | 30 | 367.5 | 92 | |

| | YEAR | TRANSM. | F/R | L/R | BODY STYLE & DRIVE TYPE & ENGINE | REMARKS | G-AP Ref. | PRODUCT | ABS | Technical Specifications A | B | C | H | L | P |
|---|---|---|---|---|---|---|---|---|---|---|---|---|---|---|---|
| **OPEL** **Vivaro** | | | | | | | | | | | | | | | |
| 1.6 (103 kw) | 2014.06-2016.12 | 6MT | F | L | Van FWD R9M 450 | | GDS82548 | Drive Shaft | | 29 | 39 | 60 | 95.5 | 694 | |
| | 2014.06-2016.12 | 6MT | F | R | Van FWD R9M 450 | | GDS18445 | Drive Shaft | | 29 | 39 | 60 | 96 | 1020 | |
| | 2014.06-2016.12 | MT | F | L | Van FWD R9M 450 | | GCO81973 | Outer Joint | | 29 | 28 | 60 | 95.5 | 68.5 | I |
| | 2014.06-2016.12 | MT | F | R | Van FWD R9M 450 | | GCO18327 | Outer Joint | | 29 | 28 | 60 | 96 | 69 | I |
| | 2014.06-2016.12 | MT | F | L | Van FWD R9M 450 | | GCI18247 | Inner Joint | | 39 | 27 | 39 | 74 | 108.5 | |
| | 2014.06-2016.12 | MT | F | R | Van FWD R9M 450 | | GCI81567 | Inner Joint | | 39 | 27 | 30 | 367.5 | 92 | |
| | 2015.08-2016.12 | 6MT | F | L | Platform/Chassis FWD R9M 450 | | GDS82548 | Drive Shaft | | 29 | 39 | 60 | 95.5 | 694 | |
| | 2015.08-2016.12 | 6MT | F | R | Platform/Chassis FWD R9M 450 | | GDS18445 | Drive Shaft | | 29 | 39 | 60 | 96 | 1020 | |
| | 2015.08-2016.12 | MT | F | L | Platform/Chassis FWD R9M 450 | | GCO81973 | Outer Joint | | 29 | 28 | 60 | 95.5 | 68.5 | I |
| | 2015.08-2016.12 | MT | F | R | Platform/Chassis FWD R9M 450 | | GCO18327 | Outer Joint | | 29 | 28 | 60 | 96 | 69 | I |
| | 2015.08-2016.12 | MT | F | L | Platform/Chassis FWD R9M 450 | | GCI18247 | Inner Joint | | 39 | 27 | 39 | 74 | 108.5 | |
| | 2015.08-2016.12 | MT | F | R | Platform/Chassis FWD R9M 450 | | GCI81567 | Inner Joint | | 39 | 27 | 30 | 367.5 | 92 | |
| 1.6 (107 kw) | 2015.04-2019.12 | 6MT | F | L | Bus FWD R9M 452 | | GDS82548 | Drive Shaft | | 29 | 39 | 60 | 95.5 | 694 | |
| | 2015.04-2019.12 | 6MT | F | R | Bus FWD R9M 452 | | GDS18445 | Drive Shaft | | 29 | 39 | 60 | 96 | 1020 | |
| | 2015.04-2019.12 | MT | F | L | Bus FWD R9M 452 | | GCO81973 | Outer Joint | | 29 | 28 | 60 | 95.5 | 68.5 | I |
| | 2015.04-2019.12 | MT | F | R | Bus FWD R9M 452 | | GCO18327 | Outer Joint | | 29 | 28 | 60 | 96 | 69 | I |
| | 2015.04-2019.12 | MT | F | L | Bus FWD R9M 452 | | GCI18247 | Inner Joint | | 39 | 27 | 39 | 74 | 108.5 | |
| | 2015.04-2019.12 | MT | F | R | Bus FWD R9M 452 | | GCI81567 | Inner Joint | | 39 | 27 | 30 | 367.5 | 92 | |
| | 2016.03-2019.12 | 6MT | F | L | Van FWD R9M 452 | | GDS82548 | Drive Shaft | | 29 | 39 | 60 | 95.5 | 694 | |
| | 2016.03-2019.12 | 6MT | F | R | Van FWD R9M 452 | | GDS18445 | Drive Shaft | | 29 | 39 | 60 | 96 | 1020 | |
| | 2016.03-2019.12 | 6MT | F | L | Van FWD R9M 452 | | GCO81973 | Outer Joint | | 29 | 28 | 60 | 95.5 | 68.5 | I |
| | 2016.03-2019.12 | 6MT | F | R | Van FWD R9M 452 | | GCO18327 | Outer Joint | | 29 | 28 | 60 | 96 | 69 | I |
| | 2016.03-2019.12 | 6MT | F | R | Van FWD R9M 452 | | GCI81567 | Inner Joint | | 39 | 27 | 30 | 367.5 | 92 | |
| | 2016.03-2019.12 | MT | F | L | Van FWD R9M 452 | | GCI18247 | Inner Joint | | 39 | 27 | 39 | 74 | 108.5 | |
| | 2016.11-2019.12 | 6MT | F | L | Platform/Chassis FWD R9M 452 | | GDS82548 | Drive Shaft | | 29 | 39 | 60 | 95.5 | 694 | |
| | 2016.11-2019.12 | 6MT | F | R | Platform/Chassis FWD R9M 452 | | GDS18445 | Drive Shaft | | 29 | 39 | 60 | 96 | 1020 | |
| | 2016.11-2019.12 | 6MT | F | R | Platform/Chassis FWD R9M 452 | | GCO18327 | Outer Joint | | 29 | 28 | 60 | 96 | 69 | I |
| | 2016.11-2019.12 | 6MT | F | R | Platform/Chassis FWD R9M 452 | | GCI81567 | Inner Joint | | 39 | 27 | 30 | 367.5 | 92 | |
| | 2016.11-2019.12 | MT | F | L | Platform/Chassis FWD R9M 452 | | GCO81973 | Outer Joint | | 29 | 28 | 60 | 95.5 | 68.5 | I |
| | 2016.11-2019.12 | MT | F | L | Platform/Chassis FWD R9M 452 | | GCI18247 | Inner Joint | | 39 | 27 | 39 | 74 | 108.5 | |
| 1.9 (60 kw) | 2001.08-2006.07 | 5MT | F | L | Bus FWD F9Q 762 | | GDS44003 | Drive Shaft | | 27 | 37 | 56.5 | 93.5 | 676 | |
| | 2001.08-2006.07 | 5MT | F | L/R | Bus FWD F9Q 762 | | GCO18105 | Outer Joint | | 27 | 26 | 56.5 | 93.5 | 64 | M |
| | 2001.08-2006.07 | | F | R | Bus FWD F9Q 762 | Date To:2006.07 | GDS44013 | Drive Shaft | | 27 | 39 | 56.5 | 93.5 | 1020 | |
| | 2001.08-2006.07 | 5MT | F | L | Van FWD F9Q 762 | | GDS44003 | Drive Shaft | | 27 | 37 | 56.5 | 93.5 | 676 | |
| | 2001.08-2006.07 | 5MT | F | L/R | Van FWD F9Q 762 | | GCO18105 | Outer Joint | | 27 | 26 | 56.5 | 93.5 | 64 | M |
| | 2001.08-2006.07 | | F | R | Van FWD F9Q 762 | Date To:2006.07 | GDS44013 | Drive Shaft | | 27 | 39 | 56.5 | 93.5 | 1020 | |
| | 2001.08-2014.07 | 5MT | F | L | Platform/Chassis FWD F9Q 762 | | GDS44003 | Drive Shaft | | 27 | 37 | 56.5 | 93.5 | 676 | |
| | 2001.08-2014.07 | 5MT | F | R | Platform/Chassis FWD F9Q 762 | | GDS44013 | Drive Shaft | | 27 | 39 | 56.5 | 93.5 | 1020 | |
| | 2001.08-2014.07 | MT | F | L | Platform/Chassis FWD F9Q 762 | | GCO18105 | Outer Joint | | 27 | 26 | 56.5 | 93.5 | 64 | M |
| 1.9 (74 kw) | 2001.02-2010.12 | 5MT/6MT | F | L | Platform/Chassis FWD F9Q 760 | | GDS44003 | Drive Shaft | | 27 | 37 | 56.5 | 93.5 | 676 | |
| | 2001.02-2010.12 | 5MT/6MT | F | R | Platform/Chassis FWD F9Q 760 | | GDS44013 | Drive Shaft | | 27 | 39 | 56.5 | 93.5 | 1020 | |
| | 2001.02-2010.12 | 5MT/6MT | F | L/R | Platform/Chassis FWD F9Q 760 | | GCO18105 | Outer Joint | | 27 | 26 | 56.5 | 93.5 | 64 | M |
| | 2001.02-2010.12 | | F | L | Platform/Chassis FWD F9Q 760 | Date To:2010.12 | GDS44038 | Drive Shaft | 29T | 33 | 34 | 52 | 103.5 | 595 | |
| | 2001.02-2010.12 | | F | R | Platform/Chassis FWD F9Q 760 | Date To:2010.12 | GDS44039 | Drive Shaft | 29T | 33 | 34 | 52 | 103.5 | 959 | |
| | 2001.08-2014.07 | 5MT/6MT | F | L | Bus FWD F9Q 760 | | GDS44003 | Drive Shaft | | 27 | 37 | 56.5 | 93.5 | 676 | |
| | 2001.08-2014.07 | 5MT/6MT | F | R | Bus FWD F9Q 760 | | GDS44013 | Drive Shaft | | 27 | 39 | 56.5 | 93.5 | 1020 | |
| | 2001.08-2014.07 | 5MT/6MT | F | L/R | Bus FWD F9Q 760 | | GCO18105 | Outer Joint | | 27 | 26 | 56.5 | 93.5 | 64 | M |
| | 2001.08-2014.07 | 6MT | F | L | Van FWD F9Q 760 | | GDS44003 | Drive Shaft | | 27 | 37 | 56.5 | 93.5 | 676 | |
| | 2001.08-2014.07 | 6MT | F | R | Van FWD F9Q 760 | | GDS44013 | Drive Shaft | | 27 | 39 | 56.5 | 93.5 | 1020 | |
| | 2001.08-2014.07 | 6MT | F | L/R | Van FWD F9Q 760 | | GCO18105 | Outer Joint | | 27 | 26 | 56.5 | 93.5 | 64 | M |
| 2.0 (66 kw) | 2006.01-2014.07 | 6AT/6MT | F | L | Platform/Chassis FWD M9R 780;M9R 782;M9R 786;M9R 630;M9R 692 | | GDS60022 | Drive Shaft | | 27 | 39 | 56.6 | 94 | 694 | |
| | 2006.01-2014.07 | 6AT/6MT | F | R | Platform/Chassis FWD M9R 780;M9R 782;M9R 786;M9R 630;M9R 692 | | GDS18271 | Drive Shaft | | 27 | 39 | 56.6 | 94 | 1013 | |
| | 2006.01-2014.07 | 6AT/6MT | F | L/R | Platform/Chassis FWD M9R 780;M9R 782;M9R 786;M9R 630;M9R 692 | | GCO18281 | Outer Joint | | 27 | 28 | 56.5 | 93.5 | 66.5 | I |
| | 2006.01-2014.07 | 6AT/6MT | F | L/R | Platform/Chassis FWD M9R 780;M9R 782;M9R 786;M9R 630;M9R 692 | | GCO60005 | Outer Joint | | 27 | 36 | 56.6 | 94 | 71 | I |
| | 2006.01-2014.07 | 6AT/6MT | F | R | Platform/Chassis FWD M9R 780;M9R 782;M9R 786;M9R 630;M9R 692 | | GCI50046 | Inner Joint | | 39 | 27 | 30 | 364 | 87 | |
| | 2006.08-2014.07 | 6AT/6MT | F | L | Bus FWD M9R 780;M9R 782;M9R 786;M9R 630;M9R 692 | | GDS60022 | Drive Shaft | | 27 | 39 | 56.6 | 94 | 694 | |
| | 2006.08-2014.07 | 6AT/6MT | F | R | Bus FWD M9R 780;M9R 782;M9R 786;M9R 630;M9R 692 | | GDS18271 | Drive Shaft | | 27 | 39 | 56.6 | 94 | 1013 | |
| | 2006.08-2014.07 | 6AT/6MT | F | L/R | Bus FWD M9R 780;M9R 782;M9R 786;M9R 630;M9R 692 | | GCO18281 | Outer Joint | | 27 | 28 | 56.5 | 93.5 | 66.5 | I |
| | 2006.08-2014.07 | 6AT/6MT | F | L/R | Bus FWD M9R 780;M9R 782;M9R 786;M9R 630;M9R 692 | | GCO60005 | Outer Joint | | 27 | 36 | 56.6 | 94 | 71 | I |
| | 2006.08-2014.07 | 6AT/6MT | F | R | Bus FWD M9R 780;M9R 782;M9R 786;M9R 630;M9R 692 | | GCI50046 | Inner Joint | | 39 | 27 | 30 | 364 | 87 | |
| | 2006.08-2014.07 | 6AT/6MT | F | L | Van FWD M9R 780;M9R 782;M9R 786;M9R 630;M9R 692 | | GDS60022 | Drive Shaft | | 27 | 39 | 56.6 | 94 | 694 | |
| | 2006.08-2014.07 | 6AT/6MT | F | R | Van FWD M9R 780;M9R 782;M9R 786;M9R 630;M9R 692 | | GDS18271 | Drive Shaft | | 27 | 39 | 56.6 | 94 | 1013 | |
| | 2006.08-2014.07 | 6AT/6MT | F | L/R | Van FWD M9R 780;M9R 782;M9R 786;M9R 630;M9R 692 | | GCO18281 | Outer Joint | | 27 | 28 | 56.5 | 93.5 | 66.5 | I |
| | 2006.08-2014.07 | 6AT/6MT | F | L/R | Van FWD M9R 780;M9R 782;M9R 786;M9R 630;M9R 692 | | GCO60005 | Outer Joint | | 27 | 36 | 56.6 | 94 | 71 | I |
| | 2006.08-2014.07 | 6AT/6MT | F | R | Van FWD M9R 780;M9R 782;M9R 786;M9R 630;M9R 692 | | GCI50046 | Inner Joint | | 39 | 27 | 30 | 364 | 87 | |

| | YEAR | TRANSM. | F/R | L/R | BODY STYLE & DRIVE TYPE & ENGINE | REMARKS | G-AP Ref. | PRODUCT | ABS | Technical Specifications A | B | C | H | L | P |
|---|---|---|---|---|---|---|---|---|---|---|---|---|---|---|---|
| **OPEL** | | | | | | | | | | | | | | | |
| **Vivaro** | | | | | | | | | | | | | | | |
| 2.0 (84 kw) | 2006.08-2014.07 | 6AT/6MT | F | L | Bus FWD M9R 780;M9R 786;M9R 794;M9R 788;M9R 630;M9R 692 | | GDS60022 | Drive Shaft | | 27 | 39 | 56.6 | 94 | 694 | |
| | 2006.08-2014.07 | 6AT/6MT | F | R | Bus FWD M9R 780;M9R 786;M9R 794;M9R 788;M9R 630;M9R 692 | | GDS18271 | Drive Shaft | | 27 | 39 | 56.6 | 94 | 1013 | |
| | 2006.08-2014.07 | 6AT/6MT | F | L/R | Bus FWD M9R 780;M9R 786;M9R 794;M9R 788;M9R 630;M9R 692 | | GCO18281 | Outer Joint | | 27 | 28 | 56.5 | 93.5 | 66.5 | I |
| | 2006.08-2014.07 | 6AT/6MT | F | L/R | Bus FWD M9R 780;M9R 786;M9R 794;M9R 788;M9R 630;M9R 692 | | GCO60005 | Outer Joint | | 27 | 36 | 56.6 | 94 | 71 | I |
| | 2006.08-2014.07 | 6AT/6MT | F | R | Bus FWD M9R 780;M9R 786;M9R 794;M9R 788;M9R 630;M9R 692 | | GCI50046 | Inner Joint | | 39 | 27 | 30 | 364 | 87 | |
| | 2006.08-2014.07 | 6AT/6MT | F | L | Platform/Chassis FWD M9R 780;M9R 782;M9R 786;M9R 794;M9R 788;M9R 630;M9R 692 | | GDS60022 | Drive Shaft | | 27 | 39 | 56.6 | 94 | 694 | |
| | 2006.08-2014.07 | 6AT/6MT | F | R | Platform/Chassis FWD M9R 780;M9R 782;M9R 786;M9R 794;M9R 788;M9R 630;M9R 692 | Date to:2014.07 | GDS18271 | Drive Shaft | | 27 | 39 | 56.6 | 94 | 1013 | |
| | 2006.08-2014.07 | 6AT/6MT | F | L/R | Platform/Chassis FWD M9R 780;M9R 782;M9R 786;M9R 794;M9R 788;M9R 630;M9R 692 | | GCO18281 | Outer Joint | | 27 | 28 | 56.5 | 93.5 | 66.5 | I |
| | 2006.08-2014.07 | 6AT/6MT | F | R | Platform/Chassis FWD M9R 780;M9R 782;M9R 786;M9R 794;M9R 788;M9R 630;M9R 692 | Date to:2014.07 | GCI50046 | Inner Joint | | 39 | 27 | 30 | 364 | 87 | |
| | 2006.08-2014.07 | 6MT | F | L/R | Platform/Chassis FWD M9R 780;M9R 782;M9R 786;M9R 794;M9R 788;M9R 630;M9R 692 | | GCO60005 | Outer Joint | | 27 | 36 | 56.6 | 94 | 71 | I |
| | 2006.08-2014.07 | 6AT/6MT | F | L | Van FWD M9R 780;M9R 786;M9R 794;M9R 788;M9R 630;M9R 692 | | GDS60022 | Drive Shaft | | 27 | 39 | 56.6 | 94 | 694 | |
| | 2006.08-2014.07 | 6AT/6MT | F | R | Van FWD M9R 780;M9R 786;M9R 794;M9R 788;M9R 630;M9R 692 | | GDS18271 | Drive Shaft | | 27 | 39 | 56.6 | 94 | 1013 | |
| | 2006.08-2014.07 | 6AT/6MT | F | L/R | Van FWD M9R 780;M9R 786;M9R 794;M9R 788;M9R 630;M9R 692 | | GCO18281 | Outer Joint | | 27 | 28 | 56.5 | 93.5 | 66.5 | I |
| | 2006.08-2014.07 | 6AT/6MT | F | L/R | Van FWD M9R 780;M9R 786;M9R 794;M9R 788;M9R 630;M9R 692 | | GCO60005 | Outer Joint | | 27 | 36 | 56.6 | 94 | 71 | I |
| | 2006.08-2014.07 | 6AT/6MT | F | R | Van FWD M9R 780;M9R 786;M9R 794;M9R 788;M9R 630;M9R 692 | | GCI50046 | Inner Joint | | 39 | 27 | 30 | 364 | 87 | |
| 2.0 (86 kw) | 2006.08-2014.07 | 6MT | F | L | Bus FWD F4R 820 | | GDS44003 | Drive Shaft | | 27 | 37 | 56.5 | 93.5 | 676 | |
| | 2006.08-2014.07 | 6MT | F | R | Bus FWD F4R 820 | | GDS44013 | Drive Shaft | | 27 | 39 | 56.5 | 93.5 | 1020 | |
| | 2006.08-2014.07 | 6MT | F | L/R | Bus FWD F4R 820 | | GCO18105 | Outer Joint | | 27 | 26 | 56.5 | 93.5 | 64 | M |
| | 2006.08-2014.07 | | F | L | Bus FWD F4R 820 | Date To:2014.07 | GDS44038 | Drive Shaft | 29T | 33 | 34 | 52 | 103.5 | 595 | |
| | 2006.08-2014.07 | | F | R | Bus FWD F4R 820 | Date To:2014.07 | GDS44039 | Drive Shaft | 29T | 33 | 34 | 52 | 103.5 | 959 | |
| | 2006.08-2014.07 | 6MT | F | L | Platform/Chassis FWD F4R 820 | | GDS44003 | Drive Shaft | | 27 | 37 | 56.5 | 93.5 | 676 | |
| | 2006.08-2014.07 | 6MT | F | R | Platform/Chassis FWD F4R 820 | | GDS44013 | Drive Shaft | | 27 | 39 | 56.5 | 93.5 | 1020 | |
| | 2006.08-2014.07 | 6MT | F | L/R | Platform/Chassis FWD F4R 820 | | GCO18105 | Outer Joint | | 27 | 26 | 56.5 | 93.5 | 64 | M |
| | 2006.08-2014.07 | | F | L | Platform/Chassis FWD F4R 820 | Date To:2014.07 | GDS44038 | Drive Shaft | 29T | 33 | 34 | 52 | 103.5 | 595 | |
| | 2006.08-2014.07 | | F | R | Platform/Chassis FWD F4R 820 | Date To:2014.07 | GDS44039 | Drive Shaft | 29T | 33 | 34 | 52 | 103.5 | 959 | |
| | 2006.08-2014.07 | 6MT | F | L | Van FWD F4R 820 | | GDS44003 | Drive Shaft | | 27 | 37 | 56.5 | 93.5 | 676 | |
| | 2006.08-2014.07 | 6MT | F | R | Van FWD F4R 820 | | GDS44013 | Drive Shaft | | 27 | 39 | 56.5 | 93.5 | 1020 | |
| | 2006.08-2014.07 | 6MT | F | L/R | Van FWD F4R 820 | | GCO18105 | Outer Joint | | 27 | 26 | 56.5 | 93.5 | 64 | M |
| | 2006.08-2014.07 | | F | L | Van FWD F4R 820 | Date To:2014.07 | GDS44038 | Drive Shaft | 29T | 33 | 34 | 52 | 103.5 | 595 | |
| | 2006.08-2014.07 | | F | R | Van FWD F4R 820 | Date To:2014.07 | GDS44039 | Drive Shaft | 29T | 33 | 34 | 52 | 103.5 | 959 | |
| 2.0 (88 kw) | 2001.08-2006.07 | 6MT | F | L | Bus FWD F4R 720 | | GDS44003 | Drive Shaft | | 27 | 37 | 56.5 | 93.5 | 676 | |
| | 2001.08-2006.07 | 6MT | F | L/R | Bus FWD F4R 720 | | GCO18105 | Outer Joint | | 27 | 26 | 56.5 | 93.5 | 64 | M |
| | 2001.08-2006.07 | | F | R | Bus FWD F4R 720 | Date To:2006.07 | GDS44013 | Drive Shaft | | 27 | 39 | 56.5 | 93.5 | 1020 | |
| | 2001.08-2006.07 | 6MT | F | L | Van FWD F4R 720 | | GDS44003 | Drive Shaft | | 27 | 37 | 56.5 | 93.5 | 676 | |
| | 2001.08-2006.07 | 6MT | F | R | Van FWD F4R 720 | | GDS44013 | Drive Shaft | | 27 | 39 | 56.5 | 93.5 | 1020 | |
| | 2001.08-2006.07 | 6MT | F | L/R | Van FWD F4R 720 | | GCO18105 | Outer Joint | | 27 | 26 | 56.5 | 93.5 | 64 | M |
| | 2002.01-2006.07 | 6MT | F | L | Platform/Chassis FWD F4R 720 | | GDS44003 | Drive Shaft | | 27 | 37 | 56.5 | 93.5 | 676 | |
| | 2002.01-2006.07 | 6MT | F | R | Platform/Chassis FWD F4R 720 | | GDS44013 | Drive Shaft | | 27 | 39 | 56.5 | 93.5 | 1020 | |
| | 2002.01-2006.07 | 6MT | F | L/R | Platform/Chassis FWD F4R 720 | | GCO18105 | Outer Joint | | 27 | 26 | 56.5 | 93.5 | 64 | M |
| 2.0 (90 kw) | 2019.03-2022.12 | 8AT | F | L | Bus FWD D 20 DTL (DW10FE) | | GDS56191 | Drive Shaft | | 28 | 37 | 58.6 | 93 | 649 | |
| | 2019.03-2022.12 | 8AT | F | R | Bus FWD D 20 DTL (DW10FE) | | GDS56190 | Drive Shaft | | 28 | 37 | 58.6 | 93 | 989 | |
| | 2019.03-2022.12 | 8AT | F | L/R | Bus FWD D 20 DTL (DW10FE) | | GCO82805 | Outer Joint | | 28 | 39 | 58.6 | 93 | 63 | I |
| | 2019.03-2022.12 | 8AT | F | L | Bus FWD D 20 DTL (DW10FE) | | GCI10120 | Inner Joint | | 37 | 39 | 42.2 | 60 | 95.5 | |
| | 2019.03-2022.12 | 8AT | F | R | Bus FWD D 20 DTL (DW10FE) | | GCI45033 | Inner Joint | | 37 | 39 | | 379 | 96 | |
| | 2019.03-2022.12 | 6MT | F | L | Platform/Chassis FWD D 20 DTL (DW10FE) | For vehicles without standard suspension | GDS83778 | Drive Shaft | | 28 | 37 | 58.5 | 92.5 | 699 | |
| | 2019.03-2022.12 | 6MT | F | L | Platform/Chassis FWD D 20 DTL (DW10FE) | For vehicles with standard suspension | GDS84397 | Drive Shaft | | 28 | 37 | 58.6 | 93 | 696 | |
| | 2019.03-2022.12 | 6MT | F | R | Platform/Chassis FWD D 20 DTL (DW10FE) | For vehicles with standard suspension | GDS82847 | Drive Shaft | | 28 | 37 | 58.6 | 93 | 1005 | |
| | 2019.03-2022.12 | 6MT | F | R | Platform/Chassis FWD D 20 DTL (DW10FE) | For vehicles without standard suspension | GDS83775 | Drive Shaft | | 28 | 37 | 58.5 | 92.5 | 1002 | |
| | 2019.03-2022.12 | 6MT | F | L/R | Platform/Chassis FWD D 20 DTL (DW10FE) | | GCO82483 | Outer Joint | | 28 | 36 | 58.5 | 92.5 | 60.5 | I |
| | 2019.03-2022.12 | 6MT | F | L | Platform/Chassis FWD D 20 DTL (DW10FE) | | GCI82363 | Inner Joint | | 37 | 36 | 40 | 68 | 108 | |
| | 2019.03-2022.12 | 6MT | F | R | Platform/Chassis FWD D 20 DTL (DW10FE) | For vehicles with standard suspension | GCI10041 | Inner Joint | | 37 | 39 | 32 | 399 | 95.5 | |
| | 2019.03-2022.12 | 6MT | F | R | Platform/Chassis FWD D 20 DTL (DW10FE) | For vehicles without standard suspension | GCI82364 | Inner Joint | | 37 | 36 | 32 | 400 | 108 | |
| | 2019.03-2022.12 | 6MT | F | L | Van FWD D 20 DTL (DW10FE) | For vehicles without standard suspension | GDS83778 | Drive Shaft | | 28 | 37 | 58.5 | 92.5 | 699 | |
| | 2019.03-2022.12 | 6MT | F | L | Van FWD D 20 DTL (DW10FE) | For vehicles with standard suspension | GDS84397 | Drive Shaft | | 28 | 37 | 58.6 | 93 | 696 | |
| | 2019.03-2022.12 | 6MT | F | R | Van FWD D 20 DTL (DW10FE) | For vehicles with standard suspension | GDS82847 | Drive Shaft | | 28 | 37 | 58.6 | 93 | 1005 | |
| | 2019.03-2022.12 | 6MT | F | R | Van FWD D 20 DTL (DW10FE) | For vehicles without standard suspension | GDS83775 | Drive Shaft | | 28 | 37 | 58.5 | 92.5 | 1002 | |
| | 2019.03-2022.12 | 6MT | F | L/R | Van FWD D 20 DTL (DW10FE) | | GCO82483 | Outer Joint | | 28 | 36 | 58.5 | 92.5 | 60.5 | I |
| | 2019.03-2022.12 | 6MT | F | L | Van FWD D 20 DTL (DW10FE) | | GCI82363 | Inner Joint | | 37 | 36 | 40 | 68 | 108 | |
| | 2019.03-2022.12 | 6MT | F | R | Van FWD D 20 DTL (DW10FE) | For vehicles with standard suspension | GCI10041 | Inner Joint | | 37 | 39 | 32 | 399 | 95.5 | |
| | 2019.03-2022.12 | 6MT | F | R | Van FWD D 20 DTL (DW10FE) | For vehicles without standard suspension | GCI82364 | Inner Joint | | 37 | 36 | 32 | 400 | 108 | |
| | 2019.03-2022.12 | 8AT | F | L | Van FWD D 20 DTL (DW10FE) | For vehicles with standard suspension | GDS56191 | Drive Shaft | | 28 | 37 | 58.6 | 93 | 649 | |
| | 2019.03-2022.12 | 8AT | F | R | Van FWD D 20 DTL (DW10FE) | For vehicles with standard suspension | GDS56190 | Drive Shaft | | 28 | 37 | 58.6 | 93 | 989 | |
| | 2019.03-2022.12 | 8AT | F | L/R | Van FWD D 20 DTL (DW10FE) | For vehicles with standard suspension | GCO82805 | Outer Joint | | 28 | 39 | 58.6 | 93 | 63 | I |
| 2.0 (106 kw) | 2020.09-2025.04 | 6MT | F | L | Bus FWD DW10FDDU370;DW10FDDU340 | For vehicles without standard suspension | GDS83778 | Drive Shaft | | 28 | 37 | 58.5 | 92.5 | 699 | |
| | 2020.09-2025.04 | 6MT | F | L | Bus FWD DW10FDDU370;DW10FDDU340 | For vehicles with standard suspension | GDS84397 | Drive Shaft | | 28 | 37 | 58.6 | 93 | 696 | |

| | YEAR | TRANSM. | F/R | L/R | BODY STYLE & DRIVE TYPE & ENGINE | REMARKS | G-AP Ref. | PRODUCT | ABS | Technical Specifications A | B | C | H | L | P |
|---|---|---|---|---|---|---|---|---|---|---|---|---|---|---|---|
| **OPEL** **Vivaro** | | | | | | | | | | | | | | | |
| 2.0 (106 kw) | 2020.09-2025.04 | 6MT | F | R | Bus FWD DW10FDDU370;DW10FDDU340 | For vehicles with standard suspension | GDS82847 | Drive Shaft | | 28 | 37 | 58.6 | 93 | 1005 | |
| | 2020.09-2025.04 | 6MT | F | R | Bus FWD DW10FDDU370;DW10FDDU340 | For vehicles without standard suspension | GDS83775 | Drive Shaft | | 28 | 37 | 58.5 | 92.5 | 1002 | |
| | 2020.09-2025.04 | 6MT | F | L/R | Bus FWD DW10FDDU370;DW10FDDU340 | | GCO82483 | Outer Joint | | 28 | 36 | 58.5 | 92.5 | 60.5 | I |
| | 2020.09-2025.04 | 6MT | F | L | Bus FWD DW10FDDU370;DW10FDDU340 | | GCI82363 | Inner Joint | | 37 | 36 | 40 | 68 | 108 | |
| | 2020.09-2025.04 | 6MT | F | R | Bus FWD DW10FDDU370;DW10FDDU340 | For vehicles with standard suspension | GCI10041 | Inner Joint | | 37 | 39 | 32 | 399 | 95.5 | |
| | 2020.09-2025.04 | 6MT | F | R | Bus FWD DW10FDDU370;DW10FDDU340 | For vehicles without standard suspension | GCI82364 | Inner Joint | | 37 | 36 | 32 | 400 | 108 | |
| | 2020.09-2025.04 | 8AT | F | L | Bus FWD DW10FDDU370;DW10FDDU340 | For vehicles with standard suspension | GDS56191 | Drive Shaft | | 28 | 37 | 58.6 | 93 | 649 | |
| | 2020.09-2025.04 | 8AT | F | R | Bus FWD DW10FDDU370;DW10FDDU340 | For vehicles with standard suspension | GDS56190 | Drive Shaft | | 28 | 37 | 58.6 | 93 | 989 | |
| | 2020.09-2025.04 | 8AT | F | L/R | Bus FWD DW10FDDU370;DW10FDDU340 | For vehicles with standard suspension | GCO82805 | Outer Joint | | 28 | 39 | 58.6 | 93 | 63 | I |
| | 2021.08-2025.04 | 6MT | F | L | Van FWD DW10FDDU370;DW10FDDU340 | For vehicles without standard suspension | GDS83778 | Drive Shaft | | 28 | 37 | 58.5 | 92.5 | 699 | |
| | 2021.08-2025.04 | 6MT | F | L | Van FWD DW10FDDU370;DW10FDDU340 | For vehicles with standard suspension | GDS84397 | Drive Shaft | | 28 | 37 | 58.6 | 93 | 696 | |
| | 2021.08-2025.04 | 6MT | F | R | Van FWD DW10FDDU370;DW10FDDU340 | For vehicles with standard suspension | GDS82847 | Drive Shaft | | 28 | 37 | 58.6 | 93 | 1005 | |
| | 2021.08-2025.04 | 6MT | F | R | Van FWD DW10FDDU370;DW10FDDU340 | For vehicles without standard suspension | GDS83775 | Drive Shaft | | 28 | 37 | 58.5 | 92.5 | 1002 | |
| | 2021.08-2025.04 | 6MT | F | L | Van FWD DW10FDDU370;DW10FDDU340 | For vehicles with standard suspension | GCI10040 | Inner Joint | | 37 | 39 | 40 | 69 | 95.5 | |
| | 2021.08-2025.04 | 6MT | F | L | Van FWD DW10FDDU370;DW10FDDU340 | For vehicles without standard suspension | GCI82363 | Inner Joint | | 37 | 36 | 40 | 68 | 108 | |
| | 2021.08-2025.04 | 6MT | F | R | Van FWD DW10FDDU370;DW10FDDU340 | For vehicles with standard suspension | GCI10041 | Inner Joint | | 37 | 39 | 32 | 399 | 95.5 | |
| | 2021.08-2025.04 | 6MT | F | R | Van FWD DW10FDDU370;DW10FDDU340 | For vehicles without standard suspension | GCI82364 | Inner Joint | | 37 | 36 | 32 | 400 | 108 | |
| | 2021.08-2025.04 | 8AT | F | L | Van FWD DW10FDDU370;DW10FDDU340 | For vehicles with standard suspension | GDS56191 | Drive Shaft | | 28 | 37 | 58.6 | 93 | 649 | |
| | 2021.08-2025.04 | 8AT | F | R | Van FWD DW10FDDU370;DW10FDDU340 | For vehicles with standard suspension | GDS56190 | Drive Shaft | | 28 | 37 | 58.6 | 93 | 989 | |
| | 2021.08-2025.04 | 8AT | F | L/R | Van FWD DW10FDDU370;DW10FDDU340 | For vehicles with standard suspension | GCO82805 | Outer Joint | | 28 | 39 | 58.6 | 93 | 63 | I |
| | 2021.08-2025.04 | 8AT | F | L | Van FWD DW10FDDU370;DW10FDDU340 | For vehicles with standard suspension | GCI10120 | Inner Joint | | 37 | 39 | 42.2 | 60 | 95.5 | |
| | 2021.08-2025.04 | 8AT | F | R | Van FWD DW10FDDU370;DW10FDDU340 | For vehicles with standard suspension | GCI45033 | Inner Joint | | 37 | 39 | | 379 | 96 | |
| | 2023.01-2025.04 | 6MT | F | L | Platform/Chassis FWD DW10FDDU340 | | GDS83778 | Drive Shaft | | 28 | 37 | 58.5 | 92.5 | 699 | |
| | 2023.01-2025.04 | 6MT | F | R | Platform/Chassis FWD DW10FDDU340 | For vehicles with standard suspension | GDS82847 | Drive Shaft | | 28 | 37 | 58.6 | 93 | 1005 | |
| | 2023.01-2025.04 | 6MT | F | R | Platform/Chassis FWD DW10FDDU340 | | GDS83775 | Drive Shaft | | 28 | 37 | 58.5 | 92.5 | 1002 | |
| | 2023.01-2025.04 | 6MT | F | R | Platform/Chassis FWD DW10FDDU340 | For vehicles with standard suspension | GCI10041 | Inner Joint | | 37 | 39 | 32 | 399 | 95.5 | |
| 2.0 (110 kw) | 2019.03-2022.12 | 5MT | F | L | Bus FWD D 20 DTH (DW10FD) | | GDS84395 | Drive Shaft | | 28 | 24 | 58.6 | 93 | 732 | |
| | 2019.03-2022.12 | 5MT | F | R | Bus FWD D 20 DTH (DW10FD) | | GDS84394 | Drive Shaft | | 28 | 24 | 58.6 | 93 | 965 | |
| | 2019.03-2022.12 | 5MT | F | L/R | Bus FWD D 20 DTH (DW10FD) | | GCO82805 | Outer Joint | | 28 | 39 | 58.6 | 93 | 63 | I |
| | 2019.03-2022.12 | 5MT | F | L | Bus FWD D 20 DTH (DW10FD) | | GCI10129 | Inner Joint | | 24 | 34 | 40 | 62 | 89 | |
| | 2019.03-2022.12 | 5MT | F | R | Bus FWD D 20 DTH (DW10FD) | | GCI82740 | Inner Joint | | 24 | 34 | 29.8 | 290 | 88 | |
| | 2019.03-2022.12 | 6MT | F | L | Bus FWD D 20 DTH (DW10FD) | For vehicles without standard suspension | GDS83778 | Drive Shaft | | 28 | 37 | 58.5 | 92.5 | 699 | |
| | 2019.03-2022.12 | 6MT | F | L | Bus FWD D 20 DTH (DW10FD) | For vehicles with standard suspension | GDS84397 | Drive Shaft | | 28 | 37 | 58.6 | 93 | 696 | |
| | 2019.03-2022.12 | 6MT | F | R | Bus FWD D 20 DTH (DW10FD) | For vehicles with standard suspension | GDS82847 | Drive Shaft | | 28 | 37 | 58.6 | 93 | 1005 | |
| | 2019.03-2022.12 | 6MT | F | R | Bus FWD D 20 DTH (DW10FD) | For vehicles without standard suspension | GDS83775 | Drive Shaft | | 28 | 37 | 58.5 | 92.5 | 1002 | |
| | 2019.03-2022.12 | 6MT | F | L/R | Bus FWD D 20 DTH (DW10FD) | | GCO82483 | Outer Joint | | 28 | 36 | 58.5 | 92.5 | 60.5 | I |
| | 2019.03-2022.12 | 6MT | F | L | Bus FWD D 20 DTH (DW10FD) | | GCI82363 | Inner Joint | | 37 | 36 | 40 | 68 | 108 | |
| | 2019.03-2022.12 | 6MT | F | R | Bus FWD D 20 DTH (DW10FD) | For vehicles with standard suspension | GCI10041 | Inner Joint | | 37 | 39 | 32 | 399 | 95.5 | |
| | 2019.03-2022.12 | 6MT | F | R | Bus FWD D 20 DTH (DW10FD) | For vehicles without standard suspension | GCI82364 | Inner Joint | | 37 | 36 | 32 | 400 | 108 | |
| | 2019.03-2022.12 | 6MT | F | L | Platform/Chassis FWD D 20 DTH (DW10FD) | For vehicles without standard suspension | GDS83778 | Drive Shaft | | 28 | 37 | 58.5 | 92.5 | 699 | |
| | 2019.03-2022.12 | 6MT | F | L | Platform/Chassis FWD D 20 DTH (DW10FD) | For vehicles with standard suspension | GDS84397 | Drive Shaft | | 28 | 37 | 58.6 | 93 | 696 | |
| | 2019.03-2022.12 | 6MT | F | R | Platform/Chassis FWD D 20 DTH (DW10FD) | For vehicles with standard suspension | GDS82847 | Drive Shaft | | 28 | 37 | 58.6 | 93 | 1005 | |
| | 2019.03-2022.12 | 6MT | F | R | Platform/Chassis FWD D 20 DTH (DW10FD) | For vehicles without standard suspension | GDS83775 | Drive Shaft | | 28 | 37 | 58.5 | 92.5 | 1002 | |
| | 2019.03-2022.12 | 6MT | F | L/R | Platform/Chassis FWD D 20 DTH (DW10FD) | | GCO82483 | Outer Joint | | 28 | 36 | 58.5 | 92.5 | 60.5 | I |
| | 2019.03-2022.12 | 6MT | F | L | Platform/Chassis FWD D 20 DTH (DW10FD) | | GCI82363 | Inner Joint | | 37 | 36 | 40 | 68 | 108 | |
| | 2019.03-2022.12 | 6MT | F | R | Platform/Chassis FWD D 20 DTH (DW10FD) | For vehicles with standard suspension | GCI10041 | Inner Joint | | 37 | 39 | 32 | 399 | 95.5 | |
| | 2019.03-2022.12 | 6MT | F | R | Platform/Chassis FWD D 20 DTH (DW10FD) | For vehicles without standard suspension | GCI82364 | Inner Joint | | 37 | 36 | 32 | 400 | 108 | |
| | 2019.03-2022.12 | 6MT | F | L | Van FWD D 20 DTH (DW10FD) | For vehicles without standard suspension | GDS83778 | Drive Shaft | | 28 | 37 | 58.5 | 92.5 | 699 | |
| | 2019.03-2022.12 | 6MT | F | L | Van FWD D 20 DTH (DW10FD) | For vehicles with standard suspension | GDS84397 | Drive Shaft | | 28 | 37 | 58.6 | 93 | 696 | |
| | 2019.03-2022.12 | 6MT | F | R | Van FWD D 20 DTH (DW10FD) | For vehicles with standard suspension | GDS82847 | Drive Shaft | | 28 | 37 | 58.6 | 93 | 1005 | |
| | 2019.03-2022.12 | 6MT | F | R | Van FWD D 20 DTH (DW10FD) | For vehicles without standard suspension | GDS83775 | Drive Shaft | | 28 | 37 | 58.5 | 92.5 | 1002 | |
| | 2019.03-2022.12 | 6MT | F | L/R | Van FWD D 20 DTH (DW10FD) | | GCO82483 | Outer Joint | | 28 | 36 | 58.5 | 92.5 | 60.5 | I |
| | 2019.03-2022.12 | 6MT | F | L | Van FWD D 20 DTH (DW10FD) | | GCI82363 | Inner Joint | | 37 | 36 | 40 | 68 | 108 | |
| | 2019.03-2022.12 | 6MT | F | R | Van FWD D 20 DTH (DW10FD) | For vehicles with standard suspension | GCI10041 | Inner Joint | | 37 | 39 | 32 | 399 | 95.5 | |
| | 2019.03-2022.12 | 6MT | F | R | Van FWD D 20 DTH (DW10FD) | For vehicles without standard suspension | GCI82364 | Inner Joint | | 37 | 36 | 32 | 400 | 108 | |
| 2.0 (130 kw) | 2019.03-2025.04 | 8AT | F | L | Van FWD D 20 DTR (DW10FDCU) | | GDS56191 | Drive Shaft | | 28 | 37 | 58.6 | 93 | 649 | |
| | 2019.03-2025.04 | 8AT | F | R | Van FWD D 20 DTR (DW10FDCU) | | GDS56190 | Drive Shaft | | 28 | 37 | 58.6 | 93 | 989 | |
| | 2019.03-2025.04 | 8AT | F | L/R | Van FWD D 20 DTR (DW10FDCU) | | GCO82805 | Outer Joint | | 28 | 39 | 58.6 | 93 | 63 | I |
| | 2019.03-2025.04 | 8AT | F | L | Van FWD D 20 DTR (DW10FDCU) | | GCI10120 | Inner Joint | | 37 | 39 | 42.2 | 60 | 95.5 | |
| | 2019.03-2025.04 | 8AT | F | R | Van FWD D 20 DTR (DW10FDCU) | | GCI45033 | Inner Joint | | 37 | 39 | | 379 | 96 | |
| | 2022.12-2025.04 | AT | F | L | Bus FWD D 20 DTR (DW10FDCU) | | GDS56191 | Drive Shaft | | 28 | 37 | 58.6 | 93 | 649 | |
| | 2022.12-2025.04 | AT | F | R | Bus FWD D 20 DTR (DW10FDCU) | | GDS56190 | Drive Shaft | | 28 | 37 | 58.6 | 93 | 989 | |
| | 2022.12-2025.04 | AT | F | L/R | Bus FWD D 20 DTR (DW10FDCU) | | GCO82805 | Outer Joint | | 28 | 39 | 58.6 | 93 | 63 | I |
| | 2022.12-2025.04 | AT | F | L | Bus FWD D 20 DTR (DW10FDCU) | | GCI10120 | Inner Joint | | 37 | 39 | 42.2 | 60 | 95.5 | |
| | 2022.12-2025.04 | AT | F | R | Bus FWD D 20 DTR (DW10FDCU) | | GCI45033 | Inner Joint | | 37 | 39 | | 379 | 96 | |

| | YEAR | TRANSM. | F/R | L/R | BODY STYLE & DRIVE TYPE & ENGINE | REMARKS | G-AP Ref. | PRODUCT | ABS | Technical Specifications A | B | C | H | L | P |
|---|---|---|---|---|---|---|---|---|---|---|---|---|---|---|---|
| **OPEL** | | | | | | | | | | | | | | | |
| **Vivaro** | | | | | | | | | | | | | | | |
| 2.5 (84 kw) | 2006.08-2010.03 | 6AT/6MT | F | L | Bus FWD G9U 630 | Chassis no. from:7V600001 | GDS50497 | Drive Shaft | | 27 | 39 | 56.6 | 94 | 667 | |
| | 2006.08-2010.03 | 6AT/6MT | F | L | Bus FWD G9U 630 | Chassis no. to:6V699999 | GDS50557 | Drive Shaft | | 27 | 37 | 56.5 | 92 | 634 | |
| | 2006.08-2010.03 | 6AT/6MT | F | R | Bus FWD G9U 630 | Chassis no. from:7V600001 | GDS18301 | Drive Shaft | | 27 | 39 | 56.6 | 94 | 1045 | |
| | 2006.08-2010.03 | 6AT/6MT | F | R | Bus FWD G9U 630 | Chassis no. to:6V699999 | GDS50562 | Drive Shaft | | 27 | 39 | 56.5 | 92 | 1056 | |
| | 2006.08-2010.03 | 6AT/6MT | F | L/R | Bus FWD G9U 630 | | GCO60005 | Outer Joint | | 27 | 36 | 56.6 | 94 | 71 | I |
| | 2006.08-2010.03 | 6AT/6MT | F | R | Bus FWD G9U 630 | Chassis no. to:6V699999 | GCI50097 | Inner Joint | | 39 | 35 | 30 | 409 | 90 | |
| | 2006.08-2010.03 | 6MT | F | L | Platform/Chassis FWD G9U 630 | Chassis no. from:7V600001 | GDS50497 | Drive Shaft | | 27 | 39 | 56.6 | 94 | 667 | |
| | 2006.08-2010.03 | 6MT | F | L | Platform/Chassis FWD G9U 630 | Chassis no. to:6V699999 | GDS50557 | Drive Shaft | | 27 | 37 | 56.5 | 92 | 634 | |
| | 2006.08-2010.03 | 6MT | F | R | Platform/Chassis FWD G9U 630 | Chassis no. from:7V600001 | GDS18301 | Drive Shaft | | 27 | 39 | 56.6 | 94 | 1045 | |
| | 2006.08-2010.03 | 6MT | F | R | Platform/Chassis FWD G9U 630 | Chassis no. to:6V699999 | GDS50562 | Drive Shaft | | 27 | 39 | 56.5 | 92 | 1056 | |
| | 2006.08-2010.03 | 6MT | F | L/R | Platform/Chassis FWD G9U 630 | | GCO60005 | Outer Joint | | 27 | 36 | 56.6 | 94 | 71 | I |
| | 2006.08-2010.03 | 6MT | F | R | Platform/Chassis FWD G9U 630 | Chassis no. to:6V699999 | GCI50097 | Inner Joint | | 39 | 35 | 30 | 409 | 90 | |
| | 2006.08-2010.03 | 6AT/6MT | F | L | Van FWD G9U 630 | Chassis no. from:7V600001 | GDS50497 | Drive Shaft | | 27 | 39 | 56.6 | 94 | 667 | |
| | 2006.08-2010.03 | 6AT/6MT | F | L | Van FWD G9U 630 | Chassis no. to:6V699999 | GDS50557 | Drive Shaft | | 27 | 37 | 56.5 | 92 | 634 | |
| | 2006.08-2010.03 | 6AT/6MT | F | R | Van FWD G9U 630 | Chassis no. from:7V600001 | GDS18301 | Drive Shaft | | 27 | 39 | 56.6 | 94 | 1045 | |
| | 2006.08-2010.03 | 6AT/6MT | F | R | Van FWD G9U 630 | Chassis no. to:6V699999 | GDS50562 | Drive Shaft | | 27 | 39 | 56.5 | 92 | 1056 | |
| | 2006.08-2010.03 | 6AT/6MT | F | L/R | Van FWD G9U 630 | | GCO60005 | Outer Joint | | 27 | 36 | 56.6 | 94 | 71 | I |
| | 2006.08-2010.03 | 6AT/6MT | F | R | Van FWD G9U 630 | Chassis no. to:6V699999 | GCI50097 | Inner Joint | | 39 | 35 | 30 | 409 | 90 | |
| 2.5 (99 kw) | 2003.04-2010.03 | 6AT/6MT | F | L | Bus FWD G9U 730 | Chassis no. from:7V600001 | GDS50497 | Drive Shaft | | 27 | 39 | 56.6 | 94 | 667 | |
| | 2003.04-2010.03 | 6AT/6MT | F | L | Bus FWD G9U 730 | Chassis no. to:6V699999 | GDS50557 | Drive Shaft | | 27 | 37 | 56.5 | 92 | 634 | |
| | 2003.04-2010.03 | 6AT/6MT | F | R | Bus FWD G9U 730 | Chassis no. from:7V600001 | GDS18301 | Drive Shaft | | 27 | 39 | 56.6 | 94 | 1045 | |
| | 2003.04-2010.03 | 6AT/6MT | F | R | Bus FWD G9U 730 | Chassis no. to:6V699999 | GDS50562 | Drive Shaft | | 27 | 39 | 56.5 | 92 | 1056 | |
| | 2003.04-2010.03 | 6AT/6MT | F | L/R | Bus FWD G9U 730 | | GCO60005 | Outer Joint | | 27 | 36 | 56.6 | 94 | 71 | I |
| | 2003.04-2010.03 | 6AT/6MT | F | R | Bus FWD G9U 730 | Chassis no. to:6V699999 | GCI50097 | Inner Joint | | 39 | 35 | 30 | 409 | 90 | |
| | 2003.04-2010.03 | AT/MT | F | L/R | Bus FWD G9U 730 | | GCO50080 | Outer Joint | | 27 | 37 | 56.5 | 92 | 73 | I |
| | 2003.04-2010.03 | 6MT | F | L | Platform/Chassis FWD G9U 730 | Chassis no. from:7V600001 | GDS50497 | Drive Shaft | | 27 | 39 | 56.6 | 94 | 667 | |
| | 2003.04-2010.03 | 6MT | F | L | Platform/Chassis FWD G9U 730 | Chassis no. to:6V699999 | GDS50557 | Drive Shaft | | 27 | 37 | 56.5 | 92 | 634 | |
| | 2003.04-2010.03 | 6MT | F | R | Platform/Chassis FWD G9U 730 | Chassis no. from:7V600001 | GDS18301 | Drive Shaft | | 27 | 39 | 56.6 | 94 | 1045 | |
| | 2003.04-2010.03 | 6MT | F | R | Platform/Chassis FWD G9U 730 | Chassis no. to:6V699999 | GDS50562 | Drive Shaft | | 27 | 39 | 56.5 | 92 | 1056 | |
| | 2003.04-2010.03 | 6MT | F | R | Platform/Chassis FWD G9U 730 | Chassis no. to:6V699999 | GCI50097 | Inner Joint | | 39 | 35 | 30 | 409 | 90 | |
| | 2003.04-2010.03 | MT | F | R | Platform/Chassis FWD G9U 730 | | GCO60005 | Outer Joint | | 27 | 36 | 56.6 | 94 | 71 | I |
| | 2003.04-2010.03 | 6AT/6MT | F | L | Van FWD G9U 730 | Chassis no. from:7V600001 | GDS50497 | Drive Shaft | | 27 | 39 | 56.6 | 94 | 667 | |
| | 2003.04-2010.03 | 6AT/6MT | F | L | Van FWD G9U 730 | Chassis no. to:6V699999 | GDS50557 | Drive Shaft | | 27 | 37 | 56.5 | 92 | 634 | |
| | 2003.04-2010.03 | 6AT/6MT | F | R | Van FWD G9U 730 | Chassis no. from:7V600001 | GDS18301 | Drive Shaft | | 27 | 39 | 56.6 | 94 | 1045 | |
| | 2003.04-2010.03 | 6AT/6MT | F | R | Van FWD G9U 730 | Chassis no. to:6V699999 | GDS50562 | Drive Shaft | | 27 | 39 | 56.5 | 92 | 1056 | |
| | 2003.04-2010.03 | 6AT/6MT | F | L/R | Van FWD G9U 730 | | GCO60005 | Outer Joint | | 27 | 36 | 56.6 | 94 | 71 | I |
| | 2003.04-2010.03 | 6AT/6MT | F | R | Van FWD G9U 730 | Chassis no. to:6V699999 | GCI50097 | Inner Joint | | 39 | 35 | 30 | 409 | 90 | |
| | 2003.04-2010.03 | AT/MT | F | L/R | Van FWD G9U 730 | | GCO50080 | Outer Joint | | 27 | 37 | 56.5 | 92 | 73 | I |
| 2.5 (107 kw) | 2006.08-2014.07 | 6AT/6MT | F | L | Bus FWD G9U 630 | Chassis no. from:7V600001 | GDS50497 | Drive Shaft | | 27 | 39 | 56.6 | 94 | 667 | |
| | 2006.08-2014.07 | 6AT/6MT | F | L | Bus FWD G9U 630 | Chassis no. to:6V699999 | GDS50557 | Drive Shaft | | 27 | 37 | 56.5 | 92 | 634 | |
| | 2006.08-2014.07 | 6AT/6MT | F | R | Bus FWD G9U 630 | Chassis no. from:7V600001 | GDS18301 | Drive Shaft | | 27 | 39 | 56.6 | 94 | 1045 | |
| | 2006.08-2014.07 | 6AT/6MT | F | R | Bus FWD G9U 630 | Chassis no. to:6V699999 | GDS50562 | Drive Shaft | | 27 | 39 | 56.5 | 92 | 1056 | |
| | 2006.08-2014.07 | 6AT/6MT | F | L/R | Bus FWD G9U 630 | | GCO60005 | Outer Joint | | 27 | 36 | 56.6 | 94 | 71 | I |
| | 2006.08-2014.07 | 6AT/6MT | F | R | Bus FWD G9U 630 | Chassis no. to:6V699999 | GCI50097 | Inner Joint | | 39 | 35 | 30 | 409 | 90 | |
| | 2006.08-2014.07 | 6AT/6MT | F | L | Platform/Chassis FWD G9U 630 | Chassis no. from:7V600001 | GDS50497 | Drive Shaft | | 27 | 39 | 56.6 | 94 | 667 | |
| | 2006.08-2014.07 | 6AT/6MT | F | L | Platform/Chassis FWD G9U 630 | Chassis no. to:6V699999 | GDS50557 | Drive Shaft | | 27 | 37 | 56.5 | 92 | 634 | |
| | 2006.08-2014.07 | 6AT/6MT | F | R | Platform/Chassis FWD G9U 630 | Chassis no. from:7V600001 | GDS18301 | Drive Shaft | | 27 | 39 | 56.6 | 94 | 1045 | |
| | 2006.08-2014.07 | 6AT/6MT | F | R | Platform/Chassis FWD G9U 630 | Chassis no. to:6V699999 | GDS50562 | Drive Shaft | | 27 | 39 | 56.5 | 92 | 1056 | |
| | 2006.08-2014.07 | 6AT/6MT | F | L/R | Platform/Chassis FWD G9U 630 | | GCO60005 | Outer Joint | | 27 | 36 | 56.6 | 94 | 71 | I |
| | 2006.08-2014.07 | 6AT/6MT | F | R | Platform/Chassis FWD G9U 630 | Chassis no. to:6V699999 | GCI50097 | Inner Joint | | 39 | 35 | 30 | 409 | 90 | |
| | 2006.08-2014.07 | 6AT/6MT | F | L | Van FWD G9U 630 | Chassis no. from:7V600001 | GDS50497 | Drive Shaft | | 27 | 39 | 56.6 | 94 | 667 | |
| | 2006.08-2014.07 | 6AT/6MT | F | L | Van FWD G9U 630 | Chassis no. to:6V699999 | GDS50557 | Drive Shaft | | 27 | 37 | 56.5 | 92 | 634 | |
| | 2006.08-2014.07 | 6AT/6MT | F | R | Van FWD G9U 630 | Chassis no. from:7V600001 | GDS18301 | Drive Shaft | | 27 | 39 | 56.6 | 94 | 1045 | |
| | 2006.08-2014.07 | 6AT/6MT | F | R | Van FWD G9U 630 | Chassis no. to:6V699999 | GDS50562 | Drive Shaft | | 27 | 39 | 56.5 | 92 | 1056 | |
| | 2006.08-2014.07 | 6AT/6MT | F | L/R | Van FWD G9U 630 | | GCO60005 | Outer Joint | | 27 | 36 | 56.6 | 94 | 71 | I |
| | 2006.08-2014.07 | 6AT/6MT | F | R | Van FWD G9U 630 | Chassis no. to:6V699999 | GCI50097 | Inner Joint | | 39 | 35 | 30 | 409 | 90 | |
| EV (100 kw) | 2024.04- | ET | F | L | Bus FWD ZKU (ZK02) | | GDS57725 | Drive Shaft | | 28 | 37 | 58.5 | 96 | 724 | |
| | 2024.04- | ET | F | R | Bus FWD ZKU (ZK02) | | GDS82316 | Drive Shaft | | 28 | 37 | 58.6 | 93 | 974 | |
| | 2024.04- | ET | F | L/R | Bus FWD ZKU (ZK02) | | GCO10098 | Outer Joint | | 28 | 39 | 58.6 | 93 | 63 | I |
| | 2024.04- | ET | F | L | Platform/Chassis FWD ZKU (ZK02) | | GDS57725 | Drive Shaft | | 28 | 37 | 58.5 | 96 | 724 | |
| | 2024.04- | ET | F | R | Platform/Chassis FWD ZKU (ZK02) | | GDS82316 | Drive Shaft | | 28 | 37 | 58.6 | 93 | 974 | |
| | 2024.04- | ET | F | L/R | Platform/Chassis FWD ZKU (ZK02) | | GCO10098 | Outer Joint | | 28 | 39 | 58.6 | 93 | 63 | I |
| | 2024.04- | ET | F | L | Van FWD ZKU (ZK02) | | GDS57725 | Drive Shaft | | 28 | 37 | 58.5 | 96 | 724 | |
| | 2024.04- | ET | F | R | Van FWD ZKU (ZK02) | | GDS82316 | Drive Shaft | | 28 | 37 | 58.6 | 93 | 974 | |
| | 2024.04- | ET | F | L/R | Van FWD ZKU (ZK02) | | GCO10098 | Outer Joint | | 28 | 39 | 58.6 | 93 | 63 | I |

| | YEAR | TRANSM. | F/R | L/R | BODY STYLE & DRIVE TYPE & ENGINE | REMARKS | G-AP Ref. | PRODUCT | ABS | Technical Specifications A | B | C | H | L | P |
|---|---|---|---|---|---|---|---|---|---|---|---|---|---|---|---|
| **OPEL** | | | | | | | | | | | | | | | |
| **Vivaro-E** | | | | | | | | | | | | | | | |
| 0.0 (100 kw) | 2022.08-2024.09 | ET | F | L | Van FWD ZKX (ZK01) | | GDS57725 | Drive Shaft | | 28 | 37 | 58.5 | 96 | 724 | |
| | 2022.08-2024.09 | ET | F | R | Van FWD ZKX (ZK01) | | GDS82316 | Drive Shaft | | 28 | 37 | 58.6 | 93 | 974 | |
| | 2022.08-2024.09 | ET | F | L/R | Van FWD ZKX (ZK01) | | GCO10098 | Outer Joint | | 28 | 39 | 58.6 | 93 | 63 | I |
| EV (100 kw) | 2020.09-2024.03 | ET | F | L | Bus FWD ZKX (ZK01) | | GDS57725 | Drive Shaft | | 28 | 37 | 58.5 | 96 | 724 | |
| | 2020.09-2024.03 | ET | F | R | Bus FWD ZKX (ZK01) | | GDS82316 | Drive Shaft | | 28 | 37 | 58.6 | 93 | 974 | |
| | 2020.09-2024.03 | ET | F | L/R | Bus FWD ZKX (ZK01) | | GCO10098 | Outer Joint | | 28 | 39 | 58.6 | 93 | 63 | I |
| | 2020.09-2024.03 | ET | F | R | Bus FWD ZKX (ZK01) | | GCI81759 | Inner Joint | | 37 | 34 | 31.9 | 302 | 88 | |
| | 2020.09-2024.03 | ET | F | L | Platform/Chassis FWD ZKX (ZK01) | | GDS57725 | Drive Shaft | | 28 | 37 | 58.5 | 96 | 724 | |
| | 2020.09-2024.03 | ET | F | R | Platform/Chassis FWD ZKX (ZK01) | | GDS82316 | Drive Shaft | | 28 | 37 | 58.6 | 93 | 974 | |
| | 2020.09-2024.03 | ET | F | L/R | Platform/Chassis FWD ZKX (ZK01) | | GCO10098 | Outer Joint | | 28 | 39 | 58.6 | 93 | 63 | I |
| | 2020.09-2024.03 | ET | F | R | Platform/Chassis FWD ZKX (ZK01) | | GCI81759 | Inner Joint | | 37 | 34 | 31.9 | 302 | 88 | |
| | 2020.09-2024.03 | ET | F | L | Van FWD ZKX (ZK01) | | GDS57725 | Drive Shaft | | 28 | 37 | 58.5 | 96 | 724 | |
| | 2020.09-2024.03 | ET | F | R | Van FWD ZKX (ZK01) | | GDS82316 | Drive Shaft | | 28 | 37 | 58.6 | 93 | 974 | |
| | 2020.09-2024.03 | ET | F | L/R | Van FWD ZKX (ZK01) | | GCO10098 | Outer Joint | | 28 | 39 | 58.6 | 93 | 63 | I |
| | 2020.09-2024.03 | ET | F | R | Van FWD ZKX (ZK01) | | GCI81759 | Inner Joint | | 37 | 34 | 31.9 | 302 | 88 | |
| **Zafira** | | | | | | | | | | | | | | | |
| 1.6 (69 kw) | 2005.07-2015.04 | 5MT | F | L | MPV FWD Z 16 YNG | | GDS44028 | Drive Shaft | | 33 | 22 | 53 | 95 | 590 | |
| | 2005.07-2015.04 | 5MT | F | R | MPV FWD Z 16 YNG | | GDS44030 | Drive Shaft | | 33 | 22 | 53 | 95 | 952 | |
| | 2005.07-2015.04 | MT | F | L | MPV FWD Z 16 YNG | Date to:2011.12 | GCI21014 | Inner Joint | | 22 | 22 | 35 | 57.5 | 105.5 | |
| | 2005.07-2015.04 | MT | F | L/R | MPV FWD Z 16 YNG | Date from:2006.01 | GCI44004 | Inner Joint | | 22 | 22 | 34.95 | 57.5 | 103 | |
| | 2005.07-2015.04 | | F | L/R | MPV FWD Z 16 YNG | | GCO44003 | Outer Joint | | 33 | 22 | 53 | 95 | 54.5 | M |
| 1.6 (71 kw) | 2001.09-2005.06 | 5MT | F | L | MPV FWD Z16YNG | Chassis no. from:42000001 | GDS60013 | Drive Shaft | | 33 | 22 | 52 | 103 | 595 | |
| | 2001.09-2005.06 | 5MT | F | R | MPV FWD Z16YNG | Chassis no. from:42000001 | GDS44033 | Drive Shaft | | 33 | 22 | 52 | 103 | 950.5 | |
| | 2001.09-2005.06 | 5MT | F | R | MPV FWD Z16YNG | Chassis no. to:32999999 | GDS60035 | Drive Shaft | | 33 | 22 | 52 | 109 | 961 | |
| | 2001.09-2005.06 | 5MT | F | L/R | MPV FWD Z16YNG | Chassis no. from:42084194 | GCI44004 | Inner Joint | | 22 | 22 | 34.95 | 57.5 | 103 | |
| | 2001.09-2005.06 | 5MT | F | L/R | MPV FWD Z16YNG | Chassis no. to:42084193 | GCI99026 | Inner Joint | | 22 | 25 | 35 | 57 | 111.7 | |
| | 2001.09-2005.06 | MT | F | R | MPV FWD Z16YNG | | GCO44049 | Outer Joint | | 33 | 25 | 52 | 109 | 61 | O |
| | 2001.09-2005.06 | | F | L/R | MPV FWD Z16YNG | | GCO44006 | Outer Joint | 29T | 33 | 25 | 52 | 103.5 | 61 | O |
| | 2001.09-2005.06 | | F | | MPV FWD Z16YNG | | GCO44010 | Outer Joint | 29T | 33 | 22 | 52 | 103 | 50.5 | O |
| | 2001.09-2005.06 | | F | L | MPV FWD Z16YNG | | GCI21014 | Inner Joint | | 22 | 22 | 35 | 57.5 | 105.5 | |
| 1.6 (74 kw) | 1999.04-2005.06 | 4AT/5MT | F | L/R | MPV FWD X16XEL/Z16XE | | GCI44004 | Inner Joint | | 22 | 22 | 34.95 | 57.5 | 103 | |
| | 1999.04-2005.06 | 4AT/5MT | F | L/R | MPV FWD X16XEL/Z16XE | | GCI99026 | Inner Joint | | 22 | 25 | 35 | 57 | 111.7 | |
| | 1999.04-2005.06 | 5MT | F | L | MPV FWD X16XEL/Z16XE | Chassis no. from:42000001 | GDS60013 | Drive Shaft | | 33 | 22 | 52 | 103 | 595 | |
| | 1999.04-2005.06 | 5MT | F | R | MPV FWD X16XEL/Z16XE | Chassis no. from:42000001 | GDS44033 | Drive Shaft | | 33 | 22 | 52 | 103 | 950.5 | |
| | 1999.04-2005.06 | 5MT | F | R | MPV FWD X16XEL/Z16XE | Chassis no. to:32999999 | GDS60035 | Drive Shaft | | 33 | 22 | 52 | 109 | 961 | |
| | 1999.04-2005.06 | 5MT | F | L | MPV FWD X16XEL/Z16XE | Chassis no. from:42000001 | GCI21014 | Inner Joint | | 22 | 22 | 35 | 57.5 | 105.5 | |
| | 1999.04-2005.06 | 5MT | F | L/R | MPV FWD X16XEL/Z16XE | Chassis no. from:42084194 | GCI44004 | Inner Joint | | 22 | 22 | 34.95 | 57.5 | 103 | |
| | 1999.04-2005.06 | 5MT | F | L/R | MPV FWD X16XEL/Z16XE | Chassis no. to:42084193 | GCI99026 | Inner Joint | | 22 | 25 | 35 | 57 | 111.7 | |
| | 1999.04-2005.06 | AT/MT | F | L | MPV FWD X16XEL/Z16XE | Chassis no. from:42000001 | GDS60013 | Drive Shaft | | 33 | 22 | 52 | 103 | 595 | |
| | 1999.04-2005.06 | AT/MT | F | R | MPV FWD X16XEL/Z16XE | Chassis no. from:42000001 | GDS44033 | Drive Shaft | | 33 | 22 | 52 | 103 | 950.5 | |
| | 1999.04-2005.06 | AT/MT | F | R | MPV FWD X16XEL/Z16XE | Chassis no. to:32999999 | GDS60035 | Drive Shaft | | 33 | 22 | 52 | 109 | 961 | |
| | 1999.04-2005.06 | AT/MT | F | L/R | MPV FWD X16XEL/Z16XE | Chassis no. to:42084193 | GCO44006 | Outer Joint | 29T | 33 | 25 | 52 | 103.5 | 61 | O |
| | 1999.04-2005.06 | AT/MT | F | L/R | MPV FWD X16XEL/Z16XE | | GCO44009 | Outer Joint | | 33 | 22 | 52 | 103 | 50.5 | O |
| | 1999.04-2005.06 | AT/MT | F | L/R | MPV FWD X16XEL/Z16XE | | GCO44030 | Outer Joint | | 33 | 22 | 52 | 103 | 50.5 | O |
| | 1999.04-2005.06 | MT | F | R | MPV FWD X16XEL/Z16XE | | GCO44049 | Outer Joint | | 33 | 25 | 52 | 109 | 61 | O |
| | 1999.04-2005.06 | | F | L/R | MPV FWD X16XEL/Z16XE | | GCO44009 | Outer Joint | | 33 | 22 | 52 | 103 | 50.5 | O |
| | 1999.04-2005.06 | | F | L/R | MPV FWD X16XEL/Z16XE | | GCO44030 | Outer Joint | | 33 | 22 | 52 | 103 | 50.5 | O |
| | 1999.04-2005.06 | | F | | MPV FWD X16XEL/Z16XE | | GCO44010 | Outer Joint | 29T | 33 | 22 | 52 | 103 | 50.5 | O |
| 1.6 (76 kw) | 2003.10-2005.06 | 4AT/5MT | F | L | MPV FWD Z16XEP | Chassis no. from:42000001 | GDS60013 | Drive Shaft | | 33 | 22 | 52 | 103 | 595 | |
| | 2003.10-2005.06 | 4AT/5MT | F | R | MPV FWD Z16XEP | Chassis no. from:42000001 | GDS44033 | Drive Shaft | | 33 | 22 | 52 | 103 | 950.5 | |
| | 2003.10-2005.06 | 4AT/5MT | F | R | MPV FWD Z16XEP | Chassis no. to:32999999 | GDS60035 | Drive Shaft | | 33 | 22 | 52 | 109 | 961 | |
| | 2003.10-2005.06 | 4AT/5MT | F | L/R | MPV FWD Z16XEP | | GCI44004 | Inner Joint | | 22 | 22 | 34.95 | 57.5 | 103 | |
| | 2003.10-2005.06 | 4AT/5MT | F | L/R | MPV FWD Z16XEP | | GCI99026 | Inner Joint | | 22 | 25 | 35 | 57 | 111.7 | |
| | 2003.10-2005.06 | | F | L/R | MPV FWD Z16XEP | | GCO44009 | Outer Joint | | 33 | 22 | 52 | 103 | 50.5 | O |
| | 2003.10-2005.06 | | F | L/R | MPV FWD Z16XEP | | GCO44030 | Outer Joint | | 33 | 22 | 52 | 103 | 50.5 | O |
| 1.6 (77 kw) | 2005.07-2012.09 | 5MT | F | L | MPV FWD Z 16 XEP;Z 16 XE1 | | GDS44028 | Drive Shaft | | 33 | 22 | 53 | 95 | 590 | |
| | 2005.07-2012.09 | 5MT | F | R | MPV FWD Z 16 XEP;Z 16 XE1 | | GDS44030 | Drive Shaft | | 33 | 22 | 53 | 95 | 952 | |
| | 2005.07-2012.09 | MT | F | L/R | MPV FWD Z 16 XEP;Z 16 XE1 | Date to:2009.12 | GCO44003 | Outer Joint | | 33 | 22 | 53 | 95 | 54.5 | M |
| | 2005.07-2012.09 | MT | F | L | MPV FWD Z 16 XEP;Z 16 XE1 | Date to:2009.12 | GCI21014 | Inner Joint | | 22 | 22 | 35 | 57.5 | 105.5 | |
| | 2005.07-2012.09 | MT | F | L/R | MPV FWD Z 16 XEP;Z 16 XE1 | | GCI44004 | Inner Joint | | 22 | 22 | 34.95 | 57.5 | 103 | |
| 1.6 (85 kw) | 2008.01-2015.04 | 4AT/5MT | F | L | MPV FWD Z 16 XER;A 16 XER | | GDS44028 | Drive Shaft | | 33 | 22 | 53 | 95 | 590 | |
| | 2008.01-2015.04 | 4AT/5MT | F | R | MPV FWD Z 16 XER;A 16 XER | For left-hand drive vehicles | GDS44030 | Drive Shaft | | 33 | 22 | 53 | 95 | 952 | |
| | 2008.01-2015.04 | 4AT/5MT | F | L/R | MPV FWD Z 16 XER;A 16 XER | | GCO44003 | Outer Joint | | 33 | 22 | 53 | 95 | 54.5 | M |
| | 2008.01-2015.04 | 4AT/5MT | F | L/R | MPV FWD Z 16 XER;A 16 XER | | GCI21014 | Inner Joint | | 22 | 22 | 35 | 57.5 | 105.5 | |
| | 2008.01-2015.04 | 4AT/5MT | F | L/R | MPV FWD Z 16 XER;A 16 XER | | GCI44004 | Inner Joint | | 22 | 22 | 34.95 | 57.5 | 103 | |

| | YEAR | TRANSM. | F/R | L/R | BODY STYLE & DRIVE TYPE & ENGINE | REMARKS | G-AP Ref. | PRODUCT | ABS | Technical Specifications A | B | C | H | L | P |
|---|---|---|---|---|---|---|---|---|---|---|---|---|---|---|---|
| **OPEL** **Zafira** | | | | | | | | | | | | | | | |
| 1.6 (85 kw) | 2008.08-2012.12 | 5MT | F | L | MPV FWD Z 16 XER | | GDS44028 | Drive Shaft | | 33 | 22 | 53 | 95 | 590 | |
| | 2008.08-2012.12 | 5MT | F | R | MPV FWD Z 16 XER | | GDS44030 | Drive Shaft | | 33 | 22 | 53 | 95 | 952 | |
| | 2008.08-2012.12 | 5MT | F | L/R | MPV FWD Z 16 XER | | GCI21014 | Inner Joint | | 22 | 22 | 35 | 57.5 | 105.5 | |
| | 2008.08-2012.12 | | F | L/R | MPV FWD Z 16 XER | | GCO44003 | Outer Joint | | 33 | 22 | 53 | 95 | 54.5 | M |
| 1.6 (110 kw) | 2010.04-2015.04 | 6MT | F | L | MPV FWD Z 16 XNT;A 16 XNT | | GCI44008 | Inner Joint | | 25 | 25 | 34.9 | 57.5 | 113.2 | |
| | 2010.04-2015.04 | | F | L/R | MPV FWD Z 16 XNT;A 16 XNT | | GCO44028 | Outer Joint | | 33 | 24 | 53 | 93.5 | 63.5 | M |
| | 2010.04-2015.04 | | F | R | MPV FWD Z 16 XNT;A 16 XNT | | GCI44005 | Inner Joint | | 34 | 25 | 35 | | 130.2 | |
| 1.7 (81 kw) | 2008.01-2015.04 | 6MT | F | L | MPV FWD A 17 DTJ;Z 17 DTJ | | GDS21051 | Drive Shaft | | 33 | 25 | 52.5 | 94 | 579 | |
| | 2008.01-2015.04 | 6MT | F | R | MPV FWD A 17 DTJ;Z 17 DTJ | | GDS44099 | Drive Shaft | | 33 | 34 | 52.5 | 94 | 563 | |
| | 2008.01-2015.04 | AT/MT | F | L/R | MPV FWD A 17 DTJ;Z 17 DTJ | | GCO44027 | Outer Joint | | 33 | 26 | 52.5 | 94 | 65.5 | M |
| | 2008.01-2015.04 | MT | F | | MPV FWD A 17 DTJ;Z 17 DTJ | | GCO99024 | Outer Joint | | 33 | 26 | 52.5 | 94 | 65.5 | M |
| | 2008.01-2015.04 | MT | F | L | MPV FWD A 17 DTJ;Z 17 DTJ | | GCI99186 | Inner Joint | | 25 | 28 | 34.9 | 57.5 | 111 | |
| | 2008.01-2015.04 | MT | F | R | MPV FWD A 17 DTJ;Z 17 DTJ | | GCI44016 | Inner Joint | | 34 | 28 | 37.5 | | 129.2 | |
| 1.8 (85 kw) | 1999.02-2000.06 | 4AT/5MT | F | R | MPV FWD X18XE1 | | GDS60035 | Drive Shaft | | 33 | 22 | 52 | 109 | 961 | |
| | 1999.02-2000.06 | AT/MT | F | L | MPV FWD X18XE1 | | GDS60013 | Drive Shaft | | 33 | 22 | 52 | 103 | 595 | |
| | 1999.02-2000.06 | AT/MT | F | L/R | MPV FWD X18XE1 | Date to:2000.06 | GCO44006 | Outer Joint | 29T | 33 | 25 | 52 | 103.5 | 61 | O |
| | 1999.02-2000.06 | MT | F | R | MPV FWD X18XE1 | | GCO44049 | Outer Joint | | 33 | 25 | 52 | 109 | 61 | O |
| | 1999.02-2000.06 | | F | L/R | MPV FWD X18XE1 | | GCI99026 | Inner Joint | | 22 | 25 | 35 | 57 | 111.7 | |
| 1.8 (92 kw) | 2000.07-2005.06 | 4AT/5MT | F | R | MPV FWD Z18XE | | GDS60035 | Drive Shaft | | 33 | 22 | 52 | 109 | 961 | |
| | 2000.07-2005.06 | 4AT/5MT | F | L/R | MPV FWD Z18XE | | GCI99026 | Inner Joint | | 22 | 25 | 35 | 57 | 111.7 | |
| | 2000.07-2005.06 | AT/MT | F | L | MPV FWD Z18XE | | GDS60013 | Drive Shaft | | 33 | 22 | 52 | 103 | 595 | |
| | 2000.07-2005.06 | AT/MT | F | L/R | MPV FWD Z18XE | | GCO44006 | Outer Joint | 29T | 33 | 25 | 52 | 103.5 | 61 | O |
| | 2000.07-2005.06 | MT | F | R | MPV FWD Z18XE | | GCO44049 | Outer Joint | | 33 | 25 | 52 | 109 | 61 | O |
| 1.8 (103 kw) | 2009.07-2015.04 | SAT/5MT | F | L | MPV FWD Z 18 XER | | GDS21063 | Drive Shaft | | 33 | 22 | 53 | 93.5 | 586 | |
| | 2009.07-2015.04 | SAT/5MT | F | R | MPV FWD Z 18 XER | | GDS21055 | Drive Shaft | | 33 | 22 | 53 | 93.5 | 950 | |
| | 2009.07-2015.04 | | F | L/R | MPV FWD Z 18 XER | | GCO44028 | Outer Joint | | 33 | 24 | 53 | 93.5 | 63.5 | M |
| | 2009.07-2015.04 | | F | L/R | MPV FWD Z 18 XER | | GCI99026 | Inner Joint | | 22 | 25 | 35 | 57 | 111.7 | |
| 1.9 (74 kw) | 2005.07-2010.12 | 6AT | F | L | MPV FWD Z 19 DTL | Chassis no. from:72024736/7G032261 | GDS21111 | Drive Shaft | | 33 | 27 | 52.5 | 94 | 562 | |
| | 2005.07-2010.12 | 6AT | F | L | MPV FWD Z 19 DTL | Chassis no. to:72024735/7G032260 | GDS60034 | Drive Shaft | | 33 | 27 | 52.5 | 94 | 564 | |
| | 2005.07-2010.12 | 6AT | F | L | MPV FWD Z 19 DTL | Chassis no. from:72024736/7G032260 | GCI86015 | Inner Joint | | 27 | 26 | 35 | 78.5 | 109.5 | |
| | 2005.07-2010.12 | 6MT | F | R | MPV FWD Z 19 DTL | Chassis no. to:72025241/7G032293 | GCI99187 | Inner Joint | | 34 | 34 | 37.5 | | 124 | |
| | 2005.07-2010.12 | AT | F | R | MPV FWD Z 19 DTL | | GDS21110 | Drive Shaft | | 33 | 27 | 52.5 | 94 | 576 | |
| | 2005.07-2010.12 | MT | F | L | MPV FWD Z 19 DTL | Date from:2007.08 | GDS21051 | Drive Shaft | | 33 | 25 | 52.5 | 94 | 579 | |
| | 2005.07-2010.12 | MT | F | L | MPV FWD Z 19 DTL | Date to:2007.07 | GDS21073 | Drive Shaft | | 33 | 25 | 52.5 | 94 | 578 | |
| | 2005.07-2010.12 | MT | F | R | MPV FWD Z 19 DTL | | GDS21056 | Drive Shaft | | 33 | 34 | 52.5 | 94 | 595 | |
| | 2005.07-2010.12 | MT | F | L/R | MPV FWD Z 19 DTL | | GCO44027 | Outer Joint | | 33 | 26 | 52.5 | 94 | 65.5 | M |
| | 2005.07-2010.12 | MT | F | L | MPV FWD Z 19 DTL | Date to:2007.07 | GCI21018 | Inner Joint | | 25 | 34 | 35 | 58 | 116 | |
| | 2005.07-2010.12 | MT | F | L | MPV FWD Z 19 DTL | Date from:2007.08 | GCI99186 | Inner Joint | | 25 | 28 | 34.9 | 57.5 | 111 | |
| | 2005.07-2010.12 | | F | | MPV FWD Z 19 DTL | | GCO99024 | Outer Joint | | 33 | 26 | 52.5 | 94 | 65.5 | M |
| 1.9 (88 kw) | 2005.07-2015.04 | 6AT | F | L | MPV FWD Z 19 DT | Chassis no. from:72024736/7G032261 | GDS21111 | Drive Shaft | | 33 | 27 | 52.5 | 94 | 562 | |
| | 2005.07-2015.04 | 6AT | F | L | MPV FWD Z 19 DT | Chassis no. to:72024735/7G032260 | GDS60034 | Drive Shaft | | 33 | 27 | 52.5 | 94 | 564 | |
| | 2005.07-2015.04 | 6AT | F | L | MPV FWD Z 19 DT | Chassis no. from:72024736/7G032261 | GCI21016 | Inner Joint | | 27 | 26 | 35 | 78.5 | 112 | |
| | 2005.07-2015.04 | 6AT | F | L | MPV FWD Z 19 DT | Chassis no. from:72024736/7G032260 | GCI86015 | Inner Joint | | 27 | 26 | 35 | 78.5 | 109.5 | |
| | 2005.07-2015.04 | 6MT | F | R | MPV FWD Z 19 DT | Chassis no. to:72025241/7G032293 | GCI99187 | Inner Joint | | 34 | 34 | 37.5 | | 124 | |
| | 2005.07-2015.04 | AT | F | R | MPV FWD Z 19 DT | | GDS21110 | Drive Shaft | | 33 | 27 | 52.5 | 94 | 576 | |
| | 2005.07-2015.04 | AT/MT | F | L/R | MPV FWD Z 19 DT | | GCO44027 | Outer Joint | | 33 | 26 | 52.5 | 94 | 65.5 | M |
| | 2005.07-2015.04 | MT | F | L | MPV FWD Z 19 DT | Date from:2007.08 | GDS21051 | Drive Shaft | | 33 | 25 | 52.5 | 94 | 579 | |
| | 2005.07-2015.04 | MT | F | L | MPV FWD Z 19 DT | Date to:2007.07 | GDS21073 | Drive Shaft | | 33 | 25 | 52.5 | 94 | 578 | |
| | 2005.07-2015.04 | MT | F | R | MPV FWD Z 19 DT | | GDS21056 | Drive Shaft | | 33 | 34 | 52.5 | 94 | 595 | |
| | 2005.07-2015.04 | MT | F | | MPV FWD Z 19 DT | | GCO99024 | Outer Joint | | 33 | 26 | 52.5 | 94 | 65.5 | M |
| | 2005.07-2015.04 | MT | F | L | MPV FWD Z 19 DT | Date to:2007.07 | GCI21018 | Inner Joint | | 25 | 34 | 35 | 58 | 116 | |
| | 2005.07-2015.04 | MT | F | L | MPV FWD Z 19 DT | Date from:2007.08 | GCI99186 | Inner Joint | | 25 | 28 | 34.9 | 57.5 | 111 | |
| 1.9 (110 kw) | 2005.07-2015.04 | 6AT | F | L | MPV FWD Z 19 DTH | Chassis no. from:72024736/7G031833 | GDS56693 | Drive Shaft | | 30 | 27 | 52.5 | 94.5 | 562 | |
| | 2005.07-2015.04 | 6AT | F | R | MPV FWD Z 19 DTH | Chassis no. from:72024736/7G031833 | GDS84029 | Drive Shaft | | 30 | 27 | 53.8 | 94.5 | 575 | |
| | 2005.07-2015.04 | 6AT | F | L/R | MPV FWD Z 19 DTH | Chassis no. from:72024736/7G031833 | GCI86015 | Inner Joint | | 27 | 26 | 35 | 78.5 | 109.5 | |
| | 2005.07-2015.04 | 6AT/6MT | F | L/R | MPV FWD Z 19 DTH | | GCO17051 | Outer Joint | | 30 | 26 | 53.8 | 94.5 | 65.5 | M |
| | 2005.07-2015.04 | 6MT | F | R | MPV FWD Z 19 DTH | Chassis no. to:72024735/7G032584 | GDS21056 | Drive Shaft | | 33 | 34 | 52.5 | 94 | 595 | |
| | 2005.07-2015.04 | 6MT | F | R | MPV FWD Z 19 DTH | Date to:2007.07;Chassis no. to:72024735/7G032584 | GDS21062 | Drive Shaft | | 30 | 34 | 53.8 | 94.5 | 595 | |
| | 2005.07-2015.04 | 6MT | F | R | MPV FWD Z 19 DTH | Chassis no. from:72024736/7G032585 | GDS82084 | Drive Shaft | | 30 | 34 | 53.8 | 94.5 | 598 | |
| | 2005.07-2015.04 | 6MT | F | R | MPV FWD Z 19 DTH | Chassis no. to:72024735/7G032584 | GCI99187 | Inner Joint | | 34 | 34 | 37.5 | | 124 | |
| | 2005.07-2015.04 | MT | F | L | MPV FWD Z 19 DTH | Date from:2007.08 | GDS21035 | Drive Shaft | | 30 | 25 | 53.8 | 94.5 | 581 | |
| | 2005.07-2015.04 | MT | F | L | MPV FWD Z 19 DTH | Date to:2007.07 | GDS21071 | Drive Shaft | | 30 | 25 | 53.8 | 94.5 | 576 | |
| | 2005.07-2015.04 | MT | F | L | MPV FWD Z 19 DTH | Date to:2007.07 | GCI21018 | Inner Joint | | 25 | 34 | 35 | 58 | 116 | |
| | 2005.07-2015.04 | MT | F | L | MPV FWD Z 19 DTH | Date from:2007.08 | GCI99186 | Inner Joint | | 25 | 28 | 34.9 | 57.5 | 111 | |
| 2.0 (60 kw) | 1999.05-2005.06 | 5MT | F | L | MPV FWD X20DTL/Y20DTL | | GDS44044 | Drive Shaft | | 33 | 34 | 52 | 103.5 | 595 | |

| | YEAR | TRANSM. | F/R | L/R | BODY STYLE & DRIVE TYPE & ENGINE | REMARKS | G-AP Ref. | PRODUCT | ABS | Technical Specifications A | B | C | H | L | P |
|---|---|---|---|---|---|---|---|---|---|---|---|---|---|---|---|
| **OPEL** | | | | | | | | | | | | | | | |
| **Zafira** | | | | | | | | | | | | | | | |
| 2.0 (60 kw) | 1999.05-2005.06 | 5MT | F | R | MPV FWD X20DTL/Y20DTL | | GDS88011 | Drive Shaft | | 33 | 34 | 52 | 104 | 959 | |
| | 1999.05-2005.06 | 5MT | F | L | MPV FWD X20DTL/Y20DTL | | GCO44032 | Outer Joint | | 33 | 25 | 52 | 103.5 | 61 | O |
| | 1999.05-2005.06 | 5MT | F | L/R | MPV FWD X20DTL/Y20DTL | | GCO44006 | Outer Joint | 29T | 33 | 25 | 52 | 103.5 | 61 | O |
| | 1999.05-2005.06 | 5MT | F | L/R | MPV FWD X20DTL/Y20DTL | | GCI44002 | Inner Joint | | 34 | 25 | 35 | 56.2 | 114.8 | |
| | 1999.05-2005.06 | MT | F | R | MPV FWD X20DTL/Y20DTL | | GCO44049 | Outer Joint | | 33 | 25 | 52 | 109 | 61 | O |
| 2.0 (74 kw) | 2000.09-2005.06 | 5MT | F | L | MPV FWD Y20DTH | | GDS44044 | Drive Shaft | | 33 | 34 | 52 | 103.5 | 595 | |
| | 2000.09-2005.06 | 5MT | F | R | MPV FWD Y20DTH | | GDS88011 | Drive Shaft | | 33 | 34 | 52 | 104 | 959 | |
| | 2000.09-2005.06 | 5MT | F | L | MPV FWD Y20DTH | | GCO44032 | Outer Joint | | 33 | 25 | 52 | 103.5 | 61 | O |
| | 2000.09-2005.06 | AT/MT | F | L/R | MPV FWD Y20DTH | | GCO44006 | Outer Joint | 29T | 33 | 25 | 52 | 103.5 | 61 | O |
| | 2000.09-2005.06 | MT | F | R | MPV FWD Y20DTH | | GCO44049 | Outer Joint | | 33 | 25 | 52 | 109 | 61 | O |
| | 2000.09-2005.06 | MT | F | L/R | MPV FWD Y20DTH | | GCI44002 | Inner Joint | | 34 | 25 | 35 | 56.2 | 114.8 | |
| 2.0 (141 kw) | 2002.06-2002.12 | 5MT | F | R | MPV FWD Z20LET | | GDS44082 | Drive Shaft | | 33 | 34 | 55 | 104 | 663 | |
| | 2002.06-2002.12 | MT | F | L | MPV FWD Z20LET | | GDS44025 | Drive Shaft | | 33 | 34 | 55 | 104 | 593 | |
| | 2002.06-2002.12 | MT | F | L/R | MPV FWD Z20LET | | GCO99061 | Outer Joint | | 33 | 35 | 55 | 104 | 67.5 | I |
| | 2002.06-2002.12 | MT | F | L | MPV FWD Z20LET | | GCI44018 | Inner Joint | | 34 | 35 | 35 | 56 | 119.5 | |
| | 2002.06-2002.12 | | F | L | MPV FWD Z20LET | | GCO44065 | Outer Joint | 29T | 33 | 35 | 55 | 104 | 67.5 | I |
| 2.0 (147 kw) | 2002.09-2005.06 | 5MT | F | R | MPV FWD Z20LET | | GDS44082 | Drive Shaft | | 33 | 34 | 55 | 104 | 663 | |
| | 2002.09-2005.06 | MT | F | L | MPV FWD Z20LET | | GDS44025 | Drive Shaft | | 33 | 34 | 55 | 104 | 593 | |
| | 2002.09-2005.06 | MT | F | L/R | MPV FWD Z20LET | | GCO99061 | Outer Joint | | 33 | 35 | 55 | 104 | 67.5 | I |
| | 2002.09-2005.06 | MT | F | L | MPV FWD Z20LET | | GCI44018 | Inner Joint | | 34 | 35 | 35 | 56 | 119.5 | |
| | 2002.09-2005.06 | | F | L | MPV FWD Z20LET | | GCO44065 | Outer Joint | 29T | 33 | 35 | 55 | 104 | 67.5 | I |
| | 2005.07-2010.12 | 6MT | F | R | MPV FWD Z 20 LER | | GDS21056 | Drive Shaft | | 33 | 34 | 52.5 | 94 | 595 | |
| | 2005.07-2010.12 | 6MT | F | R | MPV FWD Z 20 LER | | GCI99187 | Inner Joint | | 34 | 34 | 37.5 | | 124 | |
| | 2005.07-2010.12 | AT/MT | F | L/R | MPV FWD Z 20 LER | | GCO44027 | Outer Joint | | 33 | 26 | 52.5 | 94 | 65.5 | M |
| | 2005.07-2010.12 | | F | | MPV FWD Z 20 LER | | GCO99024 | Outer Joint | | 33 | 26 | 52.5 | 94 | 65.5 | M |
| 2.0 (177 kw) | 2006.01-2010.12 | 6MT | F | R | MPV FWD Z 20 LEH | Chassis no. to:72024735 | GDS21062 | Drive Shaft | | 30 | 34 | 53.8 | 94.5 | 595 | |
| | 2006.01-2010.12 | 6MT | F | R | MPV FWD Z 20 LEH | Chassis no. from:72024736/7G031833 | GDS82084 | Drive Shaft | | 30 | 34 | 53.8 | 94.5 | 598 | |
| | 2006.01-2010.12 | 6MT | F | R | MPV FWD Z 20 LEH | Chassis no. from:72024736/7G031833 | GCI44016 | Inner Joint | | 34 | 28 | 37.5 | | 129.2 | |
| | 2006.01-2010.12 | 6MT | F | R | MPV FWD Z 20 LEH | Chassis no. to:72024735/7G031832 | GCI99187 | Inner Joint | | 34 | 34 | 37.5 | | 124 | |
| | 2006.01-2010.12 | | F | L/R | MPV FWD Z 20 LEH | | GCO17051 | Outer Joint | | 30 | 26 | 53.8 | 94.5 | 65.5 | M |
| 2.2 (86 kw) | 2002.01-2005.06 | 5MT | F | R | MPV FWD Y22DTR | | GDS44101 | Drive Shaft | | 33 | 27 | 52 | 103.5 | 623 | |
| 2.2 (92 kw) | 2002.01-2005.06 | 5MT | F | R | MPV FWD Y22DTR | | GDS44101 | Drive Shaft | | 33 | 27 | 52 | 103.5 | 623 | |
| 2.2 (108 kw) | 2000.08-2005.06 | 4AT/5MT | F | L | MPV FWD Z22SE | | GDS44044 | Drive Shaft | | 33 | 34 | 52 | 103.5 | 595 | |
| | 2000.08-2005.06 | 4AT/5MT | F | R | MPV FWD Z22SE | | GDS88011 | Drive Shaft | | 33 | 34 | 52 | 104 | 959 | |
| | 2000.08-2005.06 | 4AT/5MT | F | L | MPV FWD Z22SE | | GCO44032 | Outer Joint | | 33 | 25 | 52 | 103.5 | 61 | O |
| | 2000.08-2005.06 | MT | F | R | MPV FWD Z22SE | | GCO44049 | Outer Joint | | 33 | 25 | 52 | 109 | 61 | O |
| | 2000.08-2005.06 | | F | L/R | MPV FWD Z22SE | | GCO44006 | Outer Joint | 29T | 33 | 25 | 52 | 103.5 | 61 | O |
| | 2000.08-2005.06 | | F | L/R | MPV FWD Z22SE | | GCI44002 | Inner Joint | | 34 | 25 | 35 | 56.2 | 114.8 | |
| 2.2 (110 kw) | 2005.07-2012.12 | MT | F | L | MPV FWD Z 22 YH | | GDS21107 | Drive Shaft | | 33 | 25 | 53 | 93.5 | 557 | |
| | 2005.07-2012.12 | MT | F | R | MPV FWD Z 22 YH | | GDS44051 | Drive Shaft | | 33 | 34 | 53 | 93.5 | 570 | |
| | 2005.07-2012.12 | MT | F | L/R | MPV FWD Z 22 YH | | GCO44028 | Outer Joint | | 33 | 24 | 53 | 93.5 | 63.5 | M |
| | 2005.07-2012.12 | MT | F | R | MPV FWD Z 22 YH | | GCI44011 | Inner Joint | | 34 | 25 | 37.5 | | 130.2 | |
| | 2005.07-2012.12 | SAT/4AT/6MT | F | L | MPV FWD Z 22 YH | | GCI44008 | Inner Joint | | 25 | 25 | 34.9 | 57.5 | 113.2 | |
| | 2005.07-2012.12 | SAT/4AT/6MT | F | R | MPV FWD Z 22 YH | | GCI44005 | Inner Joint | | 34 | 25 | 35 | | 130.2 | |
| **Zafira Family** | | | | | | | | | | | | | | | |
| 1.8 (88 kw) | 2013.06-2015.04 | MT | F | L | MPV FWD A 18 XEL | | GDS21063 | Drive Shaft | | 33 | 22 | 53 | 93.5 | 586 | |
| | 2013.06-2015.04 | MT | F | R | MPV FWD A 18 XEL | | GDS21055 | Drive Shaft | | 33 | 22 | 53 | 93.5 | 950 | |
| | 2013.06-2015.04 | MT | F | L/R | MPV FWD A 18 XEL | | GCO44028 | Outer Joint | | 33 | 24 | 53 | 93.5 | 63.5 | M |
| | 2013.06-2015.04 | MT | F | L/R | MPV FWD A 18 XEL | | GCI99026 | Inner Joint | | 22 | 25 | 35 | 57 | 111.7 | |
| **Zafira Life** | | | | | | | | | | | | | | | |
| 1.5 (75 kw) | 2019.03-2025.04 | 6MT | F | L | Bus FWD D 15 DT (DV5RUCD) | | GDS82315 | Drive Shaft | | 28 | 37 | 58.6 | 93 | 719 | |
| | 2019.03-2025.04 | 6MT | F | R | Bus FWD D 15 DT (DV5RUCD) | | GDS82316 | Drive Shaft | | 28 | 37 | 58.6 | 93 | 974 | |
| | 2019.03-2025.04 | 6MT | F | L/R | Bus FWD D 15 DT (DV5RUCD) | | GCO10098 | Outer Joint | | 28 | 39 | 58.6 | 93 | 63 | I |
| | 2019.03-2025.04 | 6MT | F | R | Bus FWD D 15 DT (DV5RUCD) | | GCI81759 | Inner Joint | | 37 | 34 | 31.9 | 302 | 88 | |
| 1.5 (88 kw) | 2019.03-2025.04 | 6MT | F | L | Bus FWD D 15 DTH (DV5RUC) | | GDS82315 | Drive Shaft | | 28 | 37 | 58.6 | 93 | 719 | |
| | 2019.03-2025.04 | 6MT | F | R | Bus FWD D 15 DTH (DV5RUC) | | GDS82316 | Drive Shaft | | 28 | 37 | 58.6 | 93 | 974 | |
| | 2019.03-2025.04 | 6MT | F | L/R | Bus FWD D 15 DTH (DV5RUC) | | GCO10098 | Outer Joint | | 28 | 39 | 58.6 | 93 | 63 | I |
| | 2019.03-2025.04 | 6MT | F | R | Bus FWD D 15 DTH (DV5RUC) | | GCI81759 | Inner Joint | | 37 | 34 | 31.9 | 302 | 88 | |
| 2.0 (90 kw) | 2019.08-2022.12 | 8AT | F | L | Bus FWD D 20 DTL (DW10FE) | For vehicles with standard suspension | GDS56191 | Drive Shaft | | 28 | 37 | 58.6 | 93 | 649 | |
| | 2019.08-2022.12 | 8AT | F | R | Bus FWD D 20 DTL (DW10FE) | For vehicles with standard suspension | GDS56190 | Drive Shaft | | 28 | 37 | 58.6 | 93 | 989 | |
| | 2019.08-2022.12 | 8AT | F | L/R | Bus FWD D 20 DTL (DW10FE) | For vehicles with standard suspension | GCO82805 | Outer Joint | | 28 | 39 | 58.6 | 93 | 63 | I |
| | 2019.08-2022.12 | 8AT | F | L | Bus FWD D 20 DTL (DW10FE) | For vehicles with standard suspension | GCI10120 | Inner Joint | | 37 | 39 | 42.2 | 60 | 95.5 | |
| | 2019.08-2022.12 | 8AT | F | R | Bus FWD D 20 DTL (DW10FE) | For vehicles with standard suspension | GCI45033 | Inner Joint | | 37 | 39 | | 379 | 96 | |
| 2.0 (106 kw) | 2020.09-2025.04 | 6MT | F | L | Bus FWD DW10FDDU370;DW10FDDU340 | | GDS83778 | Drive Shaft | | 28 | 37 | 58.5 | 92.5 | 699 | |
| | 2020.09-2025.04 | 6MT | F | R | Bus FWD DW10FDDU370;DW10FDDU340 | | GDS83775 | Drive Shaft | | 28 | 37 | 58.5 | 92.5 | 1002 | |

| | YEAR | TRANSM. | F/R | L/R | BODY STYLE & DRIVE TYPE & ENGINE | REMARKS | G-AP Ref. | PRODUCT | ABS | Technical Specifications A | B | C | H | L | P |
|---|---|---|---|---|---|---|---|---|---|---|---|---|---|---|---|
| **OPEL** | | | | | | | | | | | | | | | |
| **Zafira Life** | | | | | | | | | | | | | | | |
| 2.0 (106 kw) | 2020.09-2025.04 | 6MT | F | L/R | Bus FWD DW10FDDU370;DW10FDDU340 | | GCO82483 | Outer Joint | | 28 | 36 | 58.5 | 92.5 | 60.5 | I |
| | 2020.09-2025.04 | 6MT | F | L | Bus FWD DW10FDDU370;DW10FDDU340 | | GCI82363 | Inner Joint | | 37 | 36 | 40 | 68 | 108 | |
| | 2020.09-2025.04 | 6MT | F | R | Bus FWD DW10FDDU370;DW10FDDU340 | | GCI82364 | Inner Joint | | 37 | 36 | 32 | 400 | 108 | |
| | 2020.09-2025.04 | 8AT | F | L | Bus FWD DW10FDDU370;DW10FDDU340 | For vehicles with standard suspension | GDS56191 | Drive Shaft | | 28 | 37 | 58.6 | 93 | 649 | |
| | 2020.09-2025.04 | 8AT | F | R | Bus FWD DW10FDDU370;DW10FDDU340 | For vehicles with standard suspension | GDS56190 | Drive Shaft | | 28 | 37 | 58.6 | 93 | 989 | |
| | 2020.09-2025.04 | 8AT | F | L/R | Bus FWD DW10FDDU370;DW10FDDU340 | For vehicles with standard suspension | GCO82805 | Outer Joint | | 28 | 39 | 58.6 | 93 | 63 | I |
| 2.0 (110 kw) | 2019.03-2022.12 | 6MT | F | L | Bus FWD D 20 DTH (DW10FD) | | GDS82315 | Drive Shaft | | 28 | 37 | 58.6 | 93 | 719 | |
| | 2019.03-2022.12 | 6MT | F | R | Bus FWD D 20 DTH (DW10FD) | | GDS82316 | Drive Shaft | | 28 | 37 | 58.6 | 93 | 974 | |
| | 2019.03-2022.12 | 6MT | F | L/R | Bus FWD D 20 DTH (DW10FD) | Vehicle Production Country:Great Britain | GCO10098 | Outer Joint | | 28 | 39 | 58.6 | 93 | 63 | I |
| | 2019.03-2022.12 | 6MT | F | R | Bus FWD D 20 DTH (DW10FD) | | GCI81759 | Inner Joint | | 37 | 34 | 31.9 | 302 | 88 | |
| 2.0 (130 kw) | 2019.03-2025.04 | 8AT | F | L | Bus FWD D 20 DTR (DW10FDCU) | For vehicles with standard suspension | GDS56191 | Drive Shaft | | 28 | 37 | 58.6 | 93 | 649 | |
| | 2019.03-2025.04 | 8AT | F | R | Bus FWD D 20 DTR (DW10FDCU) | For vehicles with standard suspension | GDS56190 | Drive Shaft | | 28 | 37 | 58.6 | 93 | 989 | |
| | 2019.03-2025.04 | 8AT | F | L/R | Bus FWD D 20 DTR (DW10FDCU) | For vehicles with standard suspension | GCO82805 | Outer Joint | | 28 | 39 | 58.6 | 93 | 63 | I |
| | 2019.03-2025.04 | 8AT | F | L | Bus FWD D 20 DTR (DW10FDCU) | For vehicles with standard suspension | GCI10120 | Inner Joint | | 37 | 39 | 42.2 | 60 | 95.5 | |
| | 2019.03-2025.04 | 8AT | F | R | Bus FWD D 20 DTR (DW10FDCU) | For vehicles with standard suspension | GCI45033 | Inner Joint | | 37 | 39 | | 379 | 96 | |
| EV (100 kw) | 2024.04- | ET | F | L | Bus FWD ZKU (ZK02) | | GDS57725 | Drive Shaft | | 28 | 37 | 58.5 | 96 | 724 | |
| | 2024.04- | ET | F | R | Bus FWD ZKU (ZK02) | | GDS82316 | Drive Shaft | | 28 | 37 | 58.6 | 93 | 974 | |
| | 2024.04- | ET | F | L/R | Bus FWD ZKU (ZK02) | | GCO10098 | Outer Joint | | 28 | 39 | 58.6 | 93 | 63 | I |
| **Zafira Tourer** | | | | | | | | | | | | | | | |
| 1.4 (88 kw) | 2011.10-2018.05 | 6MT | F | L | MPV FWD A 14 NEL;B 14 NEL | | GDS56465 | Drive Shaft | | 30 | 25 | 52.5 | 94 | 615 | |
| | 2011.10-2018.05 | 6MT | F | R | MPV FWD A 14 NEL;B 14 NEL | | GDS56464 | Drive Shaft | | 30 | 25 | 52.5 | 94 | 1014 | |
| | 2011.10-2018.05 | 6MT | F | L/R | MPV FWD A 14 NEL;B 14 NEL | | GCO83304 | Outer Joint | | 30 | 24 | 52.5 | 94 | 63.5 | M |
| 1.4 (103 kw) | 2011.10-2018.05 | 6AT | F | L | MPV FWD A 14 NET;B 14 NET | | GDS57772 | Drive Shaft | | 30 | 34 | 52.3 | 94 | 658 | |
| | 2011.10-2018.05 | 6AT | F | R | MPV FWD A 14 NET;B 14 NET | | GDS57771 | Drive Shaft | | 30 | 34 | 52.3 | 94 | 604 | |
| | 2011.10-2018.05 | 6AT | F | L/R | MPV FWD A 14 NET;B 14 NET | | GCO81305 | Outer Joint | | 30 | 23 | 52.3 | 94 | 59.5 | M |
| | 2011.10-2018.05 | 6AT | F | L | MPV FWD A 14 NET;B 14 NET | | GCI81774 | Inner Joint | | 34 | 23 | 35 | 136.5 | 84.5 | |
| | 2011.10-2018.05 | 6AT | F | R | MPV FWD A 14 NET;B 14 NET | | GCI81706 | Inner Joint | | 34 | 23 | 37.5 | | 121.5 | |
| | 2011.10-2018.05 | 6MT | F | L | MPV FWD A 14 NET;B 14 NET | | GDS56465 | Drive Shaft | | 30 | 25 | 52.5 | 94 | 615 | |
| | 2011.10-2018.05 | 6MT | F | R | MPV FWD A 14 NET;B 14 NET | | GDS56464 | Drive Shaft | | 30 | 25 | 52.5 | 94 | 1014 | |
| | 2011.10-2018.05 | 6MT | F | L/R | MPV FWD A 14 NET;B 14 NET | | GCO83304 | Outer Joint | | 30 | 24 | 52.5 | 94 | 63.5 | M |
| 1.6 (88 kw) | 2014.07-2018.11 | 6MT | F | L | MPV FWD B 16 DTJ;D 16 DTJ | Chassis no. to:B1999999 | GDS60027 | Drive Shaft | | 30 | 27 | 52.5 | 94.5 | 619 | |
| | 2014.07-2018.11 | 6MT | F | L | MPV FWD B 16 DTJ;D 16 DTJ | Chassis no. from:C1000001 | GDS84292 | Drive Shaft | | 30 | 27 | 52.5 | 94 | 618 | |
| | 2014.07-2018.11 | 6MT | F | L/R | MPV FWD B 16 DTJ;D 16 DTJ | | GCO88046 | Outer Joint | | 30 | 26 | 52.5 | 94.5 | 65.5 | M |
| | 2014.07-2018.11 | 6MT | F | L | MPV FWD B 16 DTJ;D 16 DTJ | | GCI21030 | Inner Joint | | 27 | 26 | 35 | 78 | 112.5 | |
| 1.6 (99 kw) | 2013.07-2019.03 | 6MT | F | L | MPV FWD B 16 DTH;D 16 DTH | Chassis no. to:B1999999 | GDS60027 | Drive Shaft | | 30 | 27 | 52.5 | 94.5 | 619 | |
| | 2013.07-2019.03 | 6MT | F | L | MPV FWD B 16 DTH;D 16 DTH | Chassis no. from:C1000001 | GDS84292 | Drive Shaft | | 30 | 27 | 52.5 | 94 | 618 | |
| | 2013.07-2019.03 | 6MT | F | L | MPV FWD B 16 DTH;D 16 DTH | Chassis no. from:C1000001 | GCO21049 | Outer Joint | | 30 | 26 | 52.5 | 94 | 65.5 | M |
| | 2013.07-2019.03 | 6MT | F | L | MPV FWD B 16 DTH;D 16 DTH | Chassis no. to:B1999999 | GCO88046 | Outer Joint | | 30 | 26 | 52.5 | 94.5 | 65.5 | M |
| | 2013.07-2019.03 | 6MT | F | L | MPV FWD B 16 DTH;D 16 DTH | | GCI21030 | Inner Joint | | 27 | 26 | 35 | 78 | 112.5 | |
| 1.6 (100 kw) | 2013.02-2016.05 | 6MT | F | L | MPV FWD B 16 DTH | Chassis no. from:C1000001 | GDS84292 | Drive Shaft | | 30 | 27 | 52.5 | 94 | 618 | |
| | 2013.02-2016.05 | 6MT | F | L/R | MPV FWD B 16 DTH | Chassis no. to:B1999999 | GDS60027 | Drive Shaft | | 30 | 27 | 52.5 | 94.5 | 619 | |
| | 2013.02-2016.05 | 6MT | F | L/R | MPV FWD B 16 DTH | | GCO88046 | Outer Joint | | 30 | 26 | 52.5 | 94.5 | 65.5 | M |
| | 2013.02-2016.05 | 6MT | F | L/R | MPV FWD B 16 DTH | | GCI21030 | Inner Joint | | 27 | 26 | 35 | 78 | 112.5 | |
| | 2018.09-2019.07 | 6AT | F | R | MPV FWD D 16 SHJ | | GDS82388 | Drive Shaft | | 30 | 27 | 52.5 | 94 | 609 | |
| | 2018.09-2019.07 | 6MT | F | R | MPV FWD D 16 SHJ | | GDS60027 | Drive Shaft | | 30 | 27 | 52.5 | 94.5 | 619 | |
| | 2018.09-2019.07 | 6MT | F | L/R | MPV FWD D 16 SHJ | | GCO88046 | Outer Joint | | 30 | 26 | 52.5 | 94.5 | 65.5 | M |
| | 2018.09-2019.07 | 6MT | F | R | MPV FWD D 16 SHJ | | GCI21030 | Inner Joint | | 27 | 26 | 35 | 78 | 112.5 | |
| | 2018.09-2019.07 | 6MT/6AT | F | L/R | MPV FWD D 16 SHJ | | GCO17051 | Outer Joint | | 30 | 26 | 53.8 | 94.5 | 65.5 | M |
| | 2018.09-2019.07 | 6MT/6AT | F | L/R | MPV FWD D 16 SHJ | | GCO21049 | Outer Joint | | 30 | 26 | 52.5 | 94 | 65.5 | M |
| 1.6 (110 kw) | 2011.10-2018.05 | 6MT | F | L/R | MPV FWD A 16 XNT;B 16 XNT | | GCO17051 | Outer Joint | | 30 | 26 | 53.8 | 94.5 | 65.5 | M |
| | 2011.10-2018.05 | 6MT | F | L/R | MPV FWD A 16 XNT;B 16 XNT | | GCO21049 | Outer Joint | | 30 | 26 | 52.5 | 94 | 65.5 | M |
| | 2011.10-2018.05 | 6MT | F | L/R | MPV FWD A 16 XNT;B 16 XNT | | GCO88046 | Outer Joint | | 30 | 26 | 52.5 | 94.5 | 65.5 | M |
| 1.6 (125 kw) | 2012.12-2019.03 | 6AT | F | L/R | MPV FWD A 16 XHT;B 16 SHL;D 16 SHL | | GDS82388 | Drive Shaft | | 30 | 27 | 52.5 | 94 | 609 | |
| | 2012.12-2019.03 | 6AT | F | L/R | MPV FWD A 16 XHT;B 16 SHL;D 16 SHL | | GCO17051 | Outer Joint | | 30 | 26 | 53.8 | 94.5 | 65.5 | M |
| | 2012.12-2019.03 | 6AT | F | L/R | MPV FWD A 16 XHT;B 16 SHL;D 16 SHL | | GCO21049 | Outer Joint | | 30 | 26 | 52.5 | 94 | 65.5 | M |
| | 2012.12-2019.03 | 6AT | F | L/R | MPV FWD A 16 XHT;B 16 SHL;D 16 SHL | | GCI86015 | Inner Joint | | 27 | 26 | 35 | 78.5 | 109.5 | |
| | 2012.12-2019.03 | 6MT | F | R | MPV FWD A 16 XHT;B 16 SHL;D 16 SHL | | GDS60027 | Drive Shaft | | 30 | 27 | 52.5 | 94.5 | 619 | |
| | 2012.12-2019.03 | 6MT | F | L/R | MPV FWD A 16 XHT;B 16 SHL;D 16 SHL | | GCO88046 | Outer Joint | | 30 | 26 | 52.5 | 94.5 | 65.5 | M |
| 1.6 (147 kw) | 2013.07-2018.05 | 6MT | F | R | MPV FWD A 16 SHT;B 16 SHT;D 16 SHT | | GDS60027 | Drive Shaft | | 30 | 27 | 52.5 | 94.5 | 619 | |
| | 2013.07-2018.05 | 6MT | F | L/R | MPV FWD A 16 SHT;B 16 SHT;D 16 SHT | | GCO17051 | Outer Joint | | 30 | 26 | 53.8 | 94.5 | 65.5 | M |
| | 2013.07-2018.05 | 6MT | F | L/R | MPV FWD A 16 SHT;B 16 SHT;D 16 SHT | | GCO21049 | Outer Joint | | 30 | 26 | 52.5 | 94 | 65.5 | M |
| | 2013.07-2018.05 | 6MT | F | L/R | MPV FWD A 16 SHT;B 16 SHT;D 16 SHT | | GCO88046 | Outer Joint | | 30 | 26 | 52.5 | 94.5 | 65.5 | M |
| | 2013.07-2018.05 | 6MT | F | R | MPV FWD A 16 SHT;B 16 SHT;D 16 SHT | | GCI21030 | Inner Joint | | 27 | 26 | 35 | 78 | 112.5 | |
| 2.0 (81 kw) | 2011.10-2014.10 | 6MT | F | L | MPV FWD A 20 DTL | Chassis no. to:B1999999 | GDS60027 | Drive Shaft | | 30 | 27 | 52.5 | 94.5 | 619 | |
| | 2011.10-2014.10 | 6MT | F | L | MPV FWD A 20 DTL | Chassis no. from:C1000001 | GDS84292 | Drive Shaft | | 30 | 27 | 52.5 | 94 | 618 | |

| | YEAR | TRANSM. | F/R | L/R | BODY STYLE & DRIVE TYPE & ENGINE | REMARKS | G-AP Ref. | PRODUCT | ABS | Technical Specifications A | B | C | H | L | P |
|---|---|---|---|---|---|---|---|---|---|---|---|---|---|---|---|
| **OPEL** | | | | | | | | | | | | | | | |
| **Zafira Tourer** | | | | | | | | | | | | | | | |
| 2.0 (81 kw) | 2011.10-2014.10 | 6MT | F | L | MPV FWD A 20 DTL | Chassis no. from:C1000001 | GCO21049 | Outer Joint | | 30 | 26 | 52.5 | 94 | 65.5 | M |
| | 2011.10-2014.10 | 6MT | F | L | MPV FWD A 20 DTL | Chassis no. to:B1999999 | GCO88046 | Outer Joint | | 30 | 26 | 52.5 | 94.5 | 65.5 | M |
| | 2011.10-2014.10 | 6MT | F | L | MPV FWD A 20 DTL | | GCI21030 | Inner Joint | | 27 | 26 | 35 | 78 | 112.5 | |
| | 2013.01-2014.10 | 6MT | F | L | Box Body/MPV FWD A 20 DTL | Chassis no. to:B1999999 | GDS60027 | Drive Shaft | | 30 | 27 | 52.5 | 94.5 | 619 | |
| | 2013.01-2014.10 | 6MT | F | L | Box Body/MPV FWD A 20 DTL | Chassis no. from:C1000001 | GDS84292 | Drive Shaft | | 30 | 27 | 52.5 | 94 | 618 | |
| | 2013.01-2014.10 | 6MT | F | L | Box Body/MPV FWD A 20 DTL | Chassis no. from:C1000001 | GCO21049 | Outer Joint | | 30 | 26 | 52.5 | 94 | 65.5 | M |
| | 2013.01-2014.10 | 6MT | F | L | Box Body/MPV FWD A 20 DTL | Chassis no. to:B1999999 | GCO88046 | Outer Joint | | 30 | 26 | 52.5 | 94.5 | 65.5 | M |
| | 2013.01-2014.10 | 6MT | F | L | Box Body/MPV FWD A 20 DTL | | GCI21030 | Inner Joint | | 27 | 26 | 35 | 78 | 112.5 | |
| 2.0 (96 kw) | 2011.10-2018.11 | 6AT | F | L | MPV FWD A 20 DTJ;Z 20 DTJ;Y 20 DTJ;B 20 DTJ;D 20 DTJ | For Engine code:B20DTJ/D20DTJ | GDS21093 | Drive Shaft | | 30 | 27 | 52.5 | 94 | 625 | |
| | 2011.10-2018.11 | 6AT | F | L/R | MPV FWD A 20 DTJ;Z 20 DTJ;Y 20 DTJ;B 20 DTJ;D 20 DTJ | Front axle left,For Engine code:Y20DTJ/Z20DTJ,Front axle right,For Engine code:B20DTJ/D20DTJ | GDS82388 | Drive Shaft | | 30 | 27 | 52.5 | 94 | 609 | |
| | 2011.10-2018.11 | 6AT | F | L/R | MPV FWD A 20 DTJ;Z 20 DTJ;Y 20 DTJ;B 20 DTJ;D 20 DTJ | | GCO17051 | Outer Joint | | 30 | 26 | 53.8 | 94.5 | 65.5 | M |
| | 2011.10-2018.11 | 6AT | F | L/R | MPV FWD A 20 DTJ;Z 20 DTJ;Y 20 DTJ;B 20 DTJ;D 20 DTJ | | GCO21049 | Outer Joint | | 30 | 26 | 52.5 | 94 | 65.5 | M |
| | 2011.10-2018.11 | 6AT | F | L | MPV FWD A 20 DTJ;Z 20 DTJ;Y 20 DTJ;B 20 DTJ;D 20 DTJ | For Engine code:B20DTJ/D20DTJ | GCI21016 | Inner Joint | | 27 | 26 | 35 | 78.5 | 112 | |
| | 2011.10-2018.11 | 6AT | F | L/R | MPV FWD A 20 DTJ;Z 20 DTJ;Y 20 DTJ;B 20 DTJ;D 20 DTJ | Front axle left,For Engine code:Y20DTJ/Z20DTJ,Front axle right,For Engine code:B20DTJ/D20DTJ | GCI86015 | Inner Joint | | 27 | 26 | 35 | 78.5 | 109.5 | |
| | 2011.10-2018.11 | 6MT | F | L | MPV FWD A 20 DTJ;Z 20 DTJ;Y 20 DTJ;B 20 DTJ;D 20 DTJ | For Engine code:A20DTJ/Y20DTJ/Z20DTJ,Chassis no. from:C1000001 | GDS84292 | Drive Shaft | | 30 | 27 | 52.5 | 94 | 618 | |
| | 2011.10-2018.11 | 6MT | F | R | MPV FWD A 20 DTJ;Z 20 DTJ;Y 20 DTJ;B 20 DTJ;D 20 DTJ | For Engine code:B20DTJ/D20DTJ,Chassis no. from:C1000001 | GDS84292 | Drive Shaft | | 30 | 27 | 52.5 | 94 | 618 | |
| | 2011.10-2018.11 | 6MT | F | L/R | MPV FWD A 20 DTJ;Z 20 DTJ;Y 20 DTJ;B 20 DTJ;D 20 DTJ | Chassis no. to:B1999999,For Engine code:A20DTJ/Y20DTJ/Z20DTJ | GDS60027 | Drive Shaft | | 30 | 27 | 52.5 | 94.5 | 619 | |
| | 2011.10-2018.11 | 6MT | F | L/R | MPV FWD A 20 DTJ;Z 20 DTJ;Y 20 DTJ;B 20 DTJ;D 20 DTJ | | GCO88046 | Outer Joint | | 30 | 26 | 52.5 | 94.5 | 65.5 | M |
| | 2012.01-2014.10 | 6MT | F | L | Box Body/MPV FWD A 20 DTJ;Z 20 DTJ;Y 20 DTJ | Chassis no. to:B1999999,For Engine code:A20DTJ/Y20DTJ/Z20DTJ | GDS60027 | Drive Shaft | | 30 | 27 | 52.5 | 94.5 | 619 | |
| | 2012.01-2014.10 | 6MT | F | L | Box Body/MPV FWD A 20 DTJ;Z 20 DTJ;Y 20 DTJ | For Engine code:A20DTJ/Y20DTJ/Z20DTJ,Chassis no. from:C1000001 | GDS84292 | Drive Shaft | | 30 | 27 | 52.5 | 94 | 618 | |
| | 2012.01-2014.10 | 6MT | F | L/R | Box Body/MPV FWD A 20 DTJ;Z 20 DTJ;Y 20 DTJ | | GCO17051 | Outer Joint | | 30 | 26 | 53.8 | 94.5 | 65.5 | M |
| | 2012.01-2014.10 | 6MT | F | L/R | Box Body/MPV FWD A 20 DTJ;Z 20 DTJ;Y 20 DTJ | | GCO21049 | Outer Joint | | 30 | 26 | 52.5 | 94 | 65.5 | M |
| | 2012.01-2014.10 | 6MT | F | L/R | Box Body/MPV FWD A 20 DTJ;Z 20 DTJ;Y 20 DTJ | | GCO88046 | Outer Joint | | 30 | 26 | 52.5 | 94.5 | 65.5 | M |
| | 2012.01-2014.10 | 6MT | F | L/R | Box Body/MPV FWD A 20 DTJ;Z 20 DTJ;Y 20 DTJ | | GCI21030 | Inner Joint | | 27 | 26 | 35 | 78 | 112.5 | |
| 2.0 (121 kw) | 2011.10-2014.10 | 6AT | F | L | MPV FWD A 20 DTH | | GDS82388 | Drive Shaft | | 30 | 27 | 52.5 | 94 | 609 | |
| | 2011.10-2014.10 | 6AT | F | L/R | MPV FWD A 20 DTH | | GCO17051 | Outer Joint | | 30 | 26 | 53.8 | 94.5 | 65.5 | M |
| | 2011.10-2014.10 | 6AT | F | L/R | MPV FWD A 20 DTH | | GCO21049 | Outer Joint | | 30 | 26 | 52.5 | 94 | 65.5 | M |
| | 2011.10-2014.10 | 6AT | F | L | MPV FWD A 20 DTH | | GCI86015 | Inner Joint | | 27 | 26 | 35 | 78.5 | 109.5 | |
| | 2011.10-2014.10 | 6MT | F | L | MPV FWD A 20 DTH | Chassis no. to:B1999999 | GDS60027 | Drive Shaft | | 30 | 27 | 52.5 | 94.5 | 619 | |
| | 2011.10-2014.10 | 6MT | F | L | MPV FWD A 20 DTH | Chassis no. from:C1000001 | GDS84292 | Drive Shaft | | 30 | 27 | 52.5 | 94 | 618 | |
| | 2011.10-2014.10 | 6MT | F | L/R | MPV FWD A 20 DTH | | GCO88046 | Outer Joint | | 30 | 26 | 52.5 | 94.5 | 65.5 | M |
| | 2013.01-2014.10 | 6AT | F | L/R | Box Body/MPV FWD A 20 DTH | | GDS82388 | Drive Shaft | | 30 | 27 | 52.5 | 94 | 609 | |
| | 2013.01-2014.10 | 6AT | F | L/R | Box Body/MPV FWD A 20 DTH | | GCO17051 | Outer Joint | | 30 | 26 | 53.8 | 94.5 | 65.5 | M |
| | 2013.01-2014.10 | 6AT | F | L/R | Box Body/MPV FWD A 20 DTH | | GCO21049 | Outer Joint | | 30 | 26 | 52.5 | 94 | 65.5 | M |
| | 2013.01-2014.10 | 6AT | F | L/R | Box Body/MPV FWD A 20 DTH | | GCI86015 | Inner Joint | | 27 | 26 | 35 | 78.5 | 109.5 | |
| | 2013.01-2014.10 | 6MT | F | L | Box Body/MPV FWD A 20 DTH | Chassis no. to:B1999999 | GDS60027 | Drive Shaft | | 30 | 27 | 52.5 | 94.5 | 619 | |
| | 2013.01-2014.10 | 6MT | F | L | Box Body/MPV FWD A 20 DTH | Chassis no. from:C1000001 | GDS84292 | Drive Shaft | | 30 | 27 | 52.5 | 94 | 618 | |
| | 2013.01-2014.10 | 6MT | F | L/R | Box Body/MPV FWD A 20 DTH | | GCO88046 | Outer Joint | | 30 | 26 | 52.5 | 94.5 | 65.5 | M |
| | 2013.01-2014.10 | 6MT | F | L | Box Body/MPV FWD A 20 DTH | | GCI21030 | Inner Joint | | 27 | 26 | 35 | 78 | 112.5 | |
| 2.0 (125 kw) | 2014.11-2019.03 | 6AT | F | L | MPV FWD B 20 DTH;D 20 DTH | | GDS21093 | Drive Shaft | | 30 | 27 | 52.5 | 94 | 625 | |
| | 2014.11-2019.03 | 6AT | F | R | MPV FWD B 20 DTH;D 20 DTH | | GDS82388 | Drive Shaft | | 30 | 27 | 52.5 | 94 | 609 | |
| | 2014.11-2019.03 | 6AT | F | L/R | MPV FWD B 20 DTH;D 20 DTH | | GCO17051 | Outer Joint | | 30 | 26 | 53.8 | 94.5 | 65.5 | M |
| | 2014.11-2019.03 | 6AT | F | L/R | MPV FWD B 20 DTH;D 20 DTH | | GCO21049 | Outer Joint | | 30 | 26 | 52.5 | 94 | 65.5 | M |
| | 2014.11-2019.03 | 6AT | F | L | MPV FWD B 20 DTH;D 20 DTH | | GCI21016 | Inner Joint | | 27 | 26 | 35 | 78.5 | 112 | |
| | 2014.11-2019.03 | 6AT | F | R | MPV FWD B 20 DTH;D 20 DTH | | GCI86015 | Inner Joint | | 27 | 26 | 35 | 78.5 | 109.5 | |
| | 2014.11-2019.03 | 6MT | F | R | MPV FWD B 20 DTH;D 20 DTH | Chassis no. to:B1999999 | GDS60027 | Drive Shaft | | 30 | 27 | 52.5 | 94.5 | 619 | |
| | 2014.11-2019.03 | 6MT | F | R | MPV FWD B 20 DTH;D 20 DTH | Chassis no. from:C1000001 | GDS84292 | Drive Shaft | | 30 | 27 | 52.5 | 94 | 618 | |
| | 2014.11-2019.03 | 6MT | F | L/R | MPV FWD B 20 DTH;D 20 DTH | | GCO88046 | Outer Joint | | 30 | 26 | 52.5 | 94.5 | 65.5 | M |
| 2.0 (143 kw) | 2013.01-2014.10 | 6MT | F | L | MPV FWD A 20 DTR | Chassis no. to:B1999999 | GDS60027 | Drive Shaft | | 30 | 27 | 52.5 | 94.5 | 619 | |
| | 2013.01-2014.10 | 6MT | F | L | MPV FWD A 20 DTR | Chassis no. from:C1000001 | GDS84292 | Drive Shaft | | 30 | 27 | 52.5 | 94 | 618 | |
| | 2013.01-2014.10 | 6MT | F | L | MPV FWD A 20 DTR | Chassis no. from:C1000001 | GCO21049 | Outer Joint | | 30 | 26 | 52.5 | 94 | 65.5 | M |
| | 2013.01-2014.10 | 6MT | F | L | MPV FWD A 20 DTR | Chassis no. to:B1999999 | GCO88046 | Outer Joint | | 30 | 26 | 52.5 | 94.5 | 65.5 | M |
| | 2013.01-2014.10 | 6MT | F | L | MPV FWD A 20 DTR | | GCI21030 | Inner Joint | | 27 | 26 | 35 | 78 | 112.5 | |
| **Zafira Van** | | | | | | | | | | | | | | | |
| 1.6 (69 kw) | 2005.07-2015.04 | 5MT | F | L/R | Box Body/MPV FWD Z 16 YNG | | GCI21014 | Inner Joint | | 22 | 22 | 35 | 57.5 | 105.5 | |
| | 2005.07-2015.04 | | F | L | Box Body/MPV FWD Z 16 YNG | | GDS44028 | Drive Shaft | | 33 | 22 | 53 | 95 | 590 | |
| | 2005.07-2015.04 | | F | R | Box Body/MPV FWD Z 16 YNG | | GDS44030 | Drive Shaft | | 33 | 22 | 53 | 95 | 952 | |
| | 2005.07-2015.04 | | F | L/R | Box Body/MPV FWD Z 16 YNG | | GCO44003 | Outer Joint | | 33 | 22 | 53 | 95 | 54.5 | M |
| 1.6 (110 kw) | 2009.02-2015.04 | 6MT | F | L | Box Body/MPV FWD Z 16 XNT;A 16 XNT | | GCI44008 | Inner Joint | | 25 | 25 | 34.9 | 57.5 | 113.2 | |
| | 2009.02-2015.04 | | F | L/R | Box Body/MPV FWD Z 16 XNT;A 16 XNT | | GCO44028 | Outer Joint | | 33 | 24 | 53 | 93.5 | 63.5 | M |
| | 2009.02-2015.04 | | F | R | Box Body/MPV FWD Z 16 XNT;A 16 XNT | | GCI44005 | Inner Joint | | 34 | 25 | 35 | | 130.2 | |
| 1.7 (81 kw) | 2008.01-2015.04 | 6MT | F | L | Box Body/MPV FWD A 17 DTJ;Z 17 DTJ | | GDS21051 | Drive Shaft | | 33 | 25 | 52.5 | 94 | 579 | |
| | 2008.01-2015.04 | 6MT | F | R | Box Body/MPV FWD A 17 DTJ;Z 17 DTJ | | GDS44099 | Drive Shaft | | 33 | 34 | 52.5 | 94 | 563 | |
| | 2008.01-2015.04 | MT | F | | Box Body/MPV FWD A 17 DTJ;Z 17 DTJ | | GCO99024 | Outer Joint | | 33 | 26 | 52.5 | 94 | 65.5 | M |
| | 2008.01-2015.04 | MT | F | L | Box Body/MPV FWD A 17 DTJ;Z 17 DTJ | | GCI99186 | Inner Joint | | 25 | 28 | 34.9 | 57.5 | 111 | |

| | YEAR | TRANSM. | F/R | L/R | BODY STYLE & DRIVE TYPE & ENGINE | REMARKS | G-AP Ref. | PRODUCT | ABS | Technical Specifications A | B | C | H | L | P |
|---|---|---|---|---|---|---|---|---|---|---|---|---|---|---|---|
| **OPEL** | | | | | | | | | | | | | | | |
| **Zafira Van** | | | | | | | | | | | | | | | |
| 1.7 (81 kw) | 2008.01-2015.04 | MT | F | R | Box Body/MPV FWD A 17 DTJ;Z 17 DTJ | | GCI44016 | Inner Joint | | 34 | 28 | 37.5 | | 129.2 | |
| | 2008.01-2015.04 | | F | L/R | Box Body/MPV FWD A 17 DTJ;Z 17 DTJ | | GCO44027 | Outer Joint | | 33 | 26 | 52.5 | 94 | 65.5 | M |
| 1.7 (92 kw) | 2008.01-2015.04 | 6MT | F | L | Box Body/MPV FWD A 17 DTR | | GDS21051 | Drive Shaft | | 33 | 25 | 52.5 | 94 | 579 | |
| | 2008.01-2015.04 | 6MT | F | R | Box Body/MPV FWD A 17 DTR | | GDS44099 | Drive Shaft | | 33 | 34 | 52.5 | 94 | 563 | |
| | 2008.01-2015.04 | MT | F | | Box Body/MPV FWD A 17 DTR | | GCO99024 | Outer Joint | | 33 | 26 | 52.5 | 94 | 65.5 | M |
| | 2008.01-2015.04 | MT | F | L | Box Body/MPV FWD A 17 DTR | | GCI99186 | Inner Joint | | 25 | 28 | 34.9 | 57.5 | 111 | |
| | 2008.01-2015.04 | MT | F | R | Box Body/MPV FWD A 17 DTR | | GCI44016 | Inner Joint | | 34 | 28 | 37.5 | | 129.2 | |
| | 2008.01-2015.04 | | F | L/R | Box Body/MPV FWD A 17 DTR | | GCO44027 | Outer Joint | | 33 | 26 | 52.5 | 94 | 65.5 | M |
| 1.8 (103 kw) | 2005.07-2015.04 | SAT/5MT | F | L | Box Body/MPV FWD Z 18 XER;A 18 XER | | GDS21063 | Drive Shaft | | 33 | 22 | 53 | 93.5 | 586 | |
| | 2005.07-2015.04 | SAT/5MT | F | R | Box Body/MPV FWD Z 18 XER;A 18 XER | | GDS21055 | Drive Shaft | | 33 | 22 | 53 | 93.5 | 950 | |
| | 2005.07-2015.04 | | F | L/R | Box Body/MPV FWD Z 18 XER;A 18 XER | | GCO44028 | Outer Joint | | 33 | 24 | 53 | 93.5 | 63.5 | M |
| | 2005.07-2015.04 | | F | L/R | Box Body/MPV FWD Z 18 XER;A 18 XER | | GCI99026 | Inner Joint | | 22 | 25 | 35 | 57 | 111.7 | |
| 1.9 (88 kw) | 2005.07-2015.04 | 6AT | F | L | Box Body/MPV FWD Z 19 DT | Chassis no. from:72024736/7G032261 | GDS21111 | Drive Shaft | | 33 | 27 | 52.5 | 94 | 562 | |
| | 2005.07-2015.04 | 6AT | F | L | Box Body/MPV FWD Z 19 DT | Chassis no. to:72024735/7G032260 | GDS60034 | Drive Shaft | | 33 | 27 | 52.5 | 94 | 564 | |
| | 2005.07-2015.04 | 6AT | F | L | Box Body/MPV FWD Z 19 DT | Chassis no. from:72024736/7G032260 | GCI86015 | Inner Joint | | 27 | 26 | 35 | 78.5 | 109.5 | |
| | 2005.07-2015.04 | AT | F | R | Box Body/MPV FWD Z 19 DT | Chassis no. from:72024736 | GDS21110 | Drive Shaft | | 33 | 27 | 52.5 | 94 | 576 | |
| | 2005.07-2015.04 | AT | F | L | Box Body/MPV FWD Z 19 DT | Chassis no. from:72024736 | GCI21024 | Inner Joint | | 27 | 34 | 35 | 101 | 88 | |
| | 2005.07-2015.04 | AT | F | R | Box Body/MPV FWD Z 19 DT | Chassis no. from:72024736 | GCI21016 | Inner Joint | | 27 | 26 | 35 | 78.5 | 112 | |
| | 2005.07-2015.04 | AT/MT | F | L/R | Box Body/MPV FWD Z 19 DT | | GCO44027 | Outer Joint | | 33 | 26 | 52.5 | 94 | 65.5 | M |
| | 2005.07-2015.04 | MT | F | L | Box Body/MPV FWD Z 19 DT | Chassis no. from:72025242 | GDS21051 | Drive Shaft | | 33 | 25 | 52.5 | 94 | 579 | |
| | 2005.07-2015.04 | MT | F | L | Box Body/MPV FWD Z 19 DT | Chassis no. to:72025241 | GDS21073 | Drive Shaft | | 33 | 25 | 52.5 | 94 | 578 | |
| | 2005.07-2015.04 | MT | F | R | Box Body/MPV FWD Z 19 DT | | GDS21056 | Drive Shaft | | 33 | 34 | 52.5 | 94 | 595 | |
| | 2005.07-2015.04 | MT | F | L | Box Body/MPV FWD Z 19 DT | Chassis no. to:72025241 | GCI21018 | Inner Joint | | 25 | 34 | 35 | 58 | 116 | |
| | 2005.07-2015.04 | MT | F | L | Box Body/MPV FWD Z 19 DT | Chassis no. from:72025242 | GCI99186 | Inner Joint | | 25 | 28 | 34.9 | 57.5 | 111 | |
| | 2005.07-2015.04 | MT | F | R | Box Body/MPV FWD Z 19 DT | | GCI99187 | Inner Joint | | 34 | 34 | 37.5 | | 124 | |
| 1.9 (110 kw) | 2005.07-2015.04 | 6AT | F | L | Box Body/MPV FWD Z 19 DTH | Chassis no. from:72024736/7G031833 | GDS56693 | Drive Shaft | | 30 | 27 | 52.5 | 94.5 | 562 | |
| | 2005.07-2015.04 | 6AT | F | R | Box Body/MPV FWD Z 19 DTH | Chassis no. from:72024736/7G031833 | GDS84029 | Drive Shaft | | 30 | 27 | 53.8 | 94.5 | 575 | |
| | 2005.07-2015.04 | 6AT | F | L/R | Box Body/MPV FWD Z 19 DTH | Chassis no. from:72024736/7G031833 | GCI86015 | Inner Joint | | 27 | 26 | 35 | 78.5 | 109.5 | |
| | 2005.07-2015.04 | 6AT/6MT | F | L/R | Box Body/MPV FWD Z 19 DTH | | GCO17051 | Outer Joint | | 30 | 26 | 53.8 | 94.5 | 65.5 | M |
| | 2005.07-2015.04 | 6MT | F | R | Box Body/MPV FWD Z 19 DTH | Chassis no. to:72024735/7G032584 | GDS21056 | Drive Shaft | | 33 | 34 | 52.5 | 94 | 595 | |
| | 2005.07-2015.04 | 6MT | F | R | Box Body/MPV FWD Z 19 DTH | Chassis no. from:72024736/7G032585 | GDS82084 | Drive Shaft | | 30 | 34 | 53.8 | 94.5 | 598 | |
| | 2005.07-2015.04 | 6MT | F | L | Box Body/MPV FWD Z 19 DTH | Chassis no. to:72024735/7G032584 | GCI21018 | Inner Joint | | 25 | 34 | 35 | 58 | 116 | |
| | 2005.07-2015.04 | 6MT | F | R | Box Body/MPV FWD Z 19 DTH | Chassis no. to:72024735/7G032584 | GCI99187 | Inner Joint | | 34 | 34 | 37.5 | | 124 | |
| | 2005.07-2015.04 | MT | F | L | Box Body/MPV FWD Z 19 DTH | Chassis no. from:72024736 | GDS21035 | Drive Shaft | | 30 | 25 | 53.8 | 94.5 | 581 | |
| | 2005.07-2015.04 | MT | F | L | Box Body/MPV FWD Z 19 DTH | Chassis no. to:72024735 | GDS21071 | Drive Shaft | | 30 | 25 | 53.8 | 94.5 | 576 | |
| | 2005.07-2015.04 | MT | F | R | Box Body/MPV FWD Z 19 DTH | Chassis no. to:72024735 | GDS21062 | Drive Shaft | | 30 | 34 | 53.8 | 94.5 | 595 | |
| 2.0 (147 kw) | 2005.07-2010.12 | 6MT | F | R | Box Body/MPV FWD Z 20 LER | Chassis no. from:72025242 | GCI99187 | Inner Joint | | 34 | 34 | 37.5 | | 124 | |
| | 2005.07-2010.12 | | F | R | Box Body/MPV FWD Z 20 LER | Chassis no. from:72025242 | GDS21056 | Drive Shaft | | 33 | 34 | 52.5 | 94 | 595 | |
| | 2005.07-2010.12 | | F | L/R | Box Body/MPV FWD Z 20 LER | | GCO44027 | Outer Joint | | 33 | 26 | 52.5 | 94 | 65.5 | M |
| 2.2 (110 kw) | 2005.07-2011.12 | MT | F | L | Box Body/MPV FWD Z 22 YH | | GDS21107 | Drive Shaft | | 33 | 25 | 53 | 93.5 | 557 | |
| | 2005.07-2011.12 | MT | F | R | Box Body/MPV FWD Z 22 YH | | GDS44051 | Drive Shaft | | 33 | 34 | 53 | 93.5 | 570 | |
| | 2005.07-2011.12 | MT | F | L | Box Body/MPV FWD Z 22 YH | | GCI44008 | Inner Joint | | 25 | 25 | 34.9 | 57.5 | 113.2 | |
| | 2005.07-2011.12 | MT | F | R | Box Body/MPV FWD Z 22 YH | | GCI44005 | Inner Joint | | 34 | 25 | 35 | | 130.2 | |
| | 2005.07-2011.12 | MT | F | R | Box Body/MPV FWD Z 22 YH | | GCI44011 | Inner Joint | | 34 | 25 | 37.5 | | 130.2 | |
| | 2005.07-2011.12 | | F | L/R | Box Body/MPV FWD Z 22 YH | | GCO44028 | Outer Joint | | 33 | 24 | 53 | 93.5 | 63.5 | M |
| **ZAFIRA-E LIFE** | | | | | | | | | | | | | | | |
| EV (100 kw) | 2020.09- | ET | F | L | Bus FWD ZKX (ZK01) | | GDS57725 | Drive Shaft | | 28 | 37 | 58.5 | 96 | 724 | |
| | 2020.09- | ET | F | R | Bus FWD ZKX (ZK01) | | GDS82316 | Drive Shaft | | 28 | 37 | 58.6 | 93 | 974 | |
| | 2020.09- | ET | F | L/R | Bus FWD ZKX (ZK01) | | GCO10098 | Outer Joint | | 28 | 39 | 58.6 | 93 | 63 | I |
| | 2020.09- | ET | F | R | Bus FWD ZKX (ZK01) | | GCI81759 | Inner Joint | | 37 | 34 | 31.9 | 302 | 88 | |
| **Zafira/Zafira Family** | | | | | | | | | | | | | | | |
| 1.7 (92 kw) | 2007.03-2015.04 | 6MT | F | L | MPV FWD Z 17 DTR, A 17 DTR | | GDS21051 | Drive Shaft | | 33 | 25 | 52.5 | 94 | 579 | |
| | 2007.03-2015.04 | 6MT | F | R | MPV FWD Z 17 DTR, A 17 DTR | | GDS44099 | Drive Shaft | | 33 | 34 | 52.5 | 94 | 563 | |
| | 2007.03-2015.04 | 6MT | F | L | MPV FWD Z 17 DTR, A 17 DTR | | GCI99186 | Inner Joint | | 25 | 28 | 34.9 | 57.5 | 111 | |
| | 2007.03-2015.04 | 6MT | F | R | MPV FWD Z 17 DTR, A 17 DTR | | GCI44016 | Inner Joint | | 34 | 28 | 37.5 | | 129.2 | |
| | 2007.03-2015.04 | MT | F | L/R | MPV FWD Z 17 DTR, A 17 DTR | | GCO44027 | Outer Joint | | 33 | 26 | 52.5 | 94 | 65.5 | M |
| | 2007.03-2015.04 | MT | F | | MPV FWD Z 17 DTR, A 17 DTR | | GCO99024 | Outer Joint | | 33 | 26 | 52.5 | 94 | 65.5 | M |
| 1.8 (103 kw) | 2005.07-2015.04 | 5AT/5MT | F | L | MPV FWD Z 18 XER, A 18 XER | | GDS21063 | Drive Shaft | | 33 | 22 | 53 | 93.5 | 586 | |
| | 2005.07-2015.04 | 5AT/5MT | F | R | MPV FWD Z 18 XER, A 18 XER | | GDS21055 | Drive Shaft | | 33 | 22 | 53 | 93.5 | 950 | |
| | 2005.07-2015.04 | MT | F | L/R | MPV FWD Z 18 XER, A 18 XER | | GCO44028 | Outer Joint | | 33 | 24 | 53 | 93.5 | 63.5 | M |
| | 2005.07-2015.04 | MT | F | L/R | MPV FWD Z 18 XER, A 18 XER | | GCI99026 | Inner Joint | | 22 | 25 | 35 | 57 | 111.7 | |

| | YEAR | TRANSM. | F/R | L/R | BODY STYLE & DRIVE TYPE & ENGINE | REMARKS | G-AP Ref. | PRODUCT | ABS | Technical Specifications A | B | C | H | L | P |
|---|---|---|---|---|---|---|---|---|---|---|---|---|---|---|---|
| **ORA** | | | | | | | | | | | | | | | |
| **ES11** | | | | | | | | | | | | | | | |
| EV (105 kw) | 2020.11- | ET | F | L | Hatchback FWD TZ153XS000 | | GDS56975 | Drive Shaft | | 28 | 27 | 55 | 89.5 | 712 | |
| | 2020.11- | ET | F | R | Hatchback FWD TZ153XS000 | | GDS56976 | Drive Shaft | | 28 | 27 | 55 | 89.5 | 897 | |
| | 2020.11- | ET | F | L/R | Hatchback FWD TZ153XS000 | | GCO83493 | Outer Joint | | 28 | 25 | 55 | 89.5 | 63 | M |
| | 2020.11- | ET | F | L | Hatchback FWD TZ153XS000 | | GCI83582 | Inner Joint | | 27 | 25 | 35 | 59 | 113 | |
| | 2020.11- | ET | F | R | Hatchback FWD TZ153XS000 | | GCI83583 | Inner Joint | | 27 | 25 | 35 | 249 | 108 | |
| EV (135 kw) | 2023.08- | ET | F | L | Hatchback FWD TZ180XS006 | | GDS56975 | Drive Shaft | | 28 | 27 | 55 | 89.5 | 712 | |
| | 2023.08- | ET | F | R | Hatchback FWD TZ180XS006 | | GDS56976 | Drive Shaft | | 28 | 27 | 55 | 89.5 | 897 | |
| | 2023.08- | ET | F | L/R | Hatchback FWD TZ180XS006 | | GCO83493 | Outer Joint | | 28 | 25 | 55 | 89.5 | 63 | M |
| | 2023.08- | ET | F | L | Hatchback FWD TZ180XS006 | | GCI83582 | Inner Joint | | 27 | 25 | 35 | 59 | 113 | |
| | 2023.08- | ET | F | R | Hatchback FWD TZ180XS006 | | GCI83583 | Inner Joint | | 27 | 25 | 35 | 249 | 108 | |
| **ES11 GT** | | | | | | | | | | | | | | | |
| EV (126 kw) | 2022.09- | ET | F | L | Hatchback FWD TZ153XS001/TZ180XS009 | Bellows Material:Neoprene | GDS56787 | Drive Shaft | | 28 | 27 | 55 | 90 | 706 | |
| | 2022.09- | ET | F | L | Hatchback FWD TZ153XS001/TZ180XS009 | Enginecode:TZ180XS009,Model year from:2024 | GDS56975 | Drive Shaft | | 28 | 27 | 55 | 89.5 | 712 | |
| | 2022.09- | ET | F | R | Hatchback FWD TZ153XS001/TZ180XS009 | Bellows Material:Neoprene | GDS56788 | Drive Shaft | | 28 | 27 | 55 | 90 | 894 | |
| | 2022.09- | ET | F | R | Hatchback FWD TZ153XS001/TZ180XS009 | Enginecode:TZ180XS009,Model year from:2024 | GDS56976 | Drive Shaft | | 28 | 27 | 55 | 89.5 | 897 | |
| | 2022.09- | ET | F | L/R | Hatchback FWD TZ153XS001/TZ180XS009 | | GCO83434 | Outer Joint | | 28 | 27 | 55 | 90 | 65 | M |
| | 2022.09- | ET | F | L/R | Hatchback FWD TZ153XS001/TZ180XS009 | Enginecode:TZ180XS009,Model year from:2024 | GCO83493 | Outer Joint | | 28 | 25 | 55 | 89.5 | 63 | M |
| | 2022.09- | ET | F | L | Hatchback FWD TZ153XS001/TZ180XS009 | | GCI83491 | Inner Joint | | 27 | 26 | 35 | 59 | 115 | |
| | 2022.09- | ET | F | L | Hatchback FWD TZ153XS001/TZ180XS009 | Enginecode:TZ180XS009,Model year from:2024 | GCI83582 | Inner Joint | | 27 | 25 | 35 | 59 | 113 | |
| | 2022.09- | ET | F | R | Hatchback FWD TZ153XS001/TZ180XS009 | | GCI83492 | Inner Joint | | 27 | 26 | 35 | 249 | 112 | |
| | 2022.09- | ET | F | R | Hatchback FWD TZ153XS001/TZ180XS009 | Enginecode:TZ180XS009,Model year from:2024 | GCI83583 | Inner Joint | | 27 | 25 | 35 | 249 | 108 | |
| **OSHAN** | | | | | | | | | | | | | | | |
| **X7 Plus** | | | | | | | | | | | | | | | |
| 1.5 (138 kw) | 2021.10- | 7DCT | F | L | SUV FWD JL473ZQ7 | | GDS57968 | Drive Shaft | 46T | 28 | 34 | 60 | 93 | 668 | |
| | 2021.10- | 7DCT | F | R | SUV FWD JL473ZQ7 | | GDS57967 | Drive Shaft | 46T | 28 | 34 | 60 | 93 | 982 | |
| | 2021.10- | 7DCT | F | L/R | SUV FWD JL473ZQ7 | | GCO83813 | Outer Joint | 46T | 28 | 32 | 60 | 93 | 63.5 | I |
| | 2021.10- | 7DCT | F | L | SUV FWD JL473ZQ7 | | GCI83958 | Inner Joint | | 34 | 24 | 35 | 64 | 112 | |
| | 2021.10- | 7DCT | F | R | SUV FWD JL473ZQ7 | | GCI83967 | Inner Joint | | 34 | 24 | 28.5 | 415 | 92 | |
| **PERODUA** | | | | | | | | | | | | | | | |
| **Kelisa** | | | | | | | | | | | | | | | |
| 1.0 (41 kw) | 2001.08-2007.06 | | F | L | Hatchback FWD EJDE | | GDS14035 | Drive Shaft | | 24 | 23 | 47 | 84.5 | 581 | |
| | 2001.08-2007.06 | | F | R | Hatchback FWD EJDE | | GDS14036 | Drive Shaft | | 24 | 23 | 47 | 84.5 | 794 | |
| | 2001.08-2007.06 | | F | | Hatchback FWD EJDE | | GCO14028 | Outer Joint | | 24 | 19 | 47 | 84.5 | 47.5 | I |
| **PEUGEOT** | | | | | | | | | | | | | | | |
| **1007** | | | | | | | | | | | | | | | |
| 1.4 (50 kw) | 2005.04- | 5MT | F | L | Hatchback FWD 8HX (DV4TD);8HZ (DV4TD) | Date from:2006.04,From ORG/OPR:10745;Inner teeth of wheel side:21 | GDS10001 | Drive Shaft | | 21 | 22 | 48 | 86.5 | 636 | |
| | 2005.04- | 5MT | F | L | Hatchback FWD 8HX (DV4TD);8HZ (DV4TD) | Date to:2006.03,To ORG/OPR:10744;Inner teeth of wheel side:21 | GDS10125 | Drive Shaft | | 21 | 22 | 48 | 86.5 | 649 | |
| | 2005.04- | 5MT | F | R | Hatchback FWD 8HX (DV4TD);8HZ (DV4TD) | | GDS10002 | Drive Shaft | | 21 | 22 | 48 | 86.5 | 852 | |
| | 2005.04- | 5MT | F | L | Hatchback FWD 8HX (DV4TD);8HZ (DV4TD) | Trans. code:77 | GCO45057 | Outer Joint | | 21 | 22 | 48 | 86.5 | 54 | I |
| | 2005.04- | 5MT | F | L/R | Hatchback FWD 8HX (DV4TD);8HZ (DV4TD) | Date to:2006.03,To ORG/OPR:10744 | GCO10069 | Outer Joint | | 21 | 21 | 48 | 86.5 | 54 | I |
| | 2005.04- | | F | | Hatchback FWD 8HX (DV4TD);8HZ (DV4TD) | | GCO10077 | Outer Joint | | 21 | 28 | 49 | 86 | 56.5 | O |
| | 2005.04- | | F | L | Hatchback FWD 8HX (DV4TD);8HZ (DV4TD) | Transm.code:77 | GCI17022 | Inner Joint | | 31 | 29 | 44.95 | 77 | 109.5 | |
| 1.4 (54 kw) | 2005.04- | 5AT/5MT | F | L | Hatchback FWD KFV (TU3JP);KFV (TU3A) | Inner teeth of wheel side:21 | GDS10125 | Drive Shaft | | 21 | 22 | 48 | 86.5 | 649 | |
| | 2005.04- | 5AT/5MT | F | R | Hatchback FWD KFV (TU3JP);KFV (TU3A) | | GDS10124 | Drive Shaft | | 21 | 22 | 48 | 86.5 | 840 | |
| | 2005.04- | 5AT/5MT | F | L | Hatchback FWD KFV (TU3JP);KFV (TU3A) | | GCI10068 | Inner Joint | | 22 | 21 | 40 | 65 | 87.5 | |
| | 2005.04- | MT | F | L/R | Hatchback FWD KFV (TU3JP);KFV (TU3A) | | GCO45056 | Outer Joint | | 21 | 27 | 49 | 86 | 53 | O |
| 1.4 (65 kw) | 2005.10- | 5MT | F | L/R | Hatchback FWD KFU (ET3J4) | | GCO45057 | Outer Joint | | 21 | 22 | 48 | 86.5 | 54 | I |
| | 2005.10- | 5MT | F | L | Hatchback FWD KFU (ET3J4) | Date to:2007.02,To ORG/OPR:11080 | GCI10098 | Inner Joint | | 22 | 21 | 40 | 60 | 88 | |
| | 2005.10- | MT | F | L | Hatchback FWD KFU (ET3J4) | Inner teeth of wheel side:21 | GDS10001 | Drive Shaft | | 21 | 22 | 48 | 86.5 | 636 | |
| | 2005.10- | MT | F | R | Hatchback FWD KFU (ET3J4) | | GDS10242 | Drive Shaft | | 21 | 22 | 48 | 86.5 | 844 | |
| | 2005.10- | MT | F | L/R | Hatchback FWD KFU (ET3J4) | | GCO10077 | Outer Joint | | 21 | 28 | 49 | 86 | 56.5 | O |
| 1.6 (80 kw) | 2005.04- | 5MT/SAT | F | L | Hatchback FWD NFU (TU5JP4) | Date to:2007.02,To ORG/OPR:11080 | GCI10098 | Inner Joint | | 22 | 21 | 40 | 60 | 88 | |
| | 2005.04- | MT | F | L | Hatchback FWD NFU (TU5JP4) | Inner teeth of wheel side:21 | GDS10001 | Drive Shaft | | 21 | 22 | 48 | 86.5 | 636 | |
| | 2005.04- | MT | F | R | Hatchback FWD NFU (TU5JP4) | | GDS10242 | Drive Shaft | | 21 | 22 | 48 | 86.5 | 844 | |
| | 2005.04- | MT | F | L/R | Hatchback FWD NFU (TU5JP4) | | GCO10077 | Outer Joint | | 21 | 28 | 49 | 86 | 56.5 | O |
| | 2005.04- | SAT/5MT | F | L/R | Hatchback FWD NFU (TU5JP4) | | GCO45057 | Outer Joint | | 21 | 22 | 48 | 86.5 | 54 | I |
| | 2007.06- | 5MT | F | L | Hatchback FWD 9HZ (DV6TED4) | | GDS10364 | Drive Shaft | | 21 | 24 | 50 | 85 | 631 | |
| | 2007.06- | 5MT | F | R | Hatchback FWD 9HZ (DV6TED4) | | GDS45103 | Drive Shaft | | 21 | 24 | 48 | 86.5 | 854 | |
| | 2007.06- | 5MT | F | L/R | Hatchback FWD 9HZ (DV6TED4) | | GCO10130 | Outer Joint | | 21 | 34 | 48.3 | 86.5 | 55.5 | I |
| | 2007.06- | MT | F | L | Hatchback FWD 9HZ (DV6TED4) | Date to:2010.12 | GCO99301 | Outer Joint | | 21 | 22 | 50 | 85 | 53 | I |
| | 2007.06- | MT | F | L | Hatchback FWD 9HZ (DV6TED4) | | GCI10080 | Inner Joint | | 24 | 34 | 40 | 69 | 89.5 | |
| | 2007.06- | MT | F | L | Hatchback FWD 9HZ (DV6TED4) | Date to:2010.12 | GCI10092 | Inner Joint | | 24 | 22 | 39.95 | 69 | 86 | |
| | 2007.06- | MT | F | R | Hatchback FWD 9HZ (DV6TED4) | | GCI10082 | Inner Joint | | 24 | 34 | 29.8 | 291 | 88 | |

| | YEAR | TRANSM. | F/R | L/R | BODY STYLE & DRIVE TYPE & ENGINE | REMARKS | G-AP Ref. | PRODUCT | ABS | Technical Specifications A | B | C | H | L | P |
|---|---|---|---|---|---|---|---|---|---|---|---|---|---|---|---|
| **PEUGEOT** | | | | | | | | | | | | | | | |
| **106** | | | | | | | | | | | | | | | |
| 1.0 (33 kw) | 1991.09-1996.04 | 4MT/5MT | F | L | Hatchback FWD TU9 | | GDS10009 | Drive Shaft | | 21 | 22 | 50 | 81.5 | 618 | |
| | 1991.09-1996.04 | 4MT/5MT | F | R | Hatchback FWD TU9 | | GDS10008 | Drive Shaft | | 21 | 22 | 50 | 81.5 | 800 | |
| | 1991.09-1996.04 | MT | F | L | Hatchback FWD TU9 | Number of Holes:4 | GDS10038 | Drive Shaft | 48T | 21 | 22 | 58.5 | 76 | 614 | |
| | 1991.09-1996.04 | MT | F | L | Hatchback FWD TU9 | Inner teeth of wheel side:20,Inner teeth of tranm.side:22 | GDS10088 | Drive Shaft | | 21 | 22 | 56.4 | 76 | 613 | |
| | 1991.09-1996.04 | MT | F | L | Hatchback FWD TU9 | Inner teeth of wheel side:22,Inner teeth of tranm.side:22 | GDS10164 | Drive Shaft | | 21 | 22 | 58.5 | 76 | 614 | |
| | 1991.09-1996.04 | MT | F | R | Hatchback FWD TU9 | Rim Hole Number:4 | GDS10089 | Drive Shaft | | 21 | 22 | 56.4 | 76 | 790 | |
| | 1991.09-1996.04 | MT | F | L | Hatchback FWD TU9 | | GCO10034 | Outer Joint | | 21 | 20 | 50 | 81.5 | 54 | O |
| | 1996.04-1999.10 | MT | F | L | Hatchback FWD TU9M | | GDS45071 | Drive Shaft | | 21 | 22 | 48 | 86.5 | 622 | |
| | 1996.04-1999.10 | MT | F | L | Hatchback FWD TU9M | | GDS99006 | Drive Shaft | 48T | 21 | 22 | 58.5 | 86 | 624 | |
| | 1996.04-1999.10 | MT | F | R | Hatchback FWD TU9M | | GDS10003 | Drive Shaft | | 21 | 22 | 49 | 81 | 798 | |
| | 1996.04-1999.10 | MT | F | R | Hatchback FWD TU9M | | GDS45072 | Drive Shaft | | 21 | 22 | 48 | 86.5 | 798.5 | |
| | 1996.04-1999.10 | MT | F | R | Hatchback FWD TU9M | | GDS99010 | Drive Shaft | 48T | 21 | 22 | 58.5 | 86 | 807 | |
| | 1996.04-1999.10 | | F | L | Hatchback FWD TU9M | | GDS10009 | Drive Shaft | | 21 | 22 | 50 | 81.5 | 618 | |
| | 1996.04-1999.10 | | F | L | Hatchback FWD TU9M | Date To:1999.01;To ORG/OPR:08094 | GDS10088 | Drive Shaft | | 21 | 22 | 56.4 | 76 | 613 | |
| | 1996.04-1999.10 | | F | L | Hatchback FWD TU9M | Date From:1999.02;From ORG/OPR:08095 | GDS10161 | Drive Shaft | | 21 | 22 | 58.5 | 86 | 624 | |
| | 1996.04-1999.10 | | F | L | Hatchback FWD TU9M | Date To:1999.01;To ORG/OPR:08094 | GDS10164 | Drive Shaft | | 21 | 22 | 58.5 | 76 | 614 | |
| | 1996.04-1999.10 | | F | R | Hatchback FWD TU9M | | GDS10008 | Drive Shaft | | 21 | 22 | 50 | 81.5 | 800 | |
| | 1996.04-1999.10 | | F | R | Hatchback FWD TU9M | Date From:1999.02;From ORG/OPR:08095 | GDS10156 | Drive Shaft | | 21 | 22 | 58.5 | 86 | 807 | |
| | 1996.04-1999.10 | | F | L/R | Hatchback FWD TU9M | | GCO10034 | Outer Joint | | 21 | 20 | 50 | 81.5 | 54 | O |
| | 1996.04-2001.03 | 5MT | F | L | Hatchback Van FWD TU9M | | GDS10161 | Drive Shaft | | 21 | 22 | 58.5 | 86 | 624 | |
| | 1996.04-2001.03 | 5MT | F | R | Hatchback Van FWD TU9M | Date to:1999.01,To ORG/OPR:08094 | GDS10089 | Drive Shaft | | 21 | 22 | 56.4 | 76 | 790 | |
| | 1996.04-2001.03 | | F | L | Hatchback Van FWD TU9M | Date To:1999.01;To ORG/OPR:08094 | GDS10088 | Drive Shaft | | 21 | 22 | 56.4 | 76 | 613 | |
| | 1996.04-2001.03 | | F | L | Hatchback Van FWD TU9M | Date To:1999.01;To ORG/OPR:08094 | GDS10164 | Drive Shaft | | 21 | 22 | 58.5 | 76 | 614 | |
| | 1996.04-2001.03 | | F | R | Hatchback Van FWD TU9M | Date from:1999.02,From ORG/OPR:08095 | GDS10156 | Drive Shaft | | 21 | 22 | 58.5 | 86 | 807 | |
| 1.0 (37 kw) | 1991.08-1996.03 | 4MT/5MT | F | L | Hatchback FWD TU9M | | GDS10009 | Drive Shaft | | 21 | 22 | 50 | 81.5 | 618 | |
| | 1991.08-1996.03 | 4MT/5MT | F | R | Hatchback FWD TU9M | Inner teeth of wheel side:20 | GDS10008 | Drive Shaft | | 21 | 22 | 50 | 81.5 | 800 | |
| | 1991.08-1996.03 | MT | F | L | Hatchback FWD TU9M | | GCO10034 | Outer Joint | | 21 | 20 | 50 | 81.5 | 54 | O |
| | 1996.04-2001.03 | MT | F | L | Hatchback FWD TU9M | Holes:3 | GDS10009 | Drive Shaft | | 21 | 22 | 50 | 81.5 | 618 | |
| | 1996.04-2001.03 | MT | F | L | Hatchback FWD TU9M | Date To:1999.12;Number of Holes:4 | GDS10038 | Drive Shaft | 48T | 21 | 22 | 58.5 | 76 | 614 | |
| | 1996.04-2001.03 | MT | F | L | Hatchback FWD TU9M | Date to:1999.01,To ORG/OPR:08094 | GDS10088 | Drive Shaft | | 21 | 22 | 56.4 | 76 | 613 | |
| | 1996.04-2001.03 | MT | F | L | Hatchback FWD TU9M | | GDS10161 | Drive Shaft | | 21 | 22 | 58.5 | 86 | 624 | |
| | 1996.04-2001.03 | MT | F | L | Hatchback FWD TU9M | Date to:1999.01,To ORG/OPR:08094 | GDS10164 | Drive Shaft | | 21 | 22 | 58.5 | 76 | 614 | |
| | 1996.04-2001.03 | MT | F | L | Hatchback FWD TU9M | | GDS45071 | Drive Shaft | | 21 | 22 | 48 | 86.5 | 622 | |
| | 1996.04-2001.03 | MT | F | L | Hatchback FWD TU9M | Date from:1999.01 | GDS99006 | Drive Shaft | 48T | 21 | 22 | 58.5 | 86 | 624 | |
| | 1996.04-2001.03 | MT | F | R | Hatchback FWD TU9M | Holes:3,Inner teeth of wheel side:22;Groove Type:Outer | GDS10003 | Drive Shaft | | 21 | 22 | 49 | 81 | 798 | |
| | 1996.04-2001.03 | MT | F | R | Hatchback FWD TU9M | Holes:3,Inner teeth of wheel side:20 | GDS10008 | Drive Shaft | | 21 | 22 | 50 | 81.5 | 800 | |
| | 1996.04-2001.03 | MT | F | R | Hatchback FWD TU9M | Date to:1999.01,To ORG/OPR:08094 | GDS10089 | Drive Shaft | | 21 | 22 | 56.4 | 76 | 790 | |
| | 1996.04-2001.03 | MT | F | R | Hatchback FWD TU9M | Date from:1999.02,ORG/OPR:08095 | GDS10156 | Drive Shaft | | 21 | 22 | 58.5 | 86 | 807 | |
| | 1996.04-2001.03 | MT | F | R | Hatchback FWD TU9M | Groove Type:Inner | GDS45072 | Drive Shaft | | 21 | 22 | 48 | 86.5 | 798.5 | |
| | 1996.04-2001.03 | MT | F | R | Hatchback FWD TU9M | Date from:1999.01 | GDS99010 | Drive Shaft | 48T | 21 | 22 | 58.5 | 86 | 807 | |
| | 1996.04-2001.03 | MT | F | L/R | Hatchback FWD TU9M | Holes:3 | GCO10034 | Outer Joint | | 21 | 20 | 50 | 81.5 | 54 | O |
| 1.1 (40 kw) | 1997.01-2001.03 | 5MT | F | R | Hatchback FWD TU1M+ | Date to:1999.01,To ORG/OPR:08094 | GDS10089 | Drive Shaft | | 21 | 22 | 56.4 | 76 | 790 | |
| | 1997.01-2001.03 | MT | F | L | Hatchback FWD TU1M+ | | GDS45071 | Drive Shaft | | 21 | 22 | 48 | 86.5 | 622 | |
| | 1997.01-2001.03 | MT | F | L | Hatchback FWD TU1M+ | Date from:1999.01 | GDS99006 | Drive Shaft | 48T | 21 | 22 | 58.5 | 86 | 624 | |
| | 1997.01-2001.03 | MT | F | R | Hatchback FWD TU1M+ | | GDS10003 | Drive Shaft | | 21 | 22 | 49 | 81 | 798 | |
| | 1997.01-2001.03 | MT | F | R | Hatchback FWD TU1M+ | Date to:1999.12;Number of Holes:3 | GDS10008 | Drive Shaft | | 21 | 22 | 50 | 81.5 | 800 | |
| | 1997.01-2001.03 | MT | F | R | Hatchback FWD TU1M+ | | GDS45072 | Drive Shaft | | 21 | 22 | 48 | 86.5 | 798.5 | |
| | 1997.01-2001.03 | MT | F | R | Hatchback FWD TU1M+ | Date from:1999.01 | GDS99010 | Drive Shaft | 48T | 21 | 22 | 58.5 | 86 | 807 | |
| | 1997.01-2001.03 | | F | L | Hatchback FWD TU1M+ | | GDS10009 | Drive Shaft | | 21 | 22 | 50 | 81.5 | 618 | |
| | 1997.01-2001.03 | | F | L | Hatchback FWD TU1M+ | Date To:1999.01;Chassis no. to:8094 | GDS10038 | Drive Shaft | 48T | 21 | 22 | 58.5 | 76 | 614 | |
| | 1997.01-2001.03 | | F | L | Hatchback FWD TU1M+ | Date To:1999.01;To ORG/OPR:08094 | GDS10088 | Drive Shaft | | 21 | 22 | 56.4 | 76 | 613 | |
| | 1997.01-2001.03 | | F | L | Hatchback FWD TU1M+ | Date From:1999.02;From ORG/OPR:08095 | GDS10161 | Drive Shaft | | 21 | 22 | 58.5 | 86 | 624 | |
| | 1997.01-2001.03 | | F | L | Hatchback FWD TU1M+ | Date To:1999.01;To ORG/OPR:08094 | GDS10164 | Drive Shaft | | 21 | 22 | 58.5 | 76 | 614 | |
| | 1997.01-2001.03 | | F | R | Hatchback FWD TU1M+ | Date To:1999.01;Chassis no. to:8094 | GDS10042 | Drive Shaft | 48T | 21 | 22 | 56.4 | 76 | 798 | |
| | 1997.01-2001.03 | | F | R | Hatchback FWD TU1M+ | Date from:1999.02,From ORG/OPR:08095 | GDS10156 | Drive Shaft | | 21 | 22 | 58.5 | 86 | 807 | |
| | 1997.01-2001.03 | | F | L | Hatchback FWD TU1M+ | | GCO10034 | Outer Joint | | 21 | 20 | 50 | 81.5 | 54 | O |
| 1.1 (44 kw) | 1991.08-1996.03 | 4MT/5MT | F | L | Hatchback FWD TU1/TU1M | Inner teeth of wheel side:20,Inner teeth of tranm.side:19 | GDS10009 | Drive Shaft | | 21 | 22 | 50 | 81.5 | 618 | |
| | 1991.08-1996.03 | 4MT/5MT | F | L | Hatchback FWD TU1/TU1M | Rim:4-Hole,Inner teeth of wheel side:20,Inner teeth of tranm.side:22 | GDS10088 | Drive Shaft | | 21 | 22 | 56.4 | 76 | 613 | |
| | 1991.08-1996.03 | 4MT/5MT | F | L | Hatchback FWD TU1/TU1M | Inner teeth of wheel side:22,Inner teeth of tranm.side:22 | GDS10164 | Drive Shaft | | 21 | 22 | 58.5 | 76 | 614 | |
| | 1991.08-1996.03 | 4MT/5MT | F | R | Hatchback FWD TU1/TU1M | Inner teeth of tranm.side:19 | GDS10008 | Drive Shaft | | 21 | 22 | 50 | 81.5 | 800 | |
| | 1991.08-1996.03 | 4MT/5MT | F | R | Hatchback FWD TU1/TU1M | Inner teeth of tranm.side:22 | GDS10089 | Drive Shaft | | 21 | 22 | 56.4 | 76 | 790 | |
| | 1991.08-1996.03 | MT | F | L | Hatchback FWD TU1/TU1M | | GCO10034 | Outer Joint | | 21 | 20 | 50 | 81.5 | 54 | O |
| | 1996.04-2001.03 | 5MT | F | L | Hatchback FWD TU1M+ | | GDS10161 | Drive Shaft | | 21 | 22 | 58.5 | 86 | 624 | |
| | 1996.04-2001.03 | 5MT | F | R | Hatchback FWD TU1M+ | | GDS10156 | Drive Shaft | | 21 | 22 | 58.5 | 86 | 807 | |
| | 1996.04-2001.03 | | F | L | Hatchback FWD TU1M+ | | GDS10009 | Drive Shaft | | 21 | 22 | 50 | 81.5 | 618 | |

| | YEAR | TRANSM. | F/R | L/R | BODY STYLE & DRIVE TYPE & ENGINE | REMARKS | G-AP Ref. | PRODUCT | ABS | Technical Specifications | | | | | |
|---|---|---|---|---|---|---|---|---|---|---|---|---|---|---|---|
| | | | | | | | | | | A | B | C | H | L | P |
| **PEUGEOT** | | | | | | | | | | | | | | | |
| **106** | | | | | | | | | | | | | | | |
| 1.1 (44 kw) | 1996.04-2001.03 | | F | L | Hatchback FWD TU1M+ | Date To:1999.01;To ORG/OPR:08094 | GDS10088 | Drive Shaft | | 21 | 22 | 56.4 | 76 | 613 | |
| | 1996.04-2001.03 | | F | L | Hatchback FWD TU1M+ | Date To:1999.01;To ORG/OPR:08094 | GDS10164 | Drive Shaft | | 21 | 22 | 58.5 | 76 | 614 | |
| | 1996.04-2001.03 | | F | R | Hatchback FWD TU1M+ | | GDS10008 | Drive Shaft | | 21 | 22 | 50 | 81.5 | 800 | |
| | 1996.04-2001.03 | | F | R | Hatchback FWD TU1M+ | Date To:1999.01;To ORG/OPR:08094 | GDS10089 | Drive Shaft | | 21 | 22 | 56.4 | 76 | 790 | |
| | 1996.04-2001.03 | | F | L/R | Hatchback FWD TU1M+ | | GCO10034 | Outer Joint | | 21 | 20 | 50 | 81.5 | 54 | O |
| | 1996.05-2004.07 | 5MT | F | L | Hatchback FWD TU1JP/TU1M+ | Groove Type:Outer | GDS10009 | Drive Shaft | | 21 | 22 | 50 | 81.5 | 618 | |
| | 1996.05-2004.07 | 5MT | F | L | Hatchback FWD TU1JP/TU1M+ | Date From:1999.02;From ORG/OPR:08095;Groove Type:Middle | GDS10161 | Drive Shaft | | 21 | 22 | 58.5 | 86 | 624 | |
| | 1996.05-2004.07 | 5MT | F | L | Hatchback FWD TU1JP/TU1M+ | Date To:1999.01;To ORG/OPR:08094;Groove Type:Inner | GDS10164 | Drive Shaft | | 21 | 22 | 58.5 | 76 | 614 | |
| | 1996.05-2004.07 | MT | F | L | Hatchback FWD TU1JP/TU1M+ | Groove Type:Inner | GDS45071 | Drive Shaft | | 21 | 22 | 48 | 86.5 | 622 | |
| | 1996.05-2004.07 | MT | F | L | Hatchback FWD TU1JP/TU1M+ | | GDS99006 | Drive Shaft | 48T | 21 | 22 | 58.5 | 86 | 624 | |
| | 1996.05-2004.07 | MT | F | R | Hatchback FWD TU1JP/TU1M+ | Groove Type:Outer | GDS10003 | Drive Shaft | | 21 | 22 | 49 | 81 | 798 | |
| | 1996.05-2004.07 | MT | F | R | Hatchback FWD TU1JP/TU1M+ | Date to:1999.12;Number of Holes:3 | GDS10008 | Drive Shaft | | 21 | 22 | 50 | 81.5 | 800 | |
| | 1996.05-2004.07 | MT | F | R | Hatchback FWD TU1JP/TU1M+ | Groove Type:Outer | GDS10089 | Drive Shaft | | 21 | 22 | 56.4 | 76 | 790 | |
| | 1996.05-2004.07 | MT | F | R | Hatchback FWD TU1JP/TU1M+ | Date From:1999.02;From ORG/OPR:08095;Groove Type:Middle | GDS10156 | Drive Shaft | | 21 | 22 | 58.5 | 86 | 807 | |
| | 1996.05-2004.07 | MT | F | R | Hatchback FWD TU1JP/TU1M+ | Groove Type:Inner | GDS45072 | Drive Shaft | | 21 | 22 | 48 | 86.5 | 798.5 | |
| | 1996.05-2004.07 | MT | F | R | Hatchback FWD TU1JP/TU1M+ | | GDS99010 | Drive Shaft | 48T | 21 | 22 | 58.5 | 86 | 807 | |
| | 1996.05-2004.07 | | F | L | Hatchback FWD TU1JP/TU1M+ | Date To:1999.01;To ORG/OPR:08094;Groove Type:Outer | GDS10088 | Drive Shaft | | 21 | 22 | 56.4 | 76 | 613 | |
| | 1996.05-2004.07 | | F | L | Hatchback FWD TU1JP/TU1M+ | | GCO10034 | Outer Joint | | 21 | 20 | 50 | 81.5 | 54 | O |
| 1.3 (72 kw) | 1991.08-1996.03 | 5MT | F | L | Hatchback FWD TU2J2 | | GDS10020 | Drive Shaft | 48T | 21 | 22 | 58.5 | 76 | 615 | |
| | 1991.08-1996.03 | 5MT | F | R | Hatchback FWD TU2J2 | | GDS10118 | Drive Shaft | | 21 | 22 | 56.4 | 76 | 800 | |
| | 1991.08-1996.03 | 5MT | F | R | Hatchback FWD TU2J2 | | GDS10174 | Drive Shaft | 48T | 21 | 22 | 58.5 | 76 | 800 | |
| | 1991.08-1996.03 | MT | F | L | Hatchback FWD TU2J2 | Trans. code:MA | GDS10048 | Drive Shaft | 48T | 21 | 22 | 58.5 | 86 | 616 | |
| | 1991.08-1996.03 | MT | F | L | Hatchback FWD TU2J2 | | GDS10054 | Drive Shaft | | 21 | 22 | 56.4 | 76 | 610 | |
| | 1991.08-1996.03 | MT | F | L | Hatchback FWD TU2J2 | Trans. code:MA | GDS10157 | Drive Shaft | | 21 | 22 | 58.5 | 86 | 616 | |
| | 1991.08-1996.03 | MT | F | R | Hatchback FWD TU2J2 | Trans. code:MA | GDS10049 | Drive Shaft | 48T | 21 | 22 | 58.5 | 86 | 811.5 | |
| | 1991.08-1996.03 | MT | F | R | Hatchback FWD TU2J2 | Trans. code:MA | GDS10152 | Drive Shaft | | 21 | 22 | 50 | 85 | 812 | |
| 1.4 (37 kw) | 1991.08-1996.03 | 4MT/5MT | F | L | Hatchback FWD TUD3 | Rim:4-Hole;Inner teeth of wheel side:20;Inner teeth of tranm.side:22 | GDS10088 | Drive Shaft | | 21 | 22 | 56.4 | 76 | 613 | |
| | 1991.08-1996.03 | 4MT/5MT | F | L | Hatchback FWD TUD3 | Inner teeth of wheel side:22;Inner teeth of tranm.side:22 | GDS10164 | Drive Shaft | | 21 | 22 | 58.5 | 76 | 614 | |
| | 1991.08-1996.03 | 4MT/5MT | F | R | Hatchback FWD TUD3 | | GDS10089 | Drive Shaft | | 21 | 22 | 56.4 | 76 | 790 | |
| | 1991.08-1996.03 | AT | F | L | Hatchback FWD TUD3 | | GDS10200 | Drive Shaft | 48T | 21 | | 50.5 | 76.5 | 592 | |
| | 1991.08-1996.03 | MT | F | L | Hatchback FWD TUD3 | Inner teeth of wheel side:22 | GDS10038 | Drive Shaft | 48T | 21 | 22 | 58.5 | 76 | 614 | |
| | 1991.08-1996.03 | MT/4MT/5MT | F | R | Hatchback FWD TUD3 | | GDS10042 | Drive Shaft | 48T | 21 | 22 | 56.4 | 76 | 798 | |
| | 1991.08-1996.03 | | F | L | Hatchback Van FWD TUD3 | | GDS10088 | Drive Shaft | | 21 | 22 | 56.4 | 76 | 613 | |
| | 1991.08-1996.03 | | F | L | Hatchback Van FWD TUD3 | | GDS10164 | Drive Shaft | | 21 | 22 | 58.5 | 76 | 614 | |
| | 1991.08-1996.03 | | F | R | Hatchback Van FWD TUD3 | | GDS10042 | Drive Shaft | 48T | 21 | 22 | 56.4 | 76 | 798 | |
| | 1991.08-1996.03 | | F | R | Hatchback Van FWD TUD3 | | GDS10089 | Drive Shaft | | 21 | 22 | 56.4 | 76 | 790 | |
| 1.4 (51 kw) | 1991.08-1996.03 | 5MT | F | L | Hatchback FWD TU3 | Inner teeth of wheel side:20;Inner teeth of tranm.side:22 | GDS10088 | Drive Shaft | | 21 | 22 | 56.4 | 76 | 613 | |
| | 1991.08-1996.03 | 5MT | F | L | Hatchback FWD TU3 | Inner teeth of wheel side:22;Inner teeth of tranm.side:22 | GDS10164 | Drive Shaft | | 21 | 22 | 58.5 | 76 | 614 | |
| | 1991.08-1996.03 | 5MT | F | R | Hatchback FWD TU3 | | GDS10042 | Drive Shaft | 48T | 21 | 22 | 56.4 | 76 | 798 | |
| | 1991.08-1996.03 | 5MT | F | R | Hatchback FWD TU3 | | GDS10089 | Drive Shaft | | 21 | 22 | 56.4 | 76 | 790 | |
| | 1991.08-1996.03 | MT | F | L | Hatchback FWD TU3 | | GDS10009 | Drive Shaft | | 21 | 22 | 50 | 81.5 | 618 | |
| | 1991.08-1996.03 | MT | F | R | Hatchback FWD TU3 | | GDS10003 | Drive Shaft | | 21 | 22 | 49 | 81 | 798 | |
| 1.4 (55 kw) | 1991.08-1996.03 | 5MT | F | L | Hatchback FWD TU32/TU3MC | Rim:4-Hole;Inner teeth of wheel side:20;Inner teeth of tranm.side:22 | GDS10088 | Drive Shaft | | 21 | 22 | 56.4 | 76 | 613 | |
| | 1991.08-1996.03 | 5MT | F | L | Hatchback FWD TU32/TU3MC | Inner teeth of wheel side:22;Inner teeth of tranm.side:22 | GDS10164 | Drive Shaft | | 21 | 22 | 58.5 | 76 | 614 | |
| | 1991.08-1996.03 | 5MT | F | R | Hatchback FWD TU32/TU3MC | | GDS10089 | Drive Shaft | | 21 | 22 | 56.4 | 76 | 790 | |
| | 1991.08-1996.03 | MT | F | L | Hatchback FWD TU32/TU3MC | | GDS10009 | Drive Shaft | | 21 | 22 | 50 | 81.5 | 618 | |
| | 1991.08-1996.03 | MT | F | L | Hatchback FWD TU32/TU3MC | Inner teeth of wheel side:22 | GDS10038 | Drive Shaft | 48T | 21 | 22 | 58.5 | 76 | 614 | |
| | 1991.08-1996.03 | MT | F | R | Hatchback FWD TU32/TU3MC | | GDS10003 | Drive Shaft | | 21 | 22 | 49 | 81 | 798 | |
| | 1991.08-1996.03 | MT/5MT | F | R | Hatchback FWD TU32/TU3MC | | GDS10042 | Drive Shaft | 48T | 21 | 22 | 56.4 | 76 | 798 | |
| | 1996.04-2004.07 | 3AT/5MT | F | L | Hatchback FWD TU32/TU3JP | For Engine code:TU32 | GDS10009 | Drive Shaft | | 21 | 22 | 50 | 81.5 | 618 | |
| | 1996.04-2004.07 | 3AT/5MT | F | R | Hatchback FWD TU32/TU3JP | For Engine code:TU32;Inner teeth of wheel side:20 | GDS10008 | Drive Shaft | | 21 | 22 | 50 | 81.5 | 800 | |
| | 1996.04-2004.07 | 3AT/5MT | F | L/R | Hatchback FWD TU32/TU3JP | For Engine code:TU32 | GCO10034 | Outer Joint | | 21 | 20 | 50 | 81.5 | 54 | O |
| | 1996.04-2004.07 | AT | F | L | Hatchback FWD TU32/TU3JP | Date from:1999.01;Trans. code:BVA MB3 | GDS10138 | Drive Shaft | 48T | 21 | | 50 | 86 | 603.5 | |
| | 1996.04-2004.07 | AT | F | L | Hatchback FWD TU32/TU3JP | Date To:1999.01;Chassis no. to:08094;For Engine Code:TU3JP | GDS10200 | Drive Shaft | 48T | 21 | | 50.5 | 76.5 | 592 | |
| | 1996.04-2004.07 | AT | F | R | Hatchback FWD TU32/TU3JP | For Engine code:TU3JP | GDS10028 | Drive Shaft | 48T | 21 | 23 | 50.5 | 76.5 | 693.5 | |
| | 1996.04-2004.07 | MT | F | L | Hatchback FWD TU32/TU3JP | Date To:1999.01;For Engine Code:TU3JP;Inner teeth of wheel side:22 | GDS10038 | Drive Shaft | 48T | 21 | 22 | 58.5 | 76 | 614 | |
| | 1996.04-2004.07 | MT | F | L | Hatchback FWD TU32/TU3JP | Date to:1999.01,For Engine code:TU32/TU3JP;To ORG/OPR:08094 | GDS10088 | Drive Shaft | | 21 | 22 | 56.4 | 76 | 613 | |
| | 1996.04-2004.07 | MT | F | L | Hatchback FWD TU32/TU3JP | Date from:1999.01,For Engine code:TU3JP;From ORG/OPR:08095 | GDS10161 | Drive Shaft | | 21 | 22 | 58.5 | 86 | 624 | |
| | 1996.04-2004.07 | MT | F | L | Hatchback FWD TU32/TU3JP | Date to:1999.01,For Engine code:TU32/TU3JP;To ORG/OPR:08094 | GDS10164 | Drive Shaft | | 21 | 22 | 58.5 | 76 | 614 | |
| | 1996.04-2004.07 | MT | F | L | Hatchback FWD TU32/TU3JP | Date From:1999.01;For Engine Code:TU3JP | GDS99006 | Drive Shaft | 48T | 21 | 22 | 58.5 | 86 | 624 | |
| | 1996.04-2004.07 | MT | F | R | Hatchback FWD TU32/TU3JP | Date to:1999.04;Inner teeth of wheel side:22 | GDS10003 | Drive Shaft | | 21 | 22 | 49 | 81 | 798 | |
| | 1996.04-2004.07 | MT | F | R | Hatchback FWD TU32/TU3JP | Date To:1999.01 | GDS10042 | Drive Shaft | 48T | 21 | 22 | 56.4 | 76 | 798 | |
| | 1996.04-2004.07 | MT | F | R | Hatchback FWD TU32/TU3JP | Date to:1999.01;For Engine code:TU32/TU3JP;To ORG/OPR:08094;Inner teeth of wheel side:20 | GDS10089 | Drive Shaft | | 21 | 22 | 56.4 | 76 | 790 | |
| | 1996.04-2004.07 | MT | F | R | Hatchback FWD TU32/TU3JP | Date from:1999.02;For Engine code:TU3JP;From ORG/OPR:08095;Inner teeth of wheel side:22 | GDS10156 | Drive Shaft | | 21 | 22 | 58.5 | 86 | 807 | |
| | 1996.04-2004.07 | MT | F | R | Hatchback FWD TU32/TU3JP | Date from:1999.02 | GDS99010 | Drive Shaft | 48T | 21 | 22 | 58.5 | 86 | 807 | |

| | YEAR | TRANSM. | F/R | L/R | BODY STYLE & DRIVE TYPE & ENGINE | REMARKS | G-AP Ref. | PRODUCT | ABS | Technical Specifications | | | | | |
|---|---|---|---|---|---|---|---|---|---|---|---|---|---|---|---|
| | | | | | | | | | | A | B | C | H | L | P |
| **PEUGEOT** | | | | | | | | | | | | | | | |
| **106** | | | | | | | | | | | | | | | |
| 1.4 (72 kw) | 1991.09-1996.03 | MT | F | L | Hatchback FWD TU3J | | GDS10054 | Drive Shaft | | 21 | 22 | 56.4 | 76 | 610 | |
| 1.5 (40 kw) | 1994.06-1996.04 | 5MT | F | L | Hatchback FWD TUD5 | Inner teeth of wheel side:20,Inner teeth of tranm.side:22 | GDS10088 | Drive Shaft | | 21 | 22 | 56.4 | 76 | 613 | |
| | 1994.06-1996.04 | 5MT | F | L | Hatchback FWD TUD5 | Inner teeth of wheel side:22,Inner teeth of tranm.side:22 | GDS10164 | Drive Shaft | | 21 | 22 | 58.5 | 76 | 614 | |
| | 1994.06-1996.04 | 5MT | F | R | Hatchback FWD TUD5 | | GDS10042 | Drive Shaft | 48T | 21 | 22 | 56.4 | 76 | 798 | |
| | 1994.06-1996.04 | 5MT | F | R | Hatchback FWD TUD5 | | GDS10089 | Drive Shaft | | 21 | 22 | 56.4 | 76 | 790 | |
| | 1994.06-1996.04 | AT | F | L | Hatchback FWD TUD5 | | GDS10200 | Drive Shaft | 48T | 21 | | 50.5 | 76.5 | 592 | |
| | 1994.06-1996.04 | MT | F | L | Hatchback FWD TUD5 | | GDS10020 | Drive Shaft | 48T | 21 | 22 | 58.5 | 76 | 615 | |
| | 1994.06-1996.04 | MT | F | L | Hatchback FWD TUD5 | Number of Holes:4 | GDS10038 | Drive Shaft | 48T | 21 | 22 | 58.5 | 76 | 614 | |
| | 1996.05-2001.03 | 5MT | F | L | Hatchback FWD TUD5 | | GDS10161 | Drive Shaft | | 21 | 22 | 58.5 | 86 | 624 | |
| | 1996.05-2001.03 | 5MT | F | L | Hatchback FWD TUD5 | Date to:1999.01;Chassis no. to:08094;Inner teeth of wheel side:22;Inner teeth of tranm.side:22 | GDS10164 | Drive Shaft | | 21 | 22 | 58.5 | 76 | 614 | |
| | 1996.05-2001.03 | 5MT | F | L | Hatchback FWD TUD5 | | GDS99006 | Drive Shaft | 48T | 21 | 22 | 58.5 | 86 | 624 | |
| | 1996.05-2001.03 | 5MT | F | R | Hatchback FWD TUD5 | Date To:1999.01 | GDS10042 | Drive Shaft | 48T | 21 | 22 | 56.4 | 76 | 798 | |
| | 1996.05-2001.03 | 5MT | F | R | Hatchback FWD TUD5 | Date to:1999.01,To ORG/OPR:08094 | GDS10089 | Drive Shaft | | 21 | 22 | 56.4 | 76 | 790 | |
| | 1996.05-2001.03 | 5MT | F | R | Hatchback FWD TUD5 | | GDS99010 | Drive Shaft | 48T | 21 | 22 | 58.5 | 86 | 807 | |
| | 1996.05-2001.03 | MT | F | L | Hatchback FWD TUD5 | | GDS10009 | Drive Shaft | | 21 | 22 | 50 | 81.5 | 618 | |
| | 1996.05-2001.03 | MT | F | L | Hatchback FWD TUD5 | | GDS10020 | Drive Shaft | 48T | 21 | 22 | 58.5 | 76 | 615 | |
| | 1996.05-2001.03 | MT | F | L | Hatchback FWD TUD5 | Date To:1999.01;For Engine Code:TU3JP;Inner teeth of wheel side:22 | GDS10038 | Drive Shaft | 48T | 21 | 22 | 58.5 | 76 | 614 | |
| | 1996.05-2001.03 | MT | F | L | Hatchback FWD TUD5 | | GDS45071 | Drive Shaft | | 21 | 22 | 48 | 86.5 | 622 | |
| | 1996.05-2001.03 | MT | F | R | Hatchback FWD TUD5 | | GDS10003 | Drive Shaft | | 21 | 22 | 49 | 81 | 798 | |
| | 1996.05-2001.03 | MT | F | R | Hatchback FWD TUD5 | | GDS10156 | Drive Shaft | | 21 | 22 | 58.5 | 86 | 807 | |
| | 1996.05-2001.03 | MT | F | R | Hatchback FWD TUD5 | | GDS45072 | Drive Shaft | | 21 | 22 | 48 | 86.5 | 798.5 | |
| | 1996.05-2001.03 | 5MT | F | R | Hatchback Van FWD TUD5 | Date to:1999.01,To ORG/OPR:08094 | GDS10089 | Drive Shaft | | 21 | 22 | 56.4 | 76 | 790 | |
| | 1996.05-2001.03 | MT | F | L | Hatchback Van FWD TUD5 | | GDS10161 | Drive Shaft | | 21 | 22 | 58.5 | 86 | 624 | |
| | 1996.05-2001.03 | MT | F | L | Hatchback Van FWD TUD5 | Date from:2000.12;From ORG/OPR:08095 | GDS99006 | Drive Shaft | 48T | 21 | 22 | 58.5 | 86 | 624 | |
| | 1996.05-2001.03 | MT | F | R | Hatchback Van FWD TUD5 | | GDS10156 | Drive Shaft | | 21 | 22 | 58.5 | 86 | 807 | |
| | 1996.05-2001.03 | MT | F | R | Hatchback Van FWD TUD5 | | GDS99010 | Drive Shaft | 48T | 21 | 22 | 58.5 | 86 | 807 | |
| | 1996.05-2001.03 | | F | L | Hatchback Van FWD TUD5 | Date To:1999.01;To ORG/OPR:08094 | GDS10088 | Drive Shaft | | 21 | 22 | 56.4 | 76 | 613 | |
| | 1996.05-2001.03 | | F | L | Hatchback Van FWD TUD5 | Date To:1999.01;To ORG/OPR:08094 | GDS10164 | Drive Shaft | | 21 | 22 | 58.5 | 76 | 614 | |
| | 1996.05-2001.03 | | F | R | Hatchback Van FWD TUD5 | Date To:1999.01;To ORG/OPR:08094 | GDS10042 | Drive Shaft | 48T | 21 | 22 | 56.4 | 76 | 798 | |
| 1.5 (42 kw) | 1996.06-2001.03 | MT | F | L | Hatchback Van FWD TUD5/TUD5B | | GDS10161 | Drive Shaft | | 21 | 22 | 58.5 | 86 | 624 | |
| | 1996.06-2001.03 | MT | F | L | Hatchback Van FWD TUD5/TUD5B | | GDS45071 | Drive Shaft | | 21 | 22 | 48 | 86.5 | 622 | |
| | 1996.06-2001.03 | MT | F | L | Hatchback Van FWD TUD5/TUD5B | | GDS99006 | Drive Shaft | 48T | 21 | 22 | 58.5 | 86 | 624 | |
| | 1996.06-2001.03 | MT | F | R | Hatchback Van FWD TUD5/TUD5B | | GDS10156 | Drive Shaft | | 21 | 22 | 58.5 | 86 | 807 | |
| | 1996.06-2001.03 | MT | F | R | Hatchback Van FWD TUD5/TUD5B | | GDS45072 | Drive Shaft | | 21 | 22 | 48 | 86.5 | 798.5 | |
| | 1996.06-2001.03 | MT | F | R | Hatchback Van FWD TUD5/TUD5B | | GDS99010 | Drive Shaft | 48T | 21 | 22 | 58.5 | 86 | 807 | |
| | 1998.04-2004.07 | 5MT | F | R | Hatchback FWD TUD5B | | GDS99010 | Drive Shaft | 48T | 21 | 22 | 58.5 | 86 | 807 | |
| | 1998.04-2004.07 | MT | F | L | Hatchback FWD TUD5B | Inner teeth of wheel side:20 | GDS10009 | Drive Shaft | | 21 | 22 | 50 | 81.5 | 618 | |
| | 1998.04-2004.07 | MT | F | L | Hatchback FWD TUD5B | Date to:1999.01;Inner teeth of wheel side:20;Inner teeth of tranm.side:22 | GDS10088 | Drive Shaft | | 21 | 22 | 56.4 | 76 | 613 | |
| | 1998.04-2004.07 | MT | F | L | Hatchback FWD TUD5B | Date from:1999.02;Inner teeth of wheel side:22 | GDS10161 | Drive Shaft | | 21 | 22 | 58.5 | 86 | 624 | |
| | 1998.04-2004.07 | MT | F | L | Hatchback FWD TUD5B | Date to:1999.01;Inner teeth of wheel side:22;Inner teeth of tranm.side:22 | GDS10164 | Drive Shaft | | 21 | 22 | 58.5 | 76 | 614 | |
| | 1998.04-2004.07 | MT | F | L | Hatchback FWD TUD5B | Inner teeth of wheel side:22 | GDS45071 | Drive Shaft | | 21 | 22 | 48 | 86.5 | 622 | |
| | 1998.04-2004.07 | MT | F | R | Hatchback FWD TUD5B | Groove Type:Outer | GDS10003 | Drive Shaft | | 21 | 22 | 49 | 81 | 798 | |
| | 1998.04-2004.07 | MT | F | R | Hatchback FWD TUD5B | Date to:1999.01;Groove Type:Outer | GDS10089 | Drive Shaft | | 21 | 22 | 56.4 | 76 | 790 | |
| | 1998.04-2004.07 | MT | F | R | Hatchback FWD TUD5B | Date from:1999.02;Groove Type:Middle | GDS10156 | Drive Shaft | | 21 | 22 | 58.5 | 86 | 807 | |
| | 1998.04-2004.07 | MT | F | R | Hatchback FWD TUD5B | Groove Type:Inner | GDS45072 | Drive Shaft | | 21 | 22 | 48 | 86.5 | 798.5 | |
| 1.5 (43 kw) | 1994.06-1996.04 | 5MT | F | L | Hatchback FWD TUD5 | Inner teeth of wheel side:20,Inner teeth of tranm.side:22 | GDS10088 | Drive Shaft | | 21 | 22 | 56.4 | 76 | 613 | |
| | 1994.06-1996.04 | 5MT | F | R | Hatchback FWD TUD5 | | GDS10089 | Drive Shaft | | 21 | 22 | 56.4 | 76 | 790 | |
| | 1994.06-1996.04 | AT | F | L | Hatchback FWD TUD5 | | GDS10200 | Drive Shaft | 48T | 21 | | 50.5 | 76.5 | 592 | |
| | 1994.06-1996.04 | MT | F | L | Hatchback FWD TUD5 | Number of Holes:4 | GDS10038 | Drive Shaft | 48T | 21 | 22 | 58.5 | 76 | 614 | |
| 1.6 (65 kw) | 1993.06-1996.06 | AT | F | L | Hatchback FWD TU5JP | | GDS10200 | Drive Shaft | 48T | 21 | | 50.5 | 76.5 | 592 | |
| | 1993.06-1996.06 | AT | F | R | Hatchback FWD TU5JP | | GDS10028 | Drive Shaft | 48T | 21 | 23 | 50.5 | 76.5 | 693.5 | |
| | 1993.06-1996.06 | MT | F | L | Hatchback FWD TU5JP | | GDS10020 | Drive Shaft | 48T | 21 | 22 | 58.5 | 76 | 615 | |
| | 1993.06-1996.06 | MT | F | L | Hatchback FWD TU5JP | Number of Holes:4 | GDS10038 | Drive Shaft | 48T | 21 | 22 | 58.5 | 76 | 614 | |
| | 1993.06-1996.06 | MT | F | L | Hatchback FWD TU5JP | | GDS10054 | Drive Shaft | | 21 | 22 | 56.4 | 76 | 610 | |
| | 1993.06-1996.06 | MT | F | R | Hatchback FWD TU5JP | | GDS10089 | Drive Shaft | | 21 | 22 | 56.4 | 76 | 790 | |
| | 1993.06-1996.06 | MT | F | R | Hatchback FWD TU5JP | | GDS10186 | Drive Shaft | 48T | 21 | 22 | 54 | 75.5 | 799 | |
| | 1993.06-1996.06 | MT | F | L | Hatchback FWD TU5JP | | GCI10006 | Inner Joint | | 22 | 22 | 40 | 58.5 | 87 | |
| | 1996.04-1999.10 | AT | F | L | Hatchback FWD TU5JP | | GDS10200 | Drive Shaft | 48T | 21 | | 50.5 | 76.5 | 592 | |
| | 1996.04-1999.10 | AT | F | R | Hatchback FWD TU5JP | | GDS10028 | Drive Shaft | 48T | 21 | 23 | 50.5 | 76.5 | 693.5 | |
| | 1996.04-1999.10 | MT | F | L | Hatchback FWD TU5JP | Date to:1998.12 | GDS10020 | Drive Shaft | 48T | 21 | 22 | 58.5 | 76 | 615 | |
| | 1996.04-1999.10 | MT | F | L | Hatchback FWD TU5JP | Date from:1999.01 | GDS10048 | Drive Shaft | 48T | 21 | 22 | 58.5 | 86 | 616 | |
| | 1996.04-1999.10 | MT | F | L | Hatchback FWD TU5JP | | GDS10054 | Drive Shaft | | 21 | 22 | 56.4 | 76 | 610 | |
| | 1996.04-1999.10 | MT | F | L | Hatchback FWD TU5JP | Date from:1999.01 | GDS10157 | Drive Shaft | | 21 | 22 | 58.5 | 86 | 616 | |
| | 1996.04-1999.10 | MT | F | R | Hatchback FWD TU5JP | Date from:1999.01 | GDS10049 | Drive Shaft | 48T | 21 | 22 | 58.5 | 86 | 811.5 | |
| | 1996.04-1999.10 | MT | F | R | Hatchback FWD TU5JP | Date to:1998.12 | GDS10118 | Drive Shaft | | 21 | 22 | 56.4 | 76 | 800 | |

| | YEAR | TRANSM. | F/R | L/R | BODY STYLE & DRIVE TYPE & ENGINE | REMARKS | G-AP Ref. | PRODUCT | ABS | Technical Specifications A | B | C | H | L | P |
|---|---|---|---|---|---|---|---|---|---|---|---|---|---|---|---|
| **PEUGEOT** | | | | | | | | | | | | | | | |
| **106** | | | | | | | | | | | | | | | |
| 1.6 (65 kw) | 1996.04-1999.10 | MT | F | R | Hatchback FWD TU5JP | Date to:1998.12 | GDS10174 | Drive Shaft | 48T | 21 | 22 | 58.5 | 76 | 800 | |
| | 1996.04-1999.10 | MT | F | L | Hatchback FWD TU5JP | | GCI10006 | Inner Joint | | 22 | 22 | 40 | 58.5 | 87 | |
| 1.6 (74 kw) | 1996.04-2001.01 | 5MT | F | L | Hatchback FWD TU5J2 | | GDS10020 | Drive Shaft | 48T | 21 | 22 | 58.5 | 76 | 615 | |
| | 1996.04-2001.01 | 5MT | F | R | Hatchback FWD TU5J2 | | GDS10089 | Drive Shaft | | 21 | 22 | 56.4 | 76 | 790 | |
| | 1996.04-2001.01 | 5MT | F | R | Hatchback FWD TU5J2 | | GDS10186 | Drive Shaft | 48T | 21 | 22 | 54 | 75.5 | 799 | |
| | 1996.04-2001.01 | MT | F | L | Hatchback FWD TU5J2 | Date from:1999.01;Trans. code:MA | GDS10048 | Drive Shaft | 48T | 21 | 22 | 58.5 | 86 | 616 | |
| | 1996.04-2001.01 | MT | F | L | Hatchback FWD TU5J2 | | GDS10054 | Drive Shaft | | 21 | 22 | 56.4 | 76 | 610 | |
| | 1996.04-2001.01 | MT | F | L | Hatchback FWD TU5J2 | Date from:1999.01;Trans. code:MA | GDS10157 | Drive Shaft | | 21 | 22 | 58.5 | 86 | 616 | |
| | 1996.04-2001.01 | MT | F | R | Hatchback FWD TU5J2 | Date from:1999.01;Trans. code:MA | GDS10049 | Drive Shaft | 48T | 21 | 22 | 58.5 | 86 | 811.5 | |
| | 1996.04-2001.01 | MT | F | R | Hatchback FWD TU5J2 | Date from:1999.01;Trans. code:MA | GDS10152 | Drive Shaft | | 21 | 22 | 50 | 85 | 812 | |
| | 1996.04-2001.01 | MT | F | R | Hatchback FWD TU5J2 | Date to:1999.12;Trans. code:MA | GDS10174 | Drive Shaft | 48T | 21 | 22 | 58.5 | 76 | 800 | |
| 1.6 (76 kw) | 1994.11-1996.04 | 5MT | F | L | Hatchback FWD TU5J2 | | GDS10020 | Drive Shaft | 48T | 21 | 22 | 58.5 | 76 | 615 | |
| | 1994.11-1996.04 | 5MT | F | R | Hatchback FWD TU5J2 | | GDS10118 | Drive Shaft | | 21 | 22 | 56.4 | 76 | 800 | |
| | 1994.11-1996.04 | 5MT | F | R | Hatchback FWD TU5J2 | | GDS10174 | Drive Shaft | 48T | 21 | 22 | 58.5 | 76 | 800 | |
| | 1994.11-1996.04 | AT | F | L | Hatchback FWD TU5J2 | | GDS10200 | Drive Shaft | 48T | 21 | | 50.5 | 76.5 | 592 | |
| | 1994.11-1996.04 | MT | F | L | Hatchback FWD TU5J2 | | GDS10054 | Drive Shaft | | 21 | 22 | 56.4 | 76 | 610 | |
| 1.6 (87 kw) | 1996.04-2004.07 | 5MT | F | L | Hatchback FWD TU5J4 | | GDS10020 | Drive Shaft | 48T | 21 | 22 | 58.5 | 76 | 615 | |
| | 1996.04-2004.07 | 5MT | F | R | Hatchback FWD TU5J4 | | GDS10089 | Drive Shaft | | 21 | 22 | 56.4 | 76 | 790 | |
| | 1996.04-2004.07 | 5MT | F | R | Hatchback FWD TU5J4 | | GDS10186 | Drive Shaft | 48T | 21 | 22 | 54 | 75.5 | 799 | |
| | 1996.04-2004.07 | AT | F | R | Hatchback FWD TU5J4 | | GDS10028 | Drive Shaft | 48T | 21 | 23 | 50.5 | 76.5 | 693.5 | |
| | 1996.04-2004.07 | MT | F | L | Hatchback FWD TU5J4 | Date from:1999.01;Trans. code:MA | GDS10048 | Drive Shaft | 48T | 21 | 22 | 58.5 | 86 | 616 | |
| | 1996.04-2004.07 | MT | F | L | Hatchback FWD TU5J4 | | GDS10054 | Drive Shaft | | 21 | 22 | 56.4 | 76 | 610 | |
| | 1996.04-2004.07 | MT | F | L | Hatchback FWD TU5J4 | Date from:1999.01;Trans. code:MA | GDS10157 | Drive Shaft | | 21 | 22 | 58.5 | 86 | 616 | |
| | 1996.04-2004.07 | MT | F | R | Hatchback FWD TU5J4 | Date from:1999.01;Trans. code:MA | GDS10049 | Drive Shaft | 48T | 21 | 22 | 58.5 | 86 | 811.5 | |
| | 1996.04-2004.07 | MT | F | R | Hatchback FWD TU5J4 | Date from:1999.01;Trans. code:MA | GDS10152 | Drive Shaft | | 21 | 22 | 50 | 85 | 812 | |
| | 1996.04-2004.07 | MT | F | R | Hatchback FWD TU5J4 | Date to:1999.12;Trans. code:MA | GDS10174 | Drive Shaft | 48T | 21 | 22 | 58.5 | 76 | 800 | |
| **107** | | | | | | | | | | | | | | | |
| 1.0 (50 kw) | 2005.06-2014.05 | 5AT/5MT | F | L | Hatchback FWD CFA (384F);CFB (1KR) | | GDS10232 | Drive Shaft | | 24 | 23 | 49.5 | 91 | 650 | |
| | 2005.06-2014.05 | 5AT/5MT | F | R | Hatchback FWD CFA (384F);CFB (1KR) | | GDS10231 | Drive Shaft | | 24 | 23 | 49.5 | 91 | 841 | |
| | 2005.06-2014.05 | 5AT/5MT | F | L/R | Hatchback FWD CFA (384F);CFB (1KR) | | GCO99128 | Outer Joint | | 24 | 19 | 49.5 | 91 | 46 | M |
| | 2005.06-2014.05 | 5AT/5MT | F | L/R | Hatchback FWD CFA (384F);CFB (1KR) | | GCI59069 | Inner Joint | | 23 | 19 | 34 | 60 | 101 | |
| 1.4 (40 kw) | 2005.06-2014.05 | 5MT | F | L | Hatchback FWD 8HT (DV4TD) | | GDS59495 | Drive Shaft | | 24 | 23 | 49.5 | 91 | 593 | |
| | 2005.06-2014.05 | 5MT | F | R | Hatchback FWD 8HT (DV4TD) | | GDS81476 | Drive Shaft | | 24 | 23 | 49.5 | 91 | 897 | |
| | 2005.06-2014.05 | 5MT | F | L/R | Hatchback FWD 8HT (DV4TD) | | GCO45058 | Outer Joint | | 24 | 20 | 49.5 | 91 | 46 | M |
| | 2005.06-2014.05 | 5MT | F | R | Hatchback FWD 8HT (DV4TD) | | GCI59069 | Inner Joint | | 23 | 19 | 34 | 60 | 101 | |
| **108** | | | | | | | | | | | | | | | |
| 1.0 (51 kw) | 2014.05- | 5AT/5MT | F | L | Hatchback FWD CFB (1KR) | | GDS82094 | Drive Shaft | | 24 | 23 | 49.5 | 91 | 651 | |
| | 2014.05- | 5AT/5MT | F | R | Hatchback FWD CFB (1KR) | | GDS10231 | Drive Shaft | | 24 | 23 | 49.5 | 91 | 841 | |
| | 2014.05- | 5AT/5MT | F | L/R | Hatchback FWD CFB (1KR) | | GCI59069 | Inner Joint | | 23 | 19 | 34 | 60 | 101 | |
| | 2014.05- | AT/MT | F | L/R | Hatchback FWD CFB (1KR) | | GCO45058 | Outer Joint | | 24 | 20 | 49.5 | 91 | 46 | M |
| 1.0 (53 kw) | 2018.05- | 5AT/5MT | F | L | Hatchback FWD CFB (1KR) | | GDS82094 | Drive Shaft | | 24 | 23 | 49.5 | 91 | 651 | |
| | 2018.05- | 5AT/5MT | F | R | Hatchback FWD CFB (1KR) | | GDS10231 | Drive Shaft | | 24 | 23 | 49.5 | 91 | 841 | |
| | 2018.05- | 5AT/5MT | F | L | Hatchback FWD CFB (1KR) | | GCO81642 | Outer Joint | | 24 | 20 | 49.5 | 91 | 46 | M |
| | 2018.05- | 5AT/5MT | F | R | Hatchback FWD CFB (1KR) | | GCO99128 | Outer Joint | | 24 | 19 | 49.5 | 91 | 46 | M |
| | 2018.05- | 5AT/5MT | F | L/R | Hatchback FWD CFB (1KR) | | GCI59069 | Inner Joint | | 23 | 19 | 34 | 60 | 101 | |
| 1.2 (60 kw) | 2014.05- | 5MT | F | L | Hatchback FWD HMZ (EB2F);HMT (EB2D);HMZ (EB2) | | GDS81194 | Drive Shaft | | 24 | 22 | 49.5 | 88.5 | 670 | |
| | 2014.05- | 5MT | F | R | Hatchback FWD HMZ (EB2F);HMT (EB2D);HMZ (EB2) | | GDS81497 | Drive Shaft | | 24 | 22 | 49.5 | 88.5 | 799 | |
| | 2014.05- | 5MT | F | L/R | Hatchback FWD HMZ (EB2F);HMT (EB2D);HMZ (EB2) | | GCO81068 | Outer Joint | | 24 | 21 | 49.5 | 88.5 | 50 | M |
| **2008** | | | | | | | | | | | | | | | |
| 1.2 (60 kw) | 2013.03-2018.12 | 5AT | F | L | SUV FWD HMZ (EB2F);HMZ (EB2) | | GDS45202 | Drive Shaft | | 25 | 26 | 58.5 | 78.5 | 620 | |
| | 2013.03-2018.12 | 5AT | F | R | SUV FWD HMZ (EB2F);HMZ (EB2) | | GDS10267 | Drive Shaft | | 25 | 26 | 58.5 | 79.5 | 766 | |
| | 2013.03-2018.12 | 5AT | F | L | SUV FWD HMZ (EB2F);HMZ (EB2) | | GCO10156 | Outer Joint | | 25 | 22 | 58.5 | 78.5 | 55 | I |
| | 2013.03-2018.12 | 5MT | F | L | SUV FWD HMZ (EB2F);HMZ (EB2) | | GDS83807 | Drive Shaft | | 21 | 22 | 48.2 | 85.5 | 652 | |
| | 2013.03-2018.12 | 5MT | F | R | SUV FWD HMZ (EB2F);HMZ (EB2) | | GDS82810 | Drive Shaft | | 21 | 22 | 48.2 | 85.5 | 865 | |
| | 2013.03-2018.12 | 5MT | F | L | SUV FWD HMZ (EB2F);HMZ (EB2) | | GCO10125 | Outer Joint | | 21 | 21 | 49 | 86 | 49 | I |
| | 2013.03-2018.12 | 5MT | F | R | SUV FWD HMZ (EB2F);HMZ (EB2) | | GCO10143 | Outer Joint | | 21 | 34 | 48.2 | 85.5 | 56.5 | I |
| | 2013.03-2018.12 | 5MT | F | L | SUV FWD HMZ (EB2F);HMZ (EB2) | | GCI10054 | Inner Joint | | 22 | 21 | 40 | 60 | 88 | |
| | 2013.03-2018.12 | 5MT | F | R | SUV FWD HMZ (EB2F);HMZ (EB2) | | GCI82122 | Inner Joint | | 22 | 34 | 30.05 | 98.5 | 89.5 | |
| | 2013.03-2018.12 | MT | F | L/R | SUV FWD HMZ (EB2F);HMZ (EB2) | | GCO10042 | Outer Joint | | 25 | 34 | 54.8 | 78.5 | 56 | I |
| 1.2 (61 kw) | 2018.01-2019.12 | 5MT | F | L | SUV FWD HMR (EB2FA) | | GDS83807 | Drive Shaft | | 21 | 22 | 48.2 | 85.5 | 652 | |
| | 2018.01-2019.12 | 5MT | F | R | SUV FWD HMR (EB2FA) | | GDS82810 | Drive Shaft | | 21 | 22 | 48.2 | 85.5 | 865 | |
| | 2018.01-2019.12 | 5MT | F | R | SUV FWD HMR (EB2FA) | Inner teeth:34 | GCO10143 | Outer Joint | | 21 | 34 | 48.2 | 85.5 | 56.5 | I |
| | 2018.01-2019.12 | 5MT | F | R | SUV FWD HMR (EB2FA) | Inner teeth:34 | GCI82122 | Inner Joint | | 22 | 34 | 30.05 | 98.5 | 89.5 | |
| 1.2 (74 kw) | 2019.11- | 6MT | F | L | SUV FWD HNK (EB2ADTD) | | GDS84174 | Drive Shaft | | 25 | 24 | 55.7 | 84 | 685 | |
| | 2019.11- | 6MT | F | R | SUV FWD HNK (EB2ADTD) | | GDS84335 | Drive Shaft | | 25 | 24 | 55.7 | 84 | 910 | |

| | YEAR | TRANSM. | F/R | L/R | BODY STYLE & DRIVE TYPE & ENGINE | REMARKS | G-AP Ref. | PRODUCT | ABS | Technical Specifications A | B | C | H | L | P |
|---|---|---|---|---|---|---|---|---|---|---|---|---|---|---|---|
| **PEUGEOT** **2008** | | | | | | | | | | | | | | | |
| 1.2 (74 kw) | 2019.11- | 6MT | F | L/R | SUV FWD HNK (EB2ADTD) | | GCO82279 | Outer Joint | | 25 | 34 | 55.7 | 84 | 55.5 | I |
| | 2019.11- | 6MT | F | L | SUV FWD HNK (EB2ADTD) | | GCI82131 | Inner Joint | | 24 | 34 | 40 | 62 | 89 | |
| | 2019.11- | 6MT | F | R | SUV FWD HNK (EB2ADTD) | | GCI82130 | Inner Joint | | 24 | 34 | 29.8 | 291 | 88 | |
| 1.2 (81 kw) | 2015.01- | 5MT | F | L | SUV FWD HNZ (EB2DT);HNV (EB2DTM);HNP (EB2ADT) | | GDS83645 | Drive Shaft | | 25 | 24 | 58.5 | 79 | 638 | |
| | 2015.01- | 5MT | F | R | SUV FWD HNZ (EB2DT);HNV (EB2DTM);HNP (EB2ADT) | | GDS83806 | Drive Shaft | | 25 | 24 | 58.5 | 79 | 867 | |
| | 2015.01- | 5MT | F | L/R | SUV FWD HNZ (EB2DT);HNV (EB2DTM);HNP (EB2ADT) | | GCO82355 | Outer Joint | | 25 | 34 | 58.5 | 79 | 55.5 | I |
| | 2015.01- | 5MT | F | L | SUV FWD HNZ (EB2DT);HNV (EB2DTM);HNP (EB2ADT) | | GCI82131 | Inner Joint | | 24 | 34 | 40 | 62 | 89 | |
| | 2015.01- | 5MT | F | R | SUV FWD HNZ (EB2DT);HNV (EB2DTM);HNP (EB2ADT) | | GCI82374 | Inner Joint | | 24 | 34 | 29.8 | 291 | 88 | |
| | 2015.01- | 6AT | F | L | SUV FWD HNZ (EB2DT);HNV (EB2DTM);HNP (EB2ADT) | | GDS83216 | Drive Shaft | | 25 | 37 | 58.5 | 79 | 598 | |
| | 2015.01- | 6AT | F | R | SUV FWD HNZ (EB2DT);HNV (EB2DTM);HNP (EB2ADT) | | GDS83217 | Drive Shaft | | 25 | 37 | 58.5 | 79 | 862 | |
| | 2015.01- | 6AT | F | L | SUV FWD HNZ (EB2DT);HNV (EB2DTM);HNP (EB2ADT) | | GCO82355 | Outer Joint | | 25 | 34 | 58.5 | 79 | 55.5 | I |
| | 2015.01- | 6AT | F | R | SUV FWD HNZ (EB2DT);HNV (EB2DTM);HNP (EB2ADT) | | GCO82351 | Outer Joint | | 25 | 34 | 58.5 | 79 | 55.5 | I |
| | 2015.01- | 6AT | F | R | SUV FWD HNZ (EB2DT);HNV (EB2DTM);HNP (EB2ADT) | | GCI82182 | Inner Joint | | 37 | 34 | | 290 | 88 | |
| | 2025.11- | 6DCT | F | R | SUV FWD HPX (EB2LTEDH2), HPV (EB2LTED) | | GDS56753 | Drive Shaft | | 25 | 37 | 55.7 | 84 | 911 | |
| 1.2 (96 kw) | 2015.01-2019.11 | 6MT | F | L | SUV FWD HNY (EB2DTS);HNS (EB2ADTS) | Transm. code:MC | GDS10253 | Drive Shaft | | 25 | 24 | 58.5 | 79 | 626 | |
| | 2015.01-2019.11 | 6MT | F | L | SUV FWD HNY (EB2DTS);HNS (EB2ADTS) | Transm. code:AL4 | GDS45202 | Drive Shaft | | 25 | 26 | 58.5 | 78.5 | 620 | |
| | 2015.01-2019.11 | 6MT | F | L | SUV FWD HNY (EB2DTS);HNS (EB2ADTS) | Transm. code:MA,MA+ | GDS83807 | Drive Shaft | | 21 | 22 | 48.2 | 85.5 | 652 | |
| | 2015.01-2019.11 | 6MT | F | R | SUV FWD HNY (EB2DTS);HNS (EB2ADTS) | | GDS45221 | Drive Shaft | | 25 | 24 | 58.5 | 79 | 881 | |
| | 2015.01-2019.11 | 6MT | F | L | SUV FWD HNY (EB2DTS);HNS (EB2ADTS) | Transm. code:AL4 | GCO10156 | Outer Joint | | 25 | 22 | 58.5 | 78.5 | 55 | I |
| | 2015.01-2019.11 | 6MT | F | L | SUV FWD HNY (EB2DTS);HNS (EB2ADTS) | Transm. code:MA,MA+ | GCO82278 | Outer Joint | | 21 | 34 | 48.2 | 85.5 | 56.5 | I |
| | 2015.01-2019.11 | 6MT | F | L | SUV FWD HNY (EB2DTS);HNS (EB2ADTS) | Transm. code:BE4R | GCO99366 | Outer Joint | | 25 | 34 | 58.5 | 79 | 55 | I |
| | 2015.01-2019.11 | 6MT | F | L | SUV FWD HNY (EB2DTS);HNS (EB2ADTS) | Transm. code:BE4R | GCI10070 | Inner Joint | | 24 | 34 | 40 | 62 | 88 | |
| | 2015.01-2019.11 | 6MT | F | L | SUV FWD HNY (EB2DTS);HNS (EB2ADTS) | Transm. code:MA,MA+ | GCI82092 | Inner Joint | | 22 | 34 | 40 | 57.5 | 91 | |
| | 2015.01-2019.11 | 6MT | F | R | SUV FWD HNY (EB2DTS);HNS (EB2ADTS) | Transm. code:BE4R | GCI10144 | Inner Joint | | 24 | 22 | 29.82 | 291 | 101 | |
| | 2018.01-2019.11 | 6MT | F | L | SUV Van FWD HNY (EB2DTS);HNS (EB2ADTS) | | GDS10253 | Drive Shaft | | 25 | 24 | 58.5 | 79 | 626 | |
| | 2018.01-2019.11 | 6MT | F | R | SUV Van FWD HNY (EB2DTS);HNS (EB2ADTS) | | GDS45221 | Drive Shaft | | 25 | 24 | 58.5 | 79 | 881 | |
| | 2019.08- | 6MT | F | L | SUV FWD HNS (EB2ADTS) | | GDS84174 | Drive Shaft | | 25 | 24 | 55.7 | 84 | 685 | |
| | 2019.08- | 6MT | F | R | SUV FWD HNS (EB2ADTS) | | GDS84335 | Drive Shaft | | 25 | 24 | 55.7 | 84 | 910 | |
| | 2019.08- | 6MT | F | L/R | SUV FWD HNS (EB2ADTS) | | GCO82279 | Outer Joint | | 25 | 34 | 55.7 | 84 | 55.5 | I |
| | 2019.08- | 6MT | F | L | SUV FWD HNS (EB2ADTS) | | GCI82131 | Inner Joint | | 24 | 34 | 40 | 62 | 89 | |
| | 2019.08- | 6MT | F | R | SUV FWD HNS (EB2ADTS) | | GCI82130 | Inner Joint | | 24 | 34 | 29.8 | 291 | 88 | |
| | 2019.08- | 8AT | F | L | SUV FWD HNS (EB2ADTS) | | GDS84557 | Drive Shaft | | 25 | 37 | 56 | 83.5 | 641 | |
| | 2019.08- | 8AT | F | R | SUV FWD HNS (EB2ADTS) | | GDS84559 | Drive Shaft | | 25 | 37 | 56 | 83.5 | 903 | |
| | 2019.08- | 8AT | F | L | SUV FWD HNS (EB2ADTS) | | GCO82749 | Outer Joint | | 25 | 23 | 56 | 83.5 | 50 | I |
| | 2019.08- | 8AT | F | L | SUV FWD HNS (EB2ADTS) | | GCI82859 | Inner Joint | | 37 | 24 | 42 | 58.5 | 101.5 | |
| | 2019.08- | 8AT | F | R | SUV FWD HNS (EB2ADTS) | | GCI82860 | Inner Joint | | 37 | 24 | 29.85 | 285 | 101 | |
| 1.2 (100 kw) | 2023.11- | 8AT | F | R | SUV FWD HPY (EB2LTDH2) | | GDS56753 | Drive Shaft | | 25 | 37 | 55.7 | 84 | 911 | |
| | 2023.11- | 8AT | F | R | SUV FWD HPY (EB2LTDH2) | | GCO82279 | Outer Joint | | 25 | 34 | 55.7 | 84 | 55.5 | I |
| | 2023.11- | 8AT | F | R | SUV FWD HPY (EB2LTDH2) | | GCI83474 | Inner Joint | | 37 | 34 | 29.8 | 290 | 99 | |
| 1.2 (107 kw) | 2025.03- | 6DCT | F | R | SUV FWD | | GDS56753 | Drive Shaft | | 25 | 37 | 55.7 | 84 | 911 | |
| | 2025.03- | 6DCT | F | R | SUV FWD | | GCO82279 | Outer Joint | | 25 | 34 | 55.7 | 84 | 55.5 | I |
| | 2025.03- | 6DCT | F | R | SUV FWD | | GCI83474 | Inner Joint | | 37 | 34 | 29.8 | 290 | 99 | |
| 1.2 (114 kw) | 2019.11- | 8AT | F | L | SUV FWD HNN (EB2ADTX);HNJ (EB2ADTXM);HNR (EB2ADTXM) | | GDS84557 | Drive Shaft | | 25 | 37 | 56 | 83.5 | 641 | |
| | 2019.11- | 8AT | F | R | SUV FWD HNN (EB2ADTX);HNJ (EB2ADTXM);HNR (EB2ADTXM) | | GDS84559 | Drive Shaft | | 25 | 37 | 56 | 83.5 | 903 | |
| | 2019.11- | 8AT | F | L | SUV FWD HNN (EB2ADTX);HNJ (EB2ADTXM);HNR (EB2ADTXM) | | GCO82749 | Outer Joint | | 25 | 23 | 56 | 83.5 | 50 | I |
| | 2019.11- | 8AT | F | L | SUV FWD HNN (EB2ADTX);HNJ (EB2ADTXM);HNR (EB2ADTXM) | | GCI82859 | Inner Joint | | 37 | 24 | 42 | 58.5 | 101.5 | |
| | 2019.11- | 8AT | F | R | SUV FWD HNN (EB2ADTX);HNJ (EB2ADTXM);HNR (EB2ADTXM) | | GCI82860 | Inner Joint | | 37 | 24 | 29.85 | 285 | 101 | |
| 1.4 (50 kw) | 2013.06- | 5MT | F | L | SUV FWD 8HR (DV4C) | Date to:2015.03,To ORG/OPR:14034 | GDS82810 | Drive Shaft | | 21 | 22 | 48.2 | 85.5 | 865 | |
| | 2013.06- | 5MT | F | L | SUV FWD 8HR (DV4C) | | GDS83807 | Drive Shaft | | 21 | 22 | 48.2 | 85.5 | 652 | |
| | 2013.06- | 5MT | F | R | SUV FWD 8HR (DV4C) | | GDS82810 | Drive Shaft | | 21 | 22 | 48.2 | 85.5 | 865 | |
| | 2013.06- | 5MT | F | L/R | SUV FWD 8HR (DV4C) | | GCO10143 | Outer Joint | | 21 | 34 | 48.2 | 85.5 | 56.5 | I |
| | 2013.06- | 5MT | F | R | SUV FWD 8HR (DV4C) | | GCI82122 | Inner Joint | | 22 | 34 | 30.05 | 98.5 | 89.5 | |
| | 2013.06- | MT | F | L/R | SUV FWD 8HR (DV4C) | | GCO45012 | Outer Joint | | 21 | 34 | 48.5 | 86 | 55.5 | I |
| 1.5 (75 kw) | 2018.05- | 5MT | F | L | SUV FWD YHY (DV5RD) | | GCO82355 | Outer Joint | | 25 | 34 | 58.5 | 79 | 55.5 | I |
| | 2018.05- | 5MT/6MT | F | L | SUV FWD YHY (DV5RD) | | GDS83645 | Drive Shaft | | 25 | 24 | 58.5 | 79 | 638 | |
| | 2018.05- | 5MT/6MT | F | L | SUV FWD YHY (DV5RD) | | GCI82131 | Inner Joint | | 24 | 34 | 40 | 62 | 89 | |
| | 2018.05- | 6MT | F | R | SUV FWD YHY (DV5RD) | | GDS83806 | Drive Shaft | | 25 | 24 | 58.5 | 79 | 867 | |
| | 2018.05- | 6MT | F | L/R | SUV FWD YHY (DV5RD) | | GCO82355 | Outer Joint | | 25 | 34 | 58.5 | 79 | 55.5 | I |
| | 2018.05- | 6MT | F | R | SUV FWD YHY (DV5RD) | | GCI82374 | Inner Joint | | 24 | 34 | 29.8 | 291 | 88 | |
| | 2018.05- | 6MT | F | L | SUV Van FWD YHY (DV5RD) | | GDS83645 | Drive Shaft | | 25 | 24 | 58.5 | 79 | 638 | |
| | 2018.05- | 6MT | F | R | SUV Van FWD YHY (DV5RD) | | GDS83806 | Drive Shaft | | 25 | 24 | 58.5 | 79 | 867 | |
| | 2018.05- | 6MT | F | L/R | SUV Van FWD YHY (DV5RD) | | GCO82355 | Outer Joint | | 25 | 34 | 58.5 | 79 | 55.5 | I |
| | 2018.05- | 6MT | F | L | SUV Van FWD YHY (DV5RD) | | GCI82131 | Inner Joint | | 24 | 34 | 40 | 62 | 89 | |
| | 2018.05- | 6MT | F | R | SUV Van FWD YHY (DV5RD) | | GCI82374 | Inner Joint | | 24 | 34 | 29.8 | 291 | 88 | |
| | 2019.08- | 6MT | F | L | SUV FWD YHY (DV5RD) | | GDS84174 | Drive Shaft | | 25 | 24 | 55.7 | 84 | 685 | |

| | YEAR | TRANSM. | F/R | L/R | BODY STYLE & DRIVE TYPE & ENGINE | REMARKS | G-AP Ref. | PRODUCT | ABS | Technical Specifications A | B | C | H | L | P |
|---|---|---|---|---|---|---|---|---|---|---|---|---|---|---|---|
| **PEUGEOT** **2008** | | | | | | | | | | | | | | | |
| 1.5 (75 kw) | 2019.08- | 6MT | F | R | SUV FWD YHY (DV5RD) | | GDS84335 | Drive Shaft | | 25 | 24 | 55.7 | 84 | 910 | |
| | 2019.08- | 6MT | F | L/R | SUV FWD YHY (DV5RD) | | GCO82279 | Outer Joint | | 25 | 34 | 55.7 | 84 | 55.5 | I |
| | 2019.08- | 6MT | F | L | SUV FWD YHY (DV5RD) | | GCI82131 | Inner Joint | | 24 | 34 | 40 | 62 | 89 | |
| | 2019.08- | 6MT | F | R | SUV FWD YHY (DV5RD) | | GCI82130 | Inner Joint | | 24 | 34 | 29.8 | 291 | 88 | |
| 1.5 (81 kw) | 2021.01- | 6MT | F | L | SUV FWD YHS (DV5RCE) | | GDS84174 | Drive Shaft | | 25 | 24 | 55.7 | 84 | 685 | |
| | 2021.01- | 6MT | F | R | SUV FWD YHS (DV5RCE) | | GDS84335 | Drive Shaft | | 25 | 24 | 55.7 | 84 | 910 | |
| | 2021.01- | 6MT | F | L/R | SUV FWD YHS (DV5RCE) | | GCO82279 | Outer Joint | | 25 | 34 | 55.7 | 84 | 55.5 | I |
| | 2021.01- | 6MT | F | L | SUV FWD YHS (DV5RCE) | | GCI82131 | Inner Joint | | 24 | 34 | 40 | 62 | 89 | |
| | 2021.01- | 6MT | F | R | SUV FWD YHS (DV5RCE) | | GCI82130 | Inner Joint | | 24 | 34 | 29.8 | 291 | 88 | |
| 1.5 (88 kw) | 2018.05- | 6AT | F | L | SUV FWD YHX (DV5RC) | | GDS83216 | Drive Shaft | | 25 | 37 | 58.5 | 79 | 598 | |
| | 2018.05- | 6AT | F | R | SUV FWD YHX (DV5RC) | | GDS83217 | Drive Shaft | | 25 | 37 | 58.5 | 79 | 862 | |
| | 2018.05- | 6AT | F | L | SUV FWD YHX (DV5RC) | | GCO82355 | Outer Joint | | 25 | 34 | 58.5 | 79 | 55.5 | I |
| | 2018.05- | 6AT | F | R | SUV FWD YHX (DV5RC) | | GCO82351 | Outer Joint | | 25 | 34 | 58.5 | 79 | 55.5 | I |
| | 2018.05- | 6AT | F | R | SUV FWD YHX (DV5RC) | | GCI82182 | Inner Joint | | 37 | 34 | | 290 | 88 | |
| | 2018.05- | 6AT | F | L | SUV Van FWD YHX (DV5RC) | | GDS83216 | Drive Shaft | | 25 | 37 | 58.5 | 79 | 598 | |
| | 2018.05- | 6AT | F | R | SUV Van FWD YHX (DV5RC) | | GDS83217 | Drive Shaft | | 25 | 37 | 58.5 | 79 | 862 | |
| | 2018.05- | 6AT | F | L | SUV Van FWD YHX (DV5RC) | | GCO82355 | Outer Joint | | 25 | 34 | 58.5 | 79 | 55.5 | I |
| | 2018.05- | 6AT | F | R | SUV Van FWD YHX (DV5RC) | | GCO82351 | Outer Joint | | 25 | 34 | 58.5 | 79 | 55.5 | I |
| | 2018.05- | 6AT | F | L | SUV Van FWD YHX (DV5RC) | | GCI82119 | Inner Joint | | 37 | 34 | 41.5 | 58.5 | 94 | |
| | 2018.05- | 6AT | F | R | SUV Van FWD YHX (DV5RC) | | GCI82182 | Inner Joint | | 37 | 34 | | 290 | 88 | |
| 1.5 (96 kw) | 2019.08- | 8AT | F | L | SUV FWD YHZ (DV5RC) | | GDS56654 | Drive Shaft | | 25 | 37 | 56 | 83.5 | 642 | |
| | 2019.08- | 8AT | F | R | SUV FWD YHZ (DV5RC) | | GDS84423 | Drive Shaft | | 25 | 37 | 56 | 83.5 | 903 | |
| | 2019.08- | 8AT | F | R | SUV FWD YHZ (DV5RC) | | GCO82810 | Outer Joint | | 25 | 25 | 56 | 83.5 | 56 | I |
| | 2019.08- | 8AT | F | L | SUV FWD YHZ (DV5RC) | | GCI82859 | Inner Joint | | 37 | 24 | 42 | 58.5 | 101.5 | |
| | 2019.08- | 8AT | F | R | SUV FWD YHZ (DV5RC) | | GCI82748 | Inner Joint | | 37 | 26 | 29.85 | 285 | 104 | |
| 1.6 (55 kw) | 2015.01-2019.11 | 5MT | F | L | SUV FWD BHW (DV6FE) | | GDS83645 | Drive Shaft | | 25 | 24 | 58.5 | 79 | 638 | |
| | 2015.01-2019.11 | 5MT | F | R | SUV FWD BHW (DV6FE) | | GDS83806 | Drive Shaft | | 25 | 24 | 58.5 | 79 | 867 | |
| | 2015.01-2019.11 | 5MT | F | L/R | SUV FWD BHW (DV6FE) | | GCO82355 | Outer Joint | | 25 | 34 | 58.5 | 79 | 55.5 | I |
| | 2015.01-2019.11 | 5MT | F | L | SUV FWD BHW (DV6FE) | | GCI82131 | Inner Joint | | 24 | 34 | 40 | 62 | 89 | |
| | 2015.01-2019.11 | 5MT | F | R | SUV FWD BHW (DV6FE) | | GCI82374 | Inner Joint | | 24 | 34 | 29.8 | 291 | 88 | |
| 1.6 (68 kw) | 2013.03- | 4AT | F | L | SUV FWD 9HP (DV6DTED) | Hollow shaft | GDS45194 | Drive Shaft | | 25 | 26 | 58.5 | 79 | 621 | |
| | 2013.03- | 4AT | F | L | SUV FWD 9HP (DV6DTED) | Solid shaft | GDS45202 | Drive Shaft | | 25 | 26 | 58.5 | 78.5 | 620 | |
| | 2013.03- | 4AT | F | R | SUV FWD 9HP (DV6DTED) | | GDS10267 | Drive Shaft | | 25 | 26 | 58.5 | 79.5 | 766 | |
| | 2013.03- | 5MT | F | L | SUV FWD 9HP (DV6DTED) | | GDS10248 | Drive Shaft | | 25 | 24 | 58.5 | 79 | 642 | |
| | 2013.03- | 5MT | F | L | SUV FWD 9HP (DV6DTED) | | GDS10250 | Drive Shaft | | 25 | 24 | 58.5 | 79 | 630 | |
| | 2013.03- | 5MT | F | R | SUV FWD 9HP (DV6DTED) | Inner teeth of wheel side:22 | GDS10413 | Drive Shaft | | 25 | 24 | 58.5 | 78.5 | 860 | |
| | 2013.03- | 6AT | F | L | SUV FWD 9HP (DV6DTED) | | GDS83216 | Drive Shaft | | 25 | 37 | 58.5 | 79 | 598 | |
| | 2013.03- | 6AT | F | R | SUV FWD 9HP (DV6DTED) | | GDS83217 | Drive Shaft | | 25 | 37 | 58.5 | 79 | 862 | |
| | 2013.03- | 6AT | F | L | SUV FWD 9HP (DV6DTED) | | GCO82355 | Outer Joint | | 25 | 34 | 58.5 | 79 | 55.5 | I |
| | 2013.03- | 6AT | F | R | SUV FWD 9HP (DV6DTED) | | GCO82351 | Outer Joint | | 25 | 34 | 58.5 | 79 | 55.5 | I |
| | 2013.03- | 6AT | F | R | SUV FWD 9HP (DV6DTED) | | GCI82182 | Inner Joint | | 37 | 34 | | 290 | 88 | |
| | 2013.03- | 6MT | F | L | SUV FWD 9HP (DV6DTED) | | GDS10253 | Drive Shaft | | 25 | 24 | 58.5 | 79 | 626 | |
| | 2013.03- | 6MT | F | R | SUV FWD 9HP (DV6DTED) | | GDS45221 | Drive Shaft | | 25 | 24 | 58.5 | 79 | 881 | |
| | 2013.03- | 6MT | F | L | SUV FWD 9HP (DV6DTED) | | GCO10148 | Outer Joint | | 25 | 34 | 58.5 | 79 | 55.5 | I |
| | 2013.03- | 6MT | F | L | SUV FWD 9HP (DV6DTED) | | GCI10057 | Inner Joint | | 24 | 34 | 40 | 52.5 | 90 | |
| | 2013.03- | 6MT | F | R | SUV FWD 9HP (DV6DTED) | | GCI10165 | Inner Joint | | 24 | 34 | 29.8 | 305.5 | 87.5 | |
| | 2013.03- | AT/MT | F | L/R | SUV FWD 9HP (DV6DTED) | | GCO10042 | Outer Joint | | 25 | 34 | 54.8 | 78.5 | 56 | I |
| | 2013.03- | MT | F | R | SUV FWD 9HP (DV6DTED) | Trans. code:BVM5;Inner teeth of wheel side:34 | GDS10249 | Drive Shaft | | 25 | 24 | 58.5 | 79 | 864 | |
| | 2013.03- | MT | F | L | SUV FWD 9HP (DV6DTED) | | GCO99366 | Outer Joint | | 25 | 34 | 58.5 | 79 | 55 | I |
| 1.6 (73 kw) | 2015.01-2019.11 | 5MT | F | L | SUV FWD BHY (DV6FD) | | GDS83645 | Drive Shaft | | 25 | 24 | 58.5 | 79 | 638 | |
| | 2015.01-2019.11 | 5MT | F | R | SUV FWD BHY (DV6FD) | | GDS83806 | Drive Shaft | | 25 | 24 | 58.5 | 79 | 867 | |
| | 2015.01-2019.11 | 5MT | F | L/R | SUV FWD BHY (DV6FD) | | GCO82355 | Outer Joint | | 25 | 34 | 58.5 | 79 | 55.5 | I |
| | 2015.01-2019.11 | 5MT | F | L | SUV FWD BHY (DV6FD) | | GCI82131 | Inner Joint | | 24 | 34 | 40 | 62 | 89 | |
| | 2015.01-2019.11 | 5MT | F | R | SUV FWD BHY (DV6FD) | | GCI82374 | Inner Joint | | 24 | 34 | 29.8 | 291 | 88 | |
| | 2015.01-2019.11 | 6AMT | F | L | SUV FWD BHY (DV6FD) | | GDS83807 | Drive Shaft | | 21 | 22 | 48.2 | 85.5 | 652 | |
| | 2015.01-2019.11 | Semi-6AT | F | R | SUV FWD BHY (DV6FD) | | GDS82810 | Drive Shaft | | 21 | 22 | 48.2 | 85.5 | 865 | |
| | 2015.01-2019.11 | Semi-6AT | F | R | SUV FWD BHY (DV6FD) | | GCO10143 | Outer Joint | | 21 | 34 | 48.2 | 85.5 | 56.5 | I |
| | 2015.01-2019.11 | Semi-6AT | F | R | SUV FWD BHY (DV6FD) | | GCI82122 | Inner Joint | | 22 | 34 | 30.05 | 98.5 | 89.5 | |
| | 2015.01-2019.11 | | F | L/R | SUV FWD BHY (DV6FD) | | GCO10042 | Outer Joint | | 25 | 34 | 54.8 | 78.5 | 56 | I |
| 1.6 (84 kw) | 2013.03- | 6MT | F | L | SUV FWD 9HD (DV6C) | | GDS10253 | Drive Shaft | | 25 | 24 | 58.5 | 79 | 626 | |
| | 2013.03- | 6MT | F | R | SUV FWD 9HD (DV6C) | | GDS45221 | Drive Shaft | | 25 | 24 | 58.5 | 79 | 881 | |
| | 2013.03- | 6MT | F | L | SUV FWD 9HD (DV6C) | | GCO99366 | Outer Joint | | 25 | 34 | 58.5 | 79 | 55 | I |
| | 2013.03- | 6MT | F | R | SUV FWD 9HD (DV6C) | | GCI10165 | Inner Joint | | 24 | 34 | 29.8 | 305.5 | 87.5 | |
| | 2013.03- | AT | F | L | SUV FWD 9HD (DV6C) | | GDS45194 | Drive Shaft | | 25 | 26 | 58.5 | 79 | 621 | |
| | 2013.03- | AT/MT | F | L/R | SUV FWD 9HD (DV6C) | | GCO10042 | Outer Joint | | 25 | 34 | 54.8 | 78.5 | 56 | I |

| | YEAR | TRANSM. | F/R | L/R | BODY STYLE & DRIVE TYPE & ENGINE | REMARKS | G-AP Ref. | PRODUCT | ABS | Technical Specifications A | B | C | H | L | P |
|---|---|---|---|---|---|---|---|---|---|---|---|---|---|---|---|
| **PEUGEOT** | | | | | | | | | | | | | | | |
| **2008** | | | | | | | | | | | | | | | |
| 1.6 (84 kw) | 2013.03- | MT | F | L | SUV FWD 9HD (DV6C) | | GCO10148 | Outer Joint | | 25 | 34 | 58.5 | 79 | 55.5 | I |
| | 2013.03- | MT | F | L | SUV FWD 9HD (DV6C) | | GCI10057 | Inner Joint | | 24 | 34 | 40 | 52.5 | 90 | |
| 1.6 (85 kw) | 2013.05- | 5MT | F | L | SUV FWD 5FS (EP6C) | | GDS10248 | Drive Shaft | | 25 | 24 | 58.5 | 79 | 642 | |
| | 2013.05- | 5MT | F | R | SUV FWD 5FS (EP6C) | | GDS10413 | Drive Shaft | | 25 | 24 | 58.5 | 78.5 | 860 | |
| | 2013.05- | 5MT | F | L | SUV FWD 5FS (EP6C) | | GCI10080 | Inner Joint | | 24 | 34 | 40 | 69 | 89.5 | |
| | 2013.05- | 5MT | F | R | SUV FWD 5FS (EP6C) | | GCI10144 | Inner Joint | | 24 | 22 | 29.82 | 291 | 101 | |
| | 2013.05- | AT | F | L/R | SUV FWD 5FS (EP6C) | | GCO10025 | Outer Joint | | 25 | 22 | 60 | 80 | 54 | I |
| | 2013.05- | MT | F | L | SUV FWD 5FS (EP6C) | | GDS10250 | Drive Shaft | | 25 | 24 | 58.5 | 79 | 630 | |
| | 2014.07- | 6MT | F | L | SUV FWD BHX (DV6FC) | | GDS10253 | Drive Shaft | | 25 | 24 | 58.5 | 79 | 626 | |
| | 2014.07- | 6MT | F | R | SUV FWD BHX (DV6FC) | | GDS45221 | Drive Shaft | | 25 | 24 | 58.5 | 79 | 881 | |
| | 2014.07- | 6MT | F | L | SUV FWD BHX (DV6FC) | | GCO99366 | Outer Joint | | 25 | 34 | 58.5 | 79 | 55 | I |
| | 2014.07- | MT | F | R | SUV FWD BHX (DV6FC) | | GDS10325 | Drive Shaft | | 25 | 24 | 58.5 | 79 | 940 | |
| | 2014.07- | MT | F | L | SUV FWD BHX (DV6FC) | | GCO10148 | Outer Joint | | 25 | 34 | 58.5 | 79 | 55.5 | I |
| | 2014.07- | MT | F | L | SUV FWD BHX (DV6FC) | | GCI10057 | Inner Joint | | 24 | 34 | 40 | 52.5 | 90 | |
| | 2014.07- | MT | F | R | SUV FWD BHX (DV6FC) | | GCI10058 | Inner Joint | | 24 | 34 | 29.8 | 365 | 88 | |
| | 2014.07- | | F | L/R | SUV FWD BHX (DV6FC) | | GCO10042 | Outer Joint | | 25 | 34 | 54.8 | 78.5 | 56 | I |
| 1.6 (88 kw) | 2013.03- | 4AT | F | L | SUV FWD 5FS (EP6C) | | GDS45202 | Drive Shaft | | 25 | 26 | 58.5 | 78.5 | 620 | |
| | 2013.03- | 4AT | F | R | SUV FWD 5FS (EP6C) | | GDS10267 | Drive Shaft | | 25 | 26 | 58.5 | 79.5 | 766 | |
| | 2013.03- | 5MT | F | L | SUV FWD 5FS (EP6C) | | GDS10248 | Drive Shaft | | 25 | 24 | 58.5 | 79 | 642 | |
| | 2013.03- | 5MT | F | L | SUV FWD 5FS (EP6C) | | GDS10250 | Drive Shaft | | 25 | 24 | 58.5 | 79 | 630 | |
| | 2013.03- | 5MT | F | R | SUV FWD 5FS (EP6C) | | GDS10413 | Drive Shaft | | 25 | 24 | 58.5 | 78.5 | 860 | |
| | 2013.03- | 5MT | F | L | SUV FWD 5FS (EP6C) | | GCI10080 | Inner Joint | | 24 | 34 | 40 | 69 | 89.5 | |
| | 2013.03- | 5MT | F | R | SUV FWD 5FS (EP6C) | | GCI10144 | Inner Joint | | 24 | 22 | 29.82 | 291 | 101 | |
| | 2013.03- | AT | F | L/R | SUV FWD 5FS (EP6C) | | GCO10025 | Outer Joint | | 25 | 22 | 60 | 80 | 54 | I |
| | 2013.03- | | F | L/R | SUV FWD 5FS (EP6C) | | GCO10042 | Outer Joint | | 25 | 34 | 54.8 | 78.5 | 56 | I |
| | 2014.07-2018.04 | 6MT | F | L | SUV FWD BHZ (DV6FC) | | GDS10253 | Drive Shaft | | 25 | 24 | 58.5 | 79 | 626 | |
| | 2014.07-2018.04 | 6MT | F | R | SUV FWD BHZ (DV6FC) | | GDS45221 | Drive Shaft | | 25 | 24 | 58.5 | 79 | 881 | |
| | 2014.07-2018.04 | 6MT | F | L | SUV FWD BHZ (DV6FC) | | GCO99366 | Outer Joint | | 25 | 34 | 58.5 | 79 | 55 | I |
| | 2014.07-2018.04 | 6MT | F | R | SUV FWD BHZ (DV6FC) | | GCI10165 | Inner Joint | | 24 | 34 | 29.8 | 305.5 | 87.5 | |
| | 2014.07-2018.04 | MT | F | R | SUV FWD BHZ (DV6FC) | | GDS10325 | Drive Shaft | | 25 | 24 | 58.5 | 79 | 940 | |
| | 2014.07-2018.04 | MT | F | L | SUV FWD BHZ (DV6FC) | | GCO10148 | Outer Joint | | 25 | 34 | 58.5 | 79 | 55.5 | I |
| | 2014.07-2018.04 | MT | F | L | SUV FWD BHZ (DV6FC) | | GCI10057 | Inner Joint | | 24 | 34 | 40 | 52.5 | 90 | |
| | 2014.07-2018.04 | | F | L/R | SUV FWD BHZ (DV6FC) | | GCO10042 | Outer Joint | | 25 | 34 | 54.8 | 78.5 | 56 | I |
| **205** | | | | | | | | | | | | | | | |
| 1.1 (44 kw) | 1989.07-1998.09 | 4MT | F | L | Hatchback FWD TU1M | Trans. code:MA | GDS45015 | Drive Shaft | | 21 | 22 | 56.4 | 76 | 576 | |
| | 1989.07-1998.09 | 4MT | F | R | Hatchback FWD TU1M | | GDS10044 | Drive Shaft | | 21 | 22 | 56.4 | 76 | 832.5 | |
| | 1989.07-1998.09 | 4MT | F | R | Hatchback FWD TU1M | | GDS45066 | Drive Shaft | | 21 | 24 | 56.4 | 76 | 825.5 | |
| 1.4 (55 kw) | 1988.07-1998.09 | 5MT | F | L | Hatchback FWD KDY (TU3M), KDZ (TU3M), KFX (TU3JP) (01.96-) | Trans. code:MA | GDS45015 | Drive Shaft | | 21 | 22 | 56.4 | 76 | 576 | |
| 1.6 (53 kw) | 1987.10-1998.09 | AT | F | L | Hatchback FWD XU5CP | | GDS10039 | Drive Shaft | | 21 | 24 | 56.4 | 76 | 567 | |
| | 1987.10-1998.09 | AT | F | R | Hatchback FWD XU5CP | | GDS10007 | Drive Shaft | | 21 | 24 | 48 | 75.5 | 845 | |
| | 1987.10-1998.09 | MT | F | L/R | Hatchback FWD XU5CP | | GCO10009 | Outer Joint | | 21 | 22 | 56 | 79 | 60 | I |
| | 1987.10-1998.09 | | F | L | Hatchback FWD XU5CP | | GDS10022 | Drive Shaft | 48T | 25 | 24 | 54.8 | 78.5 | 573 | |
| 1.6 (55 kw) | 1987.10-1998.09 | MT | F | L | Hatchback FWD XU5CP | | GDS10039 | Drive Shaft | | 21 | 24 | 56.4 | 76 | 567 | |
| | 1987.10-1998.09 | MT | F | R | Hatchback FWD XU5CP | | GDS10007 | Drive Shaft | | 21 | 24 | 48 | 75.5 | 845 | |
| | 1987.10-1998.09 | MT | F | L/R | Hatchback FWD XU5CP | | GCO10009 | Outer Joint | | 21 | 22 | 56 | 79 | 60 | I |
| | 1987.10-1998.09 | | F | L | Hatchback FWD XU5CP | | GDS10022 | Drive Shaft | 48T | 25 | 24 | 54.8 | 78.5 | 573 | |
| 1.6 (58 kw) | 1987.10-1998.09 | AT | F | L | Hatchback FWD XU51C | | GDS10039 | Drive Shaft | | 21 | 24 | 56.4 | 76 | 567 | |
| | 1987.10-1998.09 | AT | F | R | Hatchback FWD XU51C | | GDS10007 | Drive Shaft | | 21 | 24 | 48 | 75.5 | 845 | |
| | 1987.10-1998.09 | | F | L | Hatchback FWD XU51C | | GDS10022 | Drive Shaft | 48T | 25 | 24 | 54.8 | 78.5 | 573 | |
| 1.6 (65 kw) | 1987.08-1996.06 | 4AT | F | L | Hatchback FWD XU5M | | GDS10022 | Drive Shaft | 48T | 25 | 24 | 54.8 | 78.5 | 573 | |
| | 1987.08-1996.06 | 4AT | F | L | Hatchback FWD XU5M | Date to:1996.06 | GDS10039 | Drive Shaft | | 21 | 24 | 56.4 | 76 | 567 | |
| | 1987.08-1996.06 | 4AT | F | R | Hatchback FWD XU5M | Model year to:1996.06 | GDS10007 | Drive Shaft | | 21 | 24 | 48 | 75.5 | 845 | |
| | 1987.08-1996.06 | 4AT | F | L/R | Hatchback FWD XU5M | | GCO10009 | Outer Joint | | 21 | 22 | 56 | 79 | 60 | I |
| 1.7 (44 kw) | 1987.07-1998.09 | MT | F | L | Hatchback FWD 161A (XUD7) | | GDS10039 | Drive Shaft | | 21 | 24 | 56.4 | 76 | 567 | |
| | 1987.07-1998.09 | MT | F | R | Hatchback FWD 161A (XUD7) | | GDS10007 | Drive Shaft | | 21 | 24 | 48 | 75.5 | 845 | |
| | 1987.07-1998.09 | MT | F | L/R | Hatchback FWD 161A (XUD7) | | GCO10009 | Outer Joint | | 21 | 22 | 56 | 79 | 60 | I |
| 1.8 (44 kw) | 1994.03-1997.05 | MT | F | L | Hatchback Van FWD XUD7 | | GDS10039 | Drive Shaft | | 21 | 24 | 56.4 | 76 | 567 | |
| | 1994.03-1997.05 | MT | F | R | Hatchback Van FWD XUD7 | | GDS10007 | Drive Shaft | | 21 | 24 | 48 | 75.5 | 845 | |
| 1.8 (57 kw) | 1990.01-1998.09 | MT | F | L | Hatchback FWD XUD7T | | GDS10039 | Drive Shaft | | 21 | 24 | 56.4 | 76 | 567 | |
| | 1990.01-1998.09 | MT | F | R | Hatchback FWD XUD7T | | GDS10007 | Drive Shaft | | 21 | 24 | 48 | 75.5 | 845 | |
| | 1990.01-1998.09 | MT | F | L/R | Hatchback FWD XUD7T | | GCO10009 | Outer Joint | | 21 | 22 | 56 | 79 | 60 | I |
| | 1990.01-1998.09 | | F | L | Hatchback FWD XUD7T | | GDS10022 | Drive Shaft | 48T | 25 | 24 | 54.8 | 78.5 | 573 | |
| 1.8 (58 kw) | 1990.08-1997.05 | 5MT | F | L | Hatchback FWD XUD7T | | GDS10039 | Drive Shaft | | 21 | 24 | 56.4 | 76 | 567 | |
| 1.9 (47 kw) | 1990.08-1998.09 | AT/MT | F | L | Hatchback FWD XUD9A | | GDS10039 | Drive Shaft | | 21 | 24 | 56.4 | 76 | 567 | |
| | 1990.08-1998.09 | AT/MT | F | R | Hatchback FWD XUD9A | | GDS10007 | Drive Shaft | | 21 | 24 | 48 | 75.5 | 845 | |

| | YEAR | TRANSM. | F/R | L/R | BODY STYLE & DRIVE TYPE & ENGINE | REMARKS | G-AP Ref. | PRODUCT | ABS | Technical Specifications A | B | C | H | L | P |
|---|---|---|---|---|---|---|---|---|---|---|---|---|---|---|---|
| **PEUGEOT** | | | | | | | | | | | | | | | |
| **205** | | | | | | | | | | | | | | | |
| 1.9 (47 kw) | 1990.08-1998.09 | MT | F | L/R | Hatchback FWD XUD9A | | GCO10009 | Outer Joint | | 21 | 22 | 56 | 79 | 60 | I |
| | 1990.08-1998.09 | | F | L | Hatchback FWD XUD9A | | GDS10022 | Drive Shaft | 48T | 25 | 24 | 54.8 | 78.5 | 573 | |
| 1.9 (94 kw) | 1987.10-1998.09 | MT | F | L | Hatchback FWD XU9JA | Trans. code:BE1/3 | GDS45134 | Drive Shaft | | 25 | 24 | 54.8 | 78.5 | 573 | |
| | 1987.10-1998.09 | MT | F | L/R | Hatchback FWD XU9JA | | GCO10002 | Outer Joint | | 25 | 23 | 54.8 | 78.5 | 56 | I |
| | 1987.10-1998.09 | MT | F | L/R | Hatchback FWD XU9JA | Date from:1991.01 | GCO10005 | Outer Joint | 90T | 25 | 23 | 54.8 | 78.5 | 56 | I |
| | 1987.10-1998.09 | MT | F | L/R | Hatchback FWD XU9JA | Date to:1990.12 | GCO10024 | Outer Joint | 48T | 25 | 34 | 55.7 | 79 | 55 | I |
| | 1987.10-1998.09 | | F | L | Hatchback FWD XU9JA | | GDS10022 | Drive Shaft | 48T | 25 | 24 | 54.8 | 78.5 | 573 | |
| | 1987.10-1998.09 | | F | R | Hatchback FWD XU9JA | | GDS10177 | Drive Shaft | | 25 | 24 | 54.8 | 78.5 | 845 | |
| **206** | | | | | | | | | | | | | | | |
| 1.1 (40 kw) | 1998.08-2000.07 | 5MT | F | L | Hatchback FWD TU1JP | | GDS10043 | Drive Shaft | | 21 | 22 | 48 | 86.5 | 610 | |
| | 1998.08-2000.07 | 5MT | F | L | Hatchback FWD TU1JP | | GDS45027 | Drive Shaft | 48T | 21 | 22 | 48 | 86.5 | 610 | |
| | 1998.08-2000.07 | 5MT | F | R | Hatchback FWD TU1JP | | GDS45035 | Drive Shaft | 48T | 21 | 22 | 48 | 86.5 | 886 | |
| | 1998.08-2000.07 | 5MT | F | R | Hatchback FWD TU1JP | | GDS45094 | Drive Shaft | | 21 | 22 | 48 | 86.5 | 886 | |
| | 1998.08-2000.07 | 5MT | F | L/R | Hatchback FWD TU1JP | org. no. to:09695 | GCO45011 | Outer Joint | | 21 | 22 | 48 | 86.5 | 54 | I |
| | 1998.08-2000.07 | 5MT | F | L/R | Hatchback FWD TU1JP | | GCO45033 | Outer Joint | 48T | 21 | 22 | 48 | 86.5 | 54 | I |
| | 1998.08-2000.07 | 5MT | F | L/R | Hatchback FWD TU1JP | org. no. from:09696 | GCO45065 | Outer Joint | | 21 | 21 | 48.5 | 86 | 54 | I |
| | 1998.08-2000.07 | 5MT | F | L | Hatchback FWD TU1JP | | GCI45011 | Inner Joint | | 22 | 22 | 40 | 65 | 88 | |
| | 1998.08-2000.07 | 5MT | F | R | Hatchback FWD TU1JP | | GCI10024 | Inner Joint | | 22 | 22 | 30 | 329.5 | 86 | |
| | 1998.08-2000.07 | MT | F | R | Hatchback FWD TU1JP | | GDS45098 | Drive Shaft | 48T | 21 | 22 | 48 | 86.5 | 884 | |
| 1.1 (44 kw) | 1998.08-2007.02 | MT | F | L | Hatchback FWD TU1JP | | GDS10043 | Drive Shaft | | 21 | 22 | 48 | 86.5 | 610 | |
| | 1998.08-2007.02 | MT | F | L | Hatchback FWD TU1JP | Date to:2003.08,To ORG/OPR:09793 | GDS45027 | Drive Shaft | 48T | 21 | 22 | 48 | 86.5 | 610 | |
| | 1998.08-2007.02 | MT | F | R | Hatchback FWD TU1JP | Date to:2003.08,To ORG/OPR:09793 | GDS45035 | Drive Shaft | 48T | 21 | 22 | 48 | 86.5 | 886 | |
| | 1998.08-2007.02 | MT | F | R | Hatchback FWD TU1JP | | GDS45094 | Drive Shaft | | 21 | 22 | 48 | 86.5 | 886 | |
| | 1998.08-2007.02 | MT | F | L | Hatchback FWD TU1JP | | GCO45065 | Outer Joint | | 21 | 21 | 48.5 | 86 | 54 | I |
| | 1998.08-2007.02 | MT | F | L/R | Hatchback FWD TU1JP | | GCO45011 | Outer Joint | | 21 | 22 | 48 | 86.5 | 54 | I |
| | 1998.08-2007.02 | MT | F | L/R | Hatchback FWD TU1JP | Date to:2003.08,To ORG/OPR:09793 | GCO45033 | Outer Joint | 48T | 21 | 22 | 48 | 86.5 | 54 | I |
| | 1998.08-2007.02 | MT | F | L/R | Hatchback FWD TU1JP | Date from:2003.09,From ORG/OPR:09794 | GCO45067 | Outer Joint | 48T | 21 | 21 | 48.5 | 86 | 54 | I |
| | 1998.08-2007.02 | MT | F | L | Hatchback FWD TU1JP | | GCI45011 | Inner Joint | | 22 | 22 | 40 | 65 | 88 | |
| | 1998.08-2007.02 | MT | F | R | Hatchback FWD TU1JP | | GCI10024 | Inner Joint | | 22 | 22 | 30 | 329.5 | 86 | |
| | 1998.08-2007.02 | 5MT | F | L | Hatchback Van FWD TU1JP | | GDS10043 | Drive Shaft | | 21 | 22 | 48 | 86.5 | 610 | |
| | 1998.08-2007.02 | 5MT | F | L | Hatchback Van FWD TU1JP | | GDS45027 | Drive Shaft | 48T | 21 | 22 | 48 | 86.5 | 610 | |
| | 1998.08-2007.02 | 5MT | F | R | Hatchback Van FWD TU1JP | | GDS45035 | Drive Shaft | 48T | 21 | 22 | 48 | 86.5 | 886 | |
| | 1998.08-2007.02 | 5MT | F | R | Hatchback Van FWD TU1JP | | GDS45094 | Drive Shaft | | 21 | 22 | 48 | 86.5 | 886 | |
| | 1998.08-2007.02 | 5MT | F | L/R | Hatchback Van FWD TU1JP | | GCO45011 | Outer Joint | | 21 | 22 | 48 | 86.5 | 54 | I |
| | 1998.08-2007.02 | 5MT | F | L/R | Hatchback Van FWD TU1JP | | GCO45033 | Outer Joint | 48T | 21 | 22 | 48 | 86.5 | 54 | I |
| | 1998.08-2007.02 | 5MT | F | L | Hatchback Van FWD TU1JP | | GCI45011 | Inner Joint | | 22 | 22 | 40 | 65 | 88 | |
| | 1998.08-2007.02 | 5MT | F | R | Hatchback Van FWD TU1JP | | GCI10024 | Inner Joint | | 22 | 22 | 30 | 329.5 | 86 | |
| 1.4 (50 kw) | 2001.09-2009.03 | MT | F | L | Hatchback Van FWD DV4TD | Date from:2004.02,From ORG/OPR:09948 | GDS45027 | Drive Shaft | 48T | 21 | 22 | 48 | 86.5 | 610 | |
| | 2001.09-2009.03 | MT | F | L | Hatchback Van FWD DV4TD | | GDS45031 | Drive Shaft | | 21 | 22 | 48 | 86.5 | 604.5 | |
| | 2001.09-2009.03 | MT | F | L | Hatchback Van FWD DV4TD | Date to:2004.01;To ORG/OPR:09947 | GDS45032 | Drive Shaft | 48T | 21 | 22 | 48 | 86.5 | 604.5 | |
| | 2001.09-2009.03 | MT | F | R | Hatchback Van FWD DV4TD | | GDS45035 | Drive Shaft | 48T | 21 | 22 | 48 | 86.5 | 886 | |
| | 2001.09-2009.03 | MT | F | R | Hatchback Van FWD DV4TD | | GDS45094 | Drive Shaft | | 21 | 22 | 48 | 86.5 | 886 | |
| | 2001.09-2009.03 | MT | F | L/R | Hatchback Van FWD DV4TD | | GCO45011 | Outer Joint | | 21 | 22 | 48 | 86.5 | 54 | I |
| | 2001.09-2009.03 | MT | F | L/R | Hatchback Van FWD DV4TD | Type:Back clip location | GCO45033 | Outer Joint | 48T | 21 | 22 | 48 | 86.5 | 54 | I |
| | 2001.09-2009.03 | MT | F | L/R | Hatchback Van FWD DV4TD | | GCO45065 | Outer Joint | | 21 | 21 | 48.5 | 86 | 54 | I |
| | 2001.09-2009.03 | MT | F | L/R | Hatchback Van FWD DV4TD | Date from:2004.02,From ORG/OPR:09948 | GCO45067 | Outer Joint | 48T | 21 | 21 | 48.5 | 86 | 54 | I |
| | 2001.09-2009.03 | MT | F | L | Hatchback Van FWD DV4TD | Date from:2004.02,From ORG/OPR:09948 | GCI45011 | Inner Joint | | 22 | 22 | 40 | 65 | 88 | |
| | 2001.09-2009.03 | MT | F | R | Hatchback Van FWD DV4TD | | GCI10024 | Inner Joint | | 22 | 22 | 30 | 329.5 | 86 | |
| | 2001.09-2009.04 | MT | F | L | Hatchback FWD DV4TD | Trans. code:MA | GDS10043 | Drive Shaft | | 21 | 22 | 48 | 86.5 | 610 | |
| | 2001.09-2009.04 | MT | F | L | Hatchback FWD DV4TD | Date from:2004.02,From ORG/OPR:09948 | GDS45027 | Drive Shaft | 48T | 21 | 22 | 48 | 86.5 | 610 | |
| | 2001.09-2009.04 | MT | F | L | Hatchback FWD DV4TD | | GDS45031 | Drive Shaft | | 21 | 22 | 48 | 86.5 | 604.5 | |
| | 2001.09-2009.04 | MT | F | L | Hatchback FWD DV4TD | Date to:2004.01,To ORG/OPR:09947 | GDS45032 | Drive Shaft | 48T | 21 | 22 | 48 | 86.5 | 604.5 | |
| | 2001.09-2009.04 | MT | F | R | Hatchback FWD DV4TD | Date to:2004.01,To ORG/OPR:09947 | GDS45035 | Drive Shaft | 48T | 21 | 22 | 48 | 86.5 | 886 | |
| | 2001.09-2009.04 | MT | F | R | Hatchback FWD DV4TD | | GDS45094 | Drive Shaft | | 21 | 22 | 48 | 86.5 | 886 | |
| | 2001.09-2009.04 | MT | F | L/R | Hatchback FWD DV4TD | | GCO45011 | Outer Joint | | 21 | 22 | 48 | 86.5 | 54 | I |
| | 2001.09-2009.04 | MT | F | L/R | Hatchback FWD DV4TD | | GCO45033 | Outer Joint | 48T | 21 | 22 | 48 | 86.5 | 54 | I |
| | 2001.09-2009.04 | MT | F | L/R | Hatchback FWD DV4TD | Trans. code:MA | GCO45065 | Outer Joint | | 21 | 21 | 48.5 | 86 | 54 | I |
| | 2001.09-2009.04 | MT | F | L/R | Hatchback FWD DV4TD | Date from:2004.02,From ORG/OPR:09948 | GCO45067 | Outer Joint | 48T | 21 | 21 | 48.5 | 86 | 54 | I |
| | 2001.09-2009.04 | MT | F | L | Hatchback FWD DV4TD | Date to:2004.01,To ORG/OPR:09947 | GCI10023 | Inner Joint | | 22 | 22 | 40 | 58.5 | 86 | |
| | 2001.09-2009.04 | MT | F | L | Hatchback FWD DV4TD | Date from:2004.02,From ORG/OPR:09948 | GCI45011 | Inner Joint | | 22 | 22 | 40 | 65 | 88 | |
| | 2001.09-2009.04 | MT | F | R | Hatchback FWD DV4TD | Date to:2004.01,To ORG/OPR:09947 | GCI10024 | Inner Joint | | 22 | 22 | 30 | 329.5 | 86 | |
| | 2008.01-2010.12 | MT | F | L | Saloon FWD DV4TD | Trans. code:MA | GDS10043 | Drive Shaft | | 21 | 22 | 48 | 86.5 | 610 | |
| | 2008.01-2010.12 | MT | F | L | Saloon FWD DV4TD | Date from:2004.02;From ORG/OPR:09948 | GDS45027 | Drive Shaft | 48T | 21 | 22 | 48 | 86.5 | 610 | |
| | 2008.01-2010.12 | MT | F | L | Saloon FWD DV4TD | | GDS45031 | Drive Shaft | | 21 | 22 | 48 | 86.5 | 604.5 | |
| | 2008.01-2010.12 | MT | F | R | Saloon FWD DV4TD | Date from:2004.02 | GDS45035 | Drive Shaft | 48T | 21 | 22 | 48 | 86.5 | 886 | |

| | YEAR | TRANSM. | F/R | L/R | BODY STYLE & DRIVE TYPE & ENGINE | REMARKS | G-AP Ref. | PRODUCT | ABS | Technical Specifications A | B | C | H | L | P |
|---|---|---|---|---|---|---|---|---|---|---|---|---|---|---|---|
| **PEUGEOT** | | | | | | | | | | | | | | | |
| **206** | | | | | | | | | | | | | | | |
| 1.4 (50 kw) | 2008.01-2010.12 | MT | F | R | Saloon FWD DV4TD | | GDS45094 | Drive Shaft | | 21 | 22 | 48 | 86.5 | 886 | |
| | 2008.01-2010.12 | MT | F | R | Saloon FWD DV4TD | | GCO45065 | Outer Joint | | 21 | 21 | 48.5 | 86 | 54 | I |
| | 2008.01-2010.12 | MT | F | L/R | Saloon FWD DV4TD | | GCO45011 | Outer Joint | | 21 | 22 | 48 | 86.5 | 54 | I |
| | 2008.01-2010.12 | MT | F | L/R | Saloon FWD DV4TD | Type:Back clip location | GCO45033 | Outer Joint | 48T | 21 | 22 | 48 | 86.5 | 54 | I |
| | 2008.01-2010.12 | MT | F | L/R | Saloon FWD DV4TD | Date from:2004.02;From ORG/OPR:09948 | GCO45067 | Outer Joint | 48T | 21 | 21 | 48.5 | 86 | 54 | I |
| | 2008.01-2010.12 | MT | F | L | Saloon FWD DV4TD | Date from:2004.02;From ORG/OPR:09948 | GCI45011 | Inner Joint | | 22 | 22 | 40 | 65 | 88 | |
| | 2008.01-2010.12 | MT | F | R | Saloon FWD DV4TD | | GCI10024 | Inner Joint | | 22 | 22 | 30 | 329.5 | 86 | |
| 1.4 (51 kw) | 2002.09-2007.02 | MT | F | L | Hatchback FWD DV4TD | Date from:2004.02;From ORG/OPR:09948 | GDS45027 | Drive Shaft | 48T | 21 | 22 | 48 | 86.5 | 610 | |
| | 2002.09-2007.02 | MT | F | L | Hatchback FWD DV4TD | | GDS45031 | Drive Shaft | | 21 | 22 | 48 | 86.5 | 604.5 | |
| | 2002.09-2007.02 | MT | F | L | Hatchback FWD DV4TD | | GDS45032 | Drive Shaft | 48T | 21 | 22 | 48 | 86.5 | 604.5 | |
| | 2002.09-2007.02 | MT | F | R | Hatchback FWD DV4TD | | GDS45035 | Drive Shaft | 48T | 21 | 22 | 48 | 86.5 | 886 | |
| | 2002.09-2007.02 | MT | F | R | Hatchback FWD DV4TD | | GDS45094 | Drive Shaft | | 21 | 22 | 48 | 86.5 | 886 | |
| | 2002.09-2007.02 | MT | F | L/R | Hatchback FWD DV4TD | For vehicles without ABS | GCO45011 | Outer Joint | | 21 | 22 | 48 | 86.5 | 54 | I |
| | 2002.09-2007.02 | MT | F | L/R | Hatchback FWD DV4TD | Date from:2004.02;From ORG/OPR:09948 | GCO45067 | Outer Joint | 48T | 21 | 21 | 48.5 | 86 | 54 | I |
| | 2002.09-2007.02 | MT | F | L | Hatchback FWD DV4TD | Date from:2004.02;From ORG/OPR:09948 | GCI45011 | Inner Joint | | 22 | 22 | 40 | 65 | 88 | |
| | 2002.09-2007.02 | MT | F | R | Hatchback FWD DV4TD | | GCI10024 | Inner Joint | | 22 | 22 | 30 | 329.5 | 86 | |
| 1.4 (55 kw) | 1998.08-2012.12 | 4AT/5MT | F | L | Hatchback FWD TU3A/TU3JP | For Enginecode:TU3A | GDS10043 | Drive Shaft | | 21 | 22 | 48 | 86.5 | 610 | |
| | 1998.08-2012.12 | 4AT/5MT | F | R | Hatchback FWD TU3A/TU3JP | For Enginecode:TU3A | GDS45094 | Drive Shaft | | 21 | 22 | 48 | 86.5 | 886 | |
| | 1998.08-2012.12 | 4AT/5MT | F | R | Hatchback FWD TU3A/TU3JP | For Enginecode:TU3A | GCI10024 | Inner Joint | | 22 | 22 | 30 | 329.5 | 86 | |
| | 1998.08-2012.12 | 5MT | F | L/R | Hatchback FWD TU3A/TU3JP | | GCO45011 | Outer Joint | | 21 | 22 | 48 | 86.5 | 54 | I |
| | 1998.08-2012.12 | 5MT | F | L | Hatchback FWD TU3A/TU3JP | For Enginecode:TU3JP,Date to:2008.02 | GCI45011 | Inner Joint | | 22 | 22 | 40 | 65 | 88 | |
| | 1998.08-2012.12 | AT | F | L | Hatchback FWD TU3A/TU3JP | For Enginecode:TU3JP | GDS10281 | Drive Shaft | 48T | 21 | 26 | 48.5 | 86 | 588 | |
| | 1998.08-2012.12 | AT | F | L | Hatchback FWD TU3A/TU3JP | For Enginecode:TU3JP | GDS45146 | Drive Shaft | | 21 | 26 | 48.5 | 86 | 588 | |
| | 1998.08-2012.12 | AT | F | R | Hatchback FWD TU3A/TU3JP | Outer teeth of transm.side:26;For Enginecode:TU3JP;Date From 2000.04 | GDS10287 | Drive Shaft | 48T | 21 | 26 | 48.5 | 86 | 809 | |
| | 1998.08-2012.12 | AT | F | R | Hatchback FWD TU3A/TU3JP | Chassis no. to:08547;Outer teeth of transm.side:23 | GDS10326 | Drive Shaft | 48T | 21 | 23 | 48.5 | 86 | 807 | |
| | 1998.08-2012.12 | AT | F | R | Hatchback FWD TU3A/TU3JP | Chassis no. from:08548,Outer teeth of transm.side:26 | GDS10433 | Drive Shaft | | 21 | 26 | 48.5 | 86 | 809 | |
| | 1998.08-2012.12 | AT | F | R | Hatchback FWD TU3A/TU3JP | Outer teeth of transm.side:23;For Enginecode:TU3JP;Date To 2000.03 | GDS45147 | Drive Shaft | | 21 | 23 | 48.5 | 86 | 807 | |
| | 1998.08-2012.12 | AT | F | L/R | Hatchback FWD TU3A/TU3JP | | GCO10056 | Outer Joint | 48T | 21 | 34 | 48.5 | 86 | 55.5 | I |
| | 1998.08-2012.12 | AT | F | L/R | Hatchback FWD TU3A/TU3JP | | GCO45012 | Outer Joint | | 21 | 34 | 48.5 | 86 | 55.5 | I |
| | 1998.08-2012.12 | AT | F | L | Hatchback FWD TU3A/TU3JP | For Enginecode:TU3JP | GCI99001 | Inner Joint | | 26 | 34 | 30.2 | 46.5 | 103.5 | |
| | 1998.08-2012.12 | AT | F | R | Hatchback FWD TU3A/TU3JP | For Enginecode:TU3JP,Date To 2000.03 | GCI50098 | Inner Joint | | 23 | 34 | | 259.5 | 88 | |
| | 1998.08-2012.12 | MT | F | L | Hatchback FWD TU3A/TU3JP | For Enginecode:TU3JP ,Date to:2008.02 | GDS10043 | Drive Shaft | | 21 | 22 | 48 | 86.5 | 610 | |
| | 1998.08-2012.12 | MT | F | L | Hatchback FWD TU3A/TU3JP | For Enginecode:TU3JP,Date To:2003.08 | GDS45027 | Drive Shaft | 48T | 21 | 22 | 48 | 86.5 | 610 | |
| | 1998.08-2012.12 | MT | F | R | Hatchback FWD TU3A/TU3JP | For Enginecode:TU3JP,Date To 2003.08 | GDS45035 | Drive Shaft | 48T | 21 | 22 | 48 | 86.5 | 886 | |
| | 1998.08-2012.12 | MT | F | R | Hatchback FWD TU3A/TU3JP | For Enginecode:TU3JP,Date To 2008.02 | GDS45094 | Drive Shaft | | 21 | 22 | 48 | 86.5 | 886 | |
| | 1998.08-2012.12 | MT | F | L | Hatchback FWD TU3A/TU3JP | | GCO45065 | Outer Joint | | 21 | 21 | 48.5 | 86 | 54 | I |
| | 1998.08-2012.12 | MT | F | L/R | Hatchback FWD TU3A/TU3JP | | GCO45033 | Outer Joint | 48T | 21 | 22 | 48 | 86.5 | 54 | I |
| | 1998.08-2012.12 | MT | F | L/R | Hatchback FWD TU3A/TU3JP | | GCO45067 | Outer Joint | 48T | 21 | 21 | 48.5 | 86 | 54 | I |
| | 1998.08-2012.12 | MT | F | L | Hatchback FWD TU3A/TU3JP | For Enginecode:TU3JP;Date To 2003.08;For Enginecode:TU3A | GCI45011 | Inner Joint | | 22 | 22 | 40 | 65 | 88 | |
| | 1998.08-2012.12 | MT | F | R | Hatchback FWD TU3A/TU3JP | For Enginecode:TU3JP;Date to:2003.08;For Enginecode:TU3JP;Date to:2008.02 | GCI10024 | Inner Joint | | 22 | 22 | 30 | 329.5 | 86 | |
| | 2006.05-2007.09 | 5MT | F | L | Hatchback FWD TU3AF | | GDS45012 | Drive Shaft | 48T | 25 | 22 | 60 | 78.5 | 601 | |
| | 2006.05-2007.09 | 5MT | F | R | Hatchback FWD TU3AF | | GDS45011 | Drive Shaft | 48T | 25 | 22 | 60 | 78.5 | 880 | |
| | 2006.05-2007.09 | 5MT | F | L/R | Hatchback FWD TU3AF | | GCO99008 | Outer Joint | 48T | 25 | 22 | 60 | 78.5 | 54 | I |
| | 2006.05-2007.09 | 5MT | F | L | Hatchback FWD TU3AF | | GCI10023 | Inner Joint | | 22 | 22 | 40 | 58.5 | 86 | |
| | 2006.05-2007.09 | 5MT | F | R | Hatchback FWD TU3AF | | GCI10024 | Inner Joint | | 22 | 22 | 30 | 329.5 | 86 | |
| | 2006.05-2007.09 | AT | F | L | Hatchback FWD TU3JP | | GDS10281 | Drive Shaft | 48T | 21 | 26 | 48.5 | 86 | 588 | |
| | 2006.05-2007.09 | AT | F | L | Hatchback FWD TU3JP | | GDS45146 | Drive Shaft | | 21 | 26 | 48.5 | 86 | 588 | |
| | 2006.05-2007.09 | AT | F | R | Hatchback FWD TU3JP | | GDS10287 | Drive Shaft | 48T | 21 | 26 | 48.5 | 86 | 809 | |
| | 2006.05-2007.09 | AT | F | R | Hatchback FWD TU3JP | | GDS10433 | Drive Shaft | | 21 | 26 | 48.5 | 86 | 809 | |
| | 2006.05-2007.09 | AT | F | L | Hatchback FWD TU3JP | | GCI99001 | Inner Joint | | 26 | 34 | 30.2 | 46.5 | 103.5 | |
| | 2006.05-2007.09 | MT | F | L | Hatchback FWD TU3JP | | GDS10043 | Drive Shaft | | 21 | 22 | 48 | 86.5 | 610 | |
| | 2006.05-2007.09 | MT | F | R | Hatchback FWD TU3JP | | GDS45094 | Drive Shaft | | 21 | 22 | 48 | 86.5 | 886 | |
| | 2006.05-2007.09 | MT | F | L/R | Hatchback FWD TU3JP | org. no. to:09695 | GCO45011 | Outer Joint | | 21 | 22 | 48 | 86.5 | 54 | I |
| | 2006.05-2007.09 | MT | F | L/R | Hatchback FWD TU3JP | org. no. from:09696 | GCO45065 | Outer Joint | | 21 | 21 | 48.5 | 86 | 54 | I |
| | 2006.05-2007.09 | MT | F | L | Hatchback FWD TU3JP | | GCI45011 | Inner Joint | | 22 | 22 | 40 | 65 | 88 | |
| | 2006.05-2007.09 | MT | F | R | Hatchback FWD TU3JP | | GCI10024 | Inner Joint | | 22 | 22 | 30 | 329.5 | 86 | |
| | 2007.03-2012.12 | 4AT | F | R | Saloon FWD TU3A | | GDS10287 | Drive Shaft | 48T | 21 | 26 | 48.5 | 86 | 809 | |
| | 2007.03-2012.12 | 5MT | F | L | Saloon FWD TU3A | | GDS10043 | Drive Shaft | | 21 | 22 | 48 | 86.5 | 610 | |
| | 2007.03-2012.12 | 5MT | F | R | Saloon FWD TU3A | | GDS45094 | Drive Shaft | | 21 | 22 | 48 | 86.5 | 886 | |
| | 2007.03-2012.12 | AT | F | L | Saloon FWD TU3A | | GDS10281 | Drive Shaft | 48T | 21 | 26 | 48.5 | 86 | 588 | |
| | 2007.03-2012.12 | AT | F | R | Saloon FWD TU3A | | GDS10326 | Drive Shaft | 48T | 21 | 23 | 48.5 | 86 | 807 | |
| | 2007.03-2012.12 | AT | F | R | Saloon FWD TU3A | | GDS10433 | Drive Shaft | | 21 | 26 | 48.5 | 86 | 809 | |
| | 2007.03-2012.12 | AT | F | L | Saloon FWD TU3A | | GCI99001 | Inner Joint | | 26 | 34 | 30.2 | 46.5 | 103.5 | |
| | 2007.03-2012.12 | AT | F | R | Saloon FWD TU3A | | GCI50098 | Inner Joint | | 23 | 34 | | 259.5 | 88 | |
| | 2007.03-2012.12 | MT | F | L | Saloon FWD TU3A | | GDS45027 | Drive Shaft | 48T | 21 | 22 | 48 | 86.5 | 610 | |

| | YEAR | TRANSM. | F/R | L/R | BODY STYLE & DRIVE TYPE & ENGINE | REMARKS | G-AP Ref. | PRODUCT | ABS | Technical Specifications A | B | C | H | L | P |
|---|---|---|---|---|---|---|---|---|---|---|---|---|---|---|---|
| **PEUGEOT** | | | | | | | | | | | | | | | |
| **206** | | | | | | | | | | | | | | | |
| 1.4 (55 kw) | 2007.03-2012.12 | MT | F | R | Saloon FWD TU3A | | GDS45035 | Drive Shaft | 48T | 21 | 22 | 48 | 86.5 | 886 | |
| | 2007.03-2012.12 | MT | F | L/R | Saloon FWD TU3A | Date to:2012.12,transm. type:MA,org. no. to:09695 | GCO45011 | Outer Joint | | 21 | 22 | 48 | 86.5 | 54 | I |
| | 2007.03-2012.12 | MT | F | L/R | Saloon FWD TU3A | Date to:2012.12;Trans. code:MA;RPO number to:09793 | GCO45033 | Outer Joint | 48T | 21 | 22 | 48 | 86.5 | 54 | I |
| | 2007.03-2012.12 | MT | F | L/R | Saloon FWD TU3A | Date to:2012.12,transm. type:MA,org. no. from:09696 | GCO45065 | Outer Joint | | 21 | 21 | 48.5 | 86 | 54 | I |
| | 2007.03-2012.12 | MT | F | L/R | Saloon FWD TU3A | Date to:2012.12,transm. type:MA,org. no. from:09696 | GCO45067 | Outer Joint | 48T | 21 | 21 | 48.5 | 86 | 54 | I |
| 1.4 (65 kw) | 2003.10-2008.02 | 5MT | F | L | Hatchback FWD ET3J4 | | GDS10043 | Drive Shaft | | 21 | 22 | 48 | 86.5 | 610 | |
| | 2003.10-2008.02 | 5MT | F | R | Hatchback FWD ET3J4 | | GDS45094 | Drive Shaft | | 21 | 22 | 48 | 86.5 | 886 | |
| | 2003.10-2008.02 | AT | F | L | Hatchback FWD ET3J4 | | GDS10281 | Drive Shaft | 48T | 21 | 26 | 48.5 | 86 | 588 | |
| | 2003.10-2008.02 | AT | F | L | Hatchback FWD ET3J4 | | GCI99001 | Inner Joint | | 26 | 34 | 30.2 | 46.5 | 103.5 | |
| | 2003.10-2008.02 | AT | F | R | Hatchback FWD ET3J4 | | GCI50098 | Inner Joint | | 23 | 34 | | 259.5 | 88 | |
| | 2003.10-2008.02 | MT | F | L | Hatchback FWD ET3J4 | | GDS45027 | Drive Shaft | 48T | 21 | 22 | 48 | 86.5 | 610 | |
| | 2003.10-2008.02 | MT | F | R | Hatchback FWD ET3J4 | | GDS45035 | Drive Shaft | 48T | 21 | 22 | 48 | 86.5 | 886 | |
| | 2003.10-2008.02 | MT | F | L/R | Hatchback FWD ET3J4 | Date to:2008.02,transm. type:MA,org. no. to:09695 | GCO45011 | Outer Joint | | 21 | 22 | 48 | 86.5 | 54 | I |
| | 2003.10-2008.02 | MT | F | L/R | Hatchback FWD ET3J4 | Trans. code:MA;RPO number to:09695 | GCO45033 | Outer Joint | 48T | 21 | 22 | 48 | 86.5 | 54 | I |
| | 2003.10-2008.02 | MT | F | L/R | Hatchback FWD ET3J4 | Date to:2008.02,transm. type:MA,org. no. from:09696 | GCO45065 | Outer Joint | | 21 | 21 | 48.5 | 86 | 54 | I |
| | 2003.10-2008.02 | MT | F | L/R | Hatchback FWD ET3J4 | Date to:2008.02,transm. type:MA,org. no. from:09696 | GCO45067 | Outer Joint | 48T | 21 | 21 | 48.5 | 86 | 54 | I |
| 1.6 (65 kw) | 1998.09-2004.09 | 4AT | F | R | Hatchback FWD TU5JP | Date to:2000.03,ORG/OPR to:08547 | GDS10326 | Drive Shaft | 48T | 21 | 23 | 48.5 | 86 | 807 | |
| | 1998.09-2004.09 | 4AT | F | R | Hatchback FWD TU5JP | Date from:2000.04,ORG/OPR From:08548 | GDS10433 | Drive Shaft | | 21 | 26 | 48.5 | 86 | 809 | |
| | 1998.09-2004.09 | 4AT/5MT | F | R | Hatchback FWD TU5JP | Date from:2000.04;transm. type:AL4 | GDS10287 | Drive Shaft | 48T | 21 | 26 | 48.5 | 86 | 809 | |
| | 1998.09-2004.09 | 5MT | F | R | Hatchback FWD TU5JP | | GCO45065 | Outer Joint | | 21 | 21 | 48.5 | 86 | 54 | I |
| | 1998.09-2004.09 | AT | F | L | Hatchback FWD TU5JP | | GDS10281 | Drive Shaft | 48T | 21 | 26 | 48.5 | 86 | 588 | |
| | 1998.09-2004.09 | AT | F | L | Hatchback FWD TU5JP | | GDS45146 | Drive Shaft | | 21 | 26 | 48.5 | 86 | 588 | |
| | 1998.09-2004.09 | AT | F | R | Hatchback FWD TU5JP | | GDS45147 | Drive Shaft | | 21 | 23 | 48.5 | 86 | 807 | |
| | 1998.09-2004.09 | AT | F | L | Hatchback FWD TU5JP | | GCO10056 | Outer Joint | 48T | 21 | 34 | 48.5 | 86 | 55.5 | I |
| | 1998.09-2004.09 | AT | F | L/R | Hatchback FWD TU5JP | | GCO45012 | Outer Joint | | 21 | 34 | 48.5 | 86 | 55.5 | I |
| | 1998.09-2004.09 | AT | F | R | Hatchback FWD TU5JP | | GCI50098 | Inner Joint | | 23 | 34 | | 259.5 | 88 | |
| | 1998.09-2004.09 | MT | F | L | Hatchback FWD TU5JP | | GDS45031 | Drive Shaft | | 21 | 22 | 48 | 86.5 | 604.5 | |
| | 1998.09-2004.09 | MT | F | L | Hatchback FWD TU5JP | | GDS45032 | Drive Shaft | 48T | 21 | 22 | 48 | 86.5 | 604.5 | |
| | 1998.09-2004.09 | MT | F | R | Hatchback FWD TU5JP | | GDS45035 | Drive Shaft | 48T | 21 | 22 | 48 | 86.5 | 886 | |
| | 1998.09-2004.09 | MT | F | R | Hatchback FWD TU5JP | | GDS45094 | Drive Shaft | | 21 | 22 | 48 | 86.5 | 886 | |
| | 1998.09-2004.09 | MT | F | R | Hatchback FWD TU5JP | | GDS45098 | Drive Shaft | 48T | 21 | 22 | 48 | 86.5 | 884 | |
| | 1998.09-2004.09 | MT | F | L/R | Hatchback FWD TU5JP | | GCO45011 | Outer Joint | | 21 | 22 | 48 | 86.5 | 54 | I |
| | 1998.09-2004.09 | MT | F | L/R | Hatchback FWD TU5JP | Trans. code:MA | GCO45033 | Outer Joint | 48T | 21 | 22 | 48 | 86.5 | 54 | I |
| 1.6 (66 kw) | 1999.05-2003.10 | 4AT | F | L | Hatchback FWD TU5JP | | GDS10281 | Drive Shaft | 48T | 21 | 26 | 48.5 | 86 | 588 | |
| | 1999.05-2003.10 | 4AT | F | L | Hatchback FWD TU5JP | | GDS45146 | Drive Shaft | | 21 | 26 | 48.5 | 86 | 588 | |
| | 1999.05-2003.10 | 4AT | F | R | Hatchback FWD TU5JP | Date from:2000.04;From ORG/OPR:08548 | GDS10287 | Drive Shaft | 48T | 21 | 26 | 48.5 | 86 | 809 | |
| | 1999.05-2003.10 | 4AT | F | R | Hatchback FWD TU5JP | Date to:2000.03;To ORG/OPR:08547 | GDS45147 | Drive Shaft | | 21 | 23 | 48.5 | 86 | 807 | |
| | 1999.05-2003.10 | 4AT | F | L | Hatchback FWD TU5JP | | GCO10056 | Outer Joint | 48T | 21 | 34 | 48.5 | 86 | 55.5 | I |
| | 1999.05-2003.10 | 5MT | F | L | Hatchback FWD TU5JP | | GDS45031 | Drive Shaft | | 21 | 22 | 48 | 86.5 | 604.5 | |
| | 1999.05-2003.10 | 5MT | F | L | Hatchback FWD TU5JP | | GDS45032 | Drive Shaft | 48T | 21 | 22 | 48 | 86.5 | 604.5 | |
| | 1999.05-2003.10 | 5MT | F | R | Hatchback FWD TU5JP | | GDS45035 | Drive Shaft | 48T | 21 | 22 | 48 | 86.5 | 886 | |
| | 1999.05-2003.10 | 5MT | F | R | Hatchback FWD TU5JP | | GDS45094 | Drive Shaft | | 21 | 22 | 48 | 86.5 | 886 | |
| | 1999.05-2003.10 | 5MT | F | L/R | Hatchback FWD TU5JP | For vehicles without ABS | GCO45011 | Outer Joint | | 21 | 22 | 48 | 86.5 | 54 | I |
| | 1999.05-2003.10 | AT | F | R | Hatchback FWD TU5JP | | GDS10326 | Drive Shaft | 48T | 21 | 23 | 48.5 | 86 | 807 | |
| | 1999.05-2003.10 | AT | F | R | Hatchback FWD TU5JP | | GDS10433 | Drive Shaft | | 21 | 26 | 48.5 | 86 | 809 | |
| | 1999.05-2003.10 | AT | F | L | Hatchback FWD TU5JP | | GCI99001 | Inner Joint | | 26 | 34 | 30.2 | 46.5 | 103.5 | |
| | 1999.05-2003.10 | | F | R | Hatchback FWD TU5JP | | GCI50098 | Inner Joint | | 23 | 34 | | 259.5 | 88 | |
| 1.6 (80 kw) | 2000.07-2009.04 | AT | F | L | Hatchback FWD TU5JP4 | | GDS10281 | Drive Shaft | 48T | 21 | 26 | 48.5 | 86 | 588 | |
| | 2000.07-2009.04 | AT | F | L | Hatchback FWD TU5JP4 | | GDS10345 | Drive Shaft | 48T | 25 | 26 | 58.5 | 78.5 | 580 | |
| | 2000.07-2009.04 | AT | F | R | Hatchback FWD TU5JP4 | | GDS45011 | Drive Shaft | 48T | 25 | 22 | 60 | 78.5 | 880 | |
| | 2000.07-2009.04 | AT | F | R | Hatchback FWD TU5JP4 | | GDS45214 | Drive Shaft | 48T | 25 | 26 | 58.5 | 79 | 795 | |
| | 2000.07-2009.04 | AT | F | L | Hatchback FWD TU5JP4 | | GCI99001 | Inner Joint | | 26 | 34 | 30.2 | 46.5 | 103.5 | |
| | 2000.07-2009.04 | MT | F | L | Hatchback FWD TU5JP4 | | GDS45012 | Drive Shaft | 48T | 25 | 22 | 60 | 78.5 | 601 | |
| | 2000.07-2009.04 | MT | F | L | Hatchback FWD TU5JP4 | For vehicles with ABS | GDS45012 | Drive Shaft | 48T | 25 | 22 | 60 | 78.5 | 601 | |
| | 2000.07-2009.04 | MT | F | L | Hatchback FWD TU5JP4 | | GDS45138 | Drive Shaft | | 25 | 22 | 60 | 78.5 | 601 | |
| | 2000.07-2009.04 | MT | F | L | Hatchback FWD TU5JP4 | For vehicles without ABS | GDS45138 | Drive Shaft | | 25 | 22 | 60 | 78.5 | 601 | |
| | 2000.07-2009.04 | MT | F | R | Hatchback FWD TU5JP4 | | GDS45011 | Drive Shaft | 48T | 25 | 22 | 60 | 78.5 | 880 | |
| | 2000.07-2009.04 | MT | F | R | Hatchback FWD TU5JP4 | For vehicles without ABS | GDS45137 | Drive Shaft | | 25 | 22 | 60 | 78.5 | 880 | |
| | 2000.07-2009.04 | MT | F | R | Hatchback FWD TU5JP4 | | GDS45137 | Drive Shaft | | 25 | 22 | 60 | 78.5 | 880 | |
| | 2000.07-2009.04 | MT | F | L/R | Hatchback FWD TU5JP4 | Trans. code:MA77 | GCO45045 | Outer Joint | | 25 | 22 | 60 | 78.5 | 54 | I |
| | 2000.07-2009.04 | MT | F | L/R | Hatchback FWD TU5JP4 | Trans. code:MA77 | GCO99008 | Outer Joint | 48T | 25 | 22 | 60 | 78.5 | 54 | I |
| | 2000.07-2009.04 | MT | F | L/R | Hatchback FWD TU5JP4 | | GCO99008 | Outer Joint | 48T | 25 | 22 | 60 | 78.5 | 54 | I |
| | 2000.07-2009.04 | MT | F | L/R | Hatchback FWD TU5JP4 | | GCO99267 | Outer Joint | 48T | 25 | 22 | 60 | 78.5 | 54 | I |
| | 2000.07-2009.04 | MT | F | L/R | Hatchback FWD TU5JP4 | | GCO99309 | Outer Joint | | 25 | 22 | 60 | 78.5 | 54 | I |
| | 2000.07-2009.04 | MT | F | L | Hatchback FWD TU5JP4 | | GCI10023 | Inner Joint | | 22 | 22 | 40 | 58.5 | 86 | |

| | YEAR | TRANSM. | F/R | L/R | BODY STYLE & DRIVE TYPE & ENGINE | REMARKS | G-AP Ref. | PRODUCT | ABS | Technical Specifications A | B | C | H | L | P |
|---|---|---|---|---|---|---|---|---|---|---|---|---|---|---|---|
| **PEUGEOT** | | | | | | | | | | | | | | | |
| **206** | | | | | | | | | | | | | | | |
| 1.6 (80 kw) | 2000.07-2009.04 | MT | F | R | Hatchback FWD TU5JP4 | | GCI10024 | Inner Joint | | 22 | 22 | 30 | 329.5 | 86 | |
| | 2003.11-2007.02 | 5MT | F | L | Hatchback FWD DV6TED4 | | GDS45101 | Drive Shaft | 48T | 25 | 24 | 58 | 79 | 592 | |
| | 2003.11-2007.02 | 5MT | F | R | Hatchback FWD DV6TED4 | | GDS45016 | Drive Shaft | 48T | 25 | 24 | 60 | 78.7 | 888 | |
| | 2003.11-2007.02 | 5MT | F | L/R | Hatchback FWD DV6TED4 | | GCO45049 | Outer Joint | 48T | 25 | 34 | 58 | 79 | 55.5 | I |
| | 2003.11-2007.02 | 5MT | F | L | Hatchback FWD DV6TED4 | | GCI10020 | Inner Joint | | 24 | 34 | 40 | 62.5 | 99 | |
| | 2003.11-2007.02 | MT | F | L/R | Hatchback FWD DV6TED4 | | GCO10024 | Outer Joint | 48T | 25 | 34 | 55.7 | 79 | 55 | I |
| | 2003.11-2007.02 | MT | F | L/R | Hatchback FWD DV6TED4 | | GCO10043 | Outer Joint | | 25 | 34 | 54.8 | 78.5 | 56 | I |
| | 2003.11-2007.02 | MT | F | L/R | Hatchback FWD DV6TED4 | | GCO45035 | Outer Joint | 48T | 25 | 34 | 58 | 79 | 55.5 | I |
| | 2007.03-2010.12 | 4AT/5MT | F | L | Saloon FWD TU5JP4 | | GDS45012 | Drive Shaft | 48T | 25 | 22 | 60 | 78.5 | 601 | |
| | 2007.03-2010.12 | 4AT/5MT | F | L | Saloon FWD TU5JP4 | | GDS45138 | Drive Shaft | | 25 | 22 | 60 | 78.5 | 601 | |
| | 2007.03-2010.12 | 4AT/5MT | F | R | Saloon FWD TU5JP4 | | GDS45011 | Drive Shaft | 48T | 25 | 22 | 60 | 78.5 | 880 | |
| | 2007.03-2010.12 | 4AT/5MT | F | R | Saloon FWD TU5JP4 | | GDS45137 | Drive Shaft | | 25 | 22 | 60 | 78.5 | 880 | |
| | 2007.03-2010.12 | 4AT/5MT | F | L/R | Saloon FWD TU5JP4 | | GCO99008 | Outer Joint | 48T | 25 | 22 | 60 | 78.5 | 54 | I |
| | 2007.03-2010.12 | AT | F | L | Saloon FWD TU5JP4 | | GDS10281 | Drive Shaft | 48T | 21 | 26 | 48.5 | 86 | 588 | |
| | 2007.03-2010.12 | AT | F | L | Saloon FWD TU5JP4 | | GDS10345 | Drive Shaft | 48T | 25 | 26 | 58.5 | 78.5 | 580 | |
| | 2007.03-2010.12 | AT | F | L/R | Saloon FWD TU5JP4 | | GCO45035 | Outer Joint | 48T | 25 | 34 | 58 | 79 | 55.5 | I |
| | 2007.03-2010.12 | AT | F | L | Saloon FWD TU5JP4 | | GCI99001 | Inner Joint | | 26 | 34 | 30.2 | 46.5 | 103.5 | |
| | 2007.03-2010.12 | MT | F | L/R | Saloon FWD TU5JP4 | | GCO99267 | Outer Joint | 48T | 25 | 22 | 60 | 78.5 | 54 | I |
| | 2007.03-2010.12 | MT | F | L/R | Saloon FWD TU5JP4 | | GCO99309 | Outer Joint | | 25 | 22 | 60 | 78.5 | 54 | I |
| 1.6 (81 kw) | 2000.09-2009.12 | AT | F | L | Hatchback FWD TU5JP4 | | GDS10345 | Drive Shaft | 48T | 25 | 26 | 58.5 | 78.5 | 580 | |
| | 2000.09-2009.12 | AT | F | R | Hatchback FWD TU5JP4 | | GDS45214 | Drive Shaft | 48T | 25 | 26 | 58.5 | 79 | 795 | |
| | 2000.09-2009.12 | MT | F | L | Hatchback FWD TU5JP4 | | GDS45012 | Drive Shaft | 48T | 25 | 22 | 60 | 78.5 | 601 | |
| | 2000.09-2009.12 | MT | F | L | Hatchback FWD TU5JP4 | | GDS45138 | Drive Shaft | | 25 | 22 | 60 | 78.5 | 601 | |
| | 2000.09-2009.12 | MT | F | R | Hatchback FWD TU5JP4 | | GDS45011 | Drive Shaft | 48T | 25 | 22 | 60 | 78.5 | 880 | |
| | 2000.09-2009.12 | MT | F | R | Hatchback FWD TU5JP4 | | GDS45137 | Drive Shaft | | 25 | 22 | 60 | 78.5 | 880 | |
| 1.9 (51 kw) | 1998.08-2004.03 | 5MT | F | L | Hatchback FWD DW8/DW8B | Inner teeth of wheel side:22 | GDS45009 | Drive Shaft | 48T | 21 | 24 | 48 | 86.5 | 602 | |
| | 1998.08-2004.03 | 5MT | F | R | Hatchback FWD DW8/DW8B | Inner teeth of wheel side:34 | GDS45065 | Drive Shaft | 48T | 21 | 24 | 48.5 | 86 | 900 | |
| | 1998.08-2004.03 | MT | F | L | Hatchback FWD DW8/DW8B | | GDS10136 | Drive Shaft | | 21 | 24 | 48.5 | 86 | 611.5 | |
| | 1998.08-2004.03 | MT | F | L | Hatchback FWD DW8/DW8B | Trans. code:M5;Inner teeth of wheel side:34 | GDS45064 | Drive Shaft | 48T | 21 | 24 | 48.5 | 86 | 611.5 | |
| | 1998.08-2004.03 | MT | F | R | Hatchback FWD DW8/DW8B | | GDS10137 | Drive Shaft | | 21 | 24 | 48.5 | 86 | 900 | |
| | 1998.08-2004.03 | MT | F | R | Hatchback FWD DW8/DW8B | Inner teeth of wheel side:22 | GDS45010 | Drive Shaft | 48T | 21 | 24 | 48 | 86.5 | 896 | |
| | 1998.08-2004.03 | | F | L/R | Hatchback FWD DW8/DW8B | | GCO10056 | Outer Joint | 48T | 21 | 34 | 48.5 | 86 | 55.5 | I |
| | 1998.08-2004.03 | | F | L/R | Hatchback FWD DW8/DW8B | | GCO45012 | Outer Joint | | 21 | 34 | 48.5 | 86 | 55.5 | I |
| | 1999.04-2007.07 | 5MT | F | L | Hatchback Van FWD DW8/DW8B | | GDS45009 | Drive Shaft | 48T | 21 | 24 | 48 | 86.5 | 602 | |
| | 1999.04-2007.07 | 5MT | F | R | Hatchback Van FWD DW8/DW8B | Inner teeth of wheel side:22 | GDS45010 | Drive Shaft | 48T | 21 | 24 | 48 | 86.5 | 896 | |
| | 1999.04-2007.07 | 5MT | F | R | Hatchback Van FWD DW8/DW8B | Inner teeth of wheel side:34 | GDS45065 | Drive Shaft | 48T | 21 | 24 | 48.5 | 86 | 900 | |
| | 1999.04-2007.07 | 5MT | F | L/R | Hatchback Van FWD DW8/DW8B | | GCO45033 | Outer Joint | 48T | 21 | 22 | 48 | 86.5 | 54 | I |
| | 1999.04-2007.07 | MT | F | L | Hatchback Van FWD DW8/DW8B | | GDS10136 | Drive Shaft | | 21 | 24 | 48.5 | 86 | 611.5 | |
| | 1999.04-2007.07 | MT | F | R | Hatchback Van FWD DW8/DW8B | | GDS10137 | Drive Shaft | | 21 | 24 | 48.5 | 86 | 900 | |
| 2.0 (66 kw) | 1999.01-2007.02 | 5MT | F | R | Hatchback FWD DW10TD | Inner teeth of wheel side:22 | GDS45016 | Drive Shaft | 48T | 25 | 24 | 60 | 78.7 | 888 | |
| | 1999.01-2007.02 | MT | F | L | Hatchback FWD DW10TD | | GDS45101 | Drive Shaft | 48T | 25 | 24 | 58 | 79 | 592 | |
| | 1999.01-2007.02 | MT | F | R | Hatchback FWD DW10TD | | GDS45038 | Drive Shaft | | 25 | 24 | 58 | 79 | 888 | |
| | 1999.01-2007.02 | MT | F | L/R | Hatchback FWD DW10TD | | GCO45049 | Outer Joint | 48T | 25 | 34 | 58 | 79 | 55.5 | I |
| | 1999.01-2007.02 | MT | F | L | Hatchback FWD DW10TD | | GCI10020 | Inner Joint | | 24 | 34 | 40 | 62.5 | 99 | |
| 2.0 (99 kw) | 1999.04-2000.10 | 5MT | F | L | Hatchback FWD EW10J4 | | GDS45101 | Drive Shaft | 48T | 25 | 24 | 58 | 79 | 592 | |
| | 1999.04-2000.10 | 5MT | F | R | Hatchback FWD EW10J4 | | GDS45016 | Drive Shaft | 48T | 25 | 24 | 60 | 78.7 | 888 | |
| | 1999.04-2000.10 | 5MT | F | L | Hatchback FWD EW10J4 | | GCO45049 | Outer Joint | 48T | 25 | 34 | 58 | 79 | 55.5 | I |
| | 1999.04-2000.10 | 5MT | F | L | Hatchback FWD EW10J4 | | GCI10020 | Inner Joint | | 24 | 34 | 40 | 62.5 | 99 | |
| | 1999.04-2000.10 | MT | F | L/R | Hatchback FWD EW10J4 | | GCO10024 | Outer Joint | 48T | 25 | 34 | 55.7 | 79 | 55 | I |
| | 1999.04-2000.10 | MT | F | L/R | Hatchback FWD EW10J4 | | GCO10043 | Outer Joint | | 25 | 34 | 54.8 | 78.5 | 56 | I |
| | 1999.04-2000.10 | MT | F | L/R | Hatchback FWD EW10J4 | | GCO45035 | Outer Joint | 48T | 25 | 34 | 58 | 79 | 55.5 | I |
| 2.0 (100 kw) | 1999.06-2007.02 | 5MT | F | L | Hatchback FWD EW10J4 | | GDS45101 | Drive Shaft | 48T | 25 | 24 | 58 | 79 | 592 | |
| | 1999.06-2007.02 | 5MT | F | R | Hatchback FWD EW10J4 | | GDS45016 | Drive Shaft | 48T | 25 | 24 | 60 | 78.7 | 888 | |
| | 1999.06-2007.02 | 5MT | F | L/R | Hatchback FWD EW10J4 | | GCO45049 | Outer Joint | 48T | 25 | 34 | 58 | 79 | 55.5 | I |
| | 1999.06-2007.02 | 5MT | F | L | Hatchback FWD EW10J4 | | GCI10020 | Inner Joint | | 24 | 34 | 40 | 62.5 | 99 | |
| | 1999.06-2007.02 | MT | F | L/R | Hatchback FWD EW10J4 | Date from:2001.01 | GCO10024 | Outer Joint | 48T | 25 | 34 | 55.7 | 79 | 55 | I |
| | 1999.06-2007.02 | MT | F | L/R | Hatchback FWD EW10J4 | Date from:2001.01 | GCO10043 | Outer Joint | | 25 | 34 | 54.8 | 78.5 | 56 | I |
| | 1999.06-2007.02 | MT | F | L/R | Hatchback FWD EW10J4 | | GCO45035 | Outer Joint | 48T | 25 | 34 | 58 | 79 | 55.5 | I |
| 2.0 (130 kw) | 2003.04-2007.02 | 5MT | F | L | Hatchback FWD EW10J4S | | GDS45101 | Drive Shaft | 48T | 25 | 24 | 58 | 79 | 592 | |
| | 2003.04-2007.02 | 5MT | F | R | Hatchback FWD EW10J4S | | GDS45016 | Drive Shaft | 48T | 25 | 24 | 60 | 78.7 | 888 | |
| | 2003.04-2007.02 | 5MT | F | L/R | Hatchback FWD EW10J4S | | GCO45049 | Outer Joint | 48T | 25 | 34 | 58 | 79 | 55.5 | I |
| | 2003.04-2007.02 | 5MT | F | L | Hatchback FWD EW10J4S | | GCI10020 | Inner Joint | | 24 | 34 | 40 | 62.5 | 99 | |
| | 2003.04-2007.02 | MT | F | L/R | Hatchback FWD EW10J4S | | GCO10024 | Outer Joint | 48T | 25 | 34 | 55.7 | 79 | 55 | I |
| | 2003.04-2007.02 | MT | F | L/R | Hatchback FWD EW10J4S | | GCO10043 | Outer Joint | | 25 | 34 | 54.8 | 78.5 | 56 | I |
| | 2003.04-2007.02 | MT | F | L/R | Hatchback FWD EW10J4S | | GCO45035 | Outer Joint | 48T | 25 | 34 | 58 | 79 | 55.5 | I |

| | YEAR | TRANSM. | F/R | L/R | BODY STYLE & DRIVE TYPE & ENGINE | REMARKS | G-AP Ref. | PRODUCT | ABS | Technical Specifications A | B | C | H | L | P |
|---|---|---|---|---|---|---|---|---|---|---|---|---|---|---|---|
| **PEUGEOT** | | | | | | | | | | | | | | | |
| **206 CC** | | | | | | | | | | | | | | | |
| 1.6 (80 kw) | 2000.07-2007.02 | AT | F | L | Cabriolet FWD TU5JP4 | | GDS10281 | Drive Shaft | 48T | 21 | 26 | 48.5 | 86 | 588 | |
| | 2000.07-2007.02 | AT | F | L | Cabriolet FWD TU5JP4 | | GDS10345 | Drive Shaft | 48T | 25 | 26 | 58.5 | 78.5 | 580 | |
| | 2000.07-2007.02 | AT | F | R | Cabriolet FWD TU5JP4 | | GDS45214 | Drive Shaft | 48T | 25 | 26 | 58.5 | 79 | 795 | |
| | 2000.07-2007.02 | AT | F | L/R | Cabriolet FWD TU5JP4 | | GCO45035 | Outer Joint | 48T | 25 | 34 | 58 | 79 | 55.5 | I |
| | 2000.07-2007.02 | AT | F | L | Cabriolet FWD TU5JP4 | | GCI99001 | Inner Joint | | 26 | 34 | 30.2 | 46.5 | 103.5 | |
| | 2000.07-2007.02 | MT | F | L | Cabriolet FWD TU5JP4 | Groove Type:Inner | GDS45012 | Drive Shaft | 48T | 25 | 22 | 60 | 78.5 | 601 | |
| | 2000.07-2007.02 | MT | F | L | Cabriolet FWD TU5JP4 | | GDS45138 | Drive Shaft | | 25 | 22 | 60 | 78.5 | 601 | |
| | 2000.07-2007.02 | MT | F | R | Cabriolet FWD TU5JP4 | | GDS45011 | Drive Shaft | 48T | 25 | 22 | 60 | 78.5 | 880 | |
| | 2000.07-2007.02 | MT | F | R | Cabriolet FWD TU5JP4 | | GDS45137 | Drive Shaft | | 25 | 22 | 60 | 78.5 | 880 | |
| | 2000.07-2007.02 | MT | F | L/R | Cabriolet FWD TU5JP4 | Date to:2007.02;Trans. code:MA77 | GCO45045 | Outer Joint | | 25 | 22 | 60 | 78.5 | 54 | I |
| | 2000.07-2007.02 | MT | F | L/R | Cabriolet FWD TU5JP4 | | GCO99008 | Outer Joint | 48T | 25 | 22 | 60 | 78.5 | 54 | I |
| | 2000.07-2007.02 | MT | F | L/R | Cabriolet FWD TU5JP4 | | GCO99267 | Outer Joint | 48T | 25 | 22 | 60 | 78.5 | 54 | I |
| | 2000.07-2007.02 | MT | F | L/R | Cabriolet FWD TU5JP4 | | GCO99309 | Outer Joint | | 25 | 22 | 60 | 78.5 | 54 | I |
| | 2005.02-2007.02 | 5MT | F | L | Cabriolet FWD DV6TED4 | | GDS45101 | Drive Shaft | 48T | 25 | 24 | 58 | 79 | 592 | |
| | 2005.02-2007.02 | 5MT | F | R | Cabriolet FWD DV6TED4 | | GDS45016 | Drive Shaft | 48T | 25 | 24 | 60 | 78.7 | 888 | |
| | 2005.02-2007.02 | 5MT | F | L/R | Cabriolet FWD DV6TED4 | | GCO45049 | Outer Joint | 48T | 25 | 34 | 58 | 79 | 55.5 | I |
| | 2005.02-2007.02 | 5MT | F | L | Cabriolet FWD DV6TED4 | | GCI10020 | Inner Joint | | 24 | 34 | 40 | 62.5 | 99 | |
| | 2005.02-2007.02 | MT | F | L/R | Cabriolet FWD DV6TED4 | | GCO10024 | Outer Joint | 48T | 25 | 34 | 55.7 | 79 | 55 | I |
| | 2005.02-2007.02 | MT | F | L/R | Cabriolet FWD DV6TED4 | | GCO10043 | Outer Joint | | 25 | 34 | 54.8 | 78.5 | 56 | I |
| | 2005.02-2007.02 | MT | F | L/R | Cabriolet FWD DV6TED4 | | GCO45035 | Outer Joint | 48T | 25 | 34 | 58 | 79 | 55.5 | I |
| 1.6 (81 kw) | 2001.09-2007.12 | 4AT | F | L | Cabriolet FWD TU5JP4 | | GDS10345 | Drive Shaft | 48T | 25 | 26 | 58.5 | 78.5 | 580 | |
| | 2001.09-2007.12 | 4AT | F | R | Cabriolet FWD TU5JP4 | | GDS45214 | Drive Shaft | 48T | 25 | 26 | 58.5 | 79 | 795 | |
| | 2001.09-2007.12 | 4AT | F | L | Cabriolet FWD TU5JP4 | | GCI99001 | Inner Joint | | 26 | 34 | 30.2 | 46.5 | 103.5 | |
| | 2001.09-2007.12 | 5MT | F | L | Cabriolet FWD TU5JP4 | | GDS45012 | Drive Shaft | 48T | 25 | 22 | 60 | 78.5 | 601 | |
| | 2001.09-2007.12 | 5MT | F | L | Cabriolet FWD TU5JP4 | | GDS45138 | Drive Shaft | | 25 | 22 | 60 | 78.5 | 601 | |
| | 2001.09-2007.12 | 5MT | F | R | Cabriolet FWD TU5JP4 | | GDS45011 | Drive Shaft | 48T | 25 | 22 | 60 | 78.5 | 880 | |
| | 2001.09-2007.12 | 5MT | F | R | Cabriolet FWD TU5JP4 | | GDS45137 | Drive Shaft | | 25 | 22 | 60 | 78.5 | 880 | |
| | 2001.09-2007.12 | 5MT | F | L/R | Cabriolet FWD TU5JP4 | | GCO45045 | Outer Joint | | 25 | 22 | 60 | 78.5 | 54 | I |
| | 2001.09-2007.12 | 5MT | F | L/R | Cabriolet FWD TU5JP4 | | GCO99008 | Outer Joint | 48T | 25 | 22 | 60 | 78.5 | 54 | I |
| | 2001.09-2007.12 | 5MT | F | L | Cabriolet FWD TU5JP4 | | GCI10023 | Inner Joint | | 22 | 22 | 40 | 58.5 | 86 | |
| | 2001.09-2007.12 | 5MT | F | R | Cabriolet FWD TU5JP4 | | GCI10024 | Inner Joint | | 22 | 22 | 30 | 329.5 | 86 | |
| 2.0 (100 kw) | 2000.07-2007.02 | 5MT | F | L | Cabriolet FWD EW10J4 | | GDS45101 | Drive Shaft | 48T | 25 | 24 | 58 | 79 | 592 | |
| | 2000.07-2007.02 | 5MT | F | R | Cabriolet FWD EW10J4 | Inner teeth of wheel side:22 | GDS45016 | Drive Shaft | 48T | 25 | 24 | 60 | 78.7 | 888 | |
| | 2000.07-2007.02 | 5MT | F | L/R | Cabriolet FWD EW10J4 | | GCO45049 | Outer Joint | 48T | 25 | 34 | 58 | 79 | 55.5 | I |
| | 2000.07-2007.02 | 5MT | F | L | Cabriolet FWD EW10J4 | | GCI10020 | Inner Joint | | 24 | 34 | 40 | 62.5 | 99 | |
| | 2000.07-2007.02 | MT | F | L/R | Cabriolet FWD EW10J4 | | GCO10024 | Outer Joint | 48T | 25 | 34 | 55.7 | 79 | 55 | I |
| | 2000.07-2007.02 | MT | F | L/R | Cabriolet FWD EW10J4 | | GCO10043 | Outer Joint | | 25 | 34 | 54.8 | 78.5 | 56 | I |
| | 2000.07-2007.02 | MT | F | L/R | Cabriolet FWD EW10J4 | | GCO45035 | Outer Joint | 48T | 25 | 34 | 58 | 79 | 55.5 | I |
| **206 SW** | | | | | | | | | | | | | | | |
| 1.1 (44 kw) | 2002.07-2007.02 | 5MT | F | L | Estate FWD TU1JP | | GDS10043 | Drive Shaft | | 21 | 22 | 48 | 86.5 | 610 | |
| | 2002.07-2007.02 | 5MT | F | L | Estate FWD TU1JP | | GDS45027 | Drive Shaft | 48T | 21 | 22 | 48 | 86.5 | 610 | |
| | 2002.07-2007.02 | 5MT | F | R | Estate FWD TU1JP | | GDS45035 | Drive Shaft | 48T | 21 | 22 | 48 | 86.5 | 886 | |
| | 2002.07-2007.02 | 5MT | F | R | Estate FWD TU1JP | | GDS45094 | Drive Shaft | | 21 | 22 | 48 | 86.5 | 886 | |
| | 2002.07-2007.02 | 5MT | F | L/R | Estate FWD TU1JP | Date to:2003.08 | GCO45011 | Outer Joint | | 21 | 22 | 48 | 86.5 | 54 | I |
| | 2002.07-2007.02 | 5MT | F | L/R | Estate FWD TU1JP | Date to:2003.08 | GCO45033 | Outer Joint | 48T | 21 | 22 | 48 | 86.5 | 54 | I |
| | 2002.07-2007.02 | 5MT | F | L/R | Estate FWD TU1JP | Date from:2003.09 | GCO45065 | Outer Joint | | 21 | 21 | 48.5 | 86 | 54 | I |
| | 2002.07-2007.02 | 5MT | F | L/R | Estate FWD TU1JP | Date from:2003.09 | GCO45067 | Outer Joint | 48T | 21 | 21 | 48.5 | 86 | 54 | I |
| | 2002.07-2007.02 | 5MT | F | L | Estate FWD TU1JP | | GCI45011 | Inner Joint | | 22 | 22 | 40 | 65 | 88 | |
| | 2002.07-2007.02 | 5MT | F | R | Estate FWD TU1JP | | GCI10024 | Inner Joint | | 22 | 22 | 30 | 329.5 | 86 | |
| 1.4 (50 kw) | 2002.07-2007.02 | MT | F | L | Estate FWD DV4TD | Date from:2004.02,From ORG/OPR:09948 | GDS45027 | Drive Shaft | 48T | 21 | 22 | 48 | 86.5 | 610 | |
| | 2002.07-2007.02 | MT | F | L | Estate FWD DV4TD | | GDS45031 | Drive Shaft | | 21 | 22 | 48 | 86.5 | 604.5 | |
| | 2002.07-2007.02 | MT | F | L | Estate FWD DV4TD | Date to:2004.01;To ORG/OPR:09947 | GDS45032 | Drive Shaft | 48T | 21 | 22 | 48 | 86.5 | 604.5 | |
| | 2002.07-2007.02 | MT | F | R | Estate FWD DV4TD | | GDS45035 | Drive Shaft | 48T | 21 | 22 | 48 | 86.5 | 886 | |
| | 2002.07-2007.02 | MT | F | R | Estate FWD DV4TD | | GDS45094 | Drive Shaft | | 21 | 22 | 48 | 86.5 | 886 | |
| | 2002.07-2007.02 | MT | F | L/R | Estate FWD DV4TD | | GCO45011 | Outer Joint | | 21 | 22 | 48 | 86.5 | 54 | I |
| | 2002.07-2007.02 | MT | F | L/R | Estate FWD DV4TD | Date to:2007.02;Trans. code:MA | GCO45033 | Outer Joint | 48T | 21 | 22 | 48 | 86.5 | 54 | I |
| | 2002.07-2007.02 | MT | F | L/R | Estate FWD DV4TD | | GCO45065 | Outer Joint | | 21 | 21 | 48.5 | 86 | 54 | I |
| | 2002.07-2007.02 | MT | F | L/R | Estate FWD DV4TD | Date from:2004.02,From ORG/OPR:09948 | GCO45067 | Outer Joint | 48T | 21 | 21 | 48.5 | 86 | 54 | I |
| | 2002.07-2007.02 | MT | F | L | Estate FWD DV4TD | Date from:2004.02,From ORG/OPR:09948 | GCI45011 | Inner Joint | | 22 | 22 | 40 | 65 | 88 | |
| | 2002.07-2007.02 | MT | F | R | Estate FWD DV4TD | | GCI10024 | Inner Joint | | 22 | 22 | 30 | 329.5 | 86 | |
| 1.4 (55 kw) | 2002.07-2007.02 | 5MT | F | L | Estate FWD TU3A/TU3JP | | GDS10043 | Drive Shaft | | 21 | 22 | 48 | 86.5 | 610 | |
| | 2002.07-2007.02 | 5MT | F | R | Estate FWD TU3A/TU3JP | | GDS45094 | Drive Shaft | | 21 | 22 | 48 | 86.5 | 886 | |
| | 2002.07-2007.02 | 5MT | F | L/R | Estate FWD TU3A/TU3JP | Engine code:TU3A;Date from:2003.09,Engine code:TU3JP | GCO45065 | Outer Joint | | 21 | 21 | 48.5 | 86 | 54 | I |
| | 2002.07-2007.02 | 5MT | F | L/R | Estate FWD TU3A/TU3JP | Engine code:TU3A;Date from:2003.09,Engine code:TU3JP | GCO45067 | Outer Joint | 48T | 21 | 21 | 48.5 | 86 | 54 | I |
| | 2002.07-2007.02 | AT | F | L | Estate FWD TU3A/TU3JP | | GDS10281 | Drive Shaft | 48T | 21 | 26 | 48.5 | 86 | 588 | |

| | YEAR | TRANSM. | F/R | L/R | BODY STYLE & DRIVE TYPE & ENGINE | REMARKS | G-AP Ref. | PRODUCT | ABS | Technical Specifications A | B | C | H | L | P |
|---|---|---|---|---|---|---|---|---|---|---|---|---|---|---|---|
| **PEUGEOT** **206 SW** | | | | | | | | | | | | | | | |
| 1.4 (55 kw) | 2002.07-2007.02 | AT | F | L | Estate FWD TU3A/TU3JP | | GDS45146 | Drive Shaft | | 21 | 26 | 48.5 | 86 | 588 | |
| | 2002.07-2007.02 | AT | F | R | Estate FWD TU3A/TU3JP | | GDS10287 | Drive Shaft | 48T | 21 | 26 | 48.5 | 86 | 809 | |
| | 2002.07-2007.02 | AT | F | R | Estate FWD TU3A/TU3JP | | GDS10326 | Drive Shaft | 48T | 21 | 23 | 48.5 | 86 | 807 | |
| | 2002.07-2007.02 | AT | F | R | Estate FWD TU3A/TU3JP | | GDS10433 | Drive Shaft | | 21 | 26 | 48.5 | 86 | 809 | |
| | 2002.07-2007.02 | AT | F | R | Estate FWD TU3A/TU3JP | | GDS45147 | Drive Shaft | | 21 | 23 | 48.5 | 86 | 807 | |
| | 2002.07-2007.02 | AT | F | L/R | Estate FWD TU3A/TU3JP | | GCO10056 | Outer Joint | 48T | 21 | 34 | 48.5 | 86 | 55.5 | I |
| | 2002.07-2007.02 | AT | F | L/R | Estate FWD TU3A/TU3JP | | GCO45012 | Outer Joint | | 21 | 34 | 48.5 | 86 | 55.5 | I |
| | 2002.07-2007.02 | AT | F | R | Estate FWD TU3A/TU3JP | | GCI50098 | Inner Joint | | 23 | 34 | | 259.5 | 88 | |
| | 2002.07-2007.02 | MT | F | L | Estate FWD TU3A/TU3JP | | GDS45027 | Drive Shaft | 48T | 21 | 22 | 48 | 86.5 | 610 | |
| | 2002.07-2007.02 | MT | F | R | Estate FWD TU3A/TU3JP | | GDS45035 | Drive Shaft | 48T | 21 | 22 | 48 | 86.5 | 886 | |
| | 2002.07-2007.02 | MT | F | L/R | Estate FWD TU3A/TU3JP | Date to:2003.08,Engine code:TU3JP | GCO45011 | Outer Joint | | 21 | 22 | 48 | 86.5 | 54 | I |
| | 2002.07-2007.02 | MT | F | L/R | Estate FWD TU3A/TU3JP | Date to:2003.08,Engine code:TU3JP | GCO45033 | Outer Joint | 48T | 21 | 22 | 48 | 86.5 | 54 | I |
| | 2002.07-2007.02 | MT | F | L | Estate FWD TU3JP | | GDS10043 | Drive Shaft | | 21 | 22 | 48 | 86.5 | 610 | |
| | 2002.07-2007.02 | MT | F | L | Estate FWD TU3JP | | GDS45027 | Drive Shaft | 48T | 21 | 22 | 48 | 86.5 | 610 | |
| | 2002.07-2007.02 | MT | F | R | Estate FWD TU3JP | | GDS45035 | Drive Shaft | 48T | 21 | 22 | 48 | 86.5 | 886 | |
| | 2002.07-2007.02 | MT | F | R | Estate FWD TU3JP | | GDS45094 | Drive Shaft | | 21 | 22 | 48 | 86.5 | 886 | |
| | 2002.07-2007.02 | MT | F | L | Estate FWD TU3JP | | GCO45033 | Outer Joint | 48T | 21 | 22 | 48 | 86.5 | 54 | I |
| | 2002.07-2007.02 | MT | F | L | Estate FWD TU3JP | | GCO45065 | Outer Joint | | 21 | 21 | 48.5 | 86 | 54 | I |
| | 2002.07-2007.02 | MT | F | L/R | Estate FWD TU3JP | | GCO45011 | Outer Joint | | 21 | 22 | 48 | 86.5 | 54 | I |
| | 2002.07-2007.02 | MT | F | L/R | Estate FWD TU3JP | | GCO45067 | Outer Joint | 48T | 21 | 21 | 48.5 | 86 | 54 | I |
| | 2002.07-2007.02 | MT | F | L | Estate FWD TU3JP | | GCI45011 | Inner Joint | | 22 | 22 | 40 | 65 | 88 | |
| | 2002.07-2007.02 | MT | F | R | Estate FWD TU3JP | | GCI10024 | Inner Joint | | 22 | 22 | 30 | 329.5 | 86 | |
| 1.4 (65 kw) | 2003.12-2007.02 | 5MT | F | L | Estate FWD ET3J4 | | GDS10043 | Drive Shaft | | 21 | 22 | 48 | 86.5 | 610 | |
| | 2003.12-2007.02 | 5MT | F | R | Estate FWD ET3J4 | | GDS45094 | Drive Shaft | | 21 | 22 | 48 | 86.5 | 886 | |
| | 2003.12-2007.02 | 5MT | F | R | Estate FWD ET3J4 | | GCI10024 | Inner Joint | | 22 | 22 | 30 | 329.5 | 86 | |
| | 2003.12-2007.02 | AT | F | L | Estate FWD ET3J4 | | GDS10281 | Drive Shaft | 48T | 21 | 26 | 48.5 | 86 | 588 | |
| | 2003.12-2007.02 | MT | F | L | Estate FWD ET3J4 | | GDS45027 | Drive Shaft | 48T | 21 | 22 | 48 | 86.5 | 610 | |
| | 2003.12-2007.02 | MT | F | R | Estate FWD ET3J4 | | GDS45035 | Drive Shaft | 48T | 21 | 22 | 48 | 86.5 | 886 | |
| | 2003.12-2007.02 | MT | F | L/R | Estate FWD ET3J4 | Date to:2007.02,transm. type:MA,org. no. to:09695 | GCO45011 | Outer Joint | | 21 | 22 | 48 | 86.5 | 54 | I |
| | 2003.12-2007.02 | MT | F | L/R | Estate FWD ET3J4 | Date to:2007.02;Trans. code:MA;RPO number to:09695 | GCO45033 | Outer Joint | 48T | 21 | 22 | 48 | 86.5 | 54 | I |
| | 2003.12-2007.02 | MT | F | L/R | Estate FWD ET3J4 | Date to:2007.02,transm. type:MA,org. no. from:09696 | GCO45065 | Outer Joint | | 21 | 21 | 48.5 | 86 | 54 | I |
| | 2003.12-2007.02 | MT | F | L/R | Estate FWD ET3J4 | Date to:2007.02,transm. type:MA,org. no. from:09696 | GCO45067 | Outer Joint | 48T | 21 | 21 | 48.5 | 86 | 54 | I |
| 1.6 (80 kw) | 2002.07-2007.02 | AT | F | L | Estate FWD TU5JP4 | | GDS10281 | Drive Shaft | 48T | 21 | 26 | 48.5 | 86 | 588 | |
| | 2002.07-2007.02 | AT | F | L | Estate FWD TU5JP4 | | GDS10345 | Drive Shaft | 48T | 25 | 26 | 58.5 | 78.5 | 580 | |
| | 2002.07-2007.02 | AT | F | R | Estate FWD TU5JP4 | | GDS45214 | Drive Shaft | 48T | 25 | 26 | 58.5 | 79 | 795 | |
| | 2002.07-2007.02 | AT | F | L/R | Estate FWD TU5JP4 | | GCO45035 | Outer Joint | 48T | 25 | 34 | 58 | 79 | 55.5 | I |
| | 2002.07-2007.02 | AT | F | L | Estate FWD TU5JP4 | | GCI99001 | Inner Joint | | 26 | 34 | 30.2 | 46.5 | 103.5 | |
| | 2002.07-2007.02 | MT | F | L | Estate FWD TU5JP4 | | GDS45012 | Drive Shaft | 48T | 25 | 22 | 60 | 78.5 | 601 | |
| | 2002.07-2007.02 | MT | F | L | Estate FWD TU5JP4 | | GDS45138 | Drive Shaft | | 25 | 22 | 60 | 78.5 | 601 | |
| | 2002.07-2007.02 | MT | F | R | Estate FWD TU5JP4 | | GDS45011 | Drive Shaft | 48T | 25 | 22 | 60 | 78.5 | 880 | |
| | 2002.07-2007.02 | MT | F | R | Estate FWD TU5JP4 | | GDS45137 | Drive Shaft | | 25 | 22 | 60 | 78.5 | 880 | |
| | 2002.07-2007.02 | MT | F | L/R | Estate FWD TU5JP4 | Date to:2007.02;Trans. code:MA77 | GCO45045 | Outer Joint | | 25 | 22 | 60 | 78.5 | 54 | I |
| | 2002.07-2007.02 | MT | F | L/R | Estate FWD TU5JP4 | | GCO99008 | Outer Joint | 48T | 25 | 22 | 60 | 78.5 | 54 | I |
| | 2002.07-2007.02 | MT | F | L/R | Estate FWD TU5JP4 | | GCO99267 | Outer Joint | 48T | 25 | 22 | 60 | 78.5 | 54 | I |
| | 2002.07-2007.02 | MT | F | L/R | Estate FWD TU5JP4 | | GCO99309 | Outer Joint | | 25 | 22 | 60 | 78.5 | 54 | I |
| | 2002.07-2007.02 | MT | F | L | Estate FWD TU5JP4 | | GCI10023 | Inner Joint | | 22 | 22 | 40 | 58.5 | 86 | |
| | 2002.07-2007.02 | MT | F | R | Estate FWD TU5JP4 | | GCI10024 | Inner Joint | | 22 | 22 | 30 | 329.5 | 86 | |
| | 2004.02-2007.02 | 5MT | F | L | Estate FWD DV6TED4 | | GDS45101 | Drive Shaft | 48T | 25 | 24 | 58 | 79 | 592 | |
| | 2004.02-2007.02 | 5MT | F | R | Estate FWD DV6TED4 | | GDS45016 | Drive Shaft | 48T | 25 | 24 | 60 | 78.7 | 888 | |
| | 2004.02-2007.02 | 5MT | F | L/R | Estate FWD DV6TED4 | | GCO45049 | Outer Joint | 48T | 25 | 34 | 58 | 79 | 55.5 | I |
| | 2004.02-2007.02 | 5MT | F | L | Estate FWD DV6TED4 | | GCI10020 | Inner Joint | | 24 | 34 | 40 | 62.5 | 99 | |
| | 2004.02-2007.02 | MT | F | L/R | Estate FWD DV6TED4 | | GCO10024 | Outer Joint | 48T | 25 | 34 | 55.7 | 79 | 55 | I |
| | 2004.02-2007.02 | MT | F | L/R | Estate FWD DV6TED4 | | GCO10043 | Outer Joint | | 25 | 34 | 54.8 | 78.5 | 56 | I |
| | 2004.02-2007.02 | MT | F | L/R | Estate FWD DV6TED4 | | GCO45035 | Outer Joint | 48T | 25 | 34 | 58 | 79 | 55.5 | I |
| 1.6 (81 kw) | 2005.05-2008.07 | MT | F | L | Estate FWD TU5JP4 | | GDS45012 | Drive Shaft | 48T | 25 | 22 | 60 | 78.5 | 601 | |
| | 2005.05-2008.07 | MT | F | L | Estate FWD TU5JP4 | | GDS45138 | Drive Shaft | | 25 | 22 | 60 | 78.5 | 601 | |
| | 2005.05-2008.07 | MT | F | R | Estate FWD TU5JP4 | | GDS45011 | Drive Shaft | 48T | 25 | 22 | 60 | 78.5 | 880 | |
| | 2005.05-2008.07 | MT | F | R | Estate FWD TU5JP4 | | GDS45137 | Drive Shaft | | 25 | 22 | 60 | 78.5 | 880 | |
| 2.0 (66 kw) | 2002.07-2007.02 | 5MT | F | R | Estate FWD DW10TD | Inner teeth of wheel side:22 | GDS45016 | Drive Shaft | 48T | 25 | 24 | 60 | 78.7 | 888 | |
| | 2002.07-2007.02 | MT | F | L | Estate FWD DW10TD | | GDS45101 | Drive Shaft | 48T | 25 | 24 | 58 | 79 | 592 | |
| | 2002.07-2007.02 | MT | F | R | Estate FWD DW10TD | | GDS45038 | Drive Shaft | | 25 | 24 | 58 | 79 | 888 | |
| | 2002.07-2007.02 | MT | F | L/R | Estate FWD DW10TD | | GCO45049 | Outer Joint | 48T | 25 | 34 | 58 | 79 | 55.5 | I |
| | 2002.07-2007.02 | MT | F | L | Estate FWD DW10TD | | GCI10020 | Inner Joint | | 24 | 34 | 40 | 62.5 | 99 | |
| 2.0 (100 kw) | 2002.07-2007.02 | 5MT | F | L | Estate FWD EW10J4 | | GDS45101 | Drive Shaft | 48T | 25 | 24 | 58 | 79 | 592 | |
| | 2002.07-2007.02 | 5MT | F | R | Estate FWD EW10J4 | | GDS45016 | Drive Shaft | 48T | 25 | 24 | 60 | 78.7 | 888 | |

| | YEAR | TRANSM. | F/R | L/R | BODY STYLE & DRIVE TYPE & ENGINE | REMARKS | G-AP Ref. | PRODUCT | ABS | Technical Specifications A | B | C | H | L | P |
|---|---|---|---|---|---|---|---|---|---|---|---|---|---|---|---|
| **PEUGEOT** | | | | | | | | | | | | | | | |
| **206 SW** | | | | | | | | | | | | | | | |
| 2.0 (100 kw) | 2002.07-2007.02 | 5MT | F | L/R | Estate FWD EW10J4 | | GCO45049 | Outer Joint | 48T | 25 | 34 | 58 | 79 | 55.5 | I |
| | 2002.07-2007.02 | 5MT | F | L | Estate FWD EW10J4 | | GCI10020 | Inner Joint | | 24 | 34 | 40 | 62.5 | 99 | |
| | 2002.07-2007.02 | MT | F | L/R | Estate FWD EW10J4 | | GCO10024 | Outer Joint | 48T | 25 | 34 | 55.7 | 79 | 55 | I |
| | 2002.07-2007.02 | MT | F | L/R | Estate FWD EW10J4 | | GCO10043 | Outer Joint | | 25 | 34 | 54.8 | 78.5 | 56 | I |
| | 2002.07-2007.02 | MT | F | L/R | Estate FWD EW10J4 | | GCO45035 | Outer Joint | 48T | 25 | 34 | 58 | 79 | 55.5 | I |
| **206+** | | | | | | | | | | | | | | | |
| 1.1 (44 kw) | 2009.01-2013.06 | 5MT | F | L | Hatchback FWD HFX (TU1A) | Date from:2010.11,From ORG/OPR:12411,for Differential 77 | GDS45032 | Drive Shaft | 48T | 21 | 22 | 48 | 86.5 | 604.5 | |
| | 2009.01-2013.06 | 5MT | F | L | Hatchback FWD HFX (TU1A) | Date to:2010.10,To ORG/OPR:12410;Date from:2010.11,From ORG/OPR:12411,for Differential 68 | GDS45220 | Drive Shaft | 48T | 21 | 22 | 48.5 | 86 | 610 | |
| | 2009.01-2013.06 | 5MT | F | R | Hatchback FWD HFX (TU1A) | | GDS45223 | Drive Shaft | 48T | 21 | 22 | 48.5 | 86 | 886 | |
| | 2009.01-2013.06 | 5MT | F | L/R | Hatchback FWD HFX (TU1A) | | GCO45093 | Outer Joint | 48T | 21 | 21 | 48.5 | 86 | 54 | I |
| | 2009.01-2013.06 | 5MT | F | L | Hatchback FWD HFX (TU1A) | | GCI10068 | Inner Joint | | 22 | 21 | 40 | 65 | 87.5 | |
| | 2009.01-2013.06 | 5MT | F | R | Hatchback FWD HFX (TU1A) | | GCI10067 | Inner Joint | | 22 | 21 | 29.85 | 329.5 | 87.5 | |
| | 2009.04-2013.06 | 5MT | F | L | Hatchback FWD HFX (TU1JP);HFX (TU1A) | Date from:2010.11,From ORG/OPR:12411,for Differential 77 | GDS45032 | Drive Shaft | 48T | 21 | 22 | 48 | 86.5 | 604.5 | |
| | 2009.04-2013.06 | 5MT | F | L | Hatchback FWD HFX (TU1JP);HFX (TU1A) | Date to:2010.10,To ORG/OPR:12410;Date from:2010.11,From ORG/OPR:12411,for Differential 68 | GDS45220 | Drive Shaft | 48T | 21 | 22 | 48.5 | 86 | 610 | |
| | 2009.04-2013.06 | 5MT | F | R | Hatchback FWD HFX (TU1JP);HFX (TU1A) | | GDS45223 | Drive Shaft | 48T | 21 | 22 | 48.5 | 86 | 886 | |
| | 2009.04-2013.06 | 5MT | F | L/R | Hatchback FWD HFX (TU1JP);HFX (TU1A) | | GCO45093 | Outer Joint | 48T | 21 | 21 | 48.5 | 86 | 54 | I |
| | 2009.04-2013.06 | 5MT | F | L | Hatchback FWD HFX (TU1JP);HFX (TU1A) | | GCI10068 | Inner Joint | | 22 | 21 | 40 | 65 | 87.5 | |
| | 2009.04-2013.06 | 5MT | F | R | Hatchback FWD HFX (TU1JP);HFX (TU1A) | | GCI10067 | Inner Joint | | 22 | 21 | 29.85 | 329.5 | 87.5 | |
| 1.4 (50 kw) | 2009.01-2013.06 | 5MT | F | L | Hatchback FWD 8HZ (DV4TD);8HR (DV4C) | Date to:2010.10,To ORG/OPR:12410;Date from:2010.11,From ORG/OPR:12411,for Differential 68;Inner teeth of wheel side:21 | GDS45220 | Drive Shaft | 48T | 21 | 22 | 48.5 | 86 | 610 | |
| | 2009.01-2013.06 | 5MT | F | R | Hatchback FWD 8HZ (DV4TD);8HR (DV4C) | Inner teeth of wheel side:21 | GDS45223 | Drive Shaft | 48T | 21 | 22 | 48.5 | 86 | 886 | |
| | 2009.01-2013.06 | 5MT | F | L/R | Hatchback FWD 8HZ (DV4TD);8HR (DV4C) | | GCO45093 | Outer Joint | 48T | 21 | 21 | 48.5 | 86 | 54 | I |
| | 2009.01-2013.06 | 5MT | F | L | Hatchback FWD 8HZ (DV4TD);8HR (DV4C) | Date to:2010.10,To ORG/OPR:12410;Date from:2010.11,From ORG/OPR:12411,Differential:68 | GCI10068 | Inner Joint | | 22 | 21 | 40 | 65 | 87.5 | |
| | 2009.01-2013.06 | 5MT | F | R | Hatchback FWD 8HZ (DV4TD);8HR (DV4C) | | GCI10067 | Inner Joint | | 22 | 21 | 29.85 | 329.5 | 87.5 | |
| | 2009.01-2013.06 | MT | F | L | Hatchback FWD 8HZ (DV4TD);8HR (DV4C) | Trans. code:MA | GDS10043 | Drive Shaft | | 21 | 22 | 48 | 86.5 | 610 | |
| | 2009.01-2013.06 | MT | F | L | Hatchback FWD 8HZ (DV4TD);8HR (DV4C) | Trans. code:MA;Inner teeth of wheel side:22 | GDS45027 | Drive Shaft | 48T | 21 | 22 | 48 | 86.5 | 610 | |
| | 2009.01-2013.06 | MT | F | R | Hatchback FWD 8HZ (DV4TD);8HR (DV4C) | Trans. code:MA;Inner teeth of wheel side:22 | GDS45035 | Drive Shaft | 48T | 21 | 22 | 48 | 86.5 | 886 | |
| | 2009.01-2013.06 | MT | F | R | Hatchback FWD 8HZ (DV4TD);8HR (DV4C) | Trans. code:MA | GDS45094 | Drive Shaft | | 21 | 22 | 48 | 86.5 | 886 | |
| | 2009.01-2013.06 | MT | F | L/R | Hatchback FWD 8HZ (DV4TD);8HR (DV4C) | Type:Back clip location | GCO45033 | Outer Joint | 48T | 21 | 22 | 48 | 86.5 | 54 | I |
| | 2009.01-2013.06 | MT | F | L/R | Hatchback FWD 8HZ (DV4TD);8HR (DV4C) | Type:Back clip location | GCO45067 | Outer Joint | 48T | 21 | 21 | 48.5 | 86 | 54 | I |
| 1.4 (54 kw) | 2010.09-2013.06 | 5MT | F | L | Hatchback FWD KFT (TU3AE5) | Date from:2010.11,From ORG/OPR:12411,for Differential 77 | GDS45032 | Drive Shaft | 48T | 21 | 22 | 48 | 86.5 | 604.5 | |
| | 2010.09-2013.06 | 5MT | F | L | Hatchback FWD KFT (TU3AE5) | Date to:2010.10,To ORG/OPR:12410;Date from:2010.11,From ORG/OPR:12411,for Differential 68 | GDS45220 | Drive Shaft | 48T | 21 | 22 | 48.5 | 86 | 610 | |
| | 2010.09-2013.06 | 5MT | F | R | Hatchback FWD KFT (TU3AE5) | | GDS45223 | Drive Shaft | 48T | 21 | 22 | 48.5 | 86 | 886 | |
| | 2010.09-2013.06 | 5MT | F | L/R | Hatchback FWD KFT (TU3AE5) | | GCO45093 | Outer Joint | 48T | 21 | 21 | 48.5 | 86 | 54 | I |
| | 2010.09-2013.06 | 5MT | F | L | Hatchback FWD KFT (TU3AE5) | | GCI10068 | Inner Joint | | 22 | 21 | 40 | 65 | 87.5 | |
| | 2010.09-2013.06 | 5MT | F | R | Hatchback FWD KFT (TU3AE5) | | GCI10067 | Inner Joint | | 22 | 21 | 29.85 | 329.5 | 87.5 | |
| 1.4 (55 kw) | 2009.01-2013.08 | 5MT | F | L | Hatchback FWD KFW (TU3A) | Date from:2010.11,From ORG/OPR:12411,for Differential 77 | GDS45032 | Drive Shaft | 48T | 21 | 22 | 48 | 86.5 | 604.5 | |
| | 2009.01-2013.08 | 5MT | F | L | Hatchback FWD KFW (TU3A) | Date to:2010.10,To ORG/OPR:12410;Date from:2010.11,From ORG/OPR:12411,for Differential 68 | GDS45220 | Drive Shaft | 48T | 21 | 22 | 48.5 | 86 | 610 | |
| | 2009.01-2013.08 | 5MT | F | R | Hatchback FWD KFW (TU3A) | | GDS45223 | Drive Shaft | 48T | 21 | 22 | 48.5 | 86 | 886 | |
| | 2009.01-2013.08 | 5MT | F | L/R | Hatchback FWD KFW (TU3A) | | GCO45093 | Outer Joint | 48T | 21 | 21 | 48.5 | 86 | 54 | I |
| | 2009.01-2013.08 | 5MT | F | L | Hatchback FWD KFW (TU3A) | | GCI10068 | Inner Joint | | 22 | 21 | 40 | 65 | 87.5 | |
| | 2009.01-2013.08 | 5MT | F | R | Hatchback FWD KFW (TU3A) | | GCI10067 | Inner Joint | | 22 | 21 | 29.85 | 329.5 | 87.5 | |
| **207** | | | | | | | | | | | | | | | |
| 1.4 (50 kw) | 2006.02-2015.12 | 5MT | F | L | Hatchback FWD 8HZ (DV4TD), 8HR (DV4C) | without Height-Adjustable Suspension | GDS10311 | Drive Shaft | | 21 | 22 | 48 | 86.5 | 647 | |
| | 2006.02-2015.12 | 5MT | F | L | Hatchback FWD 8HZ (DV4TD), 8HR (DV4C) | with Height-Adjustable Suspension | GDS45200 | Drive Shaft | | 25 | 22 | 58.5 | 78.5 | 640 | |
| | 2006.02-2015.12 | 5MT | F | R | Hatchback FWD 8HZ (DV4TD), 8HR (DV4C) | with Height-Adjustable Suspension | GDS45201 | Drive Shaft | | 25 | 22 | 58.5 | 79 | 854 | |
| | 2006.02-2015.12 | 5MT | F | R | Hatchback FWD 8HZ (DV4TD), 8HR (DV4C) | without Height-Adjustable Suspension | GDS99271 | Drive Shaft | | 21 | 22 | 48 | 86.5 | 860 | |
| | 2006.02-2015.12 | 5MT | F | L/R | Hatchback FWD 8HZ (DV4TD), 8HR (DV4C) | with Height-Adjustable Suspension | GCO10025 | Outer Joint | | 25 | 22 | 60 | 80 | 54 | I |
| | 2006.02-2015.12 | 5MT | F | L/R | Hatchback FWD 8HZ (DV4TD), 8HR (DV4C) | without Height-Adjustable Suspension | GCO45021 | Outer Joint | | 25 | 22 | 60 | 78.7 | 54 | M |
| | 2006.02-2015.12 | 5MT | F | L/R | Hatchback FWD 8HZ (DV4TD), 8HR (DV4C) | with Height-Adjustable Suspension | GCO45036 | Outer Joint | 29T | 25 | 22 | 60 | 80 | 54 | I |
| | 2006.02-2015.12 | 5MT | F | L | Hatchback FWD 8HZ (DV4TD), 8HR (DV4C) | | GCI17029 | Inner Joint | | 22 | 22 | 40 | 58.5 | 101 | |
| | 2006.02-2015.12 | 5MT | F | R | Hatchback FWD 8HZ (DV4TD), 8HR (DV4C) | | GCI17030 | Inner Joint | | 22 | 22 | 30 | 96.5 | 99 | |
| | 2007.04- | 5MT | F | L | Hatchback Van FWD 8HZ (DV4TD);8HR (DV4C) | Date from:2007.04,without Height-Adjustable Suspension | GDS10311 | Drive Shaft | | 21 | 22 | 48 | 86.5 | 647 | |
| | 2007.04- | 5MT | F | L | Hatchback Van FWD 8HZ (DV4TD);8HR (DV4C) | with Height-Adjustable Suspension;without Height-Adjustable Suspension;Date to:2007.03 | GDS45200 | Drive Shaft | | 25 | 22 | 58.5 | 78.5 | 640 | |
| | 2007.04- | 5MT | F | R | Hatchback Van FWD 8HZ (DV4TD);8HR (DV4C) | with Height-Adjustable Suspension;without Height-Adjustable Suspension;Date to:2007.03 | GDS45201 | Drive Shaft | | 25 | 22 | 58.5 | 79 | 854 | |
| | 2007.04- | 5MT | F | R | Hatchback Van FWD 8HZ (DV4TD);8HR (DV4C) | Date from:2007.04,without Height-Adjustable Suspension | GDS99271 | Drive Shaft | | 21 | 22 | 48 | 86.5 | 860 | |
| | 2007.04- | 5MT | F | L/R | Hatchback Van FWD 8HZ (DV4TD);8HR (DV4C) | with Height-Adjustable Suspension;Date to:2007.03;without Height-Adjustable Suspension | GCO10025 | Outer Joint | | 25 | 22 | 60 | 80 | 54 | I |
| | 2007.04- | 5MT | F | L/R | Hatchback Van FWD 8HZ (DV4TD);8HR (DV4C) | with Height-Adjustable Suspension;Date to:2007.03;without Height-Adjustable Suspension | GCO45036 | Outer Joint | 29T | 25 | 22 | 60 | 80 | 54 | I |
| | 2007.04- | 5MT | F | L | Hatchback Van FWD 8HZ (DV4TD);8HR (DV4C) | with Height-Adjustable Suspension;without Height-Adjustable Suspension;Date to:2007.03 | GCI17029 | Inner Joint | | 22 | 22 | 40 | 58.5 | 101 | |
| 1.4 (52 kw) | 2011.02-2015.12 | 5MT | F | L | Hatchback FWD 8HZ (DV4TD) | For Enginecode:DV4TD,For vehicles without Height-Adjustable Suspension | GDS10311 | Drive Shaft | | 21 | 22 | 48 | 86.5 | 647 | |
| | 2011.02-2015.12 | 5MT | F | L | Hatchback FWD 8HZ (DV4TD) | | GDS45200 | Drive Shaft | | 25 | 22 | 58.5 | 78.5 | 640 | |
| | 2011.02-2015.12 | 5MT | F | R | Hatchback FWD 8HZ (DV4TD) | | GDS45201 | Drive Shaft | | 25 | 22 | 58.5 | 79 | 854 | |
| | 2011.02-2015.12 | 5MT | F | R | Hatchback FWD 8HZ (DV4TD) | For Enginecode:DV4TD,For vehicles without Height-Adjustable Suspension | GDS99271 | Drive Shaft | | 21 | 22 | 48 | 86.5 | 860 | |
| | 2011.02-2015.12 | 5MT | F | L | Hatchback FWD 8HZ (DV4TD) | | GCO10156 | Outer Joint | | 25 | 22 | 58.5 | 78.5 | 55 | I |
| | 2011.02-2015.12 | 5MT | F | L | Hatchback FWD 8HZ (DV4TD) | For Enginecode:DV4TD,For vehicles without Height-Adjustable Suspension | GCO45057 | Outer Joint | | 21 | 22 | 48 | 86.5 | 54 | I |
| | 2011.02-2015.12 | 5MT | F | R | Hatchback FWD 8HZ (DV4TD) | For Enginecode:DV4TD,For vehicles without Height-Adjustable Suspension | GCO45011 | Outer Joint | | 21 | 22 | 48 | 86.5 | 54 | I |

| | YEAR | TRANSM. | F/R | L/R | BODY STYLE & DRIVE TYPE & ENGINE | REMARKS | G-AP Ref. | PRODUCT | ABS | Technical Specifications A | B | C | H | L | P |
|---|---|---|---|---|---|---|---|---|---|---|---|---|---|---|---|
| **PEUGEOT** | | | | | | | | | | | | | | | |
| **207** | | | | | | | | | | | | | | | |
| 1.4 (52 kw) | 2011.02-2015.12 | 5MT | F | L/R | Hatchback FWD 8HZ (DV4TD) | For Enginecode:DV4TD | GCO10025 | Outer Joint | | 25 | 22 | 60 | 80 | 54 | I |
| | 2011.02-2015.12 | 5MT | F | L | Hatchback FWD 8HZ (DV4TD) | | GCI17029 | Inner Joint | | 22 | 22 | 40 | 58.5 | 101 | |
| | 2011.02-2015.12 | 5MT | F | R | Hatchback FWD 8HZ (DV4TD) | | GCI17030 | Inner Joint | | 22 | 22 | 30 | 96.5 | 99 | |
| 1.4 (54 kw) | 2006.04-2013.10 | 5MT | F | L | Hatchback FWD KFV (TU3A);KFT (TU3A);KFT (TU3AE5) | For Engine code:TU3A;For Engine code:TU3AE5,Date to:2012.03 | GDS99272 | Drive Shaft | | 21 | 22 | 48 | 86.5 | 655 | |
| | 2006.04-2013.10 | 5MT | F | R | Hatchback FWD KFV (TU3A);KFT (TU3A);KFT (TU3AE5) | | GDS99271 | Drive Shaft | | 21 | 22 | 48 | 86.5 | 860 | |
| | 2006.04-2013.10 | 5MT | F | L | Hatchback FWD KFV (TU3A);KFT (TU3A);KFT (TU3AE5) | GrooveType:Inner;For Engine code:TU3A;For Engine code:TU3AE5,Date to:2012.03 | GCO45057 | Outer Joint | | 21 | 22 | 48 | 86.5 | 54 | I |
| | 2006.04-2013.10 | 5MT | F | R | Hatchback FWD KFV (TU3A);KFT (TU3A);KFT (TU3AE5) | GrooveType:Inner | GCO45011 | Outer Joint | | 21 | 22 | 48 | 86.5 | 54 | I |
| | 2006.04-2013.10 | 5MT | F | L | Hatchback FWD KFV (TU3A);KFT (TU3A);KFT (TU3AE5) | For Engine code:TU3A;For Engine code:TU3AE5,Date to:2012.03 | GCI17029 | Inner Joint | | 22 | 22 | 40 | 58.5 | 101 | |
| | 2006.04-2013.10 | 5MT | F | R | Hatchback FWD KFV (TU3A);KFT (TU3A);KFT (TU3AE5) | | GCI17030 | Inner Joint | | 22 | 22 | 30 | 96.5 | 99 | |
| | 2006.04-2013.10 | MT | F | L/R | Hatchback FWD KFV (TU3A);KFT (TU3A);KFT (TU3AE5) | GrooveType:Middle | GCO45068 | Outer Joint | | 21 | 22 | 48 | 86.5 | 54 | M |
| | 2007.06-2008.10 | 5MT | F | L | Hatchback Van FWD KFV (TU3A) | | GDS99272 | Drive Shaft | | 21 | 22 | 48 | 86.5 | 655 | |
| | 2007.06-2008.10 | 5MT | F | R | Hatchback Van FWD KFV (TU3A) | | GDS99271 | Drive Shaft | | 21 | 22 | 48 | 86.5 | 860 | |
| | 2007.06-2008.10 | 5MT | F | L | Hatchback Van FWD KFV (TU3A) | | GCO45057 | Outer Joint | | 21 | 22 | 48 | 86.5 | 54 | I |
| | 2007.06-2008.10 | 5MT | F | R | Hatchback Van FWD KFV (TU3A) | | GCO45011 | Outer Joint | | 21 | 22 | 48 | 86.5 | 54 | I |
| | 2007.06-2008.10 | 5MT | F | L | Hatchback Van FWD KFV (TU3A) | | GCI17029 | Inner Joint | | 22 | 22 | 40 | 58.5 | 101 | |
| | 2007.06-2008.10 | 5MT | F | R | Hatchback Van FWD KFV (TU3A) | | GCI17030 | Inner Joint | | 22 | 22 | 30 | 96.5 | 99 | |
| | 2007.08-2013.12 | 5MT | F | L | Hatchback FWD KFV (TU3A) | | GDS99272 | Drive Shaft | | 21 | 22 | 48 | 86.5 | 655 | |
| | 2007.08-2013.12 | 5MT | F | R | Hatchback FWD KFV (TU3A) | | GDS99271 | Drive Shaft | | 21 | 22 | 48 | 86.5 | 860 | |
| | 2007.08-2013.12 | 5MT | F | L | Hatchback FWD KFV (TU3A) | | GCO45057 | Outer Joint | | 21 | 22 | 48 | 86.5 | 54 | I |
| | 2007.08-2013.12 | 5MT | F | R | Hatchback FWD KFV (TU3A) | | GCO45011 | Outer Joint | | 21 | 22 | 48 | 86.5 | 54 | I |
| | 2007.08-2013.12 | 5MT | F | L | Hatchback FWD KFV (TU3A) | | GCI17029 | Inner Joint | | 22 | 22 | 40 | 58.5 | 101 | |
| | 2007.08-2013.12 | 5MT | F | R | Hatchback FWD KFV (TU3A) | | GCI17030 | Inner Joint | | 22 | 22 | 30 | 96.5 | 99 | |
| | 2007.12-2012.12 | 5MT | F | L | Saloon FWD KFV (TU3A);KFT (TU3A) | | GDS99272 | Drive Shaft | | 21 | 22 | 48 | 86.5 | 655 | |
| | 2007.12-2012.12 | 5MT | F | R | Saloon FWD KFV (TU3A);KFT (TU3A) | | GDS99271 | Drive Shaft | | 21 | 22 | 48 | 86.5 | 860 | |
| | 2007.12-2012.12 | 5MT | F | L | Saloon FWD KFV (TU3A);KFT (TU3A) | | GCO45057 | Outer Joint | | 21 | 22 | 48 | 86.5 | 54 | I |
| | 2007.12-2012.12 | 5MT | F | R | Saloon FWD KFV (TU3A);KFT (TU3A) | | GCO45011 | Outer Joint | | 21 | 22 | 48 | 86.5 | 54 | I |
| | 2007.12-2012.12 | 5MT | F | L | Saloon FWD KFV (TU3A);KFT (TU3A) | | GCI17029 | Inner Joint | | 22 | 22 | 40 | 58.5 | 101 | |
| | 2007.12-2012.12 | 5MT | F | R | Saloon FWD KFV (TU3A);KFT (TU3A) | | GCI17030 | Inner Joint | | 22 | 22 | 30 | 96.5 | 99 | |
| 1.4 (55 kw) | 2008.08-2015.12 | 5MT | F | L | Hatchback FWD KFV (TU3A), KFW (TU3A) | | GDS99272 | Drive Shaft | | 21 | 22 | 48 | 86.5 | 655 | |
| | 2008.08-2015.12 | 5MT | F | R | Hatchback FWD KFV (TU3A), KFW (TU3A) | | GDS99271 | Drive Shaft | | 21 | 22 | 48 | 86.5 | 860 | |
| | 2008.08-2015.12 | 5MT | F | L | Hatchback FWD KFV (TU3A), KFW (TU3A) | | GCO45057 | Outer Joint | | 21 | 22 | 48 | 86.5 | 54 | I |
| | 2008.08-2015.12 | 5MT | F | R | Hatchback FWD KFV (TU3A), KFW (TU3A) | | GCO45011 | Outer Joint | | 21 | 22 | 48 | 86.5 | 54 | I |
| | 2008.08-2015.12 | 5MT | F | L/R | Hatchback FWD KFV (TU3A), KFW (TU3A) | | GCO45068 | Outer Joint | | 21 | 22 | 48 | 86.5 | 54 | M |
| | 2008.08-2015.12 | 5MT | F | L | Hatchback FWD KFV (TU3A), KFW (TU3A) | | GCI17029 | Inner Joint | | 22 | 22 | 40 | 58.5 | 101 | |
| | 2008.08-2015.12 | 5MT | F | R | Hatchback FWD KFV (TU3A), KFW (TU3A) | | GCI17030 | Inner Joint | | 22 | 22 | 30 | 96.5 | 99 | |
| 1.4 (65 kw) | 2006.02-2013.10 | SAT/5MT | F | L | Hatchback FWD KFU (ET3J4) | | GDS99272 | Drive Shaft | | 21 | 22 | 48 | 86.5 | 655 | |
| | 2006.02-2013.10 | SAT/5MT | F | R | Hatchback FWD KFU (ET3J4) | | GDS99271 | Drive Shaft | | 21 | 22 | 48 | 86.5 | 860 | |
| | 2006.02-2013.10 | SAT/5MT | F | L | Hatchback FWD KFU (ET3J4) | | GCO45057 | Outer Joint | | 21 | 22 | 48 | 86.5 | 54 | I |
| | 2006.02-2013.10 | SAT/5MT | F | R | Hatchback FWD KFU (ET3J4) | | GCO45011 | Outer Joint | | 21 | 22 | 48 | 86.5 | 54 | I |
| | 2006.02-2013.10 | SAT/5MT | F | L | Hatchback FWD KFU (ET3J4) | | GCI17029 | Inner Joint | | 22 | 22 | 40 | 58.5 | 101 | |
| | 2006.02-2013.10 | SAT/5MT | F | R | Hatchback FWD KFU (ET3J4) | | GCI17030 | Inner Joint | | 22 | 22 | 30 | 96.5 | 99 | |
| | 2006.02-2013.10 | | F | | Hatchback FWD KFU (ET3J4) | | GCO45068 | Outer Joint | | 21 | 22 | 48 | 86.5 | 54 | M |
| 1.4 (70 kw) | 2007.06-2013.10 | 5MT | F | L/R | Hatchback FWD EP3;8FS (EP3);EP3C | | GCO10025 | Outer Joint | | 25 | 22 | 60 | 80 | 54 | I |
| | 2007.06-2013.10 | 5MT | F | L/R | Hatchback FWD EP3;8FS (EP3);EP3C | Wheel Hub Diam:82mm | GCO45036 | Outer Joint | 29T | 25 | 22 | 60 | 80 | 54 | I |
| | 2007.06-2013.10 | MT | F | L | Hatchback FWD EP3;8FS (EP3);EP3C | Date from:2007.10 | GDS10311 | Drive Shaft | | 21 | 22 | 48 | 86.5 | 647 | |
| | 2007.06-2013.10 | MT | F | L | Hatchback FWD EP3;8FS (EP3);EP3C | Date To:2012.03;To ORG/OPR:12942;Wheel Hub Diam:82mm | GDS45200 | Drive Shaft | | 25 | 22 | 58.5 | 78.5 | 640 | |
| | 2007.06-2013.10 | MT | F | R | Hatchback FWD EP3;8FS (EP3);EP3C | Date To:2012.03;To ORG/OPR:12942;Wheel Hub Diam:82mm | GDS45201 | Drive Shaft | | 25 | 22 | 58.5 | 79 | 854 | |
| | 2007.06-2013.10 | MT | F | R | Hatchback FWD EP3;8FS (EP3);EP3C | Date from:2007.10 | GDS99271 | Drive Shaft | | 21 | 22 | 48 | 86.5 | 860 | |
| | 2007.06-2013.10 | MT | F | L/R | Hatchback FWD EP3;8FS (EP3);EP3C | | GCO45068 | Outer Joint | | 21 | 22 | 48 | 86.5 | 54 | M |
| | 2007.06-2013.10 | MT | F | L | Hatchback FWD EP3;8FS (EP3);EP3C | Date to:2012.03;To ORG/OPR:12942;Wheel Hub Diam:82mm | GCI17029 | Inner Joint | | 22 | 22 | 40 | 58.5 | 101 | |
| | 2007.06-2013.10 | MT | F | R | Hatchback FWD EP3;8FS (EP3);EP3C | Date to:2012.03;To ORG/OPR:12942;Wheel Hub Diam:82mm | GCI17030 | Inner Joint | | 22 | 22 | 30 | 96.5 | 99 | |
| 1.4 (72 kw) | 2009.10-2012.12 | 5MT | F | L | Hatchback FWD 8FR (EP3) | Wheel Hub Diam:72mm | GDS10311 | Drive Shaft | | 21 | 22 | 48 | 86.5 | 647 | |
| | 2009.10-2012.12 | 5MT | F | L | Hatchback FWD 8FR (EP3) | | GCI17029 | Inner Joint | | 22 | 22 | 40 | 58.5 | 101 | |
| | 2009.10-2012.12 | 5MT | F | R | Hatchback FWD 8FR (EP3) | | GCI17030 | Inner Joint | | 22 | 22 | 30 | 96.5 | 99 | |
| | 2009.10-2012.12 | MT | F | L/R | Hatchback FWD 8FR (EP3) | | GCO10025 | Outer Joint | | 25 | 22 | 60 | 80 | 54 | I |
| | 2009.10-2012.12 | MT | F | | Hatchback FWD 8FR (EP3) | | GCO45068 | Outer Joint | | 21 | 22 | 48 | 86.5 | 54 | M |
| | 2009.10-2012.12 | | F | L | Hatchback FWD 8FR (EP3) | Date to:2012.03,To ORG/OPR:12942/12936,Wheel Hub Diam:82 | GDS45200 | Drive Shaft | | 25 | 22 | 58.5 | 78.5 | 640 | |
| | 2009.10-2012.12 | | F | R | Hatchback FWD 8FR (EP3) | Wheel Hub Diam:82mm | GDS45201 | Drive Shaft | | 25 | 22 | 58.5 | 79 | 854 | |
| | 2009.10-2012.12 | | F | R | Hatchback FWD 8FR (EP3) | Wheel Hub Diam:72mm | GDS99271 | Drive Shaft | | 21 | 22 | 48 | 86.5 | 860 | |
| | 2009.10-2012.12 | | F | L/R | Hatchback FWD 8FR (EP3) | Wheel Hub Diam:82mm | GCO45036 | Outer Joint | 29T | 25 | 22 | 60 | 80 | 54 | I |
| 1.6 (66 kw) | 2006.02-2013.10 | 5MT | F | L | Hatchback FWD 9HX (DV6ATED4);9HV (DV6TED4B);9HV (DV6TED4B);(9HV (DV6TED4) | Date to:2010.06,for Engine code:DV6ATED4 | GDS10248 | Drive Shaft | | 25 | 24 | 58.5 | 79 | 642 | |
| | 2006.02-2013.10 | 5MT | F | L | Hatchback FWD 9HX (DV6ATED4);9HV (DV6TED4B);9HV (DV6TED4B);(9HV (DV6TED4) | Date from:2010.07,For Engine code:DV6ATED4;For Engine code:DV6TED4B | GDS10250 | Drive Shaft | | 25 | 24 | 58.5 | 79 | 630 | |
| | 2006.02-2013.10 | 5MT | F | R | Hatchback FWD 9HX (DV6ATED4);9HV (DV6TED4B);9HV (DV6TED4B);(9HV (DV6TED4) | | GDS10249 | Drive Shaft | | 25 | 24 | 58.5 | 79 | 864 | |
| | 2006.02-2013.10 | 5MT | F | R | Hatchback FWD 9HX (DV6ATED4);9HV (DV6TED4B);9HV (DV6TED4B);(9HV (DV6TED4) | | GCO10067 | Outer Joint | 48W | 25 | 34 | 58.5 | 79 | 55 | I |
| | 2006.02-2013.10 | 5MT | F | L/R | Hatchback FWD 9HX (DV6ATED4);9HV (DV6TED4B);9HV (DV6TED4B);(9HV (DV6TED4) | | GCO10042 | Outer Joint | | 25 | 34 | 54.8 | 78.5 | 56 | I |

| | YEAR | TRANSM. | F/R | L/R | BODY STYLE & DRIVE TYPE & ENGINE | REMARKS | G-AP Ref. | PRODUCT | ABS | Technical Specifications A | B | C | H | L | P |
|---|---|---|---|---|---|---|---|---|---|---|---|---|---|---|---|
| **PEUGEOT** | | | | | | | | | | | | | | | |
| **207** | | | | | | | | | | | | | | | |
| 1.6 (66 kw) | 2006.02-2013.10 | 5MT | F | L/R | Hatchback FWD 9HX (DV6ATED4);9HV (DV6TED4);9HV (DV6TED4Bz);9HV (DV6TEDz) | | GCO99366 | Outer Joint | | 25 | 34 | 58.5 | 79 | 55 | I |
| | 2006.02-2013.10 | 5MT | F | L | Hatchback FWD 9HX (DV6ATED4);9HV (DV6TED4);9HV (DV6TED4Bz);9HV (DV6TEDz) | Date from:2010.07,For Engine code:DV6ATED4;For Engine code:DV6TED4B | GCI10070 | Inner Joint | | 24 | 34 | 40 | 62 | 88 | |
| | 2006.02-2013.10 | 5MT | F | L | Hatchback FWD 9HX (DV6ATED4);9HV (DV6TED4);9HV (DV6TED4Bz);9HV (DV6TEDz) | Date to:2010.06,for Engine code:DV6ATED4 | GCI10080 | Inner Joint | | 24 | 34 | 40 | 69 | 89.5 | |
| | 2007.04-2012.10 | 5MT | F | L | Hatchback Van FWD 9HX (DV6ATED4) | Date to:2010.06 | GDS10248 | Drive Shaft | | 25 | 24 | 58.5 | 79 | 642 | |
| | 2007.04-2012.10 | 5MT | F | L | Hatchback Van FWD 9HX (DV6ATED4) | Date from:2010.07,For Engine code:DV6TED4B,To ORG/OPR:11682 | GDS10250 | Drive Shaft | | 25 | 24 | 58.5 | 79 | 630 | |
| | 2007.04-2012.10 | 5MT | F | R | Hatchback Van FWD 9HX (DV6ATED4) | | GDS10249 | Drive Shaft | | 25 | 24 | 58.5 | 79 | 864 | |
| | 2007.04-2012.10 | 5MT | F | L/R | Hatchback Van FWD 9HX (DV6ATED4) | | GCO99366 | Outer Joint | | 25 | 34 | 58.5 | 79 | 55 | I |
| | 2007.04-2012.10 | 5MT | F | L | Hatchback Van FWD 9HX (DV6ATED4) | Date from:2010.07,For Engine code:DV6TED4B,To ORG/OPR:11682 | GCI10070 | Inner Joint | | 24 | 34 | 40 | 62 | 88 | |
| | 2007.04-2012.10 | 5MT | F | L | Hatchback Van FWD 9HX (DV6ATED4) | Date to:2010.06 | GCI10080 | Inner Joint | | 24 | 34 | 40 | 69 | 89.5 | |
| | 2007.04-2012.10 | 5MT | F | R | Hatchback Van FWD 9HX (DV6ATED4) | | GCI10082 | Inner Joint | | 24 | 34 | 29.8 | 291 | 88 | |
| 1.6 (68 kw) | 2009.11-2012.12 | 5MT | F | L | Hatchback FWD 9HP (DV6DTED) | | GDS10250 | Drive Shaft | | 25 | 24 | 58.5 | 79 | 630 | |
| | 2009.11-2012.12 | 5MT | F | R | Hatchback FWD 9HP (DV6DTED) | | GDS10249 | Drive Shaft | | 25 | 24 | 58.5 | 79 | 864 | |
| | 2009.11-2012.12 | 5MT | F | L/R | Hatchback FWD 9HP (DV6DTED) | | GCO99366 | Outer Joint | | 25 | 34 | 58.5 | 79 | 55 | I |
| | 2009.11-2012.12 | 5MT | F | L | Hatchback FWD 9HP (DV6DTED) | | GCI10070 | Inner Joint | | 24 | 34 | 40 | 62 | 88 | |
| | 2009.11-2012.12 | 5MT | F | R | Hatchback FWD 9HP (DV6DTED) | | GCI10082 | Inner Joint | | 24 | 34 | 29.8 | 291 | 88 | |
| | 2009.11-2013.03 | 5MT | F | L | Hatchback Van FWD 9HP (DV6DTED) | | GDS10248 | Drive Shaft | | 25 | 24 | 58.5 | 79 | 642 | |
| | 2009.11-2013.03 | 5MT | F | R | Hatchback Van FWD 9HP (DV6DTED) | | GDS10249 | Drive Shaft | | 25 | 24 | 58.5 | 79 | 864 | |
| | 2009.11-2013.03 | 5MT | F | L | Hatchback Van FWD 9HP (DV6DTED) | | GCI10080 | Inner Joint | | 24 | 34 | 40 | 69 | 89.5 | |
| | 2009.11-2013.03 | 5MT | F | R | Hatchback Van FWD 9HP (DV6DTED) | | GCI10082 | Inner Joint | | 24 | 34 | 29.8 | 291 | 88 | |
| | 2009.11-2013.03 | MT | F | L | Hatchback Van FWD 9HP (DV6DTED) | Date to:2013.03 | GDS10250 | Drive Shaft | | 25 | 24 | 58.5 | 79 | 630 | |
| | 2009.11-2013.03 | | F | L/R | Hatchback Van FWD 9HP (DV6DTED) | | GCO10067 | Outer Joint | 48W | 25 | 34 | 58.5 | 79 | 55 | I |
| 1.6 (80 kw) | 2006.02-2013.10 | 5MT | F | L | Hatchback FWD 9HY (DV6TED4);9HZ (DV6TED4) | Inner teeth of wheel side:34 | GDS10248 | Drive Shaft | | 25 | 24 | 58.5 | 79 | 642 | |
| | 2006.02-2013.10 | 5MT | F | R | Hatchback FWD 9HY (DV6TED4);9HZ (DV6TED4) | | GDS10249 | Drive Shaft | | 25 | 24 | 58.5 | 79 | 864 | |
| | 2006.02-2013.10 | 5MT | F | L | Hatchback FWD 9HY (DV6TED4);9HZ (DV6TED4) | | GCI10080 | Inner Joint | | 24 | 34 | 40 | 69 | 89.5 | |
| | 2006.02-2013.10 | 5MT | F | R | Hatchback FWD 9HY (DV6TED4);9HZ (DV6TED4) | | GCI10082 | Inner Joint | | 24 | 34 | 29.8 | 291 | 88 | |
| | 2006.02-2013.10 | MT | F | L | Hatchback FWD 9HY (DV6TED4);9HZ (DV6TED4) | Trans. code:BE4R;Inner teeth of wheel side:34 | GDS10250 | Drive Shaft | | 25 | 24 | 58.5 | 79 | 630 | |
| | 2006.02-2013.10 | MT | F | R | Hatchback FWD 9HY (DV6TED4);9HZ (DV6TED4) | Date to:2013.10 | GCO10158 | Outer Joint | | 25 | 26 | 58.5 | 89 | 61.5 | M |
| | 2006.02-2013.10 | MT | F | L/R | Hatchback FWD 9HY (DV6TED4);9HZ (DV6TED4) | | GCO10027 | Outer Joint | 48T | 25 | 34 | 55.7 | 79 | 55 | I |
| | 2006.02-2013.10 | | F | L | Hatchback FWD 9HY (DV6TED4);9HZ (DV6TED4) | Type:SB09;Inner teeth of wheel side:26 | GDS10142 | Drive Shaft | | 25 | 24 | 58.5 | 89 | 648 | |
| | 2006.02-2013.10 | | F | R | Hatchback FWD 9HY (DV6TED4);9HZ (DV6TED4) | | GDS10143 | Drive Shaft | | 25 | 24 | 58.5 | 89 | 936 | |
| | 2006.02-2013.10 | | F | L/R | Hatchback FWD 9HY (DV6TED4);9HZ (DV6TED4) | | GCO10042 | Outer Joint | | 25 | 34 | 54.8 | 78.5 | 56 | I |
| | 2006.02-2013.10 | 4AT | F | L | Hatchback FWD NFU (TU5JP4) | | GDS45194 | Drive Shaft | | 25 | 26 | 58.5 | 79 | 621 | |
| | 2006.02-2013.10 | 4AT | F | R | Hatchback FWD NFU (TU5JP4) | | GDS45193 | Drive Shaft | | 25 | 26 | 58.5 | 79 | 759 | |
| | 2006.02-2013.10 | 5MT | F | L | Hatchback FWD NFU (TU5JP4) | | GDS45203 | Drive Shaft | | 25 | 22 | 58.5 | 79 | 645 | |
| | 2006.02-2013.10 | 5MT | F | R | Hatchback FWD NFU (TU5JP4) | | GDS45204 | Drive Shaft | | 25 | 22 | 58.5 | 79 | 846 | |
| | 2006.02-2013.10 | 5MT | F | L/R | Hatchback FWD NFU (TU5JP4) | | GCO10025 | Outer Joint | | 25 | 22 | 60 | 80 | 54 | I |
| | 2006.02-2013.10 | 5MT | F | L/R | Hatchback FWD NFU (TU5JP4) | | GCO45036 | Outer Joint | 29T | 25 | 22 | 60 | 80 | 54 | I |
| | 2006.02-2013.10 | 5MT | F | L | Hatchback FWD NFU (TU5JP4) | | GCI17029 | Inner Joint | | 22 | 22 | 40 | 58.5 | 101 | |
| | 2006.02-2013.10 | 5MT | F | R | Hatchback FWD NFU (TU5JP4) | | GCI17030 | Inner Joint | | 22 | 22 | 30 | 96.5 | 99 | |
| | 2006.04-2012.12 | 5MT | F | L | Hatchback Van FWD 9HZ (DV6TED4) | | GDS10248 | Drive Shaft | | 25 | 24 | 58.5 | 79 | 642 | |
| | 2006.04-2012.12 | 5MT | F | L | Hatchback Van FWD 9HZ (DV6TED4) | Date to:2008.10,To ORG/OPR:11682;Date from:2008.11,From ORG/OPR:11683 | GDS10250 | Drive Shaft | | 25 | 24 | 58.5 | 79 | 630 | |
| | 2006.04-2012.12 | 5MT | F | R | Hatchback Van FWD 9HZ (DV6TED4) | | GDS10249 | Drive Shaft | | 25 | 24 | 58.5 | 79 | 864 | |
| | 2006.04-2012.12 | 5MT | F | L | Hatchback Van FWD 9HZ (DV6TED4) | Date to:2008.10,To ORG/OPR:11682;Date from:2008.11,From ORG/OPR:11683 | GCI10070 | Inner Joint | | 24 | 34 | 40 | 62 | 88 | |
| | 2006.04-2012.12 | 5MT | F | L | Hatchback Van FWD 9HZ (DV6TED4) | | GCI10080 | Inner Joint | | 24 | 34 | 40 | 69 | 89.5 | |
| | 2006.04-2012.12 | 5MT | F | R | Hatchback Van FWD 9HZ (DV6TED4) | | GCI10082 | Inner Joint | | 24 | 34 | 29.8 | 291 | 88 | |
| | 2006.04-2012.12 | | F | L | Hatchback Van FWD 9HZ (DV6TED4) | Trans. code:MC | GDS10253 | Drive Shaft | | 25 | 24 | 58.5 | 79 | 626 | |
| | 2006.04-2012.12 | | F | L/R | Hatchback Van FWD 9HZ (DV6TED4) | | GCO10067 | Outer Joint | 48W | 25 | 34 | 58.5 | 79 | 55 | I |
| 1.6 (81 kw) | 2008.08-2013.12 | 5MT | F | L | Hatchback FWD N6A (TU5JP4) | | GDS45203 | Drive Shaft | | 25 | 22 | 58.5 | 79 | 645 | |
| | 2008.08-2013.12 | 5MT | F | R | Hatchback FWD N6A (TU5JP4) | | GDS45204 | Drive Shaft | | 25 | 22 | 58.5 | 79 | 846 | |
| | 2008.08-2013.12 | 5MT | F | L/R | Hatchback FWD N6A (TU5JP4) | | GCO10025 | Outer Joint | | 25 | 22 | 60 | 80 | 54 | I |
| | 2008.08-2013.12 | 5MT | F | L | Hatchback FWD N6A (TU5JP4) | | GCI17029 | Inner Joint | | 22 | 22 | 40 | 58.5 | 101 | |
| | 2008.08-2013.12 | 5MT | F | R | Hatchback FWD N6A (TU5JP4) | | GCI17030 | Inner Joint | | 22 | 22 | 30 | 96.5 | 99 | |
| | 2008.08-2013.12 | MT | F | L | Hatchback FWD N6A (TU5JP4) | | GDS10292 | Drive Shaft | | 25 | 22 | 58.5 | 79 | 645 | |
| | 2008.08-2013.12 | MT | F | R | Hatchback FWD N6A (TU5JP4) | | GCO45021 | Outer Joint | | 25 | 22 | 60 | 78.7 | 54 | M |
| | 2008.09-2012.12 | 4AT | F | L | Hatchback FWD EP6 | | GDS45202 | Drive Shaft | | 25 | 26 | 58.5 | 78.5 | 620 | |
| | 2008.09-2012.12 | 4AT | F | R | Hatchback FWD EP6 | | GDS10267 | Drive Shaft | | 25 | 26 | 58.5 | 79.5 | 766 | |
| | 2008.09-2012.12 | 4AT | F | L | Hatchback FWD EP6 | | GCO10156 | Outer Joint | | 25 | 22 | 58.5 | 78.5 | 55 | I |
| 1.6 (82 kw) | 2009.08-2012.12 | 6MT | F | R | Hatchback FWD 9HR (DV6C) | | GDS45221 | Drive Shaft | | 25 | 24 | 58.5 | 79 | 881 | |
| | 2009.08-2012.12 | 6MT | F | R | Hatchback FWD 9HR (DV6C) | | GCO10148 | Outer Joint | | 25 | 34 | 58.5 | 79 | 55.5 | I |
| | 2009.08-2012.12 | 6MT | F | | Hatchback FWD 9HR (DV6C) | | GCO99366 | Outer Joint | | 25 | 34 | 58.5 | 79 | 55 | I |
| | 2009.08-2012.12 | 6MT | F | R | Hatchback FWD 9HR (DV6C) | | GCI10165 | Inner Joint | | 24 | 34 | 29.8 | 305.5 | 87.5 | |
| | 2009.08-2012.12 | MT | F | R | Hatchback FWD 9HR (DV6C) | | GDS10249 | Drive Shaft | | 25 | 24 | 58.5 | 79 | 864 | |
| | 2009.08-2012.12 | | F | L | Hatchback FWD 9HR (DV6C) | | GDS10253 | Drive Shaft | | 25 | 24 | 58.5 | 79 | 626 | |
| | 2009.08-2012.12 | | F | L/R | Hatchback FWD 9HR (DV6C) | | GCO10042 | Outer Joint | | 25 | 34 | 54.8 | 78.5 | 56 | I |
| 1.6 (83 kw) | 2008.08-2013.12 | AT | F | R | Hatchback FWD N6A (TU5JP4) | Date to:2012.12 | GDS45193 | Drive Shaft | | 25 | 26 | 58.5 | 79 | 759 | |

| | YEAR | TRANSM. | F/R | L/R | BODY STYLE & DRIVE TYPE & ENGINE | REMARKS | G-AP Ref. | PRODUCT | ABS | Technical Specifications A | B | C | H | L | P |
|---|---|---|---|---|---|---|---|---|---|---|---|---|---|---|---|
| **PEUGEOT** | | | | | | | | | | | | | | | |
| **207** | | | | | | | | | | | | | | | |
| 1.6 (83 kw) | 2008.08-2013.12 | MT | F | L | Hatchback FWD N6A (TU5JP4) | Date to:2012.12 | GDS45203 | Drive Shaft | | 25 | 22 | 58.5 | 79 | 645 | |
| | 2008.08-2013.12 | MT | F | R | Hatchback FWD N6A (TU5JP4) | Date to:2012.12 | GDS45204 | Drive Shaft | | 25 | 22 | 58.5 | 79 | 846 | |
| 1.6 (88 kw) | 2007.02-2012.12 | 4AT | F | L | Hatchback FWD EP6;5FS (EP6C);5FW (EP6) | | GDS45202 | Drive Shaft | | 25 | 26 | 58.5 | 78.5 | 620 | |
| | 2007.02-2012.12 | 4AT | F | R | Hatchback FWD EP6;5FS (EP6C);5FW (EP6) | | GDS10267 | Drive Shaft | | 25 | 26 | 58.5 | 79.5 | 766 | |
| | 2007.02-2012.12 | 5MT | F | L | Hatchback FWD EP6;5FS (EP6C);5FW (EP6) | | GDS45200 | Drive Shaft | | 25 | 22 | 58.5 | 78.5 | 640 | |
| | 2007.02-2012.12 | 5MT | F | R | Hatchback FWD EP6;5FS (EP6C);5FW (EP6) | | GDS45201 | Drive Shaft | | 25 | 22 | 58.5 | 79 | 854 | |
| | 2007.02-2012.12 | 5MT | F | L/R | Hatchback FWD EP6;5FS (EP6C);5FW (EP6) | | GCO10025 | Outer Joint | | 25 | 22 | 60 | 80 | 54 | I |
| | 2007.02-2012.12 | 5MT | F | L/R | Hatchback FWD EP6;5FS (EP6C);5FW (EP6) | | GCO45036 | Outer Joint | 29T | 25 | 22 | 60 | 80 | 54 | I |
| | 2007.02-2012.12 | 5MT | F | L | Hatchback FWD EP6;5FS (EP6C);5FW (EP6) | | GCI17029 | Inner Joint | | 22 | 22 | 40 | 58.5 | 101 | |
| | 2007.02-2012.12 | AT | F | L/R | Hatchback FWD EP6;5FS (EP6C);5FW (EP6) | | GCO10042 | Outer Joint | | 25 | 34 | 54.8 | 78.5 | 56 | I |
| | 2007.03-2012.12 | 4AT | F | L | Hatchback Van FWD 5FW (EP6) | | GDS45202 | Drive Shaft | | 25 | 26 | 58.5 | 78.5 | 620 | |
| | 2007.03-2012.12 | 4AT | F | R | Hatchback Van FWD 5FW (EP6) | | GDS10267 | Drive Shaft | | 25 | 26 | 58.5 | 79.5 | 766 | |
| | 2007.03-2012.12 | 5MT | F | L | Hatchback Van FWD 5FW (EP6) | | GDS45200 | Drive Shaft | | 25 | 22 | 58.5 | 78.5 | 640 | |
| | 2007.03-2012.12 | 5MT | F | R | Hatchback Van FWD 5FW (EP6) | | GDS45201 | Drive Shaft | | 25 | 22 | 58.5 | 79 | 854 | |
| | 2007.03-2012.12 | 5MT | F | L/R | Hatchback Van FWD 5FW (EP6) | For Engine code:EP6 | GCO10025 | Outer Joint | | 25 | 22 | 60 | 80 | 54 | I |
| | 2007.03-2012.12 | 5MT | F | L/R | Hatchback Van FWD 5FW (EP6) | For Engine code:EP6 | GCO45036 | Outer Joint | 29T | 25 | 22 | 60 | 80 | 54 | I |
| | 2007.03-2012.12 | 5MT | F | L | Hatchback Van FWD 5FW (EP6) | | GCI17029 | Inner Joint | | 22 | 22 | 40 | 58.5 | 101 | |
| | 2007.03-2012.12 | 5MT | F | R | Hatchback Van FWD 5FW (EP6) | | GCI17030 | Inner Joint | | 22 | 22 | 30 | 96.5 | 99 | |
| 1.6 (110 kw) | 2006.02-2013.10 | 5MT | F | L | Hatchback FWD 5FX (EP6DT) | | GDS10248 | Drive Shaft | | 25 | 24 | 58.5 | 79 | 642 | |
| | 2006.02-2013.10 | 5MT | F | R | Hatchback FWD 5FX (EP6DT) | | GDS10249 | Drive Shaft | | 25 | 24 | 58.5 | 79 | 864 | |
| | 2006.02-2013.10 | 5MT | F | L | Hatchback FWD 5FX (EP6DT) | | GCI10080 | Inner Joint | | 24 | 34 | 40 | 69 | 89.5 | |
| | 2006.02-2013.10 | 5MT | F | R | Hatchback FWD 5FX (EP6DT) | | GCI10082 | Inner Joint | | 24 | 34 | 29.8 | 291 | 88 | |
| | 2006.02-2013.10 | MT | F | L | Hatchback FWD 5FX (EP6DT) | Date to:2011.08;Trans. code:BE4R;RPO number to:11682 | GDS10250 | Drive Shaft | | 25 | 24 | 58.5 | 79 | 630 | |
| | 2006.02-2013.10 | MT | F | L/R | Hatchback FWD 5FX (EP6DT) | | GCO10027 | Outer Joint | 48T | 25 | 34 | 55.7 | 79 | 55 | I |
| | 2006.02-2013.10 | | F | L/R | Hatchback FWD 5FX (EP6DT) | | GCO10042 | Outer Joint | | 25 | 34 | 54.8 | 78.5 | 56 | I |
| | 2006.02-2013.10 | | F | L/R | Hatchback FWD 5FX (EP6DT) | | GCO10067 | Outer Joint | 48W | 25 | 34 | 58.5 | 79 | 55 | I |
| 1.6 (115 kw) | 2009.10-2012.12 | 6MT | F | R | Hatchback FWD 5FR (EP6DT) | | GDS45221 | Drive Shaft | | 25 | 24 | 58.5 | 79 | 881 | |
| | 2009.10-2012.12 | 6MT | F | R | Hatchback FWD 5FR (EP6DT) | | GCO10148 | Outer Joint | | 25 | 34 | 58.5 | 79 | 55.5 | I |
| | 2009.10-2012.12 | 6MT | F | | Hatchback FWD 5FR (EP6DT) | | GCO99366 | Outer Joint | | 25 | 34 | 58.5 | 79 | 55 | I |
| | 2009.10-2012.12 | 6MT | F | R | Hatchback FWD 5FR (EP6DT) | | GCI10165 | Inner Joint | | 24 | 34 | 29.8 | 305.5 | 87.5 | |
| | 2009.10-2012.12 | MT | F | L | Hatchback FWD 5FR (EP6DT) | Trans. code:BE4R | GDS10250 | Drive Shaft | | 25 | 24 | 58.5 | 79 | 630 | |
| | 2009.10-2012.12 | MT | F | R | Hatchback FWD 5FR (EP6DT) | | GDS10249 | Drive Shaft | | 25 | 24 | 58.5 | 79 | 864 | |
| | 2009.10-2012.12 | | F | L | Hatchback FWD 5FR (EP6DT) | | GDS10253 | Drive Shaft | | 25 | 24 | 58.5 | 79 | 626 | |
| | 2009.10-2012.12 | | F | L/R | Hatchback FWD 5FR (EP6DT) | | GCO10042 | Outer Joint | | 25 | 34 | 54.8 | 78.5 | 56 | I |
| 1.6 (128 kw) | 2007.02-2012.12 | 5MT | F | L | Hatchback FWD 5FY (EP6DTS) | | GDS10248 | Drive Shaft | | 25 | 24 | 58.5 | 79 | 642 | |
| | 2007.02-2012.12 | 5MT | F | R | Hatchback FWD 5FY (EP6DTS) | | GDS10249 | Drive Shaft | | 25 | 24 | 58.5 | 79 | 864 | |
| | 2007.02-2012.12 | 5MT | F | R | Hatchback FWD 5FY (EP6DTS) | | GCO10067 | Outer Joint | 48W | 25 | 34 | 58.5 | 79 | 55 | I |
| | 2007.02-2012.12 | 5MT | F | L | Hatchback FWD 5FY (EP6DTS) | | GCI10080 | Inner Joint | | 24 | 34 | 40 | 69 | 89.5 | |
| | 2007.02-2012.12 | 5MT | F | R | Hatchback FWD 5FY (EP6DTS) | | GCI10082 | Inner Joint | | 24 | 34 | 29.8 | 291 | 88 | |
| | 2007.02-2012.12 | MT | F | L | Hatchback FWD 5FY (EP6DTS) | Trans. code:BE4R | GDS10250 | Drive Shaft | | 25 | 24 | 58.5 | 79 | 630 | |
| | 2007.02-2012.12 | | F | L/R | Hatchback FWD 5FY (EP6DTS) | | GCO10042 | Outer Joint | | 25 | 34 | 54.8 | 78.5 | 56 | I |
| **207 CC** | | | | | | | | | | | | | | | |
| 1.6 (80 kw) | 2007.02-2015.01 | 5MT | F | L | Convertible FWD 9HZ (DV6TED4) | | GDS10248 | Drive Shaft | | 25 | 24 | 58.5 | 79 | 642 | |
| | 2007.02-2015.01 | 5MT | F | R | Convertible FWD 9HZ (DV6TED4) | | GDS10249 | Drive Shaft | | 25 | 24 | 58.5 | 79 | 864 | |
| | 2007.02-2015.01 | 5MT | F | L | Convertible FWD 9HZ (DV6TED4) | | GCI10080 | Inner Joint | | 24 | 34 | 40 | 69 | 89.5 | |
| | 2007.02-2015.01 | 5MT | F | R | Convertible FWD 9HZ (DV6TED4) | | GCI10082 | Inner Joint | | 24 | 34 | 29.8 | 291 | 88 | |
| | 2007.02-2015.01 | MT | F | L | Convertible FWD 9HZ (DV6TED4) | Trans. code:BE4R | GDS10250 | Drive Shaft | | 25 | 24 | 58.5 | 79 | 630 | |
| | 2007.02-2015.01 | | F | L/R | Convertible FWD 9HZ (DV6TED4) | | GCO10042 | Outer Joint | | 25 | 34 | 54.8 | 78.5 | 56 | I |
| 1.6 (82 kw) | 2009.08-2013.10 | 6MT | F | R | Convertible FWD 9HR (DV6C) | | GDS45221 | Drive Shaft | | 25 | 24 | 58.5 | 79 | 881 | |
| | 2009.08-2013.10 | 6MT | F | R | Convertible FWD 9HR (DV6C) | | GCO10148 | Outer Joint | | 25 | 34 | 58.5 | 79 | 55.5 | I |
| | 2009.08-2013.10 | 6MT | F | | Convertible FWD 9HR (DV6C) | | GCO99366 | Outer Joint | | 25 | 34 | 58.5 | 79 | 55 | I |
| | 2009.08-2013.10 | 6MT | F | R | Convertible FWD 9HR (DV6C) | | GCI10165 | Inner Joint | | 24 | 34 | 29.8 | 305.5 | 87.5 | |
| | 2009.08-2013.10 | MT | F | R | Convertible FWD 9HR (DV6C) | | GDS10249 | Drive Shaft | | 25 | 24 | 58.5 | 79 | 864 | |
| | 2009.08-2013.10 | | F | L | Convertible FWD 9HR (DV6C) | | GDS10253 | Drive Shaft | | 25 | 24 | 58.5 | 79 | 626 | |
| | 2009.08-2013.10 | | F | L/R | Convertible FWD 9HR (DV6C) | | GCO10042 | Outer Joint | | 25 | 34 | 54.8 | 78.5 | 56 | I |
| 1.6 (88 kw) | 2007.02-2013.10 | 4AT | F | L | Convertible FWD EP6;5FS (EP6C);5FW (EP6) | | GDS45202 | Drive Shaft | | 25 | 26 | 58.5 | 78.5 | 620 | |
| | 2007.02-2013.10 | 4AT | F | R | Convertible FWD EP6;5FS (EP6C);5FW (EP6) | | GDS10267 | Drive Shaft | | 25 | 26 | 58.5 | 79.5 | 766 | |
| | 2007.02-2013.10 | 5MT | F | L | Convertible FWD EP6;5FS (EP6C);5FW (EP6) | For Engine code:EP6/EP6C | GDS45200 | Drive Shaft | | 25 | 22 | 58.5 | 78.5 | 640 | |
| | 2007.02-2013.10 | 5MT | F | R | Convertible FWD EP6;5FS (EP6C);5FW (EP6) | | GDS45201 | Drive Shaft | | 25 | 22 | 58.5 | 79 | 854 | |
| | 2007.02-2013.10 | 5MT | F | L/R | Convertible FWD EP6;5FS (EP6C);5FW (EP6) | For Engine code:EP6 | GCO10025 | Outer Joint | | 25 | 22 | 60 | 80 | 54 | I |
| | 2007.02-2013.10 | 5MT | F | L/R | Convertible FWD EP6;5FS (EP6C);5FW (EP6) | For Engine code:EP6 | GCO45036 | Outer Joint | 29T | 25 | 22 | 60 | 80 | 54 | I |
| | 2007.02-2013.10 | 5MT | F | L | Convertible FWD EP6;5FS (EP6C);5FW (EP6) | For Engine code:EP6/EP6C | GCI17029 | Inner Joint | | 22 | 22 | 40 | 58.5 | 101 | |
| | 2007.02-2013.10 | AT | F | L/R | Convertible FWD EP6;5FS (EP6C);5FW (EP6) | | GCO10042 | Outer Joint | | 25 | 34 | 54.8 | 78.5 | 56 | I |
| 1.6 (110 kw) | 2007.02-2012.12 | 5MT | F | L | Convertible FWD 5FX (EP6DT) | | GDS10248 | Drive Shaft | | 25 | 24 | 58.5 | 79 | 642 | |
| | 2007.02-2012.12 | 5MT | F | L | Convertible FWD 5FX (EP6DT) | Date to:2008.10;To ORG/OPR:11682;Date from:2008.11;From ORG/OPR:11683 | GDS10250 | Drive Shaft | | 25 | 24 | 58.5 | 79 | 630 | |

| | YEAR | TRANSM. | F/R | L/R | BODY STYLE & DRIVE TYPE & ENGINE | REMARKS | G-AP Ref. | PRODUCT | ABS | Technical Specifications A | B | C | H | L | P |
|---|---|---|---|---|---|---|---|---|---|---|---|---|---|---|---|
| **PEUGEOT** | | | | | | | | | | | | | | | |
| **207 CC** | | | | | | | | | | | | | | | |
| 1.6 (110 kw) | 2007.02-2012.12 | 5MT | F | R | Convertible FWD 5FX (EP6DT) | | GDS10249 | Drive Shaft | | 25 | 24 | 58.5 | 79 | 864 | |
| | 2007.02-2012.12 | 5MT | F | R | Convertible FWD 5FX (EP6DT) | | GCO10067 | Outer Joint | 48W | 25 | 34 | 58.5 | 79 | 55 | I |
| | 2007.02-2012.12 | 6MT | F | L | Convertible FWD 5FX (EP6DT) | | GDS10253 | Drive Shaft | | 25 | 24 | 58.5 | 79 | 626 | |
| | 2007.02-2012.12 | 6MT | F | R | Convertible FWD 5FX (EP6DT) | | GDS45221 | Drive Shaft | | 25 | 24 | 58.5 | 79 | 881 | |
| | 2007.02-2012.12 | 6MT | F | R | Convertible FWD 5FX (EP6DT) | | GCI10165 | Inner Joint | | 24 | 34 | 29.8 | 305.5 | 87.5 | |
| | 2007.02-2012.12 | MT | F | L/R | Convertible FWD 5FX (EP6DT) | | GCO10027 | Outer Joint | 48T | 25 | 34 | 55.7 | 79 | 55 | I |
| | 2007.02-2012.12 | | F | L/R | Convertible FWD 5FX (EP6DT) | | GCO10042 | Outer Joint | | 25 | 34 | 54.8 | 78.5 | 56 | I |
| 1.6 (115 kw) | 2009.10-2013.12 | 6MT | F | L | Convertible FWD 5FR (EP6DT);5FV (EP6CDT) | | GDS10253 | Drive Shaft | | 25 | 24 | 58.5 | 79 | 626 | |
| | 2009.10-2013.12 | 6MT | F | R | Convertible FWD 5FR (EP6DT);5FV (EP6CDT) | | GDS45221 | Drive Shaft | | 25 | 24 | 58.5 | 79 | 881 | |
| | 2009.10-2013.12 | 6MT | F | R | Convertible FWD 5FR (EP6DT);5FV (EP6CDT) | | GCO10148 | Outer Joint | | 25 | 34 | 58.5 | 79 | 55.5 | I |
| | 2009.10-2013.12 | 6MT | F | | Convertible FWD 5FR (EP6DT);5FV (EP6CDT) | | GCO99366 | Outer Joint | | 25 | 34 | 58.5 | 79 | 55 | I |
| | 2009.10-2013.12 | 6MT | F | R | Convertible FWD 5FR (EP6DT);5FV (EP6CDT) | | GCI10165 | Inner Joint | | 24 | 34 | 29.8 | 305.5 | 87.5 | |
| | 2009.10-2013.12 | MT | F | L | Convertible FWD 5FR (EP6DT);5FV (EP6CDT) | Date to:2012.12;Trans. code:BE4R | GDS10250 | Drive Shaft | | 25 | 24 | 58.5 | 79 | 630 | |
| | 2009.10-2013.12 | MT | F | R | Convertible FWD 5FR (EP6DT);5FV (EP6CDT) | | GDS10249 | Drive Shaft | | 25 | 24 | 58.5 | 79 | 864 | |
| | 2009.10-2013.12 | | F | L/R | Convertible FWD 5FR (EP6DT);5FV (EP6CDT) | | GCO10042 | Outer Joint | | 25 | 34 | 54.8 | 78.5 | 56 | I |
| | 2009.10-2013.12 | | F | | Convertible FWD 5FR (EP6DT);5FV (EP6CDT) | | GCO10067 | Outer Joint | 48W | 25 | 34 | 58.5 | 79 | 55 | I |
| **207 SW** | | | | | | | | | | | | | | | |
| 1.4 (54 kw) | 2007.06-2012.12 | 5MT | F | L | Estate FWD KFV (TU3A);KFT (TU3AE5) | | GDS99272 | Drive Shaft | | 21 | 22 | 48 | 86.5 | 655 | |
| | 2007.06-2012.12 | 5MT | F | R | Estate FWD KFV (TU3A);KFT (TU3AE5) | | GDS99271 | Drive Shaft | | 21 | 22 | 48 | 86.5 | 860 | |
| | 2007.06-2012.12 | 5MT | F | L | Estate FWD KFV (TU3A);KFT (TU3AE5) | | GCO45057 | Outer Joint | | 21 | 22 | 48 | 86.5 | 54 | I |
| | 2007.06-2012.12 | 5MT | F | R | Estate FWD KFV (TU3A);KFT (TU3AE5) | | GCO45011 | Outer Joint | | 21 | 22 | 48 | 86.5 | 54 | I |
| | 2007.06-2012.12 | 5MT | F | L | Estate FWD KFV (TU3A);KFT (TU3AE5) | | GCI17029 | Inner Joint | | 22 | 22 | 40 | 58.5 | 101 | |
| | 2007.06-2012.12 | 5MT | F | R | Estate FWD KFV (TU3A);KFT (TU3AE5) | | GCI17030 | Inner Joint | | 22 | 22 | 30 | 96.5 | 99 | |
| | 2007.06-2012.12 | | F | | Estate FWD KFV (TU3A);KFT (TU3AE5) | | GCO45068 | Outer Joint | | 21 | 22 | 48 | 86.5 | 54 | M |
| | 2007.08-2012.12 | 5MT | F | L | Estate FWD KFV (TU3A) | | GDS99272 | Drive Shaft | | 21 | 22 | 48 | 86.5 | 655 | |
| | 2007.08-2012.12 | 5MT | F | R | Estate FWD KFV (TU3A) | | GDS99271 | Drive Shaft | | 21 | 22 | 48 | 86.5 | 860 | |
| | 2007.08-2012.12 | 5MT | F | L | Estate FWD KFV (TU3A) | | GCO45057 | Outer Joint | | 21 | 22 | 48 | 86.5 | 54 | I |
| | 2007.08-2012.12 | 5MT | F | R | Estate FWD KFV (TU3A) | | GCO45011 | Outer Joint | | 21 | 22 | 48 | 86.5 | 54 | I |
| | 2007.08-2012.12 | 5MT | F | L | Estate FWD KFV (TU3A) | | GCI17029 | Inner Joint | | 22 | 22 | 40 | 58.5 | 101 | |
| | 2007.08-2012.12 | 5MT | F | R | Estate FWD KFV (TU3A) | | GCI17030 | Inner Joint | | 22 | 22 | 30 | 96.5 | 99 | |
| 1.4 (70 kw) | 2007.06-2013.10 | 5MT | F | L | Estate FWD 8FS (EP3);8FP (EP3C) | Wheel Hub Diameter [mm]:72;Date to:2012.03;For Engine code:EP3C;Date to:2012.03;For Engine code:EP3C;Ex DAM no. or 12410;For Engine code:EP3 | GDS10311 | Drive Shaft | | 21 | 22 | 48 | 86.5 | 647 | |
| | 2007.06-2013.10 | 5MT | F | L | Estate FWD 8FS (EP3);8FP (EP3C) | ---------- | GDS45200 | Drive Shaft | | 25 | 22 | 58.5 | 78.5 | 640 | |
| | 2007.06-2013.10 | 5MT | F | R | Estate FWD 8FS (EP3);8FP (EP3C) | Wheel Hub Diameter [mm]:82 | GDS45201 | Drive Shaft | | 25 | 22 | 58.5 | 79 | 854 | |
| | 2007.06-2013.10 | 5MT | F | R | Estate FWD 8FS (EP3);8FP (EP3C) | Wheel Hub Diameter [mm]:72 | GDS99271 | Drive Shaft | | 21 | 22 | 48 | 86.5 | 860 | |
| | 2007.06-2013.10 | 5MT | F | L/R | Estate FWD 8FS (EP3);8FP (EP3C) | For Engine code:EP3C;Date to:2012.03;To ORG/OPR:12936;Wheel Hub Diameter [mm]:82 | GCO10025 | Outer Joint | | 25 | 22 | 60 | 80 | 54 | I |
| | 2007.06-2013.10 | 5MT | F | L/R | Estate FWD 8FS (EP3);8FP (EP3C) | | GCO10156 | Outer Joint | | 25 | 22 | 58.5 | 78.5 | 55 | I |
| | 2007.06-2013.10 | 5MT | F | L | Estate FWD 8FS (EP3);8FP (EP3C) | | GCI17029 | Inner Joint | | 22 | 22 | 40 | 58.5 | 101 | |
| | 2007.06-2013.10 | MT | F | L/R | Estate FWD 8FS (EP3);8FP (EP3C) | | GCO45068 | Outer Joint | | 21 | 22 | 48 | 86.5 | 54 | M |
| 1.4 (72 kw) | 2009.11-2012.12 | 5MT | F | L | Estate FWD 8FR (EP3C) | ---------- | GCI17029 | Inner Joint | | 22 | 22 | 40 | 58.5 | 101 | |
| | 2009.11-2012.12 | MT | F | L | Estate FWD 8FR (EP3C) | | GDS10311 | Drive Shaft | | 21 | 22 | 48 | 86.5 | 647 | |
| | 2009.11-2012.12 | MT | F | L | Estate FWD 8FR (EP3C) | Date to:2012.04;Type:TRENDY | GDS45200 | Drive Shaft | | 25 | 22 | 58.5 | 78.5 | 640 | |
| | 2009.11-2012.12 | MT | F | R | Estate FWD 8FR (EP3C) | Type:TRENDY/SPORT | GDS45201 | Drive Shaft | | 25 | 22 | 58.5 | 79 | 854 | |
| | 2009.11-2012.12 | MT | F | R | Estate FWD 8FR (EP3C) | | GDS99271 | Drive Shaft | | 21 | 22 | 48 | 86.5 | 860 | |
| | 2009.11-2012.12 | MT | F | | Estate FWD 8FR (EP3C) | | GCO45068 | Outer Joint | | 21 | 22 | 48 | 86.5 | 54 | M |
| | 2009.11-2012.12 | | F | L | Estate FWD 8FR (EP3C) | Date To:2012.03;To ORG/OPR:12936;Wheel Hub Diam:82mm | GCO10025 | Outer Joint | | 25 | 22 | 60 | 80 | 54 | I |
| | 2009.11-2012.12 | | F | L | Estate FWD 8FR (EP3C) | Date To:2012.03;To ORG/OPR:12936;Wheel Hub Diam:82mm | GCO45036 | Outer Joint | 29T | 25 | 22 | 60 | 80 | 54 | I |
| | 2009.11-2012.12 | | F | R | Estate FWD 8FR (EP3C) | Wheel Hub Diam:82mm | GCO10025 | Outer Joint | | 25 | 22 | 60 | 80 | 54 | I |
| | 2009.11-2012.12 | | F | R | Estate FWD 8FR (EP3C) | Wheel Hub Diam:82mm | GCO45036 | Outer Joint | 29T | 25 | 22 | 60 | 80 | 54 | I |
| 1.6 (66 kw) | 2007.06-2012.12 | 5MT | F | L | Estate FWD 9HX (DV6ATED4);9HV (DV6TED4B);9HV (DV6TED4BU);9HV (DV6TED4) | | GDS10248 | Drive Shaft | | 25 | 24 | 58.5 | 79 | 642 | |
| | 2007.06-2012.12 | 5MT | F | R | Estate FWD 9HX (DV6ATED4);9HV (DV6TED4B);9HV (DV6TED4BU);9HV (DV6TED4) | | GDS10249 | Drive Shaft | | 25 | 24 | 58.5 | 79 | 864 | |
| | 2007.06-2012.12 | 5MT | F | R | Estate FWD 9HX (DV6ATED4);9HV (DV6TED4B);9HV (DV6TED4BU);9HV (DV6TED4) | | GCO10067 | Outer Joint | 48W | 25 | 34 | 58.5 | 79 | 55 | I |
| | 2007.06-2012.12 | 5MT | F | L | Estate FWD 9HX (DV6ATED4);9HV (DV6TED4B);9HV (DV6TED4BU);9HV (DV6TED4) | Date to:2008.10;For Engine Code:DV6TED4B;To ORG/OPR:11662 | GCI10070 | Inner Joint | | 24 | 34 | 40 | 62 | 88 | |
| | 2007.06-2012.12 | 5MT | F | L | Estate FWD 9HX (DV6ATED4);9HV (DV6TED4B);9HV (DV6TED4BU);9HV (DV6TED4) | | GCI10080 | Inner Joint | | 24 | 34 | 40 | 69 | 89.5 | |
| | 2007.06-2012.12 | 5MT | F | R | Estate FWD 9HX (DV6ATED4);9HV (DV6TED4B);9HV (DV6TED4BU);9HV (DV6TED4) | | GCI10082 | Inner Joint | | 24 | 34 | 29.8 | 291 | 88 | |
| | 2007.06-2012.12 | | F | L | Estate FWD 9HX (DV6ATED4);9HV (DV6TED4B);9HV (DV6TED4BU);9HV (DV6TED4) | Date To:2008.10;For Engine Code:DV6TED4B;To ORG/OPR:11662 | GDS10250 | Drive Shaft | | 25 | 24 | 58.5 | 79 | 630 | |
| | 2007.06-2012.12 | | F | L/R | Estate FWD 9HX (DV6ATED4);9HV (DV6TED4B);9HV (DV6TED4BU);9HV (DV6TED4) | | GCO10042 | Outer Joint | | 25 | 34 | 54.8 | 78.5 | 56 | I |
| | 2007.08-2012.12 | 5MT | F | L | Estate Van FWD 9HX (DV6ATED4) | | GDS10248 | Drive Shaft | | 25 | 24 | 58.5 | 79 | 642 | |
| | 2007.08-2012.12 | 5MT | F | R | Estate Van FWD 9HX (DV6ATED4) | | GDS10249 | Drive Shaft | | 25 | 24 | 58.5 | 79 | 864 | |
| | 2007.08-2012.12 | 5MT | F | L | Estate Van FWD 9HX (DV6ATED4) | | GCI10080 | Inner Joint | | 24 | 34 | 40 | 69 | 89.5 | |
| | 2007.08-2012.12 | 5MT | F | R | Estate Van FWD 9HX (DV6ATED4) | | GCI10082 | Inner Joint | | 24 | 34 | 29.8 | 291 | 88 | |
| | 2007.08-2012.12 | | F | L | Estate Van FWD 9HX (DV6ATED4) | Date From:2010.07;RPO number from:12292 | GDS10250 | Drive Shaft | | 25 | 24 | 58.5 | 79 | 630 | |
| | 2007.08-2012.12 | | F | L/R | Estate Van FWD 9HX (DV6ATED4) | | GCO10067 | Outer Joint | 48W | 25 | 34 | 58.5 | 79 | 55 | I |
| 1.6 (68 kw) | 2009.11-2013.12 | 5MT | F | L | Estate FWD 9HP (DV6DTED) | Trans. code:BE4R | GDS10250 | Drive Shaft | | 25 | 24 | 58.5 | 79 | 630 | |
| | 2009.11-2013.12 | 5MT | F | R | Estate FWD 9HP (DV6DTED) | | GDS10249 | Drive Shaft | | 25 | 24 | 58.5 | 79 | 864 | |
| | 2009.11-2013.12 | 5MT | F | L/R | Estate FWD 9HP (DV6DTED) | | GCO99366 | Outer Joint | | 25 | 34 | 58.5 | 79 | 55 | I |

| | YEAR | TRANSM. | F/R | L/R | BODY STYLE & DRIVE TYPE & ENGINE | REMARKS | G-AP Ref. | PRODUCT | ABS | Technical Specifications A | B | C | H | L | P |
|---|---|---|---|---|---|---|---|---|---|---|---|---|---|---|---|
| **PEUGEOT** | | | | | | | | | | | | | | | |
| **207 SW** | | | | | | | | | | | | | | | |
| 1.6 (68 kw) | 2009.11-2013.12 | 5MT | F | L | Estate FWD 9HP (DV6DTED) | Trans. code:BE4R | GCI10070 | Inner Joint | | 24 | 34 | 40 | 62 | 88 | |
| | 2009.11-2013.12 | 5MT | F | R | Estate FWD 9HP (DV6DTED) | | GCI10082 | Inner Joint | | 24 | 34 | 29.8 | 291 | 88 | |
| 1.6 (80 kw) | 2007.06-2012.12 | 5MT | F | L | Estate FWD 9HZ (DV6TED4) | | GDS10248 | Drive Shaft | | 25 | 24 | 58.5 | 79 | 642 | |
| | 2007.06-2012.12 | 5MT | F | R | Estate FWD 9HZ (DV6TED4) | | GDS10249 | Drive Shaft | | 25 | 24 | 58.5 | 79 | 864 | |
| | 2007.06-2012.12 | 5MT | F | R | Estate FWD 9HZ (DV6TED4) | | GCO10067 | Outer Joint | 48W | 25 | 34 | 58.5 | 79 | 55 | I |
| | 2007.06-2012.12 | 5MT | F | L | Estate FWD 9HZ (DV6TED4) | | GCI10080 | Inner Joint | | 24 | 34 | 40 | 69 | 89.5 | |
| | 2007.06-2012.12 | 5MT | F | R | Estate FWD 9HZ (DV6TED4) | | GCI10082 | Inner Joint | | 24 | 34 | 29.8 | 291 | 88 | |
| | 2007.06-2012.12 | MT | F | L | Estate FWD 9HZ (DV6TED4) | Trans. code:BE4R | GDS10250 | Drive Shaft | | 25 | 24 | 58.5 | 79 | 630 | |
| | 2007.06-2012.12 | MT | F | L/R | Estate FWD 9HZ (DV6TED4) | | GCO10027 | Outer Joint | 48T | 25 | 34 | 55.7 | 79 | 55 | I |
| | 2007.06-2012.12 | | F | L/R | Estate FWD 9HZ (DV6TED4) | | GCO10042 | Outer Joint | | 25 | 34 | 54.8 | 78.5 | 56 | I |
| | 2007.08-2012.12 | 5MT | F | L | Estate Van FWD 9HZ (DV6TED4) | | GDS10248 | Drive Shaft | | 25 | 24 | 58.5 | 79 | 642 | |
| | 2007.08-2012.12 | 5MT | F | R | Estate Van FWD 9HZ (DV6TED4) | | GDS10249 | Drive Shaft | | 25 | 24 | 58.5 | 79 | 864 | |
| | 2007.08-2012.12 | 5MT | F | L | Estate Van FWD 9HZ (DV6TED4) | Date to:2008.10;For Engine Code:DV6TED4B;To ORG/OPR:11682 | GCI10070 | Inner Joint | | 24 | 34 | 40 | 62 | 88 | |
| | 2007.08-2012.12 | 5MT | F | L | Estate Van FWD 9HZ (DV6TED4) | | GCI10080 | Inner Joint | | 24 | 34 | 40 | 69 | 89.5 | |
| | 2007.08-2012.12 | 5MT | F | R | Estate Van FWD 9HZ (DV6TED4) | | GCI10082 | Inner Joint | | 24 | 34 | 29.8 | 291 | 88 | |
| | 2007.08-2012.12 | | F | L | Estate Van FWD 9HZ (DV6TED4) | Date To:2008.10;For Engine Code:DV6TED4B;To ORG/OPR:11682 | GDS10250 | Drive Shaft | | 25 | 24 | 58.5 | 79 | 630 | |
| | 2007.08-2012.12 | | F | L/R | Estate Van FWD 9HZ (DV6TED4) | | GCO10067 | Outer Joint | 48W | 25 | 34 | 58.5 | 79 | 55 | I |
| 1.6 (82 kw) | 2009.08-2013.10 | 6MT | F | R | Estate FWD 9HR (DV6C) | | GDS45221 | Drive Shaft | | 25 | 24 | 58.5 | 79 | 881 | |
| | 2009.08-2013.10 | 6MT | F | R | Estate FWD 9HR (DV6C) | | GCO10148 | Outer Joint | | 25 | 34 | 58.5 | 79 | 55.5 | I |
| | 2009.08-2013.10 | 6MT | F | | Estate FWD 9HR (DV6C) | | GCO99366 | Outer Joint | | 25 | 34 | 58.5 | 79 | 55 | I |
| | 2009.08-2013.10 | 6MT | F | R | Estate FWD 9HR (DV6C) | | GCI10165 | Inner Joint | | 24 | 34 | 29.8 | 305.5 | 87.5 | |
| | 2009.08-2013.10 | MT | F | R | Estate FWD 9HR (DV6C) | | GDS10249 | Drive Shaft | | 25 | 24 | 58.5 | 79 | 864 | |
| | 2009.08-2013.10 | | F | L | Estate FWD 9HR (DV6C) | | GDS10253 | Drive Shaft | | 25 | 24 | 58.5 | 79 | 626 | |
| | 2009.08-2013.10 | | F | L/R | Estate FWD 9HR (DV6C) | | GCO10042 | Outer Joint | | 25 | 34 | 54.8 | 78.5 | 56 | I |
| 1.6 (88 kw) | 2007.06-2013.10 | 4AT | F | L | Estate FWD EP6;5FS (EP6C);5FW (EP6) | | GDS45202 | Drive Shaft | | 25 | 26 | 58.5 | 78.5 | 620 | |
| | 2007.06-2013.10 | 4AT | F | R | Estate FWD EP6;5FS (EP6C);5FW (EP6) | | GDS10267 | Drive Shaft | | 25 | 26 | 58.5 | 79.5 | 766 | |
| | 2007.06-2013.10 | 5MT | F | L | Estate FWD EP6;5FS (EP6C);5FW (EP6) | For Engine code:EP6/EP6C | GDS45200 | Drive Shaft | | 25 | 22 | 58.5 | 78.5 | 640 | |
| | 2007.06-2013.10 | 5MT | F | R | Estate FWD EP6;5FS (EP6C);5FW (EP6) | | GDS45201 | Drive Shaft | | 25 | 22 | 58.5 | 79 | 854 | |
| | 2007.06-2013.10 | 5MT | F | L/R | Estate FWD EP6;5FS (EP6C);5FW (EP6) | For Engine code:EP6 | GCO10025 | Outer Joint | | 25 | 22 | 60 | 80 | 54 | I |
| | 2007.06-2013.10 | 5MT | F | L/R | Estate FWD EP6;5FS (EP6C);5FW (EP6) | For Engine code:EP6 | GCO45036 | Outer Joint | 29T | 25 | 22 | 60 | 80 | 54 | I |
| | 2007.06-2013.10 | 5MT | F | L | Estate FWD EP6;5FS (EP6C);5FW (EP6) | | GCI17029 | Inner Joint | | 22 | 22 | 40 | 58.5 | 101 | |
| | 2007.06-2013.10 | AT | F | L/R | Estate FWD EP6;5FS (EP6C);5FW (EP6) | | GCO10042 | Outer Joint | | 25 | 34 | 54.8 | 78.5 | 56 | I |
| 1.6 (110 kw) | 2007.02-2012.12 | 5MT | F | L | Estate FWD 5FX (EP6DT) | | GDS10248 | Drive Shaft | | 25 | 24 | 58.5 | 79 | 642 | |
| | 2007.02-2012.12 | 5MT | F | R | Estate FWD 5FX (EP6DT) | | GDS10249 | Drive Shaft | | 25 | 24 | 58.5 | 79 | 864 | |
| | 2007.02-2012.12 | 5MT | F | L | Estate FWD 5FX (EP6DT) | | GCI10080 | Inner Joint | | 24 | 34 | 40 | 69 | 89.5 | |
| | 2007.02-2012.12 | 5MT | F | R | Estate FWD 5FX (EP6DT) | | GCI10082 | Inner Joint | | 24 | 34 | 29.8 | 291 | 88 | |
| | 2007.02-2012.12 | MT | F | L | Estate FWD 5FX (EP6DT) | | GDS10250 | Drive Shaft | | 25 | 24 | 58.5 | 79 | 630 | |
| | 2007.02-2012.12 | | F | L/R | Estate FWD 5FX (EP6DT) | | GCO10067 | Outer Joint | 48W | 25 | 34 | 58.5 | 79 | 55 | I |
| 1.6 (128 kw) | 2007.02-2012.12 | 5MT | F | L | Estate FWD 5FY (EP6DTS) | | GDS10248 | Drive Shaft | | 25 | 24 | 58.5 | 79 | 642 | |
| | 2007.02-2012.12 | 5MT | F | L | Estate FWD 5FY (EP6DTS) | | GCI10080 | Inner Joint | | 24 | 34 | 40 | 69 | 89.5 | |
| | 2007.02-2012.12 | MT | F | L | Estate FWD 5FY (EP6DTS) | Trans. code:BE4R | GDS10250 | Drive Shaft | | 25 | 24 | 58.5 | 79 | 630 | |
| | 2007.02-2012.12 | | F | R | Estate FWD 5FY (EP6DTS) | | GDS10249 | Drive Shaft | | 25 | 24 | 58.5 | 79 | 864 | |
| | 2007.02-2012.12 | | F | L/R | Estate FWD 5FY (EP6DTS) | | GCO10042 | Outer Joint | | 25 | 34 | 54.8 | 78.5 | 56 | I |
| | 2007.02-2012.12 | | F | L/R | Estate FWD 5FY (EP6DTS) | | GCO10067 | Outer Joint | 48W | 25 | 34 | 58.5 | 79 | 55 | I |
| **208** | | | | | | | | | | | | | | | |
| 1.0 (50 kw) | 2012.03-2019.12 | 5MT | F | L | Hatchback FWD ZMZ (EB0) | | GDS10306 | Drive Shaft | | 21 | 22 | 49 | 86 | 652 | |
| | 2012.03-2019.12 | 5MT | F | R | Hatchback FWD ZMZ (EB0) | Date To:2013.08 | GDS45222 | Drive Shaft | | 21 | 22 | 48 | 86.5 | 864 | |
| | 2012.03-2019.12 | 5MT | F | R | Hatchback FWD ZMZ (EB0) | Date From:2013.09 | GDS83941 | Drive Shaft | | 21 | 22 | 49 | 86 | 866 | |
| | 2012.03-2019.12 | 5MT | F | L | Hatchback FWD ZMZ (EB0) | | GCO10125 | Outer Joint | | 21 | 21 | 49 | 86 | 49 | I |
| | 2012.03-2019.12 | 5MT | F | R | Hatchback FWD ZMZ (EB0) | Date To:2013.08 | GCO45011 | Outer Joint | | 21 | 22 | 48 | 86.5 | 54 | I |
| | 2012.03-2019.12 | 5MT | F | R | Hatchback FWD ZMZ (EB0) | Date From:2013.09 | GCO82376 | Outer Joint | | 21 | 21 | 49 | 86 | 49 | I |
| | 2012.03-2019.12 | 5MT | F | L | Hatchback FWD ZMZ (EB0) | | GCI10054 | Inner Joint | | 22 | 21 | 40 | 60 | 88 | |
| | 2012.03-2019.12 | 5MT | F | R | Hatchback FWD ZMZ (EB0) | Date To:2013.08 | GCI17030 | Inner Joint | | 22 | 22 | 30 | 96.5 | 99 | |
| | 2012.03-2019.12 | 5MT | F | R | Hatchback FWD ZMZ (EB0) | Date From:2013.09 | GCI45041 | Inner Joint | | 22 | 21 | 30 | 96.5 | 88 | |
| 1.2 (50 kw) | 2015.06-2019.12 | 5MT | F | L | Hatchback Van FWD HMP (EB2FB);HMM (EB2FAD) | | GDS10306 | Drive Shaft | | 21 | 22 | 49 | 86 | 652 | |
| | 2015.06-2019.12 | 5MT | F | R | Hatchback Van FWD HMP (EB2FB);HMM (EB2FAD) | | GDS83941 | Drive Shaft | | 21 | 22 | 49 | 86 | 866 | |
| | 2015.06-2019.12 | 5MT | F | L | Hatchback Van FWD HMP (EB2FB);HMM (EB2FAD) | | GCO10125 | Outer Joint | | 21 | 21 | 49 | 86 | 49 | I |
| | 2015.06-2019.12 | 5MT | F | R | Hatchback Van FWD HMP (EB2FB);HMM (EB2FAD) | | GCO82376 | Outer Joint | | 21 | 21 | 49 | 86 | 49 | I |
| | 2015.06-2019.12 | 5MT | F | L | Hatchback Van FWD HMP (EB2FB);HMM (EB2FAD) | | GCI10054 | Inner Joint | | 22 | 21 | 40 | 60 | 88 | |
| | 2015.06-2019.12 | 5MT | F | R | Hatchback Van FWD HMP (EB2FB);HMM (EB2FAD) | | GCI45041 | Inner Joint | | 22 | 21 | 30 | 96.5 | 88 | |
| | 2016.08-2019.12 | 5MT | F | L | Hatchback FWD HMP (EB2FB);HMM (EB2FAD) | | GDS10306 | Drive Shaft | | 21 | 22 | 49 | 86 | 652 | |
| | 2016.08-2019.12 | 5MT | F | R | Hatchback FWD HMP (EB2FB);HMM (EB2FAD) | | GDS83941 | Drive Shaft | | 21 | 22 | 49 | 86 | 866 | |
| | 2016.08-2019.12 | 5MT | F | L | Hatchback FWD HMP (EB2FB);HMM (EB2FAD) | | GCO10125 | Outer Joint | | 21 | 21 | 49 | 86 | 49 | I |
| | 2016.08-2019.12 | 5MT | F | R | Hatchback FWD HMP (EB2FB);HMM (EB2FAD) | | GCO82376 | Outer Joint | | 21 | 21 | 49 | 86 | 49 | I |
| | 2016.08-2019.12 | 5MT | F | L | Hatchback FWD HMP (EB2FB);HMM (EB2FAD) | | GCI10054 | Inner Joint | | 22 | 21 | 40 | 60 | 88 | |

| | YEAR | TRANSM. | F/R | L/R | BODY STYLE & DRIVE TYPE & ENGINE | REMARKS | G-AP Ref. | PRODUCT | ABS | Technical Specifications A | B | C | H | L | P |
|---|---|---|---|---|---|---|---|---|---|---|---|---|---|---|---|
| **PEUGEOT 208** | | | | | | | | | | | | | | | |
| 1.2 (50 kw) | 2016.08-2019.12 | 5MT | F | R | Hatchback FWD HMP (EB2FB);HMM (EB2FAD) | | GCI45041 | Inner Joint | | 22 | 21 | 30 | 96.5 | 88 | |
| 1.2 (55 kw) | 2019.06- | 5MT | F | L | Hatchback FWD HMH (EB2FAD);HMG (EB2FAMD) | | GDS83112 | Drive Shaft | | 21 | 22 | 48.2 | 85.5 | 671 | |
| | 2019.06- | 5MT | F | R | Hatchback FWD HMH (EB2FAD);HMG (EB2FAMD) | | GDS83068 | Drive Shaft | | 21 | 22 | 48.2 | 85.5 | 890 | |
| | 2019.06- | 5MT | F | L | Hatchback FWD HMH (EB2FAD);HMG (EB2FAMD) | | GCO82278 | Outer Joint | | 21 | 34 | 48.2 | 85.5 | 56.5 | I |
| | 2019.06- | 5MT | F | R | Hatchback FWD HMH (EB2FAD);HMG (EB2FAMD) | | GCO10143 | Outer Joint | | 21 | 34 | 48.2 | 85.5 | 56.5 | I |
| | 2019.06- | 5MT | F | L | Hatchback FWD HMH (EB2FAD);HMG (EB2FAMD) | | GCI82092 | Inner Joint | | 22 | 34 | 40 | 57.5 | 91 | |
| | 2019.06- | 5MT | F | R | Hatchback FWD HMH (EB2FAD);HMG (EB2FAMD) | | GCI82122 | Inner Joint | | 22 | 34 | 30.05 | 98.5 | 89.5 | |
| 1.2 (60 kw) | 2012.03-2019.12 | 5AT/5MT | F | L | Hatchback FWD HMZ (EB2F);HMR (EB2FA);HMZ (EB2) | | GDS10306 | Drive Shaft | | 21 | 22 | 49 | 86 | 652 | |
| | 2012.03-2019.12 | 5AT/5MT | F | R | Hatchback FWD HMZ (EB2F);HMR (EB2FA);HMZ (EB2) | Date To:2013.08 | GDS45222 | Drive Shaft | | 21 | 22 | 48 | 86.5 | 864 | |
| | 2012.03-2019.12 | 5AT/5MT | F | R | Hatchback FWD HMZ (EB2F);HMR (EB2FA);HMZ (EB2) | Date From:2013.09 | GDS83941 | Drive Shaft | | 21 | 22 | 49 | 86 | 866 | |
| | 2012.03-2019.12 | 5AT/5MT | F | L | Hatchback FWD HMZ (EB2F);HMR (EB2FA);HMZ (EB2) | | GCO10125 | Outer Joint | | 21 | 21 | 49 | 86 | 49 | I |
| | 2012.03-2019.12 | 5AT/5MT | F | R | Hatchback FWD HMZ (EB2F);HMR (EB2FA);HMZ (EB2) | Date To:2013.08 | GCO45011 | Outer Joint | | 21 | 22 | 48 | 86.5 | 54 | I |
| | 2012.03-2019.12 | 5AT/5MT | F | R | Hatchback FWD HMZ (EB2F);HMR (EB2FA);HMZ (EB2) | Date From:2013.09 | GCO82376 | Outer Joint | | 21 | 21 | 49 | 86 | 49 | I |
| | 2012.03-2019.12 | 5AT/5MT | F | L | Hatchback FWD HMZ (EB2F);HMR (EB2FA);HMZ (EB2) | | GCI10054 | Inner Joint | | 22 | 21 | 40 | 60 | 88 | |
| | 2012.03-2019.12 | 5AT/5MT | F | R | Hatchback FWD HMZ (EB2F);HMR (EB2FA);HMZ (EB2) | Date To:2013.08 | GCI17030 | Inner Joint | | 22 | 22 | 30 | 96.5 | 99 | |
| | 2012.03-2019.12 | 5AT/5MT | F | R | Hatchback FWD HMZ (EB2F);HMR (EB2FA);HMZ (EB2) | Date From:2013.09 | GCI45041 | Inner Joint | | 22 | 21 | 30 | 96.5 | 88 | |
| | 2015.06-2019.12 | 5MT | F | L | Hatchback FWD HMZ (EB2F);HMX (EB2) | | GDS10306 | Drive Shaft | | 21 | 22 | 49 | 86 | 652 | |
| | 2015.06-2019.12 | 5MT | F | R | Hatchback FWD HMZ (EB2F);HMX (EB2) | | GDS83941 | Drive Shaft | | 21 | 22 | 49 | 86 | 866 | |
| | 2015.06-2019.12 | 5MT | F | L | Hatchback FWD HMZ (EB2F);HMX (EB2) | | GCO10125 | Outer Joint | | 21 | 21 | 49 | 86 | 49 | I |
| | 2015.06-2019.12 | 5MT | F | R | Hatchback FWD HMZ (EB2F);HMX (EB2) | | GCO82376 | Outer Joint | | 21 | 21 | 49 | 86 | 49 | I |
| | 2015.06-2019.12 | 5MT | F | L | Hatchback FWD HMZ (EB2F);HMX (EB2) | | GCI10054 | Inner Joint | | 22 | 21 | 40 | 60 | 88 | |
| | 2015.06-2019.12 | 5MT | F | R | Hatchback FWD HMZ (EB2F);HMX (EB2) | | GCI45041 | Inner Joint | | 22 | 21 | 30 | 96.5 | 88 | |
| | 2015.06-2019.12 | 5MT | F | L | Hatchback Van FWD HMZ (EB2F);HMR (EB2FA);HMZ (EB2) | | GDS10306 | Drive Shaft | | 21 | 22 | 49 | 86 | 652 | |
| | 2015.06-2019.12 | 5MT | F | R | Hatchback Van FWD HMZ (EB2F);HMR (EB2FA);HMZ (EB2) | | GDS83941 | Drive Shaft | | 21 | 22 | 49 | 86 | 866 | |
| | 2015.06-2019.12 | 5MT | F | L | Hatchback Van FWD HMZ (EB2F);HMR (EB2FA);HMZ (EB2) | | GCO10125 | Outer Joint | | 21 | 21 | 49 | 86 | 49 | I |
| | 2015.06-2019.12 | 5MT | F | R | Hatchback Van FWD HMZ (EB2F);HMR (EB2FA);HMZ (EB2) | | GCO82376 | Outer Joint | | 21 | 21 | 49 | 86 | 49 | I |
| | 2015.06-2019.12 | 5MT | F | L | Hatchback Van FWD HMZ (EB2F);HMR (EB2FA);HMZ (EB2) | | GCI10054 | Inner Joint | | 22 | 21 | 40 | 60 | 88 | |
| | 2015.06-2019.12 | 5MT | F | R | Hatchback Van FWD HMZ (EB2F);HMR (EB2FA);HMZ (EB2) | | GCI45041 | Inner Joint | | 22 | 21 | 30 | 96.5 | 88 | |
| | 2019.06- | 5MT | F | L | Hatchback FWD HMR (EB2FA);HMJ (EB2FAM) | | GDS83112 | Drive Shaft | | 21 | 22 | 48.2 | 85.5 | 671 | |
| | 2019.06- | 5MT | F | R | Hatchback FWD HMR (EB2FA);HMJ (EB2FAM) | | GDS83068 | Drive Shaft | | 21 | 22 | 48.2 | 85.5 | 890 | |
| | 2019.06- | 5MT | F | L | Hatchback FWD HMR (EB2FA);HMJ (EB2FAM) | | GCO82278 | Outer Joint | | 21 | 34 | 48.2 | 85.5 | 56.5 | I |
| | 2019.06- | 5MT | F | R | Hatchback FWD HMR (EB2FA);HMJ (EB2FAM) | | GCO10143 | Outer Joint | | 21 | 34 | 48.2 | 85.5 | 56.5 | I |
| | 2019.06- | 5MT | F | L | Hatchback FWD HMR (EB2FA);HMJ (EB2FAM) | | GCI82092 | Inner Joint | | 22 | 34 | 40 | 57.5 | 91 | |
| | 2019.06- | 5MT | F | R | Hatchback FWD HMR (EB2FA);HMJ (EB2FAM) | | GCI82122 | Inner Joint | | 22 | 34 | 30.05 | 98.5 | 89.5 | |
| 1.2 (61 kw) | 2018.03-2019.12 | 5MT | F | L | Hatchback FWD HMZ (EB2F);HMR (EB2FA) | | GDS10306 | Drive Shaft | | 21 | 22 | 49 | 86 | 652 | |
| | 2018.03-2019.12 | 5MT | F | R | Hatchback FWD HMZ (EB2F);HMR (EB2FA) | | GDS83941 | Drive Shaft | | 21 | 22 | 49 | 86 | 866 | |
| | 2018.03-2019.12 | 5MT | F | L | Hatchback FWD HMZ (EB2F);HMR (EB2FA) | | GCI10054 | Inner Joint | | 22 | 21 | 40 | 60 | 88 | |
| | 2018.03-2019.12 | 5MT | F | R | Hatchback FWD HMZ (EB2F);HMR (EB2FA) | | GCI45041 | Inner Joint | | 22 | 21 | 30 | 96.5 | 88 | |
| 1.2 (74 kw) | 2019.06- | 6MT | F | L | Hatchback FWD HNK (EB2ADT);HNK (EB2ADTD);HNE (EB2ADTD_B) | Date to:2019.12 | GDS83116 | Drive Shaft | | 25 | 24 | 55.7 | 84 | 655 | |
| | 2019.06- | 6MT | F | R | Hatchback FWD HNK (EB2ADT);HNK (EB2ADTD);HNE (EB2ADTD_B) | Date to:2019.12 | GDS83115 | Drive Shaft | | 25 | 24 | 55.7 | 84 | 880 | |
| | 2019.06- | 6MT | F | R | Hatchback FWD HNK (EB2ADT);HNK (EB2ADTD);HNE (EB2ADTD_B) | Date from:2020.01,From ORG/OPR:15764 | GDS84114 | Drive Shaft | | 25 | 24 | 56 | 86 | 892 | |
| | 2019.06- | 6MT | F | L/R | Hatchback FWD HNK (EB2ADT);HNK (EB2ADTD);HNE (EB2ADTD_B) | Date from:2020.01,From ORG/OPR:15764 | GCO82602 | Outer Joint | | 25 | 24 | 56 | 86 | 60 | I |
| | 2019.06- | 6MT | F | L | Hatchback FWD HNK (EB2ADT);HNK (EB2ADTD);HNE (EB2ADTD_B) | | GCI82131 | Inner Joint | | 24 | 34 | 40 | 62 | 89 | |
| | 2019.06- | 6MT | F | R | Hatchback FWD HNK (EB2ADT);HNK (EB2ADTD);HNE (EB2ADTD_B) | Date to:2019.12 | GCI82130 | Inner Joint | | 24 | 34 | 29.8 | 291 | 88 | |
| | 2019.06- | 6MT | F | R | Hatchback FWD HNK (EB2ADT);HNK (EB2ADTD);HNE (EB2ADTD_B) | Date from:2020.01,From ORG/OPR:15764 | GCI82520 | Inner Joint | | 24 | 24 | 29.8 | 289 | 99 | |
| | 2019.06- | 8AT | F | L | Hatchback FWD HNK (EB2ADT);HNK (EB2ADTD);HNE (EB2ADTD_B) | | GDS83113 | Drive Shaft | | 25 | 37 | 55.7 | 84 | 623 | |
| | 2019.06- | 8AT | F | R | Hatchback FWD HNK (EB2ADT);HNK (EB2ADTD);HNE (EB2ADTD_B) | Date from:2020.05 | GDS58066 | Drive Shaft | | 25 | 37 | 56 | 86 | 873 | |
| | 2019.06- | 8AT | F | R | Hatchback FWD HNK (EB2ADT);HNK (EB2ADTD);HNE (EB2ADTD_B) | Date to 2020.05 | GDS83114 | Drive Shaft | | 25 | 37 | 55.7 | 84 | 880 | |
| | 2019.06- | 8AT | F | L/R | Hatchback FWD HNK (EB2ADT);HNK (EB2ADTD);HNE (EB2ADTD_B) | Date from:2020.05 | GCO83833 | Outer Joint | | 25 | 29 | 56 | 86 | 56 | M |
| | 2019.06- | 8AT | F | L | Hatchback FWD HNK (EB2ADT);HNK (EB2ADTD);HNE (EB2ADTD_B) | | GCI82119 | Inner Joint | | 37 | 34 | 41.5 | 58.5 | 94 | |
| | 2019.06- | 8AT | F | R | Hatchback FWD HNK (EB2ADT);HNK (EB2ADTD);HNE (EB2ADTD_B) | Date to 2020.05 | GCI82118 | Inner Joint | | 37 | 34 | | 290 | 88 | |
| | 2019.06- | 8AT | F | R | Hatchback FWD HNK (EB2ADT);HNK (EB2ADTD);HNE (EB2ADTD_B) | Date from:2020.05 | GCI83998 | Inner Joint | | 37 | 29 | | 286.5 | 96.5 | |
| | 2019.06- | 8AT/6MT | F | L/R | Hatchback FWD HNK (EB2ADT);HNK (EB2ADTD);HNE (EB2ADTD_B) | Transmission:6MT,Date to:2019.12;Transmission:8AT,Date to 2020.05 | GCO82279 | Outer Joint | | 25 | 34 | 55.7 | 84 | 55.5 | I |
| | 2023.08- | AT | F | R | Hatchback FWD HPX (EB2LTEDH2) | Date from:2020.05 | GDS58066 | Drive Shaft | | 25 | 37 | 56 | 86 | 873 | |
| | 2023.08- | AT | F | R | Hatchback FWD HPX (EB2LTEDH2) | Date to 2020.05 | GDS83114 | Drive Shaft | | 25 | 37 | 55.7 | 84 | 880 | |
| | 2023.08- | AT | F | L/R | Hatchback FWD HPX (EB2LTEDH2) | Date to 2020.05 | GCO82279 | Outer Joint | | 25 | 34 | 55.7 | 84 | 55.5 | I |
| | 2023.08- | AT | F | L/R | Hatchback FWD HPX (EB2LTEDH2) | Date from:2020.05 | GCO83833 | Outer Joint | | 25 | 29 | 56 | 86 | 56 | M |
| | 2023.08- | AT | F | R | Hatchback FWD HPX (EB2LTEDH2) | Date to 2020.05 | GCI82118 | Inner Joint | | 37 | 34 | | 290 | 88 | |
| | 2023.08- | AT | F | R | Hatchback FWD HPX (EB2LTEDH2) | Date from:2020.05 | GCI83998 | Inner Joint | | 37 | 29 | | 286.5 | 96.5 | |
| 1.2 (81 kw) | 2013.01-2019.12 | 5MT | F | L | Hatchback FWD HNZ (EB2DT);HNV (EB2DTM);HNP (EB2ADT) | | GDS10309 | Drive Shaft | | 21 | 24 | 48.3 | 86.5 | 641 | |
| | 2013.01-2019.12 | 5MT | F | R | Hatchback FWD HNZ (EB2DT);HNV (EB2DTM);HNP (EB2ADT) | Date To:2014.10;To ORG/OPR:14873 | GDS10301 | Drive Shaft | | 21 | 24 | 48.3 | 86.5 | 871 | |
| | 2013.01-2019.12 | 5MT | F | L | Hatchback FWD HNZ (EB2DT);HNV (EB2DTM);HNP (EB2ADT) | | GCI10129 | Inner Joint | | 24 | 34 | 40 | 62 | 89 | |
| | 2013.01-2019.12 | 5MT | F | R | Hatchback FWD HNZ (EB2DT);HNV (EB2DTM);HNP (EB2ADT) | Date to:2014.10;To ORG/OPR:14873 | GCI10082 | Inner Joint | | 24 | 34 | 29.8 | 291 | 88 | |
| | 2013.01-2019.12 | 5MT/6MT | F | L | Hatchback FWD HNZ (EB2DT);HNV (EB2DTM);HNP (EB2ADT) | Date from:2014.11,From ORG/OPR:13874 | GCO82278 | Outer Joint | | 21 | 34 | 48.2 | 85.5 | 56.5 | I |
| | 2013.01-2019.12 | 6AT | F | L | Hatchback FWD HNZ (EB2DT);HNV (EB2DTM);HNP (EB2ADT) | | GDS57933 | Drive Shaft | | 21 | 37 | 48.2 | 85.5 | 605 | |

| | YEAR | TRANSM. | F/R | L/R | BODY STYLE & DRIVE TYPE & ENGINE | REMARKS | G-AP Ref. | PRODUCT | ABS | Technical Specifications A | B | C | H | L | P |
|---|---|---|---|---|---|---|---|---|---|---|---|---|---|---|---|
| **PEUGEOT** | | | | | | | | | | | | | | | |
| **208** | | | | | | | | | | | | | | | |
| 1.2 (81 kw) | 2013.01-2019.12 | 6AT | F | R | Hatchback FWD HNZ (EB2DT);HNV (EB2DTM);HNP (EB2ADT) | | GDS58095 | Drive Shaft | | 21 | 37 | 48.2 | 85.5 | 863 | |
| | 2013.01-2019.12 | 6AT | F | R | Hatchback FWD HNZ (EB2DT);HNV (EB2DTM);HNP (EB2ADT) | | GCO10143 | Outer Joint | | 21 | 34 | 48.2 | 85.5 | 56.5 | I |
| | 2013.01-2019.12 | 6AT | F | L | Hatchback FWD HNZ (EB2DT);HNV (EB2DTM);HNP (EB2ADT) | | GCI82119 | Inner Joint | | 37 | 34 | 41.5 | 58.5 | 94 | |
| | 2013.01-2019.12 | 6AT | F | R | Hatchback FWD HNZ (EB2DT);HNV (EB2DTM);HNP (EB2ADT) | | GCI82182 | Inner Joint | | 37 | 34 | | 290 | 88 | |
| | 2025.03- | 6DCT | F | R | Hatchback FWD HPX (EB2LTEDH2) | Date from:2020.05 | GDS58066 | Drive Shaft | | 25 | 37 | 56 | 86 | 873 | |
| | 2025.03- | 6DCT | F | R | Hatchback FWD HPX (EB2LTEDH2) | Date to:2020.03 | GDS83114 | Drive Shaft | | 25 | 37 | 55.7 | 84 | 880 | |
| | 2025.03- | 6DCT | F | R | Hatchback FWD HPX (EB2LTEDH2) | Date to:2020.03 | GCI82118 | Inner Joint | | 37 | 34 | | 290 | 88 | |
| | 2025.03- | 6DCT | F | R | Hatchback FWD HPX (EB2LTEDH2) | Date from:2020.05 | GCI83998 | Inner Joint | | 37 | 29 | | 286.5 | 96.5 | |
| | 2025.03- | AT | F | L/R | Hatchback FWD HPX (EB2LTEDH2) | Date from:2020.05 | GCO83833 | Outer Joint | | 25 | 29 | 56 | 86 | 56 | M |
| 1.2 (96 kw) | 2019.06- | 8AT | F | L | Hatchback FWD HNY (EB2DTS);HNS (EB2ADTS) | | GDS83113 | Drive Shaft | | 25 | 37 | 55.7 | 84 | 623 | |
| | 2019.06- | 8AT | F | R | Hatchback FWD HNY (EB2DTS);HNS (EB2ADTS) | Date from:2020.05 | GDS58066 | Drive Shaft | | 25 | 37 | 56 | 86 | 873 | |
| | 2019.06- | 8AT | F | R | Hatchback FWD HNY (EB2DTS);HNS (EB2ADTS) | Date to 2020.05 | GDS83114 | Drive Shaft | | 25 | 37 | 55.7 | 84 | 880 | |
| | 2019.06- | 8AT | F | L/R | Hatchback FWD HNY (EB2DTS);HNS (EB2ADTS) | Date to 2020.05 | GCO82279 | Outer Joint | | 25 | 34 | 55.7 | 84 | 55.5 | I |
| | 2019.06- | 8AT | F | L/R | Hatchback FWD HNY (EB2DTS);HNS (EB2ADTS) | Date from:2020.05 | GCO83833 | Outer Joint | | 25 | 29 | 56 | 86 | 56 | M |
| | 2019.06- | 8AT | F | L | Hatchback FWD HNY (EB2DTS);HNS (EB2ADTS) | | GCI82119 | Inner Joint | | 37 | 34 | 41.5 | 58.5 | 94 | |
| | 2019.06- | 8AT | F | R | Hatchback FWD HNY (EB2DTS);HNS (EB2ADTS) | Date to 2020.05 | GCI82118 | Inner Joint | | 37 | 34 | | 290 | 88 | |
| | 2019.06- | 8AT | F | R | Hatchback FWD HNY (EB2DTS);HNS (EB2ADTS) | Date from:2020.05 | GCI83998 | Inner Joint | | 37 | 29 | | 286.5 | 96.5 | |
| 1.2 (100 kw) | 2023.09- | 6DCT | F | R | Hatchback FWD HPY (EB2LTDH2) | Date from:2020.05 | GDS58066 | Drive Shaft | | 25 | 37 | 56 | 86 | 873 | |
| | 2023.09- | 6DCT | F | R | Hatchback FWD HPY (EB2LTDH2) | Date to:2020.03 | GDS83114 | Drive Shaft | | 25 | 37 | 55.7 | 84 | 880 | |
| | 2023.09- | 6DCT | F | R | Hatchback FWD HPY (EB2LTDH2) | Date to:2020.03 | GCI82118 | Inner Joint | | 37 | 34 | | 290 | 88 | |
| | 2023.09- | 6DCT | F | R | Hatchback FWD HPY (EB2LTDH2) | Date from:2020.05 | GCI83998 | Inner Joint | | 37 | 29 | | 286.5 | 96.5 | |
| | 2023.09- | AT | F | L/R | Hatchback FWD HPY (EB2LTDH2) | Date from:2020.05 | GCO83833 | Outer Joint | | 25 | 29 | 56 | 86 | 56 | M |
| 1.2 (107 kw) | 2025.03- | 6DCT | F | R | Hatchback FWD HPY (EB2LTDH2) | Date from:2020.05 | GDS58066 | Drive Shaft | | 25 | 37 | 56 | 86 | 873 | |
| | 2025.03- | 6DCT | F | R | Hatchback FWD HPY (EB2LTDH2) | Date to:2020.03 | GDS83114 | Drive Shaft | | 25 | 37 | 55.7 | 84 | 880 | |
| | 2025.03- | 6DCT | F | R | Hatchback FWD HPY (EB2LTDH2) | Date to:2020.03 | GCI82118 | Inner Joint | | 37 | 34 | | 290 | 88 | |
| | 2025.03- | 6DCT | F | R | Hatchback FWD HPY (EB2LTDH2) | Date from:2020.05 | GCI83998 | Inner Joint | | 37 | 29 | | 286.5 | 96.5 | |
| | 2025.03- | AT | F | L/R | Hatchback FWD HPY (EB2LTDH2) | Date from:2020.05 | GCO83833 | Outer Joint | | 25 | 29 | 56 | 86 | 56 | M |
| 1.4 (50 kw) | 2012.03-2019.12 | 5MT | F | L | Hatchback FWD 8HR (DV4C);8HP (DV4C) | | GDS10306 | Drive Shaft | | 21 | 22 | 49 | 86 | 652 | |
| | 2012.03-2019.12 | 5MT | F | R | Hatchback FWD 8HR (DV4C);8HP (DV4C) | Date To:2013.08 | GDS45222 | Drive Shaft | | 21 | 22 | 48 | 86.5 | 864 | |
| | 2012.03-2019.12 | 5MT | F | R | Hatchback FWD 8HR (DV4C);8HP (DV4C) | Date From:2013.09 | GDS83941 | Drive Shaft | | 21 | 22 | 49 | 86 | 866 | |
| | 2012.03-2019.12 | 5MT | F | L | Hatchback FWD 8HR (DV4C);8HP (DV4C) | | GCO10125 | Outer Joint | | 21 | 21 | 49 | 86 | 49 | I |
| | 2012.03-2019.12 | 5MT | F | R | Hatchback FWD 8HR (DV4C);8HP (DV4C) | Date To:2013.08 | GCO45011 | Outer Joint | | 21 | 22 | 48 | 86.5 | 54 | I |
| | 2012.03-2019.12 | 5MT | F | R | Hatchback FWD 8HR (DV4C);8HP (DV4C) | Date From:2013.09 | GCO82376 | Outer Joint | | 21 | 21 | 49 | 86 | 49 | I |
| | 2012.03-2019.12 | 5MT | F | L | Hatchback FWD 8HR (DV4C);8HP (DV4C) | | GCI10054 | Inner Joint | | 22 | 21 | 40 | 60 | 88 | |
| | 2012.03-2019.12 | 5MT | F | R | Hatchback FWD 8HR (DV4C);8HP (DV4C) | Date To:2013.08 | GCI17030 | Inner Joint | | 22 | 22 | 30 | 96.5 | 99 | |
| | 2012.03-2019.12 | 5MT | F | R | Hatchback FWD 8HR (DV4C);8HP (DV4C) | Date From:2013.09 | GCI45041 | Inner Joint | | 22 | 21 | 30 | 96.5 | 88 | |
| | 2013.02-2019.12 | 5MT | F | L | Hatchback Van FWD 8HR (DV4C) | | GDS10306 | Drive Shaft | | 21 | 22 | 49 | 86 | 652 | |
| | 2013.02-2019.12 | 5MT | F | R | Hatchback Van FWD 8HR (DV4C) | Date To:2013.08 | GDS45222 | Drive Shaft | | 21 | 22 | 48 | 86.5 | 864 | |
| | 2013.02-2019.12 | 5MT | F | R | Hatchback Van FWD 8HR (DV4C) | Date From:2013.09 | GDS83941 | Drive Shaft | | 21 | 22 | 49 | 86 | 866 | |
| | 2013.02-2019.12 | 5MT | F | L | Hatchback Van FWD 8HR (DV4C) | | GCO10125 | Outer Joint | | 21 | 21 | 49 | 86 | 49 | I |
| | 2013.02-2019.12 | 5MT | F | R | Hatchback Van FWD 8HR (DV4C) | Date To:2013.08 | GCO45011 | Outer Joint | | 21 | 22 | 48 | 86.5 | 54 | I |
| | 2013.02-2019.12 | 5MT | F | R | Hatchback Van FWD 8HR (DV4C) | Date From:2013.09 | GCO82376 | Outer Joint | | 21 | 21 | 49 | 86 | 49 | I |
| | 2013.02-2019.12 | 5MT | F | L | Hatchback Van FWD 8HR (DV4C) | | GCI10054 | Inner Joint | | 22 | 21 | 40 | 60 | 88 | |
| | 2013.02-2019.12 | 5MT | F | R | Hatchback Van FWD 8HR (DV4C) | Date To:2013.08 | GCI17030 | Inner Joint | | 22 | 22 | 30 | 96.5 | 99 | |
| | 2013.02-2019.12 | 5MT | F | R | Hatchback Van FWD 8HR (DV4C) | Date From:2013.09 | GCI45041 | Inner Joint | | 22 | 21 | 30 | 96.5 | 88 | |
| 1.4 (70 kw) | 2012.03-2019.12 | 5MT | F | L | Hatchback FWD 8FS (EP3);8FP (EP3C);8FN (EP3C) | | GDS10306 | Drive Shaft | | 21 | 22 | 49 | 86 | 652 | |
| | 2012.03-2019.12 | 5MT | F | R | Hatchback FWD 8FS (EP3);8FP (EP3C);8FN (EP3C) | Date To:2013.08 | GDS45222 | Drive Shaft | | 21 | 22 | 48 | 86.5 | 864 | |
| | 2012.03-2019.12 | 5MT | F | R | Hatchback FWD 8FS (EP3);8FP (EP3C);8FN (EP3C) | Date From:2013.09 | GDS83941 | Drive Shaft | | 21 | 22 | 49 | 86 | 866 | |
| | 2012.03-2019.12 | 5MT | F | L | Hatchback FWD 8FS (EP3);8FP (EP3C);8FN (EP3C) | | GCO10125 | Outer Joint | | 21 | 21 | 49 | 86 | 49 | I |
| | 2012.03-2019.12 | 5MT | F | R | Hatchback FWD 8FS (EP3);8FP (EP3C);8FN (EP3C) | Date To:2013.08 | GCO45011 | Outer Joint | | 21 | 22 | 48 | 86.5 | 54 | I |
| | 2012.03-2019.12 | 5MT | F | R | Hatchback FWD 8FS (EP3);8FP (EP3C);8FN (EP3C) | Date From:2013.09 | GCO82376 | Outer Joint | | 21 | 21 | 49 | 86 | 49 | I |
| | 2012.03-2019.12 | 5MT | F | L | Hatchback FWD 8FS (EP3);8FP (EP3C);8FN (EP3C) | | GCI10054 | Inner Joint | | 22 | 21 | 40 | 60 | 88 | |
| | 2012.03-2019.12 | 5MT | F | R | Hatchback FWD 8FS (EP3);8FP (EP3C);8FN (EP3C) | Date To:2013.08 | GCI17030 | Inner Joint | | 22 | 22 | 30 | 96.5 | 99 | |
| | 2012.03-2019.12 | 5MT | F | R | Hatchback FWD 8FS (EP3);8FP (EP3C);8FN (EP3C) | Date From:2013.09 | GCI45041 | Inner Joint | | 22 | 21 | 30 | 96.5 | 88 | |
| | 2013.10-2019.12 | 5MT | F | L | Hatchback FWD EP3C | | GDS10306 | Drive Shaft | | 21 | 22 | 49 | 86 | 652 | |
| | 2013.10-2019.12 | 5MT | F | R | Hatchback FWD EP3C | | GDS83941 | Drive Shaft | | 21 | 22 | 49 | 86 | 866 | |
| | 2013.10-2019.12 | 5MT | F | L | Hatchback FWD EP3C | | GCO10125 | Outer Joint | | 21 | 21 | 49 | 86 | 49 | I |
| | 2013.10-2019.12 | 5MT | F | R | Hatchback FWD EP3C | | GCO82376 | Outer Joint | | 21 | 21 | 49 | 86 | 49 | I |
| | 2013.10-2019.12 | 5MT | F | L | Hatchback FWD EP3C | | GCI10054 | Inner Joint | | 22 | 21 | 40 | 60 | 88 | |
| | 2013.10-2019.12 | 5MT | F | R | Hatchback FWD EP3C | | GCI45041 | Inner Joint | | 22 | 21 | 30 | 96.5 | 88 | |
| 1.5 (75 kw) | 2018.05-2019.12 | 6MT | F | L | Hatchback FWD YHY (DV5RD) | | GDS10309 | Drive Shaft | | 21 | 24 | 48.3 | 86.5 | 641 | |
| | 2018.05-2019.12 | 6MT | F | R | Hatchback FWD YHY (DV5RD) | | GDS10301 | Drive Shaft | | 21 | 24 | 48.3 | 86.5 | 871 | |
| | 2018.05-2019.12 | 6MT | F | L | Hatchback FWD YHY (DV5RD) | | GCO82278 | Outer Joint | | 21 | 34 | 48.2 | 85.5 | 56.5 | I |
| | 2018.05-2019.12 | 6MT | F | L | Hatchback FWD YHY (DV5RD) | | GCI10129 | Inner Joint | | 24 | 34 | 40 | 62 | 89 | |
| | 2018.05-2019.12 | 6MT | F | L | Hatchback Van FWD YHY (DV5RD) | | GDS10309 | Drive Shaft | | 21 | 24 | 48.3 | 86.5 | 641 | |

| | YEAR | TRANSM. | F/R | L/R | BODY STYLE & DRIVE TYPE & ENGINE | REMARKS | G-AP Ref. | PRODUCT | ABS | Technical Specifications A | B | C | H | L | P |
|---|---|---|---|---|---|---|---|---|---|---|---|---|---|---|---|
| **PEUGEOT 208** | | | | | | | | | | | | | | | |
| 1.5 (75 kw) | 2018.05-2019.12 | 6MT | F | R | Hatchback Van FWD YHY (DV5RD) | | GDS10301 | Drive Shaft | | 21 | 24 | 48.3 | 86.5 | 871 | |
| | 2018.05-2019.12 | 6MT | F | L | Hatchback Van FWD YHY (DV5RD) | | GCO82278 | Outer Joint | | 21 | 34 | 48.2 | 85.5 | 56.5 | I |
| | 2018.05-2019.12 | 6MT | F | L | Hatchback Van FWD YHY (DV5RD) | | GCI10129 | Inner Joint | | 24 | 34 | 40 | 62 | 89 | |
| | 2019.06- | 6MT | F | L | Hatchback FWD YHY (DV5RD);YHT (DV5RCF) | Date to:2019.12 | GDS83116 | Drive Shaft | | 25 | 24 | 55.7 | 84 | 655 | |
| | 2019.06- | 6MT | F | R | Hatchback FWD YHY (DV5RD);YHT (DV5RCF) | Date to:2019.12 | GDS83115 | Drive Shaft | | 25 | 24 | 55.7 | 84 | 880 | |
| | 2019.06- | 6MT | F | R | Hatchback FWD YHY (DV5RD);YHT (DV5RCF) | Date from:2020.01,From ORG/OPR:15764 | GDS84114 | Drive Shaft | | 25 | 24 | 56 | 86 | 892 | |
| | 2019.06- | 6MT | F | L/R | Hatchback FWD YHY (DV5RD);YHT (DV5RCF) | Date to:2019.12 | GCO82279 | Outer Joint | | 25 | 34 | 55.7 | 84 | 55.5 | I |
| | 2019.06- | 6MT | F | L/R | Hatchback FWD YHY (DV5RD);YHT (DV5RCF) | Date from:2020.01,From ORG/OPR:15764 | GCO82602 | Outer Joint | | 25 | 24 | 56 | 86 | 60 | I |
| | 2019.06- | 6MT | F | L | Hatchback FWD YHY (DV5RD);YHT (DV5RCF) | Date to:2019.12 | GCI82131 | Inner Joint | | 24 | 34 | 40 | 62 | 89 | |
| | 2019.06- | 6MT | F | R | Hatchback FWD YHY (DV5RD);YHT (DV5RCF) | Date to:2019.12 | GCI82130 | Inner Joint | | 24 | 34 | 29.8 | 291 | 88 | |
| | 2019.06- | 6MT | F | R | Hatchback FWD YHY (DV5RD);YHT (DV5RCF) | Date from:2020.01,From ORG/OPR:15764 | GCI82520 | Inner Joint | | 24 | 24 | 29.8 | 289 | 99 | |
| 1.5 (96 kw) | 2019.09- | 8AT | F | L | Hatchback FWD YHZ (DV5RC) | Date To:2020.03 | GDS83113 | Drive Shaft | | 25 | 37 | 55.7 | 84 | 623 | |
| | 2019.09- | 8AT | F | R | Hatchback FWD YHZ (DV5RC) | Date To:2020.03 | GDS83114 | Drive Shaft | | 25 | 37 | 55.7 | 84 | 880 | |
| | 2019.09- | 8AT | F | L/R | Hatchback FWD YHZ (DV5RC) | Date To:2020.03 | GCO82279 | Outer Joint | | 25 | 34 | 55.7 | 84 | 55.5 | I |
| | 2019.09- | 8AT | F | L | Hatchback FWD YHZ (DV5RC) | Date To:2020.03 | GCI82119 | Inner Joint | | 37 | 34 | 41.5 | 58.5 | 94 | |
| | 2019.09- | 8AT | F | R | Hatchback FWD YHZ (DV5RC) | Date To:2020.03 | GCI82118 | Inner Joint | | 37 | 34 | | 290 | 88 | |
| 1.6 (55 kw) | 2013.01-2019.12 | 5MT | F | L | Hatchback FWD 9HK (DV6ETEDM);BHW (DV6FE) | Wheel Hub Diam:82,length2:69 | GDS10248 | Drive Shaft | | 25 | 24 | 58.5 | 79 | 642 | |
| | 2013.01-2019.12 | 5MT | F | L | Hatchback FWD 9HK (DV6ETEDM);BHW (DV6FE) | Wheel Hub Diam:82,length2:62 | GDS10250 | Drive Shaft | | 25 | 24 | 58.5 | 79 | 630 | |
| | 2013.01-2019.12 | 5MT | F | L | Hatchback FWD 9HK (DV6ETEDM);BHW (DV6FE) | Trans. code:MC | GDS10253 | Drive Shaft | | 25 | 24 | 58.5 | 79 | 626 | |
| | 2013.01-2019.12 | 5MT | F | L | Hatchback FWD 9HK (DV6ETEDM);BHW (DV6FE) | Trans. code:BE4R | GDS10309 | Drive Shaft | | 21 | 24 | 48.3 | 86.5 | 641 | |
| | 2013.01-2019.12 | 5MT | F | R | Hatchback FWD 9HK (DV6ETEDM);BHW (DV6FE) | For Enginecode:DV6ETEDM,Wheel Hub Diam:82 | GDS10249 | Drive Shaft | | 25 | 24 | 58.5 | 79 | 864 | |
| | 2013.01-2019.12 | 5MT | F | R | Hatchback FWD 9HK (DV6ETEDM);BHW (DV6FE) | Trans. code:BE4R | GDS10301 | Drive Shaft | | 21 | 24 | 48.3 | 86.5 | 871 | |
| | 2013.01-2019.12 | 5MT | F | R | Hatchback FWD 9HK (DV6ETEDM);BHW (DV6FE) | | GDS45221 | Drive Shaft | | 25 | 24 | 58.5 | 79 | 881 | |
| | 2013.01-2019.12 | 5MT | F | R | Hatchback FWD 9HK (DV6ETEDM);BHW (DV6FE) | Trans. code:MA | GDS45222 | Drive Shaft | | 21 | 22 | 48 | 86.5 | 864 | |
| | 2013.01-2019.12 | 5MT | F | L | Hatchback FWD 9HK (DV6ETEDM);BHW (DV6FE) | Wheel Hub Diam:82mm | GCO10067 | Outer Joint | 48W | 25 | 34 | 58.5 | 79 | 55 | I |
| | 2013.01-2019.12 | 5MT | F | R | Hatchback FWD 9HK (DV6ETEDM);BHW (DV6FE) | For Engine Code:DV6ETEDM,Wheel Hub Diam:82mm | GCO10067 | Outer Joint | 48W | 25 | 34 | 58.5 | 79 | 55 | I |
| | 2013.01-2019.12 | 5MT | F | R | Hatchback FWD 9HK (DV6ETEDM);BHW (DV6FE) | Trans. code:MA | GCO45011 | Outer Joint | | 21 | 22 | 48 | 86.5 | 54 | I |
| | 2013.01-2019.12 | 5MT | F | L | Hatchback FWD 9HK (DV6ETEDM);BHW (DV6FE) | | GCI10070 | Inner Joint | | 24 | 34 | 40 | 62 | 88 | |
| | 2013.01-2019.12 | 5MT | F | L | Hatchback FWD 9HK (DV6ETEDM);BHW (DV6FE) | | GCI10080 | Inner Joint | | 24 | 34 | 40 | 69 | 89.5 | |
| | 2013.01-2019.12 | 5MT | F | R | Hatchback FWD 9HK (DV6ETEDM);BHW (DV6FE) | For Enginecode:DV6ETEDM,Wheel Hub Diam:82 | GCI10082 | Inner Joint | | 24 | 34 | 29.8 | 291 | 88 | |
| | 2015.04-2019.12 | 5MT | F | L | Hatchback Van FWD BHW (DV6FE) | | GDS10248 | Drive Shaft | | 25 | 24 | 58.5 | 79 | 642 | |
| | 2015.04-2019.12 | 5MT | F | L | Hatchback Van FWD BHW (DV6FE) | | GCO99366 | Outer Joint | | 25 | 34 | 58.5 | 79 | 55 | I |
| | 2015.04-2019.12 | 5MT | F | L | Hatchback Van FWD BHW (DV6FE) | | GCI10080 | Inner Joint | | 24 | 34 | 40 | 69 | 89.5 | |
| | 2015.04-2019.12 | MT | F | L | Hatchback Van FWD BHW (DV6FE) | | GDS10250 | Drive Shaft | | 25 | 24 | 58.5 | 79 | 630 | |
| | 2015.04-2019.12 | MT | F | R | Hatchback Van FWD BHW (DV6FE) | | GDS10249 | Drive Shaft | | 25 | 24 | 58.5 | 79 | 864 | |
| 1.6 (68 kw) | 2012.03-2019.12 | 5MT | F | L | Hatchback FWD 9HP (DV6DTED);9HJ (DV6DTEDM) | Wheel Hub Diam:72mm | GDS10309 | Drive Shaft | | 21 | 24 | 48.3 | 86.5 | 641 | |
| | 2012.03-2019.12 | 5MT | F | R | Hatchback FWD 9HP (DV6DTED);9HJ (DV6DTEDM) | Wheel Hub Diam:72mm | GDS10301 | Drive Shaft | | 21 | 24 | 48.3 | 86.5 | 871 | |
| | 2012.03-2019.12 | 6AMT | F | L | Hatchback FWD 9HP (DV6DTED);9HJ (DV6DTEDM) | | GDS10253 | Drive Shaft | | 25 | 24 | 58.5 | 79 | 626 | |
| | 2012.03-2019.12 | 6AMT | F | R | Hatchback FWD 9HP (DV6DTED);9HJ (DV6DTEDM) | | GDS45221 | Drive Shaft | | 25 | 24 | 58.5 | 79 | 881 | |
| | 2012.03-2019.12 | MT | F | R | Hatchback FWD 9HP (DV6DTED);9HJ (DV6DTEDM) | Trans. code:MA | GDS45222 | Drive Shaft | | 21 | 22 | 48 | 86.5 | 864 | |
| | 2012.03-2019.12 | MT | F | R | Hatchback FWD 9HP (DV6DTED);9HJ (DV6DTEDM) | | GCO45011 | Outer Joint | | 21 | 22 | 48 | 86.5 | 54 | I |
| | 2012.03-2019.12 | MT | F | R | Hatchback FWD 9HP (DV6DTED);9HJ (DV6DTEDM) | Trans. code:MA | GCI17030 | Inner Joint | | 22 | 22 | 30 | 96.5 | 99 | |
| | 2014.03-2019.12 | 6MT | F | L | Hatchback Van FWD 9HP (DV6DTED) | | GDS10253 | Drive Shaft | | 25 | 24 | 58.5 | 79 | 626 | |
| | 2014.03-2019.12 | 6MT | F | R | Hatchback Van FWD 9HP (DV6DTED) | | GDS45221 | Drive Shaft | | 25 | 24 | 58.5 | 79 | 881 | |
| | 2014.03-2019.12 | 6MT | F | L/R | Hatchback Van FWD 9HP (DV6DTED) | | GCO99366 | Outer Joint | | 25 | 34 | 58.5 | 79 | 55 | I |
| | 2014.03-2019.12 | 6MT | F | R | Hatchback Van FWD 9HP (DV6DTED) | | GCI10165 | Inner Joint | | 24 | 34 | 29.8 | 305.5 | 87.5 | |
| | 2014.03-2019.12 | MT | F | L | Hatchback Van FWD 9HP (DV6DTED) | | GDS10250 | Drive Shaft | | 25 | 24 | 58.5 | 79 | 630 | |
| | 2014.03-2019.12 | MT | F | R | Hatchback Van FWD 9HP (DV6DTED) | | GDS10249 | Drive Shaft | | 25 | 24 | 58.5 | 79 | 864 | |
| | 2019.10- | 5MT | F | L | Hatchback FWD 9HP (DV6DTED);BHN (DV6DR) | Date to:2019.12,To ORG/OPR:15763 | GDS83116 | Drive Shaft | | 25 | 24 | 55.7 | 84 | 655 | |
| | 2019.10- | 5MT | F | R | Hatchback FWD 9HP (DV6DTED);BHN (DV6DR) | Date to:2019.12,To ORG/OPR:15763 | GDS83115 | Drive Shaft | | 25 | 24 | 55.7 | 84 | 880 | |
| | 2019.10- | 5MT | F | R | Hatchback FWD 9HP (DV6DTED);BHN (DV6DR) | Date from:2020.01,From ORG/OPR:15764 | GDS84114 | Drive Shaft | | 25 | 24 | 56 | 86 | 892 | |
| | 2019.10- | 5MT | F | L/R | Hatchback FWD 9HP (DV6DTED);BHN (DV6DR) | Date from:2020.01,From ORG/OPR:15764 | GCO82602 | Outer Joint | | 25 | 24 | 56 | 86 | 60 | I |
| | 2019.10- | 5MT | F | R | Hatchback FWD 9HP (DV6DTED);BHN (DV6DR) | Date to:2019.12,To ORG/OPR:15763 | GCI82130 | Inner Joint | | 24 | 34 | 29.8 | 291 | 88 | |
| | 2019.10- | 5MT | F | R | Hatchback FWD 9HP (DV6DTED);BHN (DV6DR) | Date from:2020.01,From ORG/OPR:15764 | GCI82520 | Inner Joint | | 24 | 24 | 29.8 | 289 | 99 | |
| 1.6 (73 kw) | 2015.01-2019.12 | 5MT | F | L | Hatchback FWD BHY (DV6FD) | | GDS10248 | Drive Shaft | | 25 | 24 | 58.5 | 79 | 642 | |
| | 2015.01-2019.12 | 5MT | F | L | Hatchback FWD BHY (DV6FD) | | GDS10250 | Drive Shaft | | 25 | 24 | 58.5 | 79 | 630 | |
| | 2015.01-2019.12 | 5MT | F | R | Hatchback FWD BHY (DV6FD) | | GDS10249 | Drive Shaft | | 25 | 24 | 58.5 | 79 | 864 | |
| | 2015.01-2019.12 | 5MT | F | L/R | Hatchback FWD BHY (DV6FD) | | GCO99366 | Outer Joint | | 25 | 34 | 58.5 | 79 | 55 | I |
| | 2015.01-2019.12 | 5MT | F | L | Hatchback FWD BHY (DV6FD) | | GCI10070 | Inner Joint | | 24 | 34 | 40 | 62 | 88 | |
| | 2015.01-2019.12 | 5MT | F | L | Hatchback FWD BHY (DV6FD) | | GCI10080 | Inner Joint | | 24 | 34 | 40 | 69 | 89.5 | |
| | 2015.01-2019.12 | 5MT | F | R | Hatchback FWD BHY (DV6FD) | | GCI10082 | Inner Joint | | 24 | 34 | 29.8 | 291 | 88 | |
| | 2015.01-2019.12 | 6AMT | F | L | Hatchback FWD BHY (DV6FD) | | GDS10253 | Drive Shaft | | 25 | 24 | 58.5 | 79 | 626 | |
| | 2015.01-2019.12 | 6AMT | F | R | Hatchback FWD BHY (DV6FD) | | GDS45221 | Drive Shaft | | 25 | 24 | 58.5 | 79 | 881 | |
| | 2015.01-2019.12 | 6AMT | F | L | Hatchback FWD BHY (DV6FD) | | GCO10148 | Outer Joint | | 25 | 34 | 58.5 | 79 | 55.5 | I |
| | 2015.01-2019.12 | 6AMT | F | R | Hatchback FWD BHY (DV6FD) | | GCO82351 | Outer Joint | | 25 | 34 | 58.5 | 79 | 55.5 | I |

| | YEAR | TRANSM. | F/R | L/R | BODY STYLE & DRIVE TYPE & ENGINE | REMARKS | G-AP Ref. | PRODUCT | ABS | Technical Specifications A | B | C | H | L | P |
|---|---|---|---|---|---|---|---|---|---|---|---|---|---|---|---|
| **PEUGEOT** | | | | | | | | | | | | | | | |
| **208** | | | | | | | | | | | | | | | |
| 1.6 (73 kw) | 2015.01-2019.12 | 6AMT | F | L | Hatchback FWD BHY (DV6FD) | | GCI10057 | Inner Joint | | 24 | 34 | 40 | 52.5 | 90 | |
| | 2015.01-2019.12 | 6AMT | F | R | Hatchback FWD BHY (DV6FD) | | GCI10165 | Inner Joint | | 24 | 34 | 29.8 | 305.5 | 87.5 | |
| | 2015.06-2019.12 | 5MT | F | L | Hatchback Van FWD BHY (DV6FD) | | GCI10070 | Inner Joint | | 24 | 34 | 40 | 62 | 88 | |
| | 2015.06-2019.12 | 6AMT | F | L | Hatchback Van FWD BHY (DV6FD) | | GDS10253 | Drive Shaft | | 25 | 24 | 58.5 | 79 | 626 | |
| | 2015.06-2019.12 | 6AMT | F | R | Hatchback Van FWD BHY (DV6FD) | | GDS45221 | Drive Shaft | | 25 | 24 | 58.5 | 79 | 881 | |
| 1.6 (82 kw) | 2015.07-2019.12 | 6AT/6MT | F | L | Hatchback FWD 9HR (DV6C) | | GDS10253 | Drive Shaft | | 25 | 24 | 58.5 | 79 | 626 | |
| | 2015.07-2019.12 | 6AT/6MT | F | R | Hatchback FWD 9HR (DV6C) | | GDS45221 | Drive Shaft | | 25 | 24 | 58.5 | 79 | 881 | |
| | 2015.07-2019.12 | 6AT/6MT | F | R | Hatchback FWD 9HR (DV6C) | | GCO82351 | Outer Joint | | 25 | 34 | 58.5 | 79 | 55.5 | I |
| | 2015.07-2019.12 | | F | R | Hatchback FWD 9HR (DV6C) | | GCI10165 | Inner Joint | | 24 | 34 | 29.8 | 305.5 | 87.5 | |
| 1.6 (84 kw) | 2012.03-2019.12 | 6AT/6MT | F | L | Hatchback FWD 9HD (DV6C) | Type:8NN48 | GDS10253 | Drive Shaft | | 25 | 24 | 58.5 | 79 | 626 | |
| | 2012.03-2019.12 | 6MT | F | R | Hatchback FWD 9HD (DV6C) | | GDS45221 | Drive Shaft | | 25 | 24 | 58.5 | 79 | 881 | |
| | 2012.03-2019.12 | 6MT | F | R | Hatchback FWD 9HD (DV6C) | | GCI10165 | Inner Joint | | 24 | 34 | 29.8 | 305.5 | 87.5 | |
| | 2012.03-2019.12 | MT | F | L | Hatchback FWD 9HD (DV6C) | Trans. code:BE4R | GDS10309 | Drive Shaft | | 21 | 24 | 48.3 | 86.5 | 641 | |
| | 2012.03-2019.12 | MT | F | R | Hatchback FWD 9HD (DV6C) | Trans. code:BE4R | GDS10301 | Drive Shaft | | 21 | 24 | 48.3 | 86.5 | 871 | |
| | 2012.03-2019.12 | MT | F | R | Hatchback FWD 9HD (DV6C) | Trans. code:MA | GDS45222 | Drive Shaft | | 21 | 22 | 48 | 86.5 | 864 | |
| | 2012.03-2019.12 | MT | F | R | Hatchback FWD 9HD (DV6C) | | GCO45011 | Outer Joint | | 21 | 22 | 48 | 86.5 | 54 | I |
| | 2012.03-2019.12 | | F | L | Hatchback FWD 9HD (DV6C) | | GCO99366 | Outer Joint | | 25 | 34 | 58.5 | 79 | 55 | I |
| | 2012.03-2019.12 | | F | L/R | Hatchback FWD 9HD (DV6C) | | GCO10042 | Outer Joint | | 25 | 34 | 54.8 | 78.5 | 56 | I |
| 1.6 (85 kw) | 2015.01-2019.12 | 6MT | F | L | Hatchback FWD BHX (DV6FC) | | GDS10253 | Drive Shaft | | 25 | 24 | 58.5 | 79 | 626 | |
| | 2015.01-2019.12 | 6MT | F | R | Hatchback FWD BHX (DV6FC) | | GDS45221 | Drive Shaft | | 25 | 24 | 58.5 | 79 | 881 | |
| | 2015.01-2019.12 | 6MT | F | L/R | Hatchback FWD BHX (DV6FC) | | GCO99366 | Outer Joint | | 25 | 34 | 58.5 | 79 | 55 | I |
| | 2015.01-2019.12 | 6MT | F | R | Hatchback FWD BHX (DV6FC) | | GCI10165 | Inner Joint | | 24 | 34 | 29.8 | 305.5 | 87.5 | |
| | 2015.01-2019.12 | MT | F | L | Hatchback FWD BHX (DV6FC) | Trans. code:BE4R | GDS10309 | Drive Shaft | | 21 | 24 | 48.3 | 86.5 | 641 | |
| | 2015.01-2019.12 | MT | F | R | Hatchback FWD BHX (DV6FC) | Trans. code:BE4R | GDS10301 | Drive Shaft | | 21 | 24 | 48.3 | 86.5 | 871 | |
| | 2015.01-2019.12 | MT | F | R | Hatchback FWD BHX (DV6FC) | | GDS10325 | Drive Shaft | | 25 | 24 | 58.5 | 79 | 940 | |
| | 2015.01-2019.12 | MT | F | R | Hatchback FWD BHX (DV6FC) | Trans. code:MA | GDS45222 | Drive Shaft | | 21 | 22 | 48 | 86.5 | 864 | |
| | 2015.01-2019.12 | MT | F | L | Hatchback FWD BHX (DV6FC) | Date from:2015.01 | GCO10148 | Outer Joint | | 25 | 34 | 58.5 | 79 | 55.5 | I |
| | 2019.11- | 6AT | F | L | Hatchback FWD NFJ (EC5F);NFP (EC5F) | | GDS83113 | Drive Shaft | | 25 | 37 | 55.7 | 84 | 623 | |
| | 2019.11- | 6AT | F | R | Hatchback FWD NFJ (EC5F);NFP (EC5F) | Date from:2020.04 | GDS58066 | Drive Shaft | | 25 | 37 | 56 | 86 | 873 | |
| | 2019.11- | 6AT | F | R | Hatchback FWD NFJ (EC5F);NFP (EC5F) | Date to:2020.03 | GDS83114 | Drive Shaft | | 25 | 37 | 55.7 | 84 | 880 | |
| | 2019.11- | 6AT | F | L | Hatchback FWD NFJ (EC5F);NFP (EC5F) | | GCI82119 | Inner Joint | | 37 | 34 | 41.5 | 58.5 | 94 | |
| | 2019.11- | 6AT | F | R | Hatchback FWD NFJ (EC5F);NFP (EC5F) | Date to:2020.03 | GCI82118 | Inner Joint | | 37 | 34 | | 290 | 88 | |
| | 2019.11- | 6AT | F | R | Hatchback FWD NFJ (EC5F);NFP (EC5F) | Date from:2020.04 | GCI83998 | Inner Joint | | 37 | 29 | | 286.5 | 96.5 | |
| | 2019.11- | AT | F | L/R | Hatchback FWD NFJ (EC5F);NFP (EC5F) | Date from:2020.05 | GCO83833 | Outer Joint | | 25 | 29 | 56 | 86 | 56 | M |
| | 2019.11- | | F | L | Hatchback FWD NFJ (EC5F);NFP (EC5F) | | GCO82279 | Outer Joint | | 25 | 34 | 55.7 | 84 | 55.5 | I |
| 1.6 (88 kw) | 2012.03-2019.12 | 4AT | F | L | Hatchback FWD 5FS (EP6C) | Wheel Hub Diam:72mm | GDS83447 | Drive Shaft | | 21 | 26 | 49 | 86 | 629 | |
| | 2012.03-2019.12 | 4AT | F | L | Hatchback FWD 5FS (EP6C) | Wheel Hub Diam:82mm | GDS83515 | Drive Shaft | | 25 | 26 | 58.5 | 80 | 629 | |
| | 2012.03-2019.12 | 4AT | F | R | Hatchback FWD 5FS (EP6C) | Wheel Hub Diam:72mm | GDS83448 | Drive Shaft | | 21 | 26 | 49 | 86 | 778 | |
| | 2012.03-2019.12 | 4AT | F | R | Hatchback FWD 5FS (EP6C) | Wheel Hub Diam:82mm | GDS83516 | Drive Shaft | | 25 | 26 | 58.5 | 80 | 770 | |
| | 2012.03-2019.12 | 4AT | F | L | Hatchback FWD 5FS (EP6C) | Wheel Hub Diam:72mm | GCO10125 | Outer Joint | | 21 | 21 | 49 | 86 | 49 | I |
| | 2012.03-2019.12 | 4AT | F | R | Hatchback FWD 5FS (EP6C) | Wheel Hub Diam:72mm | GCO82376 | Outer Joint | | 21 | 21 | 49 | 86 | 49 | I |
| | 2012.03-2019.12 | 4AT | F | L/R | Hatchback FWD 5FS (EP6C) | Wheel Hub Diam:82mm | GCO82399 | Outer Joint | | 25 | 30 | 58.5 | 80 | 53.5 | I |
| | 2012.03-2019.12 | 4AT | F | L | Hatchback FWD 5FS (EP6C) | Wheel Hub Diam:72mm | GCI10162 | Inner Joint | | 26 | 21 | 41.8 | 46 | 87.5 | |
| | 2012.03-2019.12 | 4AT | F | L | Hatchback FWD 5FS (EP6C) | Wheel Hub Diam:82mm | GCI82252 | Inner Joint | | 26 | 29 | 43 | 45.5 | 91 | |
| | 2012.03-2019.12 | 4AT | F | R | Hatchback FWD 5FS (EP6C) | Wheel Hub Diam:72mm | GCI10148 | Inner Joint | | 26 | 21 | 42 | | 117 | |
| | 2012.03-2019.12 | 4AT | F | R | Hatchback FWD 5FS (EP6C) | Wheel Hub Diam:82mm | GCI82253 | Inner Joint | | 26 | 29 | 36.3 | | 117 | |
| | 2012.03-2019.12 | 5MT | F | L | Hatchback FWD 5FS (EP6C) | | GDS10306 | Drive Shaft | | 21 | 22 | 49 | 86 | 652 | |
| | 2012.03-2019.12 | 5MT | F | R | Hatchback FWD 5FS (EP6C) | Date To:2013.08 | GDS45222 | Drive Shaft | | 21 | 22 | 48 | 86.5 | 864 | |
| | 2012.03-2019.12 | 5MT | F | R | Hatchback FWD 5FS (EP6C) | Date From:2013.09 | GDS83941 | Drive Shaft | | 21 | 22 | 49 | 86 | 866 | |
| | 2012.03-2019.12 | 5MT | F | R | Hatchback FWD 5FS (EP6C) | Date To:2013.08 | GCO45011 | Outer Joint | | 21 | 22 | 48 | 86.5 | 54 | I |
| | 2012.03-2019.12 | 5MT | F | R | Hatchback FWD 5FS (EP6C) | Date From:2013.09 | GCO82376 | Outer Joint | | 21 | 21 | 49 | 86 | 49 | I |
| | 2012.03-2019.12 | 5MT | F | L | Hatchback FWD 5FS (EP6C) | | GCI10054 | Inner Joint | | 22 | 21 | 40 | 60 | 88 | |
| | 2012.03-2019.12 | 5MT | F | R | Hatchback FWD 5FS (EP6C) | Date To:2013.08 | GCI17030 | Inner Joint | | 22 | 22 | 30 | 96.5 | 99 | |
| | 2012.03-2019.12 | 5MT | F | R | Hatchback FWD 5FS (EP6C) | Date From:2013.09 | GCI45041 | Inner Joint | | 22 | 21 | 30 | 96.5 | 88 | |
| | 2015.01-2019.12 | 6MT | F | L | Hatchback FWD BHZ (DV6FC) | | GDS10253 | Drive Shaft | | 25 | 24 | 58.5 | 79 | 626 | |
| | 2015.01-2019.12 | 6MT | F | R | Hatchback FWD BHZ (DV6FC) | | GDS45221 | Drive Shaft | | 25 | 24 | 58.5 | 79 | 881 | |
| | 2015.01-2019.12 | 6MT | F | L/R | Hatchback FWD BHZ (DV6FC) | | GCO99366 | Outer Joint | | 25 | 34 | 58.5 | 79 | 55 | I |
| | 2015.01-2019.12 | 6MT | F | R | Hatchback FWD BHZ (DV6FC) | | GCI10165 | Inner Joint | | 24 | 34 | 29.8 | 305.5 | 87.5 | |
| | 2015.01-2019.12 | MT | F | L | Hatchback FWD BHZ (DV6FC) | Date from:2015.01 | GCO10148 | Outer Joint | | 25 | 34 | 58.5 | 79 | 55.5 | I |
| | 2015.01-2019.12 | MT | F | L | Hatchback FWD BHZ (DV6FC) | Date from:2015.01 | GCI10057 | Inner Joint | | 24 | 34 | 40 | 52.5 | 90 | |
| 1.6 (115 kw) | 2012.03-2019.12 | 6MT | F | L | Hatchback FWD 5FV (EP6CDT) | Date to:2014.10 | GDS10253 | Drive Shaft | | 25 | 24 | 58.5 | 79 | 626 | |
| | 2012.03-2019.12 | 6MT | F | R | Hatchback FWD 5FV (EP6CDT) | Date to:2014.10 | GDS45221 | Drive Shaft | | 25 | 24 | 58.5 | 79 | 881 | |
| | 2012.03-2019.12 | 6MT | F | L | Hatchback FWD 5FV (EP6CDT) | | GCO10148 | Outer Joint | | 25 | 34 | 58.5 | 79 | 55.5 | I |
| | 2012.03-2019.12 | 6MT | F | R | Hatchback FWD 5FV (EP6CDT) | Date to:2014.10 | GCI10165 | Inner Joint | | 24 | 34 | 29.8 | 305.5 | 87.5 | |
| | 2012.03-2019.12 | MT | F | L | Hatchback FWD 5FV (EP6CDT) | Trans. code:BE4R | GDS10309 | Drive Shaft | | 21 | 24 | 48.3 | 86.5 | 641 | |

| | YEAR | TRANSM. | F/R | L/R | BODY STYLE & DRIVE TYPE & ENGINE | REMARKS | G-AP Ref. | PRODUCT | ABS | Technical Specifications A | B | C | H | L | P |
|---|---|---|---|---|---|---|---|---|---|---|---|---|---|---|---|
| **PEUGEOT** | | | | | | | | | | | | | | | |
| **208** | | | | | | | | | | | | | | | |
| 1.6 (115 kw) | 2012.03-2019.12 | MT | F | R | Hatchback FWD 5FV (EP6CDT) | Trans. code:BE4R | GDS10301 | Drive Shaft | | 21 | 24 | 48.3 | 86.5 | 871 | |
| | 2012.03-2019.12 | MT | F | R | Hatchback FWD 5FV (EP6CDT) | Trans. code:MA | GDS45222 | Drive Shaft | | 21 | 22 | 48 | 86.5 | 864 | |
| | 2012.03-2019.12 | MT | F | L | Hatchback FWD 5FV (EP6CDT) | | GCO99366 | Outer Joint | | 25 | 34 | 58.5 | 79 | 55 | I |
| | 2012.03-2019.12 | MT | F | R | Hatchback FWD 5FV (EP6CDT) | | GCO45011 | Outer Joint | | 21 | 22 | 48 | 86.5 | 54 | I |
| 1.6 (121 kw) | 2015.03-2019.12 | 6MT | F | R | Hatchback FWD 5GZ (EP6FDT) | | GDS45221 | Drive Shaft | | 25 | 24 | 58.5 | 79 | 881 | |
| | 2015.03-2019.12 | MT | F | L | Hatchback FWD 5GZ (EP6FDT) | | GDS10253 | Drive Shaft | | 25 | 24 | 58.5 | 79 | 626 | |
| | 2015.03-2019.12 | MT | F | L | Hatchback FWD 5GZ (EP6FDT) | | GCO10148 | Outer Joint | | 25 | 34 | 58.5 | 79 | 55.5 | I |
| | 2015.03-2019.12 | MT | F | L | Hatchback FWD 5GZ (EP6FDT) | | GCI10057 | Inner Joint | | 24 | 34 | 40 | 52.5 | 90 | |
| | 2015.03-2019.12 | MT | F | R | Hatchback FWD 5GZ (EP6FDT) | | GCI10058 | Inner Joint | | 24 | 34 | 29.8 | 365 | 88 | |
| 1.6 (147 kw) | 2012.08-2019.12 | 6MT | F | L | Hatchback FWD 5FU (EP6CDTX) | Date to:2014.10 | GDS10253 | Drive Shaft | | 25 | 24 | 58.5 | 79 | 626 | |
| | 2012.08-2019.12 | 6MT | F | R | Hatchback FWD 5FU (EP6CDTX) | Date to:2014.10 | GDS45221 | Drive Shaft | | 25 | 24 | 58.5 | 79 | 881 | |
| | 2012.08-2019.12 | 6MT | F | R | Hatchback FWD 5FU (EP6CDTX) | Date to:2014.10 | GCI10165 | Inner Joint | | 24 | 34 | 29.8 | 305.5 | 87.5 | |
| | 2012.08-2019.12 | MT | F | L | Hatchback FWD 5FU (EP6CDTX) | Date from:2013.01;Trans. code:BE4R | GDS10309 | Drive Shaft | | 21 | 24 | 48.3 | 86.5 | 641 | |
| | 2012.08-2019.12 | MT | F | R | Hatchback FWD 5FU (EP6CDTX) | Date From:2013.01;Trans. code:BE4R | GDS10301 | Drive Shaft | | 21 | 24 | 48.3 | 86.5 | 871 | |
| | 2012.08-2019.12 | MT | F | R | Hatchback FWD 5FU (EP6CDTX) | Date from:2013.01;Trans. code:MA | GDS45222 | Drive Shaft | | 21 | 22 | 48 | 86.5 | 864 | |
| | 2012.08-2019.12 | MT | F | L | Hatchback FWD 5FU (EP6CDTX) | | GCO99366 | Outer Joint | | 25 | 34 | 58.5 | 79 | 55 | I |
| | 2012.08-2019.12 | MT | F | R | Hatchback FWD 5FU (EP6CDTX) | | GCO45011 | Outer Joint | | 21 | 22 | 48 | 86.5 | 54 | I |
| | 2012.08-2019.12 | | F | L | Hatchback FWD 5FU (EP6CDTX) | | GCO10148 | Outer Joint | | 25 | 34 | 58.5 | 79 | 55.5 | I |
| | 2012.08-2019.12 | | F | L/R | Hatchback FWD 5FU (EP6CDTX) | | GCO10042 | Outer Joint | | 25 | 34 | 54.8 | 78.5 | 56 | I |
| 1.6 (153 kw) | 2014.10-2019.12 | 6MT | F | L | Hatchback FWD 5GR (EP6FDTX) | Date to:2014.10 | GDS10253 | Drive Shaft | | 25 | 24 | 58.5 | 79 | 626 | |
| | 2014.10-2019.12 | 6MT | F | L | Hatchback FWD 5GR (EP6FDTX) | Date from:2014.11 | GDS82736 | Drive Shaft | | 25 | 24 | 58.5 | 79 | 640 | |
| | 2014.10-2019.12 | 6MT | F | R | Hatchback FWD 5GR (EP6FDTX) | Date to:2014.10 | GDS45221 | Drive Shaft | | 25 | 24 | 58.5 | 79 | 881 | |
| | 2014.10-2019.12 | 6MT | F | R | Hatchback FWD 5GR (EP6FDTX) | Date from:2014.11 | GDS82735 | Drive Shaft | | 25 | 24 | 58.5 | 79 | 894 | |
| | 2014.10-2019.12 | 6MT | F | L/R | Hatchback FWD 5GR (EP6FDTX) | Date to:2014.10 | GCO99366 | Outer Joint | | 25 | 34 | 58.5 | 79 | 55 | I |
| | 2014.10-2019.12 | 6MT | F | R | Hatchback FWD 5GR (EP6FDTX) | Date to:2014.10 | GCI10165 | Inner Joint | | 24 | 34 | 29.8 | 305.5 | 87.5 | |
| | 2014.10-2019.12 | MT | F | L | Hatchback FWD 5GR (EP6FDTX) | | GCO10148 | Outer Joint | | 25 | 34 | 58.5 | 79 | 55.5 | I |
| | 2014.10-2019.12 | MT | F | L | Hatchback FWD 5GR (EP6FDTX) | | GCI10057 | Inner Joint | | 24 | 34 | 40 | 52.5 | 90 | |
| **3008** | | | | | | | | | | | | | | | |
| 1.2 (96 kw) | 2015.01-2016.08 | 6MT | F | L | MPV FWD HNY (EB2DTS) | | GDS10253 | Drive Shaft | | 25 | 24 | 58.5 | 79 | 626 | |
| | 2015.01-2016.08 | 6MT | F | R | MPV FWD HNY (EB2DTS) | | GDS10325 | Drive Shaft | | 25 | 24 | 58.5 | 79 | 940 | |
| | 2015.01-2016.08 | 6MT | F | L | MPV FWD HNY (EB2DTS) | | GCO10148 | Outer Joint | | 25 | 34 | 58.5 | 79 | 55.5 | I |
| | 2015.01-2016.08 | 6MT | F | L/R | MPV FWD HNY (EB2DTS) | | GCO99366 | Outer Joint | | 25 | 34 | 58.5 | 79 | 55 | I |
| | 2015.01-2016.08 | 6MT | F | L | MPV FWD HNY (EB2DTS) | | GCI10057 | Inner Joint | | 24 | 34 | 40 | 52.5 | 90 | |
| | 2015.01-2016.08 | 6MT | F | R | MPV FWD HNY (EB2DTS) | | GCI10058 | Inner Joint | | 24 | 34 | 29.8 | 365 | 88 | |
| | 2016.05- | 6AT | F | L | SUV FWD HNY (EB2DTS);HNS (EB2ADTS) | | GDS83110 | Drive Shaft | | 28 | 37 | 58.5 | 92.5 | 662 | |
| | 2016.05- | 6AT | F | R | SUV FWD HNY (EB2DTS);HNS (EB2ADTS) | | GDS83109 | Drive Shaft | | 28 | 37 | 58.5 | 92.5 | 933 | |
| | 2016.05- | 6AT | F | L | SUV FWD HNY (EB2DTS);HNS (EB2ADTS) | | GCI82119 | Inner Joint | | 37 | 34 | 41.5 | 58.5 | 94 | |
| | 2016.05- | 6AT | F | R | SUV FWD HNY (EB2DTS);HNS (EB2ADTS) | | GCI82118 | Inner Joint | | 37 | 34 | | 290 | 88 | |
| | 2016.05- | 6AT/6MT | F | L/R | SUV FWD HNY (EB2DTS);HNS (EB2ADTS) | | GCO82273 | Outer Joint | | 28 | 34 | 58.5 | 92.5 | 56 | I |
| | 2016.05- | 6MT | F | L | SUV FWD HNY (EB2DTS);HNS (EB2ADTS) | | GDS83617 | Drive Shaft | | 28 | 24 | 58.5 | 92.5 | 688 | |
| | 2016.05- | 6MT | F | R | SUV FWD HNY (EB2DTS);HNS (EB2ADTS) | | GDS83618 | Drive Shaft | | 28 | 24 | 58.5 | 92.5 | 950 | |
| | 2016.05- | 6MT | F | L | SUV FWD HNY (EB2DTS);HNS (EB2ADTS) | | GCI82181 | Inner Joint | | 24 | 34 | 40 | 52.5 | 90 | |
| | 2016.05- | 6MT | F | R | SUV FWD HNY (EB2DTS);HNS (EB2ADTS) | | GCI82323 | Inner Joint | | 24 | 34 | 29.8 | 306 | 88 | |
| | 2016.05- | 8AT | F | L | SUV FWD HNY (EB2DTS);HNS (EB2ADTS) | | GDS83646 | Drive Shaft | | 28 | 37 | 58.5 | 92 | 622 | |
| | 2016.05- | 8AT | F | R | SUV FWD HNY (EB2DTS);HNS (EB2ADTS) | | GDS83652 | Drive Shaft | | 28 | 37 | 58.5 | 92 | 951 | |
| | 2016.05- | 8AT | F | L/R | SUV FWD HNY (EB2DTS);HNS (EB2ADTS) | | GCO82449 | Outer Joint | | 28 | 36 | 58.5 | 92 | 60 | I |
| | 2016.05- | 8AT | F | L | SUV FWD HNY (EB2DTS);HNS (EB2ADTS) | | GCI82321 | Inner Joint | | 37 | 36 | 42.5 | 59.5 | 108 | |
| | 2016.05- | 8AT | F | R | SUV FWD HNY (EB2DTS);HNS (EB2ADTS) | | GCI82322 | Inner Joint | | 37 | 36 | | 379 | 108.5 | |
| | 2016.05- | 6MT | F | L | SUV Van FWD HNY (EB2DTS) | | GDS83617 | Drive Shaft | | 28 | 24 | 58.5 | 92.5 | 688 | |
| | 2016.05- | 6MT | F | R | SUV Van FWD HNY (EB2DTS) | | GDS83618 | Drive Shaft | | 28 | 24 | 58.5 | 92.5 | 950 | |
| | 2016.05- | 6MT | F | L/R | SUV Van FWD HNY (EB2DTS) | | GCO82273 | Outer Joint | | 28 | 34 | 58.5 | 92.5 | 56 | I |
| | 2016.05- | 6MT | F | L | SUV Van FWD HNY (EB2DTS) | | GCI82181 | Inner Joint | | 24 | 34 | 40 | 52.5 | 90 | |
| | 2016.05- | 6MT | F | R | SUV Van FWD HNY (EB2DTS) | | GCI82323 | Inner Joint | | 24 | 34 | 29.8 | 306 | 88 | |
| 1.2 (100 kw) | 2023.05-2023.11 | 6AT | F | R | SUV FWD HPY (EB2LTDH2) | | GDS83109 | Drive Shaft | | 28 | 37 | 58.5 | 92.5 | 933 | |
| | 2023.05-2023.11 | 6AT | F | R | SUV FWD HPY (EB2LTDH2) | | GCO82273 | Outer Joint | | 28 | 34 | 58.5 | 92.5 | 56 | I |
| | 2023.05-2023.11 | 6AT | F | R | SUV FWD HPY (EB2LTDH2) | | GCI82118 | Inner Joint | | 37 | 34 | | 290 | 88 | |
| 1.5 (96 kw) | 2018.02- | 6AT/8AT | F | L | SUV FWD YHZ (DV5RC) | Trans. code:AT6 | GDS83076 | Drive Shaft | | 28 | 37 | 58.5 | 93 | 655 | |
| | 2018.02- | 6AT/8AT | F | R | SUV FWD YHZ (DV5RC) | Trans. code:AT6 | GDS83077 | Drive Shaft | | 28 | 37 | 58.5 | 93 | 928 | |
| | 2018.02- | 6AT/8AT | F | L/R | SUV FWD YHZ (DV5RC) | Trans. code:AT6 | GCO10199 | Outer Joint | | 28 | 23 | 58.5 | 93 | 50.5 | I |
| | 2018.02- | 6AT/8AT | F | L | SUV FWD YHZ (DV5RC) | Trans. code:AT6 | GCI10139 | Inner Joint | | 37 | 23 | 40.3 | 59 | 95 | |
| | 2018.02- | 6AT/8AT | F | R | SUV FWD YHZ (DV5RC) | Trans. code:AT6 | GCI45038 | Inner Joint | | 37 | 23 | | 284 | 95 | |
| | 2018.02- | 6MT | F | L | SUV FWD YHZ (DV5RC) | TJ | GDS83608 | Drive Shaft | | 28 | 37 | 58.5 | 92.5 | 683 | |
| | 2018.02- | 6MT | F | R | SUV FWD YHZ (DV5RC) | TJ | GDS83607 | Drive Shaft | | 28 | 37 | 58.5 | 92.5 | 944 | |
| | 2018.02- | 6MT | F | L | SUV FWD YHZ (DV5RC) | | GCI82301 | Inner Joint | | 37 | 34 | 40 | 65.5 | 89.5 | |
| | 2018.02- | 6MT | F | R | SUV FWD YHZ (DV5RC) | | GCI82300 | Inner Joint | | 37 | 34 | 31.9 | 302 | 88 | |

| | YEAR | TRANSM. | F/R | L/R | BODY STYLE & DRIVE TYPE & ENGINE | REMARKS | G-AP Ref. | PRODUCT | ABS | Technical Specifications | | | | | |
|---|---|---|---|---|---|---|---|---|---|---|---|---|---|---|---|
| | | | | | | | | | | A | B | C | H | L | P |
| **PEUGEOT** | | | | | | | | | | | | | | | |
| **3008** | | | | | | | | | | | | | | | |
| 1.5 (96 kw) | 2018.02- | 8AT/6MT | F | L | SUV FWD YHZ (DV5RC) | Trans. code:AM6;PTJ | GDS83646 | Drive Shaft | | 28 | 37 | 58.5 | 92 | 622 | |
| | 2018.02- | 8AT/6MT | F | R | SUV FWD YHZ (DV5RC) | Trans. code:AM6;PTJ | GDS83652 | Drive Shaft | | 28 | 37 | 58.5 | 92 | 951 | |
| | 2018.02- | 8AT/6MT | F | L/R | SUV FWD YHZ (DV5RC) | Trans. code:AM6 | GCO82449 | Outer Joint | | 28 | 36 | 58.5 | 92 | 60 | I |
| | 2018.02- | 8AT/6MT | F | L | SUV FWD YHZ (DV5RC) | Trans. code:AM6 | GCI82321 | Inner Joint | | 37 | 36 | 42.5 | 59.5 | 108 | |
| | 2018.02- | 8AT/6MT | F | R | SUV FWD YHZ (DV5RC) | Trans. code:AM6 | GCI82322 | Inner Joint | | 37 | 36 | | 379 | 108.5 | |
| | 2018.02- | 6MT | F | L | SUV Van FWD YHZ (DV5RC) | | GDS83608 | Drive Shaft | | 28 | 37 | 58.5 | 92.5 | 683 | |
| | 2018.02- | 6MT | F | R | SUV Van FWD YHZ (DV5RC) | | GDS83607 | Drive Shaft | | 28 | 37 | 58.5 | 92.5 | 944 | |
| | 2018.02- | 6MT | F | L | SUV Van FWD YHZ (DV5RC) | | GCI82301 | Inner Joint | | 37 | 34 | 40 | 65.5 | 89.5 | |
| | 2018.02- | 6MT | F | R | SUV Van FWD YHZ (DV5RC) | | GCI82300 | Inner Joint | | 37 | 34 | 31.9 | 302 | 88 | |
| | 2018.02- | 8AT | F | L | SUV Van FWD YHZ (DV5RC) | Trans. code:AT6 | GDS83076 | Drive Shaft | | 28 | 37 | 58.5 | 93 | 655 | |
| | 2018.02- | 8AT | F | L | SUV Van FWD YHZ (DV5RC) | Trans. code:AM6 | GDS83646 | Drive Shaft | | 28 | 37 | 58.5 | 92 | 622 | |
| | 2018.02- | 8AT | F | R | SUV Van FWD YHZ (DV5RC) | Trans. code:AT6 | GDS83077 | Drive Shaft | | 28 | 37 | 58.5 | 93 | 928 | |
| | 2018.02- | 8AT | F | R | SUV Van FWD YHZ (DV5RC) | Trans. code:AM6 | GDS83652 | Drive Shaft | | 28 | 37 | 58.5 | 92 | 951 | |
| | 2018.02- | 8AT | F | L/R | SUV Van FWD YHZ (DV5RC) | Trans. code:AT6 | GCO10199 | Outer Joint | | 28 | 23 | 58.5 | 93 | 50.5 | I |
| | 2018.02- | 8AT | F | L/R | SUV Van FWD YHZ (DV5RC) | Trans. code:AM6 | GCO82449 | Outer Joint | | 28 | 36 | 58.5 | 92 | 60 | I |
| | 2018.02- | 8AT | F | L | SUV Van FWD YHZ (DV5RC) | Trans. code:AT6 | GCI10139 | Inner Joint | | 37 | 23 | 40.3 | 59 | 95 | |
| | 2018.02- | 8AT | F | L | SUV Van FWD YHZ (DV5RC) | Trans. code:AM6 | GCI82321 | Inner Joint | | 37 | 36 | 42.5 | 59.5 | 108 | |
| | 2018.02- | 8AT | F | R | SUV Van FWD YHZ (DV5RC) | Trans. code:AT6 | GCI45038 | Inner Joint | | 37 | 23 | | 284 | 95 | |
| | 2018.02- | 8AT | F | R | SUV Van FWD YHZ (DV5RC) | Trans. code:AM6 | GCI82322 | Inner Joint | | 37 | 36 | | 379 | 108.5 | |
| 1.6 (73 kw) | 2016.11-2019.12 | 5MT | F | L | SUV FWD BHY (DV6FD) | | GDS83067 | Drive Shaft | | 28 | 24 | 58.5 | 92.5 | 696 | |
| | 2016.11-2019.12 | 5MT | F | R | SUV FWD BHY (DV6FD) | | GDS57671 | Drive Shaft | | 28 | 24 | 58.5 | 92.5 | 936 | |
| | 2016.11-2019.12 | 5MT | F | L | SUV FWD BHY (DV6FD) | | GCO82273 | Outer Joint | | 28 | 34 | 58.5 | 92.5 | 56 | I |
| | 2016.11-2019.12 | 5MT | F | R | SUV FWD BHY (DV6FD) | | GCO81397 | Outer Joint | | 28 | 34 | 58.5 | 92.5 | 56 | I |
| | 2016.11-2019.12 | 5MT | F | L | SUV FWD BHY (DV6FD) | | GCI82131 | Inner Joint | | 24 | 34 | 40 | 62 | 89 | |
| 1.6 (80 kw) | 2009.06-2016.08 | 6AT/6MT | F | L | Box Body/MPV FWD 9HZ (DV6TED4) | | GDS10253 | Drive Shaft | | 25 | 24 | 58.5 | 79 | 626 | |
| | 2009.06-2016.08 | 6AT/6MT | F | R | Box Body/MPV FWD 9HZ (DV6TED4) | | GDS10325 | Drive Shaft | | 25 | 24 | 58.5 | 79 | 940 | |
| | 2009.06-2016.08 | 6AT/6MT | F | L/R | Box Body/MPV FWD 9HZ (DV6TED4) | | GCO10148 | Outer Joint | | 25 | 34 | 58.5 | 79 | 55.5 | I |
| | 2009.06-2016.08 | 6AT/6MT | F | L | Box Body/MPV FWD 9HZ (DV6TED4) | | GCI10057 | Inner Joint | | 24 | 34 | 40 | 52.5 | 90 | |
| | 2009.06-2016.08 | 6AT/6MT | F | R | Box Body/MPV FWD 9HZ (DV6TED4) | | GCI10058 | Inner Joint | | 24 | 34 | 29.8 | 365 | 88 | |
| | 2009.06-2016.08 | 6AT | F | L | MPV FWD 9HZ (DV6TED4) | Trans. code:AM6C | GDS10380 | Drive Shaft | | 25 | 37 | 58.5 | 89 | 635 | |
| | 2009.06-2016.08 | 6AT | F | R | MPV FWD 9HZ (DV6TED4) | Trans. code:AM6C | GDS10363 | Drive Shaft | | 25 | 37 | 58.5 | 89 | 935 | |
| | 2009.06-2016.08 | 6AT | F | R | MPV FWD 9HZ (DV6TED4) | Trans. code:AM6C | GCI10091 | Inner Joint | | 37 | 26 | | 366 | 100 | |
| | 2009.06-2016.08 | 6MT | F | L | MPV FWD 9HZ (DV6TED4) | | GDS10253 | Drive Shaft | | 25 | 24 | 58.5 | 79 | 626 | |
| | 2009.06-2016.08 | 6MT | F | L | MPV FWD 9HZ (DV6TED4) | Trans. code:ML6C | GDS10427 | Drive Shaft | | 25 | 37 | 58.5 | 89 | 638 | |
| | 2009.06-2016.08 | 6MT | F | R | MPV FWD 9HZ (DV6TED4) | | GDS10325 | Drive Shaft | | 25 | 24 | 58.5 | 79 | 940 | |
| | 2009.06-2016.08 | 6MT | F | R | MPV FWD 9HZ (DV6TED4) | Trans. code:ML6C | GDS10421 | Drive Shaft | | 25 | 37 | 58.5 | 89 | 972 | |
| | 2009.06-2016.08 | 6MT | F | L | MPV FWD 9HZ (DV6TED4) | | GCO10148 | Outer Joint | | 25 | 34 | 58.5 | 79 | 55.5 | I |
| | 2009.06-2016.08 | 6MT | F | L | MPV FWD 9HZ (DV6TED4) | Trans. code:ML6C | GCO10158 | Outer Joint | | 25 | 26 | 58.5 | 89 | 61.5 | M |
| | 2009.06-2016.08 | 6MT | F | R | MPV FWD 9HZ (DV6TED4) | | GCO99366 | Outer Joint | | 25 | 34 | 58.5 | 79 | 55 | I |
| | 2009.06-2016.08 | 6MT | F | L | MPV FWD 9HZ (DV6TED4) | | GCI10057 | Inner Joint | | 24 | 34 | 40 | 52.5 | 90 | |
| | 2009.06-2016.08 | 6MT | F | R | MPV FWD 9HZ (DV6TED4) | | GCI10058 | Inner Joint | | 24 | 34 | 29.8 | 365 | 88 | |
| | 2009.06-2016.08 | AT | F | L | MPV FWD 9HZ (DV6TED4) | | GDS10375 | Drive Shaft | | 25 | 37 | 58.4 | 89 | 619 | |
| | 2009.06-2016.08 | AT | F | L | MPV FWD 9HZ (DV6TED4) | Technical Information no.:8PN05 | GDS58072 | Drive Shaft | | 25 | 37 | 58.5 | 79 | 598 | |
| | 2009.06-2016.08 | MT | F | L | MPV FWD 9HZ (DV6TED4) | Trans. code:ML6C | GDS10312 | Drive Shaft | | 25 | 37 | 58.5 | 89 | 625 | |
| | 2009.06-2016.08 | MT/Semi-AT | F | L | MPV FWD 9HZ (DV6TED4) | | GDS10210 | Drive Shaft | | 25 | 37 | 58.5 | 89 | 638 | |
| | 2009.06-2016.08 | MT/Semi-AT | F | R | MPV FWD 9HZ (DV6TED4) | | GDS10361 | Drive Shaft | | 25 | 37 | 58.5 | 89 | 959 | |
| | 2009.06-2016.08 | MT/Semi-AT | F | L/R | MPV FWD 9HZ (DV6TED4) | | GCO10042 | Outer Joint | | 25 | 34 | 54.8 | 78.5 | 56 | I |
| 1.6 (82 kw) | 2009.12-2016.08 | 6AT/6MT | F | L | MPV FWD 9HR (DV6C) | | GDS10253 | Drive Shaft | | 25 | 24 | 58.5 | 79 | 626 | |
| | 2009.12-2016.08 | 6AT/6MT | F | R | MPV FWD 9HR (DV6C) | | GDS10325 | Drive Shaft | | 25 | 24 | 58.5 | 79 | 940 | |
| | 2009.12-2016.08 | 6MT | F | L | MPV FWD 9HR (DV6C) | | GCO10148 | Outer Joint | | 25 | 34 | 58.5 | 79 | 55.5 | I |
| | 2009.12-2016.08 | 6MT | F | R | MPV FWD 9HR (DV6C) | | GCO99366 | Outer Joint | | 25 | 34 | 58.5 | 79 | 55 | I |
| | 2009.12-2016.08 | 6MT | F | L | MPV FWD 9HR (DV6C) | | GCI10057 | Inner Joint | | 24 | 34 | 40 | 52.5 | 90 | |
| | 2009.12-2016.08 | 6MT | F | R | MPV FWD 9HR (DV6C) | | GCI10058 | Inner Joint | | 24 | 34 | 29.8 | 365 | 88 | |
| | 2009.12-2016.08 | AT | F | L | MPV FWD 9HR (DV6C) | | GDS10375 | Drive Shaft | | 25 | 37 | 58.4 | 89 | 619 | |
| | 2009.12-2016.08 | MT | F | L | MPV FWD 9HR (DV6C) | | GDS10312 | Drive Shaft | | 25 | 37 | 58.5 | 89 | 625 | |
| | 2009.12-2016.08 | MT/Semi-AT | F | L/R | MPV FWD 9HR (DV6C) | | GCO10042 | Outer Joint | | 25 | 34 | 54.8 | 78.5 | 56 | I |
| | 2009.12-2016.08 | Semi-AT | F | L | MPV FWD 9HR (DV6C) | | GDS10210 | Drive Shaft | | 25 | 37 | 58.5 | 89 | 638 | |
| | 2009.12-2016.08 | Semi-AT | F | R | MPV FWD 9HR (DV6C) | | GDS10361 | Drive Shaft | | 25 | 37 | 58.5 | 89 | 959 | |
| | 2009.12-2016.08 | Semi-AT | F | R | MPV FWD 9HR (DV6C) | | GCI10041 | Inner Joint | | 37 | 39 | 32 | 399 | 95.5 | |
| 1.6 (84 kw) | 2013.03-2016.08 | 6AT/6MT | F | L | MPV FWD 9HD (DV6CTED) | | GDS10253 | Drive Shaft | | 25 | 24 | 58.5 | 79 | 626 | |
| | 2013.03-2016.08 | 6AT/6MT | F | R | MPV FWD 9HD (DV6CTED) | | GDS10325 | Drive Shaft | | 25 | 24 | 58.5 | 79 | 940 | |
| | 2013.03-2016.08 | 6MT | F | R | MPV FWD 9HD (DV6CTED) | | GCO99366 | Outer Joint | | 25 | 34 | 58.5 | 79 | 55 | I |
| | 2013.03-2016.08 | AT | F | L | MPV FWD 9HD (DV6CTED) | | GDS10375 | Drive Shaft | | 25 | 37 | 58.4 | 89 | 619 | |
| | 2013.03-2016.08 | AT | F | L | MPV FWD 9HD (DV6CTED) | Technical Information no.:8PN05 | GDS58072 | Drive Shaft | | 25 | 37 | 58.5 | 79 | 598 | |
| | 2013.03-2016.08 | MT | F | L | MPV FWD 9HD (DV6CTED) | | GDS10312 | Drive Shaft | | 25 | 37 | 58.5 | 89 | 625 | |

| | YEAR | TRANSM. | F/R | L/R | BODY STYLE & DRIVE TYPE & ENGINE | REMARKS | G-AP Ref. | PRODUCT | ABS | Technical Specifications A | B | C | H | L | P |
|---|---|---|---|---|---|---|---|---|---|---|---|---|---|---|---|
| **PEUGEOT 3008** | | | | | | | | | | | | | | | |
| 1.6 (84 kw) | 2013.03-2016.08 | MT | F | L | MPV FWD 9HD (DV6CTED) | Date to:2016.08 | GCO10148 | Outer Joint | | 25 | 34 | 58.5 | 79 | 55.5 | I |
| | 2013.03-2016.08 | MT | F | L | MPV FWD 9HD (DV6CTED) | Date to:2016.08 | GCI10057 | Inner Joint | | 24 | 34 | 40 | 52.5 | 90 | |
| | 2013.03-2016.08 | MT | F | R | MPV FWD 9HD (DV6CTED) | Date to:2016.08 | GCI10058 | Inner Joint | | 24 | 34 | 29.8 | 365 | 88 | |
| | 2013.03-2016.08 | MT/Semi-AT | F | L/R | MPV FWD 9HD (DV6CTED) | | GCO10042 | Outer Joint | | 25 | 34 | 54.8 | 78.5 | 56 | I |
| | 2013.03-2016.08 | Semi-AT | F | L | MPV FWD 9HD (DV6CTED) | | GDS10210 | Drive Shaft | | 25 | 37 | 58.5 | 89 | 638 | |
| | 2013.03-2016.08 | Semi-AT | F | R | MPV FWD 9HD (DV6CTED) | | GDS10361 | Drive Shaft | | 25 | 37 | 58.5 | 89 | 959 | |
| | 2013.03-2016.08 | Semi-AT | F | R | MPV FWD 9HD (DV6CTED) | | GCI10041 | Inner Joint | | 37 | 39 | 32 | 399 | 95.5 | |
| 1.6 (85 kw) | 2013.02-2016.08 | 6AMT | F | L | MPV FWD BHX (DV6FC);9HC (DV6C) | Not for cold climate zones | GDS10253 | Drive Shaft | | 25 | 24 | 58.5 | 79 | 626 | |
| | 2013.02-2016.08 | 6AMT | F | R | MPV FWD BHX (DV6FC);9HC (DV6C) | Not for cold climate zones | GDS10325 | Drive Shaft | | 25 | 24 | 58.5 | 79 | 940 | |
| | 2013.02-2016.08 | 6AMT | F | L/R | MPV FWD BHX (DV6FC);9HC (DV6C) | | GCO99366 | Outer Joint | | 25 | 34 | 58.5 | 79 | 55 | I |
| | 2013.02-2016.08 | 6AMT | F | L | MPV FWD BHX (DV6FC);9HC (DV6C) | Not for cold climate zones | GCI10057 | Inner Joint | | 24 | 34 | 40 | 52.5 | 90 | |
| | 2013.02-2016.08 | 6AMT | F | R | MPV FWD BHX (DV6FC);9HC (DV6C) | Not for cold climate zones | GCI10058 | Inner Joint | | 24 | 34 | 29.8 | 365 | 88 | |
| | 2013.02-2016.08 | 6AT | F | R | MPV FWD BHX (DV6FC);9HC (DV6C) | Technical Information no.:8PN06 | GDS84640 | Drive Shaft | | 25 | 37 | 58.5 | 79 | 931 | |
| | 2013.02-2016.08 | 6AT | F | L | MPV FWD BHX (DV6FC);9HC (DV6C) | Technical Information no.:8PN05 | GCO99366 | Outer Joint | | 25 | 34 | 58.5 | 79 | 55 | I |
| | 2013.02-2016.08 | 6AT | F | R | MPV FWD BHX (DV6FC);9HC (DV6C) | Technical Information no.:8PN06 | GCO82351 | Outer Joint | | 25 | 34 | 58.5 | 79 | 55.5 | I |
| | 2013.02-2016.08 | 6AT | F | L | MPV FWD BHX (DV6FC);9HC (DV6C) | | GCI82119 | Inner Joint | | 37 | 34 | 41.5 | 58.5 | 94 | |
| | 2013.02-2016.08 | AT | F | L | MPV FWD BHX (DV6FC);9HC (DV6C) | Technical Information no.:8PN05 | GDS58072 | Drive Shaft | | 25 | 37 | 58.5 | 79 | 598 | |
| | 2016.11-2019.12 | 6AT | F | L | SUV FWD BHX (DV6FC) | | GDS83110 | Drive Shaft | | 28 | 37 | 58.5 | 92.5 | 662 | |
| | 2016.11-2019.12 | 6AT | F | R | SUV FWD BHX (DV6FC) | | GDS83109 | Drive Shaft | | 28 | 37 | 58.5 | 92.5 | 933 | |
| | 2016.11-2019.12 | 6AT | F | L/R | SUV FWD BHX (DV6FC) | | GCO82273 | Outer Joint | | 28 | 34 | 58.5 | 92.5 | 56 | I |
| | 2016.11-2019.12 | 6AT | F | L | SUV FWD BHX (DV6FC) | | GCI82119 | Inner Joint | | 37 | 34 | 41.5 | 58.5 | 94 | |
| | 2016.11-2019.12 | 6AT | F | R | SUV FWD BHX (DV6FC) | | GCI82118 | Inner Joint | | 37 | 34 | | 290 | 88 | |
| | 2016.11-2019.12 | 6MT | F | L | SUV FWD BHX (DV6FC) | | GDS83608 | Drive Shaft | | 28 | 37 | 58.5 | 92.5 | 683 | |
| | 2016.11-2019.12 | 6MT | F | R | SUV FWD BHX (DV6FC) | | GDS83607 | Drive Shaft | | 28 | 37 | 58.5 | 92.5 | 944 | |
| 1.6 (88 kw) | 2009.06-2016.08 | 5MT | F | L | MPV FWD EP6;5FS (EP6C);5FW (EP6) | | GDS10248 | Drive Shaft | | 25 | 24 | 58.5 | 79 | 642 | |
| | 2009.06-2016.08 | 5MT | F | L | MPV FWD EP6;5FS (EP6C);5FW (EP6) | | GDS10250 | Drive Shaft | | 25 | 24 | 58.5 | 79 | 630 | |
| | 2009.06-2016.08 | 5MT | F | R | MPV FWD EP6;5FS (EP6C);5FW (EP6) | | GDS10251 | Drive Shaft | | 25 | 24 | 58.5 | 79 | 935 | |
| | 2009.06-2016.08 | 5MT | F | L/R | MPV FWD EP6;5FS (EP6C);5FW (EP6) | | GCO99366 | Outer Joint | | 25 | 34 | 58.5 | 79 | 55 | I |
| | 2009.06-2016.08 | 5MT | F | L | MPV FWD EP6;5FS (EP6C);5FW (EP6) | | GCI10070 | Inner Joint | | 24 | 34 | 40 | 62 | 88 | |
| | 2009.06-2016.08 | 5MT | F | R | MPV FWD EP6;5FS (EP6C);5FW (EP6) | | GCI99159 | Inner Joint | | 24 | 34 | 29.8 | 350 | 87.5 | |
| | 2009.06-2016.08 | MT | F | L | MPV FWD EP6;5FS (EP6C);5FW (EP6) | | GDS10312 | Drive Shaft | | 25 | 37 | 58.5 | 89 | 625 | |
| | 2014.05-2016.08 | 6AT | F | R | MPV FWD BHZ (DV6FC) | Technical Information no.:8PN06 | GDS84640 | Drive Shaft | | 25 | 37 | 58.5 | 79 | 931 | |
| | 2014.05-2016.08 | 6AT | F | L | MPV FWD BHZ (DV6FC) | Technical Information no.:8PN05 | GCO99366 | Outer Joint | | 25 | 34 | 58.5 | 79 | 55 | I |
| | 2014.05-2016.08 | 6AT | F | R | MPV FWD BHZ (DV6FC) | Technical Information no.:8PN06 | GCO82351 | Outer Joint | | 25 | 34 | 58.5 | 79 | 55.5 | I |
| | 2014.05-2016.08 | 6AT | F | L | MPV FWD BHZ (DV6FC) | | GCI82119 | Inner Joint | | 37 | 34 | 41.5 | 58.5 | 94 | |
| | 2014.05-2016.08 | 6MT | F | L | MPV FWD BHZ (DV6FC) | | GDS10253 | Drive Shaft | | 25 | 24 | 58.5 | 79 | 626 | |
| | 2014.05-2016.08 | 6MT | F | L | MPV FWD BHZ (DV6FC) | Trans. code:ML6C | GDS10312 | Drive Shaft | | 25 | 37 | 58.5 | 89 | 625 | |
| | 2014.05-2016.08 | 6MT | F | R | MPV FWD BHZ (DV6FC) | | GDS10325 | Drive Shaft | | 25 | 24 | 58.5 | 79 | 940 | |
| | 2014.05-2016.08 | 6MT | F | L | MPV FWD BHZ (DV6FC) | | GCO10148 | Outer Joint | | 25 | 34 | 58.5 | 79 | 55.5 | I |
| | 2014.05-2016.08 | 6MT | F | L | MPV FWD BHZ (DV6FC) | | GCI10057 | Inner Joint | | 24 | 34 | 40 | 52.5 | 90 | |
| | 2014.05-2016.08 | 6MT | F | R | MPV FWD BHZ (DV6FC) | | GCI10058 | Inner Joint | | 24 | 34 | 29.8 | 365 | 88 | |
| | 2014.05-2016.08 | AT | F | L | MPV FWD BHZ (DV6FC) | Technical Information no.:8PN05 | GDS58072 | Drive Shaft | | 25 | 37 | 58.5 | 79 | 598 | |
| | 2016.05-2019.12 | 6AT | F | L | SUV FWD BHZ (DV6FC) | | GDS83110 | Drive Shaft | | 28 | 37 | 58.5 | 92.5 | 662 | |
| | 2016.05-2019.12 | 6AT | F | R | SUV FWD BHZ (DV6FC) | | GDS83109 | Drive Shaft | | 28 | 37 | 58.5 | 92.5 | 933 | |
| | 2016.05-2019.12 | 6AT | F | L | SUV FWD BHZ (DV6FC) | | GCI82119 | Inner Joint | | 37 | 34 | 41.5 | 58.5 | 94 | |
| | 2016.05-2019.12 | 6AT | F | R | SUV FWD BHZ (DV6FC) | | GCI82118 | Inner Joint | | 37 | 34 | | 290 | 88 | |
| | 2016.05-2019.12 | 6AT/6MT | F | L/R | SUV FWD BHZ (DV6FC) | | GCO82273 | Outer Joint | | 28 | 34 | 58.5 | 92.5 | 56 | I |
| | 2016.05-2019.12 | 6MT | F | L | SUV FWD BHZ (DV6FC) | | GDS83608 | Drive Shaft | | 28 | 37 | 58.5 | 92.5 | 683 | |
| | 2016.05-2019.12 | 6MT | F | R | SUV FWD BHZ (DV6FC) | | GDS83607 | Drive Shaft | | 28 | 37 | 58.5 | 92.5 | 944 | |
| | 2016.05-2019.12 | 6MT | F | L | SUV FWD BHZ (DV6FC) | | GCI82301 | Inner Joint | | 37 | 34 | 40 | 65.5 | 89.5 | |
| | 2016.05-2019.12 | 6MT | F | R | SUV FWD BHZ (DV6FC) | | GCI82300 | Inner Joint | | 37 | 34 | 31.9 | 302 | 88 | |
| 1.6 (110 kw) | 2009.06-2016.08 | 6AT | F | L | MPV FWD 5FX (EP6DT);5FE (EP6CDTMD);5FE (EP6CDTM) | Technical Information no.:8PN05 | GDS58072 | Drive Shaft | | 25 | 37 | 58.5 | 79 | 598 | |
| | 2009.06-2016.08 | 6AT | F | R | MPV FWD 5FX (EP6DT);5FE (EP6CDTMD);5FE (EP6CDTM) | Technical Information no.:8PN06 | GDS84640 | Drive Shaft | | 25 | 37 | 58.5 | 79 | 931 | |
| | 2009.06-2016.08 | 6AT | F | L | MPV FWD 5FX (EP6DT);5FE (EP6CDTMD);5FE (EP6CDTM) | Technical Information no.:8PN05 | GCO99366 | Outer Joint | | 25 | 34 | 58.5 | 79 | 55 | I |
| | 2009.06-2016.08 | 6AT | F | R | MPV FWD 5FX (EP6DT);5FE (EP6CDTMD);5FE (EP6CDTM) | Technical Information no.:8PN06 | GCO82351 | Outer Joint | | 25 | 34 | 58.5 | 79 | 55.5 | I |
| | 2009.06-2016.08 | 6AT | F | L | MPV FWD 5FX (EP6DT);5FE (EP6CDTMD);5FE (EP6CDTM) | | GCI82119 | Inner Joint | | 37 | 34 | 41.5 | 58.5 | 94 | |
| | 2009.06-2016.08 | 6MT | F | L | MPV FWD 5FX (EP6DT);5FE (EP6CDTMD);5FE (EP6CDTM) | | GDS10253 | Drive Shaft | | 25 | 24 | 58.5 | 79 | 626 | |
| | 2009.06-2016.08 | 6MT | F | L | MPV FWD 5FX (EP6DT);5FE (EP6CDTMD);5FE (EP6CDTM) | Trans. code:ML6C | GDS10427 | Drive Shaft | | 25 | 37 | 58.5 | 89 | 638 | |
| | 2009.06-2016.08 | 6MT | F | R | MPV FWD 5FX (EP6DT);5FE (EP6CDTMD);5FE (EP6CDTM) | | GDS10325 | Drive Shaft | | 25 | 24 | 58.5 | 79 | 940 | |
| | 2009.06-2016.08 | 6MT | F | R | MPV FWD 5FX (EP6DT);5FE (EP6CDTMD);5FE (EP6CDTM) | Trans. code:ML6C | GDS10421 | Drive Shaft | | 25 | 37 | 58.5 | 89 | 972 | |
| | 2009.06-2016.08 | 6MT | F | L/R | MPV FWD 5FX (EP6DT);5FE (EP6CDTMD);5FE (EP6CDTM) | for OE No.:3642357 | GCO10148 | Outer Joint | | 25 | 34 | 58.5 | 79 | 55.5 | I |
| | 2009.06-2016.08 | 6MT | F | L/R | MPV FWD 5FX (EP6DT);5FE (EP6CDTMD);5FE (EP6CDTM) | for OE No.:3272PZ/3273QK | GCO99366 | Outer Joint | | 25 | 34 | 58.5 | 79 | 55 | I |
| | 2009.06-2016.08 | 6MT | F | L | MPV FWD 5FX (EP6DT);5FE (EP6CDTMD);5FE (EP6CDTM) | | GCI10057 | Inner Joint | | 24 | 34 | 40 | 52.5 | 90 | |
| | 2009.06-2016.08 | 6MT | F | R | MPV FWD 5FX (EP6DT);5FE (EP6CDTMD);5FE (EP6CDTM) | | GCI10058 | Inner Joint | | 24 | 34 | 29.8 | 365 | 88 | |
| | 2009.06-2016.08 | MT | F | L | MPV FWD 5FX (EP6DT);5FE (EP6CDTMD);5FE (EP6CDTM) | Trans. code:ML6 | GDS10210 | Drive Shaft | | 25 | 37 | 58.5 | 89 | 638 | |

| | YEAR | TRANSM. | F/R | L/R | BODY STYLE & DRIVE TYPE & ENGINE | REMARKS | G-AP Ref. | PRODUCT | ABS | Technical Specifications A | B | C | H | L | P |
|---|---|---|---|---|---|---|---|---|---|---|---|---|---|---|---|
| **PEUGEOT 3008** | | | | | | | | | | | | | | | |
| 1.6 (110 kw) | 2009.06-2016.08 | MT | F | L | MPV FWD 5FX (EP6DT);5FE (EP6CDTMD);5FE (EP6CDTM) | Trans. code:ML6C | GDS10312 | Drive Shaft | | 25 | 37 | 58.5 | 89 | 625 | |
| | 2009.06-2016.08 | MT | F | R | MPV FWD 5FX (EP6DT);5FE (EP6CDTMD);5FE (EP6CDTM) | Trans. code:ML6 | GDS10361 | Drive Shaft | | 25 | 37 | 58.5 | 89 | 959 | |
| | 2017.11- | 6AT | F | L | SUV FWD 5GX (EP6FDTMD) | Date from:2019.01,Trans. code:AT6,From ORG/OPR:15401 | GDS83076 | Drive Shaft | | 28 | 37 | 58.5 | 93 | 655 | |
| | 2017.11- | 6AT | F | L | SUV FWD 5GX (EP6FDTMD) | Date to:2018.12,ORG/OPR no. to:15400,Trans. code:AT6 | GDS83110 | Drive Shaft | | 28 | 37 | 58.5 | 92.5 | 662 | |
| | 2017.11- | 6AT | F | L | SUV FWD 5GX (EP6FDTMD) | Trans. code:AM6 | GDS83646 | Drive Shaft | | 28 | 37 | 58.5 | 92 | 622 | |
| | 2017.11- | 6AT | F | R | SUV FWD 5GX (EP6FDTMD) | Date from:2019.01,Trans. code:AT6,From ORG/OPR:15401 | GDS83077 | Drive Shaft | | 28 | 37 | 58.5 | 93 | 928 | |
| | 2017.11- | 6AT | F | R | SUV FWD 5GX (EP6FDTMD) | Date to:2018.12,ORG/OPR no. to:15400,Trans. code:AT6 | GDS83109 | Drive Shaft | | 28 | 37 | 58.5 | 92.5 | 933 | |
| | 2017.11- | 6AT | F | R | SUV FWD 5GX (EP6FDTMD) | Trans. code:AM6 | GDS83652 | Drive Shaft | | 28 | 37 | 58.5 | 92 | 951 | |
| | 2017.11- | 6AT | F | L/R | SUV FWD 5GX (EP6FDTMD) | Date from:2019.01,Trans. code:AT6,From ORG/OPR:15401 | GCO10199 | Outer Joint | | 28 | 23 | 58.5 | 93 | 50.5 | I |
| | 2017.11- | 6AT | F | L/R | SUV FWD 5GX (EP6FDTMD) | Date to:2018.12,ORG/OPR no. to:15400,Trans. code:AT6 | GCO82273 | Outer Joint | | 28 | 34 | 58.5 | 92.5 | 56 | I |
| | 2017.11- | 6AT | F | L/R | SUV FWD 5GX (EP6FDTMD) | Trans. code:AM6 | GCO82449 | Outer Joint | | 28 | 36 | 58.5 | 92 | 60 | I |
| | 2017.11- | 6AT | F | L | SUV FWD 5GX (EP6FDTMD) | Date from:2019.01,Trans. code:AT6,From ORG/OPR:15401 | GCI10139 | Inner Joint | | 37 | 23 | 40.3 | 59 | 95 | |
| | 2017.11- | 6AT | F | L | SUV FWD 5GX (EP6FDTMD) | Date to:2018.12,ORG/OPR no. to:15400,Trans. code:AT6 | GCI82119 | Inner Joint | | 37 | 34 | 41.5 | 58.5 | 94 | |
| | 2017.11- | 6AT | F | L | SUV FWD 5GX (EP6FDTMD) | Trans. code:AM6 | GCI82321 | Inner Joint | | 37 | 36 | 42.5 | 59.5 | 108 | |
| | 2017.11- | 6AT | F | R | SUV FWD 5GX (EP6FDTMD) | Date from:2019.01,Trans. code:AT6,From ORG/OPR:15401 | GCI45038 | Inner Joint | | 37 | 23 | | 284 | 95 | |
| | 2017.11- | 6AT | F | R | SUV FWD 5GX (EP6FDTMD) | Date to:2018.12,ORG/OPR no. to:15400,Trans. code:AT6 | GCI82118 | Inner Joint | | 37 | 34 | | 290 | 88 | |
| | 2017.11- | 6AT | F | R | SUV FWD 5GX (EP6FDTMD) | Trans. code:AM6 | GCI82322 | Inner Joint | | 37 | 36 | | 379 | 108.5 | |
| 1.6 (115 kw) | 2009.06-2016.08 | 6AT | F | L | MPV FWD 5FV (EP6CDT) | Technical Information no.:8PN05 | GDS58072 | Drive Shaft | | 25 | 37 | 58.5 | 79 | 598 | |
| | 2009.06-2016.08 | 6AT | F | R | MPV FWD 5FV (EP6CDT) | Technical Information no.:8PN06 | GDS84640 | Drive Shaft | | 25 | 37 | 58.5 | 79 | 931 | |
| | 2009.06-2016.08 | 6AT | F | L | MPV FWD 5FV (EP6CDT) | Technical Information no.:8PN05 | GCO99366 | Outer Joint | | 25 | 34 | 58.5 | 79 | 55 | I |
| | 2009.06-2016.08 | 6AT | F | R | MPV FWD 5FV (EP6CDT) | Technical Information no.:8PN06 | GCO82351 | Outer Joint | | 25 | 34 | 58.5 | 79 | 55.5 | I |
| | 2009.06-2016.08 | 6AT | F | L | MPV FWD 5FV (EP6CDT) | | GCI82119 | Inner Joint | | 37 | 34 | 41.5 | 58.5 | 94 | |
| | 2009.06-2016.08 | 6MT | F | L | MPV FWD 5FV (EP6CDT) | | GDS10253 | Drive Shaft | | 25 | 24 | 58.5 | 79 | 626 | |
| | 2009.06-2016.08 | 6MT | F | L | MPV FWD 5FV (EP6CDT) | Trans. code:ML6C | GDS10427 | Drive Shaft | | 25 | 37 | 58.5 | 89 | 638 | |
| | 2009.06-2016.08 | 6MT | F | R | MPV FWD 5FV (EP6CDT) | | GDS10325 | Drive Shaft | | 25 | 24 | 58.5 | 79 | 940 | |
| | 2009.06-2016.08 | 6MT | F | R | MPV FWD 5FV (EP6CDT) | Trans. code:ML6C | GDS10421 | Drive Shaft | | 25 | 37 | 58.5 | 89 | 972 | |
| | 2009.06-2016.08 | 6MT | F | L/R | MPV FWD 5FV (EP6CDT) | for OE No.:3642357 | GCO10148 | Outer Joint | | 25 | 34 | 58.5 | 79 | 55.5 | I |
| | 2009.06-2016.08 | 6MT | F | L/R | MPV FWD 5FV (EP6CDT) | for OE No.:3272PZ/3273QK | GCO99366 | Outer Joint | | 25 | 34 | 58.5 | 79 | 55 | I |
| | 2009.06-2016.08 | 6MT | F | L | MPV FWD 5FV (EP6CDT) | | GCI10057 | Inner Joint | | 24 | 34 | 40 | 52.5 | 90 | |
| | 2009.06-2016.08 | MT | F | L | MPV FWD 5FV (EP6CDT) | Trans. code:ML6 | GDS10210 | Drive Shaft | | 25 | 37 | 58.5 | 89 | 638 | |
| | 2009.06-2016.08 | MT | F | L | MPV FWD 5FV (EP6CDT) | Trans. code:ML6C | GDS10312 | Drive Shaft | | 25 | 37 | 58.5 | 89 | 625 | |
| | 2009.06-2016.08 | MT | F | R | MPV FWD 5FV (EP6CDT) | Trans. code:ML6 | GDS10361 | Drive Shaft | | 25 | 37 | 58.5 | 89 | 959 | |
| | 2009.06-2016.08 | MT | F | R | MPV FWD 5FV (EP6CDT) | | GCI10058 | Inner Joint | | 24 | 34 | 29.8 | 365 | 88 | |
| 1.6 (120 kw) | 2010.09-2016.08 | 6AT | F | R | MPV FWD 5FM (EP6CDTM) | Technical Information no.:8PN06 | GDS84640 | Drive Shaft | | 25 | 37 | 58.5 | 79 | 931 | |
| | 2010.09-2016.08 | 6AT | F | L | MPV FWD 5FM (EP6CDTM) | Technical Information no.:8PN05 | GCO99366 | Outer Joint | | 25 | 34 | 58.5 | 79 | 55 | I |
| | 2010.09-2016.08 | 6AT | F | R | MPV FWD 5FM (EP6CDTM) | Technical Information no.:8PN06 | GCO82351 | Outer Joint | | 25 | 34 | 58.5 | 79 | 55.5 | I |
| | 2010.09-2016.08 | 6AT | F | L | MPV FWD 5FM (EP6CDTM) | | GCI82119 | Inner Joint | | 37 | 34 | 41.5 | 58.5 | 94 | |
| 1.6 (121 kw) | 2014.05-2016.08 | 6AT | F | R | MPV FWD 5GZ (EP6FDT) | Technical Information no.:8PN06 | GDS84640 | Drive Shaft | | 25 | 37 | 58.5 | 79 | 931 | |
| | 2014.05-2016.08 | 6AT | F | L | MPV FWD 5GZ (EP6FDT) | Technical Information no.:8PN05 | GCO99366 | Outer Joint | | 25 | 34 | 58.5 | 79 | 55 | I |
| | 2014.05-2016.08 | 6AT | F | R | MPV FWD 5GZ (EP6FDT) | Technical Information no.:8PN06 | GCO82351 | Outer Joint | | 25 | 34 | 58.5 | 79 | 55.5 | I |
| | 2014.05-2016.08 | 6AT | F | L | MPV FWD 5GZ (EP6FDT) | | GCI82119 | Inner Joint | | 37 | 34 | 41.5 | 58.5 | 94 | |
| | 2014.05-2016.08 | AT | F | L | MPV FWD 5GZ (EP6FDT) | Technical Information no.:8PN05 | GDS58072 | Drive Shaft | | 25 | 37 | 58.5 | 79 | 598 | |
| | 2016.05- | 6AT | F | L | SUV FWD 5GZ (EP6FDT);5GY (EP6FDTM) | | GDS83110 | Drive Shaft | | 28 | 37 | 58.5 | 92.5 | 662 | |
| | 2016.05- | 6AT | F | R | SUV FWD 5GZ (EP6FDT);5GY (EP6FDTM) | | GDS83109 | Drive Shaft | | 28 | 37 | 58.5 | 92.5 | 933 | |
| | 2016.05- | 6AT | F | L/R | SUV FWD 5GZ (EP6FDT);5GY (EP6FDTM) | | GCO82273 | Outer Joint | | 28 | 34 | 58.5 | 92.5 | 56 | I |
| | 2016.05- | 6AT | F | L | SUV FWD 5GZ (EP6FDT);5GY (EP6FDTM) | | GCI82119 | Inner Joint | | 37 | 34 | 41.5 | 58.5 | 94 | |
| | 2016.05- | 6AT | F | R | SUV FWD 5GZ (EP6FDT);5GY (EP6FDTM) | | GCI82118 | Inner Joint | | 37 | 34 | | 290 | 88 | |
| 1.6 (133 kw) | 2018.07- | 8AT | F | L | SUV FWD 5GF (EP6FADTXD) | Date to:2018.12,ORG/OPR no. to:15400 | GDS83110 | Drive Shaft | | 28 | 37 | 58.5 | 92.5 | 662 | |
| | 2018.07- | 8AT | F | R | SUV FWD 5GF (EP6FADTXD) | Date to:2018.12,ORG/OPR no. to:15400 | GDS83109 | Drive Shaft | | 28 | 37 | 58.5 | 92.5 | 933 | |
| | 2018.07- | 8AT | F | L/R | SUV FWD 5GF (EP6FADTXD) | Date to:2018.12,ORG/OPR no. to:15400 | GCO82273 | Outer Joint | | 28 | 34 | 58.5 | 92.5 | 56 | I |
| | 2018.07- | 8AT | F | L | SUV FWD 5GF (EP6FADTXD) | Date to:2018.12,ORG/OPR no. to:15400 | GCI82119 | Inner Joint | | 37 | 34 | 41.5 | 58.5 | 94 | |
| | 2018.07- | 8AT | F | R | SUV FWD 5GF (EP6FADTXD) | Date to:2018.12,ORG/OPR no. to:15400 | GCI82118 | Inner Joint | | 37 | 34 | | 290 | 88 | |
| 2.0 (100 kw) | 2011.09-2016.08 | 6MT | F | L | MPV FWD RHD (DW10CB) | | GDS10427 | Drive Shaft | | 25 | 37 | 58.5 | 89 | 638 | |
| | 2011.09-2016.08 | 6MT | F | R | MPV FWD RHD (DW10CB) | | GDS10313 | Drive Shaft | | 25 | 37 | 58.5 | 89 | 950 | |
| | 2011.09-2016.08 | 6MT | F | R | MPV FWD RHD (DW10CB) | Tech info no:8NN74/8NN53;Inner teeth of wheel side:26 | GDS10421 | Drive Shaft | | 25 | 37 | 58.5 | 89 | 972 | |
| | 2011.09-2016.08 | 6MT | F | L | MPV FWD RHD (DW10CB) | | GCO10155 | Outer Joint | | 25 | 39 | 58.5 | 89 | 63.5 | I |
| | 2011.09-2016.08 | MT | F | L | MPV FWD RHD (DW10CB) | | GDS10210 | Drive Shaft | | 25 | 37 | 58.5 | 89 | 638 | |
| | 2011.09-2016.08 | MT | F | L | MPV FWD RHD (DW10CB) | | GDS10312 | Drive Shaft | | 25 | 37 | 58.5 | 89 | 625 | |
| | 2011.09-2016.08 | MT | F | R | MPV FWD RHD (DW10CB) | Inner teeth of wheel side:39 | GDS10361 | Drive Shaft | | 25 | 37 | 58.5 | 89 | 959 | |
| | 2011.09-2016.08 | MT | F | L | MPV FWD RHD (DW10CB) | Date to:2016.08 | GCO10158 | Outer Joint | | 25 | 26 | 58.5 | 89 | 61.5 | M |
| | 2011.09-2016.08 | MT | F | L/R | MPV FWD RHD (DW10CB) | Date from:2012.01 | GCO10085 | Outer Joint | | 25 | 39 | 59 | 89 | 63.5 | I |
| | 2011.09-2016.08 | MT | F | R | MPV FWD RHD (DW10CB) | | GCI10041 | Inner Joint | | 37 | 39 | 32 | 399 | 95.5 | |
| | 2016.11- | 6MT | F | L | SUV FWD AHV (DW10FD) | | GDS58210 | Drive Shaft | | 28 | 37 | 58.5 | 92 | 667 | |
| | 2016.11- | 6MT | F | R | SUV FWD AHV (DW10FD) | | GDS58209 | Drive Shaft | | 28 | 37 | 58.5 | 92 | 969 | |
| | 2016.11- | 6MT | F | L/R | SUV FWD AHV (DW10FD) | | GCO82449 | Outer Joint | | 28 | 36 | 58.5 | 92 | 60 | I |

| | YEAR | TRANSM. | F/R | L/R | BODY STYLE & DRIVE TYPE & ENGINE | REMARKS | G-AP Ref. | PRODUCT | ABS | Technical Specifications A | B | C | H | L | P |
|---|---|---|---|---|---|---|---|---|---|---|---|---|---|---|---|
| **PEUGEOT 3008** | | | | | | | | | | | | | | | |
| 2.0 (100 kw) | 2016.11- | 6MT | F | L | SUV FWD AHV (DW10FD) | | GCI82363 | Inner Joint | | 37 | 36 | 40 | 68 | 108 | |
| | 2016.11- | 6MT | F | R | SUV FWD AHV (DW10FD) | | GCI82364 | Inner Joint | | 37 | 36 | 32 | 400 | 108 | |
| 2.0 (110 kw) | 2009.06-2016.08 | 6MT | F | L | Box Body/MPV FWD RHE (DW10CTED4) | | GDS10427 | Drive Shaft | | 25 | 37 | 58.5 | 89 | 638 | |
| | 2009.06-2016.08 | 6MT | F | R | Box Body/MPV FWD RHE (DW10CTED4) | | GDS10421 | Drive Shaft | | 25 | 37 | 58.5 | 89 | 972 | |
| | 2009.06-2016.08 | 6MT | F | L/R | Box Body/MPV FWD RHE (DW10CTED4) | | GCO10158 | Outer Joint | | 25 | 26 | 58.5 | 89 | 61.5 | M |
| | 2009.06-2016.08 | 6MT | F | L | Box Body/MPV FWD RHE (DW10CTED4) | | GCI10095 | Inner Joint | | 37 | 26 | 40 | 68 | 100 | |
| | 2009.06-2016.08 | 6AT | F | L | MPV FWD RHE (DW10CTED4);AHX (DW10FD) | Technical Information no.:8NN76 | GDS10380 | Drive Shaft | | 25 | 37 | 58.5 | 89 | 635 | |
| | 2009.06-2016.08 | 6AT | F | R | MPV FWD RHE (DW10CTED4);AHX (DW10FD) | | GDS10363 | Drive Shaft | | 25 | 37 | 58.5 | 89 | 935 | |
| | 2009.06-2016.08 | 6AT | F | L/R | MPV FWD RHE (DW10CTED4);AHX (DW10FD) | | GCO10155 | Outer Joint | | 25 | 39 | 58.5 | 89 | 63.5 | I |
| | 2009.06-2016.08 | 6AT | F | R | MPV FWD RHE (DW10CTED4);AHX (DW10FD) | | GCI10091 | Inner Joint | | 37 | 26 | | 366 | 100 | |
| | 2009.06-2016.08 | 6MT | F | L | MPV FWD RHE (DW10CTED4);AHX (DW10FD) | Trans. code:MC | GDS10253 | Drive Shaft | | 25 | 24 | 58.5 | 79 | 626 | |
| | 2009.06-2016.08 | 6MT | F | L | MPV FWD RHE (DW10CTED4);AHX (DW10FD) | | GDS10312 | Drive Shaft | | 25 | 37 | 58.5 | 89 | 625 | |
| | 2009.06-2016.08 | 6MT | F | L | MPV FWD RHE (DW10CTED4);AHX (DW10FD) | Trans. code:ML6C | GDS10427 | Drive Shaft | | 25 | 37 | 58.5 | 89 | 638 | |
| | 2009.06-2016.08 | 6MT | F | R | MPV FWD RHE (DW10CTED4);AHX (DW10FD) | Trans. code:MC | GDS10325 | Drive Shaft | | 25 | 24 | 58.5 | 79 | 940 | |
| | 2009.06-2016.08 | 6MT | F | R | MPV FWD RHE (DW10CTED4);AHX (DW10FD) | Trans. code:ML6C | GDS10421 | Drive Shaft | | 25 | 37 | 58.5 | 89 | 972 | |
| | 2009.06-2016.08 | 6MT | F | L | MPV FWD RHE (DW10CTED4);AHX (DW10FD) | Trans. code:MC | GCO10148 | Outer Joint | | 25 | 34 | 58.5 | 79 | 55.5 | I |
| | 2009.06-2016.08 | 6MT | F | L | MPV FWD RHE (DW10CTED4);AHX (DW10FD) | Trans. code:ML6C | GCO10158 | Outer Joint | | 25 | 26 | 58.5 | 89 | 61.5 | M |
| | 2009.06-2016.08 | 6MT | F | L | MPV FWD RHE (DW10CTED4);AHX (DW10FD) | Trans. code:MC | GCI10057 | Inner Joint | | 24 | 34 | 40 | 52.5 | 90 | |
| | 2009.06-2016.08 | 6MT | F | R | MPV FWD RHE (DW10CTED4);AHX (DW10FD) | Trans. code:MC | GCI10058 | Inner Joint | | 24 | 34 | 29.8 | 365 | 88 | |
| | 2009.06-2016.08 | AT | F | L | MPV FWD RHE (DW10CTED4);AHX (DW10FD) | Technical Information no.:8PN05 | GDS58072 | Drive Shaft | | 25 | 37 | 58.5 | 79 | 598 | |
| | 2009.06-2016.08 | MT | F | L | MPV FWD RHE (DW10CTED4);AHX (DW10FD) | | GDS10210 | Drive Shaft | | 25 | 37 | 58.5 | 89 | 638 | |
| | 2009.06-2016.08 | MT | F | R | MPV FWD RHE (DW10CTED4);AHX (DW10FD) | | GDS10361 | Drive Shaft | | 25 | 37 | 58.5 | 89 | 959 | |
| | 2009.06-2016.08 | MT | F | L/R | MPV FWD RHE (DW10CTED4);AHX (DW10FD) | | GCO10042 | Outer Joint | | 25 | 34 | 54.8 | 78.5 | 56 | I |
| | 2009.06-2016.08 | MT | F | L/R | MPV FWD RHE (DW10CTED4);AHX (DW10FD) | | GCO10085 | Outer Joint | | 25 | 39 | 59 | 89 | 63.5 | I |
| | 2009.06-2016.08 | MT | F | R | MPV FWD RHE (DW10CTED4);AHX (DW10FD) | | GCI10041 | Inner Joint | | 37 | 39 | 32 | 399 | 95.5 | |
| | 2016.05-2020.09 | 6AT | F | L | SUV FWD AHX (DW10FD);AHR (DW10FD);AHS (DW10FD) | | GDS83076 | Drive Shaft | | 28 | 37 | 58.5 | 93 | 655 | |
| | 2016.05-2020.09 | 6AT | F | R | SUV FWD AHX (DW10FD);AHR (DW10FD);AHS (DW10FD) | | GDS83077 | Drive Shaft | | 28 | 37 | 58.5 | 93 | 928 | |
| | 2016.05-2020.09 | 6AT | F | L/R | SUV FWD AHX (DW10FD);AHR (DW10FD);AHS (DW10FD) | | GCO10199 | Outer Joint | | 28 | 23 | 58.5 | 93 | 50.5 | I |
| | 2016.05-2020.09 | 6AT | F | L | SUV FWD AHX (DW10FD);AHR (DW10FD);AHS (DW10FD) | | GCI10139 | Inner Joint | | 37 | 23 | 40.3 | 59 | 95 | |
| | 2016.05-2020.09 | 6AT | F | R | SUV FWD AHX (DW10FD);AHR (DW10FD);AHS (DW10FD) | | GCI45038 | Inner Joint | | 37 | 23 | | 284 | 95 | |
| | 2016.05-2020.09 | 6MT | F | L | SUV FWD AHX (DW10FD);AHR (DW10FD);AHS (DW10FD) | | GDS58210 | Drive Shaft | | 28 | 37 | 58.5 | 92 | 667 | |
| | 2016.05-2020.09 | 6MT | F | R | SUV FWD AHX (DW10FD);AHR (DW10FD);AHS (DW10FD) | | GDS58209 | Drive Shaft | | 28 | 37 | 58.5 | 92 | 969 | |
| | 2016.05-2020.09 | 6MT | F | L/R | SUV FWD AHX (DW10FD);AHR (DW10FD);AHS (DW10FD) | | GCO82449 | Outer Joint | | 28 | 36 | 58.5 | 92 | 60 | I |
| | 2016.05-2020.09 | 6MT | F | L | SUV FWD AHX (DW10FD);AHR (DW10FD);AHS (DW10FD) | | GCI82363 | Inner Joint | | 37 | 36 | 40 | 68 | 108 | |
| | 2016.05-2020.09 | 6MT | F | R | SUV FWD AHX (DW10FD);AHR (DW10FD);AHS (DW10FD) | | GCI82364 | Inner Joint | | 37 | 36 | 32 | 400 | 108 | |
| 2.0 (120 kw) | 2009.06-2016.08 | 6AT | F | L | Box Body/MPV FWD RHH (DW10CTED4) | | GDS10380 | Drive Shaft | | 25 | 37 | 58.5 | 89 | 635 | |
| | 2009.06-2016.08 | 6AT | F | R | Box Body/MPV FWD RHH (DW10CTED4) | | GDS10363 | Drive Shaft | | 25 | 37 | 58.5 | 89 | 935 | |
| | 2009.06-2016.08 | 6AT | F | L | Box Body/MPV FWD RHH (DW10CTED4) | | GCO10155 | Outer Joint | | 25 | 39 | 58.5 | 89 | 63.5 | I |
| | 2009.06-2016.08 | 6AT | F | R | Box Body/MPV FWD RHH (DW10CTED4) | | GCO10158 | Outer Joint | | 25 | 26 | 58.5 | 89 | 61.5 | M |
| | 2009.06-2016.08 | 6AT | F | R | Box Body/MPV FWD RHH (DW10CTED4) | | GCI10091 | Inner Joint | | 37 | 26 | | 366 | 100 | |
| | 2009.06-2016.08 | 6AT | F | L | MPV FWD RHH (DW10CTED4) | Technical Information no.:8NN76 | GDS10380 | Drive Shaft | | 25 | 37 | 58.5 | 89 | 635 | |
| | 2009.06-2016.08 | 6AT | F | R | MPV FWD RHH (DW10CTED4) | | GDS10363 | Drive Shaft | | 25 | 37 | 58.5 | 89 | 935 | |
| | 2009.06-2016.08 | 6AT | F | L/R | MPV FWD RHH (DW10CTED4) | | GCO10155 | Outer Joint | | 25 | 39 | 58.5 | 89 | 63.5 | I |
| | 2009.06-2016.08 | 6AT | F | R | MPV FWD RHH (DW10CTED4) | Date to:2016.08 | GCI10091 | Inner Joint | | 37 | 26 | | 366 | 100 | |
| | 2009.06-2016.08 | 6MT | F | L | MPV FWD RHH (DW10CTED4) | Trans. code:MC | GDS10253 | Drive Shaft | | 25 | 24 | 58.5 | 79 | 626 | |
| | 2009.06-2016.08 | 6MT | F | L | MPV FWD RHH (DW10CTED4) | | GDS10312 | Drive Shaft | | 25 | 37 | 58.5 | 89 | 625 | |
| | 2009.06-2016.08 | 6MT | F | L | MPV FWD RHH (DW10CTED4) | | GDS10427 | Drive Shaft | | 25 | 37 | 58.5 | 89 | 638 | |
| | 2009.06-2016.08 | 6MT | F | R | MPV FWD RHH (DW10CTED4) | Trans. code:MC | GDS10325 | Drive Shaft | | 25 | 24 | 58.5 | 79 | 940 | |
| | 2009.06-2016.08 | 6MT | F | R | MPV FWD RHH (DW10CTED4) | | GDS10421 | Drive Shaft | | 25 | 37 | 58.5 | 89 | 972 | |
| | 2009.06-2016.08 | 6MT | F | L | MPV FWD RHH (DW10CTED4) | Date to:2016.08 | GCO10148 | Outer Joint | | 25 | 34 | 58.5 | 79 | 55.5 | I |
| | 2009.06-2016.08 | 6MT | F | L | MPV FWD RHH (DW10CTED4) | | GCO10155 | Outer Joint | | 25 | 39 | 58.5 | 89 | 63.5 | I |
| | 2009.06-2016.08 | 6MT | F | L | MPV FWD RHH (DW10CTED4) | Date to:2016.08 | GCO10158 | Outer Joint | | 25 | 26 | 58.5 | 89 | 61.5 | M |
| | 2009.06-2016.08 | 6MT | F | L | MPV FWD RHH (DW10CTED4) | Date to:2016.08 | GCI10057 | Inner Joint | | 24 | 34 | 40 | 52.5 | 90 | |
| | 2009.06-2016.08 | 6MT | F | R | MPV FWD RHH (DW10CTED4) | Date to:2016.08 | GCI10058 | Inner Joint | | 24 | 34 | 29.8 | 365 | 88 | |
| | 2009.06-2016.08 | AT | F | L | MPV FWD RHH (DW10CTED4) | Technical Information no.:8PN05 | GDS58072 | Drive Shaft | | 25 | 37 | 58.5 | 79 | 598 | |
| | 2009.06-2016.08 | MT | F | L | MPV FWD RHH (DW10CTED4) | | GDS10210 | Drive Shaft | | 25 | 37 | 58.5 | 89 | 638 | |
| | 2009.06-2016.08 | MT | F | R | MPV FWD RHH (DW10CTED4) | | GDS10361 | Drive Shaft | | 25 | 37 | 58.5 | 89 | 959 | |
| | 2009.06-2016.08 | MT | F | L/R | MPV FWD RHH (DW10CTED4) | | GCO10042 | Outer Joint | | 25 | 34 | 54.8 | 78.5 | 56 | I |
| | 2009.06-2016.08 | MT | F | L/R | MPV FWD RHH (DW10CTED4) | | GCO10085 | Outer Joint | | 25 | 39 | 59 | 89 | 63.5 | I |
| | 2009.06-2016.08 | MT | F | R | MPV FWD RHH (DW10CTED4) | | GCI10041 | Inner Joint | | 37 | 39 | 32 | 399 | 95.5 | |
| 2.0 (130 kw) | 2018.01- | 8AT | F | L | SUV FWD EHZ (DW10FC) | Date to:2018.12,ORG/OPR no. to:15400 | GDS83110 | Drive Shaft | | 28 | 37 | 58.5 | 92.5 | 662 | |
| | 2018.01- | 8AT | F | R | SUV FWD EHZ (DW10FC) | Date to:2018.12,ORG/OPR no. to:15400 | GDS83109 | Drive Shaft | | 28 | 37 | 58.5 | 92.5 | 933 | |
| | 2018.01- | 8AT | F | L/R | SUV FWD EHZ (DW10FC) | Date to:2018.12,ORG/OPR no. to:15400 | GCO82273 | Outer Joint | | 28 | 34 | 58.5 | 92.5 | 56 | I |
| | 2018.01- | 8AT | F | L | SUV FWD EHZ (DW10FC) | Date to:2018.12,ORG/OPR no. to:15400 | GCI82119 | Inner Joint | | 37 | 34 | 41.5 | 58.5 | 94 | |
| | 2018.01- | 8AT | F | R | SUV FWD EHZ (DW10FC) | Date to:2018.12,ORG/OPR no. to:15400 | GCI82118 | Inner Joint | | 37 | 34 | | 290 | 88 | |

| | YEAR | TRANSM. | F/R | L/R | BODY STYLE & DRIVE TYPE & ENGINE | REMARKS | G-AP Ref. | PRODUCT | ABS | Technical Specifications A | B | C | H | L | P |
|---|---|---|---|---|---|---|---|---|---|---|---|---|---|---|---|
| **PEUGEOT** | | | | | | | | | | | | | | | |
| **3008** | | | | | | | | | | | | | | | |
| 2.0 (130 kw) | 2018.01- | 8AT | F | L | SUV Van FWD EHZ (DW10FC) | Date to:2018.12,ORG/OPR no. to:15400 | GDS83110 | Drive Shaft | | 28 | 37 | 58.5 | 92.5 | 662 | |
| | 2018.01- | 8AT | F | R | SUV Van FWD EHZ (DW10FC) | Date to:2018.12,ORG/OPR no. to:15400 | GDS83109 | Drive Shaft | | 28 | 37 | 58.5 | 92.5 | 933 | |
| | 2018.01- | 8AT | F | L/R | SUV Van FWD EHZ (DW10FC) | Date to:2018.12,ORG/OPR no. to:15400 | GCO82273 | Outer Joint | | 28 | 34 | 58.5 | 92.5 | 56 | I |
| | 2018.01- | 8AT | F | L | SUV Van FWD EHZ (DW10FC) | Date to:2018.12,ORG/OPR no. to:15400 | GCI82119 | Inner Joint | | 37 | 34 | 41.5 | 58.5 | 94 | |
| | 2018.01- | 8AT | F | R | SUV Van FWD EHZ (DW10FC) | Date to:2018.12,ORG/OPR no. to:15400 | GCI82118 | Inner Joint | | 37 | 34 | | 290 | 88 | |
| 2.0 (133 kw) | 2016.05- | 6AT | F | L | SUV FWD AHW (DW10FC) | | GDS83646 | Drive Shaft | | 28 | 37 | 58.5 | 92 | 622 | |
| | 2016.05- | 6AT | F | R | SUV FWD AHW (DW10FC) | | GDS83652 | Drive Shaft | | 28 | 37 | 58.5 | 92 | 951 | |
| | 2016.05- | 6AT | F | L/R | SUV FWD AHW (DW10FC) | | GCO82449 | Outer Joint | | 28 | 36 | 58.5 | 92 | 60 | I |
| | 2016.05- | 6AT | F | L | SUV FWD AHW (DW10FC) | | GCI82321 | Inner Joint | | 37 | 36 | 42.5 | 59.5 | 108 | |
| | 2016.05- | 6AT | F | R | SUV FWD AHW (DW10FC) | | GCI82322 | Inner Joint | | 37 | 36 | | 379 | 108.5 | |
| EV (157 kw) | 2023.11- | ET | F | L | SUV FWD ZKZ (ZK03) | | GDS58077 | Drive Shaft | | 28 | 37 | 60 | 96 | 724 | |
| | 2023.11- | ET | F | R | SUV FWD ZKZ (ZK03) | | GDS58329 | Drive Shaft | | 28 | 37 | 60 | 96 | 974 | |
| | 2023.11- | ET | F | L/R | SUV FWD ZKZ (ZK03) | | GCO83838 | Outer Joint | | 28 | 39 | 60 | 96 | 63 | I |
| | 2023.11- | ET | F | L | SUV FWD ZKZ (ZK03) | | GCI10040 | Inner Joint | | 37 | 39 | 40 | 69 | 95.5 | |
| EV (170 kw) | 2024.10- | ET | F | L | SUV FWD ZKZ (ZK03) | | GDS58077 | Drive Shaft | | 28 | 37 | 60 | 96 | 724 | |
| | 2024.10- | ET | F | R | SUV FWD ZKZ (ZK03) | | GDS58329 | Drive Shaft | | 28 | 37 | 60 | 96 | 974 | |
| | 2024.10- | ET | F | L/R | SUV FWD ZKZ (ZK03) | | GCO83838 | Outer Joint | | 28 | 39 | 60 | 96 | 63 | I |
| | 2024.10- | ET | F | L | SUV FWD ZKZ (ZK03) | | GCI10040 | Inner Joint | | 37 | 39 | 40 | 69 | 95.5 | |
| EV (239 kw) | 2025.07- | ET | F | L | SUV 4WD | | GDS58077 | Drive Shaft | | 28 | 37 | 60 | 96 | 724 | |
| | 2025.07- | ET | F | R | SUV 4WD | | GDS58329 | Drive Shaft | | 28 | 37 | 60 | 96 | 974 | |
| | 2025.07- | ET | F | L/R | SUV 4WD | | GCO83838 | Outer Joint | | 28 | 39 | 60 | 96 | 63 | I |
| | 2025.07- | ET | F | L | SUV 4WD | | GCI10040 | Inner Joint | | 37 | 39 | 40 | 69 | 95.5 | |
| **301** | | | | | | | | | | | | | | | |
| 1.2 (53 kw) | 2012.11- | 5AT/5MT | F | L | Saloon FWD HMY (EB2M) | | GDS10346 | Drive Shaft | | 21 | 22 | 49 | 86 | 668 | |
| | 2012.11- | 5AT/5MT | F | R | Saloon FWD HMY (EB2M) | | GDS10347 | Drive Shaft | | 21 | 22 | 49 | 86 | 884 | |
| | 2012.11- | 5AT/5MT | F | L/R | Saloon FWD HMY (EB2M) | | GCO50211 | Outer Joint | | 21 | 21 | 49 | 86 | 49 | M |
| | 2012.11- | 5AT/5MT | F | L | Saloon FWD HMY (EB2M) | | GCI10098 | Inner Joint | | 22 | 21 | 40 | 60 | 88 | |
| | 2012.11- | 5AT/5MT | F | R | Saloon FWD HMY (EB2M) | | GCI10159 | Inner Joint | | 22 | 21 | 30 | 96.5 | 88 | |
| 1.2 (60 kw) | 2014.12- | 5AT | F | L | Saloon FWD HMZ (EB2F) | | GDS10346 | Drive Shaft | | 21 | 22 | 49 | 86 | 668 | |
| | 2014.12- | 5AT | F | R | Saloon FWD HMZ (EB2F) | | GDS10347 | Drive Shaft | | 21 | 22 | 49 | 86 | 884 | |
| | 2014.12- | 5AT | F | L/R | Saloon FWD HMZ (EB2F) | | GCO50211 | Outer Joint | | 21 | 21 | 49 | 86 | 49 | M |
| | 2014.12- | 5AT | F | L | Saloon FWD HMZ (EB2F) | | GCI10098 | Inner Joint | | 22 | 21 | 40 | 60 | 88 | |
| | 2014.12- | 5AT | F | R | Saloon FWD HMZ (EB2F) | | GCI10159 | Inner Joint | | 22 | 21 | 30 | 96.5 | 88 | |
| 1.2 (61 kw) | 2018.02- | 5MT | F | L | Saloon FWD HMR (EB2FA) | | GDS83858 | Drive Shaft | | 21 | 22 | 49 | 86 | 673 | |
| | 2018.02- | 5MT | F | R | Saloon FWD HMR (EB2FA) | | GDS84081 | Drive Shaft | | 21 | 22 | 49 | 86 | 877 | |
| | 2018.02- | 5MT | F | L/R | Saloon FWD HMR (EB2FA) | | GCO50211 | Outer Joint | | 21 | 21 | 49 | 86 | 49 | M |
| | 2018.02- | 5MT | F | L | Saloon FWD HMR (EB2FA) | | GCI45042 | Inner Joint | | 22 | 21 | 40 | 58.5 | 88 | |
| | 2018.02- | 5MT | F | R | Saloon FWD HMR (EB2FA) | | GCI81325 | Inner Joint | | 22 | 21 | 30 | 93 | 88 | |
| 1.5 (75 kw) | 2018.05- | 6MT | F | L | Saloon FWD YHY (DV5RD) | | GDS56473 | Drive Shaft | | 21 | 24 | 48.2 | 85.5 | 657 | |
| | 2018.05- | 6MT | F | R | Saloon FWD YHY (DV5RD) | | GDS56472 | Drive Shaft | | 21 | 24 | 48.2 | 85.5 | 889 | |
| | 2018.05- | 6MT | F | L/R | Saloon FWD YHY (DV5RD) | | GCO82278 | Outer Joint | | 21 | 34 | 48.2 | 85.5 | 56.5 | I |
| 1.6 (68 kw) | 2012.11- | 5MT | F | L | Saloon FWD 9HF (DV6DTED);9HJ (DV6DTEDM) | | GDS10307 | Drive Shaft | | 21 | 24 | 48.2 | 85.5 | 660 | |
| | 2012.11- | 5MT | F | R | Saloon FWD 9HF (DV6DTED);9HJ (DV6DTEDM) | | GDS10308 | Drive Shaft | | 21 | 24 | 48.2 | 85.5 | 890 | |
| | 2012.11- | 5MT | F | L/R | Saloon FWD 9HF (DV6DTED);9HJ (DV6DTEDM) | | GCO10143 | Outer Joint | | 21 | 34 | 48.2 | 85.5 | 56.5 | I |
| | 2012.11- | 5MT | F | L | Saloon FWD 9HF (DV6DTED);9HJ (DV6DTEDM) | | GCI10129 | Inner Joint | | 24 | 34 | 40 | 62 | 89 | |
| | 2012.11- | 5MT | F | R | Saloon FWD 9HF (DV6DTED);9HJ (DV6DTEDM) | | GCI10082 | Inner Joint | | 24 | 34 | 29.8 | 291 | 88 | |
| 1.6 (73 kw) | 2014.04- | 5MT | F | L | Saloon FWD BHY (DV6FD) | Hollow shaft | GDS82411 | Drive Shaft | | 25 | 24 | 58.5 | 79 | 657 | |
| | 2014.04- | 5MT | F | L | Saloon FWD BHY (DV6FD) | Solid shaft | GDS84007 | Drive Shaft | | 25 | 24 | 58.5 | 79 | 654 | |
| | 2014.04- | MT | F | R | Saloon FWD BHY (DV6FD) | | GDS82412 | Drive Shaft | | 25 | 24 | 58.5 | 79 | 886 | |
| | 2014.04- | MT | F | L/R | Saloon FWD BHY (DV6FD) | | GCO10148 | Outer Joint | | 25 | 34 | 58.5 | 79 | 55.5 | I |
| | 2014.04- | MT | F | L | Saloon FWD BHY (DV6FD) | | GCI10129 | Inner Joint | | 24 | 34 | 40 | 62 | 89 | |
| | 2014.04- | MT | F | R | Saloon FWD BHY (DV6FD) | | GCI10082 | Inner Joint | | 24 | 34 | 29.8 | 291 | 88 | |
| 1.6 (85 kw) | 2012.11- | 5MT | F | R | Saloon FWD NFP (EC5) | | GDS84081 | Drive Shaft | | 21 | 22 | 49 | 86 | 877 | |
| | 2012.11- | 5MT | F | L | Saloon FWD NFP (EC5) | | GCI45042 | Inner Joint | | 22 | 21 | 40 | 58.5 | 88 | |
| | 2012.11- | 5MT | F | R | Saloon FWD NFP (EC5) | | GCI81325 | Inner Joint | | 22 | 21 | 30 | 93 | 88 | |
| | 2012.11- | 8AT | F | L | Saloon FWD NFP (EC5) | | GCI10162 | Inner Joint | | 26 | 21 | 41.8 | 46 | 87.5 | |
| | 2012.11- | 8AT | F | R | Saloon FWD NFP (EC5) | | GCI45040 | Inner Joint | | 26 | 21 | 42 | | 117 | |
| | 2012.11- | AT | F | L | Saloon FWD NFP (EC5) | | GDS56127 | Drive Shaft | | 21 | 26 | 49 | 86 | 651 | |
| | 2012.11- | AT | F | R | Saloon FWD NFP (EC5) | | GDS83970 | Drive Shaft | | 21 | 26 | 49 | 86 | 786 | |
| | 2012.11- | AT | F | L/R | Saloon FWD NFP (EC5) | | GCO82546 | Outer Joint | | 21 | 21 | 49 | 86 | 49 | M |
| | 2012.11- | MT | F | L | Saloon FWD NFP (EC5) | | GDS83858 | Drive Shaft | | 21 | 22 | 49 | 86 | 673 | |
| | 2012.11- | MT | F | L | Saloon FWD NFP (EC5) | | GCO50211 | Outer Joint | | 21 | 21 | 49 | 86 | 49 | M |
| | 2014.07- | 5MT | F | L | Saloon FWD NFP (EC5) | | GDS83858 | Drive Shaft | | 21 | 22 | 49 | 86 | 673 | |
| | 2014.07- | 5MT | F | R | Saloon FWD NFP (EC5) | | GDS84081 | Drive Shaft | | 21 | 22 | 49 | 86 | 877 | |
| | 2014.07- | 5MT | F | L/R | Saloon FWD NFP (EC5) | | GCO50211 | Outer Joint | | 21 | 21 | 49 | 86 | 49 | M |

| | YEAR | TRANSM. | F/R | L/R | BODY STYLE & DRIVE TYPE & ENGINE | REMARKS | G-AP Ref. | PRODUCT | ABS | Technical Specifications A | B | C | H | L | P |
|---|---|---|---|---|---|---|---|---|---|---|---|---|---|---|---|
| **PEUGEOT** | | | | | | | | | | | | | | | |
| **301** | | | | | | | | | | | | | | | |
| 1.6 (85 kw) | 2014.07- | 5MT | F | R | Saloon FWD NFP (EC5) | | GCI81325 | Inner Joint | | 22 | 21 | 30 | 93 | 88 | |
| **306** | | | | | | | | | | | | | | | |
| 1.1 (44 kw) | 1993.05-1996.12 | 5MT | F | L | Hatchback FWD TU1M/TU1M+ | | GDS45004 | Drive Shaft | | 21 | 22 | 56.4 | 76 | 614 | |
| | 1993.05-1996.12 | 5MT | F | R | Hatchback FWD TU1M/TU1M+ | | GDS45025 | Drive Shaft | | 21 | 22 | 56.4 | 76 | 877.5 | |
| | 1993.05-1996.12 | MT | F | L | Hatchback FWD TU1M/TU1M+ | Date to:1996.12;Trans. code:MA70 | GDS45157 | Drive Shaft | 29T | 25 | 22 | 54.5 | 79.5 | 605 | |
| | 1993.05-1996.12 | MT | F | R | Hatchback FWD TU1M/TU1M+ | Date to:1996.12;Trans. code:MA70 | GDS45158 | Drive Shaft | 29T | 25 | 22 | 54.5 | 79.5 | 875 | |
| | 1993.05-1996.12 | | F | R | Hatchback FWD TU1M/TU1M+ | | GDS45156 | Drive Shaft | 48T | 25 | 22 | 54.5 | 79.5 | 869.5 | |
| | 1994.06-1996.12 | 5MT | F | L | Saloon FWD TU1M | | GDS45004 | Drive Shaft | | 21 | 22 | 56.4 | 76 | 614 | |
| | 1994.06-1996.12 | 5MT | F | R | Saloon FWD TU1M | | GDS45025 | Drive Shaft | | 21 | 22 | 56.4 | 76 | 877.5 | |
| | 1994.06-1996.12 | MT | F | L | Saloon FWD TU1M | Date to:1996.12;Trans. code:MA70 | GDS45157 | Drive Shaft | 29T | 25 | 22 | 54.5 | 79.5 | 605 | |
| | 1994.06-1996.12 | MT | F | R | Saloon FWD TU1M | Date to:1996.12;Trans. code:MA70 | GDS45158 | Drive Shaft | 29T | 25 | 22 | 54.5 | 79.5 | 875 | |
| | 1994.06-1996.12 | | F | R | Saloon FWD TU1M | | GDS45156 | Drive Shaft | 48T | 25 | 22 | 54.5 | 79.5 | 869.5 | |
| 1.4 (55 kw) | 1993.04-2001.07 | 5MT | F | L | Hatchback FWD TU3JP/TU3MC | outer teeth of wheel side: 21;without ABS | GDS45004 | Drive Shaft | | 21 | 22 | 56.4 | 76 | 614 | |
| | 1993.04-2001.07 | 5MT | F | L | Hatchback FWD TU3JP/TU3MC | outer teeth of wheel side:25;without ABS | GDS45138 | Drive Shaft | | 25 | 22 | 60 | 78.5 | 601 | |
| | 1993.04-2001.07 | 5MT | F | L | Hatchback FWD TU3JP/TU3MC | with ABS | GDS45157 | Drive Shaft | 29T | 25 | 22 | 54.5 | 79.5 | 605 | |
| | 1993.04-2001.07 | 5MT | F | R | Hatchback FWD TU3JP/TU3MC | | GDS45025 | Drive Shaft | | 21 | 22 | 56.4 | 76 | 877.5 | |
| | 1993.04-2001.07 | 5MT | F | R | Hatchback FWD TU3JP/TU3MC | without ABS;outer teeth of wheel side:25 | GDS45137 | Drive Shaft | | 25 | 22 | 60 | 78.5 | 880 | |
| | 1993.04-2001.07 | 5MT | F | R | Hatchback FWD TU3JP/TU3MC | with ABS;ABS teeth:29 | GDS45158 | Drive Shaft | 29T | 25 | 22 | 54.5 | 79.5 | 875 | |
| | 1993.04-2001.07 | 5MT | F | L | Hatchback FWD TU3JP/TU3MC | | GCI10006 | Inner Joint | | 22 | 22 | 40 | 58.5 | 87 | |
| | 1993.04-2001.07 | MT | F | L/R | Hatchback FWD TU3JP/TU3MC | without ABS | GCO10025 | Outer Joint | | 25 | 22 | 60 | 80 | 54 | I |
| | 1993.04-2001.07 | MT | F | L/R | Hatchback FWD TU3JP/TU3MC | with ABS | GCO45036 | Outer Joint | 29T | 25 | 22 | 60 | 80 | 54 | I |
| | 1994.06-2001.05 | 5MT | F | L | Saloon FWD TU32/TU3JP/TU3MC | | GDS45004 | Drive Shaft | | 21 | 22 | 56.4 | 76 | 614 | |
| | 1994.06-2001.05 | 5MT | F | L | Saloon FWD TU32/TU3JP/TU3MC | | GDS45157 | Drive Shaft | 29T | 25 | 22 | 54.5 | 79.5 | 605 | |
| | 1994.06-2001.05 | 5MT | F | R | Saloon FWD TU32/TU3JP/TU3MC | | GDS45025 | Drive Shaft | | 21 | 22 | 56.4 | 76 | 877.5 | |
| | 1994.06-2001.05 | 5MT | F | R | Saloon FWD TU32/TU3JP/TU3MC | Inner teeth of wheel side:20 | GDS45158 | Drive Shaft | 29T | 25 | 22 | 54.5 | 79.5 | 875 | |
| | 1994.06-2001.05 | 5MT | F | L | Saloon FWD TU32/TU3JP/TU3MC | | GCI10006 | Inner Joint | | 22 | 22 | 40 | 58.5 | 87 | |
| | 1994.06-2001.05 | MT | F | L | Saloon FWD TU32/TU3JP/TU3MC | Date from:1998.07;Trans. code:MA;RPO number from:07892 | GDS99037 | Drive Shaft | 29T | 25 | 22 | 60 | 80 | 608 | |
| | 1994.06-2001.05 | MT | F | R | Saloon FWD TU32/TU3JP/TU3MC | Trans. code:MA;RPO number from:08093 | GDS45137 | Drive Shaft | | 25 | 22 | 60 | 78.5 | 880 | |
| | 1994.06-2001.05 | MT | F | L/R | Saloon FWD TU32/TU3JP/TU3MC | Date from:1997.04 | GCO45036 | Outer Joint | 29T | 25 | 22 | 60 | 80 | 54 | I |
| | 1996.03-2001.07 | 5MT | F | L | Hatchback Van FWD TU3JP | | GCI10006 | Inner Joint | | 22 | 22 | 40 | 58.5 | 87 | |
| | 1996.03-2001.07 | | F | L | Hatchback Van FWD TU3JP | | GDS45004 | Drive Shaft | | 21 | 22 | 56.4 | 76 | 614 | |
| | 1996.03-2001.07 | | F | R | Hatchback Van FWD TU3JP | | GDS45025 | Drive Shaft | | 21 | 22 | 56.4 | 76 | 877.5 | |
| | 1996.03-2001.07 | | F | R | Hatchback Van FWD TU3JP | | GDS45156 | Drive Shaft | 48T | 25 | 22 | 54.5 | 79.5 | 869.5 | |
| | 1996.03-2001.07 | | F | R | Hatchback Van FWD TU3JP | | GDS45158 | Drive Shaft | 29T | 25 | 22 | 54.5 | 79.5 | 875 | |
| | 1997.05-2000.06 | 5MT | F | L | Estate Van FWD TU3JP | | GDS45004 | Drive Shaft | | 21 | 22 | 56.4 | 76 | 614 | |
| | 1997.05-2000.06 | 5MT | F | L | Estate Van FWD TU3JP | | GDS45157 | Drive Shaft | 29T | 25 | 22 | 54.5 | 79.5 | 605 | |
| | 1997.05-2000.06 | 5MT | F | L | Estate Van FWD TU3JP | | GDS99037 | Drive Shaft | 29T | 25 | 22 | 60 | 80 | 608 | |
| | 1997.05-2000.06 | 5MT | F | R | Estate Van FWD TU3JP | | GDS45025 | Drive Shaft | | 21 | 22 | 56.4 | 76 | 877.5 | |
| | 1997.05-2000.06 | 5MT | F | R | Estate Van FWD TU3JP | | GDS45156 | Drive Shaft | 48T | 25 | 22 | 54.5 | 79.5 | 869.5 | |
| | 1997.05-2000.06 | 5MT | F | R | Estate Van FWD TU3JP | | GDS45158 | Drive Shaft | 29T | 25 | 22 | 54.5 | 79.5 | 875 | |
| | 1997.05-2000.06 | 5MT | F | L | Estate Van FWD TU3JP | | GCO45036 | Outer Joint | 29T | 25 | 22 | 60 | 80 | 54 | I |
| | 1997.05-2002.04 | 5MT | F | L | Estate FWD TU3JP | Date to:1998.06;Inner teeth of wheel side:20 | GDS45157 | Drive Shaft | 29T | 25 | 22 | 54.5 | 79.5 | 605 | |
| | 1997.05-2002.04 | 5MT | F | L | Estate FWD TU3JP | Inner teeth of wheel side:22 | GDS99037 | Drive Shaft | 29T | 25 | 22 | 60 | 80 | 608 | |
| | 1997.05-2002.04 | 5MT | F | R | Estate FWD TU3JP | Inner teeth of wheel side:20 | GDS45158 | Drive Shaft | 29T | 25 | 22 | 54.5 | 79.5 | 875 | |
| | 1997.05-2002.04 | 5MT | F | L | Estate FWD TU3JP | | GCI10023 | Inner Joint | | 22 | 22 | 40 | 58.5 | 86 | |
| | 1997.05-2002.04 | MT | F | L | Estate FWD TU3JP | Trans. code:MA;RPO number to:08092 | GDS45004 | Drive Shaft | | 21 | 22 | 56.4 | 76 | 614 | |
| | 1997.05-2002.04 | MT | F | L | Estate FWD TU3JP | Trans. code:MA;RPO number from:08093 | GDS45138 | Drive Shaft | | 25 | 22 | 60 | 78.5 | 601 | |
| | 1997.05-2002.04 | MT | F | R | Estate FWD TU3JP | Trans. code:MA;RPO number to:08092 | GDS45025 | Drive Shaft | | 21 | 22 | 56.4 | 76 | 877.5 | |
| | 1997.05-2002.04 | MT | F | R | Estate FWD TU3JP | Trans. code:MA;RPO number from:08093 | GDS45137 | Drive Shaft | | 25 | 22 | 60 | 78.5 | 880 | |
| | 1997.05-2002.04 | MT | F | L/R | Estate FWD TU3JP | | GCO45036 | Outer Joint | 29T | 25 | 22 | 60 | 80 | 54 | I |
| 1.6 (65 kw) | 1993.05-2000.10 | 4AT/5MT | F | L | Hatchback FWD TU5JP | Inner teeth of tranm.side:30 | GDS45021 | Drive Shaft | | 25 | 22 | 54.8 | 79 | 607 | |
| | 1993.05-2000.10 | 4AT/5MT | F | R | Hatchback FWD TU5JP | Inner teeth of tranm.side:30 | GDS45014 | Drive Shaft | | 25 | 22 | 54.8 | 79 | 879.5 | |
| | 1993.05-2000.10 | AT | F | L/R | Hatchback FWD TU5JP | | GCO10022 | Outer Joint | 29W | 25 | 34 | 55.7 | 79 | 55 | I |
| | 1993.05-2000.10 | MT | F | L | Hatchback FWD TU5JP | Trans. code:MA;RPO number from:07995;Inner teeth of tranm.side:22 | GDS45138 | Drive Shaft | | 25 | 22 | 60 | 78.5 | 601 | |
| | 1993.05-2000.10 | MT | F | R | Hatchback FWD TU5JP | Trans. code:MA;RPO number from:07995;Inner teeth of tranm.side:22 | GDS45137 | Drive Shaft | | 25 | 22 | 60 | 78.5 | 880 | |
| | 1993.05-2000.10 | MT | F | R | Hatchback FWD TU5JP | Inner teeth of wheel side:20 | GDS45158 | Drive Shaft | 29T | 25 | 22 | 54.5 | 79.5 | 875 | |
| | 1993.05-2000.10 | MT | F | L/R | Hatchback FWD TU5JP | Trans. code:MG | GCO10002 | Outer Joint | | 25 | 23 | 54.8 | 78.5 | 56 | I |
| | 1993.05-2000.10 | MT | F | L/R | Hatchback FWD TU5JP | | GCO10004 | Outer Joint | 48T | 25 | 23 | 54.8 | 78.5 | 56 | I |
| | 1993.05-2000.10 | MT | F | L/R | Hatchback FWD TU5JP | | GCO45036 | Outer Joint | 29T | 25 | 22 | 60 | 80 | 54 | I |
| | 1994.06-2000.10 | 4AT/5MT | F | L | Saloon FWD TU5JP | Inner teeth of tranm.side:30 | GDS45021 | Drive Shaft | | 25 | 22 | 54.8 | 79 | 607 | |
| | 1994.06-2000.10 | 4AT/5MT | F | L | Saloon FWD TU5JP | Inner teeth of wheel side:22 | GDS99037 | Drive Shaft | 29T | 25 | 22 | 60 | 80 | 608 | |
| | 1994.06-2000.10 | 4AT/5MT | F | R | Saloon FWD TU5JP | Inner teeth of tranm.side:30 | GDS45014 | Drive Shaft | | 25 | 22 | 54.8 | 79 | 879.5 | |
| | 1994.06-2000.10 | AT | F | L/R | Saloon FWD TU5JP | | GCO10022 | Outer Joint | 29W | 25 | 34 | 55.7 | 79 | 55 | I |
| | 1994.06-2000.10 | MT | F | L | Saloon FWD TU5JP | Inner teeth of tranm.side:22 | GDS99135 | Drive Shaft | | 25 | 22 | 60 | 80 | 608 | |
| | 1994.06-2000.10 | MT | F | R | Saloon FWD TU5JP | Inner teeth of wheel side:20 | GDS45158 | Drive Shaft | 29T | 25 | 22 | 54.5 | 79.5 | 875 | |

| | YEAR | TRANSM. | F/R | L/R | BODY STYLE & DRIVE TYPE & ENGINE | REMARKS | G-AP Ref. | PRODUCT | ABS | Technical Specifications | | | | | |
|---|---|---|---|---|---|---|---|---|---|---|---|---|---|---|---|
| | | | | | | | | | | A | B | C | H | L | P |
| **PEUGEOT** | | | | | | | | | | | | | | | |
| **306** | | | | | | | | | | | | | | | |
| 1.6 (65 kw) | 1994.06-2000.10 | MT | F | L/R | Saloon FWD TU5JP | Trans. code:MG | GCO10002 | Outer Joint | | 25 | 23 | 54.8 | 78.5 | 56 | I |
| | 1994.06-2000.10 | MT | F | L/R | Saloon FWD TU5JP | | GCO10004 | Outer Joint | 48T | 25 | 23 | 54.8 | 78.5 | 56 | I |
| | 1994.06-2000.10 | MT | F | L/R | Saloon FWD TU5JP | | GCO45036 | Outer Joint | 29T | 25 | 22 | 60 | 80 | 54 | I |
| | 1997.03-2000.10 | AT | F | L/R | Estate FWD TU5JP | | GCO10022 | Outer Joint | 29W | 25 | 34 | 55.7 | 79 | 55 | I |
| | 1997.03-2000.10 | MT | F | L | Estate FWD TU5JP | Trans. code:MA;RPO number to:07994 | GDS45021 | Drive Shaft | | 25 | 22 | 54.8 | 79 | 607 | |
| | 1997.03-2000.10 | MT | F | L | Estate FWD TU5JP | Trans. code:MA;RPO number from:07995 | GDS45138 | Drive Shaft | | 25 | 22 | 60 | 78.5 | 601 | |
| | 1997.03-2000.10 | MT | F | L | Estate FWD TU5JP | Inner teeth of wheel side:22 | GDS99037 | Drive Shaft | 29T | 25 | 22 | 60 | 80 | 608 | |
| | 1997.03-2000.10 | MT | F | R | Estate FWD TU5JP | Date from:1998.07,Date to:1998.09 | GDS45014 | Drive Shaft | | 25 | 22 | 54.8 | 79 | 879.5 | |
| | 1997.03-2000.10 | MT | F | R | Estate FWD TU5JP | Date from:1998.10 | GDS45137 | Drive Shaft | | 25 | 22 | 60 | 78.5 | 880 | |
| | 1997.03-2000.10 | MT | F | R | Estate FWD TU5JP | Date to:1998.06 | GDS45158 | Drive Shaft | 29T | 25 | 22 | 54.5 | 79.5 | 875 | |
| | 1997.03-2000.10 | MT | F | L/R | Estate FWD TU5JP | | GCO10004 | Outer Joint | 48T | 25 | 23 | 54.8 | 78.5 | 56 | I |
| | 1997.03-2000.10 | MT | F | L/R | Estate FWD TU5JP | | GCO45036 | Outer Joint | 29T | 25 | 22 | 60 | 80 | 54 | I |
| | 1997.03-2000.10 | MT | F | R | Estate FWD TU5JP | Date from:1998.10 | GCI10024 | Inner Joint | | 22 | 22 | 30 | 329.5 | 86 | |
| 1.6 (66 kw) | 1993.01-2001.05 | AT | F | L/R | Hatchback FWD TU5JP | | GCO10022 | Outer Joint | 29W | 25 | 34 | 55.7 | 79 | 55 | I |
| | 1993.01-2001.05 | MT | F | L | Hatchback FWD TU5JP | | GDS99135 | Drive Shaft | | 25 | 22 | 60 | 80 | 608 | |
| | 1993.01-2001.05 | MT | F | L/R | Hatchback FWD TU5JP | | GCO45036 | Outer Joint | 29T | 25 | 22 | 60 | 80 | 54 | I |
| | 1996.09-2001.05 | AT | F | | Saloon FWD TU5JP | | GCO10022 | Outer Joint | 29W | 25 | 34 | 55.7 | 79 | 55 | I |
| | 1996.09-2001.05 | MT | F | L | Saloon FWD TU5JP | | GDS99135 | Drive Shaft | | 25 | 22 | 60 | 80 | 608 | |
| | 1996.09-2001.05 | MT | F | L/R | Saloon FWD TU5JP | | GCO45036 | Outer Joint | 29T | 25 | 22 | 60 | 80 | 54 | I |
| 1.6 (72 kw) | 2000.07-2001.05 | AT | F | | Saloon FWD TU5JP | | GCO10022 | Outer Joint | 29W | 25 | 34 | 55.7 | 79 | 55 | I |
| | 2000.07-2001.05 | MT | F | L | Saloon FWD TU5JP | | GDS99037 | Drive Shaft | 29T | 25 | 22 | 60 | 80 | 608 | |
| | 2000.07-2001.05 | MT | F | L | Saloon FWD TU5JP | | GDS99135 | Drive Shaft | | 25 | 22 | 60 | 80 | 608 | |
| | 2000.07-2001.05 | MT | F | R | Saloon FWD TU5JP | | GDS45137 | Drive Shaft | | 25 | 22 | 60 | 78.5 | 880 | |
| | 2000.07-2001.05 | MT | F | R | Saloon FWD TU5JP | | GDS45158 | Drive Shaft | 29T | 25 | 22 | 54.5 | 79.5 | 875 | |
| | 2000.07-2001.05 | MT | F | L/R | Saloon FWD TU5JP | | GCO45036 | Outer Joint | 29T | 25 | 22 | 60 | 80 | 54 | I |
| | 2000.07-2001.05 | MT | F | L | Saloon FWD TU5JP | | GCI10023 | Inner Joint | | 22 | 22 | 40 | 58.5 | 86 | |
| | 2000.07-2001.05 | MT | F | R | Saloon FWD TU5JP | | GCI10024 | Inner Joint | | 22 | 22 | 30 | 329.5 | 86 | |
| | 2000.07-2002.02 | AT | F | | Hatchback FWD TU5JP | | GCO10022 | Outer Joint | 29W | 25 | 34 | 55.7 | 79 | 55 | I |
| | 2000.07-2002.02 | MT | F | L | Hatchback FWD TU5JP | | GDS99037 | Drive Shaft | 29T | 25 | 22 | 60 | 80 | 608 | |
| | 2000.07-2002.02 | MT | F | L | Hatchback FWD TU5JP | | GDS99135 | Drive Shaft | | 25 | 22 | 60 | 80 | 608 | |
| | 2000.07-2002.02 | MT | F | R | Hatchback FWD TU5JP | | GDS45137 | Drive Shaft | | 25 | 22 | 60 | 78.5 | 880 | |
| | 2000.07-2002.02 | MT | F | R | Hatchback FWD TU5JP | | GDS45158 | Drive Shaft | 29T | 25 | 22 | 54.5 | 79.5 | 875 | |
| | 2000.07-2002.02 | MT | F | L/R | Hatchback FWD TU5JP | | GCO45036 | Outer Joint | 29T | 25 | 22 | 60 | 80 | 54 | I |
| | 2000.07-2002.02 | MT | F | L | Hatchback FWD TU5JP | | GCI10023 | Inner Joint | | 22 | 22 | 40 | 58.5 | 86 | |
| | 2000.07-2002.02 | MT | F | R | Hatchback FWD TU5JP | | GCI10024 | Inner Joint | | 22 | 22 | 30 | 329.5 | 86 | |
| | 2000.07-2002.04 | AT | F | | Estate FWD TU5JP | | GCO10022 | Outer Joint | 29W | 25 | 34 | 55.7 | 79 | 55 | I |
| | 2000.07-2002.04 | MT | F | L | Estate FWD TU5JP | | GDS99037 | Drive Shaft | 29T | 25 | 22 | 60 | 80 | 608 | |
| | 2000.07-2002.04 | MT | F | L | Estate FWD TU5JP | | GDS99135 | Drive Shaft | | 25 | 22 | 60 | 80 | 608 | |
| | 2000.07-2002.04 | MT | F | R | Estate FWD TU5JP | | GDS45158 | Drive Shaft | 29T | 25 | 22 | 54.5 | 79.5 | 875 | |
| | 2000.07-2002.04 | MT | F | L/R | Estate FWD TU5JP | | GCO45036 | Outer Joint | 29T | 25 | 22 | 60 | 80 | 54 | I |
| | 2000.07-2002.04 | MT | F | L | Estate FWD TU5JP | | GCI10023 | Inner Joint | | 22 | 22 | 40 | 58.5 | 86 | |
| 1.8 (43 kw) | 1993.05-2001.05 | 5MT | F | R | Hatchback FWD XUD7 | | GCO45023 | Outer Joint | 29W | 25 | 34 | 55.7 | 79 | 55 | I |
| | 1993.05-2001.05 | AT/MT | F | R | Hatchback FWD XUD7 | | GDS10126 | Drive Shaft | 29W | 25 | 24 | 55.7 | 79 | 886 | |
| | 1993.05-2001.05 | AT/MT | F | L/R | Hatchback FWD XUD7 | | GCO10002 | Outer Joint | | 25 | 23 | 54.8 | 78.5 | 56 | I |
| | 1993.05-2001.05 | AT/MT | F | L/R | Hatchback FWD XUD7 | | GCO10027 | Outer Joint | 48T | 25 | 34 | 55.7 | 79 | 55 | I |
| 1.8 (44 kw) | 1993.04-1999.05 | 5MT | F | R | Hatchback Van FWD XUD7 | | GDS45017 | Drive Shaft | 29W | 25 | 24 | 55.7 | 79 | 881 | |
| | 1993.04-1999.05 | 5MT | F | R | Hatchback Van FWD XUD7 | | GCO45023 | Outer Joint | 29W | 25 | 34 | 55.7 | 79 | 55 | I |
| | 1997.05-2000.06 | 5MT | F | R | Estate FWD XUD7 | | GDS45017 | Drive Shaft | 29W | 25 | 24 | 55.7 | 79 | 881 | |
| | 1997.05-2000.06 | 5MT | F | R | Estate FWD XUD7 | | GCO45023 | Outer Joint | 29W | 25 | 34 | 55.7 | 79 | 55 | I |
| | 1997.05-2000.06 | 5MT | F | R | Estate Van FWD XUD7 | | GDS45017 | Drive Shaft | 29W | 25 | 24 | 55.7 | 79 | 881 | |
| | 1997.05-2000.06 | 5MT | F | R | Estate Van FWD XUD7 | | GCO45023 | Outer Joint | 29W | 25 | 34 | 55.7 | 79 | 55 | I |
| | 1997.05-2000.06 | 5MT | F | R | Saloon FWD XUD7 | | GDS45017 | Drive Shaft | 29W | 25 | 24 | 55.7 | 79 | 881 | |
| | 1997.05-2000.06 | 5MT | F | R | Saloon FWD XUD7 | | GCO45023 | Outer Joint | 29W | 25 | 34 | 55.7 | 79 | 55 | I |
| 1.8 (74 kw) | 1993.05-2001.05 | 4AT/5MT | F | L | Hatchback FWD XU7JP | inner teeth of wheel side:23 | GDS45059 | Drive Shaft | 29T | 25 | 24 | 54.8 | 78.5 | 613 | |
| | 1993.05-2001.05 | 4AT/5MT | F | L | Hatchback FWD XU7JP | | GDS45160 | Drive Shaft | | 25 | 24 | 54.8 | 78.5 | 609 | |
| | 1993.05-2001.05 | 4AT/5MT | F | R | Hatchback FWD XU7JP | | GDS45017 | Drive Shaft | 29W | 25 | 24 | 55.7 | 79 | 881 | |
| | 1993.05-2001.05 | 4AT/5MT | F | R | Hatchback FWD XU7JP | transm. no:BE3 | GDS45022 | Drive Shaft | | 25 | 24 | 54.8 | 79 | 880 | |
| | 1993.05-2001.05 | 4AT/5MT | F | R | Hatchback FWD XU7JP | | GDS45198 | Drive Shaft | | 25 | 24 | 56.7 | 80 | 891 | |
| | 1993.05-2001.05 | 4AT/5MT | F | R | Hatchback FWD XU7JP | | GCO45023 | Outer Joint | 29W | 25 | 34 | 55.7 | 79 | 55 | I |
| | 1993.05-2001.05 | 4AT/5MT | F | L | Hatchback FWD XU7JP | | GCI45020 | Inner Joint | | 24 | 34 | 40 | 69 | 89 | |
| | 1993.05-2001.05 | AT/MT | F | R | Hatchback FWD XU7JP | | GDS10126 | Drive Shaft | 29W | 25 | 24 | 55.7 | 79 | 886 | |
| | 1993.05-2001.05 | AT/MT | F | L/R | Hatchback FWD XU7JP | Trans. code:MG | GCO10027 | Outer Joint | 48T | 25 | 34 | 55.7 | 79 | 55 | I |
| | 1993.05-2001.05 | MT | F | L | Hatchback FWD XU7JP | | GDS99025 | Drive Shaft | 29W | 25 | 24 | 55.7 | 79 | 597 | |
| | 1993.05-2001.05 | | F | R | Hatchback FWD XU7JP | | GDS45070 | Drive Shaft | | 25 | 24 | 54.8 | 78.5 | 880 | |
| | 1993.05-2001.05 | | F | L/R | Hatchback FWD XU7JP | | GCO10022 | Outer Joint | 29W | 25 | 34 | 55.7 | 79 | 55 | I |

| | YEAR | TRANSM. | F/R | L/R | BODY STYLE & DRIVE TYPE & ENGINE | REMARKS | G-AP Ref. | PRODUCT | ABS | Technical Specifications A | B | C | H | L | P |
|---|---|---|---|---|---|---|---|---|---|---|---|---|---|---|---|
| **PEUGEOT** | | | | | | | | | | | | | | | |
| **306** | | | | | | | | | | | | | | | |
| 1.8 (74 kw) | 1993.05-2001.05 | | F | L/R | Hatchback FWD XU7JP | | GCO10042 | Outer Joint | | 25 | 34 | 54.8 | 78.5 | 56 | I |
| | 1994.03-2002.04 | 4AT/5MT | F | L | Convertible FWD L6A (XU7JP), LFZ (XU7JP) | inner teeth of wheel side:23 | GDS45059 | Drive Shaft | 29T | 25 | 24 | 54.8 | 78.5 | 613 | |
| | 1994.03-2002.04 | 4AT/5MT | F | L | Convertible FWD L6A (XU7JP), LFZ (XU7JP) | | GDS45160 | Drive Shaft | | 25 | 24 | 54.8 | 78.5 | 609 | |
| | 1994.03-2002.04 | 4AT/5MT | F | R | Convertible FWD L6A (XU7JP), LFZ (XU7JP) | | GDS45017 | Drive Shaft | 29W | 25 | 24 | 55.7 | 79 | 881 | |
| | 1994.03-2002.04 | 4AT/5MT | F | R | Convertible FWD L6A (XU7JP), LFZ (XU7JP) | transm. no:BE3 | GDS45022 | Drive Shaft | | 25 | 24 | 54.8 | 79 | 880 | |
| | 1994.03-2002.04 | 4AT/5MT | F | R | Convertible FWD L6A (XU7JP), LFZ (XU7JP) | | GDS45198 | Drive Shaft | | 25 | 24 | 56.7 | 80 | 891 | |
| | 1994.03-2002.04 | 4AT/5MT | F | R | Convertible FWD L6A (XU7JP), LFZ (XU7JP) | | GCO45023 | Outer Joint | 29W | 25 | 34 | 55.7 | 79 | 55 | I |
| | 1994.03-2002.04 | 4AT/5MT | F | L | Convertible FWD L6A (XU7JP), LFZ (XU7JP) | | GCI45020 | Inner Joint | | 24 | 34 | 40 | 69 | 89 | |
| | 1994.03-2002.04 | AT/MT | F | L | Convertible FWD L6A (XU7JP), LFZ (XU7JP) | Trans. code:BE3 | GDS45023 | Drive Shaft | | 25 | 24 | 60 | 80 | 608 | |
| | 1994.03-2002.04 | AT/MT | F | L | Convertible FWD L6A (XU7JP), LFZ (XU7JP) | Trans. code:BE3 | GDS45024 | Drive Shaft | 29W | 25 | 24 | 55.7 | 79 | 603.5 | |
| | 1994.03-2002.04 | AT/MT | F | R | Convertible FWD L6A (XU7JP), LFZ (XU7JP) | | GDS10126 | Drive Shaft | 29W | 25 | 24 | 55.7 | 79 | 886 | |
| | 1994.03-2002.04 | AT/MT | F | R | Convertible FWD L6A (XU7JP), LFZ (XU7JP) | | GCO45014 | Outer Joint | | 25 | 22 | 56.7 | 80 | 59 | O |
| | 1994.03-2002.04 | AT/MT | F | L/R | Convertible FWD L6A (XU7JP), LFZ (XU7JP) | | GCO10002 | Outer Joint | | 25 | 23 | 54.8 | 78.5 | 56 | I |
| | 1994.03-2002.04 | AT/MT | F | L/R | Convertible FWD L6A (XU7JP), LFZ (XU7JP) | | GCO10003 | Outer Joint | 29T | 25 | 23 | 54.8 | 78.5 | 56 | I |
| | 1994.03-2002.04 | AT/MT | F | L/R | Convertible FWD L6A (XU7JP), LFZ (XU7JP) | | GCO10024 | Outer Joint | 48T | 25 | 34 | 55.7 | 79 | 55 | I |
| | 1994.03-2002.04 | AT/MT | F | L/R | Convertible FWD L6A (XU7JP), LFZ (XU7JP) | | GCO10027 | Outer Joint | 48T | 25 | 34 | 55.7 | 79 | 55 | I |
| | 1994.03-2002.04 | AT/MT | F | L/R | Convertible FWD L6A (XU7JP), LFZ (XU7JP) | Date from:1995.01 | GCO45001 | Outer Joint | 29T | 25 | 34 | 54.8 | 78.5 | 56 | I |
| | 1994.03-2002.04 | | F | R | Convertible FWD L6A (XU7JP), LFZ (XU7JP) | | GDS45070 | Drive Shaft | | 25 | 24 | 54.8 | 78.5 | 880 | |
| | 1994.06-2001.05 | 4AT/5MT | F | L | Saloon FWD LFZ (XU7JP) | inner teeth of wheel side:23 | GDS45059 | Drive Shaft | 29T | 25 | 24 | 54.8 | 78.5 | 613 | |
| | 1994.06-2001.05 | 4AT/5MT | F | L | Saloon FWD LFZ (XU7JP) | | GDS45160 | Drive Shaft | | 25 | 24 | 54.8 | 78.5 | 609 | |
| | 1994.06-2001.05 | 4AT/5MT | F | R | Saloon FWD LFZ (XU7JP) | | GDS45017 | Drive Shaft | 29W | 25 | 24 | 55.7 | 79 | 881 | |
| | 1994.06-2001.05 | 4AT/5MT | F | R | Saloon FWD LFZ (XU7JP) | transm. no:BE3 | GDS45022 | Drive Shaft | | 25 | 24 | 54.8 | 79 | 880 | |
| | 1994.06-2001.05 | 4AT/5MT | F | R | Saloon FWD LFZ (XU7JP) | | GDS45198 | Drive Shaft | | 25 | 24 | 56.7 | 80 | 891 | |
| | 1994.06-2001.05 | 4AT/5MT | F | R | Saloon FWD LFZ (XU7JP) | | GCO45023 | Outer Joint | 29W | 25 | 34 | 55.7 | 79 | 55 | I |
| | 1994.06-2001.05 | 4AT/5MT | F | L | Saloon FWD LFZ (XU7JP) | | GCI45020 | Inner Joint | | 24 | 34 | 40 | 69 | 89 | |
| | 1994.06-2001.05 | AT/MT | F | L | Saloon FWD LFZ (XU7JP) | Trans. code:BE3 | GDS45023 | Drive Shaft | | 25 | 24 | 60 | 80 | 608 | |
| | 1994.06-2001.05 | AT/MT | F | L | Saloon FWD LFZ (XU7JP) | Trans. code:BE3 | GDS45024 | Drive Shaft | 29W | 25 | 24 | 55.7 | 79 | 603.5 | |
| | 1994.06-2001.05 | AT/MT | F | R | Saloon FWD LFZ (XU7JP) | | GCO45014 | Outer Joint | | 25 | 22 | 56.7 | 80 | 59 | O |
| | 1994.06-2001.05 | AT/MT | F | L/R | Saloon FWD LFZ (XU7JP) | | GCO10002 | Outer Joint | | 25 | 23 | 54.8 | 78.5 | 56 | I |
| | 1994.06-2001.05 | AT/MT | F | L/R | Saloon FWD LFZ (XU7JP) | Date to:1994.12 | GCO10003 | Outer Joint | 29T | 25 | 23 | 54.8 | 78.5 | 56 | I |
| | 1994.06-2001.05 | AT/MT | F | L/R | Saloon FWD LFZ (XU7JP) | | GCO10024 | Outer Joint | 48T | 25 | 34 | 55.7 | 79 | 55 | I |
| | 1994.06-2001.05 | AT/MT | F | L/R | Saloon FWD LFZ (XU7JP) | Date from:1995.01 | GCO45001 | Outer Joint | 29T | 25 | 34 | 54.8 | 78.5 | 56 | I |
| | 1994.06-2001.05 | MT | F | L | Saloon FWD LFZ (XU7JP) | | GDS99025 | Drive Shaft | 29W | 25 | 24 | 55.7 | 79 | 597 | |
| | 1994.06-2001.05 | MT | F | R | Saloon FWD LFZ (XU7JP) | | GDS10126 | Drive Shaft | 29W | 25 | 24 | 55.7 | 79 | 886 | |
| | 1994.06-2001.05 | | F | R | Saloon FWD LFZ (XU7JP) | | GDS45070 | Drive Shaft | | 25 | 24 | 54.8 | 78.5 | 880 | |
| | 1994.06-2001.05 | | F | L/R | Saloon FWD LFZ (XU7JP) | | GCO10022 | Outer Joint | 29W | 25 | 34 | 55.7 | 79 | 55 | I |
| | 1994.06-2001.05 | | F | L/R | Saloon FWD LFZ (XU7JP) | | GCO10042 | Outer Joint | | 25 | 34 | 54.8 | 78.5 | 56 | I |
| | 1994.06-2001.05 | | F | | Saloon FWD LFZ (XU7JP) | | GCO10027 | Outer Joint | 48T | 25 | 34 | 55.7 | 79 | 55 | I |
| | 1997.05-1999.04 | 4AT/5MT | F | L | Convertible FWD LFZ (XU7JP) | inner teeth of wheel side:23 | GDS45059 | Drive Shaft | 29T | 25 | 24 | 54.8 | 78.5 | 613 | |
| | 1997.05-1999.04 | 4AT/5MT | F | L | Convertible FWD LFZ (XU7JP) | | GDS45160 | Drive Shaft | | 25 | 24 | 54.8 | 78.5 | 609 | |
| | 1997.05-1999.04 | 4AT/5MT | F | R | Convertible FWD LFZ (XU7JP) | | GDS45017 | Drive Shaft | 29W | 25 | 24 | 55.7 | 79 | 881 | |
| | 1997.05-1999.04 | 4AT/5MT | F | R | Convertible FWD LFZ (XU7JP) | transm. no:BE3 | GDS45022 | Drive Shaft | | 25 | 24 | 54.8 | 79 | 880 | |
| | 1997.05-1999.04 | 4AT/5MT | F | R | Convertible FWD LFZ (XU7JP) | | GDS45198 | Drive Shaft | | 25 | 24 | 56.7 | 80 | 891 | |
| | 1997.05-1999.04 | 4AT/5MT | F | R | Convertible FWD LFZ (XU7JP) | | GCO45023 | Outer Joint | 29W | 25 | 34 | 55.7 | 79 | 55 | I |
| | 1997.05-1999.04 | 4AT/5MT | F | L | Convertible FWD LFZ (XU7JP) | | GCI45020 | Inner Joint | | 24 | 34 | 40 | 69 | 89 | |
| | 1997.05-1999.04 | AT/MT | F | L | Convertible FWD LFZ (XU7JP) | Trans. code:BE3 | GDS45023 | Drive Shaft | | 25 | 24 | 60 | 80 | 608 | |
| | 1997.05-1999.04 | AT/MT | F | L | Convertible FWD LFZ (XU7JP) | Trans. code:BE3 | GDS45024 | Drive Shaft | 29W | 25 | 24 | 55.7 | 79 | 603.5 | |
| | 1997.05-1999.04 | AT/MT | F | R | Convertible FWD LFZ (XU7JP) | | GDS10126 | Drive Shaft | 29W | 25 | 24 | 55.7 | 79 | 886 | |
| | 1997.05-1999.04 | AT/MT | F | R | Convertible FWD LFZ (XU7JP) | | GCO45014 | Outer Joint | | 25 | 22 | 56.7 | 80 | 59 | O |
| | 1997.05-1999.04 | AT/MT | F | L/R | Convertible FWD LFZ (XU7JP) | | GCO10002 | Outer Joint | | 25 | 23 | 54.8 | 78.5 | 56 | I |
| | 1997.05-1999.04 | AT/MT | F | L/R | Convertible FWD LFZ (XU7JP) | | GCO10003 | Outer Joint | 29T | 25 | 23 | 54.8 | 78.5 | 56 | I |
| | 1997.05-1999.04 | AT/MT | F | L/R | Convertible FWD LFZ (XU7JP) | | GCO10024 | Outer Joint | 48T | 25 | 34 | 55.7 | 79 | 55 | I |
| | 1997.05-1999.04 | AT/MT | F | L/R | Convertible FWD LFZ (XU7JP) | | GCO10027 | Outer Joint | 48T | 25 | 34 | 55.7 | 79 | 55 | I |
| | 1997.05-1999.04 | AT/MT | F | L/R | Convertible FWD LFZ (XU7JP) | Date from:1995.01 | GCO45001 | Outer Joint | 29T | 25 | 34 | 54.8 | 78.5 | 56 | I |
| | 1997.05-1999.04 | | F | R | Convertible FWD LFZ (XU7JP) | | GDS45070 | Drive Shaft | | 25 | 24 | 54.8 | 78.5 | 880 | |
| | 1997.05-1999.04 | 4AT | F | L | Estate FWD XU7JP | inner teeth of wheel side:23 | GDS45059 | Drive Shaft | 29T | 25 | 24 | 54.8 | 78.5 | 613 | |
| | 1997.05-1999.04 | AT/MT | F | L | Estate FWD XU7JP | Date to:1999.04;Trans. code:BE3 | GDS45023 | Drive Shaft | | 25 | 24 | 60 | 80 | 608 | |
| | 1997.05-1999.04 | AT/MT | F | L | Estate FWD XU7JP | Date to:1999.04;Trans. code:BE3;inner teeth of wheel side:34 | GDS45024 | Drive Shaft | 29W | 25 | 24 | 55.7 | 79 | 603.5 | |
| | 1997.05-1999.04 | AT/MT | F | R | Estate FWD XU7JP | | GDS10126 | Drive Shaft | 29W | 25 | 24 | 55.7 | 79 | 886 | |
| | 1997.05-1999.04 | AT/MT | F | R | Estate FWD XU7JP | Date to:1999.04;Trans. code:BE3 | GDS45017 | Drive Shaft | 29W | 25 | 24 | 55.7 | 79 | 881 | |
| | 1997.05-1999.04 | AT/MT | F | R | Estate FWD XU7JP | Date to:1999.04;Trans. code:BE3 | GDS45198 | Drive Shaft | | 25 | 24 | 56.7 | 80 | 891 | |
| | 1997.05-1999.04 | AT/MT | F | R | Estate FWD XU7JP | Date to:1999.04 | GCO45014 | Outer Joint | | 25 | 22 | 56.7 | 80 | 59 | O |
| | 1997.05-1999.04 | AT/MT | F | L/R | Estate FWD XU7JP | Date to:1999.04 | GCO10002 | Outer Joint | | 25 | 23 | 54.8 | 78.5 | 56 | I |
| | 1997.05-1999.04 | AT/MT | F | L/R | Estate FWD XU7JP | Date to:1999.04 | GCO10024 | Outer Joint | 48T | 25 | 34 | 55.7 | 79 | 55 | I |
| | 1997.05-1999.04 | AT/MT | F | L/R | Estate FWD XU7JP | | GCO10027 | Outer Joint | 48T | 25 | 34 | 55.7 | 79 | 55 | I |

| | YEAR | TRANSM. | F/R | L/R | BODY STYLE & DRIVE TYPE & ENGINE | REMARKS | G-AP Ref. | PRODUCT | ABS | Technical Specifications A | B | C | H | L | P |
|---|---|---|---|---|---|---|---|---|---|---|---|---|---|---|---|
| **PEUGEOT** | | | | | | | | | | | | | | | |
| **306** | | | | | | | | | | | | | | | |
| 1.8 (74 kw) | 1997.05-1999.04 | AT/MT | F | L/R | Estate FWD XU7JP | Date to:1999.04 | GCO45001 | Outer Joint | 29T | 25 | 34 | 54.8 | 78.5 | 56 | I |
| | 1997.05-1999.04 | MT | F | L | Estate FWD XU7JP | | GDS99025 | Drive Shaft | 29W | 25 | 24 | 55.7 | 79 | 597 | |
| | 1997.05-1999.04 | | F | L/R | Estate FWD XU7JP | | GCO10042 | Outer Joint | | 25 | 34 | 54.8 | 78.5 | 56 | I |
| | 1997.05-1999.04 | | F | | Estate FWD XU7JP | | GCO10022 | Outer Joint | 29W | 25 | 34 | 55.7 | 79 | 55 | I |
| 1.8 (81 kw) | 1997.03-2001.05 | 5MT | F | L | Saloon FWD XU7JP4 | inner teeth of wheel side:23 | GDS45059 | Drive Shaft | 29T | 25 | 24 | 54.8 | 78.5 | 613 | |
| | 1997.03-2001.05 | 5MT | F | R | Saloon FWD XU7JP4 | | GDS45017 | Drive Shaft | 29W | 25 | 24 | 55.7 | 79 | 881 | |
| | 1997.03-2001.05 | 5MT | F | R | Saloon FWD XU7JP4 | | GCO45023 | Outer Joint | 29W | 25 | 34 | 55.7 | 79 | 55 | I |
| | 1997.03-2001.05 | AT/MT | F | L | Saloon FWD XU7JP4 | | GDS45023 | Drive Shaft | | 25 | 24 | 60 | 80 | 608 | |
| | 1997.03-2001.05 | AT/MT | F | L | Saloon FWD XU7JP4 | inner teeth of wheel side:34 | GDS45024 | Drive Shaft | 29W | 25 | 24 | 55.7 | 79 | 603.5 | |
| | 1997.03-2001.05 | AT/MT | F | R | Saloon FWD XU7JP4 | | GDS10126 | Drive Shaft | 29W | 25 | 24 | 55.7 | 79 | 886 | |
| | 1997.03-2001.05 | AT/MT | F | R | Saloon FWD XU7JP4 | | GDS45198 | Drive Shaft | | 25 | 24 | 56.7 | 80 | 891 | |
| | 1997.03-2001.05 | AT/MT | F | R | Saloon FWD XU7JP4 | | GCO45014 | Outer Joint | | 25 | 22 | 56.7 | 80 | 59 | O |
| | 1997.03-2001.05 | AT/MT | F | L/R | Saloon FWD XU7JP4 | | GCO10002 | Outer Joint | | 25 | 23 | 54.8 | 78.5 | 56 | I |
| | 1997.03-2001.05 | AT/MT | F | L/R | Saloon FWD XU7JP4 | | GCO10027 | Outer Joint | 48T | 25 | 34 | 55.7 | 79 | 55 | I |
| | 1997.03-2001.05 | | F | L | Saloon FWD XU7JP4 | | GDS99025 | Drive Shaft | 29W | 25 | 24 | 55.7 | 79 | 597 | |
| | 1997.03-2001.05 | | F | L/R | Saloon FWD XU7JP4 | | GCO10022 | Outer Joint | 29W | 25 | 34 | 55.7 | 79 | 55 | I |
| | 1997.03-2001.05 | | F | L/R | Saloon FWD XU7JP4 | | GCO10042 | Outer Joint | | 25 | 34 | 54.8 | 78.5 | 56 | I |
| | 1997.05-2002.04 | 5MT | F | L | Estate FWD XU7JP4 | inner teeth of wheel side:23 | GDS45059 | Drive Shaft | 29T | 25 | 24 | 54.8 | 78.5 | 613 | |
| | 1997.05-2002.04 | 5MT | F | R | Estate FWD XU7JP4 | | GDS45017 | Drive Shaft | 29W | 25 | 24 | 55.7 | 79 | 881 | |
| | 1997.05-2002.04 | 5MT | F | R | Estate FWD XU7JP4 | | GCO45023 | Outer Joint | 29W | 25 | 34 | 55.7 | 79 | 55 | I |
| | 1997.05-2002.04 | AT/MT | F | L | Estate FWD XU7JP4 | | GDS45023 | Drive Shaft | | 25 | 24 | 60 | 80 | 608 | |
| | 1997.05-2002.04 | AT/MT | F | L | Estate FWD XU7JP4 | inner teeth of wheel side:34 | GDS45024 | Drive Shaft | 29W | 25 | 24 | 55.7 | 79 | 603.5 | |
| | 1997.05-2002.04 | AT/MT | F | R | Estate FWD XU7JP4 | | GDS10126 | Drive Shaft | 29W | 25 | 24 | 55.7 | 79 | 886 | |
| | 1997.05-2002.04 | AT/MT | F | R | Estate FWD XU7JP4 | | GDS45198 | Drive Shaft | | 25 | 24 | 56.7 | 80 | 891 | |
| | 1997.05-2002.04 | AT/MT | F | R | Estate FWD XU7JP4 | | GCO45014 | Outer Joint | | 25 | 22 | 56.7 | 80 | 59 | O |
| | 1997.05-2002.04 | AT/MT | F | L/R | Estate FWD XU7JP4 | | GCO10002 | Outer Joint | | 25 | 23 | 54.8 | 78.5 | 56 | I |
| | 1997.05-2002.04 | AT/MT | F | L/R | Estate FWD XU7JP4 | | GCO10027 | Outer Joint | 48T | 25 | 34 | 55.7 | 79 | 55 | I |
| | 1997.05-2002.04 | MT | F | L | Estate FWD XU7JP4 | | GDS99025 | Drive Shaft | 29W | 25 | 24 | 55.7 | 79 | 597 | |
| | 1997.05-2002.04 | | F | L/R | Estate FWD XU7JP4 | | GCO10022 | Outer Joint | 29W | 25 | 34 | 55.7 | 79 | 55 | I |
| | 1997.05-2003.10 | 5MT | F | L | Hatchback FWD XU7JP4 | inner teeth of wheel side:23 | GDS45059 | Drive Shaft | 29T | 25 | 24 | 54.8 | 78.5 | 613 | |
| | 1997.05-2003.10 | 5MT | F | R | Hatchback FWD XU7JP4 | | GDS45017 | Drive Shaft | 29W | 25 | 24 | 55.7 | 79 | 881 | |
| | 1997.05-2003.10 | 5MT | F | R | Hatchback FWD XU7JP4 | | GCO45023 | Outer Joint | 29W | 25 | 34 | 55.7 | 79 | 55 | I |
| | 1997.05-2003.10 | AT/MT | F | L | Hatchback FWD XU7JP4 | | GDS45023 | Drive Shaft | | 25 | 24 | 60 | 80 | 608 | |
| | 1997.05-2003.10 | AT/MT | F | L | Hatchback FWD XU7JP4 | inner teeth of wheel side:34 | GDS45024 | Drive Shaft | 29W | 25 | 24 | 55.7 | 79 | 603.5 | |
| | 1997.05-2003.10 | AT/MT | F | R | Hatchback FWD XU7JP4 | | GDS10126 | Drive Shaft | 29W | 25 | 24 | 55.7 | 79 | 886 | |
| | 1997.05-2003.10 | AT/MT | F | R | Hatchback FWD XU7JP4 | | GDS45198 | Drive Shaft | | 25 | 24 | 56.7 | 80 | 891 | |
| | 1997.05-2003.10 | AT/MT | F | R | Hatchback FWD XU7JP4 | | GCO45014 | Outer Joint | | 25 | 22 | 56.7 | 80 | 59 | O |
| | 1997.05-2003.10 | AT/MT | F | L/R | Hatchback FWD XU7JP4 | | GCO10002 | Outer Joint | | 25 | 23 | 54.8 | 78.5 | 56 | I |
| | 1997.05-2003.10 | AT/MT | F | L/R | Hatchback FWD XU7JP4 | | GCO10027 | Outer Joint | 48T | 25 | 34 | 55.7 | 79 | 55 | I |
| | 1997.05-2003.10 | | F | L | Hatchback FWD XU7JP4 | | GDS99025 | Drive Shaft | 29W | 25 | 24 | 55.7 | 79 | 597 | |
| | 1997.05-2003.10 | | F | L/R | Hatchback FWD XU7JP4 | | GCO10022 | Outer Joint | 29W | 25 | 34 | 55.7 | 79 | 55 | I |
| | 1997.05-2003.10 | | F | L/R | Hatchback FWD XU7JP4 | | GCO10042 | Outer Joint | | 25 | 34 | 54.8 | 78.5 | 56 | I |
| 1.9 (47 kw) | 1993.05-2001.05 | 5MT | F | L | Hatchback FWD XUD9 | inner teeth of wheel side:23 | GDS45059 | Drive Shaft | 29T | 25 | 24 | 54.8 | 78.5 | 613 | |
| | 1993.05-2001.05 | 5MT | F | R | Hatchback FWD XUD9 | | GDS45017 | Drive Shaft | 29W | 25 | 24 | 55.7 | 79 | 881 | |
| | 1993.05-2001.05 | 5MT | F | R | Hatchback FWD XUD9 | | GCO45023 | Outer Joint | 29W | 25 | 34 | 55.7 | 79 | 55 | I |
| | 1993.05-2001.05 | 5MT | F | L/R | Hatchback FWD XUD9 | Date from:1995.10 | GCO10003 | Outer Joint | 29T | 25 | 23 | 54.8 | 78.5 | 56 | I |
| | 1993.05-2001.05 | 5MT | F | L/R | Hatchback FWD XUD9 | Date to:1995.09 | GCO10024 | Outer Joint | 48T | 25 | 34 | 55.7 | 79 | 55 | I |
| | 1993.05-2001.05 | AT/MT | F | L | Hatchback FWD XUD9 | Trans. code:BE3 | GDS45023 | Drive Shaft | | 25 | 24 | 60 | 80 | 608 | |
| | 1993.05-2001.05 | AT/MT | F | L | Hatchback FWD XUD9 | Trans. code:BE3;inner teeth of wheel side:34 | GDS45024 | Drive Shaft | 29W | 25 | 24 | 55.7 | 79 | 603.5 | |
| | 1993.05-2001.05 | AT/MT | F | R | Hatchback FWD XUD9 | | GDS10126 | Drive Shaft | 29W | 25 | 24 | 55.7 | 79 | 886 | |
| | 1993.05-2001.05 | AT/MT | F | R | Hatchback FWD XUD9 | Trans. code:BE3 | GDS45198 | Drive Shaft | | 25 | 24 | 56.7 | 80 | 891 | |
| | 1993.05-2001.05 | AT/MT | F | R | Hatchback FWD XUD9 | | GCO45014 | Outer Joint | | 25 | 22 | 56.7 | 80 | 59 | O |
| | 1993.05-2001.05 | AT/MT | F | L/R | Hatchback FWD XUD9 | | GCO10002 | Outer Joint | | 25 | 23 | 54.8 | 78.5 | 56 | I |
| | 1993.05-2001.05 | AT/MT | F | L/R | Hatchback FWD XUD9 | | GCO10027 | Outer Joint | 48T | 25 | 34 | 55.7 | 79 | 55 | I |
| | 1993.05-2001.05 | AT/MT | F | L/R | Hatchback FWD XUD9 | Date from:1995.01 | GCO45001 | Outer Joint | 29T | 25 | 34 | 54.8 | 78.5 | 56 | I |
| | 1993.05-2001.05 | MT | F | L | Hatchback FWD XUD9 | | GDS99025 | Drive Shaft | 29W | 25 | 24 | 55.7 | 79 | 597 | |
| | 1993.05-2001.05 | | F | L/R | Hatchback FWD XUD9 | | GCO10042 | Outer Joint | | 25 | 34 | 54.8 | 78.5 | 56 | I |
| | 1993.05-2001.05 | | F | | Hatchback FWD XUD9 | | GCO10022 | Outer Joint | 29W | 25 | 34 | 55.7 | 79 | 55 | I |
| | 1994.06-2001.06 | 5MT | F | L | Saloon FWD XUD9 | inner teeth of wheel side:23 | GDS45059 | Drive Shaft | 29T | 25 | 24 | 54.8 | 78.5 | 613 | |
| | 1994.06-2001.06 | 5MT | F | R | Saloon FWD XUD9 | | GDS45017 | Drive Shaft | 29W | 25 | 24 | 55.7 | 79 | 881 | |
| | 1994.06-2001.06 | 5MT | F | R | Saloon FWD XUD9 | | GCO45023 | Outer Joint | 29W | 25 | 34 | 55.7 | 79 | 55 | I |
| | 1994.06-2001.06 | AT/MT | F | L | Saloon FWD XUD9 | Trans. code:BE3 | GDS45023 | Drive Shaft | | 25 | 24 | 60 | 80 | 608 | |
| | 1994.06-2001.06 | AT/MT | F | L | Saloon FWD XUD9 | Trans. code:BE3;inner teeth of wheel side:34 | GDS45024 | Drive Shaft | 29W | 25 | 24 | 55.7 | 79 | 603.5 | |
| | 1994.06-2001.06 | AT/MT | F | R | Saloon FWD XUD9 | | GDS10126 | Drive Shaft | 29W | 25 | 24 | 55.7 | 79 | 886 | |
| | 1994.06-2001.06 | AT/MT | F | R | Saloon FWD XUD9 | Trans. code:BE3 | GDS45198 | Drive Shaft | | 25 | 24 | 56.7 | 80 | 891 | |

| | YEAR | TRANSM. | F/R | L/R | BODY STYLE & DRIVE TYPE & ENGINE | REMARKS | G-AP Ref. | PRODUCT | ABS | Technical Specifications A | B | C | H | L | P |
|---|---|---|---|---|---|---|---|---|---|---|---|---|---|---|---|
| **PEUGEOT** | | | | | | | | | | | | | | | |
| **306** | | | | | | | | | | | | | | | |
| 1.9 (47 kw) | 1994.06-2001.06 | AT/MT | F | R | Saloon FWD XUD9 | | GCO45014 | Outer Joint | | 25 | 22 | 56.7 | 80 | 59 | O |
| | 1994.06-2001.06 | AT/MT | F | L/R | Saloon FWD XUD9 | | GCO10002 | Outer Joint | | 25 | 23 | 54.8 | 78.5 | 56 | I |
| | 1994.06-2001.06 | AT/MT | F | L/R | Saloon FWD XUD9 | Date To:1995.12 | GCO10003 | Outer Joint | 29T | 25 | 23 | 54.8 | 78.5 | 56 | I |
| | 1994.06-2001.06 | AT/MT | F | L/R | Saloon FWD XUD9 | | GCO10024 | Outer Joint | 48T | 25 | 34 | 55.7 | 79 | 55 | I |
| | 1994.06-2001.06 | AT/MT | F | L/R | Saloon FWD XUD9 | | GCO10027 | Outer Joint | 48T | 25 | 34 | 55.7 | 79 | 55 | I |
| | 1994.06-2001.06 | AT/MT | F | L/R | Saloon FWD XUD9 | Date from:1995.01 | GCO45001 | Outer Joint | 29T | 25 | 34 | 54.8 | 78.5 | 56 | I |
| | 1994.06-2001.06 | MT | F | L | Saloon FWD XUD9 | | GDS99025 | Drive Shaft | 29W | 25 | 24 | 55.7 | 79 | 597 | |
| | 1994.06-2001.06 | | F | L/R | Saloon FWD XUD9 | | GCO10042 | Outer Joint | | 25 | 34 | 54.8 | 78.5 | 56 | I |
| | 1994.06-2001.06 | | F | | Saloon FWD XUD9 | | GCO10022 | Outer Joint | 29W | 25 | 34 | 55.7 | 79 | 55 | I |
| 1.9 (50 kw) | 1994.06-2001.05 | 5MT | F | R | Hatchback FWD XUD9 | | GDS45017 | Drive Shaft | 29W | 25 | 24 | 55.7 | 79 | 881 | |
| | 1994.06-2001.05 | 5MT | F | R | Hatchback FWD XUD9 | | GCO45023 | Outer Joint | 29W | 25 | 34 | 55.7 | 79 | 55 | I |
| | 1994.06-2001.05 | AT/MT | F | L | Hatchback FWD XUD9 | Trans. code:BE3 | GDS45023 | Drive Shaft | | 25 | 24 | 60 | 80 | 608 | |
| | 1994.06-2001.05 | AT/MT | F | L | Hatchback FWD XUD9 | Trans. code:BE3 | GDS45024 | Drive Shaft | 29W | 25 | 24 | 55.7 | 79 | 603.5 | |
| | 1994.06-2001.05 | AT/MT | F | R | Hatchback FWD XUD9 | | GDS10126 | Drive Shaft | 29W | 25 | 24 | 55.7 | 79 | 886 | |
| | 1994.06-2001.05 | AT/MT | F | R | Hatchback FWD XUD9 | Trans. code:BE3 | GDS45198 | Drive Shaft | | 25 | 24 | 56.7 | 80 | 891 | |
| | 1994.06-2001.05 | AT/MT | F | R | Hatchback FWD XUD9 | | GCO45014 | Outer Joint | | 25 | 22 | 56.7 | 80 | 59 | O |
| | 1994.06-2001.05 | AT/MT | F | L/R | Hatchback FWD XUD9 | | GCO10002 | Outer Joint | | 25 | 23 | 54.8 | 78.5 | 56 | I |
| | 1994.06-2001.05 | AT/MT | F | L/R | Hatchback FWD XUD9 | Date To:1995.12 | GCO10003 | Outer Joint | 29T | 25 | 23 | 54.8 | 78.5 | 56 | I |
| | 1994.06-2001.05 | AT/MT | F | L/R | Hatchback FWD XUD9 | | GCO10024 | Outer Joint | 48T | 25 | 34 | 55.7 | 79 | 55 | I |
| | 1994.06-2001.05 | AT/MT | F | L/R | Hatchback FWD XUD9 | | GCO10027 | Outer Joint | 48T | 25 | 34 | 55.7 | 79 | 55 | I |
| | 1994.06-2001.05 | AT/MT | F | L/R | Hatchback FWD XUD9 | Date from:1995.01 | GCO45001 | Outer Joint | 29T | 25 | 34 | 54.8 | 78.5 | 56 | I |
| | 1994.06-2001.05 | MT | F | L | Hatchback FWD XUD9 | | GDS99025 | Drive Shaft | 29W | 25 | 24 | 55.7 | 79 | 597 | |
| | 1994.06-2001.05 | | F | L/R | Hatchback FWD XUD9 | | GCO10042 | Outer Joint | | 25 | 34 | 54.8 | 78.5 | 56 | I |
| | 1994.06-2001.05 | | F | | Hatchback FWD XUD9 | | GCO10022 | Outer Joint | 29W | 25 | 34 | 55.7 | 79 | 55 | I |
| | 1994.06-2001.05 | 5MT | F | L | Saloon FWD XUD9 | inner teeth of wheel side:23 | GDS45059 | Drive Shaft | 29T | 25 | 24 | 54.8 | 78.5 | 613 | |
| | 1994.06-2001.05 | AT/MT | F | L | Saloon FWD XUD9 | Trans. code:BE3 | GDS45023 | Drive Shaft | | 25 | 24 | 60 | 80 | 608 | |
| | 1994.06-2001.05 | AT/MT | F | L | Saloon FWD XUD9 | Trans. code:BE3;inner teeth of wheel side:34 | GDS45024 | Drive Shaft | 29W | 25 | 24 | 55.7 | 79 | 603.5 | |
| | 1994.06-2001.05 | AT/MT | F | R | Saloon FWD XUD9 | Date To:1995.12 | GDS10126 | Drive Shaft | 29W | 25 | 24 | 55.7 | 79 | 886 | |
| | 1994.06-2001.05 | AT/MT | F | R | Saloon FWD XUD9 | Trans. code:BE3 | GDS45017 | Drive Shaft | 29W | 25 | 24 | 55.7 | 79 | 881 | |
| | 1994.06-2001.05 | AT/MT | F | R | Saloon FWD XUD9 | Trans. code:BE3 | GDS45198 | Drive Shaft | | 25 | 24 | 56.7 | 80 | 891 | |
| | 1994.06-2001.05 | AT/MT | F | R | Saloon FWD XUD9 | | GCO45014 | Outer Joint | | 25 | 22 | 56.7 | 80 | 59 | O |
| | 1994.06-2001.05 | AT/MT | F | L/R | Saloon FWD XUD9 | | GCO10002 | Outer Joint | | 25 | 23 | 54.8 | 78.5 | 56 | I |
| | 1994.06-2001.05 | AT/MT | F | L/R | Saloon FWD XUD9 | Date To:1995.12 | GCO10003 | Outer Joint | 29T | 25 | 23 | 54.8 | 78.5 | 56 | I |
| | 1994.06-2001.05 | AT/MT | F | L/R | Saloon FWD XUD9 | | GCO10024 | Outer Joint | 48T | 25 | 34 | 55.7 | 79 | 55 | I |
| | 1994.06-2001.05 | AT/MT | F | L/R | Saloon FWD XUD9 | | GCO10027 | Outer Joint | 48T | 25 | 34 | 55.7 | 79 | 55 | I |
| | 1994.06-2001.05 | AT/MT | F | L/R | Saloon FWD XUD9 | | GCO45001 | Outer Joint | 29T | 25 | 34 | 54.8 | 78.5 | 56 | I |
| | 1994.06-2001.05 | MT | F | L | Saloon FWD XUD9 | | GDS99025 | Drive Shaft | 29W | 25 | 24 | 55.7 | 79 | 597 | |
| | 1994.06-2001.05 | | F | L/R | Saloon FWD XUD9 | | GCO10042 | Outer Joint | | 25 | 34 | 54.8 | 78.5 | 56 | I |
| | 1994.06-2001.05 | | F | | Saloon FWD XUD9 | | GCO10022 | Outer Joint | 29W | 25 | 34 | 55.7 | 79 | 55 | I |
| | 1997.05-1999.05 | 5MT | F | L | Estate FWD XUD9 | inner teeth of wheel side:23 | GDS45059 | Drive Shaft | 29T | 25 | 24 | 54.8 | 78.5 | 613 | |
| | 1997.05-1999.05 | AT/MT | F | L | Estate FWD XUD9 | Date to:1999.05 | GDS45023 | Drive Shaft | | 25 | 24 | 60 | 80 | 608 | |
| | 1997.05-1999.05 | AT/MT | F | L | Estate FWD XUD9 | Date to:1999.05;Trans. code:BE3;inner teeth of wheel side:34 | GDS45024 | Drive Shaft | 29W | 25 | 24 | 55.7 | 79 | 603.5 | |
| | 1997.05-1999.05 | AT/MT | F | R | Estate FWD XUD9 | Date to:1999.05;Trans. code:BE3 | GDS45017 | Drive Shaft | 29W | 25 | 24 | 55.7 | 79 | 881 | |
| | 1997.05-1999.05 | AT/MT | F | R | Estate FWD XUD9 | Date to:1999.05;Trans. code:BE3 | GDS45198 | Drive Shaft | | 25 | 24 | 56.7 | 80 | 891 | |
| | 1997.05-1999.05 | AT/MT | F | R | Estate FWD XUD9 | Date to:1999.05;inner teeth of wheel side:22 | GCO45014 | Outer Joint | | 25 | 22 | 56.7 | 80 | 59 | O |
| | 1997.05-1999.05 | AT/MT | F | L/R | Estate FWD XUD9 | Date to:1999.05;inner teeth of wheel side:23 | GCO10002 | Outer Joint | | 25 | 23 | 54.8 | 78.5 | 56 | I |
| | 1997.05-1999.05 | AT/MT | F | L/R | Estate FWD XUD9 | Date to:1999.05 | GCO10024 | Outer Joint | 48T | 25 | 34 | 55.7 | 79 | 55 | I |
| | 1997.05-1999.05 | AT/MT | F | L/R | Estate FWD XUD9 | | GCO10027 | Outer Joint | 48T | 25 | 34 | 55.7 | 79 | 55 | I |
| | 1997.05-1999.05 | AT/MT | F | L/R | Estate FWD XUD9 | Date to:1999.05 | GCO45001 | Outer Joint | 29T | 25 | 34 | 54.8 | 78.5 | 56 | I |
| | 1997.05-1999.05 | MT | F | L | Estate FWD XUD9 | Date from:1997.04 | GDS99025 | Drive Shaft | 29W | 25 | 24 | 55.7 | 79 | 597 | |
| | 1997.05-1999.05 | MT | F | R | Estate FWD XUD9 | Date from:1997.04 | GDS10126 | Drive Shaft | 29W | 25 | 24 | 55.7 | 79 | 886 | |
| | 1997.05-1999.05 | | F | L/R | Estate FWD XUD9 | | GCO10042 | Outer Joint | | 25 | 34 | 54.8 | 78.5 | 56 | I |
| | 1997.05-1999.05 | | F | | Estate FWD XUD9 | | GCO10022 | Outer Joint | 29W | 25 | 34 | 55.7 | 79 | 55 | I |
| 1.9 (51 kw) | 1993.04-1999.05 | 5MT | F | R | Hatchback FWD XUD9 | | GCO45023 | Outer Joint | 29W | 25 | 34 | 55.7 | 79 | 55 | I |
| | 1993.04-1999.05 | MT | F | L | Hatchback FWD XUD9 | | GDS99025 | Drive Shaft | 29W | 25 | 24 | 55.7 | 79 | 597 | |
| | 1993.04-1999.05 | MT | F | R | Hatchback FWD XUD9 | | GDS10126 | Drive Shaft | 29W | 25 | 24 | 55.7 | 79 | 886 | |
| | 1993.04-1999.05 | | F | L | Hatchback FWD XUD9 | | GDS45023 | Drive Shaft | | 25 | 24 | 60 | 80 | 608 | |
| | 1993.04-1999.05 | | F | | Hatchback FWD XUD9 | | GCO10022 | Outer Joint | 29W | 25 | 34 | 55.7 | 79 | 55 | I |
| | 1993.04-1999.05 | | F | | Hatchback FWD XUD9 | | GCO10027 | Outer Joint | 48T | 25 | 34 | 55.7 | 79 | 55 | I |
| | 1993.04-1999.05 | | F | | Hatchback FWD XUD9 | | GCO10042 | Outer Joint | | 25 | 34 | 54.8 | 78.5 | 56 | I |
| | 1997.05-1999.05 | MT | F | L | Estate FWD XUD9 | | GDS99025 | Drive Shaft | 29W | 25 | 24 | 55.7 | 79 | 597 | |
| | 1997.05-1999.05 | MT | F | R | Estate FWD XUD9 | | GDS10126 | Drive Shaft | 29W | 25 | 24 | 55.7 | 79 | 886 | |
| | 1997.05-1999.05 | | F | | Estate FWD XUD9 | | GCO10022 | Outer Joint | 29W | 25 | 34 | 55.7 | 79 | 55 | I |
| | 1997.05-1999.05 | | F | | Estate FWD XUD9 | | GCO10042 | Outer Joint | | 25 | 34 | 54.8 | 78.5 | 56 | I |
| | 1997.05-1999.05 | 5MT | F | R | Estate Van FWD XUD9 | | GCO45023 | Outer Joint | 29W | 25 | 34 | 55.7 | 79 | 55 | I |

| | YEAR | TRANSM. | F/R | L/R | BODY STYLE & DRIVE TYPE & ENGINE | REMARKS | G-AP Ref. | PRODUCT | ABS | Technical Specifications A | B | C | H | L | P |
|---|---|---|---|---|---|---|---|---|---|---|---|---|---|---|---|
| **PEUGEOT** | | | | | | | | | | | | | | | |
| **306** | | | | | | | | | | | | | | | |
| 1.9 (51 kw) | 1997.05-1999.05 | MT | F | L | Estate Van FWD XUD9 | | GDS99025 | Drive Shaft | 29W | 25 | 24 | 55.7 | 79 | 597 | |
| | 1997.05-1999.05 | MT | F | R | Estate Van FWD XUD9 | | GDS10126 | Drive Shaft | 29W | 25 | 24 | 55.7 | 79 | 886 | |
| | 1997.05-1999.05 | | F | L | Estate Van FWD XUD9 | | GDS45023 | Drive Shaft | | 25 | 24 | 60 | 80 | 608 | |
| | 1997.05-1999.05 | | F | | Estate Van FWD XUD9 | | GCO10022 | Outer Joint | 29W | 25 | 34 | 55.7 | 79 | 55 | I |
| | 1997.05-1999.05 | | F | | Estate Van FWD XUD9 | | GCO10027 | Outer Joint | 48T | 25 | 34 | 55.7 | 79 | 55 | I |
| | 1999.02-2001.08 | 5MT | F | R | Hatchback Van FWD DW8/DW8B | | GDS45017 | Drive Shaft | 29W | 25 | 24 | 55.7 | 79 | 881 | |
| | 1999.02-2001.08 | 5MT | F | R | Hatchback Van FWD DW8/DW8B | | GCO45023 | Outer Joint | 29W | 25 | 34 | 55.7 | 79 | 55 | I |
| | 1999.02-2002.08 | 5MT | F | R | Estate Van FWD DW8/DW8B | | GDS45017 | Drive Shaft | 29W | 25 | 24 | 55.7 | 79 | 881 | |
| | 1999.02-2002.08 | 5MT | F | R | Estate Van FWD DW8/DW8B | | GCO45023 | Outer Joint | 29W | 25 | 34 | 55.7 | 79 | 55 | I |
| | 1999.05-2001.05 | 5MT | F | R | Hatchback FWD DW8/DW8B | | GDS45017 | Drive Shaft | 29W | 25 | 24 | 55.7 | 79 | 881 | |
| | 1999.05-2001.05 | 5MT | F | R | Hatchback FWD DW8/DW8B | | GCO45023 | Outer Joint | 29W | 25 | 34 | 55.7 | 79 | 55 | I |
| | 1999.05-2001.05 | AT/MT | F | L | Hatchback FWD DW8/DW8B | Model year from:1999.05;Trans. code:BE3 | GDS45023 | Drive Shaft | | 25 | 24 | 60 | 80 | 608 | |
| | 1999.05-2001.05 | AT/MT | F | L | Hatchback FWD DW8/DW8B | Model year from:1999.05;Trans. code:BE3;Inner teeth of wheel side:34 | GDS45024 | Drive Shaft | 29W | 25 | 24 | 55.7 | 79 | 603.5 | |
| | 1999.05-2001.05 | AT/MT | F | R | Hatchback FWD DW8/DW8B | Model year from:1999.05;Trans. code:BE3 | GDS45198 | Drive Shaft | | 25 | 24 | 56.7 | 80 | 891 | |
| | 1999.05-2001.05 | AT/MT | F | L/R | Hatchback FWD DW8/DW8B | Model year from:1999.05 | GCO10002 | Outer Joint | | 25 | 23 | 54.8 | 78.5 | 56 | I |
| | 1999.05-2001.05 | AT/MT | F | L/R | Hatchback FWD DW8/DW8B | Bendix | GCO10024 | Outer Joint | 48T | 25 | 34 | 55.7 | 79 | 55 | I |
| | 1999.05-2001.05 | AT/MT | F | L/R | Hatchback FWD DW8/DW8B | Model year from:1999.05 | GCO45001 | Outer Joint | 29T | 25 | 34 | 54.8 | 78.5 | 56 | I |
| | 1999.05-2001.05 | AT/MT | F | L/R | Hatchback FWD DW8/DW8B | Model year from:1999.05,Trans. code:BE3 | GCO45014 | Outer Joint | | 25 | 22 | 56.7 | 80 | 59 | O |
| | 1999.05-2001.05 | 5MT | F | R | Saloon FWD DW8/DW8B | | GDS45017 | Drive Shaft | 29W | 25 | 24 | 55.7 | 79 | 881 | |
| | 1999.05-2001.05 | 5MT | F | R | Saloon FWD DW8/DW8B | | GCO45023 | Outer Joint | 29W | 25 | 34 | 55.7 | 79 | 55 | I |
| | 1999.05-2001.05 | AT/MT | F | L | Saloon FWD DW8/DW8B | Model year from:1999.05;Trans. code:BE3 | GDS45023 | Drive Shaft | | 25 | 24 | 60 | 80 | 608 | |
| | 1999.05-2001.05 | AT/MT | F | L | Saloon FWD DW8/DW8B | Model year from:1999.05;Trans. code:BE3;Inner teeth of wheel side:34 | GDS45024 | Drive Shaft | 29W | 25 | 24 | 55.7 | 79 | 603.5 | |
| | 1999.05-2001.05 | AT/MT | F | R | Saloon FWD DW8/DW8B | Model year from:1999.05;Trans. code:BE3 | GDS45198 | Drive Shaft | | 25 | 24 | 56.7 | 80 | 891 | |
| | 1999.05-2001.05 | AT/MT | F | L/R | Saloon FWD DW8/DW8B | Model year from:1999.05 | GCO10002 | Outer Joint | | 25 | 23 | 54.8 | 78.5 | 56 | I |
| | 1999.05-2001.05 | AT/MT | F | L/R | Saloon FWD DW8/DW8B | Bendix | GCO10027 | Outer Joint | 48T | 25 | 34 | 55.7 | 79 | 55 | I |
| | 1999.05-2001.05 | AT/MT | F | L/R | Saloon FWD DW8/DW8B | Model year from:1999.05 | GCO45001 | Outer Joint | 29T | 25 | 34 | 54.8 | 78.5 | 56 | I |
| | 1999.05-2001.05 | AT/MT | F | L/R | Saloon FWD DW8/DW8B | Model year from:1999.05;Trans. code:BE3 | GCO45014 | Outer Joint | | 25 | 22 | 56.7 | 80 | 59 | O |
| | 1999.05-2002.04 | 5MT | F | L | Estate FWD DW8/DW8B | inner teeth of wheel side:23 | GDS45059 | Drive Shaft | 29T | 25 | 24 | 54.8 | 78.5 | 613 | |
| | 1999.05-2002.04 | 5MT | F | R | Estate FWD DW8/DW8B | | GDS45017 | Drive Shaft | 29W | 25 | 24 | 55.7 | 79 | 881 | |
| | 1999.05-2002.04 | 5MT | F | R | Estate FWD DW8/DW8B | | GCO45023 | Outer Joint | 29W | 25 | 34 | 55.7 | 79 | 55 | I |
| | 1999.05-2002.04 | AT/MT | F | L | Estate FWD DW8/DW8B | Date from:1999.05;Trans. code:BE3 | GDS45023 | Drive Shaft | | 25 | 24 | 60 | 80 | 608 | |
| | 1999.05-2002.04 | AT/MT | F | L | Estate FWD DW8/DW8B | Date from:1999.05;Trans. code:BE3;inner teeth of wheel side:34 | GDS45024 | Drive Shaft | 29W | 25 | 24 | 55.7 | 79 | 603.5 | |
| | 1999.05-2002.04 | AT/MT | F | R | Estate FWD DW8/DW8B | | GDS10126 | Drive Shaft | 29W | 25 | 24 | 55.7 | 79 | 886 | |
| | 1999.05-2002.04 | AT/MT | F | R | Estate FWD DW8/DW8B | Date from:1999.05;Trans. code:BE3 | GDS45198 | Drive Shaft | | 25 | 24 | 56.7 | 80 | 891 | |
| | 1999.05-2002.04 | AT/MT | F | R | Estate FWD DW8/DW8B | Date from:1999.05 | GCO45014 | Outer Joint | | 25 | 22 | 56.7 | 80 | 59 | O |
| | 1999.05-2002.04 | AT/MT | F | L/R | Estate FWD DW8/DW8B | Date from:1999.05 | GCO10002 | Outer Joint | | 25 | 23 | 54.8 | 78.5 | 56 | I |
| | 1999.05-2002.04 | AT/MT | F | L/R | Estate FWD DW8/DW8B | Date from:1999.05 | GCO10024 | Outer Joint | 48T | 25 | 34 | 55.7 | 79 | 55 | I |
| | 1999.05-2002.04 | AT/MT | F | L/R | Estate FWD DW8/DW8B | | GCO10027 | Outer Joint | 48T | 25 | 34 | 55.7 | 79 | 55 | I |
| | 1999.05-2002.04 | AT/MT | F | L/R | Estate FWD DW8/DW8B | Date from:1999.05 | GCO45001 | Outer Joint | 29T | 25 | 34 | 54.8 | 78.5 | 56 | I |
| | 1999.05-2002.04 | MT | F | L | Estate FWD DW8/DW8B | | GDS99025 | Drive Shaft | 29W | 25 | 24 | 55.7 | 79 | 597 | |
| | 1999.05-2002.04 | | F | L/R | Estate FWD DW8/DW8B | | GCO10042 | Outer Joint | | 25 | 34 | 54.8 | 78.5 | 56 | I |
| | 1999.05-2002.04 | | F | | Estate FWD DW8/DW8B | | GCO10022 | Outer Joint | 29W | 25 | 34 | 55.7 | 79 | 55 | I |
| 1.9 (55 kw) | 1997.05-1999.04 | 5MT | F | L | Estate FWD XUD9BSD | inner teeth of wheel side:23 | GDS45059 | Drive Shaft | 29T | 25 | 24 | 54.8 | 78.5 | 613 | |
| | 1997.05-1999.04 | 5MT | F | R | Estate FWD XUD9BSD | | GCO45023 | Outer Joint | 29W | 25 | 34 | 55.7 | 79 | 55 | I |
| | 1997.05-1999.04 | AT/MT | F | R | Estate FWD XUD9BSD | | GDS10126 | Drive Shaft | 29W | 25 | 24 | 55.7 | 79 | 886 | |
| | 1997.05-1999.04 | AT/MT | F | L/R | Estate FWD XUD9BSD | Date to:1999.04 | GCO10002 | Outer Joint | | 25 | 23 | 54.8 | 78.5 | 56 | I |
| | 1997.05-1999.04 | AT/MT | F | L/R | Estate FWD XUD9BSD | Date to:1999.04 | GCO10024 | Outer Joint | 48T | 25 | 34 | 55.7 | 79 | 55 | I |
| | 1997.05-1999.04 | AT/MT | F | L/R | Estate FWD XUD9BSD | ABS Ring Ø [mm]:90 | GCO10027 | Outer Joint | 48T | 25 | 34 | 55.7 | 79 | 55 | I |
| | 1997.05-1999.04 | AT/MT | F | L/R | Estate FWD XUD9BSD | Date to:1999.04 | GCO45001 | Outer Joint | 29T | 25 | 34 | 54.8 | 78.5 | 56 | I |
| | 1997.05-1999.04 | MT | F | L | Estate FWD XUD9BSD | | GDS99025 | Drive Shaft | 29W | 25 | 24 | 55.7 | 79 | 597 | |
| | 1997.05-1999.04 | | F | L/R | Estate FWD XUD9BSD | | GCO10042 | Outer Joint | | 25 | 34 | 54.8 | 78.5 | 56 | I |
| | 1997.05-1999.04 | | F | | Estate FWD XUD9BSD | | GCO10022 | Outer Joint | 29W | 25 | 34 | 55.7 | 79 | 55 | I |
| | 1997.05-1999.04 | 5MT | F | L | Hatchback FWD XUD9BSD | inner teeth of wheel side:23 | GDS45059 | Drive Shaft | 29T | 25 | 24 | 54.8 | 78.5 | 613 | |
| | 1997.05-1999.04 | 5MT | F | R | Hatchback FWD XUD9BSD | | GCO45023 | Outer Joint | 29W | 25 | 34 | 55.7 | 79 | 55 | I |
| | 1997.05-1999.04 | AT/MT | F | R | Hatchback FWD XUD9BSD | | GDS10126 | Drive Shaft | 29W | 25 | 24 | 55.7 | 79 | 886 | |
| | 1997.05-1999.04 | AT/MT | F | L/R | Hatchback FWD XUD9BSD | Date to:1999.04 | GCO10002 | Outer Joint | | 25 | 23 | 54.8 | 78.5 | 56 | I |
| | 1997.05-1999.04 | AT/MT | F | L/R | Hatchback FWD XUD9BSD | Date to:1999.04 | GCO10024 | Outer Joint | 48T | 25 | 34 | 55.7 | 79 | 55 | I |
| | 1997.05-1999.04 | AT/MT | F | L/R | Hatchback FWD XUD9BSD | | GCO10027 | Outer Joint | 48T | 25 | 34 | 55.7 | 79 | 55 | I |
| | 1997.05-1999.04 | AT/MT | F | L/R | Hatchback FWD XUD9BSD | Date to:1999.04 | GCO45001 | Outer Joint | 29T | 25 | 34 | 54.8 | 78.5 | 56 | I |
| | 1997.05-1999.04 | MT | F | L | Hatchback FWD XUD9BSD | | GDS99025 | Drive Shaft | 29W | 25 | 24 | 55.7 | 79 | 597 | |
| | 1997.05-1999.04 | | F | L/R | Hatchback FWD XUD9BSD | | GCO10042 | Outer Joint | | 25 | 34 | 54.8 | 78.5 | 56 | I |
| | 1997.05-1999.04 | | F | | Hatchback FWD XUD9BSD | | GCO10022 | Outer Joint | 29W | 25 | 34 | 55.7 | 79 | 55 | I |
| | 1997.05-1999.04 | 5MT | F | L | Saloon FWD XUD9BSD | inner teeth of wheel side:23 | GDS45059 | Drive Shaft | 29T | 25 | 24 | 54.8 | 78.5 | 613 | |
| | 1997.05-1999.04 | 5MT | F | R | Saloon FWD XUD9BSD | | GCO45023 | Outer Joint | 29W | 25 | 34 | 55.7 | 79 | 55 | I |
| | 1997.05-1999.04 | AT/MT | F | R | Saloon FWD XUD9BSD | | GDS10126 | Drive Shaft | 29W | 25 | 24 | 55.7 | 79 | 886 | |

| | YEAR | TRANSM. | F/R | L/R | BODY STYLE & DRIVE TYPE & ENGINE | REMARKS | G-AP Ref. | PRODUCT | ABS | Technical Specifications A | B | C | H | L | P |
|---|---|---|---|---|---|---|---|---|---|---|---|---|---|---|---|
| **PEUGEOT** | | | | | | | | | | | | | | | |
| **306** | | | | | | | | | | | | | | | |
| 1.9 (55 kw) | 1997.05-1999.04 | AT/MT | F | L/R | Saloon FWD XUD9BSD | Date to:1999.04 | GCO10002 | Outer Joint | | 25 | 23 | 54.8 | 78.5 | 56 | I |
| | 1997.05-1999.04 | AT/MT | F | L/R | Saloon FWD XUD9BSD | Date to:1999.04 | GCO10024 | Outer Joint | 48T | 25 | 34 | 55.7 | 79 | 55 | I |
| | 1997.05-1999.04 | AT/MT | F | L/R | Saloon FWD XUD9BSD | | GCO10027 | Outer Joint | 48T | 25 | 34 | 55.7 | 79 | 55 | I |
| | 1997.05-1999.04 | AT/MT | F | L/R | Saloon FWD XUD9BSD | Date to:1999.04 | GCO45001 | Outer Joint | 29T | 25 | 34 | 54.8 | 78.5 | 56 | I |
| | 1997.05-1999.04 | MT | F | L | Saloon FWD XUD9BSD | | GDS99025 | Drive Shaft | 29W | 25 | 24 | 55.7 | 79 | 597 | |
| | 1997.05-1999.04 | | F | L/R | Saloon FWD XUD9BSD | | GCO10042 | Outer Joint | | 25 | 34 | 54.8 | 78.5 | 56 | I |
| | 1997.05-1999.04 | | F | | Saloon FWD XUD9BSD | | GCO10022 | Outer Joint | 29W | 25 | 34 | 55.7 | 79 | 55 | I |
| 1.9 (66 kw) | 1993.04-1999.04 | 5MT | F | L | Hatchback FWD XUD9TE | Date to:1999.04 | GDS45008 | Drive Shaft | | 25 | 24 | 54.8 | 78.5 | 601.5 | |
| | 1993.04-1999.04 | 5MT | F | L | Hatchback FWD XUD9TE | | GDS45024 | Drive Shaft | 29W | 25 | 24 | 55.7 | 79 | 603.5 | |
| | 1993.04-1999.04 | 5MT | F | R | Hatchback FWD XUD9TE | | GDS45017 | Drive Shaft | 29W | 25 | 24 | 55.7 | 79 | 881 | |
| | 1993.04-1999.04 | 5MT | F | R | Hatchback FWD XUD9TE | Date to:1999.04 | GDS45070 | Drive Shaft | | 25 | 24 | 54.8 | 78.5 | 880 | |
| | 1993.04-1999.04 | 5MT | F | R | Hatchback FWD XUD9TE | | GCO45023 | Outer Joint | 29W | 25 | 34 | 55.7 | 79 | 55 | I |
| | 1993.04-1999.04 | 5MT | F | L/R | Hatchback FWD XUD9TE | Date to:1995.12 | GCO45001 | Outer Joint | 29T | 25 | 34 | 54.8 | 78.5 | 56 | I |
| | 1993.04-1999.04 | 5MT | F | L | Hatchback FWD XUD9TE | | GCI10018 | Inner Joint | | 24 | 29 | 40 | 62.5 | 99 | |
| | 1993.04-1999.04 | MT | F | L | Hatchback FWD XUD9TE | | GDS99025 | Drive Shaft | 29W | 25 | 24 | 55.7 | 79 | 597 | |
| | 1993.04-1999.04 | MT | F | R | Hatchback FWD XUD9TE | | GDS10126 | Drive Shaft | 29W | 25 | 24 | 55.7 | 79 | 886 | |
| | 1993.04-1999.04 | MT | F | L/R | Hatchback FWD XUD9TE | Date to:1999.04 | GCO10002 | Outer Joint | | 25 | 23 | 54.8 | 78.5 | 56 | I |
| | 1993.04-1999.04 | MT | F | L/R | Hatchback FWD XUD9TE | Date to:1994.12 | GCO10003 | Outer Joint | 29T | 25 | 23 | 54.8 | 78.5 | 56 | I |
| | 1993.04-1999.04 | MT | F | L/R | Hatchback FWD XUD9TE | Date to:1999.04 | GCO10024 | Outer Joint | 48T | 25 | 34 | 55.7 | 79 | 55 | I |
| | 1993.04-1999.04 | | F | L/R | Hatchback FWD XUD9TE | | GCO10042 | Outer Joint | | 25 | 34 | 54.8 | 78.5 | 56 | I |
| | 1993.04-1999.04 | | F | | Hatchback FWD XUD9TE | | GCO10022 | Outer Joint | 29W | 25 | 34 | 55.7 | 79 | 55 | I |
| | 1994.06-2001.05 | 5MT | F | L | Saloon FWD XUD9TE | | GDS45024 | Drive Shaft | 29W | 25 | 24 | 55.7 | 79 | 603.5 | |
| | 1994.06-2001.05 | 5MT | F | R | Saloon FWD XUD9TE | | GDS45017 | Drive Shaft | 29W | 25 | 24 | 55.7 | 79 | 881 | |
| | 1994.06-2001.05 | 5MT | F | R | Saloon FWD XUD9TE | | GCO45023 | Outer Joint | 29W | 25 | 34 | 55.7 | 79 | 55 | I |
| | 1994.06-2001.05 | AT/MT | F | L/R | Saloon FWD XUD9TE | Date from:1999.01;Trans. code:BE | GCO10043 | Outer Joint | | 25 | 34 | 54.8 | 78.5 | 56 | I |
| | 1994.06-2001.05 | MT | F | L | Saloon FWD XUD9TE | | GDS45008 | Drive Shaft | | 25 | 24 | 54.8 | 78.5 | 601.5 | |
| | 1994.06-2001.05 | MT | F | L | Saloon FWD XUD9TE | | GDS99025 | Drive Shaft | 29W | 25 | 24 | 55.7 | 79 | 597 | |
| | 1994.06-2001.05 | MT | F | R | Saloon FWD XUD9TE | | GDS10126 | Drive Shaft | 29W | 25 | 24 | 55.7 | 79 | 886 | |
| | 1994.06-2001.05 | MT | F | R | Saloon FWD XUD9TE | | GDS45070 | Drive Shaft | | 25 | 24 | 54.8 | 78.5 | 880 | |
| | 1994.06-2001.05 | MT | F | L/R | Saloon FWD XUD9TE | | GCO10002 | Outer Joint | | 25 | 23 | 54.8 | 78.5 | 56 | I |
| | 1994.06-2001.05 | MT | F | L/R | Saloon FWD XUD9TE | Date to:1994.12 | GCO10003 | Outer Joint | 29T | 25 | 23 | 54.8 | 78.5 | 56 | I |
| | 1994.06-2001.05 | MT | F | L/R | Saloon FWD XUD9TE | | GCO10024 | Outer Joint | 48T | 25 | 34 | 55.7 | 79 | 55 | I |
| | 1994.06-2001.05 | MT | F | L/R | Saloon FWD XUD9TE | Date from:1995.01 | GCO45001 | Outer Joint | 29T | 25 | 34 | 54.8 | 78.5 | 56 | I |
| | 1994.06-2001.05 | MT | F | L | Saloon FWD XUD9TE | | GCI10018 | Inner Joint | | 24 | 29 | 40 | 62.5 | 99 | |
| | 1994.06-2001.05 | | F | L | Saloon FWD XUD9TE | | GDS45023 | Drive Shaft | | 25 | 24 | 60 | 80 | 608 | |
| | 1994.06-2001.05 | | F | L/R | Saloon FWD XUD9TE | | GCO10042 | Outer Joint | | 25 | 34 | 54.8 | 78.5 | 56 | I |
| | 1994.06-2001.05 | | F | | Saloon FWD XUD9TE | | GCO10022 | Outer Joint | 29W | 25 | 34 | 55.7 | 79 | 55 | I |
| | 1994.06-2001.05 | | F | | Saloon FWD XUD9TE | | GCO10027 | Outer Joint | 48T | 25 | 34 | 55.7 | 79 | 55 | I |
| | 1997.02-2002.04 | 5MT | F | L | Estate FWD XUD9TE | | GDS45024 | Drive Shaft | 29W | 25 | 24 | 55.7 | 79 | 603.5 | |
| | 1997.02-2002.04 | 5MT | F | R | Estate FWD XUD9TE | | GDS45017 | Drive Shaft | 29W | 25 | 24 | 55.7 | 79 | 881 | |
| | 1997.02-2002.04 | 5MT | F | R | Estate FWD XUD9TE | | GCO45023 | Outer Joint | 29W | 25 | 34 | 55.7 | 79 | 55 | I |
| | 1997.02-2002.04 | MT | F | L | Estate FWD XUD9TE | | GDS45008 | Drive Shaft | | 25 | 24 | 54.8 | 78.5 | 601.5 | |
| | 1997.02-2002.04 | MT | F | L | Estate FWD XUD9TE | | GDS99025 | Drive Shaft | 29W | 25 | 24 | 55.7 | 79 | 597 | |
| | 1997.02-2002.04 | MT | F | R | Estate FWD XUD9TE | | GDS10126 | Drive Shaft | 29W | 25 | 24 | 55.7 | 79 | 886 | |
| | 1997.02-2002.04 | MT | F | R | Estate FWD XUD9TE | | GDS45070 | Drive Shaft | | 25 | 24 | 54.8 | 78.5 | 880 | |
| | 1997.02-2002.04 | MT | F | L/R | Estate FWD XUD9TE | | GCO10002 | Outer Joint | | 25 | 23 | 54.8 | 78.5 | 56 | I |
| | 1997.02-2002.04 | MT | F | L/R | Estate FWD XUD9TE | | GCO10024 | Outer Joint | 48T | 25 | 34 | 55.7 | 79 | 55 | I |
| | 1997.02-2002.04 | MT | F | L/R | Estate FWD XUD9TE | Trans. code:BE | GCO10043 | Outer Joint | | 25 | 34 | 54.8 | 78.5 | 56 | I |
| | 1997.02-2002.04 | MT | F | L/R | Estate FWD XUD9TE | | GCO45001 | Outer Joint | 29T | 25 | 34 | 54.8 | 78.5 | 56 | I |
| | 1997.02-2002.04 | MT | F | L | Estate FWD XUD9TE | | GCI10018 | Inner Joint | | 24 | 29 | 40 | 62.5 | 99 | |
| | 1997.02-2002.04 | | F | L/R | Estate FWD XUD9TE | | GCO10042 | Outer Joint | | 25 | 34 | 54.8 | 78.5 | 56 | I |
| | 1997.02-2002.04 | | F | | Estate FWD XUD9TE | | GCO10022 | Outer Joint | 29W | 25 | 34 | 55.7 | 79 | 55 | I |
| 1.9 (67 kw) | 1999.01-2002.04 | 5MT | F | L | Estate FWD XUD9TE | | GCI10020 | Inner Joint | | 24 | 34 | 40 | 62.5 | 99 | |
| | 1999.01-2002.04 | | F | L | Estate FWD XUD9TE | | GDS45024 | Drive Shaft | 29W | 25 | 24 | 55.7 | 79 | 603.5 | |
| | 1999.01-2002.04 | | F | R | Estate FWD XUD9TE | Date From:1995.10 | GDS45017 | Drive Shaft | 29W | 25 | 24 | 55.7 | 79 | 881 | |
| | 1999.01-2002.04 | | F | R | Estate FWD XUD9TE | Date From:1995.10 | GCO45023 | Outer Joint | 29W | 25 | 34 | 55.7 | 79 | 55 | I |
| 1.9 (68 kw) | 1993.04-1997.04 | MT | F | L | Hatchback FWD XUD9TE | | GDS99025 | Drive Shaft | 29W | 25 | 24 | 55.7 | 79 | 597 | |
| | 1993.04-1997.04 | MT | F | R | Hatchback FWD XUD9TE | | GDS10126 | Drive Shaft | 29W | 25 | 24 | 55.7 | 79 | 886 | |
| | 1993.04-1997.04 | | F | L | Hatchback FWD XUD9TE | | GDS45023 | Drive Shaft | | 25 | 24 | 60 | 80 | 608 | |
| | 1993.04-1997.04 | | F | | Hatchback FWD XUD9TE | | GCO10022 | Outer Joint | 29W | 25 | 34 | 55.7 | 79 | 55 | I |
| | 1993.04-1997.04 | | F | | Hatchback FWD XUD9TE | | GCO10027 | Outer Joint | 48T | 25 | 34 | 55.7 | 79 | 55 | I |
| | 1993.04-1997.04 | | F | | Hatchback FWD XUD9TE | | GCO10042 | Outer Joint | | 25 | 34 | 54.8 | 78.5 | 56 | I |
| | 1994.02-1997.04 | MT | F | L | Saloon FWD XUD9TE | | GDS99025 | Drive Shaft | 29W | 25 | 24 | 55.7 | 79 | 597 | |
| | 1994.02-1997.04 | MT | F | R | Saloon FWD XUD9TE | | GDS10126 | Drive Shaft | 29W | 25 | 24 | 55.7 | 79 | 886 | |
| | 1994.02-1997.04 | | F | L | Saloon FWD XUD9TE | | GDS45023 | Drive Shaft | | 25 | 24 | 60 | 80 | 608 | |

| | YEAR | TRANSM. | F/R | L/R | BODY STYLE & DRIVE TYPE & ENGINE | REMARKS | G-AP Ref. | PRODUCT | ABS | Technical Specifications A | B | C | H | L | P |
|---|---|---|---|---|---|---|---|---|---|---|---|---|---|---|---|
| **PEUGEOT** | | | | | | | | | | | | | | | |
| **306** | | | | | | | | | | | | | | | |
| 1.9 (68 kw) | 1994.02-1997.04 | | F | | Saloon FWD XUD9TE | | GCO10022 | Outer Joint | 29W | 25 | 34 | 55.7 | 79 | 55 | I |
| | 1994.02-1997.04 | | F | | Saloon FWD XUD9TE | | GCO10027 | Outer Joint | 48T | 25 | 34 | 55.7 | 79 | 55 | I |
| | 1994.02-1997.04 | | F | | Saloon FWD XUD9TE | | GCO10042 | Outer Joint | | 25 | 34 | 54.8 | 78.5 | 56 | I |
| | 1994.02-1999.04 | MT | F | L | Estate Van FWD XUD9TE | Date to:1997.04 | GDS99025 | Drive Shaft | 29W | 25 | 24 | 55.7 | 79 | 597 | |
| | 1994.02-1999.04 | MT | F | R | Estate Van FWD XUD9TE | Date to:1997.04 | GDS10126 | Drive Shaft | 29W | 25 | 24 | 55.7 | 79 | 886 | |
| | 1994.02-1999.04 | | F | L | Estate Van FWD XUD9TE | Date to:1997.04 | GDS45023 | Drive Shaft | | 25 | 24 | 60 | 80 | 608 | |
| | 1994.02-1999.04 | | F | | Estate Van FWD XUD9TE | | GCO10022 | Outer Joint | 29W | 25 | 34 | 55.7 | 79 | 55 | I |
| | 1994.02-1999.04 | | F | | Estate Van FWD XUD9TE | | GCO10027 | Outer Joint | 48T | 25 | 34 | 55.7 | 79 | 55 | I |
| | 1994.02-1999.04 | | F | | Estate Van FWD XUD9TE | | GCO10042 | Outer Joint | | 25 | 34 | 54.8 | 78.5 | 56 | I |
| 2.0 (66 kw) | 1998.08-2000.06 | 5MT | F | L | Estate Van FWD DW10TD | | GDS45024 | Drive Shaft | 29W | 25 | 24 | 55.7 | 79 | 603.5 | |
| | 1998.08-2000.06 | 5MT | F | R | Estate Van FWD DW10TD | | GDS45017 | Drive Shaft | 29W | 25 | 24 | 55.7 | 79 | 881 | |
| | 1998.08-2000.06 | 5MT | F | R | Estate Van FWD DW10TD | | GCO45023 | Outer Joint | 29W | 25 | 34 | 55.7 | 79 | 55 | I |
| | 1998.08-2000.06 | 5MT | F | L | Estate Van FWD DW10TD | | GCI10020 | Inner Joint | | 24 | 34 | 40 | 62.5 | 99 | |
| | 1998.08-2001.05 | 5MT | F | L | Saloon FWD DW10TD | | GDS45024 | Drive Shaft | 29W | 25 | 24 | 55.7 | 79 | 603.5 | |
| | 1998.08-2001.05 | 5MT | F | R | Saloon FWD DW10TD | | GDS45017 | Drive Shaft | 29W | 25 | 24 | 55.7 | 79 | 881 | |
| | 1998.08-2001.05 | 5MT | F | R | Saloon FWD DW10TD | | GCO45023 | Outer Joint | 29W | 25 | 34 | 55.7 | 79 | 55 | I |
| | 1998.08-2001.05 | MT | F | L | Saloon FWD DW10TD | Date to:2001.05 | GDS45008 | Drive Shaft | | 25 | 24 | 54.8 | 78.5 | 601.5 | |
| | 1998.08-2001.05 | MT | F | L | Saloon FWD DW10TD | | GDS99025 | Drive Shaft | 29W | 25 | 24 | 55.7 | 79 | 597 | |
| | 1998.08-2001.05 | MT | F | R | Saloon FWD DW10TD | | GDS10126 | Drive Shaft | 29W | 25 | 24 | 55.7 | 79 | 886 | |
| | 1998.08-2001.05 | MT | F | R | Saloon FWD DW10TD | Date to:2001.05 | GDS45070 | Drive Shaft | | 25 | 24 | 54.8 | 78.5 | 880 | |
| | 1998.08-2001.05 | MT | F | L/R | Saloon FWD DW10TD | | GCO10043 | Outer Joint | | 25 | 34 | 54.8 | 78.5 | 56 | I |
| | 1998.08-2001.05 | MT | F | L | Saloon FWD DW10TD | | GCI10018 | Inner Joint | | 24 | 29 | 40 | 62.5 | 99 | |
| | 1998.08-2001.05 | | F | | Saloon FWD DW10TD | | GCO10022 | Outer Joint | 29W | 25 | 34 | 55.7 | 79 | 55 | I |
| | 1998.08-2002.04 | MT | F | L | Estate FWD DW10TD | | GDS45008 | Drive Shaft | | 25 | 24 | 54.8 | 78.5 | 601.5 | |
| | 1998.08-2002.04 | MT | F | L | Estate FWD DW10TD | | GDS45024 | Drive Shaft | 29W | 25 | 24 | 55.7 | 79 | 603.5 | |
| | 1998.08-2002.04 | MT | F | L | Estate FWD DW10TD | | GDS99025 | Drive Shaft | 29W | 25 | 24 | 55.7 | 79 | 597 | |
| | 1998.08-2002.04 | MT | F | R | Estate FWD DW10TD | | GDS10126 | Drive Shaft | 29W | 25 | 24 | 55.7 | 79 | 886 | |
| | 1998.08-2002.04 | MT | F | R | Estate FWD DW10TD | | GDS45017 | Drive Shaft | 29W | 25 | 24 | 55.7 | 79 | 881 | |
| | 1998.08-2002.04 | MT | F | R | Estate FWD DW10TD | | GDS45070 | Drive Shaft | | 25 | 24 | 54.8 | 78.5 | 880 | |
| | 1998.08-2002.04 | MT | F | R | Estate FWD DW10TD | | GCO45023 | Outer Joint | 29W | 25 | 34 | 55.7 | 79 | 55 | I |
| | 1998.08-2002.04 | MT | F | L/R | Estate FWD DW10TD | | GCO10002 | Outer Joint | | 25 | 23 | 54.8 | 78.5 | 56 | I |
| | 1998.08-2002.04 | MT | F | L | Estate FWD DW10TD | Inner Teeth:29 | GCI10018 | Inner Joint | | 24 | 29 | 40 | 62.5 | 99 | |
| | 1998.08-2002.04 | MT | F | L | Estate FWD DW10TD | Inner Teeth:34 | GCI10020 | Inner Joint | | 24 | 34 | 40 | 62.5 | 99 | |
| | 1998.08-2002.12 | 5MT | F | R | Hatchback FWD DW10TD | | GCO45023 | Outer Joint | 29W | 25 | 34 | 55.7 | 79 | 55 | I |
| | 1998.08-2002.12 | MT | F | L | Hatchback FWD DW10TD | | GDS45008 | Drive Shaft | | 25 | 24 | 54.8 | 78.5 | 601.5 | |
| | 1998.08-2002.12 | MT | F | L | Hatchback FWD DW10TD | | GDS99025 | Drive Shaft | 29W | 25 | 24 | 55.7 | 79 | 597 | |
| | 1998.08-2002.12 | MT | F | R | Hatchback FWD DW10TD | | GDS10126 | Drive Shaft | 29W | 25 | 24 | 55.7 | 79 | 886 | |
| | 1998.08-2002.12 | MT | F | R | Hatchback FWD DW10TD | | GDS45070 | Drive Shaft | | 25 | 24 | 54.8 | 78.5 | 880 | |
| | 1998.08-2002.12 | MT | F | L/R | Hatchback FWD DW10TD | | GCO10043 | Outer Joint | | 25 | 34 | 54.8 | 78.5 | 56 | I |
| | 1998.08-2002.12 | MT | F | L | Hatchback FWD DW10TD | | GCI10018 | Inner Joint | | 24 | 29 | 40 | 62.5 | 99 | |
| | 1998.08-2002.12 | | F | | Hatchback FWD DW10TD | | GCO10022 | Outer Joint | 29W | 25 | 34 | 55.7 | 79 | 55 | I |
| 2.0 (89 kw) | 1993.05-2001.05 | 4AT/5MT | F | L | Hatchback FWD XU10J2 | inner teeth of wheel side:23 | GDS45059 | Drive Shaft | 29T | 25 | 24 | 54.8 | 78.5 | 613 | |
| | 1993.05-2001.05 | 4AT/5MT | F | L | Hatchback FWD XU10J2 | transm. no:BE3 | GDS45160 | Drive Shaft | | 25 | 24 | 54.8 | 78.5 | 609 | |
| | 1993.05-2001.05 | 4AT/5MT | F | R | Hatchback FWD XU10J2 | | GDS45017 | Drive Shaft | 29W | 25 | 24 | 55.7 | 79 | 881 | |
| | 1993.05-2001.05 | 4AT/5MT | F | R | Hatchback FWD XU10J2 | transm. no:BE3 | GDS45070 | Drive Shaft | | 25 | 24 | 54.8 | 78.5 | 880 | |
| | 1993.05-2001.05 | 4AT/5MT | F | R | Hatchback FWD XU10J2 | | GCO45023 | Outer Joint | 29W | 25 | 34 | 55.7 | 79 | 55 | I |
| | 1993.05-2001.05 | 4AT/5MT | F | L/R | Hatchback FWD XU10J2 | | GCO10003 | Outer Joint | 29T | 25 | 23 | 54.8 | 78.5 | 56 | I |
| | 1993.05-2001.05 | AT/MT | F | L | Hatchback FWD XU10J2 | | GDS45008 | Drive Shaft | | 25 | 24 | 54.8 | 78.5 | 601.5 | |
| | 1993.05-2001.05 | AT/MT | F | L | Hatchback FWD XU10J2 | inner teeth of wheel side:34 | GDS45024 | Drive Shaft | 29W | 25 | 24 | 55.7 | 79 | 603.5 | |
| | 1993.05-2001.05 | AT/MT | F | R | Hatchback FWD XU10J2 | | GDS10126 | Drive Shaft | 29W | 25 | 24 | 55.7 | 79 | 886 | |
| | 1993.05-2001.05 | AT/MT | F | L/R | Hatchback FWD XU10J2 | | GCO10002 | Outer Joint | | 25 | 23 | 54.8 | 78.5 | 56 | I |
| | 1993.05-2001.05 | AT/MT | F | L/R | Hatchback FWD XU10J2 | | GCO10024 | Outer Joint | 48T | 25 | 34 | 55.7 | 79 | 55 | I |
| | 1993.05-2001.05 | AT/MT | F | L/R | Hatchback FWD XU10J2 | | GCO10027 | Outer Joint | 48T | 25 | 34 | 55.7 | 79 | 55 | I |
| | 1993.05-2001.05 | AT/MT | F | L/R | Hatchback FWD XU10J2 | Date from:1995.01 | GCO45001 | Outer Joint | 29T | 25 | 34 | 54.8 | 78.5 | 56 | I |
| | 1993.05-2001.05 | AT/MT | F | L | Hatchback FWD XU10J2 | | GCI10018 | Inner Joint | | 24 | 29 | 40 | 62.5 | 99 | |
| | 1993.05-2001.05 | MT | F | L | Hatchback FWD XU10J2 | | GDS99025 | Drive Shaft | 29W | 25 | 24 | 55.7 | 79 | 597 | |
| | 1993.05-2001.05 | | F | R | Hatchback FWD XU10J2 | | GDS45022 | Drive Shaft | | 25 | 24 | 54.8 | 79 | 880 | |
| | 1993.05-2001.05 | | F | R | Hatchback FWD XU10J2 | | GDS45198 | Drive Shaft | | 25 | 24 | 56.7 | 80 | 891 | |
| | 1993.05-2001.05 | | F | L/R | Hatchback FWD XU10J2 | | GCO10022 | Outer Joint | 29W | 25 | 34 | 55.7 | 79 | 55 | I |
| | 1994.07-2001.05 | 5MT | F | L | Saloon FWD XU10J2 | inner teeth of wheel side:23 | GDS45059 | Drive Shaft | 29T | 25 | 24 | 54.8 | 78.5 | 613 | |
| | 1994.07-2001.05 | 5MT | F | L | Saloon FWD XU10J2 | | GDS45160 | Drive Shaft | | 25 | 24 | 54.8 | 78.5 | 609 | |
| | 1994.07-2001.05 | 5MT | F | R | Saloon FWD XU10J2 | | GDS45017 | Drive Shaft | 29W | 25 | 24 | 55.7 | 79 | 881 | |
| | 1994.07-2001.05 | 5MT | F | R | Saloon FWD XU10J2 | | GDS45070 | Drive Shaft | | 25 | 24 | 54.8 | 78.5 | 880 | |
| | 1994.07-2001.05 | 5MT | F | R | Saloon FWD XU10J2 | | GCO45023 | Outer Joint | 29W | 25 | 34 | 55.7 | 79 | 55 | I |
| | 1994.07-2001.05 | AT/MT | F | L | Saloon FWD XU10J2 | | GDS45008 | Drive Shaft | | 25 | 24 | 54.8 | 78.5 | 601.5 | |

| | YEAR | TRANSM. | F/R | L/R | BODY STYLE & DRIVE TYPE & ENGINE | REMARKS | G-AP Ref. | PRODUCT | ABS | Technical Specifications A | B | C | H | L | P |
|---|---|---|---|---|---|---|---|---|---|---|---|---|---|---|---|
| **PEUGEOT** | | | | | | | | | | | | | | | |
| **306** | | | | | | | | | | | | | | | |
| 2.0 (89 kw) | 1994.07-2001.05 | AT/MT | F | L | Saloon FWD XU10J2 | inner teeth of wheel side:34 | GDS45024 | Drive Shaft | 29W | 25 | 24 | 55.7 | 79 | 603.5 | |
| | 1994.07-2001.05 | AT/MT | F | R | Saloon FWD XU10J2 | | GDS10126 | Drive Shaft | 29W | 25 | 24 | 55.7 | 79 | 886 | |
| | 1994.07-2001.05 | AT/MT | F | L/R | Saloon FWD XU10J2 | | GCO10002 | Outer Joint | | 25 | 23 | 54.8 | 78.5 | 56 | I |
| | 1994.07-2001.05 | AT/MT | F | L/R | Saloon FWD XU10J2 | Date To:1995.12 | GCO10003 | Outer Joint | 29T | 25 | 23 | 54.8 | 78.5 | 56 | I |
| | 1994.07-2001.05 | AT/MT | F | L/R | Saloon FWD XU10J2 | | GCO10024 | Outer Joint | 48T | 25 | 34 | 55.7 | 79 | 55 | I |
| | 1994.07-2001.05 | AT/MT | F | L/R | Saloon FWD XU10J2 | Date from:1995.01 | GCO45001 | Outer Joint | 29T | 25 | 34 | 54.8 | 78.5 | 56 | I |
| | 1994.07-2001.05 | AT/MT | F | L | Saloon FWD XU10J2 | | GCI10018 | Inner Joint | | 24 | 29 | 40 | 62.5 | 99 | |
| | 1994.07-2001.05 | MT | F | L | Saloon FWD XU10J2 | | GDS99025 | Drive Shaft | 29W | 25 | 24 | 55.7 | 79 | 597 | |
| | 1994.07-2001.05 | | F | L | Saloon FWD XU10J2 | | GDS45023 | Drive Shaft | | 25 | 24 | 60 | 80 | 608 | |
| | 1994.07-2001.05 | | F | R | Saloon FWD XU10J2 | | GDS45022 | Drive Shaft | | 25 | 24 | 54.8 | 79 | 880 | |
| | 1994.07-2001.05 | | F | R | Saloon FWD XU10J2 | | GDS45198 | Drive Shaft | | 25 | 24 | 56.7 | 80 | 891 | |
| | 1994.07-2001.05 | | F | L/R | Saloon FWD XU10J2 | | GCO10042 | Outer Joint | | 25 | 34 | 54.8 | 78.5 | 56 | I |
| | 1994.07-2001.05 | | F | | Saloon FWD XU10J2 | | GCO10022 | Outer Joint | 29W | 25 | 34 | 55.7 | 79 | 55 | I |
| | 1994.07-2001.05 | | F | | Saloon FWD XU10J2 | | GCO10027 | Outer Joint | 48T | 25 | 34 | 55.7 | 79 | 55 | I |
| 2.0 (92 kw) | 1995.11-1997.06 | | F | L | Saloon FWD XU10J2 | | GDS45160 | Drive Shaft | | 25 | 24 | 54.8 | 78.5 | 609 | |
| | 1995.11-1997.06 | | F | R | Saloon FWD XU10J2 | | GDS45017 | Drive Shaft | 29W | 25 | 24 | 55.7 | 79 | 881 | |
| | 1995.11-1997.06 | | F | R | Saloon FWD XU10J2 | | GDS45022 | Drive Shaft | | 25 | 24 | 54.8 | 79 | 880 | |
| | 1995.11-1997.06 | | F | R | Saloon FWD XU10J2 | | GDS45070 | Drive Shaft | | 25 | 24 | 54.8 | 78.5 | 880 | |
| | 1995.11-1997.06 | | F | R | Saloon FWD XU10J2 | | GDS45198 | Drive Shaft | | 25 | 24 | 56.7 | 80 | 891 | |
| | 1995.11-1997.06 | | F | R | Saloon FWD XU10J2 | | GCO45023 | Outer Joint | 29W | 25 | 34 | 55.7 | 79 | 55 | I |
| | 1995.11-1997.06 | | F | L | Saloon FWD XU10J2 | | GCI45020 | Inner Joint | | 24 | 34 | 40 | 69 | 89 | |
| 2.0 (97 kw) | 1997.03-2001.05 | AT/MT | F | L/R | Hatchback FWD XU10J4R | inner teeth of wheel side:23 | GCO10002 | Outer Joint | | 25 | 23 | 54.8 | 78.5 | 56 | I |
| | 1997.03-2001.05 | MT | F | L | Hatchback FWD XU10J4R | Date from:1997.04 | GDS99025 | Drive Shaft | 29W | 25 | 24 | 55.7 | 79 | 597 | |
| | 1997.03-2001.05 | MT | F | R | Hatchback FWD XU10J4R | Date from:1997.04 | GDS10126 | Drive Shaft | 29W | 25 | 24 | 55.7 | 79 | 886 | |
| | 1997.03-2001.05 | | F | L/R | Hatchback FWD XU10J4R | inner teeth of wheel side:34 | GCO10042 | Outer Joint | | 25 | 34 | 54.8 | 78.5 | 56 | I |
| | 1997.03-2001.05 | | F | | Hatchback FWD XU10J4R | | GCO10022 | Outer Joint | 29W | 25 | 34 | 55.7 | 79 | 55 | I |
| | 1997.03-2001.05 | | F | | Hatchback FWD XU10J4R | | GCO45001 | Outer Joint | 29T | 25 | 34 | 54.8 | 78.5 | 56 | I |
| | 1997.03-2001.05 | AT/MT | F | R | Saloon FWD XU10J4R | | GDS10126 | Drive Shaft | 29W | 25 | 24 | 55.7 | 79 | 886 | |
| | 1997.03-2001.05 | AT/MT | F | L/R | Saloon FWD XU10J4R | | GCO10002 | Outer Joint | | 25 | 23 | 54.8 | 78.5 | 56 | I |
| | 1997.03-2001.05 | MT | F | L | Saloon FWD XU10J4R | | GDS99025 | Drive Shaft | 29W | 25 | 24 | 55.7 | 79 | 597 | |
| | 1997.03-2001.05 | MT | F | R | Saloon FWD XU10J4R | | GCO45023 | Outer Joint | 29W | 25 | 34 | 55.7 | 79 | 55 | I |
| | 1997.03-2001.05 | | F | L/R | Saloon FWD XU10J4R | | GCO10042 | Outer Joint | | 25 | 34 | 54.8 | 78.5 | 56 | I |
| | 1997.03-2001.05 | | F | | Saloon FWD XU10J4R | | GCO10022 | Outer Joint | 29W | 25 | 34 | 55.7 | 79 | 55 | I |
| | 1997.03-2001.05 | | F | | Saloon FWD XU10J4R | | GCO45001 | Outer Joint | 29T | 25 | 34 | 54.8 | 78.5 | 56 | I |
| | 1997.03-2001.10 | AT/MT | F | L/R | Estate FWD XU10J4R | inner teeth of transm. side:23 | GCO10002 | Outer Joint | | 25 | 23 | 54.8 | 78.5 | 56 | I |
| | 1997.03-2001.10 | MT | F | L | Estate FWD XU10J4R | Date from:1997.04 | GDS99025 | Drive Shaft | 29W | 25 | 24 | 55.7 | 79 | 597 | |
| | 1997.03-2001.10 | MT | F | R | Estate FWD XU10J4R | Date from:1997.04 | GDS10126 | Drive Shaft | 29W | 25 | 24 | 55.7 | 79 | 886 | |
| | 1997.03-2001.10 | | F | L/R | Estate FWD XU10J4R | inner teeth of transm. side:34 | GCO10042 | Outer Joint | | 25 | 34 | 54.8 | 78.5 | 56 | I |
| | 1997.03-2001.10 | | F | | Estate FWD XU10J4R | | GCO10022 | Outer Joint | 29W | 25 | 34 | 55.7 | 79 | 55 | I |
| | 1997.03-2001.10 | | F | | Estate FWD XU10J4R | | GCO45001 | Outer Joint | 29T | 25 | 34 | 54.8 | 78.5 | 56 | I |
| 2.0 (99 kw) | 1997.03-2000.06 | MT | F | L | Hatchback FWD XU10J4R | | GDS99025 | Drive Shaft | 29W | 25 | 24 | 55.7 | 79 | 597 | |
| | 1997.03-2000.06 | MT | F | R | Hatchback FWD XU10J4R | | GDS10126 | Drive Shaft | 29W | 25 | 24 | 55.7 | 79 | 886 | |
| | 1997.03-2000.06 | MT | F | R | Hatchback FWD XU10J4R | | GCO45023 | Outer Joint | 29W | 25 | 34 | 55.7 | 79 | 55 | I |
| | 1997.03-2000.06 | | F | L/R | Hatchback FWD XU10J4R | | GCO10042 | Outer Joint | | 25 | 34 | 54.8 | 78.5 | 56 | I |
| | 1997.03-2000.06 | | F | | Hatchback FWD XU10J4R | | GCO10022 | Outer Joint | 29W | 25 | 34 | 55.7 | 79 | 55 | I |
| | 1997.03-2002.12 | MT | F | R | Estate FWD XU10J4R | | GDS45017 | Drive Shaft | 29W | 25 | 24 | 55.7 | 79 | 881 | |
| | 1997.03-2002.12 | MT | F | R | Estate FWD XU10J4R | | GCO45023 | Outer Joint | 29W | 25 | 34 | 55.7 | 79 | 55 | I |
| 2.0 (110 kw) | 1994.06-2001.05 | 5MT | F | L | Hatchback FWD XU10J4 | | GDS45024 | Drive Shaft | 29W | 25 | 24 | 55.7 | 79 | 603.5 | |
| | 1994.06-2001.05 | 5MT | F | R | Hatchback FWD XU10J4 | | GDS45017 | Drive Shaft | 29W | 25 | 24 | 55.7 | 79 | 881 | |
| | 1994.06-2001.05 | 5MT | F | R | Hatchback FWD XU10J4 | | GCO45023 | Outer Joint | 29W | 25 | 34 | 55.7 | 79 | 55 | I |
| | 1994.06-2001.05 | 5MT | F | L | Hatchback FWD XU10J4 | | GCI10020 | Inner Joint | | 24 | 34 | 40 | 62.5 | 99 | |
| | 1994.06-2001.05 | AT/MT | F | R | Hatchback FWD XU10J4 | Date from:1996.01 | GDS45070 | Drive Shaft | | 25 | 24 | 54.8 | 78.5 | 880 | |
| | 1994.06-2001.05 | AT/MT | F | L/R | Hatchback FWD XU10J4 | | GCO10002 | Outer Joint | | 25 | 23 | 54.8 | 78.5 | 56 | I |
| | 1994.06-2001.05 | AT/MT | F | L/R | Hatchback FWD XU10J4 | Date to:1994.12 | GCO10003 | Outer Joint | 29T | 25 | 23 | 54.8 | 78.5 | 56 | I |
| | 1994.06-2001.05 | AT/MT | F | L/R | Hatchback FWD XU10J4 | | GCO10024 | Outer Joint | 48T | 25 | 34 | 55.7 | 79 | 55 | I |
| | 1994.06-2001.05 | AT/MT | F | L/R | Hatchback FWD XU10J4 | Date from:1996.01 | GCO10043 | Outer Joint | | 25 | 34 | 54.8 | 78.5 | 56 | I |
| | 1994.06-2001.05 | AT/MT | F | L/R | Hatchback FWD XU10J4 | Date from:1995.01 | GCO45001 | Outer Joint | 29T | 25 | 34 | 54.8 | 78.5 | 56 | I |
| | 1994.06-2001.05 | MT | F | L | Hatchback FWD XU10J4 | | GDS99025 | Drive Shaft | 29W | 25 | 24 | 55.7 | 79 | 597 | |
| | 1994.06-2001.05 | MT | F | R | Hatchback FWD XU10J4 | | GDS10126 | Drive Shaft | 29W | 25 | 24 | 55.7 | 79 | 886 | |
| | 1994.06-2001.05 | | F | L | Hatchback FWD XU10J4 | Date To:1996.01 | GDS45008 | Drive Shaft | | 25 | 24 | 54.8 | 78.5 | 601.5 | |
| | 1994.06-2001.05 | | F | L/R | Hatchback FWD XU10J4 | | GCO10022 | Outer Joint | 29W | 25 | 34 | 55.7 | 79 | 55 | I |
| | 1994.06-2001.05 | 5MT | F | L | Saloon FWD XU10J4 | | GDS45024 | Drive Shaft | 29W | 25 | 24 | 55.7 | 79 | 603.5 | |
| | 1994.06-2001.05 | 5MT | F | R | Saloon FWD XU10J4 | | GDS45017 | Drive Shaft | 29W | 25 | 24 | 55.7 | 79 | 881 | |
| | 1994.06-2001.05 | 5MT | F | R | Saloon FWD XU10J4 | | GCO45023 | Outer Joint | 29W | 25 | 34 | 55.7 | 79 | 55 | I |
| | 1994.06-2001.05 | 5MT | F | L | Saloon FWD XU10J4 | | GCI10020 | Inner Joint | | 24 | 34 | 40 | 62.5 | 99 | |

| | YEAR | TRANSM. | F/R | L/R | BODY STYLE & DRIVE TYPE & ENGINE | REMARKS | G-AP Ref. | PRODUCT | ABS | Technical Specifications A | B | C | H | L | P |
|---|---|---|---|---|---|---|---|---|---|---|---|---|---|---|---|
| **PEUGEOT** | | | | | | | | | | | | | | | |
| **306** | | | | | | | | | | | | | | | |
| 2.0 (110 kw) | 1994.06-2001.05 | AT/MT | F | R | Saloon FWD XU10J4 | Trans. code:BE | GDS45070 | Drive Shaft | | 25 | 24 | 54.8 | 78.5 | 880 | |
| | 1994.06-2001.05 | AT/MT | F | L/R | Saloon FWD XU10J4 | | GCO10002 | Outer Joint | | 25 | 23 | 54.8 | 78.5 | 56 | I |
| | 1994.06-2001.05 | AT/MT | F | L/R | Saloon FWD XU10J4 | Date to:1994.12 | GCO10003 | Outer Joint | 29T | 25 | 23 | 54.8 | 78.5 | 56 | I |
| | 1994.06-2001.05 | AT/MT | F | L/R | Saloon FWD XU10J4 | | GCO10024 | Outer Joint | 48T | 25 | 34 | 55.7 | 79 | 55 | I |
| | 1994.06-2001.05 | AT/MT | F | L/R | Saloon FWD XU10J4 | Trans. code:BE | GCO10043 | Outer Joint | | 25 | 34 | 54.8 | 78.5 | 56 | I |
| | 1994.06-2001.05 | AT/MT | F | L/R | Saloon FWD XU10J4 | Date from:1995.01 | GCO45001 | Outer Joint | 29T | 25 | 34 | 54.8 | 78.5 | 56 | I |
| | 1994.06-2001.05 | MT | F | L | Saloon FWD XU10J4 | | GDS99025 | Drive Shaft | 29W | 25 | 24 | 55.7 | 79 | 597 | |
| | 1994.06-2001.05 | MT | F | R | Saloon FWD XU10J4 | | GDS10126 | Drive Shaft | 29W | 25 | 24 | 55.7 | 79 | 886 | |
| | 1994.06-2001.05 | | F | L | Saloon FWD XU10J4 | Date To:1996.01 | GDS45008 | Drive Shaft | | 25 | 24 | 54.8 | 78.5 | 601.5 | |
| | 1994.06-2001.05 | | F | | Saloon FWD XU10J4 | | GCO10022 | Outer Joint | 29W | 25 | 34 | 55.7 | 79 | 55 | I |
| 2.0 (112 kw) | 1993.05-2001.05 | 5MT | F | L | Hatchback FWD XU10J4 | | GDS45024 | Drive Shaft | 29W | 25 | 24 | 55.7 | 79 | 603.5 | |
| | 1993.05-2001.05 | 5MT | F | R | Hatchback FWD XU10J4 | | GDS45017 | Drive Shaft | 29W | 25 | 24 | 55.7 | 79 | 881 | |
| | 1993.05-2001.05 | 5MT | F | R | Hatchback FWD XU10J4 | | GCO45023 | Outer Joint | 29W | 25 | 34 | 55.7 | 79 | 55 | I |
| | 1993.05-2001.05 | 5MT | F | L | Hatchback FWD XU10J4 | | GCI10020 | Inner Joint | | 24 | 34 | 40 | 62.5 | 99 | |
| | 1993.05-2001.05 | AT/MT | F | L/R | Hatchback FWD XU10J4 | | GCO10002 | Outer Joint | | 25 | 23 | 54.8 | 78.5 | 56 | I |
| | 1993.05-2001.05 | AT/MT | F | L/R | Hatchback FWD XU10J4 | Date to:1994.12 | GCO10003 | Outer Joint | 29T | 25 | 23 | 54.8 | 78.5 | 56 | I |
| | 1993.05-2001.05 | AT/MT | F | L/R | Hatchback FWD XU10J4 | | GCO10024 | Outer Joint | 48T | 25 | 34 | 55.7 | 79 | 55 | I |
| | 1993.05-2001.05 | AT/MT | F | L/R | Hatchback FWD XU10J4 | Date from:1995.01 | GCO45001 | Outer Joint | 29T | 25 | 34 | 54.8 | 78.5 | 56 | I |
| | 1993.05-2001.05 | MT | F | L | Hatchback FWD XU10J4 | | GDS99025 | Drive Shaft | 29W | 25 | 24 | 55.7 | 79 | 597 | |
| | 1993.05-2001.05 | MT | F | R | Hatchback FWD XU10J4 | | GDS10126 | Drive Shaft | 29W | 25 | 24 | 55.7 | 79 | 886 | |
| | 1993.05-2001.05 | | F | L | Hatchback FWD XU10J4 | Date To:1996.01 | GDS45008 | Drive Shaft | | 25 | 24 | 54.8 | 78.5 | 601.5 | |
| | 1993.05-2001.05 | | F | R | Hatchback FWD XU10J4 | Date To:1996.01 | GDS45070 | Drive Shaft | | 25 | 24 | 54.8 | 78.5 | 880 | |
| | 1993.05-2001.05 | | F | | Hatchback FWD XU10J4 | | GCO10022 | Outer Joint | 29W | 25 | 34 | 55.7 | 79 | 55 | I |
| | 1994.06-2001.05 | 5MT | F | L | Saloon FWD XU10J4 | | GDS45024 | Drive Shaft | 29W | 25 | 24 | 55.7 | 79 | 603.5 | |
| | 1994.06-2001.05 | 5MT | F | R | Saloon FWD XU10J4 | | GDS45017 | Drive Shaft | 29W | 25 | 24 | 55.7 | 79 | 881 | |
| | 1994.06-2001.05 | 5MT | F | R | Saloon FWD XU10J4 | | GCO45023 | Outer Joint | 29W | 25 | 34 | 55.7 | 79 | 55 | I |
| | 1994.06-2001.05 | 5MT | F | L | Saloon FWD XU10J4 | | GCI10020 | Inner Joint | | 24 | 34 | 40 | 62.5 | 99 | |
| | 1994.06-2001.05 | AT/MT | F | L/R | Saloon FWD XU10J4 | | GCO10002 | Outer Joint | | 25 | 23 | 54.8 | 78.5 | 56 | I |
| | 1994.06-2001.05 | AT/MT | F | L/R | Saloon FWD XU10J4 | Date to:1994.12 | GCO10003 | Outer Joint | 29T | 25 | 23 | 54.8 | 78.5 | 56 | I |
| | 1994.06-2001.05 | AT/MT | F | L/R | Saloon FWD XU10J4 | | GCO10024 | Outer Joint | 48T | 25 | 34 | 55.7 | 79 | 55 | I |
| | 1994.06-2001.05 | AT/MT | F | L/R | Saloon FWD XU10J4 | Date from:1995.01 | GCO45001 | Outer Joint | 29T | 25 | 34 | 54.8 | 78.5 | 56 | I |
| | 1994.06-2001.05 | MT | F | L | Saloon FWD XU10J4 | | GDS99025 | Drive Shaft | 29W | 25 | 24 | 55.7 | 79 | 597 | |
| | 1994.06-2001.05 | MT | F | R | Saloon FWD XU10J4 | | GDS10126 | Drive Shaft | 29W | 25 | 24 | 55.7 | 79 | 886 | |
| | 1994.06-2001.05 | | F | L | Saloon FWD XU10J4 | Date To:1996.01 | GDS45008 | Drive Shaft | | 25 | 24 | 54.8 | 78.5 | 601.5 | |
| | 1994.06-2001.05 | | F | R | Saloon FWD XU10J4 | Date To:1996.01 | GDS45070 | Drive Shaft | | 25 | 24 | 54.8 | 78.5 | 880 | |
| | 1994.06-2001.05 | | F | | Saloon FWD XU10J4 | | GCO10022 | Outer Joint | 29W | 25 | 34 | 55.7 | 79 | 55 | I |
| 2.0 (120 kw) | 1996.07-2001.05 | 5MT/6MT | F | L | Hatchback FWD XU10J4RS | | GDS45024 | Drive Shaft | 29W | 25 | 24 | 55.7 | 79 | 603.5 | |
| | 1996.07-2001.05 | 5MT/6MT | F | R | Hatchback FWD XU10J4RS | | GDS45017 | Drive Shaft | 29W | 25 | 24 | 55.7 | 79 | 881 | |
| | 1996.07-2001.05 | 5MT/6MT | F | R | Hatchback FWD XU10J4RS | | GCO45023 | Outer Joint | 29W | 25 | 34 | 55.7 | 79 | 55 | I |
| | 1996.07-2001.05 | 5MT/6MT | F | L | Hatchback FWD XU10J4RS | | GCI10020 | Inner Joint | | 24 | 34 | 40 | 62.5 | 99 | |
| | 1996.07-2001.05 | AT/MT | F | R | Hatchback FWD XU10J4RS | | GDS45070 | Drive Shaft | | 25 | 24 | 54.8 | 78.5 | 880 | |
| | 1996.07-2001.05 | AT/MT | F | L/R | Hatchback FWD XU10J4RS | | GCO10043 | Outer Joint | | 25 | 34 | 54.8 | 78.5 | 56 | I |
| | 1996.07-2001.05 | MT | F | L | Hatchback FWD XU10J4RS | | GDS99025 | Drive Shaft | 29W | 25 | 24 | 55.7 | 79 | 597 | |
| | 1996.07-2001.05 | MT | F | R | Hatchback FWD XU10J4RS | | GDS10126 | Drive Shaft | 29W | 25 | 24 | 55.7 | 79 | 886 | |
| | 1996.07-2001.05 | | F | L | Hatchback FWD XU10J4RS | | GDS45023 | Drive Shaft | | 25 | 24 | 60 | 80 | 608 | |
| | 1996.07-2001.05 | | F | L/R | Hatchback FWD XU10J4RS | | GCO10042 | Outer Joint | | 25 | 34 | 54.8 | 78.5 | 56 | I |
| | 1996.07-2001.05 | | F | | Hatchback FWD XU10J4RS | | GCO10022 | Outer Joint | 29W | 25 | 34 | 55.7 | 79 | 55 | I |
| | 1996.07-2001.05 | | F | | Hatchback FWD XU10J4RS | | GCO10027 | Outer Joint | 48T | 25 | 34 | 55.7 | 79 | 55 | I |
| | 1996.07-2001.05 | | F | | Hatchback FWD XU10J4RS | | GCO45001 | Outer Joint | 29T | 25 | 34 | 54.8 | 78.5 | 56 | I |
| **306 Cabrio** | | | | | | | | | | | | | | | |
| 1.6 (65 kw) | 1996.08-2000.06 | 4AT/5MT | F | L | Cabriolet FWD TU5JP | | GDS45021 | Drive Shaft | | 25 | 22 | 54.8 | 79 | 607 | |
| | 1996.08-2000.06 | 4AT/5MT | F | L | Cabriolet FWD TU5JP | Inner teeth of wheel side:22 | GDS99037 | Drive Shaft | 29T | 25 | 22 | 60 | 80 | 608 | |
| | 1996.08-2000.06 | 4AT/5MT | F | R | Cabriolet FWD TU5JP | | GDS45014 | Drive Shaft | | 25 | 22 | 54.8 | 79 | 879.5 | |
| | 1996.08-2000.06 | 4AT/5MT | F | R | Cabriolet FWD TU5JP | | GDS45158 | Drive Shaft | 29T | 25 | 22 | 54.5 | 79.5 | 875 | |
| | 1996.08-2000.06 | AT | F | L/R | Cabriolet FWD TU5JP | | GCO10022 | Outer Joint | 29W | 25 | 34 | 55.7 | 79 | 55 | I |
| | 1996.08-2000.06 | MT | F | L/R | Cabriolet FWD TU5JP | | GCO10002 | Outer Joint | | 25 | 23 | 54.8 | 78.5 | 56 | I |
| | 1996.08-2000.06 | MT | F | L/R | Cabriolet FWD TU5JP | | GCO10004 | Outer Joint | 48T | 25 | 23 | 54.8 | 78.5 | 56 | I |
| | 1996.08-2000.06 | MT | F | L/R | Cabriolet FWD TU5JP | | GCO45036 | Outer Joint | 29T | 25 | 22 | 60 | 80 | 54 | I |
| 1.6 (72 kw) | 2000.07-2002.12 | AT | F | | Cabriolet FWD TU5JP | | GCO10022 | Outer Joint | 29W | 25 | 34 | 55.7 | 79 | 55 | I |
| | 2000.07-2002.12 | MT | F | L | Cabriolet FWD TU5JP | | GDS99037 | Drive Shaft | 29T | 25 | 22 | 60 | 80 | 608 | |
| | 2000.07-2002.12 | MT | F | L | Cabriolet FWD TU5JP | | GDS99135 | Drive Shaft | | 25 | 22 | 60 | 80 | 608 | |
| | 2000.07-2002.12 | MT | F | R | Cabriolet FWD TU5JP | | GDS45137 | Drive Shaft | | 25 | 22 | 60 | 78.5 | 880 | |
| | 2000.07-2002.12 | MT | F | R | Cabriolet FWD TU5JP | | GDS45158 | Drive Shaft | 29T | 25 | 22 | 54.5 | 79.5 | 875 | |
| | 2000.07-2002.12 | MT | F | L/R | Cabriolet FWD TU5JP | | GCO45036 | Outer Joint | 29T | 25 | 22 | 60 | 80 | 54 | I |
| | 2000.07-2002.12 | MT | F | L | Cabriolet FWD TU5JP | | GCI10023 | Inner Joint | | 22 | 22 | 40 | 58.5 | 86 | |

| | YEAR | TRANSM. | F/R | L/R | BODY STYLE & DRIVE TYPE & ENGINE | REMARKS | G-AP Ref. | PRODUCT | ABS | Technical Specifications A | B | C | H | L | P |
|---|---|---|---|---|---|---|---|---|---|---|---|---|---|---|---|
| **PEUGEOT** | | | | | | | | | | | | | | | |
| **306 Cabrio** | | | | | | | | | | | | | | | |
| 1.6 (72 kw) | 2000.07-2002.12 | MT | F | R | Cabriolet FWD TU5JP | | GCI10024 | Inner Joint | | 22 | 22 | 30 | 329.5 | 86 | |
| 1.8 (81 kw) | 1997.05-2002.12 | 5MT | F | L | Cabriolet FWD XU7JP4 | inner teeth of wheel side:23 | GDS45059 | Drive Shaft | 29T | 25 | 24 | 54.8 | 78.5 | 613 | |
| | 1997.05-2002.12 | 5MT | F | R | Cabriolet FWD XU7JP4 | | GDS45017 | Drive Shaft | 29W | 25 | 24 | 55.7 | 79 | 881 | |
| | 1997.05-2002.12 | 5MT | F | R | Cabriolet FWD XU7JP4 | | GCO45023 | Outer Joint | 29W | 25 | 34 | 55.7 | 79 | 55 | I |
| | 1997.05-2002.12 | AT/MT | F | L | Cabriolet FWD XU7JP4 | | GDS45023 | Drive Shaft | | 25 | 24 | 60 | 80 | 608 | |
| | 1997.05-2002.12 | AT/MT | F | L | Cabriolet FWD XU7JP4 | inner teeth of wheel side:34 | GDS45024 | Drive Shaft | 29W | 25 | 24 | 55.7 | 79 | 603.5 | |
| | 1997.05-2002.12 | AT/MT | F | R | Cabriolet FWD XU7JP4 | | GDS10126 | Drive Shaft | 29W | 25 | 24 | 55.7 | 79 | 886 | |
| | 1997.05-2002.12 | AT/MT | F | R | Cabriolet FWD XU7JP4 | | GDS45198 | Drive Shaft | | 25 | 24 | 56.7 | 80 | 891 | |
| | 1997.05-2002.12 | AT/MT | F | R | Cabriolet FWD XU7JP4 | | GCO45014 | Outer Joint | | 25 | 22 | 56.7 | 80 | 59 | O |
| | 1997.05-2002.12 | AT/MT | F | L/R | Cabriolet FWD XU7JP4 | | GCO10002 | Outer Joint | | 25 | 23 | 54.8 | 78.5 | 56 | I |
| | 1997.05-2002.12 | AT/MT | F | L/R | Cabriolet FWD XU7JP4 | | GCO10027 | Outer Joint | 48T | 25 | 34 | 55.7 | 79 | 55 | I |
| | 1997.05-2002.12 | | F | L | Cabriolet FWD XU7JP4 | | GDS99025 | Drive Shaft | 29W | 25 | 24 | 55.7 | 79 | 597 | |
| | 1997.05-2002.12 | | F | L/R | Cabriolet FWD XU7JP4 | | GCO10042 | Outer Joint | | 25 | 34 | 54.8 | 78.5 | 56 | I |
| | 1997.05-2002.12 | | F | | Cabriolet FWD XU7JP4 | | GCO10022 | Outer Joint | 29W | 25 | 34 | 55.7 | 79 | 55 | I |
| 2.0 (89 kw) | 1994.03-1997.04 | 4AT/5MT | F | L | Cabriolet FWD XU10J2 | inner teeth of wheel side:23 | GDS45059 | Drive Shaft | 29T | 25 | 24 | 54.8 | 78.5 | 613 | |
| | 1994.03-1997.04 | 4AT/5MT | F | R | Cabriolet FWD XU10J2 | | GDS45017 | Drive Shaft | 29W | 25 | 24 | 55.7 | 79 | 881 | |
| | 1994.03-1997.04 | 4AT/5MT | F | R | Cabriolet FWD XU10J2 | | GCO45023 | Outer Joint | 29W | 25 | 34 | 55.7 | 79 | 55 | I |
| | 1994.03-1997.04 | AT/MT | F | L | Cabriolet FWD XU10J2 | Date to:1997.04 | GDS45008 | Drive Shaft | | 25 | 24 | 54.8 | 78.5 | 601.5 | |
| | 1994.03-1997.04 | AT/MT | F | L | Cabriolet FWD XU10J2 | Date to:1997.04;inner teeth of wheel side:34 | GDS45024 | Drive Shaft | 29W | 25 | 24 | 55.7 | 79 | 603.5 | |
| | 1994.03-1997.04 | AT/MT | F | R | Cabriolet FWD XU10J2 | Date to:1997.04 | GDS45070 | Drive Shaft | | 25 | 24 | 54.8 | 78.5 | 880 | |
| | 1994.03-1997.04 | AT/MT | F | L/R | Cabriolet FWD XU10J2 | Date to:1997.04 | GCO10002 | Outer Joint | | 25 | 23 | 54.8 | 78.5 | 56 | I |
| | 1994.03-1997.04 | AT/MT | F | L/R | Cabriolet FWD XU10J2 | Date To:1995.12 | GCO10003 | Outer Joint | 29T | 25 | 23 | 54.8 | 78.5 | 56 | I |
| | 1994.03-1997.04 | AT/MT | F | L/R | Cabriolet FWD XU10J2 | Date to:1997.04 | GCO10024 | Outer Joint | 48T | 25 | 34 | 55.7 | 79 | 55 | I |
| | 1994.03-1997.04 | AT/MT | F | L/R | Cabriolet FWD XU10J2 | | GCO10027 | Outer Joint | 48T | 25 | 34 | 55.7 | 79 | 55 | I |
| | 1994.03-1997.04 | AT/MT | F | L/R | Cabriolet FWD XU10J2 | Date from:1995.01;Date to:1997.04 | GCO45001 | Outer Joint | 29T | 25 | 34 | 54.8 | 78.5 | 56 | I |
| | 1994.03-1997.04 | AT/MT | F | L | Cabriolet FWD XU10J2 | | GCI10018 | Inner Joint | | 24 | 29 | 40 | 62.5 | 99 | |
| | 1994.03-1997.04 | MT | F | L | Cabriolet FWD XU10J2 | | GDS99025 | Drive Shaft | 29W | 25 | 24 | 55.7 | 79 | 597 | |
| | 1994.03-1997.04 | MT | F | R | Cabriolet FWD XU10J2 | | GDS10126 | Drive Shaft | 29W | 25 | 24 | 55.7 | 79 | 886 | |
| | 1994.03-1997.04 | | F | L | Cabriolet FWD XU10J2 | | GDS45023 | Drive Shaft | | 25 | 24 | 60 | 80 | 608 | |
| | 1994.03-1997.04 | | F | L | Cabriolet FWD XU10J2 | | GDS45160 | Drive Shaft | | 25 | 24 | 54.8 | 78.5 | 609 | |
| | 1994.03-1997.04 | | F | L/R | Cabriolet FWD XU10J2 | | GCO10022 | Outer Joint | 29W | 25 | 34 | 55.7 | 79 | 55 | I |
| | 1994.03-1997.04 | | F | L/R | Cabriolet FWD XU10J2 | | GCO10042 | Outer Joint | | 25 | 34 | 54.8 | 78.5 | 56 | I |
| 2.0 (92 kw) | 1994.01-1997.06 | 4AT/5MT | F | R | Cabriolet FWD XU10J2 | | GDS45017 | Drive Shaft | 29W | 25 | 24 | 55.7 | 79 | 881 | |
| | 1994.01-1997.06 | 4AT/5MT | F | R | Cabriolet FWD XU10J2 | | GCO45023 | Outer Joint | 29W | 25 | 34 | 55.7 | 79 | 55 | I |
| 2.0 (97 kw) | 1997.03-2002.04 | MT | F | L | Cabriolet FWD XU10J4R | Date from:1997.04 | GDS99025 | Drive Shaft | 29W | 25 | 24 | 55.7 | 79 | 597 | |
| | 1997.03-2002.04 | MT | F | R | Cabriolet FWD XU10J4R | Date from:1997.04 | GDS10126 | Drive Shaft | 29W | 25 | 24 | 55.7 | 79 | 886 | |
| | 1997.03-2002.04 | | F | L/R | Cabriolet FWD XU10J4R | | GCO10042 | Outer Joint | | 25 | 34 | 54.8 | 78.5 | 56 | I |
| | 1997.03-2002.04 | | F | | Cabriolet FWD XU10J4R | | GCO10022 | Outer Joint | 29W | 25 | 34 | 55.7 | 79 | 55 | I |
| | 1997.03-2002.04 | | F | | Cabriolet FWD XU10J4R | | GCO45001 | Outer Joint | 29T | 25 | 34 | 54.8 | 78.5 | 56 | I |
| 2.0 (99 kw) | 1997.03-2002.04 | MT | F | L | Cabriolet FWD XU10J4R | | GDS99025 | Drive Shaft | 29W | 25 | 24 | 55.7 | 79 | 597 | |
| | 1997.03-2002.04 | MT | F | R | Cabriolet FWD XU10J4R | | GDS10126 | Drive Shaft | 29W | 25 | 24 | 55.7 | 79 | 886 | |
| | 1997.03-2002.04 | MT | F | R | Cabriolet FWD XU10J4R | | GCO45023 | Outer Joint | 29W | 25 | 34 | 55.7 | 79 | 55 | I |
| | 1997.03-2002.04 | | F | L/R | Cabriolet FWD XU10J4R | | GCO10042 | Outer Joint | | 25 | 34 | 54.8 | 78.5 | 56 | I |
| | 1997.03-2002.04 | | F | | Cabriolet FWD XU10J4R | | GCO10022 | Outer Joint | 29W | 25 | 34 | 55.7 | 79 | 55 | I |
| **307** | | | | | | | | | | | | | | | |
| 1.4 (50 kw) | 2001.10-2005.06 | 5MT | F | L | Hatchback FWD 8HX (DV4TD);8HZ (DV4TD) | | GDS45105 | Drive Shaft | | 25 | 24 | 58 | 79 | 625 | |
| | 2001.10-2005.06 | 5MT | F | R | Hatchback FWD 8HX (DV4TD);8HZ (DV4TD) | | GDS45104 | Drive Shaft | | 25 | 24 | 58 | 79 | 925 | |
| | 2001.10-2005.06 | 5MT | F | R | Hatchback FWD 8HX (DV4TD);8HZ (DV4TD) | | GCO45027 | Outer Joint | | 25 | 34 | 58 | 79 | 55.5 | I |
| | 2001.10-2005.06 | 5MT | F | L/R | Hatchback FWD 8HX (DV4TD);8HZ (DV4TD) | | GCO99366 | Outer Joint | | 25 | 34 | 58.5 | 79 | 55 | I |
| | 2001.10-2005.06 | MT | F | L | Hatchback FWD 8HX (DV4TD);8HZ (DV4TD) | Trans. code:BE4 | GDS45126 | Drive Shaft | | 25 | 24 | 58.5 | 89 | 630 | |
| | 2001.10-2005.06 | MT | F | L/R | Hatchback FWD 8HX (DV4TD);8HZ (DV4TD) | | GCO10042 | Outer Joint | | 25 | 34 | 54.8 | 78.5 | 56 | I |
| 1.4 (55 kw) | 2000.08-2003.09 | 5MT | F | L | Hatchback FWD KFW (TU3JP) | | GDS45119 | Drive Shaft | | 25 | 22 | 58.5 | 79.5 | 633 | |
| | 2000.08-2003.09 | 5MT | F | R | Hatchback FWD KFW (TU3JP) | | GDS45113 | Drive Shaft | | 25 | 22 | 58.5 | 79.5 | 915 | |
| | 2000.08-2003.09 | 5MT | F | L/R | Hatchback FWD KFW (TU3JP) | | GCO10025 | Outer Joint | | 25 | 22 | 60 | 80 | 54 | I |
| | 2000.08-2003.09 | 5MT | F | R | Hatchback FWD KFW (TU3JP) | | GCI10024 | Inner Joint | | 22 | 22 | 30 | 329.5 | 86 | |
| 1.4 (65 kw) | 2003.11-2007.07 | 5MT | F | L | Hatchback FWD KFU (ET3J4) | | GDS45119 | Drive Shaft | | 25 | 22 | 58.5 | 79.5 | 633 | |
| | 2003.11-2007.07 | 5MT | F | R | Hatchback FWD KFU (ET3J4) | | GDS45113 | Drive Shaft | | 25 | 22 | 58.5 | 79.5 | 915 | |
| | 2003.11-2007.07 | 5MT | F | L/R | Hatchback FWD KFU (ET3J4) | | GCO10025 | Outer Joint | | 25 | 22 | 60 | 80 | 54 | I |
| | 2003.11-2007.07 | 5MT | F | R | Hatchback FWD KFU (ET3J4) | | GCI10024 | Inner Joint | | 22 | 22 | 30 | 329.5 | 86 | |
| | 2003.11-2007.07 | MT | F | L/R | Hatchback FWD KFU (ET3J4) | Trans. code:MA | GCO10097 | Outer Joint | | 25 | 30 | 58.5 | 79.5 | 55 | I |
| 1.6 (66 kw) | 2005.04-2009.03 | 5MT | F | L | Hatchback FWD 9HX (DV6ATED4);9HV (DV6TED4B);9HV (DV6TED4BU);9HV (DV6TED4) | | GDS45126 | Drive Shaft | | 25 | 24 | 58.5 | 89 | 630 | |
| | 2005.04-2009.03 | 5MT | F | R | Hatchback FWD 9HX (DV6ATED4);9HV (DV6TED4B);9HV (DV6TED4BU);9HV (DV6TED4) | | GDS45104 | Drive Shaft | | 25 | 24 | 58 | 79 | 925 | |
| | 2005.04-2009.03 | 5MT | F | R | Hatchback FWD 9HX (DV6ATED4);9HV (DV6TED4B);9HV (DV6TED4BU);9HV (DV6TED4) | | GCO45027 | Outer Joint | | 25 | 34 | 58 | 79 | 55.5 | I |
| | 2005.04-2009.03 | 5MT | F | L/R | Hatchback FWD 9HX (DV6ATED4);9HV (DV6TED4B);9HV (DV6TED4BU);9HV (DV6TED4) | | GCO99366 | Outer Joint | | 25 | 34 | 58.5 | 79 | 55 | I |
| | 2005.04-2009.03 | MT | F | L | Hatchback FWD 9HX (DV6ATED4);9HV (DV6TED4B);9HV (DV6TED4BU);9HV (DV6TED4) | | GDS45105 | Drive Shaft | | 25 | 24 | 58 | 79 | 625 | |

| | YEAR | TRANSM. | F/R | L/R | BODY STYLE & DRIVE TYPE & ENGINE | REMARKS | G-AP Ref. | PRODUCT | ABS | Technical Specifications A | B | C | H | L | P |
|---|---|---|---|---|---|---|---|---|---|---|---|---|---|---|---|
| **PEUGEOT** | | | | | | | | | | | | | | | |
| **307** | | | | | | | | | | | | | | | |
| 1.6 (66 kw) | 2005.04-2009.03 | MT | F | L/R | Hatchback FWD 9HX (DV6ATED4);9HV (DV6TED4B);9HV (DV6TED4BU);9HV (DV6TED4) | | GCO10042 | Outer Joint | | 25 | 34 | 54.8 | 78.5 | 56 | I |
| | 2005.04-2009.03 | MT | F | L | Hatchback FWD 9HX (DV6ATED4);9HV (DV6TED4B);9HV (DV6TED4BU);9HV (DV6TED4) | | GCI10020 | Inner Joint | | 24 | 34 | 40 | 62.5 | 99 | |
| 1.6 (80 kw) | 2000.08-2007.11 | 4AT | F | L/R | Hatchback FWD NFU (TU5JP4) | | GCO99366 | Outer Joint | | 25 | 34 | 58.5 | 79 | 55 | I |
| | 2000.08-2007.11 | 5MT | F | L | Hatchback FWD NFU (TU5JP4) | Trans. code:MA | GDS45119 | Drive Shaft | | 25 | 22 | 58.5 | 79.5 | 633 | |
| | 2000.08-2007.11 | 5MT | F | R | Hatchback FWD NFU (TU5JP4) | Trans. code:BE4 | GDS45104 | Drive Shaft | | 25 | 24 | 58 | 79 | 925 | |
| | 2000.08-2007.11 | 5MT | F | R | Hatchback FWD NFU (TU5JP4) | Transmission Type:MA | GDS45113 | Drive Shaft | | 25 | 22 | 58.5 | 79.5 | 915 | |
| | 2000.08-2007.11 | 5MT | F | R | Hatchback FWD NFU (TU5JP4) | Trans. code:BE4R | GCO45027 | Outer Joint | | 25 | 34 | 58 | 79 | 55.5 | I |
| | 2000.08-2007.11 | AT | F | L | Hatchback FWD NFU (TU5JP4) | | GDS10286 | Drive Shaft | | 25 | 26 | 58.5 | 79 | 613 | |
| | 2000.08-2007.11 | AT | F | L | Hatchback FWD NFU (TU5JP4) | | GCI99001 | Inner Joint | | 26 | 34 | 30.2 | 46.5 | 103.5 | |
| | 2000.08-2007.11 | AT/Semi-AT | F | R | Hatchback FWD NFU (TU5JP4) | | GDS10291 | Drive Shaft | | 25 | 26 | 58.5 | 79 | 833 | |
| | 2000.08-2007.11 | MT | F | L | Hatchback FWD NFU (TU5JP4) | | GDS45105 | Drive Shaft | | 25 | 24 | 58 | 79 | 625 | |
| | 2000.08-2007.11 | MT | F | L | Hatchback FWD NFU (TU5JP4) | | GDS45126 | Drive Shaft | | 25 | 24 | 58.5 | 89 | 630 | |
| | 2000.08-2007.11 | MT | F | L/R | Hatchback FWD NFU (TU5JP4) | Date from:2007.03;Trans. code:MA | GCO10025 | Outer Joint | | 25 | 22 | 60 | 80 | 54 | I |
| | 2000.08-2007.11 | MT | F | L/R | Hatchback FWD NFU (TU5JP4) | Trans. code:MA | GCO10097 | Outer Joint | | 25 | 30 | 58.5 | 79.5 | 55 | I |
| | 2000.08-2007.11 | MT/Semi-AT | F | L/R | Hatchback FWD NFU (TU5JP4) | | GCO10042 | Outer Joint | | 25 | 34 | 54.8 | 78.5 | 56 | I |
| | 2004.02-2009.03 | 5MT | F | L | Hatchback FWD 9HY (DV6TED4);9HZ (DV6TED4) | | GDS45126 | Drive Shaft | | 25 | 24 | 58.5 | 89 | 630 | |
| | 2004.02-2009.03 | 5MT | F | R | Hatchback FWD 9HY (DV6TED4);9HZ (DV6TED4) | | GDS45104 | Drive Shaft | | 25 | 24 | 58 | 79 | 925 | |
| | 2004.02-2009.03 | 5MT | F | R | Hatchback FWD 9HY (DV6TED4);9HZ (DV6TED4) | | GCO45027 | Outer Joint | | 25 | 34 | 58 | 79 | 55.5 | I |
| | 2004.02-2009.03 | 5MT | F | L/R | Hatchback FWD 9HY (DV6TED4);9HZ (DV6TED4) | | GCO99366 | Outer Joint | | 25 | 34 | 58.5 | 79 | 55 | I |
| | 2004.02-2009.03 | MT | F | L | Hatchback FWD 9HY (DV6TED4);9HZ (DV6TED4) | | GDS45105 | Drive Shaft | | 25 | 24 | 58 | 79 | 625 | |
| | 2004.02-2009.03 | MT | F | R | Hatchback FWD 9HY (DV6TED4);9HZ (DV6TED4) | | GDS10173 | Drive Shaft | 29W | 25 | 24 | 58.5 | 79 | 921 | |
| | 2004.02-2009.03 | MT | F | L/R | Hatchback FWD 9HY (DV6TED4);9HZ (DV6TED4) | | GCO10042 | Outer Joint | | 25 | 34 | 54.8 | 78.5 | 56 | I |
| | 2004.02-2009.03 | MT | F | L | Hatchback FWD 9HY (DV6TED4);9HZ (DV6TED4) | | GCI10020 | Inner Joint | | 24 | 34 | 40 | 62.5 | 99 | |
| | 2007.09-2009.04 | 5MT | F | L | Hatchback FWD NFU (TU5JP4) | Trans. code:BE4R | GDS45105 | Drive Shaft | | 25 | 24 | 58 | 79 | 625 | |
| | 2007.09-2009.04 | 5MT | F | L | Hatchback FWD NFU (TU5JP4) | Trans. code:MA | GDS45119 | Drive Shaft | | 25 | 22 | 58.5 | 79.5 | 633 | |
| | 2007.09-2009.04 | 5MT | F | R | Hatchback FWD NFU (TU5JP4) | Trans. code:BE4R | GDS45104 | Drive Shaft | | 25 | 24 | 58 | 79 | 925 | |
| | 2007.09-2009.04 | 5MT | F | R | Hatchback FWD NFU (TU5JP4) | Trans. code:MA | GDS45113 | Drive Shaft | | 25 | 22 | 58.5 | 79.5 | 915 | |
| 1.6 (81 kw) | 2006.07-2012.04 | 5MT | F | R | Hatchback FWD NFU (TU5JP4) | Date from:2007.03;From ORG/OPR:11074;Trans. code:MA | GDS45113 | Drive Shaft | | 25 | 22 | 58.5 | 79.5 | 915 | |
| | 2006.07-2012.04 | 5MT | F | R | Hatchback FWD NFU (TU5JP4) | Trans. code:BE4R | GCO45027 | Outer Joint | | 25 | 34 | 58 | 79 | 55.5 | I |
| | 2006.07-2012.04 | 5MT | F | R | Hatchback FWD NFU (TU5JP4) | Date from:2007.03;From ORG/OPR:11074;Trans. code:MA | GCI10024 | Inner Joint | | 22 | 22 | 30 | 329.5 | 86 | |
| | 2006.07-2012.04 | AT/MT | F | L | Hatchback FWD NFU (TU5JP4) | Trans. code:BE4R | GDS45105 | Drive Shaft | | 25 | 24 | 58 | 79 | 625 | |
| | 2006.07-2012.04 | AT/MT/5MT | F | L | Hatchback FWD NFU (TU5JP4) | Trans. code:BE4R | GDS45126 | Drive Shaft | | 25 | 24 | 58.5 | 89 | 630 | |
| | 2006.07-2012.04 | AT/Semi-AT | F | R | Hatchback FWD NFU (TU5JP4) | | GDS10291 | Drive Shaft | | 25 | 26 | 58.5 | 79 | 833 | |
| | 2006.07-2012.04 | MT | F | L | Hatchback FWD NFU (TU5JP4) | Trans. code:MA;Vehicle Production Country:France | GDS45119 | Drive Shaft | | 25 | 22 | 58.5 | 79.5 | 633 | |
| | 2006.07-2012.04 | MT | F | R | Hatchback FWD NFU (TU5JP4) | Trans. code:BE4R | GDS45104 | Drive Shaft | | 25 | 24 | 58 | 79 | 925 | |
| | 2006.07-2012.04 | MT | F | L/R | Hatchback FWD NFU (TU5JP4) | Trans. code:MA | GCO10025 | Outer Joint | | 25 | 22 | 60 | 80 | 54 | I |
| | 2006.07-2012.04 | MT | F | L/R | Hatchback FWD NFU (TU5JP4) | Trans. code:BE4R | GCO99366 | Outer Joint | | 25 | 34 | 58.5 | 79 | 55 | I |
| | 2006.07-2012.04 | MT/Semi-AT | F | L/R | Hatchback FWD NFU (TU5JP4) | Trans. code:BE4R | GCO10042 | Outer Joint | | 25 | 34 | 54.8 | 78.5 | 56 | I |
| | 2006.07-2012.04 | | F | L/R | Hatchback FWD NFU (TU5JP4) | Trans. code:MA | GCO10097 | Outer Joint | | 25 | 30 | 58.5 | 79.5 | 55 | I |
| 1.6 (83 kw) | 2006.07-2012.12 | 5MT | F | L | Hatchback FWD N6A (TU5JP4) | Trans. code:BE4R | GDS45105 | Drive Shaft | | 25 | 24 | 58 | 79 | 625 | |
| | 2006.07-2012.12 | 5MT | F | L | Hatchback FWD N6A (TU5JP4) | Trans. code:BE4R | GDS45126 | Drive Shaft | | 25 | 24 | 58.5 | 89 | 630 | |
| | 2006.07-2012.12 | 5MT | F | R | Hatchback FWD N6A (TU5JP4) | Trans. code:BE4R | GDS45104 | Drive Shaft | | 25 | 24 | 58 | 79 | 925 | |
| | 2006.07-2012.12 | 5MT | F | R | Hatchback FWD N6A (TU5JP4) | | GDS45113 | Drive Shaft | | 25 | 22 | 58.5 | 79.5 | 915 | |
| | 2006.07-2012.12 | 5MT | F | L | Hatchback FWD N6A (TU5JP4) | Trans. code:BE4R | GCO99366 | Outer Joint | | 25 | 34 | 58.5 | 79 | 55 | I |
| | 2006.07-2012.12 | 5MT | F | R | Hatchback FWD N6A (TU5JP4) | Trans. code:BE4R | GCO45027 | Outer Joint | | 25 | 34 | 58 | 79 | 55.5 | I |
| | 2006.07-2012.12 | 5MT | F | L | Hatchback FWD N6A (TU5JP4) | Trans. code:BE4R | GCI10020 | Inner Joint | | 24 | 34 | 40 | 62.5 | 99 | |
| | 2006.07-2012.12 | 5MT | F | R | Hatchback FWD N6A (TU5JP4) | | GCI10024 | Inner Joint | | 22 | 22 | 30 | 329.5 | 86 | |
| 2.0 (66 kw) | 2000.08-2007.03 | 5MT | F | L | Hatchback FWD RHY (DW10TD) | | GDS45126 | Drive Shaft | | 25 | 24 | 58.5 | 89 | 630 | |
| | 2000.08-2007.03 | 5MT | F | R | Hatchback FWD RHY (DW10TD) | | GDS45104 | Drive Shaft | | 25 | 24 | 58 | 79 | 925 | |
| | 2000.08-2007.03 | 5MT | F | R | Hatchback FWD RHY (DW10TD) | | GCO45027 | Outer Joint | | 25 | 34 | 58 | 79 | 55.5 | I |
| | 2000.08-2007.03 | 5MT | F | L/R | Hatchback FWD RHY (DW10TD) | | GCO99366 | Outer Joint | | 25 | 34 | 58.5 | 79 | 55 | I |
| | 2000.08-2007.03 | AT | F | L | Hatchback FWD RHY (DW10TD) | | GDS10286 | Drive Shaft | | 25 | 26 | 58.5 | 79 | 613 | |
| | 2000.08-2007.03 | AT | F | R | Hatchback FWD RHY (DW10TD) | | GDS10291 | Drive Shaft | | 25 | 26 | 58.5 | 79 | 833 | |
| | 2000.08-2007.03 | MT | F | L | Hatchback FWD RHY (DW10TD) | | GDS45105 | Drive Shaft | | 25 | 24 | 58 | 79 | 625 | |
| | 2000.08-2007.03 | MT | F | R | Hatchback FWD RHY (DW10TD) | | GDS10173 | Drive Shaft | 29W | 25 | 24 | 58.5 | 79 | 921 | |
| | 2000.08-2007.03 | MT | F | L/R | Hatchback FWD RHY (DW10TD) | | GCO10042 | Outer Joint | | 25 | 34 | 54.8 | 78.5 | 56 | I |
| | 2000.08-2007.03 | MT | F | L | Hatchback FWD RHY (DW10TD) | | GCI10020 | Inner Joint | | 24 | 34 | 40 | 62.5 | 99 | |
| 2.0 (79 kw) | 2000.08-2007.03 | 5MT | F | R | Hatchback FWD RHS (DW10ATED) | | GCO45027 | Outer Joint | | 25 | 34 | 58 | 79 | 55.5 | I |
| | 2000.08-2007.03 | AT | F | L | Hatchback FWD RHS (DW10ATED) | | GDS10286 | Drive Shaft | | 25 | 26 | 58.5 | 79 | 613 | |
| | 2000.08-2007.03 | AT | F | R | Hatchback FWD RHS (DW10ATED) | | GDS10291 | Drive Shaft | | 25 | 26 | 58.5 | 79 | 833 | |
| | 2000.08-2007.03 | MT | F | L | Hatchback FWD RHS (DW10ATED) | | GDS45105 | Drive Shaft | | 25 | 24 | 58 | 79 | 625 | |
| | 2000.08-2007.03 | MT | F | L | Hatchback FWD RHS (DW10ATED) | | GDS45126 | Drive Shaft | | 25 | 24 | 58.5 | 89 | 630 | |
| | 2000.08-2007.03 | MT | F | R | Hatchback FWD RHS (DW10ATED) | | GDS10173 | Drive Shaft | 29W | 25 | 24 | 58.5 | 79 | 921 | |
| | 2000.08-2007.03 | MT | F | R | Hatchback FWD RHS (DW10ATED) | | GDS45104 | Drive Shaft | | 25 | 24 | 58 | 79 | 925 | |
| | 2000.08-2007.03 | MT | F | L/R | Hatchback FWD RHS (DW10ATED) | | GCO10042 | Outer Joint | | 25 | 34 | 54.8 | 78.5 | 56 | I |

| | YEAR | TRANSM. | F/R | L/R | BODY STYLE & DRIVE TYPE & ENGINE | REMARKS | G-AP Ref. | PRODUCT | ABS | Technical Specifications A | B | C | H | L | P |
|---|---|---|---|---|---|---|---|---|---|---|---|---|---|---|---|
| **PEUGEOT** | | | | | | | | | | | | | | | |
| **307** | | | | | | | | | | | | | | | |
| 2.0 (79 kw) | 2000.08-2007.03 | MT | F | L/R | Hatchback FWD RHS (DW10ATED) | | GCO99366 | Outer Joint | | 25 | 34 | 58.5 | 79 | 55 | I |
| | 2000.08-2007.03 | MT | F | L | Hatchback FWD RHS (DW10ATED) | | GCI10020 | Inner Joint | | 24 | 34 | 40 | 62.5 | 99 | |
| 2.0 (100 kw) | 2000.08-2005.06 | 5MT | F | L | Hatchback FWD RFN (EW10J4) | | GDS45105 | Drive Shaft | | 25 | 24 | 58 | 79 | 625 | |
| | 2000.08-2005.06 | 5MT | F | L | Hatchback FWD RFN (EW10J4) | | GDS45126 | Drive Shaft | | 25 | 24 | 58.5 | 89 | 630 | |
| | 2000.08-2005.06 | 5MT | F | R | Hatchback FWD RFN (EW10J4) | | GCO45027 | Outer Joint | | 25 | 34 | 58 | 79 | 55.5 | I |
| | 2000.08-2005.06 | AT | F | L | Hatchback FWD RFN (EW10J4) | | GDS10286 | Drive Shaft | | 25 | 26 | 58.5 | 79 | 613 | |
| | 2000.08-2005.06 | AT | F | R | Hatchback FWD RFN (EW10J4) | | GDS10291 | Drive Shaft | | 25 | 26 | 58.5 | 79 | 833 | |
| | 2000.08-2005.06 | AT | F | L | Hatchback FWD RFN (EW10J4) | | GCI99001 | Inner Joint | | 26 | 34 | 30.2 | 46.5 | 103.5 | |
| | 2000.08-2005.06 | AT/MT | F | L/R | Hatchback FWD RFN (EW10J4) | | GCO99366 | Outer Joint | | 25 | 34 | 58.5 | 79 | 55 | I |
| | 2000.08-2005.06 | MT | F | R | Hatchback FWD RFN (EW10J4) | | GDS45104 | Drive Shaft | | 25 | 24 | 58 | 79 | 925 | |
| | 2000.08-2005.06 | | F | L/R | Hatchback FWD RFN (EW10J4) | | GCO10042 | Outer Joint | | 25 | 34 | 54.8 | 78.5 | 56 | I |
| | 2003.10-2007.11 | 6AT | F | L | Hatchback FWD RHR (DW10BTED4) | | GDS56611 | Drive Shaft | | 25 | 37 | 58.4 | 89 | 603 | |
| | 2003.10-2007.11 | 6AT | F | R | Hatchback FWD RHR (DW10BTED4) | | GDS83400 | Drive Shaft | | 25 | 37 | 58.4 | 89 | 917 | |
| | 2003.10-2007.11 | 6AT | F | L/R | Hatchback FWD RHR (DW10BTED4) | | GCO10170 | Outer Joint | | 25 | 39 | 58.4 | 89 | 63 | I |
| | 2003.10-2007.11 | 6AT | F | L | Hatchback FWD RHR (DW10BTED4) | | GCI10120 | Inner Joint | | 37 | 39 | 42.2 | 60 | 95.5 | |
| | 2003.10-2007.11 | 6AT | F | R | Hatchback FWD RHR (DW10BTED4) | | GCI82199 | Inner Joint | | 37 | 39 | | 365 | 95 | |
| | 2003.10-2007.11 | 6MT | F | L | Hatchback FWD RHR (DW10BTED4) | | GDS10268 | Drive Shaft | | 25 | 37 | 58.5 | 89 | 621 | |
| | 2003.10-2007.11 | 6MT | F | R | Hatchback FWD RHR (DW10BTED4) | Date to:2007.11 | GCI10041 | Inner Joint | | 37 | 39 | 32 | 399 | 95.5 | |
| | 2003.10-2007.11 | MT | F | L | Hatchback FWD RHR (DW10BTED4) | Trans. code:BE4 | GDS45105 | Drive Shaft | | 25 | 24 | 58 | 79 | 625 | |
| | 2003.10-2007.11 | MT | F | R | Hatchback FWD RHR (DW10BTED4) | | GDS10173 | Drive Shaft | 29W | 25 | 24 | 58.5 | 79 | 921 | |
| | 2003.10-2007.11 | MT | F | R | Hatchback FWD RHR (DW10BTED4) | Trans. code:BE4 | GDS45104 | Drive Shaft | | 25 | 24 | 58 | 79 | 925 | |
| | 2003.10-2007.11 | MT | F | R | Hatchback FWD RHR (DW10BTED4) | | GDS88082 | Drive Shaft | | 25 | 37 | 58.5 | 89 | 949 | |
| | 2003.10-2007.11 | MT | F | L/R | Hatchback FWD RHR (DW10BTED4) | Trans. code:ML | GCO10085 | Outer Joint | | 25 | 39 | 59 | 89 | 63.5 | I |
| 2.0 (103 kw) | 2005.03-2007.11 | 5MT | F | L | Hatchback FWD RFJ (EW10A) | | GDS45105 | Drive Shaft | | 25 | 24 | 58 | 79 | 625 | |
| | 2005.03-2007.11 | 5MT | F | R | Hatchback FWD RFJ (EW10A) | | GCO45027 | Outer Joint | | 25 | 34 | 58 | 79 | 55.5 | I |
| | 2005.03-2007.11 | AT | F | L | Hatchback FWD RFJ (EW10A) | | GDS10286 | Drive Shaft | | 25 | 26 | 58.5 | 79 | 613 | |
| | 2005.03-2007.11 | AT | F | R | Hatchback FWD RFJ (EW10A) | | GDS10291 | Drive Shaft | | 25 | 26 | 58.5 | 79 | 833 | |
| | 2005.03-2007.11 | AT | F | L | Hatchback FWD RFJ (EW10A) | | GCI99001 | Inner Joint | | 26 | 34 | 30.2 | 46.5 | 103.5 | |
| | 2005.03-2007.11 | MT | F | R | Hatchback FWD RFJ (EW10A) | | GDS45104 | Drive Shaft | | 25 | 24 | 58 | 79 | 925 | |
| | 2005.03-2007.11 | MT | F | L/R | Hatchback FWD RFJ (EW10A) | | GCO99366 | Outer Joint | | 25 | 34 | 58.5 | 79 | 55 | I |
| | 2005.03-2007.11 | MT/5MT | F | L | Hatchback FWD RFJ (EW10A) | | GDS45126 | Drive Shaft | | 25 | 24 | 58.5 | 89 | 630 | |
| | 2005.03-2007.11 | | F | L/R | Hatchback FWD RFJ (EW10A) | | GCO10042 | Outer Joint | | 25 | 34 | 54.8 | 78.5 | 56 | I |
| 2.0 (105 kw) | 2008.08-2011.12 | 4AT | F | L | Hatchback FWD RFN (EW10J4);RFJ (EW10A) | | GDS10286 | Drive Shaft | | 25 | 26 | 58.5 | 79 | 613 | |
| | 2008.08-2011.12 | 4AT | F | R | Hatchback FWD RFN (EW10J4);RFJ (EW10A) | | GDS10291 | Drive Shaft | | 25 | 26 | 58.5 | 79 | 833 | |
| 2.0 (130 kw) | 2005.06-2007.11 | 4AT | F | R | Hatchback FWD RFK (EW10J4S) | | GDS10291 | Drive Shaft | | 25 | 26 | 58.5 | 79 | 833 | |
| | 2005.06-2007.11 | 5MT | F | L | Hatchback FWD RFK (EW10J4S) | | GDS45105 | Drive Shaft | | 25 | 24 | 58 | 79 | 625 | |
| | 2005.06-2007.11 | 5MT | F | R | Hatchback FWD RFK (EW10J4S) | | GCO45027 | Outer Joint | | 25 | 34 | 58 | 79 | 55.5 | I |
| | 2005.06-2007.11 | AT | F | L | Hatchback FWD RFK (EW10J4S) | | GDS10286 | Drive Shaft | | 25 | 26 | 58.5 | 79 | 613 | |
| | 2005.06-2007.11 | AT | F | L | Hatchback FWD RFK (EW10J4S) | | GCI99001 | Inner Joint | | 26 | 34 | 30.2 | 46.5 | 103.5 | |
| | 2005.06-2007.11 | MT | F | R | Hatchback FWD RFK (EW10J4S) | | GDS45104 | Drive Shaft | | 25 | 24 | 58 | 79 | 925 | |
| | 2005.06-2007.11 | MT | F | L/R | Hatchback FWD RFK (EW10J4S) | | GCO99366 | Outer Joint | | 25 | 34 | 58.5 | 79 | 55 | I |
| | 2005.06-2007.11 | MT/5MT | F | L | Hatchback FWD RFK (EW10J4S) | | GDS45126 | Drive Shaft | | 25 | 24 | 58.5 | 89 | 630 | |
| | 2005.06-2007.11 | | F | L/R | Hatchback FWD RFK (EW10J4S) | | GCO10042 | Outer Joint | | 25 | 34 | 54.8 | 78.5 | 56 | I |
| **307 CC** | | | | | | | | | | | | | | | |
| 1.6 (80 kw) | 2003.03-2009.04 | 5MT | F | L | Convertible FWD NFU (TU5JP4) | Trans. code:MA | GDS45119 | Drive Shaft | | 25 | 22 | 58.5 | 79.5 | 633 | |
| | 2003.03-2009.04 | 5MT | F | R | Convertible FWD NFU (TU5JP4) | | GDS45104 | Drive Shaft | | 25 | 24 | 58 | 79 | 925 | |
| | 2003.03-2009.04 | 5MT | F | R | Convertible FWD NFU (TU5JP4) | Date from:2007.02,From OR6DPR11073,Trans. code:MA,Date to:2007.02,To OR6DPR-11073,Trans. code:MA | GDS45113 | Drive Shaft | | 25 | 22 | 58.5 | 79.5 | 915 | |
| | 2003.03-2009.04 | 5MT | F | R | Convertible FWD NFU (TU5JP4) | Trans. code:BE4R | GCO45027 | Outer Joint | | 25 | 34 | 58 | 79 | 55.5 | I |
| | 2003.03-2009.04 | 5MT | F | L/R | Convertible FWD NFU (TU5JP4) | Date from:2007.03 | GCO10025 | Outer Joint | | 25 | 22 | 60 | 80 | 54 | I |
| | 2003.03-2009.04 | 5MT | F | L/R | Convertible FWD NFU (TU5JP4) | Date to:2007.02 | GCO99366 | Outer Joint | | 25 | 34 | 58.5 | 79 | 55 | I |
| | 2003.03-2009.04 | AT | F | L | Convertible FWD NFU (TU5JP4) | | GDS10286 | Drive Shaft | | 25 | 26 | 58.5 | 79 | 613 | |
| | 2003.03-2009.04 | AT | F | L | Convertible FWD NFU (TU5JP4) | | GCI99001 | Inner Joint | | 26 | 34 | 30.2 | 46.5 | 103.5 | |
| | 2003.03-2009.04 | AT/Semi-AT | F | R | Convertible FWD NFU (TU5JP4) | | GDS10291 | Drive Shaft | | 25 | 26 | 58.5 | 79 | 833 | |
| | 2003.03-2009.04 | MT | F | L | Convertible FWD NFU (TU5JP4) | | GDS45105 | Drive Shaft | | 25 | 24 | 58 | 79 | 625 | |
| | 2003.03-2009.04 | MT | F | L | Convertible FWD NFU (TU5JP4) | | GDS45126 | Drive Shaft | | 25 | 24 | 58.5 | 89 | 630 | |
| | 2003.03-2009.04 | MT | F | L/R | Convertible FWD NFU (TU5JP4) | Trans. code:MA | GCO10097 | Outer Joint | | 25 | 30 | 58.5 | 79.5 | 55 | I |
| | 2003.03-2009.04 | MT/Semi-AT | F | L/R | Convertible FWD NFU (TU5JP4) | | GCO10042 | Outer Joint | | 25 | 34 | 54.8 | 78.5 | 56 | I |
| 2.0 (100 kw) | 2003.10-2005.06 | 5MT | F | L | Convertible FWD RFN (EW10J4) | | GDS45105 | Drive Shaft | | 25 | 24 | 58 | 79 | 625 | |
| | 2003.10-2005.06 | 5MT | F | L | Convertible FWD RFN (EW10J4) | | GDS45126 | Drive Shaft | | 25 | 24 | 58.5 | 89 | 630 | |
| | 2003.10-2005.06 | 5MT | F | R | Convertible FWD RFN (EW10J4) | | GCO45027 | Outer Joint | | 25 | 34 | 58 | 79 | 55.5 | I |
| | 2003.10-2005.06 | AT | F | L | Convertible FWD RFN (EW10J4) | | GDS10286 | Drive Shaft | | 25 | 26 | 58.5 | 79 | 613 | |
| | 2003.10-2005.06 | AT | F | R | Convertible FWD RFN (EW10J4) | | GDS10291 | Drive Shaft | | 25 | 26 | 58.5 | 79 | 833 | |
| | 2003.10-2005.06 | AT | F | L | Convertible FWD RFN (EW10J4) | | GCI99001 | Inner Joint | | 26 | 34 | 30.2 | 46.5 | 103.5 | |
| | 2003.10-2005.06 | MT | F | R | Convertible FWD RFN (EW10J4) | | GDS45104 | Drive Shaft | | 25 | 24 | 58 | 79 | 925 | |
| | 2003.10-2005.06 | MT | F | L/R | Convertible FWD RFN (EW10J4) | | GCO99366 | Outer Joint | | 25 | 34 | 58.5 | 79 | 55 | I |

| | YEAR | TRANSM. | F/R | L/R | BODY STYLE & DRIVE TYPE & ENGINE | REMARKS | G-AP Ref. | PRODUCT | ABS | Technical Specifications A | B | C | H | L | P |
|---|---|---|---|---|---|---|---|---|---|---|---|---|---|---|---|
| **PEUGEOT** | | | | | | | | | | | | | | | |
| **307 CC** | | | | | | | | | | | | | | | |
| 2.0 (100 kw) | 2003.10-2005.06 | | F | L/R | Convertible FWD RFN (EW10J4) | | GCO10042 | Outer Joint | | 25 | 34 | 54.8 | 78.5 | 56 | I |
| | 2005.06-2009.04 | 6AT | F | L | Convertible FWD RHR (DW10BTED4) | | GDS56611 | Drive Shaft | | 25 | 37 | 58.4 | 89 | 603 | |
| | 2005.06-2009.04 | 6AT | F | R | Convertible FWD RHR (DW10BTED4) | | GDS83400 | Drive Shaft | | 25 | 37 | 58.4 | 89 | 917 | |
| | 2005.06-2009.04 | 6AT | F | L/R | Convertible FWD RHR (DW10BTED4) | | GCO10170 | Outer Joint | | 25 | 39 | 58.4 | 89 | 63 | I |
| | 2005.06-2009.04 | 6AT | F | L | Convertible FWD RHR (DW10BTED4) | | GCI10120 | Inner Joint | | 37 | 39 | 42.2 | 60 | 95.5 | |
| | 2005.06-2009.04 | 6AT | F | R | Convertible FWD RHR (DW10BTED4) | | GCI82199 | Inner Joint | | 37 | 39 | | 365 | 95 | |
| | 2005.06-2009.04 | 6MT | F | L/R | Convertible FWD RHR (DW10BTED4) | | GCO10085 | Outer Joint | | 25 | 39 | 59 | 89 | 63.5 | I |
| | 2005.06-2009.04 | MT | F | L | Convertible FWD RHR (DW10BTED4) | | GDS10268 | Drive Shaft | | 25 | 37 | 58.5 | 89 | 621 | |
| | 2005.06-2009.04 | MT | F | L | Convertible FWD RHR (DW10BTED4) | Trans. code:BE4R | GDS45105 | Drive Shaft | | 25 | 24 | 58 | 79 | 625 | |
| | 2005.06-2009.04 | MT | F | R | Convertible FWD RHR (DW10BTED4) | Trans. code:BE4R | GDS45104 | Drive Shaft | | 25 | 24 | 58 | 79 | 925 | |
| | 2005.06-2009.04 | MT | F | R | Convertible FWD RHR (DW10BTED4) | | GDS88082 | Drive Shaft | | 25 | 37 | 58.5 | 89 | 949 | |
| | 2005.06-2009.04 | MT | F | R | Convertible FWD RHR (DW10BTED4) | Date to:2009.04 | GCI10041 | Inner Joint | | 37 | 39 | 32 | 399 | 95.5 | |
| 2.0 (103 kw) | 2004.12-2009.04 | 5MT | F | R | Convertible FWD RFJ (EW10A) | | GCO45027 | Outer Joint | | 25 | 34 | 58 | 79 | 55.5 | I |
| | 2004.12-2009.04 | AT | F | L | Convertible FWD RFJ (EW10A) | | GDS10286 | Drive Shaft | | 25 | 26 | 58.5 | 79 | 613 | |
| | 2004.12-2009.04 | AT | F | R | Convertible FWD RFJ (EW10A) | | GDS10291 | Drive Shaft | | 25 | 26 | 58.5 | 79 | 833 | |
| | 2004.12-2009.04 | AT | F | L | Convertible FWD RFJ (EW10A) | | GCI99001 | Inner Joint | | 26 | 34 | 30.2 | 46.5 | 103.5 | |
| | 2004.12-2009.04 | MT | F | L | Convertible FWD RFJ (EW10A) | Date from:2005.01;Trans. code:BE4R | GDS45105 | Drive Shaft | | 25 | 24 | 58 | 79 | 625 | |
| | 2004.12-2009.04 | MT | F | L | Convertible FWD RFJ (EW10A) | | GDS45126 | Drive Shaft | | 25 | 24 | 58.5 | 89 | 630 | |
| | 2004.12-2009.04 | MT | F | R | Convertible FWD RFJ (EW10A) | | GDS45104 | Drive Shaft | | 25 | 24 | 58 | 79 | 925 | |
| | 2004.12-2009.04 | MT | F | L/R | Convertible FWD RFJ (EW10A) | | GCO99366 | Outer Joint | | 25 | 34 | 58.5 | 79 | 55 | I |
| | 2004.12-2009.04 | | F | L/R | Convertible FWD RFJ (EW10A) | | GCO10042 | Outer Joint | | 25 | 34 | 54.8 | 78.5 | 56 | I |
| 2.0 (105 kw) | 2005.10-2009.04 | 4AT | F | L | Cabriolet FWD EW10J4 | | GDS10286 | Drive Shaft | | 25 | 26 | 58.5 | 79 | 613 | |
| | 2005.10-2009.04 | 4AT | F | R | Cabriolet FWD EW10J4 | | GDS10291 | Drive Shaft | | 25 | 26 | 58.5 | 79 | 833 | |
| | 2005.10-2009.04 | 5MT | F | L | Cabriolet FWD EW10J4 | | GDS45105 | Drive Shaft | | 25 | 24 | 58 | 79 | 625 | |
| | 2005.10-2009.04 | 5MT | F | R | Cabriolet FWD EW10J4 | | GDS45104 | Drive Shaft | | 25 | 24 | 58 | 79 | 925 | |
| 2.0 (130 kw) | 2003.10-2009.04 | 5MT | F | R | Convertible FWD RFK (EW10J4S) | | GCO45027 | Outer Joint | | 25 | 34 | 58 | 79 | 55.5 | I |
| | 2003.10-2009.04 | AT | F | L | Convertible FWD RFK (EW10J4S) | | GDS10286 | Drive Shaft | | 25 | 26 | 58.5 | 79 | 613 | |
| | 2003.10-2009.04 | AT | F | R | Convertible FWD RFK (EW10J4S) | | GDS10291 | Drive Shaft | | 25 | 26 | 58.5 | 79 | 833 | |
| | 2003.10-2009.04 | AT | F | L | Convertible FWD RFK (EW10J4S) | | GCI99001 | Inner Joint | | 26 | 34 | 30.2 | 46.5 | 103.5 | |
| | 2003.10-2009.04 | MT | F | L | Convertible FWD RFK (EW10J4S) | | GDS45105 | Drive Shaft | | 25 | 24 | 58 | 79 | 625 | |
| | 2003.10-2009.04 | MT | F | L | Convertible FWD RFK (EW10J4S) | Trans. code:BE4 | GDS45126 | Drive Shaft | | 25 | 24 | 58.5 | 89 | 630 | |
| | 2003.10-2009.04 | MT | F | R | Convertible FWD RFK (EW10J4S) | | GDS45104 | Drive Shaft | | 25 | 24 | 58 | 79 | 925 | |
| | 2003.10-2009.04 | MT | F | L/R | Convertible FWD RFK (EW10J4S) | | GCO99366 | Outer Joint | | 25 | 34 | 58.5 | 79 | 55 | I |
| | 2003.10-2009.04 | | F | L/R | Convertible FWD RFK (EW10J4S) | | GCO10042 | Outer Joint | | 25 | 34 | 54.8 | 78.5 | 56 | I |
| 2.0 (132 kw) | 2005.04-2009.06 | 5MT | F | L | Convertible FWD RFK (EW10J4S) | | GDS45105 | Drive Shaft | | 25 | 24 | 58 | 79 | 625 | |
| | 2005.04-2009.06 | 5MT | F | R | Convertible FWD RFK (EW10J4S) | | GDS45104 | Drive Shaft | | 25 | 24 | 58 | 79 | 925 | |
| **307 SW** | | | | | | | | | | | | | | | |
| 1.4 (50 kw) | 2002.03-2005.06 | 5MT | F | L | Estate FWD 8HZ (DV4TD) | | GDS45105 | Drive Shaft | | 25 | 24 | 58 | 79 | 625 | |
| | 2002.03-2005.06 | 5MT | F | R | Estate FWD 8HZ (DV4TD) | | GDS45104 | Drive Shaft | | 25 | 24 | 58 | 79 | 925 | |
| | 2002.03-2005.06 | 5MT | F | R | Estate FWD 8HZ (DV4TD) | | GCO45027 | Outer Joint | | 25 | 34 | 58 | 79 | 55.5 | I |
| | 2002.03-2005.06 | 5MT | F | L/R | Estate FWD 8HZ (DV4TD) | | GCO99366 | Outer Joint | | 25 | 34 | 58.5 | 79 | 55 | I |
| | 2002.03-2005.06 | MT | F | L | Estate FWD 8HZ (DV4TD) | Trans. code:BE4 | GDS45126 | Drive Shaft | | 25 | 24 | 58.5 | 89 | 630 | |
| | 2002.03-2005.06 | MT | F | L/R | Estate FWD 8HZ (DV4TD) | | GCO10042 | Outer Joint | | 25 | 34 | 54.8 | 78.5 | 56 | I |
| 1.4 (51 kw) | 2002.04-2005.06 | 5MT | F | L | Estate Van FWD 8HZ (DV4TD) | | GDS45105 | Drive Shaft | | 25 | 24 | 58 | 79 | 625 | |
| | 2002.04-2005.06 | 5MT | F | L | Estate Van FWD 8HZ (DV4TD) | | GDS45126 | Drive Shaft | | 25 | 24 | 58.5 | 89 | 630 | |
| | 2002.04-2005.06 | 5MT | F | R | Estate Van FWD 8HZ (DV4TD) | | GDS45104 | Drive Shaft | | 25 | 24 | 58 | 79 | 925 | |
| | 2002.04-2005.06 | 5MT | F | R | Estate Van FWD 8HZ (DV4TD) | | GCO45027 | Outer Joint | | 25 | 34 | 58 | 79 | 55.5 | I |
| | 2002.04-2005.06 | | F | L | Estate Van FWD 8HZ (DV4TD) | | GCO99366 | Outer Joint | | 25 | 34 | 58.5 | 79 | 55 | I |
| 1.4 (55 kw) | 2002.04-2003.09 | 5MT | F | L | Estate FWD KFW (TU3JP) | | GDS45119 | Drive Shaft | | 25 | 22 | 58.5 | 79.5 | 633 | |
| | 2002.04-2003.09 | 5MT | F | R | Estate FWD KFW (TU3JP) | | GDS45113 | Drive Shaft | | 25 | 22 | 58.5 | 79.5 | 915 | |
| | 2002.04-2003.09 | 5MT | F | L/R | Estate FWD KFW (TU3JP) | | GCO10025 | Outer Joint | | 25 | 22 | 60 | 80 | 54 | I |
| | 2002.04-2003.09 | 5MT | F | R | Estate FWD KFW (TU3JP) | | GCI10024 | Inner Joint | | 22 | 22 | 30 | 329.5 | 86 | |
| 1.4 (65 kw) | 2003.11-2007.07 | 5MT | F | L | Estate FWD KFU (ET3J4) | | GDS45119 | Drive Shaft | | 25 | 22 | 58.5 | 79.5 | 633 | |
| | 2003.11-2007.07 | 5MT | F | R | Estate FWD KFU (ET3J4) | | GDS45113 | Drive Shaft | | 25 | 22 | 58.5 | 79.5 | 915 | |
| | 2003.11-2007.07 | 5MT | F | L/R | Estate FWD KFU (ET3J4) | | GCO10025 | Outer Joint | | 25 | 22 | 60 | 80 | 54 | I |
| | 2003.11-2007.07 | 5MT | F | L/R | Estate FWD KFU (ET3J4) | Date to:2007.03,To ORG/OPR:11072 | GCO10025 | Outer Joint | | 25 | 22 | 60 | 80 | 54 | I |
| | 2003.11-2007.07 | 5MT | F | R | Estate FWD KFU (ET3J4) | | GCI10024 | Inner Joint | | 22 | 22 | 30 | 329.5 | 86 | |
| | 2003.11-2007.07 | MT | F | L/R | Estate FWD KFU (ET3J4) | Trans. code:MA | GCO10097 | Outer Joint | | 25 | 30 | 58.5 | 79.5 | 55 | I |
| 1.6 (66 kw) | 2005.04-2008.04 | 5MT | F | L | Estate FWD 9HX (DV6ATED4),9HX (DV6AUTED4),9HY (DV6TED4B),9HY (DV6TED4B),9HY (DV6TED4B),9HY (DV6TED4 | | GDS45105 | Drive Shaft | | 25 | 24 | 58 | 79 | 625 | |
| | 2005.04-2008.04 | 5MT | F | L | Estate FWD 9HX (DV6ATED4),9HX (DV6AUTED4),9HY (DV6TED4B),9HY (DV6TED4B),9HY (DV6TED4B),9HY (DV6TED4 | | GDS45126 | Drive Shaft | | 25 | 24 | 58.5 | 89 | 630 | |
| | 2005.04-2008.04 | 5MT | F | R | Estate FWD 9HX (DV6ATED4),9HX (DV6AUTED4),9HY (DV6TED4B),9HY (DV6TED4B),9HY (DV6TED4B),9HY (DV6TED4 | | GDS45104 | Drive Shaft | | 25 | 24 | 58 | 79 | 925 | |
| | 2005.04-2008.04 | 5MT | F | R | Estate FWD 9HX (DV6ATED4),9HX (DV6AUTED4),9HY (DV6TED4B),9HY (DV6TED4B),9HY (DV6TED4B),9HY (DV6TED4 | | GCO45027 | Outer Joint | | 25 | 34 | 58 | 79 | 55.5 | I |
| | 2005.04-2008.04 | 5MT | F | L/R | Estate FWD 9HX (DV6ATED4),9HX (DV6AUTED4),9HY (DV6TED4B),9HY (DV6TED4B),9HY (DV6TED4B),9HY (DV6TED4 | | GCO10028 | Outer Joint | | 25 | 34 | 58 | 89 | 56 | I |
| | 2005.04-2008.04 | 5MT | F | L/R | Estate FWD 9HX (DV6ATED4),9HX (DV6AUTED4),9HY (DV6TED4B),9HY (DV6TED4B),9HY (DV6TED4B),9HY (DV6TED4 | | GCO99366 | Outer Joint | | 25 | 34 | 58.5 | 79 | 55 | I |
| | 2005.04-2008.04 | MT | F | L/R | Estate FWD 9HX (DV6ATED4),9HX (DV6AUTED4),9HY (DV6TED4B),9HY (DV6TED4B),9HY (DV6TED4B),9HY (DV6TED4 | | GCO10042 | Outer Joint | | 25 | 34 | 54.8 | 78.5 | 56 | I |

| | YEAR | TRANSM. | F/R | L/R | BODY STYLE & DRIVE TYPE & ENGINE | REMARKS | G-AP Ref. | PRODUCT | ABS | Technical Specifications A | B | C | H | L | P |
|---|---|---|---|---|---|---|---|---|---|---|---|---|---|---|---|
| **PEUGEOT** **307 SW** | | | | | | | | | | | | | | | |
| 1.6 (66 kw) | 2006.04-2008.10 | 5MT | F | L | Estate Van FWD 9HX (DV6ATED4) | | GDS45105 | Drive Shaft | | 25 | 24 | 58 | 79 | 625 | |
| | 2006.04-2008.10 | 5MT | F | L | Estate Van FWD 9HX (DV6ATED4) | | GDS45126 | Drive Shaft | | 25 | 24 | 58.5 | 89 | 630 | |
| | 2006.04-2008.10 | 5MT | F | R | Estate Van FWD 9HX (DV6ATED4) | | GDS45104 | Drive Shaft | | 25 | 24 | 58 | 79 | 925 | |
| | 2006.04-2008.10 | 5MT | F | R | Estate Van FWD 9HX (DV6ATED4) | | GCO45027 | Outer Joint | | 25 | 34 | 58 | 79 | 55.5 | I |
| | 2006.04-2008.10 | | F | L | Estate Van FWD 9HX (DV6ATED4) | | GCO99366 | Outer Joint | | 25 | 34 | 58.5 | 79 | 55 | I |
| 1.6 (80 kw) | 2002.03-2008.04 | 4AT | F | L | Estate FWD NFU (TU5JP4) | | GDS10286 | Drive Shaft | | 25 | 26 | 58.5 | 79 | 613 | |
| | 2002.03-2008.04 | 4AT | F | R | Estate FWD NFU (TU5JP4) | | GDS10291 | Drive Shaft | | 25 | 26 | 58.5 | 79 | 833 | |
| | 2002.03-2008.04 | 5MT | F | L | Estate FWD NFU (TU5JP4) | Trans. code:MA | GDS45119 | Drive Shaft | | 25 | 22 | 58.5 | 79.5 | 633 | |
| | 2002.03-2008.04 | 5MT | F | L | Estate FWD NFU (TU5JP4) | Trans. code:BE4R | GDS45126 | Drive Shaft | | 25 | 24 | 58.5 | 89 | 630 | |
| | 2002.03-2008.04 | 5MT | F | R | Estate FWD NFU (TU5JP4) | Trans. code:BE4R | GDS45104 | Drive Shaft | | 25 | 24 | 58 | 79 | 925 | |
| | 2002.03-2008.04 | 5MT | F | R | Estate FWD NFU (TU5JP4) | Date from:2007.03;From ORG/OPR:11074;Trans. code:MA | GDS45113 | Drive Shaft | | 25 | 22 | 58.5 | 79.5 | 915 | |
| | 2002.03-2008.04 | 5MT | F | R | Estate FWD NFU (TU5JP4) | Trans. code:MA | GDS45113 | Drive Shaft | | 25 | 22 | 58.5 | 79.5 | 915 | |
| | 2002.03-2008.04 | 5MT | F | R | Estate FWD NFU (TU5JP4) | Trans. code:BE4R | GCO45027 | Outer Joint | | 25 | 34 | 58 | 79 | 55.5 | I |
| | 2002.03-2008.04 | 5MT | F | L/R | Estate FWD NFU (TU5JP4) | Date to:2007.02,Trans. code:MA,To ORG/OPR:11073 | GCO10025 | Outer Joint | | 25 | 22 | 60 | 80 | 54 | I |
| | 2002.03-2008.04 | 5MT | F | L/R | Estate FWD NFU (TU5JP4) | Trans. code:BE4R | GCO10028 | Outer Joint | | 25 | 34 | 58 | 89 | 56 | I |
| | 2002.03-2008.04 | AT | F | L | Estate FWD NFU (TU5JP4) | | GDS10286 | Drive Shaft | | 25 | 26 | 58.5 | 79 | 613 | |
| | 2002.03-2008.04 | AT | F | L | Estate FWD NFU (TU5JP4) | | GCI99001 | Inner Joint | | 26 | 34 | 30.2 | 46.5 | 103.5 | |
| | 2002.03-2008.04 | AT/Semi-AT | F | R | Estate FWD NFU (TU5JP4) | | GDS10291 | Drive Shaft | | 25 | 26 | 58.5 | 79 | 833 | |
| | 2002.03-2008.04 | MT | F | L | Estate FWD NFU (TU5JP4) | Date from:2004.02;Date to:2007.02 | GDS45105 | Drive Shaft | | 25 | 24 | 58 | 79 | 625 | |
| | 2002.03-2008.04 | MT | F | L | Estate FWD NFU (TU5JP4) | Date from:2007.03 | GDS45119 | Drive Shaft | | 25 | 22 | 58.5 | 79.5 | 633 | |
| | 2002.03-2008.04 | MT | F | L | Estate FWD NFU (TU5JP4) | Date to:2007.02;for OE number:3272LV | GDS45126 | Drive Shaft | | 25 | 24 | 58.5 | 89 | 630 | |
| | 2002.03-2008.04 | MT | F | R | Estate FWD NFU (TU5JP4) | Date from:2004.02;Date to:2007.02 | GDS45104 | Drive Shaft | | 25 | 24 | 58 | 79 | 925 | |
| | 2002.03-2008.04 | MT | F | L/R | Estate FWD NFU (TU5JP4) | Date from:2007.03;Trans. code:MA | GCO10025 | Outer Joint | | 25 | 22 | 60 | 80 | 54 | I |
| | 2002.03-2008.04 | MT | F | L/R | Estate FWD NFU (TU5JP4) | Trans. code:MA | GCO10097 | Outer Joint | | 25 | 30 | 58.5 | 79.5 | 55 | I |
| | 2002.03-2008.04 | MT | F | L/R | Estate FWD NFU (TU5JP4) | Date from:2004.02,Date to:2007.02 | GCO99366 | Outer Joint | | 25 | 34 | 58.5 | 79 | 55 | I |
| | 2002.03-2008.04 | MT/Semi-AT | F | L/R | Estate FWD NFU (TU5JP4) | | GCO10042 | Outer Joint | | 25 | 34 | 54.8 | 78.5 | 56 | I |
| | 2003.11-2007.12 | 5MT | F | R | Estate FWD 9HY (DV6TED4);9HZ (DV6TED4) | | GCO45027 | Outer Joint | | 25 | 34 | 58 | 79 | 55.5 | I |
| | 2003.11-2007.12 | 5MT | F | L/R | Estate FWD 9HY (DV6TED4);9HZ (DV6TED4) | | GCO10028 | Outer Joint | | 25 | 34 | 58 | 89 | 56 | I |
| | 2003.11-2007.12 | MT | F | L | Estate FWD 9HY (DV6TED4);9HZ (DV6TED4) | | GDS45105 | Drive Shaft | | 25 | 24 | 58 | 79 | 625 | |
| | 2003.11-2007.12 | MT | F | L | Estate FWD 9HY (DV6TED4);9HZ (DV6TED4) | | GDS45126 | Drive Shaft | | 25 | 24 | 58.5 | 89 | 630 | |
| | 2003.11-2007.12 | MT | F | R | Estate FWD 9HY (DV6TED4);9HZ (DV6TED4) | | GDS10173 | Drive Shaft | 29W | 25 | 24 | 58.5 | 79 | 921 | |
| | 2003.11-2007.12 | MT | F | R | Estate FWD 9HY (DV6TED4);9HZ (DV6TED4) | | GDS45104 | Drive Shaft | | 25 | 24 | 58 | 79 | 925 | |
| | 2003.11-2007.12 | MT | F | L/R | Estate FWD 9HY (DV6TED4);9HZ (DV6TED4) | | GCO10042 | Outer Joint | | 25 | 34 | 54.8 | 78.5 | 56 | I |
| | 2003.11-2007.12 | MT | F | L/R | Estate FWD 9HY (DV6TED4);9HZ (DV6TED4) | | GCO99366 | Outer Joint | | 25 | 34 | 58.5 | 79 | 55 | I |
| | 2003.11-2007.12 | MT | F | L | Estate FWD 9HY (DV6TED4);9HZ (DV6TED4) | | GCI10020 | Inner Joint | | 24 | 34 | 40 | 62.5 | 99 | |
| | 2004.02-2008.04 | 5MT | F | L | Estate FWD 9HY (DV6TED4);9HZ (DV6TED4) | | GDS45105 | Drive Shaft | | 25 | 24 | 58 | 79 | 625 | |
| | 2004.02-2008.04 | 5MT | F | R | Estate FWD 9HY (DV6TED4);9HZ (DV6TED4) | | GDS45104 | Drive Shaft | | 25 | 24 | 58 | 79 | 925 | |
| | 2007.09-2008.04 | 5MT | F | L | Estate FWD NFU (TU5JP4) | Trans. code:BE4R | GDS45105 | Drive Shaft | | 25 | 24 | 58 | 79 | 625 | |
| | 2007.09-2008.04 | 5MT | F | L | Estate FWD NFU (TU5JP4) | Trans. code:MA | GDS45119 | Drive Shaft | | 25 | 22 | 58.5 | 79.5 | 633 | |
| | 2007.09-2008.04 | 5MT | F | R | Estate FWD NFU (TU5JP4) | | GDS45104 | Drive Shaft | | 25 | 24 | 58 | 79 | 925 | |
| | 2007.09-2008.04 | 5MT | F | R | Estate FWD NFU (TU5JP4) | Trans. code:BE4R | GDS45104 | Drive Shaft | | 25 | 24 | 58 | 79 | 925 | |
| | 2007.09-2008.04 | 5MT | F | R | Estate FWD NFU (TU5JP4) | Trans. code:MA | GDS45113 | Drive Shaft | | 25 | 22 | 58.5 | 79.5 | 915 | |
| | 2007.09-2008.04 | 5MT | F | R | Estate FWD NFU (TU5JP4) | Trans. code:BE4R | GCO45027 | Outer Joint | | 25 | 34 | 58 | 79 | 55.5 | I |
| | 2007.09-2008.04 | 5MT | F | L/R | Estate FWD NFU (TU5JP4) | Trans. code:BE4R | GCO10028 | Outer Joint | | 25 | 34 | 58 | 89 | 56 | I |
| | 2007.09-2008.04 | MT | F | L | Estate FWD NFU (TU5JP4) | Trans. code:BE4R | GDS45105 | Drive Shaft | | 25 | 24 | 58 | 79 | 625 | |
| | 2007.09-2008.04 | MT | F | L/R | Estate FWD NFU (TU5JP4) | Trans. code:MA | GCO10097 | Outer Joint | | 25 | 30 | 58.5 | 79.5 | 55 | I |
| | 2007.09-2008.04 | MT | F | L/R | Estate FWD NFU (TU5JP4) | | GCO99366 | Outer Joint | | 25 | 34 | 58.5 | 79 | 55 | I |
| | 2007.09-2008.04 | MT/5MT | F | L | Estate FWD NFU (TU5JP4) | Trans. code:BE4R | GDS45126 | Drive Shaft | | 25 | 24 | 58.5 | 89 | 630 | |
| | 2007.09-2008.04 | | F | R | Estate FWD NFU (TU5JP4) | | GCI10024 | Inner Joint | | 22 | 22 | 30 | 329.5 | 86 | |
| 2.0 (66 kw) | 2002.03-2008.04 | 5MT | F | L | Estate FWD RHY (DW10TD) | | GDS45105 | Drive Shaft | | 25 | 24 | 58 | 79 | 625 | |
| | 2002.03-2008.04 | 5MT | F | L | Estate FWD RHY (DW10TD) | | GDS45126 | Drive Shaft | | 25 | 24 | 58.5 | 89 | 630 | |
| | 2002.03-2008.04 | 5MT | F | R | Estate FWD RHY (DW10TD) | | GDS45104 | Drive Shaft | | 25 | 24 | 58 | 79 | 925 | |
| | 2002.03-2008.04 | 5MT | F | R | Estate FWD RHY (DW10TD) | | GCO10028 | Outer Joint | | 25 | 34 | 58 | 89 | 56 | I |
| | 2002.03-2008.04 | 5MT | F | L/R | Estate FWD RHY (DW10TD) | | GCO45027 | Outer Joint | | 25 | 34 | 58 | 79 | 55.5 | I |
| | 2002.03-2008.04 | 5MT | F | L/R | Estate FWD RHY (DW10TD) | | GCO99366 | Outer Joint | | 25 | 34 | 58.5 | 79 | 55 | I |
| | 2002.03-2008.04 | 5MT | F | L | Estate FWD RHY (DW10TD) | | GCI10020 | Inner Joint | | 24 | 34 | 40 | 62.5 | 99 | |
| | 2002.03-2008.04 | MT | F | R | Estate FWD RHY (DW10TD) | | GDS10173 | Drive Shaft | 29W | 25 | 24 | 58.5 | 79 | 921 | |
| | 2002.03-2008.04 | MT | F | R | Estate FWD RHY (DW10TD) | | GDS45104 | Drive Shaft | | 25 | 24 | 58 | 79 | 925 | |
| | 2002.03-2008.04 | MT | F | L/R | Estate FWD RHY (DW10TD) | | GCO10042 | Outer Joint | | 25 | 34 | 54.8 | 78.5 | 56 | I |
| | 2003.04-2008.04 | 5MT | F | L | Estate Van FWD RHY (DW10TD) | | GDS45105 | Drive Shaft | | 25 | 24 | 58 | 79 | 625 | |
| | 2003.04-2008.04 | 5MT | F | L | Estate Van FWD RHY (DW10TD) | | GDS45126 | Drive Shaft | | 25 | 24 | 58.5 | 89 | 630 | |
| | 2003.04-2008.04 | 5MT | F | R | Estate Van FWD RHY (DW10TD) | | GDS45104 | Drive Shaft | | 25 | 24 | 58 | 79 | 925 | |
| | 2003.04-2008.04 | 5MT | F | R | Estate Van FWD RHY (DW10TD) | | GCO45027 | Outer Joint | | 25 | 34 | 58 | 79 | 55.5 | I |
| | 2003.04-2008.04 | | F | | Estate Van FWD RHY (DW10TD) | | GCO99366 | Outer Joint | | 25 | 34 | 58.5 | 79 | 55 | I |
| 2.0 (79 kw) | 2002.03-2009.12 | 5MT | F | L | Estate FWD RHS (DW10ATED) | | GDS45105 | Drive Shaft | | 25 | 24 | 58 | 79 | 625 | |

| | YEAR | TRANSM. | F/R | L/R | BODY STYLE & DRIVE TYPE & ENGINE | REMARKS | G-AP Ref. | PRODUCT | ABS | Technical Specifications A | B | C | H | L | P |
|---|---|---|---|---|---|---|---|---|---|---|---|---|---|---|---|
| **PEUGEOT** | | | | | | | | | | | | | | | |
| **307 SW** | | | | | | | | | | | | | | | |
| 2.0 (79 kw) | 2002.03-2009.12 | 5MT | F | L | Estate FWD RHS (DW10ATED) | | GDS45126 | Drive Shaft | | 25 | 24 | 58.5 | 89 | 630 | |
| | 2002.03-2009.12 | 5MT | F | R | Estate FWD RHS (DW10ATED) | | GDS45104 | Drive Shaft | | 25 | 24 | 58 | 79 | 925 | |
| | 2002.03-2009.12 | 5MT | F | R | Estate FWD RHS (DW10ATED) | | GCO45027 | Outer Joint | | 25 | 34 | 58 | 79 | 55.5 | I |
| | 2002.03-2009.12 | 5MT | F | L/R | Estate FWD RHS (DW10ATED) | | GCO10028 | Outer Joint | | 25 | 34 | 58 | 89 | 56 | I |
| | 2002.03-2009.12 | 5MT | F | L/R | Estate FWD RHS (DW10ATED) | | GCO99366 | Outer Joint | | 25 | 34 | 58.5 | 79 | 55 | I |
| | 2002.03-2009.12 | MT | F | L | Estate FWD RHS (DW10ATED) | | GDS45105 | Drive Shaft | | 25 | 24 | 58 | 79 | 625 | |
| | 2002.03-2009.12 | MT | F | R | Estate FWD RHS (DW10ATED) | | GDS10173 | Drive Shaft | 29W | 25 | 24 | 58.5 | 79 | 921 | |
| | 2002.03-2009.12 | MT | F | R | Estate FWD RHS (DW10ATED) | | GDS45104 | Drive Shaft | | 25 | 24 | 58 | 79 | 925 | |
| | 2002.03-2009.12 | MT | F | L/R | Estate FWD RHS (DW10ATED) | | GCO10042 | Outer Joint | | 25 | 34 | 54.8 | 78.5 | 56 | I |
| | 2002.03-2009.12 | MT | F | L | Estate FWD RHS (DW10ATED) | | GCI10020 | Inner Joint | | 24 | 34 | 40 | 62.5 | 99 | |
| | 2003.01-2009.12 | 5MT | F | R | Estate Van FWD RHZ (DW10ATED) | | GCO45027 | Outer Joint | | 25 | 34 | 58 | 79 | 55.5 | I |
| | 2003.01-2009.12 | MT | F | L | Estate Van FWD RHZ (DW10ATED) | | GDS45105 | Drive Shaft | | 25 | 24 | 58 | 79 | 625 | |
| | 2003.01-2009.12 | MT | F | L | Estate Van FWD RHZ (DW10ATED) | | GDS45126 | Drive Shaft | | 25 | 24 | 58.5 | 89 | 630 | |
| | 2003.01-2009.12 | MT | F | R | Estate Van FWD RHZ (DW10ATED) | | GDS45104 | Drive Shaft | | 25 | 24 | 58 | 79 | 925 | |
| | 2003.01-2009.12 | | F | | Estate Van FWD RHZ (DW10ATED) | | GCO99366 | Outer Joint | | 25 | 34 | 58.5 | 79 | 55 | I |
| 2.0 (100 kw) | 2002.03-2005.06 | 4AT | F | L | Estate FWD RFN (EW10J4) | | GDS10286 | Drive Shaft | | 25 | 26 | 58.5 | 79 | 613 | |
| | 2002.03-2005.06 | 4AT | F | R | Estate FWD RFN (EW10J4) | | GDS10291 | Drive Shaft | | 25 | 26 | 58.5 | 79 | 833 | |
| | 2002.03-2005.06 | 4AT | F | L/R | Estate FWD RFN (EW10J4) | | GCO99366 | Outer Joint | | 25 | 34 | 58.5 | 79 | 55 | I |
| | 2002.03-2005.06 | 5MT | F | L | Estate FWD RFN (EW10J4) | | GDS45105 | Drive Shaft | | 25 | 24 | 58 | 79 | 625 | |
| | 2002.03-2005.06 | 5MT | F | R | Estate FWD RFN (EW10J4) | | GDS45104 | Drive Shaft | | 25 | 24 | 58 | 79 | 925 | |
| | 2002.03-2005.06 | 5MT | F | L/R | Estate FWD RFN (EW10J4) | | GCO10028 | Outer Joint | | 25 | 34 | 58 | 89 | 56 | I |
| | 2002.03-2005.06 | 5MT | F | L/R | Estate FWD RFN (EW10J4) | | GCO45027 | Outer Joint | | 25 | 34 | 58 | 79 | 55.5 | I |
| | 2002.03-2005.06 | AT | F | L | Estate FWD RFN (EW10J4) | | GCI99001 | Inner Joint | | 26 | 34 | 30.2 | 46.5 | 103.5 | |
| | 2002.03-2005.06 | MT | F | L | Estate FWD RFN (EW10J4) | | GDS45126 | Drive Shaft | | 25 | 24 | 58.5 | 89 | 630 | |
| | 2002.03-2005.06 | | F | L/R | Estate FWD RFN (EW10J4) | | GCO10042 | Outer Joint | | 25 | 34 | 54.8 | 78.5 | 56 | I |
| | 2004.02-2008.04 | 6AT | F | L | Estate FWD RHR (DW10BTED4) | | GDS56611 | Drive Shaft | | 25 | 37 | 58.4 | 89 | 603 | |
| | 2004.02-2008.04 | 6AT | F | R | Estate FWD RHR (DW10BTED4) | | GDS83400 | Drive Shaft | | 25 | 37 | 58.4 | 89 | 917 | |
| | 2004.02-2008.04 | 6AT | F | L/R | Estate FWD RHR (DW10BTED4) | | GCO10170 | Outer Joint | | 25 | 39 | 58.4 | 89 | 63 | I |
| | 2004.02-2008.04 | 6AT | F | L | Estate FWD RHR (DW10BTED4) | | GCI10120 | Inner Joint | | 37 | 39 | 42.2 | 60 | 95.5 | |
| | 2004.02-2008.04 | 6AT | F | R | Estate FWD RHR (DW10BTED4) | | GCI82199 | Inner Joint | | 37 | 39 | | 365 | 95 | |
| | 2004.02-2008.04 | 6MT | F | L | Estate FWD RHR (DW10BTED4) | Trans. code:ML6 | GDS10268 | Drive Shaft | | 25 | 37 | 58.5 | 89 | 621 | |
| | 2004.02-2008.04 | 6MT | F | L | Estate FWD RHR (DW10BTED4) | | GDS10268 | Drive Shaft | | 25 | 37 | 58.5 | 89 | 621 | |
| | 2004.02-2008.04 | 6MT | F | R | Estate FWD RHR (DW10BTED4) | | GDS88082 | Drive Shaft | | 25 | 37 | 58.5 | 89 | 949 | |
| | 2004.02-2008.04 | 6MT | F | L/R | Estate FWD RHR (DW10BTED4) | | GCO10085 | Outer Joint | | 25 | 39 | 59 | 89 | 63.5 | I |
| | 2004.02-2008.04 | 6MT | F | R | Estate FWD RHR (DW10BTED4) | | GCI10041 | Inner Joint | | 37 | 39 | 32 | 399 | 95.5 | |
| | 2004.02-2008.04 | MT | F | L | Estate FWD RHR (DW10BTED4) | Trans. code:BE4 | GDS45105 | Drive Shaft | | 25 | 24 | 58 | 79 | 625 | |
| | 2004.02-2008.04 | MT | F | R | Estate FWD RHR (DW10BTED4) | | GDS10173 | Drive Shaft | 29W | 25 | 24 | 58.5 | 79 | 921 | |
| | 2004.02-2008.04 | MT | F | R | Estate FWD RHR (DW10BTED4) | Trans. code:BE4 | GDS45104 | Drive Shaft | | 25 | 24 | 58 | 79 | 925 | |
| | 2004.02-2008.04 | MT | F | R | Estate FWD RHR (DW10BTED4) | | GDS88082 | Drive Shaft | | 25 | 37 | 58.5 | 89 | 949 | |
| | 2004.02-2008.04 | MT | F | L/R | Estate FWD RHR (DW10BTED4) | Trans. code:ML | GCO10085 | Outer Joint | | 25 | 39 | 59 | 89 | 63.5 | I |
| | 2004.04-2007.11 | 6MT | F | L | Estate Van FWD RHR (DW10BTED4) | | GDS10268 | Drive Shaft | | 25 | 37 | 58.5 | 89 | 621 | |
| | 2004.04-2007.11 | 6MT | F | R | Estate Van FWD RHR (DW10BTED4) | | GDS88082 | Drive Shaft | | 25 | 37 | 58.5 | 89 | 949 | |
| | 2004.04-2007.11 | 6MT | F | L | Estate Van FWD RHR (DW10BTED4) | | GCI45032 | Inner Joint | | 37 | 39 | 40 | 68.5 | 100 | |
| | 2004.04-2007.11 | 6MT | F | R | Estate Van FWD RHR (DW10BTED4) | | GCI10041 | Inner Joint | | 37 | 39 | 32 | 399 | 95.5 | |
| | 2004.04-2007.11 | | F | | Estate Van FWD RHR (DW10BTED4) | | GCO10085 | Outer Joint | | 25 | 39 | 59 | 89 | 63.5 | I |
| 2.0 (103 kw) | 2005.03-2008.04 | /MT | F | L/R | Estate FWD RFJ (EW10A) | | GCO99366 | Outer Joint | | 25 | 34 | 58.5 | 79 | 55 | I |
| | 2005.03-2008.04 | 4AT | F | L | Estate FWD RFJ (EW10A) | | GDS10286 | Drive Shaft | | 25 | 26 | 58.5 | 79 | 613 | |
| | 2005.03-2008.04 | 4AT | F | R | Estate FWD RFJ (EW10A) | | GDS10291 | Drive Shaft | | 25 | 26 | 58.5 | 79 | 833 | |
| | 2005.03-2008.04 | 5MT | F | L | Estate FWD RFJ (EW10A) | | GDS45105 | Drive Shaft | | 25 | 24 | 58 | 79 | 625 | |
| | 2005.03-2008.04 | 5MT | F | R | Estate FWD RFJ (EW10A) | | GDS45104 | Drive Shaft | | 25 | 24 | 58 | 79 | 925 | |
| | 2005.03-2008.04 | 5MT | F | R | Estate FWD RFJ (EW10A) | | GCO45027 | Outer Joint | | 25 | 34 | 58 | 79 | 55.5 | I |
| | 2005.03-2008.04 | 5MT | F | L/R | Estate FWD RFJ (EW10A) | | GCO10028 | Outer Joint | | 25 | 34 | 58 | 89 | 56 | I |
| | 2005.03-2008.04 | AT | F | L | Estate FWD RFJ (EW10A) | | GDS10286 | Drive Shaft | | 25 | 26 | 58.5 | 79 | 613 | |
| | 2005.03-2008.04 | AT | F | R | Estate FWD RFJ (EW10A) | | GDS10291 | Drive Shaft | | 25 | 26 | 58.5 | 79 | 833 | |
| | 2005.03-2008.04 | AT | F | L | Estate FWD RFJ (EW10A) | | GCI99001 | Inner Joint | | 26 | 34 | 30.2 | 46.5 | 103.5 | |
| | 2005.03-2008.04 | MT | F | L | Estate FWD RFJ (EW10A) | Trans. code:BE | GDS45105 | Drive Shaft | | 25 | 24 | 58 | 79 | 625 | |
| | 2005.03-2008.04 | MT | F | L | Estate FWD RFJ (EW10A) | | GDS45126 | Drive Shaft | | 25 | 24 | 58.5 | 89 | 630 | |
| | 2005.03-2008.04 | MT/5MT | F | R | Estate FWD RFJ (EW10A) | | GDS45104 | Drive Shaft | | 25 | 24 | 58 | 79 | 925 | |
| | 2005.03-2008.04 | | F | L/R | Estate FWD RFJ (EW10A) | | GCO10042 | Outer Joint | | 25 | 34 | 54.8 | 78.5 | 56 | I |
| 2.0 (130 kw) | 2005.06-2008.04 | AT | F | L | Estate FWD EW10J4S | | GCI99001 | Inner Joint | | 26 | 34 | 30.2 | 46.5 | 103.5 | |
| | 2005.06-2008.04 | MT | F | L | Estate FWD EW10J4S | | GDS45105 | Drive Shaft | | 25 | 24 | 58 | 79 | 625 | |
| | 2005.06-2008.04 | MT | F | L | Estate FWD EW10J4S | | GDS45126 | Drive Shaft | | 25 | 24 | 58.5 | 89 | 630 | |
| **308** | | | | | | | | | | | | | | | |
| 1.2 (60 kw) | 2013.09-2021.06 | 5MT | F | R | Hatchback FWD HMZ (EB2F) | | GDS84457 | Drive Shaft | | 28 | 24 | 58.5 | 92.5 | 921 | |
| | 2013.09-2021.06 | 5MT | F | L | Hatchback FWD HMZ (EB2F) | | GCO82273 | Outer Joint | | 28 | 34 | 58.5 | 92.5 | 56 | I |

| | YEAR | TRANSM. | F/R | L/R | BODY STYLE & DRIVE TYPE & ENGINE | REMARKS | G-AP Ref. | PRODUCT | ABS | Technical Specifications A | B | C | H | L | P |
|---|---|---|---|---|---|---|---|---|---|---|---|---|---|---|---|
| **PEUGEOT** | | | | | | | | | | | | | | | |
| **308** | | | | | | | | | | | | | | | |
| 1.2 (60 kw) | 2013.09-2021.06 | 5MT | F | R | Hatchback FWD HMZ (EB2F) | | GCO81397 | Outer Joint | | 28 | 34 | 58.5 | 92.5 | 56 | I |
| | 2013.09-2021.06 | 5MT | F | L | Hatchback FWD HMZ (EB2F) | | GCI82131 | Inner Joint | | 24 | 34 | 40 | 62 | 89 | |
| | 2013.09-2021.06 | 5MT | F | R | Hatchback FWD HMZ (EB2F) | | GCI82769 | Inner Joint | | 24 | 34 | 40 | 61 | 103 | |
| | 2013.09-2021.06 | 6MT | F | R | Hatchback FWD HMZ (EB2F) | Trans. code:MB6 | GDS83663 | Drive Shaft | | 28 | 24 | 58.5 | 92.5 | 919 | |
| | 2013.09-2021.06 | 6MT/5MT | F | L | Hatchback FWD HMZ (EB2F) | Trans. code:MB6 | GDS83616 | Drive Shaft | | 28 | 24 | 58.5 | 92.5 | 681 | |
| 1.2 (81 kw) | 2013.11-2021.06 | 5MT | F | L | Hatchback FWD HNZ (EB2DT);HNV (EB2DTM);HNP (EB2ADT) | | GDS83616 | Drive Shaft | | 28 | 24 | 58.5 | 92.5 | 681 | |
| | 2013.11-2021.06 | 5MT | F | R | Hatchback FWD HNZ (EB2DT);HNV (EB2DTM);HNP (EB2ADT) | | GDS84457 | Drive Shaft | | 28 | 24 | 58.5 | 92.5 | 921 | |
| | 2013.11-2021.06 | 5MT | F | L/R | Hatchback FWD HNZ (EB2DT);HNV (EB2DTM);HNP (EB2ADT) | | GCO82273 | Outer Joint | | 28 | 34 | 58.5 | 92.5 | 56 | I |
| | 2013.11-2021.06 | 5MT | F | L | Hatchback FWD HNZ (EB2DT);HNV (EB2DTM);HNP (EB2ADT) | | GCI82131 | Inner Joint | | 24 | 34 | 40 | 62 | 89 | |
| | 2013.11-2021.06 | 5MT/6MT | F | R | Hatchback FWD HNZ (EB2DT);HNV (EB2DTM);HNP (EB2ADT) | Transmission:6MT,Trans. code:MB6 | GCI82320 | Inner Joint | | 24 | 34 | 29.8 | 290 | 88 | |
| | 2013.11-2021.06 | 5MT/6MT | F | R | Hatchback FWD HNZ (EB2DT);HNV (EB2DTM);HNP (EB2ADT) | Transmission:6MT,Trans. code:MB6 | GCI82769 | Inner Joint | | 24 | 34 | 40 | 61 | 103 | |
| | 2013.11-2021.06 | 6MT | F | L | Hatchback FWD HNZ (EB2DT);HNV (EB2DTM);HNP (EB2ADT) | Trans. code:MC | GDS83218 | Drive Shaft | | 28 | 24 | 58.5 | 92.5 | 673 | |
| | 2013.11-2021.06 | 6MT | F | L | Hatchback FWD HNZ (EB2DT);HNV (EB2DTM);HNP (EB2ADT) | Trans. code:MB6 | GDS83616 | Drive Shaft | | 28 | 24 | 58.5 | 92.5 | 681 | |
| | 2013.11-2021.06 | 6MT | F | R | Hatchback FWD HNZ (EB2DT);HNV (EB2DTM);HNP (EB2ADT) | Trans. code:MC | GDS10399 | Drive Shaft | | 28 | 24 | 58.5 | 92.5 | 938 | |
| | 2013.11-2021.06 | 6MT | F | R | Hatchback FWD HNZ (EB2DT);HNV (EB2DTM);HNP (EB2ADT) | Trans. code:MB6 | GDS83663 | Drive Shaft | | 28 | 24 | 58.5 | 92.5 | 919 | |
| | 2013.11-2021.06 | 6MT | F | L/R | Hatchback FWD HNZ (EB2DT);HNV (EB2DTM);HNP (EB2ADT) | Trans. code:MB6 | GCO82273 | Outer Joint | | 28 | 34 | 58.5 | 92.5 | 56 | I |
| | 2013.11-2021.06 | 6MT | F | L | Hatchback FWD HNZ (EB2DT);HNV (EB2DTM);HNP (EB2ADT) | Trans. code:MB6 | GCI82131 | Inner Joint | | 24 | 34 | 40 | 62 | 89 | |
| | 2013.11-2021.06 | 6MT | F | L | Hatchback FWD HNZ (EB2DT);HNV (EB2DTM);HNP (EB2ADT) | Trans. code:MC | GCI82181 | Inner Joint | | 24 | 34 | 40 | 52.5 | 90 | |
| | 2021.07- | 6MT | F | L | Hatchback FWD HNP (EB2ADT) | | GDS83616 | Drive Shaft | | 28 | 24 | 58.5 | 92.5 | 681 | |
| | 2021.07- | 6MT | F | R | Hatchback FWD HNP (EB2ADT) | | GDS83663 | Drive Shaft | | 28 | 24 | 58.5 | 92.5 | 919 | |
| | 2021.07- | 6MT | F | L/R | Hatchback FWD HNP (EB2ADT) | | GCO82273 | Outer Joint | | 28 | 34 | 58.5 | 92.5 | 56 | I |
| | 2021.07- | 6MT | F | L | Hatchback FWD HNP (EB2ADT) | | GCI82131 | Inner Joint | | 24 | 34 | 40 | 62 | 89 | |
| | 2021.07- | 6MT | F | R | Hatchback FWD HNP (EB2ADT) | | GCI82320 | Inner Joint | | 24 | 34 | 29.8 | 290 | 88 | |
| | 2021.07- | 6MT | F | R | Hatchback FWD HNP (EB2ADT) | | GCI82769 | Inner Joint | | 24 | 34 | 40 | 61 | 103 | |
| 1.2 (96 kw) | 2013.11-2021.06 | 5MT | F | R | Hatchback FWD HNY (EB2DTS);HNS (EB2ADTS) | | GDS84457 | Drive Shaft | | 28 | 24 | 58.5 | 92.5 | 921 | |
| | 2013.11-2021.06 | 5MT/6MT | F | L | Hatchback FWD HNY (EB2DTS);HNS (EB2ADTS) | Trans. code:MB6 | GDS83616 | Drive Shaft | | 28 | 24 | 58.5 | 92.5 | 681 | |
| | 2013.11-2021.06 | 6AT/8AT | F | L | Hatchback FWD HNY (EB2DTS);HNS (EB2ADTS) | | GCI82119 | Inner Joint | | 37 | 34 | 41.5 | 58.5 | 94 | |
| | 2013.11-2021.06 | 6AT/8AT | F | R | Hatchback FWD HNY (EB2DTS);HNS (EB2ADTS) | | GCI82118 | Inner Joint | | 37 | 34 | | 290 | 88 | |
| | 2013.11-2021.06 | 6MT | F | L | Hatchback FWD HNY (EB2DTS);HNS (EB2ADTS) | Trans. code:MC | GDS83218 | Drive Shaft | | 28 | 24 | 58.5 | 92.5 | 673 | |
| | 2013.11-2021.06 | 6MT | F | R | Hatchback FWD HNY (EB2DTS);HNS (EB2ADTS) | Trans. code:MC | GDS10399 | Drive Shaft | | 28 | 24 | 58.5 | 92.5 | 938 | |
| | 2013.11-2021.06 | 6MT | F | R | Hatchback FWD HNY (EB2DTS);HNS (EB2ADTS) | Trans. code:MB6 | GDS83663 | Drive Shaft | | 28 | 24 | 58.5 | 92.5 | 919 | |
| | 2013.11-2021.06 | 6MT | F | L | Hatchback FWD HNY (EB2DTS);HNS (EB2ADTS) | | GCO82273 | Outer Joint | | 28 | 34 | 58.5 | 92.5 | 56 | I |
| | 2013.11-2021.06 | 6MT | F | R | Hatchback FWD HNY (EB2DTS);HNS (EB2ADTS) | | GCO81397 | Outer Joint | | 28 | 34 | 58.5 | 92.5 | 56 | I |
| | 2013.11-2021.06 | 6MT | F | L | Hatchback FWD HNY (EB2DTS);HNS (EB2ADTS) | | GCI82181 | Inner Joint | | 24 | 34 | 40 | 52.5 | 90 | |
| | 2013.11-2021.06 | 6MT | F | R | Hatchback FWD HNY (EB2DTS);HNS (EB2ADTS) | Trans. code:MC MANUAL | GCI10165 | Inner Joint | | 24 | 34 | 29.8 | 305.5 | 87.5 | |
| | 2013.11-2021.06 | 6MT | F | R | Hatchback FWD HNY (EB2DTS);HNS (EB2ADTS) | Trans. code:MB6 | GCI82769 | Inner Joint | | 24 | 34 | 40 | 61 | 103 | |
| | 2013.11-2021.06 | 8AT | F | L | Hatchback FWD HNY (EB2DTS);HNS (EB2ADTS) | | GDS84579 | Drive Shaft | | 28 | 37 | 58.5 | 92.5 | 641 | |
| | 2013.11-2021.06 | 8AT | F | R | Hatchback FWD HNY (EB2DTS);HNS (EB2ADTS) | | GDS84582 | Drive Shaft | | 28 | 37 | 58.5 | 92.5 | 918 | |
| | 2021.07- | 6MT | F | L | Hatchback FWD HNS (EB2ADTS) | | GDS83616 | Drive Shaft | | 28 | 24 | 58.5 | 92.5 | 681 | |
| | 2021.07- | 6MT | F | R | Hatchback FWD HNS (EB2ADTS) | | GDS83663 | Drive Shaft | | 28 | 24 | 58.5 | 92.5 | 919 | |
| | 2021.07- | 6MT | F | L | Hatchback FWD HNS (EB2ADTS) | | GCI82131 | Inner Joint | | 24 | 34 | 40 | 62 | 89 | |
| | 2021.07- | 6MT | F | R | Hatchback FWD HNS (EB2ADTS) | | GCI82320 | Inner Joint | | 24 | 34 | 29.8 | 290 | 88 | |
| | 2021.07- | 6MT | F | R | Hatchback FWD HNS (EB2ADTS) | | GCI82769 | Inner Joint | | 24 | 34 | 40 | 61 | 103 | |
| | 2021.07- | 6MT/8AT | F | L/R | Hatchback FWD HNS (EB2ADTS) | | GCO82273 | Outer Joint | | 28 | 34 | 58.5 | 92.5 | 56 | I |
| | 2021.07- | 8AT | F | L | Hatchback FWD HNS (EB2ADTS) | | GDS84579 | Drive Shaft | | 28 | 37 | 58.5 | 92.5 | 641 | |
| 1.2 (100 kw) | 2023.08-2025.03 | 6AT | F | R | Hatchback FWD HPY (EB2LTDH2) | | GDS84582 | Drive Shaft | | 28 | 37 | 58.5 | 92.5 | 918 | |
| | 2023.08-2025.03 | 6AT | F | R | Hatchback FWD HPY (EB2LTDH2) | | GCO82273 | Outer Joint | | 28 | 34 | 58.5 | 92.5 | 56 | I |
| | 2023.08-2025.03 | 6AT | F | R | Hatchback FWD HPY (EB2LTDH2) | | GCI82118 | Inner Joint | | 37 | 34 | | 290 | 88 | |
| 1.4 (70 kw) | 2007.09-2014.10 | 5MT | F | L | Hatchback FWD EP3;8FS (EP3) | | GDS10248 | Drive Shaft | | 25 | 24 | 58.5 | 79 | 642 | |
| | 2007.09-2014.10 | 5MT | F | R | Hatchback FWD EP3;8FS (EP3) | | GDS10251 | Drive Shaft | | 25 | 24 | 58.5 | 79 | 935 | |
| | 2007.09-2014.10 | 5MT | F | L | Hatchback FWD EP3;8FS (EP3) | | GCI10080 | Inner Joint | | 24 | 34 | 40 | 69 | 89.5 | |
| | 2007.09-2014.10 | 5MT | F | R | Hatchback FWD EP3;8FS (EP3) | | GCI99159 | Inner Joint | | 24 | 34 | 29.8 | 350 | 87.5 | |
| | 2007.09-2014.10 | 6MT | F | | Hatchback FWD EP3;8FS (EP3) | | GCO10155 | Outer Joint | | 25 | 39 | 58.5 | 89 | 63.5 | I |
| | 2007.09-2014.10 | MT | F | L | Hatchback FWD EP3;8FS (EP3) | Trans. code:BE4R | GDS10250 | Drive Shaft | | 25 | 24 | 58.5 | 79 | 630 | |
| | 2007.09-2014.10 | | F | L/R | Hatchback FWD EP3;8FS (EP3) | | GCO10042 | Outer Joint | | 25 | 34 | 54.8 | 78.5 | 56 | I |
| 1.4 (72 kw) | 2009.12-2014.10 | 5MT | F | L | Hatchback FWD 8FR (EP3) | | GDS10248 | Drive Shaft | | 25 | 24 | 58.5 | 79 | 642 | |
| | 2009.12-2014.10 | 5MT | F | R | Hatchback FWD 8FR (EP3) | | GDS10251 | Drive Shaft | | 25 | 24 | 58.5 | 79 | 935 | |
| | 2009.12-2014.10 | 5MT | F | L | Hatchback FWD 8FR (EP3) | | GCI10080 | Inner Joint | | 24 | 34 | 40 | 69 | 89.5 | |
| | 2009.12-2014.10 | 5MT | F | R | Hatchback FWD 8FR (EP3) | | GCI99159 | Inner Joint | | 24 | 34 | 29.8 | 350 | 87.5 | |
| | 2009.12-2014.10 | 6MT | F | | Hatchback FWD 8FR (EP3) | | GCO10155 | Outer Joint | | 25 | 39 | 58.5 | 89 | 63.5 | I |
| | 2009.12-2014.10 | AT | F | | Hatchback FWD 8FR (EP3) | | GCO99366 | Outer Joint | | 25 | 34 | 58.5 | 79 | 55 | I |
| | 2009.12-2014.10 | MT | F | L | Hatchback FWD 8FR (EP3) | Trans. code:BE4R | GDS10250 | Drive Shaft | | 25 | 24 | 58.5 | 79 | 630 | |
| | 2009.12-2014.10 | | F | L/R | Hatchback FWD 8FR (EP3) | | GCO10042 | Outer Joint | | 25 | 34 | 54.8 | 78.5 | 56 | I |
| 1.5 (75 kw) | 2018.05-2021.06 | 5MT | F | R | Hatchback FWD YHY (DV5RD) | | GDS84457 | Drive Shaft | | 28 | 24 | 58.5 | 92.5 | 921 | |
| | 2018.05-2021.06 | 6MT | F | L | Hatchback FWD YHY (DV5RD) | | GDS83616 | Drive Shaft | | 28 | 24 | 58.5 | 92.5 | 681 | |

| | YEAR | TRANSM. | F/R | L/R | BODY STYLE & DRIVE TYPE & ENGINE | REMARKS | G-AP Ref. | PRODUCT | ABS | Technical Specifications A | B | C | H | L | P |
|---|---|---|---|---|---|---|---|---|---|---|---|---|---|---|---|
| **PEUGEOT** | | | | | | | | | | | | | | | |
| **308** | | | | | | | | | | | | | | | |
| 1.5 (75 kw) | 2018.05-2021.06 | 6MT | F | R | Hatchback FWD YHY (DV5RD) | | GDS83663 | Drive Shaft | | 28 | 24 | 58.5 | 92.5 | 919 | |
| | 2018.05-2021.06 | 6MT | F | L/R | Hatchback FWD YHY (DV5RD) | | GCO82273 | Outer Joint | | 28 | 34 | 58.5 | 92.5 | 56 | I |
| | 2018.05-2021.06 | 6MT | F | L | Hatchback FWD YHY (DV5RD) | | GCI82131 | Inner Joint | | 24 | 34 | 40 | 62 | 89 | |
| | 2018.05-2021.06 | 6MT | F | R | Hatchback FWD YHY (DV5RD) | | GCI82320 | Inner Joint | | 24 | 34 | 29.8 | 290 | 88 | |
| | 2018.05-2021.06 | 6MT | F | R | Hatchback FWD YHY (DV5RD) | | GCI82769 | Inner Joint | | 24 | 34 | 40 | 61 | 103 | |
| 1.5 (96 kw) | 2017.06-2021.06 | 6AT | F | L | Hatchback FWD YHZ (DV5RC) | | GDS84579 | Drive Shaft | | 28 | 37 | 58.5 | 92.5 | 641 | |
| | 2017.06-2021.06 | 6AT | F | R | Hatchback FWD YHZ (DV5RC) | | GDS84582 | Drive Shaft | | 28 | 37 | 58.5 | 92.5 | 918 | |
| | 2017.06-2021.06 | 6AT/8AT | F | L | Hatchback FWD YHZ (DV5RC) | | GCI82119 | Inner Joint | | 37 | 34 | 41.5 | 58.5 | 94 | |
| | 2017.06-2021.06 | 6AT/8AT | F | R | Hatchback FWD YHZ (DV5RC) | | GCI82118 | Inner Joint | | 37 | 34 | | 290 | 88 | |
| | 2017.06-2021.06 | 6MT | F | L | Hatchback FWD YHZ (DV5RC) | | GDS84550 | Drive Shaft | | 28 | 37 | 58.5 | 92.5 | 663 | |
| | 2017.06-2021.06 | 6MT | F | R | Hatchback FWD YHZ (DV5RC) | | GDS84336 | Drive Shaft | | 28 | 37 | 58.5 | 92.5 | 930 | |
| | 2017.06-2021.06 | 6MT | F | L/R | Hatchback FWD YHZ (DV5RC) | | GCO82273 | Outer Joint | | 28 | 34 | 58.5 | 92.5 | 56 | I |
| | 2017.06-2021.06 | 6MT | F | L | Hatchback FWD YHZ (DV5RC) | | GCI82301 | Inner Joint | | 37 | 34 | 40 | 65.5 | 89.5 | |
| | 2017.06-2021.06 | 6MT | F | R | Hatchback FWD YHZ (DV5RC) | | GCI82300 | Inner Joint | | 37 | 34 | 31.9 | 302 | 88 | |
| | 2017.06-2021.06 | 6MT | F | L | Hatchback Van FWD YHZ (DV5RC) | | GDS84550 | Drive Shaft | | 28 | 37 | 58.5 | 92.5 | 663 | |
| | 2017.06-2021.06 | 6MT | F | R | Hatchback Van FWD YHZ (DV5RC) | | GDS84336 | Drive Shaft | | 28 | 37 | 58.5 | 92.5 | 930 | |
| | 2017.06-2021.06 | 6MT | F | L/R | Hatchback Van FWD YHZ (DV5RC) | | GCO82273 | Outer Joint | | 28 | 34 | 58.5 | 92.5 | 56 | I |
| | 2017.06-2021.06 | 6MT | F | L | Hatchback Van FWD YHZ (DV5RC) | | GCI82301 | Inner Joint | | 37 | 34 | 40 | 65.5 | 89.5 | |
| | 2017.06-2021.06 | 6MT | F | R | Hatchback Van FWD YHZ (DV5RC) | | GCI82300 | Inner Joint | | 37 | 34 | 31.9 | 302 | 88 | |
| | 2021.07- | 6MT | F | L | Hatchback FWD YHZ (DV5RC) | | GDS84550 | Drive Shaft | | 28 | 37 | 58.5 | 92.5 | 663 | |
| | 2021.07- | 6MT | F | R | Hatchback FWD YHZ (DV5RC) | | GDS84336 | Drive Shaft | | 28 | 37 | 58.5 | 92.5 | 930 | |
| | 2021.07- | 6MT | F | L | Hatchback FWD YHZ (DV5RC) | | GCI82301 | Inner Joint | | 37 | 34 | 40 | 65.5 | 89.5 | |
| | 2021.07- | 6MT | F | R | Hatchback FWD YHZ (DV5RC) | | GCI82300 | Inner Joint | | 37 | 34 | 31.9 | 302 | 88 | |
| | 2021.07- | 6MT/8AT | F | L/R | Hatchback FWD YHZ (DV5RC) | | GCO82273 | Outer Joint | | 28 | 34 | 58.5 | 92.5 | 56 | I |
| | 2021.07- | 8AT | F | L | Hatchback FWD YHZ (DV5RC) | | GDS84579 | Drive Shaft | | 28 | 37 | 58.5 | 92.5 | 641 | |
| 1.6 (66 kw) | 2007.09-2014.10 | 5MT | F | L | Hatchback FWD 9HX (DV6ATED4);9HV (DV6TED4B);9HV (DV6TED4BU) | | GDS10248 | Drive Shaft | | 25 | 24 | 58.5 | 79 | 642 | |
| | 2007.09-2014.10 | 5MT | F | L | Hatchback FWD 9HX (DV6ATED4);9HV (DV6TED4B);9HV (DV6TED4BU) | | GDS10250 | Drive Shaft | | 25 | 24 | 58.5 | 79 | 630 | |
| | 2007.09-2014.10 | 5MT | F | R | Hatchback FWD 9HX (DV6ATED4);9HV (DV6TED4B);9HV (DV6TED4BU) | | GDS10251 | Drive Shaft | | 25 | 24 | 58.5 | 79 | 935 | |
| | 2007.09-2014.10 | 5MT | F | L | Hatchback FWD 9HX (DV6ATED4);9HV (DV6TED4B);9HV (DV6TED4BU) | | GCI10070 | Inner Joint | | 24 | 34 | 40 | 62 | 88 | |
| | 2007.09-2014.10 | 5MT | F | L | Hatchback FWD 9HX (DV6ATED4);9HV (DV6TED4B);9HV (DV6TED4BU) | | GCI10080 | Inner Joint | | 24 | 34 | 40 | 69 | 89.5 | |
| | 2007.09-2014.10 | 5MT | F | R | Hatchback FWD 9HX (DV6ATED4);9HV (DV6TED4B);9HV (DV6TED4BU) | | GCI99159 | Inner Joint | | 24 | 34 | 29.8 | 350 | 87.5 | |
| | 2007.09-2014.10 | 6MT | F | L/R | Hatchback FWD 9HX (DV6ATED4);9HV (DV6TED4B);9HV (DV6TED4BU) | | GCO10155 | Outer Joint | | 25 | 39 | 58.5 | 89 | 63.5 | I |
| | 2007.09-2014.10 | MT | F | L/R | Hatchback FWD 9HX (DV6ATED4);9HV (DV6TED4B);9HV (DV6TED4BU) | | GCO10042 | Outer Joint | | 25 | 34 | 54.8 | 78.5 | 56 | I |
| 1.6 (68 kw) | 2009.11-2014.10 | 5MT | F | L | Hatchback FWD 9HP (DV6DTED);9HJ (DV6DTEDM) | | GDS10250 | Drive Shaft | | 25 | 24 | 58.5 | 79 | 630 | |
| | 2009.11-2014.10 | 5MT | F | R | Hatchback FWD 9HP (DV6DTED);9HJ (DV6DTEDM) | | GDS10251 | Drive Shaft | | 25 | 24 | 58.5 | 79 | 935 | |
| | 2009.11-2014.10 | 5MT | F | L/R | Hatchback FWD 9HP (DV6DTED);9HJ (DV6DTEDM) | | GCO99366 | Outer Joint | | 25 | 34 | 58.5 | 79 | 55 | I |
| | 2009.11-2014.10 | 5MT | F | L | Hatchback FWD 9HP (DV6DTED);9HJ (DV6DTEDM) | | GCI10070 | Inner Joint | | 24 | 34 | 40 | 62 | 88 | |
| | 2009.11-2014.10 | 5MT | F | R | Hatchback FWD 9HP (DV6DTED);9HJ (DV6DTEDM) | | GCI99159 | Inner Joint | | 24 | 34 | 29.8 | 350 | 87.5 | |
| | 2013.09-2021.06 | 5MT | F | L | Hatchback FWD 9HP (DV6DTED) | Trans. code:MC | GDS83218 | Drive Shaft | | 28 | 24 | 58.5 | 92.5 | 673 | |
| | 2013.09-2021.06 | 5MT | F | L | Hatchback FWD 9HP (DV6DTED) | Transm. code:BE4R | GDS83616 | Drive Shaft | | 28 | 24 | 58.5 | 92.5 | 681 | |
| | 2013.09-2021.06 | 5MT | F | R | Hatchback FWD 9HP (DV6DTED) | Trans. code:MC | GDS10399 | Drive Shaft | | 28 | 24 | 58.5 | 92.5 | 938 | |
| | 2013.09-2021.06 | 5MT | F | R | Hatchback FWD 9HP (DV6DTED) | Transm. code:BE4R | GDS84457 | Drive Shaft | | 28 | 24 | 58.5 | 92.5 | 921 | |
| | 2013.09-2021.06 | 5MT | F | R | Hatchback FWD 9HP (DV6DTED) | | GCI82769 | Inner Joint | | 24 | 34 | 40 | 61 | 103 | |
| 1.6 (73 kw) | 2014.04-2021.06 | 5MT | F | R | Hatchback FWD BHY (DV6FD) | | GDS84457 | Drive Shaft | | 28 | 24 | 58.5 | 92.5 | 921 | |
| | 2014.04-2021.06 | 6MT | F | R | Hatchback FWD BHY (DV6FD) | Trans. code:MB6 | GDS83663 | Drive Shaft | | 28 | 24 | 58.5 | 92.5 | 919 | |
| | 2014.04-2021.06 | 6MT/5MT | F | L | Hatchback FWD BHY (DV6FD) | Trans. code:MB6 | GDS83616 | Drive Shaft | | 28 | 24 | 58.5 | 92.5 | 681 | |
| | 2014.04-2021.06 | MT | F | L | Hatchback FWD BHY (DV6FD) | | GCO82273 | Outer Joint | | 28 | 34 | 58.5 | 92.5 | 56 | I |
| | 2014.04-2021.06 | MT | F | R | Hatchback FWD BHY (DV6FD) | | GCO81397 | Outer Joint | | 28 | 34 | 58.5 | 92.5 | 56 | I |
| | 2014.04-2021.06 | MT | F | L | Hatchback FWD BHY (DV6FD) | | GCI82131 | Inner Joint | | 24 | 34 | 40 | 62 | 89 | |
| | 2014.04-2021.06 | MT | F | R | Hatchback FWD BHY (DV6FD) | | GCI82769 | Inner Joint | | 24 | 34 | 40 | 61 | 103 | |
| 1.6 (80 kw) | 2007.09-2014.10 | 5MT | F | L | Hatchback FWD 9HY (DV6TED4);9HZ (DV6TED4) | | GDS10248 | Drive Shaft | | 25 | 24 | 58.5 | 79 | 642 | |
| | 2007.09-2014.10 | 5MT/6MT | F | L | Hatchback FWD 9HY (DV6TED4);9HZ (DV6TED4) | | GDS10253 | Drive Shaft | | 25 | 24 | 58.5 | 79 | 626 | |
| | 2007.09-2014.10 | 5MT/6MT | F | R | Hatchback FWD 9HY (DV6TED4);9HZ (DV6TED4) | | GDS10325 | Drive Shaft | | 25 | 24 | 58.5 | 79 | 940 | |
| | 2007.09-2014.10 | 5MT/6MT | F | L | Hatchback FWD 9HY (DV6TED4);9HZ (DV6TED4) | | GCO10148 | Outer Joint | | 25 | 34 | 58.5 | 79 | 55.5 | I |
| | 2007.09-2014.10 | 5MT/6MT | F | L | Hatchback FWD 9HY (DV6TED4);9HZ (DV6TED4) | | GCI10057 | Inner Joint | | 24 | 34 | 40 | 52.5 | 90 | |
| | 2007.09-2014.10 | 5MT/6MT | F | R | Hatchback FWD 9HY (DV6TED4);9HZ (DV6TED4) | | GCI10058 | Inner Joint | | 24 | 34 | 29.8 | 365 | 88 | |
| | 2007.09-2014.10 | AT/MT | F | L/R | Hatchback FWD 9HY (DV6TED4);9HZ (DV6TED4) | | GCO99366 | Outer Joint | | 25 | 34 | 58.5 | 79 | 55 | I |
| | 2007.09-2014.10 | MT | F | L | Hatchback FWD 9HY (DV6TED4);9HZ (DV6TED4) | | GDS10250 | Drive Shaft | | 25 | 24 | 58.5 | 79 | 630 | |
| | 2007.09-2014.10 | MT | F | R | Hatchback FWD 9HY (DV6TED4);9HZ (DV6TED4) | | GDS10251 | Drive Shaft | | 25 | 24 | 58.5 | 79 | 935 | |
| | 2007.09-2014.10 | | F | L/R | Hatchback FWD 9HY (DV6TED4);9HZ (DV6TED4) | | GCO10042 | Outer Joint | | 25 | 34 | 54.8 | 78.5 | 56 | I |
| | 2008.04-2014.10 | 5MT | F | L | Hatchback FWD NFU (TU5JP4) | | GDS10248 | Drive Shaft | | 25 | 24 | 58.5 | 79 | 642 | |
| | 2008.04-2014.10 | 5MT | F | R | Hatchback FWD NFU (TU5JP4) | | GDS10251 | Drive Shaft | | 25 | 24 | 58.5 | 79 | 935 | |
| | 2008.04-2014.10 | 5MT | F | L | Hatchback FWD NFU (TU5JP4) | | GCI10070 | Inner Joint | | 24 | 34 | 40 | 62 | 88 | |
| | 2008.04-2014.10 | 5MT | F | L | Hatchback FWD NFU (TU5JP4) | | GCI10080 | Inner Joint | | 24 | 34 | 40 | 69 | 89.5 | |
| | 2008.04-2014.10 | 5MT | F | R | Hatchback FWD NFU (TU5JP4) | | GCI99159 | Inner Joint | | 24 | 34 | 29.8 | 350 | 87.5 | |

| | YEAR | TRANSM. | F/R | L/R | BODY STYLE & DRIVE TYPE & ENGINE | REMARKS | G-AP Ref. | PRODUCT | ABS | Technical Specifications A | B | C | H | L | P |
|---|---|---|---|---|---|---|---|---|---|---|---|---|---|---|---|
| **PEUGEOT** | | | | | | | | | | | | | | | |
| **308** | | | | | | | | | | | | | | | |
| 1.6 (80 kw) | 2008.04-2014.10 | MT | F | L | Hatchback FWD NFU (TU5JP4) | | GDS10253 | Drive Shaft | | 25 | 24 | 58.5 | 79 | 626 | |
| | 2008.04-2014.10 | MT | F | R | Hatchback FWD NFU (TU5JP4) | | GDS10325 | Drive Shaft | | 25 | 24 | 58.5 | 79 | 940 | |
| | 2008.04-2014.10 | | F | L | Hatchback FWD NFU (TU5JP4) | | GDS10250 | Drive Shaft | | 25 | 24 | 58.5 | 79 | 630 | |
| | 2008.04-2014.10 | | F | L/R | Hatchback FWD NFU (TU5JP4) | | GCO10042 | Outer Joint | | 25 | 34 | 54.8 | 78.5 | 56 | I |
| 1.6 (82 kw) | 2009.12-2014.10 | 6AT/6MT | F | L | Hatchback FWD 9HR (DV6C) | | GDS10253 | Drive Shaft | | 25 | 24 | 58.5 | 79 | 626 | |
| | 2009.12-2014.10 | 6AT/6MT | F | R | Hatchback FWD 9HR (DV6C) | | GDS10325 | Drive Shaft | | 25 | 24 | 58.5 | 79 | 940 | |
| | 2009.12-2014.10 | 6AT/6MT | F | L/R | Hatchback FWD 9HR (DV6C) | | GCO99366 | Outer Joint | | 25 | 34 | 58.5 | 79 | 55 | I |
| | 2009.12-2014.10 | 6AT/6MT | F | L | Hatchback FWD 9HR (DV6C) | | GCI10057 | Inner Joint | | 24 | 34 | 40 | 52.5 | 90 | |
| | 2009.12-2014.10 | 6AT/6MT | F | R | Hatchback FWD 9HR (DV6C) | | GCI10058 | Inner Joint | | 24 | 34 | 29.8 | 365 | 88 | |
| | 2009.12-2014.10 | MT | F | L | Hatchback FWD 9HR (DV6C) | | GDS10250 | Drive Shaft | | 25 | 24 | 58.5 | 79 | 630 | |
| | 2009.12-2014.10 | MT | F | R | Hatchback FWD 9HR (DV6C) | | GDS10251 | Drive Shaft | | 25 | 24 | 58.5 | 79 | 935 | |
| 1.6 (84 kw) | 2013.03-2014.10 | 6MT | F | L | Hatchback FWD 9HD (DV6C);9HG (DV6C M) | | GDS10253 | Drive Shaft | | 25 | 24 | 58.5 | 79 | 626 | |
| | 2013.03-2014.10 | 6MT | F | R | Hatchback FWD 9HD (DV6C);9HG (DV6C M) | | GDS10325 | Drive Shaft | | 25 | 24 | 58.5 | 79 | 940 | |
| | 2013.03-2014.10 | MT | F | L | Hatchback FWD 9HD (DV6C);9HG (DV6C M) | | GDS10250 | Drive Shaft | | 25 | 24 | 58.5 | 79 | 630 | |
| | 2013.03-2014.10 | MT | F | R | Hatchback FWD 9HD (DV6C);9HG (DV6C M) | | GDS10251 | Drive Shaft | | 25 | 24 | 58.5 | 79 | 935 | |
| | 2013.03-2014.10 | MT | F | L/R | Hatchback FWD 9HD (DV6C);9HG (DV6C M) | | GCO99366 | Outer Joint | | 25 | 34 | 58.5 | 79 | 55 | I |
| | 2013.03-2014.10 | | F | L | Hatchback FWD 9HD (DV6C);9HG (DV6C M) | Date To:2014.10 | GCO10148 | Outer Joint | | 25 | 34 | 58.5 | 79 | 55.5 | I |
| | 2013.03-2014.10 | | F | L/R | Hatchback FWD 9HD (DV6C);9HG (DV6C M) | | GCO10042 | Outer Joint | | 25 | 34 | 54.8 | 78.5 | 56 | I |
| | 2013.03-2014.10 | | F | L | Hatchback FWD 9HD (DV6C);9HG (DV6C M) | Date To:2014.10 | GCI10057 | Inner Joint | | 24 | 34 | 40 | 52.5 | 90 | |
| | 2013.03-2014.10 | | F | R | Hatchback FWD 9HD (DV6C);9HG (DV6C M) | Date To:2014.10 | GCI10058 | Inner Joint | | 24 | 34 | 29.8 | 365 | 88 | |
| 1.6 (85 kw) | 2013.09-2021.06 | 6AT | F | L | Hatchback FWD BHZ (DV6FC);BHX (DV6FC);9HC (DV6C) | | GDS84579 | Drive Shaft | | 28 | 37 | 58.5 | 92.5 | 641 | |
| | 2013.09-2021.06 | 6AT | F | R | Hatchback FWD BHZ (DV6FC);BHX (DV6FC);9HC (DV6C) | | GDS84582 | Drive Shaft | | 28 | 37 | 58.5 | 92.5 | 918 | |
| | 2013.09-2021.06 | 6MT | F | L | Hatchback FWD BHZ (DV6FC);BHX (DV6FC);9HC (DV6C) | Trans. code:MC | GDS83218 | Drive Shaft | | 28 | 24 | 58.5 | 92.5 | 673 | |
| | 2013.09-2021.06 | 6MT | F | L | Hatchback FWD BHZ (DV6FC);BHX (DV6FC);9HC (DV6C) | Transm. code:BE4R | GDS83616 | Drive Shaft | | 28 | 24 | 58.5 | 92.5 | 681 | |
| | 2013.09-2021.06 | 6MT | F | R | Hatchback FWD BHZ (DV6FC);BHX (DV6FC);9HC (DV6C) | | GDS10399 | Drive Shaft | | 28 | 24 | 58.5 | 92.5 | 938 | |
| | 2013.09-2021.06 | 6MT | F | R | Hatchback FWD BHZ (DV6FC);BHX (DV6FC);9HC (DV6C) | Transm. code:BE4R | GDS83663 | Drive Shaft | | 28 | 24 | 58.5 | 92.5 | 919 | |
| | 2013.09-2021.06 | 8AT | F | L | Hatchback FWD BHZ (DV6FC);BHX (DV6FC);9HC (DV6C) | | GCI82119 | Inner Joint | | 37 | 34 | 41.5 | 58.5 | 94 | |
| | 2013.09-2021.06 | 8AT | F | R | Hatchback FWD BHZ (DV6FC);BHX (DV6FC);9HC (DV6C) | | GCI82118 | Inner Joint | | 37 | 34 | | 290 | 88 | |
| | 2013.09-2021.06 | MT | F | L | Hatchback FWD BHZ (DV6FC);BHX (DV6FC);9HC (DV6C) | Transm. code:ML6C | GDS84550 | Drive Shaft | | 28 | 37 | 58.5 | 92.5 | 663 | |
| | 2013.09-2021.06 | MT | F | R | Hatchback FWD BHZ (DV6FC);BHX (DV6FC);9HC (DV6C) | | GDS84336 | Drive Shaft | | 28 | 37 | 58.5 | 92.5 | 930 | |
| | 2013.09-2021.06 | MT | F | L/R | Hatchback FWD BHZ (DV6FC);BHX (DV6FC);9HC (DV6C) | | GCO82273 | Outer Joint | | 28 | 34 | 58.5 | 92.5 | 56 | I |
| | 2013.09-2021.06 | MT | F | L | Hatchback FWD BHZ (DV6FC);BHX (DV6FC);9HC (DV6C) | | GCI82301 | Inner Joint | | 37 | 34 | 40 | 65.5 | 89.5 | |
| | 2013.09-2021.06 | MT | F | R | Hatchback FWD BHZ (DV6FC);BHX (DV6FC);9HC (DV6C) | | GCI82300 | Inner Joint | | 37 | 34 | 31.9 | 302 | 88 | |
| | 2015.03-2021.06 | MT | F | L | Hatchback Van FWD 9HC (DV6C) | | GDS83218 | Drive Shaft | | 28 | 24 | 58.5 | 92.5 | 673 | |
| | 2015.03-2021.06 | MT | F | R | Hatchback Van FWD 9HC (DV6C) | | GDS10399 | Drive Shaft | | 28 | 24 | 58.5 | 92.5 | 938 | |
| | 2015.03-2021.06 | MT | F | L | Hatchback Van FWD 9HC (DV6C) | | GCO82273 | Outer Joint | | 28 | 34 | 58.5 | 92.5 | 56 | I |
| | 2015.03-2021.06 | MT | F | R | Hatchback Van FWD 9HC (DV6C) | | GCO81397 | Outer Joint | | 28 | 34 | 58.5 | 92.5 | 56 | I |
| | 2015.03-2021.06 | MT | F | L | Hatchback Van FWD 9HC (DV6C) | | GCI82181 | Inner Joint | | 24 | 34 | 40 | 52.5 | 90 | |
| | 2015.03-2021.06 | MT | F | R | Hatchback Van FWD 9HC (DV6C) | | GCI10165 | Inner Joint | | 24 | 34 | 29.8 | 305.5 | 87.5 | |
| | 2015.05-2021.06 | 5MT | F | R | Hatchback FWD NFP (EC5) | | GCI82769 | Inner Joint | | 24 | 34 | 40 | 61 | 103 | |
| | 2015.05-2021.06 | MT | F | R | Hatchback FWD NFP (EC5) | Transm. code:BE4R/MB6 | GDS83663 | Drive Shaft | | 28 | 24 | 58.5 | 92.5 | 919 | |
| 1.6 (88 kw) | 2007.09-2014.10 | 4AT | F | L | Hatchback FWD 5FS (EP6C);5FW (EP6);5FS (EP6C M) | | GCO99366 | Outer Joint | | 25 | 34 | 58.5 | 79 | 55 | I |
| | 2007.09-2014.10 | 6MT | F | L/R | Hatchback FWD 5FS (EP6C);5FW (EP6);5FS (EP6C M) | | GCO10155 | Outer Joint | | 25 | 39 | 58.5 | 89 | 63.5 | I |
| | 2007.09-2014.10 | AT | F | L | Hatchback FWD 5FS (EP6C);5FW (EP6);5FS (EP6C M) | | GDS10362 | Drive Shaft | | 25 | 26 | 58.5 | 79 | 624 | |
| | 2007.09-2014.10 | AT | F | R | Hatchback FWD 5FS (EP6C);5FW (EP6);5FS (EP6C M) | | GDS10383 | Drive Shaft | | 25 | 26 | 58 | 79 | 842 | |
| | 2007.09-2014.10 | AT | F | R | Hatchback FWD 5FS (EP6C);5FW (EP6);5FS (EP6C M) | | GCO10035 | Outer Joint | | 25 | 34 | 58 | 79 | 55.5 | I |
| | 2007.09-2014.10 | AT | F | L | Hatchback FWD 5FS (EP6C);5FW (EP6);5FS (EP6C M) | Date to:2014.10 | GCI99001 | Inner Joint | | 26 | 34 | 30.2 | 46.5 | 103.5 | |
| | 2007.09-2014.10 | MT | F | L | Hatchback FWD 5FS (EP6C);5FW (EP6);5FS (EP6C M) | | GDS10248 | Drive Shaft | | 25 | 24 | 58.5 | 79 | 642 | |
| | 2007.09-2014.10 | MT | F | L | Hatchback FWD 5FS (EP6C);5FW (EP6);5FS (EP6C M) | | GDS10250 | Drive Shaft | | 25 | 24 | 58.5 | 79 | 630 | |
| | 2007.09-2014.10 | MT | F | R | Hatchback FWD 5FS (EP6C);5FW (EP6);5FS (EP6C M) | | GDS10251 | Drive Shaft | | 25 | 24 | 58.5 | 79 | 935 | |
| | 2007.09-2014.10 | | F | L/R | Hatchback FWD 5FS (EP6C);5FW (EP6);5FS (EP6C M) | | GCO10042 | Outer Joint | | 25 | 34 | 54.8 | 78.5 | 56 | I |
| | 2013.11-2021.06 | 6AT | F | L | Hatchback FWD BHZ (DV6FC) | Trans. code:MC | GDS83218 | Drive Shaft | | 28 | 24 | 58.5 | 92.5 | 673 | |
| | 2013.11-2021.06 | 6AT | F | L | Hatchback FWD BHZ (DV6FC) | | GDS84579 | Drive Shaft | | 28 | 37 | 58.5 | 92.5 | 641 | |
| | 2013.11-2021.06 | 6AT | F | R | Hatchback FWD BHZ (DV6FC) | | GDS84582 | Drive Shaft | | 28 | 37 | 58.5 | 92.5 | 918 | |
| | 2013.11-2021.06 | 6AT | F | L | Hatchback FWD BHZ (DV6FC) | | GCI82119 | Inner Joint | | 37 | 34 | 41.5 | 58.5 | 94 | |
| | 2013.11-2021.06 | 6AT | F | R | Hatchback FWD BHZ (DV6FC) | | GCI82118 | Inner Joint | | 37 | 34 | | 290 | 88 | |
| | 2013.11-2021.06 | 6MT | F | L | Hatchback FWD BHZ (DV6FC) | Transm. code:BE4R | GDS83616 | Drive Shaft | | 28 | 24 | 58.5 | 92.5 | 681 | |
| | 2013.11-2021.06 | 6MT | F | R | Hatchback FWD BHZ (DV6FC) | Transm. code:BE4R | GDS83663 | Drive Shaft | | 28 | 24 | 58.5 | 92.5 | 919 | |
| | 2013.11-2021.06 | MT | F | L | Hatchback FWD BHZ (DV6FC) | Transm. code:ML6C | GDS84550 | Drive Shaft | | 28 | 37 | 58.5 | 92.5 | 663 | |
| | 2013.11-2021.06 | MT | F | R | Hatchback FWD BHZ (DV6FC) | | GDS84336 | Drive Shaft | | 28 | 37 | 58.5 | 92.5 | 930 | |
| | 2013.11-2021.06 | MT | F | L/R | Hatchback FWD BHZ (DV6FC) | | GCO82273 | Outer Joint | | 28 | 34 | 58.5 | 92.5 | 56 | I |
| | 2013.11-2021.06 | MT | F | L | Hatchback FWD BHZ (DV6FC) | | GCI82301 | Inner Joint | | 37 | 34 | 40 | 65.5 | 89.5 | |
| | 2013.11-2021.06 | MT | F | R | Hatchback FWD BHZ (DV6FC) | | GCI82300 | Inner Joint | | 37 | 34 | 31.9 | 302 | 88 | |
| | 2015.03-2021.06 | 6MT | F | L | Hatchback Van FWD BHX (DV6FC) | | GDS84550 | Drive Shaft | | 28 | 37 | 58.5 | 92.5 | 663 | |
| | 2015.03-2021.06 | 6MT | F | R | Hatchback Van FWD BHX (DV6FC) | | GDS84336 | Drive Shaft | | 28 | 37 | 58.5 | 92.5 | 930 | |

| | YEAR | TRANSM. | F/R | L/R | BODY STYLE & DRIVE TYPE & ENGINE | REMARKS | G-AP Ref. | PRODUCT | ABS | Technical Specifications A | B | C | H | L | P |
|---|---|---|---|---|---|---|---|---|---|---|---|---|---|---|---|
| **PEUGEOT** | | | | | | | | | | | | | | | |
| **308** | | | | | | | | | | | | | | | |
| 1.6 (88 kw) | 2015.03-2021.06 | 6MT | F | L/R | Hatchback Van FWD BHX (DV6FC) | | GCO82273 | Outer Joint | | 28 | 34 | 58.5 | 92.5 | 56 | I |
| | 2015.03-2021.06 | 6MT | F | L | Hatchback Van FWD BHX (DV6FC) | | GCI82301 | Inner Joint | | 37 | 34 | 40 | 65.5 | 89.5 | |
| | 2015.03-2021.06 | 6MT | F | R | Hatchback Van FWD BHX (DV6FC) | | GCI82300 | Inner Joint | | 37 | 34 | 31.9 | 302 | 88 | |
| 1.6 (92 kw) | 2013.09-2021.06 | MT | F | L | Hatchback FWD 5FA (EP6CDT) | | GDS83218 | Drive Shaft | | 28 | 24 | 58.5 | 92.5 | 673 | |
| | 2013.09-2021.06 | MT | F | R | Hatchback FWD 5FA (EP6CDT) | | GDS10399 | Drive Shaft | | 28 | 24 | 58.5 | 92.5 | 938 | |
| | 2013.09-2021.06 | MT | F | L/R | Hatchback FWD 5FA (EP6CDT) | | GCO10052 | Outer Joint | | 28 | 34 | 58.5 | 92 | 55 | I |
| | 2013.09-2021.06 | MT | F | L | Hatchback FWD 5FA (EP6CDT) | | GCI82181 | Inner Joint | | 24 | 34 | 40 | 52.5 | 90 | |
| | 2013.09-2021.06 | MT | F | R | Hatchback FWD 5FA (EP6CDT) | | GCI10165 | Inner Joint | | 24 | 34 | 29.8 | 305.5 | 87.5 | |
| 1.6 (103 kw) | 2007.09-2014.10 | AT | F | L | Hatchback FWD 5FT (EP6DT) | Trans. code:AL4 | GDS10362 | Drive Shaft | | 25 | 26 | 58.5 | 79 | 624 | |
| | 2007.09-2014.10 | AT | F | R | Hatchback FWD 5FT (EP6DT) | Trans. code:AL4 | GDS10383 | Drive Shaft | | 25 | 26 | 58 | 79 | 842 | |
| | 2007.09-2014.10 | AT | F | R | Hatchback FWD 5FT (EP6DT) | | GCO10035 | Outer Joint | | 25 | 34 | 58 | 79 | 55.5 | I |
| | 2007.09-2014.10 | AT | F | L | Hatchback FWD 5FT (EP6DT) | Date to:2014.10 | GCI99001 | Inner Joint | | 26 | 34 | 30.2 | 46.5 | 103.5 | |
| | 2007.09-2014.10 | AT/MT | F | L/R | Hatchback FWD 5FT (EP6DT) | | GCO10042 | Outer Joint | | 25 | 34 | 54.8 | 78.5 | 56 | I |
| | 2007.09-2014.10 | MT | F | L | Hatchback FWD 5FT (EP6DT) | | GDS10250 | Drive Shaft | | 25 | 24 | 58.5 | 79 | 630 | |
| | 2007.09-2014.10 | MT | F | R | Hatchback FWD 5FT (EP6DT) | Trans. code:BE4R | GDS10251 | Drive Shaft | | 25 | 24 | 58.5 | 79 | 935 | |
| | 2007.09-2014.10 | | F | L | Hatchback FWD 5FT (EP6DT) | | GCO99366 | Outer Joint | | 25 | 34 | 58.5 | 79 | 55 | I |
| 1.6 (110 kw) | 2007.09-2014.10 | 4AT | F | L | Hatchback FWD 5FX (EP6DT) | | GDS10362 | Drive Shaft | | 25 | 26 | 58.5 | 79 | 624 | |
| | 2007.09-2014.10 | 6AT | F | L | Hatchback FWD 5FX (EP6DT) | Technical Information no.:8PN05 | GDS58072 | Drive Shaft | | 25 | 37 | 58.5 | 79 | 598 | |
| | 2007.09-2014.10 | AT | F | R | Hatchback FWD 5FX (EP6DT) | | GDS10383 | Drive Shaft | | 25 | 26 | 58 | 79 | 842 | |
| | 2007.09-2014.10 | AT | F | R | Hatchback FWD 5FX (EP6DT) | | GCO10035 | Outer Joint | | 25 | 34 | 58 | 79 | 55.5 | I |
| | 2007.09-2014.10 | AT | F | L | Hatchback FWD 5FX (EP6DT) | Date to:2014.10 | GCI99001 | Inner Joint | | 26 | 34 | 30.2 | 46.5 | 103.5 | |
| | 2007.09-2014.10 | MT | F | R | Hatchback FWD 5FX (EP6DT) | Trans. code:BE4R;Type:8NN47 | GDS10251 | Drive Shaft | | 25 | 24 | 58.5 | 79 | 935 | |
| | 2007.09-2014.10 | MT | F | L | Hatchback FWD 5FX (EP6DT) | Date to:2014.10 | GCO10148 | Outer Joint | | 25 | 34 | 58.5 | 79 | 55.5 | I |
| | 2007.09-2014.10 | MT | F | L/R | Hatchback FWD 5FX (EP6DT) | | GCO99366 | Outer Joint | | 25 | 34 | 58.5 | 79 | 55 | I |
| | 2007.09-2014.10 | MT | F | L | Hatchback FWD 5FX (EP6DT) | Date to:2014.10 | GCI10057 | Inner Joint | | 24 | 34 | 40 | 52.5 | 90 | |
| | 2007.09-2014.10 | MT | F | R | Hatchback FWD 5FX (EP6DT) | Date to:2014.10 | GCI10058 | Inner Joint | | 24 | 34 | 29.8 | 365 | 88 | |
| | 2007.09-2014.10 | | F | L/R | Hatchback FWD 5FX (EP6DT) | | GCO10042 | Outer Joint | | 25 | 34 | 54.8 | 78.5 | 56 | I |
| | 2007.09-2014.10 | | F | | Hatchback FWD 5FX (EP6DT) | | GCO10067 | Outer Joint | 48W | 25 | 34 | 58.5 | 79 | 55 | I |
| | 2014.03-2021.06 | 6AT | F | L | Hatchback FWD 5GX (EP6FDTMD) | | GDS84579 | Drive Shaft | | 28 | 37 | 58.5 | 92.5 | 641 | |
| | 2014.03-2021.06 | 6AT | F | L/R | Hatchback FWD 5GX (EP6FDTMD) | | GCO82273 | Outer Joint | | 28 | 34 | 58.5 | 92.5 | 56 | I |
| | 2014.03-2021.06 | 6AT | F | L | Hatchback FWD 5GX (EP6FDTMD) | | GCI82119 | Inner Joint | | 37 | 34 | 41.5 | 58.5 | 94 | |
| | 2014.03-2021.06 | AT | F | R | Hatchback FWD 5GX (EP6FDTMD) | | GDS84582 | Drive Shaft | | 28 | 37 | 58.5 | 92.5 | 918 | |
| | 2014.03-2021.06 | AT | F | R | Hatchback FWD 5GX (EP6FDTMD) | | GCI82118 | Inner Joint | | 37 | 34 | | 290 | 88 | |
| 1.6 (112 kw) | 2013.09-2021.06 | 6AT | F | L | Hatchback FWD 5GX (EP6FDTMD) | | GDS84579 | Drive Shaft | | 28 | 37 | 58.5 | 92.5 | 641 | |
| | 2013.09-2021.06 | 6AT | F | R | Hatchback FWD 5GX (EP6FDTMD) | | GDS84582 | Drive Shaft | | 28 | 37 | 58.5 | 92.5 | 918 | |
| | 2013.09-2021.06 | 6AT | F | L | Hatchback FWD 5GX (EP6FDTMD) | | GCI82119 | Inner Joint | | 37 | 34 | 41.5 | 58.5 | 94 | |
| | 2013.09-2021.06 | 6AT | F | R | Hatchback FWD 5GX (EP6FDTMD) | | GCI82118 | Inner Joint | | 37 | 34 | | 290 | 88 | |
| 1.6 (115 kw) | 2009.10-2014.10 | 6AT | F | R | Hatchback FWD 5FV (EP6CDT) | Technical Information no.:8PN06 | GDS84640 | Drive Shaft | | 25 | 37 | 58.5 | 79 | 931 | |
| | 2009.10-2014.10 | 6AT | F | L | Hatchback FWD 5FV (EP6CDT) | Technical Information no.:8PN05 | GCO99366 | Outer Joint | | 25 | 34 | 58.5 | 79 | 55 | I |
| | 2009.10-2014.10 | 6AT | F | R | Hatchback FWD 5FV (EP6CDT) | Technical Information no.:8PN06 | GCO82351 | Outer Joint | | 25 | 34 | 58.5 | 79 | 55.5 | I |
| | 2009.10-2014.10 | 6AT | F | L | Hatchback FWD 5FV (EP6CDT) | | GCI82119 | Inner Joint | | 37 | 34 | 41.5 | 58.5 | 94 | |
| | 2009.10-2014.10 | 6MT | F | L/R | Hatchback FWD 5FV (EP6CDT) | | GCO10148 | Outer Joint | | 25 | 34 | 58.5 | 79 | 55.5 | I |
| | 2009.10-2014.10 | AT | F | L | Hatchback FWD 5FV (EP6CDT) | Technical Information no.:8PN05 | GDS58072 | Drive Shaft | | 25 | 37 | 58.5 | 79 | 598 | |
| | 2009.10-2014.10 | MT | F | L | Hatchback FWD 5FV (EP6CDT) | | GDS10253 | Drive Shaft | | 25 | 24 | 58.5 | 79 | 626 | |
| | 2009.10-2014.10 | MT | F | R | Hatchback FWD 5FV (EP6CDT) | | GDS10325 | Drive Shaft | | 25 | 24 | 58.5 | 79 | 940 | |
| | 2009.10-2014.10 | MT | F | L | Hatchback FWD 5FV (EP6CDT) | | GCI10057 | Inner Joint | | 24 | 34 | 40 | 52.5 | 90 | |
| | 2009.10-2014.10 | MT | F | R | Hatchback FWD 5FV (EP6CDT) | | GCI10058 | Inner Joint | | 24 | 34 | 29.8 | 365 | 88 | |
| | 2013.09-2021.06 | 6AT | F | L | Hatchback FWD 5FV (EP6CDT) | | GDS83809 | Drive Shaft | | 28 | 37 | 58.5 | 93 | 606 | |
| | 2013.09-2021.06 | 6AT | F | R | Hatchback FWD 5FV (EP6CDT) | | GDS83808 | Drive Shaft | | 28 | 37 | 58.5 | 93 | 942 | |
| | 2013.09-2021.06 | 6AT | F | L/R | Hatchback FWD 5FV (EP6CDT) | | GCO82489 | Outer Joint | | 28 | 39 | 58.5 | 93 | 63.5 | I |
| | 2013.09-2021.06 | 6AT | F | L | Hatchback FWD 5FV (EP6CDT) | | GCI10120 | Inner Joint | | 37 | 39 | 42.2 | 60 | 95.5 | |
| | 2013.09-2021.06 | 6AT | F | R | Hatchback FWD 5FV (EP6CDT) | | GCI45033 | Inner Joint | | 37 | 39 | | 379 | 96 | |
| | 2013.09-2021.06 | MT | F | L | Hatchback FWD 5FV (EP6CDT) | | GDS83218 | Drive Shaft | | 28 | 24 | 58.5 | 92.5 | 673 | |
| | 2013.09-2021.06 | MT | F | R | Hatchback FWD 5FV (EP6CDT) | | GDS10399 | Drive Shaft | | 28 | 24 | 58.5 | 92.5 | 938 | |
| | 2013.09-2021.06 | MT | F | L/R | Hatchback FWD 5FV (EP6CDT) | | GCO10052 | Outer Joint | | 28 | 34 | 58.5 | 92 | 55 | I |
| | 2013.09-2021.06 | MT | F | L | Hatchback FWD 5FV (EP6CDT) | | GCI82181 | Inner Joint | | 24 | 34 | 40 | 52.5 | 90 | |
| | 2013.09-2021.06 | MT | F | R | Hatchback FWD 5FV (EP6CDT) | | GCI10165 | Inner Joint | | 24 | 34 | 29.8 | 305.5 | 87.5 | |
| 1.6 (120 kw) | 2012.01-2015.12 | 6AT | F | R | Hatchback FWD | Technical Information no.:8PN06 | GDS84640 | Drive Shaft | | 25 | 37 | 58.5 | 79 | 931 | |
| | 2012.01-2015.12 | 6AT | F | L | Hatchback FWD | Technical Information no.:8PN05 | GCO99366 | Outer Joint | | 25 | 34 | 58.5 | 79 | 55 | I |
| | 2012.01-2015.12 | 6AT | F | R | Hatchback FWD | Technical Information no.:8PN06 | GCO82351 | Outer Joint | | 25 | 34 | 58.5 | 79 | 55.5 | I |
| | 2012.01-2015.12 | 6AT | F | L | Hatchback FWD | | GCI82119 | Inner Joint | | 37 | 34 | 41.5 | 58.5 | 94 | |
| | 2014.06-2021.06 | 6AT | F | L | Hatchback FWD 5FM (EP6CDTM) | | GCI82119 | Inner Joint | | 37 | 34 | 41.5 | 58.5 | 94 | |
| | 2014.06-2021.06 | 6AT | F | R | Hatchback FWD 5FM (EP6CDTM) | | GCI82118 | Inner Joint | | 37 | 34 | | 290 | 88 | |
| | 2014.06-2021.06 | | F | L | Hatchback FWD 5FM (EP6CDTM) | | GDS84579 | Drive Shaft | | 28 | 37 | 58.5 | 92.5 | 641 | |
| | 2014.06-2021.06 | | F | R | Hatchback FWD 5FM (EP6CDTM) | | GDS84582 | Drive Shaft | | 28 | 37 | 58.5 | 92.5 | 918 | |

| | YEAR | TRANSM. | F/R | L/R | BODY STYLE & DRIVE TYPE & ENGINE | REMARKS | G-AP Ref. | PRODUCT | ABS | Technical Specifications A | B | C | H | L | P |
|---|---|---|---|---|---|---|---|---|---|---|---|---|---|---|---|
| **PEUGEOT** | | | | | | | | | | | | | | | |
| **308** | | | | | | | | | | | | | | | |
| 1.6 (128 kw) | 2008.03-2014.10 | 6MT | F | L | Hatchback FWD 5FY (EP6DTS) | | GDS10253 | Drive Shaft | | 25 | 24 | 58.5 | 79 | 626 | |
| | 2008.03-2014.10 | 6MT | F | R | Hatchback FWD 5FY (EP6DTS) | | GDS10325 | Drive Shaft | | 25 | 24 | 58.5 | 79 | 940 | |
| | 2008.03-2014.10 | AT | F | L | Hatchback FWD 5FY (EP6DTS) | Trans. code:AL4 | GDS10362 | Drive Shaft | | 25 | 26 | 58.5 | 79 | 624 | |
| | 2008.03-2014.10 | AT | F | R | Hatchback FWD 5FY (EP6DTS) | Trans. code:AL4 | GDS10383 | Drive Shaft | | 25 | 26 | 58 | 79 | 842 | |
| | 2008.03-2014.10 | AT | F | R | Hatchback FWD 5FY (EP6DTS) | | GCO10035 | Outer Joint | | 25 | 34 | 58 | 79 | 55.5 | I |
| | 2008.03-2014.10 | AT | F | L | Hatchback FWD 5FY (EP6DTS) | Date to:2014.10 | GCI99001 | Inner Joint | | 26 | 34 | 30.2 | 46.5 | 103.5 | |
| | 2008.03-2014.10 | AT/MT | F | L/R | Hatchback FWD 5FY (EP6DTS) | | GCO99366 | Outer Joint | | 25 | 34 | 58.5 | 79 | 55 | I |
| | 2008.03-2014.10 | MT | F | R | Hatchback FWD 5FY (EP6DTS) | Trans. code:BE4R;Type:8NN47 | GDS10251 | Drive Shaft | | 25 | 24 | 58.5 | 79 | 935 | |
| | 2008.03-2014.10 | MT | F | R | Hatchback FWD 5FY (EP6DTS) | Date to:2014.10 | GCI10058 | Inner Joint | | 24 | 34 | 29.8 | 365 | 88 | |
| | 2008.03-2014.10 | | F | L | Hatchback FWD 5FY (EP6DTS) | Date To:2014.10 | GCO10148 | Outer Joint | | 25 | 34 | 58.5 | 79 | 55.5 | I |
| | 2008.03-2014.10 | | F | L/R | Hatchback FWD 5FY (EP6DTS) | | GCO10042 | Outer Joint | | 25 | 34 | 54.8 | 78.5 | 56 | I |
| | 2008.03-2014.10 | | F | L | Hatchback FWD 5FY (EP6DTS) | Date To:2014.10 | GCI10057 | Inner Joint | | 24 | 34 | 40 | 52.5 | 90 | |
| 1.6 (147 kw) | 2010.07-2014.10 | 6MT | F | | Hatchback FWD 5FY (EP6CDTX) | | GCO10155 | Outer Joint | | 25 | 39 | 58.5 | 89 | 63.5 | I |
| | 2010.07-2014.10 | AT | F | | Hatchback FWD 5FY (EP6CDTX) | | GCO99366 | Outer Joint | | 25 | 34 | 58.5 | 79 | 55 | I |
| 1.6 (151 kw) | 2014.06-2021.06 | MT | F | L | Hatchback FWD 5GT (EP6FDTX) | | GDS56852 | Drive Shaft | | 28 | 24 | 58.5 | 93 | 675 | |
| | 2014.06-2021.06 | MT | F | R | Hatchback FWD 5GT (EP6FDTX) | | GDS56853 | Drive Shaft | | 28 | 24 | 58.5 | 93 | 928 | |
| | 2014.06-2021.06 | MT | F | L/R | Hatchback FWD 5GT (EP6FDTX) | | GCO82489 | Outer Joint | | 28 | 39 | 58.5 | 93 | 63.5 | I |
| | 2014.06-2021.06 | MT | F | L | Hatchback FWD 5GT (EP6FDTX) | | GCI10057 | Inner Joint | | 24 | 34 | 40 | 52.5 | 90 | |
| | 2014.06-2021.06 | MT | F | R | Hatchback FWD 5GT (EP6FDTX) | | GCI83528 | Inner Joint | | 24 | 34 | 29.8 | 306 | 88 | |
| 1.6 (165 kw) | 2018.01-2021.06 | 8AT | F | L | Hatchback FWD GGR (EP6FADTX) | | GDS84579 | Drive Shaft | | 28 | 37 | 58.5 | 92.5 | 641 | |
| | 2018.01-2021.06 | 8AT | F | R | Hatchback FWD GGR (EP6FADTX) | | GDS84582 | Drive Shaft | | 28 | 37 | 58.5 | 92.5 | 918 | |
| | 2018.01-2021.06 | 8AT | F | L/R | Hatchback FWD GGR (EP6FADTX) | | GCO82273 | Outer Joint | | 28 | 34 | 58.5 | 92.5 | 56 | I |
| | 2018.01-2021.06 | 8AT | F | L | Hatchback FWD GGR (EP6FADTX) | | GCI82119 | Inner Joint | | 37 | 34 | 41.5 | 58.5 | 94 | |
| | 2018.01-2021.06 | 8AT | F | R | Hatchback FWD GGR (EP6FADTX) | | GCI82118 | Inner Joint | | 37 | 34 | | 290 | 88 | |
| 1.6 (184 kw) | 2015.08-2021.06 | 6MT | F | L | Hatchback FWD 5GP (EP6FDTR) | | GDS56852 | Drive Shaft | | 28 | 24 | 58.5 | 93 | 675 | |
| | 2015.08-2021.06 | 6MT | F | R | Hatchback FWD 5GP (EP6FDTR) | | GDS56853 | Drive Shaft | | 28 | 24 | 58.5 | 93 | 928 | |
| | 2015.08-2021.06 | 6MT | F | L/R | Hatchback FWD 5GP (EP6FDTR) | | GCO82489 | Outer Joint | | 28 | 39 | 58.5 | 93 | 63.5 | I |
| | 2015.08-2021.06 | 6MT | F | L | Hatchback FWD 5GP (EP6FDTR) | | GCI10057 | Inner Joint | | 24 | 34 | 40 | 52.5 | 90 | |
| | 2015.08-2021.06 | 6MT | F | R | Hatchback FWD 5GP (EP6FDTR) | | GCI83528 | Inner Joint | | 24 | 34 | 29.8 | 306 | 88 | |
| 1.6 (193 kw) | 2018.07-2021.06 | 6MT | F | L | Hatchback FWD EGX (EP6FADTR) | | GDS56852 | Drive Shaft | | 28 | 24 | 58.5 | 93 | 675 | |
| | 2018.07-2021.06 | 6MT | F | R | Hatchback FWD EGX (EP6FADTR) | | GDS56853 | Drive Shaft | | 28 | 24 | 58.5 | 93 | 928 | |
| | 2018.07-2021.06 | 6MT | F | L/R | Hatchback FWD EGX (EP6FADTR) | | GCO82489 | Outer Joint | | 28 | 39 | 58.5 | 93 | 63.5 | I |
| | 2018.07-2021.06 | 6MT | F | L | Hatchback FWD EGX (EP6FADTR) | | GCI10057 | Inner Joint | | 24 | 34 | 40 | 52.5 | 90 | |
| | 2018.07-2021.06 | 6MT | F | R | Hatchback FWD EGX (EP6FADTR) | | GCI83528 | Inner Joint | | 24 | 34 | 29.8 | 306 | 88 | |
| 1.6 (200 kw) | 2015.06-2021.06 | 6MT | F | L | Hatchback FWD 5GN (EP6FDTR) | | GDS56852 | Drive Shaft | | 28 | 24 | 58.5 | 93 | 675 | |
| | 2015.06-2021.06 | 6MT | F | R | Hatchback FWD 5GN (EP6FDTR) | | GDS56853 | Drive Shaft | | 28 | 24 | 58.5 | 93 | 928 | |
| | 2015.06-2021.06 | 6MT | F | L/R | Hatchback FWD 5GN (EP6FDTR) | | GCO82489 | Outer Joint | | 28 | 39 | 58.5 | 93 | 63.5 | I |
| | 2015.06-2021.06 | 6MT | F | L | Hatchback FWD 5GN (EP6FDTR) | | GCI10057 | Inner Joint | | 24 | 34 | 40 | 52.5 | 90 | |
| | 2015.06-2021.06 | 6MT | F | R | Hatchback FWD 5GN (EP6FDTR) | | GCI83528 | Inner Joint | | 24 | 34 | 29.8 | 306 | 88 | |
| 2.0 (100 kw) | 2007.09-2014.10 | 6AT | F | L | Hatchback FWD RHR (DW10BTED4);RHR (DW10CB) | | GDS10380 | Drive Shaft | | 25 | 37 | 58.5 | 89 | 635 | |
| | 2007.09-2014.10 | 6AT | F | R | Hatchback FWD RHR (DW10BTED4);RHR (DW10CB) | | GDS10363 | Drive Shaft | | 25 | 37 | 58.5 | 89 | 935 | |
| | 2007.09-2014.10 | 6AT/6MT | F | L/R | Hatchback FWD RHR (DW10BTED4);RHR (DW10CB) | | GCO10155 | Outer Joint | | 25 | 39 | 58.5 | 89 | 63.5 | I |
| | 2007.09-2014.10 | 6MT | F | L | Hatchback FWD RHR (DW10BTED4);RHR (DW10CB) | inner teeth of wheel side:26 | GDS10312 | Drive Shaft | | 25 | 37 | 58.5 | 89 | 625 | |
| | 2007.09-2014.10 | 6MT | F | L | Hatchback FWD RHR (DW10BTED4);RHR (DW10CB) | inner teeth of wheel side:26 | GDS10427 | Drive Shaft | | 25 | 37 | 58.5 | 89 | 638 | |
| | 2007.09-2014.10 | 6MT | F | R | Hatchback FWD RHR (DW10BTED4);RHR (DW10CB) | inner teeth of wheel side:26 | GDS10421 | Drive Shaft | | 25 | 37 | 58.5 | 89 | 972 | |
| | 2007.09-2014.10 | 6MT | F | L | Hatchback FWD RHR (DW10BTED4);RHR (DW10CB) | | GCO10158 | Outer Joint | | 25 | 26 | 58.5 | 89 | 61.5 | M |
| | 2007.09-2014.10 | AT | F | L | Hatchback FWD RHR (DW10BTED4);RHR (DW10CB) | | GDS10375 | Drive Shaft | | 25 | 37 | 58.4 | 89 | 619 | |
| | 2007.09-2014.10 | AT | F | R | Hatchback FWD RHR (DW10BTED4);RHR (DW10CB) | Date to:2014.10 | GCI10091 | Inner Joint | | 37 | 26 | | 366 | 100 | |
| | 2007.09-2014.10 | MT | F | L | Hatchback FWD RHR (DW10BTED4);RHR (DW10CB) | inner teeth of wheel side:39 | GDS10210 | Drive Shaft | | 25 | 37 | 58.5 | 89 | 638 | |
| | 2007.09-2014.10 | MT | F | R | Hatchback FWD RHR (DW10BTED4);RHR (DW10CB) | inner teeth of wheel side:39 | GDS10361 | Drive Shaft | | 25 | 37 | 58.5 | 89 | 959 | |
| | 2007.09-2014.10 | MT | F | R | Hatchback FWD RHR (DW10BTED4);RHR (DW10CB) | | GCI10041 | Inner Joint | | 37 | 39 | 32 | 399 | 95.5 | |
| 2.0 (103 kw) | 2008.01-2012.12 | 5MT | F | L | Hatchback FWD RFJ (EW10A) | | GDS10248 | Drive Shaft | | 25 | 24 | 58.5 | 79 | 642 | |
| | 2008.01-2012.12 | 5MT | F | R | Hatchback FWD RFJ (EW10A) | | GDS10251 | Drive Shaft | | 25 | 24 | 58.5 | 79 | 935 | |
| | 2008.01-2012.12 | 5MT | F | L/R | Hatchback FWD RFJ (EW10A) | | GCO99366 | Outer Joint | | 25 | 34 | 58.5 | 79 | 55 | I |
| | 2008.01-2012.12 | 5MT | F | L | Hatchback FWD RFJ (EW10A) | | GCI10080 | Inner Joint | | 24 | 34 | 40 | 69 | 89.5 | |
| | 2008.01-2012.12 | 5MT | F | R | Hatchback FWD RFJ (EW10A) | | GCI99159 | Inner Joint | | 24 | 34 | 29.8 | 350 | 87.5 | |
| | 2008.01-2012.12 | | F | L | Hatchback FWD RFJ (EW10A) | | GDS10250 | Drive Shaft | | 25 | 24 | 58.5 | 79 | 630 | |
| | 2010.07-2012.12 | 6AT | F | L | Hatchback FWD RHR (DW10BTED4) | | GDS10380 | Drive Shaft | | 25 | 37 | 58.5 | 89 | 635 | |
| | 2010.07-2012.12 | 6AT | F | R | Hatchback FWD RHR (DW10BTED4) | | GDS10363 | Drive Shaft | | 25 | 37 | 58.5 | 89 | 935 | |
| | 2010.07-2012.12 | 6AT/6MT | F | L/R | Hatchback FWD RHR (DW10BTED4) | | GCO10155 | Outer Joint | | 25 | 39 | 58.5 | 89 | 63.5 | I |
| | 2010.07-2012.12 | 6MT | F | L | Hatchback FWD RHR (DW10BTED4) | inner teeth of wheel side:26 | GDS10312 | Drive Shaft | | 25 | 37 | 58.5 | 89 | 625 | |
| | 2010.07-2012.12 | 6MT | F | L | Hatchback FWD RHR (DW10BTED4) | inner teeth of wheel side:26 | GDS10427 | Drive Shaft | | 25 | 37 | 58.5 | 89 | 638 | |
| | 2010.07-2012.12 | 6MT | F | R | Hatchback FWD RHR (DW10BTED4) | inner teeth of wheel side:26 | GDS10421 | Drive Shaft | | 25 | 37 | 58.5 | 89 | 972 | |
| | 2010.07-2012.12 | 6MT | F | L | Hatchback FWD RHR (DW10BTED4) | | GCO10158 | Outer Joint | | 25 | 26 | 58.5 | 89 | 61.5 | M |
| | 2010.07-2012.12 | AT | F | L | Hatchback FWD RHR (DW10BTED4) | | GDS10375 | Drive Shaft | | 25 | 37 | 58.4 | 89 | 619 | |

| | YEAR | TRANSM. | F/R | L/R | BODY STYLE & DRIVE TYPE & ENGINE | REMARKS | G-AP Ref. | PRODUCT | ABS | Technical Specifications A | B | C | H | L | P |
|---|---|---|---|---|---|---|---|---|---|---|---|---|---|---|---|
| **PEUGEOT** | | | | | | | | | | | | | | | |
| **308** | | | | | | | | | | | | | | | |
| 2.0 (103 kw) | 2010.07-2012.12 | AT | F | R | Hatchback FWD RHR (DW10BTED4) | Date to:2012.12 | GCI10091 | Inner Joint | | 37 | 26 | | 366 | 100 | |
| | 2010.07-2012.12 | MT | F | L | Hatchback FWD RHR (DW10BTED4) | inner teeth of wheel side:39 | GDS10210 | Drive Shaft | | 25 | 37 | 58.5 | 89 | 638 | |
| | 2010.07-2012.12 | MT | F | R | Hatchback FWD RHR (DW10BTED4) | inner teeth of wheel side:39 | GDS10361 | Drive Shaft | | 25 | 37 | 58.5 | 89 | 959 | |
| | 2010.07-2012.12 | MT | F | R | Hatchback FWD RHR (DW10BTED4) | | GCI10041 | Inner Joint | | 37 | 39 | 32 | 399 | 95.5 | |
| 2.0 (110 kw) | 2011.10-2014.10 | 6AT | F | L | Hatchback FWD RHE (DW10CTED4) | inner teeth of wheel side:37 | GDS10380 | Drive Shaft | | 25 | 37 | 58.5 | 89 | 635 | |
| | 2011.10-2014.10 | 6AT | F | R | Hatchback FWD RHE (DW10CTED4) | | GDS10363 | Drive Shaft | | 25 | 37 | 58.5 | 89 | 935 | |
| | 2011.10-2014.10 | 6AT/6MT | F | L/R | Hatchback FWD RHE (DW10CTED4) | inner teeth of wheel side:39 | GCO10155 | Outer Joint | | 25 | 39 | 58.5 | 89 | 63.5 | I |
| | 2011.10-2014.10 | 6MT | F | L | Hatchback FWD RHE (DW10CTED4) | inner teeth of wheel side:39 | GDS10427 | Drive Shaft | | 25 | 37 | 58.5 | 89 | 638 | |
| | 2011.10-2014.10 | 6MT | F | R | Hatchback FWD RHE (DW10CTED4) | inner teeth of wheel side:26 | GDS10421 | Drive Shaft | | 25 | 37 | 58.5 | 89 | 972 | |
| | 2011.10-2014.10 | AT | F | | Hatchback FWD RHE (DW10CTED4) | Transm. Type: AT8/AL4 | GCO99366 | Outer Joint | | 25 | 34 | 58.5 | 79 | 55 | I |
| | 2011.10-2014.10 | AT | F | R | Hatchback FWD RHE (DW10CTED4) | Date to:2014.10 | GCI10091 | Inner Joint | | 37 | 26 | | 366 | 100 | |
| | 2011.10-2014.10 | MT | F | L | Hatchback FWD RHE (DW10CTED4) | inner teeth of wheel side:26 | GDS10210 | Drive Shaft | | 25 | 37 | 58.5 | 89 | 638 | |
| | 2011.10-2014.10 | MT | F | R | Hatchback FWD RHE (DW10CTED4) | inner teeth of wheel side:39 | GDS10361 | Drive Shaft | | 25 | 37 | 58.5 | 89 | 959 | |
| | 2011.10-2014.10 | MT | F | L | Hatchback FWD RHE (DW10CTED4) | inner teeth of wheel side:26 | GCO10158 | Outer Joint | | 25 | 26 | 58.5 | 89 | 61.5 | M |
| | 2011.10-2014.10 | MT | F | R | Hatchback FWD RHE (DW10CTED4) | | GCI10041 | Inner Joint | | 37 | 39 | 32 | 399 | 95.5 | |
| | 2013.11-2021.06 | AT | F | L | Hatchback FWD AHX (DW10FD);AHX (DW10FCD) | | GDS83809 | Drive Shaft | | 28 | 37 | 58.5 | 93 | 606 | |
| | 2013.11-2021.06 | AT | F | R | Hatchback FWD AHX (DW10FD);AHX (DW10FCD) | | GDS83808 | Drive Shaft | | 28 | 37 | 58.5 | 93 | 942 | |
| | 2013.11-2021.06 | AT | F | L/R | Hatchback FWD AHX (DW10FD);AHX (DW10FCD) | | GCO82489 | Outer Joint | | 28 | 39 | 58.5 | 93 | 63.5 | I |
| | 2013.11-2021.06 | AT | F | L | Hatchback FWD AHX (DW10FD);AHX (DW10FCD) | | GCI10120 | Inner Joint | | 37 | 39 | 42.2 | 60 | 95.5 | |
| | 2013.11-2021.06 | AT | F | R | Hatchback FWD AHX (DW10FD);AHX (DW10FCD) | | GCI45033 | Inner Joint | | 37 | 39 | | 379 | 96 | |
| 2.0 (120 kw) | 2012.04-2014.10 | 6AT | F | L | Hatchback FWD RHH (DW10CTED4) | Trans. code:AM6 | GDS10380 | Drive Shaft | | 25 | 37 | 58.5 | 89 | 635 | |
| | 2012.04-2014.10 | 6AT | F | R | Hatchback FWD RHH (DW10CTED4) | Trans. code:AM6 | GDS10363 | Drive Shaft | | 25 | 37 | 58.5 | 89 | 935 | |
| | 2012.04-2014.10 | 6AT | F | L | Hatchback FWD RHH (DW10CTED4) | Trans. code:AT6 | GCI82119 | Inner Joint | | 37 | 34 | 41.5 | 58.5 | 94 | |
| | 2012.04-2014.10 | 6AT | F | R | Hatchback FWD RHH (DW10CTED4) | Trans. code:AM6 | GCI10091 | Inner Joint | | 37 | 26 | | 366 | 100 | |
| | 2012.04-2014.10 | 6MT | F | L/R | Hatchback FWD RHH (DW10CTED4) | Technical Information no.:8NN76/8NN77 | GCO10155 | Outer Joint | | 25 | 39 | 58.5 | 89 | 63.5 | I |
| | 2012.04-2014.10 | AT | F | L | Hatchback FWD RHH (DW10CTED4) | Technical Information no.:8PN05 | GDS58072 | Drive Shaft | | 25 | 37 | 58.5 | 79 | 598 | |
| | 2012.04-2014.10 | MT | F | L | Hatchback FWD RHH (DW10CTED4) | inner teeth of wheel side:39 | GDS10210 | Drive Shaft | | 25 | 37 | 58.5 | 89 | 638 | |
| | 2012.04-2014.10 | MT | F | L | Hatchback FWD RHH (DW10CTED4) | inner teeth of wheel side:26 | GDS10427 | Drive Shaft | | 25 | 37 | 58.5 | 89 | 638 | |
| | 2012.04-2014.10 | MT | F | R | Hatchback FWD RHH (DW10CTED4) | inner teeth of wheel side:39 | GDS10361 | Drive Shaft | | 25 | 37 | 58.5 | 89 | 959 | |
| | 2012.04-2014.10 | MT | F | R | Hatchback FWD RHH (DW10CTED4) | inner teeth of wheel side:26 | GDS10421 | Drive Shaft | | 25 | 37 | 58.5 | 89 | 972 | |
| | 2012.04-2014.10 | MT | F | R | Hatchback FWD RHH (DW10CTED4) | | GCI10041 | Inner Joint | | 37 | 39 | 32 | 399 | 95.5 | |
| 2.0 (130 kw) | 2017.06-2021.06 | 8AT | F | L | Hatchback FWD EHZ (DW10FC) | | GDS83809 | Drive Shaft | | 28 | 37 | 58.5 | 93 | 606 | |
| | 2017.06-2021.06 | 8AT | F | R | Hatchback FWD EHZ (DW10FC) | | GDS83808 | Drive Shaft | | 28 | 37 | 58.5 | 93 | 942 | |
| | 2017.06-2021.06 | 8AT | F | L/R | Hatchback FWD EHZ (DW10FC) | | GCO82489 | Outer Joint | | 28 | 39 | 58.5 | 93 | 63.5 | I |
| | 2017.06-2021.06 | 8AT | F | L | Hatchback FWD EHZ (DW10FC) | | GCI10120 | Inner Joint | | 37 | 39 | 42.2 | 60 | 95.5 | |
| | 2017.06-2021.06 | 8AT | F | R | Hatchback FWD EHZ (DW10FC) | | GCI45033 | Inner Joint | | 37 | 39 | | 379 | 96 | |
| 2.0 (132 kw) | 2017.06-2021.06 | 8AT | F | L | Hatchback FWD AHW (DW10FC) | | GDS83809 | Drive Shaft | | 28 | 37 | 58.5 | 93 | 606 | |
| | 2017.06-2021.06 | 8AT | F | R | Hatchback FWD AHW (DW10FC) | | GDS83808 | Drive Shaft | | 28 | 37 | 58.5 | 93 | 942 | |
| | 2017.06-2021.06 | 8AT | F | L/R | Hatchback FWD AHW (DW10FC) | | GCO82489 | Outer Joint | | 28 | 39 | 58.5 | 93 | 63.5 | I |
| | 2017.06-2021.06 | 8AT | F | L | Hatchback FWD AHW (DW10FC) | | GCI10120 | Inner Joint | | 37 | 39 | 42.2 | 60 | 95.5 | |
| | 2017.06-2021.06 | 8AT | F | R | Hatchback FWD AHW (DW10FC) | | GCI45033 | Inner Joint | | 37 | 39 | | 379 | 96 | |
| 2.0 (133 kw) | 2014.06-2021.06 | AT | F | L | Hatchback FWD AHW (DW10FC) | | GDS83809 | Drive Shaft | | 28 | 37 | 58.5 | 93 | 606 | |
| | 2014.06-2021.06 | AT | F | R | Hatchback FWD AHW (DW10FC) | | GDS83808 | Drive Shaft | | 28 | 37 | 58.5 | 93 | 942 | |
| | 2014.06-2021.06 | AT | F | L/R | Hatchback FWD AHW (DW10FC) | | GCO82489 | Outer Joint | | 28 | 39 | 58.5 | 93 | 63.5 | I |
| | 2014.06-2021.06 | AT | F | L | Hatchback FWD AHW (DW10FC) | | GCI10120 | Inner Joint | | 37 | 39 | 42.2 | 60 | 95.5 | |
| | 2014.06-2021.06 | AT | F | R | Hatchback FWD AHW (DW10FC) | | GCI45033 | Inner Joint | | 37 | 39 | | 379 | 96 | |
| **308 CC** | | | | | | | | | | | | | | | |
| 1.6 (82 kw) | 2009.02-2012.05 | MT | F | L | Convertible FWD 9HZ (DV6TED4) | | GDS10253 | Drive Shaft | | 25 | 24 | 58.5 | 79 | 626 | |
| | 2009.02-2012.05 | MT | F | R | Convertible FWD 9HZ (DV6TED4) | | GDS10325 | Drive Shaft | | 25 | 24 | 58.5 | 79 | 940 | |
| | 2009.02-2012.05 | MT | F | L | Convertible FWD 9HZ (DV6TED4) | | GCO10148 | Outer Joint | | 25 | 34 | 58.5 | 79 | 55.5 | I |
| | 2009.02-2012.05 | MT | F | L | Convertible FWD 9HZ (DV6TED4) | | GCI10057 | Inner Joint | | 24 | 34 | 40 | 52.5 | 90 | |
| | 2009.02-2012.05 | MT | F | R | Convertible FWD 9HZ (DV6TED4) | | GCI10058 | Inner Joint | | 24 | 34 | 29.8 | 365 | 88 | |
| | 2009.02-2012.05 | | F | L/R | Convertible FWD 9HZ (DV6TED4) | | GCO99366 | Outer Joint | | 25 | 34 | 58.5 | 79 | 55 | I |
| | 2009.06-2014.12 | 6MT | F | L | Convertible FWD 9HR (DV6C) | | GDS10253 | Drive Shaft | | 25 | 24 | 58.5 | 79 | 626 | |
| | 2009.06-2014.12 | 6MT | F | R | Convertible FWD 9HR (DV6C) | | GDS10325 | Drive Shaft | | 25 | 24 | 58.5 | 79 | 940 | |
| | 2009.06-2014.12 | 6MT | F | L/R | Convertible FWD 9HR (DV6C) | | GCO10148 | Outer Joint | | 25 | 34 | 58.5 | 79 | 55.5 | I |
| | 2009.06-2014.12 | 6MT | F | L/R | Convertible FWD 9HR (DV6C) | | GCO99366 | Outer Joint | | 25 | 34 | 58.5 | 79 | 55 | I |
| | 2009.06-2014.12 | 6MT | F | L | Convertible FWD 9HR (DV6C) | | GCI10057 | Inner Joint | | 24 | 34 | 40 | 52.5 | 90 | |
| | 2009.06-2014.12 | 6MT | F | R | Convertible FWD 9HR (DV6C) | | GCI10058 | Inner Joint | | 24 | 34 | 29.8 | 365 | 88 | |
| | 2009.06-2014.12 | MT | F | L | Convertible FWD 9HR (DV6C) | | GDS10250 | Drive Shaft | | 25 | 24 | 58.5 | 79 | 630 | |
| | 2009.06-2014.12 | MT | F | R | Convertible FWD 9HR (DV6C) | | GDS10251 | Drive Shaft | | 25 | 24 | 58.5 | 79 | 935 | |
| 1.6 (84 kw) | 2013.03-2014.12 | 6AT/6MT | F | L | Convertible FWD 9HD (DV6C) | | GDS10253 | Drive Shaft | | 25 | 24 | 58.5 | 79 | 626 | |
| | 2013.03-2014.12 | 6AT/6MT | F | R | Convertible FWD 9HD (DV6C) | | GDS10325 | Drive Shaft | | 25 | 24 | 58.5 | 79 | 940 | |
| | 2013.03-2014.12 | MT | F | L | Convertible FWD 9HD (DV6C) | | GDS10250 | Drive Shaft | | 25 | 24 | 58.5 | 79 | 630 | |
| | 2013.03-2014.12 | MT | F | R | Convertible FWD 9HD (DV6C) | | GDS10251 | Drive Shaft | | 25 | 24 | 58.5 | 79 | 935 | |

| | YEAR | TRANSM. | F/R | L/R | BODY STYLE & DRIVE TYPE & ENGINE | REMARKS | G-AP Ref. | PRODUCT | ABS | Technical Specifications A | B | C | H | L | P |
|---|---|---|---|---|---|---|---|---|---|---|---|---|---|---|---|
| **PEUGEOT** **308 CC** | | | | | | | | | | | | | | | |
| 1.6 (84 kw) | 2013.03-2014.12 | MT | F | R | Convertible FWD 9HD (DV6C) | | GCO10042 | Outer Joint | | 25 | 34 | 54.8 | 78.5 | 56 | I |
| | 2013.03-2014.12 | MT | F | L/R | Convertible FWD 9HD (DV6C) | | GCO99366 | Outer Joint | | 25 | 34 | 58.5 | 79 | 55 | I |
| | 2013.03-2014.12 | MT/6MT | F | | Convertible FWD 9HD (DV6C) | | GCO10155 | Outer Joint | | 25 | 39 | 58.5 | 89 | 63.5 | I |
| | 2013.03-2014.12 | | F | L | Convertible FWD 9HD (DV6C) | Date To:2014.12 | GCO10148 | Outer Joint | | 25 | 34 | 58.5 | 79 | 55.5 | I |
| | 2013.03-2014.12 | | F | L | Convertible FWD 9HD (DV6C) | Date To:2014.12 | GCI10057 | Inner Joint | | 24 | 34 | 40 | 52.5 | 90 | |
| | 2013.03-2014.12 | | F | R | Convertible FWD 9HD (DV6C) | Date To:2014.12 | GCI10058 | Inner Joint | | 24 | 34 | 29.8 | 365 | 88 | |
| 1.6 (88 kw) | 2009.06-2014.12 | 5MT | F | L | Convertible FWD EP6 | | GDS10248 | Drive Shaft | | 25 | 24 | 58.5 | 79 | 642 | |
| | 2009.06-2014.12 | 5MT | F | R | Convertible FWD EP6 | | GDS10251 | Drive Shaft | | 25 | 24 | 58.5 | 79 | 935 | |
| | 2009.06-2014.12 | AT | F | L | Convertible FWD EP6 | Trans. code:AL4 | GDS10362 | Drive Shaft | | 25 | 26 | 58.5 | 79 | 624 | |
| | 2009.06-2014.12 | AT | F | R | Convertible FWD EP6 | Trans. code:AL4 | GDS10383 | Drive Shaft | | 25 | 26 | 58 | 79 | 842 | |
| | 2009.06-2014.12 | AT | F | R | Convertible FWD EP6 | | GCO10035 | Outer Joint | | 25 | 34 | 58 | 79 | 55.5 | I |
| | 2009.06-2014.12 | AT | F | L | Convertible FWD EP6 | Date to:2014.12 | GCI99001 | Inner Joint | | 26 | 34 | 30.2 | 46.5 | 103.5 | |
| | 2009.06-2014.12 | MT | F | L | Convertible FWD EP6 | Trans. code:BE4R | GDS10250 | Drive Shaft | | 25 | 24 | 58.5 | 79 | 630 | |
| | 2009.06-2014.12 | | F | L/R | Convertible FWD EP6 | | GCO10042 | Outer Joint | | 25 | 34 | 54.8 | 78.5 | 56 | I |
| 1.6 (103 kw) | 2009.06-2014.12 | AT | F | L | Convertible FWD 5FT (EP6DT) | | GDS10362 | Drive Shaft | | 25 | 26 | 58.5 | 79 | 624 | |
| | 2009.06-2014.12 | AT | F | R | Convertible FWD 5FT (EP6DT) | | GDS10383 | Drive Shaft | | 25 | 26 | 58 | 79 | 842 | |
| | 2009.06-2014.12 | AT | F | L | Convertible FWD 5FT (EP6DT) | For vehicles without heavy duty suspension | GCO99366 | Outer Joint | | 25 | 34 | 58.5 | 79 | 55 | I |
| | 2009.06-2014.12 | AT | F | R | Convertible FWD 5FT (EP6DT) | | GCO10035 | Outer Joint | | 25 | 34 | 58 | 79 | 55.5 | I |
| | 2009.06-2014.12 | AT | F | L | Convertible FWD 5FT (EP6DT) | Date to:2014.12 | GCI99001 | Inner Joint | | 26 | 34 | 30.2 | 46.5 | 103.5 | |
| | 2009.06-2014.12 | MT | F | L | Convertible FWD 5FT (EP6DT) | | GDS10250 | Drive Shaft | | 25 | 24 | 58.5 | 79 | 630 | |
| | 2009.06-2014.12 | MT | F | L | Convertible FWD 5FT (EP6DT) | | GDS10253 | Drive Shaft | | 25 | 24 | 58.5 | 79 | 626 | |
| | 2009.06-2014.12 | MT | F | R | Convertible FWD 5FT (EP6DT) | | GDS10251 | Drive Shaft | | 25 | 24 | 58.5 | 79 | 935 | |
| | 2009.06-2014.12 | MT | F | R | Convertible FWD 5FT (EP6DT) | | GDS10325 | Drive Shaft | | 25 | 24 | 58.5 | 79 | 940 | |
| | 2009.06-2014.12 | MT | F | L | Convertible FWD 5FT (EP6DT) | Date to:2014.12 | GCO10148 | Outer Joint | | 25 | 34 | 58.5 | 79 | 55.5 | I |
| | 2009.06-2014.12 | MT | F | L/R | Convertible FWD 5FT (EP6DT) | | GCO99366 | Outer Joint | | 25 | 34 | 58.5 | 79 | 55 | I |
| | 2009.06-2014.12 | MT | F | L | Convertible FWD 5FT (EP6DT) | Date to:2014.12 | GCI10057 | Inner Joint | | 24 | 34 | 40 | 52.5 | 90 | |
| | 2009.06-2014.12 | MT | F | R | Convertible FWD 5FT (EP6DT) | Date to:2014.12 | GCI10058 | Inner Joint | | 24 | 34 | 29.8 | 365 | 88 | |
| | 2009.06-2014.12 | MT/6MT | F | | Convertible FWD 5FT (EP6DT) | | GCO10155 | Outer Joint | | 25 | 39 | 58.5 | 89 | 63.5 | I |
| | 2009.06-2014.12 | | F | L/R | Convertible FWD 5FT (EP6DT) | | GCO10042 | Outer Joint | | 25 | 34 | 54.8 | 78.5 | 56 | I |
| 1.6 (110 kw) | 2009.06-2014.12 | 4AT | F | L | Convertible FWD 5FX (EP6DT) | | GDS10362 | Drive Shaft | | 25 | 26 | 58.5 | 79 | 624 | |
| | 2009.06-2014.12 | 4AT | F | R | Convertible FWD 5FX (EP6DT) | For vehicles with heavy duty suspension | GDS10383 | Drive Shaft | | 25 | 26 | 58 | 79 | 842 | |
| | 2009.06-2014.12 | 4AT | F | L/R | Convertible FWD 5FX (EP6DT) | | GCO99366 | Outer Joint | | 25 | 34 | 58.5 | 79 | 55 | I |
| | 2009.06-2014.12 | 4AT | F | L | Convertible FWD 5FX (EP6DT) | | GCI99001 | Inner Joint | | 26 | 34 | 30.2 | 46.5 | 103.5 | |
| | 2009.06-2014.12 | 6AT | F | R | Convertible FWD 5FX (EP6DT) | Technical Information no.:8PN06 | GDS84640 | Drive Shaft | | 25 | 37 | 58.5 | 79 | 931 | |
| | 2009.06-2014.12 | 6AT | F | R | Convertible FWD 5FX (EP6DT) | Technical Information no.:8PN06 | GCO82351 | Outer Joint | | 25 | 34 | 58.5 | 79 | 55.5 | I |
| | 2009.06-2014.12 | 6AT | F | L | Convertible FWD 5FX (EP6DT) | | GCI82119 | Inner Joint | | 37 | 34 | 41.5 | 58.5 | 94 | |
| | 2009.06-2014.12 | 6MT | F | L | Convertible FWD 5FX (EP6DT) | | GDS10253 | Drive Shaft | | 25 | 24 | 58.5 | 79 | 626 | |
| | 2009.06-2014.12 | 6MT | F | R | Convertible FWD 5FX (EP6DT) | | GDS10325 | Drive Shaft | | 25 | 24 | 58.5 | 79 | 940 | |
| | 2009.06-2014.12 | 6MT | F | L/R | Convertible FWD 5FX (EP6DT) | for OE No.:3642357 | GCO10148 | Outer Joint | | 25 | 34 | 58.5 | 79 | 55.5 | I |
| | 2009.06-2014.12 | 6MT | F | L/R | Convertible FWD 5FX (EP6DT) | for OE No.:3272PZ/3273QK | GCO99366 | Outer Joint | | 25 | 34 | 58.5 | 79 | 55 | I |
| | 2009.06-2014.12 | 6MT | F | L | Convertible FWD 5FX (EP6DT) | | GCI10057 | Inner Joint | | 24 | 34 | 40 | 52.5 | 90 | |
| | 2009.06-2014.12 | 6MT | F | R | Convertible FWD 5FX (EP6DT) | | GCI10058 | Inner Joint | | 24 | 34 | 29.8 | 365 | 88 | |
| | 2009.06-2014.12 | AT | F | L | Convertible FWD 5FX (EP6DT) | Technical Information no.:8PN05 | GDS58072 | Drive Shaft | | 25 | 37 | 58.5 | 79 | 598 | |
| | 2009.06-2014.12 | MT | F | R | Convertible FWD 5FX (EP6DT) | Trans. code:BE4R,Type:8NN47 | GDS10251 | Drive Shaft | | 25 | 24 | 58.5 | 79 | 935 | |
| 1.6 (115 kw) | 2009.06-2014.12 | AT | F | L | Convertible FWD 5FV (EP6CDT) | Technical Information no.:8PN05 | GDS58072 | Drive Shaft | | 25 | 37 | 58.5 | 79 | 598 | |
| | 2009.06-2014.12 | AT | F | R | Convertible FWD 5FV (EP6CDT) | Technical Information no.:8PN06 | GDS84640 | Drive Shaft | | 25 | 37 | 58.5 | 79 | 931 | |
| | 2009.06-2014.12 | AT | F | L | Convertible FWD 5FV (EP6CDT) | Technical Information no.:8PN05 | GCO99366 | Outer Joint | | 25 | 34 | 58.5 | 79 | 55 | I |
| | 2009.06-2014.12 | AT | F | R | Convertible FWD 5FV (EP6CDT) | Technical Information no.:8PN06 | GCO82351 | Outer Joint | | 25 | 34 | 58.5 | 79 | 55.5 | I |
| | 2009.06-2014.12 | AT | F | L | Convertible FWD 5FV (EP6CDT) | | GCI82119 | Inner Joint | | 37 | 34 | 41.5 | 58.5 | 94 | |
| | 2009.06-2014.12 | MT | F | L | Convertible FWD 5FV (EP6CDT) | | GDS10253 | Drive Shaft | | 25 | 24 | 58.5 | 79 | 626 | |
| | 2009.06-2014.12 | MT | F | R | Convertible FWD 5FV (EP6CDT) | | GDS10325 | Drive Shaft | | 25 | 24 | 58.5 | 79 | 940 | |
| | 2009.06-2014.12 | MT | F | L/R | Convertible FWD 5FV (EP6CDT) | | GCO10148 | Outer Joint | | 25 | 34 | 58.5 | 79 | 55.5 | I |
| | 2009.06-2014.12 | MT | F | L | Convertible FWD 5FV (EP6CDT) | Date to:2014.12 | GCI10057 | Inner Joint | | 24 | 34 | 40 | 52.5 | 90 | |
| | 2009.06-2014.12 | MT | F | R | Convertible FWD 5FV (EP6CDT) | Date to:2014.12 | GCI10058 | Inner Joint | | 24 | 34 | 29.8 | 365 | 88 | |
| 1.6 (147 kw) | 2010.10-2014.12 | MT/6MT | F | | Convertible FWD 5FY (EP6CDTX) | | GCO10155 | Outer Joint | | 25 | 39 | 58.5 | 89 | 63.5 | I |
| | 2010.10-2014.12 | MT/6MT | F | | Convertible FWD 5FY (EP6CDTX) | | GCO99366 | Outer Joint | | 25 | 34 | 58.5 | 79 | 55 | I |
| 2.0 (100 kw) | 2009.04-2014.12 | 6MT | F | L | Convertible FWD RHR (DW10BTED4);RHR (DW10CB) | | GDS10312 | Drive Shaft | | 25 | 37 | 58.5 | 89 | 625 | |
| | 2009.04-2014.12 | 6MT | F | L | Convertible FWD RHR (DW10BTED4);RHR (DW10CB) | Date to:2014.12 | GCO10158 | Outer Joint | | 25 | 26 | 58.5 | 89 | 61.5 | M |
| | 2009.04-2014.12 | AT | F | L | Convertible FWD RHR (DW10BTED4);RHR (DW10CB) | | GDS10375 | Drive Shaft | | 25 | 37 | 58.4 | 89 | 619 | |
| | 2009.04-2014.12 | AT | F | L | Convertible FWD RHR (DW10BTED4);RHR (DW10CB) | | GDS10380 | Drive Shaft | | 25 | 37 | 58.5 | 89 | 635 | |
| | 2009.04-2014.12 | AT | F | R | Convertible FWD RHR (DW10BTED4);RHR (DW10CB) | | GDS10363 | Drive Shaft | | 25 | 37 | 58.5 | 89 | 935 | |
| | 2009.04-2014.12 | AT | F | R | Convertible FWD RHR (DW10BTED4);RHR (DW10CB) | | GCO10155 | Outer Joint | | 25 | 39 | 58.5 | 89 | 63.5 | I |
| | 2009.04-2014.12 | AT | F | R | Convertible FWD RHR (DW10BTED4);RHR (DW10CB) | Date to:2014.12 | GCI10091 | Inner Joint | | 37 | 26 | | 366 | 100 | |
| | 2009.04-2014.12 | MT | F | L | Convertible FWD RHR (DW10BTED4);RHR (DW10CB) | | GDS10210 | Drive Shaft | | 25 | 37 | 58.5 | 89 | 638 | |
| | 2009.04-2014.12 | MT | F | L | Convertible FWD RHR (DW10BTED4);RHR (DW10CB) | | GDS10427 | Drive Shaft | | 25 | 37 | 58.5 | 89 | 638 | |

| | YEAR | TRANSM. | F/R | L/R | BODY STYLE & DRIVE TYPE & ENGINE | REMARKS | G-AP Ref. | PRODUCT | ABS | Technical Specifications A | B | C | H | L | P |
|---|---|---|---|---|---|---|---|---|---|---|---|---|---|---|---|
| **PEUGEOT** | | | | | | | | | | | | | | | |
| **308 CC** | | | | | | | | | | | | | | | |
| 2.0 (100 kw) | 2009.04-2014.12 | MT | F | R | Convertible FWD RHR (DW10BTED4);RHR (DW10CB) | | GDS10361 | Drive Shaft | | 25 | 37 | 58.5 | 89 | 959 | |
| | 2009.04-2014.12 | MT | F | R | Convertible FWD RHR (DW10BTED4);RHR (DW10CB) | | GDS10421 | Drive Shaft | | 25 | 37 | 58.5 | 89 | 972 | |
| | 2009.04-2014.12 | MT | F | L/R | Convertible FWD RHR (DW10BTED4);RHR (DW10CB) | | GCO10155 | Outer Joint | | 25 | 39 | 58.5 | 89 | 63.5 | I |
| | 2009.04-2014.12 | MT | F | R | Convertible FWD RHR (DW10BTED4);RHR (DW10CB) | | GCI10041 | Inner Joint | | 37 | 39 | 32 | 399 | 95.5 | |
| | 2009.04-2014.12 | MT/6MT | F | | Convertible FWD RHR (DW10BTED4);RHR (DW10CB) | | GCO99366 | Outer Joint | | 25 | 34 | 58.5 | 79 | 55 | I |
| 2.0 (103 kw) | 2009.04-2012.12 | 6AT | F | L | Convertible FWD RHF (DW10BTED4) | | GDS10380 | Drive Shaft | | 25 | 37 | 58.5 | 89 | 635 | |
| | 2009.04-2012.12 | 6AT | F | R | Convertible FWD RHF (DW10BTED4) | | GDS10363 | Drive Shaft | | 25 | 37 | 58.5 | 89 | 935 | |
| | 2009.04-2012.12 | 6AT | F | R | Convertible FWD RHF (DW10BTED4) | | GCO10155 | Outer Joint | | 25 | 39 | 58.5 | 89 | 63.5 | I |
| | 2009.04-2012.12 | 6MT | F | L | Convertible FWD RHF (DW10BTED4) | inner teeth of wheel side:26 | GDS10312 | Drive Shaft | | 25 | 37 | 58.5 | 89 | 625 | |
| | 2009.04-2012.12 | 6MT | F | L | Convertible FWD RHF (DW10BTED4) | inner teeth of wheel side:26 | GDS10427 | Drive Shaft | | 25 | 37 | 58.5 | 89 | 638 | |
| | 2009.04-2012.12 | 6MT | F | R | Convertible FWD RHF (DW10BTED4) | inner teeth of wheel side:26 | GDS10421 | Drive Shaft | | 25 | 37 | 58.5 | 89 | 972 | |
| | 2009.04-2012.12 | 6MT | F | L | Convertible FWD RHF (DW10BTED4) | inner teeth of wheel side:26 | GCO10158 | Outer Joint | | 25 | 26 | 58.5 | 89 | 61.5 | M |
| | 2009.04-2012.12 | 6MT | F | L/R | Convertible FWD RHF (DW10BTED4) | inner teeth:39 | GCO10155 | Outer Joint | | 25 | 39 | 58.5 | 89 | 63.5 | I |
| | 2009.04-2012.12 | AT | F | L | Convertible FWD RHF (DW10BTED4) | | GDS10375 | Drive Shaft | | 25 | 37 | 58.4 | 89 | 619 | |
| | 2009.04-2012.12 | AT | F | R | Convertible FWD RHF (DW10BTED4) | Date to:2012.12 | GCI10091 | Inner Joint | | 37 | 26 | | 366 | 100 | |
| | 2009.04-2012.12 | MT | F | L | Convertible FWD RHF (DW10BTED4) | inner teeth of wheel side:39 | GDS10210 | Drive Shaft | | 25 | 37 | 58.5 | 89 | 638 | |
| | 2009.04-2012.12 | MT | F | R | Convertible FWD RHF (DW10BTED4) | inner teeth of wheel side:39 | GDS10361 | Drive Shaft | | 25 | 37 | 58.5 | 89 | 959 | |
| | 2009.04-2012.12 | MT | F | R | Convertible FWD RHF (DW10BTED4) | | GCI10041 | Inner Joint | | 37 | 39 | 32 | 399 | 95.5 | |
| | 2009.07-2014.12 | AT | F | L | Convertible FWD RFJ (EW10A) | | GDS10362 | Drive Shaft | | 25 | 26 | 58.5 | 79 | 624 | |
| | 2009.07-2014.12 | AT | F | R | Convertible FWD RFJ (EW10A) | | GDS10383 | Drive Shaft | | 25 | 26 | 58 | 79 | 842 | |
| | 2009.07-2014.12 | AT | F | L | Convertible FWD RFJ (EW10A) | | GCO99366 | Outer Joint | | 25 | 34 | 58.5 | 79 | 55 | I |
| | 2009.07-2014.12 | AT | F | L | Convertible FWD RFJ (EW10A) | | GCI99001 | Inner Joint | | 26 | 34 | 30.2 | 46.5 | 103.5 | |
| | 2009.07-2014.12 | MT | F | L | Convertible FWD RFJ (EW10A) | | GDS10248 | Drive Shaft | | 25 | 24 | 58.5 | 79 | 642 | |
| | 2009.07-2014.12 | MT | F | L | Convertible FWD RFJ (EW10A) | | GDS10250 | Drive Shaft | | 25 | 24 | 58.5 | 79 | 630 | |
| | 2009.07-2014.12 | MT | F | R | Convertible FWD RFJ (EW10A) | | GDS10251 | Drive Shaft | | 25 | 24 | 58.5 | 79 | 935 | |
| 2.0 (120 kw) | 2009.06-2014.12 | 6AT | F | L | Convertible FWD RHH (DW10CTED4) | | GDS10380 | Drive Shaft | | 25 | 37 | 58.5 | 89 | 635 | |
| | 2009.06-2014.12 | 6AT | F | R | Convertible FWD RHH (DW10CTED4) | | GDS10363 | Drive Shaft | | 25 | 37 | 58.5 | 89 | 935 | |
| | 2009.06-2014.12 | 6AT | F | R | Convertible FWD RHH (DW10CTED4) | | GCO10155 | Outer Joint | | 25 | 39 | 58.5 | 89 | 63.5 | I |
| | 2009.06-2014.12 | AT | F | L | Convertible FWD RHH (DW10CTED4) | | GDS10375 | Drive Shaft | | 25 | 37 | 58.4 | 89 | 619 | |
| | 2009.06-2014.12 | AT | F | R | Convertible FWD RHH (DW10CTED4) | | GCO10158 | Outer Joint | | 25 | 26 | 58.5 | 89 | 61.5 | M |
| | 2009.06-2014.12 | AT | F | R | Convertible FWD RHH (DW10CTED4) | Date to:2014.12 | GCI10091 | Inner Joint | | 37 | 26 | | 366 | 100 | |
| | 2009.06-2014.12 | AT/6MT | F | | Convertible FWD RHH (DW10CTED4) | | GCO99366 | Outer Joint | | 25 | 34 | 58.5 | 79 | 55 | I |
| | 2009.06-2014.12 | MT | F | L | Convertible FWD RHH (DW10CTED4) | inner teeth of wheel side:39 | GDS10210 | Drive Shaft | | 25 | 37 | 58.5 | 89 | 638 | |
| | 2009.06-2014.12 | MT | F | L | Convertible FWD RHH (DW10CTED4) | inner teeth of wheel side:26 | GDS10427 | Drive Shaft | | 25 | 37 | 58.5 | 89 | 638 | |
| | 2009.06-2014.12 | MT | F | R | Convertible FWD RHH (DW10CTED4) | inner teeth of wheel side:39 | GDS10361 | Drive Shaft | | 25 | 37 | 58.5 | 89 | 959 | |
| | 2009.06-2014.12 | MT | F | R | Convertible FWD RHH (DW10CTED4) | inner teeth of wheel side:26 | GDS10421 | Drive Shaft | | 25 | 37 | 58.5 | 89 | 972 | |
| | 2009.06-2014.12 | MT | F | R | Convertible FWD RHH (DW10CTED4) | | GCI10041 | Inner Joint | | 37 | 39 | 32 | 399 | 95.5 | |
| **308 SW** | | | | | | | | | | | | | | | |
| 1.2 (81 kw) | 2014.03-2021.06 | 5MT | F | L | Estate FWD HNZ (EB2DT);HNV (EB2DTM);HNP (EB2ADT) | | GDS83616 | Drive Shaft | | 28 | 24 | 58.5 | 92.5 | 681 | |
| | 2014.03-2021.06 | 5MT | F | R | Estate FWD HNZ (EB2DT);HNV (EB2DTM);HNP (EB2ADT) | | GDS84457 | Drive Shaft | | 28 | 24 | 58.5 | 92.5 | 921 | |
| | 2014.03-2021.06 | 5MT | F | L/R | Estate FWD HNZ (EB2DT);HNV (EB2DTM);HNP (EB2ADT) | | GCO82273 | Outer Joint | | 28 | 34 | 58.5 | 92.5 | 56 | I |
| | 2014.03-2021.06 | 5MT | F | L | Estate FWD HNZ (EB2DT);HNV (EB2DTM);HNP (EB2ADT) | | GCI82131 | Inner Joint | | 24 | 34 | 40 | 62 | 89 | |
| | 2014.03-2021.06 | 5MT/6MT | F | R | Estate FWD HNZ (EB2DT);HNV (EB2DTM);HNP (EB2ADT) | Transmission:6MT,Trans. code:MB6 | GCI82320 | Inner Joint | | 24 | 34 | 29.8 | 290 | 88 | |
| | 2014.03-2021.06 | 5MT/6MT | F | R | Estate FWD HNZ (EB2DT);HNV (EB2DTM);HNP (EB2ADT) | Transmission:6MT,Trans. code:MB6 | GCI82769 | Inner Joint | | 24 | 34 | 40 | 61 | 103 | |
| | 2014.03-2021.06 | 6MT | F | L | Estate FWD HNZ (EB2DT);HNV (EB2DTM);HNP (EB2ADT) | Trans. code:MC | GDS83218 | Drive Shaft | | 28 | 24 | 58.5 | 92.5 | 673 | |
| | 2014.03-2021.06 | 6MT | F | L | Estate FWD HNZ (EB2DT);HNV (EB2DTM);HNP (EB2ADT) | Trans. code:MB6 | GDS83616 | Drive Shaft | | 28 | 24 | 58.5 | 92.5 | 681 | |
| | 2014.03-2021.06 | 6MT | F | R | Estate FWD HNZ (EB2DT);HNV (EB2DTM);HNP (EB2ADT) | Trans. code:MC | GDS10399 | Drive Shaft | | 28 | 24 | 58.5 | 92.5 | 938 | |
| | 2014.03-2021.06 | 6MT | F | R | Estate FWD HNZ (EB2DT);HNV (EB2DTM);HNP (EB2ADT) | Trans. code:MB6 | GDS83663 | Drive Shaft | | 28 | 24 | 58.5 | 92.5 | 919 | |
| | 2014.03-2021.06 | 6MT | F | L/R | Estate FWD HNZ (EB2DT);HNV (EB2DTM);HNP (EB2ADT) | Trans. code:MB6 | GCO82273 | Outer Joint | | 28 | 34 | 58.5 | 92.5 | 56 | I |
| | 2014.03-2021.06 | 6MT | F | L | Estate FWD HNZ (EB2DT);HNV (EB2DTM);HNP (EB2ADT) | Trans. code:MB6 | GCI82131 | Inner Joint | | 24 | 34 | 40 | 62 | 89 | |
| | 2021.07- | 6MT | F | L | Estate FWD HNP (EB2ADT) | | GDS83616 | Drive Shaft | | 28 | 24 | 58.5 | 92.5 | 681 | |
| | 2021.07- | 6MT | F | R | Estate FWD HNP (EB2ADT) | | GDS83663 | Drive Shaft | | 28 | 24 | 58.5 | 92.5 | 919 | |
| | 2021.07- | 6MT | F | L/R | Estate FWD HNP (EB2ADT) | | GCO82273 | Outer Joint | | 28 | 34 | 58.5 | 92.5 | 56 | I |
| | 2021.07- | 6MT | F | L | Estate FWD HNP (EB2ADT) | | GCI82131 | Inner Joint | | 24 | 34 | 40 | 62 | 89 | |
| | 2021.07- | 6MT | F | R | Estate FWD HNP (EB2ADT) | | GCI82320 | Inner Joint | | 24 | 34 | 29.8 | 290 | 88 | |
| | 2021.07- | 6MT | F | R | Estate FWD HNP (EB2ADT) | | GCI82769 | Inner Joint | | 24 | 34 | 40 | 61 | 103 | |
| 1.2 (96 kw) | 2014.03-2021.06 | 5MT | F | R | Estate FWD HNY (EB2DTS);HNS (EB2ADTS) | | GDS84457 | Drive Shaft | | 28 | 24 | 58.5 | 92.5 | 921 | |
| | 2014.03-2021.06 | 5MT/6MT | F | L | Estate FWD HNY (EB2DTS);HNS (EB2ADTS) | Trans. code:MB6 | GDS83616 | Drive Shaft | | 28 | 24 | 58.5 | 92.5 | 681 | |
| | 2014.03-2021.06 | 6AT/8AT | F | L | Estate FWD HNY (EB2DTS);HNS (EB2ADTS) | | GCI82119 | Inner Joint | | 37 | 34 | 41.5 | 58.5 | 94 | |
| | 2014.03-2021.06 | 6AT/8AT | F | R | Estate FWD HNY (EB2DTS);HNS (EB2ADTS) | | GCI82118 | Inner Joint | | 37 | 34 | | 290 | 88 | |
| | 2014.03-2021.06 | 6MT | F | L | Estate FWD HNY (EB2DTS);HNS (EB2ADTS) | Trans. code:MC | GDS83218 | Drive Shaft | | 28 | 24 | 58.5 | 92.5 | 673 | |
| | 2014.03-2021.06 | 6MT | F | R | Estate FWD HNY (EB2DTS);HNS (EB2ADTS) | Trans. code:MC | GDS10399 | Drive Shaft | | 28 | 24 | 58.5 | 92.5 | 938 | |
| | 2014.03-2021.06 | 6MT | F | R | Estate FWD HNY (EB2DTS);HNS (EB2ADTS) | Trans. code:MB6 | GDS83663 | Drive Shaft | | 28 | 24 | 58.5 | 92.5 | 919 | |
| | 2014.03-2021.06 | 6MT | F | L | Estate FWD HNY (EB2DTS);HNS (EB2ADTS) | | GCO82273 | Outer Joint | | 28 | 34 | 58.5 | 92.5 | 56 | I |
| | 2014.03-2021.06 | 6MT | F | R | Estate FWD HNY (EB2DTS);HNS (EB2ADTS) | | GCO81397 | Outer Joint | | 28 | 34 | 58.5 | 92.5 | 56 | I |

| | YEAR | TRANSM. | F/R | L/R | BODY STYLE & DRIVE TYPE & ENGINE | REMARKS | G-AP Ref. | PRODUCT | ABS | Technical Specifications A | B | C | H | L | P |
|---|---|---|---|---|---|---|---|---|---|---|---|---|---|---|---|
| **PEUGEOT** **308 SW** | | | | | | | | | | | | | | | |
| 1.2 (96 kw) | 2014.03-2021.06 | 6MT | F | L | Estate FWD HNY (EB2DTS);HNS (EB2ADTS) | | GCI82181 | Inner Joint | | 24 | 34 | 40 | 52.5 | 90 | |
| | 2014.03-2021.06 | 6MT | F | R | Estate FWD HNY (EB2DTS);HNS (EB2ADTS) | Trans. code:MC MANUAL | GCI10165 | Inner Joint | | 24 | 34 | 29.8 | 305.5 | 87.5 | |
| | 2014.03-2021.06 | 6MT | F | R | Estate FWD HNY (EB2DTS);HNS (EB2ADTS) | Trans. code:MB6 | GCI82769 | Inner Joint | | 24 | 34 | 40 | 61 | 103 | |
| | 2014.03-2021.06 | 8AT | F | L | Estate FWD HNY (EB2DTS);HNS (EB2ADTS) | | GDS84579 | Drive Shaft | | 28 | 37 | 58.5 | 92.5 | 641 | |
| | 2014.03-2021.06 | 8AT | F | R | Estate FWD HNY (EB2DTS);HNS (EB2ADTS) | | GDS84582 | Drive Shaft | | 28 | 37 | 58.5 | 92.5 | 918 | |
| | 2021.07- | 6MT | F | L | Estate FWD HNS (EB2ADTS) | | GDS83616 | Drive Shaft | | 28 | 24 | 58.5 | 92.5 | 681 | |
| | 2021.07- | 6MT | F | R | Estate FWD HNS (EB2ADTS) | | GDS83663 | Drive Shaft | | 28 | 24 | 58.5 | 92.5 | 919 | |
| | 2021.07- | 6MT | F | L | Estate FWD HNS (EB2ADTS) | | GCI82131 | Inner Joint | | 24 | 34 | 40 | 62 | 89 | |
| | 2021.07- | 6MT | F | R | Estate FWD HNS (EB2ADTS) | | GCI82320 | Inner Joint | | 24 | 34 | 29.8 | 290 | 88 | |
| | 2021.07- | 6MT | F | R | Estate FWD HNS (EB2ADTS) | | GCI82769 | Inner Joint | | 24 | 34 | 40 | 61 | 103 | |
| | 2021.07- | 6MT/8AT | F | L/R | Estate FWD HNS (EB2ADTS) | | GCO82273 | Outer Joint | | 28 | 34 | 58.5 | 92.5 | 56 | I |
| | 2021.07- | 8AT | F | L | Estate FWD HNS (EB2ADTS) | | GDS84579 | Drive Shaft | | 28 | 37 | 58.5 | 92.5 | 641 | |
| 1.2 (100 kw) | 2023.08-2025.03 | 6AT | F | R | Estate FWD HPY (EB2LTDH2) | | GDS84582 | Drive Shaft | | 28 | 37 | 58.5 | 92.5 | 918 | |
| | 2023.08-2025.03 | 6AT | F | R | Estate FWD HPY (EB2LTDH2) | | GCO82273 | Outer Joint | | 28 | 34 | 58.5 | 92.5 | 56 | I |
| | 2023.08-2025.03 | 6AT | F | R | Estate FWD HPY (EB2LTDH2) | | GCI82118 | Inner Joint | | 37 | 34 | | 290 | 88 | |
| 1.4 (70 kw) | 2007.09-2014.10 | 5MT | F | L | Estate FWD 8FS (EP3) | | GDS10248 | Drive Shaft | | 25 | 24 | 58.5 | 79 | 642 | |
| | 2007.09-2014.10 | 5MT | F | R | Estate FWD 8FS (EP3) | | GDS10251 | Drive Shaft | | 25 | 24 | 58.5 | 79 | 935 | |
| | 2007.09-2014.10 | 5MT | F | L | Estate FWD 8FS (EP3) | | GCI10080 | Inner Joint | | 24 | 34 | 40 | 69 | 89.5 | |
| | 2007.09-2014.10 | 5MT | F | R | Estate FWD 8FS (EP3) | | GCI99159 | Inner Joint | | 24 | 34 | 29.8 | 350 | 87.5 | |
| | 2007.09-2014.10 | 6MT | F | | Estate FWD 8FS (EP3) | | GCO10155 | Outer Joint | | 25 | 39 | 58.5 | 89 | 63.5 | I |
| | 2007.09-2014.10 | MT | F | L | Estate FWD 8FS (EP3) | Date from:2008.01;Trans. code:BE4R | GDS10250 | Drive Shaft | | 25 | 24 | 58.5 | 79 | 630 | |
| | 2007.09-2014.10 | | F | L/R | Estate FWD 8FS (EP3) | | GCO10042 | Outer Joint | | 25 | 34 | 54.8 | 78.5 | 56 | I |
| 1.4 (72 kw) | 2009.12-2014.10 | 5MT | F | L | Estate FWD 8FR (EP3C) | | GDS10248 | Drive Shaft | | 25 | 24 | 58.5 | 79 | 642 | |
| | 2009.12-2014.10 | 5MT | F | R | Estate FWD 8FR (EP3C) | | GDS10251 | Drive Shaft | | 25 | 24 | 58.5 | 79 | 935 | |
| | 2009.12-2014.10 | 5MT | F | L | Estate FWD 8FR (EP3C) | | GCI10080 | Inner Joint | | 24 | 34 | 40 | 69 | 89.5 | |
| | 2009.12-2014.10 | 5MT | F | R | Estate FWD 8FR (EP3C) | | GCI99159 | Inner Joint | | 24 | 34 | 29.8 | 350 | 87.5 | |
| | 2009.12-2014.10 | 6MT | F | | Estate FWD 8FR (EP3C) | | GCO10155 | Outer Joint | | 25 | 39 | 58.5 | 89 | 63.5 | I |
| | 2009.12-2014.10 | MT | F | L | Estate FWD 8FR (EP3C) | Trans. code:BE4R | GDS10250 | Drive Shaft | | 25 | 24 | 58.5 | 79 | 630 | |
| | 2009.12-2014.10 | | F | L/R | Estate FWD 8FR (EP3C) | | GCO10042 | Outer Joint | | 25 | 34 | 54.8 | 78.5 | 56 | I |
| 1.5 (75 kw) | 2018.04-2021.06 | 5MT | F | R | Estate FWD YHY (DV5RD) | | GDS84457 | Drive Shaft | | 28 | 24 | 58.5 | 92.5 | 921 | |
| | 2018.04-2021.06 | 6MT | F | L | Estate FWD YHY (DV5RD) | | GDS83616 | Drive Shaft | | 28 | 24 | 58.5 | 92.5 | 681 | |
| | 2018.04-2021.06 | 6MT | F | R | Estate FWD YHY (DV5RD) | | GDS83663 | Drive Shaft | | 28 | 24 | 58.5 | 92.5 | 919 | |
| | 2018.04-2021.06 | 6MT | F | L/R | Estate FWD YHY (DV5RD) | | GCO82273 | Outer Joint | | 28 | 34 | 58.5 | 92.5 | 56 | I |
| | 2018.04-2021.06 | 6MT | F | L | Estate FWD YHY (DV5RD) | | GCI82131 | Inner Joint | | 24 | 34 | 40 | 62 | 89 | |
| | 2018.04-2021.06 | 6MT | F | R | Estate FWD YHY (DV5RD) | | GCI82320 | Inner Joint | | 24 | 34 | 29.8 | 290 | 88 | |
| | 2018.04-2021.06 | 6MT | F | R | Estate FWD YHY (DV5RD) | | GCI82769 | Inner Joint | | 24 | 34 | 40 | 61 | 103 | |
| 1.5 (96 kw) | 2017.06-2021.06 | 6AT | F | L | Estate FWD YHZ (DV5RC) | | GDS84579 | Drive Shaft | | 28 | 37 | 58.5 | 92.5 | 641 | |
| | 2017.06-2021.06 | 6AT | F | R | Estate FWD YHZ (DV5RC) | | GDS84582 | Drive Shaft | | 28 | 37 | 58.5 | 92.5 | 918 | |
| | 2017.06-2021.06 | 6AT/8AT | F | L | Estate FWD YHZ (DV5RC) | | GCI82119 | Inner Joint | | 37 | 34 | 41.5 | 58.5 | 94 | |
| | 2017.06-2021.06 | 6AT/8AT | F | R | Estate FWD YHZ (DV5RC) | | GCI82118 | Inner Joint | | 37 | 34 | | 290 | 88 | |
| | 2017.06-2021.06 | 6MT | F | L | Estate FWD YHZ (DV5RC) | | GDS84550 | Drive Shaft | | 28 | 37 | 58.5 | 92.5 | 663 | |
| | 2017.06-2021.06 | 6MT | F | R | Estate FWD YHZ (DV5RC) | | GDS84336 | Drive Shaft | | 28 | 37 | 58.5 | 92.5 | 930 | |
| | 2017.06-2021.06 | 6MT | F | L/R | Estate FWD YHZ (DV5RC) | | GCO82273 | Outer Joint | | 28 | 34 | 58.5 | 92.5 | 56 | I |
| | 2017.06-2021.06 | 6MT | F | L | Estate FWD YHZ (DV5RC) | | GCI82301 | Inner Joint | | 37 | 34 | 40 | 65.5 | 89.5 | |
| | 2017.06-2021.06 | 6MT | F | R | Estate FWD YHZ (DV5RC) | | GCI82300 | Inner Joint | | 37 | 34 | 31.9 | 302 | 88 | |
| | 2017.06-2021.06 | 6MT | F | L | Estate Van FWD YHZ (DV5RC) | | GDS84550 | Drive Shaft | | 28 | 37 | 58.5 | 92.5 | 663 | |
| | 2017.06-2021.06 | 6MT | F | R | Estate Van FWD YHZ (DV5RC) | | GDS84336 | Drive Shaft | | 28 | 37 | 58.5 | 92.5 | 930 | |
| | 2017.06-2021.06 | 6MT | F | L/R | Estate Van FWD YHZ (DV5RC) | | GCO82273 | Outer Joint | | 28 | 34 | 58.5 | 92.5 | 56 | I |
| | 2017.06-2021.06 | 6MT | F | L | Estate Van FWD YHZ (DV5RC) | | GCI82301 | Inner Joint | | 37 | 34 | 40 | 65.5 | 89.5 | |
| | 2017.06-2021.06 | 6MT | F | R | Estate Van FWD YHZ (DV5RC) | | GCI82300 | Inner Joint | | 37 | 34 | 31.9 | 302 | 88 | |
| | 2021.07- | 6MT | F | L | Estate FWD YHZ (DV5RC) | | GDS84550 | Drive Shaft | | 28 | 37 | 58.5 | 92.5 | 663 | |
| | 2021.07- | 6MT | F | R | Estate FWD YHZ (DV5RC) | | GDS84336 | Drive Shaft | | 28 | 37 | 58.5 | 92.5 | 930 | |
| | 2021.07- | 6MT | F | L | Estate FWD YHZ (DV5RC) | | GCI82301 | Inner Joint | | 37 | 34 | 40 | 65.5 | 89.5 | |
| | 2021.07- | 6MT | F | R | Estate FWD YHZ (DV5RC) | | GCI82300 | Inner Joint | | 37 | 34 | 31.9 | 302 | 88 | |
| | 2021.07- | 6MT/8AT | F | L/R | Estate FWD YHZ (DV5RC) | | GCO82273 | Outer Joint | | 28 | 34 | 58.5 | 92.5 | 56 | I |
| | 2021.07- | 8AT | F | L | Estate FWD YHZ (DV5RC) | | GDS84579 | Drive Shaft | | 28 | 37 | 58.5 | 92.5 | 641 | |
| 1.6 (66 kw) | 2007.09-2014.10 | 5MT | F | L | Estate FWD 9HX (DV6ATED4);9HV (DV6TED4BU) | | GDS10248 | Drive Shaft | | 25 | 24 | 58.5 | 79 | 642 | |
| | 2007.09-2014.10 | 5MT | F | R | Estate FWD 9HX (DV6ATED4);9HV (DV6TED4BU) | | GDS10251 | Drive Shaft | | 25 | 24 | 58.5 | 79 | 935 | |
| | 2007.09-2014.10 | 5MT | F | L | Estate FWD 9HX (DV6ATED4);9HV (DV6TED4BU) | | GCI10080 | Inner Joint | | 24 | 34 | 40 | 69 | 89.5 | |
| | 2007.09-2014.10 | 5MT | F | R | Estate FWD 9HX (DV6ATED4);9HV (DV6TED4BU) | | GCI99159 | Inner Joint | | 24 | 34 | 29.8 | 350 | 87.5 | |
| | 2007.09-2014.10 | 6MT | F | L/R | Estate FWD 9HX (DV6ATED4);9HV (DV6TED4BU) | | GCO10155 | Outer Joint | | 25 | 39 | 58.5 | 89 | 63.5 | I |
| | 2007.09-2014.10 | MT | F | L | Estate FWD 9HX (DV6ATED4);9HV (DV6TED4BU) | Date from:2008.01;Trans. code:BE4R | GDS10250 | Drive Shaft | | 25 | 24 | 58.5 | 79 | 630 | |
| | 2007.09-2014.10 | | F | L/R | Estate FWD 9HX (DV6ATED4);9HV (DV6TED4BU) | | GCO10042 | Outer Joint | | 25 | 34 | 54.8 | 78.5 | 56 | I |
| | 2008.01-2011.12 | 5MT | F | L | Estate Van FWD 9HX (DV6ATED4) | | GDS10248 | Drive Shaft | | 25 | 24 | 58.5 | 79 | 642 | |
| | 2008.01-2011.12 | 5MT | F | R | Estate Van FWD 9HX (DV6ATED4) | | GDS10251 | Drive Shaft | | 25 | 24 | 58.5 | 79 | 935 | |

| | YEAR | TRANSM. | F/R | L/R | BODY STYLE & DRIVE TYPE & ENGINE | REMARKS | G-AP Ref. | PRODUCT | ABS | Technical Specifications A | B | C | H | L | P |
|---|---|---|---|---|---|---|---|---|---|---|---|---|---|---|---|
| **PEUGEOT 308 SW** | | | | | | | | | | | | | | | |
| 1.6 (66 kw) | 2008.01-2011.12 | 5MT | F | L/R | Estate Van FWD 9HX (DV6ATED4) | | GCO99366 | Outer Joint | | 25 | 34 | 58.5 | 79 | 55 | I |
| | 2008.01-2011.12 | 5MT | F | L | Estate Van FWD 9HX (DV6ATED4) | | GCI10080 | Inner Joint | | 24 | 34 | 40 | 69 | 89.5 | |
| | 2008.01-2011.12 | 5MT | F | R | Estate Van FWD 9HX (DV6ATED4) | | GCI99159 | Inner Joint | | 24 | 34 | 29.8 | 350 | 87.5 | |
| | 2008.01-2011.12 | | F | L | Estate Van FWD 9HX (DV6ATED4) | | GDS10250 | Drive Shaft | | 25 | 24 | 58.5 | 79 | 630 | |
| 1.6 (68 kw) | 2009.11-2014.10 | 5MT | F | L | Estate FWD 9HP (DV6DTED) | | GDS10248 | Drive Shaft | | 25 | 24 | 58.5 | 79 | 642 | |
| | 2009.11-2014.10 | 5MT | F | R | Estate FWD 9HP (DV6DTED) | | GDS10251 | Drive Shaft | | 25 | 24 | 58.5 | 79 | 935 | |
| | 2009.11-2014.10 | 5MT | F | L | Estate FWD 9HP (DV6DTED) | | GCI10080 | Inner Joint | | 24 | 34 | 40 | 69 | 89.5 | |
| | 2009.11-2014.10 | 5MT | F | R | Estate FWD 9HP (DV6DTED) | | GCI99159 | Inner Joint | | 24 | 34 | 29.8 | 350 | 87.5 | |
| | 2009.11-2014.10 | 6MT | F | L/R | Estate FWD 9HP (DV6DTED) | | GCO10155 | Outer Joint | | 25 | 39 | 58.5 | 89 | 63.5 | I |
| | 2009.11-2014.10 | AT | F | L/R | Estate FWD 9HP (DV6DTED) | | GCO99366 | Outer Joint | | 25 | 34 | 58.5 | 79 | 55 | I |
| | 2009.11-2014.10 | MT | F | L | Estate FWD 9HP (DV6DTED) | | GDS10250 | Drive Shaft | | 25 | 24 | 58.5 | 79 | 630 | |
| | 2009.11-2014.10 | | F | L/R | Estate FWD 9HP (DV6DTED) | | GCO10042 | Outer Joint | | 25 | 34 | 54.8 | 78.5 | 56 | I |
| | 2014.03-2021.06 | 5MT | F | R | Estate FWD 9HP (DV6DTED) | | GDS84457 | Drive Shaft | | 28 | 24 | 58.5 | 92.5 | 921 | |
| | 2014.03-2021.06 | 6MT | F | R | Estate FWD 9HP (DV6DTED) | Trans. code:MB6 | GDS83663 | Drive Shaft | | 28 | 24 | 58.5 | 92.5 | 919 | |
| | 2014.03-2021.06 | 6MT/5MT | F | L | Estate FWD 9HP (DV6DTED) | Trans. code:MB6 | GDS83616 | Drive Shaft | | 28 | 24 | 58.5 | 92.5 | 681 | |
| | 2014.03-2021.06 | MT | F | L | Estate FWD 9HP (DV6DTED) | | GCO82273 | Outer Joint | | 28 | 34 | 58.5 | 92.5 | 56 | I |
| | 2014.03-2021.06 | MT | F | R | Estate FWD 9HP (DV6DTED) | | GCO81397 | Outer Joint | | 28 | 34 | 58.5 | 92.5 | 56 | I |
| | 2014.03-2021.06 | MT | F | L | Estate FWD 9HP (DV6DTED) | | GCI82131 | Inner Joint | | 24 | 34 | 40 | 62 | 89 | |
| | 2014.03-2021.06 | MT | F | R | Estate FWD 9HP (DV6DTED) | | GCI82769 | Inner Joint | | 24 | 34 | 40 | 61 | 103 | |
| 1.6 (73 kw) | 2014.04-2021.06 | 5MT | F | R | Estate FWD BHY (DV6FD) | | GDS84457 | Drive Shaft | | 28 | 24 | 58.5 | 92.5 | 921 | |
| | 2014.04-2021.06 | 6MT | F | R | Estate FWD BHY (DV6FD) | Trans. code:MB6 | GDS83663 | Drive Shaft | | 28 | 24 | 58.5 | 92.5 | 919 | |
| | 2014.04-2021.06 | 6MT/5MT | F | L | Estate FWD BHY (DV6FD) | Trans. code:MB6 | GDS83616 | Drive Shaft | | 28 | 24 | 58.5 | 92.5 | 681 | |
| | 2014.04-2021.06 | MT | F | L | Estate FWD BHY (DV6FD) | | GCO82273 | Outer Joint | | 28 | 34 | 58.5 | 92.5 | 56 | I |
| | 2014.04-2021.06 | MT | F | R | Estate FWD BHY (DV6FD) | | GCO81397 | Outer Joint | | 28 | 34 | 58.5 | 92.5 | 56 | I |
| | 2014.04-2021.06 | MT | F | L | Estate FWD BHY (DV6FD) | | GCI82131 | Inner Joint | | 24 | 34 | 40 | 62 | 89 | |
| | 2014.04-2021.06 | MT | F | R | Estate FWD BHY (DV6FD) | | GCI82769 | Inner Joint | | 24 | 34 | 40 | 61 | 103 | |
| | 2014.04-2021.06 | 5MT | F | R | Estate Van FWD BHY (DV6FD) | | GDS84457 | Drive Shaft | | 28 | 24 | 58.5 | 92.5 | 921 | |
| | 2014.04-2021.06 | 6MT | F | R | Estate Van FWD BHY (DV6FD) | Trans. code:MB6 | GDS83663 | Drive Shaft | | 28 | 24 | 58.5 | 92.5 | 919 | |
| | 2014.04-2021.06 | 6MT/5MT | F | L | Estate Van FWD BHY (DV6FD) | Trans. code:MB6 | GDS83616 | Drive Shaft | | 28 | 24 | 58.5 | 92.5 | 681 | |
| | 2014.04-2021.06 | MT | F | L | Estate Van FWD BHY (DV6FD) | | GCO82273 | Outer Joint | | 28 | 34 | 58.5 | 92.5 | 56 | I |
| | 2014.04-2021.06 | MT | F | R | Estate Van FWD BHY (DV6FD) | | GCO81397 | Outer Joint | | 28 | 34 | 58.5 | 92.5 | 56 | I |
| | 2014.04-2021.06 | MT | F | L | Estate Van FWD BHY (DV6FD) | | GCI82131 | Inner Joint | | 24 | 34 | 40 | 62 | 89 | |
| | 2014.04-2021.06 | MT | F | R | Estate Van FWD BHY (DV6FD) | | GCI82769 | Inner Joint | | 24 | 34 | 40 | 61 | 103 | |
| 1.6 (80 kw) | 2007.09-2014.10 | 5MT | F | L | Estate FWD 9HY (DV6TED4);9HZ (DV6TED4) | | GDS10248 | Drive Shaft | | 25 | 24 | 58.5 | 79 | 642 | |
| | 2007.09-2014.10 | 5MT | F | R | Estate FWD 9HY (DV6TED4);9HZ (DV6TED4) | | GDS10251 | Drive Shaft | | 25 | 24 | 58.5 | 79 | 935 | |
| | 2007.09-2014.10 | 5MT | F | L | Estate FWD 9HY (DV6TED4);9HZ (DV6TED4) | | GCI10080 | Inner Joint | | 24 | 34 | 40 | 69 | 89.5 | |
| | 2007.09-2014.10 | 5MT | F | R | Estate FWD 9HY (DV6TED4);9HZ (DV6TED4) | | GCI99159 | Inner Joint | | 24 | 34 | 29.8 | 350 | 87.5 | |
| | 2007.09-2014.10 | 6MT/6AMT | F | L | Estate FWD 9HY (DV6TED4);9HZ (DV6TED4) | | GDS10253 | Drive Shaft | | 25 | 24 | 58.5 | 79 | 626 | |
| | 2007.09-2014.10 | 6MT/6AMT | F | R | Estate FWD 9HY (DV6TED4);9HZ (DV6TED4) | | GDS10325 | Drive Shaft | | 25 | 24 | 58.5 | 79 | 940 | |
| | 2007.09-2014.10 | MT | F | L | Estate FWD 9HY (DV6TED4);9HZ (DV6TED4) | Trans. code:BE4R | GDS10250 | Drive Shaft | | 25 | 24 | 58.5 | 79 | 630 | |
| | 2007.09-2014.10 | MT | F | L/R | Estate FWD 9HY (DV6TED4);9HZ (DV6TED4) | | GCO10042 | Outer Joint | | 25 | 34 | 54.8 | 78.5 | 56 | I |
| | 2008.01-2012.12 | 5MT | F | L | Estate Van FWD 9HZ (DV6TED4) | For vehicles with heavy duty suspension | GCI10070 | Inner Joint | | 24 | 34 | 40 | 62 | 88 | |
| | 2008.01-2012.12 | 6MT | F | L | Estate Van FWD 9HZ (DV6TED4) | | GDS10253 | Drive Shaft | | 25 | 24 | 58.5 | 79 | 626 | |
| | 2008.01-2012.12 | 6MT | F | R | Estate Van FWD 9HZ (DV6TED4) | | GDS10325 | Drive Shaft | | 25 | 24 | 58.5 | 79 | 940 | |
| | 2008.01-2012.12 | | F | L | Estate Van FWD 9HZ (DV6TED4) | | GDS10250 | Drive Shaft | | 25 | 24 | 58.5 | 79 | 630 | |
| 1.6 (82 kw) | 2009.03-2014.10 | | F | L/R | Estate FWD NFU (TU5JP4) | | GCO10042 | Outer Joint | | 25 | 34 | 54.8 | 78.5 | 56 | I |
| | 2009.12-2014.10 | 6MT | F | L | Estate FWD 9HR (DV6C) | Technical Information no.:8NN48,Trans. code:MC | GDS10253 | Drive Shaft | | 25 | 24 | 58.5 | 79 | 626 | |
| | 2009.12-2014.10 | 6MT | F | R | Estate FWD 9HR (DV6C) | Technical Information no.:8NN69,Trans. code:MC | GDS10325 | Drive Shaft | | 25 | 24 | 58.5 | 79 | 940 | |
| | 2009.12-2014.10 | 6MT | F | L/R | Estate FWD 9HR (DV6C) | | GCO10155 | Outer Joint | | 25 | 39 | 58.5 | 89 | 63.5 | I |
| | 2009.12-2014.10 | AT | F | | Estate FWD 9HR (DV6C) | | GCO99366 | Outer Joint | | 25 | 34 | 58.5 | 79 | 55 | I |
| | 2009.12-2014.10 | MT | F | L | Estate FWD 9HR (DV6C) | Technical Information no.:8NN23,Trans. code:BE4R | GDS10250 | Drive Shaft | | 25 | 24 | 58.5 | 79 | 630 | |
| | 2009.12-2014.10 | MT | F | R | Estate FWD 9HR (DV6C) | Technical Information no.:8NN47,Trans. code:BE4R | GDS10251 | Drive Shaft | | 25 | 24 | 58.5 | 79 | 935 | |
| | 2009.12-2014.10 | MT | F | L/R | Estate FWD 9HR (DV6C) | | GCO10042 | Outer Joint | | 25 | 34 | 54.8 | 78.5 | 56 | I |
| 1.6 (84 kw) | 2013.03-2014.10 | 6AT/6MT | F | L | Estate FWD 9HD (DV6C) | | GDS10253 | Drive Shaft | | 25 | 24 | 58.5 | 79 | 626 | |
| | 2013.03-2014.10 | 6AT/6MT | F | R | Estate FWD 9HD (DV6C) | | GDS10325 | Drive Shaft | | 25 | 24 | 58.5 | 79 | 940 | |
| | 2013.03-2014.10 | 6AT/6MT | F | L | Estate FWD 9HD (DV6C) | | GCI10057 | Inner Joint | | 24 | 34 | 40 | 52.5 | 90 | |
| | 2013.03-2014.10 | 6AT/6MT | F | R | Estate FWD 9HD (DV6C) | | GCI10058 | Inner Joint | | 24 | 34 | 29.8 | 365 | 88 | |
| | 2013.03-2014.10 | MT | F | L | Estate FWD 9HD (DV6C) | | GDS10250 | Drive Shaft | | 25 | 24 | 58.5 | 79 | 630 | |
| | 2013.03-2014.10 | MT | F | L/R | Estate FWD 9HD (DV6C) | | GCO10042 | Outer Joint | | 25 | 34 | 54.8 | 78.5 | 56 | I |
| 1.6 (85 kw) | 2014.03-2021.06 | 6AT | F | L | Estate FWD BHZ (DV6FC);BHX (DV6FC);9HC (DV6C) | | GDS84579 | Drive Shaft | | 28 | 37 | 58.5 | 92.5 | 641 | |
| | 2014.03-2021.06 | 6AT | F | R | Estate FWD BHZ (DV6FC);BHX (DV6FC);9HC (DV6C) | | GDS84582 | Drive Shaft | | 28 | 37 | 58.5 | 92.5 | 918 | |
| | 2014.03-2021.06 | 6AT | F | L | Estate FWD BHZ (DV6FC);BHX (DV6FC);9HC (DV6C) | | GCI82119 | Inner Joint | | 37 | 34 | 41.5 | 58.5 | 94 | |
| | 2014.03-2021.06 | 6AT | F | R | Estate FWD BHZ (DV6FC);BHX (DV6FC);9HC (DV6C) | | GCI82118 | Inner Joint | | 37 | 34 | | 290 | 88 | |
| | 2014.03-2021.06 | MT | F | L | Estate FWD BHZ (DV6FC);BHX (DV6FC);9HC (DV6C) | For Engine Code:DV6C | GDS83218 | Drive Shaft | | 28 | 24 | 58.5 | 92.5 | 673 | |
| | 2014.03-2021.06 | MT | F | L | Estate FWD BHZ (DV6FC);BHX (DV6FC);9HC (DV6C) | For Engine code:DV6FC | GDS84550 | Drive Shaft | | 28 | 37 | 58.5 | 92.5 | 663 | |

| | YEAR | TRANSM. | F/R | L/R | BODY STYLE & DRIVE TYPE & ENGINE | REMARKS | G-AP Ref. | PRODUCT | ABS | Technical Specifications A | B | C | H | L | P |
|---|---|---|---|---|---|---|---|---|---|---|---|---|---|---|---|
| **PEUGEOT** **308 SW** | | | | | | | | | | | | | | | |
| 1.6 (85 kw) | 2014.03-2021.06 | MT | F | R | Estate FWD BHZ (DV6FC);BHX (DV6FC);9HC (DV6C) | For Engine code:DV6C | GDS10399 | Drive Shaft | | 28 | 24 | 58.5 | 92.5 | 938 | |
| | 2014.03-2021.06 | MT | F | R | Estate FWD BHZ (DV6FC);BHX (DV6FC);9HC (DV6C) | For Enginecode:DV6FC | GDS84336 | Drive Shaft | | 28 | 37 | 58.5 | 92.5 | 930 | |
| | 2014.03-2021.06 | MT | F | L/R | Estate FWD BHZ (DV6FC);BHX (DV6FC);9HC (DV6C) | For Enginecode:DV6FC | GCO82273 | Outer Joint | | 28 | 34 | 58.5 | 92.5 | 56 | I |
| | 2014.03-2021.06 | MT | F | L | Estate FWD BHZ (DV6FC);BHX (DV6FC);9HC (DV6C) | For Engine code:DV6FC | GCI82301 | Inner Joint | | 37 | 34 | 40 | 65.5 | 89.5 | |
| | 2014.03-2021.06 | MT | F | R | Estate FWD BHZ (DV6FC);BHX (DV6FC);9HC (DV6C) | For Enginecode:DV6FC | GCI82300 | Inner Joint | | 37 | 34 | 31.9 | 302 | 88 | |
| | 2014.03-2021.06 | 5MT | F | R | Estate FWD NFP (EC5) | | GCI82769 | Inner Joint | | 24 | 34 | 40 | 61 | 103 | |
| | 2014.03-2021.06 | MT | F | L | Estate FWD NFP (EC5) | Transm. code:BE4R/MB6 | GDS83616 | Drive Shaft | | 28 | 24 | 58.5 | 92.5 | 681 | |
| | 2014.03-2021.06 | MT | F | R | Estate FWD NFP (EC5) | Transm. code:BE4R/MB6 | GDS83663 | Drive Shaft | | 28 | 24 | 58.5 | 92.5 | 919 | |
| 1.6 (88 kw) | 2007.09-2014.10 | 6MT | F | | Estate FWD 5FS (EP6C);5FW (EP6) | | GCO10155 | Outer Joint | | 25 | 39 | 58.5 | 89 | 63.5 | I |
| | 2007.09-2014.10 | AT | F | L | Estate FWD 5FS (EP6C);5FW (EP6) | | GDS10362 | Drive Shaft | | 25 | 26 | 58.5 | 79 | 624 | |
| | 2007.09-2014.10 | AT | F | R | Estate FWD 5FS (EP6C);5FW (EP6) | | GDS10383 | Drive Shaft | | 25 | 26 | 58 | 79 | 842 | |
| | 2007.09-2014.10 | AT | F | L | Estate FWD 5FS (EP6C);5FW (EP6) | For vehicles without heavy duty suspension | GCO99366 | Outer Joint | | 25 | 34 | 58.5 | 79 | 55 | I |
| | 2007.09-2014.10 | AT | F | R | Estate FWD 5FS (EP6C);5FW (EP6) | | GCO10035 | Outer Joint | | 25 | 34 | 58 | 79 | 55.5 | I |
| | 2007.09-2014.10 | AT | F | L | Estate FWD 5FS (EP6C);5FW (EP6) | Date from:2008.01,Date to:2014.10 | GCI99001 | Inner Joint | | 26 | 34 | 30.2 | 46.5 | 103.5 | |
| | 2007.09-2014.10 | MT | F | L | Estate FWD 5FS (EP6C);5FW (EP6) | | GDS10248 | Drive Shaft | | 25 | 24 | 58.5 | 79 | 642 | |
| | 2007.09-2014.10 | MT | F | L | Estate FWD 5FS (EP6C);5FW (EP6) | | GDS10250 | Drive Shaft | | 25 | 24 | 58.5 | 79 | 630 | |
| | 2007.09-2014.10 | MT | F | R | Estate FWD 5FS (EP6C);5FW (EP6) | | GDS10251 | Drive Shaft | | 25 | 24 | 58.5 | 79 | 935 | |
| | 2007.09-2014.10 | | F | L/R | Estate FWD 5FS (EP6C);5FW (EP6) | | GCO10042 | Outer Joint | | 25 | 34 | 54.8 | 78.5 | 56 | I |
| | 2014.03-2021.06 | 6AT | F | L | Estate FWD BHZ (DV6FC) | Trans. code:MC | GDS83218 | Drive Shaft | | 28 | 24 | 58.5 | 92.5 | 673 | |
| | 2014.03-2021.06 | 6AT | F | L | Estate FWD BHZ (DV6FC) | | GDS84579 | Drive Shaft | | 28 | 37 | 58.5 | 92.5 | 641 | |
| | 2014.03-2021.06 | 6AT | F | R | Estate FWD BHZ (DV6FC) | | GDS84582 | Drive Shaft | | 28 | 37 | 58.5 | 92.5 | 918 | |
| | 2014.03-2021.06 | 6AT | F | L | Estate FWD BHZ (DV6FC) | | GCI82119 | Inner Joint | | 37 | 34 | 41.5 | 58.5 | 94 | |
| | 2014.03-2021.06 | 6AT | F | R | Estate FWD BHZ (DV6FC) | | GCI82118 | Inner Joint | | 37 | 34 | | 290 | 88 | |
| | 2014.03-2021.06 | 6MT | F | L | Estate FWD BHZ (DV6FC) | Transm. code:BE4R | GDS83616 | Drive Shaft | | 28 | 24 | 58.5 | 92.5 | 681 | |
| | 2014.03-2021.06 | 6MT | F | R | Estate FWD BHZ (DV6FC) | Transm. code:BE4R | GDS83663 | Drive Shaft | | 28 | 24 | 58.5 | 92.5 | 919 | |
| | 2014.03-2021.06 | MT | F | L | Estate FWD BHZ (DV6FC) | Transm. code:ML6C | GDS84550 | Drive Shaft | | 28 | 37 | 58.5 | 92.5 | 663 | |
| | 2014.03-2021.06 | MT | F | R | Estate FWD BHZ (DV6FC) | Transm. code:ML6C | GDS84336 | Drive Shaft | | 28 | 37 | 58.5 | 92.5 | 930 | |
| | 2014.03-2021.06 | MT | F | L/R | Estate FWD BHZ (DV6FC) | | GCO82273 | Outer Joint | | 28 | 34 | 58.5 | 92.5 | 56 | I |
| | 2014.03-2021.06 | MT | F | L | Estate FWD BHZ (DV6FC) | | GCI82301 | Inner Joint | | 37 | 34 | 40 | 65.5 | 89.5 | |
| | 2014.03-2021.06 | MT | F | R | Estate FWD BHZ (DV6FC) | | GCI82300 | Inner Joint | | 37 | 34 | 31.9 | 302 | 88 | |
| 1.6 (92 kw) | 2014.03-2021.06 | MT | F | L | Estate FWD 5FA (EP6CDT) | | GDS83218 | Drive Shaft | | 28 | 24 | 58.5 | 92.5 | 673 | |
| | 2014.03-2021.06 | MT | F | R | Estate FWD 5FA (EP6CDT) | | GDS10399 | Drive Shaft | | 28 | 24 | 58.5 | 92.5 | 938 | |
| | 2014.03-2021.06 | MT | F | L/R | Estate FWD 5FA (EP6CDT) | | GCO10052 | Outer Joint | | 28 | 34 | 58.5 | 92 | 55 | I |
| | 2014.03-2021.06 | MT | F | L | Estate FWD 5FA (EP6CDT) | | GCI82181 | Inner Joint | | 24 | 34 | 40 | 52.5 | 90 | |
| | 2014.03-2021.06 | MT | F | R | Estate FWD 5FA (EP6CDT) | | GCI10165 | Inner Joint | | 24 | 34 | 29.8 | 305.5 | 87.5 | |
| 1.6 (103 kw) | 2007.09-2014.10 | AT | F | L | Estate FWD 5FT (EP6DT) | Date from:2008.01;Trans. code:AL4 | GDS10362 | Drive Shaft | | 25 | 26 | 58.5 | 79 | 624 | |
| | 2007.09-2014.10 | AT | F | R | Estate FWD 5FT (EP6DT) | Date from:2008.01;Trans. code:AL4 | GDS10383 | Drive Shaft | | 25 | 26 | 58 | 79 | 842 | |
| | 2007.09-2014.10 | AT | F | R | Estate FWD 5FT (EP6DT) | | GCO10035 | Outer Joint | | 25 | 34 | 58 | 79 | 55.5 | I |
| | 2007.09-2014.10 | AT | F | L | Estate FWD 5FT (EP6DT) | Date from:2008.01,Date to:2014.10 | GCI99001 | Inner Joint | | 26 | 34 | 30.2 | 46.5 | 103.5 | |
| | 2007.09-2014.10 | MT | F | L | Estate FWD 5FT (EP6DT) | | GDS10250 | Drive Shaft | | 25 | 24 | 58.5 | 79 | 630 | |
| | 2007.09-2014.10 | MT | F | R | Estate FWD 5FT (EP6DT) | | GDS10251 | Drive Shaft | | 25 | 24 | 58.5 | 79 | 935 | |
| | 2007.09-2014.10 | MT/6MT | F | | Estate FWD 5FT (EP6DT) | | GCO10155 | Outer Joint | | 25 | 39 | 58.5 | 89 | 63.5 | I |
| | 2007.09-2014.10 | | F | L | Estate FWD 5FT (EP6DT) | For vehicles without heavy duty suspension | GCO99366 | Outer Joint | | 25 | 34 | 58.5 | 79 | 55 | I |
| | 2007.09-2014.10 | | F | L/R | Estate FWD 5FT (EP6DT) | | GCO10042 | Outer Joint | | 25 | 34 | 54.8 | 78.5 | 56 | I |
| 1.6 (110 kw) | 2007.09-2014.10 | 5MT | F | L | Estate FWD 5FX (EP6DT) | for OE No.:3272LE | GDS10248 | Drive Shaft | | 25 | 24 | 58.5 | 79 | 642 | |
| | 2007.09-2014.10 | 5MT | F | L | Estate FWD 5FX (EP6DT) | for OE No.:3272LG | GDS10250 | Drive Shaft | | 25 | 24 | 58.5 | 79 | 630 | |
| | 2007.09-2014.10 | 5MT | F | R | Estate FWD 5FX (EP6DT) | | GDS10251 | Drive Shaft | | 25 | 24 | 58.5 | 79 | 935 | |
| | 2007.09-2014.10 | 6AT | F | L | Estate FWD 5FX (EP6DT) | Technical Information no.:8PN05 | GDS58072 | Drive Shaft | | 25 | 37 | 58.5 | 79 | 598 | |
| | 2007.09-2014.10 | 6AT | F | R | Estate FWD 5FX (EP6DT) | Technical Information no.:8PN06 | GDS84640 | Drive Shaft | | 25 | 37 | 58.5 | 79 | 931 | |
| | 2007.09-2014.10 | 6AT | F | R | Estate FWD 5FX (EP6DT) | Technical Information no.:8PN06 | GCO82351 | Outer Joint | | 25 | 34 | 58.5 | 79 | 55.5 | I |
| | 2007.09-2014.10 | 6AT | F | L | Estate FWD 5FX (EP6DT) | | GCI82119 | Inner Joint | | 37 | 34 | 41.5 | 58.5 | 94 | |
| | 2007.09-2014.10 | 6MT | F | L | Estate FWD 5FX (EP6DT) | | GDS10253 | Drive Shaft | | 25 | 24 | 58.5 | 79 | 626 | |
| | 2007.09-2014.10 | 6MT | F | R | Estate FWD 5FX (EP6DT) | | GDS10325 | Drive Shaft | | 25 | 24 | 58.5 | 79 | 940 | |
| | 2007.09-2014.10 | 6MT | F | L/R | Estate FWD 5FX (EP6DT) | for OE No.:3642357 | GCO10148 | Outer Joint | | 25 | 34 | 58.5 | 79 | 55.5 | I |
| | 2007.09-2014.10 | 6MT | F | L/R | Estate FWD 5FX (EP6DT) | for OE No.:3272PZ/3273QK | GCO99366 | Outer Joint | | 25 | 34 | 58.5 | 79 | 55 | I |
| | 2007.09-2014.10 | 6MT | F | L | Estate FWD 5FX (EP6DT) | | GCI10057 | Inner Joint | | 24 | 34 | 40 | 52.5 | 90 | |
| | 2007.09-2014.10 | 6MT | F | R | Estate FWD 5FX (EP6DT) | | GCI10058 | Inner Joint | | 24 | 34 | 29.8 | 365 | 88 | |
| | 2007.09-2014.10 | AT | F | L | Estate FWD 5FX (EP6DT) | Date from:2008.01,Trans. code:AL4 | GDS10362 | Drive Shaft | | 25 | 26 | 58.5 | 79 | 624 | |
| | 2007.09-2014.10 | AT | F | R | Estate FWD 5FX (EP6DT) | Date from:2008.01,Trans. code:AL4 | GDS10383 | Drive Shaft | | 25 | 26 | 58 | 79 | 842 | |
| | 2007.09-2014.10 | AT | F | L | Estate FWD 5FX (EP6DT) | Date from:2008.01,Trans. code:AL4 | GCI99001 | Inner Joint | | 26 | 34 | 30.2 | 46.5 | 103.5 | |
| | 2014.03-2021.06 | 6AT | F | L | Estate FWD 5GX (EP6FDTMD) | | GDS84579 | Drive Shaft | | 28 | 37 | 58.5 | 92.5 | 641 | |
| | 2014.03-2021.06 | 6AT | F | R | Estate FWD 5GX (EP6FDTMD) | | GDS84582 | Drive Shaft | | 28 | 37 | 58.5 | 92.5 | 918 | |
| | 2014.03-2021.06 | 6AT | F | L/R | Estate FWD 5GX (EP6FDTMD) | | GCO82273 | Outer Joint | | 28 | 34 | 58.5 | 92.5 | 56 | I |
| | 2014.03-2021.06 | 6AT | F | L | Estate FWD 5GX (EP6FDTMD) | | GCI82119 | Inner Joint | | 37 | 34 | 41.5 | 58.5 | 94 | |
| | 2014.03-2021.06 | 6AT | F | R | Estate FWD 5GX (EP6FDTMD) | | GCI82118 | Inner Joint | | 37 | 34 | | 290 | 88 | |

| | YEAR | TRANSM. | F/R | L/R | BODY STYLE & DRIVE TYPE & ENGINE | REMARKS | G-AP Ref. | PRODUCT | ABS | Technical Specifications A | B | C | H | L | P |
|---|---|---|---|---|---|---|---|---|---|---|---|---|---|---|---|
| **PEUGEOT 308 SW** | | | | | | | | | | | | | | | |
| 1.6 (115 kw) | 2009.10-2014.10 | 6AT | F | R | Estate FWD 5FV (EP6CDT) | Technical Information no.:8PN06 | GDS84640 | Drive Shaft | | 25 | 37 | 58.5 | 79 | 931 | |
| | 2009.10-2014.10 | 6AT | F | L | Estate FWD 5FV (EP6CDT) | Technical Information no.:8PN05 | GCO99366 | Outer Joint | | 25 | 34 | 58.5 | 79 | 55 | I |
| | 2009.10-2014.10 | 6AT | F | R | Estate FWD 5FV (EP6CDT) | Technical Information no.:8PN06 | GCO82351 | Outer Joint | | 25 | 34 | 58.5 | 79 | 55.5 | I |
| | 2009.10-2014.10 | 6AT | F | L | Estate FWD 5FV (EP6CDT) | | GCI82119 | Inner Joint | | 37 | 34 | 41.5 | 58.5 | 94 | |
| | 2009.10-2014.10 | 6MT | F | L/R | Estate FWD 5FV (EP6CDT) | | GCO10148 | Outer Joint | | 25 | 34 | 58.5 | 79 | 55.5 | I |
| | 2009.10-2014.10 | AT | F | L | Estate FWD 5FV (EP6CDT) | Technical Information no.:8PN05 | GDS58072 | Drive Shaft | | 25 | 37 | 58.5 | 79 | 598 | |
| | 2009.10-2014.10 | MT | F | L | Estate FWD 5FV (EP6CDT) | | GDS10253 | Drive Shaft | | 25 | 24 | 58.5 | 79 | 626 | |
| | 2009.10-2014.10 | MT | F | R | Estate FWD 5FV (EP6CDT) | | GDS10325 | Drive Shaft | | 25 | 24 | 58.5 | 79 | 940 | |
| | 2009.10-2014.10 | MT | F | L | Estate FWD 5FV (EP6CDT) | | GCI10057 | Inner Joint | | 24 | 34 | 40 | 52.5 | 90 | |
| | 2009.10-2014.10 | MT | F | R | Estate FWD 5FV (EP6CDT) | | GCI10058 | Inner Joint | | 24 | 34 | 29.8 | 365 | 88 | |
| | 2014.03-2021.06 | MT | F | L | Estate FWD 5FV (EP6CDT) | | GDS83218 | Drive Shaft | | 28 | 24 | 58.5 | 92.5 | 673 | |
| | 2014.03-2021.06 | MT | F | R | Estate FWD 5FV (EP6CDT) | | GDS10399 | Drive Shaft | | 28 | 24 | 58.5 | 92.5 | 938 | |
| | 2014.03-2021.06 | MT | F | L/R | Estate FWD 5FV (EP6CDT) | | GCO10052 | Outer Joint | | 28 | 34 | 58.5 | 92 | 55 | I |
| | 2014.03-2021.06 | MT | F | L | Estate FWD 5FV (EP6CDT) | | GCI82181 | Inner Joint | | 24 | 34 | 40 | 52.5 | 90 | |
| | 2014.03-2021.06 | MT | F | R | Estate FWD 5FV (EP6CDT) | | GCI10165 | Inner Joint | | 24 | 34 | 29.8 | 305.5 | 87.5 | |
| 1.6 (128 kw) | 2008.03-2014.10 | 6MT | F | L | Estate FWD 5FY (EP6DTS) | | GDS10253 | Drive Shaft | | 25 | 24 | 58.5 | 79 | 626 | |
| | 2008.03-2014.10 | 6MT | F | R | Estate FWD 5FY (EP6DTS) | | GDS10325 | Drive Shaft | | 25 | 24 | 58.5 | 79 | 940 | |
| | 2008.03-2014.10 | AT | F | L | Estate FWD 5FY (EP6DTS) | Trans. code:AL4 | GDS10362 | Drive Shaft | | 25 | 26 | 58.5 | 79 | 624 | |
| | 2008.03-2014.10 | AT | F | R | Estate FWD 5FY (EP6DTS) | Trans. code:AL4 | GDS10383 | Drive Shaft | | 25 | 26 | 58 | 79 | 842 | |
| | 2008.03-2014.10 | AT | F | R | Estate FWD 5FY (EP6DTS) | | GCO10035 | Outer Joint | | 25 | 34 | 58 | 79 | 55.5 | I |
| | 2008.03-2014.10 | AT | F | L | Estate FWD 5FY (EP6DTS) | Date to:2014.10 | GCI99001 | Inner Joint | | 26 | 34 | 30.2 | 46.5 | 103.5 | |
| | 2008.03-2014.10 | AT/MT | F | L/R | Estate FWD 5FY (EP6DTS) | | GCO99366 | Outer Joint | | 25 | 34 | 58.5 | 79 | 55 | I |
| | 2008.03-2014.10 | MT | F | R | Estate FWD 5FY (EP6DTS) | Trans. code:BE4R;Type:8NN47 | GDS10251 | Drive Shaft | | 25 | 24 | 58.5 | 79 | 935 | |
| | 2008.03-2014.10 | MT | F | R | Estate FWD 5FY (EP6DTS) | Date to:2014.10 | GCI10058 | Inner Joint | | 24 | 34 | 29.8 | 365 | 88 | |
| | 2008.03-2014.10 | | F | L | Estate FWD 5FY (EP6DTS) | Date To:2014.10 | GCO10148 | Outer Joint | | 25 | 34 | 58.5 | 79 | 55.5 | I |
| | 2008.03-2014.10 | | F | L/R | Estate FWD 5FY (EP6DTS) | | GCO10042 | Outer Joint | | 25 | 34 | 54.8 | 78.5 | 56 | I |
| | 2008.03-2014.10 | | F | L | Estate FWD 5FY (EP6DTS) | Date To:2014.10 | GCI10057 | Inner Joint | | 24 | 34 | 40 | 52.5 | 90 | |
| 1.6 (151 kw) | 2015.02-2021.06 | MT | F | L | Estate FWD 5GT (EP6FDTX) | | GDS56852 | Drive Shaft | | 28 | 24 | 58.5 | 93 | 675 | |
| | 2015.02-2021.06 | MT | F | R | Estate FWD 5GT (EP6FDTX) | | GDS56853 | Drive Shaft | | 28 | 24 | 58.5 | 93 | 928 | |
| | 2015.02-2021.06 | MT | F | L/R | Estate FWD 5GT (EP6FDTX) | | GCO82489 | Outer Joint | | 28 | 39 | 58.5 | 93 | 63.5 | I |
| | 2015.02-2021.06 | MT | F | L | Estate FWD 5GT (EP6FDTX) | | GCI10057 | Inner Joint | | 24 | 34 | 40 | 52.5 | 90 | |
| | 2015.02-2021.06 | MT | F | R | Estate FWD 5GT (EP6FDTX) | | GCI83528 | Inner Joint | | 24 | 34 | 29.8 | 306 | 88 | |
| 1.6 (165 kw) | 2018.01-2021.06 | 8AT | F | L | Estate FWD 5GG (EP6FADTX) | | GDS84579 | Drive Shaft | | 28 | 37 | 58.5 | 92.5 | 641 | |
| | 2018.01-2021.06 | 8AT | F | R | Estate FWD 5GG (EP6FADTX) | | GDS84582 | Drive Shaft | | 28 | 37 | 58.5 | 92.5 | 918 | |
| | 2018.01-2021.06 | 8AT | F | L/R | Estate FWD 5GG (EP6FADTX) | | GCO82273 | Outer Joint | | 28 | 34 | 58.5 | 92.5 | 56 | I |
| | 2018.01-2021.06 | 8AT | F | L | Estate FWD 5GG (EP6FADTX) | | GCI82119 | Inner Joint | | 37 | 34 | 41.5 | 58.5 | 94 | |
| | 2018.01-2021.06 | 8AT | F | R | Estate FWD 5GG (EP6FADTX) | | GCI82118 | Inner Joint | | 37 | 34 | | 290 | 88 | |
| 2.0 (100 kw) | 2007.09-2012.12 | 6AT | F | L | Estate FWD RHR (DW10BTED4) | | GDS10380 | Drive Shaft | | 25 | 37 | 58.5 | 89 | 635 | |
| | 2007.09-2012.12 | 6AT | F | R | Estate FWD RHR (DW10BTED4) | | GDS10363 | Drive Shaft | | 25 | 37 | 58.5 | 89 | 935 | |
| | 2007.09-2012.12 | 6AT/6MT | F | L/R | Estate FWD RHR (DW10BTED4) | | GCO10155 | Outer Joint | | 25 | 39 | 58.5 | 89 | 63.5 | I |
| | 2007.09-2012.12 | 6MT | F | L | Estate FWD RHR (DW10BTED4) | Date from:2008.01 | GDS10312 | Drive Shaft | | 25 | 37 | 58.5 | 89 | 625 | |
| | 2007.09-2012.12 | 6MT | F | L | Estate FWD RHR (DW10BTED4) | inner teeth of wheel side:26 | GDS10427 | Drive Shaft | | 25 | 37 | 58.5 | 89 | 638 | |
| | 2007.09-2012.12 | 6MT | F | R | Estate FWD RHR (DW10BTED4) | inner teeth of wheel side:26 | GDS10421 | Drive Shaft | | 25 | 37 | 58.5 | 89 | 972 | |
| | 2007.09-2012.12 | 6MT | F | L | Estate FWD RHR (DW10BTED4) | Date from:2008.01,Date to:2012.12 | GCO10158 | Outer Joint | | 25 | 26 | 58.5 | 89 | 61.5 | M |
| | 2007.09-2012.12 | AT | F | L | Estate FWD RHR (DW10BTED4) | | GDS10375 | Drive Shaft | | 25 | 37 | 58.4 | 89 | 619 | |
| | 2007.09-2012.12 | AT | F | R | Estate FWD RHR (DW10BTED4) | Date from:2008.01,Date to:2012.12 | GCI10091 | Inner Joint | | 37 | 26 | | 366 | 100 | |
| | 2007.09-2012.12 | MT | F | L | Estate FWD RHR (DW10BTED4) | inner teeth of wheel side:39 | GDS10210 | Drive Shaft | | 25 | 37 | 58.5 | 89 | 638 | |
| | 2007.09-2012.12 | MT | F | R | Estate FWD RHR (DW10BTED4) | inner teeth of wheel side:39 | GDS10361 | Drive Shaft | | 25 | 37 | 58.5 | 89 | 959 | |
| | 2007.09-2012.12 | MT | F | R | Estate FWD RHR (DW10BTED4) | | GCI10041 | Inner Joint | | 37 | 39 | 32 | 399 | 95.5 | |
| | 2008.01-2011.12 | AT | F | L | Estate Van FWD RHR (DW10BTED4) | | GDS10380 | Drive Shaft | | 25 | 37 | 58.5 | 89 | 635 | |
| | 2008.01-2011.12 | AT | F | R | Estate Van FWD RHR (DW10BTED4) | | GDS10363 | Drive Shaft | | 25 | 37 | 58.5 | 89 | 935 | |
| | 2008.01-2011.12 | AT | F | R | Estate Van FWD RHR (DW10BTED4) | | GCO10158 | Outer Joint | | 25 | 26 | 58.5 | 89 | 61.5 | M |
| | 2008.01-2011.12 | AT | F | R | Estate Van FWD RHR (DW10BTED4) | | GCI10091 | Inner Joint | | 37 | 26 | | 366 | 100 | |
| | 2008.01-2011.12 | MT | F | L | Estate Van FWD RHR (DW10BTED4) | | GDS10427 | Drive Shaft | | 25 | 37 | 58.5 | 89 | 638 | |
| | 2008.01-2011.12 | MT | F | R | Estate Van FWD RHR (DW10BTED4) | | GDS10421 | Drive Shaft | | 25 | 37 | 58.5 | 89 | 972 | |
| 2.0 (103 kw) | 2007.09-2014.10 | 6AT | F | L | Estate FWD RHR (DW10BTED4) | | GDS10380 | Drive Shaft | | 25 | 37 | 58.5 | 89 | 635 | |
| | 2007.09-2014.10 | 6AT | F | R | Estate FWD RHR (DW10BTED4) | | GDS10363 | Drive Shaft | | 25 | 37 | 58.5 | 89 | 935 | |
| | 2007.09-2014.10 | 6AT | F | R | Estate FWD RHR (DW10BTED4) | | GCO10155 | Outer Joint | | 25 | 39 | 58.5 | 89 | 63.5 | I |
| | 2007.09-2014.10 | 6MT | F | L | Estate FWD RHR (DW10BTED4) | inner teeth of wheel side:26 | GDS10312 | Drive Shaft | | 25 | 37 | 58.5 | 89 | 625 | |
| | 2007.09-2014.10 | 6MT | F | L | Estate FWD RHR (DW10BTED4) | inner teeth of wheel side:26 | GDS10427 | Drive Shaft | | 25 | 37 | 58.5 | 89 | 638 | |
| | 2007.09-2014.10 | 6MT | F | R | Estate FWD RHR (DW10BTED4) | inner teeth of wheel side:26 | GDS10421 | Drive Shaft | | 25 | 37 | 58.5 | 89 | 972 | |
| | 2007.09-2014.10 | 6MT | F | L | Estate FWD RHR (DW10BTED4) | Date to:2014.10;inner teeth of wheel side:26 | GCO10158 | Outer Joint | | 25 | 26 | 58.5 | 89 | 61.5 | M |
| | 2007.09-2014.10 | 6MT | F | L/R | Estate FWD RHR (DW10BTED4) | inner teeth:39 | GCO10155 | Outer Joint | | 25 | 39 | 58.5 | 89 | 63.5 | I |
| | 2007.09-2014.10 | AT | F | L | Estate FWD RHR (DW10BTED4) | | GDS10375 | Drive Shaft | | 25 | 37 | 58.4 | 89 | 619 | |
| | 2007.09-2014.10 | AT | F | R | Estate FWD RHR (DW10BTED4) | Date to:2014.10 | GCI10091 | Inner Joint | | 37 | 26 | | 366 | 100 | |

| | YEAR | TRANSM. | F/R | L/R | BODY STYLE & DRIVE TYPE & ENGINE | REMARKS | G-AP Ref. | PRODUCT | ABS | Technical Specifications A | B | C | H | L | P |
|---|---|---|---|---|---|---|---|---|---|---|---|---|---|---|---|
| **PEUGEOT** | | | | | | | | | | | | | | | |
| **308 SW** | | | | | | | | | | | | | | | |
| 2.0 (103 kw) | 2007.09-2014.10 | MT | F | L | Estate FWD RHR (DW10BTED4) | inner teeth of wheel side:39 | GDS10210 | Drive Shaft | | 25 | 37 | 58.5 | 89 | 638 | |
| | 2007.09-2014.10 | MT | F | R | Estate FWD RHR (DW10BTED4) | inner teeth of wheel side:39 | GDS10361 | Drive Shaft | | 25 | 37 | 58.5 | 89 | 959 | |
| | 2007.09-2014.10 | MT | F | R | Estate FWD RHR (DW10BTED4) | | GCI10041 | Inner Joint | | 37 | 39 | 32 | 399 | 95.5 | |
| | 2008.01-2011.12 | 4AT | F | L | Estate FWD RFJ (EW10A) | | GDS10362 | Drive Shaft | | 25 | 26 | 58.5 | 79 | 624 | |
| | 2008.01-2011.12 | 4AT | F | R | Estate FWD RFJ (EW10A) | | GDS10383 | Drive Shaft | | 25 | 26 | 58 | 79 | 842 | |
| | 2008.01-2011.12 | 4AT | F | L | Estate FWD RFJ (EW10A) | | GCI99001 | Inner Joint | | 26 | 34 | 30.2 | 46.5 | 103.5 | |
| | 2008.01-2011.12 | AT | F | L | Estate FWD RFJ (EW10A) | | GDS10362 | Drive Shaft | | 25 | 26 | 58.5 | 79 | 624 | |
| | 2008.01-2011.12 | AT | F | R | Estate FWD RFJ (EW10A) | | GDS10383 | Drive Shaft | | 25 | 26 | 58 | 79 | 842 | |
| | 2008.01-2011.12 | AT | F | L | Estate FWD RFJ (EW10A) | | GCO99366 | Outer Joint | | 25 | 34 | 58.5 | 79 | 55 | I |
| | 2008.01-2011.12 | AT | F | L | Estate FWD RFJ (EW10A) | Date to:2011.12 | GCI99001 | Inner Joint | | 26 | 34 | 30.2 | 46.5 | 103.5 | |
| | 2008.01-2011.12 | MT | F | L | Estate FWD RFJ (EW10A) | | GDS10248 | Drive Shaft | | 25 | 24 | 58.5 | 79 | 642 | |
| | 2008.01-2011.12 | MT | F | L | Estate FWD RFJ (EW10A) | Trans. code:BE4R | GDS10250 | Drive Shaft | | 25 | 24 | 58.5 | 79 | 630 | |
| | 2008.01-2011.12 | MT | F | R | Estate FWD RFJ (EW10A) | | GDS10251 | Drive Shaft | | 25 | 24 | 58.5 | 79 | 935 | |
| 2.0 (110 kw) | 2011.04-2014.10 | 6AT | F | L | Estate FWD RHE (DW10CTED4) | | GDS10380 | Drive Shaft | | 25 | 37 | 58.5 | 89 | 635 | |
| | 2011.04-2014.10 | 6AT | F | R | Estate FWD RHE (DW10CTED4) | | GDS10363 | Drive Shaft | | 25 | 37 | 58.5 | 89 | 935 | |
| | 2011.04-2014.10 | 6AT | F | L/R | Estate FWD RHE (DW10CTED4) | inner teeth of wheel side:39 | GCO10155 | Outer Joint | | 25 | 39 | 58.5 | 89 | 63.5 | I |
| | 2011.04-2014.10 | 6AT/6MT | F | R | Estate FWD RHE (DW10CTED4) | Date from:2011.10,Date to:2014.10 | GCI10091 | Inner Joint | | 37 | 26 | | 366 | 100 | |
| | 2011.04-2014.10 | AT | F | | Estate FWD RHE (DW10CTED4) | Trans. code:AT8/AL4 | GCO99366 | Outer Joint | | 25 | 34 | 58.5 | 79 | 55 | I |
| | 2011.04-2014.10 | MT | F | L | Estate FWD RHE (DW10CTED4) | inner teeth of wheel side:39 | GDS10210 | Drive Shaft | | 25 | 37 | 58.5 | 89 | 638 | |
| | 2011.04-2014.10 | MT | F | L | Estate FWD RHE (DW10CTED4) | inner teeth of wheel side:26 | GDS10427 | Drive Shaft | | 25 | 37 | 58.5 | 89 | 638 | |
| | 2011.04-2014.10 | MT | F | R | Estate FWD RHE (DW10CTED4) | inner teeth of wheel side:39 | GDS10361 | Drive Shaft | | 25 | 37 | 58.5 | 89 | 959 | |
| | 2011.04-2014.10 | MT | F | R | Estate FWD RHE (DW10CTED4) | inner teeth of wheel side:26 | GDS10421 | Drive Shaft | | 25 | 37 | 58.5 | 89 | 972 | |
| | 2011.04-2014.10 | MT | F | R | Estate FWD RHE (DW10CTED4) | Date from:2011.10,Date to:2014.10 | GCO10158 | Outer Joint | | 25 | 26 | 58.5 | 89 | 61.5 | M |
| | 2011.04-2014.10 | MT | F | R | Estate FWD RHE (DW10CTED4) | | GCI10041 | Inner Joint | | 37 | 39 | 32 | 399 | 95.5 | |
| | 2014.03-2021.06 | 6AT | F | L | Estate FWD AHR (DW10FD);AHX (DW10FCD) | | GDS83809 | Drive Shaft | | 28 | 37 | 58.5 | 93 | 606 | |
| | 2014.03-2021.06 | 6AT | F | R | Estate FWD AHR (DW10FD);AHX (DW10FCD) | | GDS83808 | Drive Shaft | | 28 | 37 | 58.5 | 93 | 942 | |
| | 2014.03-2021.06 | 6AT | F | L/R | Estate FWD AHR (DW10FD);AHX (DW10FCD) | | GCO82489 | Outer Joint | | 28 | 39 | 58.5 | 93 | 63.5 | I |
| | 2014.03-2021.06 | 6AT | F | L | Estate FWD AHR (DW10FD);AHX (DW10FCD) | | GCI10120 | Inner Joint | | 37 | 39 | 42.2 | 60 | 95.5 | |
| | 2014.03-2021.06 | 6AT | F | R | Estate FWD AHR (DW10FD);AHX (DW10FCD) | | GCI45033 | Inner Joint | | 37 | 39 | | 379 | 96 | |
| 2.0 (120 kw) | 2009.06-2014.10 | 6AT | F | L | Estate FWD RHH (DW10CTED4) | | GDS10380 | Drive Shaft | | 25 | 37 | 58.5 | 89 | 635 | |
| | 2009.06-2014.10 | 6AT | F | R | Estate FWD RHH (DW10CTED4) | | GDS10363 | Drive Shaft | | 25 | 37 | 58.5 | 89 | 935 | |
| | 2009.06-2014.10 | AT | F | L | Estate FWD RHH (DW10CTED4) | | GDS10375 | Drive Shaft | | 25 | 37 | 58.4 | 89 | 619 | |
| | 2009.06-2014.10 | AT | F | R | Estate FWD RHH (DW10CTED4) | inner teeth of wheel side:39 | GCO10155 | Outer Joint | | 25 | 39 | 58.5 | 89 | 63.5 | I |
| | 2009.06-2014.10 | AT | F | R | Estate FWD RHH (DW10CTED4) | inner teeth of wheel side:26 | GCO10158 | Outer Joint | | 25 | 26 | 58.5 | 89 | 61.5 | M |
| | 2009.06-2014.10 | AT | F | | Estate FWD RHH (DW10CTED4) | Transm. Type: AT8/AL4 | GCO99366 | Outer Joint | | 25 | 34 | 58.5 | 79 | 55 | I |
| | 2009.06-2014.10 | AT | F | R | Estate FWD RHH (DW10CTED4) | Date to:2014.10 | GCI10091 | Inner Joint | | 37 | 26 | | 366 | 100 | |
| | 2009.06-2014.10 | MT | F | L | Estate FWD RHH (DW10CTED4) | inner teeth of wheel side:39 | GDS10210 | Drive Shaft | | 25 | 37 | 58.5 | 89 | 638 | |
| | 2009.06-2014.10 | MT | F | L | Estate FWD RHH (DW10CTED4) | inner teeth of wheel side:26 | GDS10427 | Drive Shaft | | 25 | 37 | 58.5 | 89 | 638 | |
| | 2009.06-2014.10 | MT | F | R | Estate FWD RHH (DW10CTED4) | inner teeth of wheel side:39 | GDS10361 | Drive Shaft | | 25 | 37 | 58.5 | 89 | 959 | |
| | 2009.06-2014.10 | MT | F | R | Estate FWD RHH (DW10CTED4) | inner teeth of wheel side:26 | GDS10421 | Drive Shaft | | 25 | 37 | 58.5 | 89 | 972 | |
| | 2009.06-2014.10 | MT | F | R | Estate FWD RHH (DW10CTED4) | | GCI10041 | Inner Joint | | 37 | 39 | 32 | 399 | 95.5 | |
| 2.0 (130 kw) | 2017.06-2021.06 | 8AT | F | L | Estate FWD EHZ (DW10FC) | | GDS83809 | Drive Shaft | | 28 | 37 | 58.5 | 93 | 606 | |
| | 2017.06-2021.06 | 8AT | F | R | Estate FWD EHZ (DW10FC) | | GDS83808 | Drive Shaft | | 28 | 37 | 58.5 | 93 | 942 | |
| | 2017.06-2021.06 | 8AT | F | L/R | Estate FWD EHZ (DW10FC) | | GCO82489 | Outer Joint | | 28 | 39 | 58.5 | 93 | 63.5 | I |
| | 2017.06-2021.06 | 8AT | F | L | Estate FWD EHZ (DW10FC) | | GCI10120 | Inner Joint | | 37 | 39 | 42.2 | 60 | 95.5 | |
| | 2017.06-2021.06 | 8AT | F | R | Estate FWD EHZ (DW10FC) | | GCI45033 | Inner Joint | | 37 | 39 | | 379 | 96 | |
| 2.0 (132 kw) | 2017.06-2021.06 | 8AT | F | L | Estate FWD AHW (DW10FC) | | GDS83809 | Drive Shaft | | 28 | 37 | 58.5 | 93 | 606 | |
| | 2017.06-2021.06 | 8AT | F | R | Estate FWD AHW (DW10FC) | | GDS83808 | Drive Shaft | | 28 | 37 | 58.5 | 93 | 942 | |
| | 2017.06-2021.06 | 8AT | F | L/R | Estate FWD AHW (DW10FC) | | GCO82489 | Outer Joint | | 28 | 39 | 58.5 | 93 | 63.5 | I |
| | 2017.06-2021.06 | 8AT | F | L | Estate FWD AHW (DW10FC) | | GCI10120 | Inner Joint | | 37 | 39 | 42.2 | 60 | 95.5 | |
| | 2017.06-2021.06 | 8AT | F | R | Estate FWD AHW (DW10FC) | | GCI45033 | Inner Joint | | 37 | 39 | | 379 | 96 | |
| 2.0 (133 kw) | 2014.06-2021.06 | AT | F | L | Estate FWD AHW (DW10FC) | | GDS83809 | Drive Shaft | | 28 | 37 | 58.5 | 93 | 606 | |
| | 2014.06-2021.06 | AT | F | R | Estate FWD AHW (DW10FC) | | GDS83808 | Drive Shaft | | 28 | 37 | 58.5 | 93 | 942 | |
| | 2014.06-2021.06 | AT | F | L/R | Estate FWD AHW (DW10FC) | | GCO82489 | Outer Joint | | 28 | 39 | 58.5 | 93 | 63.5 | I |
| | 2014.06-2021.06 | AT | F | L | Estate FWD AHW (DW10FC) | | GCI10120 | Inner Joint | | 37 | 39 | 42.2 | 60 | 95.5 | |
| | 2014.06-2021.06 | AT | F | R | Estate FWD AHW (DW10FC) | | GCI45033 | Inner Joint | | 37 | 39 | | 379 | 96 | |
| **4007** | | | | | | | | | | | | | | | |
| 2.0 (108 kw) | 2010.11-2013.03 | AT | F | L/R | SUV 4WD 4B11 | | GCO39117 | Outer Joint | | 28 | 35 | 59.5 | 95 | 65 | I |
| | 2010.11-2013.03 | CVT | F | R | SUV 4WD 4B11 | | GDS39120 | Drive Shaft | | 28 | 27 | 59.5 | 95 | 965 | |
| | 2010.11-2013.03 | CVT | F | L | SUV 4WD 4B11 | | GCI51034 | Inner Joint | | 27 | 35 | 40 | 62 | 113 | |
| | 2010.11-2013.03 | CVT | F | R | SUV 4WD 4B11 | | GCI81083 | Inner Joint | | 27 | 35 | 50 | 255.5 | 120 | |
| | 2010.11-2013.03 | AT | F | L | SUV FWD 4B11 | | GCO39117 | Outer Joint | | 28 | 35 | 59.5 | 95 | 65 | I |
| | 2010.11-2013.03 | CVT/5MT | F | R | SUV FWD 4B11 | | GCI81083 | Inner Joint | | 27 | 35 | 50 | 255.5 | 120 | |
| 2.2 (115 kw) | 2007.02-2013.03 | MT | F | L | SUV 4WD 4HN (DW12MTED4);4HK (DW12ME5) | | GDS51047 | Drive Shaft | | 28 | 24 | 59.5 | 94.5 | 631 | |
| | 2007.02-2013.03 | MT | F | R | SUV 4WD 4HN (DW12MTED4);4HK (DW12ME5) | | GDS51050 | Drive Shaft | | 28 | 24 | 59.5 | 94.5 | 993 | |

| | YEAR | TRANSM. | F/R | L/R | BODY STYLE & DRIVE TYPE & ENGINE | REMARKS | G-AP Ref. | PRODUCT | ABS | Technical Specifications A | B | C | H | L | P |
|---|---|---|---|---|---|---|---|---|---|---|---|---|---|---|---|
| **PEUGEOT** | | | | | | | | | | | | | | | |
| **4007** | | | | | | | | | | | | | | | |
| 2.2 (115 kw) | 2007.02-2013.03 | MT | F | L/R | SUV 4WD 4HN (DW12MTED4);4HK (DW12ME5) | | GCO39117 | Outer Joint | | 28 | 35 | 59.5 | 95 | 65 | I |
| | 2007.02-2013.03 | MT | F | L | SUV 4WD 4HN (DW12MTED4);4HK (DW12ME5) | | GCI59140 | Inner Joint | | 24 | 36 | 50 | 67 | 116 | |
| | 2007.02-2013.03 | MT | F | R | SUV 4WD 4HN (DW12MTED4);4HK (DW12ME5) | | GCI51021 | Inner Joint | | 24 | 36 | 50 | 280.5 | 129 | |
| | 2007.02-2013.03 | 6AT/6MT | R | L | SUV 4WD 4HN (DW12MTED4);4HK (DW12ME5) | | GDS39169 | Drive Shaft | | 27 | 23 | 58 | 94.5 | 754.5 | |
| | 2007.02-2013.03 | 6DCT/6MT | R | R | SUV 4WD 4HN (DW12MTED4);4HK (DW12ME5) | | GDS57586 | Drive Shaft | | 27 | 23 | 58 | 95 | 834 | |
| | 2007.02-2013.03 | 6DCT/6MT | R | L/R | SUV 4WD 4HN (DW12MTED4);4HK (DW12ME5) | | GCO83634 | Outer Joint | | 27 | 26 | 58 | 95 | 52.5 | I |
| | 2007.02-2013.03 | 6DCT/6MT | R | L/R | SUV 4WD 4HN (DW12MTED4);4HK (DW12ME5) | | GCI39050 | Inner Joint | | 23 | 26 | 35 | 64 | 96 | |
| | 2007.02-2013.03 | 6MT | F | L | SUV Van 4WD 4HN (DW12MTED4);4HK (DW12ME5) | | GDS51047 | Drive Shaft | | 28 | 24 | 59.5 | 94.5 | 631 | |
| | 2007.02-2013.03 | 6MT | F | R | SUV Van 4WD 4HN (DW12MTED4);4HK (DW12ME5) | | GDS51050 | Drive Shaft | | 28 | 24 | 59.5 | 94.5 | 993 | |
| | 2007.02-2013.03 | 6MT | F | L/R | SUV Van 4WD 4HN (DW12MTED4);4HK (DW12ME5) | | GCO39137 | Outer Joint | | 28 | 37 | 59.5 | 94.5 | 71.5 | I |
| | 2007.02-2013.03 | 6MT | F | L | SUV Van 4WD 4HN (DW12MTED4);4HK (DW12ME5) | | GCI59140 | Inner Joint | | 24 | 36 | 50 | 67 | 116 | |
| | 2007.02-2013.03 | 6MT | F | R | SUV Van 4WD 4HN (DW12MTED4);4HK (DW12ME5) | | GCI51021 | Inner Joint | | 24 | 36 | 50 | 280.5 | 129 | |
| | 2007.02-2013.03 | 6AT/6MT | R | L | SUV Van 4WD 4HN (DW12MTED4);4HK (DW12ME5) | | GDS39169 | Drive Shaft | | 27 | 23 | 58 | 94.5 | 754.5 | |
| | 2007.02-2013.03 | 6DCT/6MT | R | R | SUV Van 4WD 4HN (DW12MTED4);4HK (DW12ME5) | | GDS57586 | Drive Shaft | | 27 | 23 | 58 | 95 | 834 | |
| | 2007.02-2013.03 | 6DCT/6MT | R | L/R | SUV Van 4WD 4HN (DW12MTED4);4HK (DW12ME5) | | GCO83634 | Outer Joint | | 27 | 26 | 58 | 95 | 52.5 | I |
| | 2007.02-2013.03 | 6DCT/6MT | R | L/R | SUV Van 4WD 4HN (DW12MTED4);4HK (DW12ME5) | | GCI39050 | Inner Joint | | 23 | 26 | 35 | 64 | 96 | |
| 2.4 (125 kw) | 2007.02-2013.03 | AT | F | L | SUV 4WD SFZ (4B12-MMC);SFY (4B12-MMC) | | GDS82991 | Drive Shaft | | 28 | 27 | 59.6 | 95 | 651 | |
| | 2007.02-2013.03 | CVT | F | R | SUV 4WD SFZ (4B12-MMC);SFY (4B12-MMC) | | GDS39120 | Drive Shaft | | 28 | 27 | 59.5 | 95 | 965 | |
| | 2007.02-2013.03 | CVT | F | L/R | SUV 4WD SFZ (4B12-MMC);SFY (4B12-MMC) | | GCO39117 | Outer Joint | | 28 | 35 | 59.5 | 95 | 65 | I |
| | 2007.02-2013.03 | CVT/5MT | F | R | SUV 4WD SFZ (4B12-MMC);SFY (4B12-MMC) | | GCI81083 | Inner Joint | | 27 | 35 | 50 | 255.5 | 120 | |
| | 2007.02-2013.03 | 5MT/CVT | R | L | SUV 4WD SFZ (4B12-MMC);SFY (4B12-MMC) | | GDS39169 | Drive Shaft | | 27 | 23 | 58 | 94.5 | 754.5 | |
| | 2007.02-2013.03 | CVT | R | R | SUV 4WD SFZ (4B12-MMC);SFY (4B12-MMC) | | GDS57586 | Drive Shaft | | 27 | 23 | 58 | 95 | 834 | |
| | 2007.02-2013.03 | CVT | R | L/R | SUV 4WD SFZ (4B12-MMC);SFY (4B12-MMC) | | GCO83634 | Outer Joint | | 27 | 26 | 58 | 95 | 52.5 | I |
| | 2007.02-2013.03 | CVT | R | L/R | SUV 4WD SFZ (4B12-MMC);SFY (4B12-MMC) | | GCI39050 | Inner Joint | | 23 | 26 | 35 | 64 | 96 | |
| **4008** | | | | | | | | | | | | | | | |
| 1.6 (86 kw) | 2012.05- | | F | R | SUV FWD 4A92 | | GCI81083 | Inner Joint | | 27 | 35 | 50 | 255.5 | 120 | |
| 1.8 (110 kw) | 2012.05- | 6MT | F | L | SUV 4WD 6HZ (4N13) | | GDS51047 | Drive Shaft | | 28 | 24 | 59.5 | 94.5 | 631 | |
| | 2012.05- | 6MT | F | R | SUV 4WD 6HZ (4N13) | | GDS51050 | Drive Shaft | | 28 | 24 | 59.5 | 94.5 | 993 | |
| | 2012.05- | 6MT | F | L | SUV 4WD 6HZ (4N13) | | GCI59140 | Inner Joint | | 24 | 36 | 50 | 67 | 116 | |
| | 2012.05- | 6MT | F | R | SUV 4WD 6HZ (4N13) | | GCI51021 | Inner Joint | | 24 | 36 | 50 | 280.5 | 129 | |
| | 2012.05- | MT | F | L/R | SUV 4WD 6HZ (4N13) | | GCO39117 | Outer Joint | | 28 | 35 | 59.5 | 95 | 65 | I |
| | 2012.05- | 6MT | F | L | SUV FWD 6HZ (4N13) | | GDS51047 | Drive Shaft | | 28 | 24 | 59.5 | 94.5 | 631 | |
| | 2012.05- | 6MT | F | L | SUV FWD 6HZ (4N13) | | GCO39137 | Outer Joint | | 28 | 37 | 59.5 | 94.5 | 71.5 | I |
| | 2012.05- | 6MT | F | L | SUV FWD 6HZ (4N13) | | GCI59140 | Inner Joint | | 24 | 36 | 50 | 67 | 116 | |
| 2.0 (110 kw) | 2012.05- | CVT | F | R | SUV 4WD 4B11 | | GDS39120 | Drive Shaft | | 28 | 27 | 59.5 | 95 | 965 | |
| | 2012.05- | CVT | F | L/R | SUV 4WD 4B11 | | GCO39117 | Outer Joint | | 28 | 35 | 59.5 | 95 | 65 | I |
| | 2012.05- | CVT/5MT | F | R | SUV 4WD 4B11 | | GCI81083 | Inner Joint | | 27 | 35 | 50 | 255.5 | 120 | |
| | 2013.05- | 5MT | F | R | SUV FWD 4B11 | | GCI81083 | Inner Joint | | 27 | 35 | 50 | 255.5 | 120 | |
| **405** | | | | | | | | | | | | | | | |
| 1.6 (65 kw) | 1992.08-1996.10 | AT/MT | F | R | Estate FWD XU5M | | GDS10126 | Drive Shaft | 29W | 25 | 24 | 55.7 | 79 | 886 | |
| | 1992.08-1996.10 | AT/MT | F | L/R | Estate FWD XU5M | | GCO10003 | Outer Joint | 29T | 25 | 23 | 54.8 | 78.5 | 56 | I |
| | 1992.08-1996.10 | AT/MT | F | L/R | Estate FWD XU5M | | GCO10005 | Outer Joint | 90T | 25 | 23 | 54.8 | 78.5 | 56 | I |
| | 1992.08-1996.10 | MT | F | L | Estate FWD XU5M | | GDS45023 | Drive Shaft | | 25 | 24 | 60 | 80 | 608 | |
| | 1992.08-1996.10 | MT | F | R | Estate FWD XU5M | | GDS45022 | Drive Shaft | | 25 | 24 | 54.8 | 79 | 880 | |
| | 1992.08-1996.10 | MT | F | L/R | Estate FWD XU5M | | GCO45006 | Outer Joint | | 25 | 31 | 55 | 79.5 | 50.5 | I |
| | 1992.08-1996.10 | | F | L | Estate FWD XU5M | | GDS99025 | Drive Shaft | 29W | 25 | 24 | 55.7 | 79 | 597 | |
| | 1992.08-1996.10 | | F | R | Estate FWD XU5M | | GDS45153 | Drive Shaft | 90T | 25 | 24 | 55.7 | 79 | 880 | |
| | 1992.08-1996.10 | | F | | Estate FWD XU5M | | GCO45004 | Outer Joint | 90T | 25 | 34 | 55.7 | 79 | 55 | I |
| 1.6 (66 kw) | 1992.08-1997.05 | AT/MT | F | R | Saloon FWD XU5JP | Date to:1992.12 | GDS45017 | Drive Shaft | 29W | 25 | 24 | 55.7 | 79 | 881 | |
| | 1992.08-1997.05 | AT/MT | F | R | Saloon FWD XU5JP | | GDS45022 | Drive Shaft | | 25 | 24 | 54.8 | 79 | 880 | |
| | 1992.08-1997.05 | AT/MT | F | R | Saloon FWD XU5JP | Date to:1992.12 | GCO45023 | Outer Joint | 29W | 25 | 34 | 55.7 | 79 | 55 | I |
| 1.8 (74 kw) | 1992.08-1997.05 | AT/MT | F | R | Estate FWD XU7JP | | GDS10126 | Drive Shaft | 29W | 25 | 24 | 55.7 | 79 | 886 | |
| | 1992.08-1997.05 | AT/MT | F | L/R | Estate FWD XU7JP | | GCO10003 | Outer Joint | 29T | 25 | 23 | 54.8 | 78.5 | 56 | I |
| | 1992.08-1997.05 | AT/MT | F | L/R | Estate FWD XU7JP | | GCO10005 | Outer Joint | 90T | 25 | 23 | 54.8 | 78.5 | 56 | I |
| | 1992.08-1997.05 | AT/MT | F | L/R | Estate FWD XU7JP | | GCO45006 | Outer Joint | | 25 | 31 | 55 | 79.5 | 50.5 | I |
| | 1992.08-1997.05 | | F | L | Estate FWD XU7JP | | GDS45023 | Drive Shaft | | 25 | 24 | 60 | 80 | 608 | |
| | 1992.08-1997.05 | | F | L | Estate FWD XU7JP | | GDS99025 | Drive Shaft | 29W | 25 | 24 | 55.7 | 79 | 597 | |
| 1.8 (76 kw) | 1996.08-1999.11 | | F | L | Saloon FWD XU7JP | | GDS45023 | Drive Shaft | | 25 | 24 | 60 | 80 | 608 | |
| | 1996.08-1999.11 | | F | L | Saloon FWD XU7JP | | GDS99025 | Drive Shaft | 29W | 25 | 24 | 55.7 | 79 | 597 | |
| | 1996.08-1999.11 | | F | R | Saloon FWD XU7JP | | GDS10126 | Drive Shaft | 29W | 25 | 24 | 55.7 | 79 | 886 | |
| 1.9 (47 kw) | 1992.08-1996.10 | AT/MT | F | R | Estate FWD XUD9 | | GDS10126 | Drive Shaft | 29W | 25 | 24 | 55.7 | 79 | 886 | |
| | 1992.08-1996.10 | AT/MT | F | L/R | Estate FWD XUD9 | | GCO10003 | Outer Joint | 29T | 25 | 23 | 54.8 | 78.5 | 56 | I |
| | 1992.08-1996.10 | AT/MT | F | L/R | Estate FWD XUD9 | | GCO10005 | Outer Joint | 90T | 25 | 23 | 54.8 | 78.5 | 56 | I |
| | 1992.08-1996.10 | MT | F | L | Estate FWD XUD9 | | GDS45023 | Drive Shaft | | 25 | 24 | 60 | 80 | 608 | |
| | 1992.08-1996.10 | MT | F | R | Estate FWD XUD9 | | GDS45022 | Drive Shaft | | 25 | 24 | 54.8 | 79 | 880 | |

| | YEAR | TRANSM. | F/R | L/R | BODY STYLE & DRIVE TYPE & ENGINE | REMARKS | G-AP Ref. | PRODUCT | ABS | Technical Specifications A | B | C | H | L | P |
|---|---|---|---|---|---|---|---|---|---|---|---|---|---|---|---|
| **PEUGEOT** | | | | | | | | | | | | | | | |
| **405** | | | | | | | | | | | | | | | |
| 1.9 (47 kw) | 1992.08-1996.10 | MT | F | L/R | Estate FWD XUD9 | | GCO45006 | Outer Joint | | 25 | 31 | 55 | 79.5 | 50.5 | I |
| | 1992.08-1996.10 | | F | L | Estate FWD XUD9 | | GDS99025 | Drive Shaft | 29W | 25 | 24 | 55.7 | 79 | 597 | |
| | 1992.08-1996.10 | | F | R | Estate FWD XUD9 | | GDS45153 | Drive Shaft | 90T | 25 | 24 | 55.7 | 79 | 880 | |
| | 1992.08-1996.10 | | F | | Estate FWD XUD9 | | GCO10022 | Outer Joint | 29W | 25 | 34 | 55.7 | 79 | 55 | I |
| | 1992.08-1996.10 | | F | | Estate FWD XUD9 | | GCO10042 | Outer Joint | | 25 | 34 | 54.8 | 78.5 | 56 | I |
| | 1992.08-1996.10 | | F | | Estate FWD XUD9 | | GCO45001 | Outer Joint | 29T | 25 | 34 | 54.8 | 78.5 | 56 | I |
| | 1992.08-1996.10 | | F | | Estate FWD XUD9 | | GCO45004 | Outer Joint | 90T | 25 | 34 | 55.7 | 79 | 55 | I |
| 1.9 (50 kw) | 1994.06-1996.10 | AT/MT | F | R | Estate FWD XUD9 | | GDS10126 | Drive Shaft | 29W | 25 | 24 | 55.7 | 79 | 886 | |
| | 1994.06-1996.10 | AT/MT | F | L/R | Estate FWD XUD9 | | GCO10003 | Outer Joint | 29T | 25 | 23 | 54.8 | 78.5 | 56 | I |
| | 1994.06-1996.10 | AT/MT | F | L/R | Estate FWD XUD9 | | GCO10005 | Outer Joint | 90T | 25 | 23 | 54.8 | 78.5 | 56 | I |
| | 1994.06-1996.10 | AT/MT | F | L/R | Estate FWD XUD9 | | GCO45006 | Outer Joint | | 25 | 31 | 55 | 79.5 | 50.5 | I |
| | 1994.06-1996.10 | MT | F | L | Estate FWD XUD9 | | GDS45023 | Drive Shaft | | 25 | 24 | 60 | 80 | 608 | |
| | 1994.06-1996.10 | MT | F | R | Estate FWD XUD9 | | GDS45022 | Drive Shaft | | 25 | 24 | 54.8 | 79 | 880 | |
| | 1994.06-1996.10 | | F | L | Estate FWD XUD9 | | GDS99025 | Drive Shaft | 29W | 25 | 24 | 55.7 | 79 | 597 | |
| | 1994.06-1996.10 | | F | R | Estate FWD XUD9 | | GDS45153 | Drive Shaft | 90T | 25 | 24 | 55.7 | 79 | 880 | |
| | 1994.06-1996.10 | | F | | Estate FWD XUD9 | | GCO10022 | Outer Joint | 29W | 25 | 34 | 55.7 | 79 | 55 | I |
| | 1994.06-1996.10 | | F | | Estate FWD XUD9 | | GCO10042 | Outer Joint | | 25 | 34 | 54.8 | 78.5 | 56 | I |
| | 1994.06-1996.10 | | F | | Estate FWD XUD9 | | GCO45001 | Outer Joint | 29T | 25 | 34 | 54.8 | 78.5 | 56 | I |
| | 1994.06-1996.10 | | F | | Estate FWD XUD9 | | GCO45004 | Outer Joint | 90T | 25 | 34 | 55.7 | 79 | 55 | I |
| 1.9 (52 kw) | 1997.08-1999.11 | | F | L | Saloon FWD XUD9 | | GDS45023 | Drive Shaft | | 25 | 24 | 60 | 80 | 608 | |
| | 1997.08-1999.11 | | F | L | Saloon FWD XUD9 | | GDS99025 | Drive Shaft | 29W | 25 | 24 | 55.7 | 79 | 597 | |
| | 1997.08-1999.11 | | F | R | Saloon FWD XUD9 | | GDS10126 | Drive Shaft | 29W | 25 | 24 | 55.7 | 79 | 886 | |
| | 1997.08-1999.11 | | F | | Saloon FWD XUD9 | | GCO10022 | Outer Joint | 29W | 25 | 34 | 55.7 | 79 | 55 | I |
| | 1997.08-1999.11 | | F | | Saloon FWD XUD9 | | GCO10042 | Outer Joint | | 25 | 34 | 54.8 | 78.5 | 56 | I |
| 1.9 (66 kw) | 1992.08-1997.05 | MT | F | L | Estate FWD XUD9TE | | GDS45008 | Drive Shaft | | 25 | 24 | 54.8 | 78.5 | 601.5 | |
| | 1992.08-1997.05 | MT | F | L | Estate FWD XUD9TE | | GDS45024 | Drive Shaft | 29W | 25 | 24 | 55.7 | 79 | 603.5 | |
| | 1992.08-1997.05 | MT | F | R | Estate FWD XUD9TE | | GDS45017 | Drive Shaft | 29W | 25 | 24 | 55.7 | 79 | 881 | |
| | 1992.08-1997.05 | MT | F | R | Estate FWD XUD9TE | | GDS45070 | Drive Shaft | | 25 | 24 | 54.8 | 78.5 | 880 | |
| | 1992.08-1997.05 | MT | F | R | Estate FWD XUD9TE | | GDS45153 | Drive Shaft | 90T | 25 | 24 | 55.7 | 79 | 880 | |
| | 1992.08-1997.05 | MT | F | L/R | Estate FWD XUD9TE | | GCO10043 | Outer Joint | | 25 | 34 | 54.8 | 78.5 | 56 | I |
| | 1992.08-1997.05 | MT | F | L/R | Estate FWD XUD9TE | | GCO45001 | Outer Joint | 29T | 25 | 34 | 54.8 | 78.5 | 56 | I |
| | 1992.08-1997.05 | MT | F | L/R | Estate FWD XUD9TE | | GCO45004 | Outer Joint | 90T | 25 | 34 | 55.7 | 79 | 55 | I |
| | 1992.08-1997.05 | MT | F | L | Estate FWD XUD9TE | | GCI10018 | Inner Joint | | 24 | 29 | 40 | 62.5 | 99 | |
| | 1992.08-1997.05 | | F | L | Estate FWD XUD9TE | | GDS45023 | Drive Shaft | | 25 | 24 | 60 | 80 | 608 | |
| | 1992.08-1997.05 | | F | L | Estate FWD XUD9TE | | GDS99025 | Drive Shaft | 29W | 25 | 24 | 55.7 | 79 | 597 | |
| | 1992.08-1997.05 | | F | R | Estate FWD XUD9TE | | GDS10126 | Drive Shaft | 29W | 25 | 24 | 55.7 | 79 | 886 | |
| | 1992.08-1997.05 | | F | | Estate FWD XUD9TE | | GCO10022 | Outer Joint | 29W | 25 | 34 | 55.7 | 79 | 55 | I |
| | 1992.08-1997.05 | | F | | Estate FWD XUD9TE | | GCO10042 | Outer Joint | | 25 | 34 | 54.8 | 78.5 | 56 | I |
| 1.9 (69 kw) | 1992.08-1997.05 | | F | L | Saloon FWD XUD9TE | | GDS45023 | Drive Shaft | | 25 | 24 | 60 | 80 | 608 | |
| | 1992.08-1997.05 | | F | L | Saloon FWD XUD9TE | | GDS99025 | Drive Shaft | 29W | 25 | 24 | 55.7 | 79 | 597 | |
| | 1992.08-1997.05 | | F | R | Saloon FWD XUD9TE | | GDS10126 | Drive Shaft | 29W | 25 | 24 | 55.7 | 79 | 886 | |
| | 1992.08-1997.05 | | F | | Saloon FWD XUD9TE | | GCO10022 | Outer Joint | 29W | 25 | 34 | 55.7 | 79 | 55 | I |
| | 1992.08-1997.05 | | F | | Saloon FWD XUD9TE | | GCO10042 | Outer Joint | | 25 | 34 | 54.8 | 78.5 | 56 | I |
| 2.0 (89 kw) | 1992.08-1996.03 | MT | F | L | Saloon FWD XU10J2 | | GDS45008 | Drive Shaft | | 25 | 24 | 54.8 | 78.5 | 601.5 | |
| | 1992.08-1996.03 | MT | F | L | Saloon FWD XU10J2 | | GDS45024 | Drive Shaft | 29W | 25 | 24 | 55.7 | 79 | 603.5 | |
| | 1992.08-1996.03 | MT | F | L | Saloon FWD XU10J2 | | GDS99025 | Drive Shaft | 29W | 25 | 24 | 55.7 | 79 | 597 | |
| | 1992.08-1996.03 | MT | F | R | Saloon FWD XU10J2 | | GDS10126 | Drive Shaft | 29W | 25 | 24 | 55.7 | 79 | 886 | |
| | 1992.08-1996.03 | MT | F | R | Saloon FWD XU10J2 | | GDS45017 | Drive Shaft | 29W | 25 | 24 | 55.7 | 79 | 881 | |
| | 1992.08-1996.03 | MT | F | R | Saloon FWD XU10J2 | | GDS45070 | Drive Shaft | | 25 | 24 | 54.8 | 78.5 | 880 | |
| | 1992.08-1996.03 | MT | F | R | Saloon FWD XU10J2 | | GDS45153 | Drive Shaft | 90T | 25 | 24 | 55.7 | 79 | 880 | |
| | 1992.08-1996.03 | MT | F | L/R | Saloon FWD XU10J2 | | GCO10043 | Outer Joint | | 25 | 34 | 54.8 | 78.5 | 56 | I |
| | 1992.08-1996.03 | MT | F | L/R | Saloon FWD XU10J2 | | GCO45001 | Outer Joint | 29T | 25 | 34 | 54.8 | 78.5 | 56 | I |
| | 1992.08-1996.03 | MT | F | L/R | Saloon FWD XU10J2 | | GCO45004 | Outer Joint | 90T | 25 | 34 | 55.7 | 79 | 55 | I |
| | 1992.08-1996.03 | MT | F | L | Saloon FWD XU10J2 | | GCI10018 | Inner Joint | | 24 | 29 | 40 | 62.5 | 99 | |
| | 1992.08-1996.03 | | F | L/R | Saloon FWD XU10J2 | | GCO10022 | Outer Joint | 29W | 25 | 34 | 55.7 | 79 | 55 | I |
| | 1992.08-1996.03 | | F | L/R | Saloon FWD XU10J2 | | GCO10042 | Outer Joint | | 25 | 34 | 54.8 | 78.5 | 56 | I |
| | 1992.08-1997.05 | MT | F | R | Estate 4WD XU10J2 | | GDS45017 | Drive Shaft | 29W | 25 | 24 | 55.7 | 79 | 881 | |
| | 1992.08-1997.05 | MT | F | R | Estate 4WD XU10J2 | | GDS45070 | Drive Shaft | | 25 | 24 | 54.8 | 78.5 | 880 | |
| | 1992.08-1997.05 | MT | F | L/R | Estate 4WD XU10J2 | | GCO10043 | Outer Joint | | 25 | 34 | 54.8 | 78.5 | 56 | I |
| | 1992.08-1997.05 | MT | F | L/R | Estate 4WD XU10J2 | | GCO45001 | Outer Joint | 29T | 25 | 34 | 54.8 | 78.5 | 56 | I |
| | 1992.08-1997.05 | MT | F | L/R | Estate 4WD XU10J2 | | GCO45004 | Outer Joint | 90T | 25 | 34 | 55.7 | 79 | 55 | I |
| | 1992.08-1997.05 | | F | L | Estate 4WD XU10J2 | | GDS99025 | Drive Shaft | 29W | 25 | 24 | 55.7 | 79 | 597 | |
| | 1992.08-1997.05 | | F | R | Estate 4WD XU10J2 | | GDS10126 | Drive Shaft | 29W | 25 | 24 | 55.7 | 79 | 886 | |
| | 1992.08-1997.05 | | F | R | Estate 4WD XU10J2 | | GDS45153 | Drive Shaft | 90T | 25 | 24 | 55.7 | 79 | 880 | |
| | 1992.08-1997.05 | | F | | Estate 4WD XU10J2 | | GCO10022 | Outer Joint | 29W | 25 | 34 | 55.7 | 79 | 55 | I |

| | YEAR | TRANSM. | F/R | L/R | BODY STYLE & DRIVE TYPE & ENGINE | REMARKS | G-AP Ref. | PRODUCT | ABS | Technical Specifications A | B | C | H | L | P |
|---|---|---|---|---|---|---|---|---|---|---|---|---|---|---|---|
| **PEUGEOT** | | | | | | | | | | | | | | | |
| **405** | | | | | | | | | | | | | | | |
| 2.0 (89 kw) | 1992.08-1997.05 | | R | | Estate 4WD XU10J2 | | GCO10042 | Outer Joint | | 25 | 34 | 54.8 | 78.5 | 56 | I |
| | 1992.08-1997.05 | MT | F | L | Estate FWD XU10J2 | | GDS45008 | Drive Shaft | | 25 | 24 | 54.8 | 78.5 | 601.5 | |
| | 1992.08-1997.05 | MT | F | L | Estate FWD XU10J2 | | GDS45024 | Drive Shaft | 29W | 25 | 24 | 55.7 | 79 | 603.5 | |
| | 1992.08-1997.05 | MT | F | R | Estate FWD XU10J2 | | GDS45017 | Drive Shaft | 29W | 25 | 24 | 55.7 | 79 | 881 | |
| | 1992.08-1997.05 | MT | F | R | Estate FWD XU10J2 | | GDS45070 | Drive Shaft | | 25 | 24 | 54.8 | 78.5 | 880 | |
| | 1992.08-1997.05 | MT | F | R | Estate FWD XU10J2 | | GDS45153 | Drive Shaft | 90T | 25 | 24 | 55.7 | 79 | 880 | |
| | 1992.08-1997.05 | MT | F | L/R | Estate FWD XU10J2 | | GCO10043 | Outer Joint | | 25 | 34 | 54.8 | 78.5 | 56 | I |
| | 1992.08-1997.05 | MT | F | L/R | Estate FWD XU10J2 | | GCO45001 | Outer Joint | 29T | 25 | 34 | 54.8 | 78.5 | 56 | I |
| | 1992.08-1997.05 | MT | F | L/R | Estate FWD XU10J2 | | GCO45004 | Outer Joint | 90T | 25 | 34 | 55.7 | 79 | 55 | I |
| | 1992.08-1997.05 | MT | F | L | Estate FWD XU10J2 | | GCI10018 | Inner Joint | | 24 | 29 | 40 | 62.5 | 99 | |
| | 1992.08-1997.05 | | F | L | Estate FWD XU10J2 | | GDS99025 | Drive Shaft | 29W | 25 | 24 | 55.7 | 79 | 597 | |
| | 1992.08-1997.05 | | F | R | Estate FWD XU10J2 | | GDS10126 | Drive Shaft | 29W | 25 | 24 | 55.7 | 79 | 886 | |
| | 1992.08-1997.05 | | F | | Estate FWD XU10J2 | | GCO10022 | Outer Joint | 29W | 25 | 34 | 55.7 | 79 | 55 | I |
| | 1992.08-1997.05 | | F | | Estate FWD XU10J2 | | GCO10042 | Outer Joint | | 25 | 34 | 54.8 | 78.5 | 56 | I |
| **406** | | | | | | | | | | | | | | | |
| 1.6 (65 kw) | 1995.11-2004.05 | 5MT | F | L | Saloon FWD XU5JP | Date from:1999.03 | GDS45152 | Drive Shaft | 48T | 25 | 24 | 55.7 | 79 | 630 | |
| | 1995.11-2004.05 | 5MT | F | R | Saloon FWD XU5JP | Date from:1999.03 | GDS45020 | Drive Shaft | 48T | 25 | 24 | 58 | 79 | 905.5 | |
| | 1995.11-2004.05 | 5MT | F | R | Saloon FWD XU5JP | Date to:1999.03 | GDS45088 | Drive Shaft | 29T | 25 | 24 | 55.7 | 79 | 906.5 | |
| | 1995.11-2004.05 | 5MT | F | L/R | Saloon FWD XU5JP | Date to:1999.03 | GCO45005 | Outer Joint | 29T | 25 | 34 | 55.7 | 79 | 55 | I |
| | 1995.11-2004.05 | 5MT | F | L | Saloon FWD XU5JP | Date to:1999.03 | GCI45020 | Inner Joint | | 24 | 34 | 40 | 69 | 89 | |
| | 1995.11-2004.05 | 5MT | F | R | Saloon FWD XU5JP | Date from:1999.03 | GCI10004 | Inner Joint | | 24 | 34 | 29.8 | 348 | 99.5 | |
| | 1995.11-2004.05 | MT | F | L | Saloon FWD XU5JP | Date to:1999.03;Trans. code:BE3/BE4 | GDS45182 | Drive Shaft | | 25 | 24 | 55.7 | 79 | 630 | |
| | 1995.11-2004.05 | MT | F | R | Saloon FWD XU5JP | Date to:1999.03;Trans. code:BE3/BE4 | GDS45002 | Drive Shaft | 29T | 25 | 24 | 55.7 | 79 | 904.5 | |
| | 1995.11-2004.05 | MT | F | R | Saloon FWD XU5JP | Date to:1999.03;Trans. code:BE3/BE4 | GDS45150 | Drive Shaft | | 25 | 24 | 55.7 | 79 | 900 | |
| | 1995.11-2004.05 | MT | F | L/R | Saloon FWD XU5JP | Date from:1999.04 | GCO10024 | Outer Joint | 48T | 25 | 34 | 55.7 | 79 | 55 | I |
| | 1995.11-2004.05 | MT | F | L/R | Saloon FWD XU5JP | Date from:1999.03;Trans. code:BE3/BE4 | GCO10086 | Outer Joint | 48T | 25 | 34 | 55.7 | 79 | 55 | I |
| | 1995.11-2004.05 | | F | L | Saloon FWD XU5JP | Date To:1999.03 | GDS45151 | Drive Shaft | 29T | 25 | 24 | 55.7 | 79 | 630 | |
| | 1995.11-2004.05 | | F | | Saloon FWD XU5JP | Date to:1999.03 | GCO45027 | Outer Joint | | 25 | 34 | 58 | 79 | 55.5 | I |
| 1.8 (66 kw) | 1997.05-2004.05 | 5MT | F | L | Saloon FWD XU7JB | | GDS45152 | Drive Shaft | 48T | 25 | 24 | 55.7 | 79 | 630 | |
| | 1997.05-2004.05 | 5MT | F | R | Saloon FWD XU7JB | | GDS45020 | Drive Shaft | 48T | 25 | 24 | 58 | 79 | 905.5 | |
| | 1997.05-2004.05 | 5MT | F | R | Saloon FWD XU7JB | Date to:1999.03 | GDS45088 | Drive Shaft | 29T | 25 | 24 | 55.7 | 79 | 906.5 | |
| | 1997.05-2004.05 | 5MT | F | L | Saloon FWD XU7JB | | GCI45020 | Inner Joint | | 24 | 34 | 40 | 69 | 89 | |
| | 1997.05-2004.05 | 5MT | F | R | Saloon FWD XU7JB | | GCI10004 | Inner Joint | | 24 | 34 | 29.8 | 348 | 99.5 | |
| | 1997.05-2004.05 | MT | F | L | Saloon FWD XU7JB | Date to:1999.03;Trans. code:BE3/BE4 | GDS45182 | Drive Shaft | | 25 | 24 | 55.7 | 79 | 630 | |
| | 1997.05-2004.05 | MT | F | R | Saloon FWD XU7JB | Date to:1999.03;Trans. code:BE3/BE4 | GDS45002 | Drive Shaft | 29T | 25 | 24 | 55.7 | 79 | 904.5 | |
| | 1997.05-2004.05 | MT | F | R | Saloon FWD XU7JB | Date to:1999.03;Trans. code:BE3/BE4 | GDS45150 | Drive Shaft | | 25 | 24 | 55.7 | 79 | 900 | |
| | 1997.05-2004.05 | MT | F | L/R | Saloon FWD XU7JB | Date from:1999.01;Trans. code:BE3R/BE4R | GCO10024 | Outer Joint | 48T | 25 | 34 | 55.7 | 79 | 55 | I |
| | 1997.05-2004.05 | MT | F | L/R | Saloon FWD XU7JB | Date from:1999.03;Trans. code:BE3/BE4 | GCO10086 | Outer Joint | 48T | 25 | 34 | 55.7 | 79 | 55 | I |
| | 1997.05-2004.05 | MT | F | L/R | Saloon FWD XU7JB | | GCO45035 | Outer Joint | 48T | 25 | 34 | 58 | 79 | 55.5 | I |
| | 1997.05-2004.05 | | F | L | Saloon FWD XU7JB | | GDS45151 | Drive Shaft | 29T | 25 | 24 | 55.7 | 79 | 630 | |
| | 1997.05-2004.05 | | F | L | Saloon FWD XU7JB | | GCO45005 | Outer Joint | 29T | 25 | 34 | 55.7 | 79 | 55 | I |
| | 1997.05-2004.05 | | F | L/R | Saloon FWD XU7JB | | GCO10042 | Outer Joint | | 25 | 34 | 54.8 | 78.5 | 56 | I |
| | 1997.05-2004.05 | | F | | Saloon FWD XU7JB | | GCO45003 | Outer Joint | 29T | 25 | 34 | 58 | 79 | 55.5 | I |
| | 1997.05-2004.05 | | F | | Saloon FWD XU7JB | Date to:1999.03 | GCO45027 | Outer Joint | | 25 | 34 | 58 | 79 | 55.5 | I |
| | 1997.08-2004.10 | 5MT | F | L | Estate FWD XU7JB | | GDS45152 | Drive Shaft | 48T | 25 | 24 | 55.7 | 79 | 630 | |
| | 1997.08-2004.10 | 5MT | F | R | Estate FWD XU7JB | | GDS45020 | Drive Shaft | 48T | 25 | 24 | 58 | 79 | 905.5 | |
| | 1997.08-2004.10 | 5MT | F | R | Estate FWD XU7JB | Date to:1999.03 | GDS45088 | Drive Shaft | 29T | 25 | 24 | 55.7 | 79 | 906.5 | |
| | 1997.08-2004.10 | 5MT | F | L | Estate FWD XU7JB | | GCI45020 | Inner Joint | | 24 | 34 | 40 | 69 | 89 | |
| | 1997.08-2004.10 | 5MT | F | R | Estate FWD XU7JB | | GCI10004 | Inner Joint | | 24 | 34 | 29.8 | 348 | 99.5 | |
| | 1997.08-2004.10 | MT | F | L | Estate FWD XU7JB | Date from:1997.08;Date to:1999.03;Trans. code:BE3/BE4 | GDS45182 | Drive Shaft | | 25 | 24 | 55.7 | 79 | 630 | |
| | 1997.08-2004.10 | MT | F | R | Estate FWD XU7JB | Date from:1997.08;Date to:1999.03;Trans. code:BE3/BE4 | GDS45002 | Drive Shaft | 29T | 25 | 24 | 55.7 | 79 | 904.5 | |
| | 1997.08-2004.10 | MT | F | R | Estate FWD XU7JB | Date from:1997.08;Date to:1999.03;Trans. code:BE3/BE4 | GDS45150 | Drive Shaft | | 25 | 24 | 55.7 | 79 | 900 | |
| | 1997.08-2004.10 | MT | F | L/R | Estate FWD XU7JB | Date from:1999.03;Trans. code:BE3/BE4 | GCO10086 | Outer Joint | 48T | 25 | 34 | 55.7 | 79 | 55 | I |
| | 1997.08-2004.10 | | F | L | Estate FWD XU7JB | | GDS45151 | Drive Shaft | 29T | 25 | 24 | 55.7 | 79 | 630 | |
| | 1997.08-2004.10 | | F | L | Estate FWD XU7JB | | GCO45005 | Outer Joint | 29T | 25 | 34 | 55.7 | 79 | 55 | I |
| | 1997.08-2004.10 | | F | | Estate FWD XU7JB | Date to:1999.03 | GCO45027 | Outer Joint | | 25 | 34 | 58 | 79 | 55.5 | I |
| 1.8 (74 kw) | 1995.08-1999.03 | 5MT | F | R | Saloon FWD XU7JP | | GDS45088 | Drive Shaft | 29T | 25 | 24 | 55.7 | 79 | 906.5 | |
| | 1995.08-1999.03 | 5MT | F | L | Saloon FWD XU7JP | | GCO45005 | Outer Joint | 29T | 25 | 34 | 55.7 | 79 | 55 | I |
| | 1995.08-1999.03 | 5MT | F | L | Saloon FWD XU7JP | | GCI45020 | Inner Joint | | 24 | 34 | 40 | 69 | 89 | |
| | 1995.08-1999.03 | | F | L | Saloon FWD XU7JP | | GDS45151 | Drive Shaft | 29T | 25 | 24 | 55.7 | 79 | 630 | |
| | 1995.08-1999.03 | | F | L | Saloon FWD XU7JP | | GDS45182 | Drive Shaft | | 25 | 24 | 55.7 | 79 | 630 | |
| | 1995.08-1999.03 | | F | R | Saloon FWD XU7JP | | GDS45002 | Drive Shaft | 29T | 25 | 24 | 55.7 | 79 | 904.5 | |
| | 1995.08-1999.03 | | F | R | Saloon FWD XU7JP | | GDS45150 | Drive Shaft | | 25 | 24 | 55.7 | 79 | 900 | |
| | 1996.10-1999.03 | 5MT | F | R | Estate FWD XU7JP | | GDS45088 | Drive Shaft | 29T | 25 | 24 | 55.7 | 79 | 906.5 | |
| | 1996.10-1999.03 | 5MT | F | L | Estate FWD XU7JP | | GCO45005 | Outer Joint | 29T | 25 | 34 | 55.7 | 79 | 55 | I |

| | YEAR | TRANSM. | F/R | L/R | BODY STYLE & DRIVE TYPE & ENGINE | REMARKS | G-AP Ref. | PRODUCT | ABS | Technical Specifications A | B | C | H | L | P |
|---|---|---|---|---|---|---|---|---|---|---|---|---|---|---|---|
| **PEUGEOT** | | | | | | | | | | | | | | | |
| **406** | | | | | | | | | | | | | | | |
| 1.8 (74 kw) | 1996.10-1999.03 | 5MT | F | L | Estate FWD XU7JP | | GCI45020 | Inner Joint | | 24 | 34 | 40 | 69 | 89 | |
| | 1996.10-1999.03 | | F | L | Estate FWD XU7JP | | GDS45151 | Drive Shaft | 29T | 25 | 24 | 55.7 | 79 | 630 | |
| | 1996.10-1999.03 | | F | L | Estate FWD XU7JP | | GDS45182 | Drive Shaft | | 25 | 24 | 55.7 | 79 | 630 | |
| | 1996.10-1999.03 | | F | R | Estate FWD XU7JP | | GDS45002 | Drive Shaft | 29T | 25 | 24 | 55.7 | 79 | 904.5 | |
| | 1996.10-1999.03 | | F | R | Estate FWD XU7JP | | GDS45150 | Drive Shaft | | 25 | 24 | 55.7 | 79 | 900 | |
| 1.8 (81 kw) | 1995.11-2000.10 | AT | F | R | Saloon FWD XU7JP4 | Date from:2000.05 | GDS56402 | Drive Shaft | 48T | 25 | 26 | 58.5 | 79 | 814 | |
| | 1995.11-2000.10 | AT | F | R | Saloon FWD XU7JP4 | Date from:2000.05 | GCO83282 | Outer Joint | 48T | 25 | 34 | 58.5 | 79 | 55 | I |
| | 1995.11-2000.10 | MT | F | L | Saloon FWD XU7JP4 | Date to:1999.03 | GDS45151 | Drive Shaft | 29T | 25 | 24 | 55.7 | 79 | 630 | |
| | 1995.11-2000.10 | MT | F | L | Saloon FWD XU7JP4 | Date from:1999.04 | GDS45152 | Drive Shaft | 48T | 25 | 24 | 55.7 | 79 | 630 | |
| | 1995.11-2000.10 | MT | F | L | Saloon FWD XU7JP4 | Date to:1999.03 | GDS45182 | Drive Shaft | | 25 | 24 | 55.7 | 79 | 630 | |
| | 1995.11-2000.10 | MT | F | R | Saloon FWD XU7JP4 | Date to:1999.03;Inner teeth of wheel side:23 | GDS45002 | Drive Shaft | 29T | 25 | 24 | 55.7 | 79 | 904.5 | |
| | 1995.11-2000.10 | MT | F | R | Saloon FWD XU7JP4 | Date from:1999.04 | GDS45020 | Drive Shaft | 48T | 25 | 24 | 58 | 79 | 905.5 | |
| | 1995.11-2000.10 | MT | F | R | Saloon FWD XU7JP4 | Date to:1999.03;Inner teeth of wheel side:34 | GDS45088 | Drive Shaft | 29T | 25 | 24 | 55.7 | 79 | 906.5 | |
| | 1995.11-2000.10 | MT | F | R | Saloon FWD XU7JP4 | Date to:1999.03 | GDS45150 | Drive Shaft | | 25 | 24 | 55.7 | 79 | 900 | |
| | 1995.11-2000.10 | MT | F | L/R | Saloon FWD XU7JP4 | Date to:1999.03 | GCO45005 | Outer Joint | 29T | 25 | 34 | 55.7 | 79 | 55 | I |
| | 1995.11-2000.10 | MT | F | L/R | Saloon FWD XU7JP4 | Date to:1999.03 | GCO45027 | Outer Joint | | 25 | 34 | 58 | 79 | 55.5 | I |
| | 1995.11-2000.10 | MT | F | L/R | Saloon FWD XU7JP4 | Date from:1999.04 | GCO45035 | Outer Joint | 48T | 25 | 34 | 58 | 79 | 55.5 | I |
| | 1995.11-2000.10 | MT | F | L | Saloon FWD XU7JP4 | Date to:1999.03 | GCI45020 | Inner Joint | | 24 | 34 | 40 | 69 | 89 | |
| | 1995.11-2000.10 | MT | F | R | Saloon FWD XU7JP4 | Date from:1999.04 | GCI10004 | Inner Joint | | 24 | 34 | 29.8 | 348 | 99.5 | |
| | 1999.04-2003.05 | AT | F | L | Saloon FWD XU7JP4 | | GDS10028 | Drive Shaft | 48T | 21 | 23 | 50.5 | 76.5 | 693.5 | |
| | 1999.04-2003.05 | AT | F | R | Saloon FWD XU7JP4 | Date from:2000.05 | GDS56402 | Drive Shaft | 48T | 25 | 26 | 58.5 | 79 | 814 | |
| | 1999.04-2003.05 | AT | F | R | Saloon FWD XU7JP4 | Date from:2000.05 | GCO83282 | Outer Joint | 48T | 25 | 34 | 58.5 | 79 | 55 | I |
| | 1999.04-2003.05 | MT | F | L | Saloon FWD XU7JP4 | | GDS45152 | Drive Shaft | 48T | 25 | 24 | 55.7 | 79 | 630 | |
| | 1999.04-2003.05 | MT | F | R | Saloon FWD XU7JP4 | | GDS45020 | Drive Shaft | 48T | 25 | 24 | 58 | 79 | 905.5 | |
| | 1999.04-2003.05 | MT | F | R | Saloon FWD XU7JP4 | | GCO45035 | Outer Joint | 48T | 25 | 34 | 58 | 79 | 55.5 | I |
| | 1999.04-2003.05 | MT | F | R | Saloon FWD XU7JP4 | | GCI10004 | Inner Joint | | 24 | 34 | 29.8 | 348 | 99.5 | |
| 1.8 (82 kw) | 1996.10-2000.10 | 4AT/5MT | F | L | Estate FWD XU7JP4 | | GCI45020 | Inner Joint | | 24 | 34 | 40 | 69 | 89 | |
| | 1996.10-2000.10 | AT | F | R | Estate FWD XU7JP4 | Date from:2000.05 | GDS56402 | Drive Shaft | 48T | 25 | 26 | 58.5 | 79 | 814 | |
| | 1996.10-2000.10 | AT | F | R | Estate FWD XU7JP4 | Date from:2000.05 | GCO83282 | Outer Joint | 48T | 25 | 34 | 58.5 | 79 | 55 | I |
| | 1996.10-2000.10 | MT | F | L | Estate FWD XU7JP4 | Date from:1999.03 | GDS45152 | Drive Shaft | 48T | 25 | 24 | 55.7 | 79 | 630 | |
| | 1996.10-2000.10 | MT | F | L | Estate FWD XU7JP4 | Date to:1999.03;Trans. code:BE3/BE4 | GDS45182 | Drive Shaft | | 25 | 24 | 55.7 | 79 | 630 | |
| | 1996.10-2000.10 | MT | F | R | Estate FWD XU7JP4 | Date to:1999.03;Trans. code:BE3/BE4 | GDS45002 | Drive Shaft | 29T | 25 | 24 | 55.7 | 79 | 904.5 | |
| | 1996.10-2000.10 | MT | F | R | Estate FWD XU7JP4 | Date from:1999.03 | GDS45020 | Drive Shaft | 48T | 25 | 24 | 58 | 79 | 905.5 | |
| | 1996.10-2000.10 | MT | F | R | Estate FWD XU7JP4 | Date to:1999.03 | GDS45088 | Drive Shaft | 29T | 25 | 24 | 55.7 | 79 | 906.5 | |
| | 1996.10-2000.10 | MT | F | R | Estate FWD XU7JP4 | Date to:1999.03;Trans. code:BE3/BE4 | GDS45150 | Drive Shaft | | 25 | 24 | 55.7 | 79 | 900 | |
| | 1996.10-2000.10 | MT | F | L | Estate FWD XU7JP4 | Date to:1999.03 | GCO45005 | Outer Joint | 29T | 25 | 34 | 55.7 | 79 | 55 | I |
| | 1996.10-2000.10 | MT | F | L/R | Estate FWD XU7JP4 | Date from:1999.04,Trans. code:BE3/BE4 | GCO10086 | Outer Joint | 48T | 25 | 34 | 55.7 | 79 | 55 | I |
| | 1996.10-2000.10 | MT | F | R | Estate FWD XU7JP4 | Date from:1999.03 | GCI10004 | Inner Joint | | 24 | 34 | 29.8 | 348 | 99.5 | |
| | 1996.10-2000.10 | | F | L | Estate FWD XU7JP4 | | GDS45151 | Drive Shaft | 29T | 25 | 24 | 55.7 | 79 | 630 | |
| 1.8 (85 kw) | 2000.09-2004.05 | 4AT/5MT | F | L | Saloon FWD EW7J4 | | GDS45152 | Drive Shaft | 48T | 25 | 24 | 55.7 | 79 | 630 | |
| | 2000.09-2004.05 | 4AT/5MT | F | R | Saloon FWD EW7J4 | | GDS45020 | Drive Shaft | 48T | 25 | 24 | 58 | 79 | 905.5 | |
| | 2000.09-2004.05 | 4AT/5MT | F | R | Saloon FWD EW7J4 | | GCO45035 | Outer Joint | 48T | 25 | 34 | 58 | 79 | 55.5 | I |
| | 2000.09-2004.05 | 4AT/5MT | F | R | Saloon FWD EW7J4 | | GCI10004 | Inner Joint | | 24 | 34 | 29.8 | 348 | 99.5 | |
| | 2000.09-2004.05 | AT | F | L | Saloon FWD EW7J4 | | GDS10028 | Drive Shaft | 48T | 21 | 23 | 50.5 | 76.5 | 693.5 | |
| | 2000.09-2004.05 | AT | F | R | Saloon FWD EW7J4 | | GDS56402 | Drive Shaft | 48T | 25 | 26 | 58.5 | 79 | 814 | |
| | 2000.09-2004.05 | AT | F | R | Saloon FWD EW7J4 | | GCO83282 | Outer Joint | 48T | 25 | 34 | 58.5 | 79 | 55 | I |
| | 2000.09-2004.05 | MT | F | L | Saloon FWD EW7J4 | | GDS45152 | Drive Shaft | 48T | 25 | 24 | 55.7 | 79 | 630 | |
| | 2000.09-2004.05 | MT | F | R | Saloon FWD EW7J4 | | GDS45020 | Drive Shaft | 48T | 25 | 24 | 58 | 79 | 905.5 | |
| | 2000.09-2004.05 | MT | F | L/R | Saloon FWD EW7J4 | | GCO45035 | Outer Joint | 48T | 25 | 34 | 58 | 79 | 55.5 | I |
| | 2000.09-2004.05 | MT | F | R | Saloon FWD EW7J4 | | GCI10004 | Inner Joint | | 24 | 34 | 29.8 | 348 | 99.5 | |
| | 2000.09-2004.10 | AT | F | L | Estate FWD EW7J4 | | GDS10028 | Drive Shaft | 48T | 21 | 23 | 50.5 | 76.5 | 693.5 | |
| | 2000.09-2004.10 | AT | F | R | Estate FWD EW7J4 | | GDS56402 | Drive Shaft | 48T | 25 | 26 | 58.5 | 79 | 814 | |
| | 2000.09-2004.10 | AT | F | R | Estate FWD EW7J4 | | GCO83282 | Outer Joint | 48T | 25 | 34 | 58.5 | 79 | 55 | I |
| | 2000.09-2004.10 | MT | F | L | Estate FWD EW7J4 | | GDS45152 | Drive Shaft | 48T | 25 | 24 | 55.7 | 79 | 630 | |
| | 2000.09-2004.10 | MT | F | R | Estate FWD EW7J4 | | GDS45020 | Drive Shaft | 48T | 25 | 24 | 58 | 79 | 905.5 | |
| | 2000.09-2004.10 | MT | F | L/R | Estate FWD EW7J4 | | GCO45035 | Outer Joint | 48T | 25 | 34 | 58 | 79 | 55.5 | I |
| | 2000.09-2004.10 | MT | F | R | Estate FWD EW7J4 | | GCI10004 | Inner Joint | | 24 | 34 | 29.8 | 348 | 99.5 | |
| | 2000.10-2004.02 | 5MT | F | L | Estate FWD EW7J4 | | GDS45152 | Drive Shaft | 48T | 25 | 24 | 55.7 | 79 | 630 | |
| | 2000.10-2004.02 | 5MT | F | R | Estate FWD EW7J4 | | GDS45020 | Drive Shaft | 48T | 25 | 24 | 58 | 79 | 905.5 | |
| | 2000.10-2004.02 | 5MT | F | R | Estate FWD EW7J4 | | GCO45035 | Outer Joint | 48T | 25 | 34 | 58 | 79 | 55.5 | I |
| | 2000.10-2004.02 | 5MT | F | R | Estate FWD EW7J4 | | GCI10004 | Inner Joint | | 24 | 34 | 29.8 | 348 | 99.5 | |
| 1.9 (55 kw) | 1996.10-1999.03 | 5MT | F | R | Estate FWD XUD9SD | | GDS45088 | Drive Shaft | 29T | 25 | 24 | 55.7 | 79 | 906.5 | |
| | 1996.10-1999.03 | 5MT | F | L | Estate FWD XUD9SD | | GCI45020 | Inner Joint | | 24 | 34 | 40 | 69 | 89 | |
| | 1996.10-1999.03 | MT | F | L | Estate FWD XUD9SD | Date to:1999.03;Trans. code:BE3/BE4 | GDS45152 | Drive Shaft | 48T | 25 | 24 | 55.7 | 79 | 630 | |
| | 1996.10-1999.03 | MT | F | L | Estate FWD XUD9SD | Date to:1999.03;Trans. code:BE3/BE4 | GDS45182 | Drive Shaft | | 25 | 24 | 55.7 | 79 | 630 | |

| | YEAR | TRANSM. | F/R | L/R | BODY STYLE & DRIVE TYPE & ENGINE | REMARKS | G-AP Ref. | PRODUCT | ABS | Technical Specifications A | B | C | H | L | P |
|---|---|---|---|---|---|---|---|---|---|---|---|---|---|---|---|
| **PEUGEOT 406** | | | | | | | | | | | | | | | |
| 1.9 (55 kw) | 1996.10-1999.03 | MT | F | R | Estate FWD XUD9SD | Date to:1999.03;Trans. code:BE3/BE4 | GDS45002 | Drive Shaft | 29T | 25 | 24 | 55.7 | 79 | 904.5 | |
| | 1996.10-1999.03 | MT | F | R | Estate FWD XUD9SD | Date to:1999.03;Trans. code:BE3/BE4 | GDS45020 | Drive Shaft | 48T | 25 | 24 | 58 | 79 | 905.5 | |
| | 1996.10-1999.03 | MT | F | R | Estate FWD XUD9SD | Date to:1999.03;Trans. code:BE3/BE4 | GDS45150 | Drive Shaft | | 25 | 24 | 55.7 | 79 | 900 | |
| | 1996.10-1999.03 | MT | F | L/R | Estate FWD XUD9SD | Date to:1999.03;Trans. code:BE3/BE4 | GCO10086 | Outer Joint | 48T | 25 | 34 | 55.7 | 79 | 55 | I |
| | 1996.10-1999.03 | | F | L | Estate FWD XUD9SD | | GDS45151 | Drive Shaft | 29T | 25 | 24 | 55.7 | 79 | 630 | |
| | 1996.10-1999.03 | | F | L | Estate FWD XUD9SD | | GCO45005 | Outer Joint | 29T | 25 | 34 | 55.7 | 79 | 55 | I |
| | 1996.10-1999.03 | | F | L/R | Estate FWD XUD9SD | | GCO10042 | Outer Joint | | 25 | 34 | 54.8 | 78.5 | 56 | I |
| | 1996.10-1999.03 | | F | | Estate FWD XUD9SD | Date to:1999.03 | GCO45027 | Outer Joint | | 25 | 34 | 58 | 79 | 55.5 | I |
| | 1996.10-1999.03 | 5MT | F | L | Saloon FWD XUD9SD | | GDS45151 | Drive Shaft | 29T | 25 | 24 | 55.7 | 79 | 630 | |
| | 1996.10-1999.03 | 5MT | F | R | Saloon FWD XUD9SD | | GDS45088 | Drive Shaft | 29T | 25 | 24 | 55.7 | 79 | 906.5 | |
| | 1996.10-1999.03 | 5MT | F | L | Saloon FWD XUD9SD | | GCO45005 | Outer Joint | 29T | 25 | 34 | 55.7 | 79 | 55 | I |
| | 1996.10-1999.03 | 5MT | F | L | Saloon FWD XUD9SD | | GCI45020 | Inner Joint | | 24 | 34 | 40 | 69 | 89 | |
| | 1996.10-1999.03 | MT | F | L | Saloon FWD XUD9SD | Date to:1999.03;Trans. code:BE3/BE4 | GDS45152 | Drive Shaft | 48T | 25 | 24 | 55.7 | 79 | 630 | |
| | 1996.10-1999.03 | MT | F | L | Saloon FWD XUD9SD | Date to:1999.03;Trans. code:BE3/BE4 | GDS45182 | Drive Shaft | | 25 | 24 | 55.7 | 79 | 630 | |
| | 1996.10-1999.03 | MT | F | R | Saloon FWD XUD9SD | Date to:1999.03;Trans. code:BE3/BE4 | GDS45020 | Drive Shaft | 48T | 25 | 24 | 58 | 79 | 905.5 | |
| | 1996.10-1999.03 | MT | F | R | Saloon FWD XUD9SD | Date to:1999.03;Trans. code:BE3/BE4 | GDS45150 | Drive Shaft | | 25 | 24 | 55.7 | 79 | 900 | |
| | 1996.10-1999.03 | MT | F | L/R | Saloon FWD XUD9SD | Date to:1999.03;Trans. code:BE3/BE4 | GCO10086 | Outer Joint | 48T | 25 | 34 | 55.7 | 79 | 55 | I |
| | 1996.10-1999.03 | | F | L/R | Saloon FWD XUD9SD | | GCO10042 | Outer Joint | | 25 | 34 | 54.8 | 78.5 | 56 | I |
| | 1996.10-1999.03 | | F | | Saloon FWD XUD9SD | Date to:1999.03 | GCO45027 | Outer Joint | | 25 | 34 | 58 | 79 | 55.5 | I |
| 1.9 (66 kw) | 1996.01-1999.03 | 5MT | F | L | Saloon FWD XUD9TE | | GDS45007 | Drive Shaft | 29T | 25 | 24 | 55.7 | 79 | 621 | |
| | 1996.01-1999.03 | 5MT | F | R | Saloon FWD XUD9TE | | GDS45088 | Drive Shaft | 29T | 25 | 24 | 55.7 | 79 | 906.5 | |
| | 1996.01-1999.03 | MT | F | L | Saloon FWD XUD9TE | Date to:1999.03;Trans. code:BE3R/BE4R | GDS45026 | Drive Shaft | 48T | 25 | 24 | 55.7 | 79 | 620 | |
| | 1996.01-1999.03 | MT | F | L | Saloon FWD XUD9TE | Date to:1999.03 | GDS45182 | Drive Shaft | | 25 | 24 | 55.7 | 79 | 630 | |
| | 1996.01-1999.03 | MT | F | R | Saloon FWD XUD9TE | Date to:1999.03;Trans. code:BE3R/BE4R | GDS45002 | Drive Shaft | 29T | 25 | 24 | 55.7 | 79 | 904.5 | |
| | 1996.01-1999.03 | MT | F | R | Saloon FWD XUD9TE | Date to:1999.03;Trans. code:BE3R/BE4R | GDS45020 | Drive Shaft | 48T | 25 | 24 | 58 | 79 | 905.5 | |
| | 1996.01-1999.03 | MT | F | R | Saloon FWD XUD9TE | Date to:1999.03;Trans. code:BE3R/BE4R | GDS45150 | Drive Shaft | | 25 | 24 | 55.7 | 79 | 900 | |
| | 1996.01-1999.03 | MT | F | L/R | Saloon FWD XUD9TE | Date from:1999.01;Trans. code:BE3R/BE4R | GCO10024 | Outer Joint | 48T | 25 | 34 | 55.7 | 79 | 55 | I |
| | 1996.01-1999.03 | MT | F | L/R | Saloon FWD XUD9TE | Date to:1999.03;Trans. code:BE3R/BE4R | GCO10086 | Outer Joint | 48T | 25 | 34 | 55.7 | 79 | 55 | I |
| | 1996.01-1999.03 | MT | F | L/R | Saloon FWD XUD9TE | | GCO45002 | Outer Joint | 29T | 25 | 34 | 58.5 | 78.5 | 55 | I |
| | 1996.01-1999.03 | MT | F | L/R | Saloon FWD XUD9TE | Date to:1999.12;Trans. code:BE3R/BE4R | GCO45005 | Outer Joint | 29T | 25 | 34 | 55.7 | 79 | 55 | I |
| | 1996.01-1999.03 | MT | F | L | Saloon FWD XUD9TE | Date to:1999.03 | GCI10093 | Inner Joint | | 24 | 22 | 40 | 62 | 90 | |
| | 1996.01-1999.03 | | F | L | Saloon FWD XUD9TE | Date To:1999.03 | GDS45151 | Drive Shaft | 29T | 25 | 24 | 55.7 | 79 | 630 | |
| | 1996.01-1999.03 | | F | L | Saloon FWD XUD9TE | | GCO45003 | Outer Joint | 29T | 25 | 34 | 58 | 79 | 55.5 | I |
| | 1996.01-1999.03 | | F | | Saloon FWD XUD9TE | Date to:1999.03 | GCO45027 | Outer Joint | | 25 | 34 | 58 | 79 | 55.5 | I |
| | 1996.10-1999.03 | 5MT | F | L | Estate FWD XUD9TE | | GDS45007 | Drive Shaft | 29T | 25 | 24 | 55.7 | 79 | 621 | |
| | 1996.10-1999.03 | 5MT | F | R | Estate FWD XUD9TE | | GDS45088 | Drive Shaft | 29T | 25 | 24 | 55.7 | 79 | 906.5 | |
| | 1996.10-1999.03 | MT | F | L | Estate FWD XUD9TE | Date to:1999.03;Trans. code:BE3R/BE4R | GDS45026 | Drive Shaft | 48T | 25 | 24 | 55.7 | 79 | 620 | |
| | 1996.10-1999.03 | MT | F | L | Estate FWD XUD9TE | Date to:1999.03 | GDS45182 | Drive Shaft | | 25 | 24 | 55.7 | 79 | 630 | |
| | 1996.10-1999.03 | MT | F | R | Estate FWD XUD9TE | Date to:1999.03;Trans. code:BE3R/BE4R | GDS45020 | Drive Shaft | 48T | 25 | 24 | 58 | 79 | 905.5 | |
| | 1996.10-1999.03 | MT | F | R | Estate FWD XUD9TE | Date to:1999.03;Trans. code:BE3R/BE4R | GDS45150 | Drive Shaft | | 25 | 24 | 55.7 | 79 | 900 | |
| | 1996.10-1999.03 | MT | F | L/R | Estate FWD XUD9TE | Trans. code:BE3R/BE4R | GCO10024 | Outer Joint | 48T | 25 | 34 | 55.7 | 79 | 55 | I |
| | 1996.10-1999.03 | MT | F | L/R | Estate FWD XUD9TE | Date to:1999.03;Trans. code:BE3R/BE4R | GCO10086 | Outer Joint | 48T | 25 | 34 | 55.7 | 79 | 55 | I |
| | 1996.10-1999.03 | MT | F | L/R | Estate FWD XUD9TE | | GCO45002 | Outer Joint | 29T | 25 | 34 | 58.5 | 78.5 | 55 | I |
| | 1996.10-1999.03 | MT | F | L/R | Estate FWD XUD9TE | Date to:1999.12;Trans. code:BE3R/BE4R | GCO45005 | Outer Joint | 29T | 25 | 34 | 55.7 | 79 | 55 | I |
| | 1996.10-1999.03 | MT | F | L | Estate FWD XUD9TE | Date to:1999.03 | GCI10093 | Inner Joint | | 24 | 22 | 40 | 62 | 90 | |
| | 1996.10-1999.03 | | F | L | Estate FWD XUD9TE | Date To:1999.03 | GDS45151 | Drive Shaft | 29T | 25 | 24 | 55.7 | 79 | 630 | |
| | 1996.10-1999.03 | | F | L | Estate FWD XUD9TE | | GCO45003 | Outer Joint | 29T | 25 | 34 | 58 | 79 | 55.5 | I |
| | 1996.10-1999.03 | | F | L/R | Estate FWD XUD9TE | | GCO10042 | Outer Joint | | 25 | 34 | 54.8 | 78.5 | 56 | I |
| | 1996.10-1999.03 | | F | | Estate FWD XUD9TE | Date to:1999.03 | GCO45027 | Outer Joint | | 25 | 34 | 58 | 79 | 55.5 | I |
| 1.9 (68 kw) | 1996.01-1999.03 | 5MT | F | L | Saloon FWD XUD9TE | | GDS45007 | Drive Shaft | 29T | 25 | 24 | 55.7 | 79 | 621 | |
| | 1996.01-1999.03 | 5MT | F | R | Saloon FWD XUD9TE | | GDS45088 | Drive Shaft | 29T | 25 | 24 | 55.7 | 79 | 906.5 | |
| | 1996.01-1999.03 | MT | F | R | Saloon FWD XUD9TE | Date to:1999.03;Trans. code:BE3R/BE4R | GDS45150 | Drive Shaft | | 25 | 24 | 55.7 | 79 | 900 | |
| | 1996.01-1999.03 | MT | F | L/R | Saloon FWD XUD9TE | Date from:1999.01;Trans. code:BE3R/BE4R | GCO10024 | Outer Joint | 48T | 25 | 34 | 55.7 | 79 | 55 | I |
| | 1996.01-1999.03 | MT | F | L/R | Saloon FWD XUD9TE | Date to:1999.03;Trans. code:BE3R/BE4R | GCO10086 | Outer Joint | 48T | 25 | 34 | 55.7 | 79 | 55 | I |
| | 1996.01-1999.03 | MT | F | L/R | Saloon FWD XUD9TE | | GCO45002 | Outer Joint | 29T | 25 | 34 | 58.5 | 78.5 | 55 | I |
| | 1996.01-1999.03 | MT | F | L/R | Saloon FWD XUD9TE | Date to:1999.12;Trans. code:BE3R/BE4R | GCO45005 | Outer Joint | 29T | 25 | 34 | 55.7 | 79 | 55 | I |
| | 1996.01-1999.03 | MT | F | L | Saloon FWD XUD9TE | Date to:1999.03 | GCI10093 | Inner Joint | | 24 | 22 | 40 | 62 | 90 | |
| | 1996.01-1999.03 | | F | L | Saloon FWD XUD9TE | Date To:1999.03 | GDS45151 | Drive Shaft | 29T | 25 | 24 | 55.7 | 79 | 630 | |
| | 1996.01-1999.03 | | F | L | Saloon FWD XUD9TE | | GCO45003 | Outer Joint | 29T | 25 | 34 | 58 | 79 | 55.5 | I |
| | 1996.01-1999.03 | | F | L/R | Saloon FWD XUD9TE | | GCO10042 | Outer Joint | | 25 | 34 | 54.8 | 78.5 | 56 | I |
| | 1996.01-1999.03 | | F | | Saloon FWD XUD9TE | Date to:1999.03 | GCO45027 | Outer Joint | | 25 | 34 | 58 | 79 | 55.5 | I |
| 1.9 (69 kw) | 1995.08-1997.10 | 5MT | F | L | Saloon FWD XUD9TE | | GDS45007 | Drive Shaft | 29T | 25 | 24 | 55.7 | 79 | 621 | |
| | 1995.08-1997.10 | 5MT | F | R | Saloon FWD XUD9TE | | GDS45088 | Drive Shaft | 29T | 25 | 24 | 55.7 | 79 | 906.5 | |
| | 1995.08-1997.10 | 5MT | F | L | Saloon FWD XUD9TE | | GCI10093 | Inner Joint | | 24 | 22 | 40 | 62 | 90 | |
| | 1995.08-1997.10 | | F | R | Saloon FWD XUD9TE | | GDS45002 | Drive Shaft | 29T | 25 | 24 | 55.7 | 79 | 904.5 | |

| | YEAR | TRANSM. | F/R | L/R | BODY STYLE & DRIVE TYPE & ENGINE | REMARKS | G-AP Ref. | PRODUCT | ABS | Technical Specifications A | B | C | H | L | P |
|---|---|---|---|---|---|---|---|---|---|---|---|---|---|---|---|
| **PEUGEOT** | | | | | | | | | | | | | | | |
| **406** | | | | | | | | | | | | | | | |
| 1.9 (69 kw) | 1995.08-1997.10 | | F | R | Saloon FWD XUD9TE | | GDS45150 | Drive Shaft | | 25 | 24 | 55.7 | 79 | 900 | |
| | 1995.08-1997.10 | | F | L | Saloon FWD XUD9TE | | GCO45003 | Outer Joint | 29T | 25 | 34 | 58 | 79 | 55.5 | I |
| 2.0 (66 kw) | 1999.04-2004.10 | 5MT | F | L | Estate FWD DW10TD | | GDS45026 | Drive Shaft | 48T | 25 | 24 | 55.7 | 79 | 620 | |
| | 1999.04-2004.10 | 5MT | F | R | Estate FWD DW10TD | | GDS45020 | Drive Shaft | 48T | 25 | 24 | 58 | 79 | 905.5 | |
| | 1999.04-2004.10 | 5MT | F | L | Estate FWD DW10TD | | GCI10020 | Inner Joint | | 24 | 34 | 40 | 62.5 | 99 | |
| | 1999.04-2004.10 | 5MT | F | R | Estate FWD DW10TD | | GCI10004 | Inner Joint | | 24 | 34 | 29.8 | 348 | 99.5 | |
| | 1999.04-2004.10 | MT | F | L/R | Estate FWD DW10TD | Trans. code:BE3R/BE4R | GCO10024 | Outer Joint | 48T | 25 | 34 | 55.7 | 79 | 55 | I |
| | 1999.04-2004.10 | MT | F | L/R | Estate FWD DW10TD | Trans. code:BE3R/BE4R | GCO10086 | Outer Joint | 48T | 25 | 34 | 55.7 | 79 | 55 | I |
| | 1999.04-2004.10 | MT | F | L/R | Estate FWD DW10TD | | GCO45035 | Outer Joint | 48T | 25 | 34 | 58 | 79 | 55.5 | I |
| | 1999.04-2004.10 | | F | L/R | Estate FWD DW10TD | | GCO10042 | Outer Joint | | 25 | 34 | 54.8 | 78.5 | 56 | I |
| | 1999.04-2004.10 | | F | | Estate FWD DW10TD | Date To:1999.03 | GCO10127 | Outer Joint | 29T | 25 | 39 | 59 | 89 | 63.5 | I |
| | 1999.04-2004.10 | 5MT | F | L | Saloon FWD DW10TD | | GDS45026 | Drive Shaft | 48T | 25 | 24 | 55.7 | 79 | 620 | |
| | 1999.04-2004.10 | 5MT | F | R | Saloon FWD DW10TD | | GDS45020 | Drive Shaft | 48T | 25 | 24 | 58 | 79 | 905.5 | |
| | 1999.04-2004.10 | 5MT | F | L | Saloon FWD DW10TD | | GCI10020 | Inner Joint | | 24 | 34 | 40 | 62.5 | 99 | |
| | 1999.04-2004.10 | 5MT | F | R | Saloon FWD DW10TD | | GCI10004 | Inner Joint | | 24 | 34 | 29.8 | 348 | 99.5 | |
| | 1999.04-2004.10 | MT | F | L | Saloon FWD DW10TD | | GCO45035 | Outer Joint | 48T | 25 | 34 | 58 | 79 | 55.5 | I |
| | 1999.04-2004.10 | | F | L/R | Saloon FWD DW10TD | | GCO10042 | Outer Joint | | 25 | 34 | 54.8 | 78.5 | 56 | I |
| 2.0 (79 kw) | 1998.12-2004.10 | AT | F | L | Estate FWD DW10ATED | | GDS10028 | Drive Shaft | 48T | 21 | 23 | 50.5 | 76.5 | 693.5 | |
| | 1998.12-2004.10 | AT | F | R | Estate FWD DW10ATED | Date from:2000.05 | GDS56402 | Drive Shaft | 48T | 25 | 26 | 58.5 | 79 | 814 | |
| | 1998.12-2004.10 | AT | F | R | Estate FWD DW10ATED | Date from:2000.05 | GCO83282 | Outer Joint | 48T | 25 | 34 | 58.5 | 79 | 55 | I |
| | 1998.12-2004.10 | MT | F | L | Estate FWD DW10ATED | | GDS10162 | Drive Shaft | 48T | 25 | 37 | 59 | 89 | 625 | |
| | 1998.12-2004.10 | MT | F | L | Estate FWD DW10ATED | | GDS45106 | Drive Shaft | 29T | 25 | 37 | 59 | 89 | 628 | |
| | 1998.12-2004.10 | MT | F | R | Estate FWD DW10ATED | | GDS45108 | Drive Shaft | 48T | 25 | 37 | 59 | 89 | 928 | |
| | 1998.12-2004.10 | MT | F | R | Estate FWD DW10ATED | | GDS99003 | Drive Shaft | 29T | 25 | 37 | 59 | 89 | 928 | |
| | 1998.12-2004.10 | MT | F | L/R | Estate FWD DW10ATED | Trans. code:ML | GCO10019 | Outer Joint | 48T | 25 | 39 | 59 | 89 | 63.5 | I |
| | 1998.12-2004.10 | MT | F | L/R | Estate FWD DW10ATED | Date to:1999.03 | GCO10127 | Outer Joint | 29T | 25 | 39 | 59 | 89 | 63.5 | I |
| | 1998.12-2004.10 | MT | F | L/R | Estate FWD DW10ATED | Date from:1999.04 | GCO45052 | Outer Joint | 48T | 25 | 39 | 59 | 89 | 63.5 | I |
| | 1998.12-2004.10 | MT | F | L | Estate FWD DW10ATED | | GCI45032 | Inner Joint | | 37 | 39 | 40 | 68.5 | 100 | |
| | 1998.12-2004.10 | MT | F | R | Estate FWD DW10ATED | | GCI88058 | Inner Joint | | 37 | 39 | 31.9 | 363 | 94 | |
| | 1999.08-2004.05 | AT | F | L | Saloon FWD DW10ATED | | GDS10028 | Drive Shaft | 48T | 21 | 23 | 50.5 | 76.5 | 693.5 | |
| | 1999.08-2004.05 | AT | F | R | Saloon FWD DW10ATED | Date from:2000.05 | GDS56402 | Drive Shaft | 48T | 25 | 26 | 58.5 | 79 | 814 | |
| | 1999.08-2004.05 | AT | F | R | Saloon FWD DW10ATED | Date from:2000.05 | GCO83282 | Outer Joint | 48T | 25 | 34 | 58.5 | 79 | 55 | I |
| | 1999.08-2004.05 | MT | F | L | Saloon FWD DW10ATED | | GDS10162 | Drive Shaft | 48T | 25 | 37 | 59 | 89 | 625 | |
| | 1999.08-2004.05 | MT | F | R | Saloon FWD DW10ATED | | GDS45108 | Drive Shaft | 48T | 25 | 37 | 59 | 89 | 928 | |
| | 1999.08-2004.05 | MT | F | L/R | Saloon FWD DW10ATED | Trans. code:ML | GCO10019 | Outer Joint | 48T | 25 | 39 | 59 | 89 | 63.5 | I |
| | 1999.08-2004.05 | MT | F | L/R | Saloon FWD DW10ATED | Date from:1999.04 | GCO45052 | Outer Joint | 48T | 25 | 39 | 59 | 89 | 63.5 | I |
| | 1999.08-2004.05 | MT | F | L | Saloon FWD DW10ATED | | GCI45032 | Inner Joint | | 37 | 39 | 40 | 68.5 | 100 | |
| | 1999.08-2004.05 | MT | F | R | Saloon FWD DW10ATED | | GCI88058 | Inner Joint | | 37 | 39 | 31.9 | 363 | 94 | |
| 2.0 (80 kw) | 1998.06-2004.06 | AT | F | L | Saloon FWD DW10ATED | | GDS10028 | Drive Shaft | 48T | 21 | 23 | 50.5 | 76.5 | 693.5 | |
| | 1998.06-2004.06 | AT | F | R | Saloon FWD DW10ATED | Date from:2000.05 | GDS56402 | Drive Shaft | 48T | 25 | 26 | 58.5 | 79 | 814 | |
| | 1998.06-2004.06 | AT | F | R | Saloon FWD DW10ATED | Date from:2000.05 | GCO83282 | Outer Joint | 48T | 25 | 34 | 58.5 | 79 | 55 | I |
| | 1998.06-2004.06 | MT | F | L | Saloon FWD DW10ATED | | GDS10162 | Drive Shaft | 48T | 25 | 37 | 59 | 89 | 625 | |
| | 1998.06-2004.06 | MT | F | L | Saloon FWD DW10ATED | Solid shaft | GDS45007 | Drive Shaft | 29T | 25 | 24 | 55.7 | 79 | 621 | |
| | 1998.06-2004.06 | MT | F | L | Saloon FWD DW10ATED | Date from:1999.03;Trans. code:BE3R/BE4R | GDS45026 | Drive Shaft | 48T | 25 | 24 | 55.7 | 79 | 620 | |
| | 1998.06-2004.06 | MT | F | L | Saloon FWD DW10ATED | Hollow shaft | GDS45106 | Drive Shaft | 29T | 25 | 37 | 59 | 89 | 628 | |
| | 1998.06-2004.06 | MT | F | R | Saloon FWD DW10ATED | Date to:1999.03;Trans. code:BE3R/BE4R;Solid shaft | GDS45002 | Drive Shaft | 29T | 25 | 24 | 55.7 | 79 | 904.5 | |
| | 1998.06-2004.06 | MT | F | R | Saloon FWD DW10ATED | Date from:1999.03;Trans. code:BE3R/BE4R;Solid shaft | GDS45020 | Drive Shaft | 48T | 25 | 24 | 58 | 79 | 905.5 | |
| | 1998.06-2004.06 | MT | F | R | Saloon FWD DW10ATED | Hollow shaft | GDS45108 | Drive Shaft | 48T | 25 | 37 | 59 | 89 | 928 | |
| | 1998.06-2004.06 | MT | F | R | Saloon FWD DW10ATED | Date to:1999.03;Trans. code:BE3R/BE4R | GDS45150 | Drive Shaft | | 25 | 24 | 55.7 | 79 | 900 | |
| | 1998.06-2004.06 | MT | F | R | Saloon FWD DW10ATED | Hollow shaft | GDS99003 | Drive Shaft | 29T | 25 | 37 | 59 | 89 | 928 | |
| | 1998.06-2004.06 | MT | F | L | Saloon FWD DW10ATED | Date to:1999.03 | GCO10127 | Outer Joint | 29T | 25 | 39 | 59 | 89 | 63.5 | I |
| | 1998.06-2004.06 | MT | F | R | Saloon FWD DW10ATED | Date to:1999.03 | GCO10019 | Outer Joint | 48T | 25 | 39 | 59 | 89 | 63.5 | I |
| | 1998.06-2004.06 | MT | F | L/R | Saloon FWD DW10ATED | Trans. code:BE3R/BE4R | GCO10086 | Outer Joint | 48T | 25 | 34 | 55.7 | 79 | 55 | I |
| | 1998.06-2004.06 | MT | F | L/R | Saloon FWD DW10ATED | Date from:1999.04 | GCO45052 | Outer Joint | 48T | 25 | 39 | 59 | 89 | 63.5 | I |
| | 1998.06-2004.06 | MT | F | L | Saloon FWD DW10ATED | Date to:1999.03 | GCI45032 | Inner Joint | | 37 | 39 | 40 | 68.5 | 100 | |
| | 1998.06-2004.06 | MT | F | R | Saloon FWD DW10ATED | | GCI88058 | Inner Joint | | 37 | 39 | 31.9 | 363 | 94 | |
| | 1999.02-2004.04 | AT | F | L | Estate FWD DW10ATED | | GDS10028 | Drive Shaft | 48T | 21 | 23 | 50.5 | 76.5 | 693.5 | |
| | 1999.02-2004.04 | AT | F | R | Estate FWD DW10ATED | Date from:2000.05 | GDS56402 | Drive Shaft | 48T | 25 | 26 | 58.5 | 79 | 814 | |
| | 1999.02-2004.04 | AT | F | R | Estate FWD DW10ATED | Date from:2000.05 | GCO83282 | Outer Joint | 48T | 25 | 34 | 58.5 | 79 | 55 | I |
| | 1999.02-2004.04 | MT | F | L | Estate FWD DW10ATED | Trans. code:ML,Date From:1999.04 | GDS10162 | Drive Shaft | 48T | 25 | 37 | 59 | 89 | 625 | |
| | 1999.02-2004.04 | MT | F | L | Estate FWD DW10ATED | Trans. code:BE3/BE4,Date To:1999.03 | GDS45007 | Drive Shaft | 29T | 25 | 24 | 55.7 | 79 | 621 | |
| | 1999.02-2004.04 | MT | F | L | Estate FWD DW10ATED | Trans. code:BE3/BE4,Date From:1999.04 | GDS45026 | Drive Shaft | 48T | 25 | 24 | 55.7 | 79 | 620 | |
| | 1999.02-2004.04 | MT | F | L | Estate FWD DW10ATED | Trans. code:ML,Date To:1999.03 | GDS45106 | Drive Shaft | 29T | 25 | 37 | 59 | 89 | 628 | |
| | 1999.02-2004.04 | MT | F | R | Estate FWD DW10ATED | Trans. code:BE3/BE4,Date To:1999.03 | GDS45002 | Drive Shaft | 29T | 25 | 24 | 55.7 | 79 | 904.5 | |
| | 1999.02-2004.04 | MT | F | R | Estate FWD DW10ATED | Trans. code:BE3/BE4,Date From:1999.04 | GDS45020 | Drive Shaft | 48T | 25 | 24 | 58 | 79 | 905.5 | |

| | YEAR | TRANSM. | F/R | L/R | BODY STYLE & DRIVE TYPE & ENGINE | REMARKS | G-AP Ref. | PRODUCT | ABS | Technical Specifications A | B | C | H | L | P |
|---|---|---|---|---|---|---|---|---|---|---|---|---|---|---|---|
| **PEUGEOT** | | | | | | | | | | | | | | | |
| **406** | | | | | | | | | | | | | | | |
| 2.0 (80 kw) | 1999.02-2004.04 | MT | F | R | Estate FWD DW10ATED | Trans. code:ML,Date From:1999.04 | GDS45108 | Drive Shaft | 48T | 25 | 37 | 59 | 89 | 928 | |
| | 1999.02-2004.04 | MT | F | R | Estate FWD DW10ATED | Trans. code:BE3/BE4,Date To:1999.03 | GDS45150 | Drive Shaft | | 25 | 24 | 55.7 | 79 | 900 | |
| | 1999.02-2004.04 | MT | F | R | Estate FWD DW10ATED | Trans. code:ML,Date To:1999.03 | GDS99003 | Drive Shaft | 29T | 25 | 37 | 59 | 89 | 928 | |
| | 1999.02-2004.04 | MT | F | L | Estate FWD DW10ATED | Trans. code:ML,Date to:1999.03 | GCO10127 | Outer Joint | 29T | 25 | 39 | 59 | 89 | 63.5 | I |
| | 1999.02-2004.04 | MT | F | L/R | Estate FWD DW10ATED | Trans. code:BE3/BE4 | GCO10086 | Outer Joint | 48T | 25 | 34 | 55.7 | 79 | 55 | I |
| | 1999.02-2004.04 | MT | F | L/R | Estate FWD DW10ATED | Trans. code:ML,Date from:1999.04 | GCO45052 | Outer Joint | 48T | 25 | 39 | 59 | 89 | 63.5 | I |
| | 1999.02-2004.04 | MT | F | L | Estate FWD DW10ATED | Trans. code:BE3/BE4,Date To:1999.03 | GCI10093 | Inner Joint | | 24 | 22 | 40 | 62 | 90 | |
| | 1999.02-2004.04 | MT | F | L | Estate FWD DW10ATED | Trans. code:ML | GCI45032 | Inner Joint | | 37 | 39 | 40 | 68.5 | 100 | |
| | 1999.02-2004.04 | MT | F | R | Estate FWD DW10ATED | Trans.code:ML,Date From:1999.04 | GCI88058 | Inner Joint | | 37 | 39 | 31.9 | 363 | 94 | |
| 2.0 (97 kw) | 1995.11-2004.05 | AT | F | L | Saloon FWD XU10J4R | | GDS45044 | Drive Shaft | 29T | 25 | 37 | 59 | 89 | 592 | |
| | 1995.11-2004.05 | AT | F | R | Saloon FWD XU10J4R | Date to:1999.03 | GDS10153 | Drive Shaft | 29T | 25 | 37 | 59 | 89 | 902 | |
| | 1995.11-2004.05 | AT | F | R | Saloon FWD XU10J4R | Date from:2000.05 | GDS56402 | Drive Shaft | 48T | 25 | 26 | 58.5 | 79 | 814 | |
| | 1995.11-2004.05 | AT | F | R | Saloon FWD XU10J4R | Date from:2000.05 | GCO83282 | Outer Joint | 48T | 25 | 34 | 58.5 | 79 | 55 | I |
| | 1995.11-2004.05 | AT | F | L/R | Saloon FWD XU10J4R | Date to:1999.03 | GCO99003 | Outer Joint | 29T | 25 | 39 | 59 | 89 | 63.5 | I |
| | 1995.11-2004.05 | MT | F | L | Saloon FWD XU10J4R | Date to:1999.03 | GDS45007 | Drive Shaft | 29T | 25 | 24 | 55.7 | 79 | 621 | |
| | 1995.11-2004.05 | MT | F | L | Saloon FWD XU10J4R | Date from:1999.03 | GDS45026 | Drive Shaft | 48T | 25 | 24 | 55.7 | 79 | 620 | |
| | 1995.11-2004.05 | MT | F | R | Saloon FWD XU10J4R | Date from:1999.03 | GDS45020 | Drive Shaft | 48T | 25 | 24 | 58 | 79 | 905.5 | |
| | 1995.11-2004.05 | MT | F | R | Saloon FWD XU10J4R | Date to:1999.03 | GDS45088 | Drive Shaft | 29T | 25 | 24 | 55.7 | 79 | 906.5 | |
| | 1995.11-2004.05 | MT | F | L | Saloon FWD XU10J4R | Date to:1999.03 | GCO45003 | Outer Joint | 29T | 25 | 34 | 58 | 79 | 55.5 | I |
| | 1995.11-2004.05 | MT | F | L/R | Saloon FWD XU10J4R | | GCO10042 | Outer Joint | | 25 | 34 | 54.8 | 78.5 | 56 | I |
| | 1995.11-2004.05 | MT | F | L/R | Saloon FWD XU10J4R | Date from:1999.03,Trans. code:BE3R/BE4R | GCO10086 | Outer Joint | 48T | 25 | 34 | 55.7 | 79 | 55 | I |
| | 1995.11-2004.05 | MT | F | L | Saloon FWD XU10J4R | Date to:1999.03 | GCI10093 | Inner Joint | | 24 | 22 | 40 | 62 | 90 | |
| | 1996.10-2004.10 | AT | F | R | Estate FWD XU10J4R | Date to:1999.03 | GDS10153 | Drive Shaft | 29T | 25 | 37 | 59 | 89 | 902 | |
| | 1996.10-2004.10 | AT | F | R | Estate FWD XU10J4R | Date from:2000.05 | GDS56402 | Drive Shaft | 48T | 25 | 26 | 58.5 | 79 | 814 | |
| | 1996.10-2004.10 | AT | F | R | Estate FWD XU10J4R | Date from:2000.05 | GCO83282 | Outer Joint | 48T | 25 | 34 | 58.5 | 79 | 55 | I |
| | 1996.10-2004.10 | MT | F | L | Estate FWD XU10J4R | Date to:1999.03 | GDS45007 | Drive Shaft | 29T | 25 | 24 | 55.7 | 79 | 621 | |
| | 1996.10-2004.10 | MT | F | L | Estate FWD XU10J4R | Date from:1999.03 | GDS45026 | Drive Shaft | 48T | 25 | 24 | 55.7 | 79 | 620 | |
| | 1996.10-2004.10 | MT | F | R | Estate FWD XU10J4R | Date from:1999.03 | GDS45020 | Drive Shaft | 48T | 25 | 24 | 58 | 79 | 905.5 | |
| | 1996.10-2004.10 | MT | F | R | Estate FWD XU10J4R | Date to:1999.03 | GDS45088 | Drive Shaft | 29T | 25 | 24 | 55.7 | 79 | 906.5 | |
| | 1996.10-2004.10 | MT | F | L | Estate FWD XU10J4R | Date to:1999.03 | GCO45003 | Outer Joint | 29T | 25 | 34 | 58 | 79 | 55.5 | I |
| | 1996.10-2004.10 | MT | F | L/R | Estate FWD XU10J4R | Date from:1999.03,Trans. code:BE3R/BE4R | GCO10086 | Outer Joint | 48T | 25 | 34 | 55.7 | 79 | 55 | I |
| | 1996.10-2004.10 | MT | F | L | Estate FWD XU10J4R | Date to:1999.03 | GCI10093 | Inner Joint | | 24 | 22 | 40 | 62 | 90 | |
| | 1996.10-2004.10 | | F | L/R | Estate FWD XU10J4R | | GCO10042 | Outer Joint | | 25 | 34 | 54.8 | 78.5 | 56 | I |
| 2.0 (99 kw) | 1997.02-2000.10 | 5MT | F | L | Estate FWD EW10J4 | | GDS45026 | Drive Shaft | 48T | 25 | 24 | 55.7 | 79 | 620 | |
| | 1997.02-2000.10 | 5MT | F | R | Estate FWD EW10J4 | | GDS45020 | Drive Shaft | 48T | 25 | 24 | 58 | 79 | 905.5 | |
| | 1997.02-2000.10 | MT | F | L | Estate FWD EW10J4 | Trans. code:BE3R/BE4R | GDS45007 | Drive Shaft | 29T | 25 | 24 | 55.7 | 79 | 621 | |
| | 1997.02-2000.10 | MT | F | R | Estate FWD EW10J4 | Trans. code:BE3R/BE4R | GDS45002 | Drive Shaft | 29T | 25 | 24 | 55.7 | 79 | 904.5 | |
| | 1997.02-2000.10 | MT | F | L/R | Estate FWD EW10J4 | | GCO45035 | Outer Joint | 48T | 25 | 34 | 58 | 79 | 55.5 | I |
| | 1997.02-2000.10 | MT | F | L | Estate FWD EW10J4 | | GCI10093 | Inner Joint | | 24 | 22 | 40 | 62 | 90 | |
| | 1997.02-2000.10 | | F | L/R | Estate FWD EW10J4 | | GCO45003 | Outer Joint | 29T | 25 | 34 | 58 | 79 | 55.5 | I |
| | 1997.02-2000.10 | | F | L/R | Estate FWD EW10J4 | Date to:1999.03 | GCO45027 | Outer Joint | | 25 | 34 | 58 | 79 | 55.5 | I |
| | 1999.01-2004.06 | 5MT | F | L | Saloon FWD EW10J4 | | GDS45026 | Drive Shaft | 48T | 25 | 24 | 55.7 | 79 | 620 | |
| | 1999.01-2004.06 | 5MT | F | R | Saloon FWD EW10J4 | | GDS45020 | Drive Shaft | 48T | 25 | 24 | 58 | 79 | 905.5 | |
| | 1999.01-2004.06 | MT | F | L | Saloon FWD EW10J4 | Trans. code:BE3R/BE4R | GDS45007 | Drive Shaft | 29T | 25 | 24 | 55.7 | 79 | 621 | |
| | 1999.01-2004.06 | MT | F | R | Saloon FWD EW10J4 | Trans. code:BE3R/BE4R | GDS45002 | Drive Shaft | 29T | 25 | 24 | 55.7 | 79 | 904.5 | |
| | 1999.01-2004.06 | MT | F | L/R | Saloon FWD EW10J4 | | GCO45035 | Outer Joint | 48T | 25 | 34 | 58 | 79 | 55.5 | I |
| | 1999.01-2004.06 | MT | F | L | Saloon FWD EW10J4 | | GCI10093 | Inner Joint | | 24 | 22 | 40 | 62 | 90 | |
| | 1999.01-2004.06 | | F | | Saloon FWD EW10J4 | | GCO45003 | Outer Joint | 29T | 25 | 34 | 58 | 79 | 55.5 | I |
| | 1999.01-2004.06 | | F | | Saloon FWD EW10J4 | Date to:1999.03 | GCO45027 | Outer Joint | | 25 | 34 | 58 | 79 | 55.5 | I |
| 2.0 (100 kw) | 1999.04-2004.05 | AT | F | L | Saloon FWD EW10J4 | | GDS10028 | Drive Shaft | 48T | 21 | 23 | 50.5 | 76.5 | 693.5 | |
| | 1999.04-2004.05 | AT | F | R | Saloon FWD EW10J4 | Date from:2000.05 | GDS56402 | Drive Shaft | 48T | 25 | 26 | 58.5 | 79 | 814 | |
| | 1999.04-2004.05 | AT | F | R | Saloon FWD EW10J4 | Date from:2000.05 | GCO83282 | Outer Joint | 48T | 25 | 34 | 58.5 | 79 | 55 | I |
| | 1999.04-2004.05 | MT | F | L | Saloon FWD EW10J4 | | GDS45026 | Drive Shaft | 48T | 25 | 24 | 55.7 | 79 | 620 | |
| | 1999.04-2004.05 | MT | F | R | Saloon FWD EW10J4 | | GDS45020 | Drive Shaft | 48T | 25 | 24 | 58 | 79 | 905.5 | |
| | 1999.04-2004.05 | MT | F | L/R | Saloon FWD EW10J4 | | GCO45035 | Outer Joint | 48T | 25 | 34 | 58 | 79 | 55.5 | I |
| | 1999.04-2004.05 | MT | F | L | Saloon FWD EW10J4 | | GCI10020 | Inner Joint | | 24 | 34 | 40 | 62.5 | 99 | |
| | 1999.04-2004.05 | MT | F | R | Saloon FWD EW10J4 | | GCI10004 | Inner Joint | | 24 | 34 | 29.8 | 348 | 99.5 | |
| | 1999.04-2004.10 | AT | F | L | Estate FWD EW10J4 | | GDS10028 | Drive Shaft | 48T | 21 | 23 | 50.5 | 76.5 | 693.5 | |
| | 1999.04-2004.10 | AT | F | R | Estate FWD EW10J4 | Date from:2000.05 | GDS56402 | Drive Shaft | 48T | 25 | 26 | 58.5 | 79 | 814 | |
| | 1999.04-2004.10 | AT | F | R | Estate FWD EW10J4 | Date from:2000.05 | GCO83282 | Outer Joint | 48T | 25 | 34 | 58.5 | 79 | 55 | I |
| | 1999.04-2004.10 | MT | F | L | Estate FWD EW10J4 | | GDS45026 | Drive Shaft | 48T | 25 | 24 | 55.7 | 79 | 620 | |
| | 1999.04-2004.10 | MT | F | R | Estate FWD EW10J4 | | GDS45020 | Drive Shaft | 48T | 25 | 24 | 58 | 79 | 905.5 | |
| | 1999.04-2004.10 | MT | F | L/R | Estate FWD EW10J4 | | GCO45035 | Outer Joint | 48T | 25 | 34 | 58 | 79 | 55.5 | I |
| | 1999.04-2004.10 | MT | F | L | Estate FWD EW10J4 | | GCI10020 | Inner Joint | | 24 | 34 | 40 | 62.5 | 99 | |
| | 1999.04-2004.10 | MT | F | R | Estate FWD EW10J4 | | GCI10004 | Inner Joint | | 24 | 34 | 29.8 | 348 | 99.5 | |

| | YEAR | TRANSM. | F/R | L/R | BODY STYLE & DRIVE TYPE & ENGINE | REMARKS | G-AP Ref. | PRODUCT | ABS | Technical Specifications A | B | C | H | L | P |
|---|---|---|---|---|---|---|---|---|---|---|---|---|---|---|---|
| **PEUGEOT** | | | | | | | | | | | | | | | |
| **406** | | | | | | | | | | | | | | | |
| 2.0 (103 kw) | 2001.04-2003.03 | 5MT | F | L | Estate FWD EW10D | | GDS45026 | Drive Shaft | 48T | 25 | 24 | 55.7 | 79 | 620 | |
| | 2001.04-2003.03 | 5MT | F | R | Estate FWD EW10D | | GDS45020 | Drive Shaft | 48T | 25 | 24 | 58 | 79 | 905.5 | |
| | 2001.04-2003.03 | 5MT | F | L | Estate FWD EW10D | | GCI10020 | Inner Joint | | 24 | 34 | 40 | 62.5 | 99 | |
| | 2001.04-2003.03 | 5MT | F | R | Estate FWD EW10D | | GCI10004 | Inner Joint | | 24 | 34 | 29.8 | 348 | 99.5 | |
| | 2001.04-2003.03 | MT | F | L/R | Estate FWD EW10D | | GCO45035 | Outer Joint | 48T | 25 | 34 | 58 | 79 | 55.5 | I |
| | 2001.04-2003.03 | 5MT | F | L | Saloon FWD EW10D | | GDS45026 | Drive Shaft | 48T | 25 | 24 | 55.7 | 79 | 620 | |
| | 2001.04-2003.03 | 5MT | F | R | Saloon FWD EW10D | | GDS45020 | Drive Shaft | 48T | 25 | 24 | 58 | 79 | 905.5 | |
| | 2001.04-2003.03 | 5MT | F | L | Saloon FWD EW10D | | GCI10020 | Inner Joint | | 24 | 34 | 40 | 62.5 | 99 | |
| | 2001.04-2003.03 | 5MT | F | R | Saloon FWD EW10D | | GCI10004 | Inner Joint | | 24 | 34 | 29.8 | 348 | 99.5 | |
| | 2001.04-2003.03 | MT | F | L/R | Saloon FWD EW10D | | GCO45035 | Outer Joint | 48T | 25 | 34 | 58 | 79 | 55.5 | I |
| 2.0 (104 kw) | 1996.11-1999.03 | | F | | Estate FWD XU10J2TE | | GCO10042 | Outer Joint | | 25 | 34 | 54.8 | 78.5 | 56 | I |
| | 1996.11-1999.03 | | F | | Estate FWD XU10J2TE | | GCO45003 | Outer Joint | 29T | 25 | 34 | 58 | 79 | 55.5 | I |
| | 1996.11-1999.03 | | F | | Saloon FWD XU10J2TE | | GCO10042 | Outer Joint | | 25 | 34 | 54.8 | 78.5 | 56 | I |
| | 1996.11-1999.03 | | F | | Saloon FWD XU10J2TE | | GCO45003 | Outer Joint | 29T | 25 | 34 | 58 | 79 | 55.5 | I |
| 2.0 (108 kw) | 1996.04-1999.03 | MT | F | L | Saloon FWD XU10J2TE | Trans. code:ML | GDS45106 | Drive Shaft | 29T | 25 | 37 | 59 | 89 | 628 | |
| | 1996.04-1999.03 | MT | F | R | Saloon FWD XU10J2TE | Trans. code:BE3/BE4 | GDS45002 | Drive Shaft | 29T | 25 | 24 | 55.7 | 79 | 904.5 | |
| | 1996.04-1999.03 | MT | F | R | Saloon FWD XU10J2TE | Trans. code:ML | GDS99003 | Drive Shaft | 29T | 25 | 37 | 59 | 89 | 928 | |
| | 1996.04-1999.03 | MT | F | L | Saloon FWD XU10J2TE | Trans. code:ML | GCO10127 | Outer Joint | 29T | 25 | 39 | 59 | 89 | 63.5 | I |
| | 1996.04-1999.03 | MT | F | L/R | Saloon FWD XU10J2TE | Trans. code:BE3/BE4 | GCO10086 | Outer Joint | 48T | 25 | 34 | 55.7 | 79 | 55 | I |
| | 1996.04-1999.03 | MT | F | L | Saloon FWD XU10J2TE | Trans. code:ML | GCI45032 | Inner Joint | | 37 | 39 | 40 | 68.5 | 100 | |
| | 1996.10-1999.03 | MT | F | L | Estate FWD XU10J2TE | Trans. code:ML | GDS45106 | Drive Shaft | 29T | 25 | 37 | 59 | 89 | 628 | |
| | 1996.10-1999.03 | MT | F | R | Estate FWD XU10J2TE | Date to:1999.03 | GDS45002 | Drive Shaft | 29T | 25 | 24 | 55.7 | 79 | 904.5 | |
| | 1996.10-1999.03 | MT | F | R | Estate FWD XU10J2TE | Trans. code:ML | GDS99003 | Drive Shaft | 29T | 25 | 37 | 59 | 89 | 928 | |
| | 1996.10-1999.03 | MT | F | L | Estate FWD XU10J2TE | Trans. code:ML | GCO10127 | Outer Joint | 29T | 25 | 39 | 59 | 89 | 63.5 | I |
| | 1996.10-1999.03 | MT | F | L/R | Estate FWD XU10J2TE | Trans. code:BE3/BE4;date to:1999.03 | GCO10086 | Outer Joint | 48T | 25 | 34 | 55.7 | 79 | 55 | I |
| | 1996.10-1999.03 | MT | F | L | Estate FWD XU10J2TE | Trans. code:ML | GCI45032 | Inner Joint | | 37 | 39 | 40 | 68.5 | 100 | |
| 2.1 (80 kw) | 1996.01-1999.03 | 5MT | F | L | Saloon FWD XUD11BTE | | GDS45106 | Drive Shaft | 29T | 25 | 37 | 59 | 89 | 628 | |
| | 1996.01-1999.03 | 5MT | F | R | Saloon FWD XUD11BTE | | GDS99003 | Drive Shaft | 29T | 25 | 37 | 59 | 89 | 928 | |
| | 1996.01-1999.03 | 5MT | F | L/R | Saloon FWD XUD11BTE | | GCO10127 | Outer Joint | 29T | 25 | 39 | 59 | 89 | 63.5 | I |
| | 1996.01-1999.03 | 5MT | F | L | Saloon FWD XUD11BTE | | GCI45032 | Inner Joint | | 37 | 39 | 40 | 68.5 | 100 | |
| | 1996.01-1999.03 | 5MT | F | R | Saloon FWD XUD11BTE | | GCI88058 | Inner Joint | | 37 | 39 | 31.9 | 363 | 94 | |
| | 1996.01-1999.03 | AT/MT | F | L/R | Saloon FWD XUD11BTE | Date from:1999.01;Trans. code:ML | GCO10019 | Outer Joint | 48T | 25 | 39 | 59 | 89 | 63.5 | I |
| | 1996.01-1999.03 | MT | F | L/R | Saloon FWD XUD11BTE | | GCO99003 | Outer Joint | 29T | 25 | 39 | 59 | 89 | 63.5 | I |
| | 1996.10-1999.03 | 5MT | F | L | Estate FWD XUD11BTE | | GDS45106 | Drive Shaft | 29T | 25 | 37 | 59 | 89 | 628 | |
| | 1996.10-1999.03 | 5MT | F | R | Estate FWD XUD11BTE | | GDS99003 | Drive Shaft | 29T | 25 | 37 | 59 | 89 | 928 | |
| | 1996.10-1999.03 | 5MT | F | L | Estate FWD XUD11BTE | | GCI45032 | Inner Joint | | 37 | 39 | 40 | 68.5 | 100 | |
| | 1996.10-1999.03 | 5MT | F | R | Estate FWD XUD11BTE | | GCI88058 | Inner Joint | | 37 | 39 | 31.9 | 363 | 94 | |
| | 1996.10-1999.03 | MT | F | L/R | Estate FWD XUD11BTE | | GCO99003 | Outer Joint | 29T | 25 | 39 | 59 | 89 | 63.5 | I |
| | 1996.10-1999.03 | | F | L | Estate FWD XUD11BTE | | GCO10127 | Outer Joint | 29T | 25 | 39 | 59 | 89 | 63.5 | I |
| 2.2 (98 kw) | 2000.03-2004.10 | MT | F | L | Estate FWD DW12TED4 | | GDS10162 | Drive Shaft | 48T | 25 | 37 | 59 | 89 | 625 | |
| | 2000.03-2004.10 | MT | F | L | Estate FWD DW12TED4 | | GDS45106 | Drive Shaft | 29T | 25 | 37 | 59 | 89 | 628 | |
| | 2000.03-2004.10 | MT | F | R | Estate FWD DW12TED4 | | GDS45108 | Drive Shaft | 48T | 25 | 37 | 59 | 89 | 928 | |
| | 2000.03-2004.10 | MT | F | L/R | Estate FWD DW12TED4 | Trans. code:ML | GCO10019 | Outer Joint | 48T | 25 | 39 | 59 | 89 | 63.5 | I |
| | 2000.03-2004.10 | MT | F | L/R | Estate FWD DW12TED4 | | GCO45052 | Outer Joint | 48T | 25 | 39 | 59 | 89 | 63.5 | I |
| | 2000.03-2004.10 | MT | F | L | Estate FWD DW12TED4 | | GCI45032 | Inner Joint | | 37 | 39 | 40 | 68.5 | 100 | |
| | 2000.03-2004.10 | MT | F | R | Estate FWD DW12TED4 | | GCI88058 | Inner Joint | | 37 | 39 | 31.9 | 363 | 94 | |
| | 2000.09-2004.05 | MT | F | L | Saloon FWD DW12TED4 | | GDS10162 | Drive Shaft | 48T | 25 | 37 | 59 | 89 | 625 | |
| | 2000.09-2004.05 | MT | F | R | Saloon FWD DW12TED4 | | GDS45108 | Drive Shaft | 48T | 25 | 37 | 59 | 89 | 928 | |
| | 2000.09-2004.05 | MT | F | L/R | Saloon FWD DW12TED4 | Trans. code:ML | GCO10019 | Outer Joint | 48T | 25 | 39 | 59 | 89 | 63.5 | I |
| | 2000.09-2004.05 | MT | F | L/R | Saloon FWD DW12TED4 | | GCO45052 | Outer Joint | 48T | 25 | 39 | 59 | 89 | 63.5 | I |
| | 2000.09-2004.05 | MT | F | L | Saloon FWD DW12TED4 | | GCI45032 | Inner Joint | | 37 | 39 | 40 | 68.5 | 100 | |
| | 2000.09-2004.05 | MT | F | R | Saloon FWD DW12TED4 | | GCI88058 | Inner Joint | | 37 | 39 | 31.9 | 363 | 94 | |
| 2.2 (116 kw) | 2000.09-2004.05 | AT/MT | F | L/R | Saloon FWD EW12J4 | Trans. code:ML | GCO10019 | Outer Joint | 48T | 25 | 39 | 59 | 89 | 63.5 | I |
| | 2000.09-2004.05 | MT | F | L | Saloon FWD EW12J4 | | GDS10162 | Drive Shaft | 48T | 25 | 37 | 59 | 89 | 625 | |
| | 2000.09-2004.05 | MT | F | R | Saloon FWD EW12J4 | | GDS45108 | Drive Shaft | 48T | 25 | 37 | 59 | 89 | 928 | |
| | 2000.09-2004.05 | MT | F | L/R | Saloon FWD EW12J4 | | GCO45052 | Outer Joint | 48T | 25 | 39 | 59 | 89 | 63.5 | I |
| | 2000.09-2004.05 | MT | F | L | Saloon FWD EW12J4 | | GCI45032 | Inner Joint | | 37 | 39 | 40 | 68.5 | 100 | |
| | 2000.09-2004.05 | MT | F | R | Saloon FWD EW12J4 | | GCI88058 | Inner Joint | | 37 | 39 | 31.9 | 363 | 94 | |
| | 2000.09-2004.10 | AT/MT | F | L/R | Estate FWD EW12J4 | Trans. code:ML | GCO10019 | Outer Joint | 48T | 25 | 39 | 59 | 89 | 63.5 | I |
| | 2000.09-2004.10 | MT | F | L | Estate FWD EW12J4 | | GDS10162 | Drive Shaft | 48T | 25 | 37 | 59 | 89 | 625 | |
| | 2000.09-2004.10 | MT | F | R | Estate FWD EW12J4 | | GDS45108 | Drive Shaft | 48T | 25 | 37 | 59 | 89 | 928 | |
| | 2000.09-2004.10 | MT | F | L/R | Estate FWD EW12J4 | | GCO45052 | Outer Joint | 48T | 25 | 39 | 59 | 89 | 63.5 | I |
| | 2000.09-2004.10 | MT | F | L | Estate FWD EW12J4 | | GCI45032 | Inner Joint | | 37 | 39 | 40 | 68.5 | 100 | |
| | 2000.09-2004.10 | MT | F | R | Estate FWD EW12J4 | | GCI88058 | Inner Joint | | 37 | 39 | 31.9 | 363 | 94 | |
| 3.0 (140 kw) | 1995.08-2004.05 | AT | F | L | Saloon FWD ES9J4 | | GDS45044 | Drive Shaft | 29T | 25 | 37 | 59 | 89 | 592 | |

| | YEAR | TRANSM. | F/R | L/R | BODY STYLE & DRIVE TYPE & ENGINE | REMARKS | G-AP Ref. | PRODUCT | ABS | Technical Specifications A | B | C | H | L | P |
|---|---|---|---|---|---|---|---|---|---|---|---|---|---|---|---|
| **PEUGEOT** | | | | | | | | | | | | | | | |
| **406** | | | | | | | | | | | | | | | |
| 3.0 (140 kw) | 1995.08-2004.05 | AT | F | R | Saloon FWD ES9J4 | | GDS10153 | Drive Shaft | 29T | 25 | 37 | 59 | 89 | 902 | |
| | 1995.08-2004.05 | MT | F | L | Saloon FWD ES9J4 | | GDS10162 | Drive Shaft | 48T | 25 | 37 | 59 | 89 | 625 | |
| | 1995.08-2004.05 | MT | F | L | Saloon FWD ES9J4 | | GDS45106 | Drive Shaft | 29T | 25 | 37 | 59 | 89 | 628 | |
| | 1995.08-2004.05 | MT | F | R | Saloon FWD ES9J4 | | GDS45108 | Drive Shaft | 48T | 25 | 37 | 59 | 89 | 928 | |
| | 1995.08-2004.05 | MT | F | R | Saloon FWD ES9J4 | | GDS99003 | Drive Shaft | 29T | 25 | 37 | 59 | 89 | 928 | |
| | 1995.08-2004.05 | MT | F | L | Saloon FWD ES9J4 | | GCO10127 | Outer Joint | 29T | 25 | 39 | 59 | 89 | 63.5 | I |
| | 1995.08-2004.05 | MT | F | L/R | Saloon FWD ES9J4 | Trans. code:ML | GCO10019 | Outer Joint | 48T | 25 | 39 | 59 | 89 | 63.5 | I |
| | 1995.08-2004.05 | MT | F | L/R | Saloon FWD ES9J4 | | GCO45052 | Outer Joint | 48T | 25 | 39 | 59 | 89 | 63.5 | I |
| | 1995.08-2004.05 | MT | F | L | Saloon FWD ES9J4 | | GCI45032 | Inner Joint | | 37 | 39 | 40 | 68.5 | 100 | |
| | 1995.08-2004.05 | MT | F | R | Saloon FWD ES9J4 | | GCI88058 | Inner Joint | | 37 | 39 | 31.9 | 363 | 94 | |
| | 1995.08-2004.05 | | F | L/R | Saloon FWD ES9J4 | | GCO99003 | Outer Joint | 29T | 25 | 39 | 59 | 89 | 63.5 | I |
| | 1996.10-2004.10 | AT | F | L | Estate FWD ES9J4 | | GDS45044 | Drive Shaft | 29T | 25 | 37 | 59 | 89 | 592 | |
| | 1996.10-2004.10 | AT | F | R | Estate FWD ES9J4 | | GDS10153 | Drive Shaft | 29T | 25 | 37 | 59 | 89 | 902 | |
| | 1996.10-2004.10 | MT | F | L | Estate FWD ES9J4 | | GDS10162 | Drive Shaft | 48T | 25 | 37 | 59 | 89 | 625 | |
| | 1996.10-2004.10 | MT | F | L | Estate FWD ES9J4 | | GDS45106 | Drive Shaft | 29T | 25 | 37 | 59 | 89 | 628 | |
| | 1996.10-2004.10 | MT | F | R | Estate FWD ES9J4 | | GDS45108 | Drive Shaft | 48T | 25 | 37 | 59 | 89 | 928 | |
| | 1996.10-2004.10 | MT | F | R | Estate FWD ES9J4 | | GDS99003 | Drive Shaft | 29T | 25 | 37 | 59 | 89 | 928 | |
| | 1996.10-2004.10 | MT | F | L | Estate FWD ES9J4 | | GCO10127 | Outer Joint | 29T | 25 | 39 | 59 | 89 | 63.5 | I |
| | 1996.10-2004.10 | MT | F | L/R | Estate FWD ES9J4 | Trans. code:ML | GCO10019 | Outer Joint | 48T | 25 | 39 | 59 | 89 | 63.5 | I |
| | 1996.10-2004.10 | MT | F | L/R | Estate FWD ES9J4 | | GCO45052 | Outer Joint | 48T | 25 | 39 | 59 | 89 | 63.5 | I |
| | 1996.10-2004.10 | MT | F | L | Estate FWD ES9J4 | | GCI45032 | Inner Joint | | 37 | 39 | 40 | 68.5 | 100 | |
| | 1996.10-2004.10 | MT | F | R | Estate FWD ES9J4 | | GCI88058 | Inner Joint | | 37 | 39 | 31.9 | 363 | 94 | |
| | 1996.10-2004.10 | | F | L/R | Estate FWD ES9J4 | | GCO99003 | Outer Joint | 29T | 25 | 39 | 59 | 89 | 63.5 | I |
| 3.0 (143 kw) | 1998.01-2004.06 | AT | F | L | Saloon FWD ES9J4 | | GDS45044 | Drive Shaft | 29T | 25 | 37 | 59 | 89 | 592 | |
| | 1998.01-2004.06 | AT | F | R | Saloon FWD ES9J4 | | GDS10153 | Drive Shaft | 29T | 25 | 37 | 59 | 89 | 902 | |
| | 1998.01-2004.06 | MT | F | L | Saloon FWD ES9J4 | Date from:1999.04 | GDS10162 | Drive Shaft | 48T | 25 | 37 | 59 | 89 | 625 | |
| | 1998.01-2004.06 | MT | F | L | Saloon FWD ES9J4 | Date to:1999.03 | GDS45106 | Drive Shaft | 29T | 25 | 37 | 59 | 89 | 628 | |
| | 1998.01-2004.06 | MT | F | R | Saloon FWD ES9J4 | Date from:1999.04 | GDS45108 | Drive Shaft | 48T | 25 | 37 | 59 | 89 | 928 | |
| | 1998.01-2004.06 | MT | F | R | Saloon FWD ES9J4 | Date to:1999.03 | GDS99003 | Drive Shaft | 29T | 25 | 37 | 59 | 89 | 928 | |
| | 1998.01-2004.06 | MT | F | L | Saloon FWD ES9J4 | Date to:1999.03 | GCO10127 | Outer Joint | 29T | 25 | 39 | 59 | 89 | 63.5 | I |
| | 1998.01-2004.06 | MT | F | L/R | Saloon FWD ES9J4 | Date from:1999.04 | GCO45052 | Outer Joint | 48T | 25 | 39 | 59 | 89 | 63.5 | I |
| | 1998.01-2004.06 | MT | F | L | Saloon FWD ES9J4 | Date to:1999.03 | GCI45032 | Inner Joint | | 37 | 39 | 40 | 68.5 | 100 | |
| | 1998.01-2004.06 | MT | F | R | Saloon FWD ES9J4 | Date from:1999.04 | GCI88058 | Inner Joint | | 37 | 39 | 31.9 | 363 | 94 | |
| 3.0 (152 kw) | 1999.04-2004.05 | AT | F | L | Saloon FWD ES9J4S | | GDS45044 | Drive Shaft | 29T | 25 | 37 | 59 | 89 | 592 | |
| | 1999.04-2004.05 | AT | F | R | Saloon FWD ES9J4S | | GDS10153 | Drive Shaft | 29T | 25 | 37 | 59 | 89 | 902 | |
| | 1999.04-2004.05 | MT | F | L | Saloon FWD ES9J4S | | GDS10162 | Drive Shaft | 48T | 25 | 37 | 59 | 89 | 625 | |
| | 1999.04-2004.05 | MT | F | R | Saloon FWD ES9J4S | | GDS45108 | Drive Shaft | 48T | 25 | 37 | 59 | 89 | 928 | |
| | 1999.04-2004.05 | MT | F | L/R | Saloon FWD ES9J4S | Trans. code:ML | GCO10019 | Outer Joint | 48T | 25 | 39 | 59 | 89 | 63.5 | I |
| | 1999.04-2004.05 | MT | F | L/R | Saloon FWD ES9J4S | | GCO45052 | Outer Joint | 48T | 25 | 39 | 59 | 89 | 63.5 | I |
| | 1999.04-2004.05 | MT | F | L | Saloon FWD ES9J4S | | GCI45032 | Inner Joint | | 37 | 39 | 40 | 68.5 | 100 | |
| | 1999.04-2004.05 | MT | F | R | Saloon FWD ES9J4S | | GCI88058 | Inner Joint | | 37 | 39 | 31.9 | 363 | 94 | |
| | 1999.04-2004.10 | AT | F | L | Estate FWD ES9J4S | | GDS45044 | Drive Shaft | 29T | 25 | 37 | 59 | 89 | 592 | |
| | 1999.04-2004.10 | AT | F | R | Estate FWD ES9J4S | | GDS10153 | Drive Shaft | 29T | 25 | 37 | 59 | 89 | 902 | |
| | 1999.04-2004.10 | MT | F | L | Estate FWD ES9J4S | | GDS10162 | Drive Shaft | 48T | 25 | 37 | 59 | 89 | 625 | |
| | 1999.04-2004.10 | MT | F | R | Estate FWD ES9J4S | | GDS45108 | Drive Shaft | 48T | 25 | 37 | 59 | 89 | 928 | |
| | 1999.04-2004.10 | MT | F | L/R | Estate FWD ES9J4S | Trans. code:ML | GCO10019 | Outer Joint | 48T | 25 | 39 | 59 | 89 | 63.5 | I |
| | 1999.04-2004.10 | MT | F | L/R | Estate FWD ES9J4S | | GCO45052 | Outer Joint | 48T | 25 | 39 | 59 | 89 | 63.5 | I |
| | 1999.04-2004.10 | MT | F | L | Estate FWD ES9J4S | | GCI45032 | Inner Joint | | 37 | 39 | 40 | 68.5 | 100 | |
| | 1999.04-2004.10 | MT | F | R | Estate FWD ES9J4S | | GCI88058 | Inner Joint | | 37 | 39 | 31.9 | 363 | 94 | |
| **406 Coupe** | | | | | | | | | | | | | | | |
| 2.0 (97 kw) | 1997.03-1999.07 | AT | F | L | Coupe FWD XU10J4R | | GDS45044 | Drive Shaft | 29T | 25 | 37 | 59 | 89 | 592 | |
| | 1997.03-1999.07 | AT | F | R | Coupe FWD XU10J4R | | GDS10153 | Drive Shaft | 29T | 25 | 37 | 59 | 89 | 902 | |
| | 1997.03-1999.07 | AT/MT | F | L/R | Coupe FWD XU10J4R | Date from:1999.01 | GCO10024 | Outer Joint | 48T | 25 | 34 | 55.7 | 79 | 55 | I |
| | 1997.03-1999.07 | AT/MT | F | L/R | Coupe FWD XU10J4R | | GCO45002 | Outer Joint | 29T | 25 | 34 | 58.5 | 78.5 | 55 | I |
| | 1997.03-1999.07 | AT/MT | F | L/R | Coupe FWD XU10J4R | Date to:1999.12 | GCO45005 | Outer Joint | 29T | 25 | 34 | 55.7 | 79 | 55 | I |
| | 1997.03-1999.07 | MT | F | L | Coupe FWD XU10J4R | | GDS45007 | Drive Shaft | 29T | 25 | 24 | 55.7 | 79 | 621 | |
| | 1997.03-1999.07 | MT | F | L | Coupe FWD XU10J4R | Date from:1999.03;Date to:1999.07;Trans. code:BE3R/BE4R | GDS45026 | Drive Shaft | 48T | 25 | 24 | 55.7 | 79 | 620 | |
| | 1997.03-1999.07 | MT | F | R | Coupe FWD XU10J4R | Date from:1999.03;Date to:1999.07;Trans. code:BE3R/BE4R | GDS45020 | Drive Shaft | 48T | 25 | 24 | 58 | 79 | 905.5 | |
| | 1997.03-1999.07 | MT | F | R | Coupe FWD XU10J4R | | GDS45088 | Drive Shaft | 29T | 25 | 24 | 55.7 | 79 | 906.5 | |
| | 1997.03-1999.07 | MT | F | L | Coupe FWD XU10J4R | | GCO45003 | Outer Joint | 29T | 25 | 34 | 58 | 79 | 55.5 | I |
| | 1997.03-1999.07 | MT | F | L/R | Coupe FWD XU10J4R | Date from:1999.03;Date to:1999.07;Trans. code:BE3R/BE4R | GCO10086 | Outer Joint | 48T | 25 | 34 | 55.7 | 79 | 55 | I |
| | 1997.03-1999.07 | MT | F | L/R | Coupe FWD XU10J4R | | GCO45035 | Outer Joint | 48T | 25 | 34 | 58 | 79 | 55.5 | I |
| | 1997.03-1999.07 | MT | F | L | Coupe FWD XU10J4R | Date to:1999.03 | GCI10093 | Inner Joint | | 24 | 22 | 40 | 62 | 90 | |
| | 1997.03-1999.07 | | F | L/R | Coupe FWD XU10J4R | | GCO10042 | Outer Joint | | 25 | 34 | 54.8 | 78.5 | 56 | I |
| | 1997.03-1999.07 | | F | | Coupe FWD XU10J4R | Date to:1999.03 | GCO45027 | Outer Joint | | 25 | 34 | 58 | 79 | 55.5 | I |

| | YEAR | TRANSM. | F/R | L/R | BODY STYLE & DRIVE TYPE & ENGINE | REMARKS | G-AP Ref. | PRODUCT | ABS | Technical Specifications A | B | C | H | L | P |
|---|---|---|---|---|---|---|---|---|---|---|---|---|---|---|---|
| **PEUGEOT** | | | | | | | | | | | | | | | |
| **406 Coupe** | | | | | | | | | | | | | | | |
| 2.0 (99 kw) | 1999.01-2000.10 | 4AT | F | R | Coupe FWD EW10J4 | Date from:2000.05 | GCO83282 | Outer Joint | 48T | 25 | 34 | 58.5 | 79 | 55 | I |
| | 1999.01-2000.10 | AT | F | R | Coupe FWD EW10J4 | Date from:2000.05 | GDS56402 | Drive Shaft | 48T | 25 | 26 | 58.5 | 79 | 814 | |
| | 1999.01-2000.10 | MT | F | L | Coupe FWD EW10J4 | Trans. code:BE3R/BE4R | GDS45007 | Drive Shaft | 29T | 25 | 24 | 55.7 | 79 | 621 | |
| | 1999.01-2000.10 | MT | F | L | Coupe FWD EW10J4 | Trans. code:BE3R/BE4R | GDS45026 | Drive Shaft | 48T | 25 | 24 | 55.7 | 79 | 620 | |
| | 1999.01-2000.10 | MT | F | R | Coupe FWD EW10J4 | Trans. code:BE3R/BE4R | GDS45002 | Drive Shaft | 29T | 25 | 24 | 55.7 | 79 | 904.5 | |
| | 1999.01-2000.10 | MT | F | R | Coupe FWD EW10J4 | Trans. code:BE3R/BE4R | GDS45020 | Drive Shaft | 48T | 25 | 24 | 58 | 79 | 905.5 | |
| | 1999.01-2000.10 | MT | F | L/R | Coupe FWD EW10J4 | | GCO45035 | Outer Joint | 48T | 25 | 34 | 58 | 79 | 55.5 | I |
| | 1999.01-2000.10 | MT | F | L | Coupe FWD EW10J4 | | GCI10093 | Inner Joint | | 24 | 22 | 40 | 62 | 90 | |
| | 1999.04-2004.09 | 4AT | F | L | Coupe FWD XU10J4R | | GDS10028 | Drive Shaft | 48T | 21 | 23 | 50.5 | 76.5 | 693.5 | |
| | 1999.04-2004.09 | 4AT | F | R | Coupe FWD XU10J4R | Date from:2000.04 | GCO83282 | Outer Joint | 48T | 25 | 34 | 58.5 | 79 | 55 | I |
| | 1999.04-2004.09 | AT | F | R | Coupe FWD XU10J4R | Date from:2000.04 | GDS56402 | Drive Shaft | 48T | 25 | 26 | 58.5 | 79 | 814 | |
| 2.0 (100 kw) | 1999.04-2004.12 | AT | F | L | Coupe FWD EW10J4 | | GDS10028 | Drive Shaft | 48T | 21 | 23 | 50.5 | 76.5 | 693.5 | |
| | 1999.04-2004.12 | AT | F | R | Coupe FWD EW10J4 | Date from:2000.05 | GDS56402 | Drive Shaft | 48T | 25 | 26 | 58.5 | 79 | 814 | |
| | 1999.04-2004.12 | AT | F | R | Coupe FWD EW10J4 | Date from:2000.05 | GCO83282 | Outer Joint | 48T | 25 | 34 | 58.5 | 79 | 55 | I |
| | 1999.04-2004.12 | MT | F | L | Coupe FWD EW10J4 | | GDS45026 | Drive Shaft | 48T | 25 | 24 | 55.7 | 79 | 620 | |
| | 1999.04-2004.12 | MT | F | R | Coupe FWD EW10J4 | | GDS45020 | Drive Shaft | 48T | 25 | 24 | 58 | 79 | 905.5 | |
| | 1999.04-2004.12 | MT | F | L/R | Coupe FWD EW10J4 | | GCO45035 | Outer Joint | 48T | 25 | 34 | 58 | 79 | 55.5 | I |
| | 1999.04-2004.12 | MT | F | L | Coupe FWD EW10J4 | | GCI10020 | Inner Joint | | 24 | 34 | 40 | 62.5 | 99 | |
| | 1999.04-2004.12 | MT | F | R | Coupe FWD EW10J4 | | GCI10004 | Inner Joint | | 24 | 34 | 29.8 | 348 | 99.5 | |
| 2.2 (98 kw) | 2000.09-2004.12 | 5MT | F | L | Coupe FWD DW12TED4 | | GDS10162 | Drive Shaft | 48T | 25 | 37 | 59 | 89 | 625 | |
| | 2000.09-2004.12 | 5MT | F | R | Coupe FWD DW12TED4 | | GDS45108 | Drive Shaft | 48T | 25 | 37 | 59 | 89 | 928 | |
| | 2000.09-2004.12 | 5MT | F | L/R | Coupe FWD DW12TED4 | | GCO45052 | Outer Joint | 48T | 25 | 39 | 59 | 89 | 63.5 | I |
| | 2000.09-2004.12 | 5MT | F | R | Coupe FWD DW12TED4 | | GCI88058 | Inner Joint | | 37 | 39 | 31.9 | 363 | 94 | |
| | 2000.09-2004.12 | MT | F | L | Coupe FWD DW12TED4 | | GDS45106 | Drive Shaft | 29T | 25 | 37 | 59 | 89 | 628 | |
| | 2000.09-2004.12 | MT | F | L/R | Coupe FWD DW12TED4 | Trans. code:ML | GCO10019 | Outer Joint | 48T | 25 | 39 | 59 | 89 | 63.5 | I |
| | 2000.09-2004.12 | MT | F | L | Coupe FWD DW12TED4 | | GCI45032 | Inner Joint | | 37 | 39 | 40 | 68.5 | 100 | |
| 2.2 (116 kw) | 2002.03-2004.12 | 5MT | F | L | Coupe FWD EW12J4 | | GDS10162 | Drive Shaft | 48T | 25 | 37 | 59 | 89 | 625 | |
| | 2002.03-2004.12 | 5MT | F | R | Coupe FWD EW12J4 | | GDS45108 | Drive Shaft | 48T | 25 | 37 | 59 | 89 | 928 | |
| | 2002.03-2004.12 | 5MT | F | L/R | Coupe FWD EW12J4 | | GCO45052 | Outer Joint | 48T | 25 | 39 | 59 | 89 | 63.5 | I |
| | 2002.03-2004.12 | 5MT | F | R | Coupe FWD EW12J4 | | GCI88058 | Inner Joint | | 37 | 39 | 31.9 | 363 | 94 | |
| | 2002.03-2004.12 | MT | F | L/R | Coupe FWD EW12J4 | Trans. code:ML | GCO10019 | Outer Joint | 48T | 25 | 39 | 59 | 89 | 63.5 | I |
| | 2002.03-2004.12 | MT | F | L | Coupe FWD EW12J4 | | GCI45032 | Inner Joint | | 37 | 39 | 40 | 68.5 | 100 | |
| 3.0 (140 kw) | 1997.03-2005.02 | AT | F | L | Coupe FWD ES9J4 | | GDS45044 | Drive Shaft | 29T | 25 | 37 | 59 | 89 | 592 | |
| | 1997.03-2005.02 | AT | F | R | Coupe FWD ES9J4 | | GDS10153 | Drive Shaft | 29T | 25 | 37 | 59 | 89 | 902 | |
| | 1997.03-2005.02 | MT | F | L | Coupe FWD ES9J4 | Date from:1999.03;Trans. code:ML5T | GDS10162 | Drive Shaft | 48T | 25 | 37 | 59 | 89 | 625 | |
| | 1997.03-2005.02 | MT | F | L | Coupe FWD ES9J4 | | GDS45106 | Drive Shaft | 29T | 25 | 37 | 59 | 89 | 628 | |
| | 1997.03-2005.02 | MT | F | R | Coupe FWD ES9J4 | Date from:1999.03;Trans. code:ML5T | GDS45108 | Drive Shaft | 48T | 25 | 37 | 59 | 89 | 928 | |
| | 1997.03-2005.02 | MT | F | R | Coupe FWD ES9J4 | | GDS99003 | Drive Shaft | 29T | 25 | 37 | 59 | 89 | 928 | |
| | 1997.03-2005.02 | MT | F | L | Coupe FWD ES9J4 | | GCO10127 | Outer Joint | 29T | 25 | 39 | 59 | 89 | 63.5 | I |
| | 1997.03-2005.02 | MT | F | L/R | Coupe FWD ES9J4 | Date from:1999.01;Trans. code:ML | GCO10019 | Outer Joint | 48T | 25 | 39 | 59 | 89 | 63.5 | I |
| | 1997.03-2005.02 | MT | F | L/R | Coupe FWD ES9J4 | | GCO45052 | Outer Joint | 48T | 25 | 39 | 59 | 89 | 63.5 | I |
| | 1997.03-2005.02 | MT | F | L | Coupe FWD ES9J4 | | GCI45032 | Inner Joint | | 37 | 39 | 40 | 68.5 | 100 | |
| | 1997.03-2005.02 | | F | L/R | Coupe FWD ES9J4 | | GCO99003 | Outer Joint | 29T | 25 | 39 | 59 | 89 | 63.5 | I |
| 3.0 (143 kw) | 1997.05-2002.11 | AT | F | L | Coupe FWD ES9J4 | | GDS45044 | Drive Shaft | 29T | 25 | 37 | 59 | 89 | 592 | |
| | 1997.05-2002.11 | AT | F | R | Coupe FWD ES9J4 | | GDS10153 | Drive Shaft | 29T | 25 | 37 | 59 | 89 | 902 | |
| | 1997.05-2002.11 | MT | F | L | Coupe FWD ES9J4 | | GDS45106 | Drive Shaft | 29T | 25 | 37 | 59 | 89 | 628 | |
| | 1997.05-2002.11 | MT | F | R | Coupe FWD ES9J4 | | GDS99003 | Drive Shaft | 29T | 25 | 37 | 59 | 89 | 928 | |
| | 1997.05-2002.11 | MT | F | L/R | Coupe FWD ES9J4 | | GCO10127 | Outer Joint | 29T | 25 | 39 | 59 | 89 | 63.5 | I |
| | 1997.05-2002.11 | MT | F | L | Coupe FWD ES9J4 | | GCI45032 | Inner Joint | | 37 | 39 | 40 | 68.5 | 100 | |
| 3.0 (152 kw) | 1999.04-2004.12 | AT | F | L | Coupe FWD ES9J4S | | GDS45044 | Drive Shaft | 29T | 25 | 37 | 59 | 89 | 592 | |
| | 1999.04-2004.12 | AT | F | R | Coupe FWD ES9J4S | | GDS10153 | Drive Shaft | 29T | 25 | 37 | 59 | 89 | 902 | |
| | 1999.04-2004.12 | MT | F | L | Coupe FWD ES9J4S | | GDS10162 | Drive Shaft | 48T | 25 | 37 | 59 | 89 | 625 | |
| | 1999.04-2004.12 | MT | F | R | Coupe FWD ES9J4S | | GDS45108 | Drive Shaft | 48T | 25 | 37 | 59 | 89 | 928 | |
| | 1999.04-2004.12 | MT | F | L/R | Coupe FWD ES9J4S | Trans. code:ML | GCO10019 | Outer Joint | 48T | 25 | 39 | 59 | 89 | 63.5 | I |
| | 1999.04-2004.12 | MT | F | L/R | Coupe FWD ES9J4S | | GCO45052 | Outer Joint | 48T | 25 | 39 | 59 | 89 | 63.5 | I |
| | 1999.04-2004.12 | MT | F | L | Coupe FWD ES9J4S | | GCI45032 | Inner Joint | | 37 | 39 | 40 | 68.5 | 100 | |
| | 1999.04-2004.12 | MT | F | R | Coupe FWD ES9J4S | | GCI88058 | Inner Joint | | 37 | 39 | 31.9 | 363 | 94 | |
| 3.0 (154 kw) | 1999.03-2001.06 | AT | F | R | Coupe FWD ES9J4S | | GDS10153 | Drive Shaft | 29T | 25 | 37 | 59 | 89 | 902 | |
| **407** | | | | | | | | | | | | | | | |
| 1.6 (80 kw) | 2004.05-2010.12 | 5MT | F | L | Saloon FWD 9HY (DV6TED4);9HZ (DV6TED4) | Inner teeth of wheel side:26;for OE No.:3272GE | GDS10266 | Drive Shaft | | 28 | 24 | 59 | 91 | 678 | |
| | 2004.05-2010.12 | 5MT | F | L | Saloon FWD 9HY (DV6TED4);9HZ (DV6TED4) | Inner teeth of wheel side:26;for OE No.:3272GG | GDS10310 | Drive Shaft | | 28 | 24 | 59 | 91 | 670 | |
| | 2004.05-2010.12 | 5MT | F | R | Saloon FWD 9HY (DV6TED4);9HZ (DV6TED4) | Inner teeth of wheel side:26 | GDS10265 | Drive Shaft | | 28 | 24 | 59 | 91 | 951 | |
| | 2004.05-2010.12 | 5MT | F | L/R | Saloon FWD 9HY (DV6TED4);9HZ (DV6TED4) | | GCO10052 | Outer Joint | | 28 | 34 | 58.5 | 92 | 55 | I |
| | 2004.05-2010.12 | 5MT | F | L/R | Saloon FWD 9HY (DV6TED4);9HZ (DV6TED4) | | GCO45074 | Outer Joint | | 28 | 26 | 59 | 91 | 61.5 | M |
| | 2004.05-2010.12 | 5MT | F | L | Saloon FWD 9HY (DV6TED4);9HZ (DV6TED4) | | GCI45018 | Inner Joint | | 24 | 34 | 40 | 62 | 88 | |

| | YEAR | TRANSM. | F/R | L/R | BODY STYLE & DRIVE TYPE & ENGINE | REMARKS | G-AP Ref. | PRODUCT | ABS | Technical Specifications A | B | C | H | L | P |
|---|---|---|---|---|---|---|---|---|---|---|---|---|---|---|---|
| **PEUGEOT** | | | | | | | | | | | | | | | |
| **407** | | | | | | | | | | | | | | | |
| 1.6 (80 kw) | 2004.05-2010.12 | MT | F | L | Saloon FWD 9HY (DV6TED4);9HZ (DV6TED4) | Inner teeth of wheel side:34 | GDS10238 | Drive Shaft | | 28 | 24 | 58.5 | 92 | 669 | |
| | 2004.05-2010.12 | MT | F | R | Saloon FWD 9HY (DV6TED4);9HZ (DV6TED4) | Inner teeth of wheel side:34 | GDS10239 | Drive Shaft | | 28 | 24 | 58.5 | 92 | 955 | |
| | 2004.05-2010.12 | MT | F | L/R | Saloon FWD 9HY (DV6TED4);9HZ (DV6TED4) | | GCO10124 | Outer Joint | | 28 | 34 | 58.5 | 92 | 55 | I |
| 1.8 (85 kw) | 2004.03-2005.07 | 5MT | F | L | Saloon FWD 6FZ (EW7J4) | Inner teeth of wheel side:26,length2:69 | GDS10266 | Drive Shaft | | 28 | 24 | 59 | 91 | 678 | |
| | 2004.03-2005.07 | 5MT | F | L | Saloon FWD 6FZ (EW7J4) | length2:62 | GDS10310 | Drive Shaft | | 28 | 24 | 59 | 91 | 670 | |
| | 2004.03-2005.07 | 5MT | F | R | Saloon FWD 6FZ (EW7J4) | Inner teeth of wheel side:26 | GDS10265 | Drive Shaft | | 28 | 24 | 59 | 91 | 951 | |
| | 2004.03-2005.07 | 5MT | F | L/R | Saloon FWD 6FZ (EW7J4) | Inner teeth:34 | GCO10052 | Outer Joint | | 28 | 34 | 58.5 | 92 | 55 | I |
| | 2004.03-2005.07 | 5MT | F | L/R | Saloon FWD 6FZ (EW7J4) | Inner teeth:26 | GCO45074 | Outer Joint | | 28 | 26 | 59 | 91 | 61.5 | M |
| 1.8 (92 kw) | 2005.08-2010.12 | 5MT | F | L | Saloon FWD 6FY (EW7A) | length2:69mm | GDS10266 | Drive Shaft | | 28 | 24 | 59 | 91 | 678 | |
| | 2005.08-2010.12 | 5MT | F | R | Saloon FWD 6FY (EW7A) | | GDS10265 | Drive Shaft | | 28 | 24 | 59 | 91 | 951 | |
| | 2005.08-2010.12 | 5MT | F | L/R | Saloon FWD 6FY (EW7A) | Inner teeth:34 | GCO10052 | Outer Joint | | 28 | 34 | 58.5 | 92 | 55 | I |
| | 2005.08-2010.12 | MT | F | L | Saloon FWD 6FY (EW7A) | length2:62mm | GDS10310 | Drive Shaft | | 28 | 24 | 59 | 91 | 670 | |
| | 2005.08-2010.12 | MT | F | L/R | Saloon FWD 6FY (EW7A) | Inner teeth:26 | GCO45074 | Outer Joint | | 28 | 26 | 59 | 91 | 61.5 | M |
| | 2005.08-2010.12 | MT | F | L | Saloon FWD 6FY (EW7A) | length2:62mm | GCI45018 | Inner Joint | | 24 | 34 | 40 | 62 | 88 | |
| 2.0 (93 kw) | 2004.11-2007.10 | 4AT | F | L | Saloon FWD RHL (DW10BTED4) | | GDS56858 | Drive Shaft | | 28 | 37 | 58.6 | 93 | 620 | |
| | 2004.11-2007.10 | 4AT | F | L | Saloon FWD RHL (DW10BTED4) | | GCI10120 | Inner Joint | | 37 | 39 | 42.2 | 60 | 95.5 | |
| | 2004.11-2007.10 | 6MT | F | L | Saloon FWD RHL (DW10BTED4) | | GDS45133 | Drive Shaft | | 28 | 37 | 58.6 | 94 | 653 | |
| | 2004.11-2007.10 | 6MT | F | R | Saloon FWD RHL (DW10BTED4) | | GDS10302 | Drive Shaft | | 28 | 37 | 58.6 | 94 | 969 | |
| | 2004.11-2007.10 | 6MT | F | L/R | Saloon FWD RHL (DW10BTED4) | | GCO10051 | Outer Joint | | 28 | 39 | 58.6 | 94 | 63 | I |
| | 2004.11-2007.10 | 6MT | F | L/R | Saloon FWD RHL (DW10BTED4) | | GCO10098 | Outer Joint | | 28 | 39 | 58.6 | 93 | 63 | I |
| | 2004.11-2007.10 | 6MT | F | L | Saloon FWD RHL (DW10BTED4) | | GCI45032 | Inner Joint | | 37 | 39 | 40 | 68.5 | 100 | |
| | 2004.11-2007.10 | 6MT | F | R | Saloon FWD RHL (DW10BTED4) | | GCI10041 | Inner Joint | | 37 | 39 | 32 | 399 | 95.5 | |
| 2.0 (100 kw) | 2004.03-2005.07 | AT | F | L | Saloon FWD RFN (EW10J4) | | GDS10285 | Drive Shaft | | 28 | 26 | 58.5 | 92 | 661 | |
| | 2004.03-2005.07 | AT | F | R | Saloon FWD RFN (EW10J4) | | GDS10283 | Drive Shaft | | 28 | 26 | 58.5 | 92 | 866 | |
| | 2004.03-2005.07 | AT | F | L/R | Saloon FWD RFN (EW10J4) | | GCO10052 | Outer Joint | | 28 | 34 | 58.5 | 92 | 55 | I |
| | 2004.03-2005.07 | AT | F | L | Saloon FWD RFN (EW10J4) | | GCI99001 | Inner Joint | | 26 | 34 | 30.2 | 46.5 | 103.5 | |
| | 2004.03-2005.07 | MT | F | L | Saloon FWD RFN (EW10J4) | | GDS10266 | Drive Shaft | | 28 | 24 | 59 | 91 | 678 | |
| | 2004.03-2005.07 | MT | F | R | Saloon FWD RFN (EW10J4) | | GDS10265 | Drive Shaft | | 28 | 24 | 59 | 91 | 951 | |
| | 2004.03-2005.07 | MT | F | L/R | Saloon FWD RFN (EW10J4) | | GCO45074 | Outer Joint | | 28 | 26 | 59 | 91 | 61.5 | M |
| | 2004.05-2010.10 | 4AT | F | L | Saloon FWD RHR (DW10BTED4) | | GDS56858 | Drive Shaft | | 28 | 37 | 58.6 | 93 | 620 | |
| | 2004.05-2010.10 | 4AT | F | L | Saloon FWD RHR (DW10BTED4) | | GCI10120 | Inner Joint | | 37 | 39 | 42.2 | 60 | 95.5 | |
| | 2004.05-2010.10 | 6AT | F | L | Saloon FWD RHR (DW10BTED4) | | GDS10385 | Drive Shaft | | 28 | 37 | 58.6 | 93 | 615 | |
| | 2004.05-2010.10 | 6AT | F | R | Saloon FWD RHR (DW10BTED4) | | GDS10435 | Drive Shaft | | 28 | 37 | 58.6 | 94 | 952 | |
| | 2004.05-2010.10 | 6AT | F | L | Saloon FWD RHR (DW10BTED4) | | GCO10098 | Outer Joint | | 28 | 39 | 58.6 | 93 | 63 | I |
| | 2004.05-2010.10 | 6AT | F | R | Saloon FWD RHR (DW10BTED4) | | GCO10051 | Outer Joint | | 28 | 39 | 58.6 | 94 | 63 | I |
| | 2004.05-2010.10 | 6AT | F | L | Saloon FWD RHR (DW10BTED4) | | GCI45034 | Inner Joint | | 37 | 39 | 42 | 68.5 | 97 | |
| | 2004.05-2010.10 | 6AT | F | R | Saloon FWD RHR (DW10BTED4) | | GCI10142 | Inner Joint | | 37 | 39 | | 380 | 96 | |
| | 2004.05-2010.10 | 6MT | F | L | Saloon FWD RHR (DW10BTED4) | | GDS45133 | Drive Shaft | | 28 | 37 | 58.6 | 94 | 653 | |
| | 2004.05-2010.10 | 6MT | F | R | Saloon FWD RHR (DW10BTED4) | | GDS10302 | Drive Shaft | | 28 | 37 | 58.6 | 94 | 969 | |
| | 2004.05-2010.10 | 6MT | F | L | Saloon FWD RHR (DW10BTED4) | | GCI45032 | Inner Joint | | 37 | 39 | 40 | 68.5 | 100 | |
| | 2004.05-2010.10 | 6MT | F | R | Saloon FWD RHR (DW10BTED4) | | GCI10041 | Inner Joint | | 37 | 39 | 32 | 399 | 95.5 | |
| | 2004.05-2010.10 | MT | F | L/R | Saloon FWD RHR (DW10BTED4) | | GCO10051 | Outer Joint | | 28 | 39 | 58.6 | 94 | 63 | I |
| | 2004.05-2010.10 | MT | F | L/R | Saloon FWD RHR (DW10BTED4) | | GCO10098 | Outer Joint | | 28 | 39 | 58.6 | 93 | 63 | I |
| 2.0 (103 kw) | 2005.09-2010.12 | AT | F | L | Saloon FWD RFJ (EW10A) | | GDS10285 | Drive Shaft | | 28 | 26 | 58.5 | 92 | 661 | |
| | 2005.09-2010.12 | AT | F | R | Saloon FWD RFJ (EW10A) | | GDS10283 | Drive Shaft | | 28 | 26 | 58.5 | 92 | 866 | |
| | 2005.09-2010.12 | AT | F | L/R | Saloon FWD RFJ (EW10A) | | GCO10052 | Outer Joint | | 28 | 34 | 58.5 | 92 | 55 | I |
| | 2005.09-2010.12 | AT | F | L | Saloon FWD RFJ (EW10A) | | GCI99001 | Inner Joint | | 26 | 34 | 30.2 | 46.5 | 103.5 | |
| | 2005.09-2010.12 | MT | F | L | Saloon FWD RFJ (EW10A) | length2:69mm | GDS10266 | Drive Shaft | | 28 | 24 | 59 | 91 | 678 | |
| | 2005.09-2010.12 | MT | F | L | Saloon FWD RFJ (EW10A) | length2:62mm | GDS10310 | Drive Shaft | | 28 | 24 | 59 | 91 | 670 | |
| | 2005.09-2010.12 | MT | F | R | Saloon FWD RFJ (EW10A) | | GDS10265 | Drive Shaft | | 28 | 24 | 59 | 91 | 951 | |
| | 2005.09-2010.12 | MT | F | L/R | Saloon FWD RFJ (EW10A) | | GCO45074 | Outer Joint | | 28 | 26 | 59 | 91 | 61.5 | M |
| | 2005.09-2010.12 | MT | F | L | Saloon FWD RFJ (EW10A) | length2:62mm | GCI45018 | Inner Joint | | 24 | 34 | 40 | 62 | 88 | |
| | 2005.10-2011.02 | 5MT | F | L | Saloon FWD RFJ (EW10A) | length2:69mm | GDS10266 | Drive Shaft | | 28 | 24 | 59 | 91 | 678 | |
| | 2005.10-2011.02 | 5MT | F | L | Saloon FWD RFJ (EW10A) | length2:62mm | GDS10310 | Drive Shaft | | 28 | 24 | 59 | 91 | 670 | |
| | 2005.10-2011.02 | 5MT | F | R | Saloon FWD RFJ (EW10A) | | GDS10265 | Drive Shaft | | 28 | 24 | 59 | 91 | 951 | |
| | 2005.10-2011.02 | 5MT | F | L/R | Saloon FWD RFJ (EW10A) | Inner teeth:34 | GCO10052 | Outer Joint | | 28 | 34 | 58.5 | 92 | 55 | I |
| | 2005.10-2011.02 | 5MT | F | L/R | Saloon FWD RFJ (EW10A) | Inner teeth:26 | GCO45074 | Outer Joint | | 28 | 26 | 59 | 91 | 61.5 | M |
| | 2005.10-2011.02 | 5MT | F | L | Saloon FWD RFJ (EW10A) | length2:62mm | GCI45018 | Inner Joint | | 24 | 34 | 40 | 62 | 88 | |
| | 2007.09-2011.02 | 5MT | F | L | Saloon FWD RFJ (EW10A) | length2:69mm | GDS10266 | Drive Shaft | | 28 | 24 | 59 | 91 | 678 | |
| | 2007.09-2011.02 | 5MT | F | L | Saloon FWD RFJ (EW10A) | length2:62mm | GDS10310 | Drive Shaft | | 28 | 24 | 59 | 91 | 670 | |
| | 2007.09-2011.02 | 5MT | F | R | Saloon FWD RFJ (EW10A) | | GDS10265 | Drive Shaft | | 28 | 24 | 59 | 91 | 951 | |
| | 2007.09-2011.02 | 5MT | F | L/R | Saloon FWD RFJ (EW10A) | Inner teeth:34 | GCO10052 | Outer Joint | | 28 | 34 | 58.5 | 92 | 55 | I |
| | 2007.09-2011.02 | 5MT | F | L/R | Saloon FWD RFJ (EW10A) | Inner teeth:26 | GCO45074 | Outer Joint | | 28 | 26 | 59 | 91 | 61.5 | M |
| | 2007.09-2011.02 | 5MT | F | L | Saloon FWD RFJ (EW10A) | length2:62mm | GCI45018 | Inner Joint | | 24 | 34 | 40 | 62 | 88 | |
| | 2009.06-2010.12 | 6MT | F | L | Saloon FWD RHR (DW10BTED4) | | GDS45133 | Drive Shaft | | 28 | 37 | 58.6 | 94 | 653 | |

| | YEAR | TRANSM. | F/R | L/R | BODY STYLE & DRIVE TYPE & ENGINE | REMARKS | G-AP Ref. | PRODUCT | ABS | Technical Specifications A | B | C | H | L | P |
|---|---|---|---|---|---|---|---|---|---|---|---|---|---|---|---|
| **PEUGEOT** | | | | | | | | | | | | | | | |
| **407** | | | | | | | | | | | | | | | |
| 2.0 (103 kw) | 2009.06-2010.12 | 6MT | F | R | Saloon FWD RHR (DW10BTED4) | | GDS10302 | Drive Shaft | | 28 | 37 | 58.6 | 94 | 969 | |
| | 2009.06-2010.12 | 6MT | F | L/R | Saloon FWD RHR (DW10BTED4) | | GCO10051 | Outer Joint | | 28 | 39 | 58.6 | 94 | 63 | I |
| | 2009.06-2010.12 | 6MT | F | L/R | Saloon FWD RHR (DW10BTED4) | | GCO10098 | Outer Joint | | 28 | 39 | 58.6 | 93 | 63 | I |
| | 2009.06-2010.12 | 6MT | F | L | Saloon FWD RHR (DW10BTED4) | | GCI45032 | Inner Joint | | 37 | 39 | 40 | 68.5 | 100 | |
| | 2009.06-2010.12 | 6MT | F | R | Saloon FWD RHR (DW10BTED4) | | GCI10041 | Inner Joint | | 37 | 39 | 32 | 399 | 95.5 | |
| | 2009.06-2010.12 | AT | F | R | Saloon FWD RHR (DW10BTED4) | | GDS10243 | Drive Shaft | | 28 | 37 | 58.5 | 92.5 | 957 | |
| 2.0 (105 kw) | 2008.08-2009.12 | 4AT | F | L | Saloon FWD | | GDS10285 | Drive Shaft | | 28 | 26 | 58.5 | 92 | 661 | |
| | 2008.08-2009.12 | 4AT | F | R | Saloon FWD | | GDS10283 | Drive Shaft | | 28 | 26 | 58.5 | 92 | 866 | |
| | 2008.08-2009.12 | 4AT | F | L/R | Saloon FWD | | GCO10052 | Outer Joint | | 28 | 34 | 58.5 | 92 | 55 | I |
| | 2008.08-2009.12 | 4AT | F | L | Saloon FWD | | GCI99001 | Inner Joint | | 26 | 34 | 30.2 | 46.5 | 103.5 | |
| | 2008.08-2009.12 | 5MT | F | L | Saloon FWD | | GDS10266 | Drive Shaft | | 28 | 24 | 59 | 91 | 678 | |
| | 2008.08-2009.12 | 5MT | F | L | Saloon FWD | | GDS10310 | Drive Shaft | | 28 | 24 | 59 | 91 | 670 | |
| | 2008.08-2009.12 | 5MT | F | R | Saloon FWD | | GDS10265 | Drive Shaft | | 28 | 24 | 59 | 91 | 951 | |
| | 2008.08-2009.12 | 5MT | F | L/R | Saloon FWD | | GCO45074 | Outer Joint | | 28 | 26 | 59 | 91 | 61.5 | M |
| | 2008.08-2009.12 | 5MT | F | L | Saloon FWD | | GCI45018 | Inner Joint | | 24 | 34 | 40 | 62 | 88 | |
| 2.0 (120 kw) | 2009.06-2010.12 | AT | F | R | Saloon FWD RHH (DW10CTED4) | | GDS10435 | Drive Shaft | | 28 | 37 | 58.6 | 94 | 952 | |
| | 2009.06-2010.12 | AT | F | R | Saloon FWD RHH (DW10CTED4) | | GCO10051 | Outer Joint | | 28 | 39 | 58.6 | 94 | 63 | I |
| | 2009.06-2010.12 | AT | F | R | Saloon FWD RHH (DW10CTED4) | | GCI10142 | Inner Joint | | 37 | 39 | | 380 | 96 | |
| | 2009.06-2010.12 | MT | F | L | Saloon FWD RHH (DW10CTED4) | | GDS45133 | Drive Shaft | | 28 | 37 | 58.6 | 94 | 653 | |
| | 2009.06-2010.12 | MT | F | R | Saloon FWD RHH (DW10CTED4) | | GDS10302 | Drive Shaft | | 28 | 37 | 58.6 | 94 | 969 | |
| | 2009.06-2010.12 | MT | F | R | Saloon FWD RHH (DW10CTED4) | | GCO10098 | Outer Joint | | 28 | 39 | 58.6 | 93 | 63 | I |
| | 2009.06-2010.12 | MT | F | L/R | Saloon FWD RHH (DW10CTED4) | | GCO10051 | Outer Joint | | 28 | 39 | 58.6 | 94 | 63 | I |
| | 2009.06-2010.12 | MT | F | L | Saloon FWD RHH (DW10CTED4) | | GCI45032 | Inner Joint | | 37 | 39 | 40 | 68.5 | 100 | |
| | 2009.06-2010.12 | MT | F | R | Saloon FWD RHH (DW10CTED4) | | GCI10041 | Inner Joint | | 37 | 39 | 32 | 399 | 95.5 | |
| 2.2 (116 kw) | 2004.03-2006.10 | 4AT | F | L | Saloon FWD 3FZ (EW12J4) | | GDS56858 | Drive Shaft | | 28 | 37 | 58.6 | 93 | 620 | |
| | 2004.03-2006.10 | 4AT | F | L | Saloon FWD 3FZ (EW12J4) | | GCO10098 | Outer Joint | | 28 | 39 | 58.6 | 93 | 63 | I |
| | 2004.03-2006.10 | 4AT | F | L | Saloon FWD 3FZ (EW12J4) | | GCI10120 | Inner Joint | | 37 | 39 | 42.2 | 60 | 95.5 | |
| | 2004.03-2006.10 | 6MT | F | L/R | Saloon FWD 3FZ (EW12J4) | | GCO10051 | Outer Joint | | 28 | 39 | 58.6 | 94 | 63 | I |
| 2.2 (120 kw) | 2005.08-2010.12 | 4AT | F | L | Saloon FWD 3FY (EW12J4) | | GDS56858 | Drive Shaft | | 28 | 37 | 58.6 | 93 | 620 | |
| | 2005.08-2010.12 | 4AT | F | L | Saloon FWD 3FY (EW12J4) | | GCO10098 | Outer Joint | | 28 | 39 | 58.6 | 93 | 63 | I |
| | 2005.08-2010.12 | 4AT | F | L | Saloon FWD 3FY (EW12J4) | | GCI10120 | Inner Joint | | 37 | 39 | 42.2 | 60 | 95.5 | |
| | 2005.08-2010.12 | 6MT | F | L/R | Saloon FWD 3FY (EW12J4) | | GCO10051 | Outer Joint | | 28 | 39 | 58.6 | 94 | 63 | I |
| | 2006.03-2010.12 | 6MT | F | L | Saloon FWD 4HP (DW12BTED4) | | GDS45133 | Drive Shaft | | 28 | 37 | 58.6 | 94 | 653 | |
| | 2006.03-2010.12 | 6MT | F | R | Saloon FWD 4HP (DW12BTED4) | | GDS10302 | Drive Shaft | | 28 | 37 | 58.6 | 94 | 969 | |
| | 2006.03-2010.12 | 6MT | F | R | Saloon FWD 4HP (DW12BTED4) | | GDS81105 | Drive Shaft | | 28 | 37 | 58.6 | 94 | 978 | |
| | 2006.03-2010.12 | 6MT | F | L | Saloon FWD 4HP (DW12BTED4) | | GCO10098 | Outer Joint | | 28 | 39 | 58.6 | 93 | 63 | I |
| | 2006.03-2010.12 | 6MT | F | L/R | Saloon FWD 4HP (DW12BTED4) | | GCO10051 | Outer Joint | | 28 | 39 | 58.6 | 94 | 63 | I |
| | 2006.03-2010.12 | 6MT | F | L | Saloon FWD 4HP (DW12BTED4) | | GCI45032 | Inner Joint | | 37 | 39 | 40 | 68.5 | 100 | |
| | 2006.03-2010.12 | AT | F | R | Saloon FWD 4HP (DW12BTED4) | | GDS10243 | Drive Shaft | | 28 | 37 | 58.5 | 92.5 | 957 | |
| 2.2 (125 kw) | 2006.03-2010.12 | 6MT | F | L | Saloon FWD 4HT (DW12BTED4);4HS (DW12BTED4) | | GDS45133 | Drive Shaft | | 28 | 37 | 58.6 | 94 | 653 | |
| | 2006.03-2010.12 | 6MT | F | R | Saloon FWD 4HT (DW12BTED4);4HS (DW12BTED4) | | GDS10302 | Drive Shaft | | 28 | 37 | 58.6 | 94 | 969 | |
| | 2006.03-2010.12 | 6MT | F | R | Saloon FWD 4HT (DW12BTED4);4HS (DW12BTED4) | | GDS81105 | Drive Shaft | | 28 | 37 | 58.6 | 94 | 978 | |
| | 2006.03-2010.12 | 6MT | F | L | Saloon FWD 4HT (DW12BTED4);4HS (DW12BTED4) | | GCO10098 | Outer Joint | | 28 | 39 | 58.6 | 93 | 63 | I |
| | 2006.03-2010.12 | 6MT | F | L/R | Saloon FWD 4HT (DW12BTED4);4HS (DW12BTED4) | | GCO10051 | Outer Joint | | 28 | 39 | 58.6 | 94 | 63 | I |
| | 2006.03-2010.12 | 6MT | F | L | Saloon FWD 4HT (DW12BTED4);4HS (DW12BTED4) | | GCI45032 | Inner Joint | | 37 | 39 | 40 | 68.5 | 100 | |
| 2.7 (150 kw) | 2005.10-2010.12 | 6AT | F | L | Saloon FWD UHZ (DT17TED4) | | GDS10385 | Drive Shaft | | 28 | 37 | 58.6 | 93 | 615 | |
| | 2005.10-2010.12 | 6AT | F | R | Saloon FWD UHZ (DT17TED4) | | GDS57852 | Drive Shaft | | 28 | 37 | 58.6 | 94 | 951 | |
| | 2005.10-2010.12 | 6AT | F | L | Saloon FWD UHZ (DT17TED4) | | GCO10098 | Outer Joint | | 28 | 39 | 58.6 | 93 | 63 | I |
| | 2005.10-2010.12 | 6AT | F | R | Saloon FWD UHZ (DT17TED4) | | GCO83743 | Outer Joint | | 28 | 39 | 58.6 | 94 | 63 | I |
| | 2005.10-2010.12 | 6AT | F | L | Saloon FWD UHZ (DT17TED4) | | GCI45034 | Inner Joint | | 37 | 39 | 42 | 68.5 | 97 | |
| 3.0 (155 kw) | 2004.03-2010.12 | 6AT | F | L | Saloon FWD XFV (ES9A) | | GDS10385 | Drive Shaft | | 28 | 37 | 58.6 | 93 | 615 | |
| | 2004.03-2010.12 | 6AT | F | R | Saloon FWD XFV (ES9A) | | GDS57852 | Drive Shaft | | 28 | 37 | 58.6 | 94 | 951 | |
| | 2004.03-2010.12 | 6AT | F | L | Saloon FWD XFV (ES9A) | | GCO10098 | Outer Joint | | 28 | 39 | 58.6 | 93 | 63 | I |
| | 2004.03-2010.12 | 6AT | F | R | Saloon FWD XFV (ES9A) | | GCO83743 | Outer Joint | | 28 | 39 | 58.6 | 94 | 63 | I |
| | 2004.03-2010.12 | 6AT | F | L | Saloon FWD XFV (ES9A) | | GCI45034 | Inner Joint | | 37 | 39 | 42 | 68.5 | 97 | |
| | 2004.03-2010.12 | 6MT | F | L/R | Saloon FWD XFV (ES9A) | | GCO10051 | Outer Joint | | 28 | 39 | 58.6 | 94 | 63 | I |
| **407 Coupe** | | | | | | | | | | | | | | | |
| 2.0 (100 kw) | 2005.10- | 4AT | F | L | Coupe FWD RHR (DW10BTED4) | | GDS56858 | Drive Shaft | | 28 | 37 | 58.6 | 93 | 620 | |
| | 2005.10- | 4AT | F | L | Coupe FWD RHR (DW10BTED4) | | GCI10120 | Inner Joint | | 37 | 39 | 42.2 | 60 | 95.5 | |
| | 2005.10- | 6AT | F | L | Coupe FWD RHR (DW10BTED4) | | GDS10385 | Drive Shaft | | 28 | 37 | 58.6 | 93 | 615 | |
| | 2005.10- | 6AT | F | R | Coupe FWD RHR (DW10BTED4) | | GDS10435 | Drive Shaft | | 28 | 37 | 58.6 | 94 | 952 | |
| | 2005.10- | 6AT | F | L | Coupe FWD RHR (DW10BTED4) | | GCI45034 | Inner Joint | | 37 | 39 | 42 | 68.5 | 97 | |
| | 2005.10- | 6AT | F | R | Coupe FWD RHR (DW10BTED4) | | GCI10142 | Inner Joint | | 37 | 39 | | 380 | 96 | |
| | 2005.10- | 6MT | F | L | Coupe FWD RHR (DW10BTED4) | | GDS45133 | Drive Shaft | | 28 | 37 | 58.6 | 94 | 653 | |
| | 2005.10- | 6MT | F | R | Coupe FWD RHR (DW10BTED4) | | GDS10302 | Drive Shaft | | 28 | 37 | 58.6 | 94 | 969 | |

| | YEAR | TRANSM. | F/R | L/R | BODY STYLE & DRIVE TYPE & ENGINE | REMARKS | G-AP Ref. | PRODUCT | ABS | Technical Specifications A | B | C | H | L | P |
|---|---|---|---|---|---|---|---|---|---|---|---|---|---|---|---|
| **PEUGEOT** | | | | | | | | | | | | | | | |
| **407 Coupe** | | | | | | | | | | | | | | | |
| 2.0 (100 kw) | 2005.10- | 6MT | F | L/R | Coupe FWD RHR (DW10BTED4) | | GCO10098 | Outer Joint | | 28 | 39 | 58.6 | 93 | 63 | I |
| | 2005.10- | 6MT | F | L | Coupe FWD RHR (DW10BTED4) | | GCI45032 | Inner Joint | | 37 | 39 | 40 | 68.5 | 100 | |
| | 2005.10- | 6MT | F | R | Coupe FWD RHR (DW10BTED4) | | GCI10041 | Inner Joint | | 37 | 39 | 32 | 399 | 95.5 | |
| 2.0 (120 kw) | 2009.06- | 6MT | F | L | Coupe FWD RHH (DW10CTED4) | | GDS45133 | Drive Shaft | | 28 | 37 | 58.6 | 94 | 653 | |
| | 2009.06- | 6MT | F | R | Coupe FWD RHH (DW10CTED4) | | GDS10302 | Drive Shaft | | 28 | 37 | 58.6 | 94 | 969 | |
| | 2009.06- | 6MT | F | L/R | Coupe FWD RHH (DW10CTED4) | | GCO10051 | Outer Joint | | 28 | 39 | 58.6 | 94 | 63 | I |
| | 2009.06- | 6MT | F | L | Coupe FWD RHH (DW10CTED4) | | GCI45032 | Inner Joint | | 37 | 39 | 40 | 68.5 | 100 | |
| | 2009.06- | 6MT | F | R | Coupe FWD RHH (DW10CTED4) | | GCI10041 | Inner Joint | | 37 | 39 | 32 | 399 | 95.5 | |
| | 2009.06- | AT | F | R | Coupe FWD RHH (DW10CTED4) | | GDS10243 | Drive Shaft | | 28 | 37 | 58.5 | 92.5 | 957 | |
| 2.2 (120 kw) | 2005.10- | 4AT | F | L | Coupe FWD 3FY (EW12J4) | | GDS56858 | Drive Shaft | | 28 | 37 | 58.6 | 93 | 620 | |
| | 2005.10- | 4AT | F | L | Coupe FWD 3FY (EW12J4) | | GCO10098 | Outer Joint | | 28 | 39 | 58.6 | 93 | 63 | I |
| | 2005.10- | 4AT | F | L | Coupe FWD 3FY (EW12J4) | | GCI10120 | Inner Joint | | 37 | 39 | 42.2 | 60 | 95.5 | |
| | 2005.10- | 6MT | F | L/R | Coupe FWD 3FY (EW12J4) | | GCO10051 | Outer Joint | | 28 | 39 | 58.6 | 94 | 63 | I |
| 2.7 (150 kw) | 2005.10- | 6AT | F | R | Coupe FWD UHZ (DT17TED4) | | GDS57852 | Drive Shaft | | 28 | 37 | 58.6 | 94 | 951 | |
| | 2005.10- | 6AT | F | R | Coupe FWD UHZ (DT17TED4) | | GCO83743 | Outer Joint | | 28 | 39 | 58.6 | 94 | 63 | I |
| | 2005.10- | SAT | F | L | Coupe FWD UHZ (DT17TED4) | | GDS10385 | Drive Shaft | | 28 | 37 | 58.6 | 93 | 615 | |
| | 2005.10- | SAT | F | L | Coupe FWD UHZ (DT17TED4) | | GCO10098 | Outer Joint | | 28 | 39 | 58.6 | 93 | 63 | I |
| | 2005.10- | SAT | F | L | Coupe FWD UHZ (DT17TED4) | | GCI45034 | Inner Joint | | 37 | 39 | 42 | 68.5 | 97 | |
| 3.0 (155 kw) | 2005.10- | 6AT | F | L | Coupe FWD XFV (ES9A) | | GDS10385 | Drive Shaft | | 28 | 37 | 58.6 | 93 | 615 | |
| | 2005.10- | 6AT | F | R | Coupe FWD XFV (ES9A) | | GDS57852 | Drive Shaft | | 28 | 37 | 58.6 | 94 | 951 | |
| | 2005.10- | 6AT | F | L | Coupe FWD XFV (ES9A) | | GCO10098 | Outer Joint | | 28 | 39 | 58.6 | 93 | 63 | I |
| | 2005.10- | 6AT | F | R | Coupe FWD XFV (ES9A) | | GCO83743 | Outer Joint | | 28 | 39 | 58.6 | 94 | 63 | I |
| | 2005.10- | 6AT | F | L | Coupe FWD XFV (ES9A) | | GCI45034 | Inner Joint | | 37 | 39 | 42 | 68.5 | 97 | |
| | 2005.10- | 6MT | F | L/R | Coupe FWD XFV (ES9A) | | GCO10051 | Outer Joint | | 28 | 39 | 58.6 | 94 | 63 | I |
| 3.0 (177 kw) | 2009.06- | 6AT | F | R | Coupe FWD DT20C | | GDS57852 | Drive Shaft | | 28 | 37 | 58.6 | 94 | 951 | |
| | 2009.06- | 6AT | F | R | Coupe FWD DT20C | | GCO83743 | Outer Joint | | 28 | 39 | 58.6 | 94 | 63 | I |
| **407 SW** | | | | | | | | | | | | | | | |
| 1.6 (80 kw) | 2004.05-2010.12 | 5MT | F | L | Estate FWD 9HY (DV6TED4);9HZ (DV6TED4) | Inner teeth of wheel side:26;for OE No.:3272GE | GDS10266 | Drive Shaft | | 28 | 24 | 59 | 91 | 678 | |
| | 2004.05-2010.12 | 5MT | F | L | Estate FWD 9HY (DV6TED4);9HZ (DV6TED4) | Inner teeth of wheel side:26;for OE No.:3272GG | GDS10310 | Drive Shaft | | 28 | 24 | 59 | 91 | 670 | |
| | 2004.05-2010.12 | 5MT | F | R | Estate FWD 9HY (DV6TED4);9HZ (DV6TED4) | Inner teeth of wheel side:26 | GDS10265 | Drive Shaft | | 28 | 24 | 59 | 91 | 951 | |
| | 2004.05-2010.12 | 5MT | F | L/R | Estate FWD 9HY (DV6TED4);9HZ (DV6TED4) | | GCO10052 | Outer Joint | | 28 | 34 | 58.5 | 92 | 55 | I |
| | 2004.05-2010.12 | 5MT | F | L/R | Estate FWD 9HY (DV6TED4);9HZ (DV6TED4) | | GCO45074 | Outer Joint | | 28 | 26 | 59 | 91 | 61.5 | M |
| | 2004.05-2010.12 | 5MT | F | L | Estate FWD 9HY (DV6TED4);9HZ (DV6TED4) | | GCI45018 | Inner Joint | | 24 | 34 | 40 | 62 | 88 | |
| | 2004.05-2010.12 | MT | F | L | Estate FWD 9HY (DV6TED4);9HZ (DV6TED4) | Inner teeth of wheel side:34 | GDS10238 | Drive Shaft | | 28 | 24 | 58.5 | 92 | 669 | |
| | 2004.05-2010.12 | MT | F | R | Estate FWD 9HY (DV6TED4);9HZ (DV6TED4) | Inner teeth of wheel side:34 | GDS10239 | Drive Shaft | | 28 | 24 | 58.5 | 92 | 955 | |
| | 2004.05-2010.12 | MT | F | L/R | Estate FWD 9HY (DV6TED4);9HZ (DV6TED4) | | GCO10124 | Outer Joint | | 28 | 34 | 58.5 | 92 | 55 | I |
| | 2004.08-2010.12 | 5MT | F | L | Estate Van FWD 9HZ (DV6TED4) | | GDS10266 | Drive Shaft | | 28 | 24 | 59 | 91 | 678 | |
| | 2004.08-2010.12 | 5MT | F | L | Estate Van FWD 9HZ (DV6TED4) | | GDS10310 | Drive Shaft | | 28 | 24 | 59 | 91 | 670 | |
| | 2004.08-2010.12 | 5MT | F | R | Estate Van FWD 9HZ (DV6TED4) | | GDS10265 | Drive Shaft | | 28 | 24 | 59 | 91 | 951 | |
| | 2004.08-2010.12 | 5MT | F | L/R | Estate Van FWD 9HZ (DV6TED4) | Inner teeth:34 | GCO10052 | Outer Joint | | 28 | 34 | 58.5 | 92 | 55 | I |
| | 2004.08-2010.12 | 5MT | F | L/R | Estate Van FWD 9HZ (DV6TED4) | Inner teeth:26 | GCO45074 | Outer Joint | | 28 | 26 | 59 | 91 | 61.5 | M |
| | 2004.08-2010.12 | 5MT | F | L | Estate Van FWD 9HZ (DV6TED4) | | GCI45018 | Inner Joint | | 24 | 34 | 40 | 62 | 88 | |
| 1.8 (85 kw) | 2004.05-2005.07 | 5MT | F | L | Estate FWD 6FZ (EW7J4) | length2:69 | GDS10266 | Drive Shaft | | 28 | 24 | 59 | 91 | 678 | |
| | 2004.05-2005.07 | 5MT | F | L | Estate FWD 6FZ (EW7J4) | length2:62 | GDS10310 | Drive Shaft | | 28 | 24 | 59 | 91 | 670 | |
| | 2004.05-2005.07 | 5MT | F | R | Estate FWD 6FZ (EW7J4) | | GDS10265 | Drive Shaft | | 28 | 24 | 59 | 91 | 951 | |
| | 2004.05-2005.07 | 5MT | F | L/R | Estate FWD 6FZ (EW7J4) | Inner teeth:34 | GCO10052 | Outer Joint | | 28 | 34 | 58.5 | 92 | 55 | I |
| | 2004.05-2005.07 | 5MT | F | L/R | Estate FWD 6FZ (EW7J4) | Inner teeth:26 | GCO45074 | Outer Joint | | 28 | 26 | 59 | 91 | 61.5 | M |
| 1.8 (92 kw) | 2005.08-2010.12 | 5MT | F | L | Estate FWD 6FY (EW7A) | length2:69mm | GDS10266 | Drive Shaft | | 28 | 24 | 59 | 91 | 678 | |
| | 2005.08-2010.12 | 5MT | F | R | Estate FWD 6FY (EW7A) | | GDS10265 | Drive Shaft | | 28 | 24 | 59 | 91 | 951 | |
| | 2005.08-2010.12 | 5MT | F | L/R | Estate FWD 6FY (EW7A) | Inner teeth:34 | GCO10052 | Outer Joint | | 28 | 34 | 58.5 | 92 | 55 | I |
| | 2005.08-2010.12 | MT | F | L | Estate FWD 6FY (EW7A) | length2:62mm | GDS10310 | Drive Shaft | | 28 | 24 | 59 | 91 | 670 | |
| | 2005.08-2010.12 | MT | F | L/R | Estate FWD 6FY (EW7A) | Inner teeth:26 | GCO45074 | Outer Joint | | 28 | 26 | 59 | 91 | 61.5 | M |
| | 2005.08-2010.12 | MT | F | L | Estate FWD 6FY (EW7A) | length2:62mm | GCI45018 | Inner Joint | | 24 | 34 | 40 | 62 | 88 | |
| 2.0 (93 kw) | 2004.11-2007.10 | 4AT | F | L | Estate FWD RHL (DW10BTED4) | | GDS56858 | Drive Shaft | | 28 | 37 | 58.6 | 93 | 620 | |
| | 2004.11-2007.10 | 4AT | F | L | Estate FWD RHL (DW10BTED4) | | GCI10120 | Inner Joint | | 37 | 39 | 42.2 | 60 | 95.5 | |
| | 2004.11-2007.10 | 6MT | F | L | Estate FWD RHL (DW10BTED4) | | GDS45133 | Drive Shaft | | 28 | 37 | 58.6 | 94 | 653 | |
| | 2004.11-2007.10 | 6MT | F | R | Estate FWD RHL (DW10BTED4) | | GDS10302 | Drive Shaft | | 28 | 37 | 58.6 | 94 | 969 | |
| | 2004.11-2007.10 | 6MT | F | L/R | Estate FWD RHL (DW10BTED4) | | GCO10051 | Outer Joint | | 28 | 39 | 58.6 | 94 | 63 | I |
| | 2004.11-2007.10 | 6MT | F | L/R | Estate FWD RHL (DW10BTED4) | | GCO10098 | Outer Joint | | 28 | 39 | 58.6 | 93 | 63 | I |
| | 2004.11-2007.10 | 6MT | F | L | Estate FWD RHL (DW10BTED4) | | GCI45032 | Inner Joint | | 37 | 39 | 40 | 68.5 | 100 | |
| | 2004.11-2007.10 | 6MT | F | R | Estate FWD RHL (DW10BTED4) | | GCI10041 | Inner Joint | | 37 | 39 | 32 | 399 | 95.5 | |
| 2.0 (100 kw) | 2004.05-2005.07 | AT | F | L | Estate FWD RFN (EW10J4) | | GDS10285 | Drive Shaft | | 28 | 26 | 58.5 | 92 | 661 | |
| | 2004.05-2005.07 | AT | F | R | Estate FWD RFN (EW10J4) | | GDS10283 | Drive Shaft | | 28 | 26 | 58.5 | 92 | 866 | |
| | 2004.05-2005.07 | AT | F | L/R | Estate FWD RFN (EW10J4) | | GCO10052 | Outer Joint | | 28 | 34 | 58.5 | 92 | 55 | I |
| | 2004.05-2005.07 | AT | F | L | Estate FWD RFN (EW10J4) | | GCI99001 | Inner Joint | | 26 | 34 | 30.2 | 46.5 | 103.5 | |

| | YEAR | TRANSM. | F/R | L/R | BODY STYLE & DRIVE TYPE & ENGINE | REMARKS | G-AP Ref. | PRODUCT | ABS | Technical Specifications | | | | | |
|---|---|---|---|---|---|---|---|---|---|---|---|---|---|---|---|
| | | | | | | | | | | A | B | C | H | L | P |
| **PEUGEOT** | | | | | | | | | | | | | | | |
| **407 SW** | | | | | | | | | | | | | | | |
| 2.0 (100 kw) | 2004.05-2005.07 | MT | F | L | Estate FWD RFN (EW10J4) | | GDS10266 | Drive Shaft | | 28 | 24 | 59 | 91 | 678 | |
| | 2004.05-2005.07 | MT | F | R | Estate FWD RFN (EW10J4) | | GDS10265 | Drive Shaft | | 28 | 24 | 59 | 91 | 951 | |
| | 2004.05-2005.07 | MT | F | L/R | Estate FWD RFN (EW10J4) | | GCO45074 | Outer Joint | | 28 | 26 | 59 | 91 | 61.5 | M |
| | 2004.07-2010.12 | 4AT | F | L | Estate FWD RHR (DW10BTED4) | | GDS56858 | Drive Shaft | | 28 | 37 | 58.6 | 93 | 620 | |
| | 2004.07-2010.12 | 4AT | F | L | Estate FWD RHR (DW10BTED4) | | GCI10120 | Inner Joint | | 37 | 39 | 42.2 | 60 | 95.5 | |
| | 2004.07-2010.12 | 6AT | F | L | Estate FWD RHR (DW10BTED4) | | GDS10385 | Drive Shaft | | 28 | 37 | 58.6 | 93 | 615 | |
| | 2004.07-2010.12 | 6AT | F | R | Estate FWD RHR (DW10BTED4) | Inner teeth of wheel side:39 | GDS10435 | Drive Shaft | | 28 | 37 | 58.6 | 94 | 952 | |
| | 2004.07-2010.12 | 6AT | F | L | Estate FWD RHR (DW10BTED4) | | GCO10098 | Outer Joint | | 28 | 39 | 58.6 | 93 | 63 | I |
| | 2004.07-2010.12 | 6AT | F | R | Estate FWD RHR (DW10BTED4) | | GCO10051 | Outer Joint | | 28 | 39 | 58.6 | 94 | 63 | I |
| | 2004.07-2010.12 | 6AT | F | L | Estate FWD RHR (DW10BTED4) | | GCI45034 | Inner Joint | | 37 | 39 | 42 | 68.5 | 97 | |
| | 2004.07-2010.12 | 6AT | F | R | Estate FWD RHR (DW10BTED4) | | GCI10142 | Inner Joint | | 37 | 39 | | 380 | 96 | |
| | 2004.07-2010.12 | 6MT | F | L | Estate FWD RHR (DW10BTED4) | Exhaust Emis:Euro 4/Euro 5 | GDS45133 | Drive Shaft | | 28 | 37 | 58.6 | 94 | 653 | |
| | 2004.07-2010.12 | 6MT | F | R | Estate FWD RHR (DW10BTED4) | for OE No.:3273SW | GDS10302 | Drive Shaft | | 28 | 37 | 58.6 | 94 | 969 | |
| | 2004.07-2010.12 | MT | F | L/R | Estate FWD RHR (DW10BTED4) | | GCO10051 | Outer Joint | | 28 | 39 | 58.6 | 94 | 63 | I |
| | 2004.07-2010.12 | MT | F | L/R | Estate FWD RHR (DW10BTED4) | | GCO10098 | Outer Joint | | 28 | 39 | 58.6 | 93 | 63 | I |
| | 2004.07-2010.12 | MT | F | L | Estate FWD RHR (DW10BTED4) | Exhaust Emis:Euro 4/Euro 5 | GCI45032 | Inner Joint | | 37 | 39 | 40 | 68.5 | 100 | |
| | 2004.07-2010.12 | MT | F | R | Estate FWD RHR (DW10BTED4) | for OE No.:3273SW | GCI10041 | Inner Joint | | 37 | 39 | 32 | 399 | 95.5 | |
| 2.0 (103 kw) | 2005.08-2010.12 | AT | F | L | Estate FWD RFJ (EW10A) | | GDS10285 | Drive Shaft | | 28 | 26 | 58.5 | 92 | 661 | |
| | 2005.08-2010.12 | AT | F | R | Estate FWD RFJ (EW10A) | | GDS10283 | Drive Shaft | | 28 | 26 | 58.5 | 92 | 866 | |
| | 2005.08-2010.12 | AT | F | L/R | Estate FWD RFJ (EW10A) | | GCO10052 | Outer Joint | | 28 | 34 | 58.5 | 92 | 55 | I |
| | 2005.08-2010.12 | AT | F | L | Estate FWD RFJ (EW10A) | | GCI99001 | Inner Joint | | 26 | 34 | 30.2 | 46.5 | 103.5 | |
| | 2005.08-2010.12 | MT | F | L | Estate FWD RFJ (EW10A) | length2:69mm | GDS10266 | Drive Shaft | | 28 | 24 | 59 | 91 | 678 | |
| | 2005.08-2010.12 | MT | F | L | Estate FWD RFJ (EW10A) | length2:62mm | GDS10310 | Drive Shaft | | 28 | 24 | 59 | 91 | 670 | |
| | 2005.08-2010.12 | MT | F | R | Estate FWD RFJ (EW10A) | | GDS10265 | Drive Shaft | | 28 | 24 | 59 | 91 | 951 | |
| | 2005.08-2010.12 | MT | F | L/R | Estate FWD RFJ (EW10A) | | GCO45074 | Outer Joint | | 28 | 26 | 59 | 91 | 61.5 | M |
| | 2005.08-2010.12 | MT | F | L | Estate FWD RFJ (EW10A) | length2:62mm | GCI45018 | Inner Joint | | 24 | 34 | 40 | 62 | 88 | |
| | 2005.10-2011.02 | 5MT | F | L | Estate FWD RFJ (EW10A) | | GDS10266 | Drive Shaft | | 28 | 24 | 59 | 91 | 678 | |
| | 2005.10-2011.02 | 5MT | F | R | Estate FWD RFJ (EW10A) | | GDS10265 | Drive Shaft | | 28 | 24 | 59 | 91 | 951 | |
| | 2005.10-2011.02 | 5MT | F | L/R | Estate FWD RFJ (EW10A) | | GCO10052 | Outer Joint | | 28 | 34 | 58.5 | 92 | 55 | I |
| | 2008.01-2010.12 | 5MT | F | L | Estate FWD RFJ (EW10A) | length2:69mm | GDS10266 | Drive Shaft | | 28 | 24 | 59 | 91 | 678 | |
| | 2008.01-2010.12 | 5MT | F | L | Estate FWD RFJ (EW10A) | length2:62mm | GDS10310 | Drive Shaft | | 28 | 24 | 59 | 91 | 670 | |
| | 2008.01-2010.12 | 5MT | F | R | Estate FWD RFJ (EW10A) | | GDS10265 | Drive Shaft | | 28 | 24 | 59 | 91 | 951 | |
| | 2008.01-2010.12 | 5MT | F | L/R | Estate FWD RFJ (EW10A) | Inner teeth:34 | GCO10052 | Outer Joint | | 28 | 34 | 58.5 | 92 | 55 | I |
| | 2008.01-2010.12 | 5MT | F | L/R | Estate FWD RFJ (EW10A) | Inner teeth:26 | GCO45074 | Outer Joint | | 28 | 26 | 59 | 91 | 61.5 | M |
| | 2008.01-2010.12 | 5MT | F | L | Estate FWD RFJ (EW10A) | length2:62mm | GCI45018 | Inner Joint | | 24 | 34 | 40 | 62 | 88 | |
| | 2008.08-2010.12 | 6MT | F | L | Estate FWD RHR (DW10BTED4) | | GDS45133 | Drive Shaft | | 28 | 37 | 58.6 | 94 | 653 | |
| | 2008.08-2010.12 | 6MT | F | R | Estate FWD RHR (DW10BTED4) | | GDS10302 | Drive Shaft | | 28 | 37 | 58.6 | 94 | 969 | |
| | 2008.08-2010.12 | 6MT | F | L/R | Estate FWD RHR (DW10BTED4) | | GCO10051 | Outer Joint | | 28 | 39 | 58.6 | 94 | 63 | I |
| | 2008.08-2010.12 | 6MT | F | L/R | Estate FWD RHR (DW10BTED4) | | GCO10098 | Outer Joint | | 28 | 39 | 58.6 | 93 | 63 | I |
| | 2008.08-2010.12 | 6MT | F | L | Estate FWD RHR (DW10BTED4) | | GCI45032 | Inner Joint | | 37 | 39 | 40 | 68.5 | 100 | |
| | 2008.08-2010.12 | 6MT | F | R | Estate FWD RHR (DW10BTED4) | | GCI10041 | Inner Joint | | 37 | 39 | 32 | 399 | 95.5 | |
| | 2008.08-2010.12 | AT | F | R | Estate FWD RHR (DW10BTED4) | | GDS10243 | Drive Shaft | | 28 | 37 | 58.5 | 92.5 | 957 | |
| | 2009.06-2010.12 | 6MT | F | L | Estate Van FWD RHR (DW10BTED4) | | GDS45133 | Drive Shaft | | 28 | 37 | 58.6 | 94 | 653 | |
| | 2009.06-2010.12 | 6MT | F | R | Estate Van FWD RHR (DW10BTED4) | | GDS10302 | Drive Shaft | | 28 | 37 | 58.6 | 94 | 969 | |
| | 2009.06-2010.12 | 6MT | F | L/R | Estate Van FWD RHR (DW10BTED4) | | GCO10051 | Outer Joint | | 28 | 39 | 58.6 | 94 | 63 | I |
| | 2009.06-2010.12 | 6MT | F | L/R | Estate Van FWD RHR (DW10BTED4) | | GCO10098 | Outer Joint | | 28 | 39 | 58.6 | 93 | 63 | I |
| | 2009.06-2010.12 | 6MT | F | L | Estate Van FWD RHR (DW10BTED4) | | GCI45032 | Inner Joint | | 37 | 39 | 40 | 68.5 | 100 | |
| | 2009.06-2010.12 | 6MT | F | R | Estate Van FWD RHR (DW10BTED4) | | GCI10041 | Inner Joint | | 37 | 39 | 32 | 399 | 95.5 | |
| 2.0 (120 kw) | 2009.06-2010.12 | 6AT | F | R | Estate FWD RHH (DW10CTED4) | | GDS10435 | Drive Shaft | | 28 | 37 | 58.6 | 94 | 952 | |
| | 2009.06-2010.12 | 6AT | F | R | Estate FWD RHH (DW10CTED4) | | GCO10051 | Outer Joint | | 28 | 39 | 58.6 | 94 | 63 | I |
| | 2009.06-2010.12 | 6AT | F | R | Estate FWD RHH (DW10CTED4) | | GCI10142 | Inner Joint | | 37 | 39 | | 380 | 96 | |
| | 2009.06-2010.12 | 6AT | F | R | Estate Van FWD RHH (DW10CTED4) | | GDS10435 | Drive Shaft | | 28 | 37 | 58.6 | 94 | 952 | |
| | 2009.06-2010.12 | 6AT | F | R | Estate Van FWD RHH (DW10CTED4) | | GCI10142 | Inner Joint | | 37 | 39 | | 380 | 96 | |
| 2.2 (116 kw) | 2004.05-2005.07 | 4AT | F | L | Estate FWD 3FZ (EW12J4) | | GDS56858 | Drive Shaft | | 28 | 37 | 58.6 | 93 | 620 | |
| | 2004.05-2005.07 | 4AT | F | L | Estate FWD 3FZ (EW12J4) | | GCO10098 | Outer Joint | | 28 | 39 | 58.6 | 93 | 63 | I |
| | 2004.05-2005.07 | 4AT | F | L | Estate FWD 3FZ (EW12J4) | | GCI10120 | Inner Joint | | 37 | 39 | 42.2 | 60 | 95.5 | |
| | 2004.05-2005.07 | 6MT | F | L/R | Estate FWD 3FZ (EW12J4) | | GCO10051 | Outer Joint | | 28 | 39 | 58.6 | 94 | 63 | I |
| 2.2 (120 kw) | 2005.08-2010.12 | 4AT | F | L | Estate FWD 3FY (EW12J4) | | GDS56858 | Drive Shaft | | 28 | 37 | 58.6 | 93 | 620 | |
| | 2005.08-2010.12 | 4AT | F | L | Estate FWD 3FY (EW12J4) | | GCO10098 | Outer Joint | | 28 | 39 | 58.6 | 93 | 63 | I |
| | 2005.08-2010.12 | 4AT | F | L | Estate FWD 3FY (EW12J4) | | GCI10120 | Inner Joint | | 37 | 39 | 42.2 | 60 | 95.5 | |
| | 2005.08-2010.12 | 6MT | F | L/R | Estate FWD 3FY (EW12J4) | | GCO10051 | Outer Joint | | 28 | 39 | 58.6 | 94 | 63 | I |
| | 2008.06-2010.12 | 6MT | F | L | Estate FWD 4HP (DW12BTED4) | | GDS45133 | Drive Shaft | | 28 | 37 | 58.6 | 94 | 653 | |
| | 2008.06-2010.12 | 6MT | F | R | Estate FWD 4HP (DW12BTED4) | | GDS10302 | Drive Shaft | | 28 | 37 | 58.6 | 94 | 969 | |
| | 2008.06-2010.12 | 6MT | F | R | Estate FWD 4HP (DW12BTED4) | | GDS81105 | Drive Shaft | | 28 | 37 | 58.6 | 94 | 978 | |
| | 2008.06-2010.12 | 6MT | F | L | Estate FWD 4HP (DW12BTED4) | | GCO10098 | Outer Joint | | 28 | 39 | 58.6 | 93 | 63 | I |

| | YEAR | TRANSM. | F/R | L/R | BODY STYLE & DRIVE TYPE & ENGINE | REMARKS | G-AP Ref. | PRODUCT | ABS | Technical Specifications A | B | C | H | L | P |
|---|---|---|---|---|---|---|---|---|---|---|---|---|---|---|---|
| **PEUGEOT** | | | | | | | | | | | | | | | |
| **407 SW** | | | | | | | | | | | | | | | |
| 2.2 (120 kw) | 2008.06-2010.12 | 6MT | F | L/R | Estate FWD 4HP (DW12BTED4) | | GCO10051 | Outer Joint | | 28 | 39 | 58.6 | 94 | 63 | I |
| | 2008.06-2010.12 | 6MT | F | L | Estate FWD 4HP (DW12BTED4) | | GCI45032 | Inner Joint | | 37 | 39 | 40 | 68.5 | 100 | |
| | 2008.06-2010.12 | AT | F | R | Estate FWD 4HP (DW12BTED4) | | GDS10243 | Drive Shaft | | 28 | 37 | 58.5 | 92.5 | 957 | |
| 2.2 (125 kw) | 2006.03-2010.12 | 6MT | F | L | Estate FWD 4HT (DW12BTED4);4HS (DW12BTED4) | | GDS45133 | Drive Shaft | | 28 | 37 | 58.6 | 94 | 653 | |
| | 2006.03-2010.12 | 6MT | F | R | Estate FWD 4HT (DW12BTED4);4HS (DW12BTED4) | | GDS10302 | Drive Shaft | | 28 | 37 | 58.6 | 94 | 969 | |
| | 2006.03-2010.12 | 6MT | F | R | Estate FWD 4HT (DW12BTED4);4HS (DW12BTED4) | | GDS81105 | Drive Shaft | | 28 | 37 | 58.6 | 94 | 978 | |
| | 2006.03-2010.12 | 6MT | F | L | Estate FWD 4HT (DW12BTED4);4HS (DW12BTED4) | | GCO10098 | Outer Joint | | 28 | 39 | 58.6 | 93 | 63 | I |
| | 2006.03-2010.12 | 6MT | F | L/R | Estate FWD 4HT (DW12BTED4);4HS (DW12BTED4) | | GCO10051 | Outer Joint | | 28 | 39 | 58.6 | 94 | 63 | I |
| | 2006.03-2010.12 | 6MT | F | L | Estate FWD 4HT (DW12BTED4);4HS (DW12BTED4) | | GCI45032 | Inner Joint | | 37 | 39 | 40 | 68.5 | 100 | |
| 2.7 (150 kw) | 2005.10-2010.12 | 6AT | F | L | Estate FWD UHZ (DT17TED4) | | GDS10385 | Drive Shaft | | 28 | 37 | 58.6 | 93 | 615 | |
| | 2005.10-2010.12 | 6AT | F | R | Estate FWD UHZ (DT17TED4) | | GDS57852 | Drive Shaft | | 28 | 37 | 58.6 | 94 | 951 | |
| | 2005.10-2010.12 | 6AT | F | L | Estate FWD UHZ (DT17TED4) | | GCO10098 | Outer Joint | | 28 | 39 | 58.6 | 93 | 63 | I |
| | 2005.10-2010.12 | 6AT | F | R | Estate FWD UHZ (DT17TED4) | | GCO83743 | Outer Joint | | 28 | 39 | 58.6 | 94 | 63 | I |
| | 2005.10-2010.12 | 6AT | F | L | Estate FWD UHZ (DT17TED4) | | GCI45034 | Inner Joint | | 37 | 39 | 42 | 68.5 | 97 | |
| 3.0 (155 kw) | 2004.05-2010.12 | 6AT | F | L | Estate FWD XFV (ES9A) | | GDS10385 | Drive Shaft | | 28 | 37 | 58.6 | 93 | 615 | |
| | 2004.05-2010.12 | 6AT | F | R | Estate FWD XFV (ES9A) | | GDS57852 | Drive Shaft | | 28 | 37 | 58.6 | 94 | 951 | |
| | 2004.05-2010.12 | 6AT | F | L | Estate FWD XFV (ES9A) | | GCO10098 | Outer Joint | | 28 | 39 | 58.6 | 93 | 63 | I |
| | 2004.05-2010.12 | 6AT | F | R | Estate FWD XFV (ES9A) | | GCO83743 | Outer Joint | | 28 | 39 | 58.6 | 94 | 63 | I |
| | 2004.05-2010.12 | 6AT | F | L | Estate FWD XFV (ES9A) | | GCI45034 | Inner Joint | | 37 | 39 | 42 | 68.5 | 97 | |
| | 2004.05-2010.12 | 6MT | F | L/R | Estate FWD XFV (ES9A) | | GCO10051 | Outer Joint | | 28 | 39 | 58.6 | 94 | 63 | I |
| **408** | | | | | | | | | | | | | | | |
| 1.2 (96 kw) | 2022.07- | 8AT | F | L | Hatchback FWD HNS (EB2ADTS) | | GDS83110 | Drive Shaft | | 28 | 37 | 58.5 | 92.5 | 662 | |
| | 2022.07- | 8AT | F | R | Hatchback FWD HNS (EB2ADTS) | | GDS83109 | Drive Shaft | | 28 | 37 | 58.5 | 92.5 | 933 | |
| 1.2 (100 kw) | 2023.07- | 6DCT | F | R | Hatchback FWD HPY (EB2LTDH2) | | GDS83109 | Drive Shaft | | 28 | 37 | 58.5 | 92.5 | 933 | |
| | 2023.07- | 6DCT | F | R | Hatchback FWD HPY (EB2LTDH2) | | GCI82118 | Inner Joint | | 37 | 34 | | 290 | 88 | |
| 1.2 (107 kw) | 2025.03- | 6DCT | F | R | Hatchback FWD | | GDS83109 | Drive Shaft | | 28 | 37 | 58.5 | 92.5 | 933 | |
| | 2025.03- | 6DCT | F | R | Hatchback FWD | | GCI82118 | Inner Joint | | 37 | 34 | | 290 | 88 | |
| 1.6 (158 kw) | 2023.02- | 8AT | F | L | Hatchback FWD EGP (EP6FADTXM) | | GDS83110 | Drive Shaft | | 28 | 37 | 58.5 | 92.5 | 662 | |
| | 2023.02- | 8AT | F | R | Hatchback FWD EGP (EP6FADTXM) | | GDS83109 | Drive Shaft | | 28 | 37 | 58.5 | 92.5 | 933 | |
| **5008** | | | | | | | | | | | | | | | |
| 1.2 (96 kw) | 2015.01-2017.03 | MT | F | L | MPV FWD HNY (EB2DTS) | | GDS10253 | Drive Shaft | | 25 | 24 | 58.5 | 79 | 626 | |
| | 2015.01-2017.03 | MT | F | R | MPV FWD HNY (EB2DTS) | | GDS10325 | Drive Shaft | | 25 | 24 | 58.5 | 79 | 940 | |
| | 2015.01-2017.03 | MT | F | L | MPV FWD HNY (EB2DTS) | Date to:2017.03 | GCO10148 | Outer Joint | | 25 | 34 | 58.5 | 79 | 55.5 | I |
| | 2015.01-2017.03 | MT | F | L | MPV FWD HNY (EB2DTS) | | GCO99366 | Outer Joint | | 25 | 34 | 58.5 | 79 | 55 | I |
| | 2015.01-2017.03 | MT | F | L | MPV FWD HNY (EB2DTS) | Date to:2017.03 | GCI10057 | Inner Joint | | 24 | 34 | 40 | 52.5 | 90 | |
| | 2015.01-2017.03 | MT | F | R | MPV FWD HNY (EB2DTS) | Date to:2017.03 | GCI10058 | Inner Joint | | 24 | 34 | 29.8 | 365 | 88 | |
| | 2016.12- | 6AT/8AT | F | L | MPV FWD HNY (EB2DTS);HNS (EB2ADTS) | | GDS83110 | Drive Shaft | | 28 | 37 | 58.5 | 92.5 | 662 | |
| | 2016.12- | 6AT/8AT | F | R | MPV FWD HNY (EB2DTS);HNS (EB2ADTS) | | GDS83109 | Drive Shaft | | 28 | 37 | 58.5 | 92.5 | 933 | |
| | 2016.12- | 6AT/8AT | F | L | MPV FWD HNY (EB2DTS);HNS (EB2ADTS) | | GCI82119 | Inner Joint | | 37 | 34 | 41.5 | 58.5 | 94 | |
| | 2016.12- | 6AT/8AT | F | R | MPV FWD HNY (EB2DTS);HNS (EB2ADTS) | | GCI82118 | Inner Joint | | 37 | 34 | | 290 | 88 | |
| | 2016.12- | 6AT/8AT/6MT | F | L/R | MPV FWD HNY (EB2DTS);HNS (EB2ADTS) | | GCO82273 | Outer Joint | | 28 | 34 | 58.5 | 92.5 | 56 | I |
| | 2016.12- | 6MT | F | L | MPV FWD HNY (EB2DTS);HNS (EB2ADTS) | Trans. code:MB6 | GDS83067 | Drive Shaft | | 28 | 24 | 58.5 | 92.5 | 696 | |
| | 2016.12- | 6MT | F | L | MPV FWD HNY (EB2DTS);HNS (EB2ADTS) | Trans. code:MC MANUAL | GDS83617 | Drive Shaft | | 28 | 24 | 58.5 | 92.5 | 688 | |
| | 2016.12- | 6MT | F | R | MPV FWD HNY (EB2DTS);HNS (EB2ADTS) | Trans. code:MC MANUAL | GDS83618 | Drive Shaft | | 28 | 24 | 58.5 | 92.5 | 950 | |
| | 2016.12- | 6MT | F | R | MPV FWD HNY (EB2DTS);HNS (EB2ADTS) | Trans. code:MB6 | GDS84363 | Drive Shaft | | 28 | 24 | 58.5 | 92.5 | 933 | |
| | 2016.12- | 6MT | F | L | MPV FWD HNY (EB2DTS);HNS (EB2ADTS) | | GCI82181 | Inner Joint | | 24 | 34 | 40 | 52.5 | 90 | |
| | 2016.12- | 6MT | F | R | MPV FWD HNY (EB2DTS);HNS (EB2ADTS) | | GCI82323 | Inner Joint | | 24 | 34 | 29.8 | 306 | 88 | |
| 1.2 (100 kw) | 2023.06- | 6DCT | F | R | MPV FWD HPY (EB2LTDH2) | | GDS83109 | Drive Shaft | | 28 | 37 | 58.5 | 92.5 | 933 | |
| | 2023.06- | 6DCT | F | R | MPV FWD HPY (EB2LTDH2) | | GCI82118 | Inner Joint | | 37 | 34 | | 290 | 88 | |
| 1.5 (96 kw) | 2018.02- | 8AT | F | L | MPV FWD YHZ (DV5RC) | | GDS83110 | Drive Shaft | | 28 | 37 | 58.5 | 92.5 | 662 | |
| | 2018.02- | 8AT | F | R | MPV FWD YHZ (DV5RC) | | GDS83109 | Drive Shaft | | 28 | 37 | 58.5 | 92.5 | 933 | |
| | 2018.02- | 8AT | F | L/R | MPV FWD YHZ (DV5RC) | | GCO82273 | Outer Joint | | 28 | 34 | 58.5 | 92.5 | 56 | I |
| | 2018.02- | 8AT | F | L | MPV FWD YHZ (DV5RC) | | GCI82119 | Inner Joint | | 37 | 34 | 41.5 | 58.5 | 94 | |
| | 2018.02- | 8AT | F | R | MPV FWD YHZ (DV5RC) | | GCI82118 | Inner Joint | | 37 | 34 | | 290 | 88 | |
| | 2018.06- | 8AT | F | L | Box Body/MPV FWD YHZ (DV5RC) | | GDS83110 | Drive Shaft | | 28 | 37 | 58.5 | 92.5 | 662 | |
| | 2018.06- | 8AT | F | R | Box Body/MPV FWD YHZ (DV5RC) | | GDS83109 | Drive Shaft | | 28 | 37 | 58.5 | 92.5 | 933 | |
| | 2018.06- | 8AT | F | L/R | Box Body/MPV FWD YHZ (DV5RC) | | GCO82273 | Outer Joint | | 28 | 34 | 58.5 | 92.5 | 56 | I |
| | 2018.06- | 8AT | F | L | Box Body/MPV FWD YHZ (DV5RC) | | GCI82119 | Inner Joint | | 37 | 34 | 41.5 | 58.5 | 94 | |
| | 2018.06- | 8AT | F | R | Box Body/MPV FWD YHZ (DV5RC) | | GCI82118 | Inner Joint | | 37 | 34 | | 290 | 88 | |
| 1.6 (73 kw) | 2016.12- | 5MT | F | L | MPV FWD BHY (DV6FD) | | GDS83067 | Drive Shaft | | 28 | 24 | 58.5 | 92.5 | 696 | |
| | 2016.12- | 5MT | F | R | MPV FWD BHY (DV6FD) | | GDS57671 | Drive Shaft | | 28 | 24 | 58.5 | 92.5 | 936 | |
| | 2016.12- | 5MT | F | L | MPV FWD BHY (DV6FD) | | GCO82273 | Outer Joint | | 28 | 34 | 58.5 | 92.5 | 56 | I |
| | 2016.12- | 5MT | F | R | MPV FWD BHY (DV6FD) | | GCO81397 | Outer Joint | | 28 | 34 | 58.5 | 92.5 | 56 | I |
| | 2016.12- | 5MT | F | L | MPV FWD BHY (DV6FD) | | GCI82131 | Inner Joint | | 24 | 34 | 40 | 62 | 89 | |
| 1.6 (80 kw) | 2009.09-2017.03 | 5MT | F | L | MPV FWD 9HZ (DV6TED4) | Technical Information no.:8NN48 | GCO99366 | Outer Joint | | 25 | 34 | 58.5 | 79 | 55 | I |

| | YEAR | TRANSM. | F/R | L/R | BODY STYLE & DRIVE TYPE & ENGINE | REMARKS | G-AP Ref. | PRODUCT | ABS | Technical Specifications A | B | C | H | L | P |
|---|---|---|---|---|---|---|---|---|---|---|---|---|---|---|---|
| **PEUGEOT** **5008** | | | | | | | | | | | | | | | |
| 1.6 (80 kw) | 2009.09-2017.03 | 6MT | F | R | MPV FWD 9HZ (DV6TED4) | Technical Information no.:8NN69 | GCO99366 | Outer Joint | | 25 | 34 | 58.5 | 79 | 55 | I |
| | 2009.09-2017.03 | 6MT | F | L/R | MPV FWD 9HZ (DV6TED4) | | GCO10155 | Outer Joint | | 25 | 39 | 58.5 | 89 | 63.5 | I |
| | 2009.09-2017.03 | AT | F | L | MPV FWD 9HZ (DV6TED4) | Technical Information no.:8PN05 | GDS58072 | Drive Shaft | | 25 | 37 | 58.5 | 79 | 598 | |
| | 2009.09-2017.03 | MT | F | L | MPV FWD 9HZ (DV6TED4) | | GDS10253 | Drive Shaft | | 25 | 24 | 58.5 | 79 | 626 | |
| | 2009.09-2017.03 | MT | F | L | MPV FWD 9HZ (DV6TED4) | | GDS10312 | Drive Shaft | | 25 | 37 | 58.5 | 89 | 625 | |
| | 2009.09-2017.03 | MT | F | R | MPV FWD 9HZ (DV6TED4) | | GDS10325 | Drive Shaft | | 25 | 24 | 58.5 | 79 | 940 | |
| | 2009.09-2017.03 | MT | F | L/R | MPV FWD 9HZ (DV6TED4) | | GCO10148 | Outer Joint | | 25 | 34 | 58.5 | 79 | 55.5 | I |
| | 2009.09-2017.03 | MT | F | L | MPV FWD 9HZ (DV6TED4) | | GCI10057 | Inner Joint | | 24 | 34 | 40 | 52.5 | 90 | |
| | 2009.09-2017.03 | MT | F | R | MPV FWD 9HZ (DV6TED4) | | GCI10058 | Inner Joint | | 24 | 34 | 29.8 | 365 | 88 | |
| | 2009.09-2017.03 | | F | L/R | MPV FWD 9HZ (DV6TED4) | | GCO10042 | Outer Joint | | 25 | 34 | 54.8 | 78.5 | 56 | I |
| 1.6 (82 kw) | 2010.08-2017.03 | 6AT/6MT | F | L | Box Body/MPV FWD 9HR (DV6C) | | GDS10253 | Drive Shaft | | 25 | 24 | 58.5 | 79 | 626 | |
| | 2010.08-2017.03 | 6AT/6MT | F | R | Box Body/MPV FWD 9HR (DV6C) | | GDS10325 | Drive Shaft | | 25 | 24 | 58.5 | 79 | 940 | |
| | 2010.08-2017.03 | 6AT/6MT | F | R | Box Body/MPV FWD 9HR (DV6C) | | GCO10148 | Outer Joint | | 25 | 34 | 58.5 | 79 | 55.5 | I |
| | 2010.08-2017.03 | 6AT/6MT | F | R | Box Body/MPV FWD 9HR (DV6C) | | GCI10058 | Inner Joint | | 24 | 34 | 29.8 | 365 | 88 | |
| | 2010.08-2017.03 | 6MT | F | L/R | MPV FWD 9HR (DV6C) | | GCO10155 | Outer Joint | | 25 | 39 | 58.5 | 89 | 63.5 | I |
| | 2010.08-2017.03 | AT | F | L | MPV FWD 9HR (DV6C) | Technical Information no.:8PN05 | GDS58072 | Drive Shaft | | 25 | 37 | 58.5 | 79 | 598 | |
| | 2010.08-2017.03 | MT | F | L | MPV FWD 9HR (DV6C) | | GDS10253 | Drive Shaft | | 25 | 24 | 58.5 | 79 | 626 | |
| | 2010.08-2017.03 | MT | F | R | MPV FWD 9HR (DV6C) | | GDS10325 | Drive Shaft | | 25 | 24 | 58.5 | 79 | 940 | |
| | 2010.08-2017.03 | MT | F | L | MPV FWD 9HR (DV6C) | | GCO10148 | Outer Joint | | 25 | 34 | 58.5 | 79 | 55.5 | I |
| | 2010.08-2017.03 | MT | F | L | MPV FWD 9HR (DV6C) | Not for cold climate zones,Technical Information no.:8NN48 | GCO99366 | Outer Joint | | 25 | 34 | 58.5 | 79 | 55 | I |
| | 2010.08-2017.03 | MT | F | R | MPV FWD 9HR (DV6C) | Not for cold climate zones,Technical Information no.:8NN69 | GCO99366 | Outer Joint | | 25 | 34 | 58.5 | 79 | 55 | I |
| | 2010.08-2017.03 | MT | F | L | MPV FWD 9HR (DV6C) | | GCI10057 | Inner Joint | | 24 | 34 | 40 | 52.5 | 90 | |
| | 2010.08-2017.03 | MT | F | R | MPV FWD 9HR (DV6C) | | GCI10058 | Inner Joint | | 24 | 34 | 29.8 | 365 | 88 | |
| | 2010.08-2017.03 | | F | L/R | MPV FWD 9HR (DV6C) | | GCO10042 | Outer Joint | | 25 | 34 | 54.8 | 78.5 | 56 | I |
| 1.6 (84 kw) | 2013.03-2017.03 | 6AT/6MT | F | R | Box Body/MPV FWD 9HD (DV6C) | | GDS10325 | Drive Shaft | | 25 | 24 | 58.5 | 79 | 940 | |
| | 2013.03-2017.03 | 6AT/6MT | F | R | Box Body/MPV FWD 9HD (DV6C) | | GCO10148 | Outer Joint | | 25 | 34 | 58.5 | 79 | 55.5 | I |
| | 2013.03-2017.03 | 6AT/6MT | F | R | Box Body/MPV FWD 9HD (DV6C) | | GCI10058 | Inner Joint | | 24 | 34 | 29.8 | 365 | 88 | |
| | 2013.03-2017.03 | AT | F | L | Box Body/MPV FWD 9HD (DV6C) | Technical Information no.:8PN05 | GDS58072 | Drive Shaft | | 25 | 37 | 58.5 | 79 | 598 | |
| | 2013.03-2017.03 | MT | F | L | Box Body/MPV FWD 9HD (DV6C) | | GDS10253 | Drive Shaft | | 25 | 24 | 58.5 | 79 | 626 | |
| | 2013.03-2017.03 | 6MT | F | L | MPV FWD 9HD (DV6C) | | GDS10253 | Drive Shaft | | 25 | 24 | 58.5 | 79 | 626 | |
| | 2013.03-2017.03 | 6MT | F | R | MPV FWD 9HD (DV6C) | | GDS10325 | Drive Shaft | | 25 | 24 | 58.5 | 79 | 940 | |
| | 2013.03-2017.03 | 6MT | F | L/R | MPV FWD 9HD (DV6C) | | GCO99366 | Outer Joint | | 25 | 34 | 58.5 | 79 | 55 | I |
| | 2013.03-2017.03 | 6MT | F | L | MPV FWD 9HD (DV6C) | | GCI10057 | Inner Joint | | 24 | 34 | 40 | 52.5 | 90 | |
| | 2013.03-2017.03 | 6MT | F | R | MPV FWD 9HD (DV6C) | | GCI10058 | Inner Joint | | 24 | 34 | 29.8 | 365 | 88 | |
| | 2013.03-2017.03 | AT | F | L | MPV FWD 9HD (DV6C) | Technical Information no.:8PN05 | GDS58072 | Drive Shaft | | 25 | 37 | 58.5 | 79 | 598 | |
| | 2013.03-2017.03 | MT | F | L | MPV FWD 9HD (DV6C) | | GDS10312 | Drive Shaft | | 25 | 37 | 58.5 | 89 | 625 | |
| | 2013.03-2017.03 | | F | L/R | MPV FWD 9HD (DV6C) | | GCO10042 | Outer Joint | | 25 | 34 | 54.8 | 78.5 | 56 | I |
| 1.6 (85 kw) | 2014.11-2017.03 | 6AT | F | R | MPV FWD BHX (DV6FC) | Technical Information no.:8PN06 | GDS84640 | Drive Shaft | | 25 | 37 | 58.5 | 79 | 931 | |
| | 2014.11-2017.03 | 6AT | F | L | MPV FWD BHX (DV6FC) | Technical Information no.:8PN05 | GCO99366 | Outer Joint | | 25 | 34 | 58.5 | 79 | 55 | I |
| | 2014.11-2017.03 | 6AT | F | R | MPV FWD BHX (DV6FC) | Technical Information no.:8PN06 | GCO82351 | Outer Joint | | 25 | 34 | 58.5 | 79 | 55.5 | I |
| | 2014.11-2017.03 | 6AT | F | L | MPV FWD BHX (DV6FC) | | GCI82119 | Inner Joint | | 37 | 34 | 41.5 | 58.5 | 94 | |
| | 2014.11-2017.03 | 6MT | F | L | MPV FWD BHX (DV6FC) | | GDS10253 | Drive Shaft | | 25 | 24 | 58.5 | 79 | 626 | |
| | 2014.11-2017.03 | 6MT | F | R | MPV FWD BHX (DV6FC) | | GDS10325 | Drive Shaft | | 25 | 24 | 58.5 | 79 | 940 | |
| | 2014.11-2017.03 | 6MT | F | L/R | MPV FWD BHX (DV6FC) | | GCO99366 | Outer Joint | | 25 | 34 | 58.5 | 79 | 55 | I |
| | 2014.11-2017.03 | 6MT | F | L | MPV FWD BHX (DV6FC) | | GCI10057 | Inner Joint | | 24 | 34 | 40 | 52.5 | 90 | |
| | 2014.11-2017.03 | 6MT | F | R | MPV FWD BHX (DV6FC) | | GCI10058 | Inner Joint | | 24 | 34 | 29.8 | 365 | 88 | |
| | 2016.12-2019.11 | 6AT | F | L | MPV FWD BHX (DV6FC) | | GDS83110 | Drive Shaft | | 28 | 37 | 58.5 | 92.5 | 662 | |
| | 2016.12-2019.11 | 6AT | F | R | MPV FWD BHX (DV6FC) | | GDS83109 | Drive Shaft | | 28 | 37 | 58.5 | 92.5 | 933 | |
| | 2016.12-2019.11 | 6AT | F | L/R | MPV FWD BHX (DV6FC) | | GCO82273 | Outer Joint | | 28 | 34 | 58.5 | 92.5 | 56 | I |
| | 2016.12-2019.11 | 6AT | F | L | MPV FWD BHX (DV6FC) | | GCI82119 | Inner Joint | | 37 | 34 | 41.5 | 58.5 | 94 | |
| | 2016.12-2019.11 | 6AT | F | R | MPV FWD BHX (DV6FC) | | GCI82118 | Inner Joint | | 37 | 34 | | 290 | 88 | |
| | 2016.12-2019.11 | 6MT | F | L | MPV FWD BHX (DV6FC) | | GDS58210 | Drive Shaft | | 28 | 37 | 58.5 | 92 | 667 | |
| | 2016.12-2019.11 | 6MT | F | R | MPV FWD BHX (DV6FC) | | GDS58209 | Drive Shaft | | 28 | 37 | 58.5 | 92 | 969 | |
| | 2016.12-2019.11 | 6MT | F | L/R | MPV FWD BHX (DV6FC) | | GCO82449 | Outer Joint | | 28 | 36 | 58.5 | 92 | 60 | I |
| | 2016.12-2019.11 | 6MT | F | L | MPV FWD BHX (DV6FC) | | GCI82363 | Inner Joint | | 37 | 36 | 40 | 68 | 108 | |
| | 2016.12-2019.11 | 6MT | F | R | MPV FWD BHX (DV6FC) | | GCI82364 | Inner Joint | | 37 | 36 | 32 | 400 | 108 | |
| 1.6 (88 kw) | 2009.09-2017.03 | 5MT | F | L | MPV FWD EP6;5FS (EP6C);5FW (EP6) | | GDS10248 | Drive Shaft | | 25 | 24 | 58.5 | 79 | 642 | |
| | 2009.09-2017.03 | 5MT | F | R | MPV FWD EP6;5FS (EP6C);5FW (EP6) | | GDS10251 | Drive Shaft | | 25 | 24 | 58.5 | 79 | 935 | |
| | 2009.09-2017.03 | 5MT | F | L | MPV FWD EP6;5FS (EP6C);5FW (EP6) | | GCI10080 | Inner Joint | | 24 | 34 | 40 | 69 | 89.5 | |
| | 2009.09-2017.03 | 5MT | F | R | MPV FWD EP6;5FS (EP6C);5FW (EP6) | | GCI99159 | Inner Joint | | 24 | 34 | 29.8 | 350 | 87.5 | |
| | 2009.09-2017.03 | 6MT | F | | MPV FWD EP6;5FS (EP6C);5FW (EP6) | | GCO10155 | Outer Joint | | 25 | 39 | 58.5 | 89 | 63.5 | I |
| | 2009.09-2017.03 | 6MT | F | | MPV FWD EP6;5FS (EP6C);5FW (EP6) | | GCO99366 | Outer Joint | | 25 | 34 | 58.5 | 79 | 55 | I |
| | 2009.09-2017.03 | MT | F | L | MPV FWD EP6;5FS (EP6C);5FW (EP6) | Trans. code:BE4R | GDS10250 | Drive Shaft | | 25 | 24 | 58.5 | 79 | 630 | |
| | 2009.09-2017.03 | | F | L/R | MPV FWD EP6;5FS (EP6C);5FW (EP6) | | GCO10042 | Outer Joint | | 25 | 34 | 54.8 | 78.5 | 56 | I |
| | 2014.05-2017.03 | 6AT | F | R | MPV FWD BHZ (DV6FC) | Technical Information no.:8PN06 | GDS84640 | Drive Shaft | | 25 | 37 | 58.5 | 79 | 931 | |

| | YEAR | TRANSM. | F/R | L/R | BODY STYLE & DRIVE TYPE & ENGINE | REMARKS | G-AP Ref. | PRODUCT | ABS | Technical Specifications | | | | | |
|---|---|---|---|---|---|---|---|---|---|---|---|---|---|---|---|
| | | | | | | | | | | A | B | C | H | L | P |
| **PEUGEOT** **5008** | | | | | | | | | | | | | | | |
| 1.6 (88 kw) | 2014.05-2017.03 | 6AT | F | L | MPV FWD BHZ (DV6FC) | Technical Information no.:8PN05 | GCO99366 | Outer Joint | | 25 | 34 | 58.5 | 79 | 55 | I |
| | 2014.05-2017.03 | 6AT | F | R | MPV FWD BHZ (DV6FC) | Technical Information no.:8PN06 | GCO82351 | Outer Joint | | 25 | 34 | 58.5 | 79 | 55.5 | I |
| | 2014.05-2017.03 | 6AT | F | L | MPV FWD BHZ (DV6FC) | | GCI82119 | Inner Joint | | 37 | 34 | 41.5 | 58.5 | 94 | |
| | 2014.05-2017.03 | 6MT | F | L | MPV FWD BHZ (DV6FC) | | GDS10253 | Drive Shaft | | 25 | 24 | 58.5 | 79 | 626 | |
| | 2014.05-2017.03 | 6MT | F | R | MPV FWD BHZ (DV6FC) | | GDS10325 | Drive Shaft | | 25 | 24 | 58.5 | 79 | 940 | |
| | 2014.05-2017.03 | 6MT | F | L/R | MPV FWD BHZ (DV6FC) | | GCO10148 | Outer Joint | | 25 | 34 | 58.5 | 79 | 55.5 | I |
| | 2014.05-2017.03 | 6MT | F | L | MPV FWD BHZ (DV6FC) | | GCI10057 | Inner Joint | | 24 | 34 | 40 | 52.5 | 90 | |
| | 2014.05-2017.03 | 6MT | F | R | MPV FWD BHZ (DV6FC) | | GCI10058 | Inner Joint | | 24 | 34 | 29.8 | 365 | 88 | |
| | 2014.05-2017.03 | AT | F | L | MPV FWD BHZ (DV6FC) | Technical Information no.:8PN05 | GDS58072 | Drive Shaft | | 25 | 37 | 58.5 | 79 | 598 | |
| | 2016.12-2019.11 | 6AT | F | L | MPV FWD BHZ (DV6FC) | | GDS83110 | Drive Shaft | | 28 | 37 | 58.5 | 92.5 | 662 | |
| | 2016.12-2019.11 | 6AT | F | R | MPV FWD BHZ (DV6FC) | | GDS83109 | Drive Shaft | | 28 | 37 | 58.5 | 92.5 | 933 | |
| | 2016.12-2019.11 | 6AT | F | L | MPV FWD BHZ (DV6FC) | | GCI82119 | Inner Joint | | 37 | 34 | 41.5 | 58.5 | 94 | |
| | 2016.12-2019.11 | 6AT | F | R | MPV FWD BHZ (DV6FC) | | GCI82118 | Inner Joint | | 37 | 34 | | 290 | 88 | |
| | 2016.12-2019.11 | 6AT/6MT | F | L/R | MPV FWD BHZ (DV6FC) | | GCO82273 | Outer Joint | | 28 | 34 | 58.5 | 92.5 | 56 | I |
| | 2016.12-2019.11 | 6MT | F | L | MPV FWD BHZ (DV6FC) | | GDS83608 | Drive Shaft | | 28 | 37 | 58.5 | 92.5 | 683 | |
| | 2016.12-2019.11 | 6MT | F | R | MPV FWD BHZ (DV6FC) | | GDS83607 | Drive Shaft | | 28 | 37 | 58.5 | 92.5 | 944 | |
| | 2016.12-2019.11 | 6MT | F | L | MPV FWD BHZ (DV6FC) | | GCI82301 | Inner Joint | | 37 | 34 | 40 | 65.5 | 89.5 | |
| | 2016.12-2019.11 | 6MT | F | R | MPV FWD BHZ (DV6FC) | | GCI82300 | Inner Joint | | 37 | 34 | 31.9 | 302 | 88 | |
| 1.6 (110 kw) | 2012.02-2017.03 | 6AT | F | R | MPV FWD 5FX (EP6DT) | Technical Information no.:8PN06 | GDS84640 | Drive Shaft | | 25 | 37 | 58.5 | 79 | 931 | |
| | 2012.02-2017.03 | 6AT | F | L | MPV FWD 5FX (EP6DT) | Technical Information no.:8PN05 | GCO99366 | Outer Joint | | 25 | 34 | 58.5 | 79 | 55 | I |
| | 2012.02-2017.03 | 6AT | F | R | MPV FWD 5FX (EP6DT) | Technical Information no.:8PN06 | GCO82351 | Outer Joint | | 25 | 34 | 58.5 | 79 | 55.5 | I |
| | 2012.02-2017.03 | 6AT | F | L | MPV FWD 5FX (EP6DT) | | GCI82119 | Inner Joint | | 37 | 34 | 41.5 | 58.5 | 94 | |
| | 2012.02-2017.03 | AT | F | L | MPV FWD 5FX (EP6DT) | Technical Information no.:8PN05 | GDS58072 | Drive Shaft | | 25 | 37 | 58.5 | 79 | 598 | |
| | 2012.02-2017.03 | MT | F | L | MPV FWD 5FX (EP6DT) | | GDS10253 | Drive Shaft | | 25 | 24 | 58.5 | 79 | 626 | |
| | 2018.07- | 6AT | F | L | MPV FWD 5GX (EP6FDTMD) | Trans. code:AT6 | GDS83110 | Drive Shaft | | 28 | 37 | 58.5 | 92.5 | 662 | |
| | 2018.07- | 6AT | F | L | MPV FWD 5GX (EP6FDTMD) | Trans. code:AM6 | GDS83646 | Drive Shaft | | 28 | 37 | 58.5 | 92 | 622 | |
| | 2018.07- | 6AT | F | R | MPV FWD 5GX (EP6FDTMD) | Trans. code:AT6 | GDS83109 | Drive Shaft | | 28 | 37 | 58.5 | 92.5 | 933 | |
| | 2018.07- | 6AT | F | R | MPV FWD 5GX (EP6FDTMD) | Trans. code:AM6 | GDS83652 | Drive Shaft | | 28 | 37 | 58.5 | 92 | 951 | |
| | 2018.07- | 6AT | F | L/R | MPV FWD 5GX (EP6FDTMD) | Trans. code:AT6 | GCO82273 | Outer Joint | | 28 | 34 | 58.5 | 92.5 | 56 | I |
| | 2018.07- | 6AT | F | L/R | MPV FWD 5GX (EP6FDTMD) | Trans. code:AM6 | GCO82449 | Outer Joint | | 28 | 36 | 58.5 | 92 | 60 | I |
| | 2018.07- | 6AT | F | L | MPV FWD 5GX (EP6FDTMD) | Trans. code:AT6 | GCI82119 | Inner Joint | | 37 | 34 | 41.5 | 58.5 | 94 | |
| | 2018.07- | 6AT | F | L | MPV FWD 5GX (EP6FDTMD) | Trans. code:AM6 | GCI82321 | Inner Joint | | 37 | 36 | 42.5 | 59.5 | 108 | |
| | 2018.07- | 6AT | F | R | MPV FWD 5GX (EP6FDTMD) | Trans. code:AT6 | GCI82118 | Inner Joint | | 37 | 34 | | 290 | 88 | |
| | 2018.07- | 6AT | F | R | MPV FWD 5GX (EP6FDTMD) | Trans. code:AM6 | GCI82322 | Inner Joint | | 37 | 36 | | 379 | 108.5 | |
| 1.6 (115 kw) | 2009.09-2017.03 | 6AT | F | R | MPV FWD 5FV (EP6CDT) | Technical Information no.:8PN06 | GDS84640 | Drive Shaft | | 25 | 37 | 58.5 | 79 | 931 | |
| | 2009.09-2017.03 | 6AT | F | L | MPV FWD 5FV (EP6CDT) | Technical Information no.:8PN05 | GCO99366 | Outer Joint | | 25 | 34 | 58.5 | 79 | 55 | I |
| | 2009.09-2017.03 | 6AT | F | R | MPV FWD 5FV (EP6CDT) | Technical Information no.:8PN06 | GCO82351 | Outer Joint | | 25 | 34 | 58.5 | 79 | 55.5 | I |
| | 2009.09-2017.03 | 6AT | F | L | MPV FWD 5FV (EP6CDT) | | GCI82119 | Inner Joint | | 37 | 34 | 41.5 | 58.5 | 94 | |
| | 2009.09-2017.03 | 6MT | F | L | MPV FWD 5FV (EP6CDT) | | GDS10253 | Drive Shaft | | 25 | 24 | 58.5 | 79 | 626 | |
| | 2009.09-2017.03 | 6MT | F | R | MPV FWD 5FV (EP6CDT) | | GDS10325 | Drive Shaft | | 25 | 24 | 58.5 | 79 | 940 | |
| | 2009.09-2017.03 | 6MT | F | L/R | MPV FWD 5FV (EP6CDT) | | GCO10148 | Outer Joint | | 25 | 34 | 58.5 | 79 | 55.5 | I |
| | 2009.09-2017.03 | 6MT | F | L | MPV FWD 5FV (EP6CDT) | | GCI10057 | Inner Joint | | 24 | 34 | 40 | 52.5 | 90 | |
| | 2009.09-2017.03 | 6MT | F | R | MPV FWD 5FV (EP6CDT) | | GCI10058 | Inner Joint | | 24 | 34 | 29.8 | 365 | 88 | |
| | 2009.09-2017.03 | AT | F | L | MPV FWD 5FV (EP6CDT) | Technical Information no.:8PN05 | GDS58072 | Drive Shaft | | 25 | 37 | 58.5 | 79 | 598 | |
| 1.6 (120 kw) | 2012.02-2017.03 | 6AT | F | R | MPV FWD 5GZ (EP6FDT) | Technical Information no.:8PN06 | GDS84640 | Drive Shaft | | 25 | 37 | 58.5 | 79 | 931 | |
| | 2012.02-2017.03 | 6AT | F | L | MPV FWD 5GZ (EP6FDT) | Technical Information no.:8PN05 | GCO99366 | Outer Joint | | 25 | 34 | 58.5 | 79 | 55 | I |
| | 2012.02-2017.03 | 6AT | F | R | MPV FWD 5GZ (EP6FDT) | Technical Information no.:8PN06 | GCO82351 | Outer Joint | | 25 | 34 | 58.5 | 79 | 55.5 | I |
| | 2012.02-2017.03 | 6AT | F | L | MPV FWD 5GZ (EP6FDT) | | GCI82119 | Inner Joint | | 37 | 34 | 41.5 | 58.5 | 94 | |
| | 2012.02-2017.03 | AT | F | L | MPV FWD 5GZ (EP6FDT) | Technical Information no.:8PN05 | GDS58072 | Drive Shaft | | 25 | 37 | 58.5 | 79 | 598 | |
| 1.6 (121 kw) | 2012.02-2017.03 | 6AT | F | R | MPV FWD 5GZ (EP6FDT) | Technical Information no.:8PN06 | GDS84640 | Drive Shaft | | 25 | 37 | 58.5 | 79 | 931 | |
| | 2012.02-2017.03 | 6AT | F | L | MPV FWD 5GZ (EP6FDT) | Technical Information no.:8PN05 | GCO99366 | Outer Joint | | 25 | 34 | 58.5 | 79 | 55 | I |
| | 2012.02-2017.03 | 6AT | F | R | MPV FWD 5GZ (EP6FDT) | Technical Information no.:8PN06 | GCO82351 | Outer Joint | | 25 | 34 | 58.5 | 79 | 55.5 | I |
| | 2012.02-2017.03 | 6AT | F | L | MPV FWD 5GZ (EP6FDT) | | GCI82119 | Inner Joint | | 37 | 34 | 41.5 | 58.5 | 94 | |
| | 2012.02-2017.03 | AT | F | L | MPV FWD 5GZ (EP6FDT) | Technical Information no.:8PN05 | GDS58072 | Drive Shaft | | 25 | 37 | 58.5 | 79 | 598 | |
| | 2016.12- | 6AT | F | L | MPV FWD 5GZ (EP6FDT);5GY (EP6FDTM) | | GDS83110 | Drive Shaft | | 28 | 37 | 58.5 | 92.5 | 662 | |
| | 2016.12- | 6AT | F | R | MPV FWD 5GZ (EP6FDT);5GY (EP6FDTM) | | GDS83109 | Drive Shaft | | 28 | 37 | 58.5 | 92.5 | 933 | |
| | 2016.12- | 6AT | F | L/R | MPV FWD 5GZ (EP6FDT);5GY (EP6FDTM) | | GCO82273 | Outer Joint | | 28 | 34 | 58.5 | 92.5 | 56 | I |
| | 2016.12- | 6AT | F | L | MPV FWD 5GZ (EP6FDT);5GY (EP6FDTM) | | GCI82119 | Inner Joint | | 37 | 34 | 41.5 | 58.5 | 94 | |
| | 2016.12- | 6AT | F | R | MPV FWD 5GZ (EP6FDT);5GY (EP6FDTM) | | GCI82118 | Inner Joint | | 37 | 34 | | 290 | 88 | |
| 1.6 (133 kw) | 2018.07- | 8AT | F | L | MPV FWD 5GF (EP6FADTXD) | | GDS83110 | Drive Shaft | | 28 | 37 | 58.5 | 92.5 | 662 | |
| | 2018.07- | 8AT | F | R | MPV FWD 5GF (EP6FADTXD) | | GDS83109 | Drive Shaft | | 28 | 37 | 58.5 | 92.5 | 933 | |
| | 2018.07- | 8AT | F | L/R | MPV FWD 5GF (EP6FADTXD) | | GCO82273 | Outer Joint | | 28 | 34 | 58.5 | 92.5 | 56 | I |
| | 2018.07- | 8AT | F | L | MPV FWD 5GF (EP6FADTXD) | | GCI82119 | Inner Joint | | 37 | 34 | 41.5 | 58.5 | 94 | |
| | 2018.07- | 8AT | F | R | MPV FWD 5GF (EP6FADTXD) | | GCI82118 | Inner Joint | | 37 | 34 | | 290 | 88 | |
| 2.0 (100 kw) | 2012.02-2017.03 | 6MT | F | L | Box Body/MPV FWD RHE (DW10CTED4) | | GDS10427 | Drive Shaft | | 25 | 37 | 58.5 | 89 | 638 | |

| | YEAR | TRANSM. | F/R | L/R | BODY STYLE & DRIVE TYPE & ENGINE | REMARKS | G-AP Ref. | PRODUCT | ABS | Technical Specifications | | | | | |
|---|---|---|---|---|---|---|---|---|---|---|---|---|---|---|---|
| | | | | | | | | | | A | B | C | H | L | P |
| **PEUGEOT** | | | | | | | | | | | | | | | |
| **5008** | | | | | | | | | | | | | | | |
| 2.0 (100 kw) | 2012.02-2017.03 | 6MT | F | R | Box Body/MPV FWD RHE (DW10CTED4) | | GDS10421 | Drive Shaft | | 25 | 37 | 58.5 | 89 | 972 | |
| | 2012.02-2017.03 | 6MT | F | L/R | Box Body/MPV FWD RHE (DW10CTED4) | | GCO10158 | Outer Joint | | 25 | 26 | 58.5 | 89 | 61.5 | M |
| | 2012.02-2017.03 | 6MT | F | L | Box Body/MPV FWD RHE (DW10CTED4) | | GCI10095 | Inner Joint | | 37 | 26 | 40 | 68 | 100 | |
| | 2012.02-2017.03 | 6MT | F | L | MPV FWD RHD (DW10CTED4);AHV (DW10FD);RHD (DW10CB) | | GDS10312 | Drive Shaft | | 25 | 37 | 58.5 | 89 | 625 | |
| | 2012.02-2017.03 | 6MT | F | L | MPV FWD RHD (DW10CTED4);AHV (DW10FD);RHD (DW10CB) | | GDS10427 | Drive Shaft | | 25 | 37 | 58.5 | 89 | 638 | |
| | 2012.02-2017.03 | 6MT | F | R | MPV FWD RHD (DW10CTED4);AHV (DW10FD);RHD (DW10CB) | | GDS10421 | Drive Shaft | | 25 | 37 | 58.5 | 89 | 972 | |
| | 2012.02-2017.03 | 6MT | F | L | MPV FWD RHD (DW10CTED4);AHV (DW10FD);RHD (DW10CB) | Date to:2017.03 | GCO10158 | Outer Joint | | 25 | 26 | 58.5 | 89 | 61.5 | M |
| | 2012.02-2017.03 | 6MT | F | L/R | MPV FWD RHD (DW10CTED4);AHV (DW10FD);RHD (DW10CB) | | GCO10155 | Outer Joint | | 25 | 39 | 58.5 | 89 | 63.5 | I |
| | 2012.02-2017.03 | AT | F | L | MPV FWD RHD (DW10CTED4);AHV (DW10FD);RHD (DW10CB) | | GDS10380 | Drive Shaft | | 25 | 37 | 58.5 | 89 | 635 | |
| | 2012.02-2017.03 | AT | F | R | MPV FWD RHD (DW10CTED4);AHV (DW10FD);RHD (DW10CB) | | GDS10363 | Drive Shaft | | 25 | 37 | 58.5 | 89 | 935 | |
| | 2012.02-2017.03 | MT | F | L | MPV FWD RHD (DW10CTED4);AHV (DW10FD);RHD (DW10CB) | | GDS10210 | Drive Shaft | | 25 | 37 | 58.5 | 89 | 638 | |
| | 2012.02-2017.03 | MT | F | R | MPV FWD RHD (DW10CTED4);AHV (DW10FD);RHD (DW10CB) | | GDS10361 | Drive Shaft | | 25 | 37 | 58.5 | 89 | 959 | |
| | 2012.02-2017.03 | MT | F | L/R | MPV FWD RHD (DW10CTED4);AHV (DW10FD);RHD (DW10CB) | | GCO10085 | Outer Joint | | 25 | 39 | 59 | 89 | 63.5 | I |
| | 2012.02-2017.03 | MT | F | R | MPV FWD RHD (DW10CTED4);AHV (DW10FD);RHD (DW10CB) | | GCI10041 | Inner Joint | | 37 | 39 | 32 | 399 | 95.5 | |
| | 2016.12- | 6AT | F | L | MPV FWD AHV (DW10FD);AHS (DW10FD) | | GDS83646 | Drive Shaft | | 28 | 37 | 58.5 | 92 | 622 | |
| | 2016.12- | 6AT | F | R | MPV FWD AHV (DW10FD);AHS (DW10FD) | | GDS83652 | Drive Shaft | | 28 | 37 | 58.5 | 92 | 951 | |
| | 2016.12- | 6AT | F | L/R | MPV FWD AHV (DW10FD);AHS (DW10FD) | | GCO82449 | Outer Joint | | 28 | 36 | 58.5 | 92 | 60 | I |
| | 2016.12- | 6AT | F | L | MPV FWD AHV (DW10FD);AHS (DW10FD) | | GCI82321 | Inner Joint | | 37 | 36 | 42.5 | 59.5 | 108 | |
| | 2016.12- | 6AT | F | R | MPV FWD AHV (DW10FD);AHS (DW10FD) | | GCI82322 | Inner Joint | | 37 | 36 | | 379 | 108.5 | |
| 2.0 (110 kw) | 2009.06-2017.03 | 6MT | F | L | Box Body/MPV FWD RHE (DW10CTED4) | | GDS10427 | Drive Shaft | | 25 | 37 | 58.5 | 89 | 638 | |
| | 2009.06-2017.03 | 6MT | F | R | Box Body/MPV FWD RHE (DW10CTED4) | | GDS10421 | Drive Shaft | | 25 | 37 | 58.5 | 89 | 972 | |
| | 2009.06-2017.03 | 6MT | F | L/R | Box Body/MPV FWD RHE (DW10CTED4) | | GCO10158 | Outer Joint | | 25 | 26 | 58.5 | 89 | 61.5 | M |
| | 2009.06-2017.03 | 6MT | F | L | Box Body/MPV FWD RHE (DW10CTED4) | | GCI10095 | Inner Joint | | 37 | 26 | 40 | 68 | 100 | |
| | 2009.06-2017.03 | 6MT | F | L | MPV FWD RHE (DW10CTED4);AHX (DW10FD) | inner teeth of wheel side:26 | GDS10312 | Drive Shaft | | 25 | 37 | 58.5 | 89 | 625 | |
| | 2009.06-2017.03 | 6MT | F | L | MPV FWD RHE (DW10CTED4);AHX (DW10FD) | | GCO10158 | Outer Joint | | 25 | 26 | 58.5 | 89 | 61.5 | M |
| | 2009.06-2017.03 | 6MT | F | L/R | MPV FWD RHE (DW10CTED4);AHX (DW10FD) | | GCO99366 | Outer Joint | | 25 | 34 | 58.5 | 79 | 55 | I |
| | 2009.06-2017.03 | AT | F | L | MPV FWD RHE (DW10CTED4);AHX (DW10FD) | | GDS10380 | Drive Shaft | | 25 | 37 | 58.5 | 89 | 635 | |
| | 2009.06-2017.03 | AT | F | R | MPV FWD RHE (DW10CTED4);AHX (DW10FD) | | GDS10363 | Drive Shaft | | 25 | 37 | 58.5 | 89 | 935 | |
| | 2009.06-2017.03 | AT | F | R | MPV FWD RHE (DW10CTED4);AHX (DW10FD) | Date to:2017.03 | GCI10091 | Inner Joint | | 37 | 26 | | 366 | 100 | |
| | 2009.06-2017.03 | AT/6MT | F | L/R | MPV FWD RHE (DW10CTED4);AHX (DW10FD) | | GCO10155 | Outer Joint | | 25 | 39 | 58.5 | 89 | 63.5 | I |
| | 2009.06-2017.03 | MT | F | L | MPV FWD RHE (DW10CTED4);AHX (DW10FD) | inner teeth of wheel side:39 | GDS10210 | Drive Shaft | | 25 | 37 | 58.5 | 89 | 638 | |
| | 2009.06-2017.03 | MT | F | L | MPV FWD RHE (DW10CTED4);AHX (DW10FD) | inner teeth of wheel side:26 | GDS10427 | Drive Shaft | | 25 | 37 | 58.5 | 89 | 638 | |
| | 2009.06-2017.03 | MT | F | R | MPV FWD RHE (DW10CTED4);AHX (DW10FD) | inner teeth of wheel side:39 | GDS10361 | Drive Shaft | | 25 | 37 | 58.5 | 89 | 959 | |
| | 2009.06-2017.03 | MT | F | R | MPV FWD RHE (DW10CTED4);AHX (DW10FD) | inner teeth of wheel side:26 | GDS10421 | Drive Shaft | | 25 | 37 | 58.5 | 89 | 972 | |
| | 2009.06-2017.03 | MT | F | L/R | MPV FWD RHE (DW10CTED4);AHX (DW10FD) | Date from:2010.01 | GCO10085 | Outer Joint | | 25 | 39 | 59 | 89 | 63.5 | I |
| | 2009.06-2017.03 | MT | F | R | MPV FWD RHE (DW10CTED4);AHX (DW10FD) | | GCI10041 | Inner Joint | | 37 | 39 | 32 | 399 | 95.5 | |
| | 2016.12- | 6AT | F | L | MPV FWD AHX (DW10FD) | | GDS83646 | Drive Shaft | | 28 | 37 | 58.5 | 92 | 622 | |
| | 2016.12- | 6AT | F | R | MPV FWD AHX (DW10FD) | | GDS83652 | Drive Shaft | | 28 | 37 | 58.5 | 92 | 951 | |
| | 2016.12- | 6AT | F | L | MPV FWD AHX (DW10FD) | | GCI82321 | Inner Joint | | 37 | 36 | 42.5 | 59.5 | 108 | |
| | 2016.12- | 6AT | F | R | MPV FWD AHX (DW10FD) | | GCI82322 | Inner Joint | | 37 | 36 | | 379 | 108.5 | |
| | 2016.12- | 6AT/6MT | F | L/R | MPV FWD AHX (DW10FD) | | GCO82449 | Outer Joint | | 28 | 36 | 58.5 | 92 | 60 | I |
| | 2016.12- | 6MT | F | L | MPV FWD AHX (DW10FD) | | GDS58210 | Drive Shaft | | 28 | 37 | 58.5 | 92 | 667 | |
| | 2016.12- | 6MT | F | R | MPV FWD AHX (DW10FD) | | GDS58209 | Drive Shaft | | 28 | 37 | 58.5 | 92 | 969 | |
| | 2016.12- | 6MT | F | L | MPV FWD AHX (DW10FD) | | GCI82363 | Inner Joint | | 37 | 36 | 40 | 68 | 108 | |
| | 2016.12- | 6MT | F | R | MPV FWD AHX (DW10FD) | | GCI82364 | Inner Joint | | 37 | 36 | 32 | 400 | 108 | |
| 2.0 (120 kw) | 2009.06-2017.03 | 6AT | F | L | Box Body/MPV FWD RHH (DW10CTED4) | | GDS10380 | Drive Shaft | | 25 | 37 | 58.5 | 89 | 635 | |
| | 2009.06-2017.03 | 6AT | F | R | Box Body/MPV FWD RHH (DW10CTED4) | | GDS10363 | Drive Shaft | | 25 | 37 | 58.5 | 89 | 935 | |
| | 2009.06-2017.03 | 6AT | F | L | Box Body/MPV FWD RHH (DW10CTED4) | | GCO10155 | Outer Joint | | 25 | 39 | 58.5 | 89 | 63.5 | I |
| | 2009.06-2017.03 | 6AT | F | R | Box Body/MPV FWD RHH (DW10CTED4) | | GCO10158 | Outer Joint | | 25 | 26 | 58.5 | 89 | 61.5 | M |
| | 2009.06-2017.03 | 6AT | F | R | Box Body/MPV FWD RHH (DW10CTED4) | | GCI10091 | Inner Joint | | 37 | 26 | | 366 | 100 | |
| | 2009.09-2017.03 | 6MT | F | L | MPV FWD RHH (DW10CTED4) | inner teeth of wheel side:26 | GDS10312 | Drive Shaft | | 25 | 37 | 58.5 | 89 | 625 | |
| | 2009.09-2017.03 | 6MT | F | L | MPV FWD RHH (DW10CTED4) | inner teeth of wheel side:26 | GCO10158 | Outer Joint | | 25 | 26 | 58.5 | 89 | 61.5 | M |
| | 2009.09-2017.03 | AT | F | L | MPV FWD RHH (DW10CTED4) | | GDS10380 | Drive Shaft | | 25 | 37 | 58.5 | 89 | 635 | |
| | 2009.09-2017.03 | AT | F | R | MPV FWD RHH (DW10CTED4) | | GDS10363 | Drive Shaft | | 25 | 37 | 58.5 | 89 | 935 | |
| | 2009.09-2017.03 | AT | F | R | MPV FWD RHH (DW10CTED4) | Date to:2017.03 | GCI10091 | Inner Joint | | 37 | 26 | | 366 | 100 | |
| | 2009.09-2017.03 | AT/6MT | F | L/R | MPV FWD RHH (DW10CTED4) | inner teeth of wheel side:39 | GCO10155 | Outer Joint | | 25 | 39 | 58.5 | 89 | 63.5 | I |
| | 2009.09-2017.03 | MT | F | L | MPV FWD RHH (DW10CTED4) | inner teeth of wheel side:39 | GDS10210 | Drive Shaft | | 25 | 37 | 58.5 | 89 | 638 | |
| | 2009.09-2017.03 | MT | F | L | MPV FWD RHH (DW10CTED4) | inner teeth of wheel side:26 | GDS10427 | Drive Shaft | | 25 | 37 | 58.5 | 89 | 638 | |
| | 2009.09-2017.03 | MT | F | R | MPV FWD RHH (DW10CTED4) | inner teeth of wheel side:39 | GDS10361 | Drive Shaft | | 25 | 37 | 58.5 | 89 | 959 | |
| | 2009.09-2017.03 | MT | F | R | MPV FWD RHH (DW10CTED4) | inner teeth of wheel side:26 | GDS10421 | Drive Shaft | | 25 | 37 | 58.5 | 89 | 972 | |
| | 2009.09-2017.03 | MT | F | L/R | MPV FWD RHH (DW10CTED4) | inner teeth of wheel side:39 | GCO10085 | Outer Joint | | 25 | 39 | 59 | 89 | 63.5 | I |
| | 2009.09-2017.03 | MT | F | R | MPV FWD RHH (DW10CTED4) | | GCI10041 | Inner Joint | | 37 | 39 | 32 | 399 | 95.5 | |
| 2.0 (130 kw) | 2018.01- | 8AT | F | L | Box Body/MPV FWD EHZ (DW10FC) | | GDS83646 | Drive Shaft | | 28 | 37 | 58.5 | 92 | 622 | |
| | 2018.01- | 8AT | F | R | Box Body/MPV FWD EHZ (DW10FC) | | GDS83652 | Drive Shaft | | 28 | 37 | 58.5 | 92 | 951 | |
| | 2018.01- | 8AT | F | L/R | Box Body/MPV FWD EHZ (DW10FC) | | GCO82449 | Outer Joint | | 28 | 36 | 58.5 | 92 | 60 | I |

| | YEAR | TRANSM. | F/R | L/R | BODY STYLE & DRIVE TYPE & ENGINE | REMARKS | G-AP Ref. | PRODUCT | ABS | Technical Specifications A | B | C | H | L | P |
|---|---|---|---|---|---|---|---|---|---|---|---|---|---|---|---|
| **PEUGEOT** | | | | | | | | | | | | | | | |
| **5008** | | | | | | | | | | | | | | | |
| 2.0 (130 kw) | 2018.01- | 8AT | F | L | Box Body/MPV FWD EHZ (DW10FC) | | GCI82321 | Inner Joint | | 37 | 36 | 42.5 | 59.5 | 108 | |
| | 2018.01- | 8AT | F | R | Box Body/MPV FWD EHZ (DW10FC) | | GCI82322 | Inner Joint | | 37 | 36 | | 379 | 108.5 | |
| | 2018.01- | 6AT/8AT | F | L | MPV FWD EHZ (DW10FC) | | GDS83646 | Drive Shaft | | 28 | 37 | 58.5 | 92 | 622 | |
| | 2018.01- | 6AT/8AT | F | R | MPV FWD EHZ (DW10FC) | | GDS83652 | Drive Shaft | | 28 | 37 | 58.5 | 92 | 951 | |
| | 2018.01- | 6AT/8AT | F | L/R | MPV FWD EHZ (DW10FC) | | GCO82449 | Outer Joint | | 28 | 36 | 58.5 | 92 | 60 | I |
| | 2018.01- | 6AT/8AT | F | L | MPV FWD EHZ (DW10FC) | | GCI82321 | Inner Joint | | 37 | 36 | 42.5 | 59.5 | 108 | |
| | 2018.01- | 6AT/8AT | F | R | MPV FWD EHZ (DW10FC) | | GCI82322 | Inner Joint | | 37 | 36 | | 379 | 108.5 | |
| 2.0 (133 kw) | 2016.12- | 6AT/8AT | F | L | MPV FWD AHW (DW10FC) | | GDS83646 | Drive Shaft | | 28 | 37 | 58.5 | 92 | 622 | |
| | 2016.12- | 6AT/8AT | F | R | MPV FWD AHW (DW10FC) | | GDS83652 | Drive Shaft | | 28 | 37 | 58.5 | 92 | 951 | |
| | 2016.12- | 6AT/8AT | F | L/R | MPV FWD AHW (DW10FC) | | GCO82449 | Outer Joint | | 28 | 36 | 58.5 | 92 | 60 | I |
| | 2016.12- | 6AT/8AT | F | L | MPV FWD AHW (DW10FC) | | GCI82321 | Inner Joint | | 37 | 36 | 42.5 | 59.5 | 108 | |
| | 2016.12- | 6AT/8AT | F | R | MPV FWD AHW (DW10FC) | | GCI82322 | Inner Joint | | 37 | 36 | | 379 | 108.5 | |
| **508** | | | | | | | | | | | | | | | |
| 1.2 (96 kw) | 2020.06- | 8AT | F | L | Hatchback FWD HNS (EB2ADTS) | | GDS83110 | Drive Shaft | | 28 | 37 | 58.5 | 92.5 | 662 | |
| | 2020.06- | 8AT | F | R | Hatchback FWD HNS (EB2ADTS) | | GDS83109 | Drive Shaft | | 28 | 37 | 58.5 | 92.5 | 933 | |
| | 2020.06- | 8AT | F | L/R | Hatchback FWD HNS (EB2ADTS) | | GCO82273 | Outer Joint | | 28 | 34 | 58.5 | 92.5 | 56 | I |
| | 2020.06- | 8AT | F | L | Hatchback FWD HNS (EB2ADTS) | | GCI82119 | Inner Joint | | 37 | 34 | 41.5 | 58.5 | 94 | |
| | 2020.06- | 8AT | F | R | Hatchback FWD HNS (EB2ADTS) | | GCI82118 | Inner Joint | | 37 | 34 | | 290 | 88 | |
| 1.5 (96 kw) | 2018.10- | 6MT | F | L | Hatchback FWD YHZ (DV5RC) | | GDS83608 | Drive Shaft | | 28 | 37 | 58.5 | 92.5 | 683 | |
| | 2018.10- | 6MT | F | R | Hatchback FWD YHZ (DV5RC) | | GDS83607 | Drive Shaft | | 28 | 37 | 58.5 | 92.5 | 944 | |
| | 2018.10- | 6MT | F | L | Hatchback FWD YHZ (DV5RC) | | GCI82301 | Inner Joint | | 37 | 34 | 40 | 65.5 | 89.5 | |
| | 2018.10- | 6MT | F | R | Hatchback FWD YHZ (DV5RC) | | GCI82300 | Inner Joint | | 37 | 34 | 31.9 | 302 | 88 | |
| | 2018.10- | 8AT | F | L | Hatchback FWD YHZ (DV5RC) | | GDS83110 | Drive Shaft | | 28 | 37 | 58.5 | 92.5 | 662 | |
| | 2018.10- | 8AT | F | R | Hatchback FWD YHZ (DV5RC) | | GDS83109 | Drive Shaft | | 28 | 37 | 58.5 | 92.5 | 933 | |
| | 2018.10- | 8AT | F | L | Hatchback FWD YHZ (DV5RC) | | GCI82119 | Inner Joint | | 37 | 34 | 41.5 | 58.5 | 94 | |
| | 2018.10- | 8AT | F | R | Hatchback FWD YHZ (DV5RC) | | GCI82118 | Inner Joint | | 37 | 34 | | 290 | 88 | |
| | 2018.10- | 8AT/6MT | F | L/R | Hatchback FWD YHZ (DV5RC) | | GCO82273 | Outer Joint | | 28 | 34 | 58.5 | 92.5 | 56 | I |
| 1.6 (82 kw) | 2010.11-2018.12 | 5MT | F | L | Saloon FWD 9HR (DV6C);9HL (DV6C) | | GDS10238 | Drive Shaft | | 28 | 24 | 58.5 | 92 | 669 | |
| | 2010.11-2018.12 | 5MT | F | R | Saloon FWD 9HR (DV6C);9HL (DV6C) | | GDS10239 | Drive Shaft | | 28 | 24 | 58.5 | 92 | 955 | |
| | 2010.11-2018.12 | 5MT | F | L/R | Saloon FWD 9HR (DV6C);9HL (DV6C) | | GCO10124 | Outer Joint | | 28 | 34 | 58.5 | 92 | 55 | I |
| | 2010.11-2018.12 | 5MT | F | R | Saloon FWD 9HR (DV6C);9HL (DV6C) | | GCI99159 | Inner Joint | | 24 | 34 | 29.8 | 350 | 87.5 | |
| | 2010.11-2018.12 | 6AMT | F | L | Saloon FWD 9HR (DV6C);9HL (DV6C) | | GDS57897 | Drive Shaft | | 28 | 24 | 58.5 | 92 | 674 | |
| | 2010.11-2018.12 | 6AMT | F | R | Saloon FWD 9HR (DV6C);9HL (DV6C) | | GDS57955 | Drive Shaft | | 28 | 24 | 58.5 | 92 | 985 | |
| | 2010.11-2018.12 | 6AMT | F | L/R | Saloon FWD 9HR (DV6C);9HL (DV6C) | | GCO10052 | Outer Joint | | 28 | 34 | 58.5 | 92 | 55 | I |
| | 2010.11-2018.12 | 6AMT | F | L | Saloon FWD 9HR (DV6C);9HL (DV6C) | | GCI10058 | Inner Joint | | 24 | 34 | 29.8 | 365 | 88 | |
| 1.6 (84 kw) | 2012.02-2018.12 | 5MT | F | L | Saloon FWD 9HD (DV6CTED) | | GDS10238 | Drive Shaft | | 28 | 24 | 58.5 | 92 | 669 | |
| | 2012.02-2018.12 | 5MT | F | R | Saloon FWD 9HD (DV6CTED) | | GDS10239 | Drive Shaft | | 28 | 24 | 58.5 | 92 | 955 | |
| | 2012.02-2018.12 | 5MT | F | L/R | Saloon FWD 9HD (DV6CTED) | | GCO10124 | Outer Joint | | 28 | 34 | 58.5 | 92 | 55 | I |
| | 2012.02-2018.12 | 5MT | F | R | Saloon FWD 9HD (DV6CTED) | | GCI99159 | Inner Joint | | 24 | 34 | 29.8 | 350 | 87.5 | |
| | 2012.02-2018.12 | 6AMT | F | L | Saloon FWD 9HD (DV6CTED) | | GDS57897 | Drive Shaft | | 28 | 24 | 58.5 | 92 | 674 | |
| | 2012.02-2018.12 | 6AMT | F | R | Saloon FWD 9HD (DV6CTED) | | GDS57955 | Drive Shaft | | 28 | 24 | 58.5 | 92 | 985 | |
| | 2012.02-2018.12 | 6AMT | F | L/R | Saloon FWD 9HD (DV6CTED) | | GCO10052 | Outer Joint | | 28 | 34 | 58.5 | 92 | 55 | I |
| | 2012.02-2018.12 | 6MT | F | L | Saloon FWD 9HD (DV6CTED) | | GDS84333 | Drive Shaft | | 28 | 24 | 58.6 | 93 | 668 | |
| | 2012.02-2018.12 | 6MT | F | R | Saloon FWD 9HD (DV6CTED) | | GDS84332 | Drive Shaft | | 28 | 24 | 58.6 | 93 | 978 | |
| | 2012.02-2018.12 | 6MT | F | L/R | Saloon FWD 9HD (DV6CTED) | | GCO10098 | Outer Joint | | 28 | 39 | 58.6 | 93 | 63 | I |
| | 2012.02-2018.12 | 6MT | F | L | Saloon FWD 9HD (DV6CTED) | | GCI10057 | Inner Joint | | 24 | 34 | 40 | 52.5 | 90 | |
| | 2012.02-2018.12 | 6MT | F | R | Saloon FWD 9HD (DV6CTED) | | GCI10058 | Inner Joint | | 24 | 34 | 29.8 | 365 | 88 | |
| 1.6 (85 kw) | 2010.11-2018.12 | 6AMT | F | L | Saloon FWD 5FH (EP6C) | | GDS57897 | Drive Shaft | | 28 | 24 | 58.5 | 92 | 674 | |
| | 2010.11-2018.12 | 6AMT | F | R | Saloon FWD 5FH (EP6C) | Hollow shaft | GDS57955 | Drive Shaft | | 28 | 24 | 58.5 | 92 | 985 | |
| | 2010.11-2018.12 | 6AMT | F | L | Saloon FWD 5FH (EP6C) | | GCI10058 | Inner Joint | | 24 | 34 | 29.8 | 365 | 88 | |
| | 2010.11-2018.12 | 6MT | F | R | Saloon FWD 5FH (EP6C) | Transm. code:ML6C;Solid shaft | GDS10320 | Drive Shaft | | 28 | 37 | 59 | 91 | 980 | |
| | 2010.11-2018.12 | AT/MT | F | L/R | Saloon FWD 5FH (EP6C) | | GCO10052 | Outer Joint | | 28 | 34 | 58.5 | 92 | 55 | I |
| | 2014.09-2018.12 | 6MT | F | L | Saloon FWD BHX (DV6FC) | | GDS84333 | Drive Shaft | | 28 | 24 | 58.6 | 93 | 668 | |
| | 2014.09-2018.12 | 6MT | F | R | Saloon FWD BHX (DV6FC) | | GDS84332 | Drive Shaft | | 28 | 24 | 58.6 | 93 | 978 | |
| | 2014.09-2018.12 | 6MT | F | L/R | Saloon FWD BHX (DV6FC) | | GCO10098 | Outer Joint | | 28 | 39 | 58.6 | 93 | 63 | I |
| | 2014.09-2018.12 | 6MT | F | L | Saloon FWD BHX (DV6FC) | | GCI10057 | Inner Joint | | 24 | 34 | 40 | 52.5 | 90 | |
| | 2014.09-2018.12 | 6MT | F | R | Saloon FWD BHX (DV6FC) | | GCI10058 | Inner Joint | | 24 | 34 | 29.8 | 365 | 88 | |
| 1.6 (88 kw) | 2010.11-2018.12 | 6AMT | F | L | Saloon FWD 5FS (EP6C) | | GDS57897 | Drive Shaft | | 28 | 24 | 58.5 | 92 | 674 | |
| | 2010.11-2018.12 | 6AMT | F | R | Saloon FWD 5FS (EP6C) | | GDS57955 | Drive Shaft | | 28 | 24 | 58.5 | 92 | 985 | |
| | 2010.11-2018.12 | 6AMT | F | L/R | Saloon FWD 5FS (EP6C) | | GCO10052 | Outer Joint | | 28 | 34 | 58.5 | 92 | 55 | I |
| | 2010.11-2018.12 | 6AMT | F | L | Saloon FWD 5FS (EP6C) | | GCI10058 | Inner Joint | | 24 | 34 | 29.8 | 365 | 88 | |
| | 2014.03-2018.12 | 6AT | F | L | Saloon FWD BHZ (DV6FC) | Date to:2015.06 | GDS57898 | Drive Shaft | | 28 | 37 | 58.5 | 92 | 640 | |
| | 2014.03-2018.12 | 6AT | F | R | Saloon FWD BHZ (DV6FC) | Date to:2015.06 | GDS57651 | Drive Shaft | | 28 | 37 | 58.5 | 92 | 968 | |
| | 2014.03-2018.12 | 6AT | F | R | Saloon FWD BHZ (DV6FC) | Date to:2015.06 | GCI83795 | Inner Joint | | 37 | 34 | | 350 | 90 | |
| | 2014.03-2018.12 | 6MT | F | L | Saloon FWD BHZ (DV6FC) | | GDS84333 | Drive Shaft | | 28 | 24 | 58.6 | 93 | 668 | |

| | YEAR | TRANSM. | F/R | L/R | BODY STYLE & DRIVE TYPE & ENGINE | REMARKS | G-AP Ref. | PRODUCT | ABS | Technical Specifications A | B | C | H | L | P |
|---|---|---|---|---|---|---|---|---|---|---|---|---|---|---|---|
| **PEUGEOT** | | | | | | | | | | | | | | | |
| **508** | | | | | | | | | | | | | | | |
| 1.6 (88 kw) | 2014.03-2018.12 | 6MT | F | R | Saloon FWD BHZ (DV6FC) | | GDS84332 | Drive Shaft | | 28 | 24 | 58.6 | 93 | 978 | |
| | 2014.03-2018.12 | 6MT | F | L/R | Saloon FWD BHZ (DV6FC) | | GCO10098 | Outer Joint | | 28 | 39 | 58.6 | 93 | 63 | I |
| | 2014.03-2018.12 | 6MT | F | L | Saloon FWD BHZ (DV6FC) | | GCI10057 | Inner Joint | | 24 | 34 | 40 | 52.5 | 90 | |
| | 2014.03-2018.12 | 6MT | F | R | Saloon FWD BHZ (DV6FC) | | GCI10058 | Inner Joint | | 24 | 34 | 29.8 | 365 | 88 | |
| | 2014.03-2018.12 | AT | F | L/R | Saloon FWD BHZ (DV6FC) | | GCO10052 | Outer Joint | | 28 | 34 | 58.5 | 92 | 55 | I |
| 1.6 (110 kw) | 2010.11-2018.12 | 6AT | F | L | Saloon FWD 5FN (EP6CDT) | | GDS57898 | Drive Shaft | | 28 | 37 | 58.5 | 92 | 640 | |
| | 2010.11-2018.12 | 6AT | F | R | Saloon FWD 5FN (EP6CDT) | | GDS57651 | Drive Shaft | | 28 | 37 | 58.5 | 92 | 968 | |
| | 2010.11-2018.12 | 6AT | F | L | Saloon FWD 5FN (EP6CDT) | Trans. code:AT6 | GCO10052 | Outer Joint | | 28 | 34 | 58.5 | 92 | 55 | I |
| | 2010.11-2018.12 | 6AT | F | R | Saloon FWD 5FN (EP6CDT) | | GCI83795 | Inner Joint | | 37 | 34 | | 350 | 90 | |
| | 2010.11-2018.12 | 6MT | F | L | Saloon FWD 5FN (EP6CDT) | | GDS84333 | Drive Shaft | | 28 | 24 | 58.6 | 93 | 668 | |
| | 2010.11-2018.12 | 6MT | F | R | Saloon FWD 5FN (EP6CDT) | | GDS84332 | Drive Shaft | | 28 | 24 | 58.6 | 93 | 978 | |
| | 2010.11-2018.12 | 6MT | F | L/R | Saloon FWD 5FN (EP6CDT) | | GCO10098 | Outer Joint | | 28 | 39 | 58.6 | 93 | 63 | I |
| | 2010.11-2018.12 | 6MT | F | L | Saloon FWD 5FN (EP6CDT) | | GCI10057 | Inner Joint | | 24 | 34 | 40 | 52.5 | 90 | |
| | 2010.11-2018.12 | 6MT | F | R | Saloon FWD 5FN (EP6CDT) | | GCI10058 | Inner Joint | | 24 | 34 | 29.8 | 365 | 88 | |
| | 2018.09- | 6AT | F | L | Hatchback FWD 5GX (EP6FDTMD) | | GDS83110 | Drive Shaft | | 28 | 37 | 58.5 | 92.5 | 662 | |
| | 2018.09- | 6AT | F | R | Hatchback FWD 5GX (EP6FDTMD) | | GDS83109 | Drive Shaft | | 28 | 37 | 58.5 | 92.5 | 933 | |
| | 2018.09- | 6AT | F | L/R | Hatchback FWD 5GX (EP6FDTMD) | | GCO82273 | Outer Joint | | 28 | 34 | 58.5 | 92.5 | 56 | I |
| | 2018.09- | 6AT | F | L | Hatchback FWD 5GX (EP6FDTMD) | | GCI82119 | Inner Joint | | 37 | 34 | 41.5 | 58.5 | 94 | |
| | 2018.09- | 6AT | F | R | Hatchback FWD 5GX (EP6FDTMD) | | GCI82118 | Inner Joint | | 37 | 34 | | 290 | 88 | |
| 1.6 (115 kw) | 2010.11-2018.12 | 6AT | F | L | Saloon FWD 5FV (EP6CDT) | | GDS57898 | Drive Shaft | | 28 | 37 | 58.5 | 92 | 640 | |
| | 2010.11-2018.12 | 6AT | F | R | Saloon FWD 5FV (EP6CDT) | | GDS57651 | Drive Shaft | | 28 | 37 | 58.5 | 92 | 968 | |
| | 2010.11-2018.12 | 6AT | F | L | Saloon FWD 5FV (EP6CDT) | Trans. code:AT6 | GCO10052 | Outer Joint | | 28 | 34 | 58.5 | 92 | 55 | I |
| | 2010.11-2018.12 | 6AT | F | R | Saloon FWD 5FV (EP6CDT) | | GCI83795 | Inner Joint | | 37 | 34 | | 350 | 90 | |
| | 2010.11-2018.12 | 6MT | F | L | Saloon FWD 5FV (EP6CDT) | | GDS84333 | Drive Shaft | | 28 | 24 | 58.6 | 93 | 668 | |
| | 2010.11-2018.12 | 6MT | F | R | Saloon FWD 5FV (EP6CDT) | | GDS84332 | Drive Shaft | | 28 | 24 | 58.6 | 93 | 978 | |
| | 2010.11-2018.12 | 6MT | F | L/R | Saloon FWD 5FV (EP6CDT) | | GCO10098 | Outer Joint | | 28 | 39 | 58.6 | 93 | 63 | I |
| | 2010.11-2018.12 | 6MT | F | L | Saloon FWD 5FV (EP6CDT) | | GCI10057 | Inner Joint | | 24 | 34 | 40 | 52.5 | 90 | |
| | 2010.11-2018.12 | 6MT | F | R | Saloon FWD 5FV (EP6CDT) | | GCI10058 | Inner Joint | | 24 | 34 | 29.8 | 365 | 88 | |
| 1.6 (120 kw) | 2012.01-2018.12 | 6AT | F | L | Saloon FWD 5GZ (EP6FDT) | | GDS57898 | Drive Shaft | | 28 | 37 | 58.5 | 92 | 640 | |
| | 2012.01-2018.12 | 6AT | F | R | Saloon FWD 5GZ (EP6FDT) | | GDS57651 | Drive Shaft | | 28 | 37 | 58.5 | 92 | 968 | |
| | 2012.01-2018.12 | 6AT | F | L/R | Saloon FWD 5GZ (EP6FDT) | | GCO10052 | Outer Joint | | 28 | 34 | 58.5 | 92 | 55 | I |
| | 2012.01-2018.12 | 6AT | F | R | Saloon FWD 5GZ (EP6FDT) | | GCI83795 | Inner Joint | | 37 | 34 | | 350 | 90 | |
| 1.6 (121 kw) | 2011.09-2018.12 | 6AT | F | L | Saloon FWD 5GZ (EP6FDT) | Date to:2015.06 | GDS57898 | Drive Shaft | | 28 | 37 | 58.5 | 92 | 640 | |
| | 2011.09-2018.12 | 6AT | F | R | Saloon FWD 5GZ (EP6FDT) | Date to:2015.06 | GDS57651 | Drive Shaft | | 28 | 37 | 58.5 | 92 | 968 | |
| | 2011.09-2018.12 | 6AT | F | R | Saloon FWD 5GZ (EP6FDT) | Date to:2015.06 | GCI83795 | Inner Joint | | 37 | 34 | | 350 | 90 | |
| | 2011.09-2018.12 | 6MT | F | L | Saloon FWD 5GZ (EP6FDT) | | GDS84333 | Drive Shaft | | 28 | 24 | 58.6 | 93 | 668 | |
| | 2011.09-2018.12 | 6MT | F | R | Saloon FWD 5GZ (EP6FDT) | | GDS84332 | Drive Shaft | | 28 | 24 | 58.6 | 93 | 978 | |
| | 2011.09-2018.12 | 6MT | F | L/R | Saloon FWD 5GZ (EP6FDT) | | GCO10098 | Outer Joint | | 28 | 39 | 58.6 | 93 | 63 | I |
| | 2011.09-2018.12 | 6MT | F | L | Saloon FWD 5GZ (EP6FDT) | | GCI10057 | Inner Joint | | 24 | 34 | 40 | 52.5 | 90 | |
| | 2011.09-2018.12 | 6MT | F | R | Saloon FWD 5GZ (EP6FDT) | | GCI10058 | Inner Joint | | 24 | 34 | 29.8 | 365 | 88 | |
| | 2011.09-2018.12 | AT | F | L | Saloon FWD 5GZ (EP6FDT) | | GCO10052 | Outer Joint | | 28 | 34 | 58.5 | 92 | 55 | I |
| | 2011.09-2018.12 | MT | F | R | Saloon FWD 5GZ (EP6FDT) | Transm. code:ML6C | GDS10320 | Drive Shaft | | 28 | 37 | 59 | 91 | 980 | |
| | 2018.09- | 6AT | F | L | Hatchback FWD 5GY (EP6FDTM) | | GDS83110 | Drive Shaft | | 28 | 37 | 58.5 | 92.5 | 662 | |
| | 2018.09- | 6AT | F | R | Hatchback FWD 5GY (EP6FDTM) | | GDS83109 | Drive Shaft | | 28 | 37 | 58.5 | 92.5 | 933 | |
| | 2018.09- | 6AT | F | L/R | Hatchback FWD 5GY (EP6FDTM) | | GCO82273 | Outer Joint | | 28 | 34 | 58.5 | 92.5 | 56 | I |
| | 2018.09- | 6AT | F | L | Hatchback FWD 5GY (EP6FDTM) | | GCI82119 | Inner Joint | | 37 | 34 | 41.5 | 58.5 | 94 | |
| | 2018.09- | 6AT | F | R | Hatchback FWD 5GY (EP6FDTM) | | GCI82118 | Inner Joint | | 37 | 34 | | 290 | 88 | |
| 1.6 (133 kw) | 2018.10- | 8AT | F | L | Hatchback FWD 5GF (EP6FADTXD) | | GDS83110 | Drive Shaft | | 28 | 37 | 58.5 | 92.5 | 662 | |
| | 2018.10- | 8AT | F | R | Hatchback FWD 5GF (EP6FADTXD) | | GDS83109 | Drive Shaft | | 28 | 37 | 58.5 | 92.5 | 933 | |
| | 2018.10- | 8AT | F | L/R | Hatchback FWD 5GF (EP6FADTXD) | | GCO82273 | Outer Joint | | 28 | 34 | 58.5 | 92.5 | 56 | I |
| | 2018.10- | 8AT | F | L | Hatchback FWD 5GF (EP6FADTXD) | | GCI82119 | Inner Joint | | 37 | 34 | 41.5 | 58.5 | 94 | |
| | 2018.10- | 8AT | F | R | Hatchback FWD 5GF (EP6FADTXD) | | GCI82118 | Inner Joint | | 37 | 34 | | 290 | 88 | |
| 1.6 (165 kw) | 2018.10- | 8AT | F | L | Hatchback FWD 5GG (EP6FADTX) | | GDS83110 | Drive Shaft | | 28 | 37 | 58.5 | 92.5 | 662 | |
| | 2018.10- | 8AT | F | R | Hatchback FWD 5GG (EP6FADTX) | | GDS83109 | Drive Shaft | | 28 | 37 | 58.5 | 92.5 | 933 | |
| | 2018.10- | 8AT | F | L/R | Hatchback FWD 5GG (EP6FADTX) | | GCO82273 | Outer Joint | | 28 | 34 | 58.5 | 92.5 | 56 | I |
| | 2018.10- | 8AT | F | L | Hatchback FWD 5GG (EP6FADTX) | | GCI82119 | Inner Joint | | 37 | 34 | 41.5 | 58.5 | 94 | |
| | 2018.10- | 8AT | F | R | Hatchback FWD 5GG (EP6FADTX) | | GCI82118 | Inner Joint | | 37 | 34 | | 290 | 88 | |
| | 2019.08- | 8AT | F | L | Hatchback FWD 5GQ (EP6FADTXHPD);DGZ (EP6FADTXHPD) | | GDS83110 | Drive Shaft | | 28 | 37 | 58.5 | 92.5 | 662 | |
| | 2019.08- | 8AT | F | R | Hatchback FWD 5GQ (EP6FADTXHPD);DGZ (EP6FADTXHPD) | | GDS83109 | Drive Shaft | | 28 | 37 | 58.5 | 92.5 | 933 | |
| | 2019.08- | 8AT | F | L/R | Hatchback FWD 5GQ (EP6FADTXHPD);DGZ (EP6FADTXHPD) | | GCO82273 | Outer Joint | | 28 | 34 | 58.5 | 92.5 | 56 | I |
| | 2019.08- | 8AT | F | L | Hatchback FWD 5GQ (EP6FADTXHPD);DGZ (EP6FADTXHPD) | | GCI82119 | Inner Joint | | 37 | 34 | 41.5 | 58.5 | 94 | |
| | 2019.08- | 8AT | F | R | Hatchback FWD 5GQ (EP6FADTXHPD);DGZ (EP6FADTXHPD) | | GCI82118 | Inner Joint | | 37 | 34 | | 290 | 88 | |
| 2.0 (100 kw) | 2010.11-2018.12 | 6AT | F | L | Saloon FWD RHR (DW10BTED4);AHX (DW10FD);AHV (DW10FD);AHG (DW10FD) | | GDS56858 | Drive Shaft | | 28 | 37 | 58.6 | 93 | 620 | |
| | 2010.11-2018.12 | 6AT | F | R | Saloon FWD RHR (DW10BTED4);AHX (DW10FD);AHV (DW10FD);AHG (DW10FD) | | GDS56859 | Drive Shaft | | 28 | 37 | 58.6 | 93 | 961 | |
| | 2010.11-2018.12 | 6AT | F | L | Saloon FWD RHR (DW10BTED4);AHX (DW10FD);AHV (DW10FD);AHG (DW10FD) | | GCI10120 | Inner Joint | | 37 | 39 | 42.2 | 60 | 95.5 | |

| | YEAR | TRANSM. | F/R | L/R | BODY STYLE & DRIVE TYPE & ENGINE | REMARKS | G-AP Ref. | PRODUCT | ABS | Technical Specifications A | B | C | H | L | P |
|---|---|---|---|---|---|---|---|---|---|---|---|---|---|---|---|
| **PEUGEOT** | | | | | | | | | | | | | | | |
| **508** | | | | | | | | | | | | | | | |
| 2.0 (100 kw) | 2010.11-2018.12 | 6AT | F | R | Saloon FWD RHR (DW10BTED4);AHX (DW10FD);AHV (DW10FD);AHS (DW10FD) | | GCI45033 | Inner Joint | | 37 | 39 | | 379 | 96 | |
| | 2010.11-2018.12 | 6AT/6MT | F | L/R | Saloon FWD RHR (DW10BTED4);AHX (DW10FD);AHV (DW10FD);AHS (DW10FD) | Trans. code:ML6C | GCO10098 | Outer Joint | | 28 | 39 | 58.6 | 93 | 63 | I |
| | 2010.11-2018.12 | 6MT | F | L | Saloon FWD RHR (DW10BTED4);AHX (DW10FD);AHV (DW10FD);AHS (DW10FD) | Trans. code:ML6C | GDS10343 | Drive Shaft | | 28 | 37 | 58.6 | 93 | 672 | |
| | 2010.11-2018.12 | 6MT | F | R | Saloon FWD RHR (DW10BTED4);AHX (DW10FD);AHV (DW10FD);AHS (DW10FD) | Trans. code:ML6C | GDS99214 | Drive Shaft | | 28 | 37 | 58.6 | 94 | 978 | |
| | 2010.11-2018.12 | 6MT | F | L | Saloon FWD RHR (DW10BTED4);AHX (DW10FD);AHV (DW10FD);AHS (DW10FD) | Trans. code:ML6C | GCI10040 | Inner Joint | | 37 | 39 | 40 | 69 | 95.5 | |
| | 2010.11-2018.12 | 6MT | F | R | Saloon FWD RHR (DW10BTED4);AHX (DW10FD);AHV (DW10FD);AHS (DW10FD) | Trans. code:ML6C | GCI10041 | Inner Joint | | 37 | 39 | 32 | 399 | 95.5 | |
| 2.0 (103 kw) | 2010.11-2018.12 | 6MT | F | L | Saloon FWD RHF (DW10BTED4);RHA (DW10CTED4) | Trans. code:ML6C | GDS10343 | Drive Shaft | | 28 | 37 | 58.6 | 93 | 672 | |
| | 2010.11-2018.12 | 6MT | F | R | Saloon FWD RHF (DW10BTED4);RHA (DW10CTED4) | Trans. code:ML6C | GDS99214 | Drive Shaft | | 28 | 37 | 58.6 | 94 | 978 | |
| | 2010.11-2018.12 | 6MT | F | R | Saloon FWD RHF (DW10BTED4);RHA (DW10CTED4) | Trans. code:ML6C | GCO10098 | Outer Joint | | 28 | 39 | 58.6 | 93 | 63 | I |
| | 2010.11-2018.12 | 6MT | F | L | Saloon FWD RHF (DW10BTED4);RHA (DW10CTED4) | Trans. code:ML6C | GCI10040 | Inner Joint | | 37 | 39 | 40 | 69 | 95.5 | |
| | 2010.11-2018.12 | 6MT | F | R | Saloon FWD RHF (DW10BTED4);RHA (DW10CTED4) | Trans. code:ML6C | GCI10041 | Inner Joint | | 37 | 39 | 32 | 399 | 95.5 | |
| 2.0 (110 kw) | 2014.04-2018.12 | 6MT | F | L | Saloon FWD AHX (DW10FD) | Date from:2015.03;For Engine code:DW10FD;From ORG/OPR:13593 | GDS45133 | Drive Shaft | | 28 | 37 | 58.6 | 94 | 653 | |
| | 2014.04-2018.12 | 6MT | F | L | Saloon FWD AHX (DW10FD) | Date from:2015.03;For Engine code:DW10FD;From ORG/OPR:13593 | GCI45032 | Inner Joint | | 37 | 39 | 40 | 68.5 | 100 | |
| 2.0 (120 kw) | 2010.11-2018.12 | 6AT | F | L | Saloon FWD RHH (DW10CTED4) | | GDS56858 | Drive Shaft | | 28 | 37 | 58.6 | 93 | 620 | |
| | 2010.11-2018.12 | 6AT | F | R | Saloon FWD RHH (DW10CTED4) | | GDS56859 | Drive Shaft | | 28 | 37 | 58.6 | 93 | 961 | |
| | 2010.11-2018.12 | 6AT | F | L | Saloon FWD RHH (DW10CTED4) | | GCI10120 | Inner Joint | | 37 | 39 | 42.2 | 60 | 95.5 | |
| | 2010.11-2018.12 | 6AT | F | R | Saloon FWD RHH (DW10CTED4) | | GCI45033 | Inner Joint | | 37 | 39 | | 379 | 96 | |
| | 2010.11-2018.12 | 6AT/6MT | F | L/R | Saloon FWD RHH (DW10CTED4) | Trans. code:ML6C | GCO10098 | Outer Joint | | 28 | 39 | 58.6 | 93 | 63 | I |
| | 2010.11-2018.12 | 6MT | F | L | Saloon FWD RHH (DW10CTED4) | Trans. code:ML6C | GDS10343 | Drive Shaft | | 28 | 37 | 58.6 | 93 | 672 | |
| | 2010.11-2018.12 | 6MT | F | R | Saloon FWD RHH (DW10CTED4) | Trans. code:ML6C | GDS99214 | Drive Shaft | | 28 | 37 | 58.6 | 94 | 978 | |
| | 2010.11-2018.12 | 6MT | F | L | Saloon FWD RHH (DW10CTED4) | Trans. code:ML6C | GCI10040 | Inner Joint | | 37 | 39 | 40 | 69 | 95.5 | |
| | 2010.11-2018.12 | 6MT | F | R | Saloon FWD RHH (DW10CTED4) | Trans. code:ML6C | GCI10041 | Inner Joint | | 37 | 39 | 32 | 399 | 95.5 | |
| | 2018.10- | 8AT | F | L | Hatchback FWD EHY (DW10FCC) | | GDS56288 | Drive Shaft | | 28 | 37 | 58.5 | 93 | 619 | |
| | 2018.10- | 8AT | F | R | Hatchback FWD EHY (DW10FCC) | | GDS56634 | Drive Shaft | | 28 | 37 | 58.5 | 93 | 948 | |
| | 2018.10- | 8AT | F | L/R | Hatchback FWD EHY (DW10FCC) | | GCO82489 | Outer Joint | | 28 | 39 | 58.5 | 93 | 63.5 | I |
| | 2018.10- | 8AT | F | L | Hatchback FWD EHY (DW10FCC) | | GCI10120 | Inner Joint | | 37 | 39 | 42.2 | 60 | 95.5 | |
| | 2018.10- | 8AT | F | R | Hatchback FWD EHY (DW10FCC) | | GCI83415 | Inner Joint | | 37 | 39 | | 379 | 96 | |
| 2.0 (130 kw) | 2018.10- | 8AT | F | L | Hatchback FWD EHZ (DW10FC) | | GDS56288 | Drive Shaft | | 28 | 37 | 58.5 | 93 | 619 | |
| | 2018.10- | 8AT | F | R | Hatchback FWD EHZ (DW10FC) | | GDS56634 | Drive Shaft | | 28 | 37 | 58.5 | 93 | 948 | |
| | 2018.10- | 8AT | F | L/R | Hatchback FWD EHZ (DW10FC) | | GCO82489 | Outer Joint | | 28 | 39 | 58.5 | 93 | 63.5 | I |
| | 2018.10- | 8AT | F | L | Hatchback FWD EHZ (DW10FC) | | GCI10120 | Inner Joint | | 37 | 39 | 42.2 | 60 | 95.5 | |
| | 2018.10- | 8AT | F | R | Hatchback FWD EHZ (DW10FC) | | GCI83415 | Inner Joint | | 37 | 39 | | 379 | 96 | |
| 2.0 (147 kw) | 2010.11-2018.12 | 6AT | F | L | Saloon 4WD RHC (DW10CTED4) | | GDS84333 | Drive Shaft | | 28 | 24 | 58.6 | 93 | 668 | |
| | 2010.11-2018.12 | 6AT | F | L | Saloon 4WD RHC (DW10CTED4) | | GCO10098 | Outer Joint | | 28 | 39 | 58.6 | 93 | 63 | I |
| | 2010.11-2018.12 | 6AT | F | L | Saloon 4WD RHC (DW10CTED4) | | GCI10057 | Inner Joint | | 24 | 34 | 40 | 52.5 | 90 | |
| | 2010.11-2018.12 | 6MT | F | L | Saloon 4WD RHC (DW10CTED4) | Trans. Code.: ML6C | GDS10343 | Drive Shaft | | 28 | 37 | 58.6 | 93 | 672 | |
| 2.2 (150 kw) | 2010.11-2018.12 | 6AT | F | R | Saloon FWD 4HL (DW12C) | | GDS10435 | Drive Shaft | | 28 | 37 | 58.6 | 94 | 952 | |
| | 2010.11-2018.12 | 6AT | F | R | Saloon FWD 4HL (DW12C) | | GCI10142 | Inner Joint | | 37 | 39 | | 380 | 96 | |
| | 2010.11-2018.12 | MT | F | R | Saloon FWD 4HL (DW12C) | Trans. code:ML6C | GDS99214 | Drive Shaft | | 28 | 37 | 58.6 | 94 | 978 | |
| | 2010.11-2018.12 | MT | F | R | Saloon FWD 4HL (DW12C) | | GCO10098 | Outer Joint | | 28 | 39 | 58.6 | 93 | 63 | I |
| | 2010.11-2018.12 | MT | F | R | Saloon FWD 4HL (DW12C) | | GCI10041 | Inner Joint | | 37 | 39 | 32 | 399 | 95.5 | |
| **508 RXH** | | | | | | | | | | | | | | | |
| 2.0 (133 kw) | 2014.10-2018.12 | 6AT | F | L | Estate FWD AHW (DW10FC) | | GDS56768 | Drive Shaft | | 28 | 37 | 59 | 91 | 645 | |
| | 2014.10-2018.12 | 6AT | F | R | Estate FWD AHW (DW10FC) | | GDS56767 | Drive Shaft | | 28 | 37 | 59 | 91 | 982 | |
| | 2014.10-2018.12 | 6AT | F | L/R | Estate FWD AHW (DW10FC) | | GCO45074 | Outer Joint | | 28 | 26 | 59 | 91 | 61.5 | M |
| | 2014.10-2018.12 | 6AT | F | L | Estate FWD AHW (DW10FC) | | GCI10161 | Inner Joint | | 37 | 26 | 40.5 | 65.5 | 100 | |
| | 2014.10-2018.12 | 6AT | F | R | Estate FWD AHW (DW10FC) | | GCI10157 | Inner Joint | | 37 | 26 | | 380 | 100 | |
| 2.0 (147 kw) | 2010.11-2018.12 | AT | F | L | Estate 4WD RHC (DW10CTED4) | | GDS56332 | Drive Shaft | | 28 | 24 | 59.5 | 94 | 682 | |
| | 2010.11-2018.12 | AT | F | R | Estate 4WD RHC (DW10CTED4) | | GDS56333 | Drive Shaft | | 28 | 24 | 59.5 | 94 | 1002 | |
| | 2010.11-2018.12 | AT | F | L/R | Estate 4WD RHC (DW10CTED4) | | GCO83255 | Outer Joint | | 28 | 36 | 59.5 | 94 | 60.5 | I |
| | 2010.11-2018.12 | AT | F | L | Estate 4WD RHC (DW10CTED4) | | GCI83244 | Inner Joint | | 24 | 36 | 40 | 52 | 98 | |
| | 2010.11-2018.12 | AT | F | R | Estate 4WD RHC (DW10CTED4) | | GCI83245 | Inner Joint | | 24 | 36 | 29.9 | 401 | 103 | |
| **508 SW** | | | | | | | | | | | | | | | |
| 1.2 (96 kw) | 2020.06- | 8AT | F | L | Estate FWD HNS (EB2ADTS) | | GDS83110 | Drive Shaft | | 28 | 37 | 58.5 | 92.5 | 662 | |
| | 2020.06- | 8AT | F | R | Estate FWD HNS (EB2ADTS) | | GDS83109 | Drive Shaft | | 28 | 37 | 58.5 | 92.5 | 933 | |
| | 2020.06- | 8AT | F | L/R | Estate FWD HNS (EB2ADTS) | | GCO82273 | Outer Joint | | 28 | 34 | 58.5 | 92.5 | 56 | I |
| | 2020.06- | 8AT | F | L | Estate FWD HNS (EB2ADTS) | | GCI82119 | Inner Joint | | 37 | 34 | 41.5 | 58.5 | 94 | |
| | 2020.06- | 8AT | F | R | Estate FWD HNS (EB2ADTS) | | GCI82118 | Inner Joint | | 37 | 34 | | 290 | 88 | |
| 1.5 (96 kw) | 2018.09- | 6MT | F | L | Estate FWD YHZ (DV5RC) | | GDS83608 | Drive Shaft | | 28 | 37 | 58.5 | 92.5 | 683 | |
| | 2018.09- | 6MT | F | R | Estate FWD YHZ (DV5RC) | | GDS83607 | Drive Shaft | | 28 | 37 | 58.5 | 92.5 | 944 | |
| | 2018.09- | 6MT | F | L | Estate FWD YHZ (DV5RC) | | GCI82301 | Inner Joint | | 37 | 34 | 40 | 65.5 | 89.5 | |
| | 2018.09- | 6MT | F | R | Estate FWD YHZ (DV5RC) | | GCI82300 | Inner Joint | | 37 | 34 | 31.9 | 302 | 88 | |
| | 2018.09- | 8AT | F | L | Estate FWD YHZ (DV5RC) | | GDS83110 | Drive Shaft | | 28 | 37 | 58.5 | 92.5 | 662 | |
| | 2018.09- | 8AT | F | R | Estate FWD YHZ (DV5RC) | | GDS83109 | Drive Shaft | | 28 | 37 | 58.5 | 92.5 | 933 | |
| | 2018.09- | 8AT | F | L | Estate FWD YHZ (DV5RC) | | GCI82119 | Inner Joint | | 37 | 34 | 41.5 | 58.5 | 94 | |

| | YEAR | TRANSM. | F/R | L/R | BODY STYLE & DRIVE TYPE & ENGINE | REMARKS | G-AP Ref. | PRODUCT | ABS | Technical Specifications A | B | C | H | L | P |
|---|---|---|---|---|---|---|---|---|---|---|---|---|---|---|---|
| **PEUGEOT** **508 SW** | | | | | | | | | | | | | | | |
| 1.5 (96 kw) | 2018.09- | 8AT | F | R | Estate FWD YHZ (DV5RC) | | GCI82118 | Inner Joint | | 37 | 34 | | 290 | 88 | |
| | 2018.09- | 8AT/6MT | F | L/R | Estate FWD YHZ (DV5RC) | | GCO82273 | Outer Joint | | 28 | 34 | 58.5 | 92.5 | 56 | I |
| 1.6 (82 kw) | 2010.11-2018.12 | 5MT | F | L | Estate FWD 9HR (DV6C);9HL (DV6C) | | GDS10238 | Drive Shaft | | 28 | 24 | 58.5 | 92 | 669 | |
| | 2010.11-2018.12 | 5MT | F | R | Estate FWD 9HR (DV6C);9HL (DV6C) | | GDS10239 | Drive Shaft | | 28 | 24 | 58.5 | 92 | 955 | |
| | 2010.11-2018.12 | 5MT | F | R | Estate FWD 9HR (DV6C);9HL (DV6C) | | GCI99159 | Inner Joint | | 24 | 34 | 29.8 | 350 | 87.5 | |
| | 2010.11-2018.12 | 6AMT | F | L | Estate FWD 9HR (DV6C);9HL (DV6C) | | GDS57897 | Drive Shaft | | 28 | 24 | 58.5 | 92 | 674 | |
| | 2010.11-2018.12 | 6AMT | F | R | Estate FWD 9HR (DV6C);9HL (DV6C) | | GDS57955 | Drive Shaft | | 28 | 24 | 58.5 | 92 | 985 | |
| | 2010.11-2018.12 | 6AMT | F | L/R | Estate FWD 9HR (DV6C);9HL (DV6C) | | GCO10052 | Outer Joint | | 28 | 34 | 58.5 | 92 | 55 | I |
| | 2010.11-2018.12 | 6AMT | F | L | Estate FWD 9HR (DV6C);9HL (DV6C) | | GCI10058 | Inner Joint | | 24 | 34 | 29.8 | 365 | 88 | |
| 1.6 (84 kw) | 2012.02-2018.12 | 5MT | F | L | Estate FWD 9HR (DV6C);9HL (DV6C) | | GDS10238 | Drive Shaft | | 28 | 24 | 58.5 | 92 | 669 | |
| | 2012.02-2018.12 | 5MT | F | R | Estate FWD 9HR (DV6C);9HL (DV6C) | | GDS10239 | Drive Shaft | | 28 | 24 | 58.5 | 92 | 955 | |
| | 2012.02-2018.12 | 5MT | F | L/R | Estate FWD 9HR (DV6C);9HL (DV6C) | | GCO10124 | Outer Joint | | 28 | 34 | 58.5 | 92 | 55 | I |
| | 2012.02-2018.12 | 5MT | F | R | Estate FWD 9HR (DV6C);9HL (DV6C) | | GCI99159 | Inner Joint | | 24 | 34 | 29.8 | 350 | 87.5 | |
| | 2012.02-2018.12 | 6AMT | F | L | Estate FWD 9HR (DV6C);9HL (DV6C) | | GDS57897 | Drive Shaft | | 28 | 24 | 58.5 | 92 | 674 | |
| | 2012.02-2018.12 | 6AMT | F | R | Estate FWD 9HR (DV6C);9HL (DV6C) | | GDS57955 | Drive Shaft | | 28 | 24 | 58.5 | 92 | 985 | |
| | 2012.02-2018.12 | 6AMT | F | L/R | Estate FWD 9HR (DV6C);9HL (DV6C) | | GCO10052 | Outer Joint | | 28 | 34 | 58.5 | 92 | 55 | I |
| | 2012.02-2018.12 | 6MT | F | L | Estate FWD 9HR (DV6C);9HL (DV6C) | | GDS84333 | Drive Shaft | | 28 | 24 | 58.6 | 93 | 668 | |
| | 2012.02-2018.12 | 6MT | F | R | Estate FWD 9HR (DV6C);9HL (DV6C) | | GDS84332 | Drive Shaft | | 28 | 24 | 58.6 | 93 | 978 | |
| | 2012.02-2018.12 | 6MT | F | L/R | Estate FWD 9HR (DV6C);9HL (DV6C) | | GCO10098 | Outer Joint | | 28 | 39 | 58.6 | 93 | 63 | I |
| | 2012.02-2018.12 | 6MT | F | L | Estate FWD 9HR (DV6C);9HL (DV6C) | | GCI10057 | Inner Joint | | 24 | 34 | 40 | 52.5 | 90 | |
| | 2012.02-2018.12 | 6MT | F | R | Estate FWD 9HR (DV6C);9HL (DV6C) | | GCI10058 | Inner Joint | | 24 | 34 | 29.8 | 365 | 88 | |
| | 2013.03-2018.12 | 6AMT | F | L | Estate Van FWD 9HL (DV6C) | | GDS57897 | Drive Shaft | | 28 | 24 | 58.5 | 92 | 674 | |
| | 2013.03-2018.12 | 6AMT | F | R | Estate Van FWD 9HL (DV6C) | | GDS57955 | Drive Shaft | | 28 | 24 | 58.5 | 92 | 985 | |
| | 2013.03-2018.12 | 6AMT | F | L/R | Estate Van FWD 9HL (DV6C) | | GCO10052 | Outer Joint | | 28 | 34 | 58.5 | 92 | 55 | I |
| | 2013.03-2018.12 | 6AMT | F | L | Estate Van FWD 9HL (DV6C) | | GCI10058 | Inner Joint | | 24 | 34 | 29.8 | 365 | 88 | |
| | 2013.03-2018.12 | MT | F | L | Estate Van FWD 9HL (DV6C) | | GDS10238 | Drive Shaft | | 28 | 24 | 58.5 | 92 | 669 | |
| | 2013.03-2018.12 | MT | F | R | Estate Van FWD 9HL (DV6C) | | GDS10239 | Drive Shaft | | 28 | 24 | 58.5 | 92 | 955 | |
| | 2013.03-2018.12 | MT | F | L/R | Estate Van FWD 9HL (DV6C) | | GCO10124 | Outer Joint | | 28 | 34 | 58.5 | 92 | 55 | I |
| | 2013.03-2018.12 | MT | F | R | Estate Van FWD 9HL (DV6C) | | GCI99159 | Inner Joint | | 24 | 34 | 29.8 | 350 | 87.5 | |
| 1.6 (85 kw) | 2010.11-2018.12 | 6AMT | F | L | Estate FWD 5FH (EP6C) | | GDS57897 | Drive Shaft | | 28 | 24 | 58.5 | 92 | 674 | |
| | 2010.11-2018.12 | 6AMT | F | R | Estate FWD 5FH (EP6C) | | GDS57955 | Drive Shaft | | 28 | 24 | 58.5 | 92 | 985 | |
| | 2010.11-2018.12 | 6AMT | F | L/R | Estate FWD 5FH (EP6C) | | GCO10052 | Outer Joint | | 28 | 34 | 58.5 | 92 | 55 | I |
| | 2010.11-2018.12 | 6AMT | F | L | Estate FWD 5FH (EP6C) | | GCI10058 | Inner Joint | | 24 | 34 | 29.8 | 365 | 88 | |
| | 2014.09-2018.12 | 6MT | F | L | Estate FWD BHX (DV6FC) | | GDS84333 | Drive Shaft | | 28 | 24 | 58.6 | 93 | 668 | |
| | 2014.09-2018.12 | 6MT | F | R | Estate FWD BHX (DV6FC) | | GDS84332 | Drive Shaft | | 28 | 24 | 58.6 | 93 | 978 | |
| | 2014.09-2018.12 | 6MT | F | L/R | Estate FWD BHX (DV6FC) | | GCO10098 | Outer Joint | | 28 | 39 | 58.6 | 93 | 63 | I |
| | 2014.09-2018.12 | 6MT | F | L | Estate FWD BHX (DV6FC) | | GCI10057 | Inner Joint | | 24 | 34 | 40 | 52.5 | 90 | |
| | 2014.09-2018.12 | 6MT | F | R | Estate FWD BHX (DV6FC) | | GCI10058 | Inner Joint | | 24 | 34 | 29.8 | 365 | 88 | |
| 1.6 (88 kw) | 2010.11-2018.12 | 6AMT | F | L | Estate FWD 5FS (EP6C) | | GDS57897 | Drive Shaft | | 28 | 24 | 58.5 | 92 | 674 | |
| | 2010.11-2018.12 | 6AMT | F | R | Estate FWD 5FS (EP6C) | | GDS57955 | Drive Shaft | | 28 | 24 | 58.5 | 92 | 985 | |
| | 2010.11-2018.12 | 6AMT | F | L/R | Estate FWD 5FS (EP6C) | | GCO10052 | Outer Joint | | 28 | 34 | 58.5 | 92 | 55 | I |
| | 2010.11-2018.12 | 6AMT | F | L | Estate FWD 5FS (EP6C) | | GCI10058 | Inner Joint | | 24 | 34 | 29.8 | 365 | 88 | |
| | 2014.03-2018.12 | 6AT | F | L | Estate FWD BHZ (DV6FC) | Date to:2015.06 | GDS57898 | Drive Shaft | | 28 | 37 | 58.5 | 92 | 640 | |
| | 2014.03-2018.12 | 6AT | F | R | Estate FWD BHZ (DV6FC) | Date to:2015.06 | GDS57651 | Drive Shaft | | 28 | 37 | 58.5 | 92 | 968 | |
| | 2014.03-2018.12 | 6AT | F | L/R | Estate FWD BHZ (DV6FC) | Date to:2015.06 | GCO10052 | Outer Joint | | 28 | 34 | 58.5 | 92 | 55 | I |
| | 2014.03-2018.12 | 6AT | F | R | Estate FWD BHZ (DV6FC) | Date to:2015.06 | GCI83795 | Inner Joint | | 37 | 34 | | 350 | 90 | |
| | 2014.03-2018.12 | 6MT | F | L | Estate FWD BHZ (DV6FC) | Inner teeth of tranm.side:24 | GDS84333 | Drive Shaft | | 28 | 24 | 58.6 | 93 | 668 | |
| | 2014.03-2018.12 | 6MT | F | R | Estate FWD BHZ (DV6FC) | | GDS84332 | Drive Shaft | | 28 | 24 | 58.6 | 93 | 978 | |
| | 2014.03-2018.12 | 6MT | F | L/R | Estate FWD BHZ (DV6FC) | | GCO10098 | Outer Joint | | 28 | 39 | 58.6 | 93 | 63 | I |
| | 2014.03-2018.12 | 6MT | F | L | Estate FWD BHZ (DV6FC) | | GCI10057 | Inner Joint | | 24 | 34 | 40 | 52.5 | 90 | |
| | 2014.03-2018.12 | 6MT | F | R | Estate FWD BHZ (DV6FC) | | GCI10058 | Inner Joint | | 24 | 34 | 29.8 | 365 | 88 | |
| | 2014.03-2018.12 | MT | F | L | Estate FWD BHZ (DV6FC) | Trans. Code.: ML6C | GDS10343 | Drive Shaft | | 28 | 37 | 58.6 | 93 | 672 | |
| 1.6 (110 kw) | 2010.11-2018.12 | 6AT | F | L | Estate FWD 5FN (EP6CDT);5FE (EP6CDTM) | | GDS57898 | Drive Shaft | | 28 | 37 | 58.5 | 92 | 640 | |
| | 2010.11-2018.12 | 6AT | F | R | Estate FWD 5FN (EP6CDT);5FE (EP6CDTM) | | GDS57651 | Drive Shaft | | 28 | 37 | 58.5 | 92 | 968 | |
| | 2010.11-2018.12 | 6AT | F | L | Estate FWD 5FN (EP6CDT);5FE (EP6CDTM) | Trans. code:AT6 | GCO10052 | Outer Joint | | 28 | 34 | 58.5 | 92 | 55 | I |
| | 2010.11-2018.12 | 6AT | F | R | Estate FWD 5FN (EP6CDT);5FE (EP6CDTM) | | GCI83795 | Inner Joint | | 37 | 34 | | 350 | 90 | |
| | 2010.11-2018.12 | 6MT | F | L | Estate FWD 5FN (EP6CDT);5FE (EP6CDTM) | | GDS84333 | Drive Shaft | | 28 | 24 | 58.6 | 93 | 668 | |
| | 2010.11-2018.12 | 6MT | F | R | Estate FWD 5FN (EP6CDT);5FE (EP6CDTM) | | GDS84332 | Drive Shaft | | 28 | 24 | 58.6 | 93 | 978 | |
| | 2010.11-2018.12 | 6MT | F | L/R | Estate FWD 5FN (EP6CDT);5FE (EP6CDTM) | | GCO10098 | Outer Joint | | 28 | 39 | 58.6 | 93 | 63 | I |
| | 2010.11-2018.12 | 6MT | F | L | Estate FWD 5FN (EP6CDT);5FE (EP6CDTM) | | GCI10057 | Inner Joint | | 24 | 34 | 40 | 52.5 | 90 | |
| | 2010.11-2018.12 | 6MT | F | R | Estate FWD 5FN (EP6CDT);5FE (EP6CDTM) | | GCI10058 | Inner Joint | | 24 | 34 | 29.8 | 365 | 88 | |
| 1.6 (115 kw) | 2010.11-2018.12 | 6AT | F | L | Estate FWD 5FV (EP6CDT) | | GDS57898 | Drive Shaft | | 28 | 37 | 58.5 | 92 | 640 | |
| | 2010.11-2018.12 | 6AT | F | R | Estate FWD 5FV (EP6CDT) | | GDS57651 | Drive Shaft | | 28 | 37 | 58.5 | 92 | 968 | |
| | 2010.11-2018.12 | 6AT | F | L | Estate FWD 5FV (EP6CDT) | Trans. code:AT6 | GCO10052 | Outer Joint | | 28 | 34 | 58.5 | 92 | 55 | I |
| | 2010.11-2018.12 | 6AT | F | R | Estate FWD 5FV (EP6CDT) | | GCI83795 | Inner Joint | | 37 | 34 | | 350 | 90 | |

| | YEAR | TRANSM. | F/R | L/R | BODY STYLE & DRIVE TYPE & ENGINE | REMARKS | G-AP Ref. | PRODUCT | ABS | Technical Specifications A | B | C | H | L | P |
|---|---|---|---|---|---|---|---|---|---|---|---|---|---|---|---|
| **PEUGEOT** **508 SW** | | | | | | | | | | | | | | | |
| 1.6 (115 kw) | 2010.11-2018.12 | 6MT | F | L | Estate FWD 5FV (EP6CDT) | | GDS84333 | Drive Shaft | | 28 | 24 | 58.6 | 93 | 668 | |
| | 2010.11-2018.12 | 6MT | F | R | Estate FWD 5FV (EP6CDT) | | GDS84332 | Drive Shaft | | 28 | 24 | 58.6 | 93 | 978 | |
| | 2010.11-2018.12 | 6MT | F | L/R | Estate FWD 5FV (EP6CDT) | | GCO10098 | Outer Joint | | 28 | 39 | 58.6 | 93 | 63 | I |
| | 2010.11-2018.12 | 6MT | F | L | Estate FWD 5FV (EP6CDT) | | GCI10057 | Inner Joint | | 24 | 34 | 40 | 52.5 | 90 | |
| | 2010.11-2018.12 | 6MT | F | R | Estate FWD 5FV (EP6CDT) | | GCI10058 | Inner Joint | | 24 | 34 | 29.8 | 365 | 88 | |
| 1.6 (121 kw) | 2012.02-2018.12 | 6AT | F | L | Estate FWD 5GZ (EP6FDT) | Date to:2015.06 | GDS57898 | Drive Shaft | | 28 | 37 | 58.5 | 92 | 640 | |
| | 2012.02-2018.12 | 6AT | F | R | Estate FWD 5GZ (EP6FDT) | Date to:2015.06 | GDS57651 | Drive Shaft | | 28 | 37 | 58.5 | 92 | 968 | |
| | 2012.02-2018.12 | 6AT | F | R | Estate FWD 5GZ (EP6FDT) | Date to:2015.06 | GCI83795 | Inner Joint | | 37 | 34 | | 350 | 90 | |
| | 2012.02-2018.12 | 6MT | F | L | Estate FWD 5GZ (EP6FDT) | | GDS84333 | Drive Shaft | | 28 | 24 | 58.6 | 93 | 668 | |
| | 2012.02-2018.12 | 6MT | F | R | Estate FWD 5GZ (EP6FDT) | | GDS84332 | Drive Shaft | | 28 | 24 | 58.6 | 93 | 978 | |
| | 2012.02-2018.12 | 6MT | F | L/R | Estate FWD 5GZ (EP6FDT) | | GCO10098 | Outer Joint | | 28 | 39 | 58.6 | 93 | 63 | I |
| | 2012.02-2018.12 | 6MT | F | L | Estate FWD 5GZ (EP6FDT) | | GCI10057 | Inner Joint | | 24 | 34 | 40 | 52.5 | 90 | |
| | 2012.02-2018.12 | 6MT | F | R | Estate FWD 5GZ (EP6FDT) | | GCI10058 | Inner Joint | | 24 | 34 | 29.8 | 365 | 88 | |
| | 2012.02-2018.12 | AT | F | L | Estate FWD 5GZ (EP6FDT) | | GCO10052 | Outer Joint | | 28 | 34 | 58.5 | 92 | 55 | I |
| | 2012.02-2018.12 | MT | F | R | Estate FWD 5GZ (EP6FDT) | Transm. code:ML6C | GDS10320 | Drive Shaft | | 28 | 37 | 59 | 91 | 980 | |
| | 2018.09- | 6AT | F | L | Estate FWD 5GY (EP6FDTM) | | GDS83110 | Drive Shaft | | 28 | 37 | 58.5 | 92.5 | 662 | |
| | 2018.09- | 6AT | F | R | Estate FWD 5GY (EP6FDTM) | | GDS83109 | Drive Shaft | | 28 | 37 | 58.5 | 92.5 | 933 | |
| | 2018.09- | 6AT | F | L/R | Estate FWD 5GY (EP6FDTM) | | GCO82273 | Outer Joint | | 28 | 34 | 58.5 | 92.5 | 56 | I |
| | 2018.09- | 6AT | F | L | Estate FWD 5GY (EP6FDTM) | | GCI82119 | Inner Joint | | 37 | 34 | 41.5 | 58.5 | 94 | |
| | 2018.09- | 6AT | F | R | Estate FWD 5GY (EP6FDTM) | | GCI82118 | Inner Joint | | 37 | 34 | | 290 | 88 | |
| 1.6 (133 kw) | 2018.09- | 8AT | F | L | Estate FWD GFR (EP6FADTXD) | | GDS83110 | Drive Shaft | | 28 | 37 | 58.5 | 92.5 | 662 | |
| | 2018.09- | 8AT | F | R | Estate FWD GFR (EP6FADTXD) | | GDS83109 | Drive Shaft | | 28 | 37 | 58.5 | 92.5 | 933 | |
| | 2018.09- | 8AT | F | L/R | Estate FWD GFR (EP6FADTXD) | | GCO82273 | Outer Joint | | 28 | 34 | 58.5 | 92.5 | 56 | I |
| | 2018.09- | 8AT | F | L | Estate FWD GFR (EP6FADTXD) | | GCI82119 | Inner Joint | | 37 | 34 | 41.5 | 58.5 | 94 | |
| | 2018.09- | 8AT | F | R | Estate FWD GFR (EP6FADTXD) | | GCI82118 | Inner Joint | | 37 | 34 | | 290 | 88 | |
| 1.6 (165 kw) | 2018.09- | 8AT | F | L | Estate FWD GCR (EP6FADTX) | | GDS83110 | Drive Shaft | | 28 | 37 | 58.5 | 92.5 | 662 | |
| | 2018.09- | 8AT | F | R | Estate FWD GCR (EP6FADTX) | | GDS83109 | Drive Shaft | | 28 | 37 | 58.5 | 92.5 | 933 | |
| | 2018.09- | 8AT | F | L/R | Estate FWD GCR (EP6FADTX) | | GCO82273 | Outer Joint | | 28 | 34 | 58.5 | 92.5 | 56 | I |
| | 2018.09- | 8AT | F | L | Estate FWD GCR (EP6FADTX) | | GCI82119 | Inner Joint | | 37 | 34 | 41.5 | 58.5 | 94 | |
| | 2018.09- | 8AT | F | R | Estate FWD GCR (EP6FADTX) | | GCI82118 | Inner Joint | | 37 | 34 | | 290 | 88 | |
| | 2019.08- | 8AT | F | L | Estate FWD 5GQ (EP6FADTXHPD) | | GDS83110 | Drive Shaft | | 28 | 37 | 58.5 | 92.5 | 662 | |
| | 2019.08- | 8AT | F | R | Estate FWD 5GQ (EP6FADTXHPD) | | GDS83109 | Drive Shaft | | 28 | 37 | 58.5 | 92.5 | 933 | |
| | 2019.08- | 8AT | F | L/R | Estate FWD 5GQ (EP6FADTXHPD) | | GCO82273 | Outer Joint | | 28 | 34 | 58.5 | 92.5 | 56 | I |
| | 2019.08- | 8AT | F | L | Estate FWD 5GQ (EP6FADTXHPD) | | GCI82119 | Inner Joint | | 37 | 34 | 41.5 | 58.5 | 94 | |
| | 2019.08- | 8AT | F | R | Estate FWD 5GQ (EP6FADTXHPD) | | GCI82118 | Inner Joint | | 37 | 34 | | 290 | 88 | |
| 2.0 (100 kw) | 2010.11-2018.12 | 6AT | F | L | Estate FWD RHR (DW10BTED4);4HX (DW10FD);4HV (DW10FD);4HS (DW10FD) | | GDS56858 | Drive Shaft | | 28 | 37 | 58.6 | 93 | 620 | |
| | 2010.11-2018.12 | 6AT | F | R | Estate FWD RHR (DW10BTED4);4HX (DW10FD);4HV (DW10FD);4HS (DW10FD) | | GDS56859 | Drive Shaft | | 28 | 37 | 58.6 | 93 | 961 | |
| | 2010.11-2018.12 | 6AT | F | L | Estate FWD RHR (DW10BTED4);4HX (DW10FD);4HV (DW10FD);4HS (DW10FD) | | GCI10120 | Inner Joint | | 37 | 39 | 42.2 | 60 | 95.5 | |
| | 2010.11-2018.12 | 6AT | F | R | Estate FWD RHR (DW10BTED4);4HX (DW10FD);4HV (DW10FD);4HS (DW10FD) | | GCI45033 | Inner Joint | | 37 | 39 | | 379 | 96 | |
| | 2010.11-2018.12 | 6AT/6MT | F | L/R | Estate FWD RHR (DW10BTED4);4HX (DW10FD);4HV (DW10FD);4HS (DW10FD) | | GCO10098 | Outer Joint | | 28 | 39 | 58.6 | 93 | 63 | I |
| | 2010.11-2018.12 | 6MT | F | L | Estate FWD RHR (DW10BTED4);4HX (DW10FD);4HV (DW10FD);4HS (DW10FD) | | GDS10343 | Drive Shaft | | 28 | 37 | 58.6 | 93 | 672 | |
| | 2010.11-2018.12 | 6MT | F | R | Estate FWD RHR (DW10BTED4);4HX (DW10FD);4HV (DW10FD);4HS (DW10FD) | | GDS99214 | Drive Shaft | | 28 | 37 | 58.6 | 94 | 978 | |
| | 2010.11-2018.12 | 6MT | F | L | Estate FWD RHR (DW10BTED4);4HX (DW10FD);4HV (DW10FD);4HS (DW10FD) | | GCI10040 | Inner Joint | | 37 | 39 | 40 | 69 | 95.5 | |
| | 2010.11-2018.12 | 6MT | F | R | Estate FWD RHR (DW10BTED4);4HX (DW10FD);4HV (DW10FD);4HS (DW10FD) | | GCI10041 | Inner Joint | | 37 | 39 | 32 | 399 | 95.5 | |
| 2.0 (103 kw) | 2010.11-2018.12 | 6MT | F | L | Estate FWD RHF (DW10BTED4);RHA (DW10CTED4) | Trans. code:ML6C | GDS10343 | Drive Shaft | | 28 | 37 | 58.6 | 93 | 672 | |
| | 2010.11-2018.12 | 6MT | F | R | Estate FWD RHF (DW10BTED4);RHA (DW10CTED4) | Trans. code:ML6C | GDS99214 | Drive Shaft | | 28 | 37 | 58.6 | 94 | 978 | |
| | 2010.11-2018.12 | 6MT | F | R | Estate FWD RHF (DW10BTED4);RHA (DW10CTED4) | Trans. code:ML6C | GCO10098 | Outer Joint | | 28 | 39 | 58.6 | 93 | 63 | I |
| | 2010.11-2018.12 | 6MT | F | L | Estate FWD RHF (DW10BTED4);RHA (DW10CTED4) | Trans. code:ML6C | GCI10040 | Inner Joint | | 37 | 39 | 40 | 69 | 95.5 | |
| | 2010.11-2018.12 | 6MT | F | R | Estate FWD RHF (DW10BTED4);RHA (DW10CTED4) | Trans. code:ML6C | GCI10041 | Inner Joint | | 37 | 39 | 32 | 399 | 95.5 | |
| | 2013.03-2018.12 | MT | F | L | Estate Van FWD RHF (DW10BTED4) | | GDS10343 | Drive Shaft | | 28 | 37 | 58.6 | 93 | 672 | |
| | 2013.03-2018.12 | MT | F | R | Estate Van FWD RHF (DW10BTED4) | | GDS99214 | Drive Shaft | | 28 | 37 | 58.6 | 94 | 978 | |
| | 2013.03-2018.12 | MT | F | L/R | Estate Van FWD RHF (DW10BTED4) | | GCO10098 | Outer Joint | | 28 | 39 | 58.6 | 93 | 63 | I |
| | 2013.03-2018.12 | MT | F | L | Estate Van FWD RHF (DW10BTED4) | | GCI10040 | Inner Joint | | 37 | 39 | 40 | 69 | 95.5 | |
| | 2013.03-2018.12 | MT | F | R | Estate Van FWD RHF (DW10BTED4) | | GCI10041 | Inner Joint | | 37 | 39 | 32 | 399 | 95.5 | |
| 2.0 (110 kw) | 2014.04-2018.12 | 6MT | F | L | Estate FWD AHX (DW10FD) | Date from:2015.03,For Engine code:DW10FD,From ORG/OPR:13993 | GDS45133 | Drive Shaft | | 28 | 37 | 58.6 | 94 | 653 | |
| | 2014.04-2018.12 | 6MT | F | L | Estate FWD AHX (DW10FD) | Date from:2015.03,For Engine code:DW10FD,From ORG/OPR:13993 | GCI45032 | Inner Joint | | 37 | 39 | 40 | 68.5 | 100 | |
| 2.0 (120 kw) | 2010.11-2018.12 | 6AT | F | L | Estate FWD RHH (DW10CTED4) | | GDS56858 | Drive Shaft | | 28 | 37 | 58.6 | 93 | 620 | |
| | 2010.11-2018.12 | 6AT | F | R | Estate FWD RHH (DW10CTED4) | | GDS56859 | Drive Shaft | | 28 | 37 | 58.6 | 93 | 961 | |
| | 2010.11-2018.12 | 6AT | F | L | Estate FWD RHH (DW10CTED4) | | GCI10120 | Inner Joint | | 37 | 39 | 42.2 | 60 | 95.5 | |
| | 2010.11-2018.12 | 6AT | F | R | Estate FWD RHH (DW10CTED4) | | GCI45033 | Inner Joint | | 37 | 39 | | 379 | 96 | |
| | 2010.11-2018.12 | 6AT/6MT | F | L/R | Estate FWD RHH (DW10CTED4) | Trans. code:ML6C | GCO10098 | Outer Joint | | 28 | 39 | 58.6 | 93 | 63 | I |
| | 2010.11-2018.12 | 6MT | F | L | Estate FWD RHH (DW10CTED4) | Trans. code:ML6C | GDS10343 | Drive Shaft | | 28 | 37 | 58.6 | 93 | 672 | |
| | 2010.11-2018.12 | 6MT | F | R | Estate FWD RHH (DW10CTED4) | Trans. code:ML6C | GDS99214 | Drive Shaft | | 28 | 37 | 58.6 | 94 | 978 | |
| | 2010.11-2018.12 | 6MT | F | L | Estate FWD RHH (DW10CTED4) | Trans. code:ML6C | GCI10040 | Inner Joint | | 37 | 39 | 40 | 69 | 95.5 | |
| | 2010.11-2018.12 | 6MT | F | R | Estate FWD RHH (DW10CTED4) | Trans. code:ML6C | GCI10041 | Inner Joint | | 37 | 39 | 32 | 399 | 95.5 | |

| | YEAR | TRANSM. | F/R | L/R | BODY STYLE & DRIVE TYPE & ENGINE | REMARKS | G-AP Ref. | PRODUCT | ABS | Technical Specifications A | B | C | H | L | P |
|---|---|---|---|---|---|---|---|---|---|---|---|---|---|---|---|
| **PEUGEOT** | | | | | | | | | | | | | | | |
| **508 SW** | | | | | | | | | | | | | | | |
| 2.0 (120 kw) | 2013.03-2018.12 | 6AT | F | L | Estate Van FWD RHH (DW10CTED4) | | GDS56858 | Drive Shaft | | 28 | 37 | 58.6 | 93 | 620 | |
| | 2013.03-2018.12 | 6AT | F | R | Estate Van FWD RHH (DW10CTED4) | | GDS56859 | Drive Shaft | | 28 | 37 | 58.6 | 93 | 961 | |
| | 2013.03-2018.12 | 6AT | F | L | Estate Van FWD RHH (DW10CTED4) | | GCI10120 | Inner Joint | | 37 | 39 | 42.2 | 60 | 95.5 | |
| | 2013.03-2018.12 | 6AT | F | R | Estate Van FWD RHH (DW10CTED4) | | GCI45033 | Inner Joint | | 37 | 39 | | 379 | 96 | |
| | 2013.03-2018.12 | 6AT/6MT | F | L/R | Estate Van FWD RHH (DW10CTED4) | | GCO10098 | Outer Joint | | 28 | 39 | 58.6 | 93 | 63 | I |
| | 2013.03-2018.12 | 6MT | F | L | Estate Van FWD RHH (DW10CTED4) | | GDS10343 | Drive Shaft | | 28 | 37 | 58.6 | 93 | 672 | |
| | 2013.03-2018.12 | 6MT | F | R | Estate Van FWD RHH (DW10CTED4) | | GDS99214 | Drive Shaft | | 28 | 37 | 58.6 | 94 | 978 | |
| | 2013.03-2018.12 | 6MT | F | L | Estate Van FWD RHH (DW10CTED4) | | GCI10040 | Inner Joint | | 37 | 39 | 40 | 69 | 95.5 | |
| | 2013.03-2018.12 | 6MT | F | R | Estate Van FWD RHH (DW10CTED4) | | GCI10041 | Inner Joint | | 37 | 39 | 32 | 399 | 95.5 | |
| | 2018.09- | 8AT | F | L | Estate FWD EHY (DW10FCC) | | GDS56288 | Drive Shaft | | 28 | 37 | 58.5 | 93 | 619 | |
| | 2018.09- | 8AT | F | R | Estate FWD EHY (DW10FCC) | | GDS56634 | Drive Shaft | | 28 | 37 | 58.5 | 93 | 948 | |
| | 2018.09- | 8AT | F | L/R | Estate FWD EHY (DW10FCC) | | GCO82489 | Outer Joint | | 28 | 39 | 58.5 | 93 | 63.5 | I |
| | 2018.09- | 8AT | F | L | Estate FWD EHY (DW10FCC) | | GCI10120 | Inner Joint | | 37 | 39 | 42.2 | 60 | 95.5 | |
| | 2018.09- | 8AT | F | R | Estate FWD EHY (DW10FCC) | | GCI83415 | Inner Joint | | 37 | 39 | | 379 | 96 | |
| 2.0 (130 kw) | 2018.09- | 8AT | F | L | Estate FWD EHZ (DW10FC) | | GDS56288 | Drive Shaft | | 28 | 37 | 58.5 | 93 | 619 | |
| | 2018.09- | 8AT | F | R | Estate FWD EHZ (DW10FC) | | GDS56634 | Drive Shaft | | 28 | 37 | 58.5 | 93 | 948 | |
| | 2018.09- | 8AT | F | L/R | Estate FWD EHZ (DW10FC) | | GCO82489 | Outer Joint | | 28 | 39 | 58.5 | 93 | 63.5 | I |
| | 2018.09- | 8AT | F | L | Estate FWD EHZ (DW10FC) | | GCI10120 | Inner Joint | | 37 | 39 | 42.2 | 60 | 95.5 | |
| | 2018.09- | 8AT | F | R | Estate FWD EHZ (DW10FC) | | GCI83415 | Inner Joint | | 37 | 39 | | 379 | 96 | |
| 2.2 (150 kw) | 2010.11-2018.12 | 6AT | F | R | Estate FWD 4HL (DW12C) | | GDS10435 | Drive Shaft | | 28 | 37 | 58.6 | 94 | 952 | |
| | 2010.11-2018.12 | 6AT | F | R | Estate FWD 4HL (DW12C) | | GCI10142 | Inner Joint | | 37 | 39 | | 380 | 96 | |
| | 2010.11-2018.12 | MT | F | R | Estate FWD 4HL (DW12C) | Trans. code:ML6C | GDS99214 | Drive Shaft | | 28 | 37 | 58.6 | 94 | 978 | |
| | 2010.11-2018.12 | MT | F | R | Estate FWD 4HL (DW12C) | | GCO10098 | Outer Joint | | 28 | 39 | 58.6 | 93 | 63 | I |
| | 2010.11-2018.12 | MT | F | R | Estate FWD 4HL (DW12C) | | GCI10041 | Inner Joint | | 37 | 39 | 32 | 399 | 95.5 | |
| | 2011.11- | AT | F | R | Estate Van FWD 4HL (DW12C) | | GDS10435 | Drive Shaft | | 28 | 37 | 58.6 | 94 | 952 | |
| | 2011.11- | AT | F | R | Estate Van FWD 4HL (DW12C) | | GCO10051 | Outer Joint | | 28 | 39 | 58.6 | 94 | 63 | I |
| | 2011.11- | AT | F | R | Estate Van FWD 4HL (DW12C) | | GCI10142 | Inner Joint | | 37 | 39 | | 380 | 96 | |
| **605** | | | | | | | | | | | | | | | |
| 2.0 (79 kw) | 1990.02-1999.09 | AT/MT | F | L | Saloon FWD XU10MZ | | GCI10018 | Inner Joint | | 24 | 29 | 40 | 62.5 | 99 | |
| | 1990.02-1999.09 | MT | F | L | Saloon FWD XU10MZ | | GDS10083 | Drive Shaft | 48T | 28 | 24 | 58 | 88.5 | 651 | |
| | 1990.02-1999.09 | MT | F | R | Saloon FWD XU10MZ | | GDS10084 | Drive Shaft | 48T | 28 | 24 | 58 | 88.5 | 942.5 | |
| | 1990.02-1999.09 | MT | F | L/R | Saloon FWD XU10MZ | | GCO10006 | Outer Joint | | 28 | 23 | 59 | 88.5 | 55 | I |
| | 1990.02-1999.09 | MT | F | L/R | Saloon FWD XU10MZ | | GCO10007 | Outer Joint | 48T | 28 | 23 | 58 | 88.5 | 55 | I |
| | 1990.02-1999.09 | MT | F | L/R | Saloon FWD XU10MZ | for manufacturer:bosch | GCO10021 | Outer Joint | 29T | 28 | 23 | 58 | 88.5 | 55 | I |
| | 1990.02-1999.09 | | F | L | Saloon FWD XU10MZ | | GDS10113 | Drive Shaft | | 28 | 24 | 58 | 88.5 | 651 | |
| | 1990.02-1999.09 | | F | R | Saloon FWD XU10MZ | | GDS10114 | Drive Shaft | | 28 | 24 | 58 | 88.5 | 942.5 | |
| | 1990.02-1999.09 | | F | | Saloon FWD XU10MZ | | GCO10008 | Outer Joint | 48T | 28 | 27 | 58 | 89 | 63 | I |
| 2.0 (89 kw) | 1989.06-1999.09 | AT | F | L | Saloon FWD XU10J2 | | GDS10071 | Drive Shaft | 48T | 28 | 37 | 58 | 89 | 641.5 | |
| | 1989.06-1999.09 | AT | F | R | Saloon FWD XU10J2 | | GDS10070 | Drive Shaft | 48T | 28 | 37 | 58 | 89 | 939 | |
| | 1989.06-1999.09 | AT/MT | F | L | Saloon FWD XU10J2 | | GCI10018 | Inner Joint | | 24 | 29 | 40 | 62.5 | 99 | |
| | 1989.06-1999.09 | MT | F | L | Saloon FWD XU10J2 | transm. no:BE3 | GDS10083 | Drive Shaft | 48T | 28 | 24 | 58 | 88.5 | 651 | |
| | 1989.06-1999.09 | MT | F | R | Saloon FWD XU10J2 | transm. no:BE3 | GDS10084 | Drive Shaft | 48T | 28 | 24 | 58 | 88.5 | 942.5 | |
| | 1989.06-1999.09 | MT | F | L/R | Saloon FWD XU10J2 | | GCO10006 | Outer Joint | | 28 | 23 | 59 | 88.5 | 55 | I |
| | 1989.06-1999.09 | MT | F | L/R | Saloon FWD XU10J2 | | GCO10007 | Outer Joint | 48T | 28 | 23 | 58 | 88.5 | 55 | I |
| | 1989.06-1999.09 | MT | F | L/R | Saloon FWD XU10J2 | | GCO10021 | Outer Joint | 29T | 28 | 23 | 58 | 88.5 | 55 | I |
| | 1989.06-1999.09 | | F | L | Saloon FWD XU10J2 | | GDS10113 | Drive Shaft | | 28 | 24 | 58 | 88.5 | 651 | |
| | 1989.06-1999.09 | | F | L | Saloon FWD XU10J2 | Date to:1994.06,Trans. code:ME5T | GDS10191 | Drive Shaft | 29T | 28 | 37 | 58 | 88 | 642 | |
| | 1989.06-1999.09 | | F | R | Saloon FWD XU10J2 | | GDS10114 | Drive Shaft | | 28 | 24 | 58 | 88.5 | 942.5 | |
| | 1989.06-1999.09 | | F | R | Saloon FWD XU10J2 | Date to:1994.06,Trans. code:ME5T | GDS10190 | Drive Shaft | 29T | 28 | 37 | 58 | 88 | 935 | |
| | 1989.06-1999.09 | | F | | Saloon FWD XU10J2 | Date To:1994.06 | GCO10029 | Outer Joint | 29T | 28 | 27 | 58 | 89 | 63 | I |
| 2.0 (97 kw) | 1994.07-1999.09 | AT/MT | F | L/R | Saloon FWD XU10J4R | | GCO10007 | Outer Joint | 48T | 28 | 23 | 58 | 88.5 | 55 | I |
| | 1994.07-1999.09 | AT/MT | F | L/R | Saloon FWD XU10J4R | | GCO10021 | Outer Joint | 29T | 28 | 23 | 58 | 88.5 | 55 | I |
| | 1994.07-1999.09 | AT/MT | F | L | Saloon FWD XU10J4R | | GCI10018 | Inner Joint | | 24 | 29 | 40 | 62.5 | 99 | |
| | 1994.07-1999.09 | MT | F | L | Saloon FWD XU10J4R | | GDS10083 | Drive Shaft | 48T | 28 | 24 | 58 | 88.5 | 651 | |
| | 1994.07-1999.09 | MT | F | R | Saloon FWD XU10J4R | | GDS10084 | Drive Shaft | 48T | 28 | 24 | 58 | 88.5 | 942.5 | |
| | 1994.07-1999.09 | | F | L | Saloon FWD XU10J4R | | GDS10113 | Drive Shaft | | 28 | 24 | 58 | 88.5 | 651 | |
| | 1994.07-1999.09 | | F | R | Saloon FWD XU10J4R | | GDS10114 | Drive Shaft | | 28 | 24 | 58 | 88.5 | 942.5 | |
| | 1994.07-1999.09 | | F | | Saloon FWD XU10J4R | | GCO10008 | Outer Joint | 48T | 28 | 27 | 58 | 89 | 63 | I |
| 2.0 (104 kw) | 1992.07-1999.09 | AT/MT | F | L | Saloon FWD XU10J2TE | | GCI10018 | Inner Joint | | 24 | 29 | 40 | 62.5 | 99 | |
| | 1992.07-1999.09 | MT | F | L | Saloon FWD XU10J2TE | | GDS10441 | Drive Shaft | 48T | 28 | 37 | 58.5 | 88 | 623 | |
| | 1992.07-1999.09 | MT | F | R | Saloon FWD XU10J2TE | | GDS10442 | Drive Shaft | 48T | 28 | 37 | 58 | 89 | 920 | |
| | 1992.07-1999.09 | | F | L | Saloon FWD XU10J2TE | Date To:1994.06 | GDS10191 | Drive Shaft | 29T | 28 | 37 | 58 | 88 | 642 | |
| | 1992.07-1999.09 | | F | R | Saloon FWD XU10J2TE | Date To:1994.06 | GDS10190 | Drive Shaft | 29T | 28 | 37 | 58 | 88 | 935 | |
| | 1992.07-1999.09 | | F | | Saloon FWD XU10J2TE | | GCO10008 | Outer Joint | 48T | 28 | 27 | 58 | 89 | 63 | I |
| | 1992.07-1999.09 | | F | | Saloon FWD XU10J2TE | | GCO10021 | Outer Joint | 29T | 28 | 23 | 58 | 88.5 | 55 | I |

| | YEAR | TRANSM. | F/R | L/R | BODY STYLE & DRIVE TYPE & ENGINE | REMARKS | G-AP Ref. | PRODUCT | ABS | Technical Specifications A | B | C | H | L | P |
|---|---|---|---|---|---|---|---|---|---|---|---|---|---|---|---|
| **PEUGEOT** | | | | | | | | | | | | | | | |
| **605** | | | | | | | | | | | | | | | |
| 2.0 (104 kw) | 1992.07-1999.09 | | F | | Saloon FWD XU10J2TE | Date To:1994.06 | GCO10029 | Outer Joint | 29T | 28 | 27 | 58 | 89 | 63 | I |
| 2.0 (108 kw) | 1991.07-1999.09 | MT | F | L | Saloon FWD XU10J2TE | | GDS10441 | Drive Shaft | 48T | 28 | 37 | 58.5 | 88 | 623 | |
| | 1991.07-1999.09 | MT | F | R | Saloon FWD XU10J2TE | | GDS10442 | Drive Shaft | 48T | 28 | 37 | 58 | 89 | 920 | |
| | 1991.07-1999.09 | | F | L | Saloon FWD XU10J2TE | Date To:1994.06 | GDS10191 | Drive Shaft | 29T | 28 | 37 | 58 | 88 | 642 | |
| | 1991.07-1999.09 | | F | R | Saloon FWD XU10J2TE | Date To:1994.06 | GDS10190 | Drive Shaft | 29T | 28 | 37 | 58 | 88 | 935 | |
| | 1991.07-1999.09 | | F | | Saloon FWD XU10J2TE | | GCO10008 | Outer Joint | 48T | 28 | 27 | 58 | 89 | 63 | I |
| | 1991.07-1999.09 | | F | | Saloon FWD XU10J2TE | | GCO10021 | Outer Joint | 29T | 28 | 23 | 58 | 88.5 | 55 | I |
| | 1991.07-1999.09 | | F | | Saloon FWD XU10J2TE | Date To:1994.06 | GCO10029 | Outer Joint | 29T | 28 | 27 | 58 | 89 | 63 | I |
| 2.1 (80 kw) | 1989.06-1999.09 | AT/MT | F | L/R | Saloon FWD PHZ (XUD11ATE) | | GCO10008 | Outer Joint | 48T | 28 | 27 | 58 | 89 | 63 | I |
| | 1989.06-1999.09 | AT/MT | F | L/R | Saloon FWD PHZ (XUD11ATE) | | GCO10029 | Outer Joint | 29T | 28 | 27 | 58 | 89 | 63 | I |
| | 1989.06-1999.09 | MT | F | L | Saloon FWD PHZ (XUD11ATE) | | GDS10441 | Drive Shaft | 48T | 28 | 37 | 58.5 | 88 | 623 | |
| | 1989.06-1999.09 | MT | F | R | Saloon FWD PHZ (XUD11ATE) | | GDS10442 | Drive Shaft | 48T | 28 | 37 | 58 | 89 | 920 | |
| | 1989.06-1999.09 | | F | L | Saloon FWD PHZ (XUD11ATE) | | GDS10071 | Drive Shaft | 48T | 28 | 37 | 58 | 89 | 641.5 | |
| | 1989.06-1999.09 | | F | L | Saloon FWD PHZ (XUD11ATE) | Date to:1994.06,Trans. code:ME5T | GDS10191 | Drive Shaft | 29T | 28 | 37 | 58 | 88 | 642 | |
| | 1989.06-1999.09 | | F | R | Saloon FWD PHZ (XUD11ATE) | | GDS10070 | Drive Shaft | 48T | 28 | 37 | 58 | 89 | 939 | |
| | 1989.06-1999.09 | | F | R | Saloon FWD PHZ (XUD11ATE) | Date to:1994.06,Trans. code:ME5T | GDS10190 | Drive Shaft | 29T | 28 | 37 | 58 | 88 | 935 | |
| | 1994.08-1999.09 | AT/MT | F | L/R | Saloon FWD P8C (XUD11BTE), PHZ (XUD11ATE) | | GCO10008 | Outer Joint | 48T | 28 | 27 | 58 | 89 | 63 | I |
| | 1994.08-1999.09 | AT/MT | F | L/R | Saloon FWD P8C (XUD11BTE), PHZ (XUD11ATE) | | GCO10029 | Outer Joint | 29T | 28 | 27 | 58 | 89 | 63 | I |
| | 1994.08-1999.09 | MT | F | L | Saloon FWD P8C (XUD11BTE), PHZ (XUD11ATE) | | GDS10441 | Drive Shaft | 48T | 28 | 37 | 58.5 | 88 | 623 | |
| | 1994.08-1999.09 | MT | F | R | Saloon FWD P8C (XUD11BTE), PHZ (XUD11ATE) | | GDS10442 | Drive Shaft | 48T | 28 | 37 | 58 | 89 | 920 | |
| | 1994.08-1999.09 | | F | L | Saloon FWD P8C (XUD11BTE), PHZ (XUD11ATE) | | GDS10071 | Drive Shaft | 48T | 28 | 37 | 58 | 89 | 641.5 | |
| | 1994.08-1999.09 | | F | L | Saloon FWD P8C (XUD11BTE), PHZ (XUD11ATE) | Date to:1994.06,Trans. code:ME5T | GDS10191 | Drive Shaft | 29T | 28 | 37 | 58 | 88 | 642 | |
| | 1994.08-1999.09 | | F | R | Saloon FWD P8C (XUD11BTE), PHZ (XUD11ATE) | | GDS10070 | Drive Shaft | 48T | 28 | 37 | 58 | 89 | 939 | |
| | 1994.08-1999.09 | | F | R | Saloon FWD P8C (XUD11BTE), PHZ (XUD11ATE) | Date to:1994.06,Trans. code:ME5T | GDS10190 | Drive Shaft | 29T | 28 | 37 | 58 | 88 | 935 | |
| 3.0 (123 kw) | 1989.10-1999.09 | AT/MT | F | L/R | Saloon FWD UFZ (ZPJ) | | GCO10008 | Outer Joint | 48T | 28 | 27 | 58 | 89 | 63 | I |
| | 1989.10-1999.09 | AT/MT | F | L/R | Saloon FWD UFZ (ZPJ) | | GCO10029 | Outer Joint | 29T | 28 | 27 | 58 | 89 | 63 | I |
| | 1989.10-1999.09 | MT | F | L | Saloon FWD UFZ (ZPJ) | | GDS10441 | Drive Shaft | 48T | 28 | 37 | 58.5 | 88 | 623 | |
| | 1989.10-1999.09 | MT | F | R | Saloon FWD UFZ (ZPJ) | | GDS10442 | Drive Shaft | 48T | 28 | 37 | 58 | 89 | 920 | |
| | 1989.10-1999.09 | | F | L | Saloon FWD UFZ (ZPJ) | | GDS10071 | Drive Shaft | 48T | 28 | 37 | 58 | 89 | 641.5 | |
| | 1989.10-1999.09 | | F | L | Saloon FWD UFZ (ZPJ) | Date to:1994.06,Trans. code:ME5T | GDS10191 | Drive Shaft | 29T | 28 | 37 | 58 | 88 | 642 | |
| | 1989.10-1999.09 | | F | R | Saloon FWD UFZ (ZPJ) | | GDS10070 | Drive Shaft | 48T | 28 | 37 | 58 | 89 | 939 | |
| | 1989.10-1999.09 | | F | R | Saloon FWD UFZ (ZPJ) | Date to:1994.06,Trans. code:ME5T | GDS10190 | Drive Shaft | 29T | 28 | 37 | 58 | 88 | 935 | |
| 3.0 (140 kw) | 1997.04-2000.06 | | F | | Saloon FWD ES9J4 | | GCO10008 | Outer Joint | 48T | 28 | 27 | 58 | 89 | 63 | I |
| 3.0 (147 kw) | 1989.08-1999.09 | AT/MT | F | L/R | Saloon FWD UKZ (ZPJ4/Z) | | GCO10008 | Outer Joint | 48T | 28 | 27 | 58 | 89 | 63 | I |
| | 1989.08-1999.09 | AT/MT | F | L/R | Saloon FWD UKZ (ZPJ4/Z) | | GCO10029 | Outer Joint | 29T | 28 | 27 | 58 | 89 | 63 | I |
| | 1989.08-1999.09 | MT | F | L | Saloon FWD UKZ (ZPJ4/Z) | | GDS10441 | Drive Shaft | 48T | 28 | 37 | 58.5 | 88 | 623 | |
| | 1989.08-1999.09 | MT | F | R | Saloon FWD UKZ (ZPJ4/Z) | | GDS10442 | Drive Shaft | 48T | 28 | 37 | 58 | 89 | 920 | |
| | 1989.08-1999.09 | | F | L | Saloon FWD UKZ (ZPJ4/Z) | | GDS10071 | Drive Shaft | 48T | 28 | 37 | 58 | 89 | 641.5 | |
| | 1989.08-1999.09 | | F | L | Saloon FWD UKZ (ZPJ4/Z) | Date to:1994.06,Trans. code:ME5T | GDS10191 | Drive Shaft | 29T | 28 | 37 | 58 | 88 | 642 | |
| | 1989.08-1999.09 | | F | R | Saloon FWD UKZ (ZPJ4/Z) | | GDS10070 | Drive Shaft | 48T | 28 | 37 | 58 | 89 | 939 | |
| | 1989.08-1999.09 | | F | R | Saloon FWD UKZ (ZPJ4/Z) | Date to:1994.06,Trans. code:ME5T | GDS10190 | Drive Shaft | 29T | 28 | 37 | 58 | 88 | 935 | |
| **607** | | | | | | | | | | | | | | | |
| 2.0 (79 kw) | 2001.03-2004.09 | 5MT | F | L | Saloon FWD RHS (DW10ATED) | | GDS10218 | Drive Shaft | 48T | 28 | 37 | 58 | 89 | 638 | |
| | 2001.03-2004.09 | 5MT | F | L | Saloon FWD RHS (DW10ATED) | | GCI45032 | Inner Joint | | 37 | 39 | 40 | 68.5 | 100 | |
| | 2001.03-2004.09 | MT | F | L | Saloon FWD RHS (DW10ATED) | | GDS45166 | Drive Shaft | 48T | 28 | 37 | 58 | 88 | 648 | |
| | 2001.03-2004.09 | MT | F | R | Saloon FWD RHS (DW10ATED) | | GDS10221 | Drive Shaft | 48T | 28 | 37 | 58 | 89 | 948 | |
| | 2001.03-2004.09 | MT | F | R | Saloon FWD RHS (DW10ATED) | | GDS45165 | Drive Shaft | 48T | 28 | 37 | 58 | 89 | 960 | |
| 2.0 (80 kw) | 2000.05-2005.09 | 5MT | F | L | Saloon FWD RHZ (DW10ATED) | | GDS10218 | Drive Shaft | 48T | 28 | 37 | 58 | 89 | 638 | |
| | 2000.05-2005.09 | 5MT | F | L | Saloon FWD RHZ (DW10ATED) | | GCI45032 | Inner Joint | | 37 | 39 | 40 | 68.5 | 100 | |
| | 2000.05-2005.09 | MT | F | L | Saloon FWD RHZ (DW10ATED) | | GDS45166 | Drive Shaft | 48T | 28 | 37 | 58 | 88 | 648 | |
| | 2000.05-2005.09 | MT | F | R | Saloon FWD RHZ (DW10ATED) | | GDS10221 | Drive Shaft | 48T | 28 | 37 | 58 | 89 | 948 | |
| | 2000.05-2005.09 | MT | F | R | Saloon FWD RHZ (DW10ATED) | | GDS45165 | Drive Shaft | 48T | 28 | 37 | 58 | 89 | 960 | |
| 2.0 (100 kw) | 2000.02-2005.08 | 5MT | F | R | Saloon FWD RFN (EW10J4) | | GDS10221 | Drive Shaft | 48T | 28 | 37 | 58 | 89 | 948 | |
| 2.2 (98 kw) | 2000.02-2006.02 | AT | F | L | Saloon FWD 4HX (DW12TED4) | | GDS10441 | Drive Shaft | 48T | 28 | 37 | 58.5 | 88 | 623 | |
| | 2000.02-2006.02 | AT | F | R | Saloon FWD 4HX (DW12TED4) | | GDS10442 | Drive Shaft | 48T | 28 | 37 | 58 | 89 | 920 | |
| | 2000.02-2006.02 | AT | F | L | Saloon FWD 4HX (DW12TED4) | | GCI45034 | Inner Joint | | 37 | 39 | 42 | 68.5 | 97 | |
| | 2000.02-2006.02 | MT | F | L | Saloon FWD 4HX (DW12TED4) | Hollow shaft | GDS10218 | Drive Shaft | 48T | 28 | 37 | 58 | 89 | 638 | |
| | 2000.02-2006.02 | MT | F | L | Saloon FWD 4HX (DW12TED4) | Solid shaft | GDS45166 | Drive Shaft | 48T | 28 | 37 | 58 | 88 | 648 | |
| | 2000.02-2006.02 | MT | F | R | Saloon FWD 4HX (DW12TED4) | Solid shaft | GDS10221 | Drive Shaft | 48T | 28 | 37 | 58 | 89 | 948 | |
| | 2000.02-2006.02 | MT | F | R | Saloon FWD 4HX (DW12TED4) | Hollow shaft | GDS45165 | Drive Shaft | 48T | 28 | 37 | 58 | 89 | 960 | |
| | 2000.02-2006.02 | MT | F | L | Saloon FWD 4HX (DW12TED4) | | GCI45032 | Inner Joint | | 37 | 39 | 40 | 68.5 | 100 | |
| 2.2 (116 kw) | 2000.02-2005.08 | 4AT | F | L | Saloon FWD 3FZ (EW12J4) | No Facelift | GDS10441 | Drive Shaft | 48T | 28 | 37 | 58.5 | 88 | 623 | |
| | 2000.02-2005.08 | 4AT | F | R | Saloon FWD 3FZ (EW12J4) | No Facelift | GDS10442 | Drive Shaft | 48T | 28 | 37 | 58 | 89 | 920 | |
| | 2000.02-2005.08 | 5MT | F | L | Saloon FWD 3FZ (EW12J4) | Facelift | GDS45133 | Drive Shaft | | 28 | 37 | 58.6 | 94 | 653 | |
| | 2000.02-2005.08 | 5MT | F | R | Saloon FWD 3FZ (EW12J4) | No Facelift | GDS10221 | Drive Shaft | 48T | 28 | 37 | 58 | 89 | 948 | |

| | YEAR | TRANSM. | F/R | L/R | BODY STYLE & DRIVE TYPE & ENGINE | REMARKS | G-AP Ref. | PRODUCT | ABS | Technical Specifications A | B | C | H | L | P |
|---|---|---|---|---|---|---|---|---|---|---|---|---|---|---|---|
| **PEUGEOT** | | | | | | | | | | | | | | | |
| **607** | | | | | | | | | | | | | | | |
| 2.2 (116 kw) | 2000.02-2005.08 | 5MT | F | L/R | Saloon FWD 3FZ (EW12J4) | For facelift | GCO10051 | Outer Joint | | 28 | 39 | 58.6 | 94 | 63 | I |
| | 2000.02-2005.08 | 5MT | F | L | Saloon FWD 3FZ (EW12J4) | Facelift | GCI45032 | Inner Joint | | 37 | 39 | 40 | 68.5 | 100 | |
| | 2000.02-2005.08 | AT | F | L | Saloon FWD 3FZ (EW12J4) | Date To:2004.09 | GCI45034 | Inner Joint | | 37 | 39 | 42 | 68.5 | 97 | |
| 2.2 (120 kw) | 2005.09-2010.06 | 6MT | F | L | Saloon FWD 3FY (EW12J4) | | GDS45133 | Drive Shaft | | 28 | 37 | 58.6 | 94 | 653 | |
| | 2005.09-2010.06 | 6MT | F | L | Saloon FWD 3FY (EW12J4) | | GCI45032 | Inner Joint | | 37 | 39 | 40 | 68.5 | 100 | |
| 2.7 (150 kw) | 2004.12-2011.07 | 6AT | F | L | Saloon FWD DT17TED4 | Date to:2007.01,to ORG/OPR:11045 | GDS10385 | Drive Shaft | | 28 | 37 | 58.6 | 93 | 615 | |
| | 2004.12-2011.07 | 6AT | F | R | Saloon FWD DT17TED4 | | GDS10396 | Drive Shaft | | 28 | 37 | 58.6 | 94 | 925 | |
| | 2004.12-2011.07 | 6AT | F | L | Saloon FWD DT17TED4 | Date to:2007.01,to ORG/OPR:11045 | GCI45034 | Inner Joint | | 37 | 39 | 42 | 68.5 | 97 | |
| 3.0 (152 kw) | 2000.02-2004.07 | AT | F | L | Saloon FWD XFX (ES9J4S) | | GDS10441 | Drive Shaft | 48T | 28 | 37 | 58.5 | 88 | 623 | |
| | 2000.02-2004.07 | AT | F | R | Saloon FWD XFX (ES9J4S) | | GDS10396 | Drive Shaft | | 28 | 37 | 58.6 | 94 | 925 | |
| | 2000.02-2004.07 | AT | F | R | Saloon FWD XFX (ES9J4S) | | GDS10442 | Drive Shaft | 48T | 28 | 37 | 58 | 89 | 920 | |
| | 2000.02-2004.07 | AT | F | R | Saloon FWD XFX (ES9J4S) | | GCO10098 | Outer Joint | | 28 | 39 | 58.6 | 93 | 63 | I |
| | 2000.02-2004.07 | AT | F | L | Saloon FWD XFX (ES9J4S) | | GCI45034 | Inner Joint | | 37 | 39 | 42 | 68.5 | 97 | |
| | 2000.02-2004.07 | MT | F | R | Saloon FWD XFX (ES9J4S) | | GDS10221 | Drive Shaft | 48T | 28 | 37 | 58 | 89 | 948 | |
| 3.0 (155 kw) | 2004.03-2011.07 | 6AT | F | L | Saloon FWD XFX (ES9J4S);XFV (ES9A) | | GDS10385 | Drive Shaft | | 28 | 37 | 58.6 | 93 | 615 | |
| | 2004.03-2011.07 | 6AT | F | R | Saloon FWD XFX (ES9J4S);XFV (ES9A) | | GDS10396 | Drive Shaft | | 28 | 37 | 58.6 | 94 | 925 | |
| | 2004.03-2011.07 | 6AT | F | L | Saloon FWD XFX (ES9J4S);XFV (ES9A) | | GCI45034 | Inner Joint | | 37 | 39 | 42 | 68.5 | 97 | |
| | 2004.03-2011.07 | AT | F | R | Saloon FWD XFX (ES9J4S);XFV (ES9A) | | GCO10098 | Outer Joint | | 28 | 39 | 58.6 | 93 | 63 | I |
| **806** | | | | | | | | | | | | | | | |
| 1.8 (73 kw) | 1995.07-2002.08 | 5MT | F | L | MPV FWD XU7JP | | GDS10082 | Drive Shaft | 48T | 27 | 24 | 59 | 82 | 648 | |
| | 1995.07-2002.08 | 5MT | F | R | MPV FWD XU7JP | | GDS10081 | Drive Shaft | 48T | 27 | 24 | 59 | 82 | 935 | |
| | 1995.07-2002.08 | 5MT | F | R | MPV FWD XU7JP | | GCI10004 | Inner Joint | | 24 | 34 | 29.8 | 348 | 99.5 | |
| | 1995.07-2002.08 | MT | F | L | MPV FWD XU7JP | Trans. code:BE3 | GDS10112 | Drive Shaft | | 27 | 24 | 59 | 82 | 648 | |
| | 1995.07-2002.08 | MT | F | L/R | MPV FWD XU7JP | | GCO10018 | Outer Joint | 48T | 27 | 34 | 61 | 82 | 56.5 | I |
| | 1995.07-2002.08 | MT | F | L/R | MPV FWD XU7JP | Trans. code:BE3R | GCO10059 | Outer Joint | 48T | 27 | 34 | 59 | 82 | 56.5 | I |
| 1.9 (66 kw) | 1995.07-2002.08 | 5MT | F | L | MPV FWD XUD9TE | | GDS10016 | Drive Shaft | 48T | 27 | 37 | 59 | 82 | 641 | |
| | 1995.07-2002.08 | 5MT | F | L | MPV FWD XUD9TE | | GDS10072 | Drive Shaft | | 27 | 37 | 59 | 82 | 641 | |
| | 1995.07-2002.08 | 5MT | F | R | MPV FWD XUD9TE | | GDS10014 | Drive Shaft | 48T | 27 | 37 | 59 | 82 | 947 | |
| | 1995.07-2002.08 | 5MT | F | R | MPV FWD XUD9TE | | GDS10155 | Drive Shaft | | 27 | 37 | 59 | 82 | 947 | |
| | 1995.07-2002.08 | 5MT | F | L/R | MPV FWD XUD9TE | | GCO10014 | Outer Joint | | 27 | 39 | 59 | 82 | 63 | I |
| | 1995.07-2002.08 | 5MT | F | L/R | MPV FWD XUD9TE | | GCO10015 | Outer Joint | 48T | 27 | 39 | 59 | 82 | 63 | I |
| | 1995.07-2002.08 | 5MT | F | L | MPV FWD XUD9TE | | GCI10015 | Inner Joint | | 37 | 39 | 40 | 68.5 | 104 | |
| | 1995.07-2002.08 | 5MT | F | R | MPV FWD XUD9TE | | GCI10034 | Inner Joint | | 37 | 39 | 31.9 | 369.5 | 99 | |
| | 1995.07-2002.08 | 5MT | F | L | MPV Van FWD XUD9TE | | GDS10016 | Drive Shaft | 48T | 27 | 37 | 59 | 82 | 641 | |
| | 1995.07-2002.08 | 5MT | F | L | MPV Van FWD XUD9TE | | GDS10072 | Drive Shaft | | 27 | 37 | 59 | 82 | 641 | |
| | 1995.07-2002.08 | 5MT | F | R | MPV Van FWD XUD9TE | | GDS10014 | Drive Shaft | 48T | 27 | 37 | 59 | 82 | 947 | |
| | 1995.07-2002.08 | 5MT | F | R | MPV Van FWD XUD9TE | | GDS10155 | Drive Shaft | | 27 | 37 | 59 | 82 | 947 | |
| | 1995.07-2002.08 | 5MT | F | L | MPV Van FWD XUD9TE | Date from:1996.09,From ORG/OPR:07250 | GCO10015 | Outer Joint | 48T | 27 | 39 | 59 | 82 | 63 | I |
| | 1995.07-2002.08 | 5MT | F | R | MPV Van FWD XUD9TE | | GCI10034 | Inner Joint | | 37 | 39 | 31.9 | 369.5 | 99 | |
| 1.9 (68 kw) | 1997.05-2002.08 | AT/MT | F | L | MPV FWD XUD9TE | | GDS10016 | Drive Shaft | 48T | 27 | 37 | 59 | 82 | 641 | |
| | 1997.05-2002.08 | AT/MT | F | L | MPV FWD XUD9TE | | GDS10072 | Drive Shaft | | 27 | 37 | 59 | 82 | 641 | |
| | 1997.05-2002.08 | AT/MT | F | R | MPV FWD XUD9TE | | GDS10014 | Drive Shaft | 48T | 27 | 37 | 59 | 82 | 947 | |
| | 1997.05-2002.08 | AT/MT | F | R | MPV FWD XUD9TE | | GDS10155 | Drive Shaft | | 27 | 37 | 59 | 82 | 947 | |
| | 1997.05-2002.08 | AT/MT | F | L/R | MPV FWD XUD9TE | | GCO10014 | Outer Joint | | 27 | 39 | 59 | 82 | 63 | I |
| | 1997.05-2002.08 | AT/MT | F | L/R | MPV FWD XUD9TE | | GCO10015 | Outer Joint | 48T | 27 | 39 | 59 | 82 | 63 | I |
| | 1997.05-2002.08 | AT/MT | F | L | MPV FWD XUD9TE | | GCI10015 | Inner Joint | | 37 | 39 | 40 | 68.5 | 104 | |
| | 1997.05-2002.08 | AT/MT | F | R | MPV FWD XUD9TE | | GCI10034 | Inner Joint | | 37 | 39 | 31.9 | 369.5 | 99 | |
| 2.0 (80 kw) | 1999.05-2003.02 | 5MT | F | L | MPV FWD DW10ATED/DW10BTED | | GDS10264 | Drive Shaft | 48T | 27 | 37 | 59 | 82 | 630 | |
| | 1999.05-2003.02 | 5MT | F | L | MPV FWD DW10ATED/DW10BTED | | GDS10430 | Drive Shaft | | 27 | 37 | 59 | 82 | 630 | |
| | 1999.05-2003.02 | 5MT | F | R | MPV FWD DW10ATED/DW10BTED | | GDS10057 | Drive Shaft | | 27 | 37 | 59 | 82 | 960 | |
| | 1999.05-2003.02 | 5MT | F | R | MPV FWD DW10ATED/DW10BTED | | GDS45120 | Drive Shaft | 48T | 27 | 37 | 59 | 82 | 960 | |
| | 1999.05-2003.02 | 5MT | F | L/R | MPV FWD DW10ATED/DW10BTED | | GCO10014 | Outer Joint | | 27 | 39 | 59 | 82 | 63 | I |
| | 1999.05-2003.02 | 5MT | F | L/R | MPV FWD DW10ATED/DW10BTED | | GCO10015 | Outer Joint | 48T | 27 | 39 | 59 | 82 | 63 | I |
| | 1999.05-2003.02 | 5MT | F | L | MPV FWD DW10ATED/DW10BTED | | GCI10015 | Inner Joint | | 37 | 39 | 40 | 68.5 | 104 | |
| | 1999.05-2003.02 | 5MT | F | R | MPV FWD DW10ATED/DW10BTED | | GCI10034 | Inner Joint | | 37 | 39 | 31.9 | 369.5 | 99 | |
| | 1999.06-2003.02 | 5MT | F | L | MPV Van FWD DW10ATED | | GDS10264 | Drive Shaft | 48T | 27 | 37 | 59 | 82 | 630 | |
| | 1999.06-2003.02 | 5MT | F | R | MPV Van FWD DW10ATED | | GDS10057 | Drive Shaft | | 27 | 37 | 59 | 82 | 960 | |
| | 1999.06-2003.02 | 5MT | F | R | MPV Van FWD DW10ATED | | GDS45120 | Drive Shaft | 48T | 27 | 37 | 59 | 82 | 960 | |
| | 1999.06-2003.02 | 5MT | F | L/R | MPV Van FWD DW10ATED | | GCO10015 | Outer Joint | 48T | 27 | 39 | 59 | 82 | 63 | I |
| | 1999.06-2003.02 | 5MT | F | R | MPV Van FWD DW10ATED | | GCI10034 | Inner Joint | | 37 | 39 | 31.9 | 369.5 | 99 | |
| | 1999.08-2002.08 | 5MT | F | L | MPV FWD DW10ATED4 | | GDS10264 | Drive Shaft | 48T | 27 | 37 | 59 | 82 | 630 | |
| | 1999.08-2002.08 | 5MT | F | L | MPV FWD DW10ATED4 | | GDS10430 | Drive Shaft | | 27 | 37 | 59 | 82 | 630 | |
| | 1999.08-2002.08 | 5MT | F | R | MPV FWD DW10ATED4 | | GDS10057 | Drive Shaft | | 27 | 37 | 59 | 82 | 960 | |
| | 1999.08-2002.08 | 5MT | F | R | MPV FWD DW10ATED4 | | GDS45120 | Drive Shaft | 48T | 27 | 37 | 59 | 82 | 960 | |
| | 1999.08-2002.08 | 5MT | F | L/R | MPV FWD DW10ATED4 | | GCO10014 | Outer Joint | | 27 | 39 | 59 | 82 | 63 | I |

| | YEAR | TRANSM. | F/R | L/R | BODY STYLE & DRIVE TYPE & ENGINE | REMARKS | G-AP Ref. | PRODUCT | ABS | Technical Specifications A | B | C | H | L | P |
|---|---|---|---|---|---|---|---|---|---|---|---|---|---|---|---|
| **PEUGEOT** | | | | | | | | | | | | | | | |
| **806** | | | | | | | | | | | | | | | |
| 2.0 (80 kw) | 1999.08-2002.08 | 5MT | F | L/R | MPV FWD DW10ATED4 | | GCO10015 | Outer Joint | 48T | 27 | 39 | 59 | 82 | 63 | I |
| | 1999.08-2002.08 | 5MT | F | L | MPV FWD DW10ATED4 | | GCI10015 | Inner Joint | | 37 | 39 | 40 | 68.5 | 104 | |
| | 1999.08-2002.08 | 5MT | F | R | MPV FWD DW10ATED4 | | GCI10034 | Inner Joint | | 37 | 39 | 31.9 | 369.5 | 99 | |
| 2.0 (89 kw) | 1994.08-2000.05 | 5MT | F | L | MPV FWD XU10J2 | | GDS10082 | Drive Shaft | 48T | 27 | 24 | 59 | 82 | 648 | |
| | 1994.08-2000.05 | 5MT | F | R | MPV FWD XU10J2 | | GDS10081 | Drive Shaft | 48T | 27 | 24 | 59 | 82 | 935 | |
| | 1994.08-2000.05 | 5MT | F | R | MPV FWD XU10J2 | | GCI10004 | Inner Joint | | 24 | 34 | 29.8 | 348 | 99.5 | |
| | 1994.08-2000.05 | MT | F | L | MPV FWD XU10J2 | | GDS10112 | Drive Shaft | | 27 | 24 | 59 | 82 | 648 | |
| | 1994.08-2000.05 | MT | F | L/R | MPV FWD XU10J2 | | GCO10016 | Outer Joint | | 27 | 34 | 59 | 82 | 56.5 | I |
| | 1994.08-2000.05 | MT | F | L/R | MPV FWD XU10J2 | Date from:1994.09 | GCO10018 | Outer Joint | 48T | 27 | 34 | 61 | 82 | 56.5 | I |
| | 1994.08-2000.05 | MT | F | L/R | MPV FWD XU10J2 | Trans. code:BE3R | GCO10059 | Outer Joint | 48T | 27 | 34 | 59 | 82 | 56.5 | I |
| | 1994.08-2000.05 | | F | R | MPV FWD XU10J2 | | GDS10111 | Drive Shaft | | 27 | 24 | 59 | 82 | 935 | |
| 2.0 (97 kw) | 1998.05-2000.09 | 4AT/5MT | F | L | MPV FWD XU10J4R | | GDS10016 | Drive Shaft | 48T | 27 | 37 | 59 | 82 | 641 | |
| | 1998.05-2000.09 | 4AT/5MT | F | L | MPV FWD XU10J4R | | GDS10072 | Drive Shaft | | 27 | 37 | 59 | 82 | 641 | |
| | 1998.05-2000.09 | 4AT/5MT | F | R | MPV FWD XU10J4R | | GDS10014 | Drive Shaft | 48T | 27 | 37 | 59 | 82 | 947 | |
| | 1998.05-2000.09 | 4AT/5MT | F | R | MPV FWD XU10J4R | | GDS10155 | Drive Shaft | | 27 | 37 | 59 | 82 | 947 | |
| | 1998.05-2000.09 | 5MT | F | L/R | MPV FWD XU10J4R | | GCO10015 | Outer Joint | 48T | 27 | 39 | 59 | 82 | 63 | I |
| | 1998.05-2000.09 | MT | F | L | MPV FWD XU10J4R | | GDS10112 | Drive Shaft | | 27 | 24 | 59 | 82 | 648 | |
| | 1998.05-2000.09 | MT | F | L/R | MPV FWD XU10J4R | | GCO10016 | Outer Joint | | 27 | 34 | 59 | 82 | 56.5 | I |
| | 1998.05-2000.09 | MT | F | L/R | MPV FWD XU10J4R | | GCO10018 | Outer Joint | 48T | 27 | 34 | 61 | 82 | 56.5 | I |
| | 1998.05-2000.09 | MT | F | L/R | MPV FWD XU10J4R | Trans. code:BE3R | GCO10059 | Outer Joint | 48T | 27 | 34 | 59 | 82 | 56.5 | I |
| | 1998.05-2000.09 | | F | L | MPV FWD XU10J4R | Date From:1996.09;From ORG/OPR:07250 | GDS45027 | Drive Shaft | 48T | 21 | 22 | 48 | 86.5 | 610 | |
| | 1998.05-2000.09 | | F | R | MPV FWD XU10J4R | | GDS10111 | Drive Shaft | | 27 | 24 | 59 | 82 | 935 | |
| | 1998.05-2000.09 | | F | L | MPV FWD XU10J4R | | GCI10015 | Inner Joint | | 37 | 39 | 40 | 68.5 | 104 | |
| | 1998.05-2000.09 | | F | R | MPV FWD XU10J4R | | GCI10034 | Inner Joint | | 37 | 39 | 31.9 | 369.5 | 99 | |
| | 1998.05-2000.09 | 5MT | F | L | MPV Van FWD XU10J4R | | GDS10016 | Drive Shaft | 48T | 27 | 37 | 59 | 82 | 641 | |
| | 1998.05-2000.09 | 5MT | F | L | MPV Van FWD XU10J4R | | GDS10072 | Drive Shaft | | 27 | 37 | 59 | 82 | 641 | |
| | 1998.05-2000.09 | 5MT | F | R | MPV Van FWD XU10J4R | | GDS10014 | Drive Shaft | 48T | 27 | 37 | 59 | 82 | 947 | |
| | 1998.05-2000.09 | 5MT | F | R | MPV Van FWD XU10J4R | | GDS10155 | Drive Shaft | | 27 | 37 | 59 | 82 | 947 | |
| | 1998.05-2000.09 | 5MT | F | L/R | MPV Van FWD XU10J4R | | GCO10015 | Outer Joint | 48T | 27 | 39 | 59 | 82 | 63 | I |
| | 1998.05-2000.09 | 5MT | F | R | MPV Van FWD XU10J4R | | GCI10034 | Inner Joint | | 37 | 39 | 31.9 | 369.5 | 99 | |
| 2.0 (100 kw) | 2000.05-2003.02 | MT | F | L | MPV Van FWD EW10J4 | | GDS10082 | Drive Shaft | 48T | 27 | 24 | 59 | 82 | 648 | |
| | 2000.05-2003.02 | MT | F | L | MPV Van FWD EW10J4 | | GDS10112 | Drive Shaft | | 27 | 24 | 59 | 82 | 648 | |
| | 2000.05-2003.02 | MT | F | R | MPV Van FWD EW10J4 | | GDS10081 | Drive Shaft | 48T | 27 | 24 | 59 | 82 | 935 | |
| | 2000.05-2003.02 | MT | F | R | MPV Van FWD EW10J4 | | GDS10120 | Drive Shaft | | 27 | 24 | 59 | 82 | 928 | |
| | 2000.05-2003.02 | MT | F | R | MPV Van FWD EW10J4 | | GCO10059 | Outer Joint | 48T | 27 | 34 | 59 | 82 | 56.5 | I |
| | 2000.05-2003.02 | MT | F | R | MPV Van FWD EW10J4 | | GCI10004 | Inner Joint | | 24 | 34 | 29.8 | 348 | 99.5 | |
| | 2000.06-2003.02 | MT | F | L | MPV FWD EW10J4 | | GDS10082 | Drive Shaft | 48T | 27 | 24 | 59 | 82 | 648 | |
| | 2000.06-2003.02 | MT | F | L | MPV FWD EW10J4 | | GDS10112 | Drive Shaft | | 27 | 24 | 59 | 82 | 648 | |
| | 2000.06-2003.02 | MT | F | R | MPV FWD EW10J4 | | GDS10081 | Drive Shaft | 48T | 27 | 24 | 59 | 82 | 935 | |
| | 2000.06-2003.02 | MT | F | R | MPV FWD EW10J4 | | GDS10111 | Drive Shaft | | 27 | 24 | 59 | 82 | 935 | |
| | 2000.06-2003.02 | MT | F | R | MPV FWD EW10J4 | | GDS10120 | Drive Shaft | | 27 | 24 | 59 | 82 | 928 | |
| | 2000.06-2003.02 | MT | F | L/R | MPV FWD EW10J4 | | GCO10016 | Outer Joint | | 27 | 34 | 59 | 82 | 56.5 | I |
| | 2000.06-2003.02 | MT | F | L/R | MPV FWD EW10J4 | | GCO10018 | Outer Joint | 48T | 27 | 34 | 61 | 82 | 56.5 | I |
| | 2000.06-2003.02 | MT | F | L/R | MPV FWD EW10J4 | Trans. code:BE3R | GCO10059 | Outer Joint | 48T | 27 | 34 | 59 | 82 | 56.5 | I |
| | 2000.06-2003.02 | MT | F | R | MPV FWD EW10J4 | | GCI10004 | Inner Joint | | 24 | 34 | 29.8 | 348 | 99.5 | |
| 2.0 (108 kw) | 1994.08-2000.05 | MT | F | L | MPV FWD XU10J2TE | | GDS10016 | Drive Shaft | 48T | 27 | 37 | 59 | 82 | 641 | |
| | 1994.08-2000.05 | MT | F | L | MPV FWD XU10J2TE | | GDS10072 | Drive Shaft | | 27 | 37 | 59 | 82 | 641 | |
| | 1994.08-2000.05 | MT | F | R | MPV FWD XU10J2TE | | GDS10014 | Drive Shaft | 48T | 27 | 37 | 59 | 82 | 947 | |
| | 1994.08-2000.05 | MT | F | R | MPV FWD XU10J2TE | | GDS10155 | Drive Shaft | | 27 | 37 | 59 | 82 | 947 | |
| | 1994.08-2000.05 | MT | F | L/R | MPV FWD XU10J2TE | | GCO10014 | Outer Joint | | 27 | 39 | 59 | 82 | 63 | I |
| | 1994.08-2000.05 | MT | F | L/R | MPV FWD XU10J2TE | | GCO10015 | Outer Joint | 48T | 27 | 39 | 59 | 82 | 63 | I |
| | 1994.08-2000.05 | MT | F | L | MPV FWD XU10J2TE | | GCI10015 | Inner Joint | | 37 | 39 | 40 | 68.5 | 104 | |
| | 1994.08-2000.05 | MT | F | R | MPV FWD XU10J2TE | | GCI10034 | Inner Joint | | 37 | 39 | 31.9 | 369.5 | 99 | |
| | 1997.02-2000.05 | 5MT | F | L | MPV Van FWD XU10J2TE | | GDS10016 | Drive Shaft | 48T | 27 | 37 | 59 | 82 | 641 | |
| | 1997.02-2000.05 | 5MT | F | L | MPV Van FWD XU10J2TE | | GDS10072 | Drive Shaft | | 27 | 37 | 59 | 82 | 641 | |
| | 1997.02-2000.05 | 5MT | F | R | MPV Van FWD XU10J2TE | | GDS10014 | Drive Shaft | 48T | 27 | 37 | 59 | 82 | 947 | |
| | 1997.02-2000.05 | 5MT | F | R | MPV Van FWD XU10J2TE | | GDS10155 | Drive Shaft | | 27 | 37 | 59 | 82 | 947 | |
| | 1997.02-2000.05 | 5MT | F | L/R | MPV Van FWD XU10J2TE | | GCO10015 | Outer Joint | 48T | 27 | 39 | 59 | 82 | 63 | I |
| | 1997.02-2000.05 | 5MT | F | R | MPV Van FWD XU10J2TE | | GCI10034 | Inner Joint | | 37 | 39 | 31.9 | 369.5 | 99 | |
| 2.1 (80 kw) | 1996.04-2000.05 | 5MT | F | L | MPV FWD XUD11BTE | | GDS10016 | Drive Shaft | 48T | 27 | 37 | 59 | 82 | 641 | |
| | 1996.04-2000.05 | 5MT | F | L | MPV FWD XUD11BTE | | GDS10072 | Drive Shaft | | 27 | 37 | 59 | 82 | 641 | |
| | 1996.04-2000.05 | 5MT | F | R | MPV FWD XUD11BTE | | GDS10014 | Drive Shaft | 48T | 27 | 37 | 59 | 82 | 947 | |
| | 1996.04-2000.05 | 5MT | F | R | MPV FWD XUD11BTE | | GDS10155 | Drive Shaft | | 27 | 37 | 59 | 82 | 947 | |
| | 1996.04-2000.05 | 5MT | F | L/R | MPV FWD XUD11BTE | | GCO10014 | Outer Joint | | 27 | 39 | 59 | 82 | 63 | I |
| | 1996.04-2000.05 | 5MT | F | L/R | MPV FWD XUD11BTE | | GCO10015 | Outer Joint | 48T | 27 | 39 | 59 | 82 | 63 | I |

| | YEAR | TRANSM. | F/R | L/R | BODY STYLE & DRIVE TYPE & ENGINE | REMARKS | G-AP Ref. | PRODUCT | ABS | Technical Specifications A | B | C | H | L | P |
|---|---|---|---|---|---|---|---|---|---|---|---|---|---|---|---|
| **PEUGEOT** | | | | | | | | | | | | | | | |
| **806** | | | | | | | | | | | | | | | |
| 2.1 (80 kw) | 1996.04-2000.05 | 5MT | F | L | MPV FWD XUD11BTE | | GCI10015 | Inner Joint | | 37 | 39 | 40 | 68.5 | 104 | |
| | 1996.04-2000.05 | 5MT | F | R | MPV FWD XUD11BTE | | GCI10034 | Inner Joint | | 37 | 39 | 31.9 | 369.5 | 99 | |
| | 1997.02-2000.05 | 5MT | F | L | MPV Van FWD XUD11BTE | | GDS10016 | Drive Shaft | 48T | 27 | 37 | 59 | 82 | 641 | |
| | 1997.02-2000.05 | 5MT | F | L | MPV Van FWD XUD11BTE | | GDS10072 | Drive Shaft | | 27 | 37 | 59 | 82 | 641 | |
| | 1997.02-2000.05 | 5MT | F | R | MPV Van FWD XUD11BTE | | GDS10014 | Drive Shaft | 48T | 27 | 37 | 59 | 82 | 947 | |
| | 1997.02-2000.05 | 5MT | F | R | MPV Van FWD XUD11BTE | | GDS10155 | Drive Shaft | | 27 | 37 | 59 | 82 | 947 | |
| | 1997.02-2000.05 | 5MT | F | L/R | MPV Van FWD XUD11BTE | | GCO10015 | Outer Joint | 48T | 27 | 39 | 59 | 82 | 63 | I |
| | 1997.02-2000.05 | 5MT | F | R | MPV Van FWD XUD11BTE | | GCI10034 | Inner Joint | | 37 | 39 | 31.9 | 369.5 | 99 | |
| **807** | | | | | | | | | | | | | | | |
| 2.0 (79 kw) | 2002.06-2006.05 | 4AT | F | L | Box Body/MPV FWD RHM (DW10ATED4) | | GDS10423 | Drive Shaft | | 27 | 26 | 58 | 81.5 | 635 | |
| | 2002.06-2006.05 | 4AT | F | R | Box Body/MPV FWD RHM (DW10ATED4) | | GDS10425 | Drive Shaft | | 27 | 26 | 59 | 82 | 855 | |
| | 2002.06-2006.05 | 4AT | F | L | Box Body/MPV FWD RHM (DW10ATED4) | | GCO45059 | Outer Joint | | 27 | 34 | 58 | 81.5 | 56.5 | I |
| | 2002.06-2006.05 | 4AT | F | R | Box Body/MPV FWD RHM (DW10ATED4) | | GCO10016 | Outer Joint | | 27 | 34 | 59 | 82 | 56.5 | I |
| | 2002.06-2006.05 | 4AT | F | L | Box Body/MPV FWD RHM (DW10ATED4) | | GCI81321 | Inner Joint | | 26 | 34 | 30.2 | 46.5 | 103.5 | |
| | 2002.06-2006.05 | 4AT | F | R | Box Body/MPV FWD RHM (DW10ATED4) | | GCI10105 | Inner Joint | | 26 | 34 | | 259 | 87 | |
| | 2002.06-2006.05 | 4AT | F | L | MPV FWD RHW (DW10ATED4);RHT (DW10ATED4);RHM (DW10ATED4) | | GDS10423 | Drive Shaft | | 27 | 26 | 58 | 81.5 | 635 | |
| | 2002.06-2006.05 | 4AT | F | R | MPV FWD RHW (DW10ATED4);RHT (DW10ATED4);RHM (DW10ATED4) | | GDS10425 | Drive Shaft | | 27 | 26 | 59 | 82 | 855 | |
| | 2002.06-2006.05 | 4AT/5MT | F | L | MPV FWD RHW (DW10ATED4);RHT (DW10ATED4);RHM (DW10ATED4) | | GCI81321 | Inner Joint | | 26 | 34 | 30.2 | 46.5 | 103.5 | |
| | 2002.06-2006.05 | 4AT/5MT | F | R | MPV FWD RHW (DW10ATED4);RHT (DW10ATED4);RHM (DW10ATED4) | | GCI10105 | Inner Joint | | 26 | 34 | | 259 | 87 | |
| | 2002.06-2006.05 | 5MT | F | L | MPV FWD RHW (DW10ATED4);RHT (DW10ATED4);RHM (DW10ATED4) | | GDS10072 | Drive Shaft | | 27 | 37 | 59 | 82 | 641 | |
| | 2002.06-2006.05 | 5MT | F | R | MPV FWD RHW (DW10ATED4);RHT (DW10ATED4);RHM (DW10ATED4) | | GDS10284 | Drive Shaft | | 27 | 37 | 59 | 82 | 964 | |
| | 2002.06-2006.05 | 5MT | F | L/R | MPV FWD RHW (DW10ATED4);RHT (DW10ATED4);RHM (DW10ATED4) | | GCO10015 | Outer Joint | 48T | 27 | 39 | 59 | 82 | 63 | I |
| | 2002.06-2006.05 | AT | F | L/R | MPV FWD RHW (DW10ATED4);RHT (DW10ATED4);RHM (DW10ATED4) | | GCO10016 | Outer Joint | | 27 | 34 | 59 | 82 | 56.5 | I |
| | 2002.06-2006.05 | MT | F | L/R | MPV FWD RHW (DW10ATED4);RHT (DW10ATED4);RHM (DW10ATED4) | | GCO17044 | Outer Joint | | 27 | 28 | 58 | 81.5 | 62 | M |
| 2.0 (80 kw) | 2004.04- | 5MT | F | L | MPV FWD RHW (DW10ATED4) | | GDS10072 | Drive Shaft | | 27 | 37 | 59 | 82 | 641 | |
| | 2004.04- | 5MT | F | R | MPV FWD RHW (DW10ATED4) | | GDS10284 | Drive Shaft | | 27 | 37 | 59 | 82 | 964 | |
| | 2004.04- | 5MT | F | L | MPV FWD RHW (DW10ATED4) | | GCO45059 | Outer Joint | | 27 | 34 | 58 | 81.5 | 56.5 | I |
| | 2004.04- | 5MT | F | R | MPV FWD RHW (DW10ATED4) | | GCO10016 | Outer Joint | | 27 | 34 | 59 | 82 | 56.5 | I |
| | 2004.04- | 5MT | F | L/R | MPV FWD RHW (DW10ATED4) | | GCO10015 | Outer Joint | 48T | 27 | 39 | 59 | 82 | 63 | I |
| | 2004.04- | 5MT | F | L | MPV FWD RHW (DW10ATED4) | | GCI81321 | Inner Joint | | 26 | 34 | 30.2 | 46.5 | 103.5 | |
| | 2004.04- | 5MT | F | R | MPV FWD RHW (DW10ATED4) | | GCI10105 | Inner Joint | | 26 | 34 | | 259 | 87 | |
| | 2004.04- | MT | F | L/R | MPV FWD RHW (DW10ATED4) | Date to:2006.12 | GCO17044 | Outer Joint | | 27 | 28 | 58 | 81.5 | 62 | M |
| | 2004.04-2006.05 | 5MT | F | L | Box Body/MPV FWD RHW (DW10ATED4);RHT (DW10ATED4) | | GDS10072 | Drive Shaft | | 27 | 37 | 59 | 82 | 641 | |
| | 2004.04-2006.05 | 5MT | F | R | Box Body/MPV FWD RHW (DW10ATED4);RHT (DW10ATED4) | | GDS10284 | Drive Shaft | | 27 | 37 | 59 | 82 | 964 | |
| | 2004.04-2006.05 | 5MT | F | L | Box Body/MPV FWD RHW (DW10ATED4);RHT (DW10ATED4) | | GCO45059 | Outer Joint | | 27 | 34 | 58 | 81.5 | 56.5 | I |
| | 2004.04-2006.05 | 5MT | F | R | Box Body/MPV FWD RHW (DW10ATED4);RHT (DW10ATED4) | | GCO10016 | Outer Joint | | 27 | 34 | 59 | 82 | 56.5 | I |
| | 2004.04-2006.05 | 5MT | F | L/R | Box Body/MPV FWD RHW (DW10ATED4);RHT (DW10ATED4) | | GCO10015 | Outer Joint | 48T | 27 | 39 | 59 | 82 | 63 | I |
| | 2004.04-2006.05 | 5MT | F | L | Box Body/MPV FWD RHW (DW10ATED4);RHT (DW10ATED4) | | GCI81321 | Inner Joint | | 26 | 34 | 30.2 | 46.5 | 103.5 | |
| | 2004.04-2006.05 | 5MT | F | R | Box Body/MPV FWD RHW (DW10ATED4);RHT (DW10ATED4) | | GCI10105 | Inner Joint | | 26 | 34 | | 259 | 87 | |
| 2.0 (88 kw) | 2006.02- | 6MT | F | L | MPV FWD RHK (DW10UTED4) | | GDS10072 | Drive Shaft | | 27 | 37 | 59 | 82 | 641 | |
| | 2006.02- | 6MT | F | R | MPV FWD RHK (DW10UTED4) | | GDS10440 | Drive Shaft | | 27 | 37 | 58 | 81 | 973 | |
| | 2006.02- | 6MT | F | R | MPV FWD RHK (DW10UTED4) | | GCO18098 | Outer Joint | | 27 | 29 | 58 | 81 | 71 | M |
| | 2006.02- | 6MT | F | L/R | MPV FWD RHK (DW10UTED4) | | GCO10015 | Outer Joint | 48T | 27 | 39 | 59 | 82 | 63 | I |
| | 2006.02- | 6MT | F | R | MPV FWD RHK (DW10UTED4) | | GCI10160 | Inner Joint | | 37 | 28 | 32 | 399 | 95.5 | |
| 2.0 (100 kw) | 2002.06- | AT | F | L | MPV FWD RFN (EW10J4) | | GDS17220 | Drive Shaft | | 27 | 26 | 58 | 81.5 | 648 | |
| | 2002.06- | AT | F | R | MPV FWD RFN (EW10J4) | | GDS10425 | Drive Shaft | | 27 | 26 | 59 | 82 | 855 | |
| | 2002.06- | AT | F | L | MPV FWD RFN (EW10J4) | | GCI81321 | Inner Joint | | 26 | 34 | 30.2 | 46.5 | 103.5 | |
| | 2002.06- | AT/MT | F | L/R | MPV FWD RFN (EW10J4) | | GCO10016 | Outer Joint | | 27 | 34 | 59 | 82 | 56.5 | I |
| | 2002.06- | AT/MT | F | L/R | MPV FWD RFN (EW10J4) | Date to:2006.12 | GCO10059 | Outer Joint | 48T | 27 | 34 | 59 | 82 | 56.5 | I |
| | 2002.06- | AT/MT | F | L/R | MPV FWD RFN (EW10J4) | | GCO45059 | Outer Joint | | 27 | 34 | 58 | 81.5 | 56.5 | I |
| | 2002.06- | MT | F | L | MPV FWD RFN (EW10J4) | | GDS10422 | Drive Shaft | | 27 | 24 | 58 | 81.5 | 659 | |
| | 2002.06- | MT | F | R | MPV FWD RFN (EW10J4) | | GDS10431 | Drive Shaft | | 27 | 24 | 59 | 82 | 944 | |
| | 2002.06- | | F | R | MPV FWD RFN (EW10J4) | | GDS17218 | Drive Shaft | | 27 | 26 | 58 | 81.5 | 855 | |
| | 2006.06- | 6MT | F | L | MPV FWD RHR (DW10BTED4);RHD (DW10CTED4);RHR (DW10CB) | | GDS10072 | Drive Shaft | | 27 | 37 | 59 | 82 | 641 | |
| | 2006.06- | 6MT | F | L/R | MPV FWD RHR (DW10BTED4);RHD (DW10CTED4);RHR (DW10CB) | | GCO10015 | Outer Joint | 48T | 27 | 39 | 59 | 82 | 63 | I |
| | 2006.06- | MT | F | R | MPV FWD RHR (DW10BTED4);RHD (DW10CTED4);RHR (DW10CB) | | GDS10440 | Drive Shaft | | 27 | 37 | 58 | 81 | 973 | |
| | 2006.06- | MT | F | R | MPV FWD RHR (DW10BTED4);RHD (DW10CTED4);RHR (DW10CB) | | GCO18098 | Outer Joint | | 27 | 29 | 58 | 81 | 71 | M |
| | 2006.06- | MT | F | R | MPV FWD RHR (DW10BTED4);RHD (DW10CTED4);RHR (DW10CB) | | GCI10160 | Inner Joint | | 37 | 28 | 32 | 399 | 95.5 | |
| 2.0 (103 kw) | 2005.09- | AT | F | L | MPV FWD RFJ (EW10A) | | GDS17220 | Drive Shaft | | 27 | 26 | 58 | 81.5 | 648 | |
| | 2005.09- | AT | F | R | MPV FWD RFJ (EW10A) | | GDS10425 | Drive Shaft | | 27 | 26 | 59 | 82 | 855 | |
| | 2005.09- | AT | F | L | MPV FWD RFJ (EW10A) | | GCI81321 | Inner Joint | | 26 | 34 | 30.2 | 46.5 | 103.5 | |
| | 2005.09- | AT/MT | F | L/R | MPV FWD RFJ (EW10A) | | GCO10016 | Outer Joint | | 27 | 34 | 59 | 82 | 56.5 | I |
| | 2005.09- | AT/MT | F | L/R | MPV FWD RFJ (EW10A) | Date to:2010.12 | GCO10059 | Outer Joint | 48T | 27 | 34 | 59 | 82 | 56.5 | I |
| | 2005.09- | AT/MT | F | L/R | MPV FWD RFJ (EW10A) | | GCO45059 | Outer Joint | | 27 | 34 | 58 | 81.5 | 56.5 | I |
| | 2005.09- | MT | F | L | MPV FWD RFJ (EW10A) | | GDS10422 | Drive Shaft | | 27 | 24 | 58 | 81.5 | 659 | |

| | YEAR | TRANSM. | F/R | L/R | BODY STYLE & DRIVE TYPE & ENGINE | REMARKS | G-AP Ref. | PRODUCT | ABS | Technical Specifications A | B | C | H | L | P |
|---|---|---|---|---|---|---|---|---|---|---|---|---|---|---|---|
| **PEUGEOT** | | | | | | | | | | | | | | | |
| **807** | | | | | | | | | | | | | | | |
| 2.0 (103 kw) | 2005.09- | MT | F | R | MPV FWD RFJ (EW10A) | | GDS10431 | Drive Shaft | | 27 | 24 | 59 | 82 | 944 | |
| | 2005.09- | | F | R | MPV FWD RFJ (EW10A) | | GDS17218 | Drive Shaft | | 27 | 26 | 58 | 81.5 | 855 | |
| 2.0 (120 kw) | 2009.06- | 6AT | F | R | MPV FWD RHH (DW10CTED4) | | GCI45033 | Inner Joint | | 37 | 39 | | 379 | 96 | |
| | 2009.06- | AT | F | R | MPV FWD RHH (DW10CTED4) | | GCO82523 | Outer Joint | | 27 | 39 | 61.3 | 84 | 64 | I |
| | 2009.06- | MT | F | L | MPV FWD RHH (DW10CTED4) | | GDS10424 | Drive Shaft | | 27 | 37 | 61.3 | 84 | 637 | |
| | 2009.06- | MT | F | L | MPV FWD RHH (DW10CTED4) | Date from:2010.05 | GCI10015 | Inner Joint | | 37 | 39 | 40 | 68.5 | 104 | |
| | 2010.05- | 6AT | F | R | Box Body/MPV FWD RHH (DW10CTED4) | | GCI45033 | Inner Joint | | 37 | 39 | | 379 | 96 | |
| | 2010.05- | AT | F | R | Box Body/MPV FWD RHH (DW10CTED4) | | GCO82523 | Outer Joint | | 27 | 39 | 61.3 | 84 | 64 | I |
| | 2010.05- | MT | F | L | Box Body/MPV FWD RHH (DW10CTED4) | | GDS10424 | Drive Shaft | | 27 | 37 | 61.3 | 84 | 637 | |
| 2.2 (94 kw) | 2002.06- | 5MT/6MT | F | L | MPV FWD 4HW (DW12TED4) | Date to:2004.02 ;To: ORG/OPR:09961 ;Date from:2004.03 ;From: ORG/OPR:09962 | GDS10430 | Drive Shaft | | 27 | 37 | 59 | 82 | 630 | |
| | 2002.06- | AT/MT | F | L/R | MPV FWD 4HW (DW12TED4) | | GCO18098 | Outer Joint | | 27 | 29 | 58 | 81 | 71 | M |
| | 2002.06- | MT | F | R | MPV FWD 4HW (DW12TED4) | | GDS18291 | Drive Shaft | | 27 | 37 | 58 | 81 | 977 | |
| | 2002.06- | MT | F | L | MPV FWD 4HW (DW12TED4) | | GCI10006 | Inner Joint | | 22 | 22 | 40 | 58.5 | 87 | |
| | 2004.04-2006.05 | 6MT | F | L | Box Body/MPV FWD 4HW (DW12TED4) | | GDS10430 | Drive Shaft | | 27 | 37 | 59 | 82 | 630 | |
| | 2004.04-2006.05 | 6MT | F | R | Box Body/MPV FWD 4HW (DW12TED4) | | GDS18291 | Drive Shaft | | 27 | 37 | 58 | 81 | 977 | |
| | 2004.04-2006.05 | 6MT | F | R | Box Body/MPV FWD 4HW (DW12TED4) | | GCO18098 | Outer Joint | | 27 | 29 | 58 | 81 | 71 | M |
| | 2004.04-2006.05 | 6MT | F | L | Box Body/MPV FWD 4HW (DW12TED4) | | GCI10006 | Inner Joint | | 22 | 22 | 40 | 58.5 | 87 | |
| 2.2 (100 kw) | 2004.04-2006.05 | 6MT | F | L | MPV FWD 4HW (DW12TED4) | Chassis no. from:09962 | GDS10430 | Drive Shaft | | 27 | 37 | 59 | 82 | 630 | |
| | 2004.04-2006.05 | 6MT | F | L | MPV FWD 4HW (DW12TED4) | Chassis no. from:09962 | GCO10014 | Outer Joint | | 27 | 39 | 59 | 82 | 63 | I |
| | 2004.04-2006.05 | 6MT | F | R | MPV FWD 4HW (DW12TED4) | | GCO18098 | Outer Joint | | 27 | 29 | 58 | 81 | 71 | M |
| | 2004.04-2006.05 | 6MT | F | L | MPV FWD 4HW (DW12TED4) | Chassis no. from:09962 | GCI10015 | Inner Joint | | 37 | 39 | 40 | 68.5 | 104 | |
| | 2004.04-2006.05 | MT | F | L | MPV FWD 4HW (DW12TED4) | Chassis no. to:09961 | GDS10020 | Drive Shaft | 48T | 21 | 22 | 58.5 | 76 | 615 | |
| | 2004.04-2006.05 | MT | F | R | MPV FWD 4HW (DW12TED4) | | GDS18291 | Drive Shaft | | 27 | 37 | 58 | 81 | 977 | |
| | 2004.04-2006.05 | MT | F | L | MPV FWD 4HW (DW12TED4) | Chassis no. to:09961 | GCI10006 | Inner Joint | | 22 | 22 | 40 | 58.5 | 87 | |
| 2.2 (116 kw) | 2002.06- | 5MT | F | L | MPV FWD 3FZ (EW12J4) | | GDS10072 | Drive Shaft | | 27 | 37 | 59 | 82 | 641 | |
| | 2002.06- | 5MT | F | R | MPV FWD 3FZ (EW12J4) | | GDS10284 | Drive Shaft | | 27 | 37 | 59 | 82 | 964 | |
| | 2002.06- | 5MT | F | L | MPV FWD 3FZ (EW12J4) | | GCO10014 | Outer Joint | | 27 | 39 | 59 | 82 | 63 | I |
| | 2002.06- | 5MT | F | R | MPV FWD 3FZ (EW12J4) | | GCO18098 | Outer Joint | | 27 | 29 | 58 | 81 | 71 | M |
| | 2002.06- | 5MT | F | L/R | MPV FWD 3FZ (EW12J4) | | GCO10015 | Outer Joint | 48T | 27 | 39 | 59 | 82 | 63 | I |
| | 2002.06- | 5MT | F | L | MPV FWD 3FZ (EW12J4) | | GCI10015 | Inner Joint | | 37 | 39 | 40 | 68.5 | 104 | |
| | 2002.06- | MT | F | L/R | MPV FWD 3FZ (EW12J4) | Date from:2003.01 | GCO17044 | Outer Joint | | 27 | 28 | 58 | 81.5 | 62 | M |
| 2.2 (120 kw) | 2006.06- | 6AT | F | R | MPV FWD 4HP (DW12BTED4);4HR (DW12BTED4) | | GCI45033 | Inner Joint | | 37 | 39 | | 379 | 96 | |
| | 2006.06- | AT | F | R | MPV FWD 4HP (DW12BTED4);4HR (DW12BTED4) | | GCO82523 | Outer Joint | | 27 | 39 | 61.3 | 84 | 64 | I |
| | 2006.06- | MT | F | L | MPV FWD 4HP (DW12BTED4);4HR (DW12BTED4) | | GDS10424 | Drive Shaft | | 27 | 37 | 61.3 | 84 | 637 | |
| | 2006.06- | MT | F | L | MPV FWD 4HP (DW12BTED4);4HR (DW12BTED4) | | GCI10015 | Inner Joint | | 37 | 39 | 40 | 68.5 | 104 | |
| 2.2 (125 kw) | 2006.06-2010.06 | 6AT | F | R | MPV FWD 4HT (DW12BTED4);4HS (DW12BTED4) | | GCI45033 | Inner Joint | | 37 | 39 | | 379 | 96 | |
| | 2006.06-2010.06 | AT | F | R | MPV FWD 4HT (DW12BTED4);4HS (DW12BTED4) | | GCO82523 | Outer Joint | | 27 | 39 | 61.3 | 84 | 64 | I |
| | 2006.06-2010.06 | MT | F | L | MPV FWD 4HT (DW12BTED4);4HS (DW12BTED4) | | GDS10424 | Drive Shaft | | 27 | 37 | 61.3 | 84 | 637 | |
| | 2006.06-2010.06 | MT | F | L | MPV FWD 4HT (DW12BTED4);4HS (DW12BTED4) | | GCI10015 | Inner Joint | | 37 | 39 | 40 | 68.5 | 104 | |
| 3.0 (150 kw) | 2002.06- | 4AT | F | L | MPV FWD XFX (ES9J4S) | | GDS17221 | Drive Shaft | | 27 | 37 | 58 | 81.5 | 624 | |
| | 2002.06- | 4AT | F | R | MPV FWD XFX (ES9J4S) | | GDS17217 | Drive Shaft | | 27 | 37 | 58 | 81.5 | 924 | |
| | 2002.06- | 4AT | F | L/R | MPV FWD XFX (ES9J4S) | | GCO17044 | Outer Joint | | 27 | 28 | 58 | 81.5 | 62 | M |
| | 2002.06- | 4AT | F | L | MPV FWD XFX (ES9J4S) | | GCI10168 | Inner Joint | | 37 | 28 | 40.3 | 60 | 94 | |
| | 2002.06- | 4AT | F | R | MPV FWD XFX (ES9J4S) | | GCI10167 | Inner Joint | | 37 | 28 | | 340 | 93 | |
| **Bipper** | | | | | | | | | | | | | | | |
| 1.3 (55 kw) | 2010.10- | MT | F | L | Box Body/MPV FWD FHZ (F13DTE5) | | GDS17166 | Drive Shaft | | 25 | 24 | 51 | 84.5 | 605 | |
| | 2010.10- | MT | F | R | Box Body/MPV FWD FHZ (F13DTE5) | | GDS17167 | Drive Shaft | | 25 | 24 | 51 | 84.5 | 919 | |
| | 2010.10- | MT | F | L/R | Box Body/MPV FWD FHZ (F13DTE5) | | GCO17028 | Outer Joint | | 25 | 24 | 51 | 84.5 | 62 | M |
| | 2010.10- | MT | F | L | Box Body/MPV FWD FHZ (F13DTE5) | | GCI17106 | Inner Joint | | 24 | 24 | 29.7 | 93 | 86 | |
| | 2010.10- | MT | F | R | Box Body/MPV FWD FHZ (F13DTE5) | | GCI17107 | Inner Joint | | 24 | 24 | 29.7 | 394 | 99 | |
| 1.3 (59 kw) | 2015.12- | AT/MT | F | L/R | Box Body/MPV FWD FHY (F13DTE6) | | GDS17167 | Drive Shaft | | 25 | 24 | 51 | 84.5 | 919 | |
| | 2015.12- | AT/MT | F | L/R | Box Body/MPV FWD FHY (F13DTE6) | | GCO17028 | Outer Joint | | 25 | 24 | 51 | 84.5 | 62 | M |
| | 2015.12- | AT/MT | F | L/R | Box Body/MPV FWD FHY (F13DTE6) | | GCI17107 | Inner Joint | | 24 | 24 | 29.7 | 394 | 99 | |
| 1.4 (50 kw) | 2008.02- | 5AT/5MT | F | L | Box Body/MPV FWD 8HS (DV4TED) | | GDS17151 | Drive Shaft | | 25 | 22 | 51 | 84 | 656 | |
| | 2008.02- | 5AT/5MT | F | R | Box Body/MPV FWD 8HS (DV4TED) | | GDS17052 | Drive Shaft | | 25 | 22 | 51 | 84 | 881 | |
| | 2008.02- | 5AT/5MT | F | L | Box Body/MPV FWD 8HS (DV4TED) | | GCO83423 | Outer Joint | | 25 | 22 | 51 | 84 | 57.5 | M |
| | 2008.02- | 5AT/5MT | F | R | Box Body/MPV FWD 8HS (DV4TED) | | GCO17068 | Outer Joint | | 25 | 22 | 51 | 84 | 57.5 | M |
| | 2008.02- | 5AT/5MT | F | L | Box Body/MPV FWD 8HS (DV4TED) | | GCI17029 | Inner Joint | | 22 | 22 | 40 | 58.5 | 101 | |
| | 2008.02- | 5AT/5MT | F | R | Box Body/MPV FWD 8HS (DV4TED) | | GCI17030 | Inner Joint | | 22 | 22 | 30 | 96.5 | 99 | |
| 1.4 (54 kw) | 2008.02- | 5MT | F | L | Box Body/MPV FWD KFV (TU3A);KFT (TU3AE5) | | GDS84233 | Drive Shaft | | 22 | 22 | 51 | 79 | 651 | |
| | 2008.02- | 5MT | F | R | Box Body/MPV FWD KFV (TU3A);KFT (TU3AE5) | | GDS83558 | Drive Shaft | | 22 | 22 | 51 | 79 | 880 | |
| | 2008.02- | 5MT | F | R | Box Body/MPV FWD KFV (TU3A);KFT (TU3AE5) | | GCO82416 | Outer Joint | | 22 | 22 | 51 | 79 | 57.5 | M |
| | 2008.02- | 5MT | F | L/R | Box Body/MPV FWD KFV (TU3A);KFT (TU3AE5) | | GCO17070 | Outer Joint | | 22 | 22 | 51 | 79 | 57.5 | M |
| | 2008.02- | 5MT | F | L | Box Body/MPV FWD KFV (TU3A);KFT (TU3AE5) | | GCI17029 | Inner Joint | | 22 | 22 | 40 | 58.5 | 101 | |
| | 2008.02- | 5MT | F | R | Box Body/MPV FWD KFV (TU3A);KFT (TU3AE5) | | GCI17030 | Inner Joint | | 22 | 22 | 30 | 96.5 | 99 | |

| | YEAR | TRANSM. | F/R | L/R | BODY STYLE & DRIVE TYPE & ENGINE | REMARKS | G-AP Ref. | PRODUCT | ABS | Technical Specifications A | B | C | H | L | P |
|---|---|---|---|---|---|---|---|---|---|---|---|---|---|---|---|
| **PEUGEOT** | | | | | | | | | | | | | | | |
| **Bipper Tepee** | | | | | | | | | | | | | | | |
| 1.3 (55 kw) | 2010.10- | MT | F | L | MPV FWD FHZ (F13DTE5) | | GDS17166 | Drive Shaft | | 25 | 24 | 51 | 84.5 | 605 | |
| | 2010.10- | MT | F | R | MPV FWD FHZ (F13DTE5) | | GDS17167 | Drive Shaft | | 25 | 24 | 51 | 84.5 | 919 | |
| | 2010.10- | MT | F | L/R | MPV FWD FHZ (F13DTE5) | | GCO17028 | Outer Joint | | 25 | 24 | 51 | 84.5 | 62 | M |
| | 2010.10- | MT | F | L | MPV FWD FHZ (F13DTE5) | | GCI17106 | Inner Joint | | 24 | 24 | 29.7 | 93 | 86 | |
| | 2010.10- | MT | F | R | MPV FWD FHZ (F13DTE5) | | GCI17107 | Inner Joint | | 24 | 24 | 29.7 | 394 | 99 | |
| 1.3 (59 kw) | 2015.12- | 5MT | F | L/R | MPV FWD FHY (F13DTE6) | | GDS17167 | Drive Shaft | | 25 | 24 | 51 | 84.5 | 919 | |
| | 2015.12- | 5MT | F | L/R | MPV FWD FHY (F13DTE6) | | GCO17028 | Outer Joint | | 25 | 24 | 51 | 84.5 | 62 | M |
| | 2015.12- | 5MT | F | L/R | MPV FWD FHY (F13DTE6) | | GCI17107 | Inner Joint | | 24 | 24 | 29.7 | 394 | 99 | |
| 1.4 (50 kw) | 2008.04- | 5AT/5MT | F | L | MPV FWD 8HS (DV4TED) | | GCO83423 | Outer Joint | | 25 | 22 | 51 | 84 | 57.5 | M |
| | 2008.04- | 5AT/5MT | F | R | MPV FWD 8HS (DV4TED) | | GCO17068 | Outer Joint | | 25 | 22 | 51 | 84 | 57.5 | M |
| | 2008.04- | SAT/5MT | F | L | MPV FWD 8HS (DV4TED) | | GDS17151 | Drive Shaft | | 25 | 22 | 51 | 84 | 656 | |
| | 2008.04- | SAT/5MT | F | R | MPV FWD 8HS (DV4TED) | | GDS17052 | Drive Shaft | | 25 | 22 | 51 | 84 | 881 | |
| | 2008.04- | SAT/5MT | F | L | MPV FWD 8HS (DV4TED) | | GCI17029 | Inner Joint | | 22 | 22 | 40 | 58.5 | 101 | |
| | 2008.04- | SAT/5MT | F | R | MPV FWD 8HS (DV4TED) | | GCI17030 | Inner Joint | | 22 | 22 | 30 | 96.5 | 99 | |
| 1.4 (54 kw) | 2008.04- | 5MT | F | L | MPV FWD KFV (TU3A);KFT (TU3AE5) | | GDS84233 | Drive Shaft | | 22 | 22 | 51 | 79 | 651 | |
| | 2008.04- | 5MT | F | R | MPV FWD KFV (TU3A);KFT (TU3AE5) | | GDS83558 | Drive Shaft | | 22 | 22 | 51 | 79 | 880 | |
| | 2008.04- | 5MT | F | R | MPV FWD KFV (TU3A);KFT (TU3AE5) | | GCO82416 | Outer Joint | | 22 | 22 | 51 | 79 | 57.5 | M |
| | 2008.04- | 5MT | F | L/R | MPV FWD KFV (TU3A);KFT (TU3AE5) | | GCO17070 | Outer Joint | | 22 | 22 | 51 | 79 | 57.5 | M |
| | 2008.04- | 5MT | F | L | MPV FWD KFV (TU3A);KFT (TU3AE5) | | GCI17029 | Inner Joint | | 22 | 22 | 40 | 58.5 | 101 | |
| | 2008.04- | 5MT | F | R | MPV FWD KFV (TU3A);KFT (TU3AE5) | | GCI17030 | Inner Joint | | 22 | 22 | 30 | 96.5 | 99 | |
| **Boxer** | | | | | | | | | | | | | | | |
| 1.9 (50 kw) | 1999.07-2002.04 | MT | F | L | Van FWD DJY (XUD9A) | Payload:1800kg,Trans. code:MG | GDS10033 | Drive Shaft | 54T | 35 | 41 | 70 | 117 | 762 | |
| | 1999.07-2002.04 | MT | F | L | Van FWD DJY (XUD9A) | Payload:1000/1400kg,Trans. code:MG | GDS10035 | Drive Shaft | 54T | 28 | 41 | 63 | 112.5 | 757.5 | |
| | 1999.07-2002.04 | MT | F | L | Van FWD DJY (XUD9A) | Payload:1000/1400kg,Trans. code:ME/ML | GDS10037 | Drive Shaft | 54T | 28 | 37 | 63 | 112.5 | 771 | |
| | 1999.07-2002.04 | MT | F | L | Van FWD DJY (XUD9A) | Payload:1800kg,Trans. code:MG | GDS10067 | Drive Shaft | | 35 | 41 | 70 | 117 | 762 | |
| | 1999.07-2002.04 | MT | F | L | Van FWD DJY (XUD9A) | Payload:1000/1400kg,Trans. code:MG | GDS10102 | Drive Shaft | | 28 | 41 | 63 | 112.5 | 757.5 | |
| | 1999.07-2002.04 | MT | F | L | Van FWD DJY (XUD9A) | Payload:1000/1400kg,Trans. code:ME/ML | GDS10105 | Drive Shaft | | 28 | 37 | 63 | 112.5 | 771 | |
| | 1999.07-2002.04 | MT | F | R | Van FWD DJY (XUD9A) | Payload:1800kg,Trans. code:MG | GDS10032 | Drive Shaft | 54T | 35 | 41 | 70 | 117 | 1085 | |
| | 1999.07-2002.04 | MT | F | R | Van FWD DJY (XUD9A) | Payload:1000/1400kg,Trans. code:MG | GDS10036 | Drive Shaft | 54T | 28 | 41 | 63 | 112.5 | 1079 | |
| | 1999.07-2002.04 | MT | F | R | Van FWD DJY (XUD9A) | Payload:1800kg,Trans. code:MG | GDS10066 | Drive Shaft | | 35 | 41 | 70 | 117 | 1085 | |
| | 1999.07-2002.04 | MT | F | R | Van FWD DJY (XUD9A) | Payload:1000/1400kg,Trans. code:ME/ML | GDS10069 | Drive Shaft | | 28 | 37 | 63 | 112.5 | 1072 | |
| | 1999.07-2002.04 | MT | F | R | Van FWD DJY (XUD9A) | Payload:1000/1400kg,Trans. code:MG | GDS10103 | Drive Shaft | | 28 | 41 | 63 | 112.5 | 1079 | |
| | 1999.07-2002.04 | MT | F | R | Van FWD DJY (XUD9A) | Payload:1000/1400kg,Trans. code:ME/ML | GDS10104 | Drive Shaft | 54T | 28 | 37 | 63 | 112.5 | 1072 | |
| | 1999.07-2002.04 | MT | F | L/R | Van FWD DJY (XUD9A) | Payload:1800kg,Trans. code:MG | GCO10011 | Outer Joint | 54T | 35 | 45 | 70 | 117 | 73 | I |
| | 1999.07-2002.04 | MT | F | L/R | Van FWD DJY (XUD9A) | Payload:1000/1400kg,Trans. code:ME/ML/MG | GCO10012 | Outer Joint | | 28 | 39 | 63 | 112.5 | 63 | I |
| | 1999.07-2002.04 | MT | F | L/R | Van FWD DJY (XUD9A) | Payload:1000/1400kg,Trans. code:ME/ML/MG | GCO10013 | Outer Joint | 54T | 28 | 39 | 63 | 112.5 | 63 | I |
| | 1999.07-2002.04 | MT | F | L/R | Van FWD DJY (XUD9A) | Payload:1800kg,Trans. code:MG | GCO10050 | Outer Joint | | 35 | 45 | 70 | 117 | 73 | I |
| | 1999.07-2002.04 | MT | F | L | Van FWD DJY (XUD9A) | Payload:1800kg,Trans. code:MG | GCI10010 | Inner Joint | | 41 | 45 | 43 | 70 | 115.5 | |
| | 1999.07-2002.04 | MT | F | L | Van FWD DJY (XUD9A) | Payload:1000/1400kg,Trans. code:MG | GCI10013 | Inner Joint | | 41 | 39 | 43 | 70 | 104 | |
| | 1999.07-2002.04 | MT | F | L | Van FWD DJY (XUD9A) | Payload:1000/1400kg,Trans. code:ME/ML | GCI10015 | Inner Joint | | 37 | 39 | 40 | 68.5 | 104 | |
| | 1999.07-2002.04 | MT | F | L | Van FWD DJY (XUD9A) | Payload:1000/1400kg,Trans. code:ME/ML | GCI45013 | Inner Joint | | 37 | 39 | 40 | 68.5 | 100 | |
| | 1999.07-2002.04 | MT | F | R | Van FWD DJY (XUD9A) | Payload:1800kg,Trans. code:MG | GCI10009 | Inner Joint | | 41 | 45 | 34.9 | 393 | 115.6 | |
| | 1999.07-2002.04 | MT | F | R | Van FWD DJY (XUD9A) | Payload:1000/1400kg,Trans. code:ME/ML | GCI10034 | Inner Joint | | 37 | 39 | 31.9 | 369.5 | 99 | |
| 1.9 (51 kw) | 1994.03-2002.04 | MT | F | L | Bus FWD D9B (XUD9AU) | Payload:1800kg,Trans. code:MG | GDS10033 | Drive Shaft | 54T | 35 | 41 | 70 | 117 | 762 | |
| | 1994.03-2002.04 | MT | F | L | Bus FWD D9B (XUD9AU) | Payload:1000/1400kg,Trans. code:MG | GDS10035 | Drive Shaft | 54T | 28 | 41 | 63 | 112.5 | 757.5 | |
| | 1994.03-2002.04 | MT | F | L | Bus FWD D9B (XUD9AU) | Payload:1000/1400kg,Trans. code:ME/ML | GDS10037 | Drive Shaft | 54T | 28 | 37 | 63 | 112.5 | 771 | |
| | 1994.03-2002.04 | MT | F | L | Bus FWD D9B (XUD9AU) | Payload:1800kg,Trans. code:MG | GDS10067 | Drive Shaft | | 35 | 41 | 70 | 117 | 762 | |
| | 1994.03-2002.04 | MT | F | L | Bus FWD D9B (XUD9AU) | Payload:1000/1400kg,Trans. code:MG | GDS10102 | Drive Shaft | | 28 | 41 | 63 | 112.5 | 757.5 | |
| | 1994.03-2002.04 | MT | F | L | Bus FWD D9B (XUD9AU) | Payload:1000/1400kg,Trans. code:ME/ML | GDS10105 | Drive Shaft | | 28 | 37 | 63 | 112.5 | 771 | |
| | 1994.03-2002.04 | MT | F | R | Bus FWD D9B (XUD9AU) | Payload:1800kg,Trans. code:MG | GDS10032 | Drive Shaft | 54T | 35 | 41 | 70 | 117 | 1085 | |
| | 1994.03-2002.04 | MT | F | R | Bus FWD D9B (XUD9AU) | Payload:1000/1400kg,Trans. code:MG | GDS10036 | Drive Shaft | 54T | 28 | 41 | 63 | 112.5 | 1079 | |
| | 1994.03-2002.04 | MT | F | R | Bus FWD D9B (XUD9AU) | Payload:1800kg,Trans. code:MG | GDS10066 | Drive Shaft | | 35 | 41 | 70 | 117 | 1085 | |
| | 1994.03-2002.04 | MT | F | R | Bus FWD D9B (XUD9AU) | Payload:1000/1400kg,Trans. code:ME/ML | GDS10069 | Drive Shaft | | 28 | 37 | 63 | 112.5 | 1072 | |
| | 1994.03-2002.04 | MT | F | R | Bus FWD D9B (XUD9AU) | Payload:1000/1400kg,Trans. code:MG | GDS10103 | Drive Shaft | | 28 | 41 | 63 | 112.5 | 1079 | |
| | 1994.03-2002.04 | MT | F | R | Bus FWD D9B (XUD9AU) | Payload:1000/1400kg,Trans. code:ME/ML | GDS10104 | Drive Shaft | 54T | 28 | 37 | 63 | 112.5 | 1072 | |
| | 1994.03-2002.04 | MT | F | L/R | Bus FWD D9B (XUD9AU) | Payload:1800kg,Trans. code:MG | GCO10011 | Outer Joint | 54T | 35 | 45 | 70 | 117 | 73 | I |
| | 1994.03-2002.04 | MT | F | L/R | Bus FWD D9B (XUD9AU) | Payload:1000/1400kg,Trans. code:ME/ML/MG | GCO10012 | Outer Joint | | 28 | 39 | 63 | 112.5 | 63 | I |
| | 1994.03-2002.04 | MT | F | L/R | Bus FWD D9B (XUD9AU) | Payload:1000/1400kg,Trans. code:ME/ML/MG | GCO10013 | Outer Joint | 54T | 28 | 39 | 63 | 112.5 | 63 | I |
| | 1994.03-2002.04 | MT | F | L/R | Bus FWD D9B (XUD9AU) | Payload:1800kg,Trans. code:MG | GCO10050 | Outer Joint | | 35 | 45 | 70 | 117 | 73 | I |
| | 1994.03-2002.04 | MT | F | L | Bus FWD D9B (XUD9AU) | Payload:1800kg,Trans. code:MG | GCI10010 | Inner Joint | | 41 | 45 | 43 | 70 | 115.5 | |
| | 1994.03-2002.04 | MT | F | L | Bus FWD D9B (XUD9AU) | Payload:1000/1400kg,Trans. code:MG | GCI10013 | Inner Joint | | 41 | 39 | 43 | 70 | 104 | |
| | 1994.03-2002.04 | MT | F | L | Bus FWD D9B (XUD9AU) | Payload:1000/1400kg,Trans. code:ME/ML | GCI10015 | Inner Joint | | 37 | 39 | 40 | 68.5 | 104 | |
| | 1994.03-2002.04 | MT | F | L | Bus FWD D9B (XUD9AU) | Payload:1000/1400kg,Trans. code:ME/ML | GCI45013 | Inner Joint | | 37 | 39 | 40 | 68.5 | 100 | |
| | 1994.03-2002.04 | MT | F | R | Bus FWD D9B (XUD9AU) | Payload:1800kg,Trans. code:MG | GCI10009 | Inner Joint | | 41 | 45 | 34.9 | 393 | 115.6 | |
| | 1994.03-2002.04 | MT | F | R | Bus FWD D9B (XUD9AU) | Payload:1000/1400kg,Trans. code:ME/ML | GCI10034 | Inner Joint | | 37 | 39 | 31.9 | 369.5 | 99 | |

| | YEAR | TRANSM. | F/R | L/R | BODY STYLE & DRIVE TYPE & ENGINE | REMARKS | G-AP Ref. | PRODUCT | ABS | Technical Specifications A | B | C | H | L | P |
|---|---|---|---|---|---|---|---|---|---|---|---|---|---|---|---|
| **PEUGEOT** **Boxer** | | | | | | | | | | | | | | | |
| 1.9 (51 kw) | 1994.03-2002.04 | MT | F | L | Van FWD D9B (XUD9AU) | Payload:1800kg,Trans. code:MG | GDS10033 | Drive Shaft | 54T | 35 | 41 | 70 | 117 | 762 | |
| | 1994.03-2002.04 | MT | F | L | Van FWD D9B (XUD9AU) | Payload:1000/1400kg,Trans. code:MG | GDS10035 | Drive Shaft | 54T | 28 | 41 | 63 | 112.5 | 757.5 | |
| | 1994.03-2002.04 | MT | F | L | Van FWD D9B (XUD9AU) | Payload:1000/1400kg,Trans. code:ME/ML | GDS10037 | Drive Shaft | 54T | 28 | 37 | 63 | 112.5 | 771 | |
| | 1994.03-2002.04 | MT | F | L | Van FWD D9B (XUD9AU) | Payload:1800kg,Trans. code:MG | GDS10067 | Drive Shaft | | 35 | 41 | 70 | 117 | 762 | |
| | 1994.03-2002.04 | MT | F | L | Van FWD D9B (XUD9AU) | Payload:1000/1400kg,Trans. code:MG | GDS10102 | Drive Shaft | | 28 | 41 | 63 | 112.5 | 757.5 | |
| | 1994.03-2002.04 | MT | F | L | Van FWD D9B (XUD9AU) | Payload:1000/1400kg,Trans. code:ME/ML | GDS10105 | Drive Shaft | | 28 | 37 | 63 | 112.5 | 771 | |
| | 1994.03-2002.04 | MT | F | R | Van FWD D9B (XUD9AU) | Payload:1800kg,Trans. code:MG | GDS10032 | Drive Shaft | 54T | 35 | 41 | 70 | 117 | 1085 | |
| | 1994.03-2002.04 | MT | F | R | Van FWD D9B (XUD9AU) | Payload:1000/1400kg,Trans. code:MG | GDS10036 | Drive Shaft | 54T | 28 | 41 | 63 | 112.5 | 1079 | |
| | 1994.03-2002.04 | MT | F | R | Van FWD D9B (XUD9AU) | Payload:1800kg,Trans. code:MG | GDS10066 | Drive Shaft | | 35 | 41 | 70 | 117 | 1085 | |
| | 1994.03-2002.04 | MT | F | R | Van FWD D9B (XUD9AU) | Payload:1000/1400kg,Trans. code:ME/ML | GDS10069 | Drive Shaft | | 28 | 37 | 63 | 112.5 | 1072 | |
| | 1994.03-2002.04 | MT | F | R | Van FWD D9B (XUD9AU) | Payload:1000/1400kg,Trans. code:MG | GDS10103 | Drive Shaft | | 28 | 41 | 63 | 112.5 | 1079 | |
| | 1994.03-2002.04 | MT | F | R | Van FWD D9B (XUD9AU) | Payload:1000/1400kg,Trans. code:ME/ML | GDS10104 | Drive Shaft | 54T | 28 | 37 | 63 | 112.5 | 1072 | |
| | 1994.03-2002.04 | MT | F | L/R | Van FWD D9B (XUD9AU) | Payload:1800kg,Trans. code:MG | GCO10011 | Outer Joint | 54T | 35 | 45 | 70 | 117 | 73 | I |
| | 1994.03-2002.04 | MT | F | L/R | Van FWD D9B (XUD9AU) | Payload:1000/1400kg,Trans. code:ME/ML/MG | GCO10012 | Outer Joint | | 28 | 39 | 63 | 112.5 | 63 | I |
| | 1994.03-2002.04 | MT | F | L/R | Van FWD D9B (XUD9AU) | Payload:1000/1400kg,Trans. code:ME/ML/MG | GCO10013 | Outer Joint | 54T | 28 | 39 | 63 | 112.5 | 63 | I |
| | 1994.03-2002.04 | MT | F | L/R | Van FWD D9B (XUD9AU) | Payload:1800kg,Trans. code:MG | GCO10050 | Outer Joint | | 35 | 45 | 70 | 117 | 73 | I |
| | 1994.03-2002.04 | MT | F | L | Van FWD D9B (XUD9AU) | Payload:1800kg,Trans. code:MG | GCI10010 | Inner Joint | | 41 | 45 | 43 | 70 | 115.5 | |
| | 1994.03-2002.04 | MT | F | L | Van FWD D9B (XUD9AU) | Payload:1000/1400kg,Trans. code:MG | GCI10013 | Inner Joint | | 41 | 39 | 43 | 70 | 104 | |
| | 1994.03-2002.04 | MT | F | L | Van FWD D9B (XUD9AU) | Payload:1000/1400kg,Trans. code:ME/ML | GCI10015 | Inner Joint | | 37 | 39 | 40 | 68.5 | 104 | |
| | 1994.03-2002.04 | MT | F | L | Van FWD D9B (XUD9AU) | Payload:1000/1400kg,Trans. code:ME/ML | GCI45013 | Inner Joint | | 37 | 39 | 40 | 68.5 | 100 | |
| | 1994.03-2002.04 | MT | F | R | Van FWD D9B (XUD9AU) | Payload:1800kg,Trans. code:MG | GCI10009 | Inner Joint | | 41 | 45 | 34.9 | 393 | 115.6 | |
| | 1994.03-2002.04 | MT | F | R | Van FWD D9B (XUD9AU) | Payload:1000/1400kg,Trans. code:ME/ML | GCI10034 | Inner Joint | | 37 | 39 | 31.9 | 369.5 | 99 | |
| 1.9 (66 kw) | 1994.06-2002.04 | MT | F | L | Platform/Chassis FWD DHY (XUD9TE), XUD9TE | Payload:1800kg,Trans. code:MG | GDS10033 | Drive Shaft | 54T | 35 | 41 | 70 | 117 | 762 | |
| | 1994.06-2002.04 | MT | F | L | Platform/Chassis FWD DHY (XUD9TE), XUD9TE | Payload:1000/1400kg,Trans. code:MG | GDS10035 | Drive Shaft | 54T | 28 | 41 | 63 | 112.5 | 757.5 | |
| | 1994.06-2002.04 | MT | F | L | Platform/Chassis FWD DHY (XUD9TE), XUD9TE | Payload:1000/1400kg,Trans. code:ME/ML | GDS10037 | Drive Shaft | 54T | 28 | 37 | 63 | 112.5 | 771 | |
| | 1994.06-2002.04 | MT | F | L | Platform/Chassis FWD DHY (XUD9TE), XUD9TE | Payload:1800kg,Trans. code:MG | GDS10067 | Drive Shaft | | 35 | 41 | 70 | 117 | 762 | |
| | 1994.06-2002.04 | MT | F | L | Platform/Chassis FWD DHY (XUD9TE), XUD9TE | Payload:1000/1400kg,Trans. code:MG | GDS10102 | Drive Shaft | | 28 | 41 | 63 | 112.5 | 757.5 | |
| | 1994.06-2002.04 | MT | F | L | Platform/Chassis FWD DHY (XUD9TE), XUD9TE | Payload:1000/1400kg,Trans. code:ME/ML | GDS10105 | Drive Shaft | | 28 | 37 | 63 | 112.5 | 771 | |
| | 1994.06-2002.04 | MT | F | R | Platform/Chassis FWD DHY (XUD9TE), XUD9TE | Payload:1800kg,Trans. code:MG | GDS10032 | Drive Shaft | 54T | 35 | 41 | 70 | 117 | 1085 | |
| | 1994.06-2002.04 | MT | F | R | Platform/Chassis FWD DHY (XUD9TE), XUD9TE | Payload:1000/1400kg,Trans. code:MG | GDS10036 | Drive Shaft | 54T | 28 | 41 | 63 | 112.5 | 1079 | |
| | 1994.06-2002.04 | MT | F | R | Platform/Chassis FWD DHY (XUD9TE), XUD9TE | Payload:1800kg,Trans. code:MG | GDS10066 | Drive Shaft | | 35 | 41 | 70 | 117 | 1085 | |
| | 1994.06-2002.04 | MT | F | R | Platform/Chassis FWD DHY (XUD9TE), XUD9TE | Payload:1000/1400kg,Trans. code:ME/ML | GDS10069 | Drive Shaft | | 28 | 37 | 63 | 112.5 | 1072 | |
| | 1994.06-2002.04 | MT | F | R | Platform/Chassis FWD DHY (XUD9TE), XUD9TE | Payload:1000/1400kg,Trans. code:MG | GDS10103 | Drive Shaft | | 28 | 41 | 63 | 112.5 | 1079 | |
| | 1994.06-2002.04 | MT | F | R | Platform/Chassis FWD DHY (XUD9TE), XUD9TE | Payload:1000/1400kg,Trans. code:ME/ML | GDS10104 | Drive Shaft | 54T | 28 | 37 | 63 | 112.5 | 1072 | |
| | 1994.06-2002.04 | MT | F | L/R | Platform/Chassis FWD DHY (XUD9TE), XUD9TE | Payload:1800kg,Trans. code:MG | GCO10011 | Outer Joint | 54T | 35 | 45 | 70 | 117 | 73 | I |
| | 1994.06-2002.04 | MT | F | L/R | Platform/Chassis FWD DHY (XUD9TE), XUD9TE | Payload:1000/1400kg,Trans. code:ME/ML/MG | GCO10012 | Outer Joint | | 28 | 39 | 63 | 112.5 | 63 | I |
| | 1994.06-2002.04 | MT | F | L/R | Platform/Chassis FWD DHY (XUD9TE), XUD9TE | Payload:1000/1400kg,Trans. code:ME/ML/MG | GCO10013 | Outer Joint | 54T | 28 | 39 | 63 | 112.5 | 63 | I |
| | 1994.06-2002.04 | MT | F | L/R | Platform/Chassis FWD DHY (XUD9TE), XUD9TE | Payload:1800kg,Trans. code:MG | GCO10050 | Outer Joint | | 35 | 45 | 70 | 117 | 73 | I |
| | 1994.06-2002.04 | MT | F | L | Platform/Chassis FWD DHY (XUD9TE), XUD9TE | Payload:1800kg,Trans. code:MG | GCI10010 | Inner Joint | | 41 | 45 | 43 | 70 | 115.5 | |
| | 1994.06-2002.04 | MT | F | L | Platform/Chassis FWD DHY (XUD9TE), XUD9TE | Payload:1000/1400kg,Trans. code:MG | GCI10013 | Inner Joint | | 41 | 39 | 43 | 70 | 104 | |
| | 1994.06-2002.04 | MT | F | L | Platform/Chassis FWD DHY (XUD9TE), XUD9TE | Payload:1000/1400kg,Trans. code:ME/ML | GCI10015 | Inner Joint | | 37 | 39 | 40 | 68.5 | 104 | |
| | 1994.06-2002.04 | MT | F | L | Platform/Chassis FWD DHY (XUD9TE), XUD9TE | Payload:1000/1400kg,Trans. code:ME/ML | GCI45013 | Inner Joint | | 37 | 39 | 40 | 68.5 | 100 | |
| | 1994.06-2002.04 | MT | F | R | Platform/Chassis FWD DHY (XUD9TE), XUD9TE | Payload:1800kg,Trans. code:MG | GCI10009 | Inner Joint | | 41 | 45 | 34.9 | 393 | 115.6 | |
| | 1994.06-2002.04 | MT | F | R | Platform/Chassis FWD DHY (XUD9TE), XUD9TE | Payload:1000/1400kg,Trans. code:ME/ML | GCI10034 | Inner Joint | | 37 | 39 | 31.9 | 369.5 | 99 | |
| | 1994.08-2002.04 | MT | F | L | Bus FWD DHY (XUD9TE) | Payload:1800kg,Trans. code:MG | GDS10033 | Drive Shaft | 54T | 35 | 41 | 70 | 117 | 762 | |
| | 1994.08-2002.04 | MT | F | L | Bus FWD DHY (XUD9TE) | Payload:1000/1400kg,Trans. code:MG | GDS10035 | Drive Shaft | 54T | 28 | 41 | 63 | 112.5 | 757.5 | |
| | 1994.08-2002.04 | MT | F | L | Bus FWD DHY (XUD9TE) | Payload:1000/1400kg,Trans. code:ME/ML | GDS10037 | Drive Shaft | 54T | 28 | 37 | 63 | 112.5 | 771 | |
| | 1994.08-2002.04 | MT | F | L | Bus FWD DHY (XUD9TE) | Payload:1800kg,Trans. code:MG | GDS10067 | Drive Shaft | | 35 | 41 | 70 | 117 | 762 | |
| | 1994.08-2002.04 | MT | F | L | Bus FWD DHY (XUD9TE) | Payload:1000/1400kg,Trans. code:MG | GDS10102 | Drive Shaft | | 28 | 41 | 63 | 112.5 | 757.5 | |
| | 1994.08-2002.04 | MT | F | L | Bus FWD DHY (XUD9TE) | Payload:1000/1400kg,Trans. code:ME/ML | GDS10105 | Drive Shaft | | 28 | 37 | 63 | 112.5 | 771 | |
| | 1994.08-2002.04 | MT | F | R | Bus FWD DHY (XUD9TE) | Payload:1800kg,Trans. code:MG | GDS10032 | Drive Shaft | 54T | 35 | 41 | 70 | 117 | 1085 | |
| | 1994.08-2002.04 | MT | F | R | Bus FWD DHY (XUD9TE) | Payload:1000/1400kg,Trans. code:MG | GDS10036 | Drive Shaft | 54T | 28 | 41 | 63 | 112.5 | 1079 | |
| | 1994.08-2002.04 | MT | F | R | Bus FWD DHY (XUD9TE) | Payload:1800kg,Trans. code:MG | GDS10066 | Drive Shaft | | 35 | 41 | 70 | 117 | 1085 | |
| | 1994.08-2002.04 | MT | F | R | Bus FWD DHY (XUD9TE) | Payload:1000/1400kg,Trans. code:ME/ML | GDS10069 | Drive Shaft | | 28 | 37 | 63 | 112.5 | 1072 | |
| | 1994.08-2002.04 | MT | F | R | Bus FWD DHY (XUD9TE) | Payload:1000/1400kg,Trans. code:MG | GDS10103 | Drive Shaft | | 28 | 41 | 63 | 112.5 | 1079 | |
| | 1994.08-2002.04 | MT | F | R | Bus FWD DHY (XUD9TE) | Payload:1000/1400kg,Trans. code:ME/ML | GDS10104 | Drive Shaft | 54T | 28 | 37 | 63 | 112.5 | 1072 | |
| | 1994.08-2002.04 | MT | F | L/R | Bus FWD DHY (XUD9TE) | Payload:1800kg,Trans. code:MG | GCO10011 | Outer Joint | 54T | 35 | 45 | 70 | 117 | 73 | I |
| | 1994.08-2002.04 | MT | F | L/R | Bus FWD DHY (XUD9TE) | Payload:1000/1400kg,Trans. code:ME/ML/MG | GCO10012 | Outer Joint | | 28 | 39 | 63 | 112.5 | 63 | I |
| | 1994.08-2002.04 | MT | F | L/R | Bus FWD DHY (XUD9TE) | Payload:1000/1400kg,Trans. code:ME/ML/MG | GCO10013 | Outer Joint | 54T | 28 | 39 | 63 | 112.5 | 63 | I |
| | 1994.08-2002.04 | MT | F | L/R | Bus FWD DHY (XUD9TE) | Payload:1800kg,Trans. code:MG | GCO10050 | Outer Joint | | 35 | 45 | 70 | 117 | 73 | I |
| | 1994.08-2002.04 | MT | F | L | Bus FWD DHY (XUD9TE) | Payload:1800kg,Trans. code:MG | GCI10010 | Inner Joint | | 41 | 45 | 43 | 70 | 115.5 | |
| | 1994.08-2002.04 | MT | F | L | Bus FWD DHY (XUD9TE) | Payload:1000/1400kg,Trans. code:MG | GCI10013 | Inner Joint | | 41 | 39 | 43 | 70 | 104 | |
| | 1994.08-2002.04 | MT | F | L | Bus FWD DHY (XUD9TE) | Payload:1000/1400kg,Trans. code:ME/ML | GCI10015 | Inner Joint | | 37 | 39 | 40 | 68.5 | 104 | |
| | 1994.08-2002.04 | MT | F | L | Bus FWD DHY (XUD9TE) | Payload:1000/1400kg,Trans. code:ME/ML | GCI45013 | Inner Joint | | 37 | 39 | 40 | 68.5 | 100 | |
| | 1994.08-2002.04 | MT | F | R | Bus FWD DHY (XUD9TE) | Payload:1800kg,Trans. code:MG | GCI10009 | Inner Joint | | 41 | 45 | 34.9 | 393 | 115.6 | |

| | YEAR | TRANSM. | F/R | L/R | BODY STYLE & DRIVE TYPE & ENGINE | REMARKS | G-AP Ref. | PRODUCT | ABS | Technical Specifications A | B | C | H | L | P |
|---|---|---|---|---|---|---|---|---|---|---|---|---|---|---|---|
| **PEUGEOT** **Boxer** | | | | | | | | | | | | | | | |
| 1.9 (66 kw) | 1994.08-2002.04 | MT | F | R | Bus FWD DHY (XUD9TE) | Payload:1000/1400kg,Trans. code:ME/ML | GCI10034 | Inner Joint | | 37 | 39 | 31.9 | 369.5 | 99 | |
| | 1999.07-2002.04 | 5MT | F | L | Van FWD XUD9TE | Transm. code:MG5T/MLGU,Payload:1800kg | GDS10033 | Drive Shaft | 54T | 35 | 41 | 70 | 117 | 762 | |
| | 1999.07-2002.04 | 5MT | F | L | Van FWD XUD9TE | Transm. code:MG5T/MLGU,Payload:1000kg/1400kg | GDS10035 | Drive Shaft | 54T | 28 | 41 | 63 | 112.5 | 757.5 | |
| | 1999.07-2002.04 | 5MT | F | L | Van FWD XUD9TE | Transm. code:ME/ML5T/MLGU | GDS10037 | Drive Shaft | 54T | 28 | 37 | 63 | 112.5 | 771 | |
| | 1999.07-2002.04 | 5MT | F | R | Van FWD XUD9TE | Transm. code:MG5T/MLGU,Payload:1800kg | GDS10032 | Drive Shaft | 54T | 35 | 41 | 70 | 117 | 1085 | |
| | 1999.07-2002.04 | 5MT | F | R | Van FWD XUD9TE | Transm. code:MG5T/MLGU,Payload:1000kg/1400kg | GDS10036 | Drive Shaft | 54T | 28 | 41 | 63 | 112.5 | 1079 | |
| | 1999.07-2002.04 | 5MT | F | R | Van FWD XUD9TE | Transm. code:ME/ML5T/MLGU | GDS10104 | Drive Shaft | 54T | 28 | 37 | 63 | 112.5 | 1072 | |
| | 1999.07-2002.04 | 5MT | F | L/R | Van FWD XUD9TE | Payload [kg]:1800,Trans. code:MG5T/MLGU | GCO10011 | Outer Joint | 54T | 35 | 45 | 70 | 117 | 73 | I |
| | 1999.07-2002.04 | 5MT | F | L/R | Van FWD XUD9TE | Payload [kg]:1000/1400,Trans. code:MG5T/MLGU | GCO10013 | Outer Joint | 54T | 28 | 39 | 63 | 112.5 | 63 | I |
| | 1999.07-2002.04 | 5MT | F | L/R | Van FWD XUD9TE | Trans. code:ME/ML5T/MLUC | GCO10013 | Outer Joint | 54T | 28 | 39 | 63 | 112.5 | 63 | I |
| 1.9 (68 kw) | 1994.03-2002.04 | MT | F | L | Bus FWD D8C (XUD9UTF) | Payload:1800kg,Trans. code:MG | GDS10033 | Drive Shaft | 54T | 35 | 41 | 70 | 117 | 762 | |
| | 1994.03-2002.04 | MT | F | L | Bus FWD D8C (XUD9UTF) | Payload:1000/1400kg,Trans. code:MG | GDS10035 | Drive Shaft | 54T | 28 | 41 | 63 | 112.5 | 757.5 | |
| | 1994.03-2002.04 | MT | F | L | Bus FWD D8C (XUD9UTF) | Payload:1000/1400kg,Trans. code:ME/ML | GDS10037 | Drive Shaft | 54T | 28 | 37 | 63 | 112.5 | 771 | |
| | 1994.03-2002.04 | MT | F | L | Bus FWD D8C (XUD9UTF) | Payload:1800kg,Trans. code:MG | GDS10067 | Drive Shaft | | 35 | 41 | 70 | 117 | 762 | |
| | 1994.03-2002.04 | MT | F | L | Bus FWD D8C (XUD9UTF) | Payload:1000/1400kg,Trans. code:MG | GDS10102 | Drive Shaft | | 28 | 41 | 63 | 112.5 | 757.5 | |
| | 1994.03-2002.04 | MT | F | L | Bus FWD D8C (XUD9UTF) | Payload:1000/1400kg,Trans. code:ME/ML | GDS10105 | Drive Shaft | | 28 | 37 | 63 | 112.5 | 771 | |
| | 1994.03-2002.04 | MT | F | R | Bus FWD D8C (XUD9UTF) | Payload:1800kg,Trans. code:MG | GDS10032 | Drive Shaft | 54T | 35 | 41 | 70 | 117 | 1085 | |
| | 1994.03-2002.04 | MT | F | R | Bus FWD D8C (XUD9UTF) | Payload:1000/1400kg,Trans. code:MG | GDS10036 | Drive Shaft | 54T | 28 | 41 | 63 | 112.5 | 1079 | |
| | 1994.03-2002.04 | MT | F | R | Bus FWD D8C (XUD9UTF) | Payload:1800kg,Trans. code:MG | GDS10066 | Drive Shaft | | 35 | 41 | 70 | 117 | 1085 | |
| | 1994.03-2002.04 | MT | F | R | Bus FWD D8C (XUD9UTF) | Payload:1000/1400kg,Trans. code:ME/ML | GDS10069 | Drive Shaft | | 28 | 37 | 63 | 112.5 | 1072 | |
| | 1994.03-2002.04 | MT | F | R | Bus FWD D8C (XUD9UTF) | Payload:1000/1400kg,Trans. code:MG | GDS10103 | Drive Shaft | | 28 | 41 | 63 | 112.5 | 1079 | |
| | 1994.03-2002.04 | MT | F | R | Bus FWD D8C (XUD9UTF) | Payload:1000/1400kg,Trans. code:ME/ML | GDS10104 | Drive Shaft | 54T | 28 | 37 | 63 | 112.5 | 1072 | |
| | 1994.03-2002.04 | MT | F | L/R | Bus FWD D8C (XUD9UTF) | Payload:1800kg,Trans. code:MG | GCO10011 | Outer Joint | 54T | 35 | 45 | 70 | 117 | 73 | I |
| | 1994.03-2002.04 | MT | F | L/R | Bus FWD D8C (XUD9UTF) | Payload:1000/1400kg,Trans. code:ME/ML/MG | GCO10012 | Outer Joint | | 28 | 39 | 63 | 112.5 | 63 | I |
| | 1994.03-2002.04 | MT | F | L/R | Bus FWD D8C (XUD9UTF) | Payload:1000/1400kg,Trans. code:ME/ML/MG | GCO10013 | Outer Joint | 54T | 28 | 39 | 63 | 112.5 | 63 | I |
| | 1994.03-2002.04 | MT | F | L/R | Bus FWD D8C (XUD9UTF) | Payload:1800kg,Trans. code:MG | GCO10050 | Outer Joint | | 35 | 45 | 70 | 117 | 73 | I |
| | 1994.03-2002.04 | MT | F | L | Bus FWD D8C (XUD9UTF) | Payload:1800kg,Trans. code:MG | GCI10010 | Inner Joint | | 41 | 45 | 43 | 70 | 115.5 | |
| | 1994.03-2002.04 | MT | F | L | Bus FWD D8C (XUD9UTF) | Payload:1000/1400kg,Trans. code:MG | GCI10013 | Inner Joint | | 41 | 39 | 43 | 70 | 104 | |
| | 1994.03-2002.04 | MT | F | L | Bus FWD D8C (XUD9UTF) | Payload:1000/1400kg,Trans. code:ME/ML | GCI10015 | Inner Joint | | 37 | 39 | 40 | 68.5 | 104 | |
| | 1994.03-2002.04 | MT | F | L | Bus FWD D8C (XUD9UTF) | Payload:1000/1400kg,Trans. code:ME/ML | GCI45013 | Inner Joint | | 37 | 39 | 40 | 68.5 | 100 | |
| | 1994.03-2002.04 | MT | F | R | Bus FWD D8C (XUD9UTF) | Payload:1800kg,Trans. code:MG | GCI10009 | Inner Joint | | 41 | 45 | 34.9 | 393 | 115.6 | |
| | 1994.03-2002.04 | MT | F | R | Bus FWD D8C (XUD9UTF) | Payload:1000/1400kg,Trans. code:ME/ML | GCI10034 | Inner Joint | | 37 | 39 | 31.9 | 369.5 | 99 | |
| | 1994.03-2002.04 | MT | F | L | Van FWD D8C (XUD9UTF) | Payload:1800kg,Trans. code:MG | GDS10033 | Drive Shaft | 54T | 35 | 41 | 70 | 117 | 762 | |
| | 1994.03-2002.04 | MT | F | L | Van FWD D8C (XUD9UTF) | Payload:1000/1400kg,Trans. code:MG | GDS10035 | Drive Shaft | 54T | 28 | 41 | 63 | 112.5 | 757.5 | |
| | 1994.03-2002.04 | MT | F | L | Van FWD D8C (XUD9UTF) | Payload:1000/1400kg,Trans. code:ME/ML | GDS10037 | Drive Shaft | 54T | 28 | 37 | 63 | 112.5 | 771 | |
| | 1994.03-2002.04 | MT | F | L | Van FWD D8C (XUD9UTF) | Payload:1800kg,Trans. code:MG | GDS10067 | Drive Shaft | | 35 | 41 | 70 | 117 | 762 | |
| | 1994.03-2002.04 | MT | F | L | Van FWD D8C (XUD9UTF) | Payload:1000/1400kg,Trans. code:MG | GDS10102 | Drive Shaft | | 28 | 41 | 63 | 112.5 | 757.5 | |
| | 1994.03-2002.04 | MT | F | L | Van FWD D8C (XUD9UTF) | Payload:1000/1400kg,Trans. code:ME/ML | GDS10105 | Drive Shaft | | 28 | 37 | 63 | 112.5 | 771 | |
| | 1994.03-2002.04 | MT | F | R | Van FWD D8C (XUD9UTF) | Payload:1800kg,Trans. code:MG | GDS10032 | Drive Shaft | 54T | 35 | 41 | 70 | 117 | 1085 | |
| | 1994.03-2002.04 | MT | F | R | Van FWD D8C (XUD9UTF) | Payload:1000/1400kg,Trans. code:MG | GDS10036 | Drive Shaft | 54T | 28 | 41 | 63 | 112.5 | 1079 | |
| | 1994.03-2002.04 | MT | F | R | Van FWD D8C (XUD9UTF) | Payload:1800kg,Trans. code:MG | GDS10066 | Drive Shaft | | 35 | 41 | 70 | 117 | 1085 | |
| | 1994.03-2002.04 | MT | F | R | Van FWD D8C (XUD9UTF) | Payload:1000/1400kg,Trans. code:ME/ML | GDS10069 | Drive Shaft | | 28 | 37 | 63 | 112.5 | 1072 | |
| | 1994.03-2002.04 | MT | F | R | Van FWD D8C (XUD9UTF) | Payload:1000/1400kg,Trans. code:MG | GDS10103 | Drive Shaft | | 28 | 41 | 63 | 112.5 | 1079 | |
| | 1994.03-2002.04 | MT | F | R | Van FWD D8C (XUD9UTF) | Payload:1000/1400kg,Trans. code:ME/ML | GDS10104 | Drive Shaft | 54T | 28 | 37 | 63 | 112.5 | 1072 | |
| | 1994.03-2002.04 | MT | F | L/R | Van FWD D8C (XUD9UTF) | Payload:1800kg,Trans. code:MG | GCO10011 | Outer Joint | 54T | 35 | 45 | 70 | 117 | 73 | I |
| | 1994.03-2002.04 | MT | F | L/R | Van FWD D8C (XUD9UTF) | Payload:1000/1400kg,Trans. code:ME/ML/MG | GCO10012 | Outer Joint | | 28 | 39 | 63 | 112.5 | 63 | I |
| | 1994.03-2002.04 | MT | F | L/R | Van FWD D8C (XUD9UTF) | Payload:1000/1400kg,Trans. code:ME/ML/MG | GCO10013 | Outer Joint | 54T | 28 | 39 | 63 | 112.5 | 63 | I |
| | 1994.03-2002.04 | MT | F | L/R | Van FWD D8C (XUD9UTF) | Payload:1800kg,Trans. code:MG | GCO10050 | Outer Joint | | 35 | 45 | 70 | 117 | 73 | I |
| | 1994.03-2002.04 | MT | F | L | Van FWD D8C (XUD9UTF) | Payload:1800kg,Trans. code:MG | GCI10010 | Inner Joint | | 41 | 45 | 43 | 70 | 115.5 | |
| | 1994.03-2002.04 | MT | F | L | Van FWD D8C (XUD9UTF) | Payload:1000/1400kg,Trans. code:MG | GCI10013 | Inner Joint | | 41 | 39 | 43 | 70 | 104 | |
| | 1994.03-2002.04 | MT | F | L | Van FWD D8C (XUD9UTF) | Payload:1000/1400kg,Trans. code:ME/ML | GCI10015 | Inner Joint | | 37 | 39 | 40 | 68.5 | 104 | |
| | 1994.03-2002.04 | MT | F | L | Van FWD D8C (XUD9UTF) | Payload:1000/1400kg,Trans. code:ME/ML | GCI45013 | Inner Joint | | 37 | 39 | 40 | 68.5 | 100 | |
| | 1994.03-2002.04 | MT | F | R | Van FWD D8C (XUD9UTF) | Payload:1800kg,Trans. code:MG | GCI10009 | Inner Joint | | 41 | 45 | 34.9 | 393 | 115.6 | |
| | 1994.03-2002.04 | MT | F | R | Van FWD D8C (XUD9UTF) | Payload:1000/1400kg,Trans. code:ME/ML | GCI10034 | Inner Joint | | 37 | 39 | 31.9 | 369.5 | 99 | |
| | 1994.07-2002.04 | MT | F | L | Platform/Chassis FWD D8C (XUD9UTF), XUD9TE | Payload:1800kg,Trans. code:MG | GDS10033 | Drive Shaft | 54T | 35 | 41 | 70 | 117 | 762 | |
| | 1994.07-2002.04 | MT | F | L | Platform/Chassis FWD D8C (XUD9UTF), XUD9TE | Payload:1000/1400kg,Trans. code:MG | GDS10035 | Drive Shaft | 54T | 28 | 41 | 63 | 112.5 | 757.5 | |
| | 1994.07-2002.04 | MT | F | L | Platform/Chassis FWD D8C (XUD9UTF), XUD9TE | Payload:1000/1400kg,Trans. code:ME/ML | GDS10037 | Drive Shaft | 54T | 28 | 37 | 63 | 112.5 | 771 | |
| | 1994.07-2002.04 | MT | F | L | Platform/Chassis FWD D8C (XUD9UTF), XUD9TE | Payload:1800kg,Trans. code:MG | GDS10067 | Drive Shaft | | 35 | 41 | 70 | 117 | 762 | |
| | 1994.07-2002.04 | MT | F | L | Platform/Chassis FWD D8C (XUD9UTF), XUD9TE | Payload:1000/1400kg,Trans. code:MG | GDS10102 | Drive Shaft | | 28 | 41 | 63 | 112.5 | 757.5 | |
| | 1994.07-2002.04 | MT | F | L | Platform/Chassis FWD D8C (XUD9UTF), XUD9TE | Payload:1000/1400kg,Trans. code:ME/ML | GDS10105 | Drive Shaft | | 28 | 37 | 63 | 112.5 | 771 | |
| | 1994.07-2002.04 | MT | F | R | Platform/Chassis FWD D8C (XUD9UTF), XUD9TE | Payload:1800kg,Trans. code:MG | GDS10032 | Drive Shaft | 54T | 35 | 41 | 70 | 117 | 1085 | |
| | 1994.07-2002.04 | MT | F | R | Platform/Chassis FWD D8C (XUD9UTF), XUD9TE | Payload:1000/1400kg,Trans. code:MG | GDS10036 | Drive Shaft | 54T | 28 | 41 | 63 | 112.5 | 1079 | |
| | 1994.07-2002.04 | MT | F | R | Platform/Chassis FWD D8C (XUD9UTF), XUD9TE | Payload:1800kg,Trans. code:MG | GDS10066 | Drive Shaft | | 35 | 41 | 70 | 117 | 1085 | |
| | 1994.07-2002.04 | MT | F | R | Platform/Chassis FWD D8C (XUD9UTF), XUD9TE | Payload:1000/1400kg,Trans. code:ME/ML | GDS10069 | Drive Shaft | | 28 | 37 | 63 | 112.5 | 1072 | |
| | 1994.07-2002.04 | MT | F | R | Platform/Chassis FWD D8C (XUD9UTF), XUD9TE | Payload:1000/1400kg,Trans. code:MG | GDS10103 | Drive Shaft | | 28 | 41 | 63 | 112.5 | 1079 | |

| | YEAR | TRANSM. | F/R | L/R | BODY STYLE & DRIVE TYPE & ENGINE | REMARKS | G-AP Ref. | PRODUCT | ABS | Technical Specifications A | B | C | H | L | P |
|---|---|---|---|---|---|---|---|---|---|---|---|---|---|---|---|
| **PEUGEOT** **Boxer** | | | | | | | | | | | | | | | |
| 1.9 (68 kw) | 1994.07-2002.04 | MT | F | R | Platform/Chassis FWD D8C (XUD9UTF), XUD9TE | Payload:1000/1400kg,Trans. code:ME/ML | GDS10104 | Drive Shaft | 54T | 28 | 37 | 63 | 112.5 | 1072 | |
| | 1994.07-2002.04 | MT | F | L/R | Platform/Chassis FWD D8C (XUD9UTF), XUD9TE | Payload:1800kg,Trans. code:MG | GCO10011 | Outer Joint | 54T | 35 | 45 | 70 | 117 | 73 | I |
| | 1994.07-2002.04 | MT | F | L/R | Platform/Chassis FWD D8C (XUD9UTF), XUD9TE | Payload:1000/1400kg,Trans. code:ME/ML/MG | GCO10012 | Outer Joint | | 28 | 39 | 63 | 112.5 | 63 | I |
| | 1994.07-2002.04 | MT | F | L/R | Platform/Chassis FWD D8C (XUD9UTF), XUD9TE | Payload:1000/1400kg,Trans. code:ME/ML/MG | GCO10013 | Outer Joint | 54T | 28 | 39 | 63 | 112.5 | 63 | I |
| | 1994.07-2002.04 | MT | F | L/R | Platform/Chassis FWD D8C (XUD9UTF), XUD9TE | Payload:1800kg,Trans. code:MG | GCO10050 | Outer Joint | | 35 | 45 | 70 | 117 | 73 | I |
| | 1994.07-2002.04 | MT | F | L | Platform/Chassis FWD D8C (XUD9UTF), XUD9TE | Payload:1800kg,Trans. code:MG | GCI10010 | Inner Joint | | 41 | 45 | 43 | 70 | 115.5 | |
| | 1994.07-2002.04 | MT | F | L | Platform/Chassis FWD D8C (XUD9UTF), XUD9TE | Payload:1000/1400kg,Trans. code:MG | GCI10013 | Inner Joint | | 41 | 39 | 43 | 70 | 104 | |
| | 1994.07-2002.04 | MT | F | L | Platform/Chassis FWD D8C (XUD9UTF), XUD9TE | Payload:1000/1400kg,Trans. code:ME/ML | GCI10015 | Inner Joint | | 37 | 39 | 40 | 68.5 | 104 | |
| | 1994.07-2002.04 | MT | F | L | Platform/Chassis FWD D8C (XUD9UTF), XUD9TE | Payload:1000/1400kg,Trans. code:ME/ML | GCI45013 | Inner Joint | | 37 | 39 | 40 | 68.5 | 100 | |
| | 1994.07-2002.04 | MT | F | R | Platform/Chassis FWD D8C (XUD9UTF), XUD9TE | Payload:1800kg,Trans. code:MG | GCI10009 | Inner Joint | | 41 | 45 | 34.9 | 393 | 115.6 | |
| | 1994.07-2002.04 | MT | F | R | Platform/Chassis FWD D8C (XUD9UTF), XUD9TE | Payload:1000/1400kg,Trans. code:ME/ML | GCI10034 | Inner Joint | | 37 | 39 | 31.9 | 369.5 | 99 | |
| | 1996.07-2002.04 | MT | F | L | Bus 4WD D8C (XUD9UTF) | Payload:1800kg,Trans. code:MG | GDS10033 | Drive Shaft | 54T | 35 | 41 | 70 | 117 | 762 | |
| | 1996.07-2002.04 | MT | F | L | Bus 4WD D8C (XUD9UTF) | Payload:1000/1400kg,Trans. code:MG | GDS10035 | Drive Shaft | 54T | 28 | 41 | 63 | 112.5 | 757.5 | |
| | 1996.07-2002.04 | MT | F | L | Bus 4WD D8C (XUD9UTF) | Payload:1000/1400kg,Trans. code:ME/ML | GDS10037 | Drive Shaft | 54T | 28 | 37 | 63 | 112.5 | 771 | |
| | 1996.07-2002.04 | MT | F | L | Bus 4WD D8C (XUD9UTF) | Payload:1800kg,Trans. code:MG | GDS10067 | Drive Shaft | | 35 | 41 | 70 | 117 | 762 | |
| | 1996.07-2002.04 | MT | F | L | Bus 4WD D8C (XUD9UTF) | Payload:1000/1400kg,Trans. code:MG | GDS10102 | Drive Shaft | | 28 | 41 | 63 | 112.5 | 757.5 | |
| | 1996.07-2002.04 | MT | F | L | Bus 4WD D8C (XUD9UTF) | Payload:1000/1400kg,Trans. code:ME/ML | GDS10105 | Drive Shaft | | 28 | 37 | 63 | 112.5 | 771 | |
| | 1996.07-2002.04 | MT | F | R | Bus 4WD D8C (XUD9UTF) | Payload:1800kg,Trans. code:MG | GDS10032 | Drive Shaft | 54T | 35 | 41 | 70 | 117 | 1085 | |
| | 1996.07-2002.04 | MT | F | R | Bus 4WD D8C (XUD9UTF) | Payload:1000/1400kg,Trans. code:MG | GDS10036 | Drive Shaft | 54T | 28 | 41 | 63 | 112.5 | 1079 | |
| | 1996.07-2002.04 | MT | F | R | Bus 4WD D8C (XUD9UTF) | Payload:1800kg,Trans. code:MG | GDS10066 | Drive Shaft | | 35 | 41 | 70 | 117 | 1085 | |
| | 1996.07-2002.04 | MT | F | R | Bus 4WD D8C (XUD9UTF) | Payload:1000/1400kg,Trans. code:ME/ML | GDS10069 | Drive Shaft | | 28 | 37 | 63 | 112.5 | 1072 | |
| | 1996.07-2002.04 | MT | F | R | Bus 4WD D8C (XUD9UTF) | Payload:1000/1400kg,Trans. code:MG | GDS10103 | Drive Shaft | | 28 | 41 | 63 | 112.5 | 1079 | |
| | 1996.07-2002.04 | MT | F | R | Bus 4WD D8C (XUD9UTF) | Payload:1000/1400kg,Trans. code:ME/ML | GDS10104 | Drive Shaft | 54T | 28 | 37 | 63 | 112.5 | 1072 | |
| | 1996.07-2002.04 | MT | F | L/R | Bus 4WD D8C (XUD9UTF) | Payload:1800kg,Trans. code:MG | GCO10011 | Outer Joint | 54T | 35 | 45 | 70 | 117 | 73 | I |
| | 1996.07-2002.04 | MT | F | L/R | Bus 4WD D8C (XUD9UTF) | Payload:1000/1400kg,Trans. code:ME/ML/MG | GCO10012 | Outer Joint | | 28 | 39 | 63 | 112.5 | 63 | I |
| | 1996.07-2002.04 | MT | F | L/R | Bus 4WD D8C (XUD9UTF) | Payload:1000/1400kg,Trans. code:ME/ML/MG | GCO10013 | Outer Joint | 54T | 28 | 39 | 63 | 112.5 | 63 | I |
| | 1996.07-2002.04 | MT | F | L/R | Bus 4WD D8C (XUD9UTF) | Payload:1800kg,Trans. code:MG | GCO10050 | Outer Joint | | 35 | 45 | 70 | 117 | 73 | I |
| | 1996.07-2002.04 | MT | F | L | Bus 4WD D8C (XUD9UTF) | Payload:1800kg,Trans. code:MG | GCI10010 | Inner Joint | | 41 | 45 | 43 | 70 | 115.5 | |
| | 1996.07-2002.04 | MT | F | L | Bus 4WD D8C (XUD9UTF) | Payload:1000/1400kg,Trans. code:MG | GCI10013 | Inner Joint | | 41 | 39 | 43 | 70 | 104 | |
| | 1996.07-2002.04 | MT | F | L | Bus 4WD D8C (XUD9UTF) | Payload:1000/1400kg,Trans. code:ME/ML | GCI10015 | Inner Joint | | 37 | 39 | 40 | 68.5 | 104 | |
| | 1996.07-2002.04 | MT | F | L | Bus 4WD D8C (XUD9UTF) | Payload:1000/1400kg,Trans. code:ME/ML | GCI45013 | Inner Joint | | 37 | 39 | 40 | 68.5 | 100 | |
| | 1996.07-2002.04 | MT | F | R | Bus 4WD D8C (XUD9UTF) | Payload:1800kg,Trans. code:MG | GCI10009 | Inner Joint | | 41 | 45 | 34.9 | 393 | 115.6 | |
| | 1996.07-2002.04 | MT | F | R | Bus 4WD D8C (XUD9UTF) | Payload:1000/1400kg,Trans. code:ME/ML | GCI10034 | Inner Joint | | 37 | 39 | 31.9 | 369.5 | 99 | |
| 2.0 (62 kw) | 2001.08-2002.04 | 5MT | F | L | Van FWD RHV (DW10UTD);RHV (DW10TD) | Transm. code:MG5T/MLGU,Payload:1800kg | GDS10033 | Drive Shaft | 54T | 35 | 41 | 70 | 117 | 762 | |
| | 2001.08-2002.04 | 5MT | F | L | Van FWD RHV (DW10UTD);RHV (DW10TD) | Transm. code:MG5T/MLGU,Payload:1000kg/1400kg | GDS10035 | Drive Shaft | 54T | 28 | 41 | 63 | 112.5 | 757.5 | |
| | 2001.08-2002.04 | 5MT | F | L | Van FWD RHV (DW10UTD);RHV (DW10TD) | Transm. code:ME/ML5T/MLGU | GDS10037 | Drive Shaft | 54T | 28 | 37 | 63 | 112.5 | 771 | |
| | 2001.08-2002.04 | 5MT | F | R | Van FWD RHV (DW10UTD);RHV (DW10TD) | Transm. code:MG5T/MLGU,Payload:1800kg | GDS10032 | Drive Shaft | 54T | 35 | 41 | 70 | 117 | 1085 | |
| | 2001.08-2002.04 | 5MT | F | R | Van FWD RHV (DW10UTD);RHV (DW10TD) | Transm. code:MG5T/MLGU,Payload:1000kg/1400kg | GDS10036 | Drive Shaft | 54T | 28 | 41 | 63 | 112.5 | 1079 | |
| | 2001.08-2002.04 | 5MT | F | R | Van FWD RHV (DW10UTD);RHV (DW10TD) | Transm. code:ME/ML5T/MLGU | GDS10104 | Drive Shaft | 54T | 28 | 37 | 63 | 112.5 | 1072 | |
| | 2001.08-2002.04 | 5MT | F | L/R | Van FWD RHV (DW10UTD);RHV (DW10TD) | Payload [kg]:1800,Trans. code:MG5T/MLGU | GCO10011 | Outer Joint | 54T | 35 | 45 | 70 | 117 | 73 | I |
| | 2001.08-2002.04 | 5MT | F | L/R | Van FWD RHV (DW10UTD);RHV (DW10TD) | Payload [kg]:1000/1400,Trans. code:MG5T/MLGU | GCO10013 | Outer Joint | 54T | 28 | 39 | 63 | 112.5 | 63 | I |
| | 2001.08-2002.04 | 5MT | F | L/R | Van FWD RHV (DW10UTD);RHV (DW10TD) | Trans. code:ME/ML5T/MLUC | GCO10013 | Outer Joint | 54T | 28 | 39 | 63 | 112.5 | 63 | I |
| | 2001.08-2002.04 | 5MT | F | L | Van FWD RHV (DW10UTD);RHV (DW10TD) | | GCI45013 | Inner Joint | | 37 | 39 | 40 | 68.5 | 100 | |
| | 2001.08-2002.04 | 5MT | F | R | Van FWD RHV (DW10UTD);RHV (DW10TD) | | GCI10034 | Inner Joint | | 37 | 39 | 31.9 | 369.5 | 99 | |
| | 2001.12-2006.06 | 5MT | F | L | Bus FWD RHV (DW10UTD);RHV (DW10TD) | | GDS10037 | Drive Shaft | 54T | 28 | 37 | 63 | 112.5 | 771 | |
| | 2001.12-2006.06 | 5MT | F | L | Bus FWD RHV (DW10UTD);RHV (DW10TD) | | GDS10105 | Drive Shaft | | 28 | 37 | 63 | 112.5 | 771 | |
| | 2001.12-2006.06 | 5MT | F | R | Bus FWD RHV (DW10UTD);RHV (DW10TD) | | GDS10069 | Drive Shaft | | 28 | 37 | 63 | 112.5 | 1072 | |
| | 2001.12-2006.06 | 5MT | F | R | Bus FWD RHV (DW10UTD);RHV (DW10TD) | | GDS10104 | Drive Shaft | 54T | 28 | 37 | 63 | 112.5 | 1072 | |
| | 2001.12-2006.06 | 5MT | F | L/R | Bus FWD RHV (DW10UTD);RHV (DW10TD) | | GCO10012 | Outer Joint | | 28 | 39 | 63 | 112.5 | 63 | I |
| | 2001.12-2006.06 | 5MT | F | L/R | Bus FWD RHV (DW10UTD);RHV (DW10TD) | | GCO10013 | Outer Joint | 54T | 28 | 39 | 63 | 112.5 | 63 | I |
| | 2001.12-2006.06 | 5MT | F | L | Bus FWD RHV (DW10UTD);RHV (DW10TD) | | GCI10015 | Inner Joint | | 37 | 39 | 40 | 68.5 | 104 | |
| | 2001.12-2006.06 | 5MT | F | L | Bus FWD RHV (DW10UTD);RHV (DW10TD) | | GCI45013 | Inner Joint | | 37 | 39 | 40 | 68.5 | 100 | |
| | 2001.12-2006.06 | 5MT | F | R | Bus FWD RHV (DW10UTD);RHV (DW10TD) | | GCI10034 | Inner Joint | | 37 | 39 | 31.9 | 369.5 | 99 | |
| | 2001.12-2006.06 | 5MT | F | L | Platform/Chassis FWD RHV (DW10UTD);RHV (DW10TD) | | GDS10037 | Drive Shaft | 54T | 28 | 37 | 63 | 112.5 | 771 | |
| | 2001.12-2006.06 | 5MT | F | L | Platform/Chassis FWD RHV (DW10UTD);RHV (DW10TD) | | GDS10105 | Drive Shaft | | 28 | 37 | 63 | 112.5 | 771 | |
| | 2001.12-2006.06 | 5MT | F | R | Platform/Chassis FWD RHV (DW10UTD);RHV (DW10TD) | | GDS10069 | Drive Shaft | | 28 | 37 | 63 | 112.5 | 1072 | |
| | 2001.12-2006.06 | 5MT | F | R | Platform/Chassis FWD RHV (DW10UTD);RHV (DW10TD) | | GDS10104 | Drive Shaft | 54T | 28 | 37 | 63 | 112.5 | 1072 | |
| | 2001.12-2006.06 | 5MT | F | L/R | Platform/Chassis FWD RHV (DW10UTD);RHV (DW10TD) | | GCO10012 | Outer Joint | | 28 | 39 | 63 | 112.5 | 63 | I |
| | 2001.12-2006.06 | 5MT | F | L/R | Platform/Chassis FWD RHV (DW10UTD);RHV (DW10TD) | | GCO10013 | Outer Joint | 54T | 28 | 39 | 63 | 112.5 | 63 | I |
| | 2001.12-2006.06 | 5MT | F | L | Platform/Chassis FWD RHV (DW10UTD);RHV (DW10TD) | | GCI10015 | Inner Joint | | 37 | 39 | 40 | 68.5 | 104 | |
| | 2001.12-2006.06 | 5MT | F | L | Platform/Chassis FWD RHV (DW10UTD);RHV (DW10TD) | | GCI45013 | Inner Joint | | 37 | 39 | 40 | 68.5 | 100 | |
| | 2001.12-2006.06 | 5MT | F | R | Platform/Chassis FWD RHV (DW10UTD);RHV (DW10TD) | | GCI10034 | Inner Joint | | 37 | 39 | 31.9 | 369.5 | 99 | |
| | 2002.04-2006.06 | 5MT | F | L | Van FWD RHV (DW10UTD);RHV (DW10TD) | | GDS10037 | Drive Shaft | 54T | 28 | 37 | 63 | 112.5 | 771 | |
| | 2002.04-2006.06 | 5MT | F | L | Van FWD RHV (DW10UTD);RHV (DW10TD) | | GDS10105 | Drive Shaft | | 28 | 37 | 63 | 112.5 | 771 | |
| | 2002.04-2006.06 | 5MT | F | R | Van FWD RHV (DW10UTD);RHV (DW10TD) | | GDS10069 | Drive Shaft | | 28 | 37 | 63 | 112.5 | 1072 | |

| | YEAR | TRANSM. | F/R | L/R | BODY STYLE & DRIVE TYPE & ENGINE | REMARKS | G-AP Ref. | PRODUCT | ABS | Technical Specifications A | B | C | H | L | P |
|---|---|---|---|---|---|---|---|---|---|---|---|---|---|---|---|
| **PEUGEOT** **Boxer** | | | | | | | | | | | | | | | |
| 2.0 (62 kw) | 2002.04-2006.06 | 5MT | F | R | Van FWD RHV (DW10UTD);RHV (DW10TD) | | GDS10104 | Drive Shaft | 54T | 28 | 37 | 63 | 112.5 | 1072 | |
| | 2002.04-2006.06 | 5MT | F | L/R | Van FWD RHV (DW10UTD);RHV (DW10TD) | | GCO10012 | Outer Joint | | 28 | 39 | 63 | 112.5 | 63 | I |
| | 2002.04-2006.06 | 5MT | F | L/R | Van FWD RHV (DW10UTD);RHV (DW10TD) | | GCO10013 | Outer Joint | 54T | 28 | 39 | 63 | 112.5 | 63 | I |
| | 2002.04-2006.06 | 5MT | F | L | Van FWD RHV (DW10UTD);RHV (DW10TD) | | GCI10015 | Inner Joint | | 37 | 39 | 40 | 68.5 | 104 | |
| | 2002.04-2006.06 | 5MT | F | L | Van FWD RHV (DW10UTD);RHV (DW10TD) | | GCI45013 | Inner Joint | | 37 | 39 | 40 | 68.5 | 100 | |
| | 2002.04-2006.06 | 5MT | F | R | Van FWD RHV (DW10UTD);RHV (DW10TD) | | GCI10034 | Inner Joint | | 37 | 39 | 31.9 | 369.5 | 99 | |
| 2.0 (80 kw) | 1994.03-2002.04 | MT | F | L | Bus FWD RFW (XU10J2) | Payload:1800kg,Trans. code:MG | GDS10033 | Drive Shaft | 54T | 35 | 41 | 70 | 117 | 762 | |
| | 1994.03-2002.04 | MT | F | L | Bus FWD RFW (XU10J2) | Payload:1000/1400kg,Trans. code:MG | GDS10035 | Drive Shaft | 54T | 28 | 41 | 63 | 112.5 | 757.5 | |
| | 1994.03-2002.04 | MT | F | L | Bus FWD RFW (XU10J2) | Payload:1000/1400kg,Trans. code:ME/ML | GDS10037 | Drive Shaft | 54T | 28 | 37 | 63 | 112.5 | 771 | |
| | 1994.03-2002.04 | MT | F | L | Bus FWD RFW (XU10J2) | Payload:1800kg,Trans. code:MG | GDS10067 | Drive Shaft | | 35 | 41 | 70 | 117 | 762 | |
| | 1994.03-2002.04 | MT | F | L | Bus FWD RFW (XU10J2) | Payload:1000/1400kg,Trans. code:MG | GDS10102 | Drive Shaft | | 28 | 41 | 63 | 112.5 | 757.5 | |
| | 1994.03-2002.04 | MT | F | L | Bus FWD RFW (XU10J2) | Payload:1000/1400kg,Trans. code:ME/ML | GDS10105 | Drive Shaft | | 28 | 37 | 63 | 112.5 | 771 | |
| | 1994.03-2002.04 | MT | F | R | Bus FWD RFW (XU10J2) | Payload:1800kg,Trans. code:MG | GDS10032 | Drive Shaft | 54T | 35 | 41 | 70 | 117 | 1085 | |
| | 1994.03-2002.04 | MT | F | R | Bus FWD RFW (XU10J2) | Payload:1000/1400kg,Trans. code:MG | GDS10036 | Drive Shaft | 54T | 28 | 41 | 63 | 112.5 | 1079 | |
| | 1994.03-2002.04 | MT | F | R | Bus FWD RFW (XU10J2) | Payload:1800kg,Trans. code:MG | GDS10066 | Drive Shaft | | 35 | 41 | 70 | 117 | 1085 | |
| | 1994.03-2002.04 | MT | F | R | Bus FWD RFW (XU10J2) | Payload:1000/1400kg,Trans. code:ME/ML | GDS10069 | Drive Shaft | | 28 | 37 | 63 | 112.5 | 1072 | |
| | 1994.03-2002.04 | MT | F | R | Bus FWD RFW (XU10J2) | Payload:1000/1400kg,Trans. code:MG | GDS10103 | Drive Shaft | | 28 | 41 | 63 | 112.5 | 1079 | |
| | 1994.03-2002.04 | MT | F | R | Bus FWD RFW (XU10J2) | Payload:1000/1400kg,Trans. code:ME/ML | GDS10104 | Drive Shaft | 54T | 28 | 37 | 63 | 112.5 | 1072 | |
| | 1994.03-2002.04 | MT | F | L/R | Bus FWD RFW (XU10J2) | Payload:1800kg,Trans. code:MG | GCO10011 | Outer Joint | 54T | 35 | 45 | 70 | 117 | 73 | I |
| | 1994.03-2002.04 | MT | F | L/R | Bus FWD RFW (XU10J2) | Payload:1000/1400kg,Trans. code:ME/ML/MG | GCO10012 | Outer Joint | | 28 | 39 | 63 | 112.5 | 63 | I |
| | 1994.03-2002.04 | MT | F | L/R | Bus FWD RFW (XU10J2) | Payload:1000/1400kg,Trans. code:ME/ML/MG | GCO10013 | Outer Joint | 54T | 28 | 39 | 63 | 112.5 | 63 | I |
| | 1994.03-2002.04 | MT | F | L/R | Bus FWD RFW (XU10J2) | Payload:1800kg,Trans. code:MG | GCO10050 | Outer Joint | | 35 | 45 | 70 | 117 | 73 | I |
| | 1994.03-2002.04 | MT | F | L | Bus FWD RFW (XU10J2) | Payload:1800kg,Trans. code:MG | GCI10010 | Inner Joint | | 41 | 45 | 43 | 70 | 115.5 | |
| | 1994.03-2002.04 | MT | F | L | Bus FWD RFW (XU10J2) | Payload:1000/1400kg,Trans. code:MG | GCI10013 | Inner Joint | | 41 | 39 | 43 | 70 | 104 | |
| | 1994.03-2002.04 | MT | F | L | Bus FWD RFW (XU10J2) | Payload:1000/1400kg,Trans. code:ME/ML | GCI10015 | Inner Joint | | 37 | 39 | 40 | 68.5 | 104 | |
| | 1994.03-2002.04 | MT | F | L | Bus FWD RFW (XU10J2) | Payload:1000/1400kg,Trans. code:ME/ML | GCI45013 | Inner Joint | | 37 | 39 | 40 | 68.5 | 100 | |
| | 1994.03-2002.04 | MT | F | R | Bus FWD RFW (XU10J2) | Payload:1800kg,Trans. code:MG | GCI10009 | Inner Joint | | 41 | 45 | 34.9 | 393 | 115.6 | |
| | 1994.03-2002.04 | MT | F | R | Bus FWD RFW (XU10J2) | Payload:1000/1400kg,Trans. code:ME/ML | GCI10034 | Inner Joint | | 37 | 39 | 31.9 | 369.5 | 99 | |
| | 1994.06-2002.04 | MT | F | L | Platform/Chassis FWD RFW (XU10J2) | Payload:1800kg,Trans. code:MG | GDS10033 | Drive Shaft | 54T | 35 | 41 | 70 | 117 | 762 | |
| | 1994.06-2002.04 | MT | F | L | Platform/Chassis FWD RFW (XU10J2) | Payload:1000/1400kg,Trans. code:MG | GDS10035 | Drive Shaft | 54T | 28 | 41 | 63 | 112.5 | 757.5 | |
| | 1994.06-2002.04 | MT | F | L | Platform/Chassis FWD RFW (XU10J2) | Payload:1000/1400kg,Trans. code:ME/ML | GDS10037 | Drive Shaft | 54T | 28 | 37 | 63 | 112.5 | 771 | |
| | 1994.06-2002.04 | MT | F | L | Platform/Chassis FWD RFW (XU10J2) | Payload:1800kg,Trans. code:MG | GDS10067 | Drive Shaft | | 35 | 41 | 70 | 117 | 762 | |
| | 1994.06-2002.04 | MT | F | L | Platform/Chassis FWD RFW (XU10J2) | Payload:1000/1400kg,Trans. code:MG | GDS10102 | Drive Shaft | | 28 | 41 | 63 | 112.5 | 757.5 | |
| | 1994.06-2002.04 | MT | F | L | Platform/Chassis FWD RFW (XU10J2) | Payload:1000/1400kg,Trans. code:ME/ML | GDS10105 | Drive Shaft | | 28 | 37 | 63 | 112.5 | 771 | |
| | 1994.06-2002.04 | MT | F | R | Platform/Chassis FWD RFW (XU10J2) | Payload:1800kg,Trans. code:MG | GDS10032 | Drive Shaft | 54T | 35 | 41 | 70 | 117 | 1085 | |
| | 1994.06-2002.04 | MT | F | R | Platform/Chassis FWD RFW (XU10J2) | Payload:1000/1400kg,Trans. code:MG | GDS10036 | Drive Shaft | 54T | 28 | 41 | 63 | 112.5 | 1079 | |
| | 1994.06-2002.04 | MT | F | R | Platform/Chassis FWD RFW (XU10J2) | Payload:1800kg,Trans. code:MG | GDS10066 | Drive Shaft | | 35 | 41 | 70 | 117 | 1085 | |
| | 1994.06-2002.04 | MT | F | R | Platform/Chassis FWD RFW (XU10J2) | Payload:1000/1400kg,Trans. code:ME/ML | GDS10069 | Drive Shaft | | 28 | 37 | 63 | 112.5 | 1072 | |
| | 1994.06-2002.04 | MT | F | R | Platform/Chassis FWD RFW (XU10J2) | Payload:1000/1400kg,Trans. code:MG | GDS10103 | Drive Shaft | | 28 | 41 | 63 | 112.5 | 1079 | |
| | 1994.06-2002.04 | MT | F | R | Platform/Chassis FWD RFW (XU10J2) | Payload:1000/1400kg,Trans. code:ME/ML | GDS10104 | Drive Shaft | 54T | 28 | 37 | 63 | 112.5 | 1072 | |
| | 1994.06-2002.04 | MT | F | L/R | Platform/Chassis FWD RFW (XU10J2) | Payload:1800kg,Trans. code:MG | GCO10011 | Outer Joint | 54T | 35 | 45 | 70 | 117 | 73 | I |
| | 1994.06-2002.04 | MT | F | L/R | Platform/Chassis FWD RFW (XU10J2) | Payload:1000/1400kg,Trans. code:ME/ML/MG | GCO10012 | Outer Joint | | 28 | 39 | 63 | 112.5 | 63 | I |
| | 1994.06-2002.04 | MT | F | L/R | Platform/Chassis FWD RFW (XU10J2) | Payload:1000/1400kg,Trans. code:ME/ML/MG | GCO10013 | Outer Joint | 54T | 28 | 39 | 63 | 112.5 | 63 | I |
| | 1994.06-2002.04 | MT | F | L/R | Platform/Chassis FWD RFW (XU10J2) | Payload:1800kg,Trans. code:MG | GCO10050 | Outer Joint | | 35 | 45 | 70 | 117 | 73 | I |
| | 1994.06-2002.04 | MT | F | L | Platform/Chassis FWD RFW (XU10J2) | Payload:1800kg,Trans. code:MG | GCI10010 | Inner Joint | | 41 | 45 | 43 | 70 | 115.5 | |
| | 1994.06-2002.04 | MT | F | L | Platform/Chassis FWD RFW (XU10J2) | Payload:1000/1400kg,Trans. code:MG | GCI10013 | Inner Joint | | 41 | 39 | 43 | 70 | 104 | |
| | 1994.06-2002.04 | MT | F | L | Platform/Chassis FWD RFW (XU10J2) | Payload:1000/1400kg,Trans. code:ME/ML | GCI10015 | Inner Joint | | 37 | 39 | 40 | 68.5 | 104 | |
| | 1994.06-2002.04 | MT | F | L | Platform/Chassis FWD RFW (XU10J2) | Payload:1000/1400kg,Trans. code:ME/ML | GCI45013 | Inner Joint | | 37 | 39 | 40 | 68.5 | 100 | |
| | 1994.06-2002.04 | MT | F | R | Platform/Chassis FWD RFW (XU10J2) | Payload:1800kg,Trans. code:MG | GCI10009 | Inner Joint | | 41 | 45 | 34.9 | 393 | 115.6 | |
| | 1994.06-2002.04 | MT | F | R | Platform/Chassis FWD RFW (XU10J2) | Payload:1000/1400kg,Trans. code:ME/ML | GCI10034 | Inner Joint | | 37 | 39 | 31.9 | 369.5 | 99 | |
| | 1994.06-2002.04 | MT | F | L | Van FWD RFW (XU10J2) | Payload:1800kg,Trans. code:MG | GDS10033 | Drive Shaft | 54T | 35 | 41 | 70 | 117 | 762 | |
| | 1994.06-2002.04 | MT | F | L | Van FWD RFW (XU10J2) | Payload:1000/1400kg,Trans. code:MG | GDS10035 | Drive Shaft | 54T | 28 | 41 | 63 | 112.5 | 757.5 | |
| | 1994.06-2002.04 | MT | F | L | Van FWD RFW (XU10J2) | Payload:1000/1400kg,Trans. code:ME/ML | GDS10037 | Drive Shaft | 54T | 28 | 37 | 63 | 112.5 | 771 | |
| | 1994.06-2002.04 | MT | F | L | Van FWD RFW (XU10J2) | Payload:1800kg,Trans. code:MG | GDS10067 | Drive Shaft | | 35 | 41 | 70 | 117 | 762 | |
| | 1994.06-2002.04 | MT | F | L | Van FWD RFW (XU10J2) | Payload:1000/1400kg,Trans. code:MG | GDS10102 | Drive Shaft | | 28 | 41 | 63 | 112.5 | 757.5 | |
| | 1994.06-2002.04 | MT | F | L | Van FWD RFW (XU10J2) | Payload:1000/1400kg,Trans. code:ME/ML | GDS10105 | Drive Shaft | | 28 | 37 | 63 | 112.5 | 771 | |
| | 1994.06-2002.04 | MT | F | R | Van FWD RFW (XU10J2) | Payload:1800kg,Trans. code:MG | GDS10032 | Drive Shaft | 54T | 35 | 41 | 70 | 117 | 1085 | |
| | 1994.06-2002.04 | MT | F | R | Van FWD RFW (XU10J2) | Payload:1000/1400kg,Trans. code:MG | GDS10036 | Drive Shaft | 54T | 28 | 41 | 63 | 112.5 | 1079 | |
| | 1994.06-2002.04 | MT | F | R | Van FWD RFW (XU10J2) | Payload:1800kg,Trans. code:MG | GDS10066 | Drive Shaft | | 35 | 41 | 70 | 117 | 1085 | |
| | 1994.06-2002.04 | MT | F | R | Van FWD RFW (XU10J2) | Payload:1000/1400kg,Trans. code:ME/ML | GDS10069 | Drive Shaft | | 28 | 37 | 63 | 112.5 | 1072 | |
| | 1994.06-2002.04 | MT | F | R | Van FWD RFW (XU10J2) | Payload:1000/1400kg,Trans. code:MG | GDS10103 | Drive Shaft | | 28 | 41 | 63 | 112.5 | 1079 | |
| | 1994.06-2002.04 | MT | F | R | Van FWD RFW (XU10J2) | Payload:1000/1400kg,Trans. code:ME/ML | GDS10104 | Drive Shaft | 54T | 28 | 37 | 63 | 112.5 | 1072 | |
| | 1994.06-2002.04 | MT | F | L/R | Van FWD RFW (XU10J2) | Payload:1800kg,Trans. code:MG | GCO10011 | Outer Joint | 54T | 35 | 45 | 70 | 117 | 73 | I |
| | 1994.06-2002.04 | MT | F | L/R | Van FWD RFW (XU10J2) | Payload:1000/1400kg,Trans. code:ME/ML/MG | GCO10012 | Outer Joint | | 28 | 39 | 63 | 112.5 | 63 | I |
| | 1994.06-2002.04 | MT | F | L/R | Van FWD RFW (XU10J2) | Payload:1000/1400kg,Trans. code:ME/ML/MG | GCO10013 | Outer Joint | 54T | 28 | 39 | 63 | 112.5 | 63 | I |

| | YEAR | TRANSM. | F/R | L/R | BODY STYLE & DRIVE TYPE & ENGINE | REMARKS | G-AP Ref. | PRODUCT | ABS | Technical Specifications A | B | C | H | L | P |
|---|---|---|---|---|---|---|---|---|---|---|---|---|---|---|---|
| **PEUGEOT** **Boxer** | | | | | | | | | | | | | | | |
| 2.0 (80 kw) | 1994.06-2002.04 | MT | F | L/R | Van FWD RFW (XU10J2) | Payload:1800kg,Trans. code:MG | GCO10050 | Outer Joint | | 35 | 45 | 70 | 117 | 73 | I |
| | 1994.06-2002.04 | MT | F | L | Van FWD RFW (XU10J2) | Payload:1800kg,Trans. code:MG | GCI10010 | Inner Joint | | 41 | 45 | 43 | 70 | 115.5 | |
| | 1994.06-2002.04 | MT | F | L | Van FWD RFW (XU10J2) | Payload:1000/1400kg,Trans. code:MG | GCI10013 | Inner Joint | | 41 | 39 | 43 | 70 | 104 | |
| | 1994.06-2002.04 | MT | F | L | Van FWD RFW (XU10J2) | Payload:1000/1400kg,Trans. code:ME/ML | GCI10015 | Inner Joint | | 37 | 39 | 40 | 68.5 | 104 | |
| | 1994.06-2002.04 | MT | F | L | Van FWD RFW (XU10J2) | Payload:1000/1400kg,Trans. code:ME/ML | GCI45013 | Inner Joint | | 37 | 39 | 40 | 68.5 | 100 | |
| | 1994.06-2002.04 | MT | F | R | Van FWD RFW (XU10J2) | Payload:1800kg,Trans. code:MG | GCI10009 | Inner Joint | | 41 | 45 | 34.9 | 393 | 115.6 | |
| | 1994.06-2002.04 | MT | F | R | Van FWD RFW (XU10J2) | Payload:1000/1400kg,Trans. code:ME/ML | GCI10034 | Inner Joint | | 37 | 39 | 31.9 | 369.5 | 99 | |
| | 1996.08-2002.04 | MT | F | L | Bus 4WD RFW (XU10J2) | Payload:1800kg,Trans. code:MG | GDS10033 | Drive Shaft | 54T | 35 | 41 | 70 | 117 | 762 | |
| | 1996.08-2002.04 | MT | F | L | Bus 4WD RFW (XU10J2) | Payload:1000/1400kg,Trans. code:MG | GDS10035 | Drive Shaft | 54T | 28 | 41 | 63 | 112.5 | 757.5 | |
| | 1996.08-2002.04 | MT | F | L | Bus 4WD RFW (XU10J2) | Payload:1000/1400kg,Trans. code:ME/ML | GDS10037 | Drive Shaft | 54T | 28 | 37 | 63 | 112.5 | 771 | |
| | 1996.08-2002.04 | MT | F | L | Bus 4WD RFW (XU10J2) | Payload:1800kg,Trans. code:MG | GDS10067 | Drive Shaft | | 35 | 41 | 70 | 117 | 762 | |
| | 1996.08-2002.04 | MT | F | L | Bus 4WD RFW (XU10J2) | Payload:1000/1400kg,Trans. code:MG | GDS10102 | Drive Shaft | | 28 | 41 | 63 | 112.5 | 757.5 | |
| | 1996.08-2002.04 | MT | F | L | Bus 4WD RFW (XU10J2) | Payload:1000/1400kg,Trans. code:ME/ML | GDS10105 | Drive Shaft | | 28 | 37 | 63 | 112.5 | 771 | |
| | 1996.08-2002.04 | MT | F | R | Bus 4WD RFW (XU10J2) | Payload:1800kg,Trans. code:MG | GDS10032 | Drive Shaft | 54T | 35 | 41 | 70 | 117 | 1085 | |
| | 1996.08-2002.04 | MT | F | R | Bus 4WD RFW (XU10J2) | Payload:1000/1400kg,Trans. code:MG | GDS10036 | Drive Shaft | 54T | 28 | 41 | 63 | 112.5 | 1079 | |
| | 1996.08-2002.04 | MT | F | R | Bus 4WD RFW (XU10J2) | Payload:1800kg,Trans. code:MG | GDS10066 | Drive Shaft | | 35 | 41 | 70 | 117 | 1085 | |
| | 1996.08-2002.04 | MT | F | R | Bus 4WD RFW (XU10J2) | Payload:1000/1400kg,Trans. code:ME/ML | GDS10069 | Drive Shaft | | 28 | 37 | 63 | 112.5 | 1072 | |
| | 1996.08-2002.04 | MT | F | R | Bus 4WD RFW (XU10J2) | Payload:1000/1400kg,Trans. code:MG | GDS10103 | Drive Shaft | | 28 | 41 | 63 | 112.5 | 1079 | |
| | 1996.08-2002.04 | MT | F | R | Bus 4WD RFW (XU10J2) | Payload:1000/1400kg,Trans. code:ME/ML | GDS10104 | Drive Shaft | 54T | 28 | 37 | 63 | 112.5 | 1072 | |
| | 1996.08-2002.04 | MT | F | L/R | Bus 4WD RFW (XU10J2) | Payload:1800kg,Trans. code:MG | GCO10011 | Outer Joint | 54T | 35 | 45 | 70 | 117 | 73 | I |
| | 1996.08-2002.04 | MT | F | L/R | Bus 4WD RFW (XU10J2) | Payload:1000/1400kg,Trans. code:ME/ML/MG | GCO10012 | Outer Joint | | 28 | 39 | 63 | 112.5 | 63 | I |
| | 1996.08-2002.04 | MT | F | L/R | Bus 4WD RFW (XU10J2) | Payload:1000/1400kg,Trans. code:ME/ML/MG | GCO10013 | Outer Joint | 54T | 28 | 39 | 63 | 112.5 | 63 | I |
| | 1996.08-2002.04 | MT | F | L/R | Bus 4WD RFW (XU10J2) | Payload:1800kg,Trans. code:MG | GCO10050 | Outer Joint | | 35 | 45 | 70 | 117 | 73 | I |
| | 1996.08-2002.04 | MT | F | L | Bus 4WD RFW (XU10J2) | Payload:1800kg,Trans. code:MG | GCI10010 | Inner Joint | | 41 | 45 | 43 | 70 | 115.5 | |
| | 1996.08-2002.04 | MT | F | L | Bus 4WD RFW (XU10J2) | Payload:1000/1400kg,Trans. code:MG | GCI10013 | Inner Joint | | 41 | 39 | 43 | 70 | 104 | |
| | 1996.08-2002.04 | MT | F | L | Bus 4WD RFW (XU10J2) | Payload:1000/1400kg,Trans. code:ME/ML | GCI10015 | Inner Joint | | 37 | 39 | 40 | 68.5 | 104 | |
| | 1996.08-2002.04 | MT | F | L | Bus 4WD RFW (XU10J2) | Payload:1000/1400kg,Trans. code:ME/ML | GCI45013 | Inner Joint | | 37 | 39 | 40 | 68.5 | 100 | |
| | 1996.08-2002.04 | MT | F | R | Bus 4WD RFW (XU10J2) | Payload:1800kg,Trans. code:MG | GCI10009 | Inner Joint | | 41 | 45 | 34.9 | 393 | 115.6 | |
| | 1996.08-2002.04 | MT | F | R | Bus 4WD RFW (XU10J2) | Payload:1000/1400kg,Trans. code:ME/ML | GCI10034 | Inner Joint | | 37 | 39 | 31.9 | 369.5 | 99 | |
| 2.0 (81 kw) | 2001.12-2002.04 | MT | F | L | Platform/Chassis FWD RFL (XU10J2U) | Gross Vehicle W:3500 | GDS10033 | Drive Shaft | 54T | 35 | 41 | 70 | 117 | 762 | |
| | 2001.12-2002.04 | MT | F | L | Platform/Chassis FWD RFL (XU10J2U) | Gross Vehicle W:2900/3300 | GDS10035 | Drive Shaft | 54T | 28 | 41 | 63 | 112.5 | 757.5 | |
| | 2001.12-2002.04 | MT | F | R | Platform/Chassis FWD RFL (XU10J2U) | Gross Vehicle W:3500 | GDS10032 | Drive Shaft | 54T | 35 | 41 | 70 | 117 | 1085 | |
| | 2001.12-2002.04 | MT | F | R | Platform/Chassis FWD RFL (XU10J2U) | Gross Vehicle W:2900/3300 | GDS10036 | Drive Shaft | 54T | 28 | 41 | 63 | 112.5 | 1079 | |
| | 2001.12-2002.04 | MT | F | R | Platform/Chassis FWD RFL (XU10J2U) | Payload [kg]:1800 | GDS10066 | Drive Shaft | | 35 | 41 | 70 | 117 | 1085 | |
| | 2001.12-2002.04 | MT | F | L/R | Platform/Chassis FWD RFL (XU10J2U) | Gross Vehicle W:3500 | GCO10011 | Outer Joint | 54T | 35 | 45 | 70 | 117 | 73 | I |
| | 2001.12-2002.04 | MT | F | L/R | Platform/Chassis FWD RFL (XU10J2U) | Gross Vehicle W:2900/3300 | GCO10013 | Outer Joint | 54T | 28 | 39 | 63 | 112.5 | 63 | I |
| | 2001.12-2002.04 | MT | F | R | Platform/Chassis FWD RFL (XU10J2U) | Gross Vehicle W:3500 | GCI10009 | Inner Joint | | 41 | 45 | 34.9 | 393 | 115.6 | |
| | 2001.12-2006.06 | 5MT | F | L | Bus FWD | Payload [kg]:1800 | GDS10033 | Drive Shaft | 54T | 35 | 41 | 70 | 117 | 762 | |
| | 2001.12-2006.06 | 5MT | F | L | Bus FWD | Payload [kg]:1000/1400 | GDS10035 | Drive Shaft | 54T | 28 | 41 | 63 | 112.5 | 757.5 | |
| | 2001.12-2006.06 | 5MT | F | R | Bus FWD | Payload [kg]:1000/1400 | GDS10036 | Drive Shaft | 54T | 28 | 41 | 63 | 112.5 | 1079 | |
| | 2001.12-2006.06 | 5MT | F | L/R | Bus FWD | | GCO10013 | Outer Joint | 54T | 28 | 39 | 63 | 112.5 | 63 | I |
| | 2001.12-2006.06 | 5MT | F | L | Bus FWD | | GCI10013 | Inner Joint | | 41 | 39 | 43 | 70 | 104 | |
| | 2001.12-2006.06 | MT | F | R | Bus FWD | Payload [kg]:1800 | GDS10032 | Drive Shaft | 54T | 35 | 41 | 70 | 117 | 1085 | |
| | 2001.12-2006.06 | MT | F | R | Bus FWD | Payload [kg]:1800 | GDS10066 | Drive Shaft | | 35 | 41 | 70 | 117 | 1085 | |
| | 2001.12-2006.06 | 5MT | F | L | Bus FWD RFL (XU10J2U) | Gross Vehicle:3500 | GDS10033 | Drive Shaft | 54T | 35 | 41 | 70 | 117 | 762 | |
| | 2001.12-2006.06 | 5MT | F | L | Bus FWD RFL (XU10J2U) | Gross Vehicle:2900/3300 | GDS10035 | Drive Shaft | 54T | 28 | 41 | 63 | 112.5 | 757.5 | |
| | 2001.12-2006.06 | 5MT | F | R | Bus FWD RFL (XU10J2U) | Gross Vehicle:3500 | GDS10032 | Drive Shaft | 54T | 35 | 41 | 70 | 117 | 1085 | |
| | 2001.12-2006.06 | 5MT | F | R | Bus FWD RFL (XU10J2U) | Gross Vehicle:2900/3300 | GDS10036 | Drive Shaft | 54T | 28 | 41 | 63 | 112.5 | 1079 | |
| | 2001.12-2006.06 | 5MT | F | L/R | Bus FWD RFL (XU10J2U) | Gross Vehicle:3500 | GCO10011 | Outer Joint | 54T | 35 | 45 | 70 | 117 | 73 | I |
| | 2001.12-2006.06 | 5MT | F | L/R | Bus FWD RFL (XU10J2U) | Gross Vehicle:2900/3300 | GCO10013 | Outer Joint | 54T | 28 | 39 | 63 | 112.5 | 63 | I |
| | 2001.12-2006.06 | 5MT | F | L | Bus FWD RFL (XU10J2U) | Gross Vehicle:3500 | GCI10010 | Inner Joint | | 41 | 45 | 43 | 70 | 115.5 | |
| | 2001.12-2006.06 | 5MT | F | L | Bus FWD RFL (XU10J2U) | Gross Vehicle:2900/3300 | GCI10013 | Inner Joint | | 41 | 39 | 43 | 70 | 104 | |
| | 2001.12-2006.06 | 5MT | F | R | Bus FWD RFL (XU10J2U) | Gross Vehicle:3500 | GCI10009 | Inner Joint | | 41 | 45 | 34.9 | 393 | 115.6 | |
| | 2001.12-2006.06 | 5MT | F | L | Platform/Chassis FWD | Payload [kg]:1800 | GDS10033 | Drive Shaft | 54T | 35 | 41 | 70 | 117 | 762 | |
| | 2001.12-2006.06 | 5MT | F | L | Platform/Chassis FWD | Payload [kg]:1000/1400 | GDS10035 | Drive Shaft | 54T | 28 | 41 | 63 | 112.5 | 757.5 | |
| | 2001.12-2006.06 | MT | F | R | Platform/Chassis FWD | Payload [kg]:1800 | GDS10032 | Drive Shaft | 54T | 35 | 41 | 70 | 117 | 1085 | |
| | 2001.12-2006.06 | MT | F | R | Platform/Chassis FWD | Payload [kg]:1800 | GDS10066 | Drive Shaft | | 35 | 41 | 70 | 117 | 1085 | |
| | 2001.12-2006.06 | 5MT | F | L | Van FWD | Payload [kg]:1800 | GDS10033 | Drive Shaft | 54T | 35 | 41 | 70 | 117 | 762 | |
| | 2001.12-2006.06 | 5MT | F | L | Van FWD | Payload [kg]:1000/1400 | GDS10035 | Drive Shaft | 54T | 28 | 41 | 63 | 112.5 | 757.5 | |
| | 2001.12-2006.06 | 5MT | F | R | Van FWD | Payload [kg]:1000/1400 | GDS10036 | Drive Shaft | 54T | 28 | 41 | 63 | 112.5 | 1079 | |
| | 2001.12-2006.06 | 5MT | F | L/R | Van FWD | | GCO10013 | Outer Joint | 54T | 28 | 39 | 63 | 112.5 | 63 | I |
| | 2001.12-2006.06 | 5MT | F | L | Van FWD | | GCI10013 | Inner Joint | | 41 | 39 | 43 | 70 | 104 | |
| | 2001.12-2006.06 | MT | F | R | Van FWD | Payload [kg]:1800 | GDS10032 | Drive Shaft | 54T | 35 | 41 | 70 | 117 | 1085 | |
| | 2001.12-2006.06 | MT | F | R | Van FWD | Payload [kg]:1800 | GDS10066 | Drive Shaft | | 35 | 41 | 70 | 117 | 1085 | |
| | 2001.12-2006.06 | 5MT | F | L | Van FWD RFL (XU10J2U) | Gross Vehicle:3500 | GDS10033 | Drive Shaft | 54T | 35 | 41 | 70 | 117 | 762 | |

| | YEAR | TRANSM. | F/R | L/R | BODY STYLE & DRIVE TYPE & ENGINE | REMARKS | G-AP Ref. | PRODUCT | ABS | Technical Specifications A | B | C | H | L | P |
|---|---|---|---|---|---|---|---|---|---|---|---|---|---|---|---|
| **PEUGEOT** **Boxer** | | | | | | | | | | | | | | | |
| 2.0 (81 kw) | 2001.12-2006.06 | 5MT | F | L | Van FWD RFL (XU10J2U) | Gross Vehicle:2900/3300 | GDS10035 | Drive Shaft | 54T | 28 | 41 | 63 | 112.5 | 757.5 | |
| | 2001.12-2006.06 | 5MT | F | R | Van FWD RFL (XU10J2U) | Gross Vehicle:3500 | GDS10032 | Drive Shaft | 54T | 35 | 41 | 70 | 117 | 1085 | |
| | 2001.12-2006.06 | 5MT | F | R | Van FWD RFL (XU10J2U) | Gross Vehicle:2900/3300 | GDS10036 | Drive Shaft | 54T | 28 | 41 | 63 | 112.5 | 1079 | |
| | 2001.12-2006.06 | 5MT | F | L/R | Van FWD RFL (XU10J2U) | Gross Vehicle:3500 | GCO10011 | Outer Joint | 54T | 35 | 45 | 70 | 117 | 73 | I |
| | 2001.12-2006.06 | 5MT | F | L/R | Van FWD RFL (XU10J2U) | Gross Vehicle:2900/3300 | GCO10013 | Outer Joint | 54T | 28 | 39 | 63 | 112.5 | 63 | I |
| | 2001.12-2006.06 | 5MT | F | L | Van FWD RFL (XU10J2U) | Gross Vehicle:3500 | GCI10010 | Inner Joint | | 41 | 45 | 43 | 70 | 115.5 | |
| | 2001.12-2006.06 | 5MT | F | L | Van FWD RFL (XU10J2U) | Gross Vehicle:2900/3300 | GCI10013 | Inner Joint | | 41 | 39 | 43 | 70 | 104 | |
| | 2001.12-2006.06 | 5MT | F | R | Van FWD RFL (XU10J2U) | Gross Vehicle:3500 | GCI10009 | Inner Joint | | 41 | 45 | 34.9 | 393 | 115.6 | |
| | 2015.07-2019.09 | 6MT | F | L | Bus FWD AHM (DW10FUE) | | GDS83907 | Drive Shaft | | 35 | 41 | 71.5 | 127 | 822 | |
| | 2015.07-2019.09 | 6MT | F | R | Bus FWD AHM (DW10FUE) | | GDS83906 | Drive Shaft | | 35 | 41 | 71.5 | 127 | 1125 | |
| | 2015.07-2019.09 | 6MT | F | L/R | Bus FWD AHM (DW10FUE) | | GCO17045 | Outer Joint | | 35 | 29 | 71.5 | 127 | 71 | M |
| | 2015.07-2019.09 | 6MT | F | L | Bus FWD AHM (DW10FUE) | | GCI17028 | Inner Joint | | 41 | 29 | 43 | 69.5 | 109.5 | |
| | 2015.07-2019.09 | 6MT | F | R | Bus FWD AHM (DW10FUE) | | GCI82445 | Inner Joint | | 41 | 29 | 34.85 | 372 | 110 | |
| | 2016.03-2019.09 | 6MT | F | L | Platform/Chassis FWD AHM (DW10FUE) | | GDS83907 | Drive Shaft | | 35 | 41 | 71.5 | 127 | 822 | |
| | 2016.03-2019.09 | 6MT | F | R | Platform/Chassis FWD AHM (DW10FUE) | | GDS83906 | Drive Shaft | | 35 | 41 | 71.5 | 127 | 1125 | |
| | 2016.03-2019.09 | 6MT | F | L/R | Platform/Chassis FWD AHM (DW10FUE) | | GCO17045 | Outer Joint | | 35 | 29 | 71.5 | 127 | 71 | M |
| | 2016.03-2019.09 | 6MT | F | L | Platform/Chassis FWD AHM (DW10FUE) | | GCI17028 | Inner Joint | | 41 | 29 | 43 | 69.5 | 109.5 | |
| | 2016.03-2019.09 | 6MT | F | R | Platform/Chassis FWD AHM (DW10FUE) | | GCI82445 | Inner Joint | | 41 | 29 | 34.85 | 372 | 110 | |
| | 2016.03-2019.09 | 6MT | F | L | Van FWD AHM (DW10FUE) | | GDS83907 | Drive Shaft | | 35 | 41 | 71.5 | 127 | 822 | |
| | 2016.03-2019.09 | 6MT | F | R | Van FWD AHM (DW10FUE) | | GDS83906 | Drive Shaft | | 35 | 41 | 71.5 | 127 | 1125 | |
| | 2016.03-2019.09 | 6MT | F | L/R | Van FWD AHM (DW10FUE) | | GCO17045 | Outer Joint | | 35 | 29 | 71.5 | 127 | 71 | M |
| | 2016.03-2019.09 | 6MT | F | L | Van FWD AHM (DW10FUE) | | GCI17028 | Inner Joint | | 41 | 29 | 43 | 69.5 | 109.5 | |
| | 2016.03-2019.09 | 6MT | F | R | Van FWD AHM (DW10FUE) | | GCI82445 | Inner Joint | | 41 | 29 | 34.85 | 372 | 110 | |
| 2.0 (96 kw) | 2015.07-2019.09 | 6MT | F | L | Bus FWD AHN (DW10FUD) | | GDS83907 | Drive Shaft | | 35 | 41 | 71.5 | 127 | 822 | |
| | 2015.07-2019.09 | 6MT | F | R | Bus FWD AHN (DW10FUD) | | GDS83906 | Drive Shaft | | 35 | 41 | 71.5 | 127 | 1125 | |
| | 2015.07-2019.09 | 6MT | F | L/R | Bus FWD AHN (DW10FUD) | | GCO17045 | Outer Joint | | 35 | 29 | 71.5 | 127 | 71 | M |
| | 2015.07-2019.09 | 6MT | F | L | Bus FWD AHN (DW10FUD) | | GCI17028 | Inner Joint | | 41 | 29 | 43 | 69.5 | 109.5 | |
| | 2015.07-2019.09 | 6MT | F | R | Bus FWD AHN (DW10FUD) | | GCI82445 | Inner Joint | | 41 | 29 | 34.85 | 372 | 110 | |
| | 2016.03-2019.09 | 6MT | F | L | Platform/Chassis FWD AHN (DW10FUD) | | GDS83907 | Drive Shaft | | 35 | 41 | 71.5 | 127 | 822 | |
| | 2016.03-2019.09 | 6MT | F | R | Platform/Chassis FWD AHN (DW10FUD) | | GDS83906 | Drive Shaft | | 35 | 41 | 71.5 | 127 | 1125 | |
| | 2016.03-2019.09 | 6MT | F | L/R | Platform/Chassis FWD AHN (DW10FUD) | | GCO17045 | Outer Joint | | 35 | 29 | 71.5 | 127 | 71 | M |
| | 2016.03-2019.09 | 6MT | F | L | Platform/Chassis FWD AHN (DW10FUD) | | GCI17028 | Inner Joint | | 41 | 29 | 43 | 69.5 | 109.5 | |
| | 2016.03-2019.09 | 6MT | F | R | Platform/Chassis FWD AHN (DW10FUD) | | GCI82445 | Inner Joint | | 41 | 29 | 34.85 | 372 | 110 | |
| | 2016.03-2019.09 | 6MT | F | L | Van FWD AHN (DW10FUD) | | GDS83907 | Drive Shaft | | 35 | 41 | 71.5 | 127 | 822 | |
| | 2016.03-2019.09 | 6MT | F | R | Van FWD AHN (DW10FUD) | | GDS83906 | Drive Shaft | | 35 | 41 | 71.5 | 127 | 1125 | |
| | 2016.03-2019.09 | 6MT | F | L/R | Van FWD AHN (DW10FUD) | | GCO17045 | Outer Joint | | 35 | 29 | 71.5 | 127 | 71 | M |
| | 2016.03-2019.09 | 6MT | F | L | Van FWD AHN (DW10FUD) | | GCI17028 | Inner Joint | | 41 | 29 | 43 | 69.5 | 109.5 | |
| | 2016.03-2019.09 | 6MT | F | R | Van FWD AHN (DW10FUD) | | GCI82445 | Inner Joint | | 41 | 29 | 34.85 | 372 | 110 | |
| | 2016.03-2019.09 | 6MT | F | R | Van FWD DW10FUD | | GCI82445 | Inner Joint | | 41 | 29 | 34.85 | 372 | 110 | |
| | 2016.03-2019.09 | | F | L | Van FWD DW10FUD | | GDS83907 | Drive Shaft | | 35 | 41 | 71.5 | 127 | 822 | |
| | 2016.03-2019.09 | | F | R | Van FWD DW10FUD | | GDS83906 | Drive Shaft | | 35 | 41 | 71.5 | 127 | 1125 | |
| 2.0 (120 kw) | 2015.07-2019.09 | 6MT | F | L | Bus FWD AHP (DW10FUC) | | GDS56467 | Drive Shaft | | 35 | 41 | 71.5 | 127 | 824 | |
| | 2015.07-2019.09 | 6MT | F | R | Bus FWD AHP (DW10FUC) | | GDS57538 | Drive Shaft | | 35 | 41 | 71.5 | 127 | 1127 | |
| | 2015.07-2019.09 | 6MT | F | L/R | Bus FWD AHP (DW10FUC) | | GCO17060 | Outer Joint | | 35 | 29 | 71.5 | 127 | 71 | I |
| | 2015.07-2019.09 | 6MT | F | L | Bus FWD AHP (DW10FUC) | | GCI17028 | Inner Joint | | 41 | 29 | 43 | 69.5 | 109.5 | |
| | 2016.03-2023.12 | 6MT | F | L | Platform/Chassis FWD AHP (DW10FUC) | | GDS56467 | Drive Shaft | | 35 | 41 | 71.5 | 127 | 824 | |
| | 2016.03-2023.12 | 6MT | F | R | Platform/Chassis FWD AHP (DW10FUC) | | GDS57538 | Drive Shaft | | 35 | 41 | 71.5 | 127 | 1127 | |
| | 2016.03-2023.12 | 6MT | F | L/R | Platform/Chassis FWD AHP (DW10FUC) | | GCO17060 | Outer Joint | | 35 | 29 | 71.5 | 127 | 71 | I |
| | 2016.03-2023.12 | 6MT | F | L | Platform/Chassis FWD AHP (DW10FUC) | | GCI17028 | Inner Joint | | 41 | 29 | 43 | 69.5 | 109.5 | |
| | 2016.03-2023.12 | 6MT | F | L | Van FWD AHP (DW10FUC) | | GDS56467 | Drive Shaft | | 35 | 41 | 71.5 | 127 | 824 | |
| | 2016.03-2023.12 | 6MT | F | R | Van FWD AHP (DW10FUC) | | GDS57538 | Drive Shaft | | 35 | 41 | 71.5 | 127 | 1127 | |
| | 2016.03-2023.12 | 6MT | F | L/R | Van FWD AHP (DW10FUC) | | GCO17060 | Outer Joint | | 35 | 29 | 71.5 | 127 | 71 | I |
| | 2016.03-2023.12 | 6MT | F | L | Van FWD AHP (DW10FUC) | | GCI17028 | Inner Joint | | 41 | 29 | 43 | 69.5 | 109.5 | |
| 2.2 (74 kw) | 2001.12-2006.06 | 5MT | F | L | Bus FWD 4HY (DW12UTED) | Gross Vehicle:3500 | GDS10033 | Drive Shaft | 54T | 35 | 41 | 70 | 117 | 762 | |
| | 2001.12-2006.06 | 5MT | F | L | Bus FWD 4HY (DW12UTED) | Gross Vehicle:2900/3300 | GDS10035 | Drive Shaft | 54T | 28 | 41 | 63 | 112.5 | 757.5 | |
| | 2001.12-2006.06 | 5MT | F | R | Bus FWD 4HY (DW12UTED) | Gross Vehicle:3500 | GDS10032 | Drive Shaft | 54T | 35 | 41 | 70 | 117 | 1085 | |
| | 2001.12-2006.06 | 5MT | F | R | Bus FWD 4HY (DW12UTED) | Gross Vehicle:2900/3300 | GDS10036 | Drive Shaft | 54T | 28 | 41 | 63 | 112.5 | 1079 | |
| | 2001.12-2006.06 | 5MT | F | L/R | Bus FWD 4HY (DW12UTED) | Gross Vehicle:3500 | GCO10011 | Outer Joint | 54T | 35 | 45 | 70 | 117 | 73 | I |
| | 2001.12-2006.06 | 5MT | F | L/R | Bus FWD 4HY (DW12UTED) | Gross Vehicle:2900/3300 | GCO10013 | Outer Joint | 54T | 28 | 39 | 63 | 112.5 | 63 | I |
| | 2001.12-2006.06 | 5MT | F | L | Bus FWD 4HY (DW12UTED) | Gross Vehicle:3500 | GCI10010 | Inner Joint | | 41 | 45 | 43 | 70 | 115.5 | |
| | 2001.12-2006.06 | 5MT | F | L | Bus FWD 4HY (DW12UTED) | Gross Vehicle:2900/3300 | GCI10013 | Inner Joint | | 41 | 39 | 43 | 70 | 104 | |
| | 2001.12-2006.06 | 5MT | F | R | Bus FWD 4HY (DW12UTED) | Gross Vehicle:3500 | GCI10009 | Inner Joint | | 41 | 45 | 34.9 | 393 | 115.6 | |
| | 2001.12-2006.06 | 5MT | F | L | Platform/Chassis FWD 4HY (DW12UTED) | Gross Vehicle:3500 | GDS10033 | Drive Shaft | 54T | 35 | 41 | 70 | 117 | 762 | |
| | 2001.12-2006.06 | 5MT | F | L | Platform/Chassis FWD 4HY (DW12UTED) | Gross Vehicle:2900/3300 | GDS10035 | Drive Shaft | 54T | 28 | 41 | 63 | 112.5 | 757.5 | |
| | 2001.12-2006.06 | 5MT | F | R | Platform/Chassis FWD 4HY (DW12UTED) | Gross Vehicle:3500 | GDS10032 | Drive Shaft | 54T | 35 | 41 | 70 | 117 | 1085 | |

| | YEAR | TRANSM. | F/R | L/R | BODY STYLE & DRIVE TYPE & ENGINE | REMARKS | G-AP Ref. | PRODUCT | ABS | Technical Specifications A | B | C | H | L | P |
|---|---|---|---|---|---|---|---|---|---|---|---|---|---|---|---|
| **PEUGEOT** **Boxer** | | | | | | | | | | | | | | | |
| 2.2 (74 kw) | 2001.12-2006.06 | 5MT | F | R | Platform/Chassis FWD 4HY (DW12UTED) | Gross Vehicle:2900/3300 | GDS10036 | Drive Shaft | 54T | 28 | 41 | 63 | 112.5 | 1079 | |
| | 2001.12-2006.06 | 5MT | F | L/R | Platform/Chassis FWD 4HY (DW12UTED) | Gross Vehicle:3500 | GCO10011 | Outer Joint | 54T | 35 | 45 | 70 | 117 | 73 | I |
| | 2001.12-2006.06 | 5MT | F | L/R | Platform/Chassis FWD 4HY (DW12UTED) | Gross Vehicle:2900/3300 | GCO10013 | Outer Joint | 54T | 28 | 39 | 63 | 112.5 | 63 | I |
| | 2001.12-2006.06 | 5MT | F | L | Platform/Chassis FWD 4HY (DW12UTED) | Gross Vehicle:3500 | GCI10010 | Inner Joint | | 41 | 45 | 43 | 70 | 115.5 | |
| | 2001.12-2006.06 | 5MT | F | L | Platform/Chassis FWD 4HY (DW12UTED) | Gross Vehicle:2900/3300 | GCI10013 | Inner Joint | | 41 | 39 | 43 | 70 | 104 | |
| | 2001.12-2006.06 | 5MT | F | R | Platform/Chassis FWD 4HY (DW12UTED) | Gross Vehicle:3500 | GCI10009 | Inner Joint | | 41 | 45 | 34.9 | 393 | 115.6 | |
| | 2001.12-2006.06 | 5MT | F | L | Van FWD 4HY (DW12UTED) | Gross Vehicle:3500 | GDS10033 | Drive Shaft | 54T | 35 | 41 | 70 | 117 | 762 | |
| | 2001.12-2006.06 | 5MT | F | L | Van FWD 4HY (DW12UTED) | Gross Vehicle:2900/3300 | GDS10035 | Drive Shaft | 54T | 28 | 41 | 63 | 112.5 | 757.5 | |
| | 2001.12-2006.06 | 5MT | F | R | Van FWD 4HY (DW12UTED) | Gross Vehicle:3500 | GDS10032 | Drive Shaft | 54T | 35 | 41 | 70 | 117 | 1085 | |
| | 2001.12-2006.06 | 5MT | F | R | Van FWD 4HY (DW12UTED) | Gross Vehicle:2900/3300 | GDS10036 | Drive Shaft | 54T | 28 | 41 | 63 | 112.5 | 1079 | |
| | 2001.12-2006.06 | 5MT | F | L/R | Van FWD 4HY (DW12UTED) | Gross Vehicle:3500 | GCO10011 | Outer Joint | 54T | 35 | 45 | 70 | 117 | 73 | I |
| | 2001.12-2006.06 | 5MT | F | L/R | Van FWD 4HY (DW12UTED) | Gross Vehicle:2900/3300 | GCO10013 | Outer Joint | 54T | 28 | 39 | 63 | 112.5 | 63 | I |
| | 2001.12-2006.06 | 5MT | F | L | Van FWD 4HY (DW12UTED) | Gross Vehicle:3500 | GCI10010 | Inner Joint | | 41 | 45 | 43 | 70 | 115.5 | |
| | 2001.12-2006.06 | 5MT | F | L | Van FWD 4HY (DW12UTED) | Gross Vehicle:2900/3300 | GCI10013 | Inner Joint | | 41 | 39 | 43 | 70 | 104 | |
| | 2001.12-2006.06 | 5MT | F | R | Van FWD 4HY (DW12UTED) | Gross Vehicle:3500 | GCI10009 | Inner Joint | | 41 | 45 | 34.9 | 393 | 115.6 | |
| | 2006.04-2013.06 | 5MT | F | L | Bus FWD 4HV (P22DTE) | | GDS45176 | Drive Shaft | | 35 | 41 | 71.5 | 127 | 808 | |
| | 2006.04-2013.06 | 5MT | F | R | Bus FWD 4HV (P22DTE) | | GDS17050 | Drive Shaft | | 35 | 41 | 71.5 | 127 | 1140 | |
| | 2006.04-2013.06 | 5MT/6MT | F | L/R | Bus FWD 4HV (P22DTE) | Date from:2007.02;Trans. code:MLGU | GCO17054 | Outer Joint | | 35 | 29 | 71.5 | 127 | 71 | M |
| | 2006.04-2013.06 | 5MT/6MT | F | L/R | Bus FWD 4HV (P22DTE) | Date from:2007.02;Trans. code:MLGU | GCO17055 | Outer Joint | | 35 | 27 | 71.5 | 127 | 66.5 | I |
| | 2006.04-2013.06 | 5MT/6MT | F | L | Bus FWD 4HV (P22DTE) | Date from:2007.02;Trans. code:MLGU | GCI17028 | Inner Joint | | 41 | 29 | 43 | 69.5 | 109.5 | |
| | 2006.04-2013.06 | 5MT/6MT | F | L | Bus FWD 4HV (P22DTE) | Date from:2007.02;Trans. code:MLGU | GCI17042 | Inner Joint | | 41 | 27 | 43 | 70 | 102 | |
| | 2006.04-2013.06 | 5MT/6MT | F | R | Bus FWD 4HV (P22DTE) | Date from:2007.02;Trans. code:MLGU | GCI10038 | Inner Joint | | 41 | 27 | 34.85 | 403 | 102 | |
| | 2006.04-2013.06 | 5MT/6MT | F | R | Bus FWD 4HV (P22DTE) | Date from:2007.02;Trans. code:MLGU | GCI17020 | Inner Joint | | 41 | 29 | 34.85 | 403 | 109 | |
| | 2006.04-2013.06 | MT | F | L | Bus FWD 4HV (P22DTE) | | GDS17053 | Drive Shaft | | 35 | 41 | 71.5 | 127 | 806 | |
| | 2006.04-2013.06 | 5MT | F | L | Platform/Chassis FWD 4HV (P22DTE) | | GDS45176 | Drive Shaft | | 35 | 41 | 71.5 | 127 | 808 | |
| | 2006.04-2013.06 | 5MT | F | R | Platform/Chassis FWD 4HV (P22DTE) | | GDS17050 | Drive Shaft | | 35 | 41 | 71.5 | 127 | 1140 | |
| | 2006.04-2013.06 | 5MT/6MT | F | L/R | Platform/Chassis FWD 4HV (P22DTE) | Date from:2007.02;Trans. code:MLGU | GCO17054 | Outer Joint | | 35 | 29 | 71.5 | 127 | 71 | M |
| | 2006.04-2013.06 | 5MT/6MT | F | L/R | Platform/Chassis FWD 4HV (P22DTE) | Date from:2007.02;Trans. code:MLGU | GCO17055 | Outer Joint | | 35 | 27 | 71.5 | 127 | 66.5 | I |
| | 2006.04-2013.06 | 5MT/6MT | F | L | Platform/Chassis FWD 4HV (P22DTE) | Date from:2007.02;Trans. code:MLGU | GCI17028 | Inner Joint | | 41 | 29 | 43 | 69.5 | 109.5 | |
| | 2006.04-2013.06 | 5MT/6MT | F | L | Platform/Chassis FWD 4HV (P22DTE) | Date from:2007.02;Trans. code:MLGU | GCI17042 | Inner Joint | | 41 | 27 | 43 | 70 | 102 | |
| | 2006.04-2013.06 | 5MT/6MT | F | R | Platform/Chassis FWD 4HV (P22DTE) | Date from:2007.02;Trans. code:MLGU | GCI10038 | Inner Joint | | 41 | 27 | 34.85 | 403 | 102 | |
| | 2006.04-2013.06 | 5MT/6MT | F | R | Platform/Chassis FWD 4HV (P22DTE) | Date from:2007.02;Trans. code:MLGU | GCI17020 | Inner Joint | | 41 | 29 | 34.85 | 403 | 109 | |
| | 2006.04-2013.06 | MT | F | L | Platform/Chassis FWD 4HV (P22DTE) | | GDS17053 | Drive Shaft | | 35 | 41 | 71.5 | 127 | 806 | |
| | 2006.04-2013.06 | 5MT | F | L | Van FWD 4HV (P22DTE) | | GDS45176 | Drive Shaft | | 35 | 41 | 71.5 | 127 | 808 | |
| | 2006.04-2013.06 | 5MT | F | R | Van FWD 4HV (P22DTE) | | GDS17050 | Drive Shaft | | 35 | 41 | 71.5 | 127 | 1140 | |
| | 2006.04-2013.06 | 5MT/6MT | F | L/R | Van FWD 4HV (P22DTE) | Date from:2006.07;Trans. code:MLGU | GCO17054 | Outer Joint | | 35 | 29 | 71.5 | 127 | 71 | M |
| | 2006.04-2013.06 | 5MT/6MT | F | L/R | Van FWD 4HV (P22DTE) | Date from:2006.07;Trans. code:MLGU | GCO17055 | Outer Joint | | 35 | 27 | 71.5 | 127 | 66.5 | I |
| | 2006.04-2013.06 | 5MT/6MT | F | L | Van FWD 4HV (P22DTE) | Date from:2006.07;Trans. code:MLGU | GCI17028 | Inner Joint | | 41 | 29 | 43 | 69.5 | 109.5 | |
| | 2006.04-2013.06 | 5MT/6MT | F | L | Van FWD 4HV (P22DTE) | Date from:2006.07;Trans. code:MLGU | GCI17042 | Inner Joint | | 41 | 27 | 43 | 70 | 102 | |
| | 2006.04-2013.06 | 5MT/6MT | F | R | Van FWD 4HV (P22DTE) | Date from:2006.07;Trans. code:MLGU | GCI10038 | Inner Joint | | 41 | 27 | 34.85 | 403 | 102 | |
| | 2006.04-2013.06 | 5MT/6MT | F | R | Van FWD 4HV (P22DTE) | Date from:2006.07;Trans. code:MLGU | GCI17020 | Inner Joint | | 41 | 29 | 34.85 | 403 | 109 | |
| | 2006.04-2013.06 | MT | F | L | Van FWD 4HV (P22DTE) | | GDS17053 | Drive Shaft | | 35 | 41 | 71.5 | 127 | 806 | |
| 2.2 (81 kw) | 2011.03-2020.12 | 5MT/6MT | F | L | Bus FWD 4HG (P22DTE) | | GDS17053 | Drive Shaft | | 35 | 41 | 71.5 | 127 | 806 | |
| | 2011.03-2020.12 | 5MT/6MT | F | L | Bus FWD 4HG (P22DTE) | | GDS45176 | Drive Shaft | | 35 | 41 | 71.5 | 127 | 808 | |
| | 2011.03-2020.12 | 5MT/6MT | F | R | Bus FWD 4HG (P22DTE) | | GDS17050 | Drive Shaft | | 35 | 41 | 71.5 | 127 | 1140 | |
| | 2011.03-2020.12 | 5MT/6MT | F | L | Bus FWD 4HG (P22DTE) | | GCI17028 | Inner Joint | | 41 | 29 | 43 | 69.5 | 109.5 | |
| | 2011.03-2020.12 | MT | F | L/R | Bus FWD 4HG (P22DTE) | | GCO17055 | Outer Joint | | 35 | 27 | 71.5 | 127 | 66.5 | I |
| | 2011.03-2020.12 | | F | L/R | Bus FWD 4HG (P22DTE) | For motor home | GCO17045 | Outer Joint | | 35 | 29 | 71.5 | 127 | 71 | M |
| | 2011.03-2020.12 | | F | R | Bus FWD 4HG (P22DTE) | For motor home | GCI17020 | Inner Joint | | 41 | 29 | 34.85 | 403 | 109 | |
| | 2011.03-2020.12 | 5MT/6MT | F | L | Platform/Chassis FWD 4HG (P22DTE) | | GDS17053 | Drive Shaft | | 35 | 41 | 71.5 | 127 | 806 | |
| | 2011.03-2020.12 | 5MT/6MT | F | L | Platform/Chassis FWD 4HG (P22DTE) | | GDS45176 | Drive Shaft | | 35 | 41 | 71.5 | 127 | 808 | |
| | 2011.03-2020.12 | 5MT/6MT | F | R | Platform/Chassis FWD 4HG (P22DTE) | | GDS17050 | Drive Shaft | | 35 | 41 | 71.5 | 127 | 1140 | |
| | 2011.03-2020.12 | 5MT/6MT | F | L | Platform/Chassis FWD 4HG (P22DTE) | | GCI17028 | Inner Joint | | 41 | 29 | 43 | 69.5 | 109.5 | |
| | 2011.03-2020.12 | MT | F | L/R | Platform/Chassis FWD 4HG (P22DTE) | | GCO17045 | Outer Joint | | 35 | 29 | 71.5 | 127 | 71 | M |
| | 2011.03-2020.12 | | F | L/R | Platform/Chassis FWD 4HG (P22DTE) | | GCO17055 | Outer Joint | | 35 | 27 | 71.5 | 127 | 66.5 | I |
| | 2011.03-2020.12 | | F | R | Platform/Chassis FWD 4HG (P22DTE) | For motor home | GCI17020 | Inner Joint | | 41 | 29 | 34.85 | 403 | 109 | |
| | 2011.03-2020.12 | 5MT/6MT | F | L | Van FWD 4HG (P22DTE) | | GDS17053 | Drive Shaft | | 35 | 41 | 71.5 | 127 | 806 | |
| | 2011.03-2020.12 | 5MT/6MT | F | L | Van FWD 4HG (P22DTE) | | GDS45176 | Drive Shaft | | 35 | 41 | 71.5 | 127 | 808 | |
| | 2011.03-2020.12 | 5MT/6MT | F | R | Van FWD 4HG (P22DTE) | | GDS17050 | Drive Shaft | | 35 | 41 | 71.5 | 127 | 1140 | |
| | 2011.03-2020.12 | 5MT/6MT | F | L | Van FWD 4HG (P22DTE) | | GCI17028 | Inner Joint | | 41 | 29 | 43 | 69.5 | 109.5 | |
| | 2011.03-2020.12 | MT | F | L/R | Van FWD 4HG (P22DTE) | | GCO17055 | Outer Joint | | 35 | 27 | 71.5 | 127 | 66.5 | I |
| | 2011.03-2020.12 | | F | L/R | Van FWD 4HG (P22DTE) | For motor home | GCO17045 | Outer Joint | | 35 | 29 | 71.5 | 127 | 71 | M |
| | 2011.03-2020.12 | | F | R | Van FWD 4HG (P22DTE) | For motor home | GCI17020 | Inner Joint | | 41 | 29 | 34.85 | 403 | 109 | |
| 2.2 (88 kw) | 2006.04-2016.12 | 5MT/6MT | F | L/R | Bus FWD 4HU (P22DTE) | Date from:2006.07;Trans. code:MLGU | GCO17054 | Outer Joint | | 35 | 29 | 71.5 | 127 | 71 | M |
| | 2006.04-2016.12 | 5MT/6MT | F | L/R | Bus FWD 4HU (P22DTE) | Date from:2006.07;Trans. code:MLGU | GCO17055 | Outer Joint | | 35 | 27 | 71.5 | 127 | 66.5 | I |

| | YEAR | TRANSM. | F/R | L/R | BODY STYLE & DRIVE TYPE & ENGINE | REMARKS | G-AP Ref. | PRODUCT | ABS | Technical Specifications | | | | | |
|---|---|---|---|---|---|---|---|---|---|---|---|---|---|---|---|
| | | | | | | | | | | A | B | C | H | L | P |
| **PEUGEOT** | | | | | | | | | | | | | | | |
| **Boxer** | | | | | | | | | | | | | | | |
| 2.2 (88 kw) | 2006.04-2016.12 | 5MT/6MT | F | L | Bus FWD 4HU (P22DTE) | Date from:2006.07;Trans. code:MLGU | GCI17042 | Inner Joint | | 41 | 27 | 43 | 70 | 102 | |
| | 2006.04-2016.12 | 5MT/6MT | F | R | Bus FWD 4HU (P22DTE) | Date from:2006.07;Trans. code:MLGU | GCI10038 | Inner Joint | | 41 | 27 | 34.85 | 403 | 102 | |
| | 2006.04-2016.12 | 5MT/6MT | F | R | Bus FWD 4HU (P22DTE) | Date from:2006.07;Trans. code:MLGU | GCI17020 | Inner Joint | | 41 | 29 | 34.85 | 403 | 109 | |
| | 2006.04-2016.12 | 6MT | F | L | Bus FWD 4HU (P22DTE) | | GDS17053 | Drive Shaft | | 35 | 41 | 71.5 | 127 | 806 | |
| | 2006.04-2016.12 | 6MT | F | R | Bus FWD 4HU (P22DTE) | | GDS17050 | Drive Shaft | | 35 | 41 | 71.5 | 127 | 1140 | |
| | 2006.04-2016.12 | 6MT | F | L | Bus FWD 4HU (P22DTE) | | GCI17028 | Inner Joint | | 41 | 29 | 43 | 69.5 | 109.5 | |
| | 2006.04-2016.12 | 5MT/6MT | F | L/R | Platform/Chassis FWD 4HU (P22DTE) | Date from:2007.02;Trans. code:MLGU | GCO17054 | Outer Joint | | 35 | 29 | 71.5 | 127 | 71 | M |
| | 2006.04-2016.12 | 5MT/6MT | F | L/R | Platform/Chassis FWD 4HU (P22DTE) | Date from:2007.02;Trans. code:MLGU | GCO17055 | Outer Joint | | 35 | 27 | 71.5 | 127 | 66.5 | I |
| | 2006.04-2016.12 | 5MT/6MT | F | L | Platform/Chassis FWD 4HU (P22DTE) | Date from:2007.02;Trans. code:MLGU | GCI17042 | Inner Joint | | 41 | 27 | 43 | 70 | 102 | |
| | 2006.04-2016.12 | 5MT/6MT | F | R | Platform/Chassis FWD 4HU (P22DTE) | Date from:2007.02;Trans. code:MLGU | GCI10038 | Inner Joint | | 41 | 27 | 34.85 | 403 | 102 | |
| | 2006.04-2016.12 | 5MT/6MT | F | R | Platform/Chassis FWD 4HU (P22DTE) | Date from:2007.02;Trans. code:MLGU | GCI17020 | Inner Joint | | 41 | 29 | 34.85 | 403 | 109 | |
| | 2006.04-2016.12 | 6MT | F | L | Platform/Chassis FWD 4HU (P22DTE) | | GDS17053 | Drive Shaft | | 35 | 41 | 71.5 | 127 | 806 | |
| | 2006.04-2016.12 | 6MT | F | R | Platform/Chassis FWD 4HU (P22DTE) | | GDS17050 | Drive Shaft | | 35 | 41 | 71.5 | 127 | 1140 | |
| | 2006.04-2016.12 | 6MT | F | L | Platform/Chassis FWD 4HU (P22DTE) | | GCI17028 | Inner Joint | | 41 | 29 | 43 | 69.5 | 109.5 | |
| | 2006.04-2016.12 | 5MT/6MT | F | L | Van FWD 4HU (P22DTE) | Trans. code:MLGU | GCI17042 | Inner Joint | | 41 | 27 | 43 | 70 | 102 | |
| | 2006.04-2016.12 | 5MT/6MT | F | R | Van FWD 4HU (P22DTE) | Trans. code:MLGU | GCI10038 | Inner Joint | | 41 | 27 | 34.85 | 403 | 102 | |
| | 2006.04-2016.12 | 5MT/6MT | F | R | Van FWD 4HU (P22DTE) | Trans. code:MLGU | GCI17020 | Inner Joint | | 41 | 29 | 34.85 | 403 | 109 | |
| | 2006.04-2016.12 | 6MT | F | L | Van FWD 4HU (P22DTE) | | GDS17053 | Drive Shaft | | 35 | 41 | 71.5 | 127 | 806 | |
| | 2006.04-2016.12 | 6MT | F | R | Van FWD 4HU (P22DTE) | | GDS17050 | Drive Shaft | | 35 | 41 | 71.5 | 127 | 1140 | |
| | 2006.04-2016.12 | 6MT | F | L/R | Van FWD 4HU (P22DTE) | Trans. code:MLGU | GCO17055 | Outer Joint | | 35 | 27 | 71.5 | 127 | 66.5 | I |
| | 2006.04-2016.12 | 6MT | F | L | Van FWD 4HU (P22DTE) | | GCI17028 | Inner Joint | | 41 | 29 | 43 | 69.5 | 109.5 | |
| | 2019.07-2023.10 | 6MT | F | L | Bus FWD 4HA (DW12RUE) | | GDS83907 | Drive Shaft | | 35 | 41 | 71.5 | 127 | 822 | |
| | 2019.07-2023.10 | 6MT | F | R | Bus FWD 4HA (DW12RUE) | | GDS83906 | Drive Shaft | | 35 | 41 | 71.5 | 127 | 1125 | |
| | 2019.07-2023.10 | 6MT | F | L/R | Bus FWD 4HA (DW12RUE) | | GCO17045 | Outer Joint | | 35 | 29 | 71.5 | 127 | 71 | M |
| | 2019.07-2023.10 | 6MT | F | L | Bus FWD 4HA (DW12RUE) | | GCI17028 | Inner Joint | | 41 | 29 | 43 | 69.5 | 109.5 | |
| | 2019.07-2023.10 | 6MT | F | R | Bus FWD 4HA (DW12RUE) | | GCI82445 | Inner Joint | | 41 | 29 | 34.85 | 372 | 110 | |
| | 2019.07-2023.10 | 6MT | F | L | Van FWD 4HA (DW12RUE) | | GDS83907 | Drive Shaft | | 35 | 41 | 71.5 | 127 | 822 | |
| | 2019.07-2023.10 | 6MT | F | R | Van FWD 4HA (DW12RUE) | | GDS83906 | Drive Shaft | | 35 | 41 | 71.5 | 127 | 1125 | |
| | 2019.07-2023.10 | 6MT | F | L/R | Van FWD 4HA (DW12RUE) | | GCO17045 | Outer Joint | | 35 | 29 | 71.5 | 127 | 71 | M |
| | 2019.07-2023.10 | 6MT | F | L | Van FWD 4HA (DW12RUE) | | GCI17028 | Inner Joint | | 41 | 29 | 43 | 69.5 | 109.5 | |
| | 2019.07-2023.10 | 6MT | F | R | Van FWD 4HA (DW12RUE) | | GCI82445 | Inner Joint | | 41 | 29 | 34.85 | 372 | 110 | |
| | 2019.08-2023.10 | 6MT | F | L | Platform/Chassis FWD 4HA (DW12RUE) | | GDS83907 | Drive Shaft | | 35 | 41 | 71.5 | 127 | 822 | |
| | 2019.08-2023.10 | 6MT | F | R | Platform/Chassis FWD 4HA (DW12RUE) | | GDS83906 | Drive Shaft | | 35 | 41 | 71.5 | 127 | 1125 | |
| | 2019.08-2023.10 | 6MT | F | L/R | Platform/Chassis FWD 4HA (DW12RUE) | | GCO17045 | Outer Joint | | 35 | 29 | 71.5 | 127 | 71 | M |
| | 2019.08-2023.10 | 6MT | F | L | Platform/Chassis FWD 4HA (DW12RUE) | | GCI17028 | Inner Joint | | 41 | 29 | 43 | 69.5 | 109.5 | |
| | 2019.08-2023.10 | 6MT | F | R | Platform/Chassis FWD 4HA (DW12RUE) | | GCI82445 | Inner Joint | | 41 | 29 | 34.85 | 372 | 110 | |
| 2.2 (96 kw) | 2006.04-2016.05 | 5MT/6MT | F | L | Platform/Chassis FWD 4HH (P22DTE);4HM (P22DTE+) | | GDS17053 | Drive Shaft | | 35 | 41 | 71.5 | 127 | 806 | |
| | 2006.04-2016.05 | 5MT/6MT | F | R | Platform/Chassis FWD 4HH (P22DTE);4HM (P22DTE+) | | GDS17050 | Drive Shaft | | 35 | 41 | 71.5 | 127 | 1140 | |
| | 2006.04-2016.05 | 5MT/6MT | F | L | Platform/Chassis FWD 4HH (P22DTE);4HM (P22DTE+) | | GCI17028 | Inner Joint | | 41 | 29 | 43 | 69.5 | 109.5 | |
| | 2006.04-2016.05 | MT | F | L/R | Platform/Chassis FWD 4HH (P22DTE);4HM (P22DTE+) | | GCO17045 | Outer Joint | | 35 | 29 | 71.5 | 127 | 71 | M |
| | 2006.04-2016.05 | | F | R | Platform/Chassis FWD 4HH (P22DTE);4HM (P22DTE+) | For motor home | GCI17020 | Inner Joint | | 41 | 29 | 34.85 | 403 | 109 | |
| | 2011.03-2016.05 | 6MT | F | L | Bus FWD 4HH (P22DTE) | | GDS17053 | Drive Shaft | | 35 | 41 | 71.5 | 127 | 806 | |
| | 2011.03-2016.05 | 6MT | F | R | Bus FWD 4HH (P22DTE) | | GDS17050 | Drive Shaft | | 35 | 41 | 71.5 | 127 | 1140 | |
| | 2011.03-2016.05 | 6MT | F | L | Bus FWD 4HH (P22DTE) | | GCI17028 | Inner Joint | | 41 | 29 | 43 | 69.5 | 109.5 | |
| | 2011.03-2016.05 | MT | F | L/R | Bus FWD 4HH (P22DTE) | | GCO17055 | Outer Joint | | 35 | 27 | 71.5 | 127 | 66.5 | I |
| | 2011.03-2016.05 | | F | L/R | Bus FWD 4HH (P22DTE) | For motor home | GCO17045 | Outer Joint | | 35 | 29 | 71.5 | 127 | 71 | M |
| | 2011.03-2016.05 | | F | R | Bus FWD 4HH (P22DTE) | For motor home | GCI17020 | Inner Joint | | 41 | 29 | 34.85 | 403 | 109 | |
| | 2011.03-2016.05 | 6MT | F | L | Van FWD 4HH (P22DTE) | | GDS17053 | Drive Shaft | | 35 | 41 | 71.5 | 127 | 806 | |
| | 2011.03-2016.05 | 6MT | F | R | Van FWD 4HH (P22DTE) | | GDS17050 | Drive Shaft | | 35 | 41 | 71.5 | 127 | 1140 | |
| | 2011.03-2016.05 | 6MT | F | L/R | Van FWD 4HH (P22DTE) | For motor home | GCO17045 | Outer Joint | | 35 | 29 | 71.5 | 127 | 71 | M |
| | 2011.03-2016.05 | 6MT | F | L | Van FWD 4HH (P22DTE) | | GCI17028 | Inner Joint | | 41 | 29 | 43 | 69.5 | 109.5 | |
| | 2011.03-2016.05 | 6MT | F | R | Van FWD 4HH (P22DTE) | For motor home | GCI17020 | Inner Joint | | 41 | 29 | 34.85 | 403 | 109 | |
| | 2011.03-2016.05 | MT | F | L/R | Van FWD 4HH (P22DTE) | | GCO17055 | Outer Joint | | 35 | 27 | 71.5 | 127 | 66.5 | I |
| 2.2 (103 kw) | 2019.07- | 6MT | F | L | Bus FWD 4HB (DW12RUD) | | GDS56467 | Drive Shaft | | 35 | 41 | 71.5 | 127 | 824 | |
| | 2019.07- | 6MT | F | R | Bus FWD 4HB (DW12RUD) | | GDS57538 | Drive Shaft | | 35 | 41 | 71.5 | 127 | 1127 | |
| | 2019.07- | 6MT | F | L | Bus FWD 4HB (DW12RUD) | | GCI17028 | Inner Joint | | 41 | 29 | 43 | 69.5 | 109.5 | |
| | 2019.07- | 6MT | F | L | Van FWD 4HB (DW12RUD) | | GDS56467 | Drive Shaft | | 35 | 41 | 71.5 | 127 | 824 | |
| | 2019.07- | 6MT | F | R | Van FWD 4HB (DW12RUD) | | GDS57538 | Drive Shaft | | 35 | 41 | 71.5 | 127 | 1127 | |
| | 2019.07- | 6MT | F | L | Van FWD 4HB (DW12RUD) | | GCI17028 | Inner Joint | | 41 | 29 | 43 | 69.5 | 109.5 | |
| | 2019.08-2023.10 | 6MT | F | L | Platform/Chassis FWD 4HB (DW12RUD) | | GDS56467 | Drive Shaft | | 35 | 41 | 71.5 | 127 | 824 | |
| | 2019.08-2023.10 | 6MT | F | R | Platform/Chassis FWD 4HB (DW12RUD) | | GDS57538 | Drive Shaft | | 35 | 41 | 71.5 | 127 | 1127 | |
| | 2019.08-2023.10 | 6MT | F | L | Platform/Chassis FWD 4HB (DW12RUD) | | GCI17028 | Inner Joint | | 41 | 29 | 43 | 69.5 | 109.5 | |
| 2.2 (110 kw) | 2011.03-2016.12 | MT | F | L | Bus FWD 4HJ (P22DTE) | | GDS17053 | Drive Shaft | | 35 | 41 | 71.5 | 127 | 806 | |
| | 2011.03-2016.12 | MT | F | L | Bus FWD 4HJ (P22DTE) | | GDS45176 | Drive Shaft | | 35 | 41 | 71.5 | 127 | 808 | |
| | 2011.03-2016.12 | MT | F | R | Bus FWD 4HJ (P22DTE) | | GDS17050 | Drive Shaft | | 35 | 41 | 71.5 | 127 | 1140 | |

| | YEAR | TRANSM. | F/R | L/R | BODY STYLE & DRIVE TYPE & ENGINE | REMARKS | G-AP Ref. | PRODUCT | ABS | Technical Specifications A | B | C | H | L | P |
|---|---|---|---|---|---|---|---|---|---|---|---|---|---|---|---|
| **PEUGEOT** **Boxer** | | | | | | | | | | | | | | | |
| 2.2 (110 kw) | 2011.03-2016.12 | MT | F | L/R | Bus FWD 4HJ (P22DTE) | | GCO17055 | Outer Joint | | 35 | 27 | 71.5 | 127 | 66.5 | I |
| | 2011.03-2016.12 | | F | L | Bus FWD 4HJ (P22DTE) | | GCI17022 | Inner Joint | | 31 | 29 | 44.95 | 77 | 109.5 | |
| | 2011.03-2016.12 | MT | F | L | Platform/Chassis FWD 4HJ (P22DTE) | | GDS17053 | Drive Shaft | | 35 | 41 | 71.5 | 127 | 806 | |
| | 2011.03-2016.12 | MT | F | L | Platform/Chassis FWD 4HJ (P22DTE) | | GDS45176 | Drive Shaft | | 35 | 41 | 71.5 | 127 | 808 | |
| | 2011.03-2016.12 | MT | F | R | Platform/Chassis FWD 4HJ (P22DTE) | | GDS17050 | Drive Shaft | | 35 | 41 | 71.5 | 127 | 1140 | |
| | 2011.03-2016.12 | MT | F | L/R | Platform/Chassis FWD 4HJ (P22DTE) | | GCO17045 | Outer Joint | | 35 | 29 | 71.5 | 127 | 71 | M |
| | 2011.03-2016.12 | | F | L | Platform/Chassis FWD 4HJ (P22DTE) | | GCI17022 | Inner Joint | | 31 | 29 | 44.95 | 77 | 109.5 | |
| | 2011.03-2016.12 | MT | F | L | Van FWD 4HJ (P22DTE) | | GDS17053 | Drive Shaft | | 35 | 41 | 71.5 | 127 | 806 | |
| | 2011.03-2016.12 | MT | F | L | Van FWD 4HJ (P22DTE) | | GDS45176 | Drive Shaft | | 35 | 41 | 71.5 | 127 | 808 | |
| | 2011.03-2016.12 | MT | F | R | Van FWD 4HJ (P22DTE) | | GDS17050 | Drive Shaft | | 35 | 41 | 71.5 | 127 | 1140 | |
| | 2011.03-2016.12 | MT | F | L/R | Van FWD 4HJ (P22DTE) | | GCO17055 | Outer Joint | | 35 | 27 | 71.5 | 127 | 66.5 | I |
| | 2011.03-2016.12 | | F | L | Van FWD 4HJ (P22DTE) | | GCI17022 | Inner Joint | | 31 | 29 | 44.95 | 77 | 109.5 | |
| 2.2 (121 kw) | 2019.07-2023.10 | 6MT | F | L | Van FWD 4HH (DW12RUC) | | GDS56467 | Drive Shaft | | 35 | 41 | 71.5 | 127 | 824 | |
| | 2019.07-2023.10 | 6MT | F | R | Van FWD 4HH (DW12RUC) | | GDS57538 | Drive Shaft | | 35 | 41 | 71.5 | 127 | 1127 | |
| | 2019.07-2023.10 | 6MT | F | L | Van FWD 4HH (DW12RUC) | | GCI17028 | Inner Joint | | 41 | 29 | 43 | 69.5 | 109.5 | |
| | 2019.08-2023.10 | 6MT | F | L | Bus FWD 4HH (DW12RUC) | | GDS56467 | Drive Shaft | | 35 | 41 | 71.5 | 127 | 824 | |
| | 2019.08-2023.10 | 6MT | F | R | Bus FWD 4HH (DW12RUC) | | GDS57538 | Drive Shaft | | 35 | 41 | 71.5 | 127 | 1127 | |
| | 2019.08-2023.10 | 6MT | F | L | Bus FWD 4HH (DW12RUC) | | GCI17028 | Inner Joint | | 41 | 29 | 43 | 69.5 | 109.5 | |
| | 2019.08-2023.10 | 6MT | F | L | Platform/Chassis FWD 4HH (DW12RUC) | | GDS56467 | Drive Shaft | | 35 | 41 | 71.5 | 127 | 824 | |
| | 2019.08-2023.10 | 6MT | F | R | Platform/Chassis FWD 4HH (DW12RUC) | | GDS57538 | Drive Shaft | | 35 | 41 | 71.5 | 127 | 1127 | |
| | 2019.08-2023.10 | 6MT | F | L | Platform/Chassis FWD 4HH (DW12RUC) | | GCI17028 | Inner Joint | | 41 | 29 | 43 | 69.5 | 109.5 | |
| 2.5 (63 kw) | 1994.03-2002.04 | MT | F | L | Platform/Chassis FWD T9A (DJ5) | Payload:1800kg,Trans. code:MG | GDS10033 | Drive Shaft | 54T | 35 | 41 | 70 | 117 | 762 | |
| | 1994.03-2002.04 | MT | F | L | Platform/Chassis FWD T9A (DJ5) | Payload:1000/1400kg,Trans. code:MG | GDS10035 | Drive Shaft | 54T | 28 | 41 | 63 | 112.5 | 757.5 | |
| | 1994.03-2002.04 | MT | F | L | Platform/Chassis FWD T9A (DJ5) | Payload:1000/1400kg,Trans. code:ME/ML | GDS10037 | Drive Shaft | 54T | 28 | 37 | 63 | 112.5 | 771 | |
| | 1994.03-2002.04 | MT | F | L | Platform/Chassis FWD T9A (DJ5) | Payload:1800kg,Trans. code:MG | GDS10067 | Drive Shaft | | 35 | 41 | 70 | 117 | 762 | |
| | 1994.03-2002.04 | MT | F | L | Platform/Chassis FWD T9A (DJ5) | Payload:1000/1400kg,Trans. code:MG | GDS10102 | Drive Shaft | | 28 | 41 | 63 | 112.5 | 757.5 | |
| | 1994.03-2002.04 | MT | F | L | Platform/Chassis FWD T9A (DJ5) | Payload:1000/1400kg,Trans. code:ME/ML | GDS10105 | Drive Shaft | | 28 | 37 | 63 | 112.5 | 771 | |
| | 1994.03-2002.04 | MT | F | R | Platform/Chassis FWD T9A (DJ5) | Payload:1800kg,Trans. code:MG | GDS10032 | Drive Shaft | 54T | 35 | 41 | 70 | 117 | 1085 | |
| | 1994.03-2002.04 | MT | F | R | Platform/Chassis FWD T9A (DJ5) | Payload:1000/1400kg,Trans. code:MG | GDS10036 | Drive Shaft | 54T | 28 | 41 | 63 | 112.5 | 1079 | |
| | 1994.03-2002.04 | MT | F | R | Platform/Chassis FWD T9A (DJ5) | Payload:1800kg,Trans. code:MG | GDS10066 | Drive Shaft | | 35 | 41 | 70 | 117 | 1085 | |
| | 1994.03-2002.04 | MT | F | R | Platform/Chassis FWD T9A (DJ5) | Payload:1000/1400kg,Trans. code:ME/ML | GDS10069 | Drive Shaft | | 28 | 37 | 63 | 112.5 | 1072 | |
| | 1994.03-2002.04 | MT | F | R | Platform/Chassis FWD T9A (DJ5) | Payload:1000/1400kg,Trans. code:MG | GDS10103 | Drive Shaft | | 28 | 41 | 63 | 112.5 | 1079 | |
| | 1994.03-2002.04 | MT | F | R | Platform/Chassis FWD T9A (DJ5) | Payload:1000/1400kg,Trans. code:ME/ML | GDS10104 | Drive Shaft | 54T | 28 | 37 | 63 | 112.5 | 1072 | |
| | 1994.03-2002.04 | MT | F | L/R | Platform/Chassis FWD T9A (DJ5) | Payload:1800kg,Trans. code:MG | GCO10011 | Outer Joint | 54T | 35 | 45 | 70 | 117 | 73 | I |
| | 1994.03-2002.04 | MT | F | L/R | Platform/Chassis FWD T9A (DJ5) | Payload:1000/1400kg,Trans. code:ME/ML/MG | GCO10012 | Outer Joint | | 28 | 39 | 63 | 112.5 | 63 | I |
| | 1994.03-2002.04 | MT | F | L/R | Platform/Chassis FWD T9A (DJ5) | Payload:1000/1400kg,Trans. code:ME/ML/MG | GCO10013 | Outer Joint | 54T | 28 | 39 | 63 | 112.5 | 63 | I |
| | 1994.03-2002.04 | MT | F | L/R | Platform/Chassis FWD T9A (DJ5) | Payload:1800kg,Trans. code:MG | GCO10050 | Outer Joint | | 35 | 45 | 70 | 117 | 73 | I |
| | 1994.03-2002.04 | MT | F | L | Platform/Chassis FWD T9A (DJ5) | Payload:1800kg,Trans. code:MG | GCI10010 | Inner Joint | | 41 | 45 | 43 | 70 | 115.5 | |
| | 1994.03-2002.04 | MT | F | L | Platform/Chassis FWD T9A (DJ5) | Payload:1000/1400kg,Trans. code:MG | GCI10013 | Inner Joint | | 41 | 39 | 43 | 70 | 104 | |
| | 1994.03-2002.04 | MT | F | L | Platform/Chassis FWD T9A (DJ5) | Payload:1000/1400kg,Trans. code:ME/ML | GCI10015 | Inner Joint | | 37 | 39 | 40 | 68.5 | 104 | |
| | 1994.03-2002.04 | MT | F | L | Platform/Chassis FWD T9A (DJ5) | Payload:1000/1400kg,Trans. code:ME/ML | GCI45013 | Inner Joint | | 37 | 39 | 40 | 68.5 | 100 | |
| | 1994.03-2002.04 | MT | F | R | Platform/Chassis FWD T9A (DJ5) | Payload:1800kg,Trans. code:MG | GCI10009 | Inner Joint | | 41 | 45 | 34.9 | 393 | 115.6 | |
| | 1994.03-2002.04 | MT | F | R | Platform/Chassis FWD T9A (DJ5) | Payload:1000/1400kg,Trans. code:ME/ML | GCI10034 | Inner Joint | | 37 | 39 | 31.9 | 369.5 | 99 | |
| | 1994.03-2002.04 | MT | F | L | Van FWD T9A (DJ5) | Payload:1800kg,Trans. code:MG | GDS10033 | Drive Shaft | 54T | 35 | 41 | 70 | 117 | 762 | |
| | 1994.03-2002.04 | MT | F | L | Van FWD T9A (DJ5) | Payload:1000/1400kg,Trans. code:MG | GDS10035 | Drive Shaft | 54T | 28 | 41 | 63 | 112.5 | 757.5 | |
| | 1994.03-2002.04 | MT | F | L | Van FWD T9A (DJ5) | Payload:1000/1400kg,Trans. code:ME/ML | GDS10037 | Drive Shaft | 54T | 28 | 37 | 63 | 112.5 | 771 | |
| | 1994.03-2002.04 | MT | F | L | Van FWD T9A (DJ5) | Payload:1800kg,Trans. code:MG | GDS10067 | Drive Shaft | | 35 | 41 | 70 | 117 | 762 | |
| | 1994.03-2002.04 | MT | F | L | Van FWD T9A (DJ5) | Payload:1000/1400kg,Trans. code:MG | GDS10102 | Drive Shaft | | 28 | 41 | 63 | 112.5 | 757.5 | |
| | 1994.03-2002.04 | MT | F | L | Van FWD T9A (DJ5) | Payload:1000/1400kg,Trans. code:ME/ML | GDS10105 | Drive Shaft | | 28 | 37 | 63 | 112.5 | 771 | |
| | 1994.03-2002.04 | MT | F | R | Van FWD T9A (DJ5) | Payload:1800kg,Trans. code:MG | GDS10032 | Drive Shaft | 54T | 35 | 41 | 70 | 117 | 1085 | |
| | 1994.03-2002.04 | MT | F | R | Van FWD T9A (DJ5) | Payload:1000/1400kg,Trans. code:MG | GDS10036 | Drive Shaft | 54T | 28 | 41 | 63 | 112.5 | 1079 | |
| | 1994.03-2002.04 | MT | F | R | Van FWD T9A (DJ5) | Payload:1800kg,Trans. code:MG | GDS10066 | Drive Shaft | | 35 | 41 | 70 | 117 | 1085 | |
| | 1994.03-2002.04 | MT | F | R | Van FWD T9A (DJ5) | Payload:1000/1400kg,Trans. code:ME/ML | GDS10069 | Drive Shaft | | 28 | 37 | 63 | 112.5 | 1072 | |
| | 1994.03-2002.04 | MT | F | R | Van FWD T9A (DJ5) | Payload:1000/1400kg,Trans. code:MG | GDS10103 | Drive Shaft | | 28 | 41 | 63 | 112.5 | 1079 | |
| | 1994.03-2002.04 | MT | F | R | Van FWD T9A (DJ5) | Payload:1000/1400kg,Trans. code:ME/ML | GDS10104 | Drive Shaft | 54T | 28 | 37 | 63 | 112.5 | 1072 | |
| | 1994.03-2002.04 | MT | F | L/R | Van FWD T9A (DJ5) | Payload:1800kg,Trans. code:MG | GCO10011 | Outer Joint | 54T | 35 | 45 | 70 | 117 | 73 | I |
| | 1994.03-2002.04 | MT | F | L/R | Van FWD T9A (DJ5) | Payload:1000/1400kg,Trans. code:ME/ML/MG | GCO10012 | Outer Joint | | 28 | 39 | 63 | 112.5 | 63 | I |
| | 1994.03-2002.04 | MT | F | L/R | Van FWD T9A (DJ5) | Payload:1000/1400kg,Trans. code:ME/ML/MG | GCO10013 | Outer Joint | 54T | 28 | 39 | 63 | 112.5 | 63 | I |
| | 1994.03-2002.04 | MT | F | L/R | Van FWD T9A (DJ5) | Payload:1800kg,Trans. code:MG | GCO10050 | Outer Joint | | 35 | 45 | 70 | 117 | 73 | I |
| | 1994.03-2002.04 | MT | F | L | Van FWD T9A (DJ5) | Payload:1800kg,Trans. code:MG | GCI10010 | Inner Joint | | 41 | 45 | 43 | 70 | 115.5 | |
| | 1994.03-2002.04 | MT | F | L | Van FWD T9A (DJ5) | Payload:1000/1400kg,Trans. code:MG | GCI10013 | Inner Joint | | 41 | 39 | 43 | 70 | 104 | |
| | 1994.03-2002.04 | MT | F | L | Van FWD T9A (DJ5) | Payload:1000/1400kg,Trans. code:ME/ML | GCI10015 | Inner Joint | | 37 | 39 | 40 | 68.5 | 104 | |
| | 1994.03-2002.04 | MT | F | L | Van FWD T9A (DJ5) | Payload:1000/1400kg,Trans. code:ME/ML | GCI45013 | Inner Joint | | 37 | 39 | 40 | 68.5 | 100 | |
| | 1994.03-2002.04 | MT | F | R | Van FWD T9A (DJ5) | Payload:1800kg,Trans. code:MG | GCI10009 | Inner Joint | | 41 | 45 | 34.9 | 393 | 115.6 | |
| | 1994.03-2002.04 | MT | F | R | Van FWD T9A (DJ5) | Payload:1000/1400kg,Trans. code:ME/ML | GCI10034 | Inner Joint | | 37 | 39 | 31.9 | 369.5 | 99 | |

| | YEAR | TRANSM. | F/R | L/R | BODY STYLE & DRIVE TYPE & ENGINE | REMARKS | G-AP Ref. | PRODUCT | ABS | Technical Specifications A | B | C | H | L | P |
|---|---|---|---|---|---|---|---|---|---|---|---|---|---|---|---|
| **PEUGEOT** | | | | | | | | | | | | | | | |
| **Boxer** | | | | | | | | | | | | | | | |
| 2.5 (63 kw) | 1994.08-2002.04 | MT | F | L | Bus FWD T9A (DJ5) | Payload:1800kg,Trans. code:MG | GDS10033 | Drive Shaft | 54T | 35 | 41 | 70 | 117 | 762 | |
| | 1994.08-2002.04 | MT | F | L | Bus FWD T9A (DJ5) | Payload:1000/1400kg,Trans. code:MG | GDS10035 | Drive Shaft | 54T | 28 | 41 | 63 | 112.5 | 757.5 | |
| | 1994.08-2002.04 | MT | F | L | Bus FWD T9A (DJ5) | Payload:1000/1400kg,Trans. code:ME/ML | GDS10037 | Drive Shaft | 54T | 28 | 37 | 63 | 112.5 | 771 | |
| | 1994.08-2002.04 | MT | F | L | Bus FWD T9A (DJ5) | Payload:1800kg,Trans. code:MG | GDS10067 | Drive Shaft | | 35 | 41 | 70 | 117 | 762 | |
| | 1994.08-2002.04 | MT | F | L | Bus FWD T9A (DJ5) | Payload:1000/1400kg,Trans. code:MG | GDS10102 | Drive Shaft | | 28 | 41 | 63 | 112.5 | 757.5 | |
| | 1994.08-2002.04 | MT | F | L | Bus FWD T9A (DJ5) | Payload:1000/1400kg,Trans. code:ME/ML | GDS10105 | Drive Shaft | | 28 | 37 | 63 | 112.5 | 771 | |
| | 1994.08-2002.04 | MT | F | R | Bus FWD T9A (DJ5) | Payload:1800kg,Trans. code:MG | GDS10032 | Drive Shaft | 54T | 35 | 41 | 70 | 117 | 1085 | |
| | 1994.08-2002.04 | MT | F | R | Bus FWD T9A (DJ5) | Payload:1000/1400kg,Trans. code:MG | GDS10036 | Drive Shaft | 54T | 28 | 41 | 63 | 112.5 | 1079 | |
| | 1994.08-2002.04 | MT | F | R | Bus FWD T9A (DJ5) | Payload:1800kg,Trans. code:MG | GDS10066 | Drive Shaft | | 35 | 41 | 70 | 117 | 1085 | |
| | 1994.08-2002.04 | MT | F | R | Bus FWD T9A (DJ5) | Payload:1000/1400kg,Trans. code:ME/ML | GDS10069 | Drive Shaft | | 28 | 37 | 63 | 112.5 | 1072 | |
| | 1994.08-2002.04 | MT | F | R | Bus FWD T9A (DJ5) | Payload:1000/1400kg,Trans. code:MG | GDS10103 | Drive Shaft | | 28 | 41 | 63 | 112.5 | 1079 | |
| | 1994.08-2002.04 | MT | F | R | Bus FWD T9A (DJ5) | Payload:1000/1400kg,Trans. code:ME/ML | GDS10104 | Drive Shaft | 54T | 28 | 37 | 63 | 112.5 | 1072 | |
| | 1994.08-2002.04 | MT | F | L/R | Bus FWD T9A (DJ5) | Payload:1800kg,Trans. code:MG | GCO10011 | Outer Joint | 54T | 35 | 45 | 70 | 117 | 73 | I |
| | 1994.08-2002.04 | MT | F | L/R | Bus FWD T9A (DJ5) | Payload:1000/1400kg,Trans. code:ME/ML/MG | GCO10012 | Outer Joint | | 28 | 39 | 63 | 112.5 | 63 | I |
| | 1994.08-2002.04 | MT | F | L/R | Bus FWD T9A (DJ5) | Payload:1000/1400kg,Trans. code:ME/ML/MG | GCO10013 | Outer Joint | 54T | 28 | 39 | 63 | 112.5 | 63 | I |
| | 1994.08-2002.04 | MT | F | L/R | Bus FWD T9A (DJ5) | Payload:1800kg,Trans. code:MG | GCO10050 | Outer Joint | | 35 | 45 | 70 | 117 | 73 | I |
| | 1994.08-2002.04 | MT | F | L | Bus FWD T9A (DJ5) | Payload:1800kg,Trans. code:MG | GCI10010 | Inner Joint | | 41 | 45 | 43 | 70 | 115.5 | |
| | 1994.08-2002.04 | MT | F | L | Bus FWD T9A (DJ5) | Payload:1000/1400kg,Trans. code:MG | GCI10013 | Inner Joint | | 41 | 39 | 43 | 70 | 104 | |
| | 1994.08-2002.04 | MT | F | L | Bus FWD T9A (DJ5) | Payload:1000/1400kg,Trans. code:ME/ML | GCI10015 | Inner Joint | | 37 | 39 | 40 | 68.5 | 104 | |
| | 1994.08-2002.04 | MT | F | L | Bus FWD T9A (DJ5) | Payload:1000/1400kg,Trans. code:ME/ML | GCI45013 | Inner Joint | | 37 | 39 | 40 | 68.5 | 100 | |
| | 1994.08-2002.04 | MT | F | R | Bus FWD T9A (DJ5) | Payload:1800kg,Trans. code:MG | GCI10009 | Inner Joint | | 41 | 45 | 34.9 | 393 | 115.6 | |
| | 1994.08-2002.04 | MT | F | R | Bus FWD T9A (DJ5) | Payload:1000/1400kg,Trans. code:ME/ML | GCI10034 | Inner Joint | | 37 | 39 | 31.9 | 369.5 | 99 | |
| | 1996.07-2002.04 | MT | F | L | Bus 4WD T9A (DJ5) | Payload:1800kg,Trans. code:MG | GDS10033 | Drive Shaft | 54T | 35 | 41 | 70 | 117 | 762 | |
| | 1996.07-2002.04 | MT | F | L | Bus 4WD T9A (DJ5) | Payload:1000/1400kg,Trans. code:MG | GDS10035 | Drive Shaft | 54T | 28 | 41 | 63 | 112.5 | 757.5 | |
| | 1996.07-2002.04 | MT | F | L | Bus 4WD T9A (DJ5) | Payload:1000/1400kg,Trans. code:ME/ML | GDS10037 | Drive Shaft | 54T | 28 | 37 | 63 | 112.5 | 771 | |
| | 1996.07-2002.04 | MT | F | L | Bus 4WD T9A (DJ5) | Payload:1800kg,Trans. code:MG | GDS10067 | Drive Shaft | | 35 | 41 | 70 | 117 | 762 | |
| | 1996.07-2002.04 | MT | F | L | Bus 4WD T9A (DJ5) | Payload:1000/1400kg,Trans. code:MG | GDS10102 | Drive Shaft | | 28 | 41 | 63 | 112.5 | 757.5 | |
| | 1996.07-2002.04 | MT | F | L | Bus 4WD T9A (DJ5) | Payload:1000/1400kg,Trans. code:ME/ML | GDS10105 | Drive Shaft | | 28 | 37 | 63 | 112.5 | 771 | |
| | 1996.07-2002.04 | MT | F | R | Bus 4WD T9A (DJ5) | Payload:1800kg,Trans. code:MG | GDS10032 | Drive Shaft | 54T | 35 | 41 | 70 | 117 | 1085 | |
| | 1996.07-2002.04 | MT | F | R | Bus 4WD T9A (DJ5) | Payload:1000/1400kg,Trans. code:MG | GDS10036 | Drive Shaft | 54T | 28 | 41 | 63 | 112.5 | 1079 | |
| | 1996.07-2002.04 | MT | F | R | Bus 4WD T9A (DJ5) | Payload:1800kg,Trans. code:MG | GDS10066 | Drive Shaft | | 35 | 41 | 70 | 117 | 1085 | |
| | 1996.07-2002.04 | MT | F | R | Bus 4WD T9A (DJ5) | Payload:1000/1400kg,Trans. code:ME/ML | GDS10069 | Drive Shaft | | 28 | 37 | 63 | 112.5 | 1072 | |
| | 1996.07-2002.04 | MT | F | R | Bus 4WD T9A (DJ5) | Payload:1000/1400kg,Trans. code:MG | GDS10103 | Drive Shaft | | 28 | 41 | 63 | 112.5 | 1079 | |
| | 1996.07-2002.04 | MT | F | R | Bus 4WD T9A (DJ5) | Payload:1000/1400kg,Trans. code:ME/ML | GDS10104 | Drive Shaft | 54T | 28 | 37 | 63 | 112.5 | 1072 | |
| | 1996.07-2002.04 | MT | F | L/R | Bus 4WD T9A (DJ5) | Payload:1800kg,Trans. code:MG | GCO10011 | Outer Joint | 54T | 35 | 45 | 70 | 117 | 73 | I |
| | 1996.07-2002.04 | MT | F | L/R | Bus 4WD T9A (DJ5) | Payload:1000/1400kg,Trans. code:ME/ML/MG | GCO10012 | Outer Joint | | 28 | 39 | 63 | 112.5 | 63 | I |
| | 1996.07-2002.04 | MT | F | L/R | Bus 4WD T9A (DJ5) | Payload:1000/1400kg,Trans. code:ME/ML/MG | GCO10013 | Outer Joint | 54T | 28 | 39 | 63 | 112.5 | 63 | I |
| | 1996.07-2002.04 | MT | F | L/R | Bus 4WD T9A (DJ5) | Payload:1800kg,Trans. code:MG | GCO10050 | Outer Joint | | 35 | 45 | 70 | 117 | 73 | I |
| | 1996.07-2002.04 | MT | F | L | Bus 4WD T9A (DJ5) | Payload:1800kg,Trans. code:MG | GCI10010 | Inner Joint | | 41 | 45 | 43 | 70 | 115.5 | |
| | 1996.07-2002.04 | MT | F | L | Bus 4WD T9A (DJ5) | Payload:1000/1400kg,Trans. code:MG | GCI10013 | Inner Joint | | 41 | 39 | 43 | 70 | 104 | |
| | 1996.07-2002.04 | MT | F | L | Bus 4WD T9A (DJ5) | Payload:1000/1400kg,Trans. code:ME/ML | GCI10015 | Inner Joint | | 37 | 39 | 40 | 68.5 | 104 | |
| | 1996.07-2002.04 | MT | F | L | Bus 4WD T9A (DJ5) | Payload:1000/1400kg,Trans. code:ME/ML | GCI45013 | Inner Joint | | 37 | 39 | 40 | 68.5 | 100 | |
| | 1996.07-2002.04 | MT | F | R | Bus 4WD T9A (DJ5) | Payload:1800kg,Trans. code:MG | GCI10009 | Inner Joint | | 41 | 45 | 34.9 | 393 | 115.6 | |
| | 1996.07-2002.04 | MT | F | R | Bus 4WD T9A (DJ5) | Payload:1000/1400kg,Trans. code:ME/ML | GCI10034 | Inner Joint | | 37 | 39 | 31.9 | 369.5 | 99 | |
| | 1999.07-2002.04 | MT | F | L | Platform/Chassis 4WD T9A (DJ5) | Payload:1800kg,Trans. code:MG | GDS10033 | Drive Shaft | 54T | 35 | 41 | 70 | 117 | 762 | |
| | 1999.07-2002.04 | MT | F | L | Platform/Chassis 4WD T9A (DJ5) | Payload:1000/1400kg,Trans. code:MG | GDS10035 | Drive Shaft | 54T | 28 | 41 | 63 | 112.5 | 757.5 | |
| | 1999.07-2002.04 | MT | F | L | Platform/Chassis 4WD T9A (DJ5) | Payload:1000/1400kg,Trans. code:ME/ML | GDS10037 | Drive Shaft | 54T | 28 | 37 | 63 | 112.5 | 771 | |
| | 1999.07-2002.04 | MT | F | L | Platform/Chassis 4WD T9A (DJ5) | Payload:1800kg,Trans. code:MG | GDS10067 | Drive Shaft | | 35 | 41 | 70 | 117 | 762 | |
| | 1999.07-2002.04 | MT | F | L | Platform/Chassis 4WD T9A (DJ5) | Payload:1000/1400kg,Trans. code:MG | GDS10102 | Drive Shaft | | 28 | 41 | 63 | 112.5 | 757.5 | |
| | 1999.07-2002.04 | MT | F | L | Platform/Chassis 4WD T9A (DJ5) | Payload:1000/1400kg,Trans. code:ME/ML | GDS10105 | Drive Shaft | | 28 | 37 | 63 | 112.5 | 771 | |
| | 1999.07-2002.04 | MT | F | R | Platform/Chassis 4WD T9A (DJ5) | Payload:1800kg,Trans. code:MG | GDS10032 | Drive Shaft | 54T | 35 | 41 | 70 | 117 | 1085 | |
| | 1999.07-2002.04 | MT | F | R | Platform/Chassis 4WD T9A (DJ5) | Payload:1000/1400kg,Trans. code:MG | GDS10036 | Drive Shaft | 54T | 28 | 41 | 63 | 112.5 | 1079 | |
| | 1999.07-2002.04 | MT | F | R | Platform/Chassis 4WD T9A (DJ5) | Payload:1800kg,Trans. code:MG | GDS10066 | Drive Shaft | | 35 | 41 | 70 | 117 | 1085 | |
| | 1999.07-2002.04 | MT | F | R | Platform/Chassis 4WD T9A (DJ5) | Payload:1000/1400kg,Trans. code:ME/ML | GDS10069 | Drive Shaft | | 28 | 37 | 63 | 112.5 | 1072 | |
| | 1999.07-2002.04 | MT | F | R | Platform/Chassis 4WD T9A (DJ5) | Payload:1000/1400kg,Trans. code:MG | GDS10103 | Drive Shaft | | 28 | 41 | 63 | 112.5 | 1079 | |
| | 1999.07-2002.04 | MT | F | R | Platform/Chassis 4WD T9A (DJ5) | Payload:1000/1400kg,Trans. code:ME/ML | GDS10104 | Drive Shaft | 54T | 28 | 37 | 63 | 112.5 | 1072 | |
| | 1999.07-2002.04 | MT | F | L/R | Platform/Chassis 4WD T9A (DJ5) | Payload:1800kg,Trans. code:MG | GCO10011 | Outer Joint | 54T | 35 | 45 | 70 | 117 | 73 | I |
| | 1999.07-2002.04 | MT | F | L/R | Platform/Chassis 4WD T9A (DJ5) | Payload:1000/1400kg,Trans. code:ME/ML/MG | GCO10012 | Outer Joint | | 28 | 39 | 63 | 112.5 | 63 | I |
| | 1999.07-2002.04 | MT | F | L/R | Platform/Chassis 4WD T9A (DJ5) | Payload:1000/1400kg,Trans. code:ME/ML/MG | GCO10013 | Outer Joint | 54T | 28 | 39 | 63 | 112.5 | 63 | I |
| | 1999.07-2002.04 | MT | F | L/R | Platform/Chassis 4WD T9A (DJ5) | Payload:1800kg,Trans. code:MG | GCO10050 | Outer Joint | | 35 | 45 | 70 | 117 | 73 | I |
| | 1999.07-2002.04 | MT | F | L | Platform/Chassis 4WD T9A (DJ5) | Payload:1800kg,Trans. code:MG | GCI10010 | Inner Joint | | 41 | 45 | 43 | 70 | 115.5 | |
| | 1999.07-2002.04 | MT | F | L | Platform/Chassis 4WD T9A (DJ5) | Payload:1000/1400kg,Trans. code:MG | GCI10013 | Inner Joint | | 41 | 39 | 43 | 70 | 104 | |
| | 1999.07-2002.04 | MT | F | L | Platform/Chassis 4WD T9A (DJ5) | Payload:1000/1400kg,Trans. code:ME/ML | GCI10015 | Inner Joint | | 37 | 39 | 40 | 68.5 | 104 | |
| | 1999.07-2002.04 | MT | F | L | Platform/Chassis 4WD T9A (DJ5) | Payload:1000/1400kg,Trans. code:ME/ML | GCI45013 | Inner Joint | | 37 | 39 | 40 | 68.5 | 100 | |
| | 1999.07-2002.04 | MT | F | R | Platform/Chassis 4WD T9A (DJ5) | Payload:1800kg,Trans. code:MG | GCI10009 | Inner Joint | | 41 | 45 | 34.9 | 393 | 115.6 | |

| | YEAR | TRANSM. | F/R | L/R | BODY STYLE & DRIVE TYPE & ENGINE | REMARKS | G-AP Ref. | PRODUCT | ABS | Technical Specifications A | B | C | H | L | P |
|---|---|---|---|---|---|---|---|---|---|---|---|---|---|---|---|
| **PEUGEOT** | | | | | | | | | | | | | | | |
| **Boxer** | | | | | | | | | | | | | | | |
| 2.5 (63 kw) | 1999.07-2002.04 | MT | F | R | Platform/Chassis 4WD T9A (DJ5) | Payload:1000/1400kg,Trans. code:ME/ML | GCI10034 | Inner Joint | | 37 | 39 | 31.9 | 369.5 | 99 | |
| | 1999.07-2002.04 | MT | F | L | Van 4WD T9A (DJ5) | Payload:1800kg,Trans. code:MG | GDS10033 | Drive Shaft | 54T | 35 | 41 | 70 | 117 | 762 | |
| | 1999.07-2002.04 | MT | F | L | Van 4WD T9A (DJ5) | Payload:1000/1400kg,Trans. code:MG | GDS10035 | Drive Shaft | 54T | 28 | 41 | 63 | 112.5 | 757.5 | |
| | 1999.07-2002.04 | MT | F | L | Van 4WD T9A (DJ5) | Payload:1000/1400kg,Trans. code:ME/ML | GDS10037 | Drive Shaft | 54T | 28 | 37 | 63 | 112.5 | 771 | |
| | 1999.07-2002.04 | MT | F | L | Van 4WD T9A (DJ5) | Payload:1800kg,Trans. code:MG | GDS10067 | Drive Shaft | | 35 | 41 | 70 | 117 | 762 | |
| | 1999.07-2002.04 | MT | F | L | Van 4WD T9A (DJ5) | Payload:1000/1400kg,Trans. code:MG | GDS10102 | Drive Shaft | | 28 | 41 | 63 | 112.5 | 757.5 | |
| | 1999.07-2002.04 | MT | F | L | Van 4WD T9A (DJ5) | Payload:1000/1400kg,Trans. code:ME/ML | GDS10105 | Drive Shaft | | 28 | 37 | 63 | 112.5 | 771 | |
| | 1999.07-2002.04 | MT | F | R | Van 4WD T9A (DJ5) | Payload:1800kg,Trans. code:MG | GDS10032 | Drive Shaft | 54T | 35 | 41 | 70 | 117 | 1085 | |
| | 1999.07-2002.04 | MT | F | R | Van 4WD T9A (DJ5) | Payload:1000/1400kg,Trans. code:MG | GDS10036 | Drive Shaft | 54T | 28 | 41 | 63 | 112.5 | 1079 | |
| | 1999.07-2002.04 | MT | F | R | Van 4WD T9A (DJ5) | Payload:1800kg,Trans. code:MG | GDS10066 | Drive Shaft | | 35 | 41 | 70 | 117 | 1085 | |
| | 1999.07-2002.04 | MT | F | R | Van 4WD T9A (DJ5) | Payload:1000/1400kg,Trans. code:ME/ML | GDS10069 | Drive Shaft | | 28 | 37 | 63 | 112.5 | 1072 | |
| | 1999.07-2002.04 | MT | F | R | Van 4WD T9A (DJ5) | Payload:1000/1400kg,Trans. code:MG | GDS10103 | Drive Shaft | | 28 | 41 | 63 | 112.5 | 1079 | |
| | 1999.07-2002.04 | MT | F | R | Van 4WD T9A (DJ5) | Payload:1000/1400kg,Trans. code:ME/ML | GDS10104 | Drive Shaft | 54T | 28 | 37 | 63 | 112.5 | 1072 | |
| | 1999.07-2002.04 | MT | F | L/R | Van 4WD T9A (DJ5) | Payload:1800kg,Trans. code:MG | GCO10011 | Outer Joint | 54T | 35 | 45 | 70 | 117 | 73 | I |
| | 1999.07-2002.04 | MT | F | L/R | Van 4WD T9A (DJ5) | Payload:1000/1400kg,Trans. code:ME/ML/MG | GCO10012 | Outer Joint | | 28 | 39 | 63 | 112.5 | 63 | I |
| | 1999.07-2002.04 | MT | F | L/R | Van 4WD T9A (DJ5) | Payload:1000/1400kg,Trans. code:ME/ML/MG | GCO10013 | Outer Joint | 54T | 28 | 39 | 63 | 112.5 | 63 | I |
| | 1999.07-2002.04 | MT | F | L/R | Van 4WD T9A (DJ5) | Payload:1800kg,Trans. code:MG | GCO10050 | Outer Joint | | 35 | 45 | 70 | 117 | 73 | I |
| | 1999.07-2002.04 | MT | F | L | Van 4WD T9A (DJ5) | Payload:1800kg,Trans. code:MG | GCI10010 | Inner Joint | | 41 | 45 | 43 | 70 | 115.5 | |
| | 1999.07-2002.04 | MT | F | L | Van 4WD T9A (DJ5) | Payload:1000/1400kg,Trans. code:MG | GCI10013 | Inner Joint | | 41 | 39 | 43 | 70 | 104 | |
| | 1999.07-2002.04 | MT | F | L | Van 4WD T9A (DJ5) | Payload:1000/1400kg,Trans. code:ME/ML | GCI10015 | Inner Joint | | 37 | 39 | 40 | 68.5 | 104 | |
| | 1999.07-2002.04 | MT | F | L | Van 4WD T9A (DJ5) | Payload:1000/1400kg,Trans. code:ME/ML | GCI45013 | Inner Joint | | 37 | 39 | 40 | 68.5 | 100 | |
| | 1999.07-2002.04 | MT | F | R | Van 4WD T9A (DJ5) | Payload:1800kg,Trans. code:MG | GCI10009 | Inner Joint | | 41 | 45 | 34.9 | 393 | 115.6 | |
| | 1999.07-2002.04 | MT | F | R | Van 4WD T9A (DJ5) | Payload:1000/1400kg,Trans. code:ME/ML | GCI10034 | Inner Joint | | 37 | 39 | 31.9 | 369.5 | 99 | |
| 2.5 (76 kw) | 1994.03-1997.12 | MT | F | L | Platform/Chassis FWD T8A (DJ5T) | Payload:1800kg,Trans. code:MG | GDS10033 | Drive Shaft | 54T | 35 | 41 | 70 | 117 | 762 | |
| | 1994.03-1997.12 | MT | F | L | Platform/Chassis FWD T8A (DJ5T) | Payload:1000/1400kg,Trans. code:MG | GDS10035 | Drive Shaft | 54T | 28 | 41 | 63 | 112.5 | 757.5 | |
| | 1994.03-1997.12 | MT | F | L | Platform/Chassis FWD T8A (DJ5T) | Payload:1000/1400kg,Trans. code:ME/ML | GDS10037 | Drive Shaft | 54T | 28 | 37 | 63 | 112.5 | 771 | |
| | 1994.03-1997.12 | MT | F | L | Platform/Chassis FWD T8A (DJ5T) | Payload:1800kg,Trans. code:MG | GDS10067 | Drive Shaft | | 35 | 41 | 70 | 117 | 762 | |
| | 1994.03-1997.12 | MT | F | L | Platform/Chassis FWD T8A (DJ5T) | Payload:1000/1400kg,Trans. code:MG | GDS10102 | Drive Shaft | | 28 | 41 | 63 | 112.5 | 757.5 | |
| | 1994.03-1997.12 | MT | F | L | Platform/Chassis FWD T8A (DJ5T) | Payload:1000/1400kg,Trans. code:ME/ML | GDS10105 | Drive Shaft | | 28 | 37 | 63 | 112.5 | 771 | |
| | 1994.03-1997.12 | MT | F | R | Platform/Chassis FWD T8A (DJ5T) | Payload:1800kg,Trans. code:MG | GDS10032 | Drive Shaft | 54T | 35 | 41 | 70 | 117 | 1085 | |
| | 1994.03-1997.12 | MT | F | R | Platform/Chassis FWD T8A (DJ5T) | Payload:1000/1400kg,Trans. code:MG | GDS10036 | Drive Shaft | 54T | 28 | 41 | 63 | 112.5 | 1079 | |
| | 1994.03-1997.12 | MT | F | R | Platform/Chassis FWD T8A (DJ5T) | Payload:1800kg,Trans. code:MG | GDS10066 | Drive Shaft | | 35 | 41 | 70 | 117 | 1085 | |
| | 1994.03-1997.12 | MT | F | R | Platform/Chassis FWD T8A (DJ5T) | Payload:1000/1400kg,Trans. code:ME/ML | GDS10069 | Drive Shaft | | 28 | 37 | 63 | 112.5 | 1072 | |
| | 1994.03-1997.12 | MT | F | R | Platform/Chassis FWD T8A (DJ5T) | Payload:1000/1400kg,Trans. code:MG | GDS10103 | Drive Shaft | | 28 | 41 | 63 | 112.5 | 1079 | |
| | 1994.03-1997.12 | MT | F | R | Platform/Chassis FWD T8A (DJ5T) | Payload:1000/1400kg,Trans. code:ME/ML | GDS10104 | Drive Shaft | 54T | 28 | 37 | 63 | 112.5 | 1072 | |
| | 1994.03-1997.12 | MT | F | L/R | Platform/Chassis FWD T8A (DJ5T) | Payload:1800kg,Trans. code:MG | GCO10011 | Outer Joint | 54T | 35 | 45 | 70 | 117 | 73 | I |
| | 1994.03-1997.12 | MT | F | L/R | Platform/Chassis FWD T8A (DJ5T) | Payload:1000/1400kg,Trans. code:ME/ML/MG | GCO10012 | Outer Joint | | 28 | 39 | 63 | 112.5 | 63 | I |
| | 1994.03-1997.12 | MT | F | L/R | Platform/Chassis FWD T8A (DJ5T) | Payload:1000/1400kg,Trans. code:ME/ML/MG | GCO10013 | Outer Joint | 54T | 28 | 39 | 63 | 112.5 | 63 | I |
| | 1994.03-1997.12 | MT | F | L/R | Platform/Chassis FWD T8A (DJ5T) | Payload:1800kg,Trans. code:MG | GCO10050 | Outer Joint | | 35 | 45 | 70 | 117 | 73 | I |
| | 1994.03-1997.12 | MT | F | L | Platform/Chassis FWD T8A (DJ5T) | Payload:1800kg,Trans. code:MG | GCI10010 | Inner Joint | | 41 | 45 | 43 | 70 | 115.5 | |
| | 1994.03-1997.12 | MT | F | L | Platform/Chassis FWD T8A (DJ5T) | Payload:1000/1400kg,Trans. code:MG | GCI10013 | Inner Joint | | 41 | 39 | 43 | 70 | 104 | |
| | 1994.03-1997.12 | MT | F | L | Platform/Chassis FWD T8A (DJ5T) | Payload:1000/1400kg,Trans. code:ME/ML | GCI10015 | Inner Joint | | 37 | 39 | 40 | 68.5 | 104 | |
| | 1994.03-1997.12 | MT | F | L | Platform/Chassis FWD T8A (DJ5T) | Payload:1000/1400kg,Trans. code:ME/ML | GCI45013 | Inner Joint | | 37 | 39 | 40 | 68.5 | 100 | |
| | 1994.03-1997.12 | MT | F | R | Platform/Chassis FWD T8A (DJ5T) | Payload:1800kg,Trans. code:MG | GCI10009 | Inner Joint | | 41 | 45 | 34.9 | 393 | 115.6 | |
| | 1994.03-1997.12 | MT | F | R | Platform/Chassis FWD T8A (DJ5T) | Payload:1000/1400kg,Trans. code:ME/ML | GCI10034 | Inner Joint | | 37 | 39 | 31.9 | 369.5 | 99 | |
| | 1994.03-2002.03 | MT | F | L | Van FWD T8A (DJ5T) | Payload:1800kg,Trans. code:MG | GDS10033 | Drive Shaft | 54T | 35 | 41 | 70 | 117 | 762 | |
| | 1994.03-2002.03 | MT | F | L | Van FWD T8A (DJ5T) | Payload:1000/1400kg,Trans. code:MG | GDS10035 | Drive Shaft | 54T | 28 | 41 | 63 | 112.5 | 757.5 | |
| | 1994.03-2002.03 | MT | F | L | Van FWD T8A (DJ5T) | Payload:1000/1400kg,Trans. code:ME/ML | GDS10037 | Drive Shaft | 54T | 28 | 37 | 63 | 112.5 | 771 | |
| | 1994.03-2002.03 | MT | F | L | Van FWD T8A (DJ5T) | Payload:1800kg,Trans. code:MG | GDS10067 | Drive Shaft | | 35 | 41 | 70 | 117 | 762 | |
| | 1994.03-2002.03 | MT | F | L | Van FWD T8A (DJ5T) | Payload:1000/1400kg,Trans. code:MG | GDS10102 | Drive Shaft | | 28 | 41 | 63 | 112.5 | 757.5 | |
| | 1994.03-2002.03 | MT | F | L | Van FWD T8A (DJ5T) | Payload:1000/1400kg,Trans. code:ME/ML | GDS10105 | Drive Shaft | | 28 | 37 | 63 | 112.5 | 771 | |
| | 1994.03-2002.03 | MT | F | R | Van FWD T8A (DJ5T) | Payload:1800kg,Trans. code:MG | GDS10032 | Drive Shaft | 54T | 35 | 41 | 70 | 117 | 1085 | |
| | 1994.03-2002.03 | MT | F | R | Van FWD T8A (DJ5T) | Payload:1000/1400kg,Trans. code:MG | GDS10036 | Drive Shaft | 54T | 28 | 41 | 63 | 112.5 | 1079 | |
| | 1994.03-2002.03 | MT | F | R | Van FWD T8A (DJ5T) | Payload:1800kg,Trans. code:MG | GDS10066 | Drive Shaft | | 35 | 41 | 70 | 117 | 1085 | |
| | 1994.03-2002.03 | MT | F | R | Van FWD T8A (DJ5T) | Payload:1000/1400kg,Trans. code:ME/ML | GDS10069 | Drive Shaft | | 28 | 37 | 63 | 112.5 | 1072 | |
| | 1994.03-2002.03 | MT | F | R | Van FWD T8A (DJ5T) | Payload:1000/1400kg,Trans. code:MG | GDS10103 | Drive Shaft | | 28 | 41 | 63 | 112.5 | 1079 | |
| | 1994.03-2002.03 | MT | F | R | Van FWD T8A (DJ5T) | Payload:1000/1400kg,Trans. code:ME/ML | GDS10104 | Drive Shaft | 54T | 28 | 37 | 63 | 112.5 | 1072 | |
| | 1994.03-2002.03 | MT | F | L/R | Van FWD T8A (DJ5T) | Payload:1800kg,Trans. code:MG | GCO10011 | Outer Joint | 54T | 35 | 45 | 70 | 117 | 73 | I |
| | 1994.03-2002.03 | MT | F | L/R | Van FWD T8A (DJ5T) | Payload:1000/1400kg,Trans. code:ME/ML/MG | GCO10012 | Outer Joint | | 28 | 39 | 63 | 112.5 | 63 | I |
| | 1994.03-2002.03 | MT | F | L/R | Van FWD T8A (DJ5T) | Payload:1000/1400kg,Trans. code:ME/ML/MG | GCO10013 | Outer Joint | 54T | 28 | 39 | 63 | 112.5 | 63 | I |
| | 1994.03-2002.03 | MT | F | L/R | Van FWD T8A (DJ5T) | Payload:1800kg,Trans. code:MG | GCO10050 | Outer Joint | | 35 | 45 | 70 | 117 | 73 | I |
| | 1994.03-2002.03 | MT | F | L | Van FWD T8A (DJ5T) | Payload:1800kg,Trans. code:MG | GCI10010 | Inner Joint | | 41 | 45 | 43 | 70 | 115.5 | |
| | 1994.03-2002.03 | MT | F | L | Van FWD T8A (DJ5T) | Payload:1000/1400kg,Trans. code:MG | GCI10013 | Inner Joint | | 41 | 39 | 43 | 70 | 104 | |
| | 1994.03-2002.03 | MT | F | L | Van FWD T8A (DJ5T) | Payload:1000/1400kg,Trans. code:ME/ML | GCI10015 | Inner Joint | | 37 | 39 | 40 | 68.5 | 104 | |
| | 1994.03-2002.03 | MT | F | L | Van FWD T8A (DJ5T) | Payload:1000/1400kg,Trans. code:ME/ML | GCI45013 | Inner Joint | | 37 | 39 | 40 | 68.5 | 100 | |

| | YEAR | TRANSM. | F/R | L/R | BODY STYLE & DRIVE TYPE & ENGINE | REMARKS | G-AP Ref. | PRODUCT | ABS | Technical Specifications A | B | C | H | L | P |
|---|---|---|---|---|---|---|---|---|---|---|---|---|---|---|---|
| **PEUGEOT** | | | | | | | | | | | | | | | |
| **Boxer** | | | | | | | | | | | | | | | |
| 2.5 (76 kw) | 1994.03-2002.03 | MT | F | R | Van FWD T8A (DJ5T) | Payload:1800kg,Trans. code:MG | GCI10009 | Inner Joint | | 41 | 45 | 34.9 | 393 | 115.6 | |
| | 1994.03-2002.03 | MT | F | R | Van FWD T8A (DJ5T) | Payload:1000/1400kg,Trans. code:ME/ML | GCI10034 | Inner Joint | | 37 | 39 | 31.9 | 369.5 | 99 | |
| | 1994.07-1997.12 | MT | F | L | Bus FWD T8A (DJ5T) | Payload:1800kg,Trans. code:MG | GDS10033 | Drive Shaft | 54T | 35 | 41 | 70 | 117 | 762 | |
| | 1994.07-1997.12 | MT | F | L | Bus FWD T8A (DJ5T) | Payload:1000/1400kg,Trans. code:MG | GDS10035 | Drive Shaft | 54T | 28 | 41 | 63 | 112.5 | 757.5 | |
| | 1994.07-1997.12 | MT | F | L | Bus FWD T8A (DJ5T) | Payload:1000/1400kg,Trans. code:ME/ML | GDS10037 | Drive Shaft | 54T | 28 | 37 | 63 | 112.5 | 771 | |
| | 1994.07-1997.12 | MT | F | L | Bus FWD T8A (DJ5T) | Payload:1800kg,Trans. code:MG | GDS10067 | Drive Shaft | | 35 | 41 | 70 | 117 | 762 | |
| | 1994.07-1997.12 | MT | F | L | Bus FWD T8A (DJ5T) | Payload:1000/1400kg,Trans. code:MG | GDS10102 | Drive Shaft | | 28 | 41 | 63 | 112.5 | 757.5 | |
| | 1994.07-1997.12 | MT | F | L | Bus FWD T8A (DJ5T) | Payload:1000/1400kg,Trans. code:ME/ML | GDS10105 | Drive Shaft | | 28 | 37 | 63 | 112.5 | 771 | |
| | 1994.07-1997.12 | MT | F | R | Bus FWD T8A (DJ5T) | Payload:1800kg,Trans. code:MG | GDS10032 | Drive Shaft | 54T | 35 | 41 | 70 | 117 | 1085 | |
| | 1994.07-1997.12 | MT | F | R | Bus FWD T8A (DJ5T) | Payload:1000/1400kg,Trans. code:MG | GDS10036 | Drive Shaft | 54T | 28 | 41 | 63 | 112.5 | 1079 | |
| | 1994.07-1997.12 | MT | F | R | Bus FWD T8A (DJ5T) | Payload:1800kg,Trans. code:MG | GDS10066 | Drive Shaft | | 35 | 41 | 70 | 117 | 1085 | |
| | 1994.07-1997.12 | MT | F | R | Bus FWD T8A (DJ5T) | Payload:1000/1400kg,Trans. code:ME/ML | GDS10069 | Drive Shaft | | 28 | 37 | 63 | 112.5 | 1072 | |
| | 1994.07-1997.12 | MT | F | R | Bus FWD T8A (DJ5T) | Payload:1000/1400kg,Trans. code:MG | GDS10103 | Drive Shaft | | 28 | 41 | 63 | 112.5 | 1079 | |
| | 1994.07-1997.12 | MT | F | R | Bus FWD T8A (DJ5T) | Payload:1000/1400kg,Trans. code:ME/ML | GDS10104 | Drive Shaft | 54T | 28 | 37 | 63 | 112.5 | 1072 | |
| | 1994.07-1997.12 | MT | F | L/R | Bus FWD T8A (DJ5T) | Payload:1800kg,Trans. code:MG | GCO10011 | Outer Joint | 54T | 35 | 45 | 70 | 117 | 73 | I |
| | 1994.07-1997.12 | MT | F | L/R | Bus FWD T8A (DJ5T) | Payload:1000/1400kg,Trans. code:ME/ML/MG | GCO10012 | Outer Joint | | 28 | 39 | 63 | 112.5 | 63 | I |
| | 1994.07-1997.12 | MT | F | L/R | Bus FWD T8A (DJ5T) | Payload:1000/1400kg,Trans. code:ME/ML/MG | GCO10013 | Outer Joint | 54T | 28 | 39 | 63 | 112.5 | 63 | I |
| | 1994.07-1997.12 | MT | F | L/R | Bus FWD T8A (DJ5T) | Payload:1800kg,Trans. code:MG | GCO10050 | Outer Joint | | 35 | 45 | 70 | 117 | 73 | I |
| | 1994.07-1997.12 | MT | F | L | Bus FWD T8A (DJ5T) | Payload:1800kg,Trans. code:MG | GCI10010 | Inner Joint | | 41 | 45 | 43 | 70 | 115.5 | |
| | 1994.07-1997.12 | MT | F | L | Bus FWD T8A (DJ5T) | Payload:1000/1400kg,Trans. code:MG | GCI10013 | Inner Joint | | 41 | 39 | 43 | 70 | 104 | |
| | 1994.07-1997.12 | MT | F | L | Bus FWD T8A (DJ5T) | Payload:1000/1400kg,Trans. code:ME/ML | GCI10015 | Inner Joint | | 37 | 39 | 40 | 68.5 | 104 | |
| | 1994.07-1997.12 | MT | F | L | Bus FWD T8A (DJ5T) | Payload:1000/1400kg,Trans. code:ME/ML | GCI45013 | Inner Joint | | 37 | 39 | 40 | 68.5 | 100 | |
| | 1994.07-1997.12 | MT | F | R | Bus FWD T8A (DJ5T) | Payload:1800kg,Trans. code:MG | GCI10009 | Inner Joint | | 41 | 45 | 34.9 | 393 | 115.6 | |
| | 1994.07-1997.12 | MT | F | R | Bus FWD T8A (DJ5T) | Payload:1000/1400kg,Trans. code:ME/ML | GCI10034 | Inner Joint | | 37 | 39 | 31.9 | 369.5 | 99 | |
| | 1996.07-2002.04 | MT | F | L | Bus 4WD T8A (DJ5T) | Payload:1800kg,Trans. code:MG | GDS10033 | Drive Shaft | 54T | 35 | 41 | 70 | 117 | 762 | |
| | 1996.07-2002.04 | MT | F | L | Bus 4WD T8A (DJ5T) | Payload:1000/1400kg,Trans. code:MG | GDS10035 | Drive Shaft | 54T | 28 | 41 | 63 | 112.5 | 757.5 | |
| | 1996.07-2002.04 | MT | F | L | Bus 4WD T8A (DJ5T) | Payload:1000/1400kg,Trans. code:ME/ML | GDS10037 | Drive Shaft | 54T | 28 | 37 | 63 | 112.5 | 771 | |
| | 1996.07-2002.04 | MT | F | L | Bus 4WD T8A (DJ5T) | Payload:1800kg,Trans. code:MG | GDS10067 | Drive Shaft | | 35 | 41 | 70 | 117 | 762 | |
| | 1996.07-2002.04 | MT | F | L | Bus 4WD T8A (DJ5T) | Payload:1000/1400kg,Trans. code:MG | GDS10102 | Drive Shaft | | 28 | 41 | 63 | 112.5 | 757.5 | |
| | 1996.07-2002.04 | MT | F | L | Bus 4WD T8A (DJ5T) | Payload:1000/1400kg,Trans. code:ME/ML | GDS10105 | Drive Shaft | | 28 | 37 | 63 | 112.5 | 771 | |
| | 1996.07-2002.04 | MT | F | R | Bus 4WD T8A (DJ5T) | Payload:1800kg,Trans. code:MG | GDS10032 | Drive Shaft | 54T | 35 | 41 | 70 | 117 | 1085 | |
| | 1996.07-2002.04 | MT | F | R | Bus 4WD T8A (DJ5T) | Payload:1000/1400kg,Trans. code:MG | GDS10036 | Drive Shaft | 54T | 28 | 41 | 63 | 112.5 | 1079 | |
| | 1996.07-2002.04 | MT | F | R | Bus 4WD T8A (DJ5T) | Payload:1800kg,Trans. code:MG | GDS10066 | Drive Shaft | | 35 | 41 | 70 | 117 | 1085 | |
| | 1996.07-2002.04 | MT | F | R | Bus 4WD T8A (DJ5T) | Payload:1000/1400kg,Trans. code:ME/ML | GDS10069 | Drive Shaft | | 28 | 37 | 63 | 112.5 | 1072 | |
| | 1996.07-2002.04 | MT | F | R | Bus 4WD T8A (DJ5T) | Payload:1000/1400kg,Trans. code:MG | GDS10103 | Drive Shaft | | 28 | 41 | 63 | 112.5 | 1079 | |
| | 1996.07-2002.04 | MT | F | R | Bus 4WD T8A (DJ5T) | Payload:1000/1400kg,Trans. code:ME/ML | GDS10104 | Drive Shaft | 54T | 28 | 37 | 63 | 112.5 | 1072 | |
| | 1996.07-2002.04 | MT | F | L/R | Bus 4WD T8A (DJ5T) | Payload:1800kg,Trans. code:MG | GCO10011 | Outer Joint | 54T | 35 | 45 | 70 | 117 | 73 | I |
| | 1996.07-2002.04 | MT | F | L/R | Bus 4WD T8A (DJ5T) | Payload:1000/1400kg,Trans. code:ME/ML/MG | GCO10012 | Outer Joint | | 28 | 39 | 63 | 112.5 | 63 | I |
| | 1996.07-2002.04 | MT | F | L/R | Bus 4WD T8A (DJ5T) | Payload:1000/1400kg,Trans. code:ME/ML/MG | GCO10013 | Outer Joint | 54T | 28 | 39 | 63 | 112.5 | 63 | I |
| | 1996.07-2002.04 | MT | F | L/R | Bus 4WD T8A (DJ5T) | Payload:1800kg,Trans. code:MG | GCO10050 | Outer Joint | | 35 | 45 | 70 | 117 | 73 | I |
| | 1996.07-2002.04 | MT | F | L | Bus 4WD T8A (DJ5T) | Payload:1800kg,Trans. code:MG | GCI10010 | Inner Joint | | 41 | 45 | 43 | 70 | 115.5 | |
| | 1996.07-2002.04 | MT | F | L | Bus 4WD T8A (DJ5T) | Payload:1000/1400kg,Trans. code:MG | GCI10013 | Inner Joint | | 41 | 39 | 43 | 70 | 104 | |
| | 1996.07-2002.04 | MT | F | L | Bus 4WD T8A (DJ5T) | Payload:1000/1400kg,Trans. code:ME/ML | GCI10015 | Inner Joint | | 37 | 39 | 40 | 68.5 | 104 | |
| | 1996.07-2002.04 | MT | F | L | Bus 4WD T8A (DJ5T) | Payload:1000/1400kg,Trans. code:ME/ML | GCI45013 | Inner Joint | | 37 | 39 | 40 | 68.5 | 100 | |
| | 1996.07-2002.04 | MT | F | R | Bus 4WD T8A (DJ5T) | Payload:1800kg,Trans. code:MG | GCI10009 | Inner Joint | | 41 | 45 | 34.9 | 393 | 115.6 | |
| | 1996.07-2002.04 | MT | F | R | Bus 4WD T8A (DJ5T) | Payload:1000/1400kg,Trans. code:ME/ML | GCI10034 | Inner Joint | | 37 | 39 | 31.9 | 369.5 | 99 | |
| 2.5 (79 kw) | 1997.01-2002.04 | MT | F | L | Bus 4WD THX (DJ5TED) | Payload:1800kg,Trans. code:MG | GDS10033 | Drive Shaft | 54T | 35 | 41 | 70 | 117 | 762 | |
| | 1997.01-2002.04 | MT | F | L | Bus 4WD THX (DJ5TED) | Payload:1000/1400kg,Trans. code:MG | GDS10035 | Drive Shaft | 54T | 28 | 41 | 63 | 112.5 | 757.5 | |
| | 1997.01-2002.04 | MT | F | L | Bus 4WD THX (DJ5TED) | Payload:1000/1400kg,Trans. code:ME/ML | GDS10037 | Drive Shaft | 54T | 28 | 37 | 63 | 112.5 | 771 | |
| | 1997.01-2002.04 | MT | F | L | Bus 4WD THX (DJ5TED) | Payload:1800kg,Trans. code:MG | GDS10067 | Drive Shaft | | 35 | 41 | 70 | 117 | 762 | |
| | 1997.01-2002.04 | MT | F | L | Bus 4WD THX (DJ5TED) | Payload:1000/1400kg,Trans. code:MG | GDS10102 | Drive Shaft | | 28 | 41 | 63 | 112.5 | 757.5 | |
| | 1997.01-2002.04 | MT | F | L | Bus 4WD THX (DJ5TED) | Payload:1000/1400kg,Trans. code:ME/ML | GDS10105 | Drive Shaft | | 28 | 37 | 63 | 112.5 | 771 | |
| | 1997.01-2002.04 | MT | F | R | Bus 4WD THX (DJ5TED) | Payload:1800kg,Trans. code:MG | GDS10032 | Drive Shaft | 54T | 35 | 41 | 70 | 117 | 1085 | |
| | 1997.01-2002.04 | MT | F | R | Bus 4WD THX (DJ5TED) | Payload:1000/1400kg,Trans. code:MG | GDS10036 | Drive Shaft | 54T | 28 | 41 | 63 | 112.5 | 1079 | |
| | 1997.01-2002.04 | MT | F | R | Bus 4WD THX (DJ5TED) | Payload:1800kg,Trans. code:MG | GDS10066 | Drive Shaft | | 35 | 41 | 70 | 117 | 1085 | |
| | 1997.01-2002.04 | MT | F | R | Bus 4WD THX (DJ5TED) | Payload:1000/1400kg,Trans. code:ME/ML | GDS10069 | Drive Shaft | | 28 | 37 | 63 | 112.5 | 1072 | |
| | 1997.01-2002.04 | MT | F | R | Bus 4WD THX (DJ5TED) | Payload:1000/1400kg,Trans. code:MG | GDS10103 | Drive Shaft | | 28 | 41 | 63 | 112.5 | 1079 | |
| | 1997.01-2002.04 | MT | F | R | Bus 4WD THX (DJ5TED) | Payload:1000/1400kg,Trans. code:ME/ML | GDS10104 | Drive Shaft | 54T | 28 | 37 | 63 | 112.5 | 1072 | |
| | 1997.01-2002.04 | MT | F | L/R | Bus 4WD THX (DJ5TED) | Payload:1800kg,Trans. code:MG | GCO10011 | Outer Joint | 54T | 35 | 45 | 70 | 117 | 73 | I |
| | 1997.01-2002.04 | MT | F | L/R | Bus 4WD THX (DJ5TED) | Payload:1000/1400kg,Trans. code:ME/ML/MG | GCO10012 | Outer Joint | | 28 | 39 | 63 | 112.5 | 63 | I |
| | 1997.01-2002.04 | MT | F | L/R | Bus 4WD THX (DJ5TED) | Payload:1000/1400kg,Trans. code:ME/ML/MG | GCO10013 | Outer Joint | 54T | 28 | 39 | 63 | 112.5 | 63 | I |
| | 1997.01-2002.04 | MT | F | L/R | Bus 4WD THX (DJ5TED) | Payload:1800kg,Trans. code:MG | GCO10050 | Outer Joint | | 35 | 45 | 70 | 117 | 73 | I |
| | 1997.01-2002.04 | MT | F | L | Bus 4WD THX (DJ5TED) | Payload:1800kg,Trans. code:MG | GCI10010 | Inner Joint | | 41 | 45 | 43 | 70 | 115.5 | |
| | 1997.01-2002.04 | MT | F | L | Bus 4WD THX (DJ5TED) | Payload:1000/1400kg,Trans. code:MG | GCI10013 | Inner Joint | | 41 | 39 | 43 | 70 | 104 | |
| | 1997.01-2002.04 | MT | F | L | Bus 4WD THX (DJ5TED) | Payload:1000/1400kg,Trans. code:ME/ML | GCI10015 | Inner Joint | | 37 | 39 | 40 | 68.5 | 104 | |

| | YEAR | TRANSM. | F/R | L/R | BODY STYLE & DRIVE TYPE & ENGINE | REMARKS | G-AP Ref. | PRODUCT | ABS | Technical Specifications A | B | C | H | L | P |
|---|---|---|---|---|---|---|---|---|---|---|---|---|---|---|---|
| **PEUGEOT** | | | | | | | | | | | | | | | |
| **Boxer** | | | | | | | | | | | | | | | |
| 2.5 (79 kw) | 1997.01-2002.04 | MT | F | L | Bus 4WD THX (DJ5TED) | Payload:1000/1400kg,Trans. code:ME/ML | GCI45013 | Inner Joint | | 37 | 39 | 40 | 68.5 | 100 | |
| | 1997.01-2002.04 | MT | F | R | Bus 4WD THX (DJ5TED) | Payload:1800kg,Trans. code:MG | GCI10009 | Inner Joint | | 41 | 45 | 34.9 | 393 | 115.6 | |
| | 1997.01-2002.04 | MT | F | R | Bus 4WD THX (DJ5TED) | Payload:1000/1400kg,Trans. code:ME/ML | GCI10034 | Inner Joint | | 37 | 39 | 31.9 | 369.5 | 99 | |
| | 1997.01-2002.04 | MT | F | L | Bus FWD THX (DJ5TED) | Payload:1800kg,Trans. code:MG | GDS10033 | Drive Shaft | 54T | 35 | 41 | 70 | 117 | 762 | |
| | 1997.01-2002.04 | MT | F | L | Bus FWD THX (DJ5TED) | Payload:1000/1400kg,Trans. code:MG | GDS10035 | Drive Shaft | 54T | 28 | 41 | 63 | 112.5 | 757.5 | |
| | 1997.01-2002.04 | MT | F | L | Bus FWD THX (DJ5TED) | Payload:1000/1400kg,Trans. code:ME/ML | GDS10037 | Drive Shaft | 54T | 28 | 37 | 63 | 112.5 | 771 | |
| | 1997.01-2002.04 | MT | F | L | Bus FWD THX (DJ5TED) | Payload:1800kg,Trans. code:MG | GDS10067 | Drive Shaft | | 35 | 41 | 70 | 117 | 762 | |
| | 1997.01-2002.04 | MT | F | L | Bus FWD THX (DJ5TED) | Payload:1000/1400kg,Trans. code:MG | GDS10102 | Drive Shaft | | 28 | 41 | 63 | 112.5 | 757.5 | |
| | 1997.01-2002.04 | MT | F | L | Bus FWD THX (DJ5TED) | Payload:1000/1400kg,Trans. code:ME/ML | GDS10105 | Drive Shaft | | 28 | 37 | 63 | 112.5 | 771 | |
| | 1997.01-2002.04 | MT | F | R | Bus FWD THX (DJ5TED) | Payload:1800kg,Trans. code:MG | GDS10032 | Drive Shaft | 54T | 35 | 41 | 70 | 117 | 1085 | |
| | 1997.01-2002.04 | MT | F | R | Bus FWD THX (DJ5TED) | Payload:1000/1400kg,Trans. code:MG | GDS10036 | Drive Shaft | 54T | 28 | 41 | 63 | 112.5 | 1079 | |
| | 1997.01-2002.04 | MT | F | R | Bus FWD THX (DJ5TED) | Payload:1800kg,Trans. code:MG | GDS10066 | Drive Shaft | | 35 | 41 | 70 | 117 | 1085 | |
| | 1997.01-2002.04 | MT | F | R | Bus FWD THX (DJ5TED) | Payload:1000/1400kg,Trans. code:ME/ML | GDS10069 | Drive Shaft | | 28 | 37 | 63 | 112.5 | 1072 | |
| | 1997.01-2002.04 | MT | F | R | Bus FWD THX (DJ5TED) | Payload:1000/1400kg,Trans. code:MG | GDS10103 | Drive Shaft | | 28 | 41 | 63 | 112.5 | 1079 | |
| | 1997.01-2002.04 | MT | F | R | Bus FWD THX (DJ5TED) | Payload:1000/1400kg,Trans. code:ME/ML | GDS10104 | Drive Shaft | 54T | 28 | 37 | 63 | 112.5 | 1072 | |
| | 1997.01-2002.04 | MT | F | L/R | Bus FWD THX (DJ5TED) | Payload:1800kg,Trans. code:MG | GCO10011 | Outer Joint | 54T | 35 | 45 | 70 | 117 | 73 | I |
| | 1997.01-2002.04 | MT | F | L/R | Bus FWD THX (DJ5TED) | Payload:1000/1400kg,Trans. code:ME/ML/MG | GCO10012 | Outer Joint | | 28 | 39 | 63 | 112.5 | 63 | I |
| | 1997.01-2002.04 | MT | F | L/R | Bus FWD THX (DJ5TED) | Payload:1000/1400kg,Trans. code:ME/ML/MG | GCO10013 | Outer Joint | 54T | 28 | 39 | 63 | 112.5 | 63 | I |
| | 1997.01-2002.04 | MT | F | L/R | Bus FWD THX (DJ5TED) | Payload:1800kg,Trans. code:MG | GCO10050 | Outer Joint | | 35 | 45 | 70 | 117 | 73 | I |
| | 1997.01-2002.04 | MT | F | L | Bus FWD THX (DJ5TED) | Payload:1800kg,Trans. code:MG | GCI10010 | Inner Joint | | 41 | 45 | 43 | 70 | 115.5 | |
| | 1997.01-2002.04 | MT | F | L | Bus FWD THX (DJ5TED) | Payload:1000/1400kg,Trans. code:MG | GCI10013 | Inner Joint | | 41 | 39 | 43 | 70 | 104 | |
| | 1997.01-2002.04 | MT | F | L | Bus FWD THX (DJ5TED) | Payload:1000/1400kg,Trans. code:ME/ML | GCI10015 | Inner Joint | | 37 | 39 | 40 | 68.5 | 104 | |
| | 1997.01-2002.04 | MT | F | L | Bus FWD THX (DJ5TED) | Payload:1000/1400kg,Trans. code:ME/ML | GCI45013 | Inner Joint | | 37 | 39 | 40 | 68.5 | 100 | |
| | 1997.01-2002.04 | MT | F | R | Bus FWD THX (DJ5TED) | Payload:1800kg,Trans. code:MG | GCI10009 | Inner Joint | | 41 | 45 | 34.9 | 393 | 115.6 | |
| | 1997.01-2002.04 | MT | F | R | Bus FWD THX (DJ5TED) | Payload:1000/1400kg,Trans. code:ME/ML | GCI10034 | Inner Joint | | 37 | 39 | 31.9 | 369.5 | 99 | |
| | 1997.01-2002.04 | MT | F | L | Platform/Chassis FWD THX (DJ5TED) | Payload:1800kg,Trans. code:MG | GDS10033 | Drive Shaft | 54T | 35 | 41 | 70 | 117 | 762 | |
| | 1997.01-2002.04 | MT | F | L | Platform/Chassis FWD THX (DJ5TED) | Payload:1000/1400kg,Trans. code:MG | GDS10035 | Drive Shaft | 54T | 28 | 41 | 63 | 112.5 | 757.5 | |
| | 1997.01-2002.04 | MT | F | L | Platform/Chassis FWD THX (DJ5TED) | Payload:1000/1400kg,Trans. code:ME/ML | GDS10037 | Drive Shaft | 54T | 28 | 37 | 63 | 112.5 | 771 | |
| | 1997.01-2002.04 | MT | F | L | Platform/Chassis FWD THX (DJ5TED) | Payload:1800kg,Trans. code:MG | GDS10067 | Drive Shaft | | 35 | 41 | 70 | 117 | 762 | |
| | 1997.01-2002.04 | MT | F | L | Platform/Chassis FWD THX (DJ5TED) | Payload:1000/1400kg,Trans. code:MG | GDS10102 | Drive Shaft | | 28 | 41 | 63 | 112.5 | 757.5 | |
| | 1997.01-2002.04 | MT | F | L | Platform/Chassis FWD THX (DJ5TED) | Payload:1000/1400kg,Trans. code:ME/ML | GDS10105 | Drive Shaft | | 28 | 37 | 63 | 112.5 | 771 | |
| | 1997.01-2002.04 | MT | F | R | Platform/Chassis FWD THX (DJ5TED) | Payload:1800kg,Trans. code:MG | GDS10032 | Drive Shaft | 54T | 35 | 41 | 70 | 117 | 1085 | |
| | 1997.01-2002.04 | MT | F | R | Platform/Chassis FWD THX (DJ5TED) | Payload:1000/1400kg,Trans. code:MG | GDS10036 | Drive Shaft | 54T | 28 | 41 | 63 | 112.5 | 1079 | |
| | 1997.01-2002.04 | MT | F | R | Platform/Chassis FWD THX (DJ5TED) | Payload:1800kg,Trans. code:MG | GDS10066 | Drive Shaft | | 35 | 41 | 70 | 117 | 1085 | |
| | 1997.01-2002.04 | MT | F | R | Platform/Chassis FWD THX (DJ5TED) | Payload:1000/1400kg,Trans. code:ME/ML | GDS10069 | Drive Shaft | | 28 | 37 | 63 | 112.5 | 1072 | |
| | 1997.01-2002.04 | MT | F | R | Platform/Chassis FWD THX (DJ5TED) | Payload:1000/1400kg,Trans. code:MG | GDS10103 | Drive Shaft | | 28 | 41 | 63 | 112.5 | 1079 | |
| | 1997.01-2002.04 | MT | F | R | Platform/Chassis FWD THX (DJ5TED) | Payload:1000/1400kg,Trans. code:ME/ML | GDS10104 | Drive Shaft | 54T | 28 | 37 | 63 | 112.5 | 1072 | |
| | 1997.01-2002.04 | MT | F | L/R | Platform/Chassis FWD THX (DJ5TED) | Payload:1800kg,Trans. code:MG | GCO10011 | Outer Joint | 54T | 35 | 45 | 70 | 117 | 73 | I |
| | 1997.01-2002.04 | MT | F | L/R | Platform/Chassis FWD THX (DJ5TED) | Payload:1000/1400kg,Trans. code:ME/ML/MG | GCO10012 | Outer Joint | | 28 | 39 | 63 | 112.5 | 63 | I |
| | 1997.01-2002.04 | MT | F | L/R | Platform/Chassis FWD THX (DJ5TED) | Payload:1000/1400kg,Trans. code:ME/ML/MG | GCO10013 | Outer Joint | 54T | 28 | 39 | 63 | 112.5 | 63 | I |
| | 1997.01-2002.04 | MT | F | L/R | Platform/Chassis FWD THX (DJ5TED) | Payload:1800kg,Trans. code:MG | GCO10050 | Outer Joint | | 35 | 45 | 70 | 117 | 73 | I |
| | 1997.01-2002.04 | MT | F | L | Platform/Chassis FWD THX (DJ5TED) | Payload:1800kg,Trans. code:MG | GCI10010 | Inner Joint | | 41 | 45 | 43 | 70 | 115.5 | |
| | 1997.01-2002.04 | MT | F | L | Platform/Chassis FWD THX (DJ5TED) | Payload:1000/1400kg,Trans. code:MG | GCI10013 | Inner Joint | | 41 | 39 | 43 | 70 | 104 | |
| | 1997.01-2002.04 | MT | F | L | Platform/Chassis FWD THX (DJ5TED) | Payload:1000/1400kg,Trans. code:ME/ML | GCI10015 | Inner Joint | | 37 | 39 | 40 | 68.5 | 104 | |
| | 1997.01-2002.04 | MT | F | L | Platform/Chassis FWD THX (DJ5TED) | Payload:1000/1400kg,Trans. code:ME/ML | GCI45013 | Inner Joint | | 37 | 39 | 40 | 68.5 | 100 | |
| | 1997.01-2002.04 | MT | F | R | Platform/Chassis FWD THX (DJ5TED) | Payload:1800kg,Trans. code:MG | GCI10009 | Inner Joint | | 41 | 45 | 34.9 | 393 | 115.6 | |
| | 1997.01-2002.04 | MT | F | R | Platform/Chassis FWD THX (DJ5TED) | Payload:1000/1400kg,Trans. code:ME/ML | GCI10034 | Inner Joint | | 37 | 39 | 31.9 | 369.5 | 99 | |
| | 1997.01-2002.04 | MT | F | L | Van FWD THX (DJ5TED) | Payload:1800kg,Trans. code:MG | GDS10033 | Drive Shaft | 54T | 35 | 41 | 70 | 117 | 762 | |
| | 1997.01-2002.04 | MT | F | L | Van FWD THX (DJ5TED) | Payload:1000/1400kg,Trans. code:MG | GDS10035 | Drive Shaft | 54T | 28 | 41 | 63 | 112.5 | 757.5 | |
| | 1997.01-2002.04 | MT | F | L | Van FWD THX (DJ5TED) | Payload:1000/1400kg,Trans. code:ME/ML | GDS10037 | Drive Shaft | 54T | 28 | 37 | 63 | 112.5 | 771 | |
| | 1997.01-2002.04 | MT | F | L | Van FWD THX (DJ5TED) | Payload:1800kg,Trans. code:MG | GDS10067 | Drive Shaft | | 35 | 41 | 70 | 117 | 762 | |
| | 1997.01-2002.04 | MT | F | L | Van FWD THX (DJ5TED) | Payload:1000/1400kg,Trans. code:MG | GDS10102 | Drive Shaft | | 28 | 41 | 63 | 112.5 | 757.5 | |
| | 1997.01-2002.04 | MT | F | L | Van FWD THX (DJ5TED) | Payload:1000/1400kg,Trans. code:ME/ML | GDS10105 | Drive Shaft | | 28 | 37 | 63 | 112.5 | 771 | |
| | 1997.01-2002.04 | MT | F | R | Van FWD THX (DJ5TED) | Payload:1800kg,Trans. code:MG | GDS10032 | Drive Shaft | 54T | 35 | 41 | 70 | 117 | 1085 | |
| | 1997.01-2002.04 | MT | F | R | Van FWD THX (DJ5TED) | Payload:1000/1400kg,Trans. code:MG | GDS10036 | Drive Shaft | 54T | 28 | 41 | 63 | 112.5 | 1079 | |
| | 1997.01-2002.04 | MT | F | R | Van FWD THX (DJ5TED) | Payload:1800kg,Trans. code:MG | GDS10066 | Drive Shaft | | 35 | 41 | 70 | 117 | 1085 | |
| | 1997.01-2002.04 | MT | F | R | Van FWD THX (DJ5TED) | Payload:1000/1400kg,Trans. code:ME/ML | GDS10069 | Drive Shaft | | 28 | 37 | 63 | 112.5 | 1072 | |
| | 1997.01-2002.04 | MT | F | R | Van FWD THX (DJ5TED) | Payload:1000/1400kg,Trans. code:MG | GDS10103 | Drive Shaft | | 28 | 41 | 63 | 112.5 | 1079 | |
| | 1997.01-2002.04 | MT | F | R | Van FWD THX (DJ5TED) | Payload:1000/1400kg,Trans. code:ME/ML | GDS10104 | Drive Shaft | 54T | 28 | 37 | 63 | 112.5 | 1072 | |
| | 1997.01-2002.04 | MT | F | L/R | Van FWD THX (DJ5TED) | Payload:1800kg,Trans. code:MG | GCO10011 | Outer Joint | 54T | 35 | 45 | 70 | 117 | 73 | I |
| | 1997.01-2002.04 | MT | F | L/R | Van FWD THX (DJ5TED) | Payload:1000/1400kg,Trans. code:ME/ML/MG | GCO10012 | Outer Joint | | 28 | 39 | 63 | 112.5 | 63 | I |
| | 1997.01-2002.04 | MT | F | L/R | Van FWD THX (DJ5TED) | Payload:1000/1400kg,Trans. code:ME/ML/MG | GCO10013 | Outer Joint | 54T | 28 | 39 | 63 | 112.5 | 63 | I |
| | 1997.01-2002.04 | MT | F | L/R | Van FWD THX (DJ5TED) | Payload:1800kg,Trans. code:MG | GCO10050 | Outer Joint | | 35 | 45 | 70 | 117 | 73 | I |
| | 1997.01-2002.04 | MT | F | L | Van FWD THX (DJ5TED) | Payload:1800kg,Trans. code:MG | GCI10010 | Inner Joint | | 41 | 45 | 43 | 70 | 115.5 | |
| | 1997.01-2002.04 | MT | F | L | Van FWD THX (DJ5TED) | Payload:1000/1400kg,Trans. code:MG | GCI10013 | Inner Joint | | 41 | 39 | 43 | 70 | 104 | |

| | YEAR | TRANSM. | F/R | L/R | BODY STYLE & DRIVE TYPE & ENGINE | REMARKS | G-AP Ref. | PRODUCT | ABS | Technical Specifications A | B | C | H | L | P |
|---|---|---|---|---|---|---|---|---|---|---|---|---|---|---|---|
| **PEUGEOT** **Boxer** | | | | | | | | | | | | | | | |
| 2.5 (79 kw) | 1997.01-2002.04 | MT | F | L | Van FWD THX (DJ5TED) | Payload:1000/1400kg,Trans. code:ME/ML | GCI10015 | Inner Joint | | 37 | 39 | 40 | 68.5 | 104 | |
| | 1997.01-2002.04 | MT | F | L | Van FWD THX (DJ5TED) | Payload:1000/1400kg,Trans. code:ME/ML | GCI45013 | Inner Joint | | 37 | 39 | 40 | 68.5 | 100 | |
| | 1997.01-2002.04 | MT | F | R | Van FWD THX (DJ5TED) | Payload:1800kg,Trans. code:MG | GCI10009 | Inner Joint | | 41 | 45 | 34.9 | 393 | 115.6 | |
| | 1997.01-2002.04 | MT | F | R | Van FWD THX (DJ5TED) | Payload:1000/1400kg,Trans. code:ME/ML | GCI10034 | Inner Joint | | 37 | 39 | 31.9 | 369.5 | 99 | |
| | 1999.07-2002.04 | MT | F | L | Platform/Chassis 4WD THX (DJ5TED) | Payload:1800kg,Trans. code:MG | GDS10033 | Drive Shaft | 54T | 35 | 41 | 70 | 117 | 762 | |
| | 1999.07-2002.04 | MT | F | L | Platform/Chassis 4WD THX (DJ5TED) | Payload:1000/1400kg,Trans. code:MG | GDS10035 | Drive Shaft | 54T | 28 | 41 | 63 | 112.5 | 757.5 | |
| | 1999.07-2002.04 | MT | F | L | Platform/Chassis 4WD THX (DJ5TED) | Payload:1000/1400kg,Trans. code:ME/ML | GDS10037 | Drive Shaft | 54T | 28 | 37 | 63 | 112.5 | 771 | |
| | 1999.07-2002.04 | MT | F | L | Platform/Chassis 4WD THX (DJ5TED) | Payload:1800kg,Trans. code:MG | GDS10067 | Drive Shaft | | 35 | 41 | 70 | 117 | 762 | |
| | 1999.07-2002.04 | MT | F | L | Platform/Chassis 4WD THX (DJ5TED) | Payload:1000/1400kg,Trans. code:MG | GDS10102 | Drive Shaft | | 28 | 41 | 63 | 112.5 | 757.5 | |
| | 1999.07-2002.04 | MT | F | L | Platform/Chassis 4WD THX (DJ5TED) | Payload:1000/1400kg,Trans. code:ME/ML | GDS10105 | Drive Shaft | | 28 | 37 | 63 | 112.5 | 771 | |
| | 1999.07-2002.04 | MT | F | R | Platform/Chassis 4WD THX (DJ5TED) | Payload:1800kg,Trans. code:MG | GDS10032 | Drive Shaft | 54T | 35 | 41 | 70 | 117 | 1085 | |
| | 1999.07-2002.04 | MT | F | R | Platform/Chassis 4WD THX (DJ5TED) | Payload:1000/1400kg,Trans. code:MG | GDS10036 | Drive Shaft | 54T | 28 | 41 | 63 | 112.5 | 1079 | |
| | 1999.07-2002.04 | MT | F | R | Platform/Chassis 4WD THX (DJ5TED) | Payload:1800kg,Trans. code:MG | GDS10066 | Drive Shaft | | 35 | 41 | 70 | 117 | 1085 | |
| | 1999.07-2002.04 | MT | F | R | Platform/Chassis 4WD THX (DJ5TED) | Payload:1000/1400kg,Trans. code:ME/ML | GDS10069 | Drive Shaft | | 28 | 37 | 63 | 112.5 | 1072 | |
| | 1999.07-2002.04 | MT | F | R | Platform/Chassis 4WD THX (DJ5TED) | Payload:1000/1400kg,Trans. code:MG | GDS10103 | Drive Shaft | | 28 | 41 | 63 | 112.5 | 1079 | |
| | 1999.07-2002.04 | MT | F | R | Platform/Chassis 4WD THX (DJ5TED) | Payload:1000/1400kg,Trans. code:ME/ML | GDS10104 | Drive Shaft | 54T | 28 | 37 | 63 | 112.5 | 1072 | |
| | 1999.07-2002.04 | MT | F | L/R | Platform/Chassis 4WD THX (DJ5TED) | Payload:1800kg,Trans. code:MG | GCO10011 | Outer Joint | 54T | 35 | 45 | 70 | 117 | 73 | I |
| | 1999.07-2002.04 | MT | F | L/R | Platform/Chassis 4WD THX (DJ5TED) | Payload:1000/1400kg,Trans. code:ME/ML/MG | GCO10012 | Outer Joint | | 28 | 39 | 63 | 112.5 | 63 | I |
| | 1999.07-2002.04 | MT | F | L/R | Platform/Chassis 4WD THX (DJ5TED) | Payload:1000/1400kg,Trans. code:ME/ML/MG | GCO10013 | Outer Joint | 54T | 28 | 39 | 63 | 112.5 | 63 | I |
| | 1999.07-2002.04 | MT | F | L/R | Platform/Chassis 4WD THX (DJ5TED) | Payload:1800kg,Trans. code:MG | GCO10050 | Outer Joint | | 35 | 45 | 70 | 117 | 73 | I |
| | 1999.07-2002.04 | MT | F | L | Platform/Chassis 4WD THX (DJ5TED) | Payload:1800kg,Trans. code:MG | GCI10010 | Inner Joint | | 41 | 45 | 43 | 70 | 115.5 | |
| | 1999.07-2002.04 | MT | F | L | Platform/Chassis 4WD THX (DJ5TED) | Payload:1000/1400kg,Trans. code:MG | GCI10013 | Inner Joint | | 41 | 39 | 43 | 70 | 104 | |
| | 1999.07-2002.04 | MT | F | L | Platform/Chassis 4WD THX (DJ5TED) | Payload:1000/1400kg,Trans. code:ME/ML | GCI10015 | Inner Joint | | 37 | 39 | 40 | 68.5 | 104 | |
| | 1999.07-2002.04 | MT | F | L | Platform/Chassis 4WD THX (DJ5TED) | Payload:1000/1400kg,Trans. code:ME/ML | GCI45013 | Inner Joint | | 37 | 39 | 40 | 68.5 | 100 | |
| | 1999.07-2002.04 | MT | F | R | Platform/Chassis 4WD THX (DJ5TED) | Payload:1800kg,Trans. code:MG | GCI10009 | Inner Joint | | 41 | 45 | 34.9 | 393 | 115.6 | |
| | 1999.07-2002.04 | MT | F | R | Platform/Chassis 4WD THX (DJ5TED) | Payload:1000/1400kg,Trans. code:ME/ML | GCI10034 | Inner Joint | | 37 | 39 | 31.9 | 369.5 | 99 | |
| | 1999.07-2002.04 | MT | F | L | Van 4WD THX (DJ5TED) | Payload:1800kg,Trans. code:MG | GDS10033 | Drive Shaft | 54T | 35 | 41 | 70 | 117 | 762 | |
| | 1999.07-2002.04 | MT | F | L | Van 4WD THX (DJ5TED) | Payload:1000/1400kg,Trans. code:MG | GDS10035 | Drive Shaft | 54T | 28 | 41 | 63 | 112.5 | 757.5 | |
| | 1999.07-2002.04 | MT | F | L | Van 4WD THX (DJ5TED) | Payload:1000/1400kg,Trans. code:ME/ML | GDS10037 | Drive Shaft | 54T | 28 | 37 | 63 | 112.5 | 771 | |
| | 1999.07-2002.04 | MT | F | L | Van 4WD THX (DJ5TED) | Payload:1800kg,Trans. code:MG | GDS10067 | Drive Shaft | | 35 | 41 | 70 | 117 | 762 | |
| | 1999.07-2002.04 | MT | F | L | Van 4WD THX (DJ5TED) | Payload:1000/1400kg,Trans. code:MG | GDS10102 | Drive Shaft | | 28 | 41 | 63 | 112.5 | 757.5 | |
| | 1999.07-2002.04 | MT | F | L | Van 4WD THX (DJ5TED) | Payload:1000/1400kg,Trans. code:ME/ML | GDS10105 | Drive Shaft | | 28 | 37 | 63 | 112.5 | 771 | |
| | 1999.07-2002.04 | MT | F | R | Van 4WD THX (DJ5TED) | Payload:1800kg,Trans. code:MG | GDS10032 | Drive Shaft | 54T | 35 | 41 | 70 | 117 | 1085 | |
| | 1999.07-2002.04 | MT | F | R | Van 4WD THX (DJ5TED) | Payload:1000/1400kg,Trans. code:MG | GDS10036 | Drive Shaft | 54T | 28 | 41 | 63 | 112.5 | 1079 | |
| | 1999.07-2002.04 | MT | F | R | Van 4WD THX (DJ5TED) | Payload:1800kg,Trans. code:MG | GDS10066 | Drive Shaft | | 35 | 41 | 70 | 117 | 1085 | |
| | 1999.07-2002.04 | MT | F | R | Van 4WD THX (DJ5TED) | Payload:1000/1400kg,Trans. code:ME/ML | GDS10069 | Drive Shaft | | 28 | 37 | 63 | 112.5 | 1072 | |
| | 1999.07-2002.04 | MT | F | R | Van 4WD THX (DJ5TED) | Payload:1000/1400kg,Trans. code:MG | GDS10103 | Drive Shaft | | 28 | 41 | 63 | 112.5 | 1079 | |
| | 1999.07-2002.04 | MT | F | R | Van 4WD THX (DJ5TED) | Payload:1000/1400kg,Trans. code:ME/ML | GDS10104 | Drive Shaft | 54T | 28 | 37 | 63 | 112.5 | 1072 | |
| | 1999.07-2002.04 | MT | F | L/R | Van 4WD THX (DJ5TED) | Payload:1800kg,Trans. code:MG | GCO10011 | Outer Joint | 54T | 35 | 45 | 70 | 117 | 73 | I |
| | 1999.07-2002.04 | MT | F | L/R | Van 4WD THX (DJ5TED) | Payload:1000/1400kg,Trans. code:ME/ML/MG | GCO10012 | Outer Joint | | 28 | 39 | 63 | 112.5 | 63 | I |
| | 1999.07-2002.04 | MT | F | L/R | Van 4WD THX (DJ5TED) | Payload:1000/1400kg,Trans. code:ME/ML/MG | GCO10013 | Outer Joint | 54T | 28 | 39 | 63 | 112.5 | 63 | I |
| | 1999.07-2002.04 | MT | F | L/R | Van 4WD THX (DJ5TED) | Payload:1800kg,Trans. code:MG | GCO10050 | Outer Joint | | 35 | 45 | 70 | 117 | 73 | I |
| | 1999.07-2002.04 | MT | F | L | Van 4WD THX (DJ5TED) | Payload:1800kg,Trans. code:MG | GCI10010 | Inner Joint | | 41 | 45 | 43 | 70 | 115.5 | |
| | 1999.07-2002.04 | MT | F | L | Van 4WD THX (DJ5TED) | Payload:1000/1400kg,Trans. code:MG | GCI10013 | Inner Joint | | 41 | 39 | 43 | 70 | 104 | |
| | 1999.07-2002.04 | MT | F | L | Van 4WD THX (DJ5TED) | Payload:1000/1400kg,Trans. code:ME/ML | GCI10015 | Inner Joint | | 37 | 39 | 40 | 68.5 | 104 | |
| | 1999.07-2002.04 | MT | F | L | Van 4WD THX (DJ5TED) | Payload:1000/1400kg,Trans. code:ME/ML | GCI45013 | Inner Joint | | 37 | 39 | 40 | 68.5 | 100 | |
| | 1999.07-2002.04 | MT | F | R | Van 4WD THX (DJ5TED) | Payload:1800kg,Trans. code:MG | GCI10009 | Inner Joint | | 41 | 45 | 34.9 | 393 | 115.6 | |
| | 1999.07-2002.04 | MT | F | R | Van 4WD THX (DJ5TED) | Payload:1000/1400kg,Trans. code:ME/ML | GCI10034 | Inner Joint | | 37 | 39 | 31.9 | 369.5 | 99 | |
| 2.8 (93 kw) | 2005.09-2009.09 | 5MT | F | L | Van FWD 8140.43S (F28DTCR) | Date from 2008.03,Trans. code:MLGU5C6,Trans. code:MLGU,Payload [kg]:1800 | GDS10033 | Drive Shaft | 54T | 35 | 41 | 70 | 117 | 762 | |
| | 2005.09-2009.09 | 5MT | F | L | Van FWD 8140.43S (F28DTCR) | Trans. code:MLGU,Payload [kg]:1000/1400 | GDS10035 | Drive Shaft | 54T | 28 | 41 | 63 | 112.5 | 757.5 | |
| | 2005.09-2009.09 | 5MT | F | R | Van FWD 8140.43S (F28DTCR) | Trans. code:MLGU,Payload [kg]:1000/1400 | GDS10036 | Drive Shaft | 54T | 28 | 41 | 63 | 112.5 | 1079 | |
| | 2005.09-2009.09 | MT | F | R | Van FWD 8140.43S (F28DTCR) | | GDS10032 | Drive Shaft | 54T | 35 | 41 | 70 | 117 | 1085 | |
| | 2005.09-2009.09 | MT | F | R | Van FWD 8140.43S (F28DTCR) | | GDS10066 | Drive Shaft | | 35 | 41 | 70 | 117 | 1085 | |
| | 2005.09-2009.09 | MT | F | R | Van FWD 8140.43S (F28DTCR) | | GCO10011 | Outer Joint | 54T | 35 | 45 | 70 | 117 | 73 | I |
| | 2005.09-2009.09 | MT | F | R | Van FWD 8140.43S (F28DTCR) | | GCO10050 | Outer Joint | | 35 | 45 | 70 | 117 | 73 | I |
| | 2005.09-2009.09 | MT | F | R | Van FWD 8140.43S (F28DTCR) | | GCI10009 | Inner Joint | | 41 | 45 | 34.9 | 393 | 115.6 | |
| 2.8 (94 kw) | 2000.11-2002.04 | MT | F | L | Bus FWD 8140.43S (F28DTCR) | Payload:1800kg,Trans. code:MG | GDS10033 | Drive Shaft | 54T | 35 | 41 | 70 | 117 | 762 | |
| | 2000.11-2002.04 | MT | F | L | Bus FWD 8140.43S (F28DTCR) | Payload:1800kg,Trans. code:MG | GDS10067 | Drive Shaft | | 35 | 41 | 70 | 117 | 762 | |
| | 2000.11-2002.04 | MT | F | R | Bus FWD 8140.43S (F28DTCR) | Payload:1800kg,Trans. code:MG | GDS10032 | Drive Shaft | 54T | 35 | 41 | 70 | 117 | 1085 | |
| | 2000.11-2002.04 | MT | F | R | Bus FWD 8140.43S (F28DTCR) | Payload:1800kg,Trans. code:MG | GDS10066 | Drive Shaft | | 35 | 41 | 70 | 117 | 1085 | |
| | 2000.11-2002.04 | MT | F | L/R | Bus FWD 8140.43S (F28DTCR) | Payload:1800kg,Trans. code:MG | GCO10011 | Outer Joint | 54T | 35 | 45 | 70 | 117 | 73 | I |
| | 2000.11-2002.04 | MT | F | L/R | Bus FWD 8140.43S (F28DTCR) | Payload:1800kg,Trans. code:MG | GCO10050 | Outer Joint | | 35 | 45 | 70 | 117 | 73 | I |
| | 2000.11-2002.04 | MT | F | L | Bus FWD 8140.43S (F28DTCR) | Payload:1800kg,Trans. code:MG | GCI10010 | Inner Joint | | 41 | 45 | 43 | 70 | 115.5 | |
| | 2000.11-2002.04 | MT | F | R | Bus FWD 8140.43S (F28DTCR) | Payload:1800kg,Trans. code:MG | GCI10009 | Inner Joint | | 41 | 45 | 34.9 | 393 | 115.6 | |
| | 2000.11-2002.04 | MT | F | L | Platform/Chassis FWD 8140.43S (F28DTCR) | Payload:1800kg,Trans. code:MG | GDS10033 | Drive Shaft | 54T | 35 | 41 | 70 | 117 | 762 | |

| | YEAR | TRANSM. | F/R | L/R | BODY STYLE & DRIVE TYPE & ENGINE | REMARKS | G-AP Ref. | PRODUCT | ABS | Technical Specifications | | | | | |
|---|---|---|---|---|---|---|---|---|---|---|---|---|---|---|---|
| | | | | | | | | | | A | B | C | H | L | P |
| **PEUGEOT** | | | | | | | | | | | | | | | |
| **Boxer** | | | | | | | | | | | | | | | |
| 2.8 (94 kw) | 2000.11-2002.04 | MT | F | L | Platform/Chassis FWD 8140.43S (F28DTCR) | Payload:1800kg,Trans. code:MG | GDS10067 | Drive Shaft | | 35 | 41 | 70 | 117 | 762 | |
| | 2000.11-2002.04 | MT | F | R | Platform/Chassis FWD 8140.43S (F28DTCR) | Payload:1800kg,Trans. code:MG | GDS10032 | Drive Shaft | 54T | 35 | 41 | 70 | 117 | 1085 | |
| | 2000.11-2002.04 | MT | F | R | Platform/Chassis FWD 8140.43S (F28DTCR) | Payload:1800kg,Trans. code:MG | GDS10066 | Drive Shaft | | 35 | 41 | 70 | 117 | 1085 | |
| | 2000.11-2002.04 | MT | F | L/R | Platform/Chassis FWD 8140.43S (F28DTCR) | Payload:1800kg,Trans. code:MG | GCO10011 | Outer Joint | 54T | 35 | 45 | 70 | 117 | 73 | I |
| | 2000.11-2002.04 | MT | F | L/R | Platform/Chassis FWD 8140.43S (F28DTCR) | Payload:1800kg,Trans. code:MG | GCO10050 | Outer Joint | | 35 | 45 | 70 | 117 | 73 | I |
| | 2000.11-2002.04 | MT | F | L | Platform/Chassis FWD 8140.43S (F28DTCR) | Payload:1800kg,Trans. code:MG | GCI10010 | Inner Joint | | 41 | 45 | 43 | 70 | 115.5 | |
| | 2000.11-2002.04 | MT | F | R | Platform/Chassis FWD 8140.43S (F28DTCR) | Payload:1800kg,Trans. code:MG | GCI10009 | Inner Joint | | 41 | 45 | 34.9 | 393 | 115.6 | |
| | 2000.11-2002.04 | MT | F | L | Van FWD 8140.43S (F28DTCR) | Payload:1800kg,Trans. code:MG | GDS10033 | Drive Shaft | 54T | 35 | 41 | 70 | 117 | 762 | |
| | 2000.11-2002.04 | MT | F | L | Van FWD 8140.43S (F28DTCR) | Payload:1800kg,Trans. code:MG | GDS10067 | Drive Shaft | | 35 | 41 | 70 | 117 | 762 | |
| | 2000.11-2002.04 | MT | F | R | Van FWD 8140.43S (F28DTCR) | Payload:1800kg,Trans. code:MG | GDS10032 | Drive Shaft | 54T | 35 | 41 | 70 | 117 | 1085 | |
| | 2000.11-2002.04 | MT | F | R | Van FWD 8140.43S (F28DTCR) | Payload:1800kg,Trans. code:MG | GDS10066 | Drive Shaft | | 35 | 41 | 70 | 117 | 1085 | |
| | 2000.11-2002.04 | MT | F | L/R | Van FWD 8140.43S (F28DTCR) | Payload:1800kg,Trans. code:MG | GCO10011 | Outer Joint | 54T | 35 | 45 | 70 | 117 | 73 | I |
| | 2000.11-2002.04 | MT | F | L/R | Van FWD 8140.43S (F28DTCR) | Payload:1800kg,Trans. code:MG | GCO10050 | Outer Joint | | 35 | 45 | 70 | 117 | 73 | I |
| | 2000.11-2002.04 | MT | F | L | Van FWD 8140.43S (F28DTCR) | Payload:1800kg,Trans. code:MG | GCI10010 | Inner Joint | | 41 | 45 | 43 | 70 | 115.5 | |
| | 2000.11-2002.04 | MT | F | R | Van FWD 8140.43S (F28DTCR) | Payload:1800kg,Trans. code:MG | GCI10009 | Inner Joint | | 41 | 45 | 34.9 | 393 | 115.6 | |
| | 2001.12-2006.06 | 5MT | F | L | Bus 4WD 8140.43S (F28DTCR) | Gross Vehicle:3500 | GDS10033 | Drive Shaft | 54T | 35 | 41 | 70 | 117 | 762 | |
| | 2001.12-2006.06 | 5MT | F | L | Bus 4WD 8140.43S (F28DTCR) | Gross Vehicle:3300 | GDS10035 | Drive Shaft | 54T | 28 | 41 | 63 | 112.5 | 757.5 | |
| | 2001.12-2006.06 | 5MT | F | R | Bus 4WD 8140.43S (F28DTCR) | Gross Vehicle:3500 | GDS10032 | Drive Shaft | 54T | 35 | 41 | 70 | 117 | 1085 | |
| | 2001.12-2006.06 | 5MT | F | R | Bus 4WD 8140.43S (F28DTCR) | Gross Vehicle:3300 | GDS10036 | Drive Shaft | 54T | 28 | 41 | 63 | 112.5 | 1079 | |
| | 2001.12-2006.06 | 5MT | F | L/R | Bus 4WD 8140.43S (F28DTCR) | Gross Vehicle:3500 | GCO10011 | Outer Joint | 54T | 35 | 45 | 70 | 117 | 73 | I |
| | 2001.12-2006.06 | 5MT | F | L/R | Bus 4WD 8140.43S (F28DTCR) | Gross Vehicle:3300 | GCO10013 | Outer Joint | 54T | 28 | 39 | 63 | 112.5 | 63 | I |
| | 2001.12-2006.06 | 5MT | F | L | Bus 4WD 8140.43S (F28DTCR) | Gross Vehicle:3500 | GCI10010 | Inner Joint | | 41 | 45 | 43 | 70 | 115.5 | |
| | 2001.12-2006.06 | 5MT | F | L | Bus 4WD 8140.43S (F28DTCR) | Gross Vehicle:3300 | GCI10013 | Inner Joint | | 41 | 39 | 43 | 70 | 104 | |
| | 2001.12-2006.06 | 5MT | F | R | Bus 4WD 8140.43S (F28DTCR) | Gross Vehicle:3500 | GCI10009 | Inner Joint | | 41 | 45 | 34.9 | 393 | 115.6 | |
| | 2001.12-2006.06 | 5MT | F | R | Bus FWD 8140.43S (F28DTCR) | Trans. code:MLGU5C6 | GDS10032 | Drive Shaft | 54T | 35 | 41 | 70 | 117 | 1085 | |
| | 2001.12-2006.06 | 5MT | F | R | Bus FWD 8140.43S (F28DTCR) | Trans. code:MLGU5C6 | GDS10066 | Drive Shaft | | 35 | 41 | 70 | 117 | 1085 | |
| | 2001.12-2006.06 | 5MT | F | L/R | Bus FWD 8140.43S (F28DTCR) | Trans. code:MLGU5C6 | GCO10050 | Outer Joint | | 35 | 45 | 70 | 117 | 73 | I |
| | 2001.12-2006.06 | MT | F | L | Bus FWD 8140.43S (F28DTCR) | Gross Vehicle:3500 | GDS10033 | Drive Shaft | 54T | 35 | 41 | 70 | 117 | 762 | |
| | 2001.12-2006.06 | MT | F | L | Bus FWD 8140.43S (F28DTCR) | Gross Vehicle:2900/3300 | GDS10035 | Drive Shaft | 54T | 28 | 41 | 63 | 112.5 | 757.5 | |
| | 2001.12-2006.06 | MT | F | R | Bus FWD 8140.43S (F28DTCR) | Gross Vehicle:2900/3300 | GDS10036 | Drive Shaft | 54T | 28 | 41 | 63 | 112.5 | 1079 | |
| | 2001.12-2006.06 | MT | F | L/R | Bus FWD 8140.43S (F28DTCR) | Gross Vehicle:3500 | GCO10011 | Outer Joint | 54T | 35 | 45 | 70 | 117 | 73 | I |
| | 2001.12-2006.06 | MT | F | L/R | Bus FWD 8140.43S (F28DTCR) | Gross Vehicle:2900/3300 | GCO10013 | Outer Joint | 54T | 28 | 39 | 63 | 112.5 | 63 | I |
| | 2001.12-2006.06 | MT | F | L | Bus FWD 8140.43S (F28DTCR) | Gross Vehicle:3500 | GCI10010 | Inner Joint | | 41 | 45 | 43 | 70 | 115.5 | |
| | 2001.12-2006.06 | MT | F | L | Bus FWD 8140.43S (F28DTCR) | Gross Vehicle:2900/3300 | GCI10013 | Inner Joint | | 41 | 39 | 43 | 70 | 104 | |
| | 2001.12-2006.06 | MT | F | R | Bus FWD 8140.43S (F28DTCR) | Gross Vehicle:3500 | GCI10009 | Inner Joint | | 41 | 45 | 34.9 | 393 | 115.6 | |
| | 2001.12-2006.06 | MT | F | L | Platform/Chassis 4WD 8140.43S (F28DTCR) | Gross Vehicle:3500 | GDS10033 | Drive Shaft | 54T | 35 | 41 | 70 | 117 | 762 | |
| | 2001.12-2006.06 | MT | F | L | Platform/Chassis 4WD 8140.43S (F28DTCR) | Gross Vehicle:3300 | GDS10035 | Drive Shaft | 54T | 28 | 41 | 63 | 112.5 | 757.5 | |
| | 2001.12-2006.06 | MT | F | R | Platform/Chassis 4WD 8140.43S (F28DTCR) | Gross Vehicle:3500 | GDS10032 | Drive Shaft | 54T | 35 | 41 | 70 | 117 | 1085 | |
| | 2001.12-2006.06 | MT | F | R | Platform/Chassis 4WD 8140.43S (F28DTCR) | Gross Vehicle:3300 | GDS10036 | Drive Shaft | 54T | 28 | 41 | 63 | 112.5 | 1079 | |
| | 2001.12-2006.06 | MT | F | L/R | Platform/Chassis 4WD 8140.43S (F28DTCR) | Gross Vehicle:3500 | GCO10011 | Outer Joint | 54T | 35 | 45 | 70 | 117 | 73 | I |
| | 2001.12-2006.06 | MT | F | L/R | Platform/Chassis 4WD 8140.43S (F28DTCR) | Gross Vehicle:3300 | GCO10013 | Outer Joint | 54T | 28 | 39 | 63 | 112.5 | 63 | I |
| | 2001.12-2006.06 | MT | F | L | Platform/Chassis 4WD 8140.43S (F28DTCR) | Gross Vehicle:3500 | GCI10010 | Inner Joint | | 41 | 45 | 43 | 70 | 115.5 | |
| | 2001.12-2006.06 | MT | F | L | Platform/Chassis 4WD 8140.43S (F28DTCR) | Gross Vehicle:3300 | GCI10013 | Inner Joint | | 41 | 39 | 43 | 70 | 104 | |
| | 2001.12-2006.06 | MT | F | R | Platform/Chassis 4WD 8140.43S (F28DTCR) | Gross Vehicle:3500 | GCI10009 | Inner Joint | | 41 | 45 | 34.9 | 393 | 115.6 | |
| | 2001.12-2006.06 | MT | F | L | Platform/Chassis FWD 8140.43S (F28DTCR) | Gross Vehicle:3500 | GDS10033 | Drive Shaft | 54T | 35 | 41 | 70 | 117 | 762 | |
| | 2001.12-2006.06 | MT | F | L | Platform/Chassis FWD 8140.43S (F28DTCR) | Gross Vehicle:3300 | GDS10035 | Drive Shaft | 54T | 28 | 41 | 63 | 112.5 | 757.5 | |
| | 2001.12-2006.06 | MT | F | L | Platform/Chassis FWD 8140.43S (F28DTCR) | Gross Vehicle:3500 | GDS10067 | Drive Shaft | | 35 | 41 | 70 | 117 | 762 | |
| | 2001.12-2006.06 | MT | F | R | Platform/Chassis FWD 8140.43S (F28DTCR) | Gross Vehicle:3500 | GDS10032 | Drive Shaft | 54T | 35 | 41 | 70 | 117 | 1085 | |
| | 2001.12-2006.06 | MT | F | R | Platform/Chassis FWD 8140.43S (F28DTCR) | Gross Vehicle:3300 | GDS10036 | Drive Shaft | 54T | 28 | 41 | 63 | 112.5 | 1079 | |
| | 2001.12-2006.06 | MT | F | R | Platform/Chassis FWD 8140.43S (F28DTCR) | Gross Vehicle:3500 | GDS10066 | Drive Shaft | | 35 | 41 | 70 | 117 | 1085 | |
| | 2001.12-2006.06 | MT | F | L/R | Platform/Chassis FWD 8140.43S (F28DTCR) | Gross Vehicle:3500 | GCO10011 | Outer Joint | 54T | 35 | 45 | 70 | 117 | 73 | I |
| | 2001.12-2006.06 | MT | F | L/R | Platform/Chassis FWD 8140.43S (F28DTCR) | Gross Vehicle:3300 | GCO10013 | Outer Joint | 54T | 28 | 39 | 63 | 112.5 | 63 | I |
| | 2001.12-2006.06 | MT | F | L/R | Platform/Chassis FWD 8140.43S (F28DTCR) | Gross Vehicle:3500 | GCO10050 | Outer Joint | | 35 | 45 | 70 | 117 | 73 | I |
| | 2001.12-2006.06 | MT | F | L | Platform/Chassis FWD 8140.43S (F28DTCR) | Gross Vehicle:3500 | GCI10010 | Inner Joint | | 41 | 45 | 43 | 70 | 115.5 | |
| | 2001.12-2006.06 | MT | F | L | Platform/Chassis FWD 8140.43S (F28DTCR) | Gross Vehicle:3300 | GCI10013 | Inner Joint | | 41 | 39 | 43 | 70 | 104 | |
| | 2001.12-2006.06 | MT | F | R | Platform/Chassis FWD 8140.43S (F28DTCR) | Gross Vehicle:3500 | GCI10009 | Inner Joint | | 41 | 45 | 34.9 | 393 | 115.6 | |
| | 2001.12-2006.06 | 5MT | F | L | Van 4WD 8140.43S (F28DTCR) | Gross Vehicle:3500 | GDS10033 | Drive Shaft | 54T | 35 | 41 | 70 | 117 | 762 | |
| | 2001.12-2006.06 | 5MT | F | L | Van 4WD 8140.43S (F28DTCR) | Gross Vehicle:3300 | GDS10035 | Drive Shaft | 54T | 28 | 41 | 63 | 112.5 | 757.5 | |
| | 2001.12-2006.06 | 5MT | F | R | Van 4WD 8140.43S (F28DTCR) | Gross Vehicle:3500 | GDS10032 | Drive Shaft | 54T | 35 | 41 | 70 | 117 | 1085 | |
| | 2001.12-2006.06 | 5MT | F | R | Van 4WD 8140.43S (F28DTCR) | Gross Vehicle:3300 | GDS10036 | Drive Shaft | 54T | 28 | 41 | 63 | 112.5 | 1079 | |
| | 2001.12-2006.06 | 5MT | F | L/R | Van 4WD 8140.43S (F28DTCR) | Gross Vehicle:3500 | GCO10011 | Outer Joint | 54T | 35 | 45 | 70 | 117 | 73 | I |
| | 2001.12-2006.06 | 5MT | F | L/R | Van 4WD 8140.43S (F28DTCR) | Gross Vehicle:3300 | GCO10013 | Outer Joint | 54T | 28 | 39 | 63 | 112.5 | 63 | I |
| | 2001.12-2006.06 | 5MT | F | L | Van 4WD 8140.43S (F28DTCR) | Gross Vehicle:3500 | GCI10010 | Inner Joint | | 41 | 45 | 43 | 70 | 115.5 | |
| | 2001.12-2006.06 | 5MT | F | L | Van 4WD 8140.43S (F28DTCR) | Gross Vehicle:3300 | GCI10013 | Inner Joint | | 41 | 39 | 43 | 70 | 104 | |
| | 2001.12-2006.06 | 5MT | F | R | Van 4WD 8140.43S (F28DTCR) | Gross Vehicle:3500 | GCI10009 | Inner Joint | | 41 | 45 | 34.9 | 393 | 115.6 | |

| | YEAR | TRANSM. | F/R | L/R | BODY STYLE & DRIVE TYPE & ENGINE | REMARKS | G-AP Ref. | PRODUCT | ABS | Technical Specifications A | B | C | H | L | P |
|---|---|---|---|---|---|---|---|---|---|---|---|---|---|---|---|
| **PEUGEOT** **Boxer** | | | | | | | | | | | | | | | |
| 2.8 (94 kw) | 2001.12-2006.06 | 5MT | F | R | Van FWD 8140.43S (F28DTCR) | Trans. code:MLGU5C6 | GDS10032 | Drive Shaft | 54T | 35 | 41 | 70 | 117 | 1085 | |
| | 2001.12-2006.06 | 5MT | F | R | Van FWD 8140.43S (F28DTCR) | Trans. code:MLGU5C6 | GDS10066 | Drive Shaft | | 35 | 41 | 70 | 117 | 1085 | |
| | 2001.12-2006.06 | 5MT | F | L/R | Van FWD 8140.43S (F28DTCR) | Trans. code:MLGU5C6 | GCO10050 | Outer Joint | | 35 | 45 | 70 | 117 | 73 | I |
| | 2001.12-2006.06 | MT | F | L | Van FWD 8140.43S (F28DTCR) | Gross Vehicle:3500 | GDS10033 | Drive Shaft | 54T | 35 | 41 | 70 | 117 | 762 | |
| | 2001.12-2006.06 | MT | F | L | Van FWD 8140.43S (F28DTCR) | Gross Vehicle:2900/3300 | GDS10035 | Drive Shaft | 54T | 28 | 41 | 63 | 112.5 | 757.5 | |
| | 2001.12-2006.06 | MT | F | R | Van FWD 8140.43S (F28DTCR) | Gross Vehicle:2900/3300 | GDS10036 | Drive Shaft | 54T | 28 | 41 | 63 | 112.5 | 1079 | |
| | 2001.12-2006.06 | MT | F | L/R | Van FWD 8140.43S (F28DTCR) | Gross Vehicle:3500 | GCO10011 | Outer Joint | 54T | 35 | 45 | 70 | 117 | 73 | I |
| | 2001.12-2006.06 | MT | F | L/R | Van FWD 8140.43S (F28DTCR) | Gross Vehicle:2900/3300 | GCO10013 | Outer Joint | 54T | 28 | 39 | 63 | 112.5 | 63 | I |
| | 2001.12-2006.06 | MT | F | L | Van FWD 8140.43S (F28DTCR) | Gross Vehicle:3500 | GCI10010 | Inner Joint | | 41 | 45 | 43 | 70 | 115.5 | |
| | 2001.12-2006.06 | MT | F | L | Van FWD 8140.43S (F28DTCR) | Gross Vehicle:2900/3300 | GCI10013 | Inner Joint | | 41 | 39 | 43 | 70 | 104 | |
| | 2001.12-2006.06 | MT | F | R | Van FWD 8140.43S (F28DTCR) | Gross Vehicle:3500 | GCI10009 | Inner Joint | | 41 | 45 | 34.9 | 393 | 115.6 | |
| 2.8 (107 kw) | 2004.04-2006.06 | 5MT | F | L | Bus FWD 8140.43N | Payload [kg]:1800 | GDS10033 | Drive Shaft | 54T | 35 | 41 | 70 | 117 | 762 | |
| | 2004.04-2006.06 | 5MT | F | L | Bus FWD 8140.43N | Payload [kg]:1000/1400 | GDS10035 | Drive Shaft | 54T | 28 | 41 | 63 | 112.5 | 757.5 | |
| | 2004.04-2006.06 | 5MT | F | R | Bus FWD 8140.43N | Payload [kg]:1000/1400 | GDS10036 | Drive Shaft | 54T | 28 | 41 | 63 | 112.5 | 1079 | |
| | 2004.04-2006.06 | 5MT | F | L | Bus FWD 8140.43N | | GCI10013 | Inner Joint | | 41 | 39 | 43 | 70 | 104 | |
| | 2004.04-2006.06 | MT | F | L/R | Bus FWD 8140.43N | | GCO10013 | Outer Joint | 54T | 28 | 39 | 63 | 112.5 | 63 | I |
| | 2004.04-2006.06 | 5MT | F | L | Platform/Chassis FWD 8140.43N | For Vehicles With Tolerated Total Weight:1800 Kg | GDS10033 | Drive Shaft | 54T | 35 | 41 | 70 | 117 | 762 | |
| | 2004.04-2006.06 | 5MT | F | L | Platform/Chassis FWD 8140.43N | For vehicles with tolerated total weight:1400/1000 KG | GDS10035 | Drive Shaft | 54T | 28 | 41 | 63 | 112.5 | 757.5 | |
| | 2004.04-2006.06 | 5MT | F | R | Platform/Chassis FWD 8140.43N | Vehicle Production Country:France/Brazil | GDS10032 | Drive Shaft | 54T | 35 | 41 | 70 | 117 | 1085 | |
| | 2004.04-2006.06 | 5MT | F | L/R | Platform/Chassis FWD 8140.43N | Vehicle Production Country:France/Brazil | GCO10011 | Outer Joint | 54T | 35 | 45 | 70 | 117 | 73 | I |
| | 2004.04-2006.06 | 5MT | F | L | Platform/Chassis FWD 8140.43N | Vehicle Production Country:France/Brazil | GCI10010 | Inner Joint | | 41 | 45 | 43 | 70 | 115.5 | |
| | 2004.04-2006.06 | 5MT | F | R | Platform/Chassis FWD 8140.43N | Vehicle Production Country:France/Brazil | GCI10009 | Inner Joint | | 41 | 45 | 34.9 | 393 | 115.6 | |
| | 2004.04-2006.06 | 5MT | F | L | Van FWD 8140.43N | For Vehicles With Tolerated Total Weight:1800 Kg | GDS10033 | Drive Shaft | 54T | 35 | 41 | 70 | 117 | 762 | |
| | 2004.04-2006.06 | 5MT | F | L | Van FWD 8140.43N | For Vehicles With Tolerated Total Weight:1400/1000 Kg | GDS10035 | Drive Shaft | 54T | 28 | 41 | 63 | 112.5 | 757.5 | |
| | 2004.04-2006.06 | 5MT | F | R | Van FWD 8140.43N | For Vehicles With Tolerated Total Weight:1800 Kg | GDS10032 | Drive Shaft | 54T | 35 | 41 | 70 | 117 | 1085 | |
| | 2004.04-2006.06 | 5MT | F | R | Van FWD 8140.43N | For Vehicles With Tolerated Total Weight:1400/1000 Kg | GDS10036 | Drive Shaft | 54T | 28 | 41 | 63 | 112.5 | 1079 | |
| | 2004.04-2006.06 | MT | F | L/R | Van FWD 8140.43N | for vehicles with tolerated total weight above [kg]:1800 | GCO10011 | Outer Joint | 54T | 35 | 45 | 70 | 117 | 73 | I |
| | 2004.04-2006.06 | MT | F | L/R | Van FWD 8140.43N | for vehicles with tolerated total weight to [kg]:1800 | GCO10013 | Outer Joint | 54T | 28 | 39 | 63 | 112.5 | 63 | I |
| | 2004.04-2006.06 | MT | F | L/R | Van FWD 8140.43N | for vehicles with tolerated total weight above [kg]:1800 | GCO10050 | Outer Joint | | 35 | 45 | 70 | 117 | 73 | I |
| | 2004.04-2006.06 | MT | F | L | Van FWD 8140.43N | for vehicles with tolerated total weight above [kg]:1800 | GCI10010 | Inner Joint | | 41 | 45 | 43 | 70 | 115.5 | |
| | 2004.04-2006.06 | MT | F | L | Van FWD 8140.43N | for vehicles with tolerated total weight to [kg]:1800 | GCI10013 | Inner Joint | | 41 | 39 | 43 | 70 | 104 | |
| | 2004.04-2006.06 | MT | F | R | Van FWD 8140.43N | for vehicles with tolerated total weight above [kg]:1800 | GCI10009 | Inner Joint | | 41 | 45 | 34.9 | 393 | 115.6 | |
| 3.0 (107 kw) | 2010.04-2013.12 | 6MT | F | L | Bus FWD F1CE3481N (F30DTE) | | GDS45175 | Drive Shaft | | 35 | 31 | 71.5 | 127 | 749.5 | |
| | 2010.04-2013.12 | 6MT | F | R | Bus FWD F1CE3481N (F30DTE) | | GDS45174 | Drive Shaft | | 35 | 31 | 71.5 | 127 | 1199 | |
| | 2010.04-2013.12 | 6MT | F | L/R | Bus FWD F1CE3481N (F30DTE) | | GCO17060 | Outer Joint | | 35 | 29 | 71.5 | 127 | 71 | I |
| | 2010.04-2013.12 | 6MT | F | L | Bus FWD F1CE3481N (F30DTE) | | GCI17022 | Inner Joint | | 31 | 29 | 44.95 | 77 | 109.5 | |
| | 2010.04-2013.12 | 6MT | F | R | Bus FWD F1CE3481N (F30DTE) | | GCI17021 | Inner Joint | | 31 | 29 | 34.85 | 530 | 109 | |
| | 2010.04-2013.12 | 6MT | F | L | Platform/Chassis FWD F1CE3481N (F30DTE) | | GDS45175 | Drive Shaft | | 35 | 31 | 71.5 | 127 | 749.5 | |
| | 2010.04-2013.12 | 6MT | F | R | Platform/Chassis FWD F1CE3481N (F30DTE) | | GDS45174 | Drive Shaft | | 35 | 31 | 71.5 | 127 | 1199 | |
| | 2010.04-2013.12 | 6MT | F | L/R | Platform/Chassis FWD F1CE3481N (F30DTE) | | GCO17060 | Outer Joint | | 35 | 29 | 71.5 | 127 | 71 | I |
| | 2010.04-2013.12 | 6MT | F | L | Platform/Chassis FWD F1CE3481N (F30DTE) | | GCI17022 | Inner Joint | | 31 | 29 | 44.95 | 77 | 109.5 | |
| | 2010.04-2013.12 | 6MT | F | R | Platform/Chassis FWD F1CE3481N (F30DTE) | | GCI17021 | Inner Joint | | 31 | 29 | 34.85 | 530 | 109 | |
| | 2010.04-2013.12 | 6MT | F | L | Van FWD F1CE3481N (F30DTE) | | GDS45175 | Drive Shaft | | 35 | 31 | 71.5 | 127 | 749.5 | |
| | 2010.04-2013.12 | 6MT | F | R | Van FWD F1CE3481N (F30DTE) | | GDS45174 | Drive Shaft | | 35 | 31 | 71.5 | 127 | 1199 | |
| | 2010.04-2013.12 | 6MT | F | L/R | Van FWD F1CE3481N (F30DTE) | | GCO17060 | Outer Joint | | 35 | 29 | 71.5 | 127 | 71 | I |
| | 2010.04-2013.12 | 6MT | F | L | Van FWD F1CE3481N (F30DTE) | | GCI17022 | Inner Joint | | 31 | 29 | 44.95 | 77 | 109.5 | |
| | 2010.04-2013.12 | 6MT | F | R | Van FWD F1CE3481N (F30DTE) | | GCI17021 | Inner Joint | | 31 | 29 | 34.85 | 530 | 109 | |
| 3.0 (115 kw) | 2006.04-2015.12 | 6MT | F | L | Bus FWD F1CE0481D (F30DT) | | GDS45175 | Drive Shaft | | 35 | 31 | 71.5 | 127 | 749.5 | |
| | 2006.04-2015.12 | 6MT | F | R | Bus FWD F1CE0481D (F30DT) | | GDS45174 | Drive Shaft | | 35 | 31 | 71.5 | 127 | 1199 | |
| | 2006.04-2015.12 | 6MT | F | L/R | Bus FWD F1CE0481D (F30DT) | | GCO17060 | Outer Joint | | 35 | 29 | 71.5 | 127 | 71 | I |
| | 2006.04-2015.12 | 6MT | F | L | Bus FWD F1CE0481D (F30DT) | | GCI17022 | Inner Joint | | 31 | 29 | 44.95 | 77 | 109.5 | |
| | 2006.04-2015.12 | 6MT | F | R | Bus FWD F1CE0481D (F30DT) | | GCI17021 | Inner Joint | | 31 | 29 | 34.85 | 530 | 109 | |
| | 2006.04-2015.12 | 6MT | F | L | Platform/Chassis FWD F1CE0481D (F30DT) | | GDS45175 | Drive Shaft | | 35 | 31 | 71.5 | 127 | 749.5 | |
| | 2006.04-2015.12 | 6MT | F | R | Platform/Chassis FWD F1CE0481D (F30DT) | | GDS45174 | Drive Shaft | | 35 | 31 | 71.5 | 127 | 1199 | |
| | 2006.04-2015.12 | 6MT | F | L/R | Platform/Chassis FWD F1CE0481D (F30DT) | | GCO17060 | Outer Joint | | 35 | 29 | 71.5 | 127 | 71 | I |
| | 2006.04-2015.12 | 6MT | F | L | Platform/Chassis FWD F1CE0481D (F30DT) | | GCI17022 | Inner Joint | | 31 | 29 | 44.95 | 77 | 109.5 | |
| | 2006.04-2015.12 | 6MT | F | R | Platform/Chassis FWD F1CE0481D (F30DT) | | GCI17021 | Inner Joint | | 31 | 29 | 34.85 | 530 | 109 | |
| | 2006.07-2015.12 | 6MT | F | L | Van FWD F1CE0481D (F30DT) | | GDS45175 | Drive Shaft | | 35 | 31 | 71.5 | 127 | 749.5 | |
| | 2006.07-2015.12 | 6MT | F | R | Van FWD F1CE0481D (F30DT) | | GDS45174 | Drive Shaft | | 35 | 31 | 71.5 | 127 | 1199 | |
| | 2006.07-2015.12 | 6MT | F | L/R | Van FWD F1CE0481D (F30DT) | | GCO17060 | Outer Joint | | 35 | 29 | 71.5 | 127 | 71 | I |
| | 2006.07-2015.12 | 6MT | F | L | Van FWD F1CE0481D (F30DT) | | GCI17022 | Inner Joint | | 31 | 29 | 44.95 | 77 | 109.5 | |
| | 2006.07-2015.12 | 6MT | F | R | Van FWD F1CE0481D (F30DT) | | GCI17021 | Inner Joint | | 31 | 29 | 34.85 | 530 | 109 | |
| 3.0 (116 kw) | 2006.04-2015.12 | 6MT | F | L | Platform/Chassis FWD F1CE0481D (F30DT) | | GDS45175 | Drive Shaft | | 35 | 31 | 71.5 | 127 | 749.5 | |
| | 2006.04-2015.12 | 6MT | F | R | Platform/Chassis FWD F1CE0481D (F30DT) | | GDS45174 | Drive Shaft | | 35 | 31 | 71.5 | 127 | 1199 | |
| | 2006.04-2015.12 | 6MT | F | L/R | Platform/Chassis FWD F1CE0481D (F30DT) | | GCO17060 | Outer Joint | | 35 | 29 | 71.5 | 127 | 71 | I |

| | YEAR | TRANSM. | F/R | L/R | BODY STYLE & DRIVE TYPE & ENGINE | REMARKS | G-AP Ref. | PRODUCT | ABS | Technical Specifications A | B | C | H | L | P |
|---|---|---|---|---|---|---|---|---|---|---|---|---|---|---|---|
| **PEUGEOT** | | | | | | | | | | | | | | | |
| **Boxer** | | | | | | | | | | | | | | | |
| 3.0 (116 kw) | 2006.04-2015.12 | 6MT | F | L | Platform/Chassis FWD F1CE0481D (F30DT) | | GCI17022 | Inner Joint | | 31 | 29 | 44.95 | 77 | 109.5 | |
| | 2006.04-2015.12 | 6MT | F | R | Platform/Chassis FWD F1CE0481D (F30DT) | | GCI17021 | Inner Joint | | 31 | 29 | 34.85 | 530 | 109 | |
| | 2006.04-2015.12 | 6MT | F | L | Van FWD F1CE0481D (F30DT) | | GDS45175 | Drive Shaft | | 35 | 31 | 71.5 | 127 | 749.5 | |
| | 2006.04-2015.12 | 6MT | F | R | Van FWD F1CE0481D (F30DT) | | GDS45174 | Drive Shaft | | 35 | 31 | 71.5 | 127 | 1199 | |
| | 2006.04-2015.12 | 6MT | F | L/R | Van FWD F1CE0481D (F30DT) | | GCO17060 | Outer Joint | | 35 | 29 | 71.5 | 127 | 71 | I |
| | 2006.04-2015.12 | 6MT | F | L | Van FWD F1CE0481D (F30DT) | | GCI17022 | Inner Joint | | 31 | 29 | 44.95 | 77 | 109.5 | |
| | 2006.04-2015.12 | 6MT | F | R | Van FWD F1CE0481D (F30DT) | | GCI17021 | Inner Joint | | 31 | 29 | 34.85 | 530 | 109 | |
| 3.0 (130 kw) | 2011.03- | 6MT | F | L | Platform/Chassis FWD F1CE3481E (F30DT) | | GDS45175 | Drive Shaft | | 35 | 31 | 71.5 | 127 | 749.5 | |
| | 2011.03- | 6MT | F | R | Platform/Chassis FWD F1CE3481E (F30DT) | | GDS45174 | Drive Shaft | | 35 | 31 | 71.5 | 127 | 1199 | |
| | 2011.03- | 6MT | F | L/R | Platform/Chassis FWD F1CE3481E (F30DT) | | GCO17060 | Outer Joint | | 35 | 29 | 71.5 | 127 | 71 | I |
| | 2011.03- | 6MT | F | L | Platform/Chassis FWD F1CE3481E (F30DT) | | GCI17022 | Inner Joint | | 31 | 29 | 44.95 | 77 | 109.5 | |
| | 2011.03- | 6MT | F | R | Platform/Chassis FWD F1CE3481E (F30DT) | | GCI17021 | Inner Joint | | 31 | 29 | 34.85 | 530 | 109 | |
| | 2011.03-2016.12 | 6MT | F | L | Bus FWD F1CE3481E (F30DT) | | GDS45175 | Drive Shaft | | 35 | 31 | 71.5 | 127 | 749.5 | |
| | 2011.03-2016.12 | 6MT | F | R | Bus FWD F1CE3481E (F30DT) | | GDS45174 | Drive Shaft | | 35 | 31 | 71.5 | 127 | 1199 | |
| | 2011.03-2016.12 | 6MT | F | L/R | Bus FWD F1CE3481E (F30DT) | | GCO17060 | Outer Joint | | 35 | 29 | 71.5 | 127 | 71 | I |
| | 2011.03-2016.12 | 6MT | F | L | Bus FWD F1CE3481E (F30DT) | | GCI17022 | Inner Joint | | 31 | 29 | 44.95 | 77 | 109.5 | |
| | 2011.03-2016.12 | 6MT | F | R | Bus FWD F1CE3481E (F30DT) | | GCI17021 | Inner Joint | | 31 | 29 | 34.85 | 530 | 109 | |
| | 2011.03-2016.12 | 6MT | F | L | Van FWD F1CE3481E (F30DT) | | GDS45175 | Drive Shaft | | 35 | 31 | 71.5 | 127 | 749.5 | |
| | 2011.03-2016.12 | 6MT | F | R | Van FWD F1CE3481E (F30DT) | | GDS45174 | Drive Shaft | | 35 | 31 | 71.5 | 127 | 1199 | |
| | 2011.03-2016.12 | 6MT | F | L/R | Van FWD F1CE3481E (F30DT) | | GCO17060 | Outer Joint | | 35 | 29 | 71.5 | 127 | 71 | I |
| | 2011.03-2016.12 | 6MT | F | L | Van FWD F1CE3481E (F30DT) | | GCI17022 | Inner Joint | | 31 | 29 | 44.95 | 77 | 109.5 | |
| | 2011.03-2016.12 | 6MT | F | R | Van FWD F1CE3481E (F30DT) | | GCI17021 | Inner Joint | | 31 | 29 | 34.85 | 530 | 109 | |
| **E-2008** | | | | | | | | | | | | | | | |
| EV (100 kw) | 2019.09- | ET | F | L | SUV FWD ZKX (ZK01) | | GDS56582 | Drive Shaft | | 25 | 24 | 56 | 83.5 | 675 | |
| | 2019.09- | ET | F | R | SUV FWD ZKX (ZK01) | | GDS56581 | Drive Shaft | | 25 | 24 | 56 | 83.5 | 902 | |
| | 2019.09- | ET | F | L/R | SUV FWD ZKX (ZK01) | | GCO82749 | Outer Joint | | 25 | 23 | 56 | 83.5 | 50 | I |
| | 2019.09- | ET | F | L | SUV FWD ZKX (ZK01) | | GCI83389 | Inner Joint | | 24 | 23 | 40 | 61.5 | 110.5 | |
| | 2019.09- | ET | F | R | SUV FWD ZKX (ZK01) | | GCI83388 | Inner Joint | | 24 | 23 | 29.8 | 290.5 | 110.5 | |
| EV (115 kw) | 2023.04- | ET | F | L | SUV FWD ZKW (ZK02) | Trans. code:RG1 | GDS56582 | Drive Shaft | | 25 | 24 | 56 | 83.5 | 675 | |
| | 2023.04- | ET | F | R | SUV FWD ZKW (ZK02) | Trans. code:RG1 | GDS56581 | Drive Shaft | | 25 | 24 | 56 | 83.5 | 902 | |
| | 2023.04- | ET | F | L/R | SUV FWD ZKW (ZK02) | Trans. code:RG1 | GCO82749 | Outer Joint | | 25 | 23 | 56 | 83.5 | 50 | I |
| | 2023.04- | ET | F | L | SUV FWD ZKW (ZK02) | Trans. code:RG1 | GCI83389 | Inner Joint | | 24 | 23 | 40 | 61.5 | 110.5 | |
| | 2023.04- | ET | F | R | SUV FWD ZKW (ZK02) | Trans. code:RG1 | GCI83388 | Inner Joint | | 24 | 23 | 29.8 | 290.5 | 110.5 | |
| **E-208** | | | | | | | | | | | | | | | |
| EV (100 kw) | 2019.06- | ET | F | L | Hatchback FWD ZKX (ZK01) | Date from:2021.12 | GDS57917 | Drive Shaft | | 25 | 24 | 55.7 | 84.5 | 655 | |
| | 2019.06- | ET | F | L | Hatchback FWD ZKX (ZK01) | Date to:2021.11 | GDS84261 | Drive Shaft | | 25 | 24 | 56 | 83.5 | 657 | |
| | 2019.06- | ET | F | R | Hatchback FWD ZKX (ZK01) | Date from:2021.12 | GDS57916 | Drive Shaft | | 25 | 24 | 55.7 | 84.5 | 880 | |
| | 2019.06- | ET | F | R | Hatchback FWD ZKX (ZK01) | Date to:2021.11 | GDS84314 | Drive Shaft | | 25 | 24 | 56 | 83.5 | 886 | |
| | 2019.06- | ET | F | L/R | Hatchback FWD ZKX (ZK01) | Date to:2021.11 | GCO82749 | Outer Joint | | 25 | 23 | 56 | 83.5 | 50 | I |
| | 2019.06- | ET | F | L/R | Hatchback FWD ZKX (ZK01) | Date from:2021.12 | GCO83785 | Outer Joint | | 25 | 34 | 55.7 | 84.5 | 55.5 | I |
| | 2019.06- | ET | F | R | Hatchback FWD ZKX (ZK01) | Date to:2021.11 | GCI10141 | Inner Joint | | 24 | 23 | 29.85 | 291 | 95 | |
| EV (115 kw) | 2023.01- | ET | F | L | Hatchback FWD ZKW (ZK02) | Solid shaft | GDS57917 | Drive Shaft | | 25 | 24 | 55.7 | 84.5 | 655 | |
| | 2023.01- | ET | F | L | Hatchback FWD ZKW (ZK02) | Hollow shaft | GDS84261 | Drive Shaft | | 25 | 24 | 56 | 83.5 | 657 | |
| | 2023.01- | ET | F | R | Hatchback FWD ZKW (ZK02) | Solid shaft | GDS57916 | Drive Shaft | | 25 | 24 | 55.7 | 84.5 | 880 | |
| | 2023.01- | ET | F | R | Hatchback FWD ZKW (ZK02) | Hollow shaft | GDS84314 | Drive Shaft | | 25 | 24 | 56 | 83.5 | 886 | |
| | 2023.01- | ET | F | L/R | Hatchback FWD ZKW (ZK02) | | GCO82749 | Outer Joint | | 25 | 23 | 56 | 83.5 | 50 | I |
| | 2023.01- | ET | F | L/R | Hatchback FWD ZKW (ZK02) | | GCO83785 | Outer Joint | | 25 | 34 | 55.7 | 84.5 | 55.5 | I |
| | 2023.01- | ET | F | R | Hatchback FWD ZKW (ZK02) | | GCI10141 | Inner Joint | | 24 | 23 | 29.85 | 291 | 95 | |
| EV (206 kw) | 2025.10- | ET | F | L | Hatchback FWD | Solid shaft | GDS57917 | Drive Shaft | | 25 | 24 | 55.7 | 84.5 | 655 | |
| | 2025.10- | ET | F | L | Hatchback FWD | Hollow shaft | GDS84261 | Drive Shaft | | 25 | 24 | 56 | 83.5 | 657 | |
| | 2025.10- | ET | F | R | Hatchback FWD | Solid shaft | GDS57916 | Drive Shaft | | 25 | 24 | 55.7 | 84.5 | 880 | |
| | 2025.10- | ET | F | R | Hatchback FWD | Hollow shaft | GDS84314 | Drive Shaft | | 25 | 24 | 56 | 83.5 | 886 | |
| | 2025.10- | ET | F | L/R | Hatchback FWD | | GCO82749 | Outer Joint | | 25 | 23 | 56 | 83.5 | 50 | I |
| | 2025.10- | ET | F | L/R | Hatchback FWD | | GCO83785 | Outer Joint | | 25 | 34 | 55.7 | 84.5 | 55.5 | I |
| | 2025.10- | ET | F | R | Hatchback FWD | | GCI10141 | Inner Joint | | 24 | 23 | 29.85 | 291 | 95 | |
| **E-EXPERT** | | | | | | | | | | | | | | | |
| 0.0 (100 kw) | 2023.01-2024.09 | ET | F | L | Van FWD ZKX (ZK01) | | GDS57725 | Drive Shaft | | 28 | 37 | 58.5 | 96 | 724 | |
| | 2023.01-2024.09 | ET | F | R | Van FWD ZKX (ZK01) | | GDS82316 | Drive Shaft | | 28 | 37 | 58.6 | 93 | 974 | |
| | 2023.01-2024.09 | ET | F | L/R | Van FWD ZKX (ZK01) | | GCO10098 | Outer Joint | | 28 | 39 | 58.6 | 93 | 63 | I |
| **E-Expert** | | | | | | | | | | | | | | | |
| EV (100 kw) | 2020.09- | ET | F | L | Van FWD ZKX (ZK01) | | GDS57725 | Drive Shaft | | 28 | 37 | 58.5 | 96 | 724 | |
| | 2020.09- | ET | F | R | Van FWD ZKX (ZK01) | | GDS82316 | Drive Shaft | | 28 | 37 | 58.6 | 93 | 974 | |
| | 2020.09- | ET | F | L/R | Van FWD ZKX (ZK01) | | GCO10098 | Outer Joint | | 28 | 39 | 58.6 | 93 | 63 | I |
| | 2020.09- | ET | F | R | Van FWD ZKX (ZK01) | | GCI81759 | Inner Joint | | 37 | 34 | 31.9 | 302 | 88 | |
| | 2020.09-2023.10 | ET | F | L | Bus FWD ZKX (ZK01) | | GDS57725 | Drive Shaft | | 28 | 37 | 58.5 | 96 | 724 | |

| | YEAR | TRANSM. | F/R | L/R | BODY STYLE & DRIVE TYPE & ENGINE | REMARKS | G-AP Ref. | PRODUCT | ABS | Technical Specifications A | B | C | H | L | P |
|---|---|---|---|---|---|---|---|---|---|---|---|---|---|---|---|
| **PEUGEOT** | | | | | | | | | | | | | | | |
| **E-Expert** | | | | | | | | | | | | | | | |
| EV (100 kw) | 2020.09-2023.10 | ET | F | R | Bus FWD ZKX (ZK01) | | GDS82316 | Drive Shaft | | 28 | 37 | 58.6 | 93 | 974 | |
| | 2020.09-2023.10 | ET | F | L/R | Bus FWD ZKX (ZK01) | | GCO10098 | Outer Joint | | 28 | 39 | 58.6 | 93 | 63 | I |
| | 2020.09-2023.10 | ET | F | L | Platform/Chassis FWD ZKX (ZK01) | | GDS57725 | Drive Shaft | | 28 | 37 | 58.5 | 96 | 724 | |
| | 2020.09-2023.10 | ET | F | R | Platform/Chassis FWD ZKX (ZK01) | | GDS82316 | Drive Shaft | | 28 | 37 | 58.6 | 93 | 974 | |
| | 2020.09-2023.10 | ET | F | L/R | Platform/Chassis FWD ZKX (ZK01) | | GCO10098 | Outer Joint | | 28 | 39 | 58.6 | 93 | 63 | I |
| | 2020.09-2023.10 | ET | F | R | Platform/Chassis FWD ZKX (ZK01) | | GCI81759 | Inner Joint | | 37 | 34 | 31.9 | 302 | 88 | |
| | 2023.11- | ET | F | L | Bus FWD ZKU (ZK02) | | GDS57725 | Drive Shaft | | 28 | 37 | 58.5 | 96 | 724 | |
| | 2023.11- | ET | F | R | Bus FWD ZKU (ZK02) | | GDS82316 | Drive Shaft | | 28 | 37 | 58.6 | 93 | 974 | |
| | 2023.11- | ET | F | L/R | Bus FWD ZKU (ZK02) | | GCO10098 | Outer Joint | | 28 | 39 | 58.6 | 93 | 63 | I |
| | 2023.11- | ET | F | L | Platform/Chassis FWD ZKU (ZK02) | | GDS57725 | Drive Shaft | | 28 | 37 | 58.5 | 96 | 724 | |
| | 2023.11- | ET | F | R | Platform/Chassis FWD ZKU (ZK02) | | GDS82316 | Drive Shaft | | 28 | 37 | 58.6 | 93 | 974 | |
| | 2023.11- | ET | F | L/R | Platform/Chassis FWD ZKU (ZK02) | | GCO10098 | Outer Joint | | 28 | 39 | 58.6 | 93 | 63 | I |
| | 2023.11- | ET | F | L | Van FWD ZKU (ZK02) | | GDS57725 | Drive Shaft | | 28 | 37 | 58.5 | 96 | 724 | |
| | 2023.11- | ET | F | R | Van FWD ZKU (ZK02) | | GDS82316 | Drive Shaft | | 28 | 37 | 58.6 | 93 | 974 | |
| | 2023.11- | ET | F | L/R | Van FWD ZKU (ZK02) | | GCO10098 | Outer Joint | | 28 | 39 | 58.6 | 93 | 63 | I |
| **e-Partner** | | | | | | | | | | | | | | | |
| EV (100 kw) | 2021.07- | ET | F | L | Box Body/MPV FWD ZKX (ZK01) | | GDS57969 | Drive Shaft | | 28 | 37 | 58.5 | 92.5 | 675 | |
| | 2021.07- | ET | F | R | Box Body/MPV FWD ZKX (ZK01) | | GDS58244 | Drive Shaft | | 28 | 37 | 58.5 | 92.5 | 927 | |
| | 2021.07- | ET | F | L | Box Body/MPV FWD ZKX (ZK01) | | GCO83814 | Outer Joint | | 28 | 34 | 58.5 | 92.5 | 56 | I |
| | 2021.07- | ET | F | L | Box Body/MPV FWD ZKX (ZK01) | | GCI82301 | Inner Joint | | 37 | 34 | 40 | 65.5 | 89.5 | |
| | 2023.11- | ET | F | L | Box Body/MPV FWD ZKU (ZK02) | | GDS57969 | Drive Shaft | | 28 | 37 | 58.5 | 92.5 | 675 | |
| | 2023.11- | ET | F | R | Box Body/MPV FWD ZKU (ZK02) | | GDS58244 | Drive Shaft | | 28 | 37 | 58.5 | 92.5 | 927 | |
| | 2023.11- | ET | F | L | Box Body/MPV FWD ZKU (ZK02) | | GCO83814 | Outer Joint | | 28 | 34 | 58.5 | 92.5 | 56 | I |
| | 2023.11- | ET | F | L | Box Body/MPV FWD ZKU (ZK02) | | GCI82301 | Inner Joint | | 37 | 34 | 40 | 65.5 | 89.5 | |
| **e-Rifter** | | | | | | | | | | | | | | | |
| EV (100 kw) | 2021.07-2023.10 | ET | F | L | MPV FWD ZKX (ZK01) | | GDS57969 | Drive Shaft | | 28 | 37 | 58.5 | 92.5 | 675 | |
| | 2021.07-2023.10 | ET | F | R | MPV FWD ZKX (ZK01) | | GDS58244 | Drive Shaft | | 28 | 37 | 58.5 | 92.5 | 927 | |
| | 2021.07-2023.10 | ET | F | L | MPV FWD ZKX (ZK01) | | GCO83814 | Outer Joint | | 28 | 34 | 58.5 | 92.5 | 56 | I |
| | 2021.07-2023.10 | ET | F | L | MPV FWD ZKX (ZK01) | | GCI82301 | Inner Joint | | 37 | 34 | 40 | 65.5 | 89.5 | |
| | 2023.11- | ET | F | L | MPV FWD ZKU (ZK02) | | GDS57969 | Drive Shaft | | 28 | 37 | 58.5 | 92.5 | 675 | |
| | 2023.11- | ET | F | R | MPV FWD ZKU (ZK02) | | GDS58244 | Drive Shaft | | 28 | 37 | 58.5 | 92.5 | 927 | |
| | 2023.11- | ET | F | L | MPV FWD ZKU (ZK02) | | GCO83814 | Outer Joint | | 28 | 34 | 58.5 | 92.5 | 56 | I |
| | 2023.11- | ET | F | L | MPV FWD ZKU (ZK02) | | GCI82301 | Inner Joint | | 37 | 34 | 40 | 65.5 | 89.5 | |
| **E-Traveller** | | | | | | | | | | | | | | | |
| EV (100 kw) | 2020.09-2023.10 | ET | F | L | Bus FWD ZKX (ZK01) | | GDS57725 | Drive Shaft | | 28 | 37 | 58.5 | 96 | 724 | |
| | 2020.09-2023.10 | ET | F | R | Bus FWD ZKX (ZK01) | | GDS82316 | Drive Shaft | | 28 | 37 | 58.6 | 93 | 974 | |
| | 2020.09-2023.10 | ET | F | L/R | Bus FWD ZKX (ZK01) | | GCO10098 | Outer Joint | | 28 | 39 | 58.6 | 93 | 63 | I |
| | 2020.09-2023.10 | ET | F | R | Bus FWD ZKX (ZK01) | | GCI81759 | Inner Joint | | 37 | 34 | 31.9 | 302 | 88 | |
| | 2023.11- | ET | F | L | Bus FWD ZKU (ZK02) | | GDS57725 | Drive Shaft | | 28 | 37 | 58.5 | 96 | 724 | |
| | 2023.11- | ET | F | R | Bus FWD ZKU (ZK02) | | GDS82316 | Drive Shaft | | 28 | 37 | 58.6 | 93 | 974 | |
| | 2023.11- | ET | F | L/R | Bus FWD ZKU (ZK02) | | GCO10098 | Outer Joint | | 28 | 39 | 58.6 | 93 | 63 | I |
| **Expert** | | | | | | | | | | | | | | | |
| 0.0 (100 kw) | 2024.10- | AT | F | L | Van FWD ZKU (ZK02) | | GDS57725 | Drive Shaft | | 28 | 37 | 58.5 | 96 | 724 | |
| | 2024.10- | ET | F | R | Van FWD ZKU (ZK02) | | GDS82316 | Drive Shaft | | 28 | 37 | 58.6 | 93 | 974 | |
| | 2024.10- | ET | F | L/R | Van FWD ZKU (ZK02) | | GCO10098 | Outer Joint | | 28 | 39 | 58.6 | 93 | 63 | I |
| 1.5 (75 kw) | 2018.06-2025.04 | 6MT | F | L | Bus FWD YHR (DV5RUCd) | | GDS82315 | Drive Shaft | | 28 | 37 | 58.6 | 93 | 719 | |
| | 2018.06-2025.04 | 6MT | F | R | Bus FWD YHR (DV5RUCd) | | GDS82316 | Drive Shaft | | 28 | 37 | 58.6 | 93 | 974 | |
| | 2018.06-2025.04 | 6MT | F | L/R | Bus FWD YHR (DV5RUCd) | | GCO10098 | Outer Joint | | 28 | 39 | 58.6 | 93 | 63 | I |
| | 2018.06-2025.04 | 6MT | F | R | Bus FWD YHR (DV5RUCd) | | GCI81759 | Inner Joint | | 37 | 34 | 31.9 | 302 | 88 | |
| | 2018.06-2025.04 | 6MT | F | L | Van FWD YHR (DV5RUCd) | | GDS82315 | Drive Shaft | | 28 | 37 | 58.6 | 93 | 719 | |
| | 2018.06-2025.04 | 6MT | F | R | Van FWD YHR (DV5RUCd) | | GDS82316 | Drive Shaft | | 28 | 37 | 58.6 | 93 | 974 | |
| | 2018.06-2025.04 | 6MT | F | L/R | Van FWD YHR (DV5RUCd) | | GCO10098 | Outer Joint | | 28 | 39 | 58.6 | 93 | 63 | I |
| | 2018.06-2025.04 | 6MT | F | R | Van FWD YHR (DV5RUCd) | | GCI81759 | Inner Joint | | 37 | 34 | 31.9 | 302 | 88 | |
| 1.5 (88 kw) | 2018.06- | 6MT | F | L | Van FWD YHV (DV5RUC) | | GDS82315 | Drive Shaft | | 28 | 37 | 58.6 | 93 | 719 | |
| | 2018.06- | 6MT | F | R | Van FWD YHV (DV5RUC) | | GDS82316 | Drive Shaft | | 28 | 37 | 58.6 | 93 | 974 | |
| | 2018.06- | 6MT | F | L/R | Van FWD YHV (DV5RUC) | | GCO10098 | Outer Joint | | 28 | 39 | 58.6 | 93 | 63 | I |
| | 2018.06- | 6MT | F | R | Van FWD YHV (DV5RUC) | | GCI81759 | Inner Joint | | 37 | 34 | 31.9 | 302 | 88 | |
| | 2018.06-2025.04 | 6MT | F | L | Bus FWD YHV (DV5RUC) | | GDS82315 | Drive Shaft | | 28 | 37 | 58.6 | 93 | 719 | |
| | 2018.06-2025.04 | 6MT | F | R | Bus FWD YHV (DV5RUC) | | GDS82316 | Drive Shaft | | 28 | 37 | 58.6 | 93 | 974 | |
| | 2018.06-2025.04 | 6MT | F | L/R | Bus FWD YHV (DV5RUC) | | GCO10098 | Outer Joint | | 28 | 39 | 58.6 | 93 | 63 | I |
| | 2018.06-2025.04 | 6MT | F | R | Bus FWD YHV (DV5RUC) | | GCI81759 | Inner Joint | | 37 | 34 | 31.9 | 302 | 88 | |
| 1.6 (58 kw) | 1996.02-2000.09 | 5MT | F | L | Bus FWD 222A2 (1580 SPI) | | GDS10082 | Drive Shaft | 48T | 27 | 24 | 59 | 82 | 648 | |
| | 1996.02-2000.09 | 5MT | F | R | Bus FWD 222A2 (1580 SPI) | | GDS10081 | Drive Shaft | 48T | 27 | 24 | 59 | 82 | 935 | |
| | 1996.02-2000.09 | 5MT | F | R | Bus FWD 222A2 (1580 SPI) | | GCI10004 | Inner Joint | | 24 | 34 | 29.8 | 348 | 99.5 | |
| | 1996.02-2000.09 | MT | F | L | Bus FWD 222A2 (1580 SPI) | Trans. code:BE3 | GDS10112 | Drive Shaft | | 27 | 24 | 59 | 82 | 648 | |

| | YEAR | TRANSM. | F/R | L/R | BODY STYLE & DRIVE TYPE & ENGINE | REMARKS | G-AP Ref. | PRODUCT | ABS | Technical Specifications A | B | C | H | L | P |
|---|---|---|---|---|---|---|---|---|---|---|---|---|---|---|---|
| **PEUGEOT** | | | | | | | | | | | | | | | |
| **Expert** | | | | | | | | | | | | | | | |
| 1.6 (58 kw) | 1996.02-2000.09 | MT | F | L/R | Bus FWD 222A2 (1580 SPI) | | GCO10018 | Outer Joint | 48T | 27 | 34 | 61 | 82 | 56.5 | I |
| | 1996.02-2000.09 | 5MT | F | L | Platform/Chassis FWD 222A2 (1580 SPI) | | GDS10082 | Drive Shaft | 48T | 27 | 24 | 59 | 82 | 648 | |
| | 1996.02-2000.09 | 5MT | F | R | Platform/Chassis FWD 222A2 (1580 SPI) | | GDS10081 | Drive Shaft | 48T | 27 | 24 | 59 | 82 | 935 | |
| | 1996.02-2000.09 | 5MT | F | R | Platform/Chassis FWD 222A2 (1580 SPI) | | GCI10004 | Inner Joint | | 24 | 34 | 29.8 | 348 | 99.5 | |
| | 1996.02-2000.09 | MT | F | L | Platform/Chassis FWD 222A2 (1580 SPI) | Trans. code:BE3 | GDS10112 | Drive Shaft | | 27 | 24 | 59 | 82 | 648 | |
| | 1996.02-2000.09 | MT | F | L/R | Platform/Chassis FWD 222A2 (1580 SPI) | | GCO10018 | Outer Joint | 48T | 27 | 34 | 61 | 82 | 56.5 | I |
| | 1996.02-2000.09 | 5MT | F | L | Van FWD 222A2 (1580 SPI) | | GDS10082 | Drive Shaft | 48T | 27 | 24 | 59 | 82 | 648 | |
| | 1996.02-2000.09 | 5MT | F | R | Van FWD 222A2 (1580 SPI) | | GDS10081 | Drive Shaft | 48T | 27 | 24 | 59 | 82 | 935 | |
| | 1996.02-2000.09 | 5MT | F | R | Van FWD 222A2 (1580 SPI) | | GCI10004 | Inner Joint | | 24 | 34 | 29.8 | 348 | 99.5 | |
| | 1996.02-2000.09 | MT | F | L | Van FWD 222A2 (1580 SPI) | Trans. code:BE3 | GDS10112 | Drive Shaft | | 27 | 24 | 59 | 82 | 648 | |
| | 1996.02-2000.09 | MT | F | L/R | Van FWD 222A2 (1580 SPI) | | GCO10018 | Outer Joint | 48T | 27 | 34 | 61 | 82 | 56.5 | I |
| | 1996.02-2000.09 | MT | F | L/R | Van FWD 222A2 (1580 SPI) | | GCO10059 | Outer Joint | 48T | 27 | 34 | 59 | 82 | 56.5 | I |
| 1.6 (66 kw) | 2007.01- | MT | F | L | Platform/Chassis FWD 9HM (DV6UC);9HH (DV6DUM) | | GDS10238 | Drive Shaft | | 28 | 24 | 58.5 | 92 | 669 | |
| | 2007.01- | MT | F | R | Platform/Chassis FWD 9HM (DV6UC);9HH (DV6DUM) | | GDS10239 | Drive Shaft | | 28 | 24 | 58.5 | 92 | 955 | |
| | 2007.01- | MT | F | L/R | Platform/Chassis FWD 9HM (DV6UC);9HH (DV6DUM) | | GCO10052 | Outer Joint | | 28 | 34 | 58.5 | 92 | 55 | I |
| | 2007.01- | MT | F | L/R | Platform/Chassis FWD 9HM (DV6UC);9HH (DV6DUM) | | GCO10124 | Outer Joint | | 28 | 34 | 58.5 | 92 | 55 | I |
| | 2007.01- | MT | F | R | Platform/Chassis FWD 9HM (DV6UC);9HH (DV6DUM) | | GCI99159 | Inner Joint | | 24 | 34 | 29.8 | 350 | 87.5 | |
| | 2007.01- | MT | F | L | Platform/Chassis FWD 9HU (DV6UTED4) | | GDS10238 | Drive Shaft | | 28 | 24 | 58.5 | 92 | 669 | |
| | 2007.01- | MT | F | R | Platform/Chassis FWD 9HU (DV6UTED4) | | GDS10239 | Drive Shaft | | 28 | 24 | 58.5 | 92 | 955 | |
| | 2007.01- | MT | F | L/R | Platform/Chassis FWD 9HU (DV6UTED4) | | GCO10052 | Outer Joint | | 28 | 34 | 58.5 | 92 | 55 | I |
| | 2007.01- | MT | F | L/R | Platform/Chassis FWD 9HU (DV6UTED4) | | GCO10124 | Outer Joint | | 28 | 34 | 58.5 | 92 | 55 | I |
| | 2007.01- | MT | F | L | Platform/Chassis FWD 9HU (DV6UTED4) | | GCI45032 | Inner Joint | | 37 | 39 | 40 | 68.5 | 100 | |
| | 2007.01- | MT | F | R | Platform/Chassis FWD 9HU (DV6UTED4) | | GCI99159 | Inner Joint | | 24 | 34 | 29.8 | 350 | 87.5 | |
| | 2007.01- | MT | F | L | Van FWD 9HM (DV6UC);9HH (DV6DUM) | | GDS10238 | Drive Shaft | | 28 | 24 | 58.5 | 92 | 669 | |
| | 2007.01- | MT | F | R | Van FWD 9HM (DV6UC);9HH (DV6DUM) | | GDS10239 | Drive Shaft | | 28 | 24 | 58.5 | 92 | 955 | |
| | 2007.01- | MT | F | L/R | Van FWD 9HM (DV6UC);9HH (DV6DUM) | | GCO10052 | Outer Joint | | 28 | 34 | 58.5 | 92 | 55 | I |
| | 2007.01- | MT | F | L/R | Van FWD 9HM (DV6UC);9HH (DV6DUM) | | GCO10124 | Outer Joint | | 28 | 34 | 58.5 | 92 | 55 | I |
| | 2007.01- | MT | F | R | Van FWD 9HM (DV6UC);9HH (DV6DUM) | | GCI99159 | Inner Joint | | 24 | 34 | 29.8 | 350 | 87.5 | |
| | 2007.01- | MT | F | L | Van FWD 9HU (DV6UTED4) | | GDS10238 | Drive Shaft | | 28 | 24 | 58.5 | 92 | 669 | |
| | 2007.01- | MT | F | R | Van FWD 9HU (DV6UTED4) | | GDS10239 | Drive Shaft | | 28 | 24 | 58.5 | 92 | 955 | |
| | 2007.01- | MT | F | L/R | Van FWD 9HU (DV6UTED4) | | GCO10052 | Outer Joint | | 28 | 34 | 58.5 | 92 | 55 | I |
| | 2007.01- | MT | F | L/R | Van FWD 9HU (DV6UTED4) | | GCO10124 | Outer Joint | | 28 | 34 | 58.5 | 92 | 55 | I |
| | 2007.01- | MT | F | R | Van FWD 9HU (DV6UTED4) | | GCI99159 | Inner Joint | | 24 | 34 | 29.8 | 350 | 87.5 | |
| | 2007.01-2016.03 | MT | F | L | Bus FWD 9HM (DV6UC);9HH (DV6DUM) | | GDS10238 | Drive Shaft | | 28 | 24 | 58.5 | 92 | 669 | |
| | 2007.01-2016.03 | MT | F | R | Bus FWD 9HM (DV6UC);9HH (DV6DUM) | | GDS10239 | Drive Shaft | | 28 | 24 | 58.5 | 92 | 955 | |
| | 2007.01-2016.03 | MT | F | L/R | Bus FWD 9HM (DV6UC);9HH (DV6DUM) | | GCO10052 | Outer Joint | | 28 | 34 | 58.5 | 92 | 55 | I |
| | 2007.01-2016.03 | MT | F | L/R | Bus FWD 9HM (DV6UC);9HH (DV6DUM) | | GCO10124 | Outer Joint | | 28 | 34 | 58.5 | 92 | 55 | I |
| | 2007.01-2016.03 | MT | F | R | Bus FWD 9HM (DV6UC);9HH (DV6DUM) | | GCI99159 | Inner Joint | | 24 | 34 | 29.8 | 350 | 87.5 | |
| 1.6 (70 kw) | 2016.04-2019.12 | 5MT | F | L | Bus FWD BHV (DV6FDU);BHS (DV6FDU) | Exhaust Emis Nm:Euro 5 | GDS84395 | Drive Shaft | | 28 | 24 | 58.6 | 93 | 732 | |
| | 2016.04-2019.12 | 5MT | F | R | Bus FWD BHV (DV6FDU);BHS (DV6FDU) | Date to:2021.01,for DAM no. to:16155LT,Vehicle Production Country:Great Britain | GDS84394 | Drive Shaft | | 28 | 24 | 58.6 | 93 | 965 | |
| | 2016.04-2019.12 | 5MT | F | L | Bus FWD BHV (DV6FDU);BHS (DV6FDU) | Exhaust Emis Nm:Euro 5 | GCO82805 | Outer Joint | | 28 | 39 | 58.6 | 93 | 63 | I |
| | 2016.04-2019.12 | 5MT | F | R | Bus FWD BHV (DV6FDU);BHS (DV6FDU) | Date to:2021.01,for DAM no. to:16155LT,Vehicle Production Country:Great Britain | GCO82805 | Outer Joint | | 28 | 39 | 58.6 | 93 | 63 | I |
| | 2016.04-2019.12 | 5MT | F | L/R | Bus FWD BHV (DV6FDU);BHS (DV6FDU) | | GCO10019 | Outer Joint | 48T | 25 | 39 | 59 | 89 | 63.5 | I |
| | 2016.04-2019.12 | 5MT | F | L | Bus FWD BHV (DV6FDU);BHS (DV6FDU) | Exhaust Emis Nm:Euro 5 | GCI10129 | Inner Joint | | 24 | 34 | 40 | 62 | 89 | |
| | 2016.04-2019.12 | 5MT | F | R | Bus FWD BHV (DV6FDU);BHS (DV6FDU) | Date to:2021.01,for DAM no. to:16155LT,Vehicle Production Country:Great Britain | GCI82740 | Inner Joint | | 24 | 34 | 29.8 | 290 | 88 | |
| | 2016.04-2019.12 | 5MT | F | L | Van FWD BHV (DV6FDU) | Exhaust Emis Nm:Euro 5 | GDS84395 | Drive Shaft | | 28 | 24 | 58.6 | 93 | 732 | |
| | 2016.04-2019.12 | 5MT | F | R | Van FWD BHV (DV6FDU) | Date to:2021.01,for DAM no. to:16155LT,Vehicle Production Country:Great Britain | GDS84394 | Drive Shaft | | 28 | 24 | 58.6 | 93 | 965 | |
| | 2016.04-2019.12 | 5MT | F | L | Van FWD BHV (DV6FDU) | Exhaust Emis Nm:Euro 5 | GCO82805 | Outer Joint | | 28 | 39 | 58.6 | 93 | 63 | I |
| | 2016.04-2019.12 | 5MT | F | R | Van FWD BHV (DV6FDU) | Date to:2021.01,for DAM no. to:16155LT,Vehicle Production Country:Great Britain | GCO82805 | Outer Joint | | 28 | 39 | 58.6 | 93 | 63 | I |
| | 2016.04-2019.12 | 5MT | F | L/R | Van FWD BHV (DV6FDU) | | GCO10019 | Outer Joint | 48T | 25 | 39 | 59 | 89 | 63.5 | I |
| | 2016.04-2019.12 | 5MT | F | L | Van FWD BHV (DV6FDU) | Exhaust Emis Nm:Euro 5 | GCI10129 | Inner Joint | | 24 | 34 | 40 | 62 | 89 | |
| | 2016.04-2019.12 | 5MT | F | R | Van FWD BHV (DV6FDU) | Date to:2021.01,for DAM no. to:16155LT,Vehicle Production Country:Great Britain | GCI82740 | Inner Joint | | 24 | 34 | 29.8 | 290 | 88 | |
| | 2016.09-2019.12 | 5MT | F | L | Platform/Chassis FWD BHV (DV6FDU) | Exhaust Emis Nm:Euro 5 | GDS84395 | Drive Shaft | | 28 | 24 | 58.6 | 93 | 732 | |
| | 2016.09-2019.12 | 5MT | F | R | Platform/Chassis FWD BHV (DV6FDU) | Date to:2021.01,for DAM no. to:16155LT,Vehicle Production Country:Great Britain | GDS84394 | Drive Shaft | | 28 | 24 | 58.6 | 93 | 965 | |
| | 2016.09-2019.12 | 5MT | F | L | Platform/Chassis FWD BHV (DV6FDU) | Exhaust Emis Nm:Euro 5 | GCO82805 | Outer Joint | | 28 | 39 | 58.6 | 93 | 63 | I |
| | 2016.09-2019.12 | 5MT | F | R | Platform/Chassis FWD BHV (DV6FDU) | Date to:2021.01,for DAM no. to:16155LT,Vehicle Production Country:Great Britain | GCO82805 | Outer Joint | | 28 | 39 | 58.6 | 93 | 63 | I |
| | 2016.09-2019.12 | 5MT | F | L/R | Platform/Chassis FWD BHV (DV6FDU) | | GCO10019 | Outer Joint | 48T | 25 | 39 | 59 | 89 | 63.5 | I |
| | 2016.09-2019.12 | 5MT | F | L | Platform/Chassis FWD BHV (DV6FDU) | Exhaust Emis Nm:Euro 5 | GCI10129 | Inner Joint | | 24 | 34 | 40 | 62 | 89 | |
| | 2016.09-2019.12 | 5MT | F | R | Platform/Chassis FWD BHV (DV6FDU) | Date to:2021.01,for DAM no. to:16155LT,Vehicle Production Country:Great Britain | GCI82740 | Inner Joint | | 24 | 34 | 29.8 | 290 | 88 | |
| 1.6 (85 kw) | 2016.04-2019.12 | 6MT | F | L | Bus FWD BHX (DV6FCU) | | GDS82315 | Drive Shaft | | 28 | 37 | 58.6 | 93 | 719 | |
| | 2016.04-2019.12 | 6MT | F | R | Bus FWD BHX (DV6FCU) | | GDS82316 | Drive Shaft | | 28 | 37 | 58.6 | 93 | 974 | |
| | 2016.04-2019.12 | 6MT | F | L/R | Bus FWD BHX (DV6FCU) | | GCO10098 | Outer Joint | | 28 | 39 | 58.6 | 93 | 63 | I |
| | 2016.04-2019.12 | 6MT | F | R | Bus FWD BHX (DV6FCU) | | GCI81759 | Inner Joint | | 37 | 34 | 31.9 | 302 | 88 | |
| | 2016.04-2019.12 | MT | F | L/R | Bus FWD BHX (DV6FCU) | | GCO10052 | Outer Joint | | 28 | 34 | 58.5 | 92 | 55 | I |
| | 2016.04-2019.12 | 6MT | F | L | Van FWD BHX (DV6FCU) | | GDS82315 | Drive Shaft | | 28 | 37 | 58.6 | 93 | 719 | |

| | YEAR | TRANSM. | F/R | L/R | BODY STYLE & DRIVE TYPE & ENGINE | REMARKS | G-AP Ref. | PRODUCT | ABS | Technical Specifications A | B | C | H | L | P |
|---|---|---|---|---|---|---|---|---|---|---|---|---|---|---|---|
| **PEUGEOT** **Expert** | | | | | | | | | | | | | | | |
| 1.6 (85 kw) | 2016.04-2019.12 | 6MT | F | R | Van FWD BHX (DV6FCU) | | GDS82316 | Drive Shaft | | 28 | 37 | 58.6 | 93 | 974 | |
| | 2016.04-2019.12 | 6MT | F | L/R | Van FWD BHX (DV6FCU) | | GCO10098 | Outer Joint | | 28 | 39 | 58.6 | 93 | 63 | I |
| | 2016.04-2019.12 | 6MT | F | R | Van FWD BHX (DV6FCU) | | GCI81759 | Inner Joint | | 37 | 34 | 31.9 | 302 | 88 | |
| | 2016.04-2019.12 | MT | F | L/R | Van FWD BHX (DV6FCU) | | GCO10052 | Outer Joint | | 28 | 34 | 58.5 | 92 | 55 | I |
| 1.8 (74 kw) | 1996.10-2000.09 | 5MT | F | L | Bus FWD LFZ (XU7JP) | | GDS10082 | Drive Shaft | 48T | 27 | 24 | 59 | 82 | 648 | |
| | 1996.10-2000.09 | 5MT | F | R | Bus FWD LFZ (XU7JP) | | GDS10081 | Drive Shaft | 48T | 27 | 24 | 59 | 82 | 935 | |
| | 1996.10-2000.09 | 5MT | F | L/R | Bus FWD LFZ (XU7JP) | | GCO10059 | Outer Joint | 48T | 27 | 34 | 59 | 82 | 56.5 | I |
| | 1996.10-2000.09 | 5MT | F | R | Bus FWD LFZ (XU7JP) | | GCI10004 | Inner Joint | | 24 | 34 | 29.8 | 348 | 99.5 | |
| | 1996.10-2000.09 | | F | L | Bus FWD LFZ (XU7JP) | | GDS10112 | Drive Shaft | | 27 | 24 | 59 | 82 | 648 | |
| | 1996.10-2000.09 | 5MT | F | L | Van FWD LFZ (XU7JP) | | GDS10082 | Drive Shaft | 48T | 27 | 24 | 59 | 82 | 648 | |
| | 1996.10-2000.09 | 5MT | F | R | Van FWD LFZ (XU7JP) | | GDS10081 | Drive Shaft | 48T | 27 | 24 | 59 | 82 | 935 | |
| | 1996.10-2000.09 | 5MT | F | L/R | Van FWD LFZ (XU7JP) | | GCO10059 | Outer Joint | 48T | 27 | 34 | 59 | 82 | 56.5 | I |
| | 1996.10-2000.09 | 5MT | F | R | Van FWD LFZ (XU7JP) | | GCI10004 | Inner Joint | | 24 | 34 | 29.8 | 348 | 99.5 | |
| | 1996.10-2000.09 | | F | L | Van FWD LFZ (XU7JP) | | GDS10112 | Drive Shaft | | 27 | 24 | 59 | 82 | 648 | |
| 1.9 (51 kw) | 1996.02-1998.12 | 5MT | F | L | Bus FWD D9B (XUD9AU) | | GDS10082 | Drive Shaft | 48T | 27 | 24 | 59 | 82 | 648 | |
| | 1996.02-1998.12 | 5MT | F | R | Bus FWD D9B (XUD9AU) | | GDS10081 | Drive Shaft | 48T | 27 | 24 | 59 | 82 | 935 | |
| | 1996.02-1998.12 | 5MT | F | R | Bus FWD D9B (XUD9AU) | | GCI10004 | Inner Joint | | 24 | 34 | 29.8 | 348 | 99.5 | |
| | 1996.02-1998.12 | MT | F | L | Bus FWD D9B (XUD9AU) | | GDS10112 | Drive Shaft | | 27 | 24 | 59 | 82 | 648 | |
| | 1996.02-1998.12 | MT | F | L/R | Bus FWD D9B (XUD9AU) | | GCO10018 | Outer Joint | 48T | 27 | 34 | 61 | 82 | 56.5 | I |
| | 1996.02-1998.12 | MT | F | L/R | Bus FWD D9B (XUD9AU) | | GCO10059 | Outer Joint | 48T | 27 | 34 | 59 | 82 | 56.5 | I |
| | 1996.02-1998.12 | | F | R | Bus FWD D9B (XUD9AU) | | GDS10111 | Drive Shaft | | 27 | 24 | 59 | 82 | 935 | |
| | 1996.02-1998.12 | | F | | Bus FWD D9B (XUD9AU) | | GCO10016 | Outer Joint | | 27 | 34 | 59 | 82 | 56.5 | I |
| | 1996.02-1998.12 | 5MT | F | L | Platform/Chassis FWD D9B (XUD9AU) | | GDS10082 | Drive Shaft | 48T | 27 | 24 | 59 | 82 | 648 | |
| | 1996.02-1998.12 | 5MT | F | R | Platform/Chassis FWD D9B (XUD9AU) | | GDS10081 | Drive Shaft | 48T | 27 | 24 | 59 | 82 | 935 | |
| | 1996.02-1998.12 | 5MT | F | R | Platform/Chassis FWD D9B (XUD9AU) | | GCI10004 | Inner Joint | | 24 | 34 | 29.8 | 348 | 99.5 | |
| | 1996.02-1998.12 | MT | F | L | Platform/Chassis FWD D9B (XUD9AU) | | GDS10112 | Drive Shaft | | 27 | 24 | 59 | 82 | 648 | |
| | 1996.02-1998.12 | MT | F | L/R | Platform/Chassis FWD D9B (XUD9AU) | | GCO10018 | Outer Joint | 48T | 27 | 34 | 61 | 82 | 56.5 | I |
| | 1996.02-1998.12 | MT | F | L/R | Platform/Chassis FWD D9B (XUD9AU) | | GCO10059 | Outer Joint | 48T | 27 | 34 | 59 | 82 | 56.5 | I |
| | 1996.02-1998.12 | | F | R | Platform/Chassis FWD D9B (XUD9AU) | | GDS10111 | Drive Shaft | | 27 | 24 | 59 | 82 | 935 | |
| | 1996.02-1998.12 | | F | | Platform/Chassis FWD D9B (XUD9AU) | | GCO10016 | Outer Joint | | 27 | 34 | 59 | 82 | 56.5 | I |
| | 1996.02-1998.12 | 5MT | F | L | Van FWD D9B (XUD9AU) | | GDS10082 | Drive Shaft | 48T | 27 | 24 | 59 | 82 | 648 | |
| | 1996.02-1998.12 | 5MT | F | L | Van FWD D9B (XUD9AU) | | GDS10112 | Drive Shaft | | 27 | 24 | 59 | 82 | 648 | |
| | 1996.02-1998.12 | 5MT | F | R | Van FWD D9B (XUD9AU) | | GDS10081 | Drive Shaft | 48T | 27 | 24 | 59 | 82 | 935 | |
| | 1996.02-1998.12 | 5MT | F | R | Van FWD D9B (XUD9AU) | | GDS10111 | Drive Shaft | | 27 | 24 | 59 | 82 | 935 | |
| | 1996.02-1998.12 | 5MT | F | L/R | Van FWD D9B (XUD9AU) | | GCO10016 | Outer Joint | | 27 | 34 | 59 | 82 | 56.5 | I |
| | 1996.02-1998.12 | 5MT | F | L/R | Van FWD D9B (XUD9AU) | | GCO10059 | Outer Joint | 48T | 27 | 34 | 59 | 82 | 56.5 | I |
| | 1996.02-1998.12 | 5MT | F | R | Van FWD D9B (XUD9AU) | | GCI10004 | Inner Joint | | 24 | 34 | 29.8 | 348 | 99.5 | |
| | 1998.06-2001.09 | 5MT | F | L | Platform/Chassis FWD WJY (DW8B), WJZ (DW8) | | GDS10082 | Drive Shaft | 48T | 27 | 24 | 59 | 82 | 648 | |
| | 1998.06-2001.09 | 5MT | F | L | Platform/Chassis FWD WJY (DW8B), WJZ (DW8) | | GDS10112 | Drive Shaft | | 27 | 24 | 59 | 82 | 648 | |
| | 1998.06-2001.09 | 5MT | F | R | Platform/Chassis FWD WJY (DW8B), WJZ (DW8) | | GDS10081 | Drive Shaft | 48T | 27 | 24 | 59 | 82 | 935 | |
| | 1998.06-2001.09 | 5MT | F | R | Platform/Chassis FWD WJY (DW8B), WJZ (DW8) | | GDS10120 | Drive Shaft | | 27 | 24 | 59 | 82 | 928 | |
| | 1998.06-2001.09 | 5MT | F | L/R | Platform/Chassis FWD WJY (DW8B), WJZ (DW8) | | GCO10018 | Outer Joint | 48T | 27 | 34 | 61 | 82 | 56.5 | I |
| | 1998.06-2001.09 | 5MT | F | R | Platform/Chassis FWD WJY (DW8B), WJZ (DW8) | | GCI10004 | Inner Joint | | 24 | 34 | 29.8 | 348 | 99.5 | |
| | 1998.12-2006.12 | 5MT | F | L | Van FWD WJY (DW8B), WJZ (DW8) | | GDS10082 | Drive Shaft | 48T | 27 | 24 | 59 | 82 | 648 | |
| | 1998.12-2006.12 | 5MT | F | L | Van FWD WJY (DW8B), WJZ (DW8) | | GDS10112 | Drive Shaft | | 27 | 24 | 59 | 82 | 648 | |
| | 1998.12-2006.12 | 5MT | F | R | Van FWD WJY (DW8B), WJZ (DW8) | | GDS10081 | Drive Shaft | 48T | 27 | 24 | 59 | 82 | 935 | |
| | 1998.12-2006.12 | 5MT | F | R | Van FWD WJY (DW8B), WJZ (DW8) | | GDS10111 | Drive Shaft | | 27 | 24 | 59 | 82 | 935 | |
| | 1998.12-2006.12 | 5MT | F | L/R | Van FWD WJY (DW8B), WJZ (DW8) | | GCO10059 | Outer Joint | 48T | 27 | 34 | 59 | 82 | 56.5 | I |
| | 1998.12-2006.12 | 5MT | F | R | Van FWD WJY (DW8B), WJZ (DW8) | | GCI10004 | Inner Joint | | 24 | 34 | 29.8 | 348 | 99.5 | |
| | 1998.12-2006.12 | MT | F | L/R | Van FWD WJY (DW8B), WJZ (DW8) | | GCO10016 | Outer Joint | | 27 | 34 | 59 | 82 | 56.5 | I |
| | 2003.12-2006.12 | 5MT | F | L | Bus FWD WJY (DW8B), WJZ (DW8) | | GDS10082 | Drive Shaft | 48T | 27 | 24 | 59 | 82 | 648 | |
| | 2003.12-2006.12 | 5MT | F | L | Bus FWD WJY (DW8B), WJZ (DW8) | | GDS10112 | Drive Shaft | | 27 | 24 | 59 | 82 | 648 | |
| | 2003.12-2006.12 | 5MT | F | R | Bus FWD WJY (DW8B), WJZ (DW8) | | GDS10081 | Drive Shaft | 48T | 27 | 24 | 59 | 82 | 935 | |
| | 2003.12-2006.12 | 5MT | F | R | Bus FWD WJY (DW8B), WJZ (DW8) | | GDS10120 | Drive Shaft | | 27 | 24 | 59 | 82 | 928 | |
| | 2003.12-2006.12 | 5MT | F | L/R | Bus FWD WJY (DW8B), WJZ (DW8) | | GCO10018 | Outer Joint | 48T | 27 | 34 | 61 | 82 | 56.5 | I |
| | 2003.12-2006.12 | 5MT | F | R | Bus FWD WJY (DW8B), WJZ (DW8) | | GCI10004 | Inner Joint | | 24 | 34 | 29.8 | 348 | 99.5 | |
| 1.9 (66 kw) | 1996.02-2000.09 | 5MT | F | L | Bus FWD DHX (XUD9TE) | Trans. code:ML5T/ME | GDS10016 | Drive Shaft | 48T | 27 | 37 | 59 | 82 | 641 | |
| | 1996.02-2000.09 | 5MT | F | L | Bus FWD DHX (XUD9TE) | Trans. code:ML5T/ME | GDS10072 | Drive Shaft | | 27 | 37 | 59 | 82 | 641 | |
| | 1996.02-2000.09 | 5MT | F | L | Bus FWD DHX (XUD9TE) | Trans. code:BE3R/BE4R | GDS10082 | Drive Shaft | 48T | 27 | 24 | 59 | 82 | 648 | |
| | 1996.02-2000.09 | 5MT | F | L | Bus FWD DHX (XUD9TE) | Trans. code:BE3R/BE4R | GDS10112 | Drive Shaft | | 27 | 24 | 59 | 82 | 648 | |
| | 1996.02-2000.09 | 5MT | F | R | Bus FWD DHX (XUD9TE) | Trans. code:ML5T/ME | GDS10014 | Drive Shaft | 48T | 27 | 37 | 59 | 82 | 947 | |
| | 1996.02-2000.09 | 5MT | F | R | Bus FWD DHX (XUD9TE) | Trans. code:BE3R/BE4R | GDS10081 | Drive Shaft | 48T | 27 | 24 | 59 | 82 | 935 | |
| | 1996.02-2000.09 | 5MT | F | R | Bus FWD DHX (XUD9TE) | Trans. code:ML5T/ME | GDS10155 | Drive Shaft | | 27 | 37 | 59 | 82 | 947 | |
| | 1996.02-2000.09 | 5MT | F | L | Bus FWD DHX (XUD9TE) | Trans. code:BE3R/BE4R | GCO10016 | Outer Joint | | 27 | 34 | 59 | 82 | 56.5 | I |
| | 1996.02-2000.09 | 5MT | F | L | Bus FWD DHX (XUD9TE) | Trans. code:BE3R/BE4R | GCO10059 | Outer Joint | 48T | 27 | 34 | 59 | 82 | 56.5 | I |

| | YEAR | TRANSM. | F/R | L/R | BODY STYLE & DRIVE TYPE & ENGINE | REMARKS | G-AP Ref. | PRODUCT | ABS | Technical Specifications | | | | | |
|---|---|---|---|---|---|---|---|---|---|---|---|---|---|---|---|
| | | | | | | | | | | A | B | C | H | L | P |
| **PEUGEOT** **Expert** | | | | | | | | | | | | | | | |
| 1.9 (66 kw) | 1996.02-2000.09 | 5MT | F | L/R | Bus FWD DHX (XUD9TE) | Trans. code:ML5T/ME | GCO10014 | Outer Joint | | 27 | 39 | 59 | 82 | 63 | I |
| | 1996.02-2000.09 | 5MT | F | L/R | Bus FWD DHX (XUD9TE) | Trans. code:ML5T/ME | GCO10015 | Outer Joint | 48T | 27 | 39 | 59 | 82 | 63 | I |
| | 1996.02-2000.09 | 5MT | F | L | Bus FWD DHX (XUD9TE) | Trans. code:ML5T/ME | GCI10015 | Inner Joint | | 37 | 39 | 40 | 68.5 | 104 | |
| | 1996.02-2000.09 | 5MT | F | R | Bus FWD DHX (XUD9TE) | Trans. code:ML5T/ME | GCI10034 | Inner Joint | | 37 | 39 | 31.9 | 369.5 | 99 | |
| | 1996.02-2000.09 | 5MT | F | L | Platform/Chassis FWD DHX (XUD9TE) | Trans. code:ML5T/ME | GDS10016 | Drive Shaft | 48T | 27 | 37 | 59 | 82 | 641 | |
| | 1996.02-2000.09 | 5MT | F | L | Platform/Chassis FWD DHX (XUD9TE) | Trans. code:ML5T/ME | GDS10072 | Drive Shaft | | 27 | 37 | 59 | 82 | 641 | |
| | 1996.02-2000.09 | 5MT | F | L | Platform/Chassis FWD DHX (XUD9TE) | Trans. code:BE3R/BE4R | GDS10082 | Drive Shaft | 48T | 27 | 24 | 59 | 82 | 648 | |
| | 1996.02-2000.09 | 5MT | F | L | Platform/Chassis FWD DHX (XUD9TE) | Trans. code:BE3R/BE4R | GDS10112 | Drive Shaft | | 27 | 24 | 59 | 82 | 648 | |
| | 1996.02-2000.09 | 5MT | F | R | Platform/Chassis FWD DHX (XUD9TE) | Trans. code:ML5T/ME | GDS10014 | Drive Shaft | 48T | 27 | 37 | 59 | 82 | 947 | |
| | 1996.02-2000.09 | 5MT | F | R | Platform/Chassis FWD DHX (XUD9TE) | Trans. code:BE3R/BE4R | GDS10081 | Drive Shaft | 48T | 27 | 24 | 59 | 82 | 935 | |
| | 1996.02-2000.09 | 5MT | F | R | Platform/Chassis FWD DHX (XUD9TE) | Trans. code:ML5T/ME | GDS10155 | Drive Shaft | | 27 | 37 | 59 | 82 | 947 | |
| | 1996.02-2000.09 | 5MT | F | L | Platform/Chassis FWD DHX (XUD9TE) | Trans. code:BE3R/BE4R | GCO10016 | Outer Joint | | 27 | 34 | 59 | 82 | 56.5 | I |
| | 1996.02-2000.09 | 5MT | F | L | Platform/Chassis FWD DHX (XUD9TE) | Trans. code:BE3R/BE4R | GCO10059 | Outer Joint | 48T | 27 | 34 | 59 | 82 | 56.5 | I |
| | 1996.02-2000.09 | 5MT | F | L/R | Platform/Chassis FWD DHX (XUD9TE) | Trans. code:ML5T/ME | GCO10014 | Outer Joint | | 27 | 39 | 59 | 82 | 63 | I |
| | 1996.02-2000.09 | 5MT | F | L/R | Platform/Chassis FWD DHX (XUD9TE) | Trans. code:ML5T/ME | GCO10015 | Outer Joint | 48T | 27 | 39 | 59 | 82 | 63 | I |
| | 1996.02-2000.09 | 5MT | F | L | Platform/Chassis FWD DHX (XUD9TE) | Trans. code:ML5T/ME | GCI10015 | Inner Joint | | 37 | 39 | 40 | 68.5 | 104 | |
| | 1996.02-2000.09 | 5MT | F | R | Platform/Chassis FWD DHX (XUD9TE) | Trans. code:ML5T/ME | GCI10034 | Inner Joint | | 37 | 39 | 31.9 | 369.5 | 99 | |
| | 1996.02-2000.09 | 5MT | F | L | Van FWD DHX (XUD9TE) | Trans. code:ML5T/ME | GDS10016 | Drive Shaft | 48T | 27 | 37 | 59 | 82 | 641 | |
| | 1996.02-2000.09 | 5MT | F | L | Van FWD DHX (XUD9TE) | Trans. code:ML5T/ME | GDS10072 | Drive Shaft | | 27 | 37 | 59 | 82 | 641 | |
| | 1996.02-2000.09 | 5MT | F | L | Van FWD DHX (XUD9TE) | Trans. code:BE3R/BE4R | GDS10082 | Drive Shaft | 48T | 27 | 24 | 59 | 82 | 648 | |
| | 1996.02-2000.09 | 5MT | F | L | Van FWD DHX (XUD9TE) | Trans. code:BE3R/BE4R | GDS10112 | Drive Shaft | | 27 | 24 | 59 | 82 | 648 | |
| | 1996.02-2000.09 | 5MT | F | R | Van FWD DHX (XUD9TE) | Trans. code:ML5T/ME | GDS10014 | Drive Shaft | 48T | 27 | 37 | 59 | 82 | 947 | |
| | 1996.02-2000.09 | 5MT | F | R | Van FWD DHX (XUD9TE) | Trans. code:BE3R/BE4R | GDS10081 | Drive Shaft | 48T | 27 | 24 | 59 | 82 | 935 | |
| | 1996.02-2000.09 | 5MT | F | R | Van FWD DHX (XUD9TE) | Trans. code:ML5T/ME | GDS10155 | Drive Shaft | | 27 | 37 | 59 | 82 | 947 | |
| | 1996.02-2000.09 | 5MT | F | L | Van FWD DHX (XUD9TE) | Trans. code:BE3R/BE4R | GCO10016 | Outer Joint | | 27 | 34 | 59 | 82 | 56.5 | I |
| | 1996.02-2000.09 | 5MT | F | L | Van FWD DHX (XUD9TE) | Trans. code:BE3R/BE4R | GCO10059 | Outer Joint | 48T | 27 | 34 | 59 | 82 | 56.5 | I |
| | 1996.02-2000.09 | 5MT | F | L/R | Van FWD DHX (XUD9TE) | Trans. code:ML5T/ME | GCO10014 | Outer Joint | | 27 | 39 | 59 | 82 | 63 | I |
| | 1996.02-2000.09 | 5MT | F | L/R | Van FWD DHX (XUD9TE) | Trans. code:ML5T/ME | GCO10015 | Outer Joint | 48T | 27 | 39 | 59 | 82 | 63 | I |
| | 1996.02-2000.09 | 5MT | F | L | Van FWD DHX (XUD9TE) | Trans. code:ML5T/ME | GCI10015 | Inner Joint | | 37 | 39 | 40 | 68.5 | 104 | |
| | 1996.02-2000.09 | 5MT | F | R | Van FWD DHX (XUD9TE) | Trans. code:ML5T/ME | GCI10034 | Inner Joint | | 37 | 39 | 31.9 | 369.5 | 99 | |
| 1.9 (68 kw) | 1996.02-1998.05 | 5MT | F | L | Bus FWD D8B (XUD9TE) | Trans. code:ML5T/ME | GDS10016 | Drive Shaft | 48T | 27 | 37 | 59 | 82 | 641 | |
| | 1996.02-1998.05 | 5MT | F | L | Bus FWD D8B (XUD9TE) | Trans. code:ML5T/ME | GDS10072 | Drive Shaft | | 27 | 37 | 59 | 82 | 641 | |
| | 1996.02-1998.05 | 5MT | F | L | Bus FWD D8B (XUD9TE) | Trans. code:BE3R/BE4R | GDS10082 | Drive Shaft | 48T | 27 | 24 | 59 | 82 | 648 | |
| | 1996.02-1998.05 | 5MT | F | L | Bus FWD D8B (XUD9TE) | Trans. code:BE3R/BE4R | GDS10112 | Drive Shaft | | 27 | 24 | 59 | 82 | 648 | |
| | 1996.02-1998.05 | 5MT | F | R | Bus FWD D8B (XUD9TE) | Trans. code:ML5T/ME | GDS10014 | Drive Shaft | 48T | 27 | 37 | 59 | 82 | 947 | |
| | 1996.02-1998.05 | 5MT | F | R | Bus FWD D8B (XUD9TE) | Trans. code:BE3R/BE4R | GDS10081 | Drive Shaft | 48T | 27 | 24 | 59 | 82 | 935 | |
| | 1996.02-1998.05 | 5MT | F | R | Bus FWD D8B (XUD9TE) | Trans. code:ML5T/ME | GDS10155 | Drive Shaft | | 27 | 37 | 59 | 82 | 947 | |
| | 1996.02-1998.05 | 5MT | F | L/R | Bus FWD D8B (XUD9TE) | Trans. code:ML5T/ME | GCO10014 | Outer Joint | | 27 | 39 | 59 | 82 | 63 | I |
| | 1996.02-1998.05 | 5MT | F | L/R | Bus FWD D8B (XUD9TE) | Trans. code:ML5T/ME | GCO10015 | Outer Joint | 48T | 27 | 39 | 59 | 82 | 63 | I |
| | 1996.02-1998.05 | 5MT | F | L/R | Bus FWD D8B (XUD9TE) | Trans. code:BE3R/BE4R | GCO10016 | Outer Joint | | 27 | 34 | 59 | 82 | 56.5 | I |
| | 1996.02-1998.05 | 5MT | F | L/R | Bus FWD D8B (XUD9TE) | Trans. code:BE3R/BE4R | GCO10059 | Outer Joint | 48T | 27 | 34 | 59 | 82 | 56.5 | I |
| | 1996.02-1998.05 | 5MT | F | L | Bus FWD D8B (XUD9TE) | Trans. code:ML5T/ME | GCI10015 | Inner Joint | | 37 | 39 | 40 | 68.5 | 104 | |
| | 1996.02-1998.05 | 5MT | F | R | Bus FWD D8B (XUD9TE) | Trans. code:ML5T/ME | GCI10034 | Inner Joint | | 37 | 39 | 31.9 | 369.5 | 99 | |
| | 1996.02-1998.05 | 5MT | F | L | Platform/Chassis FWD D8B (XUD9TE) | Trans. code:ML5T/ME | GDS10016 | Drive Shaft | 48T | 27 | 37 | 59 | 82 | 641 | |
| | 1996.02-1998.05 | 5MT | F | L | Platform/Chassis FWD D8B (XUD9TE) | Trans. code:ML5T/ME | GDS10072 | Drive Shaft | | 27 | 37 | 59 | 82 | 641 | |
| | 1996.02-1998.05 | 5MT | F | L | Platform/Chassis FWD D8B (XUD9TE) | Trans. code:BE3R/BE4R | GDS10082 | Drive Shaft | 48T | 27 | 24 | 59 | 82 | 648 | |
| | 1996.02-1998.05 | 5MT | F | L | Platform/Chassis FWD D8B (XUD9TE) | Trans. code:BE3R/BE4R | GDS10112 | Drive Shaft | | 27 | 24 | 59 | 82 | 648 | |
| | 1996.02-1998.05 | 5MT | F | R | Platform/Chassis FWD D8B (XUD9TE) | Trans. code:ML5T/ME | GDS10014 | Drive Shaft | 48T | 27 | 37 | 59 | 82 | 947 | |
| | 1996.02-1998.05 | 5MT | F | R | Platform/Chassis FWD D8B (XUD9TE) | Trans. code:BE3R/BE4R | GDS10081 | Drive Shaft | 48T | 27 | 24 | 59 | 82 | 935 | |
| | 1996.02-1998.05 | 5MT | F | R | Platform/Chassis FWD D8B (XUD9TE) | Trans. code:ML5T/ME | GDS10155 | Drive Shaft | | 27 | 37 | 59 | 82 | 947 | |
| | 1996.02-1998.05 | 5MT | F | L | Platform/Chassis FWD D8B (XUD9TE) | Trans. code:BE3R/BE4R | GCO10016 | Outer Joint | | 27 | 34 | 59 | 82 | 56.5 | I |
| | 1996.02-1998.05 | 5MT | F | L | Platform/Chassis FWD D8B (XUD9TE) | Trans. code:BE3R/BE4R | GCO10059 | Outer Joint | 48T | 27 | 34 | 59 | 82 | 56.5 | I |
| | 1996.02-1998.05 | 5MT | F | L/R | Platform/Chassis FWD D8B (XUD9TE) | Trans. code:ML5T/ME | GCO10014 | Outer Joint | | 27 | 39 | 59 | 82 | 63 | I |
| | 1996.02-1998.05 | 5MT | F | L/R | Platform/Chassis FWD D8B (XUD9TE) | Trans. code:ML5T/ME | GCO10015 | Outer Joint | 48T | 27 | 39 | 59 | 82 | 63 | I |
| | 1996.02-1998.05 | 5MT | F | L | Platform/Chassis FWD D8B (XUD9TE) | Trans. code:ML5T/ME | GCI10015 | Inner Joint | | 37 | 39 | 40 | 68.5 | 104 | |
| | 1996.02-1998.05 | 5MT | F | R | Platform/Chassis FWD D8B (XUD9TE) | Trans. code:ML5T/ME | GCI10034 | Inner Joint | | 37 | 39 | 31.9 | 369.5 | 99 | |
| | 1996.02-1998.05 | 5MT | F | L | Van FWD D8B (XUD9TE) | Trans. code:ML5T/ME | GDS10016 | Drive Shaft | 48T | 27 | 37 | 59 | 82 | 641 | |
| | 1996.02-1998.05 | 5MT | F | L | Van FWD D8B (XUD9TE) | Trans. code:ML5T/ME | GDS10072 | Drive Shaft | | 27 | 37 | 59 | 82 | 641 | |
| | 1996.02-1998.05 | 5MT | F | L | Van FWD D8B (XUD9TE) | Trans. code:BE3R/BE4R | GDS10082 | Drive Shaft | 48T | 27 | 24 | 59 | 82 | 648 | |
| | 1996.02-1998.05 | 5MT | F | L | Van FWD D8B (XUD9TE) | Trans. code:BE3R/BE4R | GDS10112 | Drive Shaft | | 27 | 24 | 59 | 82 | 648 | |
| | 1996.02-1998.05 | 5MT | F | R | Van FWD D8B (XUD9TE) | Trans. code:ML5T/ME | GDS10014 | Drive Shaft | 48T | 27 | 37 | 59 | 82 | 947 | |
| | 1996.02-1998.05 | 5MT | F | R | Van FWD D8B (XUD9TE) | Trans. code:BE3R/BE4R | GDS10081 | Drive Shaft | 48T | 27 | 24 | 59 | 82 | 935 | |
| | 1996.02-1998.05 | 5MT | F | R | Van FWD D8B (XUD9TE) | Trans. code:ML5T/ME | GDS10155 | Drive Shaft | | 27 | 37 | 59 | 82 | 947 | |
| | 1996.02-1998.05 | 5MT | F | L | Van FWD D8B (XUD9TE) | Trans. code:BE3R/BE4R | GCO10016 | Outer Joint | | 27 | 34 | 59 | 82 | 56.5 | I |
| | 1996.02-1998.05 | 5MT | F | L | Van FWD D8B (XUD9TE) | Trans. code:BE3R/BE4R | GCO10059 | Outer Joint | 48T | 27 | 34 | 59 | 82 | 56.5 | I |

| | YEAR | TRANSM. | F/R | L/R | BODY STYLE & DRIVE TYPE & ENGINE | REMARKS | G-AP Ref. | PRODUCT | ABS | Technical Specifications A | B | C | H | L | P |
|---|---|---|---|---|---|---|---|---|---|---|---|---|---|---|---|
| **PEUGEOT** | | | | | | | | | | | | | | | |
| **Expert** | | | | | | | | | | | | | | | |
| 1.9 (68 kw) | 1996.02-1998.05 | 5MT | F | L/R | Van FWD D8B (XUD9TE) | Trans. code:ML5T/ME | GCO10014 | Outer Joint | | 27 | 39 | 59 | 82 | 63 | I |
| | 1996.02-1998.05 | 5MT | F | L/R | Van FWD D8B (XUD9TE) | Trans. code:ML5T/ME | GCO10015 | Outer Joint | 48T | 27 | 39 | 59 | 82 | 63 | I |
| | 1996.02-1998.05 | 5MT | F | L | Van FWD D8B (XUD9TE) | Trans. code:ML5T/ME | GCI10015 | Inner Joint | | 37 | 39 | 40 | 68.5 | 104 | |
| | 1996.02-1998.05 | 5MT | F | R | Van FWD D8B (XUD9TE) | Trans. code:ML5T/ME | GCI10034 | Inner Joint | | 37 | 39 | 31.9 | 369.5 | 99 | |
| 2.0 (69 kw) | 2000.07-2006.12 | 5MT | F | L | Van FWD RHX (DW10BTED), RHX (DW10BTED+) | Trans. code:BE3R/BE4R | GDS10082 | Drive Shaft | 48T | 27 | 24 | 59 | 82 | 648 | |
| | 2000.07-2006.12 | 5MT | F | L | Van FWD RHX (DW10BTED), RHX (DW10BTED+) | Trans. code:BE3R/BE4R | GDS10112 | Drive Shaft | | 27 | 24 | 59 | 82 | 648 | |
| | 2000.07-2006.12 | 5MT | F | L | Van FWD RHX (DW10BTED), RHX (DW10BTED+) | Trans. code:ML5T/ML5C | GDS10264 | Drive Shaft | 48T | 27 | 37 | 59 | 82 | 630 | |
| | 2000.07-2006.12 | 5MT | F | L | Van FWD RHX (DW10BTED), RHX (DW10BTED+) | Trans. code:ML5T/ML5C | GDS10430 | Drive Shaft | | 27 | 37 | 59 | 82 | 630 | |
| | 2000.07-2006.12 | 5MT | F | R | Van FWD RHX (DW10BTED), RHX (DW10BTED+) | Trans. code:ML5T/ML5C | GDS10057 | Drive Shaft | | 27 | 37 | 59 | 82 | 960 | |
| | 2000.07-2006.12 | 5MT | F | R | Van FWD RHX (DW10BTED), RHX (DW10BTED+) | Trans. code:BE3R/BE4R | GDS10081 | Drive Shaft | 48T | 27 | 24 | 59 | 82 | 935 | |
| | 2000.07-2006.12 | 5MT | F | R | Van FWD RHX (DW10BTED), RHX (DW10BTED+) | Trans. code:ML5T/ML5C | GDS45120 | Drive Shaft | 48T | 27 | 37 | 59 | 82 | 960 | |
| | 2000.07-2006.12 | 5MT | F | L/R | Van FWD RHX (DW10BTED), RHX (DW10BTED+) | Trans. code:ML5T/ML5C | GCO10014 | Outer Joint | | 27 | 39 | 59 | 82 | 63 | I |
| | 2000.07-2006.12 | 5MT | F | L/R | Van FWD RHX (DW10BTED), RHX (DW10BTED+) | Trans. code:ML5T/ML5C | GCO10015 | Outer Joint | 48T | 27 | 39 | 59 | 82 | 63 | I |
| | 2000.07-2006.12 | 5MT | F | L/R | Van FWD RHX (DW10BTED), RHX (DW10BTED+) | Trans. code:BE3R/BE4R | GCO10016 | Outer Joint | | 27 | 34 | 59 | 82 | 56.5 | I |
| | 2000.07-2006.12 | 5MT | F | L/R | Van FWD RHX (DW10BTED), RHX (DW10BTED+) | Trans. code:BE3R/BE4R | GCO10059 | Outer Joint | 48T | 27 | 34 | 59 | 82 | 56.5 | I |
| | 2000.07-2006.12 | 5MT | F | L | Van FWD RHX (DW10BTED), RHX (DW10BTED+) | Trans. code:ML5T/ML5C | GCI10015 | Inner Joint | | 37 | 39 | 40 | 68.5 | 104 | |
| | 2000.07-2006.12 | 5MT | F | R | Van FWD RHX (DW10BTED), RHX (DW10BTED+) | Trans. code:ML5T/ML5C | GCI10034 | Inner Joint | | 37 | 39 | 31.9 | 369.5 | 99 | |
| | 2000.10-2006.10 | 5MT | F | L | Bus FWD RHX (DW10BTED), RHX (DW10BTED+) | Trans. code:BE3R/BE4R | GDS10082 | Drive Shaft | 48T | 27 | 24 | 59 | 82 | 648 | |
| | 2000.10-2006.10 | 5MT | F | L | Bus FWD RHX (DW10BTED), RHX (DW10BTED+) | Trans. code:BE3R/BE4R | GDS10112 | Drive Shaft | | 27 | 24 | 59 | 82 | 648 | |
| | 2000.10-2006.10 | 5MT | F | L | Bus FWD RHX (DW10BTED), RHX (DW10BTED+) | Trans. code:ML5T/ML5C | GDS10264 | Drive Shaft | 48T | 27 | 37 | 59 | 82 | 630 | |
| | 2000.10-2006.10 | 5MT | F | L | Bus FWD RHX (DW10BTED), RHX (DW10BTED+) | Trans. code:ML5T/ML5C | GDS10430 | Drive Shaft | | 27 | 37 | 59 | 82 | 630 | |
| | 2000.10-2006.10 | 5MT | F | R | Bus FWD RHX (DW10BTED), RHX (DW10BTED+) | Trans. code:ML5T/ML5C | GDS10057 | Drive Shaft | | 27 | 37 | 59 | 82 | 960 | |
| | 2000.10-2006.10 | 5MT | F | R | Bus FWD RHX (DW10BTED), RHX (DW10BTED+) | Trans. code:BE3R/BE4R | GDS10081 | Drive Shaft | 48T | 27 | 24 | 59 | 82 | 935 | |
| | 2000.10-2006.10 | 5MT | F | R | Bus FWD RHX (DW10BTED), RHX (DW10BTED+) | Trans. code:ML5T/ML5C | GDS45120 | Drive Shaft | 48T | 27 | 37 | 59 | 82 | 960 | |
| | 2000.10-2006.10 | 5MT | F | L/R | Bus FWD RHX (DW10BTED), RHX (DW10BTED+) | Trans. code:ML5T/ML5C | GCO10014 | Outer Joint | | 27 | 39 | 59 | 82 | 63 | I |
| | 2000.10-2006.10 | 5MT | F | L/R | Bus FWD RHX (DW10BTED), RHX (DW10BTED+) | Trans. code:ML5T/ML5C | GCO10015 | Outer Joint | 48T | 27 | 39 | 59 | 82 | 63 | I |
| | 2000.10-2006.10 | 5MT | F | L/R | Bus FWD RHX (DW10BTED), RHX (DW10BTED+) | Trans. code:BE3R/BE4R | GCO10016 | Outer Joint | | 27 | 34 | 59 | 82 | 56.5 | I |
| | 2000.10-2006.10 | 5MT | F | L/R | Bus FWD RHX (DW10BTED), RHX (DW10BTED+) | Trans. code:BE3R/BE4R | GCO10059 | Outer Joint | 48T | 27 | 34 | 59 | 82 | 56.5 | I |
| | 2000.10-2006.10 | 5MT | F | L | Bus FWD RHX (DW10BTED), RHX (DW10BTED+) | Trans. code:ML5T/ML5C | GCI10015 | Inner Joint | | 37 | 39 | 40 | 68.5 | 104 | |
| | 2000.10-2006.10 | 5MT | F | R | Bus FWD RHX (DW10BTED), RHX (DW10BTED+) | Trans. code:ML5T/ML5C | GCI10034 | Inner Joint | | 37 | 39 | 31.9 | 369.5 | 99 | |
| | 2000.10-2006.10 | 5MT | F | L | Platform/Chassis FWD RHX (DW10BTED), RHX (DW10BTED+) | Trans. code:BE3R/BE4R | GDS10082 | Drive Shaft | 48T | 27 | 24 | 59 | 82 | 648 | |
| | 2000.10-2006.10 | 5MT | F | L | Platform/Chassis FWD RHX (DW10BTED), RHX (DW10BTED+) | Trans. code:BE3R/BE4R | GDS10112 | Drive Shaft | | 27 | 24 | 59 | 82 | 648 | |
| | 2000.10-2006.10 | 5MT | F | L | Platform/Chassis FWD RHX (DW10BTED), RHX (DW10BTED+) | Trans. code:ML5T/ML5C | GDS10264 | Drive Shaft | 48T | 27 | 37 | 59 | 82 | 630 | |
| | 2000.10-2006.10 | 5MT | F | L | Platform/Chassis FWD RHX (DW10BTED), RHX (DW10BTED+) | Trans. code:ML5T/ML5C | GDS10430 | Drive Shaft | | 27 | 37 | 59 | 82 | 630 | |
| | 2000.10-2006.10 | 5MT | F | R | Platform/Chassis FWD RHX (DW10BTED), RHX (DW10BTED+) | Trans. code:ML5T/ML5C | GDS10057 | Drive Shaft | | 27 | 37 | 59 | 82 | 960 | |
| | 2000.10-2006.10 | 5MT | F | R | Platform/Chassis FWD RHX (DW10BTED), RHX (DW10BTED+) | Trans. code:BE3R/BE4R | GDS10081 | Drive Shaft | 48T | 27 | 24 | 59 | 82 | 935 | |
| | 2000.10-2006.10 | 5MT | F | R | Platform/Chassis FWD RHX (DW10BTED), RHX (DW10BTED+) | Trans. code:BE3R/BE4R | GDS10120 | Drive Shaft | | 27 | 24 | 59 | 82 | 928 | |
| | 2000.10-2006.10 | 5MT | F | R | Platform/Chassis FWD RHX (DW10BTED), RHX (DW10BTED+) | Trans. code:ML5T/ML5C | GDS45120 | Drive Shaft | 48T | 27 | 37 | 59 | 82 | 960 | |
| | 2000.10-2006.10 | 5MT | F | L | Platform/Chassis FWD RHX (DW10BTED), RHX (DW10BTED+) | Trans. code:BE3R/BE4R | GCO10016 | Outer Joint | | 27 | 34 | 59 | 82 | 56.5 | I |
| | 2000.10-2006.10 | 5MT | F | L | Platform/Chassis FWD RHX (DW10BTED), RHX (DW10BTED+) | Trans. code:BE3R/BE4R | GCO10059 | Outer Joint | 48T | 27 | 34 | 59 | 82 | 56.5 | I |
| | 2000.10-2006.10 | 5MT | F | L/R | Platform/Chassis FWD RHX (DW10BTED), RHX (DW10BTED+) | Trans. code:ML5T/ML5C | GCO10014 | Outer Joint | | 27 | 39 | 59 | 82 | 63 | I |
| | 2000.10-2006.10 | 5MT | F | L/R | Platform/Chassis FWD RHX (DW10BTED), RHX (DW10BTED+) | Trans. code:ML5T/ML5C | GCO10015 | Outer Joint | 48T | 27 | 39 | 59 | 82 | 63 | I |
| | 2000.10-2006.10 | 5MT | F | L | Platform/Chassis FWD RHX (DW10BTED), RHX (DW10BTED+) | Trans. code:ML5T/ML5C | GCI10015 | Inner Joint | | 37 | 39 | 40 | 68.5 | 104 | |
| | 2000.10-2006.10 | 5MT | F | R | Platform/Chassis FWD RHX (DW10BTED), RHX (DW10BTED+) | Trans. code:ML5T/ML5C | GCI10034 | Inner Joint | | 37 | 39 | 31.9 | 369.5 | 99 | |
| 2.0 (72 kw) | 2011.03- | 6AT | F | L | Van FWD | For Engine Code:DW10CE,Trans. code:AM6 | GDS83137 | Drive Shaft | | 28 | 37 | 59.5 | 94 | 609 | |
| | 2011.03- | | F | L | Van FWD | Transm. code:ML6C | GDS10314 | Drive Shaft | | 28 | 37 | 59 | 91 | 655 | |
| | 2011.03- | | F | R | Van FWD | For Engine Code:DW10CE,Trans. code:ML6C | GDS10320 | Drive Shaft | | 28 | 37 | 59 | 91 | 980 | |
| 2.0 (80 kw) | 2000.07-2006.12 | 5MT | F | L | Bus FWD RHW (DW10ATED4) | Trans. code:BE4R | GDS10082 | Drive Shaft | 48T | 27 | 24 | 59 | 82 | 648 | |
| | 2000.07-2006.12 | 5MT | F | L | Bus FWD RHW (DW10ATED4) | Date from:2000.10;Trans. code:BE4R | GDS10112 | Drive Shaft | | 27 | 24 | 59 | 82 | 648 | |
| | 2000.07-2006.12 | 5MT | F | L | Bus FWD RHW (DW10ATED4) | Trans. code:ML5T/ML5C | GDS10264 | Drive Shaft | 48T | 27 | 37 | 59 | 82 | 630 | |
| | 2000.07-2006.12 | 5MT | F | L | Bus FWD RHW (DW10ATED4) | Date from:2000.10;Trans. code:ML5T/ML5C | GDS10430 | Drive Shaft | | 27 | 37 | 59 | 82 | 630 | |
| | 2000.07-2006.12 | 5MT | F | R | Bus FWD RHW (DW10ATED4) | Trans. code:ML5T/ML5C | GDS10057 | Drive Shaft | | 27 | 37 | 59 | 82 | 960 | |
| | 2000.07-2006.12 | 5MT | F | R | Bus FWD RHW (DW10ATED4) | Trans. code:BE4R | GDS10081 | Drive Shaft | 48T | 27 | 24 | 59 | 82 | 935 | |
| | 2000.07-2006.12 | 5MT | F | R | Bus FWD RHW (DW10ATED4) | Trans. code:ML5T/ML5C | GDS45120 | Drive Shaft | 48T | 27 | 37 | 59 | 82 | 960 | |
| | 2000.07-2006.12 | 5MT | F | L/R | Bus FWD RHW (DW10ATED4) | Trans. code:ML5T/ML5C | GCO10014 | Outer Joint | | 27 | 39 | 59 | 82 | 63 | I |
| | 2000.07-2006.12 | 5MT | F | L/R | Bus FWD RHW (DW10ATED4) | Trans. code:ML5T/ML5C | GCO10015 | Outer Joint | 48T | 27 | 39 | 59 | 82 | 63 | I |
| | 2000.07-2006.12 | 5MT | F | L/R | Bus FWD RHW (DW10ATED4) | Trans. code:BE4R | GCO10016 | Outer Joint | | 27 | 34 | 59 | 82 | 56.5 | I |
| | 2000.07-2006.12 | 5MT | F | L/R | Bus FWD RHW (DW10ATED4) | Trans. code:BE4R | GCO10059 | Outer Joint | 48T | 27 | 34 | 59 | 82 | 56.5 | I |
| | 2000.07-2006.12 | 5MT | F | L | Bus FWD RHW (DW10ATED4) | Trans. code:ML5T/ML5C | GCI10015 | Inner Joint | | 37 | 39 | 40 | 68.5 | 104 | |
| | 2000.07-2006.12 | 5MT | F | R | Bus FWD RHW (DW10ATED4) | Trans. code:ML5T/ML5C | GCI10034 | Inner Joint | | 37 | 39 | 31.9 | 369.5 | 99 | |
| | 2000.07-2006.12 | MT | F | L | Bus FWD RHZ (DW10ATED), RHZ (DW10BTED), RHZ (DW10BTED+), RHZ (DW10CTED) | Trans. code:BE3R/BE4R | GDS10082 | Drive Shaft | 48T | 27 | 24 | 59 | 82 | 648 | |
| | 2000.07-2006.12 | MT | F | L | Bus FWD RHZ (DW10ATED), RHZ (DW10BTED), RHZ (DW10BTED+), RHZ (DW10CTED) | Trans. code:BE3R/BE4R | GDS10112 | Drive Shaft | | 27 | 24 | 59 | 82 | 648 | |
| | 2000.07-2006.12 | MT | F | L | Bus FWD RHZ (DW10ATED), RHZ (DW10BTED), RHZ (DW10BTED+), RHZ (DW10CTED) | Trans. code:ML5T/ML5C | GDS10264 | Drive Shaft | 48T | 27 | 37 | 59 | 82 | 630 | |
| | 2000.07-2006.12 | MT | F | L | Bus FWD RHZ (DW10ATED), RHZ (DW10BTED), RHZ (DW10BTED+), RHZ (DW10CTED) | Trans. code:ML5T/ML5C | GDS10430 | Drive Shaft | | 27 | 37 | 59 | 82 | 630 | |
| | 2000.07-2006.12 | MT | F | R | Bus FWD RHZ (DW10ATED), RHZ (DW10BTED), RHZ (DW10BTED+), RHZ (DW10CTED) | Trans. code:ML5T/ML5C | GDS10057 | Drive Shaft | | 27 | 37 | 59 | 82 | 960 | |

| | YEAR | TRANSM. | F/R | L/R | BODY STYLE & DRIVE TYPE & ENGINE | REMARKS | G-AP Ref. | PRODUCT | ABS | Technical Specifications A | B | C | H | L | P |
|---|---|---|---|---|---|---|---|---|---|---|---|---|---|---|---|
| **PEUGEOT** | | | | | | | | | | | | | | | |
| **Expert** | | | | | | | | | | | | | | | |
| 2.0 (80 kw) | 2000.07-2006.12 | MT | F | R | Bus FWD RHZ (DW10ATED), RHZ (DW10BTED), RHZ (DW10BTED), RHZ (DW10BTED+), RHZ (DW10CTED) | Trans. code:BE3R/BE4R | GDS10081 | Drive Shaft | 48T | 27 | 24 | 59 | 82 | 935 | |
| | 2000.07-2006.12 | MT | F | R | Bus FWD RHZ (DW10ATED), RHZ (DW10BTED), RHZ (DW10BTED), RHZ (DW10BTED+), RHZ (DW10CTED) | Trans. code:ML5T/ML5C | GDS45120 | Drive Shaft | 48T | 27 | 37 | 59 | 82 | 960 | |
| | 2000.07-2006.12 | MT | F | L/R | Bus FWD RHZ (DW10ATED), RHZ (DW10BTED), RHZ (DW10BTED), RHZ (DW10BTED+), RHZ (DW10CTED) | Trans. code:ML5T/ML5C | GCO10014 | Outer Joint | | 27 | 39 | 59 | 82 | 63 | I |
| | 2000.07-2006.12 | MT | F | L/R | Bus FWD RHZ (DW10ATED), RHZ (DW10BTED), RHZ (DW10BTED), RHZ (DW10BTED+), RHZ (DW10CTED) | Trans. code:ML5T/ML5C | GCO10015 | Outer Joint | 48T | 27 | 39 | 59 | 82 | 63 | I |
| | 2000.07-2006.12 | MT | F | L/R | Bus FWD RHZ (DW10ATED), RHZ (DW10BTED), RHZ (DW10BTED), RHZ (DW10BTED+), RHZ (DW10CTED) | Trans. code:BE3R/BE4R | GCO10016 | Outer Joint | | 27 | 34 | 59 | 82 | 56.5 | I |
| | 2000.07-2006.12 | MT | F | L/R | Bus FWD RHZ (DW10ATED), RHZ (DW10BTED), RHZ (DW10BTED), RHZ (DW10BTED+), RHZ (DW10CTED) | Trans. code:BE3R/BE4R | GCO10059 | Outer Joint | 48T | 27 | 34 | 59 | 82 | 56.5 | I |
| | 2000.07-2006.12 | MT | F | L | Bus FWD RHZ (DW10ATED), RHZ (DW10BTED), RHZ (DW10BTED), RHZ (DW10BTED+), RHZ (DW10CTED) | Trans. code:ML5T/ML5C | GCI10015 | Inner Joint | | 37 | 39 | 40 | 68.5 | 104 | |
| | 2000.07-2006.12 | MT | F | R | Bus FWD RHZ (DW10ATED), RHZ (DW10BTED), RHZ (DW10BTED), RHZ (DW10BTED+), RHZ (DW10CTED) | Trans. code:ML5T/ML5C | GCI10034 | Inner Joint | | 37 | 39 | 31.9 | 369.5 | 99 | |
| | 2000.07-2006.12 | 5MT | F | L | Van FWD RHW (DW10ATED4) | Trans. code:BE4R | GDS10082 | Drive Shaft | 48T | 27 | 24 | 59 | 82 | 648 | |
| | 2000.07-2006.12 | 5MT | F | L | Van FWD RHW (DW10ATED4) | Trans. code:BE4R | GDS10112 | Drive Shaft | | 27 | 24 | 59 | 82 | 648 | |
| | 2000.07-2006.12 | 5MT | F | L | Van FWD RHW (DW10ATED4) | Trans. code:ML5T/ML5C | GDS10264 | Drive Shaft | 48T | 27 | 37 | 59 | 82 | 630 | |
| | 2000.07-2006.12 | 5MT | F | L | Van FWD RHW (DW10ATED4) | Trans. code:ML5T/ML5C | GDS10430 | Drive Shaft | | 27 | 37 | 59 | 82 | 630 | |
| | 2000.07-2006.12 | 5MT | F | R | Van FWD RHW (DW10ATED4) | Trans. code:ML5T/ML5C | GDS10057 | Drive Shaft | | 27 | 37 | 59 | 82 | 960 | |
| | 2000.07-2006.12 | 5MT | F | R | Van FWD RHW (DW10ATED4) | Trans. code:BE4R | GDS10081 | Drive Shaft | 48T | 27 | 24 | 59 | 82 | 935 | |
| | 2000.07-2006.12 | 5MT | F | R | Van FWD RHW (DW10ATED4) | Trans. code:ML5T/ML5C | GDS45120 | Drive Shaft | 48T | 27 | 37 | 59 | 82 | 960 | |
| | 2000.07-2006.12 | 5MT | F | L | Van FWD RHW (DW10ATED4) | Trans. code:BE4R | GCO10016 | Outer Joint | | 27 | 34 | 59 | 82 | 56.5 | I |
| | 2000.07-2006.12 | 5MT | F | L | Van FWD RHW (DW10ATED4) | Trans. code:BE4R | GCO10059 | Outer Joint | 48T | 27 | 34 | 59 | 82 | 56.5 | I |
| | 2000.07-2006.12 | 5MT | F | L/R | Van FWD RHW (DW10ATED4) | Trans. code:ML5T/ML5C | GCO10014 | Outer Joint | | 27 | 39 | 59 | 82 | 63 | I |
| | 2000.07-2006.12 | 5MT | F | L/R | Van FWD RHW (DW10ATED4) | Trans. code:ML5T/ML5C | GCO10015 | Outer Joint | 48T | 27 | 39 | 59 | 82 | 63 | I |
| | 2000.07-2006.12 | 5MT | F | L | Van FWD RHW (DW10ATED4) | Trans. code:ML5T/ML5C | GCI10015 | Inner Joint | | 37 | 39 | 40 | 68.5 | 104 | |
| | 2000.07-2006.12 | 5MT | F | R | Van FWD RHW (DW10ATED4) | Trans. code:ML5T/ML5C | GCI10034 | Inner Joint | | 37 | 39 | 31.9 | 369.5 | 99 | |
| | 2000.07-2006.12 | MT | F | L | Van FWD RHZ (DW10ATED) | Trans. code:BE3R/BE4R | GDS10082 | Drive Shaft | 48T | 27 | 24 | 59 | 82 | 648 | |
| | 2000.07-2006.12 | MT | F | L | Van FWD RHZ (DW10ATED) | Trans. code:BE3R/BE4R | GDS10112 | Drive Shaft | | 27 | 24 | 59 | 82 | 648 | |
| | 2000.07-2006.12 | MT | F | L | Van FWD RHZ (DW10ATED) | Trans. code:ML5T/ML5C | GDS10264 | Drive Shaft | 48T | 27 | 37 | 59 | 82 | 630 | |
| | 2000.07-2006.12 | MT | F | L | Van FWD RHZ (DW10ATED) | Trans. code:ML5T/ML5C | GDS10430 | Drive Shaft | | 27 | 37 | 59 | 82 | 630 | |
| | 2000.07-2006.12 | MT | F | R | Van FWD RHZ (DW10ATED) | Trans. code:ML5T/ML5C | GDS10057 | Drive Shaft | | 27 | 37 | 59 | 82 | 960 | |
| | 2000.07-2006.12 | MT | F | R | Van FWD RHZ (DW10ATED) | Trans. code:BE3R/BE4R | GDS10081 | Drive Shaft | 48T | 27 | 24 | 59 | 82 | 935 | |
| | 2000.07-2006.12 | MT | F | R | Van FWD RHZ (DW10ATED) | Trans. code:ML5T/ML5C | GDS45120 | Drive Shaft | 48T | 27 | 37 | 59 | 82 | 960 | |
| | 2000.07-2006.12 | MT | F | L/R | Van FWD RHZ (DW10ATED) | Trans. code:ML5T/ML5C | GCO10014 | Outer Joint | | 27 | 39 | 59 | 82 | 63 | I |
| | 2000.07-2006.12 | MT | F | L/R | Van FWD RHZ (DW10ATED) | Trans. code:ML5T/ML5C | GCO10015 | Outer Joint | 48T | 27 | 39 | 59 | 82 | 63 | I |
| | 2000.07-2006.12 | MT | F | L/R | Van FWD RHZ (DW10ATED) | Trans. code:BE3R/BE4R | GCO10016 | Outer Joint | | 27 | 34 | 59 | 82 | 56.5 | I |
| | 2000.07-2006.12 | MT | F | L/R | Van FWD RHZ (DW10ATED) | Trans. code:BE3R/BE4R | GCO10059 | Outer Joint | 48T | 27 | 34 | 59 | 82 | 56.5 | I |
| | 2000.07-2006.12 | MT | F | L | Van FWD RHZ (DW10ATED) | Trans. code:ML5T/ML5C | GCI10015 | Inner Joint | | 37 | 39 | 40 | 68.5 | 104 | |
| | 2000.07-2006.12 | MT | F | R | Van FWD RHZ (DW10ATED) | Trans. code:ML5T/ML5C | GCI10034 | Inner Joint | | 37 | 39 | 31.9 | 369.5 | 99 | |
| | 2000.10-2006.10 | 5MT | F | L | Platform/Chassis FWD RHW (DW10ATED4) | Trans. code:BE4R | GDS10082 | Drive Shaft | 48T | 27 | 24 | 59 | 82 | 648 | |
| | 2000.10-2006.10 | 5MT | F | L | Platform/Chassis FWD RHW (DW10ATED4) | Trans. code:BE4R | GDS10112 | Drive Shaft | | 27 | 24 | 59 | 82 | 648 | |
| | 2000.10-2006.10 | 5MT | F | L | Platform/Chassis FWD RHW (DW10ATED4) | Trans. code:ML5T/ML5C | GDS10264 | Drive Shaft | 48T | 27 | 37 | 59 | 82 | 630 | |
| | 2000.10-2006.10 | 5MT | F | L | Platform/Chassis FWD RHW (DW10ATED4) | Trans. code:ML5T/ML5C | GDS10430 | Drive Shaft | | 27 | 37 | 59 | 82 | 630 | |
| | 2000.10-2006.10 | 5MT | F | R | Platform/Chassis FWD RHW (DW10ATED4) | Trans. code:ML5T/ML5C | GDS10057 | Drive Shaft | | 27 | 37 | 59 | 82 | 960 | |
| | 2000.10-2006.10 | 5MT | F | R | Platform/Chassis FWD RHW (DW10ATED4) | Trans. code:BE4R | GDS10081 | Drive Shaft | 48T | 27 | 24 | 59 | 82 | 935 | |
| | 2000.10-2006.10 | 5MT | F | R | Platform/Chassis FWD RHW (DW10ATED4) | Trans. code:BE4R | GDS10120 | Drive Shaft | | 27 | 24 | 59 | 82 | 928 | |
| | 2000.10-2006.10 | 5MT | F | R | Platform/Chassis FWD RHW (DW10ATED4) | Trans. code:ML5T/ML5C | GDS45120 | Drive Shaft | 48T | 27 | 37 | 59 | 82 | 960 | |
| | 2000.10-2006.10 | 5MT | F | L | Platform/Chassis FWD RHW (DW10ATED4) | Trans. code:BE4R | GCO10016 | Outer Joint | | 27 | 34 | 59 | 82 | 56.5 | I |
| | 2000.10-2006.10 | 5MT | F | L | Platform/Chassis FWD RHW (DW10ATED4) | Trans. code:BE4R | GCO10059 | Outer Joint | 48T | 27 | 34 | 59 | 82 | 56.5 | I |
| | 2000.10-2006.10 | 5MT | F | L/R | Platform/Chassis FWD RHW (DW10ATED4) | Trans. code:ML5T/ML5C | GCO10014 | Outer Joint | | 27 | 39 | 59 | 82 | 63 | I |
| | 2000.10-2006.10 | 5MT | F | L/R | Platform/Chassis FWD RHW (DW10ATED4) | Trans. code:ML5T/ML5C | GCO10015 | Outer Joint | 48T | 27 | 39 | 59 | 82 | 63 | I |
| | 2000.10-2006.10 | 5MT | F | L | Platform/Chassis FWD RHW (DW10ATED4) | Trans. code:ML5T/ML5C | GCI10015 | Inner Joint | | 37 | 39 | 40 | 68.5 | 104 | |
| | 2000.10-2006.10 | 5MT | F | R | Platform/Chassis FWD RHW (DW10ATED4) | Trans. code:ML5T/ML5C | GCI10034 | Inner Joint | | 37 | 39 | 31.9 | 369.5 | 99 | |
| | 2000.10-2006.10 | MT | F | L | Platform/Chassis FWD RHZ (DW10ATED) | Trans. code:BE3R/BE4R | GDS10082 | Drive Shaft | 48T | 27 | 24 | 59 | 82 | 648 | |
| | 2000.10-2006.10 | MT | F | L | Platform/Chassis FWD RHZ (DW10ATED) | Trans. code:BE3R/BE4R | GDS10112 | Drive Shaft | | 27 | 24 | 59 | 82 | 648 | |
| | 2000.10-2006.10 | MT | F | L | Platform/Chassis FWD RHZ (DW10ATED) | Trans. code:ML5T/ML5C | GDS10264 | Drive Shaft | 48T | 27 | 37 | 59 | 82 | 630 | |
| | 2000.10-2006.10 | MT | F | L | Platform/Chassis FWD RHZ (DW10ATED) | Trans. code:ML5T/ML5C | GDS10430 | Drive Shaft | | 27 | 37 | 59 | 82 | 630 | |
| | 2000.10-2006.10 | MT | F | R | Platform/Chassis FWD RHZ (DW10ATED) | Trans. code:ML5T/ML5C | GDS10057 | Drive Shaft | | 27 | 37 | 59 | 82 | 960 | |
| | 2000.10-2006.10 | MT | F | R | Platform/Chassis FWD RHZ (DW10ATED) | Trans. code:BE3R/BE4R | GDS10081 | Drive Shaft | 48T | 27 | 24 | 59 | 82 | 935 | |
| | 2000.10-2006.10 | MT | F | R | Platform/Chassis FWD RHZ (DW10ATED) | Trans. code:BE3R/BE4R | GDS10120 | Drive Shaft | | 27 | 24 | 59 | 82 | 928 | |
| | 2000.10-2006.10 | MT | F | R | Platform/Chassis FWD RHZ (DW10ATED) | Trans. code:ML5T/ML5C | GDS45120 | Drive Shaft | 48T | 27 | 37 | 59 | 82 | 960 | |
| | 2000.10-2006.10 | MT | F | L | Platform/Chassis FWD RHZ (DW10ATED) | Trans. code:BE3R/BE4R | GCO10016 | Outer Joint | | 27 | 34 | 59 | 82 | 56.5 | I |
| | 2000.10-2006.10 | MT | F | L | Platform/Chassis FWD RHZ (DW10ATED) | Trans. code:BE3R/BE4R | GCO10059 | Outer Joint | 48T | 27 | 34 | 59 | 82 | 56.5 | I |
| | 2000.10-2006.10 | MT | F | L/R | Platform/Chassis FWD RHZ (DW10ATED) | Trans. code:ML5T/ML5C | GCO10014 | Outer Joint | | 27 | 39 | 59 | 82 | 63 | I |
| | 2000.10-2006.10 | MT | F | L/R | Platform/Chassis FWD RHZ (DW10ATED) | Trans. code:ML5T/ML5C | GCO10015 | Outer Joint | 48T | 27 | 39 | 59 | 82 | 63 | I |
| | 2000.10-2006.10 | MT | F | L | Platform/Chassis FWD RHZ (DW10ATED) | Trans. code:ML5T/ML5C | GCI10015 | Inner Joint | | 37 | 39 | 40 | 68.5 | 104 | |
| | 2000.10-2006.10 | MT | F | R | Platform/Chassis FWD RHZ (DW10ATED) | Trans. code:ML5T/ML5C | GCI10034 | Inner Joint | | 37 | 39 | 31.9 | 369.5 | 99 | |
| 2.0 (88 kw) | 2007.01- | 6MT | F | L | Platform/Chassis FWD RHK (DW10UTED4) | | GDS45133 | Drive Shaft | | 28 | 37 | 58.6 | 94 | 653 | |
| | 2007.01- | 6MT | F | R | Platform/Chassis FWD RHK (DW10UTED4) | | GDS99214 | Drive Shaft | | 28 | 37 | 58.6 | 94 | 978 | |
| | 2007.01- | 6MT | F | L | Platform/Chassis FWD RHK (DW10UTED4) | | GCO10051 | Outer Joint | | 28 | 39 | 58.6 | 94 | 63 | I |

| | YEAR | TRANSM. | F/R | L/R | BODY STYLE & DRIVE TYPE & ENGINE | REMARKS | G-AP Ref. | PRODUCT | ABS | Technical Specifications A | B | C | H | L | P |
|---|---|---|---|---|---|---|---|---|---|---|---|---|---|---|---|
| **PEUGEOT** | | | | | | | | | | | | | | | |
| **Expert** | | | | | | | | | | | | | | | |
| 2.0 (88 kw) | 2007.01- | 6MT | F | R | Platform/Chassis FWD RHK (DW10UTED4) | | GCO10098 | Outer Joint | | 28 | 39 | 58.6 | 93 | 63 | I |
| | 2007.01- | 6MT | F | L | Platform/Chassis FWD RHK (DW10UTED4) | | GCI45032 | Inner Joint | | 37 | 39 | 40 | 68.5 | 100 | |
| | 2007.01- | 6MT | F | R | Platform/Chassis FWD RHK (DW10UTED4) | | GCI10041 | Inner Joint | | 37 | 39 | 32 | 399 | 95.5 | |
| | 2007.01- | 6MT | F | L | Van FWD RHK (DW10UTED4) | | GDS45133 | Drive Shaft | | 28 | 37 | 58.6 | 94 | 653 | |
| | 2007.01- | 6MT | F | R | Van FWD RHK (DW10UTED4) | | GDS99214 | Drive Shaft | | 28 | 37 | 58.6 | 94 | 978 | |
| | 2007.01- | 6MT | F | L | Van FWD RHK (DW10UTED4) | | GCO10051 | Outer Joint | | 28 | 39 | 58.6 | 94 | 63 | I |
| | 2007.01- | 6MT | F | R | Van FWD RHK (DW10UTED4) | | GCO10098 | Outer Joint | | 28 | 39 | 58.6 | 93 | 63 | I |
| | 2007.01- | 6MT | F | L | Van FWD RHK (DW10UTED4) | | GCI45032 | Inner Joint | | 37 | 39 | 40 | 68.5 | 100 | |
| | 2007.01- | 6MT | F | R | Van FWD RHK (DW10UTED4) | | GCI10041 | Inner Joint | | 37 | 39 | 32 | 399 | 95.5 | |
| | 2010.01- | 6MT | F | L | Van 4WD RHK (DW10UTED4) | For Engine Code:DW10UTED4,Trans. code:ML6C | GDS10314 | Drive Shaft | | 28 | 37 | 59 | 91 | 655 | |
| | 2010.01- | 6MT | F | R | Van 4WD RHK (DW10UTED4) | For Engine Code:DW10UTED4,Trans. code:ML6C | GDS10320 | Drive Shaft | | 28 | 37 | 59 | 91 | 980 | |
| 2.0 (90 kw) | 2016.04-2022.12 | 6MT | F | L | Van FWD AHK (DW10FE) | | GDS83778 | Drive Shaft | | 28 | 37 | 58.5 | 92.5 | 699 | |
| | 2016.04-2022.12 | 6MT | F | L | Van FWD AHK (DW10FE) | For vehicles with standard suspension | GDS84397 | Drive Shaft | | 28 | 37 | 58.6 | 93 | 696 | |
| | 2016.04-2022.12 | 6MT | F | R | Van FWD AHK (DW10FE) | For vehicles with standard suspension | GDS82847 | Drive Shaft | | 28 | 37 | 58.6 | 93 | 1005 | |
| | 2016.04-2022.12 | 6MT | F | R | Van FWD AHK (DW10FE) | | GDS83775 | Drive Shaft | | 28 | 37 | 58.5 | 92.5 | 1002 | |
| | 2016.04-2022.12 | 6MT | F | L/R | Van FWD AHK (DW10FE) | | GCO10098 | Outer Joint | | 28 | 39 | 58.6 | 93 | 63 | I |
| | 2016.04-2022.12 | 6MT | F | L | Van FWD AHK (DW10FE) | | GCI10040 | Inner Joint | | 37 | 39 | 40 | 69 | 95.5 | |
| | 2016.04-2022.12 | 6MT | F | R | Van FWD AHK (DW10FE) | | GCI10041 | Inner Joint | | 37 | 39 | 32 | 399 | 95.5 | |
| | 2016.04-2022.12 | 8AT | F | L | Van FWD AHK (DW10FE) | For vehicles with standard suspension | GDS56191 | Drive Shaft | | 28 | 37 | 58.6 | 93 | 649 | |
| | 2016.04-2022.12 | 8AT | F | R | Van FWD AHK (DW10FE) | For vehicles with standard suspension | GDS56190 | Drive Shaft | | 28 | 37 | 58.6 | 93 | 989 | |
| | 2016.04-2022.12 | 8AT | F | L/R | Van FWD AHK (DW10FE) | For vehicles with standard suspension | GCO82805 | Outer Joint | | 28 | 39 | 58.6 | 93 | 63 | I |
| | 2016.09-2022.12 | 6MT | F | L | Platform/Chassis FWD AHK (DW10FE) | | GDS83778 | Drive Shaft | | 28 | 37 | 58.5 | 92.5 | 699 | |
| | 2016.09-2022.12 | 6MT | F | L | Platform/Chassis FWD AHK (DW10FE) | For vehicles with standard suspension | GDS84397 | Drive Shaft | | 28 | 37 | 58.6 | 93 | 696 | |
| | 2016.09-2022.12 | 6MT | F | R | Platform/Chassis FWD AHK (DW10FE) | For vehicles with standard suspension | GDS82847 | Drive Shaft | | 28 | 37 | 58.6 | 93 | 1005 | |
| | 2016.09-2022.12 | 6MT | F | R | Platform/Chassis FWD AHK (DW10FE) | | GDS83775 | Drive Shaft | | 28 | 37 | 58.5 | 92.5 | 1002 | |
| | 2016.09-2022.12 | 6MT | F | L/R | Platform/Chassis FWD AHK (DW10FE) | | GCO10098 | Outer Joint | | 28 | 39 | 58.6 | 93 | 63 | I |
| | 2016.09-2022.12 | 6MT | F | L | Platform/Chassis FWD AHK (DW10FE) | | GCI10040 | Inner Joint | | 37 | 39 | 40 | 69 | 95.5 | |
| | 2016.09-2022.12 | 6MT | F | R | Platform/Chassis FWD AHK (DW10FE) | | GCI10041 | Inner Joint | | 37 | 39 | 32 | 399 | 95.5 | |
| | 2019.09-2022.12 | 8AT | F | L | Bus FWD AHK (DW10FE) | For vehicles with standard suspension | GDS56191 | Drive Shaft | | 28 | 37 | 58.6 | 93 | 649 | |
| | 2019.09-2022.12 | 8AT | F | R | Bus FWD AHK (DW10FE) | For vehicles with standard suspension | GDS56190 | Drive Shaft | | 28 | 37 | 58.6 | 93 | 989 | |
| | 2019.09-2022.12 | 8AT | F | L/R | Bus FWD AHK (DW10FE) | For vehicles with standard suspension | GCO82805 | Outer Joint | | 28 | 39 | 58.6 | 93 | 63 | I |
| | 2019.09-2022.12 | 8AT | F | L | Bus FWD AHK (DW10FE) | For vehicles with standard suspension | GCI10120 | Inner Joint | | 37 | 39 | 42.2 | 60 | 95.5 | |
| | 2019.09-2022.12 | 8AT | F | R | Bus FWD AHK (DW10FE) | For vehicles with standard suspension | GCI45033 | Inner Joint | | 37 | 39 | | 379 | 96 | |
| 2.0 (94 kw) | 2011.03- | 6MT | F | L | Platform/Chassis FWD AHZ (DW10CD) | | GDS45133 | Drive Shaft | | 28 | 37 | 58.6 | 94 | 653 | |
| | 2011.03- | 6MT | F | R | Platform/Chassis FWD AHZ (DW10CD) | | GDS99214 | Drive Shaft | | 28 | 37 | 58.6 | 94 | 978 | |
| | 2011.03- | 6MT | F | L | Platform/Chassis FWD AHZ (DW10CD) | | GCO10051 | Outer Joint | | 28 | 39 | 58.6 | 94 | 63 | I |
| | 2011.03- | 6MT | F | R | Platform/Chassis FWD AHZ (DW10CD) | | GCO10098 | Outer Joint | | 28 | 39 | 58.6 | 93 | 63 | I |
| | 2011.03- | 6MT | F | L | Platform/Chassis FWD AHZ (DW10CD) | | GCI45032 | Inner Joint | | 37 | 39 | 40 | 68.5 | 100 | |
| | 2011.03- | 6MT | F | R | Platform/Chassis FWD AHZ (DW10CD) | | GCI10041 | Inner Joint | | 37 | 39 | 32 | 399 | 95.5 | |
| | 2011.03- | 6MT | F | L | Van FWD AHZ (DW10CD) | | GDS45133 | Drive Shaft | | 28 | 37 | 58.6 | 94 | 653 | |
| | 2011.03- | 6MT | F | R | Van FWD AHZ (DW10CD) | | GDS99214 | Drive Shaft | | 28 | 37 | 58.6 | 94 | 978 | |
| | 2011.03- | 6MT | F | L | Van FWD AHZ (DW10CD) | | GCO10051 | Outer Joint | | 28 | 39 | 58.6 | 94 | 63 | I |
| | 2011.03- | 6MT | F | R | Van FWD AHZ (DW10CD) | | GCO10098 | Outer Joint | | 28 | 39 | 58.6 | 93 | 63 | I |
| | 2011.03- | 6MT | F | L | Van FWD AHZ (DW10CD) | | GCI45032 | Inner Joint | | 37 | 39 | 40 | 68.5 | 100 | |
| | 2011.03- | 6MT | F | R | Van FWD AHZ (DW10CD) | | GCI10041 | Inner Joint | | 37 | 39 | 32 | 399 | 95.5 | |
| | 2012.01-2016.03 | 6MT | F | L | Van 4WD AHZ (DW10CD) | Transm. code:ML6C | GDS10314 | Drive Shaft | | 28 | 37 | 59 | 91 | 655 | |
| | 2012.01-2016.03 | 6MT | F | R | Van 4WD AHZ (DW10CD) | Transm. code:ML6C | GDS10320 | Drive Shaft | | 28 | 37 | 59 | 91 | 980 | |
| 2.0 (100 kw) | 2000.07-2006.12 | 4AT/5MT | F | L/R | Bus FWD RFN (EW10J4) | | GCO10018 | Outer Joint | 48T | 27 | 34 | 61 | 82 | 56.5 | I |
| | 2000.07-2006.12 | MT | F | L | Bus FWD RFN (EW10J4) | Trans. code:BE4R | GDS10082 | Drive Shaft | 48T | 27 | 24 | 59 | 82 | 648 | |
| | 2000.07-2006.12 | MT | F | L | Bus FWD RFN (EW10J4) | Trans. code:BE4R | GDS10112 | Drive Shaft | | 27 | 24 | 59 | 82 | 648 | |
| | 2000.07-2006.12 | MT | F | L | Bus FWD RFN (EW10J4) | Trans. code:ML5T/ML5C | GDS10264 | Drive Shaft | 48T | 27 | 37 | 59 | 82 | 630 | |
| | 2000.07-2006.12 | MT | F | L | Bus FWD RFN (EW10J4) | Trans. code:ML5T/ML5C | GDS10430 | Drive Shaft | | 27 | 37 | 59 | 82 | 630 | |
| | 2000.07-2006.12 | MT | F | R | Bus FWD RFN (EW10J4) | Trans. code:ML5T/ML5C | GDS10057 | Drive Shaft | | 27 | 37 | 59 | 82 | 960 | |
| | 2000.07-2006.12 | MT | F | R | Bus FWD RFN (EW10J4) | Trans. code:BE4R | GDS10081 | Drive Shaft | 48T | 27 | 24 | 59 | 82 | 935 | |
| | 2000.07-2006.12 | MT | F | R | Bus FWD RFN (EW10J4) | Trans. code:ML5T/ML5C | GDS45120 | Drive Shaft | 48T | 27 | 37 | 59 | 82 | 960 | |
| | 2000.07-2006.12 | MT | F | L | Bus FWD RFN (EW10J4) | Trans. code:BE4R | GCO10016 | Outer Joint | | 27 | 34 | 59 | 82 | 56.5 | I |
| | 2000.07-2006.12 | MT | F | L | Bus FWD RFN (EW10J4) | Trans. code:BE4R | GCO10059 | Outer Joint | 48T | 27 | 34 | 59 | 82 | 56.5 | I |
| | 2000.07-2006.12 | MT | F | L/R | Bus FWD RFN (EW10J4) | Trans. code:ML5T/ML5C | GCO10014 | Outer Joint | | 27 | 39 | 59 | 82 | 63 | I |
| | 2000.07-2006.12 | MT | F | L/R | Bus FWD RFN (EW10J4) | Trans. code:ML5T/ML5C | GCO10015 | Outer Joint | 48T | 27 | 39 | 59 | 82 | 63 | I |
| | 2000.07-2006.12 | MT | F | L | Bus FWD RFN (EW10J4) | Trans. code:ML5T/ML5C | GCI10015 | Inner Joint | | 37 | 39 | 40 | 68.5 | 104 | |
| | 2000.07-2006.12 | MT | F | R | Bus FWD RFN (EW10J4) | Trans. code:ML5T/ML5C | GCI10034 | Inner Joint | | 37 | 39 | 31.9 | 369.5 | 99 | |
| | 2002.09-2006.12 | 4AT/5MT | F | L/R | Van FWD RFN (EW10J4) | | GCO10018 | Outer Joint | 48T | 27 | 34 | 61 | 82 | 56.5 | I |
| | 2002.09-2006.12 | MT | F | L | Van FWD RFN (EW10J4) | Trans. code:BE4R | GDS10082 | Drive Shaft | 48T | 27 | 24 | 59 | 82 | 648 | |
| | 2002.09-2006.12 | MT | F | L | Van FWD RFN (EW10J4) | Trans. code:BE4R | GDS10112 | Drive Shaft | | 27 | 24 | 59 | 82 | 648 | |
| | 2002.09-2006.12 | MT | F | L | Van FWD RFN (EW10J4) | Trans. code:ML5T/ML5C | GDS10264 | Drive Shaft | 48T | 27 | 37 | 59 | 82 | 630 | |

| | YEAR | TRANSM. | F/R | L/R | BODY STYLE & DRIVE TYPE & ENGINE | REMARKS | G-AP Ref. | PRODUCT | ABS | Technical Specifications A | B | C | H | L | P |
|---|---|---|---|---|---|---|---|---|---|---|---|---|---|---|---|
| **PEUGEOT** **Expert** | | | | | | | | | | | | | | | |
| 2.0 (100 kw) | 2002.09-2006.12 | MT | F | L | Van FWD RFN (EW10J4) | Trans. code:ML5T/ML5C | GDS10430 | Drive Shaft | | 27 | 37 | 59 | 82 | 630 | |
| | 2002.09-2006.12 | MT | F | R | Van FWD RFN (EW10J4) | Trans. code:ML5T/ML5C | GDS10057 | Drive Shaft | | 27 | 37 | 59 | 82 | 960 | |
| | 2002.09-2006.12 | MT | F | R | Van FWD RFN (EW10J4) | Trans. code:BE4R | GDS10081 | Drive Shaft | 48T | 27 | 24 | 59 | 82 | 935 | |
| | 2002.09-2006.12 | MT | F | R | Van FWD RFN (EW10J4) | Trans. code:ML5T/ML5C | GDS45120 | Drive Shaft | 48T | 27 | 37 | 59 | 82 | 960 | |
| | 2002.09-2006.12 | MT | F | L | Van FWD RFN (EW10J4) | Trans. code:BE4R | GCO10016 | Outer Joint | | 27 | 34 | 59 | 82 | 56.5 | I |
| | 2002.09-2006.12 | MT | F | L | Van FWD RFN (EW10J4) | Trans. code:BE4R | GCO10059 | Outer Joint | 48T | 27 | 34 | 59 | 82 | 56.5 | I |
| | 2002.09-2006.12 | MT | F | L/R | Van FWD RFN (EW10J4) | Trans. code:ML5T/ML5C | GCO10014 | Outer Joint | | 27 | 39 | 59 | 82 | 63 | I |
| | 2002.09-2006.12 | MT | F | L/R | Van FWD RFN (EW10J4) | Trans. code:ML5T/ML5C | GCO10015 | Outer Joint | 48T | 27 | 39 | 59 | 82 | 63 | I |
| | 2002.09-2006.12 | MT | F | L | Van FWD RFN (EW10J4) | Trans. code:ML5T/ML5C | GCI10015 | Inner Joint | | 37 | 39 | 40 | 68.5 | 104 | |
| | 2002.09-2006.12 | MT | F | R | Van FWD RFN (EW10J4) | Trans. code:ML5T/ML5C | GCI10034 | Inner Joint | | 37 | 39 | 31.9 | 369.5 | 99 | |
| | 2007.01- | 6MT | F | L | Platform/Chassis FWD RHR (DW10BTED4) | | GDS45133 | Drive Shaft | | 28 | 37 | 58.6 | 94 | 653 | |
| | 2007.01- | 6MT | F | R | Platform/Chassis FWD RHR (DW10BTED4) | | GDS99214 | Drive Shaft | | 28 | 37 | 58.6 | 94 | 978 | |
| | 2007.01- | 6MT | F | L | Platform/Chassis FWD RHR (DW10BTED4) | | GCO10051 | Outer Joint | | 28 | 39 | 58.6 | 94 | 63 | I |
| | 2007.01- | 6MT | F | R | Platform/Chassis FWD RHR (DW10BTED4) | | GCO10098 | Outer Joint | | 28 | 39 | 58.6 | 93 | 63 | I |
| | 2007.01- | 6MT | F | L | Platform/Chassis FWD RHR (DW10BTED4) | | GCI45032 | Inner Joint | | 37 | 39 | 40 | 68.5 | 100 | |
| | 2007.01- | 6MT | F | R | Platform/Chassis FWD RHR (DW10BTED4) | | GCI10041 | Inner Joint | | 37 | 39 | 32 | 399 | 95.5 | |
| | 2007.01- | 6MT | F | L | Van FWD RHR (DW10BTED4) | | GDS45133 | Drive Shaft | | 28 | 37 | 58.6 | 94 | 653 | |
| | 2007.01- | 6MT | F | R | Van FWD RHR (DW10BTED4) | | GDS99214 | Drive Shaft | | 28 | 37 | 58.6 | 94 | 978 | |
| | 2007.01- | 6MT | F | L | Van FWD RHR (DW10BTED4) | | GCO10051 | Outer Joint | | 28 | 39 | 58.6 | 94 | 63 | I |
| | 2007.01- | 6MT | F | R | Van FWD RHR (DW10BTED4) | | GCO10098 | Outer Joint | | 28 | 39 | 58.6 | 93 | 63 | I |
| | 2007.01- | 6MT | F | L | Van FWD RHR (DW10BTED4) | | GCI45032 | Inner Joint | | 37 | 39 | 40 | 68.5 | 100 | |
| | 2007.01- | 6MT | F | R | Van FWD RHR (DW10BTED4) | | GCI10041 | Inner Joint | | 37 | 39 | 32 | 399 | 95.5 | |
| 2.0 (103 kw) | 2007.01- | 5MT | F | L | Van FWD RFJ (EW10A);RFH (EW10A) | | GDS10238 | Drive Shaft | | 28 | 24 | 58.5 | 92 | 669 | |
| | 2007.01- | 5MT | F | R | Van FWD RFJ (EW10A);RFH (EW10A) | | GDS10239 | Drive Shaft | | 28 | 24 | 58.5 | 92 | 955 | |
| | 2007.01- | 6AT | F | L | Van FWD RFJ (EW10A);RFH (EW10A) | | GDS83137 | Drive Shaft | | 28 | 37 | 59.5 | 94 | 609 | |
| | 2007.01- | 6AT | F | R | Van FWD RFJ (EW10A);RFH (EW10A) | | GDS10416 | Drive Shaft | | 28 | 37 | 59 | 91 | 955 | |
| | 2007.01- | 6AT | F | L | Van FWD RFJ (EW10A);RFH (EW10A) | | GCO82534 | Outer Joint | | 28 | 36 | 59.5 | 94 | 60.5 | I |
| | 2007.01- | 6AT | F | L | Van FWD RFJ (EW10A);RFH (EW10A) | | GCI82416 | Inner Joint | | 37 | 36 | 42.3 | 59.5 | 126 | |
| | 2007.01- | MT | F | L/R | Van FWD RFJ (EW10A);RFH (EW10A) | | GCO10124 | Outer Joint | | 28 | 34 | 58.5 | 92 | 55 | I |
| | 2007.01-2016.03 | 5MT | F | L | Platform/Chassis FWD | | GDS10238 | Drive Shaft | | 28 | 24 | 58.5 | 92 | 669 | |
| | 2007.01-2016.03 | 5MT | F | R | Platform/Chassis FWD | | GDS10239 | Drive Shaft | | 28 | 24 | 58.5 | 92 | 955 | |
| 2.0 (106 kw) | 2021.07-2025.04 | 6MT | F | L | Bus FWD EHT (DW10FDDU340) | For vehicles with increased ground clearance | GDS83778 | Drive Shaft | | 28 | 37 | 58.5 | 92.5 | 699 | |
| | 2021.07-2025.04 | 6MT | F | L | Bus FWD EHT (DW10FDDU340) | For vehicles with standard suspension | GDS84397 | Drive Shaft | | 28 | 37 | 58.6 | 93 | 696 | |
| | 2021.07-2025.04 | 6MT | F | R | Bus FWD EHT (DW10FDDU340) | For vehicles with standard suspension | GDS82847 | Drive Shaft | | 28 | 37 | 58.6 | 93 | 1005 | |
| | 2021.07-2025.04 | 6MT | F | R | Bus FWD EHT (DW10FDDU340) | For vehicles with increased ground clearance | GDS83775 | Drive Shaft | | 28 | 37 | 58.5 | 92.5 | 1002 | |
| | 2021.08-2025.04 | 6MT | F | L | Van FWD EHT (DW10FDDU340);EHS (DW10FDDU370) | For vehicles with increased ground clearance,Reinforced wheel suspension | GDS83778 | Drive Shaft | | 28 | 37 | 58.5 | 92.5 | 699 | |
| | 2021.08-2025.04 | 6MT | F | L | Van FWD EHT (DW10FDDU340);EHS (DW10FDDU370) | For vehicles with standard suspension | GDS84397 | Drive Shaft | | 28 | 37 | 58.6 | 93 | 696 | |
| | 2021.08-2025.04 | 6MT | F | R | Van FWD EHT (DW10FDDU340);EHS (DW10FDDU370) | For vehicles with standard suspension | GDS82847 | Drive Shaft | | 28 | 37 | 58.6 | 93 | 1005 | |
| | 2021.08-2025.04 | 6MT | F | R | Van FWD EHT (DW10FDDU340);EHS (DW10FDDU370) | For vehicles with increased ground clearance,Reinforced wheel suspension | GDS83775 | Drive Shaft | | 28 | 37 | 58.5 | 92.5 | 1002 | |
| | 2021.08-2025.04 | 6MT | F | L | Van FWD EHT (DW10FDDU340);EHS (DW10FDDU370) | For vehicles with standard suspension | GCI10040 | Inner Joint | | 37 | 39 | 40 | 69 | 95.5 | |
| | 2021.08-2025.04 | 6MT | F | L | Van FWD EHT (DW10FDDU340);EHS (DW10FDDU370) | For vehicles with increased ground clearance,Reinforced wheel suspension | GCI82363 | Inner Joint | | 37 | 36 | 40 | 68 | 108 | |
| | 2021.08-2025.04 | 6MT | F | R | Van FWD EHT (DW10FDDU340);EHS (DW10FDDU370) | For vehicles with standard suspension | GCI10041 | Inner Joint | | 37 | 39 | 32 | 399 | 95.5 | |
| | 2021.08-2025.04 | 6MT | F | R | Van FWD EHT (DW10FDDU340);EHS (DW10FDDU370) | For vehicles with increased ground clearance,Reinforced wheel suspension | GCI82364 | Inner Joint | | 37 | 36 | 32 | 400 | 108 | |
| | 2021.08-2025.04 | 8AT | F | L | Van FWD EHT (DW10FDDU340);EHS (DW10FDDU370) | For vehicles with standard suspension | GDS56191 | Drive Shaft | | 28 | 37 | 58.6 | 93 | 649 | |
| | 2021.08-2025.04 | 8AT | F | R | Van FWD EHT (DW10FDDU340);EHS (DW10FDDU370) | For vehicles with standard suspension | GDS56190 | Drive Shaft | | 28 | 37 | 58.6 | 93 | 989 | |
| | 2021.08-2025.04 | 8AT | F | L/R | Van FWD EHT (DW10FDDU340);EHS (DW10FDDU370) | For vehicles with standard suspension | GCO82805 | Outer Joint | | 28 | 39 | 58.6 | 93 | 63 | I |
| | 2021.08-2025.04 | 8AT | F | L | Van FWD EHT (DW10FDDU340);EHS (DW10FDDU370) | For vehicles with standard suspension | GCI10120 | Inner Joint | | 37 | 39 | 42.2 | 60 | 95.5 | |
| | 2021.08-2025.04 | 8AT | F | R | Van FWD EHT (DW10FDDU340);EHS (DW10FDDU370) | For vehicles with standard suspension | GCI45033 | Inner Joint | | 37 | 39 | | 379 | 96 | |
| | 2023.01-2025.04 | 6MT | F | L | Platform/Chassis FWD EHT (DW10FDDU340) | For vehicles with increased ground clearance | GDS83778 | Drive Shaft | | 28 | 37 | 58.5 | 92.5 | 699 | |
| | 2023.01-2025.04 | 6MT | F | R | Platform/Chassis FWD EHT (DW10FDDU340) | For vehicles with standard suspension | GDS82847 | Drive Shaft | | 28 | 37 | 58.6 | 93 | 1005 | |
| | 2023.01-2025.04 | 6MT | F | R | Platform/Chassis FWD EHT (DW10FDDU340) | For vehicles with increased ground clearance | GDS83775 | Drive Shaft | | 28 | 37 | 58.5 | 92.5 | 1002 | |
| | 2023.01-2025.04 | 6MT | F | R | Platform/Chassis FWD EHT (DW10FDDU340) | For vehicles with standard suspension | GCI10041 | Inner Joint | | 37 | 39 | 32 | 399 | 95.5 | |
| 2.0 (110 kw) | 2016.04-2022.12 | 6MT | F | L | Bus FWD AHX (DW10FD) | Reinforced wheel suspension | GDS83778 | Drive Shaft | | 28 | 37 | 58.5 | 92.5 | 699 | |
| | 2016.04-2022.12 | 6MT | F | L | Bus FWD AHX (DW10FD) | Date from:2016.05;6 balls,TJ | GDS84397 | Drive Shaft | | 28 | 37 | 58.6 | 93 | 696 | |
| | 2016.04-2022.12 | 6MT | F | R | Bus FWD AHX (DW10FD) | Date from:2016.05 | GDS82847 | Drive Shaft | | 28 | 37 | 58.6 | 93 | 1005 | |
| | 2016.04-2022.12 | 6MT | F | R | Bus FWD AHX (DW10FD) | Reinforced wheel suspension | GDS83775 | Drive Shaft | | 28 | 37 | 58.5 | 92.5 | 1002 | |
| | 2016.04-2022.12 | 6MT | F | L/R | Bus FWD AHX (DW10FD) | Date from:2016.05;6 balls | GCO10098 | Outer Joint | | 28 | 39 | 58.6 | 93 | 63 | I |
| | 2016.04-2022.12 | 6MT | F | L/R | Bus FWD AHX (DW10FD) | Reinforced wheel suspension | GCO82483 | Outer Joint | | 28 | 36 | 58.5 | 92.5 | 60.5 | I |
| | 2016.04-2022.12 | 6MT | F | L | Bus FWD AHX (DW10FD) | Date from:2016.05;TJ | GCI10040 | Inner Joint | | 37 | 39 | 40 | 69 | 95.5 | |
| | 2016.04-2022.12 | 6MT | F | L | Bus FWD AHX (DW10FD) | Reinforced wheel suspension | GCI82363 | Inner Joint | | 37 | 36 | 40 | 68 | 108 | |
| | 2016.04-2022.12 | 6MT | F | R | Bus FWD AHX (DW10FD) | Date from:2016.05;TJ | GCI10041 | Inner Joint | | 37 | 39 | 32 | 399 | 95.5 | |
| | 2016.04-2022.12 | 6MT | F | R | Bus FWD AHX (DW10FD) | Reinforced wheel suspension | GCI82364 | Inner Joint | | 37 | 36 | 32 | 400 | 108 | |
| | 2016.04-2022.12 | 6MT | F | L | Van FWD AHX (DW10FD) | Reinforced wheel suspension | GDS83778 | Drive Shaft | | 28 | 37 | 58.5 | 92.5 | 699 | |
| | 2016.04-2022.12 | 6MT | F | L | Van FWD AHX (DW10FD) | Date from:2016.05;6 balls,TJ | GDS84397 | Drive Shaft | | 28 | 37 | 58.6 | 93 | 696 | |
| | 2016.04-2022.12 | 6MT | F | R | Van FWD AHX (DW10FD) | Date from:2016.05 | GDS82847 | Drive Shaft | | 28 | 37 | 58.6 | 93 | 1005 | |

| | YEAR | TRANSM. | F/R | L/R | BODY STYLE & DRIVE TYPE & ENGINE | REMARKS | G-AP Ref. | PRODUCT | ABS | Technical Specifications A | B | C | H | L | P |
|---|---|---|---|---|---|---|---|---|---|---|---|---|---|---|---|
| **PEUGEOT** | | | | | | | | | | | | | | | |
| **Expert** | | | | | | | | | | | | | | | |
| 2.0 (110 kw) | 2016.04-2022.12 | 6MT | F | R | Van FWD AHX (DW10FD) | Reinforced wheel suspension | GDS83775 | Drive Shaft | | 28 | 37 | 58.5 | 92.5 | 1002 | |
| | 2016.04-2022.12 | 6MT | F | L/R | Van FWD AHX (DW10FD) | Date from:2016.05;6 balls | GCO10098 | Outer Joint | | 28 | 39 | 58.6 | 93 | 63 | I |
| | 2016.04-2022.12 | 6MT | F | L/R | Van FWD AHX (DW10FD) | Reinforced wheel suspension | GCO82483 | Outer Joint | | 28 | 36 | 58.5 | 92.5 | 60.5 | I |
| | 2016.04-2022.12 | 6MT | F | L | Van FWD AHX (DW10FD) | Date from:2016.05;TJ | GCI10040 | Inner Joint | | 37 | 39 | 40 | 69 | 95.5 | |
| | 2016.04-2022.12 | 6MT | F | L | Van FWD AHX (DW10FD) | Reinforced wheel suspension | GCI82363 | Inner Joint | | 37 | 36 | 40 | 68 | 108 | |
| | 2016.04-2022.12 | 6MT | F | R | Van FWD AHX (DW10FD) | Date from:2016.05;TJ | GCI10041 | Inner Joint | | 37 | 39 | 32 | 399 | 95.5 | |
| | 2016.04-2022.12 | 6MT | F | R | Van FWD AHX (DW10FD) | Reinforced wheel suspension | GCI82364 | Inner Joint | | 37 | 36 | 32 | 400 | 108 | |
| | 2016.09-2022.12 | 6MT | F | L | Platform/Chassis FWD AHX (DW10FD) | Reinforced wheel suspension | GDS83778 | Drive Shaft | | 28 | 37 | 58.5 | 92.5 | 699 | |
| | 2016.09-2022.12 | 6MT | F | L | Platform/Chassis FWD AHX (DW10FD) | 6 balls | GDS84397 | Drive Shaft | | 28 | 37 | 58.6 | 93 | 696 | |
| | 2016.09-2022.12 | 6MT | F | R | Platform/Chassis FWD AHX (DW10FD) | | GDS82847 | Drive Shaft | | 28 | 37 | 58.6 | 93 | 1005 | |
| | 2016.09-2022.12 | 6MT | F | R | Platform/Chassis FWD AHX (DW10FD) | Reinforced wheel suspension | GDS83775 | Drive Shaft | | 28 | 37 | 58.5 | 92.5 | 1002 | |
| | 2016.09-2022.12 | 6MT | F | L/R | Platform/Chassis FWD AHX (DW10FD) | 6 balls | GCO10098 | Outer Joint | | 28 | 39 | 58.6 | 93 | 63 | I |
| | 2016.09-2022.12 | 6MT | F | L/R | Platform/Chassis FWD AHX (DW10FD) | Reinforced wheel suspension | GCO82483 | Outer Joint | | 28 | 36 | 58.5 | 92.5 | 60.5 | I |
| | 2016.09-2022.12 | 6MT | F | L | Platform/Chassis FWD AHX (DW10FD) | TJ | GCI10040 | Inner Joint | | 37 | 39 | 40 | 69 | 95.5 | |
| | 2016.09-2022.12 | 6MT | F | L | Platform/Chassis FWD AHX (DW10FD) | Reinforced wheel suspension | GCI82363 | Inner Joint | | 37 | 36 | 40 | 68 | 108 | |
| | 2016.09-2022.12 | 6MT | F | R | Platform/Chassis FWD AHX (DW10FD) | TJ | GCI10041 | Inner Joint | | 37 | 39 | 32 | 399 | 95.5 | |
| | 2016.09-2022.12 | 6MT | F | R | Platform/Chassis FWD AHX (DW10FD) | Reinforced wheel suspension | GCI82364 | Inner Joint | | 37 | 36 | 32 | 400 | 108 | |
| 2.0 (120 kw) | 2009.09- | 6MT | F | L | Platform/Chassis FWD RHH (DW10CTED4) | | GDS45133 | Drive Shaft | | 28 | 37 | 58.6 | 94 | 653 | |
| | 2009.09- | 6MT | F | R | Platform/Chassis FWD RHH (DW10CTED4) | | GDS99214 | Drive Shaft | | 28 | 37 | 58.6 | 94 | 978 | |
| | 2009.09- | 6MT | F | L | Platform/Chassis FWD RHH (DW10CTED4) | | GCO10051 | Outer Joint | | 28 | 39 | 58.6 | 94 | 63 | I |
| | 2009.09- | 6MT | F | R | Platform/Chassis FWD RHH (DW10CTED4) | | GCO10098 | Outer Joint | | 28 | 39 | 58.6 | 93 | 63 | I |
| | 2009.09- | 6MT | F | L | Platform/Chassis FWD RHH (DW10CTED4) | | GCI45032 | Inner Joint | | 37 | 39 | 40 | 68.5 | 100 | |
| | 2009.09- | 6MT | F | R | Platform/Chassis FWD RHH (DW10CTED4) | | GCI10041 | Inner Joint | | 37 | 39 | 32 | 399 | 95.5 | |
| | 2009.09- | 6AT | F | L | Van FWD RHH (DW10CTED4) | | GDS83137 | Drive Shaft | | 28 | 37 | 59.5 | 94 | 609 | |
| | 2009.09- | 6AT | F | R | Van FWD RHH (DW10CTED4) | | GDS10416 | Drive Shaft | | 28 | 37 | 59 | 91 | 955 | |
| | 2009.09- | 6AT/6MT | F | L | Van FWD RHH (DW10CTED4) | | GCO10051 | Outer Joint | | 28 | 39 | 58.6 | 94 | 63 | I |
| | 2009.09- | 6AT/6MT | F | R | Van FWD RHH (DW10CTED4) | | GCO10098 | Outer Joint | | 28 | 39 | 58.6 | 93 | 63 | I |
| | 2009.09- | 6AT/6MT | F | L | Van FWD RHH (DW10CTED4) | | GCI45032 | Inner Joint | | 37 | 39 | 40 | 68.5 | 100 | |
| | 2009.09- | 6AT/6MT | F | R | Van FWD RHH (DW10CTED4) | | GCI10041 | Inner Joint | | 37 | 39 | 32 | 399 | 95.5 | |
| | 2009.09- | 6MT | F | L | Van FWD RHH (DW10CTED4) | | GDS45133 | Drive Shaft | | 28 | 37 | 58.6 | 94 | 653 | |
| | 2009.09- | 6MT | F | R | Van FWD RHH (DW10CTED4) | | GDS99214 | Drive Shaft | | 28 | 37 | 58.6 | 94 | 978 | |
| 2.0 (130 kw) | 2016.04-2025.04 | 6AT | F | L | Bus FWD AHH (DW10FC);EHZ (DW10FDCU) | For vehicles with standard suspension | GDS56191 | Drive Shaft | | 28 | 37 | 58.6 | 93 | 649 | |
| | 2016.04-2025.04 | 6AT | F | R | Bus FWD AHH (DW10FC);EHZ (DW10FDCU) | For vehicles with standard suspension | GDS56190 | Drive Shaft | | 28 | 37 | 58.6 | 93 | 989 | |
| | 2016.04-2025.04 | 6AT | F | L/R | Bus FWD AHH (DW10FC);EHZ (DW10FDCU) | For vehicles with standard suspension | GCO82805 | Outer Joint | | 28 | 39 | 58.6 | 93 | 63 | I |
| | 2016.04-2025.04 | 6AT | F | L | Bus FWD AHH (DW10FC);EHZ (DW10FDCU) | For vehicles with standard suspension | GCI10120 | Inner Joint | | 37 | 39 | 42.2 | 60 | 95.5 | |
| | 2016.04-2025.04 | 6AT | F | R | Bus FWD AHH (DW10FC);EHZ (DW10FDCU) | For vehicles with standard suspension | GCI45033 | Inner Joint | | 37 | 39 | | 379 | 96 | |
| | 2016.04-2025.04 | AT | F | L | Van FWD AHH (DW10FC);EHZ (DW10FDCU) | For vehicles with standard suspension | GDS56191 | Drive Shaft | | 28 | 37 | 58.6 | 93 | 649 | |
| | 2016.04-2025.04 | AT | F | R | Van FWD AHH (DW10FC);EHZ (DW10FDCU) | For vehicles with standard suspension | GDS56190 | Drive Shaft | | 28 | 37 | 58.6 | 93 | 989 | |
| | 2016.04-2025.04 | AT | F | L/R | Van FWD AHH (DW10FC);EHZ (DW10FDCU) | For vehicles with standard suspension | GCO82805 | Outer Joint | | 28 | 39 | 58.6 | 93 | 63 | I |
| | 2016.04-2025.04 | AT | F | L | Van FWD AHH (DW10FC);EHZ (DW10FDCU) | For vehicles with standard suspension | GCI10120 | Inner Joint | | 37 | 39 | 42.2 | 60 | 95.5 | |
| | 2016.04-2025.04 | AT | F | R | Van FWD AHH (DW10FC);EHZ (DW10FDCU) | For vehicles with standard suspension | GCI45033 | Inner Joint | | 37 | 39 | | 379 | 96 | |
| **Expert Tepee** | | | | | | | | | | | | | | | |
| 1.6 (66 kw) | 2007.01-2016.03 | MT | F | L | Bus FWD 9HU (DV6UTED4) | | GDS10238 | Drive Shaft | | 28 | 24 | 58.5 | 92 | 669 | |
| | 2007.01-2016.03 | MT | F | R | Bus FWD 9HU (DV6UTED4) | | GDS10239 | Drive Shaft | | 28 | 24 | 58.5 | 92 | 955 | |
| | 2007.01-2016.03 | MT | F | L/R | Bus FWD 9HU (DV6UTED4) | | GCO10052 | Outer Joint | | 28 | 34 | 58.5 | 92 | 55 | I |
| | 2007.01-2016.03 | MT | F | L/R | Bus FWD 9HU (DV6UTED4) | | GCO10124 | Outer Joint | | 28 | 34 | 58.5 | 92 | 55 | I |
| | 2007.01-2016.03 | MT | F | L | Bus FWD 9HU (DV6UTED4) | | GCI45032 | Inner Joint | | 37 | 39 | 40 | 68.5 | 100 | |
| | 2007.01-2016.03 | MT | F | R | Bus FWD 9HU (DV6UTED4) | | GCI99159 | Inner Joint | | 24 | 34 | 29.8 | 350 | 87.5 | |
| 2.0 (72 kw) | 2011.03-2016.03 | 6MT | F | L | Bus FWD AHY (DW10CE) | | GDS45133 | Drive Shaft | | 28 | 37 | 58.6 | 94 | 653 | |
| | 2011.03-2016.03 | 6MT | F | R | Bus FWD AHY (DW10CE) | | GDS99214 | Drive Shaft | | 28 | 37 | 58.6 | 94 | 978 | |
| | 2011.03-2016.03 | 6MT | F | L | Bus FWD AHY (DW10CE) | | GCO10051 | Outer Joint | | 28 | 39 | 58.6 | 94 | 63 | I |
| | 2011.03-2016.03 | 6MT | F | R | Bus FWD AHY (DW10CE) | | GCO10098 | Outer Joint | | 28 | 39 | 58.6 | 93 | 63 | I |
| | 2011.03-2016.03 | 6MT | F | L | Bus FWD AHY (DW10CE) | | GCI45032 | Inner Joint | | 37 | 39 | 40 | 68.5 | 100 | |
| | 2011.03-2016.03 | 6MT | F | R | Bus FWD AHY (DW10CE) | | GCI10041 | Inner Joint | | 37 | 39 | 32 | 399 | 95.5 | |
| 2.0 (88 kw) | 2007.01-2016.03 | MT | F | L | Bus 4WD RHK (DW10UTED4) | | GDS45133 | Drive Shaft | | 28 | 37 | 58.6 | 94 | 653 | |
| | 2007.01-2016.03 | MT | F | R | Bus 4WD RHK (DW10UTED4) | | GDS99214 | Drive Shaft | | 28 | 37 | 58.6 | 94 | 978 | |
| | 2007.01-2016.03 | MT | F | L | Bus 4WD RHK (DW10UTED4) | | GCO10051 | Outer Joint | | 28 | 39 | 58.6 | 94 | 63 | I |
| | 2007.01-2016.03 | MT | F | R | Bus 4WD RHK (DW10UTED4) | | GCO10098 | Outer Joint | | 28 | 39 | 58.6 | 93 | 63 | I |
| | 2007.01-2016.03 | MT | F | L | Bus 4WD RHK (DW10UTED4) | | GCI45032 | Inner Joint | | 37 | 39 | 40 | 68.5 | 100 | |
| | 2007.01-2016.03 | MT | F | R | Bus 4WD RHK (DW10UTED4) | | GCI10041 | Inner Joint | | 37 | 39 | 32 | 399 | 95.5 | |
| | 2007.01-2016.03 | 6MT | F | L | Bus FWD RHK (DW10UTED4) | | GDS45133 | Drive Shaft | | 28 | 37 | 58.6 | 94 | 653 | |
| | 2007.01-2016.03 | 6MT | F | R | Bus FWD RHK (DW10UTED4) | | GDS99214 | Drive Shaft | | 28 | 37 | 58.6 | 94 | 978 | |
| | 2007.01-2016.03 | MT | F | L | Bus FWD RHK (DW10UTED4) | | GCO10051 | Outer Joint | | 28 | 39 | 58.6 | 94 | 63 | I |
| | 2007.01-2016.03 | MT | F | R | Bus FWD RHK (DW10UTED4) | | GCO10098 | Outer Joint | | 28 | 39 | 58.6 | 93 | 63 | I |
| | 2007.01-2016.03 | MT | F | L | Bus FWD RHK (DW10UTED4) | | GCI45032 | Inner Joint | | 37 | 39 | 40 | 68.5 | 100 | |

| | YEAR | TRANSM. | F/R | L/R | BODY STYLE & DRIVE TYPE & ENGINE | REMARKS | G-AP Ref. | PRODUCT | ABS | Technical Specifications A | B | C | H | L | P |
|---|---|---|---|---|---|---|---|---|---|---|---|---|---|---|---|
| **PEUGEOT** | | | | | | | | | | | | | | | |
| **Expert Tepee** | | | | | | | | | | | | | | | |
| 2.0 (88 kw) | 2007.01-2016.03 | MT | F | R | Bus FWD RHK (DW10UTED4) | | GCI10041 | Inner Joint | | 37 | 39 | 32 | 399 | 95.5 | |
| 2.0 (94 kw) | 2011.03- | MT | F | L | Bus FWD AHZ (DW10CD) | | GDS45133 | Drive Shaft | | 28 | 37 | 58.6 | 94 | 653 | |
| | 2011.03- | MT | F | R | Bus FWD AHZ (DW10CD) | | GDS99214 | Drive Shaft | | 28 | 37 | 58.6 | 94 | 978 | |
| | 2011.03- | MT | F | L | Bus FWD AHZ (DW10CD) | | GCO10051 | Outer Joint | | 28 | 39 | 58.6 | 94 | 63 | I |
| | 2011.03- | MT | F | R | Bus FWD AHZ (DW10CD) | | GCO10098 | Outer Joint | | 28 | 39 | 58.6 | 93 | 63 | I |
| | 2011.03- | MT | F | L | Bus FWD AHZ (DW10CD) | | GCI45032 | Inner Joint | | 37 | 39 | 40 | 68.5 | 100 | |
| | 2011.03- | MT | F | R | Bus FWD AHZ (DW10CD) | | GCI10041 | Inner Joint | | 37 | 39 | 32 | 399 | 95.5 | |
| | 2011.03-2016.03 | AT | F | L | Bus 4WD AHZ (DW10CD) | | GDS83137 | Drive Shaft | | 28 | 37 | 59.5 | 94 | 609 | |
| | 2011.03-2016.03 | AT | F | R | Bus 4WD AHZ (DW10CD) | | GDS10416 | Drive Shaft | | 28 | 37 | 59 | 91 | 955 | |
| | 2011.03-2016.03 | AT | F | L | Bus 4WD AHZ (DW10CD) | | GCO82534 | Outer Joint | | 28 | 36 | 59.5 | 94 | 60.5 | I |
| | 2011.03-2016.03 | AT | F | L | Bus 4WD AHZ (DW10CD) | | GCI82416 | Inner Joint | | 37 | 36 | 42.3 | 59.5 | 126 | |
| 2.0 (100 kw) | 2007.01- | 6MT | F | L | Bus FWD RHR (DW10BTED4) | | GDS45133 | Drive Shaft | | 28 | 37 | 58.6 | 94 | 653 | |
| | 2007.01- | 6MT | F | R | Bus FWD RHR (DW10BTED4) | | GDS99214 | Drive Shaft | | 28 | 37 | 58.6 | 94 | 978 | |
| | 2007.01- | 6MT | F | L | Bus FWD RHR (DW10BTED4) | | GCO10051 | Outer Joint | | 28 | 39 | 58.6 | 94 | 63 | I |
| | 2007.01- | 6MT | F | R | Bus FWD RHR (DW10BTED4) | | GCO10098 | Outer Joint | | 28 | 39 | 58.6 | 93 | 63 | I |
| | 2007.01- | 6MT | F | L | Bus FWD RHR (DW10BTED4) | | GCI45032 | Inner Joint | | 37 | 39 | 40 | 68.5 | 100 | |
| | 2007.01- | 6MT | F | R | Bus FWD RHR (DW10BTED4) | | GCI10041 | Inner Joint | | 37 | 39 | 32 | 399 | 95.5 | |
| 2.0 (103 kw) | 2007.01-2016.03 | 5MT | F | L | Bus FWD RFJ (EW10A);RFH (EW10A) | | GDS10238 | Drive Shaft | | 28 | 24 | 58.5 | 92 | 669 | |
| | 2007.01-2016.03 | 5MT | F | R | Bus FWD RFJ (EW10A);RFH (EW10A) | | GDS10239 | Drive Shaft | | 28 | 24 | 58.5 | 92 | 955 | |
| | 2007.01-2016.03 | 5MT | F | L/R | Bus FWD RFJ (EW10A);RFH (EW10A) | | GCO10124 | Outer Joint | | 28 | 34 | 58.5 | 92 | 55 | I |
| | 2007.01-2016.03 | 5MT | F | R | Bus FWD RFJ (EW10A);RFH (EW10A) | | GCI99159 | Inner Joint | | 24 | 34 | 29.8 | 350 | 87.5 | |
| 2.0 (120 kw) | 2009.09- | 6AT | F | L | Bus FWD RHH (DW10CTED4) | | GDS83137 | Drive Shaft | | 28 | 37 | 59.5 | 94 | 609 | |
| | 2009.09- | 6AT | F | R | Bus FWD RHH (DW10CTED4) | | GDS10416 | Drive Shaft | | 28 | 37 | 59 | 91 | 955 | |
| | 2009.09- | 6AT/6MT | F | L | Bus FWD RHH (DW10CTED4) | | GCO10051 | Outer Joint | | 28 | 39 | 58.6 | 94 | 63 | I |
| | 2009.09- | 6AT/6MT | F | R | Bus FWD RHH (DW10CTED4) | | GCO10098 | Outer Joint | | 28 | 39 | 58.6 | 93 | 63 | I |
| | 2009.09- | 6AT/6MT | F | L | Bus FWD RHH (DW10CTED4) | | GCI45032 | Inner Joint | | 37 | 39 | 40 | 68.5 | 100 | |
| | 2009.09- | 6AT/6MT | F | R | Bus FWD RHH (DW10CTED4) | | GCI10041 | Inner Joint | | 37 | 39 | 32 | 399 | 95.5 | |
| | 2009.09- | 6MT | F | L | Bus FWD RHH (DW10CTED4) | | GDS45133 | Drive Shaft | | 28 | 37 | 58.6 | 94 | 653 | |
| | 2009.09- | 6MT | F | R | Bus FWD RHH (DW10CTED4) | | GDS99214 | Drive Shaft | | 28 | 37 | 58.6 | 94 | 978 | |
| **Partner** | | | | | | | | | | | | | | | |
| 1.1 (44 kw) | 1996.06-2002.10 | 5MT | F | L | MPV FWD HDZ (TU1M), HFX (TU1JP) | | GDS10026 | Drive Shaft | | 25 | 22 | 56.7 | 79 | 594 | |
| | 1996.06-2002.10 | 5MT | F | L | MPV FWD HDZ (TU1M), HFX (TU1JP) | | GDS10187 | Drive Shaft | 29T | 25 | 22 | 54.5 | 79.5 | 590.5 | |
| | 1996.06-2002.10 | 5MT | F | R | MPV FWD HDZ (TU1M), HFX (TU1JP) | | GDS10019 | Drive Shaft | 29T | 25 | 22 | 60 | 80 | 867 | |
| | 1996.06-2002.10 | 5MT | F | R | MPV FWD HDZ (TU1M), HFX (TU1JP) | | GCO45036 | Outer Joint | 29T | 25 | 22 | 60 | 80 | 54 | I |
| | 1996.06-2002.10 | 5MT | F | L | MPV FWD HDZ (TU1M), HFX (TU1JP) | | GCI10006 | Inner Joint | | 22 | 22 | 40 | 58.5 | 87 | |
| | 1996.06-2002.10 | MT | F | L | MPV FWD HDZ (TU1M), HFX (TU1JP) | | GDS10075 | Drive Shaft | 29T | 25 | 22 | 54.5 | 79.5 | 587 | |
| | 1996.06-2002.10 | MT | F | R | MPV FWD HDZ (TU1M), HFX (TU1JP) | | GDS10188 | Drive Shaft | 29T | 25 | 22 | 54.5 | 79.5 | 860 | |
| | 1996.06-2002.10 | | F | L | MPV FWD HDZ (TU1M), HFX (TU1JP) | Date From:2000.09 | GDS10021 | Drive Shaft | 29T | 25 | 22 | 60 | 80 | 593 | |
| | 1996.06-2002.10 | | F | R | MPV FWD HDZ (TU1M), HFX (TU1JP) | | GDS10205 | Drive Shaft | | 25 | 22 | 58.5 | 79 | 866 | |
| | 1996.06-2005.09 | 5MT | F | L | Box Body/MPV FWD HDZ (TU1M) | For vehicles with power steering ,For vehicles without ESP | GDS10021 | Drive Shaft | 29T | 25 | 22 | 60 | 80 | 593 | |
| | 1996.06-2005.09 | 5MT | F | L | Box Body/MPV FWD HDZ (TU1M) | | GDS10026 | Drive Shaft | | 25 | 22 | 56.7 | 79 | 594 | |
| | 1996.06-2005.09 | 5MT | F | L | Box Body/MPV FWD HDZ (TU1M) | For vehicles with power steering ,For vehicles without ESP | GDS10187 | Drive Shaft | 29T | 25 | 22 | 54.5 | 79.5 | 590.5 | |
| | 1996.06-2005.09 | 5MT | F | R | Box Body/MPV FWD HDZ (TU1M) | For vehicles with power steering,For vehicles without ESP | GDS10019 | Drive Shaft | 29T | 25 | 22 | 60 | 80 | 867 | |
| | 1996.06-2005.09 | 5MT | F | R | Box Body/MPV FWD HDZ (TU1M) | For vehicles with power steering,For vehicles with ESP | GDS82450 | Drive Shaft | 48T | 25 | 22 | 58.5 | 79.5 | 865 | |
| | 1996.06-2005.09 | 5MT | F | R | Box Body/MPV FWD HDZ (TU1M) | | GCO45036 | Outer Joint | 29T | 25 | 22 | 60 | 80 | 54 | I |
| | 1996.06-2005.09 | 5MT | F | L | Box Body/MPV FWD HDZ (TU1M) | | GCI10006 | Inner Joint | | 22 | 22 | 40 | 58.5 | 87 | |
| | 1996.06-2005.09 | MT | F | L | Box Body/MPV FWD HDZ (TU1M) | | GDS10075 | Drive Shaft | 29T | 25 | 22 | 54.5 | 79.5 | 587 | |
| | 1996.06-2005.09 | | F | R | Box Body/MPV FWD HDZ (TU1M) | | GDS10205 | Drive Shaft | | 25 | 22 | 58.5 | 79 | 866 | |
| 1.2 (81 kw) | 2016.02- | 5MT | F | L | Box Body/MPV FWD HNZ (EB2DT) | | GDS45105 | Drive Shaft | | 25 | 24 | 58 | 79 | 625 | |
| | 2016.02- | 5MT | F | L | Box Body/MPV FWD HNZ (EB2DT) | | GDS45126 | Drive Shaft | | 25 | 24 | 58.5 | 89 | 630 | |
| | 2016.02- | 5MT | F | R | Box Body/MPV FWD HNZ (EB2DT) | | GDS45104 | Drive Shaft | | 25 | 24 | 58 | 79 | 925 | |
| | 2016.02- | 5MT | F | R | Box Body/MPV FWD HNZ (EB2DT) | | GCO45027 | Outer Joint | | 25 | 34 | 58 | 79 | 55.5 | I |
| | 2016.02- | 5MT | F | L | Box Body/MPV FWD HNZ (EB2DT) | | GCI10020 | Inner Joint | | 24 | 34 | 40 | 62.5 | 99 | |
| | 2016.02- | | F | L | Box Body/MPV FWD HNZ (EB2DT) | | GCO99366 | Outer Joint | | 25 | 34 | 58.5 | 79 | 55 | I |
| | 2019.01- | 6MT | F | L | Box Body/MPV FWD HNP (EB2ADT) | | GDS83616 | Drive Shaft | | 28 | 24 | 58.5 | 92.5 | 681 | |
| | 2019.01- | 6MT | F | R | Box Body/MPV FWD HNP (EB2ADT) | | GDS83663 | Drive Shaft | | 28 | 24 | 58.5 | 92.5 | 919 | |
| | 2019.01- | 6MT | F | L/R | Box Body/MPV FWD HNP (EB2ADT) | | GCO82273 | Outer Joint | | 28 | 34 | 58.5 | 92.5 | 56 | I |
| | 2019.01- | 6MT | F | L | Box Body/MPV FWD HNP (EB2ADT) | | GCI82131 | Inner Joint | | 24 | 34 | 40 | 62 | 89 | |
| | 2019.01- | 6MT | F | R | Box Body/MPV FWD HNP (EB2ADT) | | GCI82320 | Inner Joint | | 24 | 34 | 29.8 | 290 | 88 | |
| | 2019.01- | 6MT | F | R | Box Body/MPV FWD HNP (EB2ADT) | | GCI82769 | Inner Joint | | 24 | 34 | 40 | 61 | 103 | |
| 1.2 (96 kw) | 2019.07- | 8AT | F | L | Box Body/MPV FWD HNS (EB2ADTS) | | GDS84579 | Drive Shaft | | 28 | 37 | 58.5 | 92.5 | 641 | |
| | 2019.07- | 8AT | F | R | Box Body/MPV FWD HNS (EB2ADTS) | | GDS84582 | Drive Shaft | | 28 | 37 | 58.5 | 92.5 | 918 | |
| | 2019.07- | 8AT | F | L/R | Box Body/MPV FWD HNS (EB2ADTS) | | GCO82273 | Outer Joint | | 28 | 34 | 58.5 | 92.5 | 56 | I |
| | 2019.07- | 8AT | F | L | Box Body/MPV FWD HNS (EB2ADTS) | | GCI82119 | Inner Joint | | 37 | 34 | 41.5 | 58.5 | 94 | |
| | 2019.07- | 8AT | F | R | Box Body/MPV FWD HNS (EB2ADTS) | | GCI82118 | Inner Joint | | 37 | 34 | | 290 | 88 | |

| | YEAR | TRANSM. | F/R | L/R | BODY STYLE & DRIVE TYPE & ENGINE | REMARKS | G-AP Ref. | PRODUCT | ABS | Technical Specifications A | B | C | H | L | P |
|---|---|---|---|---|---|---|---|---|---|---|---|---|---|---|---|
| **PEUGEOT** **Partner** | | | | | | | | | | | | | | | |
| 1.4 (48 kw) | 2005.10-2010.12 | 5MT | F | L | MPV Van FWD TU3JP | For vehicles without ESP,For vehicles with ABS | GDS10021 | Drive Shaft | 29T | 25 | 22 | 60 | 80 | 593 | |
| | 2005.10-2010.12 | 5MT | F | L | MPV Van FWD TU3JP | For vehicles without ABS | GDS10026 | Drive Shaft | | 25 | 22 | 56.7 | 79 | 594 | |
| | 2005.10-2010.12 | 5MT | F | L | MPV Van FWD TU3JP | For vehicles without ESP,For vehicles with ABS | GDS10187 | Drive Shaft | 29T | 25 | 22 | 54.5 | 79.5 | 590.5 | |
| | 2005.10-2010.12 | 5MT | F | R | MPV Van FWD TU3JP | For vehicles without ESP,For vehicles with ABS | GDS10019 | Drive Shaft | 29T | 25 | 22 | 60 | 80 | 867 | |
| | 2005.10-2010.12 | 5MT | F | R | MPV Van FWD TU3JP | For vehicles without ABS | GDS10205 | Drive Shaft | | 25 | 22 | 58.5 | 79 | 866 | |
| | 2005.10-2010.12 | 5MT | F | R | MPV Van FWD TU3JP | For vehicles with ESP,For vehicles with ABS | GDS82450 | Drive Shaft | 48T | 25 | 22 | 58.5 | 79.5 | 865 | |
| | 2005.10-2010.12 | 5MT | F | R | MPV Van FWD TU3JP | | GCO45036 | Outer Joint | 29T | 25 | 22 | 60 | 80 | 54 | I |
| 1.4 (54 kw) | 2002.11-2006.10 | 5MT | F | L | MPV FWD KFW (TU3JP) | For vehicles without ESP,For vehicles with ABS | GDS10021 | Drive Shaft | 29T | 25 | 22 | 60 | 80 | 593 | |
| | 2002.11-2006.10 | 5MT | F | L | MPV FWD KFW (TU3JP) | For vehicles without ABS | GDS10026 | Drive Shaft | | 25 | 22 | 56.7 | 79 | 594 | |
| | 2002.11-2006.10 | 5MT | F | L | MPV FWD KFW (TU3JP) | For vehicles without ESP,For vehicles with ABS | GDS10187 | Drive Shaft | 29T | 25 | 22 | 54.5 | 79.5 | 590.5 | |
| | 2002.11-2006.10 | 5MT | F | R | MPV FWD KFW (TU3JP) | For vehicles without ESP,For vehicles with ABS | GDS10019 | Drive Shaft | 29T | 25 | 22 | 60 | 80 | 867 | |
| | 2002.11-2006.10 | 5MT | F | R | MPV FWD KFW (TU3JP) | For vehicles without ABS | GDS10205 | Drive Shaft | | 25 | 22 | 58.5 | 79 | 866 | |
| | 2002.11-2006.10 | 5MT | F | R | MPV FWD KFW (TU3JP) | For vehicles with ESP,For vehicles with ABS | GDS82450 | Drive Shaft | 48T | 25 | 22 | 58.5 | 79.5 | 865 | |
| | 2002.11-2006.10 | 5MT | F | R | MPV FWD KFW (TU3JP) | | GCO45036 | Outer Joint | 29T | 25 | 22 | 60 | 80 | 54 | I |
| 1.4 (55 kw) | 1996.06-2015.12 | 5MT | F | L | Box Body/MPV FWD KFX (TU3JP), TU32, KFW (TU3A) | For vehicles without ESP | GDS10021 | Drive Shaft | 29T | 25 | 22 | 60 | 80 | 593 | |
| | 1996.06-2015.12 | 5MT | F | L | Box Body/MPV FWD KFX (TU3JP), TU32, KFW (TU3A) | | GDS10026 | Drive Shaft | | 25 | 22 | 56.7 | 79 | 594 | |
| | 1996.06-2015.12 | 5MT | F | L | Box Body/MPV FWD KFX (TU3JP), TU32, KFW (TU3A) | For vehicles without ESP | GDS10187 | Drive Shaft | 29T | 25 | 22 | 54.5 | 79.5 | 590.5 | |
| | 1996.06-2015.12 | 5MT | F | R | Box Body/MPV FWD KFX (TU3JP), TU32, KFW (TU3A) | For vehicles without ESP | GDS10019 | Drive Shaft | 29T | 25 | 22 | 60 | 80 | 867 | |
| | 1996.06-2015.12 | 5MT | F | R | Box Body/MPV FWD KFX (TU3JP), TU32, KFW (TU3A) | For vehicles with ESP | GDS82450 | Drive Shaft | 48T | 25 | 22 | 58.5 | 79.5 | 865 | |
| | 1996.06-2015.12 | 5MT | F | R | Box Body/MPV FWD KFX (TU3JP), TU32, KFW (TU3A) | | GCO45036 | Outer Joint | 29T | 25 | 22 | 60 | 80 | 54 | I |
| | 1996.06-2015.12 | MT | F | L | Box Body/MPV FWD KFX (TU3JP), TU32, KFW (TU3A) | | GDS10075 | Drive Shaft | 29T | 25 | 22 | 54.5 | 79.5 | 587 | |
| | 1996.06-2015.12 | MT | F | R | Box Body/MPV FWD KFX (TU3JP), TU32, KFW (TU3A) | | GDS10205 | Drive Shaft | | 25 | 22 | 58.5 | 79 | 866 | |
| | 1996.06-2015.12 | 5MT | F | L | MPV FWD KFX (TU3JP), KFW (TU3JP), KFW (TU3A) | For vehicles without ABS | GDS10026 | Drive Shaft | | 25 | 22 | 56.7 | 79 | 594 | |
| | 1996.06-2015.12 | 5MT | F | L | MPV FWD KFX (TU3JP), KFW (TU3JP), KFW (TU3A) | For vehicles without ESP,For vehicles with ABS | GDS10187 | Drive Shaft | 29T | 25 | 22 | 54.5 | 79.5 | 590.5 | |
| | 1996.06-2015.12 | 5MT | F | R | MPV FWD KFX (TU3JP), KFW (TU3JP), KFW (TU3A) | For vehicles without ESP,For vehicles with ABS | GDS10019 | Drive Shaft | 29T | 25 | 22 | 60 | 80 | 867 | |
| | 1996.06-2015.12 | 5MT | F | R | MPV FWD KFX (TU3JP), KFW (TU3JP), KFW (TU3A) | For vehicles without ABS | GDS10205 | Drive Shaft | | 25 | 22 | 58.5 | 79 | 866 | |
| | 1996.06-2015.12 | 5MT | F | R | MPV FWD KFX (TU3JP), KFW (TU3JP), KFW (TU3A) | For vehicles with ESP,For vehicles with ABS | GDS82450 | Drive Shaft | 48T | 25 | 22 | 58.5 | 79.5 | 865 | |
| | 1996.06-2015.12 | 5MT | F | R | MPV FWD KFX (TU3JP), KFW (TU3JP), KFW (TU3A) | | GCO45036 | Outer Joint | 29T | 25 | 22 | 60 | 80 | 54 | I |
| | 1996.06-2015.12 | MT | F | L | MPV FWD KFX (TU3JP), KFW (TU3JP), KFW (TU3A) | | GDS10075 | Drive Shaft | 29T | 25 | 22 | 54.5 | 79.5 | 587 | |
| 1.5 (55 kw) | 2019.07- | 5MT | F | L | Box Body/MPV FWD YHW (DV5RE) | | GDS83616 | Drive Shaft | | 28 | 24 | 58.5 | 92.5 | 681 | |
| | 2019.07- | 5MT | F | R | Box Body/MPV FWD YHW (DV5RE) | | GDS84457 | Drive Shaft | | 28 | 24 | 58.5 | 92.5 | 921 | |
| | 2019.07- | 5MT | F | L/R | Box Body/MPV FWD YHW (DV5RE) | | GCO82273 | Outer Joint | | 28 | 34 | 58.5 | 92.5 | 56 | I |
| | 2019.07- | 5MT | F | L | Box Body/MPV FWD YHW (DV5RE) | | GCI82131 | Inner Joint | | 24 | 34 | 40 | 62 | 89 | |
| | 2019.07- | 5MT | F | R | Box Body/MPV FWD YHW (DV5RE) | | GCI82769 | Inner Joint | | 24 | 34 | 40 | 61 | 103 | |
| | 2019.07- | 6MT | F | R | Box Body/MPV FWD YHW (DV5RE) | | GDS83663 | Drive Shaft | | 28 | 24 | 58.5 | 92.5 | 919 | |
| 1.5 (75 kw) | 2019.07- | 5MT | F | L | Box Body/MPV FWD YHY (DV5RD);YHT (DV5RCF) | | GDS83616 | Drive Shaft | | 28 | 24 | 58.5 | 92.5 | 681 | |
| | 2019.07- | 5MT | F | R | Box Body/MPV FWD YHY (DV5RD);YHT (DV5RCF) | | GDS84457 | Drive Shaft | | 28 | 24 | 58.5 | 92.5 | 921 | |
| | 2019.07- | 5MT | F | L/R | Box Body/MPV FWD YHY (DV5RD);YHT (DV5RCF) | | GCO82273 | Outer Joint | | 28 | 34 | 58.5 | 92.5 | 56 | I |
| | 2019.07- | 5MT | F | L | Box Body/MPV FWD YHY (DV5RD);YHT (DV5RCF) | | GCI82131 | Inner Joint | | 24 | 34 | 40 | 62 | 89 | |
| | 2019.07- | 5MT/6MT | F | R | Box Body/MPV FWD YHY (DV5RD);YHT (DV5RCF) | | GCI82320 | Inner Joint | | 24 | 34 | 29.8 | 290 | 88 | |
| | 2019.07- | 5MT/6MT | F | R | Box Body/MPV FWD YHY (DV5RD);YHT (DV5RCF) | | GCI82769 | Inner Joint | | 24 | 34 | 40 | 61 | 103 | |
| | 2019.07- | 6MT | F | R | Box Body/MPV FWD YHY (DV5RD);YHT (DV5RCF) | For right-hand drive vehicles | GDS83663 | Drive Shaft | | 28 | 24 | 58.5 | 92.5 | 919 | |
| 1.5 (96 kw) | 2018.09- | 5MT | F | R | Box Body/MPV FWD YHZ (DV5RC);YHP (DV5RC) | Trans. code:BE4R | GDS84457 | Drive Shaft | | 28 | 24 | 58.5 | 92.5 | 921 | |
| | 2018.09- | 5MT/6MT | F | L | Box Body/MPV FWD YHZ (DV5RC);YHP (DV5RC) | Trans. code:MB6/BE4R | GDS83616 | Drive Shaft | | 28 | 24 | 58.5 | 92.5 | 681 | |
| | 2018.09- | 6MT | F | L | Box Body/MPV FWD YHZ (DV5RC);YHP (DV5RC) | Trans. code:ML6C | GDS84170 | Drive Shaft | | 28 | 37 | 58.5 | 92.5 | 670 | |
| | 2018.09- | 6MT | F | R | Box Body/MPV FWD YHZ (DV5RC);YHP (DV5RC) | Trans. code:MB6 | GDS83663 | Drive Shaft | | 28 | 24 | 58.5 | 92.5 | 919 | |
| | 2018.09- | 6MT | F | R | Box Body/MPV FWD YHZ (DV5RC);YHP (DV5RC) | Trans. code:ML6C | GDS84336 | Drive Shaft | | 28 | 37 | 58.5 | 92.5 | 930 | |
| | 2018.09- | 6MT | F | L/R | Box Body/MPV FWD YHZ (DV5RC);YHP (DV5RC) | | GCO82273 | Outer Joint | | 28 | 34 | 58.5 | 92.5 | 56 | I |
| | 2018.09- | 6MT | F | L | Box Body/MPV FWD YHZ (DV5RC);YHP (DV5RC) | | GCI82301 | Inner Joint | | 37 | 34 | 40 | 65.5 | 89.5 | |
| | 2018.09- | 6MT | F | R | Box Body/MPV FWD YHZ (DV5RC);YHP (DV5RC) | Trans. code:ML6C | GCI82300 | Inner Joint | | 37 | 34 | 31.9 | 302 | 88 | |
| | 2018.09- | 6MT | F | R | Box Body/MPV FWD YHZ (DV5RC);YHP (DV5RC) | Trans. code:MB6 | GCI82769 | Inner Joint | | 24 | 34 | 40 | 61 | 103 | |
| | 2018.09- | 8AT | F | L | Box Body/MPV FWD YHZ (DV5RC);YHP (DV5RC) | | GDS84579 | Drive Shaft | | 28 | 37 | 58.5 | 92.5 | 641 | |
| | 2018.09- | 8AT | F | R | Box Body/MPV FWD YHZ (DV5RC);YHP (DV5RC) | | GDS84582 | Drive Shaft | | 28 | 37 | 58.5 | 92.5 | 918 | |
| | 2018.09- | 8AT | F | L | Box Body/MPV FWD YHZ (DV5RC);YHP (DV5RC) | | GCI82119 | Inner Joint | | 37 | 34 | 41.5 | 58.5 | 94 | |
| | 2018.09- | 8AT | F | R | Box Body/MPV FWD YHZ (DV5RC);YHP (DV5RC) | | GCI82118 | Inner Joint | | 37 | 34 | | 290 | 88 | |
| 1.6 (55 kw) | 2005.08-2008.07 | 5MT | F | L | MPV FWD DV6BTED4 | | GDS99195 | Drive Shaft | 48W | 25 | 24 | 58.5 | 79 | 585 | |
| | 2005.08-2008.07 | 5MT | F | R | MPV FWD DV6BTED4 | | GDS99196 | Drive Shaft | 48W | 25 | 24 | 58.5 | 79 | 869 | |
| | 2005.08-2008.07 | 5MT | F | L | MPV FWD DV6BTED4 | | GCI10020 | Inner Joint | | 24 | 34 | 40 | 62.5 | 99 | |
| | 2005.08-2008.07 | MT | F | L/R | MPV FWD DV6BTED4 | Date from:2006.01 | GCO10027 | Outer Joint | 48T | 25 | 34 | 55.7 | 79 | 55 | I |
| | 2005.08-2008.07 | MT | F | L | MPV Van FWD DV6ETEDM | | GDS99195 | Drive Shaft | 48W | 25 | 24 | 58.5 | 79 | 585 | |
| | 2005.08-2008.07 | MT | F | R | MPV Van FWD DV6ETEDM | | GDS99196 | Drive Shaft | 48W | 25 | 24 | 58.5 | 79 | 869 | |
| | 2005.08-2008.07 | MT | F | L | MPV Van FWD DV6ETEDM | | GCO10067 | Outer Joint | 48W | 25 | 34 | 58.5 | 79 | 55 | I |
| | 2005.08-2008.07 | MT | F | L | MPV Van FWD DV6ETEDM | | GCI10020 | Inner Joint | | 24 | 34 | 40 | 62.5 | 99 | |
| | 2005.08-2011.12 | 5MT | F | L | Box Body/MPV FWD 9HW (DV6BTED4) | | GDS99195 | Drive Shaft | 48W | 25 | 24 | 58.5 | 79 | 585 | |
| | 2005.08-2011.12 | 5MT | F | R | Box Body/MPV FWD 9HW (DV6BTED4) | | GDS99196 | Drive Shaft | 48W | 25 | 24 | 58.5 | 79 | 869 | |

| | YEAR | TRANSM. | F/R | L/R | BODY STYLE & DRIVE TYPE & ENGINE | REMARKS | G-AP Ref. | PRODUCT | ABS | Technical Specifications A | B | C | H | L | P |
|---|---|---|---|---|---|---|---|---|---|---|---|---|---|---|---|
| **PEUGEOT** **Partner** | | | | | | | | | | | | | | | |
| 1.6 (55 kw) | 2005.08-2011.12 | 5MT | F | L/R | Box Body/MPV FWD 9HW (DV6BTED4) | for vehicles with ESP | GCO10067 | Outer Joint | 48W | 25 | 34 | 58.5 | 79 | 55 | I |
| | 2005.08-2011.12 | 5MT | F | L | Box Body/MPV FWD 9HW (DV6BTED4) | | GCI10020 | Inner Joint | | 24 | 34 | 40 | 62.5 | 99 | |
| | 2005.08-2011.12 | MT | F | L/R | Box Body/MPV FWD 9HW (DV6BTED4) | Date from:2006.01 | GCO10027 | Outer Joint | 48T | 25 | 34 | 55.7 | 79 | 55 | I |
| | 2005.08-2011.12 | | F | L | Box Body/MPV FWD 9HW (DV6BTED4) | | GDS10080 | Drive Shaft | 29W | 25 | 24 | 55.7 | 79 | 597 | |
| | 2005.08-2011.12 | | F | R | Box Body/MPV FWD 9HW (DV6BTED4) | | GDS10078 | Drive Shaft | 29W | 25 | 24 | 55.7 | 79 | 872 | |
| | 2005.08-2011.12 | | F | | Box Body/MPV FWD 9HW (DV6BTED4) | | GCO10042 | Outer Joint | | 25 | 34 | 54.8 | 78.5 | 56 | I |
| | 2006.02-2008.07 | MT | F | L | Platform/Chassis FWD | | GDS99195 | Drive Shaft | 48W | 25 | 24 | 58.5 | 79 | 585 | |
| | 2006.02-2008.07 | MT | F | L | Platform/Chassis FWD | | GCO10067 | Outer Joint | 48W | 25 | 34 | 58.5 | 79 | 55 | I |
| | 2006.02-2008.07 | MT | F | L | Platform/Chassis FWD | | GCI10020 | Inner Joint | | 24 | 34 | 40 | 62.5 | 99 | |
| | 2006.02-2008.07 | | F | R | Platform/Chassis FWD | | GDS99196 | Drive Shaft | 48W | 25 | 24 | 58.5 | 79 | 869 | |
| | 2008.04- | 5MT | F | R | Box Body/MPV FWD 9HT (DV6BTED4);9HW (DV6BTED4);9HT (DV6BUTED4) | | GDS45104 | Drive Shaft | | 25 | 24 | 58 | 79 | 925 | |
| | 2008.04- | 5MT | F | R | Box Body/MPV FWD 9HT (DV6BTED4);9HW (DV6BTED4);9HT (DV6BUTED4) | | GCO45027 | Outer Joint | | 25 | 34 | 58 | 79 | 55.5 | I |
| | 2008.04- | MT | F | L | Box Body/MPV FWD 9HT (DV6BTED4);9HW (DV6BTED4);9HT (DV6BUTED4) | | GDS45105 | Drive Shaft | | 25 | 24 | 58 | 79 | 625 | |
| | 2008.04- | MT | F | L | Box Body/MPV FWD 9HT (DV6BTED4);9HW (DV6BTED4);9HT (DV6BUTED4) | | GDS45126 | Drive Shaft | | 25 | 24 | 58.5 | 89 | 630 | |
| | 2008.04- | MT | F | L/R | Box Body/MPV FWD 9HT (DV6BTED4);9HW (DV6BTED4);9HT (DV6BUTED4) | | GCO99366 | Outer Joint | | 25 | 34 | 58.5 | 79 | 55 | I |
| | 2008.04- | MT | F | L | Box Body/MPV FWD 9HT (DV6BTED4);9HW (DV6BTED4);9HT (DV6BUTED4) | | GCI10020 | Inner Joint | | 24 | 34 | 40 | 62.5 | 99 | |
| | 2008.04- | | F | L/R | Box Body/MPV FWD 9HT (DV6BTED4);9HW (DV6BTED4);9HT (DV6BUTED4) | | GCO10042 | Outer Joint | | 25 | 34 | 54.8 | 78.5 | 56 | I |
| | 2009.01- | 5MT | F | L | Platform/Chassis FWD 9HT (DV6BTED4) | | GDS45105 | Drive Shaft | | 25 | 24 | 58 | 79 | 625 | |
| | 2009.01- | 5MT | F | L | Platform/Chassis FWD 9HT (DV6BTED4) | | GDS45126 | Drive Shaft | | 25 | 24 | 58.5 | 89 | 630 | |
| | 2009.01- | 5MT | F | R | Platform/Chassis FWD 9HT (DV6BTED4) | | GDS45104 | Drive Shaft | | 25 | 24 | 58 | 79 | 925 | |
| | 2009.01- | 5MT | F | R | Platform/Chassis FWD 9HT (DV6BTED4) | | GCO45027 | Outer Joint | | 25 | 34 | 58 | 79 | 55.5 | I |
| | 2009.01- | | F | L/R | Platform/Chassis FWD 9HT (DV6BTED4) | | GCO99366 | Outer Joint | | 25 | 34 | 58.5 | 79 | 55 | I |
| | 2011.07- | 5MT | F | R | Box Body/MPV FWD 9HK (DV6ETEDM);BHW (DV6FE);9HN (DV6ETED) | | GDS45104 | Drive Shaft | | 25 | 24 | 58 | 79 | 925 | |
| | 2011.07- | 5MT | F | R | Box Body/MPV FWD 9HK (DV6ETEDM);BHW (DV6FE);9HN (DV6ETED) | | GCO45027 | Outer Joint | | 25 | 34 | 58 | 79 | 55.5 | I |
| | 2011.07- | AT | F | L | Box Body/MPV FWD 9HK (DV6ETEDM);BHW (DV6FE);9HN (DV6ETED) | Date from:2012.01 | GDS10255 | Drive Shaft | | 25 | 24 | 58.5 | 79 | 616 | |
| | 2011.07- | AT | F | R | Box Body/MPV FWD 9HK (DV6ETEDM);BHW (DV6FE);9HN (DV6ETED) | Date from:2012.01 | GDS10254 | Drive Shaft | | 25 | 24 | 58.5 | 79 | 939 | |
| | 2011.07- | MT | F | L | Box Body/MPV FWD 9HK (DV6ETEDM);BHW (DV6FE);9HN (DV6ETED) | | GDS45105 | Drive Shaft | | 25 | 24 | 58 | 79 | 625 | |
| | 2011.07- | MT | F | L | Box Body/MPV FWD 9HK (DV6ETEDM);BHW (DV6FE);9HN (DV6ETED) | | GDS45126 | Drive Shaft | | 25 | 24 | 58.5 | 89 | 630 | |
| | 2011.07- | MT | F | L/R | Box Body/MPV FWD 9HK (DV6ETEDM);BHW (DV6FE);9HN (DV6ETED) | | GCO99366 | Outer Joint | | 25 | 34 | 58.5 | 79 | 55 | I |
| | 2011.07- | | F | L/R | Box Body/MPV FWD 9HK (DV6ETEDM);BHW (DV6FE);9HN (DV6ETED) | | GCO10042 | Outer Joint | | 25 | 34 | 54.8 | 78.5 | 56 | I |
| | 2018.09- | 5MT | F | L | Box Body/MPV FWD BHW (DV6FE) | | GDS83616 | Drive Shaft | | 28 | 24 | 58.5 | 92.5 | 681 | |
| | 2018.09- | 5MT | F | R | Box Body/MPV FWD BHW (DV6FE) | | GDS83663 | Drive Shaft | | 28 | 24 | 58.5 | 92.5 | 919 | |
| | 2018.09- | 5MT | F | L/R | Box Body/MPV FWD BHW (DV6FE) | | GCO82273 | Outer Joint | | 28 | 34 | 58.5 | 92.5 | 56 | I |
| | 2018.09- | 5MT | F | L | Box Body/MPV FWD BHW (DV6FE) | | GCI82131 | Inner Joint | | 24 | 34 | 40 | 62 | 89 | |
| | 2018.09- | 5MT | F | R | Box Body/MPV FWD BHW (DV6FE) | | GCI82320 | Inner Joint | | 24 | 34 | 29.8 | 290 | 88 | |
| | 2018.09- | 5MT | F | R | Box Body/MPV FWD BHW (DV6FE) | | GCI82769 | Inner Joint | | 24 | 34 | 40 | 61 | 103 | |
| 1.6 (66 kw) | 2005.08-2015.12 | 5MT | F | L | Box Body/MPV FWD 9HX (DV6ATED4) | | GDS99195 | Drive Shaft | 48W | 25 | 24 | 58.5 | 79 | 585 | |
| | 2005.08-2015.12 | 5MT | F | R | Box Body/MPV FWD 9HX (DV6ATED4) | | GDS99196 | Drive Shaft | 48W | 25 | 24 | 58.5 | 79 | 869 | |
| | 2005.08-2015.12 | 5MT | F | L/R | Box Body/MPV FWD 9HX (DV6ATED4) | | GCO10067 | Outer Joint | 48W | 25 | 34 | 58.5 | 79 | 55 | I |
| | 2005.08-2015.12 | 5MT | F | L | Box Body/MPV FWD 9HX (DV6ATED4) | | GCI10020 | Inner Joint | | 24 | 34 | 40 | 62.5 | 99 | |
| | 2005.08-2015.12 | AT | F | L | Box Body/MPV FWD 9HX (DV6ATED4) | Date from:2006.01 | GDS10255 | Drive Shaft | | 25 | 24 | 58.5 | 79 | 616 | |
| | 2005.08-2015.12 | AT | F | R | Box Body/MPV FWD 9HX (DV6ATED4) | Date from:2006.01 | GDS10254 | Drive Shaft | | 25 | 24 | 58.5 | 79 | 939 | |
| | 2005.08-2015.12 | MT | F | L/R | Box Body/MPV FWD 9HX (DV6ATED4) | Date from:2006.01 | GCO10027 | Outer Joint | 48T | 25 | 34 | 55.7 | 79 | 55 | I |
| | 2005.08-2015.12 | | F | L | Box Body/MPV FWD 9HX (DV6ATED4) | | GDS10080 | Drive Shaft | 29W | 25 | 24 | 55.7 | 79 | 597 | |
| | 2005.08-2015.12 | | F | R | Box Body/MPV FWD 9HX (DV6ATED4) | | GDS10078 | Drive Shaft | 29W | 25 | 24 | 55.7 | 79 | 872 | |
| | 2005.08-2015.12 | | F | | Box Body/MPV FWD 9HX (DV6ATED4) | | GCO10022 | Outer Joint | 29W | 25 | 34 | 55.7 | 79 | 55 | I |
| | 2005.08-2015.12 | | F | | Box Body/MPV FWD 9HX (DV6ATED4) | | GCO10042 | Outer Joint | | 25 | 34 | 54.8 | 78.5 | 56 | I |
| | 2005.08-2015.12 | 5MT | F | L | MPV FWD 9HX (DV6ATED4) | | GDS99195 | Drive Shaft | 48W | 25 | 24 | 58.5 | 79 | 585 | |
| | 2005.08-2015.12 | 5MT | F | R | MPV FWD 9HX (DV6ATED4) | | GDS99196 | Drive Shaft | 48W | 25 | 24 | 58.5 | 79 | 869 | |
| | 2005.08-2015.12 | 5MT | F | L/R | MPV FWD 9HX (DV6ATED4) | | GCO10067 | Outer Joint | 48W | 25 | 34 | 58.5 | 79 | 55 | I |
| | 2005.08-2015.12 | 5MT | F | L | MPV FWD 9HX (DV6ATED4) | | GCI10020 | Inner Joint | | 24 | 34 | 40 | 62.5 | 99 | |
| | 2005.08-2015.12 | AT | F | L | MPV FWD 9HX (DV6ATED4) | | GDS10255 | Drive Shaft | | 25 | 24 | 58.5 | 79 | 616 | |
| | 2005.08-2015.12 | AT | F | R | MPV FWD 9HX (DV6ATED4) | | GDS10254 | Drive Shaft | | 25 | 24 | 58.5 | 79 | 939 | |
| | 2005.08-2015.12 | MT | F | L/R | MPV FWD 9HX (DV6ATED4) | | GCO10027 | Outer Joint | 48T | 25 | 34 | 55.7 | 79 | 55 | I |
| | 2008.04- | 5MT | F | L | Box Body/MPV FWD 9HS (DV6TED4BU);9HX (DV6AUTED4) | | GDS45126 | Drive Shaft | | 25 | 24 | 58.5 | 89 | 630 | |
| | 2008.04- | 5MT | F | R | Box Body/MPV FWD 9HS (DV6TED4BU);9HX (DV6AUTED4) | | GDS45104 | Drive Shaft | | 25 | 24 | 58 | 79 | 925 | |
| | 2008.04- | 5MT | F | R | Box Body/MPV FWD 9HS (DV6TED4BU);9HX (DV6AUTED4) | | GCO45027 | Outer Joint | | 25 | 34 | 58 | 79 | 55.5 | I |
| | 2008.04- | AT | F | L | Box Body/MPV FWD 9HS (DV6TED4BU);9HX (DV6AUTED4) | Trans. code:MC | GDS10255 | Drive Shaft | | 25 | 24 | 58.5 | 79 | 616 | |
| | 2008.04- | AT | F | R | Box Body/MPV FWD 9HS (DV6TED4BU);9HX (DV6AUTED4) | Trans. code:MC | GDS10254 | Drive Shaft | | 25 | 24 | 58.5 | 79 | 939 | |
| | 2008.04- | AT | F | L | Box Body/MPV FWD 9HS (DV6TED4BU);9HX (DV6AUTED4) | | GCI10057 | Inner Joint | | 24 | 34 | 40 | 52.5 | 90 | |
| | 2008.04- | AT | F | R | Box Body/MPV FWD 9HS (DV6TED4BU);9HX (DV6AUTED4) | | GCI10058 | Inner Joint | | 24 | 34 | 29.8 | 365 | 88 | |
| | 2008.04- | AT/MT | F | L/R | Box Body/MPV FWD 9HS (DV6TED4BU);9HX (DV6AUTED4) | | GCO99366 | Outer Joint | | 25 | 34 | 58.5 | 79 | 55 | I |
| | 2008.04- | MT | F | L | Box Body/MPV FWD 9HS (DV6TED4BU);9HX (DV6AUTED4) | | GDS45105 | Drive Shaft | | 25 | 24 | 58 | 79 | 625 | |
| | 2008.04- | | F | L/R | Box Body/MPV FWD 9HS (DV6TED4BU);9HX (DV6AUTED4) | | GCO10042 | Outer Joint | | 25 | 34 | 54.8 | 78.5 | 56 | I |
| | 2008.04- | 5MT | F | L | Box Body/MPV FWD NFR (TU5JP4B) | | GDS45126 | Drive Shaft | | 25 | 24 | 58.5 | 89 | 630 | |

| | YEAR | TRANSM. | F/R | L/R | BODY STYLE & DRIVE TYPE & ENGINE | REMARKS | G-AP Ref. | PRODUCT | ABS | Technical Specifications A | B | C | H | L | P |
|---|---|---|---|---|---|---|---|---|---|---|---|---|---|---|---|
| **PEUGEOT** **Partner** | | | | | | | | | | | | | | | |
| 1.6 (66 kw) | 2008.04- | 5MT | F | R | Box Body/MPV FWD NFR (TU5JP4B) | | GDS45104 | Drive Shaft | | 25 | 24 | 58 | 79 | 925 | |
| | 2008.04- | 5MT | F | R | Box Body/MPV FWD NFR (TU5JP4B) | | GCO45027 | Outer Joint | | 25 | 34 | 58 | 79 | 55.5 | I |
| | 2008.04- | 5MT | F | L/R | Box Body/MPV FWD NFR (TU5JP4B) | | GCO99366 | Outer Joint | | 25 | 34 | 58.5 | 79 | 55 | I |
| | 2008.04- | AT | F | L | Box Body/MPV FWD NFR (TU5JP4B) | | GDS10255 | Drive Shaft | | 25 | 24 | 58.5 | 79 | 616 | |
| | 2008.04- | AT | F | R | Box Body/MPV FWD NFR (TU5JP4B) | | GDS10254 | Drive Shaft | | 25 | 24 | 58.5 | 79 | 939 | |
| | 2008.04- | MT | F | L | Box Body/MPV FWD NFR (TU5JP4B) | Trans. code:BE4R;Type:8MN04 | GDS45105 | Drive Shaft | | 25 | 24 | 58 | 79 | 625 | |
| | 2008.04- | | F | L/R | Box Body/MPV FWD NFR (TU5JP4B) | | GCO10042 | Outer Joint | | 25 | 34 | 54.8 | 78.5 | 56 | I |
| | 2009.01- | 5MT | F | L | Platform/Chassis FWD 9HS (DV6TED4BU);9HX (DV6AUTED4) | Trans. code:MC | GDS10255 | Drive Shaft | | 25 | 24 | 58.5 | 79 | 616 | |
| | 2009.01- | 5MT | F | L | Platform/Chassis FWD 9HS (DV6TED4BU);9HX (DV6AUTED4) | | GDS45105 | Drive Shaft | | 25 | 24 | 58 | 79 | 625 | |
| | 2009.01- | 5MT | F | R | Platform/Chassis FWD 9HS (DV6TED4BU);9HX (DV6AUTED4) | Trans. code:MC | GDS10254 | Drive Shaft | | 25 | 24 | 58.5 | 79 | 939 | |
| | 2009.01- | 5MT | F | R | Platform/Chassis FWD 9HS (DV6TED4BU);9HX (DV6AUTED4) | | GDS45104 | Drive Shaft | | 25 | 24 | 58 | 79 | 925 | |
| | 2009.01- | 5MT | F | R | Platform/Chassis FWD 9HS (DV6TED4BU);9HX (DV6AUTED4) | | GCO45027 | Outer Joint | | 25 | 34 | 58 | 79 | 55.5 | I |
| | 2009.01- | 5MT | F | L | Platform/Chassis FWD 9HS (DV6TED4BU);9HX (DV6AUTED4) | | GCI10020 | Inner Joint | | 24 | 34 | 40 | 62.5 | 99 | |
| | 2009.01- | MT | F | L | Platform/Chassis FWD 9HS (DV6TED4BU);9HX (DV6AUTED4) | | GDS45126 | Drive Shaft | | 25 | 24 | 58.5 | 89 | 630 | |
| | 2009.01- | MT | F | L/R | Platform/Chassis FWD 9HS (DV6TED4BU);9HX (DV6AUTED4) | | GCO99366 | Outer Joint | | 25 | 34 | 58.5 | 79 | 55 | I |
| | 2009.09- | MT | F | L | MPV Van 4WD DV6ATED4/DV6AUTED4/DV6TED4BU | | GDS45105 | Drive Shaft | | 25 | 24 | 58 | 79 | 625 | |
| | 2009.09- | MT | F | L | MPV Van 4WD DV6ATED4/DV6AUTED4/DV6TED4BU | | GDS45126 | Drive Shaft | | 25 | 24 | 58.5 | 89 | 630 | |
| | 2009.09- | MT | F | R | MPV Van 4WD DV6ATED4/DV6AUTED4/DV6TED4BU | | GDS45104 | Drive Shaft | | 25 | 24 | 58 | 79 | 925 | |
| | 2009.09- | MT | F | L | MPV Van 4WD DV6ATED4/DV6AUTED4/DV6TED4BU | | GCO45038 | Outer Joint | | 25 | 34 | 58.5 | 89 | 55 | I |
| | 2009.09- | MT | F | L/R | MPV Van 4WD DV6ATED4/DV6AUTED4/DV6TED4BU | | GCO45027 | Outer Joint | | 25 | 34 | 58 | 79 | 55.5 | I |
| | 2009.09- | MT | F | L | MPV Van 4WD DV6ATED4/DV6AUTED4/DV6TED4BU | | GCI10020 | Inner Joint | | 24 | 34 | 40 | 62.5 | 99 | |
| | 2011.12- | 5MT | F | L | Box Body/MPV FWD 9HF (DV6DTED) | | GDS45105 | Drive Shaft | | 25 | 24 | 58 | 79 | 625 | |
| | 2011.12- | 5MT | F | L | Box Body/MPV FWD 9HF (DV6DTED) | | GDS45126 | Drive Shaft | | 25 | 24 | 58.5 | 89 | 630 | |
| | 2011.12- | 5MT | F | R | Box Body/MPV FWD 9HF (DV6DTED) | | GDS45104 | Drive Shaft | | 25 | 24 | 58 | 79 | 925 | |
| | 2011.12- | 5MT | F | R | Box Body/MPV FWD 9HF (DV6DTED) | | GCO45027 | Outer Joint | | 25 | 34 | 58 | 79 | 55.5 | I |
| | 2011.12- | 5MT | F | L/R | Box Body/MPV FWD 9HF (DV6DTED) | | GCO99366 | Outer Joint | | 25 | 34 | 58.5 | 79 | 55 | I |
| | 2011.12- | 6AMT | F | L | Box Body/MPV FWD 9HF (DV6DTED) | | GDS10255 | Drive Shaft | | 25 | 24 | 58.5 | 79 | 616 | |
| | 2011.12- | 6AT | F | L | Box Body/MPV FWD 9HF (DV6DTED) | | GCO10075 | Outer Joint | | 25 | 26 | 58.5 | 89 | 63 | M |
| | 2011.12- | 6MT | F | R | Box Body/MPV FWD 9HF (DV6DTED) | | GDS10254 | Drive Shaft | | 25 | 24 | 58.5 | 79 | 939 | |
| | 2011.12- | 6MT | F | L | Box Body/MPV FWD 9HF (DV6DTED) | | GCI10057 | Inner Joint | | 24 | 34 | 40 | 52.5 | 90 | |
| | 2011.12- | 6MT | F | R | Box Body/MPV FWD 9HF (DV6DTED) | | GCI10058 | Inner Joint | | 24 | 34 | 29.8 | 365 | 88 | |
| | 2011.12- | | F | L/R | Box Body/MPV FWD 9HF (DV6DTED) | | GCO10042 | Outer Joint | | 25 | 34 | 54.8 | 78.5 | 56 | I |
| | 2013.03- | 5MT | F | R | Platform/Chassis FWD 9HF (DV6DTED) | | GDS45104 | Drive Shaft | | 25 | 24 | 58 | 79 | 925 | |
| | 2013.03- | 5MT | F | R | Platform/Chassis FWD 9HF (DV6DTED) | | GCO45027 | Outer Joint | | 25 | 34 | 58 | 79 | 55.5 | I |
| | 2013.03- | MT | F | L | Platform/Chassis FWD 9HF (DV6DTED) | Date from:2015.04 | GDS45105 | Drive Shaft | | 25 | 24 | 58 | 79 | 625 | |
| | 2013.03- | MT | F | L | Platform/Chassis FWD 9HF (DV6DTED) | Date from:2015.04 | GDS45126 | Drive Shaft | | 25 | 24 | 58.5 | 89 | 630 | |
| | 2013.03- | MT | F | L/R | Platform/Chassis FWD 9HF (DV6DTED) | | GCO99366 | Outer Joint | | 25 | 34 | 58.5 | 79 | 55 | I |
| 1.6 (68 kw) | 2009.11-2010.12 | MT | F | L | MPV FWD DV6DTED/DV6DTEDM | | GDS99195 | Drive Shaft | 48W | 25 | 24 | 58.5 | 79 | 585 | |
| | 2009.11-2010.12 | MT | F | R | MPV FWD DV6DTED/DV6DTEDM | | GDS99196 | Drive Shaft | 48W | 25 | 24 | 58.5 | 79 | 869 | |
| | 2009.11-2010.12 | MT | F | L | MPV FWD DV6DTED/DV6DTEDM | | GCO10067 | Outer Joint | 48W | 25 | 34 | 58.5 | 79 | 55 | I |
| | 2009.11-2010.12 | MT | F | L | MPV FWD DV6DTED/DV6DTEDM | | GCI10020 | Inner Joint | | 24 | 34 | 40 | 62.5 | 99 | |
| | 2009.11-2010.12 | MT | F | L | MPV Van FWD DV6DTED/DV6DTEDM | | GDS99195 | Drive Shaft | 48W | 25 | 24 | 58.5 | 79 | 585 | |
| | 2009.11-2010.12 | MT | F | R | MPV Van FWD DV6DTED/DV6DTEDM | | GDS99196 | Drive Shaft | 48W | 25 | 24 | 58.5 | 79 | 869 | |
| | 2009.11-2010.12 | MT | F | L | MPV Van FWD DV6DTED/DV6DTEDM | | GCO10067 | Outer Joint | 48W | 25 | 34 | 58.5 | 79 | 55 | I |
| | 2009.11-2010.12 | MT | F | L | MPV Van FWD DV6DTED/DV6DTEDM | | GCI10020 | Inner Joint | | 24 | 34 | 40 | 62.5 | 99 | |
| | 2010.04- | 5MT | F | R | Box Body/MPV FWD 9HP (DV6DTED);9HJ (DV6DTEDM) | | GDS45104 | Drive Shaft | | 25 | 24 | 58 | 79 | 925 | |
| | 2010.04- | 5MT | F | R | Box Body/MPV FWD 9HP (DV6DTED);9HJ (DV6DTEDM) | | GCO45027 | Outer Joint | | 25 | 34 | 58 | 79 | 55.5 | I |
| | 2010.04- | AT | F | L | Box Body/MPV FWD 9HP (DV6DTED);9HJ (DV6DTEDM) | | GDS10255 | Drive Shaft | | 25 | 24 | 58.5 | 79 | 616 | |
| | 2010.04- | AT | F | R | Box Body/MPV FWD 9HP (DV6DTED);9HJ (DV6DTEDM) | | GDS10254 | Drive Shaft | | 25 | 24 | 58.5 | 79 | 939 | |
| | 2010.04- | MT | F | L | Box Body/MPV FWD 9HP (DV6DTED);9HJ (DV6DTEDM) | Date from:2011.05 | GDS45105 | Drive Shaft | | 25 | 24 | 58 | 79 | 625 | |
| | 2010.04- | MT | F | L | Box Body/MPV FWD 9HP (DV6DTED);9HJ (DV6DTEDM) | Date from:2011.05 | GDS45126 | Drive Shaft | | 25 | 24 | 58.5 | 89 | 630 | |
| | 2010.04- | MT | F | L/R | Box Body/MPV FWD 9HP (DV6DTED);9HJ (DV6DTEDM) | | GCO99366 | Outer Joint | | 25 | 34 | 58.5 | 79 | 55 | I |
| | 2010.04- | | F | L/R | Box Body/MPV FWD 9HP (DV6DTED);9HJ (DV6DTEDM) | | GCO10042 | Outer Joint | | 25 | 34 | 54.8 | 78.5 | 56 | I |
| | 2010.04- | 5MT | F | L | Box Body/MPV FWD 9HX (DV6ATED4) | | GDS45126 | Drive Shaft | | 25 | 24 | 58.5 | 89 | 630 | |
| | 2010.04- | 5MT | F | R | Box Body/MPV FWD 9HX (DV6ATED4) | | GDS45104 | Drive Shaft | | 25 | 24 | 58 | 79 | 925 | |
| | 2010.04- | 5MT | F | R | Box Body/MPV FWD 9HX (DV6ATED4) | | GCO45027 | Outer Joint | | 25 | 34 | 58 | 79 | 55.5 | I |
| | 2010.04- | AT | F | L | Box Body/MPV FWD 9HX (DV6ATED4) | | GDS10255 | Drive Shaft | | 25 | 24 | 58.5 | 79 | 616 | |
| | 2010.04- | AT | F | R | Box Body/MPV FWD 9HX (DV6ATED4) | | GDS10254 | Drive Shaft | | 25 | 24 | 58.5 | 79 | 939 | |
| | 2010.04- | AT/MT | F | L/R | Box Body/MPV FWD 9HX (DV6ATED4) | | GCO99366 | Outer Joint | | 25 | 34 | 58.5 | 79 | 55 | I |
| | 2010.04- | MT | F | L | Box Body/MPV FWD 9HX (DV6ATED4) | | GDS45105 | Drive Shaft | | 25 | 24 | 58 | 79 | 625 | |
| | 2010.04- | | F | L | Box Body/MPV FWD 9HX (DV6ATED4) | | GCI10057 | Inner Joint | | 24 | 34 | 40 | 52.5 | 90 | |
| | 2010.04- | | F | R | Box Body/MPV FWD 9HX (DV6ATED4) | | GCI10058 | Inner Joint | | 24 | 34 | 29.8 | 365 | 88 | |
| | 2018.09- | 5MT | F | R | Box Body/MPV FWD 9HP (DV6DTED);BHN (DV6DR) | Trans. code:BE4R,Engine code:DV6DTED | GDS84457 | Drive Shaft | | 28 | 24 | 58.5 | 92.5 | 921 | |
| | 2018.09- | 5MT | F | R | Box Body/MPV FWD 9HP (DV6DTED);BHN (DV6DR) | | GCI82769 | Inner Joint | | 24 | 34 | 40 | 61 | 103 | |
| | 2018.09- | 5MT/6MT | F | L | Box Body/MPV FWD 9HP (DV6DTED);BHN (DV6DR) | Trans. code:MB6/BE4R | GDS83616 | Drive Shaft | | 28 | 24 | 58.5 | 92.5 | 681 | |

| | YEAR | TRANSM. | F/R | L/R | BODY STYLE & DRIVE TYPE & ENGINE | REMARKS | G-AP Ref. | PRODUCT | ABS | Technical Specifications A | B | C | H | L | P |
|---|---|---|---|---|---|---|---|---|---|---|---|---|---|---|---|
| **PEUGEOT** **Partner** | | | | | | | | | | | | | | | |
| 1.6 (68 kw) | 2018.09- | 6MT | F | R | Box Body/MPV FWD 9HP (DV6DTED);BHN (DV6DR) | Trans. code:MB6 | GDS83663 | Drive Shaft | | 28 | 24 | 58.5 | 92.5 | 919 | |
| 1.6 (72 kw) | 2010.11- | 5MT | F | L | Box Body/MPV FWD 5FK (EP6CB) | Trans. code:MC | GDS10255 | Drive Shaft | | 25 | 24 | 58.5 | 79 | 616 | |
| | 2010.11- | 5MT | F | L | Box Body/MPV FWD 5FK (EP6CB) | | GDS45105 | Drive Shaft | | 25 | 24 | 58 | 79 | 625 | |
| | 2010.11- | 5MT | F | L | Box Body/MPV FWD 5FK (EP6CB) | | GDS45126 | Drive Shaft | | 25 | 24 | 58.5 | 89 | 630 | |
| | 2010.11- | 5MT | F | R | Box Body/MPV FWD 5FK (EP6CB) | Trans. code:MC | GDS10254 | Drive Shaft | | 25 | 24 | 58.5 | 79 | 939 | |
| | 2010.11- | 5MT | F | R | Box Body/MPV FWD 5FK (EP6CB) | | GDS45104 | Drive Shaft | | 25 | 24 | 58 | 79 | 925 | |
| | 2010.11- | MT | F | R | Box Body/MPV FWD 5FK (EP6CB) | | GCO45027 | Outer Joint | | 25 | 34 | 58 | 79 | 55.5 | I |
| | 2010.11- | MT | F | L/R | Box Body/MPV FWD 5FK (EP6CB) | | GCO99366 | Outer Joint | | 25 | 34 | 58.5 | 79 | 55 | I |
| | 2010.11- | | F | L/R | Box Body/MPV FWD 5FK (EP6CB) | | GCO10042 | Outer Joint | | 25 | 34 | 54.8 | 78.5 | 56 | I |
| | 2010.11- | | F | L | Box Body/MPV FWD 5FK (EP6CB) | | GCI10057 | Inner Joint | | 24 | 34 | 40 | 52.5 | 90 | |
| | 2010.11- | | F | R | Box Body/MPV FWD 5FK (EP6CB) | | GCI10058 | Inner Joint | | 24 | 34 | 29.8 | 365 | 88 | |
| 1.6 (73 kw) | 2015.04- | 5MT | F | L | Box Body/MPV FWD BHY (DV6FD) | | GDS45105 | Drive Shaft | | 25 | 24 | 58 | 79 | 625 | |
| | 2015.04- | 5MT | F | L | Box Body/MPV FWD BHY (DV6FD) | | GDS45126 | Drive Shaft | | 25 | 24 | 58.5 | 89 | 630 | |
| | 2015.04- | 5MT | F | R | Box Body/MPV FWD BHY (DV6FD) | | GDS45104 | Drive Shaft | | 25 | 24 | 58 | 79 | 925 | |
| | 2015.04- | 5MT | F | R | Box Body/MPV FWD BHY (DV6FD) | | GCO45027 | Outer Joint | | 25 | 34 | 58 | 79 | 55.5 | I |
| | 2015.04- | 5MT/Semi-6AT | F | L/R | Box Body/MPV FWD BHY (DV6FD) | | GCO99366 | Outer Joint | | 25 | 34 | 58.5 | 79 | 55 | I |
| | 2015.04- | 6AMT | F | L | Box Body/MPV FWD BHY (DV6FD) | | GDS10255 | Drive Shaft | | 25 | 24 | 58.5 | 79 | 616 | |
| | 2015.04- | 6AT | F | L | Box Body/MPV FWD BHY (DV6FD) | | GCO10075 | Outer Joint | | 25 | 26 | 58.5 | 89 | 63 | M |
| | 2015.04- | 6MT | F | R | Box Body/MPV FWD BHY (DV6FD) | | GDS10254 | Drive Shaft | | 25 | 24 | 58.5 | 79 | 939 | |
| | 2015.04- | MT | F | L | Box Body/MPV FWD BHY (DV6FD) | | GCI10057 | Inner Joint | | 24 | 34 | 40 | 52.5 | 90 | |
| | 2015.04- | MT | F | R | Box Body/MPV FWD BHY (DV6FD) | | GCI10058 | Inner Joint | | 24 | 34 | 29.8 | 365 | 88 | |
| | 2015.04- | | F | L/R | Box Body/MPV FWD BHY (DV6FD) | | GCO10042 | Outer Joint | | 25 | 34 | 54.8 | 78.5 | 56 | I |
| | 2015.04- | 5MT | F | L | Platform/Chassis FWD BHY (DV6FD) | | GDS45105 | Drive Shaft | | 25 | 24 | 58 | 79 | 625 | |
| | 2015.04- | 5MT | F | L | Platform/Chassis FWD BHY (DV6FD) | | GDS45126 | Drive Shaft | | 25 | 24 | 58.5 | 89 | 630 | |
| | 2015.04- | 5MT | F | R | Platform/Chassis FWD BHY (DV6FD) | | GDS45104 | Drive Shaft | | 25 | 24 | 58 | 79 | 925 | |
| | 2015.04- | 5MT | F | R | Platform/Chassis FWD BHY (DV6FD) | | GCO45027 | Outer Joint | | 25 | 34 | 58 | 79 | 55.5 | I |
| | 2015.04- | | F | L/R | Platform/Chassis FWD BHY (DV6FD) | | GCO99366 | Outer Joint | | 25 | 34 | 58.5 | 79 | 55 | I |
| | 2018.09- | 5MT | F | L | Box Body/MPV FWD BHY (DV6FD) | | GDS83616 | Drive Shaft | | 28 | 24 | 58.5 | 92.5 | 681 | |
| | 2018.09- | 5MT | F | R | Box Body/MPV FWD BHY (DV6FD) | | GDS83663 | Drive Shaft | | 28 | 24 | 58.5 | 92.5 | 919 | |
| | 2018.09- | 5MT | F | L/R | Box Body/MPV FWD BHY (DV6FD) | | GCO82273 | Outer Joint | | 28 | 34 | 58.5 | 92.5 | 56 | I |
| | 2018.09- | 5MT | F | L | Box Body/MPV FWD BHY (DV6FD) | | GCI82131 | Inner Joint | | 24 | 34 | 40 | 62 | 89 | |
| | 2018.09- | 5MT | F | R | Box Body/MPV FWD BHY (DV6FD) | | GCI82320 | Inner Joint | | 24 | 34 | 29.8 | 290 | 88 | |
| | 2018.09- | 5MT | F | R | Box Body/MPV FWD BHY (DV6FD) | | GCI82769 | Inner Joint | | 24 | 34 | 40 | 61 | 103 | |
| 1.6 (80 kw) | 2000.09-2002.10 | 5MT | F | L | MPV FWD TU5JP4 | | GDS10025 | Drive Shaft | 29T | 25 | 24 | 54.8 | 78.5 | 593 | |
| | 2000.09-2002.10 | 5MT | F | L | MPV FWD TU5JP4 | | GDS10090 | Drive Shaft | | 25 | 24 | 54.8 | 78.5 | 593 | |
| | 2000.09-2002.10 | 5MT | F | R | MPV FWD TU5JP4 | | GDS10077 | Drive Shaft | | 25 | 24 | 55.7 | 79 | 872 | |
| | 2000.09-2002.10 | 5MT | F | R | MPV FWD TU5JP4 | | GDS10078 | Drive Shaft | 29W | 25 | 24 | 55.7 | 79 | 872 | |
| | 2000.09-2002.10 | | F | L | MPV FWD TU5JP4 | | GCO10022 | Outer Joint | 29W | 25 | 34 | 55.7 | 79 | 55 | I |
| | 2000.09-2002.10 | | F | L | MPV FWD TU5JP4 | | GCO10049 | Outer Joint | | 25 | 34 | 55.7 | 79 | 55 | I |
| | 2000.09-2002.10 | 5MT | F | L | MPV Van FWD TU5JP4 | | GDS10025 | Drive Shaft | 29T | 25 | 24 | 54.8 | 78.5 | 593 | |
| | 2000.09-2002.10 | 5MT | F | L | MPV Van FWD TU5JP4 | | GDS10090 | Drive Shaft | | 25 | 24 | 54.8 | 78.5 | 593 | |
| | 2000.09-2002.10 | 5MT | F | R | MPV Van FWD TU5JP4 | | GDS10077 | Drive Shaft | | 25 | 24 | 55.7 | 79 | 872 | |
| | 2000.09-2002.10 | 5MT | F | R | MPV Van FWD TU5JP4 | | GDS10078 | Drive Shaft | 29W | 25 | 24 | 55.7 | 79 | 872 | |
| | 2000.09-2002.10 | 5MT | F | R | MPV Van FWD TU5JP4 | | GDS10193 | Drive Shaft | 29T | 25 | 24 | 54.8 | 78.5 | 868 | |
| | 2000.09-2002.10 | MT | F | L/R | MPV Van FWD TU5JP4 | | GCO10043 | Outer Joint | | 25 | 34 | 54.8 | 78.5 | 56 | I |
| | 2000.09-2002.10 | | F | L | MPV Van FWD TU5JP4 | Without Stability Control System (ESP/DSC) | GCO10022 | Outer Joint | 29W | 25 | 34 | 55.7 | 79 | 55 | I |
| | 2000.09-2002.10 | | F | L | MPV Van FWD TU5JP4 | | GCO10022 | Outer Joint | 29W | 25 | 34 | 55.7 | 79 | 55 | I |
| | 2000.09-2002.10 | | F | L | MPV Van FWD TU5JP4 | | GCO10049 | Outer Joint | | 25 | 34 | 55.7 | 79 | 55 | I |
| | 2000.09-2008.05 | 5MT | F | L | Platform/Chassis FWD | | GDS10025 | Drive Shaft | 29T | 25 | 24 | 54.8 | 78.5 | 593 | |
| | 2000.09-2008.05 | 5MT | F | L | Platform/Chassis FWD | | GDS10090 | Drive Shaft | | 25 | 24 | 54.8 | 78.5 | 593 | |
| | 2000.09-2008.05 | 5MT | F | R | Platform/Chassis FWD | | GDS10077 | Drive Shaft | | 25 | 24 | 55.7 | 79 | 872 | |
| | 2000.09-2008.05 | 5MT | F | R | Platform/Chassis FWD | | GDS10078 | Drive Shaft | 29W | 25 | 24 | 55.7 | 79 | 872 | |
| | 2000.09-2008.05 | 5MT | F | R | Platform/Chassis FWD | | GDS99196 | Drive Shaft | 48W | 25 | 24 | 58.5 | 79 | 869 | |
| | 2000.09-2008.05 | 5MT | F | L | Platform/Chassis FWD | With Stability Control System (ESP/DSC) | GCI10020 | Inner Joint | | 24 | 34 | 40 | 62.5 | 99 | |
| | 2000.09-2008.05 | | F | L | Platform/Chassis FWD | | GDS10131 | Drive Shaft | 29T | 25 | 24 | 54.8 | 78.5 | 583 | |
| | 2000.09-2008.05 | | F | L | Platform/Chassis FWD | | GDS10163 | Drive Shaft | | 25 | 24 | 54.8 | 78.5 | 583 | |
| | 2000.09-2008.05 | | F | L | Platform/Chassis FWD | With Stability Control System (ESP/DSC) | GDS99195 | Drive Shaft | 48W | 25 | 24 | 58.5 | 79 | 585 | |
| | 2000.09-2008.05 | | F | L | Platform/Chassis FWD | | GCO10022 | Outer Joint | 29W | 25 | 34 | 55.7 | 79 | 55 | I |
| | 2000.09-2008.05 | | F | L | Platform/Chassis FWD | | GCO10049 | Outer Joint | | 25 | 34 | 55.7 | 79 | 55 | I |
| | 2000.09-2008.05 | | F | L | Platform/Chassis FWD | Without Stability Control System | GCO10049 | Outer Joint | | 25 | 34 | 55.7 | 79 | 55 | I |
| | 2000.09-2008.05 | | F | L | Platform/Chassis FWD | With Stability Control System (ESP/DSC);Facelift:Yes | GCO10067 | Outer Joint | 48W | 25 | 34 | 58.5 | 79 | 55 | I |
| | 2001.07-2008.03 | 5MT | F | L | MPV FWD NFU (TU5JP4) | | GDS99195 | Drive Shaft | 48W | 25 | 24 | 58.5 | 79 | 585 | |
| | 2001.07-2008.03 | 5MT | F | R | MPV FWD NFU (TU5JP4) | | GDS10077 | Drive Shaft | | 25 | 24 | 55.7 | 79 | 872 | |
| | 2001.07-2008.03 | 5MT | F | R | MPV FWD NFU (TU5JP4) | | GDS10078 | Drive Shaft | 29W | 25 | 24 | 55.7 | 79 | 872 | |
| | 2001.07-2008.03 | 5MT | F | R | MPV FWD NFU (TU5JP4) | | GDS10193 | Drive Shaft | 29T | 25 | 24 | 54.8 | 78.5 | 868 | |

| | YEAR | TRANSM. | F/R | L/R | BODY STYLE & DRIVE TYPE & ENGINE | REMARKS | G-AP Ref. | PRODUCT | ABS | Technical Specifications A | B | C | H | L | P |
|---|---|---|---|---|---|---|---|---|---|---|---|---|---|---|---|
| **PEUGEOT** **Partner** | | | | | | | | | | | | | | | |
| 1.6 (80 kw) | 2001.07-2008.03 | 5MT | F | R | MPV FWD NFU (TU5JP4) | | GDS99196 | Drive Shaft | 48W | 25 | 24 | 58.5 | 79 | 869 | |
| | 2001.07-2008.03 | 5MT | F | L/R | MPV FWD NFU (TU5JP4) | for ESP | GCO10067 | Outer Joint | 48W | 25 | 34 | 58.5 | 79 | 55 | I |
| | 2001.07-2008.03 | 5MT | F | L | MPV FWD NFU (TU5JP4) | | GCI10018 | Inner Joint | | 24 | 29 | 40 | 62.5 | 99 | |
| | 2001.07-2008.03 | 5MT | F | L | MPV FWD NFU (TU5JP4) | | GCI10020 | Inner Joint | | 24 | 34 | 40 | 62.5 | 99 | |
| | 2001.07-2008.03 | MT | F | L | MPV FWD NFU (TU5JP4) | | GDS10025 | Drive Shaft | 29T | 25 | 24 | 54.8 | 78.5 | 593 | |
| | 2001.07-2008.03 | MT | F | L | MPV FWD NFU (TU5JP4) | | GDS10090 | Drive Shaft | | 25 | 24 | 54.8 | 78.5 | 593 | |
| | 2001.07-2008.03 | MT | F | L/R | MPV FWD NFU (TU5JP4) | | GCO10043 | Outer Joint | | 25 | 34 | 54.8 | 78.5 | 56 | I |
| | 2001.07-2008.03 | | F | L | MPV FWD NFU (TU5JP4) | | GDS10131 | Drive Shaft | 29T | 25 | 24 | 54.8 | 78.5 | 583 | |
| | 2001.07-2008.03 | | F | L | MPV FWD NFU (TU5JP4) | Type:GJNFUB/GJNFUC | GDS10163 | Drive Shaft | | 25 | 24 | 54.8 | 78.5 | 583 | |
| | 2001.07-2008.03 | | F | L | MPV FWD NFU (TU5JP4) | | GCO10022 | Outer Joint | 29W | 25 | 34 | 55.7 | 79 | 55 | I |
| | 2001.07-2008.03 | | F | L | MPV FWD NFU (TU5JP4) | | GCO10049 | Outer Joint | | 25 | 34 | 55.7 | 79 | 55 | I |
| | 2001.07-2008.03 | | F | L | MPV FWD NFU (TU5JP4) | Without Stability Control System | GCO10049 | Outer Joint | | 25 | 34 | 55.7 | 79 | 55 | I |
| | 2008.04- | 5MT | F | L | Box Body/MPV FWD 9HZ (DV6TED4) | | GDS45126 | Drive Shaft | | 25 | 24 | 58.5 | 89 | 630 | |
| | 2008.04- | 5MT | F | R | Box Body/MPV FWD 9HZ (DV6TED4) | | GDS45104 | Drive Shaft | | 25 | 24 | 58 | 79 | 925 | |
| | 2008.04- | 5MT | F | R | Box Body/MPV FWD 9HZ (DV6TED4) | | GCO45027 | Outer Joint | | 25 | 34 | 58 | 79 | 55.5 | I |
| | 2008.04- | 5MT | F | L/R | Box Body/MPV FWD 9HZ (DV6TED4) | | GCO99366 | Outer Joint | | 25 | 34 | 58.5 | 79 | 55 | I |
| | 2008.04- | AT | F | L | Box Body/MPV FWD 9HZ (DV6TED4) | | GDS10255 | Drive Shaft | | 25 | 24 | 58.5 | 79 | 616 | |
| | 2008.04- | AT | F | R | Box Body/MPV FWD 9HZ (DV6TED4) | | GDS10254 | Drive Shaft | | 25 | 24 | 58.5 | 79 | 939 | |
| | 2008.04- | MT | F | L | Box Body/MPV FWD 9HZ (DV6TED4) | Trans. code:BE4R;Type:8MN04 | GDS45105 | Drive Shaft | | 25 | 24 | 58 | 79 | 625 | |
| | 2008.04- | | F | L/R | Box Body/MPV FWD 9HZ (DV6TED4) | | GCO10042 | Outer Joint | | 25 | 34 | 54.8 | 78.5 | 56 | I |
| | 2008.04- | 5MT | F | L | Box Body/MPV FWD NFU (TU5JP4) | | GDS45126 | Drive Shaft | | 25 | 24 | 58.5 | 89 | 630 | |
| | 2008.04- | 5MT | F | R | Box Body/MPV FWD NFU (TU5JP4) | | GDS45104 | Drive Shaft | | 25 | 24 | 58 | 79 | 925 | |
| | 2008.04- | 5MT | F | R | Box Body/MPV FWD NFU (TU5JP4) | | GCO45027 | Outer Joint | | 25 | 34 | 58 | 79 | 55.5 | I |
| | 2008.04- | 5MT | F | L/R | Box Body/MPV FWD NFU (TU5JP4) | | GCO99366 | Outer Joint | | 25 | 34 | 58.5 | 79 | 55 | I |
| | 2008.04- | AT | F | L | Box Body/MPV FWD NFU (TU5JP4) | | GDS10255 | Drive Shaft | | 25 | 24 | 58.5 | 79 | 616 | |
| | 2008.04- | AT | F | R | Box Body/MPV FWD NFU (TU5JP4) | | GDS10254 | Drive Shaft | | 25 | 24 | 58.5 | 79 | 939 | |
| | 2008.04- | MT | F | L | Box Body/MPV FWD NFU (TU5JP4) | Trans. code:BE4R;Type:8MN04 | GDS45105 | Drive Shaft | | 25 | 24 | 58 | 79 | 625 | |
| | 2008.04- | | F | L/R | Box Body/MPV FWD NFU (TU5JP4) | | GCO10042 | Outer Joint | | 25 | 34 | 54.8 | 78.5 | 56 | I |
| 1.6 (82 kw) | 2010.08- | 5MT | F | L | Box Body/MPV FWD 9HL (DV6C) | | GDS45105 | Drive Shaft | | 25 | 24 | 58 | 79 | 625 | |
| | 2010.08- | 5MT | F | L | Box Body/MPV FWD 9HL (DV6C) | | GDS45126 | Drive Shaft | | 25 | 24 | 58.5 | 89 | 630 | |
| | 2010.08- | 5MT | F | R | Box Body/MPV FWD 9HL (DV6C) | | GDS45104 | Drive Shaft | | 25 | 24 | 58 | 79 | 925 | |
| | 2010.08- | 5MT | F | R | Box Body/MPV FWD 9HL (DV6C) | | GCO45027 | Outer Joint | | 25 | 34 | 58 | 79 | 55.5 | I |
| | 2010.08- | 5MT | F | L | Box Body/MPV FWD 9HL (DV6C) | | GCI10020 | Inner Joint | | 24 | 34 | 40 | 62.5 | 99 | |
| | 2010.08- | | F | L | Box Body/MPV FWD 9HL (DV6C) | | GCO99366 | Outer Joint | | 25 | 34 | 58.5 | 79 | 55 | I |
| 1.6 (84 kw) | 2013.03- | 5MT | F | R | Box Body/MPV FWD 9HL (DV6C) | | GDS45104 | Drive Shaft | | 25 | 24 | 58 | 79 | 925 | |
| | 2013.03- | AT | F | L | Box Body/MPV FWD 9HL (DV6C) | | GDS10255 | Drive Shaft | | 25 | 24 | 58.5 | 79 | 616 | |
| | 2013.03- | AT | F | R | Box Body/MPV FWD 9HL (DV6C) | | GDS10254 | Drive Shaft | | 25 | 24 | 58.5 | 79 | 939 | |
| | 2013.03- | MT | F | L | Box Body/MPV FWD 9HL (DV6C) | | GDS45105 | Drive Shaft | | 25 | 24 | 58 | 79 | 625 | |
| | 2013.03- | MT | F | L | Box Body/MPV FWD 9HL (DV6C) | | GDS45126 | Drive Shaft | | 25 | 24 | 58.5 | 89 | 630 | |
| | 2013.03- | MT | F | R | Box Body/MPV FWD 9HL (DV6C) | | GCO45027 | Outer Joint | | 25 | 34 | 58 | 79 | 55.5 | I |
| | 2013.03- | MT | F | L/R | Box Body/MPV FWD 9HL (DV6C) | | GCO99366 | Outer Joint | | 25 | 34 | 58.5 | 79 | 55 | I |
| | 2013.03- | | F | L/R | Box Body/MPV FWD 9HL (DV6C) | | GCO10042 | Outer Joint | | 25 | 34 | 54.8 | 78.5 | 56 | I |
| | 2013.03- | | F | L | Box Body/MPV FWD 9HL (DV6C) | | GCI10057 | Inner Joint | | 24 | 34 | 40 | 52.5 | 90 | |
| | 2013.03- | | F | R | Box Body/MPV FWD 9HL (DV6C) | | GCI10058 | Inner Joint | | 24 | 34 | 29.8 | 365 | 88 | |
| 1.6 (88 kw) | 2010.04- | 5MT | F | L | Box Body/MPV FWD 5FS (EP6C) | | GDS45105 | Drive Shaft | | 25 | 24 | 58 | 79 | 625 | |
| | 2010.04- | 5MT | F | L | Box Body/MPV FWD 5FS (EP6C) | | GDS45126 | Drive Shaft | | 25 | 24 | 58.5 | 89 | 630 | |
| | 2010.04- | 5MT | F | R | Box Body/MPV FWD 5FS (EP6C) | | GDS45104 | Drive Shaft | | 25 | 24 | 58 | 79 | 925 | |
| | 2010.04- | 5MT | F | R | Box Body/MPV FWD 5FS (EP6C) | | GCO45027 | Outer Joint | | 25 | 34 | 58 | 79 | 55.5 | I |
| | 2010.04- | 5MT | F | L/R | Box Body/MPV FWD 5FS (EP6C) | | GCO99366 | Outer Joint | | 25 | 34 | 58.5 | 79 | 55 | I |
| | 2010.04- | | F | L/R | Box Body/MPV FWD 5FS (EP6C) | | GCO10042 | Outer Joint | | 25 | 34 | 54.8 | 78.5 | 56 | I |
| | 2015.04- | 6AT | F | L | Box Body/MPV FWD BHZ (DV6FC) | | GCO10075 | Outer Joint | | 25 | 26 | 58.5 | 89 | 63 | M |
| | 2015.04- | 6MT | F | L | Box Body/MPV FWD BHZ (DV6FC) | | GDS10255 | Drive Shaft | | 25 | 24 | 58.5 | 79 | 616 | |
| | 2015.04- | 6MT | F | R | Box Body/MPV FWD BHZ (DV6FC) | | GDS10254 | Drive Shaft | | 25 | 24 | 58.5 | 79 | 939 | |
| | 2015.04- | MT | F | L | Box Body/MPV FWD BHZ (DV6FC) | | GDS45105 | Drive Shaft | | 25 | 24 | 58 | 79 | 625 | |
| | 2015.04- | MT | F | R | Box Body/MPV FWD BHZ (DV6FC) | | GDS45104 | Drive Shaft | | 25 | 24 | 58 | 79 | 925 | |
| | 2015.04- | MT | F | L | Box Body/MPV FWD BHZ (DV6FC) | | GCI10057 | Inner Joint | | 24 | 34 | 40 | 52.5 | 90 | |
| | 2015.04- | MT | F | R | Box Body/MPV FWD BHZ (DV6FC) | | GCI10058 | Inner Joint | | 24 | 34 | 29.8 | 365 | 88 | |
| | 2015.04- | | F | L/R | Box Body/MPV FWD BHZ (DV6FC) | | GCO10042 | Outer Joint | | 25 | 34 | 54.8 | 78.5 | 56 | I |
| | 2015.04- | | F | L/R | Box Body/MPV FWD BHZ (DV6FC) | | GCO99366 | Outer Joint | | 25 | 34 | 58.5 | 79 | 55 | I |
| 1.8 (43 kw) | 1996.06-2002.12 | 5MT | F | L | Box Body/MPV FWD A9A (XUD7) | | GDS10025 | Drive Shaft | 29T | 25 | 24 | 54.8 | 78.5 | 593 | |
| | 1996.06-2002.12 | 5MT | F | L | Box Body/MPV FWD A9A (XUD7) | | GDS10090 | Drive Shaft | | 25 | 24 | 54.8 | 78.5 | 593 | |
| | 1996.06-2002.12 | 5MT | F | R | Box Body/MPV FWD A9A (XUD7) | | GDS10077 | Drive Shaft | | 25 | 24 | 55.7 | 79 | 872 | |
| | 1996.06-2002.12 | 5MT | F | R | Box Body/MPV FWD A9A (XUD7) | | GDS10193 | Drive Shaft | 29T | 25 | 24 | 54.8 | 78.5 | 868 | |
| | 1996.06-2002.12 | MT | F | L | Box Body/MPV FWD A9A (XUD7) | | GDS99025 | Drive Shaft | 29W | 25 | 24 | 55.7 | 79 | 597 | |
| | 1996.06-2002.12 | MT | F | R | Box Body/MPV FWD A9A (XUD7) | | GDS10078 | Drive Shaft | 29W | 25 | 24 | 55.7 | 79 | 872 | |

| | YEAR | TRANSM. | F/R | L/R | BODY STYLE & DRIVE TYPE & ENGINE | REMARKS | G-AP Ref. | PRODUCT | ABS | Technical Specifications A | B | C | H | L | P |
|---|---|---|---|---|---|---|---|---|---|---|---|---|---|---|---|
| **PEUGEOT** **Partner** | | | | | | | | | | | | | | | |
| 1.8 (43 kw) | 1996.06-2002.12 | MT | F | L/R | Box Body/MPV FWD A9A (XUD7) | | GCO10043 | Outer Joint | | 25 | 34 | 54.8 | 78.5 | 56 | I |
| | 1996.06-2002.12 | | F | L | Box Body/MPV FWD A9A (XUD7) | | GCO10022 | Outer Joint | 29W | 25 | 34 | 55.7 | 79 | 55 | I |
| | 1996.06-2002.12 | | F | L | Box Body/MPV FWD A9A (XUD7) | | GCO10049 | Outer Joint | | 25 | 34 | 55.7 | 79 | 55 | I |
| 1.8 (44 kw) | 1996.11-1998.02 | 5MT | F | L | Box Body/MPV FWD A9A (XUD7) | | GDS10025 | Drive Shaft | 29T | 25 | 24 | 54.8 | 78.5 | 593 | |
| | 1996.11-1998.02 | 5MT | F | L | Box Body/MPV FWD A9A (XUD7) | | GDS10090 | Drive Shaft | | 25 | 24 | 54.8 | 78.5 | 593 | |
| | 1996.11-1998.02 | 5MT | F | R | Box Body/MPV FWD A9A (XUD7) | | GDS10077 | Drive Shaft | | 25 | 24 | 55.7 | 79 | 872 | |
| | 1996.11-1998.02 | 5MT | F | R | Box Body/MPV FWD A9A (XUD7) | | GDS10193 | Drive Shaft | 29T | 25 | 24 | 54.8 | 78.5 | 868 | |
| | 1996.11-1998.02 | | F | L | Box Body/MPV FWD A9A (XUD7) | | GDS99025 | Drive Shaft | 29W | 25 | 24 | 55.7 | 79 | 597 | |
| | 1996.11-1998.02 | | F | R | Box Body/MPV FWD A9A (XUD7) | | GDS10078 | Drive Shaft | 29W | 25 | 24 | 55.7 | 79 | 872 | |
| | 1996.11-1998.02 | | F | L | Box Body/MPV FWD A9A (XUD7) | | GCO10022 | Outer Joint | 29W | 25 | 34 | 55.7 | 79 | 55 | I |
| | 1996.11-1998.02 | | F | L | Box Body/MPV FWD A9A (XUD7) | | GCO10049 | Outer Joint | | 25 | 34 | 55.7 | 79 | 55 | I |
| | 1996.11-1998.02 | | F | | Box Body/MPV FWD A9A (XUD7) | | GCO10076 | Outer Joint | 29W | 25 | 34 | 58.5 | 79 | 55 | I |
| 1.8 (66 kw) | 1997.03-2000.08 | 5MT | F | R | Platform/Chassis FWD LFX (XU7JB) | | GDS10077 | Drive Shaft | | 25 | 24 | 55.7 | 79 | 872 | |
| | 1997.03-2000.08 | 5MT | F | R | Platform/Chassis FWD LFX (XU7JB) | | GDS10078 | Drive Shaft | 29W | 25 | 24 | 55.7 | 79 | 872 | |
| | 1997.03-2000.08 | 5MT | F | R | Platform/Chassis FWD LFX (XU7JB) | | GDS10193 | Drive Shaft | 29T | 25 | 24 | 54.8 | 78.5 | 868 | |
| | 1997.03-2000.08 | | F | L | Platform/Chassis FWD LFX (XU7JB) | | GDS10025 | Drive Shaft | 29T | 25 | 24 | 54.8 | 78.5 | 593 | |
| | 1997.03-2000.08 | | F | L | Platform/Chassis FWD LFX (XU7JB) | | GDS10090 | Drive Shaft | | 25 | 24 | 54.8 | 78.5 | 593 | |
| | 1997.03-2000.08 | | F | L | Platform/Chassis FWD LFX (XU7JB) | | GCO10022 | Outer Joint | 29W | 25 | 34 | 55.7 | 79 | 55 | I |
| | 1997.03-2000.08 | | F | L | Platform/Chassis FWD LFX (XU7JB) | | GCO10049 | Outer Joint | | 25 | 34 | 55.7 | 79 | 55 | I |
| | 1997.03-2003.12 | 5MT | F | L | MPV Van FWD XU7JB | | GDS10025 | Drive Shaft | 29T | 25 | 24 | 54.8 | 78.5 | 593 | |
| | 1997.03-2003.12 | 5MT | F | L | MPV Van FWD XU7JB | | GDS10090 | Drive Shaft | | 25 | 24 | 54.8 | 78.5 | 593 | |
| | 1997.03-2003.12 | 5MT | F | R | MPV Van FWD XU7JB | | GDS10077 | Drive Shaft | | 25 | 24 | 55.7 | 79 | 872 | |
| | 1997.03-2003.12 | 5MT | F | R | MPV Van FWD XU7JB | | GDS10078 | Drive Shaft | 29W | 25 | 24 | 55.7 | 79 | 872 | |
| | 1997.03-2003.12 | MT | F | L/R | MPV Van FWD XU7JB | | GCO10043 | Outer Joint | | 25 | 34 | 54.8 | 78.5 | 56 | I |
| | 1997.03-2003.12 | | F | L | MPV Van FWD XU7JB | | GCO10022 | Outer Joint | 29W | 25 | 34 | 55.7 | 79 | 55 | I |
| | 1997.03-2003.12 | | F | L | MPV Van FWD XU7JB | | GCO10049 | Outer Joint | | 25 | 34 | 55.7 | 79 | 55 | I |
| | 1997.05-2002.12 | 5MT | F | L | MPV FWD LFX (XU7JB) | | GDS10025 | Drive Shaft | 29T | 25 | 24 | 54.8 | 78.5 | 593 | |
| | 1997.05-2002.12 | 5MT | F | L | MPV FWD LFX (XU7JB) | | GDS10090 | Drive Shaft | | 25 | 24 | 54.8 | 78.5 | 593 | |
| | 1997.05-2002.12 | 5MT | F | R | MPV FWD LFX (XU7JB) | | GDS10077 | Drive Shaft | | 25 | 24 | 55.7 | 79 | 872 | |
| | 1997.05-2002.12 | 5MT | F | R | MPV FWD LFX (XU7JB) | | GDS10193 | Drive Shaft | 29T | 25 | 24 | 54.8 | 78.5 | 868 | |
| | 1997.05-2002.12 | MT | F | L | MPV FWD LFX (XU7JB) | | GDS99025 | Drive Shaft | 29W | 25 | 24 | 55.7 | 79 | 597 | |
| | 1997.05-2002.12 | MT | F | R | MPV FWD LFX (XU7JB) | | GDS10078 | Drive Shaft | 29W | 25 | 24 | 55.7 | 79 | 872 | |
| | 1997.05-2002.12 | MT | F | L/R | MPV FWD LFX (XU7JB) | | GCO10043 | Outer Joint | | 25 | 34 | 54.8 | 78.5 | 56 | I |
| | 1997.05-2002.12 | | F | L | MPV FWD LFX (XU7JB) | | GCO10022 | Outer Joint | 29W | 25 | 34 | 55.7 | 79 | 55 | I |
| | 1997.05-2002.12 | | F | L | MPV FWD LFX (XU7JB) | | GCO10049 | Outer Joint | | 25 | 34 | 55.7 | 79 | 55 | I |
| 1.9 (50 kw) | 1996.06-1998.12 | 5MT | F | L | Box Body/MPV FWD DJY (XUD9A) | | GDS10025 | Drive Shaft | 29T | 25 | 24 | 54.8 | 78.5 | 593 | |
| | 1996.06-1998.12 | 5MT | F | L | Box Body/MPV FWD DJY (XUD9A) | | GDS10090 | Drive Shaft | | 25 | 24 | 54.8 | 78.5 | 593 | |
| | 1996.06-1998.12 | 5MT | F | R | Box Body/MPV FWD DJY (XUD9A) | | GDS10077 | Drive Shaft | | 25 | 24 | 55.7 | 79 | 872 | |
| | 1996.06-1998.12 | 5MT | F | R | Box Body/MPV FWD DJY (XUD9A) | | GDS10078 | Drive Shaft | 29W | 25 | 24 | 55.7 | 79 | 872 | |
| | 1996.06-1998.12 | 5MT | F | R | Box Body/MPV FWD DJY (XUD9A) | | GDS10193 | Drive Shaft | 29T | 25 | 24 | 54.8 | 78.5 | 868 | |
| | 1996.06-1998.12 | | F | L | Box Body/MPV FWD DJY (XUD9A) | | GCO10022 | Outer Joint | 29W | 25 | 34 | 55.7 | 79 | 55 | I |
| | 1996.06-1998.12 | | F | L | Box Body/MPV FWD DJY (XUD9A) | | GCO10049 | Outer Joint | | 25 | 34 | 55.7 | 79 | 55 | I |
| | 1996.06-2002.12 | 5MT | F | L | MPV FWD XUD9 | | GDS10025 | Drive Shaft | 29T | 25 | 24 | 54.8 | 78.5 | 593 | |
| | 1996.06-2002.12 | 5MT | F | L | MPV FWD XUD9 | | GDS10090 | Drive Shaft | | 25 | 24 | 54.8 | 78.5 | 593 | |
| | 1996.06-2002.12 | 5MT | F | R | MPV FWD XUD9 | | GDS10077 | Drive Shaft | | 25 | 24 | 55.7 | 79 | 872 | |
| | 1996.06-2002.12 | 5MT | F | R | MPV FWD XUD9 | | GDS10193 | Drive Shaft | 29T | 25 | 24 | 54.8 | 78.5 | 868 | |
| | 1996.06-2002.12 | MT | F | L | MPV FWD XUD9 | | GDS99025 | Drive Shaft | 29W | 25 | 24 | 55.7 | 79 | 597 | |
| | 1996.06-2002.12 | MT | F | R | MPV FWD XUD9 | | GDS10078 | Drive Shaft | 29W | 25 | 24 | 55.7 | 79 | 872 | |
| | 1996.06-2002.12 | MT | F | L/R | MPV FWD XUD9 | | GCO10043 | Outer Joint | | 25 | 34 | 54.8 | 78.5 | 56 | I |
| | 1996.06-2002.12 | | F | L | MPV FWD XUD9 | Without Stability Control System (ESP/DSC) | GCO10022 | Outer Joint | 29W | 25 | 34 | 55.7 | 79 | 55 | I |
| | 1996.06-2002.12 | | F | L | MPV FWD XUD9 | | GCO10049 | Outer Joint | | 25 | 34 | 55.7 | 79 | 55 | I |
| 1.9 (51 kw) | 1996.05-1998.12 | 5MT | F | L | MPV FWD XUD9 | | GDS10025 | Drive Shaft | 29T | 25 | 24 | 54.8 | 78.5 | 593 | |
| | 1996.05-1998.12 | 5MT | F | L | MPV FWD XUD9 | | GDS10090 | Drive Shaft | | 25 | 24 | 54.8 | 78.5 | 593 | |
| | 1996.05-1998.12 | 5MT | F | R | MPV FWD XUD9 | | GDS10077 | Drive Shaft | | 25 | 24 | 55.7 | 79 | 872 | |
| | 1996.05-1998.12 | 5MT | F | R | MPV FWD XUD9 | | GDS10193 | Drive Shaft | 29T | 25 | 24 | 54.8 | 78.5 | 868 | |
| | 1996.05-1998.12 | MT | F | L/R | MPV FWD XUD9 | | GCO10043 | Outer Joint | | 25 | 34 | 54.8 | 78.5 | 56 | I |
| | 1996.05-1998.12 | | F | L | MPV FWD XUD9 | | GDS99025 | Drive Shaft | 29W | 25 | 24 | 55.7 | 79 | 597 | |
| | 1996.05-1998.12 | | F | R | MPV FWD XUD9 | | GDS10078 | Drive Shaft | 29W | 25 | 24 | 55.7 | 79 | 872 | |
| | 1996.05-1998.12 | | F | L | MPV FWD XUD9 | | GCO10022 | Outer Joint | 29W | 25 | 34 | 55.7 | 79 | 55 | I |
| | 1996.05-1998.12 | | F | L | MPV FWD XUD9 | | GCO10049 | Outer Joint | | 25 | 34 | 55.7 | 79 | 55 | I |
| | 1996.06-2002.12 | 5MT | F | L | Box Body/MPV FWD DJY (XUD9A) | | GDS10025 | Drive Shaft | 29T | 25 | 24 | 54.8 | 78.5 | 593 | |
| | 1996.06-2002.12 | 5MT | F | L | Box Body/MPV FWD DJY (XUD9A) | | GDS10090 | Drive Shaft | | 25 | 24 | 54.8 | 78.5 | 593 | |
| | 1996.06-2002.12 | 5MT | F | R | Box Body/MPV FWD DJY (XUD9A) | | GDS10077 | Drive Shaft | | 25 | 24 | 55.7 | 79 | 872 | |
| | 1996.06-2002.12 | 5MT | F | R | Box Body/MPV FWD DJY (XUD9A) | | GDS10193 | Drive Shaft | 29T | 25 | 24 | 54.8 | 78.5 | 868 | |
| | 1996.06-2002.12 | | F | L | Box Body/MPV FWD DJY (XUD9A) | | GDS99025 | Drive Shaft | 29W | 25 | 24 | 55.7 | 79 | 597 | |

| | YEAR | TRANSM. | F/R | L/R | BODY STYLE & DRIVE TYPE & ENGINE | REMARKS | G-AP Ref. | PRODUCT | ABS | Technical Specifications A | B | C | H | L | P |
|---|---|---|---|---|---|---|---|---|---|---|---|---|---|---|---|
| **PEUGEOT** | | | | | | | | | | | | | | | |
| **Partner** | | | | | | | | | | | | | | | |
| 1.9 (51 kw) | 1996.06-2002.12 | | F | R | Box Body/MPV FWD DJY (XUD9A) | | GDS10078 | Drive Shaft | 29W | 25 | 24 | 55.7 | 79 | 872 | |
| | 1996.06-2002.12 | | F | L | Box Body/MPV FWD DJY (XUD9A) | | GCO10022 | Outer Joint | 29W | 25 | 34 | 55.7 | 79 | 55 | I |
| | 1996.06-2002.12 | | F | L | Box Body/MPV FWD DJY (XUD9A) | | GCO10049 | Outer Joint | | 25 | 34 | 55.7 | 79 | 55 | I |
| | 1996.06-2015.12 | 5MT | F | L | Box Body/MPV FWD WJZ (DW8), WJY (DW8B) | | GDS10090 | Drive Shaft | | 25 | 24 | 54.8 | 78.5 | 593 | |
| | 1996.06-2015.12 | 5MT | F | L | Box Body/MPV FWD WJZ (DW8), WJY (DW8B) | | GDS99195 | Drive Shaft | 48W | 25 | 24 | 58.5 | 79 | 585 | |
| | 1996.06-2015.12 | 5MT | F | R | Box Body/MPV FWD WJZ (DW8), WJY (DW8B) | | GDS10077 | Drive Shaft | | 25 | 24 | 55.7 | 79 | 872 | |
| | 1996.06-2015.12 | 5MT | F | R | Box Body/MPV FWD WJZ (DW8), WJY (DW8B) | | GDS99196 | Drive Shaft | 48W | 25 | 24 | 58.5 | 79 | 869 | |
| | 1996.06-2015.12 | 5MT | F | L | Box Body/MPV FWD WJZ (DW8), WJY (DW8B) | Without Stability Control System | GCO10022 | Outer Joint | 29W | 25 | 34 | 55.7 | 79 | 55 | I |
| | 1996.06-2015.12 | 5MT | F | L | Box Body/MPV FWD WJZ (DW8), WJY (DW8B) | Without Stability Control System | GCO10049 | Outer Joint | | 25 | 34 | 55.7 | 79 | 55 | I |
| | 1996.06-2015.12 | 5MT | F | L/R | Box Body/MPV FWD WJZ (DW8), WJY (DW8B) | With Stability Control System | GCO10067 | Outer Joint | 48W | 25 | 34 | 58.5 | 79 | 55 | I |
| | 1996.06-2015.12 | 5MT | F | L | Box Body/MPV FWD WJZ (DW8), WJY (DW8B) | | GCI10020 | Inner Joint | | 24 | 34 | 40 | 62.5 | 99 | |
| | 1996.06-2015.12 | MT | F | L | Box Body/MPV FWD WJZ (DW8), WJY (DW8B) | | GDS10025 | Drive Shaft | 29T | 25 | 24 | 54.8 | 78.5 | 593 | |
| | 1996.06-2015.12 | MT | F | L/R | Box Body/MPV FWD WJZ (DW8), WJY (DW8B) | | GCO10043 | Outer Joint | | 25 | 34 | 54.8 | 78.5 | 56 | I |
| | 1996.06-2015.12 | | F | L | Box Body/MPV FWD WJZ (DW8), WJY (DW8B) | | GDS99025 | Drive Shaft | 29W | 25 | 24 | 55.7 | 79 | 597 | |
| | 1996.06-2015.12 | | F | R | Box Body/MPV FWD WJZ (DW8), WJY (DW8B) | | GDS10078 | Drive Shaft | 29W | 25 | 24 | 55.7 | 79 | 872 | |
| | 1996.06-2015.12 | | F | | Box Body/MPV FWD WJZ (DW8), WJY (DW8B) | | GCO10076 | Outer Joint | 29W | 25 | 34 | 58.5 | 79 | 55 | I |
| | 1999.01-2008.07 | 5MT | F | L | MPV FWD WJZ (DW8), WJY (DW8B) | | GDS10025 | Drive Shaft | 29T | 25 | 24 | 54.8 | 78.5 | 593 | |
| | 1999.01-2008.07 | 5MT | F | L | MPV FWD WJZ (DW8), WJY (DW8B) | | GDS10090 | Drive Shaft | | 25 | 24 | 54.8 | 78.5 | 593 | |
| | 1999.01-2008.07 | 5MT | F | L | MPV FWD WJZ (DW8), WJY (DW8B) | | GDS99195 | Drive Shaft | 48W | 25 | 24 | 58.5 | 79 | 585 | |
| | 1999.01-2008.07 | 5MT | F | R | MPV FWD WJZ (DW8), WJY (DW8B) | | GDS10077 | Drive Shaft | | 25 | 24 | 55.7 | 79 | 872 | |
| | 1999.01-2008.07 | 5MT | F | R | MPV FWD WJZ (DW8), WJY (DW8B) | | GDS10193 | Drive Shaft | 29T | 25 | 24 | 54.8 | 78.5 | 868 | |
| | 1999.01-2008.07 | 5MT | F | R | MPV FWD WJZ (DW8), WJY (DW8B) | | GDS99196 | Drive Shaft | 48W | 25 | 24 | 58.5 | 79 | 869 | |
| | 1999.01-2008.07 | 5MT | F | L | MPV FWD WJZ (DW8), WJY (DW8B) | | GCO10022 | Outer Joint | 29W | 25 | 34 | 55.7 | 79 | 55 | I |
| | 1999.01-2008.07 | 5MT | F | L | MPV FWD WJZ (DW8), WJY (DW8B) | Without Stability Control System | GCO10049 | Outer Joint | | 25 | 34 | 55.7 | 79 | 55 | I |
| | 1999.01-2008.07 | 5MT | F | L/R | MPV FWD WJZ (DW8), WJY (DW8B) | for ESP | GCO10067 | Outer Joint | 48W | 25 | 34 | 58.5 | 79 | 55 | I |
| | 1999.01-2008.07 | 5MT | F | L | MPV FWD WJZ (DW8), WJY (DW8B) | | GCI10020 | Inner Joint | | 24 | 34 | 40 | 62.5 | 99 | |
| | 1999.01-2008.07 | MT | F | L | MPV FWD WJZ (DW8), WJY (DW8B) | | GDS99025 | Drive Shaft | 29W | 25 | 24 | 55.7 | 79 | 597 | |
| | 1999.01-2008.07 | MT | F | R | MPV FWD WJZ (DW8), WJY (DW8B) | | GDS10078 | Drive Shaft | 29W | 25 | 24 | 55.7 | 79 | 872 | |
| | 1999.01-2008.07 | MT | F | L/R | MPV FWD WJZ (DW8), WJY (DW8B) | | GCO10043 | Outer Joint | | 25 | 34 | 54.8 | 78.5 | 56 | I |
| | 1999.01-2008.07 | 5MT | F | L | Platform/Chassis FWD WJY (DW8B), WJZ (DW8) | | GDS10025 | Drive Shaft | 29T | 25 | 24 | 54.8 | 78.5 | 593 | |
| | 1999.01-2008.07 | 5MT | F | L | Platform/Chassis FWD WJY (DW8B), WJZ (DW8) | | GDS10090 | Drive Shaft | | 25 | 24 | 54.8 | 78.5 | 593 | |
| | 1999.01-2008.07 | 5MT | F | L | Platform/Chassis FWD WJY (DW8B), WJZ (DW8) | | GDS99195 | Drive Shaft | 48W | 25 | 24 | 58.5 | 79 | 585 | |
| | 1999.01-2008.07 | 5MT | F | R | Platform/Chassis FWD WJY (DW8B), WJZ (DW8) | For vehicles without ESP | GDS10077 | Drive Shaft | | 25 | 24 | 55.7 | 79 | 872 | |
| | 1999.01-2008.07 | 5MT | F | R | Platform/Chassis FWD WJY (DW8B), WJZ (DW8) | For vehicles without ESP | GDS10078 | Drive Shaft | 29W | 25 | 24 | 55.7 | 79 | 872 | |
| | 1999.01-2008.07 | 5MT | F | R | Platform/Chassis FWD WJY (DW8B), WJZ (DW8) | For vehicles with ESP | GDS99196 | Drive Shaft | 48W | 25 | 24 | 58.5 | 79 | 869 | |
| | 1999.01-2008.07 | 5MT | F | L/R | Platform/Chassis FWD WJY (DW8B), WJZ (DW8) | | GCO10067 | Outer Joint | 48W | 25 | 34 | 58.5 | 79 | 55 | I |
| | 1999.01-2008.07 | 5MT | F | L | Platform/Chassis FWD WJY (DW8B), WJZ (DW8) | | GCI10020 | Inner Joint | | 24 | 34 | 40 | 62.5 | 99 | |
| | 1999.01-2008.07 | | F | L | Platform/Chassis FWD WJY (DW8B), WJZ (DW8) | Without Stability Control System (ESP/DSC) | GCO10022 | Outer Joint | 29W | 25 | 34 | 55.7 | 79 | 55 | I |
| | 1999.01-2008.07 | | F | L | Platform/Chassis FWD WJY (DW8B), WJZ (DW8) | Without Stability Control System | GCO10049 | Outer Joint | | 25 | 34 | 55.7 | 79 | 55 | I |
| | 1999.01-2008.07 | | F | | Platform/Chassis FWD WJY (DW8B), WJZ (DW8) | | GCO10076 | Outer Joint | 29W | 25 | 34 | 58.5 | 79 | 55 | I |
| | 2004.04-2005.08 | | F | L | MPV 4WD DW8B | not for ESP | GDS10025 | Drive Shaft | 29T | 25 | 24 | 54.8 | 78.5 | 593 | |
| | 2004.04-2005.08 | | F | L | MPV 4WD DW8B | not for ESP | GDS10090 | Drive Shaft | | 25 | 24 | 54.8 | 78.5 | 593 | |
| | 2004.04-2005.08 | | F | L | MPV 4WD DW8B | | GDS99025 | Drive Shaft | 29W | 25 | 24 | 55.7 | 79 | 597 | |
| | 2004.04-2005.08 | | F | L | MPV 4WD DW8B | for ESP | GDS99195 | Drive Shaft | 48W | 25 | 24 | 58.5 | 79 | 585 | |
| | 2004.04-2005.08 | | F | R | MPV 4WD DW8B | not for ESP | GDS10077 | Drive Shaft | | 25 | 24 | 55.7 | 79 | 872 | |
| | 2004.04-2005.08 | | F | R | MPV 4WD DW8B | | GDS10078 | Drive Shaft | 29W | 25 | 24 | 55.7 | 79 | 872 | |
| | 2004.04-2005.08 | | F | R | MPV 4WD DW8B | for ESP | GDS99196 | Drive Shaft | 48W | 25 | 24 | 58.5 | 79 | 869 | |
| | 2004.04-2005.08 | | F | | MPV 4WD DW8B | | GCO10076 | Outer Joint | 29W | 25 | 34 | 58.5 | 79 | 55 | I |
| | 2004.04-2011.07 | | F | L | MPV Van 4WD DW8B | not for ESP | GDS10025 | Drive Shaft | 29T | 25 | 24 | 54.8 | 78.5 | 593 | |
| | 2004.04-2011.07 | | F | L | MPV Van 4WD DW8B | not for ESP | GDS10090 | Drive Shaft | | 25 | 24 | 54.8 | 78.5 | 593 | |
| | 2004.04-2011.07 | | F | L | MPV Van 4WD DW8B | | GDS99025 | Drive Shaft | 29W | 25 | 24 | 55.7 | 79 | 597 | |
| | 2004.04-2011.07 | | F | L | MPV Van 4WD DW8B | for ESP | GDS99195 | Drive Shaft | 48W | 25 | 24 | 58.5 | 79 | 585 | |
| | 2004.04-2011.07 | | F | R | MPV Van 4WD DW8B | not for ESP | GDS10077 | Drive Shaft | | 25 | 24 | 55.7 | 79 | 872 | |
| | 2004.04-2011.07 | | F | R | MPV Van 4WD DW8B | | GDS10078 | Drive Shaft | 29W | 25 | 24 | 55.7 | 79 | 872 | |
| | 2004.04-2011.07 | | F | R | MPV Van 4WD DW8B | for ESP | GDS99196 | Drive Shaft | 48W | 25 | 24 | 58.5 | 79 | 869 | |
| 2.0 (66 kw) | 2000.02-2008.07 | 5MT | F | L | MPV FWD RHY (DW10TD) | | GDS10090 | Drive Shaft | | 25 | 24 | 54.8 | 78.5 | 593 | |
| | 2000.02-2008.07 | 5MT | F | L | MPV FWD RHY (DW10TD) | | GDS99195 | Drive Shaft | 48W | 25 | 24 | 58.5 | 79 | 585 | |
| | 2000.02-2008.07 | 5MT | F | R | MPV FWD RHY (DW10TD) | | GDS10077 | Drive Shaft | | 25 | 24 | 55.7 | 79 | 872 | |
| | 2000.02-2008.07 | 5MT | F | R | MPV FWD RHY (DW10TD) | | GDS99196 | Drive Shaft | 48W | 25 | 24 | 58.5 | 79 | 869 | |
| | 2000.02-2008.07 | 5MT | F | L | MPV FWD RHY (DW10TD) | | GCO10022 | Outer Joint | 29W | 25 | 34 | 55.7 | 79 | 55 | I |
| | 2000.02-2008.07 | 5MT | F | L | MPV FWD RHY (DW10TD) | Without Stability Control System | GCO10049 | Outer Joint | | 25 | 34 | 55.7 | 79 | 55 | I |
| | 2000.02-2008.07 | 5MT | F | L/R | MPV FWD RHY (DW10TD) | for ESP | GCO10067 | Outer Joint | 48W | 25 | 34 | 58.5 | 79 | 55 | I |
| | 2000.02-2008.07 | MT | F | L | MPV FWD RHY (DW10TD) | | GDS10025 | Drive Shaft | 29T | 25 | 24 | 54.8 | 78.5 | 593 | |
| | 2000.02-2008.07 | MT | F | L | MPV FWD RHY (DW10TD) | Date To:2002.10 | GDS10131 | Drive Shaft | 29T | 25 | 24 | 54.8 | 78.5 | 583 | |
| | 2000.02-2008.07 | MT | F | L | MPV FWD RHY (DW10TD) | | GDS10163 | Drive Shaft | | 25 | 24 | 54.8 | 78.5 | 583 | |

| | YEAR | TRANSM. | F/R | L/R | BODY STYLE & DRIVE TYPE & ENGINE | REMARKS | G-AP Ref. | PRODUCT | ABS | Technical Specifications A | B | C | H | L | P |
|---|---|---|---|---|---|---|---|---|---|---|---|---|---|---|---|
| **PEUGEOT** | | | | | | | | | | | | | | | |
| **Partner** | | | | | | | | | | | | | | | |
| 2.0 (66 kw) | 2000.02-2008.07 | MT | F | L/R | MPV FWD RHY (DW10TD) | | GCO10043 | Outer Joint | | 25 | 34 | 54.8 | 78.5 | 56 | I |
| | 2000.02-2008.07 | MT | F | L | MPV FWD RHY (DW10TD) | | GCI10018 | Inner Joint | | 24 | 29 | 40 | 62.5 | 99 | |
| | 2000.02-2008.07 | | F | L | MPV FWD RHY (DW10TD) | | GDS10080 | Drive Shaft | 29W | 25 | 24 | 55.7 | 79 | 597 | |
| | 2000.02-2008.07 | | F | R | MPV FWD RHY (DW10TD) | | GDS10078 | Drive Shaft | 29W | 25 | 24 | 55.7 | 79 | 872 | |
| | 2000.04-2008.07 | 5MT | F | L | Box Body/MPV FWD RHY (DW10TD) | | GDS10090 | Drive Shaft | | 25 | 24 | 54.8 | 78.5 | 593 | |
| | 2000.04-2008.07 | 5MT | F | L | Box Body/MPV FWD RHY (DW10TD) | | GDS99195 | Drive Shaft | 48W | 25 | 24 | 58.5 | 79 | 585 | |
| | 2000.04-2008.07 | 5MT | F | R | Box Body/MPV FWD RHY (DW10TD) | | GDS10077 | Drive Shaft | | 25 | 24 | 55.7 | 79 | 872 | |
| | 2000.04-2008.07 | 5MT | F | R | Box Body/MPV FWD RHY (DW10TD) | | GDS99196 | Drive Shaft | 48W | 25 | 24 | 58.5 | 79 | 869 | |
| | 2000.04-2008.07 | 5MT | F | L/R | Box Body/MPV FWD RHY (DW10TD) | for ESP | GCO10067 | Outer Joint | 48W | 25 | 34 | 58.5 | 79 | 55 | I |
| | 2000.04-2008.07 | MT | F | L | Box Body/MPV FWD RHY (DW10TD) | | GDS10025 | Drive Shaft | 29T | 25 | 24 | 54.8 | 78.5 | 593 | |
| | 2000.04-2008.07 | MT | F | L | Box Body/MPV FWD RHY (DW10TD) | Trans. code:BE3 | GDS10131 | Drive Shaft | 29T | 25 | 24 | 54.8 | 78.5 | 583 | |
| | 2000.04-2008.07 | MT | F | L | Box Body/MPV FWD RHY (DW10TD) | | GDS10163 | Drive Shaft | | 25 | 24 | 54.8 | 78.5 | 583 | |
| | 2000.04-2008.07 | MT | F | L | Box Body/MPV FWD RHY (DW10TD) | | GCO10022 | Outer Joint | 29W | 25 | 34 | 55.7 | 79 | 55 | I |
| | 2000.04-2008.07 | MT | F | L | Box Body/MPV FWD RHY (DW10TD) | Without Stability Control System | GCO10049 | Outer Joint | | 25 | 34 | 55.7 | 79 | 55 | I |
| | 2000.04-2008.07 | MT | F | L/R | Box Body/MPV FWD RHY (DW10TD) | | GCO10043 | Outer Joint | | 25 | 34 | 54.8 | 78.5 | 56 | I |
| | 2000.04-2008.07 | MT | F | L | Box Body/MPV FWD RHY (DW10TD) | | GCI10018 | Inner Joint | | 24 | 29 | 40 | 62.5 | 99 | |
| | 2000.04-2008.07 | | F | L | Box Body/MPV FWD RHY (DW10TD) | | GDS10080 | Drive Shaft | 29W | 25 | 24 | 55.7 | 79 | 597 | |
| | 2000.04-2008.07 | | F | R | Box Body/MPV FWD RHY (DW10TD) | | GDS10078 | Drive Shaft | 29W | 25 | 24 | 55.7 | 79 | 872 | |
| | 2002.11-2008.07 | 5MT | F | L | Platform/Chassis FWD | | GDS10090 | Drive Shaft | | 25 | 24 | 54.8 | 78.5 | 593 | |
| | 2002.11-2008.07 | 5MT | F | L | Platform/Chassis FWD | | GDS99195 | Drive Shaft | 48W | 25 | 24 | 58.5 | 79 | 585 | |
| | 2002.11-2008.07 | 5MT | F | R | Platform/Chassis FWD | For vehicles without ESP | GDS10077 | Drive Shaft | | 25 | 24 | 55.7 | 79 | 872 | |
| | 2002.11-2008.07 | 5MT | F | R | Platform/Chassis FWD | For vehicles without ESP | GDS10078 | Drive Shaft | 29W | 25 | 24 | 55.7 | 79 | 872 | |
| | 2002.11-2008.07 | 5MT | F | R | Platform/Chassis FWD | For vehicles with ESP | GDS99196 | Drive Shaft | 48W | 25 | 24 | 58.5 | 79 | 869 | |
| | 2002.11-2008.07 | 5MT | F | L/R | Platform/Chassis FWD | | GCO10076 | Outer Joint | 29W | 25 | 34 | 58.5 | 79 | 55 | I |
| | 2002.11-2008.07 | 5MT | F | L | Platform/Chassis FWD | | GCI10018 | Inner Joint | | 24 | 29 | 40 | 62.5 | 99 | |
| | 2002.11-2008.07 | 5MT | F | L | Platform/Chassis FWD | | GCI10020 | Inner Joint | | 24 | 34 | 40 | 62.5 | 99 | |
| | 2002.11-2008.07 | | F | L | Platform/Chassis FWD | Date From:2002.11 | GDS10025 | Drive Shaft | 29T | 25 | 24 | 54.8 | 78.5 | 593 | |
| | 2002.11-2008.07 | | F | L | Platform/Chassis FWD | | GDS10131 | Drive Shaft | 29T | 25 | 24 | 54.8 | 78.5 | 583 | |
| | 2002.11-2008.07 | | F | L | Platform/Chassis FWD | not for ESP | GDS10163 | Drive Shaft | | 25 | 24 | 54.8 | 78.5 | 583 | |
| | 2002.11-2008.07 | | F | L | Platform/Chassis FWD | | GCO10022 | Outer Joint | 29W | 25 | 34 | 55.7 | 79 | 55 | I |
| | 2002.11-2008.07 | | F | L | Platform/Chassis FWD | | GCO10049 | Outer Joint | | 25 | 34 | 55.7 | 79 | 55 | I |
| | 2004.04-2005.08 | | F | L | MPV 4WD DW10TD | | GDS10025 | Drive Shaft | 29T | 25 | 24 | 54.8 | 78.5 | 593 | |
| | 2004.04-2005.08 | | F | L | MPV 4WD DW10TD | | GDS10131 | Drive Shaft | 29T | 25 | 24 | 54.8 | 78.5 | 583 | |
| | 2004.04-2005.08 | | F | L | MPV 4WD DW10TD | | GDS99025 | Drive Shaft | 29W | 25 | 24 | 55.7 | 79 | 597 | |
| | 2004.04-2005.08 | | F | L | MPV 4WD DW10TD | for ESP | GDS99195 | Drive Shaft | 48W | 25 | 24 | 58.5 | 79 | 585 | |
| | 2004.04-2005.08 | | F | R | MPV 4WD DW10TD | | GDS10077 | Drive Shaft | | 25 | 24 | 55.7 | 79 | 872 | |
| | 2004.04-2005.08 | | F | R | MPV 4WD DW10TD | | GDS10078 | Drive Shaft | 29W | 25 | 24 | 55.7 | 79 | 872 | |
| | 2004.04-2005.08 | | F | R | MPV 4WD DW10TD | for ESP | GDS99196 | Drive Shaft | 48W | 25 | 24 | 58.5 | 79 | 869 | |
| | 2004.04-2005.08 | | F | | MPV 4WD DW10TD | | GCO10022 | Outer Joint | 29W | 25 | 34 | 55.7 | 79 | 55 | I |
| | 2004.04-2008.07 | | F | L | MPV Van 4WD DW10TD | | GDS10025 | Drive Shaft | 29T | 25 | 24 | 54.8 | 78.5 | 593 | |
| | 2004.04-2008.07 | | F | L | MPV Van 4WD DW10TD | | GDS10090 | Drive Shaft | | 25 | 24 | 54.8 | 78.5 | 593 | |
| | 2004.04-2008.07 | | F | L | MPV Van 4WD DW10TD | not for ESP | GDS10131 | Drive Shaft | 29T | 25 | 24 | 54.8 | 78.5 | 583 | |
| | 2004.04-2008.07 | | F | L | MPV Van 4WD DW10TD | not for ESP | GDS10163 | Drive Shaft | | 25 | 24 | 54.8 | 78.5 | 583 | |
| | 2004.04-2008.07 | | F | L | MPV Van 4WD DW10TD | for vehicles with ESP | GDS99195 | Drive Shaft | 48W | 25 | 24 | 58.5 | 79 | 585 | |
| | 2004.04-2008.07 | | F | R | MPV Van 4WD DW10TD | not for ESP | GDS10077 | Drive Shaft | | 25 | 24 | 55.7 | 79 | 872 | |
| | 2004.04-2008.07 | | F | R | MPV Van 4WD DW10TD | not for ESP | GDS10078 | Drive Shaft | 29W | 25 | 24 | 55.7 | 79 | 872 | |
| | 2004.04-2008.07 | | F | R | MPV Van 4WD DW10TD | for ESP | GDS99196 | Drive Shaft | 48W | 25 | 24 | 58.5 | 79 | 869 | |
| EV (25 kw) | 1996.06-2002.12 | ET | F | L | MPV Van FWD ELSA18 | | GDS57840 | Drive Shaft | | 25 | 22 | 56.7 | 79 | 926 | |
| | 1996.06-2002.12 | ET | F | R | MPV Van FWD ELSA18 | | GDS57841 | Drive Shaft | | 25 | 22 | 56.7 | 79 | 540 | |
| EV (28 kw) | 1998.01-2001.12 | ET | F | L | MPV FWD ELSA18 | | GDS57840 | Drive Shaft | | 25 | 22 | 56.7 | 79 | 926 | |
| | 1998.01-2001.12 | ET | F | R | MPV FWD ELSA18 | | GDS57841 | Drive Shaft | | 25 | 22 | 56.7 | 79 | 540 | |
| **Partner Origin** | | | | | | | | | | | | | | | |
| 1.4 (55 kw) | 2008.07-2013.12 | 5MT | F | L | MPV FWD TU3A/TU3JP | Trim Level:ABS BOSCH 5 3 | GDS10021 | Drive Shaft | 29T | 25 | 22 | 60 | 80 | 593 | |
| | 2008.07-2013.12 | 5MT | F | L | MPV FWD TU3A/TU3JP | Trim Level:ABS BOSCH 5 3 | GDS10187 | Drive Shaft | 29T | 25 | 22 | 54.5 | 79.5 | 590.5 | |
| | 2008.07-2013.12 | 5MT | F | L | MPV FWD TU3A/TU3JP | | GDS10204 | Drive Shaft | | 25 | 22 | 58.5 | 79 | 594 | |
| | 2008.07-2013.12 | 5MT | F | R | MPV FWD TU3A/TU3JP | Trim Level:ABS BOSCH 5 3 | GDS10019 | Drive Shaft | 29T | 25 | 22 | 60 | 80 | 867 | |
| | 2008.07-2013.12 | 5MT | F | R | MPV FWD TU3A/TU3JP | | GDS10205 | Drive Shaft | | 25 | 22 | 58.5 | 79 | 866 | |
| | 2008.07-2013.12 | 5MT | F | R | MPV FWD TU3A/TU3JP | | GDS82450 | Drive Shaft | 48T | 25 | 22 | 58.5 | 79.5 | 865 | |
| | 2008.08-2015.12 | 5MT | F | L | MPV Van FWD TU3JP | For vehicles with ABS,Trim Level::ABS BOSCH 53 | GDS10021 | Drive Shaft | 29T | 25 | 22 | 60 | 80 | 593 | |
| | 2008.08-2015.12 | 5MT | F | L | MPV Van FWD TU3JP | For vehicles with ABS,Trim Level::ABS BOSCH 53 | GDS10187 | Drive Shaft | 29T | 25 | 22 | 54.5 | 79.5 | 590.5 | |
| | 2008.08-2015.12 | 5MT | F | L | MPV Van FWD TU3JP | For vehicles without ABS | GDS10204 | Drive Shaft | | 25 | 22 | 58.5 | 79 | 594 | |
| | 2008.08-2015.12 | 5MT | F | R | MPV Van FWD TU3JP | For vehicles with ABS,Trim Level::ABS BOSCH 53 | GDS10019 | Drive Shaft | 29T | 25 | 22 | 60 | 80 | 867 | |
| | 2008.08-2015.12 | 5MT | F | R | MPV Van FWD TU3JP | For vehicles without ABS | GDS10205 | Drive Shaft | | 25 | 22 | 58.5 | 79 | 866 | |
| | 2008.08-2015.12 | 5MT | F | R | MPV Van FWD TU3JP | For vehicles with ABS | GDS82450 | Drive Shaft | 48T | 25 | 22 | 58.5 | 79.5 | 865 | |
| | 2008.08-2015.12 | MT | F | L/R | MPV Van FWD TU3JP | Type:ABS BOSCH 5 3 | GCO45036 | Outer Joint | 29T | 25 | 22 | 60 | 80 | 54 | I |

| | YEAR | TRANSM. | F/R | L/R | BODY STYLE & DRIVE TYPE & ENGINE | REMARKS | G-AP Ref. | PRODUCT | ABS | Technical Specifications A | B | C | H | L | P |
|---|---|---|---|---|---|---|---|---|---|---|---|---|---|---|---|
| **PEUGEOT** | | | | | | | | | | | | | | | |
| **Partner Origin** | | | | | | | | | | | | | | | |
| 1.6 (55 kw) | 2008.08-2013.12 | 5MT | F | L | MPV FWD DV6BTED4 | | GDS10227 | Drive Shaft | | 25 | 24 | 58.5 | 78.5 | 595 | |
| | 2008.08-2013.12 | 5MT | F | L | MPV FWD DV6BTED4 | | GDS99195 | Drive Shaft | 48W | 25 | 24 | 58.5 | 79 | 585 | |
| | 2008.08-2013.12 | 5MT | F | R | MPV FWD DV6BTED4 | | GDS10078 | Drive Shaft | 29W | 25 | 24 | 55.7 | 79 | 872 | |
| | 2008.08-2013.12 | 5MT | F | R | MPV FWD DV6BTED4 | For vehicles with ABS;Equipment code:BOSCH 5.3 | GDS10193 | Drive Shaft | 29T | 25 | 24 | 54.8 | 78.5 | 868 | |
| | 2008.08-2013.12 | 5MT | F | R | MPV FWD DV6BTED4 | | GDS99196 | Drive Shaft | 48W | 25 | 24 | 58.5 | 79 | 869 | |
| | 2008.08-2013.12 | 5MT | F | L | MPV FWD DV6BTED4 | Trans. ID:77 | GCO10049 | Outer Joint | | 25 | 34 | 55.7 | 79 | 55 | I |
| | 2008.08-2013.12 | 5MT | F | L/R | MPV FWD DV6BTED4 | Trans. ID:77 | GCO10022 | Outer Joint | 29W | 25 | 34 | 55.7 | 79 | 55 | I |
| | 2008.08-2013.12 | 5MT | F | L/R | MPV FWD DV6BTED4 | Trans. ID:84/77;Trans. ID:77,Option Code+:BOSCH 5.3 | GCO10076 | Outer Joint | 29W | 25 | 34 | 58.5 | 79 | 55 | I |
| | 2008.08-2015.12 | 5MT | F | L | MPV Van FWD DV6BTED4 | | GDS10227 | Drive Shaft | | 25 | 24 | 58.5 | 78.5 | 595 | |
| | 2008.08-2015.12 | 5MT | F | L | MPV Van FWD DV6BTED4 | | GDS99195 | Drive Shaft | 48W | 25 | 24 | 58.5 | 79 | 585 | |
| | 2008.08-2015.12 | 5MT | F | R | MPV Van FWD DV6BTED4 | | GDS10078 | Drive Shaft | 29W | 25 | 24 | 55.7 | 79 | 872 | |
| | 2008.08-2015.12 | 5MT | F | R | MPV Van FWD DV6BTED4 | For vehicles with ABS;Equipment code:BOSCH 5.3 | GDS10193 | Drive Shaft | 29T | 25 | 24 | 54.8 | 78.5 | 868 | |
| | 2008.08-2015.12 | 5MT | F | R | MPV Van FWD DV6BTED4 | | GDS99196 | Drive Shaft | 48W | 25 | 24 | 58.5 | 79 | 869 | |
| | 2008.08-2015.12 | 5MT | F | L | MPV Van FWD DV6BTED4 | Trans. ID:77 | GCO10049 | Outer Joint | | 25 | 34 | 55.7 | 79 | 55 | I |
| | 2008.08-2015.12 | 5MT | F | L/R | MPV Van FWD DV6BTED4 | Trans. ID:77 | GCO10022 | Outer Joint | 29W | 25 | 34 | 55.7 | 79 | 55 | I |
| | 2008.08-2015.12 | 5MT | F | L/R | MPV Van FWD DV6BTED4 | Trans. ID:84/77;Trans. ID:77,Option Code+:BOSCH 5.3 | GCO10076 | Outer Joint | 29W | 25 | 34 | 58.5 | 79 | 55 | I |
| 1.6 (66 kw) | 2008.08-2015.12 | 5MT | F | L | MPV Van FWD DV6ATED4 | | GDS99195 | Drive Shaft | 48W | 25 | 24 | 58.5 | 79 | 585 | |
| | 2008.08-2015.12 | 5MT | F | R | MPV Van FWD DV6ATED4 | | GDS99196 | Drive Shaft | 48W | 25 | 24 | 58.5 | 79 | 869 | |
| 1.6 (81 kw) | 2011.09-2013.12 | MT | F | L | MPV FWD TU5JP4 | | GDS10025 | Drive Shaft | 29T | 25 | 24 | 54.8 | 78.5 | 593 | |
| | 2011.09-2013.12 | MT | F | L | MPV FWD TU5JP4 | | GDS10090 | Drive Shaft | | 25 | 24 | 54.8 | 78.5 | 593 | |
| | 2011.09-2013.12 | MT | F | L | MPV FWD TU5JP4 | | GDS10131 | Drive Shaft | 29T | 25 | 24 | 54.8 | 78.5 | 583 | |
| | 2011.09-2013.12 | MT | F | R | MPV FWD TU5JP4 | | GDS10077 | Drive Shaft | | 25 | 24 | 55.7 | 79 | 872 | |
| | 2011.09-2013.12 | MT | F | R | MPV FWD TU5JP4 | | GDS10078 | Drive Shaft | 29W | 25 | 24 | 55.7 | 79 | 872 | |
| | 2011.09-2013.12 | MT | F | R | MPV FWD TU5JP4 | | GDS10193 | Drive Shaft | 29T | 25 | 24 | 54.8 | 78.5 | 868 | |
| | 2011.09-2013.12 | MT | F | L | MPV FWD TU5JP4 | | GCO10022 | Outer Joint | 29W | 25 | 34 | 55.7 | 79 | 55 | I |
| | 2011.09-2013.12 | MT | F | L | MPV FWD TU5JP4 | | GCO10049 | Outer Joint | | 25 | 34 | 55.7 | 79 | 55 | I |
| | 2011.09-2013.12 | MT | F | L/R | MPV FWD TU5JP4 | | GCO10076 | Outer Joint | 29W | 25 | 34 | 58.5 | 79 | 55 | I |
| | 2011.09-2013.12 | MT | F | L | MPV FWD TU5JP4 | | GCI10018 | Inner Joint | | 24 | 29 | 40 | 62.5 | 99 | |
| | 2011.09-2015.12 | MT | F | L | MPV Van FWD TU5JP4 | | GDS99195 | Drive Shaft | 48W | 25 | 24 | 58.5 | 79 | 585 | |
| | 2011.09-2015.12 | MT | F | R | MPV Van FWD TU5JP4 | | GDS99196 | Drive Shaft | 48W | 25 | 24 | 58.5 | 79 | 869 | |
| | 2011.09-2015.12 | MT | F | L | MPV Van FWD TU5JP4 | | GCO10067 | Outer Joint | 48W | 25 | 34 | 58.5 | 79 | 55 | I |
| | 2011.09-2015.12 | MT | F | L | MPV Van FWD TU5JP4 | | GCI10020 | Inner Joint | | 24 | 34 | 40 | 62.5 | 99 | |
| 1.9 (51 kw) | 2008.08-2013.12 | 5MT | F | L | MPV FWD DW8B | | GDS10227 | Drive Shaft | | 25 | 24 | 58.5 | 78.5 | 595 | |
| | 2008.08-2013.12 | 5MT | F | L | MPV FWD DW8B | | GDS99195 | Drive Shaft | 48W | 25 | 24 | 58.5 | 79 | 585 | |
| | 2008.08-2013.12 | 5MT | F | R | MPV FWD DW8B | | GDS10078 | Drive Shaft | 29W | 25 | 24 | 55.7 | 79 | 872 | |
| | 2008.08-2013.12 | 5MT | F | R | MPV FWD DW8B | For vehicles with ABS;Equipment code:BOSCH 5.3 | GDS10193 | Drive Shaft | 29T | 25 | 24 | 54.8 | 78.5 | 868 | |
| | 2008.08-2013.12 | 5MT | F | R | MPV FWD DW8B | | GDS99196 | Drive Shaft | 48W | 25 | 24 | 58.5 | 79 | 869 | |
| | 2008.08-2013.12 | 5MT | F | L | MPV FWD DW8B | Trans. ID:77 | GCO10049 | Outer Joint | | 25 | 34 | 55.7 | 79 | 55 | I |
| | 2008.08-2013.12 | 5MT | F | L/R | MPV FWD DW8B | Trans. ID:77 | GCO10022 | Outer Joint | 29W | 25 | 34 | 55.7 | 79 | 55 | I |
| | 2008.08-2013.12 | 5MT | F | L/R | MPV FWD DW8B | Trans. ID:84/77;Trans. ID:77,Option Code+:BOSCH 5.3 | GCO10076 | Outer Joint | 29W | 25 | 34 | 58.5 | 79 | 55 | I |
| | 2008.08-2015.12 | 5MT | F | R | MPV Van FWD DW8B | | GDS10077 | Drive Shaft | | 25 | 24 | 55.7 | 79 | 872 | |
| | 2008.08-2015.12 | 5MT | F | R | MPV Van FWD DW8B | | GDS10078 | Drive Shaft | 29W | 25 | 24 | 55.7 | 79 | 872 | |
| | 2008.08-2015.12 | 5MT | F | R | MPV Van FWD DW8B | | GDS10193 | Drive Shaft | 29T | 25 | 24 | 54.8 | 78.5 | 868 | |
| | 2008.08-2015.12 | 5MT | F | R | MPV Van FWD DW8B | | GDS99196 | Drive Shaft | 48W | 25 | 24 | 58.5 | 79 | 869 | |
| | 2008.08-2015.12 | 5MT | F | L | MPV Van FWD DW8B | Differential ID:77 | GCI10018 | Inner Joint | | 24 | 29 | 40 | 62.5 | 99 | |
| | 2008.08-2015.12 | 5MT | F | L | MPV Van FWD DW8B | Differential ID:77;Type:ABS BOSCH 8 0/8 1 | GCI10020 | Inner Joint | | 24 | 34 | 40 | 62.5 | 99 | |
| | 2008.08-2015.12 | | F | L | MPV Van FWD DW8B | Differential ID:77 | GDS10025 | Drive Shaft | 29T | 25 | 24 | 54.8 | 78.5 | 593 | |
| | 2008.08-2015.12 | | F | L | MPV Van FWD DW8B | Differential ID:77 | GDS10090 | Drive Shaft | | 25 | 24 | 54.8 | 78.5 | 593 | |
| | 2008.08-2015.12 | | F | L | MPV Van FWD DW8B | Differential ID:77 | GDS10131 | Drive Shaft | 29T | 25 | 24 | 54.8 | 78.5 | 583 | |
| | 2008.08-2015.12 | | F | L | MPV Van FWD DW8B | Differential ID:77;Type:ABS BOSCH 8 0/8 1 | GDS99195 | Drive Shaft | 48W | 25 | 24 | 58.5 | 79 | 585 | |
| | 2008.08-2015.12 | | F | L | MPV Van FWD DW8B | Differential ID:77 | GCO10022 | Outer Joint | 29W | 25 | 34 | 55.7 | 79 | 55 | I |
| | 2008.08-2015.12 | | F | L | MPV Van FWD DW8B | Differential ID:77 | GCO10049 | Outer Joint | | 25 | 34 | 55.7 | 79 | 55 | I |
| | 2008.08-2015.12 | | F | L | MPV Van FWD DW8B | Differential ID:77;Type:ABS BOSCH 8 0/8 1 | GCO10067 | Outer Joint | 48W | 25 | 34 | 58.5 | 79 | 55 | I |
| | 2008.08-2015.12 | | F | L | MPV Van FWD DW8B | Differential ID:77 | GCO10076 | Outer Joint | 29W | 25 | 34 | 58.5 | 79 | 55 | I |
| EV (42 kw) | 2011.01-2012.12 | ET | F | L | MPV Van FWD MD200175 | | GDS56709 | Drive Shaft | 48T | 25 | 23 | 58.5 | 79 | 730 | |
| | 2011.01-2012.12 | ET | F | L | MPV Van FWD MD200175 | | GCO83404 | Outer Joint | 48T | 25 | 22 | 58.5 | 79 | 55 | I |
| **Partner Tepee** | | | | | | | | | | | | | | | |
| 1.2 (81 kw) | 2016.02- | 5MT | F | L | MPV FWD HNZ (EB2DT);HNV (EB2DTM) | | GDS45105 | Drive Shaft | | 25 | 24 | 58 | 79 | 625 | |
| | 2016.02- | 5MT | F | L | MPV FWD HNZ (EB2DT);HNV (EB2DTM) | | GDS45126 | Drive Shaft | | 25 | 24 | 58.5 | 89 | 630 | |
| | 2016.02- | 5MT | F | R | MPV FWD HNZ (EB2DT);HNV (EB2DTM) | | GDS45104 | Drive Shaft | | 25 | 24 | 58 | 79 | 925 | |
| | 2016.02- | 5MT | F | R | MPV FWD HNZ (EB2DT);HNV (EB2DTM) | | GCO45027 | Outer Joint | | 25 | 34 | 58 | 79 | 55.5 | I |
| | 2016.02- | 5MT | F | L/R | MPV FWD HNZ (EB2DT);HNV (EB2DTM) | | GCO99366 | Outer Joint | | 25 | 34 | 58.5 | 79 | 55 | I |
| | 2016.02- | | F | L/R | MPV FWD HNZ (EB2DT);HNV (EB2DTM) | | GCO10042 | Outer Joint | | 25 | 34 | 54.8 | 78.5 | 56 | I |
| 1.6 (55 kw) | 2008.06- | 5MT | F | L | MPV FWD 9HT (DV6BTED4) | | GDS45105 | Drive Shaft | | 25 | 24 | 58 | 79 | 625 | |
| | 2008.06- | 5MT | F | L | MPV FWD 9HT (DV6BTED4) | | GDS45126 | Drive Shaft | | 25 | 24 | 58.5 | 89 | 630 | |

| | YEAR | TRANSM. | F/R | L/R | BODY STYLE & DRIVE TYPE & ENGINE | REMARKS | G-AP Ref. | PRODUCT | ABS | Technical Specifications A | B | C | H | L | P |
|---|---|---|---|---|---|---|---|---|---|---|---|---|---|---|---|
| **PEUGEOT** **Partner Tepee** | | | | | | | | | | | | | | | |
| 1.6 (55 kw) | 2008.06- | 5MT | F | R | MPV FWD 9HT (DV6BTED4) | | GDS45104 | Drive Shaft | | 25 | 24 | 58 | 79 | 925 | |
| | 2008.06- | 5MT | F | R | MPV FWD 9HT (DV6BTED4) | | GCO45027 | Outer Joint | | 25 | 34 | 58 | 79 | 55.5 | I |
| | 2008.06- | 5MT | F | L | MPV FWD 9HT (DV6BTED4) | | GCI10020 | Inner Joint | | 24 | 34 | 40 | 62.5 | 99 | |
| | 2008.06- | | F | L | MPV FWD 9HT (DV6BTED4) | | GCO99366 | Outer Joint | | 25 | 34 | 58.5 | 79 | 55 | I |
| | 2008.06-2018.12 | 5MT | F | R | MPV FWD 9HK (DV6ETEDM);BHW (DV6FE);9HN (DV6ETED) | | GDS45104 | Drive Shaft | | 25 | 24 | 58 | 79 | 925 | |
| | 2008.06-2018.12 | 5MT | F | R | MPV FWD 9HK (DV6ETEDM);BHW (DV6FE);9HN (DV6ETED) | | GCO45027 | Outer Joint | | 25 | 34 | 58 | 79 | 55.5 | I |
| | 2008.06-2018.12 | AT | F | L | MPV FWD 9HK (DV6ETEDM);BHW (DV6FE);9HN (DV6ETED) | | GDS10255 | Drive Shaft | | 25 | 24 | 58.5 | 79 | 616 | |
| | 2008.06-2018.12 | AT | F | R | MPV FWD 9HK (DV6ETEDM);BHW (DV6FE);9HN (DV6ETED) | | GDS10254 | Drive Shaft | | 25 | 24 | 58.5 | 79 | 939 | |
| | 2008.06-2018.12 | MT | F | L | MPV FWD 9HK (DV6ETEDM);BHW (DV6FE);9HN (DV6ETED) | | GDS45105 | Drive Shaft | | 25 | 24 | 58 | 79 | 625 | |
| | 2008.06-2018.12 | MT | F | L | MPV FWD 9HK (DV6ETEDM);BHW (DV6FE);9HN (DV6ETED) | | GDS45126 | Drive Shaft | | 25 | 24 | 58.5 | 89 | 630 | |
| | 2008.06-2018.12 | MT | F | L/R | MPV FWD 9HK (DV6ETEDM);BHW (DV6FE);9HN (DV6ETED) | | GCO99366 | Outer Joint | | 25 | 34 | 58.5 | 79 | 55 | I |
| | 2008.06-2018.12 | | F | L/R | MPV FWD 9HK (DV6ETEDM);BHW (DV6FE);9HN (DV6ETED) | | GCO10042 | Outer Joint | | 25 | 34 | 54.8 | 78.5 | 56 | I |
| 1.6 (66 kw) | 2008.04- | 5MT | F | R | MPV FWD 9HV (DV6TED4B) | | GCO45027 | Outer Joint | | 25 | 34 | 58 | 79 | 55.5 | I |
| | 2008.04- | 6AT/5MT | F | L | MPV FWD 9HV (DV6TED4B) | | GDS45126 | Drive Shaft | | 25 | 24 | 58.5 | 89 | 630 | |
| | 2008.04- | 6AT/5MT | F | R | MPV FWD 9HV (DV6TED4B) | | GDS45104 | Drive Shaft | | 25 | 24 | 58 | 79 | 925 | |
| | 2008.04- | 6AT/5MT | F | L/R | MPV FWD 9HV (DV6TED4B) | | GCO99366 | Outer Joint | | 25 | 34 | 58.5 | 79 | 55 | I |
| | 2008.04- | MT | F | L | MPV FWD 9HV (DV6TED4B) | Trans. code:MC;Type:8MN27 | GDS10255 | Drive Shaft | | 25 | 24 | 58.5 | 79 | 616 | |
| | 2008.04- | MT | F | L | MPV FWD 9HV (DV6TED4B) | | GDS45105 | Drive Shaft | | 25 | 24 | 58 | 79 | 625 | |
| | 2008.04- | MT | F | R | MPV FWD 9HV (DV6TED4B) | Trans. code:MC;Type:8MN28 | GDS10254 | Drive Shaft | | 25 | 24 | 58.5 | 79 | 939 | |
| | 2008.04- | MT | F | L | MPV FWD 9HV (DV6TED4B) | Trans. code:MC;Type:8MN27 | GCI10057 | Inner Joint | | 24 | 34 | 40 | 52.5 | 90 | |
| | 2008.04- | MT | F | R | MPV FWD 9HV (DV6TED4B) | Trans. code:MC;Type:8MN28 | GCI10058 | Inner Joint | | 24 | 34 | 29.8 | 365 | 88 | |
| | 2008.04- | | F | L/R | MPV FWD 9HV (DV6TED4B) | | GCO10042 | Outer Joint | | 25 | 34 | 54.8 | 78.5 | 56 | I |
| | 2008.04- | 5MT | F | L | MPV FWD NFR (TU5JP4B) | | GDS45126 | Drive Shaft | | 25 | 24 | 58.5 | 89 | 630 | |
| | 2008.04- | 5MT | F | R | MPV FWD NFR (TU5JP4B) | | GDS45104 | Drive Shaft | | 25 | 24 | 58 | 79 | 925 | |
| | 2008.04- | 5MT | F | R | MPV FWD NFR (TU5JP4B) | | GCO45027 | Outer Joint | | 25 | 34 | 58 | 79 | 55.5 | I |
| | 2008.04- | 5MT | F | L/R | MPV FWD NFR (TU5JP4B) | | GCO99366 | Outer Joint | | 25 | 34 | 58.5 | 79 | 55 | I |
| | 2008.04- | AT | F | L | MPV FWD NFR (TU5JP4B) | | GDS10255 | Drive Shaft | | 25 | 24 | 58.5 | 79 | 616 | |
| | 2008.04- | AT | F | R | MPV FWD NFR (TU5JP4B) | | GDS10254 | Drive Shaft | | 25 | 24 | 58.5 | 79 | 939 | |
| | 2008.04- | MT | F | L | MPV FWD NFR (TU5JP4B) | Trans. code:MC;Type:8MN27 | GDS10255 | Drive Shaft | | 25 | 24 | 58.5 | 79 | 616 | |
| | 2008.04- | MT | F | L | MPV FWD NFR (TU5JP4B) | | GDS45105 | Drive Shaft | | 25 | 24 | 58 | 79 | 625 | |
| | 2008.04- | MT | F | R | MPV FWD NFR (TU5JP4B) | Trans. code:MC;Type:8MN28 | GDS10254 | Drive Shaft | | 25 | 24 | 58.5 | 79 | 939 | |
| | 2008.04- | MT | F | L | MPV FWD NFR (TU5JP4B) | | GCI10057 | Inner Joint | | 24 | 34 | 40 | 52.5 | 90 | |
| | 2008.04- | MT | F | R | MPV FWD NFR (TU5JP4B) | | GCI10058 | Inner Joint | | 24 | 34 | 29.8 | 365 | 88 | |
| | 2008.04- | | F | L/R | MPV FWD NFR (TU5JP4B) | | GCO10042 | Outer Joint | | 25 | 34 | 54.8 | 78.5 | 56 | I |
| | 2013.03- | 5MT | F | L | MPV FWD 9HF (DV6DTED) | | GDS45126 | Drive Shaft | | 25 | 24 | 58.5 | 89 | 630 | |
| | 2013.03- | 5MT | F | R | MPV FWD 9HF (DV6DTED) | | GDS45104 | Drive Shaft | | 25 | 24 | 58 | 79 | 925 | |
| | 2013.03- | 5MT | F | R | MPV FWD 9HF (DV6DTED) | | GCO45027 | Outer Joint | | 25 | 34 | 58 | 79 | 55.5 | I |
| | 2013.03- | AT | F | L | MPV FWD 9HF (DV6DTED) | | GDS10255 | Drive Shaft | | 25 | 24 | 58.5 | 79 | 616 | |
| | 2013.03- | AT | F | R | MPV FWD 9HF (DV6DTED) | | GDS10254 | Drive Shaft | | 25 | 24 | 58.5 | 79 | 939 | |
| | 2013.03- | MT | F | L | MPV FWD 9HF (DV6DTED) | | GDS45105 | Drive Shaft | | 25 | 24 | 58 | 79 | 625 | |
| | 2013.03- | MT | F | L/R | MPV FWD 9HF (DV6DTED) | | GCO99366 | Outer Joint | | 25 | 34 | 58.5 | 79 | 55 | I |
| | 2013.03- | | F | L/R | MPV FWD 9HF (DV6DTED) | | GCO10042 | Outer Joint | | 25 | 34 | 54.8 | 78.5 | 56 | I |
| 1.6 (68 kw) | 2010.04- | 5MT | F | L | MPV FWD 9HP (DV6DTED);9HJ (DV6DTEDM) | | GDS45105 | Drive Shaft | | 25 | 24 | 58 | 79 | 625 | |
| | 2010.04- | 5MT | F | L | MPV FWD 9HP (DV6DTED);9HJ (DV6DTEDM) | | GDS45126 | Drive Shaft | | 25 | 24 | 58.5 | 89 | 630 | |
| | 2010.04- | 5MT | F | R | MPV FWD 9HP (DV6DTED);9HJ (DV6DTEDM) | | GDS45104 | Drive Shaft | | 25 | 24 | 58 | 79 | 925 | |
| | 2010.04- | 5MT | F | R | MPV FWD 9HP (DV6DTED);9HJ (DV6DTEDM) | | GCO45027 | Outer Joint | | 25 | 34 | 58 | 79 | 55.5 | I |
| | 2010.04- | 6AMT | F | L | MPV FWD 9HP (DV6DTED);9HJ (DV6DTEDM) | | GDS10255 | Drive Shaft | | 25 | 24 | 58.5 | 79 | 616 | |
| | 2010.04- | 6AMT | F | L/R | MPV FWD 9HP (DV6DTED);9HJ (DV6DTEDM) | | GCO10075 | Outer Joint | | 25 | 26 | 58.5 | 89 | 63 | M |
| | 2010.04- | 6MT | F | R | MPV FWD 9HP (DV6DTED);9HJ (DV6DTEDM) | | GDS10254 | Drive Shaft | | 25 | 24 | 58.5 | 79 | 939 | |
| | 2010.04- | 6MT | F | L | MPV FWD 9HP (DV6DTED);9HJ (DV6DTEDM) | | GCI10057 | Inner Joint | | 24 | 34 | 40 | 52.5 | 90 | |
| | 2010.04- | 6MT | F | R | MPV FWD 9HP (DV6DTED);9HJ (DV6DTEDM) | | GCI10058 | Inner Joint | | 24 | 34 | 29.8 | 365 | 88 | |
| | 2010.04- | MT | F | L/R | MPV FWD 9HP (DV6DTED);9HJ (DV6DTEDM) | | GCO99366 | Outer Joint | | 25 | 34 | 58.5 | 79 | 55 | I |
| | 2010.04- | | F | L/R | MPV FWD 9HP (DV6DTED);9HJ (DV6DTEDM) | | GCO10042 | Outer Joint | | 25 | 34 | 54.8 | 78.5 | 56 | I |
| 1.6 (72 kw) | 2010.08- | 5MT | F | L | MPV FWD 5FK (EP6CB) | | GDS45105 | Drive Shaft | | 25 | 24 | 58 | 79 | 625 | |
| | 2010.08- | 5MT | F | L | MPV FWD 5FK (EP6CB) | | GDS45126 | Drive Shaft | | 25 | 24 | 58.5 | 89 | 630 | |
| | 2010.08- | 5MT | F | R | MPV FWD 5FK (EP6CB) | | GDS45104 | Drive Shaft | | 25 | 24 | 58 | 79 | 925 | |
| | 2010.08- | 5MT | F | R | MPV FWD 5FK (EP6CB) | | GCO45027 | Outer Joint | | 25 | 34 | 58 | 79 | 55.5 | I |
| | 2010.08- | | F | L/R | MPV FWD 5FK (EP6CB) | | GCO10042 | Outer Joint | | 25 | 34 | 54.8 | 78.5 | 56 | I |
| | 2010.08- | | F | L/R | MPV FWD 5FK (EP6CB) | | GCO99366 | Outer Joint | | 25 | 34 | 58.5 | 79 | 55 | I |
| 1.6 (73 kw) | 2014.12- | 5MT | F | L | MPV FWD BHY (DV6FD) | | GDS45105 | Drive Shaft | | 25 | 24 | 58 | 79 | 625 | |
| | 2014.12- | 5MT | F | L | MPV FWD BHY (DV6FD) | | GDS45126 | Drive Shaft | | 25 | 24 | 58.5 | 89 | 630 | |
| | 2014.12- | 5MT | F | R | MPV FWD BHY (DV6FD) | | GDS45104 | Drive Shaft | | 25 | 24 | 58 | 79 | 925 | |
| | 2014.12- | 5MT | F | R | MPV FWD BHY (DV6FD) | | GCO45027 | Outer Joint | | 25 | 34 | 58 | 79 | 55.5 | I |
| | 2014.12- | 6AMT | F | L | MPV FWD BHY (DV6FD) | | GDS10255 | Drive Shaft | | 25 | 24 | 58.5 | 79 | 616 | |
| | 2014.12- | 6AMT | F | R | MPV FWD BHY (DV6FD) | | GDS10254 | Drive Shaft | | 25 | 24 | 58.5 | 79 | 939 | |

| | YEAR | TRANSM. | F/R | L/R | BODY STYLE & DRIVE TYPE & ENGINE | REMARKS | G-AP Ref. | PRODUCT | ABS | Technical Specifications | | | | | |
|---|---|---|---|---|---|---|---|---|---|---|---|---|---|---|---|
| | | | | | | | | | | A | B | C | H | L | P |
| **PEUGEOT**<br>**Partner Tepee** | | | | | | | | | | | | | | | |
| 1.6 (73 kw) | 2014.12- | 6AMT | F | L/R | MPV FWD BHY (DV6FD) | | GCO10075 | Outer Joint | | 25 | 26 | 58.5 | 89 | 63 | M |
| | 2014.12- | 6AMT | F | L/R | MPV FWD BHY (DV6FD) | | GCO99366 | Outer Joint | | 25 | 34 | 58.5 | 79 | 55 | I |
| | 2014.12- | 6AMT | F | L | MPV FWD BHY (DV6FD) | | GCI10057 | Inner Joint | | 24 | 34 | 40 | 52.5 | 90 | |
| | 2014.12- | 6AMT | F | R | MPV FWD BHY (DV6FD) | | GCI10058 | Inner Joint | | 24 | 34 | 29.8 | 365 | 88 | |
| | 2014.12- | | F | L/R | MPV FWD BHY (DV6FD) | | GCO10042 | Outer Joint | | 25 | 34 | 54.8 | 78.5 | 56 | I |
| 1.6 (80 kw) | 2008.04- | 5MT | F | L | MPV FWD 9HZ (DV6TED4) | | GDS45126 | Drive Shaft | | 25 | 24 | 58.5 | 89 | 630 | |
| | 2008.04- | 5MT | F | R | MPV FWD 9HZ (DV6TED4) | | GDS45104 | Drive Shaft | | 25 | 24 | 58 | 79 | 925 | |
| | 2008.04- | 5MT | F | R | MPV FWD 9HZ (DV6TED4) | | GCO45027 | Outer Joint | | 25 | 34 | 58 | 79 | 55.5 | I |
| | 2008.04- | 5MT | F | L/R | MPV FWD 9HZ (DV6TED4) | | GCO99366 | Outer Joint | | 25 | 34 | 58.5 | 79 | 55 | I |
| | 2008.04- | AT | F | L | MPV FWD 9HZ (DV6TED4) | | GDS10255 | Drive Shaft | | 25 | 24 | 58.5 | 79 | 616 | |
| | 2008.04- | AT | F | R | MPV FWD 9HZ (DV6TED4) | | GDS10254 | Drive Shaft | | 25 | 24 | 58.5 | 79 | 939 | |
| | 2008.04- | MT | F | L | MPV FWD 9HZ (DV6TED4) | Trans. code:MC;Type:8MN27 | GDS10255 | Drive Shaft | | 25 | 24 | 58.5 | 79 | 616 | |
| | 2008.04- | MT | F | L | MPV FWD 9HZ (DV6TED4) | | GDS45105 | Drive Shaft | | 25 | 24 | 58 | 79 | 625 | |
| | 2008.04- | MT | F | R | MPV FWD 9HZ (DV6TED4) | Trans. code:MC;Type:8MN28 | GDS10254 | Drive Shaft | | 25 | 24 | 58.5 | 79 | 939 | |
| | 2008.04- | MT | F | L | MPV FWD 9HZ (DV6TED4) | | GCI10057 | Inner Joint | | 24 | 34 | 40 | 52.5 | 90 | |
| | 2008.04- | MT | F | R | MPV FWD 9HZ (DV6TED4) | | GCI10058 | Inner Joint | | 24 | 34 | 29.8 | 365 | 88 | |
| | 2008.04- | | F | L/R | MPV FWD 9HZ (DV6TED4) | | GCO10042 | Outer Joint | | 25 | 34 | 54.8 | 78.5 | 56 | I |
| | 2008.04- | 5MT | F | L | MPV FWD NFU (TU5JP4) | | GDS45126 | Drive Shaft | | 25 | 24 | 58.5 | 89 | 630 | |
| | 2008.04- | 5MT | F | R | MPV FWD NFU (TU5JP4) | | GDS45104 | Drive Shaft | | 25 | 24 | 58 | 79 | 925 | |
| | 2008.04- | 5MT | F | R | MPV FWD NFU (TU5JP4) | | GCO45027 | Outer Joint | | 25 | 34 | 58 | 79 | 55.5 | I |
| | 2008.04- | 5MT | F | L/R | MPV FWD NFU (TU5JP4) | | GCO99366 | Outer Joint | | 25 | 34 | 58.5 | 79 | 55 | I |
| | 2008.04- | AT | F | L | MPV FWD NFU (TU5JP4) | | GDS10255 | Drive Shaft | | 25 | 24 | 58.5 | 79 | 616 | |
| | 2008.04- | AT | F | R | MPV FWD NFU (TU5JP4) | | GDS10254 | Drive Shaft | | 25 | 24 | 58.5 | 79 | 939 | |
| | 2008.04- | MT | F | L | MPV FWD NFU (TU5JP4) | Trans. code:MC;Type:8MN27 | GDS10255 | Drive Shaft | | 25 | 24 | 58.5 | 79 | 616 | |
| | 2008.04- | MT | F | L | MPV FWD NFU (TU5JP4) | | GDS45105 | Drive Shaft | | 25 | 24 | 58 | 79 | 625 | |
| | 2008.04- | MT | F | R | MPV FWD NFU (TU5JP4) | Trans. code:MC;Type:8MN28 | GDS10254 | Drive Shaft | | 25 | 24 | 58.5 | 79 | 939 | |
| | 2008.04- | MT | F | L | MPV FWD NFU (TU5JP4) | | GCI10057 | Inner Joint | | 24 | 34 | 40 | 52.5 | 90 | |
| | 2008.04- | MT | F | R | MPV FWD NFU (TU5JP4) | | GCI10058 | Inner Joint | | 24 | 34 | 29.8 | 365 | 88 | |
| | 2008.04- | | F | L/R | MPV FWD NFU (TU5JP4) | | GCO10042 | Outer Joint | | 25 | 34 | 54.8 | 78.5 | 56 | I |
| 1.6 (81 kw) | 2008.09- | | F | L/R | MPV FWD NFU (TU5JP4) | | GCO10042 | Outer Joint | | 25 | 34 | 54.8 | 78.5 | 56 | I |
| | 2008.09- | | F | | MPV FWD NFU (TU5JP4) | | GCO99366 | Outer Joint | | 25 | 34 | 58.5 | 79 | 55 | I |
| 1.6 (82 kw) | 2010.08- | AT | F | L | MPV FWD 9HL (DV6C) | Date from:2011.01 | GDS10255 | Drive Shaft | | 25 | 24 | 58.5 | 79 | 616 | |
| | 2010.08- | AT | F | R | MPV FWD 9HL (DV6C) | Date from:2011.01 | GDS10254 | Drive Shaft | | 25 | 24 | 58.5 | 79 | 939 | |
| | 2010.08- | AT | F | L/R | MPV FWD 9HL (DV6C) | | GCO99366 | Outer Joint | | 25 | 34 | 58.5 | 79 | 55 | I |
| | 2010.08- | AT | F | L | MPV FWD 9HL (DV6C) | Date from:2011.01 | GCI10057 | Inner Joint | | 24 | 34 | 40 | 52.5 | 90 | |
| | 2010.08- | AT | F | R | MPV FWD 9HL (DV6C) | Date from:2011.01 | GCI10058 | Inner Joint | | 24 | 34 | 29.8 | 365 | 88 | |
| | 2010.08- | MT | F | L | MPV FWD 9HL (DV6C) | Date from:2011.01 | GDS45105 | Drive Shaft | | 25 | 24 | 58 | 79 | 625 | |
| | 2010.08- | MT | F | L | MPV FWD 9HL (DV6C) | | GDS45126 | Drive Shaft | | 25 | 24 | 58.5 | 89 | 630 | |
| | 2010.08- | MT | F | R | MPV FWD 9HL (DV6C) | | GDS45104 | Drive Shaft | | 25 | 24 | 58 | 79 | 925 | |
| | 2010.08- | MT | F | L | MPV FWD 9HL (DV6C) | | GCO45038 | Outer Joint | | 25 | 34 | 58.5 | 89 | 55 | I |
| | 2010.08- | MT | F | L/R | MPV FWD 9HL (DV6C) | | GCO45027 | Outer Joint | | 25 | 34 | 58 | 79 | 55.5 | I |
| | 2010.08- | MT | F | L | MPV FWD 9HL (DV6C) | Date from:2011.01 | GCI10020 | Inner Joint | | 24 | 34 | 40 | 62.5 | 99 | |
| 1.6 (84 kw) | 2013.03- | 5MT | F | R | MPV FWD 9HL (DV6C) | | GDS45104 | Drive Shaft | | 25 | 24 | 58 | 79 | 925 | |
| | 2013.03- | AT | F | L | MPV FWD 9HL (DV6C) | | GDS10255 | Drive Shaft | | 25 | 24 | 58.5 | 79 | 616 | |
| | 2013.03- | AT | F | R | MPV FWD 9HL (DV6C) | | GDS10254 | Drive Shaft | | 25 | 24 | 58.5 | 79 | 939 | |
| | 2013.03- | MT | F | L | MPV FWD 9HL (DV6C) | | GDS45105 | Drive Shaft | | 25 | 24 | 58 | 79 | 625 | |
| | 2013.03- | MT | F | L | MPV FWD 9HL (DV6C) | | GDS45126 | Drive Shaft | | 25 | 24 | 58.5 | 89 | 630 | |
| | 2013.03- | MT | F | R | MPV FWD 9HL (DV6C) | | GCO45027 | Outer Joint | | 25 | 34 | 58 | 79 | 55.5 | I |
| | 2013.03- | MT | F | L/R | MPV FWD 9HL (DV6C) | | GCO99366 | Outer Joint | | 25 | 34 | 58.5 | 79 | 55 | I |
| | 2013.03- | | F | L/R | MPV FWD 9HL (DV6C) | | GCO10042 | Outer Joint | | 25 | 34 | 54.8 | 78.5 | 56 | I |
| 1.6 (88 kw) | 2009.09-2016.04 | 5MT | F | L | MPV FWD 5FS (EP6C) | | GDS45105 | Drive Shaft | | 25 | 24 | 58 | 79 | 625 | |
| | 2009.09-2016.04 | 5MT | F | L | MPV FWD 5FS (EP6C) | | GDS45126 | Drive Shaft | | 25 | 24 | 58.5 | 89 | 630 | |
| | 2009.09-2016.04 | 5MT | F | R | MPV FWD 5FS (EP6C) | | GDS45104 | Drive Shaft | | 25 | 24 | 58 | 79 | 925 | |
| | 2009.09-2016.04 | 5MT | F | R | MPV FWD 5FS (EP6C) | | GCO45027 | Outer Joint | | 25 | 34 | 58 | 79 | 55.5 | I |
| | 2009.09-2016.04 | | F | L/R | MPV FWD 5FS (EP6C) | | GCO10042 | Outer Joint | | 25 | 34 | 54.8 | 78.5 | 56 | I |
| | 2009.09-2016.04 | | F | L/R | MPV FWD 5FS (EP6C) | | GCO99366 | Outer Joint | | 25 | 34 | 58.5 | 79 | 55 | I |
| | 2014.12- | 6AT | F | L | MPV FWD BHZ (DV6FC) | | GCO99366 | Outer Joint | | 25 | 34 | 58.5 | 79 | 55 | I |
| | 2014.12- | 6MT | F | L | MPV FWD BHZ (DV6FC) | | GDS10255 | Drive Shaft | | 25 | 24 | 58.5 | 79 | 616 | |
| | 2014.12- | 6MT | F | R | MPV FWD BHZ (DV6FC) | | GDS10254 | Drive Shaft | | 25 | 24 | 58.5 | 79 | 939 | |
| | 2014.12- | MT | F | L | MPV FWD BHZ (DV6FC) | Date from:2015.01 | GDS45105 | Drive Shaft | | 25 | 24 | 58 | 79 | 625 | |
| | 2014.12- | MT | F | R | MPV FWD BHZ (DV6FC) | Date from:2015.01 | GDS45104 | Drive Shaft | | 25 | 24 | 58 | 79 | 925 | |
| | 2014.12- | MT | F | L | MPV FWD BHZ (DV6FC) | | GCI10057 | Inner Joint | | 24 | 34 | 40 | 52.5 | 90 | |
| | 2014.12- | MT | F | R | MPV FWD BHZ (DV6FC) | | GCI10058 | Inner Joint | | 24 | 34 | 29.8 | 365 | 88 | |
| | 2014.12- | | F | L/R | MPV FWD BHZ (DV6FC) | | GCO10042 | Outer Joint | | 25 | 34 | 54.8 | 78.5 | 56 | I |
| | 2014.12- | | F | L/R | MPV FWD BHZ (DV6FC) | | GCO10075 | Outer Joint | | 25 | 26 | 58.5 | 89 | 63 | M |

| | YEAR | TRANSM. | F/R | L/R | BODY STYLE & DRIVE TYPE & ENGINE | REMARKS | G-AP Ref. | PRODUCT | ABS | Technical Specifications A | B | C | H | L | P |
|---|---|---|---|---|---|---|---|---|---|---|---|---|---|---|---|
| **PEUGEOT** | | | | | | | | | | | | | | | |
| **Partner/Ranch** | | | | | | | | | | | | | | | |
| 1.4 (54 kw) | 2002.11-2006.10 | MT | F | R | MPV Van FWD KFV(TU3A) | | GDS10110 | Drive Shaft | | 25 | 22 | 54.5 | 79.5 | 862 | |
| 1.4 (55 kw) | 2003.04-2006.10 | 5MT | F | L | Box Body/MPV FWD KFW (TU3JP) | | GDS10021 | Drive Shaft | 29T | 25 | 22 | 60 | 80 | 593 | |
| | 2003.04-2006.10 | 5MT | F | L | Box Body/MPV FWD KFW (TU3JP) | | GDS10187 | Drive Shaft | 29T | 25 | 22 | 54.5 | 79.5 | 590.5 | |
| | 2003.04-2006.10 | 5MT | F | L | Box Body/MPV FWD KFW (TU3JP) | | GDS10204 | Drive Shaft | | 25 | 22 | 58.5 | 79 | 594 | |
| | 2003.04-2006.10 | 5MT | F | R | Box Body/MPV FWD KFW (TU3JP) | | GDS10019 | Drive Shaft | 29T | 25 | 22 | 60 | 80 | 867 | |
| | 2003.04-2006.10 | 5MT | F | R | Box Body/MPV FWD KFW (TU3JP) | For vehicles without ABS | GDS10205 | Drive Shaft | | 25 | 22 | 58.5 | 79 | 866 | |
| | 2003.04-2006.10 | 5MT | F | R | Box Body/MPV FWD KFW (TU3JP) | | GDS10205 | Drive Shaft | | 25 | 22 | 58.5 | 79 | 866 | |
| | 2003.04-2006.10 | 5MT | F | R | Box Body/MPV FWD KFW (TU3JP) | | GDS82450 | Drive Shaft | 48T | 25 | 22 | 58.5 | 79.5 | 865 | |
| | 2003.04-2006.10 | 5MT | F | L | Box Body/MPV FWD KFW (TU3JP) | | GCI10023 | Inner Joint | | 22 | 22 | 40 | 58.5 | 86 | |
| | 2003.04-2006.10 | 5MT | F | R | Box Body/MPV FWD KFW (TU3JP) | | GCI10024 | Inner Joint | | 22 | 22 | 30 | 329.5 | 86 | |
| | 2003.04-2006.10 | MT | F | R | Box Body/MPV FWD KFW (TU3JP) | Model Partner Date from 2004.02 From DR5/DFR.09.06 Model Ranch For vehicles with ABS | GDS82450 | Drive Shaft | 48T | 25 | 22 | 58.5 | 79.5 | 865 | |
| **Partner/Urbana** | | | | | | | | | | | | | | | |
| 1.6 (81 kw) | 2000.09-2015.12 | | F | | MPV FWD NFU(TU5JP4) | | GCO10076 | Outer Joint | 29W | 25 | 34 | 58.5 | 79 | 55 | I |
| **RCZ** | | | | | | | | | | | | | | | |
| 1.6 (115 kw) | 2010.03-2015.12 | 6MT | F | R | Coupe FWD 5FV (EP6CDT) | Wheel Hub Diameter [mm]:83 | GDS84332 | Drive Shaft | | 28 | 24 | 58.6 | 93 | 978 | |
| | 2010.03-2015.12 | MT | F | L/R | Coupe FWD 5FV (EP6CDT) | Wheel Hub Diam:82mm | GCO99366 | Outer Joint | | 25 | 34 | 58.5 | 79 | 55 | I |
| | 2010.03-2015.12 | | F | L/R | Coupe FWD 5FV (EP6CDT) | | GCO10042 | Outer Joint | | 25 | 34 | 54.8 | 78.5 | 56 | I |
| 1.6 (147 kw) | 2010.06-2015.12 | 6MT | F | R | Coupe FWD 5FU (EP6CDTX) | Wheel Hub Diameter [mm]:83 | GDS84332 | Drive Shaft | | 28 | 24 | 58.6 | 93 | 978 | |
| 1.6 (199 kw) | 2013.06-2015.12 | 6MT | F | R | Coupe FWD 5FG (EP6CDTR) | Wheel Hub Diameter [mm]:83 | GDS84332 | Drive Shaft | | 28 | 24 | 58.6 | 93 | 978 | |
| | 2013.06-2015.12 | MT | F | L/R | Coupe FWD 5FG (EP6CDTR) | Wheel Hub Diam:82mm | GCO99366 | Outer Joint | | 25 | 34 | 58.5 | 79 | 55 | I |
| 2.0 (120 kw) | 2010.03-2015.12 | 6MT | F | L | Coupe FWD RHH (DW10CTED4) | Wheel Hub Diam:83 mm | GDS45133 | Drive Shaft | | 28 | 37 | 58.6 | 94 | 653 | |
| | 2010.03-2015.12 | 6MT | F | R | Coupe FWD RHH (DW10CTED4) | Wheel Hub Diameter [mm]:83 | GDS10302 | Drive Shaft | | 28 | 37 | 58.6 | 94 | 969 | |
| | 2010.03-2015.12 | 6MT | F | L/R | Coupe FWD RHH (DW10CTED4) | | GCO10051 | Outer Joint | | 28 | 39 | 58.6 | 94 | 63 | I |
| | 2010.03-2015.12 | 6MT | F | L/R | Coupe FWD RHH (DW10CTED4) | Trans. code:ML6C | GCO10155 | Outer Joint | | 25 | 39 | 58.5 | 89 | 63.5 | I |
| | 2010.03-2015.12 | 6MT | F | R | Coupe FWD RHH (DW10CTED4) | | GCI10041 | Inner Joint | | 37 | 39 | 32 | 399 | 95.5 | |
| **Rifter** | | | | | | | | | | | | | | | |
| 1.2 (81 kw) | 2018.09- | 5MT | F | R | MPV FWD HNP (EB2ADT) | | GDS84457 | Drive Shaft | | 28 | 24 | 58.5 | 92.5 | 921 | |
| | 2018.09- | 6MT | F | L | MPV FWD HNP (EB2ADT) | | GDS83616 | Drive Shaft | | 28 | 24 | 58.5 | 92.5 | 681 | |
| | 2018.09- | 6MT | F | R | MPV FWD HNP (EB2ADT) | | GDS83663 | Drive Shaft | | 28 | 24 | 58.5 | 92.5 | 919 | |
| | 2018.09- | 6MT | F | L/R | MPV FWD HNP (EB2ADT) | | GCO82273 | Outer Joint | | 28 | 34 | 58.5 | 92.5 | 56 | I |
| | 2018.09- | 6MT | F | L | MPV FWD HNP (EB2ADT) | | GCI82131 | Inner Joint | | 24 | 34 | 40 | 62 | 89 | |
| | 2018.09- | 6MT | F | R | MPV FWD HNP (EB2ADT) | | GCI82320 | Inner Joint | | 24 | 34 | 29.8 | 290 | 88 | |
| | 2018.09- | 6MT | F | R | MPV FWD HNP (EB2ADT) | | GCI82769 | Inner Joint | | 24 | 34 | 40 | 61 | 103 | |
| 1.2 (96 kw) | 2019.07- | 8AT | F | L | MPV FWD HNS (EB2ADTS) | | GDS84579 | Drive Shaft | | 28 | 37 | 58.5 | 92.5 | 641 | |
| | 2019.07- | 8AT | F | R | MPV FWD HNS (EB2ADTS) | | GDS84582 | Drive Shaft | | 28 | 37 | 58.5 | 92.5 | 918 | |
| | 2019.07- | 8AT | F | L/R | MPV FWD HNS (EB2ADTS) | | GCO82273 | Outer Joint | | 28 | 34 | 58.5 | 92.5 | 56 | I |
| | 2019.07- | 8AT | F | L | MPV FWD HNS (EB2ADTS) | | GCI82119 | Inner Joint | | 37 | 34 | 41.5 | 58.5 | 94 | |
| | 2019.07- | 8AT | F | R | MPV FWD HNS (EB2ADTS) | | GCI82118 | Inner Joint | | 37 | 34 | | 290 | 88 | |
| 1.5 (55 kw) | 2018.09- | 5MT | F | L | MPV FWD YHW (DV5RE) | | GDS83616 | Drive Shaft | | 28 | 24 | 58.5 | 92.5 | 681 | |
| | 2018.09- | 5MT | F | R | MPV FWD YHW (DV5RE) | For vehicles witouth track widening | GDS83663 | Drive Shaft | | 28 | 24 | 58.5 | 92.5 | 919 | |
| | 2018.09- | 5MT | F | R | MPV FWD YHW (DV5RE) | For vehicles with track widening | GDS84457 | Drive Shaft | | 28 | 24 | 58.5 | 92.5 | 921 | |
| | 2018.09- | 5MT | F | L | MPV FWD YHW (DV5RE) | | GCO82273 | Outer Joint | | 28 | 34 | 58.5 | 92.5 | 56 | I |
| | 2018.09- | 5MT | F | R | MPV FWD YHW (DV5RE) | For vehicles with track widening | GCO81397 | Outer Joint | | 28 | 34 | 58.5 | 92.5 | 56 | I |
| | 2018.09- | 5MT | F | L | MPV FWD YHW (DV5RE) | | GCI82131 | Inner Joint | | 24 | 34 | 40 | 62 | 89 | |
| | 2018.09- | 5MT | F | R | MPV FWD YHW (DV5RE) | For vehicles with track widening | GCI82769 | Inner Joint | | 24 | 34 | 40 | 61 | 103 | |
| 1.5 (75 kw) | 2018.08- | 5MT | F | L | MPV FWD YHY (DV5RD);YHT (DV5RCF) | | GDS83616 | Drive Shaft | | 28 | 24 | 58.5 | 92.5 | 681 | |
| | 2018.08- | 5MT | F | R | MPV FWD YHY (DV5RD);YHT (DV5RCF) | For vehicles without track widening | GDS83663 | Drive Shaft | | 28 | 24 | 58.5 | 92.5 | 919 | |
| | 2018.08- | 5MT | F | R | MPV FWD YHY (DV5RD);YHT (DV5RCF) | For vehicles with track widening | GDS84457 | Drive Shaft | | 28 | 24 | 58.5 | 92.5 | 921 | |
| | 2018.08- | 5MT | F | L | MPV FWD YHY (DV5RD);YHT (DV5RCF) | | GCO82273 | Outer Joint | | 28 | 34 | 58.5 | 92.5 | 56 | I |
| | 2018.08- | 5MT | F | R | MPV FWD YHY (DV5RD);YHT (DV5RCF) | For vehicles with track widening | GCO81397 | Outer Joint | | 28 | 34 | 58.5 | 92.5 | 56 | I |
| | 2018.08- | 5MT | F | L | MPV FWD YHY (DV5RD);YHT (DV5RCF) | | GCI82131 | Inner Joint | | 24 | 34 | 40 | 62 | 89 | |
| | 2018.08- | 5MT | F | R | MPV FWD YHY (DV5RD);YHT (DV5RCF) | For vehicles without track widening | GCI82320 | Inner Joint | | 24 | 34 | 29.8 | 290 | 88 | |
| | 2018.08- | 5MT | F | R | MPV FWD YHY (DV5RD);YHT (DV5RCF) | For vehicles with track widening | GCI82769 | Inner Joint | | 24 | 34 | 40 | 61 | 103 | |
| 1.5 (96 kw) | 2018.09- | 5MT | F | R | MPV FWD YHZ (DV5RC);YHP (DV5RC) | | GDS84457 | Drive Shaft | | 28 | 24 | 58.5 | 92.5 | 921 | |
| | 2018.09- | 5MT/6MT | F | L | MPV FWD YHZ (DV5RC);YHP (DV5RC) | Trans. code:MB6/BE4R | GDS83616 | Drive Shaft | | 28 | 24 | 58.5 | 92.5 | 681 | |
| | 2018.09- | 6MT | F | L | MPV FWD YHZ (DV5RC);YHP (DV5RC) | Trans. code:MC | GDS84170 | Drive Shaft | | 28 | 37 | 58.5 | 92.5 | 670 | |
| | 2018.09- | 6MT | F | R | MPV FWD YHZ (DV5RC);YHP (DV5RC) | Trans. code:MB6 | GDS83663 | Drive Shaft | | 28 | 24 | 58.5 | 92.5 | 919 | |
| | 2018.09- | 6MT | F | R | MPV FWD YHZ (DV5RC);YHP (DV5RC) | Trans. code:MC | GDS84336 | Drive Shaft | | 28 | 37 | 58.5 | 92.5 | 930 | |
| | 2018.09- | 6MT | F | L/R | MPV FWD YHZ (DV5RC);YHP (DV5RC) | | GCO82273 | Outer Joint | | 28 | 34 | 58.5 | 92.5 | 56 | I |
| | 2018.09- | 6MT | F | L | MPV FWD YHZ (DV5RC);YHP (DV5RC) | | GCI82301 | Inner Joint | | 37 | 34 | 40 | 65.5 | 89.5 | |
| | 2018.09- | 6MT | F | R | MPV FWD YHZ (DV5RC);YHP (DV5RC) | Trans. code:ML6C | GCI82300 | Inner Joint | | 37 | 34 | 31.9 | 302 | 88 | |
| | 2018.09- | 6MT | F | R | MPV FWD YHZ (DV5RC);YHP (DV5RC) | Trans. code:MB6 | GCI82769 | Inner Joint | | 24 | 34 | 40 | 61 | 103 | |
| | 2018.09- | 8AT | F | L | MPV FWD YHZ (DV5RC);YHP (DV5RC) | | GDS84579 | Drive Shaft | | 28 | 37 | 58.5 | 92.5 | 641 | |
| | 2018.09- | 8AT | F | R | MPV FWD YHZ (DV5RC);YHP (DV5RC) | | GDS84582 | Drive Shaft | | 28 | 37 | 58.5 | 92.5 | 918 | |
| | 2018.09- | 8AT | F | L | MPV FWD YHZ (DV5RC);YHP (DV5RC) | | GCI82119 | Inner Joint | | 37 | 34 | 41.5 | 58.5 | 94 | |

| | YEAR | TRANSM. | F/R | L/R | BODY STYLE & DRIVE TYPE & ENGINE | REMARKS | G-AP Ref. | PRODUCT | ABS | Technical Specifications A | B | C | H | L | P |
|---|---|---|---|---|---|---|---|---|---|---|---|---|---|---|---|
| **PEUGEOT** | | | | | | | | | | | | | | | |
| **Rifter** | | | | | | | | | | | | | | | |
| 1.5 (96 kw) | 2018.09- | 8AT | F | R | MPV FWD YHZ (DV5RC);YHP (DV5RC) | | GCI82118 | Inner Joint | | 37 | 34 | | 290 | 88 | |
| 1.6 (55 kw) | 2018.09- | 5MT | F | L | MPV FWD BHW (DV6FE);9HN (DV6ETED) | | GDS83616 | Drive Shaft | | 28 | 24 | 58.5 | 92.5 | 681 | |
| | 2018.09- | 5MT | F | R | MPV FWD BHW (DV6FE);9HN (DV6ETED) | | GDS83663 | Drive Shaft | | 28 | 24 | 58.5 | 92.5 | 919 | |
| | 2018.09- | 5MT | F | R | MPV FWD BHW (DV6FE);9HN (DV6ETED) | For vehicles with track widening | GDS84457 | Drive Shaft | | 28 | 24 | 58.5 | 92.5 | 921 | |
| | 2018.09- | 5MT | F | L | MPV FWD BHW (DV6FE);9HN (DV6ETED) | | GCO82273 | Outer Joint | | 28 | 34 | 58.5 | 92.5 | 56 | I |
| | 2018.09- | 5MT | F | R | MPV FWD BHW (DV6FE);9HN (DV6ETED) | For vehicles with track widening | GCO81397 | Outer Joint | | 28 | 34 | 58.5 | 92.5 | 56 | I |
| | 2018.09- | 5MT | F | L | MPV FWD BHW (DV6FE);9HN (DV6ETED) | | GCI82131 | Inner Joint | | 24 | 34 | 40 | 62 | 89 | |
| | 2018.09- | 5MT | F | R | MPV FWD BHW (DV6FE);9HN (DV6ETED) | For vehicles without track widening | GCI82320 | Inner Joint | | 24 | 34 | 29.8 | 290 | 88 | |
| | 2018.09- | 5MT | F | R | MPV FWD BHW (DV6FE);9HN (DV6ETED) | For vehicles with track widening | GCI82769 | Inner Joint | | 24 | 34 | 40 | 61 | 103 | |
| 1.6 (68 kw) | 2018.09- | 5MT | F | L | MPV FWD 9HP (DV6DTED);BHN (DV6DR) | | GDS83616 | Drive Shaft | | 28 | 24 | 58.5 | 92.5 | 681 | |
| | 2018.09- | 5MT | F | R | MPV FWD 9HP (DV6DTED);BHN (DV6DR) | | GDS83663 | Drive Shaft | | 28 | 24 | 58.5 | 92.5 | 919 | |
| | 2018.09- | 5MT | F | R | MPV FWD 9HP (DV6DTED);BHN (DV6DR) | For vehicles with track widening | GDS84457 | Drive Shaft | | 28 | 24 | 58.5 | 92.5 | 921 | |
| | 2018.09- | 5MT | F | L | MPV FWD 9HP (DV6DTED);BHN (DV6DR) | | GCO82273 | Outer Joint | | 28 | 34 | 58.5 | 92.5 | 56 | I |
| | 2018.09- | 5MT | F | R | MPV FWD 9HP (DV6DTED);BHN (DV6DR) | For vehicles with track widening | GCO81397 | Outer Joint | | 28 | 34 | 58.5 | 92.5 | 56 | I |
| | 2018.09- | 5MT | F | L | MPV FWD 9HP (DV6DTED);BHN (DV6DR) | | GCI82131 | Inner Joint | | 24 | 34 | 40 | 62 | 89 | |
| | 2018.09- | 5MT | F | R | MPV FWD 9HP (DV6DTED);BHN (DV6DR) | For vehicles without track widening | GCI82320 | Inner Joint | | 24 | 34 | 29.8 | 290 | 88 | |
| | 2018.09- | 5MT | F | R | MPV FWD 9HP (DV6DTED);BHN (DV6DR) | For vehicles with track widening | GCI82769 | Inner Joint | | 24 | 34 | 40 | 61 | 103 | |
| 1.6 (73 kw) | 2018.09- | 5MT | F | L | MPV FWD BHY (DV6FD) | | GDS83616 | Drive Shaft | | 28 | 24 | 58.5 | 92.5 | 681 | |
| | 2018.09- | 5MT | F | R | MPV FWD BHY (DV6FD) | | GDS83663 | Drive Shaft | | 28 | 24 | 58.5 | 92.5 | 919 | |
| | 2018.09- | 5MT | F | R | MPV FWD BHY (DV6FD) | For vehicles with track widening | GDS84457 | Drive Shaft | | 28 | 24 | 58.5 | 92.5 | 921 | |
| | 2018.09- | 5MT | F | L | MPV FWD BHY (DV6FD) | | GCO82273 | Outer Joint | | 28 | 34 | 58.5 | 92.5 | 56 | I |
| | 2018.09- | 5MT | F | R | MPV FWD BHY (DV6FD) | For vehicles with track widening | GCO81397 | Outer Joint | | 28 | 34 | 58.5 | 92.5 | 56 | I |
| | 2018.09- | 5MT | F | L | MPV FWD BHY (DV6FD) | | GCI82131 | Inner Joint | | 24 | 34 | 40 | 62 | 89 | |
| | 2018.09- | 5MT | F | R | MPV FWD BHY (DV6FD) | For vehicles without track widening | GCI82320 | Inner Joint | | 24 | 34 | 29.8 | 290 | 88 | |
| | 2018.09- | 5MT | F | R | MPV FWD BHY (DV6FD) | For vehicles with track widening | GCI82769 | Inner Joint | | 24 | 34 | 40 | 61 | 103 | |
| **Traveller** | | | | | | | | | | | | | | | |
| 1.5 (75 kw) | 2018.06-2025.04 | 6MT | F | L | Bus FWD YHR (DV5RUCd) | | GDS82315 | Drive Shaft | | 28 | 37 | 58.6 | 93 | 719 | |
| | 2018.06-2025.04 | 6MT | F | R | Bus FWD YHR (DV5RUCd) | | GDS82316 | Drive Shaft | | 28 | 37 | 58.6 | 93 | 974 | |
| | 2018.06-2025.04 | 6MT | F | L/R | Bus FWD YHR (DV5RUCd) | | GCO10098 | Outer Joint | | 28 | 39 | 58.6 | 93 | 63 | I |
| | 2018.06-2025.04 | 6MT | F | R | Bus FWD YHR (DV5RUCd) | | GCI81759 | Inner Joint | | 37 | 34 | 31.9 | 302 | 88 | |
| 1.5 (88 kw) | 2018.06-2025.04 | 6MT | F | L | Bus FWD YHV (DV5RUC) | | GDS82315 | Drive Shaft | | 28 | 37 | 58.6 | 93 | 719 | |
| | 2018.06-2025.04 | 6MT | F | R | Bus FWD YHV (DV5RUC) | | GDS82316 | Drive Shaft | | 28 | 37 | 58.6 | 93 | 974 | |
| | 2018.06-2025.04 | 6MT | F | L/R | Bus FWD YHV (DV5RUC) | | GCO10098 | Outer Joint | | 28 | 39 | 58.6 | 93 | 63 | I |
| | 2018.06-2025.04 | 6MT | F | R | Bus FWD YHV (DV5RUC) | | GCI81759 | Inner Joint | | 37 | 34 | 31.9 | 302 | 88 | |
| 1.6 (70 kw) | 2016.04-2019.12 | 5MT | F | L | Bus FWD BHV (DV6FDU);BHS (DV6FDU) | Exhaust Emis Nm:Euro 5 | GDS84395 | Drive Shaft | | 28 | 24 | 58.6 | 93 | 732 | |
| | 2016.04-2019.12 | 5MT | F | R | Bus FWD BHV (DV6FDU);BHS (DV6FDU) | Date to:2021.01,for DAM no. to:16155LT,Vehicle Production Country:Great Britain | GDS84394 | Drive Shaft | | 28 | 24 | 58.6 | 93 | 965 | |
| | 2016.04-2019.12 | 5MT | F | L | Bus FWD BHV (DV6FDU);BHS (DV6FDU) | Exhaust Emis Nm:Euro 5 | GCO82805 | Outer Joint | | 28 | 39 | 58.6 | 93 | 63 | I |
| | 2016.04-2019.12 | 5MT | F | R | Bus FWD BHV (DV6FDU);BHS (DV6FDU) | Date to:2021.01,for DAM no. to:16155LT,Vehicle Production Country:Great Britain | GCO82805 | Outer Joint | | 28 | 39 | 58.6 | 93 | 63 | I |
| | 2016.04-2019.12 | 5MT | F | L/R | Bus FWD BHV (DV6FDU);BHS (DV6FDU) | | GCO10019 | Outer Joint | 48T | 25 | 39 | 59 | 89 | 63.5 | I |
| | 2016.04-2019.12 | 5MT | F | L | Bus FWD BHV (DV6FDU);BHS (DV6FDU) | Exhaust Emis Nm:Euro 5 | GCI10129 | Inner Joint | | 24 | 34 | 40 | 62 | 89 | |
| | 2016.04-2019.12 | 5MT | F | R | Bus FWD BHV (DV6FDU);BHS (DV6FDU) | Date to:2021.01,for DAM no. to:16155LT,Vehicle Production Country:Great Britain | GCI82740 | Inner Joint | | 24 | 34 | 29.8 | 290 | 88 | |
| 1.6 (85 kw) | 2016.04-2019.12 | 6MT | F | L | Bus FWD BHX (DV6FCU) | | GDS82315 | Drive Shaft | | 28 | 37 | 58.6 | 93 | 719 | |
| | 2016.04-2019.12 | 6MT | F | R | Bus FWD BHX (DV6FCU) | | GDS82316 | Drive Shaft | | 28 | 37 | 58.6 | 93 | 974 | |
| | 2016.04-2019.12 | 6MT | F | L/R | Bus FWD BHX (DV6FCU) | | GCO10098 | Outer Joint | | 28 | 39 | 58.6 | 93 | 63 | I |
| | 2016.04-2019.12 | 6MT | F | R | Bus FWD BHX (DV6FCU) | | GCI81759 | Inner Joint | | 37 | 34 | 31.9 | 302 | 88 | |
| | 2016.04-2019.12 | MT | F | L/R | Bus FWD BHX (DV6FCU) | | GCO10052 | Outer Joint | | 28 | 34 | 58.5 | 92 | 55 | I |
| 2.0 (90 kw) | 2019.09-2022.12 | 8AT | F | L | Bus FWD AHK (DW10FE) | For vehicles with standard suspension | GDS56191 | Drive Shaft | | 28 | 37 | 58.6 | 93 | 649 | |
| | 2019.09-2022.12 | 8AT | F | R | Bus FWD AHK (DW10FE) | For vehicles with standard suspension | GDS56190 | Drive Shaft | | 28 | 37 | 58.6 | 93 | 989 | |
| | 2019.09-2022.12 | 8AT | F | L/R | Bus FWD AHK (DW10FE) | For vehicles with standard suspension | GCO82805 | Outer Joint | | 28 | 39 | 58.6 | 93 | 63 | I |
| | 2019.09-2022.12 | 8AT | F | L | Bus FWD AHK (DW10FE) | For vehicles with standard suspension | GCI10120 | Inner Joint | | 37 | 39 | 42.2 | 60 | 95.5 | |
| | 2019.09-2022.12 | 8AT | F | R | Bus FWD AHK (DW10FE) | For vehicles with standard suspension | GCI45033 | Inner Joint | | 37 | 39 | | 379 | 96 | |
| 2.0 (106 kw) | 2020.09-2025.04 | 6MT | F | L | Bus FWD EHT (DW10FDDU340);EHS (DW10FDDU370) | For vehicles without standard suspension | GDS83778 | Drive Shaft | | 28 | 37 | 58.5 | 92.5 | 699 | |
| | 2020.09-2025.04 | 6MT | F | L | Bus FWD EHT (DW10FDDU340);EHS (DW10FDDU370) | For vehicles with standard suspension | GDS84397 | Drive Shaft | | 28 | 37 | 58.6 | 93 | 696 | |
| | 2020.09-2025.04 | 6MT | F | R | Bus FWD EHT (DW10FDDU340);EHS (DW10FDDU370) | For vehicles with standard suspension | GDS82847 | Drive Shaft | | 28 | 37 | 58.6 | 93 | 1005 | |
| | 2020.09-2025.04 | 6MT | F | R | Bus FWD EHT (DW10FDDU340);EHS (DW10FDDU370) | For vehicles without standard suspension | GDS83775 | Drive Shaft | | 28 | 37 | 58.5 | 92.5 | 1002 | |
| | 2020.09-2025.04 | 6MT | F | L | Bus FWD EHT (DW10FDDU340);EHS (DW10FDDU370) | For vehicles with standard suspension | GCI10040 | Inner Joint | | 37 | 39 | 40 | 69 | 95.5 | |
| | 2020.09-2025.04 | 6MT | F | L | Bus FWD EHT (DW10FDDU340);EHS (DW10FDDU370) | For vehicles without standard suspension | GCI82363 | Inner Joint | | 37 | 36 | 40 | 68 | 108 | |
| | 2020.09-2025.04 | 6MT | F | R | Bus FWD EHT (DW10FDDU340);EHS (DW10FDDU370) | For vehicles with standard suspension | GCI10041 | Inner Joint | | 37 | 39 | 32 | 399 | 95.5 | |
| | 2020.09-2025.04 | 6MT | F | R | Bus FWD EHT (DW10FDDU340);EHS (DW10FDDU370) | For vehicles without standard suspension | GCI82364 | Inner Joint | | 37 | 36 | 32 | 400 | 108 | |
| | 2020.09-2025.04 | 8AT | F | L | Bus FWD EHT (DW10FDDU340);EHS (DW10FDDU370) | For vehicles with standard suspension | GDS56191 | Drive Shaft | | 28 | 37 | 58.6 | 93 | 649 | |
| | 2020.09-2025.04 | 8AT | F | R | Bus FWD EHT (DW10FDDU340);EHS (DW10FDDU370) | For vehicles with standard suspension | GDS56190 | Drive Shaft | | 28 | 37 | 58.6 | 93 | 989 | |
| | 2020.09-2025.04 | 8AT | F | L/R | Bus FWD EHT (DW10FDDU340);EHS (DW10FDDU370) | For vehicles with standard suspension | GCO82805 | Outer Joint | | 28 | 39 | 58.6 | 93 | 63 | I |
| | 2020.09-2025.04 | 8AT | F | L | Bus FWD EHT (DW10FDDU340);EHS (DW10FDDU370) | For vehicles with standard suspension | GCI10120 | Inner Joint | | 37 | 39 | 42.2 | 60 | 95.5 | |
| | 2020.09-2025.04 | 8AT | F | R | Bus FWD EHT (DW10FDDU340);EHS (DW10FDDU370) | For vehicles with standard suspension | GCI45033 | Inner Joint | | 37 | 39 | | 379 | 96 | |
| 2.0 (110 kw) | 2016.04-2022.12 | 6AT | F | L | Bus FWD AHX (DW10FD) | For vehicles with standard suspension | GDS56191 | Drive Shaft | | 28 | 37 | 58.6 | 93 | 649 | |

| | YEAR | TRANSM. | F/R | L/R | BODY STYLE & DRIVE TYPE & ENGINE | REMARKS | G-AP Ref. | PRODUCT | ABS | Technical Specifications A | B | C | H | L | P |
|---|---|---|---|---|---|---|---|---|---|---|---|---|---|---|---|
| **PEUGEOT** | | | | | | | | | | | | | | | |
| **Traveller** | | | | | | | | | | | | | | | |
| 2.0 (110 kw) | 2016.04-2022.12 | 6AT | F | R | Bus FWD AHX (DW10FD) | For vehicles with standard suspension | GDS56190 | Drive Shaft | | 28 | 37 | 58.6 | 93 | 989 | |
| | 2016.04-2022.12 | 6AT | F | L/R | Bus FWD AHX (DW10FD) | For vehicles with standard suspension | GCO82805 | Outer Joint | | 28 | 39 | 58.6 | 93 | 63 | I |
| | 2016.04-2022.12 | 6MT | F | L | Bus FWD AHX (DW10FD) | Reinforced wheel suspension | GDS83778 | Drive Shaft | | 28 | 37 | 58.5 | 92.5 | 699 | |
| | 2016.04-2022.12 | 6MT | F | L | Bus FWD AHX (DW10FD) | For vehicles with standard suspension | GDS84397 | Drive Shaft | | 28 | 37 | 58.6 | 93 | 696 | |
| | 2016.04-2022.12 | 6MT | F | R | Bus FWD AHX (DW10FD) | For vehicles with standard suspension | GDS82847 | Drive Shaft | | 28 | 37 | 58.6 | 93 | 1005 | |
| | 2016.04-2022.12 | 6MT | F | R | Bus FWD AHX (DW10FD) | Reinforced wheel suspension | GDS83775 | Drive Shaft | | 28 | 37 | 58.5 | 92.5 | 1002 | |
| | 2016.04-2022.12 | 6MT | F | L/R | Bus FWD AHX (DW10FD) | Reinforced wheel suspension | GCO82483 | Outer Joint | | 28 | 36 | 58.5 | 92.5 | 60.5 | I |
| | 2016.04-2022.12 | 6MT | F | L | Bus FWD AHX (DW10FD) | Reinforced wheel suspension | GCI82363 | Inner Joint | | 37 | 36 | 40 | 68 | 108 | |
| | 2016.04-2022.12 | 6MT | F | R | Bus FWD AHX (DW10FD) | Reinforced wheel suspension | GCI82364 | Inner Joint | | 37 | 36 | 32 | 400 | 108 | |
| 2.0 (130 kw) | 2016.04-2025.04 | 6AT | F | L | Bus FWD AHH (DW10FC);EHZ (DW10FDCU) | For vehicles with standard suspension | GDS56191 | Drive Shaft | | 28 | 37 | 58.6 | 93 | 649 | |
| | 2016.04-2025.04 | 6AT | F | R | Bus FWD AHH (DW10FC);EHZ (DW10FDCU) | For vehicles with standard suspension | GDS56190 | Drive Shaft | | 28 | 37 | 58.6 | 93 | 989 | |
| | 2016.04-2025.04 | 6AT | F | L/R | Bus FWD AHH (DW10FC);EHZ (DW10FDCU) | For vehicles with standard suspension | GCO82805 | Outer Joint | | 28 | 39 | 58.6 | 93 | 63 | I |
| | 2016.04-2025.04 | 6AT | F | L | Bus FWD AHH (DW10FC);EHZ (DW10FDCU) | For vehicles with standard suspension | GCI10120 | Inner Joint | | 37 | 39 | 42.2 | 60 | 95.5 | |
| | 2016.04-2025.04 | 6AT | F | R | Bus FWD AHH (DW10FC);EHZ (DW10FDCU) | For vehicles with standard suspension | GCI45033 | Inner Joint | | 37 | 39 | | 379 | 96 | |
| **PIAGGIO** | | | | | | | | | | | | | | | |
| **Porter** | | | | | | | | | | | | | | | |
| 1.3 (48 kw) | 1998.05- | | F | L/R | Platform/Chassis 4WD HCEE | Date To:2002.07 | GCO75007 | Outer Joint | | 24 | 20 | 44 | 125.5 | 53 | O |
| | 1998.05- | | F | L/R | Van 4WD HCEE | Date to:2002.07 | GCO75007 | Outer Joint | | 24 | 20 | 44 | 125.5 | 53 | O |
| **POLESTAR** | | | | | | | | | | | | | | | |
| **Polestar 1** | | | | | | | | | | | | | | | |
| 2.0 (448 kw) | 2018.03- | | F | L | Coupe 4WD B 4204 T25;ERAD2.2 L/R;B 4204 T22 | | GDS58139 | Drive Shaft | | 40 | 31 | 54 | 53 | 573 | |
| | 2018.03- | | F | R | Coupe 4WD B 4204 T25;ERAD2.2 L/R;B 4204 T22 | | GDS58140 | Drive Shaft | | 40 | 28 | 54 | 53 | 996 | |
| | 2018.03- | | F | L/R | Coupe 4WD B 4204 T25;ERAD2.2 L/R;B 4204 T22 | | GCO83257 | Outer Joint | | 40 | 26 | 54 | 53 | 63 | M |
| | 2018.03- | | F | L | Coupe 4WD B 4204 T25;ERAD2.2 L/R;B 4204 T22 | | GCI84021 | Inner Joint | | 31 | 24 | 36.2 | 67.5 | 82.5 | |
| | 2018.03- | | F | R | Coupe 4WD B 4204 T25;ERAD2.2 L/R;B 4204 T22 | | GCI84022 | Inner Joint | | 28 | 24 | 33 | 494 | 79 | |
| **Polestar 2** | | | | | | | | | | | | | | | |
| EV (165 kw) | 2021.04-2022.12 | ET | F | L | Hatchback FWD E400V2;E400V5 | | GDS56630 | Drive Shaft | | 40 | 31 | 54.1 | 53 | 630 | |
| | 2021.04-2022.12 | ET | F | R | Hatchback FWD E400V2;E400V5 | | GDS56629 | Drive Shaft | | 40 | 28 | 54.1 | 53 | 935 | |
| | 2021.04-2022.12 | ET | F | L/R | Hatchback FWD E400V2;E400V5 | | GCO82347 | Outer Joint | | 40 | 28 | 54.1 | 53 | 62.5 | I |
| | 2021.04-2022.12 | ET | F | L | Hatchback FWD E400V2;E400V5 | | GCI83413 | Inner Joint | | 31 | 29 | 44 | 77 | 106 | |
| | 2021.04-2022.12 | ET | F | R | Hatchback FWD E400V2;E400V5 | | GCI83412 | Inner Joint | | 28 | 29 | 44 | 408 | 92 | |
| EV (170 kw) | 2021.04- | ET | F | L | Hatchback FWD E400V6 | | GDS56630 | Drive Shaft | | 40 | 31 | 54.1 | 53 | 630 | |
| | 2021.04- | ET | F | R | Hatchback FWD E400V6 | | GDS56629 | Drive Shaft | | 40 | 28 | 54.1 | 53 | 935 | |
| | 2021.04- | ET | F | L/R | Hatchback FWD E400V6 | | GCO82347 | Outer Joint | | 40 | 28 | 54.1 | 53 | 62.5 | I |
| | 2021.04- | ET | F | L | Hatchback FWD E400V6 | | GCI83413 | Inner Joint | | 31 | 29 | 44 | 77 | 106 | |
| | 2021.04- | ET | F | R | Hatchback FWD E400V6 | | GCI83412 | Inner Joint | | 28 | 29 | 44 | 408 | 92 | |
| EV (300 kw) | 2019.04-2023.12 | ET | F | L | Hatchback 4WD E400V6 | Chassis no. from:23471 | GDS56335 | Drive Shaft | | 40 | 31 | 54 | 53 | 632 | |
| | 2019.04-2023.12 | ET | F | L | Hatchback 4WD E400V6 | Chassis no. to:22160 | GDS56349 | Drive Shaft | | 40 | 28 | 54 | 53 | 636 | |
| | 2019.04-2023.12 | ET | F | R | Hatchback 4WD E400V6 | Chassis no. to:23470 | GDS56348 | Drive Shaft | | 40 | 28 | 54 | 53 | 938 | |
| | 2019.04-2023.12 | ET | F | L/R | Hatchback 4WD E400V6 | | GCO83257 | Outer Joint | | 40 | 26 | 54 | 53 | 63 | M |
| | 2019.04-2023.12 | ET | F | L | Hatchback 4WD E400V6 | Chassis no. from:23471 | GCI83248 | Inner Joint | | 31 | 26 | 44 | 77 | 79 | |
| | 2019.04-2023.12 | ET | F | L | Hatchback 4WD E400V6 | Chassis no. to:22160 | GCI83259 | Inner Joint | | 28 | 26 | 44 | 81 | 79 | |
| | 2019.04-2023.12 | ET | F | R | Hatchback 4WD E400V6 | Chassis no. to:23470 | GCI83258 | Inner Joint | | 28 | 26 | 44 | 407 | 65 | |
| | 2019.04-2023.12 | ET | R | L | Hatchback 4WD E400V6 | | GDS56597 | Drive Shaft | | 40 | 28 | 54 | 53 | 638 | |
| | 2019.04-2023.12 | ET | R | R | Hatchback 4WD E400V6 | | GDS56598 | Drive Shaft | | 40 | 28 | 54 | 53 | 942 | |
| | 2019.04-2023.12 | ET | R | L/R | Hatchback 4WD E400V6 | | GCO83356 | Outer Joint | | 40 | 26 | 54 | 53 | 68.5 | M |
| | 2019.04-2023.12 | ET | R | L | Hatchback 4WD E400V6 | | GCI83396 | Inner Joint | | 28 | 26 | 44 | 61.5 | 79 | |
| | 2019.04-2023.12 | ET | R | R | Hatchback 4WD E400V6 | | GCI83258 | Inner Joint | | 28 | 26 | 44 | 407 | 65 | |
| EV (310 kw) | 2023.03- | ET | F | L | Hatchback 4WD E400V26 | | GDS56335 | Drive Shaft | | 40 | 31 | 54 | 53 | 632 | |
| | 2023.03- | ET | F | R | Hatchback 4WD E400V26 | | GDS56348 | Drive Shaft | | 40 | 28 | 54 | 53 | 938 | |
| | 2023.03- | ET | F | L/R | Hatchback 4WD E400V26 | | GCO83257 | Outer Joint | | 40 | 26 | 54 | 53 | 63 | M |
| | 2023.03- | ET | F | L | Hatchback 4WD E400V26 | | GCI83248 | Inner Joint | | 31 | 26 | 44 | 77 | 79 | |
| | 2023.03- | ET | F | R | Hatchback 4WD E400V26 | | GCI83258 | Inner Joint | | 28 | 26 | 44 | 407 | 65 | |
| EV (350 kw) | 2023.01- | ET | F | L | Hatchback 4WD EAD31P;E400V35;E400V36 | | GDS56335 | Drive Shaft | | 40 | 31 | 54 | 53 | 632 | |
| | 2023.01- | ET | F | R | Hatchback 4WD EAD31P;E400V35;E400V36 | | GDS56348 | Drive Shaft | | 40 | 28 | 54 | 53 | 938 | |
| | 2023.01- | ET | F | L/R | Hatchback 4WD EAD31P;E400V35;E400V36 | | GCO83257 | Outer Joint | | 40 | 26 | 54 | 53 | 63 | M |
| | 2023.01- | ET | F | L | Hatchback 4WD EAD31P;E400V35;E400V36 | | GCI83248 | Inner Joint | | 31 | 26 | 44 | 77 | 79 | |
| | 2023.01- | ET | F | R | Hatchback 4WD EAD31P;E400V35;E400V36 | | GCI83258 | Inner Joint | | 28 | 26 | 44 | 407 | 65 | |
| | 2023.01- | ET | R | L | Hatchback 4WD EAD31P;E400V35;E400V36 | For Engine code:E400V35 | GDS56597 | Drive Shaft | | 40 | 28 | 54 | 53 | 638 | |
| | 2023.01- | ET | R | R | Hatchback 4WD EAD31P;E400V35;E400V36 | For Engine code:E400V35 | GDS56598 | Drive Shaft | | 40 | 28 | 54 | 53 | 942 | |
| | 2023.01- | ET | R | L/R | Hatchback 4WD EAD31P;E400V35;E400V36 | For Engine code:E400V35 | GCO83356 | Outer Joint | | 40 | 26 | 54 | 53 | 68.5 | M |
| | 2023.01- | ET | R | L | Hatchback 4WD EAD31P;E400V35;E400V36 | For Engine code:E400V35 | GCI83396 | Inner Joint | | 28 | 26 | 44 | 61.5 | 79 | |
| | 2023.01- | ET | R | R | Hatchback 4WD EAD31P;E400V35;E400V36 | For Engine code:E400V35 | GCI83258 | Inner Joint | | 28 | 26 | 44 | 407 | 65 | |

| | YEAR | TRANSM. | F/R | L/R | BODY STYLE & DRIVE TYPE & ENGINE | REMARKS | G-AP Ref. | PRODUCT | ABS | Technical Specifications A | B | C | H | L | P |
|---|---|---|---|---|---|---|---|---|---|---|---|---|---|---|---|
| **POLESTAR** | | | | | | | | | | | | | | | |
| **Polestar 4** | | | | | | | | | | | | | | | |
| EV (200 kw) | 2023.04- | ET | R | R | SUV RWD E400P02;TZ220XSA02 | | GDS58191 | Drive Shaft | | 40 | 30 | 58 | 52 | 637 | |
| | 2023.04- | ET | R | R | SUV RWD E400P02;TZ220XSA02 | | GCI84030 | Inner Joint | | 30 | 26 | 40 | 64 | 131 | |
| **PORSCHE** | | | | | | | | | | | | | | | |
| **718 Boxster** | | | | | | | | | | | | | | | |
| 2.5 (257 kw) | 2016.04- | 7DCT | R | L/R | Convertible RWD MDD.NC;DPHA;DNZA | | GDS57444 | Drive Shaft | | 28 | | 56 | 92 | 531 | |
| | 2016.04- | 7DCT | R | L/R | Convertible RWD MDD.NC;DPHA;DNZA | | GCI83674 | Inner Joint | | | 28 | | | 33 | |
| 2.5 (269 kw) | 2017.10- | 7DCT | R | L/R | Convertible RWD MDJ.UA;MDJ.UB;DPHB;DNZB;DNZC | | GDS57444 | Drive Shaft | | 28 | | 56 | 92 | 531 | |
| | 2017.10- | 7DCT | R | L/R | Convertible RWD MDJ.UA;MDJ.UB;DPHB;DNZB;DNZC | | GCI83674 | Inner Joint | | | 28 | | | 33 | |
| 4.0 (294 kw) | 2019.01- | 7DCT | R | L/R | Convertible RWD DKDC;DKDD;DWAC;DWAD | | GDS57444 | Drive Shaft | | 28 | | 56 | 92 | 531 | |
| | 2019.01- | 7DCT | R | L/R | Convertible RWD DKDC;DKDD;DWAC;DWAD | | GCI83674 | Inner Joint | | | 28 | | | 33 | |
| **718 Cayman** | | | | | | | | | | | | | | | |
| 2.5 (257 kw) | 2016.04- | 7DCT | R | L/R | Coupe RWD MDD.NC;DPHA;DNZA | | GDS57444 | Drive Shaft | | 28 | | 56 | 92 | 531 | |
| | 2016.04- | 7DCT | R | L/R | Coupe RWD MDD.NC;DPHA;DNZA | | GCI83674 | Inner Joint | | | 28 | | | 33 | |
| 2.5 (269 kw) | 2017.10- | 7DCT | R | L/R | Coupe RWD MDJ.UA;MDJ.UB;DPHB;DNZB;DNZC | | GDS57444 | Drive Shaft | | 28 | | 56 | 92 | 531 | |
| | 2017.10- | 7DCT | R | L/R | Coupe RWD MDJ.UA;MDJ.UB;DPHB;DNZB;DNZC | | GCI83674 | Inner Joint | | | 28 | | | 33 | |
| 4.0 (294 kw) | 2019.01- | 7DCT | R | L/R | Coupe RWD DKDC;DKDD;DWAC;DWAD | | GDS57444 | Drive Shaft | | 28 | | 56 | 92 | 531 | |
| | 2019.01- | 7DCT | R | L/R | Coupe RWD DKDC;DKDD;DWAC;DWAD | | GCI83674 | Inner Joint | | | 28 | | | 33 | |
| **911** | | | | | | | | | | | | | | | |
| 3.4 (221 kw) | 1997.08-2001.07 | AT/MT | R | L/R | Coupe RWD M9601/M9602 | | GCI48002 | Inner Joint | | | 28 | | | 32 | |
| | 1997.08-2001.07 | Semi-AT | R | L/R | Coupe RWD M9601/M9602 | Chassis no. from:992S603623/992S642182/992S630737 | GDS84429 | Drive Shaft | 48W | 28 | | 60.3 | 100 | 512 | |
| | 1997.08-2001.07 | Semi-AT | R | L/R | Coupe RWD M9601/M9602 | Chassis NO. from:992S603623/992S642182/992S630737 | GCI48009 | Inner Joint | 48W | 28 | 28 | 60.3 | 100 | 83.3 | |
| | 1997.09-2001.12 | 5AT/6MT | F | L/R | Coupe 4WD M9601/M9602/M9604 | | GDS84428 | Drive Shaft | 48T | 28 | | 56.5 | 94 | 683 | |
| | 1997.09-2001.12 | 5AT/6MT | R | L/R | Coupe 4WD M9601/M9602/M9604 | Chassis no. to:992S603635/992S642174/992S630727/992S630736;992S642181/992S630736 | GCI48002 | Inner Joint | | | 28 | | | 32 | |
| | 1997.09-2001.12 | Semi-AT | R | L/R | Coupe 4WD M9601/M9602/M9604 | Chassis no. from:992S603623/992S642182/992S630737 | GDS84429 | Drive Shaft | 48W | 28 | | 60.3 | 100 | 512 | |
| | 1997.09-2001.12 | Semi-AT | R | L/R | Coupe 4WD M9601/M9602/M9604 | Chassis NO. from:992S603623/992S642182/992S630737 | GCI48009 | Inner Joint | 48W | 28 | 28 | 60.3 | 100 | 83.3 | |
| | 1998.02-2001.09 | AT/MT | R | L/R | Cabriolet RWD M9601/M9602 | | GCI48002 | Inner Joint | | | 28 | | | 32 | |
| | 1998.02-2001.09 | Semi-AT | R | L/R | Cabriolet RWD M9601/M9602 | Chassis no. from:992S603623/992S642182/992S630737 | GDS84429 | Drive Shaft | 48W | 28 | | 60.3 | 100 | 512 | |
| | 1998.02-2001.09 | Semi-AT | R | L/R | Cabriolet RWD M9601/M9602 | Chassis NO. from:992S603623/992S642182/992S630737 | GCI48009 | Inner Joint | 48W | 28 | 28 | 60.3 | 100 | 83.3 | |
| | 1998.02-2001.11 | 5AT/6MT | F | L/R | Cabriolet 4WD M9601/M9602 | | GDS84428 | Drive Shaft | 48T | 28 | | 56.5 | 94 | 683 | |
| | 1998.02-2001.11 | 5AT/6MT | R | L/R | Cabriolet 4WD M9601/M9602 | Chassis no. to:992S603635/992S642174/992S630727/992S630736;992S642181/992S630736 | GCI48002 | Inner Joint | | | 28 | | | 32 | |
| | 1998.02-2001.11 | Semi-AT | R | L/R | Cabriolet 4WD M9601/M9602 | Chassis no. from:992S603623/992S642182/992S630737 | GDS84429 | Drive Shaft | 48W | 28 | | 60.3 | 100 | 512 | |
| | 1998.02-2001.11 | Semi-AT | R | L/R | Cabriolet 4WD M9601/M9602 | Chassis NO. from:992S603623/992S642182/992S630737 | GCI48009 | Inner Joint | 48W | 28 | 28 | 60.3 | 100 | 83.3 | |
| 3.4 (235 kw) | 2001.05-2005.08 | 5AT/6MT | F | L/R | Cabriolet 4WD M9602 | | GDS84428 | Drive Shaft | 48T | 28 | | 56.5 | 94 | 683 | |
| | 2001.05-2005.08 | AT/MT | R | L/R | Cabriolet 4WD M9602 | | GCI48002 | Inner Joint | | | 28 | | | 32 | |
| | 2001.05-2005.08 | AT | R | L/R | Cabriolet RWD M9602 | Chassis no. from:992S603623/992S642182/992S630737 | GDS84429 | Drive Shaft | 48W | 28 | | 60.3 | 100 | 512 | |
| | 2001.05-2005.08 | AT | R | L/R | Cabriolet RWD M9602 | Chassis NO. from:992S603623/992S642182/992S630737 | GCI48009 | Inner Joint | 48W | 28 | 28 | 60.3 | 100 | 83.3 | |
| | 2001.05-2005.08 | AT/MT | R | L/R | Cabriolet RWD M9602 | | GCI48002 | Inner Joint | | | 28 | | | 32 | |
| | 2001.05-2005.08 | AT | R | L/R | Coupe 4WD M9602 | Chassis no. from:992S603623/992S642182/992S630737 | GDS84429 | Drive Shaft | 48W | 28 | | 60.3 | 100 | 512 | |
| | 2001.05-2005.08 | AT | R | L/R | Coupe 4WD M9602 | Chassis NO. from:992S603623/992S642182/992S630737 | GCI48009 | Inner Joint | 48W | 28 | 28 | 60.3 | 100 | 83.3 | |
| | 2001.05-2005.08 | AT/MT | R | L/R | Coupe 4WD M9602 | | GCI48002 | Inner Joint | | | 28 | | | 32 | |
| | 2001.05-2005.08 | 5AT/6MT | R | L/R | Coupe RWD M9602 | | GCI48002 | Inner Joint | | | 28 | | | 32 | |
| | 2001.05-2005.08 | Semi-AT | R | L/R | Coupe RWD M9602 | Chassis no. from:992S603623/992S642182/992S630737 | GDS84429 | Drive Shaft | 48W | 28 | | 60.3 | 100 | 512 | |
| | 2001.05-2005.08 | Semi-AT | R | L/R | Coupe RWD M9602 | Chassis NO. from:992S603623/992S642182/992S630737 | GCI48009 | Inner Joint | 48W | 28 | 28 | 60.3 | 100 | 83.3 | |
| 3.6 (200 kw) | 1993.10-1997.12 | AT/MT | R | L/R | Coupe RWD M6405/M6406/M6407/M6408 | | GCI48002 | Inner Joint | | | 28 | | | 32 | |
| | 1994.07-1998.12 | AT/MT | R | L/R | Cabriolet RWD M6405/M6406/M6407/M6408 | | GCI48002 | Inner Joint | | | 28 | | | 32 | |
| 3.6 (210 kw) | 1995.03-1997.09 | MT | R | L/R | Cabriolet RWD M6421/M6422 | | GCI48002 | Inner Joint | | | 28 | | | 32 | |
| | 1995.03-1997.09 | MT | R | L/R | Coupe RWD M6421/M6422 | | GCI48002 | Inner Joint | | | 28 | | | 32 | |
| | 1995.03-1998.12 | MT | R | L/R | Cabriolet 4WD M6421 | | GCI48002 | Inner Joint | | | 28 | | | 32 | |
| | 1995.03-1998.12 | MT | R | L/R | Coupe 4WD M6421 | | GCI48002 | Inner Joint | | | 28 | | | 32 | |
| | 1995.08-1997.09 | MT | R | L/R | Targa RWD M6421/M6422 | | GCI48002 | Inner Joint | | | 28 | | | 32 | |
| 3.6 (235 kw) | 2001.08-2005.01 | 5AT/6MT | F | L/R | Cabriolet 4WD M9603 | | GDS84428 | Drive Shaft | 48T | 28 | | 56.5 | 94 | 683 | |
| | 2001.08-2005.01 | 5AT/6MT | R | L/R | Cabriolet 4WD M9603 | Chassis no. to:992S603635/992S642174/992S630727/992S630736;992S642181/992S630736 | GCI48002 | Inner Joint | | | 28 | | | 32 | |
| | 2001.08-2005.01 | Semi-AT | R | L/R | Cabriolet 4WD M9603 | Chassis no. from:992S603623/992S642182/992S630737 | GDS84429 | Drive Shaft | 48W | 28 | | 60.3 | 100 | 512 | |
| | 2001.08-2005.01 | Semi-AT | R | L/R | Cabriolet 4WD M9603 | Chassis NO. from:992S603623/992S642182/992S630737 | GCI48009 | Inner Joint | 48W | 28 | 28 | 60.3 | 100 | 83.3 | |
| | 2001.10-2005.08 | AT/MT | R | L/R | Cabriolet RWD M9603 | | GCI48002 | Inner Joint | | | 28 | | | 32 | |
| | 2001.10-2005.08 | Semi-AT | R | L/R | Cabriolet RWD M9603 | Chassis no. from:992S603623/992S642182/992S630737 | GDS84429 | Drive Shaft | 48W | 28 | | 60.3 | 100 | 512 | |
| | 2001.10-2005.08 | Semi-AT | R | L/R | Cabriolet RWD M9603 | Chassis NO. from:992S603623/992S642182/992S630737 | GCI48009 | Inner Joint | 48W | 28 | 28 | 60.3 | 100 | 83.3 | |
| | 2001.10-2005.08 | 5AT/6MT | F | L/R | Coupe 4WD M9603 | | GDS84428 | Drive Shaft | 48T | 28 | | 56.5 | 94 | 683 | |
| | 2001.10-2005.08 | 5AT/6MT | R | L/R | Coupe 4WD M9603 | Chassis no. to:992S603635/992S642174/992S630727/992S630736;992S642181/992S630736 | GCI48002 | Inner Joint | | | 28 | | | 32 | |
| | 2001.10-2005.08 | Semi-AT | R | L/R | Coupe 4WD M9603 | Chassis no. from:992S603623/992S642182/992S630737 | GDS84429 | Drive Shaft | 48W | 28 | | 60.3 | 100 | 512 | |
| | 2001.10-2005.08 | Semi-AT | R | L/R | Coupe 4WD M9603 | Chassis NO. from:992S603623/992S642182/992S630737 | GCI48009 | Inner Joint | 48W | 28 | 28 | 60.3 | 100 | 83.3 | |
| | 2001.10-2005.08 | 5AMT | R | L/R | Coupe RWD M9603 | Chassis NO. from:992S603623/992S642182/992S630737 | GCI48009 | Inner Joint | 48W | 28 | 28 | 60.3 | 100 | 83.3 | |
| | 2001.10-2005.08 | AT/MT | R | L/R | Coupe RWD M9603 | | GCI48002 | Inner Joint | | | 28 | | | 32 | |
| | 2001.10-2005.08 | Semi-5AT | R | L/R | Coupe RWD M9603 | Chassis no. from:992S603623/992S642182/992S630737 | GDS84429 | Drive Shaft | 48W | 28 | | 60.3 | 100 | 512 | |
| | 2001.12-2005.08 | 5AT | R | L/R | Targa RWD M9603 | Chassis no. from:992S603623/992S642182/992S630737 | GDS84429 | Drive Shaft | 48W | 28 | | 60.3 | 100 | 512 | |

| | YEAR | TRANSM. | F/R | L/R | BODY STYLE & DRIVE TYPE & ENGINE | REMARKS | G-AP Ref. | PRODUCT | ABS | Technical Specifications A | B | C | H | L | P |
|---|---|---|---|---|---|---|---|---|---|---|---|---|---|---|---|
| **PORSCHE** | | | | | | | | | | | | | | | |
| **911** | | | | | | | | | | | | | | | |
| 3.6 (235 kw) | 2001.12-2005.08 | 5AT | R | L/R | Targa RWD M9603 | Chassis NO. from:992S603623/992S642182/992S630737 | GCI48009 | Inner Joint | 48W | 28 | 28 | 60.3 | 100 | 83.3 | |
| | 2001.12-2005.08 | AT/MT | R | L/R | Targa RWD M9603 | | GCI48002 | Inner Joint | | | 28 | | | 32 | |
| 3.6 (239 kw) | 2004.07-2008.12 | AT | F | R | Coupe 4WD M 96.05 | | GDS84428 | Drive Shaft | 48T | 28 | | 56.5 | 94 | 683 | |
| | 2004.07-2008.12 | AT | R | L/R | Coupe 4WD M 96.05 | | GDS84429 | Drive Shaft | 48W | 28 | | 60.3 | 100 | 512 | |
| | 2004.07-2008.12 | AT | R | L/R | Coupe RWD M 96.05 | | GDS84429 | Drive Shaft | 48W | 28 | | 60.3 | 100 | 512 | |
| | 2005.04-2008.12 | AT | F | R | Convertible 4WD M 96.05 | | GDS84428 | Drive Shaft | 48T | 28 | | 56.5 | 94 | 683 | |
| | 2005.04-2008.12 | AT | R | L/R | Convertible 4WD M 96.05 | | GDS84429 | Drive Shaft | 48W | 28 | | 60.3 | 100 | 512 | |
| | 2005.04-2008.12 | AT | R | L/R | Convertible RWD M 96.05 | | GDS84429 | Drive Shaft | 48W | 28 | | 60.3 | 100 | 512 | |
| | 2006.07-2008.12 | AT | F | R | Targa 4WD M 96.05 | | GDS84428 | Drive Shaft | 48T | 28 | | 56.5 | 94 | 683 | |
| | 2006.07-2008.12 | AT | R | L/R | Targa 4WD M 96.05 | | GDS84429 | Drive Shaft | 48W | 28 | | 60.3 | 100 | 512 | |
| 3.6 (254 kw) | 2002.06-2004.07 | AT | F | L/R | Coupe 4WD M9603 | | GDS84428 | Drive Shaft | 48T | 28 | | 56.5 | 94 | 683 | |
| | 2002.06-2004.07 | AT/MT | R | L/R | Coupe 4WD M9603 | | GCI48002 | Inner Joint | | | 28 | | | 32 | |
| | 2002.06-2004.07 | Semi-AT | R | L/R | Coupe 4WD M9603 | Chassis no. from:992S603623/992S642182/992S630737 | GDS84429 | Drive Shaft | 48W | 28 | | 60.3 | 100 | 512 | |
| | 2002.06-2004.07 | Semi-AT | R | L/R | Coupe 4WD M9603 | Chassis NO. from:992S603623/992S642182/992S630737 | GCI48009 | Inner Joint | 48W | 28 | 28 | 60.3 | 100 | 83.3 | |
| | 2002.06-2004.07 | AT/MT | R | L/R | Coupe RWD M9603 | | GCI48002 | Inner Joint | | | 28 | | | 32 | |
| | 2002.06-2004.07 | Semi-AT | R | L/R | Coupe RWD M9603 | Chassis no. from:992S603623/992S642182/992S630737 | GDS84429 | Drive Shaft | 48W | 28 | | 60.3 | 100 | 512 | |
| | 2002.06-2004.07 | Semi-AT | R | L/R | Coupe RWD M9603 | Chassis NO. from:992S603623/992S642182/992S630737 | GCI48009 | Inner Joint | 48W | 28 | 28 | 60.3 | 100 | 83.3 | |
| | 2002.06-2005.01 | AT | F | L/R | Cabriolet 4WD M9603 | | GDS84428 | Drive Shaft | 48T | 28 | | 56.5 | 94 | 683 | |
| | 2002.06-2005.01 | AT/MT | R | L/R | Cabriolet 4WD M9603 | Date from:2003.01 | GCI48002 | Inner Joint | | | 28 | | | 32 | |
| | 2002.06-2005.01 | Semi-AT | R | L/R | Cabriolet 4WD M9603 | Chassis no. from:992S603623/992S642182/992S630737 | GDS84429 | Drive Shaft | 48W | 28 | | 60.3 | 100 | 512 | |
| | 2002.06-2005.01 | Semi-AT | R | L/R | Cabriolet 4WD M9603 | Chassis NO. from:992S603623/992S642182/992S630737 | GCI48009 | Inner Joint | 48W | 28 | 28 | 60.3 | 100 | 83.3 | |
| | 2002.06-2005.01 | AT/MT | R | L/R | Cabriolet RWD M9603 | Date from:2003.01 | GCI48002 | Inner Joint | | | 28 | | | 32 | |
| | 2002.06-2005.01 | Semi-AT | R | L/R | Cabriolet RWD M9603 | Chassis no. from:992S603623/992S642182/992S630737 | GDS84429 | Drive Shaft | 48W | 28 | | 60.3 | 100 | 512 | |
| | 2002.06-2005.01 | Semi-AT | R | L/R | Cabriolet RWD M9603 | Chassis NO. from:992S603623/992S642182/992S630737 | GCI48009 | Inner Joint | 48W | 28 | 28 | 60.3 | 100 | 83.3 | |
| | 2008.06-2011.12 | AT | R | L/R | Convertible RWD MA1.02 | | GDS84429 | Drive Shaft | 48W | 28 | | 60.3 | 100 | 512 | |
| | 2008.06-2011.12 | AT | R | L/R | Coupe RWD MA1.02 | | GDS84429 | Drive Shaft | 48W | 28 | | 60.3 | 100 | 512 | |
| | 2008.06-2012.12 | AT | F | R | Convertible 4WD MA1.02 | | GDS84428 | Drive Shaft | 48T | 28 | | 56.5 | 94 | 683 | |
| | 2008.06-2012.12 | AT | R | L/R | Convertible 4WD MA1.02 | | GDS84429 | Drive Shaft | 48W | 28 | | 60.3 | 100 | 512 | |
| | 2008.06-2012.12 | AT | F | R | Coupe 4WD MA1.02 | | GDS84428 | Drive Shaft | 48T | 28 | | 56.5 | 94 | 683 | |
| | 2008.06-2012.12 | AT | R | L/R | Coupe 4WD MA1.02 | | GDS84429 | Drive Shaft | 48W | 28 | | 60.3 | 100 | 512 | |
| | 2008.10-2012.12 | AT | F | R | Targa 4WD MA1.02 | | GDS84428 | Drive Shaft | 48T | 28 | | 56.5 | 94 | 683 | |
| | 2008.10-2012.12 | AT | R | L/R | Targa 4WD MA1.02 | | GDS84429 | Drive Shaft | 48W | 28 | | 60.3 | 100 | 512 | |
| 3.7 (210 kw) | 1995.06-1997.09 | MT | R | L/R | Cabriolet 4WD M6405S/M6406S | | GCI48002 | Inner Joint | | | 28 | | | 32 | |
| | 1995.06-1997.09 | MT | R | L/R | Cabriolet RWD M6405S/M6406S | | GCI48002 | Inner Joint | | | 28 | | | 32 | |
| | 1995.06-1997.09 | MT | R | L/R | Coupe 4WD M6405S/M6406S | | GCI48002 | Inner Joint | | | 28 | | | 32 | |
| | 1995.06-1997.09 | MT | R | L/R | Coupe RWD M6405S/M6406S | | GCI48002 | Inner Joint | | | 28 | | | 32 | |
| 3.7 (221 kw) | 1995.03-1997.09 | MT | R | L/R | Cabriolet 4WD M6420 | | GCI48002 | Inner Joint | | | 28 | | | 32 | |
| | 1995.03-1997.09 | MT | R | L/R | Coupe 4WD M6420 | | GCI48002 | Inner Joint | | | 28 | | | 32 | |
| | 1995.03-1997.09 | MT | R | L/R | Coupe RWD M6420 | | GCI48002 | Inner Joint | | | 28 | | | 32 | |
| | 1995.08-1997.09 | MT | R | L/R | Cabriolet RWD M6420 | | GCI48002 | Inner Joint | | | 28 | | | 32 | |
| 3.8 (261 kw) | 2004.07-2008.12 | AT | F | R | Coupe 4WD M 97.01 | | GDS84428 | Drive Shaft | 48T | 28 | | 56.5 | 94 | 683 | |
| | 2004.07-2008.12 | AT | R | L/R | Coupe 4WD M 97.01 | | GDS84429 | Drive Shaft | 48W | 28 | | 60.3 | 100 | 512 | |
| | 2004.07-2008.12 | AT | R | L/R | Coupe RWD M 97.01 | | GDS84429 | Drive Shaft | 48W | 28 | | 60.3 | 100 | 512 | |
| | 2005.04-2008.12 | AT | F | R | Convertible 4WD M 97.01 | | GDS84428 | Drive Shaft | 48T | 28 | | 56.5 | 94 | 683 | |
| | 2005.04-2008.12 | AT | R | L/R | Convertible 4WD M 97.01 | | GDS84429 | Drive Shaft | 48W | 28 | | 60.3 | 100 | 512 | |
| | 2005.04-2008.12 | AT | R | L/R | Convertible RWD M 97.01 | | GDS84429 | Drive Shaft | 48W | 28 | | 60.3 | 100 | 512 | |
| | 2006.07-2008.12 | AT | F | R | Targa 4WD M 97.01 | | GDS84428 | Drive Shaft | 48T | 28 | | 56.5 | 94 | 683 | |
| | 2006.07-2008.12 | AT | R | L/R | Targa 4WD M 97.01 | | GDS84429 | Drive Shaft | 48W | 28 | | 60.3 | 100 | 512 | |
| 3.8 (280 kw) | 2005.08-2008.12 | AT | F | R | Convertible 4WD M 97.01S | | GDS84428 | Drive Shaft | 48T | 28 | | 56.5 | 94 | 683 | |
| | 2005.08-2008.12 | AT | R | L/R | Convertible 4WD M 97.01S | | GDS84429 | Drive Shaft | 48W | 28 | | 60.3 | 100 | 512 | |
| | 2005.08-2008.12 | AT | R | L/R | Convertible RWD M 97.01S | | GDS84429 | Drive Shaft | 48W | 28 | | 60.3 | 100 | 512 | |
| | 2005.08-2008.12 | AT | F | R | Coupe 4WD M 97.01S | | GDS84428 | Drive Shaft | 48T | 28 | | 56.5 | 94 | 683 | |
| | 2005.08-2008.12 | AT | R | L/R | Coupe 4WD M 97.01S | | GDS84429 | Drive Shaft | 48W | 28 | | 60.3 | 100 | 512 | |
| | 2005.08-2008.12 | AT | R | L/R | Coupe RWD M 97.01S | | GDS84429 | Drive Shaft | 48W | 28 | | 60.3 | 100 | 512 | |
| 3.8 (283 kw) | 2008.06-2011.12 | AT | R | L/R | Convertible RWD MA1.01 | | GDS84429 | Drive Shaft | 48W | 28 | | 60.3 | 100 | 512 | |
| | 2008.06-2011.12 | AT | R | L/R | Coupe RWD MA1.01 | | GDS84429 | Drive Shaft | 48W | 28 | | 60.3 | 100 | 512 | |
| | 2008.06-2012.12 | AT | F | R | Convertible 4WD MA1.01 | | GDS84428 | Drive Shaft | 48T | 28 | | 56.5 | 94 | 683 | |
| | 2008.06-2012.12 | AT | R | L/R | Convertible 4WD MA1.01 | | GDS84429 | Drive Shaft | 48W | 28 | | 60.3 | 100 | 512 | |
| | 2008.06-2012.12 | AT | F | R | Coupe 4WD MA1.01 | | GDS84428 | Drive Shaft | 48T | 28 | | 56.5 | 94 | 683 | |
| | 2008.06-2012.12 | AT | R | L/R | Coupe 4WD MA1.01 | | GDS84429 | Drive Shaft | 48W | 28 | | 60.3 | 100 | 512 | |
| **911 GT2** | | | | | | | | | | | | | | | |
| 3.6 (340 kw) | 2001.04-2005.08 | AT | R | L/R | Coupe RWD M9670S | | GDS84429 | Drive Shaft | 48W | 28 | | 60.3 | 100 | 512 | |
| | 2001.04-2005.08 | AT/MT | R | L/R | Coupe RWD M9670S | | GCI48002 | Inner Joint | | | 28 | | | 32 | |
| 3.6 (355 kw) | 2003.10-2005.08 | AT | R | L/R | Coupe RWD M9670S | | GDS84429 | Drive Shaft | 48W | 28 | | 60.3 | 100 | 512 | |
| | 2003.10-2005.08 | AT/MT | R | L/R | Coupe RWD M9670S | | GCI48002 | Inner Joint | | | 28 | | | 32 | |

| | YEAR | TRANSM. | F/R | L/R | BODY STYLE & DRIVE TYPE & ENGINE | REMARKS | G-AP Ref. | PRODUCT | ABS | Technical Specifications A | B | C | H | L | P |
|---|---|---|---|---|---|---|---|---|---|---|---|---|---|---|---|
| **PORSCHE** | | | | | | | | | | | | | | | |
| **911 GT2** | | | | | | | | | | | | | | | |
| 3.6 (390 kw) | 2007.09-2012.12 | AT | R | L/R | Coupe RWD M 97.70S | | GDS84429 | Drive Shaft | 48W | 28 | | 60.3 | 100 | 512 | |
| **911 GT3** | | | | | | | | | | | | | | | |
| 3.6 (265 kw) | 1999.06-2002.07 | AT | R | L/R | Coupe RWD M9676 | | GDS84429 | Drive Shaft | 48W | 28 | | 60.3 | 100 | 512 | |
| | 1999.06-2002.07 | AT/MT | R | L/R | Coupe RWD M9676 | | GCI48002 | Inner Joint | | | 28 | | | 32 | |
| 3.6 (280 kw) | 2003.10-2005.09 | AT | R | L/R | Coupe RWD M9679 | | GDS84429 | Drive Shaft | 48W | 28 | | 60.3 | 100 | 512 | |
| | 2003.10-2005.09 | AT/MT | R | L/R | Coupe RWD M9679 | | GCI48002 | Inner Joint | | | 28 | | | 32 | |
| 3.6 (305 kw) | 2006.03-2009.12 | AT | R | L/R | Coupe RWD M 97.76 | | GDS84429 | Drive Shaft | 48W | 28 | | 60.3 | 100 | 512 | |
| 3.8 (320 kw) | 2009.05-2011.12 | | R | L/R | Coupe RWD M 97.77 | | GDS84429 | Drive Shaft | 48W | 28 | | 60.3 | 100 | 512 | |
| 3.8 (331 kw) | 2009.08-2011.12 | AT | R | L/R | Coupe RWD M 97.77R | | GDS84429 | Drive Shaft | 48W | 28 | | 60.3 | 100 | 512 | |
| **911 Turbo** | | | | | | | | | | | | | | | |
| 3.6 (300 kw) | 1995.03-1997.09 | MT | R | L/R | Coupe 4WD M6460 | | GCI48002 | Inner Joint | | | 28 | | | 32 | |
| 3.6 (309 kw) | 2000.06-2005.08 | AT/MT | F | L/R | Coupe 4WD M9670 | | GDS84428 | Drive Shaft | 48T | 28 | | 56.5 | 94 | 683 | |
| | 2000.06-2005.08 | AT | R | L/R | Coupe 4WD M9670 | | GDS84429 | Drive Shaft | 48W | 28 | | 60.3 | 100 | 512 | |
| | 2000.06-2005.08 | AT/MT | R | L/R | Coupe 4WD M9670 | | GCI48002 | Inner Joint | | | 28 | | | 32 | |
| | 2003.05-2005.12 | AT/MT | F | L/R | Cabriolet 4WD M9670 | | GDS84428 | Drive Shaft | 48T | 28 | | 56.5 | 94 | 683 | |
| | 2003.05-2005.12 | AT/MT | R | L/R | Cabriolet 4WD M9670 | | GCI48002 | Inner Joint | | | 28 | | | 32 | |
| 3.6 (331 kw) | 2003.02-2005.08 | AT/MT | F | L/R | Coupe 4WD M9670 | | GDS84428 | Drive Shaft | 48T | 28 | | 56.5 | 94 | 683 | |
| | 2003.02-2005.08 | AT | R | L/R | Coupe 4WD M9670 | | GDS84429 | Drive Shaft | 48W | 28 | | 60.3 | 100 | 512 | |
| | 2003.02-2005.08 | AT/MT | R | L/R | Coupe 4WD M9670 | | GCI48002 | Inner Joint | | | 28 | | | 32 | |
| | 2003.05-2005.08 | AT/MT | F | L/R | Cabriolet 4WD M9670 | | GDS84428 | Drive Shaft | 48T | 28 | | 56.5 | 94 | 683 | |
| | 2003.05-2005.08 | AT/MT | R | L/R | Cabriolet 4WD M9670 | | GCI48002 | Inner Joint | | | 28 | | | 32 | |
| | 2004.08-2005.08 | AT | R | L/R | Cabriolet RWD M9670 | | GDS84429 | Drive Shaft | 48W | 28 | | 60.3 | 100 | 512 | |
| | 2004.08-2005.08 | AT | R | L/R | Coupe RWD M9670 | | GDS84429 | Drive Shaft | 48W | 28 | | 60.3 | 100 | 512 | |
| | 2004.08-2005.08 | AT/MT | R | L/R | Coupe RWD M9670 | | GCI48002 | Inner Joint | | | 28 | | | 32 | |
| 3.6 (353 kw) | 2006.03-2009.12 | AT | F | R | Coupe 4WD M 97.70 | | GDS84428 | Drive Shaft | 48T | 28 | | 56.5 | 94 | 683 | |
| | 2006.03-2009.12 | AT | R | L/R | Coupe 4WD M 97.70 | | GDS84429 | Drive Shaft | 48W | 28 | | 60.3 | 100 | 512 | |
| | 2007.09-2009.12 | AT | F | R | Convertible 4WD M 97.70 | | GDS84428 | Drive Shaft | 48T | 28 | | 56.5 | 94 | 683 | |
| | 2007.09-2009.12 | AT | R | L/R | Convertible 4WD M 97.70 | | GDS84429 | Drive Shaft | 48W | 28 | | 60.3 | 100 | 512 | |
| 3.8 (383 kw) | 2013.09-2020.05 | AT | F | R | Coupe 4WD MA1.71 | | GDS84428 | Drive Shaft | 48T | 28 | | 56.5 | 94 | 683 | |
| | 2013.09-2020.05 | AT | R | L/R | Coupe 4WD MA1.71 | | GDS84429 | Drive Shaft | 48W | 28 | | 60.3 | 100 | 512 | |
| 3.8 (412 kw) | 2013.09-2020.05 | AT | F | R | Coupe 4WD MA1.71 | | GDS84428 | Drive Shaft | 48T | 28 | | 56.5 | 94 | 683 | |
| | 2013.09-2020.05 | AT | R | L/R | Coupe 4WD MA1.71 | | GDS84429 | Drive Shaft | 48W | 28 | | 60.3 | 100 | 512 | |
| **Boxster** | | | | | | | | | | | | | | | |
| 2.5 (150 kw) | 1996.09-1999.08 | 5AT/5MT | R | L/R | Cabriolet RWD M9620 | | GCI82006 | Inner Joint | | | 25 | | | 32 | |
| 2.7 (155 kw) | 2012.04-2016.05 | DCT | R | L/R | Convertible RWD MA1.22 | | GDS48006 | Drive Shaft | | 28 | | 56 | 92 | 539 | |
| | 2012.04-2016.05 | DCT | R | L/R | Convertible RWD MA1.22 | For MI code:I250 | GCI85013 | Inner Joint | | | 28 | | | 26 | |
| 2.7 (195 kw) | 2012.04-2016.05 | DCT | R | L/R | Convertible RWD MA1.22 | | GDS48006 | Drive Shaft | | 28 | | 56 | 92 | 539 | |
| | 2012.04-2016.05 | DCT | R | L/R | Convertible RWD MA1.22 | | GCI85013 | Inner Joint | | | 28 | | | 26 | |
| 2.9 (155 kw) | 2009.02-2012.03 | 6MT | R | L | Convertible RWD MA1.20 | | GDS58236 | Drive Shaft | | 28 | | 56 | 92 | 647 | |
| | 2009.02-2012.03 | 6MT | R | R | Convertible RWD MA1.20 | | GDS58284 | Drive Shaft | | 28 | | 56 | 92 | 687 | |
| 2.9 (188 kw) | 2009.06-2012.03 | 6MT | R | L | Convertible RWD MA1.20 | | GDS58236 | Drive Shaft | | 28 | | 56 | 92 | 647 | |
| | 2009.06-2012.03 | 6MT | R | R | Convertible RWD MA1.20 | | GDS58284 | Drive Shaft | | 28 | | 56 | 92 | 687 | |
| 3.2 (185 kw) | 1999.08-2004.07 | AT/MT | R | L/R | Cabriolet RWD M9621 | | GCI48002 | Inner Joint | | | 28 | | | 32 | |
| | 1999.08-2004.07 | MT | R | L/R | Cabriolet RWD M9621 | | GDS48002 | Drive Shaft | 48W | 28 | | | 94 | 680 | |
| 3.2 (191 kw) | 2002.07-2004.12 | AT/MT | R | L/R | Cabriolet RWD M9624 | | GCI48002 | Inner Joint | | | 28 | | | 32 | |
| | 2002.07-2004.12 | MT | R | L/R | Cabriolet RWD M9624 | | GDS48002 | Drive Shaft | 48W | 28 | | | 94 | 680 | |
| 3.2 (196 kw) | 2002.06-2004.12 | AT/MT | R | L/R | Cabriolet RWD M9624 | | GCI48002 | Inner Joint | | | 28 | | | 32 | |
| | 2002.06-2004.12 | MT | R | L/R | Cabriolet RWD M9624 | | GDS48002 | Drive Shaft | 48W | 28 | | | 94 | 680 | |
| **Carrera GT** | | | | | | | | | | | | | | | |
| 5.7 (450 kw) | 2003.07-2006.12 | 6MT | R | L/R | Convertible RWD M 80.01 | | GCI35051 | Inner Joint | | | 30 | | | 30.5 | |
| **Cayenne** | | | | | | | | | | | | | | | |
| 2.9 (324 kw) | 2017.05-2023.05 | 8AT | F | L/R | SUV 4WD MDC.AB;DCAB | Date to:2018.12 | GDS56865 | Drive Shaft | | 42 | | 76.5 | 34 | 510 | |
| | 2017.05-2023.05 | 8AT | F | L/R | SUV 4WD MDC.AB;DCAB | Date to:2018.12 | GCO83460 | Outer Joint | | 42 | 25 | 76.5 | 34 | 47.5 | I |
| | 2017.05-2023.05 | 8AT | F | L/R | SUV 4WD MDC.AB;DCAB | Date to:2018.12 | GCI81054 | Inner Joint | | | 24 | | | 86 | |
| | 2019.01- | 8AT | F | L/R | SUV 4WD DCAB | | GDS56865 | Drive Shaft | | 42 | | 76.5 | 34 | 510 | |
| 3.0 (155 kw) | 2010.06-2018.05 | 8AT | F | L/R | SUV 4WD MCR.CB;MCV.VC | | GCI99148 | Inner Joint | | | 28 | | | 34 | |
| | 2010.06-2018.05 | AT | F | L/R | SUV 4WD MCR.CB;MCV.VC | Date from:2011.01 | GDS35085 | Drive Shaft | | 30 | | 64.4 | 103.5 | 525 | |
| | 2010.06-2018.05 | AT | F | L/R | SUV 4WD MCR.CB;MCV.VC | Date from:2011.01 | GCO35045 | Outer Joint | | 30 | 28 | 64.4 | 103.5 | 62.5 | I |
| | 2010.06-2018.05 | 8AT | R | L/R | SUV 4WD MCR.CB;MCV.VC | Wheel Side | GCI81044 | Outer Joint | | 30 | 30 | 64 | 103.5 | 95.2 | |
| | 2010.06-2018.05 | 8AT | R | L/R | SUV 4WD MCR.CB;MCV.VC | | GCI81053 | Inner Joint | | 32 | 30 | 50 | 94 | 117.2 | |
| | 2010.06-2018.05 | AT/MT | R | L/R | SUV 4WD MCR.CB;MCV.VC | Date from:2010.10 | GDS61298 | Drive Shaft | | 30 | 37 | 64 | 103.5 | 863 | |
| | 2010.06-2018.05 | AT/MT | R | L/R | SUV 4WD MCR.CB;MCV.VC | Date from:2010.10 | GCI81160 | Inner Joint | | 30 | 29 | 64 | 103.5 | 93.2 | |
| 3.0 (176 kw) | 2009.02-2010.09 | AT | F | L/R | SUV 4WD M 05.9D | | GDS35085 | Drive Shaft | | 30 | | 64.4 | 103.5 | 525 | |
| | 2009.02-2010.09 | AT | F | L/R | SUV 4WD M 05.9D | | GCO61050 | Outer Joint | | 30 | 27 | 64 | 103.5 | 63.5 | M |
| | 2009.02-2010.09 | AT | F | L/R | SUV 4WD M 05.9D | | GCI99148 | Inner Joint | | | 28 | | | 34 | |

| | YEAR | TRANSM. | F/R | L/R | BODY STYLE & DRIVE TYPE & ENGINE | REMARKS | G-AP Ref. | PRODUCT | ABS | Technical Specifications A | B | C | H | L | P |
|---|---|---|---|---|---|---|---|---|---|---|---|---|---|---|---|
| **PORSCHE** | | | | | | | | | | | | | | | |
| **Cayenne** | | | | | | | | | | | | | | | |
| 3.0 (176 kw) | 2009.02-2010.09 | AT/MT | R | L/R | SUV 4WD M 05.9D | with differential lock | GDS35086 | Drive Shaft | | 30 | | 64.3 | 103.5 | 724 | |
| | 2009.02-2010.09 | AT/MT | R | L/R | SUV 4WD M 05.9D | without differential lock | GDS61236 | Drive Shaft | | 30 | | 64 | 103.5 | 734 | |
| | 2009.02-2010.09 | AT/MT | R | L/R | SUV 4WD M 05.9D | without differential lock | GCI82450 | Outer Joint | | 30 | 28 | 64 | 103.5 | 64 | |
| | 2009.02-2010.09 | AT/MT | R | L/R | SUV 4WD M 05.9D | without differential lock | GCI83027 | Inner Joint | | | 28 | | | 28 | |
| | 2010.06-2018.05 | 8AT | F | L/R | SUV 4WD M 05.9E;MCN.RB | | GDS35085 | Drive Shaft | | 30 | | 64.4 | 103.5 | 525 | |
| | 2010.06-2018.05 | 8AT | F | R | SUV 4WD M 05.9E;MCN.RB | | GCO35045 | Outer Joint | | 30 | 28 | 64.4 | 103.5 | 62.5 | I |
| | 2010.06-2018.05 | 8AT | F | R | SUV 4WD M 05.9E;MCN.RB | | GCI99148 | Inner Joint | | | 28 | | | 34 | |
| | 2010.06-2018.05 | 8AT | R | L/R | SUV 4WD M 05.9E;MCN.RB | | GDS61298 | Drive Shaft | | 30 | 37 | 64 | 103.5 | 863 | |
| | 2010.06-2018.05 | 8AT | R | R | SUV 4WD M 05.9E;MCN.RB | without differential lock | GCI81044 | Outer Joint | | 30 | 30 | 64 | 103.5 | 95.2 | |
| | 2010.06-2018.05 | 8AT | R | R | SUV 4WD M 05.9E;MCN.RB | without differential lock | GCI81053 | Inner Joint | | 32 | 30 | 50 | 94 | 117.2 | |
| 3.0 (180 kw) | 2011.06-2018.05 | 8AT | F | L/R | SUV 4WD MCR.CA;MCR.C | | GDS35085 | Drive Shaft | | 30 | | 64.4 | 103.5 | 525 | |
| | 2011.06-2018.05 | 8AT | F | L/R | SUV 4WD MCR.CA;MCR.C | | GCO35045 | Outer Joint | | 30 | 28 | 64.4 | 103.5 | 62.5 | I |
| | 2011.06-2018.05 | 8AT | F | L/R | SUV 4WD MCR.CA;MCR.C | | GCO83117 | Outer Joint | | 30 | 28 | 64.4 | 103.5 | 62.5 | I |
| | 2011.06-2018.05 | 8AT | F | L/R | SUV 4WD MCR.CA;MCR.C | | GCI99148 | Inner Joint | | | 28 | | | 34 | |
| | 2011.06-2018.05 | 8AT | R | L/R | SUV 4WD MCR.CA;MCR.C | | GDS61298 | Drive Shaft | | 30 | 37 | 64 | 103.5 | 863 | |
| | 2011.06-2018.05 | 8AT | R | R | SUV 4WD MCR.CA;MCR.C | | GCI81044 | Outer Joint | | 30 | 30 | 64 | 103.5 | 95.2 | |
| | 2011.06-2018.05 | 8AT | R | R | SUV 4WD MCR.CA;MCR.C | | GCI81053 | Inner Joint | | 32 | 30 | 50 | 94 | 117.2 | |
| 3.0 (184 kw) | 2014.08-2018.05 | AT | F | L/R | SUV 4WD MCV.VB | Date from:2015.01 | GDS35085 | Drive Shaft | | 30 | | 64.4 | 103.5 | 525 | |
| | 2014.08-2018.05 | AT | F | L/R | SUV 4WD MCV.VB | | GCO35045 | Outer Joint | | 30 | 28 | 64.4 | 103.5 | 62.5 | I |
| | 2014.08-2018.05 | AT | F | L/R | SUV 4WD MCV.VB | | GCO83117 | Outer Joint | | 30 | 28 | 64.4 | 103.5 | 62.5 | I |
| | 2014.08-2018.05 | AT | F | L/R | SUV 4WD MCV.VB | | GCI99148 | Inner Joint | | | 28 | | | 34 | |
| | 2014.08-2018.05 | 8AT | R | L/R | SUV 4WD MCV.VB | Wheel Side | GCI81044 | Outer Joint | | 30 | 30 | 64 | 103.5 | 95.2 | |
| | 2014.08-2018.05 | 8AT | R | L/R | SUV 4WD MCV.VB | Transmission side | GCI81053 | Inner Joint | | 32 | 30 | 50 | 94 | 117.2 | |
| | 2014.08-2018.05 | AT | R | L/R | SUV 4WD MCV.VB | | GDS61298 | Drive Shaft | | 30 | 37 | 64 | 103.5 | 863 | |
| 3.0 (193 kw) | 2014.10-2018.05 | AT | F | L/R | SUV 4WD MCV.VA | | GDS35085 | Drive Shaft | | 30 | | 64.4 | 103.5 | 525 | |
| | 2014.10-2018.05 | AT | F | L/R | SUV 4WD MCV.VA | Bellows Material:Neoprene | GCO35045 | Outer Joint | | 30 | 28 | 64.4 | 103.5 | 62.5 | I |
| | 2014.10-2018.05 | AT | F | L/R | SUV 4WD MCV.VA | Bellows Material:Thermoplastic | GCO83117 | Outer Joint | | 30 | 28 | 64.4 | 103.5 | 62.5 | I |
| | 2014.10-2018.05 | AT | F | L/R | SUV 4WD MCV.VA | | GCI99148 | Inner Joint | | | 28 | | | 34 | |
| | 2014.10-2018.05 | 8AT | R | L/R | SUV 4WD MCV.VA | | GCI81044 | Outer Joint | | 30 | 30 | 64 | 103.5 | 95.2 | |
| | 2014.10-2018.05 | 8AT | R | L/R | SUV 4WD MCV.VA | | GCI81053 | Inner Joint | | 32 | 30 | 50 | 94 | 117.2 | |
| | 2014.10-2018.05 | AT | R | L/R | SUV 4WD MCV.VA | | GDS61298 | Drive Shaft | | 30 | 37 | 64 | 103.5 | 863 | |
| 3.0 (250 kw) | 2017.05-2023.05 | 8AT | F | L/R | SUV 4WD MDC.BE;DCBE | Date to:2018.12 | GDS56865 | Drive Shaft | | 42 | | 76.5 | 34 | 510 | |
| | 2017.05-2023.05 | 8AT | F | L/R | SUV 4WD MDC.BE;DCBE | Date to:2018.12 | GCO83460 | Outer Joint | | 42 | 25 | 76.5 | 34 | 47.5 | I |
| | 2017.05-2023.05 | 8AT | F | L/R | SUV 4WD MDC.BE;DCBE | Date to:2018.12 | GCI81054 | Inner Joint | | | 24 | | | 86 | |
| | 2019.01- | 8AT | F | L/R | SUV 4WD DCBE | | GDS56865 | Drive Shaft | | 42 | | 76.5 | 34 | 510 | |
| 3.0 (260 kw) | 2023.04- | 8AT | F | L/R | SUV 4WD DCBF | | GDS56865 | Drive Shaft | | 42 | | 76.5 | 34 | 510 | |
| 3.0 (279 kw) | 2010.05-2014.12 | 8AT | F | L/R | SUV 4WD CGEA, CGFA | | GDS35085 | Drive Shaft | | 30 | | 64.4 | 103.5 | 525 | |
| | 2010.05-2014.12 | 8AT | F | L/R | SUV 4WD CGEA, CGFA | | GCO35045 | Outer Joint | | 30 | 28 | 64.4 | 103.5 | 62.5 | I |
| | 2010.05-2014.12 | 8AT | F | L/R | SUV 4WD CGEA, CGFA | | GCI99148 | Inner Joint | | | 28 | | | 34 | |
| | 2010.05-2014.12 | 8AT | R | L/R | SUV 4WD CGEA, CGFA | | GDS61298 | Drive Shaft | | 30 | 37 | 64 | 103.5 | 863 | |
| | 2010.05-2014.12 | 8AT | R | L/R | SUV 4WD CGEA, CGFA | With differential lock | GCI81044 | Outer Joint | | 30 | 30 | 64 | 103.5 | 95.2 | |
| | 2010.05-2014.12 | 8AT | R | L/R | SUV 4WD CGEA, CGFA | With differential lock | GCI81053 | Inner Joint | | 32 | 30 | 50 | 94 | 117.2 | |
| 3.0 (306 kw) | 2011.05-2017.05 | 8AT | F | R | SUV 4WD M 06.EC;MCG.FA;MCG.EA;MCG.E | | GDS35085 | Drive Shaft | | 30 | | 64.4 | 103.5 | 525 | |
| | 2011.05-2017.05 | 8AT | F | R | SUV 4WD M 06.EC;MCG.FA;MCG.EA;MCG.E | | GCO35045 | Outer Joint | | 30 | 28 | 64.4 | 103.5 | 62.5 | I |
| | 2011.05-2017.05 | 8AT | F | R | SUV 4WD M 06.EC;MCG.FA;MCG.EA;MCG.E | | GCI99148 | Inner Joint | | | 28 | | | 34 | |
| | 2011.05-2017.05 | 8AT | R | L/R | SUV 4WD M 06.EC;MCG.FA;MCG.EA;MCG.E | Model year to:2014,Without differential lock;Model year from:2015 | GDS61298 | Drive Shaft | | 30 | 37 | 64 | 103.5 | 863 | |
| | 2011.05-2017.05 | 8AT | R | L/R | SUV 4WD M 06.EC;MCG.FA;MCG.EA;MCG.E | Model year to:2014,With differential lock | GCI81053 | Inner Joint | | 32 | 30 | 50 | 94 | 117.2 | |
| 3.2 (177 kw) | 2003.08-2007.09 | AT/MT | F | L/R | SUV 4WD M02.2Y | | GDS35085 | Drive Shaft | | 30 | | 64.4 | 103.5 | 525 | |
| | 2003.08-2007.09 | AT/MT | F | L/R | SUV 4WD M02.2Y | | GCO61050 | Outer Joint | | 30 | 27 | 64 | 103.5 | 63.5 | M |
| | 2003.08-2007.09 | AT/MT | F | L/R | SUV 4WD M02.2Y | | GCI99148 | Inner Joint | | | 28 | | | 34 | |
| | 2003.08-2007.09 | AT/MT | R | L/R | SUV 4WD M02.2Y | With differential lock;For MI code:IT31/I1Y1 | GDS35086 | Drive Shaft | | 30 | | 64.3 | 103.5 | 724 | |
| | 2003.08-2007.09 | AT/MT | R | L/R | SUV 4WD M02.2Y | Differential:Without differential lock;For MI code:IT31 | GDS61236 | Drive Shaft | | 30 | | 64 | 103.5 | 734 | |
| | 2003.08-2007.09 | AT/MT | R | L/R | SUV 4WD M02.2Y | Differential:Without differential lock;For MI code:IT31 | GCI82450 | Outer Joint | | 30 | 28 | 64 | 103.5 | 64 | |
| | 2003.08-2007.09 | AT/MT | R | L/R | SUV 4WD M02.2Y | Differential:Without differential lock;For MI code:IT31 | GCI83027 | Inner Joint | | | 28 | | | 28 | |
| 3.2 (184 kw) | 2003.10-2007.09 | 6AT/6MT | F | L/R | SUV 4WD M02.2Y | | GDS35085 | Drive Shaft | | 30 | | 64.4 | 103.5 | 525 | |
| | 2003.10-2007.09 | 6AT/6MT | F | L/R | SUV 4WD M02.2Y | | GCO61050 | Outer Joint | | 30 | 27 | 64 | 103.5 | 63.5 | M |
| | 2003.10-2007.09 | 6AT/6MT | F | L/R | SUV 4WD M02.2Y | | GCI99148 | Inner Joint | | | 28 | | | 34 | |
| | 2003.10-2007.09 | 6AT/6MT | R | L/R | SUV 4WD M02.2Y | with differential lock | GDS35086 | Drive Shaft | | 30 | | 64.3 | 103.5 | 724 | |
| | 2003.10-2007.09 | 6AT/6MT | R | L/R | SUV 4WD M02.2Y | without differential lock | GDS61236 | Drive Shaft | | 30 | | 64 | 103.5 | 734 | |
| | 2003.10-2007.09 | 6AT/6MT | R | L/R | SUV 4WD M02.2Y | without differential lock | GCI82450 | Outer Joint | | 30 | 28 | 64 | 103.5 | 64 | |
| | 2003.10-2007.09 | 6AT/6MT | R | L/R | SUV 4WD M02.2Y | without differential lock | GCI83027 | Inner Joint | | | 28 | | | 28 | |
| 3.6 (213 kw) | 2007.02-2010.09 | 6AT/6MT | F | L/R | SUV 4WD M 55.01 | | GDS35085 | Drive Shaft | | 30 | | 64.4 | 103.5 | 525 | |
| | 2007.02-2010.09 | 6AT/6MT | F | L/R | SUV 4WD M 55.01 | | GCO61050 | Outer Joint | | 30 | 27 | 64 | 103.5 | 63.5 | M |
| | 2007.02-2010.09 | 6AT/6MT | F | L/R | SUV 4WD M 55.01 | | GCI99148 | Inner Joint | | | 28 | | | 34 | |
| | 2007.02-2010.09 | 6AT/6MT | R | L/R | SUV 4WD M 55.01 | with differential lock | GDS35086 | Drive Shaft | | 30 | | 64.3 | 103.5 | 724 | |

| | YEAR | TRANSM. | F/R | L/R | BODY STYLE & DRIVE TYPE & ENGINE | REMARKS | G-AP Ref. | PRODUCT | ABS | Technical Specifications A | B | C | H | L | P |
|---|---|---|---|---|---|---|---|---|---|---|---|---|---|---|---|
| **PORSCHE** | | | | | | | | | | | | | | | |
| **Cayenne** | | | | | | | | | | | | | | | |
| 3.6 (213 kw) | 2007.02-2010.09 | 6AT/6MT | R | L/R | SUV 4WD M 55.01 | without differential lock | GDS61236 | Drive Shaft | | 30 | | 64 | 103.5 | 734 | |
| | 2007.02-2010.09 | 6AT/6MT | R | L/R | SUV 4WD M 55.01 | without differential lock | GCI82450 | Outer Joint | | 30 | 28 | 64 | 103.5 | 64 | |
| | 2007.02-2010.09 | 6AT/6MT | R | L/R | SUV 4WD M 55.01 | without differential lock | GCI83027 | Inner Joint | | | 28 | | | 28 | |
| 3.6 (220 kw) | 2010.06-2018.12 | 8AT | F | L/R | SUV 4WD M 55.02;MCE.YA | | GCO81667 | Outer Joint | | 30 | 25 | 64.5 | 104 | 56 | I |
| | 2010.06-2018.12 | 8AT | F | L/R | SUV 4WD M 55.02;MCE.YA | | GCI81641 | Inner Joint | | | 26 | | | 30 | |
| | 2010.06-2018.12 | 8AT | R | L/R | SUV 4WD M 55.02;MCE.YA | Without differential lock | GDS81923 | Drive Shaft | | 30 | 32 | 64 | 103.5 | 865 | |
| | 2010.06-2018.12 | AT/MT | R | L/R | SUV 4WD M 55.02;MCE.YA | | GCI81044 | Outer Joint | | 30 | 30 | 64 | 103.5 | 95.2 | |
| | 2010.06-2018.12 | AT/MT | R | L/R | SUV 4WD M 55.02;MCE.YA | | GCI81053 | Inner Joint | | 32 | 30 | 50 | 94 | 117.2 | |
| 3.6 (309 kw) | 2014.10-2018.05 | 8AT | F | L/R | SUV 4WD MCU.RA | | GCO81667 | Outer Joint | | 30 | 25 | 64.5 | 104 | 56 | I |
| | 2014.10-2018.05 | 8AT | F | L/R | SUV 4WD MCU.RA | | GCI81641 | Inner Joint | | | 26 | | | 30 | |
| | 2014.10-2018.05 | 8AT | R | L/R | SUV 4WD MCU.RA | Without differential lock | GDS81923 | Drive Shaft | | 30 | 32 | 64 | 103.5 | 865 | |
| | 2014.10-2018.05 | 8AT | R | L/R | SUV 4WD MCU.RA | Wheel Side,MI code:I1Y0/I1Y1 | GCI81044 | Outer Joint | | 30 | 30 | 64 | 103.5 | 95.2 | |
| | 2014.10-2018.05 | 8AT | R | L/R | SUV 4WD MCU.RA | Transmission side,MI code:I1Y0/I1Y1 | GCI81053 | Inner Joint | | 32 | 30 | 50 | 94 | 117.2 | |
| 3.6 (324 kw) | 2015.02-2018.05 | 8AT | F | L/R | SUV 4WD MCX.ZA | | GCO81667 | Outer Joint | | 30 | 25 | 64.5 | 104 | 56 | I |
| | 2015.02-2018.05 | 8AT | F | L/R | SUV 4WD MCX.ZA | | GCI81641 | Inner Joint | | | 26 | | | 30 | |
| | 2015.02-2018.05 | 8AT | R | L/R | SUV 4WD MCX.ZA | Without differential lock | GDS81923 | Drive Shaft | | 30 | 32 | 64 | 103.5 | 865 | |
| | 2015.02-2018.05 | 8AT | R | L/R | SUV 4WD MCX.ZA | Wheel Side,MI code:I1Y0/I1Y1 | GCI81044 | Outer Joint | | 30 | 30 | 64 | 103.5 | 95.2 | |
| | 2015.02-2018.05 | 8AT | R | L/R | SUV 4WD MCX.ZA | Transmission side,MI code:I1Y0/I1Y1 | GCI81053 | Inner Joint | | 32 | 30 | 50 | 94 | 117.2 | |
| 4.0 (338 kw) | 2017.05-2023.05 | 8AT | F | L/R | SUV 4WD DCUD | Chassis no. to:9Y_PDA99999 | GDS56865 | Drive Shaft | | 42 | | 76.5 | 34 | 510 | |
| 4.2 (281 kw) | 2012.10-2014.05 | 8AT | F | L/R | SUV 4WD MCU.DB | | GCI81641 | Inner Joint | | | 26 | | | 30 | |
| | 2012.10-2014.05 | AT | F | L/R | SUV 4WD MCU.DB | Bellows Material:Neoprene | GCO35045 | Outer Joint | | 30 | 28 | 64.4 | 103.5 | 62.5 | I |
| | 2012.10-2014.05 | AT | F | L/R | SUV 4WD MCU.DB | Bellows Material:Thermoplastic | GCO83117 | Outer Joint | | 30 | 28 | 64.4 | 103.5 | 62.5 | I |
| | 2012.10-2014.05 | AT | R | R | SUV 4WD MCU.DB | without differential lock,MI code:I1Y0 | GDS81106 | Drive Shaft | | 30 | 32 | 64 | 103.5 | 865 | |
| | 2012.10-2014.05 | AT | R | L/R | SUV 4WD MCU.DB | | GCI81044 | Outer Joint | | 30 | 30 | 64 | 103.5 | 95.2 | |
| | 2012.10-2014.05 | AT | R | L/R | SUV 4WD MCU.DB | | GCI81053 | Inner Joint | | 32 | 30 | 50 | 94 | 117.2 | |
| 4.2 (283 kw) | 2014.10-2018.05 | 8AT | F | L/R | SUV 4WD MCU.DC | | GCI81641 | Inner Joint | | | 26 | | | 30 | |
| | 2014.10-2018.05 | AT | F | L/R | SUV 4WD MCU.DC | Bellows Material:Neoprene | GCO35045 | Outer Joint | | 30 | 28 | 64.4 | 103.5 | 62.5 | I |
| | 2014.10-2018.05 | AT | F | L/R | SUV 4WD MCU.DC | Bellows Material:Thermoplastic | GCO83117 | Outer Joint | | 30 | 28 | 64.4 | 103.5 | 62.5 | I |
| | 2014.10-2018.05 | AT | R | R | SUV 4WD MCU.DC | without differential lock,MI code:1Y0 | GDS81106 | Drive Shaft | | 30 | 32 | 64 | 103.5 | 865 | |
| | 2014.10-2018.05 | AT | R | L/R | SUV 4WD MCU.DC | | GCI81044 | Outer Joint | | 30 | 30 | 64 | 103.5 | 95.2 | |
| | 2014.10-2018.05 | AT | R | L/R | SUV 4WD MCU.DC | | GCI81053 | Inner Joint | | 32 | 30 | 50 | 94 | 117.2 | |
| 4.5 (250 kw) | 2002.09-2007.09 | AT/MT | F | L/R | SUV 4WD M 48.00 | | GDS35085 | Drive Shaft | | 30 | | 64.4 | 103.5 | 525 | |
| | 2002.09-2007.09 | AT/MT | F | L/R | SUV 4WD M 48.00 | | GCO35045 | Outer Joint | | 30 | 28 | 64.4 | 103.5 | 62.5 | I |
| | 2002.09-2007.09 | AT/MT | F | L/R | SUV 4WD M 48.00 | | GCO61050 | Outer Joint | | 30 | 27 | 64 | 103.5 | 63.5 | M |
| | 2002.09-2007.09 | AT/MT | F | L/R | SUV 4WD M 48.00 | | GCI99148 | Inner Joint | | | 28 | | | 34 | |
| | 2002.09-2007.09 | 6AT | R | L/R | SUV 4WD M 48.00 | Chassis no. from:9P_5LA50 526,Without differential lock | GDS61236 | Drive Shaft | | 30 | | 64 | 103.5 | 734 | |
| | 2002.09-2007.09 | AT | R | L/R | SUV 4WD M 48.00 | | GCI82450 | Outer Joint | | 30 | 28 | 64 | 103.5 | 64 | |
| | 2002.09-2007.09 | AT | R | L/R | SUV 4WD M 48.00 | | GCI83027 | Inner Joint | | | 28 | | | 28 | |
| | 2002.09-2007.09 | MT | R | L/R | SUV 4WD M 48.00 | | GDS35086 | Drive Shaft | | 30 | | 64.3 | 103.5 | 724 | |
| | 2002.09-2007.09 | MT | R | L/R | SUV 4WD M 48.00 | | GCI35051 | Inner Joint | | | 30 | | | 30.5 | |
| 4.5 (331 kw) | 2002.09-2007.09 | 6AT | F | L/R | SUV 4WD M 48.50 | | GDS35085 | Drive Shaft | | 30 | | 64.4 | 103.5 | 525 | |
| | 2002.09-2007.09 | 6AT | F | L/R | SUV 4WD M 48.50 | | GCO61050 | Outer Joint | | 30 | 27 | 64 | 103.5 | 63.5 | M |
| | 2002.09-2007.09 | 6AT | F | L/R | SUV 4WD M 48.50 | | GCI99148 | Inner Joint | | | 28 | | | 34 | |
| | 2002.09-2007.09 | 6AT | R | L/R | SUV 4WD M 48.50 | | GDS35086 | Drive Shaft | | 30 | | 64.3 | 103.5 | 724 | |
| | 2002.09-2007.09 | 6AT | R | L/R | SUV 4WD M 48.50 | | GCI82450 | Outer Joint | | 30 | 28 | 64 | 103.5 | 64 | |
| | 2002.09-2007.09 | 6AT | R | L/R | SUV 4WD M 48.50 | | GCI83027 | Inner Joint | | | 28 | | | 28 | |
| 4.5 (368 kw) | 2004.01-2007.09 | AT | F | L/R | SUV 4WD M 48.50S | | GDS35085 | Drive Shaft | | 30 | | 64.4 | 103.5 | 525 | |
| | 2004.01-2007.09 | AT | F | L/R | SUV 4WD M 48.50S | | GCI99148 | Inner Joint | | | 28 | | | 34 | |
| | 2004.01-2007.09 | AT/MT | F | L/R | SUV 4WD M 48.50S | Date to:2006.12 | GCO61050 | Outer Joint | | 30 | 27 | 64 | 103.5 | 63.5 | M |
| | 2004.01-2007.09 | AT | R | L/R | SUV 4WD M 48.50S | | GDS35086 | Drive Shaft | | 30 | | 64.3 | 103.5 | 724 | |
| | 2004.01-2007.09 | AT | R | L/R | SUV 4WD M 48.50S | Date to:2005.10,without differential lock | GCI83027 | Inner Joint | | | 28 | | | 28 | |
| | 2004.01-2007.09 | | R | L/R | SUV 4WD M 48.50S | Date To:2005.10;Differential:without differential lock | GDS61236 | Drive Shaft | | 30 | | 64 | 103.5 | 734 | |
| 4.5 (383 kw) | 2002.05-2006.05 | AT | F | L/R | SUV 4WD M 48.50T | | GDS35085 | Drive Shaft | | 30 | | 64.4 | 103.5 | 525 | |
| | 2002.05-2006.05 | AT | F | L/R | SUV 4WD M 48.50T | | GCO61050 | Outer Joint | | 30 | 27 | 64 | 103.5 | 63.5 | M |
| | 2002.05-2006.05 | AT | F | L/R | SUV 4WD M 48.50T | | GCI99148 | Inner Joint | | | 28 | | | 34 | |
| | 2002.05-2006.05 | AT | R | L/R | SUV 4WD M 48.50T | | GDS35086 | Drive Shaft | | 30 | | 64.3 | 103.5 | 724 | |
| | 2002.05-2006.05 | AT | R | L/R | SUV 4WD M 48.50T | without differential lock | GCI83027 | Inner Joint | | | 28 | | | 28 | |
| | 2002.05-2006.05 | | R | L/R | SUV 4WD M 48.50T | Differential:without differential lock | GDS61236 | Drive Shaft | | 30 | | 64 | 103.5 | 734 | |
| 4.8 (283 kw) | 2007.02-2010.09 | AT/MT | F | L/R | SUV 4WD M 48.01 | | GDS35085 | Drive Shaft | | 30 | | 64.4 | 103.5 | 525 | |
| | 2007.02-2010.09 | AT/MT | F | L/R | SUV 4WD M 48.01 | | GCO61050 | Outer Joint | | 30 | 27 | 64 | 103.5 | 63.5 | M |
| | 2007.02-2010.09 | AT/MT | F | L/R | SUV 4WD M 48.01 | | GCI99148 | Inner Joint | | | 28 | | | 34 | |
| | 2007.02-2010.09 | 6AT | R | L/R | SUV 4WD M 48.01 | | GDS61236 | Drive Shaft | | 30 | | 64 | 103.5 | 734 | |
| | 2007.02-2010.09 | AT | R | L/R | SUV 4WD M 48.01 | | GCI82450 | Outer Joint | | 30 | 28 | 64 | 103.5 | 64 | |
| | 2007.02-2010.09 | AT | R | L/R | SUV 4WD M 48.01 | | GCI83027 | Inner Joint | | | 28 | | | 28 | |
| | 2007.02-2010.09 | MT | R | L/R | SUV 4WD M 48.01 | | GDS35086 | Drive Shaft | | 30 | | 64.3 | 103.5 | 724 | |

| | YEAR | TRANSM. | F/R | L/R | BODY STYLE & DRIVE TYPE & ENGINE | REMARKS | G-AP Ref. | PRODUCT | ABS | Technical Specifications A | B | C | H | L | P |
|---|---|---|---|---|---|---|---|---|---|---|---|---|---|---|---|
| **PORSCHE** | | | | | | | | | | | | | | | |
| **Cayenne** | | | | | | | | | | | | | | | |
| 4.8 (294 kw) | 2010.06-2014.05 | 8AT | F | L/R | SUV 4WD M 48.02 | | GCO81667 | Outer Joint | | 30 | 25 | 64.5 | 104 | 56 | I |
| | 2010.06-2014.05 | 8AT | F | L/R | SUV 4WD M 48.02 | | GCI81641 | Inner Joint | | | 26 | | | 30 | |
| | 2010.06-2014.05 | 8AT | R | L | SUV 4WD M 48.02 | Without differential lock | GDS81923 | Drive Shaft | | 30 | 32 | 64 | 103.5 | 865 | |
| | 2010.06-2014.05 | 8AT | R | R | SUV 4WD M 48.02 | without differential lock | GCI81044 | Outer Joint | | 30 | 30 | 64 | 103.5 | 95.2 | |
| | 2010.06-2014.05 | 8AT | R | R | SUV 4WD M 48.02 | without differential lock | GCI81053 | Inner Joint | | 32 | 30 | 50 | 94 | 117.2 | |
| 4.8 (298 kw) | 2007.10-2010.09 | AT/MT | F | L/R | SUV 4WD M 48.01 | | GDS35085 | Drive Shaft | | 30 | | 64.4 | 103.5 | 525 | |
| | 2007.10-2010.09 | AT/MT | F | L/R | SUV 4WD M 48.01 | | GCO61050 | Outer Joint | | 30 | 27 | 64 | 103.5 | 63.5 | M |
| | 2007.10-2010.09 | AT/MT | F | L/R | SUV 4WD M 48.01 | | GCI99148 | Inner Joint | | | 28 | | | 34 | |
| | 2007.10-2010.09 | 6AT | R | L/R | SUV 4WD M 48.01 | | GDS61236 | Drive Shaft | | 30 | | 64 | 103.5 | 734 | |
| | 2007.10-2010.09 | AT | R | L/R | SUV 4WD M 48.01 | | GCI82450 | Outer Joint | | 30 | 28 | 64 | 103.5 | 64 | |
| | 2007.10-2010.09 | AT | R | L/R | SUV 4WD M 48.01 | | GCI83027 | Inner Joint | | | 28 | | | 28 | |
| | 2007.10-2010.09 | MT | R | L/R | SUV 4WD M 48.01 | | GDS35086 | Drive Shaft | | 30 | | 64.3 | 103.5 | 724 | |
| 4.8 (309 kw) | 2012.06-2018.05 | 8AT | F | L/R | SUV 4WD M 48.02 | | GCO81667 | Outer Joint | | 30 | 25 | 64.5 | 104 | 56 | I |
| | 2012.06-2018.05 | 8AT | F | L/R | SUV 4WD M 48.02 | | GCI81641 | Inner Joint | | | 26 | | | 30 | |
| | 2012.06-2018.05 | 8AT | R | L | SUV 4WD M 48.02 | For PR code:1Y0,Without differential lock | GDS81923 | Drive Shaft | | 30 | 32 | 64 | 103.5 | 865 | |
| | 2012.06-2018.05 | 8AT | R | L/R | SUV 4WD M 48.02 | | GCI81044 | Outer Joint | | 30 | 30 | 64 | 103.5 | 95.2 | |
| | 2012.06-2018.05 | 8AT | R | L/R | SUV 4WD M 48.02 | | GCI81053 | Inner Joint | | 32 | 30 | 50 | 94 | 117.2 | |
| 4.8 (368 kw) | 2007.02-2010.09 | 6AT | F | L/R | SUV 4WD M 48.51 | | GDS35085 | Drive Shaft | | 30 | | 64.4 | 103.5 | 525 | |
| | 2007.02-2010.09 | 6AT | F | L/R | SUV 4WD M 48.51 | | GCO61050 | Outer Joint | | 30 | 27 | 64 | 103.5 | 63.5 | M |
| | 2007.02-2010.09 | 6AT | F | L/R | SUV 4WD M 48.51 | | GCI99148 | Inner Joint | | | 28 | | | 34 | |
| | 2007.02-2010.09 | 6AT | R | L/R | SUV 4WD M 48.51 | | GDS35086 | Drive Shaft | | 30 | | 64.3 | 103.5 | 724 | |
| | 2010.06-2014.05 | 8AT | F | L/R | SUV 4WD M 48.52 | | GCO81667 | Outer Joint | | 30 | 25 | 64.5 | 104 | 56 | I |
| | 2010.06-2014.05 | 8AT | F | L/R | SUV 4WD M 48.52 | | GCI81641 | Inner Joint | | | 26 | | | 30 | |
| | 2010.06-2014.05 | 8AT | R | R | SUV 4WD M 48.52 | without differential lock | GDS81106 | Drive Shaft | | 30 | 32 | 64 | 103.5 | 865 | |
| | 2010.06-2014.05 | 8AT | R | R | SUV 4WD M 48.52 | without differential lock | GCI81044 | Outer Joint | | 30 | 30 | 64 | 103.5 | 95.2 | |
| | 2010.06-2014.05 | 8AT | R | R | SUV 4WD M 48.52 | without differential lock | GCI81053 | Inner Joint | | 32 | 30 | 50 | 94 | 117.2 | |
| 4.8 (382 kw) | 2014.10-2018.05 | 8AT | F | L/R | SUV 4WD MCF.TB | | GCO81667 | Outer Joint | | 30 | 25 | 64.5 | 104 | 56 | I |
| | 2014.10-2018.05 | 8AT | F | L/R | SUV 4WD MCF.TB | | GCI81641 | Inner Joint | | | 26 | | | 30 | |
| | 2014.10-2018.05 | 8AT | R | L/R | SUV 4WD MCF.TB | Wheel Side,MI code:I1Y0/I1Y1 | GCI81044 | Outer Joint | | 30 | 30 | 64 | 103.5 | 95.2 | |
| | 2014.10-2018.05 | 8AT | R | L/R | SUV 4WD MCF.TB | Transmission side,MI code:I1Y0/I1Y1 | GCI81053 | Inner Joint | | 32 | 30 | 50 | 94 | 117.2 | |
| | 2014.10-2018.05 | AT | R | L/R | SUV 4WD MCF.TB | | GDS81106 | Drive Shaft | | 30 | 32 | 64 | 103.5 | 865 | |
| 4.8 (397 kw) | 2007.02-2010.09 | 6AT | F | L/R | SUV 4WD M 48.51 | | GDS35085 | Drive Shaft | | 30 | | 64.4 | 103.5 | 525 | |
| | 2007.02-2010.09 | 6AT | F | L/R | SUV 4WD M 48.51 | | GCI99148 | Inner Joint | | | 28 | | | 34 | |
| | 2007.02-2010.09 | AT/MT | F | L/R | SUV 4WD M 48.51 | Date from:2008.01 | GCO61050 | Outer Joint | | 30 | 27 | 64 | 103.5 | 63.5 | M |
| | 2007.02-2010.09 | 6AT | R | L/R | SUV 4WD M 48.51 | | GDS35086 | Drive Shaft | | 30 | | 64.3 | 103.5 | 724 | |
| | 2010.06-2014.05 | 8AT | F | L/R | SUV 4WD M 48.52 | | GCO81667 | Outer Joint | | 30 | 25 | 64.5 | 104 | 56 | I |
| | 2010.06-2014.05 | 8AT | F | L/R | SUV 4WD M 48.52 | | GCI81641 | Inner Joint | | | 26 | | | 30 | |
| | 2010.06-2014.05 | 8AT | R | L/R | SUV 4WD M 48.52 | | GDS81106 | Drive Shaft | | 30 | 32 | 64 | 103.5 | 865 | |
| | 2010.06-2014.05 | 8AT | R | L/R | SUV 4WD M 48.52 | | GCI81044 | Outer Joint | | 30 | 30 | 64 | 103.5 | 95.2 | |
| | 2010.06-2014.05 | 8AT | R | L/R | SUV 4WD M 48.52 | | GCI81053 | Inner Joint | | 32 | 30 | 50 | 94 | 117.2 | |
| 4.8 (404 kw) | 2008.08-2010.09 | AT | F | L/R | SUV 4WD M 48.51 | | GDS35085 | Drive Shaft | | 30 | | 64.4 | 103.5 | 525 | |
| | 2008.08-2010.09 | AT | F | L/R | SUV 4WD M 48.51 | Chassis no. is:9PRLA17027,9PRLA20134,9PRLA40029,9PRLA40186,9PRLA43023,9PRLA30000 | GCO61050 | Outer Joint | | 30 | 27 | 64 | 103.5 | 63.5 | M |
| | 2008.08-2010.09 | AT | F | L/R | SUV 4WD M 48.51 | Date to:2010.05 | GCI99148 | Inner Joint | | | 28 | | | 34 | |
| | 2008.08-2010.09 | AT | R | L/R | SUV 4WD M 48.51 | Differential:Without differential lock;For MI code:ID5V/GOR | GDS61236 | Drive Shaft | | 30 | | 64 | 103.5 | 734 | |
| | 2008.08-2010.09 | AT | R | L/R | SUV 4WD M 48.51 | Differential:Without differential lock;For MI code:ID5V/GOR | GCI82450 | Outer Joint | | 30 | 28 | 64 | 103.5 | 64 | |
| | 2008.08-2010.09 | AT | R | L/R | SUV 4WD M 48.51 | | GCI83027 | Inner Joint | | | 28 | | | 28 | |
| | 2008.08-2010.09 | MT | R | L/R | SUV 4WD M 48.51 | With differential lock;For MI code:ID5V/I1Y1 | GDS35086 | Drive Shaft | | 30 | | 64.3 | 103.5 | 724 | |
| 4.8 (405 kw) | 2012.10-2014.05 | 8AT | F | L/R | SUV 4WD M 48.52 | | GCO81667 | Outer Joint | | 30 | 25 | 64.5 | 104 | 56 | I |
| | 2012.10-2014.05 | 8AT | F | L/R | SUV 4WD M 48.52 | | GCI81641 | Inner Joint | | | 26 | | | 30 | |
| | 2012.10-2014.05 | 8AT | R | L/R | SUV 4WD M 48.52 | | GCI81044 | Outer Joint | | 30 | 30 | 64 | 103.5 | 95.2 | |
| | 2012.10-2014.05 | 8AT | R | L/R | SUV 4WD M 48.52 | | GCI81053 | Inner Joint | | 32 | 30 | 50 | 94 | 117.2 | |
| | 2012.10-2014.05 | AT | R | L/R | SUV 4WD M 48.52 | | GDS81106 | Drive Shaft | | 30 | 32 | 64 | 103.5 | 865 | |
| 4.8 (419 kw) | 2015.01-2018.05 | 8AT | F | L/R | SUV 4WD MCY.XA | | GCO81667 | Outer Joint | | 30 | 25 | 64.5 | 104 | 56 | I |
| | 2015.01-2018.05 | 8AT | F | L/R | SUV 4WD MCY.XA | | GCI81641 | Inner Joint | | | 26 | | | 30 | |
| | 2015.01-2018.05 | 8AT | R | L/R | SUV 4WD MCY.XA | Without differential lock | GDS81106 | Drive Shaft | | 30 | 32 | 64 | 103.5 | 865 | |
| | 2015.01-2018.05 | 8AT | R | L/R | SUV 4WD MCY.XA | | GCI81044 | Outer Joint | | 30 | 30 | 64 | 103.5 | 95.2 | |
| | 2015.01-2018.05 | 8AT | R | L/R | SUV 4WD MCY.XA | | GCI81053 | Inner Joint | | 32 | 30 | 50 | 94 | 117.2 | |
| **Cayman** | | | | | | | | | | | | | | | |
| 2.7 (155 kw) | 2013.03-2016.05 | AT | R | L/R | Coupe RWD MA1.22 | | GDS48006 | Drive Shaft | | 28 | | 56 | 92 | 539 | |
| | 2013.03-2016.05 | AT | R | L/R | Coupe RWD MA1.22 | For MI code:I008/I250 | GCI85013 | Inner Joint | | | 28 | | | 26 | |
| 2.7 (202 kw) | 2013.03-2016.05 | AT | R | L/R | Coupe RWD MA1.22 | | GDS48006 | Drive Shaft | | 28 | | 56 | 92 | 539 | |
| | 2013.03-2016.05 | AT | R | L/R | Coupe RWD MA1.22 | | GCI85013 | Inner Joint | | | 28 | | | 26 | |
| 2.9 (155 kw) | 2009.02-2013.06 | 6MT | R | L | Coupe RWD MA1.20 | | GDS58236 | Drive Shaft | | 28 | | 56 | 92 | 647 | |
| | 2009.02-2013.06 | 6MT | R | R | Coupe RWD MA1.20 | | GDS58284 | Drive Shaft | | 28 | | 56 | 92 | 687 | |
| 2.9 (195 kw) | 2009.02-2012.12 | 6MT | R | L | Coupe RWD MA1.20 | | GDS58236 | Drive Shaft | | 28 | | 56 | 92 | 647 | |

| | YEAR | TRANSM. | F/R | L/R | BODY STYLE & DRIVE TYPE & ENGINE | REMARKS | G-AP Ref. | PRODUCT | ABS | Technical Specifications A | B | C | H | L | P |
|---|---|---|---|---|---|---|---|---|---|---|---|---|---|---|---|
| **PORSCHE** | | | | | | | | | | | | | | | |
| **Cayman** | | | | | | | | | | | | | | | |
| 2.9 (195 kw) | 2009.02-2012.12 | 6MT | R | R | Coupe RWD MA1.20 | | GDS58284 | Drive Shaft | | 28 | | 56 | 92 | 687 | |
| **Macan** | | | | | | | | | | | | | | | |
| 2.0 (174 kw) | 2014.05-2018.09 | 7AT | F | L/R | SUV 4WD MCN.CC;MCY.NA;CNCC;CYNA | | GCO83107 | Outer Joint | | 42 | 25 | 76.5 | 34 | 47.5 | I |
| | 2014.05-2018.09 | | F | L/R | SUV 4WD MCN.CC;MCY.NA;CNCC;CYNA | | GDS81107 | Drive Shaft | | 42 | | 76.5 | 34 | 494 | |
| | 2014.05-2018.09 | 7AT | R | L | SUV 4WD MCN.CC;MCY.NA;CNCC;CYNA | With differential lock | GDS61338 | Drive Shaft | | 42 | 32 | 76.5 | 34 | 779 | |
| | 2014.05-2018.09 | 7AT | R | R | SUV 4WD MCN.CC;MCY.NA;CNCC;CYNA | With differential lock | GDS58304 | Drive Shaft | | 42 | 32 | 76.5 | 34 | 787 | |
| | 2014.05-2018.09 | AT | R | L/R | SUV 4WD MCN.CC;MCY.NA;CNCC;CYNA | | GCI61106 | Inner Joint | | 32 | 28 | 49.95 | 83 | 109 | |
| | 2014.05-2018.09 | AT | R | L/R | SUV 4WD MCN.CC;MCY.NA;CNCC;CYNA | | GCI61107 | Inner Joint | | 42 | 28 | 76.5 | 34 | 82 | |
| 2.0 (180 kw) | 2018.05- | 7AT | F | L/R | SUV 4WD DKNA | | GDS81107 | Drive Shaft | | 42 | | 76.5 | 34 | 494 | |
| | 2018.05- | 7AT | F | L/R | SUV 4WD DKNA | | GCO83107 | Outer Joint | | 42 | 25 | 76.5 | 34 | 47.5 | I |
| | 2018.05- | 7AT | F | L/R | SUV 4WD DKNA | | GCI81054 | Inner Joint | | | 24 | | | 86 | |
| | 2018.05- | 7AT | R | R | SUV 4WD DKNA | With differential lock | GDS58304 | Drive Shaft | | 42 | 32 | 76.5 | 34 | 787 | |
| | 2018.05- | 7AT | R | L/R | SUV 4WD DKNA | Without differential lock | GDS61338 | Drive Shaft | | 42 | 32 | 76.5 | 34 | 779 | |
| 2.0 (185 kw) | 2015.05- | 7AT | F | L/R | SUV 4WD MCY.NB;MCY.PA;DLHB;CYNB;CYPA | | GDS81107 | Drive Shaft | | 42 | | 76.5 | 34 | 494 | |
| | 2015.05- | 7AT | F | L/R | SUV 4WD MCY.NB;MCY.PA;DLHB;CYNB;CYPA | | GCO83107 | Outer Joint | | 42 | 25 | 76.5 | 34 | 47.5 | I |
| | 2015.05- | 7AT | F | L/R | SUV 4WD MCY.NB;MCY.PA;DLHB;CYNB;CYPA | | GCI81054 | Inner Joint | | | 24 | | | 86 | |
| | 2015.05- | 7AT | R | L | SUV 4WD MCY.NB;MCY.PA;DLHB;CYNB;CYPA | with differential lock,MI code:1Y1 | GDS61338 | Drive Shaft | | 42 | 32 | 76.5 | 34 | 779 | |
| | 2015.05- | 7AT | R | R | SUV 4WD MCY.NB;MCY.PA;DLHB;CYNB;CYPA | With differential lock | GDS58304 | Drive Shaft | | 42 | 32 | 76.5 | 34 | 787 | |
| | 2015.05- | 7AT | R | L | SUV 4WD MCY.NB;MCY.PA;DLHB;CYNB;CYPA | with differential lock,MI code:1Y1 | GCI61106 | Inner Joint | | 32 | 28 | 49.95 | 83 | 109 | |
| | 2015.05- | 7AT | R | L | SUV 4WD MCY.NB;MCY.PA;DLHB;CYNB;CYPA | with differential lock,MI code:1Y1 | GCI61107 | Inner Joint | | 42 | 28 | 76.5 | 34 | 82 | |
| 2.0 (195 kw) | 2021.07- | 7AT | F | L/R | SUV 4WD DMTA | | GDS81107 | Drive Shaft | | 42 | | 76.5 | 34 | 494 | |
| | 2021.07- | 7AT | R | R | SUV 4WD DMTA | With differential lock | GDS58304 | Drive Shaft | | 42 | 32 | 76.5 | 34 | 787 | |
| 2.9 (280 kw) | 2019.05- | 7AT | F | L/R | SUV 4WD DGRB | | GDS81107 | Drive Shaft | | 42 | | 76.5 | 34 | 494 | |
| | 2019.05- | 7AT | R | R | SUV 4WD DGRB | With differential lock | GDS58304 | Drive Shaft | | 42 | 32 | 76.5 | 34 | 787 | |
| | 2019.05- | 7AT | R | L/R | SUV 4WD DGRB | With differential lock | GCI61106 | Inner Joint | | 32 | 28 | 49.95 | 83 | 109 | |
| | 2021.05- | 7DCT | F | L/R | SUV 4WD DGRB | | GDS81107 | Drive Shaft | | 42 | | 76.5 | 34 | 494 | |
| | 2021.05- | 7AT | R | R | SUV 4WD DGRB | With differential lock | GDS58304 | Drive Shaft | | 42 | 32 | 76.5 | 34 | 787 | |
| | 2021.05- | 7AT | R | L/R | SUV 4WD DGRB | With differential lock | GCI61106 | Inner Joint | | 32 | 28 | 49.95 | 83 | 109 | |
| 2.9 (324 kw) | 2018.05- | 7AT | F | L/R | SUV 4WD DGRC;DGR | | GCO83107 | Outer Joint | | 42 | 25 | 76.5 | 34 | 47.5 | I |
| | 2018.05- | 7AT | F | L/R | SUV 4WD DGRC;DGR | | GCI81054 | Inner Joint | | | 24 | | | 86 | |
| | 2018.05- | 7DCT | F | L/R | SUV 4WD DGRC;DGR | | GDS81107 | Drive Shaft | | 42 | | 76.5 | 34 | 494 | |
| | 2018.05- | 7DCT | F | L/R | SUV 4WD DGRC;DGR | | GDS81530 | Drive Shaft | | 42 | | 76.5 | 34 | 496 | |
| | 2018.05- | 7AT | R | R | SUV 4WD DGRC;DGR | With differential lock | GDS58304 | Drive Shaft | | 42 | 32 | 76.5 | 34 | 787 | |
| | 2018.05- | 7AT | R | L/R | SUV 4WD DGRC;DGR | Without differential lock | GDS61338 | Drive Shaft | | 42 | 32 | 76.5 | 34 | 779 | |
| | 2018.05- | 7AT | R | L/R | SUV 4WD DGRC;DGR | | GCI61106 | Inner Joint | | 32 | 28 | 49.95 | 83 | 109 | |
| | 2021.05- | 7DCT | F | L/R | SUV 4WD DGRC | | GDS81530 | Drive Shaft | | 42 | | 76.5 | 34 | 496 | |
| | 2021.05- | 7AT | R | R | SUV 4WD DGRC | With differential lock | GDS58304 | Drive Shaft | | 42 | 32 | 76.5 | 34 | 787 | |
| | 2021.05- | 7AT | R | L/R | SUV 4WD DGRC | With differential lock | GCI61106 | Inner Joint | | 32 | 28 | 49.95 | 83 | 109 | |
| 3.0 (155 kw) | 2014.02-2018.09 | 7AT | F | L/R | SUV 4WD MCT.BB | | GCO83107 | Outer Joint | | 42 | 25 | 76.5 | 34 | 47.5 | I |
| | 2014.02-2018.09 | | F | L/R | SUV 4WD MCT.BB | | GDS81107 | Drive Shaft | | 42 | | 76.5 | 34 | 494 | |
| | 2014.02-2018.09 | 7AT | R | R | SUV 4WD MCT.BB | With differential lock | GDS58304 | Drive Shaft | | 42 | 32 | 76.5 | 34 | 787 | |
| | 2014.02-2018.09 | 7AT | R | L/R | SUV 4WD MCT.BB | Without differential lock | GDS61338 | Drive Shaft | | 42 | 32 | 76.5 | 34 | 779 | |
| | 2014.02-2018.09 | AT | R | L/R | SUV 4WD MCT.BB | | GCI61106 | Inner Joint | | 32 | 28 | 49.95 | 83 | 109 | |
| | 2014.02-2018.09 | AT | R | L/R | SUV 4WD MCT.BB | | GCI61107 | Inner Joint | | 42 | 28 | 76.5 | 34 | 82 | |
| 3.0 (180 kw) | 2014.02-2018.09 | 7AT | F | L/R | SUV 4WD MCD.UD | | GCO83107 | Outer Joint | | 42 | 25 | 76.5 | 34 | 47.5 | I |
| | 2014.02-2018.09 | | F | L/R | SUV 4WD MCD.UD | | GDS81107 | Drive Shaft | | 42 | | 76.5 | 34 | 494 | |
| | 2014.02-2018.09 | 7AT | R | R | SUV 4WD MCD.UD | With differential lock | GDS58304 | Drive Shaft | | 42 | 32 | 76.5 | 34 | 787 | |
| | 2014.02-2018.09 | 7AT | R | L/R | SUV 4WD MCD.UD | Without differential lock | GDS61338 | Drive Shaft | | 42 | 32 | 76.5 | 34 | 779 | |
| | 2014.02-2018.09 | DCT | R | L/R | SUV 4WD MCD.UD | | GCI61106 | Inner Joint | | 32 | 28 | 49.95 | 83 | 109 | |
| | 2014.02-2018.09 | DCT | R | L/R | SUV 4WD MCD.UD | | GCI61107 | Inner Joint | | 42 | 28 | 76.5 | 34 | 82 | |
| 3.0 (184 kw) | 2014.02-2018.09 | 7AT | F | L/R | SUV 4WD MCT.BC | | GDS81107 | Drive Shaft | | 42 | | 76.5 | 34 | 494 | |
| | 2014.02-2018.09 | 7AT | F | L/R | SUV 4WD MCT.BC | | GCO83107 | Outer Joint | | 42 | 25 | 76.5 | 34 | 47.5 | I |
| | 2014.02-2018.09 | 7AT | F | L/R | SUV 4WD MCT.BC | | GCI81054 | Inner Joint | | | 24 | | | 86 | |
| | 2014.02-2018.09 | 7AT | R | R | SUV 4WD MCT.BC | With differential lock | GDS58304 | Drive Shaft | | 42 | 32 | 76.5 | 34 | 787 | |
| | 2014.02-2018.09 | 7AT | R | L/R | SUV 4WD MCT.BC | Without differential lock | GDS61338 | Drive Shaft | | 42 | 32 | 76.5 | 34 | 779 | |
| | 2014.02-2018.09 | AT | R | L/R | SUV 4WD MCT.BC | | GCI61106 | Inner Joint | | 32 | 28 | 49.95 | 83 | 109 | |
| | 2014.02-2018.09 | AT | R | L/R | SUV 4WD MCT.BC | | GCI61107 | Inner Joint | | 42 | 28 | 76.5 | 34 | 82 | |
| 3.0 (190 kw) | 2014.02-2018.09 | 7AT | F | L/R | SUV 4WD MCT.BA | | GDS81107 | Drive Shaft | | 42 | | 76.5 | 34 | 494 | |
| | 2014.02-2018.09 | 7AT | F | L/R | SUV 4WD MCT.BA | | GCO83107 | Outer Joint | | 42 | 25 | 76.5 | 34 | 47.5 | I |
| | 2014.02-2018.09 | 7AT | F | L/R | SUV 4WD MCT.BA | | GCI81054 | Inner Joint | | | 24 | | | 86 | |
| | 2014.02-2018.09 | 7AT | R | R | SUV 4WD MCT.BA | With differential lock | GDS58304 | Drive Shaft | | 42 | 32 | 76.5 | 34 | 787 | |
| | 2014.02-2018.09 | 7AT | R | L/R | SUV 4WD MCT.BA | Without differential lock | GDS61338 | Drive Shaft | | 42 | 32 | 76.5 | 34 | 779 | |
| | 2014.02-2018.09 | 7AT | R | L/R | SUV 4WD MCT.BA | | GCI61106 | Inner Joint | | 32 | 28 | 49.95 | 83 | 109 | |
| | 2014.02-2018.09 | 7AT | R | L/R | SUV 4WD MCT.BA | | GCI61107 | Inner Joint | | 42 | 28 | 76.5 | 34 | 82 | |
| 3.0 (250 kw) | 2014.02-2018.09 | 7AT | F | L/R | SUV 4WD MCT.MA | | GDS81107 | Drive Shaft | | 42 | | 76.5 | 34 | 494 | |

| | YEAR | TRANSM. | F/R | L/R | BODY STYLE & DRIVE TYPE & ENGINE | REMARKS | G-AP Ref. | PRODUCT | ABS | Technical Specifications A | B | C | H | L | P |
|---|---|---|---|---|---|---|---|---|---|---|---|---|---|---|---|
| **PORSCHE** | | | | | | | | | | | | | | | |
| **Macan** | | | | | | | | | | | | | | | |
| 3.0 (250 kw) | 2014.02-2018.09 | 7AT | F | L/R | SUV 4WD MCT.MA | | GCO83107 | Outer Joint | | 42 | 25 | 76.5 | 34 | 47.5 | I |
| | 2014.02-2018.09 | 7AT | F | L/R | SUV 4WD MCT.MA | | GCI81054 | Inner Joint | | | 24 | | | 86 | |
| | 2014.02-2018.09 | 7AT | R | L | SUV 4WD MCT.MA | with differential lock,MI code:1Y1 | GDS61338 | Drive Shaft | | 42 | 32 | 76.5 | 34 | 779 | |
| | 2014.02-2018.09 | 7AT | R | R | SUV 4WD MCT.MA | With differential lock | GDS58304 | Drive Shaft | | 42 | 32 | 76.5 | 34 | 787 | |
| | 2014.02-2018.09 | 7AT | R | L | SUV 4WD MCT.MA | with differential lock,MI code:1Y1 | GCI61106 | Inner Joint | | 32 | 28 | 49.95 | 83 | 109 | |
| | 2014.02-2018.09 | 7AT | R | L | SUV 4WD MCT.MA | with differential lock,MI code:1Y1 | GCI61107 | Inner Joint | | 42 | 28 | 76.5 | 34 | 82 | |
| 3.0 (260 kw) | 2018.05- | 7AT | F | L/R | SUV 4WD DLZB | | GDS81107 | Drive Shaft | | 42 | | 76.5 | 34 | 494 | |
| | 2018.05- | 7AT | F | L/R | SUV 4WD DLZB | | GCO83107 | Outer Joint | | 42 | 25 | 76.5 | 34 | 47.5 | I |
| | 2018.05- | 7AT | F | L/R | SUV 4WD DLZB | | GCI81054 | Inner Joint | | | 24 | | | 86 | |
| | 2018.05- | 7AT | R | R | SUV 4WD DLZB | With differential lock | GDS58304 | Drive Shaft | | 42 | 32 | 76.5 | 34 | 787 | |
| | 2018.05- | 7AT | R | L/R | SUV 4WD DLZB | Without differential lock | GDS61338 | Drive Shaft | | 42 | 32 | 76.5 | 34 | 779 | |
| 3.0 (265 kw) | 2015.10-2018.09 | 7AT | F | L/R | SUV 4WD MDC.NA | | GDS81107 | Drive Shaft | | 42 | | 76.5 | 34 | 494 | |
| | 2015.10-2018.09 | 7AT | F | L/R | SUV 4WD MDC.NA | | GCO83107 | Outer Joint | | 42 | 25 | 76.5 | 34 | 47.5 | I |
| | 2015.10-2018.09 | 7AT | F | L/R | SUV 4WD MDC.NA | | GCI81054 | Inner Joint | | | 24 | | | 86 | |
| | 2015.10-2018.09 | 7AT | R | L | SUV 4WD MDC.NA | with differential lock,MI code:1Y1 | GDS61338 | Drive Shaft | | 42 | 32 | 76.5 | 34 | 779 | |
| | 2015.10-2018.09 | 7AT | R | R | SUV 4WD MDC.NA | With differential lock | GDS58304 | Drive Shaft | | 42 | 32 | 76.5 | 34 | 787 | |
| | 2015.10-2018.09 | DCT | R | L/R | SUV 4WD MDC.NA | with differential lock,MI code:1Y1 | GCI61106 | Inner Joint | | 32 | 28 | 49.95 | 83 | 109 | |
| | 2015.10-2018.09 | DCT | R | L/R | SUV 4WD MDC.NA | with differential lock,MI code:1Y1 | GCI61107 | Inner Joint | | 42 | 28 | 76.5 | 34 | 82 | |
| 3.6 (294 kw) | 2014.02-2018.09 | 7AT | F | L/R | SUV 4WD MCT.LA | Date to:2016.03 | GDS81107 | Drive Shaft | | 42 | | 76.5 | 34 | 494 | |
| | 2014.02-2018.09 | 7AT | F | L/R | SUV 4WD MCT.LA | | GDS81530 | Drive Shaft | | 42 | | 76.5 | 34 | 496 | |
| | 2014.02-2018.09 | 7AT | F | L/R | SUV 4WD MCT.LA | | GCO83107 | Outer Joint | | 42 | 25 | 76.5 | 34 | 47.5 | I |
| | 2014.02-2018.09 | 7AT | F | L/R | SUV 4WD MCT.LA | | GCI81054 | Inner Joint | | | 24 | | | 86 | |
| | 2014.02-2018.09 | 7AT | R | R | SUV 4WD MCT.LA | With differential lock | GDS58304 | Drive Shaft | | 42 | 32 | 76.5 | 34 | 787 | |
| | 2014.02-2018.09 | 7AT | R | L/R | SUV 4WD MCT.LA | Without differential lock | GDS61338 | Drive Shaft | | 42 | 32 | 76.5 | 34 | 779 | |
| | 2014.02-2018.09 | AT | R | L/R | SUV 4WD MCT.LA | | GCI61106 | Inner Joint | | 32 | 28 | 49.95 | 83 | 109 | |
| | 2014.02-2018.09 | AT | R | L/R | SUV 4WD MCT.LA | | GCI61107 | Inner Joint | | 42 | 28 | 76.5 | 34 | 82 | |
| 3.6 (324 kw) | 2016.09- | 7AT | F | L/R | SUV 4WD MDH.KA | | GCO81353 | Outer Joint | | 42 | 28 | 76.5 | 34 | 54 | I |
| | 2016.09- | 7AT | F | L/R | SUV 4WD MDH.KA | | GCI61077 | Inner Joint | | | 34 | | | 88 | |
| | 2016.09- | 7DCT | F | L/R | SUV 4WD MDH.KA | Model year to:2016 | GDS81107 | Drive Shaft | | 42 | | 76.5 | 34 | 494 | |
| | 2016.09- | 7DCT | F | L/R | SUV 4WD MDH.KA | Model Year from:2017 | GDS81530 | Drive Shaft | | 42 | | 76.5 | 34 | 496 | |
| | 2016.09- | 7AT | R | L | SUV 4WD MDH.KA | With differential lock,MI code:1Y1 | GDS61338 | Drive Shaft | | 42 | 32 | 76.5 | 34 | 779 | |
| | 2016.09- | 7AT | R | R | SUV 4WD MDH.KA | With differential lock | GDS58304 | Drive Shaft | | 42 | 32 | 76.5 | 34 | 787 | |
| | 2016.09- | 7AT | R | L | SUV 4WD MDH.KA | With differential lock,MI code:1Y1 | GCI61106 | Inner Joint | | 32 | 28 | 49.95 | 83 | 109 | |
| | 2016.09- | 7AT | R | L | SUV 4WD MDH.KA | With differential lock,MI code:1Y1 | GCI61107 | Inner Joint | | 42 | 28 | 76.5 | 34 | 82 | |
| **Panamera** | | | | | | | | | | | | | | | |
| 3.0 (155 kw) | 2011.08-2013.07 | 8AT | F | L/R | Hatchback RWD MCR.CB | Model year from:2011 | GDS83611 | Drive Shaft | | 30 | | 60 | 108 | 547 | |
| | 2011.08-2013.07 | 8AT | F | L/R | Hatchback RWD MCR.CB | | GCO82439 | Outer Joint | | 30 | 21 | 60 | 108 | 48.5 | I |
| 3.0 (184 kw) | 2011.08-2013.07 | 8AT | F | L/R | Hatchback RWD MCR.CC | Model year from:2011 | GDS83611 | Drive Shaft | | 30 | | 60 | 108 | 547 | |
| | 2011.08-2013.07 | 8AT | F | L/R | Hatchback RWD MCR.CC | | GCO82439 | Outer Joint | | 30 | 21 | 60 | 108 | 48.5 | I |
| 3.0 (221 kw) | 2013.07-2016.10 | 8AT | F | L/R | Hatchback RWD MCW.JA | | GDS83611 | Drive Shaft | | 30 | | 60 | 108 | 547 | |
| | 2013.07-2016.10 | 8AT | F | L/R | Hatchback RWD MCW.JA | | GCO82439 | Outer Joint | | 30 | 21 | 60 | 108 | 48.5 | I |
| 3.0 (279 kw) | 2011.03-2013.07 | 8AT | F | L/R | Hatchback RWD MCG.FA;MCG.EA | Model year from:2011 | GDS83611 | Drive Shaft | | 30 | | 60 | 108 | 547 | |
| | 2011.03-2013.07 | 8AT | F | L/R | Hatchback RWD MCG.FA;MCG.EA | | GCO82439 | Outer Joint | | 30 | 21 | 60 | 108 | 48.5 | I |
| 3.0 (306 kw) | 2013.07-2016.10 | 8AT | F | L/R | Hatchback RWD MCG.FA;MCG.EA | Model year from:2011 | GDS83611 | Drive Shaft | | 30 | | 60 | 108 | 547 | |
| | 2013.07-2016.10 | 8AT | F | L/R | Hatchback RWD MCG.FA;MCG.EA | | GCO82439 | Outer Joint | | 30 | 21 | 60 | 108 | 48.5 | I |
| 3.0 (309 kw) | 2013.07-2016.10 | AT | F | L/R | Hatchback 4WD MCW.DA | | GDS83611 | Drive Shaft | | 30 | | 60 | 108 | 547 | |
| | 2013.07-2016.10 | AT | F | L/R | Hatchback 4WD MCW.DA | | GCO82439 | Outer Joint | | 30 | 21 | 60 | 108 | 48.5 | I |
| | 2013.07-2016.10 | AT | F | L/R | Hatchback 4WD MCW.DA | | GCI82302 | Inner Joint | | | 22 | | | 86 | |
| | 2013.07-2016.10 | 7AT | F | L/R | Hatchback RWD MCW.DA | | GDS83611 | Drive Shaft | | 30 | | 60 | 108 | 547 | |
| | 2013.07-2016.10 | 7AT | F | L/R | Hatchback RWD MCW.DA | | GCO82439 | Outer Joint | | 30 | 21 | 60 | 108 | 48.5 | I |
| 3.6 (220 kw) | 2010.05-2013.07 | 7AT | F | L/R | Hatchback 4WD M 46.40 | Date from:2011.01 | GDS83611 | Drive Shaft | | 30 | | 60 | 108 | 547 | |
| | 2010.05-2013.07 | 7AT | F | L/R | Hatchback 4WD M 46.40 | | GCO82439 | Outer Joint | | 30 | 21 | 60 | 108 | 48.5 | I |
| | 2010.05-2013.07 | 7AT | F | L/R | Hatchback 4WD M 46.40 | Date from:2011.01 | GCI82302 | Inner Joint | | | 22 | | | 86 | |
| | 2010.05-2013.07 | 7AT/6MT | F | L/R | Hatchback RWD M 46.20 | Model year from:2011 | GDS83611 | Drive Shaft | | 30 | | 60 | 108 | 547 | |
| | 2010.05-2013.07 | 7AT/6MT | F | L/R | Hatchback RWD M 46.20 | | GCO82439 | Outer Joint | | 30 | 21 | 60 | 108 | 48.5 | I |
| 3.6 (228 kw) | 2013.07-2016.10 | AT | F | L/R | Hatchback 4WD MCW.AA;MCX.NA | | GDS83611 | Drive Shaft | | 30 | | 60 | 108 | 547 | |
| | 2013.07-2016.10 | AT | F | L/R | Hatchback 4WD MCW.AA;MCX.NA | | GCO82439 | Outer Joint | | 30 | 21 | 60 | 108 | 48.5 | I |
| | 2013.07-2016.10 | AT | F | L/R | Hatchback 4WD MCW.AA;MCX.NA | | GCI82302 | Inner Joint | | | 22 | | | 86 | |
| | 2013.07-2016.10 | 7AT | F | L/R | Hatchback RWD MCW.AA;MCX.NA | | GDS83611 | Drive Shaft | | 30 | | 60 | 108 | 547 | |
| | 2013.07-2016.10 | 7AT | F | L/R | Hatchback RWD MCW.AA;MCX.NA | | GCO82439 | Outer Joint | | 30 | 21 | 60 | 108 | 48.5 | I |
| 4.8 (294 kw) | 2009.09-2013.07 | 7AT/6MT | F | L/R | Hatchback 4WD M 48.40 | Date from:2011.01 | GDS83611 | Drive Shaft | | 30 | | 60 | 108 | 547 | |
| | 2009.09-2013.07 | 7AT/6MT | F | L/R | Hatchback 4WD M 48.40 | | GCO82439 | Outer Joint | | 30 | 21 | 60 | 108 | 48.5 | I |
| | 2009.09-2013.07 | 7AT/6MT | F | L/R | Hatchback 4WD M 48.40 | Date from:2011.01 | GCI82302 | Inner Joint | | | 22 | | | 86 | |
| | 2009.09-2013.07 | 7AT/6MT | F | L/R | Hatchback RWD M 48.20 | Model year from:2011 | GDS83611 | Drive Shaft | | 30 | | 60 | 108 | 547 | |
| | 2009.09-2013.07 | 7AT/6MT | F | L/R | Hatchback RWD M 48.20 | | GCO82439 | Outer Joint | | 30 | 21 | 60 | 108 | 48.5 | I |

| | YEAR | TRANSM. | F/R | L/R | BODY STYLE & DRIVE TYPE & ENGINE | REMARKS | G-AP Ref. | PRODUCT | ABS | Technical Specifications A | B | C | H | L | P |
|---|---|---|---|---|---|---|---|---|---|---|---|---|---|---|---|
| **PORSCHE** | | | | | | | | | | | | | | | |
| **Panamera** | | | | | | | | | | | | | | | |
| 4.8 (316 kw) | 2012.01-2015.12 | AT | F | L/R | Hatchback 4WD M 48.40 | | GDS83611 | Drive Shaft | | 30 | | 60 | 108 | 547 | |
| | 2012.01-2015.12 | AT | F | L/R | Hatchback 4WD M 48.40 | | GCO82439 | Outer Joint | | 30 | 21 | 60 | 108 | 48.5 | I |
| | 2012.01-2015.12 | AT | F | L/R | Hatchback 4WD M 48.40 | | GCI82302 | Inner Joint | | | 22 | | | 86 | |
| 4.8 (324 kw) | 2013.07-2016.10 | AT | F | L/R | Hatchback 4WD MCX.PA;MCX.RA | | GDS83611 | Drive Shaft | | 30 | | 60 | 108 | 547 | |
| | 2013.07-2016.10 | AT | F | L/R | Hatchback 4WD MCX.PA;MCX.RA | | GCO82439 | Outer Joint | | 30 | 21 | 60 | 108 | 48.5 | I |
| | 2013.07-2016.10 | AT | F | L/R | Hatchback 4WD MCX.PA;MCX.RA | | GCI82302 | Inner Joint | | | 22 | | | 86 | |
| 4.8 (368 kw) | 2009.09-2013.07 | 7AT | F | L/R | Hatchback 4WD M 48.70 | Date from:2011.01 | GDS83611 | Drive Shaft | | 30 | | 60 | 108 | 547 | |
| | 2009.09-2013.07 | 7AT | F | L/R | Hatchback 4WD M 48.70 | | GCO82439 | Outer Joint | | 30 | 21 | 60 | 108 | 48.5 | I |
| | 2009.09-2013.07 | 7AT | F | L/R | Hatchback 4WD M 48.70 | Date from:2011.01 | GCI82302 | Inner Joint | | | 22 | | | 86 | |
| 4.8 (382 kw) | 2013.07-2016.10 | AT | F | L/R | Hatchback 4WD MCW.BA | | GDS83611 | Drive Shaft | | 30 | | 60 | 108 | 547 | |
| | 2013.07-2016.10 | AT | F | L/R | Hatchback 4WD MCW.BA | | GCO82439 | Outer Joint | | 30 | 21 | 60 | 108 | 48.5 | I |
| | 2013.07-2016.10 | AT | F | L/R | Hatchback 4WD MCW.BA | | GCI82302 | Inner Joint | | | 22 | | | 86 | |
| 4.8 (397 kw) | 2010.08-2013.07 | 7AT | F | L/R | Hatchback 4WD M 48.70 | Date from:2011.01 | GDS83611 | Drive Shaft | | 30 | | 60 | 108 | 547 | |
| | 2010.08-2013.07 | 7AT | F | L/R | Hatchback 4WD M 48.70 | | GCO82439 | Outer Joint | | 30 | 21 | 60 | 108 | 48.5 | I |
| | 2010.08-2013.07 | 7AT | F | L/R | Hatchback 4WD M 48.70 | Date from:2011.01 | GCI82302 | Inner Joint | | | 22 | | | 86 | |
| 4.8 (404 kw) | 2011.05-2013.07 | 7AT | F | L/R | Hatchback 4WD M 48.70 | | GDS83611 | Drive Shaft | | 30 | | 60 | 108 | 547 | |
| | 2011.05-2013.07 | 7AT | F | L/R | Hatchback 4WD M 48.70 | | GCO82439 | Outer Joint | | 30 | 21 | 60 | 108 | 48.5 | I |
| | 2011.05-2013.07 | 7AT | F | L/R | Hatchback 4WD M 48.70 | | GCI82302 | Inner Joint | | | 22 | | | 86 | |
| 4.8 (419 kw) | 2013.07-2016.10 | 7AT | F | L/R | Hatchback 4WD MCW.CA | | GDS83611 | Drive Shaft | | 30 | | 60 | 108 | 547 | |
| | 2013.07-2016.10 | 7AT | F | L/R | Hatchback 4WD MCW.CA | | GCO82439 | Outer Joint | | 30 | 21 | 60 | 108 | 48.5 | I |
| | 2013.07-2016.10 | 7AT | F | L/R | Hatchback 4WD MCW.CA | | GCI82302 | Inner Joint | | | 22 | | | 86 | |
| **PROTON** | | | | | | | | | | | | | | | |
| **315** | | | | | | | | | | | | | | | |
| 1.5 (64 kw) | 1996.03-1998.08 | AT | F | | Hatchback FWD 4G15M | | GCO24009 | Outer Joint | | 25 | 30 | 50 | 95 | 56.5 | M |
| | 1996.03-1998.08 | MT | F | L/R | Hatchback FWD 4G15M | | GCO39023 | Outer Joint | | 25 | 22 | 54 | 95 | 60 | I |
| **316** | | | | | | | | | | | | | | | |
| 1.6 (70 kw) | 1996.03-2000.07 | | F | L/R | Hatchback FWD 4G92 | | GCO39023 | Outer Joint | | 25 | 22 | 54 | 95 | 60 | I |
| | 1996.03-2000.07 | | F | | Hatchback FWD 4G92 | | GCO39064 | Outer Joint | 43T | 25 | 30 | 54 | 95 | 60.5 | M |
| **413** | | | | | | | | | | | | | | | |
| 1.3 (55 kw) | 1994.01-2002.12 | | F | L/R | Hatchback FWD 4G13M | | GCO39023 | Outer Joint | | 25 | 22 | 54 | 95 | 60 | I |
| | 1994.01-2002.12 | | F | | Hatchback FWD 4G13M | | GCO24009 | Outer Joint | | 25 | 30 | 50 | 95 | 56.5 | M |
| **415** | | | | | | | | | | | | | | | |
| 1.5 (66 kw) | 1993.11-2000.07 | AT/MT | F | L/R | Hatchback FWD 4G15M | | GCO39014 | Outer Joint | | 25 | 30 | 50 | 95 | 60.5 | M |
| | 1993.11-2000.07 | | F | L/R | Hatchback FWD 4G15M | | GCO39023 | Outer Joint | | 25 | 22 | 54 | 95 | 60 | I |
| | 1993.11-2000.07 | | F | | Hatchback FWD 4G15M | | GCO24009 | Outer Joint | | 25 | 30 | 50 | 95 | 56.5 | M |
| | 1993.11-2000.07 | | F | | Hatchback FWD 4G15M | | GCO39040 | Outer Joint | | 25 | 30 | 54 | 95 | 61 | M |
| **416** | | | | | | | | | | | | | | | |
| 1.6 (83 kw) | 1993.11-2000.07 | AT/MT | F | L/R | Hatchback FWD 4G92 | | GCO39014 | Outer Joint | | 25 | 30 | 50 | 95 | 60.5 | M |
| | 1993.11-2000.07 | | F | | Hatchback FWD 4G92 | | GCO39040 | Outer Joint | | 25 | 30 | 54 | 95 | 61 | M |
| | 1993.11-2000.07 | | F | | Hatchback FWD 4G92 | | GCO39064 | Outer Joint | 43T | 25 | 30 | 54 | 95 | 60.5 | M |
| **Exora** | | | | | | | | | | | | | | | |
| 1.6 (93 kw) | 2009.04- | 4AT/5MT | F | L | MPV FWD S4PH | | GDS49011 | Drive Shaft | 46T | 25 | 27 | 54 | 95.5 | 649 | |
| | 2009.04- | 4AT/5MT | F | R | MPV FWD S4PH | | GDS49012 | Drive Shaft | 46T | 25 | 27 | 54 | 95.5 | 980 | |
| | 2009.04- | 4AT/5MT | F | L/R | MPV FWD S4PH | | GCI74001 | Inner Joint | | 27 | 24 | 41 | 62.5 | 93 | |
| 1.6 (103 kw) | 2009.04- | 4AT/5MT | F | L | MPV FWD S4PHT | | GDS49011 | Drive Shaft | 46T | 25 | 27 | 54 | 95.5 | 649 | |
| | 2009.04- | 4AT/5MT | F | R | MPV FWD S4PHT | | GDS49012 | Drive Shaft | 46T | 25 | 27 | 54 | 95.5 | 980 | |
| | 2009.04- | 4AT/5MT | F | L/R | MPV FWD S4PHT | | GCI74001 | Inner Joint | | 27 | 24 | 41 | 62.5 | 93 | |
| **Jumbuck** | | | | | | | | | | | | | | | |
| 1.5 (64 kw) | 2002.05-2008.12 | | F | | Pickup FWD 4 G 15 P, 4 G 15 | | GCO24009 | Outer Joint | | 25 | 30 | 50 | 95 | 56.5 | M |
| **Persona** | | | | | | | | | | | | | | | |
| 1.6 (83 kw) | 1993.11-2000.07 | | F | L/R | Hatchback FWD 4G92 | | GCO39023 | Outer Joint | | 25 | 22 | 54 | 95 | 60 | I |
| | 1993.11-2000.07 | | F | | Hatchback FWD 4G92 | | GCO39064 | Outer Joint | 43T | 25 | 30 | 54 | 95 | 60.5 | M |
| **Persona 313** | | | | | | | | | | | | | | | |
| 1.3 (55 kw) | 1996.03-2000.01 | | F | L/R | Hatchback FWD G 13 B | | GCO39023 | Outer Joint | | 25 | 22 | 54 | 95 | 60 | I |
| | 1996.03-2000.01 | | F | | Hatchback FWD G 13 B | | GCO24009 | Outer Joint | | 25 | 30 | 50 | 95 | 56.5 | M |
| **Persona 315** | | | | | | | | | | | | | | | |
| 1.5 (66 kw) | 1996.03-2000.07 | AT | F | | Hatchback FWD 4 G 15 M | | GCO24009 | Outer Joint | | 25 | 30 | 50 | 95 | 56.5 | M |
| | 1996.03-2000.07 | | F | L/R | Hatchback FWD 4 G 15 M | | GCO39023 | Outer Joint | | 25 | 22 | 54 | 95 | 60 | I |
| **Persona 318** | | | | | | | | | | | | | | | |
| 1.8 (99 kw) | 1996.03-2000.07 | | F | L/R | Hatchback FWD 4 G 93 (DOHC) | | GCO39064 | Outer Joint | 43T | 25 | 30 | 54 | 95 | 60.5 | M |
| **Persona 413** | | | | | | | | | | | | | | | |
| 1.3 (55 kw) | 1994.01-2003.06 | | F | L/R | Saloon FWD 4G13- P | | GCO39023 | Outer Joint | | 25 | 22 | 54 | 95 | 60 | I |
| | 1994.01-2003.06 | | F | | Saloon FWD 4G13- P | | GCO24009 | Outer Joint | | 25 | 30 | 50 | 95 | 56.5 | M |

| | YEAR | TRANSM. | F/R | L/R | BODY STYLE & DRIVE TYPE & ENGINE | REMARKS | G-AP Ref. | PRODUCT | ABS | Technical Specifications A | B | C | H | L | P |
|---|---|---|---|---|---|---|---|---|---|---|---|---|---|---|---|
| **PROTON** | | | | | | | | | | | | | | | |
| **Persona 415** | | | | | | | | | | | | | | | |
| 1.5 (66 kw) | 1994.01-2000.07 | AT/MT | F | L/R | Saloon FWD 4 G 15 | Date from:1995.01 | GCO39014 | Outer Joint | | 25 | 30 | 50 | 95 | 60.5 | M |
| | 1994.01-2000.07 | | F | L/R | Saloon FWD 4 G 15 | | GCO39023 | Outer Joint | | 25 | 22 | 54 | 95 | 60 | I |
| | 1994.01-2000.07 | | F | | Saloon FWD 4 G 15 | | GCO24009 | Outer Joint | | 25 | 30 | 50 | 95 | 56.5 | M |
| | 1994.01-2000.07 | | F | | Saloon FWD 4 G 15 | | GCO39040 | Outer Joint | | 25 | 30 | 54 | 95 | 61 | M |
| **Persona 416** | | | | | | | | | | | | | | | |
| 1.6 (70 kw) | 1995.12-2000.07 | AT/MT | F | L/R | Hatchback FWD 4 G 92 | | GCO39014 | Outer Joint | | 25 | 30 | 50 | 95 | 60.5 | M |
| | 1995.12-2000.07 | | F | L/R | Hatchback FWD 4 G 92 | | GCO39064 | Outer Joint | 43T | 25 | 30 | 54 | 95 | 60.5 | M |
| | 2000.08-2002.02 | | F | L/R | Saloon FWD 4 G 92 | | GCO39064 | Outer Joint | 43T | 25 | 30 | 54 | 95 | 60.5 | M |
| 1.6 (83 kw) | 1994.01-2000.07 | AT/MT | F | L/R | Saloon FWD 4 G 92 | | GCO39014 | Outer Joint | | 25 | 30 | 50 | 95 | 60.5 | M |
| | 1994.01-2000.07 | | F | | Saloon FWD 4 G 92 | | GCO39040 | Outer Joint | | 25 | 30 | 54 | 95 | 61 | M |
| | 1994.01-2000.07 | | F | | Saloon FWD 4 G 92 | | GCO39064 | Outer Joint | 43T | 25 | 30 | 54 | 95 | 60.5 | M |
| **Persona 418** | | | | | | | | | | | | | | | |
| 1.8 (85 kw) | 1996.05-2000.07 | | F | | Hatchback FWD 4 G 93 (DOHC) | | GCO39064 | Outer Joint | 43T | 25 | 30 | 54 | 95 | 60.5 | M |
| | 1996.05-2000.07 | | F | L/R | Saloon FWD 4 G 93 (DOHC) | | GCO39064 | Outer Joint | 43T | 25 | 30 | 54 | 95 | 60.5 | M |
| **Persona 420** | | | | | | | | | | | | | | | |
| 2.0 (48 kw) | 1996.05-1999.04 | | F | | Hatchback FWD 4 D 68 | | GCO24009 | Outer Joint | | 25 | 30 | 50 | 95 | 56.5 | M |
| | 1996.05-1999.04 | | F | | Saloon FWD 4 D 68 | | GCO24009 | Outer Joint | | 25 | 30 | 50 | 95 | 56.5 | M |
| 2.0 (60 kw) | 1996.09-2000.07 | | F | | Hatchback FWD 4 D 68 T | | GCO24009 | Outer Joint | | 25 | 30 | 50 | 95 | 56.5 | M |
| | 1996.09-2000.07 | | F | | Saloon FWD 4 D 68 T | | GCO24009 | Outer Joint | | 25 | 30 | 50 | 95 | 56.5 | M |
| **Satria** | | | | | | | | | | | | | | | |
| 1.5 (64 kw) | 1996.09-2006.05 | AT/MT | F | L/R | Hatchback FWD 4G15M | Date to:2004.12 | GCO39014 | Outer Joint | | 25 | 30 | 50 | 95 | 60.5 | M |
| **Satria Neo** | | | | | | | | | | | | | | | |
| 1.3 (70 kw) | 2006.07-2008.12 | | F | | Hatchback FWD S4PE | | GCO24009 | Outer Joint | | 25 | 30 | 50 | 95 | 56.5 | M |
| 1.6 (83 kw) | 2006.01-2012.12 | 4AT/5MT | F | L | Hatchback FWD S4PH | | GDS49009 | Drive Shaft | 29T | 25 | 25 | 54 | 94.5 | 628 | |
| | 2006.01-2012.12 | 4AT/5MT | F | R | Hatchback FWD S4PH | | GDS49010 | Drive Shaft | 29T | 25 | 25 | 54 | 94.5 | 932 | |
| 1.6 (93 kw) | 2009.02- | 4AT/5MT | F | L | Hatchback FWD S4PH | | GDS49009 | Drive Shaft | 29T | 25 | 25 | 54 | 94.5 | 628 | |
| | 2009.02- | 4AT/5MT | F | R | Hatchback FWD S4PH | | GDS49010 | Drive Shaft | 29T | 25 | 25 | 54 | 94.5 | 932 | |
| **Satria/Compact** | | | | | | | | | | | | | | | |
| 1.8 (103 kw) | 2000.08-2006.05 | MT | F | L/R | Hatchback FWD 4 G 93(DOHC) | | GCO39064 | Outer Joint | 43T | 25 | 30 | 54 | 95 | 60.5 | M |
| **Wira** | | | | | | | | | | | | | | | |
| 1.3 (55 kw) | 2000.08-2005.09 | | F | | Hatchback FWD 4G13P | | GCO24009 | Outer Joint | | 25 | 30 | 50 | 95 | 56.5 | M |
| | 2000.08-2005.09 | | F | | Hatchback FWD 4G13P | | GCO39040 | Outer Joint | | 25 | 30 | 54 | 95 | 61 | M |
| | 2000.08-2005.09 | | F | | Saloon FWD 4G13P | | GCO24009 | Outer Joint | | 25 | 30 | 50 | 95 | 56.5 | M |
| | 2000.08-2005.09 | | F | | Saloon FWD 4G13P | | GCO39040 | Outer Joint | | 25 | 30 | 54 | 95 | 61 | M |
| 1.5 (64 kw) | 2000.08-2005.09 | | F | | Hatchback FWD 4G15P | | GCO24009 | Outer Joint | | 25 | 30 | 50 | 95 | 56.5 | M |
| | 2000.08-2005.09 | | F | | Hatchback FWD 4G15P | | GCO39040 | Outer Joint | | 25 | 30 | 54 | 95 | 61 | M |
| | 2000.08-2005.09 | AT/MT | F | L/R | Saloon FWD 4G15P | | GCO39014 | Outer Joint | | 25 | 30 | 50 | 95 | 60.5 | M |
| | 2000.08-2005.09 | | F | | Saloon FWD 4G15P | | GCO24009 | Outer Joint | | 25 | 30 | 50 | 95 | 56.5 | M |
| | 2000.08-2005.09 | | F | | Saloon FWD 4G15P | | GCO39040 | Outer Joint | | 25 | 30 | 54 | 95 | 61 | M |
| 1.6 (70 kw) | 2000.08-2002.02 | AT/MT | F | L/R | Saloon FWD 4G92P | | GCO39014 | Outer Joint | | 25 | 30 | 50 | 95 | 60.5 | M |
| | 2000.08-2002.02 | | F | L/R | Saloon FWD 4G92P | | GCO39064 | Outer Joint | 43T | 25 | 30 | 54 | 95 | 60.5 | M |
| 2.0 (48 kw) | 2000.01-2001.02 | | F | | Hatchback FWD 4D68 | | GCO24009 | Outer Joint | | 25 | 30 | 50 | 95 | 56.5 | M |
| | 2000.01-2001.02 | | F | | Saloon FWD 4D68 | | GCO24009 | Outer Joint | | 25 | 30 | 50 | 95 | 56.5 | M |
| **QIYUAN** | | | | | | | | | | | | | | | |
| **A05** | | | | | | | | | | | | | | | |
| 1.5 (81(140) kw) | 2023.10- | E-CVT | F | L | Saloon FWD JL473Q5, TZ270XY551 | Model:A05,145 | GDS57974 | Drive Shaft | 46T | 30 | 34 | 60 | 94.5 | 668 | |
| | 2023.10- | E-CVT | F | L | Saloon FWD JL473Q5, TZ270XY551 | Model:A05,70 | GDS57976 | Drive Shaft | 46T | 28 | 34 | 60 | 94.5 | 668 | |
| | 2023.10- | E-CVT | F | R | Saloon FWD JL473Q5, TZ270XY551 | Model:A05,145 | GDS57973 | Drive Shaft | 46T | 30 | 34 | 60 | 94.5 | 976 | |
| | 2023.10- | E-CVT | F | R | Saloon FWD JL473Q5, TZ270XY551 | Model:A05,70 | GDS57975 | Drive Shaft | 46T | 28 | 34 | 60 | 94.5 | 976 | |
| | 2023.10- | E-CVT | F | L/R | Saloon FWD JL473Q5, TZ270XY551 | Model:A05,145 | GCO83817 | Outer Joint | 46T | 30 | 32 | 60 | 94.5 | 62.5 | I |
| | 2023.10- | E-CVT | F | L/R | Saloon FWD JL473Q5, TZ270XY551 | Model:A05,70 | GCO83818 | Outer Joint | 46T | 28 | 32 | 60 | 94.5 | 62.5 | I |
| | 2023.10- | E-CVT | F | L | Saloon FWD JL473Q5, TZ270XY551 | | GCI83971 | Inner Joint | | 34 | 24 | 40 | 84.5 | 104.5 | |
| | 2023.10- | E-CVT | F | R | Saloon FWD JL473Q5, TZ270XY551 | | GCI83970 | Inner Joint | | 34 | 24 | 40 | 71.5 | 104.5 | |
| 1.5 (81(158) kw) | 2023.10- | E-CVT | F | L | Saloon FWD JL473Q5, TZ270XY551 | Model:A05,145 | GDS57974 | Drive Shaft | 46T | 30 | 34 | 60 | 94.5 | 668 | |
| | 2023.10- | E-CVT | F | L | Saloon FWD JL473Q5, TZ270XY551 | Model:A05,70 | GDS57976 | Drive Shaft | 46T | 28 | 34 | 60 | 94.5 | 668 | |
| | 2023.10- | E-CVT | F | R | Saloon FWD JL473Q5, TZ270XY551 | Model:A05,145 | GDS57973 | Drive Shaft | 46T | 30 | 34 | 60 | 94.5 | 976 | |
| | 2023.10- | E-CVT | F | R | Saloon FWD JL473Q5, TZ270XY551 | Model:A05,70 | GDS57975 | Drive Shaft | 46T | 28 | 34 | 60 | 94.5 | 976 | |
| | 2023.10- | E-CVT | F | L/R | Saloon FWD JL473Q5, TZ270XY551 | Model:A05,145 | GCO83817 | Outer Joint | 46T | 30 | 32 | 60 | 94.5 | 62.5 | I |
| | 2023.10- | E-CVT | F | L/R | Saloon FWD JL473Q5, TZ270XY551 | Model:A05,70 | GCO83818 | Outer Joint | 46T | 28 | 32 | 60 | 94.5 | 62.5 | I |
| | 2023.10- | E-CVT | F | L | Saloon FWD JL473Q5, TZ270XY551 | | GCI83971 | Inner Joint | | 34 | 24 | 40 | 84.5 | 104.5 | |
| | 2023.10- | E-CVT | F | R | Saloon FWD JL473Q5, TZ270XY551 | | GCI83970 | Inner Joint | | 34 | 24 | 40 | 71.5 | 104.5 | |
| **Q05** | | | | | | | | | | | | | | | |
| 1.5 (72 kw) | 2024.10- | E-CVT | F | L | SUV FWD JL469Q1, TZ270XY551 | | GDS57981 | Drive Shaft | 46T | 28 | 34 | 60 | 94.5 | 686 | |
| | 2024.10- | E-CVT | F | R | SUV FWD JL469Q1, TZ270XY551 | | GDS57982 | Drive Shaft | 46T | 28 | 34 | 60 | 94.5 | 965 | |
| | 2024.10- | E-CVT | F | L/R | SUV FWD JL469Q1, TZ270XY551 | | GCO83818 | Outer Joint | 46T | 28 | 32 | 60 | 94.5 | 62.5 | I |

| | YEAR | TRANSM. | F/R | L/R | BODY STYLE & DRIVE TYPE & ENGINE | REMARKS | G-AP Ref. | PRODUCT | ABS | Technical Specifications A | B | C | H | L | P |
|---|---|---|---|---|---|---|---|---|---|---|---|---|---|---|---|
| **QIYUAN** | | | | | | | | | | | | | | | |
| **Q05** | | | | | | | | | | | | | | | |
| 1.5 (72 kw) | 2024.10- | E-CVT | F | L | SUV FWD JL469Q1, TZ270XY551 | | GCI83971 | Inner Joint | | 34 | 24 | 40 | 84.5 | 104.5 | |
| | 2024.10- | E-CVT | F | R | SUV FWD JL469Q1, TZ270XY551 | | GCI83970 | Inner Joint | | 34 | 24 | 40 | 71.5 | 104.5 | |
| 1.5 (81(140) kw) | 2023.12- | E-CVT | F | L | SUV FWD JL473Q5, TZ270XY551 | | GDS57983 | Drive Shaft | 46T | 28 | 34 | 60 | 94.5 | 675 | |
| | 2023.12- | E-CVT | F | R | SUV FWD JL473Q5, TZ270XY551 | | GDS57975 | Drive Shaft | 46T | 28 | 34 | 60 | 94.5 | 976 | |
| | 2023.12- | E-CVT | F | L/R | SUV FWD JL473Q5, TZ270XY551 | | GCO83818 | Outer Joint | 46T | 28 | 32 | 60 | 94.5 | 62.5 | I |
| | 2023.12- | E-CVT | F | L | SUV FWD JL473Q5, TZ270XY551 | | GCI83971 | Inner Joint | | 34 | 24 | 40 | 84.5 | 104.5 | |
| | 2023.12- | E-CVT | F | R | SUV FWD JL473Q5, TZ270XY551 | | GCI83970 | Inner Joint | | 34 | 24 | 40 | 71.5 | 104.5 | |
| 1.5 (81(158) kw) | 2023.12- | E-CVT | F | L | SUV FWD JL473Q5, TZ270XY551 | | GDS57983 | Drive Shaft | 46T | 28 | 34 | 60 | 94.5 | 675 | |
| | 2023.12- | E-CVT | F | R | SUV FWD JL473Q5, TZ270XY551 | | GDS57975 | Drive Shaft | 46T | 28 | 34 | 60 | 94.5 | 976 | |
| | 2023.12- | E-CVT | F | L/R | SUV FWD JL473Q5, TZ270XY551 | | GCO83818 | Outer Joint | 46T | 28 | 32 | 60 | 94.5 | 62.5 | I |
| | 2023.12- | E-CVT | F | L | SUV FWD JL473Q5, TZ270XY551 | | GCI83971 | Inner Joint | | 34 | 24 | 40 | 84.5 | 104.5 | |
| | 2023.12- | E-CVT | F | R | SUV FWD JL473Q5, TZ270XY551 | | GCI83970 | Inner Joint | | 34 | 24 | 40 | 71.5 | 104.5 | |
| **R AUTO** | | | | | | | | | | | | | | | |
| **Marvel R** | | | | | | | | | | | | | | | |
| EV (137 kw) | 2021.02- | ET | R | L | SUV RWD TZ204XS52K01, TZ204XS85K01 | | GDS56379 | Drive Shaft | | 30 | 27 | 52.5 | 94.5 | 845 | |
| | 2021.02- | ET | R | R | SUV RWD TZ204XS52K01, TZ204XS85K01 | | GDS56380 | Drive Shaft | | 30 | 27 | 52.5 | 94.5 | 871 | |
| | 2021.02- | ET | R | L/R | SUV RWD TZ204XS52K01, TZ204XS85K01 | | GCO88046 | Outer Joint | | 30 | 26 | 52.5 | 94.5 | 65.5 | M |
| | 2021.02- | ET | R | L/R | SUV RWD TZ204XS52K01, TZ204XS85K01 | | GCI83278 | Inner Joint | | 27 | 26 | 34.7 | 88 | 91 | |
| EV (222 kw) | 2021.02- | ET | F | L | SUV 4WD TZ204XS52K01, TZ204XS85K02 | | GDS57753 | Drive Shaft | | 30 | 27 | 59 | 97 | 794 | |
| | 2021.02- | ET | F | R | SUV 4WD TZ204XS52K01, TZ204XS85K02 | | GDS56552 | Drive Shaft | | 30 | 27 | 59 | 97 | 890 | |
| | 2021.02- | ET | F | R | SUV 4WD TZ204XS52K01, TZ204XS85K02 | | GCO83698 | Outer Joint | | 30 | 32 | 59 | 97 | 56 | I |
| | 2021.02- | ET | F | R | SUV 4WD TZ204XS52K01, TZ204XS85K02 | | GCI83367 | Inner Joint | | 27 | 24 | 45 | 60.5 | 109.5 | |
| | 2021.02- | ET | R | L | SUV 4WD TZ204XS52K01, TZ204XS85K02 | | GDS56379 | Drive Shaft | | 30 | 27 | 52.5 | 94.5 | 845 | |
| | 2021.02- | ET | R | R | SUV 4WD TZ204XS52K01, TZ204XS85K02 | | GDS56380 | Drive Shaft | | 30 | 27 | 52.5 | 94.5 | 871 | |
| | 2021.02- | ET | R | L/R | SUV 4WD TZ204XS52K01, TZ204XS85K02 | | GCO88046 | Outer Joint | | 30 | 26 | 52.5 | 94.5 | 65.5 | M |
| | 2021.02- | ET | R | L/R | SUV 4WD TZ204XS52K01, TZ204XS85K02 | | GCI83278 | Inner Joint | | 27 | 26 | 34.7 | 88 | 91 | |
| **R7** | | | | | | | | | | | | | | | |
| EV (400 kw) | 2022.09- | ET | F | R | SUV 4WD TZ180XS0951, TZ230XY1301 | | GDS87110 | Intermediate Shaft | | 27 | 34 | | | 322 | |
| **RAM** | | | | | | | | | | | | | | | |
| **Promaster 2500** | | | | | | | | | | | | | | | |
| 3.6 (209 kw) | 2013.09- | | F | L | Platform/Chassis FWD ERB | | GCO17054 | Outer Joint | | 35 | 29 | 71.5 | 127 | 71 | M |
| **RENAULT** | | | | | | | | | | | | | | | |
| **19** | | | | | | | | | | | | | | | |
| 1.4 (57 kw) | 1993.05-1998.12 | 5MT | F | L | Hatchback FWD E6J700 | | GDS50001 | Drive Shaft | | 21 | 30 | 49.8 | 83.5 | 639.5 | |
| | 1993.05-1998.12 | 5MT | F | R | Hatchback FWD E6J700 | | GDS50002 | Drive Shaft | | 21 | 23 | 49.8 | 83.5 | 734 | |
| 1.4 (60 kw) | 1996.10-2001.06 | 5MT | F | L | Hatchback FWD E6J706 | | GDS50001 | Drive Shaft | | 21 | 30 | 49.8 | 83.5 | 639.5 | |
| | 1996.10-2001.06 | 5MT | F | R | Hatchback FWD E6J706 | | GDS50002 | Drive Shaft | | 21 | 23 | 49.8 | 83.5 | 734 | |
| 1.7 (66 kw) | 1992.05-1997.02 | 5MT | F | L | Cabriolet FWD F3N743 | | GDS50001 | Drive Shaft | | 21 | 30 | 49.8 | 83.5 | 639.5 | |
| | 1992.05-1997.02 | 5MT | F | R | Cabriolet FWD F3N743 | | GDS50002 | Drive Shaft | | 21 | 23 | 49.8 | 83.5 | 734 | |
| 1.7 (69 kw) | 1996.10-2001.06 | | F | L | Hatchback FWD F3N 747 | | GDS50001 | Drive Shaft | | 21 | 30 | 49.8 | 83.5 | 639.5 | |
| | 1996.10-2001.06 | | F | R | Hatchback FWD F3N 747 | | GDS50002 | Drive Shaft | | 21 | 23 | 49.8 | 83.5 | 734 | |
| 1.8 (65 kw) | 1993.03-1997.02 | MT | F | L | Cabriolet FWD F3P705 | Date from:1993.03;Trans. code:JB0/1/3 | GDS50001 | Drive Shaft | | 21 | 30 | 49.8 | 83.5 | 639.5 | |
| | 1993.03-1997.02 | MT | F | L | Cabriolet FWD F3P705 | Date from:1993.03;Trans. code:JB4/5 | GDS50036 | Drive Shaft | | 21 | 30 | 46.3 | 81.5 | 652 | |
| | 1993.03-1997.02 | MT | F | R | Cabriolet FWD F3P705 | Date from:1993.03;Trans. code:JB4/5 | GDS50037 | Drive Shaft | | 21 | 23 | 46.2 | 82 | 718 | |
| | 1993.03-1997.02 | MT/3AT | F | R | Cabriolet FWD F3P705 | | GDS50002 | Drive Shaft | | 21 | 23 | 49.8 | 83.5 | 734 | |
| 1.8 (66 kw) | 1992.05-1997.02 | MT | F | L | Cabriolet FWD F3P706/F3P708/F3P760 | | GDS50001 | Drive Shaft | | 21 | 30 | 49.8 | 83.5 | 639.5 | |
| | 1992.05-1997.02 | MT | F | L | Cabriolet FWD F3P706/F3P708/F3P760 | Transm. Type:JB4/5 | GDS50036 | Drive Shaft | | 21 | 30 | 46.3 | 81.5 | 652 | |
| | 1992.05-1997.02 | MT | F | R | Cabriolet FWD F3P706/F3P708/F3P760 | Trans. code:JB4/5 | GDS50037 | Drive Shaft | | 21 | 23 | 46.2 | 82 | 718 | |
| | 1992.05-1997.02 | MT/3AT | F | R | Cabriolet FWD F3P706/F3P708/F3P760 | | GDS50002 | Drive Shaft | | 21 | 23 | 49.8 | 83.5 | 734 | |
| | 1992.05-1997.02 | MT/3AT | F | L/R | Cabriolet FWD F3P706/F3P708/F3P760 | | GCO50008 | Outer Joint | | 21 | 25 | 56.2 | 83.5 | 58 | O |
| 1.8 (79 kw) | 1992.05-1997.02 | MT | F | L | Cabriolet FWD F3P760/F3P765 | | GDS50001 | Drive Shaft | | 21 | 30 | 49.8 | 83.5 | 639.5 | |
| | 1992.05-1997.02 | MT | F | L | Cabriolet FWD F3P760/F3P765 | Transm. Type:JB4/5 | GDS50036 | Drive Shaft | | 21 | 30 | 46.3 | 81.5 | 652 | |
| | 1992.05-1997.02 | MT | F | R | Cabriolet FWD F3P760/F3P765 | Trans. code:JB4/5 | GDS50037 | Drive Shaft | | 21 | 23 | 46.2 | 82 | 718 | |
| | 1992.05-1997.02 | MT/3AT | F | R | Cabriolet FWD F3P760/F3P765 | | GDS50002 | Drive Shaft | | 21 | 23 | 49.8 | 83.5 | 734 | |
| | 1992.05-1997.02 | MT/3AT | F | L/R | Cabriolet FWD F3P760/F3P765 | | GCO50008 | Outer Joint | | 21 | 25 | 56.2 | 83.5 | 58 | O |
| 1.8 (99 kw) | 1992.05-1997.02 | AT/MT | F | L/R | Cabriolet FWD F7P704 | | GCO50008 | Outer Joint | | 21 | 25 | 56.2 | 83.5 | 58 | O |
| 1.9 (47 kw) | 1992.04-1998.11 | 5MT | F | L | Hatchback FWD F8Q706/F8Q742 | | GDS50001 | Drive Shaft | | 21 | 30 | 49.8 | 83.5 | 639.5 | |
| **5 Super** | | | | | | | | | | | | | | | |
| 1.4 (43 kw) | 1985.10-1996.12 | 3AT | F | R | Hatchback FWD C3J 700, C3J 702 (08.88-.), C3J 760 (.-08.91) | Date to:1992.01;Trans. code:MB1/3 | GDS50044 | Drive Shaft | | 21 | 23 | 46.3 | 81.5 | 693.5 | |
| | 1985.10-1996.12 | MT | F | L | Hatchback FWD C3J 700, C3J 702 (08.88-.), C3J 760 (.-08.91) | Date to:1992.01,Trans. code:JB4/5 | GDS50118 | Drive Shaft | | 21 | 30 | 46.3 | 80.5 | 604.5 | |
| | 1985.10-1996.12 | MT | F | L | Hatchback FWD C3J 700, C3J 702 (08.88-.), C3J 760 (.-08.91) | Date to:1992.01;Trans. code:JB0/1/3 | GDS50120 | Drive Shaft | | 21 | 30 | 46.3 | 80.5 | 591.5 | |
| | 1985.10-1996.12 | MT | F | R | Hatchback FWD C3J 700, C3J 702 (08.88-.), C3J 760 (.-08.91) | Date to:1992.01;Trans. code:JB4/5 | GDS50023 | Drive Shaft | | 21 | 23 | 46.2 | 82 | 680 | |
| | 1985.10-1996.12 | MT | F | R | Hatchback FWD C3J 700, C3J 702 (08.88-.), C3J 760 (.-08.91) | Date to:1992.01;Trans. code:JB3 | GDS50032 | Drive Shaft | | 21 | 23 | 49.8 | 83.5 | 690 | |
| | 1985.10-1996.12 | MT | F | R | Hatchback FWD C3J 700, C3J 702 (08.88-.), C3J 760 (.-08.91) | Date to:1992.01;Trans. code:JB0/1 | GDS50044 | Drive Shaft | | 21 | 23 | 46.3 | 81.5 | 693.5 | |
| | 1986.08-1996.12 | 3AT | F | R | Hatchback FWD | Date to:1992.01;Trans. code:MB1/3 | GDS50044 | Drive Shaft | | 21 | 23 | 46.3 | 81.5 | 693.5 | |

| | YEAR | TRANSM. | F/R | L/R | BODY STYLE & DRIVE TYPE & ENGINE | REMARKS | G-AP Ref. | PRODUCT | ABS | Technical Specifications A | B | C | H | L | P |
|---|---|---|---|---|---|---|---|---|---|---|---|---|---|---|---|
| **RENAULT** | | | | | | | | | | | | | | | |
| **5 Super** | | | | | | | | | | | | | | | |
| 1.4 (43 kw) | 1986.08-1996.12 | MT | F | L | Hatchback FWD | Date to:1992.01,Trans. code:JB4/5 | GDS50118 | Drive Shaft | | 21 | 30 | 46.3 | 80.5 | 604.5 | |
| | 1986.08-1996.12 | MT | F | L | Hatchback FWD | Date to:1992.01;Trans. code:JB0/1/3 | GDS50120 | Drive Shaft | | 21 | 30 | 46.3 | 80.5 | 591.5 | |
| | 1986.08-1996.12 | MT | F | R | Hatchback FWD | Date to:1992.01;Trans. code:JB4/5 | GDS50023 | Drive Shaft | | 21 | 23 | 46.2 | 82 | 680 | |
| | 1986.08-1996.12 | MT | F | R | Hatchback FWD | Date to:1992.01;Trans. code:JB3 | GDS50032 | Drive Shaft | | 21 | 23 | 49.8 | 83.5 | 690 | |
| | 1986.08-1996.12 | MT | F | R | Hatchback FWD | Date to:1992.01;Trans. code:JB0/1 | GDS50044 | Drive Shaft | | 21 | 23 | 46.3 | 81.5 | 693.5 | |
| 1.6 (40 kw) | 1985.08-1996.12 | MT | F | L | Hatchback FWD F8M 720 (08.85-09.87), F8M 730 (10.87-07.89) | | GDS50120 | Drive Shaft | | 21 | 30 | 46.3 | 80.5 | 591.5 | |
| | 1985.08-1996.12 | MT | F | R | Hatchback FWD F8M 720 (08.85-09.87), F8M 730 (10.87-07.89) | Trans. code:JB0/1 | GDS50044 | Drive Shaft | | 21 | 23 | 46.3 | 81.5 | 693.5 | |
| | 1985.08-1996.12 | | F | R | Hatchback FWD F8M 720 (08.85-09.87), F8M 730 (10.87-07.89) | | GDS50023 | Drive Shaft | | 21 | 23 | 46.2 | 82 | 680 | |
| **5 Super(cinque)** | | | | | | | | | | | | | | | |
| 1.1 (33 kw) | 1985.04-1996.04 | 3AT | F | R | Hatchback FWD C1E750/C1E752/C1E760 | Trans. code:MB1/3 | GDS50044 | Drive Shaft | | 21 | 23 | 46.3 | 81.5 | 693.5 | |
| | 1985.04-1996.04 | MT | F | L | Hatchback FWD C1E750/C1E752/C1E760 | Trans. code:JB4/5 | GDS50118 | Drive Shaft | | 21 | 30 | 46.3 | 80.5 | 604.5 | |
| | 1985.04-1996.04 | MT | F | L | Hatchback FWD C1E750/C1E752/C1E760 | Trans. code:JB0/1/3 | GDS50120 | Drive Shaft | | 21 | 30 | 46.3 | 80.5 | 591.5 | |
| | 1985.04-1996.04 | MT | F | R | Hatchback FWD C1E750/C1E752/C1E760 | Trans. code:JB4/5 | GDS50023 | Drive Shaft | | 21 | 23 | 46.2 | 82 | 680 | |
| | 1985.04-1996.04 | MT | F | R | Hatchback FWD C1E750/C1E752/C1E760 | Trans. code:JB0/1 | GDS50044 | Drive Shaft | | 21 | 23 | 46.3 | 81.5 | 693.5 | |
| | 1985.04-1996.04 | MT | F | L | Hatchback FWD C1E750/C1E752/C1E760 | Trans. code:JB0/1/3;Trans. code:JB4/5 | GCO50012 | Outer Joint | | 21 | 30 | 46.3 | 80.5 | 57.5 | O |
| 1.1 (34 kw) | 1984.10-1996.12 | 3AT | F | R | Hatchback Van FWD C1E750 | Trans. code:MB1/3 | GDS50044 | Drive Shaft | | 21 | 23 | 46.3 | 81.5 | 693.5 | |
| | 1984.10-1996.12 | MT | F | L | Hatchback Van FWD C1E750 | Trans. code:JB4/5 | GDS50118 | Drive Shaft | | 21 | 30 | 46.3 | 80.5 | 604.5 | |
| | 1984.10-1996.12 | MT | F | L | Hatchback Van FWD C1E750 | Trans. code:JB0/1/3 | GDS50120 | Drive Shaft | | 21 | 30 | 46.3 | 80.5 | 591.5 | |
| | 1984.10-1996.12 | MT | F | R | Hatchback Van FWD C1E750 | Trans. code:JB3 | GDS50032 | Drive Shaft | | 21 | 23 | 49.8 | 83.5 | 690 | |
| | 1984.10-1996.12 | MT | F | R | Hatchback Van FWD C1E750 | Trans. code:JB0/1 | GDS50044 | Drive Shaft | | 21 | 23 | 46.3 | 81.5 | 693.5 | |
| | 1984.10-1996.12 | | F | R | Hatchback Van FWD C1E750 | Trans. Type:JB0/1 | GDS50023 | Drive Shaft | | 21 | 23 | 46.2 | 82 | 680 | |
| 1.2 (44 kw) | 1987.07-1996.12 | | F | R | Hatchback Van FWD C1G722 | Trans. Type:JB0/1 | GDS50023 | Drive Shaft | | 21 | 23 | 46.2 | 82 | 680 | |
| 1.6 (40 kw) | 1984.10-1996.12 | MT | F | L | Hatchback Van FWD F8M720 | Trans. code:JB0/1 | GDS50120 | Drive Shaft | | 21 | 30 | 46.3 | 80.5 | 591.5 | |
| | 1984.10-1996.12 | MT | F | R | Hatchback Van FWD F8M720 | Trans. code:JB0/1 | GDS50044 | Drive Shaft | | 21 | 23 | 46.3 | 81.5 | 693.5 | |
| | 1984.10-1996.12 | | F | R | Hatchback Van FWD F8M720 | Trans. Type:JB0/1 | GDS50023 | Drive Shaft | | 21 | 23 | 46.2 | 82 | 680 | |
| **Alaskan** | | | | | | | | | | | | | | | |
| 2.3 (120 kw) | 2017.09- | 6MT | F | L/R | Pickup 4WD M9T 260 | | GDS56386 | Drive Shaft | | 29 | 30 | 67 | 125 | 641 | |
| | 2017.09- | 6MT | F | L/R | Pickup 4WD M9T 260 | | GCO83274 | Outer Joint | | 29 | 36 | 67 | 125 | 60 | I |
| | 2017.09- | 6MT | F | L/R | Pickup 4WD M9T 260 | | GCI83280 | Inner Joint | | 30 | 35 | 39 | 62 | 130 | |
| 2.3 (140 kw) | 2017.09- | 7AT/6MT | F | L/R | Pickup 4WD M9T 260 | | GDS56386 | Drive Shaft | | 29 | 30 | 67 | 125 | 641 | |
| | 2017.09- | 7AT/6MT | F | L/R | Pickup 4WD M9T 260 | | GCO83274 | Outer Joint | | 29 | 36 | 67 | 125 | 60 | I |
| | 2017.09- | 7AT/6MT | F | L/R | Pickup 4WD M9T 260 | | GCI83280 | Inner Joint | | 30 | 35 | 39 | 62 | 130 | |
| **Arkana** | | | | | | | | | | | | | | | |
| 1.6 (84 kw) | 2019.08- | 6MT | F | L | SUV 4WD H4M 442 | | GDS11017 | Drive Shaft | | 25 | 27 | 52.6 | 89 | 655 | |
| | 2019.08- | 6MT | F | R | SUV 4WD H4M 442 | | GDS83783 | Drive Shaft | | 25 | 31 | 52.6 | 89 | 615 | |
| | 2019.08- | 6MT | F | L | SUV 4WD H4M 442 | Date to:2021.03 | GCI50105 | Inner Joint | | 27 | 33 | 40 | 70.5 | 111 | |
| | 2019.08- | 5MT | F | L | SUV FWD H4M 440;H4M 441 | TJ | GDS50415 | Drive Shaft | | 25 | 26 | 52.6 | 89 | 704 | |
| | 2019.08- | 5MT | F | L | SUV FWD H4M 440;H4M 441 | | GDS50587 | Drive Shaft | | 25 | 26 | 52.6 | 89 | 700 | |
| | 2019.08- | 5MT | F | R | SUV FWD H4M 440;H4M 441 | | GDS50586 | Drive Shaft | | 25 | 26 | 52.6 | 89 | 950 | |
| | 2019.08- | 5MT | F | L/R | SUV FWD H4M 440;H4M 441 | | GCO50157 | Outer Joint | | 25 | 33 | 52.6 | 89 | 60 | I |
| | 2019.08- | 5MT | F | L | SUV FWD H4M 440;H4M 441 | | GCI41191 | Inner Joint | | 26 | 33 | 40 | 64 | 118 | |
| | 2019.08- | 5MT | F | R | SUV FWD H4M 440;H4M 441 | | GCI41190 | Inner Joint | | 26 | 33 | 33 | 329 | 101 | |
| 1.6 (105 kw) | 2021.03- | ET | F | L | SUV FWD H4M 632 | | GDS57528 | Drive Shaft | | 25 | 26 | 53 | 88.5 | 685 | |
| | 2021.03- | ET | F | R | SUV FWD H4M 632 | | GDS57527 | Drive Shaft | | 25 | 26 | 53 | 88.5 | 932 | |
| | 2021.03- | ET | F | L/R | SUV FWD H4M 632 | | GCO83588 | Outer Joint | | 25 | 24 | 53 | 88.5 | 61 | I |
| | 2021.03- | ET | F | L | SUV FWD H4M 632 | | GCI83730 | Inner Joint | | 26 | 24 | 39.95 | 64.5 | 122 | |
| | 2021.03- | ET | F | R | SUV FWD H4M 632 | | GCI83729 | Inner Joint | | 26 | 24 | 33 | 330 | 112 | |
| **Austral** | | | | | | | | | | | | | | | |
| 1.3 (103 kw) | 2022.07- | CVT | F | R | SUV FWD H5H 490 | | GDS56923 | Drive Shaft | | 29 | 29 | 62 | 98.5 | 957 | |
| 1.3 (109 kw) | 2025.11- | CVT | F | R | SUV FWD H5H 458 | | GDS56923 | Drive Shaft | | 29 | 29 | 62 | 98.5 | 957 | |
| 1.3 (116 kw) | 2022.07- | CVT | F | R | SUV FWD H5H 498 | | GDS56923 | Drive Shaft | | 29 | 29 | 62 | 98.5 | 957 | |
| **Avantime** | | | | | | | | | | | | | | | |
| 2.2 (110 kw) | 2002.05-2003.05 | MT | F | L | MPV FWD G9T 712 | | GDS50225 | Drive Shaft | 44T | 27 | 37 | 64 | 90 | 594 | |
| | 2002.05-2003.05 | MT | F | R | MPV FWD G9T 712 | | GDS50272 | Drive Shaft | 44T | 27 | 39 | 64 | 90 | 1010 | |
| **Captur** | | | | | | | | | | | | | | | |
| 0.9 (66 kw) | 2013.06-2019.12 | 5MT | F | L | Hatchback FWD H4B 400;H4B 408;H4B 412 | | GDS50620 | Drive Shaft | | 23 | 26 | 48.7 | 86 | 678 | |
| | 2013.06-2019.12 | 5MT | F | R | Hatchback FWD H4B 400;H4B 408;H4B 412 | Date to:2015.09 | GDS50618 | Drive Shaft | | 23 | 26 | 48.7 | 86 | 918 | |
| | 2013.06-2019.12 | 5MT | F | R | Hatchback FWD H4B 400;H4B 408;H4B 412 | Date from:2016.04 | GDS56523 | Drive Shaft | | 23 | 26 | 48.7 | 86 | 921 | |
| | 2013.06-2019.12 | 5MT | F | L/R | Hatchback FWD H4B 400;H4B 408;H4B 412 | | GCO50213 | Outer Joint | | 23 | 21 | 48.7 | 86 | 54 | M |
| | 2013.06-2019.12 | 5MT | F | L | Hatchback FWD H4B 400;H4B 408;H4B 412 | | GCI50107 | Inner Joint | | 26 | 21 | 40 | 64 | 105.5 | |
| | 2013.06-2019.12 | 5MT | F | R | Hatchback FWD H4B 400;H4B 408;H4B 412 | | GCI50139 | Inner Joint | | 26 | 21 | 33 | 347.5 | 92.5 | |
| 1.0 (74 kw) | 2020.01- | 5MT | F | L | Hatchback FWD H4D 450 | | GDS84246 | Drive Shaft | | 25 | 26 | 53 | 88.5 | 674 | |
| | 2020.01- | 5MT | F | R | Hatchback FWD H4D 450 | | GDS84343 | Drive Shaft | | 25 | 26 | 53 | 88.5 | 933 | |
| | 2020.01- | 5MT | F | R | Hatchback FWD H4D 450 | | GCO82552 | Outer Joint | | 25 | 33 | 53 | 88.5 | 58 | I |
| | 2020.01- | 5MT | F | L | Hatchback FWD H4D 450 | | GCI41191 | Inner Joint | | 26 | 33 | 40 | 64 | 118 | |

| | YEAR | TRANSM. | F/R | L/R | BODY STYLE & DRIVE TYPE & ENGINE | REMARKS | G-AP Ref. | PRODUCT | ABS | Technical Specifications A | B | C | H | L | P |
|---|---|---|---|---|---|---|---|---|---|---|---|---|---|---|---|
| **RENAULT** | | | | | | | | | | | | | | | |
| **Captur** | | | | | | | | | | | | | | | |
| 1.0 (74 kw) | 2020.01- | 5MT | F | R | Hatchback FWD H4D 450 | | GCI50138 | Inner Joint | | 26 | 33 | 33 | 346 | 100.5 | |
| | 2020.01- | 5MT | F | L | Hatchback FWD H4D 460;H4D 480 | | GDS84246 | Drive Shaft | | 25 | 26 | 53 | 88.5 | 674 | |
| | 2020.01- | 5MT | F | R | Hatchback FWD H4D 460;H4D 480 | | GDS84343 | Drive Shaft | | 25 | 26 | 53 | 88.5 | 933 | |
| | 2020.01- | 5MT | F | R | Hatchback FWD H4D 460;H4D 480 | | GCO82552 | Outer Joint | | 25 | 33 | 53 | 88.5 | 58 | I |
| | 2020.01- | 5MT | F | L | Hatchback FWD H4D 460;H4D 480 | | GCI41191 | Inner Joint | | 26 | 33 | 40 | 64 | 118 | |
| | 2020.01- | 5MT | F | R | Hatchback FWD H4D 460;H4D 480 | | GCI50138 | Inner Joint | | 26 | 33 | 33 | 346 | 100.5 | |
| 1.2 (83 kw) | 2013.06-2018.08 | 6AT | F | L | Hatchback FWD H5F 403 | | GDS50617 | Drive Shaft | | 25 | 34 | 52.7 | 88.5 | 625 | |
| | 2013.06-2018.08 | 6AT | F | R | Hatchback FWD H5F 403 | | GDS50615 | Drive Shaft | | 25 | 34 | 52.7 | 88.5 | 976 | |
| | 2013.06-2018.08 | 6AT | F | L | Hatchback FWD H5F 403 | | GCI50140 | Inner Joint | | 34 | 33 | 40 | 54 | 106 | |
| | 2013.06-2018.08 | 6AT | F | R | Hatchback FWD H5F 403 | | GCI50136 | Inner Joint | | 34 | 33 | 40 | 396.5 | 89.5 | |
| 1.2 (85 kw) | 2015.06-2018.08 | 6AT | F | L | Hatchback FWD H5F 403 | | GDS50617 | Drive Shaft | | 25 | 34 | 52.7 | 88.5 | 625 | |
| | 2015.06-2018.08 | 6AT | F | R | Hatchback FWD H5F 403 | | GDS50615 | Drive Shaft | | 25 | 34 | 52.7 | 88.5 | 976 | |
| | 2015.06-2018.08 | 6AT | F | L | Hatchback FWD H5F 403 | | GCI50140 | Inner Joint | | 34 | 33 | 40 | 54 | 106 | |
| | 2015.06-2018.08 | 6AT | F | R | Hatchback FWD H5F 403 | | GCI50136 | Inner Joint | | 34 | 33 | 40 | 396.5 | 89.5 | |
| 1.2 (87 kw) | 2016.01-2018.08 | 6DCT | F | L/R | Hatchback FWD H5F 408;H5F 412 | | GCO50145 | Outer Joint | | 25 | 33 | 52.7 | 88.5 | 59.5 | I |
| | 2016.01-2018.08 | 6DCT | F | L | Hatchback FWD H5F 408;H5F 412 | | GCI50140 | Inner Joint | | 34 | 33 | 40 | 54 | 106 | |
| | 2016.01-2018.08 | 6DCT | F | R | Hatchback FWD H5F 408;H5F 412 | | GCI50136 | Inner Joint | | 34 | 33 | 40 | 396.5 | 89.5 | |
| | 2016.01-2018.08 | 6MT | F | L | Hatchback FWD H5F 408;H5F 412 | | GDS83632 | Drive Shaft | | 25 | 26 | 52.5 | 88.5 | 673 | |
| | 2016.01-2018.08 | 6MT | F | R | Hatchback FWD H5F 408;H5F 412 | | GDS83659 | Drive Shaft | | 25 | 26 | 52.5 | 88.5 | 925 | |
| | 2016.01-2018.08 | 6MT | F | L/R | Hatchback FWD H5F 408;H5F 412 | | GCO82446 | Outer Joint | | 25 | 33 | 52.5 | 88.5 | 59 | I |
| | 2016.01-2018.08 | 6MT | F | L | Hatchback FWD H5F 408;H5F 412 | | GCI82309 | Inner Joint | | 26 | 33 | 40 | 64 | 106 | |
| | 2016.01-2018.08 | 6MT | F | R | Hatchback FWD H5F 408;H5F 412 | | GCI82308 | Inner Joint | | 26 | 33 | 33 | 346 | 90 | |
| | 2016.01-2018.08 | DCT | F | L | Hatchback FWD H5F 408;H5F 412 | | GDS50617 | Drive Shaft | | 25 | 34 | 52.7 | 88.5 | 625 | |
| | 2016.01-2018.08 | DCT | F | R | Hatchback FWD H5F 408;H5F 412 | | GDS50615 | Drive Shaft | | 25 | 34 | 52.7 | 88.5 | 976 | |
| | 2016.01-2018.08 | MT | F | L/R | Hatchback FWD H5F 408;H5F 412 | | GCO99213 | Outer Joint | | 25 | 33 | 53 | 88 | 61.5 | I |
| 1.2 (88 kw) | 2013.06-2018.12 | 6AT | F | L | Hatchback FWD H5F 403 | | GDS50617 | Drive Shaft | | 25 | 34 | 52.7 | 88.5 | 625 | |
| | 2013.06-2018.12 | 6AT | F | R | Hatchback FWD H5F 403 | | GDS50615 | Drive Shaft | | 25 | 34 | 52.7 | 88.5 | 976 | |
| | 2013.06-2018.12 | 6AT | F | L/R | Hatchback FWD H5F 403 | | GCO50145 | Outer Joint | | 25 | 33 | 52.7 | 88.5 | 59.5 | I |
| | 2013.06-2018.12 | 6AT | F | L | Hatchback FWD H5F 403 | | GCI50140 | Inner Joint | | 34 | 33 | 40 | 54 | 106 | |
| | 2013.06-2018.12 | 6AT | F | R | Hatchback FWD H5F 403 | | GCI50136 | Inner Joint | | 34 | 33 | 40 | 396.5 | 89.5 | |
| 1.2 (97 kw) | 2018.02-2018.12 | 6MT | F | L | Hatchback FWD H5F 408 | | GDS83632 | Drive Shaft | | 25 | 26 | 52.5 | 88.5 | 673 | |
| | 2018.02-2018.12 | 6MT | F | R | Hatchback FWD H5F 408 | | GDS83659 | Drive Shaft | | 25 | 26 | 52.5 | 88.5 | 925 | |
| | 2018.02-2018.12 | 6MT | F | L/R | Hatchback FWD H5F 408 | | GCO82446 | Outer Joint | | 25 | 33 | 52.5 | 88.5 | 59 | I |
| | 2018.02-2018.12 | 6MT | F | L | Hatchback FWD H5F 408 | | GCI82309 | Inner Joint | | 26 | 33 | 40 | 64 | 106 | |
| | 2018.02-2018.12 | 6MT | F | R | Hatchback FWD H5F 408 | | GCI82308 | Inner Joint | | 26 | 33 | 33 | 346 | 90 | |
| 1.3 (96 kw) | 2018.03-2019.12 | 6MT | F | L | Hatchback FWD H5H 450;H5H 470 | | GDS83632 | Drive Shaft | | 25 | 26 | 52.5 | 88.5 | 673 | |
| | 2018.03-2019.12 | 6MT | F | R | Hatchback FWD H5H 450;H5H 470 | | GDS83659 | Drive Shaft | | 25 | 26 | 52.5 | 88.5 | 925 | |
| | 2018.03-2019.12 | 6MT | F | L/R | Hatchback FWD H5H 450;H5H 470 | | GCO82446 | Outer Joint | | 25 | 33 | 52.5 | 88.5 | 59 | I |
| | 2018.03-2019.12 | 6MT | F | L | Hatchback FWD H5H 450;H5H 470 | | GCI82309 | Inner Joint | | 26 | 33 | 40 | 64 | 106 | |
| | 2018.03-2019.12 | 6MT | F | R | Hatchback FWD H5H 450;H5H 470 | | GCI82308 | Inner Joint | | 26 | 33 | 33 | 346 | 90 | |
| | 2020.01- | 6MT | F | L | Hatchback FWD H5H 450;H5H 470 | | GDS84246 | Drive Shaft | | 25 | 26 | 53 | 88.5 | 674 | |
| | 2020.01- | 6MT | F | R | Hatchback FWD H5H 450;H5H 470 | | GDS84245 | Drive Shaft | | 25 | 26 | 53 | 88.5 | 930 | |
| | 2020.01- | 6MT | F | L | Hatchback FWD H5H 450;H5H 470 | | GCI41191 | Inner Joint | | 26 | 33 | 40 | 64 | 118 | |
| | 2020.01- | 6MT | F | R | Hatchback FWD H5H 450;H5H 470 | | GCI50138 | Inner Joint | | 26 | 33 | 33 | 346 | 100.5 | |
| | 2020.01- | 6MT/7DCT | F | L/R | Hatchback FWD H5H 450;H5H 470 | | GCO82552 | Outer Joint | | 25 | 33 | 53 | 88.5 | 58 | I |
| | 2020.01- | 7DCT | F | L | Hatchback FWD H5H 450;H5H 470 | | GDS84243 | Drive Shaft | | 25 | 27 | 53 | 88.5 | 626 | |
| | 2020.01- | 7DCT | F | R | Hatchback FWD H5H 450;H5H 470 | | GDS84236 | Drive Shaft | | 25 | 27 | 53 | 88.5 | 985 | |
| | 2020.01- | 7DCT | F | L | Hatchback FWD H5H 450;H5H 470 | | GCI82655 | Inner Joint | | 27 | 33 | 40 | 65 | 119.5 | |
| | 2020.01- | 7DCT | F | R | Hatchback FWD H5H 450;H5H 470 | | GCI82652 | Inner Joint | | 27 | 33 | 40 | 401 | 101 | |
| 1.3 (103 kw) | 2020.09- | 6MT | F | L | Hatchback FWD H5H 490 | | GDS84246 | Drive Shaft | | 25 | 26 | 53 | 88.5 | 674 | |
| | 2020.09- | 6MT | F | R | Hatchback FWD H5H 490 | | GDS84245 | Drive Shaft | | 25 | 26 | 53 | 88.5 | 930 | |
| | 2020.09- | 6MT | F | L | Hatchback FWD H5H 490 | | GCI41191 | Inner Joint | | 26 | 33 | 40 | 64 | 118 | |
| | 2020.09- | 6MT | F | R | Hatchback FWD H5H 490 | | GCI50138 | Inner Joint | | 26 | 33 | 33 | 346 | 100.5 | |
| | 2020.09- | 6MT/7DCT | F | L/R | Hatchback FWD H5H 490 | | GCO82552 | Outer Joint | | 25 | 33 | 53 | 88.5 | 58 | I |
| | 2020.09- | 7DCT | F | L | Hatchback FWD H5H 490 | | GDS84243 | Drive Shaft | | 25 | 27 | 53 | 88.5 | 626 | |
| | 2020.09- | 7DCT | F | R | Hatchback FWD H5H 490 | | GDS84236 | Drive Shaft | | 25 | 27 | 53 | 88.5 | 985 | |
| | 2020.09- | 7DCT | F | L | Hatchback FWD H5H 490 | | GCI82655 | Inner Joint | | 27 | 33 | 40 | 65 | 119.5 | |
| | 2020.09- | 7DCT | F | R | Hatchback FWD H5H 490 | | GCI82652 | Inner Joint | | 27 | 33 | 40 | 401 | 101 | |
| 1.3 (110 kw) | 2018.03-2019.12 | 6DCT | F | L | Hatchback FWD H5H 450;H5H 470 | | GDS50617 | Drive Shaft | | 25 | 34 | 52.7 | 88.5 | 625 | |
| | 2018.03-2019.12 | 6DCT | F | R | Hatchback FWD H5H 450;H5H 470 | | GDS50615 | Drive Shaft | | 25 | 34 | 52.7 | 88.5 | 976 | |
| | 2018.03-2019.12 | 6DCT | F | L | Hatchback FWD H5H 450;H5H 470 | | GCI50140 | Inner Joint | | 34 | 33 | 40 | 54 | 106 | |
| | 2018.03-2019.12 | 6DCT | F | R | Hatchback FWD H5H 450;H5H 470 | | GCI50136 | Inner Joint | | 34 | 33 | 40 | 396.5 | 89.5 | |
| | 2018.03-2019.12 | 6MT | F | L | Hatchback FWD H5H 450;H5H 470 | | GDS83632 | Drive Shaft | | 25 | 26 | 52.5 | 88.5 | 673 | |
| | 2018.03-2019.12 | 6MT | F | R | Hatchback FWD H5H 450;H5H 470 | | GDS83659 | Drive Shaft | | 25 | 26 | 52.5 | 88.5 | 925 | |
| | 2018.03-2019.12 | 6MT | F | L/R | Hatchback FWD H5H 450;H5H 470 | | GCO82446 | Outer Joint | | 25 | 33 | 52.5 | 88.5 | 59 | I |

| | YEAR | TRANSM. | F/R | L/R | BODY STYLE & DRIVE TYPE & ENGINE | REMARKS | G-AP Ref. | PRODUCT | ABS | Technical Specifications A | B | C | H | L | P |
|---|---|---|---|---|---|---|---|---|---|---|---|---|---|---|---|
| **RENAULT** | | | | | | | | | | | | | | | |
| **Captur** | | | | | | | | | | | | | | | |
| 1.3 (110 kw) | 2018.03-2019.12 | 6MT | F | L | Hatchback FWD H5H 450;H5H 470 | | GCI82309 | Inner Joint | | 26 | 33 | 40 | 64 | 106 | |
| | 2018.03-2019.12 | 6MT | F | R | Hatchback FWD H5H 450;H5H 470 | | GCI82308 | Inner Joint | | 26 | 33 | 33 | 346 | 90 | |
| 1.3 (113 kw) | 2020.01- | 7AT | F | L | Hatchback FWD H5H 470 | | GDS84243 | Drive Shaft | | 25 | 27 | 53 | 88.5 | 626 | |
| | 2020.01- | 7AT | F | R | Hatchback FWD H5H 470 | | GDS84236 | Drive Shaft | | 25 | 27 | 53 | 88.5 | 985 | |
| | 2020.01- | 7AT | F | L/R | Hatchback FWD H5H 470 | | GCO82552 | Outer Joint | | 25 | 33 | 53 | 88.5 | 58 | I |
| | 2020.01- | 7AT | F | L | Hatchback FWD H5H 470 | | GCI82655 | Inner Joint | | 27 | 33 | 40 | 65 | 119.5 | |
| | 2020.01- | 7AT | F | R | Hatchback FWD H5H 470 | | GCI82652 | Inner Joint | | 27 | 33 | 40 | 401 | 101 | |
| 1.3 (116 kw) | 2020.09- | 7DCT | F | L | Hatchback FWD H5H 490 | | GDS84243 | Drive Shaft | | 25 | 27 | 53 | 88.5 | 626 | |
| | 2020.09- | 7DCT | F | R | Hatchback FWD H5H 490 | | GDS84236 | Drive Shaft | | 25 | 27 | 53 | 88.5 | 985 | |
| | 2020.09- | 7DCT | F | L/R | Hatchback FWD H5H 490 | | GCO82552 | Outer Joint | | 25 | 33 | 53 | 88.5 | 58 | I |
| | 2020.09- | 7DCT | F | L | Hatchback FWD H5H 490 | | GCI82655 | Inner Joint | | 27 | 33 | 40 | 65 | 119.5 | |
| | 2020.09- | 7DCT | F | R | Hatchback FWD H5H 490 | | GCI82652 | Inner Joint | | 27 | 33 | 40 | 401 | 101 | |
| 1.5 (63 kw) | 2013.06-2019.06 | 5MT | F | L | Hatchback FWD K9K 830 | | GDS50564 | Drive Shaft | | 25 | 26 | 52.4 | 88.5 | 678 | |
| | 2013.06-2019.06 | 5MT | F | R | Hatchback FWD K9K 830 | | GDS82451 | Drive Shaft | | 25 | 26 | 52.4 | 88.5 | 915 | |
| | 2013.06-2019.06 | 5MT | F | L/R | Hatchback FWD K9K 830 | | GCO50171 | Outer Joint | | 25 | 22 | 52.4 | 88.5 | 55 | M |
| | 2013.06-2019.06 | 5MT | F | L | Hatchback FWD K9K 830 | | GCI50107 | Inner Joint | | 26 | 21 | 40 | 64 | 105.5 | |
| | 2013.06-2019.06 | 5MT | F | R | Hatchback FWD K9K 830 | | GCI81808 | Inner Joint | | 26 | 21 | 33 | 330 | 92 | |
| 1.5 (66 kw) | 2013.06-2019.06 | 5MT | F | L | Hatchback FWD K9K 830;K9K 608;K9K 609;K9K 838;K9K 628;K9K 629;K9K 638 | | GDS50564 | Drive Shaft | | 25 | 26 | 52.4 | 88.5 | 678 | |
| | 2013.06-2019.06 | 5MT | F | R | Hatchback FWD K9K 830;K9K 608;K9K 609;K9K 838;K9K 628;K9K 629;K9K 638 | | GDS82451 | Drive Shaft | | 25 | 26 | 52.4 | 88.5 | 915 | |
| | 2013.06-2019.06 | 5MT | F | L/R | Hatchback FWD K9K 830;K9K 608;K9K 609;K9K 838;K9K 628;K9K 629;K9K 638 | | GCO50171 | Outer Joint | | 25 | 22 | 52.4 | 88.5 | 55 | M |
| | 2013.06-2019.06 | 5MT | F | L | Hatchback FWD K9K 830;K9K 608;K9K 609;K9K 838;K9K 628;K9K 629;K9K 638 | | GCI50107 | Inner Joint | | 26 | 21 | 40 | 64 | 105.5 | |
| | 2013.06-2019.06 | 5MT | F | R | Hatchback FWD K9K 830;K9K 608;K9K 609;K9K 838;K9K 628;K9K 629;K9K 638 | | GCI81808 | Inner Joint | | 26 | 21 | 33 | 330 | 92 | |
| | 2013.06-2019.06 | 6DCT | F | L | Hatchback FWD K9K 830;K9K 608;K9K 609;K9K 838;K9K 628;K9K 629;K9K 638 | | GDS50617 | Drive Shaft | | 25 | 34 | 52.7 | 88.5 | 625 | |
| | 2013.06-2019.06 | 6DCT | F | R | Hatchback FWD K9K 830;K9K 608;K9K 609;K9K 838;K9K 628;K9K 629;K9K 638 | | GDS84609 | Drive Shaft | | 25 | 34 | 52.5 | 88.5 | 975 | |
| | 2013.06-2019.06 | 6DCT | F | L | Hatchback FWD K9K 830;K9K 608;K9K 609;K9K 838;K9K 628;K9K 629;K9K 638 | | GCO50145 | Outer Joint | | 25 | 33 | 52.7 | 88.5 | 59.5 | I |
| | 2013.06-2019.06 | 6DCT | F | R | Hatchback FWD K9K 830;K9K 608;K9K 609;K9K 838;K9K 628;K9K 629;K9K 638 | | GCO82446 | Outer Joint | | 25 | 33 | 52.5 | 88.5 | 59 | I |
| | 2013.06-2019.06 | 6DCT | F | L | Hatchback FWD K9K 830;K9K 608;K9K 609;K9K 838;K9K 628;K9K 629;K9K 638 | | GCI50140 | Inner Joint | | 34 | 33 | 40 | 54 | 106 | |
| | 2013.06-2019.06 | 6DCT | F | R | Hatchback FWD K9K 830;K9K 608;K9K 609;K9K 838;K9K 628;K9K 629;K9K 638 | | GCI50133 | Inner Joint | | 34 | 33 | 40 | 380.5 | 86.5 | |
| 1.5 (70 kw) | 2020.01- | 6MT | F | L | Hatchback FWD K9K 872 | | GDS84246 | Drive Shaft | | 25 | 26 | 53 | 88.5 | 674 | |
| | 2020.01- | 6MT | F | L | Hatchback FWD K9K 872 | | GCO82552 | Outer Joint | | 25 | 33 | 53 | 88.5 | 58 | I |
| | 2020.01- | 6MT | F | L | Hatchback FWD K9K 872 | | GCI41191 | Inner Joint | | 26 | 33 | 40 | 64 | 118 | |
| 1.5 (81 kw) | 2015.01-2018.09 | 6MT | F | L | Hatchback FWD K9K 646;K9K 856 | | GDS50564 | Drive Shaft | | 25 | 26 | 52.4 | 88.5 | 678 | |
| | 2015.01-2018.09 | 6MT | F | R | Hatchback FWD K9K 646;K9K 856 | | GDS82451 | Drive Shaft | | 25 | 26 | 52.4 | 88.5 | 915 | |
| | 2015.01-2018.09 | 6MT | F | L/R | Hatchback FWD K9K 646;K9K 856 | | GCO50171 | Outer Joint | | 25 | 22 | 52.4 | 88.5 | 55 | M |
| | 2015.01-2018.09 | 6MT | F | L | Hatchback FWD K9K 646;K9K 856 | | GCI50107 | Inner Joint | | 26 | 21 | 40 | 64 | 105.5 | |
| | 2015.01-2018.09 | 6MT | F | R | Hatchback FWD K9K 646;K9K 856 | | GCI81808 | Inner Joint | | 26 | 21 | 33 | 330 | 92 | |
| 1.5 (85 kw) | 2020.01- | 6MT | F | L | Hatchback FWD K9K 872;K9K 873 | | GDS84246 | Drive Shaft | | 25 | 26 | 53 | 88.5 | 674 | |
| | 2020.01- | 6MT | F | L | Hatchback FWD K9K 872;K9K 873 | | GCI41191 | Inner Joint | | 26 | 33 | 40 | 64 | 118 | |
| | 2020.01- | 7DCT | F | L | Hatchback FWD K9K 872;K9K 873 | | GDS84243 | Drive Shaft | | 25 | 27 | 53 | 88.5 | 626 | |
| | 2020.01- | 7DCT | F | L | Hatchback FWD K9K 872;K9K 873 | | GCO82552 | Outer Joint | | 25 | 33 | 53 | 88.5 | 58 | I |
| | 2020.01- | 7DCT | F | L | Hatchback FWD K9K 872;K9K 873 | | GCI82655 | Inner Joint | | 27 | 33 | 40 | 65 | 119.5 | |
| 1.6 (105 kw) | 2022.01- | ET | F | L | Hatchback FWD H4M 632 | | GDS57528 | Drive Shaft | | 25 | 26 | 53 | 88.5 | 685 | |
| | 2022.01- | ET | F | R | Hatchback FWD H4M 632 | | GDS57527 | Drive Shaft | | 25 | 26 | 53 | 88.5 | 932 | |
| | 2022.01- | ET | F | L/R | Hatchback FWD H4M 632 | | GCO83588 | Outer Joint | | 25 | 24 | 53 | 88.5 | 61 | I |
| | 2022.01- | ET | F | L | Hatchback FWD H4M 632 | | GCI83730 | Inner Joint | | 26 | 24 | 39.95 | 64.5 | 122 | |
| | 2022.01- | ET | F | R | Hatchback FWD H4M 632 | | GCI83729 | Inner Joint | | 26 | 24 | 33 | 330 | 112 | |
| 1.6 (116 kw) | 2020.05- | ET | F | L | Hatchback FWD H4M 630 | | GDS57528 | Drive Shaft | | 25 | 26 | 53 | 88.5 | 685 | |
| | 2020.05- | ET | F | R | Hatchback FWD H4M 630 | | GDS57527 | Drive Shaft | | 25 | 26 | 53 | 88.5 | 932 | |
| | 2020.05- | ET | F | L/R | Hatchback FWD H4M 630 | | GCO83588 | Outer Joint | | 25 | 24 | 53 | 88.5 | 61 | I |
| | 2020.05- | ET | F | L | Hatchback FWD H4M 630 | | GCI83730 | Inner Joint | | 26 | 24 | 39.95 | 64.5 | 122 | |
| | 2020.05- | ET | F | R | Hatchback FWD H4M 630 | | GCI83729 | Inner Joint | | 26 | 24 | 33 | 330 | 112 | |
| 2.0 (109 kw) | 2017.01-2020.12 | AT | F | L/R | Hatchback FWD F4R410/F4R412/F4R418 | | GCO50145 | Outer Joint | | 25 | 33 | 52.7 | 88.5 | 59.5 | I |
| | 2017.01-2020.12 | AT | F | L | Hatchback FWD F4R410/F4R412/F4R418 | | GCI41188 | Inner Joint | | 26 | 33 | 39.6 | 46 | 100.5 | |
| | 2017.01-2020.12 | AT | F | R | Hatchback FWD F4R410/F4R412/F4R418 | | GCI41189 | Inner Joint | | 26 | 33 | 42.5 | 217 | 103.5 | |
| **Clio** | | | | | | | | | | | | | | | |
| 0.9 (56 kw) | 2018.05-2021.08 | 5MT | F | L | Hatchback FWD H4B 408 | | GDS50487 | Drive Shaft | | 23 | 26 | 49 | 86 | 662 | |
| | 2018.05-2021.08 | 5MT | F | R | Hatchback FWD H4B 408 | | GDS50563 | Drive Shaft | | 23 | 26 | 49 | 86 | 909 | |
| | 2018.05-2021.08 | 5MT | F | L/R | Hatchback FWD H4B 408 | | GCO50167 | Outer Joint | | 23 | 30 | 49 | 86 | 53.5 | I |
| | 2018.05-2021.08 | 5MT | F | L | Hatchback FWD H4B 408 | | GCI50096 | Inner Joint | | 26 | 30 | 40 | 64 | 96 | |
| | 2018.05-2021.08 | 5MT | F | R | Hatchback FWD H4B 408 | | GCI50100 | Inner Joint | | 26 | 30 | 33 | 347 | 92.5 | |
| 0.9 (66 kw) | 2012.11-2021.08 | 5MT | F | L | Hatchback FWD H4B 400;H4B 408;H4B 412 | | GDS50487 | Drive Shaft | | 23 | 26 | 49 | 86 | 662 | |
| | 2012.11-2021.08 | 5MT | F | R | Hatchback FWD H4B 400;H4B 408;H4B 412 | | GDS50563 | Drive Shaft | | 23 | 26 | 49 | 86 | 909 | |
| | 2012.11-2021.08 | 5MT | F | L/R | Hatchback FWD H4B 400;H4B 408;H4B 412 | | GCO50167 | Outer Joint | | 23 | 30 | 49 | 86 | 53.5 | I |
| | 2012.11-2021.08 | 5MT | F | L | Hatchback FWD H4B 400;H4B 408;H4B 412 | | GCI50096 | Inner Joint | | 26 | 30 | 40 | 64 | 96 | |
| | 2012.11-2021.08 | 5MT | F | L | Hatchback FWD H4B 400;H4B 408;H4B 412 | | GCI50134 | Inner Joint | | 26 | 30 | 40 | 64 | 96 | |

| | YEAR | TRANSM. | F/R | L/R | BODY STYLE & DRIVE TYPE & ENGINE | REMARKS | G-AP Ref. | PRODUCT | ABS | Technical Specifications A | B | C | H | L | P |
|---|---|---|---|---|---|---|---|---|---|---|---|---|---|---|---|
| **RENAULT** | | | | | | | | | | | | | | | |
| **Clio** | | | | | | | | | | | | | | | |
| 0.9 (66 kw) | 2012.11-2021.08 | 5MT | F | R | Hatchback FWD H4B 400;H4B 408;H4B 412 | | GCI50100 | Inner Joint | | 26 | 30 | 33 | 347 | 92.5 | |
| | 2016.06-2021.08 | 5MT | F | L | Hatchback FWD H4B 410 | | GDS50487 | Drive Shaft | | 23 | 26 | 49 | 86 | 662 | |
| | 2016.06-2021.08 | 5MT | F | R | Hatchback FWD H4B 410 | | GDS50563 | Drive Shaft | | 23 | 26 | 49 | 86 | 909 | |
| | 2016.06-2021.08 | 5MT | F | L/R | Hatchback FWD H4B 410 | | GCO50167 | Outer Joint | | 23 | 30 | 49 | 86 | 53.5 | I |
| | 2016.06-2021.08 | 5MT | F | L | Hatchback FWD H4B 410 | | GCI50096 | Inner Joint | | 26 | 30 | 40 | 64 | 96 | |
| | 2016.06-2021.08 | 5MT | F | L | Hatchback FWD H4B 410 | | GCI50134 | Inner Joint | | 26 | 30 | 40 | 64 | 96 | |
| | 2016.06-2021.08 | 5MT | F | R | Hatchback FWD H4B 410 | | GCI50100 | Inner Joint | | 26 | 30 | 33 | 347 | 92.5 | |
| 1.0 (40 kw) | 2000.02-2001.05 | 5MT | F | R | Hatchback FWD D7D760 | For vehicles without ABS | GDS50151 | Drive Shaft | | 21 | 23 | 49.8 | 83.5 | 715 | |
| | 2000.02-2001.05 | 5MT | F | R | Hatchback FWD D7D760 | For vehicles with ABS | GDS50162 | Drive Shaft | 26T | 21 | 23 | 52.2 | 85.5 | 723.5 | |
| 1.0 (48 kw) | 2019.11- | 5MT | F | L | Hatchback FWD B4D 409 | | GDS84577 | Drive Shaft | | 23 | 26 | 49.5 | 86 | 654 | |
| | 2019.11- | 5MT | F | R | Hatchback FWD B4D 409 | | GDS84131 | Drive Shaft | | 23 | 26 | 49.5 | 86 | 903 | |
| | 2019.11- | 5MT | F | L/R | Hatchback FWD B4D 409 | | GCO82606 | Outer Joint | | 23 | 28 | 49.5 | 86 | 53 | I |
| | 2019.11- | 5MT | F | L | Hatchback FWD B4D 409 | | GCI82521 | Inner Joint | | 26 | 28 | 40 | 64 | 93 | |
| | 2019.11- | 5MT | F | R | Hatchback FWD B4D 409 | | GCI82526 | Inner Joint | | 26 | 28 | 33 | 347 | 95 | |
| 1.0 (49 kw) | 2021.11- | 5MT | F | L | Hatchback FWD B4D 419 | | GDS84577 | Drive Shaft | | 23 | 26 | 49.5 | 86 | 654 | |
| | 2021.11- | 5MT | F | R | Hatchback FWD B4D 419 | | GDS84131 | Drive Shaft | | 23 | 26 | 49.5 | 86 | 903 | |
| | 2021.11- | 5MT | F | L/R | Hatchback FWD B4D 419 | | GCO82606 | Outer Joint | | 23 | 28 | 49.5 | 86 | 53 | I |
| | 2021.11- | 5MT | F | L | Hatchback FWD B4D 419 | | GCI82521 | Inner Joint | | 26 | 28 | 40 | 64 | 93 | |
| | 2021.11- | 5MT | F | R | Hatchback FWD B4D 419 | | GCI82526 | Inner Joint | | 26 | 28 | 33 | 347 | 95 | |
| 1.0 (53 kw) | 2019.06- | 5MT | F | L | Hatchback FWD B4D 409;B4D 419;B4D 470 | | GDS84577 | Drive Shaft | | 23 | 26 | 49.5 | 86 | 654 | |
| | 2019.06- | 5MT | F | R | Hatchback FWD B4D 409;B4D 419;B4D 470 | | GDS84131 | Drive Shaft | | 23 | 26 | 49.5 | 86 | 903 | |
| | 2019.06- | 5MT | F | L/R | Hatchback FWD B4D 409;B4D 419;B4D 470 | | GCO82606 | Outer Joint | | 23 | 28 | 49.5 | 86 | 53 | I |
| | 2019.06- | 5MT | F | L | Hatchback FWD B4D 409;B4D 419;B4D 470 | | GCI82521 | Inner Joint | | 26 | 28 | 40 | 64 | 93 | |
| | 2019.06- | 5MT | F | R | Hatchback FWD B4D 409;B4D 419;B4D 470 | | GCI82526 | Inner Joint | | 26 | 28 | 33 | 347 | 95 | |
| 1.0 (67 kw) | 2020.08- | 5MT | F | L | Hatchback FWD H4D 450;H4D 470 | | GDS84132 | Drive Shaft | | 23 | 26 | 49.5 | 85.5 | 655 | |
| | 2020.08- | 5MT | F | R | Hatchback FWD H4D 450;H4D 470 | | GDS84137 | Drive Shaft | | 23 | 26 | 49.5 | 85.5 | 904 | |
| | 2020.08- | CVT | F | L | Hatchback FWD H4D 450;H4D 470 | For left-hand drive vehicles | GDS56441 | Drive Shaft | | 23 | 25 | 49.5 | 85.5 | 656 | |
| | 2020.08- | CVT | F | L | Hatchback FWD H4D 450;H4D 470 | For right-hand drive vehicles | GDS84624 | Drive Shaft | | 25 | 25 | 53 | 88.5 | 656 | |
| | 2020.08- | CVT | F | R | Hatchback FWD H4D 450;H4D 470 | For left-hand drive vehicles | GDS56440 | Drive Shaft | | 23 | 25 | 49.5 | 85.5 | 902 | |
| | 2020.08- | CVT | F | R | Hatchback FWD H4D 450;H4D 470 | For right-hand drive vehicles | GDS84625 | Drive Shaft | | 25 | 25 | 53 | 88.5 | 900 | |
| | 2020.08- | CVT | F | L/R | Hatchback FWD H4D 450;H4D 470 | For right-hand drive vehicles | GCO82552 | Outer Joint | | 25 | 33 | 53 | 88.5 | 58 | I |
| | 2020.08- | CVT | F | L/R | Hatchback FWD H4D 450;H4D 470 | For left-hand drive vehicles | GCO82607 | Outer Joint | | 23 | 30 | 49.5 | 85.5 | 53 | I |
| | 2020.08- | CVT | F | L | Hatchback FWD H4D 450;H4D 470 | | GCI82896 | Inner Joint | | 25 | 30 | 40 | 53 | 102 | |
| | 2020.08- | CVT | F | R | Hatchback FWD H4D 450;H4D 470 | | GCI82897 | Inner Joint | | 25 | 30 | 33 | 345 | 90 | |
| | 2021.11- | 5MT | F | L | Hatchback FWD H4D 470 | | GDS84132 | Drive Shaft | | 23 | 26 | 49.5 | 85.5 | 655 | |
| | 2021.11- | 5MT | F | R | Hatchback FWD H4D 470 | | GDS84137 | Drive Shaft | | 23 | 26 | 49.5 | 85.5 | 904 | |
| 1.0 (74 kw) | 2019.06- | 5MT | F | L | Hatchback FWD H4D 450;H4D 452;H4D 460;H4D 480 | 16"/17" Wheels | GDS84132 | Drive Shaft | | 23 | 26 | 49.5 | 85.5 | 655 | |
| | 2019.06- | 5MT | F | L | Hatchback FWD H4D 450;H4D 452;H4D 460;H4D 480 | 15" Wheels | GDS84239 | Drive Shaft | | 25 | 26 | 53 | 88.5 | 650 | |
| | 2019.06- | 5MT | F | R | Hatchback FWD H4D 450;H4D 452;H4D 460;H4D 480 | 16 | GDS84137 | Drive Shaft | | 23 | 26 | 49.5 | 85.5 | 904 | |
| | 2019.06- | 5MT | F | R | Hatchback FWD H4D 450;H4D 452;H4D 460;H4D 480 | 15" Wheels | GDS84241 | Drive Shaft | | 25 | 26 | 53 | 88.5 | 899 | |
| | 2019.06- | 5MT | F | L | Hatchback FWD H4D 450;H4D 452;H4D 460;H4D 480 | 15"/16"/17" Wheels | GCI82527 | Inner Joint | | 26 | 30 | 40 | 64 | 96 | |
| | 2019.06- | 5MT | F | R | Hatchback FWD H4D 450;H4D 452;H4D 460;H4D 480 | 16"/17" Wheels | GCI50100 | Inner Joint | | 26 | 30 | 33 | 347 | 92.5 | |
| | 2019.06- | 5MT | F | R | Hatchback FWD H4D 450;H4D 452;H4D 460;H4D 480 | 15" Wheels | GCI82653 | Inner Joint | | 26 | 30 | 33 | 346.5 | 90 | |
| | 2019.06- | CVT | F | L | Hatchback FWD H4D 450;H4D 452;H4D 460;H4D 480 | For left-hand drive vehicles | GDS56441 | Drive Shaft | | 23 | 25 | 49.5 | 85.5 | 656 | |
| | 2019.06- | CVT | F | L | Hatchback FWD H4D 450;H4D 452;H4D 460;H4D 480 | For right-hand drive vehicles | GDS84624 | Drive Shaft | | 25 | 25 | 53 | 88.5 | 656 | |
| | 2019.06- | CVT | F | R | Hatchback FWD H4D 450;H4D 452;H4D 460;H4D 480 | For left-hand drive vehicles | GDS56440 | Drive Shaft | | 23 | 25 | 49.5 | 85.5 | 902 | |
| | 2019.06- | CVT | F | R | Hatchback FWD H4D 450;H4D 452;H4D 460;H4D 480 | For right-hand drive vehicles | GDS84625 | Drive Shaft | | 25 | 25 | 53 | 88.5 | 900 | |
| | 2019.06- | CVT | F | L | Hatchback FWD H4D 450;H4D 452;H4D 460;H4D 480 | | GCI82896 | Inner Joint | | 25 | 30 | 40 | 53 | 102 | |
| | 2019.06- | CVT | F | R | Hatchback FWD H4D 450;H4D 452;H4D 460;H4D 480 | | GCI82897 | Inner Joint | | 25 | 30 | 33 | 345 | 90 | |
| | 2019.06- | CVT/5MT | F | L/R | Hatchback FWD H4D 450;H4D 452;H4D 460;H4D 480 | For right-hand drive vehicles | GCO82552 | Outer Joint | | 25 | 33 | 53 | 88.5 | 58 | I |
| | 2019.06- | CVT/5MT | F | L/R | Hatchback FWD H4D 450;H4D 452;H4D 460;H4D 480 | For left-hand drive vehicles | GCO82607 | Outer Joint | | 23 | 30 | 49.5 | 85.5 | 53 | I |
| 1.1 (34 kw) | 1991.01-1998.09 | MT | F | L | Hatchback FWD C1E700 | inner teeth of wheel side:20 | GDS50015 | Drive Shaft | | 21 | 30 | 46.3 | 81.5 | 612.5 | |
| | 1991.01-1998.09 | MT | F | L | Hatchback FWD C1E700 | inner teeth of wheel side:30 | GDS50116 | Drive Shaft | | 21 | | 49.8 | 83.5 | 610 | |
| | 1991.01-1998.09 | MT | F | R | Hatchback FWD C1E700 | Inner teeth of wheel side:20 | GDS50014 | Drive Shaft | | 21 | 23 | 46.3 | 81.5 | 707 | |
| | 1991.01-1998.09 | MT | F | R | Hatchback FWD C1E700 | Inner teeth of wheel side:30 | GDS50117 | Drive Shaft | | 21 | 23 | 49.8 | 83.5 | 698.5 | |
| | 1991.01-1998.09 | MT | F | L/R | Hatchback FWD C1E700 | | GCO50008 | Outer Joint | | 21 | 25 | 56.2 | 83.5 | 58 | O |
| 1.2 (40 kw) | 1991.01-1996.06 | MT | F | L | Hatchback FWD E7F700/E7F704/E7F706/E7F708 | Trans. code:JB0/1 | GDS50015 | Drive Shaft | | 21 | 30 | 46.3 | 81.5 | 612.5 | |
| | 1991.01-1996.06 | MT | F | L | Hatchback FWD E7F700/E7F704/E7F706/E7F708 | Trans. code:JB0/1/3 | GDS50116 | Drive Shaft | | 21 | | 49.8 | 83.5 | 610 | |
| | 1991.01-1996.06 | MT | F | R | Hatchback FWD E7F700/E7F704/E7F706/E7F708 | Trans. code:JB0/1;Inner teeth of wheel side:20 | GDS50014 | Drive Shaft | | 21 | 23 | 46.3 | 81.5 | 707 | |
| | 1991.01-1996.06 | MT | F | R | Hatchback FWD E7F700/E7F704/E7F706/E7F708 | Trans. code:JB0/1;Inner teeth of wheel side:30 | GDS50117 | Drive Shaft | | 21 | 23 | 49.8 | 83.5 | 698.5 | |
| | 1991.01-1996.06 | MT | F | R | Hatchback FWD E7F700/E7F704/E7F706/E7F708 | Trans. code:JB4/5 | GDS50205 | Drive Shaft | | 21 | 23 | 51 | 85 | 703 | |
| | 1991.01-1996.06 | MT | F | L/R | Hatchback FWD E7F700/E7F704/E7F706/E7F708 | | GCO50008 | Outer Joint | | 21 | 25 | 56.2 | 83.5 | 58 | O |
| | 1996.01-1996.12 | MT | F | L | Hatchback FWD C3G720 | Trans. code:JB0/1 | GDS50015 | Drive Shaft | | 21 | 30 | 46.3 | 81.5 | 612.5 | |
| | 1996.01-1996.12 | MT | F | L | Hatchback FWD C3G720 | Trans. code:JB0/1/3 | GDS50116 | Drive Shaft | | 21 | | 49.8 | 83.5 | 610 | |
| | 1996.01-1996.12 | MT | F | R | Hatchback FWD C3G720 | Trans. code:JB0/1;Inner teeth of wheel side:20 | GDS50014 | Drive Shaft | | 21 | 23 | 46.3 | 81.5 | 707 | |

| RENAULT Clio | YEAR | TRANSM. | F/R | L/R | BODY STYLE & DRIVE TYPE & ENGINE | REMARKS | G-AP Ref. | PRODUCT | ABS | A | B | C | H | L | P |
|---|---|---|---|---|---|---|---|---|---|---|---|---|---|---|---|
| 1.2 (40 kw) | 1996.01-1996.12 | MT | F | R | Hatchback FWD C3G720 | Trans. code:JB0/1;Inner teeth of wheel side:30 | GDS50117 | Drive Shaft | | 21 | 23 | 49.8 | 83.5 | 698.5 | |
| | 1996.01-1996.12 | MT | F | R | Hatchback FWD C3G720 | Trans. code:JB4/5 | GDS50205 | Drive Shaft | | 21 | 23 | 51 | 85 | 703 | |
| | 1996.01-1996.12 | MT | F | L/R | Hatchback FWD C3G720 | | GCO50008 | Outer Joint | | 21 | 25 | 56.2 | 83.5 | 58 | O |
| | 1996.05-1998.02 | MT | F | L | Hatchback FWD D7F730 | Date from:1996.05;Date to:1998.02 | GDS50015 | Drive Shaft | | 21 | 30 | 46.3 | 81.5 | 612.5 | |
| | 1996.05-1998.02 | MT | F | L | Hatchback FWD D7F730 | Trans. code:JB0/1/3 | GDS50116 | Drive Shaft | | 21 | | 49.8 | 83.5 | 610 | |
| | 1996.05-1998.02 | MT | F | R | Hatchback FWD D7F730 | Inner teeth of wheel side:20;Date From:1996.05,Date To:1998.02 | GDS50014 | Drive Shaft | | 21 | 23 | 46.3 | 81.5 | 707 | |
| | 1996.05-1998.02 | MT | F | R | Hatchback FWD D7F730 | Inner teeth of wheel side:30 | GDS50117 | Drive Shaft | | 21 | 23 | 49.8 | 83.5 | 698.5 | |
| | 1996.05-1998.02 | MT | F | R | Hatchback FWD D7F730 | Inner teeth of wheel side:22;Trans. code:JB4/5 | GDS50205 | Drive Shaft | | 21 | 23 | 51 | 85 | 703 | |
| | 1996.05-1998.02 | MT | F | L/R | Hatchback FWD D7F730 | Date from:1996.05;Date to:1998.02 | GCO50008 | Outer Joint | | 21 | 25 | 56.2 | 83.5 | 58 | O |
| 1.2 (43 kw) | 1990.05-1998.09 | MT | F | L | Hatchback FWD E7F700/E7F750 | Trans. code:JB0/1 | GDS50015 | Drive Shaft | | 21 | 30 | 46.3 | 81.5 | 612.5 | |
| | 1990.05-1998.09 | MT | F | L | Hatchback FWD E7F700/E7F750 | Trans. code:JB0/1/3 | GDS50116 | Drive Shaft | | 21 | | 49.8 | 83.5 | 610 | |
| | 1990.05-1998.09 | MT | F | R | Hatchback FWD E7F700/E7F750 | Trans. code:JB0/1;Inner teeth of wheel side:20 | GDS50014 | Drive Shaft | | 21 | 23 | 46.3 | 81.5 | 707 | |
| | 1990.05-1998.09 | MT | F | R | Hatchback FWD E7F700/E7F750 | Trans. code:JB0/1;Inner teeth of wheel side:30 | GDS50117 | Drive Shaft | | 21 | 23 | 49.8 | 83.5 | 698.5 | |
| | 1990.05-1998.09 | MT | F | R | Hatchback FWD E7F700/E7F750 | Trans. code:JB4/5 | GDS50205 | Drive Shaft | | 21 | 23 | 51 | 85 | 703 | |
| | 1990.05-1998.09 | MT | F | L/R | Hatchback FWD E7F700/E7F750 | | GCO50008 | Outer Joint | | 21 | 25 | 56.2 | 83.5 | 58 | O |
| | 1996.05-1998.02 | MT | F | L | Hatchback FWD D7F730 | Date from:1996.05,Date to:1998.02,Trans. code:JB0/1 | GDS50015 | Drive Shaft | | 21 | 30 | 46.3 | 81.5 | 612.5 | |
| | 1996.05-1998.02 | MT | F | L | Hatchback FWD D7F730 | Trans. code:JB4/5 | GDS50050 | Drive Shaft | | 21 | 30 | 50 | 83 | 618 | |
| | 1996.05-1998.02 | MT | F | L | Hatchback FWD D7F730 | Trans. code:JB0/1/3 | GDS50116 | Drive Shaft | | 21 | | 49.8 | 83.5 | 610 | |
| | 1996.05-1998.02 | MT | F | R | Hatchback FWD D7F730 | Date from:1996.05,Date to:1998.02,Trans. code:JB0/1;Inner teeth of wheel side:20 | GDS50014 | Drive Shaft | | 21 | 23 | 46.3 | 81.5 | 707 | |
| | 1996.05-1998.02 | MT | F | R | Hatchback FWD D7F730 | Date from:1996.05,Date to:1998.02,Trans. code:JB0/1;Inner teeth of wheel side:30 | GDS50117 | Drive Shaft | | 21 | 23 | 49.8 | 83.5 | 698.5 | |
| | 1996.05-1998.02 | MT | F | R | Hatchback FWD D7F730 | Trans. code:JB4/5 | GDS50205 | Drive Shaft | | 21 | 23 | 51 | 85 | 703 | |
| | 1996.05-1998.02 | MT | F | L/R | Hatchback FWD D7F730 | Date from:1996.05,Date to:1998.02 | GCO50008 | Outer Joint | | 21 | 25 | 56.2 | 83.5 | 58 | O |
| | 1998.09-2009.06 | 5MT | F | R | Hatchback FWD D7F744/D7F764/D7F766 | For vehicles without ABS | GDS50151 | Drive Shaft | | 21 | 23 | 49.8 | 83.5 | 715 | |
| | 1998.09-2009.06 | 5MT | F | R | Hatchback FWD D7F744/D7F764/D7F766 | For vehicles with ABS | GDS50162 | Drive Shaft | 26T | 21 | 23 | 52.2 | 85.5 | 723.5 | |
| | 1998.09-2009.06 | MT | F | R | Hatchback FWD D7F744/D7F764/D7F766 | | GCI50008 | Inner Joint | | 23 | 30 | 36.3 | | 120.7 | |
| | 1998.09-2010.02 | 5MT | F | L | Hatchback FWD D7F 744, D7F 746, D7F 722, D7F 766, D7F 764, D7F 710, D7F 720, D7F 726 | For Modelcode:BB0A/BB0F/BB10/CB0A/CB0F/CB10;Date to:2002.10,For Modelcode:BB1K/CB1K;For Modelcode:BB0A/BB0F/CB0A/CB0F,Trans. code:JB1184/JB1963 | GDS50004 | Drive Shaft | 26T | 21 | | 57 | 84.5 | 625.7 | |
| | 1998.09-2010.02 | 5MT | F | L | Hatchback FWD D7F 744, D7F 746, D7F 722, D7F 766, D7F 764, D7F 710, D7F 720, D7F 726 | Date to:2002.10,For Modelcode:BB1K/CB1K,For Modelcode:BB0A/BB0F/BB10/CB0A/CB0F/CB10,For Modelcode:BB0A/CB0A,Trans. code:JB1909,For Modelcode:BB0F/CB0F,Trans. code:JB1909/JB1961/JB1914 | GDS50150 | Drive Shaft | | 21 | 30 | 49.8 | 83.5 | 623 | |
| | 1998.09-2010.02 | 5MT | F | L | Hatchback FWD D7F 744, D7F 746, D7F 722, D7F 766, D7F 764, D7F 710, D7F 720, D7F 726 | | GDS50261 | Drive Shaft | 44T | 23 | | 57.5 | 86.5 | 630 | |
| | 1998.09-2010.02 | 5MT | F | L | Hatchback FWD D7F 744, D7F 746, D7F 722, D7F 766, D7F 764, D7F 710, D7F 720, D7F 726 | Inner teeth of wheel side:22 | GDS50401 | Drive Shaft | 44T | 21 | | 57 | 84 | 629 | |
| | 1998.09-2010.02 | 5MT | F | R | Hatchback FWD D7F 744, D7F 746, D7F 722, D7F 766, D7F 764, D7F 710, D7F 720, D7F 726 | For Modelcode:BB0A/BB0F/BB10/CB0A/CB0F/CB10;Date to:2002.10,For Modelcode:BB1K/CB1K | GDS50017 | Drive Shaft | 26T | 21 | 23 | 51.5 | 83 | 715 | |
| | 1998.09-2010.02 | 5MT | F | R | Hatchback FWD D7F 744, D7F 746, D7F 722, D7F 766, D7F 764, D7F 710, D7F 720, D7F 726 | For Modelcode:BB0A/CB0A,Trans. code:JB1184/JB1963;For Modelcode:BB28/BB2D/CB2D | GDS50151 | Drive Shaft | | 21 | 23 | 49.8 | 83.5 | 715 | |
| | 1998.09-2010.02 | 5MT | F | R | Hatchback FWD D7F 744, D7F 746, D7F 722, D7F 766, D7F 764, D7F 710, D7F 720, D7F 726 | For Modelcode:BB0A/BB0F/CB0A/CB0F,Trans. code:JB1184/JB1963;For Modelcode:BB0A/BB0F/BB10/CB0A/CB0F/CB10;Date to:2002.10,For Modelcode:BB1K/CB1K | GDS50162 | Drive Shaft | 26T | 21 | 23 | 52.2 | 85.5 | 723.5 | |
| | 1998.09-2010.02 | 5MT | F | R | Hatchback FWD D7F 744, D7F 746, D7F 722, D7F 766, D7F 764, D7F 710, D7F 720, D7F 726 | | GDS50263 | Drive Shaft | 44T | 21 | 23 | 52.2 | 85.5 | 723.5 | |
| | 1998.09-2010.02 | 5MT | F | L | Hatchback FWD D7F 744, D7F 746, D7F 722, D7F 766, D7F 764, D7F 710, D7F 720, D7F 726 | Model:Clio Campus | GCO50069 | Outer Joint | 44T | 23 | 30 | 57.5 | 86.5 | 58.5 | I |
| | 1998.09-2010.02 | 5MT | F | R | Hatchback FWD D7F 744, D7F 746, D7F 722, D7F 766, D7F 764, D7F 710, D7F 720, D7F 726 | Model:Clio Campus | GCO50101 | Outer Joint | 44T | 21 | 30 | 52.2 | 85.5 | 59 | I |
| | 1998.09-2010.02 | 5MT | F | L/R | Hatchback FWD D7F 744, D7F 746, D7F 722, D7F 766, D7F 764, D7F 710, D7F 720, D7F 726 | For Modelcode:BB0A/BB0F/BB10/CB0A/CB0F/CB10;Date to:2002.10,For Modelcode:BB1K/CB1Kp | GCO50004 | Outer Joint | 26T | 21 | 30 | 52.2 | 85.5 | 59 | I |
| | 1998.09-2010.02 | 5MT | F | L/R | Hatchback FWD D7F 744, D7F 746, D7F 722, D7F 766, D7F 764, D7F 710, D7F 720, D7F 726 | | GCO50066 | Outer Joint | 44T | 21 | 28 | 52.5 | 85 | 51 | I |
| | 1998.09-2010.02 | 5MT | F | R | Hatchback FWD D7F 744, D7F 746, D7F 722, D7F 766, D7F 764, D7F 710, D7F 720, D7F 726 | | GCI50008 | Inner Joint | | 23 | 30 | 36.3 | | 120.7 | |
| | 1998.09-2010.02 | MT | F | L | Hatchback FWD D7F 744, D7F 746, D7F 722, D7F 766, D7F 764, D7F 710, D7F 720, D7F 726 | | GDS50177 | Drive Shaft | | 21 | | 57 | 84.5 | 625.7 | |
| | 1998.09-2010.02 | MT | F | R | Hatchback FWD D7F 744, D7F 746, D7F 722, D7F 766, D7F 764, D7F 710, D7F 720, D7F 726 | Trans. code:JB1/3 | GDS50125 | Drive Shaft | | 21 | 23 | 57 | 84.5 | 713.5 | |
| | 1998.09-2010.02 | MT | F | R | Hatchback FWD D7F 744, D7F 746, D7F 722, D7F 766, D7F 764, D7F 710, D7F 720, D7F 726 | | GDS50146 | Drive Shaft | | 21 | 23 | 57 | 84.5 | 732.5 | |
| | 1998.09-2010.02 | MT | F | R | Hatchback FWD D7F 744, D7F 746, D7F 722, D7F 766, D7F 764, D7F 710, D7F 720, D7F 726 | | GDS50250 | Drive Shaft | 26T | 21 | 23 | 57 | 84.5 | 732.5 | |
| | 1998.09-2010.02 | MT | F | R | Hatchback FWD D7F 744, D7F 746, D7F 722, D7F 766, D7F 764, D7F 710, D7F 720, D7F 726 | | GDS99072 | Drive Shaft | 44T | 21 | 23 | 57 | 84.5 | 720 | |
| | 2006.06-2010.08 | 5MT | F | L | Hatchback FWD D4F 764 | | GDS50369 | Drive Shaft | | 23 | 26 | 49 | 83.5 | 651 | |
| | 2006.06-2010.08 | 5MT | F | R | Hatchback FWD D4F 764 | | GDS50372 | Drive Shaft | | 23 | 26 | 49 | 83.5 | 890 | |
| | 2006.06-2010.08 | 5MT | F | L/R | Hatchback FWD D4F 764 | | GCO50112 | Outer Joint | | 23 | 28 | 49 | 83.5 | 54.5 | I |
| 1.2 (44 kw) | 1990.05-1996.04 | MT | F | L | Hatchback FWD E5F710/E7F708 | Trans. code:JB0/JB1;Inner teeth of wheel side:20 | GDS50015 | Drive Shaft | | 21 | 30 | 46.3 | 81.5 | 612.5 | |
| | 1990.05-1996.04 | MT | F | L | Hatchback FWD E5F710/E7F708 | Transmission ID:JB0/1/3;Inner teeth of wheel side:30 | GDS50116 | Drive Shaft | | 21 | | 49.8 | 83.5 | 610 | |
| | 1990.05-1996.04 | MT | F | R | Hatchback FWD E5F710/E7F708 | Trans. code:JB0/JB1;Inner teeth of wheel side:20 | GDS50014 | Drive Shaft | | 21 | 23 | 46.3 | 81.5 | 707 | |
| | 1990.05-1996.04 | MT | F | R | Hatchback FWD E5F710/E7F708 | Trans. code:JB0/JB1;Inner teeth of wheel side:30 | GDS50117 | Drive Shaft | | 21 | 23 | 49.8 | 83.5 | 698.5 | |
| | 1990.05-1996.04 | MT | F | R | Hatchback FWD E5F710/E7F708 | Trans. code:JB4/5;Inner teeth of wheel side:22 | GDS50205 | Drive Shaft | | 21 | 23 | 51 | 85 | 703 | |
| | 1998.09-2001.05 | 5MT | F | L | Hatchback FWD D7F722 | | GDS50004 | Drive Shaft | 26T | 21 | | 57 | 84.5 | 625.7 | |
| | 1998.09-2001.05 | 5MT | F | L | Hatchback FWD D7F722 | | GDS50150 | Drive Shaft | | 21 | 30 | 49.8 | 83.5 | 623 | |
| | 1998.09-2001.05 | 5MT | F | R | Hatchback FWD D7F722 | | GDS50017 | Drive Shaft | 26T | 21 | 23 | 51.5 | 83 | 715 | |
| | 1998.09-2001.05 | 5MT | F | R | Hatchback FWD D7F722 | | GDS50162 | Drive Shaft | 26T | 21 | 23 | 52.2 | 85.5 | 723.5 | |
| | 1998.09-2001.05 | AT | F | L/R | Hatchback FWD D7F722 | | GCO50004 | Outer Joint | 26T | 21 | 30 | 52.2 | 85.5 | 59 | I |
| | 1998.09-2001.05 | MT | F | L | Hatchback FWD D7F722 | | GDS50177 | Drive Shaft | | 21 | | 57 | 84.5 | 625.7 | |
| | 1998.09-2001.05 | MT | F | R | Hatchback FWD D7F722 | | GDS50125 | Drive Shaft | | 21 | 23 | 57 | 84.5 | 713.5 | |
| | 1998.09-2001.05 | MT | F | R | Hatchback FWD D7F722 | | GDS50146 | Drive Shaft | | 21 | 23 | 57 | 84.5 | 732.5 | |
| | 1998.09-2001.05 | MT | F | R | Hatchback FWD D7F722 | | GDS50250 | Drive Shaft | 26T | 21 | 23 | 57 | 84.5 | 732.5 | |
| | 1998.09-2001.05 | MT | F | R | Hatchback FWD D7F722 | | GDS99072 | Drive Shaft | 44T | 21 | 23 | 57 | 84.5 | 720 | |
| | 1998.09-2001.05 | MT | F | R | Hatchback FWD D7F722 | | GCI50008 | Inner Joint | | 23 | 30 | 36.3 | | 120.7 | |
| | 1998.09-2001.05 | | F | L | Hatchback FWD D7F722 | Trans. code:JB1184/JB1963 | GDS50045 | Drive Shaft | 26T | 21 | 30 | 51.5 | 83 | 634 | |
| | 1998.09-2001.05 | | F | R | Hatchback FWD D7F722 | | GDS50151 | Drive Shaft | | 21 | 23 | 49.8 | 83.5 | 715 | |
| 1.2 (48 kw) | 2005.06-2014.12 | 5MT | F | L | Hatchback FWD D4F 740 | | GDS50369 | Drive Shaft | | 23 | 26 | 49 | 83.5 | 651 | |

| | YEAR | TRANSM. | F/R | L/R | BODY STYLE & DRIVE TYPE & ENGINE | REMARKS | G-AP Ref. | PRODUCT | ABS | Technical Specifications A | B | C | H | L | P |
|---|---|---|---|---|---|---|---|---|---|---|---|---|---|---|---|
| **RENAULT** | | | | | | | | | | | | | | | |
| **Clio** | | | | | | | | | | | | | | | |
| 1.2 (48 kw) | 2005.06-2014.12 | 5MT | F | R | Hatchback FWD D4F 740 | | GDS50372 | Drive Shaft | | 23 | 26 | 49 | 83.5 | 890 | |
| | 2005.06-2014.12 | 5MT | F | L/R | Hatchback FWD D4F 740 | | GCO50112 | Outer Joint | | 23 | 28 | 49 | 83.5 | 54.5 | I |
| 1.2 (53 kw) | 2014.01-2021.08 | 5MT | F | L | Hatchback FWD D4F 744 | | GDS50487 | Drive Shaft | | 23 | 26 | 49 | 86 | 662 | |
| | 2014.01-2021.08 | 5MT | F | R | Hatchback FWD D4F 744 | | GDS50488 | Drive Shaft | | 23 | 26 | 49 | 86 | 908 | |
| | 2014.01-2021.08 | 5MT | F | L | Hatchback FWD D4F 744 | | GCI50096 | Inner Joint | | 26 | 30 | 40 | 64 | 96 | |
| | 2014.01-2021.08 | MT | F | L/R | Hatchback FWD D4F 744 | | GCO50112 | Outer Joint | | 23 | 28 | 49 | 83.5 | 54.5 | I |
| 1.2 (54 kw) | 2012.11-2015.06 | MT | F | L/R | Hatchback FWD D4F 740;D4F 744 | Date from:2013.01 | GCO50112 | Outer Joint | | 23 | 28 | 49 | 83.5 | 54.5 | I |
| | 2012.11-2015.06 | | F | L | Hatchback FWD D4F 740;D4F 744 | | GDS50487 | Drive Shaft | | 23 | 26 | 49 | 86 | 662 | |
| | 2012.11-2015.06 | | F | R | Hatchback FWD D4F 740;D4F 744 | | GDS50488 | Drive Shaft | | 23 | 26 | 49 | 86 | 908 | |
| | 2012.11-2021.08 | 5MT | F | L | Hatchback FWD D4F 740;D4F 728;D4F 744 | | GDS50487 | Drive Shaft | | 23 | 26 | 49 | 86 | 662 | |
| | 2012.11-2021.08 | 5MT | F | R | Hatchback FWD D4F 740;D4F 728;D4F 744 | | GDS50488 | Drive Shaft | | 23 | 26 | 49 | 86 | 908 | |
| | 2012.11-2021.08 | 5MT | F | L/R | Hatchback FWD D4F 740;D4F 728;D4F 744 | | GCO50167 | Outer Joint | | 23 | 30 | 49 | 86 | 53.5 | I |
| | 2012.11-2021.08 | 5MT | F | L/R | Hatchback FWD D4F 740;D4F 728;D4F 744 | Length2:86mm | GCO50219 | Outer Joint | | 23 | 28 | 49 | 86 | 52 | I |
| | 2012.11-2021.08 | 5MT | F | L | Hatchback FWD D4F 740;D4F 728;D4F 744 | | GCI50096 | Inner Joint | | 26 | 30 | 40 | 64 | 96 | |
| | 2012.11-2021.08 | MT | F | L/R | Hatchback FWD D4F 740;D4F 728;D4F 744 | Date from:2013.01;Length2:83.5mm | GCO50112 | Outer Joint | | 23 | 28 | 49 | 83.5 | 54.5 | I |
| 1.2 (55 kw) | 2000.12-2013.04 | 5AMT | F | L | Hatchback FWD D4F706/D4F712/D4F714/D4F722/D4F728 | Date from:2002.11,Date to:2008.01 | GDS50401 | Drive Shaft | 44T | 21 | | 57 | 84 | 629 | |
| | 2000.12-2013.04 | 5AMT/5MT | F | R | Hatchback FWD D4F706/D4F712/D4F714/D4F722/D4F728 | Date to:2002.10 | GDS50162 | Drive Shaft | 26T | 21 | 23 | 52.2 | 85.5 | 723.5 | |
| | 2000.12-2013.04 | 5AMT/5MT | F | R | Hatchback FWD D4F706/D4F712/D4F714/D4F722/D4F728 | Date from:2002.11 | GDS50263 | Drive Shaft | 44T | 21 | 23 | 52.2 | 85.5 | 723.5 | |
| | 2000.12-2013.04 | 5AMT/5MT | F | R | Hatchback FWD D4F706/D4F712/D4F714/D4F722/D4F728 | Date from:2002.11 | GCO50066 | Outer Joint | 44T | 21 | 28 | 52.5 | 85 | 51 | I |
| | 2000.12-2013.04 | 5AMT/5MT | F | R | Hatchback FWD D4F706/D4F712/D4F714/D4F722/D4F728 | | GCI50008 | Inner Joint | | 23 | 30 | 36.3 | | 120.7 | |
| | 2000.12-2013.04 | 5MT | F | L | Hatchback FWD D4F706/D4F712/D4F714/D4F722/D4F728 | Date to:2002.10 | GDS50004 | Drive Shaft | 26T | 21 | | 57 | 84.5 | 625.7 | |
| | 2000.12-2013.04 | 5MT | F | L | Hatchback FWD D4F706/D4F712/D4F714/D4F722/D4F728 | Date to:2002.10 | GDS50150 | Drive Shaft | | 21 | 30 | 49.8 | 83.5 | 623 | |
| | 2000.12-2013.04 | 5MT | F | L | Hatchback FWD D4F706/D4F712/D4F714/D4F722/D4F728 | Date from:2002.11 | GDS50261 | Drive Shaft | 44T | 23 | | 57.5 | 86.5 | 630 | |
| | 2000.12-2013.04 | 5MT | F | L | Hatchback FWD D4F706/D4F712/D4F714/D4F722/D4F728 | Date from:2002.11;Inner teeth of wheel side:22 | GDS50401 | Drive Shaft | 44T | 21 | | 57 | 84 | 629 | |
| | 2000.12-2013.04 | 5MT | F | R | Hatchback FWD D4F706/D4F712/D4F714/D4F722/D4F728 | Date to:2002.10 | GDS50151 | Drive Shaft | | 21 | 23 | 49.8 | 83.5 | 715 | |
| | 2000.12-2013.04 | 5MT | F | R | Hatchback FWD D4F706/D4F712/D4F714/D4F722/D4F728 | Date to:2002.10 | GCO50004 | Outer Joint | 26T | 21 | 30 | 52.2 | 85.5 | 59 | I |
| | 2000.12-2013.04 | AT | F | L | Hatchback FWD D4F706/D4F712/D4F714/D4F722/D4F728 | | GDS99169 | Drive Shaft | 26T | 21 | 26 | 52.2 | 85.5 | 621 | |
| | 2000.12-2013.04 | AT | F | R | Hatchback FWD D4F706/D4F712/D4F714/D4F722/D4F728 | | GDS50485 | Drive Shaft | 44T | 21 | 23 | 52.2 | 85.5 | 733 | |
| | 2000.12-2013.04 | AT | F | R | Hatchback FWD D4F706/D4F712/D4F714/D4F722/D4F728 | | GDS50486 | Drive Shaft | 26T | 21 | 23 | 52.2 | 85.5 | 733 | |
| | 2000.12-2013.04 | MT | F | L | Hatchback FWD D4F706/D4F712/D4F714/D4F722/D4F728 | | GDS50177 | Drive Shaft | | 21 | | 57 | 84.5 | 625.7 | |
| | 2000.12-2013.04 | MT | F | R | Hatchback FWD D4F706/D4F712/D4F714/D4F722/D4F728 | Date to:2003.01 | GDS50125 | Drive Shaft | | 21 | 23 | 57 | 84.5 | 713.5 | |
| | 2000.12-2013.04 | MT | F | R | Hatchback FWD D4F706/D4F712/D4F714/D4F722/D4F728 | | GDS50146 | Drive Shaft | | 21 | 23 | 57 | 84.5 | 732.5 | |
| | 2000.12-2013.04 | MT/Semi-AT | F | R | Hatchback FWD D4F706/D4F712/D4F714/D4F722/D4F728 | | GDS50250 | Drive Shaft | 26T | 21 | 23 | 57 | 84.5 | 732.5 | |
| | 2000.12-2013.04 | MT/Semi-AT | F | R | Hatchback FWD D4F706/D4F712/D4F714/D4F722/D4F728 | | GDS99072 | Drive Shaft | 44T | 21 | 23 | 57 | 84.5 | 720 | |
| | 2005.06-2014.12 | 5MT | F | L | Hatchback FWD D4F 764, D4F 740, D4F 706 | | GDS50369 | Drive Shaft | | 23 | 26 | 49 | 83.5 | 651 | |
| | 2005.06-2014.12 | 5MT | F | R | Hatchback FWD D4F 764, D4F 740, D4F 706 | | GDS50372 | Drive Shaft | | 23 | 26 | 49 | 83.5 | 890 | |
| | 2005.06-2014.12 | 5MT | F | L/R | Hatchback FWD D4F 764, D4F 740, D4F 706 | | GCO50112 | Outer Joint | | 23 | 28 | 49 | 83.5 | 54.5 | I |
| | 2008.07-2012.12 | 5MT | F | L | Hatchback FWD D4F 742 | | GDS50369 | Drive Shaft | | 23 | 26 | 49 | 83.5 | 651 | |
| | 2008.07-2012.12 | 5MT | F | R | Hatchback FWD D4F 742 | | GDS50372 | Drive Shaft | | 23 | 26 | 49 | 83.5 | 890 | |
| | 2008.07-2012.12 | 5MT | F | L/R | Hatchback FWD D4F 742 | | GCO50112 | Outer Joint | | 23 | 28 | 49 | 83.5 | 54.5 | I |
| | 2008.07-2014.12 | 5MT | F | L | Hatchback FWD D4F 740 | | GDS50369 | Drive Shaft | | 23 | 26 | 49 | 83.5 | 651 | |
| | 2008.07-2014.12 | 5MT | F | R | Hatchback FWD D4F 740 | | GDS50372 | Drive Shaft | | 23 | 26 | 49 | 83.5 | 890 | |
| | 2008.07-2014.12 | MT | F | L/R | Hatchback FWD D4F 740 | | GCO50112 | Outer Joint | | 23 | 28 | 49 | 83.5 | 54.5 | I |
| | 2015.06-2021.08 | 5MT | F | L | Hatchback FWD D4F 740 | | GDS50487 | Drive Shaft | | 23 | 26 | 49 | 86 | 662 | |
| | 2015.06-2021.08 | 5MT | F | R | Hatchback FWD D4F 740 | | GDS50488 | Drive Shaft | | 23 | 26 | 49 | 86 | 908 | |
| | 2015.06-2021.08 | 5MT | F | L/R | Hatchback FWD D4F 740 | | GCO50167 | Outer Joint | | 23 | 30 | 49 | 86 | 53.5 | I |
| | 2015.06-2021.08 | 5MT | F | L/R | Hatchback FWD D4F 740 | Length2:86mm | GCO50219 | Outer Joint | | 23 | 28 | 49 | 86 | 52 | I |
| | 2015.06-2021.08 | 5MT | F | L | Hatchback FWD D4F 740 | | GCI50096 | Inner Joint | | 26 | 30 | 40 | 64 | 96 | |
| | 2015.06-2021.08 | MT | F | L/R | Hatchback FWD D4F 740 | Date from:2016.01;Length2:83.5mm | GCO50112 | Outer Joint | | 23 | 28 | 49 | 83.5 | 54.5 | I |
| 1.2 (57 kw) | 2005.10-2012.12 | 5MT | F | L | Hatchback FWD D4F 764 | | GDS50353 | Drive Shaft | | 23 | 26 | 49 | 86 | 649 | |
| | 2005.10-2012.12 | 5MT | F | R | Hatchback FWD D4F 764 | | GDS50573 | Drive Shaft | | 23 | 26 | 49 | 86 | 891 | |
| | 2005.10-2012.12 | Semi-AT | F | L | Hatchback FWD D4F 764 | | GDS50369 | Drive Shaft | | 23 | 26 | 49 | 83.5 | 651 | |
| | 2005.10-2012.12 | Semi-AT | F | R | Hatchback FWD D4F 764 | | GDS50372 | Drive Shaft | | 23 | 26 | 49 | 83.5 | 890 | |
| | 2005.10-2012.12 | | F | | Hatchback FWD D4F 764 | | GCO50112 | Outer Joint | | 23 | 28 | 49 | 83.5 | 54.5 | I |
| 1.2 (58 kw) | 2005.06-2014.12 | SAT/5MT | F | L | Hatchback FWD D4F 764 | | GDS50369 | Drive Shaft | | 23 | 26 | 49 | 83.5 | 651 | |
| | 2005.06-2014.12 | SAT/5MT | F | R | Hatchback FWD D4F 764 | | GDS50372 | Drive Shaft | | 23 | 26 | 49 | 83.5 | 890 | |
| | 2005.06-2014.12 | SAT/5MT | F | L/R | Hatchback FWD D4F 764 | | GCO50112 | Outer Joint | | 23 | 28 | 49 | 83.5 | 54.5 | I |
| 1.2 (74 kw) | 2007.05-2014.12 | 5MT | F | L | Hatchback FWD D4F 784 | Inner teeth of wheel side:30 | GDS50353 | Drive Shaft | | 23 | 26 | 49 | 86 | 649 | |
| | 2007.05-2014.12 | 5MT | F | L | Hatchback FWD D4F 784 | Inner teeth of wheel side:28 | GDS50369 | Drive Shaft | | 23 | 26 | 49 | 83.5 | 651 | |
| | 2007.05-2014.12 | 5MT | F | R | Hatchback FWD D4F 784 | | GDS50372 | Drive Shaft | | 23 | 26 | 49 | 83.5 | 890 | |
| | 2007.05-2014.12 | 5MT | F | L/R | Hatchback FWD D4F 784 | | GCO50112 | Outer Joint | | 23 | 28 | 49 | 83.5 | 54.5 | I |
| | 2007.05-2014.12 | 5MT | F | L | Hatchback FWD D4F 784 | | GCI50048 | Inner Joint | | 26 | 30 | 40 | 64 | 121 | |
| 1.2 (76 kw) | 2010.09-2014.12 | 5MT | F | L | Hatchback FWD D4F 786 | Inner teeth of wheel side:30 | GDS50353 | Drive Shaft | | 23 | 26 | 49 | 86 | 649 | |
| | 2010.09-2014.12 | 5MT | F | L | Hatchback FWD D4F 786 | Inner teeth of wheel side:28 | GDS50369 | Drive Shaft | | 23 | 26 | 49 | 83.5 | 651 | |
| | 2010.09-2014.12 | 5MT | F | R | Hatchback FWD D4F 786 | | GDS50372 | Drive Shaft | | 23 | 26 | 49 | 83.5 | 890 | |

| | YEAR | TRANSM. | F/R | L/R | BODY STYLE & DRIVE TYPE & ENGINE | REMARKS | G-AP Ref. | PRODUCT | ABS | Technical Specifications A | B | C | H | L | P |
|---|---|---|---|---|---|---|---|---|---|---|---|---|---|---|---|
| **RENAULT** | | | | | | | | | | | | | | | |
| **Clio** | | | | | | | | | | | | | | | |
| 1.2 (76 kw) | 2010.09-2014.12 | 5MT | F | L/R | Hatchback FWD D4F 786 | | GCO50112 | Outer Joint | | 23 | 28 | 49 | 83.5 | 54.5 | I |
| | 2010.09-2014.12 | 5MT | F | L | Hatchback FWD D4F 786 | | GCI50048 | Inner Joint | | 26 | 30 | 40 | 64 | 121 | |
| 1.2 (87 kw) | 2016.01-2021.08 | 6AT | F | L | Hatchback FWD H5F 408;H5F 412 | | GDS82284 | Drive Shaft | | 23 | 34 | 49 | 85.5 | 610 | |
| | 2016.01-2021.08 | 6AT | F | R | Hatchback FWD H5F 408;H5F 412 | | GDS84449 | Drive Shaft | | 23 | 34 | 49 | 85.5 | 959 | |
| | 2016.01-2021.08 | 6AT | F | L | Hatchback FWD H5F 408;H5F 412 | | GCI50140 | Inner Joint | | 34 | 33 | 40 | 54 | 106 | |
| | 2016.01-2021.08 | 6AT | F | R | Hatchback FWD H5F 408;H5F 412 | | GCI50136 | Inner Joint | | 34 | 33 | 40 | 396.5 | 89.5 | |
| | 2016.01-2021.08 | 6AT/6MT | F | L/R | Hatchback FWD H5F 408;H5F 412 | 8 balls | GCO81927 | Outer Joint | | 23 | 33 | 49 | 85.5 | 58.5 | I |
| | 2016.01-2021.08 | 6MT | F | L | Hatchback FWD H5F 408;H5F 412 | | GDS83829 | Drive Shaft | | 23 | 26 | 49 | 85.5 | 661 | |
| | 2016.01-2021.08 | 6MT | F | R | Hatchback FWD H5F 408;H5F 412 | | GDS83830 | Drive Shaft | | 23 | 26 | 49 | 85.5 | 910 | |
| | 2016.01-2021.08 | 6MT | F | L | Hatchback FWD H5F 408;H5F 412 | | GCI82309 | Inner Joint | | 26 | 33 | 40 | 64 | 106 | |
| | 2016.01-2021.08 | 6MT | F | R | Hatchback FWD H5F 408;H5F 412 | | GCI82308 | Inner Joint | | 26 | 33 | 33 | 346 | 90 | |
| 1.2 (88 kw) | 2013.03-2021.08 | 6AT | F | L | Hatchback FWD H5F 403 | | GDS82284 | Drive Shaft | | 23 | 34 | 49 | 85.5 | 610 | |
| | 2013.03-2021.08 | 6AT | F | R | Hatchback FWD H5F 403 | | GDS84449 | Drive Shaft | | 23 | 34 | 49 | 85.5 | 959 | |
| | 2013.03-2021.08 | 6AT | F | L/R | Hatchback FWD H5F 403 | 8 balls | GCO81927 | Outer Joint | | 23 | 33 | 49 | 85.5 | 58.5 | I |
| | 2013.03-2021.08 | 6AT | F | L | Hatchback FWD H5F 403 | | GCI50140 | Inner Joint | | 34 | 33 | 40 | 54 | 106 | |
| | 2013.03-2021.08 | 6AT | F | R | Hatchback FWD H5F 403 | | GCI50136 | Inner Joint | | 34 | 33 | 40 | 396.5 | 89.5 | |
| 1.3 (96 kw) | 2019.06- | 7AT | F | L | Hatchback FWD H5H 450;H5H 470 | | GDS84008 | Drive Shaft | | 25 | 27 | 53 | 88.5 | 595 | |
| | 2019.06- | 7AT | F | R | Hatchback FWD H5H 450;H5H 470 | | GDS84009 | Drive Shaft | | 25 | 27 | 53 | 88.5 | 956 | |
| | 2019.06- | 7AT | F | L/R | Hatchback FWD H5H 450;H5H 470 | | GCO82552 | Outer Joint | | 25 | 33 | 53 | 88.5 | 58 | I |
| | 2019.06- | 7AT | F | L | Hatchback FWD H5H 450;H5H 470 | | GCI82387 | Inner Joint | | 27 | 33 | 40 | 65 | 109 | |
| | 2019.06- | 7AT | F | R | Hatchback FWD H5H 450;H5H 470 | | GCI82386 | Inner Joint | | 27 | 33 | 40 | 400.5 | 89.5 | |
| 1.4 (55 kw) | 1991.01-1998.12 | MT | F | L | Hatchback FWD E7J754/E7J756/E7J757 | | GDS50116 | Drive Shaft | | 21 | | 49.8 | 83.5 | 610 | |
| | 1998.03-2006.07 | 4AT/5MT | F | L | Hatchback FWD E7J634/E7J635/E7J780/K7J700 | hollow shaft;Trans. side without housing | GDS50150 | Drive Shaft | | 21 | 30 | 49.8 | 83.5 | 623 | |
| | 1998.03-2006.07 | 4AT/5MT | F | R | Hatchback FWD E7J634/E7J635/E7J780/K7J700 | For Engine Code:E7J634/E7J780 | GDS50017 | Drive Shaft | 26T | 21 | 23 | 51.5 | 83 | 715 | |
| | 1998.03-2006.07 | 5MT | F | L | Hatchback FWD E7J634/E7J635/E7J780/K7J700 | Inner teeth of wheel side:30;Trans. side without housing | GDS50004 | Drive Shaft | 26T | 21 | | 57 | 84.5 | 625.7 | |
| | 1998.03-2006.07 | AT | F | L | Hatchback FWD E7J634/E7J635/E7J780/K7J700 | Date to:2002.10 | GDS50579 | Drive Shaft | 26T | 21 | 26 | 52.2 | 85.5 | 613 | |
| | 1998.03-2006.07 | AT | F | R | Hatchback FWD E7J634/E7J635/E7J780/K7J700 | | GDS50588 | Drive Shaft | 26T | 21 | 23 | 57 | 84 | 739 | |
| | 1998.03-2006.07 | AT/MT | F | L/R | Hatchback FWD E7J634/E7J635/E7J780/K7J700 | Date to:2003.12 | GCO50004 | Outer Joint | 26T | 21 | 30 | 52.2 | 85.5 | 59 | I |
| | 1998.03-2006.07 | MT | F | L | Hatchback FWD E7J634/E7J635/E7J780/K7J700 | For Engine code:E7J634/E7J780/K7J700;Inner teeth of wheel side:22 | GDS50045 | Drive Shaft | 26T | 21 | 30 | 51.5 | 83 | 634 | |
| | 1998.03-2006.07 | MT | F | L | Hatchback FWD E7J634/E7J635/E7J780/K7J700 | solid shaft | GDS50177 | Drive Shaft | | 21 | | 57 | 84.5 | 625.7 | |
| | 1998.03-2006.07 | MT | F | R | Hatchback FWD E7J634/E7J635/E7J780/K7J700 | solid shaft;Inner teeth of wheel side:30 | GDS50125 | Drive Shaft | | 21 | 23 | 57 | 84.5 | 713.5 | |
| | 1998.03-2006.07 | MT | F | R | Hatchback FWD E7J634/E7J635/E7J780/K7J700 | solid shaft;Inner teeth of wheel side:30 | GDS50146 | Drive Shaft | | 21 | 23 | 57 | 84.5 | 732.5 | |
| | 1998.03-2006.07 | MT | F | R | Hatchback FWD E7J634/E7J635/E7J780/K7J700 | For Engine code:E7J634/E7J780/K7J700;hollow shaft | GDS50151 | Drive Shaft | | 21 | 23 | 49.8 | 83.5 | 715 | |
| | 1998.03-2006.07 | MT | F | R | Hatchback FWD E7J634/E7J635/E7J780/K7J700 | | GDS50250 | Drive Shaft | 26T | 21 | 23 | 57 | 84.5 | 732.5 | |
| | 1998.03-2006.07 | MT | F | R | Hatchback FWD E7J634/E7J635/E7J780/K7J700 | Groove Type:Outer | GDS50336 | Drive Shaft | 26T | 21 | 23 | 57 | 84 | 727 | |
| | 1998.03-2006.07 | MT | F | R | Hatchback FWD E7J634/E7J635/E7J780/K7J700 | Trans. code:JB1/3;Groove Type:Inner | GDS50395 | Drive Shaft | 26T | 21 | 23 | 51.5 | 83 | 728 | |
| | 1998.03-2006.07 | | F | R | Hatchback FWD E7J634/E7J635/E7J780/K7J700 | For Engine code:K7J700 | GDS50162 | Drive Shaft | 26T | 21 | 23 | 52.2 | 85.5 | 723.5 | |
| | 1998.03-2006.07 | | F | R | Hatchback FWD E7J634/E7J635/E7J780/K7J700 | | GCI50008 | Inner Joint | | 23 | 30 | 36.3 | | 120.7 | |
| 1.4 (57 kw) | 1990.05-1998.02 | 3AT | F | R | Hatchback FWD E6J712/E6J713/E6J760 | | GDS50022 | Drive Shaft | | 21 | 23 | 46.3 | 84 | 706 | |
| | 1990.05-1998.02 | MT | F | L | Hatchback FWD E6J712/E6J713/E6J760 | Trans. code:JB0/1;Inner teeth of wheel side:20 | GDS50015 | Drive Shaft | | 21 | 30 | 46.3 | 81.5 | 612.5 | |
| | 1990.05-1998.02 | MT | F | L | Hatchback FWD E6J712/E6J713/E6J760 | Inner teeth of wheel side:30 | GDS50116 | Drive Shaft | | 21 | | 49.8 | 83.5 | 610 | |
| | 1990.05-1998.02 | MT | F | R | Hatchback FWD E6J712/E6J713/E6J760 | Trans. code:JB0/1;Inner teeth of wheel side:20 | GDS50014 | Drive Shaft | | 21 | 23 | 46.3 | 81.5 | 707 | |
| | 1990.05-1998.02 | MT | F | R | Hatchback FWD E6J712/E6J713/E6J760 | Trans. code:JB0/1;Inner teeth of wheel side:30 | GDS50117 | Drive Shaft | | 21 | 23 | 49.8 | 83.5 | 698.5 | |
| | 1990.05-1998.02 | MT | F | R | Hatchback FWD E6J712/E6J713/E6J760 | Trans. code:JB0/1;Inner teeth of wheel side:22 | GDS50205 | Drive Shaft | | 21 | 23 | 51 | 85 | 703 | |
| | 1990.05-1998.02 | MT | F | L/R | Hatchback FWD E6J712/E6J713/E6J760 | | GCO50008 | Outer Joint | | 21 | 25 | 56.2 | 83.5 | 58 | O |
| 1.4 (58 kw) | 1991.01-1998.09 | 3AT | F | R | Hatchback FWD E7J718/E7J719 | | GDS50022 | Drive Shaft | | 21 | 23 | 46.3 | 84 | 706 | |
| | 1991.01-1998.09 | MT | F | L | Hatchback FWD E7J718/E7J719 | Trans. code:JB0/1;Inner teeth of wheel side:20 | GDS50015 | Drive Shaft | | 21 | 30 | 46.3 | 81.5 | 612.5 | |
| | 1991.01-1998.09 | MT | F | R | Hatchback FWD E7J718/E7J719 | Trans. code:JB0/1;Inner teeth of wheel side:20 | GDS50014 | Drive Shaft | | 21 | 23 | 46.3 | 81.5 | 707 | |
| | 1991.01-1998.09 | MT | F | R | Hatchback FWD E7J718/E7J719 | Trans. code:JB0/1;Inner teeth of wheel side:30 | GDS50117 | Drive Shaft | | 21 | 23 | 49.8 | 83.5 | 698.5 | |
| | 1991.01-1998.09 | MT | F | R | Hatchback FWD E7J718/E7J719 | Trans. code:JB0/1;Inner teeth of wheel side:22 | GDS50205 | Drive Shaft | | 21 | 23 | 51 | 85 | 703 | |
| | 1991.01-1998.09 | MT | F | L/R | Hatchback FWD E7J718/E7J719 | | GCO50008 | Outer Joint | | 21 | 25 | 56.2 | 83.5 | 58 | O |
| 1.4 (59 kw) | 1990.05-1998.02 | 3AT | F | R | Hatchback FWD E7J710/E7J711 | Date To:1998.02 | GDS50022 | Drive Shaft | | 21 | 23 | 46.3 | 84 | 706 | |
| | 1990.05-1998.02 | MT | F | L | Hatchback FWD E7J710/E7J711 | Date To:1998.02 | GDS50015 | Drive Shaft | | 21 | 30 | 46.3 | 81.5 | 612.5 | |
| | 1990.05-1998.02 | MT | F | L | Hatchback FWD E7J710/E7J711 | | GDS50116 | Drive Shaft | | 21 | | 49.8 | 83.5 | 610 | |
| | 1990.05-1998.02 | MT | F | R | Hatchback FWD E7J710/E7J711 | Inner teeth of wheel side:20 | GDS50014 | Drive Shaft | | 21 | 23 | 46.3 | 81.5 | 707 | |
| | 1990.05-1998.02 | MT | F | R | Hatchback FWD E7J710/E7J711 | Inner teeth of wheel side:30 | GDS50117 | Drive Shaft | | 21 | 23 | 49.8 | 83.5 | 698.5 | |
| | 1990.05-1998.02 | MT | F | R | Hatchback FWD E7J710/E7J711 | Inner teeth of wheel side:22 | GDS50205 | Drive Shaft | | 21 | 23 | 51 | 85 | 703 | |
| | 1990.05-1998.02 | MT | F | L/R | Hatchback FWD E7J710/E7J711 | Date to:1998.02 | GCO50008 | Outer Joint | | 21 | 25 | 56.2 | 83.5 | 58 | O |
| 1.4 (70 kw) | 1999.10-2004.10 | AT | F | L | Hatchback FWD K4J712/K4J713 | Date to:2002.10 | GDS50579 | Drive Shaft | 26T | 21 | 26 | 52.2 | 85.5 | 613 | |
| | 1999.10-2004.10 | AT | F | L | Hatchback FWD K4J712/K4J713 | | GDS99169 | Drive Shaft | 26T | 21 | 26 | 52.2 | 85.5 | 621 | |
| | 1999.10-2004.10 | AT | F | R | Hatchback FWD K4J712/K4J713 | | GDS50485 | Drive Shaft | 44T | 21 | 23 | 52.2 | 85.5 | 733 | |
| | 1999.10-2004.10 | AT | F | R | Hatchback FWD K4J712/K4J713 | Inner teeth of wheel side:23 | GDS50486 | Drive Shaft | 26T | 21 | 23 | 52.2 | 85.5 | 733 | |
| | 1999.10-2004.10 | AT | F | R | Hatchback FWD K4J712/K4J713 | Inner teeth of wheel side:22 | GDS50588 | Drive Shaft | 26T | 21 | 23 | 57 | 84 | 739 | |
| | 1999.10-2004.10 | AT/MT | F | L/R | Hatchback FWD K4J712/K4J713 | | GCO50004 | Outer Joint | 26T | 21 | 30 | 52.2 | 85.5 | 59 | I |
| | 1999.10-2004.10 | MT | F | L | Hatchback FWD K4J712/K4J713 | Date to:2002.10 | GDS50004 | Drive Shaft | 26T | 21 | | 57 | 84.5 | 625.7 | |

| | YEAR | TRANSM. | F/R | L/R | BODY STYLE & DRIVE TYPE & ENGINE | REMARKS | G-AP Ref. | PRODUCT | ABS | Technical Specifications A | B | C | H | L | P |
|---|---|---|---|---|---|---|---|---|---|---|---|---|---|---|---|
| **RENAULT** | | | | | | | | | | | | | | | |
| **Clio** | | | | | | | | | | | | | | | |
| 1.4 (70 kw) | 1999.10-2004.10 | MT | F | L | Hatchback FWD K4J712/K4J713 | For Engine code:E7J634/E7J780/K7J700 | GDS50045 | Drive Shaft | 26T | 21 | 30 | 51.5 | 83 | 634 | |
| | 1999.10-2004.10 | MT | F | L | Hatchback FWD K4J712/K4J713 | | GDS50150 | Drive Shaft | | 21 | 30 | 49.8 | 83.5 | 623 | |
| | 1999.10-2004.10 | MT | F | L | Hatchback FWD K4J712/K4J713 | | GDS50177 | Drive Shaft | | 21 | | 57 | 84.5 | 625.7 | |
| | 1999.10-2004.10 | MT | F | L | Hatchback FWD K4J712/K4J713 | Outer teeth of wheel side:23;Date from:2002.11 | GDS50261 | Drive Shaft | 44T | 23 | | 57.5 | 86.5 | 630 | |
| | 1999.10-2004.10 | MT | F | L | Hatchback FWD K4J712/K4J713 | Outer teeth of wheel side:21;Date from:2002.11 | GDS50401 | Drive Shaft | 44T | 21 | | 57 | 84 | 629 | |
| | 1999.10-2004.10 | MT | F | R | Hatchback FWD K4J712/K4J713 | Trans. code:JB1/3;inner teeth of transm. side:30 | GDS50125 | Drive Shaft | | 21 | 23 | 57 | 84.5 | 713.5 | |
| | 1999.10-2004.10 | MT | F | R | Hatchback FWD K4J712/K4J713 | | GDS50146 | Drive Shaft | | 21 | 23 | 57 | 84.5 | 732.5 | |
| | 1999.10-2004.10 | MT | F | R | Hatchback FWD K4J712/K4J713 | inner teeth of transm. side:22 | GDS50151 | Drive Shaft | | 21 | 23 | 49.8 | 83.5 | 715 | |
| | 1999.10-2004.10 | MT | F | R | Hatchback FWD K4J712/K4J713 | Date to:2002.10;inner teeth of wheel side:30 | GDS50162 | Drive Shaft | 26T | 21 | 23 | 52.2 | 85.5 | 723.5 | |
| | 1999.10-2004.10 | MT | F | R | Hatchback FWD K4J712/K4J713 | Date from:2002.11 | GDS50263 | Drive Shaft | 44T | 21 | 23 | 52.2 | 85.5 | 723.5 | |
| | 1999.10-2004.10 | MT | F | R | Hatchback FWD K4J712/K4J713 | Trans. code:JB1/3;Inner teeth of wheel side:22 | GDS50395 | Drive Shaft | 26T | 21 | 23 | 51.5 | 83 | 728 | |
| | 1999.10-2004.10 | MT | F | R | Hatchback FWD K4J712/K4J713 | | GDS99072 | Drive Shaft | 44T | 21 | 23 | 57 | 84.5 | 720 | |
| | 1999.10-2004.10 | MT | F | R | Hatchback FWD K4J712/K4J713 | Date from:2002.11 | GCO50066 | Outer Joint | 44T | 21 | 28 | 52.5 | 85 | 51 | I |
| | 1999.10-2004.10 | MT | F | R | Hatchback FWD K4J712/K4J713 | Date from:2002.11 | GCI50008 | Inner Joint | | 23 | 30 | 36.3 | | 120.7 | |
| 1.4 (72 kw) | 2000.02-2008.07 | AT | F | L | Hatchback FWD K4J710/K4J711/K4J712/K4J713/K4J715 | | GDS50579 | Drive Shaft | 26T | 21 | 26 | 52.2 | 85.5 | 613 | |
| | 2000.02-2008.07 | AT | F | L | Hatchback FWD K4J710/K4J711/K4J712/K4J713/K4J715 | | GDS99169 | Drive Shaft | 26T | 21 | 26 | 52.2 | 85.5 | 621 | |
| | 2000.02-2008.07 | AT | F | R | Hatchback FWD K4J710/K4J711/K4J712/K4J713/K4J715 | | GDS50485 | Drive Shaft | 44T | 21 | 23 | 52.2 | 85.5 | 733 | |
| | 2000.02-2008.07 | AT | F | R | Hatchback FWD K4J710/K4J711/K4J712/K4J713/K4J715 | | GDS50486 | Drive Shaft | 26T | 21 | 23 | 52.2 | 85.5 | 733 | |
| | 2000.02-2008.07 | AT | F | R | Hatchback FWD K4J710/K4J711/K4J712/K4J713/K4J715 | For Engine code:K4J713 | GDS50588 | Drive Shaft | 26T | 21 | 23 | 57 | 84 | 739 | |
| | 2000.02-2008.07 | AT | F | L/R | Hatchback FWD K4J710/K4J711/K4J712/K4J713/K4J715 | | GCO50004 | Outer Joint | 26T | 21 | 30 | 52.2 | 85.5 | 59 | I |
| | 2000.02-2008.07 | MT | F | L | Hatchback FWD K4J710/K4J711/K4J712/K4J713/K4J715 | Date to:2003.12 | GDS50004 | Drive Shaft | 26T | 21 | | 57 | 84.5 | 625.7 | |
| | 2000.02-2008.07 | MT | F | L | Hatchback FWD K4J710/K4J711/K4J712/K4J713/K4J715 | Engine code:K4J712/K4J715 | GDS50045 | Drive Shaft | 26T | 21 | 30 | 51.5 | 83 | 634 | |
| | 2000.02-2008.07 | MT | F | L | Hatchback FWD K4J710/K4J711/K4J712/K4J713/K4J715 | Date to:2002.10;Engine code:K4J712 | GDS50150 | Drive Shaft | | 21 | 30 | 49.8 | 83.5 | 623 | |
| | 2000.02-2008.07 | MT | F | L | Hatchback FWD K4J710/K4J711/K4J712/K4J713/K4J715 | | GDS50177 | Drive Shaft | | 21 | | 57 | 84.5 | 625.7 | |
| | 2000.02-2008.07 | MT | F | L | Hatchback FWD K4J710/K4J711/K4J712/K4J713/K4J715 | Date From:2002.11;Engine code:K4J712 | GDS50261 | Drive Shaft | 44T | 23 | | 57.5 | 86.5 | 630 | |
| | 2000.02-2008.07 | MT | F | L | Hatchback FWD K4J710/K4J711/K4J712/K4J713/K4J715 | Date From:2002.11;Engine code:K4J712;Inner teeth of wheel side:22 | GDS50401 | Drive Shaft | 44T | 21 | | 57 | 84 | 629 | |
| | 2000.02-2008.07 | MT | F | R | Hatchback FWD K4J710/K4J711/K4J712/K4J713/K4J715 | Date To:2003.12 | GDS50125 | Drive Shaft | | 21 | 23 | 57 | 84.5 | 713.5 | |
| | 2000.02-2008.07 | MT | F | R | Hatchback FWD K4J710/K4J711/K4J712/K4J713/K4J715 | | GDS50146 | Drive Shaft | | 21 | 23 | 57 | 84.5 | 732.5 | |
| | 2000.02-2008.07 | MT | F | R | Hatchback FWD K4J710/K4J711/K4J712/K4J713/K4J715 | Date to:2002.10;;For Engine code:K4J 712 | GDS50151 | Drive Shaft | | 21 | 23 | 49.8 | 83.5 | 715 | |
| | 2000.02-2008.07 | MT | F | R | Hatchback FWD K4J710/K4J711/K4J712/K4J713/K4J715 | Date to:2002.10;;For Engine code:K4J 712;inner teeth of wheel side:30 | GDS50162 | Drive Shaft | 26T | 21 | 23 | 52.2 | 85.5 | 723.5 | |
| | 2000.02-2008.07 | MT | F | R | Hatchback FWD K4J710/K4J711/K4J712/K4J713/K4J715 | For Engine code:K4J715/K4J712 | GDS50263 | Drive Shaft | 44T | 21 | 23 | 52.2 | 85.5 | 723.5 | |
| | 2000.02-2008.07 | MT | F | R | Hatchback FWD K4J710/K4J711/K4J712/K4J713/K4J715 | | GDS99072 | Drive Shaft | 44T | 21 | 23 | 57 | 84.5 | 720 | |
| | 2000.02-2008.07 | | F | R | Hatchback FWD K4J710/K4J711/K4J712/K4J713/K4J715 | Date To:2002.10 | GCI50008 | Inner Joint | | 23 | 30 | 36.3 | | 120.7 | |
| | 2005.06-2012.12 | 5MT | F | R | Hatchback FWD K4J 780 | Date from:2011.02 | GDS50625 | Drive Shaft | | 23 | 26 | 49 | 83.5 | 893 | |
| | 2005.06-2012.12 | 5MT | F | L/R | Hatchback FWD K4J 780 | Date from:2011.02 | GCO50168 | Outer Joint | | 23 | 30 | 49 | 83.5 | 54.5 | I |
| | 2005.06-2012.12 | 5MT | F | L/R | Hatchback FWD K4J 780 | Date to:2011.02 | GCO99085 | Outer Joint | | 23 | 30 | 49 | 86 | 59 | I |
| | 2005.06-2012.12 | 5MT | F | R | Hatchback FWD K4J 780 | Date from:2011.02 | GCI50148 | Inner Joint | | 26 | 30 | 33 | 326 | 90 | |
| | 2005.06-2012.12 | MT | F | L | Hatchback FWD K4J 780 | 6 balls | GDS50353 | Drive Shaft | | 23 | 26 | 49 | 86 | 649 | |
| | 2005.06-2012.12 | MT | F | L | Hatchback FWD K4J 780 | Date From:2011.03;Date To:2012.12;8 balls | GDS50630 | Drive Shaft | | 23 | 26 | 49 | 83 | 653 | |
| | 2005.06-2012.12 | MT | F | R | Hatchback FWD K4J 780 | Date To:2011.01 | GDS50354 | Drive Shaft | | 23 | 26 | 49 | 86 | 897 | |
| | 2005.06-2012.12 | MT | F | L | Hatchback FWD K4J 780 | | GCO50092 | Outer Joint | | 23 | 29 | 49 | 86 | 57 | I |
| | 2005.06-2012.12 | MT | F | R | Hatchback FWD K4J 780 | Date to:2011.01 | GCI99169 | Inner Joint | | 26 | 30 | 33 | 326 | 95 | |
| 1.5 (42 kw) | 2001.06-2006.12 | MT | F | L | Hatchback FWD K9K704 | Date to:2002.10 | GDS50004 | Drive Shaft | 26T | 21 | | 57 | 84.5 | 625.7 | |
| | 2001.06-2006.12 | MT | F | L | Hatchback FWD K9K704 | | GDS50150 | Drive Shaft | | 21 | 30 | 49.8 | 83.5 | 623 | |
| | 2001.06-2006.12 | MT | F | L | Hatchback FWD K9K704 | | GDS50177 | Drive Shaft | | 21 | | 57 | 84.5 | 625.7 | |
| | 2001.06-2006.12 | MT | F | L | Hatchback FWD K9K704 | Date from:2002.11;outer teeth of wheel side:23 | GDS50261 | Drive Shaft | 44T | 23 | | 57.5 | 86.5 | 630 | |
| | 2001.06-2006.12 | MT | F | L | Hatchback FWD K9K704 | Date from:2002.11;outer teeth of wheel side:21 | GDS50401 | Drive Shaft | 44T | 21 | | 57 | 84 | 629 | |
| | 2001.06-2006.12 | MT | F | R | Hatchback FWD K9K704 | | GDS50146 | Drive Shaft | | 21 | 23 | 57 | 84.5 | 732.5 | |
| | 2001.06-2006.12 | MT | F | R | Hatchback FWD K9K704 | Date to:2002.10 | GDS50151 | Drive Shaft | | 21 | 23 | 49.8 | 83.5 | 715 | |
| | 2001.06-2006.12 | MT | F | R | Hatchback FWD K9K704 | Date to:2002.10;inner teeth of wheel side:30 | GDS50162 | Drive Shaft | 26T | 21 | 23 | 52.2 | 85.5 | 723.5 | |
| | 2001.06-2006.12 | MT | F | R | Hatchback FWD K9K704 | | GDS50250 | Drive Shaft | 26T | 21 | 23 | 57 | 84.5 | 732.5 | |
| | 2001.06-2006.12 | MT | F | R | Hatchback FWD K9K704 | Date from:2002.11 | GDS50263 | Drive Shaft | 44T | 21 | 23 | 52.2 | 85.5 | 723.5 | |
| | 2001.06-2006.12 | MT | F | R | Hatchback FWD K9K704 | | GDS99072 | Drive Shaft | 44T | 21 | 23 | 57 | 84.5 | 720 | |
| | 2001.06-2006.12 | MT | F | R | Hatchback FWD K9K704 | Date to:2002.10 | GCI50008 | Inner Joint | | 23 | 30 | 36.3 | | 120.7 | |
| | 2001.06-2006.12 | | F | L | Hatchback FWD K9K704 | Date To:2002.10 | GCO50004 | Outer Joint | 26T | 21 | 30 | 52.2 | 85.5 | 59 | I |
| 1.5 (47 kw) | 2005.06-2010.12 | MT | F | L | Hatchback FWD K9K740 | | GDS50004 | Drive Shaft | 26T | 21 | | 57 | 84.5 | 625.7 | |
| | 2005.06-2010.12 | MT | F | L | Hatchback FWD K9K740 | | GDS50177 | Drive Shaft | | 21 | | 57 | 84.5 | 625.7 | |
| | 2005.06-2010.12 | MT | F | L | Hatchback FWD K9K740 | | GDS50280 | Drive Shaft | 44T | 23 | 26 | 57.5 | 86.5 | 602 | |
| | 2005.06-2010.12 | MT | F | R | Hatchback FWD K9K740 | | GDS50146 | Drive Shaft | | 21 | 23 | 57 | 84.5 | 732.5 | |
| | 2005.06-2010.12 | MT | F | R | Hatchback FWD K9K740 | | GDS50250 | Drive Shaft | 26T | 21 | 23 | 57 | 84.5 | 732.5 | |
| | 2005.06-2010.12 | MT | F | R | Hatchback FWD K9K740 | | GDS50364 | Drive Shaft | 44T | 23 | 26 | 57.5 | 86.5 | 866 | |
| | 2005.06-2010.12 | MT | F | R | Hatchback FWD K9K740 | | GDS99072 | Drive Shaft | 44T | 21 | 23 | 57 | 84.5 | 720 | |
| | 2005.06-2010.12 | MT | F | L/R | Hatchback FWD K9K740 | | GCO50069 | Outer Joint | 44T | 23 | 30 | 57.5 | 86.5 | 58.5 | I |
| | 2005.06-2010.12 | MT | F | L | Hatchback FWD K9K740 | | GCI50048 | Inner Joint | | 26 | 30 | 40 | 64 | 121 | |
| | 2005.06-2010.12 | MT | F | R | Hatchback FWD K9K740 | | GCI99169 | Inner Joint | | 26 | 30 | 33 | 326 | 95 | |

| | YEAR | TRANSM. | F/R | L/R | BODY STYLE & DRIVE TYPE & ENGINE | REMARKS | G-AP Ref. | PRODUCT | ABS | Technical Specifications A | B | C | H | L | P |
|---|---|---|---|---|---|---|---|---|---|---|---|---|---|---|---|
| **RENAULT** | | | | | | | | | | | | | | | |
| **Clio** | | | | | | | | | | | | | | | |
| 1.5 (47 kw) | 2005.06-2012.12 | 5MT | F | L | Hatchback FWD K9K 752 | | GDS50353 | Drive Shaft | | 23 | 26 | 49 | 86 | 649 | |
| | 2005.06-2012.12 | 5MT | F | L | Hatchback FWD K9K 752 | Date from:2011.03 | GDS50630 | Drive Shaft | | 23 | 26 | 49 | 83 | 653 | |
| | 2005.06-2012.12 | 5MT | F | R | Hatchback FWD K9K 752 | | GDS50354 | Drive Shaft | | 23 | 26 | 49 | 86 | 897 | |
| | 2005.06-2012.12 | 5MT | F | R | Hatchback FWD K9K 752 | Date from:2011.02;Date to:2012.12 | GDS50625 | Drive Shaft | | 23 | 26 | 49 | 83.5 | 893 | |
| | 2005.06-2012.12 | 5MT | F | L/R | Hatchback FWD K9K 752 | Date from:2011.02 | GCO50168 | Outer Joint | | 23 | 30 | 49 | 83.5 | 54.5 | I |
| | 2005.06-2012.12 | 5MT | F | L/R | Hatchback FWD K9K 752 | Date to:2011.02 | GCO99085 | Outer Joint | | 23 | 30 | 49 | 86 | 59 | I |
| | 2005.06-2012.12 | 5MT | F | L | Hatchback FWD K9K 752 | Date from:2011.03 | GCI50134 | Inner Joint | | 26 | 30 | 40 | 64 | 96 | |
| | 2005.06-2012.12 | 5MT | F | R | Hatchback FWD K9K 752 | | GCI50148 | Inner Joint | | 26 | 30 | 33 | 326 | 90 | |
| | 2005.06-2012.12 | MT | F | R | Hatchback FWD K9K 752 | Date from:2006.11,Date to:2011.01 | GCI99169 | Inner Joint | | 26 | 30 | 33 | 326 | 95 | |
| | 2005.06-2012.12 | | F | L | Hatchback FWD K9K 752 | | GCO50092 | Outer Joint | | 23 | 29 | 49 | 86 | 57 | I |
| 1.5 (48 kw) | 2001.06-2009.07 | 5MT | F | L | Hatchback FWD K9K700/K9K704 | Date to:2002.10 | GDS50004 | Drive Shaft | 26T | 21 | | 57 | 84.5 | 625.7 | |
| | 2001.06-2009.07 | 5MT | F | L | Hatchback FWD K9K700/K9K704 | | GDS50150 | Drive Shaft | | 21 | 30 | 49.8 | 83.5 | 623 | |
| | 2001.06-2009.07 | 5MT | F | L | Hatchback FWD K9K700/K9K704 | Date from:2002.11 | GDS50261 | Drive Shaft | 44T | 23 | | 57.5 | 86.5 | 630 | |
| | 2001.06-2009.07 | 5MT | F | L | Hatchback FWD K9K700/K9K704 | Date from:2002.11;Inner teeth of wheel side:22 | GDS50401 | Drive Shaft | 44T | 21 | | 57 | 84 | 629 | |
| | 2001.06-2009.07 | 5MT | F | R | Hatchback FWD K9K700/K9K704 | | GDS50151 | Drive Shaft | | 21 | 23 | 49.8 | 83.5 | 715 | |
| | 2001.06-2009.07 | 5MT | F | R | Hatchback FWD K9K700/K9K704 | Date to:2002.10 | GDS50162 | Drive Shaft | 26T | 21 | 23 | 52.2 | 85.5 | 723.5 | |
| | 2001.06-2009.07 | 5MT | F | R | Hatchback FWD K9K700/K9K704 | Date from:2002.11;Inner teeth of wheel side:30 | GDS50263 | Drive Shaft | 44T | 21 | 23 | 52.2 | 85.5 | 723.5 | |
| | 2001.06-2009.07 | 5MT | F | L/R | Hatchback FWD K9K700/K9K704 | Date to:2002.10 | GCO50004 | Outer Joint | 26T | 21 | 30 | 52.2 | 85.5 | 59 | I |
| | 2001.06-2009.07 | 5MT | F | R | Hatchback FWD K9K700/K9K704 | Date to:2002.10 | GCI50008 | Inner Joint | | 23 | 30 | 36.3 | | 120.7 | |
| | 2001.06-2009.07 | MT | F | L | Hatchback FWD K9K700/K9K704 | | GDS50177 | Drive Shaft | | 21 | | 57 | 84.5 | 625.7 | |
| | 2001.06-2009.07 | MT | F | L | Hatchback FWD K9K700/K9K704 | Date to:2002.10,For Modelcode:BB08/CB08 | GDS50194 | Drive Shaft | 26T | 23 | | 57.5 | 86.5 | 631 | |
| | 2001.06-2009.07 | MT | F | R | Hatchback FWD K9K700/K9K704 | Date to:2003,01 | GDS50125 | Drive Shaft | | 21 | 23 | 57 | 84.5 | 713.5 | |
| | 2001.06-2009.07 | MT | F | R | Hatchback FWD K9K700/K9K704 | | GDS50146 | Drive Shaft | | 21 | 23 | 57 | 84.5 | 732.5 | |
| | 2001.06-2009.07 | MT | F | R | Hatchback FWD K9K700/K9K704 | Trans. code:JB1/3 | GDS50395 | Drive Shaft | 26T | 21 | 23 | 51.5 | 83 | 728 | |
| | 2001.06-2009.07 | MT | F | R | Hatchback FWD K9K700/K9K704 | Inner teeth of transm. side:22 | GDS99072 | Drive Shaft | 44T | 21 | 23 | 57 | 84.5 | 720 | |
| | 2005.05-2010.11 | 5MT | F | L | Hatchback FWD K9K 768;K9K 752 | | GDS50353 | Drive Shaft | | 23 | 26 | 49 | 86 | 649 | |
| | 2005.05-2010.11 | 5MT | F | R | Hatchback FWD K9K 768;K9K 752 | | GDS50354 | Drive Shaft | | 23 | 26 | 49 | 86 | 897 | |
| | 2005.05-2010.11 | 5MT | F | L/R | Hatchback FWD K9K 768;K9K 752 | Inner Teeth:29 | GCO50092 | Outer Joint | | 23 | 29 | 49 | 86 | 57 | I |
| | 2005.05-2010.11 | 5MT | F | L/R | Hatchback FWD K9K 768;K9K 752 | Inner Teeth:30 | GCO99085 | Outer Joint | | 23 | 30 | 49 | 86 | 59 | I |
| | 2005.05-2010.11 | 5MT | F | L | Hatchback FWD K9K 768;K9K 752 | | GCI50048 | Inner Joint | | 26 | 30 | 40 | 64 | 121 | |
| | 2005.05-2010.11 | 5MT | F | R | Hatchback FWD K9K 768;K9K 752 | | GCI99169 | Inner Joint | | 26 | 30 | 33 | 326 | 95 | |
| 1.5 (50 kw) | 2004.08-2012.12 | 5MT | F | L | Hatchback FWD K9K714 | With Inner Joint housing;TJ | GDS50280 | Drive Shaft | 44T | 23 | 26 | 57.5 | 86.5 | 602 | |
| | 2004.08-2012.12 | 5MT | F | R | Hatchback FWD K9K714 | TJ | GDS50364 | Drive Shaft | 44T | 23 | 26 | 57.5 | 86.5 | 866 | |
| | 2004.08-2012.12 | MT | F | L | Hatchback FWD K9K714 | With Inner Joint housing | GDS50004 | Drive Shaft | 26T | 21 | | 57 | 84.5 | 625.7 | |
| | 2004.08-2012.12 | MT | F | L | Hatchback FWD K9K714 | Without Inner Joint housing | GDS50177 | Drive Shaft | | 21 | | 57 | 84.5 | 625.7 | |
| | 2004.08-2012.12 | MT | F | L | Hatchback FWD K9K714 | Transmission ID:JH3;With Inner Joint housing | GDS50376 | Drive Shaft | | 23 | 26 | 57.5 | 86.5 | 606 | |
| | 2004.08-2012.12 | MT | F | L | Hatchback FWD K9K714 | With Inner Joint housing;DOJ | GDS50514 | Drive Shaft | 44T | 23 | 26 | 57.5 | 86.5 | 606 | |
| | 2004.08-2012.12 | MT | F | R | Hatchback FWD K9K714 | | GDS50146 | Drive Shaft | | 21 | 23 | 57 | 84.5 | 732.5 | |
| | 2004.08-2012.12 | MT | F | R | Hatchback FWD K9K714 | | GDS50250 | Drive Shaft | 26T | 21 | 23 | 57 | 84.5 | 732.5 | |
| | 2004.08-2012.12 | MT | F | R | Hatchback FWD K9K714 | DOJ | GDS50515 | Drive Shaft | 44T | 23 | 26 | 57.5 | 86.5 | 866 | |
| | 2004.08-2012.12 | MT | F | R | Hatchback FWD K9K714 | | GDS99072 | Drive Shaft | 44T | 21 | 23 | 57 | 84.5 | 720 | |
| | 2004.08-2012.12 | MT | F | L | Hatchback FWD K9K714 | Transmission ID:JH3 | GCO99087 | Outer Joint | | 23 | 30 | 57.5 | 86.5 | 58.5 | I |
| | 2004.08-2012.12 | MT | F | L/R | Hatchback FWD K9K714 | | GCO50069 | Outer Joint | 44T | 23 | 30 | 57.5 | 86.5 | 58.5 | I |
| | 2004.08-2012.12 | MT | F | L | Hatchback FWD K9K714 | | GCI50085 | Inner Joint | | 26 | 33 | 40 | 64 | 123 | |
| | 2004.08-2012.12 | MT | F | R | Hatchback FWD K9K714 | Date to:2012.12 | GCI99169 | Inner Joint | | 26 | 30 | 33 | 326 | 95 | |
| | 2005.06-2012.12 | 5MT | F | L | Hatchback FWD K9K 768;K9K 766 | 6 balls | GDS50353 | Drive Shaft | | 23 | 26 | 49 | 86 | 649 | |
| | 2005.06-2012.12 | 5MT | F | L | Hatchback FWD K9K 768;K9K 766 | Date from:2011.03;8 balls | GDS50630 | Drive Shaft | | 23 | 26 | 49 | 83 | 653 | |
| | 2005.06-2012.12 | 5MT | F | R | Hatchback FWD K9K 768;K9K 766 | | GDS50354 | Drive Shaft | | 23 | 26 | 49 | 86 | 897 | |
| | 2005.06-2012.12 | 5MT | F | R | Hatchback FWD K9K 768;K9K 766 | | GDS50625 | Drive Shaft | | 23 | 26 | 49 | 83.5 | 893 | |
| | 2005.06-2012.12 | 5MT | F | L/R | Hatchback FWD K9K 768;K9K 766 | | GCO50092 | Outer Joint | | 23 | 29 | 49 | 86 | 57 | I |
| | 2005.06-2012.12 | 5MT | F | L/R | Hatchback FWD K9K 768;K9K 766 | 6 balls | GCO50168 | Outer Joint | | 23 | 30 | 49 | 83.5 | 54.5 | I |
| | 2005.06-2012.12 | 5MT | F | L/R | Hatchback FWD K9K 768;K9K 766 | Date from:2011.03;8 balls | GCO50223 | Outer Joint | | 23 | 30 | 49 | 83 | 53.5 | I |
| | 2005.06-2012.12 | 5MT | F | L/R | Hatchback FWD K9K 768;K9K 766 | 6 balls | GCO99085 | Outer Joint | | 23 | 30 | 49 | 86 | 59 | I |
| | 2005.06-2012.12 | 5MT | F | L | Hatchback FWD K9K 768;K9K 766 | Date from:2011.03 | GCI50134 | Inner Joint | | 26 | 30 | 40 | 64 | 96 | |
| | 2005.06-2012.12 | 5MT | F | R | Hatchback FWD K9K 768;K9K 766 | | GCI50148 | Inner Joint | | 26 | 30 | 33 | 326 | 90 | |
| 1.5 (55 kw) | 2010.08-2014.12 | 5MT | F | L | Hatchback FWD K9K 770 | Date to:2011.02 | GDS50353 | Drive Shaft | | 23 | 26 | 49 | 86 | 649 | |
| | 2010.08-2014.12 | 5MT | F | L | Hatchback FWD K9K 770 | Date from:2011.03 | GDS50630 | Drive Shaft | | 23 | 26 | 49 | 83 | 653 | |
| | 2010.08-2014.12 | 5MT | F | R | Hatchback FWD K9K 770 | | GDS50354 | Drive Shaft | | 23 | 26 | 49 | 86 | 897 | |
| | 2010.08-2014.12 | 5MT | F | R | Hatchback FWD K9K 770 | | GDS50625 | Drive Shaft | | 23 | 26 | 49 | 83.5 | 893 | |
| | 2010.08-2014.12 | 5MT | F | L | Hatchback FWD K9K 770 | Date to:2011.02 | GCO50092 | Outer Joint | | 23 | 29 | 49 | 86 | 57 | I |
| | 2010.08-2014.12 | 5MT | F | L | Hatchback FWD K9K 770 | Date from:2011.03 | GCO50223 | Outer Joint | | 23 | 30 | 49 | 83 | 53.5 | I |
| | 2010.08-2014.12 | 5MT | F | L | Hatchback FWD K9K 770 | Date to:2011.02 | GCO99085 | Outer Joint | | 23 | 30 | 49 | 86 | 59 | I |
| | 2010.08-2014.12 | 5MT | F | R | Hatchback FWD K9K 770 | | GCO50168 | Outer Joint | | 23 | 30 | 49 | 83.5 | 54.5 | I |
| | 2010.08-2014.12 | 5MT | F | L | Hatchback FWD K9K 770 | Date from:2011.03 | GCI50134 | Inner Joint | | 26 | 30 | 40 | 64 | 96 | |
| | 2010.08-2014.12 | 5MT | F | R | Hatchback FWD K9K 770 | | GCI50148 | Inner Joint | | 26 | 30 | 33 | 326 | 90 | |

| | YEAR | TRANSM. | F/R | L/R | BODY STYLE & DRIVE TYPE & ENGINE | REMARKS | G-AP Ref. | PRODUCT | ABS | Technical Specifications A | B | C | H | L | P |
|---|---|---|---|---|---|---|---|---|---|---|---|---|---|---|---|
| **RENAULT** | | | | | | | | | | | | | | | |
| **Clio** | | | | | | | | | | | | | | | |
| 1.5 (55 kw) | 2012.11-2021.08 | MT | F | L | Hatchback FWD K9K 612;K9K 628;K9K 638;K9K 626 | | GDS50487 | Drive Shaft | | 23 | 26 | 49 | 86 | 662 | |
| | 2012.11-2021.08 | MT | F | R | Hatchback FWD K9K 612;K9K 628;K9K 638;K9K 626 | | GDS50489 | Drive Shaft | | 23 | 26 | 49 | 86 | 910 | |
| | 2012.11-2021.08 | MT | F | L/R | Hatchback FWD K9K 612;K9K 628;K9K 638;K9K 626 | | GCO50167 | Outer Joint | | 23 | 30 | 49 | 86 | 53.5 | I |
| | 2012.11-2021.08 | MT | F | L | Hatchback FWD K9K 612;K9K 628;K9K 638;K9K 626 | | GCI50096 | Inner Joint | | 26 | 30 | 40 | 64 | 96 | |
| 1.5 (59 kw) | 2001.06-2003.10 | MT | F | L | Hatchback FWD K9K702 | | GDS50194 | Drive Shaft | 26T | 23 | | 57.5 | 86.5 | 631 | |
| | 2001.06-2003.10 | MT | F | L | Hatchback FWD K9K702 | | GDS50394 | Drive Shaft | | 23 | | 57.5 | 86.5 | 631 | |
| | 2001.06-2003.10 | MT | F | R | Hatchback FWD K9K702 | | GDS50193 | Drive Shaft | 26T | 23 | 23 | 57.5 | 86.5 | 724 | |
| | 2001.06-2003.10 | MT | F | L/R | Hatchback FWD K9K702 | Date from:2003.01 | GCO50069 | Outer Joint | 44T | 23 | 30 | 57.5 | 86.5 | 58.5 | I |
| | 2001.06-2003.10 | MT | F | R | Hatchback FWD K9K702 | | GCI50008 | Inner Joint | | 23 | 30 | 36.3 | | 120.7 | |
| | 2001.06-2003.10 | | F | L | Hatchback FWD K9K702 | Date To:2002.10 | GCO50106 | Outer Joint | 26T | 23 | 30 | 57.5 | 86.5 | 58.5 | I |
| 1.5 (60 kw) | 2001.06-2007.10 | 5MT | F | R | Hatchback FWD K9K702 | | GDS50193 | Drive Shaft | 26T | 23 | 23 | 57.5 | 86.5 | 724 | |
| | 2001.06-2007.10 | 5MT | F | R | Hatchback FWD K9K702 | | GDS50260 | Drive Shaft | 44T | 23 | 23 | 57.5 | 86.5 | 724 | |
| | 2001.06-2007.10 | MT | F | L | Hatchback FWD K9K702 | Date to:2003.12 | GDS50194 | Drive Shaft | 26T | 23 | | 57.5 | 86.5 | 631 | |
| | 2001.06-2007.10 | MT | F | L | Hatchback FWD K9K702 | Date from:2002.11 | GDS50261 | Drive Shaft | 44T | 23 | | 57.5 | 86.5 | 630 | |
| | 2001.06-2007.10 | MT | F | L | Hatchback FWD K9K702 | | GDS50394 | Drive Shaft | | 23 | | 57.5 | 86.5 | 631 | |
| | 2001.06-2007.10 | MT | F | L | Hatchback FWD K9K702 | Date from:2002.11 | GDS50401 | Drive Shaft | 44T | 21 | | 57 | 84 | 629 | |
| | 2001.06-2007.10 | MT | F | L/R | Hatchback FWD K9K702 | Date from:2003.01 | GCO50069 | Outer Joint | 44T | 23 | 30 | 57.5 | 86.5 | 58.5 | I |
| | 2001.06-2007.10 | | F | R | Hatchback FWD K9K702 | Date To:2005.04 | GDS50462 | Drive Shaft | | 23 | 23 | 57.5 | 86.5 | 724 | |
| | 2001.06-2007.10 | | F | L | Hatchback FWD K9K702 | Date To:2002.10 | GCO50106 | Outer Joint | 26T | 23 | 30 | 57.5 | 86.5 | 58.5 | I |
| | 2001.06-2007.10 | | F | R | Hatchback FWD K9K702 | Date To:2002.10 | GCI50008 | Inner Joint | | 23 | 30 | 36.3 | | 120.7 | |
| | 2007.11-2012.12 | 5MT | F | L | Hatchback FWD K9K 750 | | GDS50353 | Drive Shaft | | 23 | 26 | 49 | 86 | 649 | |
| | 2007.11-2012.12 | 5MT | F | L | Hatchback FWD K9K 750 | Date from:2011.03 | GDS50630 | Drive Shaft | | 23 | 26 | 49 | 83 | 653 | |
| | 2007.11-2012.12 | 5MT | F | R | Hatchback FWD K9K 750 | | GDS50354 | Drive Shaft | | 23 | 26 | 49 | 86 | 897 | |
| | 2007.11-2012.12 | 5MT | F | R | Hatchback FWD K9K 750 | Date from:2011.02;Date to:2012.12 | GDS50625 | Drive Shaft | | 23 | 26 | 49 | 83.5 | 893 | |
| | 2007.11-2012.12 | 5MT | F | L/R | Hatchback FWD K9K 750 | Date from:2011.02 | GCO50168 | Outer Joint | | 23 | 30 | 49 | 83.5 | 54.5 | I |
| | 2007.11-2012.12 | 5MT | F | L/R | Hatchback FWD K9K 750 | Date to:2011.02 | GCO99085 | Outer Joint | | 23 | 30 | 49 | 86 | 59 | I |
| | 2007.11-2012.12 | 5MT | F | L | Hatchback FWD K9K 750 | Date from:2011.03 | GCI50134 | Inner Joint | | 26 | 30 | 40 | 64 | 96 | |
| | 2007.11-2012.12 | 5MT | F | R | Hatchback FWD K9K 750 | | GCI50148 | Inner Joint | | 26 | 30 | 33 | 326 | 90 | |
| | 2007.11-2012.12 | | F | L | Hatchback FWD K9K 750 | | GCO50092 | Outer Joint | | 23 | 29 | 49 | 86 | 57 | I |
| 1.5 (62 kw) | 2007.02-2009.06 | MT | F | L | Hatchback FWD K9K718 | | GDS50353 | Drive Shaft | | 23 | 26 | 49 | 86 | 649 | |
| | 2007.02-2009.06 | MT | F | L | Hatchback FWD K9K718 | | GDS50514 | Drive Shaft | 44T | 23 | 26 | 57.5 | 86.5 | 606 | |
| | 2007.02-2009.06 | MT | F | R | Hatchback FWD K9K718 | | GDS50354 | Drive Shaft | | 23 | 26 | 49 | 86 | 897 | |
| | 2007.02-2009.06 | MT | F | R | Hatchback FWD K9K718 | | GDS50515 | Drive Shaft | 44T | 23 | 26 | 57.5 | 86.5 | 866 | |
| | 2007.02-2009.06 | MT | F | L/R | Hatchback FWD K9K718 | | GCO50069 | Outer Joint | 44T | 23 | 30 | 57.5 | 86.5 | 58.5 | I |
| | 2007.02-2009.06 | MT | F | L | Hatchback FWD K9K718 | | GCI50085 | Inner Joint | | 26 | 33 | 40 | 64 | 123 | |
| | 2007.02-2009.06 | MT | F | R | Hatchback FWD K9K718 | | GCI50086 | Inner Joint | | 26 | 33 | 33 | 326 | 94 | |
| | 2007.02-2009.06 | MT | F | R | Hatchback FWD K9K718 | | GCI99169 | Inner Joint | | 26 | 30 | 33 | 326 | 95 | |
| | 2007.02-2009.06 | | F | L | Hatchback FWD K9K718 | | GDS50280 | Drive Shaft | 44T | 23 | 26 | 57.5 | 86.5 | 602 | |
| | 2007.02-2009.06 | | F | R | Hatchback FWD K9K718 | | GDS50364 | Drive Shaft | 44T | 23 | 26 | 57.5 | 86.5 | 866 | |
| | 2012.11-2021.08 | 5MT | F | L | Hatchback FWD K9K 838 | | GDS50487 | Drive Shaft | | 23 | 26 | 49 | 86 | 662 | |
| | 2012.11-2021.08 | 5MT | F | R | Hatchback FWD K9K 838 | | GDS50489 | Drive Shaft | | 23 | 26 | 49 | 86 | 910 | |
| | 2012.11-2021.08 | 5MT | F | L/R | Hatchback FWD K9K 838 | | GCO50167 | Outer Joint | | 23 | 30 | 49 | 86 | 53.5 | I |
| | 2012.11-2021.08 | 5MT | F | L | Hatchback FWD K9K 838 | | GCI50096 | Inner Joint | | 26 | 30 | 40 | 64 | 96 | |
| 1.5 (63 kw) | 2005.06-2012.12 | 5MT | F | L | Hatchback FWD K9K 766 | 6 balls | GDS50353 | Drive Shaft | | 23 | 26 | 49 | 86 | 649 | |
| | 2005.06-2012.12 | 5MT | F | L | Hatchback FWD K9K 766 | Date from:2011.03;8 balls | GDS50630 | Drive Shaft | | 23 | 26 | 49 | 83 | 653 | |
| | 2005.06-2012.12 | 5MT | F | R | Hatchback FWD K9K 766 | | GDS50354 | Drive Shaft | | 23 | 26 | 49 | 86 | 897 | |
| | 2005.06-2012.12 | 5MT | F | R | Hatchback FWD K9K 766 | | GDS50625 | Drive Shaft | | 23 | 26 | 49 | 83.5 | 893 | |
| | 2005.06-2012.12 | 5MT | F | L/R | Hatchback FWD K9K 766 | | GCO50092 | Outer Joint | | 23 | 29 | 49 | 86 | 57 | I |
| | 2005.06-2012.12 | 5MT | F | L/R | Hatchback FWD K9K 766 | 6 balls | GCO50168 | Outer Joint | | 23 | 30 | 49 | 83.5 | 54.5 | I |
| | 2005.06-2012.12 | 5MT | F | L/R | Hatchback FWD K9K 766 | Date from:2011.03;8 balls | GCO50223 | Outer Joint | | 23 | 30 | 49 | 83 | 53.5 | I |
| | 2005.06-2012.12 | 5MT | F | L/R | Hatchback FWD K9K 766 | 6 balls | GCO99085 | Outer Joint | | 23 | 30 | 49 | 86 | 59 | I |
| | 2005.06-2012.12 | 5MT | F | L | Hatchback FWD K9K 766 | Date from:2011.03 | GCI50134 | Inner Joint | | 26 | 30 | 40 | 64 | 96 | |
| | 2005.06-2012.12 | 5MT | F | R | Hatchback FWD K9K 766 | | GCI50148 | Inner Joint | | 26 | 30 | 33 | 326 | 90 | |
| | 2012.11-2021.08 | 5MT | F | L | Hatchback FWD K9K 830 | | GDS50487 | Drive Shaft | | 23 | 26 | 49 | 86 | 662 | |
| | 2012.11-2021.08 | 5MT | F | R | Hatchback FWD K9K 830 | | GDS50489 | Drive Shaft | | 23 | 26 | 49 | 86 | 910 | |
| | 2012.11-2021.08 | 5MT | F | L/R | Hatchback FWD K9K 830 | | GCO50167 | Outer Joint | | 23 | 30 | 49 | 86 | 53.5 | I |
| | 2012.11-2021.08 | 5MT | F | L | Hatchback FWD K9K 830 | | GCI50096 | Inner Joint | | 26 | 30 | 40 | 64 | 96 | |
| | 2019.06- | 6MT | F | L | Hatchback FWD K9K 872;K9K 854 | 15"/16" Wheels | GDS84251 | Drive Shaft | | 25 | 26 | 53 | 88.5 | 645 | |
| | 2019.06- | 6MT | F | L | Hatchback FWD K9K 872;K9K 854 | 17" Wheels | GDS84576 | Drive Shaft | | 23 | 26 | 49.5 | 85.5 | 643 | |
| | 2019.06- | 6MT | F | R | Hatchback FWD K9K 872;K9K 854 | 15"/16" Wheels | GDS84276 | Drive Shaft | | 25 | 26 | 53 | 88.5 | 902 | |
| | 2019.06- | 6MT | F | R | Hatchback FWD K9K 872;K9K 854 | 17" Wheels | GDS84285 | Drive Shaft | | 23 | 26 | 49.5 | 85.5 | 898 | |
| | 2019.06- | 6MT | F | L | Hatchback FWD K9K 872;K9K 854 | 15"/16" Wheels | GCO82552 | Outer Joint | | 25 | 33 | 53 | 88.5 | 58 | I |
| | 2019.06- | 6MT | F | L/R | Hatchback FWD K9K 872;K9K 854 | 17" Wheels | GCO82755 | Outer Joint | | 23 | 33 | 49.5 | 85.5 | 58.5 | I |
| | 2019.06- | 6MT | F | L | Hatchback FWD K9K 872;K9K 854 | 15"/16" Wheels | GCI50070 | Inner Joint | | 26 | 33 | 40 | 64 | 106 | |
| | 2019.06- | 6MT | F | L | Hatchback FWD K9K 872;K9K 854 | 17" Wheels | GCI82868 | Inner Joint | | 26 | 33 | 40 | 64 | 106 | |

| | YEAR | TRANSM. | F/R | L/R | BODY STYLE & DRIVE TYPE & ENGINE | REMARKS | G-AP Ref. | PRODUCT | ABS | Technical Specifications | | | | | |
|---|---|---|---|---|---|---|---|---|---|---|---|---|---|---|---|
| | | | | | | | | | | A | B | C | H | L | P |
| **RENAULT** | | | | | | | | | | | | | | | |
| **Clio** | | | | | | | | | | | | | | | |
| 1.5 (63 kw) | 2019.06- | 6MT | F | R | Hatchback FWD K9K 872;K9K 854 | 15"/16" Wheels | GCI82671 | Inner Joint | | 26 | 33 | 33 | 330 | 90 | |
| 1.5 (65 kw) | 2010.08-2014.12 | 5MT | F | L | Hatchback FWD K9K 766;K9K 770 | 6 balls | GDS50353 | Drive Shaft | | 23 | 26 | 49 | 86 | 649 | |
| | 2010.08-2014.12 | 5MT | F | L | Hatchback FWD K9K 766;K9K 770 | Date from:2011.03;8 balls | GDS50630 | Drive Shaft | | 23 | 26 | 49 | 83 | 653 | |
| | 2010.08-2014.12 | 5MT | F | R | Hatchback FWD K9K 766;K9K 770 | | GDS50354 | Drive Shaft | | 23 | 26 | 49 | 86 | 897 | |
| | 2010.08-2014.12 | 5MT | F | R | Hatchback FWD K9K 766;K9K 770 | Date to:2014.12 | GDS50625 | Drive Shaft | | 23 | 26 | 49 | 83.5 | 893 | |
| | 2010.08-2014.12 | 5MT | F | L | Hatchback FWD K9K 766;K9K 770 | Date from:2011.03;8 balls | GCO50223 | Outer Joint | | 23 | 30 | 49 | 83 | 53.5 | I |
| | 2010.08-2014.12 | 5MT | F | R | Hatchback FWD K9K 766;K9K 770 | Date to:2014.12;6 balls | GCO50168 | Outer Joint | | 23 | 30 | 49 | 83.5 | 54.5 | I |
| | 2010.08-2014.12 | 5MT | F | L | Hatchback FWD K9K 766;K9K 770 | Date from:2011.03;Date to:2014.12 | GCI50134 | Inner Joint | | 26 | 30 | 40 | 64 | 96 | |
| | 2010.08-2014.12 | 5MT | F | R | Hatchback FWD K9K 766;K9K 770 | | GCI50148 | Inner Joint | | 26 | 30 | 33 | 326 | 90 | |
| | 2010.08-2014.12 | MT | F | L | Hatchback FWD K9K 766;K9K 770 | Date To:2011.02 | GCO50092 | Outer Joint | | 23 | 29 | 49 | 86 | 57 | I |
| | 2010.08-2014.12 | MT | F | L | Hatchback FWD K9K 766;K9K 770 | Date To:2011.02;6 balls | GCO99085 | Outer Joint | | 23 | 30 | 49 | 86 | 59 | I |
| | 2010.08-2014.12 | | F | L/R | Hatchback FWD K9K 766;K9K 770 | | GCO50143 | Outer Joint | | 25 | 32 | 52.8 | 85.5 | 62.5 | I |
| 1.5 (66 kw) | 2012.11-2021.08 | 5MT | F | L | Hatchback FWD K9K 608;K9K 612;K9K 609;K9K 629;K9K 628;K9K 638;K9K 626;K9K 639 | | GDS50487 | Drive Shaft | | 23 | 26 | 49 | 86 | 662 | |
| | 2012.11-2021.08 | 5MT | F | R | Hatchback FWD K9K 608;K9K 612;K9K 609;K9K 629;K9K 628;K9K 638;K9K 626;K9K 639 | | GDS50489 | Drive Shaft | | 23 | 26 | 49 | 86 | 910 | |
| | 2012.11-2021.08 | 5MT | F | L/R | Hatchback FWD K9K 608;K9K 612;K9K 609;K9K 629;K9K 628;K9K 638;K9K 626;K9K 639 | | GCO50167 | Outer Joint | | 23 | 30 | 49 | 86 | 53.5 | I |
| | 2012.11-2021.08 | 5MT | F | L | Hatchback FWD K9K 608;K9K 612;K9K 609;K9K 629;K9K 628;K9K 638;K9K 626;K9K 639 | | GCI50096 | Inner Joint | | 26 | 30 | 40 | 64 | 96 | |
| | 2012.11-2021.08 | AT | F | L | Hatchback FWD K9K 608;K9K 612;K9K 609;K9K 629;K9K 628;K9K 638;K9K 626;K9K 639 | | GDS82284 | Drive Shaft | | 23 | 34 | 49 | 85.5 | 610 | |
| | 2012.11-2021.08 | AT | F | R | Hatchback FWD K9K 608;K9K 612;K9K 609;K9K 629;K9K 628;K9K 638;K9K 626;K9K 639 | | GDS82447 | Drive Shaft | | 23 | 34 | 49 | 85.5 | 958 | |
| | 2012.11-2021.08 | AT | F | L/R | Hatchback FWD K9K 608;K9K 612;K9K 609;K9K 629;K9K 628;K9K 638;K9K 626;K9K 639 | 8 balls | GCO81927 | Outer Joint | | 23 | 33 | 49 | 85.5 | 58.5 | I |
| | 2012.11-2021.08 | AT | F | L | Hatchback FWD K9K 608;K9K 612;K9K 609;K9K 629;K9K 628;K9K 638;K9K 626;K9K 639 | | GCI50140 | Inner Joint | | 34 | 33 | 40 | 54 | 106 | |
| | 2012.11-2021.08 | AT | F | R | Hatchback FWD K9K 608;K9K 612;K9K 609;K9K 629;K9K 628;K9K 638;K9K 626;K9K 639 | | GCI50133 | Inner Joint | | 34 | 33 | 40 | 380.5 | 86.5 | |
| 1.5 (74 kw) | 2003.10-2005.04 | 5MT | F | L | Hatchback FWD K9K712 | | GDS50279 | Drive Shaft | 44T | 23 | 26 | 58.8 | 85 | 596 | |
| | 2003.10-2005.04 | 5MT | F | L/R | Hatchback FWD K9K712 | | GCO50082 | Outer Joint | 44T | 23 | 23 | 58.8 | 85 | 61 | M |
| | 2003.10-2005.04 | MT | F | L | Hatchback FWD K9K712 | | GDS50376 | Drive Shaft | | 23 | 26 | 57.5 | 86.5 | 606 | |
| | 2003.10-2005.04 | MT | F | R | Hatchback FWD K9K712 | | GDS50364 | Drive Shaft | 44T | 23 | 26 | 57.5 | 86.5 | 866 | |
| | 2003.10-2005.04 | MT | F | L | Hatchback FWD K9K712 | | GCO99087 | Outer Joint | | 23 | 30 | 57.5 | 86.5 | 58.5 | I |
| | 2003.10-2005.04 | MT | F | L | Hatchback FWD K9K712 | | GCI50085 | Inner Joint | | 26 | 33 | 40 | 64 | 123 | |
| | 2003.10-2005.04 | MT | F | R | Hatchback FWD K9K712 | | GCI99169 | Inner Joint | | 26 | 30 | 33 | 326 | 95 | |
| | 2021.11- | 6MT | F | L | Hatchback FWD K9K 872;K9K 876 | | GDS84576 | Drive Shaft | | 23 | 26 | 49.5 | 85.5 | 643 | |
| | 2021.11- | 6MT | F | R | Hatchback FWD K9K 872;K9K 876 | | GDS84276 | Drive Shaft | | 25 | 26 | 53 | 88.5 | 902 | |
| | 2021.11- | 6MT | F | L | Hatchback FWD K9K 872;K9K 876 | | GCO82755 | Outer Joint | | 23 | 33 | 49.5 | 85.5 | 58.5 | I |
| | 2021.11- | 6MT | F | R | Hatchback FWD K9K 872;K9K 876 | | GCO82552 | Outer Joint | | 25 | 33 | 53 | 88.5 | 58 | I |
| | 2021.11- | 6MT | F | L | Hatchback FWD K9K 872;K9K 876 | | GCI82868 | Inner Joint | | 26 | 33 | 40 | 64 | 106 | |
| | 2021.11- | 6MT | F | R | Hatchback FWD K9K 872;K9K 876 | | GCI82671 | Inner Joint | | 26 | 33 | 33 | 330 | 90 | |
| 1.5 (76 kw) | 2005.06-2012.12 | 5MT | F | L | Hatchback FWD K9K 772 | | GDS50379 | Drive Shaft | | 25 | 26 | 52.8 | 85.5 | 650 | |
| | 2005.06-2012.12 | 5MT | F | R | Hatchback FWD K9K 772 | | GDS50483 | Drive Shaft | | 25 | 26 | 52.8 | 85.5 | 891 | |
| | 2005.06-2012.12 | 6MT | F | L/R | Hatchback FWD K9K 772 | | GCO50143 | Outer Joint | | 25 | 32 | 52.8 | 85.5 | 62.5 | I |
| | 2005.06-2012.12 | MT | F | L | Hatchback FWD K9K 772 | | GDS50353 | Drive Shaft | | 23 | 26 | 49 | 86 | 649 | |
| | 2005.06-2012.12 | MT | F | R | Hatchback FWD K9K 772 | | GDS50354 | Drive Shaft | | 23 | 26 | 49 | 86 | 897 | |
| | 2005.06-2012.12 | MT | F | L/R | Hatchback FWD K9K 772 | | GCO99085 | Outer Joint | | 23 | 30 | 49 | 86 | 59 | I |
| | 2005.06-2012.12 | MT | F | R | Hatchback FWD K9K 772 | Date to:2008.03 | GCI99169 | Inner Joint | | 26 | 30 | 33 | 326 | 95 | |
| 1.5 (78 kw) | 2005.06-2014.12 | 6MT | F | L | Hatchback FWD K9K 764;K9K 774 | | GDS50379 | Drive Shaft | | 25 | 26 | 52.8 | 85.5 | 650 | |
| | 2005.06-2014.12 | 6MT | F | R | Hatchback FWD K9K 764;K9K 774 | | GDS50483 | Drive Shaft | | 25 | 26 | 52.8 | 85.5 | 891 | |
| | 2005.06-2014.12 | 6MT | F | L/R | Hatchback FWD K9K 764;K9K 774 | | GCO50143 | Outer Joint | | 25 | 32 | 52.8 | 85.5 | 62.5 | I |
| | 2005.10-2007.10 | 6MT | F | L | Hatchback Van FWD K9K 764, K9K 772 | | GDS50379 | Drive Shaft | | 25 | 26 | 52.8 | 85.5 | 650 | |
| | 2005.10-2007.10 | 6MT | F | R | Hatchback Van FWD K9K 764, K9K 772 | | GDS50483 | Drive Shaft | | 25 | 26 | 52.8 | 85.5 | 891 | |
| | 2005.10-2007.10 | 6MT | F | L/R | Hatchback Van FWD K9K 764, K9K 772 | | GCO50143 | Outer Joint | | 25 | 32 | 52.8 | 85.5 | 62.5 | I |
| 1.5 (81 kw) | 2016.06-2021.08 | 6MT | F | L | Hatchback FWD K9K 646 | | GDS50487 | Drive Shaft | | 23 | 26 | 49 | 86 | 662 | |
| | 2016.06-2021.08 | 6MT | F | R | Hatchback FWD K9K 646 | | GDS50489 | Drive Shaft | | 23 | 26 | 49 | 86 | 910 | |
| | 2016.06-2021.08 | 6MT | F | L/R | Hatchback FWD K9K 646 | | GCO50167 | Outer Joint | | 23 | 30 | 49 | 86 | 53.5 | I |
| | 2016.06-2021.08 | 6MT | F | L | Hatchback FWD K9K 646 | | GCI50096 | Inner Joint | | 26 | 30 | 40 | 64 | 96 | |
| 1.5 (85 kw) | 2019.06- | 6MT | F | L | Hatchback FWD K9K 872;K9K 854;K9K 862 | | GDS84576 | Drive Shaft | | 23 | 26 | 49.5 | 85.5 | 643 | |
| | 2019.06- | 6MT | F | R | Hatchback FWD K9K 872;K9K 854;K9K 862 | | GDS84276 | Drive Shaft | | 25 | 26 | 53 | 88.5 | 902 | |
| | 2019.06- | 6MT | F | L | Hatchback FWD K9K 872;K9K 854;K9K 862 | | GCO82755 | Outer Joint | | 23 | 33 | 49.5 | 85.5 | 58.5 | I |
| | 2019.06- | 6MT | F | R | Hatchback FWD K9K 872;K9K 854;K9K 862 | | GCO82552 | Outer Joint | | 25 | 33 | 53 | 88.5 | 58 | I |
| | 2019.06- | 6MT | F | L | Hatchback FWD K9K 872;K9K 854;K9K 862 | | GCI82868 | Inner Joint | | 26 | 33 | 40 | 64 | 106 | |
| | 2019.06- | 6MT | F | R | Hatchback FWD K9K 872;K9K 854;K9K 862 | | GCI82671 | Inner Joint | | 26 | 33 | 33 | 330 | 90 | |
| 1.6 (65 kw) | 2005.06-2007.10 | 5MT | F | L | Hatchback FWD K4M 804 | | GDS50353 | Drive Shaft | | 23 | 26 | 49 | 86 | 649 | |
| | 2005.06-2007.10 | 5MT | F | R | Hatchback FWD K4M 804 | | GDS50354 | Drive Shaft | | 23 | 26 | 49 | 86 | 897 | |
| | 2005.06-2007.10 | 5MT | F | L/R | Hatchback FWD K4M 804 | | GCO99085 | Outer Joint | | 23 | 30 | 49 | 86 | 59 | I |
| | 2005.06-2007.10 | MT | F | R | Hatchback FWD K4M 804 | Date to:2007.10 | GCI99169 | Inner Joint | | 26 | 30 | 33 | 326 | 95 | |
| | 2005.06-2007.10 | | F | L | Hatchback FWD K4M 804 | | GCO50092 | Outer Joint | | 23 | 29 | 49 | 86 | 57 | I |
| 1.6 (66 kw) | 1998.09-2006.07 | 4AT | F | L | Hatchback FWD K7M744/K7M745/K7M746 | For Engine code:K7M744/K7M745 | GDS50579 | Drive Shaft | 26T | 21 | 26 | 52.2 | 85.5 | 613 | |
| | 1998.09-2006.07 | 4AT/5MT | F | R | Hatchback FWD K7M744/K7M745/K7M746 | For Engine code:K7M744/K7M745 | GDS50588 | Drive Shaft | 26T | 21 | 23 | 57 | 84 | 739 | |
| | 1998.09-2006.07 | 5MT | F | R | Hatchback FWD K7M744/K7M745/K7M746 | For Engine code:K7M746 | GDS50162 | Drive Shaft | 26T | 21 | 23 | 52.2 | 85.5 | 723.5 | |

| | YEAR | TRANSM. | F/R | L/R | BODY STYLE & DRIVE TYPE & ENGINE | REMARKS | G-AP Ref. | PRODUCT | ABS | Technical Specifications A | B | C | H | L | P |
|---|---|---|---|---|---|---|---|---|---|---|---|---|---|---|---|
| **RENAULT** | | | | | | | | | | | | | | | |
| **Clio** | | | | | | | | | | | | | | | |
| 1.6 (66 kw) | 1998.09-2006.07 | AT | F | R | Hatchback FWD K7M744/K7M745/K7M746 | | GDS50485 | Drive Shaft | 44T | 21 | 23 | 52.2 | 85.5 | 733 | |
| | 1998.09-2006.07 | AT | F | R | Hatchback FWD K7M744/K7M745/K7M746 | | GDS50486 | Drive Shaft | 26T | 21 | 23 | 52.2 | 85.5 | 733 | |
| | 1998.09-2006.07 | MT | F | L | Hatchback FWD K7M744/K7M745/K7M746 | Trans. code:JB1/3 | GDS50004 | Drive Shaft | 26T | 21 | | 57 | 84.5 | 625.7 | |
| | 1998.09-2006.07 | MT | F | L | Hatchback FWD K7M744/K7M745/K7M746 | Trans. code:JB1/3 | GDS50150 | Drive Shaft | | 21 | 30 | 49.8 | 83.5 | 623 | |
| | 1998.09-2006.07 | MT | F | R | Hatchback FWD K7M744/K7M745/K7M746 | | GDS50017 | Drive Shaft | 26T | 21 | 23 | 51.5 | 83 | 715 | |
| | 1998.09-2006.07 | MT | F | R | Hatchback FWD K7M744/K7M745/K7M746 | | GDS50125 | Drive Shaft | | 21 | 23 | 57 | 84.5 | 713.5 | |
| | 1998.09-2006.07 | MT | F | R | Hatchback FWD K7M744/K7M745/K7M746 | | GDS50151 | Drive Shaft | | 21 | 23 | 49.8 | 83.5 | 715 | |
| | 1998.09-2006.07 | MT | F | R | Hatchback FWD K7M744/K7M745/K7M746 | Trans. code:JB1/3 | GDS50395 | Drive Shaft | 26T | 21 | 23 | 51.5 | 83 | 728 | |
| | 1998.09-2006.07 | MT | F | R | Hatchback FWD K7M744/K7M745/K7M746 | | GDS99072 | Drive Shaft | 44T | 21 | 23 | 57 | 84.5 | 720 | |
| | 1998.09-2006.07 | | F | L | Hatchback FWD K7M744/K7M745/K7M746 | For Engine code:K7M744/K7M745 | GDS99169 | Drive Shaft | 26T | 21 | 26 | 52.2 | 85.5 | 621 | |
| | 1998.09-2006.07 | | F | R | Hatchback FWD K7M744/K7M745/K7M746 | | GCI50008 | Inner Joint | | 23 | 30 | 36.3 | | 120.7 | |
| 1.6 (79 kw) | 1999.03-2005.04 | 4AT/5MT | F | L | Hatchback FWD K4M708/K4M740/K4M742/K4M743/K4M744/K4M745/K4M748 | | GDS50004 | Drive Shaft | 26T | 21 | | 57 | 84.5 | 625.7 | |
| | 1999.03-2005.04 | 4AT/5MT | F | L | Hatchback FWD K4M708/K4M740/K4M742/K4M743/K4M744/K4M745/K4M748 | | GDS50150 | Drive Shaft | | 21 | 30 | 49.8 | 83.5 | 623 | |
| | 1999.03-2005.04 | 4AT/5MT | F | L | Hatchback FWD K4M708/K4M740/K4M742/K4M743/K4M744/K4M745/K4M748 | For Engine Code:K4M744/K4M745 | GDS50261 | Drive Shaft | 44T | 23 | | 57.5 | 86.5 | 630 | |
| | 1999.03-2005.04 | 4AT/5MT | F | L | Hatchback FWD K4M708/K4M740/K4M742/K4M743/K4M744/K4M745/K4M748 | For Engine code:K4M744/K4M745 | GDS50401 | Drive Shaft | 44T | 21 | | 57 | 84 | 629 | |
| | 1999.03-2005.04 | 4AT/5MT | F | R | Hatchback FWD K4M708/K4M740/K4M742/K4M743/K4M744/K4M745/K4M748 | Date to:2002.10,For Engine code:K4M748/K4M743 | GDS50017 | Drive Shaft | 26T | 21 | 23 | 51.5 | 83 | 715 | |
| | 1999.03-2005.04 | 4AT/5MT | F | R | Hatchback FWD K4M708/K4M740/K4M742/K4M743/K4M744/K4M745/K4M748 | For Engine code:K4M748/K4M740 | GDS50151 | Drive Shaft | | 21 | 23 | 49.8 | 83.5 | 715 | |
| | 1999.03-2005.04 | 4AT/5MT | F | R | Hatchback FWD K4M708/K4M740/K4M742/K4M743/K4M744/K4M745/K4M748 | Date to:2002.10,For Engine code:K4M748/K4M743 | GDS50162 | Drive Shaft | 26T | 21 | 23 | 52.2 | 85.5 | 723.5 | |
| | 1999.03-2005.04 | 4AT/5MT | F | R | Hatchback FWD K4M708/K4M740/K4M742/K4M743/K4M744/K4M745/K4M748 | Enginecode:K4M744/K4M745 | GDS50365 | Drive Shaft | 44T | 21 | 23 | 52.2 | 85.5 | 723 | |
| | 1999.03-2005.04 | 4AT/5MT | F | R | Hatchback FWD K4M708/K4M740/K4M742/K4M743/K4M744/K4M745/K4M748 | Date from:1999.03,Date to:2002.09 | GDS50410 | Drive Shaft | 26T | 21 | 23 | 52.2 | 85.5 | 723 | |
| | 1999.03-2005.04 | 4AT/5MT | F | R | Hatchback FWD K4M708/K4M740/K4M742/K4M743/K4M744/K4M745/K4M748 | For Engine code:K4M748/K4M740 | GCI50008 | Inner Joint | | 23 | 30 | 36.3 | | 120.7 | |
| | 1999.03-2005.04 | AT | F | R | Hatchback FWD K4M708/K4M740/K4M742/K4M743/K4M744/K4M745/K4M748 | | GDS50485 | Drive Shaft | 44T | 21 | 23 | 52.2 | 85.5 | 733 | |
| | 1999.03-2005.04 | AT/MT | F | L/R | Hatchback FWD K4M708/K4M740/K4M742/K4M743/K4M744/K4M745/K4M748 | Date to:2002.10;Date to:2005.12 | GCO50004 | Outer Joint | 26T | 21 | 30 | 52.2 | 85.5 | 59 | I |
| | 1999.03-2005.04 | MT | F | R | Hatchback FWD K4M708/K4M740/K4M742/K4M743/K4M744/K4M745/K4M748 | | GDS50250 | Drive Shaft | 26T | 21 | 23 | 57 | 84.5 | 732.5 | |
| 1.6 (82 kw) | 1999.03-2008.12 | AT/MT | F | L/R | Hatchback FWD K4M708 | | GCO50048 | Outer Joint | 26T | 21 | 21 | 55 | 83.5 | 57.5 | M |
| | 1999.03-2008.12 | MT | F | L | Hatchback FWD K4M708 | | GDS50004 | Drive Shaft | 26T | 21 | | 57 | 84.5 | 625.7 | |
| | 1999.03-2008.12 | MT | F | L | Hatchback FWD K4M708 | | GDS50150 | Drive Shaft | | 21 | 30 | 49.8 | 83.5 | 623 | |
| | 1999.03-2008.12 | MT | F | R | Hatchback FWD K4M708 | | GDS50017 | Drive Shaft | 26T | 21 | 23 | 51.5 | 83 | 715 | |
| | 1999.03-2008.12 | MT | F | R | Hatchback FWD K4M708 | | GDS50151 | Drive Shaft | | 21 | 23 | 49.8 | 83.5 | 715 | |
| | 1999.03-2008.12 | MT | F | R | Hatchback FWD K4M708 | | GDS50162 | Drive Shaft | 26T | 21 | 23 | 52.2 | 85.5 | 723.5 | |
| | 1999.03-2008.12 | MT | F | R | Hatchback FWD K4M708 | | GDS50263 | Drive Shaft | 44T | 21 | 23 | 52.2 | 85.5 | 723.5 | |
| | 1999.03-2008.12 | MT | F | R | Hatchback FWD K4M708 | | GCO50066 | Outer Joint | 44T | 21 | 28 | 52.5 | 85 | 51 | I |
| | 1999.03-2008.12 | MT | F | L/R | Hatchback FWD K4M708 | | GCO41081 | Outer Joint | | 21 | 21 | 55 | 83.5 | 57.5 | M |
| | 1999.03-2008.12 | MT | F | R | Hatchback FWD K4M708 | | GCI50008 | Inner Joint | | 23 | 30 | 36.3 | | 120.7 | |
| | 1999.03-2008.12 | | F | L | Hatchback FWD K4M708 | Date To:2002.10;For Engine Code:K4M740;For Engine Code:K4M748/K4M743 | GCO50004 | Outer Joint | 26T | 21 | 30 | 52.2 | 85.5 | 59 | I |
| | 2005.06-2014.12 | 4AT | F | L | Hatchback FWD K4M 800;K4M 801 | 6 balls | GDS50574 | Drive Shaft | | 23 | 26 | 49 | 86 | 652 | |
| | 2005.06-2014.12 | 4AT/5MT | F | L | Hatchback FWD K4M 800;K4M 801 | Engine code:K4M800,Date from:2011.03;8 balls | GDS50630 | Drive Shaft | | 23 | 26 | 49 | 83 | 653 | |
| | 2005.06-2014.12 | 4AT/5MT | F | R | Hatchback FWD K4M 800;K4M 801 | Inner teeth of wheel side:30 | GDS50354 | Drive Shaft | | 23 | 26 | 49 | 86 | 897 | |
| | 2005.06-2014.12 | 4AT/5MT | F | R | Hatchback FWD K4M 800;K4M 801 | Inner teeth of wheel side:23 | GDS50443 | Drive Shaft | | 23 | 23 | 49 | 86 | 789 | |
| | 2005.06-2014.12 | 4AT/5MT | F | L/R | Hatchback FWD K4M 800;K4M 801 | For Engine Code:K4M801;For Engine Code:K4M800,Date To:2011.02 | GCO99085 | Outer Joint | | 23 | 30 | 49 | 86 | 59 | I |
| | 2005.06-2014.12 | 4AT/5MT | F | L | Hatchback FWD K4M 800;K4M 801 | Date from:2011.03;For Engine code:K4M800 | GCI50134 | Inner Joint | | 26 | 30 | 40 | 64 | 96 | |
| | 2005.06-2014.12 | MT | F | L | Hatchback FWD K4M 800;K4M 801 | | GDS50353 | Drive Shaft | | 23 | 26 | 49 | 86 | 649 | |
| | 2005.06-2014.12 | MT | F | L | Hatchback FWD K4M 800;K4M 801 | | GCO50092 | Outer Joint | | 23 | 29 | 49 | 86 | 57 | I |
| | 2005.06-2014.12 | MT | F | R | Hatchback FWD K4M 800;K4M 801 | Date to:2014.12 | GCI99169 | Inner Joint | | 26 | 30 | 33 | 326 | 95 | |
| 1.6 (86 kw) | 2005.01-2010.02 | 5MT | F | L | Hatchback FWD K4M 748 | | GDS50004 | Drive Shaft | 26T | 21 | | 57 | 84.5 | 625.7 | |
| | 2005.01-2010.02 | 5MT | F | R | Hatchback FWD K4M 748 | | GDS50151 | Drive Shaft | | 21 | 23 | 49.8 | 83.5 | 715 | |
| 1.6 (94 kw) | 2009.06-2014.12 | 6MT | F | L | Hatchback FWD K4M 862 | | GDS50379 | Drive Shaft | | 25 | 26 | 52.8 | 85.5 | 650 | |
| | 2009.06-2014.12 | 6MT | F | L | Hatchback FWD K4M 862 | Date from:2011.03 | GDS50630 | Drive Shaft | | 23 | 26 | 49 | 83 | 653 | |
| | 2009.06-2014.12 | 6MT | F | L/R | Hatchback FWD K4M 862 | | GCO50143 | Outer Joint | | 25 | 32 | 52.8 | 85.5 | 62.5 | I |
| | 2009.06-2014.12 | | F | R | Hatchback FWD K4M 862 | | GDS50483 | Drive Shaft | | 25 | 26 | 52.8 | 85.5 | 891 | |
| 1.6 (103 kw) | 2020.03- | AT | F | L/R | Hatchback FWD H4M 632 | | GCO83588 | Outer Joint | | 25 | 24 | 53 | 88.5 | 61 | I |
| | 2020.03- | AT | F | L/R | Hatchback FWD H4M 632 | | GCI84005 | Inner Joint | | 26 | 24 | 33 | 330 | 103 | |
| 1.6 (105 kw) | 2022.01- | AT | F | L/R | Hatchback FWD H4M 632 | | GCO83588 | Outer Joint | | 25 | 24 | 53 | 88.5 | 61 | I |
| | 2022.01- | AT | F | L/R | Hatchback FWD H4M 632 | | GCI84005 | Inner Joint | | 26 | 24 | 33 | 330 | 103 | |
| 1.6 (147 kw) | 2013.03-2021.08 | | F | L/R | Hatchback FWD M5M 450;M5M 400;M5M 401 | | GCO50160 | Outer Joint | | 27 | 35 | 56.5 | 91.5 | 61 | I |
| 1.8 (65 kw) | 1991.01-1998.09 | MT | F | L | Hatchback FWD F3P710 | | GDS50116 | Drive Shaft | | 21 | | 49.8 | 83.5 | 610 | |
| | 1991.01-1998.09 | MT | F | R | Hatchback FWD F3P710 | | GDS50022 | Drive Shaft | | 21 | 23 | 46.3 | 84 | 706 | |
| | 1991.01-1998.09 | MT | F | L/R | Hatchback FWD F3P710 | | GCO50008 | Outer Joint | | 21 | 25 | 56.2 | 83.5 | 58 | O |
| | 1991.01-1998.09 | MT | F | L/R | Hatchback FWD F3P710 | | GCO50011 | Outer Joint | 26T | 21 | 25 | 56.2 | 83.5 | 58 | O |
| | 1991.01-1998.09 | | F | R | Hatchback FWD F3P710 | | GDS50117 | Drive Shaft | | 21 | 23 | 49.8 | 83.5 | 698.5 | |
| 1.8 (66 kw) | 1990.08-1998.09 | AT/MT | F | L/R | Hatchback FWD F3P754/F3P755 | | GCO50008 | Outer Joint | | 21 | 25 | 56.2 | 83.5 | 58 | O |
| | 1990.08-1998.09 | MT | F | L/R | Hatchback FWD F3P754/F3P755 | | GCO50011 | Outer Joint | 26T | 21 | 25 | 56.2 | 83.5 | 58 | O |
| 1.8 (70 kw) | 1991.01-1998.09 | AT/MT | F | L/R | Hatchback FWD F3P710 | | GCO50011 | Outer Joint | 26T | 21 | 25 | 56.2 | 83.5 | 58 | O |
| | 1991.01-1998.09 | MT | F | L | Hatchback FWD F3P710 | | GDS50116 | Drive Shaft | | 21 | | 49.8 | 83.5 | 610 | |
| | 1991.01-1998.09 | MT | F | R | Hatchback FWD F3P710 | | GDS50022 | Drive Shaft | | 21 | 23 | 46.3 | 84 | 706 | |

| | YEAR | TRANSM. | F/R | L/R | BODY STYLE & DRIVE TYPE & ENGINE | REMARKS | G-AP Ref. | PRODUCT | ABS | Technical Specifications A | B | C | H | L | P |
|---|---|---|---|---|---|---|---|---|---|---|---|---|---|---|---|
| **RENAULT** | | | | | | | | | | | | | | | |
| **Clio** | | | | | | | | | | | | | | | |
| 1.8 (70 kw) | 1991.01-1998.09 | MT | F | L/R | Hatchback FWD F3P710 | | GCO50008 | Outer Joint | | 21 | 25 | 56.2 | 83.5 | 58 | O |
| | 1991.01-1998.09 | | F | R | Hatchback FWD F3P710 | | GDS50117 | Drive Shaft | | 21 | 23 | 49.8 | 83.5 | 698.5 | |
| 1.8 (79 kw) | 1995.08-1998.09 | AT/MT | F | L/R | Hatchback FWD F3P758 | | GCO50008 | Outer Joint | | 21 | 25 | 56.2 | 83.5 | 58 | O |
| | 1995.08-1998.09 | AT/MT | F | L/R | Hatchback FWD F3P758 | | GCO50011 | Outer Joint | 26T | 21 | 25 | 56.2 | 83.5 | 58 | O |
| | 1995.08-1998.09 | MT | F | L | Hatchback FWD F3P758 | | GDS50116 | Drive Shaft | | 21 | | 49.8 | 83.5 | 610 | |
| | 1995.08-1998.09 | MT | F | R | Hatchback FWD F3P758 | | GDS50022 | Drive Shaft | | 21 | 23 | 46.3 | 84 | 706 | |
| | 1995.08-1998.09 | | F | R | Hatchback FWD F3P758 | | GDS50117 | Drive Shaft | | 21 | 23 | 49.8 | 83.5 | 698.5 | |
| 1.8 (99 kw) | 1990.05-1996.04 | AT/MT | F | L/R | Hatchback FWD F7P722 | | GCO50011 | Outer Joint | 26T | 21 | 25 | 56.2 | 83.5 | 58 | O |
| | 1990.05-1996.04 | MT | F | L/R | Hatchback FWD F7P722 | | GCO50008 | Outer Joint | | 21 | 25 | 56.2 | 83.5 | 58 | O |
| 1.9 (40 kw) | 1997.01-1998.09 | MT | F | L | Hatchback FWD F8Q678 | | GDS50116 | Drive Shaft | | 21 | | 49.8 | 83.5 | 610 | |
| | 1997.01-1998.09 | | F | R | Hatchback FWD F8Q678 | | GDS50082 | Drive Shaft | 26T | 21 | 23 | 51.5 | 83 | 717 | |
| | 1997.01-1998.09 | | F | R | Hatchback FWD F8Q678 | | GDS50117 | Drive Shaft | | 21 | 23 | 49.8 | 83.5 | 698.5 | |
| 1.9 (47 kw) | 1991.01-1998.09 | AT/MT | F | L/R | Hatchback FWD F8Q714/F8Q730/F8Q732 | | GCO50011 | Outer Joint | 26T | 21 | 25 | 56.2 | 83.5 | 58 | O |
| | 1991.01-1998.09 | MT | F | L | Hatchback FWD F8Q714/F8Q730/F8Q732 | | GDS50116 | Drive Shaft | | 21 | | 49.8 | 83.5 | 610 | |
| | 1991.01-1998.09 | MT | F | R | Hatchback FWD F8Q714/F8Q730/F8Q732 | | GDS50022 | Drive Shaft | | 21 | 23 | 46.3 | 84 | 706 | |
| | 1991.01-1998.09 | MT | F | L/R | Hatchback FWD F8Q714/F8Q730/F8Q732 | | GCO50008 | Outer Joint | | 21 | 25 | 56.2 | 83.5 | 58 | O |
| | 1998.09-2001.05 | 5MT | F | L | Hatchback FWD F8Q630/F8Q632 | | GDS50004 | Drive Shaft | 26T | 21 | | 57 | 84.5 | 625.7 | |
| | 1998.09-2001.05 | 5MT | F | L | Hatchback FWD F8Q630/F8Q632 | Hollow shaft | GDS50150 | Drive Shaft | | 21 | 30 | 49.8 | 83.5 | 623 | |
| | 1998.09-2001.05 | 5MT | F | R | Hatchback FWD F8Q630/F8Q632 | | GDS50017 | Drive Shaft | 26T | 21 | 23 | 51.5 | 83 | 715 | |
| | 1998.09-2001.05 | 5MT | F | R | Hatchback FWD F8Q630/F8Q632 | | GDS50162 | Drive Shaft | 26T | 21 | 23 | 52.2 | 85.5 | 723.5 | |
| | 1998.09-2001.05 | AT | F | L/R | Hatchback FWD F8Q630/F8Q632 | | GCO50004 | Outer Joint | 26T | 21 | 30 | 52.2 | 85.5 | 59 | I |
| | 1998.09-2001.05 | MT | F | L | Hatchback FWD F8Q630/F8Q632 | | GDS50177 | Drive Shaft | | 21 | | 57 | 84.5 | 625.7 | |
| | 1998.09-2001.05 | MT | F | L | Hatchback FWD F8Q630/F8Q632 | Date to:2001.05;Trans. code:JB1/3;Solid shaft | GDS50397 | Drive Shaft | | 21 | 30 | 50 | 84 | 632 | |
| | 1998.09-2001.05 | MT | F | R | Hatchback FWD F8Q630/F8Q632 | | GDS50125 | Drive Shaft | | 21 | 23 | 57 | 84.5 | 713.5 | |
| | 1998.09-2001.05 | MT | F | R | Hatchback FWD F8Q630/F8Q632 | | GDS50146 | Drive Shaft | | 21 | 23 | 57 | 84.5 | 732.5 | |
| | 1998.09-2001.05 | MT | F | R | Hatchback FWD F8Q630/F8Q632 | Date to:2001.05;Trans. code:JB1/3 | GDS50151 | Drive Shaft | | 21 | 23 | 49.8 | 83.5 | 715 | |
| | 1998.09-2001.05 | MT | F | R | Hatchback FWD F8Q630/F8Q632 | | GDS50250 | Drive Shaft | 26T | 21 | 23 | 57 | 84.5 | 732.5 | |
| | 1998.09-2001.05 | MT | F | R | Hatchback FWD F8Q630/F8Q632 | Date to:2002.10 | GDS50336 | Drive Shaft | 26T | 21 | 23 | 57 | 84 | 727 | |
| | 1998.09-2001.05 | MT | F | R | Hatchback FWD F8Q630/F8Q632 | Date to:2001.05;Trans. code:JB1/3 | GDS50395 | Drive Shaft | 26T | 21 | 23 | 51.5 | 83 | 728 | |
| | 1998.09-2001.05 | MT | F | R | Hatchback FWD F8Q630/F8Q632 | Date to:2001.05;Trans. code:JB1/3 | GDS50437 | Drive Shaft | | 21 | 23 | 51.5 | 83 | 729 | |
| 1.9 (48 kw) | 1996.05-1998.02 | MT | F | L | Hatchback FWD F8Q676/F8Q696 | Transm. Code:JB0/1/3 | GDS50015 | Drive Shaft | | 21 | 30 | 46.3 | 81.5 | 612.5 | |
| | 1996.05-1998.02 | MT | F | L | Hatchback FWD F8Q676/F8Q696 | | GDS50116 | Drive Shaft | | 21 | | 49.8 | 83.5 | 610 | |
| | 1996.05-1998.02 | MT | F | R | Hatchback FWD F8Q676/F8Q696 | Transm. Code:JB0/1/3 | GDS50014 | Drive Shaft | | 21 | 23 | 46.3 | 81.5 | 707 | |
| | 2000.02-2001.05 | 5MT | F | L | Hatchback FWD F8Q632 | | GDS50004 | Drive Shaft | 26T | 21 | | 57 | 84.5 | 625.7 | |
| | 2000.02-2001.05 | 5MT | F | L | Hatchback FWD F8Q632 | | GDS50150 | Drive Shaft | | 21 | 30 | 49.8 | 83.5 | 623 | |
| | 2000.02-2001.05 | 5MT | F | R | Hatchback FWD F8Q632 | | GDS50017 | Drive Shaft | 26T | 21 | 23 | 51.5 | 83 | 715 | |
| | 2000.02-2001.05 | 5MT | F | R | Hatchback FWD F8Q632 | | GDS50162 | Drive Shaft | 26T | 21 | 23 | 52.2 | 85.5 | 723.5 | |
| | 2000.02-2001.05 | MT | F | L | Hatchback FWD F8Q632 | | GDS50177 | Drive Shaft | | 21 | | 57 | 84.5 | 625.7 | |
| | 2000.02-2001.05 | MT | F | R | Hatchback FWD F8Q632 | | GDS50146 | Drive Shaft | | 21 | 23 | 57 | 84.5 | 732.5 | |
| | 2000.02-2001.05 | MT | F | R | Hatchback FWD F8Q632 | | GDS50250 | Drive Shaft | 26T | 21 | 23 | 57 | 84.5 | 732.5 | |
| | 2000.02-2001.05 | MT | F | R | Hatchback FWD F8Q632 | | GDS50336 | Drive Shaft | 26T | 21 | 23 | 57 | 84 | 727 | |
| | 2000.02-2001.05 | | F | L | Hatchback FWD F8Q632 | Trans. code:JB1/3 | GDS50397 | Drive Shaft | | 21 | 30 | 50 | 84 | 632 | |
| | 2000.02-2001.05 | | F | R | Hatchback FWD F8Q632 | Trans. code:JB1/3 | GDS50151 | Drive Shaft | | 21 | 23 | 49.8 | 83.5 | 715 | |
| | 2000.02-2001.05 | | F | R | Hatchback FWD F8Q632 | Trans. code:JB1/3 | GDS50395 | Drive Shaft | 26T | 21 | 23 | 51.5 | 83 | 728 | |
| | 2000.02-2001.05 | | F | R | Hatchback FWD F8Q632 | Trans. code:JB1/3 | GDS50437 | Drive Shaft | | 21 | 23 | 51.5 | 83 | 729 | |
| | 2000.02-2001.05 | | F | L | Hatchback FWD F8Q632 | | GCO50004 | Outer Joint | 26T | 21 | 30 | 52.2 | 85.5 | 59 | I |
| 1.9 (59 kw) | 2000.02-2005.04 | 5MT | F | L | Hatchback FWD F9Q780/F9Q782 | | GDS50004 | Drive Shaft | 26T | 21 | | 57 | 84.5 | 625.7 | |
| | 2000.02-2005.04 | 5MT | F | L | Hatchback FWD F9Q780/F9Q782 | Hollow shaft | GDS50150 | Drive Shaft | | 21 | 30 | 49.8 | 83.5 | 623 | |
| | 2000.02-2005.04 | 5MT | F | R | Hatchback FWD F9Q780/F9Q782 | | GDS50017 | Drive Shaft | 26T | 21 | 23 | 51.5 | 83 | 715 | |
| | 2000.02-2005.04 | 5MT | F | R | Hatchback FWD F9Q780/F9Q782 | Date to:2002.10 | GDS50162 | Drive Shaft | 26T | 21 | 23 | 52.2 | 85.5 | 723.5 | |
| | 2000.02-2005.04 | MT | F | L | Hatchback FWD F9Q780/F9Q782 | | GDS50177 | Drive Shaft | | 21 | | 57 | 84.5 | 625.7 | |
| | 2000.02-2005.04 | MT | F | L | Hatchback FWD F9Q780/F9Q782 | Trans. code:JB1/3;Solid shaft | GDS50397 | Drive Shaft | | 21 | 30 | 50 | 84 | 632 | |
| | 2000.02-2005.04 | MT | F | R | Hatchback FWD F9Q780/F9Q782 | Date to:2003.12 | GDS50125 | Drive Shaft | | 21 | 23 | 57 | 84.5 | 713.5 | |
| | 2000.02-2005.04 | MT | F | R | Hatchback FWD F9Q780/F9Q782 | | GDS50146 | Drive Shaft | | 21 | 23 | 57 | 84.5 | 732.5 | |
| | 2000.02-2005.04 | MT | F | R | Hatchback FWD F9Q780/F9Q782 | Trans. code:JB1/3;Solid shaft | GDS50437 | Drive Shaft | | 21 | 23 | 51.5 | 83 | 729 | |
| | 2000.02-2005.04 | MT | F | L/R | Hatchback FWD F9Q780/F9Q782 | | GCO50004 | Outer Joint | 26T | 21 | 30 | 52.2 | 85.5 | 59 | I |
| | 2000.02-2005.04 | | F | L | Hatchback FWD F9Q780/F9Q782 | Date from:2002.11 | GDS50261 | Drive Shaft | 44T | 23 | | 57.5 | 86.5 | 630 | |
| | 2000.02-2005.04 | | F | L | Hatchback FWD F9Q780/F9Q782 | Date from:2002.11 | GDS50401 | Drive Shaft | 44T | 21 | | 57 | 84 | 629 | |
| | 2000.02-2005.04 | | F | R | Hatchback FWD F9Q780/F9Q782 | Hollow shaft | GDS50151 | Drive Shaft | | 21 | 23 | 49.8 | 83.5 | 715 | |
| 2.0 (102 kw) | 2006.09-2014.12 | 4AT/6MT | F | L | Hatchback FWD M4R 700;M4R 701 | | GDS50468 | Drive Shaft | | 27 | 26 | 56.7 | 88.5 | 689 | |
| | 2006.09-2014.12 | 4AT/6MT | F | R | Hatchback FWD M4R 700;M4R 701 | | GDS50467 | Drive Shaft | | 27 | 26 | 56.7 | 88.5 | 940 | |
| | 2006.09-2014.12 | | F | L/R | Hatchback FWD M4R 700;M4R 701 | For Engine code:M4R700 | GCO50149 | Outer Joint | | 27 | 33 | 56.7 | 88.5 | 59.5 | I |
| 2.0 (108 kw) | 1993.03-1996.04 | AT/MT | F | L/R | Hatchback FWD F7R700 | | GCO50011 | Outer Joint | 26T | 21 | 25 | 56.2 | 83.5 | 58 | O |
| | 1993.03-1996.04 | MT | F | L/R | Hatchback FWD F7R700 | Date to:1996.04 | GCO50008 | Outer Joint | | 21 | 25 | 56.2 | 83.5 | 58 | O |
| 2.0 (124 kw) | 2000.02-2003.10 | 5MT | F | L | Hatchback FWD F4R730/F4R732/F4R736 | | GDS50521 | Drive Shaft | 44T | 23 | | 57.5 | 87 | 640 | |

| | YEAR | TRANSM. | F/R | L/R | BODY STYLE & DRIVE TYPE & ENGINE | REMARKS | G-AP Ref. | PRODUCT | ABS | Technical Specifications A | B | C | H | L | P |
|---|---|---|---|---|---|---|---|---|---|---|---|---|---|---|---|
| **RENAULT** | | | | | | | | | | | | | | | |
| **Clio** | | | | | | | | | | | | | | | |
| 2.0 (124 kw) | 2000.02-2003.10 | 5MT | F | R | Hatchback FWD F4R730/F4R732/F4R736 | | GDS50522 | Drive Shaft | 44T | 23 | 23 | 57.5 | 87 | 732 | |
| | 2000.02-2003.10 | MT | F | L | Hatchback FWD F4R730/F4R732/F4R736 | | GDS50504 | Drive Shaft | 44T | 23 | | 57.5 | 86 | 648 | |
| | 2000.02-2003.10 | MT | F | R | Hatchback FWD F4R730/F4R732/F4R736 | | GDS50159 | Drive Shaft | 44T | 23 | 23 | 57 | 87 | 748 | |
| | 2000.02-2003.10 | MT | F | R | Hatchback FWD F4R730/F4R732/F4R736 | | GDS50505 | Drive Shaft | 44T | 23 | 23 | 57.5 | 86 | 733 | |
| | 2000.02-2003.10 | MT | F | L/R | Hatchback FWD F4R730/F4R732/F4R736 | | GCO50058 | Outer Joint | 44T | 23 | 35 | 57 | 87 | 71 | I |
| | 2000.02-2003.10 | MT | F | R | Hatchback FWD F4R730/F4R732/F4R736 | | GCI50008 | Inner Joint | | 23 | 30 | 36.3 | | 120.7 | |
| 2.0 (132 kw) | 2003.10-2006.12 | 5MT | F | R | Hatchback FWD F4R738 | | GDS99217 | Drive Shaft | 44T | 23 | 23 | 57.5 | 86 | 733 | |
| | 2003.10-2006.12 | 5MT | F | R | Hatchback FWD F4R738 | | GCO50103 | Outer Joint | 44T | 23 | 32 | 57.5 | 86 | 62.5 | I |
| | 2003.10-2006.12 | MT | F | L | Hatchback FWD F4R738 | | GDS50504 | Drive Shaft | 44T | 23 | | 57.5 | 86 | 648 | |
| | 2003.10-2006.12 | MT | F | R | Hatchback FWD F4R738 | | GDS50159 | Drive Shaft | 44T | 23 | 23 | 57 | 87 | 748 | |
| | 2003.10-2006.12 | MT | F | R | Hatchback FWD F4R738 | | GDS50505 | Drive Shaft | 44T | 23 | 23 | 57.5 | 86 | 733 | |
| | 2003.10-2006.12 | MT | F | R | Hatchback FWD F4R738 | | GCI50008 | Inner Joint | | 23 | 30 | 36.3 | | 120.7 | |
| 2.0 (145 kw) | 2006.02-2012.12 | 6MT | F | L | Hatchback FWD F4R 830;F4R 832 | | GDS50605 | Drive Shaft | | 27 | 26 | 56.7 | 88.5 | 686 | |
| | 2006.02-2012.12 | 6MT | F | L | Hatchback FWD F4R 830;F4R 832 | | GCO50149 | Outer Joint | | 27 | 33 | 56.7 | 88.5 | 59.5 | I |
| | 2006.02-2012.12 | 6MT | F | L | Hatchback FWD F4R 830;F4R 832 | | GCI50070 | Inner Joint | | 26 | 33 | 40 | 64 | 106 | |
| 2.0 (148 kw) | 2008.09-2014.12 | 6MT | F | L | Hatchback FWD F4R 832 | | GDS50605 | Drive Shaft | | 27 | 26 | 56.7 | 88.5 | 686 | |
| | 2008.09-2014.12 | 6MT | F | L | Hatchback FWD F4R 832 | | GCI50070 | Inner Joint | | 26 | 33 | 40 | 64 | 106 | |
| | 2008.09-2014.12 | | F | | Hatchback FWD F4R 832 | | GCO50152 | Outer Joint | | 27 | 33 | 56.7 | 87 | 62 | I |
| **Clio Grandtour** | | | | | | | | | | | | | | | |
| 1.2 (55 kw) | 2008.02-2014.12 | 5MT | F | L | Estate FWD D4F 740 | | GDS50369 | Drive Shaft | | 23 | 26 | 49 | 83.5 | 651 | |
| | 2008.02-2014.12 | 5MT | F | R | Estate FWD D4F 740 | | GDS50372 | Drive Shaft | | 23 | 26 | 49 | 83.5 | 890 | |
| | 2008.02-2014.12 | MT | F | L/R | Estate FWD D4F 740 | | GCO50112 | Outer Joint | | 23 | 28 | 49 | 83.5 | 54.5 | I |
| **Clio Grandtour** | | | | | | | | | | | | | | | |
| 0.9 (56 kw) | 2018.08-2021.08 | 5MT | F | L | Estate FWD H4B 408 | | GDS50487 | Drive Shaft | | 23 | 26 | 49 | 86 | 662 | |
| | 2018.08-2021.08 | 5MT | F | L | Estate FWD H4B 408 | | GCO50167 | Outer Joint | | 23 | 30 | 49 | 86 | 53.5 | I |
| | 2018.08-2021.08 | 5MT | F | L | Estate FWD H4B 408 | | GCI50096 | Inner Joint | | 26 | 30 | 40 | 64 | 96 | |
| | 2018.08-2021.08 | MT | F | R | Estate FWD H4B 408 | Date from:2019.01 | GDS50563 | Drive Shaft | | 23 | 26 | 49 | 86 | 909 | |
| 0.9 (66 kw) | 2013.01-2021.08 | 5MT | F | L | Estate FWD H4B 400;H4B 408;H4B 412 | | GDS50487 | Drive Shaft | | 23 | 26 | 49 | 86 | 662 | |
| | 2013.01-2021.08 | 5MT | F | R | Estate FWD H4B 400;H4B 408;H4B 412 | | GDS50563 | Drive Shaft | | 23 | 26 | 49 | 86 | 909 | |
| | 2013.01-2021.08 | 5MT | F | L/R | Estate FWD H4B 400;H4B 408;H4B 412 | | GCO50167 | Outer Joint | | 23 | 30 | 49 | 86 | 53.5 | I |
| | 2013.01-2021.08 | 5MT | F | L | Estate FWD H4B 400;H4B 408;H4B 412 | | GCI50096 | Inner Joint | | 26 | 30 | 40 | 64 | 96 | |
| | 2013.01-2021.08 | 5MT | F | L | Estate FWD H4B 400;H4B 408;H4B 412 | | GCI50134 | Inner Joint | | 26 | 30 | 40 | 64 | 96 | |
| | 2013.01-2021.08 | 5MT | F | R | Estate FWD H4B 400;H4B 408;H4B 412 | | GCI50100 | Inner Joint | | 26 | 30 | 33 | 347 | 92.5 | |
| | 2014.01-2021.08 | 5MT | F | L | Estate Van FWD H4B 400 | | GDS50487 | Drive Shaft | | 23 | 26 | 49 | 86 | 662 | |
| | 2014.01-2021.08 | 5MT | F | R | Estate Van FWD H4B 400 | | GDS50563 | Drive Shaft | | 23 | 26 | 49 | 86 | 909 | |
| | 2014.01-2021.08 | 5MT | F | R | Estate Van FWD H4B 400 | | GCO50167 | Outer Joint | | 23 | 30 | 49 | 86 | 53.5 | I |
| | 2014.01-2021.08 | 5MT | F | L | Estate Van FWD H4B 400 | Manufacturer:NTN | GCI50134 | Inner Joint | | 26 | 30 | 40 | 64 | 96 | |
| | 2014.01-2021.08 | 5MT | F | R | Estate Van FWD H4B 400 | | GCI50100 | Inner Joint | | 26 | 30 | 33 | 347 | 92.5 | |
| 1.2 (54 kw) | 2013.01-2021.08 | 5MT | F | L | Estate FWD D4F 740 | | GDS50487 | Drive Shaft | | 23 | 26 | 49 | 86 | 662 | |
| | 2013.01-2021.08 | 5MT | F | R | Estate FWD D4F 740 | Model code:KHMG/KHMK | GDS50488 | Drive Shaft | | 23 | 26 | 49 | 86 | 908 | |
| | 2013.01-2021.08 | 5MT | F | R | Estate FWD D4F 740 | For Modelcode:KHAK | GDS50489 | Drive Shaft | | 23 | 26 | 49 | 86 | 910 | |
| | 2013.01-2021.08 | 5MT | F | L | Estate FWD D4F 740 | | GCI50096 | Inner Joint | | 26 | 30 | 40 | 64 | 96 | |
| | 2013.01-2021.08 | | F | L/R | Estate FWD D4F 740 | | GCO50219 | Outer Joint | | 23 | 28 | 49 | 86 | 52 | I |
| 1.2 (55 kw) | 2008.07-2014.12 | 5MT | F | L | Estate FWD D4F 740 | | GDS50369 | Drive Shaft | | 23 | 26 | 49 | 83.5 | 651 | |
| | 2008.07-2014.12 | 5MT | F | R | Estate FWD D4F 740 | | GDS50372 | Drive Shaft | | 23 | 26 | 49 | 83.5 | 890 | |
| | 2008.07-2014.12 | MT | F | L/R | Estate FWD D4F 740 | | GCO50112 | Outer Joint | | 23 | 28 | 49 | 83.5 | 54.5 | I |
| 1.2 (58 kw) | 2007.11-2012.12 | 5MT | F | L | Estate FWD D4F 742 | | GDS50369 | Drive Shaft | | 23 | 26 | 49 | 83.5 | 651 | |
| | 2007.11-2012.12 | 5MT | F | R | Estate FWD D4F 742 | | GDS50372 | Drive Shaft | | 23 | 26 | 49 | 83.5 | 890 | |
| | 2007.11-2012.12 | | F | L/R | Estate FWD D4F 742 | | GCO50112 | Outer Joint | | 23 | 28 | 49 | 83.5 | 54.5 | I |
| | 2007.11-2014.12 | 5MT | F | L | Estate FWD D4F 764 | | GDS50369 | Drive Shaft | | 23 | 26 | 49 | 83.5 | 651 | |
| | 2007.11-2014.12 | 5MT | F | R | Estate FWD D4F 764 | | GDS50372 | Drive Shaft | | 23 | 26 | 49 | 83.5 | 890 | |
| | 2007.11-2014.12 | 5MT | F | L/R | Estate FWD D4F 764 | | GCO50112 | Outer Joint | | 23 | 28 | 49 | 83.5 | 54.5 | I |
| 1.2 (74 kw) | 2007.11-2012.12 | 5MT | F | L | Estate FWD D4F 784 | Date from:2008.06;Inner teeth of wheel side:30 | GDS50353 | Drive Shaft | | 23 | 26 | 49 | 86 | 649 | |
| | 2007.11-2012.12 | 5MT | F | R | Estate FWD D4F 784 | Date to:2012.12;Inner teeth of wheel side:30 | GDS50573 | Drive Shaft | | 23 | 26 | 49 | 86 | 891 | |
| | 2007.11-2012.12 | 5MT | F | L | Estate FWD D4F 784 | Date from:2008.06 | GCI50048 | Inner Joint | | 26 | 30 | 40 | 64 | 121 | |
| | 2007.11-2012.12 | MT | F | L | Estate FWD D4F 784 | Inner teeth of wheel side:28 | GDS50369 | Drive Shaft | | 23 | 26 | 49 | 83.5 | 651 | |
| | 2007.11-2012.12 | MT | F | R | Estate FWD D4F 784 | Inner teeth of wheel side:28 | GDS50372 | Drive Shaft | | 23 | 26 | 49 | 83.5 | 890 | |
| | 2007.11-2012.12 | MT | F | L | Estate FWD D4F 784 | Date from:2008.06 | GCO50092 | Outer Joint | | 23 | 29 | 49 | 86 | 57 | I |
| | 2007.11-2012.12 | MT | F | L/R | Estate FWD D4F 784 | | GCO50112 | Outer Joint | | 23 | 28 | 49 | 83.5 | 54.5 | I |
| 1.2 (76 kw) | 2010.03-2012.12 | 5MT | F | L | Estate FWD D4F 786 | | GDS50353 | Drive Shaft | | 23 | 26 | 49 | 86 | 649 | |
| | 2010.03-2012.12 | 5MT | F | R | Estate FWD D4F 786 | | GDS50573 | Drive Shaft | | 23 | 26 | 49 | 86 | 891 | |
| | 2010.03-2012.12 | MT | F | L | Estate FWD D4F 786 | | GCO50092 | Outer Joint | | 23 | 29 | 49 | 86 | 57 | I |
| | 2010.03-2012.12 | MT | F | L | Estate FWD D4F 786 | | GCI50048 | Inner Joint | | 26 | 30 | 40 | 64 | 121 | |
| | 2010.03-2012.12 | | F | | Estate FWD D4F 786 | | GCO50112 | Outer Joint | | 23 | 28 | 49 | 83.5 | 54.5 | I |
| 1.2 (87 kw) | 2016.01-2021.08 | 6AT | F | L | Estate FWD H5F 408;H5F 412 | | GDS82284 | Drive Shaft | | 23 | 34 | 49 | 85.5 | 610 | |

| | YEAR | TRANSM. | F/R | L/R | BODY STYLE & DRIVE TYPE & ENGINE | REMARKS | G-AP Ref. | PRODUCT | ABS | Technical Specifications A | B | C | H | L | P |
|---|---|---|---|---|---|---|---|---|---|---|---|---|---|---|---|
| **RENAULT** **Clio Grandtour** | | | | | | | | | | | | | | | |
| 1.2 (87 kw) | 2016.01-2021.08 | 6AT | F | R | Estate FWD H5F 408;H5F 412 | | GDS84449 | Drive Shaft | | 23 | 34 | 49 | 85.5 | 959 | |
| | 2016.01-2021.08 | 6AT | F | L | Estate FWD H5F 408;H5F 412 | | GCI50140 | Inner Joint | | 34 | 33 | 40 | 54 | 106 | |
| | 2016.01-2021.08 | 6AT | F | R | Estate FWD H5F 408;H5F 412 | | GCI50136 | Inner Joint | | 34 | 33 | 40 | 396.5 | 89.5 | |
| | 2016.01-2021.08 | 6AT/6MT | F | L/R | Estate FWD H5F 408;H5F 412 | 8 balls | GCO81927 | Outer Joint | | 23 | 33 | 49 | 85.5 | 58.5 | I |
| | 2016.01-2021.08 | 6MT | F | L | Estate FWD H5F 408;H5F 412 | | GDS83829 | Drive Shaft | | 23 | 26 | 49 | 85.5 | 661 | |
| | 2016.01-2021.08 | 6MT | F | R | Estate FWD H5F 408;H5F 412 | | GDS83830 | Drive Shaft | | 23 | 26 | 49 | 85.5 | 910 | |
| | 2016.01-2021.08 | 6MT | F | L | Estate FWD H5F 408;H5F 412 | | GCI82309 | Inner Joint | | 26 | 33 | 40 | 64 | 106 | |
| | 2016.01-2021.08 | 6MT | F | R | Estate FWD H5F 408;H5F 412 | | GCI82308 | Inner Joint | | 26 | 33 | 33 | 346 | 90 | |
| 1.2 (88 kw) | 2013.03-2021.08 | 6AT | F | L | Estate FWD H5F 403 | | GDS82284 | Drive Shaft | | 23 | 34 | 49 | 85.5 | 610 | |
| | 2013.03-2021.08 | 6AT | F | R | Estate FWD H5F 403 | | GDS84449 | Drive Shaft | | 23 | 34 | 49 | 85.5 | 959 | |
| | 2013.03-2021.08 | 6AT | F | L/R | Estate FWD H5F 403 | 8 balls | GCO81927 | Outer Joint | | 23 | 33 | 49 | 85.5 | 58.5 | I |
| | 2013.03-2021.08 | 6AT | F | L | Estate FWD H5F 403 | | GCI50140 | Inner Joint | | 34 | 33 | 40 | 54 | 106 | |
| | 2013.03-2021.08 | 6AT | F | R | Estate FWD H5F 403 | | GCI50136 | Inner Joint | | 34 | 33 | 40 | 396.5 | 89.5 | |
| 1.4 (72 kw) | 2007.11-2012.12 | 5MT | F | L | Estate FWD K4J 780 | | GDS50353 | Drive Shaft | | 23 | 26 | 49 | 86 | 649 | |
| | 2007.11-2012.12 | 5MT | F | L | Estate FWD K4J 780 | Date from:2011.03 | GDS50630 | Drive Shaft | | 23 | 26 | 49 | 83 | 653 | |
| | 2007.11-2012.12 | 5MT | F | R | Estate FWD K4J 780 | | GDS50354 | Drive Shaft | | 23 | 26 | 49 | 86 | 897 | |
| | 2007.11-2012.12 | 5MT | F | R | Estate FWD K4J 780 | Date from:2011.02;Date to:2012.12 | GDS50625 | Drive Shaft | | 23 | 26 | 49 | 83.5 | 893 | |
| | 2007.11-2012.12 | 5MT | F | L | Estate FWD K4J 780 | Date from:2011.03;Date to:2012.12 | GCO50223 | Outer Joint | | 23 | 30 | 49 | 83 | 53.5 | I |
| | 2007.11-2012.12 | 5MT | F | R | Estate FWD K4J 780 | Date from:2011.02;Date to:2012.12 | GCO50168 | Outer Joint | | 23 | 30 | 49 | 83.5 | 54.5 | I |
| | 2007.11-2012.12 | 5MT | F | R | Estate FWD K4J 780 | | GCI50148 | Inner Joint | | 26 | 30 | 33 | 326 | 90 | |
| | 2007.11-2012.12 | MT | F | R | Estate FWD K4J 780 | Date to:2011.01 | GCI99169 | Inner Joint | | 26 | 30 | 33 | 326 | 95 | |
| | 2007.11-2012.12 | | F | L | Estate FWD K4J 780 | | GCO50092 | Outer Joint | | 23 | 29 | 49 | 86 | 57 | I |
| | 2007.11-2012.12 | | F | L | Estate FWD K4J 780 | Date To:2011.02 | GCO99085 | Outer Joint | | 23 | 30 | 49 | 86 | 59 | I |
| | 2007.11-2012.12 | | F | R | Estate FWD K4J 780 | Date To:2011.01 | GCO99085 | Outer Joint | | 23 | 30 | 49 | 86 | 59 | I |
| 1.5 (48 kw) | 2007.11-2012.12 | 5MT | F | L | Estate FWD K9K 752 | | GDS50353 | Drive Shaft | | 23 | 26 | 49 | 86 | 649 | |
| | 2007.11-2012.12 | 5MT | F | L | Estate FWD K9K 752 | Date from:2011.03;Date to:2012.12 | GDS50630 | Drive Shaft | | 23 | 26 | 49 | 83 | 653 | |
| | 2007.11-2012.12 | 5MT | F | R | Estate FWD K9K 752 | | GDS50354 | Drive Shaft | | 23 | 26 | 49 | 86 | 897 | |
| | 2007.11-2012.12 | 5MT | F | R | Estate FWD K9K 752 | Date from:2011.02;Date to:2012.12 | GDS50625 | Drive Shaft | | 23 | 26 | 49 | 83.5 | 893 | |
| | 2007.11-2012.12 | 5MT | F | L | Estate FWD K9K 752 | Date from:2011.03;Date to:2012.12 | GCO50223 | Outer Joint | | 23 | 30 | 49 | 83 | 53.5 | I |
| | 2007.11-2012.12 | 5MT | F | R | Estate FWD K9K 752 | Date from:2011.02;Date to:2012.12 | GCO50168 | Outer Joint | | 23 | 30 | 49 | 83.5 | 54.5 | I |
| | 2007.11-2012.12 | 5MT | F | R | Estate FWD K9K 752 | | GCI50148 | Inner Joint | | 26 | 30 | 33 | 326 | 90 | |
| | 2007.11-2012.12 | MT | F | L | Estate FWD K9K 752 | | GDS50004 | Drive Shaft | 26T | 21 | | 57 | 84.5 | 625.7 | |
| | 2007.11-2012.12 | MT | F | L | Estate FWD K9K 752 | | GDS50177 | Drive Shaft | | 21 | | 57 | 84.5 | 625.7 | |
| | 2007.11-2012.12 | MT | F | R | Estate FWD K9K 752 | | GDS50146 | Drive Shaft | | 21 | 23 | 57 | 84.5 | 732.5 | |
| | 2007.11-2012.12 | MT | F | R | Estate FWD K9K 752 | | GDS50250 | Drive Shaft | 26T | 21 | 23 | 57 | 84.5 | 732.5 | |
| | 2007.11-2012.12 | MT | F | R | Estate FWD K9K 752 | | GDS99072 | Drive Shaft | 44T | 21 | 23 | 57 | 84.5 | 720 | |
| | 2007.11-2012.12 | MT | F | R | Estate FWD K9K 752 | Date to:2011.01 | GCI99169 | Inner Joint | | 26 | 30 | 33 | 326 | 95 | |
| | 2007.11-2012.12 | | F | L | Estate FWD K9K 752 | | GCO50092 | Outer Joint | | 23 | 29 | 49 | 86 | 57 | I |
| | 2007.11-2012.12 | | F | L | Estate FWD K9K 752 | Date To:2011.02 | GCO99085 | Outer Joint | | 23 | 30 | 49 | 86 | 59 | I |
| | 2007.11-2012.12 | | F | R | Estate FWD K9K 752 | Date To:2011.01 | GCO99085 | Outer Joint | | 23 | 30 | 49 | 86 | 59 | I |
| 1.5 (50 kw) | 2007.11-2012.12 | 5MT | F | L | Estate FWD K9K 768;K9K 714 | | GDS50353 | Drive Shaft | | 23 | 26 | 49 | 86 | 649 | |
| | 2007.11-2012.12 | 5MT | F | L | Estate FWD K9K 768;K9K 714 | Date from:2011.03 | GDS50630 | Drive Shaft | | 23 | 26 | 49 | 83 | 653 | |
| | 2007.11-2012.12 | 5MT | F | R | Estate FWD K9K 768;K9K 714 | | GDS50354 | Drive Shaft | | 23 | 26 | 49 | 86 | 897 | |
| | 2007.11-2012.12 | 5MT | F | R | Estate FWD K9K 768;K9K 714 | Date from:2011.02 | GDS50625 | Drive Shaft | | 23 | 26 | 49 | 83.5 | 893 | |
| | 2007.11-2012.12 | 5MT | F | L/R | Estate FWD K9K 768;K9K 714 | Date from:2011.02 | GCO50168 | Outer Joint | | 23 | 30 | 49 | 83.5 | 54.5 | I |
| | 2007.11-2012.12 | 5MT | F | L/R | Estate FWD K9K 768;K9K 714 | Date to:2011.02 | GCO99085 | Outer Joint | | 23 | 30 | 49 | 86 | 59 | I |
| | 2007.11-2012.12 | 5MT | F | R | Estate FWD K9K 768;K9K 714 | | GCI50148 | Inner Joint | | 26 | 30 | 33 | 326 | 90 | |
| | 2007.11-2012.12 | MT | F | R | Estate FWD K9K 768;K9K 714 | Date to:2011.01 | GCI99169 | Inner Joint | | 26 | 30 | 33 | 326 | 95 | |
| | 2007.11-2012.12 | | F | L | Estate FWD K9K 768;K9K 714 | | GCO50092 | Outer Joint | | 23 | 29 | 49 | 86 | 57 | I |
| 1.5 (55 kw) | 2010.08-2012.12 | 5MT | F | L | Estate FWD K9K 770 | Date from:2011.03 | GDS50630 | Drive Shaft | | 23 | 26 | 49 | 83 | 653 | |
| | 2010.08-2012.12 | 5MT | F | R | Estate FWD K9K 770 | | GDS50354 | Drive Shaft | | 23 | 26 | 49 | 86 | 897 | |
| | 2010.08-2012.12 | 5MT | F | R | Estate FWD K9K 770 | Date to:2012.12 | GDS50625 | Drive Shaft | | 23 | 26 | 49 | 83.5 | 893 | |
| | 2010.08-2012.12 | 5MT | F | L | Estate FWD K9K 770 | Date from:2011.03;Date to:2012.12 | GCO50223 | Outer Joint | | 23 | 30 | 49 | 83 | 53.5 | I |
| | 2010.08-2012.12 | 5MT | F | R | Estate FWD K9K 770 | Date to:2012.12 | GCO50168 | Outer Joint | | 23 | 30 | 49 | 83.5 | 54.5 | I |
| | 2010.08-2012.12 | 5MT | F | R | Estate FWD K9K 770 | | GCI50148 | Inner Joint | | 26 | 30 | 33 | 326 | 90 | |
| | 2010.08-2012.12 | | F | | Estate FWD K9K 770 | | GCO50143 | Outer Joint | | 25 | 32 | 52.8 | 85.5 | 62.5 | I |
| | 2013.01-2021.08 | MT | F | L | Estate FWD K9K 612;K9K 628 | | GDS50487 | Drive Shaft | | 23 | 26 | 49 | 86 | 662 | |
| | 2013.01-2021.08 | MT | F | R | Estate FWD K9K 612;K9K 628 | | GDS50489 | Drive Shaft | | 23 | 26 | 49 | 86 | 910 | |
| | 2013.01-2021.08 | MT | F | L/R | Estate FWD K9K 612;K9K 628 | | GCO50167 | Outer Joint | | 23 | 30 | 49 | 86 | 53.5 | I |
| | 2013.01-2021.08 | MT | F | L | Estate FWD K9K 612;K9K 628 | | GCI50096 | Inner Joint | | 26 | 30 | 40 | 64 | 96 | |
| | 2014.01-2021.08 | 5MT | F | L | Estate Van FWD K9K 612 | | GDS50487 | Drive Shaft | | 23 | 26 | 49 | 86 | 662 | |
| | 2014.01-2021.08 | 5MT | F | R | Estate Van FWD K9K 612 | | GDS50489 | Drive Shaft | | 23 | 26 | 49 | 86 | 910 | |
| | 2014.01-2021.08 | 5MT | F | L/R | Estate Van FWD K9K 612 | | GCO50167 | Outer Joint | | 23 | 30 | 49 | 86 | 53.5 | I |
| | 2014.01-2021.08 | 5MT | F | L | Estate Van FWD K9K 612 | | GCI50096 | Inner Joint | | 26 | 30 | 40 | 64 | 96 | |
| 1.5 (63 kw) | 2007.11-2012.12 | 5MT | F | L | Estate FWD K9K 766 | Date to:2011.01; | GDS50353 | Drive Shaft | | 23 | 26 | 49 | 86 | 649 | |

| | YEAR | TRANSM. | F/R | L/R | BODY STYLE & DRIVE TYPE & ENGINE | REMARKS | G-AP Ref. | PRODUCT | ABS | Technical Specifications A | B | C | H | L | P |
|---|---|---|---|---|---|---|---|---|---|---|---|---|---|---|---|
| **RENAULT** | | | | | | | | | | | | | | | |
| **Clio Grandtour** | | | | | | | | | | | | | | | |
| 1.5 (63 kw) | 2007.11-2012.12 | 5MT | F | L | Estate FWD K9K 766 | Date from:2011.03 | GDS50630 | Drive Shaft | | 23 | 26 | 49 | 83 | 653 | |
| | 2007.11-2012.12 | 5MT | F | R | Estate FWD K9K 766 | Date To:2011.01 | GDS50354 | Drive Shaft | | 23 | 26 | 49 | 86 | 897 | |
| | 2007.11-2012.12 | 5MT | F | R | Estate FWD K9K 766 | Date from:2011.02 | GDS50625 | Drive Shaft | | 23 | 26 | 49 | 83.5 | 893 | |
| | 2007.11-2012.12 | 5MT | F | L/R | Estate FWD K9K 766 | Date from:2011.02 | GCO50168 | Outer Joint | | 23 | 30 | 49 | 83.5 | 54.5 | I |
| | 2007.11-2012.12 | 5MT | F | L/R | Estate FWD K9K 766 | Date to:2011.02 | GCO99085 | Outer Joint | | 23 | 30 | 49 | 86 | 59 | I |
| | 2007.11-2012.12 | 5MT | F | L | Estate FWD K9K 766 | Date from:2011.03 | GCI50134 | Inner Joint | | 26 | 30 | 40 | 64 | 96 | |
| | 2007.11-2012.12 | 5MT | F | R | Estate FWD K9K 766 | Date to:2011.01 | GCI50148 | Inner Joint | | 26 | 30 | 33 | 326 | 90 | |
| | 2007.11-2012.12 | MT | F | L | Estate FWD K9K 766 | Date to:2011.01 | GCO50092 | Outer Joint | | 23 | 29 | 49 | 86 | 57 | I |
| | 2007.11-2012.12 | MT | F | R | Estate FWD K9K 766 | Date to:2011.01 | GCI99169 | Inner Joint | | 26 | 30 | 33 | 326 | 95 | |
| 1.5 (65 kw) | 2010.08-2012.12 | 5MT/6MT | F | R | Estate FWD K9K 772;K9K 770 | | GCI50148 | Inner Joint | | 26 | 30 | 33 | 326 | 90 | |
| | 2010.08-2012.12 | 6MT | F | L | Estate FWD K9K 772;K9K 770 | | GDS50379 | Drive Shaft | | 25 | 26 | 52.8 | 85.5 | 650 | |
| | 2010.08-2012.12 | 6MT | F | L/R | Estate FWD K9K 772;K9K 770 | | GCO50143 | Outer Joint | | 25 | 32 | 52.8 | 85.5 | 62.5 | I |
| | 2010.08-2012.12 | 6MT/10AT | F | R | Estate FWD K9K 772;K9K 770 | | GDS50483 | Drive Shaft | | 25 | 26 | 52.8 | 85.5 | 891 | |
| | 2010.08-2012.12 | | F | L | Estate FWD K9K 772;K9K 770 | Date from:2011.03,For Modelcode:KR1H | GDS50630 | Drive Shaft | | 23 | 26 | 49 | 83 | 653 | |
| | 2010.08-2012.12 | | F | R | Estate FWD K9K 772;K9K 770 | For Modelcode:KR1H | GDS50354 | Drive Shaft | | 23 | 26 | 49 | 86 | 897 | |
| | 2010.08-2012.12 | | F | R | Estate FWD K9K 772;K9K 770 | For Modelcode:KR1H | GDS50625 | Drive Shaft | | 23 | 26 | 49 | 83.5 | 893 | |
| | 2010.08-2012.12 | | F | R | Estate FWD K9K 772;K9K 770 | For Modelcode:KR1H | GCO50168 | Outer Joint | | 23 | 30 | 49 | 83.5 | 54.5 | I |
| 1.5 (66 kw) | 2012.11-2021.08 | 5MT | F | L | Estate FWD K9K 608;K9K 628;K9K 629;K9K 638 | | GDS50487 | Drive Shaft | | 23 | 26 | 49 | 86 | 662 | |
| | 2012.11-2021.08 | 5MT | F | R | Estate FWD K9K 608;K9K 628;K9K 629;K9K 638 | | GDS50489 | Drive Shaft | | 23 | 26 | 49 | 86 | 910 | |
| | 2012.11-2021.08 | 6AT | F | L | Estate FWD K9K 608;K9K 628;K9K 629;K9K 638 | | GDS82284 | Drive Shaft | | 23 | 34 | 49 | 85.5 | 610 | |
| | 2012.11-2021.08 | 6AT | F | R | Estate FWD K9K 608;K9K 628;K9K 629;K9K 638 | | GDS82447 | Drive Shaft | | 23 | 34 | 49 | 85.5 | 958 | |
| | 2012.11-2021.08 | 6AT | F | L/R | Estate FWD K9K 608;K9K 628;K9K 629;K9K 638 | 8 balls | GCO81927 | Outer Joint | | 23 | 33 | 49 | 85.5 | 58.5 | I |
| | 2012.11-2021.08 | 6AT | F | L | Estate FWD K9K 608;K9K 628;K9K 629;K9K 638 | | GCI50140 | Inner Joint | | 34 | 33 | 40 | 54 | 106 | |
| | 2014.01-2021.08 | 5MT | F | L | Estate Van FWD K9K 608 | | GDS50487 | Drive Shaft | | 23 | 26 | 49 | 86 | 662 | |
| | 2014.01-2021.08 | 5MT | F | R | Estate Van FWD K9K 608 | | GDS50489 | Drive Shaft | | 23 | 26 | 49 | 86 | 910 | |
| | 2014.01-2021.08 | 5MT | F | L/R | Estate Van FWD K9K 608 | | GCO50167 | Outer Joint | | 23 | 30 | 49 | 86 | 53.5 | I |
| | 2014.01-2021.08 | 5MT | F | L | Estate Van FWD K9K 608 | | GCI50096 | Inner Joint | | 26 | 30 | 40 | 64 | 96 | |
| 1.5 (76 kw) | 2007.11-2012.12 | 6MT | F | L | Estate FWD K9K 772 | | GDS50379 | Drive Shaft | | 25 | 26 | 52.8 | 85.5 | 650 | |
| | 2007.11-2012.12 | 6MT | F | R | Estate FWD K9K 772 | | GDS50483 | Drive Shaft | | 25 | 26 | 52.8 | 85.5 | 891 | |
| | 2007.11-2012.12 | 6MT | F | L/R | Estate FWD K9K 772 | | GCO50143 | Outer Joint | | 25 | 32 | 52.8 | 85.5 | 62.5 | I |
| | 2007.11-2012.12 | MT | F | L | Estate FWD K9K 772 | | GDS50353 | Drive Shaft | | 23 | 26 | 49 | 86 | 649 | |
| | 2007.11-2012.12 | MT | F | R | Estate FWD K9K 772 | | GDS50354 | Drive Shaft | | 23 | 26 | 49 | 86 | 897 | |
| | 2007.11-2012.12 | MT | F | L/R | Estate FWD K9K 772 | | GCO99085 | Outer Joint | | 23 | 30 | 49 | 86 | 59 | I |
| 1.5 (78 kw) | 2008.02-2012.12 | 6MT | F | L | Estate FWD K9K 764;K9K 774 | | GDS50379 | Drive Shaft | | 25 | 26 | 52.8 | 85.5 | 650 | |
| | 2008.02-2012.12 | 6MT | F | R | Estate FWD K9K 764;K9K 774 | | GDS50483 | Drive Shaft | | 25 | 26 | 52.8 | 85.5 | 891 | |
| | 2008.02-2012.12 | 6MT | F | L/R | Estate FWD K9K 764;K9K 774 | | GCO50143 | Outer Joint | | 25 | 32 | 52.8 | 85.5 | 62.5 | I |
| | 2008.02-2012.12 | MT | F | L | Estate FWD K9K 764;K9K 774 | Date to:2008.03;Model code:KR0F/KR0G | GDS50353 | Drive Shaft | | 23 | 26 | 49 | 86 | 649 | |
| | 2008.02-2012.12 | MT | F | R | Estate FWD K9K 764;K9K 774 | Date to:2008.03;Model code:KR0F/KR0G | GDS50354 | Drive Shaft | | 23 | 26 | 49 | 86 | 897 | |
| | 2008.02-2012.12 | MT | F | R | Estate FWD K9K 764;K9K 774 | Date to:2008.03 | GCI99169 | Inner Joint | | 26 | 30 | 33 | 326 | 95 | |
| 1.5 (81 kw) | 2016.06-2021.08 | 6MT | F | L | Estate FWD K9K 646 | | GDS50487 | Drive Shaft | | 23 | 26 | 49 | 86 | 662 | |
| | 2016.06-2021.08 | 6MT | F | R | Estate FWD K9K 646 | | GDS50489 | Drive Shaft | | 23 | 26 | 49 | 86 | 910 | |
| | 2016.06-2021.08 | 6MT | F | L/R | Estate FWD K9K 646 | | GCO50167 | Outer Joint | | 23 | 30 | 49 | 86 | 53.5 | I |
| | 2016.06-2021.08 | 6MT | F | L | Estate FWD K9K 646 | | GCI50096 | Inner Joint | | 26 | 30 | 40 | 64 | 96 | |
| 1.6 (80 kw) | 2007.11-2012.12 | MT | F | L | Estate FWD K4M 804 | | GDS50353 | Drive Shaft | | 23 | 26 | 49 | 86 | 649 | |
| | 2007.11-2012.12 | MT | F | L | Estate FWD K4M 804 | | GCO50092 | Outer Joint | | 23 | 29 | 49 | 86 | 57 | I |
| | 2007.11-2012.12 | MT | F | L | Estate FWD K4M 804 | | GCI50048 | Inner Joint | | 26 | 30 | 40 | 64 | 121 | |
| | 2007.11-2012.12 | | F | R | Estate FWD K4M 804 | Date To:2012.12 | GDS50354 | Drive Shaft | | 23 | 26 | 49 | 86 | 897 | |
| 1.6 (82 kw) | 2007.11-2012.12 | 4AT/5MT | F | L | Estate FWD K4M 800;K4M 801 | | GDS50353 | Drive Shaft | | 23 | 26 | 49 | 86 | 649 | |
| | 2007.11-2012.12 | 4AT/5MT | F | L | Estate FWD K4M 800;K4M 801 | For Engine Code:K4M801 | GDS50574 | Drive Shaft | | 23 | 26 | 49 | 86 | 652 | |
| | 2007.11-2012.12 | 4AT/5MT | F | L | Estate FWD K4M 800;K4M 801 | For Engine Code:K4M800,Date From:2011.03 | GDS50630 | Drive Shaft | | 23 | 26 | 49 | 83 | 653 | |
| | 2007.11-2012.12 | 4AT/5MT | F | R | Estate FWD K4M 800;K4M 801 | | GDS50354 | Drive Shaft | | 23 | 26 | 49 | 86 | 897 | |
| | 2007.11-2012.12 | 4AT/5MT | F | R | Estate FWD K4M 800;K4M 801 | For Engine Code:K4M801 | GDS50443 | Drive Shaft | | 23 | 23 | 49 | 86 | 789 | |
| | 2007.11-2012.12 | 4AT/5MT | F | L/R | Estate FWD K4M 800;K4M 801 | For Engine Code:K4M801;For Engine Code:K4M800,Date To:2011.02 | GCO99085 | Outer Joint | | 23 | 30 | 49 | 86 | 59 | I |
| | 2007.11-2012.12 | MT | F | R | Estate FWD K4M 800;K4M 801 | Date to:2012.12 | GCI99169 | Inner Joint | | 26 | 30 | 33 | 326 | 95 | |
| | 2007.11-2012.12 | | F | L | Estate FWD K4M 800;K4M 801 | | GCO50092 | Outer Joint | | 23 | 29 | 49 | 86 | 57 | I |
| 1.6 (94 kw) | 2007.11-2012.12 | 6MT | F | L | Estate FWD K4M 862 | | GDS50379 | Drive Shaft | | 25 | 26 | 52.8 | 85.5 | 650 | |
| | 2007.11-2012.12 | 6MT | F | L | Estate FWD K4M 862 | Date from:2011.03 | GDS50630 | Drive Shaft | | 23 | 26 | 49 | 83 | 653 | |
| | 2007.11-2012.12 | 6MT | F | R | Estate FWD K4M 862 | | GDS50483 | Drive Shaft | | 25 | 26 | 52.8 | 85.5 | 891 | |
| | 2007.11-2012.12 | 6MT | F | L | Estate FWD K4M 862 | Date from:2011.03;Date to:2012.12 | GCO50223 | Outer Joint | | 23 | 30 | 49 | 83 | 53.5 | I |
| | 2007.11-2012.12 | 6MT | F | L/R | Estate FWD K4M 862 | | GCO50143 | Outer Joint | | 25 | 32 | 52.8 | 85.5 | 62.5 | I |
| | 2007.11-2012.12 | MT | F | R | Estate FWD K4M 862 | | GDS50354 | Drive Shaft | | 23 | 26 | 49 | 86 | 897 | |
| | 2007.11-2012.12 | MT | F | R | Estate FWD K4M 862 | | GCI99169 | Inner Joint | | 26 | 30 | 33 | 326 | 95 | |
| **Clio I/Lutecia** | | | | | | | | | | | | | | | |
| 1.8 (66 kw) | 1990.08-1996.04 | MT | F | L | Hatchback FWD F3P 755 | | GDS50120 | Drive Shaft | | 21 | 30 | 46.3 | 80.5 | 591.5 | |

| | YEAR | TRANSM. | F/R | L/R | BODY STYLE & DRIVE TYPE & ENGINE | REMARKS | G-AP Ref. | PRODUCT | ABS | Technical Specifications A | B | C | H | L | P |
|---|---|---|---|---|---|---|---|---|---|---|---|---|---|---|---|
| **RENAULT** | | | | | | | | | | | | | | | |
| **Clio Symbol** | | | | | | | | | | | | | | | |
| 1.5 (48 kw) | 2002.04-2009.02 | MT | F | L | Saloon FWD K9K700 | | GDS50004 | Drive Shaft | 26T | 21 | | 57 | 84.5 | 625.7 | |
| | 2002.04-2009.02 | MT | F | L | Saloon FWD K9K700 | | GDS50150 | Drive Shaft | | 21 | 30 | 49.8 | 83.5 | 623 | |
| | 2002.04-2009.02 | MT | F | L | Saloon FWD K9K700 | Date from:2002.11;For Modelcode:LB1W/LB24;outer teeth of wheel side:23 | GDS50261 | Drive Shaft | 44T | 23 | | 57.5 | 86.5 | 630 | |
| | 2002.04-2009.02 | MT | F | L | Saloon FWD K9K700 | Date from:2002.11;For Modelcode:LB1W/LB24;outer teeth of wheel side:21 | GDS50401 | Drive Shaft | 44T | 21 | | 57 | 84 | 629 | |
| | 2002.04-2009.02 | MT | F | R | Saloon FWD K9K700 | | GDS50162 | Drive Shaft | 26T | 21 | 23 | 52.2 | 85.5 | 723.5 | |
| | 2002.04-2009.02 | MT | F | R | Saloon FWD K9K700 | | GDS50263 | Drive Shaft | 44T | 21 | 23 | 52.2 | 85.5 | 723.5 | |
| | 2002.04-2009.02 | MT | F | R | Saloon FWD K9K700 | Date to:2009.02;Trans. code:JB1/3 | GDS50395 | Drive Shaft | 26T | 21 | 23 | 51.5 | 83 | 728 | |
| | 2002.04-2009.02 | MT | F | L | Saloon FWD K9K700 | For Modelcode:LB07 | GCO50004 | Outer Joint | 26T | 21 | 30 | 52.2 | 85.5 | 59 | I |
| | 2002.04-2009.02 | MT | F | L | Saloon FWD K9K700 | Date from:2002.11;For Modelcode:LB1W/LB24 | GCO50066 | Outer Joint | 44T | 21 | 28 | 52.5 | 85 | 51 | I |
| | 2002.04-2009.02 | MT | F | R | Saloon FWD K9K700 | Date from:2005.09;For Modelcode:LB1W | GCO50066 | Outer Joint | 44T | 21 | 28 | 52.5 | 85 | 51 | I |
| | 2002.04-2009.02 | | F | R | Saloon FWD K9K700 | Date From:2005.09,Date To:2009.02 | GCI50008 | Inner Joint | | 23 | 30 | 36.3 | | 120.7 | |
| 1.5 (50 kw) | 2003.02-2009.02 | MT | F | L | Saloon FWD K9K714 | | GDS50280 | Drive Shaft | 44T | 23 | 26 | 57.5 | 86.5 | 602 | |
| | 2003.02-2009.02 | MT | F | R | Saloon FWD K9K714 | | GDS50364 | Drive Shaft | 44T | 23 | 26 | 57.5 | 86.5 | 866 | |
| | 2003.02-2009.02 | MT | F | L/R | Saloon FWD K9K714 | | GCO50069 | Outer Joint | 44T | 23 | 30 | 57.5 | 86.5 | 58.5 | I |
| | 2003.02-2009.02 | MT | F | R | Saloon FWD K9K714 | Date to:2009.02 | GCI99169 | Inner Joint | | 26 | 30 | 33 | 326 | 95 | |
| 1.5 (58 kw) | 2004.04-2009.02 | MT | F | R | Saloon FWD K9K706 | | GDS50260 | Drive Shaft | 44T | 23 | 23 | 57.5 | 86.5 | 724 | |
| | 2004.04-2009.02 | MT | F | R | Saloon FWD K9K706 | | GCO50069 | Outer Joint | 44T | 23 | 30 | 57.5 | 86.5 | 58.5 | I |
| | 2004.04-2009.02 | MT | F | R | Saloon FWD K9K706 | | GCI50008 | Inner Joint | | 23 | 30 | 36.3 | | 120.7 | |
| 1.6 (66 kw) | 1998.08-2008.10 | 5MT | F | R | Saloon FWD K7M746 | | GDS50151 | Drive Shaft | | 21 | 23 | 49.8 | 83.5 | 715 | |
| | 1998.08-2008.10 | 5MT | F | R | Saloon FWD K7M746 | | GDS50162 | Drive Shaft | 26T | 21 | 23 | 52.2 | 85.5 | 723.5 | |
| | 1998.08-2008.10 | 5MT | F | R | Saloon FWD K7M746 | | GCO50004 | Outer Joint | 26T | 21 | 30 | 52.2 | 85.5 | 59 | I |
| | 1998.08-2008.10 | 5MT | F | R | Saloon FWD K7M746 | | GCI50008 | Inner Joint | | 23 | 30 | 36.3 | | 120.7 | |
| 1.9 (48 kw) | 1998.02-2001.05 | 5MT | F | L | Saloon FWD F8Q630 | | GDS50004 | Drive Shaft | 26T | 21 | | 57 | 84.5 | 625.7 | |
| | 1998.02-2001.05 | 5MT | F | L | Saloon FWD F8Q630 | | GDS50150 | Drive Shaft | | 21 | 30 | 49.8 | 83.5 | 623 | |
| | 1998.02-2001.05 | 5MT | F | R | Saloon FWD F8Q630 | | GDS50017 | Drive Shaft | 26T | 21 | 23 | 51.5 | 83 | 715 | |
| | 1998.02-2001.05 | 5MT | F | R | Saloon FWD F8Q630 | | GDS50162 | Drive Shaft | 26T | 21 | 23 | 52.2 | 85.5 | 723.5 | |
| | 1998.02-2001.05 | AT | F | L/R | Saloon FWD F8Q630 | | GCO50004 | Outer Joint | 26T | 21 | 30 | 52.2 | 85.5 | 59 | I |
| | 1998.02-2001.05 | | F | L | Saloon FWD F8Q630 | | GDS50045 | Drive Shaft | 26T | 21 | 30 | 51.5 | 83 | 634 | |
| | 1998.02-2001.05 | | F | R | Saloon FWD F8Q630 | | GDS50151 | Drive Shaft | | 21 | 23 | 49.8 | 83.5 | 715 | |
| **Clio Thalia** | | | | | | | | | | | | | | | |
| 1.5 (47 kw) | 2005.06-2009.02 | MT | F | L | Saloon FWD K9K740 | | GDS50280 | Drive Shaft | 44T | 23 | 26 | 57.5 | 86.5 | 602 | |
| | 2005.06-2009.02 | MT | F | R | Saloon FWD K9K740 | | GDS50364 | Drive Shaft | 44T | 23 | 26 | 57.5 | 86.5 | 866 | |
| | 2005.06-2009.02 | MT | F | L/R | Saloon FWD K9K740 | | GCO50069 | Outer Joint | 44T | 23 | 30 | 57.5 | 86.5 | 58.5 | I |
| | 2005.06-2009.02 | MT | F | R | Saloon FWD K9K740 | Date to:2009.02 | GCI99169 | Inner Joint | | 26 | 30 | 33 | 326 | 95 | |
| 1.5 (60 kw) | 2001.06-2009.02 | MT | F | L | Saloon FWD K9K706 | | GDS50280 | Drive Shaft | 44T | 23 | 26 | 57.5 | 86.5 | 602 | |
| | 2001.06-2009.02 | MT | F | R | Saloon FWD K9K706 | | GDS50364 | Drive Shaft | 44T | 23 | 26 | 57.5 | 86.5 | 866 | |
| | 2001.06-2009.02 | MT | F | L/R | Saloon FWD K9K706 | | GCO50069 | Outer Joint | 44T | 23 | 30 | 57.5 | 86.5 | 58.5 | I |
| | 2001.06-2009.02 | MT | F | R | Saloon FWD K9K706 | Date to:2009.02 | GCI99169 | Inner Joint | | 26 | 30 | 33 | 326 | 95 | |
| 1.5 (62 kw) | 2001.06-2009.02 | 5MT | F | L | Saloon FWD K9K718 | | GDS50261 | Drive Shaft | 44T | 23 | | 57.5 | 86.5 | 630 | |
| | 2001.06-2009.02 | 5MT | F | L | Saloon FWD K9K718 | | GDS50401 | Drive Shaft | 44T | 21 | | 57 | 84 | 629 | |
| | 2001.06-2009.02 | 5MT | F | R | Saloon FWD K9K718 | | GDS50260 | Drive Shaft | 44T | 23 | 23 | 57.5 | 86.5 | 724 | |
| | 2001.06-2009.02 | 5MT | F | R | Saloon FWD K9K718 | | GDS50263 | Drive Shaft | 44T | 21 | 23 | 52.2 | 85.5 | 723.5 | |
| **Clio Van** | | | | | | | | | | | | | | | |
| 0.9 (56 kw) | 2014.01-2021.08 | 5MT | F | L | Hatchback Van FWD H4B 408 | | GDS50487 | Drive Shaft | | 23 | 26 | 49 | 86 | 662 | |
| | 2014.01-2021.08 | 5MT | F | R | Hatchback Van FWD H4B 408 | | GDS50563 | Drive Shaft | | 23 | 26 | 49 | 86 | 909 | |
| | 2014.01-2021.08 | MT | F | L | Hatchback Van FWD H4B 408 | Manufacturer:NTN | GCI50134 | Inner Joint | | 26 | 30 | 40 | 64 | 96 | |
| 0.9 (66 kw) | 2014.01-2021.08 | 5MT | F | L | Hatchback Van FWD H4B 400;H4B 408 | | GDS50487 | Drive Shaft | | 23 | 26 | 49 | 86 | 662 | |
| | 2014.01-2021.08 | 5MT | F | R | Hatchback Van FWD H4B 400;H4B 408 | | GDS50563 | Drive Shaft | | 23 | 26 | 49 | 86 | 909 | |
| | 2014.01-2021.08 | 5MT | F | L | Hatchback Van FWD H4B 400;H4B 408 | | GCI50134 | Inner Joint | | 26 | 30 | 40 | 64 | 96 | |
| | 2014.01-2021.08 | | F | L | Hatchback Van FWD H4B 400;H4B 408 | | GCO50167 | Outer Joint | | 23 | 30 | 49 | 86 | 53.5 | I |
| | 2015.08-2021.08 | 5MT | F | L | Hatchback Van FWD H4B 410 | | GDS50487 | Drive Shaft | | 23 | 26 | 49 | 86 | 662 | |
| | 2015.08-2021.08 | 5MT | F | R | Hatchback Van FWD H4B 410 | | GDS50563 | Drive Shaft | | 23 | 26 | 49 | 86 | 909 | |
| | 2015.08-2021.08 | | F | L | Hatchback Van FWD H4B 410 | | GCO50167 | Outer Joint | | 23 | 30 | 49 | 86 | 53.5 | I |
| | 2015.08-2021.08 | | F | L | Hatchback Van FWD H4B 410 | | GCI50134 | Inner Joint | | 26 | 30 | 40 | 64 | 96 | |
| 1.1 (34 kw) | 1991.01-1998.09 | MT | F | L | Hatchback Van FWD C1E700 | | GDS50015 | Drive Shaft | | 21 | 30 | 46.3 | 81.5 | 612.5 | |
| | 1991.01-1998.09 | MT | F | R | Hatchback Van FWD C1E700 | Inner teeth of wheel side:20 | GDS50014 | Drive Shaft | | 21 | 23 | 46.3 | 81.5 | 707 | |
| | 1991.01-1998.09 | MT | F | R | Hatchback Van FWD C1E700 | Inner teeth of wheel side:30 | GDS50117 | Drive Shaft | | 21 | 23 | 49.8 | 83.5 | 698.5 | |
| | 1991.01-1998.09 | MT | F | R | Hatchback Van FWD C1E700 | Inner teeth of wheel side:22 | GDS50205 | Drive Shaft | | 21 | 23 | 51 | 85 | 703 | |
| | 1991.01-1998.09 | MT | F | L/R | Hatchback Van FWD C1E700 | | GCO50008 | Outer Joint | | 21 | 25 | 56.2 | 83.5 | 58 | O |
| 1.2 (40 kw) | 1991.11-1998.02 | MT | F | L | Hatchback Van FWD E7F706 | Date from:1991.11;Date to:1998.02 | GDS50015 | Drive Shaft | | 21 | 30 | 46.3 | 81.5 | 612.5 | |
| | 1991.11-1998.02 | MT | F | R | Hatchback Van FWD E7F706 | Inner teeth of wheel side:20 | GDS50014 | Drive Shaft | | 21 | 23 | 46.3 | 81.5 | 707 | |
| | 1991.11-1998.02 | MT | F | R | Hatchback Van FWD E7F706 | Inner teeth of wheel side:30 | GDS50117 | Drive Shaft | | 21 | 23 | 49.8 | 83.5 | 698.5 | |
| | 1991.11-1998.02 | MT | F | R | Hatchback Van FWD E7F706 | Inner teeth of wheel side:22 | GDS50205 | Drive Shaft | | 21 | 23 | 51 | 85 | 703 | |
| | 1991.11-1998.02 | MT | F | L/R | Hatchback Van FWD E7F706 | Date from:1991.11;Date to:1998.02 | GCO50008 | Outer Joint | | 21 | 25 | 56.2 | 83.5 | 58 | O |
| | 1994.06-1998.02 | MT | F | R | Hatchback Van FWD C3G720 | Inner teeth of wheel side:20 | GDS50014 | Drive Shaft | | 21 | 23 | 46.3 | 81.5 | 707 | |

| | YEAR | TRANSM. | F/R | L/R | BODY STYLE & DRIVE TYPE & ENGINE | REMARKS | G-AP Ref. | PRODUCT | ABS | Technical Specifications A | B | C | H | L | P |
|---|---|---|---|---|---|---|---|---|---|---|---|---|---|---|---|
| **RENAULT** **Clio Van** | | | | | | | | | | | | | | | |
| 1.2 (40 kw) | 1994.06-1998.02 | MT | F | R | Hatchback Van FWD C3G720 | Inner teeth of wheel side:30 | GDS50117 | Drive Shaft | | 21 | 23 | 49.8 | 83.5 | 698.5 | |
| | 1994.06-1998.02 | MT | F | R | Hatchback Van FWD C3G720 | Inner teeth of wheel side:22 | GDS50205 | Drive Shaft | | 21 | 23 | 51 | 85 | 703 | |
| 1.2 (43 kw) | 1998.03-2005.04 | 5MT | F | L | Hatchback Van FWD D7F720/D7F726 | | GDS50004 | Drive Shaft | 26T | 21 | | 57 | 84.5 | 625.7 | |
| | 1998.03-2005.04 | 5MT | F | L | Hatchback Van FWD D7F720/D7F726 | | GDS50150 | Drive Shaft | | 21 | 30 | 49.8 | 83.5 | 623 | |
| | 1998.03-2005.04 | 5MT | F | L | Hatchback Van FWD D7F720/D7F726 | For Engine code:D7F726;outer teeth of wheel side:23 | GDS50261 | Drive Shaft | 44T | 23 | | 57.5 | 86.5 | 630 | |
| | 1998.03-2005.04 | 5MT | F | L | Hatchback Van FWD D7F720/D7F726 | For Engine code:D7F726;outer teeth of wheel side:21 | GDS50401 | Drive Shaft | 44T | 21 | | 57 | 84 | 629 | |
| | 1998.03-2005.04 | 5MT | F | R | Hatchback Van FWD D7F720/D7F726 | For Engine Code:D7F720 | GDS50017 | Drive Shaft | 26T | 21 | 23 | 51.5 | 83 | 715 | |
| | 1998.03-2005.04 | 5MT | F | R | Hatchback Van FWD D7F720/D7F726 | For Engine Code:D7F720 | GDS50162 | Drive Shaft | 26T | 21 | 23 | 52.2 | 85.5 | 723.5 | |
| | 1998.03-2005.04 | 5MT | F | R | Hatchback Van FWD D7F720/D7F726 | For Engine Code :D7F726 | GDS50263 | Drive Shaft | 44T | 21 | 23 | 52.2 | 85.5 | 723.5 | |
| | 1998.03-2005.04 | MT | F | L | Hatchback Van FWD D7F720/D7F726 | | GDS50177 | Drive Shaft | | 21 | | 57 | 84.5 | 625.7 | |
| | 1998.03-2005.04 | MT | F | R | Hatchback Van FWD D7F720/D7F726 | Inner teeth of tranm.side:30 | GDS50125 | Drive Shaft | | 21 | 23 | 57 | 84.5 | 713.5 | |
| | 1998.03-2005.04 | MT | F | R | Hatchback Van FWD D7F720/D7F726 | Inner teeth of tranm.side:29 | GDS50146 | Drive Shaft | | 21 | 23 | 57 | 84.5 | 732.5 | |
| | 1998.03-2005.04 | MT | F | R | Hatchback Van FWD D7F720/D7F726 | | GDS99072 | Drive Shaft | 44T | 21 | 23 | 57 | 84.5 | 720 | |
| | 1998.03-2005.04 | | F | L | Hatchback Van FWD D7F720/D7F726 | For Engine code:D7F720 | GCO50004 | Outer Joint | 26T | 21 | 30 | 52.2 | 85.5 | 59 | I |
| | 1998.03-2005.04 | | F | L/R | Hatchback Van FWD D7F720/D7F726 | For Engine code:D7F726 | GCO50066 | Outer Joint | 44T | 21 | 28 | 52.5 | 85 | 51 | I |
| | 1998.03-2005.04 | | F | R | Hatchback Van FWD D7F720/D7F726 | Date To:2005.04 | GCI50008 | Inner Joint | | 23 | 30 | 36.3 | | 120.7 | |
| 1.2 (44 kw) | 1991.03-1998.02 | MT | F | L | Hatchback Van FWD E5F710/E7F700/E7F708 | Date to:1998.02 | GDS50015 | Drive Shaft | | 21 | 30 | 46.3 | 81.5 | 612.5 | |
| | 1991.03-1998.02 | MT | F | L | Hatchback Van FWD E5F710/E7F700/E7F708 | | GDS50116 | Drive Shaft | | 21 | | 49.8 | 83.5 | 610 | |
| | 1991.03-1998.02 | MT | F | R | Hatchback Van FWD E5F710/E7F700/E7F708 | Inner teeth of wheel side:20 | GDS50014 | Drive Shaft | | 21 | 23 | 46.3 | 81.5 | 707 | |
| | 1991.03-1998.02 | MT | F | R | Hatchback Van FWD E5F710/E7F700/E7F708 | Inner teeth of wheel side:30 | GDS50117 | Drive Shaft | | 21 | 23 | 49.8 | 83.5 | 698.5 | |
| | 1991.03-1998.02 | MT | F | R | Hatchback Van FWD E5F710/E7F700/E7F708 | Inner teeth of wheel side:22 | GDS50205 | Drive Shaft | | 21 | 23 | 51 | 85 | 703 | |
| | 1991.03-1998.02 | MT | F | L/R | Hatchback Van FWD E5F710/E7F700/E7F708 | Date to:1998.02 | GCO50008 | Outer Joint | | 21 | 25 | 56.2 | 83.5 | 58 | O |
| | 1998.03-2003.10 | 5MT | F | L | Hatchback Van FWD D7F746 | | GDS50004 | Drive Shaft | 26T | 21 | | 57 | 84.5 | 625.7 | |
| | 1998.03-2003.10 | 5MT | F | L | Hatchback Van FWD D7F746 | | GDS50150 | Drive Shaft | | 21 | 30 | 49.8 | 83.5 | 623 | |
| | 1998.03-2003.10 | 5MT | F | R | Hatchback Van FWD D7F746 | | GDS50017 | Drive Shaft | 26T | 21 | 23 | 51.5 | 83 | 715 | |
| | 1998.03-2003.10 | 5MT | F | R | Hatchback Van FWD D7F746 | Date to:2002.10 | GDS50162 | Drive Shaft | 26T | 21 | 23 | 52.2 | 85.5 | 723.5 | |
| | 1998.03-2003.10 | | F | L | Hatchback Van FWD D7F746 | Date from:2002.11 | GDS50261 | Drive Shaft | 44T | 23 | | 57.5 | 86.5 | 630 | |
| | 1998.03-2003.10 | | F | L | Hatchback Van FWD D7F746 | For Engine code:D7F726 | GDS50401 | Drive Shaft | 44T | 21 | | 57 | 84 | 629 | |
| | 1998.03-2003.10 | | F | L | Hatchback Van FWD D7F746 | For Engine code:D7F720 | GCO50004 | Outer Joint | 26T | 21 | 30 | 52.2 | 85.5 | 59 | I |
| 1.2 (53 kw) | 2014.01-2021.08 | 5MT | F | L | Hatchback Van FWD D4F 744 | | GDS50487 | Drive Shaft | | 23 | 26 | 49 | 86 | 662 | |
| | 2014.01-2021.08 | 5MT | F | R | Hatchback Van FWD D4F 744 | | GDS50488 | Drive Shaft | | 23 | 26 | 49 | 86 | 908 | |
| | 2014.01-2021.08 | 5MT | F | L | Hatchback Van FWD D4F 744 | | GCI50096 | Inner Joint | | 26 | 30 | 40 | 64 | 96 | |
| | 2014.01-2021.08 | MT | F | L/R | Hatchback Van FWD D4F 744 | | GCO50112 | Outer Joint | | 23 | 28 | 49 | 83.5 | 54.5 | I |
| 1.2 (54 kw) | 2014.01-2021.08 | 5MT | F | L | Hatchback Van FWD D4F 740 | | GDS50487 | Drive Shaft | | 23 | 26 | 49 | 86 | 662 | |
| | 2014.01-2021.08 | 5MT | F | R | Hatchback Van FWD D4F 740 | | GDS50488 | Drive Shaft | | 23 | 26 | 49 | 86 | 908 | |
| | 2014.01-2021.08 | 5MT | F | L | Hatchback Van FWD D4F 740 | | GCI50096 | Inner Joint | | 26 | 30 | 40 | 64 | 96 | |
| | 2014.01-2021.08 | MT | F | L/R | Hatchback Van FWD D4F 740 | | GCO50112 | Outer Joint | | 23 | 28 | 49 | 83.5 | 54.5 | I |
| 1.2 (55 kw) | 2005.11-2014.12 | 5MT | F | L | Hatchback Van FWD D4F 740 | | GDS50369 | Drive Shaft | | 23 | 26 | 49 | 83.5 | 651 | |
| | 2005.11-2014.12 | 5MT | F | R | Hatchback Van FWD D4F 740 | | GDS50372 | Drive Shaft | | 23 | 26 | 49 | 83.5 | 890 | |
| | 2005.11-2014.12 | 5MT | F | L/R | Hatchback Van FWD D4F 740 | | GCO50112 | Outer Joint | | 23 | 28 | 49 | 83.5 | 54.5 | I |
| 1.2 (58 kw) | 2007.11-2009.12 | | F | L | Hatchback Van FWD D4F 742 | | GDS50369 | Drive Shaft | | 23 | 26 | 49 | 83.5 | 651 | |
| | 2007.11-2009.12 | | F | R | Hatchback Van FWD D4F 742 | | GDS50372 | Drive Shaft | | 23 | 26 | 49 | 83.5 | 890 | |
| | 2007.11-2009.12 | | F | L | Hatchback Van FWD D4F 742 | | GCO50112 | Outer Joint | | 23 | 28 | 49 | 83.5 | 54.5 | I |
| 1.2 (74 kw) | 2007.11-2011.12 | 5MT | F | L | Hatchback Van FWD D4F 784 | | GDS50353 | Drive Shaft | | 23 | 26 | 49 | 86 | 649 | |
| | 2007.11-2011.12 | 5MT | F | R | Hatchback Van FWD D4F 784 | | GDS50573 | Drive Shaft | | 23 | 26 | 49 | 86 | 891 | |
| | 2007.11-2011.12 | | F | L | Hatchback Van FWD D4F 784 | | GCO50092 | Outer Joint | | 23 | 29 | 49 | 86 | 57 | I |
| 1.5 (48 kw) | 2001.06-2005.04 | 5MT | F | L | Hatchback Van FWD K9K700 | | GDS50004 | Drive Shaft | 26T | 21 | | 57 | 84.5 | 625.7 | |
| | 2001.06-2005.04 | 5MT | F | L | Hatchback Van FWD K9K700 | | GDS50150 | Drive Shaft | | 21 | 30 | 49.8 | 83.5 | 623 | |
| | 2001.06-2005.04 | 5MT | F | R | Hatchback Van FWD K9K700 | | GDS50162 | Drive Shaft | 26T | 21 | 23 | 52.2 | 85.5 | 723.5 | |
| | 2001.06-2005.04 | MT | F | L | Hatchback Van FWD K9K700 | | GDS50177 | Drive Shaft | | 21 | | 57 | 84.5 | 625.7 | |
| | 2001.06-2005.04 | MT | F | L | Hatchback Van FWD K9K700 | Date to:2005.04;Trans. code:JB1/3 | GDS50397 | Drive Shaft | | 21 | 30 | 50 | 84 | 632 | |
| | 2001.06-2005.04 | MT | F | R | Hatchback Van FWD K9K700 | | GDS50146 | Drive Shaft | | 21 | 23 | 57 | 84.5 | 732.5 | |
| | 2001.06-2005.04 | MT | F | R | Hatchback Van FWD K9K700 | | GDS50250 | Drive Shaft | 26T | 21 | 23 | 57 | 84.5 | 732.5 | |
| | 2001.06-2005.04 | MT | F | R | Hatchback Van FWD K9K700 | | GDS50364 | Drive Shaft | 44T | 23 | 26 | 57.5 | 86.5 | 866 | |
| | 2001.06-2005.04 | MT | F | R | Hatchback Van FWD K9K700 | Date to:2005.04;Trans. code:JB1/3 | GDS50437 | Drive Shaft | | 21 | 23 | 51.5 | 83 | 729 | |
| | 2001.06-2005.04 | MT | F | R | Hatchback Van FWD K9K700 | | GDS99072 | Drive Shaft | 44T | 21 | 23 | 57 | 84.5 | 720 | |
| | 2001.06-2005.04 | MT | F | L | Hatchback Van FWD K9K700 | | GCO50106 | Outer Joint | 26T | 23 | 30 | 57.5 | 86.5 | 58.5 | I |
| | 2001.06-2005.04 | MT | F | R | Hatchback Van FWD K9K700 | | GCI99169 | Inner Joint | | 26 | 30 | 33 | 326 | 95 | |
| | 2001.06-2005.04 | | F | L | Hatchback Van FWD K9K700 | | GDS50194 | Drive Shaft | 26T | 23 | | 57.5 | 86.5 | 631 | |
| | 2001.06-2005.04 | | F | L | Hatchback Van FWD K9K700 | Date from:2002.11 | GDS50261 | Drive Shaft | 44T | 23 | | 57.5 | 86.5 | 630 | |
| | 2001.06-2005.04 | | F | L | Hatchback Van FWD K9K700 | Date From:2002.11 | GDS50401 | Drive Shaft | 44T | 21 | | 57 | 84 | 629 | |
| | 2001.06-2005.04 | | F | R | Hatchback Van FWD K9K700 | | GDS50151 | Drive Shaft | | 21 | 23 | 49.8 | 83.5 | 715 | |
| | 2001.06-2005.04 | | F | R | Hatchback Van FWD K9K700 | Date from:2002.11 | GDS50263 | Drive Shaft | 44T | 21 | 23 | 52.2 | 85.5 | 723.5 | |
| | 2001.06-2005.04 | | F | R | Hatchback Van FWD K9K700 | Date To:2005.04;Trans. code:JB1/3 | GDS50395 | Drive Shaft | 26T | 21 | 23 | 51.5 | 83 | 728 | |
| | 2001.06-2005.04 | | F | L | Hatchback Van FWD K9K700 | Date To:2002.10 | GCO50004 | Outer Joint | 26T | 21 | 30 | 52.2 | 85.5 | 59 | I |

| | YEAR | TRANSM. | F/R | L/R | BODY STYLE & DRIVE TYPE & ENGINE | REMARKS | G-AP Ref. | PRODUCT | ABS | Technical Specifications A | B | C | H | L | P |
|---|---|---|---|---|---|---|---|---|---|---|---|---|---|---|---|
| **RENAULT** **Clio Van** | | | | | | | | | | | | | | | |
| 1.5 (48 kw) | 2001.06-2005.04 | | F | R | Hatchback Van FWD K9K700 | Date To:2002.10 | GCI50008 | Inner Joint | | 23 | 30 | 36.3 | | 120.7 | |
| 1.5 (50 kw) | 2004.04-2010.02 | 5MT | F | L | Hatchback Van FWD K9K714 | | GDS50280 | Drive Shaft | 44T | 23 | 26 | 57.5 | 86.5 | 602 | |
| | 2004.04-2010.02 | 5MT | F | R | Hatchback Van FWD K9K714 | | GDS50364 | Drive Shaft | 44T | 23 | 26 | 57.5 | 86.5 | 866 | |
| | 2004.04-2010.02 | MT | F | L | Hatchback Van FWD K9K714 | | GDS50004 | Drive Shaft | 26T | 21 | | 57 | 84.5 | 625.7 | |
| | 2004.04-2010.02 | MT | F | L | Hatchback Van FWD K9K714 | | GDS50177 | Drive Shaft | | 21 | | 57 | 84.5 | 625.7 | |
| | 2004.04-2010.02 | MT | F | R | Hatchback Van FWD K9K714 | | GDS50146 | Drive Shaft | | 21 | 23 | 57 | 84.5 | 732.5 | |
| | 2004.04-2010.02 | MT | F | R | Hatchback Van FWD K9K714 | | GDS50250 | Drive Shaft | 26T | 21 | 23 | 57 | 84.5 | 732.5 | |
| | 2004.04-2010.02 | MT | F | R | Hatchback Van FWD K9K714 | | GDS99072 | Drive Shaft | 44T | 21 | 23 | 57 | 84.5 | 720 | |
| | 2004.04-2010.02 | MT | F | R | Hatchback Van FWD K9K714 | Date to:2010.02 | GCI99169 | Inner Joint | | 26 | 30 | 33 | 326 | 95 | |
| | 2005.10-2010.07 | 5MT | F | L | Hatchback Van FWD K9K 768 | | GDS50353 | Drive Shaft | | 23 | 26 | 49 | 86 | 649 | |
| | 2005.10-2010.07 | 5MT | F | R | Hatchback Van FWD K9K 768 | | GDS50354 | Drive Shaft | | 23 | 26 | 49 | 86 | 897 | |
| | 2005.10-2010.07 | 5MT | F | R | Hatchback Van FWD K9K 768 | | GDS50625 | Drive Shaft | | 23 | 26 | 49 | 83.5 | 893 | |
| | 2005.10-2010.07 | 5MT | F | R | Hatchback Van FWD K9K 768 | | GCO50168 | Outer Joint | | 23 | 30 | 49 | 83.5 | 54.5 | I |
| | 2005.10-2010.07 | 5MT | F | L/R | Hatchback Van FWD K9K 768 | Inner Teeth:29 | GCO50092 | Outer Joint | | 23 | 29 | 49 | 86 | 57 | I |
| | 2005.10-2010.07 | 5MT | F | L/R | Hatchback Van FWD K9K 768 | Inner Teeth:30 | GCO99085 | Outer Joint | | 23 | 30 | 49 | 86 | 59 | I |
| | 2005.10-2010.07 | 5MT | F | L | Hatchback Van FWD K9K 768 | | GCI50048 | Inner Joint | | 26 | 30 | 40 | 64 | 121 | |
| | 2005.10-2010.07 | 5MT | F | R | Hatchback Van FWD K9K 768 | | GCI50148 | Inner Joint | | 26 | 30 | 33 | 326 | 90 | |
| | 2005.10-2010.07 | 5MT | F | R | Hatchback Van FWD K9K 768 | | GCI99169 | Inner Joint | | 26 | 30 | 33 | 326 | 95 | |
| 1.5 (55 kw) | 2010.08-2014.12 | 5MT | F | L | Hatchback Van FWD K9K 770 | | GDS50353 | Drive Shaft | | 23 | 26 | 49 | 86 | 649 | |
| | 2010.08-2014.12 | 5MT | F | L | Hatchback Van FWD K9K 770 | | GCO50092 | Outer Joint | | 23 | 29 | 49 | 86 | 57 | I |
| | 2010.08-2014.12 | 5MT | F | R | Hatchback Van FWD K9K 770 | | GCO50168 | Outer Joint | | 23 | 30 | 49 | 83.5 | 54.5 | I |
| | 2010.08-2014.12 | 5MT | F | R | Hatchback Van FWD K9K 770 | | GCI50148 | Inner Joint | | 26 | 30 | 33 | 326 | 90 | |
| | 2010.08-2014.12 | MT | F | R | Hatchback Van FWD K9K 770 | | GDS50354 | Drive Shaft | | 23 | 26 | 49 | 86 | 897 | |
| | 2010.08-2014.12 | MT | F | R | Hatchback Van FWD K9K 770 | | GDS50625 | Drive Shaft | | 23 | 26 | 49 | 83.5 | 893 | |
| | 2014.01-2021.08 | 5MT | F | L | Hatchback Van FWD K9K 612 | | GDS50487 | Drive Shaft | | 23 | 26 | 49 | 86 | 662 | |
| | 2014.01-2021.08 | 5MT | F | R | Hatchback Van FWD K9K 612 | | GDS50489 | Drive Shaft | | 23 | 26 | 49 | 86 | 910 | |
| | 2014.01-2021.08 | 5MT | F | L/R | Hatchback Van FWD K9K 612 | | GCO50167 | Outer Joint | | 23 | 30 | 49 | 86 | 53.5 | I |
| | 2014.01-2021.08 | 5MT | F | L | Hatchback Van FWD K9K 612 | | GCI50096 | Inner Joint | | 26 | 30 | 40 | 64 | 96 | |
| 1.5 (59 kw) | 2001.06-2004.10 | 5MT | F | L | Hatchback Van FWD K9K702 | Number of Splines:23 | GDS50261 | Drive Shaft | 44T | 23 | | 57.5 | 86.5 | 630 | |
| | 2001.06-2004.10 | 5MT | F | L | Hatchback Van FWD K9K702 | Number of Splines:21 | GDS50401 | Drive Shaft | 44T | 21 | | 57 | 84 | 629 | |
| | 2001.06-2004.10 | 5MT | F | R | Hatchback Van FWD K9K702 | Number of Splines:23 | GDS50260 | Drive Shaft | 44T | 23 | 23 | 57.5 | 86.5 | 724 | |
| | 2001.06-2004.10 | 5MT | F | L/R | Hatchback Van FWD K9K702 | | GCO50069 | Outer Joint | 44T | 23 | 30 | 57.5 | 86.5 | 58.5 | I |
| | 2001.06-2004.10 | 5MT | F | R | Hatchback Van FWD K9K702 | | GCI50008 | Inner Joint | | 23 | 30 | 36.3 | | 120.7 | |
| 1.5 (60 kw) | 2003.11-2005.04 | 5MT | F | L | Hatchback Van FWD K9K710/K9K716 | | GCI50048 | Inner Joint | | 26 | 30 | 40 | 64 | 121 | |
| | 2003.11-2005.04 | 5MT | F | R | Hatchback Van FWD K9K710/K9K716 | For Modelcode:SB09 | GCI50008 | Inner Joint | | 23 | 30 | 36.3 | | 120.7 | |
| | 2003.11-2005.04 | 5MT | F | R | Hatchback Van FWD K9K710/K9K716 | For Modelcode:SB3A | GCI99169 | Inner Joint | | 26 | 30 | 33 | 326 | 95 | |
| | 2003.11-2005.04 | MT | F | L | Hatchback Van FWD K9K710/K9K716 | Date to:2003.12 | GDS50194 | Drive Shaft | 26T | 23 | | 57.5 | 86.5 | 631 | |
| | 2003.11-2005.04 | MT | F | R | Hatchback Van FWD K9K710/K9K716 | Date to:2003.12 | GDS50193 | Drive Shaft | 26T | 23 | 23 | 57.5 | 86.5 | 724 | |
| | 2003.11-2005.04 | MT | F | L/R | Hatchback Van FWD K9K710/K9K716 | | GCO50069 | Outer Joint | 44T | 23 | 30 | 57.5 | 86.5 | 58.5 | I |
| | 2003.11-2005.04 | | F | L | Hatchback Van FWD K9K710/K9K716 | Date From:2002.11 | GDS50261 | Drive Shaft | 44T | 23 | | 57.5 | 86.5 | 630 | |
| | 2003.11-2005.04 | | F | L | Hatchback Van FWD K9K710/K9K716 | | GDS50280 | Drive Shaft | 44T | 23 | 26 | 57.5 | 86.5 | 602 | |
| | 2003.11-2005.04 | | F | L | Hatchback Van FWD K9K710/K9K716 | Type:SB09 | GDS50401 | Drive Shaft | 44T | 21 | | 57 | 84 | 629 | |
| | 2003.11-2005.04 | | F | R | Hatchback Van FWD K9K710/K9K716 | For Modelcode:SB09 | GDS50263 | Drive Shaft | 44T | 21 | 23 | 52.2 | 85.5 | 723.5 | |
| | 2003.11-2005.04 | | F | R | Hatchback Van FWD K9K710/K9K716 | Type:SB3A | GDS50364 | Drive Shaft | 44T | 23 | 26 | 57.5 | 86.5 | 866 | |
| 1.5 (63 kw) | 2005.06-2010.07 | 5MT | F | L | Hatchback Van FWD K9K 766 | | GDS50353 | Drive Shaft | | 23 | 26 | 49 | 86 | 649 | |
| | 2005.06-2010.07 | 5MT | F | R | Hatchback Van FWD K9K 766 | | GDS50354 | Drive Shaft | | 23 | 26 | 49 | 86 | 897 | |
| | 2005.06-2010.07 | 5MT | F | L | Hatchback Van FWD K9K 766 | | GCI50048 | Inner Joint | | 26 | 30 | 40 | 64 | 121 | |
| | 2005.06-2010.07 | 5MT | F | R | Hatchback Van FWD K9K 766 | | GCI99169 | Inner Joint | | 26 | 30 | 33 | 326 | 95 | |
| | 2005.06-2010.07 | | F | L | Hatchback Van FWD K9K 766 | | GCO50092 | Outer Joint | | 23 | 29 | 49 | 86 | 57 | I |
| | 2005.06-2010.07 | | F | L | Hatchback Van FWD K9K 766 | | GCO99085 | Outer Joint | | 23 | 30 | 49 | 86 | 59 | I |
| 1.5 (65 kw) | 2010.08-2014.12 | 5MT | F | L/R | Hatchback Van FWD K9K 770 | Date to:2011.02 | GCO99085 | Outer Joint | | 23 | 30 | 49 | 86 | 59 | I |
| | 2010.08-2014.12 | MT | F | R | Hatchback Van FWD K9K 770 | | GDS50354 | Drive Shaft | | 23 | 26 | 49 | 86 | 897 | |
| | 2010.08-2014.12 | MT | F | R | Hatchback Van FWD K9K 770 | | GDS50625 | Drive Shaft | | 23 | 26 | 49 | 83.5 | 893 | |
| | 2010.08-2014.12 | MT | F | L/R | Hatchback Van FWD K9K 770 | Date from:2011.03 | GCO50168 | Outer Joint | | 23 | 30 | 49 | 83.5 | 54.5 | I |
| | 2010.08-2014.12 | MT | F | R | Hatchback Van FWD K9K 770 | | GCI50148 | Inner Joint | | 26 | 30 | 33 | 326 | 90 | |
| | 2010.08-2014.12 | | F | L | Hatchback Van FWD K9K 770 | Date To:2011.02 | GDS50353 | Drive Shaft | | 23 | 26 | 49 | 86 | 649 | |
| | 2010.08-2014.12 | | F | L | Hatchback Van FWD K9K 770 | Date from:2011.03 | GDS50630 | Drive Shaft | | 23 | 26 | 49 | 83 | 653 | |
| | 2010.08-2014.12 | | F | L | Hatchback Van FWD K9K 770 | Date To:2011.02 | GCO50092 | Outer Joint | | 23 | 29 | 49 | 86 | 57 | I |
| 1.5 (66 kw) | 2014.01-2021.08 | 5MT | F | L | Hatchback Van FWD K9K 608;K9K 628;K9K 629 | | GDS50487 | Drive Shaft | | 23 | 26 | 49 | 86 | 662 | |
| | 2014.01-2021.08 | 5MT | F | R | Hatchback Van FWD K9K 608;K9K 628;K9K 629 | | GDS50489 | Drive Shaft | | 23 | 26 | 49 | 86 | 910 | |
| | 2014.01-2021.08 | 6DCT | F | L | Hatchback Van FWD K9K 608;K9K 628;K9K 629 | | GDS82284 | Drive Shaft | | 23 | 34 | 49 | 85.5 | 610 | |
| | 2014.01-2021.08 | 6DCT | F | R | Hatchback Van FWD K9K 608;K9K 628;K9K 629 | | GDS82447 | Drive Shaft | | 23 | 34 | 49 | 85.5 | 958 | |
| | 2014.01-2021.08 | 6DCT | F | L/R | Hatchback Van FWD K9K 608;K9K 628;K9K 629 | | GCO81927 | Outer Joint | | 23 | 33 | 49 | 85.5 | 58.5 | I |
| 1.6 (79 kw) | 2003.11-2005.04 | 5MT | F | L | Hatchback Van FWD K4M746 | | GDS50004 | Drive Shaft | 26T | 21 | | 57 | 84.5 | 625.7 | |
| | 2003.11-2005.04 | 5MT | F | L | Hatchback Van FWD K4M746 | | GDS50150 | Drive Shaft | | 21 | 30 | 49.8 | 83.5 | 623 | |

| | YEAR | TRANSM. | F/R | L/R | BODY STYLE & DRIVE TYPE & ENGINE | REMARKS | G-AP Ref. | PRODUCT | ABS | Technical Specifications A | B | C | H | L | P |
|---|---|---|---|---|---|---|---|---|---|---|---|---|---|---|---|
| **RENAULT** | | | | | | | | | | | | | | | |
| **Clio Van** | | | | | | | | | | | | | | | |
| 1.6 (79 kw) | 2003.11-2005.04 | 5MT | F | L | Hatchback Van FWD K4M746 | | GDS50151 | Drive Shaft | | 21 | 23 | 49.8 | 83.5 | 715 | |
| | 2003.11-2005.04 | 5MT | F | R | Hatchback Van FWD K4M746 | | GDS50017 | Drive Shaft | 26T | 21 | 23 | 51.5 | 83 | 715 | |
| | 2003.11-2005.04 | 5MT | F | R | Hatchback Van FWD K4M746 | | GDS50162 | Drive Shaft | 26T | 21 | 23 | 52.2 | 85.5 | 723.5 | |
| | 2003.11-2005.04 | 5MT | F | L | Hatchback Van FWD K4M746 | | GCO50004 | Outer Joint | 26T | 21 | 30 | 52.2 | 85.5 | 59 | I |
| 1.9 (40 kw) | 1996.04-1998.02 | 5MT | F | R | Hatchback Van FWD F8Q678 | | GDS50082 | Drive Shaft | 26T | 21 | 23 | 51.5 | 83 | 717 | |
| | 1998.03-2001.05 | 5MT | F | L | Hatchback Van FWD F8Q662 | | GDS50004 | Drive Shaft | 26T | 21 | | 57 | 84.5 | 625.7 | |
| | 1998.03-2001.05 | 5MT | F | L | Hatchback Van FWD F8Q662 | | GDS50150 | Drive Shaft | | 21 | 30 | 49.8 | 83.5 | 623 | |
| | 1998.03-2001.05 | 5MT | F | R | Hatchback Van FWD F8Q662 | | GDS50017 | Drive Shaft | 26T | 21 | 23 | 51.5 | 83 | 715 | |
| | 1998.03-2001.05 | 5MT | F | R | Hatchback Van FWD F8Q662 | | GDS50162 | Drive Shaft | 26T | 21 | 23 | 52.2 | 85.5 | 723.5 | |
| | 1998.03-2001.05 | AT | F | L/R | Hatchback Van FWD F8Q662 | | GCO50004 | Outer Joint | 26T | 21 | 30 | 52.2 | 85.5 | 59 | I |
| | 1998.03-2001.05 | MT | F | R | Hatchback Van FWD F8Q662 | | GDS50336 | Drive Shaft | 26T | 21 | 23 | 57 | 84 | 727 | |
| | 1998.03-2001.05 | | F | L | Hatchback Van FWD F8Q662 | | GDS50045 | Drive Shaft | 26T | 21 | 30 | 51.5 | 83 | 634 | |
| | 1998.03-2001.05 | | F | R | Hatchback Van FWD F8Q662 | Trans. code:JB1184/JB1963 | GDS50151 | Drive Shaft | | 21 | 23 | 49.8 | 83.5 | 715 | |
| 1.9 (47 kw) | 1998.09-2003.10 | 5MT | F | L | Hatchback Van FWD F8Q630 | | GDS50004 | Drive Shaft | 26T | 21 | | 57 | 84.5 | 625.7 | |
| | 1998.09-2003.10 | 5MT | F | L | Hatchback Van FWD F8Q630 | | GDS50150 | Drive Shaft | | 21 | 30 | 49.8 | 83.5 | 623 | |
| | 1998.09-2003.10 | 5MT | F | R | Hatchback Van FWD F8Q630 | | GDS50017 | Drive Shaft | 26T | 21 | 23 | 51.5 | 83 | 715 | |
| | 1998.09-2003.10 | 5MT | F | R | Hatchback Van FWD F8Q630 | | GDS50162 | Drive Shaft | 26T | 21 | 23 | 52.2 | 85.5 | 723.5 | |
| | 1998.09-2003.10 | AT | F | L/R | Hatchback Van FWD F8Q630 | | GCO50004 | Outer Joint | 26T | 21 | 30 | 52.2 | 85.5 | 59 | I |
| | 1998.09-2003.10 | MT | F | L | Hatchback Van FWD F8Q630 | Date to:2003.10;Trans. code:JB1/3 | GDS50397 | Drive Shaft | | 21 | 30 | 50 | 84 | 632 | |
| | 1998.09-2003.10 | MT | F | R | Hatchback Van FWD F8Q630 | Date to:2005.12 | GDS50125 | Drive Shaft | | 21 | 23 | 57 | 84.5 | 713.5 | |
| | 1998.09-2003.10 | MT | F | R | Hatchback Van FWD F8Q630 | Date to:2003.10;Trans. code:JB1/3 | GDS50151 | Drive Shaft | | 21 | 23 | 49.8 | 83.5 | 715 | |
| | 1998.09-2003.10 | MT | F | R | Hatchback Van FWD F8Q630 | | GDS50336 | Drive Shaft | 26T | 21 | 23 | 57 | 84 | 727 | |
| | 1998.09-2003.10 | MT | F | R | Hatchback Van FWD F8Q630 | Date to:2003.10;Trans. code:JB1/3 | GDS50395 | Drive Shaft | 26T | 21 | 23 | 51.5 | 83 | 728 | |
| | 1998.09-2003.10 | MT | F | R | Hatchback Van FWD F8Q630 | Date to:2003.10;Trans. code:JB1/3 | GDS50437 | Drive Shaft | | 21 | 23 | 51.5 | 83 | 729 | |
| | 1998.09-2003.10 | | F | L | Hatchback Van FWD F8Q630 | | GDS50045 | Drive Shaft | 26T | 21 | 30 | 51.5 | 83 | 634 | |
| 1.9 (48 kw) | 1990.08-1998.02 | MT | F | L | Hatchback Van FWD F8Q730/F8Q732 | | GDS50116 | Drive Shaft | | 21 | | 49.8 | 83.5 | 610 | |
| | 1990.08-1998.02 | MT | F | R | Hatchback Van FWD F8Q730/F8Q732 | | GDS50022 | Drive Shaft | | 21 | 23 | 46.3 | 84 | 706 | |
| | 1990.08-1998.02 | MT | F | L/R | Hatchback Van FWD F8Q730/F8Q732 | Date to:1998.02 | GCO50008 | Outer Joint | | 21 | 25 | 56.2 | 83.5 | 58 | O |
| | 1990.08-1998.02 | | F | R | Hatchback Van FWD F8Q730/F8Q732 | | GDS50117 | Drive Shaft | | 21 | 23 | 49.8 | 83.5 | 698.5 | |
| | 2000.02-2001.05 | 5MT | F | L | Hatchback Van FWD F8Q632 | | GDS50004 | Drive Shaft | 26T | 21 | | 57 | 84.5 | 625.7 | |
| | 2000.02-2001.05 | 5MT | F | L | Hatchback Van FWD F8Q632 | | GDS50150 | Drive Shaft | | 21 | 30 | 49.8 | 83.5 | 623 | |
| | 2000.02-2001.05 | 5MT | F | R | Hatchback Van FWD F8Q632 | | GDS50017 | Drive Shaft | 26T | 21 | 23 | 51.5 | 83 | 715 | |
| | 2000.02-2001.05 | 5MT | F | R | Hatchback Van FWD F8Q632 | | GDS50162 | Drive Shaft | 26T | 21 | 23 | 52.2 | 85.5 | 723.5 | |
| | 2000.02-2001.05 | 5MT | F | R | Hatchback Van FWD F8Q632 | | GDS50357 | Drive Shaft | 26T | 21 | 23 | 57 | 84 | 718 | |
| | 2000.02-2001.05 | MT | F | L | Hatchback Van FWD F8Q632 | | GDS50177 | Drive Shaft | | 21 | | 57 | 84.5 | 625.7 | |
| | 2000.02-2001.05 | MT | F | R | Hatchback Van FWD F8Q632 | | GDS50146 | Drive Shaft | | 21 | 23 | 57 | 84.5 | 732.5 | |
| | 2000.02-2001.05 | MT | F | R | Hatchback Van FWD F8Q632 | | GDS50250 | Drive Shaft | 26T | 21 | 23 | 57 | 84.5 | 732.5 | |
| | 2000.02-2001.05 | MT | F | R | Hatchback Van FWD F8Q632 | | GDS50336 | Drive Shaft | 26T | 21 | 23 | 57 | 84 | 727 | |
| | 2000.02-2001.05 | | F | L | Hatchback Van FWD F8Q632 | For vehicles without off-road suspension | GCO50004 | Outer Joint | 26T | 21 | 30 | 52.2 | 85.5 | 59 | I |
| 1.9 (59 kw) | 2000.02-2001.05 | 5MT | F | L | Hatchback Van FWD F9Q780 | | GDS50004 | Drive Shaft | 26T | 21 | | 57 | 84.5 | 625.7 | |
| | 2000.02-2001.05 | 5MT | F | L | Hatchback Van FWD F9Q780 | | GDS50150 | Drive Shaft | | 21 | 30 | 49.8 | 83.5 | 623 | |
| | 2000.02-2001.05 | 5MT | F | R | Hatchback Van FWD F9Q780 | | GDS50017 | Drive Shaft | 26T | 21 | 23 | 51.5 | 83 | 715 | |
| | 2000.02-2001.05 | 5MT | F | R | Hatchback Van FWD F9Q780 | | GDS50162 | Drive Shaft | 26T | 21 | 23 | 52.2 | 85.5 | 723.5 | |
| | 2000.02-2001.05 | 5MT | F | R | Hatchback Van FWD F9Q780 | | GDS50357 | Drive Shaft | 26T | 21 | 23 | 57 | 84 | 718 | |
| | 2000.02-2001.05 | | F | L | Hatchback Van FWD F9Q780 | For vehicles without off-road suspension | GCO50004 | Outer Joint | 26T | 21 | 30 | 52.2 | 85.5 | 59 | I |
| **Clio Work** | | | | | | | | | | | | | | | |
| 1.2 (55 kw) | 2015.06- | MT | F | L/R | Hatchback Van FWD D4F722 | | GCO50112 | Outer Joint | | 23 | 28 | 49 | 83.5 | 54.5 | I |
| **Clio/Lutecia** | | | | | | | | | | | | | | | |
| 1.6 (81 kw) | 1999.06-2009.02 | AT | F | L | Hatchback FWD K4M 740, K4M 748 | | GDS99169 | Drive Shaft | 26T | 21 | 26 | 52.2 | 85.5 | 621 | |
| | 1999.06-2009.02 | AT | F | R | Hatchback FWD K4M 740, K4M 748 | | GDS50485 | Drive Shaft | 44T | 21 | 23 | 52.2 | 85.5 | 733 | |
| | 1999.06-2009.02 | AT | F | R | Hatchback FWD K4M 740, K4M 748 | | GDS50486 | Drive Shaft | 26T | 21 | 23 | 52.2 | 85.5 | 733 | |
| | 1999.06-2009.02 | MT | F | L | Hatchback FWD K4M 740, K4M 748 | | GDS50004 | Drive Shaft | 26T | 21 | | 57 | 84.5 | 625.7 | |
| | 1999.06-2009.02 | MT | F | R | Hatchback FWD K4M 740, K4M 748 | | GDS50250 | Drive Shaft | 26T | 21 | 23 | 57 | 84.5 | 732.5 | |
| | 1999.06-2009.02 | MT | F | R | Hatchback FWD K4M 740, K4M 748 | | GDS99072 | Drive Shaft | 44T | 21 | 23 | 57 | 84.5 | 720 | |
| **Dokker** | | | | | | | | | | | | | | | |
| 1.5 (66 kw) | 2013.12- | 5MT | F | L | Van FWD K9K 612 | | GDS11024 | Drive Shaft | | 25 | 26 | 52.5 | 88.5 | 653 | |
| | 2013.12- | 5MT | F | R | Van FWD K9K 612 | | GDS50501 | Drive Shaft | | 25 | 26 | 52.4 | 88.5 | 898 | |
| | 2013.12- | 5MT | F | L | Van FWD K9K 612 | | GCO50162 | Outer Joint | | 25 | 23 | 52.5 | 88.5 | 60.5 | M |
| | 2013.12- | 5MT | F | L | Van FWD K9K 612 | | GCI50057 | Inner Joint | | 26 | 22 | 40 | 64 | 104 | |
| **Duster** | | | | | | | | | | | | | | | |
| 1.3 (110 kw) | 2021.11-2024.07 | CVT/6MT | F | L | SUV 4WD H5H 460 | | GDS11017 | Drive Shaft | | 25 | 27 | 52.6 | 89 | 655 | |
| | 2021.11-2024.07 | 6MT/CVT | R | L/R | SUV 4WD H5H 460 | | GDS57265 | Drive Shaft | 48T | 25 | 21 | 52.5 | 88.5 | 824 | |
| 1.5 (63 kw) | 2011.06-2018.01 | 5MT | F | L | SUV FWD K9K 796 | | GDS50415 | Drive Shaft | | 25 | 26 | 52.6 | 89 | 704 | |
| | 2011.06-2018.01 | 5MT | F | L | SUV FWD K9K 796 | | GDS50498 | Drive Shaft | | 25 | 26 | 52.6 | 89 | 702 | |
| | 2011.06-2018.01 | 5MT | F | L | SUV FWD K9K 796 | | GDS50587 | Drive Shaft | | 25 | 26 | 52.6 | 89 | 700 | |

| | YEAR | TRANSM. | F/R | L/R | BODY STYLE & DRIVE TYPE & ENGINE | REMARKS | G-AP Ref. | PRODUCT | ABS | Technical Specifications A | B | C | H | L | P |
|---|---|---|---|---|---|---|---|---|---|---|---|---|---|---|---|
| **RENAULT** **Duster** | | | | | | | | | | | | | | | |
| 1.5 (63 kw) | 2011.06-2018.01 | 5MT | F | R | SUV FWD K9K 796 | | GDS50416 | Drive Shaft | | 25 | 26 | 52.6 | 89 | 950 | |
| | 2011.06-2018.01 | 5MT | F | R | SUV FWD K9K 796 | PTJ | GDS50586 | Drive Shaft | | 25 | 26 | 52.6 | 89 | 950 | |
| 1.5 (66 kw) | 2011.06-2018.01 | 6MT | F | L | SUV 4WD K9K 884 | | GDS50464 | Drive Shaft | | 25 | 27 | 52.6 | 89 | 652 | |
| | 2011.06-2018.01 | 6MT | F | R | SUV 4WD K9K 884 | | GDS50463 | Drive Shaft | | 25 | 31 | 52.6 | 89 | 611 | |
| | 2011.06-2018.01 | 6MT | F | L/R | SUV 4WD K9K 884 | | GCO50148 | Outer Joint | | 25 | 35 | 52.6 | 89 | 60 | I |
| | 2011.06-2018.01 | 6MT | F | L | SUV 4WD K9K 884 | | GCI50105 | Inner Joint | | 27 | 33 | 40 | 70.5 | 111 | |
| | 2011.06-2018.01 | 6MT | F | R | SUV 4WD K9K 884 | | GCI50106 | Inner Joint | | 31 | 33 | 42 | | 133.5 | |
| | 2011.06-2018.01 | 6MT | R | L/R | SUV 4WD K9K 884 | Date to:2017.03 | GDS57265 | Drive Shaft | 48T | 25 | 21 | 52.5 | 88.5 | 824 | |
| | 2011.06-2018.01 | 6MT | R | L/R | SUV 4WD K9K 884 | Date to:2017.03 | GCO57203 | Outer Joint | 48T | 25 | 28 | 52.5 | 88.5 | 60 | I |
| | 2011.06-2018.01 | 6MT | R | L/R | SUV 4WD K9K 884 | Date to:2017.03 | GCI57129 | Inner Joint | | 21 | 28 | 38 | 55 | 96 | |
| 1.5 (80 kw) | 2013.09-2018.01 | MT | F | L | SUV 4WD K9K 856;K9K 858 | | GDS50464 | Drive Shaft | | 25 | 27 | 52.6 | 89 | 652 | |
| | 2013.09-2018.01 | MT | F | R | SUV 4WD K9K 856;K9K 858 | | GDS50463 | Drive Shaft | | 25 | 31 | 52.6 | 89 | 611 | |
| | 2013.09-2018.01 | MT | F | L/R | SUV 4WD K9K 856;K9K 858 | | GCO50148 | Outer Joint | | 25 | 35 | 52.6 | 89 | 60 | I |
| | 2013.09-2018.01 | MT | F | L | SUV 4WD K9K 856;K9K 858 | | GCI50105 | Inner Joint | | 27 | 33 | 40 | 70.5 | 111 | |
| | 2013.09-2018.01 | MT | F | R | SUV 4WD K9K 856;K9K 858 | | GCI50106 | Inner Joint | | 31 | 33 | 42 | | 133.5 | |
| | 2013.09-2018.01 | MT | R | L/R | SUV 4WD K9K 856;K9K 858 | | GDS57265 | Drive Shaft | 48T | 25 | 21 | 52.5 | 88.5 | 824 | |
| | 2013.09-2018.01 | MT | R | L/R | SUV 4WD K9K 856;K9K 858 | | GCO57203 | Outer Joint | 48T | 25 | 28 | 52.5 | 88.5 | 60 | I |
| | 2013.09-2018.01 | MT | R | L/R | SUV 4WD K9K 856;K9K 858 | | GCI57129 | Inner Joint | | 21 | 28 | 38 | 55 | 96 | |
| | 2018.01-2024.07 | 6MT | F | R | SUV 4WD K9K 858;K9K 658 | | GDS57835 | Drive Shaft | | 25 | 31 | 52.6 | 89 | 634 | |
| | 2018.01-2024.07 | 6MT | F | L/R | SUV 4WD K9K 858;K9K 658 | | GCO50148 | Outer Joint | | 25 | 35 | 52.6 | 89 | 60 | I |
| | 2018.01-2024.07 | 6MT | F | R | SUV 4WD K9K 858;K9K 658 | | GCI81137 | Inner Joint | | 31 | 33 | 42 | | 133 | |
| | 2018.01-2024.07 | MT | F | L | SUV 4WD K9K 858;K9K 658 | | GDS50464 | Drive Shaft | | 25 | 27 | 52.6 | 89 | 652 | |
| | 2018.01-2024.07 | MT | F | L | SUV 4WD K9K 858;K9K 658 | | GCI50105 | Inner Joint | | 27 | 33 | 40 | 70.5 | 111 | |
| | 2018.01-2024.07 | MT | R | L/R | SUV 4WD K9K 858;K9K 658 | Date to:2017.03 | GDS57265 | Drive Shaft | 48T | 25 | 21 | 52.5 | 88.5 | 824 | |
| | 2018.01-2024.07 | MT | R | L/R | SUV 4WD K9K 858;K9K 658 | Date to:2017.03 | GCO57203 | Outer Joint | 48T | 25 | 28 | 52.5 | 88.5 | 60 | I |
| | 2018.01-2024.07 | MT | R | L/R | SUV 4WD K9K 858;K9K 658 | Date to:2017.03 | GCI57129 | Inner Joint | | 21 | 28 | 38 | 55 | 96 | |
| | 2018.01-2024.07 | 6DCT | F | L | SUV FWD K9K 656;K9K 858;K9K 658;K9K 667;K9K 678 | | GDS83561 | Drive Shaft | | 25 | 34 | 52.5 | 88.5 | 643 | |
| | 2018.01-2024.07 | 6DCT | F | R | SUV FWD K9K 656;K9K 858;K9K 658;K9K 667;K9K 678 | | GDS83764 | Drive Shaft | | 25 | 34 | 52.5 | 88.5 | 1002 | |
| | 2018.01-2024.07 | 6DCT | F | L/R | SUV FWD K9K 656;K9K 858;K9K 658;K9K 667;K9K 678 | | GCO82418 | Outer Joint | | 25 | 35 | 52.5 | 88.5 | 61 | I |
| | 2018.01-2024.07 | 6DCT | F | L | SUV FWD K9K 656;K9K 858;K9K 658;K9K 667;K9K 678 | | GCI82271 | Inner Joint | | 34 | 33 | 40 | 54 | 118 | |
| | 2018.01-2024.07 | 6DCT | F | R | SUV FWD K9K 656;K9K 858;K9K 658;K9K 667;K9K 678 | | GCI82365 | Inner Joint | | 34 | 33 | 40 | 380.5 | 101 | |
| | 2018.01-2024.07 | 6MT | F | L | SUV FWD K9K 656;K9K 858;K9K 658;K9K 667;K9K 678 | Inner teeth of wheel side:33 | GDS50415 | Drive Shaft | | 25 | 26 | 52.6 | 89 | 704 | |
| | 2018.01-2024.07 | 6MT | F | L | SUV FWD K9K 656;K9K 858;K9K 658;K9K 667;K9K 678 | Inner teeth of wheel side:35 | GDS50498 | Drive Shaft | | 25 | 26 | 52.6 | 89 | 702 | |
| | 2018.01-2024.07 | 6MT | F | R | SUV FWD K9K 656;K9K 858;K9K 658;K9K 667;K9K 678 | | GDS50586 | Drive Shaft | | 25 | 26 | 52.6 | 89 | 950 | |
| | 2018.01-2024.07 | 6MT | F | L | SUV FWD K9K 656;K9K 858;K9K 658;K9K 667;K9K 678 | | GCO50148 | Outer Joint | | 25 | 35 | 52.6 | 89 | 60 | I |
| | 2018.01-2024.07 | 6MT | F | R | SUV FWD K9K 656;K9K 858;K9K 658;K9K 667;K9K 678 | | GCO50157 | Outer Joint | | 25 | 33 | 52.6 | 89 | 60 | I |
| | 2018.01-2024.07 | 6MT | F | R | SUV FWD K9K 656;K9K 858;K9K 658;K9K 667;K9K 678 | | GCI41190 | Inner Joint | | 26 | 33 | 33 | 329 | 101 | |
| 1.6 (75 kw) | 2011.06-2015.05 | 5MT/6MT | F | L | SUV 4WD K4M 690;K4M 606;K4M 646;K4M 490 | | GDS11017 | Drive Shaft | | 25 | 27 | 52.6 | 89 | 655 | |
| | 2011.06-2015.05 | 5MT/6MT | F | R | SUV 4WD K4M 690;K4M 606;K4M 646;K4M 490 | | GDS11019 | Drive Shaft | | 25 | 31 | 52.6 | 89 | 614 | |
| | 2011.06-2015.05 | 5MT/6MT | F | R | SUV 4WD K4M 690;K4M 606;K4M 646;K4M 490 | | GCO50157 | Outer Joint | | 25 | 33 | 52.6 | 89 | 60 | I |
| | 2011.06-2015.05 | 5MT/6MT | F | R | SUV 4WD K4M 690;K4M 606;K4M 646;K4M 490 | | GCI81137 | Inner Joint | | 31 | 33 | 42 | | 133 | |
| | 2011.06-2015.05 | 6MT | F | L | SUV 4WD K4M 690;K4M 606;K4M 646;K4M 490 | | GDS50498 | Drive Shaft | | 25 | 26 | 52.6 | 89 | 702 | |
| | 2011.06-2015.05 | 6MT | F | R | SUV 4WD K4M 690;K4M 606;K4M 646;K4M 490 | | GDS83783 | Drive Shaft | | 25 | 31 | 52.6 | 89 | 615 | |
| | 2011.06-2015.05 | 6MT | F | L | SUV 4WD K4M 690;K4M 606;K4M 646;K4M 490 | | GCI50105 | Inner Joint | | 27 | 33 | 40 | 70.5 | 111 | |
| | 2011.06-2015.05 | 6MT | R | L/R | SUV 4WD K4M 690;K4M 606;K4M 646;K4M 490 | | GDS57265 | Drive Shaft | 48T | 25 | 21 | 52.5 | 88.5 | 824 | |
| | 2011.06-2015.05 | 6MT | R | L/R | SUV 4WD K4M 690;K4M 606;K4M 646;K4M 490 | | GCO57203 | Outer Joint | 48T | 25 | 28 | 52.5 | 88.5 | 60 | I |
| | 2011.06-2015.05 | 6MT | R | L/R | SUV 4WD K4M 690;K4M 606;K4M 646;K4M 490 | | GCI57129 | Inner Joint | | 21 | 28 | 38 | 55 | 96 | |
| | 2011.06-2015.05 | 5MT | F | L | SUV FWD K4M 616 | | GDS50415 | Drive Shaft | | 25 | 26 | 52.6 | 89 | 704 | |
| | 2011.06-2015.05 | 5MT | F | L | SUV FWD K4M 616 | | GDS50498 | Drive Shaft | | 25 | 26 | 52.6 | 89 | 702 | |
| | 2011.06-2015.05 | 5MT | F | L | SUV FWD K4M 616 | | GDS50587 | Drive Shaft | | 25 | 26 | 52.6 | 89 | 700 | |
| | 2011.06-2015.05 | 5MT | F | R | SUV FWD K4M 616 | | GDS50586 | Drive Shaft | | 25 | 26 | 52.6 | 89 | 950 | |
| | 2011.06-2015.05 | 5MT | F | R | SUV FWD K4M 616 | | GCO50157 | Outer Joint | | 25 | 33 | 52.6 | 89 | 60 | I |
| | 2011.06-2015.05 | 5MT | F | R | SUV FWD K4M 616 | | GCI41190 | Inner Joint | | 26 | 33 | 33 | 329 | 101 | |
| 1.6 (84 kw) | 2015.06-2018.01 | MT | F | L | SUV 4WD H4M 430 | Inner teeth of wheel side:33;TJ | GDS50415 | Drive Shaft | | 25 | 26 | 52.6 | 89 | 704 | |
| | 2015.06-2018.01 | MT | F | L | SUV 4WD H4M 430 | Inner teeth of wheel side:35;TJ | GDS50498 | Drive Shaft | | 25 | 26 | 52.6 | 89 | 702 | |
| | 2015.06-2018.01 | MT | F | L | SUV 4WD H4M 430 | Inner teeth of wheel side:33;PTJ | GDS50587 | Drive Shaft | | 25 | 26 | 52.6 | 89 | 700 | |
| | 2015.06-2018.01 | MT | F | R | SUV 4WD H4M 430 | | GDS50586 | Drive Shaft | | 25 | 26 | 52.6 | 89 | 950 | |
| | 2015.06-2018.01 | MT | F | L | SUV 4WD H4M 430 | | GCO50148 | Outer Joint | | 25 | 35 | 52.6 | 89 | 60 | I |
| | 2015.06-2018.01 | MT | R | L/R | SUV 4WD H4M 430 | | GDS57265 | Drive Shaft | 48T | 25 | 21 | 52.5 | 88.5 | 824 | |
| | 2015.06-2018.01 | MT | R | L/R | SUV 4WD H4M 430 | | GCO57203 | Outer Joint | 48T | 25 | 28 | 52.5 | 88.5 | 60 | I |
| | 2015.06-2018.01 | MT | R | L/R | SUV 4WD H4M 430 | | GCI57129 | Inner Joint | | 21 | 28 | 38 | 55 | 96 | |
| | 2015.06-2018.01 | MT | F | L | SUV FWD H4M 438 | | GDS50415 | Drive Shaft | | 25 | 26 | 52.6 | 89 | 704 | |
| | 2015.06-2018.01 | MT | F | L | SUV FWD H4M 438 | | GDS50498 | Drive Shaft | | 25 | 26 | 52.6 | 89 | 702 | |
| | 2015.06-2018.01 | MT | F | L | SUV FWD H4M 438 | | GDS50587 | Drive Shaft | | 25 | 26 | 52.6 | 89 | 700 | |
| | 2015.06-2018.01 | MT | F | R | SUV FWD H4M 438 | | GDS50586 | Drive Shaft | | 25 | 26 | 52.6 | 89 | 950 | |

| | YEAR | TRANSM. | F/R | L/R | BODY STYLE & DRIVE TYPE & ENGINE | REMARKS | G-AP Ref. | PRODUCT | ABS | Technical Specifications A | B | C | H | L | P |
|---|---|---|---|---|---|---|---|---|---|---|---|---|---|---|---|
| **RENAULT** | | | | | | | | | | | | | | | |
| **Duster** | | | | | | | | | | | | | | | |
| 1.6 (84 kw) | 2015.06-2018.01 | MT | F | L/R | SUV FWD H4M 438 | | GCO50157 | Outer Joint | | 25 | 33 | 52.6 | 89 | 60 | I |
| | 2015.06-2018.01 | MT | F | L | SUV FWD H4M 438 | | GCI41191 | Inner Joint | | 26 | 33 | 40 | 64 | 118 | |
| | 2015.06-2018.01 | MT | F | R | SUV FWD H4M 438 | | GCI41190 | Inner Joint | | 26 | 33 | 33 | 329 | 101 | |
| | 2018.01-2024.07 | 5MT | F | L | SUV FWD H4M 738;H4M 736;H4M 730 | TJ | GDS50415 | Drive Shaft | | 25 | 26 | 52.6 | 89 | 704 | |
| | 2018.01-2024.07 | 5MT | F | L | SUV FWD H4M 738;H4M 736;H4M 730 | PTJ | GDS50587 | Drive Shaft | | 25 | 26 | 52.6 | 89 | 700 | |
| | 2018.01-2024.07 | | F | L | SUV FWD H4M 738;H4M 736;H4M 730 | | GCO50157 | Outer Joint | | 25 | 33 | 52.6 | 89 | 60 | I |
| | 2018.01-2024.07 | | F | L | SUV FWD H4M 738;H4M 736;H4M 730 | PTJ | GCI41191 | Inner Joint | | 26 | 33 | 40 | 64 | 118 | |
| | 2019.07-2024.07 | 6MT | F | L | SUV 4WD H4M 730 | | GDS11017 | Drive Shaft | | 25 | 27 | 52.6 | 89 | 655 | |
| | 2019.07-2024.07 | 6MT | F | L | SUV 4WD H4M 730 | Date to:2021.02 | GCI50105 | Inner Joint | | 27 | 33 | 40 | 70.5 | 111 | |
| | 2019.07-2024.07 | AT/MT | F | R | SUV 4WD H4M 730 | | GDS83783 | Drive Shaft | | 25 | 31 | 52.6 | 89 | 615 | |
| | 2019.07-2024.07 | 6MT | R | L/R | SUV 4WD H4M 730 | | GDS57265 | Drive Shaft | 48T | 25 | 21 | 52.5 | 88.5 | 824 | |
| 2.0 (98 kw) | 2012.02-2018.01 | AT | F | L | SUV FWD F4R 403;F4R 405 | | GDS50584 | Drive Shaft | | 25 | 26 | 52.7 | 88.5 | 709 | |
| | 2012.02-2018.01 | AT | F | R | SUV FWD F4R 403;F4R 405 | | GDS50585 | Drive Shaft | | 25 | 26 | 52.7 | 88.5 | 837 | |
| | 2012.02-2018.01 | AT | F | L/R | SUV FWD F4R 403;F4R 405 | | GCO50145 | Outer Joint | | 25 | 33 | 52.7 | 88.5 | 59.5 | I |
| | 2012.02-2018.01 | AT | F | L | SUV FWD F4R 403;F4R 405 | | GCI41188 | Inner Joint | | 26 | 33 | 39.6 | 46 | 100.5 | |
| | 2012.02-2018.01 | AT | F | R | SUV FWD F4R 403;F4R 405 | | GCI41189 | Inner Joint | | 26 | 33 | 42.5 | 217 | 103.5 | |
| 2.0 (99 kw) | 2012.02-2018.01 | AT/MT | F | L | SUV 4WD F4R 402;F4R 400;F4R 410 | | GDS50464 | Drive Shaft | | 25 | 27 | 52.6 | 89 | 652 | |
| | 2012.02-2018.01 | AT/MT | F | R | SUV 4WD F4R 402;F4R 400;F4R 410 | | GDS50463 | Drive Shaft | | 25 | 31 | 52.6 | 89 | 611 | |
| | 2012.02-2018.01 | AT/MT | F | L/R | SUV 4WD F4R 402;F4R 400;F4R 410 | | GCO50148 | Outer Joint | | 25 | 35 | 52.6 | 89 | 60 | I |
| | 2012.02-2018.01 | AT/MT | F | L | SUV 4WD F4R 402;F4R 400;F4R 410 | | GCI50105 | Inner Joint | | 27 | 33 | 40 | 70.5 | 111 | |
| | 2012.02-2018.01 | AT/MT | F | R | SUV 4WD F4R 402;F4R 400;F4R 410 | | GCI50106 | Inner Joint | | 31 | 33 | 42 | | 133.5 | |
| | 2012.02-2018.01 | AT/MT | R | L/R | SUV 4WD F4R 402;F4R 400;F4R 410 | | GDS57265 | Drive Shaft | 48T | 25 | 21 | 52.5 | 88.5 | 824 | |
| | 2012.02-2018.01 | AT/MT | R | L/R | SUV 4WD F4R 402;F4R 400;F4R 410 | | GCO57203 | Outer Joint | 48T | 25 | 28 | 52.5 | 88.5 | 60 | I |
| | 2012.02-2018.01 | AT/MT | R | L/R | SUV 4WD F4R 402;F4R 400;F4R 410 | | GCI57129 | Inner Joint | | 21 | 28 | 38 | 55 | 96 | |
| 2.0 (105 kw) | 2011.10-2018.01 | AT/MT | F | L | SUV 4WD F4R 402;F4R 403 | | GDS50464 | Drive Shaft | | 25 | 27 | 52.6 | 89 | 652 | |
| | 2011.10-2018.01 | AT/MT | F | R | SUV 4WD F4R 402;F4R 403 | | GDS50463 | Drive Shaft | | 25 | 31 | 52.6 | 89 | 611 | |
| | 2011.10-2018.01 | AT/MT | F | L/R | SUV 4WD F4R 402;F4R 403 | | GCO50148 | Outer Joint | | 25 | 35 | 52.6 | 89 | 60 | I |
| | 2011.10-2018.01 | AT/MT | F | L | SUV 4WD F4R 402;F4R 403 | | GCI50105 | Inner Joint | | 27 | 33 | 40 | 70.5 | 111 | |
| | 2011.10-2018.01 | AT/MT | F | R | SUV 4WD F4R 402;F4R 403 | | GCI50106 | Inner Joint | | 31 | 33 | 42 | | 133.5 | |
| | 2011.10-2018.01 | AT/MT | R | L/R | SUV 4WD F4R 402;F4R 403 | | GDS57265 | Drive Shaft | 48T | 25 | 21 | 52.5 | 88.5 | 824 | |
| | 2011.10-2018.01 | AT/MT | R | L/R | SUV 4WD F4R 402;F4R 403 | | GCO57203 | Outer Joint | 48T | 25 | 28 | 52.5 | 88.5 | 60 | I |
| | 2011.10-2018.01 | AT/MT | R | L/R | SUV 4WD F4R 402;F4R 403 | | GCI57129 | Inner Joint | | 21 | 28 | 38 | 55 | 96 | |
| | 2021.11-2024.07 | 6MT | F | L | SUV 4WD F4R 410 | | GDS50464 | Drive Shaft | | 25 | 27 | 52.6 | 89 | 652 | |
| | 2021.11-2024.07 | 6MT | F | L | SUV 4WD F4R 410 | | GCI50105 | Inner Joint | | 27 | 33 | 40 | 70.5 | 111 | |
| | 2021.11-2024.07 | 6MT | R | L/R | SUV 4WD F4R 410 | | GDS57265 | Drive Shaft | 48T | 25 | 21 | 52.5 | 88.5 | 824 | |
| | 2021.11-2024.07 | 6MT | R | L/R | SUV 4WD F4R 410 | | GCO57203 | Outer Joint | 48T | 25 | 28 | 52.5 | 88.5 | 60 | I |
| | 2021.11-2024.07 | 6MT | R | L/R | SUV 4WD F4R 410 | | GCI57129 | Inner Joint | | 21 | 28 | 38 | 55 | 96 | |
| **Espace** | | | | | | | | | | | | | | | |
| 1.6 (118 kw) | 2015.06-2023.03 | 6AT | F | L | MPV FWD R9M 452 | | GDS57960 | Drive Shaft | | 29 | 28 | 60 | 97 | 693 | |
| | 2015.06-2023.03 | 6AT | F | R | MPV FWD R9M 452 | | GDS56334 | Drive Shaft | | 29 | 28 | 60 | 97 | 977 | |
| | 2015.06-2023.03 | 6AT | F | L/R | MPV FWD R9M 452 | | GCO82323 | Outer Joint | | 29 | 35 | 60 | 97 | 63 | I |
| | 2015.06-2023.03 | 6AT | F | L | MPV FWD R9M 452 | | GCI82157 | Inner Joint | | 28 | 35 | 33.85 | 78.5 | 85.5 | |
| | 2015.06-2023.03 | 6AT | F | R | MPV FWD R9M 452 | | GCI82158 | Inner Joint | | 28 | 35 | 33.85 | 353.5 | 93.5 | |
| 1.9 (72 kw) | 1999.02-2001.08 | 5MT | F | L | MPV FWD F9Q722 | | GDS50221 | Drive Shaft | 44T | 27 | | 64 | 89 | 729 | |
| | 1999.02-2001.08 | MT | F | R | MPV FWD F9Q722 | | GDS50211 | Drive Shaft | 44T | 27 | 23 | 65 | 88.5 | 772 | |
| | 1999.02-2001.08 | MT | F | R | MPV FWD F9Q722 | | GDS50223 | Drive Shaft | 44T | 27 | 23 | 64 | 89 | 773 | |
| | 1999.02-2001.08 | MT | F | R | MPV FWD F9Q722 | Date to:2001.08 | GCI50008 | Inner Joint | | 23 | 30 | 36.3 | | 120.7 | |
| | 1999.02-2001.08 | | F | L | MPV FWD F9Q722 | | GCO50065 | Outer Joint | 44T | 27 | 25 | 64 | 89 | 60 | O |
| | 1999.02-2001.08 | | F | | MPV FWD F9Q722 | | GCO50089 | Outer Joint | 44T | 27 | 32 | 65 | 88.5 | 62.5 | I |
| 1.9 (85 kw) | 2003.04-2005.02 | MT | F | L | MPV FWD F9Q 820 | | GDS50390 | Drive Shaft | | 27 | 37 | 56.5 | 92 | 659 | |
| | 2003.04-2005.02 | MT | F | R | MPV FWD F9Q 820 | | GDS50391 | Drive Shaft | | 27 | 39 | 56.5 | 92 | 995 | |
| | 2003.04-2005.02 | MT | F | L/R | MPV FWD F9Q 820 | | GCO50080 | Outer Joint | | 27 | 37 | 56.5 | 92 | 73 | I |
| | 2003.04-2005.02 | MT | F | R | MPV FWD F9Q 820 | | GCI81074 | Inner Joint | | 39 | 35 | | 363 | 88 | |
| 1.9 (88 kw) | 2002.11-2015.01 | 6MT | F | L | MPV FWD F9Q 826, F9Q 680, F9Q 820 | | GDS50390 | Drive Shaft | | 27 | 37 | 56.5 | 92 | 659 | |
| | 2002.11-2015.01 | 6MT | F | R | MPV FWD F9Q 826, F9Q 680, F9Q 820 | | GDS50391 | Drive Shaft | | 27 | 39 | 56.5 | 92 | 995 | |
| | 2002.11-2015.01 | 6MT | F | R | MPV FWD F9Q 826, F9Q 680, F9Q 820 | | GCI81074 | Inner Joint | | 39 | 35 | | 363 | 88 | |
| | 2002.11-2015.01 | MT | F | L/R | MPV FWD F9Q 826, F9Q 680, F9Q 820 | | GCO50080 | Outer Joint | | 27 | 37 | 56.5 | 92 | 73 | I |
| 2.0 (76 kw) | 1991.01-1996.10 | AT/MT | F | L/R | MPV FWD J7R768 | | GDS50031 | Drive Shaft | 48T | 23 | 23 | 56 | 85 | 720 | |
| | 1991.01-1996.10 | AT/MT | F | L/R | MPV FWD J7R768 | | GDS50052 | Drive Shaft | | 23 | 23 | 56.3 | 80.5 | 713 | |
| | 1991.01-1996.10 | MT | F | | MPV FWD J7R768 | | GCO50007 | Outer Joint | | 23 | 25 | 56.3 | 80.5 | 57.5 | O |
| 2.0 (84 kw) | 1996.11-2000.10 | MT | F | L | MPV FWD F3R 728, F3R 729, F3R 742, F3R 768, F3R 769 | | GDS50221 | Drive Shaft | 44T | 27 | | 64 | 89 | 729 | |
| | 1996.11-2000.10 | MT | F | R | MPV FWD F3R 728, F3R 729, F3R 742, F3R 768, F3R 769 | | GDS50211 | Drive Shaft | 44T | 27 | 23 | 65 | 88.5 | 772 | |
| | 1996.11-2000.10 | MT | F | L/R | MPV FWD F3R 728, F3R 729, F3R 742, F3R 768, F3R 769 | | GCO50065 | Outer Joint | 44T | 27 | 25 | 64 | 89 | 60 | O |
| | 1996.11-2000.10 | MT | F | | MPV FWD F3R 728, F3R 729, F3R 742, F3R 768, F3R 769 | | GCO50089 | Outer Joint | 44T | 27 | 32 | 65 | 88.5 | 62.5 | I |
| | 1996.11-2000.10 | MT | F | R | MPV FWD F3R 728, F3R 729, F3R 742, F3R 768, F3R 769 | Date from:1997.11,Date to:2000.01 | GCI50008 | Inner Joint | | 23 | 30 | 36.3 | | 120.7 | |

| | YEAR | TRANSM. | F/R | L/R | BODY STYLE & DRIVE TYPE & ENGINE | REMARKS | G-AP Ref. | PRODUCT | ABS | Technical Specifications A | B | C | H | L | P |
|---|---|---|---|---|---|---|---|---|---|---|---|---|---|---|---|
| **RENAULT** **Espace** | | | | | | | | | | | | | | | |
| 2.0 (96 kw) | 2006.01-2015.12 | 6MT | F | L | MPV FWD M9R 740, M9R 760, M9R 750, M9R 761, M9R 762, M9R 763 | | GDS50493 | Drive Shaft | | 27 | 39 | 56.8 | 90 | 663 | |
| | 2006.01-2015.12 | 6MT | F | R | MPV FWD M9R 740, M9R 760, M9R 750, M9R 761, M9R 762, M9R 763 | | GDS50592 | Drive Shaft | | 27 | 39 | 56.8 | 90 | 1006 | |
| | 2006.01-2015.12 | AT | F | L | MPV FWD M9R 740, M9R 760, M9R 750, M9R 761, M9R 762, M9R 763 | | GDS50572 | Drive Shaft | | 27 | 30 | 56.5 | 91 | 666 | |
| | 2006.01-2015.12 | AT | F | R | MPV FWD M9R 740, M9R 760, M9R 750, M9R 761, M9R 762, M9R 763 | | GDS50540 | Drive Shaft | | 27 | 30 | 56.5 | 91 | 979 | |
| | 2006.01-2015.12 | AT | F | L | MPV FWD M9R 740, M9R 760, M9R 750, M9R 761, M9R 762, M9R 763 | Model code:JK03 | GCO50186 | Outer Joint | | 27 | 26 | 56.5 | 91 | 65 | M |
| | 2006.01-2015.12 | AT/MT | F | L/R | MPV FWD M9R 740, M9R 760, M9R 750, M9R 761, M9R 762, M9R 763 | | GCO50080 | Outer Joint | | 27 | 37 | 56.5 | 92 | 73 | I |
| | 2006.01-2015.12 | MT | F | R | MPV FWD M9R 740, M9R 760, M9R 750, M9R 761, M9R 762, M9R 763 | | GDS50631 | Drive Shaft | | 27 | 39 | 56.8 | 90 | 1013 | |
| | 2006.01-2015.12 | MT | F | L | MPV FWD M9R 740, M9R 760, M9R 750, M9R 761, M9R 762, M9R 763 | | GCI50071 | Inner Joint | | 39 | 35 | 39 | 74 | 102.5 | |
| | 2006.01-2015.12 | | F | L/R | MPV FWD M9R 740, M9R 760, M9R 750, M9R 761, M9R 762, M9R 763 | | GCO99291 | Outer Joint | | 27 | 37 | 56.8 | 90 | 73 | I |
| 2.0 (98 kw) | 2002.11-2015.12 | 6MT | F | L | MPV FWD F4R 790 | | GDS50390 | Drive Shaft | | 27 | 37 | 56.5 | 92 | 659 | |
| | 2002.11-2015.12 | 6MT | F | R | MPV FWD F4R 790 | | GDS50391 | Drive Shaft | | 27 | 39 | 56.5 | 92 | 995 | |
| | 2002.11-2015.12 | 6MT | F | R | MPV FWD F4R 790 | | GCI81074 | Inner Joint | | 39 | 35 | | 363 | 88 | |
| | 2002.11-2015.12 | | F | L/R | MPV FWD F4R 790 | Date From:2005.11 | GCO50131 | Outer Joint | | 27 | 36 | 56.7 | 86.5 | 66 | I |
| 2.0 (100 kw) | 2002.11-2015.01 | 6MT | F | L | MPV FWD F4R 792 | | GDS50390 | Drive Shaft | | 27 | 37 | 56.5 | 92 | 659 | |
| | 2002.11-2015.01 | 6MT | F | R | MPV FWD F4R 792 | | GDS50391 | Drive Shaft | | 27 | 39 | 56.5 | 92 | 995 | |
| | 2002.11-2015.01 | 6MT | F | R | MPV FWD F4R 792 | | GCI81074 | Inner Joint | | 39 | 35 | | 363 | 88 | |
| | 2002.11-2015.01 | AT/MT | F | L/R | MPV FWD F4R 792 | | GCO50080 | Outer Joint | | 27 | 37 | 56.5 | 92 | 73 | I |
| | 2002.11-2015.01 | | F | L/R | MPV FWD F4R 792 | Date From:2005.11 | GCO50131 | Outer Joint | | 27 | 36 | 56.7 | 86.5 | 66 | I |
| 2.0 (102 kw) | 2001.09-2002.10 | MT | F | L | MPV FWD F4R700/F4R701 | | GDS50221 | Drive Shaft | 44T | 27 | | 64 | 89 | 729 | |
| | 2001.09-2002.10 | MT | F | R | MPV FWD F4R700/F4R701 | | GDS50211 | Drive Shaft | 44T | 27 | 23 | 65 | 88.5 | 772 | |
| | 2001.09-2002.10 | MT | F | R | MPV FWD F4R700/F4R701 | | GCO50089 | Outer Joint | 44T | 27 | 32 | 65 | 88.5 | 62.5 | I |
| | 2001.09-2002.10 | MT | F | L/R | MPV FWD F4R700/F4R701 | | GCO50065 | Outer Joint | 44T | 27 | 25 | 64 | 89 | 60 | O |
| | 2001.09-2002.10 | MT | F | R | MPV FWD F4R700/F4R701 | | GCI50008 | Inner Joint | | 23 | 30 | 36.3 | | 120.7 | |
| 2.0 (103 kw) | 1998.10-2002.10 | MT | F | L | MPV FWD F4R 700, F4R 701 | | GDS50221 | Drive Shaft | 44T | 27 | | 64 | 89 | 729 | |
| | 1998.10-2002.10 | MT | F | R | MPV FWD F4R 700, F4R 701 | | GDS50211 | Drive Shaft | 44T | 27 | 23 | 65 | 88.5 | 772 | |
| | 1998.10-2002.10 | MT | F | L/R | MPV FWD F4R 700, F4R 701 | | GCO50065 | Outer Joint | 44T | 27 | 25 | 64 | 89 | 60 | O |
| | 1998.10-2002.10 | MT | F | | MPV FWD F4R 700, F4R 701 | | GCO50089 | Outer Joint | 44T | 27 | 32 | 65 | 88.5 | 62.5 | I |
| | 1998.10-2002.10 | MT | F | R | MPV FWD F4R 700, F4R 701 | | GCI50008 | Inner Joint | | 23 | 30 | 36.3 | | 120.7 | |
| 2.0 (110 kw) | 2006.01-2015.12 | AT | F | L | MPV FWD M9R 740, M9R 815, M9R 750, M9R 814, M9R 858 | | GDS50572 | Drive Shaft | | 27 | 30 | 56.5 | 91 | 666 | |
| | 2006.01-2015.12 | AT | F | R | MPV FWD M9R 740, M9R 815, M9R 750, M9R 814, M9R 858 | | GDS50540 | Drive Shaft | | 27 | 30 | 56.5 | 91 | 979 | |
| | 2006.01-2015.12 | AT | F | L | MPV FWD M9R 740, M9R 815, M9R 750, M9R 814, M9R 858 | | GCO50186 | Outer Joint | | 27 | 26 | 56.5 | 91 | 65 | M |
| | 2006.01-2015.12 | AT/MT | F | L/R | MPV FWD M9R 740, M9R 815, M9R 750, M9R 814, M9R 858 | | GCO50080 | Outer Joint | | 27 | 37 | 56.5 | 92 | 73 | I |
| | 2006.01-2015.12 | MT | F | L | MPV FWD M9R 740, M9R 815, M9R 750, M9R 814, M9R 858 | | GDS50493 | Drive Shaft | | 27 | 39 | 56.8 | 90 | 663 | |
| | 2006.01-2015.12 | MT | F | R | MPV FWD M9R 740, M9R 815, M9R 750, M9R 814, M9R 858 | | GDS50592 | Drive Shaft | | 27 | 39 | 56.8 | 90 | 1006 | |
| | 2006.01-2015.12 | MT | F | R | MPV FWD M9R 740, M9R 815, M9R 750, M9R 814, M9R 858 | | GDS50631 | Drive Shaft | | 27 | 39 | 56.8 | 90 | 1013 | |
| | 2006.01-2015.12 | MT | F | L | MPV FWD M9R 740, M9R 815, M9R 750, M9R 814, M9R 858 | | GCI50071 | Inner Joint | | 39 | 35 | 39 | 74 | 102.5 | |
| | 2006.01-2015.12 | MT | F | R | MPV FWD M9R 740, M9R 815, M9R 750, M9R 814, M9R 858 | | GCI81074 | Inner Joint | | 39 | 35 | | 363 | 88 | |
| | 2006.01-2015.12 | | F | L/R | MPV FWD M9R 740, M9R 815, M9R 750, M9R 814, M9R 858 | | GCO99291 | Outer Joint | | 27 | 37 | 56.8 | 90 | 73 | I |
| 2.0 (120 kw) | 2002.11-2006.02 | 5AT | F | R | MPV FWD F4R 794, F4R 795, F4R 796, F4R 797 | | GCI81173 | Inner Joint | | 26 | 35 | 31 | 331.5 | 87.5 | |
| | 2002.11-2006.02 | AT | F | L | MPV FWD F4R 794, F4R 795, F4R 796, F4R 797 | | GDS50624 | Drive Shaft | | 27 | 26 | 56.5 | 92 | 682 | |
| | 2002.11-2006.02 | AT | F | R | MPV FWD F4R 794, F4R 795, F4R 796, F4R 797 | | GDS50454 | Drive Shaft | | 27 | 26 | 56.5 | 92 | 963 | |
| | 2002.11-2006.02 | AT | F | L | MPV FWD F4R 794, F4R 795, F4R 796, F4R 797 | | GCI81081 | Inner Joint | | 26 | 35 | 31 | 64 | 89 | |
| | 2002.11-2006.02 | AT/MT | F | L/R | MPV FWD F4R 794, F4R 795, F4R 796, F4R 797 | | GCO50080 | Outer Joint | | 27 | 37 | 56.5 | 92 | 73 | I |
| | 2002.11-2006.02 | MT | F | L | MPV FWD F4R 794, F4R 795, F4R 796, F4R 797 | | GDS50390 | Drive Shaft | | 27 | 37 | 56.5 | 92 | 659 | |
| | 2002.11-2006.02 | MT | F | R | MPV FWD F4R 794, F4R 795, F4R 796, F4R 797 | | GDS50391 | Drive Shaft | | 27 | 39 | 56.5 | 92 | 995 | |
| 2.0 (125 kw) | 2005.04-2015.12 | 5AT | F | R | MPV FWD F4R 896, F4R 897, F4R 796, F4R 797 | | GCI81173 | Inner Joint | | 26 | 35 | 31 | 331.5 | 87.5 | |
| | 2005.04-2015.12 | AT | F | L | MPV FWD F4R 896, F4R 897, F4R 796, F4R 797 | | GDS50624 | Drive Shaft | | 27 | 26 | 56.5 | 92 | 682 | |
| | 2005.04-2015.12 | AT | F | R | MPV FWD F4R 896, F4R 897, F4R 796, F4R 797 | | GDS50454 | Drive Shaft | | 27 | 26 | 56.5 | 92 | 963 | |
| | 2005.04-2015.12 | AT | F | L | MPV FWD F4R 896, F4R 897, F4R 796, F4R 797 | | GCI81081 | Inner Joint | | 26 | 35 | 31 | 64 | 89 | |
| | 2005.04-2015.12 | AT/MT | F | L/R | MPV FWD F4R 896, F4R 897, F4R 796, F4R 797 | | GCO50080 | Outer Joint | | 27 | 37 | 56.5 | 92 | 73 | I |
| | 2005.04-2015.12 | MT | F | L | MPV FWD F4R 896, F4R 897, F4R 796, F4R 797 | | GDS50390 | Drive Shaft | | 27 | 37 | 56.5 | 92 | 659 | |
| | 2005.04-2015.12 | MT | F | R | MPV FWD F4R 896, F4R 897, F4R 796, F4R 797 | | GDS50391 | Drive Shaft | | 27 | 39 | 56.5 | 92 | 995 | |
| 2.0 (127 kw) | 2006.01-2015.12 | AT | F | L | MPV FWD M9R 760, M9R 815, M9R 859, M9R 761, M9R 762, M9R 763, M9R 812 | | GDS50572 | Drive Shaft | | 27 | 30 | 56.5 | 91 | 666 | |
| | 2006.01-2015.12 | AT | F | R | MPV FWD M9R 760, M9R 815, M9R 859, M9R 761, M9R 762, M9R 763, M9R 812 | | GDS50540 | Drive Shaft | | 27 | 30 | 56.5 | 91 | 979 | |
| | 2006.01-2015.12 | AT | F | L | MPV FWD M9R 760, M9R 815, M9R 859, M9R 761, M9R 762, M9R 763, M9R 812 | | GCO50186 | Outer Joint | | 27 | 26 | 56.5 | 91 | 65 | M |
| | 2006.01-2015.12 | AT/MT | F | L/R | MPV FWD M9R 760, M9R 815, M9R 859, M9R 761, M9R 762, M9R 763, M9R 812 | | GCO50080 | Outer Joint | | 27 | 37 | 56.5 | 92 | 73 | I |
| | 2006.01-2015.12 | MT | F | L | MPV FWD M9R 760, M9R 815, M9R 859, M9R 761, M9R 762, M9R 763, M9R 812 | | GDS50493 | Drive Shaft | | 27 | 39 | 56.8 | 90 | 663 | |
| | 2006.01-2015.12 | MT | F | R | MPV FWD M9R 760, M9R 815, M9R 859, M9R 761, M9R 762, M9R 763, M9R 812 | | GDS50592 | Drive Shaft | | 27 | 39 | 56.8 | 90 | 1006 | |
| | 2006.01-2015.12 | MT | F | R | MPV FWD M9R 760, M9R 815, M9R 859, M9R 761, M9R 762, M9R 763, M9R 812 | | GDS50631 | Drive Shaft | | 27 | 39 | 56.8 | 90 | 1013 | |
| | 2006.01-2015.12 | MT | F | L | MPV FWD M9R 760, M9R 815, M9R 859, M9R 761, M9R 762, M9R 763, M9R 812 | | GCI50071 | Inner Joint | | 39 | 35 | 39 | 74 | 102.5 | |
| | 2006.01-2015.12 | | F | L/R | MPV FWD M9R 760, M9R 815, M9R 859, M9R 761, M9R 762, M9R 763, M9R 812 | | GCO99291 | Outer Joint | | 27 | 37 | 56.8 | 90 | 73 | I |
| 2.1 (65 kw) | 1991.01-1996.10 | AT/MT | F | L/R | MPV FWD J8S610/J8S772/J8S776 | | GDS50031 | Drive Shaft | 48T | 23 | 23 | 56 | 85 | 720 | |
| | 1991.01-1996.10 | AT/MT | F | L/R | MPV FWD J8S610/J8S772/J8S776 | | GDS50052 | Drive Shaft | | 23 | 23 | 56.3 | 80.5 | 713 | |
| | 1991.01-1996.10 | MT | F | L/R | MPV FWD J8S610/J8S772/J8S776 | | GCO50007 | Outer Joint | | 23 | 25 | 56.3 | 80.5 | 57.5 | O |
| 2.1 (66 kw) | 1994.11-1996.10 | MT | F | L/R | MPV FWD J8S612 | | GDS50031 | Drive Shaft | 48T | 23 | 23 | 56 | 85 | 720 | |

| | YEAR | TRANSM. | F/R | L/R | BODY STYLE & DRIVE TYPE & ENGINE | REMARKS | G-AP Ref. | PRODUCT | ABS | Technical Specifications A | B | C | H | L | P |
|---|---|---|---|---|---|---|---|---|---|---|---|---|---|---|---|
| **RENAULT** | | | | | | | | | | | | | | | |
| **Espace** | | | | | | | | | | | | | | | |
| 2.1 (66 kw) | 1994.11-1996.10 | MT | F | L/R | MPV FWD J8S612 | | GDS50052 | Drive Shaft | | 23 | 23 | 56.3 | 80.5 | 713 | |
| | 1994.11-1996.10 | MT | F | L/R | MPV FWD J8S612 | | GCO50007 | Outer Joint | | 23 | 25 | 56.3 | 80.5 | 57.5 | O |
| 2.2 (79 kw) | 1991.01-1996.10 | AT/MT | F | L/R | MPV 4WD J7T772 | | GDS50031 | Drive Shaft | 48T | 23 | 23 | 56 | 85 | 720 | |
| | 1991.01-1996.10 | AT/MT | F | L/R | MPV 4WD J7T772 | | GDS50052 | Drive Shaft | | 23 | 23 | 56.3 | 80.5 | 713 | |
| | 1991.01-1996.10 | MT | F | | MPV 4WD J7T772 | | GCO50007 | Outer Joint | | 23 | 25 | 56.3 | 80.5 | 57.5 | O |
| | 1991.01-1996.10 | AT/MT | F | L/R | MPV FWD J7T772/J7T776 | | GDS50031 | Drive Shaft | 48T | 23 | 23 | 56 | 85 | 720 | |
| | 1991.01-1996.10 | AT/MT | F | L/R | MPV FWD J7T772/J7T776 | | GDS50052 | Drive Shaft | | 23 | 23 | 56.3 | 80.5 | 713 | |
| | 1991.01-1996.10 | MT | F | L/R | MPV FWD J7T772/J7T776 | | GCO50007 | Outer Joint | | 23 | 25 | 56.3 | 80.5 | 57.5 | O |
| 2.2 (83 kw) | 1996.11-2000.12 | 5MT | F | L | MPV FWD G8T716 | | GDS50200 | Drive Shaft | 44T | 27 | | 64 | 89 | 619 | |
| | 1996.11-2000.12 | 5MT | F | R | MPV FWD G8T716 | | GDS50019 | Drive Shaft | 44T | 27 | 39 | 64 | 89 | 978 | |
| | 1996.11-2000.12 | | F | L/R | MPV FWD G8T716 | | GCO50065 | Outer Joint | 44T | 27 | 25 | 64 | 89 | 60 | O |
| 2.2 (84 kw) | 1997.11-2000.01 | 5MT | F | L | MPV FWD G8T 716 | | GDS50200 | Drive Shaft | 44T | 27 | | 64 | 89 | 619 | |
| | 1997.11-2000.01 | 5MT | F | R | MPV FWD G8T 716 | | GDS50019 | Drive Shaft | 44T | 27 | 39 | 64 | 89 | 978 | |
| | 1997.11-2000.01 | 5MT | F | L/R | MPV FWD G8T 716 | | GCO50065 | Outer Joint | 44T | 27 | 25 | 64 | 89 | 60 | O |
| 2.2 (85 kw) | 2000.07-2002.10 | 5MT | F | R | MPV FWD G9T710 | | GDS50272 | Drive Shaft | 44T | 27 | 39 | 64 | 90 | 1010 | |
| | 2000.07-2002.10 | MT | F | L | MPV FWD G9T710 | | GDS50225 | Drive Shaft | 44T | 27 | 37 | 64 | 90 | 594 | |
| | 2000.07-2002.10 | | F | | MPV FWD G9T710 | | GCO50080 | Outer Joint | | 27 | 37 | 56.5 | 92 | 73 | I |
| 2.2 (95 kw) | 2000.10-2002.10 | 5MT | F | R | MPV FWD G9T 710, G9T 642 | inner teeth of wheel side:27 | GDS50272 | Drive Shaft | 44T | 27 | 39 | 64 | 90 | 1010 | |
| | 2000.10-2002.10 | MT | F | L | MPV FWD G9T 710, G9T 642 | inner teeth of wheel side:27 | GDS50225 | Drive Shaft | 44T | 27 | 37 | 64 | 90 | 594 | |
| 2.2 (102 kw) | 2006.02-2015.12 | 5AT | F | L/R | MPV FWD G9T 645 | | GDS50637 | Drive Shaft | | 27 | 26 | 56.5 | 92 | 640 | |
| | 2006.02-2015.12 | AT/MT | F | L/R | MPV FWD G9T 645 | | GCO50080 | Outer Joint | | 27 | 37 | 56.5 | 92 | 73 | I |
| | 2006.02-2015.12 | MT | F | L | MPV FWD G9T 645 | | GDS50392 | Drive Shaft | | 27 | 37 | 56.8 | 90 | 619 | |
| | 2006.02-2015.12 | MT | F | R | MPV FWD G9T 645 | | GDS50393 | Drive Shaft | | 27 | 39 | 56.5 | 92 | 1035 | |
| | 2006.02-2015.12 | | F | R | MPV FWD G9T 645 | Date To:2015.01 | GCI50097 | Inner Joint | | 39 | 35 | 30 | 409 | 90 | |
| 2.2 (110 kw) | 2002.11-2006.08 | AT | F | L | MPV FWD G9T 742, G9T 743 | | GDS50637 | Drive Shaft | | 27 | 26 | 56.5 | 92 | 640 | |
| | 2002.11-2006.08 | MT | F | L | MPV FWD G9T 742, G9T 743 | | GDS50392 | Drive Shaft | | 27 | 37 | 56.8 | 90 | 619 | |
| | 2002.11-2006.08 | MT | F | R | MPV FWD G9T 742, G9T 743 | | GDS50393 | Drive Shaft | | 27 | 39 | 56.5 | 92 | 1035 | |
| | 2002.11-2006.08 | MT | F | L/R | MPV FWD G9T 742, G9T 743 | | GCO50080 | Outer Joint | | 27 | 37 | 56.5 | 92 | 73 | I |
| | 2002.11-2006.08 | MT | F | R | MPV FWD G9T 742, G9T 743 | Date to:2006.08 | GCI50097 | Inner Joint | | 39 | 35 | 30 | 409 | 90 | |
| 3.0 (120 kw) | 2005.09-2015.01 | 5AT | F | L | MPV FWD P9X 701;P9X 715 | | GDS50637 | Drive Shaft | | 27 | 26 | 56.5 | 92 | 640 | |
| | 2005.09-2015.01 | | F | | MPV FWD P9X 701;P9X 715 | | GCO50080 | Outer Joint | | 27 | 37 | 56.5 | 92 | 73 | I |
| 3.0 (130 kw) | 2002.11-2006.08 | 5AT | F | L | MPV FWD P9X 701 | | GDS50637 | Drive Shaft | | 27 | 26 | 56.5 | 92 | 640 | |
| | 2002.11-2006.08 | 5AT | F | L | MPV FWD P9X 701 | | GCI81081 | Inner Joint | | 26 | 35 | 31 | 64 | 89 | |
| | 2002.11-2006.08 | AT | F | L/R | MPV FWD P9X 701 | for vehicles with automatic transmission | GCO50080 | Outer Joint | | 27 | 37 | 56.5 | 92 | 73 | I |
| 3.0 (133 kw) | 2006.01-2015.01 | | F | | MPV FWD P9X 715 | | GCO50080 | Outer Joint | | 27 | 37 | 56.5 | 92 | 73 | I |
| 3.5 (177 kw) | 2002.11-2015.12 | 5AT | F | L | MPV FWD V4Y 711, V4Y 715 | | GDS50637 | Drive Shaft | | 27 | 26 | 56.5 | 92 | 640 | |
| | 2002.11-2015.12 | 5AT | F | L | MPV FWD V4Y 711, V4Y 715 | | GCI81081 | Inner Joint | | 26 | 35 | 31 | 64 | 89 | |
| | 2002.11-2015.12 | AT | F | L/R | MPV FWD V4Y 711, V4Y 715 | for vehicles with automatic transmission | GCO50080 | Outer Joint | | 27 | 37 | 56.5 | 92 | 73 | I |
| **Express** | | | | | | | | | | | | | | | |
| 1.3 (75 kw) | 2021.05- | 6MT | F | L | Box Body/MPV FWD H5H 470;H5H 490 | | GDS56640 | Drive Shaft | | 25 | 26 | 52.5 | 88.5 | 646 | |
| | 2021.05- | 6MT | F | L/R | Box Body/MPV FWD H5H 470;H5H 490 | | GCO83368 | Outer Joint | | 25 | 24 | 52.5 | 88.5 | 59 | I |
| | 2021.05- | 6MT | F | L | Box Body/MPV FWD H5H 470;H5H 490 | | GCI83418 | Inner Joint | | 26 | 24 | 40 | 64 | 114 | |
| 1.4 (55 kw) | 1991.09-1998.03 | AT | F | L | MPV Van FWD E7J724/E7J726/E7J773 | | GDS50201 | Drive Shaft | | 21 | 30 | 49.8 | 83.5 | 597 | |
| | 1991.09-1998.03 | MT | F | L | MPV Van FWD E7J724/E7J726/E7J773 | | GDS50120 | Drive Shaft | | 21 | 30 | 46.3 | 80.5 | 591.5 | |
| | 1991.09-1998.03 | MT | F | R | MPV Van FWD E7J724/E7J726/E7J773 | Trans. code:JB0/1 | GDS50044 | Drive Shaft | | 21 | 23 | 46.3 | 81.5 | 693.5 | |
| | 1991.09-1998.03 | | F | R | MPV Van FWD E7J724/E7J726/E7J773 | | GDS50023 | Drive Shaft | | 21 | 23 | 46.2 | 82 | 680 | |
| 1.5 (55 kw) | 2021.05- | 6MT | F | L | Box Body/MPV FWD K9K 872;K9K 876 | | GDS56640 | Drive Shaft | | 25 | 26 | 52.5 | 88.5 | 646 | |
| | 2021.05- | 6MT | F | R | Box Body/MPV FWD K9K 872;K9K 876 | | GDS56639 | Drive Shaft | | 25 | 26 | 52.5 | 88.5 | 897 | |
| | 2021.05- | 6MT | F | L/R | Box Body/MPV FWD K9K 872;K9K 876 | | GCO83368 | Outer Joint | | 25 | 24 | 52.5 | 88.5 | 59 | I |
| | 2021.05- | 6MT | F | L | Box Body/MPV FWD K9K 872;K9K 876 | | GCI83418 | Inner Joint | | 26 | 24 | 40 | 64 | 114 | |
| | 2021.05- | 6MT | F | R | Box Body/MPV FWD K9K 872;K9K 876 | | GCI83417 | Inner Joint | | 26 | 24 | 33 | 330 | 105 | |
| 1.5 (70 kw) | 2021.05- | 6MT | F | L | Box Body/MPV FWD K9K 872;K9K 876 | | GDS56640 | Drive Shaft | | 25 | 26 | 52.5 | 88.5 | 646 | |
| | 2021.05- | 6MT | F | R | Box Body/MPV FWD K9K 872;K9K 876 | | GDS56639 | Drive Shaft | | 25 | 26 | 52.5 | 88.5 | 897 | |
| | 2021.05- | 6MT | F | L/R | Box Body/MPV FWD K9K 872;K9K 876 | | GCO83368 | Outer Joint | | 25 | 24 | 52.5 | 88.5 | 59 | I |
| | 2021.05- | 6MT | F | L | Box Body/MPV FWD K9K 872;K9K 876 | | GCI83418 | Inner Joint | | 26 | 24 | 40 | 64 | 114 | |
| | 2021.05- | 6MT | F | R | Box Body/MPV FWD K9K 872;K9K 876 | | GCI83417 | Inner Joint | | 26 | 24 | 33 | 330 | 105 | |
| | 2021.05- | 6MT | F | L | Box Body/MPV FWD K9K672 | | GDS56640 | Drive Shaft | | 25 | 26 | 52.5 | 88.5 | 646 | |
| | 2021.05- | 6MT | F | R | Box Body/MPV FWD K9K672 | | GDS56639 | Drive Shaft | | 25 | 26 | 52.5 | 88.5 | 897 | |
| | 2021.05- | 6MT | F | L/R | Box Body/MPV FWD K9K672 | | GCO83368 | Outer Joint | | 25 | 24 | 52.5 | 88.5 | 59 | I |
| | 2021.05- | 6MT | F | L | Box Body/MPV FWD K9K672 | | GCI83418 | Inner Joint | | 26 | 24 | 40 | 64 | 114 | |
| | 2021.05- | 6MT | F | R | Box Body/MPV FWD K9K672 | | GCI83417 | Inner Joint | | 26 | 24 | 33 | 330 | 105 | |
| 1.9 (47 kw) | 1995.07-1998.03 | MT | F | L | MPV Van FWD F8Q646/F8Q684/F8Q724/F8Q776 | | GDS50120 | Drive Shaft | | 21 | 30 | 46.3 | 80.5 | 591.5 | |
| | 1995.07-1998.03 | MT | F | R | MPV Van FWD F8Q646/F8Q684/F8Q724/F8Q776 | | GDS50044 | Drive Shaft | | 21 | 23 | 46.3 | 81.5 | 693.5 | |
| | 1995.07-1998.03 | MT | F | L | MPV Van FWD F8Q646/F8Q684/F8Q724/F8Q776 | | GCO50012 | Outer Joint | | 21 | 30 | 46.3 | 80.5 | 57.5 | O |
| EV (21 kw) | 1994.06-1998.11 | Semi-AT | F | L | MPV Van FWD 2BD700 | | GDS50201 | Drive Shaft | | 21 | 30 | 49.8 | 83.5 | 597 | |

| | YEAR | TRANSM. | F/R | L/R | BODY STYLE & DRIVE TYPE & ENGINE | REMARKS | G-AP Ref. | PRODUCT | ABS | Technical Specifications A | B | C | H | L | P |
|---|---|---|---|---|---|---|---|---|---|---|---|---|---|---|---|
| **RENAULT** | | | | | | | | | | | | | | | |
| **Express Pick Up** | | | | | | | | | | | | | | | |
| 1.2 (40 kw) | 1995.07-1999.10 | 4MT/5MT | F | L | Pickup FWD C3G710 | | GDS50120 | Drive Shaft | | 21 | 30 | 46.3 | 80.5 | 591.5 | |
| | 1995.07-1999.10 | 4MT/5MT | F | R | Pickup FWD C3G710 | | GDS50044 | Drive Shaft | | 21 | 23 | 46.3 | 81.5 | 693.5 | |
| 1.9 (40 kw) | 1995.07-1999.10 | 4MT/5MT | F | L | Pickup FWD F8Q640/F8Q648 | | GDS50120 | Drive Shaft | | 21 | 30 | 46.3 | 80.5 | 591.5 | |
| | 1995.07-1999.10 | MT | F | R | Pickup FWD F8Q640/F8Q648 | | GDS50044 | Drive Shaft | | 21 | 23 | 46.3 | 81.5 | 693.5 | |
| 1.9 (47 kw) | 1995.07-1999.10 | MT | F | R | Pickup FWD F8Q724/F8Q776 | | GDS50044 | Drive Shaft | | 21 | 23 | 46.3 | 81.5 | 693.5 | |
| | 1995.07-1999.10 | | F | L | Pickup FWD F8Q724/F8Q776 | | GDS50120 | Drive Shaft | | 21 | 30 | 46.3 | 80.5 | 591.5 | |
| **Fluence** | | | | | | | | | | | | | | | |
| 1.5 (63 kw) | 2010.02- | 5MT | F | L | Saloon FWD K9K 830 | Date to:2013.02;Inner teeth of wheel side:33 | GDS50383 | Drive Shaft | | 25 | 26 | 52.7 | 88.5 | 688 | |
| | 2010.02- | 5MT | F | L | Saloon FWD K9K 830 | Date to:2013.02;Inner teeth of wheel side:35 | GDS50498 | Drive Shaft | | 25 | 26 | 52.6 | 89 | 702 | |
| | 2010.02- | 5MT | F | R | Saloon FWD K9K 830 | | GDS50510 | Drive Shaft | | 25 | 26 | 52.4 | 88.5 | 929 | |
| | 2010.02- | 5MT | F | L | Saloon FWD K9K 830 | | GCO50145 | Outer Joint | | 25 | 33 | 52.7 | 88.5 | 59.5 | I |
| | 2010.02- | 5MT | F | L | Saloon FWD K9K 830 | | GCI50096 | Inner Joint | | 26 | 30 | 40 | 64 | 96 | |
| | 2010.02- | 5MT | F | R | Saloon FWD K9K 830 | | GCI50051 | Inner Joint | | 26 | 22 | 33 | 326 | 96 | |
| | 2010.02- | 6MT | F | L | Saloon FWD K9K 830 | | GDS50426 | Drive Shaft | | 25 | 26 | 52.7 | 88.5 | 680 | |
| | 2010.02- | 6MT | F | R | Saloon FWD K9K 830 | Date to:2013.06 | GDS50425 | Drive Shaft | | 25 | 26 | 52.7 | 88.5 | 931 | |
| | 2010.02- | 6MT | F | L | Saloon FWD K9K 830 | | GCI50070 | Inner Joint | | 26 | 33 | 40 | 64 | 106 | |
| | 2010.02- | MT | F | L/R | Saloon FWD K9K 830 | | GCO99213 | Outer Joint | | 25 | 33 | 53 | 88 | 61.5 | I |
| 1.5 (66 kw) | 2010.02- | 5MT | F | L | Saloon FWD K9K 834 | Date to:2013.02;Inner teeth of wheel side:33 | GDS50383 | Drive Shaft | | 25 | 26 | 52.7 | 88.5 | 688 | |
| | 2010.02- | 5MT | F | L | Saloon FWD K9K 834 | Date from:2013.03 | GDS50426 | Drive Shaft | | 25 | 26 | 52.7 | 88.5 | 680 | |
| | 2010.02- | 5MT | F | L | Saloon FWD K9K 834 | Date to:2013.02;Inner teeth of wheel side:35 | GDS50498 | Drive Shaft | | 25 | 26 | 52.6 | 89 | 702 | |
| | 2010.02- | 5MT | F | R | Saloon FWD K9K 834 | | GDS50510 | Drive Shaft | | 25 | 26 | 52.4 | 88.5 | 929 | |
| | 2010.02- | 5MT | F | L | Saloon FWD K9K 834 | | GCI50070 | Inner Joint | | 26 | 33 | 40 | 64 | 106 | |
| | 2010.02- | 5MT | F | R | Saloon FWD K9K 834 | | GCI50051 | Inner Joint | | 26 | 22 | 33 | 326 | 96 | |
| | 2010.02- | MT | F | L/R | Saloon FWD K9K 834 | | GCO99213 | Outer Joint | | 25 | 33 | 53 | 88 | 61.5 | I |
| 1.5 (70 kw) | 2014.07- | 6MT | F | R | Saloon FWD K9K 826 | | GDS50510 | Drive Shaft | | 25 | 26 | 52.4 | 88.5 | 929 | |
| | 2014.07- | 6MT | F | | Saloon FWD K9K 826 | | GCO50162 | Outer Joint | | 25 | 23 | 52.5 | 88.5 | 60.5 | M |
| | 2014.07- | MT | F | L | Saloon FWD K9K 826 | | GDS50426 | Drive Shaft | | 25 | 26 | 52.7 | 88.5 | 680 | |
| | 2014.07- | MT | F | L/R | Saloon FWD K9K 826 | Date from:2015.01 | GCO99213 | Outer Joint | | 25 | 33 | 53 | 88 | 61.5 | I |
| | 2014.07- | MT | F | L | Saloon FWD K9K 826 | | GCI50070 | Inner Joint | | 26 | 33 | 40 | 64 | 106 | |
| 1.5 (78 kw) | 2010.02- | 6AT | F | L | Saloon FWD K9K 832 | | GDS50535 | Drive Shaft | | 25 | 34 | 52.7 | 88.5 | 632 | |
| | 2010.02- | 6AT | F | L | Saloon FWD K9K 832 | | GCI50129 | Inner Joint | | 34 | 33 | 40 | 54 | 106 | |
| | 2010.02- | 6MT | F | L | Saloon FWD K9K 832 | | GDS50426 | Drive Shaft | | 25 | 26 | 52.7 | 88.5 | 680 | |
| | 2010.02- | 6MT | F | R | Saloon FWD K9K 832 | Date to:2013.06 | GDS50425 | Drive Shaft | | 25 | 26 | 52.7 | 88.5 | 931 | |
| | 2010.02- | 6MT | F | R | Saloon FWD K9K 832 | Date from:2013.07 | GDS50510 | Drive Shaft | | 25 | 26 | 52.4 | 88.5 | 929 | |
| | 2010.02- | 6MT | F | | Saloon FWD K9K 832 | | GCO50162 | Outer Joint | | 25 | 23 | 52.5 | 88.5 | 60.5 | M |
| | 2010.02- | 6MT | F | L | Saloon FWD K9K 832 | | GCI50070 | Inner Joint | | 26 | 33 | 40 | 64 | 106 | |
| | 2010.02- | MT | F | L/R | Saloon FWD K9K 832 | | GCO99213 | Outer Joint | | 25 | 33 | 53 | 88 | 61.5 | I |
| 1.5 (81 kw) | 2010.02- | 6MT | F | R | Saloon FWD K9K 836;K9K 837;K9K 656;K9K 657 | Date to:2013.06 | GDS50425 | Drive Shaft | | 25 | 26 | 52.7 | 88.5 | 931 | |
| | 2010.02- | 6MT | F | R | Saloon FWD K9K 836;K9K 837;K9K 656;K9K 657 | Date from:2013.07 | GDS50510 | Drive Shaft | | 25 | 26 | 52.4 | 88.5 | 929 | |
| | 2010.02- | 6MT | F | | Saloon FWD K9K 836;K9K 837;K9K 656;K9K 657 | | GCO50157 | Outer Joint | | 25 | 33 | 52.6 | 89 | 60 | I |
| | 2010.02- | 6MT | F | | Saloon FWD K9K 836;K9K 837;K9K 656;K9K 657 | | GCO50162 | Outer Joint | | 25 | 23 | 52.5 | 88.5 | 60.5 | M |
| | 2010.02- | AT | F | L | Saloon FWD K9K 836;K9K 837;K9K 656;K9K 657 | | GDS50535 | Drive Shaft | | 25 | 34 | 52.7 | 88.5 | 632 | |
| | 2010.02- | AT | F | R | Saloon FWD K9K 836;K9K 837;K9K 656;K9K 657 | | GDS50536 | Drive Shaft | | 25 | 34 | 52.6 | 89 | 984 | |
| | 2010.02- | MT | F | L | Saloon FWD K9K 836;K9K 837;K9K 656;K9K 657 | | GDS50426 | Drive Shaft | | 25 | 26 | 52.7 | 88.5 | 680 | |
| | 2010.02- | MT | F | L/R | Saloon FWD K9K 836;K9K 837;K9K 656;K9K 657 | | GCO99213 | Outer Joint | | 25 | 33 | 53 | 88 | 61.5 | I |
| 1.6 (78 kw) | 2010.02- | 5MT | F | L | Saloon FWD K4M 838 | Date to:2013.02 | GDS50383 | Drive Shaft | | 25 | 26 | 52.7 | 88.5 | 688 | |
| | 2010.02- | 5MT | F | L | Saloon FWD K4M 838 | Date to:2013.02;Inner teeth of wheel side:35 | GDS50498 | Drive Shaft | | 25 | 26 | 52.6 | 89 | 702 | |
| | 2010.02- | 5MT | F | L | Saloon FWD K4M 838 | Date to:2013.02 | GCI50096 | Inner Joint | | 26 | 30 | 40 | 64 | 96 | |
| | 2010.02- | MT | F | L | Saloon FWD K4M 838 | Inner teeth of wheel side:33 | GDS50415 | Drive Shaft | | 25 | 26 | 52.6 | 89 | 704 | |
| | 2010.02- | MT | F | L | Saloon FWD K4M 838 | | GDS50426 | Drive Shaft | | 25 | 26 | 52.7 | 88.5 | 680 | |
| | 2010.02- | MT | F | R | Saloon FWD K4M 838 | | GDS50510 | Drive Shaft | | 25 | 26 | 52.4 | 88.5 | 929 | |
| | 2010.02- | MT | F | L | Saloon FWD K4M 838 | | GCO50145 | Outer Joint | | 25 | 33 | 52.7 | 88.5 | 59.5 | I |
| | 2010.02- | MT | F | L/R | Saloon FWD K4M 838 | | GCO50162 | Outer Joint | | 25 | 23 | 52.5 | 88.5 | 60.5 | M |
| | 2010.02- | MT | F | R | Saloon FWD K4M 838 | | GCI50051 | Inner Joint | | 26 | 22 | 33 | 326 | 96 | |
| 1.6 (81 kw) | 2010.02- | 5MT/6MT | F | L/R | Saloon FWD K4M 838;K4M 839 | | GCO99213 | Outer Joint | | 25 | 33 | 53 | 88 | 61.5 | I |
| | 2010.02- | AT | F | L | Saloon FWD K4M 838;K4M 839 | | GDS34223 | Drive Shaft | | 25 | 26 | 52.7 | 88.5 | 685 | |
| | 2010.02- | AT | F | R | Saloon FWD K4M 838;K4M 839 | | GDS34222 | Drive Shaft | | 25 | 23 | 52.7 | 88.5 | 822 | |
| | 2010.02- | AT | F | R | Saloon FWD K4M 838;K4M 839 | | GCI50084 | Inner Joint | | 23 | 30 | | 216.5 | 86 | |
| | 2010.02- | MT | F | L | Saloon FWD K4M 838;K4M 839 | Date to:2013.03 | GDS50383 | Drive Shaft | | 25 | 26 | 52.7 | 88.5 | 688 | |
| | 2010.02- | MT | F | L | Saloon FWD K4M 838;K4M 839 | Inner teeth of wheel side:33 | GDS50415 | Drive Shaft | | 25 | 26 | 52.6 | 89 | 704 | |
| | 2010.02- | MT | F | L | Saloon FWD K4M 838;K4M 839 | | GDS50426 | Drive Shaft | | 25 | 26 | 52.7 | 88.5 | 680 | |
| | 2010.02- | MT | F | L | Saloon FWD K4M 838;K4M 839 | Inner teeth of wheel side:35 | GDS50498 | Drive Shaft | | 25 | 26 | 52.6 | 89 | 702 | |
| | 2010.02- | MT | F | R | Saloon FWD K4M 838;K4M 839 | | GDS50510 | Drive Shaft | | 25 | 26 | 52.4 | 88.5 | 929 | |
| | 2010.02- | MT | F | L | Saloon FWD K4M 838;K4M 839 | Date to:2013.03 | GCO50145 | Outer Joint | | 25 | 33 | 52.7 | 88.5 | 59.5 | I |
| | 2010.02- | MT | F | L/R | Saloon FWD K4M 838;K4M 839 | | GCO50162 | Outer Joint | | 25 | 23 | 52.5 | 88.5 | 60.5 | M |

| | YEAR | TRANSM. | F/R | L/R | BODY STYLE & DRIVE TYPE & ENGINE | REMARKS | G-AP Ref. | PRODUCT | ABS | Technical Specifications A | B | C | H | L | P |
|---|---|---|---|---|---|---|---|---|---|---|---|---|---|---|---|
| **RENAULT** | | | | | | | | | | | | | | | |
| **Fluence** | | | | | | | | | | | | | | | |
| 1.6 (81 kw) | 2012.01- | 4AT | F | L | Saloon FWD K4M 839 | | GDS34223 | Drive Shaft | | 25 | 26 | 52.7 | 88.5 | 685 | |
| | 2012.01- | 4AT | F | R | Saloon FWD K4M 839 | | GDS34222 | Drive Shaft | | 25 | 23 | 52.7 | 88.5 | 822 | |
| | 2012.01- | 4AT | F | L | Saloon FWD K4M 839 | | GCI50040 | Inner Joint | | 26 | 30 | 43 | 42.5 | 83 | |
| | 2012.01- | 4AT | F | R | Saloon FWD K4M 839 | | GCI50084 | Inner Joint | | 23 | 30 | | 216.5 | 86 | |
| | 2012.01- | MT | F | L | Saloon FWD K4M 839 | | GDS50426 | Drive Shaft | | 25 | 26 | 52.7 | 88.5 | 680 | |
| | 2012.01- | MT | F | L/R | Saloon FWD K4M 839 | | GCO50162 | Outer Joint | | 25 | 23 | 52.5 | 88.5 | 60.5 | M |
| 1.6 (82 kw) | 2010.02- | 5MT/6MT | F | L/R | Saloon FWD K4M 838 | | GCO99213 | Outer Joint | | 25 | 33 | 53 | 88 | 61.5 | I |
| | 2010.02- | AT | F | L | Saloon FWD K4M 838 | | GDS34223 | Drive Shaft | | 25 | 26 | 52.7 | 88.5 | 685 | |
| | 2010.02- | AT | F | R | Saloon FWD K4M 838 | | GDS34222 | Drive Shaft | | 25 | 23 | 52.7 | 88.5 | 822 | |
| | 2010.02- | AT | F | L/R | Saloon FWD K4M 838 | | GCO50145 | Outer Joint | | 25 | 33 | 52.7 | 88.5 | 59.5 | I |
| | 2010.02- | AT | F | R | Saloon FWD K4M 838 | | GCI50084 | Inner Joint | | 23 | 30 | | 216.5 | 86 | |
| | 2010.02- | MT | F | L | Saloon FWD K4M 838 | | GDS50426 | Drive Shaft | | 25 | 26 | 52.7 | 88.5 | 680 | |
| | 2010.02- | MT | F | L | Saloon FWD K4M 838 | | GDS50498 | Drive Shaft | | 25 | 26 | 52.6 | 89 | 702 | |
| | 2010.02- | MT | F | R | Saloon FWD K4M 838 | | GDS50510 | Drive Shaft | | 25 | 26 | 52.4 | 88.5 | 929 | |
| | 2010.02- | MT | F | L/R | Saloon FWD K4M 838 | | GCO50162 | Outer Joint | | 25 | 23 | 52.5 | 88.5 | 60.5 | M |
| 1.6 (84 kw) | 2015.11- | 5MT | F | R | Saloon FWD H4M 738 | | GDS50510 | Drive Shaft | | 25 | 26 | 52.4 | 88.5 | 929 | |
| 1.6 (86 kw) | 2013.01- | CVT | F | R | Saloon FWD H4M 729;H4M 738;H4M 429;H4M 438;H4M 749;H4M720 | | GCI50088 | Inner Joint | | 25 | 22 | 33 | 328 | 93.5 | |
| | 2013.01- | MT | F | L | Saloon FWD H4M 729;H4M 738;H4M 429;H4M 438;H4M 749;H4M720 | | GDS50383 | Drive Shaft | | 25 | 26 | 52.7 | 88.5 | 688 | |
| | 2013.01- | MT | F | L | Saloon FWD H4M 729;H4M 738;H4M 429;H4M 438;H4M 749;H4M720 | Inner teeth of wheel side:33 | GDS50415 | Drive Shaft | | 25 | 26 | 52.6 | 89 | 704 | |
| | 2013.01- | MT | F | L | Saloon FWD H4M 729;H4M 738;H4M 429;H4M 438;H4M 749;H4M720 | Inner teeth of wheel side:35 | GDS50498 | Drive Shaft | | 25 | 26 | 52.6 | 89 | 702 | |
| | 2013.01- | MT | F | R | Saloon FWD H4M 729;H4M 738;H4M 429;H4M 438;H4M 749;H4M720 | | GDS50510 | Drive Shaft | | 25 | 26 | 52.4 | 88.5 | 929 | |
| | 2013.01- | MT | F | L | Saloon FWD H4M 729;H4M 738;H4M 429;H4M 438;H4M 749;H4M720 | Date to:2013.03 | GCO50145 | Outer Joint | | 25 | 33 | 52.7 | 88.5 | 59.5 | I |
| | 2013.01- | MT | F | L | Saloon FWD H4M 729;H4M 738;H4M 429;H4M 438;H4M 749;H4M720 | | GCI50096 | Inner Joint | | 26 | 30 | 40 | 64 | 96 | |
| | 2013.01- | MT | F | R | Saloon FWD H4M 729;H4M 738;H4M 429;H4M 438;H4M 749;H4M720 | | GCI50051 | Inner Joint | | 26 | 22 | 33 | 326 | 96 | |
| 1.6 (96 kw) | 2013.01- | MT | F | L | Saloon FWD R9M 402 | | GDS50428 | Drive Shaft | | 25 | 39 | 52.6 | 89 | 656 | |
| | 2013.01- | MT | F | L | Saloon FWD R9M 402 | | GCO50157 | Outer Joint | | 25 | 33 | 52.6 | 89 | 60 | I |
| | 2013.01- | MT | F | L/R | Saloon FWD R9M 402 | Date from:2015.01 | GCO99213 | Outer Joint | | 25 | 33 | 53 | 88 | 61.5 | I |
| 2.0 (101 kw) | 2011.05- | CVT | F | L | Saloon FWD M4R 714;M4R 751 | | GDS83875 | Drive Shaft | | 25 | 27 | 52.5 | 88.5 | 675 | |
| | 2011.05- | CVT | F | R | Saloon FWD M4R 714;M4R 751 | | GDS83897 | Drive Shaft | | 25 | 27 | 52.5 | 88.5 | 926 | |
| | 2011.05- | CVT | F | L/R | Saloon FWD M4R 714;M4R 751 | | GCO82528 | Outer Joint | | 25 | 24 | 52.5 | 88.5 | 59 | M |
| | 2011.05- | CVT | F | L | Saloon FWD M4R 714;M4R 751 | | GCI41073 | Inner Joint | | 27 | 24 | 40 | 62.5 | 99.5 | |
| | 2011.05- | CVT | F | R | Saloon FWD M4R 714;M4R 751 | | GCI82410 | Inner Joint | | 27 | 24 | 33 | 338 | 94 | |
| | 2011.05- | MT | F | L | Saloon FWD M4R 714;M4R 751 | | GDS50383 | Drive Shaft | | 25 | 26 | 52.7 | 88.5 | 688 | |
| | 2011.05- | MT | F | R | Saloon FWD M4R 714;M4R 751 | | GDS50604 | Drive Shaft | | 25 | 26 | 52.6 | 89 | 942 | |
| | 2011.05- | MT | F | L | Saloon FWD M4R 714;M4R 751 | | GCO50157 | Outer Joint | | 25 | 33 | 52.6 | 89 | 60 | I |
| 2.0 (103 kw) | 2010.02- | 5MT/6MT | F | L/R | Saloon FWD M4R 714;M4R 751 | | GCO99213 | Outer Joint | | 25 | 33 | 53 | 88 | 61.5 | I |
| | 2010.02- | CVT | F | L | Saloon FWD M4R 714;M4R 751 | | GDS83875 | Drive Shaft | | 25 | 27 | 52.5 | 88.5 | 675 | |
| | 2010.02- | CVT | F | R | Saloon FWD M4R 714;M4R 751 | | GDS83897 | Drive Shaft | | 25 | 27 | 52.5 | 88.5 | 926 | |
| | 2010.02- | CVT | F | L/R | Saloon FWD M4R 714;M4R 751 | | GCO82528 | Outer Joint | | 25 | 24 | 52.5 | 88.5 | 59 | M |
| | 2010.02- | CVT | F | L | Saloon FWD M4R 714;M4R 751 | | GCI41073 | Inner Joint | | 27 | 24 | 40 | 62.5 | 99.5 | |
| | 2010.02- | CVT | F | R | Saloon FWD M4R 714;M4R 751 | | GCI82410 | Inner Joint | | 27 | 24 | 33 | 338 | 94 | |
| | 2010.02- | MT | F | L | Saloon FWD M4R 714;M4R 751 | | GDS50383 | Drive Shaft | | 25 | 26 | 52.7 | 88.5 | 688 | |
| | 2010.02- | MT | F | L | Saloon FWD M4R 714;M4R 751 | | GCO50157 | Outer Joint | | 25 | 33 | 52.6 | 89 | 60 | I |
| 2.0 (105 kw) | 2014.05- | CVT | F | L | Saloon FWD M4R 714;M4R 751 | | GDS83875 | Drive Shaft | | 25 | 27 | 52.5 | 88.5 | 675 | |
| | 2014.05- | CVT | F | R | Saloon FWD M4R 714;M4R 751 | | GDS83897 | Drive Shaft | | 25 | 27 | 52.5 | 88.5 | 926 | |
| | 2014.05- | CVT | F | L/R | Saloon FWD M4R 714;M4R 751 | | GCO82528 | Outer Joint | | 25 | 24 | 52.5 | 88.5 | 59 | M |
| | 2014.05- | CVT | F | L | Saloon FWD M4R 714;M4R 751 | | GCI41073 | Inner Joint | | 27 | 24 | 40 | 62.5 | 99.5 | |
| | 2014.05- | CVT | F | R | Saloon FWD M4R 714;M4R 751 | | GCI82410 | Inner Joint | | 27 | 24 | 33 | 338 | 94 | |
| **Grand Kangoo** | | | | | | | | | | | | | | | |
| 1.3 (96 kw) | 2024.01- | 6MT | F | L | MPV FWD H5H 490 | | GDS57637 | Drive Shaft | | 25 | 26 | 53 | 88.5 | 700 | |
| | 2024.01- | 6MT | F | L | MPV FWD H5H 490 | | GDS58047 | Drive Shaft | | 29 | 26 | 60 | 95.5 | 705 | |
| | 2024.01- | 6MT | F | R | MPV FWD H5H 490 | | GDS57941 | Drive Shaft | | 25 | 26 | 53 | 88.5 | 948 | |
| | 2024.01- | 6MT | F | R | MPV FWD H5H 490 | | GDS58079 | Drive Shaft | | 29 | 26 | 60 | 95.5 | 955 | |
| | 2024.01- | 6MT | F | L/R | MPV FWD H5H 490 | | GCO83588 | Outer Joint | | 25 | 24 | 53 | 88.5 | 61 | I |
| | 2024.01- | 6MT | F | L/R | MPV FWD H5H 490 | | GCO83811 | Outer Joint | | 29 | 24 | 60 | 95.5 | 61 | I |
| | 2024.01- | 6MT | F | L | MPV FWD H5H 490 | | GCI83418 | Inner Joint | | 26 | 24 | 40 | 64 | 114 | |
| | 2024.01- | 6MT | F | L | MPV FWD H5H 490 | | GCI83782 | Inner Joint | | 26 | 24 | 40 | 64 | 114 | |
| | 2024.01- | 6MT | F | R | MPV FWD H5H 490 | | GCI83949 | Inner Joint | | 26 | 24 | 33 | 346 | 105 | |
| | 2024.01- | 7DCT | F | L | MPV FWD H5H 490 | | GDS58074 | Drive Shaft | | 29 | 27 | 60 | 95.5 | 651 | |
| | 2024.01- | 7DCT | F | L | MPV FWD H5H 490 | | GDS58093 | Drive Shaft | | 25 | 27 | 53 | 88.5 | 642 | |
| | 2024.01- | 7DCT | F | R | MPV FWD H5H 490 | | GDS57958 | Drive Shaft | | 29 | 27 | 60 | 95.5 | 1009 | |
| | 2024.01- | 7DCT | F | R | MPV FWD H5H 490 | | GDS58078 | Drive Shaft | | 25 | 27 | 53 | 88.5 | 1003 | |
| | 2024.01- | 7DCT | F | L/R | MPV FWD H5H 490 | | GCO83811 | Outer Joint | | 29 | 24 | 60 | 95.5 | 61 | I |
| | 2024.01- | 7DCT | F | L | MPV FWD H5H 490 | | GCI84006 | Inner Joint | | 27 | 24 | 40 | 65.5 | 113.5 | |
| | 2024.01- | 7DCT | F | R | MPV FWD H5H 490 | | GCI83962 | Inner Joint | | 27 | 24 | 32.5 | 400 | 104 | |

| | YEAR | TRANSM. | F/R | L/R | BODY STYLE & DRIVE TYPE & ENGINE | REMARKS | G-AP Ref. | PRODUCT | ABS | Technical Specifications A | B | C | H | L | P |
|---|---|---|---|---|---|---|---|---|---|---|---|---|---|---|---|
| **RENAULT** | | | | | | | | | | | | | | | |
| **Grand Kangoo** | | | | | | | | | | | | | | | |
| 1.5 (70 kw) | 2024.01- | 6MT | F | L | MPV FWD K9K 876 | Equipment code:CHGNOR/L1C | GDS57637 | Drive Shaft | | 25 | 26 | 53 | 88.5 | 700 | |
| | 2024.01- | 6MT | F | L | MPV FWD K9K 876 | Equipment code:CHGNOR/L1C | GDS58047 | Drive Shaft | | 29 | 26 | 60 | 95.5 | 705 | |
| | 2024.01- | 6MT | F | L | MPV FWD K9K 876 | Equipment code:CHGAUG/L1C/L2C | GDS58243 | Drive Shaft | | 29 | 27 | 60 | 95.5 | 695 | |
| | 2024.01- | 6MT | F | R | MPV FWD K9K 876 | Equipment code:CHGNOR/L1C | GDS57834 | Drive Shaft | | 25 | 26 | 53 | 88.5 | 946 | |
| | 2024.01- | 6MT | F | R | MPV FWD K9K 876 | Equipment code:CHGAUG/L1C/L2C | GDS58046 | Drive Shaft | | 29 | 27 | 60 | 95.5 | 960 | |
| | 2024.01- | 6MT | F | R | MPV FWD K9K 876 | Equipment code:CHGNOR/L1C | GDS58073 | Drive Shaft | | 29 | 26 | 60 | 95.5 | 951 | |
| | 2024.01- | 6MT | F | L | MPV FWD K9K 876 | Equipment code:CHGNOR/L1C | GCO83588 | Outer Joint | | 25 | 24 | 53 | 88.5 | 61 | I |
| | 2024.01- | 6MT | F | L/R | MPV FWD K9K 876 | Equipment code:CHGAUG/CHGNOR/L1C/L2C | GCO83811 | Outer Joint | | 29 | 24 | 60 | 95.5 | 61 | I |
| | 2024.01- | 6MT | F | L | MPV FWD K9K 876 | Equipment code:CHGNOR/L1C | GCI83418 | Inner Joint | | 26 | 24 | 40 | 64 | 114 | |
| | 2024.01- | 6MT | F | L | MPV FWD K9K 876 | Equipment code:CHGNOR/L1C;TJ | GCI83782 | Inner Joint | | 26 | 24 | 40 | 64 | 114 | |
| | 2024.01- | 6MT | F | L | MPV FWD K9K 876 | Equipment code:CHGAUG/L1C/L2C | GCI83989 | Inner Joint | | 27 | 24 | 39.95 | 67 | 114 | |
| | 2024.01- | 6MT | F | R | MPV FWD K9K 876 | Equipment code:CHGNOR/L1C | GCI83417 | Inner Joint | | 26 | 24 | 33 | 330 | 105 | |
| | 2024.01- | 6MT | F | R | MPV FWD K9K 876 | Equipment code:CHGAUG/L1C/L2C | GCI83988 | Inner Joint | | 27 | 24 | 33 | 339 | 103.5 | |
| | 2024.01- | 6MT | F | R | MPV FWD K9K 876 | Equipment code:CHGNOR/L1C | GCI84005 | Inner Joint | | 26 | 24 | 33 | 330 | 103 | |
| **Grand Scenic** | | | | | | | | | | | | | | | |
| 1.2 (85 kw) | 2012.04-2016.09 | | F | L | MPV FWD H5F 400 | | GCO50162 | Outer Joint | | 25 | 23 | 52.5 | 88.5 | 60.5 | M |
| | 2012.04-2016.09 | | F | R | MPV FWD H5F 400 | | GCO50212 | Outer Joint | | 25 | 25 | 52.6 | 88.5 | 58.5 | I |
| | 2012.04-2016.09 | | F | R | MPV FWD H5F 400 | | GCI50135 | Inner Joint | | 26 | 22 | 33 | 346 | 96 | |
| | 2016.09-2023.03 | 6MT | F | L | MPV FWD H5F 408 | | GDS57424 | Drive Shaft | | 29 | 26 | 60 | 95.5 | 710 | |
| | 2016.09-2023.03 | 6MT | F | R | MPV FWD H5F 408 | | GDS57423 | Drive Shaft | | 29 | 26 | 60 | 95.5 | 953 | |
| | 2016.09-2023.03 | 6MT | F | L/R | MPV FWD H5F 408 | | GCO83544 | Outer Joint | | 29 | 23 | 60 | 95.5 | 61 | M |
| | 2016.09-2023.03 | 6MT | F | L | MPV FWD H5F 408 | | GCI83659 | Inner Joint | | 26 | 23 | 39.95 | 64 | 104 | |
| | 2016.09-2023.03 | 6MT | F | R | MPV FWD H5F 408 | | GCI82523 | Inner Joint | | 26 | 23 | 33 | 346 | 98 | |
| 1.2 (96 kw) | 2014.07-2016.09 | MT | F | L/R | MPV FWD H5F 408 | Date from:2015.01 | GCO50162 | Outer Joint | | 25 | 23 | 52.5 | 88.5 | 60.5 | M |
| | 2014.07-2016.09 | | F | R | MPV FWD H5F 408 | | GCO50212 | Outer Joint | | 25 | 25 | 52.6 | 88.5 | 58.5 | I |
| | 2014.07-2016.09 | | F | R | MPV FWD H5F 408 | | GCI50135 | Inner Joint | | 26 | 22 | 33 | 346 | 96 | |
| | 2016.09-2023.03 | 6MT | F | L | MPV FWD H5F 408 | | GDS57424 | Drive Shaft | | 29 | 26 | 60 | 95.5 | 710 | |
| | 2016.09-2023.03 | 6MT | F | R | MPV FWD H5F 408 | | GDS57423 | Drive Shaft | | 29 | 26 | 60 | 95.5 | 953 | |
| | 2016.09-2023.03 | 6MT | F | L/R | MPV FWD H5F 408 | | GCO83544 | Outer Joint | | 29 | 23 | 60 | 95.5 | 61 | M |
| | 2016.09-2023.03 | 6MT | F | L | MPV FWD H5F 408 | | GCI83659 | Inner Joint | | 26 | 23 | 39.95 | 64 | 104 | |
| | 2016.09-2023.03 | 6MT | F | R | MPV FWD H5F 408 | | GCI82523 | Inner Joint | | 26 | 23 | 33 | 346 | 98 | |
| 1.2 (97 kw) | 2013.01-2016.09 | | F | L | MPV FWD H5F 404 | | GCO50162 | Outer Joint | | 25 | 23 | 52.5 | 88.5 | 60.5 | M |
| | 2013.01-2016.09 | | F | R | MPV FWD H5F 404 | | GCO50212 | Outer Joint | | 25 | 25 | 52.6 | 88.5 | 58.5 | I |
| | 2013.01-2016.09 | | F | R | MPV FWD H5F 404 | | GCI50135 | Inner Joint | | 26 | 22 | 33 | 346 | 96 | |
| 1.3 (85 kw) | 2018.01-2023.03 | 6MT | F | L | MPV FWD H5H 450;H5H 470 | | GDS57424 | Drive Shaft | | 29 | 26 | 60 | 95.5 | 710 | |
| | 2018.01-2023.03 | 6MT | F | R | MPV FWD H5H 450;H5H 470 | | GDS57423 | Drive Shaft | | 29 | 26 | 60 | 95.5 | 953 | |
| | 2018.01-2023.03 | 6MT | F | L/R | MPV FWD H5H 450;H5H 470 | | GCO83544 | Outer Joint | | 29 | 23 | 60 | 95.5 | 61 | M |
| | 2018.01-2023.03 | 6MT | F | L | MPV FWD H5H 450;H5H 470 | | GCI83659 | Inner Joint | | 26 | 23 | 39.95 | 64 | 104 | |
| | 2018.01-2023.03 | 6MT | F | R | MPV FWD H5H 450;H5H 470 | | GCI82523 | Inner Joint | | 26 | 23 | 33 | 346 | 98 | |
| 1.3 (103 kw) | 2018.01-2023.03 | 6MT | F | L | MPV FWD H5H 450;H5H 470;H5H 490 | | GDS57424 | Drive Shaft | | 29 | 26 | 60 | 95.5 | 710 | |
| | 2018.01-2023.03 | 6MT | F | R | MPV FWD H5H 450;H5H 470;H5H 490 | | GDS57423 | Drive Shaft | | 29 | 26 | 60 | 95.5 | 953 | |
| | 2018.01-2023.03 | 6MT | F | L/R | MPV FWD H5H 450;H5H 470;H5H 490 | | GCO83544 | Outer Joint | | 29 | 23 | 60 | 95.5 | 61 | M |
| | 2018.01-2023.03 | 6MT | F | L | MPV FWD H5H 450;H5H 470;H5H 490 | | GCI83659 | Inner Joint | | 26 | 23 | 39.95 | 64 | 104 | |
| | 2018.01-2023.03 | 6MT | F | R | MPV FWD H5H 450;H5H 470;H5H 490 | | GCI82523 | Inner Joint | | 26 | 23 | 33 | 346 | 98 | |
| | 2018.01-2023.03 | 7DCT | F | L | MPV FWD H5H 450;H5H 470;H5H 490 | | GDS58219 | Drive Shaft | | 29 | 27 | 60 | 97 | 652 | |
| | 2018.01-2023.03 | 7DCT | F | R | MPV FWD H5H 450;H5H 470;H5H 490 | | GDS58220 | Drive Shaft | | 29 | 27 | 60 | 96 | 1011 | |
| | 2018.01-2023.03 | 7DCT | F | L | MPV FWD H5H 450;H5H 470;H5H 490 | | GCO82323 | Outer Joint | | 29 | 35 | 60 | 97 | 63 | I |
| | 2018.01-2023.03 | 7DCT | F | R | MPV FWD H5H 450;H5H 470;H5H 490 | | GCO83866 | Outer Joint | | 29 | 33 | 60 | 96 | 60.5 | I |
| | 2018.01-2023.03 | 7DCT | F | L | MPV FWD H5H 450;H5H 470;H5H 490 | | GCI82385 | Inner Joint | | 27 | 35 | 40 | 65 | 109.5 | |
| | 2018.01-2023.03 | 7DCT | F | R | MPV FWD H5H 450;H5H 470;H5H 490 | | GCI82386 | Inner Joint | | 27 | 33 | 40 | 400.5 | 89.5 | |
| 1.3 (116 kw) | 2022.01-2023.03 | 6MT | F | L | MPV FWD H5H 470 | | GDS57424 | Drive Shaft | | 29 | 26 | 60 | 95.5 | 710 | |
| | 2022.01-2023.03 | 6MT | F | R | MPV FWD H5H 470 | | GDS57423 | Drive Shaft | | 29 | 26 | 60 | 95.5 | 953 | |
| | 2022.01-2023.03 | 6MT | F | L/R | MPV FWD H5H 470 | | GCO83544 | Outer Joint | | 29 | 23 | 60 | 95.5 | 61 | M |
| | 2022.01-2023.03 | 6MT | F | L | MPV FWD H5H 470 | | GCI83659 | Inner Joint | | 26 | 23 | 39.95 | 64 | 104 | |
| | 2022.01-2023.03 | 6MT | F | R | MPV FWD H5H 470 | | GCI82523 | Inner Joint | | 26 | 23 | 33 | 346 | 98 | |
| | 2022.01-2023.03 | 7DCT | F | L | MPV FWD H5H 470 | | GDS58219 | Drive Shaft | | 29 | 27 | 60 | 97 | 652 | |
| | 2022.01-2023.03 | 7DCT | F | R | MPV FWD H5H 470 | | GDS58220 | Drive Shaft | | 29 | 27 | 60 | 96 | 1011 | |
| | 2022.01-2023.03 | 7DCT | F | L | MPV FWD H5H 470 | | GCO82323 | Outer Joint | | 29 | 35 | 60 | 97 | 63 | I |
| | 2022.01-2023.03 | 7DCT | F | R | MPV FWD H5H 470 | | GCO83866 | Outer Joint | | 29 | 33 | 60 | 96 | 60.5 | I |
| | 2022.01-2023.03 | 7DCT | F | L | MPV FWD H5H 470 | | GCI82385 | Inner Joint | | 27 | 35 | 40 | 65 | 109.5 | |
| | 2022.01-2023.03 | 7DCT | F | R | MPV FWD H5H 470 | | GCI82386 | Inner Joint | | 27 | 33 | 40 | 400.5 | 89.5 | |
| 1.3 (117 kw) | 2018.09-2023.03 | 6MT | F | L | MPV FWD H5H 470 | | GDS57424 | Drive Shaft | | 29 | 26 | 60 | 95.5 | 710 | |
| | 2018.09-2023.03 | 6MT | F | R | MPV FWD H5H 470 | | GDS57423 | Drive Shaft | | 29 | 26 | 60 | 95.5 | 953 | |
| | 2018.09-2023.03 | 6MT | F | L/R | MPV FWD H5H 470 | | GCO83544 | Outer Joint | | 29 | 23 | 60 | 95.5 | 61 | M |
| | 2018.09-2023.03 | 6MT | F | L | MPV FWD H5H 470 | | GCI83659 | Inner Joint | | 26 | 23 | 39.95 | 64 | 104 | |

| | YEAR | TRANSM. | F/R | L/R | BODY STYLE & DRIVE TYPE & ENGINE | REMARKS | G-AP Ref. | PRODUCT | ABS | Technical Specifications | | | | | |
|---|---|---|---|---|---|---|---|---|---|---|---|---|---|---|---|
| | | | | | | | | | | A | B | C | H | L | P |
| **RENAULT**<br>**Grand Scenic** | | | | | | | | | | | | | | | |
| 1.3 (117 kw) | 2018.09-2023.03 | 6MT | F | R | MPV FWD H5H 470 | | GCI82523 | Inner Joint | | 26 | 23 | 33 | 346 | 98 | |
| | 2018.09-2023.03 | 7DCT | F | L | MPV FWD H5H 470 | | GDS58219 | Drive Shaft | | 29 | 27 | 60 | 97 | 652 | |
| | 2018.09-2023.03 | 7DCT | F | R | MPV FWD H5H 470 | | GDS58220 | Drive Shaft | | 29 | 27 | 60 | 96 | 1011 | |
| | 2018.09-2023.03 | 7DCT | F | L | MPV FWD H5H 470 | | GCO82323 | Outer Joint | | 29 | 35 | 60 | 97 | 63 | I |
| | 2018.09-2023.03 | 7DCT | F | R | MPV FWD H5H 470 | | GCO83866 | Outer Joint | | 29 | 33 | 60 | 96 | 60.5 | I |
| | 2018.09-2023.03 | 7DCT | F | L | MPV FWD H5H 470 | | GCI82385 | Inner Joint | | 27 | 35 | 40 | 65 | 109.5 | |
| | 2018.09-2023.03 | 7DCT | F | R | MPV FWD H5H 470 | | GCI82386 | Inner Joint | | 27 | 33 | 40 | 400.5 | 89.5 | |
| 1.3 (120 kw) | 2018.01-2023.03 | 6MT | F | L | MPV FWD H5H 450 | | GDS57424 | Drive Shaft | | 29 | 26 | 60 | 95.5 | 710 | |
| | 2018.01-2023.03 | 6MT | F | R | MPV FWD H5H 450 | | GDS57423 | Drive Shaft | | 29 | 26 | 60 | 95.5 | 953 | |
| | 2018.01-2023.03 | 6MT | F | L/R | MPV FWD H5H 450 | | GCO83544 | Outer Joint | | 29 | 23 | 60 | 95.5 | 61 | M |
| | 2018.01-2023.03 | 6MT | F | L | MPV FWD H5H 450 | | GCI83659 | Inner Joint | | 26 | 23 | 39.95 | 64 | 104 | |
| | 2018.01-2023.03 | 6MT | F | R | MPV FWD H5H 450 | | GCI82523 | Inner Joint | | 26 | 23 | 33 | 346 | 98 | |
| | 2018.01-2023.03 | 7DCT | F | L | MPV FWD H5H 450 | | GDS58219 | Drive Shaft | | 29 | 27 | 60 | 97 | 652 | |
| | 2018.01-2023.03 | 7DCT | F | R | MPV FWD H5H 450 | | GDS58220 | Drive Shaft | | 29 | 27 | 60 | 96 | 1011 | |
| | 2018.01-2023.03 | 7DCT | F | L | MPV FWD H5H 450 | | GCO82323 | Outer Joint | | 29 | 35 | 60 | 97 | 63 | I |
| | 2018.01-2023.03 | 7DCT | F | R | MPV FWD H5H 450 | | GCO83866 | Outer Joint | | 29 | 33 | 60 | 96 | 60.5 | I |
| | 2018.01-2023.03 | 7DCT | F | L | MPV FWD H5H 450 | | GCI82385 | Inner Joint | | 27 | 35 | 40 | 65 | 109.5 | |
| | 2018.01-2023.03 | 7DCT | F | R | MPV FWD H5H 450 | | GCI82386 | Inner Joint | | 27 | 33 | 40 | 400.5 | 89.5 | |
| 1.4 (96 kw) | 2009.02-2016.09 | 6MT | F | R | MPV FWD H4J 700 | | GDS50604 | Drive Shaft | | 25 | 26 | 52.6 | 89 | 942 | |
| | 2009.02-2016.09 | MT | F | L/R | MPV FWD H4J 700 | | GCO99213 | Outer Joint | | 25 | 33 | 53 | 88 | 61.5 | I |
| | 2009.02-2016.09 | | F | L/R | MPV FWD H4J 700 | | GCO50157 | Outer Joint | | 25 | 33 | 52.6 | 89 | 60 | I |
| 1.5 (63 kw) | 2009.04-2016.09 | 6MT | F | L | MPV FWD K9K 830 | | GDS50426 | Drive Shaft | | 25 | 26 | 52.7 | 88.5 | 680 | |
| | 2009.04-2016.09 | 6MT | F | R | MPV FWD K9K 830 | | GDS50425 | Drive Shaft | | 25 | 26 | 52.7 | 88.5 | 931 | |
| | 2009.04-2016.09 | 6MT | F | L | MPV FWD K9K 830 | | GCI50070 | Inner Joint | | 26 | 33 | 40 | 64 | 106 | |
| | 2009.04-2016.09 | 6MT | F | R | MPV FWD K9K 830 | Date from:2012.03 | GCI50051 | Inner Joint | | 26 | 22 | 33 | 326 | 96 | |
| | 2009.04-2016.09 | MT | F | L/R | MPV FWD K9K 830 | | GCO99213 | Outer Joint | | 25 | 33 | 53 | 88 | 61.5 | I |
| | 2009.04-2016.09 | | F | R | MPV FWD K9K 830 | Date From:2012.03 | GDS50510 | Drive Shaft | | 25 | 26 | 52.4 | 88.5 | 929 | |
| | 2009.04-2016.09 | | F | L/R | MPV FWD K9K 830 | | GCO50162 | Outer Joint | | 25 | 23 | 52.5 | 88.5 | 60.5 | M |
| 1.5 (70 kw) | 2010.11-2016.09 | 6MT | F | L | MPV FWD K9K 846 | | GDS50426 | Drive Shaft | | 25 | 26 | 52.7 | 88.5 | 680 | |
| | 2010.11-2016.09 | 6MT | F | R | MPV FWD K9K 846 | | GDS50425 | Drive Shaft | | 25 | 26 | 52.7 | 88.5 | 931 | |
| | 2010.11-2016.09 | MT | F | L/R | MPV FWD K9K 846 | | GCO99213 | Outer Joint | | 25 | 33 | 53 | 88 | 61.5 | I |
| | 2010.11-2016.09 | | F | R | MPV FWD K9K 846 | Date From:2012.03 | GDS50510 | Drive Shaft | | 25 | 26 | 52.4 | 88.5 | 929 | |
| | 2010.11-2016.09 | | F | R | MPV FWD K9K 846 | | GDS50604 | Drive Shaft | | 25 | 26 | 52.6 | 89 | 942 | |
| | 2010.11-2016.09 | | F | L/R | MPV FWD K9K 846 | | GCO50162 | Outer Joint | | 25 | 23 | 52.5 | 88.5 | 60.5 | M |
| 1.5 (74 kw) | 2004.04-2008.11 | 5MT | F | L | MPV FWD K9K 728 | | GDS50403 | Drive Shaft | | 25 | 26 | 52.6 | 88 | 674 | |
| | 2004.04-2008.11 | 5MT | F | R | MPV FWD K9K 728 | | GDS50442 | Drive Shaft | | 25 | 26 | 52.6 | 88 | 911 | |
| | 2004.04-2008.11 | 5MT | F | R | MPV FWD K9K 728 | | GDS50495 | Drive Shaft | | 25 | 26 | 52.6 | 88 | 914 | |
| | 2004.04-2008.11 | 5MT | F | L/R | MPV FWD K9K 728 | | GCO50137 | Outer Joint | | 25 | 32 | 52.6 | 88 | 58 | I |
| | 2004.04-2008.11 | 5MT | F | R | MPV FWD K9K 728 | | GCI99169 | Inner Joint | | 26 | 30 | 33 | 326 | 95 | |
| | 2004.04-2008.11 | MT | F | L | MPV FWD K9K 728 | | GDS50350 | Drive Shaft | | 25 | 26 | 52.6 | 88 | 668.5 | |
| 1.5 (76 kw) | 2006.06-2008.11 | 6MT | F | L | MPV FWD K9K 734 | Inner teeth of wheel side:30 | GDS50350 | Drive Shaft | | 25 | 26 | 52.6 | 88 | 668.5 | |
| | 2006.06-2008.11 | 6MT | F | L | MPV FWD K9K 734 | For Modelcode:JM1E;Inner teeth of wheel side:33 | GDS50402 | Drive Shaft | | 25 | 26 | 53 | 88 | 660 | |
| | 2006.06-2008.11 | 6MT | F | L | MPV FWD K9K 734 | Inner teeth of wheel side:32 | GDS50403 | Drive Shaft | | 25 | 26 | 52.6 | 88 | 674 | |
| | 2006.06-2008.11 | 6MT | F | R | MPV FWD K9K 734 | For Modelcode:JM1E;Inner teeth of wheel side:33 | GDS50348 | Drive Shaft | | 25 | 26 | 53 | 88 | 905 | |
| | 2006.06-2008.11 | 6MT | F | R | MPV FWD K9K 734 | Inner teeth of wheel side:30 | GDS50495 | Drive Shaft | | 25 | 26 | 52.6 | 88 | 914 | |
| | 2006.06-2008.11 | 6MT | F | L | MPV FWD K9K 734 | Inner teeth of wheel side:32 | GCO50137 | Outer Joint | | 25 | 32 | 52.6 | 88 | 58 | I |
| | 2006.06-2008.11 | 6MT | F | L/R | MPV FWD K9K 734 | Inner teeth of wheel side:30 | GCO50093 | Outer Joint | | 25 | 30 | 52.6 | 88 | 58 | I |
| | 2006.06-2008.11 | 6MT | F | L/R | MPV FWD K9K 734 | For Modelcode:JM1E;Inner teeth of wheel side:33 | GCO99213 | Outer Joint | | 25 | 33 | 53 | 88 | 61.5 | I |
| | 2006.06-2008.11 | 6MT | F | L | MPV FWD K9K 734 | | GCI50048 | Inner Joint | | 26 | 30 | 40 | 64 | 121 | |
| | 2006.06-2008.11 | 6MT | F | R | MPV FWD K9K 734 | Inner teeth of tranm.side:30 | GCI99169 | Inner Joint | | 26 | 30 | 33 | 326 | 95 | |
| 1.5 (78 kw) | 2005.05-2009.01 | MT | F | L | MPV FWD K9K 732 | | GDS50350 | Drive Shaft | | 25 | 26 | 52.6 | 88 | 668.5 | |
| | 2005.05-2009.01 | MT | F | L | MPV FWD K9K 732 | | GDS50402 | Drive Shaft | | 25 | 26 | 53 | 88 | 660 | |
| | 2005.05-2009.01 | MT | F | L | MPV FWD K9K 732 | for OE number:8200432516 | GDS50403 | Drive Shaft | | 25 | 26 | 52.6 | 88 | 674 | |
| | 2005.05-2009.01 | MT | F | R | MPV FWD K9K 732 | | GDS50348 | Drive Shaft | | 25 | 26 | 53 | 88 | 905 | |
| | 2005.05-2009.01 | MT | F | R | MPV FWD K9K 732 | Modelcode:JM2A | GDS50495 | Drive Shaft | | 25 | 26 | 52.6 | 88 | 914 | |
| | 2005.05-2009.01 | MT | F | L/R | MPV FWD K9K 732 | | GCO99213 | Outer Joint | | 25 | 33 | 53 | 88 | 61.5 | I |
| | 2005.05-2009.01 | MT | F | R | MPV FWD K9K 732 | Date to:2009.01 | GCI99169 | Inner Joint | | 26 | 30 | 33 | 326 | 95 | |
| | 2009.02-2016.09 | 6MT | F | L | MPV FWD K9K 832 | | GDS50426 | Drive Shaft | | 25 | 26 | 52.7 | 88.5 | 680 | |
| | 2009.02-2016.09 | 6MT | F | R | MPV FWD K9K 832 | | GDS50425 | Drive Shaft | | 25 | 26 | 52.7 | 88.5 | 931 | |
| | 2009.02-2016.09 | 6MT | F | L | MPV FWD K9K 832 | Date from:2012.03 | GCO50162 | Outer Joint | | 25 | 23 | 52.5 | 88.5 | 60.5 | M |
| | 2009.02-2016.09 | MT | F | L/R | MPV FWD K9K 832 | | GCO99213 | Outer Joint | | 25 | 33 | 53 | 88 | 61.5 | I |
| | 2009.02-2016.09 | | F | R | MPV FWD K9K 832 | Date From:2012.03 | GDS50510 | Drive Shaft | | 25 | 26 | 52.4 | 88.5 | 929 | |
| | 2009.02-2016.09 | | F | R | MPV FWD K9K 832 | Date From:2009.10 | GDS50604 | Drive Shaft | | 25 | 26 | 52.6 | 89 | 942 | |
| | 2009.02-2016.09 | | F | | MPV FWD K9K 832 | | GCO50145 | Outer Joint | | 25 | 33 | 52.7 | 88.5 | 59.5 | I |
| 1.5 (81 kw) | 2009.04-2016.09 | 6AT | F | L | MPV FWD K9K 836;K9K 837;K9K 636;K9K 656;K9K 657 | | GDS50535 | Drive Shaft | | 25 | 34 | 52.7 | 88.5 | 632 | |

| | YEAR | TRANSM. | F/R | L/R | BODY STYLE & DRIVE TYPE & ENGINE | REMARKS | G-AP Ref. | PRODUCT | ABS | Technical Specifications A | B | C | H | L | P |
|---|---|---|---|---|---|---|---|---|---|---|---|---|---|---|---|
| **RENAULT** **Grand Scenic** | | | | | | | | | | | | | | | |
| 1.5 (81 kw) | 2009.04-2016.09 | 6AT | F | R | MPV FWD K9K 836;K9K 837;K9K 636;K9K 656;K9K 657 | | GDS50536 | Drive Shaft | | 25 | 34 | 52.6 | 89 | 984 | |
| | 2009.04-2016.09 | 6MT | F | L | MPV FWD K9K 836;K9K 837;K9K 636;K9K 656;K9K 657 | | GDS50426 | Drive Shaft | | 25 | 26 | 52.7 | 88.5 | 680 | |
| | 2009.04-2016.09 | 6MT | F | R | MPV FWD K9K 836;K9K 837;K9K 636;K9K 656;K9K 657 | Date to:2012.02 | GDS50425 | Drive Shaft | | 25 | 26 | 52.7 | 88.5 | 931 | |
| | 2009.04-2016.09 | 6MT | F | R | MPV FWD K9K 836;K9K 837;K9K 636;K9K 656;K9K 657 | Date from:2012.03;Inner teeth of wheel side:23 | GDS50510 | Drive Shaft | | 25 | 26 | 52.4 | 88.5 | 929 | |
| | 2009.04-2016.09 | 6MT | F | L | MPV FWD K9K 836;K9K 837;K9K 636;K9K 656;K9K 657 | Date from:2012.03 | GCO50162 | Outer Joint | | 25 | 23 | 52.5 | 88.5 | 60.5 | M |
| | 2009.04-2016.09 | MT | F | R | MPV FWD K9K 836;K9K 837;K9K 636;K9K 656;K9K 657 | Date from:2009.10;Inner teeth of wheel side:33 | GDS50604 | Drive Shaft | | 25 | 26 | 52.6 | 89 | 942 | |
| | 2009.04-2016.09 | MT | F | L/R | MPV FWD K9K 836;K9K 837;K9K 636;K9K 656;K9K 657 | | GCO99213 | Outer Joint | | 25 | 33 | 53 | 88 | 61.5 | I |
| | 2009.04-2016.09 | | F | R | MPV FWD K9K 836;K9K 837;K9K 636;K9K 656;K9K 657 | Date From:2010.06;Date To:2012.01 | GCO50148 | Outer Joint | | 25 | 35 | 52.6 | 89 | 60 | I |
| | 2009.04-2016.09 | | F | | MPV FWD K9K 836;K9K 837;K9K 636;K9K 656;K9K 657 | | GCO50145 | Outer Joint | | 25 | 33 | 52.7 | 88.5 | 59.5 | I |
| | 2016.09-2023.03 | 5MT/6MT | F | L/R | MPV FWD K9K 646;K9K 647;K9K 649 | | GCO99213 | Outer Joint | | 25 | 33 | 53 | 88 | 61.5 | I |
| | 2016.09-2023.03 | 7DCT | F | R | MPV FWD K9K 646;K9K 647;K9K 649 | | GDS58219 | Drive Shaft | | 29 | 27 | 60 | 97 | 652 | |
| | 2016.09-2023.03 | 7DCT | F | R | MPV FWD K9K 646;K9K 647;K9K 649 | | GCO82323 | Outer Joint | | 29 | 35 | 60 | 97 | 63 | I |
| | 2016.09-2023.03 | 7DCT | F | R | MPV FWD K9K 646;K9K 647;K9K 649 | | GCI82385 | Inner Joint | | 27 | 35 | 40 | 65 | 109.5 | |
| 1.6 (77 kw) | 2006.06-2008.11 | 5MT | F | L | MPV FWD K4M 788 | | GDS50494 | Drive Shaft | | 25 | 26 | 52.6 | 88 | 664 | |
| | 2006.06-2008.11 | 5MT | F | R | MPV FWD K4M 788 | | GDS50442 | Drive Shaft | | 25 | 26 | 52.6 | 88 | 911 | |
| | 2006.06-2008.11 | 5MT | F | L | MPV FWD K4M 788 | | GCO50116 | Outer Joint | | 25 | 22 | 52.6 | 88 | 55 | I |
| | 2006.06-2008.11 | 5MT | F | R | MPV FWD K4M 788 | | GCI99169 | Inner Joint | | 26 | 30 | 33 | 326 | 95 | |
| 1.6 (79 kw) | 2012.04-2016.09 | 6MT | F | L | MPV FWD K4M 866 | | GDS50426 | Drive Shaft | | 25 | 26 | 52.7 | 88.5 | 680 | |
| | 2012.04-2016.09 | 6MT | F | R | MPV FWD K4M 866 | | GDS50510 | Drive Shaft | | 25 | 26 | 52.4 | 88.5 | 929 | |
| | 2012.04-2016.09 | 6MT | F | L/R | MPV FWD K4M 866 | | GCO50162 | Outer Joint | | 25 | 23 | 52.5 | 88.5 | 60.5 | M |
| | 2012.04-2016.09 | 6MT | F | R | MPV FWD K4M 866 | | GCI50051 | Inner Joint | | 26 | 22 | 33 | 326 | 96 | |
| 1.6 (81 kw) | 2009.02-2016.09 | 6MT | F | L | MPV FWD K4M 858 | | GDS50426 | Drive Shaft | | 25 | 26 | 52.7 | 88.5 | 680 | |
| | 2009.02-2016.09 | 6MT | F | R | MPV FWD K4M 858 | | GDS50510 | Drive Shaft | | 25 | 26 | 52.4 | 88.5 | 929 | |
| | 2009.02-2016.09 | 6MT | F | R | MPV FWD K4M 858 | | GCI50051 | Inner Joint | | 26 | 22 | 33 | 326 | 96 | |
| | 2009.02-2016.09 | MT | F | L/R | MPV FWD K4M 858 | | GCO50162 | Outer Joint | | 25 | 23 | 52.5 | 88.5 | 60.5 | M |
| | 2009.02-2016.09 | 6MT | F | L | MPV FWD K4M 866 | | GDS50426 | Drive Shaft | | 25 | 26 | 52.7 | 88.5 | 680 | |
| | 2009.02-2016.09 | 6MT | F | R | MPV FWD K4M 866 | | GDS50510 | Drive Shaft | | 25 | 26 | 52.4 | 88.5 | 929 | |
| | 2009.02-2016.09 | 6MT | F | L/R | MPV FWD K4M 866 | | GCO50162 | Outer Joint | | 25 | 23 | 52.5 | 88.5 | 60.5 | M |
| | 2009.02-2016.09 | 6MT | F | R | MPV FWD K4M 866 | | GCI50051 | Inner Joint | | 26 | 22 | 33 | 326 | 96 | |
| 1.6 (82 kw) | 2006.06-2008.11 | 4AT/5MT | F | L | MPV FWD K4M 812 | For Engine Code:K4M812 | GDS50494 | Drive Shaft | | 25 | 26 | 52.6 | 88 | 664 | |
| | 2006.06-2008.11 | 4AT/5MT | F | L | MPV FWD K4M 812 | For Engine Code:K4M813 | GDS99186 | Drive Shaft | | 25 | 26 | 52.6 | 88 | 669 | |
| | 2006.06-2008.11 | 4AT/5MT | F | R | MPV FWD K4M 812 | For Engine Code:K4M813 | GDS50386 | Drive Shaft | | 25 | 23 | 52.6 | 88 | 806 | |
| | 2006.06-2008.11 | 4AT/5MT | F | R | MPV FWD K4M 812 | For Engine Code:K4M812 | GDS50442 | Drive Shaft | | 25 | 26 | 52.6 | 88 | 911 | |
| | 2006.06-2008.11 | AT/MT | F | R | MPV FWD K4M 812 | | GCI99169 | Inner Joint | | 26 | 30 | 33 | 326 | 95 | |
| | 2006.06-2008.11 | MT | F | L | MPV FWD K4M 812 | | GDS50350 | Drive Shaft | | 25 | 26 | 52.6 | 88 | 668.5 | |
| | 2006.06-2008.11 | MT | F | L/R | MPV FWD K4M 812 | | GCO50116 | Outer Joint | | 25 | 22 | 52.6 | 88 | 55 | I |
| | 2006.06-2009.06 | 6MT | F | L | MPV FWD K4M 766 | | GDS50494 | Drive Shaft | | 25 | 26 | 52.6 | 88 | 664 | |
| | 2006.06-2009.06 | 6MT | F | R | MPV FWD K4M 766 | | GDS50442 | Drive Shaft | | 25 | 26 | 52.6 | 88 | 911 | |
| | 2006.06-2009.06 | AT/MT | F | R | MPV FWD K4M 766 | | GCI99169 | Inner Joint | | 26 | 30 | 33 | 326 | 95 | |
| | 2006.06-2009.06 | MT | F | L/R | MPV FWD K4M 766 | | GCO50116 | Outer Joint | | 25 | 22 | 52.6 | 88 | 55 | I |
| 1.6 (83 kw) | 2004.04-2006.08 | AT | F | L | MPV FWD K4M 761;K4M 782 | | GDS99186 | Drive Shaft | | 25 | 26 | 52.6 | 88 | 669 | |
| | 2004.04-2006.08 | AT | F | R | MPV FWD K4M 761;K4M 782 | Inner teeth of wheel side:30 | GDS50386 | Drive Shaft | | 25 | 23 | 52.6 | 88 | 806 | |
| | 2004.04-2006.08 | AT | F | R | MPV FWD K4M 761;K4M 782 | Inner teeth of wheel side:32 | GDS50399 | Drive Shaft | | 25 | 23 | 52.6 | 88 | 803 | |
| | 2004.04-2006.08 | AT | F | L | MPV FWD K4M 761;K4M 782 | | GCI50040 | Inner Joint | | 26 | 30 | 43 | 42.5 | 83 | |
| | 2004.04-2006.08 | AT | F | R | MPV FWD K4M 761;K4M 782 | | GCI50041 | Inner Joint | | 23 | 30 | | 217 | 94 | |
| | 2004.04-2006.08 | AT/MT | F | L/R | MPV FWD K4M 761;K4M 782 | Inner Teeth:32 | GCO50137 | Outer Joint | | 25 | 32 | 52.6 | 88 | 58 | I |
| | 2004.04-2006.08 | MT | F | L | MPV FWD K4M 761;K4M 782 | | GDS50350 | Drive Shaft | | 25 | 26 | 52.6 | 88 | 668.5 | |
| | 2004.04-2006.08 | MT | F | L | MPV FWD K4M 761;K4M 782 | | GDS50494 | Drive Shaft | | 25 | 26 | 52.6 | 88 | 664 | |
| | 2004.04-2006.08 | MT | F | R | MPV FWD K4M 761;K4M 782 | | GDS50442 | Drive Shaft | | 25 | 26 | 52.6 | 88 | 911 | |
| | 2004.04-2006.08 | MT | F | L/R | MPV FWD K4M 761;K4M 782 | Inner teeth of wheel side:22 | GCO50116 | Outer Joint | | 25 | 22 | 52.6 | 88 | 55 | I |
| | 2004.04-2006.08 | MT | F | R | MPV FWD K4M 761;K4M 782 | | GCI99169 | Inner Joint | | 26 | 30 | 33 | 326 | 95 | |
| 1.6 (96 kw) | 2011.04-2016.09 | 6MT | F | L | MPV FWD R9M 402;R9M 404;R9M 414 | | GDS50430 | Drive Shaft | | 27 | 39 | 56.5 | 91.5 | 654 | |
| | 2011.04-2016.09 | 6MT | F | R | MPV FWD R9M 402;R9M 404;R9M 414 | | GDS50429 | Drive Shaft | | 27 | 39 | 56.5 | 91.5 | 956 | |
| | 2011.04-2016.09 | 6MT | F | L/R | MPV FWD R9M 402;R9M 404;R9M 414 | | GCO50160 | Outer Joint | | 27 | 35 | 56.5 | 91.5 | 61 | I |
| | 2011.04-2016.09 | 6MT | F | L | MPV FWD R9M 402;R9M 404;R9M 414 | | GCI81352 | Inner Joint | | 39 | 33 | 39 | 65 | 106 | |
| | 2011.04-2016.09 | 6MT | F | R | MPV FWD R9M 402;R9M 404;R9M 414 | | GCI81351 | Inner Joint | | 39 | 33 | 33 | 352.5 | 82.5 | |
| | 2016.09-2023.03 | 6MT | F | L | MPV FWD R9M 409 | | GDS56655 | Drive Shaft | | 29 | 39 | 60 | 95.5 | 664 | |
| | 2016.09-2023.03 | 6MT | F | R | MPV FWD R9M 409 | | GDS56644 | Drive Shaft | | 29 | 39 | 60 | 95.5 | 1002 | |
| | 2016.09-2023.03 | 6MT | F | L/R | MPV FWD R9M 409 | | GCO82492 | Outer Joint | | 29 | 36 | 60 | 95.5 | 64.5 | I |
| | 2016.09-2023.03 | 6MT | F | L | MPV FWD R9M 409 | | GCI83425 | Inner Joint | | 39 | 36 | 39 | 74 | 98.5 | |
| | 2016.09-2023.03 | 6MT | F | R | MPV FWD R9M 409 | | GCI83419 | Inner Joint | | 39 | 36 | 30 | 371.5 | 86.5 | |
| 1.6 (118 kw) | 2016.09-2023.03 | 6AT | F | L | MPV FWD R9M 452 | | GDS83832 | Drive Shaft | | 29 | 28 | 60 | 95.5 | 676 | |
| | 2016.09-2023.03 | 6AT | F | R | MPV FWD R9M 452 | | GDS83831 | Drive Shaft | | 29 | 28 | 60 | 95.5 | 963 | |
| | 2016.09-2023.03 | 6AT | F | L/R | MPV FWD R9M 452 | | GCO82492 | Outer Joint | | 29 | 36 | 60 | 95.5 | 64.5 | I |
| | 2016.09-2023.03 | 6AT | F | L | MPV FWD R9M 452 | | GCI82157 | Inner Joint | | 28 | 35 | 33.85 | 78.5 | 85.5 | |

| | YEAR | TRANSM. | F/R | L/R | BODY STYLE & DRIVE TYPE & ENGINE | REMARKS | G-AP Ref. | PRODUCT | ABS | Technical Specifications A | B | C | H | L | P |
|---|---|---|---|---|---|---|---|---|---|---|---|---|---|---|---|
| **RENAULT** **Grand Scenic** | | | | | | | | | | | | | | | |
| 1.6 (118 kw) | 2016.09-2023.03 | 6AT | F | R | MPV FWD R9M 452 | | GCI82158 | Inner Joint | | 28 | 35 | 33.85 | 353.5 | 93.5 | |
| 1.7 (88 kw) | 2018.08-2023.03 | 6AT | F | L | MPV FWD R9N 401;R9N 400 | | GDS83832 | Drive Shaft | | 29 | 28 | 60 | 95.5 | 676 | |
| | 2018.08-2023.03 | 6AT | F | R | MPV FWD R9N 401;R9N 400 | | GDS83831 | Drive Shaft | | 29 | 28 | 60 | 95.5 | 963 | |
| | 2018.08-2023.03 | 6AT | F | L | MPV FWD R9N 401;R9N 400 | | GCI82157 | Inner Joint | | 28 | 35 | 33.85 | 78.5 | 85.5 | |
| | 2018.08-2023.03 | 6AT | F | R | MPV FWD R9N 401;R9N 400 | | GCI82158 | Inner Joint | | 28 | 35 | 33.85 | 353.5 | 93.5 | |
| | 2018.08-2023.03 | 6AT/6MT | F | L/R | MPV FWD R9N 401;R9N 400 | | GCO82492 | Outer Joint | | 29 | 36 | 60 | 95.5 | 64.5 | I |
| | 2018.08-2023.03 | 6MT | F | L | MPV FWD R9N 401;R9N 400 | | GDS56655 | Drive Shaft | | 29 | 39 | 60 | 95.5 | 664 | |
| | 2018.08-2023.03 | 6MT | F | R | MPV FWD R9N 401;R9N 400 | | GDS56644 | Drive Shaft | | 29 | 39 | 60 | 95.5 | 1002 | |
| | 2018.08-2023.03 | 6MT | F | L | MPV FWD R9N 401;R9N 400 | | GCI83425 | Inner Joint | | 39 | 36 | 39 | 74 | 98.5 | |
| | 2018.08-2023.03 | 6MT | F | R | MPV FWD R9N 401;R9N 400 | | GCI83419 | Inner Joint | | 39 | 36 | 30 | 371.5 | 86.5 | |
| 1.7 (110 kw) | 2018.08-2023.03 | 6AT | F | L | MPV FWD R9N 401 | | GDS83832 | Drive Shaft | | 29 | 28 | 60 | 95.5 | 676 | |
| | 2018.08-2023.03 | 6AT | F | R | MPV FWD R9N 401 | | GDS83831 | Drive Shaft | | 29 | 28 | 60 | 95.5 | 963 | |
| | 2018.08-2023.03 | 6AT | F | L | MPV FWD R9N 401 | | GCI82157 | Inner Joint | | 28 | 35 | 33.85 | 78.5 | 85.5 | |
| | 2018.08-2023.03 | 6AT | F | R | MPV FWD R9N 401 | | GCI82158 | Inner Joint | | 28 | 35 | 33.85 | 353.5 | 93.5 | |
| | 2018.08-2023.03 | 6AT/6MT | F | L/R | MPV FWD R9N 401 | | GCO82492 | Outer Joint | | 29 | 36 | 60 | 95.5 | 64.5 | I |
| | 2018.08-2023.03 | 6MT | F | L | MPV FWD R9N 401 | | GDS56655 | Drive Shaft | | 29 | 39 | 60 | 95.5 | 664 | |
| | 2018.08-2023.03 | 6MT | F | R | MPV FWD R9N 401 | | GDS56644 | Drive Shaft | | 29 | 39 | 60 | 95.5 | 1002 | |
| | 2018.08-2023.03 | 6MT | F | L | MPV FWD R9N 401 | | GCI83425 | Inner Joint | | 39 | 36 | 39 | 74 | 98.5 | |
| | 2018.08-2023.03 | 6MT | F | R | MPV FWD R9N 401 | | GCI83419 | Inner Joint | | 39 | 36 | 30 | 371.5 | 86.5 | |
| 1.9 (81 kw) | 2005.05-2008.11 | 6MT | F | L | MPV FWD F9Q E 804 | | GDS99201 | Drive Shaft | | 25 | 39 | 53 | 88 | 638 | |
| | 2005.05-2008.11 | 6MT | F | R | MPV FWD F9Q E 804 | | GDS50400 | Drive Shaft | | 25 | 39 | 53 | 88 | 932 | |
| | 2005.05-2008.11 | 6MT | F | L/R | MPV FWD F9Q E 804 | | GCO99213 | Outer Joint | | 25 | 33 | 53 | 88 | 61.5 | I |
| | 2005.05-2008.11 | AT/MT | F | L | MPV FWD F9Q E 804 | Date from:2006.06,Date to:2008.11 | GCI99150 | Inner Joint | | 39 | 32 | 39 | 66 | 104.5 | |
| | 2005.05-2008.11 | AT/MT | F | R | MPV FWD F9Q E 804 | Date from:2006.06,Date to:2008.11 | GCI99160 | Inner Joint | | 39 | 32 | 32.95 | 352 | 90 | |
| 1.9 (85 kw) | 2005.05-2009.01 | 4AT/5MT/6MT | F | L | MPV FWD F9Q 804;F9Q 812;F9Q 803;F9Q 816;F9Q 818 | | GDS99201 | Drive Shaft | | 25 | 39 | 53 | 88 | 638 | |
| | 2005.05-2009.01 | 4AT/5MT/6MT | F | R | MPV FWD F9Q 804;F9Q 812;F9Q 803;F9Q 816;F9Q 818 | | GDS50400 | Drive Shaft | | 25 | 39 | 53 | 88 | 932 | |
| | 2005.05-2009.01 | AT/MT | F | L | MPV FWD F9Q 804;F9Q 812;F9Q 803;F9Q 816;F9Q 818 | | GCI99150 | Inner Joint | | 39 | 32 | 39 | 66 | 104.5 | |
| | 2005.05-2009.01 | AT/MT | F | R | MPV FWD F9Q 804;F9Q 812;F9Q 803;F9Q 816;F9Q 818 | | GCI99160 | Inner Joint | | 39 | 32 | 32.95 | 352 | 90 | |
| | 2005.05-2009.01 | | F | L/R | MPV FWD F9Q 804;F9Q 812;F9Q 803;F9Q 816;F9Q 818 | | GCO99213 | Outer Joint | | 25 | 33 | 53 | 88 | 61.5 | I |
| 1.9 (88 kw) | 2004.04-2006.05 | 4AT/5MT/6MT | F | L | MPV FWD F9Q 812 | | GDS99201 | Drive Shaft | | 25 | 39 | 53 | 88 | 638 | |
| | 2004.04-2006.05 | 4AT/5MT/6MT | F | R | MPV FWD F9Q 812 | | GDS50400 | Drive Shaft | | 25 | 39 | 53 | 88 | 932 | |
| | 2004.04-2006.05 | 4AT/5MT/6MT | F | L/R | MPV FWD F9Q 812 | | GCO99213 | Outer Joint | | 25 | 33 | 53 | 88 | 61.5 | I |
| | 2004.04-2006.05 | AT/MT | F | L | MPV FWD F9Q 812 | Date to:2006.05 | GCI99150 | Inner Joint | | 39 | 32 | 39 | 66 | 104.5 | |
| | 2004.04-2006.05 | AT/MT | F | R | MPV FWD F9Q 812 | Date to:2006.05 | GCI99160 | Inner Joint | | 39 | 32 | 32.95 | 352 | 90 | |
| 1.9 (96 kw) | 2004.04-2008.02 | 4AT | F | L | MPV FWD F9Q 804;F9Q 803;F9Q 816;F9Q 818 | For Engine code:F9Q818 | GDS99186 | Drive Shaft | | 25 | 26 | 52.6 | 88 | 669 | |
| | 2004.04-2008.02 | 4AT | F | R | MPV FWD F9Q 804;F9Q 803;F9Q 816;F9Q 818 | For Engine Code:F9Q818 | GDS83826 | Drive Shaft | | 25 | 26 | 52.8 | 85.5 | 800 | |
| | 2004.04-2008.02 | 4AT | F | L/R | MPV FWD F9Q 804;F9Q 803;F9Q 816;F9Q 818 | For Engine code:F9Q818 | GCO50143 | Outer Joint | | 25 | 32 | 52.8 | 85.5 | 62.5 | I |
| | 2004.04-2008.02 | 4AT | F | R | MPV FWD F9Q 804;F9Q 803;F9Q 816;F9Q 818 | For Engine code:F9Q818 | GCI50047 | Inner Joint | | 26 | 30 | | 213.5 | 95 | |
| | 2004.04-2008.02 | 4AT/6MT | F | L | MPV FWD F9Q 804;F9Q 803;F9Q 816;F9Q 818 | For Engine code:F9Q816 | GDS99201 | Drive Shaft | | 25 | 39 | 53 | 88 | 638 | |
| | 2004.04-2008.02 | 4AT/6MT | F | R | MPV FWD F9Q 804;F9Q 803;F9Q 816;F9Q 818 | For Engine code:F9Q816 | GDS50400 | Drive Shaft | | 25 | 39 | 53 | 88 | 932 | |
| | 2004.04-2008.02 | 4AT/6MT | F | L/R | MPV FWD F9Q 804;F9Q 803;F9Q 816;F9Q 818 | For Engine code:F9Q816 | GCO99213 | Outer Joint | | 25 | 33 | 53 | 88 | 61.5 | I |
| | 2004.04-2008.02 | 4AT/6MT | F | L | MPV FWD F9Q 804;F9Q 803;F9Q 816;F9Q 818 | For Engine code:F9Q816 | GCI99150 | Inner Joint | | 39 | 32 | 39 | 66 | 104.5 | |
| | 2004.04-2008.02 | 4AT/6MT | F | R | MPV FWD F9Q 804;F9Q 803;F9Q 816;F9Q 818 | For Engine code:F9Q816 | GCI99160 | Inner Joint | | 39 | 32 | 32.95 | 352 | 90 | |
| | 2009.02-2016.09 | 6MT | F | L | MPV FWD F9Q 872;F9Q 870 | | GDS50430 | Drive Shaft | | 27 | 39 | 56.5 | 91.5 | 654 | |
| | 2009.02-2016.09 | 6MT | F | R | MPV FWD F9Q 872;F9Q 870 | | GDS50429 | Drive Shaft | | 27 | 39 | 56.5 | 91.5 | 956 | |
| | 2009.02-2016.09 | 6MT | F | L/R | MPV FWD F9Q 872;F9Q 870 | | GCO50160 | Outer Joint | | 27 | 35 | 56.5 | 91.5 | 61 | I |
| | 2009.02-2016.09 | 6MT | F | L | MPV FWD F9Q 872;F9Q 870 | | GCI81352 | Inner Joint | | 39 | 33 | 39 | 65 | 106 | |
| | 2009.02-2016.09 | 6MT | F | R | MPV FWD F9Q 872;F9Q 870 | | GCI81351 | Inner Joint | | 39 | 33 | 33 | 352.5 | 82.5 | |
| 2.0 (99 kw) | 2004.04-2009.06 | AT | F | L | MPV FWD F4R 770;F4R 771 | | GDS99186 | Drive Shaft | | 25 | 26 | 52.6 | 88 | 669 | |
| | 2004.04-2009.06 | AT | F | R | MPV FWD F4R 770;F4R 771 | | GDS50399 | Drive Shaft | | 25 | 23 | 52.6 | 88 | 803 | |
| | 2004.04-2009.06 | AT | F | | MPV FWD F4R 770;F4R 771 | | GCO50137 | Outer Joint | | 25 | 32 | 52.6 | 88 | 58 | I |
| | 2004.04-2009.06 | AT | F | R | MPV FWD F4R 770;F4R 771 | | GCI50041 | Inner Joint | | 23 | 30 | | 217 | 94 | |
| | 2004.04-2009.06 | MT | F | L | MPV FWD F4R 770;F4R 771 | | GDS99201 | Drive Shaft | | 25 | 39 | 53 | 88 | 638 | |
| | 2004.04-2009.06 | MT | F | R | MPV FWD F4R 770;F4R 771 | | GDS50400 | Drive Shaft | | 25 | 39 | 53 | 88 | 932 | |
| | 2004.04-2009.06 | MT | F | L/R | MPV FWD F4R 770;F4R 771 | | GCO99213 | Outer Joint | | 25 | 33 | 53 | 88 | 61.5 | I |
| | 2004.04-2009.06 | MT | F | L | MPV FWD F4R 770;F4R 771 | | GCI99150 | Inner Joint | | 39 | 32 | 39 | 66 | 104.5 | |
| | 2004.04-2009.06 | MT | F | R | MPV FWD F4R 770;F4R 771 | | GCI99160 | Inner Joint | | 39 | 32 | 32.95 | 352 | 90 | |
| 2.0 (103 kw) | 2009.02-2016.09 | CVT | F | L | MPV FWD M4R 711 | | GDS83875 | Drive Shaft | | 25 | 27 | 52.5 | 88.5 | 675 | |
| | 2009.02-2016.09 | CVT | F | L | MPV FWD M4R 711 | | GCO82528 | Outer Joint | | 25 | 24 | 52.5 | 88.5 | 59 | M |
| | 2009.02-2016.09 | CVT | F | L/R | MPV FWD M4R 711 | | GCO99213 | Outer Joint | | 25 | 33 | 53 | 88 | 61.5 | I |
| | 2009.02-2016.09 | CVT | F | L | MPV FWD M4R 711 | | GCI41073 | Inner Joint | | 27 | 24 | 40 | 62.5 | 99.5 | |
| 2.0 (110 kw) | 2005.09-2008.11 | 6AT/6MT | F | L | MPV FWD M9R 700;M9R 721;M9R 722 | For Engine Code:M9R721 | GDS18274 | Drive Shaft | | 27 | 30 | 56.5 | 90 | 624 | |
| | 2005.09-2008.11 | 6AT/6MT | F | L | MPV FWD M9R 700;M9R 721;M9R 722 | For Engine Code:M9R700/M9R722 | GDS50444 | Drive Shaft | | 27 | 39 | 56.5 | 90.5 | 626 | |
| | 2005.09-2008.11 | 6AT/6MT | F | R | MPV FWD M9R 700;M9R 721;M9R 722 | For Engine Code:M9R700/M9R722 | GDS50453 | Drive Shaft | | 27 | 39 | 56.5 | 90.5 | 973.5 | |
| | 2005.09-2008.11 | AT/MT | F | R | MPV FWD M9R 700;M9R 721;M9R 722 | Date to:2008.11 | GCI50087 | Inner Joint | | 39 | 35 | 30 | 367 | 89.5 | |

| | YEAR | TRANSM. | F/R | L/R | BODY STYLE & DRIVE TYPE & ENGINE | REMARKS | G-AP Ref. | PRODUCT | ABS | Technical Specifications A | B | C | H | L | P |
|---|---|---|---|---|---|---|---|---|---|---|---|---|---|---|---|
| **RENAULT** | | | | | | | | | | | | | | | |
| **Grand Scenic** | | | | | | | | | | | | | | | |
| 2.0 (110 kw) | 2005.09-2008.11 | | F | L/R | MPV FWD M9R 700;M9R 721;M9R 722 | For Engine Code:M9R700/M9R722 | GCO50108 | Outer Joint | | 27 | 35 | 56.5 | 90.5 | 71 | I |
| | 2009.02-2016.09 | 6AT | F | L | MPV FWD M9R 615 | 8 balls | GDS81271 | Drive Shaft | | 27 | 30 | 56.7 | 91 | 652 | |
| | 2009.02-2016.09 | 6AT | F | R | MPV FWD M9R 615 | 8 balls | GDS81272 | Drive Shaft | | 27 | 30 | 56.7 | 91 | 964 | |
| | 2009.02-2016.09 | 6AT | F | L/R | MPV FWD M9R 615 | | GCO81102 | Outer Joint | | 27 | 36 | 56.7 | 91 | 63.5 | I |
| | 2009.02-2016.09 | 6AT | F | L | MPV FWD M9R 615 | | GCI50150 | Inner Joint | | 30 | 36 | 34 | 76.5 | 86 | |
| | 2009.02-2016.09 | 6AT | F | R | MPV FWD M9R 615 | | GCI50123 | Inner Joint | | 30 | 36 | 33.97 | 343 | 90 | |
| | 2009.02-2016.09 | AT | F | L | MPV FWD M9R 615 | 6 balls | GDS18274 | Drive Shaft | | 27 | 30 | 56.5 | 90 | 624 | |
| 2.0 (118 kw) | 2009.04-2016.09 | 6MT | F | L | MPV FWD M9R 610 | | GDS81275 | Drive Shaft | | 27 | 39 | 56.5 | 91 | 636 | |
| | 2009.04-2016.09 | 6MT | F | R | MPV FWD M9R 610 | | GDS81274 | Drive Shaft | | 27 | 39 | 56.5 | 91 | 981 | |
| | 2009.04-2016.09 | 6MT | F | L | MPV FWD M9R 610 | | GCI18272 | Inner Joint | | 39 | 26 | 39 | 74 | 116 | |
| | 2009.04-2016.09 | 6MT | F | R | MPV FWD M9R 610 | | GCI81164 | Inner Joint | | 39 | 26 | 30 | 366.5 | 99 | |
| | 2009.04-2016.09 | | F | L | MPV FWD M9R 610 | | GCO50186 | Outer Joint | | 27 | 26 | 56.5 | 91 | 65 | M |
| 2.0 (120 kw) | 2004.04-2009.06 | 6MT | F | L | MPV FWD F4R 776 | | GDS99201 | Drive Shaft | | 25 | 39 | 53 | 88 | 638 | |
| | 2004.04-2009.06 | 6MT | F | R | MPV FWD F4R 776 | | GDS50400 | Drive Shaft | | 25 | 39 | 53 | 88 | 932 | |
| | 2004.04-2009.06 | 6MT | F | L/R | MPV FWD F4R 776 | | GCO99213 | Outer Joint | | 25 | 33 | 53 | 88 | 61.5 | I |
| | 2004.04-2009.06 | AT/MT | F | L | MPV FWD F4R 776 | Date to:2009.06 | GCI99150 | Inner Joint | | 39 | 32 | 39 | 66 | 104.5 | |
| | 2004.04-2009.06 | AT/MT | F | R | MPV FWD F4R 776 | Date to:2009.06 | GCI99160 | Inner Joint | | 39 | 32 | 32.95 | 352 | 90 | |
| **Kadjar** | | | | | | | | | | | | | | | |
| 1.2 (96 kw) | 2015.06- | 6MT | F | L | SUV FWD H5F 408 | | GDS81767 | Drive Shaft | | 29 | 26 | 62 | 102.5 | 699 | |
| | 2015.06- | 6MT | F | R | SUV FWD H5F 408 | | GDS82173 | Drive Shaft | | 29 | 26 | 62 | 102.5 | 947 | |
| | 2015.06- | 6MT | F | L/R | SUV FWD H5F 408 | | GCO81520 | Outer Joint | | 29 | 26 | 62 | 102.5 | 60 | I |
| | 2015.06- | 6MT | F | L | SUV FWD H5F 408 | | GCI81505 | Inner Joint | | 26 | 26 | 40 | 64 | 112 | |
| | 2015.06- | 6MT | F | R | SUV FWD H5F 408 | | GCI81687 | Inner Joint | | 26 | 26 | 33 | 343 | 107 | |
| | 2015.06- | 7DCT | F | L | SUV FWD H5F 408 | | GDS83656 | Drive Shaft | | 29 | 27 | 62 | 102 | 643 | |
| | 2015.06- | 7DCT | F | R | SUV FWD H5F 408 | | GDS84260 | Drive Shaft | | 29 | 27 | 62 | 102 | 1009 | |
| | 2015.06- | 7DCT | F | L | SUV FWD H5F 408 | | GCO82317 | Outer Joint | | 29 | 25 | 62 | 102.5 | 57.5 | I |
| | 2015.06- | 7DCT | F | R | SUV FWD H5F 408 | | GCO81741 | Outer Joint | | 29 | 25 | 62 | 102 | 57.5 | I |
| | 2015.06- | 7DCT | F | L | SUV FWD H5F 408 | | GCI82312 | Inner Joint | | 27 | 26 | 40 | 65 | 123.5 | |
| | 2015.06- | 7DCT | F | R | SUV FWD H5F 408 | | GCI82663 | Inner Joint | | 27 | 26 | 40 | 400 | 94.5 | |
| 1.3 (103 kw) | 2018.08- | 6MT | F | L | SUV FWD H5H 470;H5H 490 | | GDS56784 | Drive Shaft | | 29 | 26 | 62 | 102 | 700 | |
| | 2018.08- | 6MT | F | R | SUV FWD H5H 470;H5H 490 | | GDS56783 | Drive Shaft | | 29 | 26 | 62 | 102 | 948 | |
| | 2018.08- | 6MT | F | L | SUV FWD H5H 470;H5H 490 | | GCI83488 | Inner Joint | | 26 | 24 | 40 | 64 | 116 | |
| | 2018.08- | 6MT | F | R | SUV FWD H5H 470;H5H 490 | | GCI83487 | Inner Joint | | 26 | 24 | 33 | 345.5 | 107.5 | |
| | 2018.08- | 7DCT | F | L | SUV FWD H5H 470;H5H 490 | | GDS83656 | Drive Shaft | | 29 | 27 | 62 | 102 | 643 | |
| | 2018.08- | 7DCT | F | R | SUV FWD H5H 470;H5H 490 | | GDS84260 | Drive Shaft | | 29 | 27 | 62 | 102 | 1009 | |
| | 2018.08- | 7DCT | F | L/R | SUV FWD H5H 470;H5H 490 | | GCO81741 | Outer Joint | | 29 | 25 | 62 | 102 | 57.5 | I |
| | 2018.08- | 7DCT | F | L | SUV FWD H5H 470;H5H 490 | | GCI82312 | Inner Joint | | 27 | 26 | 40 | 65 | 123.5 | |
| | 2018.08- | 7DCT | F | R | SUV FWD H5H 470;H5H 490 | | GCI82663 | Inner Joint | | 27 | 26 | 40 | 400 | 94.5 | |
| 1.3 (116 kw) | 2021.07- | 7DCT | F | L | SUV FWD H5H 490 | | GDS83656 | Drive Shaft | | 29 | 27 | 62 | 102 | 643 | |
| | 2021.07- | 7DCT | F | R | SUV FWD H5H 490 | | GDS84260 | Drive Shaft | | 29 | 27 | 62 | 102 | 1009 | |
| | 2021.07- | 7DCT | F | R | SUV FWD H5H 490 | | GCI82663 | Inner Joint | | 27 | 26 | 40 | 400 | 94.5 | |
| 1.3 (117 kw) | 2018.08- | 6MT | F | L | SUV FWD H5H 470 | | GDS56784 | Drive Shaft | | 29 | 26 | 62 | 102 | 700 | |
| | 2018.08- | 6MT | F | R | SUV FWD H5H 470 | | GDS56783 | Drive Shaft | | 29 | 26 | 62 | 102 | 948 | |
| | 2018.08- | 6MT | F | L | SUV FWD H5H 470 | | GCI83488 | Inner Joint | | 26 | 24 | 40 | 64 | 116 | |
| | 2018.08- | 6MT | F | R | SUV FWD H5H 470 | | GCI83487 | Inner Joint | | 26 | 24 | 33 | 345.5 | 107.5 | |
| | 2018.08- | 7DCT | F | L | SUV FWD H5H 470 | | GDS83656 | Drive Shaft | | 29 | 27 | 62 | 102 | 643 | |
| | 2018.08- | 7DCT | F | R | SUV FWD H5H 470 | | GDS84260 | Drive Shaft | | 29 | 27 | 62 | 102 | 1009 | |
| | 2018.08- | 7DCT | F | L | SUV FWD H5H 470 | | GCO82317 | Outer Joint | | 29 | 25 | 62 | 102.5 | 57.5 | I |
| | 2018.08- | 7DCT | F | L/R | SUV FWD H5H 470 | | GCO81741 | Outer Joint | | 29 | 25 | 62 | 102 | 57.5 | I |
| | 2018.08- | 7DCT | F | L | SUV FWD H5H 470 | | GCI82312 | Inner Joint | | 27 | 26 | 40 | 65 | 123.5 | |
| | 2018.08- | 7DCT | F | R | SUV FWD H5H 470 | | GCI82663 | Inner Joint | | 27 | 26 | 40 | 400 | 94.5 | |
| 1.5 (81 kw) | 2015.06- | 6DCT | F | L | SUV FWD K9K 647;K9K 649;K9K 648;K9K 674;K9K 675;K9K 676;K9K 677 | | GDS83192 | Drive Shaft | | 29 | 34 | 62 | 102.5 | 650 | |
| | 2015.06- | 6DCT | F | R | SUV FWD K9K 647;K9K 649;K9K 648;K9K 674;K9K 675;K9K 676;K9K 677 | | GDS83193 | Drive Shaft | | 29 | 34 | 62 | 102.5 | 1011 | |
| | 2015.06- | 6DCT | F | L/R | SUV FWD K9K 647;K9K 649;K9K 648;K9K 674;K9K 675;K9K 676;K9K 677 | | GCO82317 | Outer Joint | | 29 | 25 | 62 | 102.5 | 57.5 | I |
| | 2015.06- | 6DCT | F | L | SUV FWD K9K 647;K9K 649;K9K 648;K9K 674;K9K 675;K9K 676;K9K 677 | | GCI82154 | Inner Joint | | 34 | 26 | 40 | 54 | 116 | |
| | 2015.06- | 6DCT | F | R | SUV FWD K9K 647;K9K 649;K9K 648;K9K 674;K9K 675;K9K 676;K9K 677 | | GCI82153 | Inner Joint | | 34 | 26 | 40 | 380.5 | 94.5 | |
| | 2015.06- | 6MT | F | L | SUV FWD K9K 647;K9K 649;K9K 648;K9K 674;K9K 675;K9K 676;K9K 677 | | GDS81767 | Drive Shaft | | 29 | 26 | 62 | 102.5 | 699 | |
| | 2015.06- | 6MT | F | R | SUV FWD K9K 647;K9K 649;K9K 648;K9K 674;K9K 675;K9K 676;K9K 677 | | GDS83212 | Drive Shaft | | 29 | 26 | 62 | 102.5 | 950 | |
| | 2015.06- | 6MT | F | R | SUV FWD K9K 647;K9K 649;K9K 648;K9K 674;K9K 675;K9K 676;K9K 677 | | GCO81520 | Outer Joint | | 29 | 26 | 62 | 102.5 | 60 | I |
| | 2015.06- | 6MT | F | L | SUV FWD K9K 647;K9K 649;K9K 648;K9K 674;K9K 675;K9K 676;K9K 677 | | GCI81505 | Inner Joint | | 26 | 26 | 40 | 64 | 112 | |
| | 2015.06- | 6MT | F | R | SUV FWD K9K 647;K9K 649;K9K 648;K9K 674;K9K 675;K9K 676;K9K 677 | | GCI82177 | Inner Joint | | 26 | 26 | 33 | 327 | 99 | |
| 1.5 (85 kw) | 2018.08- | 6MT | F | L | SUV FWD K9K 872;K9K 873 | | GDS83917 | Drive Shaft | | 29 | 27 | 62 | 102.5 | 686 | |
| | 2018.08- | 6MT | F | R | SUV FWD K9K 872;K9K 873 | | GDS83912 | Drive Shaft | | 29 | 27 | 62 | 102.5 | 968 | |
| | 2018.08- | 6MT | F | L/R | SUV FWD K9K 872;K9K 873 | | GCO81520 | Outer Joint | | 29 | 26 | 62 | 102.5 | 60 | I |
| | 2018.08- | 6MT | F | L | SUV FWD K9K 872;K9K 873 | | GCI82421 | Inner Joint | | 27 | 26 | 39.95 | 67 | 106.5 | |

| | YEAR | TRANSM. | F/R | L/R | BODY STYLE & DRIVE TYPE & ENGINE | REMARKS | G-AP Ref. | PRODUCT | ABS | Technical Specifications A | B | C | H | L | P |
|---|---|---|---|---|---|---|---|---|---|---|---|---|---|---|---|
| **RENAULT** | | | | | | | | | | | | | | | |
| **Kadjar** | | | | | | | | | | | | | | | |
| 1.5 (85 kw) | 2018.08- | 6MT | F | R | SUV FWD K9K 872;K9K 873 | | GCI82418 | Inner Joint | | 27 | 26 | 33 | 340 | 99 | |
| | 2018.08- | 7DCT | F | L | SUV FWD K9K 872;K9K 873 | | GDS83656 | Drive Shaft | | 29 | 27 | 62 | 102 | 643 | |
| | 2018.08- | 7DCT | F | R | SUV FWD K9K 872;K9K 873 | | GDS83914 | Drive Shaft | | 29 | 27 | 62 | 102.5 | 1012 | |
| | 2018.08- | 7DCT | F | L/R | SUV FWD K9K 872;K9K 873 | | GCO82317 | Outer Joint | | 29 | 25 | 62 | 102.5 | 57.5 | I |
| | 2018.08- | 7DCT | F | L | SUV FWD K9K 872;K9K 873 | | GCI82312 | Inner Joint | | 27 | 26 | 40 | 65 | 123.5 | |
| | 2018.08- | 7DCT | F | R | SUV FWD K9K 872;K9K 873 | | GCI82419 | Inner Joint | | 27 | 26 | 40 | 385 | 94.5 | |
| 1.6 (96 kw) | 2015.06- | 6MT | F | L | SUV 4WD R9M 414 | | GDS83621 | Drive Shaft | | 29 | 29 | 62 | 102 | 622 | |
| | 2015.06- | 6MT | F | R | SUV 4WD R9M 414 | | GDS83620 | Drive Shaft | | 29 | 29 | 62 | 102 | 1019 | |
| | 2015.06- | 6MT | F | L/R | SUV 4WD R9M 414 | | GCO81974 | Outer Joint | | 29 | 28 | 62 | 102 | 68 | I |
| | 2015.06- | 6MT | F | L | SUV 4WD R9M 414 | | GCI41192 | Inner Joint | | 29 | 29 | 39 | 65.5 | 116 | |
| | 2015.06- | 6MT | F | R | SUV 4WD R9M 414 | | GCI82324 | Inner Joint | | 29 | 29 | 33 | 478.5 | 103.5 | |
| | 2015.06- | 6MT | R | L/R | SUV 4WD R9M 414 | | GDS41538 | Drive Shaft | 48T | 25 | 21 | 56 | 110.5 | 801 | |
| | 2015.06- | 6MT | R | L/R | SUV 4WD R9M 414 | | GCI57111 | Inner Joint | | 21 | 24 | 38 | 61 | 91 | |
| | 2015.06- | CVT | F | L | SUV FWD R9M 414 | | GDS83151 | Drive Shaft | | 29 | 29 | 62 | 102 | 670 | |
| | 2015.06- | CVT | F | R | SUV FWD R9M 414 | | GDS83150 | Drive Shaft | | 29 | 29 | 62 | 102 | 968 | |
| | 2015.06- | CVT | F | L/R | SUV FWD R9M 414 | | GCO81974 | Outer Joint | | 29 | 28 | 62 | 102 | 68 | I |
| | 2015.06- | CVT | F | L | SUV FWD R9M 414 | | GCI41192 | Inner Joint | | 29 | 29 | 39 | 65.5 | 116 | |
| | 2015.06- | CVT | F | R | SUV FWD R9M 414 | | GCI82162 | Inner Joint | | 29 | 29 | 33 | 427.5 | 103.5 | |
| 1.7 (110 kw) | 2018.08- | 6MT | F | L | SUV 4WD R9N 401 | | GDS83621 | Drive Shaft | | 29 | 29 | 62 | 102 | 622 | |
| | 2018.08- | 6MT | F | R | SUV 4WD R9N 401 | | GDS83620 | Drive Shaft | | 29 | 29 | 62 | 102 | 1019 | |
| | 2018.08- | 6MT | F | L/R | SUV 4WD R9N 401 | | GCO81974 | Outer Joint | | 29 | 28 | 62 | 102 | 68 | I |
| | 2018.08- | 6MT | F | L | SUV 4WD R9N 401 | | GCI41192 | Inner Joint | | 29 | 29 | 39 | 65.5 | 116 | |
| | 2018.08- | 6MT | F | R | SUV 4WD R9N 401 | | GCI82324 | Inner Joint | | 29 | 29 | 33 | 478.5 | 103.5 | |
| **Kangoo** | | | | | | | | | | | | | | | |
| 1.0 (43 kw) | 2002.01-2007.01 | | F | L | MPV FWD D7D700/D7D760 | | GDS50552 | Drive Shaft | 26T | 21 | | 52.2 | 85.5 | 630 | |
| | 2002.01-2007.01 | | F | R | MPV FWD D7D700/D7D760 | | GDS50395 | Drive Shaft | 26T | 21 | 23 | 51.5 | 83 | 728 | |
| 1.2 (43 kw) | 1997.06-2003.06 | 5MT | F | L | MPV FWD D7F720/D7F726/D7F746 | | GDS50150 | Drive Shaft | | 21 | 30 | 49.8 | 83.5 | 623 | |
| | 1997.06-2003.06 | 5MT | F | L | MPV FWD D7F720/D7F726/D7F746 | Outer teeth of wheel side:23 | GDS50261 | Drive Shaft | 44T | 23 | | 57.5 | 86.5 | 630 | |
| | 1997.06-2003.06 | 5MT | F | L | MPV FWD D7F720/D7F726/D7F746 | Outer teeth of wheel side:21 | GDS50401 | Drive Shaft | 44T | 21 | | 57 | 84 | 629 | |
| | 1997.06-2003.06 | 5MT | F | L | MPV FWD D7F720/D7F726/D7F746 | | GDS50552 | Drive Shaft | 26T | 21 | | 52.2 | 85.5 | 630 | |
| | 1997.06-2003.06 | 5MT | F | R | MPV FWD D7F720/D7F726/D7F746 | Date to:2003.06,For Modelcode:KC0K/KC01/KC0F | GDS50395 | Drive Shaft | 26T | 21 | 23 | 51.5 | 83 | 728 | |
| | 1997.06-2003.06 | 5MT | F | R | MPV FWD D7F720/D7F726/D7F746 | Date to:2003.06,Modelcode:KC01/KC0F | GDS50526 | Drive Shaft | 26T | 21 | 23 | 52.3 | 84.5 | 724 | |
| | 1997.06-2003.06 | AT/MT | F | L/R | MPV FWD D7F720/D7F726/D7F746 | Date to:2008.12 | GCO50004 | Outer Joint | 26T | 21 | 30 | 52.2 | 85.5 | 59 | I |
| | 1997.06-2003.06 | MT | F | L | MPV FWD D7F720/D7F726/D7F746 | Date to:2008.12;Trans. code:JB1/JB3 | GDS50004 | Drive Shaft | 26T | 21 | | 57 | 84.5 | 625.7 | |
| | 1997.06-2003.06 | MT | F | L | MPV FWD D7F720/D7F726/D7F746 | Date from:1999.09,Date to:2003.06 | GDS50112 | Drive Shaft | 26T | 21 | | 57 | 84.5 | 630.7 | |
| | 1997.06-2003.06 | MT | F | L | MPV FWD D7F720/D7F726/D7F746 | | GDS50177 | Drive Shaft | | 21 | | 57 | 84.5 | 625.7 | |
| | 1997.06-2003.06 | MT | F | R | MPV FWD D7F720/D7F726/D7F746 | | GDS50125 | Drive Shaft | | 21 | 23 | 57 | 84.5 | 713.5 | |
| | 1997.06-2003.06 | MT | F | R | MPV FWD D7F720/D7F726/D7F746 | | GDS50146 | Drive Shaft | | 21 | 23 | 57 | 84.5 | 732.5 | |
| | 1997.06-2003.06 | MT | F | R | MPV FWD D7F720/D7F726/D7F746 | | GDS50357 | Drive Shaft | 26T | 21 | 23 | 57 | 84 | 718 | |
| | 1997.06-2003.06 | MT | F | R | MPV FWD D7F720/D7F726/D7F746 | | GDS50524 | Drive Shaft | 26T | 23 | 23 | 57.5 | 86.5 | 729 | |
| | 1997.06-2003.06 | MT | F | R | MPV FWD D7F720/D7F726/D7F746 | | GDS99072 | Drive Shaft | 44T | 21 | 23 | 57 | 84.5 | 720 | |
| | 1997.06-2003.06 | MT | F | R | MPV FWD D7F720/D7F726/D7F746 | | GCI50008 | Inner Joint | | 23 | 30 | 36.3 | | 120.7 | |
| | 1997.06-2003.06 | | F | R | MPV FWD D7F720/D7F726/D7F746 | Date From:2002.11;For Modelcode:KC01/KC0F | GDS50151 | Drive Shaft | | 21 | 23 | 49.8 | 83.5 | 715 | |
| | 1997.06-2003.06 | | F | L | MPV FWD D7F720/D7F726/D7F746 | | GCO50069 | Outer Joint | 44T | 23 | 30 | 57.5 | 86.5 | 58.5 | I |
| 1.2 (44 kw) | 1997.06-2003.06 | 5MT | F | R | MPV FWD D7F710/D7F722/D7F744/D7F764/D7F766 | For vehicles with ABS,Number of Splines:21 | GDS50162 | Drive Shaft | 26T | 21 | 23 | 52.2 | 85.5 | 723.5 | |
| | 1997.06-2003.06 | | F | L/R | MPV FWD D7F710/D7F722/D7F744/D7F764/D7F766 | | GCO50004 | Outer Joint | 26T | 21 | 30 | 52.2 | 85.5 | 59 | I |
| 1.2 (55 kw) | 2001.06-2007.09 | 5MT | F | L | MPV FWD D4F712/D4F714/D4F716/D4F730 | | GDS50523 | Drive Shaft | 26T | 23 | | 58.8 | 85 | 641 | |
| | 2001.06-2007.09 | 5MT | F | R | MPV FWD D4F712/D4F714/D4F716/D4F730 | | GDS50524 | Drive Shaft | 26T | 23 | 23 | 57.5 | 86.5 | 729 | |
| | 2001.06-2007.09 | 5MT | F | L | MPV FWD D4F712/D4F714/D4F716/D4F730 | | GCO50069 | Outer Joint | 44T | 23 | 30 | 57.5 | 86.5 | 58.5 | I |
| | 2001.06-2007.09 | MT | F | L | MPV FWD D4F712/D4F714/D4F716/D4F730 | Date to:2008.12;Trans. code:JB1/JB3 | GDS50004 | Drive Shaft | 26T | 21 | | 57 | 84.5 | 625.7 | |
| | 2001.06-2007.09 | MT | F | L | MPV FWD D4F712/D4F714/D4F716/D4F730 | Date to:2007.09;Trans. code:JB1/3;Hollow shaft | GDS50150 | Drive Shaft | | 21 | 30 | 49.8 | 83.5 | 623 | |
| | 2001.06-2007.09 | MT | F | L | MPV FWD D4F712/D4F714/D4F716/D4F730 | Solid shaft | GDS50177 | Drive Shaft | | 21 | | 57 | 84.5 | 625.7 | |
| | 2001.06-2007.09 | MT | F | L | MPV FWD D4F712/D4F714/D4F716/D4F730 | Date from:2002.11 | GDS50261 | Drive Shaft | 44T | 23 | | 57.5 | 86.5 | 630 | |
| | 2001.06-2007.09 | MT | F | L | MPV FWD D4F712/D4F714/D4F716/D4F730 | Date from:2002.11 | GDS50401 | Drive Shaft | 44T | 21 | | 57 | 84 | 629 | |
| | 2001.06-2007.09 | MT | F | R | MPV FWD D4F712/D4F714/D4F716/D4F730 | | GDS50125 | Drive Shaft | | 21 | 23 | 57 | 84.5 | 713.5 | |
| | 2001.06-2007.09 | MT | F | R | MPV FWD D4F712/D4F714/D4F716/D4F730 | | GDS50146 | Drive Shaft | | 21 | 23 | 57 | 84.5 | 732.5 | |
| | 2001.06-2007.09 | MT | F | R | MPV FWD D4F712/D4F714/D4F716/D4F730 | | GDS50357 | Drive Shaft | 26T | 21 | 23 | 57 | 84 | 718 | |
| | 2001.06-2007.09 | MT | F | R | MPV FWD D4F712/D4F714/D4F716/D4F730 | Date to:2007.09;Trans. code:JB1/3 | GDS50395 | Drive Shaft | 26T | 21 | 23 | 51.5 | 83 | 728 | |
| | 2001.06-2007.09 | MT | F | R | MPV FWD D4F712/D4F714/D4F716/D4F730 | | GDS99072 | Drive Shaft | 44T | 21 | 23 | 57 | 84.5 | 720 | |
| | 2001.06-2007.09 | MT | F | R | MPV FWD D4F712/D4F714/D4F716/D4F730 | Date to:2007.09 | GCO50106 | Outer Joint | 26T | 23 | 30 | 57.5 | 86.5 | 58.5 | I |
| | 2001.06-2007.09 | MT | F | L/R | MPV FWD D4F712/D4F714/D4F716/D4F730 | Date to:2008.12 | GCO50004 | Outer Joint | 26T | 21 | 30 | 52.2 | 85.5 | 59 | I |
| | 2001.06-2007.09 | MT | F | R | MPV FWD D4F712/D4F714/D4F716/D4F730 | Date to:2007.09 | GCI50008 | Inner Joint | | 23 | 30 | 36.3 | | 120.7 | |
| 1.2 (84 kw) | 2013.07- | 6DCT | F | L | MPV FWD H5F 400;H5F 408;H5F 412 | | GDS83777 | Drive Shaft | | 27 | 34 | 56.5 | 91 | 625 | |
| | 2013.07- | 6DCT | F | L | MPV FWD H5F 400;H5F 408;H5F 412 | | GCO82484 | Outer Joint | | 27 | 33 | 56.5 | 91 | 61.5 | I |
| | 2013.07- | 6DCT | F | R | MPV FWD H5F 400;H5F 408;H5F 412 | | GCO50136 | Outer Joint | | 27 | 22 | 56.7 | 91 | 55 | I |

| | YEAR | TRANSM. | F/R | L/R | BODY STYLE & DRIVE TYPE & ENGINE | REMARKS | G-AP Ref. | PRODUCT | ABS | Technical Specifications | | | | | |
|---|---|---|---|---|---|---|---|---|---|---|---|---|---|---|---|
| | | | | | | | | | | A | B | C | H | L | P |
| **RENAULT** | | | | | | | | | | | | | | | |
| **Kangoo** | | | | | | | | | | | | | | | |
| 1.2 (84 kw) | 2013.07- | 6DCT | F | L | MPV FWD H5F 400;H5F 408;H5F 412 | | GCI50140 | Inner Joint | | 34 | 33 | 40 | 54 | 106 | |
| | 2013.07- | 6MT | F | L | MPV FWD H5F 400;H5F 408;H5F 412 | | GDS99228 | Drive Shaft | | 27 | 26 | 56.7 | 91 | 675 | |
| | 2013.07- | 6MT | F | R | MPV FWD H5F 400;H5F 408;H5F 412 | For OE No.:391007733R | GDS50541 | Drive Shaft | | 23 | 26 | 49 | 83.5 | 913 | |
| | 2013.07- | 6MT | F | L/R | MPV FWD H5F 400;H5F 408;H5F 412 | | GCO50136 | Outer Joint | | 27 | 22 | 56.7 | 91 | 55 | I |
| | 2013.07- | 6MT | F | L | MPV FWD H5F 400;H5F 408;H5F 412 | | GCI50057 | Inner Joint | | 26 | 22 | 40 | 64 | 104 | |
| | 2013.07- | 6MT/6DCT | F | R | MPV FWD H5F 400;H5F 408;H5F 412 | | GDS83913 | Drive Shaft | | 27 | 26 | 56.7 | 91 | 918 | |
| | 2013.07- | 6MT/6DCT | F | R | MPV FWD H5F 400;H5F 408;H5F 412 | | GCI50135 | Inner Joint | | 26 | 22 | 33 | 346 | 96 | |
| 1.3 (75 kw) | 2021.06- | 6MT | F | L | Box Body/MPV FWD H5H 490 | | GDS57637 | Drive Shaft | | 25 | 26 | 53 | 88.5 | 700 | |
| | 2021.06- | 6MT | F | L | Box Body/MPV FWD H5H 490 | | GDS58047 | Drive Shaft | | 29 | 26 | 60 | 95.5 | 705 | |
| | 2021.06- | 6MT | F | R | Box Body/MPV FWD H5H 490 | | GDS57941 | Drive Shaft | | 25 | 26 | 53 | 88.5 | 948 | |
| | 2021.06- | 6MT | F | R | Box Body/MPV FWD H5H 490 | | GDS58079 | Drive Shaft | | 29 | 26 | 60 | 95.5 | 955 | |
| | 2021.06- | 6MT | F | L/R | Box Body/MPV FWD H5H 490 | | GCO83588 | Outer Joint | | 25 | 24 | 53 | 88.5 | 61 | I |
| | 2021.06- | 6MT | F | L/R | Box Body/MPV FWD H5H 490 | | GCO83811 | Outer Joint | | 29 | 24 | 60 | 95.5 | 61 | I |
| | 2021.06- | 6MT | F | L | Box Body/MPV FWD H5H 490 | | GCI83418 | Inner Joint | | 26 | 24 | 40 | 64 | 114 | |
| | 2021.06- | 6MT | F | L | Box Body/MPV FWD H5H 490 | | GCI83782 | Inner Joint | | 26 | 24 | 40 | 64 | 114 | |
| | 2021.06- | 6MT | F | R | Box Body/MPV FWD H5H 490 | | GCI83949 | Inner Joint | | 26 | 24 | 33 | 346 | 105 | |
| | 2021.07- | 6MT | F | L | MPV FWD H5H 490 | | GDS57637 | Drive Shaft | | 25 | 26 | 53 | 88.5 | 700 | |
| | 2021.07- | 6MT | F | L | MPV FWD H5H 490 | | GDS58047 | Drive Shaft | | 29 | 26 | 60 | 95.5 | 705 | |
| | 2021.07- | 6MT | F | R | MPV FWD H5H 490 | | GDS57941 | Drive Shaft | | 25 | 26 | 53 | 88.5 | 948 | |
| | 2021.07- | 6MT | F | R | MPV FWD H5H 490 | | GDS58079 | Drive Shaft | | 29 | 26 | 60 | 95.5 | 955 | |
| | 2021.07- | 6MT | F | L/R | MPV FWD H5H 490 | | GCO83588 | Outer Joint | | 25 | 24 | 53 | 88.5 | 61 | I |
| | 2021.07- | 6MT | F | L/R | MPV FWD H5H 490 | | GCO83811 | Outer Joint | | 29 | 24 | 60 | 95.5 | 61 | I |
| | 2021.07- | 6MT | F | L | MPV FWD H5H 490 | | GCI83418 | Inner Joint | | 26 | 24 | 40 | 64 | 114 | |
| | 2021.07- | 6MT | F | L | MPV FWD H5H 490 | | GCI83782 | Inner Joint | | 26 | 24 | 40 | 64 | 114 | |
| | 2021.07- | 6MT | F | R | MPV FWD H5H 490 | | GCI83949 | Inner Joint | | 26 | 24 | 33 | 346 | 105 | |
| 1.3 (96 kw) | 2021.06- | 6MT | F | L | Box Body/MPV FWD H5H 490 | | GDS57637 | Drive Shaft | | 25 | 26 | 53 | 88.5 | 700 | |
| | 2021.06- | 6MT | F | L | Box Body/MPV FWD H5H 490 | | GDS58047 | Drive Shaft | | 29 | 26 | 60 | 95.5 | 705 | |
| | 2021.06- | 6MT | F | R | Box Body/MPV FWD H5H 490 | | GDS57941 | Drive Shaft | | 25 | 26 | 53 | 88.5 | 948 | |
| | 2021.06- | 6MT | F | R | Box Body/MPV FWD H5H 490 | | GDS58079 | Drive Shaft | | 29 | 26 | 60 | 95.5 | 955 | |
| | 2021.06- | 6MT | F | L/R | Box Body/MPV FWD H5H 490 | | GCO83588 | Outer Joint | | 25 | 24 | 53 | 88.5 | 61 | I |
| | 2021.06- | 6MT | F | L/R | Box Body/MPV FWD H5H 490 | | GCO83811 | Outer Joint | | 29 | 24 | 60 | 95.5 | 61 | I |
| | 2021.06- | 6MT | F | L | Box Body/MPV FWD H5H 490 | | GCI83418 | Inner Joint | | 26 | 24 | 40 | 64 | 114 | |
| | 2021.06- | 6MT | F | L | Box Body/MPV FWD H5H 490 | | GCI83782 | Inner Joint | | 26 | 24 | 40 | 64 | 114 | |
| | 2021.06- | 6MT | F | R | Box Body/MPV FWD H5H 490 | | GCI83949 | Inner Joint | | 26 | 24 | 33 | 346 | 105 | |
| | 2021.06- | 7DCT | F | L | Box Body/MPV FWD H5H 490 | | GDS58074 | Drive Shaft | | 29 | 27 | 60 | 95.5 | 651 | |
| | 2021.06- | 7DCT | F | L | Box Body/MPV FWD H5H 490 | | GDS58093 | Drive Shaft | | 25 | 27 | 53 | 88.5 | 642 | |
| | 2021.06- | 7DCT | F | R | Box Body/MPV FWD H5H 490 | | GDS57958 | Drive Shaft | | 29 | 27 | 60 | 95.5 | 1009 | |
| | 2021.06- | 7DCT | F | R | Box Body/MPV FWD H5H 490 | | GDS58078 | Drive Shaft | | 25 | 27 | 53 | 88.5 | 1003 | |
| | 2021.06- | 7DCT | F | L/R | Box Body/MPV FWD H5H 490 | | GCO83811 | Outer Joint | | 29 | 24 | 60 | 95.5 | 61 | I |
| | 2021.06- | 7DCT | F | L | Box Body/MPV FWD H5H 490 | | GCI84006 | Inner Joint | | 27 | 24 | 40 | 65.5 | 113.5 | |
| | 2021.06- | 7DCT | F | R | Box Body/MPV FWD H5H 490 | | GCI83962 | Inner Joint | | 27 | 24 | 32.5 | 400 | 104 | |
| | 2021.07- | 6MT | F | L | MPV FWD H5H 490 | | GDS57637 | Drive Shaft | | 25 | 26 | 53 | 88.5 | 700 | |
| | 2021.07- | 6MT | F | L | MPV FWD H5H 490 | | GDS58047 | Drive Shaft | | 29 | 26 | 60 | 95.5 | 705 | |
| | 2021.07- | 6MT | F | R | MPV FWD H5H 490 | | GDS57941 | Drive Shaft | | 25 | 26 | 53 | 88.5 | 948 | |
| | 2021.07- | 6MT | F | R | MPV FWD H5H 490 | | GDS58079 | Drive Shaft | | 29 | 26 | 60 | 95.5 | 955 | |
| | 2021.07- | 6MT | F | L/R | MPV FWD H5H 490 | | GCO83588 | Outer Joint | | 25 | 24 | 53 | 88.5 | 61 | I |
| | 2021.07- | 6MT | F | L/R | MPV FWD H5H 490 | | GCO83811 | Outer Joint | | 29 | 24 | 60 | 95.5 | 61 | I |
| | 2021.07- | 6MT | F | L | MPV FWD H5H 490 | | GCI83418 | Inner Joint | | 26 | 24 | 40 | 64 | 114 | |
| | 2021.07- | 6MT | F | L | MPV FWD H5H 490 | | GCI83782 | Inner Joint | | 26 | 24 | 40 | 64 | 114 | |
| | 2021.07- | 6MT | F | R | MPV FWD H5H 490 | | GCI83949 | Inner Joint | | 26 | 24 | 33 | 346 | 105 | |
| | 2021.07- | 7DCT | F | L | MPV FWD H5H 490 | | GDS58074 | Drive Shaft | | 29 | 27 | 60 | 95.5 | 651 | |
| | 2021.07- | 7DCT | F | L | MPV FWD H5H 490 | | GDS58093 | Drive Shaft | | 25 | 27 | 53 | 88.5 | 642 | |
| | 2021.07- | 7DCT | F | R | MPV FWD H5H 490 | | GDS57958 | Drive Shaft | | 29 | 27 | 60 | 95.5 | 1009 | |
| | 2021.07- | 7DCT | F | R | MPV FWD H5H 490 | | GDS58078 | Drive Shaft | | 25 | 27 | 53 | 88.5 | 1003 | |
| | 2021.07- | 7DCT | F | L/R | MPV FWD H5H 490 | | GCO83811 | Outer Joint | | 29 | 24 | 60 | 95.5 | 61 | I |
| | 2021.07- | 7DCT | F | L | MPV FWD H5H 490 | | GCI84006 | Inner Joint | | 27 | 24 | 40 | 65.5 | 113.5 | |
| | 2021.07- | 7DCT | F | R | MPV FWD H5H 490 | | GCI83962 | Inner Joint | | 27 | 24 | 32.5 | 400 | 104 | |
| 1.4 (55 kw) | 1997.06-2008.06 | 4AT/5MT | F | L | MPV FWD E7J634/E7J635/E7J780/K7J700/K7J701 | Hollow shaft | GDS50150 | Drive Shaft | | 21 | 30 | 49.8 | 83.5 | 623 | |
| | 1997.06-2008.06 | 4AT/5MT | F | R | MPV FWD E7J634/E7J635/E7J780/K7J700/K7J701 | Date from:2002.11;Date to:2003.03;Engine code:E7J635/K7J701 | GDS50525 | Drive Shaft | 44T | 21 | 23 | 52.2 | 85.5 | 741 | |
| | 1997.06-2008.06 | AT | F | L | MPV FWD E7J634/E7J635/E7J780/K7J700/K7J701 | Date from:2002.11;Date to:2003.03;Engine code:E7J635/K7J701 | GDS50519 | Drive Shaft | 44T | 21 | 26 | 52.2 | 85.5 | 609 | |
| | 1997.06-2008.06 | AT | F | L | MPV FWD E7J634/E7J635/E7J780/K7J700/K7J701 | Date to:2008.06 | GDS50579 | Drive Shaft | 26T | 21 | 26 | 52.2 | 85.5 | 613 | |
| | 1997.06-2008.06 | AT | F | L | MPV FWD E7J634/E7J635/E7J780/K7J700/K7J701 | Date To:10/02;For Engine code:E7J635/K7J701 | GDS99169 | Drive Shaft | 26T | 21 | 26 | 52.2 | 85.5 | 621 | |
| | 1997.06-2008.06 | AT | F | R | MPV FWD E7J634/E7J635/E7J780/K7J700/K7J701 | | GDS50485 | Drive Shaft | 44T | 21 | 23 | 52.2 | 85.5 | 733 | |
| | 1997.06-2008.06 | AT | F | R | MPV FWD E7J634/E7J635/E7J780/K7J700/K7J701 | | GDS50486 | Drive Shaft | 26T | 21 | 23 | 52.2 | 85.5 | 733 | |
| | 1997.06-2008.06 | AT | F | R | MPV FWD E7J634/E7J635/E7J780/K7J700/K7J701 | Date to:2008.06 | GDS50588 | Drive Shaft | 26T | 21 | 23 | 57 | 84 | 739 | |

| | YEAR | TRANSM. | F/R | L/R | BODY STYLE & DRIVE TYPE & ENGINE | REMARKS | G-AP Ref. | PRODUCT | ABS | Technical Specifications A | B | C | H | L | P |
|---|---|---|---|---|---|---|---|---|---|---|---|---|---|---|---|
| **RENAULT** **Kangoo** | | | | | | | | | | | | | | | |
| 1.4 (55 kw) | 1997.06-2008.06 | MT | F | L | MPV FWD E7J634/E7J635/E7J780/K7J700/K7J701 | Date to:2008.12;Trans. code:JB1/JB3 | GDS50004 | Drive Shaft | 26T | 21 | | 57 | 84.5 | 625.7 | |
| | 1997.06-2008.06 | MT | F | L | MPV FWD E7J634/E7J635/E7J780/K7J700/K7J701 | Date from:1999.09,Date to:2008.06 | GDS50112 | Drive Shaft | 26T | 21 | | 57 | 84.5 | 630.7 | |
| | 1997.06-2008.06 | MT | F | L | MPV FWD E7J634/E7J635/E7J780/K7J700/K7J701 | Solid shaft | GDS50177 | Drive Shaft | | 21 | | 57 | 84.5 | 625.7 | |
| | 1997.06-2008.06 | MT | F | L | MPV FWD E7J634/E7J635/E7J780/K7J700/K7J701 | Date from:2002.11,For Engine code:K7J700 | GDS50261 | Drive Shaft | 44T | 23 | | 57.5 | 86.5 | 630 | |
| | 1997.06-2008.06 | MT | F | L | MPV FWD E7J634/E7J635/E7J780/K7J700/K7J701 | Date From:2002.11;For Engine Code:K7J700;For vehicles without off-road suspension | GDS50401 | Drive Shaft | 44T | 21 | | 57 | 84 | 629 | |
| | 1997.06-2008.06 | MT | F | L | MPV FWD E7J634/E7J635/E7J780/K7J700/K7J701 | Date To:2002.10;For Engine code:E7J634/E7J780;For Engine code:K7J700;For vehicles with off-road suspension | GDS50552 | Drive Shaft | 26T | 21 | | 52.2 | 85.5 | 630 | |
| | 1997.06-2008.06 | MT | F | R | MPV FWD E7J634/E7J635/E7J780/K7J700/K7J701 | | GDS50125 | Drive Shaft | | 21 | 23 | 57 | 84.5 | 713.5 | |
| | 1997.06-2008.06 | MT | F | R | MPV FWD E7J634/E7J635/E7J780/K7J700/K7J701 | | GDS50146 | Drive Shaft | | 21 | 23 | 57 | 84.5 | 732.5 | |
| | 1997.06-2008.06 | MT | F | R | MPV FWD E7J634/E7J635/E7J780/K7J700/K7J701 | Date From:2002.11;For Engine code:E7J634;For Engine code:K7J700 | GDS50151 | Drive Shaft | | 21 | 23 | 49.8 | 83.5 | 715 | |
| | 1997.06-2008.06 | MT | F | R | MPV FWD E7J634/E7J635/E7J780/K7J700/K7J701 | Date from:1998.03 | GDS50336 | Drive Shaft | 26T | 21 | 23 | 57 | 84 | 727 | |
| | 1997.06-2008.06 | MT | F | R | MPV FWD E7J634/E7J635/E7J780/K7J700/K7J701 | | GDS50357 | Drive Shaft | 26T | 21 | 23 | 57 | 84 | 718 | |
| | 1997.06-2008.06 | MT | F | R | MPV FWD E7J634/E7J635/E7J780/K7J700/K7J701 | Date from:1998.07;Date to:2008.06;Trans. code:JB1/3;Inner teeth of wheel side:22 | GDS50395 | Drive Shaft | 26T | 21 | 23 | 51.5 | 83 | 728 | |
| | 1997.06-2008.06 | MT | F | R | MPV FWD E7J634/E7J635/E7J780/K7J700/K7J701 | For Engine Code:E7J635/E7J780;For vehicles without off-road suspension;Inner teeth of wheel side:28 | GDS50526 | Drive Shaft | 26T | 21 | 23 | 52.3 | 84.5 | 724 | |
| | 1997.06-2008.06 | MT | F | R | MPV FWD E7J634/E7J635/E7J780/K7J700/K7J701 | Date from:1998.07,Date to:2008.06 | GCI50008 | Inner Joint | | 23 | 30 | 36.3 | | 120.7 | |
| | 1997.06-2008.06 | | F | L | MPV FWD E7J634/E7J635/E7J780/K7J700/K7J701 | | GCO50069 | Outer Joint | 44T | 23 | 30 | 57.5 | 86.5 | 58.5 | I |
| 1.5 (42 kw) | 2001.11-2007.04 | 5MT | F | L | MPV FWD K9K700/K9K702/K9K704 | | GDS50150 | Drive Shaft | | 21 | 30 | 49.8 | 83.5 | 623 | |
| | 2001.11-2007.04 | 5MT | F | R | MPV FWD K9K700/K9K702/K9K704 | For vehicles without off-road suspension | GDS50017 | Drive Shaft | 26T | 21 | 23 | 51.5 | 83 | 715 | |
| | 2001.11-2007.04 | 5MT | F | R | MPV FWD K9K700/K9K702/K9K704 | For vehicles without off-road suspension | GDS50162 | Drive Shaft | 26T | 21 | 23 | 52.2 | 85.5 | 723.5 | |
| | 2001.11-2007.04 | 5MT | F | L/R | MPV FWD K9K700/K9K702/K9K704 | Date to:2002.10,For vehicles with off-road suspension | GCO50004 | Outer Joint | 26T | 21 | 30 | 52.2 | 85.5 | 59 | I |
| | 2001.11-2007.04 | 5MT | F | L/R | MPV FWD K9K700/K9K702/K9K704 | Date from:2002.11,For vehicles with off-road suspension | GCO50069 | Outer Joint | 44T | 23 | 30 | 57.5 | 86.5 | 58.5 | I |
| | 2001.11-2007.04 | MT | F | L | MPV FWD K9K700/K9K702/K9K704 | | GDS50177 | Drive Shaft | | 21 | | 57 | 84.5 | 625.7 | |
| | 2001.11-2007.04 | MT | F | R | MPV FWD K9K700/K9K702/K9K704 | | GDS50146 | Drive Shaft | | 21 | 23 | 57 | 84.5 | 732.5 | |
| | 2001.11-2007.04 | MT | F | R | MPV FWD K9K700/K9K702/K9K704 | | GDS50250 | Drive Shaft | 26T | 21 | 23 | 57 | 84.5 | 732.5 | |
| | 2001.11-2007.04 | MT | F | R | MPV FWD K9K700/K9K702/K9K704 | | GDS99072 | Drive Shaft | 44T | 21 | 23 | 57 | 84.5 | 720 | |
| | 2001.11-2007.04 | | F | L | MPV FWD K9K700/K9K702/K9K704 | For vehicles with off-road suspension;Date to:2002.10;For vehicles without off-road suspension | GDS50004 | Drive Shaft | 26T | 21 | | 57 | 84.5 | 625.7 | |
| | 2001.11-2007.04 | | F | L | MPV FWD K9K700/K9K702/K9K704 | Date from:2002.11 | GDS50261 | Drive Shaft | 44T | 23 | | 57.5 | 86.5 | 630 | |
| | 2001.11-2007.04 | | F | L | MPV FWD K9K700/K9K702/K9K704 | | GDS50401 | Drive Shaft | 44T | 21 | | 57 | 84 | 629 | |
| | 2001.11-2007.04 | | F | L | MPV FWD K9K700/K9K702/K9K704 | Date To:2002.10;For vehicles with off-road suspension | GDS50552 | Drive Shaft | 26T | 21 | | 52.2 | 85.5 | 630 | |
| | 2001.11-2007.04 | | F | R | MPV FWD K9K700/K9K702/K9K704 | | GDS50151 | Drive Shaft | | 21 | 23 | 49.8 | 83.5 | 715 | |
| | 2001.11-2007.04 | | F | R | MPV FWD K9K700/K9K702/K9K704 | | GDS50245 | Drive Shaft | 44T | 21 | 23 | 52.5 | 85 | 726 | |
| | 2001.11-2007.04 | | F | R | MPV FWD K9K700/K9K702/K9K704 | Date To:2007.04;for vehicles with off-road suspension | GDS50395 | Drive Shaft | 26T | 21 | 23 | 51.5 | 83 | 728 | |
| | 2001.11-2007.04 | | F | R | MPV FWD K9K700/K9K702/K9K704 | For vehicles with off-road suspension | GDS50524 | Drive Shaft | 26T | 23 | 23 | 57.5 | 86.5 | 729 | |
| | 2001.11-2007.04 | | F | R | MPV FWD K9K700/K9K702/K9K704 | Date To:2007.04;for vehicles without off-road suspension | GCI50008 | Inner Joint | | 23 | 30 | 36.3 | | 120.7 | |
| 1.5 (45 kw) | 2005.04-2010.06 | 5MT | F | R | MPV FWD K9K700/K9K702 | | GDS50245 | Drive Shaft | 44T | 21 | 23 | 52.5 | 85 | 726 | |
| | 2005.04-2010.06 | 5MT | F | R | MPV FWD K9K700/K9K702 | | GCO50066 | Outer Joint | 44T | 21 | 28 | 52.5 | 85 | 51 | I |
| | 2005.04-2010.06 | | F | L | MPV FWD K9K700/K9K702 | | GDS50261 | Drive Shaft | 44T | 23 | | 57.5 | 86.5 | 630 | |
| | 2005.04-2010.06 | | F | L | MPV FWD K9K700/K9K702 | | GDS50401 | Drive Shaft | 44T | 21 | | 57 | 84 | 629 | |
| | 2005.04-2010.06 | | F | R | MPV FWD K9K700/K9K702 | | GCI50008 | Inner Joint | | 23 | 30 | 36.3 | | 120.7 | |
| 1.5 (48 kw) | 2001.12-2013.09 | 5MT | F | L | MPV FWD K9K700/K9K702/K9K704 | | GDS50150 | Drive Shaft | | 21 | 30 | 49.8 | 83.5 | 623 | |
| | 2001.12-2013.09 | 5MT | F | R | MPV FWD K9K700/K9K702/K9K704 | For vehicles without off-road suspension | GDS50017 | Drive Shaft | 26T | 21 | 23 | 51.5 | 83 | 715 | |
| | 2001.12-2013.09 | 5MT | F | R | MPV FWD K9K700/K9K702/K9K704 | For vehicles without off-road suspension | GDS50162 | Drive Shaft | 26T | 21 | 23 | 52.2 | 85.5 | 723.5 | |
| | 2001.12-2013.09 | 5MT | F | L/R | MPV FWD K9K700/K9K702/K9K704 | Date from:2002.11,For vehicles with off-road suspension | GCO50069 | Outer Joint | 44T | 23 | 30 | 57.5 | 86.5 | 58.5 | I |
| | 2001.12-2013.09 | MT | F | L | MPV FWD K9K700/K9K702/K9K704 | Date to:2003.12;Trans. code:JB1/JB3 | GDS50004 | Drive Shaft | 26T | 21 | | 57 | 84.5 | 625.7 | |
| | 2001.12-2013.09 | MT | F | L | MPV FWD K9K700/K9K702/K9K704 | Date to:2013.09 | GDS50112 | Drive Shaft | 26T | 21 | | 57 | 84.5 | 630.7 | |
| | 2001.12-2013.09 | MT | F | L | MPV FWD K9K700/K9K702/K9K704 | | GDS50177 | Drive Shaft | | 21 | | 57 | 84.5 | 625.7 | |
| | 2001.12-2013.09 | MT | F | L | MPV FWD K9K700/K9K702/K9K704 | Date to:2013.09;Trans. code:JB1/3 | GDS50398 | Drive Shaft | | 21 | 30 | 50 | 84 | 632 | |
| | 2001.12-2013.09 | MT | F | L | MPV FWD K9K700/K9K702/K9K704 | Date to:2013.09;Trans. code:JB1/3 | GDS50552 | Drive Shaft | 26T | 21 | | 52.2 | 85.5 | 630 | |
| | 2001.12-2013.09 | MT | F | R | MPV FWD K9K700/K9K702/K9K704 | Date to:2013.09;Trans. code:JB1/3 | GDS50125 | Drive Shaft | | 21 | 23 | 57 | 84.5 | 713.5 | |
| | 2001.12-2013.09 | MT | F | R | MPV FWD K9K700/K9K702/K9K704 | | GDS50146 | Drive Shaft | | 21 | 23 | 57 | 84.5 | 732.5 | |
| | 2001.12-2013.09 | MT | F | R | MPV FWD K9K700/K9K702/K9K704 | | GDS50151 | Drive Shaft | | 21 | 23 | 49.8 | 83.5 | 715 | |
| | 2001.12-2013.09 | MT | F | R | MPV FWD K9K700/K9K702/K9K704 | | GDS50245 | Drive Shaft | 44T | 21 | 23 | 52.5 | 85 | 726 | |
| | 2001.12-2013.09 | MT | F | R | MPV FWD K9K700/K9K702/K9K704 | Date to:2013.09;Trans. code:JB1/3 | GDS50395 | Drive Shaft | 26T | 21 | 23 | 51.5 | 83 | 728 | |
| | 2001.12-2013.09 | MT | F | R | MPV FWD K9K700/K9K702/K9K704 | For vehicles with off-road suspension | GDS50524 | Drive Shaft | 26T | 23 | 23 | 57.5 | 86.5 | 729 | |
| | 2001.12-2013.09 | MT | F | R | MPV FWD K9K700/K9K702/K9K704 | | GDS99072 | Drive Shaft | 44T | 21 | 23 | 57 | 84.5 | 720 | |
| | 2001.12-2013.09 | MT | F | L/R | MPV FWD K9K700/K9K702/K9K704 | Date to:2002.10,For vehicles with off-road suspension | GCO50004 | Outer Joint | 26T | 21 | 30 | 52.2 | 85.5 | 59 | I |
| | 2001.12-2013.09 | MT | F | R | MPV FWD K9K700/K9K702/K9K704 | Date to:2013.09 | GCI50008 | Inner Joint | | 23 | 30 | 36.3 | | 120.7 | |
| | 2001.12-2013.09 | | F | L | MPV FWD K9K700/K9K702/K9K704 | Date from:2002.11 | GDS50261 | Drive Shaft | 44T | 23 | | 57.5 | 86.5 | 630 | |
| | 2001.12-2013.09 | | F | L | MPV FWD K9K700/K9K702/K9K704 | | GDS50401 | Drive Shaft | 44T | 21 | | 57 | 84 | 629 | |
| 1.5 (50 kw) | 2005.09-2008.02 | MT | F | L | MPV FWD K9K714 | | GDS50376 | Drive Shaft | | 23 | 26 | 57.5 | 86.5 | 606 | |
| | 2005.09-2008.02 | MT | F | L | MPV FWD K9K714 | | GDS50514 | Drive Shaft | 44T | 23 | 26 | 57.5 | 86.5 | 606 | |
| | 2005.09-2008.02 | MT | F | R | MPV FWD K9K714 | | GDS50375 | Drive Shaft | | 23 | 26 | 57.5 | 86.5 | 866 | |
| | 2005.09-2008.02 | MT | F | R | MPV FWD K9K714 | | GDS50515 | Drive Shaft | 44T | 23 | 26 | 57.5 | 86.5 | 866 | |
| | 2005.09-2008.02 | MT | F | R | MPV FWD K9K714 | | GCO99087 | Outer Joint | | 23 | 30 | 57.5 | 86.5 | 58.5 | I |
| | 2005.09-2008.02 | MT | F | L/R | MPV FWD K9K714 | | GCO50069 | Outer Joint | 44T | 23 | 30 | 57.5 | 86.5 | 58.5 | I |
| | 2005.09-2008.02 | MT | F | L | MPV FWD K9K714 | | GCI50085 | Inner Joint | | 26 | 33 | 40 | 64 | 123 | |

| | YEAR | TRANSM. | F/R | L/R | BODY STYLE & DRIVE TYPE & ENGINE | REMARKS | G-AP Ref. | PRODUCT | ABS | Technical Specifications | | | | | |
|---|---|---|---|---|---|---|---|---|---|---|---|---|---|---|---|
| | | | | | | | | | | A | B | C | H | L | P |
| **RENAULT** | | | | | | | | | | | | | | | |
| **Kangoo** | | | | | | | | | | | | | | | |
| 1.5 (50 kw) | 2005.09-2008.02 | MT | F | R | MPV FWD K9K714 | Date from:2005.09,Date to:2008.02 | GCI50086 | Inner Joint | | 26 | 33 | 33 | 326 | 94 | |
| | 2005.09-2008.02 | MT | F | R | MPV FWD K9K714 | | GCI99169 | Inner Joint | | 26 | 30 | 33 | 326 | 95 | |
| | 2005.09-2008.02 | | F | R | MPV FWD K9K714 | Date From:2005.09;Date To:2008.02;Type:FOR ALL ROADS | GDS50364 | Drive Shaft | 44T | 23 | 26 | 57.5 | 86.5 | 866 | |
| | 2008.02- | 5MT | F | L | MPV FWD K9K 802;K9K 800 | | GDS99070 | Drive Shaft | | 23 | 26 | 49 | 86 | 675 | |
| | 2008.02- | 5MT | F | L | MPV FWD K9K 802;K9K 800 | | GDS99228 | Drive Shaft | | 27 | 26 | 56.7 | 91 | 675 | |
| | 2008.02- | 5MT | F | R | MPV FWD K9K 802;K9K 800 | bearing thickness 20mm | GDS50612 | Drive Shaft | | 27 | 26 | 56.7 | 91 | 918 | |
| | 2008.02- | 5MT | F | R | MPV FWD K9K 802;K9K 800 | Date to:2012.06 | GDS99071 | Drive Shaft | | 23 | 26 | 49 | 86 | 911 | |
| | 2008.02- | 5MT | F | R | MPV FWD K9K 802;K9K 800 | bearing thickness 14mm | GDS99229 | Drive Shaft | | 27 | 26 | 56.7 | 91 | 920 | |
| | 2008.02- | 5MT | F | L/R | MPV FWD K9K 802;K9K 800 | Outer teething wheel side:27 | GCO50136 | Outer Joint | | 27 | 22 | 56.7 | 91 | 55 | I |
| | 2008.02- | 5MT | F | L/R | MPV FWD K9K 802;K9K 800 | Outer teething wheel side:23 | GCO99085 | Outer Joint | | 23 | 30 | 49 | 86 | 59 | I |
| | 2008.02- | 5MT | F | L | MPV FWD K9K 802;K9K 800 | | GCI50048 | Inner Joint | | 26 | 30 | 40 | 64 | 121 | |
| | 2008.02- | 5MT | F | L | MPV FWD K9K 802;K9K 800 | | GCI50057 | Inner Joint | | 26 | 22 | 40 | 64 | 104 | |
| | 2008.02- | 5MT | F | R | MPV FWD K9K 802;K9K 800 | bearing thickness 14mm | GCI50051 | Inner Joint | | 26 | 22 | 33 | 326 | 96 | |
| | 2008.02- | 5MT | F | R | MPV FWD K9K 802;K9K 800 | bearing thickness 20mm | GCI50137 | Inner Joint | | 26 | 22 | 33 | 330 | 96.5 | |
| | 2008.02- | 5MT | F | R | MPV FWD K9K 802;K9K 800 | | GCI99169 | Inner Joint | | 26 | 30 | 33 | 326 | 95 | |
| 1.5 (55 kw) | 2012.11- | 5MT | F | L | MPV FWD K9K 808;K9K 608;K9K 628 | | GDS99070 | Drive Shaft | | 23 | 26 | 49 | 86 | 675 | |
| | 2012.11- | 5MT | F | L | MPV FWD K9K 808;K9K 608;K9K 628 | | GDS99228 | Drive Shaft | | 27 | 26 | 56.7 | 91 | 675 | |
| | 2012.11- | 5MT | F | R | MPV FWD K9K 808;K9K 608;K9K 628 | bearing thickness 20mm | GDS50612 | Drive Shaft | | 27 | 26 | 56.7 | 91 | 918 | |
| | 2012.11- | 5MT | F | R | MPV FWD K9K 808;K9K 608;K9K 628 | Date to:2012.06 | GDS99071 | Drive Shaft | | 23 | 26 | 49 | 86 | 911 | |
| | 2012.11- | 5MT | F | R | MPV FWD K9K 808;K9K 608;K9K 628 | bearing thickness 14mm | GDS99229 | Drive Shaft | | 27 | 26 | 56.7 | 91 | 920 | |
| | 2012.11- | 5MT | F | L/R | MPV FWD K9K 808;K9K 608;K9K 628 | Outer teething wheel side:27 | GCO50136 | Outer Joint | | 27 | 22 | 56.7 | 91 | 55 | I |
| | 2012.11- | 5MT | F | L/R | MPV FWD K9K 808;K9K 608;K9K 628 | Outer teething wheel side:23 | GCO99085 | Outer Joint | | 23 | 30 | 49 | 86 | 59 | I |
| | 2012.11- | 5MT | F | L | MPV FWD K9K 808;K9K 608;K9K 628 | | GCI50048 | Inner Joint | | 26 | 30 | 40 | 64 | 121 | |
| | 2012.11- | 5MT | F | L | MPV FWD K9K 808;K9K 608;K9K 628 | | GCI50057 | Inner Joint | | 26 | 22 | 40 | 64 | 104 | |
| | 2012.11- | 5MT | F | R | MPV FWD K9K 808;K9K 608;K9K 628 | bearing thickness 14mm | GCI50051 | Inner Joint | | 26 | 22 | 33 | 326 | 96 | |
| | 2012.11- | 5MT | F | R | MPV FWD K9K 808;K9K 608;K9K 628 | bearing thickness 20mm | GCI50137 | Inner Joint | | 26 | 22 | 33 | 330 | 96.5 | |
| | 2012.11- | 5MT | F | R | MPV FWD K9K 808;K9K 608;K9K 628 | | GCI99169 | Inner Joint | | 26 | 30 | 33 | 326 | 95 | |
| | 2021.06- | 6MT | F | L | Box Body/MPV FWD K9K 876 | | GDS57637 | Drive Shaft | | 25 | 26 | 53 | 88.5 | 700 | |
| | 2021.06- | 6MT | F | L | Box Body/MPV FWD K9K 876 | | GDS58047 | Drive Shaft | | 29 | 26 | 60 | 95.5 | 705 | |
| | 2021.06- | 6MT | F | R | Box Body/MPV FWD K9K 876 | | GDS57834 | Drive Shaft | | 25 | 26 | 53 | 88.5 | 946 | |
| | 2021.06- | 6MT | F | R | Box Body/MPV FWD K9K 876 | | GDS58073 | Drive Shaft | | 29 | 26 | 60 | 95.5 | 951 | |
| | 2021.06- | 6MT | F | L | Box Body/MPV FWD K9K 876 | | GCO83588 | Outer Joint | | 25 | 24 | 53 | 88.5 | 61 | I |
| | 2021.06- | 6MT | F | L/R | Box Body/MPV FWD K9K 876 | | GCO83811 | Outer Joint | | 29 | 24 | 60 | 95.5 | 61 | I |
| | 2021.06- | 6MT | F | L | Box Body/MPV FWD K9K 876 | | GCI83418 | Inner Joint | | 26 | 24 | 40 | 64 | 114 | |
| | 2021.06- | 6MT | F | L | Box Body/MPV FWD K9K 876 | | GCI83782 | Inner Joint | | 26 | 24 | 40 | 64 | 114 | |
| | 2021.06- | 6MT | F | R | Box Body/MPV FWD K9K 876 | | GCI83417 | Inner Joint | | 26 | 24 | 33 | 330 | 105 | |
| | 2021.07- | 6MT | F | L | MPV FWD K9K 876 | | GDS57637 | Drive Shaft | | 25 | 26 | 53 | 88.5 | 700 | |
| | 2021.07- | 6MT | F | L | MPV FWD K9K 876 | | GDS58047 | Drive Shaft | | 29 | 26 | 60 | 95.5 | 705 | |
| | 2021.07- | 6MT | F | R | MPV FWD K9K 876 | | GDS57834 | Drive Shaft | | 25 | 26 | 53 | 88.5 | 946 | |
| | 2021.07- | 6MT | F | R | MPV FWD K9K 876 | | GDS58073 | Drive Shaft | | 29 | 26 | 60 | 95.5 | 951 | |
| | 2021.07- | 6MT | F | L | MPV FWD K9K 876 | | GCO83588 | Outer Joint | | 25 | 24 | 53 | 88.5 | 61 | I |
| | 2021.07- | 6MT | F | L/R | MPV FWD K9K 876 | | GCO83811 | Outer Joint | | 29 | 24 | 60 | 95.5 | 61 | I |
| | 2021.07- | 6MT | F | L | MPV FWD K9K 876 | | GCI83418 | Inner Joint | | 26 | 24 | 40 | 64 | 114 | |
| | 2021.07- | 6MT | F | L | MPV FWD K9K 876 | | GCI83782 | Inner Joint | | 26 | 24 | 40 | 64 | 114 | |
| | 2021.07- | 6MT | F | R | MPV FWD K9K 876 | | GCI83417 | Inner Joint | | 26 | 24 | 33 | 330 | 105 | |
| 1.5 (59 kw) | 2019.03- | 6MT | F | L | MPV FWD K9K 872 | | GDS58128 | Drive Shaft | | 27 | 26 | 51.5 | 90.5 | 670 | |
| | 2019.03- | 6MT | F | R | MPV FWD K9K 872 | | GDS50612 | Drive Shaft | | 27 | 26 | 56.7 | 91 | 918 | |
| | 2019.03- | 6MT | F | L | MPV FWD K9K 872 | | GCO83854 | Outer Joint | | 27 | 23 | 51.5 | 90.5 | 61 | M |
| | 2019.03- | 6MT | F | L | MPV FWD K9K 872 | | GCI83909 | Inner Joint | | 26 | 23 | 39.95 | 64 | 104 | |
| 1.5 (60 kw) | 2002.01-2007.09 | 5MT | F | L | MPV FWD K9K702/K9K704/K9K710 | | GDS50401 | Drive Shaft | 44T | 21 | | 57 | 84 | 629 | |
| | 2002.01-2007.09 | 5MT | F | R | MPV FWD K9K702/K9K704/K9K710 | | GDS50151 | Drive Shaft | | 21 | 23 | 49.8 | 83.5 | 715 | |
| | 2002.01-2007.09 | 5MT | F | L | MPV FWD K9K702/K9K704/K9K710 | | GCO50069 | Outer Joint | 44T | 23 | 30 | 57.5 | 86.5 | 58.5 | I |
| | 2002.01-2007.09 | MT | F | L | MPV FWD K9K702/K9K704/K9K710 | Date To:2008.12 | GDS50194 | Drive Shaft | 26T | 23 | | 57.5 | 86.5 | 631 | |
| | 2002.01-2007.09 | MT | F | L | MPV FWD K9K702/K9K704/K9K710 | For Engine code:K9K702/K9K710;For vehicles without off-road suspension;For vehicles with off-road suspension | GDS50261 | Drive Shaft | 44T | 23 | | 57.5 | 86.5 | 630 | |
| | 2002.01-2007.09 | MT | F | L | MPV FWD K9K702/K9K704/K9K710 | Date to:2007.09;Trans. code:JB1/3 | GDS50394 | Drive Shaft | | 23 | | 57.5 | 86.5 | 631 | |
| | 2002.01-2007.09 | MT | F | R | MPV FWD K9K702/K9K704/K9K710 | Date to:2007.09;Trans. code:JB1/3 | GDS50193 | Drive Shaft | 26T | 23 | 23 | 57.5 | 86.5 | 724 | |
| | 2002.01-2007.09 | MT | F | R | MPV FWD K9K702/K9K704/K9K710 | | GDS50462 | Drive Shaft | | 23 | 23 | 57.5 | 86.5 | 724 | |
| | 2002.01-2007.09 | MT | F | L | MPV FWD K9K702/K9K704/K9K710 | Date To:2006.04;For Engine Code:K9K702;For vehicles without off-road suspension | GCO50106 | Outer Joint | 26T | 23 | 30 | 57.5 | 86.5 | 58.5 | I |
| | 2002.01-2007.09 | MT | F | R | MPV FWD K9K702/K9K704/K9K710 | Date to:2007.09 | GCO99087 | Outer Joint | | 23 | 30 | 57.5 | 86.5 | 58.5 | I |
| | 2002.01-2007.09 | MT | F | R | MPV FWD K9K702/K9K704/K9K710 | Date to:2007.09 | GCI50008 | Inner Joint | | 23 | 30 | 36.3 | | 120.7 | |
| 1.5 (62 kw) | 2005.06-2008.06 | 5MT | F | L | MPV FWD K9K718 | | GDS50514 | Drive Shaft | 44T | 23 | 26 | 57.5 | 86.5 | 606 | |
| | 2005.06-2008.06 | 5MT | F | R | MPV FWD K9K718 | TJ | GDS50364 | Drive Shaft | 44T | 23 | 26 | 57.5 | 86.5 | 866 | |
| | 2005.06-2008.06 | 5MT | F | L/R | MPV FWD K9K718 | | GCO50103 | Outer Joint | 44T | 23 | 32 | 57.5 | 86 | 62.5 | I |
| | 2005.06-2008.06 | MT | F | L | MPV FWD K9K718 | | GDS50376 | Drive Shaft | | 23 | 26 | 57.5 | 86.5 | 606 | |
| | 2005.06-2008.06 | MT | F | R | MPV FWD K9K718 | | GDS50375 | Drive Shaft | | 23 | 26 | 57.5 | 86.5 | 866 | |

| | YEAR | TRANSM. | F/R | L/R | BODY STYLE & DRIVE TYPE & ENGINE | REMARKS | G-AP Ref. | PRODUCT | ABS | Technical Specifications A | B | C | H | L | P |
|---|---|---|---|---|---|---|---|---|---|---|---|---|---|---|---|
| **RENAULT** | | | | | | | | | | | | | | | |
| **Kangoo** | | | | | | | | | | | | | | | |
| 1.5 (62 kw) | 2005.06-2008.06 | MT | F | R | MPV FWD K9K718 | Date to:200806;Type:FOR NORMAL ROADS;DOJ | GDS50515 | Drive Shaft | 44T | 23 | 26 | 57.5 | 86.5 | 866 | |
| | 2005.06-2008.06 | MT | F | R | MPV FWD K9K718 | | GCO99087 | Outer Joint | | 23 | 30 | 57.5 | 86.5 | 58.5 | I |
| | 2005.06-2008.06 | MT | F | L | MPV FWD K9K718 | | GCI50085 | Inner Joint | | 26 | 33 | 40 | 64 | 123 | |
| | 2005.06-2008.06 | MT | F | R | MPV FWD K9K718 | Date to:2008.06;DOJ | GCI50086 | Inner Joint | | 26 | 33 | 33 | 326 | 94 | |
| | 2005.06-2008.06 | MT | F | R | MPV FWD K9K718 | TJ | GCI99169 | Inner Joint | | 26 | 30 | 33 | 326 | 95 | |
| 1.5 (63 kw) | 2008.02- | 5MT | F | L | MPV FWD K9K 802;K9K 812 | | GDS99070 | Drive Shaft | | 23 | 26 | 49 | 86 | 675 | |
| | 2008.02- | 5MT | F | L | MPV FWD K9K 802;K9K 812 | | GDS99228 | Drive Shaft | | 27 | 26 | 56.7 | 91 | 675 | |
| | 2008.02- | 5MT | F | R | MPV FWD K9K 802;K9K 812 | bearing thickness 20mm | GDS50612 | Drive Shaft | | 27 | 26 | 56.7 | 91 | 918 | |
| | 2008.02- | 5MT | F | R | MPV FWD K9K 802;K9K 812 | Date to:2012.06 | GDS99071 | Drive Shaft | | 23 | 26 | 49 | 86 | 911 | |
| | 2008.02- | 5MT | F | R | MPV FWD K9K 802;K9K 812 | bearing thickness 14mm | GDS99229 | Drive Shaft | | 27 | 26 | 56.7 | 91 | 920 | |
| | 2008.02- | 5MT | F | L/R | MPV FWD K9K 802;K9K 812 | Outer teething wheel side:27 | GCO50136 | Outer Joint | | 27 | 22 | 56.7 | 91 | 55 | I |
| | 2008.02- | 5MT | F | L/R | MPV FWD K9K 802;K9K 812 | Outer teething wheel side:23 | GCO99085 | Outer Joint | | 23 | 30 | 49 | 86 | 59 | I |
| | 2008.02- | 5MT | F | L | MPV FWD K9K 802;K9K 812 | | GCI50048 | Inner Joint | | 26 | 30 | 40 | 64 | 121 | |
| | 2008.02- | 5MT | F | L | MPV FWD K9K 802;K9K 812 | | GCI50057 | Inner Joint | | 26 | 22 | 40 | 64 | 104 | |
| | 2008.02- | 5MT | F | R | MPV FWD K9K 802;K9K 812 | bearing thickness 14mm | GCI50051 | Inner Joint | | 26 | 22 | 33 | 326 | 96 | |
| | 2008.02- | 5MT | F | R | MPV FWD K9K 802;K9K 812 | bearing thickness 20mm | GCI50137 | Inner Joint | | 26 | 22 | 33 | 330 | 96.5 | |
| | 2008.02- | 5MT | F | R | MPV FWD K9K 802;K9K 812 | | GCI99169 | Inner Joint | | 26 | 30 | 33 | 326 | 95 | |
| 1.5 (66 kw) | 2008.06- | 5MT | F | L | MPV FWD K9K 808;K9K 608;K9K 612;K9K 628 | | GDS99070 | Drive Shaft | | 23 | 26 | 49 | 86 | 675 | |
| | 2008.06- | 5MT | F | L | MPV FWD K9K 808;K9K 608;K9K 612;K9K 628 | | GDS99228 | Drive Shaft | | 27 | 26 | 56.7 | 91 | 675 | |
| | 2008.06- | 5MT | F | R | MPV FWD K9K 808;K9K 608;K9K 612;K9K 628 | bearing thickness 20mm | GDS50612 | Drive Shaft | | 27 | 26 | 56.7 | 91 | 918 | |
| | 2008.06- | 5MT | F | R | MPV FWD K9K 808;K9K 608;K9K 612;K9K 628 | Date to:2012.06 | GDS99071 | Drive Shaft | | 23 | 26 | 49 | 86 | 911 | |
| | 2008.06- | 5MT | F | R | MPV FWD K9K 808;K9K 608;K9K 612;K9K 628 | bearing thickness 14mm | GDS99229 | Drive Shaft | | 27 | 26 | 56.7 | 91 | 920 | |
| | 2008.06- | 5MT | F | L/R | MPV FWD K9K 808;K9K 608;K9K 612;K9K 628 | Outer teething wheel side:27 | GCO50136 | Outer Joint | | 27 | 22 | 56.7 | 91 | 55 | I |
| | 2008.06- | 5MT | F | L/R | MPV FWD K9K 808;K9K 608;K9K 612;K9K 628 | Outer teething wheel side:23 | GCO99085 | Outer Joint | | 23 | 30 | 49 | 86 | 59 | I |
| | 2008.06- | 5MT | F | L | MPV FWD K9K 808;K9K 608;K9K 612;K9K 628 | | GCI50048 | Inner Joint | | 26 | 30 | 40 | 64 | 121 | |
| | 2008.06- | 5MT | F | L | MPV FWD K9K 808;K9K 608;K9K 612;K9K 628 | | GCI50057 | Inner Joint | | 26 | 22 | 40 | 64 | 104 | |
| | 2008.06- | 5MT | F | R | MPV FWD K9K 808;K9K 608;K9K 612;K9K 628 | bearing thickness 14mm | GCI50051 | Inner Joint | | 26 | 22 | 33 | 326 | 96 | |
| | 2008.06- | 5MT | F | R | MPV FWD K9K 808;K9K 608;K9K 612;K9K 628 | bearing thickness 20mm | GCI50137 | Inner Joint | | 26 | 22 | 33 | 330 | 96.5 | |
| | 2008.06- | 5MT | F | R | MPV FWD K9K 808;K9K 608;K9K 612;K9K 628 | | GCI99169 | Inner Joint | | 26 | 30 | 33 | 326 | 95 | |
| 1.5 (67 kw) | 2017.08- | 6AT | F | L | MPV FWD K9K 647 | | GDS83777 | Drive Shaft | | 27 | 34 | 56.5 | 91 | 625 | |
| | 2017.08- | 6AT | F | R | MPV FWD K9K 647 | | GDS83827 | Drive Shaft | | 27 | 34 | 56.5 | 91 | 975 | |
| | 2017.08- | 6AT | F | L/R | MPV FWD K9K 647 | | GCO82484 | Outer Joint | | 27 | 33 | 56.5 | 91 | 61.5 | I |
| | 2017.08- | 6AT | F | L | MPV FWD K9K 647 | | GCI50140 | Inner Joint | | 34 | 33 | 40 | 54 | 106 | |
| | 2017.08- | 6AT | F | R | MPV FWD K9K 647 | | GCI50133 | Inner Joint | | 34 | 33 | 40 | 380.5 | 86.5 | |
| 1.5 (70 kw) | 2019.03- | 6MT | F | L | MPV FWD K9K 872 | | GDS58128 | Drive Shaft | | 27 | 26 | 51.5 | 90.5 | 670 | |
| | 2019.03- | 6MT | F | R | MPV FWD K9K 872 | | GDS50612 | Drive Shaft | | 27 | 26 | 56.7 | 91 | 918 | |
| | 2019.03- | 6MT | F | L | MPV FWD K9K 872 | | GCO83854 | Outer Joint | | 27 | 23 | 51.5 | 90.5 | 61 | M |
| | 2019.03- | 6MT | F | L | MPV FWD K9K 872 | | GCI83909 | Inner Joint | | 26 | 23 | 39.95 | 64 | 104 | |
| | 2021.06- | 6MT | F | L | Box Body/MPV FWD K9K 877, K9K 876 | Date to:2021.08;Equipment code:L1C;Date from:2021.09;Equipment code:CHGNORL1C | GDS57637 | Drive Shaft | | 25 | 26 | 53 | 88.5 | 700 | |
| | 2021.06- | 6MT | F | L | Box Body/MPV FWD K9K 877, K9K 876 | [illegible] | GDS58047 | Drive Shaft | | 29 | 26 | 60 | 95.5 | 705 | |
| | 2021.06- | 6MT | F | L | Box Body/MPV FWD K9K 877, K9K 876 | Date from:2021.09;Date to:2021.10;Equipment code:CHGNUGL1C;Date from:2021.11;Equipment code:L2C | GDS58243 | Drive Shaft | | 29 | 27 | 60 | 95.5 | 695 | |
| | 2021.06- | 6MT | F | R | Box Body/MPV FWD K9K 877, K9K 876 | Date to:2021.08;Equipment code:L1C;Date from:2021.09;Equipment code:CHGNORL1C | GDS57834 | Drive Shaft | | 25 | 26 | 53 | 88.5 | 946 | |
| | 2021.06- | 6MT | F | R | Box Body/MPV FWD K9K 877, K9K 876 | [illegible] | GDS58046 | Drive Shaft | | 29 | 27 | 60 | 95.5 | 960 | |
| | 2021.06- | 6MT | F | R | Box Body/MPV FWD K9K 877, K9K 876 | [illegible] | GDS58073 | Drive Shaft | | 29 | 26 | 60 | 95.5 | 951 | |
| | 2021.06- | 6MT | F | L | Box Body/MPV FWD K9K 877, K9K 876 | Date to:2021.08;Equipment code:L1C;Date from:2021.09;Equipment code:CHGNORL1C | GCO83588 | Outer Joint | | 25 | 24 | 53 | 88.5 | 61 | I |
| | 2021.06- | 6MT | F | L/R | Box Body/MPV FWD K9K 877, K9K 876 | [illegible] | GCO83811 | Outer Joint | | 29 | 24 | 60 | 95.5 | 61 | I |
| | 2021.06- | 6MT | F | L | Box Body/MPV FWD K9K 877, K9K 876 | [illegible] | GCI83418 | Inner Joint | | 26 | 24 | 40 | 64 | 114 | |
| | 2021.06- | 6MT | F | L | Box Body/MPV FWD K9K 877, K9K 876 | Date to:2021.08;Equipment code:L1C;Date from:2021.09;Equipment code:CHGNORL1C | GCI83782 | Inner Joint | | 26 | 24 | 40 | 64 | 114 | |
| | 2021.06- | 6MT | F | L | Box Body/MPV FWD K9K 877, K9K 876 | Date from:2021.09;Date to:2021.10;Equipment code:CHGNUGL1C;Date from:2021.11;Equipment code:L2C | GCI83989 | Inner Joint | | 27 | 24 | 39.95 | 67 | 114 | |
| | 2021.06- | 6MT | F | R | Box Body/MPV FWD K9K 877, K9K 876 | Date to:2021.08;Equipment code:L1C;Date from:2021.09;Equipment code:CHGNORL1C | GCI83417 | Inner Joint | | 26 | 24 | 33 | 330 | 105 | |
| | 2021.06- | 6MT | F | R | Box Body/MPV FWD K9K 877, K9K 876 | [illegible] | GCI83988 | Inner Joint | | 27 | 24 | 33 | 339 | 103.5 | |
| | 2021.06- | 6MT | F | R | Box Body/MPV FWD K9K 877, K9K 876 | [illegible] | GCI84005 | Inner Joint | | 26 | 24 | 33 | 330 | 103 | |
| | 2021.06- | 7DCT | F | L | Box Body/MPV FWD K9K 877, K9K 876 | | GDS58074 | Drive Shaft | | 29 | 27 | 60 | 95.5 | 651 | |
| | 2021.06- | 7DCT | F | L | Box Body/MPV FWD K9K 877, K9K 876 | | GDS58093 | Drive Shaft | | 25 | 27 | 53 | 88.5 | 642 | |
| | 2021.06- | 7DCT | F | R | Box Body/MPV FWD K9K 877, K9K 876 | | GDS57712 | Drive Shaft | | 25 | 27 | 53 | 88.5 | 1000 | |
| | 2021.06- | 7DCT | F | R | Box Body/MPV FWD K9K 877, K9K 876 | | GDS58075 | Drive Shaft | | 29 | 27 | 60 | 95.5 | 1007 | |
| | 2021.06- | 7DCT | F | L/R | Box Body/MPV FWD K9K 877, K9K 876 | | GCO83811 | Outer Joint | | 29 | 24 | 60 | 95.5 | 61 | I |
| | 2021.06- | 7DCT | F | L | Box Body/MPV FWD K9K 877, K9K 876 | | GCI84006 | Inner Joint | | 27 | 24 | 40 | 65.5 | 113.5 | |
| | 2021.06- | 7DCT | F | R | Box Body/MPV FWD K9K 877, K9K 876 | | GCI83825 | Inner Joint | | 27 | 24 | 40 | 384.5 | 105 | |
| | 2021.07- | 6MT | F | L | MPV FWD K9K 876;K9K 877 | Date to:2021.08;Equipment code:L1C;Date from:2021.09;Equipment code:CHGNORL1C | GDS57637 | Drive Shaft | | 25 | 26 | 53 | 88.5 | 700 | |
| | 2021.07- | 6MT | F | L | MPV FWD K9K 876;K9K 877 | [illegible] | GDS58047 | Drive Shaft | | 29 | 26 | 60 | 95.5 | 705 | |
| | 2021.07- | 6MT | F | L | MPV FWD K9K 876;K9K 877 | Date from:2021.09;Date to:2021.10;Equipment code:CHGNUGL1C;Date from:2021.11;Equipment code:L2C | GDS58243 | Drive Shaft | | 29 | 27 | 60 | 95.5 | 695 | |
| | 2021.07- | 6MT | F | R | MPV FWD K9K 876;K9K 877 | Date to:2021.08;Equipment code:L1C;Date from:2021.09;Equipment code:CHGNORL1C | GDS57834 | Drive Shaft | | 25 | 26 | 53 | 88.5 | 946 | |
| | 2021.07- | 6MT | F | R | MPV FWD K9K 876;K9K 877 | [illegible] | GDS58046 | Drive Shaft | | 29 | 27 | 60 | 95.5 | 960 | |
| | 2021.07- | 6MT | F | R | MPV FWD K9K 876;K9K 877 | [illegible] | GDS58073 | Drive Shaft | | 29 | 26 | 60 | 95.5 | 951 | |

| | YEAR | TRANSM. | F/R | L/R | BODY STYLE & DRIVE TYPE & ENGINE | REMARKS | G-AP Ref. | PRODUCT | ABS | Technical Specifications A | B | C | H | L | P |
|---|---|---|---|---|---|---|---|---|---|---|---|---|---|---|---|
| **RENAULT** **Kangoo** | | | | | | | | | | | | | | | |
| 1.5 (70 kw) | 2021.07- | 6MT | F | L | MPV FWD K9K 876;K9K 877 | Date to:2021.08;Equipment code:L1C;Date from:2021.09;Equipment code:CH0NORL1C | GCO83588 | Outer Joint | | 25 | 24 | 53 | 88.5 | 61 | I |
| | 2021.07- | 6MT | F | L/R | MPV FWD K9K 876;K9K 877 | | GCO83811 | Outer Joint | | 29 | 24 | 60 | 95.5 | 61 | I |
| | 2021.07- | 6MT | F | L | MPV FWD K9K 876;K9K 877 | | GCI83418 | Inner Joint | | 26 | 24 | 40 | 64 | 114 | |
| | 2021.07- | 6MT | F | L | MPV FWD K9K 876;K9K 877 | Date to:2021.08;Equipment code:L1C;Date from:2021.09;Equipment code:CH0NORL1C | GCI83782 | Inner Joint | | 26 | 24 | 40 | 64 | 114 | |
| | 2021.07- | 6MT | F | L | MPV FWD K9K 876;K9K 877 | Date from:2021.09;Date to:2021.10;Equipment code:CH0NUR0L1C;Date from:2021.11;Equipment code:L1C | GCI83989 | Inner Joint | | 27 | 24 | 39.95 | 67 | 114 | |
| | 2021.07- | 6MT | F | R | MPV FWD K9K 876;K9K 877 | Date to:2021.08;Equipment code:L1C;Date from:2021.09;Equipment code:CH0NORL1C | GCI83417 | Inner Joint | | 26 | 24 | 33 | 330 | 105 | |
| | 2021.07- | 6MT | F | R | MPV FWD K9K 876;K9K 877 | | GCI83988 | Inner Joint | | 27 | 24 | 33 | 339 | 103.5 | |
| | 2021.07- | 6MT | F | R | MPV FWD K9K 876;K9K 877 | Date to:2021.08;Equipment code:L1C;Date from:2021.09;Equipment code:CH0NORL1C | GCI84005 | Inner Joint | | 26 | 24 | 33 | 330 | 103 | |
| | 2021.07- | 7DCT | F | L | MPV FWD K9K 876;K9K 877 | | GDS58074 | Drive Shaft | | 29 | 27 | 60 | 95.5 | 651 | |
| | 2021.07- | 7DCT | F | L | MPV FWD K9K 876;K9K 877 | | GDS58093 | Drive Shaft | | 25 | 27 | 53 | 88.5 | 642 | |
| | 2021.07- | 7DCT | F | R | MPV FWD K9K 876;K9K 877 | | GDS57712 | Drive Shaft | | 25 | 27 | 53 | 88.5 | 1000 | |
| | 2021.07- | 7DCT | F | R | MPV FWD K9K 876;K9K 877 | | GDS58075 | Drive Shaft | | 29 | 27 | 60 | 95.5 | 1007 | |
| | 2021.07- | 7DCT | F | L/R | MPV FWD K9K 876;K9K 877 | | GCO83811 | Outer Joint | | 29 | 24 | 60 | 95.5 | 61 | I |
| | 2021.07- | 7DCT | F | L | MPV FWD K9K 876;K9K 877 | | GCI84006 | Inner Joint | | 27 | 24 | 40 | 65.5 | 113.5 | |
| | 2021.07- | 7DCT | F | R | MPV FWD K9K 876;K9K 877 | | GCI83825 | Inner Joint | | 27 | 24 | 40 | 384.5 | 105 | |
| 1.5 (76 kw) | 2008.02- | 6MT | F | L | MPV FWD K9K 806 | Date from:2012.07 | GDS99228 | Drive Shaft | | 27 | 26 | 56.7 | 91 | 675 | |
| | 2008.02- | 6MT | F | R | MPV FWD K9K 806 | Date to:2012.06 | GDS50422 | Drive Shaft | | 27 | 26 | 56.7 | 91 | 922 | |
| | 2008.02- | 6MT | F | R | MPV FWD K9K 806 | Date from:2012.07,bearing thickness 20mm | GDS50612 | Drive Shaft | | 27 | 26 | 56.7 | 91 | 918 | |
| | 2008.02- | 6MT | F | R | MPV FWD K9K 806 | Date from:2012.07,bearing thickness 14mm | GDS99229 | Drive Shaft | | 27 | 26 | 56.7 | 91 | 920 | |
| | 2008.02- | 6MT | F | L/R | MPV FWD K9K 806 | Date To:2012.06 | GCO50130 | Outer Joint | | 27 | 33 | 56.7 | 91 | 61 | I |
| | 2008.02- | 6MT | F | L/R | MPV FWD K9K 806 | Date From:2012.07 | GCO50136 | Outer Joint | | 27 | 22 | 56.7 | 91 | 55 | I |
| | 2008.02- | 6MT | F | L | MPV FWD K9K 806 | Date From:2012.07 | GCI50057 | Inner Joint | | 26 | 22 | 40 | 64 | 104 | |
| | 2008.02- | 6MT | F | R | MPV FWD K9K 806 | Date From:2012.07,bearing thickness 14mm | GCI50051 | Inner Joint | | 26 | 22 | 33 | 326 | 96 | |
| | 2008.02- | 6MT | F | R | MPV FWD K9K 806 | Date From:2012.07,bearing thickness 20mm | GCI50137 | Inner Joint | | 26 | 22 | 33 | 330 | 96.5 | |
| 1.5 (80 kw) | 2010.09- | 6MT | F | L | MPV FWD K9K 804;K9K 816 | Date from:2012.07 | GDS99228 | Drive Shaft | | 27 | 26 | 56.7 | 91 | 675 | |
| | 2010.09- | 6MT | F | R | MPV FWD K9K 804;K9K 816 | Date to:2012.06 | GDS50422 | Drive Shaft | | 27 | 26 | 56.7 | 91 | 922 | |
| | 2010.09- | 6MT | F | R | MPV FWD K9K 804;K9K 816 | Date from:2012.07,bearing thickness 20mm | GDS50612 | Drive Shaft | | 27 | 26 | 56.7 | 91 | 918 | |
| | 2010.09- | 6MT | F | R | MPV FWD K9K 804;K9K 816 | Date from:2012.07,bearing thickness 14mm | GDS99229 | Drive Shaft | | 27 | 26 | 56.7 | 91 | 920 | |
| | 2010.09- | 6MT | F | L/R | MPV FWD K9K 804;K9K 816 | Date To:2012.06 | GCO50130 | Outer Joint | | 27 | 33 | 56.7 | 91 | 61 | I |
| | 2010.09- | 6MT | F | L/R | MPV FWD K9K 804;K9K 816 | Date From:2012.07 | GCO50136 | Outer Joint | | 27 | 22 | 56.7 | 91 | 55 | I |
| | 2010.09- | 6MT | F | L | MPV FWD K9K 804;K9K 816 | Date From:2012.07 | GCI50057 | Inner Joint | | 26 | 22 | 40 | 64 | 104 | |
| | 2010.09- | 6MT | F | R | MPV FWD K9K 804;K9K 816 | Date From:2012.07,bearing thickness 14mm | GCI50051 | Inner Joint | | 26 | 22 | 33 | 326 | 96 | |
| | 2010.09- | 6MT | F | R | MPV FWD K9K 804;K9K 816 | Date From:2012.07,bearing thickness 20mm | GCI50137 | Inner Joint | | 26 | 22 | 33 | 330 | 96.5 | |
| 1.5 (81 kw) | 2013.03- | 6DCT | F | L | MPV FWD K9K 636;K9K 646;K9K 647;K9K 648 | | GDS83777 | Drive Shaft | | 27 | 34 | 56.5 | 91 | 625 | |
| | 2013.03- | 6DCT | F | R | MPV FWD K9K 636;K9K 646;K9K 647;K9K 648 | | GDS83827 | Drive Shaft | | 27 | 34 | 56.5 | 91 | 975 | |
| | 2013.03- | 6DCT | F | L/R | MPV FWD K9K 636;K9K 646;K9K 647;K9K 648 | | GCO82484 | Outer Joint | | 27 | 33 | 56.5 | 91 | 61.5 | I |
| | 2013.03- | 6DCT | F | L | MPV FWD K9K 636;K9K 646;K9K 647;K9K 648 | | GCI50140 | Inner Joint | | 34 | 33 | 40 | 54 | 106 | |
| | 2013.03- | 6DCT | F | R | MPV FWD K9K 636;K9K 646;K9K 647;K9K 648 | | GCI50133 | Inner Joint | | 34 | 33 | 40 | 380.5 | 86.5 | |
| | 2013.03- | 6MT | F | L | MPV FWD K9K 636;K9K 646;K9K 647;K9K 648 | | GDS99228 | Drive Shaft | | 27 | 26 | 56.7 | 91 | 675 | |
| | 2013.03- | 6MT | F | R | MPV FWD K9K 636;K9K 646;K9K 647;K9K 648 | bearing thickness 20mm | GDS50612 | Drive Shaft | | 27 | 26 | 56.7 | 91 | 918 | |
| | 2013.03- | 6MT | F | R | MPV FWD K9K 636;K9K 646;K9K 647;K9K 648 | bearing thickness 14mm | GDS99229 | Drive Shaft | | 27 | 26 | 56.7 | 91 | 920 | |
| | 2013.03- | 6MT | F | L/R | MPV FWD K9K 636;K9K 646;K9K 647;K9K 648 | | GCO50136 | Outer Joint | | 27 | 22 | 56.7 | 91 | 55 | I |
| | 2013.03- | 6MT | F | L | MPV FWD K9K 636;K9K 646;K9K 647;K9K 648 | | GCI50057 | Inner Joint | | 26 | 22 | 40 | 64 | 104 | |
| | 2013.03- | 6MT | F | R | MPV FWD K9K 636;K9K 646;K9K 647;K9K 648 | bearing thickness 14mm | GCI50051 | Inner Joint | | 26 | 22 | 33 | 326 | 96 | |
| | 2013.03- | 6MT | F | R | MPV FWD K9K 636;K9K 646;K9K 647;K9K 648 | bearing thickness 20mm | GCI50137 | Inner Joint | | 26 | 22 | 33 | 330 | 96.5 | |
| 1.5 (85 kw) | 2019.03- | 6MT | F | L | MPV FWD K9K 872 | | GDS58128 | Drive Shaft | | 27 | 26 | 51.5 | 90.5 | 670 | |
| | 2019.03- | 6MT | F | R | MPV FWD K9K 872 | | GDS50612 | Drive Shaft | | 27 | 26 | 56.7 | 91 | 918 | |
| | 2019.03- | 6MT | F | L | MPV FWD K9K 872 | | GCO83854 | Outer Joint | | 27 | 23 | 51.5 | 90.5 | 61 | M |
| | 2019.03- | 6MT | F | L | MPV FWD K9K 872 | | GCI83909 | Inner Joint | | 26 | 23 | 39.95 | 64 | 104 | |
| | 2021.06- | 6MT | F | L | Box Body/MPV FWD K9K 877, K9K 876 | | GDS58243 | Drive Shaft | | 29 | 27 | 60 | 95.5 | 695 | |
| | 2021.06- | 6MT | F | R | Box Body/MPV FWD K9K 877, K9K 876 | | GDS58046 | Drive Shaft | | 29 | 27 | 60 | 95.5 | 960 | |
| | 2021.06- | 6MT | F | L/R | Box Body/MPV FWD K9K 877, K9K 876 | | GCO83811 | Outer Joint | | 29 | 24 | 60 | 95.5 | 61 | I |
| | 2021.06- | 6MT | F | L | Box Body/MPV FWD K9K 877, K9K 876 | | GCI83989 | Inner Joint | | 27 | 24 | 39.95 | 67 | 114 | |
| | 2021.06- | 6MT | F | R | Box Body/MPV FWD K9K 877, K9K 876 | | GCI83988 | Inner Joint | | 27 | 24 | 33 | 339 | 103.5 | |
| | 2021.06- | 7DCT | F | L | Box Body/MPV FWD K9K 877, K9K 876 | | GDS58074 | Drive Shaft | | 29 | 27 | 60 | 95.5 | 651 | |
| | 2021.06- | 7DCT | F | L | Box Body/MPV FWD K9K 877, K9K 876 | | GDS58093 | Drive Shaft | | 25 | 27 | 53 | 88.5 | 642 | |
| | 2021.06- | 7DCT | F | R | Box Body/MPV FWD K9K 877, K9K 876 | | GDS57712 | Drive Shaft | | 25 | 27 | 53 | 88.5 | 1000 | |
| | 2021.06- | 7DCT | F | R | Box Body/MPV FWD K9K 877, K9K 876 | | GDS58075 | Drive Shaft | | 29 | 27 | 60 | 95.5 | 1007 | |
| | 2021.06- | 7DCT | F | L/R | Box Body/MPV FWD K9K 877, K9K 876 | | GCO83588 | Outer Joint | | 25 | 24 | 53 | 88.5 | 61 | I |
| | 2021.06- | 7DCT | F | L/R | Box Body/MPV FWD K9K 877, K9K 876 | | GCO83811 | Outer Joint | | 29 | 24 | 60 | 95.5 | 61 | I |
| | 2021.06- | 7DCT | F | L | Box Body/MPV FWD K9K 877, K9K 876 | | GCI84006 | Inner Joint | | 27 | 24 | 40 | 65.5 | 113.5 | |
| | 2021.06- | 7DCT | F | R | Box Body/MPV FWD K9K 877, K9K 876 | | GCI83825 | Inner Joint | | 27 | 24 | 40 | 384.5 | 105 | |
| | 2021.10- | 6MT | F | L | MPV FWD K9K 876;K9K 877 | | GDS58243 | Drive Shaft | | 29 | 27 | 60 | 95.5 | 695 | |
| | 2021.10- | 6MT | F | R | MPV FWD K9K 876;K9K 877 | | GDS58046 | Drive Shaft | | 29 | 27 | 60 | 95.5 | 960 | |
| | 2021.10- | 6MT | F | L/R | MPV FWD K9K 876;K9K 877 | | GCO83811 | Outer Joint | | 29 | 24 | 60 | 95.5 | 61 | I |

| | YEAR | TRANSM. | F/R | L/R | BODY STYLE & DRIVE TYPE & ENGINE | REMARKS | G-AP Ref. | PRODUCT | ABS | Technical Specifications | | | | | |
|---|---|---|---|---|---|---|---|---|---|---|---|---|---|---|---|
| | | | | | | | | | | A | B | C | H | L | P |
| **RENAULT** **Kangoo** | | | | | | | | | | | | | | | |
| 1.5 (85 kw) | 2021.10- | 6MT | F | L | MPV FWD K9K 876;K9K 877 | | GCI83989 | Inner Joint | | 27 | 24 | 39.95 | 67 | 114 | |
| | 2021.10- | 6MT | F | R | MPV FWD K9K 876;K9K 877 | | GCI83988 | Inner Joint | | 27 | 24 | 33 | 339 | 103.5 | |
| | 2021.10- | 7DCT | F | L | MPV FWD K9K 876;K9K 877 | | GDS58074 | Drive Shaft | | 29 | 27 | 60 | 95.5 | 651 | |
| | 2021.10- | 7DCT | F | L | MPV FWD K9K 876;K9K 877 | | GDS58093 | Drive Shaft | | 25 | 27 | 53 | 88.5 | 642 | |
| | 2021.10- | 7DCT | F | R | MPV FWD K9K 876;K9K 877 | | GDS57712 | Drive Shaft | | 25 | 27 | 53 | 88.5 | 1000 | |
| | 2021.10- | 7DCT | F | R | MPV FWD K9K 876;K9K 877 | | GDS58075 | Drive Shaft | | 29 | 27 | 60 | 95.5 | 1007 | |
| | 2021.10- | 7DCT | F | L/R | MPV FWD K9K 876;K9K 877 | | GCO83588 | Outer Joint | | 25 | 24 | 53 | 88.5 | 61 | I |
| | 2021.10- | 7DCT | F | L/R | MPV FWD K9K 876;K9K 877 | | GCO83811 | Outer Joint | | 29 | 24 | 60 | 95.5 | 61 | I |
| | 2021.10- | 7DCT | F | L | MPV FWD K9K 876;K9K 877 | | GCI84006 | Inner Joint | | 27 | 24 | 40 | 65.5 | 113.5 | |
| | 2021.10- | 7DCT | F | R | MPV FWD K9K 876;K9K 877 | | GCI83825 | Inner Joint | | 27 | 24 | 40 | 384.5 | 105 | |
| 1.6 (64 kw) | 2008.02- | 5MT | F | L | MPV FWD K7M 750 | | GDS99070 | Drive Shaft | | 23 | 26 | 49 | 86 | 675 | |
| | 2008.02- | 5MT | F | L | MPV FWD K7M 750 | | GDS99228 | Drive Shaft | | 27 | 26 | 56.7 | 91 | 675 | |
| | 2008.02- | 5MT | F | R | MPV FWD K7M 750 | angular | GDS50541 | Drive Shaft | | 23 | 26 | 49 | 83.5 | 913 | |
| | 2008.02- | 5MT | F | R | MPV FWD K7M 750 | bearing thickness 20mm | GDS50612 | Drive Shaft | | 27 | 26 | 56.7 | 91 | 918 | |
| | 2008.02- | 5MT | F | R | MPV FWD K7M 750 | Date to:2012.06;round | GDS99071 | Drive Shaft | | 23 | 26 | 49 | 86 | 911 | |
| | 2008.02- | 5MT | F | R | MPV FWD K7M 750 | bearing thickness 14mm | GDS99229 | Drive Shaft | | 27 | 26 | 56.7 | 91 | 920 | |
| | 2008.02- | 5MT | F | L/R | MPV FWD K7M 750 | | GCO50136 | Outer Joint | | 27 | 22 | 56.7 | 91 | 55 | I |
| | 2008.02- | 5MT | F | L/R | MPV FWD K7M 750 | | GCO99085 | Outer Joint | | 23 | 30 | 49 | 86 | 59 | I |
| | 2008.02- | 5MT | F | L | MPV FWD K7M 750 | | GCI50048 | Inner Joint | | 26 | 30 | 40 | 64 | 121 | |
| | 2008.02- | 5MT | F | L | MPV FWD K7M 750 | | GCI50057 | Inner Joint | | 26 | 22 | 40 | 64 | 104 | |
| | 2008.02- | 5MT | F | R | MPV FWD K7M 750 | bearing thickness 14mm | GCI50051 | Inner Joint | | 26 | 22 | 33 | 326 | 96 | |
| | 2008.02- | 5MT | F | R | MPV FWD K7M 750 | bearing thickness 20mm | GCI50137 | Inner Joint | | 26 | 22 | 33 | 330 | 96.5 | |
| | 2008.02- | 5MT | F | R | MPV FWD K7M 750 | | GCI99169 | Inner Joint | | 26 | 30 | 33 | 326 | 95 | |
| 1.6 (66 kw) | 1999.09-2001.06 | 5MT | F | L | MPV FWD K7M746 | Teeth:21 | GDS50552 | Drive Shaft | 26T | 21 | | 52.2 | 85.5 | 630 | |
| | 1999.09-2001.06 | 5MT | F | R | MPV FWD K7M746 | Teeth:23 | GDS50524 | Drive Shaft | 26T | 23 | 23 | 57.5 | 86.5 | 729 | |
| | 1999.09-2001.06 | 5MT | F | R | MPV FWD K7M746 | Teeth:21 | GDS50526 | Drive Shaft | 26T | 21 | 23 | 52.3 | 84.5 | 724 | |
| | 1999.09-2001.06 | 5MT | F | R | MPV FWD K7M746 | | GCO50106 | Outer Joint | 26T | 23 | 30 | 57.5 | 86.5 | 58.5 | I |
| | 1999.09-2001.06 | | F | R | MPV FWD K7M746 | | GDS50395 | Drive Shaft | 26T | 21 | 23 | 51.5 | 83 | 728 | |
| 1.6 (70 kw) | 2001.06-2009.03 | 4AT/5MT | F | L | MPV FWD K4M708/K4M730/K4M732/K4M750/K4M752/K4M753/K4M754 | Date to:2002.10 | GDS50150 | Drive Shaft | | 21 | 30 | 49.8 | 83.5 | 623 | |
| | 2001.06-2009.03 | 5MT | F | L | MPV FWD K4M708/K4M730/K4M732/K4M750/K4M752/K4M753/K4M754 | Date to:2002.10 | GDS50004 | Drive Shaft | 26T | 21 | | 57 | 84.5 | 625.7 | |
| | 2001.06-2009.03 | AT | F | L | MPV FWD K4M708/K4M730/K4M732/K4M750/K4M752/K4M753/K4M754 | | GDS50519 | Drive Shaft | 44T | 21 | 26 | 52.2 | 85.5 | 609 | |
| | 2001.06-2009.03 | AT | F | L | MPV FWD K4M708/K4M730/K4M732/K4M750/K4M752/K4M753/K4M754 | | GDS99169 | Drive Shaft | 26T | 21 | 26 | 52.2 | 85.5 | 621 | |
| | 2001.06-2009.03 | AT | F | R | MPV FWD K4M708/K4M730/K4M732/K4M750/K4M752/K4M753/K4M754 | Date to:2008.12;Inner teeth of tranm.side:22 | GDS50038 | Drive Shaft | 44T | 21 | 23 | 52.2 | 85.5 | 752 | |
| | 2001.06-2009.03 | AT | F | R | MPV FWD K4M708/K4M730/K4M732/K4M750/K4M752/K4M753/K4M754 | Inner teeth of tranm.side:23 | GDS50485 | Drive Shaft | 44T | 21 | 23 | 52.2 | 85.5 | 733 | |
| | 2001.06-2009.03 | AT | F | R | MPV FWD K4M708/K4M730/K4M732/K4M750/K4M752/K4M753/K4M754 | | GDS50486 | Drive Shaft | 26T | 21 | 23 | 52.2 | 85.5 | 733 | |
| | 2001.06-2009.03 | MT | F | L | MPV FWD K4M708/K4M730/K4M732/K4M750/K4M752/K4M753/K4M754 | Date to:2009.03 | GDS50112 | Drive Shaft | 26T | 21 | | 57 | 84.5 | 630.7 | |
| | 2001.06-2009.03 | MT | F | L | MPV FWD K4M708/K4M730/K4M732/K4M750/K4M752/K4M753/K4M754 | Date from:2006.05 | GDS50177 | Drive Shaft | | 21 | | 57 | 84.5 | 625.7 | |
| | 2001.06-2009.03 | MT | F | L | MPV FWD K4M708/K4M730/K4M732/K4M750/K4M752/K4M753/K4M754 | Date From:2006.05 | GDS50261 | Drive Shaft | 44T | 23 | | 57.5 | 86.5 | 630 | |
| | 2001.06-2009.03 | MT | F | L | MPV FWD K4M708/K4M730/K4M732/K4M750/K4M752/K4M753/K4M754 | Date From:2002.11;Date To:2006.04 | GDS50401 | Drive Shaft | 44T | 21 | | 57 | 84 | 629 | |
| | 2001.06-2009.03 | MT | F | R | MPV FWD K4M708/K4M730/K4M732/K4M750/K4M752/K4M753/K4M754 | Number of Splines:21 | GDS50151 | Drive Shaft | | 21 | 23 | 49.8 | 83.5 | 715 | |
| | 2001.06-2009.03 | MT | F | R | MPV FWD K4M708/K4M730/K4M732/K4M750/K4M752/K4M753/K4M754 | | GDS50263 | Drive Shaft | 44T | 21 | 23 | 52.2 | 85.5 | 723.5 | |
| | 2001.06-2009.03 | MT | F | R | MPV FWD K4M708/K4M730/K4M732/K4M750/K4M752/K4M753/K4M754 | | GDS50395 | Drive Shaft | 26T | 21 | 23 | 51.5 | 83 | 728 | |
| | 2001.06-2009.03 | MT | F | L/R | MPV FWD K4M708/K4M730/K4M732/K4M750/K4M752/K4M753/K4M754 | Date to:2002.10;Date to:2008.12 | GCO50004 | Outer Joint | 26T | 21 | 30 | 52.2 | 85.5 | 59 | I |
| | 2001.06-2009.03 | MT | F | R | MPV FWD K4M708/K4M730/K4M732/K4M750/K4M752/K4M753/K4M754 | Date to:2009.03 | GCI50008 | Inner Joint | | 23 | 30 | 36.3 | | 120.7 | |
| | 2001.11-2008.06 | 5MT | F | R | MPV 4WD K4M750 | Date to:2008.06 | GCI50079 | Inner Joint | | 23 | 22 | 36.3 | | 105.5 | |
| | 2001.11-2008.06 | AT | F | L | MPV 4WD K4M750 | Date to:2008.12 | GDS50519 | Drive Shaft | 44T | 21 | 26 | 52.2 | 85.5 | 609 | |
| | 2001.11-2008.06 | AT | F | L | MPV 4WD K4M750 | Date to:2002.10 | GDS50579 | Drive Shaft | 26T | 21 | 26 | 52.2 | 85.5 | 613 | |
| | 2001.11-2008.06 | AT | F | R | MPV 4WD K4M750 | Date to:2008.12 | GDS50038 | Drive Shaft | 44T | 21 | 23 | 52.2 | 85.5 | 752 | |
| | 2001.11-2008.06 | AT | F | R | MPV 4WD K4M750 | Date from:2002.11;Date to:2003.03 | GDS50525 | Drive Shaft | 44T | 21 | 23 | 52.2 | 85.5 | 741 | |
| | 2001.11-2008.06 | AT | F | R | MPV 4WD K4M750 | Date to:2002.10 | GDS50588 | Drive Shaft | 26T | 21 | 23 | 57 | 84 | 739 | |
| | 2001.11-2008.06 | MT | F | L | MPV 4WD K4M750 | Date to:2008.06 | GDS50112 | Drive Shaft | 26T | 21 | | 57 | 84.5 | 630.7 | |
| | 2001.11-2008.06 | MT | F | L | MPV 4WD K4M750 | | GDS50506 | Drive Shaft | 44T | 23 | | 58.8 | 85 | 645 | |
| | 2001.11-2008.06 | MT | F | R | MPV 4WD K4M750 | | GDS50159 | Drive Shaft | 44T | 23 | 23 | 57 | 87 | 748 | |
| | 2001.11-2008.06 | MT | F | R | MPV 4WD K4M750 | Date to:2008.12 | GDS50527 | Drive Shaft | 44T | 23 | 23 | 58.8 | 85 | 739 | |
| | 2001.11-2008.06 | MT | F | R | MPV 4WD K4M750 | | GCI50008 | Inner Joint | | 23 | 30 | 36.3 | | 120.7 | |
| | 2001.11-2008.06 | 5MT | R | L/R | MPV 4WD K4M750 | | GDS50627 | Drive Shaft | 44T | 23 | 21 | 59 | 83.5 | 755 | |
| | 2001.11-2008.06 | MT | R | L/R | MPV 4WD K4M750 | | GCO50222 | Outer Joint | 44T | 23 | 21 | 59 | 83.5 | 53 | I |
| 1.6 (78 kw) | 2008.02- | 4AT | F | L | MPV FWD K4M 830;K4M 834;K4M 831;K4M 835;K4M 836 | | GDS50614 | Drive Shaft | | 27 | 26 | 56.7 | 91 | 680 | |
| | 2008.02- | 4AT | F | R | MPV FWD K4M 830;K4M 834;K4M 831;K4M 835;K4M 836 | | GDS50616 | Drive Shaft | | 27 | 23 | 56.7 | 91 | 816 | |
| | 2008.02- | 4AT | F | L/R | MPV FWD K4M 830;K4M 834;K4M 831;K4M 835;K4M 836 | | GCO50150 | Outer Joint | | 27 | 32 | 56.7 | 91 | 61 | I |
| | 2008.02- | 4AT | F | L | MPV FWD K4M 830;K4M 834;K4M 831;K4M 835;K4M 836 | | GCI50040 | Inner Joint | | 26 | 30 | 43 | 42.5 | 83 | |
| | 2008.02- | 4AT | F | R | MPV FWD K4M 830;K4M 834;K4M 831;K4M 835;K4M 836 | | GCI50041 | Inner Joint | | 23 | 30 | | 217 | 94 | |
| | 2008.02- | 5MT | F | L | MPV FWD K4M 830;K4M 834;K4M 831;K4M 835;K4M 836 | | GDS99070 | Drive Shaft | | 23 | 26 | 49 | 86 | 675 | |
| | 2008.02- | 5MT | F | L | MPV FWD K4M 830;K4M 834;K4M 831;K4M 835;K4M 836 | | GDS99228 | Drive Shaft | | 27 | 26 | 56.7 | 91 | 675 | |
| | 2008.02- | 5MT | F | R | MPV FWD K4M 830;K4M 834;K4M 831;K4M 835;K4M 836 | bearing thickness 20mm | GDS50612 | Drive Shaft | | 27 | 26 | 56.7 | 91 | 918 | |

| | YEAR | TRANSM. | F/R | L/R | BODY STYLE & DRIVE TYPE & ENGINE | REMARKS | G-AP Ref. | PRODUCT | ABS | Technical Specifications A | B | C | H | L | P |
|---|---|---|---|---|---|---|---|---|---|---|---|---|---|---|---|
| **RENAULT** **Kangoo** | | | | | | | | | | | | | | | |
| 1.6 (78 kw) | 2008.02- | 5MT | F | R | MPV FWD K4M 830;K4M 834;K4M 831;K4M 835;K4M 836 | Date to:2012.06 | GDS99071 | Drive Shaft | | 23 | 26 | 49 | 86 | 911 | |
| | 2008.02- | 5MT | F | R | MPV FWD K4M 830;K4M 834;K4M 831;K4M 835;K4M 836 | bearing thickness 14mm | GDS99229 | Drive Shaft | | 27 | 26 | 56.7 | 91 | 920 | |
| | 2008.02- | 5MT | F | L/R | MPV FWD K4M 830;K4M 834;K4M 831;K4M 835;K4M 836 | Outer teething wheel side:27 | GCO50136 | Outer Joint | | 27 | 22 | 56.7 | 91 | 55 | I |
| | 2008.02- | 5MT | F | L/R | MPV FWD K4M 830;K4M 834;K4M 831;K4M 835;K4M 836 | Outer teething wheel side:23 | GCO99085 | Outer Joint | | 23 | 30 | 49 | 86 | 59 | I |
| | 2008.02- | 5MT | F | L | MPV FWD K4M 830;K4M 834;K4M 831;K4M 835;K4M 836 | | GCI50048 | Inner Joint | | 26 | 30 | 40 | 64 | 121 | |
| | 2008.02- | 5MT | F | L | MPV FWD K4M 830;K4M 834;K4M 831;K4M 835;K4M 836 | | GCI50057 | Inner Joint | | 26 | 22 | 40 | 64 | 104 | |
| | 2008.02- | 5MT | F | R | MPV FWD K4M 830;K4M 834;K4M 831;K4M 835;K4M 836 | bearing thickness 14mm | GCI50051 | Inner Joint | | 26 | 22 | 33 | 326 | 96 | |
| | 2008.02- | 5MT | F | R | MPV FWD K4M 830;K4M 834;K4M 831;K4M 835;K4M 836 | bearing thickness 20mm | GCI50137 | Inner Joint | | 26 | 22 | 33 | 330 | 96.5 | |
| | 2008.02- | 5MT | F | R | MPV FWD K4M 830;K4M 834;K4M 831;K4M 835;K4M 836 | | GCI99169 | Inner Joint | | 26 | 30 | 33 | 326 | 95 | |
| | 2008.02- | 5MT | F | L | MPV FWD K4M 834;K4M 835 | | GDS99070 | Drive Shaft | | 23 | 26 | 49 | 86 | 675 | |
| | 2008.02- | 5MT | F | L | MPV FWD K4M 834;K4M 835 | | GDS99228 | Drive Shaft | | 27 | 26 | 56.7 | 91 | 675 | |
| | 2008.02- | 5MT | F | R | MPV FWD K4M 834;K4M 835 | bearing thickness 20mm | GDS50612 | Drive Shaft | | 27 | 26 | 56.7 | 91 | 918 | |
| | 2008.02- | 5MT | F | R | MPV FWD K4M 834;K4M 835 | Date to:2012.06 | GDS99071 | Drive Shaft | | 23 | 26 | 49 | 86 | 911 | |
| | 2008.02- | 5MT | F | R | MPV FWD K4M 834;K4M 835 | bearing thickness 14mm | GDS99229 | Drive Shaft | | 27 | 26 | 56.7 | 91 | 920 | |
| | 2008.02- | 5MT | F | L/R | MPV FWD K4M 834;K4M 835 | Outer teething wheel side:27 | GCO50136 | Outer Joint | | 27 | 22 | 56.7 | 91 | 55 | I |
| | 2008.02- | 5MT | F | L/R | MPV FWD K4M 834;K4M 835 | Outer teething wheel side:23 | GCO99085 | Outer Joint | | 23 | 30 | 49 | 86 | 59 | I |
| | 2008.02- | 5MT | F | L | MPV FWD K4M 834;K4M 835 | | GCI50048 | Inner Joint | | 26 | 30 | 40 | 64 | 121 | |
| | 2008.02- | 5MT | F | L | MPV FWD K4M 834;K4M 835 | | GCI50057 | Inner Joint | | 26 | 22 | 40 | 64 | 104 | |
| | 2008.02- | 5MT | F | R | MPV FWD K4M 834;K4M 835 | bearing thickness 14mm | GCI50051 | Inner Joint | | 26 | 22 | 33 | 326 | 96 | |
| | 2008.02- | 5MT | F | R | MPV FWD K4M 834;K4M 835 | bearing thickness 20mm | GCI50137 | Inner Joint | | 26 | 22 | 33 | 330 | 96.5 | |
| | 2008.02- | 5MT | F | R | MPV FWD K4M 834;K4M 835 | | GCI99169 | Inner Joint | | 26 | 30 | 33 | 326 | 95 | |
| | 2008.12- | 4AT | F | L | MPV FWD K4M 834;K4M 835;K4M 836 | | GDS50614 | Drive Shaft | | 27 | 26 | 56.7 | 91 | 680 | |
| | 2008.12- | 4AT | F | R | MPV FWD K4M 834;K4M 835;K4M 836 | | GDS50616 | Drive Shaft | | 27 | 23 | 56.7 | 91 | 816 | |
| | 2008.12- | 4AT | F | L/R | MPV FWD K4M 834;K4M 835;K4M 836 | | GCO50150 | Outer Joint | | 27 | 32 | 56.7 | 91 | 61 | I |
| | 2008.12- | 4AT | F | L | MPV FWD K4M 834;K4M 835;K4M 836 | | GCI50040 | Inner Joint | | 26 | 30 | 43 | 42.5 | 83 | |
| | 2008.12- | 4AT | F | R | MPV FWD K4M 834;K4M 835;K4M 836 | | GCI50041 | Inner Joint | | 23 | 30 | | 217 | 94 | |
| | 2008.12- | 5MT | F | L | MPV FWD K4M 834;K4M 835;K4M 836 | | GDS99070 | Drive Shaft | | 23 | 26 | 49 | 86 | 675 | |
| | 2008.12- | 5MT | F | L | MPV FWD K4M 834;K4M 835;K4M 836 | | GDS99228 | Drive Shaft | | 27 | 26 | 56.7 | 91 | 675 | |
| | 2008.12- | 5MT | F | R | MPV FWD K4M 834;K4M 835;K4M 836 | bearing thickness 20mm | GDS50612 | Drive Shaft | | 27 | 26 | 56.7 | 91 | 918 | |
| | 2008.12- | 5MT | F | R | MPV FWD K4M 834;K4M 835;K4M 836 | Date to:2012.06 | GDS99071 | Drive Shaft | | 23 | 26 | 49 | 86 | 911 | |
| | 2008.12- | 5MT | F | R | MPV FWD K4M 834;K4M 835;K4M 836 | bearing thickness 14mm | GDS99229 | Drive Shaft | | 27 | 26 | 56.7 | 91 | 920 | |
| | 2008.12- | 5MT | F | L/R | MPV FWD K4M 834;K4M 835;K4M 836 | Outer teething wheel side:27 | GCO50136 | Outer Joint | | 27 | 22 | 56.7 | 91 | 55 | I |
| | 2008.12- | 5MT | F | L/R | MPV FWD K4M 834;K4M 835;K4M 836 | Outer teething wheel side:23 | GCO99085 | Outer Joint | | 23 | 30 | 49 | 86 | 59 | I |
| | 2008.12- | 5MT | F | L | MPV FWD K4M 834;K4M 835;K4M 836 | | GCI50048 | Inner Joint | | 26 | 30 | 40 | 64 | 121 | |
| | 2008.12- | 5MT | F | L | MPV FWD K4M 834;K4M 835;K4M 836 | | GCI50057 | Inner Joint | | 26 | 22 | 40 | 64 | 104 | |
| | 2008.12- | 5MT | F | R | MPV FWD K4M 834;K4M 835;K4M 836 | bearing thickness 14mm | GCI50051 | Inner Joint | | 26 | 22 | 33 | 326 | 96 | |
| | 2008.12- | 5MT | F | R | MPV FWD K4M 834;K4M 835;K4M 836 | bearing thickness 20mm | GCI50137 | Inner Joint | | 26 | 22 | 33 | 330 | 96.5 | |
| | 2008.12- | 5MT | F | R | MPV FWD K4M 834;K4M 835;K4M 836 | | GCI99169 | Inner Joint | | 26 | 30 | 33 | 326 | 95 | |
| 1.9 (40 kw) | 1997.08-2001.12 | 5MT | F | L | MPV FWD F8Q662 | | GDS50150 | Drive Shaft | | 21 | 30 | 49.8 | 83.5 | 623 | |
| | 1997.08-2001.12 | 5MT | F | R | MPV FWD F8Q662 | For vehicles without off-road suspension | GDS50017 | Drive Shaft | 26T | 21 | 23 | 51.5 | 83 | 715 | |
| | 1997.08-2001.12 | 5MT | F | R | MPV FWD F8Q662 | For vehicles without off-road suspension | GDS50162 | Drive Shaft | 26T | 21 | 23 | 52.2 | 85.5 | 723.5 | |
| | 1997.08-2001.12 | AT/MT | F | L/R | MPV FWD F8Q662 | Date to:2008.12 | GCO50004 | Outer Joint | 26T | 21 | 30 | 52.2 | 85.5 | 59 | I |
| | 1997.08-2001.12 | MT | F | L | MPV FWD F8Q662 | Date to:2008.12;Trans. code:JB1/JB3 | GDS50004 | Drive Shaft | 26T | 21 | | 57 | 84.5 | 625.7 | |
| | 1997.08-2001.12 | MT | F | L | MPV FWD F8Q662 | Date from:1999.09,Date to:2001.12 | GDS50112 | Drive Shaft | 26T | 21 | | 57 | 84.5 | 630.7 | |
| | 1997.08-2001.12 | MT | F | L | MPV FWD F8Q662 | | GDS50177 | Drive Shaft | | 21 | | 57 | 84.5 | 625.7 | |
| | 1997.08-2001.12 | MT | F | L | MPV FWD F8Q662 | Date to:2001.12;Trans. code:JB1/3 | GDS50398 | Drive Shaft | | 21 | 30 | 50 | 84 | 632 | |
| | 1997.08-2001.12 | MT | F | L | MPV FWD F8Q662 | Date To:2001.12;Trans. code:JB1/3 | GDS50552 | Drive Shaft | 26T | 21 | | 52.2 | 85.5 | 630 | |
| | 1997.08-2001.12 | MT | F | R | MPV FWD F8Q662 | | GDS50125 | Drive Shaft | | 21 | 23 | 57 | 84.5 | 713.5 | |
| | 1997.08-2001.12 | MT | F | R | MPV FWD F8Q662 | | GDS50146 | Drive Shaft | | 21 | 23 | 57 | 84.5 | 732.5 | |
| | 1997.08-2001.12 | MT | F | R | MPV FWD F8Q662 | | GDS50250 | Drive Shaft | 26T | 21 | 23 | 57 | 84.5 | 732.5 | |
| | 1997.08-2001.12 | MT | F | R | MPV FWD F8Q662 | | GDS50336 | Drive Shaft | 26T | 21 | 23 | 57 | 84 | 727 | |
| | 1997.08-2001.12 | MT | F | R | MPV FWD F8Q662 | | GDS50357 | Drive Shaft | 26T | 21 | 23 | 57 | 84 | 718 | |
| | 1997.08-2001.12 | MT | F | R | MPV FWD F8Q662 | Date from:1998.07;Date to:2001.12;Trans. code:JB1/3 | GDS50395 | Drive Shaft | 26T | 21 | 23 | 51.5 | 83 | 728 | |
| | 1997.08-2001.12 | MT | F | R | MPV FWD F8Q662 | | GDS99072 | Drive Shaft | 44T | 21 | 23 | 57 | 84.5 | 720 | |
| | 1997.08-2001.12 | MT | F | R | MPV FWD F8Q662 | Date from:1998.07,Date to:2001.12 | GCI50008 | Inner Joint | | 23 | 30 | 36.3 | | 120.7 | |
| | 1997.08-2001.12 | | F | R | MPV FWD F8Q662 | For vehicles with off-road suspension | GDS50151 | Drive Shaft | | 21 | 23 | 49.8 | 83.5 | 715 | |
| 1.9 (47 kw) | 1997.08-2005.06 | AT/MT | F | L/R | MPV FWD F8Q630/F8Q632 | Date to:2008.12 | GCO50004 | Outer Joint | 26T | 21 | 30 | 52.2 | 85.5 | 59 | I |
| | 1997.08-2005.06 | MT | F | L | MPV FWD F8Q630/F8Q632 | | GDS50004 | Drive Shaft | 26T | 21 | | 57 | 84.5 | 625.7 | |
| | 1997.08-2005.06 | MT | F | L | MPV FWD F8Q630/F8Q632 | Date from:1999.09,Date to:2005.06 | GDS50112 | Drive Shaft | 26T | 21 | | 57 | 84.5 | 630.7 | |
| | 1997.08-2005.06 | MT | F | L | MPV FWD F8Q630/F8Q632 | | GDS50150 | Drive Shaft | | 21 | 30 | 49.8 | 83.5 | 623 | |
| | 1997.08-2005.06 | MT | F | L | MPV FWD F8Q630/F8Q632 | | GDS50177 | Drive Shaft | | 21 | | 57 | 84.5 | 625.7 | |
| | 1997.08-2005.06 | MT | F | L | MPV FWD F8Q630/F8Q632 | Date to:2005.06;Trans. code:JB1/3 | GDS50398 | Drive Shaft | | 21 | 30 | 50 | 84 | 632 | |
| | 1997.08-2005.06 | MT | F | L | MPV FWD F8Q630/F8Q632 | Date To:2005.06;Trans. code:JB1/3 | GDS50552 | Drive Shaft | 26T | 21 | | 52.2 | 85.5 | 630 | |
| | 1997.08-2005.06 | MT | F | R | MPV FWD F8Q630/F8Q632 | | GDS50017 | Drive Shaft | 26T | 21 | 23 | 51.5 | 83 | 715 | |
| | 1997.08-2005.06 | MT | F | R | MPV FWD F8Q630/F8Q632 | | GDS50125 | Drive Shaft | | 21 | 23 | 57 | 84.5 | 713.5 | |

| | YEAR | TRANSM. | F/R | L/R | BODY STYLE & DRIVE TYPE & ENGINE | REMARKS | G-AP Ref. | PRODUCT | ABS | Technical Specifications A | B | C | H | L | P |
|---|---|---|---|---|---|---|---|---|---|---|---|---|---|---|---|
| **RENAULT** | | | | | | | | | | | | | | | |
| **Kangoo** | | | | | | | | | | | | | | | |
| 1.9 (47 kw) | 1997.08-2005.06 | MT | F | R | MPV FWD F8Q630/F8Q632 | | GDS50146 | Drive Shaft | | 21 | 23 | 57 | 84.5 | 732.5 | |
| | 1997.08-2005.06 | MT | F | R | MPV FWD F8Q630/F8Q632 | For vehicles without off-road suspension;Inner teeth of wheel side:30 | GDS50162 | Drive Shaft | 26T | 21 | 23 | 52.2 | 85.5 | 723.5 | |
| | 1997.08-2005.06 | MT | F | R | MPV FWD F8Q630/F8Q632 | | GDS50336 | Drive Shaft | 26T | 21 | 23 | 57 | 84 | 727 | |
| | 1997.08-2005.06 | MT | F | R | MPV FWD F8Q630/F8Q632 | | GDS50357 | Drive Shaft | 26T | 21 | 23 | 57 | 84 | 718 | |
| | 1997.08-2005.06 | MT | F | R | MPV FWD F8Q630/F8Q632 | Date from:1998.07;Date to:2005.06;Trans. code:JB1/3 | GDS50395 | Drive Shaft | 26T | 21 | 23 | 51.5 | 83 | 728 | |
| | 1997.08-2005.06 | MT | F | R | MPV FWD F8Q630/F8Q632 | | GDS50524 | Drive Shaft | 26T | 23 | 23 | 57.5 | 86.5 | 729 | |
| | 1997.08-2005.06 | MT | F | R | MPV FWD F8Q630/F8Q632 | Date to:2005.06;Inner teeth of wheel side:28 | GDS50526 | Drive Shaft | 26T | 21 | 23 | 52.3 | 84.5 | 724 | |
| | 1997.08-2005.06 | MT | F | R | MPV FWD F8Q630/F8Q632 | | GDS99072 | Drive Shaft | 44T | 21 | 23 | 57 | 84.5 | 720 | |
| | 1997.08-2005.06 | MT | F | R | MPV FWD F8Q630/F8Q632 | Date from:1998.07,Date to:2005.06 | GCI50008 | Inner Joint | | 23 | 30 | 36.3 | | 120.7 | |
| 1.9 (48 kw) | 1999.09-2001.06 | 5MT | F | L | MPV FWD F8Q632 | | GDS50150 | Drive Shaft | | 21 | 30 | 49.8 | 83.5 | 623 | |
| | 1999.09-2001.06 | 5MT | F | L | MPV FWD F8Q632 | | GDS50552 | Drive Shaft | 26T | 21 | | 52.2 | 85.5 | 630 | |
| | 1999.09-2001.06 | 5MT | F | R | MPV FWD F8Q632 | | GDS50524 | Drive Shaft | 26T | 23 | 23 | 57.5 | 86.5 | 729 | |
| | 1999.09-2001.06 | MT | F | R | MPV FWD F8Q632 | | GDS50063 | Drive Shaft | | 21 | 23 | 51.5 | 83 | 720 | |
| | 1999.09-2001.06 | | F | R | MPV FWD F8Q632 | For vehicles with off-road suspension | GDS50151 | Drive Shaft | | 21 | 23 | 49.8 | 83.5 | 715 | |
| | 1999.09-2001.06 | | F | R | MPV FWD F8Q632 | | GDS50395 | Drive Shaft | 26T | 21 | 23 | 51.5 | 83 | 728 | |
| | 1999.09-2001.06 | | F | | MPV FWD F8Q632 | For vehicles without off-road suspension | GDS50004 | Drive Shaft | 26T | 21 | | 57 | 84.5 | 625.7 | |
| | 1999.09-2001.06 | | F | L | MPV FWD F8Q632 | For vehicles without off-road suspension | GCO50004 | Outer Joint | 26T | 21 | 30 | 52.2 | 85.5 | 59 | I |
| 1.9 (59 kw) | 1999.09-2003.06 | 5MT | F | L | MPV FWD F9Q780/F9Q782 | | GDS50150 | Drive Shaft | | 21 | 30 | 49.8 | 83.5 | 623 | |
| | 1999.09-2003.06 | 5MT | F | L | MPV FWD F9Q780/F9Q782 | Outer teeth of wheel side:23 | GDS50261 | Drive Shaft | 44T | 23 | | 57.5 | 86.5 | 630 | |
| | 1999.09-2003.06 | 5MT | F | L | MPV FWD F9Q780/F9Q782 | Outer teeth of wheel side:21 | GDS50401 | Drive Shaft | 44T | 21 | | 57 | 84 | 629 | |
| | 1999.09-2003.06 | 5MT | F | R | MPV FWD F9Q780/F9Q782 | For vehicles without off-road suspension | GDS50017 | Drive Shaft | 26T | 21 | 23 | 51.5 | 83 | 715 | |
| | 1999.09-2003.06 | 5MT | F | R | MPV FWD F9Q780/F9Q782 | For vehicles without off-road suspension | GDS50162 | Drive Shaft | 26T | 21 | 23 | 52.2 | 85.5 | 723.5 | |
| | 1999.09-2003.06 | 5MT | F | L | MPV FWD F9Q780/F9Q782 | Date from:2002.11 | GCO50069 | Outer Joint | 44T | 23 | 30 | 57.5 | 86.5 | 58.5 | I |
| | 1999.09-2003.06 | MT | F | L | MPV FWD F9Q780/F9Q782 | Date to:2008.12;Trans. code:JB1/JB3 | GDS50004 | Drive Shaft | 26T | 21 | | 57 | 84.5 | 625.7 | |
| | 1999.09-2003.06 | MT | F | L | MPV FWD F9Q780/F9Q782 | | GDS50177 | Drive Shaft | | 21 | | 57 | 84.5 | 625.7 | |
| | 1999.09-2003.06 | MT | F | L | MPV FWD F9Q780/F9Q782 | Date to:2003.06;Trans. code:JB1/3 | GDS50398 | Drive Shaft | | 21 | 30 | 50 | 84 | 632 | |
| | 1999.09-2003.06 | MT | F | L | MPV FWD F9Q780/F9Q782 | Date To:2003.06;Trans. code:JB1/3 | GDS50552 | Drive Shaft | 26T | 21 | | 52.2 | 85.5 | 630 | |
| | 1999.09-2003.06 | MT | F | R | MPV FWD F9Q780/F9Q782 | Date to:2003.06;Trans. code:JB1/3 | GDS50125 | Drive Shaft | | 21 | 23 | 57 | 84.5 | 713.5 | |
| | 1999.09-2003.06 | MT | F | R | MPV FWD F9Q780/F9Q782 | | GDS50146 | Drive Shaft | | 21 | 23 | 57 | 84.5 | 732.5 | |
| | 1999.09-2003.06 | MT | F | R | MPV FWD F9Q780/F9Q782 | Date to:2003.06;Trans. code:JB1/3 | GDS50395 | Drive Shaft | 26T | 21 | 23 | 51.5 | 83 | 728 | |
| | 1999.09-2003.06 | MT | F | R | MPV FWD F9Q780/F9Q782 | | GDS99072 | Drive Shaft | 44T | 21 | 23 | 57 | 84.5 | 720 | |
| | 1999.09-2003.06 | MT | F | L/R | MPV FWD F9Q780/F9Q782 | Date to:2008.12 | GCO50004 | Outer Joint | 26T | 21 | 30 | 52.2 | 85.5 | 59 | I |
| | 1999.09-2003.06 | MT | F | R | MPV FWD F9Q780/F9Q782 | Date to:2003.06 | GCI50008 | Inner Joint | | 23 | 30 | 36.3 | | 120.7 | |
| | 1999.09-2003.06 | | F | R | MPV FWD F9Q780/F9Q782 | For vehicles with off-road suspension | GDS50151 | Drive Shaft | | 21 | 23 | 49.8 | 83.5 | 715 | |
| | 1999.09-2003.06 | | F | R | MPV FWD F9Q780/F9Q782 | | GDS50524 | Drive Shaft | 26T | 23 | 23 | 57.5 | 86.5 | 729 | |
| | 2001.11-2003.06 | 5MT | F | L | MPV 4WD F9Q790 | Trans. side without housing | GDS50506 | Drive Shaft | 44T | 23 | | 58.8 | 85 | 645 | |
| | 2001.11-2003.06 | 5MT | F | R | MPV 4WD F9Q790 | Date to:2003.06 | GCI50079 | Inner Joint | | 23 | 22 | 36.3 | | 105.5 | |
| | 2001.11-2003.06 | MT | F | L | MPV 4WD F9Q790 | Trans. side without housing | GDS50112 | Drive Shaft | 26T | 21 | | 57 | 84.5 | 630.7 | |
| | 2001.11-2003.06 | MT | F | R | MPV 4WD F9Q790 | Inner teeth of wheel side:35 | GDS50159 | Drive Shaft | 44T | 23 | 23 | 57 | 87 | 748 | |
| | 2001.11-2003.06 | MT | F | R | MPV 4WD F9Q790 | Inner teeth of wheel side:23 | GDS50527 | Drive Shaft | 44T | 23 | 23 | 58.8 | 85 | 739 | |
| | 2001.11-2003.06 | MT | F | R | MPV 4WD F9Q790 | | GCI50008 | Inner Joint | | 23 | 30 | 36.3 | | 120.7 | |
| | 2001.11-2003.06 | 5MT | R | L/R | MPV 4WD F9Q790 | | GDS50627 | Drive Shaft | 44T | 23 | 21 | 59 | 83.5 | 755 | |
| | 2001.11-2003.06 | MT | R | L/R | MPV 4WD F9Q790 | | GCO50222 | Outer Joint | 44T | 23 | 21 | 59 | 83.5 | 53 | I |
| 1.9 (62 kw) | 2003.10-2007.09 | 5MT | F | L | MPV 4WD F9Q790 | | GDS50506 | Drive Shaft | 44T | 23 | | 58.8 | 85 | 645 | |
| | 2003.10-2007.09 | 5MT | F | R | MPV 4WD F9Q790 | | GDS50527 | Drive Shaft | 44T | 23 | 23 | 58.8 | 85 | 739 | |
| | 2003.10-2007.09 | 5MT | F | L/R | MPV 4WD F9Q790 | | GCO99283 | Outer Joint | 44T | 23 | 23 | 58.8 | 85 | 61 | M |
| | 2003.10-2007.09 | 5MT | F | R | MPV 4WD F9Q790 | | GCI50079 | Inner Joint | | 23 | 22 | 36.3 | | 105.5 | |
| | 2003.10-2007.09 | MT | F | R | MPV 4WD F9Q790 | | GCI50008 | Inner Joint | | 23 | 30 | 36.3 | | 120.7 | |
| | 2003.10-2007.09 | 5MT | R | L/R | MPV 4WD F9Q790 | | GDS50627 | Drive Shaft | 44T | 23 | 21 | 59 | 83.5 | 755 | |
| | 2003.10-2007.09 | 5MT | R | L/R | MPV 4WD F9Q790 | | GCO50222 | Outer Joint | 44T | 23 | 21 | 59 | 83.5 | 53 | I |
| **Kangoo Be Bop** | | | | | | | | | | | | | | | |
| 1.5 (55 kw) | 2010.09- | 5MT | F | L | MPV FWD K9K 802 | | GDS99070 | Drive Shaft | | 23 | 26 | 49 | 86 | 675 | |
| | 2010.09- | 5MT | F | L | MPV FWD K9K 802 | | GDS99228 | Drive Shaft | | 27 | 26 | 56.7 | 91 | 675 | |
| | 2010.09- | 5MT | F | R | MPV FWD K9K 802 | bearing thickness 20mm | GDS50612 | Drive Shaft | | 27 | 26 | 56.7 | 91 | 918 | |
| | 2010.09- | 5MT | F | R | MPV FWD K9K 802 | Date to:2012.06 | GDS99071 | Drive Shaft | | 23 | 26 | 49 | 86 | 911 | |
| | 2010.09- | 5MT | F | R | MPV FWD K9K 802 | bearing thickness 14mm | GDS99229 | Drive Shaft | | 27 | 26 | 56.7 | 91 | 920 | |
| | 2010.09- | 5MT | F | L/R | MPV FWD K9K 802 | Outer teething wheel side:27 | GCO50136 | Outer Joint | | 27 | 22 | 56.7 | 91 | 55 | I |
| | 2010.09- | 5MT | F | L/R | MPV FWD K9K 802 | Outer teething wheel side:23 | GCO99085 | Outer Joint | | 23 | 30 | 49 | 86 | 59 | I |
| | 2010.09- | 5MT | F | L | MPV FWD K9K 802 | | GCI50048 | Inner Joint | | 26 | 30 | 40 | 64 | 121 | |
| | 2010.09- | 5MT | F | L | MPV FWD K9K 802 | | GCI50057 | Inner Joint | | 26 | 22 | 40 | 64 | 104 | |
| | 2010.09- | 5MT | F | R | MPV FWD K9K 802 | bearing thickness 14mm | GCI50051 | Inner Joint | | 26 | 22 | 33 | 326 | 96 | |
| | 2010.09- | 5MT | F | R | MPV FWD K9K 802 | bearing thickness 20mm | GCI50137 | Inner Joint | | 26 | 22 | 33 | 330 | 96.5 | |
| | 2010.09- | 5MT | F | R | MPV FWD K9K 802 | | GCI99169 | Inner Joint | | 26 | 30 | 33 | 326 | 95 | |
| 1.5 (66 kw) | 2009.06-2012.12 | 5MT | F | L | MPV FWD K9K 808 | | GDS99070 | Drive Shaft | | 23 | 26 | 49 | 86 | 675 | |
| | 2009.06-2012.12 | 5MT | F | L | MPV FWD K9K 808 | | GDS99228 | Drive Shaft | | 27 | 26 | 56.7 | 91 | 675 | |

| | YEAR | TRANSM. | F/R | L/R | BODY STYLE & DRIVE TYPE & ENGINE | REMARKS | G-AP Ref. | PRODUCT | ABS | Technical Specifications A | B | C | H | L | P |
|---|---|---|---|---|---|---|---|---|---|---|---|---|---|---|---|
| **RENAULT** | | | | | | | | | | | | | | | |
| **Kangoo Be Bop** | | | | | | | | | | | | | | | |
| 1.5 (66 kw) | 2009.06-2012.12 | 5MT | F | R | MPV FWD K9K 808 | bearing thickness 20mm | GDS50612 | Drive Shaft | | 27 | 26 | 56.7 | 91 | 918 | |
| | 2009.06-2012.12 | 5MT | F | R | MPV FWD K9K 808 | Date to:2012.06 | GDS99071 | Drive Shaft | | 23 | 26 | 49 | 86 | 911 | |
| | 2009.06-2012.12 | 5MT | F | R | MPV FWD K9K 808 | bearing thickness 14mm | GDS99229 | Drive Shaft | | 27 | 26 | 56.7 | 91 | 920 | |
| | 2009.06-2012.12 | 5MT | F | L/R | MPV FWD K9K 808 | Outer teething wheel side:27 | GCO50136 | Outer Joint | | 27 | 22 | 56.7 | 91 | 55 | I |
| | 2009.06-2012.12 | 5MT | F | L/R | MPV FWD K9K 808 | Outer teething wheel side:23 | GCO99085 | Outer Joint | | 23 | 30 | 49 | 86 | 59 | I |
| | 2009.06-2012.12 | 5MT | F | L | MPV FWD K9K 808 | | GCI50048 | Inner Joint | | 26 | 30 | 40 | 64 | 121 | |
| | 2009.06-2012.12 | 5MT | F | L | MPV FWD K9K 808 | | GCI50057 | Inner Joint | | 26 | 22 | 40 | 64 | 104 | |
| | 2009.06-2012.12 | 5MT | F | R | MPV FWD K9K 808 | bearing thickness 14mm | GCI50051 | Inner Joint | | 26 | 22 | 33 | 326 | 96 | |
| | 2009.06-2012.12 | 5MT | F | R | MPV FWD K9K 808 | bearing thickness 20mm | GCI50137 | Inner Joint | | 26 | 22 | 33 | 330 | 96.5 | |
| | 2009.06-2012.12 | 5MT | F | R | MPV FWD K9K 808 | | GCI99169 | Inner Joint | | 26 | 30 | 33 | 326 | 95 | |
| 1.5 (76 kw) | 2009.02-2012.12 | 6MT | F | L | MPV FWD K9K 806 | Date from:2012.07 | GDS99228 | Drive Shaft | | 27 | 26 | 56.7 | 91 | 675 | |
| | 2009.02-2012.12 | 6MT | F | R | MPV FWD K9K 806 | Date to:2012.06 | GDS50422 | Drive Shaft | | 27 | 26 | 56.7 | 91 | 922 | |
| | 2009.02-2012.12 | 6MT | F | R | MPV FWD K9K 806 | Date from:2012.07,bearing thickness 20mm | GDS50612 | Drive Shaft | | 27 | 26 | 56.7 | 91 | 918 | |
| | 2009.02-2012.12 | 6MT | F | R | MPV FWD K9K 806 | Date from:2012.07,bearing thickness 14mm | GDS99229 | Drive Shaft | | 27 | 26 | 56.7 | 91 | 920 | |
| | 2009.02-2012.12 | 6MT | F | L/R | MPV FWD K9K 806 | Date To:2012.06 | GCO50130 | Outer Joint | | 27 | 33 | 56.7 | 91 | 61 | I |
| | 2009.02-2012.12 | 6MT | F | L/R | MPV FWD K9K 806 | Date From:2012.07 | GCO50136 | Outer Joint | | 27 | 22 | 56.7 | 91 | 55 | I |
| | 2009.02-2012.12 | 6MT | F | L | MPV FWD K9K 806 | Date From:2012.07 | GCI50057 | Inner Joint | | 26 | 22 | 40 | 64 | 104 | |
| | 2009.02-2012.12 | 6MT | F | R | MPV FWD K9K 806 | Date From:2012.07,bearing thickness 14mm | GCI50051 | Inner Joint | | 26 | 22 | 33 | 326 | 96 | |
| | 2009.02-2012.12 | 6MT | F | R | MPV FWD K9K 806 | Date From:2012.07,bearing thickness 20mm | GCI50137 | Inner Joint | | 26 | 22 | 33 | 330 | 96.5 | |
| 1.5 (80 kw) | 2009.06- | 6MT | F | L | MPV FWD K9K 804 | Date from:2012.07 | GDS99228 | Drive Shaft | | 27 | 26 | 56.7 | 91 | 675 | |
| | 2009.06- | 6MT | F | R | MPV FWD K9K 804 | Date to:2012.06 | GDS50422 | Drive Shaft | | 27 | 26 | 56.7 | 91 | 922 | |
| | 2009.06- | 6MT | F | R | MPV FWD K9K 804 | Date from:2012.07,bearing thickness 20mm | GDS50612 | Drive Shaft | | 27 | 26 | 56.7 | 91 | 918 | |
| | 2009.06- | 6MT | F | R | MPV FWD K9K 804 | Date from:2012.07,bearing thickness 14mm | GDS99229 | Drive Shaft | | 27 | 26 | 56.7 | 91 | 920 | |
| | 2009.06- | 6MT | F | L/R | MPV FWD K9K 804 | Date To:2012.06 | GCO50130 | Outer Joint | | 27 | 33 | 56.7 | 91 | 61 | I |
| | 2009.06- | 6MT | F | L/R | MPV FWD K9K 804 | Date From:2012.07 | GCO50136 | Outer Joint | | 27 | 22 | 56.7 | 91 | 55 | I |
| | 2009.06- | 6MT | F | L | MPV FWD K9K 804 | Date From:2012.07 | GCI50057 | Inner Joint | | 26 | 22 | 40 | 64 | 104 | |
| | 2009.06- | 6MT | F | R | MPV FWD K9K 804 | Date From:2012.07,bearing thickness 14mm | GCI50051 | Inner Joint | | 26 | 22 | 33 | 326 | 96 | |
| | 2009.06- | 6MT | F | R | MPV FWD K9K 804 | Date From:2012.07,bearing thickness 20mm | GCI50137 | Inner Joint | | 26 | 22 | 33 | 330 | 96.5 | |
| 1.6 (78 kw) | 2009.02-2012.12 | 4AT | F | L | MPV FWD K4M 830 | | GDS50614 | Drive Shaft | | 27 | 26 | 56.7 | 91 | 680 | |
| | 2009.02-2012.12 | 4AT | F | R | MPV FWD K4M 830 | | GDS50616 | Drive Shaft | | 27 | 23 | 56.7 | 91 | 816 | |
| | 2009.02-2012.12 | 4AT | F | L/R | MPV FWD K4M 830 | | GCO50150 | Outer Joint | | 27 | 32 | 56.7 | 91 | 61 | I |
| | 2009.02-2012.12 | 4AT | F | L | MPV FWD K4M 830 | | GCI50040 | Inner Joint | | 26 | 30 | 43 | 42.5 | 83 | |
| | 2009.02-2012.12 | 4AT | F | R | MPV FWD K4M 830 | | GCI50041 | Inner Joint | | 23 | 30 | | 217 | 94 | |
| | 2009.02-2012.12 | 5MT | F | L | MPV FWD K4M 830 | | GDS99070 | Drive Shaft | | 23 | 26 | 49 | 86 | 675 | |
| | 2009.02-2012.12 | 5MT | F | L | MPV FWD K4M 830 | | GDS99228 | Drive Shaft | | 27 | 26 | 56.7 | 91 | 675 | |
| | 2009.02-2012.12 | 5MT | F | R | MPV FWD K4M 830 | bearing thickness 20mm | GDS50612 | Drive Shaft | | 27 | 26 | 56.7 | 91 | 918 | |
| | 2009.02-2012.12 | 5MT | F | R | MPV FWD K4M 830 | Date to:2012.06 | GDS99071 | Drive Shaft | | 23 | 26 | 49 | 86 | 911 | |
| | 2009.02-2012.12 | 5MT | F | R | MPV FWD K4M 830 | bearing thickness 14mm | GDS99229 | Drive Shaft | | 27 | 26 | 56.7 | 91 | 920 | |
| | 2009.02-2012.12 | 5MT | F | L/R | MPV FWD K4M 830 | Outer teething wheel side:27 | GCO50136 | Outer Joint | | 27 | 22 | 56.7 | 91 | 55 | I |
| | 2009.02-2012.12 | 5MT | F | L/R | MPV FWD K4M 830 | Outer teething wheel side:23 | GCO99085 | Outer Joint | | 23 | 30 | 49 | 86 | 59 | I |
| | 2009.02-2012.12 | 5MT | F | L | MPV FWD K4M 830 | | GCI50048 | Inner Joint | | 26 | 30 | 40 | 64 | 121 | |
| | 2009.02-2012.12 | 5MT | F | L | MPV FWD K4M 830 | | GCI50057 | Inner Joint | | 26 | 22 | 40 | 64 | 104 | |
| | 2009.02-2012.12 | 5MT | F | R | MPV FWD K4M 830 | bearing thickness 14mm | GCI50051 | Inner Joint | | 26 | 22 | 33 | 326 | 96 | |
| | 2009.02-2012.12 | 5MT | F | R | MPV FWD K4M 830 | bearing thickness 20mm | GCI50137 | Inner Joint | | 26 | 22 | 33 | 330 | 96.5 | |
| | 2009.02-2012.12 | 5MT | F | R | MPV FWD K4M 830 | | GCI99169 | Inner Joint | | 26 | 30 | 33 | 326 | 95 | |
| **Kangoo Express** | | | | | | | | | | | | | | | |
| 1.0 (43 kw) | 2002.01-2007.01 | MT | F | L | MPV Van FWD D7D700 | | GDS50552 | Drive Shaft | 26T | 21 | | 52.2 | 85.5 | 630 | |
| | 2002.01-2007.01 | MT | F | R | MPV Van FWD D7D700 | | GDS50395 | Drive Shaft | 26T | 21 | 23 | 51.5 | 83 | 728 | |
| 1.2 (43 kw) | 1997.08- | 5MT | F | L | Box Body/MPV FWD D7F 744, D7F 746, D7F 722, D7F 710, D7F 720, D7F 726 | | GDS50150 | Drive Shaft | | 21 | 30 | 49.8 | 83.5 | 623 | |
| | 1997.08- | 5MT | F | R | Box Body/MPV FWD D7F 744, D7F 746, D7F 722, D7F 710, D7F 720, D7F 726 | inner teeth of transm. side:30 | GDS50526 | Drive Shaft | 26T | 21 | 23 | 52.3 | 84.5 | 724 | |
| | 1997.08- | AT | F | L/R | Box Body/MPV FWD D7F 744, D7F 746, D7F 722, D7F 710, D7F 720, D7F 726 | Date to:2008.12 | GCO50004 | Outer Joint | 26T | 21 | 30 | 52.2 | 85.5 | 59 | I |
| | 1997.08- | MT | F | L | Box Body/MPV FWD D7F 744, D7F 746, D7F 722, D7F 710, D7F 720, D7F 726 | Date to:2008.12;Trans. code:JB1/JB3 | GDS50004 | Drive Shaft | 26T | 21 | | 57 | 84.5 | 625.7 | |
| | 1997.08- | MT | F | L | Box Body/MPV FWD D7F 744, D7F 746, D7F 722, D7F 710, D7F 720, D7F 726 | Date From:1999.09,Date To:2001.06 Type:Kangoo Rapid | GDS50112 | Drive Shaft | 26T | 21 | | 57 | 84.5 | 630.7 | |
| | 1997.08- | MT | F | L | Box Body/MPV FWD D7F 744, D7F 746, D7F 722, D7F 710, D7F 720, D7F 726 | | GDS50177 | Drive Shaft | | 21 | | 57 | 84.5 | 625.7 | |
| | 1997.08- | MT | F | L | Box Body/MPV FWD D7F 744, D7F 746, D7F 722, D7F 710, D7F 720, D7F 726 | Date From:2002.11;Date To:2003.06;For Modelcode:FC1A | GDS50401 | Drive Shaft | 44T | 21 | | 57 | 84 | 629 | |
| | 1997.08- | MT | F | R | Box Body/MPV FWD D7F 744, D7F 746, D7F 722, D7F 710, D7F 720, D7F 726 | | GDS50125 | Drive Shaft | | 21 | 23 | 57 | 84.5 | 713.5 | |
| | 1997.08- | MT | F | R | Box Body/MPV FWD D7F 744, D7F 746, D7F 722, D7F 710, D7F 720, D7F 726 | | GDS50146 | Drive Shaft | | 21 | 23 | 57 | 84.5 | 732.5 | |
| | 1997.08- | MT | F | R | Box Body/MPV FWD D7F 744, D7F 746, D7F 722, D7F 710, D7F 720, D7F 726 | Date From:1998.07,Date To:2003.06,Trans. code:JB1/3 | GDS50395 | Drive Shaft | 26T | 21 | 23 | 51.5 | 83 | 728 | |
| | 1997.08- | MT | F | R | Box Body/MPV FWD D7F 744, D7F 746, D7F 722, D7F 710, D7F 720, D7F 726 | | GDS99072 | Drive Shaft | 44T | 21 | 23 | 57 | 84.5 | 720 | |
| | 1997.08- | MT | F | R | Box Body/MPV FWD D7F 744, D7F 746, D7F 722, D7F 710, D7F 720, D7F 726 | Date from:1998.07,Date to:2001.06 | GCI50008 | Inner Joint | | 23 | 30 | 36.3 | | 120.7 | |
| | 1997.08- | | F | L | Box Body/MPV FWD D7F 744, D7F 746, D7F 722, D7F 710, D7F 720, D7F 726 | Date From:2002.11 | GDS50261 | Drive Shaft | 44T | 23 | | 57.5 | 86.5 | 630 | |
| | 1997.08- | | F | L | Box Body/MPV FWD D7F 744, D7F 746, D7F 722, D7F 710, D7F 720, D7F 726 | Date To:2002.10 | GDS50523 | Drive Shaft | 26T | 23 | | 58.8 | 85 | 641 | |
| | 1997.08- | | F | L | Box Body/MPV FWD D7F 744, D7F 746, D7F 722, D7F 710, D7F 720, D7F 726 | For vehicles with off-road suspension | GDS50552 | Drive Shaft | 26T | 21 | | 52.2 | 85.5 | 630 | |
| | 1997.08- | | F | R | Box Body/MPV FWD D7F 744, D7F 746, D7F 722, D7F 710, D7F 720, D7F 726 | Date To:2002.10 | GDS50151 | Drive Shaft | | 21 | 23 | 49.8 | 83.5 | 715 | |
| | 1997.08- | | F | R | Box Body/MPV FWD D7F 744, D7F 746, D7F 722, D7F 710, D7F 720, D7F 726 | Date From:2002.11 | GDS50263 | Drive Shaft | 44T | 21 | 23 | 52.2 | 85.5 | 723.5 | |

## RENAULT
### Kangoo Express

| Model | YEAR | TRANSM. | F/R | L/R | BODY STYLE & DRIVE TYPE & ENGINE | REMARKS | G-AP Ref. | PRODUCT | ABS | A | B | C | H | L | P |
|---|---|---|---|---|---|---|---|---|---|---|---|---|---|---|---|
| 1.2 (43 kw) | 1997.08- | | F | R | Box Body/MPV FWD D7F 744, D7F 746, D7F 722, D7F 710, D7F 720, D7F 726 | outer teeth of wheel side:23 | GDS50524 | Drive Shaft | 26T | 23 | 23 | 57.5 | 86.5 | 729 | |
| | 1997.08- | | F | L | Box Body/MPV FWD D7F 744, D7F 746, D7F 722, D7F 710, D7F 720, D7F 726 | Date From:2002.11;For vehicles with off-road suspension | GCO50069 | Outer Joint | 44T | 23 | 30 | 57.5 | 86.5 | 58.5 | I |
| | 1997.08-2001.07 | 5MT | F | L | MPV Van FWD D7F710/D7F744 | | GDS50150 | Drive Shaft | | 21 | 30 | 49.8 | 83.5 | 623 | |
| | 1997.08-2001.07 | 5MT | F | R | MPV Van FWD D7F710/D7F744 | For vehicles without bad road version,For vehicles with ABS,Number of Splines:21 | GDS50526 | Drive Shaft | 26T | 21 | 23 | 52.3 | 84.5 | 724 | |
| | 1997.08-2001.07 | 5MT | F | L/R | MPV Van FWD D7F710/D7F744 | For vehicles without off-road suspension | GCO50004 | Outer Joint | 26T | 21 | 30 | 52.2 | 85.5 | 59 | I |
| | 1997.08-2001.07 | | F | L | MPV Van FWD D7F710/D7F744 | For vehicles without off-road suspension | GDS50004 | Drive Shaft | 26T | 21 | | 57 | 84.5 | 625.7 | |
| | 1997.08-2001.07 | | F | L | MPV Van FWD D7F710/D7F744 | For vehicles with off-road suspension | GDS50552 | Drive Shaft | 26T | 21 | | 52.2 | 85.5 | 630 | |
| | 1997.08-2001.07 | | F | R | MPV Van FWD D7F710/D7F744 | For vehicles with off-road suspension | GDS50151 | Drive Shaft | | 21 | 23 | 49.8 | 83.5 | 715 | |
| | 1997.08-2001.07 | | F | R | MPV Van FWD D7F710/D7F744 | for vehicles with off-road suspension | GDS50395 | Drive Shaft | 26T | 21 | 23 | 51.5 | 83 | 728 | |
| | 1997.08-2001.07 | | F | R | MPV Van FWD D7F710/D7F744 | For vehicles with off-road suspension | GDS50524 | Drive Shaft | 26T | 23 | 23 | 57.5 | 86.5 | 729 | |
| 1.2 (44 kw) | 1997.08-2003.06 | 5MT | F | L | MPV Van FWD D7F710/D7F722/D7F744/D7F764/D7F766 | | GDS50150 | Drive Shaft | | 21 | 30 | 49.8 | 83.5 | 623 | |
| | 1997.08-2003.06 | 5MT | F | L | MPV Van FWD D7F710/D7F722/D7F744/D7F764/D7F766 | | GDS50552 | Drive Shaft | 26T | 21 | | 52.2 | 85.5 | 630 | |
| | 1997.08-2003.06 | 5MT | F | R | MPV Van FWD D7F710/D7F722/D7F744/D7F764/D7F766 | For vehicles without bad road version,For vehicles with ABS,Number of Splines:21 | GDS50526 | Drive Shaft | 26T | 21 | 23 | 52.3 | 84.5 | 724 | |
| | 1997.08-2003.06 | 5MT | F | L/R | MPV Van FWD D7F710/D7F722/D7F744/D7F764/D7F766 | | GCO50004 | Outer Joint | 26T | 21 | 30 | 52.2 | 85.5 | 59 | I |
| | 1997.08-2003.06 | MT | F | R | MPV Van FWD D7F710/D7F722/D7F744/D7F764/D7F766 | | GDS50125 | Drive Shaft | | 21 | 23 | 57 | 84.5 | 713.5 | |
| | 1997.08-2003.06 | MT | F | R | MPV Van FWD D7F710/D7F722/D7F744/D7F764/D7F766 | | GCI50008 | Inner Joint | | 23 | 30 | 36.3 | | 120.7 | |
| | 1997.08-2003.06 | | F | L | MPV Van FWD D7F710/D7F722/D7F744/D7F764/D7F766 | For vehicles without off-road suspension | GDS50004 | Drive Shaft | 26T | 21 | | 57 | 84.5 | 625.7 | |
| | 1997.08-2003.06 | | F | R | MPV Van FWD D7F710/D7F722/D7F744/D7F764/D7F766 | For vehicles with off-road suspension | GDS50151 | Drive Shaft | | 21 | 23 | 49.8 | 83.5 | 715 | |
| | 1997.08-2003.06 | | F | R | MPV Van FWD D7F710/D7F722/D7F744/D7F764/D7F766 | for vehicles with off-road suspension | GDS50395 | Drive Shaft | 26T | 21 | 23 | 51.5 | 83 | 728 | |
| | 1997.08-2003.06 | | F | R | MPV Van FWD D7F710/D7F722/D7F744/D7F764/D7F766 | For vehicles with off-road suspension | GDS50524 | Drive Shaft | 26T | 23 | 23 | 57.5 | 86.5 | 729 | |
| 1.2 (55 kw) | 2001.10- | 5MT | F | L | Box Body/MPV FWD D4F 730, D4F 712, D4F 714 | | GDS50150 | Drive Shaft | | 21 | 30 | 49.8 | 83.5 | 623 | |
| | 2001.10- | 5MT | F | R | Box Body/MPV FWD D4F 730, D4F 712, D4F 714 | Date from:2002.11 | GDS50151 | Drive Shaft | | 21 | 23 | 49.8 | 83.5 | 715 | |
| | 2001.10- | 5MT | F | R | Box Body/MPV FWD D4F 730, D4F 712, D4F 714 | For vehicles with off-road suspension | GDS50524 | Drive Shaft | 26T | 23 | 23 | 57.5 | 86.5 | 729 | |
| | 2001.10- | 5MT | F | R | Box Body/MPV FWD D4F 730, D4F 712, D4F 714 | For vehicles without bad road version | GDS50526 | Drive Shaft | 26T | 21 | 23 | 52.3 | 84.5 | 724 | |
| | 2001.10- | 5MT | F | L/R | Box Body/MPV FWD D4F 730, D4F 712, D4F 714 | Date to:2008.12 | GCO50004 | Outer Joint | 26T | 21 | 30 | 52.2 | 85.5 | 59 | I |
| | 2001.10- | 5MT | F | L/R | Box Body/MPV FWD D4F 730, D4F 712, D4F 714 | Date from:2002.11,For vehicles with off-road suspension | GCO50069 | Outer Joint | 44T | 23 | 30 | 57.5 | 86.5 | 58.5 | I |
| | 2001.10- | MT | F | L | Box Body/MPV FWD D4F 730, D4F 712, D4F 714 | Date to:2008.12;Trans. code:JB1/JB3 | GDS50004 | Drive Shaft | 26T | 21 | | 57 | 84.5 | 625.7 | |
| | 2001.10- | MT | F | L | Box Body/MPV FWD D4F 730, D4F 712, D4F 714 | Date to:2008.06 | GDS50112 | Drive Shaft | 26T | 21 | | 57 | 84.5 | 630.7 | |
| | 2001.10- | MT | F | L | Box Body/MPV FWD D4F 730, D4F 712, D4F 714 | | GDS50177 | Drive Shaft | | 21 | | 57 | 84.5 | 625.7 | |
| | 2001.10- | MT | F | L | Box Body/MPV FWD D4F 730, D4F 712, D4F 714 | Date from:2002.11;Date to:2008.06;Type:FC1A | GDS50401 | Drive Shaft | 44T | 21 | | 57 | 84 | 629 | |
| | 2001.10- | MT | F | R | Box Body/MPV FWD D4F 730, D4F 712, D4F 714 | Date to:2008.06,Trans. code:LB1/3 | GDS50125 | Drive Shaft | | 21 | 23 | 57 | 84.5 | 713.5 | |
| | 2001.10- | MT | F | R | Box Body/MPV FWD D4F 730, D4F 712, D4F 714 | | GDS50146 | Drive Shaft | | 21 | 23 | 57 | 84.5 | 732.5 | |
| | 2001.10- | MT | F | R | Box Body/MPV FWD D4F 730, D4F 712, D4F 714 | | GDS50357 | Drive Shaft | 26T | 21 | 23 | 57 | 84 | 718 | |
| | 2001.10- | MT | F | R | Box Body/MPV FWD D4F 730, D4F 712, D4F 714 | Date to:2008.06;Trans. code:JB1/3 | GDS50395 | Drive Shaft | 26T | 21 | 23 | 51.5 | 83 | 728 | |
| | 2001.10- | MT | F | R | Box Body/MPV FWD D4F 730, D4F 712, D4F 714 | | GDS99072 | Drive Shaft | 44T | 21 | 23 | 57 | 84.5 | 720 | |
| | 2001.10- | MT | F | R | Box Body/MPV FWD D4F 730, D4F 712, D4F 714 | Date to:2008.06 | GCI50008 | Inner Joint | | 23 | 30 | 36.3 | | 120.7 | |
| | 2001.10- | | F | L | Box Body/MPV FWD D4F 730, D4F 712, D4F 714 | Date from:2002.11 | GDS50261 | Drive Shaft | 44T | 23 | | 57.5 | 86.5 | 630 | |
| | 2001.10- | | F | L | Box Body/MPV FWD D4F 730, D4F 712, D4F 714 | Date To:2002.10;For vehicles with off-road suspension | GDS50552 | Drive Shaft | 26T | 21 | | 52.2 | 85.5 | 630 | |
| | 2001.10- | | F | L | Box Body/MPV FWD D4F 730, D4F 712, D4F 714 | For vehicles with off-road suspension | GDS50552 | Drive Shaft | 26T | 21 | | 52.2 | 85.5 | 630 | |
| | 2001.10- | | F | L | Box Body/MPV FWD D4F 730, D4F 712, D4F 714 | Date To:2002.10;Type:Kangoo Rapid;for vehicles with off-road suspension | GDS50552 | Drive Shaft | 26T | 21 | | 52.2 | 85.5 | 630 | |
| 1.2 (84 kw) | 2013.07- | 6DCT | F | L | Box Body/MPV FWD H5F 400, H5F 412, H5F 408 | | GDS83777 | Drive Shaft | | 27 | 34 | 56.5 | 91 | 625 | |
| | 2013.07- | 6DCT | F | L | Box Body/MPV FWD H5F 400, H5F 412, H5F 408 | | GCO82484 | Outer Joint | | 27 | 33 | 56.5 | 91 | 61.5 | I |
| | 2013.07- | 6DCT | F | L | Box Body/MPV FWD H5F 400, H5F 412, H5F 408 | | GCI50140 | Inner Joint | | 34 | 33 | 40 | 54 | 106 | |
| | 2013.07- | 6MT | F | L | Box Body/MPV FWD H5F 400, H5F 412, H5F 408 | | GDS99228 | Drive Shaft | | 27 | 26 | 56.7 | 91 | 675 | |
| | 2013.07- | 6MT | F | R | Box Body/MPV FWD H5F 400, H5F 412, H5F 408 | | GDS50541 | Drive Shaft | | 23 | 26 | 49 | 83.5 | 913 | |
| | 2013.07- | 6MT/6DCT | F | R | Box Body/MPV FWD H5F 400, H5F 412, H5F 408 | | GDS83913 | Drive Shaft | | 27 | 26 | 56.7 | 91 | 918 | |
| | 2013.07- | 6MT/6DCT | F | R | Box Body/MPV FWD H5F 400, H5F 412, H5F 408 | | GCO50136 | Outer Joint | | 27 | 22 | 56.7 | 91 | 55 | I |
| | 2013.07- | 6MT/6DCT | F | R | Box Body/MPV FWD H5F 400, H5F 412, H5F 408 | | GCI50135 | Inner Joint | | 26 | 22 | 33 | 346 | 96 | |
| 1.4 (55 kw) | 1997.08-2008.06 | 4AT/5MT | F | L | Box Body/MPV FWD E7J 780, E7J 634, E7J 635, K7J 701, K7J 700 | | GDS50150 | Drive Shaft | | 21 | 30 | 49.8 | 83.5 | 623 | |
| | 1997.08-2008.06 | 4AT/5MT | F | R | Box Body/MPV FWD E7J 780, E7J 634, E7J 635, K7J 701, K7J 700 | Date From:2002.11;Date To:2003.03;Enginecode:E7J635/K7J701;Date From:2002.11;Date To:2003.03,For Engine Code:E7J635/K7J701 | GDS50525 | Drive Shaft | 44T | 21 | 23 | 52.2 | 85.5 | 741 | |
| | 1997.08-2008.06 | AT | F | L | Box Body/MPV FWD E7J 780, E7J 634, E7J 635, K7J 701, K7J 700 | | GDS50579 | Drive Shaft | 26T | 21 | 26 | 52.2 | 85.5 | 613 | |
| | 1997.08-2008.06 | AT | F | R | Box Body/MPV FWD E7J 780, E7J 634, E7J 635, K7J 701, K7J 700 | | GDS50485 | Drive Shaft | 44T | 21 | 23 | 52.2 | 85.5 | 733 | |
| | 1997.08-2008.06 | AT | F | R | Box Body/MPV FWD E7J 780, E7J 634, E7J 635, K7J 701, K7J 700 | | GDS50486 | Drive Shaft | 26T | 21 | 23 | 52.2 | 85.5 | 733 | |
| | 1997.08-2008.06 | AT | F | R | Box Body/MPV FWD E7J 780, E7J 634, E7J 635, K7J 701, K7J 700 | | GDS50588 | Drive Shaft | 26T | 21 | 23 | 57 | 84 | 739 | |
| | 1997.08-2008.06 | AT/MT | F | L | Box Body/MPV FWD E7J 780, E7J 634, E7J 635, K7J 701, K7J 700 | | GCO50004 | Outer Joint | 26T | 21 | 30 | 52.2 | 85.5 | 59 | I |
| | 1997.08-2008.06 | MT | F | L | Box Body/MPV FWD E7J 780, E7J 634, E7J 635, K7J 701, K7J 700 | Trans. code:JB1/JB3 | GDS50004 | Drive Shaft | 26T | 21 | | 57 | 84.5 | 625.7 | |
| | 1997.08-2008.06 | MT | F | L | Box Body/MPV FWD E7J 780, E7J 634, E7J 635, K7J 701, K7J 700 | Date From:1999.09 | GDS50112 | Drive Shaft | 26T | 21 | | 57 | 84.5 | 630.7 | |
| | 1997.08-2008.06 | MT | F | L | Box Body/MPV FWD E7J 780, E7J 634, E7J 635, K7J 701, K7J 700 | | GDS50177 | Drive Shaft | | 21 | | 57 | 84.5 | 625.7 | |
| | 1997.08-2008.06 | MT | F | R | Box Body/MPV FWD E7J 780, E7J 634, E7J 635, K7J 701, K7J 700 | | GDS50063 | Drive Shaft | | 21 | 23 | 51.5 | 83 | 720 | |
| | 1997.08-2008.06 | MT | F | R | Box Body/MPV FWD E7J 780, E7J 634, E7J 635, K7J 701, K7J 700 | | GDS50125 | Drive Shaft | | 21 | 23 | 57 | 84.5 | 713.5 | |
| | 1997.08-2008.06 | MT | F | R | Box Body/MPV FWD E7J 780, E7J 634, E7J 635, K7J 701, K7J 700 | | GDS50146 | Drive Shaft | | 21 | 23 | 57 | 84.5 | 732.5 | |
| | 1997.08-2008.06 | MT | F | R | Box Body/MPV FWD E7J 780, E7J 634, E7J 635, K7J 701, K7J 700 | | GDS50357 | Drive Shaft | 26T | 21 | 23 | 57 | 84 | 718 | |
| | 1997.08-2008.06 | MT | F | R | Box Body/MPV FWD E7J 780, E7J 634, E7J 635, K7J 701, K7J 700 | Date From:1998.07,Trans. code:JB1/3 | GDS50395 | Drive Shaft | 26T | 21 | 23 | 51.5 | 83 | 728 | |
| | 1997.08-2008.06 | MT | F | R | Box Body/MPV FWD E7J 780, E7J 634, E7J 635, K7J 701, K7J 700 | Date from:1998.07,Date to:2001.12 | GCI50008 | Inner Joint | | 23 | 30 | 36.3 | | 120.7 | |
| | 1997.08-2008.06 | | F | L | Box Body/MPV FWD E7J 780, E7J 634, E7J 635, K7J 701, K7J 700 | Date from:2002.11,For Engine code:K7J700 | GDS50261 | Drive Shaft | 44T | 23 | | 57.5 | 86.5 | 630 | |

Technical Specifications: A, B, C, H, L, P

| | YEAR | TRANSM. | F/R | L/R | BODY STYLE & DRIVE TYPE & ENGINE | REMARKS | G-AP Ref. | PRODUCT | ABS | Technical Specifications A | B | C | H | L | P |
|---|---|---|---|---|---|---|---|---|---|---|---|---|---|---|---|
| **RENAULT** **Kangoo Express** | | | | | | | | | | | | | | | |
| 1.4 (55 kw) | 1997.08-2008.06 | | F | L | Box Body/MPV FWD E7J 780, E7J 634, E7J 635, K7J 701, K7J 700 | Date From:2003.11;For Engine Code:K7J700;For vehicles without off-road suspension | GDS50401 | Drive Shaft | 44T | 21 | | 57 | 84 | 629 | |
| | 1997.08-2008.06 | | F | L | Box Body/MPV FWD E7J 780, E7J 634, E7J 635, K7J 701, K7J 700 | Date from:2002.11;Date to:2003.03;Engine code:E7J635/K7J701 | GDS50519 | Drive Shaft | 44T | 21 | 26 | 52.2 | 85.5 | 609 | |
| | 1997.08-2008.06 | | F | L | Box Body/MPV FWD E7J 780, E7J 634, E7J 635, K7J 701, K7J 700 | Date To:2002.10;For Engine Code:E7J634/K7J700;For vehicles with off-road suspension | GDS50552 | Drive Shaft | 26T | 21 | | 52.2 | 85.5 | 630 | |
| | 1997.08-2008.06 | | F | L | Box Body/MPV FWD E7J 780, E7J 634, E7J 635, K7J 701, K7J 700 | For vehicles with off-road suspension | GDS50552 | Drive Shaft | 26T | 21 | | 52.2 | 85.5 | 630 | |
| | 1997.08-2008.06 | | F | L | Box Body/MPV FWD E7J 780, E7J 634, E7J 635, K7J 701, K7J 700 | Date To:2002.10;for vehicles with off-road suspension;For Engine Code:E7J634;For Engine Code:K7J 700 | GDS50552 | Drive Shaft | 26T | 21 | | 52.2 | 85.5 | 630 | |
| | 1997.08-2008.06 | | F | L | Box Body/MPV FWD E7J 780, E7J 634, E7J 635, K7J 701, K7J 700 | Date To:2001.12;Type:Kangoo Rapid;for vehicles with off-road suspension | GDS50552 | Drive Shaft | 26T | 21 | | 52.2 | 85.5 | 630 | |
| | 1997.08-2008.06 | | F | L | Box Body/MPV FWD E7J 780, E7J 634, E7J 635, K7J 701, K7J 700 | Date To:2002.10;For Engine Code:E7J635/K7J701 | GDS99169 | Drive Shaft | 26T | 21 | 26 | 52.2 | 85.5 | 621 | |
| | 1997.08-2008.06 | | F | R | Box Body/MPV FWD E7J 780, E7J 634, E7J 635, K7J 701, K7J 700 | Date From:2002.11;For Engine Code:E7J634/K7J700 | GDS50151 | Drive Shaft | | 21 | 23 | 49.8 | 83.5 | 715 | |
| | 1997.08-2008.06 | | F | R | Box Body/MPV FWD E7J 780, E7J 634, E7J 635, K7J 701, K7J 700 | For vehicles with off-road suspension | GDS50524 | Drive Shaft | 26T | 23 | 23 | 57.5 | 86.5 | 729 | |
| | 1997.08-2008.06 | | F | R | Box Body/MPV FWD E7J 780, E7J 634, E7J 635, K7J 701, K7J 700 | For Engine Code:E7J634/K7J700;For vehicles without off-road suspension | GDS50526 | Drive Shaft | 26T | 21 | 23 | 52.3 | 84.5 | 724 | |
| | 1997.08-2008.06 | | F | L | Box Body/MPV FWD E7J 780, E7J 634, E7J 635, K7J 701, K7J 700 | | GCO50069 | Outer Joint | 44T | 23 | 30 | 57.5 | 86.5 | 58.5 | I |
| 1.5 (42 kw) | 2002.12- | MT | F | L | Box Body/MPV FWD K9K 704 | | GDS50004 | Drive Shaft | 26T | 21 | | 57 | 84.5 | 625.7 | |
| | 2002.12- | MT | F | L | Box Body/MPV FWD K9K 704 | | GDS50177 | Drive Shaft | | 21 | | 57 | 84.5 | 625.7 | |
| | 2002.12- | MT | F | L | Box Body/MPV FWD K9K 704 | | GDS50261 | Drive Shaft | 44T | 23 | | 57.5 | 86.5 | 630 | |
| | 2002.12- | MT | F | L | Box Body/MPV FWD K9K 704 | Date To:2006.12,Trans. code:JB1/3 | GDS50398 | Drive Shaft | | 21 | 30 | 50 | 84 | 632 | |
| | 2002.12- | MT | F | L | Box Body/MPV FWD K9K 704 | | GDS50401 | Drive Shaft | 44T | 21 | | 57 | 84 | 629 | |
| | 2002.12- | MT | F | L | Box Body/MPV FWD K9K 704 | Date To:2006.12,Trans. code:JB1/3 | GDS50552 | Drive Shaft | 26T | 21 | | 52.2 | 85.5 | 630 | |
| | 2002.12- | MT | F | R | Box Body/MPV FWD K9K 704 | Date To:2006.12,Trans. code:JB1/3 | GDS50125 | Drive Shaft | | 21 | 23 | 57 | 84.5 | 713.5 | |
| | 2002.12- | MT | F | R | Box Body/MPV FWD K9K 704 | | GDS50146 | Drive Shaft | | 21 | 23 | 57 | 84.5 | 732.5 | |
| | 2002.12- | MT | F | R | Box Body/MPV FWD K9K 704 | | GDS50245 | Drive Shaft | 44T | 21 | 23 | 52.5 | 85 | 726 | |
| | 2002.12- | MT | F | R | Box Body/MPV FWD K9K 704 | | GDS50250 | Drive Shaft | 26T | 21 | 23 | 57 | 84.5 | 732.5 | |
| | 2002.12- | MT | F | R | Box Body/MPV FWD K9K 704 | Date to:2006.04 | GDS50260 | Drive Shaft | 44T | 23 | 23 | 57.5 | 86.5 | 724 | |
| | 2002.12- | MT | F | R | Box Body/MPV FWD K9K 704 | Date To:2006.12,Trans. code:JB1/3 | GDS50395 | Drive Shaft | 26T | 21 | 23 | 51.5 | 83 | 728 | |
| | 2002.12- | MT | F | R | Box Body/MPV FWD K9K 704 | | GDS99072 | Drive Shaft | 44T | 21 | 23 | 57 | 84.5 | 720 | |
| | 2002.12- | MT | F | L/R | Box Body/MPV FWD K9K 704 | | GCO50069 | Outer Joint | 44T | 23 | 30 | 57.5 | 86.5 | 58.5 | I |
| | 2002.12- | MT | F | R | Box Body/MPV FWD K9K 704 | Date to:2006.12 | GCI50008 | Inner Joint | | 23 | 30 | 36.3 | | 120.7 | |
| | 2002.12- | | F | L | Box Body/MPV FWD K9K 704 | Type:FOR NORMAL ROADS | GDS50194 | Drive Shaft | 26T | 23 | | 57.5 | 86.5 | 631 | |
| | 2002.12- | | F | L | Box Body/MPV FWD K9K 704 | Type:FOR NORMAL ROADS | GDS50394 | Drive Shaft | | 23 | | 57.5 | 86.5 | 631 | |
| | 2002.12- | | F | L | Box Body/MPV FWD K9K 704 | Type:FOR NORMAL ROADS | GCO50106 | Outer Joint | 26T | 23 | 30 | 57.5 | 86.5 | 58.5 | I |
| 1.5 (45 kw) | 2005.10- | 5MT | F | L | Box Body/MPV FWD K9K 716 | with housing | GDS50514 | Drive Shaft | 44T | 23 | 26 | 57.5 | 86.5 | 606 | |
| | 2005.10- | 5MT | F | R | Box Body/MPV FWD K9K 716 | | GDS50245 | Drive Shaft | 44T | 21 | 23 | 52.5 | 85 | 726 | |
| | 2005.10- | MT | F | L | Box Body/MPV FWD K9K 716 | | GDS50004 | Drive Shaft | 26T | 21 | | 57 | 84.5 | 625.7 | |
| | 2005.10- | MT | F | L | Box Body/MPV FWD K9K 716 | | GDS50177 | Drive Shaft | | 21 | | 57 | 84.5 | 625.7 | |
| | 2005.10- | MT | F | L | Box Body/MPV FWD K9K 716 | | GDS50261 | Drive Shaft | 44T | 23 | | 57.5 | 86.5 | 630 | |
| | 2005.10- | MT | F | L | Box Body/MPV FWD K9K 716 | | GDS50401 | Drive Shaft | 44T | 21 | | 57 | 84 | 629 | |
| | 2005.10- | MT | F | R | Box Body/MPV FWD K9K 716 | | GDS50146 | Drive Shaft | | 21 | 23 | 57 | 84.5 | 732.5 | |
| | 2005.10- | MT | F | R | Box Body/MPV FWD K9K 716 | | GDS50250 | Drive Shaft | 26T | 21 | 23 | 57 | 84.5 | 732.5 | |
| | 2005.10- | MT | F | R | Box Body/MPV FWD K9K 716 | | GDS99072 | Drive Shaft | 44T | 21 | 23 | 57 | 84.5 | 720 | |
| | 2005.10- | MT | F | R | Box Body/MPV FWD K9K 716 | Date to:2008.06 | GCI50008 | Inner Joint | | 23 | 30 | 36.3 | | 120.7 | |
| | 2005.10- | MT | F | R | Box Body/MPV FWD K9K 716 | Date to:2008.06 | GCI50086 | Inner Joint | | 26 | 33 | 33 | 326 | 94 | |
| | 2005.10- | | F | R | Box Body/MPV FWD K9K 716 | Date to:2008.06,For OE number:8200535800 | GDS50515 | Drive Shaft | 44T | 23 | 26 | 57.5 | 86.5 | 866 | |
| | 2005.10- | | F | L | Box Body/MPV FWD K9K 716 | Type:FOR ALL ROADS | GCO50069 | Outer Joint | 44T | 23 | 30 | 57.5 | 86.5 | 58.5 | I |
| 1.5 (48 kw) | 2001.12- | 5MT | F | L | Box Body/MPV FWD K9K 704, K9K 702, K9K 700 | | GDS50150 | Drive Shaft | | 21 | 30 | 49.8 | 83.5 | 623 | |
| | 2001.12- | 5MT | F | R | Box Body/MPV FWD K9K 704, K9K 702, K9K 700 | For vehicles without off-road suspension | GDS50017 | Drive Shaft | 26T | 21 | 23 | 51.5 | 83 | 715 | |
| | 2001.12- | 5MT | F | R | Box Body/MPV FWD K9K 704, K9K 702, K9K 700 | For vehicles without off-road suspension;Inner teeth of tranm.side:30 | GDS50162 | Drive Shaft | 26T | 21 | 23 | 52.2 | 85.5 | 723.5 | |
| | 2001.12- | 5MT | F | L/R | Box Body/MPV FWD K9K 704, K9K 702, K9K 700 | Date to:2002.10,For vehicles with off-road suspension | GCO50004 | Outer Joint | 26T | 21 | 30 | 52.2 | 85.5 | 59 | I |
| | 2001.12- | 5MT | F | L/R | Box Body/MPV FWD K9K 704, K9K 702, K9K 700 | Date from:2002.11,For vehicles with off-road suspension | GCO50069 | Outer Joint | 44T | 23 | 30 | 57.5 | 86.5 | 58.5 | I |
| | 2001.12- | MT | F | L | Box Body/MPV FWD K9K 704, K9K 702, K9K 700 | Date To:2008.06,Type:Kangoo Rapid | GDS50004 | Drive Shaft | 26T | 21 | | 57 | 84.5 | 625.7 | |
| | 2001.12- | MT | F | L | Box Body/MPV FWD K9K 704, K9K 702, K9K 700 | Date to:2008.06 Type:Kangoo Express;Date to:2008.06 Type:Kangoo Rapid | GDS50112 | Drive Shaft | 26T | 21 | | 57 | 84.5 | 630.7 | |
| | 2001.12- | MT | F | L | Box Body/MPV FWD K9K 704, K9K 702, K9K 700 | | GDS50177 | Drive Shaft | | 21 | | 57 | 84.5 | 625.7 | |
| | 2001.12- | MT | F | L | Box Body/MPV FWD K9K 704, K9K 702, K9K 700 | Date To:2002.10;For vehicles without off-road suspension | GDS50194 | Drive Shaft | 26T | 23 | | 57.5 | 86.5 | 631 | |
| | 2001.12- | MT | F | L | Box Body/MPV FWD K9K 704, K9K 702, K9K 700 | Date from:2002.11;Date to:2008.06 | GDS50261 | Drive Shaft | 44T | 23 | | 57.5 | 86.5 | 630 | |
| | 2001.12- | MT | F | L | Box Body/MPV FWD K9K 704, K9K 702, K9K 700 | | GDS50394 | Drive Shaft | | 23 | | 57.5 | 86.5 | 631 | |
| | 2001.12- | MT | F | L | Box Body/MPV FWD K9K 704, K9K 702, K9K 700 | | GDS50398 | Drive Shaft | | 21 | 30 | 50 | 84 | 632 | |
| | 2001.12- | MT | F | L | Box Body/MPV FWD K9K 704, K9K 702, K9K 700 | Date From:2002.11,Date To:2008.06 | GDS50401 | Drive Shaft | 44T | 21 | | 57 | 84 | 629 | |
| | 2001.12- | MT | F | L | Box Body/MPV FWD K9K 704, K9K 702, K9K 700 | Date To:2008.06 | GDS50552 | Drive Shaft | 26T | 21 | | 52.2 | 85.5 | 630 | |
| | 2001.12- | MT | F | R | Box Body/MPV FWD K9K 704, K9K 702, K9K 700 | Date To:2008.06 | GDS50125 | Drive Shaft | | 21 | 23 | 57 | 84.5 | 713.5 | |
| | 2001.12- | MT | F | R | Box Body/MPV FWD K9K 704, K9K 702, K9K 700 | | GDS50146 | Drive Shaft | | 21 | 23 | 57 | 84.5 | 732.5 | |
| | 2001.12- | MT | F | R | Box Body/MPV FWD K9K 704, K9K 702, K9K 700 | Date To:2008.06,Type:Kangoo Rapid, | GDS50151 | Drive Shaft | | 21 | 23 | 49.8 | 83.5 | 715 | |
| | 2001.12- | MT | F | R | Box Body/MPV FWD K9K 704, K9K 702, K9K 700 | Date To:2008.06 | GDS50245 | Drive Shaft | 44T | 21 | 23 | 52.5 | 85 | 726 | |
| | 2001.12- | MT | F | R | Box Body/MPV FWD K9K 704, K9K 702, K9K 700 | Date to:06.2008;Inner teeth of tranm.side:22 | GDS50395 | Drive Shaft | 26T | 21 | 23 | 51.5 | 83 | 728 | |
| | 2001.12- | MT | F | R | Box Body/MPV FWD K9K 704, K9K 702, K9K 700 | Date to:06.2008 | GDS50524 | Drive Shaft | 26T | 23 | 23 | 57.5 | 86.5 | 729 | |
| | 2001.12- | MT | F | R | Box Body/MPV FWD K9K 704, K9K 702, K9K 700 | | GDS99072 | Drive Shaft | 44T | 21 | 23 | 57 | 84.5 | 720 | |
| | 2001.12- | MT | F | R | Box Body/MPV FWD K9K 704, K9K 702, K9K 700 | Date to:2008.06 | GCI50008 | Inner Joint | | 23 | 30 | 36.3 | | 120.7 | |
| | 2001.12- | | F | L | Box Body/MPV FWD K9K 704, K9K 702, K9K 700 | Date To:2002.10;For vehicles without off-road suspension | GCO50106 | Outer Joint | 26T | 23 | 30 | 57.5 | 86.5 | 58.5 | I |

| | YEAR | TRANSM. | F/R | L/R | BODY STYLE & DRIVE TYPE & ENGINE | REMARKS | G-AP Ref. | PRODUCT | ABS | Technical Specifications A | B | C | H | L | P |
|---|---|---|---|---|---|---|---|---|---|---|---|---|---|---|---|
| **RENAULT** **Kangoo Express** | | | | | | | | | | | | | | | |
| 1.5 (50 kw) | 2005.06- | 5MT | F | L | Box Body/MPV FWD K9K 714 | | GDS50514 | Drive Shaft | 44T | 23 | 26 | 57.5 | 86.5 | 606 | |
| | 2005.06- | 5MT | F | R | Box Body/MPV FWD K9K 714 | | GDS50515 | Drive Shaft | 44T | 23 | 26 | 57.5 | 86.5 | 866 | |
| | 2005.06- | MT | F | L | Box Body/MPV FWD K9K 714 | | GDS50004 | Drive Shaft | 26T | 21 | | 57 | 84.5 | 625.7 | |
| | 2005.06- | MT | F | L | Box Body/MPV FWD K9K 714 | | GDS50177 | Drive Shaft | | 21 | | 57 | 84.5 | 625.7 | |
| | 2005.06- | MT | F | L | Box Body/MPV FWD K9K 714 | | GDS50376 | Drive Shaft | | 23 | 26 | 57.5 | 86.5 | 606 | |
| | 2005.06- | MT | F | R | Box Body/MPV FWD K9K 714 | | GDS50146 | Drive Shaft | | 21 | 23 | 57 | 84.5 | 732.5 | |
| | 2005.06- | MT | F | R | Box Body/MPV FWD K9K 714 | | GDS50250 | Drive Shaft | 26T | 21 | 23 | 57 | 84.5 | 732.5 | |
| | 2005.06- | MT | F | R | Box Body/MPV FWD K9K 714 | | GDS50375 | Drive Shaft | | 23 | 26 | 57.5 | 86.5 | 866 | |
| | 2005.06- | MT | F | R | Box Body/MPV FWD K9K 714 | | GDS99072 | Drive Shaft | 44T | 21 | 23 | 57 | 84.5 | 720 | |
| | 2005.06- | MT | F | R | Box Body/MPV FWD K9K 714 | | GCO99087 | Outer Joint | | 23 | 30 | 57.5 | 86.5 | 58.5 | I |
| | 2005.06- | MT | F | L/R | Box Body/MPV FWD K9K 714 | | GCO50069 | Outer Joint | 44T | 23 | 30 | 57.5 | 86.5 | 58.5 | I |
| | 2005.06- | MT | F | L | Box Body/MPV FWD K9K 714 | | GCI50085 | Inner Joint | | 26 | 33 | 40 | 64 | 123 | |
| | 2005.06- | MT | F | R | Box Body/MPV FWD K9K 714 | Date to:2008.06 | GCI50086 | Inner Joint | | 26 | 33 | 33 | 326 | 94 | |
| | 2005.06- | MT | F | R | Box Body/MPV FWD K9K 714 | | GCI99169 | Inner Joint | | 26 | 30 | 33 | 326 | 95 | |
| | 2005.06- | | F | R | Box Body/MPV FWD K9K 714 | For vehicles with heavy duty suspension | GDS50364 | Drive Shaft | 44T | 23 | 26 | 57.5 | 86.5 | 866 | |
| | 2008.02- | 5MT | F | L | Box Body/MPV FWD K9K 800 | | GDS99070 | Drive Shaft | | 23 | 26 | 49 | 86 | 675 | |
| | 2008.02- | 5MT | F | L | Box Body/MPV FWD K9K 800 | | GDS99228 | Drive Shaft | | 27 | 26 | 56.7 | 91 | 675 | |
| | 2008.02- | 5MT | F | R | Box Body/MPV FWD K9K 800 | angular | GDS50541 | Drive Shaft | | 23 | 26 | 49 | 83.5 | 913 | |
| | 2008.02- | 5MT | F | R | Box Body/MPV FWD K9K 800 | bearing thickness 20mm | GDS50612 | Drive Shaft | | 27 | 26 | 56.7 | 91 | 918 | |
| | 2008.02- | 5MT | F | R | Box Body/MPV FWD K9K 800 | Date to:2012.06;round | GDS99071 | Drive Shaft | | 23 | 26 | 49 | 86 | 911 | |
| | 2008.02- | 5MT | F | R | Box Body/MPV FWD K9K 800 | bearing thickness 14mm | GDS99229 | Drive Shaft | | 27 | 26 | 56.7 | 91 | 920 | |
| | 2008.02- | 5MT | F | L/R | Box Body/MPV FWD K9K 800 | | GCO50136 | Outer Joint | | 27 | 22 | 56.7 | 91 | 55 | I |
| | 2008.02- | 5MT | F | L/R | Box Body/MPV FWD K9K 800 | | GCO99085 | Outer Joint | | 23 | 30 | 49 | 86 | 59 | I |
| | 2008.02- | 5MT | F | L | Box Body/MPV FWD K9K 800 | | GCI50048 | Inner Joint | | 26 | 30 | 40 | 64 | 121 | |
| | 2008.02- | 5MT | F | L | Box Body/MPV FWD K9K 800 | | GCI50057 | Inner Joint | | 26 | 22 | 40 | 64 | 104 | |
| | 2008.02- | 5MT | F | R | Box Body/MPV FWD K9K 800 | bearing thickness 14mm | GCI50051 | Inner Joint | | 26 | 22 | 33 | 326 | 96 | |
| | 2008.02- | 5MT | F | R | Box Body/MPV FWD K9K 800 | bearing thickness 20mm | GCI50137 | Inner Joint | | 26 | 22 | 33 | 330 | 96.5 | |
| | 2008.02- | 5MT | F | R | Box Body/MPV FWD K9K 800 | | GCI99169 | Inner Joint | | 26 | 30 | 33 | 326 | 95 | |
| 1.5 (55 kw) | 2010.09- | 5MT | F | L | Box Body/MPV FWD K9K 808, K9K 608, K9K 628 | | GDS99070 | Drive Shaft | | 23 | 26 | 49 | 86 | 675 | |
| | 2010.09- | 5MT | F | L | Box Body/MPV FWD K9K 808, K9K 608, K9K 628 | | GDS99228 | Drive Shaft | | 27 | 26 | 56.7 | 91 | 675 | |
| | 2010.09- | 5MT | F | R | Box Body/MPV FWD K9K 808, K9K 608, K9K 628 | bearing thickness 20mm | GDS50612 | Drive Shaft | | 27 | 26 | 56.7 | 91 | 918 | |
| | 2010.09- | 5MT | F | R | Box Body/MPV FWD K9K 808, K9K 608, K9K 628 | Date to:2012.06 | GDS99071 | Drive Shaft | | 23 | 26 | 49 | 86 | 911 | |
| | 2010.09- | 5MT | F | R | Box Body/MPV FWD K9K 808, K9K 608, K9K 628 | bearing thickness 14mm | GDS99229 | Drive Shaft | | 27 | 26 | 56.7 | 91 | 920 | |
| | 2010.09- | 5MT | F | L/R | Box Body/MPV FWD K9K 808, K9K 608, K9K 628 | Outer teething wheel side:27 | GCO50136 | Outer Joint | | 27 | 22 | 56.7 | 91 | 55 | I |
| | 2010.09- | 5MT | F | L/R | Box Body/MPV FWD K9K 808, K9K 608, K9K 628 | Outer teething wheel side:23 | GCO99085 | Outer Joint | | 23 | 30 | 49 | 86 | 59 | I |
| | 2010.09- | 5MT | F | L | Box Body/MPV FWD K9K 808, K9K 608, K9K 628 | | GCI50048 | Inner Joint | | 26 | 30 | 40 | 64 | 121 | |
| | 2010.09- | 5MT | F | L | Box Body/MPV FWD K9K 808, K9K 608, K9K 628 | | GCI50057 | Inner Joint | | 26 | 22 | 40 | 64 | 104 | |
| | 2010.09- | 5MT | F | R | Box Body/MPV FWD K9K 808, K9K 608, K9K 628 | bearing thickness 14mm | GCI50051 | Inner Joint | | 26 | 22 | 33 | 326 | 96 | |
| | 2010.09- | 5MT | F | R | Box Body/MPV FWD K9K 808, K9K 608, K9K 628 | bearing thickness 20mm | GCI50137 | Inner Joint | | 26 | 22 | 33 | 330 | 96.5 | |
| | 2010.09- | 5MT | F | R | Box Body/MPV FWD K9K 808, K9K 608, K9K 628 | | GCI99169 | Inner Joint | | 26 | 30 | 33 | 326 | 95 | |
| 1.5 (59 kw) | 2019.10- | 6MT | F | L | Box Body/MPV FWD K9K 872 | | GDS58128 | Drive Shaft | | 27 | 26 | 51.5 | 90.5 | 670 | |
| | 2019.10- | 6MT | F | R | Box Body/MPV FWD K9K 872 | | GDS50612 | Drive Shaft | | 27 | 26 | 56.7 | 91 | 918 | |
| | 2019.10- | 6MT | F | L | Box Body/MPV FWD K9K 872 | | GCO83854 | Outer Joint | | 27 | 23 | 51.5 | 90.5 | 61 | M |
| | 2019.10- | 6MT | F | L | Box Body/MPV FWD K9K 872 | | GCI83909 | Inner Joint | | 26 | 23 | 39.95 | 64 | 104 | |
| 1.5 (60 kw) | 2003.04- | MT | F | L | Box Body/MPV FWD K9K 710, K9K 702 | Date To:2008.12 | GDS50194 | Drive Shaft | 26T | 23 | | 57.5 | 86.5 | 631 | |
| | 2003.04- | MT | F | L | Box Body/MPV FWD K9K 710, K9K 702 | | GDS50261 | Drive Shaft | 44T | 23 | | 57.5 | 86.5 | 630 | |
| | 2003.04- | MT | F | L | Box Body/MPV FWD K9K 710, K9K 702 | Date To:2006.12,Trans. code:JB1/3 | GDS50394 | Drive Shaft | | 23 | | 57.5 | 86.5 | 631 | |
| | 2003.04- | MT | F | L | Box Body/MPV FWD K9K 710, K9K 702 | | GDS50401 | Drive Shaft | 44T | 21 | | 57 | 84 | 629 | |
| | 2003.04- | MT | F | R | Box Body/MPV FWD K9K 710, K9K 702 | Date To:2006.12,Trans. code:JB1/3 | GDS50193 | Drive Shaft | 26T | 23 | 23 | 57.5 | 86.5 | 724 | |
| | 2003.04- | MT | F | R | Box Body/MPV FWD K9K 710, K9K 702 | | GDS50260 | Drive Shaft | 44T | 23 | 23 | 57.5 | 86.5 | 724 | |
| | 2003.04- | MT | F | R | Box Body/MPV FWD K9K 710, K9K 702 | | GDS50462 | Drive Shaft | | 23 | 23 | 57.5 | 86.5 | 724 | |
| | 2003.04- | MT | F | R | Box Body/MPV FWD K9K 710, K9K 702 | Date to:2006.12 | GCO50106 | Outer Joint | 26T | 23 | 30 | 57.5 | 86.5 | 58.5 | I |
| | 2003.04- | MT | F | R | Box Body/MPV FWD K9K 710, K9K 702 | Date to:2006.12 | GCO99087 | Outer Joint | | 23 | 30 | 57.5 | 86.5 | 58.5 | I |
| | 2003.04- | MT | F | L/R | Box Body/MPV FWD K9K 710, K9K 702 | | GCO50069 | Outer Joint | 44T | 23 | 30 | 57.5 | 86.5 | 58.5 | I |
| | 2003.04- | MT | F | R | Box Body/MPV FWD K9K 710, K9K 702 | Date to:2006.12 | GCI50008 | Inner Joint | | 23 | 30 | 36.3 | | 120.7 | |
| | 2003.04- | | F | R | Box Body/MPV FWD K9K 710, K9K 702 | | GDS50151 | Drive Shaft | | 21 | 23 | 49.8 | 83.5 | 715 | |
| 1.5 (62 kw) | 2005.06- | 5MT | F | L | Box Body/MPV FWD K9K 718 | | GDS50514 | Drive Shaft | 44T | 23 | 26 | 57.5 | 86.5 | 606 | |
| | 2005.06- | 5MT | F | R | Box Body/MPV FWD K9K 718 | | GDS50364 | Drive Shaft | 44T | 23 | 26 | 57.5 | 86.5 | 866 | |
| | 2005.06- | 5MT | F | L/R | Box Body/MPV FWD K9K 718 | | GCO50103 | Outer Joint | 44T | 23 | 32 | 57.5 | 86 | 62.5 | I |
| | 2005.06- | MT | F | L | Box Body/MPV FWD K9K 718 | | GDS50376 | Drive Shaft | | 23 | 26 | 57.5 | 86.5 | 606 | |
| | 2005.06- | MT | F | R | Box Body/MPV FWD K9K 718 | | GDS50375 | Drive Shaft | | 23 | 26 | 57.5 | 86.5 | 866 | |
| | 2005.06- | MT | F | R | Box Body/MPV FWD K9K 718 | Date to:2009.04 | GDS50515 | Drive Shaft | 44T | 23 | 26 | 57.5 | 86.5 | 866 | |
| | 2005.06- | MT | F | R | Box Body/MPV FWD K9K 718 | | GCO99087 | Outer Joint | | 23 | 30 | 57.5 | 86.5 | 58.5 | I |
| | 2005.06- | MT | F | L | Box Body/MPV FWD K9K 718 | | GCI50085 | Inner Joint | | 26 | 33 | 40 | 64 | 123 | |
| | 2005.06- | MT | F | R | Box Body/MPV FWD K9K 718 | Date to:2008.06 | GCI50086 | Inner Joint | | 26 | 33 | 33 | 326 | 94 | |

| | YEAR | TRANSM. | F/R | L/R | BODY STYLE & DRIVE TYPE & ENGINE | REMARKS | G-AP Ref. | PRODUCT | ABS | Technical Specifications | | | | | |
|---|---|---|---|---|---|---|---|---|---|---|---|---|---|---|---|
| | | | | | | | | | | A | B | C | H | L | P |
| **RENAULT**<br>**Kangoo Express** | | | | | | | | | | | | | | | |
| 1.5 (62 kw) | 2005.06- | MT | F | R | Box Body/MPV FWD K9K 718 | | GCI99169 | Inner Joint | | 26 | 30 | 33 | 326 | 95 | |
| 1.5 (63 kw) | 2008.02- | 5MT | F | L | Box Body/MPV FWD K9K 812, K9K 802 | | GDS99070 | Drive Shaft | | 23 | 26 | 49 | 86 | 675 | |
| | 2008.02- | 5MT | F | L | Box Body/MPV FWD K9K 812, K9K 802 | | GDS99228 | Drive Shaft | | 27 | 26 | 56.7 | 91 | 675 | |
| | 2008.02- | 5MT | F | R | Box Body/MPV FWD K9K 812, K9K 802 | angular | GDS50541 | Drive Shaft | | 23 | 26 | 49 | 83.5 | 913 | |
| | 2008.02- | 5MT | F | R | Box Body/MPV FWD K9K 812, K9K 802 | bearing thickness 20mm | GDS50612 | Drive Shaft | | 27 | 26 | 56.7 | 91 | 918 | |
| | 2008.02- | 5MT | F | R | Box Body/MPV FWD K9K 812, K9K 802 | Date to:2012.06;round | GDS99071 | Drive Shaft | | 23 | 26 | 49 | 86 | 911 | |
| | 2008.02- | 5MT | F | R | Box Body/MPV FWD K9K 812, K9K 802 | bearing thickness 14mm | GDS99229 | Drive Shaft | | 27 | 26 | 56.7 | 91 | 920 | |
| | 2008.02- | 5MT | F | L/R | Box Body/MPV FWD K9K 812, K9K 802 | | GCO50136 | Outer Joint | | 27 | 22 | 56.7 | 91 | 55 | I |
| | 2008.02- | 5MT | F | L/R | Box Body/MPV FWD K9K 812, K9K 802 | | GCO99085 | Outer Joint | | 23 | 30 | 49 | 86 | 59 | I |
| | 2008.02- | 5MT | F | L | Box Body/MPV FWD K9K 812, K9K 802 | | GCI50048 | Inner Joint | | 26 | 30 | 40 | 64 | 121 | |
| | 2008.02- | 5MT | F | L | Box Body/MPV FWD K9K 812, K9K 802 | | GCI50057 | Inner Joint | | 26 | 22 | 40 | 64 | 104 | |
| | 2008.02- | 5MT | F | R | Box Body/MPV FWD K9K 812, K9K 802 | bearing thickness 14mm | GCI50051 | Inner Joint | | 26 | 22 | 33 | 326 | 96 | |
| | 2008.02- | 5MT | F | R | Box Body/MPV FWD K9K 812, K9K 802 | bearing thickness 20mm | GCI50137 | Inner Joint | | 26 | 22 | 33 | 330 | 96.5 | |
| | 2008.02- | 5MT | F | R | Box Body/MPV FWD K9K 812, K9K 802 | | GCI99169 | Inner Joint | | 26 | 30 | 33 | 326 | 95 | |
| 1.5 (66 kw) | 2009.06- | 5MT | F | L | Box Body/MPV FWD K9K 808, K9K 608, K9K 628 | | GDS99070 | Drive Shaft | | 23 | 26 | 49 | 86 | 675 | |
| | 2009.06- | 5MT | F | L | Box Body/MPV FWD K9K 808, K9K 608, K9K 628 | | GDS99228 | Drive Shaft | | 27 | 26 | 56.7 | 91 | 675 | |
| | 2009.06- | 5MT | F | R | Box Body/MPV FWD K9K 808, K9K 608, K9K 628 | bearing thickness 20mm | GDS50612 | Drive Shaft | | 27 | 26 | 56.7 | 91 | 918 | |
| | 2009.06- | 5MT | F | R | Box Body/MPV FWD K9K 808, K9K 608, K9K 628 | Date to:2012.06 | GDS99071 | Drive Shaft | | 23 | 26 | 49 | 86 | 911 | |
| | 2009.06- | 5MT | F | R | Box Body/MPV FWD K9K 808, K9K 608, K9K 628 | bearing thickness 14mm | GDS99229 | Drive Shaft | | 27 | 26 | 56.7 | 91 | 920 | |
| | 2009.06- | 5MT | F | L/R | Box Body/MPV FWD K9K 808, K9K 608, K9K 628 | Outer teething wheel side:27 | GCO50136 | Outer Joint | | 27 | 22 | 56.7 | 91 | 55 | I |
| | 2009.06- | 5MT | F | L/R | Box Body/MPV FWD K9K 808, K9K 608, K9K 628 | Outer teething wheel side:23 | GCO99085 | Outer Joint | | 23 | 30 | 49 | 86 | 59 | I |
| | 2009.06- | 5MT | F | L | Box Body/MPV FWD K9K 808, K9K 608, K9K 628 | | GCI50048 | Inner Joint | | 26 | 30 | 40 | 64 | 121 | |
| | 2009.06- | 5MT | F | L | Box Body/MPV FWD K9K 808, K9K 608, K9K 628 | | GCI50057 | Inner Joint | | 26 | 22 | 40 | 64 | 104 | |
| | 2009.06- | 5MT | F | R | Box Body/MPV FWD K9K 808, K9K 608, K9K 628 | bearing thickness 14mm | GCI50051 | Inner Joint | | 26 | 22 | 33 | 326 | 96 | |
| | 2009.06- | 5MT | F | R | Box Body/MPV FWD K9K 808, K9K 608, K9K 628 | bearing thickness 20mm | GCI50137 | Inner Joint | | 26 | 22 | 33 | 330 | 96.5 | |
| | 2009.06- | 5MT | F | R | Box Body/MPV FWD K9K 808, K9K 608, K9K 628 | | GCI99169 | Inner Joint | | 26 | 30 | 33 | 326 | 95 | |
| 1.5 (67 kw) | 2017.08- | 6AT | F | L | Box Body/MPV FWD K9K 647 | | GDS83777 | Drive Shaft | | 27 | 34 | 56.5 | 91 | 625 | |
| | 2017.08- | 6AT | F | R | Box Body/MPV FWD K9K 647 | | GDS83827 | Drive Shaft | | 27 | 34 | 56.5 | 91 | 975 | |
| | 2017.08- | 6AT | F | L/R | Box Body/MPV FWD K9K 647 | | GCO82484 | Outer Joint | | 27 | 33 | 56.5 | 91 | 61.5 | I |
| | 2017.08- | 6AT | F | L | Box Body/MPV FWD K9K 647 | | GCI50140 | Inner Joint | | 34 | 33 | 40 | 54 | 106 | |
| | 2017.08- | 6AT | F | R | Box Body/MPV FWD K9K 647 | | GCI50133 | Inner Joint | | 34 | 33 | 40 | 380.5 | 86.5 | |
| 1.5 (70 kw) | 2019.10- | 6MT | F | L | Box Body/MPV FWD K9K 872 | | GDS58128 | Drive Shaft | | 27 | 26 | 51.5 | 90.5 | 670 | |
| | 2019.10- | 6MT | F | R | Box Body/MPV FWD K9K 872 | | GDS50612 | Drive Shaft | | 27 | 26 | 56.7 | 91 | 918 | |
| | 2019.10- | 6MT | F | L | Box Body/MPV FWD K9K 872 | | GCO83854 | Outer Joint | | 27 | 23 | 51.5 | 90.5 | 61 | M |
| | 2019.10- | 6MT | F | L | Box Body/MPV FWD K9K 872 | | GCI83909 | Inner Joint | | 26 | 23 | 39.95 | 64 | 104 | |
| 1.5 (76 kw) | 2008.02- | 6MT | F | L | Box Body/MPV FWD K9K 806 | Date from:2012.07 | GDS99228 | Drive Shaft | | 27 | 26 | 56.7 | 91 | 675 | |
| | 2008.02- | 6MT | F | R | Box Body/MPV FWD K9K 806 | Date to:2012.06 | GDS50422 | Drive Shaft | | 27 | 26 | 56.7 | 91 | 922 | |
| | 2008.02- | 6MT | F | R | Box Body/MPV FWD K9K 806 | Date from:2012.07,bearing thickness 20mm | GDS50612 | Drive Shaft | | 27 | 26 | 56.7 | 91 | 918 | |
| | 2008.02- | 6MT | F | R | Box Body/MPV FWD K9K 806 | Date from:2012.07,bearing thickness 14mm | GDS99229 | Drive Shaft | | 27 | 26 | 56.7 | 91 | 920 | |
| | 2008.02- | 6MT | F | L/R | Box Body/MPV FWD K9K 806 | Date To:2012.06 | GCO50130 | Outer Joint | | 27 | 33 | 56.7 | 91 | 61 | I |
| | 2008.02- | 6MT | F | L/R | Box Body/MPV FWD K9K 806 | Date From:2012.07 | GCO50136 | Outer Joint | | 27 | 22 | 56.7 | 91 | 55 | I |
| | 2008.02- | 6MT | F | L | Box Body/MPV FWD K9K 806 | Date From:2012.07 | GCI50057 | Inner Joint | | 26 | 22 | 40 | 64 | 104 | |
| | 2008.02- | 6MT | F | R | Box Body/MPV FWD K9K 806 | Date From:2012.07,bearing thickness 14mm | GCI50051 | Inner Joint | | 26 | 22 | 33 | 326 | 96 | |
| | 2008.02- | 6MT | F | R | Box Body/MPV FWD K9K 806 | Date From:2012.07,bearing thickness 20mm | GCI50137 | Inner Joint | | 26 | 22 | 33 | 330 | 96.5 | |
| 1.5 (78 kw) | 2008.02- | 6MT | F | L | Box Body/MPV FWD K9K 804 | | GDS99228 | Drive Shaft | | 27 | 26 | 56.7 | 91 | 675 | |
| | 2008.02- | 6MT | F | R | Box Body/MPV FWD K9K 804 | Date from:2012.07 | GDS50612 | Drive Shaft | | 27 | 26 | 56.7 | 91 | 918 | |
| 1.5 (80 kw) | 2010.09- | 6MT | F | L | Box Body/MPV FWD K9K 816, K9K 804 | Date from:2012.07 | GDS99228 | Drive Shaft | | 27 | 26 | 56.7 | 91 | 675 | |
| | 2010.09- | 6MT | F | R | Box Body/MPV FWD K9K 816, K9K 804 | Date to:2012.06 | GDS50422 | Drive Shaft | | 27 | 26 | 56.7 | 91 | 922 | |
| | 2010.09- | 6MT | F | R | Box Body/MPV FWD K9K 816, K9K 804 | Date from:2012.07,bearing thickness 20mm | GDS50612 | Drive Shaft | | 27 | 26 | 56.7 | 91 | 918 | |
| | 2010.09- | 6MT | F | R | Box Body/MPV FWD K9K 816, K9K 804 | Date from:2012.07,bearing thickness 14mm | GDS99229 | Drive Shaft | | 27 | 26 | 56.7 | 91 | 920 | |
| | 2010.09- | 6MT | F | L/R | Box Body/MPV FWD K9K 816, K9K 804 | Date To:2012.06 | GCO50130 | Outer Joint | | 27 | 33 | 56.7 | 91 | 61 | I |
| | 2010.09- | 6MT | F | L/R | Box Body/MPV FWD K9K 816, K9K 804 | Date From:2012.07 | GCO50136 | Outer Joint | | 27 | 22 | 56.7 | 91 | 55 | I |
| | 2010.09- | 6MT | F | L | Box Body/MPV FWD K9K 816, K9K 804 | Date From:2012.07 | GCI50057 | Inner Joint | | 26 | 22 | 40 | 64 | 104 | |
| | 2010.09- | 6MT | F | R | Box Body/MPV FWD K9K 816, K9K 804 | Date From:2012.07,bearing thickness 14mm | GCI50051 | Inner Joint | | 26 | 22 | 33 | 326 | 96 | |
| | 2010.09- | 6MT | F | R | Box Body/MPV FWD K9K 816, K9K 804 | Date From:2012.07,bearing thickness 20mm | GCI50137 | Inner Joint | | 26 | 22 | 33 | 330 | 96.5 | |
| 1.5 (81 kw) | 2013.09- | 6DCT | F | L | Box Body/MPV FWD K9K 648, K9K 636, K9K 646, K9K 647 | | GDS83777 | Drive Shaft | | 27 | 34 | 56.5 | 91 | 625 | |
| | 2013.09- | 6DCT | F | R | Box Body/MPV FWD K9K 648, K9K 636, K9K 646, K9K 647 | | GDS83827 | Drive Shaft | | 27 | 34 | 56.5 | 91 | 975 | |
| | 2013.09- | 6DCT | F | L/R | Box Body/MPV FWD K9K 648, K9K 636, K9K 646, K9K 647 | | GCO82484 | Outer Joint | | 27 | 33 | 56.5 | 91 | 61.5 | I |
| | 2013.09- | 6DCT | F | L | Box Body/MPV FWD K9K 648, K9K 636, K9K 646, K9K 647 | | GCI50140 | Inner Joint | | 34 | 33 | 40 | 54 | 106 | |
| | 2013.09- | 6DCT | F | R | Box Body/MPV FWD K9K 648, K9K 636, K9K 646, K9K 647 | | GCI50133 | Inner Joint | | 34 | 33 | 40 | 380.5 | 86.5 | |
| | 2013.09- | 6MT | F | L | Box Body/MPV FWD K9K 648, K9K 636, K9K 646, K9K 647 | Inner teeth of wheel side:22 | GDS99228 | Drive Shaft | | 27 | 26 | 56.7 | 91 | 675 | |
| | 2013.09- | 6MT | F | R | Box Body/MPV FWD K9K 648, K9K 636, K9K 646, K9K 647 | bearing thickness 20mm | GDS50612 | Drive Shaft | | 27 | 26 | 56.7 | 91 | 918 | |
| | 2013.09- | 6MT | F | R | Box Body/MPV FWD K9K 648, K9K 636, K9K 646, K9K 647 | bearing thickness 14mm | GDS99229 | Drive Shaft | | 27 | 26 | 56.7 | 91 | 920 | |
| | 2013.09- | 6MT | F | L/R | Box Body/MPV FWD K9K 648, K9K 636, K9K 646, K9K 647 | | GCO50136 | Outer Joint | | 27 | 22 | 56.7 | 91 | 55 | I |
| | 2013.09- | 6MT | F | L | Box Body/MPV FWD K9K 648, K9K 636, K9K 646, K9K 647 | | GCI50057 | Inner Joint | | 26 | 22 | 40 | 64 | 104 | |

| | YEAR | TRANSM. | F/R | L/R | BODY STYLE & DRIVE TYPE & ENGINE | REMARKS | G-AP Ref. | PRODUCT | ABS | Technical Specifications A | B | C | H | L | P |
|---|---|---|---|---|---|---|---|---|---|---|---|---|---|---|---|
| **RENAULT** **Kangoo Express** | | | | | | | | | | | | | | | |
| 1.5 (81 kw) | 2013.09- | 6MT | F | R | Box Body/MPV FWD K9K 648, K9K 636, K9K 646, K9K 647 | bearing thickness 14mm | GCI50051 | Inner Joint | | 26 | 22 | 33 | 326 | 96 | |
| | 2013.09- | 6MT | F | R | Box Body/MPV FWD K9K 648, K9K 636, K9K 646, K9K 647 | bearing thickness 20mm | GCI50137 | Inner Joint | | 26 | 22 | 33 | 330 | 96.5 | |
| 1.5 (85 kw) | 2019.10- | 6MT | F | L | Box Body/MPV FWD K9K 872 | | GDS58128 | Drive Shaft | | 27 | 26 | 51.5 | 90.5 | 670 | |
| | 2019.10- | 6MT | F | R | Box Body/MPV FWD K9K 872 | | GDS50612 | Drive Shaft | | 27 | 26 | 56.7 | 91 | 918 | |
| | 2019.10- | 6MT | F | L | Box Body/MPV FWD K9K 872 | | GCO83854 | Outer Joint | | 27 | 23 | 51.5 | 90.5 | 61 | M |
| | 2019.10- | 6MT | F | L | Box Body/MPV FWD K9K 872 | | GCI83909 | Inner Joint | | 26 | 23 | 39.95 | 64 | 104 | |
| 1.6 (64 kw) | 2008.02- | 5MT | F | L | Box Body/MPV FWD K7M 750 | | GDS99070 | Drive Shaft | | 23 | 26 | 49 | 86 | 675 | |
| | 2008.02- | 5MT | F | L | Box Body/MPV FWD K7M 750 | | GDS99228 | Drive Shaft | | 27 | 26 | 56.7 | 91 | 675 | |
| | 2008.02- | 5MT | F | R | Box Body/MPV FWD K7M 750 | Date to:2012.06,Trans. code:JH3 | GDS50541 | Drive Shaft | | 23 | 26 | 49 | 83.5 | 913 | |
| | 2008.02- | 5MT | F | R | Box Body/MPV FWD K7M 750 | bearing thickness 20mm | GDS50612 | Drive Shaft | | 27 | 26 | 56.7 | 91 | 918 | |
| | 2008.02- | 5MT | F | R | Box Body/MPV FWD K7M 750 | Date to:2012.06 | GDS99071 | Drive Shaft | | 23 | 26 | 49 | 86 | 911 | |
| | 2008.02- | 5MT | F | R | Box Body/MPV FWD K7M 750 | bearing thickness 14mm | GDS99229 | Drive Shaft | | 27 | 26 | 56.7 | 91 | 920 | |
| | 2008.02- | 5MT | F | L/R | Box Body/MPV FWD K7M 750 | Outer teething wheel side:27 | GCO50136 | Outer Joint | | 27 | 22 | 56.7 | 91 | 55 | I |
| | 2008.02- | 5MT | F | L/R | Box Body/MPV FWD K7M 750 | Outer teething wheel side:23 | GCO99085 | Outer Joint | | 23 | 30 | 49 | 86 | 59 | I |
| | 2008.02- | 5MT | F | L | Box Body/MPV FWD K7M 750 | | GCI50048 | Inner Joint | | 26 | 30 | 40 | 64 | 121 | |
| | 2008.02- | 5MT | F | L | Box Body/MPV FWD K7M 750 | | GCI50057 | Inner Joint | | 26 | 22 | 40 | 64 | 104 | |
| | 2008.02- | 5MT | F | R | Box Body/MPV FWD K7M 750 | bearing thickness 14mm | GCI50051 | Inner Joint | | 26 | 22 | 33 | 326 | 96 | |
| | 2008.02- | 5MT | F | R | Box Body/MPV FWD K7M 750 | bearing thickness 20mm | GCI50137 | Inner Joint | | 26 | 22 | 33 | 330 | 96.5 | |
| | 2008.02- | 5MT | F | R | Box Body/MPV FWD K7M 750 | | GCI99169 | Inner Joint | | 26 | 30 | 33 | 326 | 95 | |
| 1.6 (66 kw) | 1999.09-2001.06 | MT | F | L | MPV Van FWD K7M746 | | GDS50523 | Drive Shaft | 26T | 23 | | 58.8 | 85 | 641 | |
| | 1999.09-2001.06 | MT | F | L | MPV Van FWD K7M746 | | GDS50552 | Drive Shaft | 26T | 21 | | 52.2 | 85.5 | 630 | |
| | 1999.09-2001.06 | MT | F | R | MPV Van FWD K7M746 | | GDS50395 | Drive Shaft | 26T | 21 | 23 | 51.5 | 83 | 728 | |
| | 1999.09-2001.06 | MT | F | R | MPV Van FWD K7M746 | | GDS50524 | Drive Shaft | 26T | 23 | 23 | 57.5 | 86.5 | 729 | |
| | 1999.09-2001.06 | MT | F | R | MPV Van FWD K7M746 | Teeth:21 | GDS50526 | Drive Shaft | 26T | 21 | 23 | 52.3 | 84.5 | 724 | |
| | 1999.09-2001.06 | MT | F | R | MPV Van FWD K7M746 | | GCO50106 | Outer Joint | 26T | 23 | 30 | 57.5 | 86.5 | 58.5 | I |
| 1.6 (70 kw) | 2001.07- | 4AT/5MT | F | L | MPV Van FWD K4M708/K4M730/K4M732/K4M752/K4M753/K4M754 | | GDS50004 | Drive Shaft | 26T | 21 | | 57 | 84.5 | 625.7 | |
| | 2001.07- | 4AT/5MT | F | L | MPV Van FWD K4M708/K4M730/K4M732/K4M752/K4M753/K4M754 | | GDS50150 | Drive Shaft | | 21 | 30 | 49.8 | 83.5 | 623 | |
| | 2001.07- | 5MT | F | R | MPV Van FWD K4M708/K4M730/K4M732/K4M752/K4M753/K4M754 | For vehicles without ABS | GDS50151 | Drive Shaft | | 21 | 23 | 49.8 | 83.5 | 715 | |
| | 2001.07- | AT | F | L | MPV Van FWD K4M708/K4M730/K4M732/K4M752/K4M753/K4M754 | | GDS99169 | Drive Shaft | 26T | 21 | 26 | 52.2 | 85.5 | 621 | |
| | 2001.07- | AT | F | R | MPV Van FWD K4M708/K4M730/K4M732/K4M752/K4M753/K4M754 | | GDS50485 | Drive Shaft | 44T | 21 | 23 | 52.2 | 85.5 | 733 | |
| | 2001.07- | AT | F | R | MPV Van FWD K4M708/K4M730/K4M732/K4M752/K4M753/K4M754 | | GDS50486 | Drive Shaft | 26T | 21 | 23 | 52.2 | 85.5 | 733 | |
| | 2001.07- | MT | F | L | MPV Van FWD K4M708/K4M730/K4M732/K4M752/K4M753/K4M754 | Date To:2008.06 Type:Kangoo Rapid | GDS50112 | Drive Shaft | 26T | 21 | | 57 | 84.5 | 630.7 | |
| | 2001.07- | MT | F | L | MPV Van FWD K4M708/K4M730/K4M732/K4M752/K4M753/K4M754 | | GDS50177 | Drive Shaft | | 21 | | 57 | 84.5 | 625.7 | |
| | 2001.07- | MT | F | R | MPV Van FWD K4M708/K4M730/K4M732/K4M752/K4M753/K4M754 | Trans. code:JB1/3 | GDS50395 | Drive Shaft | 26T | 21 | 23 | 51.5 | 83 | 728 | |
| | 2001.07- | MT | F | L/R | MPV Van FWD K4M708/K4M730/K4M732/K4M752/K4M753/K4M754 | Date to:2008.12 | GCO50004 | Outer Joint | 26T | 21 | 30 | 52.2 | 85.5 | 59 | I |
| | 2001.07- | MT | F | R | MPV Van FWD K4M708/K4M730/K4M732/K4M752/K4M753/K4M754 | Date to:2008.06 | GCI50008 | Inner Joint | | 23 | 30 | 36.3 | | 120.7 | |
| | 2001.07- | | F | L | MPV Van FWD K4M708/K4M730/K4M732/K4M752/K4M753/K4M754 | Date from:2002.11 | GDS50261 | Drive Shaft | 44T | 23 | | 57.5 | 86.5 | 630 | |
| | 2001.07- | | F | L | MPV Van FWD K4M708/K4M730/K4M732/K4M752/K4M753/K4M754 | Date From:2002.11;Date To:2006.04 | GDS50401 | Drive Shaft | 44T | 21 | | 57 | 84 | 629 | |
| | 2001.07- | | F | L | MPV Van FWD K4M708/K4M730/K4M732/K4M752/K4M753/K4M754 | Date from:2002.11,Date to:2003.03,For OE number:820051889 | GDS50519 | Drive Shaft | 44T | 21 | 26 | 52.2 | 85.5 | 609 | |
| | 2001.10- | 4AT/5MT | F | L/R | Box Body/MPV 4WD K4M 750, K4M 752, K4M 753 | | GDS50506 | Drive Shaft | 44T | 23 | | 58.8 | 85 | 645 | |
| | 2001.10- | 5MT | F | R | Box Body/MPV 4WD K4M 750, K4M 752, K4M 753 | | GDS50588 | Drive Shaft | 26T | 21 | 23 | 57 | 84 | 739 | |
| | 2001.10- | MT | F | L | Box Body/MPV 4WD K4M 750, K4M 752, K4M 753 | Date To:2008.06 | GDS50112 | Drive Shaft | 26T | 21 | | 57 | 84.5 | 630.7 | |
| | 2001.10- | MT | F | R | Box Body/MPV 4WD K4M 750, K4M 752, K4M 753 | | GDS50159 | Drive Shaft | 44T | 23 | 23 | 57 | 87 | 748 | |
| | 2001.10- | MT | F | R | Box Body/MPV 4WD K4M 750, K4M 752, K4M 753 | Date to:2008.12 | GDS50527 | Drive Shaft | 44T | 23 | 23 | 58.8 | 85 | 739 | |
| | 2001.10- | MT | F | R | Box Body/MPV 4WD K4M 750, K4M 752, K4M 753 | | GCI50008 | Inner Joint | | 23 | 30 | 36.3 | | 120.7 | |
| | 2001.10- | | F | L | Box Body/MPV 4WD K4M 750, K4M 752, K4M 753 | Date from:2002.11,Date to:2003.03,For OE number:820051889,For Engine Code:K4M753 | GDS50519 | Drive Shaft | 44T | 21 | 26 | 52.2 | 85.5 | 609 | |
| | 2001.10- | | F | L | Box Body/MPV 4WD K4M 750, K4M 752, K4M 753 | | GDS50579 | Drive Shaft | 26T | 21 | 26 | 52.2 | 85.5 | 613 | |
| | 2001.10- | 4AT/5MT | R | L/R | Box Body/MPV 4WD K4M 750, K4M 752, K4M 753 | | GDS50627 | Drive Shaft | 44T | 23 | 21 | 59 | 83.5 | 755 | |
| | 2001.10- | MT | R | L/R | Box Body/MPV 4WD K4M 750, K4M 752, K4M 753 | | GCO50222 | Outer Joint | 44T | 23 | 21 | 59 | 83.5 | 53 | I |
| 1.6 (78 kw) | 2008.02- | 5MT | F | L | Box Body/MPV FWD K4M 834 | | GDS99070 | Drive Shaft | | 23 | 26 | 49 | 86 | 675 | |
| | 2008.02- | 5MT | F | L | Box Body/MPV FWD K4M 834 | | GDS99228 | Drive Shaft | | 27 | 26 | 56.7 | 91 | 675 | |
| | 2008.02- | 5MT | F | R | Box Body/MPV FWD K4M 834 | bearing thickness 20mm | GDS50612 | Drive Shaft | | 27 | 26 | 56.7 | 91 | 918 | |
| | 2008.02- | 5MT | F | R | Box Body/MPV FWD K4M 834 | Date to:2012.06 | GDS99071 | Drive Shaft | | 23 | 26 | 49 | 86 | 911 | |
| | 2008.02- | 5MT | F | R | Box Body/MPV FWD K4M 834 | bearing thickness 14mm | GDS99229 | Drive Shaft | | 27 | 26 | 56.7 | 91 | 920 | |
| | 2008.02- | 5MT | F | L/R | Box Body/MPV FWD K4M 834 | Outer teething wheel side:27 | GCO50136 | Outer Joint | | 27 | 22 | 56.7 | 91 | 55 | I |
| | 2008.02- | 5MT | F | L/R | Box Body/MPV FWD K4M 834 | Outer teething wheel side:23 | GCO99085 | Outer Joint | | 23 | 30 | 49 | 86 | 59 | I |
| | 2008.02- | 5MT | F | L | Box Body/MPV FWD K4M 834 | | GCI50048 | Inner Joint | | 26 | 30 | 40 | 64 | 121 | |
| | 2008.02- | 5MT | F | L | Box Body/MPV FWD K4M 834 | | GCI50057 | Inner Joint | | 26 | 22 | 40 | 64 | 104 | |
| | 2008.02- | 5MT | F | R | Box Body/MPV FWD K4M 834 | bearing thickness 14mm | GCI50051 | Inner Joint | | 26 | 22 | 33 | 326 | 96 | |
| | 2008.02- | 5MT | F | R | Box Body/MPV FWD K4M 834 | bearing thickness 20mm | GCI50137 | Inner Joint | | 26 | 22 | 33 | 330 | 96.5 | |
| | 2008.02- | 5MT | F | R | Box Body/MPV FWD K4M 834 | | GCI99169 | Inner Joint | | 26 | 30 | 33 | 326 | 95 | |
| | 2008.02- | 4AT | F | L | Box Body/MPV FWD K4M 834, K4M 830, K4M 831 | | GDS50614 | Drive Shaft | | 27 | 26 | 56.7 | 91 | 680 | |
| | 2008.02- | 4AT | F | R | Box Body/MPV FWD K4M 834, K4M 830, K4M 831 | | GDS50616 | Drive Shaft | | 27 | 23 | 56.7 | 91 | 816 | |
| | 2008.02- | 4AT | F | L/R | Box Body/MPV FWD K4M 834, K4M 830, K4M 831 | | GCO50150 | Outer Joint | | 27 | 32 | 56.7 | 91 | 61 | I |
| | 2008.02- | 4AT | F | L | Box Body/MPV FWD K4M 834, K4M 830, K4M 831 | | GCI50040 | Inner Joint | | 26 | 30 | 43 | 42.5 | 83 | |

| | YEAR | TRANSM. | F/R | L/R | BODY STYLE & DRIVE TYPE & ENGINE | REMARKS | G-AP Ref. | PRODUCT | ABS | Technical Specifications A | B | C | H | L | P |
|---|---|---|---|---|---|---|---|---|---|---|---|---|---|---|---|
| **RENAULT** **Kangoo Express** | | | | | | | | | | | | | | | |
| 1.6 (78 kw) | 2008.02- | 4AT | F | R | Box Body/MPV FWD K4M 834, K4M 830, K4M 831 | | GCI50041 | Inner Joint | | 23 | 30 | | 217 | 94 | |
| | 2008.02- | 5MT | F | L | Box Body/MPV FWD K4M 834, K4M 830, K4M 831 | | GDS99070 | Drive Shaft | | 23 | 26 | 49 | 86 | 675 | |
| | 2008.02- | 5MT | F | L | Box Body/MPV FWD K4M 834, K4M 830, K4M 831 | | GDS99228 | Drive Shaft | | 27 | 26 | 56.7 | 91 | 675 | |
| | 2008.02- | 5MT | F | R | Box Body/MPV FWD K4M 834, K4M 830, K4M 831 | bearing thickness 20mm | GDS50612 | Drive Shaft | | 27 | 26 | 56.7 | 91 | 918 | |
| | 2008.02- | 5MT | F | R | Box Body/MPV FWD K4M 834, K4M 830, K4M 831 | Date to:2012.06 | GDS99071 | Drive Shaft | | 23 | 26 | 49 | 86 | 911 | |
| | 2008.02- | 5MT | F | R | Box Body/MPV FWD K4M 834, K4M 830, K4M 831 | bearing thickness 14mm | GDS99229 | Drive Shaft | | 27 | 26 | 56.7 | 91 | 920 | |
| | 2008.02- | 5MT | F | L/R | Box Body/MPV FWD K4M 834, K4M 830, K4M 831 | Outer teething wheel side:27 | GCO50136 | Outer Joint | | 27 | 22 | 56.7 | 91 | 55 | I |
| | 2008.02- | 5MT | F | L/R | Box Body/MPV FWD K4M 834, K4M 830, K4M 831 | Outer teething wheel side:23 | GCO99085 | Outer Joint | | 23 | 30 | 49 | 86 | 59 | I |
| | 2008.02- | 5MT | F | L | Box Body/MPV FWD K4M 834, K4M 830, K4M 831 | | GCI50048 | Inner Joint | | 26 | 30 | 40 | 64 | 121 | |
| | 2008.02- | 5MT | F | L | Box Body/MPV FWD K4M 834, K4M 830, K4M 831 | | GCI50057 | Inner Joint | | 26 | 22 | 40 | 64 | 104 | |
| | 2008.02- | 5MT | F | R | Box Body/MPV FWD K4M 834, K4M 830, K4M 831 | bearing thickness 14mm | GCI50051 | Inner Joint | | 26 | 22 | 33 | 326 | 96 | |
| | 2008.02- | 5MT | F | R | Box Body/MPV FWD K4M 834, K4M 830, K4M 831 | bearing thickness 20mm | GCI50137 | Inner Joint | | 26 | 22 | 33 | 330 | 96.5 | |
| | 2008.02- | 5MT | F | R | Box Body/MPV FWD K4M 834, K4M 830, K4M 831 | | GCI99169 | Inner Joint | | 26 | 30 | 33 | 326 | 95 | |
| 1.9 (40 kw) | 1997.08- | 5MT | F | L | Box Body/MPV FWD F8Q 662 | For vehicles without off-road suspension | GDS50004 | Drive Shaft | 26T | 21 | | 57 | 84.5 | 625.7 | |
| | 1997.08- | 5MT | F | L | Box Body/MPV FWD F8Q 662 | | GDS50150 | Drive Shaft | | 21 | 30 | 49.8 | 83.5 | 623 | |
| | 1997.08- | 5MT | F | L | Box Body/MPV FWD F8Q 662 | Model:Kangoo Rapid,For vehicles with off-road suspension | GDS50552 | Drive Shaft | 26T | 21 | | 52.2 | 85.5 | 630 | |
| | 1997.08- | 5MT | F | R | Box Body/MPV FWD F8Q 662 | For vehicles without off-road suspension | GDS50017 | Drive Shaft | 26T | 21 | 23 | 51.5 | 83 | 715 | |
| | 1997.08- | 5MT | F | R | Box Body/MPV FWD F8Q 662 | For vehicles without off-road suspension | GDS50151 | Drive Shaft | | 21 | 23 | 49.8 | 83.5 | 715 | |
| | 1997.08- | 5MT | F | R | Box Body/MPV FWD F8Q 662 | For vehicles without off-road suspension | GDS50162 | Drive Shaft | 26T | 21 | 23 | 52.2 | 85.5 | 723.5 | |
| | 1997.08- | 5MT | F | R | Box Body/MPV FWD F8Q 662 | Model:Kangoo Rapid,For vehicles with off-road suspension | GDS50524 | Drive Shaft | 26T | 23 | 23 | 57.5 | 86.5 | 729 | |
| | 1997.08- | AT/MT | F | L/R | Box Body/MPV FWD F8Q 662 | Date to:2008.12 | GCO50004 | Outer Joint | 26T | 21 | 30 | 52.2 | 85.5 | 59 | I |
| | 1997.08- | MT | F | R | Box Body/MPV FWD F8Q 662 | Date from:1998.07,Date to:2003.06 | GCI50008 | Inner Joint | | 23 | 30 | 36.3 | | 120.7 | |
| 1.9 (47 kw) | 1997.08- | 5MT | F | L | Box Body/MPV FWD F8Q 632, F8Q 630 | Date To:2002.10;Model:Kangoo Rapid | GDS50004 | Drive Shaft | 26T | 21 | | 57 | 84.5 | 625.7 | |
| | 1997.08- | 5MT | F | L | Box Body/MPV FWD F8Q 632, F8Q 630 | | GDS50150 | Drive Shaft | | 21 | 30 | 49.8 | 83.5 | 623 | |
| | 1997.08- | 5MT | F | L | Box Body/MPV FWD F8Q 632, F8Q 630 | Date from:2006.05;Date from:2002.11;Date to:2006.04 | GDS50261 | Drive Shaft | 44T | 23 | | 57.5 | 86.5 | 630 | |
| | 1997.08- | 5MT | F | L | Box Body/MPV FWD F8Q 632, F8Q 630 | Date from:2002.11;Date to:2006.04;Inner teeth of wheel side:22 | GDS50401 | Drive Shaft | 44T | 21 | | 57 | 84 | 629 | |
| | 1997.08- | 5MT | F | L | Box Body/MPV FWD F8Q 632, F8Q 630 | Date to:2002.10 | GDS50523 | Drive Shaft | 26T | 23 | | 58.8 | 85 | 641 | |
| | 1997.08- | 5MT | F | R | Box Body/MPV FWD F8Q 632, F8Q 630 | For vehicles without off-road suspension;Date to:2002.10 | GDS50017 | Drive Shaft | 26T | 21 | 23 | 51.5 | 83 | 715 | |
| | 1997.08- | 5MT | F | R | Box Body/MPV FWD F8Q 632, F8Q 630 | Date To:2002.10 | GDS50151 | Drive Shaft | | 21 | 23 | 49.8 | 83.5 | 715 | |
| | 1997.08- | 5MT | F | R | Box Body/MPV FWD F8Q 632, F8Q 630 | For vehicles without off-road suspension;Date to:2002.10;Inner teeth of trans.side:26 | GDS50162 | Drive Shaft | 26T | 21 | 23 | 52.2 | 85.5 | 723.5 | |
| | 1997.08- | 5MT | F | R | Box Body/MPV FWD F8Q 632, F8Q 630 | Date from:2002.11 | GDS50263 | Drive Shaft | 44T | 21 | 23 | 52.2 | 85.5 | 723.5 | |
| | 1997.08- | AT/MT | F | L/R | Box Body/MPV FWD F8Q 632, F8Q 630 | Date to:2008.12 | GCO50004 | Outer Joint | 26T | 21 | 30 | 52.2 | 85.5 | 59 | I |
| | 1997.08- | MT | F | L | Box Body/MPV FWD F8Q 632, F8Q 630 | Date From:1999.09,Date To:2006.12 | GDS50112 | Drive Shaft | 26T | 21 | | 57 | 84.5 | 630.7 | |
| | 1997.08- | MT | F | L | Box Body/MPV FWD F8Q 632, F8Q 630 | | GDS50177 | Drive Shaft | | 21 | | 57 | 84.5 | 625.7 | |
| | 1997.08- | MT | F | L | Box Body/MPV FWD F8Q 632, F8Q 630 | Date To:2006.12;Trans. code:JB1/3 | GDS50398 | Drive Shaft | | 21 | 30 | 50 | 84 | 632 | |
| | 1997.08- | MT | F | L | Box Body/MPV FWD F8Q 632, F8Q 630 | Date To:2006.12;Trans. code:JB1/3 | GDS50552 | Drive Shaft | 26T | 21 | | 52.2 | 85.5 | 630 | |
| | 1997.08- | MT | F | R | Box Body/MPV FWD F8Q 632, F8Q 630 | | GDS50063 | Drive Shaft | | 21 | 23 | 51.5 | 83 | 720 | |
| | 1997.08- | MT | F | R | Box Body/MPV FWD F8Q 632, F8Q 630 | | GDS50125 | Drive Shaft | | 21 | 23 | 57 | 84.5 | 713.5 | |
| | 1997.08- | MT | F | R | Box Body/MPV FWD F8Q 632, F8Q 630 | | GDS50146 | Drive Shaft | | 21 | 23 | 57 | 84.5 | 732.5 | |
| | 1997.08- | MT | F | R | Box Body/MPV FWD F8Q 632, F8Q 630 | | GDS50250 | Drive Shaft | 26T | 21 | 23 | 57 | 84.5 | 732.5 | |
| | 1997.08- | MT | F | R | Box Body/MPV FWD F8Q 632, F8Q 630 | | GDS50357 | Drive Shaft | 26T | 21 | 23 | 57 | 84 | 718 | |
| | 1997.08- | MT | F | R | Box Body/MPV FWD F8Q 632, F8Q 630 | Date From:1998.07;Date To:2006.12;Trans. code:JB1/3;Inner teeth of trans.side:22 | GDS50395 | Drive Shaft | 26T | 21 | 23 | 51.5 | 83 | 728 | |
| | 1997.08- | MT | F | R | Box Body/MPV FWD F8Q 632, F8Q 630 | Date from:1998.07,Date to:2006.12 | GCI50008 | Inner Joint | | 23 | 30 | 36.3 | | 120.7 | |
| | 1997.08- | | F | R | Box Body/MPV FWD F8Q 632, F8Q 630 | For vehicles with off-road suspension | GDS50524 | Drive Shaft | 26T | 23 | 23 | 57.5 | 86.5 | 729 | |
| 1.9 (48 kw) | 1999.09-2003.06 | 5MT | F | L | Box Body/MPV FWD F8Q 632 | | GDS50150 | Drive Shaft | | 21 | 30 | 49.8 | 83.5 | 623 | |
| | 1999.09-2003.06 | 5MT | F | L | Box Body/MPV FWD F8Q 632 | Date from:2002.11;Date to:2006.04 | GDS50261 | Drive Shaft | 44T | 23 | | 57.5 | 86.5 | 630 | |
| | 1999.09-2003.06 | 5MT | F | L | Box Body/MPV FWD F8Q 632 | Date from:2002.11;Date to:2006.04 | GDS50401 | Drive Shaft | 44T | 21 | | 57 | 84 | 629 | |
| | 1999.09-2003.06 | 5MT | F | L | Box Body/MPV FWD F8Q 632 | | GDS50552 | Drive Shaft | 26T | 21 | | 52.2 | 85.5 | 630 | |
| | 1999.09-2003.06 | 5MT | F | R | Box Body/MPV FWD F8Q 632 | | GDS50524 | Drive Shaft | 26T | 23 | 23 | 57.5 | 86.5 | 729 | |
| | 1999.09-2003.06 | AT | F | L/R | Box Body/MPV FWD F8Q 632 | | GCO50004 | Outer Joint | 26T | 21 | 30 | 52.2 | 85.5 | 59 | I |
| | 1999.09-2003.06 | MT | F | L | Box Body/MPV FWD F8Q 632 | | GDS50177 | Drive Shaft | | 21 | | 57 | 84.5 | 625.7 | |
| | 1999.09-2003.06 | MT | F | R | Box Body/MPV FWD F8Q 632 | | GDS50063 | Drive Shaft | | 21 | 23 | 51.5 | 83 | 720 | |
| | 1999.09-2003.06 | MT | F | R | Box Body/MPV FWD F8Q 632 | | GDS50125 | Drive Shaft | | 21 | 23 | 57 | 84.5 | 713.5 | |
| | 1999.09-2003.06 | MT | F | R | Box Body/MPV FWD F8Q 632 | | GDS50146 | Drive Shaft | | 21 | 23 | 57 | 84.5 | 732.5 | |
| | 1999.09-2003.06 | MT | F | R | Box Body/MPV FWD F8Q 632 | | GDS50250 | Drive Shaft | 26T | 21 | 23 | 57 | 84.5 | 732.5 | |
| | 1999.09-2003.06 | MT | F | R | Box Body/MPV FWD F8Q 632 | | GDS99072 | Drive Shaft | 44T | 21 | 23 | 57 | 84.5 | 720 | |
| | 1999.09-2003.06 | MT | F | R | Box Body/MPV FWD F8Q 632 | | GCI50008 | Inner Joint | | 23 | 30 | 36.3 | | 120.7 | |
| | 1999.09-2003.06 | | F | L | Box Body/MPV FWD F8Q 632 | For vehicles without off-road suspension | GDS50004 | Drive Shaft | 26T | 21 | | 57 | 84.5 | 625.7 | |
| | 1999.09-2003.06 | | F | R | Box Body/MPV FWD F8Q 632 | | GDS50151 | Drive Shaft | | 21 | 23 | 49.8 | 83.5 | 715 | |
| | 1999.09-2003.06 | | F | R | Box Body/MPV FWD F8Q 632 | | GDS50395 | Drive Shaft | 26T | 21 | 23 | 51.5 | 83 | 728 | |
| 1.9 (59 kw) | 2000.02- | 5MT | F | L | Box Body/MPV FWD F9Q 780, F9Q 790, F9Q 782 | | GDS50150 | Drive Shaft | | 21 | 30 | 49.8 | 83.5 | 623 | |
| | 2000.02- | 5MT | F | L | Box Body/MPV FWD F9Q 780, F9Q 790, F9Q 782 | Date from:2002.11,For vehicles with off-road suspension | GDS50261 | Drive Shaft | 44T | 23 | | 57.5 | 86.5 | 630 | |
| | 2000.02- | 5MT | F | L | Box Body/MPV FWD F9Q 780, F9Q 790, F9Q 782 | Date from:2002.11,For Engine code:F9Q782,For vehicles without off-road suspension | GDS50401 | Drive Shaft | 44T | 21 | | 57 | 84 | 629 | |
| | 2000.02- | 5MT | F | R | Box Body/MPV FWD F9Q 780, F9Q 790, F9Q 782 | For vehicles without off-road suspension | GDS50017 | Drive Shaft | 26T | 21 | 23 | 51.5 | 83 | 715 | |
| | 2000.02- | 5MT | F | R | Box Body/MPV FWD F9Q 780, F9Q 790, F9Q 782 | | GDS50151 | Drive Shaft | | 21 | 23 | 49.8 | 83.5 | 715 | |

| | YEAR | TRANSM. | F/R | L/R | BODY STYLE & DRIVE TYPE & ENGINE | REMARKS | G-AP Ref. | PRODUCT | ABS | Technical Specifications A | B | C | H | L | P |
|---|---|---|---|---|---|---|---|---|---|---|---|---|---|---|---|
| **RENAULT** | | | | | | | | | | | | | | | |
| **Kangoo Express** | | | | | | | | | | | | | | | |
| 1.9 (59 kw) | 2000.02- | 5MT | F | R | Box Body/MPV FWD F9Q 780, F9Q 790, F9Q 782 | For vehicles without off-road suspension | GDS50162 | Drive Shaft | 26T | 21 | 23 | 52.2 | 85.5 | 723.5 | |
| | 2000.02- | 5MT | F | R | Box Body/MPV FWD F9Q 780, F9Q 790, F9Q 782 | For vehicles with off-road suspension | GDS50524 | Drive Shaft | 26T | 23 | 23 | 57.5 | 86.5 | 729 | |
| | 2000.02- | 5MT | F | L | Box Body/MPV FWD F9Q 780, F9Q 790, F9Q 782 | Date from:2002.11 | GCO50069 | Outer Joint | 44T | 23 | 30 | 57.5 | 86.5 | 58.5 | I |
| | 2000.02- | MT | F | L | Box Body/MPV FWD F9Q 780, F9Q 790, F9Q 782 | Date to:2008.12;Trans. code:JB1/JB3 | GDS50004 | Drive Shaft | 26T | 21 | | 57 | 84.5 | 625.7 | |
| | 2000.02- | MT | F | L | Box Body/MPV FWD F9Q 780, F9Q 790, F9Q 782 | | GDS50177 | Drive Shaft | | 21 | | 57 | 84.5 | 625.7 | |
| | 2000.02- | MT | F | L | Box Body/MPV FWD F9Q 780, F9Q 790, F9Q 782 | Date To:2003.06;Trans. code:JB1/3 | GDS50398 | Drive Shaft | | 21 | 30 | 50 | 84 | 632 | |
| | 2000.02- | MT | F | L | Box Body/MPV FWD F9Q 780, F9Q 790, F9Q 782 | Date To:2003.06;Trans. code:JB1/3 | GDS50552 | Drive Shaft | 26T | 21 | | 52.2 | 85.5 | 630 | |
| | 2000.02- | MT | F | R | Box Body/MPV FWD F9Q 780, F9Q 790, F9Q 782 | Date To:2003.06;Trans. code:JB1/3 | GDS50125 | Drive Shaft | | 21 | 23 | 57 | 84.5 | 713.5 | |
| | 2000.02- | MT | F | R | Box Body/MPV FWD F9Q 780, F9Q 790, F9Q 782 | | GDS50146 | Drive Shaft | | 21 | 23 | 57 | 84.5 | 732.5 | |
| | 2000.02- | MT | F | R | Box Body/MPV FWD F9Q 780, F9Q 790, F9Q 782 | Date To:2003.06;Trans. code:JB1/3 | GDS50395 | Drive Shaft | 26T | 21 | 23 | 51.5 | 83 | 728 | |
| | 2000.02- | MT | F | R | Box Body/MPV FWD F9Q 780, F9Q 790, F9Q 782 | | GDS99072 | Drive Shaft | 44T | 21 | 23 | 57 | 84.5 | 720 | |
| | 2000.02- | MT | F | L/R | Box Body/MPV FWD F9Q 780, F9Q 790, F9Q 782 | Date to:2008.12 | GCO50004 | Outer Joint | 26T | 21 | 30 | 52.2 | 85.5 | 59 | I |
| | 2000.02- | MT | F | R | Box Body/MPV FWD F9Q 780, F9Q 790, F9Q 782 | Date to:2003.06 | GCI50008 | Inner Joint | | 23 | 30 | 36.3 | | 120.7 | |
| | 2001.10- | 5MT | F | L | Box Body/MPV 4WD F9Q 790, F9Q 782 | | GDS50506 | Drive Shaft | 44T | 23 | | 58.8 | 85 | 645 | |
| | 2001.10- | 5MT | F | R | Box Body/MPV 4WD F9Q 790, F9Q 782 | | GDS50527 | Drive Shaft | 44T | 23 | 23 | 58.8 | 85 | 739 | |
| | 2001.10- | 5MT | F | R | Box Body/MPV 4WD F9Q 790, F9Q 782 | Date to:2003.06 | GCI50079 | Inner Joint | | 23 | 22 | 36.3 | | 105.5 | |
| | 2001.10- | MT | F | L | Box Body/MPV 4WD F9Q 790, F9Q 782 | Date To:2003.06 | GDS50112 | Drive Shaft | 26T | 21 | | 57 | 84.5 | 630.7 | |
| | 2001.10- | MT | F | R | Box Body/MPV 4WD F9Q 790, F9Q 782 | | GDS50159 | Drive Shaft | 44T | 23 | 23 | 57 | 87 | 748 | |
| | 2001.10- | MT | F | R | Box Body/MPV 4WD F9Q 790, F9Q 782 | | GCI50008 | Inner Joint | | 23 | 30 | 36.3 | | 120.7 | |
| | 2001.10- | 5MT | R | L/R | Box Body/MPV 4WD F9Q 790, F9Q 782 | | GDS50627 | Drive Shaft | 44T | 23 | 21 | 59 | 83.5 | 755 | |
| | 2001.10- | MT | R | L/R | Box Body/MPV 4WD F9Q 790, F9Q 782 | | GCO50222 | Outer Joint | 44T | 23 | 21 | 59 | 83.5 | 53 | I |
| 1.9 (62 kw) | 2003.07- | 5MT | F | L | Box Body/MPV 4WD F9Q 790 | | GDS50506 | Drive Shaft | 44T | 23 | | 58.8 | 85 | 645 | |
| | 2003.07- | MT | F | R | Box Body/MPV 4WD F9Q 790 | | GDS50159 | Drive Shaft | 44T | 23 | 23 | 57 | 87 | 748 | |
| | 2003.07- | MT | F | R | Box Body/MPV 4WD F9Q 790 | | GCI50008 | Inner Joint | | 23 | 30 | 36.3 | | 120.7 | |
| | 2003.07- | 5MT | R | L/R | Box Body/MPV 4WD F9Q 790 | | GDS50627 | Drive Shaft | 44T | 23 | 21 | 59 | 83.5 | 755 | |
| | 2003.07- | MT | R | L/R | Box Body/MPV 4WD F9Q 790 | | GCO50222 | Outer Joint | 44T | 23 | 21 | 59 | 83.5 | 53 | I |
| | 2003.07- | 5MT | F | L | Box Body/MPV FWD F9Q 790, F9Q 782 | Outer teeth of wheel side:23 | GDS50261 | Drive Shaft | 44T | 23 | | 57.5 | 86.5 | 630 | |
| | 2003.07- | 5MT | F | L | Box Body/MPV FWD F9Q 790, F9Q 782 | Outer teeth of wheel side:21 | GDS50401 | Drive Shaft | 44T | 21 | | 57 | 84 | 629 | |
| | 2003.07- | 5MT | F | L | Box Body/MPV FWD F9Q 790, F9Q 782 | | GCO50069 | Outer Joint | 44T | 23 | 30 | 57.5 | 86.5 | 58.5 | I |
| | 2003.07- | | F | R | Box Body/MPV FWD F9Q 790, F9Q 782 | | GDS50151 | Drive Shaft | | 21 | 23 | 49.8 | 83.5 | 715 | |
| EV (44 kw) | 2011.10- | ET | F | L | Box Body/MPV FWD 5AM 400, 5AQ 604 | AZ ENGINE LEVEL | GDS57447 | Drive Shaft | | 27 | 26 | 56.7 | 91 | 638 | |
| | 2011.10- | ET | F | R | Box Body/MPV FWD 5AM 400, 5AQ 604 | AZ ENGINE LEVEL | GDS57448 | Drive Shaft | | 27 | 26 | 56.7 | 91 | 961 | |
| | 2011.10- | ET | F | L/R | Box Body/MPV FWD 5AM 400, 5AQ 604 | AZ ENGINE LEVEL | GCO83550 | Outer Joint | | 27 | 22 | 56.7 | 91 | 55 | I |
| | 2011.10- | ET | F | L | Box Body/MPV FWD 5AM 400, 5AQ 604 | AZ ENGINE LEVEL | GCI83676 | Inner Joint | | 26 | 22 | 39.95 | 64 | 104 | |
| | 2011.10- | ET | F | R | Box Body/MPV FWD 5AM 400, 5AQ 604 | AZ ENGINE LEVEL | GCI82425 | Inner Joint | | 26 | 22 | 33 | 330.5 | 82.5 | |
| **Kangoo Rapid** | | | | | | | | | | | | | | | |
| 1.6 (60 kw) | 2005.06-2006.12 | 5MT | F | R | MPV Van FWD K4M850CNG | | GCI50079 | Inner Joint | | 23 | 22 | 36.3 | | 105.5 | |
| **Kangoo/Grand Kangoo** | | | | | | | | | | | | | | | |
| 1.5 (78 kw) | 2008.02- | 6MT | F | L | MPV FWD K9K 804 | | GDS99228 | Drive Shaft | | 27 | 26 | 56.7 | 91 | 675 | |
| | 2008.02- | 6MT | F | R | MPV FWD K9K 804 | Date from:2012.07 | GDS99229 | Drive Shaft | | 27 | 26 | 56.7 | 91 | 920 | |
| | 2008.02- | MT | F | L/R | MPV FWD K9K 804 | | GCO50136 | Outer Joint | | 27 | 22 | 56.7 | 91 | 55 | I |
| | 2008.02- | MT | F | L | MPV FWD K9K 804 | | GCI50057 | Inner Joint | | 26 | 22 | 40 | 64 | 104 | |
| | 2008.02- | MT | F | R | MPV FWD K9K 804 | | GCI50051 | Inner Joint | | 26 | 22 | 33 | 326 | 96 | |
| **Kaptur** | | | | | | | | | | | | | | | |
| 1.3 (110 kw) | 2021.10- | CVT | R | L/R | Hatchback 4WD H5H 450;H5H 460 | | GDS57265 | Drive Shaft | 48T | 25 | 21 | 52.5 | 88.5 | 824 | |
| 1.6 (84 kw) | 2016.03- | 5MT | F | L | Hatchback FWD H4M 429;H4M 438 | | GDS50415 | Drive Shaft | | 25 | 26 | 52.6 | 89 | 704 | |
| | 2016.03- | 5MT | F | L | Hatchback FWD H4M 429;H4M 438 | | GDS50498 | Drive Shaft | | 25 | 26 | 52.6 | 89 | 702 | |
| | 2016.03- | 5MT | F | L | Hatchback FWD H4M 429;H4M 438 | | GDS50587 | Drive Shaft | | 25 | 26 | 52.6 | 89 | 700 | |
| | 2016.03- | 5MT | F | R | Hatchback FWD H4M 429;H4M 438 | | GDS50586 | Drive Shaft | | 25 | 26 | 52.6 | 89 | 950 | |
| | 2016.03- | 5MT | F | L/R | Hatchback FWD H4M 429;H4M 438 | | GCO50157 | Outer Joint | | 25 | 33 | 52.6 | 89 | 60 | I |
| | 2016.03- | 5MT | F | L | Hatchback FWD H4M 429;H4M 438 | | GCI41191 | Inner Joint | | 26 | 33 | 40 | 64 | 118 | |
| | 2016.03- | 5MT | F | R | Hatchback FWD H4M 429;H4M 438 | | GCI41190 | Inner Joint | | 26 | 33 | 33 | 329 | 101 | |
| | 2016.03- | CVT | F | L | Hatchback FWD H4M 429;H4M 438 | | GDS83877 | Drive Shaft | | 25 | 25 | 52.4 | 88.5 | 701 | |
| | 2016.03- | CVT | F | R | Hatchback FWD H4M 429;H4M 438 | | GDS50555 | Drive Shaft | | 25 | 25 | 52.4 | 88.5 | 940 | |
| | 2016.03- | CVT | F | R | Hatchback FWD H4M 429;H4M 438 | | GCI50088 | Inner Joint | | 25 | 22 | 33 | 328 | 93.5 | |
| 2.0 (105 kw) | 2016.03- | 4AT | F | R | Hatchback 4WD F4R 410 | Date to:2018.09 | GDS11019 | Drive Shaft | | 25 | 31 | 52.6 | 89 | 614 | |
| | 2016.03- | 4AT | F | R | Hatchback 4WD F4R 410 | Date from:2018.10 | GDS83783 | Drive Shaft | | 25 | 31 | 52.6 | 89 | 615 | |
| | 2016.03- | 4AT | F | L/R | Hatchback 4WD F4R 410 | | GCO50157 | Outer Joint | | 25 | 33 | 52.6 | 89 | 60 | I |
| | 2016.03- | 4AT | F | R | Hatchback 4WD F4R 410 | | GCI50106 | Inner Joint | | 31 | 33 | 42 | | 133.5 | |
| | 2016.03- | 6MT | F | L | Hatchback 4WD F4R 410 | | GDS50464 | Drive Shaft | | 25 | 27 | 52.6 | 89 | 652 | |
| | 2016.03- | 6MT | F | L | Hatchback 4WD F4R 410 | | GCI50105 | Inner Joint | | 27 | 33 | 40 | 70.5 | 111 | |
| | 2016.03- | 4AT/6MT | R | L/R | Hatchback 4WD F4R 410 | | GDS57265 | Drive Shaft | 48T | 25 | 21 | 52.5 | 88.5 | 824 | |
| | 2016.03- | 4AT/6MT | R | L/R | Hatchback 4WD F4R 410 | | GCO57203 | Outer Joint | 48T | 25 | 28 | 52.5 | 88.5 | 60 | I |
| | 2016.03- | 4AT/6MT | R | L/R | Hatchback 4WD F4R 410 | | GCI57129 | Inner Joint | | 21 | 28 | 38 | 55 | 96 | |

| | YEAR | TRANSM. | F/R | L/R | BODY STYLE & DRIVE TYPE & ENGINE | REMARKS | G-AP Ref. | PRODUCT | ABS | Technical Specifications A | B | C | H | L | P |
|---|---|---|---|---|---|---|---|---|---|---|---|---|---|---|---|
| **RENAULT** | | | | | | | | | | | | | | | |
| **Koleos** | | | | | | | | | | | | | | | |
| 1.6 (96 kw) | 2016.04- | 6MT | F | L | SUV FWD R9M 409;R9M 414 | | GDS56791 | Drive Shaft | | 29 | 29 | 62 | 102.5 | 671 | |
| | 2016.04- | 6MT | F | R | SUV FWD R9M 409;R9M 414 | | GDS56792 | Drive Shaft | | 29 | 29 | 62 | 102.5 | 998 | |
| | 2016.04- | 6MT | F | L/R | SUV FWD R9M 409;R9M 414 | | GCO83436 | Outer Joint | | 29 | 37 | 62 | 102.5 | 64.5 | I |
| | 2016.04- | 6MT | F | L | SUV FWD R9M 409;R9M 414 | | GCI41187 | Inner Joint | | 29 | 36 | 39 | 65.5 | 124.5 | |
| | 2016.04- | 6MT | F | R | SUV FWD R9M 409;R9M 414 | | GCI83493 | Inner Joint | | 29 | 36 | 33 | 449 | 113 | |
| 1.7 (110 kw) | 2019.06- | CVT | F | L | SUV FWD R9N 401 | | GDS58133 | Drive Shaft | | 29 | 29 | 62 | 102.5 | 685 | |
| | 2019.06- | CVT | F | R | SUV FWD R9N 401 | | GDS58132 | Drive Shaft | | 29 | 29 | 62 | 102.5 | 978 | |
| | 2019.06- | CVT | F | L/R | SUV FWD R9N 401 | | GCO83436 | Outer Joint | | 29 | 37 | 62 | 102.5 | 64.5 | I |
| | 2019.06- | CVT | F | L | SUV FWD R9N 401 | | GCI41187 | Inner Joint | | 29 | 36 | 39 | 65.5 | 124.5 | |
| | 2019.06- | CVT | F | R | SUV FWD R9N 401 | | GCI84025 | Inner Joint | | 29 | 36 | 33 | 429 | 113 | |
| 2.0 (103 kw) | 2013.08- | CVT | F | L | SUV FWD M4R 737 | | GDS41400 | Drive Shaft | | 29 | 27 | 56.1 | 102 | 689 | |
| 2.0 (107 kw) | 2016.04- | 6MT | F | L | SUV FWD M5R 402 | | GDS56864 | Drive Shaft | | 29 | 26 | 62 | 102.5 | 704 | |
| | 2016.04- | 6MT | F | L/R | SUV FWD M5R 402 | | GCO81748 | Outer Joint | | 29 | 35 | 62 | 102.5 | 60 | I |
| | 2016.04- | 6MT | F | L | SUV FWD M5R 402 | | GCI83532 | Inner Joint | | 26 | 33 | 40 | 64 | 119.5 | |
| 2.0 (110 kw) | 2008.09- | 6MT | F | R | SUV 4WD M9R 830;M9R 865;M9R 866;M9R 862 | | GCI41131 | Inner Joint | | 29 | 29 | 33 | 481 | 100 | |
| | 2008.09- | AT | F | L | SUV 4WD M9R 830;M9R 865;M9R 866;M9R 862 | | GDS41365 | Drive Shaft | | 29 | 30 | 56 | 102 | 650 | |
| | 2008.09- | AT | F | R | SUV 4WD M9R 830;M9R 865;M9R 866;M9R 862 | | GDS41475 | Drive Shaft | | 29 | 30 | 56 | 102 | 971 | |
| | 2008.09- | AT | F | L/R | SUV 4WD M9R 830;M9R 865;M9R 866;M9R 862 | | GCO41249 | Outer Joint | | 29 | 36 | 56 | 102 | 72 | I |
| | 2008.09- | MT | F | L | SUV 4WD M9R 830;M9R 865;M9R 866;M9R 862 | | GDS41481 | Drive Shaft | | 29 | 29 | 56 | 102 | 615 | |
| | 2008.09- | MT | F | R | SUV 4WD M9R 830;M9R 865;M9R 866;M9R 862 | | GDS41441 | Drive Shaft | | 29 | 29 | 56 | 102 | 1009 | |
| | 2008.09- | MT | F | L | SUV 4WD M9R 830;M9R 865;M9R 866;M9R 862 | | GCO41249 | Outer Joint | | 29 | 36 | 56 | 102 | 72 | I |
| | 2008.09- | AT/MT | R | L/R | SUV 4WD M9R 830;M9R 865;M9R 866;M9R 862 | | GDS41538 | Drive Shaft | 48T | 25 | 21 | 56 | 110.5 | 801 | |
| | 2008.09- | AT/MT | R | L/R | SUV 4WD M9R 830;M9R 865;M9R 866;M9R 862 | | GCO41285 | Outer Joint | 48T | 25 | 24 | 56 | 110.5 | 38.5 | I |
| | 2008.09- | AT/MT | R | L/R | SUV 4WD M9R 830;M9R 865;M9R 866;M9R 862 | | GCI57111 | Inner Joint | | 21 | 24 | 38 | 61 | 91 | |
| | 2008.09- | AT | F | L | SUV FWD M9R 855;M9R 856;M9R 865;M9R 866;M9R 862 | | GDS41365 | Drive Shaft | | 29 | 30 | 56 | 102 | 650 | |
| | 2008.09- | AT | F | R | SUV FWD M9R 855;M9R 856;M9R 865;M9R 866;M9R 862 | | GDS41475 | Drive Shaft | | 29 | 30 | 56 | 102 | 971 | |
| | 2008.09- | AT | F | L/R | SUV FWD M9R 855;M9R 856;M9R 865;M9R 866;M9R 862 | | GCO41249 | Outer Joint | | 29 | 36 | 56 | 102 | 72 | I |
| | 2008.09- | MT | F | L | SUV FWD M9R 855;M9R 856;M9R 865;M9R 866;M9R 862 | | GDS41577 | Drive Shaft | | 29 | 29 | 56 | 102 | 650 | |
| | 2008.09- | MT | F | R | SUV FWD M9R 855;M9R 856;M9R 865;M9R 866;M9R 862 | | GDS41299 | Drive Shaft | | 29 | 29 | 56 | 102 | 979 | |
| | 2008.09- | MT | F | L | SUV FWD M9R 855;M9R 856;M9R 865;M9R 866;M9R 862 | | GCI41192 | Inner Joint | | 29 | 29 | 39 | 65.5 | 116 | |
| 2.0 (127 kw) | 2008.09- | AT | F | L | SUV 4WD M9R 830 | | GDS41365 | Drive Shaft | | 29 | 30 | 56 | 102 | 650 | |
| | 2008.09- | AT | F | R | SUV 4WD M9R 830 | | GDS41475 | Drive Shaft | | 29 | 30 | 56 | 102 | 971 | |
| | 2008.09- | AT | F | L | SUV 4WD M9R 830 | | GCI41135 | Inner Joint | | 30 | 29 | 34 | 76 | 97 | |
| | 2008.09- | AT/MT | F | L/R | SUV 4WD M9R 830 | | GCO41249 | Outer Joint | | 29 | 36 | 56 | 102 | 72 | I |
| | 2008.09- | MT | F | L | SUV 4WD M9R 830 | | GDS41481 | Drive Shaft | | 29 | 29 | 56 | 102 | 615 | |
| | 2008.09- | MT | F | R | SUV 4WD M9R 830 | | GDS41441 | Drive Shaft | | 29 | 29 | 56 | 102 | 1009 | |
| | 2008.09- | MT | F | R | SUV 4WD M9R 830 | | GDS41482 | Drive Shaft | | 29 | 29 | 56 | 102 | 1009 | |
| | 2008.09- | MT | F | L | SUV 4WD M9R 830 | | GCI41076 | Inner Joint | | 29 | 29 | 39 | 65.5 | 116 | |
| | 2008.09- | MT | F | R | SUV 4WD M9R 830 | | GCI41131 | Inner Joint | | 29 | 29 | 33 | 481 | 100 | |
| | 2008.09- | MT | F | R | SUV 4WD M9R 830 | | GCI81064 | Inner Joint | | 29 | 29 | 33 | 482.5 | 99.5 | |
| | 2008.09- | AT/MT | R | L/R | SUV 4WD M9R 830 | | GDS41538 | Drive Shaft | 48T | 25 | 21 | 56 | 110.5 | 801 | |
| | 2008.09- | AT/MT | R | L/R | SUV 4WD M9R 830 | | GCO41285 | Outer Joint | 48T | 25 | 24 | 56 | 110.5 | 38.5 | I |
| | 2008.09- | AT/MT | R | L/R | SUV 4WD M9R 830 | | GCI57111 | Inner Joint | | 21 | 24 | 38 | 61 | 91 | |
| | 2013.07- | AT | F | L | SUV FWD M9R 865 | | GDS41365 | Drive Shaft | | 29 | 30 | 56 | 102 | 650 | |
| | 2013.07- | AT | F | R | SUV FWD M9R 865 | | GDS41475 | Drive Shaft | | 29 | 30 | 56 | 102 | 971 | |
| | 2013.07- | AT | F | L/R | SUV FWD M9R 865 | | GCO41249 | Outer Joint | | 29 | 36 | 56 | 102 | 72 | I |
| | 2013.07- | MT | F | L | SUV FWD M9R 865 | | GDS41577 | Drive Shaft | | 29 | 29 | 56 | 102 | 650 | |
| | 2013.07- | MT | F | R | SUV FWD M9R 865 | | GDS41299 | Drive Shaft | | 29 | 29 | 56 | 102 | 979 | |
| | 2013.07- | MT | F | L | SUV FWD M9R 865 | | GCI41192 | Inner Joint | | 29 | 29 | 39 | 65.5 | 116 | |
| 2.0 (130 kw) | 2008.09-2013.03 | MT | F | L | SUV 4WD M9R 830 | | GDS41481 | Drive Shaft | | 29 | 29 | 56 | 102 | 615 | |
| | 2008.09-2013.03 | MT | F | R | SUV 4WD M9R 830 | | GDS41441 | Drive Shaft | | 29 | 29 | 56 | 102 | 1009 | |
| | 2008.09-2013.03 | MT | F | L | SUV 4WD M9R 830 | | GCO41249 | Outer Joint | | 29 | 36 | 56 | 102 | 72 | I |
| | 2008.09-2013.03 | AT/MT | R | L/R | SUV 4WD M9R 830 | | GDS41538 | Drive Shaft | 48T | 25 | 21 | 56 | 110.5 | 801 | |
| | 2008.09-2013.03 | AT/MT | R | L/R | SUV 4WD M9R 830 | | GCI57111 | Inner Joint | | 21 | 24 | 38 | 61 | 91 | |
| | 2016.04- | 6MT | F | L | SUV 4WD M9R 868 | | GDS57378 | Drive Shaft | | 29 | 29 | 62 | 102.5 | 632 | |
| | 2016.04- | 6MT | F | R | SUV 4WD M9R 868 | | GDS58328 | Drive Shaft | | 29 | 29 | 62 | 102.5 | 1030 | |
| | 2016.04- | 6MT | F | L/R | SUV 4WD M9R 868 | | GCO83436 | Outer Joint | | 29 | 37 | 62 | 102.5 | 64.5 | I |
| | 2016.04- | 6MT | F | L | SUV 4WD M9R 868 | | GCI41187 | Inner Joint | | 29 | 36 | 39 | 65.5 | 124.5 | |
| | 2016.04- | 6MT | F | R | SUV 4WD M9R 868 | | GCI84067 | Inner Joint | | 29 | 36 | 33 | 478 | 113 | |
| | 2016.04- | CVT | F | L/R | SUV 4WD M9R 868 | | GCO83436 | Outer Joint | | 29 | 37 | 62 | 102.5 | 64.5 | I |
| | 2016.04- | CVT | F | L | SUV 4WD M9R 868 | | GCI41187 | Inner Joint | | 29 | 36 | 39 | 65.5 | 124.5 | |
| | 2016.04- | CVT | R | L/R | SUV 4WD M9R 868 | | GCI57111 | Inner Joint | | 21 | 24 | 38 | 61 | 91 | |
| | 2016.04- | CVT/6MT | R | L/R | SUV 4WD M9R 868 | | GDS82990 | Drive Shaft | 48T | 25 | 21 | 56 | 110.5 | 818 | |
| | 2016.04- | CVT/6MT | R | L/R | SUV 4WD M9R 868 | | GCO41285 | Outer Joint | 48T | 25 | 24 | 56 | 110.5 | 38.5 | I |
| 2.0 (135 kw) | 2020.01- | CVT | F | L/R | SUV 4WD M9R 716 | | GCO83436 | Outer Joint | | 29 | 37 | 62 | 102.5 | 64.5 | I |

| | YEAR | TRANSM. | F/R | L/R | BODY STYLE & DRIVE TYPE & ENGINE | REMARKS | G-AP Ref. | PRODUCT | ABS | Technical Specifications A | B | C | H | L | P |
|---|---|---|---|---|---|---|---|---|---|---|---|---|---|---|---|
| **RENAULT** | | | | | | | | | | | | | | | |
| **Koleos** | | | | | | | | | | | | | | | |
| 2.0 (135 kw) | 2020.01- | CVT | F | L | SUV 4WD M9R 716 | | GCI41187 | Inner Joint | | 29 | 36 | 39 | 65.5 | 124.5 | |
| | 2020.01- | CVT | R | L/R | SUV 4WD M9R 716 | | GDS82990 | Drive Shaft | 48T | 25 | 21 | 56 | 110.5 | 818 | |
| | 2020.01- | CVT | R | L/R | SUV 4WD M9R 716 | | GCO41285 | Outer Joint | 48T | 25 | 24 | 56 | 110.5 | 38.5 | I |
| | 2020.01- | CVT | R | L/R | SUV 4WD M9R 716 | | GCI57111 | Inner Joint | | 21 | 24 | 38 | 61 | 91 | |
| 2.0 (140 kw) | 2019.06- | CVT | F | L/R | SUV 4WD M9R 730 | | GCO83436 | Outer Joint | | 29 | 37 | 62 | 102.5 | 64.5 | I |
| | 2019.06- | CVT | F | L | SUV 4WD M9R 730 | | GCI41187 | Inner Joint | | 29 | 36 | 39 | 65.5 | 124.5 | |
| | 2019.06- | CVT | R | L/R | SUV 4WD M9R 730 | | GDS82990 | Drive Shaft | 48T | 25 | 21 | 56 | 110.5 | 818 | |
| | 2019.06- | CVT | R | L/R | SUV 4WD M9R 730 | | GCO41285 | Outer Joint | 48T | 25 | 24 | 56 | 110.5 | 38.5 | I |
| | 2019.06- | CVT | R | L/R | SUV 4WD M9R 730 | | GCI57111 | Inner Joint | | 21 | 24 | 38 | 61 | 91 | |
| 2.5 (126 kw) | 2008.09- | AT | F | R | SUV 4WD 2TR 702;2TR 700;2TR 703 | | GDS41399 | Drive Shaft | | 29 | 27 | 56.1 | 102 | 966 | |
| | 2008.09- | AT | F | L/R | SUV 4WD 2TR 702;2TR 700;2TR 703 | | GCI41108 | Inner Joint | | 27 | 33 | 40 | 107 | 114 | |
| | 2008.09- | AT | F | L/R | SUV 4WD 2TR 702;2TR 700;2TR 703 | | GCI41181 | Inner Joint | | 27 | 33 | 40 | 107 | 118 | |
| | 2008.09- | AT/MT | F | L/R | SUV 4WD 2TR 702;2TR 700;2TR 703 | | GCO41214 | Outer Joint | | 29 | 35 | 56.1 | 102 | 59 | I |
| | 2008.09- | CVT | F | L/R | SUV 4WD 2TR 702;2TR 700;2TR 703 | | GDS41521 | Drive Shaft | | 29 | 27 | 56.1 | 102 | 667 | |
| | 2008.09- | MT | F | L/R | SUV 4WD 2TR 702;2TR 700;2TR 703 | | GDS82464 | Drive Shaft | | 29 | 29 | 56 | 102.5 | 605 | |
| | 2008.09- | AT/MT | R | L/R | SUV 4WD 2TR 702;2TR 700;2TR 703 | | GDS41538 | Drive Shaft | 48T | 25 | 21 | 56 | 110.5 | 801 | |
| | 2008.09- | AT/MT | R | L/R | SUV 4WD 2TR 702;2TR 700;2TR 703 | | GCO41285 | Outer Joint | 48T | 25 | 24 | 56 | 110.5 | 38.5 | I |
| | 2008.09- | AT/MT | R | L/R | SUV 4WD 2TR 702;2TR 700;2TR 703 | | GCI57111 | Inner Joint | | 21 | 24 | 38 | 61 | 91 | |
| | 2008.09- | CVT | F | L/R | SUV FWD 2TR 702;2TR 700;2TR 703 | | GDS41507 | Drive Shaft | | 29 | 27 | 56.1 | 102 | 666 | |
| | 2008.09- | CVT | F | L/R | SUV FWD 2TR 702;2TR 700;2TR 703 | | GCO41214 | Outer Joint | | 29 | 35 | 56.1 | 102 | 59 | I |
| | 2008.09- | CVT | F | L/R | SUV FWD 2TR 702;2TR 700;2TR 703 | | GCI41168 | Inner Joint | | 27 | 33 | 40 | 62.5 | 118 | |
| | 2016.04- | CVT | F | L | SUV 4WD 2TR707 | | GDS82249 | Drive Shaft | | 29 | 27 | 62 | 102.5 | 686 | |
| | 2016.04- | CVT | F | L | SUV 4WD 2TR707 | | GCI81700 | Inner Joint | | 27 | 33 | 40 | 62.5 | 112 | |
| | 2016.04- | CVT | R | L/R | SUV 4WD 2TR707 | | GDS82990 | Drive Shaft | 48T | 25 | 21 | 56 | 110.5 | 818 | |
| | 2016.04- | CVT | R | L/R | SUV 4WD 2TR707 | | GCO41285 | Outer Joint | 48T | 25 | 24 | 56 | 110.5 | 38.5 | I |
| | 2016.04- | | R | L/R | SUV 4WD 2TR707 | | GCI57111 | Inner Joint | | 21 | 24 | 38 | 61 | 91 | |
| **Laguna** | | | | | | | | | | | | | | | |
| 1.5 (81 kw) | 2007.10-2015.12 | 6DCT | F | L | Hatchback FWD K9K 780;K9K 846;K9K 782 | | GDS84139 | Drive Shaft | | 27 | 34 | 56.5 | 91 | 634 | |
| | 2007.10-2015.12 | 6DCT | F | R | Hatchback FWD K9K 780;K9K 846;K9K 782 | | GDS56164 | Drive Shaft | | 27 | 34 | 56.5 | 91 | 990 | |
| | 2007.10-2015.12 | 6DCT | F | L/R | Hatchback FWD K9K 780;K9K 846;K9K 782 | | GCO82484 | Outer Joint | | 27 | 33 | 56.5 | 91 | 61.5 | I |
| | 2007.10-2015.12 | 6DCT | F | L | Hatchback FWD K9K 780;K9K 846;K9K 782 | | GCI50129 | Inner Joint | | 34 | 33 | 40 | 54 | 106 | |
| | 2007.10-2015.12 | 6DCT | F | R | Hatchback FWD K9K 780;K9K 846;K9K 782 | | GCI50133 | Inner Joint | | 34 | 33 | 40 | 380.5 | 86.5 | |
| | 2007.10-2015.12 | 6MT | F | L | Hatchback FWD K9K 780;K9K 846;K9K 782 | | GDS50378 | Drive Shaft | | 27 | 26 | 56.7 | 91 | 687 | |
| | 2007.10-2015.12 | 6MT | F | R | Hatchback FWD K9K 780;K9K 846;K9K 782 | | GDS50377 | Drive Shaft | | 27 | 26 | 56.7 | 91 | 940 | |
| | 2007.10-2015.12 | 6MT | F | L/R | Hatchback FWD K9K 780;K9K 846;K9K 782 | | GCO50130 | Outer Joint | | 27 | 33 | 56.7 | 91 | 61 | I |
| | 2012.03-2015.12 | 6DCT | F | L | Coupe FWD K9K 846 | | GDS84139 | Drive Shaft | | 27 | 34 | 56.5 | 91 | 634 | |
| | 2012.03-2015.12 | 6DCT | F | R | Coupe FWD K9K 846 | | GDS56164 | Drive Shaft | | 27 | 34 | 56.5 | 91 | 990 | |
| | 2012.03-2015.12 | 6DCT | F | L/R | Coupe FWD K9K 846 | | GCO82484 | Outer Joint | | 27 | 33 | 56.5 | 91 | 61.5 | I |
| | 2012.03-2015.12 | 6DCT | F | L | Coupe FWD K9K 846 | | GCI50129 | Inner Joint | | 34 | 33 | 40 | 54 | 106 | |
| | 2012.03-2015.12 | 6DCT | F | R | Coupe FWD K9K 846 | | GCI50133 | Inner Joint | | 34 | 33 | 40 | 380.5 | 86.5 | |
| | 2012.03-2015.12 | 6MT | F | L | Coupe FWD K9K 846 | | GDS50378 | Drive Shaft | | 27 | 26 | 56.7 | 91 | 687 | |
| | 2012.03-2015.12 | 6MT | F | R | Coupe FWD K9K 846 | | GDS50377 | Drive Shaft | | 27 | 26 | 56.7 | 91 | 940 | |
| | 2012.03-2015.12 | 6MT | F | L/R | Coupe FWD K9K 846 | | GCO50130 | Outer Joint | | 27 | 33 | 56.7 | 91 | 61 | I |
| 1.6 (76 kw) | 2001.03-2005.05 | 5MT | F | L | Hatchback FWD K4M 710 | | GDS50446 | Drive Shaft | | 27 | 30 | 56.5 | 91.5 | 719 | |
| | 2001.03-2005.05 | 5MT | F | L/R | Hatchback FWD K4M 710 | | GCO50083 | Outer Joint | | 27 | 30 | 56.5 | 91.5 | 59 | I |
| | 2001.03-2005.05 | 5MT | F | R | Hatchback FWD K4M 710 | | GCI99131 | Inner Joint | | 23 | 28 | | 182.8 | 86 | |
| 1.6 (79 kw) | 1998.07-2001.02 | AT/MT | F | L/R | Hatchback FWD K4M720 | | GCO99086 | Outer Joint | | 23 | 32 | 56.3 | 85 | 62.5 | I |
| | 1998.07-2001.02 | MT | F | L | Hatchback FWD K4M720 | | GDS50197 | Drive Shaft | | 23 | 30 | 56.3 | 85 | 706 | |
| | 1998.07-2001.02 | MT | F | R | Hatchback FWD K4M720 | | GDS50043 | Drive Shaft | | 23 | 23 | 56 | 84 | 747 | |
| | 1998.07-2001.02 | MT | F | L/R | Hatchback FWD K4M720 | | GCO50025 | Outer Joint | | 23 | 25 | 56 | 84 | 61 | O |
| | 1998.07-2001.02 | | F | R | Hatchback FWD K4M720 | Date From:1998.07 | GCI50008 | Inner Joint | | 23 | 30 | 36.3 | | 120.7 | |
| | 2001.03-2005.05 | 5MT | F | L | Hatchback FWD K4M 710;K4M 714 | | GDS50446 | Drive Shaft | | 27 | 30 | 56.5 | 91.5 | 719 | |
| | 2001.03-2005.05 | AT | F | L | Hatchback FWD K4M 710;K4M 714 | | GDS50328 | Drive Shaft | | 27 | 26 | 56.5 | 91.5 | 697 | |
| | 2001.03-2005.05 | AT | F | R | Hatchback FWD K4M 710;K4M 714 | | GDS50329 | Drive Shaft | | 27 | 23 | 56.5 | 91.5 | 824 | |
| | 2001.03-2005.05 | MT | F | L/R | Hatchback FWD K4M 710;K4M 714 | Date from:2003.01 | GCO50083 | Outer Joint | | 27 | 30 | 56.5 | 91.5 | 59 | I |
| | 2001.03-2005.05 | MT | F | L | Hatchback FWD K4M 714 | | GDS50446 | Drive Shaft | | 27 | 30 | 56.5 | 91.5 | 719 | |
| | 2001.03-2005.05 | MT | F | R | Hatchback FWD K4M 714 | | GDS50226 | Drive Shaft | | 27 | 23 | 56.5 | 92 | 802 | |
| | 2001.03-2005.05 | MT | F | L/R | Hatchback FWD K4M 714 | | GCO50083 | Outer Joint | | 27 | 30 | 56.5 | 91.5 | 59 | I |
| | 2001.03-2005.05 | MT | F | R | Hatchback FWD K4M 714 | | GCI99131 | Inner Joint | | 23 | 28 | | 182.8 | 86 | |
| 1.6 (81 kw) | 2007.10-2015.12 | 6MT | F | L | Hatchback FWD K4M 824 | | GCI50048 | Inner Joint | | 26 | 30 | 40 | 64 | 121 | |
| | 2007.10-2015.12 | | F | L | Hatchback FWD K4M 824 | | GDS50622 | Drive Shaft | | 27 | 26 | 56.7 | 91 | 690 | |
| | 2007.10-2015.12 | | F | L | Hatchback FWD K4M 824 | | GCO50150 | Outer Joint | | 27 | 32 | 56.7 | 91 | 61 | I |
| 1.6 (82 kw) | 2005.02-2007.08 | 5MT | F | L | Hatchback FWD K4M 716 | | GDS50622 | Drive Shaft | | 27 | 26 | 56.7 | 91 | 690 | |
| | 2005.02-2007.08 | 5MT | F | L | Hatchback FWD K4M 716 | | GCO50150 | Outer Joint | | 27 | 32 | 56.7 | 91 | 61 | I |
| | 2005.02-2007.08 | 5MT | F | L | Hatchback FWD K4M 716 | | GCI50048 | Inner Joint | | 26 | 30 | 40 | 64 | 121 | |

| | YEAR | TRANSM. | F/R | L/R | BODY STYLE & DRIVE TYPE & ENGINE | REMARKS | G-AP Ref. | PRODUCT | ABS | Technical Specifications A | B | C | H | L | P |
|---|---|---|---|---|---|---|---|---|---|---|---|---|---|---|---|
| **RENAULT** **Laguna** | | | | | | | | | | | | | | | |
| 1.6 (82 kw) | 2005.02-2007.08 | AT | F | R | Hatchback FWD K4M 716 | | GDS50509 | Drive Shaft | | 27 | 26 | 56.7 | 91 | 822 | |
| | 2005.02-2007.08 | | F | L | Hatchback FWD K4M 716 | | GDS50460 | Drive Shaft | | 27 | 26 | 56.5 | 92 | 692 | |
| | 2005.02-2007.08 | | F | | Hatchback FWD K4M 716 | | GCO50083 | Outer Joint | | 27 | 30 | 56.5 | 91.5 | 59 | I |
| 1.8 (66 kw) | 1993.11-2001.03 | MT | F | L | Hatchback FWD F3P 720 (11.93-.), F3P 724 (11.93-.) | Chassis no. to:950213 | GDS50026 | Drive Shaft | 44T | 23 | | 57.5 | 83.5 | 702 | |
| | 1993.11-2001.03 | MT | F | L | Hatchback FWD F3P 720 (11.93-.), F3P 724 (11.93-.) | Chassis no. to:950213 | GDS50093 | Drive Shaft | | 23 | 30 | 56.3 | 80 | 700 | |
| | 1993.11-2001.03 | MT | F | L | Hatchback FWD F3P 720 (11.93-.), F3P 724 (11.93-.) | Chassis no. from:950214 | GDS50309 | Drive Shaft | | 21 | 30 | 56.2 | 83.5 | 702 | |
| | 1993.11-2001.03 | MT | F | R | Hatchback FWD F3P 720 (11.93-.), F3P 724 (11.93-.) | Chassis no. to:950213 | GDS50046 | Drive Shaft | | 23 | 23 | 56.2 | 83.5 | 748 | |
| | 1993.11-2001.03 | MT | F | R | Hatchback FWD F3P 720 (11.93-.), F3P 724 (11.93-.) | Chassis no. from:950214 | GDS50053 | Drive Shaft | | 21 | 23 | 56.2 | 83.5 | 751 | |
| | 1993.11-2001.03 | MT | F | R | Hatchback FWD F3P 720 (11.93-.), F3P 724 (11.93-.) | Chassis no. to:950213 | GDS50134 | Drive Shaft | 44T | 23 | 23 | 56.2 | 83.5 | 748 | |
| | 1993.11-2001.03 | MT | F | L/R | Hatchback FWD F3P 720 (11.93-.), F3P 724 (11.93-.) | Chassis no. from:950214 | GCO50008 | Outer Joint | | 21 | 25 | 56.2 | 83.5 | 58 | O |
| | 1993.11-2001.03 | MT | F | L/R | Hatchback FWD F3P 720 (11.93-.), F3P 724 (11.93-.) | Chassis no. to:950213 | GCO50026 | Outer Joint | | 23 | 25 | 56.2 | 83.5 | 58 | O |
| | 1993.11-2001.03 | | F | | Hatchback FWD F3P 720 (11.93-.), F3P 724 (11.93-.) | | GCO50005 | Outer Joint | 44T | 23 | 25 | 56.3 | 84 | 61.5 | O |
| 1.8 (69 kw) | 1995.06-2001.02 | MT | F | L | Hatchback FWD F3P 674 | Date to:1998.05,Trans. code:JB3/JC5 | GDS50026 | Drive Shaft | 44T | 23 | | 57.5 | 83.5 | 702 | |
| | 1995.06-2001.02 | MT | F | L | Hatchback FWD F3P 674 | Chassis no. to:950213 | GDS50093 | Drive Shaft | | 23 | 30 | 56.3 | 80 | 700 | |
| | 1995.06-2001.02 | MT | F | L | Hatchback FWD F3P 674 | Date from:1997.01,for OE number:7701352741 | GDS50197 | Drive Shaft | | 23 | 30 | 56.3 | 85 | 706 | |
| | 1995.06-2001.02 | MT | F | L | Hatchback FWD F3P 674 | Chassis no. from:950214,Trans. code:JB3/JC5 | GDS50309 | Drive Shaft | | 21 | 30 | 56.2 | 83.5 | 702 | |
| | 1995.06-2001.02 | MT | F | R | Hatchback FWD F3P 674 | Date from:1997.01 | GDS50043 | Drive Shaft | | 23 | 23 | 56 | 84 | 747 | |
| | 1995.06-2001.02 | MT | F | R | Hatchback FWD F3P 674 | Chassis no. to:950213 | GDS50046 | Drive Shaft | | 23 | 23 | 56.2 | 83.5 | 748 | |
| | 1995.06-2001.02 | MT | F | R | Hatchback FWD F3P 674 | Chassis no. from:950214,Date to:1997.01,for OE number:7701352385 | GDS50053 | Drive Shaft | | 21 | 23 | 56.2 | 83.5 | 751 | |
| | 1995.06-2001.02 | MT | F | R | Hatchback FWD F3P 674 | Chassis no. to:950213 | GDS50134 | Drive Shaft | 44T | 23 | 23 | 56.2 | 83.5 | 748 | |
| | 1995.06-2001.02 | MT | F | R | Hatchback FWD F3P 674 | Date from:1997.01 | GDS50197 | Drive Shaft | | 23 | 30 | 56.3 | 85 | 706 | |
| | 1995.06-2001.02 | MT | F | L/R | Hatchback FWD F3P 674 | Chassis no. from:950214 | GCO50008 | Outer Joint | | 21 | 25 | 56.2 | 83.5 | 58 | O |
| | 1995.06-2001.02 | MT | F | L/R | Hatchback FWD F3P 674 | Chassis no. to:950213 | GCO50026 | Outer Joint | | 23 | 25 | 56.2 | 83.5 | 58 | O |
| | 1995.08-2001.03 | MT | F | L | Hatchback FWD F3P 720 (08.95-.), F3P 724 (08.95-.) | Date to:1998.05,Trans. code:JB3/JC5 | GDS50026 | Drive Shaft | 44T | 23 | | 57.5 | 83.5 | 702 | |
| | 1995.08-2001.03 | MT | F | L | Hatchback FWD F3P 720 (08.95-.), F3P 724 (08.95-.) | Chassis no. to:950213 | GDS50093 | Drive Shaft | | 23 | 30 | 56.3 | 80 | 700 | |
| | 1995.08-2001.03 | MT | F | L | Hatchback FWD F3P 720 (08.95-.), F3P 724 (08.95-.) | Date from:1997.01,for OE number:7701352741 | GDS50197 | Drive Shaft | | 23 | 30 | 56.3 | 85 | 706 | |
| | 1995.08-2001.03 | MT | F | L | Hatchback FWD F3P 720 (08.95-.), F3P 724 (08.95-.) | Chassis no. from:950214,Trans. code:JB3/JC5 | GDS50309 | Drive Shaft | | 21 | 30 | 56.2 | 83.5 | 702 | |
| | 1995.08-2001.03 | MT | F | R | Hatchback FWD F3P 720 (08.95-.), F3P 724 (08.95-.) | Date from:1997.01 | GDS50043 | Drive Shaft | | 23 | 23 | 56 | 84 | 747 | |
| | 1995.08-2001.03 | MT | F | R | Hatchback FWD F3P 720 (08.95-.), F3P 724 (08.95-.) | Chassis no. to:950213 | GDS50046 | Drive Shaft | | 23 | 23 | 56.2 | 83.5 | 748 | |
| | 1995.08-2001.03 | MT | F | R | Hatchback FWD F3P 720 (08.95-.), F3P 724 (08.95-.) | Chassis no. from:950214,Date to:1997.01,for OE number:7701352385 | GDS50053 | Drive Shaft | | 21 | 23 | 56.2 | 83.5 | 751 | |
| | 1995.08-2001.03 | MT | F | R | Hatchback FWD F3P 720 (08.95-.), F3P 724 (08.95-.) | Chassis no. to:950213 | GDS50134 | Drive Shaft | 44T | 23 | 23 | 56.2 | 83.5 | 748 | |
| | 1995.08-2001.03 | MT | F | R | Hatchback FWD F3P 720 (08.95-.), F3P 724 (08.95-.) | Date from:1997.01 | GDS50197 | Drive Shaft | | 23 | 30 | 56.3 | 85 | 706 | |
| | 1995.08-2001.03 | MT | F | L/R | Hatchback FWD F3P 720 (08.95-.), F3P 724 (08.95-.) | Chassis no. from:950214 | GCO50008 | Outer Joint | | 21 | 25 | 56.2 | 83.5 | 58 | O |
| | 1995.08-2001.03 | MT | F | L/R | Hatchback FWD F3P 720 (08.95-.), F3P 724 (08.95-.) | Chassis no. to:950213 | GCO50026 | Outer Joint | | 23 | 25 | 56.2 | 83.5 | 58 | O |
| 1.8 (70 kw) | 1994.04-1998.06 | MT | F | R | Hatchback FWD F3P676/F3P678 | | GDS50173 | Drive Shaft | | 21 | 23 | 57 | 84.5 | 743 | |
| | 1994.04-1998.06 | | F | | Hatchback FWD F3P676/F3P678 | | GCO50015 | Outer Joint | | 23 | 29 | 56.3 | 80 | 63 | O |
| 1.8 (85 kw) | 2001.03-2007.12 | 4AT | F | R | Hatchback FWD F4P 770;F4P 773;F4P 771;F4P 774;F4P 775 | Date to:2002.02 | GDS50219 | Drive Shaft | | 27 | 23 | 56.5 | 91.5 | 793.5 | |
| | 2001.03-2007.12 | 5MT | F | R | Hatchback FWD F4P 770;F4P 773;F4P 771;F4P 774;F4P 775 | | GCO50079 | Outer Joint | | 27 | 32 | 56.5 | 92 | 62.5 | I |
| | 2001.03-2007.12 | AT | F | L | Hatchback FWD F4P 770;F4P 773;F4P 771;F4P 774;F4P 775 | Date to:2005.05;for OE number:82000.14353 | GDS50281 | Drive Shaft | | 27 | 26 | 56.5 | 92 | 700 | |
| | 2001.03-2007.12 | AT | F | L | Hatchback FWD F4P 770;F4P 773;F4P 771;F4P 774;F4P 775 | Date to:2005.05;for OE number:8200225099 | GDS50632 | Drive Shaft | | 27 | 26 | 56.7 | 91 | 689 | |
| | 2001.03-2007.12 | AT | F | R | Hatchback FWD F4P 770;F4P 773;F4P 771;F4P 774;F4P 775 | Date from:2002.03 | GDS50509 | Drive Shaft | | 27 | 26 | 56.7 | 91 | 822 | |
| | 2001.03-2007.12 | AT | F | L | Hatchback FWD F4P 770;F4P 773;F4P 771;F4P 774;F4P 775 | Date to:2005.05;for OE number:8200225099 | GCI50040 | Inner Joint | | 26 | 30 | 43 | 42.5 | 83 | |
| | 2001.03-2007.12 | AT/MT | F | L/R | Hatchback FWD F4P 770;F4P 773;F4P 771;F4P 774;F4P 775 | Date from:2003.01 | GCO50083 | Outer Joint | | 27 | 30 | 56.5 | 91.5 | 59 | I |
| | 2001.03-2007.12 | MT | F | L | Hatchback FWD F4P 770;F4P 773;F4P 771;F4P 774;F4P 775 | | GDS50446 | Drive Shaft | | 27 | 30 | 56.5 | 91.5 | 719 | |
| | 2001.03-2007.12 | MT | F | R | Hatchback FWD F4P 770;F4P 773;F4P 771;F4P 774;F4P 775 | | GDS50226 | Drive Shaft | | 27 | 23 | 56.5 | 92 | 802 | |
| 1.8 (86 kw) | 2001.03-2005.05 | 5MT | F | R | Hatchback FWD F4P 770;F4P 774 | | GCO50079 | Outer Joint | | 27 | 32 | 56.5 | 92 | 62.5 | I |
| | 2001.03-2005.05 | AT | F | R | Hatchback FWD F4P 770;F4P 774 | | GDS50509 | Drive Shaft | | 27 | 26 | 56.7 | 91 | 822 | |
| | 2001.03-2005.05 | AT/MT | F | | Hatchback FWD F4P 770;F4P 774 | | GCO50083 | Outer Joint | | 27 | 30 | 56.5 | 91.5 | 59 | I |
| | 2001.03-2005.05 | MT | F | L | Hatchback FWD F4P 770;F4P 774 | | GDS50446 | Drive Shaft | | 27 | 30 | 56.5 | 91.5 | 719 | |
| | 2001.03-2005.05 | MT | F | R | Hatchback FWD F4P 770;F4P 774 | | GDS50226 | Drive Shaft | | 27 | 23 | 56.5 | 92 | 802 | |
| 1.8 (88 kw) | 1998.07-2001.02 | AT/MT | F | L/R | Hatchback FWD F4P760 | | GCO99086 | Outer Joint | | 23 | 32 | 56.3 | 85 | 62.5 | I |
| | 1998.07-2001.02 | MT | F | L | Hatchback FWD F4P760 | | GDS50197 | Drive Shaft | | 23 | 30 | 56.3 | 85 | 706 | |
| | 1998.07-2001.02 | MT | F | R | Hatchback FWD F4P760 | | GDS50043 | Drive Shaft | | 23 | 23 | 56 | 84 | 747 | |
| | 1998.07-2001.02 | MT | F | L/R | Hatchback FWD F4P760 | | GCO50025 | Outer Joint | | 23 | 25 | 56 | 84 | 61 | O |
| | 1998.07-2001.02 | | F | R | Hatchback FWD F4P760 | Date From:1998.07 | GCI50008 | Inner Joint | | 23 | 30 | 36.3 | | 120.7 | |
| | 2001.03-2007.09 | 4AT/5AT | F | R | Hatchback FWD F4P 770;F4P 773 | Date to:2005.05 | GDS50219 | Drive Shaft | | 27 | 23 | 56.5 | 91.5 | 793.5 | |
| | 2001.03-2007.09 | 5AT | F | L | Hatchback FWD F4P 770;F4P 773 | | GDS50632 | Drive Shaft | | 27 | 26 | 56.7 | 91 | 689 | |
| | 2001.03-2007.09 | 5AT | F | L | Hatchback FWD F4P 770;F4P 773 | | GCI50040 | Inner Joint | | 26 | 30 | 43 | 42.5 | 83 | |
| | 2001.03-2007.09 | 5MT | F | R | Hatchback FWD F4P 770;F4P 773 | | GCO50079 | Outer Joint | | 27 | 32 | 56.5 | 92 | 62.5 | I |
| | 2001.03-2007.09 | AT | F | R | Hatchback FWD F4P 770;F4P 773 | Date from:2003.01 | GDS50509 | Drive Shaft | | 27 | 26 | 56.7 | 91 | 822 | |
| | 2001.03-2007.09 | AT/MT | F | L/R | Hatchback FWD F4P 770;F4P 773 | Date from:2003.01 | GCO50083 | Outer Joint | | 27 | 30 | 56.5 | 91.5 | 59 | I |
| | 2001.03-2007.09 | MT | F | L | Hatchback FWD F4P 770;F4P 773 | | GDS50446 | Drive Shaft | | 27 | 30 | 56.5 | 91.5 | 719 | |
| | 2001.03-2007.09 | MT | F | R | Hatchback FWD F4P 770;F4P 773 | | GDS50226 | Drive Shaft | | 27 | 23 | 56.5 | 92 | 802 | |
| 1.8 (89 kw) | 2001.03-2005.05 | 5MT | F | L | Hatchback FWD F4P 770;F4P 772 | | GDS50446 | Drive Shaft | | 27 | 30 | 56.5 | 91.5 | 719 | |
| | 2001.03-2005.05 | 5MT | F | R | Hatchback FWD F4P 770;F4P 772 | | GDS50226 | Drive Shaft | | 27 | 23 | 56.5 | 92 | 802 | |

| | YEAR | TRANSM. | F/R | L/R | BODY STYLE & DRIVE TYPE & ENGINE | REMARKS | G-AP Ref. | PRODUCT | ABS | Technical Specifications A | B | C | H | L | P |
|---|---|---|---|---|---|---|---|---|---|---|---|---|---|---|---|
| **RENAULT** **Laguna** | | | | | | | | | | | | | | | |
| 1.8 (89 kw) | 2001.03-2005.05 | 5MT | F | R | Hatchback FWD F4P 770;F4P 772 | | GCO50079 | Outer Joint | | 27 | 32 | 56.5 | 92 | 62.5 | I |
| | 2001.03-2005.05 | AT | F | L | Hatchback FWD F4P 770;F4P 772 | for OE number:8200014353 | GDS50281 | Drive Shaft | | 27 | 26 | 56.5 | 92 | 700 | |
| | 2001.03-2005.05 | AT | F | L | Hatchback FWD F4P 770;F4P 772 | Date from:2003.01 | GDS50632 | Drive Shaft | | 27 | 26 | 56.7 | 91 | 689 | |
| | 2001.03-2005.05 | AT | F | R | Hatchback FWD F4P 770;F4P 772 | Date to:2002.02 | GDS50219 | Drive Shaft | | 27 | 23 | 56.5 | 91.5 | 793.5 | |
| | 2001.03-2005.05 | AT | F | R | Hatchback FWD F4P 770;F4P 772 | Date from:2003.01 | GDS50509 | Drive Shaft | | 27 | 26 | 56.7 | 91 | 822 | |
| | 2001.03-2005.05 | AT | F | L | Hatchback FWD F4P 770;F4P 772 | Date from:2003.01 | GCI50040 | Inner Joint | | 26 | 30 | 43 | 42.5 | 83 | |
| | 2001.03-2005.05 | AT/MT | F | L/R | Hatchback FWD F4P 770;F4P 772 | Date from:2003.01 | GCO50083 | Outer Joint | | 27 | 30 | 56.5 | 91.5 | 59 | I |
| 1.9 (68 kw) | 2004.03-2005.05 | 5AT | F | | Hatchback FWD F9Q 664 | | GCO50083 | Outer Joint | | 27 | 30 | 56.5 | 91.5 | 59 | I |
| | 2004.03-2005.05 | 5MT | F | L | Hatchback FWD F9Q 664 | | GDS50207 | Drive Shaft | | 27 | 37 | 56.5 | 91.5 | 632 | |
| | 2004.03-2005.05 | 5MT | F | R | Hatchback FWD F9Q 664 | | GDS50228 | Drive Shaft | | 27 | 39 | 56.5 | 90.5 | 967 | |
| | 2004.03-2005.05 | MT | F | L/R | Hatchback FWD F9Q 664 | | GCO50078 | Outer Joint | | 27 | 35 | 56.5 | 91.5 | 71 | I |
| 1.9 (72 kw) | 1997.10-2001.03 | MT | F | L | Hatchback FWD F9Q710/F9Q716/F9Q717 | | GDS50197 | Drive Shaft | | 23 | 30 | 56.3 | 85 | 706 | |
| | 1997.10-2001.03 | MT | F | R | Hatchback FWD F9Q710/F9Q716/F9Q717 | | GDS50043 | Drive Shaft | | 23 | 23 | 56 | 84 | 747 | |
| | 1997.10-2001.03 | MT | F | L/R | Hatchback FWD F9Q710/F9Q716/F9Q717 | | GCO50025 | Outer Joint | | 23 | 25 | 56 | 84 | 61 | O |
| | 1997.10-2001.03 | MT | F | R | Hatchback FWD F9Q710/F9Q716/F9Q717 | | GCI50008 | Inner Joint | | 23 | 30 | 36.3 | | 120.7 | |
| | 1997.10-2001.03 | | F | | Hatchback FWD F9Q710/F9Q716/F9Q717 | | GCO99086 | Outer Joint | | 23 | 32 | 56.3 | 85 | 62.5 | I |
| 1.9 (74 kw) | 2001.10-2005.05 | 5AT | F | L/R | Hatchback FWD F9Q 754 | | GCO50083 | Outer Joint | | 27 | 30 | 56.5 | 91.5 | 59 | I |
| | 2001.10-2005.05 | 5MT | F | L | Hatchback FWD F9Q 754 | | GDS50207 | Drive Shaft | | 27 | 37 | 56.5 | 91.5 | 632 | |
| | 2001.10-2005.05 | 5MT | F | R | Hatchback FWD F9Q 754 | | GDS50228 | Drive Shaft | | 27 | 39 | 56.5 | 90.5 | 967 | |
| | 2001.10-2005.05 | 5MT | F | L/R | Hatchback FWD F9Q 754 | | GCO50078 | Outer Joint | | 27 | 35 | 56.5 | 91.5 | 71 | I |
| 1.9 (77 kw) | 2001.06-2005.05 | 6MT | F | L | Hatchback FWD F9Q 752 | | GDS50446 | Drive Shaft | | 27 | 30 | 56.5 | 91.5 | 719 | |
| | 2001.06-2005.05 | 6MT | F | R | Hatchback FWD F9Q 752 | | GDS50226 | Drive Shaft | | 27 | 23 | 56.5 | 92 | 802 | |
| | 2001.06-2005.05 | | F | R | Hatchback FWD F9Q 752 | | GCO50079 | Outer Joint | | 27 | 32 | 56.5 | 92 | 62.5 | I |
| | 2001.06-2005.05 | | F | | Hatchback FWD F9Q 752 | | GCO50083 | Outer Joint | | 27 | 30 | 56.5 | 91.5 | 59 | I |
| 1.9 (79 kw) | 1999.09-2001.02 | MT | F | L/R | Hatchback FWD F9Q718 | | GCO50025 | Outer Joint | | 23 | 25 | 56 | 84 | 61 | O |
| | 1999.09-2001.02 | | F | L | Hatchback FWD F9Q718 | | GDS50227 | Drive Shaft | | 23 | 37 | 56 | 84 | 619 | |
| | 2001.03-2007.09 | 6MT | F | L | Hatchback FWD F9Q 718;F9Q 754 | | GDS50207 | Drive Shaft | | 27 | 37 | 56.5 | 91.5 | 632 | |
| | 2001.03-2007.09 | 6MT | F | R | Hatchback FWD F9Q 718;F9Q 754 | | GDS50228 | Drive Shaft | | 27 | 39 | 56.5 | 90.5 | 967 | |
| | 2001.03-2007.09 | 6MT | F | L/R | Hatchback FWD F9Q 718;F9Q 754 | | GCO50078 | Outer Joint | | 27 | 35 | 56.5 | 91.5 | 71 | I |
| 1.9 (81 kw) | 2005.01-2007.08 | 6MT | F | L | Hatchback FWD F9Q 758;F9Q 670;F9Q 674 | | GDS50207 | Drive Shaft | | 27 | 37 | 56.5 | 91.5 | 632 | |
| | 2005.01-2007.08 | 6MT | F | R | Hatchback FWD F9Q 758;F9Q 670;F9Q 674 | Inner teeth of wheel side:35,Inner teeth of tranm.side:32 | GDS50228 | Drive Shaft | | 27 | 39 | 56.5 | 90.5 | 967 | |
| | 2005.01-2007.08 | 6MT | F | L/R | Hatchback FWD F9Q 758;F9Q 670;F9Q 674 | | GCO50078 | Outer Joint | | 27 | 35 | 56.5 | 91.5 | 71 | I |
| | 2005.01-2007.08 | | F | R | Hatchback FWD F9Q 758;F9Q 670;F9Q 674 | Date From:2005.04 | GCO50108 | Outer Joint | | 27 | 35 | 56.5 | 90.5 | 71 | I |
| 1.9 (85 kw) | 2005.09-2007.12 | 6MT | F | R | Hatchback FWD F9Q 750;F9Q 758;F9Q 759 | | GCI81074 | Inner Joint | | 39 | 35 | | 363 | 88 | |
| | 2005.09-2007.12 | MT | F | L | Hatchback FWD F9Q 750;F9Q 758;F9Q 759 | | GDS50207 | Drive Shaft | | 27 | 37 | 56.5 | 91.5 | 632 | |
| | 2005.09-2007.12 | MT | F | R | Hatchback FWD F9Q 750;F9Q 758;F9Q 759 | Inner teeth of wheel side:35,Inner teeth of tranm.side:32 | GDS50228 | Drive Shaft | | 27 | 39 | 56.5 | 90.5 | 967 | |
| | 2005.09-2007.12 | | F | L | Hatchback FWD F9Q 750;F9Q 758;F9Q 759 | | GCO50078 | Outer Joint | | 27 | 35 | 56.5 | 91.5 | 71 | I |
| | 2005.09-2007.12 | | F | R | Hatchback FWD F9Q 750;F9Q 758;F9Q 759 | | GCO50108 | Outer Joint | | 27 | 35 | 56.5 | 90.5 | 71 | I |
| 1.9 (88 kw) | 2001.03-2007.09 | 6MT | F | R | Hatchback FWD F9Q 750;F9Q 650;F9Q 670;F9Q 674 | Inner teeth of wheel side:35 | GDS50228 | Drive Shaft | | 27 | 39 | 56.5 | 90.5 | 967 | |
| | 2001.03-2007.09 | MT | F | L/R | Hatchback FWD F9Q 750;F9Q 650;F9Q 670;F9Q 674 | | GCO50078 | Outer Joint | | 27 | 35 | 56.5 | 91.5 | 71 | I |
| | 2001.03-2007.09 | MT/6MT | F | L | Hatchback FWD F9Q 750;F9Q 650;F9Q 670;F9Q 674 | | GDS50207 | Drive Shaft | | 27 | 37 | 56.5 | 91.5 | 632 | |
| 1.9 (92 kw) | 2005.09-2007.12 | 6MT | F | R | Hatchback FWD F9Q 750;F9Q 758 | | GCI81074 | Inner Joint | | 39 | 35 | | 363 | 88 | |
| | 2005.09-2007.12 | MT | F | L | Hatchback FWD F9Q 750;F9Q 758 | | GDS50207 | Drive Shaft | | 27 | 37 | 56.5 | 91.5 | 632 | |
| | 2005.09-2007.12 | MT | F | R | Hatchback FWD F9Q 750;F9Q 758 | Inner teeth of wheel side:35,Inner teeth of tranm.side:32 | GDS50228 | Drive Shaft | | 27 | 39 | 56.5 | 90.5 | 967 | |
| | 2005.09-2007.12 | | F | L | Hatchback FWD F9Q 750;F9Q 758 | | GCO50078 | Outer Joint | | 27 | 35 | 56.5 | 91.5 | 71 | I |
| | 2005.09-2007.12 | | F | R | Hatchback FWD F9Q 750;F9Q 758 | | GCO50108 | Outer Joint | | 27 | 35 | 56.5 | 90.5 | 71 | I |
| 1.9 (96 kw) | 2005.05-2007.08 | 4AT | F | L | Hatchback FWD F9Q 758;F9Q 759 | | GDS50632 | Drive Shaft | | 27 | 26 | 56.7 | 91 | 689 | |
| | 2005.05-2007.08 | 4AT | F | L | Hatchback FWD F9Q 758;F9Q 759 | | GCO50150 | Outer Joint | | 27 | 32 | 56.7 | 91 | 61 | I |
| | 2005.05-2007.08 | 4AT | F | L | Hatchback FWD F9Q 758;F9Q 759 | | GCI50040 | Inner Joint | | 26 | 30 | 43 | 42.5 | 83 | |
| | 2005.05-2007.08 | 6MT | F | R | Hatchback FWD F9Q 758;F9Q 759 | Inner teeth of wheel side:35,Inner teeth of tranm.side:32 | GDS50228 | Drive Shaft | | 27 | 39 | 56.5 | 90.5 | 967 | |
| | 2005.05-2007.08 | 6MT | F | R | Hatchback FWD F9Q 758;F9Q 759 | | GCO50108 | Outer Joint | | 27 | 35 | 56.5 | 90.5 | 71 | I |
| | 2005.05-2007.08 | AT | F | L | Hatchback FWD F9Q 758;F9Q 759 | for OE number:8200014353 | GDS50281 | Drive Shaft | | 27 | 26 | 56.5 | 92 | 700 | |
| | 2005.05-2007.08 | AT | F | R | Hatchback FWD F9Q 758;F9Q 759 | | GDS50509 | Drive Shaft | | 27 | 26 | 56.7 | 91 | 822 | |
| | 2005.05-2007.08 | MT | F | L | Hatchback FWD F9Q 758;F9Q 759 | | GDS50207 | Drive Shaft | | 27 | 37 | 56.5 | 91.5 | 632 | |
| | 2005.05-2007.08 | | F | L | Hatchback FWD F9Q 758;F9Q 759 | | GCO50078 | Outer Joint | | 27 | 35 | 56.5 | 91.5 | 71 | I |
| 2.0 (80 kw) | 1998.07-2001.02 | MT | F | R | Hatchback FWD F3R611 | | GDS50053 | Drive Shaft | | 21 | 23 | 56.2 | 83.5 | 751 | |
| | 1998.07-2001.02 | | F | L | Hatchback FWD F3R611 | | GDS50309 | Drive Shaft | | 21 | 30 | 56.2 | 83.5 | 702 | |
| 2.0 (83 kw) | 1993.11-2001.03 | MT | F | L | Hatchback FWD F3R722/F3R723/F3R728/F3R729 | Chassis no. to:950213 | GDS50026 | Drive Shaft | 44T | 23 | | 57.5 | 83.5 | 702 | |
| | 1993.11-2001.03 | MT | F | L | Hatchback FWD F3R722/F3R723/F3R728/F3R729 | Chassis no. to:950213 | GDS50093 | Drive Shaft | | 23 | 30 | 56.3 | 80 | 700 | |
| | 1993.11-2001.03 | MT | F | L | Hatchback FWD F3R722/F3R723/F3R728/F3R729 | Date from:1998.05 | GDS50197 | Drive Shaft | | 23 | 30 | 56.3 | 85 | 706 | |
| | 1993.11-2001.03 | MT | F | R | Hatchback FWD F3R722/F3R723/F3R728/F3R729 | Chassis no. to:950213 | GDS50046 | Drive Shaft | | 23 | 23 | 56.2 | 83.5 | 748 | |
| | 1993.11-2001.03 | MT | F | R | Hatchback FWD F3R722/F3R723/F3R728/F3R729 | Chassis no. to:950213 | GDS50134 | Drive Shaft | 44T | 23 | 23 | 56.2 | 83.5 | 748 | |
| | 1993.11-2001.03 | MT | F | R | Hatchback FWD F3R722/F3R723/F3R728/F3R729 | | GDS50173 | Drive Shaft | | 21 | 23 | 57 | 84.5 | 743 | |
| | 1993.11-2001.03 | MT | F | L/R | Hatchback FWD F3R722/F3R723/F3R728/F3R729 | Chassis no. from:950214 | GCO50008 | Outer Joint | | 21 | 25 | 56.2 | 83.5 | 58 | O |
| | 1993.11-2001.03 | MT | F | L/R | Hatchback FWD F3R722/F3R723/F3R728/F3R729 | | GCO50015 | Outer Joint | | 23 | 29 | 56.3 | 80 | 63 | O |

| | YEAR | TRANSM. | F/R | L/R | BODY STYLE & DRIVE TYPE & ENGINE | REMARKS | G-AP Ref. | PRODUCT | ABS | Technical Specifications A | B | C | H | L | P |
|---|---|---|---|---|---|---|---|---|---|---|---|---|---|---|---|
| **RENAULT** | | | | | | | | | | | | | | | |
| **Laguna** | | | | | | | | | | | | | | | |
| 2.0 (83 kw) | 1993.11-2001.03 | MT | F | L/R | Hatchback FWD F3R722/F3R723/F3R728/F3R729 | | GCO50025 | Outer Joint | | 23 | 25 | 56 | 84 | 61 | O |
| | 1993.11-2001.03 | MT | F | L/R | Hatchback FWD F3R722/F3R723/F3R728/F3R729 | Chassis no. to:950213 | GCO50026 | Outer Joint | | 23 | 25 | 56.2 | 83.5 | 58 | O |
| | 1993.11-2001.03 | | F | R | Hatchback FWD F3R722/F3R723/F3R728/F3R729 | | GDS50043 | Drive Shaft | | 23 | 23 | 56 | 84 | 747 | |
| | 1993.11-2001.03 | | F | R | Hatchback FWD F3R722/F3R723/F3R728/F3R729 | | GCI50008 | Inner Joint | | 23 | 30 | 36.3 | | 120.7 | |
| 2.0 (84 kw) | 1995.06-2001.02 | MT | F | L | Hatchback FWD F3R728/F3R729/F3R768/F3R769 | | GDS50197 | Drive Shaft | | 23 | 30 | 56.3 | 85 | 706 | |
| | 1995.06-2001.02 | MT | F | R | Hatchback FWD F3R728/F3R729/F3R768/F3R769 | | GDS50173 | Drive Shaft | | 21 | 23 | 57 | 84.5 | 743 | |
| | 1995.06-2001.02 | MT | F | L/R | Hatchback FWD F3R728/F3R729/F3R768/F3R769 | | GCO50015 | Outer Joint | | 23 | 29 | 56.3 | 80 | 63 | O |
| | 1995.06-2001.02 | MT | F | L/R | Hatchback FWD F3R728/F3R729/F3R768/F3R769 | | GCO50025 | Outer Joint | | 23 | 25 | 56 | 84 | 61 | O |
| | 1995.06-2001.02 | | F | R | Hatchback FWD F3R728/F3R729/F3R768/F3R769 | | GDS50043 | Drive Shaft | | 23 | 23 | 56 | 84 | 747 | |
| | 1995.06-2001.02 | | F | R | Hatchback FWD F3R728/F3R729/F3R768/F3R769 | | GCI50008 | Inner Joint | | 23 | 30 | 36.3 | | 120.7 | |
| 2.0 (96 kw) | 2007.10-2015.12 | 6MT | F | L | Hatchback FWD M9R 802;M9R 742;M9R 744;M9R 814;M9R 854;M9R 858 | | GDS50496 | Drive Shaft | | 27 | 39 | 56.5 | 90.5 | 640 | |
| | 2007.10-2015.12 | 6MT | F | R | Hatchback FWD M9R 802;M9R 742;M9R 744;M9R 814;M9R 854;M9R 858 | | GDS50380 | Drive Shaft | | 27 | 39 | 56.7 | 86.5 | 985 | |
| | 2007.10-2015.12 | 6MT | F | L/R | Hatchback FWD M9R 802;M9R 742;M9R 744;M9R 814;M9R 854;M9R 858 | | GCO50131 | Outer Joint | | 27 | 36 | 56.7 | 86.5 | 66 | I |
| | 2007.10-2015.12 | 6MT | F | L | Hatchback FWD M9R 802;M9R 742;M9R 744;M9R 814;M9R 854;M9R 858 | | GCI50071 | Inner Joint | | 39 | 35 | 39 | 74 | 102.5 | |
| | 2007.10-2015.12 | AT/MT | F | L/R | Hatchback FWD M9R 802;M9R 742;M9R 744;M9R 814;M9R 854;M9R 858 | | GCO50161 | Outer Joint | | 27 | 36 | 56.7 | 87 | 62 | I |
| 2.0 (98 kw) | 2002.08-2006.12 | 4AT/5MT | F | L | Hatchback FWD F4R 712;F4R 713;F4R 714;F4R 715 | For Engine Code:F4R714;Type:BG00/BG0K/BG0W | GDS50446 | Drive Shaft | | 27 | 30 | 56.5 | 91.5 | 719 | |
| | 2002.08-2006.12 | 4AT/5MT | F | L | Hatchback FWD F4R 712;F4R 713;F4R 714;F4R 715 | For Engine Code:F4R714;For Modelcode:BG0P | GDS50622 | Drive Shaft | | 27 | 26 | 56.7 | 91 | 690 | |
| | 2002.08-2006.12 | 4AT/5MT | F | L | Hatchback FWD F4R 712;F4R 713;F4R 714;F4R 715 | | GDS50632 | Drive Shaft | | 27 | 26 | 56.7 | 91 | 689 | |
| | 2002.08-2006.12 | 4AT/5MT | F | R | Hatchback FWD F4R 712;F4R 713;F4R 714;F4R 715 | For Engine Code:F4R714,Model code:BG00/BG0K/BG0W | GDS50226 | Drive Shaft | | 27 | 23 | 56.5 | 92 | 802 | |
| | 2002.08-2006.12 | 4AT/5MT | F | R | Hatchback FWD F4R 712;F4R 713;F4R 714;F4R 715 | For Engine Code:F4R714;For Modelcode:BG0P;For Engine Code:F4R714,Model code:BG0P | GDS50452 | Drive Shaft | | 27 | 26 | 56.7 | 91 | 931.5 | |
| | 2002.08-2006.12 | 4AT/5MT | F | R | Hatchback FWD F4R 712;F4R 713;F4R 714;F4R 715 | For Engine Code:F4R715 | GDS50509 | Drive Shaft | | 27 | 26 | 56.7 | 91 | 822 | |
| | 2002.08-2006.12 | 4AT/5MT | F | L/R | Hatchback FWD F4R 712;F4R 713;F4R 714;F4R 715 | | GCO50079 | Outer Joint | | 27 | 32 | 56.5 | 92 | 62.5 | I |
| | 2002.08-2006.12 | 5MT | F | R | Hatchback FWD F4R 712;F4R 713;F4R 714;F4R 715 | Date from:2002.10;Date to:2004.04 | GDS50445 | Drive Shaft | | 27 | 23 | 56.5 | 92 | 791 | |
| | 2002.08-2006.12 | 5MT | F | L | Hatchback FWD F4R 712;F4R 713;F4R 714;F4R 715 | Date from:2004.05 | GCI50048 | Inner Joint | | 26 | 30 | 40 | 64 | 121 | |
| | 2002.08-2006.12 | | F | L | Hatchback FWD F4R 712;F4R 713;F4R 714;F4R 715 | for OE number:8200014353;For Engine Code:F4R 715 | GDS50281 | Drive Shaft | | 27 | 26 | 56.5 | 92 | 700 | |
| | 2002.08-2006.12 | | F | L | Hatchback FWD F4R 712;F4R 713;F4R 714;F4R 715 | For Modelcode:BG0P;For Engine Code:F4R 714 | GDS50460 | Drive Shaft | | 27 | 26 | 56.5 | 92 | 692 | |
| 2.0 (99 kw) | 2002.08-2007.12 | 4AT | F | L | Hatchback FWD F4R 712;F4R 713;F4R 714;F4R 715 | | GDS50632 | Drive Shaft | | 27 | 26 | 56.7 | 91 | 689 | |
| | 2002.08-2007.12 | 4AT | F | R | Hatchback FWD F4R 712;F4R 713;F4R 714;F4R 715 | | GDS50509 | Drive Shaft | | 27 | 26 | 56.7 | 91 | 822 | |
| | 2002.08-2007.12 | 5MT | F | L | Hatchback FWD F4R 712;F4R 713;F4R 714;F4R 715 | Date to:2004.04 | GDS50446 | Drive Shaft | | 27 | 30 | 56.5 | 91.5 | 719 | |
| | 2002.08-2007.12 | 5MT | F | L | Hatchback FWD F4R 712;F4R 713;F4R 714;F4R 715 | Date from:2004.05 | GDS50622 | Drive Shaft | | 27 | 26 | 56.7 | 91 | 690 | |
| | 2002.08-2007.12 | 5MT | F | R | Hatchback FWD F4R 712;F4R 713;F4R 714;F4R 715 | | GDS50226 | Drive Shaft | | 27 | 23 | 56.5 | 92 | 802 | |
| | 2002.08-2007.12 | 5MT | F | R | Hatchback FWD F4R 712;F4R 713;F4R 714;F4R 715 | | GDS50445 | Drive Shaft | | 27 | 23 | 56.5 | 92 | 791 | |
| | 2002.08-2007.12 | 5MT | F | R | Hatchback FWD F4R 712;F4R 713;F4R 714;F4R 715 | Date from:2004.05 | GDS50452 | Drive Shaft | | 27 | 26 | 56.7 | 91 | 931.5 | |
| | 2002.08-2007.12 | 5MT | F | L/R | Hatchback FWD F4R 712;F4R 713;F4R 714;F4R 715 | | GCO50079 | Outer Joint | | 27 | 32 | 56.5 | 92 | 62.5 | I |
| | 2002.08-2007.12 | 5MT | F | L | Hatchback FWD F4R 712;F4R 713;F4R 714;F4R 715 | Date from:2004.05 | GCI50048 | Inner Joint | | 26 | 30 | 40 | 64 | 121 | |
| | 2002.08-2007.12 | AT | F | L | Hatchback FWD F4R 712;F4R 713;F4R 714;F4R 715 | for OE number:8200014353 | GDS50281 | Drive Shaft | | 27 | 26 | 56.5 | 92 | 700 | |
| | 2002.08-2007.12 | MT | F | L | Hatchback FWD F4R 712;F4R 713;F4R 714;F4R 715 | Date from:2004.06;for OE number:8200565217 | GDS50460 | Drive Shaft | | 27 | 26 | 56.5 | 92 | 692 | |
| 2.0 (102 kw) | 1995.06-2001.03 | MT | F | L | Hatchback FWD N7Q704 | | GDS50130 | Drive Shaft | | 23 | | 56.2 | 83.5 | 658.5 | |
| | 1995.06-2001.03 | MT | F | L | Hatchback FWD N7Q704 | | GDS50197 | Drive Shaft | | 23 | 30 | 56.3 | 85 | 706 | |
| | 1995.06-2001.03 | MT | F | R | Hatchback FWD N7Q704 | Date From:1997.02 | GDS50132 | Drive Shaft | | 23 | 23 | 57.5 | 83.5 | 801 | |
| | 1995.06-2001.03 | MT | F | R | Hatchback FWD N7Q704 | | GDS50173 | Drive Shaft | | 21 | 23 | 57 | 84.5 | 743 | |
| | 1995.06-2001.03 | MT | F | L/R | Hatchback FWD N7Q704 | | GCO50005 | Outer Joint | 44T | 23 | 25 | 56.3 | 84 | 61.5 | O |
| | 1995.06-2001.03 | MT | F | L/R | Hatchback FWD N7Q704 | | GCO50025 | Outer Joint | | 23 | 25 | 56 | 84 | 61 | O |
| | 1995.06-2001.03 | | F | R | Hatchback FWD N7Q704 | | GDS50043 | Drive Shaft | | 23 | 23 | 56 | 84 | 747 | |
| | 1995.06-2001.03 | | F | L/R | Hatchback FWD N7Q704 | | GCO50015 | Outer Joint | | 23 | 29 | 56.3 | 80 | 63 | O |
| | 1995.06-2001.03 | | F | R | Hatchback FWD N7Q704 | | GCI50008 | Inner Joint | | 23 | 30 | 36.3 | | 120.7 | |
| 2.0 (103 kw) | 1995.06-2001.02 | MT | F | L | Hatchback FWD N7Q700/N7Q704 | | GDS50130 | Drive Shaft | | 23 | | 56.2 | 83.5 | 658.5 | |
| | 1995.06-2001.02 | MT | F | R | Hatchback FWD N7Q700/N7Q704 | | GDS50132 | Drive Shaft | | 23 | 23 | 57.5 | 83.5 | 801 | |
| | 1998.05-2001.03 | 5MT | F | L/R | Hatchback FWD F4R780 | | GCO99086 | Outer Joint | | 23 | 32 | 56.3 | 85 | 62.5 | I |
| | 1998.05-2001.03 | MT | F | L | Hatchback FWD F4R780 | | GDS50197 | Drive Shaft | | 23 | 30 | 56.3 | 85 | 706 | |
| | 1998.05-2001.03 | MT | F | R | Hatchback FWD F4R780 | | GDS50043 | Drive Shaft | | 23 | 23 | 56 | 84 | 747 | |
| | 1998.05-2001.03 | | F | R | Hatchback FWD F4R780 | | GDS50132 | Drive Shaft | | 23 | 23 | 57.5 | 83.5 | 801 | |
| | 1998.05-2001.03 | | F | R | Hatchback FWD F4R780 | | GCI50008 | Inner Joint | | 23 | 30 | 36.3 | | 120.7 | |
| | 2001.04-2007.09 | 4AT | F | R | Hatchback FWD F5R 700;F5R 701 | Date to:2002.02 | GDS50219 | Drive Shaft | | 27 | 23 | 56.5 | 91.5 | 793.5 | |
| | 2001.04-2007.09 | 4AT/5MT | F | R | Hatchback FWD F5R 700;F5R 701 | For Engine Code:F5R700 | GDS50226 | Drive Shaft | | 27 | 23 | 56.5 | 92 | 802 | |
| | 2001.04-2007.09 | 4AT/5MT | F | R | Hatchback FWD F5R 700;F5R 701 | For Engine Code:F5R701 | GDS50509 | Drive Shaft | | 27 | 26 | 56.7 | 91 | 822 | |
| | 2001.04-2007.09 | 5MT | F | L | Hatchback FWD F5R 700;F5R 701 | | GDS50446 | Drive Shaft | | 27 | 30 | 56.5 | 91.5 | 719 | |
| | 2001.04-2007.09 | 5MT | F | R | Hatchback FWD F5R 700;F5R 701 | | GCO50079 | Outer Joint | | 27 | 32 | 56.5 | 92 | 62.5 | I |
| | 2001.04-2007.09 | AT | F | L | Hatchback FWD F5R 700;F5R 701 | | GDS50632 | Drive Shaft | | 27 | 26 | 56.7 | 91 | 689 | |
| | 2001.04-2007.09 | AT | F | L | Hatchback FWD F5R 700;F5R 701 | | GCI50040 | Inner Joint | | 26 | 30 | 43 | 42.5 | 83 | |
| | 2001.04-2007.09 | | F | L | Hatchback FWD F5R 700;F5R 701 | Chassis no. to:8200014353;for OE number:8200014353;For Engine Code:F5R 701 | GDS50281 | Drive Shaft | | 27 | 26 | 56.5 | 92 | 700 | |
| | 2001.04-2007.09 | | F | | Hatchback FWD F5R 700;F5R 701 | | GCO50083 | Outer Joint | | 27 | 30 | 56.5 | 91.5 | 59 | I |
| | 2007.10-2012.12 | 6MT | F | L | Hatchback FWD M4R 704 | | GDS50451 | Drive Shaft | | 27 | 26 | 56.7 | 87 | 676 | |
| | 2007.10-2012.12 | 6MT | F | R | Hatchback FWD M4R 704 | | GDS50455 | Drive Shaft | | 27 | 26 | 56.7 | 87 | 943 | |
| | 2007.10-2012.12 | 6MT | F | L/R | Hatchback FWD M4R 704 | | GCO50152 | Outer Joint | | 27 | 33 | 56.7 | 87 | 62 | I |

| RENAULT Laguna | YEAR | TRANSM. | F/R | L/R | BODY STYLE & DRIVE TYPE & ENGINE | REMARKS | G-AP Ref. | PRODUCT | ABS | A | B | C | H | L | P |
|---|---|---|---|---|---|---|---|---|---|---|---|---|---|---|---|
| 2.0 (103 kw) | 2007.10-2012.12 | 6MT | F | R | Hatchback FWD M4R 704 | | GCI50110 | Inner Joint | | 26 | 33 | 33 | 346 | 113 | |
| | 2007.10-2015.12 | 6MT | F | L | Hatchback FWD M4R 726 | | GDS50451 | Drive Shaft | | 27 | 26 | 56.7 | 87 | 676 | |
| | 2007.10-2015.12 | 6MT | F | R | Hatchback FWD M4R 726 | | GDS50455 | Drive Shaft | | 27 | 26 | 56.7 | 87 | 943 | |
| | 2007.10-2015.12 | MT | F | L/R | Hatchback FWD M4R 726 | | GCO50152 | Outer Joint | | 27 | 33 | 56.7 | 87 | 62 | I |
| | 2007.10-2015.12 | | F | R | Hatchback FWD M4R 726 | | GCI50110 | Inner Joint | | 26 | 33 | 33 | 346 | 113 | |
| 2.0 (110 kw) | 2005.08-2006.08 | 6MT | F | R | Hatchback FWD M9R 740 | | GDS50518 | Drive Shaft | | 27 | 39 | 56.8 | 90 | 985 | |
| | 2005.08-2006.08 | 6MT | F | R | Hatchback FWD M9R 740 | Date to:2007.08 | GCI50087 | Inner Joint | | 39 | 35 | 30 | 367 | 89.5 | |
| | 2005.08-2006.08 | MT | F | L/R | Hatchback FWD M9R 740 | | GCO50080 | Outer Joint | | 27 | 37 | 56.5 | 92 | 73 | I |
| | 2005.08-2006.08 | | F | L/R | Hatchback FWD M9R 740 | | GCO50078 | Outer Joint | | 27 | 35 | 56.5 | 91.5 | 71 | I |
| | 2005.08-2006.08 | | F | L/R | Hatchback FWD M9R 740 | | GCO50131 | Outer Joint | | 27 | 36 | 56.7 | 86.5 | 66 | I |
| | 2007.10-2015.12 | 6AT | F | L | Hatchback FWD M9R 802;M9R 742;M9R 744;M9R 746;M9R 748;M9R 805;M9R 814;M9R 845;M9R 854;M9R 858;M9R 808;M9R 754 | 6 balls | GDS50626 | Drive Shaft | | 27 | 30 | 56.7 | 86.5 | 642 | |
| | 2007.10-2015.12 | 6AT | F | L | Hatchback FWD M9R 802;M9R 742;M9R 744;M9R 746;M9R 748;M9R 805;M9R 814;M9R 845;M9R 854;M9R 858;M9R 808;M9R 754 | 8 balls | GDS81268 | Drive Shaft | | 27 | 30 | 56.7 | 87 | 642 | |
| | 2007.10-2015.12 | 6AT | F | R | Hatchback FWD M9R 802;M9R 742;M9R 744;M9R 746;M9R 748;M9R 805;M9R 814;M9R 845;M9R 854;M9R 858;M9R 808;M9R 754 | 6 balls | GDS50596 | Drive Shaft | | 27 | 30 | 56.7 | 86.5 | 959 | |
| | 2007.10-2015.12 | 6AT | F | R | Hatchback FWD M9R 802;M9R 742;M9R 744;M9R 746;M9R 748;M9R 805;M9R 814;M9R 845;M9R 854;M9R 858;M9R 808;M9R 754 | 8 balls | GDS81267 | Drive Shaft | | 27 | 30 | 56.7 | 87 | 963 | |
| | 2007.10-2015.12 | 6AT | F | L/R | Hatchback FWD M9R 802;M9R 742;M9R 744;M9R 746;M9R 748;M9R 805;M9R 814;M9R 845;M9R 854;M9R 858;M9R 808;M9R 754 | 8 balls | GCO81101 | Outer Joint | | 27 | 36 | 56.7 | 87 | 66.5 | I |
| | 2007.10-2015.12 | 6AT | F | R | Hatchback FWD M9R 802;M9R 742;M9R 744;M9R 746;M9R 748;M9R 805;M9R 814;M9R 845;M9R 854;M9R 858;M9R 808;M9R 754 | | GCI50123 | Inner Joint | | 30 | 36 | 33.97 | 343 | 90 | |
| | 2007.10-2015.12 | 6MT | F | L | Hatchback FWD M9R 802;M9R 742;M9R 744;M9R 746;M9R 748;M9R 805;M9R 814;M9R 845;M9R 854;M9R 858;M9R 808;M9R 754 | | GDS50496 | Drive Shaft | | 27 | 39 | 56.5 | 90.5 | 640 | |
| | 2007.10-2015.12 | 6MT | F | R | Hatchback FWD M9R 802;M9R 742;M9R 744;M9R 746;M9R 748;M9R 805;M9R 814;M9R 845;M9R 854;M9R 858;M9R 808;M9R 754 | | GDS50380 | Drive Shaft | | 27 | 39 | 56.7 | 86.5 | 985 | |
| | 2007.10-2015.12 | AT/MT | F | L/R | Hatchback FWD M9R 802;M9R 742;M9R 744;M9R 746;M9R 748;M9R 805;M9R 814;M9R 845;M9R 854;M9R 858;M9R 808;M9R 754 | 6 balls | GCO50161 | Outer Joint | | 27 | 36 | 56.7 | 87 | 62 | I |
| | 2007.10-2015.12 | MT | F | L | Hatchback FWD M9R 802;M9R 742;M9R 744;M9R 746;M9R 748;M9R 805;M9R 814;M9R 845;M9R 854;M9R 858;M9R 808;M9R 754 | | GCI50071 | Inner Joint | | 39 | 35 | 39 | 74 | 102.5 | |
| | 2007.10-2015.12 | | F | | Hatchback FWD M9R 802;M9R 742;M9R 744;M9R 746;M9R 748;M9R 805;M9R 814;M9R 845;M9R 854;M9R 858;M9R 808;M9R 754 | 6 balls | GCO50131 | Outer Joint | | 27 | 36 | 56.7 | 86.5 | 66 | I |
| | 2008.09-2015.12 | 6AT | F | L | Coupe FWD M9R 802;M9R 744;M9R 748;M9R 805;M9R 814;M9R 845;M9R 854;M9R 858;M9R 808;M9R 754 | | GDS50626 | Drive Shaft | | 27 | 30 | 56.7 | 86.5 | 642 | |
| | 2008.09-2015.12 | 6AT | F | L | Coupe FWD M9R 802;M9R 744;M9R 748;M9R 805;M9R 814;M9R 845;M9R 854;M9R 858;M9R 808;M9R 754 | | GDS81268 | Drive Shaft | | 27 | 30 | 56.7 | 87 | 642 | |
| | 2008.09-2015.12 | 6AT | F | R | Coupe FWD M9R 802;M9R 744;M9R 748;M9R 805;M9R 814;M9R 845;M9R 854;M9R 858;M9R 808;M9R 754 | | GDS50596 | Drive Shaft | | 27 | 30 | 56.7 | 86.5 | 959 | |
| | 2008.09-2015.12 | 6AT | F | R | Coupe FWD M9R 802;M9R 744;M9R 748;M9R 805;M9R 814;M9R 845;M9R 854;M9R 858;M9R 808;M9R 754 | | GDS81267 | Drive Shaft | | 27 | 30 | 56.7 | 87 | 963 | |
| | 2008.09-2015.12 | 6AT | F | L/R | Coupe FWD M9R 802;M9R 744;M9R 748;M9R 805;M9R 814;M9R 845;M9R 854;M9R 858;M9R 808;M9R 754 | | GCO81101 | Outer Joint | | 27 | 36 | 56.7 | 87 | 66.5 | I |
| | 2008.09-2015.12 | 6AT | F | L | Coupe FWD M9R 802;M9R 744;M9R 748;M9R 805;M9R 814;M9R 845;M9R 854;M9R 858;M9R 808;M9R 754 | | GCI50150 | Inner Joint | | 30 | 36 | 34 | 76.5 | 86 | |
| | 2008.09-2015.12 | 6AT | F | R | Coupe FWD M9R 802;M9R 744;M9R 748;M9R 805;M9R 814;M9R 845;M9R 854;M9R 858;M9R 808;M9R 754 | | GCI50123 | Inner Joint | | 30 | 36 | 33.97 | 343 | 90 | |
| | 2008.09-2015.12 | 6MT | F | L | Coupe FWD M9R 802;M9R 744;M9R 748;M9R 805;M9R 814;M9R 845;M9R 854;M9R 858;M9R 808;M9R 754 | | GDS50496 | Drive Shaft | | 27 | 39 | 56.5 | 90.5 | 640 | |
| | 2008.09-2015.12 | 6MT | F | R | Coupe FWD M9R 802;M9R 744;M9R 748;M9R 805;M9R 814;M9R 845;M9R 854;M9R 858;M9R 808;M9R 754 | | GDS50380 | Drive Shaft | | 27 | 39 | 56.7 | 86.5 | 985 | |
| | 2008.09-2015.12 | AT | F | | Coupe FWD M9R 802;M9R 744;M9R 748;M9R 805;M9R 814;M9R 845;M9R 854;M9R 858;M9R 808;M9R 754 | | GCO50131 | Outer Joint | | 27 | 36 | 56.7 | 86.5 | 66 | I |
| | 2008.09-2015.12 | AT/MT | F | L/R | Coupe FWD M9R 802;M9R 744;M9R 748;M9R 805;M9R 814;M9R 845;M9R 854;M9R 858;M9R 808;M9R 754 | | GCO50161 | Outer Joint | | 27 | 36 | 56.7 | 87 | 62 | I |
| 2.0 (120 kw) | 2003.01-2005.03 | 5AT | F | R | Hatchback FWD F4R 764;F4R 765 | | GDS50633 | Drive Shaft | | 27 | 26 | 56.5 | 91.5 | 943 | |
| | 2003.01-2005.03 | 5AT | F | R | Hatchback FWD F4R 764;F4R 765 | | GCI81173 | Inner Joint | | 26 | 35 | 31 | 331.5 | 87.5 | |
| | 2003.01-2005.03 | 5AT/6MT | F | L/R | Hatchback FWD F4R 764;F4R 765 | | GCO50078 | Outer Joint | | 27 | 35 | 56.5 | 91.5 | 71 | I |
| | 2003.01-2005.03 | 6MT | F | R | Hatchback FWD F4R 764;F4R 765 | | GCI81074 | Inner Joint | | 39 | 35 | | 363 | 88 | |
| | 2003.01-2005.03 | MT | F | R | Hatchback FWD F4R 764;F4R 765 | | GDS50228 | Drive Shaft | | 27 | 39 | 56.5 | 90.5 | 967 | |
| | 2003.01-2005.03 | MT | F | | Hatchback FWD F4R 764;F4R 765 | | GCO50080 | Outer Joint | | 27 | 37 | 56.5 | 92 | 73 | I |
| | 2003.01-2005.03 | MT/6MT | F | L | Hatchback FWD F4R 764;F4R 765 | | GDS50207 | Drive Shaft | | 27 | 37 | 56.5 | 91.5 | 632 | |
| 2.0 (125 kw) | 2005.01-2007.09 | 5AT | F | R | Hatchback FWD F4R 786;F4R 787;F4R 784 | | GDS50633 | Drive Shaft | | 27 | 26 | 56.5 | 91.5 | 943 | |
| | 2005.01-2007.09 | 5AT | F | R | Hatchback FWD F4R 786;F4R 787;F4R 784 | | GCI81173 | Inner Joint | | 26 | 35 | 31 | 331.5 | 87.5 | |
| | 2005.01-2007.09 | 5AT/6MT | F | L/R | Hatchback FWD F4R 786;F4R 787;F4R 784 | | GCO50078 | Outer Joint | | 27 | 35 | 56.5 | 91.5 | 71 | I |
| | 2005.01-2007.09 | 6MT | F | R | Hatchback FWD F4R 786;F4R 787;F4R 784 | | GCI81074 | Inner Joint | | 39 | 35 | | 363 | 88 | |
| | 2005.01-2007.09 | MT | F | R | Hatchback FWD F4R 786;F4R 787;F4R 784 | | GDS50228 | Drive Shaft | | 27 | 39 | 56.5 | 90.5 | 967 | |
| | 2005.01-2007.09 | MT | F | | Hatchback FWD F4R 786;F4R 787;F4R 784 | | GCO50080 | Outer Joint | | 27 | 37 | 56.5 | 92 | 73 | I |
| | 2005.01-2007.09 | MT/6MT | F | L | Hatchback FWD F4R 786;F4R 787;F4R 784 | | GDS50207 | Drive Shaft | | 27 | 37 | 56.5 | 91.5 | 632 | |
| | 2007.10-2015.12 | 6AT | F | L | Hatchback FWD F4R 811 | 6 balls | GDS50626 | Drive Shaft | | 27 | 30 | 56.7 | 86.5 | 642 | |
| | 2007.10-2015.12 | 6AT | F | L | Hatchback FWD F4R 811 | 8 balls | GDS81268 | Drive Shaft | | 27 | 30 | 56.7 | 87 | 642 | |
| | 2007.10-2015.12 | 6AT | F | R | Hatchback FWD F4R 811 | 8 balls | GDS81269 | Drive Shaft | | 27 | 30 | 56.7 | 87 | 962 | |
| | 2007.10-2015.12 | 6AT | F | L | Hatchback FWD F4R 811 | 8 balls | GCO81101 | Outer Joint | | 27 | 36 | 56.7 | 87 | 66.5 | I |
| | 2007.10-2015.12 | 6AT | F | L | Hatchback FWD F4R 811 | | GCI50150 | Inner Joint | | 30 | 36 | 34 | 76.5 | 86 | |
| | 2007.10-2015.12 | 6AT | F | R | Hatchback FWD F4R 811 | | GCI81163 | Inner Joint | | 30 | 36 | 34 | 354 | 85 | |
| | 2007.10-2015.12 | AT/MT | F | L/R | Hatchback FWD F4R 811 | 6 balls | GCO50161 | Outer Joint | | 27 | 36 | 56.7 | 87 | 62 | I |
| | 2008.09-2015.12 | 6AT | F | L | Coupe FWD F4Rt 811;F4R 811 | 6 balls | GDS50626 | Drive Shaft | | 27 | 30 | 56.7 | 86.5 | 642 | |
| | 2008.09-2015.12 | 6AT | F | L | Coupe FWD F4Rt 811;F4R 811 | 8 balls | GDS81268 | Drive Shaft | | 27 | 30 | 56.7 | 87 | 642 | |
| | 2008.09-2015.12 | 6AT | F | R | Coupe FWD F4Rt 811;F4R 811 | 8 balls | GDS81269 | Drive Shaft | | 27 | 30 | 56.7 | 87 | 962 | |
| | 2008.09-2015.12 | 6AT | F | L | Coupe FWD F4Rt 811;F4R 811 | 8 balls | GCO81101 | Outer Joint | | 27 | 36 | 56.7 | 87 | 66.5 | I |
| | 2008.09-2015.12 | 6AT | F | L | Coupe FWD F4Rt 811;F4R 811 | | GCI50150 | Inner Joint | | 30 | 36 | 34 | 76.5 | 86 | |
| | 2008.09-2015.12 | 6AT | F | R | Coupe FWD F4Rt 811;F4R 811 | | GCI81163 | Inner Joint | | 30 | 36 | 34 | 354 | 85 | |
| | 2008.09-2015.12 | AT/MT | F | L/R | Coupe FWD F4Rt 811;F4R 811 | 6 balls | GCO50161 | Outer Joint | | 27 | 36 | 56.7 | 87 | 62 | I |
| 2.0 (127 kw) | 2006.01-2007.08 | 6MT | F | R | Hatchback FWD M9R 760 | | GDS50518 | Drive Shaft | | 27 | 39 | 56.8 | 90 | 985 | |
| | 2006.01-2007.08 | 6MT | F | R | Hatchback FWD M9R 760 | Date to:2007.08 | GCI50087 | Inner Joint | | 39 | 35 | 30 | 367 | 89.5 | |
| | 2006.01-2007.08 | MT | F | L/R | Hatchback FWD M9R 760 | | GCO50080 | Outer Joint | | 27 | 37 | 56.5 | 92 | 73 | I |
| | 2006.01-2007.08 | MT | F | L | Hatchback FWD M9R 760 | | GCI50071 | Inner Joint | | 39 | 35 | 39 | 74 | 102.5 | |
| | 2006.01-2007.08 | | F | L/R | Hatchback FWD M9R 760 | | GCO50131 | Outer Joint | | 27 | 36 | 56.7 | 86.5 | 66 | I |

| | YEAR | TRANSM. | F/R | L/R | BODY STYLE & DRIVE TYPE & ENGINE | REMARKS | G-AP Ref. | PRODUCT | ABS | Technical Specifications A | B | C | H | L | P |
|---|---|---|---|---|---|---|---|---|---|---|---|---|---|---|---|
| **RENAULT** **Laguna** | | | | | | | | | | | | | | | |
| 2.0 (127 kw) | 2008.01-2015.12 | 6AT | F | L | Hatchback FWD M9R 800;M9R 809;M9R 849;M9R 815;M9R 854;M9R 857;M9R 806;M9R 808 | | GDS50626 | Drive Shaft | | 27 | 30 | 56.7 | 86.5 | 642 | |
| | 2008.01-2015.12 | 6AT | F | L | Hatchback FWD M9R 800;M9R 809;M9R 849;M9R 815;M9R 854;M9R 857;M9R 806;M9R 808 | | GDS81268 | Drive Shaft | | 27 | 30 | 56.7 | 87 | 642 | |
| | 2008.01-2015.12 | 6AT | F | R | Hatchback FWD M9R 800;M9R 809;M9R 849;M9R 815;M9R 854;M9R 857;M9R 806;M9R 808 | | GDS50596 | Drive Shaft | | 27 | 30 | 56.7 | 86.5 | 959 | |
| | 2008.01-2015.12 | 6AT | F | R | Hatchback FWD M9R 800;M9R 809;M9R 849;M9R 815;M9R 854;M9R 857;M9R 806;M9R 808 | | GDS81267 | Drive Shaft | | 27 | 30 | 56.7 | 87 | 963 | |
| | 2008.01-2015.12 | 6AT | F | L/R | Hatchback FWD M9R 800;M9R 809;M9R 849;M9R 815;M9R 854;M9R 857;M9R 806;M9R 808 | | GCO81101 | Outer Joint | | 27 | 36 | 56.7 | 87 | 66.5 | I |
| | 2008.01-2015.12 | 6AT | F | R | Hatchback FWD M9R 800;M9R 809;M9R 849;M9R 815;M9R 854;M9R 857;M9R 806;M9R 808 | | GCI50123 | Inner Joint | | 30 | 36 | 33.97 | 343 | 90 | |
| | 2008.01-2015.12 | 6MT | F | L | Hatchback FWD M9R 800;M9R 809;M9R 849;M9R 815;M9R 854;M9R 857;M9R 806;M9R 808 | | GDS50496 | Drive Shaft | | 27 | 39 | 56.5 | 90.5 | 640 | |
| | 2008.01-2015.12 | 6MT | F | R | Hatchback FWD M9R 800;M9R 809;M9R 849;M9R 815;M9R 854;M9R 857;M9R 806;M9R 808 | | GDS50380 | Drive Shaft | | 27 | 39 | 56.7 | 86.5 | 985 | |
| | 2008.01-2015.12 | AT/MT | F | L/R | Hatchback FWD M9R 800;M9R 809;M9R 849;M9R 815;M9R 854;M9R 857;M9R 806;M9R 808 | | GCO50161 | Outer Joint | | 27 | 36 | 56.7 | 87 | 62 | I |
| | 2008.01-2015.12 | MT | F | L | Hatchback FWD M9R 800;M9R 809;M9R 849;M9R 815;M9R 854;M9R 857;M9R 806;M9R 808 | | GCI50071 | Inner Joint | | 39 | 35 | 39 | 74 | 102.5 | |
| | 2008.01-2015.12 | | F | | Hatchback FWD M9R 800;M9R 809;M9R 849;M9R 815;M9R 854;M9R 857;M9R 806;M9R 808 | | GCO50131 | Outer Joint | | 27 | 36 | 56.7 | 86.5 | 66 | I |
| | 2008.09-2015.12 | 6AT | F | L | Coupe FWD M9R 800;M9R 809;M9R 849;M9R 815;M9R 854;M9R 857;M9R 806 | | GDS50626 | Drive Shaft | | 27 | 30 | 56.7 | 86.5 | 642 | |
| | 2008.09-2015.12 | 6AT | F | L | Coupe FWD M9R 800;M9R 809;M9R 849;M9R 815;M9R 854;M9R 857;M9R 806 | | GDS81268 | Drive Shaft | | 27 | 30 | 56.7 | 87 | 642 | |
| | 2008.09-2015.12 | 6AT | F | R | Coupe FWD M9R 800;M9R 809;M9R 849;M9R 815;M9R 854;M9R 857;M9R 806 | | GDS50596 | Drive Shaft | | 27 | 30 | 56.7 | 86.5 | 959 | |
| | 2008.09-2015.12 | 6AT | F | R | Coupe FWD M9R 800;M9R 809;M9R 849;M9R 815;M9R 854;M9R 857;M9R 806 | | GDS81267 | Drive Shaft | | 27 | 30 | 56.7 | 87 | 963 | |
| | 2008.09-2015.12 | 6AT | F | L/R | Coupe FWD M9R 800;M9R 809;M9R 849;M9R 815;M9R 854;M9R 857;M9R 806 | | GCO81101 | Outer Joint | | 27 | 36 | 56.7 | 87 | 66.5 | I |
| | 2008.09-2015.12 | 6AT | F | L | Coupe FWD M9R 800;M9R 809;M9R 849;M9R 815;M9R 854;M9R 857;M9R 806 | | GCI50150 | Inner Joint | | 30 | 36 | 34 | 76.5 | 86 | |
| | 2008.09-2015.12 | 6AT | F | R | Coupe FWD M9R 800;M9R 809;M9R 849;M9R 815;M9R 854;M9R 857;M9R 806 | | GCI50123 | Inner Joint | | 30 | 36 | 33.97 | 343 | 90 | |
| | 2008.09-2015.12 | 6MT | F | L | Coupe FWD M9R 800;M9R 809;M9R 849;M9R 815;M9R 854;M9R 857;M9R 806 | | GDS50496 | Drive Shaft | | 27 | 39 | 56.5 | 90.5 | 640 | |
| | 2008.09-2015.12 | 6MT | F | R | Coupe FWD M9R 800;M9R 809;M9R 849;M9R 815;M9R 854;M9R 857;M9R 806 | | GDS50380 | Drive Shaft | | 27 | 39 | 56.7 | 86.5 | 985 | |
| | 2008.09-2015.12 | AT/MT | F | L/R | Coupe FWD M9R 800;M9R 809;M9R 849;M9R 815;M9R 854;M9R 857;M9R 806 | | GCO50161 | Outer Joint | | 27 | 36 | 56.7 | 87 | 62 | I |
| | 2008.09-2015.12 | | F | | Coupe FWD M9R 800;M9R 809;M9R 849;M9R 815;M9R 854;M9R 857;M9R 806 | | GCO50131 | Outer Joint | | 27 | 36 | 56.7 | 86.5 | 66 | I |
| 2.0 (131 kw) | 2008.03-2015.12 | 6MT | F | L | Hatchback FWD M9R 816;M9R 820;M9R 828 | | GDS50496 | Drive Shaft | | 27 | 39 | 56.5 | 90.5 | 640 | |
| | 2008.03-2015.12 | 6MT | F | R | Hatchback FWD M9R 816;M9R 820;M9R 828 | | GDS50380 | Drive Shaft | | 27 | 39 | 56.7 | 86.5 | 985 | |
| | 2008.03-2015.12 | 6MT | F | L | Hatchback FWD M9R 816;M9R 820;M9R 828 | | GCI50071 | Inner Joint | | 39 | 35 | 39 | 74 | 102.5 | |
| | 2008.03-2015.12 | AT/MT | F | L/R | Hatchback FWD M9R 816;M9R 820;M9R 828 | | GCO50161 | Outer Joint | | 27 | 36 | 56.7 | 87 | 62 | I |
| | 2008.03-2015.12 | | F | | Hatchback FWD M9R 816;M9R 820;M9R 828 | | GCO50131 | Outer Joint | | 27 | 36 | 56.7 | 86.5 | 66 | I |
| | 2008.09-2015.12 | 6MT | F | L | Coupe FWD M9R 816;M9R 820;M9R 828 | | GDS50496 | Drive Shaft | | 27 | 39 | 56.5 | 90.5 | 640 | |
| | 2008.09-2015.12 | 6MT | F | R | Coupe FWD M9R 816;M9R 820;M9R 828 | | GDS50380 | Drive Shaft | | 27 | 39 | 56.7 | 86.5 | 985 | |
| | 2008.09-2015.12 | AT/MT | F | L/R | Coupe FWD M9R 816;M9R 820;M9R 828 | | GCO50161 | Outer Joint | | 27 | 36 | 56.7 | 87 | 62 | I |
| | 2008.09-2015.12 | MT | F | L | Coupe FWD M9R 816;M9R 820;M9R 828 | | GCI50071 | Inner Joint | | 39 | 35 | 39 | 74 | 102.5 | |
| | 2008.09-2015.12 | | F | | Coupe FWD M9R 816;M9R 820;M9R 828 | | GCO50080 | Outer Joint | | 27 | 37 | 56.5 | 92 | 73 | I |
| | 2008.09-2015.12 | | F | | Coupe FWD M9R 816;M9R 820;M9R 828 | | GCO50131 | Outer Joint | | 27 | 36 | 56.7 | 86.5 | 66 | I |
| 2.0 (150 kw) | 2005.01-2007.09 | 5AT | F | R | Hatchback FWD F4R 886;F4R 887 | | GDS50633 | Drive Shaft | | 27 | 26 | 56.5 | 91.5 | 943 | |
| | 2005.01-2007.09 | 5AT | F | R | Hatchback FWD F4R 886;F4R 887 | | GCI81173 | Inner Joint | | 26 | 35 | 31 | 331.5 | 87.5 | |
| | 2005.01-2007.09 | 5AT/6MT | F | L/R | Hatchback FWD F4R 886;F4R 887 | | GCO50078 | Outer Joint | | 27 | 35 | 56.5 | 91.5 | 71 | I |
| | 2005.01-2007.09 | 6MT | F | L | Hatchback FWD F4R 886;F4R 887 | | GDS50207 | Drive Shaft | | 27 | 37 | 56.5 | 91.5 | 632 | |
| | 2005.01-2007.09 | 6MT | F | R | Hatchback FWD F4R 886;F4R 887 | | GCI81074 | Inner Joint | | 39 | 35 | | 363 | 88 | |
| | 2005.01-2007.09 | MT | F | R | Hatchback FWD F4R 886;F4R 887 | Date from:2006.01 | GDS50228 | Drive Shaft | | 27 | 39 | 56.5 | 90.5 | 967 | |
| | 2008.03-2015.12 | 6MT | F | L | Hatchback FWD F4R 800 | | GDS81270 | Drive Shaft | | 27 | 39 | 56.7 | 87 | 642 | |
| | 2008.03-2015.12 | 6MT | F | L | Hatchback FWD F4R 800 | | GCI50071 | Inner Joint | | 39 | 35 | 39 | 74 | 102.5 | |
| | 2008.03-2015.12 | AT/MT | F | L/R | Hatchback FWD F4R 800 | | GCO50161 | Outer Joint | | 27 | 36 | 56.7 | 87 | 62 | I |
| | 2008.03-2015.12 | | F | L | Hatchback FWD F4R 800 | | GCO81101 | Outer Joint | | 27 | 36 | 56.7 | 87 | 66.5 | I |
| | 2008.03-2015.12 | | F | | Hatchback FWD F4R 800 | | GCO50131 | Outer Joint | | 27 | 36 | 56.7 | 86.5 | 66 | I |
| | 2008.09-2015.12 | 6MT | F | L | Coupe FWD F4R 800 | | GDS81270 | Drive Shaft | | 27 | 39 | 56.7 | 87 | 642 | |
| | 2008.09-2015.12 | 6MT | F | L | Coupe FWD F4R 800 | | GCI50071 | Inner Joint | | 39 | 35 | 39 | 74 | 102.5 | |
| | 2008.09-2015.12 | AT/MT | F | L/R | Coupe FWD F4R 800 | | GCO50161 | Outer Joint | | 27 | 36 | 56.7 | 87 | 62 | I |
| | 2008.09-2015.12 | | F | L | Coupe FWD F4R 800 | | GCO81101 | Outer Joint | | 27 | 36 | 56.7 | 87 | 66.5 | I |
| | 2008.09-2015.12 | | F | | Coupe FWD F4R 800 | | GCO50131 | Outer Joint | | 27 | 36 | 56.7 | 86.5 | 66 | I |
| 2.2 (61 kw) | 1993.09-2001.03 | MT | F | L | Hatchback FWD G8T706/G8T752/G8T790/G8T792/G8T794 | | GDS50130 | Drive Shaft | | 23 | | 56.2 | 83.5 | 658.5 | |
| | 1993.09-2001.03 | MT | F | L | Hatchback FWD G8T706/G8T752/G8T790/G8T792/G8T794 | | GDS50131 | Drive Shaft | 44T | 23 | | 56.2 | 83.5 | 658.5 | |
| | 1993.09-2001.03 | MT | F | L | Hatchback FWD G8T706/G8T752/G8T790/G8T792/G8T794 | | GDS50197 | Drive Shaft | | 23 | 30 | 56.3 | 85 | 706 | |
| | 1993.09-2001.03 | MT | F | L | Hatchback FWD G8T706/G8T752/G8T790/G8T792/G8T794 | Date to:1997.01 | GDS50461 | Drive Shaft | 44T | 23 | | 56.3 | 84 | 658 | |
| | 1993.09-2001.03 | MT | F | R | Hatchback FWD G8T706/G8T752/G8T790/G8T792/G8T794 | | GDS50043 | Drive Shaft | | 23 | 23 | 56 | 84 | 747 | |
| | 1993.09-2001.03 | MT | F | R | Hatchback FWD G8T706/G8T752/G8T790/G8T792/G8T794 | | GDS50132 | Drive Shaft | | 23 | 23 | 57.5 | 83.5 | 801 | |
| | 1993.09-2001.03 | MT | F | R | Hatchback FWD G8T706/G8T752/G8T790/G8T792/G8T794 | Date to:1997.01 | GDS50215 | Drive Shaft | 44T | 23 | 23 | 56.2 | 83.5 | 802 | |
| | 1993.09-2001.03 | MT | F | L/R | Hatchback FWD G8T706/G8T752/G8T790/G8T792/G8T794 | | GCO50015 | Outer Joint | | 23 | 29 | 56.3 | 80 | 63 | O |
| | 1993.09-2001.03 | MT | F | L/R | Hatchback FWD G8T706/G8T752/G8T790/G8T792/G8T794 | | GCO50025 | Outer Joint | | 23 | 25 | 56 | 84 | 61 | O |
| | 1993.09-2001.03 | MT | F | L/R | Hatchback FWD G8T706/G8T752/G8T790/G8T792/G8T794 | | GCO50026 | Outer Joint | | 23 | 25 | 56.2 | 83.5 | 58 | O |
| | 1993.09-2001.03 | MT | F | | Hatchback FWD G8T706/G8T752/G8T790/G8T792/G8T794 | | GCO50005 | Outer Joint | 44T | 23 | 25 | 56.3 | 84 | 61.5 | O |
| | 1993.09-2001.03 | MT | F | R | Hatchback FWD G8T706/G8T752/G8T790/G8T792/G8T794 | | GCI50008 | Inner Joint | | 23 | 30 | 36.3 | | 120.7 | |
| 2.2 (83 kw) | 1995.06-2001.02 | MT | F | L | Hatchback FWD G8T760 | | GDS50131 | Drive Shaft | 44T | 23 | | 56.2 | 83.5 | 658.5 | |
| | 1995.06-2001.02 | MT | F | L | Hatchback FWD G8T760 | | GDS50197 | Drive Shaft | | 23 | 30 | 56.3 | 85 | 706 | |
| | 1995.06-2001.02 | MT | F | R | Hatchback FWD G8T760 | | GDS50043 | Drive Shaft | | 23 | 23 | 56 | 84 | 747 | |
| | 1995.06-2001.02 | MT | F | L/R | Hatchback FWD G8T760 | | GCO50015 | Outer Joint | | 23 | 29 | 56.3 | 80 | 63 | O |

| | YEAR | TRANSM. | F/R | L/R | BODY STYLE & DRIVE TYPE & ENGINE | REMARKS | G-AP Ref. | PRODUCT | ABS | Technical Specifications A | B | C | H | L | P |
|---|---|---|---|---|---|---|---|---|---|---|---|---|---|---|---|
| **RENAULT** | | | | | | | | | | | | | | | |
| **Laguna** | | | | | | | | | | | | | | | |
| 2.2 (83 kw) | 1995.06-2001.02 | MT | F | L/R | Hatchback FWD G8T760 | | GCO50025 | Outer Joint | | 23 | 25 | 56 | 84 | 61 | O |
| | 1995.06-2001.02 | MT | F | L/R | Hatchback FWD G8T760 | | GCO50105 | Outer Joint | | 23 | 27 | 56.3 | 85 | 68 | I |
| | 1995.06-2001.02 | MT | F | R | Hatchback FWD G8T760 | | GCI50008 | Inner Joint | | 23 | 30 | 36.3 | | 120.7 | |
| 2.2 (85 kw) | 2004.04-2005.10 | 6MT | F | L | Hatchback FWD G9T 600 | | GDS50256 | Drive Shaft | | 27 | 37 | 56.5 | 92 | 593 | |
| | 2004.04-2005.10 | 6MT | F | R | Hatchback FWD G9T 600 | | GDS50209 | Drive Shaft | | 27 | 39 | 56.5 | 92 | 1014 | |
| | 2004.04-2005.10 | 6MT | F | L/R | Hatchback FWD G9T 600 | | GCO50080 | Outer Joint | | 27 | 37 | 56.5 | 92 | 73 | I |
| | 2004.04-2005.10 | 6MT | F | R | Hatchback FWD G9T 600 | | GCI50097 | Inner Joint | | 39 | 35 | 30 | 409 | 90 | |
| 2.2 (102 kw) | 2005.05-2007.08 | 5AT | F | L | Hatchback FWD G9T 600;G9T 605;G9T 706;G9T 707 | | GDS50471 | Drive Shaft | | 27 | 26 | 56.8 | 90 | 619 | |
| | 2005.05-2007.08 | 5AT | F | R | Hatchback FWD G9T 600;G9T 605;G9T 706;G9T 707 | | GDS50330 | Drive Shaft | | 27 | 26 | 56.5 | 92 | 984 | |
| | 2005.05-2007.08 | 5AT/6MT | F | L/R | Hatchback FWD G9T 600;G9T 605;G9T 706;G9T 707 | For Engine Code:G9T706 | GCO50080 | Outer Joint | | 27 | 37 | 56.5 | 92 | 73 | I |
| | 2005.05-2007.08 | 6MT | F | R | Hatchback FWD G9T 600;G9T 605;G9T 706;G9T 707 | | GDS50209 | Drive Shaft | | 27 | 39 | 56.5 | 92 | 1014 | |
| | 2005.05-2007.08 | AT/MT | F | L/R | Hatchback FWD G9T 600;G9T 605;G9T 706;G9T 707 | | GCO50078 | Outer Joint | | 27 | 35 | 56.5 | 91.5 | 71 | I |
| | 2005.05-2007.08 | AT/MT/6MT | F | L | Hatchback FWD G9T 600;G9T 605;G9T 706;G9T 707 | | GDS50256 | Drive Shaft | | 27 | 37 | 56.5 | 92 | 593 | |
| 2.2 (110 kw) | 2001.10-2006.08 | 5AT | F | L | Hatchback FWD G9T 702;G9T 700 | | GDS50471 | Drive Shaft | | 27 | 26 | 56.8 | 90 | 619 | |
| | 2001.10-2006.08 | 5AT/6MT | F | L/R | Hatchback FWD G9T 702;G9T 700 | For Engine Code:G9T702 | GCO50080 | Outer Joint | | 27 | 37 | 56.5 | 92 | 73 | I |
| | 2001.10-2006.08 | 6MT | F | R | Hatchback FWD G9T 702;G9T 700 | | GDS50209 | Drive Shaft | | 27 | 39 | 56.5 | 92 | 1014 | |
| | 2001.10-2006.08 | AT/5AT | F | R | Hatchback FWD G9T 702;G9T 700 | | GDS50330 | Drive Shaft | | 27 | 26 | 56.5 | 92 | 984 | |
| | 2001.10-2006.08 | MT/6MT | F | L | Hatchback FWD G9T 702;G9T 700 | | GDS50256 | Drive Shaft | | 27 | 37 | 56.5 | 92 | 593 | |
| 2.9 (140 kw) | 1997.03-2001.03 | MT | F | R | Hatchback FWD L7X 700, L7X 701 | | GCO50105 | Outer Joint | | 23 | 27 | 56.3 | 85 | 68 | I |
| | 1997.03-2001.03 | MT | F | L/R | Hatchback FWD L7X 700, L7X 701 | | GCO50025 | Outer Joint | | 23 | 25 | 56 | 84 | 61 | O |
| 2.9 (152 kw) | 2001.03-2007.08 | 5AT | F | L | Hatchback FWD L7X 731;L7X 733 | | GDS50471 | Drive Shaft | | 27 | 26 | 56.8 | 90 | 619 | |
| | 2001.03-2007.08 | 5AT | F | R | Hatchback FWD L7X 731;L7X 733 | | GDS50330 | Drive Shaft | | 27 | 26 | 56.5 | 92 | 984 | |
| | 2001.03-2007.08 | AT/MT | F | L/R | Hatchback FWD L7X 731;L7X 733 | Date from:2003.01 | GCO50080 | Outer Joint | | 27 | 37 | 56.5 | 92 | 73 | I |
| 2.9 (155 kw) | 2001.03-2007.08 | 5AT | F | L | Hatchback FWD L7X 733 | | GDS50471 | Drive Shaft | | 27 | 26 | 56.8 | 90 | 619 | |
| | 2001.03-2007.08 | 5AT | F | R | Hatchback FWD L7X 733 | | GDS50330 | Drive Shaft | | 27 | 26 | 56.5 | 92 | 984 | |
| | 2001.03-2007.08 | 5AT | F | L | Hatchback FWD L7X 733 | | GCO99291 | Outer Joint | | 27 | 37 | 56.8 | 90 | 73 | I |
| | 2001.03-2007.08 | 5AT | F | R | Hatchback FWD L7X 733 | | GCO50080 | Outer Joint | | 27 | 37 | 56.5 | 92 | 73 | I |
| 3.0 (123 kw) | 1993.11-2001.03 | MT | F | L/R | Hatchback FWD Z7X760/Z7X765/Z7X767 | | GCO50025 | Outer Joint | | 23 | 25 | 56 | 84 | 61 | O |
| | 1993.11-2001.03 | MT | F | L/R | Hatchback FWD Z7X760/Z7X765/Z7X767 | | GCO50105 | Outer Joint | | 23 | 27 | 56.3 | 85 | 68 | I |
| | 1993.11-2001.03 | | F | R | Hatchback FWD Z7X760/Z7X765/Z7X767 | | GDS50215 | Drive Shaft | 44T | 23 | 23 | 56.2 | 83.5 | 802 | |
| | 1993.11-2001.03 | | F | L/R | Hatchback FWD Z7X760/Z7X765/Z7X767 | | GCO50005 | Outer Joint | 44T | 23 | 25 | 56.3 | 84 | 61.5 | O |
| 3.0 (140 kw) | 1997.03-2001.03 | MT | F | R | Hatchback FWD L7X 700, L7X 701 | | GCO50105 | Outer Joint | | 23 | 27 | 56.3 | 85 | 68 | I |
| | 1997.03-2001.03 | MT | F | L/R | Hatchback FWD L7X 700, L7X 701 | | GCO50025 | Outer Joint | | 23 | 25 | 56 | 84 | 61 | O |
| 3.0 (173 kw) | 2008.09-2015.12 | 6AT | F | R | Coupe FWD V9X 891;V9X 791 | | GCI81162 | Inner Joint | | 30 | 37 | 34 | 401.5 | 95 | |
| | 2008.09-2015.12 | 6AT | F | R | Hatchback FWD V9X 891;V9X 791 | | GCI81162 | Inner Joint | | 30 | 37 | 34 | 401.5 | 95 | |
| 3.0 (177 kw) | 2012.01-2015.12 | 6AT | F | R | Coupe FWD V9X 891 | | GCI81162 | Inner Joint | | 30 | 37 | 34 | 401.5 | 95 | |
| **Laguna Estate/Break** | | | | | | | | | | | | | | | |
| 1.5 (81 kw) | 2007.10-2015.12 | 6DCT | F | L | Estate FWD K9K 780;K9K 846;K9K 782 | | GDS84139 | Drive Shaft | | 27 | 34 | 56.5 | 91 | 634 | |
| | 2007.10-2015.12 | 6DCT | F | R | Estate FWD K9K 780;K9K 846;K9K 782 | | GDS56164 | Drive Shaft | | 27 | 34 | 56.5 | 91 | 990 | |
| | 2007.10-2015.12 | 6DCT | F | L/R | Estate FWD K9K 780;K9K 846;K9K 782 | | GCO82484 | Outer Joint | | 27 | 33 | 56.5 | 91 | 61.5 | I |
| | 2007.10-2015.12 | 6DCT | F | L | Estate FWD K9K 780;K9K 846;K9K 782 | | GCI50129 | Inner Joint | | 34 | 33 | 40 | 54 | 106 | |
| | 2007.10-2015.12 | 6DCT | F | R | Estate FWD K9K 780;K9K 846;K9K 782 | | GCI50133 | Inner Joint | | 34 | 33 | 40 | 380.5 | 86.5 | |
| | 2007.10-2015.12 | 6MT | F | L | Estate FWD K9K 780;K9K 846;K9K 782 | | GDS50378 | Drive Shaft | | 27 | 26 | 56.7 | 91 | 687 | |
| | 2007.10-2015.12 | 6MT | F | R | Estate FWD K9K 780;K9K 846;K9K 782 | | GDS50377 | Drive Shaft | | 27 | 26 | 56.7 | 91 | 940 | |
| | 2007.10-2015.12 | 6MT | F | L/R | Estate FWD K9K 780;K9K 846;K9K 782 | | GCO50130 | Outer Joint | | 27 | 33 | 56.7 | 91 | 61 | I |
| 1.6 (76 kw) | 2001.03-2005.10 | 5MT | F | L | Estate FWD K4M 710 | | GDS50446 | Drive Shaft | | 27 | 30 | 56.5 | 91.5 | 719 | |
| | 2001.03-2005.10 | 5MT | F | L/R | Estate FWD K4M 710 | | GCO50083 | Outer Joint | | 27 | 30 | 56.5 | 91.5 | 59 | I |
| | 2001.03-2005.10 | 5MT | F | R | Estate FWD K4M 710 | | GCI99131 | Inner Joint | | 23 | 28 | | 182.8 | 86 | |
| 1.6 (79 kw) | 1998.07-2001.02 | 5MT | F | L/R | Estate FWD K4M720 | | GCO99086 | Outer Joint | | 23 | 32 | 56.3 | 85 | 62.5 | I |
| | 1998.07-2001.02 | MT | F | L | Estate FWD K4M720 | | GDS50197 | Drive Shaft | | 23 | 30 | 56.3 | 85 | 706 | |
| | 1998.07-2001.02 | MT | F | R | Estate FWD K4M720 | | GDS50043 | Drive Shaft | | 23 | 23 | 56 | 84 | 747 | |
| | 1998.07-2001.02 | | F | R | Estate FWD K4M720 | Date From:1998.07 | GCI50008 | Inner Joint | | 23 | 30 | 36.3 | | 120.7 | |
| | 2001.03-2007.12 | 5MT | F | L | Estate FWD K4M 710;K4M 714 | | GDS50446 | Drive Shaft | | 27 | 30 | 56.5 | 91.5 | 719 | |
| | 2001.03-2007.12 | AT | F | L | Estate FWD K4M 710;K4M 714 | | GDS50328 | Drive Shaft | | 27 | 26 | 56.5 | 91.5 | 697 | |
| | 2001.03-2007.12 | AT | F | R | Estate FWD K4M 710;K4M 714 | | GDS50329 | Drive Shaft | | 27 | 23 | 56.5 | 91.5 | 824 | |
| | 2001.03-2007.12 | MT | F | L/R | Estate FWD K4M 710;K4M 714 | | GCO50083 | Outer Joint | | 27 | 30 | 56.5 | 91.5 | 59 | I |
| | 2005.06-2007.12 | MT | F | L | Estate FWD K4M 714 | | GDS50446 | Drive Shaft | | 27 | 30 | 56.5 | 91.5 | 719 | |
| | 2005.06-2007.12 | MT | F | L/R | Estate FWD K4M 714 | | GCO50083 | Outer Joint | | 27 | 30 | 56.5 | 91.5 | 59 | I |
| | 2005.06-2007.12 | MT | F | R | Estate FWD K4M 714 | | GCI99131 | Inner Joint | | 23 | 28 | | 182.8 | 86 | |
| 1.6 (81 kw) | 2007.10-2015.12 | 6MT | F | L | Estate FWD K4M 824 | | GDS50622 | Drive Shaft | | 27 | 26 | 56.7 | 91 | 690 | |
| | 2007.10-2015.12 | 6MT | F | L | Estate FWD K4M 824 | | GCO50150 | Outer Joint | | 27 | 32 | 56.7 | 91 | 61 | I |
| | 2007.10-2015.12 | 6MT | F | L | Estate FWD K4M 824 | | GCI50048 | Inner Joint | | 26 | 30 | 40 | 64 | 121 | |
| 1.6 (82 kw) | 2005.02-2007.08 | | F | L | Estate FWD K4M 716 | | GDS50460 | Drive Shaft | | 27 | 26 | 56.5 | 92 | 692 | |
| | 2005.02-2007.08 | | F | L | Estate FWD K4M 716 | | GDS50622 | Drive Shaft | | 27 | 26 | 56.7 | 91 | 690 | |
| | 2005.02-2007.08 | | F | | Estate FWD K4M 716 | | GCO50083 | Outer Joint | | 27 | 30 | 56.5 | 91.5 | 59 | I |

| | YEAR | TRANSM. | F/R | L/R | BODY STYLE & DRIVE TYPE & ENGINE | REMARKS | G-AP Ref. | PRODUCT | ABS | Technical Specifications A | B | C | H | L | P |
|---|---|---|---|---|---|---|---|---|---|---|---|---|---|---|---|
| **RENAULT** **Laguna Estate/Break** | | | | | | | | | | | | | | | |
| 1.6 (82 kw) | 2005.02-2007.08 | | F | L | Estate FWD K4M 716 | | GCI50048 | Inner Joint | | 26 | 30 | 40 | 64 | 121 | |
| 1.8 (66 kw) | 1995.06-1998.06 | MT | F | L | Estate FWD F3P724 | Chassis no. to:950213 | GDS50026 | Drive Shaft | 44T | 23 | | 57.5 | 83.5 | 702 | |
| | 1995.06-1998.06 | MT | F | R | Estate FWD F3P724 | Chassis no. from:950214 | GDS50053 | Drive Shaft | | 21 | 23 | 56.2 | 83.5 | 751 | |
| | 1995.06-1998.06 | | F | L | Estate FWD F3P724 | | GDS50309 | Drive Shaft | | 21 | 30 | 56.2 | 83.5 | 702 | |
| 1.8 (69 kw) | 1995.06-2001.03 | MT | F | L | Estate FWD F3P670/F3P674/F3P678 | Chassis no. to:950213 | GDS50026 | Drive Shaft | 44T | 23 | | 57.5 | 83.5 | 702 | |
| | 1995.06-2001.03 | MT | F | L | Estate FWD F3P670/F3P674/F3P678 | Chassis no. to:950213 | GDS50093 | Drive Shaft | | 23 | 30 | 56.3 | 80 | 700 | |
| | 1995.06-2001.03 | MT | F | L | Estate FWD F3P670/F3P674/F3P678 | Chassis no. from:950214;Trans. code:JB3/JC5 | GDS50309 | Drive Shaft | | 21 | 30 | 56.2 | 83.5 | 702 | |
| | 1995.06-2001.03 | MT | F | R | Estate FWD F3P670/F3P674/F3P678 | Chassis no. to:950213 | GDS50046 | Drive Shaft | | 23 | 23 | 56.2 | 83.5 | 748 | |
| | 1995.06-2001.03 | MT | F | R | Estate FWD F3P670/F3P674/F3P678 | Chassis no. from:950214;Trans. code:JB3/JC5 | GDS50053 | Drive Shaft | | 21 | 23 | 56.2 | 83.5 | 751 | |
| | 1995.06-2001.03 | MT | F | R | Estate FWD F3P670/F3P674/F3P678 | Chassis no. to:950213 | GDS50134 | Drive Shaft | 44T | 23 | 23 | 56.2 | 83.5 | 748 | |
| | 1995.06-2001.03 | MT | F | L/R | Estate FWD F3P670/F3P674/F3P678 | Chassis no. from:950214 | GCO50008 | Outer Joint | | 21 | 25 | 56.2 | 83.5 | 58 | O |
| | 1995.06-2001.03 | MT | F | L/R | Estate FWD F3P670/F3P674/F3P678 | Chassis no. to:950213 | GCO50026 | Outer Joint | | 23 | 25 | 56.2 | 83.5 | 58 | O |
| 1.8 (85 kw) | 2001.03-2005.05 | AT | F | L | Estate FWD F4P 770;F4P 771;F4P 774;F4P 775 | for OE number:8200014353 | GDS50281 | Drive Shaft | | 27 | 26 | 56.5 | 92 | 700 | |
| | 2001.03-2005.05 | AT | F | L | Estate FWD F4P 770;F4P 771;F4P 774;F4P 775 | for OE number:8200225099 | GDS50632 | Drive Shaft | | 27 | 26 | 56.7 | 91 | 689 | |
| | 2001.03-2005.05 | AT | F | R | Estate FWD F4P 770;F4P 771;F4P 774;F4P 775 | Date from:2002.03 | GDS50509 | Drive Shaft | | 27 | 26 | 56.7 | 91 | 822 | |
| | 2001.03-2005.05 | AT | F | L | Estate FWD F4P 770;F4P 771;F4P 774;F4P 775 | for OE number:8200225099 | GCI50040 | Inner Joint | | 26 | 30 | 43 | 42.5 | 83 | |
| | 2001.03-2005.05 | AT/MT | F | L/R | Estate FWD F4P 770;F4P 771;F4P 774;F4P 775 | | GCO50083 | Outer Joint | | 27 | 30 | 56.5 | 91.5 | 59 | I |
| | 2001.03-2005.05 | MT | F | L | Estate FWD F4P 770;F4P 771;F4P 774;F4P 775 | | GDS50446 | Drive Shaft | | 27 | 30 | 56.5 | 91.5 | 719 | |
| | 2001.03-2005.05 | MT | F | R | Estate FWD F4P 770;F4P 771;F4P 774;F4P 775 | | GDS50226 | Drive Shaft | | 27 | 23 | 56.5 | 92 | 802 | |
| | 2001.03-2005.05 | | F | R | Estate FWD F4P 770;F4P 771;F4P 774;F4P 775 | | GCO50079 | Outer Joint | | 27 | 32 | 56.5 | 92 | 62.5 | I |
| 1.8 (86 kw) | 2001.03-2005.05 | MT | F | L | Estate FWD F4P 770 | | GDS50446 | Drive Shaft | | 27 | 30 | 56.5 | 91.5 | 719 | |
| | 2001.03-2005.05 | MT | F | R | Estate FWD F4P 770 | | GDS50226 | Drive Shaft | | 27 | 23 | 56.5 | 92 | 802 | |
| | 2001.03-2005.05 | | F | R | Estate FWD F4P 770 | | GCO50079 | Outer Joint | | 27 | 32 | 56.5 | 92 | 62.5 | I |
| 1.8 (88 kw) | 1998.07-2001.02 | MT | F | L | Estate FWD F4P760 | | GDS50197 | Drive Shaft | | 23 | 30 | 56.3 | 85 | 706 | |
| | 1998.07-2001.02 | MT | F | R | Estate FWD F4P760 | | GDS50043 | Drive Shaft | | 23 | 23 | 56 | 84 | 747 | |
| | 1998.07-2001.02 | MT | F | L/R | Estate FWD F4P760 | | GCO99086 | Outer Joint | | 23 | 32 | 56.3 | 85 | 62.5 | I |
| | 1998.07-2001.02 | | F | R | Estate FWD F4P760 | Date From:1998.07 | GCI50008 | Inner Joint | | 23 | 30 | 36.3 | | 120.7 | |
| | 2001.03-2005.05 | AT | F | L | Estate FWD F4P 770;F4P 773 | Date from:2002.02 | GDS50632 | Drive Shaft | | 27 | 26 | 56.7 | 91 | 689 | |
| | 2001.03-2005.05 | AT | F | R | Estate FWD F4P 770;F4P 773 | Date from:2002.02 | GDS50509 | Drive Shaft | | 27 | 26 | 56.7 | 91 | 822 | |
| | 2001.03-2005.05 | AT | F | L | Estate FWD F4P 770;F4P 773 | Date from:2002.02 | GCI50040 | Inner Joint | | 26 | 30 | 43 | 42.5 | 83 | |
| | 2001.03-2005.05 | AT/MT | F | L/R | Estate FWD F4P 770;F4P 773 | | GCO50083 | Outer Joint | | 27 | 30 | 56.5 | 91.5 | 59 | I |
| | 2001.03-2005.05 | MT | F | L | Estate FWD F4P 770;F4P 773 | | GDS50446 | Drive Shaft | | 27 | 30 | 56.5 | 91.5 | 719 | |
| | 2001.03-2005.05 | MT | F | R | Estate FWD F4P 770;F4P 773 | | GDS50226 | Drive Shaft | | 27 | 23 | 56.5 | 92 | 802 | |
| | 2001.03-2005.05 | | F | R | Estate FWD F4P 770;F4P 773 | | GCO50079 | Outer Joint | | 27 | 32 | 56.5 | 92 | 62.5 | I |
| 1.8 (89 kw) | 2001.03-2005.05 | 5MT | F | L | Estate FWD F4P 770;F4P 774 | | GDS50446 | Drive Shaft | | 27 | 30 | 56.5 | 91.5 | 719 | |
| | 2001.03-2005.05 | 5MT | F | R | Estate FWD F4P 770;F4P 774 | | GDS50226 | Drive Shaft | | 27 | 23 | 56.5 | 92 | 802 | |
| | 2001.03-2005.05 | AT | F | L | Estate FWD F4P 770;F4P 774 | Date from:2002.02 | GDS50632 | Drive Shaft | | 27 | 26 | 56.7 | 91 | 689 | |
| | 2001.03-2005.05 | AT | F | R | Estate FWD F4P 770;F4P 774 | Date from:2002.02 | GDS50509 | Drive Shaft | | 27 | 26 | 56.7 | 91 | 822 | |
| | 2001.03-2005.05 | AT | F | L | Estate FWD F4P 770;F4P 774 | Date from:2002.02 | GCI50040 | Inner Joint | | 26 | 30 | 43 | 42.5 | 83 | |
| | 2001.03-2005.05 | AT/MT | F | L/R | Estate FWD F4P 770;F4P 774 | | GCO50083 | Outer Joint | | 27 | 30 | 56.5 | 91.5 | 59 | I |
| | 2001.03-2005.05 | | F | R | Estate FWD F4P 770;F4P 774 | | GCO50079 | Outer Joint | | 27 | 32 | 56.5 | 92 | 62.5 | I |
| 1.9 (66 kw) | 2003.08-2007.09 | 5AT | F | | Estate FWD F9Q 664 | | GCO50083 | Outer Joint | | 27 | 30 | 56.5 | 91.5 | 59 | I |
| | 2003.08-2007.09 | 5MT | F | R | Estate FWD F9Q 664 | | GDS50228 | Drive Shaft | | 27 | 39 | 56.5 | 90.5 | 967 | |
| | 2003.08-2007.09 | | F | L | Estate FWD F9Q 664 | | GDS50207 | Drive Shaft | | 27 | 37 | 56.5 | 91.5 | 632 | |
| | 2003.08-2007.09 | | F | L/R | Estate FWD F9Q 664 | | GCO50078 | Outer Joint | | 27 | 35 | 56.5 | 91.5 | 71 | I |
| 1.9 (68 kw) | 2004.03-2005.05 | 5AT | F | | Estate FWD F9Q 664 | | GCO50083 | Outer Joint | | 27 | 30 | 56.5 | 91.5 | 59 | I |
| | 2004.03-2005.05 | 5MT | F | L | Estate FWD F9Q 664 | | GDS50207 | Drive Shaft | | 27 | 37 | 56.5 | 91.5 | 632 | |
| | 2004.03-2005.05 | 5MT | F | R | Estate FWD F9Q 664 | | GDS50228 | Drive Shaft | | 27 | 39 | 56.5 | 90.5 | 967 | |
| | 2004.03-2005.05 | MT | F | L/R | Estate FWD F9Q 664 | | GCO50078 | Outer Joint | | 27 | 35 | 56.5 | 91.5 | 71 | I |
| 1.9 (72 kw) | 1997.10-2001.03 | MT | F | L | Estate FWD F9Q710/F9Q716/F9Q717 | | GDS50197 | Drive Shaft | | 23 | 30 | 56.3 | 85 | 706 | |
| | 1997.10-2001.03 | MT | F | R | Estate FWD F9Q710/F9Q716/F9Q717 | | GDS50043 | Drive Shaft | | 23 | 23 | 56 | 84 | 747 | |
| | 1997.10-2001.03 | MT | F | R | Estate FWD F9Q710/F9Q716/F9Q717 | | GCI50008 | Inner Joint | | 23 | 30 | 36.3 | | 120.7 | |
| 1.9 (74 kw) | 2001.10-2005.05 | 5AT | F | | Estate FWD F9Q 752 | | GCO50083 | Outer Joint | | 27 | 30 | 56.5 | 91.5 | 59 | I |
| | 2001.10-2005.05 | 5MT | F | L | Estate FWD F9Q 752 | Trans. code:JR5 | GDS50446 | Drive Shaft | | 27 | 30 | 56.5 | 91.5 | 719 | |
| | 2001.10-2005.05 | 5MT | F | R | Estate FWD F9Q 752 | Trans. code:JR5 | GDS50226 | Drive Shaft | | 27 | 23 | 56.5 | 92 | 802 | |
| | 2001.10-2005.05 | MT | F | L | Estate FWD F9Q 752 | | GDS50207 | Drive Shaft | | 27 | 37 | 56.5 | 91.5 | 632 | |
| | 2001.10-2005.05 | MT | F | R | Estate FWD F9Q 752 | | GDS50228 | Drive Shaft | | 27 | 39 | 56.5 | 90.5 | 967 | |
| | 2001.10-2005.05 | MT | F | L/R | Estate FWD F9Q 752 | | GCO50078 | Outer Joint | | 27 | 35 | 56.5 | 91.5 | 71 | I |
| 1.9 (77 kw) | 2001.06-2005.05 | 6MT | F | L | Estate FWD F9Q 752 | | GDS50446 | Drive Shaft | | 27 | 30 | 56.5 | 91.5 | 719 | |
| | 2001.06-2005.05 | 6MT | F | R | Estate FWD F9Q 752 | | GDS50226 | Drive Shaft | | 27 | 23 | 56.5 | 92 | 802 | |
| | 2001.06-2005.05 | | F | R | Estate FWD F9Q 752 | | GCO50079 | Outer Joint | | 27 | 32 | 56.5 | 92 | 62.5 | I |
| 1.9 (79 kw) | 1999.09-2001.02 | | F | L | Estate FWD F9Q718 | | GDS50227 | Drive Shaft | | 23 | 37 | 56 | 84 | 619 | |
| | 2001.03-2007.12 | 6MT | F | L | Estate FWD F9Q 754 | | GDS50207 | Drive Shaft | | 27 | 37 | 56.5 | 91.5 | 632 | |
| | 2001.03-2007.12 | 6MT | F | R | Estate FWD F9Q 754 | | GDS50228 | Drive Shaft | | 27 | 39 | 56.5 | 90.5 | 967 | |
| | 2001.03-2007.12 | 6MT | F | L/R | Estate FWD F9Q 754 | | GCO50078 | Outer Joint | | 27 | 35 | 56.5 | 91.5 | 71 | I |

| | YEAR | TRANSM. | F/R | L/R | BODY STYLE & DRIVE TYPE & ENGINE | REMARKS | G-AP Ref. | PRODUCT | ABS | Technical Specifications A | B | C | H | L | P |
|---|---|---|---|---|---|---|---|---|---|---|---|---|---|---|---|
| **RENAULT** **Laguna Estate/Break** | | | | | | | | | | | | | | | |
| 1.9 (81 kw) | 2005.01-2007.12 | 6MT | F | L | Estate FWD F9Q 758;F9Q 674 | | GDS50207 | Drive Shaft | | 27 | 37 | 56.5 | 91.5 | 632 | |
| | 2005.01-2007.12 | 6MT | F | R | Estate FWD F9Q 758;F9Q 674 | Inner teeth of wheel side:35,Inner teeth of tranm.side:32 | GDS50228 | Drive Shaft | | 27 | 39 | 56.5 | 90.5 | 967 | |
| | 2005.01-2007.12 | 6MT | F | L/R | Estate FWD F9Q 758;F9Q 674 | | GCO50078 | Outer Joint | | 27 | 35 | 56.5 | 91.5 | 71 | I |
| | 2005.01-2007.12 | | F | R | Estate FWD F9Q 758;F9Q 674 | Date From:2005.04 | GCO50108 | Outer Joint | | 27 | 35 | 56.5 | 90.5 | 71 | I |
| 1.9 (85 kw) | 2005.08-2007.09 | 6MT | F | L | Estate FWD F9Q 758;F9Q 759 | | GDS50207 | Drive Shaft | | 27 | 37 | 56.5 | 91.5 | 632 | |
| | 2005.08-2007.09 | 6MT | F | R | Estate FWD F9Q 758;F9Q 759 | Inner teeth of wheel side:35,Inner teeth of tranm.side:32 | GDS50228 | Drive Shaft | | 27 | 39 | 56.5 | 90.5 | 967 | |
| | 2005.08-2007.09 | 6MT | F | R | Estate FWD F9Q 758;F9Q 759 | | GCI81074 | Inner Joint | | 39 | 35 | | 363 | 88 | |
| | 2005.08-2007.09 | | F | L | Estate FWD F9Q 758;F9Q 759 | | GCO50078 | Outer Joint | | 27 | 35 | 56.5 | 91.5 | 71 | I |
| | 2005.08-2007.09 | | F | R | Estate FWD F9Q 758;F9Q 759 | | GCO50108 | Outer Joint | | 27 | 35 | 56.5 | 90.5 | 71 | I |
| 1.9 (88 kw) | 2001.03-2007.09 | 6MT | F | R | Estate FWD F9Q 750;F9Q 670;F9Q 674 | | GDS50228 | Drive Shaft | | 27 | 39 | 56.5 | 90.5 | 967 | |
| | 2001.03-2007.09 | MT | F | L/R | Estate FWD F9Q 750;F9Q 670;F9Q 674 | | GCO50078 | Outer Joint | | 27 | 35 | 56.5 | 91.5 | 71 | I |
| | 2001.03-2007.09 | MT/6MT | F | L | Estate FWD F9Q 750;F9Q 670;F9Q 674 | | GDS50207 | Drive Shaft | | 27 | 37 | 56.5 | 91.5 | 632 | |
| 1.9 (92 kw) | 2005.09-2007.12 | 6MT | F | L | Estate FWD F9Q 750 | | GDS50207 | Drive Shaft | | 27 | 37 | 56.5 | 91.5 | 632 | |
| | 2005.09-2007.12 | 6MT | F | R | Estate FWD F9Q 750 | Inner teeth of wheel side:35,Inner teeth of tranm.side:32 | GDS50228 | Drive Shaft | | 27 | 39 | 56.5 | 90.5 | 967 | |
| | 2005.09-2007.12 | 6MT | F | L/R | Estate FWD F9Q 750 | | GCO50078 | Outer Joint | | 27 | 35 | 56.5 | 91.5 | 71 | I |
| | 2005.09-2007.12 | 6MT | F | R | Estate FWD F9Q 750 | | GCI81074 | Inner Joint | | 39 | 35 | | 363 | 88 | |
| | 2005.09-2007.12 | | F | R | Estate FWD F9Q 750 | | GCO50108 | Outer Joint | | 27 | 35 | 56.5 | 90.5 | 71 | I |
| 1.9 (96 kw) | 2005.05-2007.12 | 4AT | F | L | Estate FWD F9Q 758;F9Q 759 | | GDS50632 | Drive Shaft | | 27 | 26 | 56.7 | 91 | 689 | |
| | 2005.05-2007.12 | 4AT | F | R | Estate FWD F9Q 758;F9Q 759 | | GDS50509 | Drive Shaft | | 27 | 26 | 56.7 | 91 | 822 | |
| | 2005.05-2007.12 | 4AT | F | L | Estate FWD F9Q 758;F9Q 759 | | GCI50040 | Inner Joint | | 26 | 30 | 43 | 42.5 | 83 | |
| | 2005.05-2007.12 | 6MT | F | R | Estate FWD F9Q 758;F9Q 759 | | GCO50108 | Outer Joint | | 27 | 35 | 56.5 | 90.5 | 71 | I |
| | 2005.05-2007.12 | MT | F | L | Estate FWD F9Q 758;F9Q 759 | | GDS50207 | Drive Shaft | | 27 | 37 | 56.5 | 91.5 | 632 | |
| | 2005.05-2007.12 | MT | F | R | Estate FWD F9Q 758;F9Q 759 | Inner teeth of wheel side:35,Inner teeth of tranm.side:32 | GDS50228 | Drive Shaft | | 27 | 39 | 56.5 | 90.5 | 967 | |
| | 2005.05-2007.12 | MT | F | L/R | Estate FWD F9Q 758;F9Q 759 | | GCO50078 | Outer Joint | | 27 | 35 | 56.5 | 91.5 | 71 | I |
| | 2005.05-2007.12 | | F | L | Estate FWD F9Q 758;F9Q 759 | for OE number:8200014353;For Engine Code:F9Q 759 | GDS50281 | Drive Shaft | | 27 | 26 | 56.5 | 92 | 700 | |
| 2.0 (83 kw) | 1995.09-2001.03 | MT | F | L | Estate FWD F3R611/F3R722/F3R723/F3R726/F3R729/F3R768/F3R769 | Chassis no. to:950213 | GDS50026 | Drive Shaft | 44T | 23 | | 57.5 | 83.5 | 702 | |
| | 1995.09-2001.03 | MT | F | L | Estate FWD F3R611/F3R722/F3R723/F3R726/F3R729/F3R768/F3R769 | Chassis no. to:950213 | GDS50093 | Drive Shaft | | 23 | 30 | 56.3 | 80 | 700 | |
| | 1995.09-2001.03 | MT | F | L | Estate FWD F3R611/F3R722/F3R723/F3R726/F3R729/F3R768/F3R769 | | GDS50197 | Drive Shaft | | 23 | 30 | 56.3 | 85 | 706 | |
| | 1995.09-2001.03 | MT | F | L | Estate FWD F3R611/F3R722/F3R723/F3R726/F3R729/F3R768/F3R769 | Chassis no. from:950214;Trans. code:JB3/JC5 | GDS50309 | Drive Shaft | | 21 | 30 | 56.2 | 83.5 | 702 | |
| | 1995.09-2001.03 | MT | F | R | Estate FWD F3R611/F3R722/F3R723/F3R726/F3R729/F3R768/F3R769 | Chassis no. to:950213 | GDS50046 | Drive Shaft | | 23 | 23 | 56.2 | 83.5 | 748 | |
| | 1995.09-2001.03 | MT | F | R | Estate FWD F3R611/F3R722/F3R723/F3R726/F3R729/F3R768/F3R769 | Chassis no. from:950214 | GDS50053 | Drive Shaft | | 21 | 23 | 56.2 | 83.5 | 751 | |
| | 1995.09-2001.03 | MT | F | R | Estate FWD F3R611/F3R722/F3R723/F3R726/F3R729/F3R768/F3R769 | Chassis no. to:950213 | GDS50134 | Drive Shaft | 44T | 23 | 23 | 56.2 | 83.5 | 748 | |
| | 1995.09-2001.03 | MT | F | R | Estate FWD F3R611/F3R722/F3R723/F3R726/F3R729/F3R768/F3R769 | | GDS50173 | Drive Shaft | | 21 | 23 | 57 | 84.5 | 743 | |
| | 1995.09-2001.03 | MT | F | L/R | Estate FWD F3R611/F3R722/F3R723/F3R726/F3R729/F3R768/F3R769 | Chassis no. from:950214 | GCO50008 | Outer Joint | | 21 | 25 | 56.2 | 83.5 | 58 | O |
| | 1995.09-2001.03 | MT | F | L/R | Estate FWD F3R611/F3R722/F3R723/F3R726/F3R729/F3R768/F3R769 | | GCO50015 | Outer Joint | | 23 | 29 | 56.3 | 80 | 63 | O |
| | 1995.09-2001.03 | MT | F | L/R | Estate FWD F3R611/F3R722/F3R723/F3R726/F3R729/F3R768/F3R769 | | GCO50025 | Outer Joint | | 23 | 25 | 56 | 84 | 61 | O |
| | 1995.09-2001.03 | MT | F | L/R | Estate FWD F3R611/F3R722/F3R723/F3R726/F3R729/F3R768/F3R769 | Chassis no. to:950213 | GCO50026 | Outer Joint | | 23 | 25 | 56.2 | 83.5 | 58 | O |
| | 1995.09-2001.03 | | F | R | Estate FWD F3R611/F3R722/F3R723/F3R726/F3R729/F3R768/F3R769 | | GDS50043 | Drive Shaft | | 23 | 23 | 56 | 84 | 747 | |
| | 1995.09-2001.03 | | F | R | Estate FWD F3R611/F3R722/F3R723/F3R726/F3R729/F3R768/F3R769 | | GCI50008 | Inner Joint | | 23 | 30 | 36.3 | | 120.7 | |
| 2.0 (84 kw) | 1998.10-2001.01 | MT | F | L | Estate FWD F3R768 | | GDS50197 | Drive Shaft | | 23 | 30 | 56.3 | 85 | 706 | |
| | 1998.10-2001.01 | MT | F | R | Estate FWD F3R768 | | GDS50043 | Drive Shaft | | 23 | 23 | 56 | 84 | 747 | |
| | 1998.10-2001.01 | MT | F | L/R | Estate FWD F3R768 | | GCO50025 | Outer Joint | | 23 | 25 | 56 | 84 | 61 | O |
| | 1998.10-2001.01 | MT | F | R | Estate FWD F3R768 | | GCI50008 | Inner Joint | | 23 | 30 | 36.3 | | 120.7 | |
| | 1998.10-2001.01 | | F | | Estate FWD F3R768 | | GCO99086 | Outer Joint | | 23 | 32 | 56.3 | 85 | 62.5 | I |
| 2.0 (96 kw) | 2007.10-2015.12 | 6MT | F | L | Estate FWD M9R 802;M9R 742;M9R 744;M9R 814;M9R 854;M9R 858 | | GDS50496 | Drive Shaft | | 27 | 39 | 56.5 | 90.5 | 640 | |
| | 2007.10-2015.12 | 6MT | F | R | Estate FWD M9R 802;M9R 742;M9R 744;M9R 814;M9R 854;M9R 858 | | GDS50380 | Drive Shaft | | 27 | 39 | 56.7 | 86.5 | 985 | |
| | 2007.10-2015.12 | AT/MT | F | L/R | Estate FWD M9R 802;M9R 742;M9R 744;M9R 814;M9R 854;M9R 858 | | GCO50161 | Outer Joint | | 27 | 36 | 56.7 | 87 | 62 | I |
| | 2007.10-2015.12 | MT | F | L | Estate FWD M9R 802;M9R 742;M9R 744;M9R 814;M9R 854;M9R 858 | | GCI50071 | Inner Joint | | 39 | 35 | 39 | 74 | 102.5 | |
| | 2007.10-2015.12 | | F | | Estate FWD M9R 802;M9R 742;M9R 744;M9R 814;M9R 854;M9R 858 | | GCO50131 | Outer Joint | | 27 | 36 | 56.7 | 86.5 | 66 | I |
| 2.0 (98 kw) | 2004.10-2007.09 | 4AT | F | L | Estate FWD F4R 712;F4R 713;F4R 714;F4R 715 | | GDS50281 | Drive Shaft | | 27 | 26 | 56.5 | 92 | 700 | |
| | 2004.10-2007.09 | 4AT | F | L | Estate FWD F4R 712;F4R 713;F4R 714;F4R 715 | | GDS50632 | Drive Shaft | | 27 | 26 | 56.7 | 91 | 689 | |
| | 2004.10-2007.09 | 4AT | F | R | Estate FWD F4R 712;F4R 713;F4R 714;F4R 715 | | GDS50509 | Drive Shaft | | 27 | 26 | 56.7 | 91 | 822 | |
| | 2004.10-2007.09 | 4AT/5MT | F | L | Estate FWD F4R 712;F4R 713;F4R 714;F4R 715 | | GCO50150 | Outer Joint | | 27 | 32 | 56.7 | 91 | 61 | I |
| | 2004.10-2007.09 | 5MT | F | L | Estate FWD F4R 712;F4R 713;F4R 714;F4R 715 | | GDS50460 | Drive Shaft | | 27 | 26 | 56.5 | 92 | 692 | |
| | 2004.10-2007.09 | 5MT | F | L | Estate FWD F4R 712;F4R 713;F4R 714;F4R 715 | | GDS50622 | Drive Shaft | | 27 | 26 | 56.7 | 91 | 690 | |
| | 2004.10-2007.09 | 5MT | F | R | Estate FWD F4R 712;F4R 713;F4R 714;F4R 715 | | GDS50452 | Drive Shaft | | 27 | 26 | 56.7 | 91 | 931.5 | |
| | 2004.10-2007.09 | 5MT | F | L | Estate FWD F4R 712;F4R 713;F4R 714;F4R 715 | | GCI50048 | Inner Joint | | 26 | 30 | 40 | 64 | 121 | |
| 2.0 (99 kw) | 2002.08-2007.12 | 4AT/5MT | F | R | Estate FWD F4R 712;F4R 713;F4R 714;F4R 715 | For Engine Code:F4R712 | GDS50226 | Drive Shaft | | 27 | 23 | 56.5 | 92 | 802 | |
| | 2002.08-2007.12 | 4AT/5MT | F | R | Estate FWD F4R 712;F4R 713;F4R 714;F4R 715 | For Engine Code:F4R713 | GDS50509 | Drive Shaft | | 27 | 26 | 56.7 | 91 | 822 | |
| | 2002.08-2007.12 | 5MT | F | L | Estate FWD F4R 712;F4R 713;F4R 714;F4R 715 | Date to:2004.04 | GDS50446 | Drive Shaft | | 27 | 30 | 56.5 | 91.5 | 719 | |
| | 2002.08-2007.12 | 5MT | F | L | Estate FWD F4R 712;F4R 713;F4R 714;F4R 715 | | GDS50622 | Drive Shaft | | 27 | 26 | 56.7 | 91 | 690 | |
| | 2002.08-2007.12 | 5MT | F | R | Estate FWD F4R 712;F4R 713;F4R 714;F4R 715 | Date from:2002.10;Date to:2004.04 | GDS50445 | Drive Shaft | | 27 | 23 | 56.5 | 92 | 791 | |
| | 2002.08-2007.12 | 5MT | F | R | Estate FWD F4R 712;F4R 713;F4R 714;F4R 715 | | GDS50452 | Drive Shaft | | 27 | 26 | 56.7 | 91 | 931.5 | |
| | 2002.08-2007.12 | 5MT | F | L | Estate FWD F4R 712;F4R 713;F4R 714;F4R 715 | | GCI50048 | Inner Joint | | 26 | 30 | 40 | 64 | 121 | |
| | 2002.08-2007.12 | AT | F | L | Estate FWD F4R 712;F4R 713;F4R 714;F4R 715 | | GDS50632 | Drive Shaft | | 27 | 26 | 56.7 | 91 | 689 | |

| | YEAR | TRANSM. | F/R | L/R | BODY STYLE & DRIVE TYPE & ENGINE | REMARKS | G-AP Ref. | PRODUCT | ABS | Technical Specifications A | B | C | H | L | P |
|---|---|---|---|---|---|---|---|---|---|---|---|---|---|---|---|
| **RENAULT** | | | | | | | | | | | | | | | |
| **Laguna Estate/Break** | | | | | | | | | | | | | | | |
| 2.0 (99 kw) | 2002.08-2007.12 | AT/MT | F | L/R | Estate FWD F4R 712;F4R 713;F4R 714;F4R 715 | | GCO50079 | Outer Joint | | 27 | 32 | 56.5 | 92 | 62.5 | I |
| | 2002.08-2007.12 | MT | F | L | Estate FWD F4R 712;F4R 713;F4R 714;F4R 715 | Date from:2004.05 | GDS50460 | Drive Shaft | | 27 | 26 | 56.5 | 92 | 692 | |
| | 2002.08-2007.12 | | F | L | Estate FWD F4R 712;F4R 713;F4R 714;F4R 715 | for OE number:8200014353;For Engine Code:F4R 713 | GDS50281 | Drive Shaft | | 27 | 26 | 56.5 | 92 | 700 | |
| 2.0 (102 kw) | 1995.06-2001.02 | MT | F | L | Estate FWD N7Q700/N7Q704 | | GDS50130 | Drive Shaft | | 23 | | 56.2 | 83.5 | 658.5 | |
| | 1995.06-2001.02 | MT | F | L | Estate FWD N7Q700/N7Q704 | | GDS50197 | Drive Shaft | | 23 | 30 | 56.3 | 85 | 706 | |
| | 1995.06-2001.02 | MT | F | R | Estate FWD N7Q700/N7Q704 | Date from:1997.02 | GDS50132 | Drive Shaft | | 23 | 23 | 57.5 | 83.5 | 801 | |
| | 1995.06-2001.02 | MT | F | R | Estate FWD N7Q700/N7Q704 | | GDS50173 | Drive Shaft | | 21 | 23 | 57 | 84.5 | 743 | |
| | 1995.06-2001.02 | MT | F | L/R | Estate FWD N7Q700/N7Q704 | | GCO50005 | Outer Joint | 44T | 23 | 25 | 56.3 | 84 | 61.5 | O |
| | 1995.06-2001.02 | MT | F | L/R | Estate FWD N7Q700/N7Q704 | | GCO50025 | Outer Joint | | 23 | 25 | 56 | 84 | 61 | O |
| | 1995.06-2001.02 | | F | R | Estate FWD N7Q700/N7Q704 | | GDS50043 | Drive Shaft | | 23 | 23 | 56 | 84 | 747 | |
| | 1995.06-2001.02 | | F | L/R | Estate FWD N7Q700/N7Q704 | | GCO50015 | Outer Joint | | 23 | 29 | 56.3 | 80 | 63 | O |
| | 1995.06-2001.02 | | F | R | Estate FWD N7Q700/N7Q704 | | GCI50008 | Inner Joint | | 23 | 30 | 36.3 | | 120.7 | |
| 2.0 (103 kw) | 1998.05-2001.03 | MT | F | L | Estate FWD F4R780 | | GDS50197 | Drive Shaft | | 23 | 30 | 56.3 | 85 | 706 | |
| | 1998.05-2001.03 | MT | F | R | Estate FWD F4R780 | | GDS50043 | Drive Shaft | | 23 | 23 | 56 | 84 | 747 | |
| | 1998.05-2001.03 | MT | F | L/R | Estate FWD F4R780 | | GCO50025 | Outer Joint | | 23 | 25 | 56 | 84 | 61 | O |
| | 1998.05-2001.03 | MT | F | R | Estate FWD F4R780 | | GCI50008 | Inner Joint | | 23 | 30 | 36.3 | | 120.7 | |
| | 1998.05-2001.03 | | F | | Estate FWD F4R780 | | GCO99086 | Outer Joint | | 23 | 32 | 56.3 | 85 | 62.5 | I |
| | 2001.04-2007.09 | 4AT | F | R | Estate FWD F5R 700;F5R 701 | Date to:2002.02 | GDS50219 | Drive Shaft | | 27 | 23 | 56.5 | 91.5 | 793.5 | |
| | 2001.04-2007.09 | 4AT/5MT | F | R | Estate FWD F5R 700;F5R 701 | For Engine Code:F5R700 | GDS50226 | Drive Shaft | | 27 | 23 | 56.5 | 92 | 802 | |
| | 2001.04-2007.09 | 4AT/5MT | F | R | Estate FWD F5R 700;F5R 701 | For Engine Code:F5R701 | GDS50509 | Drive Shaft | | 27 | 26 | 56.7 | 91 | 822 | |
| | 2001.04-2007.09 | 5MT | F | L | Estate FWD F5R 700;F5R 701 | | GDS50446 | Drive Shaft | | 27 | 30 | 56.5 | 91.5 | 719 | |
| | 2001.04-2007.09 | 5MT | F | R | Estate FWD F5R 700;F5R 701 | | GCO50079 | Outer Joint | | 27 | 32 | 56.5 | 92 | 62.5 | I |
| | 2001.04-2007.09 | AT | F | L | Estate FWD F5R 700;F5R 701 | | GDS50632 | Drive Shaft | | 27 | 26 | 56.7 | 91 | 689 | |
| | 2001.04-2007.09 | AT | F | L | Estate FWD F5R 700;F5R 701 | | GCI50040 | Inner Joint | | 26 | 30 | 43 | 42.5 | 83 | |
| | 2001.04-2007.09 | | F | L | Estate FWD F5R 700;F5R 701 | for OE number:8200014353;For Engine Code:F5R 701 | GDS50281 | Drive Shaft | | 27 | 26 | 56.5 | 92 | 700 | |
| | 2001.04-2007.09 | | F | | Estate FWD F5R 700;F5R 701 | | GCO50083 | Outer Joint | | 27 | 30 | 56.5 | 91.5 | 59 | I |
| | 2007.10-2015.12 | 6MT | F | L | Estate FWD M4R 704 | | GDS50451 | Drive Shaft | | 27 | 26 | 56.7 | 87 | 676 | |
| | 2007.10-2015.12 | 6MT | F | R | Estate FWD M4R 704 | | GDS50455 | Drive Shaft | | 27 | 26 | 56.7 | 87 | 943 | |
| | 2007.10-2015.12 | 6MT | F | L/R | Estate FWD M4R 704 | | GCO50152 | Outer Joint | | 27 | 33 | 56.7 | 87 | 62 | I |
| | 2007.10-2015.12 | 6MT | F | R | Estate FWD M4R 704 | | GCI50110 | Inner Joint | | 26 | 33 | 33 | 346 | 113 | |
| | 2007.10-2015.12 | 6MT | F | L | Estate FWD M4R 704;M4R 726 | | GDS50451 | Drive Shaft | | 27 | 26 | 56.7 | 87 | 676 | |
| | 2007.10-2015.12 | 6MT | F | R | Estate FWD M4R 704;M4R 726 | | GDS50455 | Drive Shaft | | 27 | 26 | 56.7 | 87 | 943 | |
| | 2007.10-2015.12 | MT | F | L/R | Estate FWD M4R 704;M4R 726 | | GCO50152 | Outer Joint | | 27 | 33 | 56.7 | 87 | 62 | I |
| | 2007.10-2015.12 | | F | R | Estate FWD M4R 704;M4R 726 | | GCI50110 | Inner Joint | | 26 | 33 | 33 | 346 | 113 | |
| 2.0 (110 kw) | 2005.08-2006.08 | 6MT | F | R | Estate FWD M9R 740 | | GDS50518 | Drive Shaft | | 27 | 39 | 56.8 | 90 | 985 | |
| | 2005.08-2006.08 | 6MT | F | R | Estate FWD M9R 740 | Date to:2007.12 | GCI50087 | Inner Joint | | 39 | 35 | 30 | 367 | 89.5 | |
| | 2005.08-2006.08 | MT | F | L/R | Estate FWD M9R 740 | | GCO50080 | Outer Joint | | 27 | 37 | 56.5 | 92 | 73 | I |
| | 2005.08-2006.08 | | F | L/R | Estate FWD M9R 740 | | GCO50131 | Outer Joint | | 27 | 36 | 56.7 | 86.5 | 66 | I |
| | 2005.08-2006.08 | | F | | Estate FWD M9R 740 | | GCO50078 | Outer Joint | | 27 | 35 | 56.5 | 91.5 | 71 | I |
| | 2007.10-2015.12 | 6AT | F | L | Estate FWD M9R 802;M9R 722;M9R 716;M9R 803;M9R 812;M9R 843;M9R 854;M9R 858;M9R 859 | 6 balls | GDS50626 | Drive Shaft | | 27 | 30 | 56.7 | 86.5 | 642 | |
| | 2007.10-2015.12 | 6AT | F | L | Estate FWD M9R 802;M9R 722;M9R 716;M9R 803;M9R 812;M9R 843;M9R 854;M9R 858;M9R 859 | 8 balls | GDS81268 | Drive Shaft | | 27 | 30 | 56.7 | 87 | 642 | |
| | 2007.10-2015.12 | 6AT | F | R | Estate FWD M9R 802;M9R 722;M9R 716;M9R 803;M9R 812;M9R 843;M9R 854;M9R 858;M9R 859 | 6 balls | GDS50596 | Drive Shaft | | 27 | 30 | 56.7 | 86.5 | 959 | |
| | 2007.10-2015.12 | 6AT | F | R | Estate FWD M9R 802;M9R 722;M9R 716;M9R 803;M9R 812;M9R 843;M9R 854;M9R 858;M9R 859 | 8 balls | GDS81267 | Drive Shaft | | 27 | 30 | 56.7 | 87 | 963 | |
| | 2007.10-2015.12 | 6AT | F | L/R | Estate FWD M9R 802;M9R 722;M9R 716;M9R 803;M9R 812;M9R 843;M9R 854;M9R 858;M9R 859 | 8 balls | GCO81101 | Outer Joint | | 27 | 36 | 56.7 | 87 | 66.5 | I |
| | 2007.10-2015.12 | 6AT | F | R | Estate FWD M9R 802;M9R 722;M9R 716;M9R 803;M9R 812;M9R 843;M9R 854;M9R 858;M9R 859 | | GCI50123 | Inner Joint | | 30 | 36 | 33.97 | 343 | 90 | |
| | 2007.10-2015.12 | 6MT | F | L | Estate FWD M9R 802;M9R 722;M9R 716;M9R 803;M9R 812;M9R 843;M9R 854;M9R 858;M9R 859 | | GDS50496 | Drive Shaft | | 27 | 39 | 56.5 | 90.5 | 640 | |
| | 2007.10-2015.12 | 6MT | F | R | Estate FWD M9R 802;M9R 722;M9R 716;M9R 803;M9R 812;M9R 843;M9R 854;M9R 858;M9R 859 | | GDS50380 | Drive Shaft | | 27 | 39 | 56.7 | 86.5 | 985 | |
| | 2007.10-2015.12 | AT/MT | F | L/R | Estate FWD M9R 802;M9R 722;M9R 716;M9R 803;M9R 812;M9R 843;M9R 854;M9R 858;M9R 859 | 6 balls | GCO50161 | Outer Joint | | 27 | 36 | 56.7 | 87 | 62 | I |
| | 2007.10-2015.12 | MT | F | L | Estate FWD M9R 802;M9R 722;M9R 716;M9R 803;M9R 812;M9R 843;M9R 854;M9R 858;M9R 859 | | GCI50071 | Inner Joint | | 39 | 35 | 39 | 74 | 102.5 | |
| | 2007.10-2015.12 | | F | | Estate FWD M9R 802;M9R 722;M9R 716;M9R 803;M9R 812;M9R 843;M9R 854;M9R 858;M9R 859 | 6 balls | GCO50131 | Outer Joint | | 27 | 36 | 56.7 | 86.5 | 66 | I |
| 2.0 (120 kw) | 2003.01-2005.08 | 5AT | F | R | Estate FWD F4R 764;F4R 765 | | GDS50633 | Drive Shaft | | 27 | 26 | 56.5 | 91.5 | 943 | |
| | 2003.01-2005.08 | 5AT | F | R | Estate FWD F4R 764;F4R 765 | | GCI81173 | Inner Joint | | 26 | 35 | 31 | 331.5 | 87.5 | |
| | 2003.01-2005.08 | 5AT/6MT | F | L/R | Estate FWD F4R 764;F4R 765 | | GCO50078 | Outer Joint | | 27 | 35 | 56.5 | 91.5 | 71 | I |
| | 2003.01-2005.08 | 6MT | F | R | Estate FWD F4R 764;F4R 765 | | GCI81074 | Inner Joint | | 39 | 35 | | 363 | 88 | |
| | 2003.01-2005.08 | MT | F | R | Estate FWD F4R 764;F4R 765 | | GDS50228 | Drive Shaft | | 27 | 39 | 56.5 | 90.5 | 967 | |
| | 2003.01-2005.08 | MT/5AT/6MT | F | L | Estate FWD F4R 764;F4R 765 | | GDS50207 | Drive Shaft | | 27 | 37 | 56.5 | 91.5 | 632 | |
| | 2003.01-2005.08 | | F | | Estate FWD F4R 764;F4R 765 | | GCO50080 | Outer Joint | | 27 | 37 | 56.5 | 92 | 73 | I |
| 2.0 (125 kw) | 2005.01-2007.09 | 5AT | F | R | Estate FWD F4R 786;F4R 787;F4R 784 | | GDS50633 | Drive Shaft | | 27 | 26 | 56.5 | 91.5 | 943 | |
| | 2005.01-2007.09 | 5AT | F | R | Estate FWD F4R 786;F4R 787;F4R 784 | | GCI81173 | Inner Joint | | 26 | 35 | 31 | 331.5 | 87.5 | |
| | 2005.01-2007.09 | 5AT/6MT | F | L/R | Estate FWD F4R 786;F4R 787;F4R 784 | | GCO50078 | Outer Joint | | 27 | 35 | 56.5 | 91.5 | 71 | I |
| | 2005.01-2007.09 | 6MT | F | R | Estate FWD F4R 786;F4R 787;F4R 784 | | GCI81074 | Inner Joint | | 39 | 35 | | 363 | 88 | |
| | 2005.01-2007.09 | MT | F | R | Estate FWD F4R 786;F4R 787;F4R 784 | | GDS50228 | Drive Shaft | | 27 | 39 | 56.5 | 90.5 | 967 | |
| | 2005.01-2007.09 | MT | F | | Estate FWD F4R 786;F4R 787;F4R 784 | | GCO50080 | Outer Joint | | 27 | 37 | 56.5 | 92 | 73 | I |
| | 2005.01-2007.09 | MT/6MT | F | L | Estate FWD F4R 786;F4R 787;F4R 784 | | GDS50207 | Drive Shaft | | 27 | 37 | 56.5 | 91.5 | 632 | |
| | 2007.10-2015.12 | 6AT | F | L | Estate FWD F4R 811 | 6 balls | GDS50626 | Drive Shaft | | 27 | 30 | 56.7 | 86.5 | 642 | |

| | YEAR | TRANSM. | F/R | L/R | BODY STYLE & DRIVE TYPE & ENGINE | REMARKS | G-AP Ref. | PRODUCT | ABS | Technical Specifications A | B | C | H | L | P |
|---|---|---|---|---|---|---|---|---|---|---|---|---|---|---|---|
| **RENAULT** **Laguna Estate/Break** | | | | | | | | | | | | | | | |
| 2.0 (125 kw) | 2007.10-2015.12 | 6AT | F | L | Estate FWD F4R 811 | 8 balls | GDS81268 | Drive Shaft | | 27 | 30 | 56.7 | 87 | 642 | |
| | 2007.10-2015.12 | 6AT | F | R | Estate FWD F4R 811 | 8 balls | GDS81269 | Drive Shaft | | 27 | 30 | 56.7 | 87 | 962 | |
| | 2007.10-2015.12 | 6AT | F | L | Estate FWD F4R 811 | 8 balls | GCO81101 | Outer Joint | | 27 | 36 | 56.7 | 87 | 66.5 | I |
| | 2007.10-2015.12 | 6AT | F | L | Estate FWD F4R 811 | | GCI50150 | Inner Joint | | 30 | 36 | 34 | 76.5 | 86 | |
| | 2007.10-2015.12 | 6AT | F | R | Estate FWD F4R 811 | | GCI81163 | Inner Joint | | 30 | 36 | 34 | 354 | 85 | |
| | 2007.10-2015.12 | AT/MT | F | L/R | Estate FWD F4R 811 | 6 balls | GCO50161 | Outer Joint | | 27 | 36 | 56.7 | 87 | 62 | I |
| 2.0 (127 kw) | 2006.01-2007.12 | 6MT | F | R | Estate FWD M9R 760 | | GDS50518 | Drive Shaft | | 27 | 39 | 56.8 | 90 | 985 | |
| | 2006.01-2007.12 | 6MT | F | R | Estate FWD M9R 760 | Date to:2007.12 | GCI50087 | Inner Joint | | 39 | 35 | 30 | 367 | 89.5 | |
| | 2006.01-2007.12 | MT | F | L/R | Estate FWD M9R 760 | | GCO50080 | Outer Joint | | 27 | 37 | 56.5 | 92 | 73 | I |
| | 2006.01-2007.12 | | F | L/R | Estate FWD M9R 760 | | GCO50078 | Outer Joint | | 27 | 35 | 56.5 | 91.5 | 71 | I |
| | 2006.01-2007.12 | | F | L/R | Estate FWD M9R 760 | | GCO50131 | Outer Joint | | 27 | 36 | 56.7 | 86.5 | 66 | I |
| | 2008.01-2015.12 | 6AT | F | L | Estate FWD M9R 800;M9R 808;M9R 849;M9R 815;M9R 854;M9R 857;M9R 858;M9R 898 | | GDS50626 | Drive Shaft | | 27 | 30 | 56.7 | 86.5 | 642 | |
| | 2008.01-2015.12 | 6AT | F | L | Estate FWD M9R 800;M9R 808;M9R 849;M9R 815;M9R 854;M9R 857;M9R 858;M9R 898 | | GDS81268 | Drive Shaft | | 27 | 30 | 56.7 | 87 | 642 | |
| | 2008.01-2015.12 | 6AT | F | R | Estate FWD M9R 800;M9R 808;M9R 849;M9R 815;M9R 854;M9R 857;M9R 858;M9R 898 | | GDS50596 | Drive Shaft | | 27 | 30 | 56.7 | 86.5 | 959 | |
| | 2008.01-2015.12 | 6AT | F | R | Estate FWD M9R 800;M9R 808;M9R 849;M9R 815;M9R 854;M9R 857;M9R 858;M9R 898 | | GDS81267 | Drive Shaft | | 27 | 30 | 56.7 | 87 | 963 | |
| | 2008.01-2015.12 | 6AT | F | L/R | Estate FWD M9R 800;M9R 808;M9R 849;M9R 815;M9R 854;M9R 857;M9R 858;M9R 898 | | GCO81101 | Outer Joint | | 27 | 36 | 56.7 | 87 | 66.5 | I |
| | 2008.01-2015.12 | 6AT | F | R | Estate FWD M9R 800;M9R 808;M9R 849;M9R 815;M9R 854;M9R 857;M9R 858;M9R 898 | | GCI50123 | Inner Joint | | 30 | 36 | 33.97 | 343 | 90 | |
| | 2008.01-2015.12 | 6MT | F | L | Estate FWD M9R 800;M9R 808;M9R 849;M9R 815;M9R 854;M9R 857;M9R 858;M9R 898 | | GDS50496 | Drive Shaft | | 27 | 39 | 56.5 | 90.5 | 640 | |
| | 2008.01-2015.12 | 6MT | F | R | Estate FWD M9R 800;M9R 808;M9R 849;M9R 815;M9R 854;M9R 857;M9R 858;M9R 898 | | GDS50380 | Drive Shaft | | 27 | 39 | 56.7 | 86.5 | 985 | |
| | 2008.01-2015.12 | AT/MT | F | L/R | Estate FWD M9R 800;M9R 808;M9R 849;M9R 815;M9R 854;M9R 857;M9R 858;M9R 898 | | GCO50161 | Outer Joint | | 27 | 36 | 56.7 | 87 | 62 | I |
| | 2008.01-2015.12 | MT | F | L | Estate FWD M9R 800;M9R 808;M9R 849;M9R 815;M9R 854;M9R 857;M9R 858;M9R 898 | | GCI50071 | Inner Joint | | 39 | 35 | 39 | 74 | 102.5 | |
| | 2008.01-2015.12 | | F | | Estate FWD M9R 800;M9R 808;M9R 849;M9R 815;M9R 854;M9R 857;M9R 858;M9R 898 | | GCO50131 | Outer Joint | | 27 | 36 | 56.7 | 86.5 | 66 | I |
| 2.0 (131 kw) | 2008.03-2015.12 | 6MT | F | L | Estate FWD M9R 816;M9R 820;M9R 828 | | GDS50496 | Drive Shaft | | 27 | 39 | 56.5 | 90.5 | 640 | |
| | 2008.03-2015.12 | 6MT | F | R | Estate FWD M9R 816;M9R 820;M9R 828 | | GDS50380 | Drive Shaft | | 27 | 39 | 56.7 | 86.5 | 985 | |
| | 2008.03-2015.12 | AT/MT | F | L/R | Estate FWD M9R 816;M9R 820;M9R 828 | | GCO50161 | Outer Joint | | 27 | 36 | 56.7 | 87 | 62 | I |
| | 2008.03-2015.12 | MT | F | L | Estate FWD M9R 816;M9R 820;M9R 828 | | GCI50071 | Inner Joint | | 39 | 35 | 39 | 74 | 102.5 | |
| | 2008.03-2015.12 | | F | | Estate FWD M9R 816;M9R 820;M9R 828 | | GCO50131 | Outer Joint | | 27 | 36 | 56.7 | 86.5 | 66 | I |
| 2.0 (150 kw) | 2005.01-2007.09 | 5AT | F | R | Estate FWD F4R 886;F4R 887 | | GDS50633 | Drive Shaft | | 27 | 26 | 56.5 | 91.5 | 943 | |
| | 2005.01-2007.09 | 5AT | F | R | Estate FWD F4R 886;F4R 887 | | GCI81173 | Inner Joint | | 26 | 35 | 31 | 331.5 | 87.5 | |
| | 2005.01-2007.09 | 6AT/6MT | F | R | Estate FWD F4R 886;F4R 887 | | GCO50078 | Outer Joint | | 27 | 35 | 56.5 | 91.5 | 71 | I |
| | 2005.01-2007.09 | 6MT | F | L | Estate FWD F4R 886;F4R 887 | | GDS50207 | Drive Shaft | | 27 | 37 | 56.5 | 91.5 | 632 | |
| | 2005.01-2007.09 | 6MT | F | R | Estate FWD F4R 886;F4R 887 | | GCI81074 | Inner Joint | | 39 | 35 | | 363 | 88 | |
| | 2005.01-2007.09 | MT | F | R | Estate FWD F4R 886;F4R 887 | Date from:2006.01 | GDS50228 | Drive Shaft | | 27 | 39 | 56.5 | 90.5 | 967 | |
| | 2008.03-2015.12 | 6AT | F | R | Estate FWD F4R 800 | | GDS50596 | Drive Shaft | | 27 | 30 | 56.7 | 86.5 | 959 | |
| | 2008.03-2015.12 | 6MT | F | L | Estate FWD F4R 800 | 6 balls | GDS50496 | Drive Shaft | | 27 | 39 | 56.5 | 90.5 | 640 | |
| | 2008.03-2015.12 | 6MT | F | L | Estate FWD F4R 800 | 8 balls | GDS81270 | Drive Shaft | | 27 | 39 | 56.7 | 87 | 642 | |
| | 2008.03-2015.12 | 6MT | F | L | Estate FWD F4R 800 | | GCI50071 | Inner Joint | | 39 | 35 | 39 | 74 | 102.5 | |
| | 2008.03-2015.12 | AT/MT | F | L/R | Estate FWD F4R 800 | | GCO50161 | Outer Joint | | 27 | 36 | 56.7 | 87 | 62 | I |
| | 2008.03-2015.12 | | F | L | Estate FWD F4R 800 | | GCO81101 | Outer Joint | | 27 | 36 | 56.7 | 87 | 66.5 | I |
| | 2008.03-2015.12 | | F | | Estate FWD F4R 800 | | GCO50131 | Outer Joint | | 27 | 36 | 56.7 | 86.5 | 66 | I |
| 2.2 (61 kw) | 1995.06-1999.11 | MT | F | L | Estate FWD G8T706/G8T752/G8T790/G8T792/G8T794 | | GDS50130 | Drive Shaft | | 23 | | 56.2 | 83.5 | 658.5 | |
| | 1995.06-1999.11 | MT | F | L | Estate FWD G8T706/G8T752/G8T790/G8T792/G8T794 | | GDS50131 | Drive Shaft | 44T | 23 | | 56.2 | 83.5 | 658.5 | |
| | 1995.06-1999.11 | MT | F | L | Estate FWD G8T706/G8T752/G8T790/G8T792/G8T794 | | GDS50197 | Drive Shaft | | 23 | 30 | 56.3 | 85 | 706 | |
| | 1995.06-1999.11 | MT | F | L | Estate FWD G8T706/G8T752/G8T790/G8T792/G8T794 | Date to:1997.01 | GDS50461 | Drive Shaft | 44T | 23 | | 56.3 | 84 | 658 | |
| | 1995.06-1999.11 | MT | F | R | Estate FWD G8T706/G8T752/G8T790/G8T792/G8T794 | | GDS50043 | Drive Shaft | | 23 | 23 | 56 | 84 | 747 | |
| | 1995.06-1999.11 | MT | F | R | Estate FWD G8T706/G8T752/G8T790/G8T792/G8T794 | | GDS50132 | Drive Shaft | | 23 | 23 | 57.5 | 83.5 | 801 | |
| | 1995.06-1999.11 | MT | F | R | Estate FWD G8T706/G8T752/G8T790/G8T792/G8T794 | Date to:1997.01 | GDS50215 | Drive Shaft | 44T | 23 | 23 | 56.2 | 83.5 | 802 | |
| | 1995.06-1999.11 | MT | F | L/R | Estate FWD G8T706/G8T752/G8T790/G8T792/G8T794 | Date to:1997.01 | GCO50005 | Outer Joint | 44T | 23 | 25 | 56.3 | 84 | 61.5 | O |
| | 1995.06-1999.11 | MT | F | L/R | Estate FWD G8T706/G8T752/G8T790/G8T792/G8T794 | | GCO50015 | Outer Joint | | 23 | 29 | 56.3 | 80 | 63 | O |
| | 1995.06-1999.11 | MT | F | L/R | Estate FWD G8T706/G8T752/G8T790/G8T792/G8T794 | | GCO50025 | Outer Joint | | 23 | 25 | 56 | 84 | 61 | O |
| | 1995.06-1999.11 | MT | F | L/R | Estate FWD G8T706/G8T752/G8T790/G8T792/G8T794 | Date to:1999.11 | GCO50026 | Outer Joint | | 23 | 25 | 56.2 | 83.5 | 58 | O |
| | 1995.06-1999.11 | MT | F | R | Estate FWD G8T706/G8T752/G8T790/G8T792/G8T794 | | GCI50008 | Inner Joint | | 23 | 30 | 36.3 | | 120.7 | |
| 2.2 (83 kw) | 1995.11-1999.10 | MT | F | L/R | Estate FWD G8T760 | Date to:1999.10 | GCO50105 | Outer Joint | | 23 | 27 | 56.3 | 85 | 68 | I |
| 2.2 (85 kw) | 2004.04-2005.10 | 6MT | F | L | Estate FWD G9T 600 | | GDS50256 | Drive Shaft | | 27 | 37 | 56.5 | 92 | 593 | |
| | 2004.04-2005.10 | 6MT | F | R | Estate FWD G9T 600 | | GDS50209 | Drive Shaft | | 27 | 39 | 56.5 | 92 | 1014 | |
| | 2004.04-2005.10 | 6MT | F | L/R | Estate FWD G9T 600 | | GCO50080 | Outer Joint | | 27 | 37 | 56.5 | 92 | 73 | I |
| | 2004.04-2005.10 | 6MT | F | R | Estate FWD G9T 600 | | GCI50097 | Inner Joint | | 39 | 35 | 30 | 409 | 90 | |
| 2.2 (102 kw) | 2005.05-2007.12 | 5AT | F | L | Estate FWD G9T 600;G9T 605;G9T 706;G9T 707 | | GDS50471 | Drive Shaft | | 27 | 26 | 56.8 | 90 | 619 | |
| | 2005.05-2007.12 | 5AT | F | R | Estate FWD G9T 600;G9T 605;G9T 706;G9T 707 | | GDS50330 | Drive Shaft | | 27 | 26 | 56.5 | 92 | 984 | |
| | 2005.05-2007.12 | 5AT/6MT | F | L/R | Estate FWD G9T 600;G9T 605;G9T 706;G9T 707 | For Engine Code:G9T706 | GCO50080 | Outer Joint | | 27 | 37 | 56.5 | 92 | 73 | I |
| | 2005.05-2007.12 | 6MT | F | R | Estate FWD G9T 600;G9T 605;G9T 706;G9T 707 | | GDS50209 | Drive Shaft | | 27 | 39 | 56.5 | 92 | 1014 | |
| | 2005.05-2007.12 | AT/MT | F | L/R | Estate FWD G9T 600;G9T 605;G9T 706;G9T 707 | | GCO50078 | Outer Joint | | 27 | 35 | 56.5 | 91.5 | 71 | I |
| | 2005.05-2007.12 | AT/MT/6MT | F | L | Estate FWD G9T 600;G9T 605;G9T 706;G9T 707 | | GDS50256 | Drive Shaft | | 27 | 37 | 56.5 | 92 | 593 | |
| 2.2 (110 kw) | 2001.10-2006.08 | 5AT | F | L | Estate FWD G9T 702;G9T 703;G9T 706;G9T 707;G9T 700 | | GDS50471 | Drive Shaft | | 27 | 26 | 56.8 | 90 | 619 | |
| | 2001.10-2006.08 | 5AT | F | R | Estate FWD G9T 702;G9T 703;G9T 706;G9T 707;G9T 700 | | GDS50330 | Drive Shaft | | 27 | 26 | 56.5 | 92 | 984 | |

| | YEAR | TRANSM. | F/R | L/R | BODY STYLE & DRIVE TYPE & ENGINE | REMARKS | G-AP Ref. | PRODUCT | ABS | Technical Specifications A | B | C | H | L | P |
|---|---|---|---|---|---|---|---|---|---|---|---|---|---|---|---|
| **RENAULT** | | | | | | | | | | | | | | | |
| **Laguna Estate/Break** | | | | | | | | | | | | | | | |
| 2.2 (110 kw) | 2001.10-2006.08 | 5AT/6MT | F | L/R | Estate FWD G9T 702;G9T 703;G9T 706;G9T 707;G9T 700 | For Engine Code:G9T702 | GCO50080 | Outer Joint | | 27 | 37 | 56.5 | 92 | 73 | I |
| | 2001.10-2006.08 | 6MT | F | R | Estate FWD G9T 702;G9T 703;G9T 706;G9T 707;G9T 700 | | GDS50209 | Drive Shaft | | 27 | 39 | 56.5 | 92 | 1014 | |
| | 2001.10-2006.08 | AT/MT/6MT | F | L | Estate FWD G9T 702;G9T 703;G9T 706;G9T 707;G9T 700 | | GDS50256 | Drive Shaft | | 27 | 37 | 56.5 | 92 | 593 | |
| 2.9 (140 kw) | 1997.04-2001.02 | AT/MT | F | L/R | Estate FWD L7X700/L7X701 | | GCO50025 | Outer Joint | | 23 | 25 | 56 | 84 | 61 | O |
| | 1997.04-2001.02 | MT | F | R | Estate FWD L7X700/L7X701 | | GCO50105 | Outer Joint | | 23 | 27 | 56.3 | 85 | 68 | I |
| 2.9 (152 kw) | 2001.03-2007.12 | 5AT | F | L | Estate FWD L7X 731;L7X 733 | | GDS50471 | Drive Shaft | | 27 | 26 | 56.8 | 90 | 619 | |
| | 2001.03-2007.12 | 5AT | F | R | Estate FWD L7X 731;L7X 733 | | GDS50330 | Drive Shaft | | 27 | 26 | 56.5 | 92 | 984 | |
| | 2001.03-2007.12 | AT/MT | F | L/R | Estate FWD L7X 731;L7X 733 | Date from:2003.01 | GCO50080 | Outer Joint | | 27 | 37 | 56.5 | 92 | 73 | I |
| 2.9 (155 kw) | 2003.10-2007.12 | 5AT | F | L | Estate FWD L7X 731 | | GDS50471 | Drive Shaft | | 27 | 26 | 56.8 | 90 | 619 | |
| | 2003.10-2007.12 | 5AT | F | R | Estate FWD L7X 731 | | GDS50330 | Drive Shaft | | 27 | 26 | 56.5 | 92 | 984 | |
| | 2003.10-2007.12 | 5AT | F | L | Estate FWD L7X 731 | | GCO99291 | Outer Joint | | 27 | 37 | 56.8 | 90 | 73 | I |
| | 2003.10-2007.12 | 5AT | F | R | Estate FWD L7X 731 | | GCO50080 | Outer Joint | | 27 | 37 | 56.5 | 92 | 73 | I |
| 3.0 (123 kw) | 1995.06-1998.06 | MT | F | L/R | Estate FWD Z7X765/Z7X767 | Date to:1998.06 | GCO50105 | Outer Joint | | 23 | 27 | 56.3 | 85 | 68 | I |
| 3.0 (173 kw) | 2008.09-2015.12 | 6AT | F | R | Estate FWD V9X 891;V9X 791 | | GCI81162 | Inner Joint | | 30 | 37 | 34 | 401.5 | 95 | |
| **Latitude** | | | | | | | | | | | | | | | |
| 1.5 (81 kw) | 2010.07- | AT | F | L | Saloon FWD K9K 782;K9K 849 | | GDS84627 | Drive Shaft | | 27 | 34 | 56.8 | 87.5 | 637 | |
| | 2010.07- | AT | F | R | Saloon FWD K9K 782;K9K 849 | | GDS84626 | Drive Shaft | | 27 | 34 | 56.8 | 87.5 | 999 | |
| | 2010.07- | AT | F | L | Saloon FWD K9K 782;K9K 849 | | GCI82899 | Inner Joint | | 34 | 24 | 40 | 54 | 106 | |
| | 2010.07- | AT | F | R | Saloon FWD K9K 782;K9K 849 | | GCI82898 | Inner Joint | | 34 | 24 | 40 | 382 | 90 | |
| | 2010.07- | AT/MT | F | L/R | Saloon FWD K9K 782;K9K 849 | | GCO82529 | Outer Joint | | 27 | 24 | 56.8 | 87.5 | 59 | M |
| | 2010.07- | MT | F | L | Saloon FWD K9K 782;K9K 849 | | GDS83878 | Drive Shaft | | 27 | 26 | 56.8 | 87.5 | 686 | |
| | 2010.07- | MT | F | R | Saloon FWD K9K 782;K9K 849 | | GDS83879 | Drive Shaft | | 27 | 26 | 56.8 | 87.5 | 934 | |
| | 2010.07- | MT | F | L | Saloon FWD K9K 782;K9K 849 | | GCI82411 | Inner Joint | | 26 | 23 | 40 | 64.5 | 104 | |
| | 2010.07- | MT | F | R | Saloon FWD K9K 782;K9K 849 | | GCI82412 | Inner Joint | | 26 | 23 | 33 | 326.5 | 101.5 | |
| 3.0 (177 kw) | 2011.02- | 6AT | F | R | Saloon FWD V9X 891 | | GDS50596 | Drive Shaft | | 27 | 30 | 56.7 | 86.5 | 959 | |
| **Lodgy** | | | | | | | | | | | | | | | |
| 1.5 (62 kw) | 2015.01- | MT | F | L | MPV FWD K9K 830 | | GDS11024 | Drive Shaft | | 25 | 26 | 52.5 | 88.5 | 653 | |
| | 2015.01- | MT | F | R | MPV FWD K9K 830 | | GDS50501 | Drive Shaft | | 25 | 26 | 52.4 | 88.5 | 898 | |
| | 2015.01- | MT | F | L/R | MPV FWD K9K 830 | | GCO50162 | Outer Joint | | 25 | 23 | 52.5 | 88.5 | 60.5 | M |
| | 2015.01- | MT | F | L | MPV FWD K9K 830 | | GCI50057 | Inner Joint | | 26 | 22 | 40 | 64 | 104 | |
| 1.6 (59 kw) | 2013.07- | 5MT | F | R | MPV FWD K7M 812 | | GDS83765 | Drive Shaft | | 25 | 23 | 52.4 | 88.5 | 762 | |
| | 2013.07- | 5MT | F | L/R | MPV FWD K7M 812 | | GCO50171 | Outer Joint | | 25 | 22 | 52.4 | 88.5 | 55 | M |
| | 2013.07- | 5MT | F | R | MPV FWD K7M 812 | | GCI50054 | Inner Joint | | 23 | 20 | 36.3 | | 119 | |
| **Logan** | | | | | | | | | | | | | | | |
| 1.2 (53 kw) | 2013.11- | 5MT | F | L | Saloon FWD D4F 732;D4F 734 | | GDS11021 | Drive Shaft | | 23 | 30 | 49 | 86 | 683 | |
| | 2013.11- | 5MT | F | R | Saloon FWD D4F 732;D4F 734 | | GDS11014 | Drive Shaft | | 23 | 23 | 49 | 83.5 | 755 | |
| | 2013.11- | 5MT | F | L | Saloon FWD D4F 732;D4F 734 | | GCO50219 | Outer Joint | | 23 | 28 | 49 | 86 | 52 | I |
| 1.2 (55 kw) | 2013.11- | | F | L | Saloon FWD D4F 732 | | GDS11021 | Drive Shaft | | 23 | 30 | 49 | 86 | 683 | |
| | 2013.11- | | F | R | Saloon FWD D4F 732 | | GDS11014 | Drive Shaft | | 23 | 23 | 49 | 83.5 | 755 | |
| | 2013.11- | | F | L/R | Saloon FWD D4F 732 | | GCO50219 | Outer Joint | | 23 | 28 | 49 | 86 | 52 | I |
| 1.4 (53 kw) | 2008.02-2013.10 | 5MT | F | L | Saloon FWD K7J 714 | Inner teeth of wheel side:24 | GDS45084 | Drive Shaft | | 21 | 30 | 49 | 84 | 681 | |
| | 2008.02-2013.10 | 5MT | F | R | Saloon FWD K7J 714 | Inner teeth of wheel side:28 | GDS11023 | Drive Shaft | | 21 | 23 | 49 | 84 | 761 | |
| | 2008.02-2013.10 | 5MT | F | R | Saloon FWD K7J 714 | Inner teeth of wheel side:24 | GDS45085 | Drive Shaft | | 21 | 23 | 49 | 84 | 763 | |
| | 2008.02-2013.10 | 5MT | F | L/R | Saloon FWD K7J 714 | new | GCO11004 | Outer Joint | | 21 | 28 | 49 | 84 | 53.5 | I |
| | 2008.02-2013.10 | 5MT | F | R | Saloon FWD K7J 714 | | GCI50008 | Inner Joint | | 23 | 30 | 36.3 | | 120.7 | |
| | 2008.02-2013.10 | 5MT | F | R | Saloon FWD K7J 714 | new | GCI50124 | Inner Joint | | 23 | 28 | 36.3 | | 115 | |
| 1.4 (55 kw) | 2004.09- | 5MT | F | L | Saloon FWD K7J 710 | | GDS45084 | Drive Shaft | | 21 | 30 | 49 | 84 | 681 | |
| | 2004.09- | 5MT | F | R | Saloon FWD K7J 710 | | GDS11023 | Drive Shaft | | 21 | 23 | 49 | 84 | 761 | |
| | 2004.09- | 5MT | F | R | Saloon FWD K7J 710 | | GDS45085 | Drive Shaft | | 21 | 23 | 49 | 84 | 763 | |
| | 2004.09- | 5MT | F | L/R | Saloon FWD K7J 710 | | GCO11004 | Outer Joint | | 21 | 28 | 49 | 84 | 53.5 | I |
| | 2004.09- | 5MT | F | R | Saloon FWD K7J 710 | | GCI50124 | Inner Joint | | 23 | 28 | 36.3 | | 115 | |
| 1.5 (48 kw) | 2006.04-2013.10 | 5MT | F | L | Saloon FWD K9K 700;K9K 790;K9K 794 | Trans. side without housing | GDS11021 | Drive Shaft | | 23 | 30 | 49 | 86 | 683 | |
| | 2006.04-2013.10 | 5MT | F | R | Saloon FWD K9K 700;K9K 790;K9K 794 | | GDS11014 | Drive Shaft | | 23 | 23 | 49 | 83.5 | 755 | |
| | 2006.04-2013.10 | | F | R | Saloon FWD K9K 700;K9K 790;K9K 794 | | GCI50008 | Inner Joint | | 23 | 30 | 36.3 | | 120.7 | |
| 1.5 (50 kw) | 2007.04- | | F | L | Estate Van FWD K9K 792 | Date To:2009.10 | GDS50353 | Drive Shaft | | 23 | 26 | 49 | 86 | 649 | |
| | 2007.04- | | F | L | Estate Van FWD K9K 792 | Date To:2009.10;Manufacturer Restriction:GKN | GDS50570 | Drive Shaft | | 23 | 26 | 49 | 83.5 | 647 | |
| | 2007.04- | | F | R | Estate Van FWD K9K 792 | Date To:2009.10 | GDS50354 | Drive Shaft | | 23 | 26 | 49 | 86 | 897 | |
| | 2007.04- | | F | R | Estate Van FWD K9K 792 | Date From:2011.01 | GDS50507 | Drive Shaft | | 23 | 26 | 49 | 86 | 898 | |
| | 2007.04- | | F | R | Estate Van FWD K9K 792 | Date To:2009.10 | GDS50593 | Drive Shaft | | 23 | 26 | 49 | 83.5 | 890 | |
| | 2007.04- | | F | R | Estate Van FWD K9K 792 | Date To:2009.10 | GCO50092 | Outer Joint | | 23 | 29 | 49 | 86 | 57 | I |
| | 2007.04- | | F | R | Estate Van FWD K9K 792 | Date To:2009.10 | GCO99085 | Outer Joint | | 23 | 30 | 49 | 86 | 59 | I |
| | 2007.04- | | F | L | Estate Van FWD K9K 792 | Date to:2009.10 | GCI50048 | Inner Joint | | 26 | 30 | 40 | 64 | 121 | |
| | 2007.04- | | F | R | Estate Van FWD K9K 792 | Date to:2009.10 | GCI50051 | Inner Joint | | 26 | 22 | 33 | 326 | 96 | |
| | 2007.04- | | F | R | Estate Van FWD K9K 792 | Date from:2011.01 | GCI50107 | Inner Joint | | 26 | 21 | 40 | 64 | 105.5 | |
| | 2007.04- | | F | R | Estate Van FWD K9K 792 | Date to:2009.10 | GCI99169 | Inner Joint | | 26 | 30 | 33 | 326 | 95 | |

| | YEAR | TRANSM. | F/R | L/R | BODY STYLE & DRIVE TYPE & ENGINE | REMARKS | G-AP Ref. | PRODUCT | ABS | Technical Specifications A | B | C | H | L | P |
|---|---|---|---|---|---|---|---|---|---|---|---|---|---|---|---|
| **RENAULT** | | | | | | | | | | | | | | | |
| **Logan** | | | | | | | | | | | | | | | |
| 1.5 (50 kw) | 2007.04- | 5MT | F | L | Saloon FWD K9K 792 | | GDS11021 | Drive Shaft | | 23 | 30 | 49 | 86 | 683 | |
| | 2007.04- | 5MT | F | R | Saloon FWD K9K 792 | | GDS11014 | Drive Shaft | | 23 | 23 | 49 | 83.5 | 755 | |
| | 2007.04- | MT | F | L | Saloon FWD K9K 792 | Date to:2011.12 | GDS50353 | Drive Shaft | | 23 | 26 | 49 | 86 | 649 | |
| | 2007.04- | MT | F | R | Saloon FWD K9K 792 | Date to:2011.12 | GDS50354 | Drive Shaft | | 23 | 26 | 49 | 86 | 897 | |
| | 2007.04- | MT | F | L/R | Saloon FWD K9K 792 | | GCO99085 | Outer Joint | | 23 | 30 | 49 | 86 | 59 | I |
| | 2007.04- | | F | R | Saloon FWD K9K 792 | | GDS11016 | Drive Shaft | | 23 | 23 | 49 | 86 | 764 | |
| | 2007.04- | | F | R | Saloon FWD K9K 792 | | GCI50008 | Inner Joint | | 23 | 30 | 36.3 | | 120.7 | |
| 1.5 (62 kw) | 2013.12- | 5MT | F | L | Saloon FWD K9K 838 | | GDS50512 | Drive Shaft | | 23 | 26 | 49 | 86 | 658 | |
| | 2013.12- | 5MT | F | R | Saloon FWD K9K 838 | | GDS50513 | Drive Shaft | | 23 | 26 | 49 | 86 | 904 | |
| | 2013.12- | 5MT | F | L/R | Saloon FWD K9K 838 | | GCO50173 | Outer Joint | | 23 | 22 | 49 | 86 | 57 | M |
| | 2013.12- | | F | R | Saloon FWD K9K 838 | | GCI50118 | Inner Joint | | 26 | 22 | 40 | 64 | 104 | |
| 1.5 (63 kw) | 2008.02-2015.06 | | F | L | Saloon FWD K9K 796 | Date From:2011.01 | GDS11022 | Drive Shaft | | 23 | 26 | 49 | 86 | 662 | |
| | 2008.02-2015.06 | | F | L | Saloon FWD K9K 796 | Date To:2010.12 | GDS50570 | Drive Shaft | | 23 | 26 | 49 | 83.5 | 647 | |
| | 2008.02-2015.06 | | F | R | Saloon FWD K9K 796 | Date From:2011.01;Date To:2011.10 | GDS11018 | Drive Shaft | | 23 | 26 | 49 | 86 | 906 | |
| | 2008.02-2015.06 | | F | R | Saloon FWD K9K 796 | Date From:2011.01 | GDS50507 | Drive Shaft | | 23 | 26 | 49 | 86 | 898 | |
| | 2008.02-2015.06 | | F | R | Saloon FWD K9K 796 | Date To:2009.10 | GDS50593 | Drive Shaft | | 23 | 26 | 49 | 83.5 | 890 | |
| | 2008.02-2015.06 | | F | R | Saloon FWD K9K 796 | Date from:2011.01 | GCO50175 | Outer Joint | | 23 | 22 | 49 | 86 | 58.5 | I |
| | 2008.02-2015.06 | | F | L/R | Saloon FWD K9K 796 | | GCO99085 | Outer Joint | | 23 | 30 | 49 | 86 | 59 | I |
| | 2008.02-2015.06 | | F | R | Saloon FWD K9K 796 | Date From:2011.01;Date To:2011.10 | GCI50134 | Inner Joint | | 26 | 30 | 40 | 64 | 96 | |
| 1.5 (66 kw) | 2013.12- | 5MT | F | L | Saloon FWD K9K 612 | | GDS50512 | Drive Shaft | | 23 | 26 | 49 | 86 | 658 | |
| | 2013.12- | 5MT | F | R | Saloon FWD K9K 612 | | GDS50513 | Drive Shaft | | 23 | 26 | 49 | 86 | 904 | |
| | 2013.12- | | F | L | Saloon FWD K9K 612 | | GCO50173 | Outer Joint | | 23 | 22 | 49 | 86 | 57 | M |
| | 2013.12- | | F | R | Saloon FWD K9K 612 | | GCI50118 | Inner Joint | | 26 | 22 | 40 | 64 | 104 | |
| 1.6 (59 kw) | 2013.11- | 5MT | F | L | Saloon FWD K7M 812 | Manufacturer:NTN | GDS11021 | Drive Shaft | | 23 | 30 | 49 | 86 | 683 | |
| | 2013.11- | 5MT | F | R | Saloon FWD K7M 812 | Manufacturer:NTN | GDS11014 | Drive Shaft | | 23 | 23 | 49 | 83.5 | 755 | |
| | 2013.11- | 5MT | F | R | Saloon FWD K7M 812 | Manufacturer:GKN | GDS50507 | Drive Shaft | | 23 | 26 | 49 | 86 | 898 | |
| | 2013.11- | 5MT | F | L | Saloon FWD K7M 812 | | GCO50219 | Outer Joint | | 23 | 28 | 49 | 86 | 52 | I |
| 1.6 (64 kw) | 2004.09- | 5MT | F | L | Saloon FWD K7M 710 | | GDS45084 | Drive Shaft | | 21 | 30 | 49 | 84 | 681 | |
| | 2004.09- | 5MT | F | R | Saloon FWD K7M 710 | | GDS11023 | Drive Shaft | | 21 | 23 | 49 | 84 | 761 | |
| | 2004.09- | 5MT | F | R | Saloon FWD K7M 710 | | GDS45085 | Drive Shaft | | 21 | 23 | 49 | 84 | 763 | |
| | 2004.09- | 5MT | F | L/R | Saloon FWD K7M 710 | | GCO11004 | Outer Joint | | 21 | 28 | 49 | 84 | 53.5 | I |
| | 2004.09- | 5MT | F | R | Saloon FWD K7M 710 | | GCI50124 | Inner Joint | | 23 | 28 | 36.3 | | 115 | |
| | 2007.04- | | F | L | Estate Van FWD K7M 710 | Date To:2009.10;For Modelcode:FS0B | GDS50353 | Drive Shaft | | 23 | 26 | 49 | 86 | 649 | |
| | 2007.04- | | F | R | Estate Van FWD K7M 710 | Date From:2009.11;Date To:2010.12;For Modelcode:FS0B | GDS50354 | Drive Shaft | | 23 | 26 | 49 | 86 | 897 | |
| | 2007.04- | | F | R | Estate Van FWD K7M 710 | | GDS50507 | Drive Shaft | | 23 | 26 | 49 | 86 | 898 | |
| | 2007.04- | | F | R | Estate Van FWD K7M 710 | Date To:2009.10;For Modelcode:FS0B | GDS50593 | Drive Shaft | | 23 | 26 | 49 | 83.5 | 890 | |
| | 2007.04- | | F | R | Estate Van FWD K7M 710 | Date From:2009.11;Date To:2010.12;For Modelcode:FS0B | GCO50092 | Outer Joint | | 23 | 29 | 49 | 86 | 57 | I |
| | 2007.04- | | F | R | Estate Van FWD K7M 710 | Date From:2009.11;Date To:2010.12;For Modelcode:FS0B | GCO99085 | Outer Joint | | 23 | 30 | 49 | 86 | 59 | I |
| | 2007.04- | | F | L | Estate Van FWD K7M 710 | Date to:2009.10;For Modelcode:FS0B | GCI50048 | Inner Joint | | 26 | 30 | 40 | 64 | 121 | |
| | 2007.04- | | F | R | Estate Van FWD K7M 710 | Date to:2009.10;For Modelcode:FS0B | GCI50051 | Inner Joint | | 26 | 22 | 33 | 326 | 96 | |
| | 2007.04- | | F | R | Estate Van FWD K7M 710 | | GCI50107 | Inner Joint | | 26 | 21 | 40 | 64 | 105.5 | |
| | 2007.04- | | F | R | Estate Van FWD K7M 710 | Date from:2009.11;Date to:2010.12;For Modelcode:FS0B | GCI99169 | Inner Joint | | 26 | 30 | 33 | 326 | 95 | |
| 1.6 (77 kw) | 2007.04-2013.10 | 4AT/5MT | F | L | Saloon FWD K4M 690;K4M 697;K4M 698;K4M 694;K4M 696 | For Engine Code:K4M690,Chassis no. From:J001764 | GDS11021 | Drive Shaft | | 23 | 30 | 49 | 86 | 683 | |
| | 2007.04-2013.10 | 4AT/5MT | F | L | Saloon FWD K4M 690;K4M 697;K4M 698;K4M 694;K4M 696 | For Engine Code:K4M697,Chassis no. From:A373196/J001764 | GDS50574 | Drive Shaft | | 23 | 26 | 49 | 86 | 652 | |
| | 2007.04-2013.10 | 4AT/5MT | F | R | Saloon FWD K4M 690;K4M 697;K4M 698;K4M 694;K4M 696 | For Engine Code:K4M690,Chassis no. From:J001764 | GDS11016 | Drive Shaft | | 23 | 23 | 49 | 86 | 764 | |
| | 2007.04-2013.10 | 4AT/5MT | F | R | Saloon FWD K4M 690;K4M 697;K4M 698;K4M 694;K4M 696 | For Engine Code:K4M697,Chassis no. From:A373196/J001764 | GDS50443 | Drive Shaft | | 23 | 23 | 49 | 86 | 789 | |
| | 2007.04-2013.10 | 4AT/5MT | F | L/R | Saloon FWD K4M 690;K4M 697;K4M 698;K4M 694;K4M 696 | For Engine Code:K4M690,Chassis no. From:J001764 | GCO50219 | Outer Joint | | 23 | 28 | 49 | 86 | 52 | I |
| | 2007.04-2013.10 | 4AT/5MT | F | L/R | Saloon FWD K4M 690;K4M 697;K4M 698;K4M 694;K4M 696 | For Engine Code:K4M697,Chassis no. From:A373196/J001764;For Engine Code:K4M690,Chassis no. From:J001764 | GCO99085 | Outer Joint | | 23 | 30 | 49 | 86 | 59 | I |
| | 2007.04-2013.10 | 4AT/5MT | F | L | Saloon FWD K4M 690;K4M 697;K4M 698;K4M 694;K4M 696 | For Engine Code:K4M697,Chassis no. From:A373196/J001764 | GCI50040 | Inner Joint | | 26 | 30 | 43 | 42.5 | 83 | |
| | 2007.04-2013.10 | 4AT/5MT | F | R | Saloon FWD K4M 690;K4M 697;K4M 698;K4M 694;K4M 696 | For Engine Code:K4M690,Chassis no. From:J001764 | GCI50008 | Inner Joint | | 23 | 30 | 36.3 | | 120.7 | |
| **Logan I/Tondar 90** | | | | | | | | | | | | | | | |
| 1.5 (66 kw) | 2011.06-2015.06 | 5MT | F | L | Estate FWD K9K 892 | Manufacturer:GKN | GDS50570 | Drive Shaft | | 23 | 26 | 49 | 83.5 | 647 | |
| | 2011.06-2015.06 | 5MT | F | R | Estate FWD K9K 892 | Manufacturer:GKN | GDS50507 | Drive Shaft | | 23 | 26 | 49 | 86 | 898 | |
| **Logan MCV** | | | | | | | | | | | | | | | |
| 0.9 (66 kw) | 2017.02-2020.12 | 5MT | F | L | Estate FWD H4B 408 | Manufacturer:GKN | GDS50508 | Drive Shaft | | 23 | 26 | 49 | 86 | 660 | |
| | 2017.02-2020.12 | 5MT | F | R | Estate FWD H4B 408 | Manufacturer:GKN | GDS50507 | Drive Shaft | | 23 | 26 | 49 | 86 | 898 | |
| | 2017.02-2020.12 | | F | L/R | Estate FWD H4B 408 | | GCO50173 | Outer Joint | | 23 | 22 | 49 | 86 | 57 | M |
| | 2017.02-2020.12 | | F | R | Estate FWD H4B 408 | | GCI50118 | Inner Joint | | 26 | 22 | 40 | 64 | 104 | |
| 1.2 (53 kw) | 2013.12- | | F | L | Estate FWD D4F 732;D4F 734 | | GDS11021 | Drive Shaft | | 23 | 30 | 49 | 86 | 683 | |
| | 2013.12- | | F | R | Estate FWD D4F 732;D4F 734 | | GDS11014 | Drive Shaft | | 23 | 23 | 49 | 83.5 | 755 | |
| | 2013.12- | | F | L | Estate FWD D4F 732;D4F 734 | | GCO50219 | Outer Joint | | 23 | 28 | 49 | 86 | 52 | I |
| 1.2 (54 kw) | 2013.12- | 5MT | F | L | Estate FWD D4F 732;D4F 734 | | GCO50219 | Outer Joint | | 23 | 28 | 49 | 86 | 52 | I |
| | 2013.12- | | F | L | Estate FWD D4F 732;D4F 734 | | GDS11021 | Drive Shaft | | 23 | 30 | 49 | 86 | 683 | |
| | 2013.12- | | F | R | Estate FWD D4F 732;D4F 734 | | GDS11014 | Drive Shaft | | 23 | 23 | 49 | 83.5 | 755 | |
| 1.4 (55 kw) | 2007.10- | 5MT | F | L | Estate FWD K7J 710 | | GDS11021 | Drive Shaft | | 23 | 30 | 49 | 86 | 683 | |

| | YEAR | TRANSM. | F/R | L/R | BODY STYLE & DRIVE TYPE & ENGINE | REMARKS | G-AP Ref. | PRODUCT | ABS | Technical Specifications A | B | C | H | L | P |
|---|---|---|---|---|---|---|---|---|---|---|---|---|---|---|---|
| **RENAULT** | | | | | | | | | | | | | | | |
| **Logan MCV** | | | | | | | | | | | | | | | |
| 1.4 (55 kw) | 2007.10- | 5MT | F | R | Estate FWD K7J 710 | | GDS11014 | Drive Shaft | | 23 | 23 | 49 | 83.5 | 755 | |
| | 2007.10- | 5MT | F | R | Estate FWD K7J 710 | | GCI50008 | Inner Joint | | 23 | 30 | 36.3 | | 120.7 | |
| | 2007.10- | MT | F | L | Estate FWD K7J 710 | | GDS50353 | Drive Shaft | | 23 | 26 | 49 | 86 | 649 | |
| | 2007.10- | MT | F | R | Estate FWD K7J 710 | | GDS50354 | Drive Shaft | | 23 | 26 | 49 | 86 | 897 | |
| | 2007.10- | MT | F | L/R | Estate FWD K7J 710 | | GCO99085 | Outer Joint | | 23 | 30 | 49 | 86 | 59 | I |
| | 2007.10- | | F | R | Estate FWD K7J 710 | | GDS11016 | Drive Shaft | | 23 | 23 | 49 | 86 | 764 | |
| 1.5 (50 kw) | 2007.04- | MT | F | L | Estate FWD K9K 792 | | GDS50353 | Drive Shaft | | 23 | 26 | 49 | 86 | 649 | |
| | 2007.04- | MT | F | L | Estate FWD K9K 792 | | GDS50570 | Drive Shaft | | 23 | 26 | 49 | 83.5 | 647 | |
| | 2007.04- | MT | F | R | Estate FWD K9K 792 | | GDS50354 | Drive Shaft | | 23 | 26 | 49 | 86 | 897 | |
| | 2007.04- | MT | F | R | Estate FWD K9K 792 | Date from:2011.01 | GDS50507 | Drive Shaft | | 23 | 26 | 49 | 86 | 898 | |
| | 2007.04- | MT | F | L | Estate FWD K9K 792 | Date to:2010.12 | GCO50092 | Outer Joint | | 23 | 29 | 49 | 86 | 57 | I |
| | 2007.04- | MT | F | L/R | Estate FWD K9K 792 | Date to:2010.12 | GCO99085 | Outer Joint | | 23 | 30 | 49 | 86 | 59 | I |
| | 2007.04- | MT | F | R | Estate FWD K9K 792 | Date to:2010.12 | GCI99169 | Inner Joint | | 26 | 30 | 33 | 326 | 95 | |
| | 2007.04- | | F | R | Estate FWD K9K 792 | | GDS50593 | Drive Shaft | | 23 | 26 | 49 | 83.5 | 890 | |
| 1.5 (62 kw) | 2013.12- | 5MT | F | L | Estate FWD K9K 838 | | GDS50512 | Drive Shaft | | 23 | 26 | 49 | 86 | 658 | |
| | 2013.12- | 5MT | F | R | Estate FWD K9K 838 | | GDS50513 | Drive Shaft | | 23 | 26 | 49 | 86 | 904 | |
| | 2013.12- | 5MT | F | L/R | Estate FWD K9K 838 | | GCO50173 | Outer Joint | | 23 | 22 | 49 | 86 | 57 | M |
| | 2013.12- | | F | R | Estate FWD K9K 838 | | GCI50118 | Inner Joint | | 26 | 22 | 40 | 64 | 104 | |
| 1.5 (63 kw) | 2008.02-2015.06 | 5MT | F | R | Estate FWD K9K 796 | | GDS50354 | Drive Shaft | | 23 | 26 | 49 | 86 | 897 | |
| | 2008.02-2015.06 | MT | F | L | Estate FWD K9K 796 | Date to:2010.12 | GDS50353 | Drive Shaft | | 23 | 26 | 49 | 86 | 649 | |
| | 2008.02-2015.06 | MT | F | R | Estate FWD K9K 796 | Date from:2011.01 | GDS50507 | Drive Shaft | | 23 | 26 | 49 | 86 | 898 | |
| | 2008.02-2015.06 | MT | F | L | Estate FWD K9K 796 | Date to:2010.12 | GCO50092 | Outer Joint | | 23 | 29 | 49 | 86 | 57 | I |
| | 2008.02-2015.06 | MT | F | L | Estate FWD K9K 796 | Date to:2010.12 | GCO99085 | Outer Joint | | 23 | 30 | 49 | 86 | 59 | I |
| | 2008.02-2015.06 | MT | F | R | Estate FWD K9K 796 | Date to:2009.10 | GCO99085 | Outer Joint | | 23 | 30 | 49 | 86 | 59 | I |
| | 2008.02-2015.06 | | F | L | Estate FWD K9K 796 | Date From:2011.01 | GDS50570 | Drive Shaft | | 23 | 26 | 49 | 83.5 | 647 | |
| | 2008.02-2015.06 | | F | R | Estate FWD K9K 796 | | GDS50593 | Drive Shaft | | 23 | 26 | 49 | 83.5 | 890 | |
| 1.5 (66 kw) | 2013.12- | 5MT | F | L | Estate FWD K9K 612 | | GDS50512 | Drive Shaft | | 23 | 26 | 49 | 86 | 658 | |
| | 2013.12- | 5MT | F | R | Estate FWD K9K 612 | | GDS50513 | Drive Shaft | | 23 | 26 | 49 | 86 | 904 | |
| | 2013.12- | | F | L | Estate FWD K9K 612 | | GCO50173 | Outer Joint | | 23 | 22 | 49 | 86 | 57 | M |
| | 2013.12- | | F | R | Estate FWD K9K 612 | | GCI50118 | Inner Joint | | 26 | 22 | 40 | 64 | 104 | |
| 1.6 (59 kw) | 2013.12- | 5MT | F | L | Estate FWD K7M 812 | Manufacturer:NTN | GDS11021 | Drive Shaft | | 23 | 30 | 49 | 86 | 683 | |
| | 2013.12- | 5MT | F | R | Estate FWD K7M 812 | Manufacturer:NTN | GDS11014 | Drive Shaft | | 23 | 23 | 49 | 83.5 | 755 | |
| | 2013.12- | 5MT | F | R | Estate FWD K7M 812 | Manufacturer:GKN | GDS50507 | Drive Shaft | | 23 | 26 | 49 | 86 | 898 | |
| | 2013.12- | 5MT | F | L | Estate FWD K7M 812 | | GCO50219 | Outer Joint | | 23 | 28 | 49 | 86 | 52 | I |
| 1.6 (64 kw) | 2007.04- | 5MT | F | R | Estate FWD K7M 710 | | GDS50354 | Drive Shaft | | 23 | 26 | 49 | 86 | 897 | |
| | 2007.04- | 5MT | F | L/R | Estate FWD K7M 710 | For special-purpose vehicles | GCO99085 | Outer Joint | | 23 | 30 | 49 | 86 | 59 | I |
| | 2007.04- | 5MT | F | R | Estate FWD K7M 710 | | GCI50008 | Inner Joint | | 23 | 30 | 36.3 | | 120.7 | |
| | 2007.04- | MT | F | L | Estate FWD K7M 710 | | GDS11021 | Drive Shaft | | 23 | 30 | 49 | 86 | 683 | |
| | 2007.04- | MT | F | L | Estate FWD K7M 710 | Date to:2011.12 | GDS50353 | Drive Shaft | | 23 | 26 | 49 | 86 | 649 | |
| | 2007.04- | MT | F | R | Estate FWD K7M 710 | Date to:2012.11,for special-purpose vehicles | GCI99169 | Inner Joint | | 26 | 30 | 33 | 326 | 95 | |
| | 2007.04- | | F | R | Estate FWD K7M 710 | | GDS11014 | Drive Shaft | | 23 | 23 | 49 | 83.5 | 755 | |
| | 2007.04- | | F | R | Estate FWD K7M 710 | | GDS11016 | Drive Shaft | | 23 | 23 | 49 | 86 | 764 | |
| | 2007.04- | | F | L/R | Estate FWD K7M 710 | For special-purpose vehicles | GCO50092 | Outer Joint | | 23 | 29 | 49 | 86 | 57 | I |
| 1.6 (77 kw) | 2007.04- | AT | F | L | Estate FWD K4M 690;K4M 697;K4M 696 | | GDS50574 | Drive Shaft | | 23 | 26 | 49 | 86 | 652 | |
| | 2007.04- | AT | F | R | Estate FWD K4M 690;K4M 697;K4M 696 | | GDS50443 | Drive Shaft | | 23 | 23 | 49 | 86 | 789 | |
| | 2007.04- | MT | F | L | Estate FWD K4M 690;K4M 697;K4M 696 | | GDS50353 | Drive Shaft | | 23 | 26 | 49 | 86 | 649 | |
| | 2007.04- | MT | F | L | Estate FWD K4M 690;K4M 697;K4M 696 | Date From:2011.01,Date To:2012.11,Manufacturer Restriction:GKN | GDS50570 | Drive Shaft | | 23 | 26 | 49 | 83.5 | 647 | |
| | 2007.04- | MT | F | R | Estate FWD K4M 690;K4M 697;K4M 696 | | GDS50354 | Drive Shaft | | 23 | 26 | 49 | 86 | 897 | |
| | 2007.04- | MT | F | R | Estate FWD K4M 690;K4M 697;K4M 696 | Date from:2011.01 | GDS50507 | Drive Shaft | | 23 | 26 | 49 | 86 | 898 | |
| | 2007.04- | MT | F | R | Estate FWD K4M 690;K4M 697;K4M 696 | | GDS50593 | Drive Shaft | | 23 | 26 | 49 | 83.5 | 890 | |
| | 2007.04- | MT | F | L/R | Estate FWD K4M 690;K4M 697;K4M 696 | Date to:2010.12 | GCO99085 | Outer Joint | | 23 | 30 | 49 | 86 | 59 | I |
| | 2007.04- | MT | F | R | Estate FWD K4M 690;K4M 697;K4M 696 | Date to:2010.12 | GCI99169 | Inner Joint | | 26 | 30 | 33 | 326 | 95 | |
| | 2007.04- | | F | L/R | Estate FWD K4M 690;K4M 697;K4M 696 | For special-purpose vehicles | GCO50092 | Outer Joint | | 23 | 29 | 49 | 86 | 57 | I |
| 1.6 (78 kw) | 2013.12- | 4AT | F | L | Estate FWD K4M 845 | | GDS50574 | Drive Shaft | | 23 | 26 | 49 | 86 | 652 | |
| | 2013.12- | 4AT | F | R | Estate FWD K4M 845 | | GDS50575 | Drive Shaft | | 23 | 23 | 49 | 86 | 790 | |
| **Logan/Stepway** | | | | | | | | | | | | | | | |
| 1.6 (60 kw) | 2014.04- | 5AT/5MT | F | L | Saloon FWD K7M 812 | | GDS84116 | Drive Shaft | | 23 | 26 | 49 | 86 | 660 | |
| | 2014.04- | 5AT/5MT | F | R | Saloon FWD K7M 812 | Trim Level:SAN713,Manufacturer:NTN | GDS11014 | Drive Shaft | | 23 | 23 | 49 | 83.5 | 755 | |
| | 2014.04- | 5AT/5MT | F | R | Saloon FWD K7M 812 | Manufacturer:NTN | GDS84115 | Drive Shaft | | 23 | 26 | 49 | 86 | 903 | |
| | 2014.04- | 5AT/5MT | F | L/R | Saloon FWD K7M 812 | | GCO50219 | Outer Joint | | 23 | 28 | 49 | 86 | 52 | I |
| | 2014.04- | 5MT | F | L | Saloon FWD K7M 812 | Manufacturer:NTN | GDS11021 | Drive Shaft | | 23 | 30 | 49 | 86 | 683 | |
| | 2014.04- | 5MT | F | R | Saloon FWD K7M 812 | Model:Logan,Manufacturer:GKN | GDS50507 | Drive Shaft | | 23 | 26 | 49 | 86 | 898 | |
| 1.6 (75 kw) | 2014.04- | 4AT | F | L | Saloon FWD K4M 842, K4M 845 | | GDS50574 | Drive Shaft | | 23 | 26 | 49 | 86 | 652 | |
| | 2014.04- | 4AT | F | R | Saloon FWD K4M 842, K4M 845 | | GDS50575 | Drive Shaft | | 23 | 23 | 49 | 86 | 790 | |
| | 2014.04- | 4AT | F | L/R | Saloon FWD K4M 842, K4M 845 | | GCO99085 | Outer Joint | | 23 | 30 | 49 | 86 | 59 | I |

| | YEAR | TRANSM. | F/R | L/R | BODY STYLE & DRIVE TYPE & ENGINE | REMARKS | G-AP Ref. | PRODUCT | ABS | Technical Specifications A | B | C | H | L | P |
|---|---|---|---|---|---|---|---|---|---|---|---|---|---|---|---|
| **RENAULT** | | | | | | | | | | | | | | | |
| **Logan/Stepway** | | | | | | | | | | | | | | | |
| 1.6 (75 kw) | 2014.04- | 4AT | F | L | Saloon FWD K4M 842, K4M 845 | | GCI50040 | Inner Joint | | 26 | 30 | 43 | 42.5 | 83 | |
| | 2014.04- | 4AT | F | R | Saloon FWD K4M 842, K4M 845 | | GCI50008 | Inner Joint | | 23 | 30 | 36.3 | | 120.7 | |
| | 2014.04- | 5MT | F | L | Saloon FWD K4M 842, K4M 845 | | GDS58249 | Drive Shaft | | 23 | 26 | 49 | 86 | 655 | |
| | 2014.04- | 5MT | F | R | Saloon FWD K4M 842, K4M 845 | | GDS50507 | Drive Shaft | | 23 | 26 | 49 | 86 | 898 | |
| | 2014.04- | 5MT | F | L | Saloon FWD K4M 842, K4M 845 | | GCO50175 | Outer Joint | | 23 | 22 | 49 | 86 | 58.5 | I |
| | 2014.04- | 5MT | F | L | Saloon FWD K4M 842, K4M 845 | | GCI82310 | Inner Joint | | 26 | 22 | 39.95 | 64 | 104 | |
| 1.6 (83 kw) | 2016.09- | 5MT | F | L | Saloon FWD H4M 438 | Manufacturer:GKN | GDS58249 | Drive Shaft | | 23 | 26 | 49 | 86 | 655 | |
| | 2016.09- | 5MT | F | R | Saloon FWD H4M 438 | | GDS50507 | Drive Shaft | | 23 | 26 | 49 | 86 | 898 | |
| | 2016.09- | 5MT | F | L/R | Saloon FWD H4M 438 | | GCO50175 | Outer Joint | | 23 | 22 | 49 | 86 | 58.5 | I |
| | 2016.09- | 5MT | F | L | Saloon FWD H4M 438 | | GCI82310 | Inner Joint | | 26 | 22 | 39.95 | 64 | 104 | |
| | 2016.09- | 5MT | F | R | Saloon FWD H4M 438 | | GCI50107 | Inner Joint | | 26 | 21 | 40 | 64 | 105.5 | |
| | 2016.09- | CVT/5MT | F | L | Saloon FWD H4M 438 | Not for Manufacturer:GKN | GDS50508 | Drive Shaft | | 23 | 26 | 49 | 86 | 660 | |
| **Master** | | | | | | | | | | | | | | | |
| 2.3 (74 kw) | 2010.02- | 6MT | F | L | Van FWD M9T 672, M9T 876, M9T 870, M9T 676, M9T 670 | | GDS18247 | Drive Shaft | | 31 | 39 | 70 | 100.5 | 743 | |
| | 2010.02- | 6MT | F | R | Van FWD M9T 672, M9T 876, M9T 870, M9T 676, M9T 670 | Date to:2014.01 | GDS18248 | Drive Shaft | | 31 | 39 | 70 | 100.5 | 1075 | |
| | 2010.02- | 6MT | F | R | Van FWD M9T 672, M9T 876, M9T 870, M9T 676, M9T 670 | Date from:2014.02,Date to:2019.07 | GDS18515 | Drive Shaft | | 31 | 39 | 70 | 101 | 1077 | |
| | 2010.02- | 6MT | F | R | Van FWD M9T 672, M9T 876, M9T 870, M9T 676, M9T 670 | Date from:2019.08 | GDS57562 | Drive Shaft | | 31 | 39 | 70 | 101 | 1085 | |
| | 2010.02- | 6MT | F | L/R | Van FWD M9T 672, M9T 876, M9T 870, M9T 676, M9T 670 | Date from:2014.02 | GCO18289 | Outer Joint | | 31 | 36 | 70 | 101 | 69 | I |
| | 2010.02- | 6MT | F | L/R | Van FWD M9T 672, M9T 876, M9T 870, M9T 676, M9T 670 | Date to:2014.01 | GCO50132 | Outer Joint | | 31 | 27 | 70 | 100.5 | 63.5 | I |
| | 2010.02- | 6MT | F | L | Van FWD M9T 672, M9T 876, M9T 870, M9T 676, M9T 670 | | GCI50045 | Inner Joint | | 39 | 27 | 39 | 74 | 109 | |
| | 2010.02- | 6MT | F | R | Van FWD M9T 672, M9T 876, M9T 870, M9T 676, M9T 670 | Date to:2014.01 | GCI50046 | Inner Joint | | 39 | 27 | 30 | 364 | 87 | |
| | 2010.02- | 6MT | F | R | Van FWD M9T 672, M9T 876, M9T 870, M9T 676, M9T 670 | Date from:2019.08 | GCI83741 | Inner Joint | | 39 | 27 | 30 | 377 | 88 | |
| | 2011.02- | 6MT | F | L | Bus FWD M9T 672, M9T 870, M9T 676, M9T 670 | | GDS18247 | Drive Shaft | | 31 | 39 | 70 | 100.5 | 743 | |
| | 2011.02- | 6MT | F | R | Bus FWD M9T 672, M9T 870, M9T 676, M9T 670 | Date to:2014.01 | GDS18248 | Drive Shaft | | 31 | 39 | 70 | 100.5 | 1075 | |
| | 2011.02- | 6MT | F | R | Bus FWD M9T 672, M9T 870, M9T 676, M9T 670 | Date from:2014.02,Date to:2019.07 | GDS18515 | Drive Shaft | | 31 | 39 | 70 | 101 | 1077 | |
| | 2011.02- | 6MT | F | R | Bus FWD M9T 672, M9T 870, M9T 676, M9T 670 | Date from:2019.08 | GDS57562 | Drive Shaft | | 31 | 39 | 70 | 101 | 1085 | |
| | 2011.02- | 6MT | F | L/R | Bus FWD M9T 672, M9T 870, M9T 676, M9T 670 | Date from:2014.02 | GCO18289 | Outer Joint | | 31 | 36 | 70 | 101 | 69 | I |
| | 2011.02- | 6MT | F | L/R | Bus FWD M9T 672, M9T 870, M9T 676, M9T 670 | Date to:2014.01 | GCO50132 | Outer Joint | | 31 | 27 | 70 | 100.5 | 63.5 | I |
| | 2011.02- | 6MT | F | L | Bus FWD M9T 672, M9T 870, M9T 676, M9T 670 | | GCI50045 | Inner Joint | | 39 | 27 | 39 | 74 | 109 | |
| | 2011.02- | 6MT | F | R | Bus FWD M9T 672, M9T 870, M9T 676, M9T 670 | Date to:2014.01 | GCI50046 | Inner Joint | | 39 | 27 | 30 | 364 | 87 | |
| | 2011.02- | 6MT | F | R | Bus FWD M9T 672, M9T 870, M9T 676, M9T 670 | Date from:2019.08 | GCI83741 | Inner Joint | | 39 | 27 | 30 | 377 | 88 | |
| 2.3 (81 kw) | 2014.09- | 6MT | F | L | Bus FWD M9T 870, M9T 704 | | GDS18247 | Drive Shaft | | 31 | 39 | 70 | 100.5 | 743 | |
| | 2014.09- | 6MT | F | R | Bus FWD M9T 870, M9T 704 | Date to:2019.07 | GDS18515 | Drive Shaft | | 31 | 39 | 70 | 101 | 1077 | |
| | 2014.09- | 6MT | F | R | Bus FWD M9T 870, M9T 704 | Date from:2019.08 | GDS57562 | Drive Shaft | | 31 | 39 | 70 | 101 | 1085 | |
| | 2014.09- | 6MT | F | L/R | Bus FWD M9T 870, M9T 704 | | GCO18289 | Outer Joint | | 31 | 36 | 70 | 101 | 69 | I |
| | 2014.09- | 6MT | F | L | Bus FWD M9T 870, M9T 704 | | GCI50045 | Inner Joint | | 39 | 27 | 39 | 74 | 109 | |
| | 2014.09- | 6MT | F | R | Bus FWD M9T 870, M9T 704 | Date from:2019.08 | GCI83741 | Inner Joint | | 39 | 27 | 30 | 377 | 88 | |
| | 2014.09- | 6MT | F | L | Van FWD M9T 726, M9T 870, M9T 704 | | GDS18247 | Drive Shaft | | 31 | 39 | 70 | 100.5 | 743 | |
| | 2014.09- | 6MT | F | R | Van FWD M9T 726, M9T 870, M9T 704 | Date to:2019.07 | GDS18515 | Drive Shaft | | 31 | 39 | 70 | 101 | 1077 | |
| | 2014.09- | 6MT | F | R | Van FWD M9T 726, M9T 870, M9T 704 | Date from:2019.08 | GDS57562 | Drive Shaft | | 31 | 39 | 70 | 101 | 1085 | |
| | 2014.09- | 6MT | F | L/R | Van FWD M9T 726, M9T 870, M9T 704 | | GCO18289 | Outer Joint | | 31 | 36 | 70 | 101 | 69 | I |
| | 2014.09- | 6MT | F | L | Van FWD M9T 726, M9T 870, M9T 704 | | GCI50045 | Inner Joint | | 39 | 27 | 39 | 74 | 109 | |
| | 2014.09- | 6MT | F | R | Van FWD M9T 726, M9T 870, M9T 704 | Date from:2019.08 | GCI83741 | Inner Joint | | 39 | 27 | 30 | 377 | 88 | |
| 2.3 (92 kw) | 2010.02- | 6MT | F | L | Platform/Chassis FWD M9T 672, M9T 876, M9T 680, M9T 870, M9T 676, M9T 880, M9T 672, M9T 670 | | GDS18247 | Drive Shaft | | 31 | 39 | 70 | 100.5 | 743 | |
| | 2010.02- | 6MT | F | R | Platform/Chassis FWD M9T 672, M9T 876, M9T 680, M9T 870, M9T 676, M9T 880, M9T 672, M9T 670 | Date to:2014.01 | GDS18248 | Drive Shaft | | 31 | 39 | 70 | 100.5 | 1075 | |
| | 2010.02- | 6MT | F | R | Platform/Chassis FWD M9T 672, M9T 876, M9T 680, M9T 870, M9T 676, M9T 880, M9T 672, M9T 670 | Date from:2014.02,Date to:2019.07 | GDS18515 | Drive Shaft | | 31 | 39 | 70 | 101 | 1077 | |
| | 2010.02- | 6MT | F | R | Platform/Chassis FWD M9T 672, M9T 876, M9T 680, M9T 870, M9T 676, M9T 880, M9T 672, M9T 670 | Date from:2019.08 | GDS57562 | Drive Shaft | | 31 | 39 | 70 | 101 | 1085 | |
| | 2010.02- | 6MT | F | L/R | Platform/Chassis FWD M9T 672, M9T 876, M9T 680, M9T 870, M9T 676, M9T 880, M9T 672, M9T 670 | Date from:2014.02 | GCO18289 | Outer Joint | | 31 | 36 | 70 | 101 | 69 | I |
| | 2010.02- | 6MT | F | L/R | Platform/Chassis FWD M9T 672, M9T 876, M9T 680, M9T 870, M9T 676, M9T 880, M9T 672, M9T 670 | Date to:2014.01 | GCO50132 | Outer Joint | | 31 | 27 | 70 | 100.5 | 63.5 | I |
| | 2010.02- | 6MT | F | L | Platform/Chassis FWD M9T 672, M9T 876, M9T 680, M9T 870, M9T 676, M9T 880, M9T 672, M9T 670 | | GCI50045 | Inner Joint | | 39 | 27 | 39 | 74 | 109 | |
| | 2010.02- | 6MT | F | R | Platform/Chassis FWD M9T 672, M9T 876, M9T 680, M9T 870, M9T 676, M9T 880, M9T 672, M9T 670 | Date to:2014.01 | GCI50046 | Inner Joint | | 39 | 27 | 30 | 364 | 87 | |
| | 2010.02- | 6MT | F | R | Platform/Chassis FWD M9T 672, M9T 876, M9T 680, M9T 870, M9T 676, M9T 880, M9T 672, M9T 670 | Date from:2019.08 | GCI83741 | Inner Joint | | 39 | 27 | 30 | 377 | 88 | |
| | 2010.02- | 6MT | F | L | Van FWD M9T 672, M9T 876, M9T 862, M9T 678, M9T 880, M9T 870, M9T 676, M9T 860, M9T 872, M9T 670 | | GDS18247 | Drive Shaft | | 31 | 39 | 70 | 100.5 | 743 | |
| | 2010.02- | 6MT | F | R | Van FWD M9T 672, M9T 876, M9T 862, M9T 678, M9T 880, M9T 870, M9T 676, M9T 860, M9T 872, M9T 670 | Date to:2014.01 | GDS18248 | Drive Shaft | | 31 | 39 | 70 | 100.5 | 1075 | |
| | 2010.02- | 6MT | F | R | Van FWD M9T 672, M9T 876, M9T 862, M9T 678, M9T 880, M9T 870, M9T 676, M9T 860, M9T 872, M9T 670 | Date from:2014.02,Date to:2019.07 | GDS18515 | Drive Shaft | | 31 | 39 | 70 | 101 | 1077 | |
| | 2010.02- | 6MT | F | R | Van FWD M9T 672, M9T 876, M9T 862, M9T 678, M9T 880, M9T 870, M9T 676, M9T 860, M9T 872, M9T 670 | Date from:2019.08 | GDS57562 | Drive Shaft | | 31 | 39 | 70 | 101 | 1085 | |
| | 2010.02- | 6MT | F | L/R | Van FWD M9T 672, M9T 876, M9T 862, M9T 678, M9T 880, M9T 870, M9T 676, M9T 860, M9T 872, M9T 670 | Date from:2014.02 | GCO18289 | Outer Joint | | 31 | 36 | 70 | 101 | 69 | I |
| | 2010.02- | 6MT | F | L/R | Van FWD M9T 672, M9T 876, M9T 862, M9T 678, M9T 880, M9T 870, M9T 676, M9T 860, M9T 872, M9T 670 | Date to:2014.01 | GCO50132 | Outer Joint | | 31 | 27 | 70 | 100.5 | 63.5 | I |
| | 2010.02- | 6MT | F | L | Van FWD M9T 672, M9T 876, M9T 862, M9T 678, M9T 880, M9T 870, M9T 676, M9T 860, M9T 872, M9T 670 | | GCI50045 | Inner Joint | | 39 | 27 | 39 | 74 | 109 | |
| | 2010.02- | 6MT | F | R | Van FWD M9T 672, M9T 876, M9T 862, M9T 678, M9T 880, M9T 870, M9T 676, M9T 860, M9T 872, M9T 670 | Date to:2014.01 | GCI50046 | Inner Joint | | 39 | 27 | 30 | 364 | 87 | |
| | 2010.02- | 6MT | F | R | Van FWD M9T 672, M9T 876, M9T 862, M9T 678, M9T 880, M9T 870, M9T 676, M9T 860, M9T 872, M9T 670 | Date from:2019.08 | GCI83741 | Inner Joint | | 39 | 27 | 30 | 377 | 88 | |
| | 2011.02- | 6MT | F | L | Bus FWD M9T 672, M9T 680, M9T 870, M9T 676, M9T 880, M9T 670 | | GDS18247 | Drive Shaft | | 31 | 39 | 70 | 100.5 | 743 | |
| | 2011.02- | 6MT | F | R | Bus FWD M9T 672, M9T 680, M9T 870, M9T 676, M9T 880, M9T 670 | Date to:2014.01 | GDS18248 | Drive Shaft | | 31 | 39 | 70 | 100.5 | 1075 | |
| | 2011.02- | 6MT | F | R | Bus FWD M9T 672, M9T 680, M9T 870, M9T 676, M9T 880, M9T 670 | Date from:2014.02,Date to:2019.07 | GDS18515 | Drive Shaft | | 31 | 39 | 70 | 101 | 1077 | |
| | 2011.02- | 6MT | F | R | Bus FWD M9T 672, M9T 680, M9T 870, M9T 676, M9T 880, M9T 670 | Date from:2019.08 | GDS57562 | Drive Shaft | | 31 | 39 | 70 | 101 | 1085 | |

| | YEAR | TRANSM. | F/R | L/R | BODY STYLE & DRIVE TYPE & ENGINE | REMARKS | G-AP Ref. | PRODUCT | ABS | Technical Specifications | | | | | |
|---|---|---|---|---|---|---|---|---|---|---|---|---|---|---|---|
| | | | | | | | | | | A | B | C | H | L | P |
| **RENAULT** **Master** | | | | | | | | | | | | | | | |
| 2.3 (92 kw) | 2011.02- | 6MT | F | L/R | Bus FWD M9T 672, M9T 680, M9T 870, M9T 676, M9T 880, M9T 670 | Date from:2014.02 | GCO18289 | Outer Joint | | 31 | 36 | 70 | 101 | 69 | I |
| | 2011.02- | 6MT | F | L/R | Bus FWD M9T 672, M9T 680, M9T 870, M9T 676, M9T 880, M9T 670 | Date to:2014.01 | GCO50132 | Outer Joint | | 31 | 27 | 70 | 100.5 | 63.5 | I |
| | 2011.02- | 6MT | F | L | Bus FWD M9T 672, M9T 680, M9T 870, M9T 676, M9T 880, M9T 670 | | GCI50045 | Inner Joint | | 39 | 27 | 39 | 74 | 109 | |
| | 2011.02- | 6MT | F | R | Bus FWD M9T 672, M9T 680, M9T 870, M9T 676, M9T 880, M9T 670 | Date to:2014.01 | GCI50046 | Inner Joint | | 39 | 27 | 30 | 364 | 87 | |
| | 2011.02- | 6MT | F | R | Bus FWD M9T 672, M9T 680, M9T 870, M9T 676, M9T 880, M9T 670 | Date from:2019.08 | GCI83741 | Inner Joint | | 39 | 27 | 30 | 377 | 88 | |
| 2.3 (96 kw) | 2016.06- | 6MT | F | L | Van FWD M9T 882, M9T 710, M9T 704 | | GDS18247 | Drive Shaft | | 31 | 39 | 70 | 100.5 | 743 | |
| | 2016.06- | 6MT | F | R | Van FWD M9T 882, M9T 710, M9T 704 | Date to:2019.07 | GDS18515 | Drive Shaft | | 31 | 39 | 70 | 101 | 1077 | |
| | 2016.06- | 6MT | F | R | Van FWD M9T 882, M9T 710, M9T 704 | Date from:2019.08 | GDS57562 | Drive Shaft | | 31 | 39 | 70 | 101 | 1085 | |
| | 2016.06- | 6MT | F | L/R | Van FWD M9T 882, M9T 710, M9T 704 | | GCO18289 | Outer Joint | | 31 | 36 | 70 | 101 | 69 | I |
| | 2016.06- | 6MT | F | L | Van FWD M9T 882, M9T 710, M9T 704 | | GCI50045 | Inner Joint | | 39 | 27 | 39 | 74 | 109 | |
| | 2016.06- | 6MT | F | R | Van FWD M9T 882, M9T 710, M9T 704 | Date from:2019.08 | GCI83741 | Inner Joint | | 39 | 27 | 30 | 377 | 88 | |
| 2.3 (100 kw) | 2014.07- | 6MT | F | L | Bus FWD M9T 716, M9T 702 | | GDS18247 | Drive Shaft | | 31 | 39 | 70 | 100.5 | 743 | |
| | 2014.07- | 6MT | F | R | Bus FWD M9T 716, M9T 702 | Date to:2019.07 | GDS18515 | Drive Shaft | | 31 | 39 | 70 | 101 | 1077 | |
| | 2014.07- | 6MT | F | R | Bus FWD M9T 716, M9T 702 | Date from:2019.08 | GDS57562 | Drive Shaft | | 31 | 39 | 70 | 101 | 1085 | |
| | 2014.07- | 6MT | F | L/R | Bus FWD M9T 716, M9T 702 | | GCO18289 | Outer Joint | | 31 | 36 | 70 | 101 | 69 | I |
| | 2014.07- | 6MT | F | L | Bus FWD M9T 716, M9T 702 | | GCI50045 | Inner Joint | | 39 | 27 | 39 | 74 | 109 | |
| | 2014.07- | 6MT | F | R | Bus FWD M9T 716, M9T 702 | Date from:2019.08 | GCI83741 | Inner Joint | | 39 | 27 | 30 | 377 | 88 | |
| | 2014.07- | 6MT | F | L | Van FWD M9T 716, M9T 726, M9T 702, M9T 704 | | GDS18247 | Drive Shaft | | 31 | 39 | 70 | 100.5 | 743 | |
| | 2014.07- | 6MT | F | R | Van FWD M9T 716, M9T 726, M9T 702, M9T 704 | Date to:2019.07 | GDS18515 | Drive Shaft | | 31 | 39 | 70 | 101 | 1077 | |
| | 2014.07- | 6MT | F | R | Van FWD M9T 716, M9T 726, M9T 702, M9T 704 | Date from:2019.08 | GDS57562 | Drive Shaft | | 31 | 39 | 70 | 101 | 1085 | |
| | 2014.07- | 6MT | F | L/R | Van FWD M9T 716, M9T 726, M9T 702, M9T 704 | | GCO18289 | Outer Joint | | 31 | 36 | 70 | 101 | 69 | I |
| | 2014.07- | 6MT | F | L | Van FWD M9T 716, M9T 726, M9T 702, M9T 704 | | GCI50045 | Inner Joint | | 39 | 27 | 39 | 74 | 109 | |
| | 2014.07- | 6MT | F | R | Van FWD M9T 716, M9T 726, M9T 702, M9T 704 | Date from:2019.08 | GCI83741 | Inner Joint | | 39 | 27 | 30 | 377 | 88 | |
| 2.3 (107 kw) | 2010.02- | 6MT | F | L | Van FWD M9T 708, M9T 678, M9T 680, M9T 706 | | GDS18247 | Drive Shaft | | 31 | 39 | 70 | 100.5 | 743 | |
| | 2010.02- | 6MT | F | R | Van FWD M9T 708, M9T 678, M9T 680, M9T 706 | Date to:2014.01 | GDS18248 | Drive Shaft | | 31 | 39 | 70 | 100.5 | 1075 | |
| | 2010.02- | 6MT | F | R | Van FWD M9T 708, M9T 678, M9T 680, M9T 706 | Date from:2014.02,Date to:2019.07 | GDS18515 | Drive Shaft | | 31 | 39 | 70 | 101 | 1077 | |
| | 2010.02- | 6MT | F | R | Van FWD M9T 708, M9T 678, M9T 680, M9T 706 | Date from:2019.08 | GDS57562 | Drive Shaft | | 31 | 39 | 70 | 101 | 1085 | |
| | 2010.02- | 6MT | F | L/R | Van FWD M9T 708, M9T 678, M9T 680, M9T 706 | Date from:2014.02 | GCO18289 | Outer Joint | | 31 | 36 | 70 | 101 | 69 | I |
| | 2010.02- | 6MT | F | L/R | Van FWD M9T 708, M9T 678, M9T 680, M9T 706 | Date to:2014.01 | GCO50132 | Outer Joint | | 31 | 27 | 70 | 100.5 | 63.5 | I |
| | 2010.02- | 6MT | F | L | Van FWD M9T 708, M9T 678, M9T 680, M9T 706 | | GCI50045 | Inner Joint | | 39 | 27 | 39 | 74 | 109 | |
| | 2010.02- | 6MT | F | R | Van FWD M9T 708, M9T 678, M9T 680, M9T 706 | Date to:2014.01 | GCI50046 | Inner Joint | | 39 | 27 | 30 | 364 | 87 | |
| | 2010.02- | 6MT | F | R | Van FWD M9T 708, M9T 678, M9T 680, M9T 706 | Date from:2019.08 | GCI83741 | Inner Joint | | 39 | 27 | 30 | 377 | 88 | |
| | 2011.02- | 6MT | F | L | Bus FWD M9T 708, M9T 680, M9T 706 | | GDS18247 | Drive Shaft | | 31 | 39 | 70 | 100.5 | 743 | |
| | 2011.02- | 6MT | F | R | Bus FWD M9T 708, M9T 680, M9T 706 | Date to:2014.01 | GDS18248 | Drive Shaft | | 31 | 39 | 70 | 100.5 | 1075 | |
| | 2011.02- | 6MT | F | R | Bus FWD M9T 708, M9T 680, M9T 706 | Date from:2014.02,Date to:2019.07 | GDS18515 | Drive Shaft | | 31 | 39 | 70 | 101 | 1077 | |
| | 2011.02- | 6MT | F | R | Bus FWD M9T 708, M9T 680, M9T 706 | Date from:2019.08 | GDS57562 | Drive Shaft | | 31 | 39 | 70 | 101 | 1085 | |
| | 2011.02- | 6MT | F | L/R | Bus FWD M9T 708, M9T 680, M9T 706 | Date from:2014.02 | GCO18289 | Outer Joint | | 31 | 36 | 70 | 101 | 69 | I |
| | 2011.02- | 6MT | F | L/R | Bus FWD M9T 708, M9T 680, M9T 706 | Date to:2014.01 | GCO50132 | Outer Joint | | 31 | 27 | 70 | 100.5 | 63.5 | I |
| | 2011.02- | 6MT | F | L | Bus FWD M9T 708, M9T 680, M9T 706 | | GCI50045 | Inner Joint | | 39 | 27 | 39 | 74 | 109 | |
| | 2011.02- | 6MT | F | R | Bus FWD M9T 708, M9T 680, M9T 706 | Date to:2014.01 | GCI50046 | Inner Joint | | 39 | 27 | 30 | 364 | 87 | |
| | 2011.02- | 6MT | F | R | Bus FWD M9T 708, M9T 680, M9T 706 | Date from:2019.08 | GCI83741 | Inner Joint | | 39 | 27 | 30 | 377 | 88 | |
| 2.3 (110 kw) | 2012.10- | 6MT | F | L | Bus FWD M9T 716, M9T 880 | | GDS18247 | Drive Shaft | | 31 | 39 | 70 | 100.5 | 743 | |
| | 2012.10- | 6MT | F | R | Bus FWD M9T 716, M9T 880 | Date to:2014.01 | GDS18248 | Drive Shaft | | 31 | 39 | 70 | 100.5 | 1075 | |
| | 2012.10- | 6MT | F | R | Bus FWD M9T 716, M9T 880 | Date from:2014.02,Date to:2019.07 | GDS18515 | Drive Shaft | | 31 | 39 | 70 | 101 | 1077 | |
| | 2012.10- | 6MT | F | R | Bus FWD M9T 716, M9T 880 | Date from:2019.08 | GDS57562 | Drive Shaft | | 31 | 39 | 70 | 101 | 1085 | |
| | 2012.10- | 6MT | F | L/R | Bus FWD M9T 716, M9T 880 | Date from:2014.02 | GCO18289 | Outer Joint | | 31 | 36 | 70 | 101 | 69 | I |
| | 2012.10- | 6MT | F | L/R | Bus FWD M9T 716, M9T 880 | Date to:2014.01 | GCO50132 | Outer Joint | | 31 | 27 | 70 | 100.5 | 63.5 | I |
| | 2012.10- | 6MT | F | L | Bus FWD M9T 716, M9T 880 | | GCI50045 | Inner Joint | | 39 | 27 | 39 | 74 | 109 | |
| | 2012.10- | 6MT | F | R | Bus FWD M9T 716, M9T 880 | Date to:2014.01 | GCI50046 | Inner Joint | | 39 | 27 | 30 | 364 | 87 | |
| | 2012.10- | 6MT | F | R | Bus FWD M9T 716, M9T 880 | Date from:2019.08 | GCI83741 | Inner Joint | | 39 | 27 | 30 | 377 | 88 | |
| | 2013.03- | 6MT | F | L | Van FWD M9T 716, M9T 726, M9T 880 | | GDS18247 | Drive Shaft | | 31 | 39 | 70 | 100.5 | 743 | |
| | 2013.03- | 6MT | F | R | Van FWD M9T 716, M9T 726, M9T 880 | Date to:2014.01 | GDS18248 | Drive Shaft | | 31 | 39 | 70 | 100.5 | 1075 | |
| | 2013.03- | 6MT | F | R | Van FWD M9T 716, M9T 726, M9T 880 | Date from:2014.02,Date to:2019.07 | GDS18515 | Drive Shaft | | 31 | 39 | 70 | 101 | 1077 | |
| | 2013.03- | 6MT | F | R | Van FWD M9T 716, M9T 726, M9T 880 | Date from:2019.08 | GDS57562 | Drive Shaft | | 31 | 39 | 70 | 101 | 1085 | |
| | 2013.03- | 6MT | F | L/R | Van FWD M9T 716, M9T 726, M9T 880 | Date from:2014.02 | GCO18289 | Outer Joint | | 31 | 36 | 70 | 101 | 69 | I |
| | 2013.03- | 6MT | F | L/R | Van FWD M9T 716, M9T 726, M9T 880 | Date to:2014.01 | GCO50132 | Outer Joint | | 31 | 27 | 70 | 100.5 | 63.5 | I |
| | 2013.03- | 6MT | F | L | Van FWD M9T 716, M9T 726, M9T 880 | | GCI50045 | Inner Joint | | 39 | 27 | 39 | 74 | 109 | |
| | 2013.03- | 6MT | F | R | Van FWD M9T 716, M9T 726, M9T 880 | Date to:2014.01 | GCI50046 | Inner Joint | | 39 | 27 | 30 | 364 | 87 | |
| | 2013.03- | 6MT | F | R | Van FWD M9T 716, M9T 726, M9T 880 | Date from:2019.08 | GCI83741 | Inner Joint | | 39 | 27 | 30 | 377 | 88 | |
| 2.3 (120 kw) | 2014.07- | 6MT | F | L | Bus FWD M9T 708, M9T 702 | | GDS18247 | Drive Shaft | | 31 | 39 | 70 | 100.5 | 743 | |
| | 2014.07- | 6MT | F | R | Bus FWD M9T 708, M9T 702 | Date to:2019.07 | GDS18515 | Drive Shaft | | 31 | 39 | 70 | 101 | 1077 | |
| | 2014.07- | 6MT | F | R | Bus FWD M9T 708, M9T 702 | Date from:2019.08 | GDS57562 | Drive Shaft | | 31 | 39 | 70 | 101 | 1085 | |
| | 2014.07- | 6MT | F | L/R | Bus FWD M9T 708, M9T 702 | | GCO18289 | Outer Joint | | 31 | 36 | 70 | 101 | 69 | I |
| | 2014.07- | 6MT | F | L | Bus FWD M9T 708, M9T 702 | | GCI50045 | Inner Joint | | 39 | 27 | 39 | 74 | 109 | |
| | 2014.07- | 6MT | F | R | Bus FWD M9T 708, M9T 702 | Date from:2019.08 | GCI83741 | Inner Joint | | 39 | 27 | 30 | 377 | 88 | |

| | YEAR | TRANSM. | F/R | L/R | BODY STYLE & DRIVE TYPE & ENGINE | REMARKS | G-AP Ref. | PRODUCT | ABS | Technical Specifications | | | | | |
|---|---|---|---|---|---|---|---|---|---|---|---|---|---|---|---|
| | | | | | | | | | | A | B | C | H | L | P |
| **RENAULT** | | | | | | | | | | | | | | | |
| **Master** | | | | | | | | | | | | | | | |
| 2.3 (120 kw) | 2014.07- | 6MT | F | L | Platform/Chassis FWD M9T 708, M9T 702 | | GDS18247 | Drive Shaft | | 31 | 39 | 70 | 100.5 | 743 | |
| | 2014.07- | 6MT | F | R | Platform/Chassis FWD M9T 708, M9T 702 | Date to:2019.07 | GDS18515 | Drive Shaft | | 31 | 39 | 70 | 101 | 1077 | |
| | 2014.07- | 6MT | F | R | Platform/Chassis FWD M9T 708, M9T 702 | Date from:2019.08 | GDS57562 | Drive Shaft | | 31 | 39 | 70 | 101 | 1085 | |
| | 2014.07- | 6MT | F | L/R | Platform/Chassis FWD M9T 708, M9T 702 | | GCO18289 | Outer Joint | | 31 | 36 | 70 | 101 | 69 | I |
| | 2014.07- | 6MT | F | L | Platform/Chassis FWD M9T 708, M9T 702 | | GCI50045 | Inner Joint | | 39 | 27 | 39 | 74 | 109 | |
| | 2014.07- | 6MT | F | R | Platform/Chassis FWD M9T 708, M9T 702 | Date from:2019.08 | GCI83741 | Inner Joint | | 39 | 27 | 30 | 377 | 88 | |
| | 2014.07- | 6MT | F | L | Van FWD M9T 708, M9T 702 | | GDS18247 | Drive Shaft | | 31 | 39 | 70 | 100.5 | 743 | |
| | 2014.07- | 6MT | F | R | Van FWD M9T 708, M9T 702 | Date to:2019.07 | GDS18515 | Drive Shaft | | 31 | 39 | 70 | 101 | 1077 | |
| | 2014.07- | 6MT | F | R | Van FWD M9T 708, M9T 702 | Date from:2019.08 | GDS57562 | Drive Shaft | | 31 | 39 | 70 | 101 | 1085 | |
| | 2014.07- | 6MT | F | L/R | Van FWD M9T 708, M9T 702 | | GCO18289 | Outer Joint | | 31 | 36 | 70 | 101 | 69 | I |
| | 2014.07- | 6MT | F | L | Van FWD M9T 708, M9T 702 | | GCI50045 | Inner Joint | | 39 | 27 | 39 | 74 | 109 | |
| | 2014.07- | 6MT | F | R | Van FWD M9T 708, M9T 702 | Date from:2019.08 | GCI83741 | Inner Joint | | 39 | 27 | 30 | 377 | 88 | |
| 2.3 (125 kw) | 2015.07- | 6MT | F | L | Bus FWD M9T 706 | | GDS18247 | Drive Shaft | | 31 | 39 | 70 | 100.5 | 743 | |
| | 2015.07- | 6MT | F | R | Bus FWD M9T 706 | Date to:2019.07 | GDS18515 | Drive Shaft | | 31 | 39 | 70 | 101 | 1077 | |
| | 2015.07- | 6MT | F | R | Bus FWD M9T 706 | Date from:2019.08 | GDS57562 | Drive Shaft | | 31 | 39 | 70 | 101 | 1085 | |
| | 2015.07- | 6MT | F | L/R | Bus FWD M9T 706 | | GCO18289 | Outer Joint | | 31 | 36 | 70 | 101 | 69 | I |
| | 2015.07- | 6MT | F | L | Bus FWD M9T 706 | | GCI50045 | Inner Joint | | 39 | 27 | 39 | 74 | 109 | |
| | 2015.07- | 6MT | F | R | Bus FWD M9T 706 | Date from:2019.08 | GCI83741 | Inner Joint | | 39 | 27 | 30 | 377 | 88 | |
| | 2015.07- | 6MT | F | L | Van FWD M9T 706 | | GDS18247 | Drive Shaft | | 31 | 39 | 70 | 100.5 | 743 | |
| | 2015.07- | 6MT | F | R | Van FWD M9T 706 | Date to:2019.07 | GDS18515 | Drive Shaft | | 31 | 39 | 70 | 101 | 1077 | |
| | 2015.07- | 6MT | F | R | Van FWD M9T 706 | Date from:2019.08 | GDS57562 | Drive Shaft | | 31 | 39 | 70 | 101 | 1085 | |
| | 2015.07- | 6MT | F | L/R | Van FWD M9T 706 | | GCO18289 | Outer Joint | | 31 | 36 | 70 | 101 | 69 | I |
| | 2015.07- | 6MT | F | L | Van FWD M9T 706 | | GCI50045 | Inner Joint | | 39 | 27 | 39 | 74 | 109 | |
| | 2015.07- | 6MT | F | R | Van FWD M9T 706 | Date from:2019.08 | GCI83741 | Inner Joint | | 39 | 27 | 30 | 377 | 88 | |
| 2.3 (132 kw) | 2019.07- | 6MT | F | L | Van FWD M9T 716, M9T 726 | | GDS18247 | Drive Shaft | | 31 | 39 | 70 | 100.5 | 743 | |
| | 2019.07- | 6MT | F | R | Van FWD M9T 716, M9T 726 | Date from:2014.02,Date to:2019.07 | GDS18515 | Drive Shaft | | 31 | 39 | 70 | 101 | 1077 | |
| | 2019.07- | 6MT | F | R | Van FWD M9T 716, M9T 726 | Date from:2019.08 | GDS57562 | Drive Shaft | | 31 | 39 | 70 | 101 | 1085 | |
| | 2019.07- | 6MT | F | L/R | Van FWD M9T 716, M9T 726 | | GCO18289 | Outer Joint | | 31 | 36 | 70 | 101 | 69 | I |
| | 2019.07- | 6MT | F | L | Van FWD M9T 716, M9T 726 | | GCI50045 | Inner Joint | | 39 | 27 | 39 | 74 | 109 | |
| | 2019.07- | 6MT | F | R | Van FWD M9T 716, M9T 726 | Date from:2019.08 | GCI83741 | Inner Joint | | 39 | 27 | 30 | 377 | 88 | |
| | 2020.01- | 6AT | F | L | Bus FWD M9T 716 | | GDS18247 | Drive Shaft | | 31 | 39 | 70 | 100.5 | 743 | |
| | 2020.01- | 6AT | F | R | Bus FWD M9T 716 | | GDS18515 | Drive Shaft | | 31 | 39 | 70 | 101 | 1077 | |
| | 2020.01- | 6AT | F | L/R | Bus FWD M9T 716 | | GCO50132 | Outer Joint | | 31 | 27 | 70 | 100.5 | 63.5 | I |
| | 2020.01- | 6AT | F | L | Bus FWD M9T 716 | | GCI50045 | Inner Joint | | 39 | 27 | 39 | 74 | 109 | |
| | 2020.01- | 6MT | F | R | Bus FWD M9T 716 | | GDS57562 | Drive Shaft | | 31 | 39 | 70 | 101 | 1085 | |
| | 2020.01- | 6MT | F | L/R | Bus FWD M9T 716 | | GCO18289 | Outer Joint | | 31 | 36 | 70 | 101 | 69 | I |
| | 2020.01- | 6MT | F | R | Bus FWD M9T 716 | | GCI83741 | Inner Joint | | 39 | 27 | 30 | 377 | 88 | |
| **Master T28** | | | | | | | | | | | | | | | |
| 1.9 (59 kw) | 1997.12-2002.03 | 5MT | F | L | Bus FWD F9Q 770 | | GDS50058 | Drive Shaft | 51T | 28 | 37 | 65 | 96 | 644 | |
| | 1997.12-2002.03 | 5MT | F | L | Bus FWD F9Q 770 | | GDS50246 | Drive Shaft | | 28 | 37 | 65 | 96 | 644 | |
| | 1997.12-2002.03 | 5MT | F | R | Bus FWD F9Q 770 | | GDS44017 | Drive Shaft | 51T | 28 | 39 | 67.1 | 93.5 | 1147 | |
| | 1997.12-2002.03 | 5MT | F | R | Bus FWD F9Q 770 | | GDS44022 | Drive Shaft | | 28 | 39 | 67.1 | 93.5 | 1147 | |
| | 1997.12-2002.03 | MT | F | L | Bus FWD F9Q 770 | Date to:2002.03;Trans. code:PK5 | GDS44005 | Drive Shaft | 51T | 28 | 37 | 65 | 96 | 670 | |
| | 1997.12-2002.03 | MT | F | L | Bus FWD F9Q 770 | Date to:2002.03;Trans. code:PK5 | GDS50010 | Drive Shaft | | 28 | | 67.1 | 93.5 | 669 | |
| | 1997.12-2002.03 | MT | F | R | Bus FWD F9Q 770 | Date To:2002.03;Trans. code:PK5 | GDS50060 | Drive Shaft | 51T | 28 | 39 | 65 | 96 | 1126 | |
| | 1997.12-2002.03 | MT | F | L/R | Bus FWD F9Q 770 | Date To:2002.03;Trans. code:PK5 | GCO44025 | Outer Joint | | 28 | 36 | 65 | 96 | 71 | I |
| | 1997.12-2002.03 | MT | F | L/R | Bus FWD F9Q 770 | Date To:2002.03;Trans. code:PK5 | GCO44026 | Outer Joint | 51T | 28 | 36 | 65 | 96 | 71 | I |
| | 1997.12-2002.03 | 5MT | F | L | Van FWD F9Q 770 | | GDS50058 | Drive Shaft | 51T | 28 | 37 | 65 | 96 | 644 | |
| | 1997.12-2002.03 | 5MT | F | L | Van FWD F9Q 770 | | GDS50246 | Drive Shaft | | 28 | 37 | 65 | 96 | 644 | |
| | 1997.12-2002.03 | 5MT | F | R | Van FWD F9Q 770 | | GDS44017 | Drive Shaft | 51T | 28 | 39 | 67.1 | 93.5 | 1147 | |
| | 1997.12-2002.03 | 5MT | F | R | Van FWD F9Q 770 | | GDS44022 | Drive Shaft | | 28 | 39 | 67.1 | 93.5 | 1147 | |
| | 1997.12-2002.03 | MT | F | L | Van FWD F9Q 770 | Date to:2002.03;Trans. code:PK5 | GDS44005 | Drive Shaft | 51T | 28 | 37 | 65 | 96 | 670 | |
| | 1997.12-2002.03 | MT | F | L | Van FWD F9Q 770 | Date to:2002.03;Trans. code:PK5 | GDS50010 | Drive Shaft | | 28 | | 67.1 | 93.5 | 669 | |
| | 1997.12-2002.03 | MT | F | R | Van FWD F9Q 770 | Date To:2002.03;Trans. code:PK5 | GDS50060 | Drive Shaft | 51T | 28 | 39 | 65 | 96 | 1126 | |
| | 1997.12-2002.03 | MT | F | L/R | Van FWD F9Q 770 | Date To:2002.03;Trans. code:PK5 | GCO44025 | Outer Joint | | 28 | 36 | 65 | 96 | 71 | I |
| | 1997.12-2002.03 | MT | F | L/R | Van FWD F9Q 770 | Date To:2002.03;Trans. code:PK5 | GCO44026 | Outer Joint | 51T | 28 | 36 | 65 | 96 | 71 | I |
| 1.9 (60 kw) | 2001.11-2006.10 | 5MT | F | L | Bus FWD F9Q 772, F9Q 774 | | GDS44004 | Drive Shaft | 51T | 28 | 39 | 67.1 | 93.5 | 1118 | |
| | 2001.11-2006.10 | 5MT | F | L | Bus FWD F9Q 772, F9Q 774 | | GDS44005 | Drive Shaft | 51T | 28 | 37 | 65 | 96 | 670 | |
| | 2001.11-2006.10 | 5MT | F | L | Bus FWD F9Q 772, F9Q 774 | | GDS50246 | Drive Shaft | | 28 | 37 | 65 | 96 | 644 | |
| | 2001.11-2006.10 | 5MT | F | L/R | Bus FWD F9Q 772, F9Q 774 | | GCO44026 | Outer Joint | 51T | 28 | 36 | 65 | 96 | 71 | I |
| | 2001.11-2006.10 | 5MT | F | L | Bus FWD F9Q 772, F9Q 774 | | GCI50006 | Inner Joint | | 39 | 27 | 30 | 437 | 98 | |
| | 2001.11-2006.10 | MT | F | L | Bus FWD F9Q 772, F9Q 774 | Date to:2006.10;Trans. code:PK5 | GDS50010 | Drive Shaft | | 28 | | 67.1 | 93.5 | 669 | |
| | 2001.11-2006.10 | MT | F | L | Bus FWD F9Q 772, F9Q 774 | Date to:2006.10;Trans. code:PF1 | GDS50058 | Drive Shaft | 51T | 28 | 37 | 65 | 96 | 644 | |
| | 2001.11-2006.10 | MT | F | R | Bus FWD F9Q 772, F9Q 774 | | GDS44017 | Drive Shaft | 51T | 28 | 39 | 67.1 | 93.5 | 1147 | |
| | 2001.11-2006.10 | MT | F | R | Bus FWD F9Q 772, F9Q 774 | | GDS44021 | Drive Shaft | | 28 | 39 | 65 | 96 | 1126 | |

| | YEAR | TRANSM. | F/R | L/R | BODY STYLE & DRIVE TYPE & ENGINE | REMARKS | G-AP Ref. | PRODUCT | ABS | Technical Specifications A | B | C | H | L | P |
|---|---|---|---|---|---|---|---|---|---|---|---|---|---|---|---|
| **RENAULT** **Master T28** | | | | | | | | | | | | | | | |
| 1.9 (60 kw) | 2001.11-2006.10 | MT | F | R | Bus FWD F9Q 772, F9Q 774 | | GDS44022 | Drive Shaft | | 28 | 39 | 67.1 | 93.5 | 1147 | |
| | 2001.11-2006.10 | MT | F | R | Bus FWD F9Q 772, F9Q 774 | Date To:2006.10;Trans. code:PK5 | GDS50060 | Drive Shaft | 51T | 28 | 39 | 65 | 96 | 1126 | |
| | 2001.11-2006.10 | MT | F | L/R | Bus FWD F9Q 772, F9Q 774 | Date To:2006.10 | GCO44025 | Outer Joint | | 28 | 36 | 65 | 96 | 71 | I |
| | 2001.11-2006.10 | | F | L | Bus FWD F9Q 772, F9Q 774 | | GCO44008 | Outer Joint | 51T | 28 | 27 | 67.1 | 93.5 | 64.5 | I |
| | 2001.11-2006.10 | 5MT | F | L | Van FWD F9Q 772, F9Q 774 | | GDS44004 | Drive Shaft | 51T | 28 | 39 | 67.1 | 93.5 | 1118 | |
| | 2001.11-2006.10 | 5MT | F | L | Van FWD F9Q 772, F9Q 774 | | GDS44005 | Drive Shaft | 51T | 28 | 37 | 65 | 96 | 670 | |
| | 2001.11-2006.10 | 5MT | F | L | Van FWD F9Q 772, F9Q 774 | | GDS50246 | Drive Shaft | | 28 | 37 | 65 | 96 | 644 | |
| | 2001.11-2006.10 | 5MT | F | L/R | Van FWD F9Q 772, F9Q 774 | | GCO44026 | Outer Joint | 51T | 28 | 36 | 65 | 96 | 71 | I |
| | 2001.11-2006.10 | 5MT | F | L | Van FWD F9Q 772, F9Q 774 | | GCI50006 | Inner Joint | | 39 | 27 | 30 | 437 | 98 | |
| | 2001.11-2006.10 | MT | F | L | Van FWD F9Q 772, F9Q 774 | Date to:2006.10;Trans. code:PK5 | GDS50010 | Drive Shaft | | 28 | | 67.1 | 93.5 | 669 | |
| | 2001.11-2006.10 | MT | F | L | Van FWD F9Q 772, F9Q 774 | Date to:2006.10;Trans. code:PF1 | GDS50058 | Drive Shaft | 51T | 28 | 37 | 65 | 96 | 644 | |
| | 2001.11-2006.10 | MT | F | R | Van FWD F9Q 772, F9Q 774 | | GDS44017 | Drive Shaft | 51T | 28 | 39 | 67.1 | 93.5 | 1147 | |
| | 2001.11-2006.10 | MT | F | R | Van FWD F9Q 772, F9Q 774 | | GDS44021 | Drive Shaft | | 28 | 39 | 65 | 96 | 1126 | |
| | 2001.11-2006.10 | MT | F | R | Van FWD F9Q 772, F9Q 774 | | GDS44022 | Drive Shaft | | 28 | 39 | 67.1 | 93.5 | 1147 | |
| | 2001.11-2006.10 | MT | F | R | Van FWD F9Q 772, F9Q 774 | Date To:2006.10;Trans. code:PK5 | GDS50060 | Drive Shaft | 51T | 28 | 39 | 65 | 96 | 1126 | |
| | 2001.11-2006.10 | MT | F | L/R | Van FWD F9Q 772, F9Q 774 | Date To:2006.10 | GCO44025 | Outer Joint | | 28 | 36 | 65 | 96 | 71 | I |
| | 2001.11-2006.10 | | F | L | Van FWD F9Q 772, F9Q 774 | | GCO44008 | Outer Joint | 51T | 28 | 27 | 67.1 | 93.5 | 64.5 | I |
| 2.2 (66 kw) | 1997.12-2006.09 | 5MT | F | L | Bus FWD G9T 720, G9T 722, G9T 750 | Date to:2003.11 | GDS44004 | Drive Shaft | 51T | 28 | 39 | 67.1 | 93.5 | 1118 | |
| | 1997.12-2006.09 | 5MT | F | L | Bus FWD G9T 720, G9T 722, G9T 750 | Date from:2003.12 | GDS50166 | Drive Shaft | 51T | 28 | 37 | 65 | 96 | 663 | |
| | 1997.12-2006.09 | 5MT | F | R | Bus FWD G9T 720, G9T 722, G9T 750 | Date To:2003.11 | GDS44016 | Drive Shaft | 51T | 28 | 39 | 65 | 96 | 1132 | |
| | 1997.12-2006.09 | 5MT | F | L/R | Bus FWD G9T 720, G9T 722, G9T 750 | | GCO44026 | Outer Joint | 51T | 28 | 36 | 65 | 96 | 71 | I |
| | 1997.12-2006.09 | MT | F | L | Bus FWD G9T 720, G9T 722, G9T 750 | Date to:2006.09;Trans. code:PF1 | GDS44005 | Drive Shaft | 51T | 28 | 37 | 65 | 96 | 670 | |
| | 1997.12-2006.09 | MT | F | L | Bus FWD G9T 720, G9T 722, G9T 750 | Date to:2006.09;Trans. code:PF1 | GDS50010 | Drive Shaft | | 28 | | 67.1 | 93.5 | 669 | |
| | 1997.12-2006.09 | MT | F | R | Bus FWD G9T 720, G9T 722, G9T 750 | Date To:2003.11 | GDS50214 | Drive Shaft | | 28 | 39 | 65 | 96 | 1132 | |
| | 1997.12-2006.09 | MT | F | L/R | Bus FWD G9T 720, G9T 722, G9T 750 | Date To:2006.09 | GCO44025 | Outer Joint | | 28 | 36 | 65 | 96 | 71 | I |
| | 1997.12-2006.09 | | F | R | Bus FWD G9T 720, G9T 722, G9T 750 | Date From:2003.12 | GDS99151 | Drive Shaft | 51T | 28 | 39 | 65 | 96 | 1144 | |
| | 1997.12-2006.09 | | F | L | Bus FWD G9T 720, G9T 722, G9T 750 | Date To:2003.11 | GCO44008 | Outer Joint | 51T | 28 | 27 | 67.1 | 93.5 | 64.5 | I |
| | 1997.12-2006.10 | 5MT | F | L | Van FWD G9T 720, G9T 722, G9T 750 | Date to:2003.11 | GDS44004 | Drive Shaft | 51T | 28 | 39 | 67.1 | 93.5 | 1118 | |
| | 1997.12-2006.10 | 5MT | F | L | Van FWD G9T 720, G9T 722, G9T 750 | Date from:2003.12;For Modelcode:JD0N/JD1N | GDS50166 | Drive Shaft | 51T | 28 | 37 | 65 | 96 | 663 | |
| | 1997.12-2006.10 | 5MT | F | R | Van FWD G9T 720, G9T 722, G9T 750 | Date To:2003.11 | GDS44016 | Drive Shaft | 51T | 28 | 39 | 65 | 96 | 1132 | |
| | 1997.12-2006.10 | 5MT | F | L/R | Van FWD G9T 720, G9T 722, G9T 750 | | GCO44026 | Outer Joint | 51T | 28 | 36 | 65 | 96 | 71 | I |
| | 1997.12-2006.10 | MT | F | L | Van FWD G9T 720, G9T 722, G9T 750 | Date to:2006.10;Trans. code:PF1 | GDS44005 | Drive Shaft | 51T | 28 | 37 | 65 | 96 | 670 | |
| | 1997.12-2006.10 | MT | F | L | Van FWD G9T 720, G9T 722, G9T 750 | Date to:2006.10;Trans. code:PF1 | GDS50010 | Drive Shaft | | 28 | | 67.1 | 93.5 | 669 | |
| | 1997.12-2006.10 | MT | F | R | Van FWD G9T 720, G9T 722, G9T 750 | Date To:2003.11 | GDS50214 | Drive Shaft | | 28 | 39 | 65 | 96 | 1132 | |
| | 1997.12-2006.10 | MT | F | L/R | Van FWD G9T 720, G9T 722, G9T 750 | Date To:2006.10 | GCO44025 | Outer Joint | | 28 | 36 | 65 | 96 | 71 | I |
| | 1997.12-2006.10 | | F | R | Van FWD G9T 720, G9T 722, G9T 750 | Date from:2003.12 | GDS99151 | Drive Shaft | 51T | 28 | 39 | 65 | 96 | 1144 | |
| | 1997.12-2006.10 | | F | L | Van FWD G9T 720, G9T 722, G9T 750 | Date To:2003.11 | GCO44008 | Outer Joint | 51T | 28 | 27 | 67.1 | 93.5 | 64.5 | I |
| 2.5 (59 kw) | 1998.07-2001.01 | 5MT | F | L | Bus FWD S8U 770, S8U 772 | | GDS44005 | Drive Shaft | 51T | 28 | 37 | 65 | 96 | 670 | |
| | 1998.07-2001.01 | 5MT | F | R | Bus FWD S8U 770, S8U 772 | | GDS44004 | Drive Shaft | 51T | 28 | 39 | 67.1 | 93.5 | 1118 | |
| | 1998.07-2001.01 | 5MT | F | L/R | Bus FWD S8U 770, S8U 772 | Internal teeth:27 | GCO44008 | Outer Joint | 51T | 28 | 27 | 67.1 | 93.5 | 64.5 | I |
| | 1998.07-2001.01 | 5MT | F | L/R | Bus FWD S8U 770, S8U 772 | Internal teeth:36 | GCO44026 | Outer Joint | 51T | 28 | 36 | 65 | 96 | 71 | I |
| | 1998.07-2001.01 | MT | F | L | Bus FWD S8U 770, S8U 772 | Trans. code:PF1 | GDS50010 | Drive Shaft | | 28 | | 67.1 | 93.5 | 669 | |
| | 1998.07-2001.01 | MT | F | R | Bus FWD S8U 770, S8U 772 | Trans. code:PF1 | GDS50011 | Drive Shaft | | 28 | 39 | 67.1 | 93.5 | 1118 | |
| | 1998.07-2001.01 | MT | F | L/R | Bus FWD S8U 770, S8U 772 | Date From:2000.04 | GCO44025 | Outer Joint | | 28 | 36 | 65 | 96 | 71 | I |
| | 1998.07-2001.01 | MT | F | R | Bus FWD S8U 770, S8U 772 | | GCI50006 | Inner Joint | | 39 | 27 | 30 | 437 | 98 | |
| | 1998.07-2001.01 | 5MT | F | L | Van FWD S8U 770, S8U 772 | | GDS44005 | Drive Shaft | 51T | 28 | 37 | 65 | 96 | 670 | |
| | 1998.07-2001.01 | 5MT | F | R | Van FWD S8U 770, S8U 772 | | GDS44004 | Drive Shaft | 51T | 28 | 39 | 67.1 | 93.5 | 1118 | |
| | 1998.07-2001.01 | 5MT | F | L/R | Van FWD S8U 770, S8U 772 | Internal teeth:27 | GCO44008 | Outer Joint | 51T | 28 | 27 | 67.1 | 93.5 | 64.5 | I |
| | 1998.07-2001.01 | 5MT | F | L/R | Van FWD S8U 770, S8U 772 | Internal teeth:36 | GCO44026 | Outer Joint | 51T | 28 | 36 | 65 | 96 | 71 | I |
| | 1998.07-2001.01 | MT | F | L | Van FWD S8U 770, S8U 772 | | GDS50010 | Drive Shaft | | 28 | | 67.1 | 93.5 | 669 | |
| | 1998.07-2001.01 | MT | F | R | Van FWD S8U 770, S8U 772 | | GDS50011 | Drive Shaft | | 28 | 39 | 67.1 | 93.5 | 1118 | |
| | 1998.07-2001.01 | MT | F | L/R | Van FWD S8U 770, S8U 772 | Date From:2000.04 | GCO44025 | Outer Joint | | 28 | 36 | 65 | 96 | 71 | I |
| | 1998.07-2001.01 | MT | F | R | Van FWD S8U 770, S8U 772 | | GCI50006 | Inner Joint | | 39 | 27 | 30 | 437 | 98 | |
| 2.5 (73 kw) | 2003.10-2010.01 | 6MT | F | L | Bus FWD G9U 754 | | GDS99286 | Drive Shaft | 51T | 28 | 39 | 65 | 96 | 700 | |
| | 2003.10-2010.01 | 6MT | F | R | Bus FWD G9U 754 | | GDS50066 | Drive Shaft | | 28 | 39 | 65 | 96 | 1142 | |
| | 2003.10-2010.01 | 6MT | F | R | Bus FWD G9U 754 | | GDS50366 | Drive Shaft | 51T | 28 | 39 | 65 | 96 | 1116 | |
| | 2003.10-2010.01 | MT | F | L/R | Bus FWD G9U 754 | Trans. code:PK5 | GCO44026 | Outer Joint | 51T | 28 | 36 | 65 | 96 | 71 | I |
| | 2003.10-2010.01 | MT | F | R | Bus FWD G9U 754 | | GCI50006 | Inner Joint | | 39 | 27 | 30 | 437 | 98 | |
| | 2003.10-2010.03 | MT | F | R | Van FWD G9U 754 | | GCI50006 | Inner Joint | | 39 | 27 | 30 | 437 | 98 | |
| | 2003.10-2010.03 | SAT/5MT/6MT | F | L | Van FWD G9U 754 | | GDS50166 | Drive Shaft | 51T | 28 | 37 | 65 | 96 | 663 | |
| | 2003.10-2010.03 | SAT/5MT/6MT | F | R | Van FWD G9U 754 | | GDS99151 | Drive Shaft | 51T | 28 | 39 | 65 | 96 | 1144 | |
| | 2003.10-2010.03 | SAT/5MT/6MT | F | L/R | Van FWD G9U 754 | | GCO44026 | Outer Joint | 51T | 28 | 36 | 65 | 96 | 71 | I |
| | 2003.10-2010.03 | | F | R | Van FWD G9U 754 | | GDS50066 | Drive Shaft | | 28 | 39 | 65 | 96 | 1142 | |
| 2.5 (74 kw) | 2006.08-2010.01 | 6MT | F | L | Platform/Chassis FWD G9U 650 | | GDS50166 | Drive Shaft | 51T | 28 | 37 | 65 | 96 | 663 | |
| | 2006.08-2010.01 | 6MT | F | R | Platform/Chassis FWD G9U 650 | | GDS99151 | Drive Shaft | 51T | 28 | 39 | 65 | 96 | 1144 | |

| | YEAR | TRANSM. | F/R | L/R | BODY STYLE & DRIVE TYPE & ENGINE | REMARKS | G-AP Ref. | PRODUCT | ABS | Technical Specifications A | B | C | H | L | P |
|---|---|---|---|---|---|---|---|---|---|---|---|---|---|---|---|
| **RENAULT** **Master T28** | | | | | | | | | | | | | | | |
| 2.5 (74 kw) | 2006.08-2010.01 | 6MT | F | L/R | Platform/Chassis FWD G9U 650 | | GCO44026 | Outer Joint | 51T | 28 | 36 | 65 | 96 | 71 | I |
| | 2006.08-2010.01 | MT | F | R | Platform/Chassis FWD G9U 650 | | GDS50366 | Drive Shaft | 51T | 28 | 39 | 65 | 96 | 1116 | |
| | 2006.08-2010.01 | MT | F | R | Platform/Chassis FWD G9U 650 | | GCI50006 | Inner Joint | | 39 | 27 | 30 | 437 | 98 | |
| | 2006.08-2010.01 | | F | R | Platform/Chassis FWD G9U 650 | | GDS50066 | Drive Shaft | | 28 | 39 | 65 | 96 | 1142 | |
| | 2006.08-2010.01 | 6MT | F | R | Van FWD G9U 650 | | GDS50066 | Drive Shaft | | 28 | 39 | 65 | 96 | 1142 | |
| | 2006.08-2010.01 | 6MT | F | R | Van FWD G9U 650 | Model code:JD01/JD02/JD11/JD12 | GDS50366 | Drive Shaft | 51T | 28 | 39 | 65 | 96 | 1116 | |
| | 2006.08-2010.01 | 6MT | F | L/R | Van FWD G9U 650 | | GCO44026 | Outer Joint | 51T | 28 | 36 | 65 | 96 | 71 | I |
| | 2006.08-2010.01 | MT | F | L | Van FWD G9U 650 | Inner teeth of tranm.side:26 | GDS99286 | Drive Shaft | 51T | 28 | 39 | 65 | 96 | 700 | |
| | 2006.08-2010.01 | MT | F | R | Van FWD G9U 650 | | GCI50006 | Inner Joint | | 39 | 27 | 30 | 437 | 98 | |
| | 2006.09-2010.01 | 6MT | F | R | Bus FWD G9U 650 | | GDS50366 | Drive Shaft | 51T | 28 | 39 | 65 | 96 | 1116 | |
| | 2006.09-2010.01 | 6MT/6AT | F | R | Bus FWD G9U 650 | | GDS50066 | Drive Shaft | | 28 | 39 | 65 | 96 | 1142 | |
| | 2006.09-2010.01 | AT/Semi-AT | F | L | Bus FWD G9U 650 | | GDS50166 | Drive Shaft | 51T | 28 | 37 | 65 | 96 | 663 | |
| | 2006.09-2010.01 | MT | F | L | Bus FWD G9U 650 | Inner teeth of tranm.side:26 | GDS99286 | Drive Shaft | 51T | 28 | 39 | 65 | 96 | 700 | |
| | 2006.09-2010.01 | MT | F | L/R | Bus FWD G9U 650 | | GCO44026 | Outer Joint | 51T | 28 | 36 | 65 | 96 | 71 | I |
| | 2006.09-2010.01 | MT | F | R | Bus FWD G9U 650 | | GCI50006 | Inner Joint | | 39 | 27 | 30 | 437 | 98 | |
| | 2006.09-2010.01 | Semi-AT | F | R | Bus FWD G9U 650 | | GDS99151 | Drive Shaft | 51T | 28 | 39 | 65 | 96 | 1144 | |
| 2.5 (84 kw) | 2001.10-2006.12 | 6MT | F | L/R | Bus FWD G9U 720, G9U 724, G9U 750, G9U 754 | | GCO44026 | Outer Joint | 51T | 28 | 36 | 65 | 96 | 71 | I |
| | 2001.10-2006.12 | 6MT/6AT | F | L | Bus FWD G9U 720, G9U 724, G9U 750, G9U 754 | | GDS44005 | Drive Shaft | 51T | 28 | 37 | 65 | 96 | 670 | |
| | 2001.10-2006.12 | MT | F | L | Bus FWD G9U 720, G9U 724, G9U 750, G9U 754 | | GDS44012 | Drive Shaft | | 28 | 37 | 65 | 96 | 663 | |
| | 2001.10-2006.12 | MT | F | L | Bus FWD G9U 720, G9U 724, G9U 750, G9U 754 | Trans. code:PK5/PK6 | GDS50166 | Drive Shaft | 51T | 28 | 37 | 65 | 96 | 663 | |
| | 2001.10-2006.12 | MT | F | R | Bus FWD G9U 720, G9U 724, G9U 750, G9U 754 | | GDS50066 | Drive Shaft | | 28 | 39 | 65 | 96 | 1142 | |
| | 2001.10-2006.12 | MT | F | R | Bus FWD G9U 720, G9U 724, G9U 750, G9U 754 | | GDS50249 | Drive Shaft | | 28 | 39 | 65 | 96 | 1144 | |
| | 2001.10-2006.12 | MT | F | R | Bus FWD G9U 720, G9U 724, G9U 750, G9U 754 | Trans. code:PK5/PK6 | GDS99151 | Drive Shaft | 51T | 28 | 39 | 65 | 96 | 1144 | |
| | 2001.10-2006.12 | MT | F | R | Bus FWD G9U 720, G9U 724, G9U 750, G9U 754 | | GCI50006 | Inner Joint | | 39 | 27 | 30 | 437 | 98 | |
| | 2001.10-2006.12 | | F | L | Bus FWD G9U 720, G9U 724, G9U 750, G9U 754 | | GCO44008 | Outer Joint | 51T | 28 | 27 | 67.1 | 93.5 | 64.5 | I |
| | 2001.10-2007.09 | 6AT/6MT/5MT | F | L | Van FWD G9U 720, G9U 724, G9U 750, G9U 754 | | GDS44005 | Drive Shaft | 51T | 28 | 37 | 65 | 96 | 670 | |
| | 2001.10-2007.09 | MT | F | L | Van FWD G9U 720, G9U 724, G9U 750, G9U 754 | Trans. code:PK5/PK6 | GDS50166 | Drive Shaft | 51T | 28 | 37 | 65 | 96 | 663 | |
| | 2001.10-2007.09 | MT | F | R | Van FWD G9U 720, G9U 724, G9U 750, G9U 754 | | GDS50066 | Drive Shaft | | 28 | 39 | 65 | 96 | 1142 | |
| | 2001.10-2007.09 | MT | F | R | Van FWD G9U 720, G9U 724, G9U 750, G9U 754 | | GCI50006 | Inner Joint | | 39 | 27 | 30 | 437 | 98 | |
| | 2001.10-2007.09 | SAT/5MT/6MT | F | R | Van FWD G9U 720, G9U 724, G9U 750, G9U 754 | | GDS99151 | Drive Shaft | 51T | 28 | 39 | 65 | 96 | 1144 | |
| | 2001.10-2007.09 | SAT/5MT/6MT | F | L/R | Van FWD G9U 720, G9U 724, G9U 750, G9U 754 | | GCO44026 | Outer Joint | 51T | 28 | 36 | 65 | 96 | 71 | I |
| | 2001.10-2007.09 | | F | L | Van FWD G9U 720, G9U 724, G9U 750, G9U 754 | | GCO44008 | Outer Joint | 51T | 28 | 27 | 67.1 | 93.5 | 64.5 | I |
| 2.5 (88 kw) | 2006.06-2010.01 | 6AT/6MT | F | L | Bus FWD G9U 650 | Model code:JD1W | GDS50166 | Drive Shaft | 51T | 28 | 37 | 65 | 96 | 663 | |
| | 2006.06-2010.01 | 6AT/6MT | F | L | Bus FWD G9U 650 | Model code:JD01/JD02/JD11/JD12 | GDS99286 | Drive Shaft | 51T | 28 | 39 | 65 | 96 | 700 | |
| | 2006.06-2010.01 | 6AT/6MT | F | R | Bus FWD G9U 650 | | GDS50066 | Drive Shaft | | 28 | 39 | 65 | 96 | 1142 | |
| | 2006.06-2010.01 | MT | F | R | Bus FWD G9U 650 | | GCI50006 | Inner Joint | | 39 | 27 | 30 | 437 | 98 | |
| | 2006.06-2010.01 | SAT/6MT | F | R | Bus FWD G9U 650 | Model code:JD01/JD02/JD11/JD12 | GDS50366 | Drive Shaft | 51T | 28 | 39 | 65 | 96 | 1116 | |
| | 2006.06-2010.01 | SAT/6MT | F | R | Bus FWD G9U 650 | | GDS99151 | Drive Shaft | 51T | 28 | 39 | 65 | 96 | 1144 | |
| | 2006.06-2010.01 | SAT/6MT | F | L/R | Bus FWD G9U 650 | | GCO44026 | Outer Joint | 51T | 28 | 36 | 65 | 96 | 71 | I |
| | 2006.08-2010.01 | 6AT/6MT | F | R | Van FWD G9U 650 | | GDS50066 | Drive Shaft | | 28 | 39 | 65 | 96 | 1142 | |
| | 2006.08-2010.01 | MT | F | L | Van FWD G9U 650 | Inner teeth of tranm.side:26 | GDS99286 | Drive Shaft | 51T | 28 | 39 | 65 | 96 | 700 | |
| | 2006.08-2010.01 | MT | F | L/R | Van FWD G9U 650 | | GCO44026 | Outer Joint | 51T | 28 | 36 | 65 | 96 | 71 | I |
| | 2006.08-2010.01 | MT | F | R | Van FWD G9U 650 | | GCI50006 | Inner Joint | | 39 | 27 | 30 | 437 | 98 | |
| | 2006.08-2010.01 | SAT/6MT | F | R | Van FWD G9U 650 | | GDS50366 | Drive Shaft | 51T | 28 | 39 | 65 | 96 | 1116 | |
| 2.5 (107 kw) | 2006.08-2010.01 | 6AT/6MT | F | L | Bus FWD G9U 632 | Model code:JD1W | GDS50166 | Drive Shaft | 51T | 28 | 37 | 65 | 96 | 663 | |
| | 2006.08-2010.01 | 6AT/6MT | F | L | Bus FWD G9U 632 | Model code:JD01/JD0Y/JD11/JD1Y | GDS99286 | Drive Shaft | 51T | 28 | 39 | 65 | 96 | 700 | |
| | 2006.08-2010.01 | 6AT/6MT | F | R | Bus FWD G9U 632 | | GDS50066 | Drive Shaft | | 28 | 39 | 65 | 96 | 1142 | |
| | 2006.08-2010.01 | MT | F | R | Bus FWD G9U 632 | | GCI50006 | Inner Joint | | 39 | 27 | 30 | 437 | 98 | |
| | 2006.08-2010.01 | SAT/6MT | F | R | Bus FWD G9U 632 | Model code:JD01/JD02/JD11/JD12 | GDS50366 | Drive Shaft | 51T | 28 | 39 | 65 | 96 | 1116 | |
| | 2006.08-2010.01 | SAT/6MT | F | R | Bus FWD G9U 632 | | GDS99151 | Drive Shaft | 51T | 28 | 39 | 65 | 96 | 1144 | |
| | 2006.08-2010.01 | SAT/6MT | F | L/R | Bus FWD G9U 632 | | GCO44026 | Outer Joint | 51T | 28 | 36 | 65 | 96 | 71 | I |
| | 2006.08-2010.01 | 6AT/6MT | F | R | Van FWD G9U 632 | | GDS50066 | Drive Shaft | | 28 | 39 | 65 | 96 | 1142 | |
| | 2006.08-2010.01 | MT | F | L | Van FWD G9U 632 | Inner teeth of tranm.side:26 | GDS99286 | Drive Shaft | 51T | 28 | 39 | 65 | 96 | 700 | |
| | 2006.08-2010.01 | MT | F | L/R | Van FWD G9U 632 | | GCO44026 | Outer Joint | 51T | 28 | 36 | 65 | 96 | 71 | I |
| | 2006.08-2010.01 | MT | F | R | Van FWD G9U 632 | | GCI50006 | Inner Joint | | 39 | 27 | 30 | 437 | 98 | |
| | 2006.08-2010.01 | SAT/6MT | F | R | Van FWD G9U 632 | | GDS50366 | Drive Shaft | 51T | 28 | 39 | 65 | 96 | 1116 | |
| 2.8 (84 kw) | 1998.07-2001.10 | 5MT | F | L | Bus FWD S9W 700, S9W 702 | | GDS44005 | Drive Shaft | 51T | 28 | 37 | 65 | 96 | 670 | |
| | 1998.07-2001.10 | 5MT | F | R | Bus FWD S9W 700, S9W 702 | | GDS44004 | Drive Shaft | 51T | 28 | 39 | 67.1 | 93.5 | 1118 | |
| | 1998.07-2001.10 | 5MT | F | L/R | Bus FWD S9W 700, S9W 702 | Internal teeth:27 | GCO44008 | Outer Joint | 51T | 28 | 27 | 67.1 | 93.5 | 64.5 | I |
| | 1998.07-2001.10 | 5MT | F | L/R | Bus FWD S9W 700, S9W 702 | Internal teeth:36 | GCO44026 | Outer Joint | 51T | 28 | 36 | 65 | 96 | 71 | I |
| | 1998.07-2001.10 | MT | F | L | Bus FWD S9W 700, S9W 702 | Trans. code:PF1 | GDS50010 | Drive Shaft | | 28 | | 67.1 | 93.5 | 669 | |
| | 1998.07-2001.10 | MT | F | R | Bus FWD S9W 700, S9W 702 | Trans. code:PF1 | GDS50011 | Drive Shaft | | 28 | 39 | 67.1 | 93.5 | 1118 | |
| | 1998.07-2001.10 | MT | F | L/R | Bus FWD S9W 700, S9W 702 | Date From:2000.04 | GCO44025 | Outer Joint | | 28 | 36 | 65 | 96 | 71 | I |
| | 1998.07-2001.10 | MT | F | L/R | Bus FWD S9W 700, S9W 702 | | GCO50014 | Outer Joint | | 28 | 27 | 67.1 | 93.5 | 64.5 | I |
| | 1998.07-2001.10 | MT | F | R | Bus FWD S9W 700, S9W 702 | | GCI50006 | Inner Joint | | 39 | 27 | 30 | 437 | 98 | |

| | YEAR | TRANSM. | F/R | L/R | BODY STYLE & DRIVE TYPE & ENGINE | REMARKS | G-AP Ref. | PRODUCT | ABS | Technical Specifications A | B | C | H | L | P |
|---|---|---|---|---|---|---|---|---|---|---|---|---|---|---|---|
| **RENAULT** | | | | | | | | | | | | | | | |
| **Master T28** | | | | | | | | | | | | | | | |
| 2.8 (84 kw) | 1998.07-2001.10 | 5MT | F | L | Van FWD S9W 700, S9W 702 | | GDS44005 | Drive Shaft | 51T | 28 | 37 | 65 | 96 | 670 | |
| | 1998.07-2001.10 | 5MT | F | R | Van FWD S9W 700, S9W 702 | | GDS44004 | Drive Shaft | 51T | 28 | 39 | 67.1 | 93.5 | 1118 | |
| | 1998.07-2001.10 | 5MT | F | L/R | Van FWD S9W 700, S9W 702 | Internal teeth:27 | GCO44008 | Outer Joint | 51T | 28 | 27 | 67.1 | 93.5 | 64.5 | I |
| | 1998.07-2001.10 | 5MT | F | L/R | Van FWD S9W 700, S9W 702 | Internal teeth:36 | GCO44026 | Outer Joint | 51T | 28 | 36 | 65 | 96 | 71 | I |
| | 1998.07-2001.10 | MT | F | L | Van FWD S9W 700, S9W 702 | | GDS50010 | Drive Shaft | | 28 | | 67.1 | 93.5 | 669 | |
| | 1998.07-2001.10 | MT | F | R | Van FWD S9W 700, S9W 702 | | GDS50011 | Drive Shaft | | 28 | 39 | 67.1 | 93.5 | 1118 | |
| | 1998.07-2001.10 | MT | F | L/R | Van FWD S9W 700, S9W 702 | Date From:2000.04 | GCO44025 | Outer Joint | | 28 | 36 | 65 | 96 | 71 | I |
| | 1998.07-2001.10 | MT | F | L/R | Van FWD S9W 700, S9W 702 | | GCO50014 | Outer Joint | | 28 | 27 | 67.1 | 93.5 | 64.5 | I |
| | 1998.07-2001.10 | MT | F | R | Van FWD S9W 700, S9W 702 | | GCI50006 | Inner Joint | | 39 | 27 | 30 | 437 | 98 | |
| 3.0 (100 kw) | 2003.10-2006.09 | 6MT | F | L | Bus FWD ZD3 200, ZD3 202 | | GDS50057 | Drive Shaft | 51T | 28 | 39 | 65 | 96 | 687 | |
| | 2003.10-2006.09 | 6MT | F | R | Bus FWD ZD3 200, ZD3 202 | | GDS50059 | Drive Shaft | 51T | 28 | 39 | 65 | 96 | 1126 | |
| | 2003.10-2006.09 | 6MT | F | L/R | Bus FWD ZD3 200, ZD3 202 | | GCO44025 | Outer Joint | | 28 | 36 | 65 | 96 | 71 | I |
| | 2003.10-2006.09 | 6MT | F | L | Bus FWD ZD3 200, ZD3 202 | | GCI18272 | Inner Joint | | 39 | 26 | 39 | 74 | 116 | |
| | 2003.10-2006.10 | 5MT/6MT | F | L | Van FWD ZD3 202 | | GDS50057 | Drive Shaft | 51T | 28 | 39 | 65 | 96 | 687 | |
| | 2003.10-2006.10 | 5MT/6MT | F | R | Van FWD ZD3 202 | | GDS50059 | Drive Shaft | 51T | 28 | 39 | 65 | 96 | 1126 | |
| | 2003.10-2006.10 | 5MT/6MT | F | L | Van FWD ZD3 202 | | GCI18272 | Inner Joint | | 39 | 26 | 39 | 74 | 116 | |
| | 2003.10-2006.10 | MT | F | L/R | Van FWD ZD3 202 | | GCO44026 | Outer Joint | 51T | 28 | 36 | 65 | 96 | 71 | I |
| **Master T30** | | | | | | | | | | | | | | | |
| 2.0 (44 kw) | 1980.08-1998.07 | 4MT/5MT | F | L/R | Bus FWD J8S 330 | | GDS50003 | Drive Shaft | | 32 | 27 | 65 | 113 | 825 | |
| | 1980.08-1998.07 | 4MT/5MT | F | L/R | Van FWD J8S 330 | | GDS50003 | Drive Shaft | | 32 | 27 | 65 | 113 | 825 | |
| 2.0 (58 kw) | 1986.10-1998.07 | MT | F | L/R | Van FWD J5R 718 | | GDS50003 | Drive Shaft | | 32 | 27 | 65 | 113 | 825 | |
| 2.2 (67 kw) | 1980.08-1998.07 | MT | F | L/R | Bus FWD J7T 782, J7T 788 (01.94-.) | | GDS50003 | Drive Shaft | | 32 | 27 | 65 | 113 | 825 | |
| 2.5 (55 kw) | 1989.08-1998.07 | 5MT | F | L/R | Van FWD 8140.67.2510, S8U 742 (08.89-.) | | GDS50003 | Drive Shaft | | 32 | 27 | 65 | 113 | 825 | |
| **Master T35** | | | | | | | | | | | | | | | |
| 2.0 (58 kw) | 1986.10-1998.07 | 5MT | F | L/R | Bus FWD J5R 718 | | GDS50003 | Drive Shaft | | 32 | 27 | 65 | 113 | 825 | |
| 2.2 (66 kw) | 1997.12-2006.09 | 5MT | F | L | Platform/Chassis FWD G9T 720, G9T 722, G9T 750 | Date to:2003.11 | GDS44004 | Drive Shaft | 51T | 28 | 39 | 67.1 | 93.5 | 1118 | |
| | 1997.12-2006.09 | 5MT | F | L | Platform/Chassis FWD G9T 720, G9T 722, G9T 750 | Date from:2003.12 | GDS50166 | Drive Shaft | 51T | 28 | 37 | 65 | 96 | 663 | |
| | 1997.12-2006.09 | 5MT | F | R | Platform/Chassis FWD G9T 720, G9T 722, G9T 750 | | GDS44016 | Drive Shaft | 51T | 28 | 39 | 65 | 96 | 1132 | |
| | 1997.12-2006.09 | 5MT | F | L/R | Platform/Chassis FWD G9T 720, G9T 722, G9T 750 | | GCO44026 | Outer Joint | 51T | 28 | 36 | 65 | 96 | 71 | I |
| | 1997.12-2006.09 | MT | F | L | Platform/Chassis FWD G9T 720, G9T 722, G9T 750 | Date to:2003.11;Trans. code:PF1 | GDS44005 | Drive Shaft | 51T | 28 | 37 | 65 | 96 | 670 | |
| | 1997.12-2006.09 | MT | F | L | Platform/Chassis FWD G9T 720, G9T 722, G9T 750 | Date to:2006.09;Trans. code:PF1 | GDS50010 | Drive Shaft | | 28 | | 67.1 | 93.5 | 669 | |
| | 1997.12-2006.09 | MT | F | R | Platform/Chassis FWD G9T 720, G9T 722, G9T 750 | Date To:2003.11 | GDS50214 | Drive Shaft | | 28 | 39 | 65 | 96 | 1132 | |
| | 1997.12-2006.09 | MT | F | L/R | Platform/Chassis FWD G9T 720, G9T 722, G9T 750 | Date to:2006.09 | GCO44025 | Outer Joint | | 28 | 36 | 65 | 96 | 71 | I |
| | 1997.12-2006.09 | | F | R | Platform/Chassis FWD G9T 720, G9T 722, G9T 750 | Date From:2003.12 | GDS99151 | Drive Shaft | 51T | 28 | 39 | 65 | 96 | 1144 | |
| | 1997.12-2006.09 | | F | L | Platform/Chassis FWD G9T 720, G9T 722, G9T 750 | Date To:2003.11 | GCO44008 | Outer Joint | 51T | 28 | 27 | 67.1 | 93.5 | 64.5 | I |
| 2.2 (67 kw) | 1980.08-1998.07 | MT | F | L/R | Van FWD J7T 782, J7T 788 (01.94-.) | | GDS50003 | Drive Shaft | | 32 | 27 | 65 | 113 | 825 | |
| 2.3 (74 kw) | 2010.02-2014.06 | 6MT | F | L | Platform/Chassis FWD M9T 676;M9T 670;M9T 672;M9T 870;M9T 876 | | GDS18247 | Drive Shaft | | 31 | 39 | 70 | 100.5 | 743 | |
| | 2010.02-2014.06 | 6MT | F | R | Platform/Chassis FWD M9T 676;M9T 670;M9T 672;M9T 870;M9T 876 | Date to:2014.01 | GDS18248 | Drive Shaft | | 31 | 39 | 70 | 100.5 | 1075 | |
| | 2010.02-2014.06 | 6MT | F | R | Platform/Chassis FWD M9T 676;M9T 670;M9T 672;M9T 870;M9T 876 | Date from:2014.02,Date to:2019.07 | GDS18515 | Drive Shaft | | 31 | 39 | 70 | 101 | 1077 | |
| | 2010.02-2014.06 | 6MT | F | R | Platform/Chassis FWD M9T 676;M9T 670;M9T 672;M9T 870;M9T 876 | Date from:2019.08 | GDS57562 | Drive Shaft | | 31 | 39 | 70 | 101 | 1085 | |
| | 2010.02-2014.06 | 6MT | F | L/R | Platform/Chassis FWD M9T 676;M9T 670;M9T 672;M9T 870;M9T 876 | Date from:2014.02 | GCO18289 | Outer Joint | | 31 | 36 | 70 | 101 | 69 | I |
| | 2010.02-2014.06 | 6MT | F | L/R | Platform/Chassis FWD M9T 676;M9T 670;M9T 672;M9T 870;M9T 876 | Date to:2014.01 | GCO50132 | Outer Joint | | 31 | 27 | 70 | 100.5 | 63.5 | I |
| | 2010.02-2014.06 | 6MT | F | L | Platform/Chassis FWD M9T 676;M9T 670;M9T 672;M9T 870;M9T 876 | | GCI50045 | Inner Joint | | 39 | 27 | 39 | 74 | 109 | |
| | 2010.02-2014.06 | 6MT | F | R | Platform/Chassis FWD M9T 676;M9T 670;M9T 672;M9T 870;M9T 876 | Date to:2014.01 | GCI50046 | Inner Joint | | 39 | 27 | 30 | 364 | 87 | |
| | 2010.02-2014.06 | 6MT | F | R | Platform/Chassis FWD M9T 676;M9T 670;M9T 672;M9T 870;M9T 876 | Date from:2019.08 | GCI83741 | Inner Joint | | 39 | 27 | 30 | 377 | 88 | |
| 2.3 (81 kw) | 2014.07-2021.12 | 6MT | F | L | Platform/Chassis FWD M9T 870;M9T 704 | | GDS18247 | Drive Shaft | | 31 | 39 | 70 | 100.5 | 743 | |
| | 2014.07-2021.12 | 6MT | F | R | Platform/Chassis FWD M9T 870;M9T 704 | Date to:2019.07 | GDS18515 | Drive Shaft | | 31 | 39 | 70 | 101 | 1077 | |
| | 2014.07-2021.12 | 6MT | F | R | Platform/Chassis FWD M9T 870;M9T 704 | Date from:2019.08 | GDS57562 | Drive Shaft | | 31 | 39 | 70 | 101 | 1085 | |
| | 2014.07-2021.12 | 6MT | F | L/R | Platform/Chassis FWD M9T 870;M9T 704 | | GCO18289 | Outer Joint | | 31 | 36 | 70 | 101 | 69 | I |
| | 2014.07-2021.12 | 6MT | F | L | Platform/Chassis FWD M9T 870;M9T 704 | | GCI50045 | Inner Joint | | 39 | 27 | 39 | 74 | 109 | |
| | 2014.07-2021.12 | 6MT | F | R | Platform/Chassis FWD M9T 870;M9T 704 | Date from:2019.08 | GCI83741 | Inner Joint | | 39 | 27 | 30 | 377 | 88 | |
| 2.3 (96 kw) | 2015.07-2020.12 | 6MT | F | L | Platform/Chassis FWD M9T 704;M9T 882 | | GDS18247 | Drive Shaft | | 31 | 39 | 70 | 100.5 | 743 | |
| | 2015.07-2020.12 | 6MT | F | R | Platform/Chassis FWD M9T 704;M9T 882 | Date to:2019.07 | GDS18515 | Drive Shaft | | 31 | 39 | 70 | 101 | 1077 | |
| | 2015.07-2020.12 | 6MT | F | R | Platform/Chassis FWD M9T 704;M9T 882 | Date from:2019.08 | GDS57562 | Drive Shaft | | 31 | 39 | 70 | 101 | 1085 | |
| | 2015.07-2020.12 | 6MT | F | L/R | Platform/Chassis FWD M9T 704;M9T 882 | | GCO18289 | Outer Joint | | 31 | 36 | 70 | 101 | 69 | I |
| | 2015.07-2020.12 | 6MT | F | L | Platform/Chassis FWD M9T 704;M9T 882 | | GCI50045 | Inner Joint | | 39 | 27 | 39 | 74 | 109 | |
| | 2015.07-2020.12 | 6MT | F | R | Platform/Chassis FWD M9T 704;M9T 882 | Date from:2019.08 | GCI83741 | Inner Joint | | 39 | 27 | 30 | 377 | 88 | |
| 2.3 (100 kw) | 2014.07-2024.12 | 6MT | F | L | Platform/Chassis FWD M9T 702;M9T 716 | | GDS18247 | Drive Shaft | | 31 | 39 | 70 | 100.5 | 743 | |
| | 2014.07-2024.12 | 6MT | F | R | Platform/Chassis FWD M9T 702;M9T 716 | Date to:2019.07 | GDS18515 | Drive Shaft | | 31 | 39 | 70 | 101 | 1077 | |
| | 2014.07-2024.12 | 6MT | F | R | Platform/Chassis FWD M9T 702;M9T 716 | Date from:2019.08 | GDS57562 | Drive Shaft | | 31 | 39 | 70 | 101 | 1085 | |
| | 2014.07-2024.12 | 6MT | F | L/R | Platform/Chassis FWD M9T 702;M9T 716 | | GCO18289 | Outer Joint | | 31 | 36 | 70 | 101 | 69 | I |
| | 2014.07-2024.12 | 6MT | F | L | Platform/Chassis FWD M9T 702;M9T 716 | | GCI50045 | Inner Joint | | 39 | 27 | 39 | 74 | 109 | |
| | 2014.07-2024.12 | 6MT | F | R | Platform/Chassis FWD M9T 702;M9T 716 | Date from:2019.08 | GCI83741 | Inner Joint | | 39 | 27 | 30 | 377 | 88 | |
| 2.3 (107 kw) | 2010.02-2024.12 | 6MT | F | L | Platform/Chassis FWD M9T 680;M9T 678;M9T 706;M9T 708 | | GDS18247 | Drive Shaft | | 31 | 39 | 70 | 100.5 | 743 | |
| | 2010.02-2024.12 | 6MT | F | R | Platform/Chassis FWD M9T 680;M9T 678;M9T 706;M9T 708 | Date to:2014.01 | GDS18248 | Drive Shaft | | 31 | 39 | 70 | 100.5 | 1075 | |

| | YEAR | TRANSM. | F/R | L/R | BODY STYLE & DRIVE TYPE & ENGINE | REMARKS | G-AP Ref. | PRODUCT | ABS | Technical Specifications A | B | C | H | L | P |
|---|---|---|---|---|---|---|---|---|---|---|---|---|---|---|---|
| **RENAULT** **Master T35** | | | | | | | | | | | | | | | |
| 2.3 (107 kw) | 2010.02-2024.12 | 6MT | F | R | Platform/Chassis FWD M9T 680;M9T 678;M9T 706;M9T 708 | Date from:2014.02,Date to:2019.07 | GDS18515 | Drive Shaft | | 31 | 39 | 70 | 101 | 1077 | |
| | 2010.02-2024.12 | 6MT | F | R | Platform/Chassis FWD M9T 680;M9T 678;M9T 706;M9T 708 | Date from:2019.08 | GDS57562 | Drive Shaft | | 31 | 39 | 70 | 101 | 1085 | |
| | 2010.02-2024.12 | 6MT | F | L/R | Platform/Chassis FWD M9T 680;M9T 678;M9T 706;M9T 708 | Date from:2014.02 | GCO18289 | Outer Joint | | 31 | 36 | 70 | 101 | 69 | I |
| | 2010.02-2024.12 | 6MT | F | L/R | Platform/Chassis FWD M9T 680;M9T 678;M9T 706;M9T 708 | Date to:2014.01 | GCO50132 | Outer Joint | | 31 | 27 | 70 | 100.5 | 63.5 | I |
| | 2010.02-2024.12 | 6MT | F | L | Platform/Chassis FWD M9T 680;M9T 678;M9T 706;M9T 708 | | GCI50045 | Inner Joint | | 39 | 27 | 39 | 74 | 109 | |
| | 2010.02-2024.12 | 6MT | F | R | Platform/Chassis FWD M9T 680;M9T 678;M9T 706;M9T 708 | Date to:2014.01 | GCI50046 | Inner Joint | | 39 | 27 | 30 | 364 | 87 | |
| | 2010.02-2024.12 | 6MT | F | R | Platform/Chassis FWD M9T 680;M9T 678;M9T 706;M9T 708 | Date from:2019.08 | GCI83741 | Inner Joint | | 39 | 27 | 30 | 377 | 88 | |
| 2.3 (110 kw) | 2013.03- | 6MT | F | L | Platform/Chassis FWD M9T 880;M9T 716 | | GDS18247 | Drive Shaft | | 31 | 39 | 70 | 100.5 | 743 | |
| | 2013.03- | 6MT | F | R | Platform/Chassis FWD M9T 880;M9T 716 | Date to:2014.01 | GDS18248 | Drive Shaft | | 31 | 39 | 70 | 100.5 | 1075 | |
| | 2013.03- | 6MT | F | R | Platform/Chassis FWD M9T 880;M9T 716 | Date from:2014.02,Date to:2019.07 | GDS18515 | Drive Shaft | | 31 | 39 | 70 | 101 | 1077 | |
| | 2013.03- | 6MT | F | R | Platform/Chassis FWD M9T 880;M9T 716 | Date from:2019.08 | GDS57562 | Drive Shaft | | 31 | 39 | 70 | 101 | 1085 | |
| | 2013.03- | 6MT | F | L/R | Platform/Chassis FWD M9T 880;M9T 716 | Date from:2014.02 | GCO18289 | Outer Joint | | 31 | 36 | 70 | 101 | 69 | I |
| | 2013.03- | 6MT | F | L/R | Platform/Chassis FWD M9T 880;M9T 716 | Date to:2014.01 | GCO50132 | Outer Joint | | 31 | 27 | 70 | 100.5 | 63.5 | I |
| | 2013.03- | 6MT | F | L | Platform/Chassis FWD M9T 880;M9T 716 | | GCI50045 | Inner Joint | | 39 | 27 | 39 | 74 | 109 | |
| | 2013.03- | 6MT | F | R | Platform/Chassis FWD M9T 880;M9T 716 | Date to:2014.01 | GCI50046 | Inner Joint | | 39 | 27 | 30 | 364 | 87 | |
| | 2013.03- | 6MT | F | R | Platform/Chassis FWD M9T 880;M9T 716 | Date from:2019.08 | GCI83741 | Inner Joint | | 39 | 27 | 30 | 377 | 88 | |
| 2.3 (125 kw) | 2016.06-2020.12 | 6MT | F | L | Platform/Chassis FWD M9T 706 | | GDS18247 | Drive Shaft | | 31 | 39 | 70 | 100.5 | 743 | |
| | 2016.06-2020.12 | 6MT | F | R | Platform/Chassis FWD M9T 706 | Date to:2019.07 | GDS18515 | Drive Shaft | | 31 | 39 | 70 | 101 | 1077 | |
| | 2016.06-2020.12 | 6MT | F | R | Platform/Chassis FWD M9T 706 | Date from:2019.08 | GDS57562 | Drive Shaft | | 31 | 39 | 70 | 101 | 1085 | |
| | 2016.06-2020.12 | 6MT | F | L/R | Platform/Chassis FWD M9T 706 | | GCO18289 | Outer Joint | | 31 | 36 | 70 | 101 | 69 | I |
| | 2016.06-2020.12 | 6MT | F | L | Platform/Chassis FWD M9T 706 | | GCI50045 | Inner Joint | | 39 | 27 | 39 | 74 | 109 | |
| | 2016.06-2020.12 | 6MT | F | R | Platform/Chassis FWD M9T 706 | Date from:2019.08 | GCI83741 | Inner Joint | | 39 | 27 | 30 | 377 | 88 | |
| 2.3 (132 kw) | 2019.07-2024.12 | 6AT/6MT | F | L | Platform/Chassis FWD M9T 716 | | GDS18247 | Drive Shaft | | 31 | 39 | 70 | 100.5 | 743 | |
| | 2019.07-2024.12 | 6MT | F | R | Platform/Chassis FWD M9T 716 | Date to:2019.07 | GDS18515 | Drive Shaft | | 31 | 39 | 70 | 101 | 1077 | |
| | 2019.07-2024.12 | 6MT | F | R | Platform/Chassis FWD M9T 716 | Date from:2019.08 | GDS57562 | Drive Shaft | | 31 | 39 | 70 | 101 | 1085 | |
| | 2019.07-2024.12 | 6MT | F | L/R | Platform/Chassis FWD M9T 716 | Date from:2019.08 | GCO18289 | Outer Joint | | 31 | 36 | 70 | 101 | 69 | I |
| | 2019.07-2024.12 | 6MT | F | R | Platform/Chassis FWD M9T 716 | Date from:2019.08 | GCI83741 | Inner Joint | | 39 | 27 | 30 | 377 | 88 | |
| 2.5 (55 kw) | 1989.08-1998.07 | 5MT | F | L/R | Bus FWD 8140.67.2510, S8U 742 (08.89-.) | | GDS50003 | Drive Shaft | | 32 | 27 | 65 | 113 | 825 | |
| 2.5 (59 kw) | 1998.07-2001.01 | 5MT | F | L | Platform/Chassis FWD S8U 770, S8U 772 | | GDS44005 | Drive Shaft | 51T | 28 | 37 | 65 | 96 | 670 | |
| | 1998.07-2001.01 | 5MT | F | R | Platform/Chassis FWD S8U 770, S8U 772 | | GDS44004 | Drive Shaft | 51T | 28 | 39 | 67.1 | 93.5 | 1118 | |
| | 1998.07-2001.01 | 5MT | F | L/R | Platform/Chassis FWD S8U 770, S8U 772 | Internal teeth:27 | GCO44008 | Outer Joint | 51T | 28 | 27 | 67.1 | 93.5 | 64.5 | I |
| | 1998.07-2001.01 | 5MT | F | L/R | Platform/Chassis FWD S8U 770, S8U 772 | Internal teeth:36 | GCO44026 | Outer Joint | 51T | 28 | 36 | 65 | 96 | 71 | I |
| | 1998.07-2001.01 | MT | F | L | Platform/Chassis FWD S8U 770, S8U 772 | Trans. code:PF1 | GDS50010 | Drive Shaft | | 28 | | 67.1 | 93.5 | 669 | |
| | 1998.07-2001.01 | MT | F | R | Platform/Chassis FWD S8U 770, S8U 772 | Trans. code:PF1 | GDS50011 | Drive Shaft | | 28 | 39 | 67.1 | 93.5 | 1118 | |
| | 1998.07-2001.01 | MT | F | L/R | Platform/Chassis FWD S8U 770, S8U 772 | Date from:2000.04 | GCO44025 | Outer Joint | | 28 | 36 | 65 | 96 | 71 | I |
| | 1998.07-2001.01 | MT | F | L/R | Platform/Chassis FWD S8U 770, S8U 772 | | GCO50014 | Outer Joint | | 28 | 27 | 67.1 | 93.5 | 64.5 | I |
| | 1998.07-2001.01 | MT | F | R | Platform/Chassis FWD S8U 770, S8U 772 | | GCI50006 | Inner Joint | | 39 | 27 | 30 | 437 | 98 | |
| 2.5 (69 kw) | 1989.08-1998.07 | 5MT | F | L/R | Bus FWD 8140.27.2500, 8140.27.2510, S9U 714 (01.94-.) | | GDS50003 | Drive Shaft | | 32 | 27 | 65 | 113 | 825 | |
| | 1989.08-1998.07 | MT | F | L/R | Van FWD 8140.27.2500, 8140.27.2510, S9U 714 (01.94-.), S9U 740 | | GDS50003 | Drive Shaft | | 32 | 27 | 65 | 113 | 825 | |
| 2.5 (72 kw) | 1989.08-1998.07 | MT | F | L/R | Van FWD 8140.27.2580, S9U 702 | | GDS50003 | Drive Shaft | | 32 | 27 | 65 | 113 | 825 | |
| 2.5 (73 kw) | 2002.10-2010.05 | MT | F | L | Platform/Chassis FWD G9U 754 | | GDS44012 | Drive Shaft | | 28 | 37 | 65 | 96 | 663 | |
| | 2002.10-2010.05 | MT | F | R | Platform/Chassis FWD G9U 754 | | GDS50249 | Drive Shaft | | 28 | 39 | 65 | 96 | 1144 | |
| | 2002.10-2010.05 | MT | F | R | Platform/Chassis FWD G9U 754 | | GCI50006 | Inner Joint | | 39 | 27 | 30 | 437 | 98 | |
| | 2002.10-2010.05 | SAT/5MT/6MT | F | L | Platform/Chassis FWD G9U 754 | | GDS50166 | Drive Shaft | 51T | 28 | 37 | 65 | 96 | 663 | |
| | 2002.10-2010.05 | SAT/5MT/6MT | F | R | Platform/Chassis FWD G9U 754 | | GDS99151 | Drive Shaft | 51T | 28 | 39 | 65 | 96 | 1144 | |
| | 2002.10-2010.05 | SAT/5MT/6MT | F | L/R | Platform/Chassis FWD G9U 754 | | GCO44026 | Outer Joint | 51T | 28 | 36 | 65 | 96 | 71 | I |
| | 2002.10-2010.05 | | F | R | Platform/Chassis FWD G9U 754 | | GDS50066 | Drive Shaft | | 28 | 39 | 65 | 96 | 1142 | |
| 2.5 (84 kw) | 2001.10-2010.05 | MT | F | R | Platform/Chassis FWD G9U 720, G9U 724, G9U 750, G9U 754 | | GDS50066 | Drive Shaft | | 28 | 39 | 65 | 96 | 1142 | |
| | 2001.10-2010.05 | MT | F | R | Platform/Chassis FWD G9U 720, G9U 724, G9U 750, G9U 754 | | GCI50006 | Inner Joint | | 39 | 27 | 30 | 437 | 98 | |
| | 2001.10-2010.05 | SAT/5MT/6MT | F | L | Platform/Chassis FWD G9U 720, G9U 724, G9U 750, G9U 754 | | GDS50166 | Drive Shaft | 51T | 28 | 37 | 65 | 96 | 663 | |
| | 2001.10-2010.05 | SAT/5MT/6MT | F | R | Platform/Chassis FWD G9U 720, G9U 724, G9U 750, G9U 754 | | GDS99151 | Drive Shaft | 51T | 28 | 39 | 65 | 96 | 1144 | |
| | 2001.10-2010.05 | SAT/5MT/6MT | F | L/R | Platform/Chassis FWD G9U 720, G9U 724, G9U 750, G9U 754 | | GCO44026 | Outer Joint | 51T | 28 | 36 | 65 | 96 | 71 | I |
| 2.5 (88 kw) | 2006.08-2011.01 | 6AT/6MT | F | R | Platform/Chassis FWD G9U 650 | | GDS50066 | Drive Shaft | | 28 | 39 | 65 | 96 | 1142 | |
| | 2006.08-2011.01 | MT | F | L | Platform/Chassis FWD G9U 650 | Inner teeth of tranm.side:26 | GDS99286 | Drive Shaft | 51T | 28 | 39 | 65 | 96 | 700 | |
| | 2006.08-2011.01 | MT | F | L/R | Platform/Chassis FWD G9U 650 | Date from:2007.01 | GCO44026 | Outer Joint | 51T | 28 | 36 | 65 | 96 | 71 | I |
| | 2006.08-2011.01 | MT | F | R | Platform/Chassis FWD G9U 650 | | GCI50006 | Inner Joint | | 39 | 27 | 30 | 437 | 98 | |
| | 2006.08-2011.01 | SAT/6MT | F | R | Platform/Chassis FWD G9U 650 | | GDS50366 | Drive Shaft | 51T | 28 | 39 | 65 | 96 | 1116 | |
| 2.5 (107 kw) | 2006.08-2010.01 | 6AT/5MT/6MT | F | R | Platform/Chassis FWD G9U 632 | | GDS50066 | Drive Shaft | | 28 | 39 | 65 | 96 | 1142 | |
| | 2006.08-2010.01 | MT | F | L | Platform/Chassis FWD G9U 632 | Inner teeth of tranm.side:26 | GDS99286 | Drive Shaft | 51T | 28 | 39 | 65 | 96 | 700 | |
| | 2006.08-2010.01 | MT | F | L/R | Platform/Chassis FWD G9U 632 | | GCO44026 | Outer Joint | 51T | 28 | 36 | 65 | 96 | 71 | I |
| | 2006.08-2010.01 | MT | F | R | Platform/Chassis FWD G9U 632 | | GCI50006 | Inner Joint | | 39 | 27 | 30 | 437 | 98 | |
| | 2006.08-2010.01 | SAT/5MT/6MT | F | R | Platform/Chassis FWD G9U 632 | | GDS50366 | Drive Shaft | 51T | 28 | 39 | 65 | 96 | 1116 | |
| 2.8 (84 kw) | 1998.07-2001.10 | 5MT | F | L | Platform/Chassis FWD S9W 700, S9W 702 | | GDS44005 | Drive Shaft | 51T | 28 | 37 | 65 | 96 | 670 | |
| | 1998.07-2001.10 | 5MT | F | R | Platform/Chassis FWD S9W 700, S9W 702 | | GDS44004 | Drive Shaft | 51T | 28 | 39 | 67.1 | 93.5 | 1118 | |
| | 1998.07-2001.10 | 5MT | F | L/R | Platform/Chassis FWD S9W 700, S9W 702 | Internal teeth:27 | GCO44008 | Outer Joint | 51T | 28 | 27 | 67.1 | 93.5 | 64.5 | I |

| | YEAR | TRANSM. | F/R | L/R | BODY STYLE & DRIVE TYPE & ENGINE | REMARKS | G-AP Ref. | PRODUCT | ABS | Technical Specifications A | B | C | H | L | P |
|---|---|---|---|---|---|---|---|---|---|---|---|---|---|---|---|
| **RENAULT** | | | | | | | | | | | | | | | |
| **Master T35** | | | | | | | | | | | | | | | |
| 2.8 (84 kw) | 1998.07-2001.10 | 5MT | F | L/R | Platform/Chassis FWD S9W 700, S9W 702 | Internal teeth:36 | GCO44026 | Outer Joint | 51T | 28 | 36 | 65 | 96 | 71 | I |
| | 1998.07-2001.10 | MT | F | L | Platform/Chassis FWD S9W 700, S9W 702 | | GDS50010 | Drive Shaft | | 28 | | 67.1 | 93.5 | 669 | |
| | 1998.07-2001.10 | MT | F | R | Platform/Chassis FWD S9W 700, S9W 702 | Trans. code:PF1 | GDS50011 | Drive Shaft | | 28 | 39 | 67.1 | 93.5 | 1118 | |
| | 1998.07-2001.10 | MT | F | R | Platform/Chassis FWD S9W 700, S9W 702 | | GDS99151 | Drive Shaft | 51T | 28 | 39 | 65 | 96 | 1144 | |
| | 1998.07-2001.10 | MT | F | L/R | Platform/Chassis FWD S9W 700, S9W 702 | Date from:2000.04 | GCO44025 | Outer Joint | | 28 | 36 | 65 | 96 | 71 | I |
| | 1998.07-2001.10 | MT | F | L/R | Platform/Chassis FWD S9W 700, S9W 702 | | GCO50014 | Outer Joint | | 28 | 27 | 67.1 | 93.5 | 64.5 | I |
| | 1998.07-2001.10 | MT | F | R | Platform/Chassis FWD S9W 700, S9W 702 | | GCI50006 | Inner Joint | | 39 | 27 | 30 | 437 | 98 | |
| 3.0 (100 kw) | 2003.10-2010.01 | MT | F | L/R | Platform/Chassis FWD ZD3 200, ZD3 202 | Trans. code:PF6 | GCO44026 | Outer Joint | 51T | 28 | 36 | 65 | 96 | 71 | I |
| | 2003.10-2010.01 | SAT/6MT | F | L | Platform/Chassis FWD ZD3 200, ZD3 202 | | GDS50057 | Drive Shaft | 51T | 28 | 39 | 65 | 96 | 687 | |
| | 2003.10-2010.01 | SAT/6MT | F | R | Platform/Chassis FWD ZD3 200, ZD3 202 | | GDS50059 | Drive Shaft | 51T | 28 | 39 | 65 | 96 | 1126 | |
| | 2003.10-2010.01 | SAT/6MT | F | L | Platform/Chassis FWD ZD3 200, ZD3 202 | | GCI18272 | Inner Joint | | 39 | 26 | 39 | 74 | 116 | |
| **Megane** | | | | | | | | | | | | | | | |
| 1.0 (84 kw) | 2020.10- | 6MT | F | L | Hatchback FWD H5D 490 | | GDS50608 | Drive Shaft | | 25 | 26 | 52.5 | 88.5 | 697 | |
| | 2020.10- | 6MT | F | L/R | Hatchback FWD H5D 490 | | GCO50162 | Outer Joint | | 25 | 23 | 52.5 | 88.5 | 60.5 | M |
| | 2020.10- | 6MT | F | L | Hatchback FWD H5D 490 | | GCI50146 | Inner Joint | | 26 | 23 | 40 | 64 | 104 | |
| 1.0 (85 kw) | 2020.01- | 6MT | F | L | Saloon FWD | | GDS50608 | Drive Shaft | | 25 | 26 | 52.5 | 88.5 | 697 | |
| 1.2 (74 kw) | 2015.11- | 6MT | F | L | Hatchback FWD H5F 408 | | GDS50608 | Drive Shaft | | 25 | 26 | 52.5 | 88.5 | 697 | |
| | 2015.11- | 6MT | F | L/R | Hatchback FWD H5F 408 | | GCO50162 | Outer Joint | | 25 | 23 | 52.5 | 88.5 | 60.5 | M |
| | 2015.11- | 6MT | F | L | Hatchback FWD H5F 408 | | GCI50146 | Inner Joint | | 26 | 23 | 40 | 64 | 104 | |
| 1.2 (85 kw) | 2012.03-2015.08 | MT | F | R | Hatchback FWD H5F 400;H5F 408 | | GCO50212 | Outer Joint | | 25 | 25 | 52.6 | 88.5 | 58.5 | I |
| | 2012.03-2015.08 | MT | F | L/R | Hatchback FWD H5F 400;H5F 408 | | GCO50162 | Outer Joint | | 25 | 23 | 52.5 | 88.5 | 60.5 | M |
| | 2012.03-2015.08 | MT | F | R | Hatchback FWD H5F 400;H5F 408 | | GCI50135 | Inner Joint | | 26 | 22 | 33 | 346 | 96 | |
| 1.2 (97 kw) | 2013.01-2016.01 | MT | F | L/R | Hatchback FWD H5F 404;H5F 412;H5F 405 | | GCO50162 | Outer Joint | | 25 | 23 | 52.5 | 88.5 | 60.5 | M |
| | 2013.01-2016.01 | | F | R | Hatchback FWD H5F 404;H5F 412;H5F 405 | | GCO50212 | Outer Joint | | 25 | 25 | 52.6 | 88.5 | 58.5 | I |
| | 2013.01-2016.01 | | F | R | Hatchback FWD H5F 404;H5F 412;H5F 405 | | GCI50135 | Inner Joint | | 26 | 22 | 33 | 346 | 96 | |
| | 2015.11- | 6MT | F | L | Hatchback FWD H5F 408 | | GDS50608 | Drive Shaft | | 25 | 26 | 52.5 | 88.5 | 697 | |
| | 2015.11- | 6MT | F | L/R | Hatchback FWD H5F 408 | | GCO50162 | Outer Joint | | 25 | 23 | 52.5 | 88.5 | 60.5 | M |
| | 2015.11- | 6MT | F | L | Hatchback FWD H5F 408 | | GCI50146 | Inner Joint | | 26 | 23 | 40 | 64 | 104 | |
| | 2015.11- | 7DCT | F | L | Hatchback FWD H5F 408 | | GDS83834 | Drive Shaft | | 25 | 27 | 52.5 | 88.5 | 641 | |
| | 2015.11- | 7DCT | F | R | Hatchback FWD H5F 408 | | GDS83833 | Drive Shaft | | 25 | 27 | 52.5 | 88.5 | 1002 | |
| | 2015.11- | 7DCT | F | L/R | Hatchback FWD H5F 408 | | GCO82446 | Outer Joint | | 25 | 33 | 52.5 | 88.5 | 59 | I |
| | 2015.11- | 7DCT | F | L | Hatchback FWD H5F 408 | | GCI82387 | Inner Joint | | 27 | 33 | 40 | 65 | 109 | |
| | 2015.11- | 7DCT | F | R | Hatchback FWD H5F 408 | | GCI82386 | Inner Joint | | 27 | 33 | 40 | 400.5 | 89.5 | |
| | 2016.10- | 6MT | F | L | Saloon FWD H5F 408 | Date from:2017.01 | GDS50608 | Drive Shaft | | 25 | 26 | 52.5 | 88.5 | 697 | |
| | 2016.10- | 6MT | F | L | Saloon FWD H5F 408 | Date From:2017.01 | GCO50162 | Outer Joint | | 25 | 23 | 52.5 | 88.5 | 60.5 | M |
| | 2016.10- | 7AT | F | L | Saloon FWD H5F 408 | | GDS83834 | Drive Shaft | | 25 | 27 | 52.5 | 88.5 | 641 | |
| | 2016.10- | 7AT | F | R | Saloon FWD H5F 408 | | GDS83833 | Drive Shaft | | 25 | 27 | 52.5 | 88.5 | 1002 | |
| | 2016.10- | 7AT | F | L | Saloon FWD H5F 408 | | GCI82387 | Inner Joint | | 27 | 33 | 40 | 65 | 109 | |
| | 2016.10- | 7AT | F | R | Saloon FWD H5F 408 | | GCI82386 | Inner Joint | | 27 | 33 | 40 | 400.5 | 89.5 | |
| | 2016.10- | 7DCT | F | L/R | Saloon FWD H5F 408 | | GCO82446 | Outer Joint | | 25 | 33 | 52.5 | 88.5 | 59 | I |
| 1.3 (75 kw) | 2018.08- | 6MT | F | L | Hatchback FWD H5H 470 | | GDS50608 | Drive Shaft | | 25 | 26 | 52.5 | 88.5 | 697 | |
| | 2018.08- | 6MT | F | R | Hatchback FWD H5H 470 | | GDS84119 | Drive Shaft | | 25 | 26 | 52.5 | 88.5 | 946 | |
| | 2018.08- | 6MT | F | L/R | Hatchback FWD H5H 470 | | GCO50162 | Outer Joint | | 25 | 23 | 52.5 | 88.5 | 60.5 | M |
| | 2018.08- | 6MT | F | L | Hatchback FWD H5H 470 | | GCI50146 | Inner Joint | | 26 | 23 | 40 | 64 | 104 | |
| | 2018.08- | 6MT | F | R | Hatchback FWD H5H 470 | | GCI82523 | Inner Joint | | 26 | 23 | 33 | 346 | 98 | |
| 1.3 (85 kw) | 2018.01- | 6MT | F | L | Hatchback FWD H5H 450;H5H 470 | | GDS50608 | Drive Shaft | | 25 | 26 | 52.5 | 88.5 | 697 | |
| | 2018.01- | 6MT | F | R | Hatchback FWD H5H 450;H5H 470 | | GDS84119 | Drive Shaft | | 25 | 26 | 52.5 | 88.5 | 946 | |
| | 2018.01- | 6MT | F | L/R | Hatchback FWD H5H 450;H5H 470 | | GCO50162 | Outer Joint | | 25 | 23 | 52.5 | 88.5 | 60.5 | M |
| | 2018.01- | 6MT | F | L | Hatchback FWD H5H 450;H5H 470 | | GCI50146 | Inner Joint | | 26 | 23 | 40 | 64 | 104 | |
| | 2018.01- | 6MT | F | R | Hatchback FWD H5H 450;H5H 470 | | GCI82523 | Inner Joint | | 26 | 23 | 33 | 346 | 98 | |
| | 2018.01- | 6MT | F | L | Saloon FWD H5H 450;H5H 470 | | GDS50608 | Drive Shaft | | 25 | 26 | 52.5 | 88.5 | 697 | |
| | 2018.01- | 6MT | F | R | Saloon FWD H5H 450;H5H 470 | | GDS84119 | Drive Shaft | | 25 | 26 | 52.5 | 88.5 | 946 | |
| | 2018.01- | 6MT | F | L/R | Saloon FWD H5H 450;H5H 470 | | GCO50162 | Outer Joint | | 25 | 23 | 52.5 | 88.5 | 60.5 | M |
| | 2018.01- | 6MT | F | L | Saloon FWD H5H 450;H5H 470 | | GCI50146 | Inner Joint | | 26 | 23 | 40 | 64 | 104 | |
| | 2018.01- | 6MT | F | R | Saloon FWD H5H 450;H5H 470 | | GCI82523 | Inner Joint | | 26 | 23 | 33 | 346 | 98 | |
| 1.3 (103 kw) | 2018.01- | 6MT | F | L | Hatchback FWD H5H 450;H5H 470;H5H 490 | | GDS50608 | Drive Shaft | | 25 | 26 | 52.5 | 88.5 | 697 | |
| | 2018.01- | 6MT | F | R | Hatchback FWD H5H 450;H5H 470;H5H 490 | | GDS84119 | Drive Shaft | | 25 | 26 | 52.5 | 88.5 | 946 | |
| | 2018.01- | 6MT | F | L/R | Hatchback FWD H5H 450;H5H 470;H5H 490 | | GCO50162 | Outer Joint | | 25 | 23 | 52.5 | 88.5 | 60.5 | M |
| | 2018.01- | 6MT | F | L | Hatchback FWD H5H 450;H5H 470;H5H 490 | | GCI50146 | Inner Joint | | 26 | 23 | 40 | 64 | 104 | |
| | 2018.01- | 6MT | F | R | Hatchback FWD H5H 450;H5H 470;H5H 490 | | GCI82523 | Inner Joint | | 26 | 23 | 33 | 346 | 98 | |
| | 2018.01- | 7DCT | F | L | Hatchback FWD H5H 450;H5H 470;H5H 490 | | GDS83828 | Drive Shaft | | 25 | 27 | 52.5 | 88.5 | 643 | |
| | 2018.01- | 7DCT | F | R | Hatchback FWD H5H 450;H5H 470;H5H 490 | | GDS58142 | Drive Shaft | | 25 | 27 | 52.5 | 88.5 | 1000 | |
| | 2018.01- | 7DCT | F | L/R | Hatchback FWD H5H 450;H5H 470;H5H 490 | | GCO82418 | Outer Joint | | 25 | 35 | 52.5 | 88.5 | 61 | I |
| | 2018.01- | 7DCT | F | L | Hatchback FWD H5H 450;H5H 470;H5H 490 | | GCI82385 | Inner Joint | | 27 | 35 | 40 | 65 | 109.5 | |
| | 2018.01- | 7DCT | F | R | Hatchback FWD H5H 450;H5H 470;H5H 490 | | GCI84023 | Inner Joint | | 27 | 35 | 40 | 400 | 96.5 | |

| | YEAR | TRANSM. | F/R | L/R | BODY STYLE & DRIVE TYPE & ENGINE | REMARKS | G-AP Ref. | PRODUCT | ABS | Technical Specifications | | | | | |
|---|---|---|---|---|---|---|---|---|---|---|---|---|---|---|---|
| | | | | | | | | | | A | B | C | H | L | P |
| **RENAULT** **Megane** | | | | | | | | | | | | | | | |
| 1.3 (103 kw) | 2018.01- | 6MT | F | L | Saloon FWD H5H 490, H5H 450, H5H 470 | | GDS50608 | Drive Shaft | | 25 | 26 | 52.5 | 88.5 | 697 | |
| | 2018.01- | 6MT | F | R | Saloon FWD H5H 490, H5H 450, H5H 470 | | GDS84119 | Drive Shaft | | 25 | 26 | 52.5 | 88.5 | 946 | |
| | 2018.01- | 6MT | F | L/R | Saloon FWD H5H 490, H5H 450, H5H 470 | | GCO50162 | Outer Joint | | 25 | 23 | 52.5 | 88.5 | 60.5 | M |
| | 2018.01- | 6MT | F | L | Saloon FWD H5H 490, H5H 450, H5H 470 | | GCI50146 | Inner Joint | | 26 | 23 | 40 | 64 | 104 | |
| | 2018.01- | 6MT | F | R | Saloon FWD H5H 490, H5H 450, H5H 470 | | GCI82523 | Inner Joint | | 26 | 23 | 33 | 346 | 98 | |
| | 2018.01- | 7DCT | F | L | Saloon FWD H5H 490, H5H 450, H5H 470 | | GDS83828 | Drive Shaft | | 25 | 27 | 52.5 | 88.5 | 643 | |
| | 2018.01- | 7DCT | F | R | Saloon FWD H5H 490, H5H 450, H5H 470 | | GDS58142 | Drive Shaft | | 25 | 27 | 52.5 | 88.5 | 1000 | |
| | 2018.01- | 7DCT | F | L/R | Saloon FWD H5H 490, H5H 450, H5H 470 | | GCO82418 | Outer Joint | | 25 | 35 | 52.5 | 88.5 | 61 | I |
| | 2018.01- | 7DCT | F | L | Saloon FWD H5H 490, H5H 450, H5H 470 | | GCI82385 | Inner Joint | | 27 | 35 | 40 | 65 | 109.5 | |
| | 2018.01- | 7DCT | F | R | Saloon FWD H5H 490, H5H 450, H5H 470 | | GCI84023 | Inner Joint | | 27 | 35 | 40 | 400 | 96.5 | |
| 1.3 (116 kw) | 2020.08- | 7DCT | F | L | Hatchback FWD H5H 450;H5H 470;H5H 490 | | GDS58219 | Drive Shaft | | 29 | 27 | 60 | 97 | 652 | |
| | 2020.08- | 7DCT | F | L | Hatchback FWD H5H 450;H5H 470;H5H 490 | | GCO82323 | Outer Joint | | 29 | 35 | 60 | 97 | 63 | I |
| | 2020.08- | 7DCT | F | L | Hatchback FWD H5H 450;H5H 470;H5H 490 | | GCI82385 | Inner Joint | | 27 | 35 | 40 | 65 | 109.5 | |
| 1.3 (117 kw) | 2018.11- | 7DCT | F | L | Hatchback FWD H5H 470 | | GDS58219 | Drive Shaft | | 29 | 27 | 60 | 97 | 652 | |
| | 2018.11- | 7DCT | F | L | Hatchback FWD H5H 470 | | GCO82323 | Outer Joint | | 29 | 35 | 60 | 97 | 63 | I |
| | 2018.11- | 7DCT | F | L | Hatchback FWD H5H 470 | | GCI82385 | Inner Joint | | 27 | 35 | 40 | 65 | 109.5 | |
| 1.3 (120 kw) | 2018.01- | 7DCT | F | L | Hatchback FWD H5H 450;H5H 470 | | GDS58219 | Drive Shaft | | 29 | 27 | 60 | 97 | 652 | |
| | 2018.01- | 7DCT | F | L | Hatchback FWD H5H 450;H5H 470 | | GCO82323 | Outer Joint | | 29 | 35 | 60 | 97 | 63 | I |
| | 2018.01- | 7DCT | F | L | Hatchback FWD H5H 450;H5H 470 | | GCI82385 | Inner Joint | | 27 | 35 | 40 | 65 | 109.5 | |
| 1.4 (52 kw) | 1995.08-1999.02 | 5MT | F | L | Hatchback FWD E7J624 | | GDS50009 | Drive Shaft | 44T | 21 | | 57 | 84.5 | 645 | |
| | 1995.08-1999.02 | 5MT | F | R | Hatchback FWD E7J624 | Transm. Type:JB1/JB3 | GDS50021 | Drive Shaft | 44T | 21 | 23 | 57 | 84.5 | 750 | |
| | 1995.08-1999.02 | 5MT | F | R | Hatchback FWD E7J624 | | GDS50327 | Drive Shaft | 44T | 21 | 23 | 57 | 84.5 | 740 | |
| | 1995.08-1999.02 | 5MT | F | L/R | Hatchback FWD E7J624 | | GCO50101 | Outer Joint | 44T | 21 | 30 | 52.2 | 85.5 | 59 | I |
| | 1995.08-1999.02 | MT | F | L | Hatchback FWD E7J624 | | GDS50055 | Drive Shaft | | 21 | 30 | 50 | 84 | 650 | |
| | 1995.08-1999.02 | MT | F | R | Hatchback FWD E7J624 | Trans. code:JB1/3,JC5 | GDS50038 | Drive Shaft | 44T | 21 | 23 | 52.2 | 85.5 | 752 | |
| | 1995.08-1999.02 | MT | F | R | Hatchback FWD E7J624 | | GDS50107 | Drive Shaft | 44T | 21 | 23 | 57 | 84.5 | 736 | |
| | 1995.08-1999.02 | MT | F | R | Hatchback FWD E7J624 | | GDS50173 | Drive Shaft | | 21 | 23 | 57 | 84.5 | 743 | |
| | 1995.08-1999.02 | MT | F | R | Hatchback FWD E7J624 | | GDS50316 | Drive Shaft | | 21 | 23 | 57 | 84 | 741 | |
| 1.4 (55 kw) | 1996.01-2003.08 | 5MT | F | L | Hatchback FWD E7J626/E7J764 | | GDS50009 | Drive Shaft | 44T | 21 | | 57 | 84.5 | 645 | |
| | 1996.01-2003.08 | 5MT | F | R | Hatchback FWD E7J626/E7J764 | Transm. Type:JB1/JB3 | GDS50021 | Drive Shaft | 44T | 21 | 23 | 57 | 84.5 | 750 | |
| | 1996.01-2003.08 | 5MT | F | R | Hatchback FWD E7J626/E7J764 | | GDS50327 | Drive Shaft | 44T | 21 | 23 | 57 | 84.5 | 740 | |
| | 1996.01-2003.08 | 5MT | F | L/R | Hatchback FWD E7J626/E7J764 | | GCO50101 | Outer Joint | 44T | 21 | 30 | 52.2 | 85.5 | 59 | I |
| | 1996.01-2003.08 | MT | F | L | Hatchback FWD E7J626/E7J764 | | GDS50055 | Drive Shaft | | 21 | 30 | 50 | 84 | 650 | |
| | 1996.01-2003.08 | MT | F | R | Hatchback FWD E7J626/E7J764 | Trans. code:JB1/3,JC5 | GDS50038 | Drive Shaft | 44T | 21 | 23 | 52.2 | 85.5 | 752 | |
| | 1996.01-2003.08 | MT | F | R | Hatchback FWD E7J626/E7J764 | | GDS50107 | Drive Shaft | 44T | 21 | 23 | 57 | 84.5 | 736 | |
| | 1996.01-2003.08 | MT | F | R | Hatchback FWD E7J626/E7J764 | | GDS50173 | Drive Shaft | | 21 | 23 | 57 | 84.5 | 743 | |
| | 1996.01-2003.08 | MT | F | R | Hatchback FWD E7J626/E7J764 | | GDS50316 | Drive Shaft | | 21 | 23 | 57 | 84 | 741 | |
| 1.4 (60 kw) | 2003.09- | 5MT | F | L | Saloon FWD K4J 732 | | GDS99070 | Drive Shaft | | 23 | 26 | 49 | 86 | 675 | |
| | 2003.09- | 5MT | F | R | Saloon FWD K4J 732 | | GDS99071 | Drive Shaft | | 23 | 26 | 49 | 86 | 911 | |
| | 2003.09- | 5MT | F | L/R | Saloon FWD K4J 732 | | GCO99085 | Outer Joint | | 23 | 30 | 49 | 86 | 59 | I |
| | 2003.09- | 5MT | F | R | Saloon FWD K4J 732 | Date to:2006.03 | GCI99169 | Inner Joint | | 26 | 30 | 33 | 326 | 95 | |
| | 2003.10-2008.02 | 5MT | F | L | Hatchback FWD K4J 732 | | GDS99070 | Drive Shaft | | 23 | 26 | 49 | 86 | 675 | |
| | 2003.10-2008.02 | 5MT | F | R | Hatchback FWD K4J 732 | | GDS99071 | Drive Shaft | | 23 | 26 | 49 | 86 | 911 | |
| | 2003.10-2008.02 | 5MT | F | L/R | Hatchback FWD K4J 732 | | GCO99085 | Outer Joint | | 23 | 30 | 49 | 86 | 59 | I |
| | 2003.10-2008.02 | 5MT | F | R | Hatchback FWD K4J 732 | | GCI99169 | Inner Joint | | 26 | 30 | 33 | 326 | 95 | |
| 1.4 (70 kw) | 1999.03-2003.08 | MT | F | L | Hatchback FWD K4J714/K4J750 | For Engine Code:K4J750 | GDS50009 | Drive Shaft | 44T | 21 | | 57 | 84.5 | 645 | |
| | 1999.03-2003.08 | MT | F | L | Hatchback FWD K4J714/K4J750 | Supplementary Article/Supplementary Info:with spring | GDS50055 | Drive Shaft | | 21 | 30 | 50 | 84 | 650 | |
| | 1999.03-2003.08 | MT | F | R | Hatchback FWD K4J714/K4J750 | Engine code:K4J714 | GDS50038 | Drive Shaft | 44T | 21 | 23 | 52.2 | 85.5 | 752 | |
| | 1999.03-2003.08 | MT | F | R | Hatchback FWD K4J714/K4J750 | | GDS50107 | Drive Shaft | 44T | 21 | 23 | 57 | 84.5 | 736 | |
| | 1999.03-2003.08 | MT | F | R | Hatchback FWD K4J714/K4J750 | | GDS50173 | Drive Shaft | | 21 | 23 | 57 | 84.5 | 743 | |
| | 1999.03-2003.08 | MT | F | R | Hatchback FWD K4J714/K4J750 | Supplementary Article/Supplementary Info:with spring | GDS50316 | Drive Shaft | | 21 | 23 | 57 | 84 | 741 | |
| | 1999.03-2003.08 | MT | F | R | Hatchback FWD K4J714/K4J750 | For Engine Code:K4J750 | GDS50327 | Drive Shaft | 44T | 21 | 23 | 57 | 84.5 | 740 | |
| | 1999.03-2003.08 | MT | F | R | Hatchback FWD K4J714/K4J750 | Engine code:K4J714 | GCO50101 | Outer Joint | 44T | 21 | 30 | 52.2 | 85.5 | 59 | I |
| | 1999.03-2003.08 | MT | F | L/R | Hatchback FWD K4J714/K4J750 | For Engine Code:K4J750 | GCO50076 | Outer Joint | 44T | 21 | 30 | 57 | 84.5 | 62 | M |
| 1.4 (72 kw) | 2002.11-2008.02 | 5MT | F | L | Hatchback FWD K4J 730;K4J 740 | | GDS99070 | Drive Shaft | | 23 | 26 | 49 | 86 | 675 | |
| | 2002.11-2008.02 | 5MT | F | R | Hatchback FWD K4J 730;K4J 740 | | GDS99071 | Drive Shaft | | 23 | 26 | 49 | 86 | 911 | |
| | 2002.11-2008.02 | 5MT | F | L/R | Hatchback FWD K4J 730;K4J 740 | | GCO99085 | Outer Joint | | 23 | 30 | 49 | 86 | 59 | I |
| | 2002.11-2008.02 | MT | F | R | Hatchback FWD K4J 730;K4J 740 | | GCI99169 | Inner Joint | | 26 | 30 | 33 | 326 | 95 | |
| | 2003.09- | 5MT | F | L | Saloon FWD K4J 730;K4J 740 | | GDS99070 | Drive Shaft | | 23 | 26 | 49 | 86 | 675 | |
| | 2003.09- | 5MT | F | R | Saloon FWD K4J 730;K4J 740 | | GDS99071 | Drive Shaft | | 23 | 26 | 49 | 86 | 911 | |
| | 2003.09- | 5MT | F | L/R | Saloon FWD K4J 730;K4J 740 | | GCO99085 | Outer Joint | | 23 | 30 | 49 | 86 | 59 | I |
| | 2003.09- | MT | F | R | Saloon FWD K4J 730;K4J 740 | Date to:2008.11 | GCI99169 | Inner Joint | | 26 | 30 | 33 | 326 | 95 | |
| 1.4 (96 kw) | 2009.04-2015.08 | 6MT | F | R | Hatchback FWD H4J 700 | | GDS50604 | Drive Shaft | | 25 | 26 | 52.6 | 89 | 942 | |
| | 2009.04-2015.08 | 6MT | F | L/R | Hatchback FWD H4J 700 | | GCO50157 | Outer Joint | | 25 | 33 | 52.6 | 89 | 60 | I |
| | 2009.04-2015.08 | MT | F | L/R | Hatchback FWD H4J 700 | | GCO99213 | Outer Joint | | 25 | 33 | 53 | 88 | 61.5 | I |

| | YEAR | TRANSM. | F/R | L/R | BODY STYLE & DRIVE TYPE & ENGINE | REMARKS | G-AP Ref. | PRODUCT | ABS | Technical Specifications | | | | | |
|---|---|---|---|---|---|---|---|---|---|---|---|---|---|---|---|
| | | | | | | | | | | A | B | C | H | L | P |
| **RENAULT** | | | | | | | | | | | | | | | |
| **Megane** | | | | | | | | | | | | | | | |
| 1.5 (60 kw) | 2002.09-2008.02 | 5MT | F | L | Hatchback FWD K9K 722 | | GDS99070 | Drive Shaft | | 23 | 26 | 49 | 86 | 675 | |
| | 2002.09-2008.02 | 5MT | F | R | Hatchback FWD K9K 722 | | GDS99071 | Drive Shaft | | 23 | 26 | 49 | 86 | 911 | |
| | 2002.09-2008.02 | 5MT | F | L/R | Hatchback FWD K9K 722 | | GCO99085 | Outer Joint | | 23 | 30 | 49 | 86 | 59 | I |
| | 2002.09-2008.02 | 5MT | F | R | Hatchback FWD K9K 722 | | GCI99169 | Inner Joint | | 26 | 30 | 33 | 326 | 95 | |
| | 2003.08-2008.02 | 5MT | F | L | Hatchback Van FWD K9K 722 | For Engine Code:K9K722 | GDS99070 | Drive Shaft | | 23 | 26 | 49 | 86 | 675 | |
| | 2003.08-2008.02 | 5MT | F | R | Hatchback Van FWD K9K 722 | For Engine Code:K9K722 | GDS99071 | Drive Shaft | | 23 | 26 | 49 | 86 | 911 | |
| | 2003.08-2008.02 | 5MT | F | L/R | Hatchback Van FWD K9K 722 | For Engine Code:K9K722 | GCO99085 | Outer Joint | | 23 | 30 | 49 | 86 | 59 | I |
| | 2003.08-2008.02 | 5MT | F | L/R | Hatchback Van FWD K9K 722 | For Engine Code:K9K732 | GCO99213 | Outer Joint | | 25 | 33 | 53 | 88 | 61.5 | I |
| | 2003.08-2008.02 | 5MT | F | L | Hatchback Van FWD K9K 722 | For Engine Code:K9K722 | GCI50048 | Inner Joint | | 26 | 30 | 40 | 64 | 121 | |
| | 2003.08-2008.02 | 5MT | F | R | Hatchback Van FWD K9K 722 | For Engine Code:K9K722 | GCI99169 | Inner Joint | | 26 | 30 | 33 | 326 | 95 | |
| | 2003.08-2010.12 | 5MT | F | L | Saloon FWD K9K 722 | | GDS99070 | Drive Shaft | | 23 | 26 | 49 | 86 | 675 | |
| | 2003.08-2010.12 | 5MT | F | R | Saloon FWD K9K 722 | | GDS99071 | Drive Shaft | | 23 | 26 | 49 | 86 | 911 | |
| | 2003.08-2010.12 | 5MT | F | L/R | Saloon FWD K9K 722 | | GCO99085 | Outer Joint | | 23 | 30 | 49 | 86 | 59 | I |
| | 2003.08-2010.12 | MT | F | R | Saloon FWD K9K 722 | | GCI99169 | Inner Joint | | 26 | 30 | 33 | 326 | 95 | |
| 1.5 (63 kw) | 2005.04-2008.02 | 5MT | F | L | Hatchback Van FWD K9K 724 | | GDS99070 | Drive Shaft | | 23 | 26 | 49 | 86 | 675 | |
| | 2005.04-2008.02 | 5MT | F | R | Hatchback Van FWD K9K 724 | | GDS99071 | Drive Shaft | | 23 | 26 | 49 | 86 | 911 | |
| | 2005.04-2008.02 | 5MT | F | L | Hatchback Van FWD K9K 724 | | GCI50048 | Inner Joint | | 26 | 30 | 40 | 64 | 121 | |
| | 2005.04-2008.02 | 5MT | F | R | Hatchback Van FWD K9K 724 | | GCI99169 | Inner Joint | | 26 | 30 | 33 | 326 | 95 | |
| | 2005.04-2008.02 | | F | L | Hatchback Van FWD K9K 724 | | GCO99085 | Outer Joint | | 23 | 30 | 49 | 86 | 59 | I |
| | 2005.05-2008.02 | 5MT | F | L | Hatchback FWD K9K 724 | | GDS99070 | Drive Shaft | | 23 | 26 | 49 | 86 | 675 | |
| | 2005.05-2008.02 | 5MT | F | R | Hatchback FWD K9K 724 | | GDS99071 | Drive Shaft | | 23 | 26 | 49 | 86 | 911 | |
| | 2005.05-2008.02 | 5MT | F | L/R | Hatchback FWD K9K 724 | | GCO99085 | Outer Joint | | 23 | 30 | 49 | 86 | 59 | I |
| | 2005.05-2008.02 | 5MT | F | R | Hatchback FWD K9K 724 | | GCI99169 | Inner Joint | | 26 | 30 | 33 | 326 | 95 | |
| | 2005.05-2010.12 | 5MT | F | L | Saloon FWD K9K 724 | | GDS99070 | Drive Shaft | | 23 | 26 | 49 | 86 | 675 | |
| | 2005.05-2010.12 | 5MT | F | R | Saloon FWD K9K 724 | | GDS99071 | Drive Shaft | | 23 | 26 | 49 | 86 | 911 | |
| | 2005.05-2010.12 | 5MT | F | L/R | Saloon FWD K9K 724 | | GCO99085 | Outer Joint | | 23 | 30 | 49 | 86 | 59 | I |
| | 2005.05-2010.12 | MT | F | R | Saloon FWD K9K 724 | | GCI99169 | Inner Joint | | 26 | 30 | 33 | 326 | 95 | |
| | 2008.11-2015.08 | 5MT | F | L | Hatchback FWD K9K 830 | Date to:2012.02 | GDS50383 | Drive Shaft | | 25 | 26 | 52.7 | 88.5 | 688 | |
| | 2008.11-2015.08 | 5MT | F | L | Hatchback FWD K9K 830 | Date to:2012.02;Inner teeth of wheel side:33 | GDS50415 | Drive Shaft | | 25 | 26 | 52.6 | 89 | 704 | |
| | 2008.11-2015.08 | 5MT | F | L | Hatchback FWD K9K 830 | | GDS50426 | Drive Shaft | | 25 | 26 | 52.7 | 88.5 | 680 | |
| | 2008.11-2015.08 | 5MT | F | L | Hatchback FWD K9K 830 | Date to:2012.02;Inner teeth of wheel side:35 | GDS50498 | Drive Shaft | | 25 | 26 | 52.6 | 89 | 702 | |
| | 2008.11-2015.08 | 5MT | F | L/R | Hatchback FWD K9K 830 | | GCO50145 | Outer Joint | | 25 | 33 | 52.7 | 88.5 | 59.5 | I |
| | 2008.11-2015.08 | 5MT | F | L | Hatchback FWD K9K 830 | | GCI50070 | Inner Joint | | 26 | 33 | 40 | 64 | 106 | |
| | 2008.11-2015.08 | 5MT | F | L | Hatchback FWD K9K 830 | Date to:2012.02 | GCI50096 | Inner Joint | | 26 | 30 | 40 | 64 | 96 | |
| | 2008.11-2015.08 | 5MT | F | R | Hatchback FWD K9K 830 | | GCI50051 | Inner Joint | | 26 | 22 | 33 | 326 | 96 | |
| | 2008.11-2015.08 | MT | F | L/R | Hatchback FWD K9K 830 | Date from:2012.03 | GCO50162 | Outer Joint | | 25 | 23 | 52.5 | 88.5 | 60.5 | M |
| | 2008.11-2015.08 | MT | F | L/R | Hatchback FWD K9K 830 | Date from:2009.01 | GCO99213 | Outer Joint | | 25 | 33 | 53 | 88 | 61.5 | I |
| | 2008.11-2015.08 | | F | R | Hatchback FWD K9K 830 | | GDS50510 | Drive Shaft | | 25 | 26 | 52.4 | 88.5 | 929 | |
| 1.5 (66 kw) | 2008.11-2015.08 | 5MT | F | L | Hatchback FWD K9K 834 | | GDS50383 | Drive Shaft | | 25 | 26 | 52.7 | 88.5 | 688 | |
| | 2008.11-2015.08 | 5MT | F | L | Hatchback FWD K9K 834 | Date to:2012.02;Inner teeth of wheel side:33 | GDS50415 | Drive Shaft | | 25 | 26 | 52.6 | 89 | 704 | |
| | 2008.11-2015.08 | 5MT | F | L | Hatchback FWD K9K 834 | Date to:2012.02;Inner teeth of wheel side:35 | GDS50498 | Drive Shaft | | 25 | 26 | 52.6 | 89 | 702 | |
| | 2008.11-2015.08 | 5MT | F | L/R | Hatchback FWD K9K 834 | | GCO50145 | Outer Joint | | 25 | 33 | 52.7 | 88.5 | 59.5 | I |
| | 2008.11-2015.08 | 5MT | F | L | Hatchback FWD K9K 834 | | GCI50096 | Inner Joint | | 26 | 30 | 40 | 64 | 96 | |
| | 2008.11-2015.08 | 5MT | F | R | Hatchback FWD K9K 834 | | GCI50051 | Inner Joint | | 26 | 22 | 33 | 326 | 96 | |
| | 2008.11-2015.08 | MT | F | L | Hatchback FWD K9K 834 | | GDS50426 | Drive Shaft | | 25 | 26 | 52.7 | 88.5 | 680 | |
| | 2008.11-2015.08 | MT | F | L/R | Hatchback FWD K9K 834 | Date from:2012.03 | GCO50162 | Outer Joint | | 25 | 23 | 52.5 | 88.5 | 60.5 | M |
| | 2008.11-2015.08 | MT | F | L/R | Hatchback FWD K9K 834 | | GCO99213 | Outer Joint | | 25 | 33 | 53 | 88 | 61.5 | I |
| | 2008.11-2015.08 | | F | R | Hatchback FWD K9K 834 | | GDS50510 | Drive Shaft | | 25 | 26 | 52.4 | 88.5 | 929 | |
| | 2008.11-2015.08 | 5MT | F | L | Hatchback Van FWD K9K 834 | Date to:2012.02 | GDS50383 | Drive Shaft | | 25 | 26 | 52.7 | 88.5 | 688 | |
| | 2008.11-2015.08 | 5MT | F | L | Hatchback Van FWD K9K 834 | Date to:2012.02;Inner teeth of wheel side:33 | GDS50415 | Drive Shaft | | 25 | 26 | 52.6 | 89 | 704 | |
| | 2008.11-2015.08 | 5MT | F | L | Hatchback Van FWD K9K 834 | Date to:2012.02;Inner teeth of wheel side:35 | GDS50498 | Drive Shaft | | 25 | 26 | 52.6 | 89 | 702 | |
| | 2008.11-2015.08 | 5MT | F | R | Hatchback Van FWD K9K 834 | | GDS50510 | Drive Shaft | | 25 | 26 | 52.4 | 88.5 | 929 | |
| | 2008.11-2015.08 | 5MT | F | L | Hatchback Van FWD K9K 834 | Date to:2012.02 | GCO50145 | Outer Joint | | 25 | 33 | 52.7 | 88.5 | 59.5 | I |
| | 2008.11-2015.08 | 5MT | F | L | Hatchback Van FWD K9K 834 | Date to:2012.02 | GCO50148 | Outer Joint | | 25 | 35 | 52.6 | 89 | 60 | I |
| | 2008.11-2015.08 | 5MT | F | L | Hatchback Van FWD K9K 834 | Date to:2012.02 | GCI50096 | Inner Joint | | 26 | 30 | 40 | 64 | 96 | |
| | 2015.11- | 6MT | F | L | Hatchback FWD K9K 656 | | GDS50608 | Drive Shaft | | 25 | 26 | 52.5 | 88.5 | 697 | |
| | 2015.11- | 6MT | F | R | Hatchback FWD K9K 656 | | GDS50607 | Drive Shaft | | 25 | 26 | 52.5 | 88.5 | 945 | |
| | 2015.11- | 6MT | F | L/R | Hatchback FWD K9K 656 | | GCO50162 | Outer Joint | | 25 | 23 | 52.5 | 88.5 | 60.5 | M |
| | 2015.11- | 6MT | F | L | Hatchback FWD K9K 656 | | GCI50146 | Inner Joint | | 26 | 23 | 40 | 64 | 104 | |
| | 2015.11- | 6MT | F | R | Hatchback FWD K9K 656 | | GCI50145 | Inner Joint | | 26 | 23 | 33 | 330.5 | 98 | |
| | 2016.10- | 6MT | F | L | Saloon FWD K9K 656 | | GDS50608 | Drive Shaft | | 25 | 26 | 52.5 | 88.5 | 697 | |
| | 2016.10- | 6MT | F | R | Saloon FWD K9K 656 | | GDS50607 | Drive Shaft | | 25 | 26 | 52.5 | 88.5 | 945 | |
| | 2016.10- | 6MT | F | L/R | Saloon FWD K9K 656 | | GCO50162 | Outer Joint | | 25 | 23 | 52.5 | 88.5 | 60.5 | M |
| | 2016.10- | 6MT | F | L | Saloon FWD K9K 656 | | GCI50146 | Inner Joint | | 26 | 23 | 40 | 64 | 104 | |
| | 2016.10- | 6MT | F | R | Saloon FWD K9K 656 | | GCI50145 | Inner Joint | | 26 | 23 | 33 | 330.5 | 98 | |

| | YEAR | TRANSM. | F/R | L/R | BODY STYLE & DRIVE TYPE & ENGINE | REMARKS | G-AP Ref. | PRODUCT | ABS | Technical Specifications | | | | | |
|---|---|---|---|---|---|---|---|---|---|---|---|---|---|---|---|
| | | | | | | | | | | A | B | C | H | L | P |
| **RENAULT** **Megane** | | | | | | | | | | | | | | | |
| 1.5 (70 kw) | 2013.11-2015.08 | 6MT | F | R | Hatchback FWD K9K 846 | Date from:2012.03 | GCI50051 | Inner Joint | | 26 | 22 | 33 | 326 | 96 | |
| | 2013.11-2015.08 | MT | F | L | Hatchback FWD K9K 846 | | GDS50426 | Drive Shaft | | 25 | 26 | 52.7 | 88.5 | 680 | |
| | 2013.11-2015.08 | MT | F | L/R | Hatchback FWD K9K 846 | | GCO50145 | Outer Joint | | 25 | 33 | 52.7 | 88.5 | 59.5 | I |
| | 2013.11-2015.08 | MT | F | L/R | Hatchback FWD K9K 846 | | GCO50162 | Outer Joint | | 25 | 23 | 52.5 | 88.5 | 60.5 | M |
| | 2013.11-2015.08 | MT | F | L/R | Hatchback FWD K9K 846 | | GCO99213 | Outer Joint | | 25 | 33 | 53 | 88 | 61.5 | I |
| | 2013.11-2015.08 | MT | F | L | Hatchback FWD K9K 846 | | GCI50070 | Inner Joint | | 26 | 33 | 40 | 64 | 106 | |
| | 2013.11-2015.08 | | F | R | Hatchback FWD K9K 846 | Date From:2012.03 | GDS50510 | Drive Shaft | | 25 | 26 | 52.4 | 88.5 | 929 | |
| | 2018.08- | 6MT | F | L | Hatchback FWD K9K 872;K9K 854;K9K 876;K9K 877 | | GDS50608 | Drive Shaft | | 25 | 26 | 52.5 | 88.5 | 697 | |
| | 2018.08- | 6MT | F | L | Hatchback FWD K9K 872;K9K 854;K9K 876;K9K 877 | | GCO50162 | Outer Joint | | 25 | 23 | 52.5 | 88.5 | 60.5 | M |
| | 2018.08- | 6MT | F | L | Hatchback FWD K9K 872;K9K 854;K9K 876;K9K 877 | | GCI50146 | Inner Joint | | 26 | 23 | 40 | 64 | 104 | |
| | 2019.02- | 6MT | F | L | Saloon FWD K9K 872 | | GDS50608 | Drive Shaft | | 25 | 26 | 52.5 | 88.5 | 697 | |
| | 2019.02- | 6MT | F | L | Saloon FWD K9K 872 | | GCO50162 | Outer Joint | | 25 | 23 | 52.5 | 88.5 | 60.5 | M |
| | 2019.02- | 6MT | F | L | Saloon FWD K9K 872 | | GCI50146 | Inner Joint | | 26 | 23 | 40 | 64 | 104 | |
| 1.5 (74 kw) | 2003.08-2008.02 | 5MT | F | L | Hatchback Van FWD K9K 728 | | GDS50516 | Drive Shaft | | 23 | 26 | 49 | 86 | 674 | |
| | 2003.08-2008.02 | 5MT | F | R | Hatchback Van FWD K9K 728 | | GDS99071 | Drive Shaft | | 23 | 26 | 49 | 86 | 911 | |
| | 2003.08-2008.02 | 5MT | F | L | Hatchback Van FWD K9K 728 | | GCO50117 | Outer Joint | | 23 | 32 | 49 | 86 | 62 | I |
| | 2003.08-2008.02 | 5MT | F | R | Hatchback Van FWD K9K 728 | | GCO99085 | Outer Joint | | 23 | 30 | 49 | 86 | 59 | I |
| | 2003.08-2008.02 | 5MT | F | R | Hatchback Van FWD K9K 728 | | GCI99169 | Inner Joint | | 26 | 30 | 33 | 326 | 95 | |
| | 2003.10-2008.02 | 4AT | F | L | Hatchback FWD K9K 728;K9K 729 | | GDS50405 | Drive Shaft | | 23 | 26 | 49 | 86 | 674 | |
| | 2003.10-2008.02 | 4AT | F | L | Hatchback FWD K9K 728;K9K 729 | | GDS99070 | Drive Shaft | | 23 | 26 | 49 | 86 | 675 | |
| | 2003.10-2008.02 | 5MT | F | L | Hatchback FWD K9K 728;K9K 729 | hollow shaft | GDS50516 | Drive Shaft | | 23 | 26 | 49 | 86 | 674 | |
| | 2003.10-2008.02 | 5MT | F | R | Hatchback FWD K9K 728;K9K 729 | hollow shaft | GDS99188 | Drive Shaft | | 23 | 26 | 49 | 86 | 916 | |
| | 2003.10-2008.02 | AT | F | R | Hatchback FWD K9K 728;K9K 729 | Date to:2006.12 | GDS50440 | Drive Shaft | | 23 | 23 | 49 | 86 | 804 | |
| | 2003.10-2008.02 | MT | F | L | Hatchback FWD K9K 728;K9K 729 | Date to:2006.12;solid shaft | GDS50405 | Drive Shaft | | 23 | 26 | 49 | 86 | 674 | |
| | 2003.10-2008.02 | MT | F | R | Hatchback FWD K9K 728;K9K 729 | Date to:2006.12;solid shaft | GDS99071 | Drive Shaft | | 23 | 26 | 49 | 86 | 911 | |
| | 2003.10-2008.02 | MT | F | L/R | Hatchback FWD K9K 728;K9K 729 | Date to:2006.12 | GCO99085 | Outer Joint | | 23 | 30 | 49 | 86 | 59 | I |
| | 2003.10-2008.02 | MT | F | R | Hatchback FWD K9K 728;K9K 729 | | GCI99169 | Inner Joint | | 26 | 30 | 33 | 326 | 95 | |
| | 2004.02-2010.12 | 4AT | F | L | Saloon FWD K9K 728;K9K 729 | | GDS50405 | Drive Shaft | | 23 | 26 | 49 | 86 | 674 | |
| | 2004.02-2010.12 | 4AT | F | L | Saloon FWD K9K 728;K9K 729 | | GDS99070 | Drive Shaft | | 23 | 26 | 49 | 86 | 675 | |
| | 2004.02-2010.12 | 5MT | F | L | Saloon FWD K9K 728;K9K 729 | | GDS50516 | Drive Shaft | | 23 | 26 | 49 | 86 | 674 | |
| | 2004.02-2010.12 | 5MT | F | R | Saloon FWD K9K 728;K9K 729 | | GDS99188 | Drive Shaft | | 23 | 26 | 49 | 86 | 916 | |
| | 2004.02-2010.12 | 5MT | F | R | Saloon FWD K9K 728;K9K 729 | | GCI99169 | Inner Joint | | 26 | 30 | 33 | 326 | 95 | |
| | 2004.02-2010.12 | AT | F | R | Saloon FWD K9K 728;K9K 729 | Date to:2006.12 | GDS50440 | Drive Shaft | | 23 | 23 | 49 | 86 | 804 | |
| | 2004.02-2010.12 | MT | F | L/R | Saloon FWD K9K 728;K9K 729 | Date to:2006.12 | GCO99085 | Outer Joint | | 23 | 30 | 49 | 86 | 59 | I |
| 1.5 (76 kw) | 2003.10-2010.12 | 6MT | F | L | Saloon FWD K9K 734 | | GDS50402 | Drive Shaft | | 25 | 26 | 53 | 88 | 660 | |
| | 2003.10-2010.12 | 6MT | F | R | Saloon FWD K9K 734 | | GDS50348 | Drive Shaft | | 25 | 26 | 53 | 88 | 905 | |
| | 2003.10-2010.12 | MT | F | L | Saloon FWD K9K 734 | Date from:2007.01 | GDS50405 | Drive Shaft | | 23 | 26 | 49 | 86 | 674 | |
| | 2003.10-2010.12 | MT | F | R | Saloon FWD K9K 734 | Date from:2007.01 | GDS99071 | Drive Shaft | | 23 | 26 | 49 | 86 | 911 | |
| | 2003.10-2010.12 | MT | F | L/R | Saloon FWD K9K 734 | Date from:2007.01 | GCO99085 | Outer Joint | | 23 | 30 | 49 | 86 | 59 | I |
| | 2003.10-2010.12 | MT | F | R | Saloon FWD K9K 734 | | GCI99169 | Inner Joint | | 26 | 30 | 33 | 326 | 95 | |
| | 2003.10-2010.12 | MT/6MT | F | L/R | Saloon FWD K9K 734 | Date from:2007.01 | GCO99213 | Outer Joint | | 25 | 33 | 53 | 88 | 61.5 | I |
| | 2003.10-2010.12 | | F | L | Saloon FWD K9K 734 | for OE number:8200432515 | GDS50516 | Drive Shaft | | 23 | 26 | 49 | 86 | 674 | |
| | 2003.10-2010.12 | | F | R | Saloon FWD K9K 734 | for OE number:8200379235 | GDS99188 | Drive Shaft | | 23 | 26 | 49 | 86 | 916 | |
| | 2007.01-2009.03 | 6MT | F | L | Hatchback FWD K9K 734 | | GDS50402 | Drive Shaft | | 25 | 26 | 53 | 88 | 660 | |
| | 2007.01-2009.03 | 6MT | F | R | Hatchback FWD K9K 734 | | GDS50348 | Drive Shaft | | 25 | 26 | 53 | 88 | 905 | |
| | 2007.01-2009.03 | MT | F | L | Hatchback FWD K9K 734 | solid shaft | GDS50405 | Drive Shaft | | 23 | 26 | 49 | 86 | 674 | |
| | 2007.01-2009.03 | MT | F | L | Hatchback FWD K9K 734 | for OE number:8200432515;hollow shaft | GDS50516 | Drive Shaft | | 23 | 26 | 49 | 86 | 674 | |
| | 2007.01-2009.03 | MT | F | R | Hatchback FWD K9K 734 | solid shaft | GDS99071 | Drive Shaft | | 23 | 26 | 49 | 86 | 911 | |
| | 2007.01-2009.03 | MT | F | R | Hatchback FWD K9K 734 | for OE number:8200379235;hollow shaft | GDS99188 | Drive Shaft | | 23 | 26 | 49 | 86 | 916 | |
| | 2007.01-2009.03 | MT | F | L/R | Hatchback FWD K9K 734 | | GCO99085 | Outer Joint | | 23 | 30 | 49 | 86 | 59 | I |
| | 2007.01-2009.03 | MT | F | L/R | Hatchback FWD K9K 734 | | GCO99213 | Outer Joint | | 25 | 33 | 53 | 88 | 61.5 | I |
| | 2007.01-2009.03 | MT | F | R | Hatchback FWD K9K 734 | | GCI99169 | Inner Joint | | 26 | 30 | 33 | 326 | 95 | |
| | 2007.01-2009.03 | 6MT | F | L | Hatchback Van FWD K9K 734 | | GDS50402 | Drive Shaft | | 25 | 26 | 53 | 88 | 660 | |
| | 2007.01-2009.03 | 6MT | F | R | Hatchback Van FWD K9K 734 | | GDS50348 | Drive Shaft | | 25 | 26 | 53 | 88 | 905 | |
| | 2007.01-2009.03 | 6MT | F | L/R | Hatchback Van FWD K9K 734 | | GCO99213 | Outer Joint | | 25 | 33 | 53 | 88 | 61.5 | I |
| | 2007.01-2009.03 | | F | L | Hatchback Van FWD K9K 734 | | GDS50516 | Drive Shaft | | 23 | 26 | 49 | 86 | 674 | |
| | 2007.01-2009.03 | | F | R | Hatchback Van FWD K9K 734 | | GDS99188 | Drive Shaft | | 23 | 26 | 49 | 86 | 916 | |
| 1.5 (78 kw) | 2005.05-2008.02 | 6MT | F | L | Hatchback Van FWD K9K 732 | | GDS50402 | Drive Shaft | | 25 | 26 | 53 | 88 | 660 | |
| | 2005.05-2008.02 | 6MT | F | R | Hatchback Van FWD K9K 732 | | GDS50348 | Drive Shaft | | 25 | 26 | 53 | 88 | 905 | |
| | 2005.05-2008.02 | 6MT | F | L/R | Hatchback Van FWD K9K 732 | | GCO99213 | Outer Joint | | 25 | 33 | 53 | 88 | 61.5 | I |
| | 2005.05-2008.06 | 5MT | F | L | Hatchback FWD K9K 732 | Inner teeth of wheel side:30 | GDS50405 | Drive Shaft | | 23 | 26 | 49 | 86 | 674 | |
| | 2005.05-2008.06 | 5MT | F | R | Hatchback FWD K9K 732 | | GDS99071 | Drive Shaft | | 23 | 26 | 49 | 86 | 911 | |
| | 2005.05-2008.06 | 6MT | F | L | Hatchback FWD K9K 732 | Inner teeth of wheel side:33 | GDS50402 | Drive Shaft | | 25 | 26 | 53 | 88 | 660 | |
| | 2005.05-2008.06 | 6MT | F | R | Hatchback FWD K9K 732 | | GDS50348 | Drive Shaft | | 25 | 26 | 53 | 88 | 905 | |
| | 2005.05-2008.06 | AT | F | L | Hatchback FWD K9K 732 | | GDS50255 | Drive Shaft | | 23 | 26 | 49 | 86 | 673 | |

| | YEAR | TRANSM. | F/R | L/R | BODY STYLE & DRIVE TYPE & ENGINE | REMARKS | G-AP Ref. | PRODUCT | ABS | Technical Specifications | | | | | |
|---|---|---|---|---|---|---|---|---|---|---|---|---|---|---|---|
| | | | | | | | | | | A | B | C | H | L | P |
| **RENAULT** **Megane** | | | | | | | | | | | | | | | |
| 1.5 (78 kw) | 2005.05-2008.06 | AT | F | R | Hatchback FWD K9K 732 | | GDS50440 | Drive Shaft | | 23 | 23 | 49 | 86 | 804 | |
| | 2005.05-2008.06 | MT | F | L | Hatchback FWD K9K 732 | Inner teeth of wheel side:30 | GDS50350 | Drive Shaft | | 25 | 26 | 52.6 | 88 | 668.5 | |
| | 2005.05-2008.06 | MT | F | L/R | Hatchback FWD K9K 732 | | GCO99085 | Outer Joint | | 23 | 30 | 49 | 86 | 59 | I |
| | 2005.05-2008.06 | MT | F | L/R | Hatchback FWD K9K 732 | | GCO99213 | Outer Joint | | 25 | 33 | 53 | 88 | 61.5 | I |
| | 2005.05-2008.06 | | F | L | Hatchback FWD K9K 732 | for OE number:8200432515;For Engine code:K9K728;Inner teeth of wheel side:32 | GDS50516 | Drive Shaft | | 23 | 26 | 49 | 86 | 674 | |
| | 2005.05-2010.12 | 6MT | F | L | Saloon FWD K9K 732 | | GDS50402 | Drive Shaft | | 25 | 26 | 53 | 88 | 660 | |
| | 2005.05-2010.12 | 6MT | F | R | Saloon FWD K9K 732 | | GDS50348 | Drive Shaft | | 25 | 26 | 53 | 88 | 905 | |
| | 2005.05-2010.12 | AT | F | L | Saloon FWD K9K 732 | | GDS50255 | Drive Shaft | | 23 | 26 | 49 | 86 | 673 | |
| | 2005.05-2010.12 | AT | F | R | Saloon FWD K9K 732 | | GDS50440 | Drive Shaft | | 23 | 23 | 49 | 86 | 804 | |
| | 2005.05-2010.12 | MT | F | L | Saloon FWD K9K 732 | | GDS50350 | Drive Shaft | | 25 | 26 | 52.6 | 88 | 668.5 | |
| | 2005.05-2010.12 | MT | F | L | Saloon FWD K9K 732 | | GDS50405 | Drive Shaft | | 23 | 26 | 49 | 86 | 674 | |
| | 2005.05-2010.12 | MT | F | R | Saloon FWD K9K 732 | | GDS99071 | Drive Shaft | | 23 | 26 | 49 | 86 | 911 | |
| | 2005.05-2010.12 | MT | F | L/R | Saloon FWD K9K 732 | | GCO99085 | Outer Joint | | 23 | 30 | 49 | 86 | 59 | I |
| | 2005.05-2010.12 | MT | F | L/R | Saloon FWD K9K 732 | | GCO99213 | Outer Joint | | 25 | 33 | 53 | 88 | 61.5 | I |
| | 2005.05-2010.12 | | F | L | Saloon FWD K9K 732 | for OE number:8200432515;For Engine code:K9K728 | GDS50516 | Drive Shaft | | 23 | 26 | 49 | 86 | 674 | |
| | 2008.12-2016.01 | 6MT | F | R | Hatchback FWD K9K 832 | Date from:2012.03 | GCI50051 | Inner Joint | | 26 | 22 | 33 | 326 | 96 | |
| | 2008.12-2016.01 | MT | F | L | Hatchback FWD K9K 832 | | GDS50426 | Drive Shaft | | 25 | 26 | 52.7 | 88.5 | 680 | |
| | 2008.12-2016.01 | MT | F | R | Hatchback FWD K9K 832 | Date to:2012.02 | GDS50425 | Drive Shaft | | 25 | 26 | 52.7 | 88.5 | 931 | |
| | 2008.12-2016.01 | MT | F | R | Hatchback FWD K9K 832 | Date From:2012.03 | GDS50510 | Drive Shaft | | 25 | 26 | 52.4 | 88.5 | 929 | |
| | 2008.12-2016.01 | MT | F | L/R | Hatchback FWD K9K 832 | | GCO99213 | Outer Joint | | 25 | 33 | 53 | 88 | 61.5 | I |
| | 2008.12-2016.01 | MT | F | L | Hatchback FWD K9K 832 | | GCI50070 | Inner Joint | | 26 | 33 | 40 | 64 | 106 | |
| | 2008.12-2016.01 | | F | L/R | Hatchback FWD K9K 832 | Date From:2012.03 | GCO50162 | Outer Joint | | 25 | 23 | 52.5 | 88.5 | 60.5 | M |
| | 2008.12-2016.01 | | F | | Hatchback FWD K9K 832 | | GCO50145 | Outer Joint | | 25 | 33 | 52.7 | 88.5 | 59.5 | I |
| 1.5 (81 kw) | 2009.02-2015.08 | MT | F | L | Hatchback Van FWD K9K 836;K9K 846 | | GDS50426 | Drive Shaft | | 25 | 26 | 52.7 | 88.5 | 680 | |
| | 2009.02-2015.08 | MT | F | R | Hatchback Van FWD K9K 836;K9K 846 | | GDS50425 | Drive Shaft | | 25 | 26 | 52.7 | 88.5 | 931 | |
| | 2009.02-2015.08 | MT | F | L | Hatchback Van FWD K9K 836;K9K 846 | | GCI50070 | Inner Joint | | 26 | 33 | 40 | 64 | 106 | |
| | 2009.02-2015.08 | | F | R | Hatchback Van FWD K9K 836;K9K 846 | Date From:2012.03 | GDS50510 | Drive Shaft | | 25 | 26 | 52.4 | 88.5 | 929 | |
| | 2009.02-2015.08 | | F | L/R | Hatchback Van FWD K9K 836;K9K 846 | Date From:2012.03 | GCO50162 | Outer Joint | | 25 | 23 | 52.5 | 88.5 | 60.5 | M |
| | 2009.02-2015.08 | | F | R | Hatchback Van FWD K9K 836;K9K 846 | Date from:2012.03 | GCI50051 | Inner Joint | | 26 | 22 | 33 | 326 | 96 | |
| | 2009.02-2015.12 | 6MT | F | R | Hatchback FWD K9K 836;K9K 846;K9K 837;K9K 636;K9K 656;K9K 657 | Date from:2012.03 | GDS50510 | Drive Shaft | | 25 | 26 | 52.4 | 88.5 | 929 | |
| | 2009.02-2015.12 | AT | F | L | Hatchback FWD K9K 836;K9K 846;K9K 837;K9K 636;K9K 656;K9K 657 | | GDS50535 | Drive Shaft | | 25 | 34 | 52.7 | 88.5 | 632 | |
| | 2009.02-2015.12 | AT | F | R | Hatchback FWD K9K 836;K9K 846;K9K 837;K9K 636;K9K 656;K9K 657 | | GDS50536 | Drive Shaft | | 25 | 34 | 52.6 | 89 | 984 | |
| | 2009.02-2015.12 | MT | F | L | Hatchback FWD K9K 836;K9K 846;K9K 837;K9K 636;K9K 656;K9K 657 | | GDS50426 | Drive Shaft | | 25 | 26 | 52.7 | 88.5 | 680 | |
| | 2009.02-2015.12 | MT | F | R | Hatchback FWD K9K 836;K9K 846;K9K 837;K9K 636;K9K 656;K9K 657 | Date to:2012.02 | GDS50425 | Drive Shaft | | 25 | 26 | 52.7 | 88.5 | 931 | |
| | 2009.02-2015.12 | MT | F | L/R | Hatchback FWD K9K 836;K9K 846;K9K 837;K9K 636;K9K 656;K9K 657 | Date From:2012.03 | GCO50162 | Outer Joint | | 25 | 23 | 52.5 | 88.5 | 60.5 | M |
| | 2009.02-2015.12 | MT | F | L/R | Hatchback FWD K9K 836;K9K 846;K9K 837;K9K 636;K9K 656;K9K 657 | | GCO99213 | Outer Joint | | 25 | 33 | 53 | 88 | 61.5 | I |
| | 2009.02-2015.12 | | F | R | Hatchback FWD K9K 836;K9K 846;K9K 837;K9K 636;K9K 656;K9K 657 | Date From:2010.03;Date To:2014.01 | GCO50148 | Outer Joint | | 25 | 35 | 52.6 | 89 | 60 | I |
| | 2009.02-2015.12 | | F | L/R | Hatchback FWD K9K 836;K9K 846;K9K 837;K9K 636;K9K 656;K9K 657 | | GCO50145 | Outer Joint | | 25 | 33 | 52.7 | 88.5 | 59.5 | I |
| | 2015.11- | 6DCT | F | L | Hatchback FWD K9K 646;K9K 656;K9K 657;K9K 648 | | GDS50609 | Drive Shaft | | 25 | 34 | 52.7 | 88.5 | 649 | |
| | 2015.11- | 6DCT | F | R | Hatchback FWD K9K 646;K9K 656;K9K 657;K9K 648 | | GDS50610 | Drive Shaft | | 25 | 34 | 52.7 | 88.5 | 1000 | |
| | 2015.11- | 6DCT | F | L | Hatchback FWD K9K 646;K9K 656;K9K 657;K9K 648 | | GCO50145 | Outer Joint | | 25 | 33 | 52.7 | 88.5 | 59.5 | I |
| | 2015.11- | 6DCT | F | L | Hatchback FWD K9K 646;K9K 656;K9K 657;K9K 648 | | GCI50129 | Inner Joint | | 34 | 33 | 40 | 54 | 106 | |
| | 2015.11- | 6DCT | F | R | Hatchback FWD K9K 646;K9K 656;K9K 657;K9K 648 | | GCI50133 | Inner Joint | | 34 | 33 | 40 | 380.5 | 86.5 | |
| | 2015.11- | 6MT | F | L | Hatchback FWD K9K 646;K9K 656;K9K 657;K9K 648 | | GDS50608 | Drive Shaft | | 25 | 26 | 52.5 | 88.5 | 697 | |
| | 2015.11- | 6MT | F | R | Hatchback FWD K9K 646;K9K 656;K9K 657;K9K 648 | | GDS50607 | Drive Shaft | | 25 | 26 | 52.5 | 88.5 | 945 | |
| | 2015.11- | 6MT | F | L/R | Hatchback FWD K9K 646;K9K 656;K9K 657;K9K 648 | | GCO50162 | Outer Joint | | 25 | 23 | 52.5 | 88.5 | 60.5 | M |
| | 2015.11- | 6MT | F | L | Hatchback FWD K9K 646;K9K 656;K9K 657;K9K 648 | | GCI50146 | Inner Joint | | 26 | 23 | 40 | 64 | 104 | |
| | 2015.11- | 6MT | F | R | Hatchback FWD K9K 646;K9K 656;K9K 657;K9K 648 | | GCI50145 | Inner Joint | | 26 | 23 | 33 | 330.5 | 98 | |
| | 2016.10- | 6AT | F | L | Saloon FWD K9K 656;K9K 657;K9K 674;K9K 675;K9K 676;K9K 677 | | GDS50609 | Drive Shaft | | 25 | 34 | 52.7 | 88.5 | 649 | |
| | 2016.10- | 6AT | F | L | Saloon FWD K9K 656;K9K 657;K9K 674;K9K 675;K9K 676;K9K 677 | | GCO50145 | Outer Joint | | 25 | 33 | 52.7 | 88.5 | 59.5 | I |
| | 2016.10- | 6AT | F | L | Saloon FWD K9K 656;K9K 657;K9K 674;K9K 675;K9K 676;K9K 677 | | GCI50129 | Inner Joint | | 34 | 33 | 40 | 54 | 106 | |
| | 2016.10- | 6DCT | F | R | Saloon FWD K9K 656;K9K 657;K9K 674;K9K 675;K9K 676;K9K 677 | | GDS50610 | Drive Shaft | | 25 | 34 | 52.7 | 88.5 | 1000 | |
| | 2016.10- | 6MT | F | L | Saloon FWD K9K 656;K9K 657;K9K 674;K9K 675;K9K 676;K9K 677 | | GDS50608 | Drive Shaft | | 25 | 26 | 52.5 | 88.5 | 697 | |
| | 2016.10- | 6MT | F | R | Saloon FWD K9K 656;K9K 657;K9K 674;K9K 675;K9K 676;K9K 677 | | GDS50607 | Drive Shaft | | 25 | 26 | 52.5 | 88.5 | 945 | |
| | 2016.10- | 6MT | F | L/R | Saloon FWD K9K 656;K9K 657;K9K 674;K9K 675;K9K 676;K9K 677 | | GCO50162 | Outer Joint | | 25 | 23 | 52.5 | 88.5 | 60.5 | M |
| | 2016.10- | 6MT | F | L | Saloon FWD K9K 656;K9K 657;K9K 674;K9K 675;K9K 676;K9K 677 | | GCI50146 | Inner Joint | | 26 | 23 | 40 | 64 | 104 | |
| | 2016.10- | 6MT | F | R | Saloon FWD K9K 656;K9K 657;K9K 674;K9K 675;K9K 676;K9K 677 | | GCI50145 | Inner Joint | | 26 | 23 | 33 | 330.5 | 98 | |
| 1.5 (85 kw) | 2018.08- | 6MT | F | L | Hatchback FWD K9K 872;K9K 873;K9K 854;K9K 876;K9K 877 | | GDS50608 | Drive Shaft | | 25 | 26 | 52.5 | 88.5 | 697 | |
| | 2018.08- | 6MT | F | L | Hatchback FWD K9K 872;K9K 873;K9K 854;K9K 876;K9K 877 | | GCO50162 | Outer Joint | | 25 | 23 | 52.5 | 88.5 | 60.5 | M |
| | 2018.08- | 6MT | F | L | Hatchback FWD K9K 872;K9K 873;K9K 854;K9K 876;K9K 877 | | GCI50146 | Inner Joint | | 26 | 23 | 40 | 64 | 104 | |
| | 2018.08- | 7DCT | F | L | Hatchback FWD K9K 872;K9K 873;K9K 854;K9K 876;K9K 877 | | GDS83828 | Drive Shaft | | 25 | 27 | 52.5 | 88.5 | 643 | |
| | 2018.08- | 7DCT | F | R | Hatchback FWD K9K 872;K9K 873;K9K 854;K9K 876;K9K 877 | | GDS83876 | Drive Shaft | | 25 | 27 | 52.5 | 88.5 | 998 | |
| | 2018.08- | 7DCT | F | L | Hatchback FWD K9K 872;K9K 873;K9K 854;K9K 876;K9K 877 | | GCI82385 | Inner Joint | | 27 | 35 | 40 | 65 | 109.5 | |
| | 2018.08- | 7DCT | F | R | Hatchback FWD K9K 872;K9K 873;K9K 854;K9K 876;K9K 877 | | GCI82408 | Inner Joint | | 27 | 35 | 40 | 384 | 94 | |
| | 2019.02- | 6MT | F | L | Saloon FWD K9K 873, K9K 872 | | GDS50608 | Drive Shaft | | 25 | 26 | 52.5 | 88.5 | 697 | |

| | YEAR | TRANSM. | F/R | L/R | BODY STYLE & DRIVE TYPE & ENGINE | REMARKS | G-AP Ref. | PRODUCT | ABS | Technical Specifications A | B | C | H | L | P |
|---|---|---|---|---|---|---|---|---|---|---|---|---|---|---|---|
| **RENAULT** **Megane** | | | | | | | | | | | | | | | |
| 1.5 (85 kw) | 2019.02- | 6MT | F | L | Saloon FWD K9K 873, K9K 872 | | GCO50162 | Outer Joint | | 25 | 23 | 52.5 | 88.5 | 60.5 | M |
| | 2019.02- | 6MT | F | L | Saloon FWD K9K 873, K9K 872 | | GCI50146 | Inner Joint | | 26 | 23 | 40 | 64 | 104 | |
| | 2019.02- | 7DCT | F | L | Saloon FWD K9K 873, K9K 872 | | GDS83828 | Drive Shaft | | 25 | 27 | 52.5 | 88.5 | 643 | |
| | 2019.02- | 7DCT | F | R | Saloon FWD K9K 873, K9K 872 | | GDS83876 | Drive Shaft | | 25 | 27 | 52.5 | 88.5 | 998 | |
| | 2019.02- | 7DCT | F | R | Saloon FWD K9K 873, K9K 872 | | GCO82418 | Outer Joint | | 25 | 35 | 52.5 | 88.5 | 61 | I |
| | 2019.02- | 7DCT | F | L | Saloon FWD K9K 873, K9K 872 | | GCI82385 | Inner Joint | | 27 | 35 | 40 | 65 | 109.5 | |
| | 2019.02- | 7DCT | F | R | Saloon FWD K9K 873, K9K 872 | | GCI82408 | Inner Joint | | 27 | 35 | 40 | 384 | 94 | |
| 1.6 (55 kw) | 1995.08-1999.02 | 5MT | F | L | Hatchback FWD K7M720/K7M790 | | GDS50009 | Drive Shaft | 44T | 21 | | 57 | 84.5 | 645 | |
| | 1995.08-1999.02 | 5MT | F | R | Hatchback FWD K7M720/K7M790 | Transm. Type:JB1/JB3 | GDS50021 | Drive Shaft | 44T | 21 | 23 | 57 | 84.5 | 750 | |
| | 1995.08-1999.02 | 5MT | F | R | Hatchback FWD K7M720/K7M790 | | GDS50327 | Drive Shaft | 44T | 21 | 23 | 57 | 84.5 | 740 | |
| | 1995.08-1999.02 | 5MT | F | L/R | Hatchback FWD K7M720/K7M790 | | GCO50101 | Outer Joint | 44T | 21 | 30 | 52.2 | 85.5 | 59 | I |
| | 1995.08-1999.02 | MT | F | L | Hatchback FWD K7M720/K7M790 | | GDS50055 | Drive Shaft | | 21 | 30 | 50 | 84 | 650 | |
| | 1995.08-1999.02 | MT | F | R | Hatchback FWD K7M720/K7M790 | Trans. code:JB1/3,JC5 | GDS50038 | Drive Shaft | 44T | 21 | 23 | 52.2 | 85.5 | 752 | |
| | 1995.08-1999.02 | MT | F | R | Hatchback FWD K7M720/K7M790 | Pin Fixing,Date from:1999.01 | GDS50107 | Drive Shaft | 44T | 21 | 23 | 57 | 84.5 | 736 | |
| | 1995.08-1999.02 | MT | F | R | Hatchback FWD K7M720/K7M790 | | GDS50173 | Drive Shaft | | 21 | 23 | 57 | 84.5 | 743 | |
| | 1995.08-1999.02 | MT | F | R | Hatchback FWD K7M720/K7M790 | | GDS50316 | Drive Shaft | | 21 | 23 | 57 | 84 | 741 | |
| 1.6 (66 kw) | 1995.08-1999.03 | 5MT | F | L | Hatchback FWD K7M702 | | GDS50009 | Drive Shaft | 44T | 21 | | 57 | 84.5 | 645 | |
| | 1995.08-1999.03 | 5MT | F | R | Hatchback FWD K7M702 | | GDS50327 | Drive Shaft | 44T | 21 | 23 | 57 | 84.5 | 740 | |
| | 1995.08-1999.03 | 5MT | F | L/R | Hatchback FWD K7M702 | | GCO50076 | Outer Joint | 44T | 21 | 30 | 57 | 84.5 | 62 | M |
| | 1995.08-1999.03 | | F | R | Hatchback FWD K7M702 | | GDS50021 | Drive Shaft | 44T | 21 | 23 | 57 | 84.5 | 750 | |
| | 1995.08-1999.03 | 4AT | F | L/R | Hatchback FWD K7M703 | | GCO50101 | Outer Joint | 44T | 21 | 30 | 52.2 | 85.5 | 59 | I |
| | 1995.08-1999.03 | MT | F | L | Hatchback FWD K7M703 | Trans. code:JB1/3,JC5 | GDS50009 | Drive Shaft | 44T | 21 | | 57 | 84.5 | 645 | |
| | 1995.08-1999.03 | MT | F | L | Hatchback FWD K7M703 | | GDS50055 | Drive Shaft | | 21 | 30 | 50 | 84 | 650 | |
| | 1995.08-1999.03 | MT | F | R | Hatchback FWD K7M703 | Trans. code:JB1/3,JC5 | GDS50038 | Drive Shaft | 44T | 21 | 23 | 52.2 | 85.5 | 752 | |
| | 1995.08-1999.03 | MT | F | R | Hatchback FWD K7M703 | | GDS50107 | Drive Shaft | 44T | 21 | 23 | 57 | 84.5 | 736 | |
| | 1995.08-1999.03 | MT | F | R | Hatchback FWD K7M703 | | GDS50173 | Drive Shaft | | 21 | 23 | 57 | 84.5 | 743 | |
| | 1995.08-1999.03 | MT | F | R | Hatchback FWD K7M703 | | GDS50316 | Drive Shaft | | 21 | 23 | 57 | 84 | 741 | |
| 1.6 (74 kw) | 2008.11-2015.08 | 5MT | F | L | Hatchback FWD K4M 848 | | GDS50383 | Drive Shaft | | 25 | 26 | 52.7 | 88.5 | 688 | |
| | 2008.11-2015.08 | 5MT | F | L | Hatchback FWD K4M 848 | Date to:2012.02;Inner teeth of wheel side:33 | GDS50415 | Drive Shaft | | 25 | 26 | 52.6 | 89 | 704 | |
| | 2008.11-2015.08 | 5MT | F | L | Hatchback FWD K4M 848 | Date to:2012.02;Inner teeth of wheel side:35 | GDS50498 | Drive Shaft | | 25 | 26 | 52.6 | 89 | 702 | |
| | 2008.11-2015.08 | 5MT | F | L/R | Hatchback FWD K4M 848 | | GCO50145 | Outer Joint | | 25 | 33 | 52.7 | 88.5 | 59.5 | I |
| | 2008.11-2015.08 | 5MT | F | L | Hatchback FWD K4M 848 | | GCI50096 | Inner Joint | | 26 | 30 | 40 | 64 | 96 | |
| | 2008.11-2015.08 | 5MT | F | R | Hatchback FWD K4M 848 | | GCI50051 | Inner Joint | | 26 | 22 | 33 | 326 | 96 | |
| | 2008.11-2015.08 | 5MT/6MT | F | L/R | Hatchback FWD K4M 848 | | GCO99213 | Outer Joint | | 25 | 33 | 53 | 88 | 61.5 | I |
| | 2008.11-2015.08 | MT | F | L | Hatchback FWD K4M 848 | | GDS50426 | Drive Shaft | | 25 | 26 | 52.7 | 88.5 | 680 | |
| | 2008.11-2015.08 | MT | F | L/R | Hatchback FWD K4M 848 | | GCO50162 | Outer Joint | | 25 | 23 | 52.5 | 88.5 | 60.5 | M |
| | 2008.11-2015.08 | | F | R | Hatchback FWD K4M 848 | | GDS50510 | Drive Shaft | | 25 | 26 | 52.4 | 88.5 | 929 | |
| 1.6 (75 kw) | 2003.09-2008.11 | 5MT | F | L | Saloon FWD K4M768 | | GDS99070 | Drive Shaft | | 23 | 26 | 49 | 86 | 675 | |
| | 2003.09-2008.11 | 5MT | F | R | Saloon FWD K4M768 | | GDS99071 | Drive Shaft | | 23 | 26 | 49 | 86 | 911 | |
| 1.6 (77 kw) | 2005.05- | 5MT | F | L | Saloon FWD K4M 762 | | GDS99070 | Drive Shaft | | 23 | 26 | 49 | 86 | 675 | |
| | 2005.05- | 5MT | F | R | Saloon FWD K4M 762 | | GDS99071 | Drive Shaft | | 23 | 26 | 49 | 86 | 911 | |
| | 2005.05- | MT | F | R | Saloon FWD K4M 762 | Date to:2008.11 | GCI99169 | Inner Joint | | 26 | 30 | 33 | 326 | 95 | |
| | 2005.06-2008.02 | 5MT | F | L | Hatchback FWD K4M 788 | | GDS99070 | Drive Shaft | | 23 | 26 | 49 | 86 | 675 | |
| | 2005.06-2008.02 | 5MT | F | R | Hatchback FWD K4M 788 | | GDS99071 | Drive Shaft | | 23 | 26 | 49 | 86 | 911 | |
| | 2005.06-2008.02 | 5MT | F | L | Hatchback FWD K4M 788 | | GCI50048 | Inner Joint | | 26 | 30 | 40 | 64 | 121 | |
| | 2005.06-2008.02 | 5MT | F | R | Hatchback FWD K4M 788 | | GCI99169 | Inner Joint | | 26 | 30 | 33 | 326 | 95 | |
| | 2005.06-2008.02 | AT | F | L | Hatchback FWD K4M 788 | | GDS50255 | Drive Shaft | | 23 | 26 | 49 | 86 | 673 | |
| | 2005.06-2008.02 | MT | F | L/R | Hatchback FWD K4M 788 | | GCO99085 | Outer Joint | | 23 | 30 | 49 | 86 | 59 | I |
| | 2007.01-2008.02 | 5MT | F | L | Hatchback FWD K4M 788 | | GDS99070 | Drive Shaft | | 23 | 26 | 49 | 86 | 675 | |
| | 2007.01-2008.02 | 5MT | F | R | Hatchback FWD K4M 788 | | GDS99071 | Drive Shaft | | 23 | 26 | 49 | 86 | 911 | |
| | 2007.01-2008.02 | AT | F | L | Hatchback FWD K4M 788 | | GDS50255 | Drive Shaft | | 23 | 26 | 49 | 86 | 673 | |
| | 2007.01-2008.02 | MT | F | L/R | Hatchback FWD K4M 788 | | GCO99085 | Outer Joint | | 23 | 30 | 49 | 86 | 59 | I |
| | 2007.01-2008.02 | MT | F | R | Hatchback FWD K4M 788 | | GCI99169 | Inner Joint | | 26 | 30 | 33 | 326 | 95 | |
| 1.6 (78 kw) | 2010.01-2015.08 | 5MT | F | L | Hatchback FWD K4M 848 | Date to:2012.02 | GDS50383 | Drive Shaft | | 25 | 26 | 52.7 | 88.5 | 688 | |
| | 2010.01-2015.08 | 5MT | F | L | Hatchback FWD K4M 848 | Date to:2012.02;Inner teeth of wheel side:33 | GDS50415 | Drive Shaft | | 25 | 26 | 52.6 | 89 | 704 | |
| | 2010.01-2015.08 | 5MT | F | L | Hatchback FWD K4M 848 | | GDS50426 | Drive Shaft | | 25 | 26 | 52.7 | 88.5 | 680 | |
| | 2010.01-2015.08 | 5MT | F | L | Hatchback FWD K4M 848 | Date to:2012.02;Inner teeth of wheel side:35 | GDS50498 | Drive Shaft | | 25 | 26 | 52.6 | 89 | 702 | |
| | 2010.01-2015.08 | 5MT | F | L | Hatchback FWD K4M 848 | | GCI50070 | Inner Joint | | 26 | 33 | 40 | 64 | 106 | |
| | 2010.01-2015.08 | 5MT | F | L | Hatchback FWD K4M 848 | Date to:2012.02 | GCI50096 | Inner Joint | | 26 | 30 | 40 | 64 | 96 | |
| | 2010.01-2015.08 | 5MT | F | R | Hatchback FWD K4M 848 | | GCI50051 | Inner Joint | | 26 | 22 | 33 | 326 | 96 | |
| | 2010.01-2015.08 | MT | F | L/R | Hatchback FWD K4M 848 | | GCO50162 | Outer Joint | | 25 | 23 | 52.5 | 88.5 | 60.5 | M |
| | 2010.01-2015.08 | | F | R | Hatchback FWD K4M 848 | | GDS50510 | Drive Shaft | | 25 | 26 | 52.4 | 88.5 | 929 | |
| | 2010.01-2015.08 | | F | L/R | Hatchback FWD K4M 848 | Date To:2012.02 | GCO50145 | Outer Joint | | 25 | 33 | 52.7 | 88.5 | 59.5 | I |
| 1.6 (79 kw) | 1999.03-2002.08 | MT | F | R | Hatchback FWD K4M700/K4M701/K4M704/K4M706/K4M708/K4M709 | | GDS50173 | Drive Shaft | | 21 | 23 | 57 | 84.5 | 743 | |
| | 1999.03-2002.08 | | F | L | Hatchback FWD K4M700/K4M701/K4M704/K4M706/K4M708/K4M709 | For Engine code:K4M708 | GDS50009 | Drive Shaft | 44T | 21 | | 57 | 84.5 | 645 | |

| | YEAR | TRANSM. | F/R | L/R | BODY STYLE & DRIVE TYPE & ENGINE | REMARKS | G-AP Ref. | PRODUCT | ABS | Technical Specifications A | B | C | H | L | P |
|---|---|---|---|---|---|---|---|---|---|---|---|---|---|---|---|
| **RENAULT** **Megane** | | | | | | | | | | | | | | | |
| 1.6 (79 kw) | 1999.03-2002.08 | | F | L | Hatchback FWD K4M700/K4M701/K4M704/K4M706/K4M708/K4M709 | For Engine code:K4M709 | GDS50253 | Drive Shaft | 44T | 23 | 26 | 57.5 | 86.5 | 637 | |
| | 1999.03-2002.08 | | F | R | Hatchback FWD K4M700/K4M701/K4M704/K4M706/K4M708/K4M709 | For Engine code:K4M708 | GDS50038 | Drive Shaft | 44T | 21 | 23 | 52.2 | 85.5 | 752 | |
| | 1999.03-2002.08 | | F | R | Hatchback FWD K4M700/K4M701/K4M704/K4M706/K4M708/K4M709 | For Engine code:K4M709 | GDS50323 | Drive Shaft | 44T | 23 | 23 | 57.5 | 86.5 | 778 | |
| | 1999.03-2002.08 | | F | R | Hatchback FWD K4M700/K4M701/K4M704/K4M706/K4M708/K4M709 | For Engine code:K4M708 | GCO50066 | Outer Joint | 44T | 21 | 28 | 52.5 | 85 | 51 | I |
| | 1999.03-2002.08 | | F | R | Hatchback FWD K4M700/K4M701/K4M704/K4M706/K4M708/K4M709 | | GCI50008 | Inner Joint | | 23 | 30 | 36.3 | | 120.7 | |
| 1.6 (80 kw) | 2000.10-2002.08 | 5MT | F | L | Hatchback FWD K4M704/K4M712 | | GDS50009 | Drive Shaft | 44T | 21 | | 57 | 84.5 | 645 | |
| | 2000.10-2002.08 | MT | F | R | Hatchback FWD K4M704/K4M712 | | GDS50173 | Drive Shaft | | 21 | 23 | 57 | 84.5 | 743 | |
| | 2000.10-2002.08 | | F | R | Hatchback FWD K4M704/K4M712 | | GDS50038 | Drive Shaft | 44T | 21 | 23 | 52.2 | 85.5 | 752 | |
| | 2000.10-2002.08 | | F | R | Hatchback FWD K4M704/K4M712 | | GCO50066 | Outer Joint | 44T | 21 | 28 | 52.5 | 85 | 51 | I |
| | 2000.10-2002.08 | | F | R | Hatchback FWD K4M704/K4M712 | | GCI50008 | Inner Joint | | 23 | 30 | 36.3 | | 120.7 | |
| 1.6 (81 kw) | 1997.09-2008.09 | 4AT | F | L | Saloon FWD K4M700/K4M701 | | GDS50253 | Drive Shaft | 44T | 23 | 26 | 57.5 | 86.5 | 637 | |
| | 1997.09-2008.09 | 4AT | F | R | Saloon FWD K4M700/K4M701 | | GDS50323 | Drive Shaft | 44T | 23 | 23 | 57.5 | 86.5 | 778 | |
| | 1997.09-2008.09 | 5MT | F | L | Saloon FWD K4M700/K4M701 | | GDS50009 | Drive Shaft | 44T | 21 | | 57 | 84.5 | 645 | |
| | 2001.11-2004.12 | 5MT | F | L | Hatchback FWD K4M700 | | GDS50009 | Drive Shaft | 44T | 21 | | 57 | 84.5 | 645 | |
| | 2001.11-2004.12 | 5MT | F | R | Hatchback FWD K4M700 | | GDS50038 | Drive Shaft | 44T | 21 | 23 | 52.2 | 85.5 | 752 | |
| | 2003.09-2008.11 | 5MT | F | L | Saloon FWD K4M 760;K4M 761 | | GDS99070 | Drive Shaft | | 23 | 26 | 49 | 86 | 675 | |
| | 2003.09-2008.11 | 5MT | F | R | Saloon FWD K4M 760;K4M 761 | | GDS99071 | Drive Shaft | | 23 | 26 | 49 | 86 | 911 | |
| | 2003.09-2008.11 | 5MT | F | L/R | Saloon FWD K4M 760;K4M 761 | | GCO99085 | Outer Joint | | 23 | 30 | 49 | 86 | 59 | I |
| | 2003.09-2008.11 | 5MT | F | L | Saloon FWD K4M 760;K4M 761 | | GCI50048 | Inner Joint | | 26 | 30 | 40 | 64 | 121 | |
| | 2003.09-2008.11 | 5MT | F | R | Saloon FWD K4M 760;K4M 761 | | GCI99169 | Inner Joint | | 26 | 30 | 33 | 326 | 95 | |
| | 2008.11-2015.08 | 5MT | F | L/R | Hatchback FWD K4M 866;K4M 858 | | GCO99213 | Outer Joint | | 25 | 33 | 53 | 88 | 61.5 | I |
| | 2008.11-2015.08 | 6MT | F | L | Hatchback FWD K4M 866;K4M 858 | | GDS50426 | Drive Shaft | | 25 | 26 | 52.7 | 88.5 | 680 | |
| | 2008.11-2015.08 | 6MT | F | R | Hatchback FWD K4M 866;K4M 858 | | GDS50510 | Drive Shaft | | 25 | 26 | 52.4 | 88.5 | 929 | |
| | 2008.11-2015.08 | 6MT | F | L | Hatchback FWD K4M 866;K4M 858 | | GCI50070 | Inner Joint | | 26 | 33 | 40 | 64 | 106 | |
| | 2008.11-2015.08 | 6MT | F | R | Hatchback FWD K4M 866;K4M 858 | | GCI50051 | Inner Joint | | 26 | 22 | 33 | 326 | 96 | |
| | 2008.11-2015.08 | MT | F | L/R | Hatchback FWD K4M 866;K4M 858 | | GCO50162 | Outer Joint | | 25 | 23 | 52.5 | 88.5 | 60.5 | M |
| | 2008.11-2017.03 | 6MT | F | R | Hatchback FWD K4M 858;K4M 838 | | GDS50510 | Drive Shaft | | 25 | 26 | 52.4 | 88.5 | 929 | |
| | 2009.05-2015.08 | 6MT | F | R | Hatchback FWD K4M 858 | | GCI50051 | Inner Joint | | 26 | 22 | 33 | 326 | 96 | |
| | 2009.05-2015.08 | MT | F | L | Hatchback FWD K4M 858 | | GDS50426 | Drive Shaft | | 25 | 26 | 52.7 | 88.5 | 680 | |
| | 2009.05-2015.08 | MT | F | L/R | Hatchback FWD K4M 858 | | GCO50162 | Outer Joint | | 25 | 23 | 52.5 | 88.5 | 60.5 | M |
| | 2009.05-2015.08 | | F | R | Hatchback FWD K4M 858 | | GDS50510 | Drive Shaft | | 25 | 26 | 52.4 | 88.5 | 929 | |
| 1.6 (82 kw) | 2006.01- | 4AT | F | L | Saloon FWD K4M 760;K4M 761;K4M 812;K4M 813 | | GDS50255 | Drive Shaft | | 23 | 26 | 49 | 86 | 673 | |
| | 2006.01- | 4AT | F | R | Saloon FWD K4M 760;K4M 761;K4M 812;K4M 813 | | GDS50440 | Drive Shaft | | 23 | 23 | 49 | 86 | 804 | |
| | 2006.01- | 5MT | F | L | Saloon FWD K4M 760;K4M 761;K4M 812;K4M 813 | | GDS99070 | Drive Shaft | | 23 | 26 | 49 | 86 | 675 | |
| | 2006.01- | 5MT | F | R | Saloon FWD K4M 760;K4M 761;K4M 812;K4M 813 | | GDS99071 | Drive Shaft | | 23 | 26 | 49 | 86 | 911 | |
| | 2006.01- | AT/MT | F | L/R | Saloon FWD K4M 760;K4M 761;K4M 812;K4M 813 | | GCO99085 | Outer Joint | | 23 | 30 | 49 | 86 | 59 | I |
| | 2006.01- | MT | F | R | Saloon FWD K4M 760;K4M 761;K4M 812;K4M 813 | Date to:2010.12 | GCI99169 | Inner Joint | | 26 | 30 | 33 | 326 | 95 | |
| | 2006.01-2008.06 | 5MT | F | L | Hatchback FWD K4M 760;K4M 812;K4M 813 | | GDS99070 | Drive Shaft | | 23 | 26 | 49 | 86 | 675 | |
| | 2006.01-2008.06 | 5MT | F | R | Hatchback FWD K4M 760;K4M 812;K4M 813 | | GDS99071 | Drive Shaft | | 23 | 26 | 49 | 86 | 911 | |
| | 2006.01-2008.06 | AT | F | L | Hatchback FWD K4M 760;K4M 812;K4M 813 | | GDS50255 | Drive Shaft | | 23 | 26 | 49 | 86 | 673 | |
| | 2006.01-2008.06 | AT | F | R | Hatchback FWD K4M 760;K4M 812;K4M 813 | | GDS50440 | Drive Shaft | | 23 | 23 | 49 | 86 | 804 | |
| | 2006.01-2008.06 | AT/MT | F | L/R | Hatchback FWD K4M 760;K4M 812;K4M 813 | | GCO99085 | Outer Joint | | 23 | 30 | 49 | 86 | 59 | I |
| | 2006.01-2008.06 | MT | F | R | Hatchback FWD K4M 760;K4M 812;K4M 813 | | GCI99169 | Inner Joint | | 26 | 30 | 33 | 326 | 95 | |
| | 2008.11-2016.01 | 5MT/6MT | F | L/R | Hatchback FWD K4M 866;K4M 858 | | GCO99213 | Outer Joint | | 25 | 33 | 53 | 88 | 61.5 | I |
| | 2008.11-2016.01 | 6MT | F | R | Hatchback FWD K4M 866;K4M 858 | | GDS50510 | Drive Shaft | | 25 | 26 | 52.4 | 88.5 | 929 | |
| | 2008.11-2016.01 | AT | F | R | Hatchback FWD K4M 866;K4M 858 | | GDS34222 | Drive Shaft | | 25 | 23 | 52.7 | 88.5 | 822 | |
| | 2008.11-2016.01 | AT | F | R | Hatchback FWD K4M 866;K4M 858 | | GCI50084 | Inner Joint | | 23 | 30 | | 216.5 | 86 | |
| | 2008.11-2016.01 | MT | F | L | Hatchback FWD K4M 866;K4M 858 | | GDS50426 | Drive Shaft | | 25 | 26 | 52.7 | 88.5 | 680 | |
| | 2008.11-2016.01 | MT | F | L/R | Hatchback FWD K4M 866;K4M 858 | | GCO50162 | Outer Joint | | 25 | 23 | 52.5 | 88.5 | 60.5 | M |
| 1.6 (83 kw) | 2002.11-2008.02 | 4AT | F | L | Hatchback FWD K4M 760 | | GDS50255 | Drive Shaft | | 23 | 26 | 49 | 86 | 673 | |
| | 2002.11-2008.02 | 4AT | F | R | Hatchback FWD K4M 760 | | GDS50440 | Drive Shaft | | 23 | 23 | 49 | 86 | 804 | |
| | 2002.11-2008.02 | 5MT | F | L | Hatchback FWD K4M 760 | | GDS99070 | Drive Shaft | | 23 | 26 | 49 | 86 | 675 | |
| | 2002.11-2008.02 | 5MT | F | R | Hatchback FWD K4M 760 | | GDS99071 | Drive Shaft | | 23 | 26 | 49 | 86 | 911 | |
| | 2002.11-2008.02 | 5MT | F | R | Hatchback FWD K4M 760 | | GCI99169 | Inner Joint | | 26 | 30 | 33 | 326 | 95 | |
| | 2002.11-2008.02 | AT/MT | F | L/R | Hatchback FWD K4M 760 | | GCO99085 | Outer Joint | | 23 | 30 | 49 | 86 | 59 | I |
| | 2003.09- | 4AT | F | L | Saloon FWD K4M 760;K4M 761 | | GDS50255 | Drive Shaft | | 23 | 26 | 49 | 86 | 673 | |
| | 2003.09- | 4AT | F | R | Saloon FWD K4M 760;K4M 761 | | GDS50440 | Drive Shaft | | 23 | 23 | 49 | 86 | 804 | |
| | 2003.09- | 5MT | F | L | Saloon FWD K4M 760;K4M 761 | | GDS99070 | Drive Shaft | | 23 | 26 | 49 | 86 | 675 | |
| | 2003.09- | 5MT | F | R | Saloon FWD K4M 760;K4M 761 | | GDS99071 | Drive Shaft | | 23 | 26 | 49 | 86 | 911 | |
| | 2003.09- | AT/MT | F | L/R | Saloon FWD K4M 760;K4M 761 | | GCO99085 | Outer Joint | | 23 | 30 | 49 | 86 | 59 | I |
| | 2003.09- | MT | F | R | Saloon FWD K4M 760;K4M 761 | Date to:2005.05 | GCI99169 | Inner Joint | | 26 | 30 | 33 | 326 | 95 | |
| 1.6 (84 kw) | 2015.11- | 5MT | F | L | Hatchback FWD H4M 738;H4M 748;H4M 749;H4M 750;H4M 751 | | GDS83185 | Drive Shaft | | 25 | 26 | 52.4 | 88.5 | 700 | |
| | 2015.11- | 5MT | F | R | Hatchback FWD H4M 738;H4M 748;H4M 749;H4M 750;H4M 751 | | GDS83184 | Drive Shaft | | 25 | 26 | 52.4 | 88.5 | 942 | |
| | 2015.11- | 5MT | F | L/R | Hatchback FWD H4M 738;H4M 748;H4M 749;H4M 750;H4M 751 | | GCO82331 | Outer Joint | | 25 | 22 | 52.4 | 88.5 | 55 | I |
| | 2015.11- | 5MT | F | L | Hatchback FWD H4M 738;H4M 748;H4M 749;H4M 750;H4M 751 | | GCI50107 | Inner Joint | | 26 | 21 | 40 | 64 | 105.5 | |

| | YEAR | TRANSM. | F/R | L/R | BODY STYLE & DRIVE TYPE & ENGINE | REMARKS | G-AP Ref. | PRODUCT | ABS | Technical Specifications | | | | | |
|---|---|---|---|---|---|---|---|---|---|---|---|---|---|---|---|
| | | | | | | | | | | A | B | C | H | L | P |
| **RENAULT** | | | | | | | | | | | | | | | |
| **Megane** | | | | | | | | | | | | | | | |
| 1.6 (84 kw) | 2015.11- | 5MT | F | R | Hatchback FWD H4M 738;H4M 748;H4M 749;H4M 750;H4M 751 | | GCI81808 | Inner Joint | | 26 | 21 | 33 | 330 | 92 | |
| | 2015.11- | CVT | F | L | Hatchback FWD H4M 738;H4M 748;H4M 749;H4M 750;H4M 751 | | GDS83877 | Drive Shaft | | 25 | 25 | 52.4 | 88.5 | 701 | |
| | 2015.11- | CVT | F | R | Hatchback FWD H4M 738;H4M 748;H4M 749;H4M 750;H4M 751 | | GDS50555 | Drive Shaft | | 25 | 25 | 52.4 | 88.5 | 940 | |
| | 2015.11- | CVT | F | L/R | Hatchback FWD H4M 738;H4M 748;H4M 749;H4M 750;H4M 751 | | GCO50171 | Outer Joint | | 25 | 22 | 52.4 | 88.5 | 55 | M |
| | 2015.11- | CVT | F | L | Hatchback FWD H4M 738;H4M 748;H4M 749;H4M 750;H4M 751 | | GCI82409 | Inner Joint | | 25 | 22 | 40 | 52.5 | 111.5 | |
| | 2015.11- | CVT | F | R | Hatchback FWD H4M 738;H4M 748;H4M 749;H4M 750;H4M 751 | | GCI50088 | Inner Joint | | 25 | 22 | 33 | 328 | 93.5 | |
| | 2016.10- | 5MT | F | L | Saloon FWD H4M 738;H4M 750;H4M 751 | | GDS50608 | Drive Shaft | | 25 | 26 | 52.5 | 88.5 | 697 | |
| | 2016.10- | 5MT | F | L | Saloon FWD H4M 738;H4M 750;H4M 751 | | GDS83185 | Drive Shaft | | 25 | 26 | 52.4 | 88.5 | 700 | |
| | 2016.10- | 5MT | F | R | Saloon FWD H4M 738;H4M 750;H4M 751 | | GDS83184 | Drive Shaft | | 25 | 26 | 52.4 | 88.5 | 942 | |
| | 2016.10- | 5MT | F | L | Saloon FWD H4M 738;H4M 750;H4M 751 | | GCO50162 | Outer Joint | | 25 | 23 | 52.5 | 88.5 | 60.5 | M |
| | 2016.10- | 5MT | F | L/R | Saloon FWD H4M 738;H4M 750;H4M 751 | | GCO82331 | Outer Joint | | 25 | 22 | 52.4 | 88.5 | 55 | I |
| | 2016.10- | 5MT | F | L | Saloon FWD H4M 738;H4M 750;H4M 751 | | GCI50107 | Inner Joint | | 26 | 21 | 40 | 64 | 105.5 | |
| | 2016.10- | 5MT | F | L | Saloon FWD H4M 738;H4M 750;H4M 751 | | GCI50146 | Inner Joint | | 26 | 23 | 40 | 64 | 104 | |
| | 2016.10- | 5MT | F | R | Saloon FWD H4M 738;H4M 750;H4M 751 | | GCI81808 | Inner Joint | | 26 | 21 | 33 | 330 | 92 | |
| 1.6 (85 kw) | 2006.03- | MT | F | L | Saloon FWD K4M 766, K4M 768, K4M 812 | | GDS50405 | Drive Shaft | | 23 | 26 | 49 | 86 | 674 | |
| | 2006.03- | MT | F | R | Saloon FWD K4M 766, K4M 768, K4M 812 | | GDS99071 | Drive Shaft | | 23 | 26 | 49 | 86 | 911 | |
| | 2013.01-2015.08 | 6MT | F | R | Hatchback FWD K4M 858;K4M 848 | Date from:2012.03 | GCI50051 | Inner Joint | | 26 | 22 | 33 | 326 | 96 | |
| | 2013.01-2015.08 | MT | F | L | Hatchback FWD K4M 858;K4M 848 | | GDS50426 | Drive Shaft | | 25 | 26 | 52.7 | 88.5 | 680 | |
| | 2013.01-2015.08 | MT | F | L/R | Hatchback FWD K4M 858;K4M 848 | | GCO50162 | Outer Joint | | 25 | 23 | 52.5 | 88.5 | 60.5 | M |
| | 2013.01-2015.08 | | F | R | Hatchback FWD K4M 858;K4M 848 | Date From:2012.03 | GDS50510 | Drive Shaft | | 25 | 26 | 52.4 | 88.5 | 929 | |
| 1.6 (86 kw) | 2014.01-2016.01 | CVT | F | R | Hatchback FWD H4M 729 | | GCI50088 | Inner Joint | | 25 | 22 | 33 | 328 | 93.5 | |
| 1.6 (96 kw) | 2011.04-2015.08 | MT | F | L | Hatchback FWD R9M 402;R9M 404;R9M 414 | | GDS50428 | Drive Shaft | | 25 | 39 | 52.6 | 89 | 656 | |
| | 2011.04-2015.08 | MT | F | R | Hatchback FWD R9M 402;R9M 404;R9M 414 | | GDS50427 | Drive Shaft | | 25 | 39 | 52.6 | 89 | 953 | |
| | 2011.04-2015.08 | MT | F | L/R | Hatchback FWD R9M 402;R9M 404;R9M 414 | | GCO99213 | Outer Joint | | 25 | 33 | 53 | 88 | 61.5 | I |
| | 2011.04-2015.08 | MT | F | L | Hatchback FWD R9M 402;R9M 404;R9M 414 | | GCI81352 | Inner Joint | | 39 | 33 | 39 | 65 | 106 | |
| | 2011.04-2015.08 | MT | F | R | Hatchback FWD R9M 402;R9M 404;R9M 414 | | GCI81351 | Inner Joint | | 39 | 33 | 33 | 352.5 | 82.5 | |
| | 2011.04-2015.08 | | F | L/R | Hatchback FWD R9M 402;R9M 404;R9M 414 | | GCO50157 | Outer Joint | | 25 | 33 | 52.6 | 89 | 60 | I |
| | 2015.11- | 6MT | F | L | Hatchback FWD R9M 409 | | GDS57389 | Drive Shaft | | 29 | 39 | 60 | 97 | 681 | |
| | 2015.11- | 6MT | F | R | Hatchback FWD R9M 409 | | GDS57390 | Drive Shaft | | 29 | 39 | 60 | 97 | 978 | |
| | 2015.11- | 6MT | F | L/R | Hatchback FWD R9M 409 | | GCO82323 | Outer Joint | | 29 | 35 | 60 | 97 | 63 | I |
| | 2015.11- | 6MT | F | L | Hatchback FWD R9M 409 | | GCI81352 | Inner Joint | | 39 | 33 | 39 | 65 | 106 | |
| | 2015.11- | 6MT | F | R | Hatchback FWD R9M 409 | | GCI83638 | Inner Joint | | 39 | 33 | 33 | 356 | 86 | |
| | 2016.10- | 6MT | F | L | Saloon FWD R9M 409 | | GDS50608 | Drive Shaft | | 25 | 26 | 52.5 | 88.5 | 697 | |
| | 2016.10- | 6MT | F | L | Saloon FWD R9M 409 | | GDS57389 | Drive Shaft | | 29 | 39 | 60 | 97 | 681 | |
| | 2016.10- | 6MT | F | R | Saloon FWD R9M 409 | | GDS57390 | Drive Shaft | | 29 | 39 | 60 | 97 | 978 | |
| | 2016.10- | 6MT | F | L | Saloon FWD R9M 409 | | GCO50162 | Outer Joint | | 25 | 23 | 52.5 | 88.5 | 60.5 | M |
| | 2016.10- | 6MT | F | L/R | Saloon FWD R9M 409 | | GCO82323 | Outer Joint | | 29 | 35 | 60 | 97 | 63 | I |
| | 2016.10- | 6MT | F | L | Saloon FWD R9M 409 | | GCI50146 | Inner Joint | | 26 | 23 | 40 | 64 | 104 | |
| | 2016.10- | 6MT | F | L | Saloon FWD R9M 409 | | GCI81352 | Inner Joint | | 39 | 33 | 39 | 65 | 106 | |
| | 2016.10- | 6MT | F | R | Saloon FWD R9M 409 | | GCI83638 | Inner Joint | | 39 | 33 | 33 | 356 | 86 | |
| 1.6 (120 kw) | 2015.11- | 6AT | F | L | Hatchback FWD R9M 452 | | GDS83832 | Drive Shaft | | 29 | 28 | 60 | 95.5 | 676 | |
| | 2015.11- | 6AT | F | R | Hatchback FWD R9M 452 | | GDS83831 | Drive Shaft | | 29 | 28 | 60 | 95.5 | 963 | |
| | 2015.11- | 6AT | F | L/R | Hatchback FWD R9M 452 | | GCO82492 | Outer Joint | | 29 | 36 | 60 | 95.5 | 64.5 | I |
| | 2015.11- | 6AT | F | L | Hatchback FWD R9M 452 | | GCI82157 | Inner Joint | | 28 | 35 | 33.85 | 78.5 | 85.5 | |
| | 2015.11- | 6AT | F | R | Hatchback FWD R9M 452 | | GCI82158 | Inner Joint | | 28 | 35 | 33.85 | 353.5 | 93.5 | |
| 1.7 (110 kw) | 2019.02- | 6AT | F | L | Hatchback FWD R9N 401 | | GDS83832 | Drive Shaft | | 29 | 28 | 60 | 95.5 | 676 | |
| | 2019.02- | 6AT | F | R | Hatchback FWD R9N 401 | | GDS83831 | Drive Shaft | | 29 | 28 | 60 | 95.5 | 963 | |
| | 2019.02- | 6AT | F | L/R | Hatchback FWD R9N 401 | | GCO82492 | Outer Joint | | 29 | 36 | 60 | 95.5 | 64.5 | I |
| | 2019.02- | 6AT | F | L | Hatchback FWD R9N 401 | | GCI82157 | Inner Joint | | 28 | 35 | 33.85 | 78.5 | 85.5 | |
| | 2019.02- | 6AT | F | R | Hatchback FWD R9N 401 | | GCI82158 | Inner Joint | | 28 | 35 | 33.85 | 353.5 | 93.5 | |
| 1.8 (85 kw) | 2000.07-2002.08 | 5MT | F | L | Hatchback FWD F4P720/F4P722 | | GDS50160 | Drive Shaft | 44T | 23 | | 57 | 87 | 656.5 | |
| | 2000.07-2002.08 | 5MT | F | R | Hatchback FWD F4P720/F4P722 | | GDS50313 | Drive Shaft | 44T | 23 | 23 | 57.5 | 86.5 | 750 | |
| | 2000.07-2002.08 | MT | F | R | Hatchback FWD F4P720/F4P722 | | GDS50156 | Drive Shaft | 44T | 23 | 23 | 57.5 | 86.5 | 746.5 | |
| | 2000.07-2002.08 | MT | F | R | Hatchback FWD F4P720/F4P722 | | GCI99131 | Inner Joint | | 23 | 28 | | 182.8 | 86 | |
| | 2000.07-2002.08 | | F | L | Hatchback FWD F4P720/F4P722 | | GCO50058 | Outer Joint | 44T | 23 | 35 | 57 | 87 | 71 | I |
| 1.9 (47 kw) | 1995.08-2000.09 | AT/MT | F | R | Hatchback FWD F8Q620/F8Q622/F8Q624 | Pin Fixing,Date to:1999.12 | GDS50107 | Drive Shaft | 44T | 21 | 23 | 57 | 84.5 | 736 | |
| | 1995.08-2000.09 | MT | F | L | Hatchback FWD F8Q620/F8Q622/F8Q624 | | GDS50055 | Drive Shaft | | 21 | 30 | 50 | 84 | 650 | |
| | 1995.08-2000.09 | MT | F | R | Hatchback FWD F8Q620/F8Q622/F8Q624 | Date to:2000.09;Trans. code:JB1/3,JC5 | GDS50038 | Drive Shaft | 44T | 21 | 23 | 52.2 | 85.5 | 752 | |
| | 1995.08-2000.09 | MT | F | R | Hatchback FWD F8Q620/F8Q622/F8Q624 | | GDS50173 | Drive Shaft | | 21 | 23 | 57 | 84.5 | 743 | |
| | 1995.08-2000.09 | MT | F | R | Hatchback FWD F8Q620/F8Q622/F8Q624 | | GDS50316 | Drive Shaft | | 21 | 23 | 57 | 84 | 741 | |
| | 1995.08-2000.09 | | F | L | Hatchback FWD F8Q620/F8Q622/F8Q624 | Date to:2000.09 | GDS50009 | Drive Shaft | 44T | 21 | | 57 | 84.5 | 645 | |
| | 1995.08-2000.09 | | F | L | Hatchback FWD F8Q620/F8Q622/F8Q624 | For Engine code:F8Q624/F8Q620 | GDS50311 | Drive Shaft | 44T | 23 | 30 | 56 | 82 | 650 | |
| | 1995.08-2000.09 | | F | R | Hatchback FWD F8Q620/F8Q622/F8Q624 | | GDS50021 | Drive Shaft | 44T | 21 | 23 | 57 | 84.5 | 750 | |
| | 1995.08-2000.09 | | F | R | Hatchback FWD F8Q620/F8Q622/F8Q624 | | GDS50327 | Drive Shaft | 44T | 21 | 23 | 57 | 84.5 | 740 | |
| | 1995.08-2000.09 | | F | L | Hatchback FWD F8Q620/F8Q622/F8Q624 | For Engine code:F8Q624/F8Q620 | GCO50043 | Outer Joint | 44T | 21 | 22 | 51.5 | 83 | 56.5 | I |

| | YEAR | TRANSM. | F/R | L/R | BODY STYLE & DRIVE TYPE & ENGINE | REMARKS | G-AP Ref. | PRODUCT | ABS | Technical Specifications A | B | C | H | L | P |
|---|---|---|---|---|---|---|---|---|---|---|---|---|---|---|---|
| **RENAULT** | | | | | | | | | | | | | | | |
| **Megane** | | | | | | | | | | | | | | | |
| 1.9 (47 kw) | 1995.08-2000.09 | 5MT | F | L | Hatchback Van FWD F8Q620/F8Q622/F8Q624 | | GDS50009 | Drive Shaft | 44T | 21 | | 57 | 84.5 | 645 | |
| | 1995.08-2000.09 | 5MT | F | R | Hatchback Van FWD F8Q620/F8Q622/F8Q624 | | GDS50327 | Drive Shaft | 44T | 21 | 23 | 57 | 84.5 | 740 | |
| 1.9 (59 kw) | 2000.10-2003.07 | 5MT | F | L | Hatchback Van FWD F9Q738/F9Q744 | | GDS50009 | Drive Shaft | 44T | 21 | | 57 | 84.5 | 645 | |
| | 2000.10-2003.07 | 5MT | F | R | Hatchback Van FWD F9Q738/F9Q744 | | GDS50327 | Drive Shaft | 44T | 21 | 23 | 57 | 84.5 | 740 | |
| | 2000.10-2003.07 | 5MT | F | L/R | Hatchback Van FWD F9Q738/F9Q744 | | GCO50076 | Outer Joint | 44T | 21 | 30 | 57 | 84.5 | 62 | M |
| | 2001.04-2003.07 | 5MT | F | L | Hatchback FWD F9Q744 | | GDS50311 | Drive Shaft | 44T | 23 | 30 | 56 | 82 | 650 | |
| | 2001.04-2003.07 | 5MT | F | R | Hatchback FWD F9Q744 | | GDS50313 | Drive Shaft | 44T | 23 | 23 | 57.5 | 86.5 | 750 | |
| | 2001.04-2003.07 | 5MT | F | R | Hatchback FWD F9Q744 | | GCI99131 | Inner Joint | | 23 | 28 | | 182.8 | 86 | |
| | 2001.04-2003.07 | AT/MT | F | L/R | Hatchback FWD F9Q744 | | GCO50069 | Outer Joint | 44T | 23 | 30 | 57.5 | 86.5 | 58.5 | I |
| | 2001.04-2003.07 | MT | F | R | Hatchback FWD F9Q744 | | GDS50156 | Drive Shaft | 44T | 23 | 23 | 57.5 | 86.5 | 746.5 | |
| | 2001.04-2003.07 | | F | L | Hatchback FWD F9Q744 | | GCO50058 | Outer Joint | 44T | 23 | 35 | 57 | 87 | 71 | I |
| 1.9 (66 kw) | 1996.01-1999.02 | AT/MT | F | L | Hatchback FWD F8Q784 | | GDS50009 | Drive Shaft | 44T | 21 | | 57 | 84.5 | 645 | |
| | 1996.01-1999.02 | AT/MT | F | L | Hatchback FWD F8Q784 | | GDS50055 | Drive Shaft | | 21 | 30 | 50 | 84 | 650 | |
| | 1996.01-1999.02 | AT/MT | F | R | Hatchback FWD F8Q784 | | GDS50038 | Drive Shaft | 44T | 21 | 23 | 52.2 | 85.5 | 752 | |
| | 1996.01-1999.02 | AT/MT | F | R | Hatchback FWD F8Q784 | | GDS50316 | Drive Shaft | | 21 | 23 | 57 | 84 | 741 | |
| | 1996.01-1999.02 | MT | F | L | Hatchback FWD F8Q784 | Date to:1999.02;Trans. code:JC5 | GDS50028 | Drive Shaft | | 23 | | 56.8 | 84 | 654 | |
| | 1996.01-1999.02 | MT | F | L | Hatchback FWD F8Q784 | | GDS50311 | Drive Shaft | 44T | 23 | 30 | 56 | 82 | 650 | |
| | 1996.01-1999.02 | MT | F | R | Hatchback FWD F8Q784 | | GDS50173 | Drive Shaft | | 21 | 23 | 57 | 84.5 | 743 | |
| | 1996.01-1999.02 | MT | F | R | Hatchback FWD F8Q784 | Date to:1999.02;Trans. code:JC5 | GDS50247 | Drive Shaft | | 23 | 23 | 56.8 | 84 | 750.5 | |
| | 1996.01-1999.02 | MT | F | R | Hatchback FWD F8Q784 | Date to:1999.02;Trans. code:JC5 | GDS50320 | Drive Shaft | 44T | 23 | 23 | 56.8 | 84 | 755 | |
| | 1996.01-1999.02 | MT | F | L/R | Hatchback FWD F8Q784 | Date to:1999.02 | GCO50026 | Outer Joint | | 23 | 25 | 56.2 | 83.5 | 58 | O |
| | 1996.01-1999.02 | MT | F | R | Hatchback FWD F8Q784 | Date to:1999.02 | GCI50079 | Inner Joint | | 23 | 22 | 36.3 | | 105.5 | |
| | 1996.01-1999.02 | | F | R | Hatchback FWD F8Q784 | | GDS50021 | Drive Shaft | 44T | 21 | 23 | 57 | 84.5 | 750 | |
| | 1996.01-1999.02 | | F | R | Hatchback FWD F8Q784 | | GDS50054 | Drive Shaft | | 21 | 23 | 49.8 | 83.5 | 741.5 | |
| | 1996.01-1999.02 | | F | R | Hatchback FWD F8Q784 | | GDS50327 | Drive Shaft | 44T | 21 | 23 | 57 | 84.5 | 740 | |
| | 1996.01-1999.02 | | F | L | Hatchback FWD F8Q784 | For Engine code:F8Q624/F8Q620 | GCO50043 | Outer Joint | 44T | 21 | 22 | 51.5 | 83 | 56.5 | I |
| | 2002.11-2005.12 | 6MT | F | L | Hatchback FWD F9Q 808 | | GCI99150 | Inner Joint | | 39 | 32 | 39 | 66 | 104.5 | |
| | 2002.11-2005.12 | 6MT | F | R | Hatchback FWD F9Q 808 | | GCI99160 | Inner Joint | | 39 | 32 | 32.95 | 352 | 90 | |
| | 2002.11-2005.12 | MT | F | L/R | Hatchback FWD F9Q 808 | | GCO99213 | Outer Joint | | 25 | 33 | 53 | 88 | 61.5 | I |
| | 2002.11-2005.12 | MT/6MT | F | L | Hatchback FWD F9Q 808 | | GDS99201 | Drive Shaft | | 25 | 39 | 53 | 88 | 638 | |
| | 2002.11-2005.12 | MT/6MT | F | R | Hatchback FWD F9Q 808 | | GDS50400 | Drive Shaft | | 25 | 39 | 53 | 88 | 932 | |
| | 2003.09-2005.12 | 6MT | F | L | Saloon FWD F9Q 808 | | GCI99150 | Inner Joint | | 39 | 32 | 39 | 66 | 104.5 | |
| | 2003.09-2005.12 | 6MT | F | R | Saloon FWD F9Q 808 | | GCI99160 | Inner Joint | | 39 | 32 | 32.95 | 352 | 90 | |
| | 2003.09-2005.12 | MT | F | L/R | Saloon FWD F9Q 808 | | GCO99213 | Outer Joint | | 25 | 33 | 53 | 88 | 61.5 | I |
| | 2003.09-2005.12 | MT/6MT | F | L | Saloon FWD F9Q 808 | | GDS99201 | Drive Shaft | | 25 | 39 | 53 | 88 | 638 | |
| | 2003.09-2005.12 | MT/6MT | F | R | Saloon FWD F9Q 808 | | GDS50400 | Drive Shaft | | 25 | 39 | 53 | 88 | 932 | |
| 1.9 (68 kw) | 2004.03- | 6MT | F | L | Saloon FWD F9Q 808 | | GDS99201 | Drive Shaft | | 25 | 39 | 53 | 88 | 638 | |
| | 2004.03- | 6MT | F | R | Saloon FWD F9Q 808 | | GDS50400 | Drive Shaft | | 25 | 39 | 53 | 88 | 932 | |
| | 2004.03- | 6MT | F | L/R | Saloon FWD F9Q 808 | | GCO99213 | Outer Joint | | 25 | 33 | 53 | 88 | 61.5 | I |
| | 2004.03- | MT | F | L | Saloon FWD F9Q 808 | Date to:2006.08 | GCI99150 | Inner Joint | | 39 | 32 | 39 | 66 | 104.5 | |
| | 2004.03- | MT | F | R | Saloon FWD F9Q 808 | Date to:2006.08 | GCI99160 | Inner Joint | | 39 | 32 | 32.95 | 352 | 90 | |
| | 2004.03-2006.08 | 6MT | F | L | Hatchback FWD F9Q 808 | | GDS99201 | Drive Shaft | | 25 | 39 | 53 | 88 | 638 | |
| | 2004.03-2006.08 | 6MT | F | R | Hatchback FWD F9Q 808 | | GDS50400 | Drive Shaft | | 25 | 39 | 53 | 88 | 932 | |
| | 2004.03-2006.08 | 6MT | F | L/R | Hatchback FWD F9Q 808 | | GCO99213 | Outer Joint | | 25 | 33 | 53 | 88 | 61.5 | I |
| | 2004.03-2006.08 | MT | F | L | Hatchback FWD F9Q 808 | | GCI99150 | Inner Joint | | 39 | 32 | 39 | 66 | 104.5 | |
| | 2004.03-2006.08 | MT | F | R | Hatchback FWD F9Q 808 | | GCI99160 | Inner Joint | | 39 | 32 | 32.95 | 352 | 90 | |
| 1.9 (69 kw) | 1996.09-1999.02 | 5MT | F | L | Hatchback FWD F8Q784/F8Q786 | | GDS50009 | Drive Shaft | 44T | 21 | | 57 | 84.5 | 645 | |
| | 1996.09-1999.02 | 5MT | F | R | Hatchback FWD F8Q784/F8Q786 | | GDS50327 | Drive Shaft | 44T | 21 | 23 | 57 | 84.5 | 740 | |
| | 1996.09-1999.02 | MT | F | L | Hatchback FWD F8Q784/F8Q786 | Date from:1996.09,Date to:1999.02,Trans. code:JC5,Date to:1999.02,Trans. code:JC5 | GDS50028 | Drive Shaft | | 23 | | 56.8 | 84 | 654 | |
| | 1996.09-1999.02 | MT | F | L | Hatchback FWD F8Q784/F8Q786 | Date to:1999.02;Trans. code:JC5 | GDS50311 | Drive Shaft | 44T | 23 | 30 | 56 | 82 | 650 | |
| | 1996.09-1999.02 | MT | F | R | Hatchback FWD F8Q784/F8Q786 | | GDS50156 | Drive Shaft | 44T | 23 | 23 | 57.5 | 86.5 | 746.5 | |
| | 1996.09-1999.02 | MT | F | R | Hatchback FWD F8Q784/F8Q786 | | GDS50159 | Drive Shaft | 44T | 23 | 23 | 57 | 87 | 748 | |
| | 1996.09-1999.02 | MT | F | R | Hatchback FWD F8Q784/F8Q786 | Date to:1999.02,Trans. code:JC5 | GDS50247 | Drive Shaft | | 23 | 23 | 56.8 | 84 | 750.5 | |
| | 1996.09-1999.02 | MT | F | R | Hatchback FWD F8Q784/F8Q786 | Date to:1999.02,Trans. code:JC5 | GDS50320 | Drive Shaft | 44T | 23 | 23 | 56.8 | 84 | 755 | |
| | 1996.09-1999.02 | MT | F | L/R | Hatchback FWD F8Q784/F8Q786 | Date from:1996.09,Date to:1999.02 | GCO50026 | Outer Joint | | 23 | 25 | 56.2 | 83.5 | 58 | O |
| | 1996.09-1999.02 | MT | F | R | Hatchback FWD F8Q784/F8Q786 | | GCI50008 | Inner Joint | | 23 | 30 | 36.3 | | 120.7 | |
| | 1996.09-1999.02 | MT | F | R | Hatchback FWD F8Q784/F8Q786 | Date to:1999.02 | GCI50079 | Inner Joint | | 23 | 22 | 36.3 | | 105.5 | |
| | 1996.09-1999.02 | | F | R | Hatchback FWD F8Q784/F8Q786 | | GDS50021 | Drive Shaft | 44T | 21 | 23 | 57 | 84.5 | 750 | |
| | 1996.09-1999.02 | | F | | Hatchback FWD F8Q784/F8Q786 | | GCO50058 | Outer Joint | 44T | 23 | 35 | 57 | 87 | 71 | I |
| 1.9 (72 kw) | 1996.04-2001.02 | 4AT/5MT | F | L | Hatchback FWD F8Q784/F8Q786/F9Q731/F9Q734/F9Q736/F9Q738 | | GDS50009 | Drive Shaft | 44T | 21 | | 57 | 84.5 | 645 | |
| | 1996.04-2001.02 | 4AT/5MT | F | R | Hatchback FWD F8Q784/F8Q786/F9Q731/F9Q734/F9Q736/F9Q738 | | GDS50327 | Drive Shaft | 44T | 21 | 23 | 57 | 84.5 | 740 | |
| | 1996.04-2001.02 | AT | F | L | Hatchback FWD F8Q784/F8Q786/F9Q731/F9Q734/F9Q736/F9Q738 | | GDS50253 | Drive Shaft | 44T | 23 | 26 | 57.5 | 86.5 | 637 | |
| | 1996.04-2001.02 | AT | F | R | Hatchback FWD F8Q784/F8Q786/F9Q731/F9Q734/F9Q736/F9Q738 | For Engine code:F9Q731/F9Q734;For Engine code:F9Q736/F9Q738 | GDS50323 | Drive Shaft | 44T | 23 | 23 | 57.5 | 86.5 | 778 | |
| | 1996.04-2001.02 | MT | F | L | Hatchback FWD F8Q784/F8Q786/F9Q731/F9Q734/F9Q736/F9Q738 | Trans. code:JC5 | GDS50028 | Drive Shaft | | 23 | | 56.8 | 84 | 654 | |
| | 1996.04-2001.02 | MT | F | L | Hatchback FWD F8Q784/F8Q786/F9Q731/F9Q734/F9Q736/F9Q738 | Date From:1999.04,For Engine Code:F9Q731/F9Q734/F9Q736/F9Q738 | GDS50148 | Drive Shaft | 44T | 23 | | 57.5 | 86.5 | 657 | |

| | YEAR | TRANSM. | F/R | L/R | BODY STYLE & DRIVE TYPE & ENGINE | REMARKS | G-AP Ref. | PRODUCT | ABS | Technical Specifications A | B | C | H | L | P |
|---|---|---|---|---|---|---|---|---|---|---|---|---|---|---|---|
| **RENAULT** **Megane** | | | | | | | | | | | | | | | |
| 1.9 (72 kw) | 1996.04-2001.02 | MT | F | L | Hatchback FWD F8Q784/F8Q786/F9Q731/F9Q734/F9Q736/F9Q738 | Trans. code:JC5 | GDS50311 | Drive Shaft | 44T | 23 | 30 | 56 | 82 | 650 | |
| | 1996.04-2001.02 | MT | F | R | Hatchback FWD F8Q784/F8Q786/F9Q731/F9Q734/F9Q736/F9Q738 | | GDS50159 | Drive Shaft | 44T | 23 | 23 | 57 | 87 | 748 | |
| | 1996.04-2001.02 | MT | F | R | Hatchback FWD F8Q784/F8Q786/F9Q731/F9Q734/F9Q736/F9Q738 | Trans. code:JC5 | GDS50247 | Drive Shaft | | 23 | 23 | 56.8 | 84 | 750.5 | |
| | 1996.04-2001.02 | MT | F | R | Hatchback FWD F8Q784/F8Q786/F9Q731/F9Q734/F9Q736/F9Q738 | Trans. code:JC5 | GDS50320 | Drive Shaft | 44T | 23 | 23 | 56.8 | 84 | 755 | |
| | 1996.04-2001.02 | MT | F | L/R | Hatchback FWD F8Q784/F8Q786/F9Q731/F9Q734/F9Q736/F9Q738 | | GCO50026 | Outer Joint | | 23 | 25 | 56.2 | 83.5 | 58 | O |
| | 1996.04-2001.02 | MT | F | L/R | Hatchback FWD F8Q784/F8Q786/F9Q731/F9Q734/F9Q736/F9Q738 | | GCO50069 | Outer Joint | 44T | 23 | 30 | 57.5 | 86.5 | 58.5 | I |
| | 1996.04-2001.02 | MT | F | | Hatchback FWD F8Q784/F8Q786/F9Q731/F9Q734/F9Q736/F9Q738 | | GCO50058 | Outer Joint | 44T | 23 | 35 | 57 | 87 | 71 | I |
| | 1996.04-2001.02 | MT | F | R | Hatchback FWD F8Q784/F8Q786/F9Q731/F9Q734/F9Q736/F9Q738 | Date from:1999.04 | GCI50008 | Inner Joint | | 23 | 30 | 36.3 | | 120.7 | |
| | 1996.04-2001.02 | MT | F | R | Hatchback FWD F8Q784/F8Q786/F9Q731/F9Q734/F9Q736/F9Q738 | | GCI50079 | Inner Joint | | 23 | 22 | 36.3 | | 105.5 | |
| | 1996.04-2001.02 | | F | R | Hatchback FWD F8Q784/F8Q786/F9Q731/F9Q734/F9Q736/F9Q738 | | GDS50021 | Drive Shaft | 44T | 21 | 23 | 57 | 84.5 | 750 | |
| | 1996.04-2001.02 | | F | L | Hatchback FWD F8Q784/F8Q786/F9Q731/F9Q734/F9Q736/F9Q738 | | GCO50043 | Outer Joint | 44T | 21 | 22 | 51.5 | 83 | 56.5 | I |
| 1.9 (75 kw) | 2000.10-2002.08 | 4AT/5MT | F | L | Hatchback FWD F9Q732/F9Q733 | | GDS50253 | Drive Shaft | 44T | 23 | 26 | 57.5 | 86.5 | 637 | |
| | 2000.10-2002.08 | AT | F | R | Hatchback FWD F9Q732/F9Q733 | For Engine code:F9Q731/F9Q734;For Engine code:F9Q736/F9Q738 | GDS50323 | Drive Shaft | 44T | 23 | 23 | 57.5 | 86.5 | 778 | |
| | 2000.10-2002.08 | AT/MT | F | L/R | Hatchback FWD F9Q732/F9Q733 | | GCO50069 | Outer Joint | 44T | 23 | 30 | 57.5 | 86.5 | 58.5 | I |
| | 2000.10-2002.08 | MT | F | L | Hatchback FWD F9Q732/F9Q733 | Date to:2002.08 | GDS50311 | Drive Shaft | 44T | 23 | 30 | 56 | 82 | 650 | |
| | 2000.10-2002.08 | MT | F | R | Hatchback FWD F9Q732/F9Q733 | | GDS50156 | Drive Shaft | 44T | 23 | 23 | 57.5 | 86.5 | 746.5 | |
| | 2000.10-2002.08 | MT | F | R | Hatchback FWD F9Q732/F9Q733 | | GDS50313 | Drive Shaft | 44T | 23 | 23 | 57.5 | 86.5 | 750 | |
| | 2000.10-2002.08 | MT | F | | Hatchback FWD F9Q732/F9Q733 | | GCO50058 | Outer Joint | 44T | 23 | 35 | 57 | 87 | 71 | I |
| 1.9 (76 kw) | 1998.08-1999.10 | 5MT | F | L | Hatchback FWD F8Q784 | | GDS50009 | Drive Shaft | 44T | 21 | | 57 | 84.5 | 645 | |
| | 1998.08-1999.10 | 5MT | F | R | Hatchback FWD F8Q784 | | GDS50327 | Drive Shaft | 44T | 21 | 23 | 57 | 84.5 | 740 | |
| 1.9 (77 kw) | 1999.03-2003.07 | 5MT | F | L | Hatchback FWD F9Q732 | | GDS50253 | Drive Shaft | 44T | 23 | 26 | 57.5 | 86.5 | 637 | |
| | 1999.03-2003.07 | AT | F | R | Hatchback FWD F9Q732 | | GDS50323 | Drive Shaft | 44T | 23 | 23 | 57.5 | 86.5 | 778 | |
| | 1999.03-2003.07 | MT | F | R | Hatchback FWD F9Q732 | | GDS50156 | Drive Shaft | 44T | 23 | 23 | 57.5 | 86.5 | 746.5 | |
| | 1999.03-2003.07 | MT | F | R | Hatchback FWD F9Q732 | | GDS50159 | Drive Shaft | 44T | 23 | 23 | 57 | 87 | 748 | |
| | 1999.03-2003.07 | MT | F | | Hatchback FWD F9Q732 | | GCO50058 | Outer Joint | 44T | 23 | 35 | 57 | 87 | 71 | I |
| | 1999.03-2003.07 | MT | F | R | Hatchback FWD F9Q732 | | GCI50008 | Inner Joint | | 23 | 30 | 36.3 | | 120.7 | |
| 1.9 (81 kw) | 2005.05- | 4AT | F | L | Saloon FWD F9Q 804;F9Q 803;F9Q 816;F9Q 818 | | GDS99186 | Drive Shaft | | 25 | 26 | 52.6 | 88 | 669 | |
| | 2005.05- | 4AT | F | R | Saloon FWD F9Q 804;F9Q 803;F9Q 816;F9Q 818 | | GDS83826 | Drive Shaft | | 25 | 26 | 52.8 | 85.5 | 800 | |
| | 2005.05- | 4AT | F | L/R | Saloon FWD F9Q 804;F9Q 803;F9Q 816;F9Q 818 | | GCO50143 | Outer Joint | | 25 | 32 | 52.8 | 85.5 | 62.5 | I |
| | 2005.05- | 4AT | F | R | Saloon FWD F9Q 804;F9Q 803;F9Q 816;F9Q 818 | | GCI50047 | Inner Joint | | 26 | 30 | | 213.5 | 95 | |
| | 2005.05- | 6MT | F | L | Saloon FWD F9Q 804;F9Q 803;F9Q 816;F9Q 818 | | GDS99201 | Drive Shaft | | 25 | 39 | 53 | 88 | 638 | |
| | 2005.05- | 6MT | F | R | Saloon FWD F9Q 804;F9Q 803;F9Q 816;F9Q 818 | | GDS50400 | Drive Shaft | | 25 | 39 | 53 | 88 | 932 | |
| | 2005.05- | MT | F | L/R | Saloon FWD F9Q 804;F9Q 803;F9Q 816;F9Q 818 | | GCO99213 | Outer Joint | | 25 | 33 | 53 | 88 | 61.5 | I |
| | 2005.05- | MT | F | L | Saloon FWD F9Q 804;F9Q 803;F9Q 816;F9Q 818 | Date to:2008.11 | GCI99150 | Inner Joint | | 39 | 32 | 39 | 66 | 104.5 | |
| | 2005.05- | MT | F | R | Saloon FWD F9Q 804;F9Q 803;F9Q 816;F9Q 818 | Date to:2008.11 | GCI99160 | Inner Joint | | 39 | 32 | 32.95 | 352 | 90 | |
| | 2005.05-2008.02 | 4AT | F | L | Hatchback FWD F9Q 804;F9Q 818 | | GDS99186 | Drive Shaft | | 25 | 26 | 52.6 | 88 | 669 | |
| | 2005.05-2008.02 | 4AT | F | R | Hatchback FWD F9Q 804;F9Q 818 | | GDS83826 | Drive Shaft | | 25 | 26 | 52.8 | 85.5 | 800 | |
| | 2005.05-2008.02 | 4AT | F | L/R | Hatchback FWD F9Q 804;F9Q 818 | | GCO50143 | Outer Joint | | 25 | 32 | 52.8 | 85.5 | 62.5 | I |
| | 2005.05-2008.02 | 4AT | F | R | Hatchback FWD F9Q 804;F9Q 818 | | GCI50047 | Inner Joint | | 26 | 30 | | 213.5 | 95 | |
| | 2005.05-2008.02 | 6MT | F | L | Hatchback FWD F9Q 804;F9Q 818 | | GDS99201 | Drive Shaft | | 25 | 39 | 53 | 88 | 638 | |
| | 2005.05-2008.02 | 6MT | F | R | Hatchback FWD F9Q 804;F9Q 818 | | GDS50400 | Drive Shaft | | 25 | 39 | 53 | 88 | 932 | |
| | 2005.05-2008.02 | MT | F | L/R | Hatchback FWD F9Q 804;F9Q 818 | | GCO99213 | Outer Joint | | 25 | 33 | 53 | 88 | 61.5 | I |
| | 2005.05-2008.02 | MT | F | L | Hatchback FWD F9Q 804;F9Q 818 | | GCI99150 | Inner Joint | | 39 | 32 | 39 | 66 | 104.5 | |
| | 2005.05-2008.02 | MT | F | R | Hatchback FWD F9Q 804;F9Q 818 | | GCI99160 | Inner Joint | | 39 | 32 | 32.95 | 352 | 90 | |
| 1.9 (85 kw) | 2002.11-2008.02 | 4AT | F | L | Hatchback FWD F9Q 800;F9Q 804;F9Q 803;F9Q 816;F9Q 818 | | GDS99186 | Drive Shaft | | 25 | 26 | 52.6 | 88 | 669 | |
| | 2002.11-2008.02 | 4AT | F | R | Hatchback FWD F9Q 800;F9Q 804;F9Q 803;F9Q 816;F9Q 818 | | GDS83826 | Drive Shaft | | 25 | 26 | 52.8 | 85.5 | 800 | |
| | 2002.11-2008.02 | 4AT | F | L/R | Hatchback FWD F9Q 800;F9Q 804;F9Q 803;F9Q 816;F9Q 818 | | GCO50143 | Outer Joint | | 25 | 32 | 52.8 | 85.5 | 62.5 | I |
| | 2002.11-2008.02 | 4AT | F | R | Hatchback FWD F9Q 800;F9Q 804;F9Q 803;F9Q 816;F9Q 818 | | GCI50047 | Inner Joint | | 26 | 30 | | 213.5 | 95 | |
| | 2002.11-2008.02 | 6MT | F | L | Hatchback FWD F9Q 800;F9Q 804;F9Q 803;F9Q 816;F9Q 818 | | GDS99201 | Drive Shaft | | 25 | 39 | 53 | 88 | 638 | |
| | 2002.11-2008.02 | 6MT | F | R | Hatchback FWD F9Q 800;F9Q 804;F9Q 803;F9Q 816;F9Q 818 | | GDS50400 | Drive Shaft | | 25 | 39 | 53 | 88 | 932 | |
| | 2002.11-2008.02 | MT | F | L/R | Hatchback FWD F9Q 800;F9Q 804;F9Q 803;F9Q 816;F9Q 818 | | GCO99213 | Outer Joint | | 25 | 33 | 53 | 88 | 61.5 | I |
| | 2002.11-2008.02 | MT | F | L | Hatchback FWD F9Q 800;F9Q 804;F9Q 803;F9Q 816;F9Q 818 | | GCI99150 | Inner Joint | | 39 | 32 | 39 | 66 | 104.5 | |
| | 2002.11-2008.02 | MT | F | R | Hatchback FWD F9Q 800;F9Q 804;F9Q 803;F9Q 816;F9Q 818 | | GCI99160 | Inner Joint | | 39 | 32 | 32.95 | 352 | 90 | |
| 1.9 (88 kw) | 2002.11-2008.02 | 5MT | F | L | Hatchback FWD F9Q 800 | | GCI99150 | Inner Joint | | 39 | 32 | 39 | 66 | 104.5 | |
| | 2002.11-2008.02 | 5MT | F | R | Hatchback FWD F9Q 800 | | GCI99160 | Inner Joint | | 39 | 32 | 32.95 | 352 | 90 | |
| | 2002.11-2008.02 | 6MT | F | L | Hatchback FWD F9Q 800 | | GDS99201 | Drive Shaft | | 25 | 39 | 53 | 88 | 638 | |
| | 2002.11-2008.02 | 6MT | F | R | Hatchback FWD F9Q 800 | | GDS50400 | Drive Shaft | | 25 | 39 | 53 | 88 | 932 | |
| | 2002.11-2008.02 | 6MT | F | L/R | Hatchback FWD F9Q 800 | | GCO99213 | Outer Joint | | 25 | 33 | 53 | 88 | 61.5 | I |
| | 2003.09- | 4AT | F | L | Saloon FWD F9Q 800 | | GDS99186 | Drive Shaft | | 25 | 26 | 52.6 | 88 | 669 | |
| | 2003.09- | 4AT | F | R | Saloon FWD F9Q 800 | | GDS83826 | Drive Shaft | | 25 | 26 | 52.8 | 85.5 | 800 | |
| | 2003.09- | 4AT | F | L/R | Saloon FWD F9Q 800 | | GCO50143 | Outer Joint | | 25 | 32 | 52.8 | 85.5 | 62.5 | I |
| | 2003.09- | 4AT | F | R | Saloon FWD F9Q 800 | | GCI50047 | Inner Joint | | 26 | 30 | | 213.5 | 95 | |
| | 2003.09- | 6MT | F | L | Saloon FWD F9Q 800 | | GDS99201 | Drive Shaft | | 25 | 39 | 53 | 88 | 638 | |
| | 2003.09- | 6MT | F | R | Saloon FWD F9Q 800 | | GDS50400 | Drive Shaft | | 25 | 39 | 53 | 88 | 932 | |
| | 2003.09- | MT | F | L/R | Saloon FWD F9Q 800 | | GCO99213 | Outer Joint | | 25 | 33 | 53 | 88 | 61.5 | I |

| | YEAR | TRANSM. | F/R | L/R | BODY STYLE & DRIVE TYPE & ENGINE | REMARKS | G-AP Ref. | PRODUCT | ABS | Technical Specifications | | | | | |
|---|---|---|---|---|---|---|---|---|---|---|---|---|---|---|---|
| | | | | | | | | | | A | B | C | H | L | P |
| **RENAULT** **Megane** | | | | | | | | | | | | | | | |
| 1.9 (88 kw) | 2003.09- | MT | F | L | Saloon FWD F9Q 800 | Date to:2008.11 | GCI99150 | Inner Joint | | 39 | 32 | 39 | 66 | 104.5 | |
| | 2003.09- | MT | F | R | Saloon FWD F9Q 800 | Date to:2008.11 | GCI99160 | Inner Joint | | 39 | 32 | 32.95 | 352 | 90 | |
| 1.9 (96 kw) | 2005.05- | 4AT | F | L | Saloon FWD F9Q 804;F9Q 803 | | GDS99186 | Drive Shaft | | 25 | 26 | 52.6 | 88 | 669 | |
| | 2005.05- | 4AT | F | R | Saloon FWD F9Q 804;F9Q 803 | | GDS83826 | Drive Shaft | | 25 | 26 | 52.8 | 85.5 | 800 | |
| | 2005.05- | 4AT | F | L/R | Saloon FWD F9Q 804;F9Q 803 | | GCO50143 | Outer Joint | | 25 | 32 | 52.8 | 85.5 | 62.5 | I |
| | 2005.05- | 4AT | F | R | Saloon FWD F9Q 804;F9Q 803 | | GCI50047 | Inner Joint | | 26 | 30 | | 213.5 | 95 | |
| | 2005.05- | 6MT | F | L | Saloon FWD F9Q 804;F9Q 803 | | GDS99201 | Drive Shaft | | 25 | 39 | 53 | 88 | 638 | |
| | 2005.05- | 6MT | F | R | Saloon FWD F9Q 804;F9Q 803 | | GDS50400 | Drive Shaft | | 25 | 39 | 53 | 88 | 932 | |
| | 2005.05- | 6MT | F | R | Saloon FWD F9Q 804;F9Q 803 | | GCO99213 | Outer Joint | | 25 | 33 | 53 | 88 | 61.5 | I |
| | 2005.05- | MT | F | L | Saloon FWD F9Q 804;F9Q 803 | Date to:2012.10 | GCI99150 | Inner Joint | | 39 | 32 | 39 | 66 | 104.5 | |
| | 2005.05- | MT | F | R | Saloon FWD F9Q 804;F9Q 803 | Date to:2012.10 | GCI99160 | Inner Joint | | 39 | 32 | 32.95 | 352 | 90 | |
| | 2005.05-2009.12 | 4AT | F | L | Hatchback FWD F9Q 804;F9Q 803;F9Q 816;F9Q 818 | | GDS99186 | Drive Shaft | | 25 | 26 | 52.6 | 88 | 669 | |
| | 2005.05-2009.12 | 4AT | F | R | Hatchback FWD F9Q 804;F9Q 803;F9Q 816;F9Q 818 | | GDS83826 | Drive Shaft | | 25 | 26 | 52.8 | 85.5 | 800 | |
| | 2005.05-2009.12 | 4AT | F | L/R | Hatchback FWD F9Q 804;F9Q 803;F9Q 816;F9Q 818 | | GCO50143 | Outer Joint | | 25 | 32 | 52.8 | 85.5 | 62.5 | I |
| | 2005.05-2009.12 | 4AT | F | R | Hatchback FWD F9Q 804;F9Q 803;F9Q 816;F9Q 818 | | GCI50047 | Inner Joint | | 26 | 30 | | 213.5 | 95 | |
| | 2005.05-2009.12 | 6MT | F | L | Hatchback FWD F9Q 804;F9Q 803;F9Q 816;F9Q 818 | | GDS99201 | Drive Shaft | | 25 | 39 | 53 | 88 | 638 | |
| | 2005.05-2009.12 | 6MT | F | R | Hatchback FWD F9Q 804;F9Q 803;F9Q 816;F9Q 818 | | GDS50400 | Drive Shaft | | 25 | 39 | 53 | 88 | 932 | |
| | 2005.05-2009.12 | 6MT | F | R | Hatchback FWD F9Q 804;F9Q 803;F9Q 816;F9Q 818 | | GCO99213 | Outer Joint | | 25 | 33 | 53 | 88 | 61.5 | I |
| | 2005.05-2009.12 | MT | F | L | Hatchback FWD F9Q 804;F9Q 803;F9Q 816;F9Q 818 | | GCI99150 | Inner Joint | | 39 | 32 | 39 | 66 | 104.5 | |
| | 2005.05-2009.12 | MT | F | R | Hatchback FWD F9Q 804;F9Q 803;F9Q 816;F9Q 818 | | GCI99160 | Inner Joint | | 39 | 32 | 32.95 | 352 | 90 | |
| | 2008.11-2016.01 | | F | L | Hatchback FWD F9Q 872;F9Q 870 | | GDS50428 | Drive Shaft | | 25 | 39 | 52.6 | 89 | 656 | |
| | 2008.11-2016.01 | | F | R | Hatchback FWD F9Q 872;F9Q 870 | | GDS50427 | Drive Shaft | | 25 | 39 | 52.6 | 89 | 953 | |
| | 2008.11-2016.01 | | F | L/R | Hatchback FWD F9Q 872;F9Q 870 | | GCO50157 | Outer Joint | | 25 | 33 | 52.6 | 89 | 60 | I |
| 2.0 (80 kw) | 1997.06-2000.04 | 4AT/5MT | F | R | Hatchback FWD F3R750/F3R751/F3R791/F3R796/F3R797/F3R798 | | GDS50327 | Drive Shaft | 44T | 21 | 23 | 57 | 84.5 | 740 | |
| | 1997.06-2000.04 | MT | F | L | Hatchback FWD F3R750/F3R751/F3R791/F3R796/F3R797/F3R798 | Date to:2000.04;Trans. code:JB1/3,JC5 | GDS50009 | Drive Shaft | 44T | 21 | | 57 | 84.5 | 645 | |
| | 1997.06-2000.04 | MT | F | L | Hatchback FWD F3R750/F3R751/F3R791/F3R796/F3R797/F3R798 | | GDS50055 | Drive Shaft | | 21 | 30 | 50 | 84 | 650 | |
| | 1997.06-2000.04 | MT | F | R | Hatchback FWD F3R750/F3R751/F3R791/F3R796/F3R797/F3R798 | Date to:2000.04;Trans. code:JB1/3,JC5 | GDS50038 | Drive Shaft | 44T | 21 | 23 | 52.2 | 85.5 | 752 | |
| | 1997.06-2000.04 | MT | F | R | Hatchback FWD F3R750/F3R751/F3R791/F3R796/F3R797/F3R798 | | GDS50173 | Drive Shaft | | 21 | 23 | 57 | 84.5 | 743 | |
| | 1997.06-2000.04 | MT | F | R | Hatchback FWD F3R750/F3R751/F3R791/F3R796/F3R797/F3R798 | | GDS50316 | Drive Shaft | | 21 | 23 | 57 | 84 | 741 | |
| | 1997.06-2000.04 | | F | L | Hatchback FWD F3R750/F3R751/F3R791/F3R796/F3R797/F3R798 | For Engine code:F3R750 | GDS50160 | Drive Shaft | 44T | 23 | | 57 | 87 | 656.5 | |
| | 1997.06-2000.04 | | F | R | Hatchback FWD F3R750/F3R751/F3R791/F3R796/F3R797/F3R798 | | GDS50054 | Drive Shaft | | 21 | 23 | 49.8 | 83.5 | 741.5 | |
| | 1997.06-2000.04 | | F | R | Hatchback FWD F3R750/F3R751/F3R791/F3R796/F3R797/F3R798 | For Engine code:F3R750 | GDS50159 | Drive Shaft | 44T | 23 | 23 | 57 | 87 | 748 | |
| 2.0 (84 kw) | 1996.01-2003.08 | 4AT/5MT | F | L | Hatchback FWD F3R750/F3R751/F3R791/F3R796/F3R797/F3R798 | For Engine Code:F3R 750 | GDS50009 | Drive Shaft | 44T | 21 | | 57 | 84.5 | 645 | |
| | 1996.01-2003.08 | MT | F | L | Hatchback FWD F3R750/F3R751/F3R791/F3R796/F3R797/F3R798 | Trans. code:JB1/3,JC5 | GDS50009 | Drive Shaft | 44T | 21 | | 57 | 84.5 | 645 | |
| | 1996.01-2003.08 | MT | F | L | Hatchback FWD F3R750/F3R751/F3R791/F3R796/F3R797/F3R798 | | GDS50055 | Drive Shaft | | 21 | 30 | 50 | 84 | 650 | |
| | 1996.01-2003.08 | MT | F | R | Hatchback FWD F3R750/F3R751/F3R791/F3R796/F3R797/F3R798 | Trans. code:JB1/3,JC5 | GDS50038 | Drive Shaft | 44T | 21 | 23 | 52.2 | 85.5 | 752 | |
| | 1996.01-2003.08 | MT | F | R | Hatchback FWD F3R750/F3R751/F3R791/F3R796/F3R797/F3R798 | | GDS50173 | Drive Shaft | | 21 | 23 | 57 | 84.5 | 743 | |
| | 1996.01-2003.08 | MT | F | R | Hatchback FWD F3R750/F3R751/F3R791/F3R796/F3R797/F3R798 | | GDS50316 | Drive Shaft | | 21 | 23 | 57 | 84 | 741 | |
| | 1996.01-2003.08 | | F | L | Hatchback FWD F3R750/F3R751/F3R791/F3R796/F3R797/F3R798 | For Engine Code:F3R 750 | GDS50311 | Drive Shaft | 44T | 23 | 30 | 56 | 82 | 650 | |
| | 1996.01-2003.08 | | F | R | Hatchback FWD F3R750/F3R751/F3R791/F3R796/F3R797/F3R798 | For Engine code:F3R750 | GDS50021 | Drive Shaft | 44T | 21 | 23 | 57 | 84.5 | 750 | |
| | 1996.01-2003.08 | | F | R | Hatchback FWD F3R750/F3R751/F3R791/F3R796/F3R797/F3R798 | | GDS50054 | Drive Shaft | | 21 | 23 | 49.8 | 83.5 | 741.5 | |
| | 1996.01-2003.08 | | F | R | Hatchback FWD F3R750/F3R751/F3R791/F3R796/F3R797/F3R798 | For Engine Code:F3R 750 | GDS50327 | Drive Shaft | 44T | 21 | 23 | 57 | 84.5 | 740 | |
| | 1996.01-2003.08 | | F | L | Hatchback FWD F3R750/F3R751/F3R791/F3R796/F3R797/F3R798 | For Engine code:F3R750 | GCO50043 | Outer Joint | 44T | 21 | 22 | 51.5 | 83 | 56.5 | I |
| 2.0 (99 kw) | 2002.11-2008.02 | 4AT | F | L | Hatchback FWD F4R 770 | | GDS50255 | Drive Shaft | | 23 | 26 | 49 | 86 | 673 | |
| | 2002.11-2008.02 | 4AT | F | R | Hatchback FWD F4R 770 | outer teeth of wheel side:25 | GDS50399 | Drive Shaft | | 25 | 23 | 52.6 | 88 | 803 | |
| | 2002.11-2008.02 | 4AT | F | R | Hatchback FWD F4R 770 | inner teeth of wheel side:32 | GDS50520 | Drive Shaft | | 23 | 23 | 49 | 86 | 803 | |
| | 2002.11-2008.02 | 4AT | F | R | Hatchback FWD F4R 770 | | GCO50117 | Outer Joint | | 23 | 32 | 49 | 86 | 62 | I |
| | 2002.11-2008.02 | 4AT | F | L | Hatchback FWD F4R 770 | | GCI50040 | Inner Joint | | 26 | 30 | 43 | 42.5 | 83 | |
| | 2002.11-2008.02 | 6MT | F | L | Hatchback FWD F4R 770 | | GDS50441 | Drive Shaft | | 23 | 39 | 49 | 86.5 | 636 | |
| | 2002.11-2008.02 | 6MT | F | R | Hatchback FWD F4R 770 | | GDS50447 | Drive Shaft | | 23 | 39 | 49 | 86.5 | 930 | |
| | 2002.11-2008.02 | 6MT | F | L/R | Hatchback FWD F4R 770 | | GCO50109 | Outer Joint | | 23 | 33 | 49 | 86.5 | 61 | I |
| | 2002.11-2008.02 | 6MT | F | L | Hatchback FWD F4R 770 | For Engine Code:F4R 770 | GCI99150 | Inner Joint | | 39 | 32 | 39 | 66 | 104.5 | |
| | 2002.11-2008.02 | 6MT | F | R | Hatchback FWD F4R 770 | For Engine Code:F4R 771 | GCI99160 | Inner Joint | | 39 | 32 | 32.95 | 352 | 90 | |
| | 2002.11-2008.02 | AT | F | R | Hatchback FWD F4R 770 | outer teeth of wheel side:23;inner teeth of wheel side:30 | GDS50440 | Drive Shaft | | 23 | 23 | 49 | 86 | 804 | |
| | 2003.09- | 4AT | F | L | Saloon FWD F4R 770;F4R 771 | | GDS50255 | Drive Shaft | | 23 | 26 | 49 | 86 | 673 | |
| | 2003.09- | 4AT | F | R | Saloon FWD F4R 770;F4R 771 | outer teeth of wheel side:25 | GDS50399 | Drive Shaft | | 25 | 23 | 52.6 | 88 | 803 | |
| | 2003.09- | 4AT | F | R | Saloon FWD F4R 770;F4R 771 | inner teeth of wheel side:32 | GDS50520 | Drive Shaft | | 23 | 23 | 49 | 86 | 803 | |
| | 2003.09- | 4AT | F | R | Saloon FWD F4R 770;F4R 771 | | GCO50117 | Outer Joint | | 23 | 32 | 49 | 86 | 62 | I |
| | 2003.09- | 4AT | F | L | Saloon FWD F4R 770;F4R 771 | | GCI50040 | Inner Joint | | 26 | 30 | 43 | 42.5 | 83 | |
| | 2003.09- | 6MT | F | L | Saloon FWD F4R 770;F4R 771 | | GDS50441 | Drive Shaft | | 23 | 39 | 49 | 86.5 | 636 | |
| | 2003.09- | 6MT | F | R | Saloon FWD F4R 770;F4R 771 | | GDS50447 | Drive Shaft | | 23 | 39 | 49 | 86.5 | 930 | |
| | 2003.09- | 6MT | F | L/R | Saloon FWD F4R 770;F4R 771 | | GCO50109 | Outer Joint | | 23 | 33 | 49 | 86.5 | 61 | I |
| | 2003.09- | AT | F | R | Saloon FWD F4R 770;F4R 771 | outer teeth of wheel side:23;inner teeth of wheel side:30 | GDS50440 | Drive Shaft | | 23 | 23 | 49 | 86 | 804 | |
| | 2003.09- | MT | F | L | Saloon FWD F4R 770;F4R 771 | Date to:2010.01 | GCI99150 | Inner Joint | | 39 | 32 | 39 | 66 | 104.5 | |
| | 2003.09- | MT | F | R | Saloon FWD F4R 770;F4R 771 | Date To:2010.01;For Engine Code:F4R 770 | GCI99160 | Inner Joint | | 39 | 32 | 32.95 | 352 | 90 | |

| | YEAR | TRANSM. | F/R | L/R | BODY STYLE & DRIVE TYPE & ENGINE | REMARKS | G-AP Ref. | PRODUCT | ABS | Technical Specifications A | B | C | H | L | P |
|---|---|---|---|---|---|---|---|---|---|---|---|---|---|---|---|
| **RENAULT** **Megane** | | | | | | | | | | | | | | | |
| 2.0 (101 kw) | 2006.04-2010.11 | 4AT | F | L | Saloon FWD F4R 770 | | GDS50255 | Drive Shaft | | 23 | 26 | 49 | 86 | 673 | |
| | 2006.04-2010.11 | 4AT | F | R | Saloon FWD F4R 770 | | GDS50399 | Drive Shaft | | 25 | 23 | 52.6 | 88 | 803 | |
| | 2006.04-2010.11 | 4AT | F | R | Saloon FWD F4R 770 | | GDS50520 | Drive Shaft | | 23 | 23 | 49 | 86 | 803 | |
| | 2006.04-2010.11 | 4AT | F | R | Saloon FWD F4R 770 | | GCO50117 | Outer Joint | | 23 | 32 | 49 | 86 | 62 | I |
| | 2006.04-2010.11 | 4AT | F | L | Saloon FWD F4R 770 | | GCI50040 | Inner Joint | | 26 | 30 | 43 | 42.5 | 83 | |
| | 2006.04-2010.11 | 6MT | F | L | Saloon FWD F4R 770 | | GDS50441 | Drive Shaft | | 23 | 39 | 49 | 86.5 | 636 | |
| | 2006.04-2010.11 | 6MT | F | R | Saloon FWD F4R 770 | | GDS50447 | Drive Shaft | | 23 | 39 | 49 | 86.5 | 930 | |
| | 2006.04-2010.11 | 6MT | F | L/R | Saloon FWD F4R 770 | | GCO50109 | Outer Joint | | 23 | 33 | 49 | 86.5 | 61 | I |
| | 2006.04-2010.11 | MT | F | L | Saloon FWD F4R 770 | | GCI99150 | Inner Joint | | 39 | 32 | 39 | 66 | 104.5 | |
| | 2006.04-2010.11 | MT | F | R | Saloon FWD F4R 770 | | GCI99160 | Inner Joint | | 39 | 32 | 32.95 | 352 | 90 | |
| 2.0 (103 kw) | 2009.02-2015.08 | CVT | F | L | Hatchback FWD M4R 711;M4R 713 | | GDS83875 | Drive Shaft | | 25 | 27 | 52.5 | 88.5 | 675 | |
| | 2009.02-2015.08 | CVT | F | L | Hatchback FWD M4R 711;M4R 713 | | GCO82528 | Outer Joint | | 25 | 24 | 52.5 | 88.5 | 59 | M |
| | 2009.02-2015.08 | CVT | F | L/R | Hatchback FWD M4R 711;M4R 713 | | GCO99213 | Outer Joint | | 25 | 33 | 53 | 88 | 61.5 | I |
| | 2009.02-2015.08 | CVT | F | L | Hatchback FWD M4R 711;M4R 713 | | GCI41073 | Inner Joint | | 27 | 24 | 40 | 62.5 | 99.5 | |
| 2.0 (105 kw) | 2011.01-2015.08 | CVT | F | L | Hatchback FWD M4R 714;M4R 710 | | GDS83875 | Drive Shaft | | 25 | 27 | 52.5 | 88.5 | 675 | |
| | 2011.01-2015.08 | CVT | F | L | Hatchback FWD M4R 714;M4R 710 | | GCO82528 | Outer Joint | | 25 | 24 | 52.5 | 88.5 | 59 | M |
| | 2011.01-2015.08 | CVT | F | L | Hatchback FWD M4R 714;M4R 710 | | GCI41073 | Inner Joint | | 27 | 24 | 40 | 62.5 | 99.5 | |
| 2.0 (108 kw) | 1996.07-1999.01 | 5MT | F | R | Hatchback FWD F7R710/F7R714 | Date to:1999.01 | GDS50145 | Drive Shaft | | 23 | 23 | 56.3 | 80 | 685 | |
| | 1996.07-1999.01 | MT | F | L | Hatchback FWD F7R710/F7R714 | Date to:1999.01;Trans. code:JC5 | GDS50028 | Drive Shaft | | 23 | | 56.8 | 84 | 654 | |
| | 1996.07-1999.01 | MT | F | L | Hatchback FWD F7R710/F7R714 | | GDS50311 | Drive Shaft | 44T | 23 | 30 | 56 | 82 | 650 | |
| | 1996.07-1999.01 | MT | F | R | Hatchback FWD F7R710/F7R714 | Date to:1999.01;Trans. code:JC5 | GDS50247 | Drive Shaft | | 23 | 23 | 56.8 | 84 | 750.5 | |
| | 1996.07-1999.01 | MT | F | R | Hatchback FWD F7R710/F7R714 | Date to:1999.01;Trans. code:JC5 | GDS50320 | Drive Shaft | 44T | 23 | 23 | 56.8 | 84 | 755 | |
| | 1996.07-1999.01 | MT | F | L/R | Hatchback FWD F7R710/F7R714 | Date to:1999.01 | GCO50026 | Outer Joint | | 23 | 25 | 56.2 | 83.5 | 58 | O |
| | 1996.07-1999.01 | MT | F | R | Hatchback FWD F7R710/F7R714 | Date to:1999.01 | GCI50079 | Inner Joint | | 23 | 22 | 36.3 | | 105.5 | |
| | 1996.07-1999.01 | | F | R | Hatchback FWD F7R710/F7R714 | | GDS50159 | Drive Shaft | 44T | 23 | 23 | 57 | 87 | 748 | |
| | 1996.07-1999.01 | | F | | Hatchback FWD F7R710/F7R714 | | GCO50058 | Outer Joint | 44T | 23 | 35 | 57 | 87 | 71 | I |
| | 1996.07-1999.01 | | F | R | Hatchback FWD F7R710/F7R714 | | GCI50008 | Inner Joint | | 23 | 30 | 36.3 | | 120.7 | |
| 2.0 (110 kw) | 2005.09- | 6MT | F | L | Saloon FWD M9R 700;M9R 722 | | GDS50444 | Drive Shaft | | 27 | 39 | 56.5 | 90.5 | 626 | |
| | 2005.09- | 6MT | F | R | Saloon FWD M9R 700;M9R 722 | | GDS50453 | Drive Shaft | | 27 | 39 | 56.5 | 90.5 | 973.5 | |
| | 2005.09- | 6MT | F | L | Saloon FWD M9R 700;M9R 722 | | GCI50071 | Inner Joint | | 39 | 35 | 39 | 74 | 102.5 | |
| | 2005.09- | 6MT | F | R | Saloon FWD M9R 700;M9R 722 | Date to:2008.11 | GCI50087 | Inner Joint | | 39 | 35 | 30 | 367 | 89.5 | |
| | 2005.09- | | F | L/R | Saloon FWD M9R 700;M9R 722 | | GCO50108 | Outer Joint | | 27 | 35 | 56.5 | 90.5 | 71 | I |
| | 2005.09-2008.02 | 6MT | F | L | Hatchback FWD M9R 700;M9R 722 | | GDS50444 | Drive Shaft | | 27 | 39 | 56.5 | 90.5 | 626 | |
| | 2005.09-2008.02 | 6MT | F | R | Hatchback FWD M9R 700;M9R 722 | | GDS50453 | Drive Shaft | | 27 | 39 | 56.5 | 90.5 | 973.5 | |
| | 2005.09-2008.02 | 6MT | F | R | Hatchback FWD M9R 700;M9R 722 | | GCI50087 | Inner Joint | | 39 | 35 | 30 | 367 | 89.5 | |
| | 2005.09-2008.02 | | F | L/R | Hatchback FWD M9R 700;M9R 722 | | GCO50108 | Outer Joint | | 27 | 35 | 56.5 | 90.5 | 71 | I |
| | 2010.10-2015.08 | 6AT | F | L | Hatchback FWD M9R 615 | 8 balls | GDS81271 | Drive Shaft | | 27 | 30 | 56.7 | 91 | 652 | |
| | 2010.10-2015.08 | 6AT | F | R | Hatchback FWD M9R 615 | 8 balls | GDS81272 | Drive Shaft | | 27 | 30 | 56.7 | 91 | 964 | |
| | 2010.10-2015.08 | 6AT | F | L/R | Hatchback FWD M9R 615 | | GCO81102 | Outer Joint | | 27 | 36 | 56.7 | 91 | 63.5 | I |
| | 2010.10-2015.08 | 6AT | F | L | Hatchback FWD M9R 615 | | GCI50150 | Inner Joint | | 30 | 36 | 34 | 76.5 | 86 | |
| | 2010.10-2015.08 | 6AT | F | R | Hatchback FWD M9R 615 | | GCI50123 | Inner Joint | | 30 | 36 | 33.97 | 343 | 90 | |
| | 2010.10-2015.08 | AT | F | L | Hatchback FWD M9R 615 | 6 balls | GDS18274 | Drive Shaft | | 27 | 30 | 56.5 | 90 | 624 | |
| 2.0 (118 kw) | 2009.04-2015.08 | 6MT | F | L | Hatchback FWD M9R 610 | | GDS81275 | Drive Shaft | | 27 | 39 | 56.5 | 91 | 636 | |
| | 2009.04-2015.08 | 6MT | F | R | Hatchback FWD M9R 610 | | GDS81274 | Drive Shaft | | 27 | 39 | 56.5 | 91 | 981 | |
| | 2009.04-2015.08 | 6MT | F | L | Hatchback FWD M9R 610 | | GCI18272 | Inner Joint | | 39 | 26 | 39 | 74 | 116 | |
| | 2009.04-2015.08 | 6MT | F | R | Hatchback FWD M9R 610 | | GCI81164 | Inner Joint | | 39 | 26 | 30 | 366.5 | 99 | |
| | 2009.04-2015.08 | AT | F | L | Hatchback FWD M9R 610 | | GDS18274 | Drive Shaft | | 27 | 30 | 56.5 | 90 | 624 | |
| | 2009.04-2015.08 | | F | L | Hatchback FWD M9R 610 | | GCO50186 | Outer Joint | | 27 | 26 | 56.5 | 91 | 65 | M |
| 2.0 (120 kw) | 2004.05-2008.02 | 6MT | F | L | Hatchback FWD F4R 776 | | GDS99201 | Drive Shaft | | 25 | 39 | 53 | 88 | 638 | |
| | 2004.05-2008.02 | 6MT | F | R | Hatchback FWD F4R 776 | | GDS50400 | Drive Shaft | | 25 | 39 | 53 | 88 | 932 | |
| | 2004.05-2008.02 | 6MT | F | L/R | Hatchback FWD F4R 776 | | GCO99213 | Outer Joint | | 25 | 33 | 53 | 88 | 61.5 | I |
| | 2004.05-2008.02 | MT | F | L | Hatchback FWD F4R 776 | Date from:2004.08 | GCI99150 | Inner Joint | | 39 | 32 | 39 | 66 | 104.5 | |
| | 2004.05-2008.02 | MT | F | R | Hatchback FWD F4R 776 | Date from:2004.08 | GCI99160 | Inner Joint | | 39 | 32 | 32.95 | 352 | 90 | |
| | 2012.07-2015.08 | 6MT | F | L | Hatchback FWD M9R 610 | | GDS81275 | Drive Shaft | | 27 | 39 | 56.5 | 91 | 636 | |
| | 2012.07-2015.08 | 6MT | F | R | Hatchback FWD M9R 610 | | GDS81274 | Drive Shaft | | 27 | 39 | 56.5 | 91 | 981 | |
| | 2012.07-2015.08 | 6MT | F | L | Hatchback FWD M9R 610 | | GCI18272 | Inner Joint | | 39 | 26 | 39 | 74 | 116 | |
| | 2012.07-2015.08 | 6MT | F | R | Hatchback FWD M9R 610 | | GCI81164 | Inner Joint | | 39 | 26 | 30 | 366.5 | 99 | |
| | 2012.07-2015.08 | AT | F | L | Hatchback FWD M9R 610 | | GDS18274 | Drive Shaft | | 27 | 30 | 56.5 | 90 | 624 | |
| | 2012.07-2015.08 | | F | L | Hatchback FWD M9R 610 | | GCO50186 | Outer Joint | | 27 | 26 | 56.5 | 91 | 65 | M |
| 2.0 (123 kw) | 2009.01-2009.12 | 6MT | F | L | Hatchback FWD F4R 776 | | GDS99201 | Drive Shaft | | 25 | 39 | 53 | 88 | 638 | |
| | 2009.01-2009.12 | 6MT | F | R | Hatchback FWD F4R 776 | | GDS50400 | Drive Shaft | | 25 | 39 | 53 | 88 | 932 | |
| 2.0 (127 kw) | 2007.01-2008.02 | MT | F | L | Hatchback FWD M9R 724 | | GDS50444 | Drive Shaft | | 27 | 39 | 56.5 | 90.5 | 626 | |
| | 2007.01-2008.02 | | F | L/R | Hatchback FWD M9R 724 | | GCO50149 | Outer Joint | | 27 | 33 | 56.7 | 88.5 | 59.5 | I |
| 2.0 (165 kw) | 2004.05-2009.10 | 6MT | F | L | Hatchback FWD F4R 774;F4Rt 774 | | GDS18197 | Drive Shaft | | 27 | 39 | 57 | 88 | 663 | |
| | 2004.05-2009.10 | 6MT | F | R | Hatchback FWD F4R 774;F4Rt 774 | | GDS50554 | Drive Shaft | | 27 | 39 | 56.7 | 88.5 | 960 | |

| | YEAR | TRANSM. | F/R | L/R | BODY STYLE & DRIVE TYPE & ENGINE | REMARKS | G-AP Ref. | PRODUCT | ABS | Technical Specifications A | B | C | H | L | P |
|---|---|---|---|---|---|---|---|---|---|---|---|---|---|---|---|
| **RENAULT** | | | | | | | | | | | | | | | |
| **Megane** | | | | | | | | | | | | | | | |
| 2.0 (165 kw) | 2004.05-2009.10 | 6MT | F | R | Hatchback FWD F4R 774;F4Rt 774 | | GCO50149 | Outer Joint | | 27 | 33 | 56.7 | 88.5 | 59.5 | I |
| | 2004.05-2009.10 | 6MT | F | L | Hatchback FWD F4R 774;F4Rt 774 | | GCI99150 | Inner Joint | | 39 | 32 | 39 | 66 | 104.5 | |
| | 2004.05-2009.10 | 6MT | F | R | Hatchback FWD F4R 774;F4Rt 774 | | GCI99160 | Inner Joint | | 39 | 32 | 32.95 | 352 | 90 | |
| 2.0 (169 kw) | 2006.08-2008.02 | 6MT | F | L | Hatchback FWD F4R 774 | | GDS18197 | Drive Shaft | | 27 | 39 | 57 | 88 | 663 | |
| | 2006.08-2008.02 | 6MT | F | R | Hatchback FWD F4R 774 | | GDS50554 | Drive Shaft | | 27 | 39 | 56.7 | 88.5 | 960 | |
| | 2006.08-2008.02 | 6MT | F | R | Hatchback FWD F4R 774 | | GCO50149 | Outer Joint | | 27 | 33 | 56.7 | 88.5 | 59.5 | I |
| | 2006.08-2008.02 | MT | F | L | Hatchback FWD F4R 774 | | GDS99201 | Drive Shaft | | 25 | 39 | 53 | 88 | 638 | |
| | 2006.08-2008.02 | MT | F | R | Hatchback FWD F4R 774 | | GDS50400 | Drive Shaft | | 25 | 39 | 53 | 88 | 932 | |
| | 2006.08-2008.02 | MT | F | L/R | Hatchback FWD F4R 774 | | GCO99213 | Outer Joint | | 25 | 33 | 53 | 88 | 61.5 | I |
| | 2006.08-2008.02 | MT | F | L | Hatchback FWD F4R 774 | | GCI99150 | Inner Joint | | 39 | 32 | 39 | 66 | 104.5 | |
| | 2006.08-2008.02 | MT | F | R | Hatchback FWD F4R 774 | | GCI99160 | Inner Joint | | 39 | 32 | 32.95 | 352 | 90 | |
| **Megane Cabrio** | | | | | | | | | | | | | | | |
| 1.4 (70 kw) | 1999.03-2003.07 | 5MT | F | L | Cabriolet FWD K4J714/K4J750 | | GDS50009 | Drive Shaft | 44T | 21 | | 57 | 84.5 | 645 | |
| | 1999.03-2003.07 | 5MT | F | R | Cabriolet FWD K4J714/K4J750 | | GDS50038 | Drive Shaft | 44T | 21 | 23 | 52.2 | 85.5 | 752 | |
| | 1999.03-2003.07 | MT | F | L | Cabriolet FWD K4J714/K4J750 | Spring Design:Tension Spring | GDS50055 | Drive Shaft | | 21 | 30 | 50 | 84 | 650 | |
| | 1999.03-2003.07 | MT | F | R | Cabriolet FWD K4J714/K4J750 | | GDS50173 | Drive Shaft | | 21 | 23 | 57 | 84.5 | 743 | |
| | 1999.03-2003.07 | MT | F | R | Cabriolet FWD K4J714/K4J750 | Spring Design:Tension Spring | GDS50316 | Drive Shaft | | 21 | 23 | 57 | 84 | 741 | |
| | 1999.03-2003.07 | | F | R | Cabriolet FWD K4J714/K4J750 | | GCO50066 | Outer Joint | 44T | 21 | 28 | 52.5 | 85 | 51 | I |
| | 1999.03-2003.07 | | F | R | Cabriolet FWD K4J714/K4J750 | | GCI50008 | Inner Joint | | 23 | 30 | 36.3 | | 120.7 | |
| 1.6 (66 kw) | 1997.02-1999.02 | 5MT | F | L | Cabriolet FWD K7M702 | Date from:1997.02 | GDS50009 | Drive Shaft | 44T | 21 | | 57 | 84.5 | 645 | |
| | 1997.02-1999.02 | 5MT | F | R | Cabriolet FWD K7M702 | Transm. Type:JB1/JB3 | GDS50021 | Drive Shaft | 44T | 21 | 23 | 57 | 84.5 | 750 | |
| | 1997.02-1999.02 | 5MT | F | R | Cabriolet FWD K7M702 | | GDS50327 | Drive Shaft | 44T | 21 | 23 | 57 | 84.5 | 740 | |
| | 1997.02-1999.02 | MT | F | L | Cabriolet FWD K7M702 | | GDS50055 | Drive Shaft | | 21 | 30 | 50 | 84 | 650 | |
| | 1997.02-1999.02 | MT | F | R | Cabriolet FWD K7M702 | Date from:1997.02;Trans. code:JB1/3,JC5 | GDS50038 | Drive Shaft | 44T | 21 | 23 | 52.2 | 85.5 | 752 | |
| | 1997.02-1999.02 | MT | F | R | Cabriolet FWD K7M702 | | GDS50107 | Drive Shaft | 44T | 21 | 23 | 57 | 84.5 | 736 | |
| | 1997.02-1999.02 | MT | F | R | Cabriolet FWD K7M702 | | GDS50173 | Drive Shaft | | 21 | 23 | 57 | 84.5 | 743 | |
| | 1997.02-1999.02 | MT | F | R | Cabriolet FWD K7M702 | | GDS50316 | Drive Shaft | | 21 | 23 | 57 | 84 | 741 | |
| | 1997.02-1999.02 | MT | F | L/R | Cabriolet FWD K7M702 | | GCO50101 | Outer Joint | 44T | 21 | 30 | 52.2 | 85.5 | 59 | I |
| 1.6 (79 kw) | 1999.03-2003.07 | MT | F | R | Cabriolet FWD K4M700/K4M701/K4M708/K4M709 | | GDS50173 | Drive Shaft | | 21 | 23 | 57 | 84.5 | 743 | |
| | 1999.03-2003.07 | MT | F | R | Cabriolet FWD K4M700/K4M701/K4M708/K4M709 | | GDS50313 | Drive Shaft | 44T | 23 | 23 | 57.5 | 86.5 | 750 | |
| | 1999.03-2003.07 | MT | F | L/R | Cabriolet FWD K4M700/K4M701/K4M708/K4M709 | | GCO50069 | Outer Joint | 44T | 23 | 30 | 57.5 | 86.5 | 58.5 | I |
| | 1999.03-2003.07 | | F | L | Cabriolet FWD K4M700/K4M701/K4M708/K4M709 | For Engine code:K4M708 | GDS50009 | Drive Shaft | 44T | 21 | | 57 | 84.5 | 645 | |
| | 1999.03-2003.07 | | F | L | Cabriolet FWD K4M700/K4M701/K4M708/K4M709 | For Engine code:K4M709 | GDS50253 | Drive Shaft | 44T | 23 | 26 | 57.5 | 86.5 | 637 | |
| | 1999.03-2003.07 | | F | R | Cabriolet FWD K4M700/K4M701/K4M708/K4M709 | For Engine code:K4M708 | GDS50038 | Drive Shaft | 44T | 21 | 23 | 52.2 | 85.5 | 752 | |
| | 1999.03-2003.07 | | F | R | Cabriolet FWD K4M700/K4M701/K4M708/K4M709 | For Engine code:K4M709 | GDS50323 | Drive Shaft | 44T | 23 | 23 | 57.5 | 86.5 | 778 | |
| | 1999.03-2003.07 | | F | R | Cabriolet FWD K4M700/K4M701/K4M708/K4M709 | For Engine code:K4M708 | GCO50066 | Outer Joint | 44T | 21 | 28 | 52.5 | 85 | 51 | I |
| | 1999.03-2003.07 | | F | R | Cabriolet FWD K4M700/K4M701/K4M708/K4M709 | | GCI50008 | Inner Joint | | 23 | 30 | 36.3 | | 120.7 | |
| 2.0 (84 kw) | 1997.02-1999.02 | 4AT/5MT | F | R | Cabriolet FWD F3R791/F3R796 | Transm. Type:JB3/JC5 | GDS50021 | Drive Shaft | 44T | 21 | 23 | 57 | 84.5 | 750 | |
| | 1997.02-1999.02 | 4AT/5MT | F | R | Cabriolet FWD F3R791/F3R796 | Transm. Type:JB3/JC5 | GDS50054 | Drive Shaft | | 21 | 23 | 49.8 | 83.5 | 741.5 | |
| | 1997.02-1999.02 | AT | F | L | Cabriolet FWD F3R791/F3R796 | | GDS50628 | Drive Shaft | 44T | 21 | 26 | 51.5 | 83 | 636 | |
| | 1997.02-1999.02 | AT | F | L | Cabriolet FWD F3R791/F3R796 | | GCO50017 | Outer Joint | | 21 | 22 | 51.5 | 83 | 56.5 | I |
| | 1997.02-1999.02 | AT | F | L | Cabriolet FWD F3R791/F3R796 | | GCO50043 | Outer Joint | 44T | 21 | 22 | 51.5 | 83 | 56.5 | I |
| | 1997.02-1999.02 | AT | F | L | Cabriolet FWD F3R791/F3R796 | | GCI50153 | Inner Joint | | 26 | 29 | | 42.5 | 74.5 | |
| | 1997.02-1999.02 | MT | F | L | Cabriolet FWD F3R791/F3R796 | Transm. Type:JB3/JC5 | GDS50009 | Drive Shaft | 44T | 21 | | 57 | 84.5 | 645 | |
| | 1997.02-1999.02 | MT | F | L | Cabriolet FWD F3R791/F3R796 | Transm. Type:JB3/JC5 | GDS50055 | Drive Shaft | | 21 | 30 | 50 | 84 | 650 | |
| | 1997.02-1999.02 | MT | F | R | Cabriolet FWD F3R791/F3R796 | Date to:1999.02,Trans. code:JB1/3,JC5 | GDS50038 | Drive Shaft | 44T | 21 | 23 | 52.2 | 85.5 | 752 | |
| | 1997.02-1999.02 | MT | F | R | Cabriolet FWD F3R791/F3R796 | Date to:1999.02 | GDS50316 | Drive Shaft | | 21 | 23 | 57 | 84 | 741 | |
| | 1997.02-1999.02 | MT | F | R | Cabriolet FWD F3R791/F3R796 | | GDS50327 | Drive Shaft | 44T | 21 | 23 | 57 | 84.5 | 740 | |
| 2.0 (102 kw) | 2002.01-2003.08 | 5MT | F | L | Cabriolet FWD F4R746 | | GDS50160 | Drive Shaft | 44T | 23 | | 57 | 87 | 656.5 | |
| | 2002.01-2003.08 | MT | F | R | Cabriolet FWD F4R746 | | GDS50159 | Drive Shaft | 44T | 23 | 23 | 57 | 87 | 748 | |
| | 2002.01-2003.08 | MT | F | R | Cabriolet FWD F4R746 | | GCI50008 | Inner Joint | | 23 | 30 | 36.3 | | 120.7 | |
| | 2002.01-2003.08 | | F | R | Cabriolet FWD F4R746 | | GDS50156 | Drive Shaft | 44T | 23 | 23 | 57.5 | 86.5 | 746.5 | |
| | 2002.01-2003.08 | | F | L | Cabriolet FWD F4R746 | | GCO50058 | Outer Joint | 44T | 23 | 35 | 57 | 87 | 71 | I |
| 2.0 (103 kw) | 1999.03-2003.07 | AT | F | L | Cabriolet FWD F3R791/F3R796 | | GDS50628 | Drive Shaft | 44T | 21 | 26 | 51.5 | 83 | 636 | |
| | 1999.03-2003.07 | AT | F | L | Cabriolet FWD F3R791/F3R796 | | GCO50017 | Outer Joint | | 21 | 22 | 51.5 | 83 | 56.5 | I |
| | 1999.03-2003.07 | AT | F | L | Cabriolet FWD F3R791/F3R796 | | GCO50043 | Outer Joint | 44T | 21 | 22 | 51.5 | 83 | 56.5 | I |
| | 1999.03-2003.07 | AT | F | L | Cabriolet FWD F3R791/F3R796 | | GCI50153 | Inner Joint | | 26 | 29 | | 42.5 | 74.5 | |
| | 1999.03-2003.07 | MT | F | L | Cabriolet FWD F3R791/F3R796 | Trans. code:JB1/3,JC5 | GDS50009 | Drive Shaft | 44T | 21 | | 57 | 84.5 | 645 | |
| | 1999.03-2003.07 | MT | F | L | Cabriolet FWD F3R791/F3R796 | | GDS50055 | Drive Shaft | | 21 | 30 | 50 | 84 | 650 | |
| | 1999.03-2003.07 | MT | F | R | Cabriolet FWD F3R791/F3R796 | | GDS50021 | Drive Shaft | 44T | 21 | 23 | 57 | 84.5 | 750 | |
| | 1999.03-2003.07 | MT | F | R | Cabriolet FWD F3R791/F3R796 | Trans. code:JB1/3,JC5 | GDS50038 | Drive Shaft | 44T | 21 | 23 | 52.2 | 85.5 | 752 | |
| | 1999.03-2003.07 | MT | F | R | Cabriolet FWD F3R791/F3R796 | | GDS50173 | Drive Shaft | | 21 | 23 | 57 | 84.5 | 743 | |
| | 1999.03-2003.07 | MT | F | R | Cabriolet FWD F3R791/F3R796 | | GDS50316 | Drive Shaft | | 21 | 23 | 57 | 84 | 741 | |
| | 1999.03-2003.07 | MT | F | R | Cabriolet FWD F3R791/F3R796 | | GDS50327 | Drive Shaft | 44T | 21 | 23 | 57 | 84.5 | 740 | |
| | 1999.03-2003.07 | | F | R | Cabriolet FWD F3R791/F3R796 | | GDS50054 | Drive Shaft | | 21 | 23 | 49.8 | 83.5 | 741.5 | |

| | YEAR | TRANSM. | F/R | L/R | BODY STYLE & DRIVE TYPE & ENGINE | REMARKS | G-AP Ref. | PRODUCT | ABS | Technical Specifications A | B | C | H | L | P |
|---|---|---|---|---|---|---|---|---|---|---|---|---|---|---|---|
| **RENAULT** | | | | | | | | | | | | | | | |
| **Megane Cabrio** | | | | | | | | | | | | | | | |
| 2.0 (103 kw) | 1999.11-2003.07 | 5MT | F | L | Cabriolet FWD F5R740 | | GDS50160 | Drive Shaft | 44T | 23 | | 57 | 87 | 656.5 | |
| | 1999.11-2003.07 | 5MT | F | R | Cabriolet FWD F5R740 | | GDS50159 | Drive Shaft | 44T | 23 | 23 | 57 | 87 | 748 | |
| | 1999.11-2003.07 | MT | F | L | Cabriolet FWD F5R740 | | GDS50404 | Drive Shaft | 44T | 23 | | 57.5 | 86 | 655 | |
| | 1999.11-2003.07 | MT | F | R | Cabriolet FWD F5R740 | | GDS50156 | Drive Shaft | 44T | 23 | 23 | 57.5 | 86.5 | 746.5 | |
| | 1999.11-2003.07 | MT | F | L/R | Cabriolet FWD F5R740 | | GCO50058 | Outer Joint | 44T | 23 | 35 | 57 | 87 | 71 | I |
| | 1999.11-2003.07 | MT | F | R | Cabriolet FWD F5R740 | | GCI50008 | Inner Joint | | 23 | 30 | 36.3 | | 120.7 | |
| 2.0 (108 kw) | 1996.10-1999.11 | 5MT | F | L | Cabriolet FWD F7R710/F7R714 | | GDS50160 | Drive Shaft | 44T | 23 | | 57 | 87 | 656.5 | |
| | 1996.10-1999.11 | 5MT | F | R | Cabriolet FWD F7R710/F7R714 | Date to:1998.09 | GDS50145 | Drive Shaft | | 23 | 23 | 56.3 | 80 | 685 | |
| | 1996.10-1999.11 | 5MT | F | R | Cabriolet FWD F7R710/F7R714 | | GDS50159 | Drive Shaft | 44T | 23 | 23 | 57 | 87 | 748 | |
| | 1996.10-1999.11 | MT | F | L | Cabriolet FWD F7R710/F7R714 | Trans. code:JC5 | GDS50028 | Drive Shaft | | 23 | | 56.8 | 84 | 654 | |
| | 1996.10-1999.11 | MT | F | L | Cabriolet FWD F7R710/F7R714 | | GDS50311 | Drive Shaft | 44T | 23 | 30 | 56 | 82 | 650 | |
| | 1996.10-1999.11 | MT | F | R | Cabriolet FWD F7R710/F7R714 | Trans. code:JC5 | GDS50247 | Drive Shaft | | 23 | 23 | 56.8 | 84 | 750.5 | |
| | 1996.10-1999.11 | MT | F | R | Cabriolet FWD F7R710/F7R714 | Trans. code:JC5 | GDS50320 | Drive Shaft | 44T | 23 | 23 | 56.8 | 84 | 755 | |
| | 1996.10-1999.11 | MT | F | L/R | Cabriolet FWD F7R710/F7R714 | | GCO50026 | Outer Joint | | 23 | 25 | 56.2 | 83.5 | 58 | O |
| | 1996.10-1999.11 | MT | F | R | Cabriolet FWD F7R710/F7R714 | | GCI50008 | Inner Joint | | 23 | 30 | 36.3 | | 120.7 | |
| | 1996.10-1999.11 | MT | F | R | Cabriolet FWD F7R710/F7R714 | | GCI50079 | Inner Joint | | 23 | 22 | 36.3 | | 105.5 | |
| | 1996.10-1999.11 | | F | L/R | Cabriolet FWD F7R710/F7R714 | | GCO50058 | Outer Joint | 44T | 23 | 35 | 57 | 87 | 71 | I |
| **Megane CC** | | | | | | | | | | | | | | | |
| 1.2 (85 kw) | 2012.09-2015.08 | MT | F | L/R | Convertible FWD H5F 400 | Date from:2013.01 | GCO50162 | Outer Joint | | 25 | 23 | 52.5 | 88.5 | 60.5 | M |
| | 2012.09-2015.08 | | F | R | Convertible FWD H5F 400 | | GCO50212 | Outer Joint | | 25 | 25 | 52.6 | 88.5 | 58.5 | I |
| | 2012.09-2015.08 | | F | R | Convertible FWD H5F 400 | | GCI50135 | Inner Joint | | 26 | 22 | 33 | 346 | 96 | |
| 1.2 (97 kw) | 2013.01-2015.08 | MT | F | L/R | Convertible FWD H5F 404 | | GCO50162 | Outer Joint | | 25 | 23 | 52.5 | 88.5 | 60.5 | M |
| | 2013.01-2015.08 | | F | R | Convertible FWD H5F 404 | | GCO50212 | Outer Joint | | 25 | 25 | 52.6 | 88.5 | 58.5 | I |
| | 2013.01-2015.08 | | F | R | Convertible FWD H5F 404 | | GCI50135 | Inner Joint | | 26 | 22 | 33 | 346 | 96 | |
| 1.4 (96 kw) | 2010.06-2015.08 | 6MT | F | R | Convertible FWD H4J 700 | | GDS50604 | Drive Shaft | | 25 | 26 | 52.6 | 89 | 942 | |
| | 2010.06-2015.08 | MT | F | L/R | Convertible FWD H4J 700 | | GCO99213 | Outer Joint | | 25 | 33 | 53 | 88 | 61.5 | I |
| | 2010.06-2015.08 | | F | L/R | Convertible FWD H4J 700 | | GCO50157 | Outer Joint | | 25 | 33 | 52.6 | 89 | 60 | I |
| 1.5 (76 kw) | 2007.01-2009.06 | 6MT | F | L | Convertible FWD K9K 734 | | GDS50402 | Drive Shaft | | 25 | 26 | 53 | 88 | 660 | |
| | 2007.01-2009.06 | 6MT | F | R | Convertible FWD K9K 734 | | GDS50348 | Drive Shaft | | 25 | 26 | 53 | 88 | 905 | |
| | 2007.01-2009.06 | MT | F | L | Convertible FWD K9K 734 | | GDS50405 | Drive Shaft | | 23 | 26 | 49 | 86 | 674 | |
| | 2007.01-2009.06 | MT | F | R | Convertible FWD K9K 734 | | GDS99071 | Drive Shaft | | 23 | 26 | 49 | 86 | 911 | |
| | 2007.01-2009.06 | MT | F | L/R | Convertible FWD K9K 734 | | GCO99085 | Outer Joint | | 23 | 30 | 49 | 86 | 59 | I |
| 1.5 (78 kw) | 2006.03-2009.01 | 6MT | F | L | Convertible FWD K9K 732 | | GDS50402 | Drive Shaft | | 25 | 26 | 53 | 88 | 660 | |
| | 2006.03-2009.01 | 6MT | F | R | Convertible FWD K9K 732 | | GDS50348 | Drive Shaft | | 25 | 26 | 53 | 88 | 905 | |
| | 2006.03-2009.01 | AT/MT | F | L/R | Convertible FWD K9K 732 | | GCO99085 | Outer Joint | | 23 | 30 | 49 | 86 | 59 | I |
| | 2006.03-2009.01 | MT | F | L | Convertible FWD K9K 732 | | GDS50350 | Drive Shaft | | 25 | 26 | 52.6 | 88 | 668.5 | |
| | 2006.03-2009.01 | | F | L/R | Convertible FWD K9K 732 | | GCO99213 | Outer Joint | | 25 | 33 | 53 | 88 | 61.5 | I |
| | 2013.11-2015.08 | 6MT | F | R | Convertible FWD K9K 832 | Date from:2012.03 | GDS50510 | Drive Shaft | | 25 | 26 | 52.4 | 88.5 | 929 | |
| | 2013.11-2015.08 | 6MT | F | L/R | Convertible FWD K9K 832 | Date from:2012.03 | GCO50162 | Outer Joint | | 25 | 23 | 52.5 | 88.5 | 60.5 | M |
| | 2013.11-2015.08 | 6MT | F | R | Convertible FWD K9K 832 | Date from:2012.03 | GCI50051 | Inner Joint | | 26 | 22 | 33 | 326 | 96 | |
| | 2013.11-2015.08 | MT | F | L | Convertible FWD K9K 832 | | GDS50426 | Drive Shaft | | 25 | 26 | 52.7 | 88.5 | 680 | |
| | 2013.11-2015.08 | MT | F | R | Convertible FWD K9K 832 | | GDS50425 | Drive Shaft | | 25 | 26 | 52.7 | 88.5 | 931 | |
| | 2013.11-2015.08 | MT | F | L | Convertible FWD K9K 832 | | GCI50070 | Inner Joint | | 26 | 33 | 40 | 64 | 106 | |
| 1.5 (81 kw) | 2010.06-2015.08 | 6DCT | F | R | Convertible FWD K9K 836;K9K 837 | | GDS50536 | Drive Shaft | | 25 | 34 | 52.6 | 89 | 984 | |
| | 2010.06-2015.08 | 6MT | F | R | Convertible FWD K9K 836;K9K 837 | Date from:2012.03 | GDS50510 | Drive Shaft | | 25 | 26 | 52.4 | 88.5 | 929 | |
| | 2010.06-2015.08 | 6MT | F | L/R | Convertible FWD K9K 836;K9K 837 | Date from:2012.03 | GCO50162 | Outer Joint | | 25 | 23 | 52.5 | 88.5 | 60.5 | M |
| | 2010.06-2015.08 | AT/6DCT | F | L | Convertible FWD K9K 836;K9K 837 | | GDS50535 | Drive Shaft | | 25 | 34 | 52.7 | 88.5 | 632 | |
| | 2010.06-2015.08 | MT | F | L | Convertible FWD K9K 836;K9K 837 | | GDS50426 | Drive Shaft | | 25 | 26 | 52.7 | 88.5 | 680 | |
| | 2010.06-2015.08 | MT | F | R | Convertible FWD K9K 836;K9K 837 | | GDS50425 | Drive Shaft | | 25 | 26 | 52.7 | 88.5 | 931 | |
| | 2010.06-2015.08 | MT | F | L/R | Convertible FWD K9K 836;K9K 837 | | GCO99213 | Outer Joint | | 25 | 33 | 53 | 88 | 61.5 | I |
| | 2010.06-2015.08 | | F | R | Convertible FWD K9K 836;K9K 837 | Date To:2012.07 | GCO50148 | Outer Joint | | 25 | 35 | 52.6 | 89 | 60 | I |
| | 2010.06-2015.08 | | F | | Convertible FWD K9K 836;K9K 837 | | GCO50145 | Outer Joint | | 25 | 33 | 52.7 | 88.5 | 59.5 | I |
| 1.6 (77 kw) | 2005.06-2009.03 | 4AT | F | L | Convertible FWD K4M 788 | | GDS50255 | Drive Shaft | | 23 | 26 | 49 | 86 | 673 | |
| | 2005.06-2009.03 | 4AT | F | R | Convertible FWD K4M 788 | | GDS50440 | Drive Shaft | | 23 | 23 | 49 | 86 | 804 | |
| | 2005.06-2009.03 | 4AT | F | L | Convertible FWD K4M 788 | | GCI50040 | Inner Joint | | 26 | 30 | 43 | 42.5 | 83 | |
| | 2005.06-2009.03 | 5MT | F | L | Convertible FWD K4M 788 | | GDS99070 | Drive Shaft | | 23 | 26 | 49 | 86 | 675 | |
| | 2005.06-2009.03 | 5MT | F | R | Convertible FWD K4M 788 | | GDS99071 | Drive Shaft | | 23 | 26 | 49 | 86 | 911 | |
| | 2005.06-2009.03 | 5MT | F | L | Convertible FWD K4M 788 | Date to:2006.02 | GCO99085 | Outer Joint | | 23 | 30 | 49 | 86 | 59 | I |
| | 2005.06-2009.03 | 5MT | F | L | Convertible FWD K4M 788 | | GCI50048 | Inner Joint | | 26 | 30 | 40 | 64 | 121 | |
| | 2005.06-2009.03 | 5MT | F | R | Convertible FWD K4M 788 | | GCI99169 | Inner Joint | | 26 | 30 | 33 | 326 | 95 | |
| 1.6 (81 kw) | 2010.06-2015.08 | 5MT/6MT | F | L/R | Convertible FWD K4M 858 | | GCO99213 | Outer Joint | | 25 | 33 | 53 | 88 | 61.5 | I |
| | 2010.06-2015.08 | 6MT | F | L | Convertible FWD K4M 858 | | GDS50426 | Drive Shaft | | 25 | 26 | 52.7 | 88.5 | 680 | |
| | 2010.06-2015.08 | 6MT | F | R | Convertible FWD K4M 858 | | GDS50510 | Drive Shaft | | 25 | 26 | 52.4 | 88.5 | 929 | |
| | 2010.06-2015.08 | 6MT | F | L/R | Convertible FWD K4M 858 | | GCO50162 | Outer Joint | | 25 | 23 | 52.5 | 88.5 | 60.5 | M |
| | 2010.06-2015.08 | 6MT | F | L | Convertible FWD K4M 858 | | GCI50070 | Inner Joint | | 26 | 33 | 40 | 64 | 106 | |

| | YEAR | TRANSM. | F/R | L/R | BODY STYLE & DRIVE TYPE & ENGINE | REMARKS | G-AP Ref. | PRODUCT | ABS | Technical Specifications | | | | | |
|---|---|---|---|---|---|---|---|---|---|---|---|---|---|---|---|
| | | | | | | | | | | A | B | C | H | L | P |
| **RENAULT** **Megane CC** | | | | | | | | | | | | | | | |
| 1.6 (81 kw) | 2010.06-2015.08 | 6MT | F | R | Convertible FWD K4M 858 | | GCI50051 | Inner Joint | | 26 | 22 | 33 | 326 | 96 | |
| | 2010.06-2015.08 | 6MT | F | L | Convertible FWD K4M 866 | | GDS50426 | Drive Shaft | | 25 | 26 | 52.7 | 88.5 | 680 | |
| | 2010.06-2015.08 | 6MT | F | R | Convertible FWD K4M 866 | | GDS50510 | Drive Shaft | | 25 | 26 | 52.4 | 88.5 | 929 | |
| | 2010.06-2015.08 | 6MT | F | L/R | Convertible FWD K4M 866 | | GCO50162 | Outer Joint | | 25 | 23 | 52.5 | 88.5 | 60.5 | M |
| | 2010.06-2015.08 | 6MT | F | L | Convertible FWD K4M 866 | | GCI50070 | Inner Joint | | 26 | 33 | 40 | 64 | 106 | |
| | 2010.06-2015.08 | 6MT | F | R | Convertible FWD K4M 866 | | GCI50051 | Inner Joint | | 26 | 22 | 33 | 326 | 96 | |
| 1.6 (82 kw) | 2006.01-2008.06 | 4AT | F | L | Convertible FWD K4M 760;K4M 761;K4M 812;K4M 813 | | GDS50255 | Drive Shaft | | 23 | 26 | 49 | 86 | 673 | |
| | 2006.01-2008.06 | 4AT | F | R | Convertible FWD K4M 760;K4M 761;K4M 812;K4M 813 | | GDS50440 | Drive Shaft | | 23 | 23 | 49 | 86 | 804 | |
| | 2006.01-2008.06 | 5MT | F | L | Convertible FWD K4M 760;K4M 761;K4M 812;K4M 813 | | GDS99070 | Drive Shaft | | 23 | 26 | 49 | 86 | 675 | |
| | 2006.01-2008.06 | 5MT | F | R | Convertible FWD K4M 760;K4M 761;K4M 812;K4M 813 | | GDS99071 | Drive Shaft | | 23 | 26 | 49 | 86 | 911 | |
| | 2006.01-2008.06 | AT/MT | F | L/R | Convertible FWD K4M 760;K4M 761;K4M 812;K4M 813 | | GCO99085 | Outer Joint | | 23 | 30 | 49 | 86 | 59 | I |
| | 2006.01-2008.06 | MT | F | R | Convertible FWD K4M 760;K4M 761;K4M 812;K4M 813 | | GCI99169 | Inner Joint | | 26 | 30 | 33 | 326 | 95 | |
| 1.6 (83 kw) | 2003.09-2009.03 | 4AT | F | L | Convertible FWD K4M 760;K4M 761 | | GDS50255 | Drive Shaft | | 23 | 26 | 49 | 86 | 673 | |
| | 2003.09-2009.03 | 4AT | F | R | Convertible FWD K4M 760;K4M 761 | | GDS50440 | Drive Shaft | | 23 | 23 | 49 | 86 | 804 | |
| | 2003.09-2009.03 | 5MT | F | L | Convertible FWD K4M 760;K4M 761 | | GDS99070 | Drive Shaft | | 23 | 26 | 49 | 86 | 675 | |
| | 2003.09-2009.03 | 5MT | F | R | Convertible FWD K4M 760;K4M 761 | | GDS99071 | Drive Shaft | | 23 | 26 | 49 | 86 | 911 | |
| | 2003.09-2009.03 | 5MT | F | L | Convertible FWD K4M 760;K4M 761 | Date to:2006.02 | GCO99085 | Outer Joint | | 23 | 30 | 49 | 86 | 59 | I |
| | 2003.09-2009.03 | MT | F | R | Convertible FWD K4M 760;K4M 761 | Date to:2005.05 | GCI99169 | Inner Joint | | 26 | 30 | 33 | 326 | 95 | |
| 1.6 (96 kw) | 2011.04-2015.08 | MT | F | L/R | Convertible FWD R9M 402 | | GCO99213 | Outer Joint | | 25 | 33 | 53 | 88 | 61.5 | I |
| 1.9 (81 kw) | 2005.05-2009.03 | 4AT | F | L | Convertible FWD F9Q 804;F9Q 816;F9Q 818 | | GDS99186 | Drive Shaft | | 25 | 26 | 52.6 | 88 | 669 | |
| | 2005.05-2009.03 | 4AT | F | R | Convertible FWD F9Q 804;F9Q 816;F9Q 818 | | GDS83826 | Drive Shaft | | 25 | 26 | 52.8 | 85.5 | 800 | |
| | 2005.05-2009.03 | 4AT | F | L/R | Convertible FWD F9Q 804;F9Q 816;F9Q 818 | | GCO50143 | Outer Joint | | 25 | 32 | 52.8 | 85.5 | 62.5 | I |
| | 2005.05-2009.03 | 4AT | F | R | Convertible FWD F9Q 804;F9Q 816;F9Q 818 | | GCI50047 | Inner Joint | | 26 | 30 | | 213.5 | 95 | |
| | 2005.05-2009.03 | 6MT | F | L | Convertible FWD F9Q 804;F9Q 816;F9Q 818 | | GDS99201 | Drive Shaft | | 25 | 39 | 53 | 88 | 638 | |
| | 2005.05-2009.03 | 6MT | F | R | Convertible FWD F9Q 804;F9Q 816;F9Q 818 | | GDS50400 | Drive Shaft | | 25 | 39 | 53 | 88 | 932 | |
| | 2005.05-2009.03 | 6MT | F | L/R | Convertible FWD F9Q 804;F9Q 816;F9Q 818 | | GCO99213 | Outer Joint | | 25 | 33 | 53 | 88 | 61.5 | I |
| | 2005.05-2009.03 | MT | F | L | Convertible FWD F9Q 804;F9Q 816;F9Q 818 | | GCI99150 | Inner Joint | | 39 | 32 | 39 | 66 | 104.5 | |
| | 2005.05-2009.03 | MT | F | R | Convertible FWD F9Q 804;F9Q 816;F9Q 818 | | GCI99160 | Inner Joint | | 39 | 32 | 32.95 | 352 | 90 | |
| 1.9 (85 kw) | 2003.09-2009.03 | 4AT | F | L | Convertible FWD F9Q 800;F9Q 804;F9Q 803;F9Q 816;F9Q 818 | | GDS99186 | Drive Shaft | | 25 | 26 | 52.6 | 88 | 669 | |
| | 2003.09-2009.03 | 4AT | F | R | Convertible FWD F9Q 800;F9Q 804;F9Q 803;F9Q 816;F9Q 818 | | GDS83826 | Drive Shaft | | 25 | 26 | 52.8 | 85.5 | 800 | |
| | 2003.09-2009.03 | 4AT | F | L/R | Convertible FWD F9Q 800;F9Q 804;F9Q 803;F9Q 816;F9Q 818 | | GCO50143 | Outer Joint | | 25 | 32 | 52.8 | 85.5 | 62.5 | I |
| | 2003.09-2009.03 | 4AT | F | R | Convertible FWD F9Q 800;F9Q 804;F9Q 803;F9Q 816;F9Q 818 | | GCI50047 | Inner Joint | | 26 | 30 | | 213.5 | 95 | |
| | 2003.09-2009.03 | 6MT | F | L | Convertible FWD F9Q 800;F9Q 804;F9Q 803;F9Q 816;F9Q 818 | | GDS99201 | Drive Shaft | | 25 | 39 | 53 | 88 | 638 | |
| | 2003.09-2009.03 | 6MT | F | R | Convertible FWD F9Q 800;F9Q 804;F9Q 803;F9Q 816;F9Q 818 | | GDS50400 | Drive Shaft | | 25 | 39 | 53 | 88 | 932 | |
| | 2003.09-2009.03 | 6MT | F | L/R | Convertible FWD F9Q 800;F9Q 804;F9Q 803;F9Q 816;F9Q 818 | | GCO99213 | Outer Joint | | 25 | 33 | 53 | 88 | 61.5 | I |
| | 2003.09-2009.03 | MT | F | L | Convertible FWD F9Q 800;F9Q 804;F9Q 803;F9Q 816;F9Q 818 | | GCI99150 | Inner Joint | | 39 | 32 | 39 | 66 | 104.5 | |
| | 2003.09-2009.03 | MT | F | R | Convertible FWD F9Q 800;F9Q 804;F9Q 803;F9Q 816;F9Q 818 | | GCI99160 | Inner Joint | | 39 | 32 | 32.95 | 352 | 90 | |
| 1.9 (88 kw) | 2003.09-2009.03 | 6MT | F | L | Convertible FWD F9Q 800 | | GDS99201 | Drive Shaft | | 25 | 39 | 53 | 88 | 638 | |
| | 2003.09-2009.03 | 6MT | F | R | Convertible FWD F9Q 800 | | GDS50400 | Drive Shaft | | 25 | 39 | 53 | 88 | 932 | |
| | 2003.09-2009.03 | 6MT | F | L/R | Convertible FWD F9Q 800 | | GCO99213 | Outer Joint | | 25 | 33 | 53 | 88 | 61.5 | I |
| | 2003.09-2009.03 | MT | F | L | Convertible FWD F9Q 800 | | GCI99150 | Inner Joint | | 39 | 32 | 39 | 66 | 104.5 | |
| | 2003.09-2009.03 | MT | F | R | Convertible FWD F9Q 800 | | GCI99160 | Inner Joint | | 39 | 32 | 32.95 | 352 | 90 | |
| 1.9 (96 kw) | 2005.05-2007.02 | 4AT | F | L | Convertible FWD F9Q 804;F9Q 803 | | GDS99186 | Drive Shaft | | 25 | 26 | 52.6 | 88 | 669 | |
| | 2005.05-2007.02 | 4AT | F | R | Convertible FWD F9Q 804;F9Q 803 | | GDS83826 | Drive Shaft | | 25 | 26 | 52.8 | 85.5 | 800 | |
| | 2005.05-2007.02 | 4AT | F | L/R | Convertible FWD F9Q 804;F9Q 803 | | GCO50143 | Outer Joint | | 25 | 32 | 52.8 | 85.5 | 62.5 | I |
| | 2005.05-2007.02 | 4AT | F | R | Convertible FWD F9Q 804;F9Q 803 | | GCI50047 | Inner Joint | | 26 | 30 | | 213.5 | 95 | |
| | 2005.05-2007.02 | 6MT | F | L | Convertible FWD F9Q 804;F9Q 803 | | GDS99201 | Drive Shaft | | 25 | 39 | 53 | 88 | 638 | |
| | 2005.05-2007.02 | 6MT | F | R | Convertible FWD F9Q 804;F9Q 803 | | GDS50400 | Drive Shaft | | 25 | 39 | 53 | 88 | 932 | |
| | 2005.05-2007.02 | 6MT | F | L/R | Convertible FWD F9Q 804;F9Q 803 | | GCO99213 | Outer Joint | | 25 | 33 | 53 | 88 | 61.5 | I |
| | 2005.05-2007.02 | MT | F | L | Convertible FWD F9Q 804;F9Q 803 | | GCI99150 | Inner Joint | | 39 | 32 | 39 | 66 | 104.5 | |
| | 2005.05-2007.02 | MT | F | R | Convertible FWD F9Q 804;F9Q 803 | | GCI99160 | Inner Joint | | 39 | 32 | 32.95 | 352 | 90 | |
| 2.0 (99 kw) | 2003.09-2009.12 | 4AT | F | L | Convertible FWD F4R 770;F4R 771 | | GDS50255 | Drive Shaft | | 23 | 26 | 49 | 86 | 673 | |
| | 2003.09-2009.12 | 4AT | F | R | Convertible FWD F4R 770;F4R 771 | outer teeth of wheel side:25 | GDS50399 | Drive Shaft | | 25 | 23 | 52.6 | 88 | 803 | |
| | 2003.09-2009.12 | 4AT | F | R | Convertible FWD F4R 770;F4R 771 | inner teeth of wheel side:32 | GDS50520 | Drive Shaft | | 23 | 23 | 49 | 86 | 803 | |
| | 2003.09-2009.12 | 4AT | F | R | Convertible FWD F4R 770;F4R 771 | | GCO50117 | Outer Joint | | 23 | 32 | 49 | 86 | 62 | I |
| | 2003.09-2009.12 | 4AT | F | L | Convertible FWD F4R 770;F4R 771 | | GCI50040 | Inner Joint | | 26 | 30 | 43 | 42.5 | 83 | |
| | 2003.09-2009.12 | 6MT | F | L | Convertible FWD F4R 770;F4R 771 | | GDS50441 | Drive Shaft | | 23 | 39 | 49 | 86.5 | 636 | |
| | 2003.09-2009.12 | 6MT | F | R | Convertible FWD F4R 770;F4R 771 | | GDS50447 | Drive Shaft | | 23 | 39 | 49 | 86.5 | 930 | |
| | 2003.09-2009.12 | 6MT | F | L/R | Convertible FWD F4R 770;F4R 771 | | GCO50109 | Outer Joint | | 23 | 33 | 49 | 86.5 | 61 | I |
| | 2003.09-2009.12 | 6MT | F | L | Convertible FWD F4R 770;F4R 771 | For Engine Code: F4R 770 | GCI99150 | Inner Joint | | 39 | 32 | 39 | 66 | 104.5 | |
| | 2003.09-2009.12 | AT | F | R | Convertible FWD F4R 770;F4R 771 | outer teeth of wheel side:23;inner teeth of wheel side:30 | GDS50440 | Drive Shaft | | 23 | 23 | 49 | 86 | 804 | |
| | 2003.09-2009.12 | MT | F | R | Convertible FWD F4R 770;F4R 771 | For Engine Code: F4R 770 | GCI99160 | Inner Joint | | 39 | 32 | 32.95 | 352 | 90 | |
| 2.0 (102 kw) | 2003.09-2007.02 | 6MT | F | L | Convertible FWD F4R 770;F4R 771 | | GDS50441 | Drive Shaft | | 23 | 39 | 49 | 86.5 | 636 | |
| | 2003.09-2007.02 | 6MT | F | R | Convertible FWD F4R 770;F4R 771 | | GDS50447 | Drive Shaft | | 23 | 39 | 49 | 86.5 | 930 | |
| | 2003.09-2007.02 | 6MT | F | L | Convertible FWD F4R 770;F4R 771 | | GCI99150 | Inner Joint | | 39 | 32 | 39 | 66 | 104.5 | |

| | YEAR | TRANSM. | F/R | L/R | BODY STYLE & DRIVE TYPE & ENGINE | REMARKS | G-AP Ref. | PRODUCT | ABS | Technical Specifications A | B | C | H | L | P |
|---|---|---|---|---|---|---|---|---|---|---|---|---|---|---|---|
| **RENAULT** | | | | | | | | | | | | | | | |
| **Megane CC** | | | | | | | | | | | | | | | |
| 2.0 (102 kw) | 2003.09-2007.02 | 6MT | F | R | Convertible FWD F4R 770;F4R 771 | | GCI99160 | Inner Joint | | 39 | 32 | 32.95 | 352 | 90 | |
| | 2003.09-2007.02 | AT | F | L | Convertible FWD F4R 770;F4R 771 | | GDS50255 | Drive Shaft | | 23 | 26 | 49 | 86 | 673 | |
| | 2003.09-2007.02 | AT | F | | Convertible FWD F4R 770;F4R 771 | | GCO50117 | Outer Joint | | 23 | 32 | 49 | 86 | 62 | I |
| | 2003.09-2007.02 | MT | F | L/R | Convertible FWD F4R 770;F4R 771 | | GCO50109 | Outer Joint | | 23 | 33 | 49 | 86.5 | 61 | I |
| 2.0 (103 kw) | 2010.06-2015.08 | CVT | F | L | Convertible FWD M4R 711;M4R 713 | | GDS83875 | Drive Shaft | | 25 | 27 | 52.5 | 88.5 | 675 | |
| | 2010.06-2015.08 | CVT | F | L | Convertible FWD M4R 711;M4R 713 | | GCO82528 | Outer Joint | | 25 | 24 | 52.5 | 88.5 | 59 | M |
| | 2010.06-2015.08 | CVT | F | L/R | Convertible FWD M4R 711;M4R 713 | | GCO99213 | Outer Joint | | 25 | 33 | 53 | 88 | 61.5 | I |
| | 2010.06-2015.08 | CVT | F | L | Convertible FWD M4R 711;M4R 713 | | GCI41073 | Inner Joint | | 27 | 24 | 40 | 62.5 | 99.5 | |
| 2.0 (110 kw) | 2005.09-2009.03 | 6MT | F | L | Convertible FWD M9R 700;M9R 722 | | GDS50444 | Drive Shaft | | 27 | 39 | 56.5 | 90.5 | 626 | |
| | 2005.09-2009.03 | 6MT | F | R | Convertible FWD M9R 700;M9R 722 | | GDS50453 | Drive Shaft | | 27 | 39 | 56.5 | 90.5 | 973.5 | |
| | 2005.09-2009.03 | 6MT | F | L | Convertible FWD M9R 700;M9R 722 | | GCI50071 | Inner Joint | | 39 | 35 | 39 | 74 | 102.5 | |
| | 2005.09-2009.03 | 6MT | F | R | Convertible FWD M9R 700;M9R 722 | | GCI50087 | Inner Joint | | 39 | 35 | 30 | 367 | 89.5 | |
| | 2005.09-2009.03 | | F | L/R | Convertible FWD M9R 700;M9R 722 | | GCO50108 | Outer Joint | | 27 | 35 | 56.5 | 90.5 | 71 | I |
| 2.0 (118 kw) | 2010.06-2015.08 | 6MT | F | L | Convertible FWD M9R 610 | | GDS81275 | Drive Shaft | | 27 | 39 | 56.5 | 91 | 636 | |
| | 2010.06-2015.08 | 6MT | F | R | Convertible FWD M9R 610 | | GDS81274 | Drive Shaft | | 27 | 39 | 56.5 | 91 | 981 | |
| | 2010.06-2015.08 | 6MT | F | L | Convertible FWD M9R 610 | | GCI18272 | Inner Joint | | 39 | 26 | 39 | 74 | 116 | |
| | 2010.06-2015.08 | 6MT | F | R | Convertible FWD M9R 610 | | GCI81164 | Inner Joint | | 39 | 26 | 30 | 366.5 | 99 | |
| | 2010.06-2015.08 | AT | F | L | Convertible FWD M9R 610 | | GDS18274 | Drive Shaft | | 27 | 30 | 56.5 | 90 | 624 | |
| | 2010.06-2015.08 | | F | L | Convertible FWD M9R 610 | | GCO50186 | Outer Joint | | 27 | 26 | 56.5 | 91 | 65 | M |
| 2.0 (120 kw) | 2004.05-2009.03 | 6MT | F | L | Convertible FWD F4R 776 | | GDS99201 | Drive Shaft | | 25 | 39 | 53 | 88 | 638 | |
| | 2004.05-2009.03 | 6MT | F | R | Convertible FWD F4R 776 | | GDS50400 | Drive Shaft | | 25 | 39 | 53 | 88 | 932 | |
| | 2004.05-2009.03 | 6MT | F | L/R | Convertible FWD F4R 776 | | GCO99213 | Outer Joint | | 25 | 33 | 53 | 88 | 61.5 | I |
| | 2004.05-2009.03 | MT | F | L | Convertible FWD F4R 776 | | GCI99150 | Inner Joint | | 39 | 32 | 39 | 66 | 104.5 | |
| | 2004.05-2009.03 | MT | F | R | Convertible FWD F4R 776 | | GCI99160 | Inner Joint | | 39 | 32 | 32.95 | 352 | 90 | |
| 2.0 (132 kw) | 2010.06-2015.08 | | F | L/R | Convertible FWD F4R 870;F4R 872 | Date To:2012.07 | GCO50160 | Outer Joint | | 27 | 35 | 56.5 | 91.5 | 61 | I |
| **Megane Classic** | | | | | | | | | | | | | | | |
| 1.4 (55 kw) | 1996.05-2000.09 | MT | F | L | Saloon FWD E7J626/E7J764 | Date to:2000.09;Trans. code:JB1/3,JC5 | GDS50009 | Drive Shaft | 44T | 21 | | 57 | 84.5 | 645 | |
| | 1996.05-2000.09 | MT | F | L | Saloon FWD E7J626/E7J764 | | GDS50055 | Drive Shaft | | 21 | 30 | 50 | 84 | 650 | |
| | 1996.05-2000.09 | MT | F | R | Saloon FWD E7J626/E7J764 | Date to:2000.09;Trans. code:JB1/3,JC5 | GDS50038 | Drive Shaft | 44T | 21 | 23 | 52.2 | 85.5 | 752 | |
| | 1996.05-2000.09 | MT | F | R | Saloon FWD E7J626/E7J764 | | GDS50173 | Drive Shaft | | 21 | 23 | 57 | 84.5 | 743 | |
| | 1996.05-2000.09 | MT | F | R | Saloon FWD E7J626/E7J764 | | GDS50316 | Drive Shaft | | 21 | 23 | 57 | 84 | 741 | |
| | 1996.05-2000.09 | MT | F | L | Saloon FWD E7J626/E7J764 | | GCO50043 | Outer Joint | 44T | 21 | 22 | 51.5 | 83 | 56.5 | I |
| | 1996.05-2000.09 | | F | L | Saloon FWD E7J626/E7J764 | For Engine code:E7J764 | GDS50311 | Drive Shaft | 44T | 23 | 30 | 56 | 82 | 650 | |
| | 1996.05-2000.09 | | F | R | Saloon FWD E7J626/E7J764 | | GDS50021 | Drive Shaft | 44T | 21 | 23 | 57 | 84.5 | 750 | |
| | 1996.05-2000.09 | | F | R | Saloon FWD E7J626/E7J764 | | GDS50327 | Drive Shaft | 44T | 21 | 23 | 57 | 84.5 | 740 | |
| 1.4 (70 kw) | 1999.10-2003.07 | 5MT | F | L | Saloon FWD K4J714/K4J750 | | GDS50009 | Drive Shaft | 44T | 21 | | 57 | 84.5 | 645 | |
| | 1999.10-2003.07 | 5MT | F | R | Saloon FWD K4J714/K4J750 | | GDS50038 | Drive Shaft | 44T | 21 | 23 | 52.2 | 85.5 | 752 | |
| | 1999.10-2003.07 | 5MT | F | L/R | Saloon FWD K4J714/K4J750 | | GCO50076 | Outer Joint | 44T | 21 | 30 | 57 | 84.5 | 62 | M |
| | 1999.10-2003.07 | MT | F | L | Saloon FWD K4J714/K4J750 | | GDS50055 | Drive Shaft | | 21 | 30 | 50 | 84 | 650 | |
| | 1999.10-2003.07 | MT | F | R | Saloon FWD K4J714/K4J750 | | GDS50173 | Drive Shaft | | 21 | 23 | 57 | 84.5 | 743 | |
| | 1999.10-2003.07 | MT | F | R | Saloon FWD K4J714/K4J750 | | GDS50316 | Drive Shaft | | 21 | 23 | 57 | 84 | 741 | |
| 1.6 (55 kw) | 1995.08-1999.03 | 5MT | F | L | Saloon FWD K7M720/K7M790 | | GDS50009 | Drive Shaft | 44T | 21 | | 57 | 84.5 | 645 | |
| | 1995.08-1999.03 | 5MT | F | R | Saloon FWD K7M720/K7M790 | Transm. Type:JB1/JB3 | GDS50021 | Drive Shaft | 44T | 21 | 23 | 57 | 84.5 | 750 | |
| | 1995.08-1999.03 | 5MT | F | R | Saloon FWD K7M720/K7M790 | | GDS50327 | Drive Shaft | 44T | 21 | 23 | 57 | 84.5 | 740 | |
| | 1995.08-1999.03 | 5MT | F | L/R | Saloon FWD K7M720/K7M790 | | GCO50101 | Outer Joint | 44T | 21 | 30 | 52.2 | 85.5 | 59 | I |
| | 1995.08-1999.03 | MT | F | L | Saloon FWD K7M720/K7M790 | | GDS50055 | Drive Shaft | | 21 | 30 | 50 | 84 | 650 | |
| | 1995.08-1999.03 | MT | F | R | Saloon FWD K7M720/K7M790 | Trans. code:JB1/3,JC5 | GDS50038 | Drive Shaft | 44T | 21 | 23 | 52.2 | 85.5 | 752 | |
| | 1995.08-1999.03 | MT | F | R | Saloon FWD K7M720/K7M790 | | GDS50173 | Drive Shaft | | 21 | 23 | 57 | 84.5 | 743 | |
| | 1995.08-1999.03 | MT | F | R | Saloon FWD K7M720/K7M790 | | GDS50316 | Drive Shaft | | 21 | 23 | 57 | 84 | 741 | |
| 1.6 (64 kw) | 2000.02-2000.09 | | F | R | Saloon FWD K7M704 | | GDS50038 | Drive Shaft | 44T | 21 | 23 | 52.2 | 85.5 | 752 | |
| | 2000.02-2000.09 | | F | R | Saloon FWD K7M704 | | GCO50066 | Outer Joint | 44T | 21 | 28 | 52.5 | 85 | 51 | I |
| 1.6 (66 kw) | 1996.10-1999.12 | MT | F | L | Saloon FWD K7M702/K7M703 | Trans. code:JB1/3,JC5 | GDS50009 | Drive Shaft | 44T | 21 | | 57 | 84.5 | 645 | |
| | 1996.10-1999.12 | MT | F | L | Saloon FWD K7M702/K7M703 | | GDS50055 | Drive Shaft | | 21 | 30 | 50 | 84 | 650 | |
| | 1996.10-1999.12 | MT | F | R | Saloon FWD K7M702/K7M703 | Trans. code:JB1/3,JC5 | GDS50038 | Drive Shaft | 44T | 21 | 23 | 52.2 | 85.5 | 752 | |
| | 1996.10-1999.12 | MT | F | R | Saloon FWD K7M702/K7M703 | Pin Fixing | GDS50107 | Drive Shaft | 44T | 21 | 23 | 57 | 84.5 | 736 | |
| | 1996.10-1999.12 | MT | F | R | Saloon FWD K7M702/K7M703 | | GDS50173 | Drive Shaft | | 21 | 23 | 57 | 84.5 | 743 | |
| | 1996.10-1999.12 | MT | F | R | Saloon FWD K7M702/K7M703 | | GDS50316 | Drive Shaft | | 21 | 23 | 57 | 84 | 741 | |
| | 1996.10-1999.12 | MT | F | L/R | Saloon FWD K7M702/K7M703 | | GCO50101 | Outer Joint | 44T | 21 | 30 | 52.2 | 85.5 | 59 | I |
| | 1996.10-1999.12 | | F | R | Saloon FWD K7M702/K7M703 | | GDS50327 | Drive Shaft | 44T | 21 | 23 | 57 | 84.5 | 740 | |
| 1.6 (79 kw) | 1999.03-2003.07 | MT | F | R | Saloon FWD K4M700/K4M701/K4M706/K4M708/K4M709 | | GDS50173 | Drive Shaft | | 21 | 23 | 57 | 84.5 | 743 | |
| | 1999.03-2003.07 | MT | F | R | Saloon FWD K4M700/K4M701/K4M706/K4M708/K4M709 | | GDS50313 | Drive Shaft | 44T | 23 | 23 | 57.5 | 86.5 | 750 | |
| | 1999.03-2003.07 | MT | F | L/R | Saloon FWD K4M700/K4M701/K4M706/K4M708/K4M709 | | GCO50069 | Outer Joint | 44T | 23 | 30 | 57.5 | 86.5 | 58.5 | I |
| | 1999.03-2003.07 | | F | L | Saloon FWD K4M700/K4M701/K4M706/K4M708/K4M709 | For Engine code:K4M708 | GDS50009 | Drive Shaft | 44T | 21 | | 57 | 84.5 | 645 | |
| | 1999.03-2003.07 | | F | L | Saloon FWD K4M700/K4M701/K4M706/K4M708/K4M709 | For Engine code:K4M709 | GDS50253 | Drive Shaft | 44T | 23 | 26 | 57.5 | 86.5 | 637 | |
| | 1999.03-2003.07 | | F | R | Saloon FWD K4M700/K4M701/K4M706/K4M708/K4M709 | | GDS50038 | Drive Shaft | 44T | 21 | 23 | 52.2 | 85.5 | 752 | |

| | YEAR | TRANSM. | F/R | L/R | BODY STYLE & DRIVE TYPE & ENGINE | REMARKS | G-AP Ref. | PRODUCT | ABS | Technical Specifications A | B | C | H | L | P |
|---|---|---|---|---|---|---|---|---|---|---|---|---|---|---|---|
| **RENAULT** **Megane Classic** | | | | | | | | | | | | | | | |
| 1.6 (79 kw) | 1999.03-2003.07 | | F | R | Saloon FWD K4M700/K4M701/K4M706/K4M708/K4M709 | For Engine code:K4M709 | GDS50323 | Drive Shaft | 44T | 23 | 23 | 57.5 | 86.5 | 778 | |
| | 1999.03-2003.07 | | F | R | Saloon FWD K4M700/K4M701/K4M706/K4M708/K4M709 | | GCO50066 | Outer Joint | 44T | 21 | 28 | 52.5 | 85 | 51 | I |
| | 1999.03-2003.07 | | F | R | Saloon FWD K4M700/K4M701/K4M706/K4M708/K4M709 | | GCI50008 | Inner Joint | | 23 | 30 | 36.3 | | 120.7 | |
| 1.8 (85 kw) | 2000.10-2003.07 | 5MT | F | L | Saloon FWD F4P720/F4P722 | | GDS50160 | Drive Shaft | 44T | 23 | | 57 | 87 | 656.5 | |
| | 2000.10-2003.07 | 5MT | F | R | Saloon FWD F4P720/F4P722 | | GDS50313 | Drive Shaft | 44T | 23 | 23 | 57.5 | 86.5 | 750 | |
| | 2000.10-2003.07 | AT/MT | F | L/R | Saloon FWD F4P720/F4P722 | | GCO50058 | Outer Joint | 44T | 23 | 35 | 57 | 87 | 71 | I |
| | 2000.10-2003.07 | MT | F | R | Saloon FWD F4P720/F4P722 | | GCI99131 | Inner Joint | | 23 | 28 | | 182.8 | 86 | |
| | 2000.10-2003.07 | | F | R | Saloon FWD F4P720/F4P722 | | GDS50156 | Drive Shaft | 44T | 23 | 23 | 57.5 | 86.5 | 746.5 | |
| 1.9 (47 kw) | 1996.09-2003.06 | AT/MT | F | R | Saloon FWD F8Q620/F8Q622/F8Q624 | Pin Fixing | GDS50107 | Drive Shaft | 44T | 21 | 23 | 57 | 84.5 | 736 | |
| | 1996.09-2003.06 | MT | F | L | Saloon FWD F8Q620/F8Q622/F8Q624 | Trans. code:JB1/3,JC5 | GDS50009 | Drive Shaft | 44T | 21 | | 57 | 84.5 | 645 | |
| | 1996.09-2003.06 | MT | F | L | Saloon FWD F8Q620/F8Q622/F8Q624 | | GDS50055 | Drive Shaft | | 21 | 30 | 50 | 84 | 650 | |
| | 1996.09-2003.06 | MT | F | R | Saloon FWD F8Q620/F8Q622/F8Q624 | Trans. code:JB1/3,JC5 | GDS50038 | Drive Shaft | 44T | 21 | 23 | 52.2 | 85.5 | 752 | |
| | 1996.09-2003.06 | MT | F | R | Saloon FWD F8Q620/F8Q622/F8Q624 | | GDS50173 | Drive Shaft | | 21 | 23 | 57 | 84.5 | 743 | |
| | 1996.09-2003.06 | MT | F | R | Saloon FWD F8Q620/F8Q622/F8Q624 | | GDS50316 | Drive Shaft | | 21 | 23 | 57 | 84 | 741 | |
| | 1996.09-2003.06 | MT | F | L | Saloon FWD F8Q620/F8Q622/F8Q624 | | GCO50043 | Outer Joint | 44T | 21 | 22 | 51.5 | 83 | 56.5 | I |
| | 1996.09-2003.06 | | F | L | Saloon FWD F8Q620/F8Q622/F8Q624 | For Engine code:F8Q620 | GDS50311 | Drive Shaft | 44T | 23 | 30 | 56 | 82 | 650 | |
| | 1996.09-2003.06 | | F | R | Saloon FWD F8Q620/F8Q622/F8Q624 | | GDS50021 | Drive Shaft | 44T | 21 | 23 | 57 | 84.5 | 750 | |
| | 1996.09-2003.06 | | F | R | Saloon FWD F8Q620/F8Q622/F8Q624 | | GDS50327 | Drive Shaft | 44T | 21 | 23 | 57 | 84.5 | 740 | |
| 1.9 (59 kw) | 2000.02-2003.07 | 5MT | F | R | Saloon FWD F9Q730/F9Q738/F9Q744 | For Engine Code:F9Q744 | GDS50313 | Drive Shaft | 44T | 23 | 23 | 57.5 | 86.5 | 750 | |
| | 2000.02-2003.07 | 5MT | F | R | Saloon FWD F9Q730/F9Q738/F9Q744 | For Engine code:F9Q730 | GCI50008 | Inner Joint | | 23 | 30 | 36.3 | | 120.7 | |
| | 2000.02-2003.07 | 5MT | F | R | Saloon FWD F9Q730/F9Q738/F9Q744 | For Engine Code:F9Q744 | GCI99131 | Inner Joint | | 23 | 28 | | 182.8 | 86 | |
| | 2000.02-2003.07 | AT/MT | F | L/R | Saloon FWD F9Q730/F9Q738/F9Q744 | | GCO50069 | Outer Joint | 44T | 23 | 30 | 57.5 | 86.5 | 58.5 | I |
| | 2000.02-2003.07 | MT | F | R | Saloon FWD F9Q730/F9Q738/F9Q744 | | GDS50156 | Drive Shaft | 44T | 23 | 23 | 57.5 | 86.5 | 746.5 | |
| | 2000.02-2003.07 | | F | L | Saloon FWD F9Q730/F9Q738/F9Q744 | For Engine code:F9Q744/F9Q730 | GDS50311 | Drive Shaft | 44T | 23 | 30 | 56 | 82 | 650 | |
| | 2000.02-2003.07 | | F | R | Saloon FWD F9Q730/F9Q738/F9Q744 | For Engine code:F9Q730 | GDS50159 | Drive Shaft | 44T | 23 | 23 | 57 | 87 | 748 | |
| | 2000.02-2003.07 | | F | L | Saloon FWD F9Q730/F9Q738/F9Q744 | For Engine code:F9Q744 | GCO50058 | Outer Joint | 44T | 23 | 35 | 57 | 87 | 71 | I |
| 1.9 (66 kw) | 1996.09-1999.02 | 5MT | F | L | Saloon FWD F8Q784 | | GDS50009 | Drive Shaft | 44T | 21 | | 57 | 84.5 | 645 | |
| | 1996.09-1999.02 | 5MT | F | R | Saloon FWD F8Q784 | Transm. Type:JC5 | GDS50021 | Drive Shaft | 44T | 21 | 23 | 57 | 84.5 | 750 | |
| | 1996.09-1999.02 | 5MT | F | R | Saloon FWD F8Q784 | | GDS50054 | Drive Shaft | | 21 | 23 | 49.8 | 83.5 | 741.5 | |
| | 1996.09-1999.02 | 5MT | F | R | Saloon FWD F8Q784 | | GDS50327 | Drive Shaft | 44T | 21 | 23 | 57 | 84.5 | 740 | |
| | 1996.09-1999.02 | AT/MT | F | L | Saloon FWD F8Q784 | | GDS50055 | Drive Shaft | | 21 | 30 | 50 | 84 | 650 | |
| | 1996.09-1999.02 | AT/MT | F | R | Saloon FWD F8Q784 | | GDS50107 | Drive Shaft | 44T | 21 | 23 | 57 | 84.5 | 736 | |
| | 1996.09-1999.02 | MT | F | L | Saloon FWD F8Q784 | Date to:1999.02;Trans. code:JC5 | GDS50028 | Drive Shaft | | 23 | | 56.8 | 84 | 654 | |
| | 1996.09-1999.02 | MT | F | L | Saloon FWD F8Q784 | Date to:1999.02;Trans. code:JC5 | GDS50311 | Drive Shaft | 44T | 23 | 30 | 56 | 82 | 650 | |
| | 1996.09-1999.02 | MT | F | R | Saloon FWD F8Q784 | | GDS50173 | Drive Shaft | | 21 | 23 | 57 | 84.5 | 743 | |
| | 1996.09-1999.02 | MT | F | R | Saloon FWD F8Q784 | Date to:1999.02;Trans. code:JC5 | GDS50247 | Drive Shaft | | 23 | 23 | 56.8 | 84 | 750.5 | |
| | 1996.09-1999.02 | MT | F | R | Saloon FWD F8Q784 | Date to:1999.02;Trans. code:JC5 | GDS50320 | Drive Shaft | 44T | 23 | 23 | 56.8 | 84 | 755 | |
| | 1996.09-1999.02 | MT | F | L/R | Saloon FWD F8Q784 | Date to:1999.02 | GCO50026 | Outer Joint | | 23 | 25 | 56.2 | 83.5 | 58 | O |
| | 1996.09-1999.02 | MT | F | R | Saloon FWD F8Q784 | Date to:1999.02 | GCI50079 | Inner Joint | | 23 | 22 | 36.3 | | 105.5 | |
| 1.9 (69 kw) | 1996.09-2002.02 | 5MT | F | L | Saloon FWD F8Q784/F8Q786 | | GDS50009 | Drive Shaft | 44T | 21 | | 57 | 84.5 | 645 | |
| | 1996.09-2002.02 | 5MT | F | R | Saloon FWD F8Q784/F8Q786 | | GDS50327 | Drive Shaft | 44T | 21 | 23 | 57 | 84.5 | 740 | |
| | 1996.09-2002.02 | MT | F | L | Saloon FWD F8Q784/F8Q786 | Date to:2002.02;Trans. code:JC5 | GDS50028 | Drive Shaft | | 23 | | 56.8 | 84 | 654 | |
| | 1996.09-2002.02 | MT | F | L | Saloon FWD F8Q784/F8Q786 | | GDS50311 | Drive Shaft | 44T | 23 | 30 | 56 | 82 | 650 | |
| | 1996.09-2002.02 | MT | F | R | Saloon FWD F8Q784/F8Q786 | | GDS50156 | Drive Shaft | 44T | 23 | 23 | 57.5 | 86.5 | 746.5 | |
| | 1996.09-2002.02 | MT | F | R | Saloon FWD F8Q784/F8Q786 | | GDS50159 | Drive Shaft | 44T | 23 | 23 | 57 | 87 | 748 | |
| | 1996.09-2002.02 | MT | F | R | Saloon FWD F8Q784/F8Q786 | Date to:2002.02;Trans. code:JC5 | GDS50247 | Drive Shaft | | 23 | 23 | 56.8 | 84 | 750.5 | |
| | 1996.09-2002.02 | MT | F | R | Saloon FWD F8Q784/F8Q786 | Date to:2002.02;Trans. code:JC5 | GDS50320 | Drive Shaft | 44T | 23 | 23 | 56.8 | 84 | 755 | |
| | 1996.09-2002.02 | MT | F | L | Saloon FWD F8Q784/F8Q786 | | GCO50043 | Outer Joint | 44T | 21 | 22 | 51.5 | 83 | 56.5 | I |
| | 1996.09-2002.02 | MT | F | L/R | Saloon FWD F8Q784/F8Q786 | Date to:2002.02 | GCO50026 | Outer Joint | | 23 | 25 | 56.2 | 83.5 | 58 | O |
| | 1996.09-2002.02 | MT | F | R | Saloon FWD F8Q784/F8Q786 | | GCI50008 | Inner Joint | | 23 | 30 | 36.3 | | 120.7 | |
| | 1996.09-2002.02 | MT | F | R | Saloon FWD F8Q784/F8Q786 | Date to:2002.02 | GCI50079 | Inner Joint | | 23 | 22 | 36.3 | | 105.5 | |
| | 1996.09-2002.02 | | F | R | Saloon FWD F8Q784/F8Q786 | | GDS50021 | Drive Shaft | 44T | 21 | 23 | 57 | 84.5 | 750 | |
| | 1996.09-2002.02 | | F | | Saloon FWD F8Q784/F8Q786 | | GCO50058 | Outer Joint | 44T | 23 | 35 | 57 | 87 | 71 | I |
| 1.9 (72 kw) | 1997.06-2000.09 | MT | F | L | Saloon FWD F8Q784/F8Q786/F9Q731/F9Q734/F9Q736 | Date from:1997.06;Date to:2000.09;Trans. code:JC5 | GDS50028 | Drive Shaft | | 23 | | 56.8 | 84 | 654 | |
| | 1997.06-2000.09 | MT | F | L | Saloon FWD F8Q784/F8Q786/F9Q731/F9Q734/F9Q736 | | GDS50311 | Drive Shaft | 44T | 23 | 30 | 56 | 82 | 650 | |
| | 1997.06-2000.09 | MT | F | R | Saloon FWD F8Q784/F8Q786/F9Q731/F9Q734/F9Q736 | Date from:1997.06;Date to:2000.09;Trans. code:JC5 | GDS50247 | Drive Shaft | | 23 | 23 | 56.8 | 84 | 750.5 | |
| | 1997.06-2000.09 | MT | F | R | Saloon FWD F8Q784/F8Q786/F9Q731/F9Q734/F9Q736 | Date from:1997.06;Date to:2000.09;Trans. code:JC5 | GDS50320 | Drive Shaft | 44T | 23 | 23 | 56.8 | 84 | 755 | |
| | 1997.06-2000.09 | MT | F | L/R | Saloon FWD F8Q784/F8Q786/F9Q731/F9Q734/F9Q736 | Date from:1997.06;Date to:2000.09 | GCO50026 | Outer Joint | | 23 | 25 | 56.2 | 83.5 | 58 | O |
| | 1997.06-2000.09 | MT | F | | Saloon FWD F8Q784/F8Q786/F9Q731/F9Q734/F9Q736 | | GCO50058 | Outer Joint | 44T | 23 | 35 | 57 | 87 | 71 | I |
| | 1997.06-2000.09 | MT | F | R | Saloon FWD F8Q784/F8Q786/F9Q731/F9Q734/F9Q736 | Date from:1997.06,Date to:2000.09 | GCI50079 | Inner Joint | | 23 | 22 | 36.3 | | 105.5 | |
| | 1997.06-2000.09 | | F | L | Saloon FWD F8Q784/F8Q786/F9Q731/F9Q734/F9Q736 | For Engine code:F8Q786 | GDS50009 | Drive Shaft | 44T | 21 | | 57 | 84.5 | 645 | |
| | 1997.06-2000.09 | | F | L | Saloon FWD F8Q784/F8Q786/F9Q731/F9Q734/F9Q736 | For Engine Code:F9Q731/F9Q736 | GDS50148 | Drive Shaft | 44T | 23 | | 57.5 | 86.5 | 657 | |
| | 1997.06-2000.09 | | F | L | Saloon FWD F8Q784/F8Q786/F9Q731/F9Q734/F9Q736 | For Engine code:F9Q734 | GDS50253 | Drive Shaft | 44T | 23 | 26 | 57.5 | 86.5 | 637 | |
| | 1997.06-2000.09 | | F | R | Saloon FWD F8Q784/F8Q786/F9Q731/F9Q734/F9Q736 | | GDS50021 | Drive Shaft | 44T | 21 | 23 | 57 | 84.5 | 750 | |
| | 1997.06-2000.09 | | F | R | Saloon FWD F8Q784/F8Q786/F9Q731/F9Q734/F9Q736 | For Engine code:F9Q731/F9Q736 | GDS50159 | Drive Shaft | 44T | 23 | 23 | 57 | 87 | 748 | |

| | YEAR | TRANSM. | F/R | L/R | BODY STYLE & DRIVE TYPE & ENGINE | REMARKS | G-AP Ref. | PRODUCT | ABS | Technical Specifications A | B | C | H | L | P |
|---|---|---|---|---|---|---|---|---|---|---|---|---|---|---|---|
| **RENAULT** | | | | | | | | | | | | | | | |
| **Megane Classic** | | | | | | | | | | | | | | | |
| 1.9 (72 kw) | 1997.06-2000.09 | | F | R | Saloon FWD F8Q784/F8Q786/F9Q731/F9Q734/F9Q736 | For Engine code:F9Q734 | GDS50323 | Drive Shaft | 44T | 23 | 23 | 57.5 | 86.5 | 778 | |
| | 1997.06-2000.09 | | F | R | Saloon FWD F8Q784/F8Q786/F9Q731/F9Q734/F9Q736 | | GDS50327 | Drive Shaft | 44T | 21 | 23 | 57 | 84.5 | 740 | |
| | 1997.06-2000.09 | | F | L | Saloon FWD F8Q784/F8Q786/F9Q731/F9Q734/F9Q736 | | GCO50043 | Outer Joint | 44T | 21 | 22 | 51.5 | 83 | 56.5 | I |
| | 1997.06-2000.09 | | F | L/R | Saloon FWD F8Q784/F8Q786/F9Q731/F9Q734/F9Q736 | | GCO50069 | Outer Joint | 44T | 23 | 30 | 57.5 | 86.5 | 58.5 | I |
| | 1997.06-2000.09 | | F | R | Saloon FWD F8Q784/F8Q786/F9Q731/F9Q734/F9Q736 | Date From:1997.06,Date To:2000.09 | GCI50008 | Inner Joint | | 23 | 30 | 36.3 | | 120.7 | |
| 1.9 (75 kw) | 2000.10-2003.07 | 4AT/5MT | F | L | Saloon FWD F9Q732/F9Q733 | | GDS50253 | Drive Shaft | 44T | 23 | 26 | 57.5 | 86.5 | 637 | |
| | 2000.10-2003.07 | AT/MT | F | R | Saloon FWD F9Q732/F9Q733 | | GDS50313 | Drive Shaft | 44T | 23 | 23 | 57.5 | 86.5 | 750 | |
| | 2000.10-2003.07 | AT/MT | F | L/R | Saloon FWD F9Q732/F9Q733 | | GCO50069 | Outer Joint | 44T | 23 | 30 | 57.5 | 86.5 | 58.5 | I |
| | 2000.10-2003.07 | MT | F | L | Saloon FWD F9Q732/F9Q733 | | GDS50311 | Drive Shaft | 44T | 23 | 30 | 56 | 82 | 650 | |
| | 2000.10-2003.07 | MT | F | R | Saloon FWD F9Q732/F9Q733 | | GDS50156 | Drive Shaft | 44T | 23 | 23 | 57.5 | 86.5 | 746.5 | |
| | 2000.10-2003.07 | MT | F | R | Saloon FWD F9Q732/F9Q733 | | GDS50159 | Drive Shaft | 44T | 23 | 23 | 57 | 87 | 748 | |
| | 2000.10-2003.07 | MT | F | | Saloon FWD F9Q732/F9Q733 | | GCO50058 | Outer Joint | 44T | 23 | 35 | 57 | 87 | 71 | I |
| | 2000.10-2003.07 | MT | F | R | Saloon FWD F9Q732/F9Q733 | | GCI50008 | Inner Joint | | 23 | 30 | 36.3 | | 120.7 | |
| | 2000.10-2003.07 | | F | R | Saloon FWD F9Q732/F9Q733 | For Engine code:F9Q734 | GDS50323 | Drive Shaft | 44T | 23 | 23 | 57.5 | 86.5 | 778 | |
| 1.9 (76 kw) | 1998.08-1999.10 | 5MT | F | L | Saloon FWD F8Q784 | | GDS50009 | Drive Shaft | 44T | 21 | | 57 | 84.5 | 645 | |
| | 1998.08-1999.10 | 5MT | F | R | Saloon FWD F8Q784 | | GDS50327 | Drive Shaft | 44T | 21 | 23 | 57 | 84.5 | 740 | |
| 1.9 (77 kw) | 1999.03-2003.07 | 4AT/5MT | F | R | Saloon FWD F9Q732/F9Q733 | | GDS50159 | Drive Shaft | 44T | 23 | 23 | 57 | 87 | 748 | |
| | 1999.03-2003.07 | | F | L | Saloon FWD F9Q732/F9Q733 | | GDS50148 | Drive Shaft | 44T | 23 | | 57.5 | 86.5 | 657 | |
| | 1999.03-2003.07 | | F | L/R | Saloon FWD F9Q732/F9Q733 | | GCO50069 | Outer Joint | 44T | 23 | 30 | 57.5 | 86.5 | 58.5 | I |
| | 1999.03-2003.07 | | F | | Saloon FWD F9Q732/F9Q733 | | GCO50058 | Outer Joint | 44T | 23 | 35 | 57 | 87 | 71 | I |
| | 1999.03-2003.07 | | F | R | Saloon FWD F9Q732/F9Q733 | | GCI50008 | Inner Joint | | 23 | 30 | 36.3 | | 120.7 | |
| 2.0 (80 kw) | 1999.03-2000.08 | 4AT/5MT | F | R | Saloon FWD F3R750/F3R751/F3R752/F3R791/F3R796/F3R797/F3R798 | | GDS50327 | Drive Shaft | 44T | 21 | 23 | 57 | 84.5 | 740 | |
| | 1999.03-2000.08 | 4AT/5MT | F | L/R | Saloon FWD F3R750/F3R751/F3R752/F3R791/F3R796/F3R797/F3R798 | | GCO50101 | Outer Joint | 44T | 21 | 30 | 52.2 | 85.5 | 59 | I |
| | 1999.03-2000.08 | MT | F | L | Saloon FWD F3R750/F3R751/F3R752/F3R791/F3R796/F3R797/F3R798 | Date to:2000.08;Trans. code:JB1/3,JC5 | GDS50009 | Drive Shaft | 44T | 21 | | 57 | 84.5 | 645 | |
| | 1999.03-2000.08 | MT | F | L | Saloon FWD F3R750/F3R751/F3R752/F3R791/F3R796/F3R797/F3R798 | | GDS50055 | Drive Shaft | | 21 | 30 | 50 | 84 | 650 | |
| | 1999.03-2000.08 | MT | F | L | Saloon FWD F3R750/F3R751/F3R752/F3R791/F3R796/F3R797/F3R798 | For Modelcode:LA1D/LA1L | GDS50160 | Drive Shaft | 44T | 23 | | 57 | 87 | 656.5 | |
| | 1999.03-2000.08 | MT | F | R | Saloon FWD F3R750/F3R751/F3R752/F3R791/F3R796/F3R797/F3R798 | Date to:2000.08;Trans. code:JB1/3,JC5 | GDS50038 | Drive Shaft | 44T | 21 | 23 | 52.2 | 85.5 | 752 | |
| | 1999.03-2000.08 | MT | F | R | Saloon FWD F3R750/F3R751/F3R752/F3R791/F3R796/F3R797/F3R798 | | GDS50173 | Drive Shaft | | 21 | 23 | 57 | 84.5 | 743 | |
| | 1999.03-2000.08 | MT | F | R | Saloon FWD F3R750/F3R751/F3R752/F3R791/F3R796/F3R797/F3R798 | | GDS50316 | Drive Shaft | | 21 | 23 | 57 | 84 | 741 | |
| | 1999.03-2000.08 | | F | R | Saloon FWD F3R750/F3R751/F3R752/F3R791/F3R796/F3R797/F3R798 | | GDS50054 | Drive Shaft | | 21 | 23 | 49.8 | 83.5 | 741.5 | |
| | 1999.03-2000.08 | | F | R | Saloon FWD F3R750/F3R751/F3R752/F3R791/F3R796/F3R797/F3R798 | | GDS50159 | Drive Shaft | 44T | 23 | 23 | 57 | 87 | 748 | |
| 2.0 (84 kw) | 1996.09-2003.08 | 4AT/5MT | F | L | Saloon FWD F3R750/F3R751/F3R752/F3R791/F3R796/F3R797/F3R798 | | GDS50009 | Drive Shaft | 44T | 21 | | 57 | 84.5 | 645 | |
| | 1996.09-2003.08 | 4AT/5MT | F | R | Saloon FWD F3R750/F3R751/F3R752/F3R791/F3R796/F3R797/F3R798 | | GDS50327 | Drive Shaft | 44T | 21 | 23 | 57 | 84.5 | 740 | |
| | 1996.09-2003.08 | MT | F | L | Saloon FWD F3R750/F3R751/F3R752/F3R791/F3R796/F3R797/F3R798 | Trans. code:JB1/3,JC5 | GDS50009 | Drive Shaft | 44T | 21 | | 57 | 84.5 | 645 | |
| | 1996.09-2003.08 | MT | F | L | Saloon FWD F3R750/F3R751/F3R752/F3R791/F3R796/F3R797/F3R798 | | GDS50055 | Drive Shaft | | 21 | 30 | 50 | 84 | 650 | |
| | 1996.09-2003.08 | MT | F | L | Saloon FWD F3R750/F3R751/F3R752/F3R791/F3R796/F3R797/F3R798 | For Modelcode:LA1D/LA1L | GDS50160 | Drive Shaft | 44T | 23 | | 57 | 87 | 656.5 | |
| | 1996.09-2003.08 | MT | F | R | Saloon FWD F3R750/F3R751/F3R752/F3R791/F3R796/F3R797/F3R798 | | GDS10012 | Drive Shaft | 48T | 27 | 24 | 64 | 80.5 | 928 | |
| | 1996.09-2003.08 | MT | F | R | Saloon FWD F3R750/F3R751/F3R752/F3R791/F3R796/F3R797/F3R798 | | GDS10120 | Drive Shaft | | 27 | 24 | 59 | 82 | 928 | |
| | 1996.09-2003.08 | MT | F | R | Saloon FWD F3R750/F3R751/F3R752/F3R791/F3R796/F3R797/F3R798 | Trans. code:JB1/3,JC5 | GDS50038 | Drive Shaft | 44T | 21 | 23 | 52.2 | 85.5 | 752 | |
| | 1996.09-2003.08 | MT | F | R | Saloon FWD F3R750/F3R751/F3R752/F3R791/F3R796/F3R797/F3R798 | | GDS50173 | Drive Shaft | | 21 | 23 | 57 | 84.5 | 743 | |
| | 1996.09-2003.08 | MT | F | R | Saloon FWD F3R750/F3R751/F3R752/F3R791/F3R796/F3R797/F3R798 | | GDS50316 | Drive Shaft | | 21 | 23 | 57 | 84 | 741 | |
| | 1996.09-2003.08 | MT | F | L/R | Saloon FWD F3R750/F3R751/F3R752/F3R791/F3R796/F3R797/F3R798 | Date to:1999.02 | GCO50101 | Outer Joint | 44T | 21 | 30 | 52.2 | 85.5 | 59 | I |
| | 1996.09-2003.08 | | F | R | Saloon FWD F3R750/F3R751/F3R752/F3R791/F3R796/F3R797/F3R798 | | GDS50054 | Drive Shaft | | 21 | 23 | 49.8 | 83.5 | 741.5 | |
| | 1996.09-2003.08 | | F | R | Saloon FWD F3R750/F3R751/F3R752/F3R791/F3R796/F3R797/F3R798 | | GDS50159 | Drive Shaft | 44T | 23 | 23 | 57 | 87 | 748 | |
| 2.0 (103 kw) | 1999.06-2003.08 | AT | F | L | Saloon FWD F4R740/F4R741/F4R746/F4R747 | | GDS50253 | Drive Shaft | 44T | 23 | 26 | 57.5 | 86.5 | 637 | |
| | 1999.06-2003.08 | AT | F | R | Saloon FWD F4R740/F4R741/F4R746/F4R747 | | GDS50517 | Drive Shaft | 44T | 23 | 23 | 57.5 | 86 | 779 | |
| | 1999.06-2003.08 | MT | F | L | Saloon FWD F4R740/F4R741/F4R746/F4R747 | | GDS50160 | Drive Shaft | 44T | 23 | | 57 | 87 | 656.5 | |
| | 1999.06-2003.08 | MT | F | R | Saloon FWD F4R740/F4R741/F4R746/F4R747 | For Modelcode:LA1L | GDS50156 | Drive Shaft | 44T | 23 | 23 | 57.5 | 86.5 | 746.5 | |
| | 1999.06-2003.08 | MT | F | L | Saloon FWD F4R740/F4R741/F4R746/F4R747 | For Modelcode:LA1L | GCO50058 | Outer Joint | 44T | 23 | 35 | 57 | 87 | 71 | I |
| 2.0 (112 kw) | 1996.10-1999.02 | 4AT/5MT | F | L | Saloon FWD F3R750/F3R751/F3R752/F3R791/F3R796/F3R797/F3R798 | | GDS50009 | Drive Shaft | 44T | 21 | | 57 | 84.5 | 645 | |
| **Megane Coupe** | | | | | | | | | | | | | | | |
| 1.2 (85 kw) | 2012.03-2015.08 | MT | F | L/R | Coupe FWD H5F 400;H5F 408 | | GCO50162 | Outer Joint | | 25 | 23 | 52.5 | 88.5 | 60.5 | M |
| | 2012.03-2015.08 | | F | R | Coupe FWD H5F 400;H5F 408 | | GCO50212 | Outer Joint | | 25 | 25 | 52.6 | 88.5 | 58.5 | I |
| | 2012.03-2015.08 | | F | R | Coupe FWD H5F 400;H5F 408 | | GCI50135 | Inner Joint | | 26 | 22 | 33 | 346 | 96 | |
| 1.2 (97 kw) | 2013.01-2015.08 | MT | F | L/R | Coupe FWD H5F 404;H5F 412;H5F 405 | | GCO50162 | Outer Joint | | 25 | 23 | 52.5 | 88.5 | 60.5 | M |
| | 2013.01-2015.08 | | F | R | Coupe FWD H5F 404;H5F 412;H5F 405 | | GCO50212 | Outer Joint | | 25 | 25 | 52.6 | 88.5 | 58.5 | I |
| | 2013.01-2015.08 | | F | R | Coupe FWD H5F 404;H5F 412;H5F 405 | | GCI50135 | Inner Joint | | 26 | 22 | 33 | 346 | 96 | |
| 1.4 (70 kw) | 1999.03-2003.07 | 5MT | F | L | Coupe FWD K4J700/K4J714/K4J750 | | GDS50009 | Drive Shaft | 44T | 21 | | 57 | 84.5 | 645 | |
| | 1999.03-2003.07 | MT | F | L | Coupe FWD K4J700/K4J714/K4J750 | Spring Design:Tension Spring | GDS50055 | Drive Shaft | | 21 | 30 | 50 | 84 | 650 | |
| | 1999.03-2003.07 | MT | F | R | Coupe FWD K4J700/K4J714/K4J750 | Spring Design:Tension Spring | GDS50038 | Drive Shaft | 44T | 21 | 23 | 52.2 | 85.5 | 752 | |
| | 1999.03-2003.07 | MT | F | R | Coupe FWD K4J700/K4J714/K4J750 | | GDS50173 | Drive Shaft | | 21 | 23 | 57 | 84.5 | 743 | |
| | 1999.03-2003.07 | MT | F | R | Coupe FWD K4J700/K4J714/K4J750 | Spring Design:Tension Spring | GDS50316 | Drive Shaft | | 21 | 23 | 57 | 84 | 741 | |
| | 1999.03-2003.07 | | F | R | Coupe FWD K4J700/K4J714/K4J750 | For Engine code:K4J714 | GCO50066 | Outer Joint | 44T | 21 | 28 | 52.5 | 85 | 51 | I |
| | 1999.03-2003.07 | | F | R | Coupe FWD K4J700/K4J714/K4J750 | | GCI50008 | Inner Joint | | 23 | 30 | 36.3 | | 120.7 | |
| 1.4 (96 kw) | 2009.04-2015.08 | 6MT | F | R | Coupe FWD H4J 700 | | GDS50604 | Drive Shaft | | 25 | 26 | 52.6 | 89 | 942 | |

| | YEAR | TRANSM. | F/R | L/R | BODY STYLE & DRIVE TYPE & ENGINE | REMARKS | G-AP Ref. | PRODUCT | ABS | Technical Specifications A | B | C | H | L | P |
|---|---|---|---|---|---|---|---|---|---|---|---|---|---|---|---|
| **RENAULT** **Megane Coupe** | | | | | | | | | | | | | | | |
| 1.4 (96 kw) | 2009.04-2015.08 | 6MT | F | L/R | Coupe FWD H4J 700 | | GCO50157 | Outer Joint | | 25 | 33 | 52.6 | 89 | 60 | I |
| | 2009.04-2015.08 | MT | F | L/R | Coupe FWD H4J 700 | | GCO99213 | Outer Joint | | 25 | 33 | 53 | 88 | 61.5 | I |
| 1.5 (63 kw) | 2008.11-2015.08 | 5MT | F | L | Coupe FWD K9K 830 | | GDS50383 | Drive Shaft | | 25 | 26 | 52.7 | 88.5 | 688 | |
| | 2008.11-2015.08 | 5MT | F | L | Coupe FWD K9K 830 | Date to:2012.02;Inner teeth of wheel side:33 | GDS50415 | Drive Shaft | | 25 | 26 | 52.6 | 89 | 704 | |
| | 2008.11-2015.08 | 5MT | F | L | Coupe FWD K9K 830 | Date to:2012.02;Inner teeth of wheel side:35 | GDS50498 | Drive Shaft | | 25 | 26 | 52.6 | 89 | 702 | |
| | 2008.11-2015.08 | 5MT | F | L | Coupe FWD K9K 830 | | GCI50096 | Inner Joint | | 26 | 30 | 40 | 64 | 96 | |
| | 2008.11-2015.08 | 5MT | F | R | Coupe FWD K9K 830 | | GCI50051 | Inner Joint | | 26 | 22 | 33 | 326 | 96 | |
| | 2008.11-2015.08 | MT | F | L | Coupe FWD K9K 830 | | GDS50426 | Drive Shaft | | 25 | 26 | 52.7 | 88.5 | 680 | |
| | 2008.11-2015.08 | MT | F | L/R | Coupe FWD K9K 830 | | GCO99213 | Outer Joint | | 25 | 33 | 53 | 88 | 61.5 | I |
| | 2008.11-2015.08 | | F | R | Coupe FWD K9K 830 | | GDS50510 | Drive Shaft | | 25 | 26 | 52.4 | 88.5 | 929 | |
| | 2008.11-2015.08 | | F | L/R | Coupe FWD K9K 830 | Date To:2012.02 | GCO50145 | Outer Joint | | 25 | 33 | 52.7 | 88.5 | 59.5 | I |
| | 2008.11-2015.08 | | F | L/R | Coupe FWD K9K 830 | | GCO50162 | Outer Joint | | 25 | 23 | 52.5 | 88.5 | 60.5 | M |
| 1.5 (66 kw) | 2008.11-2015.08 | 5MT | F | L | Coupe FWD K9K 834 | | GDS50383 | Drive Shaft | | 25 | 26 | 52.7 | 88.5 | 688 | |
| | 2008.11-2015.08 | 5MT | F | L | Coupe FWD K9K 834 | Date to:2012.02;Inner teeth of wheel side:33 | GDS50415 | Drive Shaft | | 25 | 26 | 52.6 | 89 | 704 | |
| | 2008.11-2015.08 | 5MT | F | L | Coupe FWD K9K 834 | Date to:2012.02;Inner teeth of wheel side:35 | GDS50498 | Drive Shaft | | 25 | 26 | 52.6 | 89 | 702 | |
| | 2008.11-2015.08 | 5MT | F | L/R | Coupe FWD K9K 834 | | GCO50145 | Outer Joint | | 25 | 33 | 52.7 | 88.5 | 59.5 | I |
| | 2008.11-2015.08 | 5MT | F | L | Coupe FWD K9K 834 | | GCI50096 | Inner Joint | | 26 | 30 | 40 | 64 | 96 | |
| | 2008.11-2015.08 | 5MT | F | R | Coupe FWD K9K 834 | | GCI50051 | Inner Joint | | 26 | 22 | 33 | 326 | 96 | |
| | 2008.11-2015.08 | MT | F | L | Coupe FWD K9K 834 | | GDS50426 | Drive Shaft | | 25 | 26 | 52.7 | 88.5 | 680 | |
| | 2008.11-2015.08 | MT | F | L/R | Coupe FWD K9K 834 | | GCO99213 | Outer Joint | | 25 | 33 | 53 | 88 | 61.5 | I |
| | 2008.11-2015.08 | | F | R | Coupe FWD K9K 834 | | GDS50510 | Drive Shaft | | 25 | 26 | 52.4 | 88.5 | 929 | |
| | 2008.11-2015.08 | | F | L/R | Coupe FWD K9K 834 | | GCO50162 | Outer Joint | | 25 | 23 | 52.5 | 88.5 | 60.5 | M |
| 1.5 (70 kw) | 2014.07-2015.08 | 6MT | F | R | Coupe FWD K9K 846 | | GCI50051 | Inner Joint | | 26 | 22 | 33 | 326 | 96 | |
| | 2014.07-2015.08 | MT | F | L | Coupe FWD K9K 846 | | GDS50426 | Drive Shaft | | 25 | 26 | 52.7 | 88.5 | 680 | |
| | 2014.07-2015.08 | MT | F | L/R | Coupe FWD K9K 846 | Date from:2015.01 | GCO99213 | Outer Joint | | 25 | 33 | 53 | 88 | 61.5 | I |
| | 2014.07-2015.08 | MT | F | L | Coupe FWD K9K 846 | | GCI50070 | Inner Joint | | 26 | 33 | 40 | 64 | 106 | |
| | 2014.07-2015.08 | | F | R | Coupe FWD K9K 846 | | GDS50510 | Drive Shaft | | 25 | 26 | 52.4 | 88.5 | 929 | |
| 1.5 (78 kw) | 2009.02-2015.08 | 6MT | F | L | Coupe FWD K9K 832 | | GDS50426 | Drive Shaft | | 25 | 26 | 52.7 | 88.5 | 680 | |
| | 2009.02-2015.08 | 6MT | F | R | Coupe FWD K9K 832 | | GDS50425 | Drive Shaft | | 25 | 26 | 52.7 | 88.5 | 931 | |
| | 2009.02-2015.08 | 6MT | F | L | Coupe FWD K9K 832 | | GCI50070 | Inner Joint | | 26 | 33 | 40 | 64 | 106 | |
| | 2009.02-2015.08 | 6MT | F | R | Coupe FWD K9K 832 | | GCI50051 | Inner Joint | | 26 | 22 | 33 | 326 | 96 | |
| | 2009.02-2015.08 | MT | F | L/R | Coupe FWD K9K 832 | | GCO99213 | Outer Joint | | 25 | 33 | 53 | 88 | 61.5 | I |
| | 2009.02-2015.08 | | F | R | Coupe FWD K9K 832 | | GDS50510 | Drive Shaft | | 25 | 26 | 52.4 | 88.5 | 929 | |
| | 2009.02-2015.08 | | F | L/R | Coupe FWD K9K 832 | | GCO50162 | Outer Joint | | 25 | 23 | 52.5 | 88.5 | 60.5 | M |
| | 2009.02-2015.08 | | F | | Coupe FWD K9K 832 | | GCO50145 | Outer Joint | | 25 | 33 | 52.7 | 88.5 | 59.5 | I |
| 1.5 (81 kw) | 2009.02-2015.08 | 6MT | F | R | Coupe FWD K9K 836;K9K 846;K9K 837;K9K 636;K9K 656 | Date from:2012.03 | GDS50510 | Drive Shaft | | 25 | 26 | 52.4 | 88.5 | 929 | |
| | 2009.02-2015.08 | 6MT | F | L/R | Coupe FWD K9K 836;K9K 846;K9K 837;K9K 636;K9K 656 | | GCO50162 | Outer Joint | | 25 | 23 | 52.5 | 88.5 | 60.5 | M |
| | 2009.02-2015.08 | AT | F | L | Coupe FWD K9K 836;K9K 846;K9K 837;K9K 636;K9K 656 | | GDS50535 | Drive Shaft | | 25 | 34 | 52.7 | 88.5 | 632 | |
| | 2009.02-2015.08 | AT | F | R | Coupe FWD K9K 836;K9K 846;K9K 837;K9K 636;K9K 656 | | GDS50536 | Drive Shaft | | 25 | 34 | 52.6 | 89 | 984 | |
| | 2009.02-2015.08 | MT | F | L | Coupe FWD K9K 836;K9K 846;K9K 837;K9K 636;K9K 656 | | GDS50426 | Drive Shaft | | 25 | 26 | 52.7 | 88.5 | 680 | |
| | 2009.02-2015.08 | MT | F | R | Coupe FWD K9K 836;K9K 846;K9K 837;K9K 636;K9K 656 | Date to:2012.02 | GDS50425 | Drive Shaft | | 25 | 26 | 52.7 | 88.5 | 931 | |
| | 2009.02-2015.08 | MT | F | L/R | Coupe FWD K9K 836;K9K 846;K9K 837;K9K 636;K9K 656 | | GCO99213 | Outer Joint | | 25 | 33 | 53 | 88 | 61.5 | I |
| | 2009.02-2015.08 | | F | R | Coupe FWD K9K 836;K9K 846;K9K 837;K9K 636;K9K 656 | Date From:2010.06;Date To:2014.01 | GCO50148 | Outer Joint | | 25 | 35 | 52.6 | 89 | 60 | I |
| | 2009.02-2015.08 | | F | | Coupe FWD K9K 836;K9K 846;K9K 837;K9K 636;K9K 656 | | GCO50145 | Outer Joint | | 25 | 33 | 52.7 | 88.5 | 59.5 | I |
| 1.6 (66 kw) | 1995.08-1999.02 | MT | F | L | Coupe FWD K7M702/K7M703 | Trans. code:JB1/3,JC5 | GDS50009 | Drive Shaft | 44T | 21 | | 57 | 84.5 | 645 | |
| | 1995.08-1999.02 | MT | F | L | Coupe FWD K7M702/K7M703 | | GDS50055 | Drive Shaft | | 21 | 30 | 50 | 84 | 650 | |
| | 1995.08-1999.02 | MT | F | R | Coupe FWD K7M702/K7M703 | Trans. code:JB1/3,JC5 | GDS50038 | Drive Shaft | 44T | 21 | 23 | 52.2 | 85.5 | 752 | |
| | 1995.08-1999.02 | MT | F | R | Coupe FWD K7M702/K7M703 | | GDS50173 | Drive Shaft | | 21 | 23 | 57 | 84.5 | 743 | |
| | 1995.08-1999.02 | MT | F | R | Coupe FWD K7M702/K7M703 | | GDS50316 | Drive Shaft | | 21 | 23 | 57 | 84 | 741 | |
| | 1995.08-1999.02 | MT | F | L/R | Coupe FWD K7M702/K7M703 | | GCO50101 | Outer Joint | 44T | 21 | 30 | 52.2 | 85.5 | 59 | I |
| | 1995.08-1999.02 | | F | R | Coupe FWD K7M702/K7M703 | For Engine code:K7M702 | GDS50327 | Drive Shaft | 44T | 21 | 23 | 57 | 84.5 | 740 | |
| 1.6 (74 kw) | 2008.11-2015.08 | 5MT | F | L | Coupe FWD K4M 848 | | GDS50383 | Drive Shaft | | 25 | 26 | 52.7 | 88.5 | 688 | |
| | 2008.11-2015.08 | 5MT | F | L | Coupe FWD K4M 848 | Date to:2012.02;Inner teeth of wheel side:33 | GDS50415 | Drive Shaft | | 25 | 26 | 52.6 | 89 | 704 | |
| | 2008.11-2015.08 | 5MT | F | L | Coupe FWD K4M 848 | Date to:2012.02;Inner teeth of wheel side:35 | GDS50498 | Drive Shaft | | 25 | 26 | 52.6 | 89 | 702 | |
| | 2008.11-2015.08 | 5MT | F | L/R | Coupe FWD K4M 848 | | GCO50145 | Outer Joint | | 25 | 33 | 52.7 | 88.5 | 59.5 | I |
| | 2008.11-2015.08 | 5MT | F | L | Coupe FWD K4M 848 | | GCI50096 | Inner Joint | | 26 | 30 | 40 | 64 | 96 | |
| | 2008.11-2015.08 | 5MT | F | R | Coupe FWD K4M 848 | | GCI50051 | Inner Joint | | 26 | 22 | 33 | 326 | 96 | |
| | 2008.11-2015.08 | 5MT/6MT | F | L/R | Coupe FWD K4M 848 | | GCO99213 | Outer Joint | | 25 | 33 | 53 | 88 | 61.5 | I |
| | 2008.11-2015.08 | MT | F | L | Coupe FWD K4M 848 | | GDS50426 | Drive Shaft | | 25 | 26 | 52.7 | 88.5 | 680 | |
| | 2008.11-2015.08 | MT | F | L/R | Coupe FWD K4M 848 | | GCO50162 | Outer Joint | | 25 | 23 | 52.5 | 88.5 | 60.5 | M |
| | 2008.11-2015.08 | | F | R | Coupe FWD K4M 848 | | GDS50510 | Drive Shaft | | 25 | 26 | 52.4 | 88.5 | 929 | |
| 1.6 (79 kw) | 1999.03-2003.07 | 4AT/5MT | F | L | Coupe FWD K4M700/K4M701/K4M708/K4M709 | For Engine Code:K4M708 | GDS50009 | Drive Shaft | 44T | 21 | | 57 | 84.5 | 645 | |
| | 1999.03-2003.07 | 4AT/5MT | F | L | Coupe FWD K4M700/K4M701/K4M708/K4M709 | For Engine Code:K4M709 | GDS50253 | Drive Shaft | 44T | 23 | 26 | 57.5 | 86.5 | 637 | |
| | 1999.03-2003.07 | 4AT/5MT | F | R | Coupe FWD K4M700/K4M701/K4M708/K4M709 | For Engine Code:K4M709 | GDS50323 | Drive Shaft | 44T | 23 | 23 | 57.5 | 86.5 | 778 | |
| | 1999.03-2003.07 | 4AT/5MT | F | L/R | Coupe FWD K4M700/K4M701/K4M708/K4M709 | For Engine Code:K4M709 | GCO50069 | Outer Joint | 44T | 23 | 30 | 57.5 | 86.5 | 58.5 | I |

| | YEAR | TRANSM. | F/R | L/R | BODY STYLE & DRIVE TYPE & ENGINE | REMARKS | G-AP Ref. | PRODUCT | ABS | Technical Specifications A | B | C | H | L | P |
|---|---|---|---|---|---|---|---|---|---|---|---|---|---|---|---|
| **RENAULT** **Megane Coupe** | | | | | | | | | | | | | | | |
| 1.6 (79 kw) | 1999.03-2003.07 | 4AT/5MT | F | L/R | Coupe FWD K4M700/K4M701/K4M708/K4M709 | For Engine Code:K4M708 | GCO50076 | Outer Joint | 44T | 21 | 30 | 57 | 84.5 | 62 | M |
| | 1999.03-2003.07 | MT | F | R | Coupe FWD K4M700/K4M701/K4M708/K4M709 | | GDS50173 | Drive Shaft | | 21 | 23 | 57 | 84.5 | 743 | |
| 1.6 (81 kw) | 2008.11-2015.08 | 5MT/6MT | F | L/R | Coupe FWD K4M 858 | | GCO99213 | Outer Joint | | 25 | 33 | 53 | 88 | 61.5 | I |
| | 2008.11-2015.08 | 6MT | F | R | Coupe FWD K4M 858 | | GCI50051 | Inner Joint | | 26 | 22 | 33 | 326 | 96 | |
| | 2008.11-2015.08 | MT | F | L | Coupe FWD K4M 858 | Date from:2009.01 | GDS50426 | Drive Shaft | | 25 | 26 | 52.7 | 88.5 | 680 | |
| | 2008.11-2015.08 | MT | F | L/R | Coupe FWD K4M 858 | Date from:2009.01 | GCO50162 | Outer Joint | | 25 | 23 | 52.5 | 88.5 | 60.5 | M |
| | 2008.11-2015.08 | | F | R | Coupe FWD K4M 858 | | GDS50510 | Drive Shaft | | 25 | 26 | 52.4 | 88.5 | 929 | |
| | 2008.11-2015.08 | 5MT | F | L/R | Coupe FWD K4M 866 | | GCO99213 | Outer Joint | | 25 | 33 | 53 | 88 | 61.5 | I |
| | 2008.11-2015.08 | 6MT | F | L | Coupe FWD K4M 866 | | GDS50426 | Drive Shaft | | 25 | 26 | 52.7 | 88.5 | 680 | |
| | 2008.11-2015.08 | 6MT | F | R | Coupe FWD K4M 866 | | GDS50510 | Drive Shaft | | 25 | 26 | 52.4 | 88.5 | 929 | |
| | 2008.11-2015.08 | 6MT | F | L | Coupe FWD K4M 866 | | GCI50070 | Inner Joint | | 26 | 33 | 40 | 64 | 106 | |
| | 2008.11-2015.08 | 6MT | F | R | Coupe FWD K4M 866 | | GCI50051 | Inner Joint | | 26 | 22 | 33 | 326 | 96 | |
| | 2008.11-2015.08 | MT | F | L/R | Coupe FWD K4M 866 | Date from:2009.01 | GCO50162 | Outer Joint | | 25 | 23 | 52.5 | 88.5 | 60.5 | M |
| 1.6 (96 kw) | 2011.04-2015.08 | MT | F | L | Coupe FWD R9M 402;R9M 404;R9M 414 | | GDS50428 | Drive Shaft | | 25 | 39 | 52.6 | 89 | 656 | |
| | 2011.04-2015.08 | MT | F | R | Coupe FWD R9M 402;R9M 404;R9M 414 | | GDS50427 | Drive Shaft | | 25 | 39 | 52.6 | 89 | 953 | |
| | 2011.04-2015.08 | MT | F | L/R | Coupe FWD R9M 402;R9M 404;R9M 414 | | GCO99213 | Outer Joint | | 25 | 33 | 53 | 88 | 61.5 | I |
| | 2011.04-2015.08 | MT | F | L | Coupe FWD R9M 402;R9M 404;R9M 414 | | GCI81352 | Inner Joint | | 39 | 33 | 39 | 65 | 106 | |
| | 2011.04-2015.08 | MT | F | R | Coupe FWD R9M 402;R9M 404;R9M 414 | | GCI81351 | Inner Joint | | 39 | 33 | 33 | 352.5 | 82.5 | |
| | 2011.04-2015.08 | | F | L/R | Coupe FWD R9M 402;R9M 404;R9M 414 | | GCO50157 | Outer Joint | | 25 | 33 | 52.6 | 89 | 60 | I |
| 1.9 (72 kw) | 1997.06-2000.09 | AT | F | L | Coupe FWD F9Q731/F9Q734/F9Q736 | | GDS50253 | Drive Shaft | 44T | 23 | 26 | 57.5 | 86.5 | 637 | |
| | 1997.06-2000.09 | AT | F | R | Coupe FWD F9Q731/F9Q734/F9Q736 | | GDS50323 | Drive Shaft | 44T | 23 | 23 | 57.5 | 86.5 | 778 | |
| | 1997.06-2000.09 | MT | F | L | Coupe FWD F9Q731/F9Q734/F9Q736 | Date from:1997.06;Date to:2000.09;Trans. code:JC5 | GDS50028 | Drive Shaft | | 23 | | 56.8 | 84 | 654 | |
| | 1997.06-2000.09 | MT | F | L | Coupe FWD F9Q731/F9Q734/F9Q736 | | GDS50148 | Drive Shaft | 44T | 23 | | 57.5 | 86.5 | 657 | |
| | 1997.06-2000.09 | MT | F | R | Coupe FWD F9Q731/F9Q734/F9Q736 | | GDS50156 | Drive Shaft | 44T | 23 | 23 | 57.5 | 86.5 | 746.5 | |
| | 1997.06-2000.09 | MT | F | R | Coupe FWD F9Q731/F9Q734/F9Q736 | | GDS50159 | Drive Shaft | 44T | 23 | 23 | 57 | 87 | 748 | |
| | 1997.06-2000.09 | MT | F | R | Coupe FWD F9Q731/F9Q734/F9Q736 | Date from:1997.06;Date to:2000.09;Trans. code:JC5 | GDS50247 | Drive Shaft | | 23 | 23 | 56.8 | 84 | 750.5 | |
| | 1997.06-2000.09 | MT | F | R | Coupe FWD F9Q731/F9Q734/F9Q736 | Date From:1997.06;Date To:2000.09;Trans. code:JC5 | GDS50320 | Drive Shaft | 44T | 23 | 23 | 56.8 | 84 | 755 | |
| | 1997.06-2000.09 | MT | F | R | Coupe FWD F9Q731/F9Q734/F9Q736 | | GDS99076 | Drive Shaft | 44T | 23 | 23 | 56.2 | 83.5 | 742.5 | |
| | 1997.06-2000.09 | MT | F | R | Coupe FWD F9Q731/F9Q734/F9Q736 | | GCO50069 | Outer Joint | 44T | 23 | 30 | 57.5 | 86.5 | 58.5 | I |
| | 1997.06-2000.09 | MT | F | L/R | Coupe FWD F9Q731/F9Q734/F9Q736 | Date from:1997.06;Date to:2000.09 | GCO50026 | Outer Joint | | 23 | 25 | 56.2 | 83.5 | 58 | O |
| | 1997.06-2000.09 | MT | F | | Coupe FWD F9Q731/F9Q734/F9Q736 | | GCO50058 | Outer Joint | 44T | 23 | 35 | 57 | 87 | 71 | I |
| | 1997.06-2000.09 | MT | F | R | Coupe FWD F9Q731/F9Q734/F9Q736 | Date from:1997.06,Date to:2000.09 | GCI50008 | Inner Joint | | 23 | 30 | 36.3 | | 120.7 | |
| | 1997.06-2000.09 | MT | F | R | Coupe FWD F9Q731/F9Q734/F9Q736 | Date from:1997.06,Date to:2000.09 | GCI50079 | Inner Joint | | 23 | 22 | 36.3 | | 105.5 | |
| 1.9 (75 kw) | 2000.10-2003.07 | 4AT/5MT | F | L | Coupe FWD F9Q732/F9Q733 | | GDS50253 | Drive Shaft | 44T | 23 | 26 | 57.5 | 86.5 | 637 | |
| | 2000.10-2003.07 | AT | F | R | Coupe FWD F9Q732/F9Q733 | | GDS50323 | Drive Shaft | 44T | 23 | 23 | 57.5 | 86.5 | 778 | |
| | 2000.10-2003.07 | AT/MT | F | L/R | Coupe FWD F9Q732/F9Q733 | | GCO50069 | Outer Joint | 44T | 23 | 30 | 57.5 | 86.5 | 58.5 | I |
| | 2000.10-2003.07 | MT | F | L | Coupe FWD F9Q732/F9Q733 | | GDS50311 | Drive Shaft | 44T | 23 | 30 | 56 | 82 | 650 | |
| | 2000.10-2003.07 | MT | F | R | Coupe FWD F9Q732/F9Q733 | | GDS50156 | Drive Shaft | 44T | 23 | 23 | 57.5 | 86.5 | 746.5 | |
| | 2000.10-2003.07 | MT | F | R | Coupe FWD F9Q732/F9Q733 | | GDS50159 | Drive Shaft | 44T | 23 | 23 | 57 | 87 | 748 | |
| | 2000.10-2003.07 | MT | F | R | Coupe FWD F9Q732/F9Q733 | | GDS50313 | Drive Shaft | 44T | 23 | 23 | 57.5 | 86.5 | 750 | |
| | 2000.10-2003.07 | MT | F | | Coupe FWD F9Q732/F9Q733 | | GCO50058 | Outer Joint | 44T | 23 | 35 | 57 | 87 | 71 | I |
| | 2000.10-2003.07 | MT | F | R | Coupe FWD F9Q732/F9Q733 | | GCI50008 | Inner Joint | | 23 | 30 | 36.3 | | 120.7 | |
| 1.9 (77 kw) | 1999.03-2003.07 | 4AT/5MT | F | R | Coupe FWD F9Q732/F9Q733 | | GDS50159 | Drive Shaft | 44T | 23 | 23 | 57 | 87 | 748 | |
| | 1999.03-2003.07 | 4AT/5MT | F | R | Coupe FWD F9Q732/F9Q733 | | GCI50008 | Inner Joint | | 23 | 30 | 36.3 | | 120.7 | |
| | 1999.03-2003.07 | MT | F | L/R | Coupe FWD F9Q732/F9Q733 | | GCO50069 | Outer Joint | 44T | 23 | 30 | 57.5 | 86.5 | 58.5 | I |
| | 1999.03-2003.07 | | F | L | Coupe FWD F9Q732/F9Q733 | | GDS50148 | Drive Shaft | 44T | 23 | | 57.5 | 86.5 | 657 | |
| 1.9 (96 kw) | 2008.11-2015.08 | 6MT | F | L | Coupe FWD F9Q 872;F9Q 870 | | GCI81352 | Inner Joint | | 39 | 33 | 39 | 65 | 106 | |
| | 2008.11-2015.08 | 6MT | F | R | Coupe FWD F9Q 872;F9Q 870 | | GCI81351 | Inner Joint | | 39 | 33 | 33 | 352.5 | 82.5 | |
| | 2008.11-2015.08 | MT | F | L/R | Coupe FWD F9Q 872;F9Q 870 | Date from:2009.01 | GCO99213 | Outer Joint | | 25 | 33 | 53 | 88 | 61.5 | I |
| | 2008.11-2015.08 | | F | L | Coupe FWD F9Q 872;F9Q 870 | | GDS50428 | Drive Shaft | | 25 | 39 | 52.6 | 89 | 656 | |
| | 2008.11-2015.08 | | F | R | Coupe FWD F9Q 872;F9Q 870 | | GDS50427 | Drive Shaft | | 25 | 39 | 52.6 | 89 | 953 | |
| | 2008.11-2015.08 | | F | L/R | Coupe FWD F9Q 872;F9Q 870 | | GCO50157 | Outer Joint | | 25 | 33 | 52.6 | 89 | 60 | I |
| 2.0 (80 kw) | 1999.03-2003.08 | MT | F | L | Coupe FWD F3R750/F3R751/F3R791/F3R796/F3R797/F3R798 | | GDS50009 | Drive Shaft | 44T | 21 | | 57 | 84.5 | 645 | |
| | 1999.03-2003.08 | MT | F | L | Coupe FWD F3R750/F3R751/F3R791/F3R796/F3R797/F3R798 | | GDS50055 | Drive Shaft | | 21 | 30 | 50 | 84 | 650 | |
| | 1999.03-2003.08 | MT | F | L | Coupe FWD F3R750/F3R751/F3R791/F3R796/F3R797/F3R798 | | GDS50404 | Drive Shaft | 44T | 23 | | 57.5 | 86 | 655 | |
| | 1999.03-2003.08 | MT | F | R | Coupe FWD F3R750/F3R751/F3R791/F3R796/F3R797/F3R798 | | GDS50021 | Drive Shaft | 44T | 21 | 23 | 57 | 84.5 | 750 | |
| | 1999.03-2003.08 | MT | F | R | Coupe FWD F3R750/F3R751/F3R791/F3R796/F3R797/F3R798 | Trans. code:JB1/3,JC5 | GDS50038 | Drive Shaft | 44T | 21 | 23 | 52.2 | 85.5 | 752 | |
| | 1999.03-2003.08 | MT | F | R | Coupe FWD F3R750/F3R751/F3R791/F3R796/F3R797/F3R798 | | GDS50173 | Drive Shaft | | 21 | 23 | 57 | 84.5 | 743 | |
| | 1999.03-2003.08 | MT | F | R | Coupe FWD F3R750/F3R751/F3R791/F3R796/F3R797/F3R798 | | GDS50316 | Drive Shaft | | 21 | 23 | 57 | 84 | 741 | |
| | 1999.03-2003.08 | MT | F | R | Coupe FWD F3R750/F3R751/F3R791/F3R796/F3R797/F3R798 | | GDS50327 | Drive Shaft | 44T | 21 | 23 | 57 | 84.5 | 740 | |
| | 1999.03-2003.08 | | F | R | Coupe FWD F3R750/F3R751/F3R791/F3R796/F3R797/F3R798 | | GDS50054 | Drive Shaft | | 21 | 23 | 49.8 | 83.5 | 741.5 | |
| 2.0 (84 kw) | 1996.03-2003.08 | 4AT/5MT | F | L | Coupe FWD F3R750/F3R751/F3R797/F3R798 | | GDS50009 | Drive Shaft | 44T | 21 | | 57 | 84.5 | 645 | |
| | 1996.03-2003.08 | 4AT/5MT | F | R | Coupe FWD F3R750/F3R751/F3R797/F3R798 | | GDS50327 | Drive Shaft | 44T | 21 | 23 | 57 | 84.5 | 740 | |
| | 1996.03-2003.08 | MT | F | L | Coupe FWD F3R750/F3R751/F3R797/F3R798 | | GDS50055 | Drive Shaft | | 21 | 30 | 50 | 84 | 650 | |
| | 1996.03-2003.08 | MT | F | R | Coupe FWD F3R750/F3R751/F3R797/F3R798 | Trans. code:JB1/3,JC5 | GDS50038 | Drive Shaft | 44T | 21 | 23 | 52.2 | 85.5 | 752 | |

| | YEAR | TRANSM. | F/R | L/R | BODY STYLE & DRIVE TYPE & ENGINE | REMARKS | G-AP Ref. | PRODUCT | ABS | Technical Specifications A | B | C | H | L | P |
|---|---|---|---|---|---|---|---|---|---|---|---|---|---|---|---|
| **RENAULT** **Megane Coupe** | | | | | | | | | | | | | | | |
| 2.0 (84 kw) | 1996.03-2003.08 | MT | F | R | Coupe FWD F3R750/F3R751/F3R797/F3R798 | | GDS50173 | Drive Shaft | | 21 | 23 | 57 | 84.5 | 743 | |
| | 1996.03-2003.08 | MT | F | R | Coupe FWD F3R750/F3R751/F3R797/F3R798 | | GDS50316 | Drive Shaft | | 21 | 23 | 57 | 84 | 741 | |
| | 1996.03-2003.08 | MT | F | L/R | Coupe FWD F3R750/F3R751/F3R797/F3R798 | | GCO50101 | Outer Joint | 44T | 21 | 30 | 52.2 | 85.5 | 59 | I |
| | 1996.03-2003.08 | | F | L | Coupe FWD F3R750/F3R751/F3R797/F3R798 | Engine code:F3R750 | GDS50160 | Drive Shaft | 44T | 23 | | 57 | 87 | 656.5 | |
| | 1996.03-2003.08 | | F | R | Coupe FWD F3R750/F3R751/F3R797/F3R798 | | GDS50054 | Drive Shaft | | 21 | 23 | 49.8 | 83.5 | 741.5 | |
| | 1996.03-2003.08 | | F | R | Coupe FWD F3R750/F3R751/F3R797/F3R798 | For Engine code:F3R750 | GDS50159 | Drive Shaft | 44T | 23 | 23 | 57 | 87 | 748 | |
| 2.0 (102 kw) | 1999.04-2003.08 | 5MT | F | L | Coupe FWD F5R740 | | GDS50160 | Drive Shaft | 44T | 23 | | 57 | 87 | 656.5 | |
| | 1999.04-2003.08 | 5MT | F | R | Coupe FWD F5R740 | | GDS50159 | Drive Shaft | 44T | 23 | 23 | 57 | 87 | 748 | |
| | 1999.04-2003.08 | MT | F | R | Coupe FWD F5R740 | | GDS50156 | Drive Shaft | 44T | 23 | 23 | 57.5 | 86.5 | 746.5 | |
| | 1999.04-2003.08 | MT | F | R | Coupe FWD F5R740 | | GDS99076 | Drive Shaft | 44T | 23 | 23 | 56.2 | 83.5 | 742.5 | |
| | 1999.04-2003.08 | MT | F | R | Coupe FWD F5R740 | | GCI50008 | Inner Joint | | 23 | 30 | 36.3 | | 120.7 | |
| | 1999.04-2003.08 | | F | L/R | Coupe FWD F5R740 | | GCO50058 | Outer Joint | 44T | 23 | 35 | 57 | 87 | 71 | I |
| 2.0 (103 kw) | 1999.03-2003.08 | 5MT | F | L | Coupe FWD F4R746/F5R740 | | GDS50160 | Drive Shaft | 44T | 23 | | 57 | 87 | 656.5 | |
| | 1999.03-2003.08 | 5MT | F | R | Coupe FWD F4R746/F5R740 | | GDS50159 | Drive Shaft | 44T | 23 | 23 | 57 | 87 | 748 | |
| | 1999.03-2003.08 | MT | F | L | Coupe FWD F4R746/F5R740 | | GDS50404 | Drive Shaft | 44T | 23 | | 57.5 | 86 | 655 | |
| | 1999.03-2003.08 | MT | F | R | Coupe FWD F4R746/F5R740 | | GDS50156 | Drive Shaft | 44T | 23 | 23 | 57.5 | 86.5 | 746.5 | |
| | 1999.03-2003.08 | MT | F | R | Coupe FWD F4R746/F5R740 | | GDS99076 | Drive Shaft | 44T | 23 | 23 | 56.2 | 83.5 | 742.5 | |
| | 1999.03-2003.08 | MT | F | L/R | Coupe FWD F4R746/F5R740 | | GCO50058 | Outer Joint | 44T | 23 | 35 | 57 | 87 | 71 | I |
| | 1999.03-2003.08 | MT | F | R | Coupe FWD F4R746/F5R740 | | GCI50008 | Inner Joint | | 23 | 30 | 36.3 | | 120.7 | |
| | 2009.05-2015.08 | CVT | F | L | Coupe FWD M4R 711 | | GDS83875 | Drive Shaft | | 25 | 27 | 52.5 | 88.5 | 675 | |
| | 2009.05-2015.08 | CVT | F | L | Coupe FWD M4R 711 | | GCO82528 | Outer Joint | | 25 | 24 | 52.5 | 88.5 | 59 | M |
| | 2009.05-2015.08 | CVT | F | L/R | Coupe FWD M4R 711 | | GCO99213 | Outer Joint | | 25 | 33 | 53 | 88 | 61.5 | I |
| | 2009.05-2015.08 | CVT | F | L | Coupe FWD M4R 711 | | GCI41073 | Inner Joint | | 27 | 24 | 40 | 62.5 | 99.5 | |
| 2.0 (108 kw) | 1996.03-1999.11 | 5MT | F | L | Coupe FWD F7R710/F7R714 | Date from:1998.10, | GDS50160 | Drive Shaft | 44T | 23 | | 57 | 87 | 656.5 | |
| | 1996.03-1999.11 | 5MT | F | R | Coupe FWD F7R710/F7R714 | Date to:1998.09 | GDS50145 | Drive Shaft | | 23 | 23 | 56.3 | 80 | 685 | |
| | 1996.03-1999.11 | 5MT | F | R | Coupe FWD F7R710/F7R714 | | GDS50159 | Drive Shaft | 44T | 23 | 23 | 57 | 87 | 748 | |
| | 1996.03-1999.11 | 5MT | F | R | Coupe FWD F7R710/F7R714 | Date to:1998.09 | GDS50247 | Drive Shaft | | 23 | 23 | 56.8 | 84 | 750.5 | |
| | 1996.03-1999.11 | 5MT | F | L/R | Coupe FWD F7R710/F7R714 | Date from:1998.10 | GCO50058 | Outer Joint | 44T | 23 | 35 | 57 | 87 | 71 | I |
| | 1996.03-1999.11 | MT | F | L | Coupe FWD F7R710/F7R714 | Trans. code:JC5 | GDS50028 | Drive Shaft | | 23 | | 56.8 | 84 | 654 | |
| | 1996.03-1999.11 | MT | F | L | Coupe FWD F7R710/F7R714 | | GDS50311 | Drive Shaft | 44T | 23 | 30 | 56 | 82 | 650 | |
| | 1996.03-1999.11 | MT | F | R | Coupe FWD F7R710/F7R714 | | GDS50156 | Drive Shaft | 44T | 23 | 23 | 57.5 | 86.5 | 746.5 | |
| | 1996.03-1999.11 | MT | F | R | Coupe FWD F7R710/F7R714 | Trans. code:JC5 | GDS50320 | Drive Shaft | 44T | 23 | 23 | 56.8 | 84 | 755 | |
| | 1996.03-1999.11 | MT | F | L/R | Coupe FWD F7R710/F7R714 | | GCO50026 | Outer Joint | | 23 | 25 | 56.2 | 83.5 | 58 | O |
| | 1996.03-1999.11 | MT | F | R | Coupe FWD F7R710/F7R714 | | GCI50008 | Inner Joint | | 23 | 30 | 36.3 | | 120.7 | |
| | 1996.03-1999.11 | MT | F | R | Coupe FWD F7R710/F7R714 | | GCI50079 | Inner Joint | | 23 | 22 | 36.3 | | 105.5 | |
| | 1996.03-1999.11 | | F | | Coupe FWD F7R710/F7R714 | Date To:1996.11 | GCO50043 | Outer Joint | 44T | 21 | 22 | 51.5 | 83 | 56.5 | I |
| 2.0 (110 kw) | 2009.04-2015.08 | 6AT | F | L | Coupe FWD M9R 615 | 8 balls | GDS81271 | Drive Shaft | | 27 | 30 | 56.7 | 91 | 652 | |
| | 2009.04-2015.08 | 6AT | F | R | Coupe FWD M9R 615 | 8 balls | GDS81272 | Drive Shaft | | 27 | 30 | 56.7 | 91 | 964 | |
| | 2009.04-2015.08 | 6AT | F | L/R | Coupe FWD M9R 615 | | GCO81102 | Outer Joint | | 27 | 36 | 56.7 | 91 | 63.5 | I |
| | 2009.04-2015.08 | 6AT | F | L | Coupe FWD M9R 615 | | GCI50150 | Inner Joint | | 30 | 36 | 34 | 76.5 | 86 | |
| | 2009.04-2015.08 | 6AT | F | R | Coupe FWD M9R 615 | | GCI50123 | Inner Joint | | 30 | 36 | 33.97 | 343 | 90 | |
| | 2009.04-2015.08 | AT | F | L | Coupe FWD M9R 615 | 6 balls | GDS18274 | Drive Shaft | | 27 | 30 | 56.5 | 90 | 624 | |
| 2.0 (118 kw) | 2009.04-2015.08 | 6MT | F | L | Coupe FWD M9R 610 | | GDS81275 | Drive Shaft | | 27 | 39 | 56.5 | 91 | 636 | |
| | 2009.04-2015.08 | 6MT | F | R | Coupe FWD M9R 610 | | GDS81274 | Drive Shaft | | 27 | 39 | 56.5 | 91 | 981 | |
| | 2009.04-2015.08 | 6MT | F | L | Coupe FWD M9R 610 | | GCI18272 | Inner Joint | | 39 | 26 | 39 | 74 | 116 | |
| | 2009.04-2015.08 | 6MT | F | R | Coupe FWD M9R 610 | | GCI81164 | Inner Joint | | 39 | 26 | 30 | 366.5 | 99 | |
| | 2009.04-2015.08 | AT | F | L | Coupe FWD M9R 610 | | GDS18274 | Drive Shaft | | 27 | 30 | 56.5 | 90 | 624 | |
| | 2009.04-2015.08 | | F | L | Coupe FWD M9R 610 | | GCO50186 | Outer Joint | | 27 | 26 | 56.5 | 91 | 65 | M |
| 2.0 (120 kw) | 2012.07-2015.08 | 6MT | F | L | Coupe FWD M9R 610 | | GDS81275 | Drive Shaft | | 27 | 39 | 56.5 | 91 | 636 | |
| | 2012.07-2015.08 | 6MT | F | R | Coupe FWD M9R 610 | | GDS81274 | Drive Shaft | | 27 | 39 | 56.5 | 91 | 981 | |
| | 2012.07-2015.08 | 6MT | F | L | Coupe FWD M9R 610 | | GCI18272 | Inner Joint | | 39 | 26 | 39 | 74 | 116 | |
| | 2012.07-2015.08 | 6MT | F | R | Coupe FWD M9R 610 | | GCI81164 | Inner Joint | | 39 | 26 | 30 | 366.5 | 99 | |
| | 2012.07-2015.08 | AT | F | L | Coupe FWD M9R 610 | | GDS18274 | Drive Shaft | | 27 | 30 | 56.5 | 90 | 624 | |
| | 2012.07-2015.08 | | F | L | Coupe FWD M9R 610 | | GCO50186 | Outer Joint | | 27 | 26 | 56.5 | 91 | 65 | M |
| 2.0 (162 kw) | 2013.11-2015.08 | 6MT | F | L | Coupe FWD F4R 874 | 8 balls | GDS83644 | Drive Shaft | | 27 | 39 | 56.5 | 91.5 | 686 | |
| | 2013.11-2015.08 | 6MT | F | L/R | Coupe FWD F4R 874 | 8 balls | GCO82070 | Outer Joint | | 27 | 35 | 56.5 | 91.5 | 61 | I |
| | 2013.11-2015.08 | MT | F | L | Coupe FWD F4R 874 | 6 balls | GDS50606 | Drive Shaft | | 27 | 39 | 56.5 | 91.5 | 686 | |
| | 2013.11-2015.08 | MT | F | R | Coupe FWD F4R 874 | 8 balls | GDS82600 | Drive Shaft | | 27 | 39 | 56.5 | 91.5 | 1019 | |
| | 2013.11-2015.08 | MT | F | L | Coupe FWD F4R 874 | 6 balls | GCO50160 | Outer Joint | | 27 | 35 | 56.5 | 91.5 | 61 | I |
| | 2013.11-2015.08 | MT | F | L | Coupe FWD F4R 874 | | GCI50132 | Inner Joint | | 39 | 36 | 39 | 74 | 102.5 | |
| | 2013.11-2015.08 | MT | F | R | Coupe FWD F4R 874 | | GCI50087 | Inner Joint | | 39 | 35 | 30 | 367 | 89.5 | |
| 2.0 (184 kw) | 2009.05-2015.08 | 6MT | F | L | Coupe FWD F4R 874 | 6 balls | GDS50606 | Drive Shaft | | 27 | 39 | 56.5 | 91.5 | 686 | |
| | 2009.05-2015.08 | 6MT | F | L | Coupe FWD F4R 874 | 8 balls | GDS83644 | Drive Shaft | | 27 | 39 | 56.5 | 91.5 | 686 | |
| | 2009.05-2015.08 | 6MT | F | R | Coupe FWD F4R 874 | 8 balls | GDS82600 | Drive Shaft | | 27 | 39 | 56.5 | 91.5 | 1019 | |
| | 2009.05-2015.08 | 6MT | F | L | Coupe FWD F4R 874 | 6 balls | GCO50160 | Outer Joint | | 27 | 35 | 56.5 | 91.5 | 61 | I |

| | YEAR | TRANSM. | F/R | L/R | BODY STYLE & DRIVE TYPE & ENGINE | REMARKS | G-AP Ref. | PRODUCT | ABS | Technical Specifications A | B | C | H | L | P |
|---|---|---|---|---|---|---|---|---|---|---|---|---|---|---|---|
| **RENAULT** | | | | | | | | | | | | | | | |
| **Megane Coupe** | | | | | | | | | | | | | | | |
| 2.0 (184 kw) | 2009.05-2015.08 | 6MT | F | L/R | Coupe FWD F4R 874 | 8 balls | GCO82070 | Outer Joint | | 27 | 35 | 56.5 | 91.5 | 61 | I |
| | 2009.05-2015.08 | 6MT | F | L | Coupe FWD F4R 874 | | GCI50132 | Inner Joint | | 39 | 36 | 39 | 74 | 102.5 | |
| | 2009.05-2015.08 | 6MT | F | R | Coupe FWD F4R 874 | | GCI50087 | Inner Joint | | 39 | 35 | 30 | 367 | 89.5 | |
| 2.0 (195 kw) | 2008.11-2016.09 | 6MT | F | L | Coupe FWD F4R 874 | 8 balls | GDS83644 | Drive Shaft | | 27 | 39 | 56.5 | 91.5 | 686 | |
| | 2008.11-2016.09 | 6MT | F | L/R | Coupe FWD F4R 874 | 8 balls | GCO82070 | Outer Joint | | 27 | 35 | 56.5 | 91.5 | 61 | I |
| | 2008.11-2016.09 | MT | F | L | Coupe FWD F4R 874 | 6 balls | GDS50606 | Drive Shaft | | 27 | 39 | 56.5 | 91.5 | 686 | |
| | 2008.11-2016.09 | MT | F | R | Coupe FWD F4R 874 | 8 balls | GDS82600 | Drive Shaft | | 27 | 39 | 56.5 | 91.5 | 1019 | |
| | 2008.11-2016.09 | MT | F | L | Coupe FWD F4R 874 | 6 balls | GCO50160 | Outer Joint | | 27 | 35 | 56.5 | 91.5 | 61 | I |
| | 2008.11-2016.09 | MT | F | L | Coupe FWD F4R 874 | | GCI50132 | Inner Joint | | 39 | 36 | 39 | 74 | 102.5 | |
| | 2008.11-2016.09 | MT | F | R | Coupe FWD F4R 874 | | GCI50087 | Inner Joint | | 39 | 35 | 30 | 367 | 89.5 | |
| 2.0 (201 kw) | 2014.07-2016.09 | 6MT | F | L | Coupe FWD F4R 874 | 8 balls | GDS83644 | Drive Shaft | | 27 | 39 | 56.5 | 91.5 | 686 | |
| | 2014.07-2016.09 | 6MT | F | L/R | Coupe FWD F4R 874 | 8 balls | GCO82070 | Outer Joint | | 27 | 35 | 56.5 | 91.5 | 61 | I |
| | 2014.07-2016.09 | MT | F | L | Coupe FWD F4R 874 | 6 balls | GDS50606 | Drive Shaft | | 27 | 39 | 56.5 | 91.5 | 686 | |
| | 2014.07-2016.09 | MT | F | R | Coupe FWD F4R 874 | 8 balls | GDS82600 | Drive Shaft | | 27 | 39 | 56.5 | 91.5 | 1019 | |
| | 2014.07-2016.09 | MT | F | L | Coupe FWD F4R 874 | 6 balls | GCO50160 | Outer Joint | | 27 | 35 | 56.5 | 91.5 | 61 | I |
| | 2014.07-2016.09 | MT | F | L | Coupe FWD F4R 874 | | GCI50132 | Inner Joint | | 39 | 36 | 39 | 74 | 102.5 | |
| | 2014.07-2016.09 | MT | F | R | Coupe FWD F4R 874 | | GCI50087 | Inner Joint | | 39 | 35 | 30 | 367 | 89.5 | |
| **Megane E-Tech** | | | | | | | | | | | | | | | |
| EV (96 kw) | 2021.11- | ET | F | L | SUV FWD 6AM 402 | | GDS58043 | Drive Shaft | | 29 | 26 | 62 | 98.5 | 774 | |
| | 2021.11- | ET | F | R | SUV FWD 6AM 402 | | GDS57984 | Drive Shaft | | 29 | 26 | 62 | 98.5 | 840 | |
| | 2021.11- | ET | F | L/R | SUV FWD 6AM 402 | | GCO83821 | Outer Joint | | 29 | 33 | 62 | 98.5 | 57.5 | I |
| | 2021.11- | | F | L | SUV FWD 6AM 402 | | GDS58043 | Drive Shaft | | 29 | 26 | 62 | 98.5 | 774 | |
| | 2021.11- | | F | R | SUV FWD 6AM 402 | | GDS57984 | Drive Shaft | | 29 | 26 | 62 | 98.5 | 840 | |
| | 2021.11- | | F | L/R | SUV FWD 6AM 402 | | GCO83821 | Outer Joint | | 29 | 33 | 62 | 98.5 | 57.5 | I |
| EV (160 kw) | 2021.11- | ET | F | L | SUV FWD 6AM 402 | | GDS58043 | Drive Shaft | | 29 | 26 | 62 | 98.5 | 774 | |
| | 2021.11- | ET | F | R | SUV FWD 6AM 402 | | GDS57984 | Drive Shaft | | 29 | 26 | 62 | 98.5 | 840 | |
| | 2021.11- | ET | F | L/R | SUV FWD 6AM 402 | | GCO83821 | Outer Joint | | 29 | 33 | 62 | 98.5 | 57.5 | I |
| **Megane Estate/Break** | | | | | | | | | | | | | | | |
| 1.0 (84 kw) | 2021.07- | 6MT | F | L | Estate FWD H5D 490 | | GDS50608 | Drive Shaft | | 25 | 26 | 52.5 | 88.5 | 697 | |
| | 2021.07- | 6MT | F | L/R | Estate FWD H5D 490 | | GCO50162 | Outer Joint | | 25 | 23 | 52.5 | 88.5 | 60.5 | M |
| | 2021.07- | 6MT | F | L | Estate FWD H5D 490 | | GCI50146 | Inner Joint | | 26 | 23 | 40 | 64 | 104 | |
| 1.2 (74 kw) | 2016.04- | 6MT | F | L | Estate FWD H5F 408 | | GDS50608 | Drive Shaft | | 25 | 26 | 52.5 | 88.5 | 697 | |
| | 2016.04- | 6MT | F | L/R | Estate FWD H5F 408 | | GCO50162 | Outer Joint | | 25 | 23 | 52.5 | 88.5 | 60.5 | M |
| | 2016.04- | 6MT | F | L | Estate FWD H5F 408 | | GCI50146 | Inner Joint | | 26 | 23 | 40 | 64 | 104 | |
| 1.2 (85 kw) | 2012.03-2015.08 | MT | F | L/R | Estate FWD H5F 400;H5F 408 | | GCO50162 | Outer Joint | | 25 | 23 | 52.5 | 88.5 | 60.5 | M |
| | 2012.03-2015.08 | | F | R | Estate FWD H5F 400;H5F 408 | | GCO50212 | Outer Joint | | 25 | 25 | 52.6 | 88.5 | 58.5 | I |
| | 2012.03-2015.08 | | F | R | Estate FWD H5F 400;H5F 408 | | GCI50135 | Inner Joint | | 26 | 22 | 33 | 346 | 96 | |
| 1.2 (97 kw) | 2013.01-2016.01 | MT | F | L/R | Estate FWD H5F 404;H5F 412;H5F 405 | | GCO50162 | Outer Joint | | 25 | 23 | 52.5 | 88.5 | 60.5 | M |
| | 2013.01-2016.01 | | F | R | Estate FWD H5F 404;H5F 412;H5F 405 | | GCO50212 | Outer Joint | | 25 | 25 | 52.6 | 88.5 | 58.5 | I |
| | 2013.01-2016.01 | | F | R | Estate FWD H5F 404;H5F 412;H5F 405 | | GCI50135 | Inner Joint | | 26 | 22 | 33 | 346 | 96 | |
| | 2016.04- | 6MT | F | L | Estate FWD H5F 408 | | GDS50608 | Drive Shaft | | 25 | 26 | 52.5 | 88.5 | 697 | |
| | 2016.04- | 6MT | F | L/R | Estate FWD H5F 408 | | GCO50162 | Outer Joint | | 25 | 23 | 52.5 | 88.5 | 60.5 | M |
| | 2016.04- | 6MT | F | L | Estate FWD H5F 408 | | GCI50146 | Inner Joint | | 26 | 23 | 40 | 64 | 104 | |
| | 2016.04- | 7DCT | F | L | Estate FWD H5F 408 | | GDS83834 | Drive Shaft | | 25 | 27 | 52.5 | 88.5 | 641 | |
| | 2016.04- | 7DCT | F | R | Estate FWD H5F 408 | | GDS83833 | Drive Shaft | | 25 | 27 | 52.5 | 88.5 | 1002 | |
| | 2016.04- | 7DCT | F | L/R | Estate FWD H5F 408 | | GCO82446 | Outer Joint | | 25 | 33 | 52.5 | 88.5 | 59 | I |
| | 2016.04- | 7DCT | F | L | Estate FWD H5F 408 | | GCI82387 | Inner Joint | | 27 | 33 | 40 | 65 | 109 | |
| | 2016.04- | 7DCT | F | R | Estate FWD H5F 408 | | GCI82386 | Inner Joint | | 27 | 33 | 40 | 400.5 | 89.5 | |
| 1.3 (75 kw) | 2018.08- | 6MT | F | L | Estate FWD H5H 470;H5H 490 | | GDS50608 | Drive Shaft | | 25 | 26 | 52.5 | 88.5 | 697 | |
| | 2018.08- | 6MT | F | R | Estate FWD H5H 470;H5H 490 | | GDS84119 | Drive Shaft | | 25 | 26 | 52.5 | 88.5 | 946 | |
| | 2018.08- | 6MT | F | L/R | Estate FWD H5H 470;H5H 490 | | GCO50162 | Outer Joint | | 25 | 23 | 52.5 | 88.5 | 60.5 | M |
| | 2018.08- | 6MT | F | L | Estate FWD H5H 470;H5H 490 | | GCI50146 | Inner Joint | | 26 | 23 | 40 | 64 | 104 | |
| | 2018.08- | 6MT | F | R | Estate FWD H5H 470;H5H 490 | | GCI82523 | Inner Joint | | 26 | 23 | 33 | 346 | 98 | |
| 1.3 (85 kw) | 2018.01- | 6MT | F | L | Estate FWD H5H 450;H5H 470;H5H 490 | | GDS50608 | Drive Shaft | | 25 | 26 | 52.5 | 88.5 | 697 | |
| | 2018.01- | 6MT | F | R | Estate FWD H5H 450;H5H 470;H5H 490 | | GDS84119 | Drive Shaft | | 25 | 26 | 52.5 | 88.5 | 946 | |
| | 2018.01- | 6MT | F | L/R | Estate FWD H5H 450;H5H 470;H5H 490 | | GCO50162 | Outer Joint | | 25 | 23 | 52.5 | 88.5 | 60.5 | M |
| | 2018.01- | 6MT | F | L | Estate FWD H5H 450;H5H 470;H5H 490 | | GCI50146 | Inner Joint | | 26 | 23 | 40 | 64 | 104 | |
| | 2018.01- | 6MT | F | R | Estate FWD H5H 450;H5H 470;H5H 490 | | GCI82523 | Inner Joint | | 26 | 23 | 33 | 346 | 98 | |
| 1.3 (103 kw) | 2018.01- | 6MT | F | L | Estate FWD H5H 450;H5H 470;H5H 490 | | GDS50608 | Drive Shaft | | 25 | 26 | 52.5 | 88.5 | 697 | |
| | 2018.01- | 6MT | F | R | Estate FWD H5H 450;H5H 470;H5H 490 | | GDS84119 | Drive Shaft | | 25 | 26 | 52.5 | 88.5 | 946 | |
| | 2018.01- | 6MT | F | L/R | Estate FWD H5H 450;H5H 470;H5H 490 | | GCO50162 | Outer Joint | | 25 | 23 | 52.5 | 88.5 | 60.5 | M |
| | 2018.01- | 6MT | F | L | Estate FWD H5H 450;H5H 470;H5H 490 | | GCI50146 | Inner Joint | | 26 | 23 | 40 | 64 | 104 | |
| | 2018.01- | 6MT | F | R | Estate FWD H5H 450;H5H 470;H5H 490 | | GCI82523 | Inner Joint | | 26 | 23 | 33 | 346 | 98 | |
| | 2018.01- | 7DCT | F | L | Estate FWD H5H 450;H5H 470;H5H 490 | | GDS83828 | Drive Shaft | | 25 | 27 | 52.5 | 88.5 | 643 | |
| | 2018.01- | 7DCT | F | R | Estate FWD H5H 450;H5H 470;H5H 490 | | GDS58142 | Drive Shaft | | 25 | 27 | 52.5 | 88.5 | 1000 | |

| | YEAR | TRANSM. | F/R | L/R | BODY STYLE & DRIVE TYPE & ENGINE | REMARKS | G-AP Ref. | PRODUCT | ABS | Technical Specifications A | B | C | H | L | P |
|---|---|---|---|---|---|---|---|---|---|---|---|---|---|---|---|
| **RENAULT** **Megane Estate/Break** | | | | | | | | | | | | | | | |
| 1.3 (103 kw) | 2018.01- | 7DCT | F | L/R | Estate FWD H5H 450;H5H 470;H5H 490 | | GCO82418 | Outer Joint | | 25 | 35 | 52.5 | 88.5 | 61 | I |
| | 2018.01- | 7DCT | F | L | Estate FWD H5H 450;H5H 470;H5H 490 | | GCI82385 | Inner Joint | | 27 | 35 | 40 | 65 | 109.5 | |
| | 2018.01- | 7DCT | F | R | Estate FWD H5H 450;H5H 470;H5H 490 | | GCI84023 | Inner Joint | | 27 | 35 | 40 | 400 | 96.5 | |
| 1.3 (116 kw) | 2020.08- | 7DCT | F | L | Estate FWD H5H 450;H5H 470;H5H 490 | | GDS58219 | Drive Shaft | | 29 | 27 | 60 | 97 | 652 | |
| | 2020.08- | 7DCT | F | L | Estate FWD H5H 450;H5H 470;H5H 490 | | GCO82323 | Outer Joint | | 29 | 35 | 60 | 97 | 63 | I |
| | 2020.08- | 7DCT | F | L | Estate FWD H5H 450;H5H 470;H5H 490 | | GCI82385 | Inner Joint | | 27 | 35 | 40 | 65 | 109.5 | |
| 1.3 (117 kw) | 2018.07- | 6MT | F | L | Estate FWD H5H 470 | | GDS50608 | Drive Shaft | | 25 | 26 | 52.5 | 88.5 | 697 | |
| | 2018.07- | 6MT | F | R | Estate FWD H5H 470 | | GDS84119 | Drive Shaft | | 25 | 26 | 52.5 | 88.5 | 946 | |
| | 2018.07- | 6MT | F | L/R | Estate FWD H5H 470 | | GCO50162 | Outer Joint | | 25 | 23 | 52.5 | 88.5 | 60.5 | M |
| | 2018.07- | 6MT | F | L | Estate FWD H5H 470 | | GCI50146 | Inner Joint | | 26 | 23 | 40 | 64 | 104 | |
| | 2018.07- | 6MT | F | R | Estate FWD H5H 470 | | GCI82523 | Inner Joint | | 26 | 23 | 33 | 346 | 98 | |
| | 2018.07- | 7DCT | F | L | Estate FWD H5H 470 | | GDS58219 | Drive Shaft | | 29 | 27 | 60 | 97 | 652 | |
| | 2018.07- | 7DCT | F | L | Estate FWD H5H 470 | | GCO82323 | Outer Joint | | 29 | 35 | 60 | 97 | 63 | I |
| | 2018.07- | 7DCT | F | L | Estate FWD H5H 470 | | GCI82385 | Inner Joint | | 27 | 35 | 40 | 65 | 109.5 | |
| 1.3 (120 kw) | 2018.01- | 6MT | F | L | Estate FWD H5H 450;H5H 470;H5H 490 | | GDS50608 | Drive Shaft | | 25 | 26 | 52.5 | 88.5 | 697 | |
| | 2018.01- | 6MT | F | R | Estate FWD H5H 450;H5H 470;H5H 490 | | GDS84119 | Drive Shaft | | 25 | 26 | 52.5 | 88.5 | 946 | |
| | 2018.01- | 6MT | F | L/R | Estate FWD H5H 450;H5H 470;H5H 490 | | GCO50162 | Outer Joint | | 25 | 23 | 52.5 | 88.5 | 60.5 | M |
| | 2018.01- | 6MT | F | L | Estate FWD H5H 450;H5H 470;H5H 490 | | GCI50146 | Inner Joint | | 26 | 23 | 40 | 64 | 104 | |
| | 2018.01- | 6MT | F | R | Estate FWD H5H 450;H5H 470;H5H 490 | | GCI82523 | Inner Joint | | 26 | 23 | 33 | 346 | 98 | |
| | 2018.01- | 7DCT | F | L | Estate FWD H5H 450;H5H 470;H5H 490 | | GDS58219 | Drive Shaft | | 29 | 27 | 60 | 97 | 652 | |
| | 2018.01- | 7DCT | F | L | Estate FWD H5H 450;H5H 470;H5H 490 | | GCO82323 | Outer Joint | | 29 | 35 | 60 | 97 | 63 | I |
| | 2018.01- | 7DCT | F | L | Estate FWD H5H 450;H5H 470;H5H 490 | | GCI82385 | Inner Joint | | 27 | 35 | 40 | 65 | 109.5 | |
| 1.4 (55 kw) | 1999.03-2003.12 | 5MT | F | L | Estate FWD E7J626 | | GDS50009 | Drive Shaft | 44T | 21 | | 57 | 84.5 | 645 | |
| | 1999.03-2003.12 | 5MT | F | R | Estate FWD E7J626 | | GDS50327 | Drive Shaft | 44T | 21 | 23 | 57 | 84.5 | 740 | |
| | 1999.03-2003.12 | 5MT | F | L/R | Estate FWD E7J626 | | GCO50101 | Outer Joint | 44T | 21 | 30 | 52.2 | 85.5 | 59 | I |
| | 1999.03-2003.12 | MT | F | R | Estate FWD E7J626 | | GDS50173 | Drive Shaft | | 21 | 23 | 57 | 84.5 | 743 | |
| | 1999.03-2003.12 | | F | R | Estate FWD E7J626 | | GDS50021 | Drive Shaft | 44T | 21 | 23 | 57 | 84.5 | 750 | |
| 1.4 (70 kw) | 1999.03-2003.12 | 5MT | F | L | Estate FWD K4J714/K4J750 | | GDS50009 | Drive Shaft | 44T | 21 | | 57 | 84.5 | 645 | |
| | 1999.03-2003.12 | 5MT | F | R | Estate FWD K4J714/K4J750 | | GDS50327 | Drive Shaft | 44T | 21 | 23 | 57 | 84.5 | 740 | |
| | 1999.03-2003.12 | 5MT | F | L/R | Estate FWD K4J714/K4J750 | | GCO50076 | Outer Joint | 44T | 21 | 30 | 57 | 84.5 | 62 | M |
| | 1999.03-2003.12 | MT | F | R | Estate FWD K4J714/K4J750 | | GDS50173 | Drive Shaft | | 21 | 23 | 57 | 84.5 | 743 | |
| 1.4 (72 kw) | 2003.08-2009.07 | 5MT | F | L | Estate FWD K4J 730;K4J 740 | | GDS99070 | Drive Shaft | | 23 | 26 | 49 | 86 | 675 | |
| | 2003.08-2009.07 | 5MT | F | R | Estate FWD K4J 730;K4J 740 | | GDS99071 | Drive Shaft | | 23 | 26 | 49 | 86 | 911 | |
| | 2003.08-2009.07 | 5MT | F | L/R | Estate FWD K4J 730;K4J 740 | | GCO99085 | Outer Joint | | 23 | 30 | 49 | 86 | 59 | I |
| | 2003.08-2009.07 | MT | F | R | Estate FWD K4J 730;K4J 740 | | GCI99169 | Inner Joint | | 26 | 30 | 33 | 326 | 95 | |
| 1.4 (96 kw) | 2009.05-2015.08 | 6MT | F | R | Estate FWD H4J 700 | | GDS50604 | Drive Shaft | | 25 | 26 | 52.6 | 89 | 942 | |
| | 2009.05-2015.08 | MT | F | L/R | Estate FWD H4J 700 | | GCO99213 | Outer Joint | | 25 | 33 | 53 | 88 | 61.5 | I |
| | 2009.05-2015.08 | | F | L/R | Estate FWD H4J 700 | | GCO50157 | Outer Joint | | 25 | 33 | 52.6 | 89 | 60 | I |
| 1.5 (60 kw) | 2003.08-2006.05 | 5MT | F | L | Estate FWD K9K 722 | | GDS99070 | Drive Shaft | | 23 | 26 | 49 | 86 | 675 | |
| | 2003.08-2006.05 | 5MT | F | R | Estate FWD K9K 722 | | GDS99071 | Drive Shaft | | 23 | 26 | 49 | 86 | 911 | |
| | 2003.08-2006.05 | 5MT | F | L/R | Estate FWD K9K 722 | | GCO99085 | Outer Joint | | 23 | 30 | 49 | 86 | 59 | I |
| | 2003.08-2006.05 | MT | F | R | Estate FWD K9K 722 | | GCI99169 | Inner Joint | | 26 | 30 | 33 | 326 | 95 | |
| 1.5 (63 kw) | 2005.05-2009.07 | 5MT | F | L | Estate FWD K9K 724 | | GDS99070 | Drive Shaft | | 23 | 26 | 49 | 86 | 675 | |
| | 2005.05-2009.07 | 5MT | F | R | Estate FWD K9K 724 | | GDS99071 | Drive Shaft | | 23 | 26 | 49 | 86 | 911 | |
| | 2005.05-2009.07 | 5MT | F | L/R | Estate FWD K9K 724 | | GCO99085 | Outer Joint | | 23 | 30 | 49 | 86 | 59 | I |
| | 2005.05-2009.07 | MT | F | L/R | Estate FWD K9K 724 | | GCO99213 | Outer Joint | | 25 | 33 | 53 | 88 | 61.5 | I |
| | 2005.05-2009.07 | MT | F | R | Estate FWD K9K 724 | | GCI99169 | Inner Joint | | 26 | 30 | 33 | 326 | 95 | |
| | 2009.03-2015.08 | 5MT | F | L | Estate FWD K9K 830 | Date to:2012.02 | GDS50383 | Drive Shaft | | 25 | 26 | 52.7 | 88.5 | 688 | |
| | 2009.03-2015.08 | 5MT | F | L | Estate FWD K9K 830 | Date to:2012.02;Inner teeth of wheel side:33 | GDS50415 | Drive Shaft | | 25 | 26 | 52.6 | 89 | 704 | |
| | 2009.03-2015.08 | 5MT | F | L | Estate FWD K9K 830 | | GDS50426 | Drive Shaft | | 25 | 26 | 52.7 | 88.5 | 680 | |
| | 2009.03-2015.08 | 5MT | F | L | Estate FWD K9K 830 | Date to:2012.02;Inner teeth of wheel side:35 | GDS50498 | Drive Shaft | | 25 | 26 | 52.6 | 89 | 702 | |
| | 2009.03-2015.08 | 5MT | F | L/R | Estate FWD K9K 830 | | GCO50145 | Outer Joint | | 25 | 33 | 52.7 | 88.5 | 59.5 | I |
| | 2009.03-2015.08 | 5MT | F | L | Estate FWD K9K 830 | | GCI50070 | Inner Joint | | 26 | 33 | 40 | 64 | 106 | |
| | 2009.03-2015.08 | 5MT | F | L | Estate FWD K9K 830 | Date to:2012.02 | GCI50096 | Inner Joint | | 26 | 30 | 40 | 64 | 96 | |
| | 2009.03-2015.08 | 5MT | F | R | Estate FWD K9K 830 | | GCI50051 | Inner Joint | | 26 | 22 | 33 | 326 | 96 | |
| | 2009.03-2015.08 | MT | F | L/R | Estate FWD K9K 830 | Date from:2010.01 | GCO99213 | Outer Joint | | 25 | 33 | 53 | 88 | 61.5 | I |
| | 2009.03-2015.08 | | F | R | Estate FWD K9K 830 | | GDS50510 | Drive Shaft | | 25 | 26 | 52.4 | 88.5 | 929 | |
| | 2009.03-2015.08 | | F | L/R | Estate FWD K9K 830 | Date From:2012.03 | GCO50162 | Outer Joint | | 25 | 23 | 52.5 | 88.5 | 60.5 | M |
| 1.5 (66 kw) | 2009.05-2015.08 | 5MT | F | L | Estate FWD K9K 834 | | GDS50383 | Drive Shaft | | 25 | 26 | 52.7 | 88.5 | 688 | |
| | 2009.05-2015.08 | 5MT | F | L | Estate FWD K9K 834 | Date to:2012.02;Inner teeth of wheel side:33 | GDS50415 | Drive Shaft | | 25 | 26 | 52.6 | 89 | 704 | |
| | 2009.05-2015.08 | 5MT | F | L | Estate FWD K9K 834 | Date to:2012.02;Inner teeth of wheel side:35 | GDS50498 | Drive Shaft | | 25 | 26 | 52.6 | 89 | 702 | |
| | 2009.05-2015.08 | 5MT | F | L | Estate FWD K9K 834 | | GCI50096 | Inner Joint | | 26 | 30 | 40 | 64 | 96 | |
| | 2009.05-2015.08 | 5MT | F | R | Estate FWD K9K 834 | | GCI50051 | Inner Joint | | 26 | 22 | 33 | 326 | 96 | |
| | 2009.05-2015.08 | MT | F | L | Estate FWD K9K 834 | | GDS50426 | Drive Shaft | | 25 | 26 | 52.7 | 88.5 | 680 | |
| | 2009.05-2015.08 | MT | F | L/R | Estate FWD K9K 834 | | GCO99213 | Outer Joint | | 25 | 33 | 53 | 88 | 61.5 | I |

| | YEAR | TRANSM. | F/R | L/R | BODY STYLE & DRIVE TYPE & ENGINE | REMARKS | G-AP Ref. | PRODUCT | ABS | Technical Specifications A | B | C | H | L | P |
|---|---|---|---|---|---|---|---|---|---|---|---|---|---|---|---|
| **RENAULT** **Megane Estate/Break** | | | | | | | | | | | | | | | |
| 1.5 (66 kw) | 2009.05-2015.08 | | F | R | Estate FWD K9K 834 | | GDS50510 | Drive Shaft | | 25 | 26 | 52.4 | 88.5 | 929 | |
| | 2009.05-2015.08 | | F | L/R | Estate FWD K9K 834 | Date To:2012.02 | GCO50145 | Outer Joint | | 25 | 33 | 52.7 | 88.5 | 59.5 | I |
| | 2009.05-2015.08 | | F | L/R | Estate FWD K9K 834 | Date From:2012.03 | GCO50162 | Outer Joint | | 25 | 23 | 52.5 | 88.5 | 60.5 | M |
| | 2016.04- | 6MT | F | L | Estate FWD K9K 656 | | GDS50608 | Drive Shaft | | 25 | 26 | 52.5 | 88.5 | 697 | |
| | 2016.04- | 6MT | F | R | Estate FWD K9K 656 | | GDS50607 | Drive Shaft | | 25 | 26 | 52.5 | 88.5 | 945 | |
| | 2016.04- | 6MT | F | L/R | Estate FWD K9K 656 | | GCO50162 | Outer Joint | | 25 | 23 | 52.5 | 88.5 | 60.5 | M |
| | 2016.04- | 6MT | F | L | Estate FWD K9K 656 | | GCI50146 | Inner Joint | | 26 | 23 | 40 | 64 | 104 | |
| | 2016.04- | 6MT | F | R | Estate FWD K9K 656 | | GCI50145 | Inner Joint | | 26 | 23 | 33 | 330.5 | 98 | |
| 1.5 (70 kw) | 2013.11-2015.08 | 6MT | F | R | Estate FWD K9K 846 | Date from:2012.03 | GCI50051 | Inner Joint | | 26 | 22 | 33 | 326 | 96 | |
| | 2013.11-2015.08 | MT | F | L | Estate FWD K9K 846 | | GDS50426 | Drive Shaft | | 25 | 26 | 52.7 | 88.5 | 680 | |
| | 2013.11-2015.08 | MT | F | L/R | Estate FWD K9K 846 | | GCO50145 | Outer Joint | | 25 | 33 | 52.7 | 88.5 | 59.5 | I |
| | 2013.11-2015.08 | MT | F | L/R | Estate FWD K9K 846 | | GCO99213 | Outer Joint | | 25 | 33 | 53 | 88 | 61.5 | I |
| | 2013.11-2015.08 | MT | F | L | Estate FWD K9K 846 | | GCI50070 | Inner Joint | | 26 | 33 | 40 | 64 | 106 | |
| | 2013.11-2015.08 | | F | R | Estate FWD K9K 846 | Date From:2012.03 | GDS50510 | Drive Shaft | | 25 | 26 | 52.4 | 88.5 | 929 | |
| 1.5 (74 kw) | 2004.02-2006.03 | 4AT | F | L | Estate FWD K9K 728;K9K 729 | | GDS50405 | Drive Shaft | | 23 | 26 | 49 | 86 | 674 | |
| | 2004.02-2006.03 | 4AT | F | L | Estate FWD K9K 728;K9K 729 | | GDS99070 | Drive Shaft | | 23 | 26 | 49 | 86 | 675 | |
| | 2004.02-2006.03 | 5MT | F | L | Estate FWD K9K 728;K9K 729 | | GDS50516 | Drive Shaft | | 23 | 26 | 49 | 86 | 674 | |
| | 2004.02-2006.03 | 5MT | F | R | Estate FWD K9K 728;K9K 729 | | GDS99188 | Drive Shaft | | 23 | 26 | 49 | 86 | 916 | |
| | 2004.02-2006.03 | AT | F | R | Estate FWD K9K 728;K9K 729 | | GDS50440 | Drive Shaft | | 23 | 23 | 49 | 86 | 804 | |
| | 2004.02-2006.03 | MT | F | R | Estate FWD K9K 728;K9K 729 | | GDS99071 | Drive Shaft | | 23 | 26 | 49 | 86 | 911 | |
| | 2004.02-2006.03 | MT | F | L/R | Estate FWD K9K 728;K9K 729 | | GCO99085 | Outer Joint | | 23 | 30 | 49 | 86 | 59 | I |
| | 2004.02-2006.03 | MT | F | R | Estate FWD K9K 728;K9K 729 | | GCI99169 | Inner Joint | | 26 | 30 | 33 | 326 | 95 | |
| 1.5 (76 kw) | 2007.01-2009.07 | 6MT | F | L | Estate FWD K9K 734 | | GDS50402 | Drive Shaft | | 25 | 26 | 53 | 88 | 660 | |
| | 2007.01-2009.07 | 6MT | F | R | Estate FWD K9K 734 | | GDS50348 | Drive Shaft | | 25 | 26 | 53 | 88 | 905 | |
| | 2007.01-2009.07 | MT | F | L | Estate FWD K9K 734 | | GDS50405 | Drive Shaft | | 23 | 26 | 49 | 86 | 674 | |
| | 2007.01-2009.07 | MT | F | R | Estate FWD K9K 734 | | GDS99071 | Drive Shaft | | 23 | 26 | 49 | 86 | 911 | |
| | 2007.01-2009.07 | MT | F | L/R | Estate FWD K9K 734 | | GCO99085 | Outer Joint | | 23 | 30 | 49 | 86 | 59 | I |
| | 2007.01-2009.07 | MT | F | R | Estate FWD K9K 734 | | GCI99169 | Inner Joint | | 26 | 30 | 33 | 326 | 95 | |
| | 2007.01-2009.07 | | F | L | Estate FWD K9K 734 | for OE number:8200432515 | GDS50516 | Drive Shaft | | 23 | 26 | 49 | 86 | 674 | |
| | 2007.01-2009.07 | | F | R | Estate FWD K9K 734 | for OE number:8200379235 | GDS99188 | Drive Shaft | | 23 | 26 | 49 | 86 | 916 | |
| 1.5 (78 kw) | 2005.05-2008.06 | 6MT | F | L | Estate FWD K9K 732 | | GDS50402 | Drive Shaft | | 25 | 26 | 53 | 88 | 660 | |
| | 2005.05-2008.06 | 6MT | F | R | Estate FWD K9K 732 | | GDS50348 | Drive Shaft | | 25 | 26 | 53 | 88 | 905 | |
| | 2005.05-2008.06 | AT | F | L | Estate FWD K9K 732 | | GDS50255 | Drive Shaft | | 23 | 26 | 49 | 86 | 673 | |
| | 2005.05-2008.06 | AT | F | R | Estate FWD K9K 732 | | GDS50440 | Drive Shaft | | 23 | 23 | 49 | 86 | 804 | |
| | 2005.05-2008.06 | MT | F | L | Estate FWD K9K 732 | | GDS50350 | Drive Shaft | | 25 | 26 | 52.6 | 88 | 668.5 | |
| | 2005.05-2008.06 | MT | F | L | Estate FWD K9K 732 | | GDS50405 | Drive Shaft | | 23 | 26 | 49 | 86 | 674 | |
| | 2005.05-2008.06 | MT | F | R | Estate FWD K9K 732 | | GDS99071 | Drive Shaft | | 23 | 26 | 49 | 86 | 911 | |
| | 2005.05-2008.06 | MT | F | L/R | Estate FWD K9K 732 | | GCO99085 | Outer Joint | | 23 | 30 | 49 | 86 | 59 | I |
| | 2005.05-2008.06 | | F | L | Estate FWD K9K 732 | for OE number:8200432515;For Engine code:K9K728 | GDS50516 | Drive Shaft | | 23 | 26 | 49 | 86 | 674 | |
| | 2009.02-2015.08 | 6MT | F | L | Estate FWD K9K 832;K9K 836;K9K 846 | | GDS50426 | Drive Shaft | | 25 | 26 | 52.7 | 88.5 | 680 | |
| | 2009.02-2015.08 | 6MT | F | R | Estate FWD K9K 832;K9K 836;K9K 846 | Date to:2012.02 | GDS50425 | Drive Shaft | | 25 | 26 | 52.7 | 88.5 | 931 | |
| | 2009.02-2015.08 | 6MT | F | R | Estate FWD K9K 832;K9K 836;K9K 846 | Date From:2012.03 | GDS50510 | Drive Shaft | | 25 | 26 | 52.4 | 88.5 | 929 | |
| | 2009.02-2015.08 | 6MT | F | L | Estate FWD K9K 832;K9K 836;K9K 846 | | GCI50070 | Inner Joint | | 26 | 33 | 40 | 64 | 106 | |
| | 2009.02-2015.08 | 6MT | F | R | Estate FWD K9K 832;K9K 836;K9K 846 | Date from:2012.03 | GCI50051 | Inner Joint | | 26 | 22 | 33 | 326 | 96 | |
| | 2009.02-2015.08 | MT | F | L/R | Estate FWD K9K 832;K9K 836;K9K 846 | | GCO99213 | Outer Joint | | 25 | 33 | 53 | 88 | 61.5 | I |
| | 2009.02-2015.08 | | F | L/R | Estate FWD K9K 832;K9K 836;K9K 846 | Date From:2012.03 | GCO50162 | Outer Joint | | 25 | 23 | 52.5 | 88.5 | 60.5 | M |
| | 2009.02-2015.08 | | F | | Estate FWD K9K 832;K9K 836;K9K 846 | | GCO50145 | Outer Joint | | 25 | 33 | 52.7 | 88.5 | 59.5 | I |
| 1.5 (81 kw) | 2009.02-2015.08 | 6MT | F | R | Estate FWD K9K 836;K9K 846;K9K 837;K9K 636;K9K 656;K9K 657 | Date from:2012.03 | GDS50510 | Drive Shaft | | 25 | 26 | 52.4 | 88.5 | 929 | |
| | 2009.02-2015.08 | 6MT | F | L/R | Estate FWD K9K 836;K9K 846;K9K 837;K9K 636;K9K 656;K9K 657 | Date from:2012.03 | GCO50162 | Outer Joint | | 25 | 23 | 52.5 | 88.5 | 60.5 | M |
| | 2009.02-2015.08 | AT | F | L | Estate FWD K9K 836;K9K 846;K9K 837;K9K 636;K9K 656;K9K 657 | | GDS50535 | Drive Shaft | | 25 | 34 | 52.7 | 88.5 | 632 | |
| | 2009.02-2015.08 | AT | F | R | Estate FWD K9K 836;K9K 846;K9K 837;K9K 636;K9K 656;K9K 657 | | GDS50536 | Drive Shaft | | 25 | 34 | 52.6 | 89 | 984 | |
| | 2009.02-2015.08 | MT | F | L | Estate FWD K9K 836;K9K 846;K9K 837;K9K 636;K9K 656;K9K 657 | | GDS50426 | Drive Shaft | | 25 | 26 | 52.7 | 88.5 | 680 | |
| | 2009.02-2015.08 | MT | F | R | Estate FWD K9K 836;K9K 846;K9K 837;K9K 636;K9K 656;K9K 657 | Date to:2012.02 | GDS50425 | Drive Shaft | | 25 | 26 | 52.7 | 88.5 | 931 | |
| | 2009.02-2015.08 | MT | F | L/R | Estate FWD K9K 836;K9K 846;K9K 837;K9K 636;K9K 656;K9K 657 | | GCO99213 | Outer Joint | | 25 | 33 | 53 | 88 | 61.5 | I |
| | 2009.02-2015.08 | | F | R | Estate FWD K9K 836;K9K 846;K9K 837;K9K 636;K9K 656;K9K 657 | Date from:2010.06 | GCO50148 | Outer Joint | | 25 | 35 | 52.6 | 89 | 60 | I |
| | 2009.02-2015.08 | | F | L/R | Estate FWD K9K 836;K9K 846;K9K 837;K9K 636;K9K 656;K9K 657 | | GCO50145 | Outer Joint | | 25 | 33 | 52.7 | 88.5 | 59.5 | I |
| | 2016.04- | 6AT | F | L | Estate FWD K9K 656;K9K 657 | | GDS50609 | Drive Shaft | | 25 | 34 | 52.7 | 88.5 | 649 | |
| | 2016.04- | 6DCT | F | R | Estate FWD K9K 656;K9K 657 | | GDS50610 | Drive Shaft | | 25 | 34 | 52.7 | 88.5 | 1000 | |
| | 2016.04- | 6DCT | F | L | Estate FWD K9K 656;K9K 657 | | GCO50145 | Outer Joint | | 25 | 33 | 52.7 | 88.5 | 59.5 | I |
| | 2016.04- | 6DCT | F | L | Estate FWD K9K 656;K9K 657 | | GCI50129 | Inner Joint | | 34 | 33 | 40 | 54 | 106 | |
| | 2016.04- | 6MT | F | L | Estate FWD K9K 656;K9K 657 | | GDS50608 | Drive Shaft | | 25 | 26 | 52.5 | 88.5 | 697 | |
| | 2016.04- | 6MT | F | R | Estate FWD K9K 656;K9K 657 | | GDS50607 | Drive Shaft | | 25 | 26 | 52.5 | 88.5 | 945 | |
| | 2016.04- | 6MT | F | L/R | Estate FWD K9K 656;K9K 657 | | GCO50162 | Outer Joint | | 25 | 23 | 52.5 | 88.5 | 60.5 | M |
| | 2016.04- | 6MT | F | L | Estate FWD K9K 656;K9K 657 | | GCI50146 | Inner Joint | | 26 | 23 | 40 | 64 | 104 | |
| | 2016.04- | 6MT | F | R | Estate FWD K9K 656;K9K 657 | | GCI50145 | Inner Joint | | 26 | 23 | 33 | 330.5 | 98 | |

| | YEAR | TRANSM. | F/R | L/R | BODY STYLE & DRIVE TYPE & ENGINE | REMARKS | G-AP Ref. | PRODUCT | ABS | Technical Specifications A | B | C | H | L | P |
|---|---|---|---|---|---|---|---|---|---|---|---|---|---|---|---|
| **RENAULT** **Megane Estate/Break** | | | | | | | | | | | | | | | |
| 1.5 (85 kw) | 2018.08- | 7DCT | F | L | Estate FWD K9K 872;K9K 873;K9K 876;K9K 877 | | GDS50609 | Drive Shaft | | 25 | 34 | 52.7 | 88.5 | 649 | |
| | 2018.08- | 7DCT | F | R | Estate FWD K9K 872;K9K 873;K9K 876;K9K 877 | | GDS50610 | Drive Shaft | | 25 | 34 | 52.7 | 88.5 | 1000 | |
| | 2018.08- | 7DCT | F | L/R | Estate FWD K9K 872;K9K 873;K9K 876;K9K 877 | | GCO50145 | Outer Joint | | 25 | 33 | 52.7 | 88.5 | 59.5 | I |
| | 2018.08- | 7DCT | F | L | Estate FWD K9K 872;K9K 873;K9K 876;K9K 877 | | GCI50129 | Inner Joint | | 34 | 33 | 40 | 54 | 106 | |
| | 2018.08- | 7DCT | F | R | Estate FWD K9K 872;K9K 873;K9K 876;K9K 877 | | GCI50133 | Inner Joint | | 34 | 33 | 40 | 380.5 | 86.5 | |
| 1.6 (66 kw) | 1999.03-2003.12 | 5MT | F | L | Estate FWD K7M702 | | GDS50009 | Drive Shaft | 44T | 21 | | 57 | 84.5 | 645 | |
| | 1999.03-2003.12 | AT | F | R | Estate FWD K7M702 | | GCI50008 | Inner Joint | | 23 | 30 | 36.3 | | 120.7 | |
| | 1999.03-2003.12 | AT/5MT | F | R | Estate FWD K7M702 | | GDS50327 | Drive Shaft | 44T | 21 | 23 | 57 | 84.5 | 740 | |
| | 1999.03-2003.12 | MT | F | R | Estate FWD K7M702 | | GDS50173 | Drive Shaft | | 21 | 23 | 57 | 84.5 | 743 | |
| | 1999.03-2003.12 | MT | F | L/R | Estate FWD K7M702 | | GCO50101 | Outer Joint | 44T | 21 | 30 | 52.2 | 85.5 | 59 | I |
| 1.6 (74 kw) | 2009.05-2015.08 | 5MT | F | L | Estate FWD K4M 848 | Date to:2012.02 | GDS50383 | Drive Shaft | | 25 | 26 | 52.7 | 88.5 | 688 | |
| | 2009.05-2015.08 | 5MT | F | L | Estate FWD K4M 848 | Date to:2012.02;Inner teeth of wheel side:33 | GDS50415 | Drive Shaft | | 25 | 26 | 52.6 | 89 | 704 | |
| | 2009.05-2015.08 | 5MT | F | L | Estate FWD K4M 848 | | GDS50426 | Drive Shaft | | 25 | 26 | 52.7 | 88.5 | 680 | |
| | 2009.05-2015.08 | 5MT | F | L | Estate FWD K4M 848 | Date to:2012.02;Inner teeth of wheel side:35 | GDS50498 | Drive Shaft | | 25 | 26 | 52.6 | 89 | 702 | |
| | 2009.05-2015.08 | 5MT | F | L | Estate FWD K4M 848 | | GCI50070 | Inner Joint | | 26 | 33 | 40 | 64 | 106 | |
| | 2009.05-2015.08 | 5MT | F | L | Estate FWD K4M 848 | Date to:2012.02 | GCI50096 | Inner Joint | | 26 | 30 | 40 | 64 | 96 | |
| | 2009.05-2015.08 | 5MT | F | R | Estate FWD K4M 848 | | GCI50051 | Inner Joint | | 26 | 22 | 33 | 326 | 96 | |
| | 2009.05-2015.08 | 5MT/6MT | F | L/R | Estate FWD K4M 848 | | GCO99213 | Outer Joint | | 25 | 33 | 53 | 88 | 61.5 | I |
| | 2009.05-2015.08 | MT | F | L/R | Estate FWD K4M 848 | | GCO50162 | Outer Joint | | 25 | 23 | 52.5 | 88.5 | 60.5 | M |
| | 2009.05-2015.08 | | F | R | Estate FWD K4M 848 | | GDS50510 | Drive Shaft | | 25 | 26 | 52.4 | 88.5 | 929 | |
| | 2009.05-2015.08 | | F | L/R | Estate FWD K4M 848 | Date To:2012.02 | GCO50145 | Outer Joint | | 25 | 33 | 52.7 | 88.5 | 59.5 | I |
| 1.6 (75 kw) | 2005.05-2009.07 | 5MT | F | L | Estate FWD K4M 768 | | GDS99070 | Drive Shaft | | 23 | 26 | 49 | 86 | 675 | |
| | 2005.05-2009.07 | 5MT | F | R | Estate FWD K4M 768 | | GDS99071 | Drive Shaft | | 23 | 26 | 49 | 86 | 911 | |
| | 2005.05-2009.07 | 5MT | F | L | Estate FWD K4M 768 | | GCI50048 | Inner Joint | | 26 | 30 | 40 | 64 | 121 | |
| | 2005.05-2009.07 | 5MT | F | R | Estate FWD K4M 768 | | GCI99169 | Inner Joint | | 26 | 30 | 33 | 326 | 95 | |
| 1.6 (77 kw) | 2005.05-2009.07 | 5MT | F | L | Estate FWD K4M 762 | | GDS99070 | Drive Shaft | | 23 | 26 | 49 | 86 | 675 | |
| | 2005.05-2009.07 | 5MT | F | R | Estate FWD K4M 762 | | GDS99071 | Drive Shaft | | 23 | 26 | 49 | 86 | 911 | |
| | 2005.05-2009.07 | MT | F | R | Estate FWD K4M 762 | | GCI99169 | Inner Joint | | 26 | 30 | 33 | 326 | 95 | |
| | 2008.02-2009.07 | 5MT | F | L | Estate FWD K4M 856 | | GDS99070 | Drive Shaft | | 23 | 26 | 49 | 86 | 675 | |
| | 2008.02-2009.07 | 5MT | F | R | Estate FWD K4M 856 | | GDS99071 | Drive Shaft | | 23 | 26 | 49 | 86 | 911 | |
| | 2008.02-2009.07 | MT | F | L/R | Estate FWD K4M 856 | | GCO99085 | Outer Joint | | 23 | 30 | 49 | 86 | 59 | I |
| | 2008.02-2009.07 | MT | F | R | Estate FWD K4M 856 | | GCI99169 | Inner Joint | | 26 | 30 | 33 | 326 | 95 | |
| 1.6 (79 kw) | 1999.03-2003.12 | 4AT/5MT | F | L | Estate FWD K4M700/K4M701/K4M704/K4M708/K4M709 | For Engine code:K4M708 | GDS50009 | Drive Shaft | 44T | 21 | | 57 | 84.5 | 645 | |
| | 1999.03-2003.12 | 4AT/5MT | F | L | Estate FWD K4M700/K4M701/K4M704/K4M708/K4M709 | For Engine code:K4M709 | GDS50253 | Drive Shaft | 44T | 23 | 26 | 57.5 | 86.5 | 637 | |
| | 1999.03-2003.12 | 4AT/5MT | F | R | Estate FWD K4M700/K4M701/K4M704/K4M708/K4M709 | For Engine code:K4M708;Inner teeth of tranm.side:22 | GDS50038 | Drive Shaft | 44T | 21 | 23 | 52.2 | 85.5 | 752 | |
| | 1999.03-2003.12 | 4AT/5MT | F | R | Estate FWD K4M700/K4M701/K4M704/K4M708/K4M709 | For Engine code:K4M709 | GDS50323 | Drive Shaft | 44T | 23 | 23 | 57.5 | 86.5 | 778 | |
| | 1999.03-2003.12 | 4AT/5MT | F | R | Estate FWD K4M700/K4M701/K4M704/K4M708/K4M709 | Inner teeth of wheel side:28 | GCO50066 | Outer Joint | 44T | 21 | 28 | 52.5 | 85 | 51 | I |
| | 1999.03-2003.12 | 4AT/5MT | F | R | Estate FWD K4M700/K4M701/K4M704/K4M708/K4M709 | For Engine code:K4M708;GrooveType:Inner;Inner teeth of wheel side:30 | GCO50101 | Outer Joint | 44T | 21 | 30 | 52.2 | 85.5 | 59 | I |
| | 1999.03-2003.12 | 4AT/5MT | F | L/R | Estate FWD K4M700/K4M701/K4M704/K4M708/K4M709 | For Engine code:K4M709 | GCO50069 | Outer Joint | 44T | 23 | 30 | 57.5 | 86.5 | 58.5 | I |
| | 1999.03-2003.12 | 4AT/5MT | F | L/R | Estate FWD K4M700/K4M701/K4M704/K4M708/K4M709 | For Engine code:K4M708;GrooveType:Middle;Inner teeth of wheel side:30 | GCO50076 | Outer Joint | 44T | 21 | 30 | 57 | 84.5 | 62 | M |
| | 1999.03-2003.12 | MT | F | L | Estate FWD K4M700/K4M701/K4M704/K4M708/K4M709 | | GDS50055 | Drive Shaft | | 21 | 30 | 50 | 84 | 650 | |
| | 1999.03-2003.12 | MT | F | R | Estate FWD K4M700/K4M701/K4M704/K4M708/K4M709 | Inner teeth of tranm.side:22 | GDS50173 | Drive Shaft | | 21 | 23 | 57 | 84.5 | 743 | |
| 1.6 (80 kw) | 1999.03-2000.09 | 5MT | F | L | Estate FWD K4M712 | | GDS50009 | Drive Shaft | 44T | 21 | | 57 | 84.5 | 645 | |
| | 1999.03-2000.09 | | F | R | Estate FWD K4M712 | | GDS50038 | Drive Shaft | 44T | 21 | 23 | 52.2 | 85.5 | 752 | |
| | 1999.03-2000.09 | | F | R | Estate FWD K4M712 | | GCO50066 | Outer Joint | 44T | 21 | 28 | 52.5 | 85 | 51 | I |
| 1.6 (81 kw) | 2006.05-2011.10 | 5MT | F | L | Estate FWD K4M 762 | | GDS99070 | Drive Shaft | | 23 | 26 | 49 | 86 | 675 | |
| | 2006.05-2011.10 | 5MT | F | R | Estate FWD K4M 762 | | GDS99071 | Drive Shaft | | 23 | 26 | 49 | 86 | 911 | |
| | 2006.05-2011.10 | 5MT | F | L/R | Estate FWD K4M 762 | | GCO99085 | Outer Joint | | 23 | 30 | 49 | 86 | 59 | I |
| | 2006.05-2011.10 | 5MT | F | L | Estate FWD K4M 762 | | GCI50048 | Inner Joint | | 26 | 30 | 40 | 64 | 121 | |
| | 2006.05-2011.10 | 5MT | F | R | Estate FWD K4M 762 | | GCI99169 | Inner Joint | | 26 | 30 | 33 | 326 | 95 | |
| | 2008.11-2015.08 | 5MT/6MT | F | L/R | Estate FWD K4M 866 | | GCO99213 | Outer Joint | | 25 | 33 | 53 | 88 | 61.5 | I |
| | 2008.11-2015.08 | 6MT | F | L | Estate FWD K4M 866 | | GDS50426 | Drive Shaft | | 25 | 26 | 52.7 | 88.5 | 680 | |
| | 2008.11-2015.08 | 6MT | F | R | Estate FWD K4M 866 | | GDS50510 | Drive Shaft | | 25 | 26 | 52.4 | 88.5 | 929 | |
| | 2008.11-2015.08 | 6MT | F | L | Estate FWD K4M 866 | | GCI50070 | Inner Joint | | 26 | 33 | 40 | 64 | 106 | |
| | 2008.11-2015.08 | 6MT | F | R | Estate FWD K4M 866 | | GCI50051 | Inner Joint | | 26 | 22 | 33 | 326 | 96 | |
| | 2008.11-2015.08 | MT | F | L/R | Estate FWD K4M 866 | Date from:2009.01 | GCO50162 | Outer Joint | | 25 | 23 | 52.5 | 88.5 | 60.5 | M |
| | 2009.05-2015.08 | 5MT/6MT | F | L/R | Estate FWD K4M 866;K4M 858 | | GCO99213 | Outer Joint | | 25 | 33 | 53 | 88 | 61.5 | I |
| | 2009.05-2015.08 | MT | F | L | Estate FWD K4M 866;K4M 858 | | GDS50426 | Drive Shaft | | 25 | 26 | 52.7 | 88.5 | 680 | |
| | 2009.05-2015.08 | MT | F | R | Estate FWD K4M 866;K4M 858 | | GDS50510 | Drive Shaft | | 25 | 26 | 52.4 | 88.5 | 929 | |
| | 2009.05-2015.08 | MT | F | L/R | Estate FWD K4M 866;K4M 858 | | GCO50162 | Outer Joint | | 25 | 23 | 52.5 | 88.5 | 60.5 | M |
| | 2009.05-2015.08 | MT | F | L | Estate FWD K4M 866;K4M 858 | | GCI50070 | Inner Joint | | 26 | 33 | 40 | 64 | 106 | |
| | 2009.05-2015.08 | MT | F | R | Estate FWD K4M 866;K4M 858 | | GCI50051 | Inner Joint | | 26 | 22 | 33 | 326 | 96 | |
| 1.6 (82 kw) | 2006.01-2009.08 | 5MT | F | L | Estate FWD K4M 760 | | GDS99070 | Drive Shaft | | 23 | 26 | 49 | 86 | 675 | |
| | 2006.01-2009.08 | 5MT | F | R | Estate FWD K4M 760 | | GDS99071 | Drive Shaft | | 23 | 26 | 49 | 86 | 911 | |
| | 2006.01-2009.08 | 5MT | F | L/R | Estate FWD K4M 760 | | GCO99085 | Outer Joint | | 23 | 30 | 49 | 86 | 59 | I |

| | YEAR | TRANSM. | F/R | L/R | BODY STYLE & DRIVE TYPE & ENGINE | REMARKS | G-AP Ref. | PRODUCT | ABS | Technical Specifications A | B | C | H | L | P |
|---|---|---|---|---|---|---|---|---|---|---|---|---|---|---|---|
| **RENAULT** **Megane Estate/Break** | | | | | | | | | | | | | | | |
| 1.6 (82 kw) | 2006.01-2009.08 | 5MT | F | L | Estate FWD K4M 760 | | GCI50048 | Inner Joint | | 26 | 30 | 40 | 64 | 121 | |
| | 2006.01-2009.08 | 5MT | F | R | Estate FWD K4M 760 | | GCI99169 | Inner Joint | | 26 | 30 | 33 | 326 | 95 | |
| | 2006.01-2009.08 | 5MT | F | L | Estate FWD K4M 760;K4M 761;K4M 812;K4M 813 | | GDS99070 | Drive Shaft | | 23 | 26 | 49 | 86 | 675 | |
| | 2006.01-2009.08 | 5MT | F | R | Estate FWD K4M 760;K4M 761;K4M 812;K4M 813 | | GDS99071 | Drive Shaft | | 23 | 26 | 49 | 86 | 911 | |
| | 2006.01-2009.08 | AT | F | L | Estate FWD K4M 760;K4M 761;K4M 812;K4M 813 | Date to:2008.12 | GDS50255 | Drive Shaft | | 23 | 26 | 49 | 86 | 673 | |
| | 2006.01-2009.08 | AT | F | R | Estate FWD K4M 760;K4M 761;K4M 812;K4M 813 | Date to:2008.12 | GDS50440 | Drive Shaft | | 23 | 23 | 49 | 86 | 804 | |
| | 2006.01-2009.08 | AT/MT | F | L/R | Estate FWD K4M 760;K4M 761;K4M 812;K4M 813 | Date to:2008.12 | GCO99085 | Outer Joint | | 23 | 30 | 49 | 86 | 59 | I |
| | 2006.01-2009.08 | MT | F | R | Estate FWD K4M 760;K4M 761;K4M 812;K4M 813 | Date to:2008.06 | GCI99169 | Inner Joint | | 26 | 30 | 33 | 326 | 95 | |
| 1.6 (83 kw) | 2003.08-2009.07 | 4AT | F | L | Estate FWD K4M 760;K4M 761 | | GDS50255 | Drive Shaft | | 23 | 26 | 49 | 86 | 673 | |
| | 2003.08-2009.07 | 4AT | F | R | Estate FWD K4M 760;K4M 761 | | GDS50440 | Drive Shaft | | 23 | 23 | 49 | 86 | 804 | |
| | 2003.08-2009.07 | 5MT | F | L | Estate FWD K4M 760;K4M 761 | | GDS99070 | Drive Shaft | | 23 | 26 | 49 | 86 | 675 | |
| | 2003.08-2009.07 | 5MT | F | R | Estate FWD K4M 760;K4M 761 | | GDS99071 | Drive Shaft | | 23 | 26 | 49 | 86 | 911 | |
| | 2003.08-2009.07 | AT/MT | F | L/R | Estate FWD K4M 760;K4M 761 | | GCO99085 | Outer Joint | | 23 | 30 | 49 | 86 | 59 | I |
| | 2003.08-2009.07 | MT | F | R | Estate FWD K4M 760;K4M 761 | | GCI99169 | Inner Joint | | 26 | 30 | 33 | 326 | 95 | |
| 1.6 (84 kw) | 2016.04- | 5MT | F | L | Estate FWD H4M 738 | | GDS83185 | Drive Shaft | | 25 | 26 | 52.4 | 88.5 | 700 | |
| | 2016.04- | 5MT | F | R | Estate FWD H4M 738 | | GDS83184 | Drive Shaft | | 25 | 26 | 52.4 | 88.5 | 942 | |
| | 2016.04- | 5MT | F | L/R | Estate FWD H4M 738 | | GCO82331 | Outer Joint | | 25 | 22 | 52.4 | 88.5 | 55 | I |
| | 2016.04- | 5MT | F | L | Estate FWD H4M 738 | | GCI50107 | Inner Joint | | 26 | 21 | 40 | 64 | 105.5 | |
| | 2016.04- | 5MT | F | R | Estate FWD H4M 738 | | GCI81808 | Inner Joint | | 26 | 21 | 33 | 330 | 92 | |
| 1.6 (96 kw) | 2011.04-2015.08 | 6MT | F | R | Estate FWD R9M 402;R9M 404;R9M 414 | | GDS50427 | Drive Shaft | | 25 | 39 | 52.6 | 89 | 953 | |
| | 2011.04-2015.08 | 6MT | F | R | Estate FWD R9M 402;R9M 404;R9M 414 | | GCO50157 | Outer Joint | | 25 | 33 | 52.6 | 89 | 60 | I |
| | 2011.04-2015.08 | 6MT | F | R | Estate FWD R9M 402;R9M 404;R9M 414 | | GCI81351 | Inner Joint | | 39 | 33 | 33 | 352.5 | 82.5 | |
| | 2011.04-2015.08 | MT | F | L | Estate FWD R9M 402;R9M 404;R9M 414 | | GDS50428 | Drive Shaft | | 25 | 39 | 52.6 | 89 | 656 | |
| | 2011.04-2015.08 | MT | F | L/R | Estate FWD R9M 402;R9M 404;R9M 414 | | GCO99213 | Outer Joint | | 25 | 33 | 53 | 88 | 61.5 | I |
| | 2011.04-2015.08 | MT | F | L | Estate FWD R9M 402;R9M 404;R9M 414 | | GCI81352 | Inner Joint | | 39 | 33 | 39 | 65 | 106 | |
| | 2016.04- | 6MT | F | L | Estate FWD R9M 409 | | GDS57389 | Drive Shaft | | 29 | 39 | 60 | 97 | 681 | |
| | 2016.04- | 6MT | F | R | Estate FWD R9M 409 | | GDS57390 | Drive Shaft | | 29 | 39 | 60 | 97 | 978 | |
| | 2016.04- | 6MT | F | L/R | Estate FWD R9M 409 | | GCO82323 | Outer Joint | | 29 | 35 | 60 | 97 | 63 | I |
| | 2016.04- | 6MT | F | L | Estate FWD R9M 409 | | GCI81352 | Inner Joint | | 39 | 33 | 39 | 65 | 106 | |
| | 2016.04- | 6MT | F | R | Estate FWD R9M 409 | | GCI83638 | Inner Joint | | 39 | 33 | 33 | 356 | 86 | |
| 1.6 (120 kw) | 2016.04- | 6AT | F | L | Estate FWD R9M 452 | | GDS83832 | Drive Shaft | | 29 | 28 | 60 | 95.5 | 676 | |
| | 2016.04- | 6AT | F | R | Estate FWD R9M 452 | | GDS83831 | Drive Shaft | | 29 | 28 | 60 | 95.5 | 963 | |
| | 2016.04- | 6AT | F | L/R | Estate FWD R9M 452 | | GCO82492 | Outer Joint | | 29 | 36 | 60 | 95.5 | 64.5 | I |
| | 2016.04- | 6AT | F | L | Estate FWD R9M 452 | | GCI82157 | Inner Joint | | 28 | 35 | 33.85 | 78.5 | 85.5 | |
| | 2016.04- | 6AT | F | R | Estate FWD R9M 452 | | GCI82158 | Inner Joint | | 28 | 35 | 33.85 | 353.5 | 93.5 | |
| 1.7 (110 kw) | 2019.02- | 6AT | F | L | Estate FWD R9N 401 | | GDS83832 | Drive Shaft | | 29 | 28 | 60 | 95.5 | 676 | |
| | 2019.02- | 6AT | F | R | Estate FWD R9N 401 | | GDS83831 | Drive Shaft | | 29 | 28 | 60 | 95.5 | 963 | |
| | 2019.02- | 6AT | F | L/R | Estate FWD R9N 401 | | GCO82492 | Outer Joint | | 29 | 36 | 60 | 95.5 | 64.5 | I |
| | 2019.02- | 6AT | F | L | Estate FWD R9N 401 | | GCI82157 | Inner Joint | | 28 | 35 | 33.85 | 78.5 | 85.5 | |
| | 2019.02- | 6AT | F | R | Estate FWD R9N 401 | | GCI82158 | Inner Joint | | 28 | 35 | 33.85 | 353.5 | 93.5 | |
| 1.8 (85 kw) | 2000.10-2002.08 | 5MT | F | L | Estate FWD F4P720/F4P722 | | GDS50160 | Drive Shaft | 44T | 23 | | 57 | 87 | 656.5 | |
| | 2000.10-2002.08 | 5MT | F | R | Estate FWD F4P720/F4P722 | | GDS50313 | Drive Shaft | 44T | 23 | 23 | 57.5 | 86.5 | 750 | |
| | 2000.10-2002.08 | AT/MT | F | L/R | Estate FWD F4P720/F4P722 | | GCO50058 | Outer Joint | 44T | 23 | 35 | 57 | 87 | 71 | I |
| | 2000.10-2002.08 | MT | F | R | Estate FWD F4P720/F4P722 | | GDS50156 | Drive Shaft | 44T | 23 | 23 | 57.5 | 86.5 | 746.5 | |
| | 2000.10-2002.08 | MT | F | R | Estate FWD F4P720/F4P722 | | GCI99131 | Inner Joint | | 23 | 28 | | 182.8 | 86 | |
| 1.9 (47 kw) | 1999.02-2001.05 | 5MT | F | L | Estate FWD F8Q622/F8Q790 | | GDS50009 | Drive Shaft | 44T | 21 | | 57 | 84.5 | 645 | |
| | 1999.02-2001.05 | 5MT | F | R | Estate FWD F8Q622/F8Q790 | | GDS50327 | Drive Shaft | 44T | 21 | 23 | 57 | 84.5 | 740 | |
| | 1999.02-2001.05 | 5MT | F | L/R | Estate FWD F8Q622/F8Q790 | | GCO50101 | Outer Joint | 44T | 21 | 30 | 52.2 | 85.5 | 59 | I |
| | 1999.02-2001.05 | MT | F | R | Estate FWD F8Q622/F8Q790 | | GDS50173 | Drive Shaft | | 21 | 23 | 57 | 84.5 | 743 | |
| | 1999.02-2001.05 | | F | R | Estate FWD F8Q622/F8Q790 | | GDS50021 | Drive Shaft | 44T | 21 | 23 | 57 | 84.5 | 750 | |
| 1.9 (59 kw) | 2001.02-2003.08 | 5MT | F | L | Estate FWD F9Q738/F9Q744 | | GDS50311 | Drive Shaft | 44T | 23 | 30 | 56 | 82 | 650 | |
| | 2001.02-2003.08 | 5MT | F | R | Estate FWD F9Q738/F9Q744 | | GDS50313 | Drive Shaft | 44T | 23 | 23 | 57.5 | 86.5 | 750 | |
| | 2001.02-2003.08 | 5MT | F | R | Estate FWD F9Q738/F9Q744 | | GCI99131 | Inner Joint | | 23 | 28 | | 182.8 | 86 | |
| | 2001.02-2003.08 | AT/MT | F | L/R | Estate FWD F9Q738/F9Q744 | | GCO50069 | Outer Joint | 44T | 23 | 30 | 57.5 | 86.5 | 58.5 | I |
| | 2001.02-2003.08 | MT | F | R | Estate FWD F9Q738/F9Q744 | | GDS50156 | Drive Shaft | 44T | 23 | 23 | 57.5 | 86.5 | 746.5 | |
| | 2001.02-2003.08 | MT | F | R | Estate FWD F9Q738/F9Q744 | | GDS99076 | Drive Shaft | 44T | 23 | 23 | 56.2 | 83.5 | 742.5 | |
| | 2001.02-2003.08 | | F | L | Estate FWD F9Q738/F9Q744 | | GCO50058 | Outer Joint | 44T | 23 | 35 | 57 | 87 | 71 | I |
| 1.9 (66 kw) | 2004.04-2005.12 | 6MT | F | L | Estate FWD F9Q 808 | | GCI99150 | Inner Joint | | 39 | 32 | 39 | 66 | 104.5 | |
| | 2004.04-2005.12 | 6MT | F | R | Estate FWD F9Q 808 | | GCI99160 | Inner Joint | | 39 | 32 | 32.95 | 352 | 90 | |
| | 2004.04-2005.12 | MT | F | L | Estate FWD F9Q 808 | | GDS99201 | Drive Shaft | | 25 | 39 | 53 | 88 | 638 | |
| | 2004.04-2005.12 | MT | F | R | Estate FWD F9Q 808 | | GDS50400 | Drive Shaft | | 25 | 39 | 53 | 88 | 932 | |
| | 2004.04-2005.12 | MT | F | L/R | Estate FWD F9Q 808 | | GCO99213 | Outer Joint | | 25 | 33 | 53 | 88 | 61.5 | I |
| 1.9 (68 kw) | 2004.03-2007.02 | 6MT | F | L | Estate FWD F9Q 808 | | GDS99201 | Drive Shaft | | 25 | 39 | 53 | 88 | 638 | |
| | 2004.03-2007.02 | 6MT | F | R | Estate FWD F9Q 808 | | GDS50400 | Drive Shaft | | 25 | 39 | 53 | 88 | 932 | |
| | 2004.03-2007.02 | 6MT | F | L/R | Estate FWD F9Q 808 | | GCO99213 | Outer Joint | | 25 | 33 | 53 | 88 | 61.5 | I |

| | YEAR | TRANSM. | F/R | L/R | BODY STYLE & DRIVE TYPE & ENGINE | REMARKS | G-AP Ref. | PRODUCT | ABS | Technical Specifications A | B | C | H | L | P |
|---|---|---|---|---|---|---|---|---|---|---|---|---|---|---|---|
| **RENAULT** **Megane Estate/Break** | | | | | | | | | | | | | | | |
| 1.9 (68 kw) | 2004.03-2007.02 | MT | F | L | Estate FWD F9Q 808 | | GCI99150 | Inner Joint | | 39 | 32 | 39 | 66 | 104.5 | |
| | 2004.03-2007.02 | MT | F | R | Estate FWD F9Q 808 | | GCI99160 | Inner Joint | | 39 | 32 | 32.95 | 352 | 90 | |
| 1.9 (72 kw) | 1999.03-2000.09 | 4AT/5MT | F | L/R | Estate FWD F9Q731/F9Q736 | | GCO50069 | Outer Joint | 44T | 23 | 30 | 57.5 | 86.5 | 58.5 | I |
| | 1999.03-2000.09 | MT | F | R | Estate FWD F9Q731/F9Q736 | | GDS99076 | Drive Shaft | 44T | 23 | 23 | 56.2 | 83.5 | 742.5 | |
| | 1999.03-2000.09 | MT | F | | Estate FWD F9Q731/F9Q736 | | GCO50058 | Outer Joint | 44T | 23 | 35 | 57 | 87 | 71 | I |
| | 1999.03-2000.09 | MT/4AT/5MT | F | R | Estate FWD F9Q731/F9Q736 | | GDS50159 | Drive Shaft | 44T | 23 | 23 | 57 | 87 | 748 | |
| | 1999.03-2000.09 | | F | L | Estate FWD F9Q731/F9Q736 | For Engine Code:F9Q736 | GDS50148 | Drive Shaft | 44T | 23 | | 57.5 | 86.5 | 657 | |
| | 1999.03-2000.09 | | F | L | Estate FWD F9Q731/F9Q736 | For Engine code:F9Q731 | GDS50253 | Drive Shaft | 44T | 23 | 26 | 57.5 | 86.5 | 637 | |
| | 1999.03-2000.09 | | F | R | Estate FWD F9Q731/F9Q736 | For Engine code:F9Q731 | GDS50323 | Drive Shaft | 44T | 23 | 23 | 57.5 | 86.5 | 778 | |
| | 1999.03-2000.09 | | F | R | Estate FWD F9Q731/F9Q736 | Date To:2000.09 | GCI50008 | Inner Joint | | 23 | 30 | 36.3 | | 120.7 | |
| 1.9 (75 kw) | 2001.02-2003.08 | AT | F | L | Estate FWD F9Q732/F9Q733 | | GDS50253 | Drive Shaft | 44T | 23 | 26 | 57.5 | 86.5 | 637 | |
| | 2001.02-2003.08 | AT | F | R | Estate FWD F9Q732/F9Q733 | For Engine code:F9Q731 | GDS50323 | Drive Shaft | 44T | 23 | 23 | 57.5 | 86.5 | 778 | |
| | 2001.02-2003.08 | AT/MT | F | L/R | Estate FWD F9Q732/F9Q733 | | GCO50069 | Outer Joint | 44T | 23 | 30 | 57.5 | 86.5 | 58.5 | I |
| | 2001.02-2003.08 | MT | F | L | Estate FWD F9Q732/F9Q733 | | GDS50148 | Drive Shaft | 44T | 23 | | 57.5 | 86.5 | 657 | |
| | 2001.02-2003.08 | MT | F | R | Estate FWD F9Q732/F9Q733 | | GDS50156 | Drive Shaft | 44T | 23 | 23 | 57.5 | 86.5 | 746.5 | |
| | 2001.02-2003.08 | MT | F | R | Estate FWD F9Q732/F9Q733 | | GDS50313 | Drive Shaft | 44T | 23 | 23 | 57.5 | 86.5 | 750 | |
| | 2001.02-2003.08 | MT | F | | Estate FWD F9Q732/F9Q733 | | GCO50058 | Outer Joint | 44T | 23 | 35 | 57 | 87 | 71 | I |
| | 2001.02-2003.08 | MT | F | R | Estate FWD F9Q732/F9Q733 | | GCI99131 | Inner Joint | | 23 | 28 | | 182.8 | 86 | |
| 1.9 (77 kw) | 1999.03-2000.09 | 5MT | F | L | Estate FWD F9Q732 | | GDS50148 | Drive Shaft | 44T | 23 | | 57.5 | 86.5 | 657 | |
| | 1999.03-2000.09 | 5MT | F | R | Estate FWD F9Q732 | | GDS50313 | Drive Shaft | 44T | 23 | 23 | 57.5 | 86.5 | 750 | |
| 1.9 (81 kw) | 2005.05-2009.07 | 4AT | F | L | Estate FWD F9Q 804;F9Q 818 | | GDS99186 | Drive Shaft | | 25 | 26 | 52.6 | 88 | 669 | |
| | 2005.05-2009.07 | 4AT | F | R | Estate FWD F9Q 804;F9Q 818 | | GDS83826 | Drive Shaft | | 25 | 26 | 52.8 | 85.5 | 800 | |
| | 2005.05-2009.07 | 4AT | F | L/R | Estate FWD F9Q 804;F9Q 818 | | GCO50143 | Outer Joint | | 25 | 32 | 52.8 | 85.5 | 62.5 | I |
| | 2005.05-2009.07 | 4AT | F | R | Estate FWD F9Q 804;F9Q 818 | | GCI50047 | Inner Joint | | 26 | 30 | | 213.5 | 95 | |
| | 2005.05-2009.07 | MT | F | L | Estate FWD F9Q 804;F9Q 818 | | GDS99201 | Drive Shaft | | 25 | 39 | 53 | 88 | 638 | |
| | 2005.05-2009.07 | MT | F | R | Estate FWD F9Q 804;F9Q 818 | | GDS50400 | Drive Shaft | | 25 | 39 | 53 | 88 | 932 | |
| | 2005.05-2009.07 | MT | F | L/R | Estate FWD F9Q 804;F9Q 818 | | GCO99213 | Outer Joint | | 25 | 33 | 53 | 88 | 61.5 | I |
| | 2005.05-2009.07 | MT | F | L | Estate FWD F9Q 804;F9Q 818 | | GCI99150 | Inner Joint | | 39 | 32 | 39 | 66 | 104.5 | |
| | 2005.05-2009.07 | MT | F | R | Estate FWD F9Q 804;F9Q 818 | | GCI99160 | Inner Joint | | 39 | 32 | 32.95 | 352 | 90 | |
| 1.9 (85 kw) | 2005.05-2009.07 | 6MT | F | L | Estate FWD F9Q 818 | | GDS99201 | Drive Shaft | | 25 | 39 | 53 | 88 | 638 | |
| | 2005.05-2009.07 | 6MT | F | R | Estate FWD F9Q 818 | | GDS50400 | Drive Shaft | | 25 | 39 | 53 | 88 | 932 | |
| | 2005.05-2009.07 | 6MT | F | L/R | Estate FWD F9Q 818 | | GCO99213 | Outer Joint | | 25 | 33 | 53 | 88 | 61.5 | I |
| | 2005.05-2009.07 | 6MT | F | L | Estate FWD F9Q 818 | | GCI99150 | Inner Joint | | 39 | 32 | 39 | 66 | 104.5 | |
| | 2005.05-2009.07 | 6MT | F | R | Estate FWD F9Q 818 | | GCI99160 | Inner Joint | | 39 | 32 | 32.95 | 352 | 90 | |
| 1.9 (88 kw) | 2003.08-2009.07 | 4AT | F | L | Estate FWD F9Q 800 | | GDS99186 | Drive Shaft | | 25 | 26 | 52.6 | 88 | 669 | |
| | 2003.08-2009.07 | 4AT | F | R | Estate FWD F9Q 800 | | GDS83826 | Drive Shaft | | 25 | 26 | 52.8 | 85.5 | 800 | |
| | 2003.08-2009.07 | 4AT | F | L/R | Estate FWD F9Q 800 | | GCO50143 | Outer Joint | | 25 | 32 | 52.8 | 85.5 | 62.5 | I |
| | 2003.08-2009.07 | 4AT | F | R | Estate FWD F9Q 800 | | GCI50047 | Inner Joint | | 26 | 30 | | 213.5 | 95 | |
| | 2003.08-2009.07 | 6MT | F | L | Estate FWD F9Q 800 | | GDS99201 | Drive Shaft | | 25 | 39 | 53 | 88 | 638 | |
| | 2003.08-2009.07 | 6MT | F | R | Estate FWD F9Q 800 | | GDS50400 | Drive Shaft | | 25 | 39 | 53 | 88 | 932 | |
| | 2003.08-2009.07 | 6MT | F | L | Estate FWD F9Q 800 | | GCI99150 | Inner Joint | | 39 | 32 | 39 | 66 | 104.5 | |
| | 2003.08-2009.07 | MT | F | L/R | Estate FWD F9Q 800 | | GCO99213 | Outer Joint | | 25 | 33 | 53 | 88 | 61.5 | I |
| | 2003.08-2009.07 | MT | F | R | Estate FWD F9Q 800 | | GCI99160 | Inner Joint | | 39 | 32 | 32.95 | 352 | 90 | |
| 1.9 (96 kw) | 2005.05-2009.07 | 4AT | F | L | Estate FWD F9Q 804;F9Q 803;F9Q 816;F9Q 818 | | GDS99186 | Drive Shaft | | 25 | 26 | 52.6 | 88 | 669 | |
| | 2005.05-2009.07 | 4AT | F | R | Estate FWD F9Q 804;F9Q 803;F9Q 816;F9Q 818 | | GDS83826 | Drive Shaft | | 25 | 26 | 52.8 | 85.5 | 800 | |
| | 2005.05-2009.07 | 4AT | F | L/R | Estate FWD F9Q 804;F9Q 803;F9Q 816;F9Q 818 | | GCO50143 | Outer Joint | | 25 | 32 | 52.8 | 85.5 | 62.5 | I |
| | 2005.05-2009.07 | 4AT | F | L | Estate FWD F9Q 804;F9Q 803;F9Q 816;F9Q 818 | | GCI50040 | Inner Joint | | 26 | 30 | 43 | 42.5 | 83 | |
| | 2005.05-2009.07 | 4AT | F | R | Estate FWD F9Q 804;F9Q 803;F9Q 816;F9Q 818 | | GCI50047 | Inner Joint | | 26 | 30 | | 213.5 | 95 | |
| | 2005.05-2009.07 | 6MT | F | L | Estate FWD F9Q 804;F9Q 803;F9Q 816;F9Q 818 | | GDS99201 | Drive Shaft | | 25 | 39 | 53 | 88 | 638 | |
| | 2005.05-2009.07 | 6MT | F | R | Estate FWD F9Q 804;F9Q 803;F9Q 816;F9Q 818 | | GDS50400 | Drive Shaft | | 25 | 39 | 53 | 88 | 932 | |
| | 2005.05-2009.07 | 6MT | F | L/R | Estate FWD F9Q 804;F9Q 803;F9Q 816;F9Q 818 | | GCO99213 | Outer Joint | | 25 | 33 | 53 | 88 | 61.5 | I |
| | 2005.05-2009.07 | 6MT | F | L | Estate FWD F9Q 804;F9Q 803;F9Q 816;F9Q 818 | | GCI99150 | Inner Joint | | 39 | 32 | 39 | 66 | 104.5 | |
| | 2005.05-2009.07 | 6MT | F | R | Estate FWD F9Q 804;F9Q 803;F9Q 816;F9Q 818 | | GCI99160 | Inner Joint | | 39 | 32 | 32.95 | 352 | 90 | |
| | 2006.02-2006.10 | 6MT | F | L | Estate Van FWD F9Q E 804 | | GDS99201 | Drive Shaft | | 25 | 39 | 53 | 88 | 638 | |
| | 2006.02-2006.10 | 6MT | F | R | Estate Van FWD F9Q E 804 | | GDS50400 | Drive Shaft | | 25 | 39 | 53 | 88 | 932 | |
| | 2006.02-2006.10 | 6MT | F | L | Estate Van FWD F9Q E 804 | | GCI99150 | Inner Joint | | 39 | 32 | 39 | 66 | 104.5 | |
| | 2006.02-2006.10 | 6MT | F | R | Estate Van FWD F9Q E 804 | | GCI99160 | Inner Joint | | 39 | 32 | 32.95 | 352 | 90 | |
| | 2006.02-2006.10 | | F | L/R | Estate Van FWD F9Q E 804 | | GCO99213 | Outer Joint | | 25 | 33 | 53 | 88 | 61.5 | I |
| | 2009.05-2015.08 | 6MT | F | R | Estate FWD F9Q 872;F9Q 870 | | GDS50427 | Drive Shaft | | 25 | 39 | 52.6 | 89 | 953 | |
| | 2009.05-2015.08 | 6MT | F | L | Estate FWD F9Q 872;F9Q 870 | | GCI81352 | Inner Joint | | 39 | 33 | 39 | 65 | 106 | |
| | 2009.05-2015.08 | 6MT | F | R | Estate FWD F9Q 872;F9Q 870 | | GCI81351 | Inner Joint | | 39 | 33 | 33 | 352.5 | 82.5 | |
| | 2009.05-2015.08 | MT | F | L/R | Estate FWD F9Q 872;F9Q 870 | | GCO99213 | Outer Joint | | 25 | 33 | 53 | 88 | 61.5 | I |
| | 2009.05-2015.08 | | F | L | Estate FWD F9Q 872;F9Q 870 | | GDS50428 | Drive Shaft | | 25 | 39 | 52.6 | 89 | 656 | |
| | 2009.05-2015.08 | | F | L/R | Estate FWD F9Q 872;F9Q 870 | | GCO50157 | Outer Joint | | 25 | 33 | 52.6 | 89 | 60 | I |
| 2.0 (99 kw) | 2003.08-2009.07 | 4AT | F | L | Estate FWD F4R 770;F4R 771 | | GDS50255 | Drive Shaft | | 23 | 26 | 49 | 86 | 673 | |

| | YEAR | TRANSM. | F/R | L/R | BODY STYLE & DRIVE TYPE & ENGINE | REMARKS | G-AP Ref. | PRODUCT | ABS | Technical Specifications A | B | C | H | L | P |
|---|---|---|---|---|---|---|---|---|---|---|---|---|---|---|---|
| **RENAULT** | | | | | | | | | | | | | | | |
| **Megane Estate/Break** | | | | | | | | | | | | | | | |
| 2.0 (99 kw) | 2003.08-2009.07 | 4AT | F | R | Estate FWD F4R 770;F4R 771 | outer teeth of wheel side:25 | GDS50399 | Drive Shaft | | 25 | 23 | 52.6 | 88 | 803 | |
| | 2003.08-2009.07 | 4AT | F | R | Estate FWD F4R 770;F4R 771 | outer teeth of wheel side:23 | GDS50520 | Drive Shaft | | 23 | 23 | 49 | 86 | 803 | |
| | 2003.08-2009.07 | 4AT | F | R | Estate FWD F4R 770;F4R 771 | | GCO50117 | Outer Joint | | 23 | 32 | 49 | 86 | 62 | I |
| | 2003.08-2009.07 | 4AT | F | L | Estate FWD F4R 770;F4R 771 | | GCI50040 | Inner Joint | | 26 | 30 | 43 | 42.5 | 83 | |
| | 2003.08-2009.07 | 6MT | F | L | Estate FWD F4R 770;F4R 771 | | GDS50441 | Drive Shaft | | 23 | 39 | 49 | 86.5 | 636 | |
| | 2003.08-2009.07 | 6MT | F | R | Estate FWD F4R 770;F4R 771 | | GDS50447 | Drive Shaft | | 23 | 39 | 49 | 86.5 | 930 | |
| | 2003.08-2009.07 | 6MT | F | L/R | Estate FWD F4R 770;F4R 771 | | GCO50109 | Outer Joint | | 23 | 33 | 49 | 86.5 | 61 | I |
| | 2003.08-2009.07 | 6MT | F | L | Estate FWD F4R 770;F4R 771 | For Engine Code: F4R 770 | GCI99150 | Inner Joint | | 39 | 32 | 39 | 66 | 104.5 | |
| | 2003.08-2009.07 | AT | F | R | Estate FWD F4R 770;F4R 771 | Date from:2004.01 | GDS50440 | Drive Shaft | | 23 | 23 | 49 | 86 | 804 | |
| | 2003.08-2009.07 | MT | F | R | Estate FWD F4R 770;F4R 771 | For Engine Code: F4R 770 | GCI99160 | Inner Joint | | 39 | 32 | 32.95 | 352 | 90 | |
| 2.0 (102 kw) | 2006.12-2011.01 | 4AT/6MT | F | L | Estate FWD F4R 770;F4R 771 | | GDS50441 | Drive Shaft | | 23 | 39 | 49 | 86.5 | 636 | |
| | 2006.12-2011.01 | 4AT/6MT | F | R | Estate FWD F4R 770;F4R 771 | | GDS50447 | Drive Shaft | | 23 | 39 | 49 | 86.5 | 930 | |
| | 2006.12-2011.01 | MT | F | L/R | Estate FWD F4R 770;F4R 771 | | GCO50109 | Outer Joint | | 23 | 33 | 49 | 86.5 | 61 | I |
| | 2006.12-2011.01 | | F | | Estate FWD F4R 770;F4R 771 | | GCO50117 | Outer Joint | | 23 | 32 | 49 | 86 | 62 | I |
| 2.0 (103 kw) | 2009.05-2015.08 | CVT | F | L | Estate FWD M4R 711;M4R 713 | | GDS83875 | Drive Shaft | | 25 | 27 | 52.5 | 88.5 | 675 | |
| | 2009.05-2015.08 | CVT | F | L | Estate FWD M4R 711;M4R 713 | | GCO82528 | Outer Joint | | 25 | 24 | 52.5 | 88.5 | 59 | M |
| | 2009.05-2015.08 | CVT | F | L/R | Estate FWD M4R 711;M4R 713 | | GCO99213 | Outer Joint | | 25 | 33 | 53 | 88 | 61.5 | I |
| | 2009.05-2015.08 | CVT | F | L | Estate FWD M4R 711;M4R 713 | | GCI41073 | Inner Joint | | 27 | 24 | 40 | 62.5 | 99.5 | |
| 2.0 (110 kw) | 2005.09-2009.07 | 6MT | F | L | Estate FWD M9R 700;M9R 722 | | GDS50444 | Drive Shaft | | 27 | 39 | 56.5 | 90.5 | 626 | |
| | 2005.09-2009.07 | 6MT | F | R | Estate FWD M9R 700;M9R 722 | | GDS50453 | Drive Shaft | | 27 | 39 | 56.5 | 90.5 | 973.5 | |
| | 2005.09-2009.07 | 6MT | F | L | Estate FWD M9R 700;M9R 722 | | GCI50071 | Inner Joint | | 39 | 35 | 39 | 74 | 102.5 | |
| | 2005.09-2009.07 | 6MT | F | R | Estate FWD M9R 700;M9R 722 | | GCI50087 | Inner Joint | | 39 | 35 | 30 | 367 | 89.5 | |
| | 2005.09-2009.07 | | F | L/R | Estate FWD M9R 700;M9R 722 | | GCO50108 | Outer Joint | | 27 | 35 | 56.5 | 90.5 | 71 | I |
| | 2010.10-2015.08 | 6AT | F | L | Estate FWD M9R 615 | 8 balls | GDS81271 | Drive Shaft | | 27 | 30 | 56.7 | 91 | 652 | |
| | 2010.10-2015.08 | 6AT | F | R | Estate FWD M9R 615 | 8 balls | GDS81272 | Drive Shaft | | 27 | 30 | 56.7 | 91 | 964 | |
| | 2010.10-2015.08 | 6AT | F | L/R | Estate FWD M9R 615 | | GCO81102 | Outer Joint | | 27 | 36 | 56.7 | 91 | 63.5 | I |
| | 2010.10-2015.08 | 6AT | F | L | Estate FWD M9R 615 | | GCI50150 | Inner Joint | | 30 | 36 | 34 | 76.5 | 86 | |
| | 2010.10-2015.08 | 6AT | F | R | Estate FWD M9R 615 | | GCI50123 | Inner Joint | | 30 | 36 | 33.97 | 343 | 90 | |
| | 2010.10-2015.08 | AT | F | L | Estate FWD M9R 615 | 6 balls | GDS18274 | Drive Shaft | | 27 | 30 | 56.5 | 90 | 624 | |
| 2.0 (118 kw) | 2009.04-2015.08 | 6MT | F | L | Estate FWD M9R 610 | | GDS81275 | Drive Shaft | | 27 | 39 | 56.5 | 91 | 636 | |
| | 2009.04-2015.08 | 6MT | F | R | Estate FWD M9R 610 | | GDS81274 | Drive Shaft | | 27 | 39 | 56.5 | 91 | 981 | |
| | 2009.04-2015.08 | 6MT | F | L | Estate FWD M9R 610 | | GCI18272 | Inner Joint | | 39 | 26 | 39 | 74 | 116 | |
| | 2009.04-2015.08 | 6MT | F | R | Estate FWD M9R 610 | | GCI81164 | Inner Joint | | 39 | 26 | 30 | 366.5 | 99 | |
| | 2009.04-2015.08 | AT | F | L | Estate FWD M9R 610 | | GDS18274 | Drive Shaft | | 27 | 30 | 56.5 | 90 | 624 | |
| | 2009.04-2015.08 | | F | L | Estate FWD M9R 610 | | GCO50186 | Outer Joint | | 27 | 26 | 56.5 | 91 | 65 | M |
| 2.0 (120 kw) | 2012.07-2015.08 | 6MT | F | L | Estate FWD M9R 610 | | GDS81275 | Drive Shaft | | 27 | 39 | 56.5 | 91 | 636 | |
| | 2012.07-2015.08 | 6MT | F | R | Estate FWD M9R 610 | | GDS81274 | Drive Shaft | | 27 | 39 | 56.5 | 91 | 981 | |
| | 2012.07-2015.08 | 6MT | F | L | Estate FWD M9R 610 | | GCI18272 | Inner Joint | | 39 | 26 | 39 | 74 | 116 | |
| | 2012.07-2015.08 | 6MT | F | R | Estate FWD M9R 610 | | GCI81164 | Inner Joint | | 39 | 26 | 30 | 366.5 | 99 | |
| | 2012.07-2015.08 | AT | F | L | Estate FWD M9R 610 | | GDS18274 | Drive Shaft | | 27 | 30 | 56.5 | 90 | 624 | |
| | 2012.07-2015.08 | | F | L | Estate FWD M9R 610 | | GCO50186 | Outer Joint | | 27 | 26 | 56.5 | 91 | 65 | M |
| **Megane Scenic** | | | | | | | | | | | | | | | |
| 1.4 (55 kw) | 1996.10-1999.09 | MT | F | L | MPV FWD E7J764 | | GDS50009 | Drive Shaft | 44T | 21 | | 57 | 84.5 | 645 | |
| | 1996.10-1999.09 | MT | F | L | MPV FWD E7J764 | | GDS50055 | Drive Shaft | | 21 | 30 | 50 | 84 | 650 | |
| | 1996.10-1999.09 | MT | F | R | MPV FWD E7J764 | | GDS50107 | Drive Shaft | 44T | 21 | 23 | 57 | 84.5 | 736 | |
| | 1996.10-1999.09 | MT | F | R | MPV FWD E7J764 | | GDS50173 | Drive Shaft | | 21 | 23 | 57 | 84.5 | 743 | |
| | 1996.10-1999.09 | | F | R | MPV FWD E7J764 | Date To:1998.09 | GDS50021 | Drive Shaft | 44T | 21 | 23 | 57 | 84.5 | 750 | |
| | 1996.10-1999.09 | | F | R | MPV FWD E7J764 | Date From:1998.10 | GDS50038 | Drive Shaft | 44T | 21 | 23 | 52.2 | 85.5 | 752 | |
| | 1996.10-1999.09 | | F | R | MPV FWD E7J764 | Date to:1998.09 | GDS50327 | Drive Shaft | 44T | 21 | 23 | 57 | 84.5 | 740 | |
| | 1996.10-1999.09 | | F | R | MPV FWD E7J764 | Date From:1998.10 | GCO50066 | Outer Joint | 44T | 21 | 28 | 52.5 | 85 | 51 | I |
| | 1996.10-1999.09 | | F | R | MPV FWD E7J764 | Date From:1998.10 | GCI50008 | Inner Joint | | 23 | 30 | 36.3 | | 120.7 | |
| 1.6 (55 kw) | 1996.10-1999.09 | 5MT | F | L | MPV FWD K7M720 | | GDS50009 | Drive Shaft | 44T | 21 | | 57 | 84.5 | 645 | |
| | 1996.10-1999.09 | 5MT | F | R | MPV FWD K7M720 | Date From:1998.10 | GDS50021 | Drive Shaft | 44T | 21 | 23 | 57 | 84.5 | 750 | |
| | 1996.10-1999.09 | 5MT | F | R | MPV FWD K7M720 | Date To:1998.09 | GDS50327 | Drive Shaft | 44T | 21 | 23 | 57 | 84.5 | 740 | |
| | 1996.10-1999.09 | MT | F | R | MPV FWD K7M720 | Date To:1998.06 | GDS50027 | Drive Shaft | 44T | 23 | 23 | 56.8 | 84 | 750.5 | |
| | 1996.10-1999.09 | MT | F | R | MPV FWD K7M720 | inner teeth of wheel side:30 | GDS50173 | Drive Shaft | | 21 | 23 | 57 | 84.5 | 743 | |
| | 1996.10-1999.09 | MT | F | R | MPV FWD K7M720 | inner teeth of wheel side:22 | GDS50316 | Drive Shaft | | 21 | 23 | 57 | 84 | 741 | |
| | 1996.10-1999.09 | | F | R | MPV FWD K7M720 | Date From:1998.10 | GCO50066 | Outer Joint | 44T | 21 | 28 | 52.5 | 85 | 51 | I |
| | 1996.10-1999.09 | | F | | MPV FWD K7M720 | Date to:1998.09 | GCO50043 | Outer Joint | 44T | 21 | 22 | 51.5 | 83 | 56.5 | I |
| | 1996.10-1999.09 | | F | R | MPV FWD K7M720 | Date from:1998.10 | GCI50008 | Inner Joint | | 23 | 30 | 36.3 | | 120.7 | |
| 1.6 (66 kw) | 1996.10-1999.10 | 4AT/5MT | F | R | MPV FWD K7M702/K7M703 | Date to:1998.09;Inner teeth of tranm.side:22 | GDS50021 | Drive Shaft | 44T | 21 | 23 | 57 | 84.5 | 750 | |
| | 1996.10-1999.10 | AT | F | L | MPV FWD K7M702/K7M703 | Date to:1998.06 | GDS50253 | Drive Shaft | 44T | 23 | 26 | 57.5 | 86.5 | 637 | |
| | 1996.10-1999.10 | AT | F | R | MPV FWD K7M702/K7M703 | Date From:1998.07 | GDS50294 | Drive Shaft | 44T | 21 | 23 | 57 | 84.5 | 747 | |
| | 1996.10-1999.10 | MT | F | L | MPV FWD K7M702/K7M703 | Date to:1998.09;With ABS:44T | GDS50009 | Drive Shaft | 44T | 21 | | 57 | 84.5 | 645 | |
| | 1996.10-1999.10 | MT | F | L | MPV FWD K7M702/K7M703 | hollow shaft | GDS50055 | Drive Shaft | | 21 | 30 | 50 | 84 | 650 | |

| YEAR | TRANSM. | F/R | L/R | BODY STYLE & DRIVE TYPE & ENGINE | REMARKS | G-AP Ref. | PRODUCT | ABS | Technical Specifications A | B | C | H | L | P |
|---|---|---|---|---|---|---|---|---|---|---|---|---|---|---|
| **RENAULT** | | | | | | | | | | | | | | |
| **Megane Scenic** | | | | | | | | | | | | | | |
| 1.6 (66 kw) | | | | | | | | | | | | | | |
| 1996.10-1999.10 | MT | F | R | MPV FWD K7M702/K7M703 | Inner teeth of tranm.side:29 | GDS50107 | Drive Shaft | 44T | 21 | 23 | 57 | 84.5 | 736 | |
| 1996.10-1999.10 | MT | F | R | MPV FWD K7M702/K7M703 | Groove Type:Middle | GDS50173 | Drive Shaft | | 21 | 23 | 57 | 84.5 | 743 | |
| 1996.10-1999.10 | MT | F | R | MPV FWD K7M702/K7M703 | Inner teeth of tranm.side:30 | GDS50327 | Drive Shaft | 44T | 21 | 23 | 57 | 84.5 | 740 | |
| 1996.10-1999.10 | MT | F | R | MPV FWD K7M702/K7M703 | | GCI50008 | Inner Joint | | 23 | 30 | 36.3 | | 120.7 | |
| 1996.10-1999.10 | | F | R | MPV FWD K7M702/K7M703 | Date to:1998.09;Groove Type:Outer;Inner teeth of tranm.side:22 | GDS50054 | Drive Shaft | | 21 | 23 | 49.8 | 83.5 | 741.5 | |
| 1996.10-1999.10 | | F | L/R | MPV FWD K7M702/K7M703 | Date To:1998.09 | GCO50043 | Outer Joint | 44T | 21 | 22 | 51.5 | 83 | 56.5 | I |
| 1.6 (79 kw) | | | | | | | | | | | | | | |
| 1998.04-1999.10 | 4AT/5MT | F | L | MPV FWD K4M700/K4M701/K4M706/K4M707/K4M709/K4M712 | Date to:1998.06 | GDS50130 | Drive Shaft | | 23 | | 56.2 | 83.5 | 658.5 | |
| 1998.04-1999.10 | AT | F | L | MPV FWD K4M700/K4M701/K4M706/K4M707/K4M709/K4M712 | | GDS50253 | Drive Shaft | 44T | 23 | 26 | 57.5 | 86.5 | 637 | |
| 1998.04-1999.10 | AT | F | R | MPV FWD K4M700/K4M701/K4M706/K4M707/K4M709/K4M712 | | GDS50323 | Drive Shaft | 44T | 23 | 23 | 57.5 | 86.5 | 778 | |
| 1998.04-1999.10 | MT | F | L | MPV FWD K4M700/K4M701/K4M706/K4M707/K4M709/K4M712 | Date to:1998.06 | GDS50131 | Drive Shaft | 44T | 23 | | 56.2 | 83.5 | 658.5 | |
| 1998.04-1999.10 | MT | F | L | MPV FWD K4M700/K4M701/K4M706/K4M707/K4M709/K4M712 | Date from:1998.07;Date to:1999.04 | GDS50160 | Drive Shaft | 44T | 23 | | 57 | 87 | 656.5 | |
| 1998.04-1999.10 | MT | F | L | MPV FWD K4M700/K4M701/K4M706/K4M707/K4M709/K4M712 | Date from:1999.05 | GDS50311 | Drive Shaft | 44T | 23 | 30 | 56 | 82 | 650 | |
| 1998.04-1999.10 | MT | F | R | MPV FWD K4M700/K4M701/K4M706/K4M707/K4M709/K4M712 | Date from:1998.07 | GDS50159 | Drive Shaft | 44T | 23 | 23 | 57 | 87 | 748 | |
| 1998.04-1999.10 | MT | F | R | MPV FWD K4M700/K4M701/K4M706/K4M707/K4M709/K4M712 | Inner teeth of tranm.side:22 | GDS50173 | Drive Shaft | | 21 | 23 | 57 | 84.5 | 743 | |
| 1998.04-1999.10 | MT | F | R | MPV FWD K4M700/K4M701/K4M706/K4M707/K4M709/K4M712 | Date to:1998.06 | GDS50199 | Drive Shaft | 44T | 23 | 23 | 57.5 | 83.5 | 748 | |
| 1998.04-1999.10 | MT | F | R | MPV FWD K4M700/K4M701/K4M706/K4M707/K4M709/K4M712 | Date to:1998.06 | GDS50252 | Drive Shaft | | 23 | 23 | 57.5 | 83.5 | 748 | |
| 1998.04-1999.10 | MT | F | R | MPV FWD K4M700/K4M701/K4M706/K4M707/K4M709/K4M712 | | GCO50003 | Outer Joint | | 23 | 29 | 57.5 | 83.5 | 62 | O |
| 1998.04-1999.10 | MT | F | L/R | MPV FWD K4M700/K4M701/K4M706/K4M707/K4M709/K4M712 | Date from:1998.07 | GCO50058 | Outer Joint | 44T | 23 | 35 | 57 | 87 | 71 | I |
| 1998.04-1999.10 | MT | F | R | MPV FWD K4M700/K4M701/K4M706/K4M707/K4M709/K4M712 | Date from:1998.07 | GCI50008 | Inner Joint | | 23 | 30 | 36.3 | | 120.7 | |
| 1.9 (47 kw) | | | | | | | | | | | | | | |
| 1997.03-1999.09 | 5MT | F | L | MPV FWD F8Q790 | | GDS50311 | Drive Shaft | 44T | 23 | 30 | 56 | 82 | 650 | |
| 1997.03-1999.09 | 5MT | F | R | MPV FWD F8Q790 | | GDS50320 | Drive Shaft | 44T | 23 | 23 | 56.8 | 84 | 755 | |
| 1997.03-1999.09 | AT/MT | F | L | MPV FWD F8Q790 | | GDS50160 | Drive Shaft | 44T | 23 | | 57 | 87 | 656.5 | |
| 1997.03-1999.09 | MT | F | L | MPV FWD F8Q790 | Trans. code:JB3/JC5 | GDS50130 | Drive Shaft | | 23 | | 56.2 | 83.5 | 658.5 | |
| 1997.03-1999.09 | MT | F | L | MPV FWD F8Q790 | Trans. code:JB3/JC5 | GDS50131 | Drive Shaft | 44T | 23 | | 56.2 | 83.5 | 658.5 | |
| 1997.03-1999.09 | MT | F | R | MPV FWD F8Q790 | | GDS50173 | Drive Shaft | | 21 | 23 | 57 | 84.5 | 743 | |
| 1997.03-1999.09 | MT | F | R | MPV FWD F8Q790 | Trans. code:JB3/JC5 | GDS50199 | Drive Shaft | 44T | 23 | 23 | 57.5 | 83.5 | 748 | |
| 1997.03-1999.09 | MT | F | R | MPV FWD F8Q790 | Trans. code:JB3/JC5 | GDS50252 | Drive Shaft | | 23 | 23 | 57.5 | 83.5 | 748 | |
| 1997.03-1999.09 | MT | F | L/R | MPV FWD F8Q790 | | GCO50026 | Outer Joint | | 23 | 25 | 56.2 | 83.5 | 58 | O |
| 1997.03-1999.09 | | F | L | MPV FWD F8Q790 | Date From:1998.07 | GCO50058 | Outer Joint | 44T | 23 | 35 | 57 | 87 | 71 | I |
| 1997.03-1999.09 | | F | R | MPV FWD F8Q790 | Date From:1998.07 | GCI50079 | Inner Joint | | 23 | 22 | 36.3 | | 105.5 | |
| 1.9 (66 kw) | | | | | | | | | | | | | | |
| 1997.01-1999.09 | 5MT | F | L | MPV FWD F8Q784/F8Q786 | | GDS50311 | Drive Shaft | 44T | 23 | 30 | 56 | 82 | 650 | |
| 1997.01-1999.09 | 5MT | F | R | MPV FWD F8Q784/F8Q786 | | GDS50054 | Drive Shaft | | 21 | 23 | 49.8 | 83.5 | 741.5 | |
| 1997.01-1999.09 | 5MT | F | R | MPV FWD F8Q784/F8Q786 | | GDS50320 | Drive Shaft | 44T | 23 | 23 | 56.8 | 84 | 755 | |
| 1997.01-1999.09 | MT | F | L | MPV FWD F8Q784/F8Q786 | Fastening Type:Pin Fixing | GDS50009 | Drive Shaft | 44T | 21 | | 57 | 84.5 | 645 | |
| 1997.01-1999.09 | MT | F | L | MPV FWD F8Q784/F8Q786 | Trans. code:JC5 | GDS50028 | Drive Shaft | | 23 | | 56.8 | 84 | 654 | |
| 1997.01-1999.09 | MT | F | L | MPV FWD F8Q784/F8Q786 | Fastening Type:Pin Fixing | GDS50055 | Drive Shaft | | 21 | 30 | 50 | 84 | 650 | |
| 1997.01-1999.09 | MT | F | R | MPV FWD F8Q784/F8Q786 | Pin Fixing | GDS50107 | Drive Shaft | 44T | 21 | 23 | 57 | 84.5 | 736 | |
| 1997.01-1999.09 | MT | F | R | MPV FWD F8Q784/F8Q786 | Trans. code:JC5 | GDS50247 | Drive Shaft | | 23 | 23 | 56.8 | 84 | 750.5 | |
| 1997.01-1999.09 | MT | F | L/R | MPV FWD F8Q784/F8Q786 | | GCO50026 | Outer Joint | | 23 | 25 | 56.2 | 83.5 | 58 | O |
| 1997.01-1999.09 | MT | F | R | MPV FWD F8Q784/F8Q786 | | GCI50079 | Inner Joint | | 23 | 22 | 36.3 | | 105.5 | |
| 1997.01-1999.09 | | F | R | MPV FWD F8Q784/F8Q786 | | GDS50159 | Drive Shaft | 44T | 23 | 23 | 57 | 87 | 748 | |
| 1997.01-1999.09 | | F | L | MPV FWD F8Q784/F8Q786 | Date From:1998.07 | GCO50058 | Outer Joint | 44T | 23 | 35 | 57 | 87 | 71 | I |
| 1997.01-1999.09 | | F | R | MPV FWD F8Q784/F8Q786 | | GCI50008 | Inner Joint | | 23 | 30 | 36.3 | | 120.7 | |
| 1997.01-1999.09 | 5MT | F | L | MPV Van FWD F8Q786 | Date from:1998.07 | GDS50311 | Drive Shaft | 44T | 23 | 30 | 56 | 82 | 650 | |
| 1997.01-1999.09 | 5MT | F | R | MPV Van FWD F8Q786 | Date from:1998.07 | GDS50320 | Drive Shaft | 44T | 23 | 23 | 56.8 | 84 | 755 | |
| 1997.01-1999.09 | 5MT | F | L | MPV Van FWD F8Q786 | Date from:1998.07 | GCO50058 | Outer Joint | 44T | 23 | 35 | 57 | 87 | 71 | I |
| 1.9 (72 kw) | | | | | | | | | | | | | | |
| 1997.04-1999.09 | 5MT | F | R | MPV FWD F9Q734 | Solid shaft;Inner teeth of wheel side:35 | GDS50159 | Drive Shaft | 44T | 23 | 23 | 57 | 87 | 748 | |
| 1997.04-1999.09 | 5MT | F | R | MPV FWD F9Q734 | | GCI50008 | Inner Joint | | 23 | 30 | 36.3 | | 120.7 | |
| 1997.04-1999.09 | MT | F | L | MPV FWD F9Q734 | Trans. code:JC5 | GDS50028 | Drive Shaft | | 23 | | 56.8 | 84 | 654 | |
| 1997.04-1999.09 | MT | F | R | MPV FWD F9Q734 | Hollow shaft | GDS50027 | Drive Shaft | 44T | 23 | 23 | 56.8 | 84 | 750.5 | |
| 1997.04-1999.09 | MT | F | R | MPV FWD F9Q734 | Trans. code:JC5 | GDS50247 | Drive Shaft | | 23 | 23 | 56.8 | 84 | 750.5 | |
| 1997.04-1999.09 | MT | F | R | MPV FWD F9Q734 | Trans. code:JC5;Solid shaft;Inner teeth of wheel side:22 | GDS50320 | Drive Shaft | 44T | 23 | 23 | 56.8 | 84 | 755 | |
| 1997.04-1999.09 | MT | F | L/R | MPV FWD F9Q734 | | GCO50026 | Outer Joint | | 23 | 25 | 56.2 | 83.5 | 58 | O |
| 1997.04-1999.09 | MT | F | | MPV FWD F9Q734 | | GCO50005 | Outer Joint | 44T | 23 | 25 | 56.3 | 84 | 61.5 | O |
| 1997.04-1999.09 | MT | F | R | MPV FWD F9Q734 | | GCI50079 | Inner Joint | | 23 | 22 | 36.3 | | 105.5 | |
| 1997.04-1999.09 | | F | L | MPV FWD F9Q734 | Date From:1998.07 | GDS50148 | Drive Shaft | 44T | 23 | | 57.5 | 86.5 | 657 | |
| 1997.04-1999.09 | | F | L/R | MPV FWD F9Q734 | | GCO50069 | Outer Joint | 44T | 23 | 30 | 57.5 | 86.5 | 58.5 | I |
| 1997.04-1999.09 | | F | | MPV FWD F9Q734 | | GCO50058 | Outer Joint | 44T | 23 | 35 | 57 | 87 | 71 | I |
| 1997.04-1999.09 | 5MT | F | L | MPV Van FWD F9Q734 | Date From:1998.07 | GDS50148 | Drive Shaft | 44T | 23 | | 57.5 | 86.5 | 657 | |
| 1997.04-1999.09 | 5MT | F | R | MPV Van FWD F9Q734 | Date from:1998.07 | GDS50159 | Drive Shaft | 44T | 23 | 23 | 57 | 87 | 748 | |
| 2.0 (80 kw) | | | | | | | | | | | | | | |
| 1996.10-1999.09 | 4AT/5MT | F | L | MPV FWD F3R750/F3R751/F3R791/F3R796/F3R797/F3R798 | | GDS50130 | Drive Shaft | | 23 | | 56.2 | 83.5 | 658.5 | |
| 1996.10-1999.09 | 4AT/5MT | F | L | MPV FWD F3R750/F3R751/F3R791/F3R796/F3R797/F3R798 | Date to:1998.06 | GDS50131 | Drive Shaft | 44T | 23 | | 56.2 | 83.5 | 658.5 | |
| 1996.10-1999.09 | 4AT/5MT | F | L | MPV FWD F3R750/F3R751/F3R791/F3R796/F3R797/F3R798 | Date from:1998.07 | GDS50160 | Drive Shaft | 44T | 23 | | 57 | 87 | 656.5 | |
| 1996.10-1999.09 | 4AT/5MT | F | R | MPV FWD F3R750/F3R751/F3R791/F3R796/F3R797/F3R798 | Date to:1998.06 | GDS50199 | Drive Shaft | 44T | 23 | 23 | 57.5 | 83.5 | 748 | |
| 1996.10-1999.09 | 4AT/5MT | F | R | MPV FWD F3R750/F3R751/F3R791/F3R796/F3R797/F3R798 | | GDS50252 | Drive Shaft | | 23 | 23 | 57.5 | 83.5 | 748 | |

| | YEAR | TRANSM. | F/R | L/R | BODY STYLE & DRIVE TYPE & ENGINE | REMARKS | G-AP Ref. | PRODUCT | ABS | Technical Specifications A | B | C | H | L | P |
|---|---|---|---|---|---|---|---|---|---|---|---|---|---|---|---|
| **RENAULT** | | | | | | | | | | | | | | | |
| **Megane Scenic** | | | | | | | | | | | | | | | |
| 2.0 (80 kw) | 1996.10-1999.09 | MT | F | R | MPV FWD F3R750/F3R751/F3R791/F3R796/F3R797/F3R798 | | GDS50156 | Drive Shaft | 44T | 23 | 23 | 57.5 | 86.5 | 746.5 | |
| | 1996.10-1999.09 | MT | F | R | MPV FWD F3R750/F3R751/F3R791/F3R796/F3R797/F3R798 | | GDS50159 | Drive Shaft | 44T | 23 | 23 | 57 | 87 | 748 | |
| | 1996.10-1999.09 | MT | F | R | MPV FWD F3R750/F3R751/F3R791/F3R796/F3R797/F3R798 | | GCO50003 | Outer Joint | | 23 | 29 | 57.5 | 83.5 | 62 | O |
| | 1996.10-1999.09 | MT | F | L/R | MPV FWD F3R750/F3R751/F3R791/F3R796/F3R797/F3R798 | | GCO50026 | Outer Joint | | 23 | 25 | 56.2 | 83.5 | 58 | O |
| | 1996.10-1999.09 | MT | F | L/R | MPV FWD F3R750/F3R751/F3R791/F3R796/F3R797/F3R798 | | GCO50058 | Outer Joint | 44T | 23 | 35 | 57 | 87 | 71 | I |
| | 1996.10-1999.09 | MT | F | R | MPV FWD F3R750/F3R751/F3R791/F3R796/F3R797/F3R798 | | GCI50008 | Inner Joint | | 23 | 30 | 36.3 | | 120.7 | |
| 2.0 (84 kw) | 1997.05-1999.09 | 4AT/5MT | F | L | MPV FWD F3R750/F3R751/F3R791/F3R796/F3R797/F3R798 | Date to:1998.06 | GDS50028 | Drive Shaft | | 23 | | 56.8 | 84 | 654 | |
| | 1997.05-1999.09 | 4AT/5MT | F | L | MPV FWD F3R750/F3R751/F3R791/F3R796/F3R797/F3R798 | Date from:1997.05;Date to:1998.06 | GDS50130 | Drive Shaft | | 23 | | 56.2 | 83.5 | 658.5 | |
| | 1997.05-1999.09 | 4AT/5MT | F | L | MPV FWD F3R750/F3R751/F3R791/F3R796/F3R797/F3R798 | Date from:1997.05;Date to:1998.06 | GDS50131 | Drive Shaft | 44T | 23 | | 56.2 | 83.5 | 658.5 | |
| | 1997.05-1999.09 | 4AT/5MT | F | L | MPV FWD F3R750/F3R751/F3R791/F3R796/F3R797/F3R798 | | GDS50160 | Drive Shaft | 44T | 23 | | 57 | 87 | 656.5 | |
| | 1997.05-1999.09 | 4AT/5MT | F | R | MPV FWD F3R750/F3R751/F3R791/F3R796/F3R797/F3R798 | | GDS50159 | Drive Shaft | 44T | 23 | 23 | 57 | 87 | 748 | |
| | 1997.05-1999.09 | 4AT/5MT | F | R | MPV FWD F3R750/F3R751/F3R791/F3R796/F3R797/F3R798 | Date from:1997.05;Date to:1998.06 | GDS50199 | Drive Shaft | 44T | 23 | 23 | 57.5 | 83.5 | 748 | |
| | 1997.05-1999.09 | 4AT/5MT | F | R | MPV FWD F3R750/F3R751/F3R791/F3R796/F3R797/F3R798 | Date from:1997.05;Date to:1998.06 | GDS50252 | Drive Shaft | | 23 | 23 | 57.5 | 83.5 | 748 | |
| | 1997.05-1999.09 | MT | F | R | MPV FWD F3R750/F3R751/F3R791/F3R796/F3R797/F3R798 | Date to:1998.06;Model code:JA0G | GDS50027 | Drive Shaft | 44T | 23 | 23 | 56.8 | 84 | 750.5 | |
| | 1997.05-1999.09 | MT | F | R | MPV FWD F3R750/F3R751/F3R791/F3R796/F3R797/F3R798 | | GCO50003 | Outer Joint | | 23 | 29 | 57.5 | 83.5 | 62 | O |
| | 1997.05-1999.09 | MT | F | L/R | MPV FWD F3R750/F3R751/F3R791/F3R796/F3R797/F3R798 | Date from:1997.05 | GCO50026 | Outer Joint | | 23 | 25 | 56.2 | 83.5 | 58 | O |
| | 1997.05-1999.09 | MT | F | L/R | MPV FWD F3R750/F3R751/F3R791/F3R796/F3R797/F3R798 | | GCO50058 | Outer Joint | 44T | 23 | 35 | 57 | 87 | 71 | I |
| | 1997.05-1999.09 | MT | F | R | MPV FWD F3R750/F3R751/F3R791/F3R796/F3R797/F3R798 | | GCI50008 | Inner Joint | | 23 | 30 | 36.3 | | 120.7 | |
| | 1997.05-1999.09 | | F | R | MPV FWD F3R750/F3R751/F3R791/F3R796/F3R797/F3R798 | Date To:1998.06 | GDS50247 | Drive Shaft | | 23 | 23 | 56.8 | 84 | 750.5 | |
| | 1997.05-1999.09 | | F | | MPV FWD F3R750/F3R751/F3R791/F3R796/F3R797/F3R798 | Date to:1998.06 | GCO81059 | Outer Joint | 44T | 23 | 22 | 56.8 | 84 | 55.5 | I |
| | 1997.05-1999.10 | 5MT | F | L | MPV 4WD F3R750 | | GDS50324 | Drive Shaft | 44T | 23 | | 58.8 | 85 | 681 | |
| | 1997.05-1999.10 | 5MT | F | R | MPV 4WD F3R750 | | GDS50389 | Drive Shaft | 44T | 23 | 23 | 56.2 | 83.5 | 778 | |
| | 1997.05-1999.10 | 5MT | R | L/R | MPV 4WD F3R750 | | GDS50634 | Drive Shaft | 44T | 23 | 24 | 56.8 | 84 | 775 | |
| | 1997.05-1999.10 | 5MT | R | L/R | MPV 4WD F3R750 | | GCI50152 | Inner Joint | | 24 | 21 | 37.9 | 58 | 86 | |
| **Megane Van** | | | | | | | | | | | | | | | |
| 1.4 (70 kw) | 2001.04-2003.07 | | F | L | Estate Van FWD K4J714/K4J750 | | GDS50009 | Drive Shaft | 44T | 21 | | 57 | 84.5 | 645 | |
| | 2001.04-2003.07 | | F | R | Estate Van FWD K4J714/K4J750 | | GDS50038 | Drive Shaft | 44T | 21 | 23 | 52.2 | 85.5 | 752 | |
| | 2001.04-2003.07 | | F | R | Estate Van FWD K4J714/K4J750 | | GCO50066 | Outer Joint | 44T | 21 | 28 | 52.5 | 85 | 51 | I |
| 1.5 (60 kw) | 2003.08-2009.07 | 5MT | F | L | Estate Van FWD K9K 722 | | GDS99070 | Drive Shaft | | 23 | 26 | 49 | 86 | 675 | |
| | 2003.08-2009.07 | 5MT | F | R | Estate Van FWD K9K 722 | | GDS99071 | Drive Shaft | | 23 | 26 | 49 | 86 | 911 | |
| | 2003.08-2009.07 | 5MT | F | L/R | Estate Van FWD K9K 722 | | GCO99085 | Outer Joint | | 23 | 30 | 49 | 86 | 59 | I |
| | 2003.08-2009.07 | 5MT | F | L | Estate Van FWD K9K 722 | | GCI50048 | Inner Joint | | 26 | 30 | 40 | 64 | 121 | |
| | 2003.08-2009.07 | 5MT | F | R | Estate Van FWD K9K 722 | | GCI99169 | Inner Joint | | 26 | 30 | 33 | 326 | 95 | |
| 1.5 (63 kw) | 2005.05-2009.07 | 5MT | F | L | Estate Van FWD K9K 724 | | GDS99070 | Drive Shaft | | 23 | 26 | 49 | 86 | 675 | |
| | 2005.05-2009.07 | 5MT | F | R | Estate Van FWD K9K 724 | | GDS99071 | Drive Shaft | | 23 | 26 | 49 | 86 | 911 | |
| | 2005.05-2009.07 | 5MT | F | L/R | Estate Van FWD K9K 724 | | GCO99085 | Outer Joint | | 23 | 30 | 49 | 86 | 59 | I |
| | 2005.05-2009.07 | 5MT | F | L | Estate Van FWD K9K 724 | | GCI50048 | Inner Joint | | 26 | 30 | 40 | 64 | 121 | |
| | 2005.05-2009.07 | 5MT | F | R | Estate Van FWD K9K 724 | | GCI99169 | Inner Joint | | 26 | 30 | 33 | 326 | 95 | |
| | 2010.03-2015.08 | 5MT | F | L | Estate Van FWD K9K 830 | Date to:2012.02 | GDS50383 | Drive Shaft | | 25 | 26 | 52.7 | 88.5 | 688 | |
| | 2010.03-2015.08 | 5MT | F | L | Estate Van FWD K9K 830 | Date to:2012.02;Inner teeth of wheel side:33 | GDS50415 | Drive Shaft | | 25 | 26 | 52.6 | 89 | 704 | |
| | 2010.03-2015.08 | 5MT | F | L | Estate Van FWD K9K 830 | Date to:2012.02;Inner teeth of wheel side:35 | GDS50498 | Drive Shaft | | 25 | 26 | 52.6 | 89 | 702 | |
| | 2010.03-2015.08 | 5MT | F | L | Estate Van FWD K9K 830 | Date to:2012.02 | GCI50096 | Inner Joint | | 26 | 30 | 40 | 64 | 96 | |
| | 2010.03-2015.08 | 5MT | F | R | Estate Van FWD K9K 830 | | GCI50051 | Inner Joint | | 26 | 22 | 33 | 326 | 96 | |
| | 2010.03-2015.08 | | F | R | Estate Van FWD K9K 830 | | GDS50510 | Drive Shaft | | 25 | 26 | 52.4 | 88.5 | 929 | |
| | 2010.03-2015.08 | | F | L/R | Estate Van FWD K9K 830 | Date To:2012.02 | GCO50145 | Outer Joint | | 25 | 33 | 52.7 | 88.5 | 59.5 | I |
| | 2010.03-2015.08 | | F | L/R | Estate Van FWD K9K 830 | Date From:2012.03 | GCO50162 | Outer Joint | | 25 | 23 | 52.5 | 88.5 | 60.5 | M |
| 1.5 (66 kw) | 2010.03-2015.08 | 5MT | F | L | Estate Van FWD K9K 834 | | GDS50383 | Drive Shaft | | 25 | 26 | 52.7 | 88.5 | 688 | |
| | 2010.03-2015.08 | 5MT | F | L | Estate Van FWD K9K 834 | Date to:2012.02;Inner teeth of wheel side:33 | GDS50415 | Drive Shaft | | 25 | 26 | 52.6 | 89 | 704 | |
| | 2010.03-2015.08 | 5MT | F | L | Estate Van FWD K9K 834 | Date to:2012.02;Inner teeth of wheel side:35 | GDS50498 | Drive Shaft | | 25 | 26 | 52.6 | 89 | 702 | |
| | 2010.03-2015.08 | 5MT | F | L | Estate Van FWD K9K 834 | | GCI50096 | Inner Joint | | 26 | 30 | 40 | 64 | 96 | |
| | 2010.03-2015.08 | 5MT | F | R | Estate Van FWD K9K 834 | | GCI50051 | Inner Joint | | 26 | 22 | 33 | 326 | 96 | |
| | 2010.03-2015.08 | | F | R | Estate Van FWD K9K 834 | | GDS50510 | Drive Shaft | | 25 | 26 | 52.4 | 88.5 | 929 | |
| | 2010.03-2015.08 | | F | L/R | Estate Van FWD K9K 834 | Date To:2012.02 | GCO50145 | Outer Joint | | 25 | 33 | 52.7 | 88.5 | 59.5 | I |
| | 2010.03-2015.08 | | F | L/R | Estate Van FWD K9K 834 | Date From:2012.03 | GCO50162 | Outer Joint | | 25 | 23 | 52.5 | 88.5 | 60.5 | M |
| 1.5 (74 kw) | 2003.08-2009.07 | 5MT | F | L | Estate Van FWD K9K 728 | | GDS50516 | Drive Shaft | | 23 | 26 | 49 | 86 | 674 | |
| | 2003.08-2009.07 | 5MT | F | R | Estate Van FWD K9K 728 | | GDS99188 | Drive Shaft | | 23 | 26 | 49 | 86 | 916 | |
| | 2003.08-2009.07 | 5MT | F | L/R | Estate Van FWD K9K 728 | | GCO50117 | Outer Joint | | 23 | 32 | 49 | 86 | 62 | I |
| | 2003.08-2009.07 | 5MT | F | R | Estate Van FWD K9K 728 | | GCI99169 | Inner Joint | | 26 | 30 | 33 | 326 | 95 | |
| 1.5 (78 kw) | 2003.08-2009.07 | 6MT | F | L | Estate Van FWD K9K 732 | | GDS50402 | Drive Shaft | | 25 | 26 | 53 | 88 | 660 | |
| | 2003.08-2009.07 | 6MT | F | R | Estate Van FWD K9K 732 | | GDS50348 | Drive Shaft | | 25 | 26 | 53 | 88 | 905 | |
| | 2003.08-2009.07 | 6MT | F | L/R | Estate Van FWD K9K 732 | | GCO99213 | Outer Joint | | 25 | 33 | 53 | 88 | 61.5 | I |
| | 2003.08-2009.07 | | F | L | Estate Van FWD K9K 732 | | GDS50516 | Drive Shaft | | 23 | 26 | 49 | 86 | 674 | |
| | 2003.08-2009.07 | | F | R | Estate Van FWD K9K 732 | | GDS99188 | Drive Shaft | | 23 | 26 | 49 | 86 | 916 | |
| | 2010.03-2015.08 | 6MT | F | L | Estate Van FWD K9K 832 | | GCI50070 | Inner Joint | | 26 | 33 | 40 | 64 | 106 | |
| | 2010.03-2015.08 | 6MT | F | R | Estate Van FWD K9K 832 | Date from:2012.03 | GCI50051 | Inner Joint | | 26 | 22 | 33 | 326 | 96 | |

| | YEAR | TRANSM. | F/R | L/R | BODY STYLE & DRIVE TYPE & ENGINE | REMARKS | G-AP Ref. | PRODUCT | ABS | Technical Specifications A | B | C | H | L | P |
|---|---|---|---|---|---|---|---|---|---|---|---|---|---|---|---|
| **RENAULT** | | | | | | | | | | | | | | | |
| **Megane Van** | | | | | | | | | | | | | | | |
| 1.5 (78 kw) | 2010.03-2015.08 | | F | L | Estate Van FWD K9K 832 | | GDS50426 | Drive Shaft | | 25 | 26 | 52.7 | 88.5 | 680 | |
| | 2010.03-2015.08 | | F | R | Estate Van FWD K9K 832 | | GDS50425 | Drive Shaft | | 25 | 26 | 52.7 | 88.5 | 931 | |
| | 2010.03-2015.08 | | F | R | Estate Van FWD K9K 832 | Date From:2012.03 | GDS50510 | Drive Shaft | | 25 | 26 | 52.4 | 88.5 | 929 | |
| | 2010.03-2015.08 | | F | R | Estate Van FWD K9K 832 | Date From:2012.03 | GCO50162 | Outer Joint | | 25 | 23 | 52.5 | 88.5 | 60.5 | M |
| 1.5 (81 kw) | 2009.01-2015.08 | 6MT | F | R | Estate Van FWD K9K 836;K9K 837 | Date From:2012.03 | GDS50510 | Drive Shaft | | 25 | 26 | 52.4 | 88.5 | 929 | |
| | 2009.01-2015.08 | AT | F | L | Estate Van FWD K9K 836;K9K 837 | | GDS50535 | Drive Shaft | | 25 | 34 | 52.7 | 88.5 | 632 | |
| | 2009.01-2015.08 | AT | F | R | Estate Van FWD K9K 836;K9K 837 | | GDS50536 | Drive Shaft | | 25 | 34 | 52.6 | 89 | 984 | |
| | 2009.01-2015.08 | MT | F | L | Estate Van FWD K9K 836;K9K 837 | | GDS50426 | Drive Shaft | | 25 | 26 | 52.7 | 88.5 | 680 | |
| | 2009.01-2015.08 | MT | F | R | Estate Van FWD K9K 836;K9K 837 | | GDS50425 | Drive Shaft | | 25 | 26 | 52.7 | 88.5 | 931 | |
| | 2009.01-2015.08 | | F | L/R | Estate Van FWD K9K 836;K9K 837 | Date From:2012.03 | GCO50162 | Outer Joint | | 25 | 23 | 52.5 | 88.5 | 60.5 | M |
| 1.6 (79 kw) | 2001.04-2003.07 | | F | L | Estate Van FWD K4M700/K4M701/K4M708/K4M709 | For Engine code:K4M708 | GDS50009 | Drive Shaft | 44T | 21 | | 57 | 84.5 | 645 | |
| | 2001.04-2003.07 | | F | L | Estate Van FWD K4M700/K4M701/K4M708/K4M709 | For Engine code:K4M709 | GDS50253 | Drive Shaft | 44T | 23 | 26 | 57.5 | 86.5 | 637 | |
| | 2001.04-2003.07 | | F | R | Estate Van FWD K4M700/K4M701/K4M708/K4M709 | For Engine code:K4M708 | GDS50038 | Drive Shaft | 44T | 21 | 23 | 52.2 | 85.5 | 752 | |
| | 2001.04-2003.07 | | F | R | Estate Van FWD K4M700/K4M701/K4M708/K4M709 | For Engine code:K4M709 | GDS50323 | Drive Shaft | 44T | 23 | 23 | 57.5 | 86.5 | 778 | |
| | 2001.04-2003.07 | | F | R | Estate Van FWD K4M700/K4M701/K4M708/K4M709 | For Engine code:K4M708 | GCO50066 | Outer Joint | 44T | 21 | 28 | 52.5 | 85 | 51 | I |
| | 2001.04-2003.07 | | F | L | Estate Van FWD K4M712 | | GDS50009 | Drive Shaft | 44T | 21 | | 57 | 84.5 | 645 | |
| | 2001.04-2003.07 | | F | R | Estate Van FWD K4M712 | | GDS50038 | Drive Shaft | 44T | 21 | 23 | 52.2 | 85.5 | 752 | |
| | 2001.04-2003.07 | | F | R | Estate Van FWD K4M712 | | GCO50066 | Outer Joint | 44T | 21 | 28 | 52.5 | 85 | 51 | I |
| 1.6 (80 kw) | 2001.04-2003.07 | | F | L | Estate Van FWD K4M704 | | GDS50009 | Drive Shaft | 44T | 21 | | 57 | 84.5 | 645 | |
| | 2001.04-2003.07 | | F | R | Estate Van FWD K4M704 | | GDS50038 | Drive Shaft | 44T | 21 | 23 | 52.2 | 85.5 | 752 | |
| | 2001.04-2003.07 | | F | R | Estate Van FWD K4M704 | | GCO50066 | Outer Joint | 44T | 21 | 28 | 52.5 | 85 | 51 | I |
| 1.6 (82 kw) | 2003.10-2008.01 | 5MT | F | L | Estate Van FWD K4M 760;K4M 812 | | GDS99070 | Drive Shaft | | 23 | 26 | 49 | 86 | 675 | |
| | 2003.10-2008.01 | 5MT | F | R | Estate Van FWD K4M 760;K4M 812 | | GDS99071 | Drive Shaft | | 23 | 26 | 49 | 86 | 911 | |
| | 2003.10-2008.01 | 5MT | F | L/R | Estate Van FWD K4M 760;K4M 812 | | GCO99085 | Outer Joint | | 23 | 30 | 49 | 86 | 59 | I |
| | 2003.10-2008.01 | 5MT | F | L | Estate Van FWD K4M 760;K4M 812 | | GCI50048 | Inner Joint | | 26 | 30 | 40 | 64 | 121 | |
| | 2003.10-2008.01 | 5MT | F | R | Estate Van FWD K4M 760;K4M 812 | | GCI99169 | Inner Joint | | 26 | 30 | 33 | 326 | 95 | |
| 1.8 (85 kw) | 2001.04-2003.07 | 5MT | F | R | Estate Van FWD F4P722 | | GCI99131 | Inner Joint | | 23 | 28 | | 182.8 | 86 | |
| | 2001.04-2003.07 | | F | L | Estate Van FWD F4P722 | | GDS50160 | Drive Shaft | 44T | 23 | | 57 | 87 | 656.5 | |
| | 2001.04-2003.07 | | F | R | Estate Van FWD F4P722 | | GDS50313 | Drive Shaft | 44T | 23 | 23 | 57.5 | 86.5 | 750 | |
| | 2001.04-2003.07 | | F | L | Estate Van FWD F4P722 | | GCO50058 | Outer Joint | 44T | 23 | 35 | 57 | 87 | 71 | I |
| 1.9 (47 kw) | 2000.02-2000.09 | | F | L | Estate Van FWD F8Q622 | | GDS50009 | Drive Shaft | 44T | 21 | | 57 | 84.5 | 645 | |
| | 2000.02-2000.09 | | F | R | Estate Van FWD F8Q622 | | GDS50021 | Drive Shaft | 44T | 21 | 23 | 57 | 84.5 | 750 | |
| | 2000.02-2000.09 | | F | R | Estate Van FWD F8Q622 | | GDS50327 | Drive Shaft | 44T | 21 | 23 | 57 | 84.5 | 740 | |
| | 2000.02-2000.09 | | F | L/R | Estate Van FWD F8Q622 | | GCO50076 | Outer Joint | 44T | 21 | 30 | 57 | 84.5 | 62 | M |
| 1.9 (59 kw) | 2001.04-2003.07 | 5MT | F | R | Estate Van FWD F9Q744 | | GCI99131 | Inner Joint | | 23 | 28 | | 182.8 | 86 | |
| | 2001.04-2003.07 | | F | L | Estate Van FWD F9Q744 | | GDS50311 | Drive Shaft | 44T | 23 | 30 | 56 | 82 | 650 | |
| | 2001.04-2003.07 | | F | R | Estate Van FWD F9Q744 | | GDS50313 | Drive Shaft | 44T | 23 | 23 | 57.5 | 86.5 | 750 | |
| | 2001.04-2003.07 | | F | L | Estate Van FWD F9Q744 | | GCO50058 | Outer Joint | 44T | 23 | 35 | 57 | 87 | 71 | I |
| 1.9 (75 kw) | 2001.04-2003.07 | | F | L | Estate Van FWD F9Q732/F9Q733 | | GDS50253 | Drive Shaft | 44T | 23 | 26 | 57.5 | 86.5 | 637 | |
| | 2001.04-2003.07 | | F | R | Estate Van FWD F9Q732/F9Q733 | | GDS50323 | Drive Shaft | 44T | 23 | 23 | 57.5 | 86.5 | 778 | |
| | 2001.04-2003.07 | | F | L/R | Estate Van FWD F9Q732/F9Q733 | | GCO50069 | Outer Joint | 44T | 23 | 30 | 57.5 | 86.5 | 58.5 | I |
| 1.9 (77 kw) | 2001.04-2003.07 | 4AT/5MT | F | R | Estate Van FWD F9Q732/F9Q733 | | GCI50008 | Inner Joint | | 23 | 30 | 36.3 | | 120.7 | |
| | 2001.04-2003.07 | | F | L | Estate Van FWD F9Q732/F9Q733 | | GDS50148 | Drive Shaft | 44T | 23 | | 57.5 | 86.5 | 657 | |
| | 2001.04-2003.07 | | F | R | Estate Van FWD F9Q732/F9Q733 | | GDS50159 | Drive Shaft | 44T | 23 | 23 | 57 | 87 | 748 | |
| | 2001.04-2003.07 | | F | R | Estate Van FWD F9Q732/F9Q733 | | GCO50069 | Outer Joint | 44T | 23 | 30 | 57.5 | 86.5 | 58.5 | I |
| **Modus** | | | | | | | | | | | | | | | |
| 1.2 (48 kw) | 2005.05-2007.10 | 5MT | F | L | Hatchback FWD D4F 740 | | GDS50369 | Drive Shaft | | 23 | 26 | 49 | 83.5 | 651 | |
| | 2005.05-2007.10 | 5MT | F | R | Hatchback FWD D4F 740 | | GDS50372 | Drive Shaft | | 23 | 26 | 49 | 83.5 | 890 | |
| | 2005.05-2007.10 | 5MT | F | L/R | Hatchback FWD D4F 740 | | GCO50112 | Outer Joint | | 23 | 28 | 49 | 83.5 | 54.5 | I |
| 1.5 (60 kw) | 2004.09-2007.10 | 5MT | F | L | Hatchback FWD K9K 750 | Inner teeth of wheel side:28 | GDS50369 | Drive Shaft | | 23 | 26 | 49 | 83.5 | 651 | |
| | 2004.09-2007.10 | 5MT | F | R | Hatchback FWD K9K 750 | Inner teeth of wheel side:28 | GDS50372 | Drive Shaft | | 23 | 26 | 49 | 83.5 | 890 | |
| | 2004.09-2007.10 | 5MT | F | L/R | Hatchback FWD K9K 750 | | GCO50112 | Outer Joint | | 23 | 28 | 49 | 83.5 | 54.5 | I |
| | 2004.09-2007.10 | MT | F | L | Hatchback FWD K9K 750 | Inner teeth of wheel side:30 | GDS50353 | Drive Shaft | | 23 | 26 | 49 | 86 | 649 | |
| | 2004.09-2007.10 | MT | F | R | Hatchback FWD K9K 750 | Inner teeth of wheel side:30 | GDS50354 | Drive Shaft | | 23 | 26 | 49 | 86 | 897 | |
| | 2004.09-2007.10 | MT | F | R | Hatchback FWD K9K 750 | | GCI99169 | Inner Joint | | 26 | 30 | 33 | 326 | 95 | |
| 1.6 (65 kw) | 2004.12-2007.10 | 5MT | F | L | Hatchback FWD K4M 794 | | GDS50369 | Drive Shaft | | 23 | 26 | 49 | 83.5 | 651 | |
| | 2004.12-2007.10 | 5MT | F | L/R | Hatchback FWD K4M 794 | | GCO50112 | Outer Joint | | 23 | 28 | 49 | 83.5 | 54.5 | I |
| | 2004.12-2007.10 | AT | F | L | Hatchback FWD K4M 794 | Date to:2007.10 | GDS50574 | Drive Shaft | | 23 | 26 | 49 | 86 | 652 | |
| | 2004.12-2007.10 | MT | F | L | Hatchback FWD K4M 794 | | GDS50353 | Drive Shaft | | 23 | 26 | 49 | 86 | 649 | |
| | 2004.12-2007.10 | MT | F | R | Hatchback FWD K4M 794 | | GDS50354 | Drive Shaft | | 23 | 26 | 49 | 86 | 897 | |
| | 2004.12-2007.10 | MT | F | L/R | Hatchback FWD K4M 794 | | GCO99085 | Outer Joint | | 23 | 30 | 49 | 86 | 59 | I |
| | 2004.12-2007.10 | MT | F | | Hatchback FWD K4M 794 | | GCO50117 | Outer Joint | | 23 | 32 | 49 | 86 | 62 | I |
| | 2004.12-2007.10 | MT | F | R | Hatchback FWD K4M 794 | | GCI99169 | Inner Joint | | 26 | 30 | 33 | 326 | 95 | |
| | 2004.12-2007.10 | | F | R | Hatchback FWD K4M 794 | | GDS50372 | Drive Shaft | | 23 | 26 | 49 | 83.5 | 890 | |
| | 2004.12-2007.10 | | F | R | Hatchback FWD K4M 794 | Date To:2007.10;for OE number:8200261838;For Engine Code:K4M801 | GDS50443 | Drive Shaft | | 23 | 23 | 49 | 86 | 789 | |

| | YEAR | TRANSM. | F/R | L/R | BODY STYLE & DRIVE TYPE & ENGINE | REMARKS | G-AP Ref. | PRODUCT | ABS | Technical Specifications A | B | C | H | L | P |
|---|---|---|---|---|---|---|---|---|---|---|---|---|---|---|---|
| **RENAULT** **Modus/Grand Modus** | | | | | | | | | | | | | | | |
| 1.2 (55 kw) | 2004.12-2013.12 | 5MT | F | L | Hatchback FWD D4F 740 | | GDS50369 | Drive Shaft | | 23 | 26 | 49 | 83.5 | 651 | |
| | 2004.12-2013.12 | 5MT | F | R | Hatchback FWD D4F 740 | | GDS50372 | Drive Shaft | | 23 | 26 | 49 | 83.5 | 890 | |
| | 2004.12-2013.12 | 5MT | F | L/R | Hatchback FWD D4F 740 | | GCO50112 | Outer Joint | | 23 | 28 | 49 | 83.5 | 54.5 | I |
| | 2008.05-2012.12 | MT | F | L | Hatchback FWD D4F 744 | | GDS50369 | Drive Shaft | | 23 | 26 | 49 | 83.5 | 651 | |
| | 2008.05-2012.12 | MT | F | R | Hatchback FWD D4F 744 | | GDS50372 | Drive Shaft | | 23 | 26 | 49 | 83.5 | 890 | |
| | 2008.05-2012.12 | MT | F | L/R | Hatchback FWD D4F 744 | | GCO50112 | Outer Joint | | 23 | 28 | 49 | 83.5 | 54.5 | I |
| | 2008.10-2013.12 | 5MT | F | L | Hatchback FWD D4F 740 | | GDS50369 | Drive Shaft | | 23 | 26 | 49 | 83.5 | 651 | |
| | 2008.10-2013.12 | 5MT | F | R | Hatchback FWD D4F 740 | | GDS50372 | Drive Shaft | | 23 | 26 | 49 | 83.5 | 890 | |
| | 2008.10-2013.12 | MT | F | L/R | Hatchback FWD D4F 740 | | GCO50112 | Outer Joint | | 23 | 28 | 49 | 83.5 | 54.5 | I |
| 1.2 (58 kw) | 2004.12-2013.12 | 5MT | F | L | Hatchback FWD D4F 764 | | GDS50369 | Drive Shaft | | 23 | 26 | 49 | 83.5 | 651 | |
| | 2004.12-2013.12 | 5MT | F | R | Hatchback FWD D4F 764 | | GDS50372 | Drive Shaft | | 23 | 26 | 49 | 83.5 | 890 | |
| | 2004.12-2013.12 | 5MT | F | L/R | Hatchback FWD D4F 764 | | GCO50112 | Outer Joint | | 23 | 28 | 49 | 83.5 | 54.5 | I |
| 1.2 (74 kw) | 2007.05-2013.12 | 5MT | F | L | Hatchback FWD D4F 784 | | GDS50369 | Drive Shaft | | 23 | 26 | 49 | 83.5 | 651 | |
| | 2007.05-2013.12 | 5MT | F | R | Hatchback FWD D4F 784 | | GDS50372 | Drive Shaft | | 23 | 26 | 49 | 83.5 | 890 | |
| | 2007.05-2013.12 | 5MT | F | L/R | Hatchback FWD D4F 784 | | GCO50112 | Outer Joint | | 23 | 28 | 49 | 83.5 | 54.5 | I |
| | 2007.05-2013.12 | MT | F | L | Hatchback FWD D4F 784 | | GCI50048 | Inner Joint | | 26 | 30 | 40 | 64 | 121 | |
| | 2007.05-2013.12 | | F | | Hatchback FWD D4F 784 | | GCO50092 | Outer Joint | | 23 | 29 | 49 | 86 | 57 | I |
| 1.2 (76 kw) | 2011.04-2013.12 | 5MT | F | L | Hatchback FWD D4F 786 | | GDS50353 | Drive Shaft | | 23 | 26 | 49 | 86 | 649 | |
| | 2011.04-2013.12 | 5MT | F | R | Hatchback FWD D4F 786 | | GDS50573 | Drive Shaft | | 23 | 26 | 49 | 86 | 891 | |
| | 2011.04-2013.12 | MT | F | L | Hatchback FWD D4F 786 | | GCO50092 | Outer Joint | | 23 | 29 | 49 | 86 | 57 | I |
| | 2011.04-2013.12 | MT | F | L | Hatchback FWD D4F 786 | | GCI50048 | Inner Joint | | 26 | 30 | 40 | 64 | 121 | |
| 1.4 (72 kw) | 2004.12-2013.12 | 5MT | F | L | Hatchback FWD K4J 780, K4J 770 | | GDS50369 | Drive Shaft | | 23 | 26 | 49 | 83.5 | 651 | |
| | 2004.12-2013.12 | 5MT | F | R | Hatchback FWD K4J 780, K4J 770 | | GDS50372 | Drive Shaft | | 23 | 26 | 49 | 83.5 | 890 | |
| | 2004.12-2013.12 | 5MT | F | L/R | Hatchback FWD K4J 780, K4J 770 | | GCO50112 | Outer Joint | | 23 | 28 | 49 | 83.5 | 54.5 | I |
| | 2004.12-2013.12 | MT | F | L | Hatchback FWD K4J 780, K4J 770 | | GDS50353 | Drive Shaft | | 23 | 26 | 49 | 86 | 649 | |
| | 2004.12-2013.12 | MT | F | R | Hatchback FWD K4J 780, K4J 770 | | GDS50354 | Drive Shaft | | 23 | 26 | 49 | 86 | 897 | |
| | 2004.12-2013.12 | MT | F | R | Hatchback FWD K4J 780, K4J 770 | | GCI99169 | Inner Joint | | 26 | 30 | 33 | 326 | 95 | |
| | 2004.12-2013.12 | | F | | Hatchback FWD K4J 780, K4J 770 | | GCO99085 | Outer Joint | | 23 | 30 | 49 | 86 | 59 | I |
| 1.5 (48 kw) | 2004.12-2013.12 | 5MT | F | L | Hatchback FWD K9K 768, K9K 752 | | GDS50369 | Drive Shaft | | 23 | 26 | 49 | 83.5 | 651 | |
| | 2004.12-2013.12 | 5MT | F | R | Hatchback FWD K9K 768, K9K 752 | | GDS50372 | Drive Shaft | | 23 | 26 | 49 | 83.5 | 890 | |
| | 2004.12-2013.12 | 5MT | F | L/R | Hatchback FWD K9K 768, K9K 752 | | GCO50112 | Outer Joint | | 23 | 28 | 49 | 83.5 | 54.5 | I |
| | 2004.12-2013.12 | MT | F | R | Hatchback FWD K9K 768, K9K 752 | | GCI99169 | Inner Joint | | 26 | 30 | 33 | 326 | 95 | |
| | 2004.12-2013.12 | | F | L | Hatchback FWD K9K 768, K9K 752 | | GDS50353 | Drive Shaft | | 23 | 26 | 49 | 86 | 649 | |
| | 2004.12-2013.12 | | F | R | Hatchback FWD K9K 768, K9K 752 | | GDS50354 | Drive Shaft | | 23 | 26 | 49 | 86 | 897 | |
| 1.5 (50 kw) | 2004.12-2013.12 | 5MT | F | L | Hatchback FWD K9K 768 | | GDS50369 | Drive Shaft | | 23 | 26 | 49 | 83.5 | 651 | |
| | 2004.12-2013.12 | 5MT | F | R | Hatchback FWD K9K 768 | | GDS50372 | Drive Shaft | | 23 | 26 | 49 | 83.5 | 890 | |
| | 2004.12-2013.12 | 5MT | F | L/R | Hatchback FWD K9K 768 | | GCO50112 | Outer Joint | | 23 | 28 | 49 | 83.5 | 54.5 | I |
| | 2004.12-2013.12 | MT | F | L | Hatchback FWD K9K 768 | | GDS50353 | Drive Shaft | | 23 | 26 | 49 | 86 | 649 | |
| | 2004.12-2013.12 | MT | F | L | Hatchback FWD K9K 768 | Date From:2011.03;Date To:2013.12 | GDS50630 | Drive Shaft | | 23 | 26 | 49 | 83 | 653 | |
| | 2004.12-2013.12 | MT | F | R | Hatchback FWD K9K 768 | Date from:2011.03 | GDS50354 | Drive Shaft | | 23 | 26 | 49 | 86 | 897 | |
| | 2004.12-2013.12 | MT | F | R | Hatchback FWD K9K 768 | Date from:2011.03 | GDS50625 | Drive Shaft | | 23 | 26 | 49 | 83.5 | 893 | |
| | 2004.12-2013.12 | MT | F | L/R | Hatchback FWD K9K 768 | Date to:2011.02 | GCO50092 | Outer Joint | | 23 | 29 | 49 | 86 | 57 | I |
| | 2004.12-2013.12 | MT | F | L/R | Hatchback FWD K9K 768 | Date From:2011.03 | GCO50168 | Outer Joint | | 23 | 30 | 49 | 83.5 | 54.5 | I |
| | 2004.12-2013.12 | MT | F | L/R | Hatchback FWD K9K 768 | Date To:2011.02 | GCO99085 | Outer Joint | | 23 | 30 | 49 | 86 | 59 | I |
| | 2004.12-2013.12 | MT | F | R | Hatchback FWD K9K 768 | Date from:2011.03 | GCI50148 | Inner Joint | | 26 | 30 | 33 | 326 | 90 | |
| | 2004.12-2013.12 | MT | F | R | Hatchback FWD K9K 768 | Date from:2007.11,Date to:2011.02 | GCI99169 | Inner Joint | | 26 | 30 | 33 | 326 | 95 | |
| 1.5 (55 kw) | 2010.10-2013.12 | 5MT | F | L | Hatchback FWD K9K 770 | | GDS50353 | Drive Shaft | | 23 | 26 | 49 | 86 | 649 | |
| | 2010.10-2013.12 | 5MT | F | L | Hatchback FWD K9K 770 | Date From:2011.03;Date To:2013.12;Type:modus | GDS50630 | Drive Shaft | | 23 | 26 | 49 | 83 | 653 | |
| | 2010.10-2013.12 | 5MT | F | R | Hatchback FWD K9K 770 | | GDS50354 | Drive Shaft | | 23 | 26 | 49 | 86 | 897 | |
| | 2010.10-2013.12 | 5MT | F | R | Hatchback FWD K9K 770 | Date To:2013.12;Type:modus | GDS50625 | Drive Shaft | | 23 | 26 | 49 | 83.5 | 893 | |
| | 2010.10-2013.12 | 5MT | F | R | Hatchback FWD K9K 770 | | GCI50148 | Inner Joint | | 26 | 30 | 33 | 326 | 90 | |
| | 2010.10-2013.12 | MT | F | L | Hatchback FWD K9K 770 | Date to:2011.02 | GCO50092 | Outer Joint | | 23 | 29 | 49 | 86 | 57 | I |
| | 2010.10-2013.12 | MT | F | R | Hatchback FWD K9K 770 | Date from:2011.03 | GCO50168 | Outer Joint | | 23 | 30 | 49 | 83.5 | 54.5 | I |
| | 2010.10-2013.12 | MT | F | L/R | Hatchback FWD K9K 770 | Date to:2011.02 | GCO99085 | Outer Joint | | 23 | 30 | 49 | 86 | 59 | I |
| | 2010.10-2013.12 | MT | F | R | Hatchback FWD K9K 770 | | GCI99169 | Inner Joint | | 26 | 30 | 33 | 326 | 95 | |
| 1.5 (63 kw) | 2004.12-2013.12 | MT | F | L | Hatchback FWD K9K 766, K9K 772, K9K 760 | Date to:2011.02 | GDS50353 | Drive Shaft | | 23 | 26 | 49 | 86 | 649 | |
| | 2004.12-2013.12 | MT | F | L | Hatchback FWD K9K 766, K9K 772, K9K 760 | Date from:2011.03 | GDS50630 | Drive Shaft | | 23 | 26 | 49 | 83 | 653 | |
| | 2004.12-2013.12 | MT | F | R | Hatchback FWD K9K 766, K9K 772, K9K 760 | Date to:2011.02 | GDS50354 | Drive Shaft | | 23 | 26 | 49 | 86 | 897 | |
| | 2004.12-2013.12 | MT | F | R | Hatchback FWD K9K 766, K9K 772, K9K 760 | Date from:2011.03 | GDS50625 | Drive Shaft | | 23 | 26 | 49 | 83.5 | 893 | |
| | 2004.12-2013.12 | MT | F | L | Hatchback FWD K9K 766, K9K 772, K9K 760 | Date from:2011.03 | GCO50092 | Outer Joint | | 23 | 29 | 49 | 86 | 57 | I |
| | 2004.12-2013.12 | MT | F | L/R | Hatchback FWD K9K 766, K9K 772, K9K 760 | | GCO50117 | Outer Joint | | 23 | 32 | 49 | 86 | 62 | I |
| | 2004.12-2013.12 | MT | F | L/R | Hatchback FWD K9K 766, K9K 772, K9K 760 | Date from:2011.03 | GCO50168 | Outer Joint | | 23 | 30 | 49 | 83.5 | 54.5 | I |
| | 2004.12-2013.12 | MT | F | L/R | Hatchback FWD K9K 766, K9K 772, K9K 760 | Date to:2011.02 | GCO99085 | Outer Joint | | 23 | 30 | 49 | 86 | 59 | I |
| | 2004.12-2013.12 | MT | F | L | Hatchback FWD K9K 766, K9K 772, K9K 760 | Date from:2011.03 | GCI50134 | Inner Joint | | 26 | 30 | 40 | 64 | 96 | |
| | 2004.12-2013.12 | MT | F | R | Hatchback FWD K9K 766, K9K 772, K9K 760 | Date from:2011.03 | GCI50148 | Inner Joint | | 26 | 30 | 33 | 326 | 90 | |

| | YEAR | TRANSM. | F/R | L/R | BODY STYLE & DRIVE TYPE & ENGINE | REMARKS | G-AP Ref. | PRODUCT | ABS | Technical Specifications A | B | C | H | L | P |
|---|---|---|---|---|---|---|---|---|---|---|---|---|---|---|---|
| **RENAULT** | | | | | | | | | | | | | | | |
| **Modus/Grand Modus** | | | | | | | | | | | | | | | |
| 1.5 (63 kw) | 2004.12-2013.12 | MT | F | R | Hatchback FWD K9K 766, K9K 772, K9K 760 | Date from:2007.08,Date to:2011.02 | GCI99169 | Inner Joint | | 26 | 30 | 33 | 326 | 95 | |
| 1.5 (65 kw) | 2010.10-2013.12 | 5MT | F | L | Hatchback FWD K9K 770, K9K 750 | | GDS50353 | Drive Shaft | | 23 | 26 | 49 | 86 | 649 | |
| | 2010.10-2013.12 | 5MT | F | L | Hatchback FWD K9K 770, K9K 750 | Date From:2011.03;Date To:2013.12;Type:modus | GDS50630 | Drive Shaft | | 23 | 26 | 49 | 83 | 653 | |
| | 2010.10-2013.12 | 5MT | F | R | Hatchback FWD K9K 770, K9K 750 | | GDS50354 | Drive Shaft | | 23 | 26 | 49 | 86 | 897 | |
| | 2010.10-2013.12 | 5MT | F | R | Hatchback FWD K9K 770, K9K 750 | Date To:2013.12;Type:modus | GDS50625 | Drive Shaft | | 23 | 26 | 49 | 83.5 | 893 | |
| | 2010.10-2013.12 | 5MT | F | R | Hatchback FWD K9K 770, K9K 750 | | GCI50148 | Inner Joint | | 26 | 30 | 33 | 326 | 90 | |
| | 2010.10-2013.12 | MT | F | L | Hatchback FWD K9K 770, K9K 750 | Date to:2011.02 | GCO50092 | Outer Joint | | 23 | 29 | 49 | 86 | 57 | I |
| | 2010.10-2013.12 | MT | F | R | Hatchback FWD K9K 770, K9K 750 | Date from:2011.03 | GCO50168 | Outer Joint | | 23 | 30 | 49 | 83.5 | 54.5 | I |
| | 2010.10-2013.12 | MT | F | L/R | Hatchback FWD K9K 770, K9K 750 | Date to:2011.02 | GCO99085 | Outer Joint | | 23 | 30 | 49 | 86 | 59 | I |
| | 2010.10-2013.12 | MT | F | R | Hatchback FWD K9K 770, K9K 750 | | GCI99169 | Inner Joint | | 26 | 30 | 33 | 326 | 95 | |
| | 2010.10-2013.12 | | F | | Hatchback FWD K9K 770, K9K 750 | | GCO50117 | Outer Joint | | 23 | 32 | 49 | 86 | 62 | I |
| 1.5 (76 kw) | 2007.05-2013.12 | 6MT | F | L | Hatchback FWD K9K 772 | | GDS50379 | Drive Shaft | | 25 | 26 | 52.8 | 85.5 | 650 | |
| | 2007.05-2013.12 | 6MT | F | R | Hatchback FWD K9K 772 | | GDS50483 | Drive Shaft | | 25 | 26 | 52.8 | 85.5 | 891 | |
| | 2007.05-2013.12 | 6MT | F | L/R | Hatchback FWD K9K 772 | | GCO50143 | Outer Joint | | 25 | 32 | 52.8 | 85.5 | 62.5 | I |
| | 2007.05-2013.12 | MT | F | L | Hatchback FWD K9K 772 | | GDS50353 | Drive Shaft | | 23 | 26 | 49 | 86 | 649 | |
| | 2007.05-2013.12 | MT | F | R | Hatchback FWD K9K 772 | | GDS50354 | Drive Shaft | | 23 | 26 | 49 | 86 | 897 | |
| | 2007.05-2013.12 | MT | F | L/R | Hatchback FWD K9K 772 | | GCO99085 | Outer Joint | | 23 | 30 | 49 | 86 | 59 | I |
| | 2007.05-2013.12 | MT | F | R | Hatchback FWD K9K 772 | Date to:2011.04 | GCI99169 | Inner Joint | | 26 | 30 | 33 | 326 | 95 | |
| 1.5 (78 kw) | 2005.05-2013.12 | 5MT/6MT | F | L | Hatchback FWD K9K 764 | | GDS50369 | Drive Shaft | | 23 | 26 | 49 | 83.5 | 651 | |
| | 2005.05-2013.12 | 5MT/6MT | F | R | Hatchback FWD K9K 764 | | GDS50372 | Drive Shaft | | 23 | 26 | 49 | 83.5 | 890 | |
| | 2005.05-2013.12 | 5MT/6MT | F | L/R | Hatchback FWD K9K 764 | Model:Modus,Model code:FP0F/JP0F | GCO50112 | Outer Joint | | 23 | 28 | 49 | 83.5 | 54.5 | I |
| | 2005.05-2013.12 | 6MT | F | L/R | Hatchback FWD K9K 764 | | GCO50143 | Outer Joint | | 25 | 32 | 52.8 | 85.5 | 62.5 | I |
| | 2005.05-2013.12 | MT | F | L | Hatchback FWD K9K 764 | | GDS50379 | Drive Shaft | | 25 | 26 | 52.8 | 85.5 | 650 | |
| | 2005.05-2013.12 | MT | F | R | Hatchback FWD K9K 764 | | GDS50483 | Drive Shaft | | 25 | 26 | 52.8 | 85.5 | 891 | |
| | 2005.05-2013.12 | MT | F | R | Hatchback FWD K9K 764 | Date to:2013.12 | GCI99169 | Inner Joint | | 26 | 30 | 33 | 326 | 95 | |
| 1.6 (82 kw) | 2004.12-2013.12 | AT | F | L | Hatchback FWD K4M 790, K4M 791, K4M 800, K4M 801 | | GDS50574 | Drive Shaft | | 23 | 26 | 49 | 86 | 652 | |
| | 2004.12-2013.12 | MT | F | L | Hatchback FWD K4M 790, K4M 791, K4M 800, K4M 801 | | GDS50353 | Drive Shaft | | 23 | 26 | 49 | 86 | 649 | |
| | 2004.12-2013.12 | MT | F | L | Hatchback FWD K4M 790, K4M 791, K4M 800, K4M 801 | | GDS50369 | Drive Shaft | | 23 | 26 | 49 | 83.5 | 651 | |
| | 2004.12-2013.12 | MT | F | R | Hatchback FWD K4M 790, K4M 791, K4M 800, K4M 801 | | GDS50354 | Drive Shaft | | 23 | 26 | 49 | 86 | 897 | |
| | 2004.12-2013.12 | MT | F | R | Hatchback FWD K4M 790, K4M 791, K4M 800, K4M 801 | | GDS50372 | Drive Shaft | | 23 | 26 | 49 | 83.5 | 890 | |
| | 2004.12-2013.12 | MT | F | L | Hatchback FWD K4M 790, K4M 791, K4M 800, K4M 801 | | GCO50112 | Outer Joint | | 23 | 28 | 49 | 83.5 | 54.5 | I |
| | 2004.12-2013.12 | MT | F | L/R | Hatchback FWD K4M 790, K4M 791, K4M 800, K4M 801 | | GCO99085 | Outer Joint | | 23 | 30 | 49 | 86 | 59 | I |
| | 2004.12-2013.12 | MT | F | R | Hatchback FWD K4M 790, K4M 791, K4M 800, K4M 801 | | GCI99169 | Inner Joint | | 26 | 30 | 33 | 326 | 95 | |
| | 2004.12-2013.12 | | F | R | Hatchback FWD K4M 790, K4M 791, K4M 800, K4M 801 | Date From:2007.10;Date To:2013.12;For OE number:8200918938;For Engine Code:K4M 791/K4M 801 | GDS50443 | Drive Shaft | | 23 | 23 | 49 | 86 | 789 | |
| **Rapid** | | | | | | | | | | | | | | | |
| 1.2 (40 kw) | 1991.09-1998.03 | MT | F | L | Box Body/MPV FWD C3G 712, C3G 710 | | GDS50120 | Drive Shaft | | 21 | 30 | 46.3 | 80.5 | 591.5 | |
| | 1991.09-1998.03 | MT | F | R | Box Body/MPV FWD C3G 712, C3G 710 | Trans. code:JB0/1 | GDS50044 | Drive Shaft | | 21 | 23 | 46.3 | 81.5 | 693.5 | |
| | 1991.09-1998.03 | | F | R | Box Body/MPV FWD C3G 712, C3G 710 | | GDS50023 | Drive Shaft | | 21 | 23 | 46.2 | 82 | 680 | |
| 1.4 (58 kw) | 1994.01-1998.03 | AT | F | L | Box Body/MPV FWD E7J 728 | | GDS50201 | Drive Shaft | | 21 | 30 | 49.8 | 83.5 | 597 | |
| | 1994.01-1998.03 | MT | F | L | Box Body/MPV FWD E7J 728 | | GDS50120 | Drive Shaft | | 21 | 30 | 46.3 | 80.5 | 591.5 | |
| | 1994.01-1998.03 | MT | F | R | Box Body/MPV FWD E7J 728 | Trans. code:JB0/1 | GDS50044 | Drive Shaft | | 21 | 23 | 46.3 | 81.5 | 693.5 | |
| | 1994.01-1998.03 | | F | R | Box Body/MPV FWD E7J 728 | | GDS50023 | Drive Shaft | | 21 | 23 | 46.2 | 82 | 680 | |
| 1.4 (59 kw) | 1995.05-1997.08 | AT | F | L | Box Body/MPV FWD E7J 773 | | GDS50201 | Drive Shaft | | 21 | 30 | 49.8 | 83.5 | 597 | |
| | 1995.05-1997.08 | MT | F | L | Box Body/MPV FWD E7J 773 | | GDS50120 | Drive Shaft | | 21 | 30 | 46.3 | 80.5 | 591.5 | |
| | 1995.05-1997.08 | MT | F | R | Box Body/MPV FWD E7J 773 | | GDS50044 | Drive Shaft | | 21 | 23 | 46.3 | 81.5 | 693.5 | |
| 1.6 (40 kw) | 1986.03-1998.08 | MT | F | L | Box Body/MPV FWD F8M 720, F8M 730, F8M 736, F8M 760 | | GDS50120 | Drive Shaft | | 21 | 30 | 46.3 | 80.5 | 591.5 | |
| | 1986.03-1998.08 | MT | F | R | Box Body/MPV FWD F8M 720, F8M 730, F8M 736, F8M 760 | Trans. code:JB0/1 | GDS50044 | Drive Shaft | | 21 | 23 | 46.3 | 81.5 | 693.5 | |
| 1.9 (40 kw) | 1994.09-1998.03 | MT | F | L | Box Body/MPV FWD F8Q 682, F8Q 648, F8Q 640 | | GDS50120 | Drive Shaft | | 21 | 30 | 46.3 | 80.5 | 591.5 | |
| | 1994.09-1998.03 | MT | F | L | Box Body/MPV FWD F8Q 682, F8Q 648, F8Q 640 | | GDS50201 | Drive Shaft | | 21 | 30 | 49.8 | 83.5 | 597 | |
| | 1994.09-1998.03 | MT | F | R | Box Body/MPV FWD F8Q 682, F8Q 648, F8Q 640 | | GDS50044 | Drive Shaft | | 21 | 23 | 46.3 | 81.5 | 693.5 | |
| 1.9 (47 kw) | 1991.09-1998.03 | MT | F | L | Box Body/MPV FWD F8Q 774, F8Q 776, F8Q 646, F8Q 722, F8Q 724 | | GDS50120 | Drive Shaft | | 21 | 30 | 46.3 | 80.5 | 591.5 | |
| | 1991.09-1998.03 | MT | F | L | Box Body/MPV FWD F8Q 774, F8Q 776, F8Q 646, F8Q 722, F8Q 724 | | GDS50201 | Drive Shaft | | 21 | 30 | 49.8 | 83.5 | 597 | |
| | 1991.09-1998.03 | MT | F | R | Box Body/MPV FWD F8Q 774, F8Q 776, F8Q 646, F8Q 722, F8Q 724 | Trans. code:JB0/1 | GDS50044 | Drive Shaft | | 21 | 23 | 46.3 | 81.5 | 693.5 | |
| **Rapid/Extra/Express** | | | | | | | | | | | | | | | |
| 1.4 (43 kw) | 1988.08-1998.03 | MT | F | L | Box Body/MPV FWD C3J 700, C3J 702 (08.88-), C3J 760 (-08.91), C3J 762 (08.91-) | | GDS50120 | Drive Shaft | | 21 | 30 | 46.3 | 80.5 | 591.5 | |
| | 1988.08-1998.03 | MT | F | L | Box Body/MPV FWD C3J 700, C3J 702 (08.88-), C3J 760 (-08.91), C3J 762 (08.91-) | | GDS50201 | Drive Shaft | | 21 | 30 | 49.8 | 83.5 | 597 | |
| | 1988.08-1998.03 | MT | F | R | Box Body/MPV FWD C3J 700, C3J 702 (08.88-), C3J 760 (-08.91), C3J 762 (08.91-) | Trans. code:JB0/1 | GDS50044 | Drive Shaft | | 21 | 23 | 46.3 | 81.5 | 693.5 | |
| | 1988.08-1998.03 | | F | R | Box Body/MPV FWD C3J 700, C3J 702 (08.88-), C3J 760 (-08.91), C3J 762 (08.91-) | | GDS50023 | Drive Shaft | | 21 | 23 | 46.2 | 82 | 680 | |
| **Safrane** | | | | | | | | | | | | | | | |
| 2.0 (77 kw) | 1992.01-1996.10 | AT/MT | F | L/R | Hatchback FWD J7R732/J7R733 | | GCO50026 | Outer Joint | | 23 | 25 | 56.2 | 83.5 | 58 | O |
| | 1992.01-1996.10 | AT/MT | F | L/R | Hatchback FWD J7R732/J7R733 | | GCO50045 | Outer Joint | 30T | 23 | 25 | 56.2 | 83.5 | 58 | O |
| | 1992.01-1996.10 | MT | F | L | Hatchback FWD J7R732/J7R733 | Trans. code:PK1 | GDS50008 | Drive Shaft | 30T | 23 | 37 | 56.2 | 83.5 | 597.5 | |
| | 1992.01-1996.10 | MT | F | L | Hatchback FWD J7R732/J7R733 | | GDS50174 | Drive Shaft | | 23 | 37 | 56.2 | 83.5 | 597.5 | |
| | 1992.01-1996.10 | MT | F | R | Hatchback FWD J7R732/J7R733 | | GDS50105 | Drive Shaft | 30T | 23 | 37 | 56.2 | 83.5 | 540 | |
| 2.0 (97 kw) | 1992.01-1996.10 | AT/MT | F | L/R | Hatchback FWD J7R734/J7R735 | | GCO50026 | Outer Joint | | 23 | 25 | 56.2 | 83.5 | 58 | O |

| | YEAR | TRANSM. | F/R | L/R | BODY STYLE & DRIVE TYPE & ENGINE | REMARKS | G-AP Ref. | PRODUCT | ABS | Technical Specifications A | B | C | H | L | P |
|---|---|---|---|---|---|---|---|---|---|---|---|---|---|---|---|
| **RENAULT** | | | | | | | | | | | | | | | |
| **Safrane** | | | | | | | | | | | | | | | |
| 2.0 (97 kw) | 1992.01-1996.10 | MT | F | L | Hatchback FWD J7R734/J7R735 | Trans. code:PK1 | GDS50008 | Drive Shaft | 30T | 23 | 37 | 56.2 | 83.5 | 597.5 | |
| | 1992.01-1996.10 | MT | F | L | Hatchback FWD J7R734/J7R735 | | GDS50174 | Drive Shaft | | 23 | 37 | 56.2 | 83.5 | 597.5 | |
| | 1992.01-1996.10 | MT | F | R | Hatchback FWD J7R734/J7R735 | | GDS50105 | Drive Shaft | 30T | 23 | 37 | 56.2 | 83.5 | 540 | |
| | 1992.01-1996.10 | MT | F | L/R | Hatchback FWD J7R734/J7R735 | | GCO50045 | Outer Joint | 30T | 23 | 25 | 56.2 | 83.5 | 58 | O |
| 2.0 (100 kw) | 1996.11-2000.12 | 4AT/5MT | F | L | Hatchback FWD N7Q710/N7Q711 | | GDS50271 | Drive Shaft | 30T | 23 | 26 | 64 | 84.5 | 670 | |
| | 1996.11-2000.12 | 4AT/5MT | F | R | Hatchback FWD N7Q710/N7Q711 | | GDS50099 | Drive Shaft | 30T | 23 | 26 | 64 | 84.5 | 929 | |
| | 1996.11-2000.12 | MT | F | L | Hatchback FWD N7Q710/N7Q711 | | GCO50056 | Outer Joint | 30T | 23 | 27 | 64 | 84.5 | 68 | I |
| 2.1 (65 kw) | 1992.04-1996.10 | MT | F | L | Hatchback FWD J8S760 | Trans. code:PK1 | GDS50008 | Drive Shaft | 30T | 23 | 37 | 56.2 | 83.5 | 597.5 | |
| | 1992.04-1996.10 | MT | F | L | Hatchback FWD J8S760 | | GDS50174 | Drive Shaft | | 23 | 37 | 56.2 | 83.5 | 597.5 | |
| | 1992.04-1996.10 | MT | F | L/R | Hatchback FWD J8S760 | | GCO50026 | Outer Joint | | 23 | 25 | 56.2 | 83.5 | 58 | O |
| 2.2 (79 kw) | 1992.04-1996.07 | AT/MT | F | L/R | Hatchback FWD J7T762 | | GCO50026 | Outer Joint | | 23 | 25 | 56.2 | 83.5 | 58 | O |
| | 1992.04-1996.07 | MT | F | L | Hatchback FWD J7T762 | Trans. code:PK1 | GDS50008 | Drive Shaft | 30T | 23 | 37 | 56.2 | 83.5 | 597.5 | |
| | 1992.04-1996.07 | MT | F | L | Hatchback FWD J7T762 | | GDS50174 | Drive Shaft | | 23 | 37 | 56.2 | 83.5 | 597.5 | |
| | 1992.04-1996.07 | MT | F | R | Hatchback FWD J7T762 | | GDS50105 | Drive Shaft | 30T | 23 | 37 | 56.2 | 83.5 | 540 | |
| | 1992.04-1996.07 | MT | F | L/R | Hatchback FWD J7T762 | | GCO50045 | Outer Joint | 30T | 23 | 25 | 56.2 | 83.5 | 58 | O |
| 2.2 (83 kw) | 1996.11-2000.04 | MT | F | L | Hatchback FWD G8T740 | | GDS50174 | Drive Shaft | | 23 | 37 | 56.2 | 83.5 | 597.5 | |
| | 1996.11-2000.04 | MT | F | L | Hatchback FWD G8T740 | | GDS50295 | Drive Shaft | 30T | 23 | | 64 | 84.5 | 598 | |
| | 1996.11-2000.04 | MT | F | R | Hatchback FWD G8T740 | | GDS50296 | Drive Shaft | 30T | 23 | 39 | 64 | 84.5 | 985 | |
| | 1996.11-2000.04 | MT | F | L/R | Hatchback FWD G8T740 | | GCO50056 | Outer Joint | 30T | 23 | 27 | 64 | 84.5 | 68 | I |
| 2.2 (101 kw) | 1992.01-1996.10 | AT/MT | F | L/R | Hatchback FWD J7T760/J7T761 | | GCO50026 | Outer Joint | | 23 | 25 | 56.2 | 83.5 | 58 | O |
| | 1992.01-1996.10 | MT | F | L | Hatchback FWD J7T760/J7T761 | Trans. code:PK1 | GDS50008 | Drive Shaft | 30T | 23 | 37 | 56.2 | 83.5 | 597.5 | |
| | 1992.01-1996.10 | MT | F | L | Hatchback FWD J7T760/J7T761 | | GDS50174 | Drive Shaft | | 23 | 37 | 56.2 | 83.5 | 597.5 | |
| | 1992.01-1996.10 | MT | F | R | Hatchback FWD J7T760/J7T761 | | GDS50105 | Drive Shaft | 30T | 23 | 37 | 56.2 | 83.5 | 540 | |
| | 1992.01-1996.10 | MT | F | L/R | Hatchback FWD J7T760/J7T761 | | GCO50045 | Outer Joint | 30T | 23 | 25 | 56.2 | 83.5 | 58 | O |
| 2.5 (83 kw) | 1992.01-1996.10 | AT | F | L | Hatchback FWD S8U762/S8U763 | | GDS50174 | Drive Shaft | | 23 | 37 | 56.2 | 83.5 | 597.5 | |
| | 1992.01-1996.10 | AT | F | R | Hatchback FWD S8U762/S8U763 | | GDS50218 | Drive Shaft | | 23 | 39 | 56.2 | 83.5 | 1001 | |
| | 1992.01-1996.10 | AT | F | L/R | Hatchback FWD S8U762/S8U763 | | GCO50026 | Outer Joint | | 23 | 25 | 56.2 | 83.5 | 58 | O |
| | 1992.01-1996.10 | MT | F | L/R | Hatchback FWD S8U762/S8U763 | | GCO50045 | Outer Joint | 30T | 23 | 25 | 56.2 | 83.5 | 58 | O |
| 2.5 (121 kw) | 1996.07-2000.12 | MT | F | L | Hatchback FWD N7U700/N7U701 | | GDS50100 | Drive Shaft | 30T | 23 | 26 | 64 | 84.5 | 594 | |
| | 1996.07-2000.12 | MT | F | R | Hatchback FWD N7U700/N7U701 | | GDS50074 | Drive Shaft | 30T | 23 | 26 | 64 | 84.5 | 1020 | |
| | 1996.07-2000.12 | MT | F | L | Hatchback FWD N7U700/N7U701 | | GCO50056 | Outer Joint | 30T | 23 | 27 | 64 | 84.5 | 68 | I |
| 3.0 (123 kw) | 1992.01-1996.10 | AT | F | L | Hatchback 4WD Z7X722 | | GDS50174 | Drive Shaft | | 23 | 37 | 56.2 | 83.5 | 597.5 | |
| | 1992.01-1996.10 | MT | F | L/R | Hatchback 4WD Z7X722 | | GCO50026 | Outer Joint | | 23 | 25 | 56.2 | 83.5 | 58 | O |
| | 1992.01-1996.10 | MT | F | L/R | Hatchback 4WD Z7X722 | | GCO50045 | Outer Joint | 30T | 23 | 25 | 56.2 | 83.5 | 58 | O |
| | 1992.01-1996.10 | AT | F | L | Hatchback FWD Z7X722/Z7X723 | | GDS50174 | Drive Shaft | | 23 | 37 | 56.2 | 83.5 | 597.5 | |
| | 1992.01-1996.10 | AT | F | L/R | Hatchback FWD Z7X722/Z7X723 | | GCO50045 | Outer Joint | 30T | 23 | 25 | 56.2 | 83.5 | 58 | O |
| | 1996.11-2000.04 | AT | F | L | Hatchback FWD Z7X755 | | GDS50174 | Drive Shaft | | 23 | 37 | 56.2 | 83.5 | 597.5 | |
| 3.0 (125 kw) | 1993.02-1996.06 | AT | F | L | Hatchback FWD Z7X723 | | GDS50174 | Drive Shaft | | 23 | 37 | 56.2 | 83.5 | 597.5 | |
| | 1993.02-1996.06 | AT | F | L/R | Hatchback FWD Z7X723 | | GCO50045 | Outer Joint | 30T | 23 | 25 | 56.2 | 83.5 | 58 | O |
| | 1993.03-1996.10 | AT | F | L | Hatchback FWD Z7X721 | | GDS50174 | Drive Shaft | | 23 | 37 | 56.2 | 83.5 | 597.5 | |
| 3.0 (193 kw) | 1992.01-1996.10 | AT | F | L | Hatchback 4WD Z7X726 | | GDS50174 | Drive Shaft | | 23 | 37 | 56.2 | 83.5 | 597.5 | |
| | 1992.01-1996.10 | AT | F | L/R | Hatchback 4WD Z7X726 | | GCO50045 | Outer Joint | 30T | 23 | 25 | 56.2 | 83.5 | 58 | O |
| **Sandero** | | | | | | | | | | | | | | | |
| 1.2 (53 kw) | 2013.12- | | F | L | Hatchback FWD D4F 734 | | GDS11021 | Drive Shaft | | 23 | 30 | 49 | 86 | 683 | |
| | 2013.12- | | F | R | Hatchback FWD D4F 734 | | GDS11014 | Drive Shaft | | 23 | 23 | 49 | 83.5 | 755 | |
| | 2013.12- | | F | L | Hatchback FWD D4F 734 | | GCO50219 | Outer Joint | | 23 | 28 | 49 | 86 | 52 | I |
| 1.2 (54 kw) | 2013.12- | | F | L | Hatchback FWD D4F 732;D4F 734 | | GDS11021 | Drive Shaft | | 23 | 30 | 49 | 86 | 683 | |
| | 2013.12- | | F | R | Hatchback FWD D4F 732;D4F 734 | | GDS11014 | Drive Shaft | | 23 | 23 | 49 | 83.5 | 755 | |
| | 2013.12- | | F | L | Hatchback FWD D4F 732;D4F 734 | | GCO50219 | Outer Joint | | 23 | 28 | 49 | 86 | 52 | I |
| 1.2 (55 kw) | 2015.04- | 5MT | F | L | Hatchback FWD D4F 732 | | GDS11021 | Drive Shaft | | 23 | 30 | 49 | 86 | 683 | |
| | 2015.04- | 5MT | F | R | Hatchback FWD D4F 732 | | GDS11014 | Drive Shaft | | 23 | 23 | 49 | 83.5 | 755 | |
| | 2015.04- | 5MT | F | L | Hatchback FWD D4F 732 | | GCO50219 | Outer Joint | | 23 | 28 | 49 | 86 | 52 | I |
| 1.4 (53 kw) | 2009.02-2012.12 | 5MT | F | L | Hatchback FWD K7J 714 | Inner teeth of wheel side:24 | GDS45084 | Drive Shaft | | 21 | 30 | 49 | 84 | 681 | |
| | 2009.02-2012.12 | 5MT | F | R | Hatchback FWD K7J 714 | Inner teeth of wheel side:28 | GDS11023 | Drive Shaft | | 21 | 23 | 49 | 84 | 761 | |
| | 2009.02-2012.12 | 5MT | F | R | Hatchback FWD K7J 714 | Inner teeth of wheel side:24 | GDS45085 | Drive Shaft | | 21 | 23 | 49 | 84 | 763 | |
| | 2009.02-2012.12 | 5MT | F | L/R | Hatchback FWD K7J 714 | new | GCO11004 | Outer Joint | | 21 | 28 | 49 | 84 | 53.5 | I |
| | 2009.02-2012.12 | 5MT | F | R | Hatchback FWD K7J 714 | | GCI50008 | Inner Joint | | 23 | 30 | 36.3 | | 120.7 | |
| | 2009.02-2012.12 | 5MT | F | R | Hatchback FWD K7J 714 | new | GCI50124 | Inner Joint | | 23 | 28 | 36.3 | | 115 | |
| 1.4 (55 kw) | 2009.02-2013.07 | 5MT | F | L | Hatchback FWD K7J 710 | Inner teeth of wheel side:24 | GDS45084 | Drive Shaft | | 21 | 30 | 49 | 84 | 681 | |
| | 2009.02-2013.07 | 5MT | F | R | Hatchback FWD K7J 710 | Inner teeth of wheel side:28 | GDS11023 | Drive Shaft | | 21 | 23 | 49 | 84 | 761 | |
| | 2009.02-2013.07 | 5MT | F | R | Hatchback FWD K7J 710 | Inner teeth of wheel side:24 | GDS45085 | Drive Shaft | | 21 | 23 | 49 | 84 | 763 | |
| | 2009.02-2013.07 | 5MT | F | L/R | Hatchback FWD K7J 710 | new | GCO11004 | Outer Joint | | 21 | 28 | 49 | 84 | 53.5 | I |
| | 2009.02-2013.07 | 5MT | F | R | Hatchback FWD K7J 710 | | GCI50008 | Inner Joint | | 23 | 30 | 36.3 | | 120.7 | |
| | 2009.02-2013.07 | 5MT | F | R | Hatchback FWD K7J 710 | new | GCI50124 | Inner Joint | | 23 | 28 | 36.3 | | 115 | |
| 1.6 (62 kw) | 2010.11-2013.07 | MT | F | L | Hatchback FWD K7M 718 | Inner teeth of wheel side:24 | GDS45084 | Drive Shaft | | 21 | 30 | 49 | 84 | 681 | |

| | YEAR | TRANSM. | F/R | L/R | BODY STYLE & DRIVE TYPE & ENGINE | REMARKS | G-AP Ref. | PRODUCT | ABS | Technical Specifications A | B | C | H | L | P |
|---|---|---|---|---|---|---|---|---|---|---|---|---|---|---|---|
| **RENAULT** | | | | | | | | | | | | | | | |
| **Sandero** | | | | | | | | | | | | | | | |
| 1.6 (62 kw) | 2010.11-2013.07 | MT | F | R | Hatchback FWD K7M 718 | Inner teeth of wheel side:28 | GDS11023 | Drive Shaft | | 21 | 23 | 49 | 84 | 761 | |
| | 2010.11-2013.07 | MT | F | R | Hatchback FWD K7M 718 | Inner teeth of wheel side:24 | GDS45085 | Drive Shaft | | 21 | 23 | 49 | 84 | 763 | |
| | 2010.11-2013.07 | MT | F | L/R | Hatchback FWD K7M 718 | new | GCO11004 | Outer Joint | | 21 | 28 | 49 | 84 | 53.5 | I |
| | 2010.11-2013.07 | MT | F | R | Hatchback FWD K7M 718 | | GCI50008 | Inner Joint | | 23 | 30 | 36.3 | | 120.7 | |
| | 2010.11-2013.07 | MT | F | R | Hatchback FWD K7M 718 | new | GCI50124 | Inner Joint | | 23 | 28 | 36.3 | | 115 | |
| 1.6 (64 kw) | 2009.02-2012.10 | MT | F | L | Hatchback FWD K7M 710;K7M 718 | Inner teeth of wheel side:24 | GDS45084 | Drive Shaft | | 21 | 30 | 49 | 84 | 681 | |
| | 2009.02-2012.10 | MT | F | R | Hatchback FWD K7M 710;K7M 718 | Inner teeth of wheel side:28 | GDS11023 | Drive Shaft | | 21 | 23 | 49 | 84 | 761 | |
| | 2009.02-2012.10 | MT | F | R | Hatchback FWD K7M 710;K7M 718 | Inner teeth of wheel side:24 | GDS45085 | Drive Shaft | | 21 | 23 | 49 | 84 | 763 | |
| | 2009.02-2012.10 | MT | F | L/R | Hatchback FWD K7M 710;K7M 718 | new | GCO11004 | Outer Joint | | 21 | 28 | 49 | 84 | 53.5 | I |
| | 2009.02-2012.10 | MT | F | R | Hatchback FWD K7M 710;K7M 718 | | GCI50008 | Inner Joint | | 23 | 30 | 36.3 | | 120.7 | |
| | 2009.02-2012.10 | MT | F | R | Hatchback FWD K7M 710;K7M 718 | new | GCI50124 | Inner Joint | | 23 | 28 | 36.3 | | 115 | |
| 1.6 (76 kw) | 2007.12-2013.07 | 4AT | F | R | Hatchback FWD K4M 697 | | GDS50443 | Drive Shaft | | 23 | 23 | 49 | 86 | 789 | |
| | 2007.12-2013.07 | 4AT/5MT | F | L | Hatchback FWD K4M 697 | | GDS11021 | Drive Shaft | | 23 | 30 | 49 | 86 | 683 | |
| | 2007.12-2013.07 | 5MT | F | R | Hatchback FWD K4M 697 | | GDS11014 | Drive Shaft | | 23 | 23 | 49 | 83.5 | 755 | |
| 1.6 (77 kw) | 2012.05-2012.12 | AT | F | L | Hatchback FWD K4M 690 | | GDS50574 | Drive Shaft | | 23 | 26 | 49 | 86 | 652 | |
| | 2012.05-2012.12 | AT | F | R | Hatchback FWD K4M 690 | | GDS50575 | Drive Shaft | | 23 | 23 | 49 | 86 | 790 | |
| | 2012.05-2012.12 | AT | F | L | Hatchback FWD K4M 690 | | GCO99085 | Outer Joint | | 23 | 30 | 49 | 86 | 59 | I |
| | 2012.05-2012.12 | AT | F | L | Hatchback FWD K4M 690 | | GCI50040 | Inner Joint | | 26 | 30 | 43 | 42.5 | 83 | |
| **Sandero Stepway** | | | | | | | | | | | | | | | |
| 1.5 (66 kw) | 2017.01- | 5MT | F | L | Hatchback FWD K9K 612 | Manufacturer:GKN | GDS50508 | Drive Shaft | | 23 | 26 | 49 | 86 | 660 | |
| | 2017.01- | 5MT | F | R | Hatchback FWD K9K 612 | Manufacturer:GKN | GDS50507 | Drive Shaft | | 23 | 26 | 49 | 86 | 898 | |
| **Sandero/Stepway** | | | | | | | | | | | | | | | |
| 0.9 (66 kw) | 2015.09- | 5AT/5MT | F | L | Hatchback FWD H4B 400, H4B 410, H4B411, H4B 408 | Manufacturer:GKN | GDS50508 | Drive Shaft | | 23 | 26 | 49 | 86 | 660 | |
| | 2015.09- | | F | L/R | Hatchback FWD H4B 400, H4B 410, H4B411, H4B 408 | | GCO50173 | Outer Joint | | 23 | 22 | 49 | 86 | 57 | M |
| | 2015.09- | | F | R | Hatchback FWD H4B 400, H4B 410, H4B411, H4B 408 | | GCI50118 | Inner Joint | | 26 | 22 | 40 | 64 | 104 | |
| 1.0 (54 kw) | 2019.12- | 5MT | F | L | Hatchback FWD B4D 400 | Manufacturer:GKN | GDS50508 | Drive Shaft | | 23 | 26 | 49 | 86 | 660 | |
| | 2019.12- | 5MT | F | L | Hatchback FWD B4D 400 | Manufacturer:NTN | GDS84116 | Drive Shaft | | 23 | 26 | 49 | 86 | 660 | |
| | 2019.12- | 5MT | F | R | Hatchback FWD B4D 400 | Manufacturer:GKN | GDS50507 | Drive Shaft | | 23 | 26 | 49 | 86 | 898 | |
| | 2019.12- | 5MT | F | R | Hatchback FWD B4D 400 | Manufacturer:NTN | GDS84115 | Drive Shaft | | 23 | 26 | 49 | 86 | 903 | |
| 1.5 (62 kw) | 2013.12- | 5MT | F | L | Hatchback FWD K9K 830 | | GDS50508 | Drive Shaft | | 23 | 26 | 49 | 86 | 660 | |
| | 2013.12- | 5MT | F | R | Hatchback FWD K9K 830 | | GDS50507 | Drive Shaft | | 23 | 26 | 49 | 86 | 898 | |
| | 2013.12- | MT | F | L | Hatchback FWD K9K 830 | | GCI82311 | Inner Joint | | 26 | 22 | 39.95 | 64 | 109 | |
| | 2013.12- | | F | R | Hatchback FWD K9K 830 | | GCO50175 | Outer Joint | | 23 | 22 | 49 | 86 | 58.5 | I |
| 1.6 (59 kw) | 2013.11- | 5MT | F | L | Hatchback FWD K7M 812 | Manufacturer:NTN | GDS11021 | Drive Shaft | | 23 | 30 | 49 | 86 | 683 | |
| | 2013.11- | 5MT | F | L | Hatchback FWD K7M 812 | Manufacturer:GKN | GDS50508 | Drive Shaft | | 23 | 26 | 49 | 86 | 660 | |
| | 2013.11- | 5MT | F | R | Hatchback FWD K7M 812 | Manufacturer:NTN | GDS11014 | Drive Shaft | | 23 | 23 | 49 | 83.5 | 755 | |
| | 2013.11- | 5MT | F | R | Hatchback FWD K7M 812 | Manufacturer:GKN | GDS50507 | Drive Shaft | | 23 | 26 | 49 | 86 | 898 | |
| | 2013.11- | 5MT | F | L | Hatchback FWD K7M 812 | Manufacturer:NTN | GCO50219 | Outer Joint | | 23 | 28 | 49 | 86 | 52 | I |
| | 2013.11- | 5MT | F | L/R | Hatchback FWD K7M 812 | Manufacturer:GKN | GCO50175 | Outer Joint | | 23 | 22 | 49 | 86 | 58.5 | I |
| | 2013.11- | 5MT | F | L | Hatchback FWD K7M 812 | | GCI82311 | Inner Joint | | 26 | 22 | 39.95 | 64 | 109 | |
| | 2013.11- | 5MT | F | R | Hatchback FWD K7M 812 | Manufacturer:GKN | GCI50107 | Inner Joint | | 26 | 21 | 40 | 64 | 105.5 | |
| 1.6 (60 kw) | 2013.11- | 5AT | F | L | Hatchback FWD K7M 812 | | GDS50508 | Drive Shaft | | 23 | 26 | 49 | 86 | 660 | |
| | 2013.11- | 5AT | F | L | Hatchback FWD K7M 812 | | GCO50175 | Outer Joint | | 23 | 22 | 49 | 86 | 58.5 | I |
| | 2013.11- | 5AT | F | L | Hatchback FWD K7M 812 | | GCI82311 | Inner Joint | | 26 | 22 | 39.95 | 64 | 109 | |
| 1.6 (61 kw) | 2013.11- | 5MT | F | L | Hatchback FWD K7M 812 | Manufacturer:NTN | GDS11021 | Drive Shaft | | 23 | 30 | 49 | 86 | 683 | |
| | 2013.11- | 5MT | F | L | Hatchback FWD K7M 812 | Manufacturer:GKN | GDS50508 | Drive Shaft | | 23 | 26 | 49 | 86 | 660 | |
| | 2013.11- | 5MT | F | R | Hatchback FWD K7M 812 | Manufacturer:NTN | GDS11014 | Drive Shaft | | 23 | 23 | 49 | 83.5 | 755 | |
| | 2013.11- | 5MT | F | R | Hatchback FWD K7M 812 | Manufacturer:GKN | GDS50507 | Drive Shaft | | 23 | 26 | 49 | 86 | 898 | |
| | 2013.11- | 5MT | F | L | Hatchback FWD K7M 812 | Manufacturer:NTN | GCO50219 | Outer Joint | | 23 | 28 | 49 | 86 | 52 | I |
| | 2013.11- | 5MT | F | L/R | Hatchback FWD K7M 812 | Manufacturer:GKN | GCO50175 | Outer Joint | | 23 | 22 | 49 | 86 | 58.5 | I |
| | 2013.11- | 5MT | F | L | Hatchback FWD K7M 812 | | GCI82311 | Inner Joint | | 26 | 22 | 39.95 | 64 | 109 | |
| | 2013.11- | 5MT | F | R | Hatchback FWD K7M 812 | Manufacturer:GKN | GCI50107 | Inner Joint | | 26 | 21 | 40 | 64 | 105.5 | |
| 1.6 (75 kw) | 2014.04- | 4AT | F | L | Hatchback FWD | | GDS50574 | Drive Shaft | | 23 | 26 | 49 | 86 | 652 | |
| | 2014.04- | 4AT | F | R | Hatchback FWD | | GDS50575 | Drive Shaft | | 23 | 23 | 49 | 86 | 790 | |
| | 2014.04- | 4AT | F | L/R | Hatchback FWD | | GCO99085 | Outer Joint | | 23 | 30 | 49 | 86 | 59 | I |
| | 2014.04- | 4AT | F | L | Hatchback FWD | | GCI50040 | Inner Joint | | 26 | 30 | 43 | 42.5 | 83 | |
| | 2014.04- | 4AT | F | R | Hatchback FWD | | GCI50008 | Inner Joint | | 23 | 30 | 36.3 | | 120.7 | |
| | 2014.04- | 5MT | F | L | Hatchback FWD | | GDS50508 | Drive Shaft | | 23 | 26 | 49 | 86 | 660 | |
| | 2014.04- | 5MT | F | R | Hatchback FWD | | GDS50507 | Drive Shaft | | 23 | 26 | 49 | 86 | 898 | |
| | 2014.04- | 5MT | F | L/R | Hatchback FWD | | GCO50175 | Outer Joint | | 23 | 22 | 49 | 86 | 58.5 | I |
| | 2014.04- | 5MT | F | L | Hatchback FWD | | GCI82311 | Inner Joint | | 26 | 22 | 39.95 | 64 | 109 | |
| | 2014.04- | 5MT | F | R | Hatchback FWD | | GCI50107 | Inner Joint | | 26 | 21 | 40 | 64 | 105.5 | |
| 1.6 (77 kw) | 2008.02-2015.06 | 4AT | F | L | Hatchback FWD K4M 695/K4M 694 | | GDS50574 | Drive Shaft | | 23 | 26 | 49 | 86 | 652 | |
| | 2008.02-2015.06 | 4AT | F | R | Hatchback FWD K4M 695/K4M 694 | | GDS50575 | Drive Shaft | | 23 | 23 | 49 | 86 | 790 | |
| 1.6 (83 kw) | 2016.09- | 5MT | F | L | Hatchback FWD H4M 429, H4M 438 | | GDS50508 | Drive Shaft | | 23 | 26 | 49 | 86 | 660 | |

| | YEAR | TRANSM. | F/R | L/R | BODY STYLE & DRIVE TYPE & ENGINE | REMARKS | G-AP Ref. | PRODUCT | ABS | Technical Specifications A | B | C | H | L | P |
|---|---|---|---|---|---|---|---|---|---|---|---|---|---|---|---|
| **RENAULT** | | | | | | | | | | | | | | | |
| **Sandero/Stepway** | | | | | | | | | | | | | | | |
| 1.6 (83 kw) | 2016.09- | 5MT | F | R | Hatchback FWD H4M 429, H4M 438 | | GDS50507 | Drive Shaft | | 23 | 26 | 49 | 86 | 898 | |
| | 2016.09- | 5MT | F | L/R | Hatchback FWD H4M 429, H4M 438 | | GCO50175 | Outer Joint | | 23 | 22 | 49 | 86 | 58.5 | I |
| | 2016.09- | 5MT | F | L | Hatchback FWD H4M 429, H4M 438 | | GCI82311 | Inner Joint | | 26 | 22 | 39.95 | 64 | 109 | |
| | 2016.09- | 5MT | F | R | Hatchback FWD H4M 429, H4M 438 | | GCI50107 | Inner Joint | | 26 | 21 | 40 | 64 | 105.5 | |
| **Scenic** | | | | | | | | | | | | | | | |
| 1.2 (85 kw) | 2012.04-2016.09 | | F | L | MPV FWD H5F 400 | | GCO50162 | Outer Joint | | 25 | 23 | 52.5 | 88.5 | 60.5 | M |
| | 2012.04-2016.09 | | F | R | MPV FWD H5F 400 | | GCO50212 | Outer Joint | | 25 | 25 | 52.6 | 88.5 | 58.5 | I |
| | 2012.04-2016.09 | | F | R | MPV FWD H5F 400 | | GCI50135 | Inner Joint | | 26 | 22 | 33 | 346 | 96 | |
| | 2016.09-2022.07 | 6MT | F | L | MPV FWD H5F 408 | | GDS57424 | Drive Shaft | | 29 | 26 | 60 | 95.5 | 710 | |
| | 2016.09-2022.07 | 6MT | F | R | MPV FWD H5F 408 | | GDS57423 | Drive Shaft | | 29 | 26 | 60 | 95.5 | 953 | |
| | 2016.09-2022.07 | 6MT | F | L/R | MPV FWD H5F 408 | | GCO83544 | Outer Joint | | 29 | 23 | 60 | 95.5 | 61 | M |
| | 2016.09-2022.07 | 6MT | F | L | MPV FWD H5F 408 | | GCI83659 | Inner Joint | | 26 | 23 | 39.95 | 64 | 104 | |
| | 2016.09-2022.07 | 6MT | F | R | MPV FWD H5F 408 | | GCI82523 | Inner Joint | | 26 | 23 | 33 | 346 | 98 | |
| 1.2 (96 kw) | 2014.07-2016.09 | MT | F | L/R | MPV FWD H5F 408 | Date from:2015.01 | GCO50162 | Outer Joint | | 25 | 23 | 52.5 | 88.5 | 60.5 | M |
| | 2014.07-2016.09 | | F | R | MPV FWD H5F 408 | | GCO50212 | Outer Joint | | 25 | 25 | 52.6 | 88.5 | 58.5 | I |
| | 2014.07-2016.09 | | F | R | MPV FWD H5F 408 | | GCI50135 | Inner Joint | | 26 | 22 | 33 | 346 | 96 | |
| | 2016.09-2022.07 | 6MT | F | L | MPV FWD H5F 408 | | GDS57424 | Drive Shaft | | 29 | 26 | 60 | 95.5 | 710 | |
| | 2016.09-2022.07 | 6MT | F | R | MPV FWD H5F 408 | | GDS57423 | Drive Shaft | | 29 | 26 | 60 | 95.5 | 953 | |
| | 2016.09-2022.07 | 6MT | F | L/R | MPV FWD H5F 408 | | GCO83544 | Outer Joint | | 29 | 23 | 60 | 95.5 | 61 | M |
| | 2016.09-2022.07 | 6MT | F | L | MPV FWD H5F 408 | | GCI83659 | Inner Joint | | 26 | 23 | 39.95 | 64 | 104 | |
| | 2016.09-2022.07 | 6MT | F | R | MPV FWD H5F 408 | | GCI82523 | Inner Joint | | 26 | 23 | 33 | 346 | 98 | |
| 1.2 (97 kw) | 2013.01-2016.09 | | F | L | MPV FWD H5F 404;H5F 408 | | GCO50162 | Outer Joint | | 25 | 23 | 52.5 | 88.5 | 60.5 | M |
| | 2013.01-2016.09 | | F | R | MPV FWD H5F 404;H5F 408 | | GCO50212 | Outer Joint | | 25 | 25 | 52.6 | 88.5 | 58.5 | I |
| | 2013.01-2016.09 | | F | R | MPV FWD H5F 404;H5F 408 | | GCI50135 | Inner Joint | | 26 | 22 | 33 | 346 | 96 | |
| 1.3 (85 kw) | 2018.01-2022.07 | 6MT | F | L | MPV FWD H5H 450;H5H 470 | | GDS57424 | Drive Shaft | | 29 | 26 | 60 | 95.5 | 710 | |
| | 2018.01-2022.07 | 6MT | F | R | MPV FWD H5H 450;H5H 470 | | GDS57423 | Drive Shaft | | 29 | 26 | 60 | 95.5 | 953 | |
| | 2018.01-2022.07 | 6MT | F | L/R | MPV FWD H5H 450;H5H 470 | | GCO83544 | Outer Joint | | 29 | 23 | 60 | 95.5 | 61 | M |
| | 2018.01-2022.07 | 6MT | F | L | MPV FWD H5H 450;H5H 470 | | GCI83659 | Inner Joint | | 26 | 23 | 39.95 | 64 | 104 | |
| | 2018.01-2022.07 | 6MT | F | R | MPV FWD H5H 450;H5H 470 | | GCI82523 | Inner Joint | | 26 | 23 | 33 | 346 | 98 | |
| 1.3 (103 kw) | 2018.01-2022.07 | 6MT | F | L | MPV FWD H5H 450;H5H 470 | | GDS57424 | Drive Shaft | | 29 | 26 | 60 | 95.5 | 710 | |
| | 2018.01-2022.07 | 6MT | F | R | MPV FWD H5H 450;H5H 470 | | GDS57423 | Drive Shaft | | 29 | 26 | 60 | 95.5 | 953 | |
| | 2018.01-2022.07 | 6MT | F | L/R | MPV FWD H5H 450;H5H 470 | | GCO83544 | Outer Joint | | 29 | 23 | 60 | 95.5 | 61 | M |
| | 2018.01-2022.07 | 6MT | F | L | MPV FWD H5H 450;H5H 470 | | GCI83659 | Inner Joint | | 26 | 23 | 39.95 | 64 | 104 | |
| | 2018.01-2022.07 | 6MT | F | R | MPV FWD H5H 450;H5H 470 | | GCI82523 | Inner Joint | | 26 | 23 | 33 | 346 | 98 | |
| | 2018.01-2022.07 | 7DCT | F | L | MPV FWD H5H 450;H5H 470 | | GDS58219 | Drive Shaft | | 29 | 27 | 60 | 97 | 652 | |
| | 2018.01-2022.07 | 7DCT | F | R | MPV FWD H5H 450;H5H 470 | | GDS58220 | Drive Shaft | | 29 | 27 | 60 | 96 | 1011 | |
| | 2018.01-2022.07 | 7DCT | F | L | MPV FWD H5H 450;H5H 470 | | GCO82323 | Outer Joint | | 29 | 35 | 60 | 97 | 63 | I |
| | 2018.01-2022.07 | 7DCT | F | R | MPV FWD H5H 450;H5H 470 | | GCO83866 | Outer Joint | | 29 | 33 | 60 | 96 | 60.5 | I |
| | 2018.01-2022.07 | 7DCT | F | L | MPV FWD H5H 450;H5H 470 | | GCI82385 | Inner Joint | | 27 | 35 | 40 | 65 | 109.5 | |
| | 2018.01-2022.07 | 7DCT | F | R | MPV FWD H5H 450;H5H 470 | | GCI82386 | Inner Joint | | 27 | 33 | 40 | 400.5 | 89.5 | |
| 1.3 (117 kw) | 2018.09-2022.07 | 6MT | F | L | MPV FWD H5H 470 | | GDS57424 | Drive Shaft | | 29 | 26 | 60 | 95.5 | 710 | |
| | 2018.09-2022.07 | 6MT | F | R | MPV FWD H5H 470 | | GDS57423 | Drive Shaft | | 29 | 26 | 60 | 95.5 | 953 | |
| | 2018.09-2022.07 | 6MT | F | L/R | MPV FWD H5H 470 | | GCO83544 | Outer Joint | | 29 | 23 | 60 | 95.5 | 61 | M |
| | 2018.09-2022.07 | 6MT | F | L | MPV FWD H5H 470 | | GCI83659 | Inner Joint | | 26 | 23 | 39.95 | 64 | 104 | |
| | 2018.09-2022.07 | 6MT | F | R | MPV FWD H5H 470 | | GCI82523 | Inner Joint | | 26 | 23 | 33 | 346 | 98 | |
| | 2018.09-2022.07 | 7DCT | F | L | MPV FWD H5H 470 | | GDS58219 | Drive Shaft | | 29 | 27 | 60 | 97 | 652 | |
| | 2018.09-2022.07 | 7DCT | F | R | MPV FWD H5H 470 | | GDS58220 | Drive Shaft | | 29 | 27 | 60 | 96 | 1011 | |
| | 2018.09-2022.07 | 7DCT | F | L | MPV FWD H5H 470 | | GCO82323 | Outer Joint | | 29 | 35 | 60 | 97 | 63 | I |
| | 2018.09-2022.07 | 7DCT | F | R | MPV FWD H5H 470 | | GCO83866 | Outer Joint | | 29 | 33 | 60 | 96 | 60.5 | I |
| | 2018.09-2022.07 | 7DCT | F | L | MPV FWD H5H 470 | | GCI82385 | Inner Joint | | 27 | 35 | 40 | 65 | 109.5 | |
| | 2018.09-2022.07 | 7DCT | F | R | MPV FWD H5H 470 | | GCI82386 | Inner Joint | | 27 | 33 | 40 | 400.5 | 89.5 | |
| 1.3 (120 kw) | 2018.01-2022.07 | 6MT | F | L | MPV FWD H5H 450 | | GDS57424 | Drive Shaft | | 29 | 26 | 60 | 95.5 | 710 | |
| | 2018.01-2022.07 | 6MT | F | R | MPV FWD H5H 450 | | GDS57423 | Drive Shaft | | 29 | 26 | 60 | 95.5 | 953 | |
| | 2018.01-2022.07 | 6MT | F | L/R | MPV FWD H5H 450 | | GCO83544 | Outer Joint | | 29 | 23 | 60 | 95.5 | 61 | M |
| | 2018.01-2022.07 | 6MT | F | L | MPV FWD H5H 450 | | GCI83659 | Inner Joint | | 26 | 23 | 39.95 | 64 | 104 | |
| | 2018.01-2022.07 | 6MT | F | R | MPV FWD H5H 450 | | GCI82523 | Inner Joint | | 26 | 23 | 33 | 346 | 98 | |
| | 2018.01-2022.07 | 7DCT | F | L | MPV FWD H5H 450 | | GDS58219 | Drive Shaft | | 29 | 27 | 60 | 97 | 652 | |
| | 2018.01-2022.07 | 7DCT | F | R | MPV FWD H5H 450 | | GDS58220 | Drive Shaft | | 29 | 27 | 60 | 96 | 1011 | |
| | 2018.01-2022.07 | 7DCT | F | L | MPV FWD H5H 450 | | GCO82323 | Outer Joint | | 29 | 35 | 60 | 97 | 63 | I |
| | 2018.01-2022.07 | 7DCT | F | R | MPV FWD H5H 450 | | GCO83866 | Outer Joint | | 29 | 33 | 60 | 96 | 60.5 | I |
| | 2018.01-2022.07 | 7DCT | F | L | MPV FWD H5H 450 | | GCI82385 | Inner Joint | | 27 | 35 | 40 | 65 | 109.5 | |
| | 2018.01-2022.07 | 7DCT | F | R | MPV FWD H5H 450 | | GCI82386 | Inner Joint | | 27 | 33 | 40 | 400.5 | 89.5 | |
| 1.4 (70 kw) | 1999.09-2003.08 | 5MT | F | L | MPV FWD K4J714/K4J750 | | GDS50009 | Drive Shaft | 44T | 21 | | 57 | 84.5 | 645 | |
| | 1999.09-2003.08 | 5MT | F | R | MPV FWD K4J714/K4J750 | | GDS50038 | Drive Shaft | 44T | 21 | 23 | 52.2 | 85.5 | 752 | |
| | 1999.09-2003.08 | 5MT | F | L/R | MPV FWD K4J714/K4J750 | | GCO50076 | Outer Joint | 44T | 21 | 30 | 57 | 84.5 | 62 | M |

| | YEAR | TRANSM. | F/R | L/R | BODY STYLE & DRIVE TYPE & ENGINE | REMARKS | G-AP Ref. | PRODUCT | ABS | Technical Specifications | | | | | |
|---|---|---|---|---|---|---|---|---|---|---|---|---|---|---|---|
| | | | | | | | | | | A | B | C | H | L | P |
| **RENAULT** | | | | | | | | | | | | | | | |
| **Scenic** | | | | | | | | | | | | | | | |
| 1.4 (70 kw) | 1999.09-2003.08 | MT | F | L | MPV FWD K4J714/K4J750 | | GDS50055 | Drive Shaft | | 21 | 30 | 50 | 84 | 650 | |
| | 1999.09-2003.08 | MT | F | R | MPV FWD K4J714/K4J750 | | GDS50173 | Drive Shaft | | 21 | 23 | 57 | 84.5 | 743 | |
| | 1999.09-2003.08 | MT | F | R | MPV FWD K4J714/K4J750 | | GDS50316 | Drive Shaft | | 21 | 23 | 57 | 84 | 741 | |
| 1.4 (72 kw) | 2003.06-2008.11 | 5MT | F | R | MPV FWD K4J 730;K4J 770;K4J 740 | Date to:2008.11 | GCI99169 | Inner Joint | | 26 | 30 | 33 | 326 | 95 | |
| | 2003.06-2008.11 | MT | F | L | MPV FWD K4J 730;K4J 770;K4J 740 | | GDS50350 | Drive Shaft | | 25 | 26 | 52.6 | 88 | 668.5 | |
| | 2003.06-2008.11 | MT | F | L | MPV FWD K4J 730;K4J 770;K4J 740 | | GDS50494 | Drive Shaft | | 25 | 26 | 52.6 | 88 | 664 | |
| | 2003.06-2008.11 | MT | F | R | MPV FWD K4J 730;K4J 770;K4J 740 | | GDS50442 | Drive Shaft | | 25 | 26 | 52.6 | 88 | 911 | |
| | 2003.06-2008.11 | MT | F | L/R | MPV FWD K4J 730;K4J 770;K4J 740 | | GCO50116 | Outer Joint | | 25 | 22 | 52.6 | 88 | 55 | I |
| 1.4 (96 kw) | 2009.02-2016.09 | 6MT | F | R | MPV FWD H4J 700 | | GDS50604 | Drive Shaft | | 25 | 26 | 52.6 | 89 | 942 | |
| | 2009.02-2016.09 | MT | F | L/R | MPV FWD H4J 700 | | GCO99213 | Outer Joint | | 25 | 33 | 53 | 88 | 61.5 | I |
| | 2009.02-2016.09 | | F | L/R | MPV FWD H4J 700 | | GCO50157 | Outer Joint | | 25 | 33 | 52.6 | 89 | 60 | I |
| | 2013.01-2016.09 | 6MT | F | R | Box Body/MPV FWD H4J A 700 | | GDS50604 | Drive Shaft | | 25 | 26 | 52.6 | 89 | 942 | |
| | 2013.01-2016.09 | 6MT | F | R | Box Body/MPV FWD H4J A 700 | | GCO50157 | Outer Joint | | 25 | 33 | 52.6 | 89 | 60 | I |
| 1.5 (60 kw) | 2003.06-2006.05 | 5MT | F | L | MPV FWD K9K 722 | | GDS50350 | Drive Shaft | | 25 | 26 | 52.6 | 88 | 668.5 | |
| | 2003.06-2006.05 | 5MT | F | L | MPV FWD K9K 722 | Date to:2006.05 | GDS50403 | Drive Shaft | | 25 | 26 | 52.6 | 88 | 674 | |
| | 2003.06-2006.05 | 5MT | F | R | MPV FWD K9K 722 | | GDS50442 | Drive Shaft | | 25 | 26 | 52.6 | 88 | 911 | |
| | 2003.06-2006.05 | MT | F | L | MPV FWD K9K 722 | Trans. code:TL4 | GDS50402 | Drive Shaft | | 25 | 26 | 53 | 88 | 660 | |
| | 2003.06-2006.05 | MT | F | R | MPV FWD K9K 722 | Trans. code:TL4 | GDS50348 | Drive Shaft | | 25 | 26 | 53 | 88 | 905 | |
| | 2003.06-2006.05 | MT | F | R | MPV FWD K9K 722 | Trans. code:JR5;for OE number:8200351249 | GDS50495 | Drive Shaft | | 25 | 26 | 52.6 | 88 | 914 | |
| | 2003.06-2006.05 | MT | F | L/R | MPV FWD K9K 722 | Model code:JM0F/JM0T | GCO50093 | Outer Joint | | 25 | 30 | 52.6 | 88 | 58 | I |
| | 2003.06-2006.05 | MT | F | R | MPV FWD K9K 722 | Date to:2006.05 | GCI99169 | Inner Joint | | 26 | 30 | 33 | 326 | 95 | |
| 1.5 (63 kw) | 2005.05-2008.11 | 5MT | F | L | MPV FWD K9K 724 | | GDS50350 | Drive Shaft | | 25 | 26 | 52.6 | 88 | 668.5 | |
| | 2005.05-2008.11 | 5MT | F | L | MPV FWD K9K 724 | Date to:2008.11 | GDS50403 | Drive Shaft | | 25 | 26 | 52.6 | 88 | 674 | |
| | 2005.05-2008.11 | 5MT | F | R | MPV FWD K9K 724 | | GDS50442 | Drive Shaft | | 25 | 26 | 52.6 | 88 | 911 | |
| | 2005.05-2008.11 | MT | F | L | MPV FWD K9K 724 | Trans. code:TL4 | GDS50402 | Drive Shaft | | 25 | 26 | 53 | 88 | 660 | |
| | 2005.05-2008.11 | MT | F | R | MPV FWD K9K 724 | Trans. code:TL4 | GDS50348 | Drive Shaft | | 25 | 26 | 53 | 88 | 905 | |
| | 2005.05-2008.11 | MT | F | R | MPV FWD K9K 724 | Trans. code:JR5;for OE number:8200351249 | GDS50495 | Drive Shaft | | 25 | 26 | 52.6 | 88 | 914 | |
| | 2005.05-2008.11 | MT | F | L/R | MPV FWD K9K 724 | Model code:JM0F/JM0T/JM1F | GCO50093 | Outer Joint | | 25 | 30 | 52.6 | 88 | 58 | I |
| | 2005.05-2008.11 | MT | F | R | MPV FWD K9K 724 | Date to:2008.11 | GCI99169 | Inner Joint | | 26 | 30 | 33 | 326 | 95 | |
| | 2009.04-2016.09 | 6MT | F | L | MPV FWD K9K 830 | | GDS50426 | Drive Shaft | | 25 | 26 | 52.7 | 88.5 | 680 | |
| | 2009.04-2016.09 | 6MT | F | R | MPV FWD K9K 830 | | GDS50425 | Drive Shaft | | 25 | 26 | 52.7 | 88.5 | 931 | |
| | 2009.04-2016.09 | 6MT | F | L | MPV FWD K9K 830 | | GCI50070 | Inner Joint | | 26 | 33 | 40 | 64 | 106 | |
| | 2009.04-2016.09 | 6MT | F | R | MPV FWD K9K 830 | Date from:2012.03 | GCI50051 | Inner Joint | | 26 | 22 | 33 | 326 | 96 | |
| | 2009.04-2016.09 | MT | F | L/R | MPV FWD K9K 830 | | GCO99213 | Outer Joint | | 25 | 33 | 53 | 88 | 61.5 | I |
| | 2009.04-2016.09 | | F | R | MPV FWD K9K 830 | Date From:2012.03 | GDS50510 | Drive Shaft | | 25 | 26 | 52.4 | 88.5 | 929 | |
| | 2009.04-2016.09 | | F | L/R | MPV FWD K9K 830 | | GCO50162 | Outer Joint | | 25 | 23 | 52.5 | 88.5 | 60.5 | M |
| 1.5 (70 kw) | 2010.11-2016.09 | 6MT | F | L | MPV FWD K9K 846 | | GDS50426 | Drive Shaft | | 25 | 26 | 52.7 | 88.5 | 680 | |
| | 2010.11-2016.09 | 6MT | F | R | MPV FWD K9K 846 | | GDS50425 | Drive Shaft | | 25 | 26 | 52.7 | 88.5 | 931 | |
| | 2010.11-2016.09 | MT | F | L/R | MPV FWD K9K 846 | | GCO99213 | Outer Joint | | 25 | 33 | 53 | 88 | 61.5 | I |
| | 2010.11-2016.09 | | F | R | MPV FWD K9K 846 | Date From:2012.03 | GDS50510 | Drive Shaft | | 25 | 26 | 52.4 | 88.5 | 929 | |
| | 2010.11-2016.09 | | F | R | MPV FWD K9K 846 | | GDS50604 | Drive Shaft | | 25 | 26 | 52.6 | 89 | 942 | |
| | 2010.11-2016.09 | | F | L/R | MPV FWD K9K 846 | | GCO50162 | Outer Joint | | 25 | 23 | 52.5 | 88.5 | 60.5 | M |
| | 2013.01-2016.09 | 6MT | F | L | Box Body/MPV FWD K9K 846 | | GDS50426 | Drive Shaft | | 25 | 26 | 52.7 | 88.5 | 680 | |
| | 2013.01-2016.09 | 6MT | F | R | Box Body/MPV FWD K9K 846 | | GDS50510 | Drive Shaft | | 25 | 26 | 52.4 | 88.5 | 929 | |
| | 2013.01-2016.09 | 6MT | F | R | Box Body/MPV FWD K9K 846 | | GCO50162 | Outer Joint | | 25 | 23 | 52.5 | 88.5 | 60.5 | M |
| | 2013.01-2016.09 | 6MT | F | R | Box Body/MPV FWD K9K 846 | | GCI50051 | Inner Joint | | 26 | 22 | 33 | 326 | 96 | |
| 1.5 (74 kw) | 2003.11-2005.08 | 5MT | F | L | MPV FWD K9K 728;K9K 729 | Inner teeth of wheel side:32 | GDS50403 | Drive Shaft | | 25 | 26 | 52.6 | 88 | 674 | |
| | 2003.11-2005.08 | 5MT | F | R | MPV FWD K9K 728;K9K 729 | Inner teeth of wheel side:32 | GDS50442 | Drive Shaft | | 25 | 26 | 52.6 | 88 | 911 | |
| | 2003.11-2005.08 | 5MT | F | R | MPV FWD K9K 728;K9K 729 | Inner teeth of wheel side:30 | GDS50495 | Drive Shaft | | 25 | 26 | 52.6 | 88 | 914 | |
| | 2003.11-2005.08 | 5MT | F | L/R | MPV FWD K9K 728;K9K 729 | | GCO50137 | Outer Joint | | 25 | 32 | 52.6 | 88 | 58 | I |
| | 2003.11-2005.08 | 5MT | F | R | MPV FWD K9K 728;K9K 729 | | GCI99169 | Inner Joint | | 26 | 30 | 33 | 326 | 95 | |
| | 2003.11-2005.08 | MT | F | L | MPV FWD K9K 728;K9K 729 | Inner teeth of wheel side:30 | GDS50350 | Drive Shaft | | 25 | 26 | 52.6 | 88 | 668.5 | |
| | 2003.11-2005.08 | MT | F | L | MPV FWD K9K 728;K9K 729 | Trans. code:TL4 | GDS50402 | Drive Shaft | | 25 | 26 | 53 | 88 | 660 | |
| | 2003.11-2005.08 | MT | F | R | MPV FWD K9K 728;K9K 729 | Trans. code:TL4 | GDS50348 | Drive Shaft | | 25 | 26 | 53 | 88 | 905 | |
| 1.5 (76 kw) | 2007.01-2008.11 | 5MT | F | L | MPV FWD K9K 728;K9K 734 | | GDS50403 | Drive Shaft | | 25 | 26 | 52.6 | 88 | 674 | |
| | 2007.01-2008.11 | 5MT | F | R | MPV FWD K9K 728;K9K 734 | | GDS50442 | Drive Shaft | | 25 | 26 | 52.6 | 88 | 911 | |
| | 2007.01-2008.11 | 5MT | F | R | MPV FWD K9K 728;K9K 734 | | GDS50495 | Drive Shaft | | 25 | 26 | 52.6 | 88 | 914 | |
| | 2007.01-2008.11 | 5MT | F | L/R | MPV FWD K9K 728;K9K 734 | | GCO50137 | Outer Joint | | 25 | 32 | 52.6 | 88 | 58 | I |
| | 2007.01-2008.11 | 5MT | F | R | MPV FWD K9K 728;K9K 734 | | GCI99169 | Inner Joint | | 26 | 30 | 33 | 326 | 95 | |
| | 2007.01-2008.11 | MT | F | L | MPV FWD K9K 728;K9K 734 | | GDS50350 | Drive Shaft | | 25 | 26 | 52.6 | 88 | 668.5 | |
| | 2007.01-2008.11 | MT | F | L | MPV FWD K9K 728;K9K 734 | Trans. code:TL4 | GDS50402 | Drive Shaft | | 25 | 26 | 53 | 88 | 660 | |
| | 2007.01-2008.11 | MT | F | R | MPV FWD K9K 728;K9K 734 | Trans. code:TL4 | GDS50348 | Drive Shaft | | 25 | 26 | 53 | 88 | 905 | |
| 1.5 (78 kw) | 2005.05-2008.11 | 5MT/6MT | F | L | MPV FWD K9K 732;K9K 734 | Inner teeth of wheel side:33 | GDS50402 | Drive Shaft | | 25 | 26 | 53 | 88 | 660 | |
| | 2005.05-2008.11 | 5MT/6MT | F | R | MPV FWD K9K 732;K9K 734 | Inner teeth of wheel side:33 | GDS50348 | Drive Shaft | | 25 | 26 | 53 | 88 | 905 | |
| | 2005.05-2008.11 | MT | F | L | MPV FWD K9K 732;K9K 734 | Inner teeth of wheel side:30 | GDS50350 | Drive Shaft | | 25 | 26 | 52.6 | 88 | 668.5 | |

| | YEAR | TRANSM. | F/R | L/R | BODY STYLE & DRIVE TYPE & ENGINE | REMARKS | G-AP Ref. | PRODUCT | ABS | Technical Specifications | | | | | |
|---|---|---|---|---|---|---|---|---|---|---|---|---|---|---|---|
| | | | | | | | | | | A | B | C | H | L | P |
| **RENAULT** | | | | | | | | | | | | | | | |
| **Scenic** | | | | | | | | | | | | | | | |
| 1.5 (78 kw) | 2005.05-2008.11 | MT | F | L | MPV FWD K9K 732;K9K 734 | Trans. code:JR5;for OE number:8200351250;Inner teeth of wheel side:32 | GDS50403 | Drive Shaft | | 25 | 26 | 52.6 | 88 | 674 | |
| | 2005.05-2008.11 | MT | F | R | MPV FWD K9K 732;K9K 734 | Trans. code:JR5;for OE number:8200216519;Inner teeth of wheel side:32 | GDS50442 | Drive Shaft | | 25 | 26 | 52.6 | 88 | 911 | |
| | 2005.05-2008.11 | MT | F | R | MPV FWD K9K 732;K9K 734 | Trans. code:JR5;for OE number:8200351249;Inner teeth of wheel side:30 | GDS50495 | Drive Shaft | | 25 | 26 | 52.6 | 88 | 914 | |
| | 2005.05-2008.11 | MT | F | L/R | MPV FWD K9K 732;K9K 734 | | GCO99213 | Outer Joint | | 25 | 33 | 53 | 88 | 61.5 | I |
| | 2005.05-2008.11 | MT | F | R | MPV FWD K9K 732;K9K 734 | Date to:2008.11 | GCI99169 | Inner Joint | | 26 | 30 | 33 | 326 | 95 | |
| | 2009.02-2016.09 | 6MT | F | L | MPV FWD K9K 832 | | GDS50426 | Drive Shaft | | 25 | 26 | 52.7 | 88.5 | 680 | |
| | 2009.02-2016.09 | 6MT | F | R | MPV FWD K9K 832 | Date to:2012.02 | GDS50425 | Drive Shaft | | 25 | 26 | 52.7 | 88.5 | 931 | |
| | 2009.02-2016.09 | 6MT | F | R | MPV FWD K9K 832 | Date from:2012.03 | GDS50510 | Drive Shaft | | 25 | 26 | 52.4 | 88.5 | 929 | |
| | 2009.02-2016.09 | 6MT | F | L/R | MPV FWD K9K 832 | Date From:2012.03 | GCO50162 | Outer Joint | | 25 | 23 | 52.5 | 88.5 | 60.5 | M |
| | 2009.02-2016.09 | MT | F | L/R | MPV FWD K9K 832 | | GCO99213 | Outer Joint | | 25 | 33 | 53 | 88 | 61.5 | I |
| | 2009.02-2016.09 | | F | R | MPV FWD K9K 832 | Date from:2009.10 | GDS50604 | Drive Shaft | | 25 | 26 | 52.6 | 89 | 942 | |
| | 2009.02-2016.09 | | F | L/R | MPV FWD K9K 832 | | GCO50145 | Outer Joint | | 25 | 33 | 52.7 | 88.5 | 59.5 | I |
| 1.5 (81 kw) | 2009.04-2016.09 | 6AT | F | L | Box Body/MPV FWD K9K 836;K9K 837 | | GDS50535 | Drive Shaft | | 25 | 34 | 52.7 | 88.5 | 632 | |
| | 2009.04-2016.09 | 6AT | F | R | Box Body/MPV FWD K9K 836;K9K 837 | | GDS50536 | Drive Shaft | | 25 | 34 | 52.6 | 89 | 984 | |
| | 2009.04-2016.09 | 6MT | F | L | Box Body/MPV FWD K9K 836;K9K 837 | | GDS50426 | Drive Shaft | | 25 | 26 | 52.7 | 88.5 | 680 | |
| | 2009.04-2016.09 | 6MT | F | R | Box Body/MPV FWD K9K 836;K9K 837 | Date to:2012.02 | GDS50425 | Drive Shaft | | 25 | 26 | 52.7 | 88.5 | 931 | |
| | 2009.04-2016.09 | 6MT | F | R | Box Body/MPV FWD K9K 836;K9K 837 | Date from:2012.03 | GDS50510 | Drive Shaft | | 25 | 26 | 52.4 | 88.5 | 929 | |
| | 2009.04-2016.09 | 6AT | F | L | MPV FWD K9K 836;K9K 837;K9K 636;K9K 656;K9K 657 | | GDS50535 | Drive Shaft | | 25 | 34 | 52.7 | 88.5 | 632 | |
| | 2009.04-2016.09 | 6AT | F | R | MPV FWD K9K 836;K9K 837;K9K 636;K9K 656;K9K 657 | | GDS50536 | Drive Shaft | | 25 | 34 | 52.6 | 89 | 984 | |
| | 2009.04-2016.09 | 6AT | F | L | MPV FWD K9K 836;K9K 837;K9K 636;K9K 656;K9K 657 | | GCO50145 | Outer Joint | | 25 | 33 | 52.7 | 88.5 | 59.5 | I |
| | 2009.04-2016.09 | 6AT | F | R | MPV FWD K9K 836;K9K 837;K9K 636;K9K 656;K9K 657 | | GCO50148 | Outer Joint | | 25 | 35 | 52.6 | 89 | 60 | I |
| | 2009.04-2016.09 | 6AT | F | L | MPV FWD K9K 836;K9K 837;K9K 636;K9K 656;K9K 657 | | GCI50129 | Inner Joint | | 34 | 33 | 40 | 54 | 106 | |
| | 2009.04-2016.09 | 6MT | F | L | MPV FWD K9K 836;K9K 837;K9K 636;K9K 656;K9K 657 | | GDS50426 | Drive Shaft | | 25 | 26 | 52.7 | 88.5 | 680 | |
| | 2009.04-2016.09 | 6MT | F | R | MPV FWD K9K 836;K9K 837;K9K 636;K9K 656;K9K 657 | Date to:2012.02 | GDS50425 | Drive Shaft | | 25 | 26 | 52.7 | 88.5 | 931 | |
| | 2009.04-2016.09 | 6MT | F | R | MPV FWD K9K 836;K9K 837;K9K 636;K9K 656;K9K 657 | Date from:2012.03 | GDS50510 | Drive Shaft | | 25 | 26 | 52.4 | 88.5 | 929 | |
| | 2009.04-2016.09 | 6MT | F | L/R | MPV FWD K9K 836;K9K 837;K9K 636;K9K 656;K9K 657 | | GCO50145 | Outer Joint | | 25 | 33 | 52.7 | 88.5 | 59.5 | I |
| | 2009.04-2016.09 | 6MT | F | L/R | MPV FWD K9K 836;K9K 837;K9K 636;K9K 656;K9K 657 | Date from:2012.03 | GCO50162 | Outer Joint | | 25 | 23 | 52.5 | 88.5 | 60.5 | M |
| | 2009.04-2016.09 | 6MT | F | L | MPV FWD K9K 836;K9K 837;K9K 636;K9K 656;K9K 657 | | GCI50070 | Inner Joint | | 26 | 33 | 40 | 64 | 106 | |
| | 2009.04-2016.09 | MT | F | L/R | MPV FWD K9K 836;K9K 837;K9K 636;K9K 656;K9K 657 | | GCO99213 | Outer Joint | | 25 | 33 | 53 | 88 | 61.5 | I |
| | 2016.09-2022.07 | 7DCT | F | R | MPV FWD K9K 646;K9K 647 | | GDS58219 | Drive Shaft | | 29 | 27 | 60 | 97 | 652 | |
| | 2016.09-2022.07 | 7DCT | F | R | MPV FWD K9K 646;K9K 647 | | GCO82323 | Outer Joint | | 29 | 35 | 60 | 97 | 63 | I |
| | 2016.09-2022.07 | 7DCT | F | R | MPV FWD K9K 646;K9K 647 | | GCI82385 | Inner Joint | | 27 | 35 | 40 | 65 | 109.5 | |
| 1.6 (75 kw) | 2001.03-2003.08 | 4AT/5MT | F | R | MPV FWD K4M700/K4M701/K4M708/K4M709 | Date From:2001.07,For Engine Code:K4M708 | GDS50313 | Drive Shaft | 44T | 23 | 23 | 57.5 | 86.5 | 750 | |
| | 2001.03-2003.08 | 4AT/5MT | F | R | MPV FWD K4M700/K4M701/K4M708/K4M709 | Date to:2001.06;For Engine code:K4M708 | GCI50008 | Inner Joint | | 23 | 30 | 36.3 | | 120.7 | |
| | 2001.03-2003.08 | 4AT/5MT | F | R | MPV FWD K4M700/K4M701/K4M708/K4M709 | Date from:2001.07,For Engine Code:K4M708 | GCI99131 | Inner Joint | | 23 | 28 | | 182.8 | 86 | |
| | 2001.03-2003.08 | AT | F | | MPV FWD K4M700/K4M701/K4M708/K4M709 | | GDS50492 | Drive Shaft | 44T | 23 | 23 | 57.5 | 86.5 | 779 | |
| | 2001.03-2003.08 | MT | F | L | MPV FWD K4M700/K4M701/K4M708/K4M709 | | GDS50311 | Drive Shaft | 44T | 23 | 30 | 56 | 82 | 650 | |
| | 2001.03-2003.08 | MT | F | L/R | MPV FWD K4M700/K4M701/K4M708/K4M709 | | GCO50058 | Outer Joint | 44T | 23 | 35 | 57 | 87 | 71 | I |
| | 2001.03-2003.08 | MT | F | L/R | MPV FWD K4M700/K4M701/K4M708/K4M709 | | GCO50069 | Outer Joint | 44T | 23 | 30 | 57.5 | 86.5 | 58.5 | I |
| | 2001.03-2003.08 | | F | L | MPV FWD K4M700/K4M701/K4M708/K4M709 | For Engine code:K4M709 | GDS50253 | Drive Shaft | 44T | 23 | 26 | 57.5 | 86.5 | 637 | |
| | 2001.03-2003.08 | | F | R | MPV FWD K4M700/K4M701/K4M708/K4M709 | Date to:2001.06;For Engine code:K4M708 | GDS50159 | Drive Shaft | 44T | 23 | 23 | 57 | 87 | 748 | |
| | 2001.03-2003.08 | 5MT | F | L | MPV FWD K4M712 | | GDS50311 | Drive Shaft | 44T | 23 | 30 | 56 | 82 | 650 | |
| | 2001.03-2003.08 | 5MT | F | R | MPV FWD K4M712 | | GDS50159 | Drive Shaft | 44T | 23 | 23 | 57 | 87 | 748 | |
| | 2001.03-2003.08 | 5MT | F | R | MPV FWD K4M712 | | GCI50008 | Inner Joint | | 23 | 30 | 36.3 | | 120.7 | |
| | 2001.03-2003.08 | MT | F | L/R | MPV FWD K4M712 | | GCO50058 | Outer Joint | 44T | 23 | 35 | 57 | 87 | 71 | I |
| 1.6 (77 kw) | 2006.06-2008.11 | 5MT | F | L | MPV FWD K4M 788 | | GDS50494 | Drive Shaft | | 25 | 26 | 52.6 | 88 | 664 | |
| | 2006.06-2008.11 | 5MT | F | R | MPV FWD K4M 788 | | GDS50442 | Drive Shaft | | 25 | 26 | 52.6 | 88 | 911 | |
| | 2006.06-2008.11 | 5MT | F | L/R | MPV FWD K4M 788 | | GCO50116 | Outer Joint | | 25 | 22 | 52.6 | 88 | 55 | I |
| | 2006.06-2008.11 | 5MT | F | R | MPV FWD K4M 788 | | GCI99169 | Inner Joint | | 26 | 30 | 33 | 326 | 95 | |
| 1.6 (79 kw) | 1999.09-2001.04 | 5MT | F | L | MPV FWD K4M704 | | GDS50311 | Drive Shaft | 44T | 23 | 30 | 56 | 82 | 650 | |
| | 1999.09-2001.04 | 5MT | F | R | MPV FWD K4M704 | | GDS50159 | Drive Shaft | 44T | 23 | 23 | 57 | 87 | 748 | |
| | 1999.09-2001.04 | MT | F | L | MPV FWD K4M704 | | GDS50160 | Drive Shaft | 44T | 23 | | 57 | 87 | 656.5 | |
| | 1999.09-2001.04 | MT | F | R | MPV FWD K4M704 | | GDS50313 | Drive Shaft | 44T | 23 | 23 | 57.5 | 86.5 | 750 | |
| | 1999.09-2001.04 | MT | F | R | MPV FWD K4M704 | | GCI50008 | Inner Joint | | 23 | 30 | 36.3 | | 120.7 | |
| | 1999.09-2001.04 | | F | L/R | MPV FWD K4M704 | | GCO50058 | Outer Joint | 44T | 23 | 35 | 57 | 87 | 71 | I |
| | 1999.09-2003.09 | AT | F | L | MPV FWD K4M700/K4M706/K4M707/K4M776 | | GDS50253 | Drive Shaft | 44T | 23 | 26 | 57.5 | 86.5 | 637 | |
| | 1999.09-2003.09 | AT | F | R | MPV FWD K4M700/K4M706/K4M707/K4M776 | | GDS50323 | Drive Shaft | 44T | 23 | 23 | 57.5 | 86.5 | 778 | |
| | 1999.09-2003.09 | MT | F | L | MPV FWD K4M700/K4M706/K4M707/K4M776 | Date to:2001.03 | GDS50160 | Drive Shaft | 44T | 23 | | 57 | 87 | 656.5 | |
| | 1999.09-2003.09 | MT | F | L | MPV FWD K4M700/K4M706/K4M707/K4M776 | | GDS50311 | Drive Shaft | 44T | 23 | 30 | 56 | 82 | 650 | |
| | 1999.09-2003.09 | MT | F | R | MPV FWD K4M700/K4M706/K4M707/K4M776 | Inner teeth of wheel side:30,solid shaft | GDS50156 | Drive Shaft | 44T | 23 | 23 | 57.5 | 86.5 | 746.5 | |
| | 1999.09-2003.09 | MT | F | R | MPV FWD K4M700/K4M706/K4M707/K4M776 | Inner teeth of wheel side:35 | GDS50159 | Drive Shaft | 44T | 23 | 23 | 57 | 87 | 748 | |
| | 1999.09-2003.09 | MT | F | R | MPV FWD K4M700/K4M706/K4M707/K4M776 | Date from:2001.04;Inner teeth of wheel side:30;hollow shaft | GDS50313 | Drive Shaft | 44T | 23 | 23 | 57.5 | 86.5 | 750 | |
| | 1999.09-2003.09 | MT | F | L/R | MPV FWD K4M700/K4M706/K4M707/K4M776 | | GCO50058 | Outer Joint | 44T | 23 | 35 | 57 | 87 | 71 | I |
| | 1999.09-2003.09 | MT | F | R | MPV FWD K4M700/K4M706/K4M707/K4M776 | | GCI50008 | Inner Joint | | 23 | 30 | 36.3 | | 120.7 | |
| | 2012.04-2013.12 | 6MT | F | L | MPV FWD K4M 866 | | GDS50426 | Drive Shaft | | 25 | 26 | 52.7 | 88.5 | 680 | |

| | YEAR | TRANSM. | F/R | L/R | BODY STYLE & DRIVE TYPE & ENGINE | REMARKS | G-AP Ref. | PRODUCT | ABS | Technical Specifications A | B | C | H | L | P |
|---|---|---|---|---|---|---|---|---|---|---|---|---|---|---|---|
| **RENAULT** **Scenic** | | | | | | | | | | | | | | | |
| 1.6 (79 kw) | 2012.04-2013.12 | 6MT | F | R | MPV FWD K4M 866 | | GDS50510 | Drive Shaft | | 25 | 26 | 52.4 | 88.5 | 929 | |
| | 2012.04-2013.12 | 6MT | F | R | MPV FWD K4M 866 | | GCI50051 | Inner Joint | | 26 | 22 | 33 | 326 | 96 | |
| | 2012.04-2013.12 | MT | F | L/R | MPV FWD K4M 866 | | GCO50162 | Outer Joint | | 25 | 23 | 52.5 | 88.5 | 60.5 | M |
| | 2012.04-2013.12 | | F | | MPV FWD K4M 866 | | GCO50157 | Outer Joint | | 25 | 33 | 52.6 | 89 | 60 | I |
| 1.6 (81 kw) | 2009.02-2016.09 | 6MT | F | L | MPV FWD K4M 858;K4M R 858 | | GDS50426 | Drive Shaft | | 25 | 26 | 52.7 | 88.5 | 680 | |
| | 2009.02-2016.09 | 6MT | F | R | MPV FWD K4M 858;K4M R 858 | | GDS50510 | Drive Shaft | | 25 | 26 | 52.4 | 88.5 | 929 | |
| | 2009.02-2016.09 | 6MT | F | R | MPV FWD K4M 858;K4M R 858 | | GCI50051 | Inner Joint | | 26 | 22 | 33 | 326 | 96 | |
| | 2009.02-2016.09 | MT/6MT | F | L/R | MPV FWD K4M 858;K4M R 858 | | GCO50162 | Outer Joint | | 25 | 23 | 52.5 | 88.5 | 60.5 | M |
| | 2009.02-2016.09 | 6MT | F | L | MPV FWD K4M 866 | | GDS50426 | Drive Shaft | | 25 | 26 | 52.7 | 88.5 | 680 | |
| | 2009.02-2016.09 | 6MT | F | R | MPV FWD K4M 866 | | GDS50510 | Drive Shaft | | 25 | 26 | 52.4 | 88.5 | 929 | |
| | 2009.02-2016.09 | 6MT | F | R | MPV FWD K4M 866 | | GCI50051 | Inner Joint | | 26 | 22 | 33 | 326 | 96 | |
| | 2009.02-2016.09 | MT | F | L/R | MPV FWD K4M 866 | | GCO50162 | Outer Joint | | 25 | 23 | 52.5 | 88.5 | 60.5 | M |
| | 2009.02-2016.09 | MT/6MT | F | L | MPV FWD K4M 866 | | GDS50426 | Drive Shaft | | 25 | 26 | 52.7 | 88.5 | 680 | |
| | 2013.01-2016.09 | 6MT | F | L | Box Body/MPV FWD K4M 858 | | GDS50426 | Drive Shaft | | 25 | 26 | 52.7 | 88.5 | 680 | |
| | 2013.01-2016.09 | 6MT | F | R | Box Body/MPV FWD K4M 858 | | GDS50510 | Drive Shaft | | 25 | 26 | 52.4 | 88.5 | 929 | |
| | 2013.01-2016.09 | 6MT | F | R | Box Body/MPV FWD K4M 858 | | GCI50051 | Inner Joint | | 26 | 22 | 33 | 326 | 96 | |
| 1.6 (82 kw) | 2005.10-2008.11 | 5MT | F | L | MPV FWD K4M 706;K4M 812;K4M 813;K4M 766 | hollow shaft | GDS50494 | Drive Shaft | | 25 | 26 | 52.6 | 88 | 664 | |
| | 2005.10-2008.11 | 5MT | F | R | MPV FWD K4M 706;K4M 812;K4M 813;K4M 766 | | GDS50442 | Drive Shaft | | 25 | 26 | 52.6 | 88 | 911 | |
| | 2005.10-2008.11 | 6MT | F | L | MPV FWD K4M 706;K4M 812;K4M 813;K4M 766 | | GDS99201 | Drive Shaft | | 25 | 39 | 53 | 88 | 638 | |
| | 2005.10-2008.11 | 6MT | F | R | MPV FWD K4M 706;K4M 812;K4M 813;K4M 766 | | GDS50400 | Drive Shaft | | 25 | 39 | 53 | 88 | 932 | |
| | 2005.10-2008.11 | AT | F | L | MPV FWD K4M 706;K4M 812;K4M 813;K4M 766 | | GDS99186 | Drive Shaft | | 25 | 26 | 52.6 | 88 | 669 | |
| | 2005.10-2008.11 | AT | F | R | MPV FWD K4M 706;K4M 812;K4M 813;K4M 766 | | GDS50386 | Drive Shaft | | 25 | 23 | 52.6 | 88 | 806 | |
| | 2005.10-2008.11 | MT | F | L/R | MPV FWD K4M 706;K4M 812;K4M 813;K4M 766 | | GCO50116 | Outer Joint | | 25 | 22 | 52.6 | 88 | 55 | I |
| | 2005.10-2008.11 | MT | F | R | MPV FWD K4M 706;K4M 812;K4M 813;K4M 766 | Date from:2006.06,Date to:2008.11 | GCI99169 | Inner Joint | | 26 | 30 | 33 | 326 | 95 | |
| | 2005.10-2008.11 | | F | | MPV FWD K4M 706;K4M 812;K4M 813;K4M 766 | | GCO50093 | Outer Joint | | 25 | 30 | 52.6 | 88 | 58 | I |
| 1.6 (83 kw) | 2003.06-2006.10 | AT | F | L | MPV FWD K4M 761;K4M 782 | | GDS99186 | Drive Shaft | | 25 | 26 | 52.6 | 88 | 669 | |
| | 2003.06-2006.10 | AT | F | R | MPV FWD K4M 761;K4M 782 | | GDS50386 | Drive Shaft | | 25 | 23 | 52.6 | 88 | 806 | |
| | 2003.06-2006.10 | MT | F | L | MPV FWD K4M 761;K4M 782 | solid shaft | GDS50350 | Drive Shaft | | 25 | 26 | 52.6 | 88 | 668.5 | |
| | 2003.06-2006.10 | MT | F | L | MPV FWD K4M 761;K4M 782 | hollow shaft | GDS50494 | Drive Shaft | | 25 | 26 | 52.6 | 88 | 664 | |
| | 2003.06-2006.10 | MT | F | R | MPV FWD K4M 761;K4M 782 | | GDS50442 | Drive Shaft | | 25 | 26 | 52.6 | 88 | 911 | |
| | 2003.06-2006.10 | MT | F | L/R | MPV FWD K4M 761;K4M 782 | | GCO50116 | Outer Joint | | 25 | 22 | 52.6 | 88 | 55 | I |
| | 2003.06-2006.10 | MT | F | R | MPV FWD K4M 761;K4M 782 | Date to:2006.10 | GCI99169 | Inner Joint | | 26 | 30 | 33 | 326 | 95 | |
| | 2003.06-2006.10 | | F | | MPV FWD K4M 761;K4M 782 | | GCO50093 | Outer Joint | | 25 | 30 | 52.6 | 88 | 58 | I |
| | 2003.08-2006.05 | MT | F | L | MPV FWD K4M 764 | | GDS50494 | Drive Shaft | | 25 | 26 | 52.6 | 88 | 664 | |
| | 2003.08-2006.05 | MT | F | R | MPV FWD K4M 764 | | GDS50442 | Drive Shaft | | 25 | 26 | 52.6 | 88 | 911 | |
| | 2003.08-2006.05 | MT | F | L/R | MPV FWD K4M 764 | | GCO50116 | Outer Joint | | 25 | 22 | 52.6 | 88 | 55 | I |
| | 2003.08-2006.05 | MT | F | R | MPV FWD K4M 764 | | GCI99169 | Inner Joint | | 26 | 30 | 33 | 326 | 95 | |
| 1.6 (96 kw) | 2011.04-2016.09 | 6MT | F | L | MPV FWD R9M 402;R9M 404;R9M 414 | | GDS50430 | Drive Shaft | | 27 | 39 | 56.5 | 91.5 | 654 | |
| | 2011.04-2016.09 | 6MT | F | R | MPV FWD R9M 402;R9M 404;R9M 414 | | GDS50429 | Drive Shaft | | 27 | 39 | 56.5 | 91.5 | 956 | |
| | 2011.04-2016.09 | 6MT | F | L/R | MPV FWD R9M 402;R9M 404;R9M 414 | | GCO50160 | Outer Joint | | 27 | 35 | 56.5 | 91.5 | 61 | I |
| | 2011.04-2016.09 | 6MT | F | L | MPV FWD R9M 402;R9M 404;R9M 414 | | GCI81352 | Inner Joint | | 39 | 33 | 39 | 65 | 106 | |
| | 2011.04-2016.09 | 6MT | F | R | MPV FWD R9M 402;R9M 404;R9M 414 | | GCI81351 | Inner Joint | | 39 | 33 | 33 | 352.5 | 82.5 | |
| | 2013.01-2016.09 | 6MT | F | L | Box Body/MPV FWD R9M 402 | | GDS50430 | Drive Shaft | | 27 | 39 | 56.5 | 91.5 | 654 | |
| | 2013.01-2016.09 | 6MT | F | R | Box Body/MPV FWD R9M 402 | | GDS50429 | Drive Shaft | | 27 | 39 | 56.5 | 91.5 | 956 | |
| | 2013.01-2016.09 | 6MT | F | L/R | Box Body/MPV FWD R9M 402 | | GCO50160 | Outer Joint | | 27 | 35 | 56.5 | 91.5 | 61 | I |
| | 2013.01-2016.09 | 6MT | F | L | Box Body/MPV FWD R9M 402 | | GCI81352 | Inner Joint | | 39 | 33 | 39 | 65 | 106 | |
| | 2013.01-2016.09 | 6MT | F | R | Box Body/MPV FWD R9M 402 | | GCI81351 | Inner Joint | | 39 | 33 | 33 | 352.5 | 82.5 | |
| | 2016.09-2022.07 | 6MT | F | L | MPV FWD R9M 409 | | GDS56655 | Drive Shaft | | 29 | 39 | 60 | 95.5 | 664 | |
| | 2016.09-2022.07 | 6MT | F | R | MPV FWD R9M 409 | | GDS56644 | Drive Shaft | | 29 | 39 | 60 | 95.5 | 1002 | |
| | 2016.09-2022.07 | 6MT | F | L/R | MPV FWD R9M 409 | | GCO82492 | Outer Joint | | 29 | 36 | 60 | 95.5 | 64.5 | I |
| | 2016.09-2022.07 | 6MT | F | L | MPV FWD R9M 409 | | GCI83425 | Inner Joint | | 39 | 36 | 39 | 74 | 98.5 | |
| | 2016.09-2022.07 | 6MT | F | R | MPV FWD R9M 409 | | GCI83419 | Inner Joint | | 39 | 36 | 30 | 371.5 | 86.5 | |
| 1.6 (118 kw) | 2016.09-2022.07 | 6AT | F | L | MPV FWD R9M 452 | | GDS83832 | Drive Shaft | | 29 | 28 | 60 | 95.5 | 676 | |
| | 2016.09-2022.07 | 6AT | F | R | MPV FWD R9M 452 | | GDS83831 | Drive Shaft | | 29 | 28 | 60 | 95.5 | 963 | |
| | 2016.09-2022.07 | 6AT | F | L/R | MPV FWD R9M 452 | | GCO82492 | Outer Joint | | 29 | 36 | 60 | 95.5 | 64.5 | I |
| | 2016.09-2022.07 | 6AT | F | L | MPV FWD R9M 452 | | GCI82157 | Inner Joint | | 28 | 35 | 33.85 | 78.5 | 85.5 | |
| | 2016.09-2022.07 | 6AT | F | R | MPV FWD R9M 452 | | GCI82158 | Inner Joint | | 28 | 35 | 33.85 | 353.5 | 93.5 | |
| 1.7 (88 kw) | 2018.08-2022.07 | 6AT | F | L | MPV FWD R9N 401;R9N 400 | | GDS83832 | Drive Shaft | | 29 | 28 | 60 | 95.5 | 676 | |
| | 2018.08-2022.07 | 6AT | F | R | MPV FWD R9N 401;R9N 400 | | GDS83831 | Drive Shaft | | 29 | 28 | 60 | 95.5 | 963 | |
| | 2018.08-2022.07 | 6AT | F | L | MPV FWD R9N 401;R9N 400 | | GCI82157 | Inner Joint | | 28 | 35 | 33.85 | 78.5 | 85.5 | |
| | 2018.08-2022.07 | 6AT | F | R | MPV FWD R9N 401;R9N 400 | | GCI82158 | Inner Joint | | 28 | 35 | 33.85 | 353.5 | 93.5 | |
| | 2018.08-2022.07 | 6AT/6MT | F | L/R | MPV FWD R9N 401;R9N 400 | | GCO82492 | Outer Joint | | 29 | 36 | 60 | 95.5 | 64.5 | I |
| | 2018.08-2022.07 | 6MT | F | L | MPV FWD R9N 401;R9N 400 | | GDS56655 | Drive Shaft | | 29 | 39 | 60 | 95.5 | 664 | |
| | 2018.08-2022.07 | 6MT | F | R | MPV FWD R9N 401;R9N 400 | | GDS56644 | Drive Shaft | | 29 | 39 | 60 | 95.5 | 1002 | |
| | 2018.08-2022.07 | 6MT | F | L | MPV FWD R9N 401;R9N 400 | | GCI83425 | Inner Joint | | 39 | 36 | 39 | 74 | 98.5 | |

| | YEAR | TRANSM. | F/R | L/R | BODY STYLE & DRIVE TYPE & ENGINE | REMARKS | G-AP Ref. | PRODUCT | ABS | Technical Specifications | | | | | |
|---|---|---|---|---|---|---|---|---|---|---|---|---|---|---|---|
| | | | | | | | | | | A | B | C | H | L | P |
| **RENAULT** **Scenic** | | | | | | | | | | | | | | | |
| 1.7 (88 kw) | 2018.08-2022.07 | 6MT | F | R | MPV FWD R9N 401;R9N 400 | | GCI83419 | Inner Joint | | 39 | 36 | 30 | 371.5 | 86.5 | |
| 1.7 (110 kw) | 2018.08-2022.07 | 6AT | F | L | MPV FWD R9N 401;R9N 400 | | GDS83832 | Drive Shaft | | 29 | 28 | 60 | 95.5 | 676 | |
| | 2018.08-2022.07 | 6AT | F | R | MPV FWD R9N 401;R9N 400 | | GDS83831 | Drive Shaft | | 29 | 28 | 60 | 95.5 | 963 | |
| | 2018.08-2022.07 | 6AT | F | L | MPV FWD R9N 401;R9N 400 | | GCI82157 | Inner Joint | | 28 | 35 | 33.85 | 78.5 | 85.5 | |
| | 2018.08-2022.07 | 6AT | F | R | MPV FWD R9N 401;R9N 400 | | GCI82158 | Inner Joint | | 28 | 35 | 33.85 | 353.5 | 93.5 | |
| | 2018.08-2022.07 | 6AT/6MT | F | L/R | MPV FWD R9N 401;R9N 400 | | GCO82492 | Outer Joint | | 29 | 36 | 60 | 95.5 | 64.5 | I |
| | 2018.08-2022.07 | 6MT | F | L | MPV FWD R9N 401;R9N 400 | | GDS56655 | Drive Shaft | | 29 | 39 | 60 | 95.5 | 664 | |
| | 2018.08-2022.07 | 6MT | F | R | MPV FWD R9N 401;R9N 400 | | GDS56644 | Drive Shaft | | 29 | 39 | 60 | 95.5 | 1002 | |
| | 2018.08-2022.07 | 6MT | F | L | MPV FWD R9N 401;R9N 400 | | GCI83425 | Inner Joint | | 39 | 36 | 39 | 74 | 98.5 | |
| | 2018.08-2022.07 | 6MT | F | R | MPV FWD R9N 401;R9N 400 | | GCI83419 | Inner Joint | | 39 | 36 | 30 | 371.5 | 86.5 | |
| 1.8 (85 kw) | 2001.01-2003.08 | 5MT | F | L | MPV FWD F4P720/F4P722 | | GDS50160 | Drive Shaft | 44T | 23 | | 57 | 87 | 656.5 | |
| | 2001.01-2003.08 | 5MT | F | R | MPV FWD F4P720/F4P722 | | GDS50313 | Drive Shaft | 44T | 23 | 23 | 57.5 | 86.5 | 750 | |
| | 2001.01-2003.08 | AT/MT | F | L/R | MPV FWD F4P720/F4P722 | | GCO50058 | Outer Joint | 44T | 23 | 35 | 57 | 87 | 71 | I |
| | 2001.01-2003.08 | MT | F | R | MPV FWD F4P720/F4P722 | | GDS50156 | Drive Shaft | 44T | 23 | 23 | 57.5 | 86.5 | 746.5 | |
| | 2001.01-2003.08 | MT | F | R | MPV FWD F4P720/F4P722 | | GCI99131 | Inner Joint | | 23 | 28 | | 182.8 | 86 | |
| 1.9 (47 kw) | 1999.09-2001.02 | 5MT | F | L | MPV FWD F8Q788/F8Q790 | | GDS50311 | Drive Shaft | 44T | 23 | 30 | 56 | 82 | 650 | |
| | 1999.09-2001.02 | 5MT | F | R | MPV FWD F8Q788/F8Q790 | | GDS50320 | Drive Shaft | 44T | 23 | 23 | 56.8 | 84 | 755 | |
| | 1999.09-2001.02 | 5MT | F | R | MPV FWD F8Q788/F8Q790 | | GCI50079 | Inner Joint | | 23 | 22 | 36.3 | | 105.5 | |
| | 1999.09-2001.02 | | F | L | MPV FWD F8Q788/F8Q790 | | GCO50058 | Outer Joint | 44T | 23 | 35 | 57 | 87 | 71 | I |
| | 1999.09-2001.02 | 5MT | F | L | MPV Van FWD F8Q788/F8Q790 | | GDS50311 | Drive Shaft | 44T | 23 | 30 | 56 | 82 | 650 | |
| | 1999.09-2001.02 | 5MT | F | R | MPV Van FWD F8Q788/F8Q790 | | GDS50320 | Drive Shaft | 44T | 23 | 23 | 56.8 | 84 | 755 | |
| | 1999.09-2001.02 | 5MT | F | L/R | MPV Van FWD F8Q788/F8Q790 | | GCO50058 | Outer Joint | 44T | 23 | 35 | 57 | 87 | 71 | I |
| 1.9 (59 kw) | 2000.10-2003.08 | 5MT | F | L | MPV FWD F9Q738/F9Q744 | | GDS50311 | Drive Shaft | 44T | 23 | 30 | 56 | 82 | 650 | |
| | 2000.10-2003.08 | 5MT | F | R | MPV FWD F9Q738/F9Q744 | Date to:2001.09 | GDS50159 | Drive Shaft | 44T | 23 | 23 | 57 | 87 | 748 | |
| | 2000.10-2003.08 | 5MT | F | R | MPV FWD F9Q738/F9Q744 | | GDS50313 | Drive Shaft | 44T | 23 | 23 | 57.5 | 86.5 | 750 | |
| | 2000.10-2003.08 | MT | F | R | MPV FWD F9Q738/F9Q744 | | GDS50156 | Drive Shaft | 44T | 23 | 23 | 57.5 | 86.5 | 746.5 | |
| | 2000.10-2003.08 | MT | F | L/R | MPV FWD F9Q738/F9Q744 | | GCO50069 | Outer Joint | 44T | 23 | 30 | 57.5 | 86.5 | 58.5 | I |
| | 2000.10-2003.08 | | F | L | MPV FWD F9Q738/F9Q744 | | GCO50058 | Outer Joint | 44T | 23 | 35 | 57 | 87 | 71 | I |
| | 2000.10-2003.08 | | F | R | MPV FWD F9Q738/F9Q744 | | GCI50008 | Inner Joint | | 23 | 30 | 36.3 | | 120.7 | |
| 1.9 (72 kw) | 1999.09-2001.04 | AT | F | L | MPV FWD F9Q731/F9Q734/F9Q736 | | GDS50253 | Drive Shaft | 44T | 23 | 26 | 57.5 | 86.5 | 637 | |
| | 1999.09-2001.04 | AT | F | R | MPV FWD F9Q731/F9Q734/F9Q736 | | GDS50323 | Drive Shaft | 44T | 23 | 23 | 57.5 | 86.5 | 778 | |
| | 1999.09-2001.04 | MT | F | L | MPV FWD F9Q731/F9Q734/F9Q736 | | GDS50148 | Drive Shaft | 44T | 23 | | 57.5 | 86.5 | 657 | |
| | 1999.09-2001.04 | MT | F | R | MPV FWD F9Q731/F9Q734/F9Q736 | | GDS50159 | Drive Shaft | 44T | 23 | 23 | 57 | 87 | 748 | |
| | 1999.09-2001.04 | MT | F | L/R | MPV FWD F9Q731/F9Q734/F9Q736 | Date to:2001.04 | GCO50026 | Outer Joint | | 23 | 25 | 56.2 | 83.5 | 58 | O |
| | 1999.09-2001.04 | MT | F | L/R | MPV FWD F9Q731/F9Q734/F9Q736 | | GCO50058 | Outer Joint | 44T | 23 | 35 | 57 | 87 | 71 | I |
| | 1999.09-2001.04 | MT | F | L/R | MPV FWD F9Q731/F9Q734/F9Q736 | | GCO50069 | Outer Joint | 44T | 23 | 30 | 57.5 | 86.5 | 58.5 | I |
| | 1999.09-2001.04 | MT | F | R | MPV FWD F9Q731/F9Q734/F9Q736 | Date to:2001.04 | GCI50008 | Inner Joint | | 23 | 30 | 36.3 | | 120.7 | |
| | 1999.09-2001.04 | MT | F | L | MPV Van FWD F9Q734 | | GDS50148 | Drive Shaft | 44T | 23 | | 57.5 | 86.5 | 657 | |
| | 1999.09-2001.04 | MT | F | R | MPV Van FWD F9Q734 | | GDS50159 | Drive Shaft | 44T | 23 | 23 | 57 | 87 | 748 | |
| 1.9 (75 kw) | 1999.09-2003.08 | 4AT/5MT | F | L | MPV FWD F9Q732/F9Q733 | For Engine Code:F9Q732/F9Q733 | GCO50069 | Outer Joint | 44T | 23 | 30 | 57.5 | 86.5 | 58.5 | I |
| | 1999.09-2003.08 | 5MT | F | R | MPV FWD F9Q732/F9Q733 | Engine code:F9Q733;Inner teeth of wheel side:32 | GDS50517 | Drive Shaft | 44T | 23 | 23 | 57.5 | 86 | 779 | |
| | 1999.09-2003.08 | AT | F | L | MPV FWD F9Q732/F9Q733 | | GDS50253 | Drive Shaft | 44T | 23 | 26 | 57.5 | 86.5 | 637 | |
| | 1999.09-2003.08 | AT | F | R | MPV FWD F9Q732/F9Q733 | Engine code:F9Q733 | GDS50323 | Drive Shaft | 44T | 23 | 23 | 57.5 | 86.5 | 778 | |
| | 1999.09-2003.08 | MT | F | L | MPV FWD F9Q732/F9Q733 | For Engine Code:F9Q732 | GDS50148 | Drive Shaft | 44T | 23 | | 57.5 | 86.5 | 657 | |
| | 1999.09-2003.08 | MT | F | R | MPV FWD F9Q732/F9Q733 | Engine code:F9Q732;Inner teeth of wheel side:30;solid shaft | GDS50156 | Drive Shaft | 44T | 23 | 23 | 57.5 | 86.5 | 746.5 | |
| | 1999.09-2003.08 | MT | F | R | MPV FWD F9Q732/F9Q733 | Date to:2001.04;Inner teeth of wheel side:35 | GDS50159 | Drive Shaft | 44T | 23 | 23 | 57 | 87 | 748 | |
| | 1999.09-2003.08 | MT | F | R | MPV FWD F9Q732/F9Q733 | Inner teeth of wheel side:30;hollow shaft | GDS50313 | Drive Shaft | 44T | 23 | 23 | 57.5 | 86.5 | 750 | |
| | 1999.09-2003.08 | MT | F | L/R | MPV FWD F9Q732/F9Q733 | | GCO50058 | Outer Joint | 44T | 23 | 35 | 57 | 87 | 71 | I |
| | 1999.09-2003.08 | MT | F | R | MPV FWD F9Q732/F9Q733 | | GCI50008 | Inner Joint | | 23 | 30 | 36.3 | | 120.7 | |
| 1.9 (81 kw) | 2005.05-2008.11 | 4AT | F | L | MPV FWD F9Q 804 | | GDS99186 | Drive Shaft | | 25 | 26 | 52.6 | 88 | 669 | |
| | 2005.05-2008.11 | 4AT | F | R | MPV FWD F9Q 804 | | GDS83826 | Drive Shaft | | 25 | 26 | 52.8 | 85.5 | 800 | |
| | 2005.05-2008.11 | 4AT | F | L/R | MPV FWD F9Q 804 | | GCO50143 | Outer Joint | | 25 | 32 | 52.8 | 85.5 | 62.5 | I |
| | 2005.05-2008.11 | 4AT | F | R | MPV FWD F9Q 804 | | GCI50047 | Inner Joint | | 26 | 30 | | 213.5 | 95 | |
| | 2005.05-2008.11 | MT | F | L/R | MPV FWD F9Q 804 | | GCO99213 | Outer Joint | | 25 | 33 | 53 | 88 | 61.5 | I |
| 1.9 (85 kw) | 2006.06-2008.11 | 4AT | F | L | MPV FWD F9Q 804;F9Q 812;F9Q 803;F9Q 816;F9Q 818 | | GDS99186 | Drive Shaft | | 25 | 26 | 52.6 | 88 | 669 | |
| | 2006.06-2008.11 | 4AT | F | R | MPV FWD F9Q 804;F9Q 812;F9Q 803;F9Q 816;F9Q 818 | | GDS83826 | Drive Shaft | | 25 | 26 | 52.8 | 85.5 | 800 | |
| | 2006.06-2008.11 | 6MT | F | L | MPV FWD F9Q 804;F9Q 812;F9Q 803;F9Q 816;F9Q 818 | | GDS99201 | Drive Shaft | | 25 | 39 | 53 | 88 | 638 | |
| | 2006.06-2008.11 | 6MT | F | R | MPV FWD F9Q 804;F9Q 812;F9Q 803;F9Q 816;F9Q 818 | | GDS50400 | Drive Shaft | | 25 | 39 | 53 | 88 | 932 | |
| | 2006.06-2008.11 | 6MT | F | L/R | MPV FWD F9Q 804;F9Q 812;F9Q 803;F9Q 816;F9Q 818 | | GCO99213 | Outer Joint | | 25 | 33 | 53 | 88 | 61.5 | I |
| | 2006.06-2008.11 | AT/MT | F | L | MPV FWD F9Q 804;F9Q 812;F9Q 803;F9Q 816;F9Q 818 | Date to:2008.11 | GCI99150 | Inner Joint | | 39 | 32 | 39 | 66 | 104.5 | |
| | 2006.06-2008.11 | AT/MT | F | R | MPV FWD F9Q 804;F9Q 812;F9Q 803;F9Q 816;F9Q 818 | Date to:2008.11 | GCI99160 | Inner Joint | | 39 | 32 | 32.95 | 352 | 90 | |
| 1.9 (88 kw) | 2003.06-2006.05 | 6MT | F | L/R | MPV FWD F9Q 812 | | GCO99213 | Outer Joint | | 25 | 33 | 53 | 88 | 61.5 | I |
| | 2003.06-2006.05 | AT | F | L/R | MPV FWD F9Q 812 | | GCO50109 | Outer Joint | | 23 | 33 | 49 | 86.5 | 61 | I |
| | 2003.06-2006.05 | AT/MT | F | L | MPV FWD F9Q 812 | Transmission Type:DP0, ND0 | GDS99201 | Drive Shaft | | 25 | 39 | 53 | 88 | 638 | |
| | 2003.06-2006.05 | AT/MT | F | R | MPV FWD F9Q 812 | Transmission Type:DP0, ND0 | GDS50400 | Drive Shaft | | 25 | 39 | 53 | 88 | 932 | |

| | YEAR | TRANSM. | F/R | L/R | BODY STYLE & DRIVE TYPE & ENGINE | REMARKS | G-AP Ref. | PRODUCT | ABS | Technical Specifications A | B | C | H | L | P |
|---|---|---|---|---|---|---|---|---|---|---|---|---|---|---|---|
| **RENAULT** **Scenic** | | | | | | | | | | | | | | | |
| 1.9 (88 kw) | 2003.06-2006.05 | AT/MT | F | L | MPV FWD F9Q 812 | Transmission Type:DP0, ND0 | GCI99150 | Inner Joint | | 39 | 32 | 39 | 66 | 104.5 | |
| | 2003.06-2006.05 | AT/MT | F | R | MPV FWD F9Q 812 | Transmission Type:DP0, ND0 | GCI99160 | Inner Joint | | 39 | 32 | 32.95 | 352 | 90 | |
| 1.9 (92 kw) | 2003.06-2008.11 | AT/MT | F | L | MPV FWD F9Q 804 | Date from:2005.05,Date to:2008.11 | GCI99150 | Inner Joint | | 39 | 32 | 39 | 66 | 104.5 | |
| | 2003.06-2008.11 | AT/MT | F | R | MPV FWD F9Q 804 | Date from:2005.05,Date to:2008.11 | GCI99160 | Inner Joint | | 39 | 32 | 32.95 | 352 | 90 | |
| | 2003.06-2008.11 | MT | F | L | MPV FWD F9Q 804 | | GDS99201 | Drive Shaft | | 25 | 39 | 53 | 88 | 638 | |
| | 2003.06-2008.11 | MT | F | R | MPV FWD F9Q 804 | | GDS50400 | Drive Shaft | | 25 | 39 | 53 | 88 | 932 | |
| | 2003.06-2008.11 | MT | F | R | MPV FWD F9Q 804 | | GCO99213 | Outer Joint | | 25 | 33 | 53 | 88 | 61.5 | I |
| 1.9 (96 kw) | 2005.05-2008.11 | AT/MT | F | L | MPV FWD F9Q 804;F9Q 803;F9Q 816;F9Q 818 | Date to:2009.05 | GCI99150 | Inner Joint | | 39 | 32 | 39 | 66 | 104.5 | |
| | 2005.05-2008.11 | AT/MT | F | R | MPV FWD F9Q 804;F9Q 803;F9Q 816;F9Q 818 | Date to:2009.05 | GCI99160 | Inner Joint | | 39 | 32 | 32.95 | 352 | 90 | |
| | 2005.05-2008.11 | MT | F | L | MPV FWD F9Q 804;F9Q 803;F9Q 816;F9Q 818 | | GDS99201 | Drive Shaft | | 25 | 39 | 53 | 88 | 638 | |
| | 2005.05-2008.11 | MT | F | R | MPV FWD F9Q 804;F9Q 803;F9Q 816;F9Q 818 | | GDS50400 | Drive Shaft | | 25 | 39 | 53 | 88 | 932 | |
| | 2005.05-2008.11 | MT | F | L/R | MPV FWD F9Q 804;F9Q 803;F9Q 816;F9Q 818 | | GCO99213 | Outer Joint | | 25 | 33 | 53 | 88 | 61.5 | I |
| | 2009.02-2016.09 | 6MT | F | L | MPV FWD F9Q 872;F9Q 870 | | GDS50430 | Drive Shaft | | 27 | 39 | 56.5 | 91.5 | 654 | |
| | 2009.02-2016.09 | 6MT | F | R | MPV FWD F9Q 872;F9Q 870 | | GDS50429 | Drive Shaft | | 27 | 39 | 56.5 | 91.5 | 956 | |
| | 2009.02-2016.09 | 6MT | F | L/R | MPV FWD F9Q 872;F9Q 870 | | GCO50160 | Outer Joint | | 27 | 35 | 56.5 | 91.5 | 61 | I |
| | 2009.02-2016.09 | 6MT | F | L | MPV FWD F9Q 872;F9Q 870 | | GCI81352 | Inner Joint | | 39 | 33 | 39 | 65 | 106 | |
| | 2009.02-2016.09 | 6MT | F | R | MPV FWD F9Q 872;F9Q 870 | | GCI81351 | Inner Joint | | 39 | 33 | 33 | 352.5 | 82.5 | |
| | 2013.01-2016.09 | 6MT | F | L | Box Body/MPV FWD F9Q 872;F9Q 870 | | GDS50430 | Drive Shaft | | 27 | 39 | 56.5 | 91.5 | 654 | |
| | 2013.01-2016.09 | 6MT | F | R | Box Body/MPV FWD F9Q 872;F9Q 870 | | GDS50429 | Drive Shaft | | 27 | 39 | 56.5 | 91.5 | 956 | |
| | 2013.01-2016.09 | 6MT | F | L/R | Box Body/MPV FWD F9Q 872;F9Q 870 | | GCO50160 | Outer Joint | | 27 | 35 | 56.5 | 91.5 | 61 | I |
| | 2013.01-2016.09 | 6MT | F | L | Box Body/MPV FWD F9Q 872;F9Q 870 | | GCI81352 | Inner Joint | | 39 | 33 | 39 | 65 | 106 | |
| | 2013.01-2016.09 | 6MT | F | R | Box Body/MPV FWD F9Q 872;F9Q 870 | | GCI81351 | Inner Joint | | 39 | 33 | 33 | 352.5 | 82.5 | |
| 1.9 (97 kw) | 2005.10-2009.12 | 6MT | F | L | MPV FWD F9Q 804 | | GDS99201 | Drive Shaft | | 25 | 39 | 53 | 88 | 638 | |
| | 2005.10-2009.12 | 6MT | F | R | MPV FWD F9Q 804 | | GDS50400 | Drive Shaft | | 25 | 39 | 53 | 88 | 932 | |
| | 2005.10-2009.12 | 6MT | F | L/R | MPV FWD F9Q 804 | | GCO99213 | Outer Joint | | 25 | 33 | 53 | 88 | 61.5 | I |
| | 2005.10-2009.12 | 6MT | F | L | MPV FWD F9Q 804 | | GCI99150 | Inner Joint | | 39 | 32 | 39 | 66 | 104.5 | |
| | 2005.10-2009.12 | 6MT | F | R | MPV FWD F9Q 804 | | GCI99160 | Inner Joint | | 39 | 32 | 32.95 | 352 | 90 | |
| 2.0 (99 kw) | 2003.06-2009.06 | 4AT/6MT | F | L/R | MPV FWD F4R 770;F4R 771 | | GCO99213 | Outer Joint | | 25 | 33 | 53 | 88 | 61.5 | I |
| | 2003.06-2009.06 | MT | F | L | MPV FWD F4R 770;F4R 771 | For Engine code:F4R771 | GDS99186 | Drive Shaft | | 25 | 26 | 52.6 | 88 | 669 | |
| | 2003.06-2009.06 | MT | F | L | MPV FWD F4R 770;F4R 771 | For Engine code:F4R 770 | GDS99201 | Drive Shaft | | 25 | 39 | 53 | 88 | 638 | |
| | 2003.06-2009.06 | MT | F | R | MPV FWD F4R 770;F4R 771 | For Engine code:F4R771 | GDS50399 | Drive Shaft | | 25 | 23 | 52.6 | 88 | 803 | |
| | 2003.06-2009.06 | MT | F | R | MPV FWD F4R 770;F4R 771 | For Engine code:F4R770 | GDS50400 | Drive Shaft | | 25 | 39 | 53 | 88 | 932 | |
| | 2003.06-2009.06 | MT | F | L | MPV FWD F4R 770;F4R 771 | Date to:2009.06 | GCI99150 | Inner Joint | | 39 | 32 | 39 | 66 | 104.5 | |
| | 2003.06-2009.06 | MT | F | R | MPV FWD F4R 770;F4R 771 | For Engine code:F4R771 | GCI50041 | Inner Joint | | 23 | 30 | | 217 | 94 | |
| | 2003.06-2009.06 | MT | F | R | MPV FWD F4R 770;F4R 771 | For Engine code:F4R770 | GCI99160 | Inner Joint | | 39 | 32 | 32.95 | 352 | 90 | |
| 2.0 (101 kw) | 2008.02-2009.04 | 6MT | F | L | MPV FWD F4R 771 | | GDS99201 | Drive Shaft | | 25 | 39 | 53 | 88 | 638 | |
| | 2008.02-2009.04 | 6MT | F | R | MPV FWD F4R 771 | | GDS50400 | Drive Shaft | | 25 | 39 | 53 | 88 | 932 | |
| | 2008.02-2009.04 | AT | F | L | MPV FWD F4R 771 | | GDS99186 | Drive Shaft | | 25 | 26 | 52.6 | 88 | 669 | |
| | 2008.02-2009.04 | AT | F | R | MPV FWD F4R 771 | | GDS50399 | Drive Shaft | | 25 | 23 | 52.6 | 88 | 803 | |
| | 2008.02-2009.04 | AT | F | R | MPV FWD F4R 771 | | GCI50041 | Inner Joint | | 23 | 30 | | 217 | 94 | |
| | 2008.12-2016.09 | CVT | F | L | MPV FWD M4R 711 | | GDS83875 | Drive Shaft | | 25 | 27 | 52.5 | 88.5 | 675 | |
| | 2008.12-2016.09 | CVT | F | L | MPV FWD M4R 711 | | GCO82528 | Outer Joint | | 25 | 24 | 52.5 | 88.5 | 59 | M |
| | 2008.12-2016.09 | CVT | F | L | MPV FWD M4R 711 | | GCI41073 | Inner Joint | | 27 | 24 | 40 | 62.5 | 99.5 | |
| 2.0 (102 kw) | 2000.07-2003.08 | AT | F | L | MPV FWD F4R740/F4R741/F4R744/F4R747 | | GDS50253 | Drive Shaft | 44T | 23 | 26 | 57.5 | 86.5 | 637 | |
| | 2000.07-2003.08 | AT/MT | F | L/R | MPV FWD F4R740/F4R741/F4R744/F4R747 | | GCO50058 | Outer Joint | 44T | 23 | 35 | 57 | 87 | 71 | I |
| | 2000.07-2003.08 | MT | F | L | MPV FWD F4R740/F4R741/F4R744/F4R747 | | GDS50160 | Drive Shaft | 44T | 23 | | 57 | 87 | 656.5 | |
| | 2000.07-2003.08 | MT | F | R | MPV FWD F4R740/F4R741/F4R744/F4R747 | | GDS50156 | Drive Shaft | 44T | 23 | 23 | 57.5 | 86.5 | 746.5 | |
| | 2000.07-2003.08 | MT | F | R | MPV FWD F4R740/F4R741/F4R744/F4R747 | | GDS50159 | Drive Shaft | 44T | 23 | 23 | 57 | 87 | 748 | |
| | 2000.07-2003.08 | MT | F | R | MPV FWD F4R740/F4R741/F4R744/F4R747 | Date from:2001.02 | GDS50313 | Drive Shaft | 44T | 23 | 23 | 57.5 | 86.5 | 750 | |
| | 2000.07-2003.08 | MT | F | R | MPV FWD F4R740/F4R741/F4R744/F4R747 | | GCI50008 | Inner Joint | | 23 | 30 | 36.3 | | 120.7 | |
| 2.0 (103 kw) | 1999.09-2009.07 | AT | F | L | MPV FWD F4R740/F4R741/F4R746/F4R747 | | GDS50253 | Drive Shaft | 44T | 23 | 26 | 57.5 | 86.5 | 637 | |
| | 1999.09-2009.07 | MT | F | L | MPV FWD F4R740/F4R741/F4R746/F4R747 | | GDS50160 | Drive Shaft | 44T | 23 | | 57 | 87 | 656.5 | |
| | 1999.09-2009.07 | MT | F | R | MPV FWD F4R740/F4R741/F4R746/F4R747 | | GDS50159 | Drive Shaft | 44T | 23 | 23 | 57 | 87 | 748 | |
| | 1999.09-2009.07 | MT | F | R | MPV FWD F4R740/F4R741/F4R746/F4R747 | Date from:2001.02 | GDS50313 | Drive Shaft | 44T | 23 | 23 | 57.5 | 86.5 | 750 | |
| | 1999.09-2009.07 | MT | F | L/R | MPV FWD F4R740/F4R741/F4R746/F4R747 | | GCO50058 | Outer Joint | 44T | 23 | 35 | 57 | 87 | 71 | I |
| | 1999.09-2009.07 | MT | F | R | MPV FWD F4R740/F4R741/F4R746/F4R747 | | GCI50008 | Inner Joint | | 23 | 30 | 36.3 | | 120.7 | |
| | 1999.09-2009.07 | | F | R | MPV FWD F4R740/F4R741/F4R746/F4R747 | For Engine code:F4R746/F4R747 | GDS50156 | Drive Shaft | 44T | 23 | 23 | 57.5 | 86.5 | 746.5 | |
| | 2009.02-2016.09 | CVT | F | L | MPV FWD M4R 711;M4R 713;M4R 710 | | GDS83875 | Drive Shaft | | 25 | 27 | 52.5 | 88.5 | 675 | |
| | 2009.02-2016.09 | CVT | F | L | MPV FWD M4R 711;M4R 713;M4R 710 | | GCO82528 | Outer Joint | | 25 | 24 | 52.5 | 88.5 | 59 | M |
| | 2009.02-2016.09 | CVT | F | L | MPV FWD M4R 711;M4R 713;M4R 710 | | GCI41073 | Inner Joint | | 27 | 24 | 40 | 62.5 | 99.5 | |
| 2.0 (110 kw) | 2005.09-2008.11 | AT | F | L | MPV FWD M9R 700;M9R 721;M9R 722 | | GDS18274 | Drive Shaft | | 27 | 30 | 56.5 | 90 | 624 | |
| | 2005.09-2008.11 | AT/MT | F | R | MPV FWD M9R 700;M9R 721;M9R 722 | Date to:2008.11 | GCI50087 | Inner Joint | | 39 | 35 | 30 | 367 | 89.5 | |
| | 2005.09-2008.11 | MT | F | L | MPV FWD M9R 700;M9R 721;M9R 722 | | GDS50444 | Drive Shaft | | 27 | 39 | 56.5 | 90.5 | 626 | |
| | 2005.09-2008.11 | MT | F | L | MPV FWD M9R 700;M9R 721;M9R 722 | | GDS99201 | Drive Shaft | | 25 | 39 | 53 | 88 | 638 | |
| | 2005.09-2008.11 | MT | F | R | MPV FWD M9R 700;M9R 721;M9R 722 | | GDS50400 | Drive Shaft | | 25 | 39 | 53 | 88 | 932 | |

| | YEAR | TRANSM. | F/R | L/R | BODY STYLE & DRIVE TYPE & ENGINE | REMARKS | G-AP Ref. | PRODUCT | ABS | Technical Specifications A | B | C | H | L | P |
|---|---|---|---|---|---|---|---|---|---|---|---|---|---|---|---|
| **RENAULT** | | | | | | | | | | | | | | | |
| **Scenic** | | | | | | | | | | | | | | | |
| 2.0 (110 kw) | 2005.09-2008.11 | MT | F | R | MPV FWD M9R 700;M9R 721;M9R 722 | | GDS50453 | Drive Shaft | | 27 | 39 | 56.5 | 90.5 | 973.5 | |
| | 2005.09-2008.11 | MT | F | L/R | MPV FWD M9R 700;M9R 721;M9R 722 | | GCO50108 | Outer Joint | | 27 | 35 | 56.5 | 90.5 | 71 | I |
| | 2005.09-2008.11 | MT | F | L/R | MPV FWD M9R 700;M9R 721;M9R 722 | | GCO99213 | Outer Joint | | 25 | 33 | 53 | 88 | 61.5 | I |
| | 2009.02-2016.09 | 6AT | F | L | MPV FWD M9R 615 | 8 balls | GDS81271 | Drive Shaft | | 27 | 30 | 56.7 | 91 | 652 | |
| | 2009.02-2016.09 | 6AT | F | L/R | MPV FWD M9R 615 | | GCO81102 | Outer Joint | | 27 | 36 | 56.7 | 91 | 63.5 | I |
| | 2009.02-2016.09 | 6AT | F | L | MPV FWD M9R 615 | | GCI50150 | Inner Joint | | 30 | 36 | 34 | 76.5 | 86 | |
| | 2009.02-2016.09 | 6AT | F | R | MPV FWD M9R 615 | | GCI50123 | Inner Joint | | 30 | 36 | 33.97 | 343 | 90 | |
| | 2009.02-2016.09 | AT | F | L | MPV FWD M9R 615 | | GDS18274 | Drive Shaft | | 27 | 30 | 56.5 | 90 | 624 | |
| | 2009.02-2016.09 | | F | R | MPV FWD M9R 615 | | GDS81272 | Drive Shaft | | 27 | 30 | 56.7 | 91 | 964 | |
| 2.0 (118 kw) | 2009.04-2016.09 | 6MT | F | L | MPV FWD M9R 610 | | GDS81275 | Drive Shaft | | 27 | 39 | 56.5 | 91 | 636 | |
| | 2009.04-2016.09 | 6MT | F | R | MPV FWD M9R 610 | | GDS81274 | Drive Shaft | | 27 | 39 | 56.5 | 91 | 981 | |
| | 2009.04-2016.09 | 6MT | F | L | MPV FWD M9R 610 | | GCI18272 | Inner Joint | | 39 | 26 | 39 | 74 | 116 | |
| | 2009.04-2016.09 | 6MT | F | R | MPV FWD M9R 610 | | GCI81164 | Inner Joint | | 39 | 26 | 30 | 366.5 | 99 | |
| | 2009.04-2016.09 | AT | F | L | MPV FWD M9R 610 | | GDS18274 | Drive Shaft | | 27 | 30 | 56.5 | 90 | 624 | |
| | 2009.04-2016.09 | | F | L | MPV FWD M9R 610 | | GCO50186 | Outer Joint | | 27 | 26 | 56.5 | 91 | 65 | M |
| 2.0 (120 kw) | 2004.05-2008.11 | 6MT | F | L | MPV FWD F4R 776 | | GDS99201 | Drive Shaft | | 25 | 39 | 53 | 88 | 638 | |
| | 2004.05-2008.11 | 6MT | F | R | MPV FWD F4R 776 | | GDS50400 | Drive Shaft | | 25 | 39 | 53 | 88 | 932 | |
| | 2004.05-2008.11 | 6MT | F | L/R | MPV FWD F4R 776 | | GCO99213 | Outer Joint | | 25 | 33 | 53 | 88 | 61.5 | I |
| | 2004.05-2008.11 | AT/MT | F | L | MPV FWD F4R 776 | Date to:2008.11 | GCI99150 | Inner Joint | | 39 | 32 | 39 | 66 | 104.5 | |
| | 2004.05-2008.11 | AT/MT | F | R | MPV FWD F4R 776 | Date to:2008.11 | GCI99160 | Inner Joint | | 39 | 32 | 32.95 | 352 | 90 | |
| **Scenic RX4** | | | | | | | | | | | | | | | |
| 1.8 (85 kw) | 2000.07-2001.04 | MT | F | L | MPV 4WD F4P 722 | | GDS50160 | Drive Shaft | 44T | 23 | | 57 | 87 | 656.5 | |
| | 2000.07-2001.04 | MT | F | R | MPV 4WD F4P 722 | | GDS50159 | Drive Shaft | 44T | 23 | 23 | 57 | 87 | 748 | |
| | 2000.07-2001.04 | MT | F | L/R | MPV 4WD F4P 722 | | GCO50058 | Outer Joint | 44T | 23 | 35 | 57 | 87 | 71 | I |
| | 2000.07-2001.04 | MT | R | L/R | MPV 4WD F4P 722 | | GDS50634 | Drive Shaft | 44T | 23 | 24 | 56.8 | 84 | 775 | |
| | 2000.07-2001.04 | MT | R | L/R | MPV 4WD F4P 722 | | GCI50152 | Inner Joint | | 24 | 21 | 37.9 | 58 | 86 | |
| 1.9 (74 kw) | 2002.12-2003.08 | 5MT | F | L | MPV 4WD F9Q 732;F9Q 748;F9Q 796 | | GDS50324 | Drive Shaft | 44T | 23 | | 58.8 | 85 | 681 | |
| | 2002.12-2003.08 | 5MT | F | R | MPV 4WD F9Q 732;F9Q 748;F9Q 796 | | GDS50389 | Drive Shaft | 44T | 23 | 23 | 56.2 | 83.5 | 778 | |
| | 2002.12-2003.08 | 5MT | F | L | MPV 4WD F9Q 732;F9Q 748;F9Q 796 | | GCO99283 | Outer Joint | 44T | 23 | 23 | 58.8 | 85 | 61 | M |
| | 2002.12-2003.08 | 5MT | F | R | MPV 4WD F9Q 732;F9Q 748;F9Q 796 | | GCI50079 | Inner Joint | | 23 | 22 | 36.3 | | 105.5 | |
| | 2002.12-2003.08 | MT | F | R | MPV 4WD F9Q 732;F9Q 748;F9Q 796 | | GDS50254 | Drive Shaft | 44T | 23 | 23 | 56.2 | 83.5 | 762 | |
| | 2002.12-2003.08 | 5MT | R | L/R | MPV 4WD F9Q 732;F9Q 748;F9Q 796 | | GDS50634 | Drive Shaft | 44T | 23 | 24 | 56.8 | 84 | 775 | |
| | 2002.12-2003.08 | 5MT | R | L/R | MPV 4WD F9Q 732;F9Q 748;F9Q 796 | | GCI50152 | Inner Joint | | 24 | 21 | 37.9 | 58 | 86 | |
| 1.9 (75 kw) | 2000.11-2003.08 | 5MT | F | L | MPV 4WD F9Q 740 | | GDS50324 | Drive Shaft | 44T | 23 | | 58.8 | 85 | 681 | |
| | 2000.11-2003.08 | 5MT | F | R | MPV 4WD F9Q 740 | Inner teeth of tranm.side:22 | GDS50389 | Drive Shaft | 44T | 23 | 23 | 56.2 | 83.5 | 778 | |
| | 2000.11-2003.08 | 5MT | F | L | MPV 4WD F9Q 740 | | GCO99283 | Outer Joint | 44T | 23 | 23 | 58.8 | 85 | 61 | M |
| | 2000.11-2003.08 | 5MT | F | R | MPV 4WD F9Q 740 | | GCI50079 | Inner Joint | | 23 | 22 | 36.3 | | 105.5 | |
| | 2000.11-2003.08 | MT | F | R | MPV 4WD F9Q 740 | Inner teeth of tranm.side:29 | GDS50254 | Drive Shaft | 44T | 23 | 23 | 56.2 | 83.5 | 762 | |
| | 2000.11-2003.08 | 5MT | R | L/R | MPV 4WD F9Q 740 | | GDS50634 | Drive Shaft | 44T | 23 | 24 | 56.8 | 84 | 775 | |
| | 2000.11-2003.08 | 5MT | R | L/R | MPV 4WD F9Q 740 | | GCI50152 | Inner Joint | | 24 | 21 | 37.9 | 58 | 86 | |
| | 2000.11-2003.08 | MT | R | L/R | MPV 4WD F9Q 740 | | GCO81059 | Outer Joint | 44T | 23 | 22 | 56.8 | 84 | 55.5 | I |
| 2.0 (102 kw) | 2000.06-2003.08 | 5MT | F | L | MPV 4WD F4R 744;F4R 746 | | GDS50324 | Drive Shaft | 44T | 23 | | 58.8 | 85 | 681 | |
| | 2000.06-2003.08 | 5MT | F | R | MPV 4WD F4R 744;F4R 746 | | GDS50389 | Drive Shaft | 44T | 23 | 23 | 56.2 | 83.5 | 778 | |
| | 2000.06-2003.08 | AT | F | L/R | MPV 4WD F4R 744;F4R 746 | | GCO50058 | Outer Joint | 44T | 23 | 35 | 57 | 87 | 71 | I |
| | 2000.06-2003.08 | MT | F | R | MPV 4WD F4R 744;F4R 746 | | GDS50254 | Drive Shaft | 44T | 23 | 23 | 56.2 | 83.5 | 762 | |
| | 2000.06-2003.08 | MT | F | L/R | MPV 4WD F4R 744;F4R 746 | | GCO99283 | Outer Joint | 44T | 23 | 23 | 58.8 | 85 | 61 | M |
| | 2000.06-2003.08 | MT | F | R | MPV 4WD F4R 744;F4R 746 | | GCI50079 | Inner Joint | | 23 | 22 | 36.3 | | 105.5 | |
| | 2000.06-2003.08 | 5MT | R | L/R | MPV 4WD F4R 744;F4R 746 | | GDS50634 | Drive Shaft | 44T | 23 | 24 | 56.8 | 84 | 775 | |
| | 2000.06-2003.08 | 5MT | R | L/R | MPV 4WD F4R 744;F4R 746 | | GCI50152 | Inner Joint | | 24 | 21 | 37.9 | 58 | 86 | |
| | 2000.06-2003.08 | MT | R | L/R | MPV 4WD F4R 744;F4R 746 | | GCO81059 | Outer Joint | 44T | 23 | 22 | 56.8 | 84 | 55.5 | I |
| **Symbol** | | | | | | | | | | | | | | | |
| 0.9 (66 kw) | 2014.06- | 5MT | F | L | Saloon FWD H4B 400 | | GDS50512 | Drive Shaft | | 23 | 26 | 49 | 86 | 658 | |
| | 2014.06- | 5MT | F | R | Saloon FWD H4B 400 | | GDS50513 | Drive Shaft | | 23 | 26 | 49 | 86 | 904 | |
| | 2014.06- | 5MT | F | L/R | Saloon FWD H4B 400 | | GCO50173 | Outer Joint | | 23 | 22 | 49 | 86 | 57 | M |
| | 2014.06- | | F | R | Saloon FWD H4B 400 | | GCI50118 | Inner Joint | | 26 | 22 | 40 | 64 | 104 | |
| 1.0 (54 kw) | 2017.01-2019.11 | 5MT | F | L | Saloon FWD B4D 400 | Manufacturer:GKN | GDS50508 | Drive Shaft | | 23 | 26 | 49 | 86 | 660 | |
| | 2017.01-2019.11 | 5MT | F | L | Saloon FWD B4D 400 | Manufacturer:NTN | GDS84116 | Drive Shaft | | 23 | 26 | 49 | 86 | 660 | |
| | 2017.01-2019.11 | 5MT | F | R | Saloon FWD B4D 400 | Manufacturer:GKN | GDS50507 | Drive Shaft | | 23 | 26 | 49 | 86 | 898 | |
| | 2017.01-2019.11 | 5MT | F | R | Saloon FWD B4D 400 | Manufacturer:NTN | GDS84115 | Drive Shaft | | 23 | 26 | 49 | 86 | 903 | |
| 1.2 (55 kw) | 2010.01-2013.12 | MT | F | L | Saloon FWD D4F 728 | | GDS50261 | Drive Shaft | 44T | 23 | | 57.5 | 86.5 | 630 | |
| | 2010.01-2013.12 | MT | F | L | Saloon FWD D4F 728 | | GDS50401 | Drive Shaft | 44T | 21 | | 57 | 84 | 629 | |
| | 2010.01-2013.12 | MT | F | R | Saloon FWD D4F 728 | | GDS50263 | Drive Shaft | 44T | 21 | 23 | 52.2 | 85.5 | 723.5 | |
| | 2010.01-2013.12 | MT | F | L/R | Saloon FWD D4F 728 | | GCO50066 | Outer Joint | 44T | 21 | 28 | 52.5 | 85 | 51 | I |
| | 2010.01-2013.12 | MT | F | R | Saloon FWD D4F 728 | | GCI50008 | Inner Joint | | 23 | 30 | 36.3 | | 120.7 | |
| | 2013.12- | | F | L | Saloon FWD D4F 732 | | GDS11021 | Drive Shaft | | 23 | 30 | 49 | 86 | 683 | |

| | YEAR | TRANSM. | F/R | L/R | BODY STYLE & DRIVE TYPE & ENGINE | REMARKS | G-AP Ref. | PRODUCT | ABS | Technical Specifications A | B | C | H | L | P |
|---|---|---|---|---|---|---|---|---|---|---|---|---|---|---|---|
| **RENAULT** | | | | | | | | | | | | | | | |
| **Symbol** | | | | | | | | | | | | | | | |
| 1.2 (55 kw) | 2013.12- | | F | R | Saloon FWD D4F 732 | | GDS11014 | Drive Shaft | | 23 | 23 | 49 | 83.5 | 755 | |
| | 2013.12- | | F | L | Saloon FWD D4F 732 | | GCO50219 | Outer Joint | | 23 | 28 | 49 | 86 | 52 | I |
| | 2014.03- | MT | F | L | Saloon FWD D4F 732 | | GDS11021 | Drive Shaft | | 23 | 30 | 49 | 86 | 683 | |
| | 2014.03- | MT | F | R | Saloon FWD D4F 732 | | GDS11014 | Drive Shaft | | 23 | 23 | 49 | 83.5 | 755 | |
| | 2014.03- | MT | F | L | Saloon FWD D4F 732 | | GCO50219 | Outer Joint | | 23 | 28 | 49 | 86 | 52 | I |
| 1.5 (55 kw) | 2014.07- | 5MT | F | L | Saloon FWD K9K 612 | | GDS50512 | Drive Shaft | | 23 | 26 | 49 | 86 | 658 | |
| | 2014.07- | 5MT | F | R | Saloon FWD K9K 612 | | GDS50513 | Drive Shaft | | 23 | 26 | 49 | 86 | 904 | |
| | 2014.07- | 5MT | F | L/R | Saloon FWD K9K 612 | | GCO50173 | Outer Joint | | 23 | 22 | 49 | 86 | 57 | M |
| | 2014.07- | 5MT | F | L/R | Saloon FWD K9K 612 | | GCI50118 | Inner Joint | | 26 | 22 | 40 | 64 | 104 | |
| 1.5 (66 kw) | 2013.12- | 5MT | F | L | Saloon FWD K9K 612;K9K 626 | | GDS50512 | Drive Shaft | | 23 | 26 | 49 | 86 | 658 | |
| | 2013.12- | 5MT | F | R | Saloon FWD K9K 612;K9K 626 | | GDS50513 | Drive Shaft | | 23 | 26 | 49 | 86 | 904 | |
| | 2013.12- | 5MT | F | L/R | Saloon FWD K9K 612;K9K 626 | | GCO50173 | Outer Joint | | 23 | 22 | 49 | 86 | 57 | M |
| | 2013.12- | | F | R | Saloon FWD K9K 612;K9K 626 | | GCI50118 | Inner Joint | | 26 | 22 | 40 | 64 | 104 | |
| 1.5 (70 kw) | 2019.11- | 5MT | F | L | Saloon FWD K9K 872 | Manufacturer:GKN | GDS58249 | Drive Shaft | | 23 | 26 | 49 | 86 | 655 | |
| | 2019.11- | 5MT | F | R | Saloon FWD K9K 872 | Manufacturer:GKN | GDS50507 | Drive Shaft | | 23 | 26 | 49 | 86 | 898 | |
| | 2019.11- | 5MT | F | L | Saloon FWD K9K 872 | | GCO50175 | Outer Joint | | 23 | 22 | 49 | 86 | 58.5 | I |
| | 2019.11- | 5MT | F | L | Saloon FWD K9K 872 | | GCI82310 | Inner Joint | | 26 | 22 | 39.95 | 64 | 104 | |
| 1.6 (79 kw) | 2009.01-2014.06 | AT | F | L | Saloon FWD K4M 744;K4M 745 | | GDS50519 | Drive Shaft | 44T | 21 | 26 | 52.2 | 85.5 | 609 | |
| | 2009.01-2014.06 | AT | F | R | Saloon FWD K4M 744;K4M 745 | | GDS50485 | Drive Shaft | 44T | 21 | 23 | 52.2 | 85.5 | 733 | |
| | 2009.01-2014.06 | AT | F | L | Saloon FWD K4M 744;K4M 745 | | GCI50040 | Inner Joint | | 26 | 30 | 43 | 42.5 | 83 | |
| | 2009.01-2014.06 | MT | F | L | Saloon FWD K4M 744;K4M 745 | Date to:2014.06 | GDS50261 | Drive Shaft | 44T | 23 | | 57.5 | 86.5 | 630 | |
| | 2009.01-2014.06 | MT | F | L | Saloon FWD K4M 744;K4M 745 | Date to:2014.06 | GDS50401 | Drive Shaft | 44T | 21 | | 57 | 84 | 629 | |
| | 2009.01-2014.06 | MT | F | R | Saloon FWD K4M 744;K4M 745 | | GDS50263 | Drive Shaft | 44T | 21 | 23 | 52.2 | 85.5 | 723.5 | |
| | 2009.01-2014.06 | MT | F | R | Saloon FWD K4M 744;K4M 745 | | GCO50066 | Outer Joint | 44T | 21 | 28 | 52.5 | 85 | 51 | I |
| | 2009.01-2014.06 | MT | F | R | Saloon FWD K4M 744;K4M 745 | | GCI50008 | Inner Joint | | 23 | 30 | 36.3 | | 120.7 | |
| **Taliant** | | | | | | | | | | | | | | | |
| 1.0 (48 kw) | 2021.08- | CVT | F | L | Saloon FWD B4D 419 | | GDS56517 | Drive Shaft | | 25 | 25 | 53 | 88.5 | 677 | |
| | 2021.08- | CVT | F | R | Saloon FWD B4D 419 | | GDS56519 | Drive Shaft | | 25 | 25 | 53 | 88.5 | 924 | |
| | 2021.08- | CVT | F | L/R | Saloon FWD B4D 419 | | GCO83324 | Outer Joint | | 25 | 29 | 53 | 88.5 | 56 | M |
| | 2021.08- | CVT | F | L | Saloon FWD B4D 419 | | GCI83345 | Inner Joint | | 25 | 29 | 40 | 53 | 112 | |
| | 2021.08- | CVT | F | R | Saloon FWD B4D 419 | | GCI83347 | Inner Joint | | 25 | 29 | 33 | 345 | 97 | |
| 1.0 (66 kw) | 2021.08- | 6MT | F | L | Saloon FWD H4D 470 | | GDS58227 | Drive Shaft | | 25 | 26 | 53 | 88.5 | 671 | |
| | 2021.08- | 6MT | F | R | Saloon FWD H4D 470 | Not For Country Version:Turkey | GDS57640 | Drive Shaft | | 23 | 26 | 49.5 | 85 | 924 | |
| | 2021.08- | 6MT | F | R | Saloon FWD H4D 470 | For Country Version:Turkey | GDS58226 | Drive Shaft | | 25 | 26 | 53 | 88.5 | 924 | |
| | 2021.08- | 6MT | F | L/R | Saloon FWD H4D 470 | For Country Version:Turkey | GCO83867 | Outer Joint | | 25 | 30 | 53 | 88.5 | 53 | I |
| | 2021.08- | 6MT | F | L | Saloon FWD H4D 470 | | GCI83736 | Inner Joint | | 26 | 30 | 40 | 64 | 96 | |
| | 2021.08- | 6MT | F | R | Saloon FWD H4D 470 | For Country Version:Turkey | GCI82653 | Inner Joint | | 26 | 30 | 33 | 346.5 | 90 | |
| | 2021.08- | 6MT | F | R | Saloon FWD H4D 470 | Not For Country Version:Turkey | GCI83786 | Inner Joint | | 26 | 29 | 39.95 | 64.5 | 111 | |
| | 2021.08- | 6MT/CVT | F | L/R | Saloon FWD H4D 470 | Not For Country Version:Turkey | GCO83656 | Outer Joint | | 23 | 29 | 49.5 | 85 | 56 | M |
| | 2021.08- | CVT | F | L | Saloon FWD H4D 470 | Country Version:Turkey | GDS56517 | Drive Shaft | | 25 | 25 | 53 | 88.5 | 677 | |
| | 2021.08- | CVT | F | L | Saloon FWD H4D 470 | Not For Country version | GDS57839 | Drive Shaft | | 23 | 25 | 49.5 | 85 | 674 | |
| | 2021.08- | CVT | F | R | Saloon FWD H4D 470 | | GDS56519 | Drive Shaft | | 25 | 25 | 53 | 88.5 | 924 | |
| | 2021.08- | CVT | F | R | Saloon FWD H4D 470 | | GDS57641 | Drive Shaft | | 23 | 25 | 49.5 | 85 | 920 | |
| | 2021.08- | CVT | F | L/R | Saloon FWD H4D 470 | | GCO83324 | Outer Joint | | 25 | 29 | 53 | 88.5 | 56 | M |
| | 2021.08- | CVT | F | L | Saloon FWD H4D 470 | | GCI83345 | Inner Joint | | 25 | 29 | 40 | 53 | 112 | |
| | 2021.08- | CVT | F | R | Saloon FWD H4D 470 | | GCI83347 | Inner Joint | | 25 | 29 | 33 | 345 | 97 | |
| 1.0 (74 kw) | 2021.08- | CVT | F | L | Saloon FWD H4D 480 | | GDS56517 | Drive Shaft | | 25 | 25 | 53 | 88.5 | 677 | |
| | 2021.08- | CVT | F | R | Saloon FWD H4D 480 | | GDS56519 | Drive Shaft | | 25 | 25 | 53 | 88.5 | 924 | |
| | 2021.08- | CVT | F | L/R | Saloon FWD H4D 480 | | GCO83324 | Outer Joint | | 25 | 29 | 53 | 88.5 | 56 | M |
| | 2021.08- | CVT | F | L | Saloon FWD H4D 480 | | GCI83345 | Inner Joint | | 25 | 29 | 40 | 53 | 112 | |
| | 2021.08- | CVT | F | R | Saloon FWD H4D 480 | | GCI83347 | Inner Joint | | 25 | 29 | 33 | 345 | 97 | |
| **Talisman** | | | | | | | | | | | | | | | |
| 1.3 (116 kw) | 2021.07-2022.03 | 7DCT | F | L | Saloon FWD H5H 470;H5H 490 | | GDS58237 | Drive Shaft | | 29 | 27 | 60 | 97 | 672 | |
| | 2021.07-2022.03 | 7DCT | F | L/R | Saloon FWD H5H 470;H5H 490 | | GCO82323 | Outer Joint | | 29 | 35 | 60 | 97 | 63 | I |
| | 2021.07-2022.03 | 7DCT | F | L | Saloon FWD H5H 470;H5H 490 | | GCI82385 | Inner Joint | | 27 | 35 | 40 | 65 | 109.5 | |
| 1.3 (117 kw) | 2019.01-2022.03 | 7DCT | F | L | Saloon FWD H5H 470 | | GDS58237 | Drive Shaft | | 29 | 27 | 60 | 97 | 672 | |
| | 2019.01-2022.03 | 7DCT | F | L/R | Saloon FWD H5H 470 | | GCO82323 | Outer Joint | | 29 | 35 | 60 | 97 | 63 | I |
| | 2019.01-2022.03 | 7DCT | F | L | Saloon FWD H5H 470 | | GCI82385 | Inner Joint | | 27 | 35 | 40 | 65 | 109.5 | |
| 1.6 (96 kw) | 2015.11-2022.03 | 6AT | F | L | Saloon FWD R9M 409 | | GDS83190 | Drive Shaft | | 29 | 28 | 60 | 97 | 700 | |
| | 2015.11-2022.03 | 6AT | F | R | Saloon FWD R9M 409 | | GDS83189 | Drive Shaft | | 29 | 28 | 60 | 97 | 989 | |
| | 2015.11-2022.03 | 6AT | F | L/R | Saloon FWD R9M 409 | | GCO82323 | Outer Joint | | 29 | 35 | 60 | 97 | 63 | I |
| | 2015.11-2022.03 | 6AT | F | L | Saloon FWD R9M 409 | | GCI82157 | Inner Joint | | 28 | 35 | 33.85 | 78.5 | 85.5 | |
| | 2015.11-2022.03 | 6AT | F | R | Saloon FWD R9M 409 | | GCI82158 | Inner Joint | | 28 | 35 | 33.85 | 353.5 | 93.5 | |
| 1.6 (110 kw) | 2015.11-2022.03 | 7DCT | F | L | Saloon FWD M5M 450 | | GDS58237 | Drive Shaft | | 29 | 27 | 60 | 97 | 672 | |
| | 2015.11-2022.03 | 7DCT | F | R | Saloon FWD M5M 450 | | GDS57571 | Drive Shaft | | 29 | 27 | 60 | 97 | 1030 | |

| | YEAR | TRANSM. | F/R | L/R | BODY STYLE & DRIVE TYPE & ENGINE | REMARKS | G-AP Ref. | PRODUCT | ABS | Technical Specifications A | B | C | H | L | P |
|---|---|---|---|---|---|---|---|---|---|---|---|---|---|---|---|
| **RENAULT** | | | | | | | | | | | | | | | |
| **Talisman** | | | | | | | | | | | | | | | |
| 1.6 (110 kw) | 2015.11-2022.03 | 7DCT | F | L/R | Saloon FWD M5M 450 | | GCO82323 | Outer Joint | | 29 | 35 | 60 | 97 | 63 | I |
| | 2015.11-2022.03 | 7DCT | F | L | Saloon FWD M5M 450 | | GCI82385 | Inner Joint | | 27 | 35 | 40 | 65 | 109.5 | |
| | 2015.11-2022.03 | 7DCT | F | R | Saloon FWD M5M 450 | | GCI83743 | Inner Joint | | 27 | 35 | 40 | 436 | 94 | |
| 1.6 (118 kw) | 2015.06-2022.03 | 6AT | F | L | Saloon FWD R9M 452;R9M 453 | | GDS83190 | Drive Shaft | | 29 | 28 | 60 | 97 | 700 | |
| | 2015.06-2022.03 | 6AT | F | R | Saloon FWD R9M 452;R9M 453 | | GDS83189 | Drive Shaft | | 29 | 28 | 60 | 97 | 989 | |
| | 2015.06-2022.03 | 6AT | F | L/R | Saloon FWD R9M 452;R9M 453 | | GCO82323 | Outer Joint | | 29 | 35 | 60 | 97 | 63 | I |
| | 2015.06-2022.03 | 6AT | F | L | Saloon FWD R9M 452;R9M 453 | | GCI82157 | Inner Joint | | 28 | 35 | 33.85 | 78.5 | 85.5 | |
| | 2015.06-2022.03 | 6AT | F | R | Saloon FWD R9M 452;R9M 453 | | GCI82158 | Inner Joint | | 28 | 35 | 33.85 | 353.5 | 93.5 | |
| 1.6 (147 kw) | 2015.11-2022.03 | 7DCT | F | L | Saloon FWD M5M 450 | | GDS58237 | Drive Shaft | | 29 | 27 | 60 | 97 | 672 | |
| | 2015.11-2022.03 | 7DCT | F | R | Saloon FWD M5M 450 | | GDS57571 | Drive Shaft | | 29 | 27 | 60 | 97 | 1030 | |
| | 2015.11-2022.03 | 7DCT | F | L/R | Saloon FWD M5M 450 | | GCO82323 | Outer Joint | | 29 | 35 | 60 | 97 | 63 | I |
| | 2015.11-2022.03 | 7DCT | F | L | Saloon FWD M5M 450 | | GCI82385 | Inner Joint | | 27 | 35 | 40 | 65 | 109.5 | |
| | 2015.11-2022.03 | 7DCT | F | R | Saloon FWD M5M 450 | | GCI83743 | Inner Joint | | 27 | 35 | 40 | 436 | 94 | |
| 1.8 (165 kw) | 2018.09-2022.03 | 7DCT | F | L | Saloon FWD M5P 403 | | GDS58237 | Drive Shaft | | 29 | 27 | 60 | 97 | 672 | |
| | 2018.09-2022.03 | 7DCT | F | R | Saloon FWD M5P 403 | | GDS57571 | Drive Shaft | | 29 | 27 | 60 | 97 | 1030 | |
| | 2018.09-2022.03 | 7DCT | F | L/R | Saloon FWD M5P 403 | | GCO82323 | Outer Joint | | 29 | 35 | 60 | 97 | 63 | I |
| | 2018.09-2022.03 | 7DCT | F | L | Saloon FWD M5P 403 | | GCI82385 | Inner Joint | | 27 | 35 | 40 | 65 | 109.5 | |
| | 2018.09-2022.03 | 7DCT | F | R | Saloon FWD M5P 403 | | GCI83743 | Inner Joint | | 27 | 35 | 40 | 436 | 94 | |
| **Talisman Estate/Break** | | | | | | | | | | | | | | | |
| 1.3 (116 kw) | 2021.07-2022.03 | 7DCT | F | L | Estate FWD H5H 470;H5H 490 | | GDS58237 | Drive Shaft | | 29 | 27 | 60 | 97 | 672 | |
| | 2021.07-2022.03 | 7DCT | F | L/R | Estate FWD H5H 470;H5H 490 | | GCO82323 | Outer Joint | | 29 | 35 | 60 | 97 | 63 | I |
| | 2021.07-2022.03 | 7DCT | F | L | Estate FWD H5H 470;H5H 490 | | GCI82385 | Inner Joint | | 27 | 35 | 40 | 65 | 109.5 | |
| 1.3 (117 kw) | 2019.01-2022.03 | 7DCT | F | L | Estate FWD H5H 470 | | GDS58237 | Drive Shaft | | 29 | 27 | 60 | 97 | 672 | |
| | 2019.01-2022.03 | 7DCT | F | L/R | Estate FWD H5H 470 | | GCO82323 | Outer Joint | | 29 | 35 | 60 | 97 | 63 | I |
| | 2019.01-2022.03 | 7DCT | F | L | Estate FWD H5H 470 | | GCI82385 | Inner Joint | | 27 | 35 | 40 | 65 | 109.5 | |
| 1.6 (96 kw) | 2016.03-2022.03 | 6AT | F | L | Estate FWD R9M 409 | | GDS83190 | Drive Shaft | | 29 | 28 | 60 | 97 | 700 | |
| | 2016.03-2022.03 | 6AT | F | R | Estate FWD R9M 409 | | GDS83189 | Drive Shaft | | 29 | 28 | 60 | 97 | 989 | |
| | 2016.03-2022.03 | 6AT | F | L/R | Estate FWD R9M 409 | | GCO82323 | Outer Joint | | 29 | 35 | 60 | 97 | 63 | I |
| | 2016.03-2022.03 | 6AT | F | L | Estate FWD R9M 409 | | GCI82157 | Inner Joint | | 28 | 35 | 33.85 | 78.5 | 85.5 | |
| | 2016.03-2022.03 | 6AT | F | R | Estate FWD R9M 409 | | GCI82158 | Inner Joint | | 28 | 35 | 33.85 | 353.5 | 93.5 | |
| 1.6 (110 kw) | 2016.03-2022.03 | 7DCT | F | L | Estate FWD M5M 450 | | GDS58237 | Drive Shaft | | 29 | 27 | 60 | 97 | 672 | |
| | 2016.03-2022.03 | 7DCT | F | R | Estate FWD M5M 450 | | GDS57571 | Drive Shaft | | 29 | 27 | 60 | 97 | 1030 | |
| | 2016.03-2022.03 | 7DCT | F | L/R | Estate FWD M5M 450 | | GCO82323 | Outer Joint | | 29 | 35 | 60 | 97 | 63 | I |
| | 2016.03-2022.03 | 7DCT | F | L | Estate FWD M5M 450 | | GCI82385 | Inner Joint | | 27 | 35 | 40 | 65 | 109.5 | |
| | 2016.03-2022.03 | 7DCT | F | R | Estate FWD M5M 450 | | GCI83743 | Inner Joint | | 27 | 35 | 40 | 436 | 94 | |
| 1.6 (118 kw) | 2016.03-2022.03 | 6AT | F | L | Estate FWD R9M 452;R9M 453 | | GDS83190 | Drive Shaft | | 29 | 28 | 60 | 97 | 700 | |
| | 2016.03-2022.03 | 6AT | F | R | Estate FWD R9M 452;R9M 453 | | GDS83189 | Drive Shaft | | 29 | 28 | 60 | 97 | 989 | |
| | 2016.03-2022.03 | 6AT | F | L/R | Estate FWD R9M 452;R9M 453 | | GCO82323 | Outer Joint | | 29 | 35 | 60 | 97 | 63 | I |
| | 2016.03-2022.03 | 6AT | F | L | Estate FWD R9M 452;R9M 453 | | GCI82157 | Inner Joint | | 28 | 35 | 33.85 | 78.5 | 85.5 | |
| | 2016.03-2022.03 | 6AT | F | R | Estate FWD R9M 452;R9M 453 | | GCI82158 | Inner Joint | | 28 | 35 | 33.85 | 353.5 | 93.5 | |
| 1.6 (147 kw) | 2016.03-2022.03 | 7DCT | F | L | Estate FWD M5M 450 | | GDS58237 | Drive Shaft | | 29 | 27 | 60 | 97 | 672 | |
| | 2016.03-2022.03 | 7DCT | F | R | Estate FWD M5M 450 | | GDS57571 | Drive Shaft | | 29 | 27 | 60 | 97 | 1030 | |
| | 2016.03-2022.03 | 7DCT | F | L/R | Estate FWD M5M 450 | | GCO82323 | Outer Joint | | 29 | 35 | 60 | 97 | 63 | I |
| | 2016.03-2022.03 | 7DCT | F | L | Estate FWD M5M 450 | | GCI82385 | Inner Joint | | 27 | 35 | 40 | 65 | 109.5 | |
| | 2016.03-2022.03 | 7DCT | F | R | Estate FWD M5M 450 | | GCI83743 | Inner Joint | | 27 | 35 | 40 | 436 | 94 | |
| 1.8 (165 kw) | 2018.09-2022.03 | 7DCT | F | L | Estate FWD M5P 403 | | GDS58237 | Drive Shaft | | 29 | 27 | 60 | 97 | 672 | |
| | 2018.09-2022.03 | 7DCT | F | R | Estate FWD M5P 403 | | GDS57571 | Drive Shaft | | 29 | 27 | 60 | 97 | 1030 | |
| | 2018.09-2022.03 | 7DCT | F | L/R | Estate FWD M5P 403 | | GCO82323 | Outer Joint | | 29 | 35 | 60 | 97 | 63 | I |
| | 2018.09-2022.03 | 7DCT | F | L | Estate FWD M5P 403 | | GCI82385 | Inner Joint | | 27 | 35 | 40 | 65 | 109.5 | |
| | 2018.09-2022.03 | 7DCT | F | R | Estate FWD M5P 403 | | GCI83743 | Inner Joint | | 27 | 35 | 40 | 436 | 94 | |
| **Thalia** | | | | | | | | | | | | | | | |
| 1.2 (55 kw) | 2002.04-2009.02 | MT | F | L | Saloon FWD D4F 706, D4F 728, D4F 712 | | GDS50261 | Drive Shaft | 44T | 23 | | 57.5 | 86.5 | 630 | |
| | 2002.04-2009.02 | MT | F | L | Saloon FWD D4F 706, D4F 728, D4F 712 | | GDS50401 | Drive Shaft | 44T | 21 | | 57 | 84 | 629 | |
| | 2002.04-2009.02 | MT | F | R | Saloon FWD D4F 706, D4F 728, D4F 712 | | GDS50263 | Drive Shaft | 44T | 21 | 23 | 52.2 | 85.5 | 723.5 | |
| | 2002.04-2009.02 | MT | F | L/R | Saloon FWD D4F 706, D4F 728, D4F 712 | | GCO50066 | Outer Joint | 44T | 21 | 28 | 52.5 | 85 | 51 | I |
| | 2002.04-2009.02 | MT | F | R | Saloon FWD D4F 706, D4F 728, D4F 712 | Date from:2003.11,Date to:2008.08 | GCI50008 | Inner Joint | | 23 | 30 | 36.3 | | 120.7 | |
| | 2008.09-2014.06 | 5MT | F | R | Saloon FWD D4F 728 | | GDS50263 | Drive Shaft | 44T | 21 | 23 | 52.2 | 85.5 | 723.5 | |
| | 2008.09-2014.06 | 5MT | F | R | Saloon FWD D4F 728 | | GCI50008 | Inner Joint | | 23 | 30 | 36.3 | | 120.7 | |
| | 2008.09-2014.06 | MT | F | L | Saloon FWD D4F 728 | Outer teeth of wheel side:23 | GDS50261 | Drive Shaft | 44T | 23 | | 57.5 | 86.5 | 630 | |
| | 2008.09-2014.06 | MT | F | L | Saloon FWD D4F 728 | Outer teeth of wheel side:21 | GDS50401 | Drive Shaft | 44T | 21 | | 57 | 84 | 629 | |
| | 2008.09-2014.06 | MT | F | L | Saloon FWD D4F 728 | | GCO50066 | Outer Joint | 44T | 21 | 28 | 52.5 | 85 | 51 | I |
| 1.4 (55 kw) | 2000.08-2005.10 | AT | F | L | Saloon FWD K7J 700 | Date From:2002.08;Date To:2005.10;Type:Clio Thalia | GDS50579 | Drive Shaft | 26T | 21 | 26 | 52.2 | 85.5 | 613 | |
| | 2000.08-2005.10 | AT | F | R | Saloon FWD K7J 700 | Date From:2002.08;Date To:2005.10;Type:Clio Thalia | GDS50588 | Drive Shaft | 26T | 21 | 23 | 57 | 84 | 739 | |
| | 2000.08-2005.10 | MT | F | L | Saloon FWD K7J 700 | Date to:2002.10 | GDS50004 | Drive Shaft | 26T | 21 | | 57 | 84.5 | 625.7 | |
| | 2000.08-2005.10 | MT | F | L | Saloon FWD K7J 700 | Date to:2002.10 | GDS50150 | Drive Shaft | | 21 | 30 | 49.8 | 83.5 | 623 | |

| | YEAR | TRANSM. | F/R | L/R | BODY STYLE & DRIVE TYPE & ENGINE | REMARKS | G-AP Ref. | PRODUCT | ABS | Technical Specifications A | B | C | H | L | P |
|---|---|---|---|---|---|---|---|---|---|---|---|---|---|---|---|
| **RENAULT** **Thalia** | | | | | | | | | | | | | | | |
| 1.4 (55 kw) | 2000.08-2005.10 | MT | F | L | Saloon FWD K7J 700 | Date from:2002.11;outer teeth of wheel side:23 | GDS50261 | Drive Shaft | 44T | 23 | | 57.5 | 86.5 | 630 | |
| | 2000.08-2005.10 | MT | F | L | Saloon FWD K7J 700 | Date from:2002.11;outer teeth of wheel side:21 | GDS50401 | Drive Shaft | 44T | 21 | | 57 | 84 | 629 | |
| | 2000.08-2005.10 | MT | F | R | Saloon FWD K7J 700 | Trans. code:JB1/3 | GDS50125 | Drive Shaft | | 21 | 23 | 57 | 84.5 | 713.5 | |
| | 2000.08-2005.10 | MT | F | R | Saloon FWD K7J 700 | Date to:2002.10 | GDS50151 | Drive Shaft | | 21 | 23 | 49.8 | 83.5 | 715 | |
| | 2000.08-2005.10 | MT | F | R | Saloon FWD K7J 700 | Date from:2002.11 | GDS50263 | Drive Shaft | 44T | 21 | 23 | 52.2 | 85.5 | 723.5 | |
| | 2000.08-2005.10 | MT | F | R | Saloon FWD K7J 700 | Date From:2002.08;Date To:2005.10;Type:Clio Thalia;Trans. code:JB1/3 | GDS50395 | Drive Shaft | 26T | 21 | 23 | 51.5 | 83 | 728 | |
| | 2000.08-2005.10 | MT | F | L | Saloon FWD K7J 700 | Date to:2002.10 | GCO50004 | Outer Joint | 26T | 21 | 30 | 52.2 | 85.5 | 59 | I |
| | 2000.08-2005.10 | MT | F | L/R | Saloon FWD K7J 700 | Date from:2002.11 | GCO50066 | Outer Joint | 44T | 21 | 28 | 52.5 | 85 | 51 | I |
| | 2000.08-2005.10 | | F | R | Saloon FWD K7J 700 | Date to:2005.10 | GDS50162 | Drive Shaft | 26T | 21 | 23 | 52.2 | 85.5 | 723.5 | |
| | 2000.08-2005.10 | | F | R | Saloon FWD K7J 700 | Date To:2005.10 | GCI50008 | Inner Joint | | 23 | 30 | 36.3 | | 120.7 | |
| | 2008.09-2014.06 | MT | F | L | Saloon FWD K7J 700 | | GDS50261 | Drive Shaft | 44T | 23 | | 57.5 | 86.5 | 630 | |
| | 2008.09-2014.06 | MT | F | L | Saloon FWD K7J 700 | | GDS50401 | Drive Shaft | 44T | 21 | | 57 | 84 | 629 | |
| | 2008.09-2014.06 | MT | F | R | Saloon FWD K7J 700 | | GDS50263 | Drive Shaft | 44T | 21 | 23 | 52.2 | 85.5 | 723.5 | |
| | 2008.09-2014.06 | MT | F | L | Saloon FWD K7J 700 | | GCO50066 | Outer Joint | 44T | 21 | 28 | 52.5 | 85 | 51 | I |
| | 2008.09-2014.06 | MT | F | R | Saloon FWD K7J 700 | | GCI50008 | Inner Joint | | 23 | 30 | 36.3 | | 120.7 | |
| 1.4 (72 kw) | 2000.05-2009.02 | MT | F | L | Saloon FWD K7J 700 | | GDS50261 | Drive Shaft | 44T | 23 | | 57.5 | 86.5 | 630 | |
| | 2000.05-2009.02 | MT | F | L | Saloon FWD K7J 700 | | GDS50401 | Drive Shaft | 44T | 21 | | 57 | 84 | 629 | |
| | 2000.05-2009.02 | MT | F | R | Saloon FWD K7J 700 | | GDS50263 | Drive Shaft | 44T | 21 | 23 | 52.2 | 85.5 | 723.5 | |
| | 2000.05-2009.02 | MT | F | L | Saloon FWD K7J 700 | | GCO50066 | Outer Joint | 44T | 21 | 28 | 52.5 | 85 | 51 | I |
| | 2000.05-2009.02 | MT | F | R | Saloon FWD K7J 700 | | GCI50008 | Inner Joint | | 23 | 30 | 36.3 | | 120.7 | |
| | 2000.08-2009.02 | AT | F | L | Saloon FWD K4J 712 | Date from:2002.11 | GDS50519 | Drive Shaft | 44T | 21 | 26 | 52.2 | 85.5 | 609 | |
| | 2000.08-2009.02 | AT | F | L | Saloon FWD K4J 712 | Date to:2002.10 | GDS50579 | Drive Shaft | 26T | 21 | 26 | 52.2 | 85.5 | 613 | |
| | 2000.08-2009.02 | AT | F | L | Saloon FWD K4J 712 | Date to:2002.10 | GDS99169 | Drive Shaft | 26T | 21 | 26 | 52.2 | 85.5 | 621 | |
| | 2000.08-2009.02 | AT | F | R | Saloon FWD K4J 712 | Date from:2002.11 | GDS50485 | Drive Shaft | 44T | 21 | 23 | 52.2 | 85.5 | 733 | |
| | 2000.08-2009.02 | AT | F | R | Saloon FWD K4J 712 | Date to:2002.10 | GDS50588 | Drive Shaft | 26T | 21 | 23 | 57 | 84 | 739 | |
| | 2000.08-2009.02 | MT | F | L | Saloon FWD K4J 712 | Date to:2002.10 | GDS50004 | Drive Shaft | 26T | 21 | | 57 | 84.5 | 625.7 | |
| | 2000.08-2009.02 | MT | F | L | Saloon FWD K4J 712 | Date To:2002.10 | GDS50150 | Drive Shaft | | 21 | 30 | 49.8 | 83.5 | 623 | |
| | 2000.08-2009.02 | MT | F | L | Saloon FWD K4J 712 | Date from:2002.11;outer teeth of wheel side:23 | GDS50261 | Drive Shaft | 44T | 23 | | 57.5 | 86.5 | 630 | |
| | 2000.08-2009.02 | MT | F | L | Saloon FWD K4J 712 | Date from:2002.11;outer teeth of wheel side:21 | GDS50401 | Drive Shaft | 44T | 21 | | 57 | 84 | 629 | |
| | 2000.08-2009.02 | MT | F | R | Saloon FWD K4J 712 | Trans. code:JB1/3 | GDS50125 | Drive Shaft | | 21 | 23 | 57 | 84.5 | 713.5 | |
| | 2000.08-2009.02 | MT | F | R | Saloon FWD K4J 712 | Date To:2009.02;Trans. code:JB1/3 | GDS50151 | Drive Shaft | | 21 | 23 | 49.8 | 83.5 | 715 | |
| | 2000.08-2009.02 | MT | F | R | Saloon FWD K4J 712 | | GDS50162 | Drive Shaft | 26T | 21 | 23 | 52.2 | 85.5 | 723.5 | |
| | 2000.08-2009.02 | MT | F | R | Saloon FWD K4J 712 | Date from:2002.11 | GDS50263 | Drive Shaft | 44T | 21 | 23 | 52.2 | 85.5 | 723.5 | |
| | 2000.08-2009.02 | MT | F | R | Saloon FWD K4J 712 | Date To:2009.02;Trans. code:JB1/3 | GDS50395 | Drive Shaft | 26T | 21 | 23 | 51.5 | 83 | 728 | |
| | 2000.08-2009.02 | MT | F | L | Saloon FWD K4J 712 | Date to:2002.10 | GCO50004 | Outer Joint | 26T | 21 | 30 | 52.2 | 85.5 | 59 | I |
| | 2000.08-2009.02 | MT | F | L/R | Saloon FWD K4J 712 | Date from:2002.11 | GCO50066 | Outer Joint | 44T | 21 | 28 | 52.5 | 85 | 51 | I |
| | 2000.08-2009.02 | MT | F | R | Saloon FWD K4J 712 | Date to:2009.02 | GCI50008 | Inner Joint | | 23 | 30 | 36.3 | | 120.7 | |
| | 2009.01-2011.12 | AT | F | L | Saloon FWD K4J 712 | | GDS50519 | Drive Shaft | 44T | 21 | 26 | 52.2 | 85.5 | 609 | |
| | 2009.01-2011.12 | AT | F | R | Saloon FWD K4J 712 | Date to:2010.12 | GDS50485 | Drive Shaft | 44T | 21 | 23 | 52.2 | 85.5 | 733 | |
| | 2009.01-2011.12 | AT | F | L | Saloon FWD K4J 712 | | GCI50040 | Inner Joint | | 26 | 30 | 43 | 42.5 | 83 | |
| | 2009.01-2011.12 | MT | F | L | Saloon FWD K4J 712 | | GDS50261 | Drive Shaft | 44T | 23 | | 57.5 | 86.5 | 630 | |
| | 2009.01-2011.12 | MT | F | L | Saloon FWD K4J 712 | | GDS50401 | Drive Shaft | 44T | 21 | | 57 | 84 | 629 | |
| | 2009.01-2011.12 | MT | F | R | Saloon FWD K4J 712 | Date to:2010.12 | GDS50263 | Drive Shaft | 44T | 21 | 23 | 52.2 | 85.5 | 723.5 | |
| | 2009.01-2011.12 | MT | F | L/R | Saloon FWD K4J 712 | | GCO50066 | Outer Joint | 44T | 21 | 28 | 52.5 | 85 | 51 | I |
| | 2009.01-2011.12 | MT | F | R | Saloon FWD K4J 712 | Date to:2010.12 | GCI50008 | Inner Joint | | 23 | 30 | 36.3 | | 120.7 | |
| 1.5 (47 kw) | 2008.09-2014.06 | 5MT | F | L | Saloon FWD K9K 740 | | GDS50280 | Drive Shaft | 44T | 23 | 26 | 57.5 | 86.5 | 602 | |
| | 2008.09-2014.06 | 5MT | F | R | Saloon FWD K9K 740 | | GDS50364 | Drive Shaft | 44T | 23 | 26 | 57.5 | 86.5 | 866 | |
| | 2008.09-2014.06 | 5MT | F | L/R | Saloon FWD K9K 740 | | GCO50069 | Outer Joint | 44T | 23 | 30 | 57.5 | 86.5 | 58.5 | I |
| | 2008.09-2014.06 | 5MT | F | L | Saloon FWD K9K 740 | | GCI50048 | Inner Joint | | 26 | 30 | 40 | 64 | 121 | |
| | 2008.09-2014.06 | 5MT | F | R | Saloon FWD K9K 740 | | GCI99169 | Inner Joint | | 26 | 30 | 33 | 326 | 95 | |
| | 2008.09-2014.06 | MT | F | R | Saloon FWD K9K 740 | | GDS50515 | Drive Shaft | 44T | 23 | 26 | 57.5 | 86.5 | 866 | |
| | 2008.09-2014.06 | MT | F | R | Saloon FWD K9K 740 | | GCI50086 | Inner Joint | | 26 | 33 | 33 | 326 | 94 | |
| 1.5 (48 kw) | 2009.01-2014.06 | MT | F | L | Saloon FWD K9K 700 | | GDS50261 | Drive Shaft | 44T | 23 | | 57.5 | 86.5 | 630 | |
| | 2009.01-2014.06 | MT | F | L | Saloon FWD K9K 700 | | GDS50401 | Drive Shaft | 44T | 21 | | 57 | 84 | 629 | |
| | 2009.01-2014.06 | MT | F | R | Saloon FWD K9K 700 | | GDS50263 | Drive Shaft | 44T | 21 | 23 | 52.2 | 85.5 | 723.5 | |
| | 2009.01-2014.06 | MT | F | L | Saloon FWD K9K 700 | | GCO50069 | Outer Joint | 44T | 23 | 30 | 57.5 | 86.5 | 58.5 | I |
| | 2009.01-2014.06 | MT | F | R | Saloon FWD K9K 700 | | GCO50101 | Outer Joint | 44T | 21 | 30 | 52.2 | 85.5 | 59 | I |
| | 2009.01-2014.06 | MT | F | R | Saloon FWD K9K 700 | | GCI50008 | Inner Joint | | 23 | 30 | 36.3 | | 120.7 | |
| 1.5 (62 kw) | 2008.09-2012.12 | 5MT | F | L | Saloon FWD K9K 718 | | GDS50280 | Drive Shaft | 44T | 23 | 26 | 57.5 | 86.5 | 602 | |
| | 2008.09-2012.12 | 5MT | F | R | Saloon FWD K9K 718 | | GDS50364 | Drive Shaft | 44T | 23 | 26 | 57.5 | 86.5 | 866 | |
| | 2008.09-2012.12 | 5MT | F | L/R | Saloon FWD K9K 718 | | GCO50069 | Outer Joint | 44T | 23 | 30 | 57.5 | 86.5 | 58.5 | I |
| | 2008.09-2012.12 | MT | F | R | Saloon FWD K9K 718 | | GDS50515 | Drive Shaft | 44T | 23 | 26 | 57.5 | 86.5 | 866 | |
| | 2008.09-2012.12 | MT | F | R | Saloon FWD K9K 718 | Date to:2010.12 | GCI99169 | Inner Joint | | 26 | 30 | 33 | 326 | 95 | |
| 1.6 (77 kw) | 2008.09-2013.03 | 5MT | F | R | Saloon FWD K4M 743 | Inner teeth of wheel side:30 | GDS50263 | Drive Shaft | 44T | 21 | 23 | 52.2 | 85.5 | 723.5 | |
| | 2008.09-2013.03 | 5MT | F | R | Saloon FWD K4M 743 | Inner teeth of wheel side:23 | GDS50485 | Drive Shaft | 44T | 21 | 23 | 52.2 | 85.5 | 733 | |

| | YEAR | TRANSM. | F/R | L/R | BODY STYLE & DRIVE TYPE & ENGINE | REMARKS | G-AP Ref. | PRODUCT | ABS | Technical Specifications A | B | C | H | L | P |
|---|---|---|---|---|---|---|---|---|---|---|---|---|---|---|---|
| **RENAULT** | | | | | | | | | | | | | | | |
| **Thalia** | | | | | | | | | | | | | | | |
| 1.6 (77 kw) | 2008.09-2013.03 | AT | F | L | Saloon FWD K4M 743 | Date To:2013.03 | GDS50519 | Drive Shaft | 44T | 21 | 26 | 52.2 | 85.5 | 609 | |
| | 2008.09-2013.03 | MT | F | L | Saloon FWD K4M 743 | Outer teeth of wheel side:23 | GDS50261 | Drive Shaft | 44T | 23 | | 57.5 | 86.5 | 630 | |
| | 2008.09-2013.03 | MT | F | L | Saloon FWD K4M 743 | Outer teeth of wheel side:21 | GDS50401 | Drive Shaft | 44T | 21 | | 57 | 84 | 629 | |
| | 2008.09-2013.03 | MT | F | L/R | Saloon FWD K4M 743 | | GCO50066 | Outer Joint | 44T | 21 | 28 | 52.5 | 85 | 51 | I |
| | 2008.09-2013.03 | MT | F | R | Saloon FWD K4M 743 | Date to:2012.12 | GCI50008 | Inner Joint | | 23 | 30 | 36.3 | | 120.7 | |
| 1.6 (79 kw) | 2000.07-2009.02 | MT | F | L | Saloon FWD K4M 740 | Date to:2002.10 | GDS50004 | Drive Shaft | 26T | 21 | | 57 | 84.5 | 625.7 | |
| | 2000.07-2009.02 | MT | F | L | Saloon FWD K4M 740 | Date to:2002.10 | GDS50150 | Drive Shaft | | 21 | 30 | 49.8 | 83.5 | 623 | |
| | 2000.07-2009.02 | MT | F | L | Saloon FWD K4M 740 | Date from:2002.11;outer teeth of wheel side:23 | GDS50261 | Drive Shaft | 44T | 23 | | 57.5 | 86.5 | 630 | |
| | 2000.07-2009.02 | MT | F | R | Saloon FWD K4M 740 | | GDS50151 | Drive Shaft | | 21 | 23 | 49.8 | 83.5 | 715 | |
| | 2000.07-2009.02 | MT | F | R | Saloon FWD K4M 740 | Date to:2002.10 | GDS50162 | Drive Shaft | 26T | 21 | 23 | 52.2 | 85.5 | 723.5 | |
| | 2000.07-2009.02 | MT | F | R | Saloon FWD K4M 740 | Date from:2002.11 | GDS50263 | Drive Shaft | 44T | 21 | 23 | 52.2 | 85.5 | 723.5 | |
| | 2000.07-2009.02 | MT | F | R | Saloon FWD K4M 740 | Trans. code:JB1/3 | GDS50395 | Drive Shaft | 26T | 21 | 23 | 51.5 | 83 | 728 | |
| | 2000.07-2009.02 | MT | F | L/R | Saloon FWD K4M 740 | Date from:2002.11;outer teeth of wheel side:21 | GDS50401 | Drive Shaft | 44T | 21 | | 57 | 84 | 629 | |
| | 2000.07-2009.02 | MT | F | L | Saloon FWD K4M 740 | Date to:2002.10 | GCO50004 | Outer Joint | 26T | 21 | 30 | 52.2 | 85.5 | 59 | I |
| | 2000.07-2009.02 | MT | F | L/R | Saloon FWD K4M 740 | Date from:2002.11 | GCO50066 | Outer Joint | 44T | 21 | 28 | 52.5 | 85 | 51 | I |
| | 2000.07-2009.02 | MT | F | R | Saloon FWD K4M 740 | Date to:2002.10 | GCI50008 | Inner Joint | | 23 | 30 | 36.3 | | 120.7 | |
| 1.6 (86 kw) | 2004.11-2009.02 | | F | R | Saloon FWD K4M 736, K4M 742, K4M 743 | | GCO50101 | Outer Joint | 44T | 21 | 30 | 52.2 | 85.5 | 59 | I |
| | 2004.11-2009.02 | | F | R | Saloon FWD K4M 736, K4M 742, K4M 743 | | GCI50008 | Inner Joint | | 23 | 30 | 36.3 | | 120.7 | |
| **Trafic** | | | | | | | | | | | | | | | |
| 2.0 (59 kw) | 1989.05-1997.10 | MT | R | L/R | Platform/Chassis RWD J5R 726 (05.89-.) | | GDS50006 | Drive Shaft | | 23 | 27 | 56.3 | 109 | 712.5 | |
| **Trafic II** | | | | | | | | | | | | | | | |
| 1.9 (59 kw) | 2001.04-2003.07 | 5MT | F | L | Bus FWD F9Q 762 | | GDS44003 | Drive Shaft | | 27 | 37 | 56.5 | 93.5 | 676 | |
| | 2001.04-2003.07 | 5MT | F | R | Bus FWD F9Q 762 | | GDS44013 | Drive Shaft | | 27 | 39 | 56.5 | 93.5 | 1020 | |
| | 2001.04-2003.07 | 5MT | F | L/R | Bus FWD F9Q 762 | | GCO18105 | Outer Joint | | 27 | 26 | 56.5 | 93.5 | 64 | M |
| | 2001.04-2003.07 | 5MT | F | L | Van FWD F9Q 762 | | GDS44003 | Drive Shaft | | 27 | 37 | 56.5 | 93.5 | 676 | |
| | 2001.04-2003.07 | 5MT | F | R | Van FWD F9Q 762 | | GDS44013 | Drive Shaft | | 27 | 39 | 56.5 | 93.5 | 1020 | |
| | 2001.04-2003.07 | 5MT | F | L/R | Van FWD F9Q 762 | | GCO18105 | Outer Joint | | 27 | 26 | 56.5 | 93.5 | 64 | M |
| | 2001.09-2003.07 | 5MT | F | L | Platform/Chassis FWD F9Q 762 | | GDS44003 | Drive Shaft | | 27 | 37 | 56.5 | 93.5 | 676 | |
| | 2001.09-2003.07 | 5MT | F | R | Platform/Chassis FWD F9Q 762 | | GDS44013 | Drive Shaft | | 27 | 39 | 56.5 | 93.5 | 1020 | |
| | 2001.09-2003.07 | 5MT | F | L/R | Platform/Chassis FWD F9Q 762 | | GCO18105 | Outer Joint | | 27 | 26 | 56.5 | 93.5 | 64 | M |
| 1.9 (60 kw) | 2001.03-2006.10 | 5MT | F | L | Bus FWD F9Q 762 | | GDS44003 | Drive Shaft | | 27 | 37 | 56.5 | 93.5 | 676 | |
| | 2001.03-2006.10 | 5MT | F | R | Bus FWD F9Q 762 | | GDS44013 | Drive Shaft | | 27 | 39 | 56.5 | 93.5 | 1020 | |
| | 2001.03-2006.10 | AT/MT | F | L/R | Bus FWD F9Q 762 | | GCO44034 | Outer Joint | | 27 | 26 | 56.5 | 93.5 | 64 | M |
| | 2001.03-2006.10 | | F | L | Bus FWD F9Q 762 | | GCO18105 | Outer Joint | | 27 | 26 | 56.5 | 93.5 | 64 | M |
| | 2001.03-2006.10 | 5MT | F | L | Platform/Chassis FWD F9Q 762 | | GDS44003 | Drive Shaft | | 27 | 37 | 56.5 | 93.5 | 676 | |
| | 2001.03-2006.10 | 5MT | F | R | Platform/Chassis FWD F9Q 762 | | GDS44013 | Drive Shaft | | 27 | 39 | 56.5 | 93.5 | 1020 | |
| | 2001.03-2006.10 | 5MT | F | L/R | Platform/Chassis FWD F9Q 762 | | GCO18105 | Outer Joint | | 27 | 26 | 56.5 | 93.5 | 64 | M |
| | 2001.03-2006.10 | 5MT | F | L | Van FWD F9Q 760;F9Q 762 | | GDS44003 | Drive Shaft | | 27 | 37 | 56.5 | 93.5 | 676 | |
| | 2001.03-2006.10 | 5MT | F | R | Van FWD F9Q 760;F9Q 762 | | GDS44013 | Drive Shaft | | 27 | 39 | 56.5 | 93.5 | 1020 | |
| | 2001.03-2006.10 | AT/MT | F | L/R | Van FWD F9Q 760;F9Q 762 | | GCO44034 | Outer Joint | | 27 | 26 | 56.5 | 93.5 | 64 | M |
| | 2001.03-2006.10 | | F | L | Van FWD F9Q 760;F9Q 762 | | GCO18105 | Outer Joint | | 27 | 26 | 56.5 | 93.5 | 64 | M |
| 1.9 (74 kw) | 2001.03-2006.10 | 6MT | F | L | Bus FWD F9Q 760 | | GDS44003 | Drive Shaft | | 27 | 37 | 56.5 | 93.5 | 676 | |
| | 2001.03-2006.10 | 6MT | F | R | Bus FWD F9Q 760 | | GDS44013 | Drive Shaft | | 27 | 39 | 56.5 | 93.5 | 1020 | |
| | 2001.03-2006.10 | AT/MT | F | L/R | Bus FWD F9Q 760 | | GCO44034 | Outer Joint | | 27 | 26 | 56.5 | 93.5 | 64 | M |
| | 2001.03-2006.10 | MT | F | L/R | Bus FWD F9Q 760 | | GCO18105 | Outer Joint | | 27 | 26 | 56.5 | 93.5 | 64 | M |
| | 2001.03-2006.10 | 6MT | F | L | Platform/Chassis FWD F9Q 760 | | GDS44003 | Drive Shaft | | 27 | 37 | 56.5 | 93.5 | 676 | |
| | 2001.03-2006.10 | 6MT | F | R | Platform/Chassis FWD F9Q 760 | | GDS44013 | Drive Shaft | | 27 | 39 | 56.5 | 93.5 | 1020 | |
| | 2001.03-2006.10 | 6MT | F | L/R | Platform/Chassis FWD F9Q 760 | | GCO18105 | Outer Joint | | 27 | 26 | 56.5 | 93.5 | 64 | M |
| | 2001.03-2006.10 | AT/MT | F | L/R | Van FWD F9Q 760 | | GCO44034 | Outer Joint | | 27 | 26 | 56.5 | 93.5 | 64 | M |
| | 2001.03-2006.10 | MT | F | L | Van FWD F9Q 760 | | GDS44003 | Drive Shaft | | 27 | 37 | 56.5 | 93.5 | 676 | |
| | 2001.03-2006.10 | MT | F | R | Van FWD F9Q 760 | | GDS44013 | Drive Shaft | | 27 | 39 | 56.5 | 93.5 | 1020 | |
| | 2001.03-2006.10 | MT | F | L | Van FWD F9Q 760 | | GCO18105 | Outer Joint | | 27 | 26 | 56.5 | 93.5 | 64 | M |
| 1.9 (75 kw) | 2001.03- | 6MT | F | L | Van FWD F9Q 760 | | GDS44003 | Drive Shaft | | 27 | 37 | 56.5 | 93.5 | 676 | |
| | 2001.03- | 6MT | F | R | Van FWD F9Q 760 | | GDS44013 | Drive Shaft | | 27 | 39 | 56.5 | 93.5 | 1020 | |
| | 2001.03- | 6MT | F | L/R | Van FWD F9Q 760 | | GCO18105 | Outer Joint | | 27 | 26 | 56.5 | 93.5 | 64 | M |
| | 2001.03- | 6MT | F | L/R | Van FWD F9Q 760 | | GCO44034 | Outer Joint | | 27 | 26 | 56.5 | 93.5 | 64 | M |
| 2.0 (66 kw) | 2006.08- | 6MT | F | L/R | Bus FWD M9R 780;M9R 782;M9R 786;M9R 692;M9R 630 | | GCO18281 | Outer Joint | | 27 | 28 | 56.5 | 93.5 | 66.5 | I |
| | 2006.08- | MT | F | L | Bus FWD M9R 780;M9R 782;M9R 786;M9R 692;M9R 630 | | GDS60022 | Drive Shaft | | 27 | 39 | 56.6 | 94 | 694 | |
| | 2006.08- | MT | F | R | Bus FWD M9R 780;M9R 782;M9R 786;M9R 692;M9R 630 | | GDS18271 | Drive Shaft | | 27 | 39 | 56.6 | 94 | 1013 | |
| | 2006.08- | MT | F | L/R | Bus FWD M9R 780;M9R 782;M9R 786;M9R 692;M9R 630 | For Engine code:M9R780/M9R782/M9R786 | GCO60005 | Outer Joint | | 27 | 36 | 56.6 | 94 | 71 | I |
| | 2006.08- | MT | F | R | Bus FWD M9R 780;M9R 782;M9R 786;M9R 692;M9R 630 | | GCI50046 | Inner Joint | | 39 | 27 | 30 | 364 | 87 | |
| | 2006.08- | MT | F | L | Platform/Chassis FWD M9R 780;M9R 782;M9R 786;M9R 692;M9R 630 | | GDS60022 | Drive Shaft | | 27 | 39 | 56.6 | 94 | 694 | |
| | 2006.08- | MT | F | R | Platform/Chassis FWD M9R 780;M9R 782;M9R 786;M9R 692;M9R 630 | | GDS18271 | Drive Shaft | | 27 | 39 | 56.6 | 94 | 1013 | |
| | 2006.08- | MT | F | L | Platform/Chassis FWD M9R 780;M9R 782;M9R 786;M9R 692;M9R 630 | | GCO60005 | Outer Joint | | 27 | 36 | 56.6 | 94 | 71 | I |
| | 2006.08- | MT | F | R | Platform/Chassis FWD M9R 780;M9R 782;M9R 786;M9R 692;M9R 630 | For Engine code:M9R780/M9R782;For Engine code:M9R786 | GCO60005 | Outer Joint | | 27 | 36 | 56.6 | 94 | 71 | I |

| | YEAR | TRANSM. | F/R | L/R | BODY STYLE & DRIVE TYPE & ENGINE | REMARKS | G-AP Ref. | PRODUCT | ABS | Technical Specifications A | B | C | H | L | P |
|---|---|---|---|---|---|---|---|---|---|---|---|---|---|---|---|
| **RENAULT** **Trafic II** | | | | | | | | | | | | | | | |
| 2.0 (66 kw) | 2006.08- | MT | F | R | Platform/Chassis FWD M9R 780;M9R 782;M9R 786;M9R 692;M9R 630 | | GCI50046 | Inner Joint | | 39 | 27 | 30 | 364 | 87 | |
| | 2006.08- | MT | F | L | Van FWD M9R 780;M9R 782;M9R 786;M9R 692;M9R 630 | | GDS60022 | Drive Shaft | | 27 | 39 | 56.6 | 94 | 694 | |
| | 2006.08- | MT | F | R | Van FWD M9R 780;M9R 782;M9R 786;M9R 692;M9R 630 | | GDS18271 | Drive Shaft | | 27 | 39 | 56.6 | 94 | 1013 | |
| | 2006.08- | MT | F | L/R | Van FWD M9R 780;M9R 782;M9R 786;M9R 692;M9R 630 | | GCO60005 | Outer Joint | | 27 | 36 | 56.6 | 94 | 71 | I |
| | 2006.08- | MT | F | R | Van FWD M9R 780;M9R 782;M9R 786;M9R 692;M9R 630 | | GCI50046 | Inner Joint | | 39 | 27 | 30 | 364 | 87 | |
| 2.0 (84 kw) | 2006.08- | AT/MT | F | L | Bus FWD M9R 780;M9R 782;M9R 786;M9R 784;M9R 788;M9R 692;M9R 630 | | GDS60022 | Drive Shaft | | 27 | 39 | 56.6 | 94 | 694 | |
| | 2006.08- | AT/MT | F | R | Bus FWD M9R 780;M9R 782;M9R 786;M9R 784;M9R 788;M9R 692;M9R 630 | | GDS18271 | Drive Shaft | | 27 | 39 | 56.6 | 94 | 1013 | |
| | 2006.08- | AT/MT | F | R | Bus FWD M9R 780;M9R 782;M9R 786;M9R 784;M9R 788;M9R 692;M9R 630 | | GCI50046 | Inner Joint | | 39 | 27 | 30 | 364 | 87 | |
| | 2006.08- | MT | F | L/R | Bus FWD M9R 780;M9R 782;M9R 786;M9R 784;M9R 788;M9R 692;M9R 630 | | GCO60005 | Outer Joint | | 27 | 36 | 56.6 | 94 | 71 | I |
| | 2006.08- | AT/MT | F | L | Platform/Chassis FWD M9R 780;M9R 782;M9R 786;M9R 692;M9R 630 | | GDS60022 | Drive Shaft | | 27 | 39 | 56.6 | 94 | 694 | |
| | 2006.08- | AT/MT | F | R | Platform/Chassis FWD M9R 780;M9R 782;M9R 786;M9R 692;M9R 630 | | GDS18271 | Drive Shaft | | 27 | 39 | 56.6 | 94 | 1013 | |
| | 2006.08- | AT/MT | F | R | Platform/Chassis FWD M9R 780;M9R 782;M9R 786;M9R 692;M9R 630 | | GCI50046 | Inner Joint | | 39 | 27 | 30 | 364 | 87 | |
| | 2006.08- | MT | F | L | Platform/Chassis FWD M9R 780;M9R 782;M9R 786;M9R 692;M9R 630 | | GCO60005 | Outer Joint | | 27 | 36 | 56.6 | 94 | 71 | I |
| | 2006.08- | MT | F | R | Platform/Chassis FWD M9R 780;M9R 782;M9R 786;M9R 692;M9R 630 | For Engine code:M9R780/M9R782;For Engine code:M9R786 | GCO60005 | Outer Joint | | 27 | 36 | 56.6 | 94 | 71 | I |
| | 2006.08- | 6AT/6MT | F | L | Van FWD M9R 780;M9R 782;M9R 786;M9R 784;M9R 788;M9R 692;M9R 630 | | GDS60022 | Drive Shaft | | 27 | 39 | 56.6 | 94 | 694 | |
| | 2006.08- | 6AT/6MT | F | R | Van FWD M9R 780;M9R 782;M9R 786;M9R 784;M9R 788;M9R 692;M9R 630 | | GDS18271 | Drive Shaft | | 27 | 39 | 56.6 | 94 | 1013 | |
| | 2006.08- | 6AT/6MT | F | L/R | Van FWD M9R 780;M9R 782;M9R 786;M9R 784;M9R 788;M9R 692;M9R 630 | | GCO18281 | Outer Joint | | 27 | 28 | 56.5 | 93.5 | 66.5 | I |
| | 2006.08- | 6AT/6MT | F | L/R | Van FWD M9R 780;M9R 782;M9R 786;M9R 784;M9R 788;M9R 692;M9R 630 | | GCO60005 | Outer Joint | | 27 | 36 | 56.6 | 94 | 71 | I |
| | 2006.08- | 6AT/6MT | F | R | Van FWD M9R 780;M9R 782;M9R 786;M9R 784;M9R 788;M9R 692;M9R 630 | | GCI50046 | Inner Joint | | 39 | 27 | 30 | 364 | 87 | |
| 2.0 (86 kw) | 2006.08- | MT | F | L | Bus FWD F4R 820 | | GDS44003 | Drive Shaft | | 27 | 37 | 56.5 | 93.5 | 676 | |
| | 2006.08- | MT | F | R | Bus FWD F4R 820 | | GDS44013 | Drive Shaft | | 27 | 39 | 56.5 | 93.5 | 1020 | |
| | 2006.08- | MT | F | L | Bus FWD F4R 820 | | GCO18105 | Outer Joint | | 27 | 26 | 56.5 | 93.5 | 64 | M |
| | 2006.08- | 6MT | F | L | Platform/Chassis FWD F4R 820 | | GDS44003 | Drive Shaft | | 27 | 37 | 56.5 | 93.5 | 676 | |
| | 2006.08- | 6MT | F | R | Platform/Chassis FWD F4R 820 | | GDS44013 | Drive Shaft | | 27 | 39 | 56.5 | 93.5 | 1020 | |
| | 2006.08- | 6MT | F | L/R | Platform/Chassis FWD F4R 820 | | GCO18105 | Outer Joint | | 27 | 26 | 56.5 | 93.5 | 64 | M |
| | 2006.08- | MT | F | L | Van FWD F4R 820 | | GDS44003 | Drive Shaft | | 27 | 37 | 56.5 | 93.5 | 676 | |
| | 2006.08- | MT | F | R | Van FWD F4R 820 | | GDS44013 | Drive Shaft | | 27 | 39 | 56.5 | 93.5 | 1020 | |
| | 2006.08- | MT | F | L | Van FWD F4R 820 | | GCO18105 | Outer Joint | | 27 | 26 | 56.5 | 93.5 | 64 | M |
| 2.0 (88 kw) | 2001.03- | 6MT | F | L | Bus FWD F4R 720;F4R 722 | | GDS44003 | Drive Shaft | | 27 | 37 | 56.5 | 93.5 | 676 | |
| | 2001.03- | 6MT | F | R | Bus FWD F4R 720;F4R 722 | | GDS44013 | Drive Shaft | | 27 | 39 | 56.5 | 93.5 | 1020 | |
| | 2001.03- | AT/MT | F | L/R | Bus FWD F4R 720;F4R 722 | | GCO44034 | Outer Joint | | 27 | 26 | 56.5 | 93.5 | 64 | M |
| | 2001.03- | MT | F | L | Bus FWD F4R 720;F4R 722 | | GCO18105 | Outer Joint | | 27 | 26 | 56.5 | 93.5 | 64 | M |
| | 2001.03- | 6MT | F | L | Van FWD F4R 720;F4R 722 | | GDS44003 | Drive Shaft | | 27 | 37 | 56.5 | 93.5 | 676 | |
| | 2001.03- | 6MT | F | R | Van FWD F4R 720;F4R 722 | | GDS44013 | Drive Shaft | | 27 | 39 | 56.5 | 93.5 | 1020 | |
| | 2001.03- | AT/MT | F | L/R | Van FWD F4R 720;F4R 722 | | GCO44034 | Outer Joint | | 27 | 26 | 56.5 | 93.5 | 64 | M |
| | 2001.03- | MT | F | L | Van FWD F4R 720;F4R 722 | | GCO18105 | Outer Joint | | 27 | 26 | 56.5 | 93.5 | 64 | M |
| | 2001.03-2006.10 | 6MT | F | L | Platform/Chassis FWD F4R 720 | | GDS44003 | Drive Shaft | | 27 | 37 | 56.5 | 93.5 | 676 | |
| | 2001.03-2006.10 | 6MT | F | R | Platform/Chassis FWD F4R 720 | | GDS44013 | Drive Shaft | | 27 | 39 | 56.5 | 93.5 | 1020 | |
| | 2001.03-2006.10 | 6MT | F | L/R | Platform/Chassis FWD F4R 720 | | GCO18105 | Outer Joint | | 27 | 26 | 56.5 | 93.5 | 64 | M |
| 2.5 (84 kw) | 2007.08- | 6AT/6MT | F | L | Platform/Chassis FWD G9U 630 | | GDS50497 | Drive Shaft | | 27 | 39 | 56.6 | 94 | 667 | |
| | 2007.08- | 6AT/6MT | F | R | Platform/Chassis FWD G9U 630 | | GDS18301 | Drive Shaft | | 27 | 39 | 56.6 | 94 | 1045 | |
| | 2007.08- | 6AT/6MT | F | L/R | Platform/Chassis FWD G9U 630 | | GCO60005 | Outer Joint | | 27 | 36 | 56.6 | 94 | 71 | I |
| | 2007.08- | AT/MT | F | L | Platform/Chassis FWD G9U 630 | Chassis no. to:6V699999 | GDS50557 | Drive Shaft | | 27 | 37 | 56.5 | 92 | 634 | |
| | 2007.08- | AT/MT | F | R | Platform/Chassis FWD G9U 630 | Chassis no. to:6V699999 | GDS50562 | Drive Shaft | | 27 | 39 | 56.5 | 92 | 1056 | |
| | 2007.08- | AT/MT | F | R | Platform/Chassis FWD G9U 630 | Chassis no. to:6V699999 | GCI50097 | Inner Joint | | 39 | 35 | 30 | 409 | 90 | |
| | 2007.08- | 6AT/6MT | F | L | Van FWD G9U 630 | | GDS50497 | Drive Shaft | | 27 | 39 | 56.6 | 94 | 667 | |
| | 2007.08- | 6AT/6MT | F | R | Van FWD G9U 630 | | GDS18301 | Drive Shaft | | 27 | 39 | 56.6 | 94 | 1045 | |
| | 2007.08- | 6AT/6MT | F | L | Van FWD G9U 630 | | GCI50045 | Inner Joint | | 39 | 27 | 39 | 74 | 109 | |
| | 2007.08- | | F | L/R | Van FWD G9U 630 | | GCO60005 | Outer Joint | | 27 | 36 | 56.6 | 94 | 71 | I |
| | 2008.02- | 6AT/6MT | F | L | Bus FWD G9U 630 | | GDS50497 | Drive Shaft | | 27 | 39 | 56.6 | 94 | 667 | |
| | 2008.02- | 6AT/6MT | F | R | Bus FWD G9U 630 | | GDS18301 | Drive Shaft | | 27 | 39 | 56.6 | 94 | 1045 | |
| | 2008.02- | AT/MT | F | L | Bus FWD G9U 630 | Date from:2009.01;Chassis no. to:6V699999 | GDS50557 | Drive Shaft | | 27 | 37 | 56.5 | 92 | 634 | |
| | 2008.02- | AT/MT | F | R | Bus FWD G9U 630 | Date from:2009.01;Chassis no. to:6V699999 | GDS50562 | Drive Shaft | | 27 | 39 | 56.5 | 92 | 1056 | |
| | 2008.02- | AT/MT | F | R | Bus FWD G9U 630 | Date from:2009.01;Chassis no. to:6V699999 | GCO50080 | Outer Joint | | 27 | 37 | 56.5 | 92 | 73 | I |
| | 2008.02- | AT/MT | F | R | Bus FWD G9U 630 | Date from:2009.01;Chassis no. to:6V699999 | GCI50097 | Inner Joint | | 39 | 35 | 30 | 409 | 90 | |
| | 2008.02- | | F | L/R | Bus FWD G9U 630 | | GCO60005 | Outer Joint | | 27 | 36 | 56.6 | 94 | 71 | I |
| 2.5 (99 kw) | 2001.03-2006.10 | 6MT | F | L | Platform/Chassis FWD G9U 730 | | GDS50557 | Drive Shaft | | 27 | 37 | 56.5 | 92 | 634 | |
| | 2001.03-2006.10 | 6MT | F | R | Platform/Chassis FWD G9U 730 | | GDS50562 | Drive Shaft | | 27 | 39 | 56.5 | 92 | 1056 | |
| | 2001.03-2006.10 | 6MT | F | R | Platform/Chassis FWD G9U 730 | | GCO50080 | Outer Joint | | 27 | 37 | 56.5 | 92 | 73 | I |
| | 2001.03-2006.10 | 6MT | F | R | Platform/Chassis FWD G9U 730 | | GCI50097 | Inner Joint | | 39 | 35 | 30 | 409 | 90 | |
| | 2003.05-2006.10 | 6MT | F | L | Bus FWD G9U 730 | | GDS50557 | Drive Shaft | | 27 | 37 | 56.5 | 92 | 634 | |
| | 2003.05-2006.10 | 6MT | F | R | Bus FWD G9U 730 | | GDS50562 | Drive Shaft | | 27 | 39 | 56.5 | 92 | 1056 | |
| | 2003.05-2006.10 | 6MT | F | R | Bus FWD G9U 730 | | GCI50097 | Inner Joint | | 39 | 35 | 30 | 409 | 90 | |
| | 2003.05-2006.10 | AT/MT | F | L/R | Bus FWD G9U 730 | | GCO50080 | Outer Joint | | 27 | 37 | 56.5 | 92 | 73 | I |
| | 2003.05-2006.10 | 6MT | F | L | Van FWD G9U 730 | | GDS50557 | Drive Shaft | | 27 | 37 | 56.5 | 92 | 634 | |

| | YEAR | TRANSM. | F/R | L/R | BODY STYLE & DRIVE TYPE & ENGINE | REMARKS | G-AP Ref. | PRODUCT | ABS | Technical Specifications A | B | C | H | L | P |
|---|---|---|---|---|---|---|---|---|---|---|---|---|---|---|---|
| **RENAULT** | | | | | | | | | | | | | | | |
| **Trafic II** | | | | | | | | | | | | | | | |
| 2.5 (99 kw) | 2003.05-2006.10 | 6MT | F | R | Van FWD G9U 730 | | GDS50562 | Drive Shaft | | 27 | 39 | 56.5 | 92 | 1056 | |
| | 2003.05-2006.10 | 6MT | F | R | Van FWD G9U 730 | | GCI50097 | Inner Joint | | 39 | 35 | 30 | 409 | 90 | |
| | 2003.05-2006.10 | AT/MT | F | L/R | Van FWD G9U 730 | | GCO50080 | Outer Joint | | 27 | 37 | 56.5 | 92 | 73 | I |
| 2.5 (107 kw) | 2006.08- | 6AT/6MT | F | L | Bus FWD G9U 630 | | GDS50497 | Drive Shaft | | 27 | 39 | 56.6 | 94 | 667 | |
| | 2006.08- | 6AT/6MT | F | R | Bus FWD G9U 630 | | GDS18301 | Drive Shaft | | 27 | 39 | 56.6 | 94 | 1045 | |
| | 2006.08- | 6AT/6MT | F | L/R | Bus FWD G9U 630 | | GCO60005 | Outer Joint | | 27 | 36 | 56.6 | 94 | 71 | I |
| | 2006.08- | 6AT/6MT | F | L | Bus FWD G9U 630 | | GCI50045 | Inner Joint | | 39 | 27 | 39 | 74 | 109 | |
| | 2006.08- | | F | | Bus FWD G9U 630 | | GCO50080 | Outer Joint | | 27 | 37 | 56.5 | 92 | 73 | I |
| | 2006.08- | 6AT/6MT | F | L | Platform/Chassis FWD G9U 630 | | GDS50497 | Drive Shaft | | 27 | 39 | 56.6 | 94 | 667 | |
| | 2006.08- | 6AT/6MT | F | R | Platform/Chassis FWD G9U 630 | | GDS18301 | Drive Shaft | | 27 | 39 | 56.6 | 94 | 1045 | |
| | 2006.08- | 6AT/6MT | F | L/R | Platform/Chassis FWD G9U 630 | | GCO60005 | Outer Joint | | 27 | 36 | 56.6 | 94 | 71 | I |
| | 2006.08- | 6AT/6MT | F | L | Platform/Chassis FWD G9U 630 | | GCI50045 | Inner Joint | | 39 | 27 | 39 | 74 | 109 | |
| | 2006.08- | | F | | Platform/Chassis FWD G9U 630 | | GCO50080 | Outer Joint | | 27 | 37 | 56.5 | 92 | 73 | I |
| | 2006.08- | 6AT/6MT | F | L | Van FWD G9U 630 | | GDS50497 | Drive Shaft | | 27 | 39 | 56.6 | 94 | 667 | |
| | 2006.08- | 6AT/6MT | F | R | Van FWD G9U 630 | | GDS18301 | Drive Shaft | | 27 | 39 | 56.6 | 94 | 1045 | |
| | 2006.08- | 6AT/6MT | F | L/R | Van FWD G9U 630 | | GCO60005 | Outer Joint | | 27 | 36 | 56.6 | 94 | 71 | I |
| | 2006.08- | 6AT/6MT | F | L | Van FWD G9U 630 | | GCI50045 | Inner Joint | | 39 | 27 | 39 | 74 | 109 | |
| **Trafic III** | | | | | | | | | | | | | | | |
| 1.6 (66 kw) | 2014.05- | 6MT | F | L | Bus FWD R9M 408 | | GDS82548 | Drive Shaft | | 29 | 39 | 60 | 95.5 | 694 | |
| | 2014.05- | 6MT | F | R | Bus FWD R9M 408 | | GDS18445 | Drive Shaft | | 29 | 39 | 60 | 96 | 1020 | |
| | 2014.05- | MT | F | L | Bus FWD R9M 408 | | GCO81973 | Outer Joint | | 29 | 28 | 60 | 95.5 | 68.5 | I |
| | 2014.05- | MT | F | R | Bus FWD R9M 408 | | GCO18327 | Outer Joint | | 29 | 28 | 60 | 96 | 69 | I |
| | 2014.05- | MT | F | L | Bus FWD R9M 408 | | GCI18247 | Inner Joint | | 39 | 27 | 39 | 74 | 108.5 | |
| | 2014.05- | MT | F | R | Bus FWD R9M 408 | | GCI81567 | Inner Joint | | 39 | 27 | 30 | 367.5 | 92 | |
| | 2014.05- | 6MT | F | L | Van FWD R9M 408 | | GDS82548 | Drive Shaft | | 29 | 39 | 60 | 95.5 | 694 | |
| | 2014.05- | 6MT | F | R | Van FWD R9M 408 | | GDS18445 | Drive Shaft | | 29 | 39 | 60 | 96 | 1020 | |
| | 2014.05- | MT | F | L | Van FWD R9M 408 | | GCO81973 | Outer Joint | | 29 | 28 | 60 | 95.5 | 68.5 | I |
| | 2014.05- | MT | F | R | Van FWD R9M 408 | | GCO18327 | Outer Joint | | 29 | 28 | 60 | 96 | 69 | I |
| | 2014.05- | MT | F | L | Van FWD R9M 408 | | GCI18247 | Inner Joint | | 39 | 27 | 39 | 74 | 108.5 | |
| | 2014.05- | MT | F | R | Van FWD R9M 408 | | GCI81567 | Inner Joint | | 39 | 27 | 30 | 367.5 | 92 | |
| 1.6 (70 kw) | 2015.07- | 6MT | F | L | Bus FWD R9M 413;R9M 415 | | GDS82548 | Drive Shaft | | 29 | 39 | 60 | 95.5 | 694 | |
| | 2015.07- | 6MT | F | R | Bus FWD R9M 413;R9M 415 | | GDS18445 | Drive Shaft | | 29 | 39 | 60 | 96 | 1020 | |
| | 2015.07- | MT | F | L | Bus FWD R9M 413;R9M 415 | | GCO81973 | Outer Joint | | 29 | 28 | 60 | 95.5 | 68.5 | I |
| | 2015.07- | MT | F | R | Bus FWD R9M 413;R9M 415 | Date from:2016.01 | GCO18327 | Outer Joint | | 29 | 28 | 60 | 96 | 69 | I |
| | 2015.07- | MT | F | L | Bus FWD R9M 413;R9M 415 | | GCI18247 | Inner Joint | | 39 | 27 | 39 | 74 | 108.5 | |
| | 2015.07- | MT | F | R | Bus FWD R9M 413;R9M 415 | Date from:2016.01 | GCI81567 | Inner Joint | | 39 | 27 | 30 | 367.5 | 92 | |
| | 2015.07- | 6MT | F | L | Van FWD R9M 413;R9M 415 | | GDS82548 | Drive Shaft | | 29 | 39 | 60 | 95.5 | 694 | |
| | 2015.07- | 6MT | F | R | Van FWD R9M 413;R9M 415 | | GDS18445 | Drive Shaft | | 29 | 39 | 60 | 96 | 1020 | |
| | 2015.07- | MT | F | L | Van FWD R9M 413;R9M 415 | | GCO81973 | Outer Joint | | 29 | 28 | 60 | 95.5 | 68.5 | I |
| | 2015.07- | MT | F | R | Van FWD R9M 413;R9M 415 | Date from:2016.01 | GCO18327 | Outer Joint | | 29 | 28 | 60 | 96 | 69 | I |
| | 2015.07- | MT | F | L | Van FWD R9M 413;R9M 415 | | GCI18247 | Inner Joint | | 39 | 27 | 39 | 74 | 108.5 | |
| | 2015.07- | MT | F | R | Van FWD R9M 413;R9M 415 | Date from:2016.01 | GCI81567 | Inner Joint | | 39 | 27 | 30 | 367.5 | 92 | |
| 1.6 (85 kw) | 2014.05- | 6MT | F | L | Bus FWD R9M 408 | | GDS82548 | Drive Shaft | | 29 | 39 | 60 | 95.5 | 694 | |
| | 2014.05- | 6MT | F | R | Bus FWD R9M 408 | | GDS18445 | Drive Shaft | | 29 | 39 | 60 | 96 | 1020 | |
| | 2014.05- | MT | F | L | Bus FWD R9M 408 | | GCO81973 | Outer Joint | | 29 | 28 | 60 | 95.5 | 68.5 | I |
| | 2014.05- | MT | F | R | Bus FWD R9M 408 | | GCO18327 | Outer Joint | | 29 | 28 | 60 | 96 | 69 | I |
| | 2014.05- | MT | F | L | Bus FWD R9M 408 | | GCI18247 | Inner Joint | | 39 | 27 | 39 | 74 | 108.5 | |
| | 2014.05- | MT | F | R | Bus FWD R9M 408 | | GCI81567 | Inner Joint | | 39 | 27 | 30 | 367.5 | 92 | |
| | 2014.05- | 6MT | F | L | Van FWD R9M 408 | | GDS82548 | Drive Shaft | | 29 | 39 | 60 | 95.5 | 694 | |
| | 2014.05- | 6MT | F | R | Van FWD R9M 408 | | GDS18445 | Drive Shaft | | 29 | 39 | 60 | 96 | 1020 | |
| | 2014.05- | MT | F | L | Van FWD R9M 408 | | GCO81973 | Outer Joint | | 29 | 28 | 60 | 95.5 | 68.5 | I |
| | 2014.05- | MT | F | R | Van FWD R9M 408 | | GCO18327 | Outer Joint | | 29 | 28 | 60 | 96 | 69 | I |
| | 2014.05- | MT | F | L | Van FWD R9M 408 | | GCI18247 | Inner Joint | | 39 | 27 | 39 | 74 | 108.5 | |
| | 2014.05- | MT | F | R | Van FWD R9M 408 | | GCI81567 | Inner Joint | | 39 | 27 | 30 | 367.5 | 92 | |
| 1.6 (88 kw) | 2014.05- | 6MT | F | L | Bus FWD R9M 450 | | GDS82548 | Drive Shaft | | 29 | 39 | 60 | 95.5 | 694 | |
| | 2014.05- | 6MT | F | R | Bus FWD R9M 450 | | GDS18445 | Drive Shaft | | 29 | 39 | 60 | 96 | 1020 | |
| | 2014.05- | MT | F | L | Bus FWD R9M 450 | | GCO81973 | Outer Joint | | 29 | 28 | 60 | 95.5 | 68.5 | I |
| | 2014.05- | MT | F | R | Bus FWD R9M 450 | | GCO18327 | Outer Joint | | 29 | 28 | 60 | 96 | 69 | I |
| | 2014.05- | MT | F | L | Bus FWD R9M 450 | | GCI18247 | Inner Joint | | 39 | 27 | 39 | 74 | 108.5 | |
| | 2014.05- | MT | F | R | Bus FWD R9M 450 | | GCI81567 | Inner Joint | | 39 | 27 | 30 | 367.5 | 92 | |
| | 2014.05- | 6MT | F | L | Van FWD R9M 450 | | GDS82548 | Drive Shaft | | 29 | 39 | 60 | 95.5 | 694 | |
| | 2014.05- | 6MT | F | R | Van FWD R9M 450 | | GDS18445 | Drive Shaft | | 29 | 39 | 60 | 96 | 1020 | |
| | 2014.05- | MT | F | L | Van FWD R9M 450 | | GCO81973 | Outer Joint | | 29 | 28 | 60 | 95.5 | 68.5 | I |
| | 2014.05- | MT | F | L | Van FWD R9M 450 | | GCI18247 | Inner Joint | | 39 | 27 | 39 | 74 | 108.5 | |
| | 2014.06- | 6MT | F | L | Platform/Chassis FWD R9M 450 | | GDS82548 | Drive Shaft | | 29 | 39 | 60 | 95.5 | 694 | |

| | YEAR | TRANSM. | F/R | L/R | BODY STYLE & DRIVE TYPE & ENGINE | REMARKS | G-AP Ref. | PRODUCT | ABS | Technical Specifications A | B | C | H | L | P |
|---|---|---|---|---|---|---|---|---|---|---|---|---|---|---|---|
| **RENAULT** **Trafic III** | | | | | | | | | | | | | | | |
| 1.6 (88 kw) | 2014.06- | 6MT | F | R | Platform/Chassis FWD R9M 450 | | GDS18445 | Drive Shaft | | 29 | 39 | 60 | 96 | 1020 | |
| | 2014.06- | MT | F | L | Platform/Chassis FWD R9M 450 | | GCO81973 | Outer Joint | | 29 | 28 | 60 | 95.5 | 68.5 | I |
| | 2014.06- | MT | F | R | Platform/Chassis FWD R9M 450 | Date from:2015.01 | GCO18327 | Outer Joint | | 29 | 28 | 60 | 96 | 69 | I |
| | 2014.06- | MT | F | L | Platform/Chassis FWD R9M 450 | | GCI18247 | Inner Joint | | 39 | 27 | 39 | 74 | 108.5 | |
| | 2014.06- | MT | F | R | Platform/Chassis FWD R9M 450 | Date from:2015.01 | GCI81567 | Inner Joint | | 39 | 27 | 30 | 367.5 | 92 | |
| 1.6 (89 kw) | 2015.07- | 6MT | F | L | Van FWD R9M 413;R9M 415 | | GDS82548 | Drive Shaft | | 29 | 39 | 60 | 95.5 | 694 | |
| | 2015.07- | 6MT | F | R | Van FWD R9M 413;R9M 415 | | GDS18445 | Drive Shaft | | 29 | 39 | 60 | 96 | 1020 | |
| | 2015.07- | 6MT | F | L | Van FWD R9M 413;R9M 415 | | GCO81973 | Outer Joint | | 29 | 28 | 60 | 95.5 | 68.5 | I |
| | 2015.07- | 6MT | F | R | Van FWD R9M 413;R9M 415 | | GCO18327 | Outer Joint | | 29 | 28 | 60 | 96 | 69 | I |
| | 2015.07- | 6MT | F | L | Van FWD R9M 413;R9M 415 | | GCI18247 | Inner Joint | | 39 | 27 | 39 | 74 | 108.5 | |
| | 2015.07- | 6MT | F | R | Van FWD R9M 413;R9M 415 | | GCI81567 | Inner Joint | | 39 | 27 | 30 | 367.5 | 92 | |
| | 2019.01- | 6MT | F | L | Bus FWD R9M 415 | | GDS82548 | Drive Shaft | | 29 | 39 | 60 | 95.5 | 694 | |
| | 2019.01- | 6MT | F | R | Bus FWD R9M 415 | | GDS18445 | Drive Shaft | | 29 | 39 | 60 | 96 | 1020 | |
| | 2019.01- | 6MT | F | L | Bus FWD R9M 415 | | GCO81973 | Outer Joint | | 29 | 28 | 60 | 95.5 | 68.5 | I |
| | 2019.01- | 6MT | F | R | Bus FWD R9M 415 | | GCO18327 | Outer Joint | | 29 | 28 | 60 | 96 | 69 | I |
| | 2019.01- | 6MT | F | L | Bus FWD R9M 415 | | GCI18247 | Inner Joint | | 39 | 27 | 39 | 74 | 108.5 | |
| | 2019.01- | 6MT | F | R | Bus FWD R9M 415 | | GCI81567 | Inner Joint | | 39 | 27 | 30 | 367.5 | 92 | |
| 1.6 (92 kw) | 2015.07- | 6MT | F | L | Bus FWD R9M 452 | | GDS82548 | Drive Shaft | | 29 | 39 | 60 | 95.5 | 694 | |
| | 2015.07- | 6MT | F | R | Bus FWD R9M 452 | | GDS18445 | Drive Shaft | | 29 | 39 | 60 | 96 | 1020 | |
| | 2015.07- | MT | F | L | Bus FWD R9M 452 | Date from:2016.01 | GCO81973 | Outer Joint | | 29 | 28 | 60 | 95.5 | 68.5 | I |
| | 2015.07- | MT | F | R | Bus FWD R9M 452 | Date from:2016.01 | GCO18327 | Outer Joint | | 29 | 28 | 60 | 96 | 69 | I |
| | 2015.07- | MT | F | L | Bus FWD R9M 452 | Date from:2016.01 | GCI18247 | Inner Joint | | 39 | 27 | 39 | 74 | 108.5 | |
| | 2015.07- | MT | F | R | Bus FWD R9M 452 | Date from:2016.01 | GCI81567 | Inner Joint | | 39 | 27 | 30 | 367.5 | 92 | |
| | 2015.07- | 6MT | F | L | Platform/Chassis FWD R9M 452 | | GDS82548 | Drive Shaft | | 29 | 39 | 60 | 95.5 | 694 | |
| | 2015.07- | 6MT | F | R | Platform/Chassis FWD R9M 452 | | GDS18445 | Drive Shaft | | 29 | 39 | 60 | 96 | 1020 | |
| | 2015.07- | MT | F | L | Platform/Chassis FWD R9M 452 | | GCO81973 | Outer Joint | | 29 | 28 | 60 | 95.5 | 68.5 | I |
| | 2015.07- | MT | F | R | Platform/Chassis FWD R9M 452 | Date from:2016.01 | GCO18327 | Outer Joint | | 29 | 28 | 60 | 96 | 69 | I |
| | 2015.07- | MT | F | L | Platform/Chassis FWD R9M 452 | | GCI18247 | Inner Joint | | 39 | 27 | 39 | 74 | 108.5 | |
| | 2015.07- | MT | F | R | Platform/Chassis FWD R9M 452 | Date from:2016.01 | GCI81567 | Inner Joint | | 39 | 27 | 30 | 367.5 | 92 | |
| | 2015.07- | 6MT | F | L | Van FWD R9M 452 | | GDS82548 | Drive Shaft | | 29 | 39 | 60 | 95.5 | 694 | |
| | 2015.07- | 6MT | F | R | Van FWD R9M 452 | | GDS18445 | Drive Shaft | | 29 | 39 | 60 | 96 | 1020 | |
| | 2015.07- | MT | F | L | Van FWD R9M 452 | Date from:2016.01 | GCO81973 | Outer Joint | | 29 | 28 | 60 | 95.5 | 68.5 | I |
| | 2015.07- | MT | F | R | Van FWD R9M 452 | Date from:2016.01 | GCO18327 | Outer Joint | | 29 | 28 | 60 | 96 | 69 | I |
| | 2015.07- | MT | F | L | Van FWD R9M 452 | Date from:2016.01 | GCI18247 | Inner Joint | | 39 | 27 | 39 | 74 | 108.5 | |
| | 2015.07- | MT | F | R | Van FWD R9M 452 | Date from:2016.01 | GCI81567 | Inner Joint | | 39 | 27 | 30 | 367.5 | 92 | |
| 1.6 (103 kw) | 2014.05- | 6MT | F | L | Bus FWD R9M 450 | | GDS82548 | Drive Shaft | | 29 | 39 | 60 | 95.5 | 694 | |
| | 2014.05- | 6MT | F | R | Bus FWD R9M 450 | | GDS18445 | Drive Shaft | | 29 | 39 | 60 | 96 | 1020 | |
| | 2014.05- | MT | F | L | Bus FWD R9M 450 | | GCO81973 | Outer Joint | | 29 | 28 | 60 | 95.5 | 68.5 | I |
| | 2014.05- | MT | F | R | Bus FWD R9M 450 | | GCO18327 | Outer Joint | | 29 | 28 | 60 | 96 | 69 | I |
| | 2014.05- | MT | F | L | Bus FWD R9M 450 | | GCI18247 | Inner Joint | | 39 | 27 | 39 | 74 | 108.5 | |
| | 2014.05- | MT | F | R | Bus FWD R9M 450 | | GCI81567 | Inner Joint | | 39 | 27 | 30 | 367.5 | 92 | |
| | 2014.05- | 6MT | F | L | Van FWD R9M 450 | | GDS82548 | Drive Shaft | | 29 | 39 | 60 | 95.5 | 694 | |
| | 2014.05- | 6MT | F | R | Van FWD R9M 450 | | GDS18445 | Drive Shaft | | 29 | 39 | 60 | 96 | 1020 | |
| | 2014.05- | MT | F | L | Van FWD R9M 450 | | GCO81973 | Outer Joint | | 29 | 28 | 60 | 95.5 | 68.5 | I |
| | 2014.05- | MT | F | R | Van FWD R9M 450 | | GCO18327 | Outer Joint | | 29 | 28 | 60 | 96 | 69 | I |
| | 2014.05- | MT | F | L | Van FWD R9M 450 | | GCI18247 | Inner Joint | | 39 | 27 | 39 | 74 | 108.5 | |
| | 2014.05- | MT | F | R | Van FWD R9M 450 | | GCI81567 | Inner Joint | | 39 | 27 | 30 | 367.5 | 92 | |
| | 2014.06- | 6MT | F | L | Platform/Chassis FWD R9M 450 | | GDS82548 | Drive Shaft | | 29 | 39 | 60 | 95.5 | 694 | |
| | 2014.06- | 6MT | F | R | Platform/Chassis FWD R9M 450 | | GDS18445 | Drive Shaft | | 29 | 39 | 60 | 96 | 1020 | |
| | 2014.06- | MT | F | L | Platform/Chassis FWD R9M 450 | | GCO81973 | Outer Joint | | 29 | 28 | 60 | 95.5 | 68.5 | I |
| | 2014.06- | MT | F | R | Platform/Chassis FWD R9M 450 | Date from:2015.01 | GCO18327 | Outer Joint | | 29 | 28 | 60 | 96 | 69 | I |
| | 2014.06- | MT | F | L | Platform/Chassis FWD R9M 450 | | GCI18247 | Inner Joint | | 39 | 27 | 39 | 74 | 108.5 | |
| | 2014.06- | MT | F | R | Platform/Chassis FWD R9M 450 | Date from:2015.01 | GCI81567 | Inner Joint | | 39 | 27 | 30 | 367.5 | 92 | |
| 1.6 (107 kw) | 2015.07- | 6MT | F | L | Bus FWD R9M 452 | | GDS82548 | Drive Shaft | | 29 | 39 | 60 | 95.5 | 694 | |
| | 2015.07- | 6MT | F | R | Bus FWD R9M 452 | | GDS18445 | Drive Shaft | | 29 | 39 | 60 | 96 | 1020 | |
| | 2015.07- | MT | F | L | Bus FWD R9M 452 | | GCO81973 | Outer Joint | | 29 | 28 | 60 | 95.5 | 68.5 | I |
| | 2015.07- | MT | F | R | Bus FWD R9M 452 | Date from:2016.01 | GCO18327 | Outer Joint | | 29 | 28 | 60 | 96 | 69 | I |
| | 2015.07- | MT | F | L | Bus FWD R9M 452 | | GCI18247 | Inner Joint | | 39 | 27 | 39 | 74 | 108.5 | |
| | 2015.07- | MT | F | R | Bus FWD R9M 452 | Date from:2016.01 | GCI81567 | Inner Joint | | 39 | 27 | 30 | 367.5 | 92 | |
| | 2015.07- | 6MT | F | L | Platform/Chassis FWD R9M 452 | | GDS82548 | Drive Shaft | | 29 | 39 | 60 | 95.5 | 694 | |
| | 2015.07- | 6MT | F | R | Platform/Chassis FWD R9M 452 | | GDS18445 | Drive Shaft | | 29 | 39 | 60 | 96 | 1020 | |
| | 2015.07- | MT | F | L | Platform/Chassis FWD R9M 452 | | GCO81973 | Outer Joint | | 29 | 28 | 60 | 95.5 | 68.5 | I |
| | 2015.07- | MT | F | R | Platform/Chassis FWD R9M 452 | Date from:2016.01 | GCO18327 | Outer Joint | | 29 | 28 | 60 | 96 | 69 | I |
| | 2015.07- | MT | F | L | Platform/Chassis FWD R9M 452 | | GCI18247 | Inner Joint | | 39 | 27 | 39 | 74 | 108.5 | |
| | 2015.07- | MT | F | R | Platform/Chassis FWD R9M 452 | Date from:2016.01 | GCI81567 | Inner Joint | | 39 | 27 | 30 | 367.5 | 92 | |

| | YEAR | TRANSM. | F/R | L/R | BODY STYLE & DRIVE TYPE & ENGINE | REMARKS | G-AP Ref. | PRODUCT | ABS | Technical Specifications A | B | C | H | L | P |
|---|---|---|---|---|---|---|---|---|---|---|---|---|---|---|---|
| **RENAULT** | | | | | | | | | | | | | | | |
| **Trafic III** | | | | | | | | | | | | | | | |
| 1.6 (107 kw) | 2015.07- | 6MT | F | L | Van FWD R9M 452 | | GDS82548 | Drive Shaft | | 29 | 39 | 60 | 95.5 | 694 | |
| | 2015.07- | 6MT | F | R | Van FWD R9M 452 | | GDS18445 | Drive Shaft | | 29 | 39 | 60 | 96 | 1020 | |
| | 2015.07- | MT | F | L | Van FWD R9M 452 | | GCO81973 | Outer Joint | | 29 | 28 | 60 | 95.5 | 68.5 | I |
| | 2015.07- | MT | F | R | Van FWD R9M 452 | Date from:2016.01 | GCO18327 | Outer Joint | | 29 | 28 | 60 | 96 | 69 | I |
| | 2015.07- | MT | F | L | Van FWD R9M 452 | | GCI18247 | Inner Joint | | 39 | 27 | 39 | 74 | 108.5 | |
| | 2015.07- | MT | F | R | Van FWD R9M 452 | Date from:2016.01 | GCI81567 | Inner Joint | | 39 | 27 | 30 | 367.5 | 92 | |
| 2.0 (81 kw) | 2021.05- | 6MT | F | L | Bus FWD M9R 714;M9R717 | | GDS82548 | Drive Shaft | | 29 | 39 | 60 | 95.5 | 694 | |
| | 2021.05- | 6MT | F | L | Bus FWD M9R 714;M9R717 | | GCO81973 | Outer Joint | | 29 | 28 | 60 | 95.5 | 68.5 | I |
| | 2021.05- | 6MT | F | L | Bus FWD M9R 714;M9R717 | | GCI18247 | Inner Joint | | 39 | 27 | 39 | 74 | 108.5 | |
| | 2021.08- | | F | L | Van FWD M9R 714;M9R717 | | GDS82548 | Drive Shaft | | 29 | 39 | 60 | 95.5 | 694 | |
| | 2021.08- | | F | L | Van FWD M9R 714;M9R717 | | GCO81973 | Outer Joint | | 29 | 28 | 60 | 95.5 | 68.5 | I |
| | 2021.08- | | F | L | Van FWD M9R 714;M9R717 | | GCI18247 | Inner Joint | | 39 | 27 | 39 | 74 | 108.5 | |
| 2.0 (88 kw) | 2019.06- | 6MT | F | L | Bus FWD M9R 710 | | GDS82548 | Drive Shaft | | 29 | 39 | 60 | 95.5 | 694 | |
| | 2019.06- | 6MT | F | L | Bus FWD M9R 710 | | GCO81973 | Outer Joint | | 29 | 28 | 60 | 95.5 | 68.5 | I |
| | 2019.06- | 6MT | F | L | Bus FWD M9R 710 | | GCI18247 | Inner Joint | | 39 | 27 | 39 | 74 | 108.5 | |
| | 2019.06- | 6MT | F | L | Van FWD M9R 710 | | GDS82548 | Drive Shaft | | 29 | 39 | 60 | 95.5 | 694 | |
| | 2019.06- | 6MT | F | L | Van FWD M9R 710 | | GCO81973 | Outer Joint | | 29 | 28 | 60 | 95.5 | 68.5 | I |
| | 2019.06- | 6MT | F | L | Van FWD M9R 710 | | GCI18247 | Inner Joint | | 39 | 27 | 39 | 74 | 108.5 | |
| 2.0 (96 kw) | 2021.08- | | F | L | Van FWD M9R 714;M9R717 | | GDS82548 | Drive Shaft | | 29 | 39 | 60 | 95.5 | 694 | |
| | 2021.08- | | F | L | Van FWD M9R 714;M9R717 | | GCO81973 | Outer Joint | | 29 | 28 | 60 | 95.5 | 68.5 | I |
| | 2021.08- | | F | L | Van FWD M9R 714;M9R717 | | GCI18247 | Inner Joint | | 39 | 27 | 39 | 74 | 108.5 | |
| 2.0 (107 kw) | 2019.06- | 6DCT | F | R | Bus FWD M9R 710 | | GDS57578 | Drive Shaft | | 29 | 28 | 60 | 95.5 | 1005 | |
| | 2019.06- | 6DCT | F | R | Bus FWD M9R 710 | | GCI83748 | Inner Joint | | 28 | 27 | 33.85 | 420 | 91.5 | |
| | 2019.06- | 6MT | F | L | Bus FWD M9R 710 | | GDS82548 | Drive Shaft | | 29 | 39 | 60 | 95.5 | 694 | |
| | 2019.06- | 6MT | F | L | Bus FWD M9R 710 | | GCI18247 | Inner Joint | | 39 | 27 | 39 | 74 | 108.5 | |
| | 2019.06- | 6MT/6DCT | F | L/R | Bus FWD M9R 710 | | GCO81973 | Outer Joint | | 29 | 28 | 60 | 95.5 | 68.5 | I |
| | 2019.06- | 6MT | F | L | Platform/Chassis FWD M9R 710 | | GDS82548 | Drive Shaft | | 29 | 39 | 60 | 95.5 | 694 | |
| | 2019.06- | 6MT | F | L | Platform/Chassis FWD M9R 710 | | GCO81973 | Outer Joint | | 29 | 28 | 60 | 95.5 | 68.5 | I |
| | 2019.06- | 6MT | F | L | Platform/Chassis FWD M9R 710 | | GCI18247 | Inner Joint | | 39 | 27 | 39 | 74 | 108.5 | |
| | 2019.06- | 6DCT | F | R | Van FWD M9R 710 | | GDS57578 | Drive Shaft | | 29 | 28 | 60 | 95.5 | 1005 | |
| | 2019.06- | 6DCT | F | R | Van FWD M9R 710 | | GCI83748 | Inner Joint | | 28 | 27 | 33.85 | 420 | 91.5 | |
| | 2019.06- | 6MT | F | L | Van FWD M9R 710 | | GDS82548 | Drive Shaft | | 29 | 39 | 60 | 95.5 | 694 | |
| | 2019.06- | 6MT | F | L | Van FWD M9R 710 | | GCI18247 | Inner Joint | | 39 | 27 | 39 | 74 | 108.5 | |
| | 2019.06- | 6MT/6DCT | F | L/R | Van FWD M9R 710 | | GCO81973 | Outer Joint | | 29 | 28 | 60 | 95.5 | 68.5 | I |
| 2.0 (110 kw) | 2021.05- | 6DCT | F | R | Bus FWD M9R 714;M9R717 | | GDS57578 | Drive Shaft | | 29 | 28 | 60 | 95.5 | 1005 | |
| | 2021.05- | 6DCT | F | R | Bus FWD M9R 714;M9R717 | | GCI83748 | Inner Joint | | 28 | 27 | 33.85 | 420 | 91.5 | |
| | 2021.05- | 6MT | F | L | Bus FWD M9R 714;M9R717 | | GDS82548 | Drive Shaft | | 29 | 39 | 60 | 95.5 | 694 | |
| | 2021.05- | 6MT | F | L | Bus FWD M9R 714;M9R717 | | GCI18247 | Inner Joint | | 39 | 27 | 39 | 74 | 108.5 | |
| | 2021.05- | 6MT/6DCT | F | L/R | Bus FWD M9R 714;M9R717 | | GCO81973 | Outer Joint | | 29 | 28 | 60 | 95.5 | 68.5 | I |
| | 2021.08- | 6MT | F | L | Platform/Chassis FWD M9R 714;M9R717 | | GDS82548 | Drive Shaft | | 29 | 39 | 60 | 95.5 | 694 | |
| | 2021.08- | 6DCT | F | R | Van FWD M9R 714;M9R717 | | GDS57578 | Drive Shaft | | 29 | 28 | 60 | 95.5 | 1005 | |
| | 2021.08- | 6DCT | F | R | Van FWD M9R 714;M9R717 | | GCI83748 | Inner Joint | | 28 | 27 | 33.85 | 420 | 91.5 | |
| | 2021.08- | 6MT | F | L | Van FWD M9R 714;M9R717 | | GDS82548 | Drive Shaft | | 29 | 39 | 60 | 95.5 | 694 | |
| | 2021.08- | 6MT | F | L | Van FWD M9R 714;M9R717 | | GCI18247 | Inner Joint | | 39 | 27 | 39 | 74 | 108.5 | |
| | 2021.08- | 6MT/6DCT | F | L/R | Van FWD M9R 714;M9R717 | | GCO81973 | Outer Joint | | 29 | 28 | 60 | 95.5 | 68.5 | I |
| 2.0 (125 kw) | 2019.06- | 6DCT | F | R | Bus FWD M9R 710;M9R 714;M9R717 | | GDS57578 | Drive Shaft | | 29 | 28 | 60 | 95.5 | 1005 | |
| | 2019.06- | 6DCT | F | R | Bus FWD M9R 710;M9R 714;M9R717 | | GCI83748 | Inner Joint | | 28 | 27 | 33.85 | 420 | 91.5 | |
| | 2019.06- | 6MT | F | L | Bus FWD M9R 710;M9R 714;M9R717 | | GDS82548 | Drive Shaft | | 29 | 39 | 60 | 95.5 | 694 | |
| | 2019.06- | 6MT | F | L | Bus FWD M9R 710;M9R 714;M9R717 | | GCI18247 | Inner Joint | | 39 | 27 | 39 | 74 | 108.5 | |
| | 2019.06- | 6MT/6DCT | F | L/R | Bus FWD M9R 710;M9R 714;M9R717 | | GCO81973 | Outer Joint | | 29 | 28 | 60 | 95.5 | 68.5 | I |
| | 2019.06- | 6MT | F | L | Platform/Chassis FWD M9R 710;M9R 714;M9R717 | | GDS82548 | Drive Shaft | | 29 | 39 | 60 | 95.5 | 694 | |
| | 2019.06- | 6MT | F | L | Platform/Chassis FWD M9R 710;M9R 714;M9R717 | | GCO81973 | Outer Joint | | 29 | 28 | 60 | 95.5 | 68.5 | I |
| | 2019.06- | 6MT | F | L | Platform/Chassis FWD M9R 710;M9R 714;M9R717 | | GCI18247 | Inner Joint | | 39 | 27 | 39 | 74 | 108.5 | |
| | 2019.06- | 6DCT | F | R | Van FWD M9R 710;M9R 714;M9R717 | | GDS57578 | Drive Shaft | | 29 | 28 | 60 | 95.5 | 1005 | |
| | 2019.06- | 6DCT | F | R | Van FWD M9R 710;M9R 714;M9R717 | | GCI83748 | Inner Joint | | 28 | 27 | 33.85 | 420 | 91.5 | |
| | 2019.06- | 6MT | F | L | Van FWD M9R 710;M9R 714;M9R717 | | GDS82548 | Drive Shaft | | 29 | 39 | 60 | 95.5 | 694 | |
| | 2019.06- | 6MT | F | L | Van FWD M9R 710;M9R 714;M9R717 | | GCI18247 | Inner Joint | | 39 | 27 | 39 | 74 | 108.5 | |
| | 2019.06- | 6MT/6DCT | F | L/R | Van FWD M9R 710;M9R 714;M9R717 | | GCO81973 | Outer Joint | | 29 | 28 | 60 | 95.5 | 68.5 | I |
| **Trafic T1100** | | | | | | | | | | | | | | | |
| 2.1 (47 kw) | 1994.06-1997.10 | 5MT | F | L/R | Bus FWD J8S 620 (06.94-.), J8S 758 (06.94-.) | | GDS44006 | Drive Shaft | | 25 | 27 | 56.3 | 110.5 | 713.5 | |
| | 1994.06-1997.10 | MT | F | L/R | Bus FWD J8S 620 (06.94-.), J8S 758 (06.94-.) | | GDS50183 | Drive Shaft | | 25 | 27 | 56.3 | 110.5 | 716 | |
| | 1994.06-1997.10 | | F | L/R | Bus FWD J8S 620 (06.94-.), J8S 758 (06.94-.) | | GCO50027 | Outer Joint | | 23 | 25 | 56.3 | 109 | 56 | O |
| 2.2 (74 kw) | 1994.06-1997.10 | 5MT | F | L/R | Bus FWD J7T 600 (06.94-.) | | GDS44006 | Drive Shaft | | 25 | 27 | 56.3 | 110.5 | 713.5 | |
| | 1994.06-1997.10 | MT | F | L/R | Bus FWD J7T 600 (06.94-.) | | GDS50183 | Drive Shaft | | 25 | 27 | 56.3 | 110.5 | 716 | |
| | 1994.06-1997.10 | | F | L/R | Bus FWD J7T 600 (06.94-.) | | GCO50027 | Outer Joint | | 23 | 25 | 56.3 | 109 | 56 | O |

| | YEAR | TRANSM. | F/R | L/R | BODY STYLE & DRIVE TYPE & ENGINE | REMARKS | G-AP Ref. | PRODUCT | ABS | Technical Specifications A | B | C | H | L | P |
|---|---|---|---|---|---|---|---|---|---|---|---|---|---|---|---|
| **RENAULT** | | | | | | | | | | | | | | | |
| **Trafic T1100** | | | | | | | | | | | | | | | |
| 2.5 (51 kw) | 1989.05-2001.03 | MT | F | L/R | Platform/Chassis FWD 8140.61.240, S8U 720 (05.89-.), S8U 722 (05.89-.) | | GDS44006 | Drive Shaft | | 25 | 27 | 56.3 | 110.5 | 713.5 | |
| 2.5 (55 kw) | 1989.05-2001.03 | MT | F | L/R | Van FWD 8140.67.2500, 8140.67.2580, 8140.67.2680, S8U 750 (05.89-.), S8U 752 (05.89-.), S8U 758 | | GDS44006 | Drive Shaft | | 25 | 27 | 56.3 | 110.5 | 713.5 | |
| | 1989.05-2001.03 | MT | F | L/R | Van FWD 8140.67.2500, 8140.67.2580, 8140.67.2680, S8U 750 (05.89-.), S8U 752 (05.89-.), S8U 758 | | GDS50183 | Drive Shaft | | 25 | 27 | 56.3 | 110.5 | 716 | |
| | 1989.05-2001.03 | | F | L/R | Van FWD 8140.67.2500, 8140.67.2580, 8140.67.2680, S8U 750 (05.89-.), S8U 752 (05.89-.), S8U 758 | | GCO50027 | Outer Joint | | 23 | 25 | 56.3 | 109 | 56 | O |
| **Trafic T1400** | | | | | | | | | | | | | | | |
| 2.2 (74 kw) | 1994.09-1998.04 | 5MT | F | L/R | Platform/Chassis FWD J7T 600 | Inner teeth of wheel side:27 | GDS44006 | Drive Shaft | | 25 | 27 | 56.3 | 110.5 | 713.5 | |
| | 1994.09-1998.04 | 5MT | F | L/R | Platform/Chassis FWD J7T 600 | Inner teeth of wheel side:25 | GDS50006 | Drive Shaft | | 23 | 27 | 56.3 | 109 | 712.5 | |
| | 1994.09-1998.04 | MT | F | L/R | Platform/Chassis FWD J7T 600 | | GDS50183 | Drive Shaft | | 25 | 27 | 56.3 | 110.5 | 716 | |
| | 1994.09-1998.04 | | F | L/R | Platform/Chassis FWD J7T 600 | | GCO50027 | Outer Joint | | 23 | 25 | 56.3 | 109 | 56 | O |
| 2.5 (55 kw) | 1998.05-2001.03 | 5MT | F | L/R | Platform/Chassis FWD S8U 758, S8U 780 | Inner teeth of wheel side:27 | GDS44006 | Drive Shaft | | 25 | 27 | 56.3 | 110.5 | 713.5 | |
| | 1998.05-2001.03 | 5MT | F | L/R | Platform/Chassis FWD S8U 758, S8U 780 | Inner teeth of wheel side:25 | GDS50006 | Drive Shaft | | 23 | 27 | 56.3 | 109 | 712.5 | |
| | 1998.05-2001.03 | | F | L/R | Platform/Chassis FWD S8U 758, S8U 780 | | GCO50027 | Outer Joint | | 23 | 25 | 56.3 | 109 | 56 | O |
| 2.5 (58 kw) | 1994.09-1998.04 | 5MT | F | L/R | Platform/Chassis FWD S8U 758 | | GDS44006 | Drive Shaft | | 25 | 27 | 56.3 | 110.5 | 713.5 | |
| | 1994.09-1998.04 | MT | F | L/R | Platform/Chassis FWD S8U 758 | | GDS50183 | Drive Shaft | | 25 | 27 | 56.3 | 110.5 | 716 | |
| **Trafic T900** | | | | | | | | | | | | | | | |
| 1.9 (44 kw) | 1997.06-2001.03 | 5MT | F | L/R | Bus FWD F8Q 600, F8Q 606 | | GDS50006 | Drive Shaft | | 23 | 27 | 56.3 | 109 | 712.5 | |
| | 1997.06-2001.03 | MT | F | L/R | Bus FWD F8Q 600, F8Q 606 | | GDS44006 | Drive Shaft | | 25 | 27 | 56.3 | 110.5 | 713.5 | |
| | 1997.06-2001.03 | | F | L/R | Bus FWD F8Q 600, F8Q 606 | | GCO50027 | Outer Joint | | 23 | 25 | 56.3 | 109 | 56 | O |
| | 1997.06-2001.03 | 5MT | F | L/R | Van FWD F8Q 600 (02.99-03.01), F8Q 606 (06.97-01.99) | | GDS50006 | Drive Shaft | | 23 | 27 | 56.3 | 109 | 712.5 | |
| | 1997.06-2001.03 | MT | F | L/R | Van FWD F8Q 600 (02.99-03.01), F8Q 606 (06.97-01.99) | | GDS44006 | Drive Shaft | | 25 | 27 | 56.3 | 110.5 | 713.5 | |
| 2.1 (47 kw) | 1994.06-1997.10 | 5MT | F | L/R | Van FWD J8S 620 (06.94-.), J8S 758 (06.94-.) | | GDS50006 | Drive Shaft | | 23 | 27 | 56.3 | 109 | 712.5 | |
| | 1994.06-1997.10 | MT | F | L/R | Van FWD J8S 620 (06.94-.), J8S 758 (06.94-.) | Date From:1994.09 | GDS44006 | Drive Shaft | | 25 | 27 | 56.3 | 110.5 | 713.5 | |
| | 1994.06-1997.10 | MT | F | L/R | Van FWD J8S 620 (06.94-.), J8S 758 (06.94-.) | | GDS50183 | Drive Shaft | | 25 | 27 | 56.3 | 110.5 | 716 | |
| | 1994.06-1997.10 | | F | L/R | Van FWD J8S 620 (06.94-.), J8S 758 (06.94-.) | | GCO50027 | Outer Joint | | 23 | 25 | 56.3 | 109 | 56 | O |
| 2.2 (74 kw) | 1994.06-1997.10 | 5MT | F | L/R | Van FWD J7T 600 (06.94-.) | | GDS50006 | Drive Shaft | | 23 | 27 | 56.3 | 109 | 712.5 | |
| | 1994.06-1997.10 | MT | F | L/R | Van FWD J7T 600 (06.94-.) | Date From:1994.09 | GDS44006 | Drive Shaft | | 25 | 27 | 56.3 | 110.5 | 713.5 | |
| | 1994.06-1997.10 | MT | F | L/R | Van FWD J7T 600 (06.94-.) | | GDS50183 | Drive Shaft | | 25 | 27 | 56.3 | 110.5 | 716 | |
| | 1994.06-1997.10 | | F | L/R | Van FWD J7T 600 (06.94-.) | | GCO50027 | Outer Joint | | 23 | 25 | 56.3 | 109 | 56 | O |
| 2.5 (55 kw) | 1989.05-2001.03 | MT | F | L/R | Bus FWD 8140.67.2500, 8140.67.2580, 8140.67.2680, S8U 750 (05.89-.), S8U 752 (05.89-.), S8U 758 | Date from:1999.02 | GDS44006 | Drive Shaft | | 25 | 27 | 56.3 | 110.5 | 713.5 | |
| **Trafic V1100** | | | | | | | | | | | | | | | |
| 2.2 (74 kw) | 1994.06-1997.10 | 5MT | F | L/R | Bus 4WD J7T 600 (06.94-.) | | GDS44006 | Drive Shaft | | 25 | 27 | 56.3 | 110.5 | 713.5 | |
| | 1994.06-1997.10 | | F | L/R | Bus 4WD J7T 600 (06.94-.) | | GCO50027 | Outer Joint | | 23 | 25 | 56.3 | 109 | 56 | O |
| | 1994.06-1997.10 | 5MT | F | L/R | Van 4WD J7T 600 (06.94-.) | | GDS44006 | Drive Shaft | | 25 | 27 | 56.3 | 110.5 | 713.5 | |
| | 1994.06-1997.10 | MT | F | | Van 4WD J7T 600 (06.94-.) | | GDS50183 | Drive Shaft | | 25 | 27 | 56.3 | 110.5 | 716 | |
| | 1994.06-1997.10 | | F | L/R | Van 4WD J7T 600 (06.94-.) | | GCO50027 | Outer Joint | | 23 | 25 | 56.3 | 109 | 56 | O |
| 2.5 (55 kw) | 1989.08-2001.03 | 5MT | F | L/R | Bus 4WD 8140.67.2500, 8140.67.2580, 8140.67.2680, S8U 750 (05.89-.), S8U 752 (05.89-.), S8U 758 | | GDS44006 | Drive Shaft | | 25 | 27 | 56.3 | 110.5 | 713.5 | |
| **Trafic V1400** | | | | | | | | | | | | | | | |
| 2.2 (74 kw) | 1994.09-1998.04 | 5MT | F | L/R | Platform/Chassis 4WD J7T 600 | Date to:1997.10 | GDS50006 | Drive Shaft | | 23 | 27 | 56.3 | 109 | 712.5 | |
| | 1994.09-1998.04 | MT | F | | Platform/Chassis 4WD J7T 600 | | GDS50183 | Drive Shaft | | 25 | 27 | 56.3 | 110.5 | 716 | |
| | 1994.09-1998.04 | | F | L/R | Platform/Chassis 4WD J7T 600 | Date to:1997.10 | GDS44006 | Drive Shaft | | 25 | 27 | 56.3 | 110.5 | 713.5 | |
| | 1994.09-1998.04 | | F | L/R | Platform/Chassis 4WD J7T 600 | | GCO50027 | Outer Joint | | 23 | 25 | 56.3 | 109 | 56 | O |
| 2.5 (55 kw) | 1989.05-2001.03 | MT | F | L/R | Van 4WD 8140.67.2500, 8140.67.2580, S8U 750 (05.89-.), S8U 752 (05.89-.) | Date to:1994.08 | GDS44006 | Drive Shaft | | 25 | 27 | 56.3 | 110.5 | 713.5 | |
| **Twingo** | | | | | | | | | | | | | | | |
| 0.9 (66 kw) | 2014.09-2019.04 | 5MT | R | L | Hatchback RWD H4B 401 | | GDS82518 | Drive Shaft | | 33 | 26 | 49.2 | 44.5 | 570 | |
| | 2014.09-2019.04 | 5MT | R | R | Hatchback RWD H4B 401 | | GDS82519 | Drive Shaft | | 33 | 26 | 49.2 | 44.5 | 803 | |
| | 2014.09-2019.04 | 5MT | R | L/R | Hatchback RWD H4B 401 | | GCI81907 | Inner Joint | | 26 | 20 | 39.95 | 64 | 100 | |
| | 2014.09-2019.04 | 5MT/6DCT | R | L/R | Hatchback RWD H4B 401 | | GCO82066 | Outer Joint | | 33 | 20 | 49.2 | 44.5 | 52 | M |
| | 2014.09-2019.04 | 6DCT | R | L | Hatchback RWD H4B 401 | | GDS57936 | Drive Shaft | | 33 | 33 | 49.2 | 44.5 | 502 | |
| | 2014.09-2019.04 | 6DCT | R | R | Hatchback RWD H4B 401 | | GDS57935 | Drive Shaft | | 33 | 33 | 49.2 | 44.5 | 874 | |
| | 2014.09-2019.04 | 6DCT | R | L | Hatchback RWD H4B 401 | | GCI83945 | Inner Joint | | 33 | 20 | 40 | 60 | 114 | |
| | 2014.09-2019.04 | 6DCT | R | R | Hatchback RWD H4B 401 | | GCI83944 | Inner Joint | | 33 | 20 | 40 | 85 | 152 | |
| | 2018.08-2019.04 | 5MT | R | L | Hatchback RWD H4B 451 | | GDS82518 | Drive Shaft | | 33 | 26 | 49.2 | 44.5 | 570 | |
| | 2018.08-2019.04 | 5MT | R | R | Hatchback RWD H4B 451 | | GDS82519 | Drive Shaft | | 33 | 26 | 49.2 | 44.5 | 803 | |
| | 2018.08-2019.04 | 5MT | R | L/R | Hatchback RWD H4B 451 | | GCO82066 | Outer Joint | | 33 | 20 | 49.2 | 44.5 | 52 | M |
| | 2018.08-2019.04 | 5MT | R | L/R | Hatchback RWD H4B 451 | | GCI81907 | Inner Joint | | 26 | 20 | 39.95 | 64 | 100 | |
| 0.9 (68 kw) | 2019.03-2021.01 | 5MT | R | L | Hatchback RWD H4B 453 | | GDS82518 | Drive Shaft | | 33 | 26 | 49.2 | 44.5 | 570 | |
| | 2019.03-2021.01 | 5MT | R | R | Hatchback RWD H4B 453 | | GDS82519 | Drive Shaft | | 33 | 26 | 49.2 | 44.5 | 803 | |
| | 2019.03-2021.01 | 5MT | R | L/R | Hatchback RWD H4B 453 | | GCI81907 | Inner Joint | | 26 | 20 | 39.95 | 64 | 100 | |
| | 2019.03-2021.01 | 5MT/6DCT | R | L/R | Hatchback RWD H4B 453 | | GCO82066 | Outer Joint | | 33 | 20 | 49.2 | 44.5 | 52 | M |
| | 2019.03-2021.01 | 6DCT | R | L | Hatchback RWD H4B 453 | | GDS57936 | Drive Shaft | | 33 | 33 | 49.2 | 44.5 | 502 | |
| | 2019.03-2021.01 | 6DCT | R | R | Hatchback RWD H4B 453 | | GDS57935 | Drive Shaft | | 33 | 33 | 49.2 | 44.5 | 874 | |
| | 2019.03-2021.01 | 6DCT | R | L | Hatchback RWD H4B 453 | | GCI83945 | Inner Joint | | 33 | 20 | 40 | 60 | 114 | |
| | 2019.03-2021.01 | 6DCT | R | R | Hatchback RWD H4B 453 | | GCI83944 | Inner Joint | | 33 | 20 | 40 | 85 | 152 | |
| 0.9 (80 kw) | 2016.11-2019.04 | 5MT | R | L | Hatchback RWD H4B 401 | | GDS82518 | Drive Shaft | | 33 | 26 | 49.2 | 44.5 | 570 | |
| | 2016.11-2019.04 | 5MT | R | R | Hatchback RWD H4B 401 | | GDS82519 | Drive Shaft | | 33 | 26 | 49.2 | 44.5 | 803 | |

| | YEAR | TRANSM. | F/R | L/R | BODY STYLE & DRIVE TYPE & ENGINE | REMARKS | G-AP Ref. | PRODUCT | ABS | Technical Specifications A | B | C | H | L | P |
|---|---|---|---|---|---|---|---|---|---|---|---|---|---|---|---|
| **RENAULT** **Twingo** | | | | | | | | | | | | | | | |
| 0.9 (80 kw) | 2016.11-2019.04 | 5MT | R | L/R | Hatchback RWD H4B 401 | | GCI81907 | Inner Joint | | 26 | 20 | 39.95 | 64 | 100 | |
| | 2016.11-2019.04 | 5MT/6DCT | R | L/R | Hatchback RWD H4B 401 | | GCO82066 | Outer Joint | | 33 | 20 | 49.2 | 44.5 | 52 | M |
| | 2016.11-2019.04 | 6DCT | R | L | Hatchback RWD H4B 401 | | GDS57936 | Drive Shaft | | 33 | 33 | 49.2 | 44.5 | 502 | |
| | 2016.11-2019.04 | 6DCT | R | R | Hatchback RWD H4B 401 | | GDS57935 | Drive Shaft | | 33 | 33 | 49.2 | 44.5 | 874 | |
| | 2016.11-2019.04 | 6DCT | R | L | Hatchback RWD H4B 401 | | GCI83945 | Inner Joint | | 33 | 20 | 40 | 60 | 114 | |
| | 2016.11-2019.04 | 6DCT | R | R | Hatchback RWD H4B 401 | | GCI83944 | Inner Joint | | 33 | 20 | 40 | 85 | 152 | |
| 1.0 (48 kw) | 2019.03-2024.07 | 5MT | R | L | Hatchback RWD B4D 403;B4D 413 | | GDS82518 | Drive Shaft | | 33 | 26 | 49.2 | 44.5 | 570 | |
| | 2019.03-2024.07 | 5MT | R | R | Hatchback RWD B4D 403;B4D 413 | | GDS82519 | Drive Shaft | | 33 | 26 | 49.2 | 44.5 | 803 | |
| | 2019.03-2024.07 | 5MT | R | L/R | Hatchback RWD B4D 403;B4D 413 | | GCO82066 | Outer Joint | | 33 | 20 | 49.2 | 44.5 | 52 | M |
| | 2019.03-2024.07 | 5MT | R | L/R | Hatchback RWD B4D 403;B4D 413 | | GCI81907 | Inner Joint | | 26 | 20 | 39.95 | 64 | 100 | |
| 1.0 (51 kw) | 2015.09-2019.04 | 5MT | R | L | Hatchback RWD H4D 400 | | GDS82518 | Drive Shaft | | 33 | 26 | 49.2 | 44.5 | 570 | |
| | 2015.09-2019.04 | 5MT | R | R | Hatchback RWD H4D 400 | | GDS82519 | Drive Shaft | | 33 | 26 | 49.2 | 44.5 | 803 | |
| | 2015.09-2019.04 | 5MT | R | L/R | Hatchback RWD H4D 400 | | GCO82066 | Outer Joint | | 33 | 20 | 49.2 | 44.5 | 52 | M |
| | 2015.09-2019.04 | 5MT | R | L/R | Hatchback RWD H4D 400 | | GCI81907 | Inner Joint | | 26 | 20 | 39.95 | 64 | 100 | |
| 1.0 (52 kw) | 2014.09-2019.04 | 5MT | R | L | Hatchback RWD H4D 400 | | GDS82518 | Drive Shaft | | 33 | 26 | 49.2 | 44.5 | 570 | |
| | 2014.09-2019.04 | 5MT | R | R | Hatchback RWD H4D 400 | | GDS82519 | Drive Shaft | | 33 | 26 | 49.2 | 44.5 | 803 | |
| | 2014.09-2019.04 | 5MT | R | L/R | Hatchback RWD H4D 400 | | GCI81907 | Inner Joint | | 26 | 20 | 39.95 | 64 | 100 | |
| | 2014.09-2019.04 | 5MT/6DCT | R | L/R | Hatchback RWD H4D 400 | | GCO82066 | Outer Joint | | 33 | 20 | 49.2 | 44.5 | 52 | M |
| | 2014.09-2019.04 | 6DCT | R | L | Hatchback RWD H4D 400 | | GDS57936 | Drive Shaft | | 33 | 33 | 49.2 | 44.5 | 502 | |
| | 2014.09-2019.04 | 6DCT | R | R | Hatchback RWD H4D 400 | | GDS57935 | Drive Shaft | | 33 | 33 | 49.2 | 44.5 | 874 | |
| | 2014.09-2019.04 | 6DCT | R | L | Hatchback RWD H4D 400 | | GCI83945 | Inner Joint | | 33 | 20 | 40 | 60 | 114 | |
| | 2014.09-2019.04 | 6DCT | R | R | Hatchback RWD H4D 400 | | GCI83944 | Inner Joint | | 33 | 20 | 40 | 85 | 152 | |
| 1.0 (54 kw) | 2019.03-2021.01 | 5MT | R | L | Hatchback RWD B4D 403;B4D 413 | | GDS82518 | Drive Shaft | | 33 | 26 | 49.2 | 44.5 | 570 | |
| | 2019.03-2021.01 | 5MT | R | R | Hatchback RWD B4D 403;B4D 413 | | GDS82519 | Drive Shaft | | 33 | 26 | 49.2 | 44.5 | 803 | |
| | 2019.03-2021.01 | 5MT | R | L/R | Hatchback RWD B4D 403;B4D 413 | | GCO82066 | Outer Joint | | 33 | 20 | 49.2 | 44.5 | 52 | M |
| | 2019.03-2021.01 | 5MT | R | L/R | Hatchback RWD B4D 403;B4D 413 | | GCI81907 | Inner Joint | | 26 | 20 | 39.95 | 64 | 100 | |
| 1.2 (40 kw) | 1993.03-1996.06 | MT | F | L | Hatchback Van FWD C3G700/C3G702 | | GDS50102 | Drive Shaft | 38T | 21 | | 57 | 84.5 | 625.7 | |
| | 1993.03-1996.06 | MT | F | L | Hatchback Van FWD C3G700/C3G702 | | GDS50150 | Drive Shaft | | 21 | 30 | 49.8 | 83.5 | 623 | |
| | 1993.03-1996.06 | MT | F | R | Hatchback Van FWD C3G700/C3G702 | inner teeth of wheel side:22 | GDS50095 | Drive Shaft | | 21 | 23 | 46.2 | 80.5 | 734 | |
| | 1993.03-1996.06 | MT | F | R | Hatchback Van FWD C3G700/C3G702 | For Engine code:D4F702;inner teeth of wheel side:22 | GDS50173 | Drive Shaft | | 21 | 23 | 57 | 84.5 | 743 | |
| | 1993.03-1996.06 | MT | F | R | Hatchback Van FWD C3G700/C3G702 | | GDS50359 | Drive Shaft | 38T | 21 | 23 | 57 | 84 | 739 | |
| | 1993.03-1997.08 | 5MT | F | R | Hatchback FWD C3G700/C3G702 | Inner teeth of wheel side:30 | GDS50173 | Drive Shaft | | 21 | 23 | 57 | 84.5 | 743 | |
| | 1993.03-1997.08 | MT | F | L | Hatchback FWD C3G700/C3G702 | Trans. code:JB0/1 | GDS50102 | Drive Shaft | 38T | 21 | | 57 | 84.5 | 625.7 | |
| | 1993.03-1997.08 | MT | F | R | Hatchback FWD C3G700/C3G702 | Trans. code:JB0/1;Inner teeth of wheel side:22 | GDS50095 | Drive Shaft | | 21 | 23 | 46.2 | 80.5 | 734 | |
| | 1993.03-1997.08 | MT | F | R | Hatchback FWD C3G700/C3G702 | Trans. code:JB0/1 | GDS50359 | Drive Shaft | 38T | 21 | 23 | 57 | 84 | 739 | |
| | 1996.05-2007.03 | AT/MT | F | R | Hatchback FWD D7F700/D7F701/D7F703/D7F706 | | GDS50438 | Drive Shaft | 44T | 21 | 23 | 52.3 | 84.5 | 740 | |
| | 1996.05-2007.03 | AT/MT | F | R | Hatchback FWD D7F700/D7F701/D7F703/D7F706 | | GCO50140 | Outer Joint | 44T | 21 | 28 | 52.3 | 84.5 | 51.5 | I |
| | 1996.05-2007.03 | AT/MT | F | R | Hatchback FWD D7F700/D7F701/D7F703/D7F706 | | GCI50008 | Inner Joint | | 23 | 30 | 36.3 | | 120.7 | |
| | 1996.05-2007.03 | MT | F | L | Hatchback FWD D7F700/D7F701/D7F703/D7F706 | | GDS50150 | Drive Shaft | | 21 | 30 | 49.8 | 83.5 | 623 | |
| | 1996.05-2007.03 | MT | F | R | Hatchback FWD D7F700/D7F701/D7F703/D7F706 | | GDS50095 | Drive Shaft | | 21 | 23 | 46.2 | 80.5 | 734 | |
| 1.2 (43 kw) | 1996.05-2004.08 | 5AT/5MT | F | R | Hatchback Van FWD D7F700/D7F702/D7F703/D7F704/D7F708 | For Engine Code:D7F703/D7F704,Date From:2002.11 | GCO50140 | Outer Joint | 44T | 21 | 28 | 52.3 | 84.5 | 51.5 | I |
| | 1996.05-2004.08 | 5AT/5MT | F | R | Hatchback Van FWD D7F700/D7F702/D7F703/D7F704/D7F708 | For Engine Code:D7F703/D7F704,Date From:2002.11 | GCI50008 | Inner Joint | | 23 | 30 | 36.3 | | 120.7 | |
| | 1996.05-2007.06 | AT/MT | F | R | Hatchback FWD D7F700/D7F701/D7F702/D7F703/D7F704/D7F708 | | GDS50359 | Drive Shaft | 38T | 21 | 23 | 57 | 84 | 739 | |
| | 1996.05-2007.06 | AT/MT | F | R | Hatchback FWD D7F700/D7F701/D7F702/D7F703/D7F704/D7F708 | | GDS50438 | Drive Shaft | 44T | 21 | 23 | 52.3 | 84.5 | 740 | |
| | 1996.05-2007.06 | MT | F | L | Hatchback FWD D7F700/D7F701/D7F702/D7F703/D7F704/D7F708 | | GDS50102 | Drive Shaft | 38T | 21 | | 57 | 84.5 | 625.7 | |
| | 1996.05-2007.06 | MT | F | L | Hatchback FWD D7F700/D7F701/D7F702/D7F703/D7F704/D7F708 | | GDS50150 | Drive Shaft | | 21 | 30 | 49.8 | 83.5 | 623 | |
| | 1996.05-2007.06 | MT | F | R | Hatchback FWD D7F700/D7F701/D7F702/D7F703/D7F704/D7F708 | Inner teeth of wheel side:22 | GDS50095 | Drive Shaft | | 21 | 23 | 46.2 | 80.5 | 734 | |
| | 2000.09-2007.06 | 5MT | F | L | Hatchback FWD D7F704/D7F708 | Trans. code:JB1 | GDS50102 | Drive Shaft | 38T | 21 | | 57 | 84.5 | 625.7 | |
| | 2000.09-2007.06 | 5MT | F | R | Hatchback FWD D7F704/D7F708 | Trans. code:JB1 | GDS50095 | Drive Shaft | | 21 | 23 | 46.2 | 80.5 | 734 | |
| | 2000.09-2007.06 | 5MT | F | R | Hatchback FWD D7F704/D7F708 | Trans. code:JB1 | GDS50359 | Drive Shaft | 38T | 21 | 23 | 57 | 84 | 739 | |
| | 2000.09-2007.06 | MT | F | L | Hatchback FWD D7F704/D7F708 | Date to:2007.05 | GDS50150 | Drive Shaft | | 21 | 30 | 49.8 | 83.5 | 623 | |
| | 2000.09-2007.06 | MT | F | R | Hatchback FWD D7F704/D7F708 | Trans. code:JB0/1-MB1 | GCO50140 | Outer Joint | 44T | 21 | 28 | 52.3 | 84.5 | 51.5 | I |
| | 2000.09-2007.06 | MT | F | R | Hatchback FWD D7F704/D7F708 | Trans. code:JB0/1-MB1 | GCI50008 | Inner Joint | | 23 | 30 | 36.3 | | 120.7 | |
| | 2000.09-2007.06 | MT/AT | F | L | Hatchback FWD D7F704/D7F708 | Trans. code:JB0/1-MB1 | GDS50401 | Drive Shaft | 44T | 21 | | 57 | 84 | 629 | |
| | 2000.09-2007.06 | MT/AT | F | R | Hatchback FWD D7F704/D7F708 | Trans. code:JB0/1-MB1 | GDS50438 | Drive Shaft | 44T | 21 | 23 | 52.3 | 84.5 | 740 | |
| | 2007.03-2014.09 | 5MT | F | L | Hatchback FWD D7F 800 | | GDS50544 | Drive Shaft | | 23 | 30 | 49 | 83.5 | 631 | |
| | 2007.03-2014.09 | 5MT | F | R | Hatchback FWD D7F 800 | | GDS50542 | Drive Shaft | | 23 | 23 | 49 | 83.5 | 721 | |
| | 2007.03-2014.09 | 5MT | F | L/R | Hatchback FWD D7F 800 | | GCO50112 | Outer Joint | | 23 | 28 | 49 | 83.5 | 54.5 | I |
| 1.2 (44 kw) | 2000.09-2007.06 | AT/MT | F | L | Hatchback FWD D7F704/D7F708 | Date from:2005.01 | GDS50102 | Drive Shaft | 38T | 21 | | 57 | 84.5 | 625.7 | |
| | 2000.09-2007.06 | AT/MT | F | L | Hatchback FWD D7F704/D7F708 | | GDS50150 | Drive Shaft | | 21 | 30 | 49.8 | 83.5 | 623 | |
| | 2000.09-2007.06 | AT/MT | F | L | Hatchback FWD D7F704/D7F708 | Date from:2005.01 | GDS50401 | Drive Shaft | 44T | 21 | | 57 | 84 | 629 | |
| | 2000.09-2007.06 | AT/MT | F | R | Hatchback FWD D7F704/D7F708 | Inner teeth of wheel side:22 | GDS50095 | Drive Shaft | | 21 | 23 | 46.2 | 80.5 | 734 | |
| | 2000.09-2007.06 | AT/MT | F | R | Hatchback FWD D7F704/D7F708 | Date from:2005.01 | GDS50359 | Drive Shaft | 38T | 21 | 23 | 57 | 84 | 739 | |
| | 2000.09-2007.06 | AT/MT | F | R | Hatchback FWD D7F704/D7F708 | Date from:2005.01 | GDS50438 | Drive Shaft | 44T | 21 | 23 | 52.3 | 84.5 | 740 | |
| | 2000.09-2007.06 | AT/MT | F | R | Hatchback FWD D7F704/D7F708 | | GCO50140 | Outer Joint | 44T | 21 | 28 | 52.3 | 84.5 | 51.5 | I |

| | YEAR | TRANSM. | F/R | L/R | BODY STYLE & DRIVE TYPE & ENGINE | REMARKS | G-AP Ref. | PRODUCT | ABS | Technical Specifications A | B | C | H | L | P |
|---|---|---|---|---|---|---|---|---|---|---|---|---|---|---|---|
| **RENAULT** | | | | | | | | | | | | | | | |
| **Twingo** | | | | | | | | | | | | | | | |
| 1.2 (44 kw) | 2000.09-2007.06 | AT/MT | F | R | Hatchback FWD D7F704/D7F708 | | GCI50008 | Inner Joint | | 23 | 30 | 36.3 | | 120.7 | |
| | 2004.08-2007.06 | MT | F | L | Hatchback FWD D4F708 | Trans. code:JB0/1 | GDS50150 | Drive Shaft | | 21 | 30 | 49.8 | 83.5 | 623 | |
| | 2004.08-2007.06 | MT | F | L | Hatchback FWD D4F708 | | GDS50401 | Drive Shaft | 44T | 21 | | 57 | 84 | 629 | |
| | 2004.08-2007.06 | MT | F | R | Hatchback FWD D4F708 | | GDS50438 | Drive Shaft | 44T | 21 | 23 | 52.3 | 84.5 | 740 | |
| | 2004.08-2007.06 | MT | F | R | Hatchback FWD D4F708 | For Engine Code:D7F703/D7F704,Date From:2002.11 | GCO50140 | Outer Joint | 44T | 21 | 28 | 52.3 | 84.5 | 51.5 | I |
| | 2004.08-2007.06 | MT | F | R | Hatchback FWD D4F708 | | GCI50008 | Inner Joint | | 23 | 30 | 36.3 | | 120.7 | |
| 1.2 (55 kw) | 2001.01-2012.06 | 5AT/5MT | F | L | Hatchback FWD D4F702/D4F708 | For Engine code:D4F702 | GDS50401 | Drive Shaft | 44T | 21 | | 57 | 84 | 629 | |
| | 2001.01-2012.06 | 5AT/5MT | F | R | Hatchback FWD D4F702/D4F708 | For Engine Code:D4F708 | GDS50438 | Drive Shaft | 44T | 21 | 23 | 52.3 | 84.5 | 740 | |
| | 2001.01-2012.06 | 5AT/5MT | F | R | Hatchback FWD D4F702/D4F708 | For Engine Code:D4F708 | GCO50140 | Outer Joint | 44T | 21 | 28 | 52.3 | 84.5 | 51.5 | I |
| | 2001.01-2012.06 | 5AT/5MT | F | R | Hatchback FWD D4F702/D4F708 | For Engine Code:D4F708 | GCI50008 | Inner Joint | | 23 | 30 | 36.3 | | 120.7 | |
| | 2001.01-2012.06 | AT/MT | F | L | Hatchback FWD D4F702/D4F708 | Engine code:D4F702 | GDS50150 | Drive Shaft | | 21 | 30 | 49.8 | 83.5 | 623 | |
| | 2007.03-2014.09 | AT | F | L | Hatchback FWD D4F 772;D4F 770 | | GDS50591 | Drive Shaft | | 23 | 30 | 49 | 83.5 | 631 | |
| | 2007.03-2014.09 | AT/MT | F | R | Hatchback FWD D4F 772;D4F 770 | | GDS50542 | Drive Shaft | | 23 | 23 | 49 | 83.5 | 721 | |
| | 2007.03-2014.09 | AT/MT | F | L/R | Hatchback FWD D4F 772;D4F 770 | | GCO50112 | Outer Joint | | 23 | 28 | 49 | 83.5 | 54.5 | I |
| | 2007.03-2014.09 | MT | F | L | Hatchback FWD D4F 772;D4F 770 | | GDS50544 | Drive Shaft | | 23 | 30 | 49 | 83.5 | 631 | |
| | 2010.09-2014.09 | MT | F | R | Hatchback Van FWD D4F 770 | | GDS50542 | Drive Shaft | | 23 | 23 | 49 | 83.5 | 721 | |
| | 2010.09-2014.09 | | F | L | Hatchback Van FWD D4F 770 | | GDS50544 | Drive Shaft | | 23 | 30 | 49 | 83.5 | 631 | |
| | 2010.09-2014.09 | | F | L/R | Hatchback Van FWD D4F 770 | | GCO50112 | Outer Joint | | 23 | 28 | 49 | 83.5 | 54.5 | I |
| 1.2 (56 kw) | 2007.03-2010.10 | 5AT | F | L | Hatchback FWD D4F 772 | | GDS50591 | Drive Shaft | | 23 | 30 | 49 | 83.5 | 631 | |
| | 2007.03-2010.10 | 5AT | F | R | Hatchback FWD D4F 772 | | GDS50542 | Drive Shaft | | 23 | 23 | 49 | 83.5 | 721 | |
| | 2007.03-2010.10 | AT/MT | F | L/R | Hatchback FWD D4F 772 | | GCO50112 | Outer Joint | | 23 | 28 | 49 | 83.5 | 54.5 | I |
| | 2007.03-2010.10 | MT | F | L | Hatchback FWD D4F 772 | | GDS50544 | Drive Shaft | | 23 | 30 | 49 | 83.5 | 631 | |
| 1.2 (74 kw) | 2007.03-2014.09 | 5MT | F | L | Hatchback FWD D4F 780;D4F 782 | | GDS50539 | Drive Shaft | | 23 | 26 | 49 | 86 | 611 | |
| | 2007.03-2014.09 | 5MT | F | L | Hatchback FWD D4F 780;D4F 782 | | GCI50048 | Inner Joint | | 26 | 30 | 40 | 64 | 121 | |
| | 2007.03-2014.09 | AT/MT | F | L/R | Hatchback FWD D4F 780;D4F 782 | | GCO50112 | Outer Joint | | 23 | 28 | 49 | 83.5 | 54.5 | I |
| | 2007.03-2014.09 | | F | L | Hatchback FWD D4F 780;D4F 782 | | GCO50092 | Outer Joint | | 23 | 29 | 49 | 86 | 57 | I |
| 1.2 (75 kw) | 2011.02-2013.08 | 5MT | F | L | Hatchback FWD D4F 780;D4F 782 | | GDS50539 | Drive Shaft | | 23 | 26 | 49 | 86 | 611 | |
| | 2011.02-2013.08 | 5MT | F | L | Hatchback FWD D4F 780;D4F 782 | | GCI50048 | Inner Joint | | 26 | 30 | 40 | 64 | 121 | |
| | 2011.02-2013.08 | AT/MT | F | L/R | Hatchback FWD D4F 780;D4F 782 | | GCO50112 | Outer Joint | | 23 | 28 | 49 | 83.5 | 54.5 | I |
| | 2011.02-2013.08 | | F | L | Hatchback FWD D4F 780;D4F 782 | | GCO50092 | Outer Joint | | 23 | 29 | 49 | 86 | 57 | I |
| 1.5 (47 kw) | 2007.03-2014.09 | 5MT | F | L | Hatchback FWD K9K 740 | | GDS50539 | Drive Shaft | | 23 | 26 | 49 | 86 | 611 | |
| | 2007.03-2014.09 | 5MT | F | R | Hatchback FWD K9K 740 | | GDS50538 | Drive Shaft | | 23 | 26 | 49 | 86 | 868 | |
| | 2007.03-2014.09 | MT | F | L | Hatchback FWD K9K 740 | | GCO50092 | Outer Joint | | 23 | 29 | 49 | 86 | 57 | I |
| | 2007.03-2014.09 | MT | F | L/R | Hatchback FWD K9K 740 | | GCO50112 | Outer Joint | | 23 | 28 | 49 | 83.5 | 54.5 | I |
| | 2007.03-2014.09 | MT | F | R | Hatchback FWD K9K 740 | Date to:2014.09 | GCI99169 | Inner Joint | | 26 | 30 | 33 | 326 | 95 | |
| 1.5 (55 kw) | 2010.10-2014.08 | 5MT | F | L | Hatchback FWD K9K 820 | | GDS84140 | Drive Shaft | | 23 | 26 | 49 | 83 | 608 | |
| | 2010.10-2014.08 | 5MT | F | R | Hatchback FWD K9K 820 | 8 balls | GDS84244 | Drive Shaft | | 23 | 26 | 49 | 83 | 862 | |
| | 2010.10-2014.08 | 5MT | F | L/R | Hatchback FWD K9K 820 | 8 balls | GCO50223 | Outer Joint | | 23 | 30 | 49 | 83 | 53.5 | I |
| | 2010.10-2014.08 | 5MT | F | L | Hatchback FWD K9K 820 | | GCI50134 | Inner Joint | | 26 | 30 | 40 | 64 | 96 | |
| | 2010.10-2014.08 | 5MT | F | R | Hatchback FWD K9K 820 | | GCI82656 | Inner Joint | | 26 | 30 | 33 | 326.5 | 89.5 | |
| | 2010.10-2014.08 | MT | F | R | Hatchback FWD K9K 820 | 6 balls | GDS50538 | Drive Shaft | | 23 | 26 | 49 | 86 | 868 | |
| | 2010.10-2014.08 | MT | F | L/R | Hatchback FWD K9K 820 | 6 balls | GCO50112 | Outer Joint | | 23 | 28 | 49 | 83.5 | 54.5 | I |
| | 2010.10-2014.09 | MT | F | L | Hatchback Van FWD K9K 820 | | GDS84140 | Drive Shaft | | 23 | 26 | 49 | 83 | 608 | |
| | 2010.10-2014.09 | MT | F | R | Hatchback Van FWD K9K 820 | | GDS84244 | Drive Shaft | | 23 | 26 | 49 | 83 | 862 | |
| | 2010.10-2014.09 | MT | F | L/R | Hatchback Van FWD K9K 820 | | GCO50223 | Outer Joint | | 23 | 30 | 49 | 83 | 53.5 | I |
| | 2010.10-2014.09 | MT | F | L | Hatchback Van FWD K9K 820 | | GCI50134 | Inner Joint | | 26 | 30 | 40 | 64 | 96 | |
| | 2010.10-2014.09 | MT | F | R | Hatchback Van FWD K9K 820 | | GCI82656 | Inner Joint | | 26 | 30 | 33 | 326.5 | 89.5 | |
| 1.5 (62 kw) | 2008.04-2014.09 | 5MT | F | R | Hatchback FWD K9K 718 | | GDS84244 | Drive Shaft | | 23 | 26 | 49 | 83 | 862 | |
| | 2008.04-2014.09 | MT | F | L/R | Hatchback FWD K9K 718 | | GCO50112 | Outer Joint | | 23 | 28 | 49 | 83.5 | 54.5 | I |
| 1.5 (63 kw) | 2010.10-2014.09 | 5MT | F | L | Hatchback FWD K9K 820 | | GDS84140 | Drive Shaft | | 23 | 26 | 49 | 83 | 608 | |
| | 2010.10-2014.09 | 5MT | F | R | Hatchback FWD K9K 820 | 8 balls | GDS84244 | Drive Shaft | | 23 | 26 | 49 | 83 | 862 | |
| | 2010.10-2014.09 | 5MT | F | L/R | Hatchback FWD K9K 820 | | GCO50223 | Outer Joint | | 23 | 30 | 49 | 83 | 53.5 | I |
| | 2010.10-2014.09 | 5MT | F | L | Hatchback FWD K9K 820 | | GCI50134 | Inner Joint | | 26 | 30 | 40 | 64 | 96 | |
| | 2010.10-2014.09 | 5MT | F | R | Hatchback FWD K9K 820 | | GCI82656 | Inner Joint | | 26 | 30 | 33 | 326.5 | 89.5 | |
| | 2010.10-2014.09 | MT | F | R | Hatchback FWD K9K 820 | | GDS50538 | Drive Shaft | | 23 | 26 | 49 | 86 | 868 | |
| | 2010.10-2014.09 | MT | F | L/R | Hatchback FWD K9K 820 | | GCO50112 | Outer Joint | | 23 | 28 | 49 | 83.5 | 54.5 | I |
| EV (60 kw) | 2020.05-2024.07 | ET | R | L | Hatchback RWD 5AL 605 | | GDS58206 | Drive Shaft | | 33 | 26 | 49.2 | 44.5 | 503 | |
| | 2020.05-2024.07 | ET | R | R | Hatchback RWD 5AL 605 | | GDS58207 | Drive Shaft | | 33 | 26 | 49.2 | 44.5 | 874 | |
| | 2020.05-2024.07 | ET | R | L/R | Hatchback RWD 5AL 605 | | GCO83864 | Outer Joint | | 33 | 20 | 49.2 | 44.5 | 52 | M |
| | 2020.05-2024.07 | ET | R | L/R | Hatchback RWD 5AL 605 | | GCI81907 | Inner Joint | | 26 | 20 | 39.95 | 64 | 100 | |
| **Twizy** | | | | | | | | | | | | | | | |
| EV (4 kw) | 2012.04- | ET | R | L/R | Hatchback RWD 3CG 400 | | GDS81123 | Drive Shaft | | 21 | 18 | 34.7 | 79 | 467 | |
| | 2012.04- | ET | R | L/R | Hatchback RWD 3CG 400 | | GCI81048 | Inner Joint | | 18 | 16 | 32.6 | | 80 | |
| | 2012.04- | ET | R | L/R | Hatchback RWD 3CG 400 | | GCI81314 | Inner Joint | | 21 | 16 | 34.7 | 79 | 57 | |
| EV (8 kw) | 2012.04- | AT | R | L/R | Hatchback RWD 3CG 400 | | GDS81123 | Drive Shaft | | 21 | 18 | 34.7 | 79 | 467 | |

| | YEAR | TRANSM. | F/R | L/R | BODY STYLE & DRIVE TYPE & ENGINE | REMARKS | G-AP Ref. | PRODUCT | ABS | Technical Specifications A | B | C | H | L | P |
|---|---|---|---|---|---|---|---|---|---|---|---|---|---|---|---|
| **RENAULT** | | | | | | | | | | | | | | | |
| **Twizy** | | | | | | | | | | | | | | | |
| EV (8 kw) | 2012.04- | ET | R | L/R | Hatchback RWD 3CG 400 | | GCI81048 | Inner Joint | | 18 | 16 | 32.6 | | 80 | |
| | 2012.04- | ET | R | L/R | Hatchback RWD 3CG 400 | | GCI81314 | Inner Joint | | 21 | 16 | 34.7 | 79 | 57 | |
| EV (9 kw) | 2020.06- | ET | R | L/R | Hatchback RWD 3CG 400 | | GDS81123 | Drive Shaft | | 21 | 18 | 34.7 | 79 | 467 | |
| | 2020.06- | ET | R | L/R | Hatchback RWD 3CG 400 | | GCI81048 | Inner Joint | | 18 | 16 | 32.6 | | 80 | |
| | 2020.06- | ET | R | L/R | Hatchback RWD 3CG 400 | | GCI81314 | Inner Joint | | 21 | 16 | 34.7 | 79 | 57 | |
| EV (13 kw) | 2012.04- | ET | R | L/R | Hatchback RWD 3CG 401 | | GDS81123 | Drive Shaft | | 21 | 18 | 34.7 | 79 | 467 | |
| | 2012.04- | ET | R | L/R | Hatchback RWD 3CG 401 | | GCI81048 | Inner Joint | | 18 | 16 | 32.6 | | 80 | |
| | 2012.04- | ET | R | L/R | Hatchback RWD 3CG 401 | | GCI81314 | Inner Joint | | 21 | 16 | 34.7 | 79 | 57 | |
| **Vel Satis** | | | | | | | | | | | | | | | |
| 2.0 (110 kw) | 2005.08-2009.08 | 6MT | F | L | Hatchback FWD M9R 760 | | GDS50493 | Drive Shaft | | 27 | 39 | 56.8 | 90 | 663 | |
| | 2005.08-2009.08 | 6MT | F | R | Hatchback FWD M9R 760 | | GDS50592 | Drive Shaft | | 27 | 39 | 56.8 | 90 | 1006 | |
| | 2005.08-2009.08 | 6MT | F | R | Hatchback FWD M9R 760 | | GCI81074 | Inner Joint | | 39 | 35 | | 363 | 88 | |
| | 2005.08-2009.08 | MT | F | R | Hatchback FWD M9R 760 | | GDS50631 | Drive Shaft | | 27 | 39 | 56.8 | 90 | 1013 | |
| | 2005.08-2009.08 | MT | F | R | Hatchback FWD M9R 760 | | GCI50087 | Inner Joint | | 39 | 35 | 30 | 367 | 89.5 | |
| | 2005.08-2009.08 | MT/6MT | F | R | Hatchback FWD M9R 760 | | GCO99291 | Outer Joint | | 27 | 37 | 56.8 | 90 | 73 | I |
| 2.0 (127 kw) | 2006.01-2009.08 | 6AT | F | L | Hatchback FWD M9R 760;M9R 762;M9R 763 | | GDS50572 | Drive Shaft | | 27 | 30 | 56.5 | 91 | 666 | |
| | 2006.01-2009.08 | 6AT | F | R | Hatchback FWD M9R 760;M9R 762;M9R 763 | | GDS50540 | Drive Shaft | | 27 | 30 | 56.5 | 91 | 979 | |
| | 2006.01-2009.08 | 6AT/6MT | F | R | Hatchback FWD M9R 760;M9R 762;M9R 763 | | GCI81074 | Inner Joint | | 39 | 35 | | 363 | 88 | |
| | 2006.01-2009.08 | 6MT | F | L | Hatchback FWD M9R 760;M9R 762;M9R 763 | | GDS50493 | Drive Shaft | | 27 | 39 | 56.8 | 90 | 663 | |
| | 2006.01-2009.08 | 6MT | F | R | Hatchback FWD M9R 760;M9R 762;M9R 763 | | GDS50592 | Drive Shaft | | 27 | 39 | 56.8 | 90 | 1006 | |
| | 2006.01-2009.08 | MT | F | R | Hatchback FWD M9R 760;M9R 762;M9R 763 | | GDS50631 | Drive Shaft | | 27 | 39 | 56.8 | 90 | 1013 | |
| | 2006.01-2009.08 | MT | F | R | Hatchback FWD M9R 760;M9R 762;M9R 763 | | GCI50087 | Inner Joint | | 39 | 35 | 30 | 367 | 89.5 | |
| | 2006.01-2009.08 | MT/6AT/6MT | F | R | Hatchback FWD M9R 760;M9R 762;M9R 763 | | GCO99291 | Outer Joint | | 27 | 37 | 56.8 | 90 | 73 | I |
| **Zoe** | | | | | | | | | | | | | | | |
| EV (57 kw) | 2017.12- | ET | F | L | Hatchback FWD 5AQ 601 | | GDS83931 | Drive Shaft | | 23 | 26 | 49 | 86 | 623 | |
| | 2017.12- | ET | F | R | Hatchback FWD 5AQ 601 | | GDS83932 | Drive Shaft | | 23 | 26 | 49 | 86 | 948 | |
| | 2017.12- | ET | F | L | Hatchback FWD 5AQ 601 | | GCI50057 | Inner Joint | | 26 | 22 | 40 | 64 | 104 | |
| EV (65 kw) | 2012.06- | ET | F | L | Hatchback FWD 5AM 450;5AQ 601 | Model code:BFMB | GDS83931 | Drive Shaft | | 23 | 26 | 49 | 86 | 623 | |
| | 2012.06- | ET | F | L | Hatchback FWD 5AM 450;5AQ 601 | Modelcode:BFMA | GDS84048 | Drive Shaft | | 23 | 33 | 49 | 85.5 | 665 | |
| | 2012.06- | ET | F | R | Hatchback FWD 5AM 450;5AQ 601 | Model code:BFMB | GDS83932 | Drive Shaft | | 23 | 26 | 49 | 86 | 948 | |
| | 2012.06- | ET | F | R | Hatchback FWD 5AM 450;5AQ 601 | Modelcode:BFMA | GDS84047 | Drive Shaft | | 23 | 33 | 49 | 85.5 | 903 | |
| | 2012.06- | ET | F | L/R | Hatchback FWD 5AM 450;5AQ 601 | Modelcode:BFMA | GCO81927 | Outer Joint | | 23 | 33 | 49 | 85.5 | 58.5 | I |
| | 2012.06- | ET | F | L/R | Hatchback FWD 5AM 450;5AQ 601 | Model code:BFMB | GCO82540 | Outer Joint | | 23 | 22 | 49 | 86 | 55 | I |
| | 2012.06- | ET | F | L | Hatchback FWD 5AM 450;5AQ 601 | For Type code:BFMB | GCI50057 | Inner Joint | | 26 | 22 | 40 | 64 | 104 | |
| | 2012.06- | ET | F | L | Hatchback FWD 5AM 450;5AQ 601 | Modelcode:BFMA | GCI82505 | Inner Joint | | 33 | 33 | 31.95 | 62.5 | 96 | |
| | 2012.06- | ET | F | R | Hatchback FWD 5AM 450;5AQ 601 | Model code:BFMB | GCI82425 | Inner Joint | | 26 | 22 | 33 | 330.5 | 82.5 | |
| | 2012.06- | ET | F | R | Hatchback FWD 5AM 450;5AQ 601 | Modelcode:BFMA | GCI82496 | Inner Joint | | 33 | 33 | 31.95 | 305 | 83 | |
| | 2019.04- | ET | F | L | Hatchback Van FWD 5AM 450;5AQ 601 | Model code:BFMB | GDS83931 | Drive Shaft | | 23 | 26 | 49 | 86 | 623 | |
| | 2019.04- | ET | F | L | Hatchback Van FWD 5AM 450;5AQ 601 | Modelcode:BFMA | GDS84048 | Drive Shaft | | 23 | 33 | 49 | 85.5 | 665 | |
| | 2019.04- | ET | F | R | Hatchback Van FWD 5AM 450;5AQ 601 | Model code:BFMB | GDS83932 | Drive Shaft | | 23 | 26 | 49 | 86 | 948 | |
| | 2019.04- | ET | F | R | Hatchback Van FWD 5AM 450;5AQ 601 | Modelcode:BFMA | GDS84047 | Drive Shaft | | 23 | 33 | 49 | 85.5 | 903 | |
| | 2019.04- | ET | F | L/R | Hatchback Van FWD 5AM 450;5AQ 601 | Modelcode:BFMA | GCO81927 | Outer Joint | | 23 | 33 | 49 | 85.5 | 58.5 | I |
| | 2019.04- | ET | F | L/R | Hatchback Van FWD 5AM 450;5AQ 601 | Model code:BFMB | GCO82540 | Outer Joint | | 23 | 22 | 49 | 86 | 55 | I |
| | 2019.04- | ET | F | L | Hatchback Van FWD 5AM 450;5AQ 601 | For Type code:BFMB | GCI50057 | Inner Joint | | 26 | 22 | 40 | 64 | 104 | |
| | 2019.04- | ET | F | L | Hatchback Van FWD 5AM 450;5AQ 601 | Modelcode:BFMA | GCI82505 | Inner Joint | | 33 | 33 | 31.95 | 62.5 | 96 | |
| | 2019.04- | ET | F | R | Hatchback Van FWD 5AM 450;5AQ 601 | Model code:BFMB | GCI82425 | Inner Joint | | 26 | 22 | 33 | 330.5 | 82.5 | |
| | 2019.04- | ET | F | R | Hatchback Van FWD 5AM 450;5AQ 601 | Modelcode:BFMA | GCI82496 | Inner Joint | | 33 | 33 | 31.95 | 305 | 83 | |
| EV (68 kw) | 2016.09- | ET | F | L | Hatchback FWD 5AQ 601 | | GDS83931 | Drive Shaft | | 23 | 26 | 49 | 86 | 623 | |
| | 2016.09- | ET | F | R | Hatchback FWD 5AQ 601 | | GDS83932 | Drive Shaft | | 23 | 26 | 49 | 86 | 948 | |
| | 2016.09- | ET | F | L/R | Hatchback FWD 5AQ 601 | | GCO82540 | Outer Joint | | 23 | 22 | 49 | 86 | 55 | I |
| | 2016.09- | ET | F | L | Hatchback FWD 5AQ 601 | | GCI50057 | Inner Joint | | 26 | 22 | 40 | 64 | 104 | |
| | 2016.09- | ET | F | R | Hatchback FWD 5AQ 601 | | GCI82425 | Inner Joint | | 26 | 22 | 33 | 330.5 | 82.5 | |
| | 2019.04- | ET | F | L | Hatchback Van FWD 5AQ 601 | | GDS83931 | Drive Shaft | | 23 | 26 | 49 | 86 | 623 | |
| | 2019.04- | ET | F | R | Hatchback Van FWD 5AQ 601 | | GDS83932 | Drive Shaft | | 23 | 26 | 49 | 86 | 948 | |
| | 2019.04- | ET | F | L/R | Hatchback Van FWD 5AQ 601 | | GCO82540 | Outer Joint | | 23 | 22 | 49 | 86 | 55 | I |
| | 2019.04- | ET | F | L | Hatchback Van FWD 5AQ 601 | | GCI50057 | Inner Joint | | 26 | 22 | 40 | 64 | 104 | |
| | 2019.04- | ET | F | R | Hatchback Van FWD 5AQ 601 | | GCI82425 | Inner Joint | | 26 | 22 | 33 | 330.5 | 82.5 | |
| EV (80 kw) | 2018.08- | ET | F | L | Hatchback FWD 5AQ 607;5AQ 605 | Engine Code:5AQ605 | GDS57883 | Drive Shaft | | 25 | 26 | 52.5 | 88.5 | 621 | |
| | 2018.08- | ET | F | L | Hatchback FWD 5AQ 607;5AQ 605 | Engine Code:5AQ607 | GDS83931 | Drive Shaft | | 23 | 26 | 49 | 86 | 623 | |
| | 2018.08- | ET | F | R | Hatchback FWD 5AQ 607;5AQ 605 | Engine Code:5AQ605 | GDS50607 | Drive Shaft | | 25 | 26 | 52.5 | 88.5 | 945 | |
| | 2018.08- | ET | F | R | Hatchback FWD 5AQ 607;5AQ 605 | Engine Code:5AQ607 | GDS83932 | Drive Shaft | | 23 | 26 | 49 | 86 | 948 | |
| | 2018.08- | ET | F | L/R | Hatchback FWD 5AQ 607;5AQ 605 | Engine Code:5AQ605 | GCO50162 | Outer Joint | | 25 | 23 | 52.5 | 88.5 | 60.5 | M |
| | 2018.08- | ET | F | L/R | Hatchback FWD 5AQ 607;5AQ 605 | Engine Code:5AQ607 | GCO82540 | Outer Joint | | 23 | 22 | 49 | 86 | 55 | I |
| | 2018.08- | ET | F | L | Hatchback FWD 5AQ 607;5AQ 605 | Engine Code:5AQ607 | GCI50057 | Inner Joint | | 26 | 22 | 40 | 64 | 104 | |
| | 2018.08- | ET | F | L | Hatchback FWD 5AQ 607;5AQ 605 | Engine Code:5AQ605 | GCI83909 | Inner Joint | | 26 | 23 | 39.95 | 64 | 104 | |

| | YEAR | TRANSM. | F/R | L/R | BODY STYLE & DRIVE TYPE & ENGINE | REMARKS | G-AP Ref. | PRODUCT | ABS | Technical Specifications A | B | C | H | L | P |
|---|---|---|---|---|---|---|---|---|---|---|---|---|---|---|---|
| **RENAULT** | | | | | | | | | | | | | | | |
| **Zoe** | | | | | | | | | | | | | | | |
| EV (80 kw) | 2018.08- | ET | F | R | Hatchback FWD 5AQ 607;5AQ 605 | Engine Code:5AQ605 | GCI50145 | Inner Joint | | 26 | 23 | 33 | 330.5 | 98 | |
| | 2018.08- | ET | F | R | Hatchback FWD 5AQ 607;5AQ 605 | Engine Code:5AQ607 | GCI82425 | Inner Joint | | 26 | 22 | 33 | 330.5 | 82.5 | |
| | 2019.04- | ET | F | L | Hatchback Van FWD 5AQ 607 | | GDS83931 | Drive Shaft | | 23 | 26 | 49 | 86 | 623 | |
| | 2019.04- | ET | F | R | Hatchback Van FWD 5AQ 607 | | GDS83932 | Drive Shaft | | 23 | 26 | 49 | 86 | 948 | |
| | 2019.04- | ET | F | L/R | Hatchback Van FWD 5AQ 607 | | GCO82540 | Outer Joint | | 23 | 22 | 49 | 86 | 55 | I |
| | 2019.04- | ET | F | L | Hatchback Van FWD 5AQ 607 | | GCI50057 | Inner Joint | | 26 | 22 | 40 | 64 | 104 | |
| | 2019.04- | ET | F | R | Hatchback Van FWD 5AQ 607 | | GCI82425 | Inner Joint | | 26 | 22 | 33 | 330.5 | 82.5 | |
| EV (100 kw) | 2019.09- | ET | F | L | Hatchback FWD 5AQ 605 | | GDS57883 | Drive Shaft | | 25 | 26 | 52.5 | 88.5 | 621 | |
| | 2019.09- | ET | F | R | Hatchback FWD 5AQ 605 | | GDS50607 | Drive Shaft | | 25 | 26 | 52.5 | 88.5 | 945 | |
| | 2019.09- | ET | F | L/R | Hatchback FWD 5AQ 605 | | GCO50162 | Outer Joint | | 25 | 23 | 52.5 | 88.5 | 60.5 | M |
| | 2019.09- | ET | F | L | Hatchback FWD 5AQ 605 | | GCI83909 | Inner Joint | | 26 | 23 | 39.95 | 64 | 104 | |
| | 2019.09- | ET | F | R | Hatchback FWD 5AQ 605 | | GCI50145 | Inner Joint | | 26 | 23 | 33 | 330.5 | 98 | |
| | 2019.10- | ET | F | L | Hatchback Van FWD 5AQ 605 | | GDS57883 | Drive Shaft | | 25 | 26 | 52.5 | 88.5 | 621 | |
| | 2019.10- | ET | F | R | Hatchback Van FWD 5AQ 605 | | GDS50607 | Drive Shaft | | 25 | 26 | 52.5 | 88.5 | 945 | |
| | 2019.10- | ET | F | L/R | Hatchback Van FWD 5AQ 605 | | GCO50162 | Outer Joint | | 25 | 23 | 52.5 | 88.5 | 60.5 | M |
| | 2019.10- | ET | F | L | Hatchback Van FWD 5AQ 605 | | GCI83909 | Inner Joint | | 26 | 23 | 39.95 | 64 | 104 | |
| | 2019.10- | ET | F | R | Hatchback Van FWD 5AQ 605 | | GCI50145 | Inner Joint | | 26 | 23 | 33 | 330.5 | 98 | |
| **RIICH** | | | | | | | | | | | | | | | |
| **M5** | | | | | | | | | | | | | | | |
| 1.3 (62 kw) | 2010.09-2014.12 | 5AMT | F | L | Saloon FWD SQR473F | Model year to:2011 | GDS82372 | Drive Shaft | 43T | 23 | 25 | 51 | 94 | 569 | |
| | 2010.09-2014.12 | 5AMT | F | L/R | Saloon FWD SQR473F | Model year to:2011 | GCO68005 | Outer Joint | 43T | 23 | 21 | 51 | 94 | 54 | I |
| **ROEWE (SAIC)** | | | | | | | | | | | | | | | |
| **350** | | | | | | | | | | | | | | | |
| 1.5 (80 kw) | 2010.04-2018.12 | 4AMT | F | L | Saloon FWD 15S4U | Model year from:2014,Model year to:2016 | GDS82200 | Drive Shaft | 48T | 25 | 23 | 52 | 90.5 | 656 | |
| | 2010.04-2018.12 | 4AMT | F | R | Saloon FWD 15S4U | Model year from:2014,Model year to:2016 | GDS82201 | Drive Shaft | 48T | 25 | 23 | 52 | 90.5 | 956 | |
| | 2010.04-2018.12 | 4AT | F | L | Saloon FWD 15S4U | | GDS82192 | Drive Shaft | 48T | 25 | 22 | 52 | 90.5 | 654 | |
| | 2010.04-2018.12 | 4AT | F | R | Saloon FWD 15S4U | | GDS82193 | Drive Shaft | 48T | 25 | 22 | 52 | 90.5 | 961 | |
| | 2010.04-2018.12 | 5MT | F | L | Saloon FWD 15S4U | Model year to:2012 | GDS82194 | Drive Shaft | 48T | 25 | 25 | 52 | 90.5 | 672 | |
| | 2010.04-2018.12 | 5MT | F | R | Saloon FWD 15S4U | Model year to:2012 | GDS82195 | Drive Shaft | 48T | 25 | 25 | 52 | 90.5 | 942 | |
| | 2010.04-2018.12 | 5MT | F | L/R | Saloon FWD 15S4U | Model year from:2012 | GCO81695 | Outer Joint | 48T | 25 | 23 | 52 | 90.5 | 56 | I |
| | 2010.04-2018.12 | 5MT | F | L | Saloon FWD 15S4U | Model year from:2012 | GCI81666 | Inner Joint | | 22 | 22 | 35 | 55.5 | 102.5 | |
| | 2010.04-2018.12 | 5MT | F | R | Saloon FWD 15S4U | Model year from:2012 | GCI81667 | Inner Joint | | 22 | 22 | 35 | 55.5 | 102.5 | |
| | 2010.04-2018.12 | 5MT/4AT | F | L/R | Saloon FWD 15S4U | Model year to:2012 | GCO81697 | Outer Joint | 48T | 25 | 22 | 52 | 90.5 | 58 | M |
| **360** | | | | | | | | | | | | | | | |
| 1.5 (80 kw) | 2015.09- | 4AMT | F | L | Saloon FWD 15S4U | Model year to:2017 | GDS82200 | Drive Shaft | 48T | 25 | 23 | 52 | 90.5 | 656 | |
| | 2015.09- | 4AMT | F | R | Saloon FWD 15S4U | Model year to:2017 | GDS82201 | Drive Shaft | 48T | 25 | 23 | 52 | 90.5 | 956 | |
| | 2015.09- | 5MT | F | L | Saloon FWD 15S4U | Model year to:2018 | GDS82194 | Drive Shaft | 48T | 25 | 25 | 52 | 90.5 | 672 | |
| | 2015.09- | 5MT | F | R | Saloon FWD 15S4U | Model year to:2018 | GDS82195 | Drive Shaft | 48T | 25 | 25 | 52 | 90.5 | 942 | |
| | 2015.09- | 5MT | F | L/R | Saloon FWD 15S4U | Model year to:2018 | GCO81695 | Outer Joint | 48T | 25 | 23 | 52 | 90.5 | 56 | I |
| | 2015.09- | 5MT | F | L | Saloon FWD 15S4U | Model year to:2018 | GCI81666 | Inner Joint | | 22 | 22 | 35 | 55.5 | 102.5 | |
| | 2015.09- | 5MT | F | R | Saloon FWD 15S4U | Model year to:2018 | GCI81667 | Inner Joint | | 22 | 22 | 35 | 55.5 | 102.5 | |
| **Clever** | | | | | | | | | | | | | | | |
| EV (33 kw) | 2022.03- | ET | F | L/R | Hatchback FWD TZ154XS1001 | | GDS84427 | Drive Shaft | 48T | 23 | 22 | 51 | 92 | 738 | |
| | 2022.03- | ET | F | L/R | Hatchback FWD TZ154XS1001 | | GCO82828 | Outer Joint | 48T | 23 | 20 | 51 | 92 | 47.5 | I |
| | 2022.03- | ET | F | L/R | Hatchback FWD TZ154XS1001 | | GCI82749 | Inner Joint | | 22 | 26 | 35 | 61 | 98.5 | |
| EV (37 kw) | 2020.04- | ET | F | L/R | Hatchback FWD TZ154XS1001 | Model year to:2022 | GDS84427 | Drive Shaft | 48T | 23 | 22 | 51 | 92 | 738 | |
| | 2020.04- | ET | F | L/R | Hatchback FWD TZ154XS1001 | Model year to:2022 | GCO82828 | Outer Joint | 48T | 23 | 20 | 51 | 92 | 47.5 | I |
| | 2020.04- | ET | F | L/R | Hatchback FWD TZ154XS1001 | Model year to:2022 | GCI82749 | Inner Joint | | 22 | 26 | 35 | 61 | 98.5 | |
| **Ei5** | | | | | | | | | | | | | | | |
| EV (120 kw) | 2020.09- | ET | F | L | Estate FWD TZ204XS1152 | | GDS84638 | Drive Shaft | | 36 | 27 | 59.5 | 94 | 642 | |
| | 2020.09- | ET | F | R | Estate FWD TZ204XS1152 | | GDS84637 | Drive Shaft | | 36 | 27 | 59.5 | 94 | 585 | |
| | 2020.09- | ET | F | L/R | Estate FWD TZ204XS1152 | | GCO82911 | Outer Joint | | 36 | 24 | 59.5 | 94 | 62 | M |
| | 2020.09- | ET | F | L | Estate FWD TZ204XS1152 | | GCI82903 | Inner Joint | | 27 | 24 | 45 | 57.5 | 106 | |
| | 2020.09- | ET | F | R | Estate FWD TZ204XS1152 | | GCI82902 | Inner Joint | | 27 | 24 | 43.5 | | 122.5 | |
| | 2021.03- | ET | F | L | Estate FWD TZ204XS1152 | | GDS84638 | Drive Shaft | | 36 | 27 | 59.5 | 94 | 642 | |
| | 2021.03- | ET | F | R | Estate FWD TZ204XS1152 | | GDS84637 | Drive Shaft | | 36 | 27 | 59.5 | 94 | 585 | |
| | 2021.03- | ET | F | L/R | Estate FWD TZ204XS1152 | | GCO82911 | Outer Joint | | 36 | 24 | 59.5 | 94 | 62 | M |
| | 2021.03- | ET | F | L | Estate FWD TZ204XS1152 | | GCI82903 | Inner Joint | | 27 | 24 | 45 | 57.5 | 106 | |
| | 2021.03- | ET | F | R | Estate FWD TZ204XS1152 | | GCI82902 | Inner Joint | | 27 | 24 | 43.5 | | 122.5 | |
| **eRX5** | | | | | | | | | | | | | | | |
| 1.5 (124 kw) | 2016.11-2022.07 | 10AMT | F | L | SUV FWD 15E4E | Model year from:2021 | GDS84583 | Drive Shaft | 48T | 36 | 27 | 62 | 87 | 686 | |
| | 2016.11-2022.07 | 10AMT | F | R | SUV FWD 15E4E | Model year from:2021 | GDS84585 | Drive Shaft | 48T | 36 | 27 | 58.5 | 87 | 938 | |
| EV (85 kw) | 2017.06- | ET | F | L/R | SUV FWD TZ204XS85K02 | | GDS84636 | Drive Shaft | 48T | 36 | 27 | 58.5 | 87 | 808 | |

| | YEAR | TRANSM. | F/R | L/R | BODY STYLE & DRIVE TYPE & ENGINE | REMARKS | G-AP Ref. | PRODUCT | ABS | Technical Specifications A | B | C | H | L | P |
|---|---|---|---|---|---|---|---|---|---|---|---|---|---|---|---|
| **ROEWE (SAIC)** | | | | | | | | | | | | | | | |
| **i5** | | | | | | | | | | | | | | | |
| 1.5 (88 kw) | 2018.10- | 5MT | F | L | Saloon FWD 15S4C | | GDS57654 | Drive Shaft | | 36 | 22 | 59.5 | 94 | 673 | |
| | 2018.10- | 5MT | F | R | Saloon FWD 15S4C | | GDS57655 | Drive Shaft | | 36 | 22 | 59.5 | 94 | 937 | |
| | 2018.10- | 5MT | F | L/R | Saloon FWD 15S4C | | GCI83796 | Inner Joint | | 22 | 22 | 35 | 56 | 103 | |
| | 2018.10- | CVT | F | L | Saloon FWD 15S4C | | GDS84149 | Drive Shaft | | 36 | 25 | 59.5 | 94 | 664 | |
| | 2018.10- | CVT | F | R | Saloon FWD 15S4C | Model year to:2021 | GDS84148 | Drive Shaft | | 36 | 25 | 59.5 | 94 | 947 | |
| | 2018.10- | CVT | F | L/R | Saloon FWD 15S4C | | GCO82706 | Outer Joint | | 36 | 22 | 59.5 | 94 | 55 | I |
| | 2018.10- | CVT | F | L/R | Saloon FWD 15S4C | | GCI82608 | Inner Joint | | 25 | 22 | 41 | 63 | 107 | |
| **I5** | | | | | | | | | | | | | | | |
| 1.5 (88 kw) | 2021.04- | 5MT | F | L | Saloon FWD 15S4C | | GDS57654 | Drive Shaft | | 36 | 22 | 59.5 | 94 | 673 | |
| | 2021.04- | 5MT | F | R | Saloon FWD 15S4C | | GDS57655 | Drive Shaft | | 36 | 22 | 59.5 | 94 | 937 | |
| | 2021.04- | 5MT | F | L/R | Saloon FWD 15S4C | | GCI83796 | Inner Joint | | 22 | 22 | 35 | 56 | 103 | |
| | 2021.04- | CVT | F | L | Saloon FWD 15S4C | | GDS84149 | Drive Shaft | | 36 | 25 | 59.5 | 94 | 664 | |
| | 2021.04- | CVT | F | R | Saloon FWD 15S4C | Model year to:2023 | GDS84148 | Drive Shaft | | 36 | 25 | 59.5 | 94 | 947 | |
| | 2021.04- | CVT | F | L/R | Saloon FWD 15S4C | | GCO82706 | Outer Joint | | 36 | 22 | 59.5 | 94 | 55 | I |
| | 2021.04- | CVT | F | L/R | Saloon FWD 15S4C | | GCI82608 | Inner Joint | | 25 | 22 | 41 | 63 | 107 | |
| **i5** | | | | | | | | | | | | | | | |
| 1.5 (95 kw) | 2023.07- | CVT | F | R | Saloon FWD 15FCD | | GDS84148 | Drive Shaft | | 36 | 25 | 59.5 | 94 | 947 | |
| | 2023.07- | CVT | F | L/R | Saloon FWD 15FCD | | GCO82706 | Outer Joint | | 36 | 22 | 59.5 | 94 | 55 | I |
| | 2023.07- | CVT | F | R | Saloon FWD 15FCD | | GCI82608 | Inner Joint | | 25 | 22 | 41 | 63 | 107 | |
| 1.5 (124 kw) | 2018.10- | 7DCT | F | L | Saloon FWD 15E4E | Model year to:2019 | GDS56744 | Drive Shaft | | 36 | 34 | 59.5 | 94.5 | 650 | |
| | 2018.10- | 7DCT | F | R | Saloon FWD 15E4E | Model year to:2019 | GDS56434 | Drive Shaft | | 36 | 27 | 59.5 | 94.5 | 587 | |
| | 2018.10- | 7DCT | F | L/R | Saloon FWD 15E4E | Model year to:2019 | GCO83292 | Outer Joint | | 36 | 32 | 59.5 | 94.5 | 58.5 | I |
| | 2018.10- | 7DCT | F | L | Saloon FWD 15E4E | Model year to:2019 | GCI82612 | Inner Joint | | 34 | 24 | 30.5 | 72 | 83 | |
| | 2018.10- | 7DCT | F | R | Saloon FWD 15E4E | Model year to:2019 | GCI82644 | Inner Joint | | 27 | 24 | 48.5 | | 117.5 | |
| | 2018.10- | 7DCT | F | R | Saloon FWD 15E4E | | GDS87089 | Intermediate Shaft | | 27 | 34 | | | 384 | |
| **i5 GT** | | | | | | | | | | | | | | | |
| 1.5 (127 kw) | 2021.08- | 7DCT | F | L | Saloon FWD 15C4E | Model year to:2022 | GDS84616 | Drive Shaft | | 36 | 27 | 62 | 94.5 | 650 | |
| | 2021.08- | 7DCT | F | R | Saloon FWD 15C4E | Model year to:2022 | GDS84615 | Drive Shaft | | 36 | 27 | 62 | 94.5 | 586 | |
| | 2021.08- | 7DCT | F | L/R | Saloon FWD 15C4E | Model year to:2022 | GCO82903 | Outer Joint | | 36 | 35 | 62 | 94.5 | 63.5 | I |
| | 2021.08- | 7DCT | F | L | Saloon FWD 15C4E | Model year to:2022 | GCI82893 | Inner Joint | | 27 | 34 | 33 | 69 | 83.5 | |
| | 2021.08- | 7DCT | F | R | Saloon FWD 15C4E | Model year to:2022 | GCI82892 | Inner Joint | | 27 | 34 | 47 | | 117.5 | |
| | 2021.08- | 7DCT | F | R | Saloon FWD 15C4E | | GDS87104 | Intermediate Shaft | | 27 | 27 | | | 380 | |
| **i6** | | | | | | | | | | | | | | | |
| 1.5 (124 kw) | 2017.02- | 6MT | F | L | Saloon FWD 15E4E | Model year to:2019 | GDS57629 | Drive Shaft | | 36 | 27 | 59.5 | 94.5 | 655 | |
| | 2017.02- | 6MT | F | L | Saloon FWD 15E4E | Model year to:2019 | GCI83777 | Inner Joint | | 27 | 24 | 45 | 57.5 | 110 | |
| | 2017.02- | 6MT | F | R | Saloon FWD 15E4E | | GDS87088 | Intermediate Shaft | | 27 | 27 | | | 404 | |
| | 2017.02- | 6MT/7DCT | F | R | Saloon FWD 15E4E | Model year to:2019 | GDS56434 | Drive Shaft | | 36 | 27 | 59.5 | 94.5 | 587 | |
| | 2017.02- | 6MT/7DCT | F | L/R | Saloon FWD 15E4E | Model year to:2019 | GCO83292 | Outer Joint | | 36 | 32 | 59.5 | 94.5 | 58.5 | I |
| | 2017.02- | 6MT/7DCT | F | R | Saloon FWD 15E4E | Model year to:2019 | GCI82644 | Inner Joint | | 27 | 24 | 48.5 | | 117.5 | |
| | 2017.02- | 7DCT | F | L | Saloon FWD 15E4E | Model year to:2019 | GDS56744 | Drive Shaft | | 36 | 34 | 59.5 | 94.5 | 650 | |
| | 2017.02- | 7DCT | F | L | Saloon FWD 15E4E | Model year to:2019 | GCI82612 | Inner Joint | | 34 | 24 | 30.5 | 72 | 83 | |
| | 2017.02- | 7DCT | F | R | Saloon FWD 15E4E | | GDS87089 | Intermediate Shaft | | 27 | 34 | | | 384 | |
| **i6 Max** | | | | | | | | | | | | | | | |
| 1.5 (127 kw) | 2020.09- | 7DCT | F | L | Saloon FWD 15C4E | | GDS57624 | Drive Shaft | | 36 | 27 | 62 | 94.5 | 648 | |
| | 2020.09- | 7DCT | F | R | Saloon FWD 15C4E | Model year to:2022 | GDS84615 | Drive Shaft | | 36 | 27 | 62 | 94.5 | 586 | |
| | 2020.09- | 7DCT | F | R | Saloon FWD 15C4E | Model year to:2022 | GCO82903 | Outer Joint | | 36 | 35 | 62 | 94.5 | 63.5 | I |
| | 2020.09- | 7DCT | F | L | Saloon FWD 15C4E | Model year to:2022 | GCI82893 | Inner Joint | | 27 | 34 | 33 | 69 | 83.5 | |
| | 2020.09- | 7DCT | F | R | Saloon FWD 15C4E | Model year to:2022 | GCI82892 | Inner Joint | | 27 | 34 | 47 | | 117.5 | |
| | 2020.09- | 7DCT | F | R | Saloon FWD 15C4E | | GDS87104 | Intermediate Shaft | | 27 | 27 | | | 380 | |
| **i6 Plus** | | | | | | | | | | | | | | | |
| 1.5 (124 kw) | 2019.03- | 7DCT | F | L | Saloon FWD 15E4E | Model year to:2020 | GDS56744 | Drive Shaft | | 36 | 34 | 59.5 | 94.5 | 650 | |
| | 2019.03- | 7DCT | F | R | Saloon FWD 15E4E | Model year to:2020 | GDS56434 | Drive Shaft | | 36 | 27 | 59.5 | 94.5 | 587 | |
| | 2019.03- | 7DCT | F | L/R | Saloon FWD 15E4E | Model year to:2020 | GCO83292 | Outer Joint | | 36 | 32 | 59.5 | 94.5 | 58.5 | I |
| | 2019.03- | 7DCT | F | L | Saloon FWD 15E4E | Model year to:2020 | GCI82612 | Inner Joint | | 34 | 24 | 30.5 | 72 | 83 | |
| | 2019.03- | 7DCT | F | R | Saloon FWD 15E4E | Model year to:2020 | GCI82644 | Inner Joint | | 27 | 24 | 48.5 | | 117.5 | |
| | 2019.03- | 7DCT | F | R | Saloon FWD 15E4E | | GDS87089 | Intermediate Shaft | | 27 | 34 | | | 384 | |
| **Marvel X** | | | | | | | | | | | | | | | |
| EV (137 kw) | 2018.08- | ET | R | L | SUV RWD TZ204XS52K01, TZ204XS85K01 | Model year to:2019 | GDS56379 | Drive Shaft | | 30 | 27 | 52.5 | 94.5 | 845 | |
| | 2018.08- | ET | R | R | SUV RWD TZ204XS52K01, TZ204XS85K01 | Model year to:2019 | GDS56380 | Drive Shaft | | 30 | 27 | 52.5 | 94.5 | 871 | |
| | 2018.08- | ET | R | L/R | SUV RWD TZ204XS52K01, TZ204XS85K01 | Model year to:2019 | GCO88046 | Outer Joint | | 30 | 26 | 52.5 | 94.5 | 65.5 | M |
| | 2018.08- | ET | R | L/R | SUV RWD TZ204XS52K01, TZ204XS85K01 | Model year to:2019 | GCI83278 | Inner Joint | | 27 | 26 | 34.7 | 88 | 91 | |
| EV (222 kw) | 2018.08- | ET | F | L | SUV 4WD TZ204XS52K01, TZ204XS85K01, TZ204XS85K02 | Model year to:2019 | GDS57753 | Drive Shaft | | 30 | 27 | 59 | 97 | 794 | |
| | 2018.08- | ET | F | R | SUV 4WD TZ204XS52K01, TZ204XS85K01, TZ204XS85K02 | Model year to:2019 | GDS56552 | Drive Shaft | | 30 | 27 | 59 | 97 | 890 | |
| | 2018.08- | ET | F | R | SUV 4WD TZ204XS52K01, TZ204XS85K01, TZ204XS85K02 | Model year to:2019 | GCO83698 | Outer Joint | | 30 | 32 | 59 | 97 | 56 | I |
| | 2018.08- | ET | F | R | SUV 4WD TZ204XS52K01, TZ204XS85K01, TZ204XS85K02 | Model year to:2019 | GCI83367 | Inner Joint | | 27 | 24 | 45 | 60.5 | 109.5 | |

| | YEAR | TRANSM. | F/R | L/R | BODY STYLE & DRIVE TYPE & ENGINE | REMARKS | G-AP Ref. | PRODUCT | ABS | Technical Specifications A | B | C | H | L | P |
|---|---|---|---|---|---|---|---|---|---|---|---|---|---|---|---|
| **ROEWE (SAIC)** | | | | | | | | | | | | | | | |
| **Marvel X** | | | | | | | | | | | | | | | |
| EV (222 kw) | 2018.08- | ET | R | L | SUV 4WD TZ204XS52K01, TZ204XS85K01, TZ204XS85K02 | Model year to:2019 | GDS56379 | Drive Shaft | | 30 | 27 | 52.5 | 94.5 | 845 | |
| | 2018.08- | ET | R | R | SUV 4WD TZ204XS52K01, TZ204XS85K01, TZ204XS85K02 | Model year to:2019 | GDS56380 | Drive Shaft | | 30 | 27 | 52.5 | 94.5 | 871 | |
| | 2018.08- | ET | R | L/R | SUV 4WD TZ204XS52K01, TZ204XS85K01, TZ204XS85K02 | Model year to:2019 | GCO88046 | Outer Joint | | 30 | 26 | 52.5 | 94.5 | 65.5 | M |
| | 2018.08- | ET | R | L/R | SUV 4WD TZ204XS52K01, TZ204XS85K01, TZ204XS85K02 | Model year to:2019 | GCI83278 | Inner Joint | | 27 | 26 | 34.7 | 88 | 91 | |
| **RX3** | | | | | | | | | | | | | | | |
| 1.6 (92 kw) | 2017.11- | CVT | F | L | SUV FWD 16S4C | Model year to:2021 | GDS84152 | Drive Shaft | | 25 | 23 | 52 | 95 | 666 | |
| | 2017.11- | CVT | F | R | SUV FWD 16S4C | Model year to:2021 | GDS84151 | Drive Shaft | | 25 | 23 | 52 | 95 | 914 | |
| | 2017.11- | CVT | F | L/R | SUV FWD 16S4C | Model year to:2021 | GCO82707 | Outer Joint | | 25 | 22 | 52 | 95 | 56 | M |
| | 2017.11- | CVT | F | L/R | SUV FWD 16S4C | Model year to:2021 | GCI82609 | Inner Joint | | 23 | 22 | 34 | 56.5 | 110 | |
| **RX3 Pro** | | | | | | | | | | | | | | | |
| 1.6 (92 kw) | 2021.03- | 5MT | F | L | SUV FWD 16S4C | Model year to:2022 | GDS84629 | Drive Shaft | | 25 | 34 | 52 | 95 | 667 | |
| | 2021.03- | 5MT | F | R | SUV FWD 16S4C | Model year to:2022 | GDS84628 | Drive Shaft | | 25 | 34 | 52 | 95 | 902 | |
| | 2021.03- | 5MT | F | L/R | SUV FWD 16S4C | Model year to:2022 | GCO82905 | Outer Joint | | 25 | 22 | 52 | 95 | 56 | I |
| | 2021.03- | 5MT | F | L/R | SUV FWD 16S4C | Model year to:2022 | GCI82900 | Inner Joint | | 34 | 22 | 34.7 | 56 | 107 | |
| | 2021.03- | CVT | F | L | SUV FWD 16S4C | | GDS58258 | Drive Shaft | | 25 | 25 | 52 | 95 | 658 | |
| | 2021.03- | CVT | F | R | SUV FWD 16S4C | | GDS58257 | Drive Shaft | | 25 | 25 | 52 | 95 | 909 | |
| | 2021.03- | CVT | F | L/R | SUV FWD 16S4C | | GCO83871 | Outer Joint | | 25 | 22 | 52 | 95 | 56 | I |
| | 2021.03- | CVT | F | L/R | SUV FWD 16S4C | | GCI82608 | Inner Joint | | 25 | 22 | 41 | 63 | 107 | |
| **RX5** | | | | | | | | | | | | | | | |
| 1.5 (124 kw) | 2016.04-2022.07 | 10AMT | F | L | SUV FWD 15E4E, LFV | Model year from:2021 | GDS84583 | Drive Shaft | 48T | 36 | 27 | 62 | 87 | 686 | |
| | 2016.04-2022.07 | 10AMT | F | R | SUV FWD 15E4E, LFV | Model year from:2021 | GDS84585 | Drive Shaft | 48T | 36 | 27 | 58.5 | 87 | 938 | |
| | 2016.04-2022.07 | 6MT | F | L | SUV FWD 15E4E, LFV | Model year to:2020 | GDS82583 | Drive Shaft | 48T | 36 | 27 | 62 | 87 | 640 | |
| | 2016.04-2022.07 | 6MT | F | R | SUV FWD 15E4E, LFV | Model year to:2020 | GDS82582 | Drive Shaft | 48T | 36 | 27 | 62 | 87 | 611 | |
| | 2016.04-2022.07 | 6MT | F | L | SUV FWD 15E4E, LFV | Engine Code:15E45,Model year to:2017 | GCI81899 | Inner Joint | | 27 | 24 | 45 | 57 | 117 | |
| | 2016.04-2022.07 | 6MT | F | R | SUV FWD 15E4E, LFV | Engine Code:15E45,Model year to:2017 | GCI81898 | Inner Joint | | 27 | 24 | | | 124 | |
| | 2016.04-2022.07 | 6MT | F | R | SUV FWD 15E4E, LFV | | GDS87088 | Intermediate Shaft | | 27 | 27 | | | 404 | |
| | 2016.04-2022.07 | 6MT/7DCT | F | L/R | SUV FWD 15E4E, LFV | Model year to:2020 | GCO82058 | Outer Joint | 48T | 36 | 26 | 62 | 87 | 64 | M |
| | 2016.04-2022.07 | 7DCT | F | L | SUV FWD 15E4E, LFV | Model year from:2019,Model year to:2020;TJ | GCI82610 | Inner Joint | | 34 | 25 | 30.5 | 72.5 | 87 | |
| | 2016.04-2022.07 | 7DCT | F | L | SUV FWD 15E4E, LFV | Model year to:2020,PTJ | GCI82612 | Inner Joint | | 34 | 24 | 30.5 | 72 | 83 | |
| | 2016.04-2022.07 | 7DCT | F | R | SUV FWD 15E4E, LFV | Model year from:2019,Model year to:2020;TJ | GCI82611 | Inner Joint | | 34 | 25 | 30.5 | 72.5 | 106.5 | |
| | 2016.04-2022.07 | 7DCT | F | R | SUV FWD 15E4E, LFV | Model year to:2020,PTJ | GCI82644 | Inner Joint | | 27 | 24 | 48.5 | | 117.5 | |
| | 2016.04-2022.07 | 7DCT | F | R | SUV FWD 15E4E, LFV | | GDS87089 | Intermediate Shaft | | 27 | 34 | | | 384 | |
| 1.5 (127 kw) | 2019.06-2022.07 | 6MT | F | L | SUV FWD 15C4E | for Model year:2020 | GDS82583 | Drive Shaft | 48T | 36 | 27 | 62 | 87 | 640 | |
| | 2019.06-2022.07 | 6MT | F | R | SUV FWD 15C4E | for Model year:2020 | GDS82582 | Drive Shaft | 48T | 36 | 27 | 62 | 87 | 611 | |
| | 2019.06-2022.07 | 6MT | F | L/R | SUV FWD 15C4E | | GDS82582 | Drive Shaft | 48T | 36 | 27 | 62 | 87 | 611 | |
| | 2019.06-2022.07 | 6MT | F | L | SUV FWD 15C4E | Model year for:2020 | GCI81899 | Inner Joint | | 27 | 24 | 45 | 57 | 117 | |
| | 2019.06-2022.07 | 6MT | F | R | SUV FWD 15C4E | Model year for:2020 | GCI81898 | Inner Joint | | 27 | 24 | | | 124 | |
| | 2019.06-2022.07 | 6MT | F | R | SUV FWD 15C4E | Date from:2020.05 | GDS87088 | Intermediate Shaft | | 27 | 27 | | | 404 | |
| | 2019.06-2022.07 | 7DCT | F | R | SUV FWD 15C4E | Date from:2020.05 | GDS87089 | Intermediate Shaft | | 27 | 34 | | | 384 | |
| 1.5 (133 kw) | 2021.11-2022.07 | 7DCT | F | R | SUV FWD 15C4E | | GDS87104 | Intermediate Shaft | | 27 | 27 | | | 380 | |
| 1.5 (138 kw) | 2022.08- | 7DCT | F | R | SUV FWD 15FDE | | GDS87124 | Intermediate Shaft | | 27 | 27 | | | 416 | |
| 2.0 (162 kw) | 2016.04-2022.07 | 6DCT | F | L | SUV 4WD 20L4E | Date to:2018.09 | GDS57625 | Drive Shaft | 48T | 36 | 27 | 62 | 87 | 637 | |
| | 2016.04-2022.07 | 6DCT | F | R | SUV 4WD 20L4E | Date to:2018.09 | GDS57645 | Drive Shaft | 48T | 36 | 27 | 62 | 87 | 585 | |
| | 2016.04-2022.07 | 6DCT | F | L | SUV 4WD 20L4E | Date to:2018.09 | GCI83773 | Inner Joint | | 27 | 26 | 34.7 | 65 | 107.5 | |
| | 2016.04-2022.07 | 6DCT | F | R | SUV 4WD 20L4E | Date to:2018.09 | GCI83789 | Inner Joint | | 27 | 26 | 47 | | 119.5 | |
| | 2016.04-2022.07 | 7DCT | F | L/R | SUV 4WD 20L4E | Date to:2018.09 | GCO82058 | Outer Joint | 48T | 36 | 26 | 62 | 87 | 64 | M |
| | 2016.04-2022.07 | 6DCT | F | L | SUV FWD 20L4E | Date to:2018.09 | GDS57625 | Drive Shaft | 48T | 36 | 27 | 62 | 87 | 637 | |
| | 2016.04-2022.07 | 6DCT | F | R | SUV FWD 20L4E | Date to:2018.09 | GDS57645 | Drive Shaft | 48T | 36 | 27 | 62 | 87 | 585 | |
| | 2016.04-2022.07 | 6DCT | F | L | SUV FWD 20L4E | Date to:2018.09 | GCI83773 | Inner Joint | | 27 | 26 | 34.7 | 65 | 107.5 | |
| | 2016.04-2022.07 | 6DCT | F | R | SUV FWD 20L4E | Date to:2018.09 | GCI83789 | Inner Joint | | 27 | 26 | 47 | | 119.5 | |
| | 2016.04-2022.07 | 7DCT | F | L/R | SUV FWD 20L4E | Date to:2018.09 | GCO82058 | Outer Joint | 48T | 36 | 26 | 62 | 87 | 64 | M |
| **RX5 Max** | | | | | | | | | | | | | | | |
| 1.5 (124 kw) | 2019.11- | 10AMT | F | L | SUV FWD 15E4E | Model year to:2021 | GDS84583 | Drive Shaft | 48T | 36 | 27 | 62 | 87 | 686 | |
| | 2019.11- | 10AMT | F | R | SUV FWD 15E4E | Model year to:2021 | GDS84585 | Drive Shaft | 48T | 36 | 27 | 58.5 | 87 | 938 | |
| 1.5 (127 kw) | 2019.08- | 6AT | F | L | SUV FWD 15C4E | Model year to:2022 | GDS84571 | Drive Shaft | 48T | 36 | 34 | 62 | 87 | 706 | |
| | 2019.08- | 6AT | F | R | SUV FWD 15C4E | Model year to:2022 | GDS84570 | Drive Shaft | 48T | 36 | 34 | 62 | 87 | 914 | |
| | 2019.08- | 6AT | F | L/R | SUV FWD 15C4E | Model year to:2022 | GCO82058 | Outer Joint | 48T | 36 | 26 | 62 | 87 | 64 | M |
| | 2019.08- | 6AT | F | L | SUV FWD 15C4E | Model year to:2022 | GCI86030 | Inner Joint | | 34 | 26 | 35 | 136.5 | 89.5 | |
| | 2019.08- | 6AT | F | R | SUV FWD 15C4E | Model year to:2022 | GCI82865 | Inner Joint | | 34 | 26 | 35 | 56 | 111.5 | |
| 1.5 (133 kw) | 2021.12- | 6AT | F | L | SUV FWD 15C4E | | GDS84571 | Drive Shaft | 48T | 36 | 34 | 62 | 87 | 706 | |
| | 2021.12- | 6AT | F | R | SUV FWD 15C4E | | GDS84570 | Drive Shaft | 48T | 36 | 34 | 62 | 87 | 914 | |
| | 2021.12- | 6AT | F | L/R | SUV FWD 15C4E | | GCO82058 | Outer Joint | 48T | 36 | 26 | 62 | 87 | 64 | M |
| | 2021.12- | 6AT | F | L | SUV FWD 15C4E | | GCI86030 | Inner Joint | | 34 | 26 | 35 | 136.5 | 89.5 | |
| | 2021.12- | 6AT | F | R | SUV FWD 15C4E | | GCI82865 | Inner Joint | | 34 | 26 | 35 | 56 | 111.5 | |
| 2.0 (170 kw) | 2019.08- | 6DCT | F | R | SUV 4WD 20L4E | Model year to:2020 | GDS57628 | Drive Shaft | 48T | 36 | 27 | 62 | 87 | 587 | |

| | YEAR | TRANSM. | F/R | L/R | BODY STYLE & DRIVE TYPE & ENGINE | REMARKS | G-AP Ref. | PRODUCT | ABS | Technical Specifications A | B | C | H | L | P |
|---|---|---|---|---|---|---|---|---|---|---|---|---|---|---|---|
| **ROEWE (SAIC)** | | | | | | | | | | | | | | | |
| **RX5 Max** | | | | | | | | | | | | | | | |
| 2.0 (170 kw) | 2019.08- | 6DCT | F | R | SUV 4WD 20L4E | Model year to:2020 | GCI83776 | Inner Joint | | 27 | 26 | 47 | | 123.5 | |
| | 2019.08- | 6DCT | F | R | SUV FWD 20L4E | Model year to:2021 | GDS57628 | Drive Shaft | 48T | 36 | 27 | 62 | 87 | 587 | |
| | 2019.08- | 6DCT | F | R | SUV FWD 20L4E | Model year to:2021 | GCI83776 | Inner Joint | | 27 | 26 | 47 | | 123.5 | |
| **RX5 Plus** | | | | | | | | | | | | | | | |
| 1.5 (127 kw) | 2020.06- | 6MT | F | L | SUV FWD 15C4E | Model year to:2021 | GDS82583 | Drive Shaft | 48T | 36 | 27 | 62 | 87 | 640 | |
| | 2020.06- | 6MT | F | R | SUV FWD 15C4E | Model year to:2021 | GDS82582 | Drive Shaft | 48T | 36 | 27 | 62 | 87 | 611 | |
| | 2020.06- | 6MT | F | L | SUV FWD 15C4E | Model year for:2020 | GCI81899 | Inner Joint | | 27 | 24 | 45 | 57 | 117 | |
| | 2020.06- | 6MT | F | R | SUV FWD 15C4E | Model year for:2020 | GCI81898 | Inner Joint | | 27 | 24 | | | 124 | |
| | 2020.06- | 6MT | F | R | SUV FWD 15C4E | | GDS87088 | Intermediate Shaft | | 27 | 27 | | | 404 | |
| | 2020.06- | 6MT/7DCT | F | L/R | SUV FWD 15C4E | | GCO82058 | Outer Joint | 48T | 36 | 26 | 62 | 87 | 64 | M |
| | 2020.06- | 7DCT | F | L | SUV FWD 15C4E | for Manufacuturer:SDS | GDS84155 | Drive Shaft | 48T | 36 | 34 | 62 | 87 | 633 | |
| | 2020.06- | 7DCT | F | R | SUV FWD 15C4E | for Manufacuturer:SDS | GDS84147 | Drive Shaft | 48T | 36 | 27 | 62 | 87 | 611 | |
| | 2020.06- | 7DCT | F | L | SUV FWD 15C4E | | GCI82612 | Inner Joint | | 34 | 24 | 30.5 | 72 | 83 | |
| | 2020.06- | 7DCT | F | R | SUV FWD 15C4E | | GCI82644 | Inner Joint | | 27 | 24 | 48.5 | | 117.5 | |
| | 2020.06- | 7DCT | F | R | SUV FWD 15C4E | | GDS87089 | Intermediate Shaft | | 27 | 34 | | | 384 | |
| 1.5 (133 kw) | 2021.07- | 7DCT | F | R | SUV FWD 15C4E | | GDS87104 | Intermediate Shaft | | 27 | 27 | | | 380 | |
| **ROVER** | | | | | | | | | | | | | | | |
| **111** | | | | | | | | | | | | | | | |
| 1.1 (44 kw) | 1994.12-1998.10 | | F | | Cabriolet FWD 11K2D | | GCO51010 | Outer Joint | | 25 | 22 | 50 | 82 | 56 | I |
| **111/Metro** | | | | | | | | | | | | | | | |
| 1.1 (44 kw) | 1990.03-1998.12 | AT/MT | F | L/R | Hatchback FWD 11 K2A, 11 K2D | Type:111 | GCO51010 | Outer Joint | | 25 | 22 | 50 | 82 | 56 | I |
| **114** | | | | | | | | | | | | | | | |
| 1.4 (55 kw) | 1994.04-1997.10 | | F | | Cabriolet FWD 14K2D | | GCO51010 | Outer Joint | | 25 | 22 | 50 | 82 | 56 | I |
| 1.4 (75 kw) | 1997.03-1998.10 | MT | F | L/R | Cabriolet FWD 14K4F | | GCO51010 | Outer Joint | | 25 | 22 | 50 | 82 | 56 | I |
| 1.4 (76 kw) | 1991.08-1998.12 | MT | F | L/R | Hatchback FWD 14 K4F | | GCO51010 | Outer Joint | | 25 | 22 | 50 | 82 | 56 | I |
| **114/Metro** | | | | | | | | | | | | | | | |
| 1.4 (55 kw) | 1990.03-1998.12 | AT/MT | F | L/R | Hatchback FWD 14 K2A, 14 K2D | Type:114 | GCO51010 | Outer Joint | | 25 | 22 | 50 | 82 | 56 | I |
| 1.4 (66 kw) | 1990.03-1998.12 | | F | | Hatchback FWD 14 K4D, 14 K4C | | GCO51010 | Outer Joint | | 25 | 22 | 50 | 82 | 56 | I |
| **115** | | | | | | | | | | | | | | | |
| 1.5 (42 kw) | 1995.01-1998.10 | AT/MT | F | L/R | Hatchback FWD TUD5ECD1 | | GCO51010 | Outer Joint | | 25 | 22 | 50 | 82 | 56 | I |
| **200** | | | | | | | | | | | | | | | |
| 1.8 (107 kw) | 1996.03-1999.06 | AT/MT | F | L/R | Hatchback FWD 18K4K | Date from:1996.03,Date to:1999.06 | GCO23010 | Outer Joint | | 26 | 22 | 49 | 78.8 | 55 | I |
| | 1996.03-1999.06 | AT/MT | F | L/R | Hatchback FWD 18K4K | Date from:1996.03,Date to:1999.06 | GCO51003 | Outer Joint | 43T | 26 | 22 | 49 | 78.8 | 55 | I |
| | 1996.03-1999.06 | CVT | F | L | Hatchback FWD 18K4K | | GDS51019 | Drive Shaft | 43T | 26 | 23 | 49 | 78.8 | 630.5 | |
| | 1996.03-1999.06 | | F | | Hatchback FWD 18K4K | | GCO99209 | Outer Joint | 27T | 26 | 22 | 49 | 78.8 | 55 | I |
| **211** | | | | | | | | | | | | | | | |
| 1.1 (44 kw) | 1996.07-1999.06 | AT/MT | F | L/R | Hatchback FWD 11K2D | Date to:1999.06 | GCO23010 | Outer Joint | | 26 | 22 | 49 | 78.8 | 55 | I |
| | 1996.07-1999.06 | AT/MT | F | L/R | Hatchback FWD 11K2D | Date to:1999.06 | GCO51003 | Outer Joint | 43T | 26 | 22 | 49 | 78.8 | 55 | I |
| | 1996.07-1999.06 | MT | F | L | Hatchback FWD 11K2D | | GDS51001 | Drive Shaft | | 26 | 22 | 49 | 78.8 | 642 | |
| | 1996.07-1999.06 | MT | F | R | Hatchback FWD 11K2D | | GDS51010 | Drive Shaft | | 26 | 22 | 49 | 78.8 | 877 | |
| | 1996.07-1999.06 | | F | L | Hatchback FWD 11K2D | Chassis no. to:567941 | GDS51043 | Drive Shaft | 43T | 26 | 22 | 49 | 78.8 | 642 | |
| | 1996.07-1999.06 | | F | | Hatchback FWD 11K2D | | GCO99209 | Outer Joint | 27T | 26 | 22 | 49 | 78.8 | 55 | I |
| **214** | | | | | | | | | | | | | | | |
| 1.4 (55 kw) | 1996.01-1999.12 | AT/MT | F | L/R | Hatchback FWD 14K2F | | GCO23010 | Outer Joint | | 26 | 22 | 49 | 78.8 | 55 | I |
| | 1996.01-1999.12 | AT/MT | F | L/R | Hatchback FWD 14K2F | | GCO51003 | Outer Joint | 43T | 26 | 22 | 49 | 78.8 | 55 | I |
| | 1996.01-1999.12 | | F | L | Hatchback FWD 14K2F | Chassis no. to:567941 | GDS51043 | Drive Shaft | 43T | 26 | 22 | 49 | 78.8 | 642 | |
| 1.4 (66 kw) | 1992.10-1997.09 | MT | F | L | Cabriolet FWD 14K4D | | GDS51001 | Drive Shaft | | 26 | 22 | 49 | 78.8 | 642 | |
| | 1992.10-1997.09 | MT | F | R | Cabriolet FWD 14K4D | | GDS51010 | Drive Shaft | | 26 | 22 | 49 | 78.8 | 877 | |
| | 1992.10-1997.09 | MT | F | L/R | Cabriolet FWD 14K4D | Date from:1992.10;Date to:1997.09 | GCO23010 | Outer Joint | | 26 | 22 | 49 | 78.8 | 55 | I |
| | 1992.10-1997.09 | | F | | Cabriolet FWD 14K4D | | GCO99209 | Outer Joint | 27T | 26 | 22 | 49 | 78.8 | 55 | I |
| | 1996.01-1997.12 | | F | L | Hatchback FWD 14K4D | Chassis no. to:567941 | GDS51043 | Drive Shaft | 43T | 26 | 22 | 49 | 78.8 | 642 | |
| | 1996.01-1997.12 | | F | L/R | Hatchback FWD 14K4D | | GCO51003 | Outer Joint | 43T | 26 | 22 | 49 | 78.8 | 55 | I |
| 1.4 (76 kw) | 1993.01-1999.11 | MT | F | L | Cabriolet FWD 14K4F | | GDS51001 | Drive Shaft | | 26 | 22 | 49 | 78.8 | 642 | |
| | 1993.01-1999.11 | MT | F | R | Cabriolet FWD 14K4F | | GDS51010 | Drive Shaft | | 26 | 22 | 49 | 78.8 | 877 | |
| | 1993.01-1999.11 | MT | F | L/R | Cabriolet FWD 14K4F | | GCO23010 | Outer Joint | | 26 | 22 | 49 | 78.8 | 55 | I |
| | 1995.11-1999.06 | AT/MT | F | L/R | Hatchback FWD 14K4F | Date to:1999.06 | GCO23010 | Outer Joint | | 26 | 22 | 49 | 78.8 | 55 | I |
| | 1995.11-1999.06 | AT/MT | F | L/R | Hatchback FWD 14K4F | Date to:1999.06 | GCO51003 | Outer Joint | 43T | 26 | 22 | 49 | 78.8 | 55 | I |
| | 1995.11-1999.06 | | F | L | Hatchback FWD 14K4F | Chassis no. to:567941 | GDS51043 | Drive Shaft | 43T | 26 | 22 | 49 | 78.8 | 642 | |
| | 1995.11-1999.06 | | F | | Hatchback FWD 14K4F | | GCO99209 | Outer Joint | 27T | 26 | 22 | 49 | 78.8 | 55 | I |
| **216** | | | | | | | | | | | | | | | |
| 1.6 (82 kw) | 1990.04-1996.02 | AT/MT | F | L | Convertible FWD D 16 Z2 | chassis no. from:534200001;Chassis no. to:53E012217 | GDS23122 | Drive Shaft | | 26 | 27 | 49 | 78.8 | 608 | |
| | 1990.04-1996.02 | AT/MT | F | L | Convertible FWD D 16 Z2 | Chassis no. from:605482 | GDS81020 | Drive Shaft | 50T | 26 | 27 | 49 | 78.8 | 608 | |
| | 1990.04-1996.02 | AT/MT | F | R | Convertible FWD D 16 Z2 | Chassis no. from:605482 | GDS23040 | Drive Shaft | 50T | 26 | 27 | 49 | 78.8 | 606 | |
| | 1990.04-1996.02 | AT/MT | F | R | Convertible FWD D 16 Z2 | chassis no. from:534200001;Chassis no. to:53E012217 | GDS23078 | Drive Shaft | | 26 | 27 | 49 | 78.8 | 606 | |
| | 1990.04-1996.02 | AT/MT | F | L | Convertible FWD D 16 Z2 | | GCI81003 | Inner Joint | | 27 | 32 | 40 | 55 | 97.5 | |

| | YEAR | TRANSM. | F/R | L/R | BODY STYLE & DRIVE TYPE & ENGINE | REMARKS | G-AP Ref. | PRODUCT | ABS | Technical Specifications A | B | C | H | L | P |
|---|---|---|---|---|---|---|---|---|---|---|---|---|---|---|---|
| **ROVER** | | | | | | | | | | | | | | | |
| **216** | | | | | | | | | | | | | | | |
| 1.6 (82 kw) | 1990.04-1996.02 | MT | F | L/R | Convertible FWD D 16 Z2 | | GCO23007 | Outer Joint | | 26 | 23 | 49 | 78.8 | 55 | I |
| | 1996.01-1999.06 | AT/MT | F | L/R | Hatchback FWD 16K4F | | GCO23010 | Outer Joint | | 26 | 22 | 49 | 78.8 | 55 | I |
| | 1996.01-1999.06 | AT/MT | F | L/R | Hatchback FWD 16K4F | | GCO51003 | Outer Joint | 43T | 26 | 22 | 49 | 78.8 | 55 | I |
| | 1996.01-1999.06 | CVT | F | L | Hatchback FWD 16K4F | | GDS23020 | Drive Shaft | 50T | 26 | 25 | 49 | 78.8 | 909 | |
| | 1996.01-1999.06 | CVT | F | R | Hatchback FWD 16K4F | | GDS81010 | Drive Shaft | 50T | 26 | 25 | 55 | 78.5 | 627 | |
| | 1996.01-1999.06 | MT | F | | Hatchback FWD 16K4F | | GCO99209 | Outer Joint | 27T | 26 | 22 | 49 | 78.8 | 55 | I |
| | 1996.01-1999.06 | | F | L | Hatchback FWD 16K4F | Chassis no. to:567941 | GDS51043 | Drive Shaft | 43T | 26 | 22 | 49 | 78.8 | 642 | |
| | 1996.01-1999.11 | AT | F | L | Cabriolet FWD 16K4F | | GDS23020 | Drive Shaft | 50T | 26 | 25 | 49 | 78.8 | 909 | |
| | 1996.01-1999.11 | AT | F | R | Cabriolet FWD 16K4F | | GDS81010 | Drive Shaft | 50T | 26 | 25 | 55 | 78.5 | 627 | |
| | 1996.01-1999.11 | MT | F | L/R | Cabriolet FWD 16K4F | | GCO23010 | Outer Joint | | 26 | 22 | 49 | 78.8 | 55 | I |
| | 1996.01-1999.11 | | F | L | Cabriolet FWD 16K4F | Chassis no. to:567941 | GDS51043 | Drive Shaft | 43T | 26 | 22 | 49 | 78.8 | 642 | |
| | 1996.01-1999.11 | | F | L/R | Cabriolet FWD 16K4F | | GCO51003 | Outer Joint | 43T | 26 | 22 | 49 | 78.8 | 55 | I |
| | 1996.03-1999.11 | AT | F | L | Coupe FWD 16K4F | | GDS23020 | Drive Shaft | 50T | 26 | 25 | 49 | 78.8 | 909 | |
| | 1996.03-1999.11 | AT | F | R | Coupe FWD 16K4F | | GDS81010 | Drive Shaft | 50T | 26 | 25 | 55 | 78.5 | 627 | |
| | 1996.03-1999.11 | MT | F | L/R | Coupe FWD 16K4F | | GCO23010 | Outer Joint | | 26 | 22 | 49 | 78.8 | 55 | I |
| | 1996.03-1999.11 | | F | L | Coupe FWD 16K4F | Chassis no. to:567941 | GDS51043 | Drive Shaft | 43T | 26 | 22 | 49 | 78.8 | 642 | |
| | 1996.03-1999.11 | | F | L/R | Coupe FWD 16K4F | | GCO51003 | Outer Joint | 43T | 26 | 22 | 49 | 78.8 | 55 | I |
| 1.6 (90 kw) | 1992.01-1999.11 | AT/MT | F | L | Cabriolet FWD D16A8 | | GDS23122 | Drive Shaft | | 26 | 27 | 49 | 78.8 | 608 | |
| | 1992.01-1999.11 | AT/MT | F | L | Cabriolet FWD D16A8 | | GDS81020 | Drive Shaft | 50T | 26 | 27 | 49 | 78.8 | 608 | |
| | 1992.01-1999.11 | AT/MT | F | R | Cabriolet FWD D16A8 | | GDS23040 | Drive Shaft | 50T | 26 | 27 | 49 | 78.8 | 606 | |
| | 1992.01-1999.11 | AT/MT | F | R | Cabriolet FWD D16A8 | | GDS23078 | Drive Shaft | | 26 | 27 | 49 | 78.8 | 606 | |
| | 1992.01-1999.11 | AT/MT | F | L | Cabriolet FWD D16A8 | | GCI81003 | Inner Joint | | 27 | 32 | 40 | 55 | 97.5 | |
| | 1992.01-1999.11 | MT | F | L/R | Cabriolet FWD D16A8 | | GCO23007 | Outer Joint | | 26 | 23 | 49 | 78.8 | 55 | I |
| | 1992.01-1999.11 | MT | F | L/R | Cabriolet FWD D16A8 | | GCO23008 | Outer Joint | 50T | 26 | 23 | 49 | 78.8 | 55 | I |
| | 1992.01-1999.11 | MT | F | L/R | Cabriolet FWD D16A8 | | GCO23020 | Outer Joint | | 26 | 23 | 49 | 78.5 | 54.5 | M |
| | 1992.10-1999.06 | AT | F | L | Coupe FWD D16A8 | | GDS23020 | Drive Shaft | 50T | 26 | 25 | 49 | 78.8 | 909 | |
| | 1992.10-1999.06 | AT | F | R | Coupe FWD D16A8 | | GDS81010 | Drive Shaft | 50T | 26 | 25 | 55 | 78.5 | 627 | |
| | 1992.10-1999.06 | AT/MT | F | L | Coupe FWD D16A8 | | GDS23122 | Drive Shaft | | 26 | 27 | 49 | 78.8 | 608 | |
| | 1992.10-1999.06 | AT/MT | F | L | Coupe FWD D16A8 | | GDS81020 | Drive Shaft | 50T | 26 | 27 | 49 | 78.8 | 608 | |
| | 1992.10-1999.06 | AT/MT | F | R | Coupe FWD D16A8 | | GDS23040 | Drive Shaft | 50T | 26 | 27 | 49 | 78.8 | 606 | |
| | 1992.10-1999.06 | AT/MT | F | R | Coupe FWD D16A8 | | GDS23078 | Drive Shaft | | 26 | 27 | 49 | 78.8 | 606 | |
| | 1992.10-1999.06 | AT/MT | F | L/R | Coupe FWD D16A8 | Date to:1994.12 | GCO23020 | Outer Joint | | 26 | 23 | 49 | 78.5 | 54.5 | M |
| | 1992.10-1999.06 | AT/MT | F | L | Coupe FWD D16A8 | | GCI81003 | Inner Joint | | 27 | 32 | 40 | 55 | 97.5 | |
| | 1992.10-1999.06 | MT | F | L/R | Coupe FWD D16A8 | | GCO23007 | Outer Joint | | 26 | 23 | 49 | 78.8 | 55 | I |
| | 1992.10-1999.06 | MT | F | L/R | Coupe FWD D16A8 | | GCO23008 | Outer Joint | 50T | 26 | 23 | 49 | 78.8 | 55 | I |
| | 1992.10-1999.06 | | | | Coupe FWD D16A8 | | GCO51024 | Outer Joint | | 26 | 23 | 49 | 78.5 | 55.5 | M |
| **218** | | | | | | | | | | | | | | | |
| 1.8 (107 kw) | 1996.01-1999.06 | CVT | F | L | Coupe FWD 18K4K | | GDS51019 | Drive Shaft | 43T | 26 | 23 | 49 | 78.8 | 630.5 | |
| | 1996.01-1999.06 | CVT | F | R | Coupe FWD 18K4K | | GDS51018 | Drive Shaft | 43T | 26 | 23 | 49 | 78.8 | 887 | |
| | 1996.01-1999.06 | MT/CVT | F | | Coupe FWD 18K4K | | GCO99209 | Outer Joint | 27T | 26 | 22 | 49 | 78.8 | 55 | I |
| | 1996.01-1999.06 | | F | L | Coupe FWD 18K4K | Chassis no. to:567941 | GDS51043 | Drive Shaft | 43T | 26 | 22 | 49 | 78.8 | 642 | |
| | 1996.01-1999.06 | | F | L/R | Coupe FWD 18K4K | | GCO51003 | Outer Joint | 43T | 26 | 22 | 49 | 78.8 | 55 | I |
| **220** | | | | | | | | | | | | | | | |
| 2.0 (63 kw) | 1996.01-1999.06 | MT | F | L | Hatchback FWD 20T2R | | GDS51004 | Drive Shaft | 27T | 26 | 29 | 49 | 78 | 594 | |
| | 1996.01-1999.06 | MT | F | L/R | Hatchback FWD 20T2R | | GCO51005 | Outer Joint | | 26 | 32 | 49 | 78 | 68.5 | I |
| | 1996.01-1999.06 | | F | L/R | Hatchback FWD 20T2R | | GCO51007 | Outer Joint | 43T | 26 | 32 | 49 | 78 | 68.5 | I |
| 2.0 (77 kw) | 1996.01-1999.06 | AT/MT | F | L/R | Hatchback FWD 20T2N | | GCO51005 | Outer Joint | | 26 | 32 | 49 | 78 | 68.5 | I |
| | 1996.01-1999.06 | MT | F | L | Hatchback FWD 20T2N | | GDS51004 | Drive Shaft | 27T | 26 | 29 | 49 | 78 | 594 | |
| | 1996.01-1999.06 | | F | L/R | Hatchback FWD 20T2N | | GCO51007 | Outer Joint | 43T | 26 | 32 | 49 | 78 | 68.5 | I |
| 2.0 (100 kw) | 1994.05-1999.06 | MT | F | L/R | Coupe FWD 20T4H | Date to:1997.12 | GCO51005 | Outer Joint | | 26 | 32 | 49 | 78 | 68.5 | I |
| 2.0 (147 kw) | 1992.10-1999.06 | MT | F | L/R | Coupe FWD 20T4G | Date to:1996.12 | GCO51005 | Outer Joint | | 26 | 32 | 49 | 78 | 68.5 | I |
| **25** | | | | | | | | | | | | | | | |
| 1.1 (44 kw) | 1999.11-2005.05 | MT | F | L | Hatchback FWD 11K2F | | GDS51001 | Drive Shaft | | 26 | 22 | 49 | 78.8 | 642 | |
| | 1999.11-2005.05 | MT | F | R | Hatchback FWD 11K2F | | GDS51010 | Drive Shaft | | 26 | 22 | 49 | 78.8 | 877 | |
| | 1999.11-2005.05 | | F | L | Hatchback FWD 11K2F | Chassis no. to:567941 | GDS51043 | Drive Shaft | 43T | 26 | 22 | 49 | 78.8 | 642 | |
| | 1999.11-2005.05 | | F | L/R | Hatchback FWD 11K2F | | GCO51003 | Outer Joint | 43T | 26 | 22 | 49 | 78.8 | 55 | I |
| | 1999.11-2005.05 | | F | | Hatchback FWD 11K2F | | GCO99209 | Outer Joint | 27T | 26 | 22 | 49 | 78.8 | 55 | I |
| 1.1 (55 kw) | 1999.09-2001.06 | 5MT | F | L | Hatchback FWD 11 K4F | Chassis no. to:567941 | GDS51043 | Drive Shaft | 43T | 26 | 22 | 49 | 78.8 | 642 | |
| | 2004.01-2005.05 | MT | F | L | Hatchback FWD 11 K4F | | GDS51001 | Drive Shaft | | 26 | 22 | 49 | 78.8 | 642 | |
| | 2004.01-2005.05 | MT | F | R | Hatchback FWD 11 K4F | | GDS51010 | Drive Shaft | | 26 | 22 | 49 | 78.8 | 877 | |
| | 2004.01-2005.05 | | F | L | Hatchback FWD 11 K4F | Chassis no. to:567941 | GDS51043 | Drive Shaft | 43T | 26 | 22 | 49 | 78.8 | 642 | |
| | 2004.01-2005.05 | | F | L/R | Hatchback FWD 11 K4F | | GCO51003 | Outer Joint | 43T | 26 | 22 | 49 | 78.8 | 55 | I |
| | 2004.01-2005.05 | | F | | Hatchback FWD 11 K4F | | GCO99209 | Outer Joint | 27T | 26 | 22 | 49 | 78.8 | 55 | I |
| 1.4 (62 kw) | 1999.10-2005.05 | 5MT | F | L | Hatchback FWD 14 K4M | Chassis no. to:567941 | GDS51043 | Drive Shaft | 43T | 26 | 22 | 49 | 78.8 | 642 | |
| | 1999.10-2005.05 | AT/MT | F | L/R | Hatchback FWD 14 K4M | | GCO23010 | Outer Joint | | 26 | 22 | 49 | 78.8 | 55 | I |

| | YEAR | TRANSM. | F/R | L/R | BODY STYLE & DRIVE TYPE & ENGINE | REMARKS | G-AP Ref. | PRODUCT | ABS | Technical Specifications A | B | C | H | L | P |
|---|---|---|---|---|---|---|---|---|---|---|---|---|---|---|---|
| **ROVER** | | | | | | | | | | | | | | | |
| **25** | | | | | | | | | | | | | | | |
| 1.4 (62 kw) | 1999.10-2005.05 | AT/MT | F | L/R | Hatchback FWD 14 K4M | | GCO51003 | Outer Joint | 43T | 26 | 22 | 49 | 78.8 | 55 | I |
| | 1999.10-2005.05 | MT | F | L | Hatchback FWD 14 K4M | | GDS51001 | Drive Shaft | | 26 | 22 | 49 | 78.8 | 642 | |
| | 1999.10-2005.05 | MT | F | L | Hatchback FWD 14 K4M | | GDS51021 | Drive Shaft | 43T | 26 | 23 | 49 | 78.8 | 632 | |
| | 1999.10-2005.05 | MT | F | R | Hatchback FWD 14 K4M | | GDS51010 | Drive Shaft | | 26 | 22 | 49 | 78.8 | 877 | |
| | 1999.10-2005.05 | MT | F | R | Hatchback FWD 14 K4M | | GDS51020 | Drive Shaft | 43T | 26 | 23 | 49 | 78.8 | 903 | |
| 1.4 (76 kw) | 1999.10-2005.05 | 5MT | F | L | Hatchback FWD 14 K4F | Chassis no. to:567941 | GDS51043 | Drive Shaft | 43T | 26 | 22 | 49 | 78.8 | 642 | |
| | 1999.10-2005.05 | AT/MT | F | L/R | Hatchback FWD 14 K4F | | GCO23010 | Outer Joint | | 26 | 22 | 49 | 78.8 | 55 | I |
| | 1999.10-2005.05 | AT/MT | F | L/R | Hatchback FWD 14 K4F | | GCO51003 | Outer Joint | 43T | 26 | 22 | 49 | 78.8 | 55 | I |
| | 1999.10-2005.05 | MT | F | L | Hatchback FWD 14 K4F | | GDS51001 | Drive Shaft | | 26 | 22 | 49 | 78.8 | 642 | |
| | 1999.10-2005.05 | MT | F | L | Hatchback FWD 14 K4F | | GDS51021 | Drive Shaft | 43T | 26 | 23 | 49 | 78.8 | 632 | |
| | 1999.10-2005.05 | MT | F | R | Hatchback FWD 14 K4F | | GDS51010 | Drive Shaft | | 26 | 22 | 49 | 78.8 | 877 | |
| | 1999.10-2005.05 | MT | F | R | Hatchback FWD 14 K4F | | GDS51020 | Drive Shaft | 43T | 26 | 23 | 49 | 78.8 | 903 | |
| 1.6 (80 kw) | 1999.10-2005.05 | 5MT | F | L | Hatchback FWD 16 K4F | Chassis no. to:567941 | GDS51043 | Drive Shaft | 43T | 26 | 22 | 49 | 78.8 | 642 | |
| | 1999.10-2005.05 | AT/MT | F | L/R | Hatchback FWD 16 K4F | | GCO23010 | Outer Joint | | 26 | 22 | 49 | 78.8 | 55 | I |
| | 1999.10-2005.05 | AT/MT | F | L/R | Hatchback FWD 16 K4F | | GCO51003 | Outer Joint | 43T | 26 | 22 | 49 | 78.8 | 55 | I |
| | 1999.10-2005.05 | CVT | F | L | Hatchback FWD 16 K4F | | GDS51019 | Drive Shaft | 43T | 26 | 23 | 49 | 78.8 | 630.5 | |
| | 1999.10-2005.05 | CVT | F | R | Hatchback FWD 16 K4F | | GDS51018 | Drive Shaft | 43T | 26 | 23 | 49 | 78.8 | 887 | |
| | 1999.10-2005.05 | MT | F | L | Hatchback FWD 16 K4F | | GDS51021 | Drive Shaft | 43T | 26 | 23 | 49 | 78.8 | 632 | |
| | 1999.10-2005.05 | MT | F | R | Hatchback FWD 16 K4F | | GDS51020 | Drive Shaft | 43T | 26 | 23 | 49 | 78.8 | 903 | |
| | 1999.10-2005.05 | | F | | Hatchback FWD 16 K4F | | GCO99209 | Outer Joint | 27T | 26 | 22 | 49 | 78.8 | 55 | I |
| 1.8 (85 kw) | 1999.10-2005.05 | AT/MT | F | L/R | Hatchback FWD 18 K4F | | GCO23010 | Outer Joint | | 26 | 22 | 49 | 78.8 | 55 | I |
| | 1999.10-2005.05 | AT/MT | F | L/R | Hatchback FWD 18 K4F | | GCO51003 | Outer Joint | 43T | 26 | 22 | 49 | 78.8 | 55 | I |
| | 1999.10-2005.05 | CVT | F | L | Hatchback FWD 18 K4F | | GDS51019 | Drive Shaft | 43T | 26 | 23 | 49 | 78.8 | 630.5 | |
| | 1999.10-2005.05 | CVT | F | R | Hatchback FWD 18 K4F | | GDS51018 | Drive Shaft | 43T | 26 | 23 | 49 | 78.8 | 887 | |
| | 1999.10-2005.05 | | F | L | Hatchback FWD 18 K4F | Chassis no. to:567941 | GDS51043 | Drive Shaft | 43T | 26 | 22 | 49 | 78.8 | 642 | |
| | 1999.10-2005.05 | | F | | Hatchback FWD 18 K4F | | GCO99209 | Outer Joint | 27T | 26 | 22 | 49 | 78.8 | 55 | I |
| 1.8 (107 kw) | 2000.02-2005.05 | AT | F | L | Hatchback FWD 18 K4K | | GDS51019 | Drive Shaft | 43T | 26 | 23 | 49 | 78.8 | 630.5 | |
| | 2000.02-2005.05 | AT | F | R | Hatchback FWD 18 K4K | | GDS51018 | Drive Shaft | 43T | 26 | 23 | 49 | 78.8 | 887 | |
| | 2000.02-2005.05 | AT/MT | F | L/R | Hatchback FWD 18 K4K | | GCO23010 | Outer Joint | | 26 | 22 | 49 | 78.8 | 55 | I |
| | 2000.02-2005.05 | AT/MT | F | L/R | Hatchback FWD 18 K4K | | GCO51003 | Outer Joint | 43T | 26 | 22 | 49 | 78.8 | 55 | I |
| | 2000.02-2005.05 | | F | L | Hatchback FWD 18 K4K | Chassis no. to:567941 | GDS51043 | Drive Shaft | 43T | 26 | 22 | 49 | 78.8 | 642 | |
| | 2000.02-2005.05 | | F | | Hatchback FWD 18 K4K | | GCO99209 | Outer Joint | 27T | 26 | 22 | 49 | 78.8 | 55 | I |
| 2.0 (74 kw) | 1999.10-2005.05 | MT | F | L/R | Hatchback FWD 20 T2N | | GCO51005 | Outer Joint | | 26 | 32 | 49 | 78 | 68.5 | I |
| | 1999.10-2005.05 | MT | F | L/R | Hatchback FWD 20 T2N | | GCO51007 | Outer Joint | 43T | 26 | 32 | 49 | 78 | 68.5 | I |
| 2.0 (83 kw) | 2002.01-2004.12 | MT | F | L/R | Hatchback FWD 20 T2N | | GCO51005 | Outer Joint | | 26 | 32 | 49 | 78 | 68.5 | I |
| | 2002.01-2004.12 | MT | F | L/R | Hatchback FWD 20 T2N | | GCO51007 | Outer Joint | 43T | 26 | 32 | 49 | 78 | 68.5 | I |
| **400 Tourer** | | | | | | | | | | | | | | | |
| 1.8 (107 kw) | 1996.03-1999.12 | | F | L/R | Estate FWD 18K4K | | GCO51003 | Outer Joint | 43T | 26 | 22 | 49 | 78.8 | 55 | I |
| **414** | | | | | | | | | | | | | | | |
| 1.4 (55 kw) | 1996.03-1997.12 | | F | L/R | Hatchback FWD 14K2F | | GCO51004 | Outer Joint | 43T | 26 | 22 | 55 | 77.5 | 55.5 | I |
| | 1996.03-1997.12 | | F | | Hatchback FWD 14K2F | | GCO51018 | Outer Joint | | 26 | 22 | 55 | 77.5 | 55.5 | I |
| | 1996.03-1999.12 | | F | | Saloon FWD 14K2F | | GCO51018 | Outer Joint | | 26 | 22 | 55 | 77.5 | 55.5 | I |
| 1.4 (76 kw) | 1995.05-1999.09 | MT | F | L/R | Hatchback FWD 14K4F | | GCO51004 | Outer Joint | 43T | 26 | 22 | 55 | 77.5 | 55.5 | I |
| | 1995.05-1999.09 | MT | F | L/R | Hatchback FWD 14K4F | | GCO51018 | Outer Joint | | 26 | 22 | 55 | 77.5 | 55.5 | I |
| | 1995.05-1999.09 | MT | F | L/R | Saloon FWD 14K4F | Date to:1999.09 | GCO51004 | Outer Joint | 43T | 26 | 22 | 55 | 77.5 | 55.5 | I |
| **416** | | | | | | | | | | | | | | | |
| 1.6 (82 kw) | 1990.04-1996.02 | MT | F | L | Saloon FWD D16Z2 | | GDS23122 | Drive Shaft | | 26 | 27 | 49 | 78.8 | 608 | |
| | 1990.04-1996.02 | MT | F | L | Saloon FWD D16Z2 | | GDS81020 | Drive Shaft | 50T | 26 | 27 | 49 | 78.8 | 608 | |
| | 1990.04-1996.02 | MT | F | R | Saloon FWD D16Z2 | | GDS23040 | Drive Shaft | 50T | 26 | 27 | 49 | 78.8 | 606 | |
| | 1990.04-1996.02 | MT | F | R | Saloon FWD D16Z2 | | GDS23078 | Drive Shaft | | 26 | 27 | 49 | 78.8 | 606 | |
| | 1990.04-1996.02 | MT | F | L/R | Saloon FWD D16Z2 | | GCO23007 | Outer Joint | | 26 | 23 | 49 | 78.8 | 55 | I |
| | 1990.04-1996.02 | MT | F | L/R | Saloon FWD D16Z2 | | GCO23008 | Outer Joint | 50T | 26 | 23 | 49 | 78.8 | 55 | I |
| | 1990.04-1996.02 | MT | F | L/R | Saloon FWD D16Z2 | | GCO23020 | Outer Joint | | 26 | 23 | 49 | 78.5 | 54.5 | M |
| | 1990.04-1996.02 | | F | L | Saloon FWD D16Z2 | | GCI81003 | Inner Joint | | 27 | 32 | 40 | 55 | 97.5 | |
| | 1995.05-2000.03 | AT | F | R | Hatchback FWD 16K4F | | GDS81010 | Drive Shaft | 50T | 26 | 25 | 55 | 78.5 | 627 | |
| | 1995.05-2000.03 | MT | F | L/R | Hatchback FWD 16K4F | | GCO51004 | Outer Joint | 43T | 26 | 22 | 55 | 77.5 | 55.5 | I |
| | 1995.05-2000.03 | MT | F | L/R | Hatchback FWD 16K4F | | GCO51018 | Outer Joint | | 26 | 22 | 55 | 77.5 | 55.5 | I |
| | 1995.05-2000.03 | AT | F | R | Saloon FWD 16K4F | | GDS81010 | Drive Shaft | 50T | 26 | 25 | 55 | 78.5 | 627 | |
| | 1995.05-2000.03 | MT | F | L/R | Saloon FWD 16K4F | | GCO51004 | Outer Joint | 43T | 26 | 22 | 55 | 77.5 | 55.5 | I |
| 1.6 (83 kw) | 1995.03-1999.06 | AT | F | L | Saloon FWD D16Y3 | | GDS23020 | Drive Shaft | 50T | 26 | 25 | 49 | 78.8 | 909 | |
| | 1995.03-1999.06 | AT | F | R | Saloon FWD D16Y3 | | GDS81010 | Drive Shaft | 50T | 26 | 25 | 55 | 78.5 | 627 | |
| | 1995.03-1999.06 | MT | F | L/R | Saloon FWD D16Y3 | | GCO51004 | Outer Joint | 43T | 26 | 22 | 55 | 77.5 | 55.5 | I |
| | 1996.03-1999.06 | AT | F | R | Hatchback FWD D16Y3 | | GDS81010 | Drive Shaft | 50T | 26 | 25 | 55 | 78.5 | 627 | |
| | 1996.03-1999.06 | MT | F | L/R | Hatchback FWD D16Y3 | | GCO51004 | Outer Joint | 43T | 26 | 22 | 55 | 77.5 | 55.5 | I |
| 1.6 (90 kw) | 1990.04-1996.02 | MT | F | L | Saloon FWD D16A8 | | GDS23122 | Drive Shaft | | 26 | 27 | 49 | 78.8 | 608 | |

| | YEAR | TRANSM. | F/R | L/R | BODY STYLE & DRIVE TYPE & ENGINE | REMARKS | G-AP Ref. | PRODUCT | ABS | Technical Specifications A | B | C | H | L | P |
|---|---|---|---|---|---|---|---|---|---|---|---|---|---|---|---|
| **ROVER** | | | | | | | | | | | | | | | |
| **416** | | | | | | | | | | | | | | | |
| 1.6 (90 kw) | 1990.04-1996.02 | MT | F | L | Saloon FWD D16A8 | | GDS81020 | Drive Shaft | 50T | 26 | 27 | 49 | 78.8 | 608 | |
| | 1990.04-1996.02 | MT | F | R | Saloon FWD D16A8 | | GDS23040 | Drive Shaft | 50T | 26 | 27 | 49 | 78.8 | 606 | |
| | 1990.04-1996.02 | MT | F | R | Saloon FWD D16A8 | | GDS23078 | Drive Shaft | | 26 | 27 | 49 | 78.8 | 606 | |
| | 1990.04-1996.02 | MT | F | L/R | Saloon FWD D16A8 | | GCO23007 | Outer Joint | | 26 | 23 | 49 | 78.8 | 55 | I |
| | 1990.04-1996.02 | MT | F | L/R | Saloon FWD D16A8 | | GCO23008 | Outer Joint | 50T | 26 | 23 | 49 | 78.8 | 55 | I |
| | 1990.04-1996.02 | MT | F | L/R | Saloon FWD D16A8 | | GCO23020 | Outer Joint | | 26 | 23 | 49 | 78.5 | 54.5 | M |
| | 1990.04-1996.02 | | F | L | Saloon FWD D16A8 | | GCI81003 | Inner Joint | | 27 | 32 | 40 | 55 | 97.5 | |
| **416 Tourer** | | | | | | | | | | | | | | | |
| 1.6 (82 kw) | 1993.09-1998.11 | AT/MT | F | L | Estate FWD D16Z2 | Chassis no. from:605482 | GDS23122 | Drive Shaft | | 26 | 27 | 49 | 78.8 | 608 | |
| | 1993.09-1998.11 | AT/MT | F | L | Estate FWD D16Z2 | Chassis no. from:605482 | GDS81020 | Drive Shaft | 50T | 26 | 27 | 49 | 78.8 | 608 | |
| | 1993.09-1998.11 | AT/MT | F | R | Estate FWD D16Z2 | Chassis no. from:605482 | GDS23040 | Drive Shaft | 50T | 26 | 27 | 49 | 78.8 | 606 | |
| | 1993.09-1998.11 | AT/MT | F | R | Estate FWD D16Z2 | Chassis no. from:605482 | GDS23078 | Drive Shaft | | 26 | 27 | 49 | 78.8 | 606 | |
| | 1993.09-1998.11 | AT/MT | F | L | Estate FWD D16Z2 | | GCI81003 | Inner Joint | | 27 | 32 | 40 | 55 | 97.5 | |
| | 1993.09-1998.11 | CVT | F | L | Estate FWD D16Z2 | | GDS23020 | Drive Shaft | 50T | 26 | 25 | 49 | 78.8 | 909 | |
| | 1993.09-1998.11 | CVT | F | R | Estate FWD D16Z2 | | GDS81010 | Drive Shaft | 50T | 26 | 25 | 55 | 78.5 | 627 | |
| | 1993.09-1998.11 | | F | | Estate FWD D16Z2 | | GCO23007 | Outer Joint | | 26 | 23 | 49 | 78.8 | 55 | I |
| | 1993.09-1998.11 | | F | | Estate FWD D16Z2 | | GCO23008 | Outer Joint | 50T | 26 | 23 | 49 | 78.8 | 55 | I |
| 1.6 (90 kw) | 1994.05-1998.11 | AT | F | L | Estate FWD D16A8 | | GDS23020 | Drive Shaft | 50T | 26 | 25 | 49 | 78.8 | 909 | |
| | 1994.05-1998.11 | AT | F | R | Estate FWD D16A8 | | GDS81010 | Drive Shaft | 50T | 26 | 25 | 55 | 78.5 | 627 | |
| | 1994.05-1998.11 | AT/MT | F | L | Estate FWD D16A8 | Chassis no. from:605482 | GDS23122 | Drive Shaft | | 26 | 27 | 49 | 78.8 | 608 | |
| | 1994.05-1998.11 | AT/MT | F | L | Estate FWD D16A8 | Chassis no. from:605482 | GDS81020 | Drive Shaft | 50T | 26 | 27 | 49 | 78.8 | 608 | |
| | 1994.05-1998.11 | AT/MT | F | R | Estate FWD D16A8 | Chassis no. from:605482 | GDS23040 | Drive Shaft | 50T | 26 | 27 | 49 | 78.8 | 606 | |
| | 1994.05-1998.11 | AT/MT | F | R | Estate FWD D16A8 | Chassis no. from:605482 | GDS23078 | Drive Shaft | | 26 | 27 | 49 | 78.8 | 606 | |
| | 1994.05-1998.11 | AT/MT | F | L | Estate FWD D16A8 | | GCI81003 | Inner Joint | | 27 | 32 | 40 | 55 | 97.5 | |
| | 1994.05-1998.11 | | F | | Estate FWD D16A8 | | GCO23007 | Outer Joint | | 26 | 23 | 49 | 78.8 | 55 | I |
| | 1994.05-1998.11 | | F | | Estate FWD D16A8 | | GCO23008 | Outer Joint | 50T | 26 | 23 | 49 | 78.8 | 55 | I |
| **418 Tourer** | | | | | | | | | | | | | | | |
| 1.8 (65 kw) | 1993.09-1998.11 | AT/MT | F | L/R | Estate FWD IOCV2L | | GCO51005 | Outer Joint | | 26 | 32 | 49 | 78 | 68.5 | I |
| | 1993.09-1998.11 | MT | F | L | Estate FWD IOCV2L | | GDS51004 | Drive Shaft | 27T | 26 | 29 | 49 | 78 | 594 | |
| **420** | | | | | | | | | | | | | | | |
| 2.0 (63 kw) | 1995.05-1999.06 | AT/MT | F | L/R | Hatchback FWD 20T2R | Date to:1999.06 | GCO23002 | Outer Joint | 43T | 26 | 32 | 55 | 78 | 68.5 | I |
| | 1995.05-1999.06 | MT | F | L/R | Hatchback FWD 20T2R | | GCO51008 | Outer Joint | | 26 | 32 | 55 | 78 | 68.5 | I |
| | 1995.05-1999.06 | AT/MT | F | L/R | Saloon FWD 20T2R | Date to:1999.06 | GCO23002 | Outer Joint | 43T | 26 | 32 | 55 | 78 | 68.5 | I |
| | 1995.05-1999.06 | | F | L/R | Saloon FWD 20T2R | | GCO51008 | Outer Joint | | 26 | 32 | 55 | 78 | 68.5 | I |
| 2.0 (77 kw) | 1995.05-1999.06 | AT/MT | F | L/R | Hatchback FWD 20T2N | Date to:1999.06 | GCO23002 | Outer Joint | 43T | 26 | 32 | 55 | 78 | 68.5 | I |
| | 1995.05-1999.06 | AT/MT | F | L/R | Hatchback FWD 20T2N | | GCO51008 | Outer Joint | | 26 | 32 | 55 | 78 | 68.5 | I |
| | 1995.05-1999.06 | AT/MT | F | L/R | Saloon FWD 20T2N | Date to:1999.06 | GCO23002 | Outer Joint | 43T | 26 | 32 | 55 | 78 | 68.5 | I |
| | 1995.05-1999.06 | | F | L/R | Saloon FWD 20T2N | | GCO51008 | Outer Joint | | 26 | 32 | 55 | 78 | 68.5 | I |
| 2.0 (100 kw) | 1995.05-1999.06 | AT/MT | F | L/R | Hatchback FWD 20M4F | Date to:1999.06 | GCO23002 | Outer Joint | 43T | 26 | 32 | 55 | 78 | 68.5 | I |
| | 1995.05-1999.06 | | F | L/R | Hatchback FWD 20M4F | | GCO51008 | Outer Joint | | 26 | 32 | 55 | 78 | 68.5 | I |
| | 1995.12-1999.06 | AT/MT | F | L/R | Saloon FWD 20M4F | Date to:1999.06 | GCO23002 | Outer Joint | 43T | 26 | 32 | 55 | 78 | 68.5 | I |
| | 1995.12-1999.06 | | F | L/R | Saloon FWD 20M4F | | GCO51008 | Outer Joint | | 26 | 32 | 55 | 78 | 68.5 | I |
| **420 Tourer** | | | | | | | | | | | | | | | |
| 2.0 (100 kw) | 1994.05-1998.11 | MT | F | L/R | Estate FWD 20M4F | | GCO51005 | Outer Joint | | 26 | 32 | 49 | 78 | 68.5 | I |
| **45** | | | | | | | | | | | | | | | |
| 1.4 (76 kw) | 2000.02-2005.05 | MT | F | L | Hatchback FWD 14 K4F | | GDS51021 | Drive Shaft | 43T | 26 | 23 | 49 | 78.8 | 632 | |
| | 2000.02-2005.05 | MT | F | R | Hatchback FWD 14 K4F | | GDS51020 | Drive Shaft | 43T | 26 | 23 | 49 | 78.8 | 903 | |
| | 2000.02-2005.05 | MT | F | L/R | Hatchback FWD 14 K4F | | GCO51004 | Outer Joint | 43T | 26 | 22 | 55 | 77.5 | 55.5 | I |
| | 2000.02-2005.05 | MT | F | L | Saloon FWD 14 K4F | | GDS51021 | Drive Shaft | 43T | 26 | 23 | 49 | 78.8 | 632 | |
| | 2000.02-2005.05 | MT | F | R | Saloon FWD 14 K4F | | GDS51020 | Drive Shaft | 43T | 26 | 23 | 49 | 78.8 | 903 | |
| | 2000.02-2005.05 | MT | F | L/R | Saloon FWD 14 K4F | | GCO51004 | Outer Joint | 43T | 26 | 22 | 55 | 77.5 | 55.5 | I |
| 1.6 (80 kw) | 2000.02-2005.05 | MT | F | L | Hatchback FWD 16 K4F | | GDS51021 | Drive Shaft | 43T | 26 | 23 | 49 | 78.8 | 632 | |
| | 2000.02-2005.05 | MT | F | R | Hatchback FWD 16 K4F | | GDS51020 | Drive Shaft | 43T | 26 | 23 | 49 | 78.8 | 903 | |
| | 2000.02-2005.05 | MT | F | L/R | Hatchback FWD 16 K4F | | GCO51004 | Outer Joint | 43T | 26 | 22 | 55 | 77.5 | 55.5 | I |
| | 2000.02-2005.05 | MT | F | L | Saloon FWD 16 K4F | | GDS51021 | Drive Shaft | 43T | 26 | 23 | 49 | 78.8 | 632 | |
| | 2000.02-2005.05 | MT | F | R | Saloon FWD 16 K4F | | GDS51020 | Drive Shaft | 43T | 26 | 23 | 49 | 78.8 | 903 | |
| | 2000.02-2005.05 | MT | F | L/R | Saloon FWD 16 K4F | | GCO51004 | Outer Joint | 43T | 26 | 22 | 55 | 77.5 | 55.5 | I |
| 1.8 (86 kw) | 2000.02-2005.05 | MT | F | L/R | Hatchback FWD 18 K4F | | GCO51004 | Outer Joint | 43T | 26 | 22 | 55 | 77.5 | 55.5 | I |
| | 2000.02-2005.05 | MT | F | L/R | Saloon FWD 18 K4F | | GCO51004 | Outer Joint | 43T | 26 | 22 | 55 | 77.5 | 55.5 | I |
| 2.0 (74 kw) | 2000.02-2005.05 | AT/MT | F | L/R | Hatchback FWD 20 T2N | | GCO23002 | Outer Joint | 43T | 26 | 32 | 55 | 78 | 68.5 | I |
| | 2000.02-2005.05 | MT | F | L | Hatchback FWD 20 T2N | | GDS51017 | Drive Shaft | 43T | 26 | 29 | 55 | 77.5 | 559 | |
| | 2000.02-2005.05 | MT | F | R | Hatchback FWD 20 T2N | | GDS51072 | Drive Shaft | 43T | 26 | 29 | 55 | 77.5 | 961 | |
| | 2000.02-2005.05 | MT | F | L/R | Hatchback FWD 20 T2N | | GCO51008 | Outer Joint | | 26 | 32 | 55 | 78 | 68.5 | I |
| | 2000.02-2005.05 | AT/MT | F | L/R | Saloon FWD 20 T2N | | GCO23002 | Outer Joint | 43T | 26 | 32 | 55 | 78 | 68.5 | I |
| | 2000.02-2005.05 | MT | F | L | Saloon FWD 20 T2N | | GDS51017 | Drive Shaft | 43T | 26 | 29 | 55 | 77.5 | 559 | |

| | YEAR | TRANSM. | F/R | L/R | BODY STYLE & DRIVE TYPE & ENGINE | REMARKS | G-AP Ref. | PRODUCT | ABS | Technical Specifications A | B | C | H | L | P |
|---|---|---|---|---|---|---|---|---|---|---|---|---|---|---|---|
| **ROVER** | | | | | | | | | | | | | | | |
| **45** | | | | | | | | | | | | | | | |
| 2.0 (74 kw) | 2000.02-2005.05 | MT | F | R | Saloon FWD 20 T2N | | GDS51072 | Drive Shaft | 43T | 26 | 29 | 55 | 77.5 | 961 | |
| | 2000.02-2005.05 | MT | F | L/R | Saloon FWD 20 T2N | | GCO51008 | Outer Joint | | 26 | 32 | 55 | 78 | 68.5 | I |
| 2.0 (83 kw) | 2004.01-2005.05 | | F | L/R | Hatchback FWD 20 T2N | | GCO23002 | Outer Joint | 43T | 26 | 32 | 55 | 78 | 68.5 | I |
| | 2004.01-2005.05 | | F | L/R | Hatchback FWD 20 T2N | | GCO51008 | Outer Joint | | 26 | 32 | 55 | 78 | 68.5 | I |
| | 2004.01-2005.05 | | F | L/R | Saloon FWD 20 T2N | | GCO23002 | Outer Joint | 43T | 26 | 32 | 55 | 78 | 68.5 | I |
| | 2004.01-2005.05 | | F | L/R | Saloon FWD 20 T2N | | GCO51008 | Outer Joint | | 26 | 32 | 55 | 78 | 68.5 | I |
| 2.0 (110 kw) | 2000.02-2005.05 | AT/MT | F | L/R | Hatchback FWD 20 K4F | | GCO23002 | Outer Joint | 43T | 26 | 32 | 55 | 78 | 68.5 | I |
| | 2000.02-2005.05 | MT | F | L/R | Hatchback FWD 20 K4F | | GCO51008 | Outer Joint | | 26 | 32 | 55 | 78 | 68.5 | I |
| | 2000.02-2005.05 | AT/MT | F | L/R | Saloon FWD 20 K4F | | GCO23002 | Outer Joint | 43T | 26 | 32 | 55 | 78 | 68.5 | I |
| | 2000.02-2005.05 | MT | F | L/R | Saloon FWD 20 K4F | | GCO51008 | Outer Joint | | 26 | 32 | 55 | 78 | 68.5 | I |
| **618** | | | | | | | | | | | | | | | |
| 1.9 (85 kw) | 1994.10-1999.06 | AT/MT | F | L/R | Saloon FWD F18A/F18A3 | | GCO51001 | Outer Joint | 50T | 28 | 32 | 60 | 89 | 61 | I |
| | 1994.10-1999.06 | AT/MT | F | L/R | Saloon FWD F18A/F18A3 | | GCO51017 | Outer Joint | | 28 | 32 | 60 | 89 | 61 | I |
| | 1994.10-1999.06 | MT | F | L | Saloon FWD F18A/F18A3 | | GDS23039 | Drive Shaft | 50T | 28 | 27 | 60 | 89 | 602.7 | |
| | 1994.10-1999.06 | MT | F | R | Saloon FWD F18A/F18A3 | | GDS23038 | Drive Shaft | 50T | 28 | 27 | 60 | 89 | 552.5 | |
| | 1994.10-1999.06 | MT | F | R | Saloon FWD F18A/F18A3 | | GDS51026 | Drive Shaft | | 28 | 27 | 60 | 89 | 603 | |
| | 1994.10-1999.06 | MT | F | L | Saloon FWD F18A/F18A3 | | GCI81008 | Inner Joint | | 27 | 32 | 40 | | 121 | |
| | 1994.10-1999.06 | MT | F | R | Saloon FWD F18A/F18A3 | | GCI23009 | Inner Joint | | 27 | 32 | 40 | 58.5 | 97 | |
| **620** | | | | | | | | | | | | | | | |
| 2.0 (77 kw) | 1994.05-1999.06 | AT/MT | F | L/R | Saloon FWD 20T2N | | GCO51001 | Outer Joint | 50T | 28 | 32 | 60 | 89 | 61 | I |
| | 1994.05-1999.06 | AT/MT | F | L/R | Saloon FWD 20T2N | | GCO51017 | Outer Joint | | 28 | 32 | 60 | 89 | 61 | I |
| 2.0 (85 kw) | 1993.09-1996.02 | AT/MT | F | L/R | Saloon FWD F20Z2 | Date to:1994.05 | GCO51001 | Outer Joint | 50T | 28 | 32 | 60 | 89 | 61 | I |
| | 1993.09-1996.02 | AT/MT | F | L/R | Saloon FWD F20Z2 | Date from:1994.05;Date to:1996.02 | GCO51017 | Outer Joint | | 28 | 32 | 60 | 89 | 61 | I |
| | 1993.09-1996.02 | MT | F | L | Saloon FWD F20Z2 | | GDS23039 | Drive Shaft | 50T | 28 | 27 | 60 | 89 | 602.7 | |
| | 1993.09-1996.02 | MT | F | R | Saloon FWD F20Z2 | | GDS23038 | Drive Shaft | 50T | 28 | 27 | 60 | 89 | 552.5 | |
| | 1993.09-1996.02 | MT | F | R | Saloon FWD F20Z2 | | GDS51026 | Drive Shaft | | 28 | 27 | 60 | 89 | 603 | |
| | 1993.09-1996.02 | MT | F | L | Saloon FWD F20Z2 | | GCI81008 | Inner Joint | | 27 | 32 | 40 | | 121 | |
| | 1993.09-1996.02 | MT | F | R | Saloon FWD F20Z2 | | GCI23009 | Inner Joint | | 27 | 32 | 40 | 58.5 | 97 | |
| 2.0 (96 kw) | 1993.09-1999.06 | AT/MT | F | L | Saloon FWD F20Z1 | | GDS23039 | Drive Shaft | 50T | 28 | 27 | 60 | 89 | 602.7 | |
| | 1993.09-1999.06 | AT/MT | F | R | Saloon FWD F20Z1 | | GDS23038 | Drive Shaft | 50T | 28 | 27 | 60 | 89 | 552.5 | |
| | 1993.09-1999.06 | AT/MT | F | L/R | Saloon FWD F20Z1 | Date to:1994.05 | GCO51001 | Outer Joint | 50T | 28 | 32 | 60 | 89 | 61 | I |
| | 1993.09-1999.06 | AT/MT | F | L/R | Saloon FWD F20Z1 | Date from:1994.05 | GCO51017 | Outer Joint | | 28 | 32 | 60 | 89 | 61 | I |
| | 1993.09-1999.06 | MT | F | R | Saloon FWD F20Z1 | | GDS51026 | Drive Shaft | | 28 | 27 | 60 | 89 | 603 | |
| | 1993.09-1999.06 | MT | F | L | Saloon FWD F20Z1 | | GCI81008 | Inner Joint | | 27 | 32 | 40 | | 121 | |
| | 1993.09-1999.06 | MT | F | R | Saloon FWD F20Z1 | | GCI23009 | Inner Joint | | 27 | 32 | 40 | 58.5 | 97 | |
| 2.0 (147 kw) | 1994.05-1998.08 | AT/MT | F | L/R | Saloon FWD 20T4G | | GCO51001 | Outer Joint | 50T | 28 | 32 | 60 | 89 | 61 | I |
| | 1994.05-1998.08 | MT | F | L | Saloon FWD 20T4G | | GDS23039 | Drive Shaft | 50T | 28 | 27 | 60 | 89 | 602.7 | |
| | 1994.05-1998.08 | MT | F | R | Saloon FWD 20T4G | | GDS23038 | Drive Shaft | 50T | 28 | 27 | 60 | 89 | 552.5 | |
| **623** | | | | | | | | | | | | | | | |
| 2.3 (116 kw) | 1993.09-1999.06 | AT/MT | F | L/R | Saloon FWD H23A3 | Date to:1994.05 | GCO51001 | Outer Joint | 50T | 28 | 32 | 60 | 89 | 61 | I |
| | 1993.09-1999.06 | AT/MT | F | L/R | Saloon FWD H23A3 | Date from:1994.05 | GCO51017 | Outer Joint | | 28 | 32 | 60 | 89 | 61 | I |
| | 1993.09-1999.06 | MT | F | L | Saloon FWD H23A3 | | GDS23039 | Drive Shaft | 50T | 28 | 27 | 60 | 89 | 602.7 | |
| | 1993.09-1999.06 | MT | F | R | Saloon FWD H23A3 | | GDS23038 | Drive Shaft | 50T | 28 | 27 | 60 | 89 | 552.5 | |
| | 1993.09-1999.06 | MT | F | R | Saloon FWD H23A3 | | GDS51026 | Drive Shaft | | 28 | 27 | 60 | 89 | 603 | |
| | 1993.09-1999.06 | MT | F | L | Saloon FWD H23A3 | | GCI81008 | Inner Joint | | 27 | 32 | 40 | | 121 | |
| | 1993.09-1999.06 | MT | F | R | Saloon FWD H23A3 | | GCI23009 | Inner Joint | | 27 | 32 | 40 | 58.5 | 97 | |
| **75** | | | | | | | | | | | | | | | |
| 1.8 (88 kw) | 1999.04-2005.04 | AT | F | L | Saloon FWD 18K4F | | GDS51068 | Drive Shaft | | 28 | 34 | 57.8 | 83.5 | 623 | |
| | 1999.04-2005.04 | AT | F | R | Saloon FWD 18K4F | | GDS18471 | Drive Shaft | | 28 | 34 | 57.8 | 83.5 | 948 | |
| | 1999.04-2005.04 | AT | F | L | Saloon FWD 18K4F | | GCI38001 | Inner Joint | | 34 | 23 | 40 | 54 | 97 | |
| | 1999.04-2005.04 | AT/MT | F | L/R | Saloon FWD 18K4F | | GCO51011 | Outer Joint | | 28 | 23 | 57.8 | 83.5 | 62 | M |
| | 1999.04-2005.04 | MT | F | L | Saloon FWD 18K4F | | GDS51071 | Drive Shaft | | 28 | 34 | 57.8 | 83.5 | 600 | |
| 2.0 (85 kw) | 1999.04-2005.04 | AT | F | L | Saloon FWD 204D2 | | GDS51070 | Drive Shaft | | 28 | 34 | 57.8 | 83.5 | 627 | |
| | 1999.04-2005.04 | AT | F | R | Saloon FWD 204D2 | | GDS18456 | Drive Shaft | | 28 | 34 | 57.8 | 83.5 | 944 | |
| | 1999.04-2005.04 | AT/MT | F | L/R | Saloon FWD 204D2 | | GCO99151 | Outer Joint | | 28 | 24 | 57.8 | 83.5 | 62 | M |
| | 1999.04-2005.04 | MT | F | L | Saloon FWD 204D2 | | GDS51069 | Drive Shaft | | 28 | 34 | 57.8 | 83.5 | 614 | |
| | 1999.04-2005.04 | MT | F | R | Saloon FWD 204D2 | | GDS18457 | Drive Shaft | | 28 | 34 | 57.8 | 83.5 | 956 | |
| 2.0 (96 kw) | 2002.11-2005.04 | AT/MT | F | L/R | Saloon FWD 204D2 | | GCO99151 | Outer Joint | | 28 | 24 | 57.8 | 83.5 | 62 | M |
| 2.0 (110 kw) | 1999.04-2003.03 | AT/MT | F | L/R | Saloon FWD 20K4F | Date to:2003.03 | GCO99151 | Outer Joint | | 28 | 24 | 57.8 | 83.5 | 62 | M |
| 2.5 (130 kw) | 2001.10-2005.04 | AT/MT | F | L/R | Saloon FWD 25K4F | | GCO99151 | Outer Joint | | 28 | 24 | 57.8 | 83.5 | 62 | M |
| **75 Tourer** | | | | | | | | | | | | | | | |
| 1.8 (88 kw) | 2001.04-2005.04 | AT | F | L | Estate FWD 18K4F | | GDS51068 | Drive Shaft | | 28 | 34 | 57.8 | 83.5 | 623 | |
| | 2001.04-2005.04 | AT | F | R | Estate FWD 18K4F | | GDS18471 | Drive Shaft | | 28 | 34 | 57.8 | 83.5 | 948 | |
| | 2001.04-2005.04 | AT | F | L | Estate FWD 18K4F | | GCI38001 | Inner Joint | | 34 | 23 | 40 | 54 | 97 | |
| | 2001.04-2005.04 | AT/MT | F | L/R | Estate FWD 18K4F | | GCO51011 | Outer Joint | | 28 | 23 | 57.8 | 83.5 | 62 | M |

| | YEAR | TRANSM. | F/R | L/R | BODY STYLE & DRIVE TYPE & ENGINE | REMARKS | G-AP Ref. | PRODUCT | ABS | Technical Specifications A | B | C | H | L | P |
|---|---|---|---|---|---|---|---|---|---|---|---|---|---|---|---|
| **ROVER** | | | | | | | | | | | | | | | |
| **75 Tourer** | | | | | | | | | | | | | | | |
| 1.8 (88 kw) | 2001.04-2005.04 | MT | F | L | Estate FWD 18K4F | | GDS51071 | Drive Shaft | | 28 | 34 | 57.8 | 83.5 | 600 | |
| 2.0 (85 kw) | 2001.04-2005.04 | AT | F | L | Estate FWD 204D2 | | GDS51070 | Drive Shaft | | 28 | 34 | 57.8 | 83.5 | 627 | |
| | 2001.04-2005.04 | AT/MT | F | L/R | Estate FWD 204D2 | | GCO99151 | Outer Joint | | 28 | 24 | 57.8 | 83.5 | 62 | M |
| | 2001.04-2005.04 | MT | F | L | Estate FWD 204D2 | | GDS51069 | Drive Shaft | | 28 | 34 | 57.8 | 83.5 | 614 | |
| | 2001.04-2005.04 | MT | F | R | Estate FWD 204D2 | | GDS18457 | Drive Shaft | | 28 | 34 | 57.8 | 83.5 | 956 | |
| 2.0 (96 kw) | 2002.11-2005.04 | AT/MT | F | L/R | Estate FWD 204D2 | | GCO99151 | Outer Joint | | 28 | 24 | 57.8 | 83.5 | 62 | M |
| 2.0 (110 kw) | 2001.04-2005.04 | AT/MT | F | L/R | Estate FWD 20K4F | | GCO99151 | Outer Joint | | 28 | 24 | 57.8 | 83.5 | 62 | M |
| 2.5 (130 kw) | 2001.08-2005.04 | AT/MT | F | L/R | Estate FWD 25K4F | | GCO99151 | Outer Joint | | 28 | 24 | 57.8 | 83.5 | 62 | M |
| **820** | | | | | | | | | | | | | | | |
| 2.0 (100 kw) | 1991.01-1999.02 | | F | | Hatchback FWD 20 T4H | | GCO51002 | Outer Joint | 45T | 28 | 32 | 55.6 | 85 | 61 | I |
| | 1992.01-1999.02 | | F | | Saloon FWD 20K4H | | GCO51002 | Outer Joint | 45T | 28 | 32 | 55.6 | 85 | 61 | I |
| 2.0 (132 kw) | 1991.11-1996.01 | | F | | Hatchback FWD 20T4G | | GCO51002 | Outer Joint | 45T | 28 | 32 | 55.6 | 85 | 61 | I |
| | 1992.01-1999.02 | | F | | Saloon FWD T 16 | | GCO51002 | Outer Joint | 45T | 28 | 32 | 55.6 | 85 | 61 | I |
| | 1992.05-1999.02 | | F | | Saloon FWD 20 T4G, 20 T4H | | GCO51002 | Outer Joint | 45T | 28 | 32 | 55.6 | 85 | 61 | I |
| 2.0 (145 kw) | 1994.04-1996.03 | | F | | Hatchback FWD 20T4G | | GCO51002 | Outer Joint | 45T | 28 | 32 | 55.6 | 85 | 61 | I |
| | 1994.04-1996.03 | | F | | Saloon FWD 20T4G | | GCO51002 | Outer Joint | 45T | 28 | 32 | 55.6 | 85 | 61 | I |
| **825** | | | | | | | | | | | | | | | |
| 2.5 (87 kw) | 1990.01-1999.02 | | F | | Saloon FWD 425SL1RR/4924SHIRG | | GCO51002 | Outer Joint | 45T | 28 | 32 | 55.6 | 85 | 61 | I |
| | 1992.01-1999.02 | | F | | Hatchback FWD 97A | | GCO51002 | Outer Joint | 45T | 28 | 32 | 55.6 | 85 | 61 | I |
| | 1993.09-1999.02 | | F | | Coupe FWD 425SL1 | | GCO51002 | Outer Joint | 45T | 28 | 32 | 55.6 | 85 | 61 | I |
| 2.5 (129 kw) | 1996.02-1998.10 | | F | | Coupe FWD 25K4F | | GCO51002 | Outer Joint | 45T | 28 | 32 | 55.6 | 85 | 61 | I |
| | 1996.02-1998.10 | AT/MT | F | | Hatchback FWD 25 K4F | type:RS/XS | GCO51002 | Outer Joint | 45T | 28 | 32 | 55.6 | 85 | 61 | I |
| | 1996.02-1998.10 | | F | | Saloon FWD 25K4F | | GCO51002 | Outer Joint | 45T | 28 | 32 | 55.6 | 85 | 61 | I |
| **827** | | | | | | | | | | | | | | | |
| 2.7 (124 kw) | 1987.10-1999.02 | | F | | Saloon FWD C27A1/C27A2 | | GCO51002 | Outer Joint | 45T | 28 | 32 | 55.6 | 85 | 61 | I |
| | 1993.10-1996.01 | | F | | Coupe FWD C27A1/C27A2 | | GCO51002 | Outer Joint | 45T | 28 | 32 | 55.6 | 85 | 61 | I |
| **CDV** | | | | | | | | | | | | | | | |
| 2.0 (74 kw) | 2003.03-2005.04 | | F | L/R | Hatchback Van FWD 20 T2N | | GCO51005 | Outer Joint | | 26 | 32 | 49 | 78 | 68.5 | I |
| | 2003.03-2005.04 | | F | L/R | Hatchback Van FWD 20 T2N | | GCO51007 | Outer Joint | 43T | 26 | 32 | 49 | 78 | 68.5 | I |
| **Commerce** | | | | | | | | | | | | | | | |
| 1.4 (62 kw) | 2003.01-2005.12 | | F | L | Hatchback Van FWD 14 K4M | Chassis no. to:567941 | GDS51043 | Drive Shaft | 43T | 26 | 22 | 49 | 78.8 | 642 | |
| | 2003.01-2005.12 | | F | L | Hatchback Van FWD 14 K4M | Chassis no. to:567941 | GCO51003 | Outer Joint | 43T | 26 | 22 | 49 | 78.8 | 55 | I |
| **Mini** | | | | | | | | | | | | | | | |
| 1.3 (37 kw) | 1992.04-1996.10 | 4MT | F | R | Hatchback FWD 12A2L | | GCI99098 | Inner Joint | | 21 | 19 | 31.8 | | 99 | |
| 1.3 (39 kw) | 1996.05-1996.12 | | F | | Hatchback FWD 12A2L | | GCI99098 | Inner Joint | | 21 | 19 | 31.8 | | 99 | |
| 1.3 (46 kw) | 1992.01-2000.11 | 4MT | F | L/R | Hatchback FWD 12A2L | For Engine code:12 A2E,12 A2L | GCO51013 | Outer Joint | | 29 | 19 | 48 | 106 | 57 | I |
| | 1992.01-2000.11 | 4MT | F | R | Hatchback FWD 12A2L | | GCI99098 | Inner Joint | | 21 | 19 | 31.8 | | 99 | |
| **Streetwise** | | | | | | | | | | | | | | | |
| 1.4 (62 kw) | 2003.08-2005.05 | | F | L | Hatchback FWD 14 K4M | | GDS51021 | Drive Shaft | 43T | 26 | 23 | 49 | 78.8 | 632 | |
| | 2003.08-2005.05 | | F | L | Hatchback FWD 14 K4M | Chassis no. to:567941 | GDS51043 | Drive Shaft | 43T | 26 | 22 | 49 | 78.8 | 642 | |
| | 2003.08-2005.05 | | F | R | Hatchback FWD 14 K4M | | GDS51020 | Drive Shaft | 43T | 26 | 23 | 49 | 78.8 | 903 | |
| | 2003.08-2005.05 | | F | L/R | Hatchback FWD 14 K4M | | GCO51003 | Outer Joint | 43T | 26 | 22 | 49 | 78.8 | 55 | I |
| | 2003.08-2005.05 | | F | | Hatchback FWD 14 K4M | | GCO99209 | Outer Joint | 27T | 26 | 22 | 49 | 78.8 | 55 | I |
| 1.4 (76 kw) | 2003.08-2005.05 | | F | L | Hatchback FWD 14 K4F | | GDS51021 | Drive Shaft | 43T | 26 | 23 | 49 | 78.8 | 632 | |
| | 2003.08-2005.05 | | F | L | Hatchback FWD 14 K4F | Chassis no. to:567941 | GDS51043 | Drive Shaft | 43T | 26 | 22 | 49 | 78.8 | 642 | |
| | 2003.08-2005.05 | | F | R | Hatchback FWD 14 K4F | | GDS51020 | Drive Shaft | 43T | 26 | 23 | 49 | 78.8 | 903 | |
| | 2003.08-2005.05 | | F | L/R | Hatchback FWD 14 K4F | | GCO51003 | Outer Joint | 43T | 26 | 22 | 49 | 78.8 | 55 | I |
| | 2003.08-2005.05 | | F | | Hatchback FWD 14 K4F | | GCO99209 | Outer Joint | 27T | 26 | 22 | 49 | 78.8 | 55 | I |
| 1.6 (80 kw) | 2004.01-2005.05 | MT | F | L | Hatchback FWD 16 K4F | | GDS51019 | Drive Shaft | 43T | 26 | 23 | 49 | 78.8 | 630.5 | |
| | 2004.01-2005.05 | MT | F | L | Hatchback FWD 16 K4F | | GDS51021 | Drive Shaft | 43T | 26 | 23 | 49 | 78.8 | 632 | |
| | 2004.01-2005.05 | MT | F | R | Hatchback FWD 16 K4F | | GDS51010 | Drive Shaft | | 26 | 22 | 49 | 78.8 | 877 | |
| | 2004.01-2005.05 | MT | F | R | Hatchback FWD 16 K4F | | GDS51018 | Drive Shaft | 43T | 26 | 23 | 49 | 78.8 | 887 | |
| | 2004.01-2005.05 | MT | F | R | Hatchback FWD 16 K4F | | GDS51020 | Drive Shaft | 43T | 26 | 23 | 49 | 78.8 | 903 | |
| | 2004.01-2005.05 | | F | L | Hatchback FWD 16 K4F | Chassis no. to:567941 | GDS51043 | Drive Shaft | 43T | 26 | 22 | 49 | 78.8 | 642 | |
| | 2004.01-2005.05 | | F | L/R | Hatchback FWD 16 K4F | | GCO51003 | Outer Joint | 43T | 26 | 22 | 49 | 78.8 | 55 | I |
| | 2004.01-2005.05 | | F | | Hatchback FWD 16 K4F | | GCO99209 | Outer Joint | 27T | 26 | 22 | 49 | 78.8 | 55 | I |
| 1.8 (86 kw) | 2003.08-2005.05 | AT | F | L | Hatchback FWD 18 K4F | | GDS51019 | Drive Shaft | 43T | 26 | 23 | 49 | 78.8 | 630.5 | |
| | 2003.08-2005.05 | AT | F | R | Hatchback FWD 18 K4F | | GDS51018 | Drive Shaft | 43T | 26 | 23 | 49 | 78.8 | 887 | |
| | 2003.08-2005.05 | | F | L | Hatchback FWD 18 K4F | Chassis no. to:567941 | GDS51043 | Drive Shaft | 43T | 26 | 22 | 49 | 78.8 | 642 | |
| | 2003.08-2005.05 | | F | L/R | Hatchback FWD 18 K4F | | GCO51003 | Outer Joint | 43T | 26 | 22 | 49 | 78.8 | 55 | I |
| | 2003.08-2005.05 | | F | | Hatchback FWD 18 K4F | | GCO99209 | Outer Joint | 27T | 26 | 22 | 49 | 78.8 | 55 | I |
| 2.0 (74 kw) | 2003.08-2005.05 | AT/MT | F | L/R | Hatchback FWD 20 T2N | | GCO23002 | Outer Joint | 43T | 26 | 32 | 55 | 78 | 68.5 | I |
| | 2003.08-2005.05 | | F | L/R | Hatchback FWD 20 T2N | | GCO51005 | Outer Joint | | 26 | 32 | 49 | 78 | 68.5 | I |
| | 2003.08-2005.05 | | F | L/R | Hatchback FWD 20 T2N | | GCO51007 | Outer Joint | 43T | 26 | 32 | 49 | 78 | 68.5 | I |

| | YEAR | TRANSM. | F/R | L/R | BODY STYLE & DRIVE TYPE & ENGINE | REMARKS | G-AP Ref. | PRODUCT | ABS | Technical Specifications A | B | C | H | L | P |
|---|---|---|---|---|---|---|---|---|---|---|---|---|---|---|---|
| **SAAB** | | | | | | | | | | | | | | | |
| **9-3** | | | | | | | | | | | | | | | |
| 1.8 (90 kw) | 2004.01-2015.02 | 5MT | F | L | Convertible FWD Z 18 XE | Date from:2008.01,Chassis no. from:71146030/76110504 | GDS17223 | Drive Shaft | | 30 | 22 | 52 | 94 | 609 | |
| | 2004.01-2015.02 | 5MT | F | R | Convertible FWD Z 18 XE | Date from:2008.01,Chassis no. from:71146030/76110504 | GDS17040 | Drive Shaft | | 30 | 22 | 52.5 | 105 | 987 | |
| | 2004.01-2015.02 | 5MT | F | L/R | Convertible FWD Z 18 XE | | GCO52012 | Outer Joint | | 30 | 25 | 52 | 94.5 | 61 | O |
| | 2004.01-2015.02 | | F | L/R | Convertible FWD Z 18 XE | Date From:2008.01 | GCO21038 | Outer Joint | | 30 | 24 | 52 | 94 | 64 | M |
| | 2004.01-2015.02 | | F | L/R | Convertible FWD Z 18 XE | Date From:2006.01 | GCI99026 | Inner Joint | | 22 | 25 | 35 | 57 | 111.7 | |
| | 2004.01-2015.02 | 5MT | F | L | Saloon FWD Z 18 XE | Date from:2008.01,Chassis no. from:71146030/76110504 | GDS17223 | Drive Shaft | | 30 | 22 | 52 | 94 | 609 | |
| | 2004.01-2015.02 | 5MT | F | R | Saloon FWD Z 18 XE | Date from:2008.01,Chassis no. from:71146030/76110504 | GDS17040 | Drive Shaft | | 30 | 22 | 52.5 | 105 | 987 | |
| | 2004.01-2015.02 | 5MT | F | L/R | Saloon FWD Z 18 XE | | GCO52012 | Outer Joint | | 30 | 25 | 52 | 94.5 | 61 | O |
| | 2004.01-2015.02 | | F | L/R | Saloon FWD Z 18 XE | Date From:2008.01 | GCO21038 | Outer Joint | | 30 | 24 | 52 | 94 | 64 | M |
| | 2004.01-2015.02 | | F | L/R | Saloon FWD Z 18 XE | Date From:2006.01 | GCI99026 | Inner Joint | | 22 | 25 | 35 | 57 | 111.7 | |
| | 2005.03-2015.02 | 5MT | F | L | Estate FWD Z 18 XE | Date from:2008.01,Chassis no. from:71146030/76110504 | GDS17223 | Drive Shaft | | 30 | 22 | 52 | 94 | 609 | |
| | 2005.03-2015.02 | 5MT | F | R | Estate FWD Z 18 XE | Date from:2008.01,Chassis no. from:71146030/76110504 | GDS17040 | Drive Shaft | | 30 | 22 | 52.5 | 105 | 987 | |
| | 2005.03-2015.02 | 5MT | F | L/R | Estate FWD Z 18 XE | | GCO52012 | Outer Joint | | 30 | 25 | 52 | 94.5 | 61 | O |
| | 2005.03-2015.02 | | F | L/R | Estate FWD Z 18 XE | Date From:2008.01 | GCO21038 | Outer Joint | | 30 | 24 | 52 | 94 | 64 | M |
| | 2005.03-2015.02 | | F | L/R | Estate FWD Z 18 XE | Date From:2006.01 | GCI99026 | Inner Joint | | 22 | 25 | 35 | 57 | 111.7 | |
| 1.8 (110 kw) | 2005.03-2015.02 | AT/MT | F | L/R | Estate FWD B207E | | GCO21030 | Outer Joint | | 30 | 28 | 55.4 | 96 | 65 | M |
| | 2005.03-2015.02 | MT/5AT/5MT/6MT | F | L/R | Estate FWD B207E | | GDS21036 | Drive Shaft | | 30 | 27 | 55.4 | 100 | 602 | |
| 1.9 (88 kw) | 2004.09-2015.02 | MT | F | L | Convertible FWD Z 19 DT | | GDS21032 | Drive Shaft | | 30 | 27 | 53.8 | 94.5 | 605 | |
| | 2004.09-2015.02 | MT | F | L/R | Convertible FWD Z 19 DT | | GDS21036 | Drive Shaft | | 30 | 27 | 55.4 | 100 | 602 | |
| | 2004.09-2015.02 | | F | L/R | Convertible FWD Z 19 DT | | GCO17051 | Outer Joint | | 30 | 26 | 53.8 | 94.5 | 65.5 | M |
| | 2004.09-2015.02 | | F | R | Convertible FWD Z 19 DT | | GCI99138 | Inner Joint | | 27 | 28 | 35 | 78 | 112 | |
| | 2004.09-2015.02 | MT | F | L | Saloon FWD Z 19 DT | | GDS21032 | Drive Shaft | | 30 | 27 | 53.8 | 94.5 | 605 | |
| | 2004.09-2015.02 | MT | F | L/R | Saloon FWD Z 19 DT | | GDS21036 | Drive Shaft | | 30 | 27 | 55.4 | 100 | 602 | |
| | 2004.09-2015.02 | MT | F | L/R | Saloon FWD Z 19 DT | | GCO17051 | Outer Joint | | 30 | 26 | 53.8 | 94.5 | 65.5 | M |
| | 2004.09-2015.02 | | F | | Saloon FWD Z 19 DT | | GCO21030 | Outer Joint | | 30 | 28 | 55.4 | 96 | 65 | M |
| | 2004.09-2015.02 | | F | R | Saloon FWD Z 19 DT | | GCI99138 | Inner Joint | | 27 | 28 | 35 | 78 | 112 | |
| | 2005.03-2015.02 | MT | F | L/R | Estate FWD Z 19 DT | | GDS21032 | Drive Shaft | | 30 | 27 | 53.8 | 94.5 | 605 | |
| | 2005.03-2015.02 | MT | F | L/R | Estate FWD Z 19 DT | | GDS21036 | Drive Shaft | | 30 | 27 | 55.4 | 100 | 602 | |
| | 2005.03-2015.02 | MT | F | L/R | Estate FWD Z 19 DT | | GCO17051 | Outer Joint | | 30 | 26 | 53.8 | 94.5 | 65.5 | M |
| | 2005.03-2015.02 | | F | | Estate FWD Z 19 DT | | GCO21030 | Outer Joint | | 30 | 28 | 55.4 | 96 | 65 | M |
| | 2005.03-2015.02 | | F | R | Estate FWD Z 19 DT | | GCI99138 | Inner Joint | | 27 | 28 | 35 | 78 | 112 | |
| 1.9 (96 kw) | 2007.12-2015.02 | 6MT | F | L/R | Convertible FWD A 19 DTR | | GDS21036 | Drive Shaft | | 30 | 27 | 55.4 | 100 | 602 | |
| | 2007.12-2015.02 | MT | F | L/R | Convertible FWD A 19 DTR | | GCO21030 | Outer Joint | | 30 | 28 | 55.4 | 96 | 65 | M |
| | 2007.12-2015.02 | AT | F | L/R | Estate FWD A 19 DTR | | GCO21057 | Outer Joint | | 30 | 27 | 59.1 | 94 | 65 | M |
| | 2007.12-2015.02 | MT | F | L/R | Estate FWD A 19 DTR | | GDS21036 | Drive Shaft | | 30 | 27 | 55.4 | 100 | 602 | |
| | 2007.12-2015.02 | MT | F | L/R | Estate FWD A 19 DTR | | GCO21030 | Outer Joint | | 30 | 28 | 55.4 | 96 | 65 | M |
| | 2007.12-2015.02 | AT | F | L/R | Saloon FWD A 19 DTR | | GCO21057 | Outer Joint | | 30 | 27 | 59.1 | 94 | 65 | M |
| | 2007.12-2015.02 | MT | F | L/R | Saloon FWD A 19 DTR | | GDS21036 | Drive Shaft | | 30 | 27 | 55.4 | 100 | 602 | |
| | 2007.12-2015.02 | MT | F | L/R | Saloon FWD A 19 DTR | | GCO21030 | Outer Joint | | 30 | 28 | 55.4 | 96 | 65 | M |
| 1.9 (110 kw) | 2004.09-2015.02 | AT | F | L/R | Saloon FWD Z 19 DTH | | GDS44080 | Drive Shaft | | 30 | 27 | 53.8 | 94.5 | 591 | |
| | 2004.09-2015.02 | AT | F | L/R | Saloon FWD Z 19 DTH | | GCI21024 | Inner Joint | | 27 | 34 | 35 | 101 | 88 | |
| | 2004.09-2015.02 | MT | F | L | Saloon FWD Z 19 DTH | | GDS21032 | Drive Shaft | | 30 | 27 | 53.8 | 94.5 | 605 | |
| | 2004.09-2015.02 | MT | F | L/R | Saloon FWD Z 19 DTH | | GCO17051 | Outer Joint | | 30 | 26 | 53.8 | 94.5 | 65.5 | M |
| | 2004.09-2015.02 | MT | F | R | Saloon FWD Z 19 DTH | | GCI99138 | Inner Joint | | 27 | 28 | 35 | 78 | 112 | |
| | 2004.09-2015.02 | | F | L/R | Saloon FWD Z 19 DTH | | GCO21030 | Outer Joint | | 30 | 28 | 55.4 | 96 | 65 | M |
| | 2005.03-2015.02 | AT | F | L/R | Estate FWD Z 19 DTH | | GDS44080 | Drive Shaft | | 30 | 27 | 53.8 | 94.5 | 591 | |
| | 2005.03-2015.02 | AT | F | L/R | Estate FWD Z 19 DTH | | GCI21024 | Inner Joint | | 27 | 34 | 35 | 101 | 88 | |
| | 2005.03-2015.02 | AT/MT | F | L/R | Estate FWD Z 19 DTH | | GDS21032 | Drive Shaft | | 30 | 27 | 53.8 | 94.5 | 605 | |
| | 2005.03-2015.02 | AT/MT | F | L/R | Estate FWD Z 19 DTH | | GCO17051 | Outer Joint | | 30 | 26 | 53.8 | 94.5 | 65.5 | M |
| | 2005.03-2015.02 | MT | F | L/R | Estate FWD Z 19 DTH | | GDS21036 | Drive Shaft | | 30 | 27 | 55.4 | 100 | 602 | |
| | 2005.03-2015.02 | | F | | Estate FWD Z 19 DTH | | GCO21030 | Outer Joint | | 30 | 28 | 55.4 | 96 | 65 | M |
| | 2005.03-2015.02 | | F | R | Estate FWD Z 19 DTH | | GCI99138 | Inner Joint | | 27 | 28 | 35 | 78 | 112 | |
| | 2006.01-2015.02 | AT | F | L/R | Convertible FWD Z 19 DTH | | GDS44080 | Drive Shaft | | 30 | 27 | 53.8 | 94.5 | 591 | |
| | 2006.01-2015.02 | AT | F | L/R | Convertible FWD Z 19 DTH | | GCI21024 | Inner Joint | | 27 | 34 | 35 | 101 | 88 | |
| | 2006.01-2015.02 | AT/MT | F | L/R | Convertible FWD Z 19 DTH | | GDS21032 | Drive Shaft | | 30 | 27 | 53.8 | 94.5 | 605 | |
| | 2006.01-2015.02 | MT | F | L/R | Convertible FWD Z 19 DTH | | GDS21036 | Drive Shaft | | 30 | 27 | 55.4 | 100 | 602 | |
| | 2006.01-2015.02 | MT | F | L/R | Convertible FWD Z 19 DTH | | GCO17051 | Outer Joint | | 30 | 26 | 53.8 | 94.5 | 65.5 | M |
| | 2006.01-2015.02 | | F | | Convertible FWD Z 19 DTH | | GCO21030 | Outer Joint | | 30 | 28 | 55.4 | 96 | 65 | M |
| | 2006.01-2015.02 | | F | R | Convertible FWD Z 19 DTH | | GCI99138 | Inner Joint | | 27 | 28 | 35 | 78 | 112 | |
| 1.9 (118 kw) | 2007.12-2015.02 | AT | F | L/R | Convertible FWD A 19 DTR | | GCO21057 | Outer Joint | | 30 | 27 | 59.1 | 94 | 65 | M |
| | 2007.12-2015.02 | MT | F | L/R | Convertible FWD A 19 DTR | | GDS21036 | Drive Shaft | | 30 | 27 | 55.4 | 100 | 602 | |
| | 2007.12-2015.02 | MT | F | L/R | Convertible FWD A 19 DTR | | GCO21030 | Outer Joint | | 30 | 28 | 55.4 | 96 | 65 | M |
| | 2007.12-2015.02 | AT | F | L/R | Estate FWD A 19 DTR | | GCO21057 | Outer Joint | | 30 | 27 | 59.1 | 94 | 65 | M |
| | 2007.12-2015.02 | MT | F | L/R | Estate FWD A 19 DTR | | GDS21036 | Drive Shaft | | 30 | 27 | 55.4 | 100 | 602 | |
| | 2007.12-2015.02 | MT | F | L/R | Estate FWD A 19 DTR | | GCO21030 | Outer Joint | | 30 | 28 | 55.4 | 96 | 65 | M |

| | YEAR | TRANSM. | F/R | L/R | BODY STYLE & DRIVE TYPE & ENGINE | REMARKS | G-AP Ref. | PRODUCT | ABS | Technical Specifications | | | | | |
|---|---|---|---|---|---|---|---|---|---|---|---|---|---|---|---|
| | | | | | | | | | | A | B | C | H | L | P |
| **SAAB** | | | | | | | | | | | | | | | |
| **9-3** | | | | | | | | | | | | | | | |
| 1.9 (118 kw) | 2007.12-2015.02 | AT | F | L/R | Saloon FWD A 19 DTR | | GCO21057 | Outer Joint | | 30 | 27 | 59.1 | 94 | 65 | M |
| | 2007.12-2015.02 | MT | F | L/R | Saloon FWD A 19 DTR | | GDS21036 | Drive Shaft | | 30 | 27 | 55.4 | 100 | 602 | |
| | 2007.12-2015.02 | MT | F | L/R | Saloon FWD A 19 DTR | | GCO21030 | Outer Joint | | 30 | 28 | 55.4 | 96 | 65 | M |
| 1.9 (132 kw) | 2007.12-2015.02 | AT | F | L/R | Convertible FWD Z 19 DTR;A 19 DTR | | GCO21057 | Outer Joint | | 30 | 27 | 59.1 | 94 | 65 | M |
| | 2007.12-2015.02 | MT | F | L/R | Convertible FWD Z 19 DTR;A 19 DTR | | GDS21036 | Drive Shaft | | 30 | 27 | 55.4 | 100 | 602 | |
| | 2007.12-2015.02 | MT | F | L/R | Convertible FWD Z 19 DTR;A 19 DTR | | GCO21030 | Outer Joint | | 30 | 28 | 55.4 | 96 | 65 | M |
| | 2007.12-2015.02 | AT | F | L/R | Estate FWD Z 19 DTR | | GCO21057 | Outer Joint | | 30 | 27 | 59.1 | 94 | 65 | M |
| | 2007.12-2015.02 | MT | F | L/R | Estate FWD Z 19 DTR | | GDS21036 | Drive Shaft | | 30 | 27 | 55.4 | 100 | 602 | |
| | 2007.12-2015.02 | MT | F | L/R | Estate FWD Z 19 DTR | | GCO21030 | Outer Joint | | 30 | 28 | 55.4 | 96 | 65 | M |
| | 2007.12-2015.02 | AT | F | L/R | Saloon FWD Z 19 DTR;A 19 DTR | | GCO21057 | Outer Joint | | 30 | 27 | 59.1 | 94 | 65 | M |
| | 2007.12-2015.02 | MT | F | L/R | Saloon FWD Z 19 DTR;A 19 DTR | | GDS21036 | Drive Shaft | | 30 | 27 | 55.4 | 100 | 602 | |
| | 2007.12-2015.02 | MT | F | L/R | Saloon FWD Z 19 DTR;A 19 DTR | | GCO21030 | Outer Joint | | 30 | 28 | 55.4 | 96 | 65 | M |
| 2.0 (96 kw) | 1998.03-2000.10 | AT | F | L | Cabriolet FWD B204I | | GDS52001 | Drive Shaft | 29T | 33 | 34 | 52 | 92.5 | 594 | |
| | 1998.03-2000.10 | AT/MT | F | R | Cabriolet FWD B204I | Date to:2000.10 | GDS52002 | Drive Shaft | 29T | 33 | 37 | 52 | 92.5 | 487 | |
| | 1998.03-2000.10 | AT/MT | F | L/R | Cabriolet FWD B204I | Date to:2000.10 | GCO52001 | Outer Joint | 29T | 33 | 25 | 52 | 99 | 61 | O |
| | 1998.03-2000.10 | MT | F | R | Cabriolet FWD B204I | | GDS18199 | Drive Shaft | 29T | 33 | 34 | 52 | 92.5 | 932 | |
| | 1998.03-2000.10 | AT | F | L | Hatchback FWD B204I | | GDS52001 | Drive Shaft | 29T | 33 | 34 | 52 | 92.5 | 594 | |
| | 1998.03-2000.10 | AT/MT | F | R | Hatchback FWD B204I | Date to:2000.10 | GDS52002 | Drive Shaft | 29T | 33 | 37 | 52 | 92.5 | 487 | |
| | 1998.03-2000.10 | AT/MT | F | L/R | Hatchback FWD B204I | Date to:2000.10 | GCO52001 | Outer Joint | 29T | 33 | 25 | 52 | 99 | 61 | O |
| | 1998.03-2000.10 | MT | F | R | Hatchback FWD B204I | | GDS18199 | Drive Shaft | 29T | 33 | 34 | 52 | 92.5 | 932 | |
| 2.0 (110 kw) | 1999.03-2002.09 | | F | L/R | Hatchback FWD B204E/B205E | | GCO52001 | Outer Joint | 29T | 33 | 25 | 52 | 99 | 61 | O |
| | 1999.03-2003.07 | | F | L/R | Cabriolet FWD B204E/B205E | | GCO52001 | Outer Joint | 29T | 33 | 25 | 52 | 99 | 61 | O |
| | 2002.09-2015.02 | 5AT/5MT/6MT | F | L/R | Saloon FWD B207E | | GDS21036 | Drive Shaft | | 30 | 27 | 55.4 | 100 | 602 | |
| | 2002.09-2015.02 | 5AT/5MT/6MT | F | L/R | Saloon FWD B207E | | GCO21030 | Outer Joint | | 30 | 28 | 55.4 | 96 | 65 | M |
| | 2003.08-2015.02 | 5AT/5MT/6MT | F | L/R | Convertible FWD B207E | | GDS21036 | Drive Shaft | | 30 | 27 | 55.4 | 100 | 602 | |
| | 2003.08-2015.02 | 5AT/5MT/6MT | F | L/R | Convertible FWD B207E | | GCO21030 | Outer Joint | | 30 | 28 | 55.4 | 96 | 65 | M |
| | 2005.03-2015.02 | AT/MT | F | L/R | Estate FWD B207E | | GCO21030 | Outer Joint | | 30 | 28 | 55.4 | 96 | 65 | M |
| | 2005.03-2015.02 | MT/5AT/5MT/6MT | F | L/R | Estate FWD B207E | | GDS21036 | Drive Shaft | | 30 | 27 | 55.4 | 100 | 602 | |
| | 2007.01-2015.02 | SAT/5MT | F | L/R | Convertible FWD B207E | | GDS21036 | Drive Shaft | | 30 | 27 | 55.4 | 100 | 602 | |
| | 2007.01-2015.02 | | F | L/R | Convertible FWD B207E | | GCO21030 | Outer Joint | | 30 | 28 | 55.4 | 96 | 65 | M |
| | 2007.01-2015.02 | 5MT | F | L/R | Estate FWD B207E | | GDS21036 | Drive Shaft | | 30 | 27 | 55.4 | 100 | 602 | |
| | 2007.01-2015.02 | | F | L/R | Estate FWD B207E | | GCO21030 | Outer Joint | | 30 | 28 | 55.4 | 96 | 65 | M |
| | 2007.01-2015.02 | SAT/5MT | F | L/R | Saloon FWD B207E | | GDS21036 | Drive Shaft | | 30 | 27 | 55.4 | 100 | 602 | |
| | 2007.01-2015.02 | | F | L/R | Saloon FWD B207E | | GCO21030 | Outer Joint | | 30 | 28 | 55.4 | 96 | 65 | M |
| 2.0 (113 kw) | 1998.03-2003.08 | AT | F | L | Hatchback FWD B204E | | GDS52001 | Drive Shaft | 29T | 33 | 34 | 52 | 92.5 | 594 | |
| | 1998.03-2003.08 | AT/MT | F | R | Hatchback FWD B204E | | GDS52002 | Drive Shaft | 29T | 33 | 37 | 52 | 92.5 | 487 | |
| | 1998.03-2003.08 | AT/MT | F | L/R | Hatchback FWD B204E | | GCO52001 | Outer Joint | 29T | 33 | 25 | 52 | 99 | 61 | O |
| | 1998.09-2003.08 | AT | F | L | Cabriolet FWD B204E | | GDS52001 | Drive Shaft | 29T | 33 | 34 | 52 | 92.5 | 594 | |
| | 1998.09-2003.08 | AT/MT | F | R | Cabriolet FWD B204E | | GDS52002 | Drive Shaft | 29T | 33 | 37 | 52 | 92.5 | 487 | |
| | 1998.09-2003.08 | AT/MT | F | L/R | Cabriolet FWD B204E | | GCO52001 | Outer Joint | 29T | 33 | 25 | 52 | 99 | 61 | O |
| 2.0 (120 kw) | 2007.01-2015.02 | MT | F | L/R | Estate FWD B207G | | GDS21036 | Drive Shaft | | 30 | 27 | 55.4 | 100 | 602 | |
| | 2007.01-2015.02 | | F | L/R | Estate FWD B207G | | GCO21030 | Outer Joint | | 30 | 28 | 55.4 | 96 | 65 | M |
| | 2007.01-2015.02 | 6MT | F | L/R | Saloon 4WD B207G | | GDS21036 | Drive Shaft | | 30 | 27 | 55.4 | 100 | 602 | |
| | 2007.01-2015.02 | | F | L/R | Saloon 4WD B207G | | GCO21030 | Outer Joint | | 30 | 28 | 55.4 | 96 | 65 | M |
| | 2007.01-2015.02 | MT | F | L/R | Saloon FWD B207G | | GDS21036 | Drive Shaft | | 30 | 27 | 55.4 | 100 | 602 | |
| | 2007.01-2015.02 | | F | L/R | Saloon FWD B207G | | GCO21030 | Outer Joint | | 30 | 28 | 55.4 | 96 | 65 | M |
| | 2007.01-2015.02 | MT | F | L/R | Saloon FWD B207H | | GDS21036 | Drive Shaft | | 30 | 27 | 55.4 | 100 | 602 | |
| | 2007.01-2015.02 | | F | L/R | Saloon FWD B207H | | GCO21030 | Outer Joint | | 30 | 28 | 55.4 | 96 | 65 | M |
| | 2008.01-2015.02 | 6MT | F | L/R | Saloon 4WD B207H | | GDS21036 | Drive Shaft | | 30 | 27 | 55.4 | 100 | 602 | |
| | 2008.01-2015.02 | | F | L/R | Saloon 4WD B207H | | GCO21030 | Outer Joint | | 30 | 28 | 55.4 | 96 | 65 | M |
| | 2011.01-2015.02 | MT | F | L/R | Convertible FWD B207G | | GDS21036 | Drive Shaft | | 30 | 27 | 55.4 | 100 | 602 | |
| | 2011.01-2015.02 | | F | L/R | Convertible FWD B207G | | GCO21030 | Outer Joint | | 30 | 28 | 55.4 | 96 | 65 | M |
| | 2011.01-2015.02 | MT | F | L/R | Convertible FWD B207H | | GDS21036 | Drive Shaft | | 30 | 27 | 55.4 | 100 | 602 | |
| | 2011.01-2015.02 | | F | L/R | Convertible FWD B207H | | GCO21030 | Outer Joint | | 30 | 28 | 55.4 | 96 | 65 | M |
| | 2011.01-2015.02 | MT | F | L/R | Estate FWD B207H | | GDS21036 | Drive Shaft | | 30 | 27 | 55.4 | 100 | 602 | |
| | 2011.01-2015.02 | | F | L/R | Estate FWD B207H | | GCO21030 | Outer Joint | | 30 | 28 | 55.4 | 96 | 65 | M |
| 2.0 (129 kw) | 2002.09-2015.02 | AT/MT | F | L/R | Saloon FWD B207L | | GCO21030 | Outer Joint | | 30 | 28 | 55.4 | 96 | 65 | M |
| | 2002.09-2015.02 | MT | F | L/R | Saloon FWD B207L | | GDS21036 | Drive Shaft | | 30 | 27 | 55.4 | 100 | 602 | |
| | 2003.08-2015.02 | AT/MT | F | L/R | Convertible FWD B207L | | GCO21030 | Outer Joint | | 30 | 28 | 55.4 | 96 | 65 | M |
| | 2003.08-2015.02 | MT | F | L/R | Convertible FWD B207L | | GDS21036 | Drive Shaft | | 30 | 27 | 55.4 | 100 | 602 | |
| | 2005.03-2015.02 | AT/MT | F | L/R | Estate FWD B207L | | GCO21030 | Outer Joint | | 30 | 28 | 55.4 | 96 | 65 | M |
| | 2005.03-2015.02 | MT | F | L/R | Estate FWD B207L | | GDS21036 | Drive Shaft | | 30 | 27 | 55.4 | 100 | 602 | |
| | 2007.01-2015.02 | MT | F | L/R | Convertible FWD B207L | | GDS21036 | Drive Shaft | | 30 | 27 | 55.4 | 100 | 602 | |
| | 2007.01-2015.02 | | F | L/R | Convertible FWD B207L | | GCO21030 | Outer Joint | | 30 | 28 | 55.4 | 96 | 65 | M |
| | 2007.01-2015.02 | MT | F | L/R | Estate FWD B207L | | GDS21036 | Drive Shaft | | 30 | 27 | 55.4 | 100 | 602 | |

| | YEAR | TRANSM. | F/R | L/R | BODY STYLE & DRIVE TYPE & ENGINE | REMARKS | G-AP Ref. | PRODUCT | ABS | Technical Specifications A | B | C | H | L | P |
|---|---|---|---|---|---|---|---|---|---|---|---|---|---|---|---|
| **SAAB** | | | | | | | | | | | | | | | |
| **9-3** | | | | | | | | | | | | | | | |
| 2.0 (129 kw) | 2007.01-2015.02 | | F | L/R | Estate FWD B207L | | GCO21030 | Outer Joint | | 30 | 28 | 55.4 | 96 | 65 | M |
| | 2007.01-2015.02 | MT | F | L/R | Saloon FWD B207L | | GDS21036 | Drive Shaft | | 30 | 27 | 55.4 | 100 | 602 | |
| | 2007.01-2015.02 | | F | L/R | Saloon FWD B207L | | GCO21030 | Outer Joint | | 30 | 28 | 55.4 | 96 | 65 | M |
| | 2009.05-2011.12 | 5AT/6MT | F | L/R | Saloon FWD B207L | | GCO21030 | Outer Joint | | 30 | 28 | 55.4 | 96 | 65 | M |
| | 2009.05-2011.12 | AT/MT | F | L/R | Saloon FWD B207L | | GDS21036 | Drive Shaft | | 30 | 27 | 55.4 | 100 | 602 | |
| 2.0 (136 kw) | 1998.03-2002.09 | AT | F | L | Hatchback FWD B204L/B205L | | GDS52001 | Drive Shaft | 29T | 33 | 34 | 52 | 92.5 | 594 | |
| | 1998.03-2002.09 | AT/MT | F | R | Hatchback FWD B204L/B205L | | GDS52002 | Drive Shaft | 29T | 33 | 37 | 52 | 92.5 | 487 | |
| | 1998.03-2002.09 | AT/MT | F | L/R | Hatchback FWD B204L/B205L | | GCO52001 | Outer Joint | 29T | 33 | 25 | 52 | 99 | 61 | O |
| | 1998.03-2002.09 | MT | F | R | Hatchback FWD B204L/B205L | | GDS18199 | Drive Shaft | 29T | 33 | 34 | 52 | 92.5 | 932 | |
| | 1998.03-2003.07 | AT | F | L | Cabriolet FWD B204L/B205L | | GDS52001 | Drive Shaft | 29T | 33 | 34 | 52 | 92.5 | 594 | |
| | 1998.03-2003.07 | AT/MT | F | R | Cabriolet FWD B204L/B205L | | GDS52002 | Drive Shaft | 29T | 33 | 37 | 52 | 92.5 | 487 | |
| | 1998.03-2003.07 | AT/MT | F | L/R | Cabriolet FWD B204L/B205L | | GCO52001 | Outer Joint | 29T | 33 | 25 | 52 | 99 | 61 | O |
| | 1998.03-2003.07 | MT | F | R | Cabriolet FWD B204L/B205L | | GDS18199 | Drive Shaft | 29T | 33 | 34 | 52 | 92.5 | 932 | |
| 2.0 (143 kw) | 2006.04-2007.09 | 5MT | F | L/R | Convertible FWD B207L | | GDS21036 | Drive Shaft | | 30 | 27 | 55.4 | 100 | 602 | |
| | 2006.04-2007.09 | | F | L/R | Convertible FWD B207L | | GCO21030 | Outer Joint | | 30 | 28 | 55.4 | 96 | 65 | M |
| | 2006.04-2015.02 | 5MT | F | L/R | Estate FWD B207L | | GDS21036 | Drive Shaft | | 30 | 27 | 55.4 | 100 | 602 | |
| | 2006.04-2015.02 | | F | L/R | Estate FWD B207L | | GCO21030 | Outer Joint | | 30 | 28 | 55.4 | 96 | 65 | M |
| | 2006.06-2015.02 | 5MT | F | L/R | Saloon FWD B207L | | GDS21036 | Drive Shaft | | 30 | 27 | 55.4 | 100 | 602 | |
| | 2006.06-2015.02 | | F | L/R | Saloon FWD B207L | | GCO21030 | Outer Joint | | 30 | 28 | 55.4 | 96 | 65 | M |
| 2.0 (145 kw) | 2007.06-2015.02 | 6MT | F | L/R | Convertible FWD B207R | | GDS21036 | Drive Shaft | | 30 | 27 | 55.4 | 100 | 602 | |
| | 2007.06-2015.02 | | F | L/R | Convertible FWD B207R | | GCO21030 | Outer Joint | | 30 | 28 | 55.4 | 96 | 65 | M |
| | 2007.06-2015.02 | MT | F | L/R | Estate FWD B207R | | GDS21036 | Drive Shaft | | 30 | 27 | 55.4 | 100 | 602 | |
| | 2007.06-2015.02 | | F | L/R | Estate FWD B207R | | GCO21030 | Outer Joint | | 30 | 28 | 55.4 | 96 | 65 | M |
| | 2007.06-2015.02 | 6MT | F | L/R | Saloon FWD B207R | | GDS21036 | Drive Shaft | | 30 | 27 | 55.4 | 100 | 602 | |
| | 2007.06-2015.02 | | F | L/R | Saloon FWD B207R | | GCO21030 | Outer Joint | | 30 | 28 | 55.4 | 96 | 65 | M |
| 2.0 (147 kw) | 1998.02-2002.09 | AT | F | L | Hatchback FWD B204R | | GDS52001 | Drive Shaft | 29T | 33 | 34 | 52 | 92.5 | 594 | |
| | 1998.02-2002.09 | AT/MT | F | R | Hatchback FWD B204R | | GDS52002 | Drive Shaft | 29T | 33 | 37 | 52 | 92.5 | 487 | |
| | 1998.02-2002.09 | AT/MT | F | L/R | Hatchback FWD B204R | | GCO52001 | Outer Joint | 29T | 33 | 25 | 52 | 99 | 61 | O |
| | 1998.02-2002.09 | MT | F | R | Hatchback FWD B204R | | GDS18199 | Drive Shaft | 29T | 33 | 34 | 52 | 92.5 | 932 | |
| | 1998.02-2003.08 | AT | F | L | Cabriolet FWD B204R | | GDS52001 | Drive Shaft | 29T | 33 | 34 | 52 | 92.5 | 594 | |
| | 1998.02-2003.08 | AT/MT | F | R | Cabriolet FWD B204R | | GDS52002 | Drive Shaft | 29T | 33 | 37 | 52 | 92.5 | 487 | |
| | 1998.02-2003.08 | AT/MT | F | L/R | Cabriolet FWD B204R | | GCO52001 | Outer Joint | 29T | 33 | 25 | 52 | 99 | 61 | O |
| | 1998.02-2003.08 | MT | F | R | Cabriolet FWD B204R | | GDS18199 | Drive Shaft | 29T | 33 | 34 | 52 | 92.5 | 932 | |
| | 2007.06-2015.02 | MT | F | L/R | Convertible FWD B207M | | GDS21036 | Drive Shaft | | 30 | 27 | 55.4 | 100 | 602 | |
| | 2007.06-2015.02 | | F | L/R | Convertible FWD B207M | | GCO21030 | Outer Joint | | 30 | 28 | 55.4 | 96 | 65 | M |
| | 2009.02-2015.02 | MT | F | L/R | Estate FWD B207M | | GDS21036 | Drive Shaft | | 30 | 27 | 55.4 | 100 | 602 | |
| | 2009.02-2015.02 | | F | L/R | Estate FWD B207M | | GCO21030 | Outer Joint | | 30 | 28 | 55.4 | 96 | 65 | M |
| | 2009.05-2015.02 | MT | F | L/R | Saloon FWD B207M | | GDS21036 | Drive Shaft | | 30 | 27 | 55.4 | 100 | 602 | |
| | 2009.05-2015.02 | | F | L/R | Saloon FWD B207M | | GCO21030 | Outer Joint | | 30 | 28 | 55.4 | 96 | 65 | M |
| 2.0 (151 kw) | 1999.09-2002.09 | | F | L/R | Hatchback FWD B205R | | GCO52001 | Outer Joint | 29T | 33 | 25 | 52 | 99 | 61 | O |
| | 1999.09-2003.08 | | F | L/R | Cabriolet FWD B205R | | GCO52001 | Outer Joint | 29T | 33 | 25 | 52 | 99 | 61 | O |
| 2.0 (154 kw) | 2002.09-2015.02 | AT/MT | F | L/R | Saloon FWD B207R | | GCO21030 | Outer Joint | | 30 | 28 | 55.4 | 96 | 65 | M |
| | 2002.09-2015.02 | MT | F | L/R | Saloon FWD B207R | | GDS21036 | Drive Shaft | | 30 | 27 | 55.4 | 100 | 602 | |
| | 2002.09-2015.02 | | F | L/R | Saloon FWD B207R | | GCO21030 | Outer Joint | | 30 | 28 | 55.4 | 96 | 65 | M |
| | 2003.08-2015.02 | AT/MT | F | L/R | Convertible FWD B207R | | GCO21030 | Outer Joint | | 30 | 28 | 55.4 | 96 | 65 | M |
| | 2003.08-2015.02 | MT | F | L/R | Convertible FWD B207R | | GDS21036 | Drive Shaft | | 30 | 27 | 55.4 | 100 | 602 | |
| | 2005.03-2015.02 | AT/MT | F | L/R | Estate FWD B207R | | GCO21030 | Outer Joint | | 30 | 28 | 55.4 | 96 | 65 | M |
| | 2005.03-2015.02 | MT | F | L/R | Estate FWD B207R | | GDS21036 | Drive Shaft | | 30 | 27 | 55.4 | 100 | 602 | |
| | 2008.01-2015.02 | 6MT | F | L/R | Saloon 4WD B207R | | GDS21036 | Drive Shaft | | 30 | 27 | 55.4 | 100 | 602 | |
| | 2008.01-2015.02 | MT | F | L/R | Saloon 4WD B207R | | GDS21036 | Drive Shaft | | 30 | 27 | 55.4 | 100 | 602 | |
| | 2008.01-2015.02 | | F | L/R | Saloon 4WD B207R | | GCO21030 | Outer Joint | | 30 | 28 | 55.4 | 96 | 65 | M |
| | 2008.06-2015.02 | MT | F | L/R | Estate 4WD B207R | | GDS21036 | Drive Shaft | | 30 | 27 | 55.4 | 100 | 602 | |
| | 2008.06-2015.02 | | F | L/R | Estate 4WD B207R | | GCO21030 | Outer Joint | | 30 | 28 | 55.4 | 96 | 65 | M |
| 2.0 (162 kw) | 2008.01-2015.02 | MT | F | L/R | Saloon 4WD A 20 NFT | | GDS21036 | Drive Shaft | | 30 | 27 | 55.4 | 100 | 602 | |
| | 2008.01-2015.02 | | F | L/R | Saloon 4WD A 20 NFT | | GCO21030 | Outer Joint | | 30 | 28 | 55.4 | 96 | 65 | M |
| | 2011.01-2015.02 | MT | F | L/R | Convertible FWD A 20 NFT | | GDS21036 | Drive Shaft | | 30 | 27 | 55.4 | 100 | 602 | |
| | 2011.01-2015.02 | | F | L/R | Convertible FWD A 20 NFT | | GCO21030 | Outer Joint | | 30 | 28 | 55.4 | 96 | 65 | M |
| | 2011.01-2015.02 | MT | F | L/R | Estate 4WD A 20 NFT | | GDS21036 | Drive Shaft | | 30 | 27 | 55.4 | 100 | 602 | |
| | 2011.01-2015.02 | | F | L/R | Estate 4WD A 20 NFT | | GCO21030 | Outer Joint | | 30 | 28 | 55.4 | 96 | 65 | M |
| | 2011.01-2015.02 | MT | F | L/R | Estate FWD A 20 NFT | | GDS21036 | Drive Shaft | | 30 | 27 | 55.4 | 100 | 602 | |
| | 2011.01-2015.02 | | F | L/R | Estate FWD A 20 NFT | | GCO21030 | Outer Joint | | 30 | 28 | 55.4 | 96 | 65 | M |
| | 2011.01-2015.02 | MT | F | L/R | Saloon FWD A 20 NFT | | GDS21036 | Drive Shaft | | 30 | 27 | 55.4 | 100 | 602 | |
| | 2011.01-2015.02 | | F | L/R | Saloon FWD A 20 NFT | | GCO21030 | Outer Joint | | 30 | 28 | 55.4 | 96 | 65 | M |
| 2.0 (177 kw) | 2009.05-2015.02 | 6MT | F | L/R | Estate FWD B207R | | GDS21036 | Drive Shaft | | 30 | 27 | 55.4 | 100 | 602 | |
| | 2009.05-2015.02 | | F | L/R | Estate FWD B207R | | GCO21030 | Outer Joint | | 30 | 28 | 55.4 | 96 | 65 | M |

| | YEAR | TRANSM. | F/R | L/R | BODY STYLE & DRIVE TYPE & ENGINE | REMARKS | G-AP Ref. | PRODUCT | ABS | Technical Specifications A | B | C | H | L | P |
|---|---|---|---|---|---|---|---|---|---|---|---|---|---|---|---|
| **SAAB** | | | | | | | | | | | | | | | |
| **9-3** | | | | | | | | | | | | | | | |
| 2.0 (177 kw) | 2009.05-2015.02 | 6MT | F | L/R | Saloon 4WD B207R | | GDS21036 | Drive Shaft | | 30 | 27 | 55.4 | 100 | 602 | |
| | 2009.05-2015.02 | | F | L/R | Saloon 4WD B207R | | GCO21030 | Outer Joint | | 30 | 28 | 55.4 | 96 | 65 | M |
| | 2009.05-2015.02 | MT | F | L/R | Saloon FWD B207R | | GDS21036 | Drive Shaft | | 30 | 27 | 55.4 | 100 | 602 | |
| | 2009.05-2015.02 | | F | L/R | Saloon FWD B207R | | GCO21030 | Outer Joint | | 30 | 28 | 55.4 | 96 | 65 | M |
| 2.0 (185 kw) | 2004.04-2015.02 | 6MT | F | L/R | Convertible FWD B207R | | GDS21036 | Drive Shaft | | 30 | 27 | 55.4 | 100 | 602 | |
| | 2004.04-2015.02 | | F | L/R | Convertible FWD B207R | | GCO21030 | Outer Joint | | 30 | 28 | 55.4 | 96 | 65 | M |
| | 2004.04-2015.02 | 6MT | F | L/R | Saloon FWD B207R | | GDS21036 | Drive Shaft | | 30 | 27 | 55.4 | 100 | 602 | |
| | 2004.04-2015.02 | | F | L/R | Saloon FWD B207R | | GCO21030 | Outer Joint | | 30 | 28 | 55.4 | 96 | 65 | M |
| 2.2 (85 kw) | 1998.03-2000.11 | AT | F | L | Hatchback FWD D223L | | GDS52001 | Drive Shaft | 29T | 33 | 34 | 52 | 92.5 | 594 | |
| | 1998.03-2000.11 | AT/MT | F | R | Hatchback FWD D223L | | GDS52002 | Drive Shaft | 29T | 33 | 37 | 52 | 92.5 | 487 | |
| | 1998.03-2000.11 | AT/MT | F | L/R | Hatchback FWD D223L | | GCO52001 | Outer Joint | 29T | 33 | 25 | 52 | 99 | 61 | O |
| 2.2 (92 kw) | 2000.11-2002.09 | | F | L/R | Hatchback FWD D223L | | GCO52001 | Outer Joint | 29T | 33 | 25 | 52 | 99 | 61 | O |
| | 2002.09-2015.02 | 6MT | F | L/R | Saloon FWD D223L | | GDS21036 | Drive Shaft | | 30 | 27 | 55.4 | 100 | 602 | |
| | 2002.09-2015.02 | AT/MT | F | L/R | Saloon FWD D223L | | GCO21030 | Outer Joint | | 30 | 28 | 55.4 | 96 | 65 | M |
| 2.3 (110 kw) | 1998.03-1999.02 | AT | F | L | Cabriolet FWD B234I | | GDS52001 | Drive Shaft | 29T | 33 | 34 | 52 | 92.5 | 594 | |
| | 1998.03-1999.02 | AT/MT | F | R | Cabriolet FWD B234I | Date to:1999.02 | GDS52002 | Drive Shaft | 29T | 33 | 37 | 52 | 92.5 | 487 | |
| | 1998.03-1999.02 | AT/MT | F | L/R | Cabriolet FWD B234I | Date to:1999.02 | GCO52001 | Outer Joint | 29T | 33 | 25 | 52 | 99 | 61 | O |
| | 1998.03-1999.02 | MT | F | R | Cabriolet FWD B234I | | GDS18199 | Drive Shaft | 29T | 33 | 34 | 52 | 92.5 | 932 | |
| | 1998.03-1999.02 | AT | F | L | Hatchback FWD B234I | | GDS52001 | Drive Shaft | 29T | 33 | 34 | 52 | 92.5 | 594 | |
| | 1998.03-1999.02 | AT/MT | F | R | Hatchback FWD B234I | Date to:1999.02 | GDS52002 | Drive Shaft | 29T | 33 | 37 | 52 | 92.5 | 487 | |
| | 1998.03-1999.02 | AT/MT | F | L/R | Hatchback FWD B234I | Date to:1999.02 | GCO52001 | Outer Joint | 29T | 33 | 25 | 52 | 99 | 61 | O |
| | 1998.03-1999.02 | MT | F | R | Hatchback FWD B234I | | GDS18199 | Drive Shaft | 29T | 33 | 34 | 52 | 92.5 | 932 | |
| 2.3 (165 kw) | 1998.10-2002.09 | AT/MT | F | L/R | Hatchback FWD B235R | | GDS52006 | Drive Shaft | 29T | 33 | 27 | 59 | 92 | 613 | |
| | 1998.10-2002.09 | AT/MT | F | L/R | Hatchback FWD B235R | | GCO52008 | Outer Joint | 29T | 33 | 27 | 59 | 98 | 65 | I |
| | 1998.10-2002.09 | AT/MT | F | L/R | Hatchback FWD B235R | Date from:1999.01 | GCO99281 | Outer Joint | 29T | 33 | 27 | 59 | 98 | 65 | I |
| | 1999.03-2003.07 | | F | L/R | Cabriolet FWD B235R | | GCO52001 | Outer Joint | 29T | 33 | 25 | 52 | 99 | 61 | O |
| 2.3 (169 kw) | 1999.09-2002.01 | | F | L/R | Cabriolet FWD B235R | | GCO52008 | Outer Joint | 29T | 33 | 27 | 59 | 98 | 65 | I |
| | 1999.09-2002.12 | | F | L/R | Hatchback FWD B235R | | GCO52008 | Outer Joint | 29T | 33 | 27 | 59 | 98 | 65 | I |
| 2.8 (169 kw) | 2005.03-2015.02 | 6MT | F | L/R | Estate FWD B284L | | GDS21036 | Drive Shaft | | 30 | 27 | 55.4 | 100 | 602 | |
| | 2005.03-2015.02 | MT | F | L/R | Estate FWD B284L | | GCO21030 | Outer Joint | | 30 | 28 | 55.4 | 96 | 65 | M |
| | 2005.03-2015.02 | 6MT | F | L/R | Saloon FWD LP9 | | GDS21036 | Drive Shaft | | 30 | 27 | 55.4 | 100 | 602 | |
| | 2005.03-2015.02 | MT | F | L/R | Saloon FWD LP9 | | GCO21030 | Outer Joint | | 30 | 28 | 55.4 | 96 | 65 | M |
| | 2006.02-2015.02 | 6MT | F | L/R | Convertible FWD LP9 | | GDS21036 | Drive Shaft | | 30 | 27 | 55.4 | 100 | 602 | |
| | 2006.02-2015.02 | MT | F | L/R | Convertible FWD LP9 | | GCO21030 | Outer Joint | | 30 | 28 | 55.4 | 96 | 65 | M |
| 2.8 (184 kw) | 2005.03-2015.02 | AT | F | L/R | Estate FWD LP9 | | GCO21057 | Outer Joint | | 30 | 27 | 59.1 | 94 | 65 | M |
| | 2005.03-2015.02 | AT/MT | F | L/R | Estate FWD LP9 | | GCO21030 | Outer Joint | | 30 | 28 | 55.4 | 96 | 65 | M |
| | 2005.03-2015.02 | MT | F | L/R | Estate FWD LP9 | | GDS21036 | Drive Shaft | | 30 | 27 | 55.4 | 100 | 602 | |
| | 2005.03-2015.02 | AT | F | L/R | Saloon FWD LP9 | | GCO21057 | Outer Joint | | 30 | 27 | 59.1 | 94 | 65 | M |
| | 2005.03-2015.02 | AT/MT | F | L/R | Saloon FWD LP9 | | GCO21030 | Outer Joint | | 30 | 28 | 55.4 | 96 | 65 | M |
| | 2005.03-2015.02 | MT | F | L/R | Saloon FWD LP9 | | GDS21036 | Drive Shaft | | 30 | 27 | 55.4 | 100 | 602 | |
| | 2006.02-2015.02 | 6MT | F | L/R | Convertible FWD LP9 | | GDS21036 | Drive Shaft | | 30 | 27 | 55.4 | 100 | 602 | |
| | 2006.02-2015.02 | MT | F | L/R | Convertible FWD LP9 | | GCO21030 | Outer Joint | | 30 | 28 | 55.4 | 96 | 65 | M |
| | 2006.02-2015.02 | Semi-AT | F | L/R | Convertible FWD LP9 | | GCO21057 | Outer Joint | | 30 | 27 | 59.1 | 94 | 65 | M |
| 2.8 (188 kw) | 2007.12-2015.02 | 6AT | F | L/R | Convertible FWD B284L | | GCO21057 | Outer Joint | | 30 | 27 | 59.1 | 94 | 65 | M |
| | 2007.12-2015.02 | 6MT | F | L/R | Convertible FWD B284L | | GDS21036 | Drive Shaft | | 30 | 27 | 55.4 | 100 | 602 | |
| | 2007.12-2015.02 | MT | F | L/R | Convertible FWD B284L | | GCO21030 | Outer Joint | | 30 | 28 | 55.4 | 96 | 65 | M |
| | 2007.12-2015.02 | 6AT | F | L/R | Estate FWD B284L | | GCO21057 | Outer Joint | | 30 | 27 | 59.1 | 94 | 65 | M |
| | 2007.12-2015.02 | 6MT | F | L/R | Estate FWD B284L | | GDS21036 | Drive Shaft | | 30 | 27 | 55.4 | 100 | 602 | |
| | 2007.12-2015.02 | MT | F | L/R | Estate FWD B284L | | GCO21030 | Outer Joint | | 30 | 28 | 55.4 | 96 | 65 | M |
| | 2007.12-2015.02 | 6MT | F | L/R | Saloon FWD B284L | | GDS21036 | Drive Shaft | | 30 | 27 | 55.4 | 100 | 602 | |
| | 2007.12-2015.02 | MT | F | L/R | Saloon FWD B284L | | GCO21030 | Outer Joint | | 30 | 28 | 55.4 | 96 | 65 | M |
| | 2007.12-2015.02 | Semi-AT | F | L/R | Saloon FWD B284L | | GCO21057 | Outer Joint | | 30 | 27 | 59.1 | 94 | 65 | M |
| 2.8 (203 kw) | 2008.04-2015.02 | AT | F | L/R | Saloon FWD B284L | | GCO21057 | Outer Joint | | 30 | 27 | 59.1 | 94 | 65 | M |
| | 2008.04-2015.02 | MT | F | L/R | Saloon FWD B284L | | GDS21036 | Drive Shaft | | 30 | 27 | 55.4 | 100 | 602 | |
| | 2008.04-2015.02 | MT | F | L/R | Saloon FWD B284L | | GCO21030 | Outer Joint | | 30 | 28 | 55.4 | 96 | 65 | M |
| | 2008.05-2015.02 | AT | F | L/R | Estate FWD B284R | | GCO21057 | Outer Joint | | 30 | 27 | 59.1 | 94 | 65 | M |
| | 2008.05-2015.02 | MT | F | L/R | Estate FWD B284R | | GDS21036 | Drive Shaft | | 30 | 27 | 55.4 | 100 | 602 | |
| | 2008.05-2015.02 | MT | F | L/R | Estate FWD B284R | | GCO21030 | Outer Joint | | 30 | 28 | 55.4 | 96 | 65 | M |
| | 2009.02-2015.02 | AT | F | L/R | Convertible FWD B284R | | GCO21057 | Outer Joint | | 30 | 27 | 59.1 | 94 | 65 | M |
| | 2009.02-2015.02 | MT | F | L/R | Convertible FWD B284R | | GDS21036 | Drive Shaft | | 30 | 27 | 55.4 | 100 | 602 | |
| | 2009.02-2015.02 | MT | F | L/R | Convertible FWD B284R | | GCO21030 | Outer Joint | | 30 | 28 | 55.4 | 96 | 65 | M |
| 2.8 (206 kw) | 2008.05-2011.12 | 6AT | F | L/R | Estate 4WD B284R | | GCO21057 | Outer Joint | | 30 | 27 | 59.1 | 94 | 65 | M |
| | 2008.05-2011.12 | 6MT | F | L/R | Estate 4WD B284R | | GDS21036 | Drive Shaft | | 30 | 27 | 55.4 | 100 | 602 | |
| | 2008.05-2011.12 | MT | F | L/R | Estate 4WD B284R | | GCO21030 | Outer Joint | | 30 | 28 | 55.4 | 96 | 65 | M |
| | 2008.05-2011.12 | 6AT | F | L/R | Saloon 4WD B284R | | GCO21057 | Outer Joint | | 30 | 27 | 59.1 | 94 | 65 | M |

| | YEAR | TRANSM. | F/R | L/R | BODY STYLE & DRIVE TYPE & ENGINE | REMARKS | G-AP Ref. | PRODUCT | ABS | Technical Specifications A | B | C | H | L | P |
|---|---|---|---|---|---|---|---|---|---|---|---|---|---|---|---|
| **SAAB** | | | | | | | | | | | | | | | |
| **9-3** | | | | | | | | | | | | | | | |
| 2.8 (206 kw) | 2008.05-2011.12 | 6MT | F | L/R | Saloon 4WD B284R | | GDS21036 | Drive Shaft | | 30 | 27 | 55.4 | 100 | 602 | |
| | 2008.05-2011.12 | MT | F | L/R | Saloon 4WD B284R | | GCO21030 | Outer Joint | | 30 | 28 | 55.4 | 96 | 65 | M |
| | 2009.02-2015.02 | AT | F | L/R | Convertible FWD B284R | | GCO21057 | Outer Joint | | 30 | 27 | 59.1 | 94 | 65 | M |
| | 2009.02-2015.02 | MT | F | L/R | Convertible FWD B284R | | GDS21036 | Drive Shaft | | 30 | 27 | 55.4 | 100 | 602 | |
| | 2009.02-2015.02 | MT | F | L/R | Convertible FWD B284R | | GCO21030 | Outer Joint | | 30 | 28 | 55.4 | 96 | 65 | M |
| **9-3 X** | | | | | | | | | | | | | | | |
| 2.0 (120 kw) | 2007.01-2015.02 | 6MT | F | L/R | Estate 4WD B207G | | GDS21036 | Drive Shaft | | 30 | 27 | 55.4 | 100 | 602 | |
| | 2007.01-2015.02 | | F | L/R | Estate 4WD B207G | | GCO21030 | Outer Joint | | 30 | 28 | 55.4 | 96 | 65 | M |
| | 2007.01-2015.02 | 6MT | F | L/R | Estate 4WD B207H | | GDS21036 | Drive Shaft | | 30 | 27 | 55.4 | 100 | 602 | |
| | 2007.01-2015.02 | | F | L/R | Estate 4WD B207H | | GCO21030 | Outer Joint | | 30 | 28 | 55.4 | 96 | 65 | M |
| 2.0 (154 kw) | 2009.02-2012.12 | | F | L/R | Estate 4WD B207R | | GDS21036 | Drive Shaft | | 30 | 27 | 55.4 | 100 | 602 | |
| | 2009.02-2012.12 | | F | L/R | Estate 4WD B207R | | GCO21030 | Outer Joint | | 30 | 28 | 55.4 | 96 | 65 | M |
| | 2009.02-2015.02 | 6AT/6MT | F | L/R | Estate 4WD B207R | | GCO21030 | Outer Joint | | 30 | 28 | 55.4 | 96 | 65 | M |
| | 2009.02-2015.02 | MT | F | L/R | Estate 4WD B207R | | GDS21036 | Drive Shaft | | 30 | 27 | 55.4 | 100 | 602 | |
| 2.0 (162 kw) | 2011.01-2012.12 | MT | F | L/R | Estate 4WD A 20 NFT | | GDS21036 | Drive Shaft | | 30 | 27 | 55.4 | 100 | 602 | |
| | 2011.01-2012.12 | | F | L/R | Estate 4WD A 20 NFT | | GCO21030 | Outer Joint | | 30 | 28 | 55.4 | 96 | 65 | M |
| | 2011.01-2015.02 | 6AT | F | L/R | Estate 4WD A 20 NFT | | GCO21030 | Outer Joint | | 30 | 28 | 55.4 | 96 | 65 | M |
| | 2011.01-2015.02 | MT | F | L/R | Estate 4WD A 20 NFT | | GDS21036 | Drive Shaft | | 30 | 27 | 55.4 | 100 | 602 | |
| 2.0 (177 kw) | 2009.05-2015.02 | 6AT/6MT | F | L/R | Estate 4WD B207R | | GCO21030 | Outer Joint | | 30 | 28 | 55.4 | 96 | 65 | M |
| | 2009.05-2015.02 | AT | F | L/R | Estate 4WD B207R | | GDS21036 | Drive Shaft | | 30 | 27 | 55.4 | 100 | 602 | |
| **9-5** | | | | | | | | | | | | | | | |
| 1.6 (132 kw) | 2010.05-2012.01 | 6MT | F | L/R | Saloon FWD A 16 LET | | GCO17051 | Outer Joint | | 30 | 26 | 53.8 | 94.5 | 65.5 | M |
| | 2010.05-2012.01 | 6MT | F | L/R | Saloon FWD A 16 LET | | GCO21049 | Outer Joint | | 30 | 26 | 52.5 | 94 | 65.5 | M |
| | 2010.05-2012.01 | MT | F | L | Saloon FWD A 16 LET | | GDS21043 | Drive Shaft | | 30 | 25 | 52.5 | 94.5 | 624.5 | |
| | 2010.05-2012.01 | MT | F | L/R | Saloon FWD A 16 LET | | GCO88046 | Outer Joint | | 30 | 26 | 52.5 | 94.5 | 65.5 | M |
| | 2010.05-2012.01 | MT | F | R | Saloon FWD A 16 LET | | GCI88026 | Inner Joint | | 34 | 26 | 37.5 | | 100 | |
| 1.9 (110 kw) | 2005.09-2010.05 | AT | F | R | Estate FWD Z19DTH | | GDS99200 | Drive Shaft | 29T | 30 | 27 | 59 | 94 | 610 | |
| | 2005.09-2010.05 | MT | F | L | Estate FWD Z19DTH | | GDS99200 | Drive Shaft | 29T | 30 | 27 | 59 | 94 | 610 | |
| | 2005.09-2010.05 | | F | L/R | Estate FWD Z19DTH | | GCO99254 | Outer Joint | 29T | 30 | 27 | 59 | 94 | 65 | M |
| | 2005.09-2010.05 | AT | F | R | Saloon FWD Z19DTH | | GDS99200 | Drive Shaft | 29T | 30 | 27 | 59 | 94 | 610 | |
| | 2005.09-2010.05 | MT | F | L | Saloon FWD Z19DTH | | GDS99200 | Drive Shaft | 29T | 30 | 27 | 59 | 94 | 610 | |
| | 2005.09-2010.05 | | F | L/R | Saloon FWD Z19DTH | | GCO99254 | Outer Joint | 29T | 30 | 27 | 59 | 94 | 65 | M |
| 1.9 (129 kw) | 2007.01-2010.05 | | F | L/R | Estate FWD Z19DTH | | GCO99254 | Outer Joint | 29T | 30 | 27 | 59 | 94 | 65 | M |
| 2.0 (110 kw) | 1997.09-2010.05 | AT | F | L | Saloon FWD B205E | Date from:2001.08;Chassis no. to:23011787 | GDS99200 | Drive Shaft | 29T | 30 | 27 | 59 | 94 | 610 | |
| | 1997.09-2010.05 | AT/MT | F | L/R | Saloon FWD B205E | Date to:2001.12 | GCO52008 | Outer Joint | 29T | 33 | 27 | 59 | 98 | 65 | I |
| | 1997.09-2010.05 | AT/MT | F | L/R | Saloon FWD B205E | Date from:2002.01 | GCO99254 | Outer Joint | 29T | 30 | 27 | 59 | 94 | 65 | M |
| | 1997.09-2010.05 | AT/MT | F | L/R | Saloon FWD B205E | | GCO99281 | Outer Joint | 29T | 33 | 27 | 59 | 98 | 65 | I |
| | 1997.09-2010.05 | | F | L/R | Saloon FWD B205E | Date To:2001.07 | GDS52006 | Drive Shaft | 29T | 33 | 27 | 59 | 92 | 613 | |
| | 1998.10-2010.05 | AT | F | L | Estate FWD B205E | Date from:2001.08;Chassis no. to:23011787 | GDS99200 | Drive Shaft | 29T | 30 | 27 | 59 | 94 | 610 | |
| | 1998.10-2010.05 | AT/MT | F | L/R | Estate FWD B205E | | GDS52006 | Drive Shaft | 29T | 33 | 27 | 59 | 92 | 613 | |
| | 1998.10-2010.05 | AT/MT | F | L/R | Estate FWD B205E | Date to:2001.12 | GCO52008 | Outer Joint | 29T | 33 | 27 | 59 | 98 | 65 | I |
| | 1998.10-2010.05 | AT/MT | F | L/R | Estate FWD B205E | Date from:2002.01 | GCO99254 | Outer Joint | 29T | 30 | 27 | 59 | 94 | 65 | M |
| | 1998.10-2010.05 | AT/MT | F | L/R | Estate FWD B205E | | GCO99281 | Outer Joint | 29T | 33 | 27 | 59 | 98 | 65 | I |
| | 2005.01-2010.05 | | F | L/R | Saloon FWD B205E | | GCO99254 | Outer Joint | 29T | 30 | 27 | 59 | 94 | 65 | M |
| | 2006.01-2010.05 | | F | L/R | Estate FWD B205E | | GCO99254 | Outer Joint | 29T | 30 | 27 | 59 | 94 | 65 | M |
| 2.0 (118 kw) | 2010.05-2012.01 | 6AT | F | L/R | Saloon FWD A 20 DTH | | GDS21045 | Drive Shaft | | 30 | 27 | 52.5 | 94.5 | 615 | |
| | 2010.05-2012.01 | 6AT/6MT | F | L/R | Saloon FWD A 20 DTH | | GCO17051 | Outer Joint | | 30 | 26 | 53.8 | 94.5 | 65.5 | M |
| | 2010.05-2012.01 | 6AT/6MT | F | L/R | Saloon FWD A 20 DTH | | GCO21049 | Outer Joint | | 30 | 26 | 52.5 | 94 | 65.5 | M |
| | 2010.05-2012.01 | 6AT/6MT | F | L/R | Saloon FWD A 20 DTH | | GCO88046 | Outer Joint | | 30 | 26 | 52.5 | 94.5 | 65.5 | M |
| | 2010.05-2012.01 | MT | F | L/R | Saloon FWD A 20 DTH | | GDS60027 | Drive Shaft | | 30 | 27 | 52.5 | 94.5 | 619 | |
| | 2010.05-2012.01 | MT | F | L/R | Saloon FWD A 20 DTH | | GCI21030 | Inner Joint | | 27 | 26 | 35 | 78 | 112.5 | |
| 2.0 (132 kw) | 2005.09-2010.05 | MT | F | L | Estate FWD B205E | | GDS99200 | Drive Shaft | 29T | 30 | 27 | 59 | 94 | 610 | |
| | 2005.09-2010.05 | | F | L/R | Estate FWD B205E | | GCO99254 | Outer Joint | 29T | 30 | 27 | 59 | 94 | 65 | M |
| | 2005.09-2010.05 | MT | F | L | Saloon FWD B205E | | GDS99200 | Drive Shaft | 29T | 30 | 27 | 59 | 94 | 610 | |
| | 2005.09-2010.05 | | F | L/R | Saloon FWD B205E | | GCO99254 | Outer Joint | 29T | 30 | 27 | 59 | 94 | 65 | M |
| 2.0 (136 kw) | 2000.07-2001.07 | AT/MT | F | L/R | Estate FWD B205L | | GDS52006 | Drive Shaft | 29T | 33 | 27 | 59 | 92 | 613 | |
| | 2000.07-2001.07 | | F | L/R | Estate FWD B205L | Date to:2001.07 | GCO52008 | Outer Joint | 29T | 33 | 27 | 59 | 98 | 65 | I |
| | 2000.07-2001.07 | | F | L/R | Estate FWD B205L | | GCO99281 | Outer Joint | 29T | 33 | 27 | 59 | 98 | 65 | I |
| | 2000.07-2001.07 | AT/MT | F | L/R | Saloon FWD B205L | | GDS52006 | Drive Shaft | 29T | 33 | 27 | 59 | 92 | 613 | |
| | 2000.07-2001.07 | | F | L/R | Saloon FWD B205L | | GDS99200 | Drive Shaft | 29T | 30 | 27 | 59 | 94 | 610 | |
| | 2000.07-2001.07 | | F | L/R | Saloon FWD B205L | Date To:2001.07 | GCO52008 | Outer Joint | 29T | 33 | 27 | 59 | 98 | 65 | I |
| | 2000.07-2001.07 | | F | L/R | Saloon FWD B205L | | GCO99281 | Outer Joint | 29T | 33 | 27 | 59 | 98 | 65 | I |
| 2.0 (140 kw) | 2010.05-2012.01 | 6AT | F | L/R | Saloon 4WD A 20 DTR | | GDS21045 | Drive Shaft | | 30 | 27 | 52.5 | 94.5 | 615 | |
| | 2010.05-2012.01 | 6MT | F | L/R | Saloon 4WD A 20 DTR | | GCO17051 | Outer Joint | | 30 | 26 | 53.8 | 94.5 | 65.5 | M |
| | 2010.05-2012.01 | 6MT | F | L/R | Saloon 4WD A 20 DTR | | GCO21049 | Outer Joint | | 30 | 26 | 52.5 | 94 | 65.5 | M |

| | YEAR | TRANSM. | F/R | L/R | BODY STYLE & DRIVE TYPE & ENGINE | REMARKS | G-AP Ref. | PRODUCT | ABS | Technical Specifications A | B | C | H | L | P |
|---|---|---|---|---|---|---|---|---|---|---|---|---|---|---|---|
| **SAAB** | | | | | | | | | | | | | | | |
| **9-5** | | | | | | | | | | | | | | | |
| 2.0 (140 kw) | 2010.05-2012.01 | 6MT | F | L/R | Saloon 4WD A 20 DTR | | GCO88046 | Outer Joint | | 30 | 26 | 52.5 | 94.5 | 65.5 | M |
| | 2010.05-2012.01 | MT | F | L/R | Saloon 4WD A 20 DTR | | GDS60027 | Drive Shaft | | 30 | 27 | 52.5 | 94.5 | 619 | |
| | 2010.05-2012.01 | MT | F | L/R | Saloon 4WD A 20 DTR | | GCI21030 | Inner Joint | | 27 | 26 | 35 | 78 | 112.5 | |
| | 2010.05-2012.01 | 6MT | R | L/R | Saloon 4WD A 20 DTR | For vehicles with electronic ltd slip differential | GCO81305 | Outer Joint | | 30 | 23 | 52.3 | 94 | 59.5 | M |
| | 2010.05-2012.01 | | R | R | Saloon 4WD A 20 DTR | Veh Equip:For vehicles with lectronic ltd slip differential | GDS81333 | Drive Shaft | | 30 | 34 | 52.3 | 94 | 842 | |
| | 2010.05-2012.01 | 6MT | F | L/R | Saloon FWD A 20 DTR | | GCO17051 | Outer Joint | | 30 | 26 | 53.8 | 94.5 | 65.5 | M |
| | 2010.05-2012.01 | 6MT | F | L/R | Saloon FWD A 20 DTR | | GCO21049 | Outer Joint | | 30 | 26 | 52.5 | 94 | 65.5 | M |
| | 2010.05-2012.01 | 6MT | F | L/R | Saloon FWD A 20 DTR | | GCO88046 | Outer Joint | | 30 | 26 | 52.5 | 94.5 | 65.5 | M |
| | 2010.05-2012.01 | 6MT | F | L/R | Saloon FWD A 20 DTR | | GCI21030 | Inner Joint | | 27 | 26 | 35 | 78 | 112.5 | |
| | 2010.05-2012.01 | MT | F | L/R | Saloon FWD A 20 DTR | | GDS60027 | Drive Shaft | | 30 | 27 | 52.5 | 94.5 | 619 | |
| 2.0 (141 kw) | 1998.10-2000.07 | AT/MT | F | L/R | Estate FWD B205E | | GDS52006 | Drive Shaft | 29T | 33 | 27 | 59 | 92 | 613 | |
| | 1998.10-2000.07 | | F | L/R | Estate FWD B205E | | GCO99281 | Outer Joint | 29T | 33 | 27 | 59 | 98 | 65 | I |
| | 1998.10-2000.07 | | F | | Estate FWD B205E | | GCO52008 | Outer Joint | 29T | 33 | 27 | 59 | 98 | 65 | I |
| | 1998.10-2000.07 | AT/MT | F | L/R | Saloon FWD B205E | | GDS52006 | Drive Shaft | 29T | 33 | 27 | 59 | 92 | 613 | |
| | 1998.10-2000.07 | | F | L/R | Saloon FWD B205E | Date to:2001.07 | GCO52008 | Outer Joint | 29T | 33 | 27 | 59 | 98 | 65 | I |
| | 1998.10-2000.07 | | F | L/R | Saloon FWD B205E | | GCO99281 | Outer Joint | 29T | 33 | 27 | 59 | 98 | 65 | I |
| 2.0 (162 kw) | 2010.05-2012.01 | 6AT | F | L/R | Saloon 4WD A 20 NHT | | GDS21045 | Drive Shaft | | 30 | 27 | 52.5 | 94.5 | 615 | |
| | 2010.05-2012.01 | 6AT/6MT | F | L/R | Saloon 4WD A 20 NHT | | GCO17051 | Outer Joint | | 30 | 26 | 53.8 | 94.5 | 65.5 | M |
| | 2010.05-2012.01 | 6AT/6MT | F | L/R | Saloon 4WD A 20 NHT | | GCO21049 | Outer Joint | | 30 | 26 | 52.5 | 94 | 65.5 | M |
| | 2010.05-2012.01 | 6AT/6MT | F | L/R | Saloon 4WD A 20 NHT | | GCO88046 | Outer Joint | | 30 | 26 | 52.5 | 94.5 | 65.5 | M |
| | 2010.05-2012.01 | MT | F | L/R | Saloon 4WD A 20 NHT | | GDS60027 | Drive Shaft | | 30 | 27 | 52.5 | 94.5 | 619 | |
| | 2010.05-2012.01 | MT | F | L/R | Saloon 4WD A 20 NHT | | GCI21030 | Inner Joint | | 27 | 26 | 35 | 78 | 112.5 | |
| | 2010.05-2012.01 | 6AT/6MT | R | L/R | Saloon 4WD A 20 NHT | For vehicles with electronic ltd slip differential | GCO81305 | Outer Joint | | 30 | 23 | 52.3 | 94 | 59.5 | M |
| | 2010.05-2012.01 | | R | R | Saloon 4WD A 20 NHT | Veh Equip:For vehicles with lectronic ltd slip differential | GDS81333 | Drive Shaft | | 30 | 34 | 52.3 | 94 | 842 | |
| | 2010.05-2012.01 | 6AT | F | L/R | Saloon FWD A 20 NFT | | GDS21045 | Drive Shaft | | 30 | 27 | 52.5 | 94.5 | 615 | |
| | 2010.05-2012.01 | 6AT/6MT | F | L/R | Saloon FWD A 20 NFT | | GCO17051 | Outer Joint | | 30 | 26 | 53.8 | 94.5 | 65.5 | M |
| | 2010.05-2012.01 | 6AT/6MT | F | L/R | Saloon FWD A 20 NFT | | GCO21049 | Outer Joint | | 30 | 26 | 52.5 | 94 | 65.5 | M |
| | 2010.05-2012.01 | 6AT/6MT | F | L/R | Saloon FWD A 20 NFT | | GCO88046 | Outer Joint | | 30 | 26 | 52.5 | 94.5 | 65.5 | M |
| | 2010.05-2012.01 | MT | F | L/R | Saloon FWD A 20 NFT | | GDS60027 | Drive Shaft | | 30 | 27 | 52.5 | 94.5 | 619 | |
| | 2010.05-2012.01 | MT | F | L/R | Saloon FWD A 20 NFT | | GCI21030 | Inner Joint | | 27 | 26 | 35 | 78 | 112.5 | |
| | 2010.05-2012.01 | 6AT | F | L/R | Saloon FWD A 20 NHT | | GDS21045 | Drive Shaft | | 30 | 27 | 52.5 | 94.5 | 615 | |
| | 2010.05-2012.01 | 6AT/6MT | F | L/R | Saloon FWD A 20 NHT | | GCO17051 | Outer Joint | | 30 | 26 | 53.8 | 94.5 | 65.5 | M |
| | 2010.05-2012.01 | 6AT/6MT | F | L/R | Saloon FWD A 20 NHT | | GCO21049 | Outer Joint | | 30 | 26 | 52.5 | 94 | 65.5 | M |
| | 2010.05-2012.01 | 6AT/6MT | F | L/R | Saloon FWD A 20 NHT | | GCO88046 | Outer Joint | | 30 | 26 | 52.5 | 94.5 | 65.5 | M |
| | 2010.05-2012.01 | MT | F | L/R | Saloon FWD A 20 NHT | | GDS60027 | Drive Shaft | | 30 | 27 | 52.5 | 94.5 | 619 | |
| | 2010.05-2012.01 | MT | F | L/R | Saloon FWD A 20 NHT | | GCI21030 | Inner Joint | | 27 | 26 | 35 | 78 | 112.5 | |
| 2.2 (88 kw) | 2001.08-2005.08 | AT/MT | F | L/R | Estate FWD D223L | Date to:2005.08 | GCO99254 | Outer Joint | 29T | 30 | 27 | 59 | 94 | 65 | M |
| | 2001.08-2005.08 | | F | R | Estate FWD D223L | Chassis no. from:43002730 | GDS99200 | Drive Shaft | 29T | 30 | 27 | 59 | 94 | 610 | |
| | 2001.08-2005.08 | AT/MT | F | L/R | Saloon FWD D223L | Date to:2005.08 | GCO99254 | Outer Joint | 29T | 30 | 27 | 59 | 94 | 65 | M |
| | 2001.08-2005.08 | | F | R | Saloon FWD D223L | Chassis no. from:43002730 | GDS99200 | Drive Shaft | 29T | 30 | 27 | 59 | 94 | 610 | |
| 2.3 (125 kw) | 1997.09-2001.07 | AT/MT | F | L/R | Saloon FWD B235E | Date to:2001.12 | GCO52008 | Outer Joint | 29T | 33 | 27 | 59 | 98 | 65 | I |
| | 1997.09-2001.07 | AT/MT | F | L/R | Saloon FWD B235E | | GCO99281 | Outer Joint | 29T | 33 | 27 | 59 | 98 | 65 | I |
| | 1997.09-2001.07 | | F | L/R | Saloon FWD B235E | | GDS52006 | Drive Shaft | 29T | 33 | 27 | 59 | 92 | 613 | |
| | 1997.09-2001.07 | | F | L/R | Saloon FWD B235E | | GDS99200 | Drive Shaft | 29T | 30 | 27 | 59 | 94 | 610 | |
| | 1998.10-2001.07 | AT/MT | F | L/R | Estate FWD B235E | | GDS52006 | Drive Shaft | 29T | 33 | 27 | 59 | 92 | 613 | |
| | 1998.10-2001.07 | AT/MT | F | L/R | Estate FWD B235E | Date to:2001.12 | GCO52008 | Outer Joint | 29T | 33 | 27 | 59 | 98 | 65 | I |
| | 1998.10-2001.07 | AT/MT | F | L/R | Estate FWD B235E | | GCO99281 | Outer Joint | 29T | 33 | 27 | 59 | 98 | 65 | I |
| 2.3 (134 kw) | 2008.04-2010.05 | | F | L/R | Saloon FWD B235E | | GDS99200 | Drive Shaft | 29T | 30 | 27 | 59 | 94 | 610 | |
| | 2008.04-2010.05 | | F | L/R | Saloon FWD B235E | | GCO99254 | Outer Joint | 29T | 30 | 27 | 59 | 94 | 65 | M |
| 2.3 (136 kw) | 1999.09-2010.05 | AT | F | L | Estate FWD B235E/B235L | Date from:2001.08;Chassis no. to:23011787 | GDS99200 | Drive Shaft | 29T | 30 | 27 | 59 | 94 | 610 | |
| | 1999.09-2010.05 | AT/MT | F | L/R | Estate FWD B235E/B235L | | GDS52006 | Drive Shaft | 29T | 33 | 27 | 59 | 92 | 613 | |
| | 1999.09-2010.05 | | F | L/R | Estate FWD B235E/B235L | Date to:2001.12 | GCO52008 | Outer Joint | 29T | 33 | 27 | 59 | 98 | 65 | I |
| | 1999.09-2010.05 | | F | L/R | Estate FWD B235E/B235L | Date from:2001.08 | GCO99254 | Outer Joint | 29T | 30 | 27 | 59 | 94 | 65 | M |
| | 1999.09-2010.05 | | F | L/R | Estate FWD B235E/B235L | | GCO99281 | Outer Joint | 29T | 33 | 27 | 59 | 98 | 65 | I |
| | 1999.09-2010.05 | AT | F | L | Saloon FWD B235E/B235L | Date from:2001.08;Chassis no. to:23011787 | GDS99200 | Drive Shaft | 29T | 30 | 27 | 59 | 94 | 610 | |
| | 1999.09-2010.05 | AT/MT | F | L/R | Saloon FWD B235E/B235L | | GDS52006 | Drive Shaft | 29T | 33 | 27 | 59 | 92 | 613 | |
| | 1999.09-2010.05 | AT/MT | F | L/R | Saloon FWD B235E/B235L | Date from:2001.08 | GCO99254 | Outer Joint | 29T | 30 | 27 | 59 | 94 | 65 | M |
| | 1999.09-2010.05 | | F | L/R | Saloon FWD B235E/B235L | Date to:2001.12 | GCO52008 | Outer Joint | 29T | 33 | 27 | 59 | 98 | 65 | I |
| | 1999.09-2010.05 | | F | L/R | Saloon FWD B235E/B235L | | GCO99281 | Outer Joint | 29T | 33 | 27 | 59 | 98 | 65 | I |
| | 2007.01-2010.05 | | F | L/R | Estate FWD B235E | | GCO99254 | Outer Joint | 29T | 30 | 27 | 59 | 94 | 65 | M |
| | 2007.01-2010.05 | | F | L/R | Saloon FWD B235E | | GCO99254 | Outer Joint | 29T | 30 | 27 | 59 | 94 | 65 | M |
| 2.3 (152 kw) | 2006.11-2009.12 | | F | L/R | Estate FWD B235R | | GCO99254 | Outer Joint | 29T | 30 | 27 | 59 | 94 | 65 | M |
| | 2006.11-2010.05 | MT | F | L | Saloon FWD B235E | | GDS99200 | Drive Shaft | 29T | 30 | 27 | 59 | 94 | 610 | |
| | 2006.11-2010.05 | | F | L/R | Saloon FWD B235E | | GCO99254 | Outer Joint | 29T | 30 | 27 | 59 | 94 | 65 | M |
| 2.3 (154 kw) | 2006.11-2010.05 | | F | L/R | Estate FWD B235E | | GDS99200 | Drive Shaft | 29T | 30 | 27 | 59 | 94 | 610 | |

| | YEAR | TRANSM. | F/R | L/R | BODY STYLE & DRIVE TYPE & ENGINE | REMARKS | G-AP Ref. | PRODUCT | ABS | Technical Specifications A | B | C | H | L | P |
|---|---|---|---|---|---|---|---|---|---|---|---|---|---|---|---|
| **SAAB** | | | | | | | | | | | | | | | |
| **9-5** | | | | | | | | | | | | | | | |
| 2.3 (154 kw) | 2006.11-2010.05 | | F | L/R | Estate FWD B235E | | GCO99254 | Outer Joint | 29T | 30 | 27 | 59 | 94 | 65 | M |
| 2.3 (162 kw) | 2003.06-2010.05 | AT | F | L | Estate FWD B235L/B235R | Date from:2001.08;Chassis no. to:23011787 | GDS99200 | Drive Shaft | 29T | 30 | 27 | 59 | 94 | 610 | |
| | 2003.06-2010.05 | AT/MT | F | L/R | Estate FWD B235L/B235R | | GCO99254 | Outer Joint | 29T | 30 | 27 | 59 | 94 | 65 | M |
| | 2003.06-2010.05 | AT | F | L | Saloon FWD B235L/B235R | Date from:2001.08;Chassis no. to:23011787 | GDS99200 | Drive Shaft | 29T | 30 | 27 | 59 | 94 | 610 | |
| | 2003.06-2010.05 | AT/MT | F | L/R | Saloon FWD B235L/B235R | | GCO99254 | Outer Joint | 29T | 30 | 27 | 59 | 94 | 65 | M |
| 2.3 (169 kw) | 1999.07-2001.07 | AT/MT | F | L/R | Estate FWD B235R | | GDS52006 | Drive Shaft | 29T | 33 | 27 | 59 | 92 | 613 | |
| | 1999.07-2001.07 | AT/MT | F | L/R | Estate FWD B235R | | GCO52008 | Outer Joint | 29T | 33 | 27 | 59 | 98 | 65 | I |
| | 1999.07-2001.07 | AT/MT | F | L/R | Estate FWD B235R | | GCO99281 | Outer Joint | 29T | 33 | 27 | 59 | 98 | 65 | I |
| | 1999.07-2001.07 | AT/MT | F | L/R | Saloon FWD B235R | | GDS52006 | Drive Shaft | 29T | 33 | 27 | 59 | 92 | 613 | |
| | 1999.07-2001.07 | AT/MT | F | L/R | Saloon FWD B235R | | GCO52008 | Outer Joint | 29T | 33 | 27 | 59 | 98 | 65 | I |
| | 1999.07-2001.07 | AT/MT | F | L/R | Saloon FWD B235R | | GCO99281 | Outer Joint | 29T | 33 | 27 | 59 | 98 | 65 | I |
| 2.3 (184 kw) | 2001.09-2010.05 | AT | F | L | Estate FWD B235R | Date from:2001.08;Chassis no. to:23011787 | GDS99200 | Drive Shaft | 29T | 30 | 27 | 59 | 94 | 610 | |
| | 2001.09-2010.05 | AT/MT | F | L/R | Estate FWD B235R | | GCO99254 | Outer Joint | 29T | 30 | 27 | 59 | 94 | 65 | M |
| | 2001.09-2010.05 | | F | | Estate FWD B235R | | GCO52008 | Outer Joint | 29T | 33 | 27 | 59 | 98 | 65 | I |
| | 2001.09-2010.05 | AT | F | L | Saloon FWD B235R | Date from:2001.08;Chassis no. to:23011787 | GDS99200 | Drive Shaft | 29T | 30 | 27 | 59 | 94 | 610 | |
| | 2001.09-2010.05 | AT/MT | F | L/R | Saloon FWD B235R | | GCO99254 | Outer Joint | 29T | 30 | 27 | 59 | 94 | 65 | M |
| | 2001.09-2010.05 | | F | | Saloon FWD B235R | | GCO52008 | Outer Joint | 29T | 33 | 27 | 59 | 98 | 65 | I |
| 2.3 (188 kw) | 2008.04-2010.05 | | F | L/R | Saloon FWD B235R | | GDS99200 | Drive Shaft | 29T | 30 | 27 | 59 | 94 | 610 | |
| | 2008.04-2010.05 | | F | L/R | Saloon FWD B235R | | GCO99254 | Outer Joint | 29T | 30 | 27 | 59 | 94 | 65 | M |
| 2.3 (191 kw) | 2000.01-2010.05 | MT | F | L | Estate FWD B235R | | GDS99200 | Drive Shaft | 29T | 30 | 27 | 59 | 94 | 610 | |
| | 2000.01-2010.05 | | F | L/R | Estate FWD B235R | | GCO99254 | Outer Joint | 29T | 30 | 27 | 59 | 94 | 65 | M |
| | 2000.01-2010.05 | MT | F | L | Saloon FWD B235R | | GDS99200 | Drive Shaft | 29T | 30 | 27 | 59 | 94 | 610 | |
| | 2000.01-2010.05 | | F | L/R | Saloon FWD B235R | | GCO99254 | Outer Joint | 29T | 30 | 27 | 59 | 94 | 65 | M |
| 2.3 (224 kw) | 2003.06-2005.08 | | F | L/R | Saloon FWD B235H | | GDS99200 | Drive Shaft | 29T | 30 | 27 | 59 | 94 | 610 | |
| 2.8 (221 kw) | 2010.05-2012.01 | 6AT | F | L/R | Saloon 4WD A 28 NER | | GCO21057 | Outer Joint | | 30 | 27 | 59.1 | 94 | 65 | M |
| | 2010.05-2012.01 | 6AT | R | L/R | Saloon 4WD A 28 NER | For vehicles with electronic ltd slip differential | GCO81305 | Outer Joint | | 30 | 23 | 52.3 | 94 | 59.5 | M |
| | 2010.05-2012.01 | 6AT | R | R | Saloon 4WD A 28 NER | For vehicles with lectronic ltd slip differential | GCI81197 | Inner Joint | | 34 | 23 | 35 | 82.5 | 109 | |
| | 2010.05-2012.01 | | R | R | Saloon 4WD A 28 NER | Veh Equip:For vehicles with lectronic ltd slip differential | GDS81333 | Drive Shaft | | 30 | 34 | 52.3 | 94 | 842 | |
| 3.0 (130 kw) | 2001.07-2005.08 | AT/MT | F | L/R | Estate FWD D308L | Date to:2005.08 | GCO99254 | Outer Joint | 29T | 30 | 27 | 59 | 94 | 65 | M |
| | 2001.07-2005.08 | | F | R | Estate FWD D308L | Chassis no. from:43002730 | GDS99200 | Drive Shaft | 29T | 30 | 27 | 59 | 94 | 610 | |
| | 2001.07-2005.08 | | F | | Estate FWD D308L | | GCO52008 | Outer Joint | 29T | 33 | 27 | 59 | 98 | 65 | I |
| | 2001.07-2005.08 | AT/MT | F | L/R | Saloon FWD D308L | Date to:2005.08 | GCO99254 | Outer Joint | 29T | 30 | 27 | 59 | 94 | 65 | M |
| | 2001.07-2005.08 | | F | R | Saloon FWD D308L | Chassis no. from:43002730 | GDS99200 | Drive Shaft | 29T | 30 | 27 | 59 | 94 | 610 | |
| | 2001.07-2005.08 | | F | | Saloon FWD D308L | | GCO52008 | Outer Joint | 29T | 33 | 27 | 59 | 98 | 65 | I |
| 3.0 (147 kw) | 1997.06-2005.08 | AT | F | L | Saloon FWD B308E | Date from:2001.08;Chassis no. to:23011787 | GDS99200 | Drive Shaft | 29T | 30 | 27 | 59 | 94 | 610 | |
| | 1997.06-2005.08 | AT/MT | F | L/R | Saloon FWD B308E | Date to:2001.12 | GCO52008 | Outer Joint | 29T | 33 | 27 | 59 | 98 | 65 | I |
| | 1997.06-2005.08 | AT/MT | F | L/R | Saloon FWD B308E | Date from:2002.01 | GCO99254 | Outer Joint | 29T | 30 | 27 | 59 | 94 | 65 | M |
| | 1997.06-2005.08 | AT/MT | F | L/R | Saloon FWD B308E | | GCO99281 | Outer Joint | 29T | 33 | 27 | 59 | 98 | 65 | I |
| | 1997.06-2005.08 | | F | L/R | Saloon FWD B308E | Date To:2001.07 | GDS52006 | Drive Shaft | 29T | 33 | 27 | 59 | 92 | 613 | |
| | 1998.10-2005.08 | AT | F | L | Estate FWD B308E | Date from:2001.08;Chassis no. to:23011787 | GDS99200 | Drive Shaft | 29T | 30 | 27 | 59 | 94 | 610 | |
| | 1998.10-2005.08 | AT/MT | F | L/R | Estate FWD B308E | Date to:2001.12 | GCO52008 | Outer Joint | 29T | 33 | 27 | 59 | 98 | 65 | I |
| | 1998.10-2005.08 | AT/MT | F | L/R | Estate FWD B308E | Date from:2002.01 | GCO99254 | Outer Joint | 29T | 30 | 27 | 59 | 94 | 65 | M |
| | 1998.10-2005.08 | AT/MT | F | L/R | Estate FWD B308E | | GCO99281 | Outer Joint | 29T | 33 | 27 | 59 | 98 | 65 | I |
| | 1998.10-2005.08 | | F | L/R | Estate FWD B308E | Date To:2001.07 | GDS52006 | Drive Shaft | 29T | 33 | 27 | 59 | 92 | 613 | |
| **9-7X** | | | | | | | | | | | | | | | |
| 4.2 (213 kw) | 2005.12-2012.07 | | F | L/R | SUV 4WD LL8(254CUL6) | | GDS86016 | Drive Shaft | | 27 | 26 | 55.8 | 127.5 | 703 | |
| 5.3 (220 kw) | 2004.06-2012.07 | | F | L/R | SUV 4WD LH6(325CUV8) | | GDS86016 | Drive Shaft | | 27 | 26 | 55.8 | 127.5 | 703 | |
| **900** | | | | | | | | | | | | | | | |
| 2.0 (96 kw) | 1993.11-1998.05 | AT/MT | F | L/R | Hatchback FWD B204I | | GCO52001 | Outer Joint | 29T | 33 | 25 | 52 | 99 | 61 | O |
| | 1993.11-1998.05 | MT | F | L | Hatchback FWD B204I | | GCI44002 | Inner Joint | | 34 | 25 | 35 | 56.2 | 114.8 | |
| | 1993.12-1998.02 | AT/MT | F | L/R | Cabriolet FWD B206I | | GCO52001 | Outer Joint | 29T | 33 | 25 | 52 | 99 | 61 | O |
| | 1993.12-1998.02 | MT | F | L | Cabriolet FWD B206I | | GCI44002 | Inner Joint | | 34 | 25 | 35 | 56.2 | 114.8 | |
| | 1994.08-1998.02 | AT/MT | F | L/R | Coupe FWD B204I | | GCO52001 | Outer Joint | 29T | 33 | 25 | 52 | 99 | 61 | O |
| | 1994.08-1998.02 | MT | F | L | Coupe FWD B204I | | GCI44002 | Inner Joint | | 34 | 25 | 35 | 56.2 | 114.8 | |
| 2.0 (98 kw) | 1993.07-1996.11 | AT/MT | F | L/R | Hatchback FWD B206I | | GCO52001 | Outer Joint | 29T | 33 | 25 | 52 | 99 | 61 | O |
| | 1993.07-1996.11 | MT | F | L | Hatchback FWD B206I | | GCI44002 | Inner Joint | | 34 | 25 | 35 | 56.2 | 114.8 | |
| | 1993.12-1998.05 | AT/MT | F | L/R | Coupe FWD B206I | | GCO52001 | Outer Joint | 29T | 33 | 25 | 52 | 99 | 61 | O |
| | 1993.12-1998.05 | MT | F | L | Coupe FWD B206I | | GCI44002 | Inner Joint | | 34 | 25 | 35 | 56.2 | 114.8 | |
| 2.0 (136 kw) | 1993.11-1998.05 | AT/MT | F | L/R | Cabriolet FWD B204L | | GCO52001 | Outer Joint | 29T | 33 | 25 | 52 | 99 | 61 | O |
| | 1993.11-1998.05 | AT/MT | F | L/R | Coupe FWD B204L | | GCO52001 | Outer Joint | 29T | 33 | 25 | 52 | 99 | 61 | O |
| | 1993.11-1998.05 | AT/MT | F | L/R | Hatchback FWD B204L | Date from:1993.11 | GCO52001 | Outer Joint | 29T | 33 | 25 | 52 | 99 | 61 | O |
| 2.3 (110 kw) | 1993.07-1998.02 | AT/MT | F | L/R | Hatchback FWD B234I | | GCO52001 | Outer Joint | 29T | 33 | 25 | 52 | 99 | 61 | O |
| | 1993.07-1998.02 | MT | F | L | Hatchback FWD B234I | | GCI44002 | Inner Joint | | 34 | 25 | 35 | 56.2 | 114.8 | |
| | 1993.11-1998.05 | AT/MT | F | L/R | Cabriolet FWD B234I | | GCO52001 | Outer Joint | 29T | 33 | 25 | 52 | 99 | 61 | O |
| | 1993.11-1998.05 | MT | F | L | Cabriolet FWD B234I | | GCI44002 | Inner Joint | | 34 | 25 | 35 | 56.2 | 114.8 | |

| | YEAR | TRANSM. | F/R | L/R | BODY STYLE & DRIVE TYPE & ENGINE | REMARKS | G-AP Ref. | PRODUCT | ABS | Technical Specifications A | B | C | H | L | P |
|---|---|---|---|---|---|---|---|---|---|---|---|---|---|---|---|
| **SAAB** | | | | | | | | | | | | | | | |
| **900** | | | | | | | | | | | | | | | |
| 2.3 (110 kw) | 1993.11-1998.05 | AT/MT | F | L/R | Coupe FWD B234I | | GCO52001 | Outer Joint | 29T | 33 | 25 | 52 | 99 | 61 | O |
| | 1993.11-1998.05 | MT | F | L | Coupe FWD B234I | | GCI44002 | Inner Joint | | 34 | 25 | 35 | 56.2 | 114.8 | |
| 2.5 (125 kw) | 1993.07-1998.02 | AT/MT | F | L/R | Hatchback FWD B258I | | GCO52001 | Outer Joint | 29T | 33 | 25 | 52 | 99 | 61 | O |
| | 1993.11-1998.05 | AT/MT | F | L/R | Cabriolet FWD B258I | | GCO52001 | Outer Joint | 29T | 33 | 25 | 52 | 99 | 61 | O |
| | 1993.11-1998.05 | AT/MT | F | L/R | Coupe FWD B258I | | GCO52001 | Outer Joint | 29T | 33 | 25 | 52 | 99 | 61 | O |
| **9000** | | | | | | | | | | | | | | | |
| 2.0 (96 kw) | 1993.09-1998.10 | AT/MT | F | L/R | Hatchback FWD B204I | | GCO99212 | Outer Joint | 46T | 26 | 25 | 56 | 84 | 61 | O |
| | 1993.09-1998.12 | AT/MT | F | L/R | Saloon FWD B204I | | GCO99212 | Outer Joint | 46T | 26 | 25 | 56 | 84 | 61 | O |
| 2.0 (110 kw) | 1993.09-1998.10 | AT/MT | F | L/R | Hatchback FWD B204E/B204S | | GCO52007 | Outer Joint | 46T | 26 | 25 | 56 | 84 | 65 | O |
| | 1993.09-1998.10 | AT/MT | F | L/R | Saloon FWD B204E/B204S | | GCO52007 | Outer Joint | 46T | 26 | 25 | 56 | 84 | 65 | O |
| 2.3 (107 kw) | 1989.08-1998.12 | AT/MT | F | L/R | Saloon FWD B234I | | GCO52002 | Outer Joint | | 26 | 25 | 56 | 84 | 61 | O |
| | 1989.08-1998.12 | AT/MT | F | L/R | Saloon FWD B234I | | GCO99212 | Outer Joint | 46T | 26 | 25 | 56 | 84 | 61 | O |
| | 1989.09-1998.12 | AT/MT | F | L/R | Hatchback FWD B234I | | GCO52002 | Outer Joint | | 26 | 25 | 56 | 84 | 61 | O |
| | 1989.09-1998.12 | AT/MT | F | L/R | Hatchback FWD B234I | | GCO99212 | Outer Joint | 46T | 26 | 25 | 56 | 84 | 61 | O |
| 2.3 (108 kw) | 1988.09-1998.12 | AT/MT | F | L/R | Saloon FWD B234I | | GCO52002 | Outer Joint | | 26 | 25 | 56 | 84 | 61 | O |
| | 1988.09-1998.12 | AT/MT | F | L/R | Saloon FWD B234I | | GCO99212 | Outer Joint | 46T | 26 | 25 | 56 | 84 | 61 | O |
| | 1993.09-1998.12 | AT/MT | F | L/R | Hatchback FWD B234I | | GCO52002 | Outer Joint | | 26 | 25 | 56 | 84 | 61 | O |
| | 1993.09-1998.12 | AT/MT | F | L/R | Hatchback FWD B234I | | GCO99212 | Outer Joint | 46T | 26 | 25 | 56 | 84 | 61 | O |
| 2.3 (143 kw) | 1990.09-1998.12 | AT/MT | F | L/R | Hatchback FWD B234L | | GCO52007 | Outer Joint | 46T | 26 | 25 | 56 | 84 | 65 | O |
| | 1990.09-1998.12 | AT/MT | F | L/R | Hatchback FWD B234L | | GCO52011 | Outer Joint | | 26 | 25 | 56 | 84 | 65 | O |
| | 1990.09-1998.12 | AT/MT | F | L/R | Saloon FWD B234L | | GCO52007 | Outer Joint | 46T | 26 | 25 | 56 | 84 | 65 | O |
| | 1990.09-1998.12 | AT/MT | F | | Saloon FWD B234L | | GCO52011 | Outer Joint | | 26 | 25 | 56 | 84 | 65 | O |
| 2.3 (147 kw) | 1989.06-1998.12 | AT/MT | F | L/R | Hatchback FWD B234T | | GCO52007 | Outer Joint | 46T | 26 | 25 | 56 | 84 | 65 | O |
| | 1989.06-1998.12 | AT/MT | F | L/R | Hatchback FWD B234T | | GCO52011 | Outer Joint | | 26 | 25 | 56 | 84 | 65 | O |
| | 1990.07-1998.12 | AT/MT | F | L/R | Saloon FWD B234T | | GCO52007 | Outer Joint | 46T | 26 | 25 | 56 | 84 | 65 | O |
| | 1990.07-1998.12 | AT/MT | F | | Saloon FWD B234T | | GCO52011 | Outer Joint | | 26 | 25 | 56 | 84 | 65 | O |
| 2.3 (165 kw) | 1993.02-1998.12 | AT/MT | F | L/R | Hatchback FWD B234R | | GCO52007 | Outer Joint | 46T | 26 | 25 | 56 | 84 | 65 | O |
| **SEAT** | | | | | | | | | | | | | | | |
| **Alhambra** | | | | | | | | | | | | | | | |
| 1.4 (110 kw) | 2010.06-2015.04 | 6AT/6MT | F | L/R | MPV FWD CAVA;CNWB;CTHA | | GCI61002 | Inner Joint | | | 28 | | | 31.8 | |
| | 2010.06-2015.04 | 6MT | F | R | MPV FWD CAVA;CNWB;CTHA | | GDS83313 | Drive Shaft | | 36 | | 59.5 | 40 | 792 | |
| | 2010.06-2015.04 | 6MT/6DCT | F | L | MPV FWD CAVA;CNWB;CTHA | | GDS83295 | Drive Shaft | | 36 | | 59.5 | 40 | 491 | |
| | 2010.06-2015.04 | 6MT/6DCT | F | L/R | MPV FWD CAVA;CNWB;CTHA | 8 balls | GCO81352 | Outer Joint | | 36 | 28 | 59.5 | 40 | 65 | I |
| | 2010.06-2015.04 | AT/MT | F | L/R | MPV FWD CAVA;CNWB;CTHA | Date from:2011.01 | GCO83104 | Outer Joint | | 36 | 28 | 59.4 | 40 | 65 | I |
| | 2015.05-2022.12 | 6AT/6MT | F | L | Box Body/MPV FWD CZDA | | GDS83295 | Drive Shaft | | 36 | | 59.5 | 40 | 491 | |
| | 2015.05-2022.12 | 6AT/6MT | F | L/R | Box Body/MPV FWD CZDA | | GCI61002 | Inner Joint | | | 28 | | | 31.8 | |
| | 2015.05-2022.12 | 6DCT/6MT | F | L/R | Box Body/MPV FWD CZDA | | GCO83104 | Outer Joint | | 36 | 28 | 59.4 | 40 | 65 | I |
| | 2015.05-2022.12 | 6MT | F | R | Box Body/MPV FWD CZDA | | GDS83313 | Drive Shaft | | 36 | | 59.5 | 40 | 792 | |
| | 2015.05-2022.12 | 6AT/6MT | F | L/R | MPV FWD CZDA;DJKA | | GCI61002 | Inner Joint | | | 28 | | | 31.8 | |
| | 2015.05-2022.12 | 6DCT | F | R | MPV FWD CZDA;DJKA | Date to:2016.04 | GDS83313 | Drive Shaft | | 36 | | 59.5 | 40 | 792 | |
| | 2015.05-2022.12 | 6MT | F | R | MPV FWD CZDA;DJKA | | GDS83313 | Drive Shaft | | 36 | | 59.5 | 40 | 792 | |
| | 2015.05-2022.12 | 6MT | F | L/R | MPV FWD CZDA;DJKA | Date from:2016.11 | GCO83104 | Outer Joint | | 36 | 28 | 59.4 | 40 | 65 | I |
| | 2015.05-2022.12 | 6MT/6DCT | F | L | MPV FWD CZDA;DJKA | | GDS83295 | Drive Shaft | | 36 | | 59.5 | 40 | 491 | |
| | 2015.05-2022.12 | MT | F | L/R | MPV FWD CZDA;DJKA | | GCO81352 | Outer Joint | | 36 | 28 | 59.5 | 40 | 65 | I |
| 1.8 (110 kw) | 1998.05-2010.03 | 4AT | F | L | MPV FWD AJH/AWC | | GDS61085 | Drive Shaft | 48W | 38 | | 60 | 34.5 | 513 | |
| | 1998.05-2010.03 | 4AT | F | R | MPV FWD AJH/AWC | | GDS61065 | Drive Shaft | 48W | 38 | | 60 | 34.5 | 544 | |
| | 1998.05-2010.03 | 4AT | F | L/R | MPV FWD AJH/AWC | | GCI50019 | Inner Joint | | | 34 | | | 59.5 | |
| | 1998.05-2010.03 | 4AT/5MT | F | L/R | MPV FWD AJH/AWC | | GCO18026 | Outer Joint | 48W | 38 | 27 | 60 | 34.5 | 65 | I |
| | 1998.05-2010.03 | 5AT | F | L/R | MPV FWD AJH/AWC | | GDS83022 | Drive Shaft | 48W | 38 | | 60 | 34 | 486 | |
| | 1998.05-2010.03 | 5AT/6MT | F | L/R | MPV FWD AJH/AWC | | GCO18025 | Outer Joint | 48W | 38 | 36 | 60 | 34 | 72.5 | I |
| | 1998.05-2010.03 | 5AT/6MT | F | L/R | MPV FWD AJH/AWC | | GCI61044 | Inner Joint | | | 34 | | | 85 | |
| | 1998.05-2010.03 | 5AT/6MT | F | L/R | MPV FWD AJH/AWC | | GCI83007 | Inner Joint | | | 34 | | | 85 | |
| | 1998.05-2010.03 | 5MT | F | L | MPV FWD AJH/AWC | | GDS18009 | Drive Shaft | 48W | 38 | 26 | 60 | 34.5 | 620 | |
| | 1998.05-2010.03 | 5MT | F | R | MPV FWD AJH/AWC | | GDS18008 | Drive Shaft | 48W | 38 | 35 | 60 | 34.5 | 559 | |
| | 1998.05-2010.03 | 5MT | F | L | MPV FWD AJH/AWC | | GCI99053 | Inner Joint | | 26 | 28 | 40 | 77.5 | 111.7 | |
| | 1998.05-2010.03 | 5MT | F | R | MPV FWD AJH/AWC | | GCI61028 | Inner Joint | | 35 | 28 | 42 | | 129.2 | |
| | 1998.05-2010.03 | 5MT/6MT | F | R | MPV FWD AJH/AWC | | GDS61193 | Stub Axle-Flange | | 37 | | | 322 | 356 | |
| | 1998.05-2010.03 | 6MT | F | L/R | MPV FWD AJH/AWC | | GDS83023 | Drive Shaft | 48W | 38 | | 60 | 34 | 507 | |
| | 1998.05-2010.03 | AT | F | R | MPV FWD AJH/AWC | For Engine Code:AWC | GDS81789 | Stub Axle-Flange | | 30 | | | 263.5 | 320.5 | |
| | 1998.05-2010.03 | AT | F | R | MPV FWD AJH/AWC | For Engine Code:AWC | GDS83383 | Stub Axle-Flange | | 30 | | | 355.5 | 412.5 | |
| | 1998.05-2010.03 | MT | F | R | MPV FWD AJH/AWC | For Engine Code:AWC | GDS61192 | Stub Axle,differential | | 26 | 37 | | | 129.5 | |
| 1.8 (118 kw) | 2012.11-2015.04 | 6DCT | F | L | MPV FWD CDAA | | GDS98006 | Stub Axle-Flange | | 37 | | | 67 | 123.5 | |
| | 2012.11-2015.04 | AT | F | L | MPV FWD CDAA | | GDS83295 | Drive Shaft | | 36 | | 59.5 | 40 | 491 | |
| | 2012.11-2015.04 | AT/MT | F | L/R | MPV FWD CDAA | | GCO83104 | Outer Joint | | 36 | 28 | 59.4 | 40 | 65 | I |
| 1.9 (66 kw) | 1996.03-2010.03 | 5MT | F | L | MPV FWD 1Z/AHU/ANU | | GDS18009 | Drive Shaft | 48W | 38 | 26 | 60 | 34.5 | 620 | |

| | YEAR | TRANSM. | F/R | L/R | BODY STYLE & DRIVE TYPE & ENGINE | REMARKS | G-AP Ref. | PRODUCT | ABS | Technical Specifications A | B | C | H | L | P |
|---|---|---|---|---|---|---|---|---|---|---|---|---|---|---|---|
| **SEAT** | | | | | | | | | | | | | | | |
| **Alhambra** | | | | | | | | | | | | | | | |
| 1.9 (66 kw) | 1996.03-2010.03 | 5MT | F | R | MPV FWD 1Z/AHU/ANU | | GDS18008 | Drive Shaft | 48W | 38 | 35 | 60 | 34.5 | 559 | |
| | 1996.03-2010.03 | 5MT | F | L/R | MPV FWD 1Z/AHU/ANU | | GCO18026 | Outer Joint | 48W | 38 | 27 | 60 | 34.5 | 65 | I |
| | 1996.03-2010.03 | 5MT | F | L | MPV FWD 1Z/AHU/ANU | | GCI99053 | Inner Joint | | 26 | 28 | 40 | 77.5 | 111.7 | |
| | 1996.03-2010.03 | 5MT | F | R | MPV FWD 1Z/AHU/ANU | | GCI61028 | Inner Joint | | 35 | 28 | 42 | | 129.2 | |
| | 1996.03-2010.03 | 6MT | F | L/R | MPV FWD 1Z/AHU/ANU | Date from:2001.06 | GDS61087 | Drive Shaft | 48W | 38 | | 60 | 34.5 | 506 | |
| | 1996.03-2010.03 | 6MT | F | L/R | MPV FWD 1Z/AHU/ANU | Date to:2001.05 | GDS83023 | Drive Shaft | 48W | 38 | | 60 | 34 | 507 | |
| | 1996.03-2010.03 | 6MT | F | L/R | MPV FWD 1Z/AHU/ANU | | GCO18025 | Outer Joint | 48W | 38 | 36 | 60 | 34 | 72.5 | I |
| | 1996.03-2010.03 | 6MT | F | L/R | MPV FWD 1Z/AHU/ANU | Date from:2001.06 | GCI59006 | Inner Joint | | | 34 | | | 33.2 | |
| | 1996.03-2010.03 | 6MT | F | L/R | MPV FWD 1Z/AHU/ANU | Date from:2001.06 | GCI61032 | Inner Joint | | | 27 | | | 34 | |
| | 1996.03-2010.03 | 6MT | F | L/R | MPV FWD 1Z/AHU/ANU | Date to:2001.05 | GCI61044 | Inner Joint | | | 34 | | | 85 | |
| | 1996.03-2010.03 | 6MT | F | L/R | MPV FWD 1Z/AHU/ANU | Date to:2001.05 | GCI83007 | Inner Joint | | | 34 | | | 85 | |
| | 1996.03-2010.03 | MT | F | R | MPV FWD 1Z/AHU/ANU | Date from:2000.01 | GDS61192 | Stub Axle,differential | | 26 | 37 | | | 129.5 | |
| | 1996.03-2010.03 | MT | F | R | MPV FWD 1Z/AHU/ANU | For Engine Code:ANU,Date From:2000.01,Chassis no. from:7M-0-500001 | GDS61245 | Stub Axle-Flange | | 26 | | | 231 | 290 | |
| | 1996.03-2010.03 | MT | F | R | MPV FWD 1Z/AHU/ANU | | GDS61255 | Stub Axle-Flange | | 37 | | | 322 | 381 | |
| 1.9 (81 kw) | 1997.09-2000.02 | 4AT | F | L | MPV FWD AFN/AVG | | GDS61085 | Drive Shaft | 48W | 38 | | 60 | 34.5 | 513 | |
| | 1997.09-2000.02 | 4AT | F | R | MPV FWD AFN/AVG | | GDS61065 | Drive Shaft | 48W | 38 | | 60 | 34.5 | 544 | |
| | 1997.09-2000.02 | 4AT | F | L/R | MPV FWD AFN/AVG | | GCI50019 | Inner Joint | | | 34 | | | 59.5 | |
| | 1997.09-2000.02 | 4AT/5MT | F | L/R | MPV FWD AFN/AVG | | GCO18025 | Outer Joint | 48W | 38 | 36 | 60 | 34 | 72.5 | I |
| | 1997.09-2000.02 | 4AT/5MT | F | L/R | MPV FWD AFN/AVG | | GCO18026 | Outer Joint | 48W | 38 | 27 | 60 | 34.5 | 65 | I |
| | 1997.09-2000.02 | 5MT | F | L | MPV FWD AFN/AVG | | GDS18009 | Drive Shaft | 48W | 38 | 26 | 60 | 34.5 | 620 | |
| | 1997.09-2000.02 | 5MT | F | R | MPV FWD AFN/AVG | | GDS18008 | Drive Shaft | 48W | 38 | 35 | 60 | 34.5 | 559 | |
| | 1997.09-2000.02 | 5MT | F | L | MPV FWD AFN/AVG | | GCI99053 | Inner Joint | | 26 | 28 | 40 | 77.5 | 111.7 | |
| | 1997.09-2000.02 | 5MT | F | R | MPV FWD AFN/AVG | | GCI61028 | Inner Joint | | 35 | 28 | 42 | | 129.2 | |
| 1.9 (85 kw) | 2000.06-2010.03 | 5AT | F | L/R | MPV 4WD AUY/BVK | Chassis no. from:7M-3-055001 | GDS83022 | Drive Shaft | 48W | 38 | | 60 | 34 | 486 | |
| | 2000.06-2010.03 | 6MT | F | L/R | MPV 4WD AUY/BVK | | GDS83023 | Drive Shaft | 48W | 38 | | 60 | 34 | 507 | |
| | 2000.06-2010.03 | 6MT | F | L/R | MPV 4WD AUY/BVK | | GCO18025 | Outer Joint | 48W | 38 | 36 | 60 | 34 | 72.5 | I |
| | 2000.06-2010.03 | 6MT | F | L/R | MPV 4WD AUY/BVK | | GCI61044 | Inner Joint | | | 34 | | | 85 | |
| | 2000.06-2010.03 | 6MT | F | L/R | MPV 4WD AUY/BVK | | GCI83007 | Inner Joint | | | 34 | | | 85 | |
| | 2000.06-2010.03 | 6MT | F | R | MPV 4WD AUY/BVK | | GDS61193 | Stub Axle-Flange | | 37 | | | 322 | 356 | |
| | 2000.06-2010.03 | AT | F | R | MPV 4WD AUY/BVK | Transmission End | GDS81789 | Stub Axle-Flange | | 30 | | | 263.5 | 320.5 | |
| | 2000.06-2010.03 | AT | F | R | MPV 4WD AUY/BVK | Transmission End | GDS83383 | Stub Axle-Flange | | 30 | | | 355.5 | 412.5 | |
| | 2000.06-2010.03 | MT | F | R | MPV 4WD AUY/BVK | | GDS61192 | Stub Axle,differential | | 26 | 37 | | | 129.5 | |
| | 2000.06-2010.03 | 6MT | R | L | MPV 4WD AUY/BVK | | GDS81925 | Drive Shaft | 48W | 38 | | 60 | 34 | 628 | |
| | 2000.06-2010.03 | 5AT | F | L/R | MPV FWD AUY/BVK | | GDS83022 | Drive Shaft | 48W | 38 | | 60 | 34 | 486 | |
| | 2000.06-2010.03 | 5AT | F | L/R | MPV FWD AUY/BVK | | GCI61044 | Inner Joint | | | 34 | | | 85 | |
| | 2000.06-2010.03 | 5AT | F | L/R | MPV FWD AUY/BVK | | GCI83007 | Inner Joint | | | 34 | | | 85 | |
| | 2000.06-2010.03 | 5AT/6MT | F | L/R | MPV FWD AUY/BVK | | GCO18025 | Outer Joint | 48W | 38 | 36 | 60 | 34 | 72.5 | I |
| | 2000.06-2010.03 | 6MT | F | L/R | MPV FWD AUY/BVK | Chassis no. from:7M-6-510 501 | GDS61087 | Drive Shaft | 48W | 38 | | 60 | 34.5 | 506 | |
| | 2000.06-2010.03 | 6MT | F | L/R | MPV FWD AUY/BVK | Chassis no. to:7M-6-510 500 | GDS83023 | Drive Shaft | 48W | 38 | | 60 | 34 | 507 | |
| | 2000.06-2010.03 | 6MT | F | L/R | MPV FWD AUY/BVK | Chassis no. from:7M-6-510 501 | GCI59006 | Inner Joint | | | 34 | | | 33.2 | |
| | 2000.06-2010.03 | 6MT | F | L/R | MPV FWD AUY/BVK | Chassis no. from:7M-6-510 501 | GCI61032 | Inner Joint | | | 27 | | | 34 | |
| | 2000.06-2010.03 | 6MT | F | L/R | MPV FWD AUY/BVK | Chassis no. to:7M-6-510 500 | GCI61044 | Inner Joint | | | 34 | | | 85 | |
| | 2000.06-2010.03 | 6MT | F | L/R | MPV FWD AUY/BVK | Chassis no. to:7M-6-510 500 | GCI83007 | Inner Joint | | | 34 | | | 85 | |
| | 2000.06-2010.03 | 6MT | F | R | MPV FWD AUY/BVK | | GDS61193 | Stub Axle-Flange | | 37 | | | 322 | 356 | |
| | 2000.06-2010.03 | AT | F | R | MPV FWD AUY/BVK | Transmission End | GDS81789 | Stub Axle-Flange | | 30 | | | 263.5 | 320.5 | |
| | 2000.06-2010.03 | AT | F | R | MPV FWD AUY/BVK | Transmission End | GDS83383 | Stub Axle-Flange | | 30 | | | 355.5 | 412.5 | |
| | 2000.06-2010.03 | MT | F | R | MPV FWD AUY/BVK | | GDS61192 | Stub Axle,differential | | 26 | 37 | | | 129.5 | |
| | 2000.06-2010.03 | MT | F | R | MPV FWD AUY/BVK | Date From:2006.01 | GDS61245 | Stub Axle-Flange | | 26 | | | 231 | 290 | |
| 1.9 (96 kw) | 2002.11-2008.11 | 6MT | F | L/R | MPV FWD ASZ | | GDS83023 | Drive Shaft | 48W | 38 | | 60 | 34 | 507 | |
| | 2002.11-2008.11 | 6MT | F | L/R | MPV FWD ASZ | | GCO18025 | Outer Joint | 48W | 38 | 36 | 60 | 34 | 72.5 | I |
| | 2002.11-2008.11 | 6MT | F | L/R | MPV FWD ASZ | | GCI61044 | Inner Joint | | | 34 | | | 85 | |
| | 2002.11-2008.11 | 6MT | F | L/R | MPV FWD ASZ | | GCI83007 | Inner Joint | | | 34 | | | 85 | |
| | 2002.11-2008.11 | 6MT | F | R | MPV FWD ASZ | | GDS61193 | Stub Axle-Flange | | 37 | | | 322 | 356 | |
| | 2002.11-2008.11 | AT | F | R | MPV FWD ASZ | Transmission End | GDS81789 | Stub Axle-Flange | | 30 | | | 263.5 | 320.5 | |
| | 2002.11-2008.11 | AT | F | R | MPV FWD ASZ | Transmission End | GDS83383 | Stub Axle-Flange | | 30 | | | 355.5 | 412.5 | |
| | 2002.11-2008.11 | MT | F | R | MPV FWD ASZ | | GDS61192 | Stub Axle,differential | | 26 | 37 | | | 129.5 | |
| 1.9 (110 kw) | 2005.06-2007.05 | 6MT | F | L/R | MPV FWD BTB | | GDS83023 | Drive Shaft | 48W | 38 | | 60 | 34 | 507 | |
| | 2005.06-2007.05 | 6MT | F | L/R | MPV FWD BTB | | GCO18025 | Outer Joint | 48W | 38 | 36 | 60 | 34 | 72.5 | I |
| | 2005.06-2007.05 | 6MT | F | L/R | MPV FWD BTB | | GCI61044 | Inner Joint | | | 34 | | | 85 | |
| | 2005.06-2007.05 | 6MT | F | L/R | MPV FWD BTB | | GCI83007 | Inner Joint | | | 34 | | | 85 | |
| | 2005.06-2007.05 | 6MT | F | R | MPV FWD BTB | | GDS61193 | Stub Axle-Flange | | 37 | | | 322 | 356 | |
| | 2005.06-2007.05 | MT | F | R | MPV FWD BTB | | GDS61192 | Stub Axle,differential | | 26 | 37 | | | 129.5 | |
| 2.0 (85 kw) | 1996.03-2010.03 | 4AT | F | L | MPV FWD ADY/ATM | | GDS61085 | Drive Shaft | 48W | 38 | | 60 | 34.5 | 513 | |
| | 1996.03-2010.03 | 4AT | F | R | MPV FWD ADY/ATM | | GDS61065 | Drive Shaft | 48W | 38 | | 60 | 34.5 | 544 | |
| | 1996.03-2010.03 | 4AT | F | L/R | MPV FWD ADY/ATM | | GCI50019 | Inner Joint | | | 34 | | | 59.5 | |

| | YEAR | TRANSM. | F/R | L/R | BODY STYLE & DRIVE TYPE & ENGINE | REMARKS | G-AP Ref. | PRODUCT | ABS | Technical Specifications | | | | | |
|---|---|---|---|---|---|---|---|---|---|---|---|---|---|---|---|
| | | | | | | | | | | A | B | C | H | L | P |
| **SEAT** | | | | | | | | | | | | | | | |
| **Alhambra** | | | | | | | | | | | | | | | |
| 2.0 (85 kw) | 1996.03-2010.03 | 4AT/5MT | F | L/R | MPV FWD ADY/ATM | | GCO18026 | Outer Joint | 48W | 38 | 27 | 60 | 34.5 | 65 | I |
| | 1996.03-2010.03 | 5MT | F | L | MPV FWD ADY/ATM | | GDS18009 | Drive Shaft | 48W | 38 | 26 | 60 | 34.5 | 620 | |
| | 1996.03-2010.03 | 5MT | F | R | MPV FWD ADY/ATM | | GDS18008 | Drive Shaft | 48W | 38 | 35 | 60 | 34.5 | 559 | |
| | 1996.03-2010.03 | 5MT | F | L | MPV FWD ADY/ATM | | GCI99053 | Inner Joint | | 26 | 28 | 40 | 77.5 | 111.7 | |
| | 1996.03-2010.03 | 5MT | F | R | MPV FWD ADY/ATM | | GCI61028 | Inner Joint | | 35 | 28 | 42 | | 129.2 | |
| | 1996.03-2010.03 | 6MT | F | L/R | MPV FWD ADY/ATM | Date From:2001.06 | GDS61087 | Drive Shaft | 48W | 38 | | 60 | 34.5 | 506 | |
| | 1996.03-2010.03 | 6MT | F | L/R | MPV FWD ADY/ATM | Date To:2001.05 | GDS83023 | Drive Shaft | 48W | 38 | | 60 | 34 | 507 | |
| | 1996.03-2010.03 | 6MT | F | L/R | MPV FWD ADY/ATM | Date To:2001.05 | GCO18025 | Outer Joint | 48W | 38 | 36 | 60 | 34 | 72.5 | I |
| | 1996.03-2010.03 | 6MT | F | L/R | MPV FWD ADY/ATM | Date From:2001.06 | GCI59006 | Inner Joint | | | 34 | | | 33.2 | |
| | 1996.03-2010.03 | 6MT | F | L/R | MPV FWD ADY/ATM | Date From:2001.06 | GCI61032 | Inner Joint | | | 27 | | | 34 | |
| | 1996.03-2010.03 | 6MT | F | L/R | MPV FWD ADY/ATM | Date To:2001.05 | GCI61044 | Inner Joint | | | 34 | | | 85 | |
| | 1996.03-2010.03 | 6MT | F | L/R | MPV FWD ADY/ATM | Date To:2001.05 | GCI83007 | Inner Joint | | | 34 | | | 85 | |
| | 1996.03-2010.03 | MT | F | R | MPV FWD ADY/ATM | | GDS61192 | Stub Axle,differential | | 26 | 37 | | | 129.5 | |
| | 1996.03-2010.03 | MT | F | R | MPV FWD ADY/ATM | Date from:2000.08 | GDS61193 | Stub Axle-Flange | | 37 | | | 322 | 356 | |
| | 1996.03-2010.03 | MT | F | R | MPV FWD ADY/ATM | Date From:2001.01 | GDS61245 | Stub Axle-Flange | | 26 | | | 231 | 290 | |
| | 1996.03-2010.03 | MT | F | R | MPV FWD ADY/ATM | Date From:2001.01 | GDS61255 | Stub Axle-Flange | | 37 | | | 322 | 381 | |
| | 2011.05-2022.12 | 6MT | F | L | MPV FWD CFFE;CUVA;DFLD;DLTC | | GDS83295 | Drive Shaft | | 36 | | 59.5 | 40 | 491 | |
| | 2011.05-2022.12 | 6MT | F | R | MPV FWD CFFE;CUVA;DFLD;DLTC | | GDS83313 | Drive Shaft | | 36 | | 59.5 | 40 | 792 | |
| | 2011.05-2022.12 | 6MT | F | L/R | MPV FWD CFFE;CUVA;DFLD;DLTC | | GCO83104 | Outer Joint | | 36 | 28 | 59.4 | 40 | 65 | I |
| | 2011.05-2022.12 | 6MT | F | L/R | MPV FWD CFFE;CUVA;DFLD;DLTC | | GCI61002 | Inner Joint | | | 28 | | | 31.8 | |
| | 2011.05-2022.12 | MT | F | L/R | MPV FWD CFFE;CUVA;DFLD;DLTC | | GDS61214 | Stub Axle,differential | | 40 | 37 | | | 125 | |
| | 2011.05-2022.12 | | F | L/R | MPV FWD CFFE;CUVA;DFLD;DLTC | | GCO81352 | Outer Joint | | 36 | 28 | 59.5 | 40 | 65 | I |
| | 2014.10-2018.09 | 6MT | F | L | Box Body/MPV FWD CFFE;CUVA;DFLD | | GDS83295 | Drive Shaft | | 36 | | 59.5 | 40 | 491 | |
| | 2014.10-2018.09 | 6MT | F | R | Box Body/MPV FWD CFFE;CUVA;DFLD | | GDS83313 | Drive Shaft | | 36 | | 59.5 | 40 | 792 | |
| 2.0 (100 kw) | 2010.06-2011.05 | 6AT/6MT | F | L/R | MPV FWD CFFA | | GCI61002 | Inner Joint | | | 28 | | | 31.8 | |
| | 2010.06-2011.05 | 6AT/6MT | F | L/R | MPV FWD CFFA | | GCI81075 | Inner Joint | | | 26 | | | 89 | |
| | 2010.06-2011.05 | 6DCT | F | L | MPV FWD CFFA | | GDS61310 | Drive Shaft | | 36 | | 59.4 | 40 | 477 | |
| | 2010.06-2011.05 | 6DCT | F | R | MPV FWD CFFA | | GDS83354 | Drive Shaft | | 36 | | 59.5 | 40 | 763 | |
| | 2010.06-2011.05 | 6MT | F | L | MPV FWD CFFA | | GDS83295 | Drive Shaft | | 36 | | 59.5 | 40 | 491 | |
| | 2010.06-2011.05 | 6MT | F | R | MPV FWD CFFA | | GDS83313 | Drive Shaft | | 36 | | 59.5 | 40 | 792 | |
| | 2010.06-2011.05 | 6MT/6DCT | F | L/R | MPV FWD CFFA | | GCO83104 | Outer Joint | | 36 | 28 | 59.4 | 40 | 65 | I |
| | 2010.06-2011.05 | AT/MT | F | L/R | MPV FWD CFFA | | GCO81352 | Outer Joint | | 36 | 28 | 59.5 | 40 | 65 | I |
| | 2010.06-2011.05 | MT | F | L/R | MPV FWD CFFA | | GDS61214 | Stub Axle,differential | | 40 | 37 | | | 125 | |
| 2.0 (103 kw) | 2005.11-2010.03 | 6MT | F | L/R | MPV FWD BRT | | GDS83023 | Drive Shaft | 48W | 38 | | 60 | 34 | 507 | |
| | 2005.11-2010.03 | 6MT | F | L/R | MPV FWD BRT | | GCO18025 | Outer Joint | 48W | 38 | 36 | 60 | 34 | 72.5 | I |
| | 2005.11-2010.03 | 6MT | F | L/R | MPV FWD BRT | | GCI61044 | Inner Joint | | | 34 | | | 85 | |
| | 2005.11-2010.03 | 6MT | F | L/R | MPV FWD BRT | | GCI83007 | Inner Joint | | | 34 | | | 85 | |
| | 2005.11-2010.03 | 6MT | F | R | MPV FWD BRT | | GDS61193 | Stub Axle-Flange | | 37 | | | 322 | 356 | |
| | 2005.11-2010.03 | AT | F | R | MPV FWD BRT | Transmission End | GDS81789 | Stub Axle-Flange | | 30 | | | 263.5 | 320.5 | |
| | 2005.11-2010.03 | AT | F | R | MPV FWD BRT | Transmission End | GDS83383 | Stub Axle-Flange | | 30 | | | 355.5 | 412.5 | |
| | 2005.11-2010.03 | MT | F | R | MPV FWD BRT | | GDS61192 | Stub Axle,differential | | 26 | 37 | | | 129.5 | |
| | 2010.06-2015.04 | 6DCT | F | L | MPV FWD CFFB | | GDS61310 | Drive Shaft | | 36 | | 59.4 | 40 | 477 | |
| | 2010.06-2015.04 | 6DCT | F | R | MPV FWD CFFB | | GDS83354 | Drive Shaft | | 36 | | 59.5 | 40 | 763 | |
| | 2010.06-2015.04 | 6DCT | F | R | MPV FWD CFFB | | GCO83101 | Outer Joint | | 36 | 27 | 59.5 | 40 | 65 | M |
| | 2010.06-2015.04 | 6DCT | F | R | MPV FWD CFFB | | GCI61057 | Inner Joint | | | 34 | | | 89 | |
| | 2010.06-2015.04 | 6DCT | F | L/R | MPV FWD CFFB | | GCI81075 | Inner Joint | | | 26 | | | 89 | |
| | 2010.06-2015.04 | 6MT | F | L | MPV FWD CFFB | | GDS83295 | Drive Shaft | | 36 | | 59.5 | 40 | 491 | |
| | 2010.06-2015.04 | 6MT | F | R | MPV FWD CFFB | | GDS83313 | Drive Shaft | | 36 | | 59.5 | 40 | 792 | |
| | 2010.06-2015.04 | 6MT | F | L/R | MPV FWD CFFB | 8 balls | GCO81352 | Outer Joint | | 36 | 28 | 59.5 | 40 | 65 | I |
| | 2010.06-2015.04 | 6MT | F | L/R | MPV FWD CFFB | 6 balls | GCO83104 | Outer Joint | | 36 | 28 | 59.4 | 40 | 65 | I |
| | 2010.06-2015.04 | 6MT | F | L/R | MPV FWD CFFB | | GCI61002 | Inner Joint | | | 28 | | | 31.8 | |
| | 2010.06-2015.04 | MT | F | L/R | MPV FWD CFFB | | GDS61214 | Stub Axle,differential | | 40 | 37 | | | 125 | |
| | 2011.05-2015.04 | 6MT | F | L | MPV 4WD CFFB | | GDS81548 | Drive Shaft | | 36 | 40 | 59.5 | 40 | 494 | |
| | 2011.05-2015.04 | 6MT | F | R | MPV 4WD CFFB | | GDS82362 | Drive Shaft | | 36 | 40 | 59.5 | 40 | 587 | |
| | 2011.05-2015.04 | 6MT | F | L | MPV 4WD CFFB | | GCI61055 | Inner Joint | | 40 | 28 | 46.9 | | 107 | |
| | 2011.05-2015.04 | 6MT | F | R | MPV 4WD CFFB | | GCI81776 | Inner Joint | | 40 | 28 | 46.9 | | 107 | |
| | 2011.05-2015.04 | AT | F | R | MPV 4WD CFFB | | GDS83354 | Drive Shaft | | 36 | | 59.5 | 40 | 763 | |
| | 2011.05-2015.04 | AT | F | R | MPV 4WD CFFB | | GCI61057 | Inner Joint | | | 34 | | | 89 | |
| | 2011.05-2015.04 | AT/MT | F | L/R | MPV 4WD CFFB | 6 balls | GCO83104 | Outer Joint | | 36 | 28 | 59.4 | 40 | 65 | I |
| | 2011.05-2015.04 | MT | F | L/R | MPV 4WD CFFB | | GDS61214 | Stub Axle,differential | | 40 | 37 | | | 125 | |
| | 2011.05-2015.04 | | F | L/R | MPV 4WD CFFB | 8 balls | GCO81352 | Outer Joint | | 36 | 28 | 59.5 | 40 | 65 | I |
| | 2011.05-2015.04 | 6MT | R | L | MPV 4WD CFFB | | GDS81928 | Drive Shaft | | 36 | | 59.5 | 40 | 610 | |
| | 2011.05-2015.04 | 6MT | R | R | MPV 4WD CFFB | | GDS61293 | Drive Shaft | | 36 | | 59.5 | 40 | 631 | |
| | 2011.05-2015.04 | 6MT | R | R | MPV 4WD CFFB | | GDS81946 | Drive Shaft | | 36 | | 59.5 | 40 | 649 | |
| | 2011.05-2015.04 | 6MT | R | L/R | MPV 4WD CFFB | | GCI53002 | Inner Joint | | | 33 | | | 34 | |

| | YEAR | TRANSM. | F/R | L/R | BODY STYLE & DRIVE TYPE & ENGINE | REMARKS | G-AP Ref. | PRODUCT | ABS | Technical Specifications | | | | | |
|---|---|---|---|---|---|---|---|---|---|---|---|---|---|---|---|
| | | | | | | | | | | A | B | C | H | L | P |
| **SEAT** | | | | | | | | | | | | | | | |
| **Alhambra** | | | | | | | | | | | | | | | |
| 2.0 (110 kw) | 2015.05-2022.12 | 6MT | F | L | Box Body/MPV 4WD CUVC | | GDS81548 | Drive Shaft | | 36 | 40 | 59.5 | 40 | 494 | |
| | 2015.05-2022.12 | 6MT | F | R | Box Body/MPV 4WD CUVC | | GDS82362 | Drive Shaft | | 36 | 40 | 59.5 | 40 | 587 | |
| | 2015.05-2022.12 | 6MT | F | L/R | Box Body/MPV 4WD CUVC | | GCO83104 | Outer Joint | | 36 | 28 | 59.4 | 40 | 65 | I |
| | 2015.05-2022.12 | 6MT | F | L/R | Box Body/MPV 4WD CUVC | | GCI61055 | Inner Joint | | 40 | 28 | 46.9 | | 107 | |
| | 2015.05-2022.12 | 6MT | R | L | Box Body/MPV 4WD CUVC | | GDS81928 | Drive Shaft | | 36 | | 59.5 | 40 | 610 | |
| | 2015.05-2022.12 | 6MT | R | R | Box Body/MPV 4WD CUVC | | GDS81946 | Drive Shaft | | 36 | | 59.5 | 40 | 649 | |
| | 2015.05-2022.12 | 6AT/6MT | F | L/R | Box Body/MPV FWD CUVC;DFLA | | GCO83104 | Outer Joint | | 36 | 28 | 59.4 | 40 | 65 | I |
| | 2015.05-2022.12 | 6DCT | F | L | Box Body/MPV FWD CUVC;DFLA | | GDS61310 | Drive Shaft | | 36 | | 59.4 | 40 | 477 | |
| | 2015.05-2022.12 | 6DCT | F | R | Box Body/MPV FWD CUVC;DFLA | | GDS83354 | Drive Shaft | | 36 | | 59.5 | 40 | 763 | |
| | 2015.05-2022.12 | 6DCT | F | L/R | Box Body/MPV FWD CUVC;DFLA | | GCI81075 | Inner Joint | | | 26 | | | 89 | |
| | 2015.05-2022.12 | 6MT | F | L | Box Body/MPV FWD CUVC;DFLA | | GDS83295 | Drive Shaft | | 36 | | 59.5 | 40 | 491 | |
| | 2015.05-2022.12 | 6MT | F | R | Box Body/MPV FWD CUVC;DFLA | | GDS83313 | Drive Shaft | | 36 | | 59.5 | 40 | 792 | |
| | 2015.05-2022.12 | 6MT | F | L/R | Box Body/MPV FWD CUVC;DFLA | | GCI61002 | Inner Joint | | | 28 | | | 31.8 | |
| | 2015.05-2022.12 | 6MT | F | L | MPV 4WD CUVC;DFLA;DLTA | | GDS81548 | Drive Shaft | | 36 | 40 | 59.5 | 40 | 494 | |
| | 2015.05-2022.12 | 6MT | F | R | MPV 4WD CUVC;DFLA;DLTA | | GDS82362 | Drive Shaft | | 36 | 40 | 59.5 | 40 | 587 | |
| | 2015.05-2022.12 | 6MT | F | L/R | MPV 4WD CUVC;DFLA;DLTA | | GCO83104 | Outer Joint | | 36 | 28 | 59.4 | 40 | 65 | I |
| | 2015.05-2022.12 | 6MT | F | L | MPV 4WD CUVC;DFLA;DLTA | | GCI61055 | Inner Joint | | 40 | 28 | 46.9 | | 107 | |
| | 2015.05-2022.12 | 6MT | F | R | MPV 4WD CUVC;DFLA;DLTA | | GCI81776 | Inner Joint | | 40 | 28 | 46.9 | | 107 | |
| | 2015.05-2022.12 | MT | F | L/R | MPV 4WD CUVC;DFLA;DLTA | | GCO81352 | Outer Joint | | 36 | 28 | 59.5 | 40 | 65 | I |
| | 2015.05-2022.12 | MT | F | L/R | MPV 4WD CUVC;DFLA;DLTA | | GDS61214 | Stub Axle,differential | | 40 | 37 | | | 125 | |
| | 2015.05-2022.12 | 6MT | R | L | MPV 4WD CUVC;DFLA;DLTA | | GDS81928 | Drive Shaft | | 36 | | 59.5 | 40 | 610 | |
| | 2015.05-2022.12 | 6MT | R | R | MPV 4WD CUVC;DFLA;DLTA | | GDS81946 | Drive Shaft | | 36 | | 59.5 | 40 | 649 | |
| | 2015.05-2022.12 | 6MT | R | L/R | MPV 4WD CUVC;DFLA;DLTA | | GCI53002 | Inner Joint | | | 33 | | | 34 | |
| | 2015.05-2022.12 | 6DCT | F | L | MPV FWD CUVC;DFLA;DLTA | | GDS61310 | Drive Shaft | | 36 | | 59.4 | 40 | 477 | |
| | 2015.05-2022.12 | 6DCT | F | R | MPV FWD CUVC;DFLA;DLTA | | GDS83354 | Drive Shaft | | 36 | | 59.5 | 40 | 763 | |
| | 2015.05-2022.12 | 6DCT | F | R | MPV FWD CUVC;DFLA;DLTA | | GCO83101 | Outer Joint | | 36 | 27 | 59.5 | 40 | 65 | M |
| | 2015.05-2022.12 | 6DCT | F | R | MPV FWD CUVC;DFLA;DLTA | | GCI61057 | Inner Joint | | | 34 | | | 89 | |
| | 2015.05-2022.12 | 6DCT | F | L/R | MPV FWD CUVC;DFLA;DLTA | | GCI81075 | Inner Joint | | | 26 | | | 89 | |
| | 2015.05-2022.12 | 6MT | F | L | MPV FWD CUVC;DFLA;DLTA | | GDS83295 | Drive Shaft | | 36 | | 59.5 | 40 | 491 | |
| | 2015.05-2022.12 | 6MT | F | R | MPV FWD CUVC;DFLA;DLTA | | GDS83313 | Drive Shaft | | 36 | | 59.5 | 40 | 792 | |
| | 2015.05-2022.12 | 6MT | F | L/R | MPV FWD CUVC;DFLA;DLTA | | GCO83104 | Outer Joint | | 36 | 28 | 59.4 | 40 | 65 | I |
| | 2015.05-2022.12 | 6MT | F | L/R | MPV FWD CUVC;DFLA;DLTA | | GCI61002 | Inner Joint | | | 28 | | | 31.8 | |
| | 2015.05-2022.12 | DCT | F | L/R | MPV FWD CUVC;DFLA;DLTA | | GCO81352 | Outer Joint | | 36 | 28 | 59.5 | 40 | 65 | I |
| | 2015.05-2022.12 | MT | F | L/R | MPV FWD CUVC;DFLA;DLTA | | GDS61214 | Stub Axle,differential | | 40 | 37 | | | 125 | |
| 2.0 (125 kw) | 2010.06-2013.02 | 6AT/6MT | F | L/R | MPV FWD CFGB | | GCI61055 | Inner Joint | | 40 | 28 | 46.9 | | 107 | |
| | 2010.06-2013.02 | 6AT/6MT | F | L/R | MPV FWD CFGB | | GCI81075 | Inner Joint | | | 26 | | | 89 | |
| | 2010.06-2013.02 | 6DCT | F | L | MPV FWD CFGB | | GDS61310 | Drive Shaft | | 36 | | 59.4 | 40 | 477 | |
| | 2010.06-2013.02 | 6DCT | F | R | MPV FWD CFGB | | GDS83354 | Drive Shaft | | 36 | | 59.5 | 40 | 763 | |
| | 2010.06-2013.02 | 6MT | F | L | MPV FWD CFGB | | GDS81548 | Drive Shaft | | 36 | 40 | 59.5 | 40 | 494 | |
| | 2010.06-2013.02 | 6MT | F | R | MPV FWD CFGB | | GDS58318 | Drive Shaft | | 36 | 40 | 59.5 | 40 | 824 | |
| | 2010.06-2013.02 | AT/MT | F | L/R | MPV FWD CFGB | 6 balls | GCO83104 | Outer Joint | | 36 | 28 | 59.4 | 40 | 65 | I |
| | 2010.06-2013.02 | MT | F | L/R | MPV FWD CFGB | | GDS61214 | Stub Axle,differential | | 40 | 37 | | | 125 | |
| | 2010.06-2013.02 | | F | L/R | MPV FWD CFGB | Date to:2013.02;8 balls | GCO81352 | Outer Joint | | 36 | 28 | 59.5 | 40 | 65 | I |
| 2.0 (130 kw) | 2012.11-2022.12 | 6AT/6MT | F | L/R | MPV FWD CFGC;DLUB | | GCI61055 | Inner Joint | | 40 | 28 | 46.9 | | 107 | |
| | 2012.11-2022.12 | 6AT/6MT | F | L/R | MPV FWD CFGC;DLUB | | GCI81075 | Inner Joint | | | 26 | | | 89 | |
| | 2012.11-2022.12 | 6DCT | F | L | MPV FWD CFGC;DLUB | | GDS61310 | Drive Shaft | | 36 | | 59.4 | 40 | 477 | |
| | 2012.11-2022.12 | 6DCT | F | R | MPV FWD CFGC;DLUB | | GDS83354 | Drive Shaft | | 36 | | 59.5 | 40 | 763 | |
| | 2012.11-2022.12 | 6MT | F | L | MPV FWD CFGC;DLUB | | GDS81548 | Drive Shaft | | 36 | 40 | 59.5 | 40 | 494 | |
| | 2012.11-2022.12 | 6MT | F | R | MPV FWD CFGC;DLUB | | GDS58318 | Drive Shaft | | 36 | 40 | 59.5 | 40 | 824 | |
| | 2012.11-2022.12 | 6MT/6DCT | F | L | MPV FWD CFGC;DLUB | | GDS83295 | Drive Shaft | | 36 | | 59.5 | 40 | 491 | |
| | 2012.11-2022.12 | AT/MT | F | L/R | MPV FWD CFGC;DLUB | 6 balls | GCO83104 | Outer Joint | | 36 | 28 | 59.4 | 40 | 65 | I |
| | 2012.11-2022.12 | MT | F | L/R | MPV FWD CFGC;DLUB | | GDS61214 | Stub Axle,differential | | 40 | 37 | | | 125 | |
| | 2012.11-2022.12 | | F | L/R | MPV FWD CFGC;DLUB | 8 balls | GCO81352 | Outer Joint | | 36 | 28 | 59.5 | 40 | 65 | I |
| | 2018.11-2022.12 | | F | L/R | MPV 4WD DLUB | | GCO81352 | Outer Joint | | 36 | 28 | 59.5 | 40 | 65 | I |
| | 2018.11-2022.12 | 7AT | R | L | MPV 4WD DLUB | | GDS81928 | Drive Shaft | | 36 | | 59.5 | 40 | 610 | |
| | 2018.11-2022.12 | 7AT | R | R | MPV 4WD DLUB | | GDS81946 | Drive Shaft | | 36 | | 59.5 | 40 | 649 | |
| | 2018.11-2022.12 | 7AT | R | L/R | MPV 4WD DLUB | | GCI53002 | Inner Joint | | | 33 | | | 34 | |
| 2.0 (135 kw) | 2015.05-2018.08 | 6DCT | F | L | Box Body/MPV FWD CUWA;DFMA | | GDS61310 | Drive Shaft | | 36 | | 59.4 | 40 | 477 | |
| | 2015.05-2018.08 | 6DCT | F | R | Box Body/MPV FWD CUWA;DFMA | | GDS83354 | Drive Shaft | | 36 | | 59.5 | 40 | 763 | |
| | 2015.05-2018.08 | 6DCT | F | L/R | Box Body/MPV FWD CUWA;DFMA | | GCI81075 | Inner Joint | | | 26 | | | 89 | |
| | 2015.05-2018.08 | 6DCT/7AT/6MT | F | L/R | Box Body/MPV FWD CUWA;DFMA | 6 Balls | GCO83104 | Outer Joint | | 36 | 28 | 59.4 | 40 | 65 | I |
| | 2015.05-2018.08 | 6MT | F | L | Box Body/MPV FWD CUWA;DFMA | | GDS81548 | Drive Shaft | | 36 | 40 | 59.5 | 40 | 494 | |
| | 2015.05-2018.08 | 6MT | F | R | Box Body/MPV FWD CUWA;DFMA | | GDS58318 | Drive Shaft | | 36 | 40 | 59.5 | 40 | 824 | |
| | 2015.05-2018.08 | 6MT | F | L/R | Box Body/MPV FWD CUWA;DFMA | 8 Balls | GCO81352 | Outer Joint | | 36 | 28 | 59.5 | 40 | 65 | I |
| | 2015.05-2018.08 | 6MT | F | L/R | Box Body/MPV FWD CUWA;DFMA | | GCI61055 | Inner Joint | | 40 | 28 | 46.9 | | 107 | |

| | YEAR | TRANSM. | F/R | L/R | BODY STYLE & DRIVE TYPE & ENGINE | REMARKS | G-AP Ref. | PRODUCT | ABS | Technical Specifications A | B | C | H | L | P |
|---|---|---|---|---|---|---|---|---|---|---|---|---|---|---|---|
| **SEAT** | | | | | | | | | | | | | | | |
| **Alhambra** | | | | | | | | | | | | | | | |
| 2.0 (135 kw) | 2015.05-2018.08 | 6AT/6MT | F | L/R | MPV FWD CUWA;DFMA | | GCI61055 | Inner Joint | | 40 | 28 | 46.9 | | 107 | |
| | 2015.05-2018.08 | 6AT/6MT | F | L/R | MPV FWD CUWA;DFMA | | GCI81075 | Inner Joint | | | 26 | | | 89 | |
| | 2015.05-2018.08 | 6DCT | F | L | MPV FWD CUWA;DFMA | | GDS61310 | Drive Shaft | | 36 | | 59.4 | 40 | 477 | |
| | 2015.05-2018.08 | 6DCT | F | R | MPV FWD CUWA;DFMA | | GDS83354 | Drive Shaft | | 36 | | 59.5 | 40 | 763 | |
| | 2015.05-2018.08 | 6MT | F | L | MPV FWD CUWA;DFMA | | GDS81548 | Drive Shaft | | 36 | 40 | 59.5 | 40 | 494 | |
| | 2015.05-2018.08 | 6MT | F | R | MPV FWD CUWA;DFMA | | GDS58318 | Drive Shaft | | 36 | 40 | 59.5 | 40 | 824 | |
| | 2015.05-2018.08 | 6MT | F | L/R | MPV FWD CUWA;DFMA | | GCO83104 | Outer Joint | | 36 | 28 | 59.4 | 40 | 65 | I |
| | 2015.05-2018.08 | DCT | F | L/R | MPV FWD CUWA;DFMA | 8 balls | GCO81352 | Outer Joint | | 36 | 28 | 59.5 | 40 | 65 | I |
| | 2015.05-2018.08 | MT | F | L | MPV FWD CUWA;DFMA | | GDS83295 | Drive Shaft | | 36 | | 59.5 | 40 | 491 | |
| | 2015.05-2018.08 | MT | F | L/R | MPV FWD CUWA;DFMA | | GDS61214 | Stub Axle,differential | | 40 | 37 | | | 125 | |
| | 2016.05-2018.08 | 6MT | F | L/R | MPV 4WD DFMA | | GCO83104 | Outer Joint | | 36 | 28 | 59.4 | 40 | 65 | I |
| | 2016.05-2018.08 | MT | F | L/R | MPV 4WD DFMA | | GDS61214 | Stub Axle,differential | | 40 | 37 | | | 125 | |
| | 2016.05-2018.08 | | F | L/R | MPV 4WD DFMA | | GCO81352 | Outer Joint | | 36 | 28 | 59.5 | 40 | 65 | I |
| | 2016.05-2018.08 | 7AT | R | L | MPV 4WD DFMA | | GDS81928 | Drive Shaft | | 36 | | 59.5 | 40 | 610 | |
| | 2016.05-2018.08 | 7AT | R | R | MPV 4WD DFMA | | GDS81946 | Drive Shaft | | 36 | | 59.5 | 40 | 649 | |
| | 2016.05-2018.08 | 7AT | R | L/R | MPV 4WD DFMA | | GCI53002 | Inner Joint | | | 33 | | | 34 | |
| 2.0 (147 kw) | 2010.11-2012.05 | 6AT | F | L | MPV FWD CCZA | Date to:2014.07 | GDS83295 | Drive Shaft | | 36 | | 59.5 | 40 | 491 | |
| | 2010.11-2012.05 | 6AT | F | L/R | MPV FWD CCZA | | GCI61002 | Inner Joint | | | 28 | | | 31.8 | |
| | 2010.11-2012.05 | 6DCT | F | L | MPV FWD CCZA | | GDS98006 | Stub Axle-Flange | | 37 | | | 67 | 123.5 | |
| | 2010.11-2012.05 | AT/MT | F | L/R | MPV FWD CCZA | 6 balls | GCO83104 | Outer Joint | | 36 | 28 | 59.4 | 40 | 65 | I |
| | 2010.11-2012.05 | | F | R | MPV FWD CCZA | Date To:2011.11;Type:1 | GDS83313 | Drive Shaft | | 36 | | 59.5 | 40 | 792 | |
| | 2010.11-2012.05 | | F | L/R | MPV FWD CCZA | Date to:2012.05 | GCO81352 | Outer Joint | | 36 | 28 | 59.5 | 40 | 65 | I |
| 2.0 (162 kw) | 2015.05-2022.12 | 6AT | F | L | MPV FWD DEDA | | GDS83295 | Drive Shaft | | 36 | | 59.5 | 40 | 491 | |
| | 2015.05-2022.12 | 6AT | F | L/R | MPV FWD DEDA | | GCO83104 | Outer Joint | | 36 | 28 | 59.4 | 40 | 65 | I |
| | 2015.05-2022.12 | 6AT | F | L/R | MPV FWD DEDA | | GCI61002 | Inner Joint | | | 28 | | | 31.8 | |
| | 2015.05-2022.12 | DCT | F | L/R | MPV FWD DEDA | | GCO81352 | Outer Joint | | 36 | 28 | 59.5 | 40 | 65 | I |
| 2.8 (150 kw) | 2000.08-2010.03 | 5AT | F | L | MPV 4WD AUE/AYL | Chassis no. from:7M-3-055001 | GDS83022 | Drive Shaft | 48W | 38 | | 60 | 34 | 486 | |
| | 2000.08-2010.03 | 5AT | F | R | MPV 4WD AUE/AYL | Chassis no. from:7M-3-055001 | GDS99120 | Drive Shaft | 48W | 38 | 30 | 60 | 34 | 561 | |
| | 2000.08-2010.03 | 5AT/6MT | F | R | MPV 4WD AUE/AYL | | GDS61193 | Stub Axle-Flange | | 37 | | | 322 | 356 | |
| | 2000.08-2010.03 | 6MT | F | L/R | MPV 4WD AUE/AYL | | GDS83023 | Drive Shaft | 48W | 38 | | 60 | 34 | 507 | |
| | 2000.08-2010.03 | 6MT | F | L/R | MPV 4WD AUE/AYL | | GCO18025 | Outer Joint | 48W | 38 | 36 | 60 | 34 | 72.5 | I |
| | 2000.08-2010.03 | 6MT | F | L/R | MPV 4WD AUE/AYL | | GCI61044 | Inner Joint | | | 34 | | | 85 | |
| | 2000.08-2010.03 | 6MT | F | L/R | MPV 4WD AUE/AYL | | GCI83007 | Inner Joint | | | 34 | | | 85 | |
| | 2000.08-2010.03 | MT | F | R | MPV 4WD AUE/AYL | | GDS61192 | Stub Axle,differential | | 26 | 37 | | | 129.5 | |
| | 2000.08-2010.03 | 6MT | R | L | MPV 4WD AUE/AYL | | GDS81925 | Drive Shaft | 48W | 38 | | 60 | 34 | 628 | |
| | 2000.08-2010.03 | 5AT | F | L | MPV FWD AUE/AYL | | GDS83022 | Drive Shaft | 48W | 38 | | 60 | 34 | 486 | |
| | 2000.08-2010.03 | 5AT | F | R | MPV FWD AUE/AYL | | GDS99120 | Drive Shaft | 48W | 38 | 30 | 60 | 34 | 561 | |
| | 2000.08-2010.03 | 5AT | F | L | MPV FWD AUE/AYL | TJ | GCI61044 | Inner Joint | | | 34 | | | 85 | |
| | 2000.08-2010.03 | 5AT | F | L | MPV FWD AUE/AYL | | GCI83007 | Inner Joint | | | 34 | | | 85 | |
| | 2000.08-2010.03 | 5AT/6MT | F | L/R | MPV FWD AUE/AYL | | GCO18025 | Outer Joint | 48W | 38 | 36 | 60 | 34 | 72.5 | I |
| | 2000.08-2010.03 | 5AT/6MT | F | R | MPV FWD AUE/AYL | | GDS61193 | Stub Axle-Flange | | 37 | | | 322 | 356 | |
| | 2000.08-2010.03 | 6MT | F | L/R | MPV FWD AUE/AYL | | GDS83023 | Drive Shaft | 48W | 38 | | 60 | 34 | 507 | |
| | 2000.08-2010.03 | 6MT | F | L/R | MPV FWD AUE/AYL | TJ | GCI61044 | Inner Joint | | | 34 | | | 85 | |
| | 2000.08-2010.03 | 6MT | F | L/R | MPV FWD AUE/AYL | | GCI83007 | Inner Joint | | | 34 | | | 85 | |
| | 2000.08-2010.03 | MT | F | R | MPV FWD AUE/AYL | | GDS61192 | Stub Axle,differential | | 26 | 37 | | | 129.5 | |
| **Alhambra Van** | | | | | | | | | | | | | | | |
| 1.9 (66 kw) | 1996.03-2010.03 | 5MT | F | L | MPV Van FWD 1Z/AHU/ANU | | GDS18009 | Drive Shaft | 48W | 38 | 26 | 60 | 34.5 | 620 | |
| | 1996.03-2010.03 | 5MT | F | R | MPV Van FWD 1Z/AHU/ANU | | GDS18008 | Drive Shaft | 48W | 38 | 35 | 60 | 34.5 | 559 | |
| | 1996.03-2010.03 | 5MT | F | L/R | MPV Van FWD 1Z/AHU/ANU | | GCO18026 | Outer Joint | 48W | 38 | 27 | 60 | 34.5 | 65 | I |
| | 1996.03-2010.03 | 5MT | F | L | MPV Van FWD 1Z/AHU/ANU | | GCI99053 | Inner Joint | | 26 | 28 | 40 | 77.5 | 111.7 | |
| | 1996.03-2010.03 | 5MT | F | R | MPV Van FWD 1Z/AHU/ANU | | GCI61028 | Inner Joint | | 35 | 28 | 42 | | 129.2 | |
| | 1996.03-2010.03 | 6MT | F | L/R | MPV Van FWD 1Z/AHU/ANU | Date From:2001.06 | GDS61087 | Drive Shaft | 48W | 38 | | 60 | 34.5 | 506 | |
| | 1996.03-2010.03 | 6MT | F | L/R | MPV Van FWD 1Z/AHU/ANU | Date To:2001.05 | GDS83023 | Drive Shaft | 48W | 38 | | 60 | 34 | 507 | |
| | 1996.03-2010.03 | 6MT | F | L/R | MPV Van FWD 1Z/AHU/ANU | Date To:2001.05 | GCO18025 | Outer Joint | 48W | 38 | 36 | 60 | 34 | 72.5 | I |
| | 1996.03-2010.03 | 6MT | F | L/R | MPV Van FWD 1Z/AHU/ANU | Date From:2001.06 | GCI59006 | Inner Joint | | | 34 | | | 33.2 | |
| | 1996.03-2010.03 | 6MT | F | L/R | MPV Van FWD 1Z/AHU/ANU | Date From:2001.06 | GCI61032 | Inner Joint | | | 27 | | | 34 | |
| | 1996.03-2010.03 | 6MT | F | L/R | MPV Van FWD 1Z/AHU/ANU | Date To:2001.05 | GCI61044 | Inner Joint | | | 34 | | | 85 | |
| | 1996.03-2010.03 | 6MT | F | L/R | MPV Van FWD 1Z/AHU/ANU | Date To:2001.05 | GCI83007 | Inner Joint | | | 34 | | | 85 | |
| 1.9 (81 kw) | 1997.09-2000.02 | 4AT | F | L | MPV Van FWD AFN | | GDS61085 | Drive Shaft | 48W | 38 | | 60 | 34.5 | 513 | |
| | 1997.09-2000.02 | 4AT | F | R | MPV Van FWD AFN | | GDS61065 | Drive Shaft | 48W | 38 | | 60 | 34.5 | 544 | |
| | 1997.09-2000.02 | 4AT | F | L/R | MPV Van FWD AFN | | GCI50019 | Inner Joint | | | 34 | | | 59.5 | |
| | 1997.09-2000.02 | 4AT/5MT | F | L/R | MPV Van FWD AFN | | GCO18026 | Outer Joint | 48W | 38 | 27 | 60 | 34.5 | 65 | I |
| | 1997.09-2000.02 | 5MT | F | L | MPV Van FWD AFN | | GDS18009 | Drive Shaft | 48W | 38 | 26 | 60 | 34.5 | 620 | |
| | 1997.09-2000.02 | 5MT | F | R | MPV Van FWD AFN | | GDS18008 | Drive Shaft | 48W | 38 | 35 | 60 | 34.5 | 559 | |
| | 1997.09-2000.02 | 5MT | F | L | MPV Van FWD AFN | | GCI99053 | Inner Joint | | 26 | 28 | 40 | 77.5 | 111.7 | |

| | YEAR | TRANSM. | F/R | L/R | BODY STYLE & DRIVE TYPE & ENGINE | REMARKS | G-AP Ref. | PRODUCT | ABS | Technical Specifications A | B | C | H | L | P |
|---|---|---|---|---|---|---|---|---|---|---|---|---|---|---|---|
| **SEAT** | | | | | | | | | | | | | | | |
| **Alhambra Van** | | | | | | | | | | | | | | | |
| 1.9 (81 kw) | 1997.09-2000.02 | 5MT | F | R | MPV Van FWD AFN | | GCI61028 | Inner Joint | | 35 | 28 | 42 | | 129.2 | |
| 1.9 (85 kw) | 2000.06-2010.03 | 5AT | F | L/R | MPV Van FWD AUY/BVK | | GDS83022 | Drive Shaft | 48W | 38 | | 60 | 34 | 486 | |
| | 2000.06-2010.03 | 5AT/6MT | F | L/R | MPV Van FWD AUY/BVK | | GCO18025 | Outer Joint | 48W | 38 | 36 | 60 | 34 | 72.5 | I |
| | 2000.06-2010.03 | 5AT/6MT | F | L/R | MPV Van FWD AUY/BVK | | GCI61044 | Inner Joint | | | 34 | | | 85 | |
| | 2000.06-2010.03 | 6MT | F | L/R | MPV Van FWD AUY/BVK | | GDS61087 | Drive Shaft | 48W | 38 | | 60 | 34.5 | 506 | |
| | 2000.06-2010.03 | 6MT | F | L/R | MPV Van FWD AUY/BVK | | GDS83023 | Drive Shaft | 48W | 38 | | 60 | 34 | 507 | |
| | 2000.06-2010.03 | 6MT | F | L/R | MPV Van FWD AUY/BVK | | GCI59006 | Inner Joint | | | 34 | | | 33.2 | |
| | 2002.06-2008.05 | 6MT | F | L/R | MPV Van 4WD AUY/BVK | | GDS83023 | Drive Shaft | 48W | 38 | | 60 | 34 | 507 | |
| | 2002.06-2008.05 | 6MT | F | L/R | MPV Van 4WD AUY/BVK | | GCO18025 | Outer Joint | 48W | 38 | 36 | 60 | 34 | 72.5 | I |
| | 2002.06-2008.05 | 6MT | R | L | MPV Van 4WD AUY/BVK | | GDS81925 | Drive Shaft | 48W | 38 | | 60 | 34 | 628 | |
| 1.9 (96 kw) | 2002.11-2008.11 | 6MT | F | L/R | MPV Van FWD ASZ | Date from:2005.06 | GDS83023 | Drive Shaft | 48W | 38 | | 60 | 34 | 507 | |
| | 2002.11-2008.11 | 6MT | F | L/R | MPV Van FWD ASZ | | GCO18025 | Outer Joint | 48W | 38 | 36 | 60 | 34 | 72.5 | I |
| 2.0 (85 kw) | 1996.03-2010.03 | 4AT | F | L | MPV Van FWD ADY/ATM | | GDS61085 | Drive Shaft | 48W | 38 | | 60 | 34.5 | 513 | |
| | 1996.03-2010.03 | 4AT | F | R | MPV Van FWD ADY/ATM | | GDS61065 | Drive Shaft | 48W | 38 | | 60 | 34.5 | 544 | |
| | 1996.03-2010.03 | 4AT | F | L/R | MPV Van FWD ADY/ATM | | GCI50019 | Inner Joint | | | 34 | | | 59.5 | |
| | 1996.03-2010.03 | 4AT/5MT | F | L/R | MPV Van FWD ADY/ATM | | GCO18026 | Outer Joint | 48W | 38 | 27 | 60 | 34.5 | 65 | I |
| | 1996.03-2010.03 | 5MT | F | L | MPV Van FWD ADY/ATM | | GDS18009 | Drive Shaft | 48W | 38 | 26 | 60 | 34.5 | 620 | |
| | 1996.03-2010.03 | 5MT | F | R | MPV Van FWD ADY/ATM | | GDS18008 | Drive Shaft | 48W | 38 | 35 | 60 | 34.5 | 559 | |
| | 1996.03-2010.03 | 5MT | F | L | MPV Van FWD ADY/ATM | | GCI99053 | Inner Joint | | 26 | 28 | 40 | 77.5 | 111.7 | |
| | 1996.03-2010.03 | 5MT | F | R | MPV Van FWD ADY/ATM | | GCI61028 | Inner Joint | | 35 | 28 | 42 | | 129.2 | |
| | 1996.03-2010.03 | 6MT | F | L/R | MPV Van FWD ADY/ATM | Date From:2001.06 | GDS61087 | Drive Shaft | 48W | 38 | | 60 | 34.5 | 506 | |
| | 1996.03-2010.03 | 6MT | F | L/R | MPV Van FWD ADY/ATM | Date To:2001.05 | GDS83023 | Drive Shaft | 48W | 38 | | 60 | 34 | 507 | |
| | 1996.03-2010.03 | 6MT | F | L/R | MPV Van FWD ADY/ATM | Date To:2001.05 | GCO18025 | Outer Joint | 48W | 38 | 36 | 60 | 34 | 72.5 | I |
| | 1996.03-2010.03 | 6MT | F | L/R | MPV Van FWD ADY/ATM | Date From:2001.06 | GCI59006 | Inner Joint | | | 34 | | | 33.2 | |
| | 1996.03-2010.03 | 6MT | F | L/R | MPV Van FWD ADY/ATM | Date From:2001.06 | GCI61032 | Inner Joint | | | 27 | | | 34 | |
| | 1996.03-2010.03 | 6MT | F | L/R | MPV Van FWD ADY/ATM | Date To:2001.05 | GCI61044 | Inner Joint | | | 34 | | | 85 | |
| | 1996.03-2010.03 | 6MT | F | L/R | MPV Van FWD ADY/ATM | Date To:2001.05 | GCI83007 | Inner Joint | | | 34 | | | 85 | |
| **Altea** | | | | | | | | | | | | | | | |
| 1.2 (77 kw) | 2010.04-2015.07 | 5MT/6MT | F | L | MPV FWD CBZB | | GDS61201 | Drive Shaft | | 36 | | 59.5 | 40.5 | 535 | |
| | 2010.04-2015.07 | 5MT/6MT | F | R | MPV FWD CBZB | | GDS61096 | Drive Shaft | | 36 | | 59.5 | 40.5 | 799 | |
| | 2010.04-2015.07 | 5MT/6MT | F | L/R | MPV FWD CBZB | | GCI82447 | Inner Joint | | | 33 | | | 34 | |
| | 2010.04-2015.07 | 6MT | F | L/R | MPV FWD CBZB | | GCO83037 | Outer Joint | | 36 | 30 | 59.5 | 40.5 | 56 | I |
| | 2010.04-2015.07 | | F | L/R | MPV FWD CBZB | | GCI83011 | Inner Joint | | | 33 | | | 34 | |
| 1.4 (63 kw) | 2006.05-2011.05 | 5MT | F | L | MPV FWD BXW;CGGB | | GDS53007 | Drive Shaft | | 36 | | 59.5 | 40 | 559 | |
| | 2006.05-2011.05 | 5MT | F | R | MPV FWD BXW;CGGB | | GDS53008 | Drive Shaft | | 36 | | 59.5 | 40 | 782 | |
| | 2006.05-2011.05 | 5MT | F | L/R | MPV FWD BXW;CGGB | | GCO53001 | Outer Joint | | 36 | 30 | 59.5 | 40 | 49 | I |
| | 2006.05-2011.05 | 5MT | F | L/R | MPV FWD BXW;CGGB | | GCI61103 | Inner Joint | | | 33 | | | 32 | |
| | 2006.05-2011.05 | | F | L/R | MPV FWD BXW;CGGB | | GCI83008 | Inner Joint | | | 33 | | | 32 | |
| 1.4 (92 kw) | 2007.11-2015.07 | 6MT | F | L | MPV FWD CAXC | | GDS61201 | Drive Shaft | | 36 | | 59.5 | 40.5 | 535 | |
| | 2007.11-2015.07 | 6MT | F | R | MPV FWD CAXC | | GDS61096 | Drive Shaft | | 36 | | 59.5 | 40.5 | 799 | |
| | 2007.11-2015.07 | 6MT | F | L/R | MPV FWD CAXC | | GCO83037 | Outer Joint | | 36 | 30 | 59.5 | 40.5 | 56 | I |
| | 2007.11-2015.07 | 6MT | F | L/R | MPV FWD CAXC | | GCI82447 | Inner Joint | | | 33 | | | 34 | |
| | 2007.11-2015.07 | MT | F | L/R | MPV FWD CAXC | | GCI83011 | Inner Joint | | | 33 | | | 34 | |
| 1.6 (66 kw) | 2010.11-2015.07 | 5MT | F | L | MPV FWD CAYB | | GDS83294 | Drive Shaft | | 36 | | 59.5 | 38 | 519 | |
| | 2010.11-2015.07 | 5MT | F | R | MPV FWD CAYB | | GDS61042 | Drive Shaft | | 36 | | 59.5 | 40.5 | 814 | |
| | 2010.11-2015.07 | 5MT | F | L/R | MPV FWD CAYB | | GCO83037 | Outer Joint | | 36 | 30 | 59.5 | 40.5 | 56 | I |
| | 2010.11-2015.07 | 5MT | F | L/R | MPV FWD CAYB | | GCI82447 | Inner Joint | | | 33 | | | 34 | |
| | 2010.11-2015.07 | MT | F | L/R | MPV FWD CAYB | | GCI83006 | Inner Joint | | | 33 | | | 34 | |
| | 2010.11-2015.07 | MT/5MT | F | L/R | MPV FWD CAYB | | GCI83011 | Inner Joint | | | 33 | | | 34 | |
| 1.6 (75 kw) | 2004.03-2010.03 | 5MT | F | L/R | MPV FWD BGU;BSE;BSF;CCSA | | GCO83037 | Outer Joint | | 36 | 30 | 59.5 | 40.5 | 56 | I |
| | 2004.03-2010.03 | 6MT | F | L | MPV FWD BGU;BSE;BSF;CCSA | | GDS61097 | Drive Shaft | | 36 | | 59.5 | 40.5 | 543 | |
| | 2004.03-2010.03 | 6MT | F | R | MPV FWD BGU;BSE;BSF;CCSA | | GDS61096 | Drive Shaft | | 36 | | 59.5 | 40.5 | 799 | |
| | 2004.03-2010.03 | 7DCT | F | L | MPV FWD BGU;BSE;BSF;CCSA | | GDS83294 | Drive Shaft | | 36 | | 59.5 | 38 | 519 | |
| | 2004.03-2010.03 | 7DCT | F | R | MPV FWD BGU;BSE;BSF;CCSA | | GDS61042 | Drive Shaft | | 36 | | 59.5 | 40.5 | 814 | |
| | 2004.03-2010.03 | 7DCT/5MT | F | L/R | MPV FWD BGU;BSE;BSF;CCSA | | GCI82447 | Inner Joint | | | 33 | | | 34 | |
| | 2004.03-2010.03 | MT | F | L/R | MPV FWD BGU;BSE;BSF;CCSA | Date to:2008.12 | GCI83011 | Inner Joint | | | 33 | | | 34 | |
| | 2004.03-2010.03 | MT | F | R | MPV FWD BGU;BSE;BSF;CCSA | | GDS61237 | Stub Axle,differential | | 23 | 37 | | | 142.5 | |
| | 2009.09-2013.06 | 5MT | F | L | MPV FWD CHGA | | GDS61097 | Drive Shaft | | 36 | | 59.5 | 40.5 | 543 | |
| | 2009.09-2013.06 | 5MT | F | R | MPV FWD CHGA | | GDS61096 | Drive Shaft | | 36 | | 59.5 | 40.5 | 799 | |
| | 2009.09-2013.06 | 5MT | F | L/R | MPV FWD CHGA | | GCO83037 | Outer Joint | | 36 | 30 | 59.5 | 40.5 | 56 | I |
| | 2009.09-2013.06 | 5MT | F | L/R | MPV FWD CHGA | | GCI82447 | Inner Joint | | | 33 | | | 34 | |
| | 2009.09-2013.06 | 5MT | F | L/R | MPV FWD CHGA | Date from:2009.12 | GCI83008 | Inner Joint | | | 33 | | | 32 | |
| | 2009.09-2013.06 | 5MT | F | L/R | MPV FWD CHGA | Date from:2009.12 | GCI83011 | Inner Joint | | | 33 | | | 34 | |
| | 2009.09-2013.06 | MT | F | L/R | MPV FWD CHGA | | GCI83006 | Inner Joint | | | 33 | | | 34 | |
| | 2010.11-2011.05 | 5MT | F | L | MPV FWD CMXA | | GDS61097 | Drive Shaft | | 36 | | 59.5 | 40.5 | 543 | |

| | YEAR | TRANSM. | F/R | L/R | BODY STYLE & DRIVE TYPE & ENGINE | REMARKS | G-AP Ref. | PRODUCT | ABS | Technical Specifications A | B | C | H | L | P |
|---|---|---|---|---|---|---|---|---|---|---|---|---|---|---|---|
| **SEAT** **Altea** | | | | | | | | | | | | | | | |
| 1.6 (75 kw) | 2010.11-2011.05 | 5MT | F | R | MPV FWD CMXA | | GDS61096 | Drive Shaft | | 36 | | 59.5 | 40.5 | 799 | |
| | 2010.11-2011.05 | 7DCT/5MT/6MT | F | L/R | MPV FWD CMXA | | GCI82447 | Inner Joint | | | 33 | | | 34 | |
| | 2010.11-2011.05 | MT | F | L/R | MPV FWD CMXA | | GCO83037 | Outer Joint | | 36 | 30 | 59.5 | 40.5 | 56 | I |
| | 2010.11-2011.05 | | F | L/R | MPV FWD CMXA | | GCI83011 | Inner Joint | | | 33 | | | 34 | |
| 1.6 (77 kw) | 2009.10-2015.07 | 5MT | F | L | MPV FWD CAYC | | GDS83294 | Drive Shaft | | 36 | | 59.5 | 38 | 519 | |
| | 2009.10-2015.07 | 5MT | F | R | MPV FWD CAYC | Chassis no. to:5P_A_045000 | GDS61042 | Drive Shaft | | 36 | | 59.5 | 40.5 | 814 | |
| | 2009.10-2015.07 | 5MT | F | R | MPV FWD CAYC | Chassis no. from:5P_B_000001 | GDS61283 | Drive Shaft | | 36 | | 59.5 | 40 | 815 | |
| | 2009.10-2015.07 | 5MT | F | L/R | MPV FWD CAYC | | GCO83037 | Outer Joint | | 36 | 30 | 59.5 | 40.5 | 56 | I |
| | 2009.10-2015.07 | 5MT | F | L/R | MPV FWD CAYC | | GCI82447 | Inner Joint | | | 33 | | | 34 | |
| | 2009.10-2015.07 | 7AT/5MT | F | L/R | MPV FWD CAYC | | GCI83016 | Inner Joint | | | 28 | | | 32 | |
| | 2009.10-2015.07 | 7DCT | F | L | MPV FWD CAYC | Date to:2011.05 | GDS61100 | Drive Shaft | | 36 | | 59.5 | 40 | 513 | |
| | 2009.10-2015.07 | 7DCT | F | L | MPV FWD CAYC | Date from:2011.06 | GDS61282 | Drive Shaft | | 36 | | 59.5 | 40 | 523 | |
| | 2009.10-2015.07 | 7DCT | F | R | MPV FWD CAYC | | GDS61096 | Drive Shaft | | 36 | | 59.5 | 40.5 | 799 | |
| | 2009.10-2015.07 | 7DCT | F | R | MPV FWD CAYC | Date To:2011.05 | GDS61339 | Drive Shaft | | 36 | | 59.5 | 40 | 794 | |
| | 2009.10-2015.07 | 7DCT | F | L/R | MPV FWD CAYC | Date from:2011.06 | GCO61059 | Outer Joint | | 36 | 33 | 59.5 | 40 | 59.5 | I |
| | 2009.10-2015.07 | 7DCT | F | L/R | MPV FWD CAYC | Date to:2011.05 | GCO83002 | Outer Joint | | 36 | 27 | 59.5 | 40 | 66 | I |
| 1.8 (118 kw) | 2007.01-2015.07 | 6MT | F | L | MPV FWD BYT;BZB;CDAA | Date To:2009.10;Date From:2010.05,Chassis no. from:5P-B-000001 | GDS61100 | Drive Shaft | | 36 | | 59.5 | 40 | 513 | |
| | 2007.01-2015.07 | 6MT | F | L | MPV FWD BYT;BZB;CDAA | Date From:2009.11,Date To:2010.05,Chassis no. to:5P-A-045000 | GDS61282 | Drive Shaft | | 36 | | 59.5 | 40 | 523 | |
| | 2007.01-2015.07 | 6MT | F | R | MPV FWD BYT;BZB;CDAA | Date From:2009.11,Date To:2010.05,Chassis no. to:5P-A-045000 | GDS61283 | Drive Shaft | | 36 | | 59.5 | 40 | 815 | |
| | 2007.01-2015.07 | 6MT | F | R | MPV FWD BYT;BZB;CDAA | Date To:2009.10;Date From:2010.05,Chassis no. from:5P-B-000001 | GDS61341 | Drive Shaft | | 36 | | 59.5 | 40 | 806 | |
| | 2007.01-2015.07 | 6MT | F | L/R | MPV FWD BYT;BZB;CDAA | Date From:2009.11,Date To:2010.05,Chassis no. to:5P-A-045000 | GCO61059 | Outer Joint | | 36 | 33 | 59.5 | 40 | 59.5 | I |
| | 2007.01-2015.07 | 6MT | F | R | MPV FWD BYT;BZB;CDAA | Date To:2009.10;Date From:2010.05,Chassis no. from:5P-B-000001 | GCI61069 | Inner Joint | | | 28 | | | 32 | |
| | 2007.01-2015.07 | 6MT | F | L/R | MPV FWD BYT;BZB;CDAA | Date From:2009.11,Date To:2010.05,Chassis no. to:5P-A-045000 | GCI53002 | Inner Joint | | | 33 | | | 34 | |
| | 2007.01-2015.07 | 6MT | F | L/R | MPV FWD BYT;BZB;CDAA | | GCI83016 | Inner Joint | | | 28 | | | 32 | |
| | 2007.01-2015.07 | 6MT/7DCT | F | L/R | MPV FWD BYT;BZB;CDAA | Transmission:6MT;Date To:2009.10;Date From:2010.05,Chassis no. from:5P8000001;Transmission:DCT | GCO83002 | Outer Joint | | 36 | 27 | 59.5 | 40 | 66 | I |
| | 2007.01-2015.07 | 7DCT | F | L | MPV FWD BYT;BZB;CDAA | | GDS61100 | Drive Shaft | | 36 | | 59.5 | 40 | 513 | |
| | 2007.01-2015.07 | 7DCT | F | R | MPV FWD BYT;BZB;CDAA | | GDS83313 | Drive Shaft | | 36 | | 59.5 | 40 | 792 | |
| | 2007.01-2015.07 | 7DCT | F | L/R | MPV FWD BYT;BZB;CDAA | GrooveType:Middle | GCO83101 | Outer Joint | | 36 | 27 | 59.5 | 40 | 65 | M |
| | 2007.01-2015.07 | 7DCT | F | R | MPV FWD BYT;BZB;CDAA | | GCI61002 | Inner Joint | | | 28 | | | 31.8 | |
| 1.9 (66 kw) | 2009.08-2010.12 | 5MT | F | L | MPV FWD BXF | | GDS83294 | Drive Shaft | | 36 | | 59.5 | 38 | 519 | |
| | 2009.08-2010.12 | 5MT | F | R | MPV FWD BXF | | GDS61042 | Drive Shaft | | 36 | | 59.5 | 40.5 | 814 | |
| | 2009.08-2010.12 | 5MT | F | L/R | MPV FWD BXF | | GCO83037 | Outer Joint | | 36 | 30 | 59.5 | 40.5 | 56 | I |
| | 2009.08-2010.12 | 5MT | F | L/R | MPV FWD BXF | | GCI82447 | Inner Joint | | | 33 | | | 34 | |
| | 2009.08-2010.12 | AT | F | L | MPV FWD BXF | | GDS83241 | Drive Shaft | | 36 | | 59.5 | 40 | 475 | |
| | 2009.08-2010.12 | AT | F | L | MPV FWD BXF | | GCI54004 | Inner Joint | | | 34 | | | 81 | |
| 1.9 (77 kw) | 2004.04-2010.12 | 5MT | F | L | MPV FWD BKC;BJB;BLS;BXE | Date from:2006.06,Chassis no. from:5P_7_000001,Chassis no. to:5P_A_045000 | GDS61282 | Drive Shaft | | 36 | | 59.5 | 40 | 523 | |
| | 2004.04-2010.12 | 5MT | F | L | MPV FWD BKC;BJB;BLS;BXE | Date to:2006.05,Chassis no. to:5P_6_100000;Chassis no. from:5P_B_000001 | GDS83294 | Drive Shaft | | 36 | | 59.5 | 38 | 519 | |
| | 2004.04-2010.12 | 5MT | F | R | MPV FWD BKC;BJB;BLS;BXE | Date to:2006.05,Chassis no. to:5P_6_100000;Chassis no. from:5P_B_000001 | GDS61042 | Drive Shaft | | 36 | | 59.5 | 40.5 | 814 | |
| | 2004.04-2010.12 | 5MT | F | R | MPV FWD BKC;BJB;BLS;BXE | Date from:2006.06,Chassis no. from:5P_7_000001,Chassis no. to:5P_A_045000 | GDS61283 | Drive Shaft | | 36 | | 59.5 | 40 | 815 | |
| | 2004.04-2010.12 | 5MT | F | L/R | MPV FWD BKC;BJB;BLS;BXE | Date to:2010.12 | GCO83037 | Outer Joint | | 36 | 30 | 59.5 | 40.5 | 56 | I |
| | 2004.04-2010.12 | 5MT | F | R | MPV FWD BKC;BJB;BLS;BXE | Date to:2010.12 | GCI53002 | Inner Joint | | | 33 | | | 34 | |
| | 2004.04-2010.12 | 5MT | F | L/R | MPV FWD BKC;BJB;BLS;BXE | | GCI82447 | Inner Joint | | | 33 | | | 34 | |
| | 2004.04-2010.12 | 6AT | F | L/R | MPV FWD BKC;BJB;BLS;BXE | Date to:2010.12 | GCO83002 | Outer Joint | | 36 | 27 | 59.5 | 40 | 66 | I |
| | 2004.04-2010.12 | 6AT | F | L/R | MPV FWD BKC;BJB;BLS;BXE | Date to:2008.03;for taxis | GCO83101 | Outer Joint | | 36 | 27 | 59.5 | 40 | 65 | M |
| | 2004.04-2010.12 | 6DCT | F | L | MPV FWD BKC;BJB;BLS;BXE | For PR code PDR/FGU/FIG/FHD,Chassis no. to:5P_A_045000;Chassis no. from:5P_B_000001 | GDS54013 | Drive Shaft | | 36 | | 59.5 | 40 | 479.5 | |
| | 2004.04-2010.12 | 6DCT | F | L | MPV FWD BKC;BJB;BLS;BXE | Chassis no. to:5P_A_045000 | GDS83381 | Drive Shaft | | 36 | | 59.5 | 40 | 483 | |
| | 2004.04-2010.12 | 6DCT | F | R | MPV FWD BKC;BJB;BLS;BXE | | GDS54011 | Drive Shaft | | 36 | | 59.5 | 40 | 755 | |
| | 2004.04-2010.12 | 6DCT | F | L/R | MPV FWD BKC;BJB;BLS;BXE | | GCI54004 | Inner Joint | | | 34 | | | 81 | |
| | 2004.04-2010.12 | 6DCT | F | L/R | MPV FWD BKC;BJB;BLS;BXE | Original Tripod Design | GCI61057 | Inner Joint | | | 34 | | | 89 | |
| | 2004.04-2010.12 | AT | F | L | MPV FWD BKC;BJB;BLS;BXE | | GDS83241 | Drive Shaft | | 36 | | 59.5 | 40 | 475 | |
| | 2004.04-2010.12 | MT | F | R | MPV FWD BKC;BJB;BLS;BXE | | GDS61237 | Stub Axle,differential | | 23 | 37 | | | 142.5 | |
| 2.0 (100 kw) | 2004.03-2009.05 | 6DCT | F | L | MPV FWD AZV | Not for taxis | GDS54013 | Drive Shaft | | 36 | | 59.5 | 40 | 479.5 | |
| | 2004.03-2009.05 | 6DCT | F | L | MPV FWD AZV | For taxis | GDS83381 | Drive Shaft | | 36 | | 59.5 | 40 | 483 | |
| | 2004.03-2009.05 | 6DCT | F | R | MPV FWD AZV | For taxis | GDS54011 | Drive Shaft | | 36 | | 59.5 | 40 | 755 | |
| | 2004.03-2009.05 | 6DCT | F | R | MPV FWD AZV | Date to:2004.04 | GDS83355 | Drive Shaft | | 36 | 23 | 59.5 | 40 | 799 | |
| | 2004.03-2009.05 | 6DCT | F | L/R | MPV FWD AZV | For taxis;Date from:2006.06,Chassis no. from:5P-7-000001 | GCO83101 | Outer Joint | | 36 | 27 | 59.5 | 40 | 65 | M |
| | 2004.03-2009.05 | 6DCT | F | R | MPV FWD AZV | Date to:2004.04,Posision:Right | GCI83041 | Inner Joint | | 23 | 34 | | 319 | 88 | |
| | 2004.03-2009.05 | 6DCT | F | L/R | MPV FWD AZV | Date to:2004.04,Posision:Left;Date from:2004.05,Posision:Left/Right;For taxis | GCI54004 | Inner Joint | | | 34 | | | 81 | |
| | 2004.03-2009.05 | 6DCT | F | L/R | MPV FWD AZV | Date to:2004.04,Posision:Left;Date from:2004.05,Posision:Left/Right;For taxis | GCI61057 | Inner Joint | | | 34 | | | 89 | |
| | 2004.03-2009.05 | 6MT | F | L | MPV FWD AZV | date to:2006.05,chassis no. from:5P-5-047 001,chassis no. to:5P-6-100000 | GDS83295 | Drive Shaft | | 36 | | 59.5 | 40 | 491 | |
| | 2004.03-2009.05 | 6MT | F | R | MPV FWD AZV | Date From:2006.06;Chassis no. from:5P-7-000001 | GDS61126 | Drive Shaft | | 36 | | 59.5 | 40 | 793 | |
| | 2004.03-2009.05 | 6MT | F | R | MPV FWD AZV | date to:2006.05,chassis no. from:5P-5-047 001,chassis no. to:5P-6-100000 | GDS83313 | Drive Shaft | | 36 | | 59.5 | 40 | 792 | |
| | 2004.03-2009.05 | 6MT | F | L/R | MPV FWD AZV | chassis no. to:5P-5-047 000 | GDS83295 | Drive Shaft | | 36 | | 59.5 | 40 | 491 | |
| | 2004.03-2009.05 | 6MT | F | L/R | MPV FWD AZV | | GCI83016 | Inner Joint | | | 28 | | | 32 | |
| | 2004.03-2009.05 | 6MT/6DCT | F | L/R | MPV FWD AZV | Chassis no. to:5P-6-100000;Date to:2006.05;Chassis no. from:5P-7-000001;Date from:2006.06 | GCO83002 | Outer Joint | | 36 | 27 | 59.5 | 40 | 66 | I |

| | YEAR | TRANSM. | F/R | L/R | BODY STYLE & DRIVE TYPE & ENGINE | REMARKS | G-AP Ref. | PRODUCT | ABS | Technical Specifications A | B | C | H | L | P |
|---|---|---|---|---|---|---|---|---|---|---|---|---|---|---|---|
| **SEAT** | | | | | | | | | | | | | | | |
| **Altea** | | | | | | | | | | | | | | | |
| 2.0 (100 kw) | 2004.03-2009.05 | AT | F | L | MPV FWD AZV | | GDS83241 | Drive Shaft | | 36 | | 59.5 | 40 | 475 | |
| | 2004.03-2009.05 | MT | F | R | MPV FWD AZV | | GDS83236 | Drive Shaft | | 36 | | 59.5 | 40 | 484 | |
| | 2004.03-2009.05 | MT | F | R | MPV FWD AZV | | GDS61237 | Stub Axle,differential | | 23 | 37 | | | 142.5 | |
| 2.0 (103 kw) | 2004.03-2015.07 | 6DCT | F | L | MPV FWD BKD;CFHC | Not for taxis | GDS54013 | Drive Shaft | | 36 | | 59.5 | 40 | 479.5 | |
| | 2004.03-2015.07 | 6DCT | F | L | MPV FWD BKD;CFHC | Date from:2009.08,For taxis | GDS83381 | Drive Shaft | | 36 | | 59.5 | 40 | 483 | |
| | 2004.03-2015.07 | 6DCT | F | R | MPV FWD BKD;CFHC | | GDS54011 | Drive Shaft | | 36 | | 59.5 | 40 | 755 | |
| | 2004.03-2015.07 | 6DCT | F | R | MPV FWD BKD;CFHC | Date from:2009.08,For taxis | GDS83354 | Drive Shaft | | 36 | | 59.5 | 40 | 763 | |
| | 2004.03-2015.07 | 6DCT | F | L/R | MPV FWD BKD;CFHC | | GCO83101 | Outer Joint | | 36 | 27 | 59.5 | 40 | 65 | M |
| | 2004.03-2015.07 | 6DCT | F | R | MPV FWD BKD;CFHC | Date to:2004.04,Posision:Right | GCI83041 | Inner Joint | | 23 | 34 | | 319 | 88 | |
| | 2004.03-2015.07 | 6DCT | F | L/R | MPV FWD BKD;CFHC | Date to:2004.04,Posision:Left;Date from:2004.05,Posision:Left/Right;For taxis | GCI54004 | Inner Joint | | | 34 | | | 81 | |
| | 2004.03-2015.07 | 6DCT | F | L/R | MPV FWD BKD;CFHC | Date to:2004.04,Posision:Left;Date from:2004.05,Posision:Left/Right;For taxis | GCI61057 | Inner Joint | | | 34 | | | 89 | |
| | 2004.03-2015.07 | 6MT | F | L | MPV FWD BKD;CFHC | [illegible] | GDS83295 | Drive Shaft | | 36 | | 59.5 | 40 | 491 | |
| | 2004.03-2015.07 | 6MT | F | R | MPV FWD BKD;CFHC | [illegible] | GDS83313 | Drive Shaft | | 36 | | 59.5 | 40 | 792 | |
| | 2004.03-2015.07 | 6MT | F | L/R | MPV FWD BKD;CFHC | Posision:Right,Chassis no. to:5P_5_047 000 | GDS83295 | Drive Shaft | | 36 | | 59.5 | 40 | 491 | |
| | 2004.03-2015.07 | 6MT | F | L/R | MPV FWD BKD;CFHC | | GCI83016 | Inner Joint | | | 28 | | | 32 | |
| | 2004.03-2015.07 | 6MT/6DCT | F | L/R | MPV FWD BKD;CFHC | | GCO83002 | Outer Joint | | 36 | 27 | 59.5 | 40 | 66 | I |
| | 2004.03-2015.07 | MT | F | R | MPV FWD BKD;CFHC | | GDS61237 | Stub Axle,differential | | 23 | 37 | | | 142.5 | |
| | 2005.11-2010.11 | 6AT/6MT | F | L/R | MPV FWD BMM | | GCI54004 | Inner Joint | | | 34 | | | 81 | |
| | 2005.11-2010.11 | 6AT/6MT | F | L/R | MPV FWD BMM | Original Tripod Design | GCI61057 | Inner Joint | | | 34 | | | 89 | |
| | 2005.11-2010.11 | 6AT/6MT | F | L/R | MPV FWD BMM | | GCI83016 | Inner Joint | | | 28 | | | 32 | |
| | 2005.11-2010.11 | 6DCT | F | L | MPV FWD BMM | Not for taxis | GDS54013 | Drive Shaft | | 36 | | 59.5 | 40 | 479.5 | |
| | 2005.11-2010.11 | 6DCT | F | L | MPV FWD BMM | For taxis | GDS83381 | Drive Shaft | | 36 | | 59.5 | 40 | 483 | |
| | 2005.11-2010.11 | 6DCT | F | R | MPV FWD BMM | | GDS54011 | Drive Shaft | | 36 | | 59.5 | 40 | 755 | |
| | 2005.11-2010.11 | 6DCT | F | L/R | MPV FWD BMM | For taxis | GCO83101 | Outer Joint | | 36 | 27 | 59.5 | 40 | 65 | M |
| | 2005.11-2010.11 | 6MT | F | L | MPV FWD BMM | | GDS83295 | Drive Shaft | | 36 | | 59.5 | 40 | 491 | |
| | 2005.11-2010.11 | 6MT | F | R | MPV FWD BMM | Date From:2010.05;Chassis no. from:5P-B-000001;For taxis | GDS61126 | Drive Shaft | | 36 | | 59.5 | 40 | 793 | |
| | 2005.11-2010.11 | 6MT | F | R | MPV FWD BMM | Date from:2010.05;Chassis no. from:5P-B-000001;For taxis | GDS61147 | Drive Shaft | | 36 | | 59.5 | 40 | 795 | |
| | 2005.11-2010.11 | 6MT | F | R | MPV FWD BMM | [illegible] | GDS83313 | Drive Shaft | | 36 | | 59.5 | 40 | 792 | |
| | 2005.11-2010.11 | 6MT | F | L/R | MPV FWD BMM | | GCO83002 | Outer Joint | | 36 | 27 | 59.5 | 40 | 66 | I |
| | 2005.11-2010.11 | AT | F | L | MPV FWD BMM | | GDS83241 | Drive Shaft | | 36 | | 59.5 | 40 | 475 | |
| | 2005.11-2010.11 | MT | F | L | MPV FWD BMM | | GDS83236 | Drive Shaft | | 36 | | 59.5 | 40 | 484 | |
| | 2005.11-2010.11 | MT | F | R | MPV FWD BMM | | GDS61237 | Stub Axle,differential | | 23 | 37 | | | 142.5 | |
| | 2010.10- | 6MT | F | L | MPV 4WD CFHC | | GDS83295 | Drive Shaft | | 36 | | 59.5 | 40 | 491 | |
| | 2010.10- | 6MT | F | R | MPV 4WD CFHC | | GDS83266 | Drive Shaft | | 36 | | 59.5 | 40 | 601 | |
| | 2010.10- | 6MT | F | L/R | MPV 4WD CFHC | Not for taxis | GCO83002 | Outer Joint | | 36 | 27 | 59.5 | 40 | 66 | I |
| | 2010.10- | 6MT | F | L/R | MPV 4WD CFHC | | GCI83016 | Inner Joint | | | 28 | | | 32 | |
| | 2010.10- | 6MT | R | L | MPV 4WD CFHC | | GDS61284 | Drive Shaft | | 36 | | 59.5 | 40 | 594 | |
| | 2010.10- | 6MT | R | R | MPV 4WD CFHC | | GDS61293 | Drive Shaft | | 36 | | 59.5 | 40 | 631 | |
| | 2010.10- | 6MT | R | L/R | MPV 4WD CFHC | | GCI35026 | Outer Joint | | 36 | 33 | 59.5 | 40 | 61 | |
| 2.0 (110 kw) | 2004.05-2009.03 | 6AT | F | L | MPV FWD BLR;BLY;BVY;BVZ | | GDS61093 | Drive Shaft | | 36 | 26 | 59.5 | 40.5 | 587.5 | |
| | 2004.05-2009.03 | 6AT | F | L | MPV FWD BLR;BLY;BVY;BVZ | Date from:2006.06,Chassis no. from:5P_7_000001 | GDS61111 | Drive Shaft | | 36 | 26 | 59.5 | 40 | 584 | |
| | 2004.05-2009.03 | 6AT | F | R | MPV FWD BLR;BLY;BVY;BVZ | | GDS61094 | Drive Shaft | | 36 | 26 | 59.5 | 40.5 | 884 | |
| | 2004.05-2009.03 | 6AT | F | L/R | MPV FWD BLR;BLY;BVY;BVZ | | GCI61011 | Inner Joint | | 26 | 32 | 31 | 68.5 | 85 | |
| | 2004.05-2009.03 | 6AT | F | L/R | MPV FWD BLR;BLY;BVY;BVZ | | GCI61050 | Inner Joint | | 26 | 32 | 31 | 68.5 | 89 | |
| | 2004.05-2009.03 | 6AT/6MT | F | L/R | MPV FWD BLR;BLY;BVY;BVZ | | GCO83037 | Outer Joint | | 36 | 30 | 59.5 | 40.5 | 56 | I |
| | 2004.05-2009.03 | 6MT | F | L | MPV FWD BLR;BLY;BVY;BVZ | | GDS83294 | Drive Shaft | | 36 | | 59.5 | 38 | 519 | |
| | 2004.05-2009.03 | 6MT | F | R | MPV FWD BLR;BLY;BVY;BVZ | | GDS61042 | Drive Shaft | | 36 | | 59.5 | 40.5 | 814 | |
| | 2004.05-2009.03 | 6MT | F | L/R | MPV FWD BLR;BLY;BVY;BVZ | | GCI82447 | Inner Joint | | | 33 | | | 34 | |
| | 2004.05-2009.03 | MT | F | R | MPV FWD BLR;BLY;BVY;BVZ | | GDS61237 | Stub Axle,differential | | 23 | 37 | | | 142.5 | |
| 2.0 (125 kw) | 2006.03-2010.05 | 6DCT | F | L/R | MPV FWD BMN;CEGA | For taxis | GCO83101 | Outer Joint | | 36 | 27 | 59.5 | 40 | 65 | M |
| | 2006.03-2010.05 | 6MT | F | L | MPV FWD BMN;CEGA | | GDS83295 | Drive Shaft | | 36 | | 59.5 | 40 | 491 | |
| | 2006.03-2010.05 | 6MT | F | R | MPV FWD BMN;CEGA | Date to:2007.12 | GDS61126 | Drive Shaft | | 36 | | 59.5 | 40 | 793 | |
| | 2006.03-2010.05 | 6MT | F | R | MPV FWD BMN;CEGA | | GDS83313 | Drive Shaft | | 36 | | 59.5 | 40 | 792 | |
| | 2006.03-2010.05 | 6MT | F | L/R | MPV FWD BMN;CEGA | | GCI83016 | Inner Joint | | | 28 | | | 32 | |
| | 2006.03-2010.05 | MT | F | L | MPV FWD BMN;CEGA | | GDS83236 | Drive Shaft | | 36 | | 59.5 | 40 | 484 | |
| | 2006.03-2010.05 | MT | F | R | MPV FWD BMN;CEGA | | GDS61237 | Stub Axle,differential | | 23 | 37 | | | 142.5 | |
| 2.0 (147 kw) | 2006.04-2009.05 | 6AT | F | R | MPV FWD BWA | | GCO83002 | Outer Joint | | 36 | 27 | 59.5 | 40 | 66 | I |
| | 2006.04-2009.05 | 6AT | F | L/R | MPV FWD BWA | | GCO83101 | Outer Joint | | 36 | 27 | 59.5 | 40 | 65 | M |
| | 2006.04-2009.05 | 6DCT | F | R | MPV FWD BWA | | GDS81891 | Drive Shaft | | 36 | | 59.5 | 40 | 781 | |
| | 2006.04-2009.05 | 6DCT | F | R | MPV FWD BWA | | GCI61069 | Inner Joint | | | 28 | | | 32 | |
| | 2006.04-2009.05 | 6MT | F | R | MPV FWD BWA | | GDS83313 | Drive Shaft | | 36 | | 59.5 | 40 | 792 | |
| | 2006.04-2009.05 | 6MT/6DCT | F | L | MPV FWD BWA | | GDS83295 | Drive Shaft | | 36 | | 59.5 | 40 | 491 | |
| | 2006.04-2009.05 | AT/MT | F | L | MPV FWD BWA | | GDS83236 | Drive Shaft | | 36 | | 59.5 | 40 | 484 | |
| | 2006.04-2009.05 | MT | F | R | MPV FWD BWA | | GDS61237 | Stub Axle,differential | | 23 | 37 | | | 142.5 | |
| | 2006.04-2009.05 | | F | L/R | MPV FWD BWA | | GCI83016 | Inner Joint | | | 28 | | | 32 | |

| | YEAR | TRANSM. | F/R | L/R | BODY STYLE & DRIVE TYPE & ENGINE | REMARKS | G-AP Ref. | PRODUCT | ABS | Technical Specifications A | B | C | H | L | P |
|---|---|---|---|---|---|---|---|---|---|---|---|---|---|---|---|
| **SEAT** | | | | | | | | | | | | | | | |
| **Altea Freetrack** | | | | | | | | | | | | | | | |
| 2.0 (155 kw) | 2009.05-2015.07 | 6AT/6MT | F | L | MPV 4WD CCZB | | GDS83295 | Drive Shaft | | 36 | | 59.5 | 40 | 491 | |
| | 2009.05-2015.07 | 6AT/6MT | F | R | MPV 4WD CCZB | | GDS83266 | Drive Shaft | | 36 | | 59.5 | 40 | 601 | |
| | 2009.05-2015.07 | AT | F | L/R | MPV 4WD CCZB | | GCI83006 | Inner Joint | | | 33 | | | 34 | |
| | 2009.05-2015.07 | AT/MT | F | L | MPV 4WD CCZB | | GDS83236 | Drive Shaft | | 36 | | 59.5 | 40 | 484 | |
| | 2009.05-2015.07 | MT | F | R | MPV 4WD CCZB | Date to:2010 | GDS61126 | Drive Shaft | | 36 | | 59.5 | 40 | 793 | |
| | 2009.05-2015.07 | | F | L/R | MPV 4WD CCZB | Date From:2015.03 | GCO83002 | Outer Joint | | 36 | 27 | 59.5 | 40 | 66 | I |
| | 2009.05-2015.07 | | F | L/R | MPV 4WD CCZB | | GCI83016 | Inner Joint | | | 28 | | | 32 | |
| | 2009.05-2015.07 | 6AT/6MT | R | L | MPV 4WD CCZB | | GDS61284 | Drive Shaft | | 36 | | 59.5 | 40 | 594 | |
| | 2009.05-2015.07 | 6AT/6MT | R | R | MPV 4WD CCZB | | GDS61293 | Drive Shaft | | 36 | | 59.5 | 40 | 631 | |
| | 2009.05-2015.07 | 6AT/6MT | R | L/R | MPV 4WD CCZB | | GCI35026 | Outer Joint | | 36 | 33 | 59.5 | 40 | 61 | |
| | 2009.05-2015.07 | 6AT/6MT | R | L/R | MPV 4WD CCZB | | GCI53002 | Inner Joint | | | 33 | | | 34 | |
| | 2009.05-2015.07 | 6AT/6MT | R | L/R | MPV 4WD CCZB | | GCI82447 | Inner Joint | | | 33 | | | 34 | |
| | 2009.05-2015.07 | 6AT | F | L | MPV FWD CCZB | | GDS83295 | Drive Shaft | | 36 | | 59.5 | 40 | 491 | |
| | 2009.05-2015.07 | 6AT | F | R | MPV FWD CCZB | | GDS81891 | Drive Shaft | | 36 | | 59.5 | 40 | 781 | |
| | 2009.05-2015.07 | 6AT | F | L/R | MPV FWD CCZB | Date to:2009.12 | GCO83002 | Outer Joint | | 36 | 27 | 59.5 | 40 | 66 | I |
| | 2009.05-2015.07 | 6AT | F | L/R | MPV FWD CCZB | Date from:2010.01 | GCO83101 | Outer Joint | | 36 | 27 | 59.5 | 40 | 65 | M |
| | 2009.05-2015.07 | 6AT | F | R | MPV FWD CCZB | | GCI61069 | Inner Joint | | | 28 | | | 32 | |
| | 2009.05-2015.07 | | F | L/R | MPV FWD CCZB | | GCI83016 | Inner Joint | | | 28 | | | 32 | |
| **Altea XL** | | | | | | | | | | | | | | | |
| 1.2 (77 kw) | 2010.04-2015.07 | 5MT/6MT | F | L | MPV FWD CBZB | | GDS61201 | Drive Shaft | | 36 | | 59.5 | 40.5 | 535 | |
| | 2010.04-2015.07 | 5MT/6MT | F | R | MPV FWD CBZB | | GDS61096 | Drive Shaft | | 36 | | 59.5 | 40.5 | 799 | |
| | 2010.04-2015.07 | 5MT/6MT | F | L/R | MPV FWD CBZB | | GCI82447 | Inner Joint | | | 33 | | | 34 | |
| | 2010.04-2015.07 | 6MT | F | L/R | MPV FWD CBZB | | GCO83037 | Outer Joint | | 36 | 30 | 59.5 | 40.5 | 56 | I |
| | 2010.04-2015.07 | | F | L/R | MPV FWD CBZB | | GCI83011 | Inner Joint | | | 33 | | | 34 | |
| 1.4 (63 kw) | 2006.10-2013.06 | 5MT | F | L | MPV FWD BXW;CGGB | | GDS53007 | Drive Shaft | | 36 | | 59.5 | 40 | 559 | |
| | 2006.10-2013.06 | 5MT | F | R | MPV FWD BXW;CGGB | | GDS53008 | Drive Shaft | | 36 | | 59.5 | 40 | 782 | |
| | 2006.10-2013.06 | 5MT | F | L/R | MPV FWD BXW;CGGB | | GCO53001 | Outer Joint | | 36 | 30 | 59.5 | 40 | 49 | I |
| | 2006.10-2013.06 | 5MT | F | L/R | MPV FWD BXW;CGGB | | GCI61103 | Inner Joint | | | 33 | | | 32 | |
| | 2006.10-2013.06 | | F | L/R | MPV FWD BXW;CGGB | | GCI83008 | Inner Joint | | | 33 | | | 32 | |
| 1.4 (92 kw) | 2007.11-2015.07 | 6MT | F | L | MPV FWD CAXC | | GDS61201 | Drive Shaft | | 36 | | 59.5 | 40.5 | 535 | |
| | 2007.11-2015.07 | 6MT | F | R | MPV FWD CAXC | | GDS61096 | Drive Shaft | | 36 | | 59.5 | 40.5 | 799 | |
| | 2007.11-2015.07 | 6MT | F | L/R | MPV FWD CAXC | | GCO83037 | Outer Joint | | 36 | 30 | 59.5 | 40.5 | 56 | I |
| | 2007.11-2015.07 | 6MT | F | L/R | MPV FWD CAXC | | GCI82447 | Inner Joint | | | 33 | | | 34 | |
| | 2007.11-2015.07 | MT | F | L/R | MPV FWD CAXC | | GCI83011 | Inner Joint | | | 33 | | | 34 | |
| 1.6 (66 kw) | 2010.11-2015.07 | 5MT | F | L | MPV FWD CAYB | | GDS83294 | Drive Shaft | | 36 | | 59.5 | 38 | 519 | |
| | 2010.11-2015.07 | 5MT | F | R | MPV FWD CAYB | | GDS61042 | Drive Shaft | | 36 | | 59.5 | 40.5 | 814 | |
| | 2010.11-2015.07 | 5MT | F | L/R | MPV FWD CAYB | | GCO83037 | Outer Joint | | 36 | 30 | 59.5 | 40.5 | 56 | I |
| | 2010.11-2015.07 | 5MT | F | L/R | MPV FWD CAYB | | GCI82447 | Inner Joint | | | 33 | | | 34 | |
| | 2010.11-2015.07 | MT | F | L/R | MPV FWD CAYB | | GCI83006 | Inner Joint | | | 33 | | | 34 | |
| 1.6 (75 kw) | 2006.10-2010.11 | 5MT | F | L/R | MPV FWD BGU;BSE;BSF;CCSA | For Engine code:BSE/BSF/CCSA/BGU | GCO83037 | Outer Joint | | 36 | 30 | 59.5 | 40.5 | 56 | I |
| | 2006.10-2010.11 | 6MT | F | L | MPV FWD BGU;BSE;BSF;CCSA | | GDS61097 | Drive Shaft | | 36 | | 59.5 | 40.5 | 543 | |
| | 2006.10-2010.11 | 6MT | F | R | MPV FWD BGU;BSE;BSF;CCSA | | GDS61096 | Drive Shaft | | 36 | | 59.5 | 40.5 | 799 | |
| | 2006.10-2010.11 | 7DCT | F | L | MPV FWD BGU;BSE;BSF;CCSA | | GDS83294 | Drive Shaft | | 36 | | 59.5 | 38 | 519 | |
| | 2006.10-2010.11 | 7DCT | F | R | MPV FWD BGU;BSE;BSF;CCSA | | GDS61042 | Drive Shaft | | 36 | | 59.5 | 40.5 | 814 | |
| | 2006.10-2010.11 | 7DCT/5MT | F | L/R | MPV FWD BGU;BSE;BSF;CCSA | | GCI82447 | Inner Joint | | | 33 | | | 34 | |
| | 2006.10-2010.11 | MT | F | L/R | MPV FWD BGU;BSE;BSF;CCSA | | GCI83011 | Inner Joint | | | 33 | | | 34 | |
| | 2006.10-2010.11 | 5MT | F | L | MPV FWD BSE;BSF;CCSA;CMXA | | GDS61097 | Drive Shaft | | 36 | | 59.5 | 40.5 | 543 | |
| | 2006.10-2010.11 | 5MT | F | R | MPV FWD BSE;BSF;CCSA;CMXA | | GDS61096 | Drive Shaft | | 36 | | 59.5 | 40.5 | 799 | |
| | 2006.10-2010.11 | 5MT | F | L/R | MPV FWD BSE;BSF;CCSA;CMXA | | GCO83037 | Outer Joint | | 36 | 30 | 59.5 | 40.5 | 56 | I |
| | 2006.10-2010.11 | 7AT | F | L | MPV FWD BSE;BSF;CCSA;CMXA | | GDS83294 | Drive Shaft | | 36 | | 59.5 | 38 | 519 | |
| | 2006.10-2010.11 | 7DCT/5MT/6MT | F | L/R | MPV FWD BSE;BSF;CCSA;CMXA | | GCI82447 | Inner Joint | | | 33 | | | 34 | |
| | 2006.10-2010.11 | MT | F | L/R | MPV FWD BSE;BSF;CCSA;CMXA | | GCI83006 | Inner Joint | | | 33 | | | 34 | |
| | 2006.10-2010.11 | | F | L/R | MPV FWD BSE;BSF;CCSA;CMXA | | GCI83011 | Inner Joint | | | 33 | | | 34 | |
| | 2009.09-2013.06 | 5MT | F | L | MPV FWD CHGA | | GDS61097 | Drive Shaft | | 36 | | 59.5 | 40.5 | 543 | |
| | 2009.09-2013.06 | 5MT | F | R | MPV FWD CHGA | | GDS61096 | Drive Shaft | | 36 | | 59.5 | 40.5 | 799 | |
| | 2009.09-2013.06 | 5MT | F | L/R | MPV FWD CHGA | | GCO83037 | Outer Joint | | 36 | 30 | 59.5 | 40.5 | 56 | I |
| | 2009.09-2013.06 | 5MT | F | L/R | MPV FWD CHGA | | GCI82447 | Inner Joint | | | 33 | | | 34 | |
| | 2009.09-2013.06 | 5MT | F | L/R | MPV FWD CHGA | | GCI83008 | Inner Joint | | | 33 | | | 32 | |
| | 2009.09-2013.06 | MT | F | L/R | MPV FWD CHGA | | GCI83006 | Inner Joint | | | 33 | | | 34 | |
| | 2009.09-2013.06 | MT | F | L/R | MPV FWD CHGA | | GCI83011 | Inner Joint | | | 33 | | | 34 | |
| 1.6 (77 kw) | 2009.10-2015.07 | 5MT | F | L | MPV FWD CAYC | | GDS83294 | Drive Shaft | | 36 | | 59.5 | 38 | 519 | |
| | 2009.10-2015.07 | 5MT | F | R | MPV FWD CAYC | Chassis no. to:5P_A_045000 | GDS61042 | Drive Shaft | | 36 | | 59.5 | 40.5 | 814 | |
| | 2009.10-2015.07 | 5MT | F | R | MPV FWD CAYC | Chassis no. from:5P_B_000001 | GDS61283 | Drive Shaft | | 36 | | 59.5 | 40 | 815 | |
| | 2009.10-2015.07 | 5MT | F | L/R | MPV FWD CAYC | | GCO83037 | Outer Joint | | 36 | 30 | 59.5 | 40.5 | 56 | I |
| | 2009.10-2015.07 | 5MT | F | L/R | MPV FWD CAYC | | GCI82447 | Inner Joint | | | 33 | | | 34 | |

| | YEAR | TRANSM. | F/R | L/R | BODY STYLE & DRIVE TYPE & ENGINE | REMARKS | G-AP Ref. | PRODUCT | ABS | Technical Specifications A | B | C | H | L | P |
|---|---|---|---|---|---|---|---|---|---|---|---|---|---|---|---|
| **SEAT** **Altea XL** | | | | | | | | | | | | | | | |
| 1.6 (77 kw) | 2009.10-2015.07 | 7AT/5MT | F | L/R | MPV FWD CAYC | | GCI83016 | Inner Joint | | | 28 | | | 32 | |
| | 2009.10-2015.07 | 7DCT | F | L | MPV FWD CAYC | | GDS61100 | Drive Shaft | | 36 | | 59.5 | 40 | 513 | |
| | 2009.10-2015.07 | 7DCT | F | L | MPV FWD CAYC | | GDS61282 | Drive Shaft | | 36 | | 59.5 | 40 | 523 | |
| | 2009.10-2015.07 | 7DCT | F | R | MPV FWD CAYC | | GDS61096 | Drive Shaft | | 36 | | 59.5 | 40.5 | 799 | |
| | 2009.10-2015.07 | 7DCT | F | R | MPV FWD CAYC | Date To:2011.05 | GDS61339 | Drive Shaft | | 36 | | 59.5 | 40 | 794 | |
| | 2009.10-2015.07 | 7DCT | F | L/R | MPV FWD CAYC | Date from:2011.06 | GCO61059 | Outer Joint | | 36 | 33 | 59.5 | 40 | 59.5 | I |
| | 2009.10-2015.07 | 7DCT | F | L/R | MPV FWD CAYC | Date to:2011.05 | GCO83002 | Outer Joint | | 36 | 27 | 59.5 | 40 | 66 | I |
| | 2009.10-2015.07 | 7DCT | F | L | MPV FWD CAYC | | GCI53002 | Inner Joint | | | 33 | | | 34 | |
| | 2009.10-2015.07 | 7DCT | F | R | MPV FWD CAYC | Date to:2011.05 | GCI61069 | Inner Joint | | | 28 | | | 32 | |
| 1.8 (118 kw) | 2007.01-2015.07 | 6MT | F | L | MPV FWD BYT;BZB;CDAA | date from:2010.05;chassis no. from:5P-B-000001;date to:2009.10 | GDS61100 | Drive Shaft | | 36 | | 59.5 | 40 | 513 | |
| | 2007.01-2015.07 | 6MT | F | L | MPV FWD BYT;BZB;CDAA | Date from:2009.11;date to:2010.05;chassis no. to:5P-A-045000 | GDS61282 | Drive Shaft | | 36 | | 59.5 | 40 | 523 | |
| | 2007.01-2015.07 | 6MT | F | R | MPV FWD BYT;BZB;CDAA | Date from:2009.11;date to:2010.05;chassis no. to:5P-A-045000 | GDS61283 | Drive Shaft | | 36 | | 59.5 | 40 | 815 | |
| | 2007.01-2015.07 | 6MT | F | R | MPV FWD BYT;BZB;CDAA | date from:2010.05;chassis no. from:5P-B-000001;date to:2009.10 | GDS61341 | Drive Shaft | | 36 | | 59.5 | 40 | 806 | |
| | 2007.01-2015.07 | 6MT | F | L/R | MPV FWD BYT;BZB;CDAA | Date from:2009.11,Date to:2010.05 | GCO61059 | Outer Joint | | 36 | 33 | 59.5 | 40 | 59.5 | I |
| | 2007.01-2015.07 | 6MT | F | L/R | MPV FWD BYT;BZB;CDAA | Date to:2009.10,Date from:2010.05 | GCO83002 | Outer Joint | | 36 | 27 | 59.5 | 40 | 66 | I |
| | 2007.01-2015.07 | 6MT | F | R | MPV FWD BYT;BZB;CDAA | Date from:2010.05,Chassis no. from:5P-B-000001;Date to:2009.10 | GCI61069 | Inner Joint | | | 28 | | | 32 | |
| | 2007.01-2015.07 | 6MT | F | L/R | MPV FWD BYT;BZB;CDAA | Date from:2009.11,Date to:2010.05,Chassis no. to:5P-A-045000 | GCI53002 | Inner Joint | | | 33 | | | 34 | |
| | 2007.01-2015.07 | 7DCT | F | L | MPV FWD BYT;BZB;CDAA | | GDS61100 | Drive Shaft | | 36 | | 59.5 | 40 | 513 | |
| | 2007.01-2015.07 | 7DCT | F | R | MPV FWD BYT;BZB;CDAA | | GDS83313 | Drive Shaft | | 36 | | 59.5 | 40 | 792 | |
| | 2007.01-2015.07 | 7DCT | F | L/R | MPV FWD BYT;BZB;CDAA | | GCO83101 | Outer Joint | | 36 | 27 | 59.5 | 40 | 65 | M |
| | 2007.01-2015.07 | MT | F | L | MPV FWD BYT;BZB;CDAA | | GDS83294 | Drive Shaft | | 36 | | 59.5 | 38 | 519 | |
| | 2007.01-2015.07 | MT | F | L | MPV FWD BYT;BZB;CDAA | | GCO83037 | Outer Joint | | 36 | 30 | 59.5 | 40.5 | 56 | I |
| | 2007.01-2015.07 | | F | L/R | MPV FWD BYT;BZB;CDAA | | GCI83016 | Inner Joint | | | 28 | | | 32 | |
| 1.9 (66 kw) | 2009.08-2010.12 | 5MT | F | L | MPV FWD BXF | | GDS83294 | Drive Shaft | | 36 | | 59.5 | 38 | 519 | |
| | 2009.08-2010.12 | 5MT | F | R | MPV FWD BXF | | GDS61042 | Drive Shaft | | 36 | | 59.5 | 40.5 | 814 | |
| | 2009.08-2010.12 | 5MT | F | L/R | MPV FWD BXF | | GCO83037 | Outer Joint | | 36 | 30 | 59.5 | 40.5 | 56 | I |
| | 2009.08-2010.12 | 5MT | F | L/R | MPV FWD BXF | | GCI82447 | Inner Joint | | | 33 | | | 34 | |
| 1.9 (77 kw) | 2006.10-2010.12 | 5MT | F | L | MPV FWD BKC;BLS;BXE | Date from:2006.06;Chassis no. from:5P_7_000001;Chassis no. to:5P_A_045000 | GDS61282 | Drive Shaft | | 36 | | 59.5 | 40 | 523 | |
| | 2006.10-2010.12 | 5MT | F | L | MPV FWD BKC;BLS;BXE | Date to:2006.05;Chassis no. to:5P_B_100000;Chassis no. from:5P_B_000001 | GDS83294 | Drive Shaft | | 36 | | 59.5 | 38 | 519 | |
| | 2006.10-2010.12 | 5MT | F | R | MPV FWD BKC;BLS;BXE | Date to:2006.05;Chassis no. to:5P_B_100000;Chassis no. from:5P_B_000001 | GDS61042 | Drive Shaft | | 36 | | 59.5 | 40.5 | 814 | |
| | 2006.10-2010.12 | 5MT | F | R | MPV FWD BKC;BLS;BXE | Date from:2006.06;Chassis no. from:5P_7_000001;Chassis no. to:5P_A_045000 | GDS61283 | Drive Shaft | | 36 | | 59.5 | 40 | 815 | |
| | 2006.10-2010.12 | 5MT | F | L/R | MPV FWD BKC;BLS;BXE | Date to:2010.12 | GCO83037 | Outer Joint | | 36 | 30 | 59.5 | 40.5 | 56 | I |
| | 2006.10-2010.12 | 5MT | F | R | MPV FWD BKC;BLS;BXE | Date to:2010.12 | GCI53002 | Inner Joint | | | 33 | | | 34 | |
| | 2006.10-2010.12 | 5MT | F | L/R | MPV FWD BKC;BLS;BXE | | GCI82447 | Inner Joint | | | 33 | | | 34 | |
| | 2006.10-2010.12 | 6AT | F | L/R | MPV FWD BKC;BLS;BXE | Date to:2010.12 | GCO83002 | Outer Joint | | 36 | 27 | 59.5 | 40 | 66 | I |
| | 2006.10-2010.12 | 6AT | F | L/R | MPV FWD BKC;BLS;BXE | Date to:2008.03;for taxis | GCO83101 | Outer Joint | | 36 | 27 | 59.5 | 40 | 65 | M |
| | 2006.10-2010.12 | 6DCT | F | L | MPV FWD BKC;BLS;BXE | For PR code:F3A;F5X;F5Z;Chassis no. to:5P_A_045000;Chassis no. from:5P_B_000001;Date to:2007.12 | GDS54013 | Drive Shaft | | 36 | | 59.5 | 40 | 479.5 | |
| | 2006.10-2010.12 | 6DCT | F | L | MPV FWD BKC;BLS;BXE | Chassis no. to:5P_A_045000;Date from:2008.01;Date to:2009.07 | GDS83381 | Drive Shaft | | 36 | | 59.5 | 40 | 483 | |
| | 2006.10-2010.12 | 6DCT | F | R | MPV FWD BKC;BLS;BXE | | GDS54011 | Drive Shaft | | 36 | | 59.5 | 40 | 755 | |
| | 2006.10-2010.12 | 6DCT | F | L/R | MPV FWD BKC;BLS;BXE | | GCI54004 | Inner Joint | | | 34 | | | 81 | |
| | 2006.10-2010.12 | 6DCT | F | L/R | MPV FWD BKC;BLS;BXE | Original Tripod Design | GCI61057 | Inner Joint | | | 34 | | | 89 | |
| | 2006.10-2010.12 | AT | F | L | MPV FWD BKC;BLS;BXE | | GDS83241 | Drive Shaft | | 36 | | 59.5 | 40 | 475 | |
| | 2009.06-2010.12 | 6MT | F | L | MPV 4WD BLS | | GDS83295 | Drive Shaft | | 36 | | 59.5 | 40 | 491 | |
| | 2009.06-2010.12 | 6MT | F | R | MPV 4WD BLS | | GDS83266 | Drive Shaft | | 36 | | 59.5 | 40 | 601 | |
| | 2009.06-2010.12 | 6MT | F | L/R | MPV 4WD BLS | | GCO83002 | Outer Joint | | 36 | 27 | 59.5 | 40 | 66 | I |
| | 2009.06-2010.12 | 6MT | F | L/R | MPV 4WD BLS | | GCI61069 | Inner Joint | | | 28 | | | 32 | |
| | 2009.06-2010.12 | 6MT | F | L/R | MPV 4WD BLS | | GCI83016 | Inner Joint | | | 28 | | | 32 | |
| | 2009.06-2010.12 | 6MT | R | L | MPV 4WD BLS | | GDS61284 | Drive Shaft | | 36 | | 59.5 | 40 | 594 | |
| | 2009.06-2010.12 | 6MT | R | R | MPV 4WD BLS | | GDS61293 | Drive Shaft | | 36 | | 59.5 | 40 | 631 | |
| | 2009.06-2010.12 | 6MT | R | L/R | MPV 4WD BLS | | GCI35026 | Outer Joint | | 36 | 33 | 59.5 | 40 | 61 | |
| | 2009.06-2010.12 | 6MT | R | L/R | MPV 4WD BLS | | GCI53002 | Inner Joint | | | 33 | | | 34 | |
| | 2009.06-2010.12 | 6MT | R | L/R | MPV 4WD BLS | | GCI82447 | Inner Joint | | | 33 | | | 34 | |
| 2.0 (100 kw) | 2006.11-2009.03 | 6AT/6MT | F | L/R | MPV FWD AZV | | GCI54004 | Inner Joint | | | 34 | | | 81 | |
| | 2006.11-2009.03 | 6AT/6MT | F | L/R | MPV FWD AZV | Original Tripod Design | GCI61057 | Inner Joint | | | 34 | | | 89 | |
| | 2006.11-2009.03 | 6AT/6MT | F | L/R | MPV FWD AZV | | GCI83016 | Inner Joint | | | 28 | | | 32 | |
| | 2006.11-2009.03 | 6DCT | F | L | MPV FWD AZV | Not for taxis | GDS54013 | Drive Shaft | | 36 | | 59.5 | 40 | 479.5 | |
| | 2006.11-2009.03 | 6DCT | F | L | MPV FWD AZV | For taxis | GDS83381 | Drive Shaft | | 36 | | 59.5 | 40 | 483 | |
| | 2006.11-2009.03 | 6DCT | F | R | MPV FWD AZV | | GDS54011 | Drive Shaft | | 36 | | 59.5 | 40 | 755 | |
| | 2006.11-2009.03 | 6DCT | F | L/R | MPV FWD AZV | For taxis | GCO83101 | Outer Joint | | 36 | 27 | 59.5 | 40 | 65 | M |
| | 2006.11-2009.03 | 6MT | F | L | MPV FWD AZV | | GDS83295 | Drive Shaft | | 36 | | 59.5 | 40 | 491 | |
| | 2006.11-2009.03 | 6MT | F | R | MPV FWD AZV | | GDS61126 | Drive Shaft | | 36 | | 59.5 | 40 | 793 | |
| | 2006.11-2009.03 | 6MT/6DCT | F | L/R | MPV FWD AZV | | GCO83002 | Outer Joint | | 36 | 27 | 59.5 | 40 | 66 | I |
| | 2006.11-2009.03 | AT | F | L | MPV FWD AZV | | GDS83241 | Drive Shaft | | 36 | | 59.5 | 40 | 475 | |
| | 2006.11-2009.03 | MT/6MT | F | R | MPV FWD AZV | | GDS83313 | Drive Shaft | | 36 | | 59.5 | 40 | 792 | |
| 2.0 (103 kw) | 2006.10-2010.11 | 6AT/6MT | F | L/R | MPV FWD BMM | | GCI54004 | Inner Joint | | | 34 | | | 81 | |

| | YEAR | TRANSM. | F/R | L/R | BODY STYLE & DRIVE TYPE & ENGINE | REMARKS | G-AP Ref. | PRODUCT | ABS | Technical Specifications A | B | C | H | L | P |
|---|---|---|---|---|---|---|---|---|---|---|---|---|---|---|---|
| **SEAT** **Altea XL** | | | | | | | | | | | | | | | |
| 2.0 (103 kw) | 2006.10-2010.11 | 6AT/6MT | F | L/R | MPV FWD BMM | Original Tripod Design | GCI61057 | Inner Joint | | | 34 | | | 89 | |
| | 2006.10-2010.11 | 6AT/6MT | F | L/R | MPV FWD BMM | Model:Altea XL | GCI83016 | Inner Joint | | | 28 | | | 32 | |
| | 2006.10-2010.11 | 6DCT | F | L | MPV FWD BMM | For taxis | GDS83381 | Drive Shaft | | 36 | | 59.5 | 40 | 483 | |
| | 2006.10-2010.11 | 6DCT | F | R | MPV FWD BMM | not For taxis | GDS54011 | Drive Shaft | | 36 | | 59.5 | 40 | 755 | |
| | 2006.10-2010.11 | 6DCT | F | R | MPV FWD BMM | For taxis | GDS83354 | Drive Shaft | | 36 | | 59.5 | 40 | 763 | |
| | 2006.10-2010.11 | 6DCT | F | L/R | MPV FWD BMM | For taxis | GCO83101 | Outer Joint | | 36 | 27 | 59.5 | 40 | 65 | M |
| | 2006.10-2010.11 | 6MT | F | L | MPV FWD BMM | | GDS83295 | Drive Shaft | | 36 | | 59.5 | 40 | 491 | |
| | 2006.10-2010.11 | 6MT | F | R | MPV FWD BMM | Date From:2010.05;Chassis no. from:5P-B-000001;For taxis | GDS61126 | Drive Shaft | | 36 | | 59.5 | 40 | 793 | |
| | 2006.10-2010.11 | 6MT | F | R | MPV FWD BMM | Date from:2010.05;Chassis no. from:5P-B-000001;For taxis | GDS61147 | Drive Shaft | | 36 | | 59.5 | 40 | 795 | |
| | 2006.10-2010.11 | 6MT | F | R | MPV FWD BMM | | GDS83313 | Drive Shaft | | 36 | | 59.5 | 40 | 792 | |
| | 2006.10-2010.11 | 6MT/6DCT | F | L/R | MPV FWD BMM | Chassis no. to:5P-A-006000;Date to:2010.09;Chassis no. from:5P-B-000001;Date from:2010.09 | GCO83002 | Outer Joint | | 36 | 27 | 59.5 | 40 | 66 | I |
| | 2006.10-2010.11 | AT | F | L | MPV FWD BMM | Model:Altea Freetrack,Date from:2007.06 | GDS54013 | Drive Shaft | | 36 | | 59.5 | 40 | 479.5 | |
| | 2006.10-2010.11 | AT | F | L | MPV FWD BMM | | GDS83241 | Drive Shaft | | 36 | | 59.5 | 40 | 475 | |
| | 2006.10-2010.11 | MT | F | L | MPV FWD BMM | | GDS83236 | Drive Shaft | | 36 | | 59.5 | 40 | 484 | |
| | 2006.10-2015.07 | 6AT/6MT | F | L/R | MPV FWD BKD;CFHC | | GCI54004 | Inner Joint | | | 34 | | | 81 | |
| | 2006.10-2015.07 | 6AT/6MT | F | L/R | MPV FWD BKD;CFHC | Original Tripod Design | GCI61057 | Inner Joint | | | 34 | | | 89 | |
| | 2006.10-2015.07 | 6AT/6MT | F | L/R | MPV FWD BKD;CFHC | | GCI83016 | Inner Joint | | | 28 | | | 32 | |
| | 2006.10-2015.07 | 6DCT | F | L | MPV FWD BKD;CFHC | Not for taxis | GDS54013 | Drive Shaft | | 36 | | 59.5 | 40 | 479.5 | |
| | 2006.10-2015.07 | 6DCT | F | L | MPV FWD BKD;CFHC | Date from:2009.08,For taxis | GDS83381 | Drive Shaft | | 36 | | 59.5 | 40 | 483 | |
| | 2006.10-2015.07 | 6DCT | F | R | MPV FWD BKD;CFHC | not For taxis | GDS54011 | Drive Shaft | | 36 | | 59.5 | 40 | 755 | |
| | 2006.10-2015.07 | 6DCT | F | R | MPV FWD BKD;CFHC | Date from:2009.08,For taxis | GDS83354 | Drive Shaft | | 36 | | 59.5 | 40 | 763 | |
| | 2006.10-2015.07 | 6DCT | F | L/R | MPV FWD BKD;CFHC | For taxis | GCO83101 | Outer Joint | | 36 | 27 | 59.5 | 40 | 65 | M |
| | 2006.10-2015.07 | 6MT | F | L | MPV FWD BKD;CFHC | | GDS83295 | Drive Shaft | | 36 | | 59.5 | 40 | 491 | |
| | 2006.10-2015.07 | 6MT | F | R | MPV FWD BKD;CFHC | Date From:2010.05;Chassis no. from:5P-B-000001;For taxis | GDS61126 | Drive Shaft | | 36 | | 59.5 | 40 | 793 | |
| | 2006.10-2015.07 | 6MT | F | R | MPV FWD BKD;CFHC | Date from:2010.05;Chassis no. from:5P-B-000001;For taxis | GDS61147 | Drive Shaft | | 36 | | 59.5 | 40 | 795 | |
| | 2006.10-2015.07 | 6MT | F | R | MPV FWD BKD;CFHC | | GDS83313 | Drive Shaft | | 36 | | 59.5 | 40 | 792 | |
| | 2006.10-2015.07 | 6MT | F | L/R | MPV FWD BKD;CFHC | Date to:2015.02,Date from:2015.03 | GCO83002 | Outer Joint | | 36 | 27 | 59.5 | 40 | 66 | I |
| | 2006.10-2015.07 | AT | F | L | MPV FWD BKD;CFHC | | GDS83241 | Drive Shaft | | 36 | | 59.5 | 40 | 475 | |
| | 2006.10-2015.07 | MT | F | L | MPV FWD BKD;CFHC | | GDS83236 | Drive Shaft | | 36 | | 59.5 | 40 | 484 | |
| | 2007.06-2010.11 | 6MT | F | L | MPV 4WD BMM | | GDS83295 | Drive Shaft | | 36 | | 59.5 | 40 | 491 | |
| | 2007.06-2010.11 | 6MT | F | R | MPV 4WD BMM | | GDS83266 | Drive Shaft | | 36 | | 59.5 | 40 | 601 | |
| | 2007.06-2010.11 | 6MT | F | L/R | MPV 4WD BMM | Date to:2015.02 | GCO83002 | Outer Joint | | 36 | 27 | 59.5 | 40 | 66 | I |
| | 2007.06-2010.11 | 6MT | F | L/R | MPV 4WD BMM | | GCI83016 | Inner Joint | | | 28 | | | 32 | |
| | 2007.06-2010.11 | AT | F | L | MPV 4WD BMM | | GDS83241 | Drive Shaft | | 36 | | 59.5 | 40 | 475 | |
| | 2007.06-2010.11 | AT | F | L | MPV 4WD BMM | | GCI54004 | Inner Joint | | | 34 | | | 81 | |
| | 2007.06-2010.11 | AT | F | L/R | MPV 4WD BMM | Date To:2010.11;Type:Altea XL | GCI61057 | Inner Joint | | | 34 | | | 89 | |
| | 2007.06-2010.11 | MT | F | L | MPV 4WD BMM | | GDS83236 | Drive Shaft | | 36 | | 59.5 | 40 | 484 | |
| | 2007.06-2010.11 | 6AT/6MT | R | L | MPV 4WD BMM | | GDS61284 | Drive Shaft | | 36 | | 59.5 | 40 | 594 | |
| | 2007.06-2010.11 | 6AT/6MT | R | L/R | MPV 4WD BMM | | GCI35026 | Outer Joint | | 36 | 33 | 59.5 | 40 | 61 | |
| | 2007.06-2010.11 | 6MT | R | R | MPV 4WD BMM | | GDS61293 | Drive Shaft | | 36 | | 59.5 | 40 | 631 | |
| | 2007.06-2010.11 | 6MT | R | L/R | MPV 4WD BMM | | GCI82447 | Inner Joint | | | 33 | | | 34 | |
| | 2010.10-2015.07 | 6AT/6MT | F | L | MPV 4WD CFHC | | GDS83295 | Drive Shaft | | 36 | | 59.5 | 40 | 491 | |
| | 2010.10-2015.07 | 6AT/6MT | F | R | MPV 4WD CFHC | | GDS83266 | Drive Shaft | | 36 | | 59.5 | 40 | 601 | |
| | 2010.10-2015.07 | 6MT | F | L/R | MPV 4WD CFHC | | GCO83002 | Outer Joint | | 36 | 27 | 59.5 | 40 | 66 | I |
| | 2010.10-2015.07 | 6MT | F | L/R | MPV 4WD CFHC | | GCI83016 | Inner Joint | | | 28 | | | 32 | |
| | 2010.10-2015.07 | AT | F | L/R | MPV 4WD CFHC | Type:Altea XL | GCI61057 | Inner Joint | | | 34 | | | 89 | |
| | 2010.10-2015.07 | AT/MT | F | L | MPV 4WD CFHC | | GDS83236 | Drive Shaft | | 36 | | 59.5 | 40 | 484 | |
| | 2010.10-2015.07 | 6AT/6MT | R | L | MPV 4WD CFHC | | GDS61284 | Drive Shaft | | 36 | | 59.5 | 40 | 594 | |
| | 2010.10-2015.07 | 6AT/6MT | R | R | MPV 4WD CFHC | | GDS61293 | Drive Shaft | | 36 | | 59.5 | 40 | 631 | |
| | 2010.10-2015.07 | 6AT/6MT | R | L/R | MPV 4WD CFHC | | GCI35026 | Outer Joint | | 36 | 33 | 59.5 | 40 | 61 | |
| | 2010.10-2015.07 | 6AT/6MT | R | L/R | MPV 4WD CFHC | | GCI82447 | Inner Joint | | | 33 | | | 34 | |
| 2.0 (110 kw) | 2006.10-2009.03 | 6AT | F | L | MPV FWD BVY;BVZ | | GDS61093 | Drive Shaft | | 36 | 26 | 59.5 | 40.5 | 587.5 | |
| | 2006.10-2009.03 | 6AT | F | L | MPV FWD BVY;BVZ | | GDS61111 | Drive Shaft | | 36 | 26 | 59.5 | 40 | 584 | |
| | 2006.10-2009.03 | 6AT | F | R | MPV FWD BVY;BVZ | | GDS61094 | Drive Shaft | | 36 | 26 | 59.5 | 40.5 | 884 | |
| | 2006.10-2009.03 | 6AT | F | L/R | MPV FWD BVY;BVZ | | GCI61011 | Inner Joint | | 26 | 32 | 31 | 68.5 | 85 | |
| | 2006.10-2009.03 | 6AT | F | L/R | MPV FWD BVY;BVZ | | GCI61050 | Inner Joint | | 26 | 32 | 31 | 68.5 | 89 | |
| | 2006.10-2009.03 | 6MT | F | L | MPV FWD BVY;BVZ | | GDS83294 | Drive Shaft | | 36 | | 59.5 | 38 | 519 | |
| | 2006.10-2009.03 | 6MT | F | R | MPV FWD BVY;BVZ | | GDS61042 | Drive Shaft | | 36 | | 59.5 | 40.5 | 814 | |
| | 2006.10-2009.03 | 6MT | F | L/R | MPV FWD BVY;BVZ | | GCI82447 | Inner Joint | | | 33 | | | 34 | |
| | 2006.10-2009.03 | AT/MT | F | L/R | MPV FWD BVY;BVZ | | GCO83037 | Outer Joint | | 36 | 30 | 59.5 | 40.5 | 56 | I |
| 2.0 (125 kw) | 2007.06-2013.06 | 6AT/6MT | F | L | MPV 4WD BMN, CEGA, CFJA | | GDS83295 | Drive Shaft | | 36 | | 59.5 | 40 | 491 | |
| | 2007.06-2013.06 | 6AT/6MT | F | R | MPV 4WD BMN, CEGA, CFJA | | GDS83266 | Drive Shaft | | 36 | | 59.5 | 40 | 601 | |
| | 2007.06-2013.06 | 6AT/6MT | F | L/R | MPV 4WD BMN, CEGA, CFJA | | GCO83002 | Outer Joint | | 36 | 27 | 59.5 | 40 | 66 | I |
| | 2007.06-2013.06 | 6MT | F | L/R | MPV 4WD BMN, CEGA, CFJA | | GCI83016 | Inner Joint | | | 28 | | | 32 | |
| | 2007.06-2013.06 | MT | F | L | MPV 4WD BMN, CEGA, CFJA | | GDS83236 | Drive Shaft | | 36 | | 59.5 | 40 | 484 | |

| | YEAR | TRANSM. | F/R | L/R | BODY STYLE & DRIVE TYPE & ENGINE | REMARKS | G-AP Ref. | PRODUCT | ABS | Technical Specifications A | B | C | H | L | P |
|---|---|---|---|---|---|---|---|---|---|---|---|---|---|---|---|
| **SEAT** | | | | | | | | | | | | | | | |
| **Altea XL** | | | | | | | | | | | | | | | |
| 2.0 (125 kw) | 2007.06-2013.06 | MT | F | L/R | MPV 4WD BMN, CEGA, CFJA | | GCI83006 | Inner Joint | | | 33 | | | 34 | |
| | 2007.06-2013.06 | 6AT/6MT | R | L | MPV 4WD BMN, CEGA, CFJA | | GDS61284 | Drive Shaft | | 36 | | 59.5 | 40 | 594 | |
| | 2007.06-2013.06 | 6AT/6MT | R | R | MPV 4WD BMN, CEGA, CFJA | | GDS61293 | Drive Shaft | | 36 | | 59.5 | 40 | 631 | |
| | 2007.06-2013.06 | 6AT/6MT | R | L/R | MPV 4WD BMN, CEGA, CFJA | | GCI35026 | Outer Joint | | 36 | 33 | 59.5 | 40 | 61 | |
| | 2007.06-2013.06 | 6MT | R | L/R | MPV 4WD BMN, CEGA, CFJA | | GCI82447 | Inner Joint | | | 33 | | | 34 | |
| | 2007.06-2013.12 | 6DCT | F | L/R | MPV FWD BMN, CEGA | | GCO83101 | Outer Joint | | 36 | 27 | 59.5 | 40 | 65 | M |
| | 2007.06-2013.12 | 6MT | F | L | MPV FWD BMN, CEGA | | GDS83295 | Drive Shaft | | 36 | | 59.5 | 40 | 491 | |
| | 2007.06-2013.12 | 6MT | F | R | MPV FWD BMN, CEGA | | GDS83313 | Drive Shaft | | 36 | | 59.5 | 40 | 792 | |
| | 2007.06-2013.12 | 6MT | F | L/R | MPV FWD BMN, CEGA | | GCI83016 | Inner Joint | | | 28 | | | 32 | |
| 2.0 (147 kw) | 2006.10-2009.05 | 6AT/6MT | F | L/R | MPV FWD BWA | | GCO83101 | Outer Joint | | 36 | 27 | 59.5 | 40 | 65 | M |
| | 2006.10-2009.05 | 6DCT | F | R | MPV FWD BWA | | GDS81891 | Drive Shaft | | 36 | | 59.5 | 40 | 781 | |
| | 2006.10-2009.05 | 6MT | F | R | MPV FWD BWA | | GDS83313 | Drive Shaft | | 36 | | 59.5 | 40 | 792 | |
| | 2006.10-2009.05 | 6MT/6DCT | F | L | MPV FWD BWA | | GDS83295 | Drive Shaft | | 36 | | 59.5 | 40 | 491 | |
| | 2006.10-2009.05 | AT | F | L | MPV FWD BWA | | GDS83241 | Drive Shaft | | 36 | | 59.5 | 40 | 475 | |
| | 2006.10-2009.05 | AT | F | L | MPV FWD BWA | | GCI54004 | Inner Joint | | | 34 | | | 81 | |
| | 2006.10-2009.05 | MT | F | L | MPV FWD BWA | | GDS83236 | Drive Shaft | | 36 | | 59.5 | 40 | 484 | |
| | 2006.10-2009.05 | | F | L/R | MPV FWD BWA | | GCI83016 | Inner Joint | | | 28 | | | 32 | |
| | 2007.06-2009.05 | 6AT | F | L | MPV 4WD BWA | | GDS83295 | Drive Shaft | | 36 | | 59.5 | 40 | 491 | |
| | 2007.06-2009.05 | 6AT | F | R | MPV 4WD BWA | | GDS83266 | Drive Shaft | | 36 | | 59.5 | 40 | 601 | |
| | 2007.06-2009.05 | AT/MT | F | L | MPV 4WD BWA | | GDS83236 | Drive Shaft | | 36 | | 59.5 | 40 | 484 | |
| | 2007.06-2009.05 | | F | L/R | MPV 4WD BWA | | GCO83002 | Outer Joint | | 36 | 27 | 59.5 | 40 | 66 | I |
| | 2007.06-2009.05 | | F | L/R | MPV 4WD BWA | | GCI83016 | Inner Joint | | | 28 | | | 32 | |
| | 2007.06-2009.05 | 6AT | R | L | MPV 4WD BWA | | GDS61284 | Drive Shaft | | 36 | | 59.5 | 40 | 594 | |
| | 2007.06-2009.05 | 6AT | R | R | MPV 4WD BWA | | GDS61293 | Drive Shaft | | 36 | | 59.5 | 40 | 631 | |
| | 2007.06-2009.05 | 6AT | R | L/R | MPV 4WD BWA | | GCI35026 | Outer Joint | | 36 | 33 | 59.5 | 40 | 61 | |
| | 2007.06-2009.05 | 6AT | R | L/R | MPV 4WD BWA | | GCI53002 | Inner Joint | | | 33 | | | 34 | |
| | 2007.06-2009.05 | 6AT | R | L/R | MPV 4WD BWA | | GCI82447 | Inner Joint | | | 33 | | | 34 | |
| **Arona** | | | | | | | | | | | | | | | |
| 1.0 (66 kw) | 2018.11- | 5MT | F | L | SUV FWD DBYA | | GDS84187 | Drive Shaft | | 36 | 33 | 52 | 64.5 | 623 | |
| | 2018.11- | 5MT | F | R | SUV FWD DBYA | Date from:2018.01 | GDS83825 | Drive Shaft | | 36 | 33 | 52 | 64.5 | 896 | |
| | 2018.11- | 5MT | F | R | SUV FWD DBYA | Date to:2017.11 | GDS84030 | Drive Shaft | | 36 | 33 | 52 | 76 | 913 | |
| | 2018.11- | 5MT | F | L | SUV FWD DBYA | | GCO81743 | Outer Joint | | 36 | 33 | 52 | 64.5 | 59 | I |
| | 2018.11- | 5MT | F | R | SUV FWD DBYA | Date to:2017.11 | GCO82558 | Outer Joint | | 36 | 33 | 52 | 76 | 60 | M |
| | 2018.11- | 5MT | F | L | SUV FWD DBYA | | GCI81546 | Inner Joint | | 33 | 32 | 39.9 | 58.5 | 105 | |
| | 2018.11- | 5MT | F | R | SUV FWD DBYA | | GCI82384 | Inner Joint | | 33 | 30 | 39.95 | 58.5 | 91.5 | |
| | 2018.11- | 5MT | F | R | SUV FWD DBYA | Date to:2017.11 | GCI82462 | Inner Joint | | 33 | 33 | 39.95 | 59 | 92.5 | |
| | 2018.11- | 5MT/6MT | F | R | SUV FWD DBYA | | GCO81744 | Outer Joint | | 36 | 30 | 52 | 64.5 | 55.5 | M |
| | 2018.11- | 6MT | F | L | SUV FWD DBYA | | GDS84563 | Drive Shaft | | 36 | | 52 | 64.5 | 506 | |
| | 2018.11- | 6MT | F | R | SUV FWD DBYA | | GDS84562 | Drive Shaft | | 36 | | 52 | 64.5 | 799 | |
| | 2018.11- | 6MT | F | L | SUV FWD DBYA | | GCO82548 | Outer Joint | | 36 | 27 | 52 | 64.5 | 65 | M |
| | 2018.11- | 6MT | F | L | SUV FWD DBYA | | GCI81689 | Inner Joint | | | 32 | | | 89 | |
| | 2018.11- | 6MT | F | R | SUV FWD DBYA | | GCI81690 | Inner Joint | | | 30 | | | 89 | |
| 1.0 (70 kw) | 2017.07- | 5MT | F | L | SUV FWD CHZL;DKLA;DLAC;DUSB | | GDS84187 | Drive Shaft | | 36 | 33 | 52 | 64.5 | 623 | |
| | 2017.07- | 5MT | F | R | SUV FWD CHZL;DKLA;DLAC;DUSB | | GDS83825 | Drive Shaft | | 36 | 33 | 52 | 64.5 | 896 | |
| | 2017.07- | 5MT | F | L | SUV FWD CHZL;DKLA;DLAC;DUSB | | GCO81743 | Outer Joint | | 36 | 33 | 52 | 64.5 | 59 | I |
| | 2017.07- | 5MT | F | R | SUV FWD CHZL;DKLA;DLAC;DUSB | | GCO81744 | Outer Joint | | 36 | 30 | 52 | 64.5 | 55.5 | M |
| | 2017.07- | 5MT | F | R | SUV FWD CHZL;DKLA;DLAC;DUSB | | GCO82558 | Outer Joint | | 36 | 33 | 52 | 76 | 60 | M |
| | 2017.07- | 5MT | F | R | SUV FWD CHZL;DKLA;DLAC;DUSB | | GCI82384 | Inner Joint | | 33 | 30 | 39.95 | 58.5 | 91.5 | |
| | 2017.07- | 5MT | F | L/R | SUV FWD CHZL;DKLA;DLAC;DUSB | | GCI81546 | Inner Joint | | 33 | 32 | 39.9 | 58.5 | 105 | |
| | 2017.07- | 5MT | F | L/R | SUV FWD CHZL;DKLA;DLAC;DUSB | | GCI82449 | Inner Joint | | 33 | 30 | 39.9 | 58.5 | 105 | |
| 1.0 (81 kw) | 2020.06- | 6MT | F | L | SUV FWD DLAA | | GDS84558 | Drive Shaft | | 36 | | 52 | 64.5 | 496 | |
| | 2020.06- | 6MT | F | R | SUV FWD DLAA | | GDS82233 | Drive Shaft | | 36 | | 52 | 64.5 | 778 | |
| | 2020.06- | 6MT | F | L/R | SUV FWD DLAA | | GCO81744 | Outer Joint | | 36 | 30 | 52 | 64.5 | 55.5 | M |
| | 2020.06- | 6MT | F | R | SUV FWD DLAA | | GCI81690 | Inner Joint | | | 30 | | | 89 | |
| | 2020.06- | 7DCT | F | L | SUV FWD DLAA | | GDS84563 | Drive Shaft | | 36 | | 52 | 64.5 | 506 | |
| | 2020.06- | 7DCT | F | R | SUV FWD DLAA | | GDS57885 | Drive Shaft | | 36 | | 52 | 64.5 | 765 | |
| | 2020.06- | 7DCT | F | L | SUV FWD DLAA | | GCO82548 | Outer Joint | | 36 | 27 | 52 | 64.5 | 65 | M |
| | 2020.06- | 7DCT | F | R | SUV FWD DLAA | | GCO81743 | Outer Joint | | 36 | 33 | 52 | 64.5 | 59 | I |
| | 2020.06- | 7DCT | F | R | SUV FWD DLAA | | GCI81689 | Inner Joint | | | 32 | | | 89 | |
| 1.0 (85 kw) | 2017.07- | 6MT | F | L | SUV FWD CHZJ;DKJA;DKRF;DUSA;DXUA | Date from:2018.04 | GDS84563 | Drive Shaft | | 36 | | 52 | 64.5 | 506 | |
| | 2017.07- | 6MT | F | R | SUV FWD CHZJ;DKJA;DKRF;DUSA;DXUA | | GDS84562 | Drive Shaft | | 36 | | 52 | 64.5 | 799 | |
| | 2017.07- | 6MT | F | L | SUV FWD CHZJ;DKJA;DKRF;DUSA;DXUA | Date to:2018.03 | GCO81743 | Outer Joint | | 36 | 33 | 52 | 64.5 | 59 | I |
| | 2017.07- | 6MT | F | L | SUV FWD CHZJ;DKJA;DKRF;DUSA;DXUA | Date from:2018.04 | GCO82548 | Outer Joint | | 36 | 27 | 52 | 64.5 | 65 | M |
| | 2017.07- | 6MT | F | R | SUV FWD CHZJ;DKJA;DKRF;DUSA;DXUA | | GCO81744 | Outer Joint | | 36 | 30 | 52 | 64.5 | 55.5 | M |
| | 2017.07- | 6MT | F | L/R | SUV FWD CHZJ;DKJA;DKRF;DUSA;DXUA | | GCI82449 | Inner Joint | | 33 | 30 | 39.9 | 58.5 | 105 | |

| | YEAR | TRANSM. | F/R | L/R | BODY STYLE & DRIVE TYPE & ENGINE | REMARKS | G-AP Ref. | PRODUCT | ABS | Technical Specifications A | B | C | H | L | P |
|---|---|---|---|---|---|---|---|---|---|---|---|---|---|---|---|
| **SEAT** | | | | | | | | | | | | | | | |
| **Arona** | | | | | | | | | | | | | | | |
| 1.0 (85 kw) | 2017.07- | 7DCT | F | L | SUV FWD CHZJ;DKJA;DKRF;DUSA;DXUA | | GDS84317 | Drive Shaft | | 36 | | 52 | 64.5 | 500 | |
| | 2017.07- | 7DCT | F | R | SUV FWD CHZJ;DKJA;DKRF;DUSA;DXUA | For Engine code:DUSA/DXUA | GDS57885 | Drive Shaft | | 36 | | 52 | 64.5 | 765 | |
| | 2017.07- | 7DCT | F | R | SUV FWD CHZJ;DKJA;DKRF;DUSA;DXUA | | GDS82233 | Drive Shaft | | 36 | | 52 | 64.5 | 778 | |
| | 2017.07- | 7DCT | F | L | SUV FWD CHZJ;DKJA;DKRF;DUSA;DXUA | | GCO82548 | Outer Joint | | 36 | 27 | 52 | 64.5 | 65 | M |
| | 2017.07- | 7DCT | F | L/R | SUV FWD CHZJ;DKJA;DKRF;DUSA;DXUA | | GCO81743 | Outer Joint | | 36 | 33 | 52 | 64.5 | 59 | I |
| | 2017.07- | 7DCT | F | L/R | SUV FWD CHZJ;DKJA;DKRF;DUSA;DXUA | | GCI81689 | Inner Joint | | | 32 | | | 89 | |
| 1.5 (110 kw) | 2017.07- | 6MT | F | L/R | SUV FWD DADA;DPCA;DXDB | | GCI83016 | Inner Joint | | | 28 | | | 32 | |
| | 2017.07- | 6MT/7DCT | F | L/R | SUV FWD DADA;DPCA;DXDB | | GCO82548 | Outer Joint | | 36 | 27 | 52 | 64.5 | 65 | M |
| | 2017.07- | 7AT/6MT | F | L | SUV FWD DADA;DPCA;DXDB | | GDS58319 | Drive Shaft | | 36 | | 52 | 64.5 | 526 | |
| | 2017.07- | 7AT/6MT | F | L | SUV FWD DADA;DPCA;DXDB | | GCI61069 | Inner Joint | | | 28 | | | 32 | |
| | 2017.07- | 7DCT | F | R | SUV FWD DADA;DPCA;DXDB | | GDS58333 | Drive Shaft | | 36 | 40 | 52 | 64.5 | 827 | |
| 1.6 (70 kw) | 2017.11- | 5MT | F | R | SUV FWD DGTD | | GDS84315 | Drive Shaft | | 36 | | 52 | 64.5 | 825 | |
| | 2017.11- | 7DCT | F | R | SUV FWD DGTD | | GDS84337 | Drive Shaft | | 36 | | 52 | 64.5 | 812 | |
| | 2017.11- | 7DCT/5MT | F | L | SUV FWD DGTD | | GDS84235 | Drive Shaft | | 36 | | 52 | 64.5 | 523 | |
| | 2017.11- | 7DCT/5MT | F | L | SUV FWD DGTD | | GCO82548 | Outer Joint | | 36 | 27 | 52 | 64.5 | 65 | M |
| | 2017.11- | 7DCT/5MT | F | L/R | SUV FWD DGTD | | GCO81743 | Outer Joint | | 36 | 33 | 52 | 64.5 | 59 | I |
| | 2017.11- | 7DCT/5MT | F | L | SUV FWD DGTD | | GCI82456 | Inner Joint | | | 28 | | | 32 | |
| | 2017.11- | 7DCT/5MT | F | L/R | SUV FWD DGTD | | GCI82447 | Inner Joint | | | 33 | | | 34 | |
| 1.6 (81 kw) | 2017.07- | 5MT | F | L/R | SUV FWD CWVA | | GCO83024 | Outer Joint | | 36 | 30 | 50.75 | 59 | 55.5 | I |
| | 2017.07- | 5MT | F | L/R | SUV FWD CWVA | | GCI82447 | Inner Joint | | | 33 | | | 34 | |
| | 2017.07- | 6AT | F | L | SUV FWD CWVA | Date to:2018.09 | GDS84612 | Drive Shaft | | 36 | 26 | 52 | 64.5 | 891 | |
| | 2017.07- | 6AT | F | L | SUV FWD CWVA | Date from:2018.10 | GDS84614 | Drive Shaft | | 36 | 26 | 52 | 64.5 | 895 | |
| | 2017.07- | 6AT | F | R | SUV FWD CWVA | | GDS84613 | Drive Shaft | | 36 | 26 | 52 | 64.5 | 597 | |
| | 2017.07- | 6AT | F | L/R | SUV FWD CWVA | Date from:2018.10 | GCO81743 | Outer Joint | | 36 | 33 | 52 | 64.5 | 59 | I |
| | 2017.07- | 6AT | F | L/R | SUV FWD CWVA | | GCO81744 | Outer Joint | | 36 | 30 | 52 | 64.5 | 55.5 | M |
| | 2017.07- | 6AT | F | L/R | SUV FWD CWVA | | GCI61011 | Inner Joint | | 26 | 32 | 31 | 68.5 | 85 | |
| | 2017.07- | 6AT | F | L/R | SUV FWD CWVA | | GCI61050 | Inner Joint | | 26 | 32 | 31 | 68.5 | 89 | |
| 1.6 (85 kw) | 2017.07- | 6MT | F | L | SUV FWD DGTA | | GDS84235 | Drive Shaft | | 36 | | 52 | 64.5 | 523 | |
| | 2017.07- | 6MT | F | R | SUV FWD DGTA | | GDS84315 | Drive Shaft | | 36 | | 52 | 64.5 | 825 | |
| | 2017.07- | 6MT | F | L | SUV FWD DGTA | | GCO82548 | Outer Joint | | 36 | 27 | 52 | 64.5 | 65 | M |
| | 2017.07- | 6MT | F | L/R | SUV FWD DGTA | | GCO81743 | Outer Joint | | 36 | 33 | 52 | 64.5 | 59 | I |
| | 2017.07- | 6MT | F | L | SUV FWD DGTA | | GCI82456 | Inner Joint | | | 28 | | | 32 | |
| | 2017.07- | 6MT | F | L/R | SUV FWD DGTA | | GCI82447 | Inner Joint | | | 33 | | | 34 | |
| **Arosa** | | | | | | | | | | | | | | | |
| 1.0 (37 kw) | 1997.02-2004.06 | 5MT | F | L | Hatchback FWD AER/ALD/ALL/ANV/AUC | Chassis no. to:6H_W_055 365 | GDS61007 | Drive Shaft | | 22 | | 53 | 78.5 | 517 | |
| | 1997.02-2004.06 | 5MT | F | R | Hatchback FWD AER/ALD/ALL/ANV/AUC | Chassis no. to:6HW055365 | GDS61010 | Drive Shaft | | 22 | | 53 | 78.5 | 740 | |
| | 1997.02-2004.06 | 5MT | F | R | Hatchback FWD AER/ALD/ALL/ANV/AUC | Chassis no. from:6H-W-055366 | GDS61189 | Drive Shaft | | 22 | | 53 | 78.5 | 752 | |
| | 1997.02-2004.06 | 5MT | F | L/R | Hatchback FWD AER/ALD/ALL/ANV/AUC | | GCO53005 | Outer Joint | | 22 | 30 | 53 | 78.5 | 51 | I |
| | 1997.02-2004.06 | AT/MT | F | L | Hatchback FWD AER/ALD/ALL/ANV/AUC | Chassis no. from:6H_W_055 366 | GDS61205 | Drive Shaft | | 22 | | 53 | 78.5 | 525 | |
| | 1997.02-2004.06 | AT/MT | F | L/R | Hatchback FWD AER/ALD/ALL/ANV/AUC | | GCI53001 | Inner Joint | | | 33 | | | 32 | |
| | 1998.11-2000.02 | 5MT | F | L/R | Hatchback FWD AHT | | GCO53005 | Outer Joint | | 22 | 30 | 53 | 78.5 | 51 | I |
| | 1998.11-2000.02 | | F | L | Hatchback FWD AHT | | GDS61189 | Drive Shaft | | 22 | | 53 | 78.5 | 752 | |
| | 1998.11-2000.02 | | F | L/R | Hatchback FWD AHT | | GCI53001 | Inner Joint | | | 33 | | | 32 | |
| 1.4 (44 kw) | 1997.02-2004.06 | 4AT | F | R | Hatchback FWD AEX/AKK/AKV/ANW/APQ/AUD | Chassis no. from:6H_W_055 366 | GDS53002 | Drive Shaft | | 22 | | 53.2 | 78 | 769 | |
| | 1997.02-2004.06 | 4AT/5MT | F | L | Hatchback FWD AEX/AKK/AKV/ANW/APQ/AUD | | GDS61007 | Drive Shaft | | 22 | | 53 | 78.5 | 517 | |
| | 1997.02-2004.06 | 4AT/5MT | F | L/R | Hatchback FWD AEX/AKK/AKV/ANW/APQ/AUD | | GCO53005 | Outer Joint | | 22 | 30 | 53 | 78.5 | 51 | I |
| | 1997.02-2004.06 | 5MT | F | L | Hatchback FWD AEX/AKK/AKV/ANW/APQ/AUD | Chassis no. from:6H-W-055 366 | GDS61205 | Drive Shaft | | 22 | | 53 | 78.5 | 525 | |
| | 1997.02-2004.06 | 5MT | F | R | Hatchback FWD AEX/AKK/AKV/ANW/APQ/AUD | | GDS61010 | Drive Shaft | | 22 | | 53 | 78.5 | 740 | |
| | 1997.02-2004.06 | AT/MT | F | R | Hatchback FWD AEX/AKK/AKV/ANW/APQ/AUD | | GDS61189 | Drive Shaft | | 22 | | 53 | 78.5 | 752 | |
| | 1997.02-2004.06 | AT/MT/5MT | F | L/R | Hatchback FWD AEX/AKK/AKV/ANW/APQ/AUD | | GCI53001 | Inner Joint | | | 33 | | | 32 | |
| 1.4 (55 kw) | 1999.10-2004.06 | 5MT | F | L | Hatchback FWD AMF | | GDS61075 | Drive Shaft | | 22 | | 53 | 78.5 | 525 | |
| | 1999.10-2004.06 | 5MT | F | R | Hatchback FWD AMF | | GDS61074 | Drive Shaft | | 22 | | 53 | 78.5 | 712 | |
| | 1999.10-2004.06 | MT | F | L/R | Hatchback FWD AMF | | GCO61007 | Outer Joint | | 22 | 30 | 53 | 78.5 | 60 | I |
| | 1999.10-2004.06 | MT | F | L/R | Hatchback FWD AMF | | GCI53001 | Inner Joint | | | 33 | | | 32 | |
| 1.4 (74 kw) | 1999.09-2004.06 | 5MT | F | L | Hatchback FWD AFK/AQQ/AUB | Chassis no. to:6HW055365 | GDS61007 | Drive Shaft | | 22 | | 53 | 78.5 | 517 | |
| | 1999.09-2004.06 | 5MT | F | L | Hatchback FWD AFK/AQQ/AUB | Chassis no. from:6H-W-055366 | GDS61205 | Drive Shaft | | 22 | | 53 | 78.5 | 525 | |
| | 1999.09-2004.06 | 5MT | F | R | Hatchback FWD AFK/AQQ/AUB | Chassis no. to:6HW055365 | GDS61010 | Drive Shaft | | 22 | | 53 | 78.5 | 740 | |
| | 1999.09-2004.06 | 5MT | F | R | Hatchback FWD AFK/AQQ/AUB | Chassis no. from:6H-W-055366 | GDS61189 | Drive Shaft | | 22 | | 53 | 78.5 | 752 | |
| | 1999.09-2004.06 | 5MT | F | L/R | Hatchback FWD AFK/AQQ/AUB | | GCO53005 | Outer Joint | | 22 | 30 | 53 | 78.5 | 51 | I |
| | 1999.09-2004.06 | 5MT | F | L/R | Hatchback FWD AFK/AQQ/AUB | | GCI53001 | Inner Joint | | | 33 | | | 32 | |
| 1.7 (44 kw) | 1997.08-2003.10 | 5MT | F | L | Hatchback FWD AKU | | GDS61007 | Drive Shaft | | 22 | | 53 | 78.5 | 517 | |
| | 1997.08-2003.10 | 5MT | F | R | Hatchback FWD AKU | | GDS61010 | Drive Shaft | | 22 | | 53 | 78.5 | 740 | |
| | 1997.08-2003.10 | 5MT | F | L/R | Hatchback FWD AKU | | GCO53005 | Outer Joint | | 22 | 30 | 53 | 78.5 | 51 | I |
| | 1997.08-2003.10 | AT/MT | F | L | Hatchback FWD AKU | | GDS61205 | Drive Shaft | | 22 | | 53 | 78.5 | 525 | |
| | 1997.08-2003.10 | AT/MT | F | R | Hatchback FWD AKU | | GDS61189 | Drive Shaft | | 22 | | 53 | 78.5 | 752 | |

| | YEAR | TRANSM. | F/R | L/R | BODY STYLE & DRIVE TYPE & ENGINE | REMARKS | G-AP Ref. | PRODUCT | ABS | Technical Specifications A | B | C | H | L | P |
|---|---|---|---|---|---|---|---|---|---|---|---|---|---|---|---|
| **SEAT** | | | | | | | | | | | | | | | |
| **Arosa** | | | | | | | | | | | | | | | |
| 1.7 (44 kw) | 1997.08-2003.10 | AT/MT | F | L/R | Hatchback FWD AKU | Date to:2003.10 | GCI53001 | Inner Joint | | | 33 | | | 32 | |
| **Ateca** | | | | | | | | | | | | | | | |
| 1.0 (81 kw) | 2020.09-2026.05 | 6MT | F | L | SUV FWD DLAA | | GDS84505 | Drive Shaft | | 36 | | 59.5 | 40 | 506 | |
| | 2020.09-2026.05 | 6MT | F | R | SUV FWD DLAA | | GDS84501 | Drive Shaft | | 36 | | 59.5 | 40 | 785 | |
| | 2020.09-2026.05 | 6MT | F | L/R | SUV FWD DLAA | | GCO83101 | Outer Joint | | 36 | 27 | 59.5 | 40 | 65 | M |
| | 2020.09-2026.05 | 6MT | F | L/R | SUV FWD DLAA | | GCI81689 | Inner Joint | | | 32 | | | 89 | |
| 1.0 (85 kw) | 2016.05-2026.05 | 6MT | F | L | SUV FWD CHZJ;DKRF;DUSA | | GDS84505 | Drive Shaft | | 36 | | 59.5 | 40 | 506 | |
| | 2016.05-2026.05 | 6MT | F | R | SUV FWD CHZJ;DKRF;DUSA | For Engine code:DUSA | GDS84501 | Drive Shaft | | 36 | | 59.5 | 40 | 785 | |
| | 2016.05-2026.05 | 6MT | F | R | SUV FWD CHZJ;DKRF;DUSA | For Engine code:CHZJ/DKRF | GDS84504 | Drive Shaft | | 36 | | 59.5 | 40 | 808 | |
| | 2016.05-2026.05 | 6MT | F | L/R | SUV FWD CHZJ;DKRF;DUSA | | GCO83101 | Outer Joint | | 36 | 27 | 59.5 | 40 | 65 | M |
| | 2016.05-2026.05 | 6MT | F | L/R | SUV FWD CHZJ;DKRF;DUSA | | GCI81689 | Inner Joint | | | 32 | | | 89 | |
| 1.4 (110 kw) | 2016.06-2020.06 | 6MT | F | L | SUV 4WD CZEA | | GDS81896 | Drive Shaft | | 36 | | 59.5 | 40 | 500 | |
| | 2016.06-2020.06 | 6MT | F | R | SUV 4WD CZEA | | GDS82352 | Drive Shaft | | 36 | | 59.5 | 40 | 614 | |
| | 2016.06-2020.06 | 6MT | F | L/R | SUV 4WD CZEA | | GCO83101 | Outer Joint | | 36 | 27 | 59.5 | 40 | 65 | M |
| | 2016.06-2020.06 | 6MT | F | L/R | SUV 4WD CZEA | | GCI61069 | Inner Joint | | | 28 | | | 32 | |
| | 2016.06-2020.06 | 6MT | F | L/R | SUV 4WD CZEA | | GCI83016 | Inner Joint | | | 28 | | | 32 | |
| | 2016.06-2020.06 | 6AT/6MT | R | L | SUV 4WD CZEA | | GDS61331 | Drive Shaft | | 36 | | 59.5 | 40 | 606 | |
| | 2016.06-2020.06 | 6AT/6MT | R | R | SUV 4WD CZEA | | GDS61332 | Drive Shaft | | 36 | | 59.5 | 40 | 650 | |
| | 2016.06-2020.06 | 6AT/6MT | R | L/R | SUV 4WD CZEA | | GCI35026 | Outer Joint | | 36 | 33 | 59.5 | 40 | 61 | |
| | 2016.06-2020.06 | 6AT/6MT | R | L/R | SUV 4WD CZEA | | GCI61103 | Inner Joint | | | 33 | | | 32 | |
| | 2016.06-2026.05 | 6MT | F | R | SUV FWD CZEA;DJKA | | GDS81987 | Drive Shaft | | 36 | | 59.5 | 40 | 817 | |
| | 2016.06-2026.05 | 6MT | F | L/R | SUV FWD CZEA;DJKA | | GCO83101 | Outer Joint | | 36 | 27 | 59.5 | 40 | 65 | M |
| | 2016.06-2026.05 | 6MT | F | L/R | SUV FWD CZEA;DJKA | | GCI83016 | Inner Joint | | | 28 | | | 32 | |
| | 2016.06-2026.05 | 6MT/7DCT | F | L | SUV FWD CZEA;DJKA | | GDS82387 | Drive Shaft | | 36 | | 59.5 | 40 | 523 | |
| | 2016.06-2026.05 | 6MT/7DCT | F | L/R | SUV FWD CZEA;DJKA | | GCI61069 | Inner Joint | | | 28 | | | 32 | |
| | 2016.06-2026.05 | 7DCT | F | R | SUV FWD CZEA;DJKA | | GDS82386 | Drive Shaft | | 36 | | 59.5 | 40 | 806 | |
| 1.5 (110 kw) | 2018.07-2020.06 | 7AT | F | L | SUV 4WD DADA;DPCA | | GDS83323 | Drive Shaft | | 36 | 37 | 59.5 | 40 | 570 | |
| | 2018.07-2020.06 | 7AT | F | L/R | SUV 4WD DADA;DPCA | | GCO83101 | Outer Joint | | 36 | 27 | 59.5 | 40 | 65 | M |
| | 2018.07-2020.06 | 7AT | F | R | SUV 4WD DADA;DPCA | | GCI61069 | Inner Joint | | | 28 | | | 32 | |
| | 2018.07-2020.06 | 7AT | F | L/R | SUV 4WD DADA;DPCA | | GCI83016 | Inner Joint | | | 28 | | | 32 | |
| | 2018.07-2020.06 | 7DCT | F | R | SUV 4WD DADA;DPCA | | GDS82352 | Drive Shaft | | 36 | | 59.5 | 40 | 614 | |
| | 2018.07-2020.06 | 7AT | R | L | SUV 4WD DADA;DPCA | | GDS61331 | Drive Shaft | | 36 | | 59.5 | 40 | 606 | |
| | 2018.07-2020.06 | 7AT | R | R | SUV 4WD DADA;DPCA | | GDS61332 | Drive Shaft | | 36 | | 59.5 | 40 | 650 | |
| | 2018.07-2020.06 | 7AT | R | L/R | SUV 4WD DADA;DPCA | | GCI35026 | Outer Joint | | 36 | 33 | 59.5 | 40 | 61 | |
| | 2018.07-2020.06 | 7AT | R | L/R | SUV 4WD DADA;DPCA | | GCI61103 | Inner Joint | | | 33 | | | 32 | |
| | 2018.07-2026.05 | 6MT | F | L | SUV FWD DADA;DPCA;DXDB | For PR code:0ED | GDS81896 | Drive Shaft | | 36 | | 59.5 | 40 | 500 | |
| | 2018.07-2026.05 | 6MT | F | R | SUV FWD DADA;DPCA;DXDB | For PR code:0EJ | GDS82386 | Drive Shaft | | 36 | | 59.5 | 40 | 806 | |
| | 2018.07-2026.05 | 6MT | F | R | SUV FWD DADA;DPCA;DXDB | For PR code:0ED | GDS83313 | Drive Shaft | | 36 | | 59.5 | 40 | 792 | |
| | 2018.07-2026.05 | 6MT | F | L/R | SUV FWD DADA;DPCA;DXDB | For PR code:0EJ | GCI83016 | Inner Joint | | | 28 | | | 32 | |
| | 2018.07-2026.05 | 6MT/7DCT | F | L | SUV FWD DADA;DPCA;DXDB | Transmission:6MT,For PR code:0EJ;Transmission:7DCT | GDS82387 | Drive Shaft | | 36 | | 59.5 | 40 | 523 | |
| | 2018.07-2026.05 | 6MT/7DCT | F | L | SUV FWD DADA;DPCA;DXDB | | GCO83101 | Outer Joint | | 36 | 27 | 59.5 | 40 | 65 | M |
| | 2018.07-2026.05 | 6MT/7DCT | F | L | SUV FWD DADA;DPCA;DXDB | | GCI61069 | Inner Joint | | | 28 | | | 32 | |
| | 2018.07-2026.05 | 7DCT | F | R | SUV FWD DADA;DPCA;DXDB | | GDS84498 | Drive Shaft | | 36 | 40 | 59.5 | 40 | 834 | |
| | 2018.07-2026.05 | 7DCT | F | L | SUV FWD DADA;DPCA;DXDB | | GCI82456 | Inner Joint | | | 28 | | | 32 | |
| 1.6 (85 kw) | 2016.04-2020.06 | 6MT | F | L | SUV FWD DDYA;DGTE | | GDS61201 | Drive Shaft | | 36 | | 59.5 | 40.5 | 535 | |
| | 2016.04-2020.06 | 6MT | F | R | SUV FWD DDYA;DGTE | | GDS81525 | Drive Shaft | | 36 | | 59.5 | 40 | 825 | |
| | 2016.04-2020.06 | 6MT | F | R | SUV FWD DDYA;DGTE | | GCO81355 | Outer Joint | | 36 | 34 | 59.5 | 40 | 59.5 | M |
| | 2016.04-2020.06 | 6MT/7DCT | F | L/R | SUV FWD DDYA;DGTE | | GCI81398 | Inner Joint | | | 34 | | | 34 | |
| | 2016.04-2020.06 | 7DCT | F | R | SUV FWD DDYA;DGTE | | GDS61283 | Drive Shaft | | 36 | | 59.5 | 40 | 815 | |
| 2.0 (81 kw) | 2016.10-2020.06 | 6MT | F | L | SUV FWD CRVA | | GDS61201 | Drive Shaft | | 36 | | 59.5 | 40.5 | 535 | |
| | 2016.10-2020.06 | 6MT | F | L | SUV FWD CRVA | | GCO83037 | Outer Joint | | 36 | 30 | 59.5 | 40.5 | 56 | I |
| | 2016.10-2020.06 | 6MT | F | R | SUV FWD CRVA | | GCO81355 | Outer Joint | | 36 | 34 | 59.5 | 40 | 59.5 | M |
| | 2016.10-2020.06 | 6MT | F | L/R | SUV FWD CRVA | | GCI81398 | Inner Joint | | | 34 | | | 34 | |
| | 2016.10-2020.06 | | F | R | SUV FWD CRVA | | GDS81525 | Drive Shaft | | 36 | | 59.5 | 40 | 825 | |
| 2.0 (85 kw) | 2021.01-2026.05 | 6MT | F | L | SUV FWD DTRD | | GDS81896 | Drive Shaft | | 36 | | 59.5 | 40 | 500 | |
| | 2021.01-2026.05 | 6MT | F | R | SUV FWD DTRD | | GDS61101 | Drive Shaft | | 36 | | 59.5 | 40 | 803 | |
| | 2021.01-2026.05 | 6MT | F | L/R | SUV FWD DTRD | | GCO83101 | Outer Joint | | 36 | 27 | 59.5 | 40 | 65 | M |
| 2.0 (105 kw) | 2016.10-2026.05 | 6DCT | F | L | SUV FWD CRVC | | GDS83381 | Drive Shaft | | 36 | | 59.5 | 40 | 483 | |
| | 2016.10-2026.05 | 6DCT | F | R | SUV FWD CRVC | | GDS61345 | Drive Shaft | | 36 | | 59.5 | 40 | 774 | |
| 2.0 (110 kw) | 2016.04-2023.06 | 6MT | F | L | SUV 4WD DFFA;DTTC | | GDS81896 | Drive Shaft | | 36 | | 59.5 | 40 | 500 | |
| | 2016.04-2023.06 | 6MT | F | R | SUV 4WD DFFA;DTTC | | GDS81889 | Drive Shaft | | 36 | | 59.5 | 40 | 614 | |
| | 2016.04-2023.06 | 6MT | F | R | SUV 4WD DFFA;DTTC | | GDS84020 | Drive Shaft | | 36 | | 59.5 | 40 | 615 | |
| | 2016.04-2023.06 | 6MT | F | L/R | SUV 4WD DFFA;DTTC | | GCI83016 | Inner Joint | | | 28 | | | 32 | |
| | 2016.04-2023.06 | 7AT/6MT | F | L/R | SUV 4WD DFFA;DTTC | | GCO83101 | Outer Joint | | 36 | 27 | 59.5 | 40 | 65 | M |
| | 2016.04-2023.06 | 7DCT | F | L | SUV 4WD DFFA;DTTC | | GDS82351 | Drive Shaft | | 36 | 37 | 59.5 | 40 | 568 | |

| | YEAR | TRANSM. | F/R | L/R | BODY STYLE & DRIVE TYPE & ENGINE | REMARKS | G-AP Ref. | PRODUCT | ABS | Technical Specifications A | B | C | H | L | P |
|---|---|---|---|---|---|---|---|---|---|---|---|---|---|---|---|
| **SEAT** | | | | | | | | | | | | | | | |
| **Ateca** | | | | | | | | | | | | | | | |
| 2.0 (110 kw) | 2016.04-2023.06 | 7DCT | F | R | SUV 4WD DFFA;DTTC | | GDS61346 | Drive Shaft | | 36 | | 59.5 | 40 | 589 | |
| | 2016.04-2023.06 | 7DCT | F | L | SUV 4WD DFFA;DTTC | | GCI81158 | Inner Joint | | 37 | 34 | 34.5 | 65.5 | 83 | |
| | 2016.04-2023.06 | 7DCT | F | R | SUV 4WD DFFA;DTTC | | GCI61057 | Inner Joint | | | 34 | | | 89 | |
| | 2016.04-2023.06 | 7AT/6MT | R | L | SUV 4WD DFFA;DTTC | | GDS61331 | Drive Shaft | | 36 | | 59.5 | 40 | 606 | |
| | 2016.04-2023.06 | 7AT/6MT | R | R | SUV 4WD DFFA;DTTC | | GDS61332 | Drive Shaft | | 36 | | 59.5 | 40 | 650 | |
| | 2016.04-2023.06 | 7AT/6MT | R | L/R | SUV 4WD DFFA;DTTC | | GCI35026 | Outer Joint | | 36 | 33 | 59.5 | 40 | 61 | |
| | 2016.04-2023.06 | 7DCT/6MT | R | L/R | SUV 4WD DFFA;DTTC | | GCI61103 | Inner Joint | | | 33 | | | 32 | |
| | 2016.04-2023.06 | 7DCT/6MT | R | L/R | SUV 4WD DFFA;DTTC | | GCI83008 | Inner Joint | | | 33 | | | 32 | |
| | 2016.04-2026.05 | 6MT | F | L | SUV FWD DFFA;DTTC;DTTA;DXRB | | GDS81896 | Drive Shaft | | 36 | | 59.5 | 40 | 500 | |
| | 2016.04-2026.05 | 6MT | F | R | SUV FWD DFFA;DTTC;DTTA;DXRB | | GDS61101 | Drive Shaft | | 36 | | 59.5 | 40 | 803 | |
| | 2016.04-2026.05 | 6MT | F | L/R | SUV FWD DFFA;DTTC;DTTA;DXRB | | GCI83016 | Inner Joint | | | 28 | | | 32 | |
| | 2016.04-2026.05 | 7DCT | F | L | SUV FWD DFFA;DTTC;DTTA;DXRB | | GDS82351 | Drive Shaft | | 36 | 37 | 59.5 | 40 | 568 | |
| | 2016.04-2026.05 | 7DCT | F | R | SUV FWD DFFA;DTTC;DTTA;DXRB | | GDS83613 | Drive Shaft | | 36 | 37 | 59.5 | 40 | 921 | |
| | 2016.04-2026.05 | 7DCT | F | L/R | SUV FWD DFFA;DTTC;DTTA;DXRB | | GCO83101 | Outer Joint | | 36 | 27 | 59.5 | 40 | 65 | M |
| | 2016.04-2026.05 | 7DCT | F | L | SUV FWD DFFA;DTTC;DTTA;DXRB | | GCI81158 | Inner Joint | | 37 | 34 | 34.5 | 65.5 | 83 | |
| | 2016.04-2026.05 | 7DCT | F | R | SUV FWD DFFA;DTTC;DTTA;DXRB | | GCI82108 | Inner Joint | | 37 | 34 | 40 | 77.5 | 103.5 | |
| 2.0 (140 kw) | 2016.06-2020.06 | 7AT | F | L | SUV 4WD DFHA | | GDS82351 | Drive Shaft | | 36 | 37 | 59.5 | 40 | 568 | |
| | 2016.06-2020.06 | 7AT | F | R | SUV 4WD DFHA | | GDS61346 | Drive Shaft | | 36 | | 59.5 | 40 | 589 | |
| | 2016.06-2020.06 | 7AT | F | L/R | SUV 4WD DFHA | | GCO83101 | Outer Joint | | 36 | 27 | 59.5 | 40 | 65 | M |
| | 2016.06-2020.06 | 7AT | F | L | SUV 4WD DFHA | | GCI81158 | Inner Joint | | 37 | 34 | 34.5 | 65.5 | 83 | |
| | 2016.06-2020.06 | 7AT | F | R | SUV 4WD DFHA | | GCI61057 | Inner Joint | | | 34 | | | 89 | |
| | 2016.06-2020.06 | 7AT | R | L | SUV 4WD DFHA | | GDS61331 | Drive Shaft | | 36 | | 59.5 | 40 | 606 | |
| | 2016.06-2020.06 | 7AT | R | R | SUV 4WD DFHA | | GDS61332 | Drive Shaft | | 36 | | 59.5 | 40 | 650 | |
| | 2016.06-2020.06 | 7AT | R | L/R | SUV 4WD DFHA | | GCI35026 | Outer Joint | | 36 | 33 | 59.5 | 40 | 61 | |
| | 2016.06-2020.06 | 7AT | R | L/R | SUV 4WD DFHA | | GCI61103 | Inner Joint | | | 33 | | | 32 | |
| | 2017.05-2026.05 | 7AT | F | R | SUV 4WD CZPB;DKZA;DNNA | | GCO83101 | Outer Joint | | 36 | 27 | 59.5 | 40 | 65 | M |
| | 2017.05-2026.05 | 7AT | F | R | SUV 4WD CZPB;DKZA;DNNA | | GCI61069 | Inner Joint | | | 28 | | | 32 | |
| | 2017.05-2026.05 | 7DCT | F | L | SUV 4WD CZPB;DKZA;DNNA | For Engine code:DNNA | GDS82351 | Drive Shaft | | 36 | 37 | 59.5 | 40 | 568 | |
| | 2017.05-2026.05 | 7DCT | F | R | SUV 4WD CZPB;DKZA;DNNA | | GDS81889 | Drive Shaft | | 36 | | 59.5 | 40 | 614 | |
| | 2017.05-2026.05 | 7DCT | F | L | SUV 4WD CZPB;DKZA;DNNA | For Engine code:DNNA | GCI81158 | Inner Joint | | 37 | 34 | 34.5 | 65.5 | 83 | |
| | 2017.05-2026.05 | 7AT | R | L | SUV 4WD CZPB;DKZA;DNNA | | GDS61331 | Drive Shaft | | 36 | | 59.5 | 40 | 606 | |
| | 2017.05-2026.05 | 7AT | R | R | SUV 4WD CZPB;DKZA;DNNA | | GDS61332 | Drive Shaft | | 36 | | 59.5 | 40 | 650 | |
| | 2017.05-2026.05 | 7AT | R | L/R | SUV 4WD CZPB;DKZA;DNNA | | GCI35026 | Outer Joint | | 36 | 33 | 59.5 | 40 | 61 | |
| | 2017.05-2026.05 | 7AT | R | L/R | SUV 4WD CZPB;DKZA;DNNA | | GCI61103 | Inner Joint | | | 33 | | | 32 | |
| **Cordoba** | | | | | | | | | | | | | | | |
| 1.0 (37 kw) | 1996.09-2002.09 | 5MT | F | L | Saloon FWD AER/ALD/ANV/AUC | | GDS53004 | Drive Shaft | | 22 | | 50 | 78.5 | 562 | |
| | 1996.09-2002.09 | MT | F | L/R | Saloon FWD AER/ALD/ANV/AUC | Date to:1999.12 | GCI53001 | Inner Joint | | | 33 | | | 32 | |
| 1.0 (51 kw) | 2000.05-2002.08 | 5MT | F | L | Saloon FWD AST/AVZ | | GDS53004 | Drive Shaft | | 22 | | 50 | 78.5 | 562 | |
| 1.2 (47 kw) | 2002.10-2006.06 | 5MT | F | L | Saloon FWD AZQ;BME | | GDS83063 | Drive Shaft | | 36 | | 50.7 | 58.5 | 501 | |
| | 2002.10-2006.06 | 5MT | F | R | Saloon FWD AZQ;BME | | GDS61063 | Drive Shaft | | 36 | | 50.7 | 58.5 | 751 | |
| | 2002.10-2006.06 | 5MT | F | L/R | Saloon FWD AZQ;BME | | GCO83027 | Outer Joint | | 36 | 30 | 50.7 | 58.5 | 47.5 | I |
| | 2002.10-2006.06 | AT/MT | F | L/R | Saloon FWD AZQ;BME | | GCI83005 | Inner Joint | | | 33 | | | 32 | |
| | 2002.10-2006.06 | | F | L/R | Saloon FWD AZQ;BME | | GCI83008 | Inner Joint | | | 33 | | | 32 | |
| 1.2 (51 kw) | 2006.05-2009.11 | 5MT | F | L | Saloon FWD BXV | | GDS83063 | Drive Shaft | | 36 | | 50.7 | 58.5 | 501 | |
| | 2006.05-2009.11 | 5MT | F | R | Saloon FWD BXV | | GDS61063 | Drive Shaft | | 36 | | 50.7 | 58.5 | 751 | |
| | 2006.05-2009.11 | 5MT | F | L/R | Saloon FWD BXV | | GCO83027 | Outer Joint | | 36 | 30 | 50.7 | 58.5 | 47.5 | I |
| | 2006.05-2009.11 | AT/MT | F | L/R | Saloon FWD BXV | | GCI83005 | Inner Joint | | | 33 | | | 32 | |
| | 2006.05-2009.11 | | F | L/R | Saloon FWD BXV | | GCI83008 | Inner Joint | | | 33 | | | 32 | |
| 1.4 (44 kw) | 1994.06-2002.10 | 5MT | F | L | Saloon FWD ABD/AEX/AKK/AKV/ANW/APQ/AUD | | GDS53004 | Drive Shaft | | 22 | | 50 | 78.5 | 562 | |
| | 1994.06-2002.10 | 5MT | F | L/R | Saloon FWD ABD/AEX/AKK/AKV/ANW/APQ/AUD | | GCO53008 | Outer Joint | | 22 | 30 | 53 | 78.5 | 51 | I |
| | 1994.06-2002.10 | MT | F | L/R | Saloon FWD ABD/AEX/AKK/AKV/ANW/APQ/AUD | Date to:1999.12 | GCI53001 | Inner Joint | | | 33 | | | 32 | |
| | 1994.06-2002.10 | | F | | Saloon FWD ABD/AEX/AKK/AKV/ANW/APQ/AUD | | GCO53006 | Outer Joint | | 22 | 30 | 50 | 78.5 | 52 | I |
| 1.4 (51 kw) | 2005.05-2009.11 | 5MT | F | L | Saloon FWD BNM | | GDS61078 | Drive Shaft | | 36 | | 50.7 | 58.5 | 501 | |
| | 2005.05-2009.11 | 5MT | F | R | Saloon FWD BNM | | GDS61223 | Drive Shaft | | 36 | | 52 | 59 | 757 | |
| | 2005.05-2009.11 | 5MT | F | L/R | Saloon FWD BNM | | GCO83024 | Outer Joint | | 36 | 30 | 50.75 | 59 | 55.5 | I |
| | 2005.05-2009.11 | MT | F | R | Saloon FWD BNM | | GDS61063 | Drive Shaft | | 36 | | 50.7 | 58.5 | 751 | |
| | 2005.05-2009.11 | MT | F | R | Saloon FWD BNM | | GCO54006 | Outer Joint | | 36 | 30 | 52 | 59 | 55.5 | I |
| | 2005.05-2009.11 | MT | F | L/R | Saloon FWD BNM | | GCI83005 | Inner Joint | | | 33 | | | 32 | |
| | 2005.05-2009.11 | | F | L/R | Saloon FWD BNM | | GCI83008 | Inner Joint | | | 33 | | | 32 | |
| 1.4 (55 kw) | 1999.09-2003.08 | 5MT | F | L | Saloon FWD APE/AUA | | GDS53004 | Drive Shaft | | 22 | | 50 | 78.5 | 562 | |
| | 1999.09-2003.08 | 5MT | F | L/R | Saloon FWD APE/AUA | | GCO53008 | Outer Joint | | 22 | 30 | 53 | 78.5 | 51 | I |
| | 1999.09-2003.08 | MT | F | L/R | Saloon FWD APE/AUA | | GCI53001 | Inner Joint | | | 33 | | | 32 | |
| | 1999.09-2003.08 | | F | | Saloon FWD APE/AUA | | GCO53006 | Outer Joint | | 22 | 30 | 50 | 78.5 | 52 | I |
| | 2002.09-2007.12 | 4AT/5MT | F | L/R | Saloon FWD BBY;BKY | | GCI61005 | Inner Joint | | | 30 | | | 57.6 | |
| | 2002.09-2007.12 | 4AT/5MT | F | L/R | Saloon FWD BBY;BKY | | GCI83008 | Inner Joint | | | 33 | | | 32 | |

| | YEAR | TRANSM. | F/R | L/R | BODY STYLE & DRIVE TYPE & ENGINE | REMARKS | G-AP Ref. | PRODUCT | ABS | Technical Specifications A | B | C | H | L | P |
|---|---|---|---|---|---|---|---|---|---|---|---|---|---|---|---|
| **SEAT** **Cordoba** | | | | | | | | | | | | | | | |
| 1.4 (55 kw) | 2002.09-2007.12 | 5AT | F | R | Saloon FWD BBY;BKY | | GCO61070 | Outer Joint | | 36 | 30 | 53.7 | 58.5 | 55 | I |
| | 2002.09-2007.12 | AT | F | L | Saloon FWD BBY;BKY | | GDS81921 | Drive Shaft | | 36 | | 52 | 59 | 494 | |
| | 2002.09-2007.12 | AT | F | R | Saloon FWD BBY;BKY | | GDS61252 | Drive Shaft | | 36 | | 53.7 | 58.5 | 730 | |
| | 2002.09-2007.12 | AT | F | L | Saloon FWD BBY;BKY | | GCO54006 | Outer Joint | | 36 | 30 | 52 | 59 | 55.5 | I |
| | 2002.09-2007.12 | AT | F | L/R | Saloon FWD BBY;BKY | | GCO83024 | Outer Joint | | 36 | 30 | 50.75 | 59 | 55.5 | I |
| | 2002.09-2007.12 | MT | F | L | Saloon FWD BBY;BKY | | GDS83063 | Drive Shaft | | 36 | | 50.7 | 58.5 | 501 | |
| | 2002.09-2007.12 | MT | F | R | Saloon FWD BBY;BKY | | GDS61063 | Drive Shaft | | 36 | | 50.7 | 58.5 | 751 | |
| | 2002.09-2007.12 | MT | F | L/R | Saloon FWD BBY;BKY | | GCO83027 | Outer Joint | | 36 | 30 | 50.7 | 58.5 | 47.5 | I |
| | 2002.09-2007.12 | MT | F | L/R | Saloon FWD BBY;BKY | | GCI83005 | Inner Joint | | | 33 | | | 32 | |
| | 2002.10-2005.12 | 5MT | F | L | Saloon FWD AMF | | GDS61098 | Drive Shaft | | 36 | | 50.5 | 59 | 472 | |
| | 2002.10-2005.12 | 5MT | F | R | Saloon FWD AMF | | GDS61099 | Drive Shaft | | 36 | | 50.5 | 59 | 759 | |
| | 2002.10-2005.12 | 5MT | F | L/R | Saloon FWD AMF | For steel rims;For light alloy rims | GCO83024 | Outer Joint | | 36 | 30 | 50.75 | 59 | 55.5 | I |
| | 2002.10-2005.12 | 7DCT | F | L/R | Saloon FWD AMF | For light alloy rims | GCO54006 | Outer Joint | | 36 | 30 | 52 | 59 | 55.5 | I |
| | 2002.10-2005.12 | | F | L/R | Saloon FWD AMF | | GCI61006 | Inner Joint | | | 30 | | | 57.6 | |
| 1.4 (59 kw) | 2005.06-2009.11 | 5MT | F | L | Saloon FWD BMS;BNV | | GDS61098 | Drive Shaft | | 36 | | 50.5 | 59 | 472 | |
| | 2005.06-2009.11 | 5MT | F | R | Saloon FWD BMS;BNV | | GDS61099 | Drive Shaft | | 36 | | 50.5 | 59 | 759 | |
| | 2005.06-2009.11 | 5MT | F | L/R | Saloon FWD BMS;BNV | | GCO83024 | Outer Joint | | 36 | 30 | 50.75 | 59 | 55.5 | I |
| | 2005.06-2009.11 | | F | L | Saloon FWD BMS;BNV | | GCO54006 | Outer Joint | | 36 | 30 | 52 | 59 | 55.5 | I |
| | 2005.06-2009.11 | | F | L/R | Saloon FWD BMS;BNV | | GCI61006 | Inner Joint | | | 30 | | | 57.6 | |
| 1.4 (63 kw) | 2006.05-2009.11 | 5MT | F | L | Saloon FWD BXW | | GDS83063 | Drive Shaft | | 36 | | 50.7 | 58.5 | 501 | |
| | 2006.05-2009.11 | 5MT | F | R | Saloon FWD BXW | | GDS61063 | Drive Shaft | | 36 | | 50.7 | 58.5 | 751 | |
| | 2006.05-2009.11 | 5MT | F | L/R | Saloon FWD BXW | | GCO83027 | Outer Joint | | 36 | 30 | 50.7 | 58.5 | 47.5 | I |
| | 2006.05-2009.11 | AT/MT | F | L/R | Saloon FWD BXW | | GCI83005 | Inner Joint | | | 33 | | | 32 | |
| | 2006.05-2009.11 | MT | F | L/R | Saloon FWD BXW | | GCI83008 | Inner Joint | | | 33 | | | 32 | |
| 1.4 (74 kw) | 1996.09-2002.09 | 5MT | F | L | Saloon FWD AFH/AQQ/AUB | | GDS53004 | Drive Shaft | | 22 | | 50 | 78.5 | 562 | |
| | 1996.09-2002.09 | MT | F | L/R | Saloon FWD AFH/AQQ/AUB | Date to:1999.12 | GCI53001 | Inner Joint | | | 33 | | | 32 | |
| | 1996.09-2002.09 | | F | | Saloon FWD AFH/AQQ/AUB | | GCO53006 | Outer Joint | | 22 | 30 | 50 | 78.5 | 52 | I |
| | 2002.10-2009.11 | 5MT | F | L | Saloon FWD BBZ | | GDS83063 | Drive Shaft | | 36 | | 50.7 | 58.5 | 501 | |
| | 2002.10-2009.11 | 5MT | F | R | Saloon FWD BBZ | | GDS61063 | Drive Shaft | | 36 | | 50.7 | 58.5 | 751 | |
| | 2002.10-2009.11 | 5MT | F | L/R | Saloon FWD BBZ | | GCO83027 | Outer Joint | | 36 | 30 | 50.7 | 58.5 | 47.5 | I |
| | 2002.10-2009.11 | AT/MT | F | L/R | Saloon FWD BBZ | | GCI83005 | Inner Joint | | | 33 | | | 32 | |
| | 2002.10-2009.11 | MT | F | L/R | Saloon FWD BBZ | | GCI83008 | Inner Joint | | | 33 | | | 32 | |
| 1.6 (55 kw) | 1993.09-2002.10 | 5MT | F | L | Saloon FWD ABU/AEE/ALM | | GDS53004 | Drive Shaft | | 22 | | 50 | 78.5 | 562 | |
| | 1993.09-2002.10 | 5MT | F | L/R | Saloon FWD ABU/AEE/ALM | | GCO53008 | Outer Joint | | 22 | 30 | 53 | 78.5 | 51 | I |
| | 1993.09-2002.10 | MT | F | L/R | Saloon FWD ABU/AEE/ALM | Date from:1993.09 | GCI53001 | Inner Joint | | | 33 | | | 32 | |
| | 1993.09-2002.10 | | F | | Saloon FWD ABU/AEE/ALM | | GCO53006 | Outer Joint | | 22 | 30 | 50 | 78.5 | 52 | I |
| | 1994.09-1999.06 | 4AT/5MT | F | L | Saloon FWD 1F | For Engine Code:1F | GDS53001 | Drive Shaft | | 22 | | 53 | 78.5 | 535 | |
| | 1994.09-1999.06 | 4AT/5MT | F | R | Saloon FWD 1F | Date To:1996.12,For Engine Code:1F | GDS53002 | Drive Shaft | | 22 | | 53.2 | 78 | 769 | |
| | 1994.09-1999.06 | AT/MT | F | L/R | Saloon FWD 1F | | GCO53006 | Outer Joint | | 22 | 30 | 50 | 78.5 | 52 | I |
| | 1994.09-1999.06 | AT/MT | F | L/R | Saloon FWD 1F | Date from:1997.01 | GCO53008 | Outer Joint | | 22 | 30 | 53 | 78.5 | 51 | I |
| | 1994.09-1999.06 | AT/MT | F | L/R | Saloon FWD 1F | Date from:1997.01 | GCI53001 | Inner Joint | | | 33 | | | 32 | |
| 1.6 (74 kw) | 1995.09-2002.10 | MT | F | L | Saloon FWD AEH/AFT/AKL/APF/AUR | | GDS53003 | Drive Shaft | | 22 | | 53 | 78.5 | 539.5 | |
| | 1995.09-2002.10 | MT | F | R | Saloon FWD AEH/AFT/AKL/APF/AUR | | GDS53005 | Drive Shaft | | 22 | | 53 | 78.5 | 774 | |
| | 1995.09-2002.10 | MT | F | L/R | Saloon FWD AEH/AFT/AKL/APF/AUR | | GCO53008 | Outer Joint | | 22 | 30 | 53 | 78.5 | 51 | I |
| | 1995.09-2002.10 | MT | F | L/R | Saloon FWD AEH/AFT/AKL/APF/AUR | | GCI83005 | Inner Joint | | | 33 | | | 32 | |
| | 1995.09-2002.10 | | F | | Saloon FWD AEH/AFT/AKL/APF/AUR | | GCO53006 | Outer Joint | | 22 | 30 | 50 | 78.5 | 52 | I |
| | 2003.04-2009.11 | MT | F | L | Saloon FWD BAH | | GDS54018 | Drive Shaft | | 36 | | 50.5 | 59 | 500 | |
| | 2003.04-2009.11 | MT | F | R | Saloon FWD BAH | | GDS61305 | Drive Shaft | | 36 | | 50.5 | 59 | 757 | |
| | 2003.04-2009.11 | MT | F | L/R | Saloon FWD BAH | | GCO83024 | Outer Joint | | 36 | 30 | 50.75 | 59 | 55.5 | I |
| | 2003.04-2009.11 | MT | F | L/R | Saloon FWD BAH | | GCI53002 | Inner Joint | | | 33 | | | 34 | |
| | 2003.04-2009.11 | MT | F | L/R | Saloon FWD BAH | | GCI83006 | Inner Joint | | | 33 | | | 34 | |
| 1.6 (77 kw) | 2006.11-2009.11 | 5MT | F | L | Saloon FWD BTS | | GDS54018 | Drive Shaft | | 36 | | 50.5 | 59 | 500 | |
| | 2006.11-2009.11 | 5MT | F | L/R | Saloon FWD BTS | | GCI82447 | Inner Joint | | | 33 | | | 34 | |
| | 2006.11-2009.11 | 6AT | F | L | Saloon FWD BTS | Chassis no. from:6L_9_033001 | GCI61039 | Inner Joint | | 26 | 22 | 31 | 68.5 | 88.5 | |
| | 2006.11-2009.11 | 6AT | F | R | Saloon FWD BTS | Chassis no. to:6L_9_033000 | GCI61011 | Inner Joint | | 26 | 32 | 31 | 68.5 | 85 | |
| | 2006.11-2009.11 | 6AT | F | R | Saloon FWD BTS | Chassis no. to:6L_9_033000 | GCI61050 | Inner Joint | | 26 | 32 | 31 | 68.5 | 89 | |
| | 2006.11-2009.11 | AT | F | L | Saloon FWD BTS | | GDS61150 | Drive Shaft | | 36 | 26 | 52 | 75 | 557 | |
| | 2006.11-2009.11 | AT | F | R | Saloon FWD BTS | | GDS61133 | Drive Shaft | | 36 | 26 | 52 | 75 | 859 | |
| | 2006.11-2009.11 | AT | F | R | Saloon FWD BTS | Date from:2009.01 | GDS81524 | Drive Shaft | | 36 | 26 | 52 | 75 | 856 | |
| | 2006.11-2009.11 | AT | F | L/R | Saloon FWD BTS | Chassis no. from:6L9033001 | GCO61074 | Outer Joint | | 36 | 30 | 52 | 75 | 55.5 | I |
| | 2006.11-2009.11 | AT | F | L/R | Saloon FWD BTS | Chassis no. from:6L9033001,Type:UF100 | GCO83079 | Outer Joint | | 36 | 30 | 52 | 75 | 55.5 | I |
| | 2006.11-2009.11 | AT/MT | F | L/R | Saloon FWD BTS | Transmission:MT;Transmission:AT,Chassis no. to:6L_9_033000 | GCO83024 | Outer Joint | | 36 | 30 | 50.75 | 59 | 55.5 | I |
| | 2006.11-2009.11 | MT | F | R | Saloon FWD BTS | | GDS61305 | Drive Shaft | | 36 | | 50.5 | 59 | 757 | |
| | 2006.11-2009.11 | | F | L | Saloon FWD BTS | | GCO54006 | Outer Joint | | 36 | 30 | 52 | 59 | 55.5 | I |
| 1.8 (66 kw) | 1993.09-1999.06 | AT/MT | F | L/R | Saloon FWD ABS/ACC/ADZ | Date from:1993.09;Date to:1999.06 | GCO53007 | Outer Joint | | 22 | 30 | 53.2 | 78 | 61 | I |

| | YEAR | TRANSM. | F/R | L/R | BODY STYLE & DRIVE TYPE & ENGINE | REMARKS | G-AP Ref. | PRODUCT | ABS | Technical Specifications A | B | C | H | L | P |
|---|---|---|---|---|---|---|---|---|---|---|---|---|---|---|---|
| **SEAT** | | | | | | | | | | | | | | | |
| **Cordoba** | | | | | | | | | | | | | | | |
| 1.8 (66 kw) | 1993.09-1999.06 | AT/MT | F | R | Saloon FWD ABS/ACC/ADZ | Date from:1993.09;Date to:1999.06 | GCI83009 | Inner Joint | | | 33 | | | 34 | |
| | 1993.09-1999.06 | MT | F | L | Saloon FWD ABS/ACC/ADZ | | GDS53001 | Drive Shaft | | 22 | | 53 | 78.5 | 535 | |
| | 1993.09-1999.06 | MT | F | R | Saloon FWD ABS/ACC/ADZ | Date from:1993.09;Date to:1999.06 | GDS53002 | Drive Shaft | | 22 | | 53.2 | 78 | 769 | |
| | 1993.09-1999.06 | MT | F | R | Saloon FWD ABS/ACC/ADZ | Date to:1999.12 | GDS61009 | Drive Shaft | | 22 | | 53.2 | 78 | 789 | |
| | 1993.09-1999.06 | MT | F | L/R | Saloon FWD ABS/ACC/ADZ | | GCO53004 | Outer Joint | | 22 | 30 | 51 | 78 | 61 | I |
| | 1993.09-1999.06 | MT | F | L/R | Saloon FWD ABS/ACC/ADZ | Date to:1999.12 | GCI83011 | Inner Joint | | | 33 | | | 34 | |
| 1.8 (95 kw) | 1994.02-1996.06 | MT | F | L | Saloon FWD ADL | | GDS53001 | Drive Shaft | | 22 | | 53 | 78.5 | 535 | |
| | 1994.02-1996.06 | MT | F | R | Saloon FWD ADL | Date from:1994.02 | GDS53002 | Drive Shaft | | 22 | | 53.2 | 78 | 769 | |
| | 1994.02-1996.06 | MT | F | L/R | Saloon FWD ADL | Date from:1994.02 | GCO53007 | Outer Joint | | 22 | 30 | 53.2 | 78 | 61 | I |
| | 1994.02-1996.06 | MT | F | R | Saloon FWD ADL | Date from:1994.02 | GCI83009 | Inner Joint | | | 33 | | | 34 | |
| | 1994.02-1996.06 | MT | F | L/R | Saloon FWD ADL | | GCI83006 | Inner Joint | | | 33 | | | 34 | |
| | 1994.02-1996.06 | MT | F | L/R | Saloon FWD ADL | | GCI83011 | Inner Joint | | | 33 | | | 34 | |
| | 1994.02-1996.06 | | F | | Saloon FWD ADL | | GCO53004 | Outer Joint | | 22 | 30 | 51 | 78 | 61 | I |
| 1.8 (115 kw) | 1999.07-2002.10 | 5MT | F | L/R | Saloon FWD AQX/AYP | | GCO53007 | Outer Joint | | 22 | 30 | 53.2 | 78 | 61 | I |
| | 1999.07-2002.10 | MT | F | L | Saloon FWD AQX/AYP | | GDS53001 | Drive Shaft | | 22 | | 53 | 78.5 | 535 | |
| | 1999.07-2002.10 | MT | F | R | Saloon FWD AQX/AYP | | GCI83009 | Inner Joint | | | 33 | | | 34 | |
| | 1999.07-2002.10 | MT | F | L/R | Saloon FWD AQX/AYP | | GCI83011 | Inner Joint | | | 33 | | | 34 | |
| 1.9 (47 kw) | 1996.08-1999.06 | MT | F | L | Saloon FWD AEY | | GDS53003 | Drive Shaft | | 22 | | 53 | 78.5 | 539.5 | |
| | 1996.08-1999.06 | MT | F | R | Saloon FWD AEY | | GDS53005 | Drive Shaft | | 22 | | 53 | 78.5 | 774 | |
| | 1996.08-1999.06 | MT | F | L/R | Saloon FWD AEY | | GCO53008 | Outer Joint | | 22 | 30 | 53 | 78.5 | 51 | I |
| | 1996.08-1999.06 | MT | F | L/R | Saloon FWD AEY | | GCI83005 | Inner Joint | | | 33 | | | 32 | |
| | 1996.08-1999.06 | | F | | Saloon FWD AEY | | GCO53006 | Outer Joint | | 22 | 30 | 50 | 78.5 | 52 | I |
| | 2002.09-2009.11 | 5MT | F | L | Saloon FWD ASY | | GDS83063 | Drive Shaft | | 36 | | 50.7 | 58.5 | 501 | |
| | 2002.09-2009.11 | 5MT | F | R | Saloon FWD ASY | | GDS61063 | Drive Shaft | | 36 | | 50.7 | 58.5 | 751 | |
| | 2002.09-2009.11 | MT | F | L/R | Saloon FWD ASY | Date to:2005.12 | GCO83027 | Outer Joint | | 36 | 30 | 50.7 | 58.5 | 47.5 | I |
| | 2002.09-2009.11 | | F | L/R | Saloon FWD ASY | | GCI83008 | Inner Joint | | | 33 | | | 32 | |
| 1.9 (50 kw) | 1993.02-1996.08 | AT/MT | F | L/R | Saloon FWD 1Y | | GCI83005 | Inner Joint | | | 33 | | | 32 | |
| | 1993.02-1996.08 | MT/5MT | F | L | Saloon FWD 1Y | | GDS53003 | Drive Shaft | | 22 | | 53 | 78.5 | 539.5 | |
| | 1993.02-1996.08 | MT/5MT | F | R | Saloon FWD 1Y | | GDS53005 | Drive Shaft | | 22 | | 53 | 78.5 | 774 | |
| | 1993.02-1996.08 | MT/5MT | F | L/R | Saloon FWD 1Y | | GCO53008 | Outer Joint | | 22 | 30 | 53 | 78.5 | 51 | I |
| | 1999.06-2002.10 | AT/MT | F | L/R | Saloon FWD AGP, AQM | | GCI83005 | Inner Joint | | | 33 | | | 32 | |
| | 1999.06-2002.10 | MT/5MT | F | L | Saloon FWD AGP, AQM | | GDS53003 | Drive Shaft | | 22 | | 53 | 78.5 | 539.5 | |
| | 1999.06-2002.10 | MT/5MT | F | R | Saloon FWD AGP, AQM | | GDS53005 | Drive Shaft | | 22 | | 53 | 78.5 | 774 | |
| | 1999.06-2002.10 | MT/5MT | F | L/R | Saloon FWD AGP, AQM | | GCO53008 | Outer Joint | | 22 | 30 | 53 | 78.5 | 51 | I |
| 1.9 (55 kw) | 1993.09-1997.08 | MT | F | L | Saloon FWD AAZ | | GDS53001 | Drive Shaft | | 22 | | 53 | 78.5 | 535 | |
| | 1993.09-1997.08 | MT | F | R | Saloon FWD AAZ | Date from:1993.09 | GDS53002 | Drive Shaft | | 22 | | 53.2 | 78 | 769 | |
| | 1993.09-1997.08 | MT | F | L/R | Saloon FWD AAZ | Date from:1993.09 | GCO53007 | Outer Joint | | 22 | 30 | 53.2 | 78 | 61 | I |
| | 1993.09-1997.08 | MT | F | R | Saloon FWD AAZ | Date from:1993.09 | GCI83009 | Inner Joint | | | 33 | | | 34 | |
| | 1993.09-1997.08 | MT | F | L/R | Saloon FWD AAZ | | GCI83011 | Inner Joint | | | 33 | | | 34 | |
| | 1993.09-1997.08 | | F | | Saloon FWD AAZ | | GCO53004 | Outer Joint | | 22 | 30 | 51 | 78 | 61 | I |
| 1.9 (66 kw) | 1996.07-2002.08 | 5MT | F | L/R | Saloon FWD 1Z/AGR/AHU/ALH | | GCO53007 | Outer Joint | | 22 | 30 | 53.2 | 78 | 61 | I |
| | 1996.07-2002.08 | MT | F | L | Saloon FWD 1Z/AGR/AHU/ALH | | GDS53001 | Drive Shaft | | 22 | | 53 | 78.5 | 535 | |
| | 1996.07-2002.08 | MT | F | R | Saloon FWD 1Z/AGR/AHU/ALH | | GDS53002 | Drive Shaft | | 22 | | 53.2 | 78 | 769 | |
| | 1996.07-2002.08 | MT | F | L/R | Saloon FWD 1Z/AGR/AHU/ALH | | GCO53004 | Outer Joint | | 22 | 30 | 51 | 78 | 61 | I |
| | 1996.07-2002.08 | MT | F | R | Saloon FWD 1Z/AGR/AHU/ALH | | GCI83009 | Inner Joint | | | 33 | | | 34 | |
| | 1996.07-2002.08 | MT | F | L/R | Saloon FWD 1Z/AGR/AHU/ALH | Date from:1997.01 | GCI83011 | Inner Joint | | | 33 | | | 34 | |
| 1.9 (74 kw) | 2002.09-2009.11 | 5MT | F | L | Saloon FWD ATD;AXR;BMT | AAR | GDS61098 | Drive Shaft | | 36 | | 50.5 | 59 | 472 | |
| | 2002.09-2009.11 | 5MT | F | R | Saloon FWD ATD;AXR;BMT | AAR | GDS61099 | Drive Shaft | | 36 | | 50.5 | 59 | 759 | |
| | 2002.09-2009.11 | 5MT | F | L/R | Saloon FWD ATD;AXR;BMT | | GCO83024 | Outer Joint | | 36 | 30 | 50.75 | 59 | 55.5 | I |
| | 2002.09-2009.11 | | F | L/R | Saloon FWD ATD;AXR;BMT | | GCO54006 | Outer Joint | | 36 | 30 | 52 | 59 | 55.5 | I |
| | 2002.09-2009.11 | | F | L/R | Saloon FWD ATD;AXR;BMT | AAR | GCI61006 | Inner Joint | | | 30 | | | 57.6 | |
| 1.9 (81 kw) | 1997.03-2002.08 | MT | F | L | Saloon FWD AFN/ASV | | GDS53001 | Drive Shaft | | 22 | | 53 | 78.5 | 535 | |
| | 1997.03-2002.08 | MT | F | L/R | Saloon FWD AFN/ASV | | GCO53004 | Outer Joint | | 22 | 30 | 51 | 78 | 61 | I |
| | 1997.03-2002.08 | MT | F | L/R | Saloon FWD AFN/ASV | Date to:1999.12 | GCO53007 | Outer Joint | | 22 | 30 | 53.2 | 78 | 61 | I |
| | 1997.03-2002.08 | MT | F | R | Saloon FWD AFN/ASV | | GCI83009 | Inner Joint | | | 33 | | | 34 | |
| | 1997.03-2002.08 | MT | F | L/R | Saloon FWD AFN/ASV | Date to:1999.12 | GCI83011 | Inner Joint | | | 33 | | | 34 | |
| 1.9 (96 kw) | 2002.10-2009.11 | 6MT | F | L | Saloon FWD ASZ;BLT | | GDS61204 | Drive Shaft | | 36 | | 50.5 | 75 | 461 | |
| | 2002.10-2009.11 | 6MT | F | R | Saloon FWD ASZ;BLT | | GDS61183 | Drive Shaft | | 36 | | 50.5 | 75 | 769 | |
| | 2002.10-2009.11 | 6MT | F | L/R | Saloon FWD ASZ;BLT | | GCO53002 | Outer Joint | | 36 | 27 | 50.75 | 75 | 65 | I |
| | 2002.10-2009.11 | 6MT | F | L/R | Saloon FWD ASZ;BLT | with Nylon spacer and Disc circlip | GCO83041 | Outer Joint | | 36 | 27 | 50.5 | 75 | 65 | I |
| | 2002.10-2009.11 | 6MT | F | L/R | Saloon FWD ASZ;BLT | | GCI61002 | Inner Joint | | | 28 | | | 31.8 | |
| 2.0 (85 kw) | 1993.09-1999.06 | MT | F | L | Saloon FWD 2E/AGG | | GDS53001 | Drive Shaft | | 22 | | 53 | 78.5 | 535 | |
| | 1993.09-1999.06 | MT | F | R | Saloon FWD 2E/AGG | Date from:1993.09 | GDS53002 | Drive Shaft | | 22 | | 53.2 | 78 | 769 | |
| | 1993.09-1999.06 | MT | F | L/R | Saloon FWD 2E/AGG | Date from:1993.09 | GCO53007 | Outer Joint | | 22 | 30 | 53.2 | 78 | 61 | I |
| | 1993.09-1999.06 | MT | F | R | Saloon FWD 2E/AGG | Date from:1993.09 | GCI83009 | Inner Joint | | | 33 | | | 34 | |

| | YEAR | TRANSM. | F/R | L/R | BODY STYLE & DRIVE TYPE & ENGINE | REMARKS | G-AP Ref. | PRODUCT | ABS | Technical Specifications A | B | C | H | L | P |
|---|---|---|---|---|---|---|---|---|---|---|---|---|---|---|---|
| **SEAT** | | | | | | | | | | | | | | | |
| **Cordoba** | | | | | | | | | | | | | | | |
| 2.0 (85 kw) | 1993.09-1999.06 | MT | F | L/R | Saloon FWD 2E/AGG | | GCI83011 | Inner Joint | | | 33 | | | 34 | |
| | 1993.09-1999.06 | | F | | Saloon FWD 2E/AGG | | GCO53004 | Outer Joint | | 22 | 30 | 51 | 78 | 61 | I |
| | 2002.09-2009.11 | 5MT | F | L | Saloon FWD AZL;BBX | | GDS54018 | Drive Shaft | | 36 | | 50.5 | 59 | 500 | |
| | 2002.09-2009.11 | 5MT | F | R | Saloon FWD AZL;BBX | | GDS61305 | Drive Shaft | | 36 | | 50.5 | 59 | 757 | |
| | 2002.09-2009.11 | 5MT | F | L/R | Saloon FWD AZL;BBX | | GCO83024 | Outer Joint | | 36 | 30 | 50.75 | 59 | 55.5 | I |
| | 2002.09-2009.11 | 5MT | F | L/R | Saloon FWD AZL;BBX | | GCI53002 | Inner Joint | | | 33 | | | 34 | |
| | 2002.09-2009.11 | MT | F | L/R | Saloon FWD AZL;BBX | | GCI83006 | Inner Joint | | | 33 | | | 34 | |
| 2.0 (110 kw) | 1996.07-1999.06 | MT | F | L | Saloon FWD ABF | | GDS53001 | Drive Shaft | | 22 | | 53 | 78.5 | 535 | |
| | 1996.07-1999.06 | MT | F | L/R | Saloon FWD ABF | | GCO83070 | Outer Joint | | 36 | 30 | 53 | 78 | 60 | I |
| | 1996.07-1999.06 | MT | F | R | Saloon FWD ABF | | GCI83009 | Inner Joint | | | 33 | | | 34 | |
| | 1996.07-1999.06 | MT | F | L/R | Saloon FWD ABF | | GCI83011 | Inner Joint | | | 33 | | | 34 | |
| | 1996.07-1999.06 | | F | | Saloon FWD ABF | | GCO53004 | Outer Joint | | 22 | 30 | 51 | 78 | 61 | I |
| **Cordoba Vario** | | | | | | | | | | | | | | | |
| 1.4 (44 kw) | 1996.09-2002.08 | 5MT | F | L | Estate FWD AEX/AKK/AKV/ANW/APQ/AUD | | GDS53004 | Drive Shaft | | 22 | | 50 | 78.5 | 562 | |
| | 1996.09-2002.08 | 5MT | F | L/R | Estate FWD AEX/AKK/AKV/ANW/APQ/AUD | | GCO53008 | Outer Joint | | 22 | 30 | 53 | 78.5 | 51 | I |
| | 1996.09-2002.08 | MT | F | L/R | Estate FWD AEX/AKK/AKV/ANW/APQ/AUD | Date to:2002.08 | GCI53001 | Inner Joint | | | 33 | | | 32 | |
| 1.4 (55 kw) | 1999.09-2003.08 | 5MT | F | L | Estate FWD APE/AUA | | GDS53004 | Drive Shaft | | 22 | | 50 | 78.5 | 562 | |
| | 1999.09-2003.08 | 5MT | F | L/R | Estate FWD APE/AUA | | GCO53008 | Outer Joint | | 22 | 30 | 53 | 78.5 | 51 | I |
| | 1999.09-2003.08 | MT | F | L/R | Estate FWD APE/AUA | Date from:1999.09 | GCI53001 | Inner Joint | | | 33 | | | 32 | |
| 1.4 (74 kw) | 2000.02-2000.07 | 5MT | F | L | Estate FWD AQQ | | GDS53004 | Drive Shaft | | 22 | | 50 | 78.5 | 562 | |
| 1.6 (55 kw) | 1997.05-1999.06 | 4AT | F | L | Estate FWD 1F | For Engine Code:1F | GDS53001 | Drive Shaft | | 22 | | 53 | 78.5 | 535 | |
| | 1997.05-1999.06 | AT | F | L/R | Estate FWD 1F | | GCI83006 | Inner Joint | | | 33 | | | 34 | |
| | 1997.05-1999.06 | AT/MT | F | L/R | Estate FWD 1F | | GCO53006 | Outer Joint | | 22 | 30 | 50 | 78.5 | 52 | I |
| | 1997.05-2002.08 | 5MT | F | L | Estate FWD AEE/ALM | | GDS53004 | Drive Shaft | | 22 | | 50 | 78.5 | 562 | |
| | 1997.05-2002.08 | 5MT | F | L/R | Estate FWD AEE/ALM | | GCO53008 | Outer Joint | | 22 | 30 | 53 | 78.5 | 51 | I |
| | 1997.05-2002.08 | AT/MT | F | L/R | Estate FWD AEE/ALM | Date to:1999.12 | GCI53001 | Inner Joint | | | 33 | | | 32 | |
| | 1997.05-2002.08 | MT | F | L/R | Estate FWD AEE/ALM | Date from:1997.05;Date to:2002.08 | GCO53007 | Outer Joint | | 22 | 30 | 53.2 | 78 | 61 | I |
| | 1997.05-2002.08 | MT | F | R | Estate FWD AEE/ALM | Date from:1997.05;Date to:2002.08 | GCI83009 | Inner Joint | | | 33 | | | 34 | |
| | 1997.05-2002.08 | | F | | Estate FWD AEE/ALM | | GCO53006 | Outer Joint | | 22 | 30 | 50 | 78.5 | 52 | I |
| 1.6 (74 kw) | 1996.09-2002.08 | AT | F | L/R | Estate FWD AEH/AFT/AKL/APF/AUR | | GCO53007 | Outer Joint | | 22 | 30 | 53.2 | 78 | 61 | I |
| | 1996.09-2002.08 | AT/MT | F | L/R | Estate FWD AEH/AFT/AKL/APF/AUR | Date to:2002.08 | GCI83005 | Inner Joint | | | 33 | | | 32 | |
| | 1996.09-2002.08 | AT/MT | F | L/R | Estate FWD AEH/AFT/AKL/APF/AUR | Date to:2002.08;Chassis no. from:6K-W-085001;For Engine code:AFT | GCI83009 | Inner Joint | | | 33 | | | 34 | |
| | 1996.09-2002.08 | MT | F | R | Estate FWD AEH/AFT/AKL/APF/AUR | | GDS53005 | Drive Shaft | | 22 | | 53 | 78.5 | 774 | |
| | 1996.09-2002.08 | MT | F | L/R | Estate FWD AEH/AFT/AKL/APF/AUR | | GCO53008 | Outer Joint | | 22 | 30 | 53 | 78.5 | 51 | I |
| | 1996.09-2002.08 | | F | L | Estate FWD AEH/AFT/AKL/APF/AUR | Date To:2002.08;For Engine Code:AFT | GDS53003 | Drive Shaft | | 22 | | 53 | 78.5 | 539.5 | |
| | 1996.09-2002.08 | | F | | Estate FWD AEH/AFT/AKL/APF/AUR | | GCO53006 | Outer Joint | | 22 | 30 | 50 | 78.5 | 52 | I |
| 1.9 (47 kw) | 1997.06-1999.06 | MT | F | L | Estate FWD AEY | Date from:1997.06 | GDS53003 | Drive Shaft | | 22 | | 53 | 78.5 | 539.5 | |
| | 1997.06-1999.06 | MT | F | R | Estate FWD AEY | Date from:1997.06 | GDS53005 | Drive Shaft | | 22 | | 53 | 78.5 | 774 | |
| | 1997.06-1999.06 | MT | F | L/R | Estate FWD AEY | Date from:1997.06 | GCO53008 | Outer Joint | | 22 | 30 | 53 | 78.5 | 51 | I |
| | 1997.06-1999.06 | MT | F | L/R | Estate FWD AEY | Date from:1997.06 | GCI83005 | Inner Joint | | | 33 | | | 32 | |
| | 1997.06-1999.06 | | F | | Estate FWD AEY | | GCO53006 | Outer Joint | | 22 | 30 | 50 | 78.5 | 52 | I |
| 1.9 (50 kw) | 1999.04-2002.08 | 5MT | F | L/R | Estate FWD AGP/AQM | | GCO53008 | Outer Joint | | 22 | 30 | 53 | 78.5 | 51 | I |
| | 1999.04-2002.08 | AT/MT | F | R | Estate FWD AGP/AQM | | GCI83005 | Inner Joint | | | 33 | | | 32 | |
| 1.9 (66 kw) | 1997.06-2002.08 | 5MT | F | L/R | Estate FWD 1Z/AGR/AHU/ALH | | GCO53007 | Outer Joint | | 22 | 30 | 53.2 | 78 | 61 | I |
| | 1997.06-2002.08 | MT | F | L | Estate FWD 1Z/AGR/AHU/ALH | | GDS53001 | Drive Shaft | | 22 | | 53 | 78.5 | 535 | |
| | 1997.06-2002.08 | MT | F | R | Estate FWD 1Z/AGR/AHU/ALH | Date from:1997.06;Date to:2002.08 | GCI83009 | Inner Joint | | | 33 | | | 34 | |
| | 1997.06-2002.08 | MT | F | L/R | Estate FWD 1Z/AGR/AHU/ALH | Date to:1999.12 | GCI83011 | Inner Joint | | | 33 | | | 34 | |
| | 1997.06-2002.08 | | F | | Estate FWD 1Z/AGR/AHU/ALH | | GCO53004 | Outer Joint | | 22 | 30 | 51 | 78 | 61 | I |
| 1.9 (81 kw) | 1998.02-2002.08 | MT | F | L | Estate FWD AFN/ASV | | GDS53001 | Drive Shaft | | 22 | | 53 | 78.5 | 535 | |
| | 1998.02-2002.08 | MT | F | L/R | Estate FWD AFN/ASV | Date to:1999.12 | GCO53007 | Outer Joint | | 22 | 30 | 53.2 | 78 | 61 | I |
| | 1998.02-2002.08 | MT | F | | Estate FWD AFN/ASV | | GCO53004 | Outer Joint | | 22 | 30 | 51 | 78 | 61 | I |
| | 1998.02-2002.08 | MT | F | R | Estate FWD AFN/ASV | Date from:1998.02;Date to:2002.08 | GCI83009 | Inner Joint | | | 33 | | | 34 | |
| | 1998.02-2002.08 | MT | F | L/R | Estate FWD AFN/ASV | | GCI83006 | Inner Joint | | | 33 | | | 34 | |
| | 1998.02-2002.08 | MT | F | L/R | Estate FWD AFN/ASV | Date to:1999.12 | GCI83011 | Inner Joint | | | 33 | | | 34 | |
| **Exeo** | | | | | | | | | | | | | | | |
| 1.6 (75 kw) | 2009.03-2010.09 | 6MT | F | R | Saloon FWD ALZ | | GCI81777 | Inner Joint | | | 33 | | | 33 | |
| | 2009.03-2010.09 | | F | R | Saloon FWD ALZ | | GDS82350 | Drive Shaft | 45W | 38 | | 59.5 | 34 | 641 | |
| | 2009.03-2010.09 | | F | L/R | Saloon FWD ALZ | | GCO83030 | Outer Joint | | 38 | 33 | 59.5 | 34 | 56.5 | M |
| | 2009.03-2010.09 | | F | L/R | Saloon FWD ALZ | | GCO83058 | Outer Joint | 45W | 38 | 33 | 59.5 | 34 | 56.5 | M |
| 1.8 (88 kw) | 2010.09-2013.05 | 6MT | F | L | Saloon FWD CDHA | | GDS83057 | Drive Shaft | 45W | 38 | | 59.5 | 34.5 | 593 | |
| | 2010.09-2013.05 | 6MT | F | R | Saloon FWD CDHA | | GDS83058 | Drive Shaft | 45W | 38 | | 59.5 | 34.5 | 613 | |
| | 2010.09-2013.05 | MT | F | L/R | Saloon FWD CDHA | TJ | GCI61044 | Inner Joint | | | 34 | | | 85 | |
| | 2010.09-2013.05 | | F | L/R | Saloon FWD CDHA | | GCO83067 | Outer Joint | 45W | 38 | 27 | 59.5 | 34 | 68 | M |
| | 2010.09-2013.05 | | F | L | Saloon FWD CDHA | AAR | GCI61076 | Inner Joint | | | 34 | | | 85 | |
| 1.8 (110 kw) | 2008.12-2010.05 | | F | L | Saloon FWD CFMA | | GDS83057 | Drive Shaft | 45W | 38 | | 59.5 | 34.5 | 593 | |

| | YEAR | TRANSM. | F/R | L/R | BODY STYLE & DRIVE TYPE & ENGINE | REMARKS | G-AP Ref. | PRODUCT | ABS | Technical Specifications A | B | C | H | L | P |
|---|---|---|---|---|---|---|---|---|---|---|---|---|---|---|---|
| **SEAT** | | | | | | | | | | | | | | | |
| **Exeo** | | | | | | | | | | | | | | | |
| 1.8 (110 kw) | 2008.12-2010.05 | | F | R | Saloon FWD CFMA | | GDS83058 | Drive Shaft | 45W | 38 | | 59.5 | 34.5 | 613 | |
| | 2008.12-2010.05 | | F | L/R | Saloon FWD CFMA | | GCO83067 | Outer Joint | 45W | 38 | 27 | 59.5 | 34 | 68 | M |
| | 2008.12-2010.05 | | F | | Saloon FWD CFMA | | GCO83078 | Outer Joint | 45W | 38 | 27 | 59.5 | 34.5 | 63 | M |
| | 2008.12-2010.05 | | F | L | Saloon FWD CFMA | AAR | GCI61076 | Inner Joint | | | 34 | | | 85 | |
| | 2008.12-2010.05 | | F | L/R | Saloon FWD CFMA | TJ | GCI61044 | Inner Joint | | | 34 | | | 85 | |
| 1.8 (118 kw) | 2010.05-2013.05 | 6MT | F | L | Saloon FWD CDHB | | GDS83057 | Drive Shaft | 45W | 38 | | 59.5 | 34.5 | 593 | |
| | 2010.05-2013.05 | 6MT | F | R | Saloon FWD CDHB | | GDS83058 | Drive Shaft | 45W | 38 | | 59.5 | 34.5 | 613 | |
| | 2010.05-2013.05 | | F | L/R | Saloon FWD CDHB | | GCO83067 | Outer Joint | 45W | 38 | 27 | 59.5 | 34 | 68 | M |
| | 2010.05-2013.05 | | F | L | Saloon FWD CDHB | AAR | GCI61076 | Inner Joint | | | 34 | | | 85 | |
| | 2010.05-2013.05 | | F | L/R | Saloon FWD CDHB | TJ | GCI61044 | Inner Joint | | | 34 | | | 85 | |
| 2.0 (88 kw) | 2008.12-2013.05 | 6MT | F | L | Saloon FWD CAGC;CJCC | | GDS83057 | Drive Shaft | 45W | 38 | | 59.5 | 34.5 | 593 | |
| | 2008.12-2013.05 | 6MT | F | R | Saloon FWD CAGC;CJCC | | GDS83058 | Drive Shaft | 45W | 38 | | 59.5 | 34.5 | 613 | |
| | 2008.12-2013.05 | AT | F | L/R | Saloon FWD CAGC;CJCC | | GDS83052 | Drive Shaft | 45W | 38 | | 59.5 | 34.5 | 522 | |
| | 2008.12-2013.05 | AT/MT/6MT | F | L/R | Saloon FWD CAGC;CJCC | TJ | GCI61044 | Inner Joint | | | 34 | | | 85 | |
| | 2008.12-2013.05 | | F | L/R | Saloon FWD CAGC;CJCC | | GCO83067 | Outer Joint | 45W | 38 | 27 | 59.5 | 34 | 68 | M |
| | 2008.12-2013.05 | | F | L | Saloon FWD CAGC;CJCC | AAR | GCI61076 | Inner Joint | | | 34 | | | 85 | |
| 2.0 (105 kw) | 2008.12-2013.05 | 6MT | F | L | Saloon FWD CAGA;CJCA | | GDS83057 | Drive Shaft | 45W | 38 | | 59.5 | 34.5 | 593 | |
| | 2008.12-2013.05 | 6MT | F | R | Saloon FWD CAGA;CJCA | | GDS83058 | Drive Shaft | 45W | 38 | | 59.5 | 34.5 | 613 | |
| | 2008.12-2013.05 | 6MT | F | L/R | Saloon FWD CAGA;CJCA | | GCO83067 | Outer Joint | 45W | 38 | 27 | 59.5 | 34 | 68 | M |
| | 2008.12-2013.05 | 6MT | F | L/R | Saloon FWD CAGA;CJCA | TJ | GCI61044 | Inner Joint | | | 34 | | | 85 | |
| | 2008.12-2013.05 | CVT | F | L/R | Saloon FWD CAGA;CJCA | Date to:2011.10 | GDS81132 | Drive Shaft | 45W | 38 | | 59.5 | 34.5 | 525 | |
| | 2008.12-2013.05 | CVT | F | L/R | Saloon FWD CAGA;CJCA | Date from:2011.11 | GDS83052 | Drive Shaft | 45W | 38 | | 59.5 | 34.5 | 522 | |
| | 2008.12-2013.05 | CVT | F | L/R | Saloon FWD CAGA;CJCA | | GCO83078 | Outer Joint | 45W | 38 | 27 | 59.5 | 34.5 | 63 | M |
| | 2008.12-2013.05 | | F | L | Saloon FWD CAGA;CJCA | AAR | GCI61076 | Inner Joint | | | 34 | | | 85 | |
| 2.0 (125 kw) | 2009.02-2013.05 | 6MT | F | L | Saloon FWD CAHA;CGLB | | GDS83057 | Drive Shaft | 45W | 38 | | 59.5 | 34.5 | 593 | |
| | 2009.02-2013.05 | AT | F | L/R | Saloon FWD CAHA;CGLB | | GDS83052 | Drive Shaft | 45W | 38 | | 59.5 | 34.5 | 522 | |
| | 2009.02-2013.05 | AT/MT/6MT | F | L/R | Saloon FWD CAHA;CGLB | TJ | GCI61044 | Inner Joint | | | 34 | | | 85 | |
| | 2009.02-2013.05 | MT/6MT | F | R | Saloon FWD CAHA;CGLB | | GDS83058 | Drive Shaft | 45W | 38 | | 59.5 | 34.5 | 613 | |
| | 2009.02-2013.05 | | F | L/R | Saloon FWD CAHA;CGLB | | GCO83067 | Outer Joint | 45W | 38 | 27 | 59.5 | 34 | 68 | M |
| | 2009.02-2013.05 | | F | L | Saloon FWD CAHA;CGLB | AAR | GCI61076 | Inner Joint | | | 34 | | | 85 | |
| 2.0 (147 kw) | 2009.03-2013.05 | 6MT | F | L | Saloon FWD BWE | | GDS83057 | Drive Shaft | 45W | 38 | | 59.5 | 34.5 | 593 | |
| | 2009.03-2013.05 | 6MT | F | R | Saloon FWD BWE | | GDS83058 | Drive Shaft | 45W | 38 | | 59.5 | 34.5 | 613 | |
| | 2009.03-2013.05 | 6MT | F | L/R | Saloon FWD BWE | | GCO83067 | Outer Joint | 45W | 38 | 27 | 59.5 | 34 | 68 | M |
| | 2009.03-2013.05 | AT/MT | F | L/R | Saloon FWD BWE | TJ | GCI61044 | Inner Joint | | | 34 | | | 85 | |
| | 2009.03-2013.05 | CVT | F | L/R | Saloon FWD BWE | | GDS83052 | Drive Shaft | 45W | 38 | | 59.5 | 34.5 | 522 | |
| | 2009.03-2013.05 | CVT | F | L/R | Saloon FWD BWE | | GCO83078 | Outer Joint | 45W | 38 | 27 | 59.5 | 34.5 | 63 | M |
| | 2009.03-2013.05 | | F | L | Saloon FWD BWE | AAR | GCI61076 | Inner Joint | | | 34 | | | 85 | |
| 2.0 (155 kw) | 2010.05-2013.05 | 6MT | F | L | Saloon FWD CDND | | GDS83057 | Drive Shaft | 45W | 38 | | 59.5 | 34.5 | 593 | |
| | 2010.05-2013.05 | 6MT | F | R | Saloon FWD CDND | | GDS83058 | Drive Shaft | 45W | 38 | | 59.5 | 34.5 | 613 | |
| | 2010.05-2013.05 | | F | L/R | Saloon FWD CDND | | GCO83067 | Outer Joint | 45W | 38 | 27 | 59.5 | 34 | 68 | M |
| | 2010.05-2013.05 | | F | L | Saloon FWD CDND | AAR | GCI61076 | Inner Joint | | | 34 | | | 85 | |
| | 2010.05-2013.05 | | F | L/R | Saloon FWD CDND | TJ | GCI61044 | Inner Joint | | | 34 | | | 85 | |
| **Exeo ST** | | | | | | | | | | | | | | | |
| 1.6 (75 kw) | 2009.06-2010.09 | 6MT | F | R | Estate FWD ALZ | | GCI81777 | Inner Joint | | | 33 | | | 33 | |
| | 2009.06-2010.09 | | F | R | Estate FWD ALZ | | GDS82350 | Drive Shaft | 45W | 38 | | 59.5 | 34 | 641 | |
| | 2009.06-2010.09 | | F | L/R | Estate FWD ALZ | | GCO83030 | Outer Joint | | 38 | 33 | 59.5 | 34 | 56.5 | M |
| | 2009.06-2010.09 | | F | L/R | Estate FWD ALZ | | GCO83058 | Outer Joint | 45W | 38 | 33 | 59.5 | 34 | 56.5 | M |
| 1.8 (88 kw) | 2010.09-2013.05 | 6MT | F | L | Estate FWD CDHA | | GDS83057 | Drive Shaft | 45W | 38 | | 59.5 | 34.5 | 593 | |
| | 2010.09-2013.05 | 6MT | F | R | Estate FWD CDHA | | GDS83058 | Drive Shaft | 45W | 38 | | 59.5 | 34.5 | 613 | |
| | 2010.09-2013.05 | MT | F | L/R | Estate FWD CDHA | TJ | GCI61044 | Inner Joint | | | 34 | | | 85 | |
| | 2010.09-2013.05 | | F | L/R | Estate FWD CDHA | | GCO83067 | Outer Joint | 45W | 38 | 27 | 59.5 | 34 | 68 | M |
| | 2010.09-2013.05 | | F | L | Estate FWD CDHA | AAR | GCI61076 | Inner Joint | | | 34 | | | 85 | |
| 1.8 (110 kw) | 2009.06-2010.05 | | F | L | Estate FWD CFMA | | GDS83057 | Drive Shaft | 45W | 38 | | 59.5 | 34.5 | 593 | |
| | 2009.06-2010.05 | | F | R | Estate FWD CFMA | | GDS83058 | Drive Shaft | 45W | 38 | | 59.5 | 34.5 | 613 | |
| | 2009.06-2010.05 | | F | L/R | Estate FWD CFMA | | GCO83067 | Outer Joint | 45W | 38 | 27 | 59.5 | 34 | 68 | M |
| | 2009.06-2010.05 | | F | | Estate FWD CFMA | | GCO83078 | Outer Joint | 45W | 38 | 27 | 59.5 | 34.5 | 63 | M |
| | 2009.06-2010.05 | | F | L | Estate FWD CFMA | AAR | GCI61076 | Inner Joint | | | 34 | | | 85 | |
| | 2009.06-2010.05 | | F | L/R | Estate FWD CFMA | TJ | GCI61044 | Inner Joint | | | 34 | | | 85 | |
| 1.8 (118 kw) | 2010.05-2013.05 | 6MT | F | L | Estate FWD CDHB | | GDS83057 | Drive Shaft | 45W | 38 | | 59.5 | 34.5 | 593 | |
| | 2010.05-2013.05 | 6MT | F | R | Estate FWD CDHB | | GDS83058 | Drive Shaft | 45W | 38 | | 59.5 | 34.5 | 613 | |
| | 2010.05-2013.05 | | F | L/R | Estate FWD CDHB | | GCO83067 | Outer Joint | 45W | 38 | 27 | 59.5 | 34 | 68 | M |
| | 2010.05-2013.05 | | F | L | Estate FWD CDHB | AAR | GCI61076 | Inner Joint | | | 34 | | | 85 | |
| | 2010.05-2013.05 | | F | L/R | Estate FWD CDHB | TJ | GCI61044 | Inner Joint | | | 34 | | | 85 | |
| 2.0 (88 kw) | 2009.07-2013.05 | 6MT | F | L | Estate FWD CAGC;CJCC | | GDS83057 | Drive Shaft | 45W | 38 | | 59.5 | 34.5 | 593 | |
| | 2009.07-2013.05 | 6MT | F | R | Estate FWD CAGC;CJCC | | GDS83058 | Drive Shaft | 45W | 38 | | 59.5 | 34.5 | 613 | |

| | YEAR | TRANSM. | F/R | L/R | BODY STYLE & DRIVE TYPE & ENGINE | REMARKS | G-AP Ref. | PRODUCT | ABS | Technical Specifications A | B | C | H | L | P |
|---|---|---|---|---|---|---|---|---|---|---|---|---|---|---|---|
| **SEAT** | | | | | | | | | | | | | | | |
| **Exeo ST** | | | | | | | | | | | | | | | |
| 2.0 (88 kw) | 2009.07-2013.05 | 6MT | F | L/R | Estate FWD CAGC;CJCC | | GCO83067 | Outer Joint | 45W | 38 | 27 | 59.5 | 34 | 68 | M |
| | 2009.07-2013.05 | 6MT | F | L/R | Estate FWD CAGC;CJCC | TJ | GCI61044 | Inner Joint | | | 34 | | | 85 | |
| | 2009.07-2013.05 | | F | L | Estate FWD CAGC;CJCC | AAR | GCI61076 | Inner Joint | | | 34 | | | 85 | |
| 2.0 (105 kw) | 2009.05-2013.05 | 6MT | F | L | Estate FWD CAGA;CJCA | | GDS83057 | Drive Shaft | 45W | 38 | | 59.5 | 34.5 | 593 | |
| | 2009.05-2013.05 | 6MT | F | R | Estate FWD CAGA;CJCA | | GDS83058 | Drive Shaft | 45W | 38 | | 59.5 | 34.5 | 613 | |
| | 2009.05-2013.05 | 6MT | F | L/R | Estate FWD CAGA;CJCA | | GCO83067 | Outer Joint | 45W | 38 | 27 | 59.5 | 34 | 68 | M |
| | 2009.05-2013.05 | 6MT | F | L/R | Estate FWD CAGA;CJCA | TJ | GCI61044 | Inner Joint | | | 34 | | | 85 | |
| | 2009.05-2013.05 | CVT | F | L/R | Estate FWD CAGA;CJCA | Date to:2011.10 | GDS81132 | Drive Shaft | 45W | 38 | | 59.5 | 34.5 | 525 | |
| | 2009.05-2013.05 | CVT | F | L/R | Estate FWD CAGA;CJCA | Date from:2011.11 | GDS83052 | Drive Shaft | 45W | 38 | | 59.5 | 34.5 | 522 | |
| | 2009.05-2013.05 | CVT | F | L/R | Estate FWD CAGA;CJCA | | GCO83078 | Outer Joint | 45W | 38 | 27 | 59.5 | 34.5 | 63 | M |
| | 2009.05-2013.05 | MT | F | L | Estate FWD CAGA;CJCA | AAR | GCI61076 | Inner Joint | | | 34 | | | 85 | |
| 2.0 (125 kw) | 2009.05-2013.05 | 6MT | F | L | Estate FWD CAHA;CGLB | | GDS83057 | Drive Shaft | 45W | 38 | | 59.5 | 34.5 | 593 | |
| | 2009.05-2013.05 | 6MT | F | R | Estate FWD CAHA;CGLB | | GDS83058 | Drive Shaft | 45W | 38 | | 59.5 | 34.5 | 613 | |
| | 2009.05-2013.05 | 6MT | F | L/R | Estate FWD CAHA;CGLB | | GCO83067 | Outer Joint | 45W | 38 | 27 | 59.5 | 34 | 68 | M |
| | 2009.05-2013.05 | 6MT | F | L/R | Estate FWD CAHA;CGLB | TJ | GCI61044 | Inner Joint | | | 34 | | | 85 | |
| | 2009.05-2013.05 | | F | L | Estate FWD CAHA;CGLB | AAR | GCI61076 | Inner Joint | | | 34 | | | 85 | |
| 2.0 (147 kw) | 2009.06-2013.05 | 6MT | F | R | Estate FWD BWE | | GDS83058 | Drive Shaft | 45W | 38 | | 59.5 | 34.5 | 613 | |
| | 2009.06-2013.05 | CVT | F | L/R | Estate FWD BWE | | GDS83052 | Drive Shaft | 45W | 38 | | 59.5 | 34.5 | 522 | |
| | 2009.06-2013.05 | CVT | F | L/R | Estate FWD BWE | | GCO83078 | Outer Joint | 45W | 38 | 27 | 59.5 | 34.5 | 63 | M |
| | 2009.06-2013.05 | MT | F | L | Estate FWD BWE | | GDS83057 | Drive Shaft | 45W | 38 | | 59.5 | 34.5 | 593 | |
| | 2009.06-2013.05 | MT | F | L/R | Estate FWD BWE | | GCO83067 | Outer Joint | 45W | 38 | 27 | 59.5 | 34 | 68 | M |
| | 2009.06-2013.05 | MT | F | L | Estate FWD BWE | AAR | GCI61076 | Inner Joint | | | 34 | | | 85 | |
| | 2009.06-2013.05 | | F | L/R | Estate FWD BWE | TJ | GCI61044 | Inner Joint | | | 34 | | | 85 | |
| 2.0 (155 kw) | 2010.05-2013.05 | 6MT | F | L | Estate FWD CDND | | GDS83057 | Drive Shaft | 45W | 38 | | 59.5 | 34.5 | 593 | |
| | 2010.05-2013.05 | 6MT | F | R | Estate FWD CDND | | GDS83058 | Drive Shaft | 45W | 38 | | 59.5 | 34.5 | 613 | |
| | 2010.05-2013.05 | | F | L/R | Estate FWD CDND | | GCO83067 | Outer Joint | 45W | 38 | 27 | 59.5 | 34 | 68 | M |
| | 2010.05-2013.05 | | F | L | Estate FWD CDND | AAR | GCI61076 | Inner Joint | | | 34 | | | 85 | |
| | 2010.05-2013.05 | | F | L/R | Estate FWD CDND | TJ | GCI61044 | Inner Joint | | | 34 | | | 85 | |
| **Ibiza** | | | | | | | | | | | | | | | |
| 1.0 (33 kw) | 1993.02-1996.06 | AT/MT | F | L/R | Hatchback FWD AAU | | GCO53006 | Outer Joint | | 22 | 30 | 50 | 78.5 | 52 | I |
| | 1993.02-1996.06 | MT | F | L | Hatchback FWD AAU | Date to:1996.06 | GDS53004 | Drive Shaft | | 22 | | 50 | 78.5 | 562 | |
| | 1993.02-1996.06 | MT | F | L/R | Hatchback FWD AAU | Date to:1996.06 | GCO53008 | Outer Joint | | 22 | 30 | 53 | 78.5 | 51 | I |
| | 1993.02-1996.06 | MT | F | L/R | Hatchback FWD AAU | Date to:1996.06 | GCI53001 | Inner Joint | | | 33 | | | 32 | |
| 1.0 (37 kw) | 1996.09-2002.05 | 5MT | F | L | Hatchback FWD AER/ALD/ANV/AUC | | GDS53004 | Drive Shaft | | 22 | | 50 | 78.5 | 562 | |
| | 1996.09-2002.05 | 5MT | F | L/R | Hatchback FWD AER/ALD/ANV/AUC | | GCO53008 | Outer Joint | | 22 | 30 | 53 | 78.5 | 51 | I |
| | 1996.09-2002.05 | MT | F | L/R | Hatchback FWD AER/ALD/ANV/AUC | | GCI53001 | Inner Joint | | | 33 | | | 32 | |
| | 1996.09-2002.05 | | F | | Hatchback FWD AER/ALD/ANV/AUC | | GCO53006 | Outer Joint | | 22 | 30 | 50 | 78.5 | 52 | I |
| 1.0 (48 kw) | 2017.07- | 5MT | F | L | Hatchback FWD CHYC;DFNB | | GDS84459 | Drive Shaft | | 36 | 33 | 52 | 76 | 636 | |
| | 2017.07- | 5MT | F | R | Hatchback FWD CHYC;DFNB | | GDS84456 | Drive Shaft | | 36 | 33 | 52 | 76 | 908 | |
| | 2017.07- | 5MT | F | L/R | Hatchback FWD CHYC;DFNB | | GCO82705 | Outer Joint | | 36 | 23 | 52 | 76 | 54 | M |
| | 2017.07- | 5MT | F | L/R | Hatchback FWD CHYC;DFNB | | GCI82767 | Inner Joint | | 33 | 22 | 40 | 59 | 88 | |
| 1.0 (51 kw) | 1999.10-2002.05 | 5MT | F | L | Hatchback FWD AST/AVZ | | GDS53004 | Drive Shaft | | 22 | | 50 | 78.5 | 562 | |
| | 1999.10-2002.05 | MT | F | L/R | Hatchback FWD AST/AVZ | Date from:2000.05 | GCI53001 | Inner Joint | | | 33 | | | 32 | |
| 1.0 (55 kw) | 2015.05-2017.06 | 5MT | F | L | Hatchback FWD CHYB | | GDS82038 | Drive Shaft | | 36 | 28 | 52 | 58.5 | 629 | |
| | 2015.05-2017.06 | 5MT | F | L | Hatchback FWD CHYB | | GCI81611 | Inner Joint | | 28 | 28 | 39.95 | 58 | 84 | |
| | 2015.05-2017.06 | MT | F | R | Hatchback FWD CHYB | | GDS82040 | Drive Shaft | | 36 | 28 | 52 | 58.5 | 821 | |
| | 2015.05-2017.06 | MT | F | L/R | Hatchback FWD CHYB | | GCO83027 | Outer Joint | | 36 | 30 | 50.7 | 58.5 | 47.5 | I |
| | 2017.01- | 5MT | F | L | Hatchback FWD CHYB | | GDS84459 | Drive Shaft | | 36 | 33 | 52 | 76 | 636 | |
| | 2017.01- | 5MT | F | R | Hatchback FWD CHYB | Date from:2018.01;Inner teeth of wheel side:30 | GDS83825 | Drive Shaft | | 36 | 33 | 52 | 64.5 | 896 | |
| | 2017.01- | 5MT | F | R | Hatchback FWD CHYB | Date to:2017.11;Inner teeth of wheel side:33 | GDS84030 | Drive Shaft | | 36 | 33 | 52 | 76 | 913 | |
| | 2017.01- | 5MT | F | R | Hatchback FWD CHYB | Inner teeth of wheel side:23 | GDS84456 | Drive Shaft | | 36 | 33 | 52 | 76 | 908 | |
| | 2017.01- | 5MT | F | L/R | Hatchback FWD CHYB | Date to:2017.11 | GCO82558 | Outer Joint | | 36 | 33 | 52 | 76 | 60 | M |
| | 2017.01- | 5MT | F | L/R | Hatchback FWD CHYB | | GCO82705 | Outer Joint | | 36 | 23 | 52 | 76 | 54 | M |
| | 2017.01- | 5MT | F | R | Hatchback FWD CHYB | Date from:2018.01 | GCI82384 | Inner Joint | | 33 | 30 | 39.95 | 58.5 | 91.5 | |
| | 2017.01- | 5MT | F | R | Hatchback FWD CHYB | Date to:2017.11 | GCI82462 | Inner Joint | | 33 | 33 | 39.95 | 59 | 92.5 | |
| | 2017.01- | 5MT | F | L/R | Hatchback FWD CHYB | | GCI82767 | Inner Joint | | 33 | 22 | 40 | 59 | 88 | |
| 1.0 (59 kw) | 2018.07- | 5MT | F | L | Hatchback FWD DFNA;DSGB;DSGD | | GDS84459 | Drive Shaft | | 36 | 33 | 52 | 76 | 636 | |
| | 2018.07- | 5MT | F | R | Hatchback FWD DFNA;DSGB;DSGD | | GDS84456 | Drive Shaft | | 36 | 33 | 52 | 76 | 908 | |
| | 2018.07- | 5MT | F | L/R | Hatchback FWD DFNA;DSGB;DSGD | | GCO82705 | Outer Joint | | 36 | 23 | 52 | 76 | 54 | M |
| | 2018.07- | 5MT | F | L/R | Hatchback FWD DFNA;DSGB;DSGD | | GCI82767 | Inner Joint | | 33 | 22 | 40 | 59 | 88 | |
| 1.0 (66 kw) | 2017.11- | 5MT | F | L | Hatchback FWD DBYA | | GDS84011 | Drive Shaft | | 36 | 33 | 52 | 64.5 | 620 | |
| | 2017.11- | 5MT | F | R | Hatchback FWD DBYA | | GCI82384 | Inner Joint | | 33 | 30 | 39.95 | 58.5 | 91.5 | |
| | 2017.11- | 5MT | F | R | Hatchback FWD DBYA | Date to:2017.11 | GCI82462 | Inner Joint | | 33 | 33 | 39.95 | 59 | 92.5 | |
| | 2017.11- | 5MT/6MT | F | R | Hatchback FWD DBYA | | GDS83825 | Drive Shaft | | 36 | 33 | 52 | 64.5 | 896 | |
| | 2017.11- | 5MT/6MT | F | R | Hatchback FWD DBYA | | GDS84030 | Drive Shaft | | 36 | 33 | 52 | 76 | 913 | |

| | YEAR | TRANSM. | F/R | L/R | BODY STYLE & DRIVE TYPE & ENGINE | REMARKS | G-AP Ref. | PRODUCT | ABS | Technical Specifications A | B | C | H | L | P |
|---|---|---|---|---|---|---|---|---|---|---|---|---|---|---|---|
| **SEAT** | | | | | | | | | | | | | | | |
| **Ibiza** | | | | | | | | | | | | | | | |
| 1.0 (66 kw) | 2017.11- | 5MT/6MT | F | L/R | Hatchback FWD DBYA | | GCO81744 | Outer Joint | | 36 | 30 | 52 | 64.5 | 55.5 | M |
| | 2017.11- | 5MT/6MT | F | L/R | Hatchback FWD DBYA | | GCO82558 | Outer Joint | | 36 | 33 | 52 | 76 | 60 | M |
| | 2017.11- | 5MT/6MT | F | L | Hatchback FWD DBYA | | GCI82449 | Inner Joint | | 33 | 30 | 39.9 | 58.5 | 105 | |
| 1.0 (70 kw) | 2015.05-2017.06 | 5MT | F | L | Hatchback FWD CHZB | | GDS81922 | Drive Shaft | | 36 | 33 | 52 | 59 | 581 | |
| | 2015.05-2017.06 | 5MT | F | R | Hatchback FWD CHZB | | GDS81924 | Drive Shaft | | 36 | 33 | 52 | 59 | 855 | |
| | 2015.05-2017.06 | 5MT | F | L/R | Hatchback FWD CHZB | | GCI81546 | Inner Joint | | 33 | 32 | 39.9 | 58.5 | 105 | |
| | 2015.05-2017.06 | 6MT | F | L/R | Hatchback FWD CHZB | | GCO54006 | Outer Joint | | 36 | 30 | 52 | 59 | 55.5 | I |
| | 2015.05-2017.06 | MT | F | L/R | Hatchback FWD CHZB | | GCO83024 | Outer Joint | | 36 | 30 | 50.75 | 59 | 55.5 | I |
| | 2017.01- | 5MT | F | L | Hatchback FWD CHZL;DKLA;DLAC;DUSB | | GDS84011 | Drive Shaft | | 36 | 33 | 52 | 64.5 | 620 | |
| | 2017.01- | 5MT | F | R | Hatchback FWD CHZL;DKLA;DLAC;DUSB | Hollow shaft | GDS83825 | Drive Shaft | | 36 | 33 | 52 | 64.5 | 896 | |
| | 2017.01- | 5MT | F | R | Hatchback FWD CHZL;DKLA;DLAC;DUSB | Solid shaft | GDS84030 | Drive Shaft | | 36 | 33 | 52 | 76 | 913 | |
| | 2017.01- | 5MT | F | L/R | Hatchback FWD CHZL;DKLA;DLAC;DUSB | | GCO81744 | Outer Joint | | 36 | 30 | 52 | 64.5 | 55.5 | M |
| | 2017.01- | 5MT | F | L/R | Hatchback FWD CHZL;DKLA;DLAC;DUSB | | GCO82558 | Outer Joint | | 36 | 33 | 52 | 76 | 60 | M |
| | 2017.01- | 5MT | F | L | Hatchback FWD CHZL;DKLA;DLAC;DUSB | | GCI82449 | Inner Joint | | 33 | 30 | 39.9 | 58.5 | 105 | |
| | 2017.01- | 5MT | F | R | Hatchback FWD CHZL;DKLA;DLAC;DUSB | | GCI82384 | Inner Joint | | 33 | 30 | 39.95 | 58.5 | 91.5 | |
| | 2017.01- | 5MT | F | R | Hatchback FWD CHZL;DKLA;DLAC;DUSB | Date to:2017.11 | GCI82462 | Inner Joint | | 33 | 33 | 39.95 | 59 | 92.5 | |
| 1.0 (81 kw) | 2015.05-2017.06 | 6MT | F | L | Hatchback FWD CHZC | | GDS81922 | Drive Shaft | | 36 | 33 | 52 | 59 | 581 | |
| | 2015.05-2017.06 | 6MT | F | R | Hatchback FWD CHZC | | GDS81924 | Drive Shaft | | 36 | 33 | 52 | 59 | 855 | |
| | 2015.05-2017.06 | 6MT | F | L/R | Hatchback FWD CHZC | | GCO54006 | Outer Joint | | 36 | 30 | 52 | 59 | 55.5 | I |
| | 2015.05-2017.06 | 6MT | F | L/R | Hatchback FWD CHZC | | GCI81546 | Inner Joint | | 33 | 32 | 39.9 | 58.5 | 105 | |
| | 2015.05-2017.06 | 7DCT | F | L | Hatchback FWD CHZC | | GDS82228 | Drive Shaft | | 36 | | 52 | 75 | 475 | |
| | 2015.05-2017.06 | 7DCT | F | R | Hatchback FWD CHZC | | GDS82358 | Drive Shaft | | 36 | | 52 | 75 | 762 | |
| | 2015.05-2017.06 | 7DCT | F | L/R | Hatchback FWD CHZC | | GCO61081 | Outer Joint | | 36 | 27 | 52 | 75 | 65 | I |
| | 2015.05-2017.06 | 7DCT | F | L/R | Hatchback FWD CHZC | | GCI81689 | Inner Joint | | | 32 | | | 89 | |
| | 2015.05-2017.06 | MT | F | L/R | Hatchback FWD CHZC | | GCO83024 | Outer Joint | | 36 | 30 | 50.75 | 59 | 55.5 | I |
| | 2020.06- | 6MT | F | L | Hatchback FWD DLAA | | GDS84558 | Drive Shaft | | 36 | | 52 | 64.5 | 496 | |
| | 2020.06- | 6MT | F | R | Hatchback FWD DLAA | | GDS82233 | Drive Shaft | | 36 | | 52 | 64.5 | 778 | |
| | 2020.06- | 6MT | F | L/R | Hatchback FWD DLAA | | GCO81744 | Outer Joint | | 36 | 30 | 52 | 64.5 | 55.5 | M |
| | 2020.06- | 6MT | F | L | Hatchback FWD DLAA | | GCI82449 | Inner Joint | | 33 | 30 | 39.9 | 58.5 | 105 | |
| | 2020.06- | 6MT | F | R | Hatchback FWD DLAA | | GCI81690 | Inner Joint | | | 30 | | | 89 | |
| 1.0 (85 kw) | 2017.01- | 6MT | F | L | Hatchback FWD CHZJ;DKJA;DKRF;DUSA | | GDS84558 | Drive Shaft | | 36 | | 52 | 64.5 | 496 | |
| | 2017.01- | 6MT | F | R | Hatchback FWD CHZJ;DKJA;DKRF;DUSA | | GDS84562 | Drive Shaft | | 36 | | 52 | 64.5 | 799 | |
| | 2017.01- | 6MT | F | L/R | Hatchback FWD CHZJ;DKJA;DKRF;DUSA | | GCO81744 | Outer Joint | | 36 | 30 | 52 | 64.5 | 55.5 | M |
| | 2017.01- | 6MT | F | L/R | Hatchback FWD CHZJ;DKJA;DKRF;DUSA | | GCI82449 | Inner Joint | | 33 | 30 | 39.9 | 58.5 | 105 | |
| | 2017.01- | 7DCT | F | L | Hatchback FWD CHZJ;DKJA;DKRF;DUSA | For Engine code:DKJA/DKRF | GDS82232 | Drive Shaft | | 36 | | 52 | 64.5 | 500 | |
| | 2017.01- | 7DCT | F | L | Hatchback FWD CHZJ;DKJA;DKRF;DUSA | For Engine code:DUSA | GDS84563 | Drive Shaft | | 36 | | 52 | 64.5 | 506 | |
| | 2017.01- | 7DCT | F | R | Hatchback FWD CHZJ;DKJA;DKRF;DUSA | For Engine code:DUSA | GDS57885 | Drive Shaft | | 36 | | 52 | 64.5 | 765 | |
| | 2017.01- | 7DCT | F | R | Hatchback FWD CHZJ;DKJA;DKRF;DUSA | For Engine code:DKJA/DKRF | GDS82233 | Drive Shaft | | 36 | | 52 | 64.5 | 778 | |
| | 2017.01- | 7DCT | F | L | Hatchback FWD CHZJ;DKJA;DKRF;DUSA | | GCO81743 | Outer Joint | | 36 | 33 | 52 | 64.5 | 59 | I |
| | 2017.01- | 7DCT | F | R | Hatchback FWD CHZJ;DKJA;DKRF;DUSA | | GCO81744 | Outer Joint | | 36 | 30 | 52 | 64.5 | 55.5 | M |
| | 2017.01- | 7DCT | F | L | Hatchback FWD CHZJ;DKJA;DKRF;DUSA | | GCI81689 | Inner Joint | | | 32 | | | 89 | |
| | 2017.01- | 7DCT | F | R | Hatchback FWD CHZJ;DKJA;DKRF;DUSA | Date from:2019.02 | GCI81689 | Inner Joint | | | 32 | | | 89 | |
| | 2017.01- | 7DCT | F | R | Hatchback FWD CHZJ;DKJA;DKRF;DUSA | Date to:2019.01 | GCI81690 | Inner Joint | | | 30 | | | 89 | |
| 1.2 (44 kw) | 2007.06-2008.05 | 5MT | F | L | Hatchback FWD BBM | | GDS83063 | Drive Shaft | | 36 | | 50.7 | 58.5 | 501 | |
| | 2007.06-2008.05 | 5MT | F | R | Hatchback FWD BBM | | GDS61063 | Drive Shaft | | 36 | | 50.7 | 58.5 | 751 | |
| | 2007.06-2008.05 | 5MT | F | L/R | Hatchback FWD BBM | | GCO83027 | Outer Joint | | 36 | 30 | 50.7 | 58.5 | 47.5 | I |
| | 2007.06-2008.05 | 5MT | F | L/R | Hatchback FWD BBM | | GCI83008 | Inner Joint | | | 33 | | | 32 | |
| | 2007.06-2008.05 | AT/MT | F | L/R | Hatchback FWD BBM | | GCI83005 | Inner Joint | | | 33 | | | 32 | |
| | 2009.07-2015.05 | 5MT | F | L | Hatchback FWD CGPB | | GDS83330 | Drive Shaft | | 36 | | 50.7 | 58.5 | 515 | |
| | 2009.07-2015.05 | 5MT | F | R | Hatchback FWD CGPB | | GDS61288 | Drive Shaft | | 36 | | 50.7 | 58.5 | 765 | |
| | 2009.07-2015.05 | 5MT | F | L/R | Hatchback FWD CGPB | | GCI83008 | Inner Joint | | | 33 | | | 32 | |
| | 2009.07-2015.05 | MT | F | L/R | Hatchback FWD CGPB | | GCO83027 | Outer Joint | | 36 | 30 | 50.7 | 58.5 | 47.5 | I |
| | 2009.07-2015.05 | MT | F | L/R | Hatchback FWD CGPB | | GCI83005 | Inner Joint | | | 33 | | | 32 | |
| 1.2 (47 kw) | 2002.02-2006.06 | 5MT | F | L | Hatchback FWD AZQ;BME | | GDS83063 | Drive Shaft | | 36 | | 50.7 | 58.5 | 501 | |
| | 2002.02-2006.06 | 5MT | F | R | Hatchback FWD AZQ;BME | | GDS61063 | Drive Shaft | | 36 | | 50.7 | 58.5 | 751 | |
| | 2002.02-2006.06 | 5MT | F | L/R | Hatchback FWD AZQ;BME | Date from:2005.06,Chassis no. from:6L_6_000001 | GCO83027 | Outer Joint | | 36 | 30 | 50.7 | 58.5 | 47.5 | I |
| | 2002.02-2006.06 | 5MT | F | L/R | Hatchback FWD AZQ;BME | | GCI83008 | Inner Joint | | | 33 | | | 32 | |
| | 2002.02-2006.06 | AT/MT | F | L/R | Hatchback FWD AZQ;BME | | GCI83005 | Inner Joint | | | 33 | | | 32 | |
| 1.2 (51 kw) | 2006.05-2009.11 | 5MT | F | L | Hatchback FWD BXV | | GDS83063 | Drive Shaft | | 36 | | 50.7 | 58.5 | 501 | |
| | 2006.05-2009.11 | 5MT | F | R | Hatchback FWD BXV | | GDS61063 | Drive Shaft | | 36 | | 50.7 | 58.5 | 751 | |
| | 2006.05-2009.11 | 5MT | F | L/R | Hatchback FWD BXV | | GCO83027 | Outer Joint | | 36 | 30 | 50.7 | 58.5 | 47.5 | I |
| | 2006.05-2009.11 | 5MT | F | L/R | Hatchback FWD BXV | | GCI83008 | Inner Joint | | | 33 | | | 32 | |
| | 2006.05-2009.11 | AT | F | | Hatchback FWD BXV | | GCO83078 | Outer Joint | 45W | 38 | 27 | 59.5 | 34.5 | 63 | M |
| | 2006.05-2009.11 | AT/MT | F | L/R | Hatchback FWD BXV | Date from:2007.01;Date to:2008.12 | GCI83005 | Inner Joint | | | 33 | | | 32 | |
| | 2008.03-2011.05 | 5MT | F | L | Hatchback FWD BZG | | GDS83330 | Drive Shaft | | 36 | | 50.7 | 58.5 | 515 | |

| | YEAR | TRANSM. | F/R | L/R | BODY STYLE & DRIVE TYPE & ENGINE | REMARKS | G-AP Ref. | PRODUCT | ABS | Technical Specifications A | B | C | H | L | P |
|---|---|---|---|---|---|---|---|---|---|---|---|---|---|---|---|
| **SEAT** | | | | | | | | | | | | | | | |
| **Ibiza** | | | | | | | | | | | | | | | |
| 1.2 (51 kw) | 2008.03-2011.05 | 5MT | F | R | Hatchback FWD BZG | | GDS61288 | Drive Shaft | | 36 | | 50.7 | 58.5 | 765 | |
| | 2008.03-2011.05 | 5MT | F | R | Hatchback FWD BZG | | GCO83027 | Outer Joint | | 36 | 30 | 50.7 | 58.5 | 47.5 | I |
| | 2008.03-2011.05 | 5MT | F | R | Hatchback FWD BZG | | GCI83008 | Inner Joint | | | 33 | | | 32 | |
| | 2008.03-2015.05 | 5MT | F | L | Hatchback FWD BZG;CGPA;CJLB | | GDS83330 | Drive Shaft | | 36 | | 50.7 | 58.5 | 515 | |
| | 2008.03-2015.05 | 5MT | F | R | Hatchback FWD BZG;CGPA;CJLB | | GDS61288 | Drive Shaft | | 36 | | 50.7 | 58.5 | 765 | |
| | 2008.03-2015.05 | 5MT | F | L/R | Hatchback FWD BZG;CGPA;CJLB | | GCI83008 | Inner Joint | | | 33 | | | 32 | |
| | 2008.03-2015.05 | AT/MT | F | L/R | Hatchback FWD BZG;CGPA;CJLB | | GCO83027 | Outer Joint | | 36 | 30 | 50.7 | 58.5 | 47.5 | I |
| 1.2 (55 kw) | 2010.06-2015.05 | 5MT | F | L | Hatchback FWD CFWA | | GDS61184 | Drive Shaft | | 36 | | 52 | 59 | 496 | |
| | 2010.06-2015.05 | 5MT | F | R | Hatchback FWD CFWA | | GDS61185 | Drive Shaft | | 36 | | 52 | 59 | 785 | |
| | 2010.06-2015.05 | 5MT | F | L/R | Hatchback FWD CFWA | | GCO83024 | Outer Joint | | 36 | 30 | 50.75 | 59 | 55.5 | I |
| | 2010.06-2015.05 | 5MT | F | L/R | Hatchback FWD CFWA | | GCI82447 | Inner Joint | | | 33 | | | 34 | |
| | 2010.06-2015.05 | MT | F | L/R | Hatchback FWD CFWA | | GCI83011 | Inner Joint | | | 33 | | | 34 | |
| | 2010.06-2015.05 | | F | L | Hatchback FWD CFWA | | GCO54006 | Outer Joint | | 36 | 30 | 52 | 59 | 55.5 | I |
| 1.2 (63 kw) | 2012.08-2015.05 | 5MT | F | L | Hatchback FWD CBZA | | GDS61297 | Drive Shaft | | 36 | | 50.5 | 59 | 513 | |
| | 2012.08-2015.05 | 5MT | F | R | Hatchback FWD CBZA | | GDS61301 | Drive Shaft | | 36 | | 50.5 | 59 | 771 | |
| | 2012.08-2015.05 | 5MT | F | L/R | Hatchback FWD CBZA | | GCO83024 | Outer Joint | | 36 | 30 | 50.75 | 59 | 55.5 | I |
| | 2012.08-2015.05 | 5MT | F | L/R | Hatchback FWD CBZA | | GCI82447 | Inner Joint | | | 33 | | | 34 | |
| | 2012.08-2015.05 | MT | F | L | Hatchback FWD CBZA | | GDS61274 | Drive Shaft | | 36 | | 50.5 | 59 | 514 | |
| | 2012.08-2015.05 | MT | F | L | Hatchback FWD CBZA | | GCO54006 | Outer Joint | | 36 | 30 | 52 | 59 | 55.5 | I |
| | 2012.08-2015.05 | MT | F | L/R | Hatchback FWD CBZA | | GCI83011 | Inner Joint | | | 33 | | | 34 | |
| 1.2 (66 kw) | 2015.05-2017.06 | 5MT | F | L | Hatchback FWD CJZC | | GDS61297 | Drive Shaft | | 36 | | 50.5 | 59 | 513 | |
| | 2015.05-2017.06 | 5MT | F | L/R | Hatchback FWD CJZC | | GCO83024 | Outer Joint | | 36 | 30 | 50.75 | 59 | 55.5 | I |
| | 2015.05-2017.06 | 5MT | F | L/R | Hatchback FWD CJZC | | GCI53002 | Inner Joint | | | 33 | | | 34 | |
| | 2015.05-2017.06 | 5MT | F | L/R | Hatchback FWD CJZC | | GCI82447 | Inner Joint | | | 33 | | | 34 | |
| | 2015.05-2017.06 | 6MT | F | R | Hatchback FWD CJZC | | GDS61301 | Drive Shaft | | 36 | | 50.5 | 59 | 771 | |
| | 2015.05-2017.06 | | F | L/R | Hatchback FWD CJZC | | GCO54006 | Outer Joint | | 36 | 30 | 52 | 59 | 55.5 | I |
| | 2015.05-2017.06 | | F | L/R | Hatchback FWD CJZC | | GCI83011 | Inner Joint | | | 33 | | | 34 | |
| 1.2 (77 kw) | 2010.09-2012.03 | 5MT | F | L | Hatchback FWD CBZB | | GDS61297 | Drive Shaft | | 36 | | 50.5 | 59 | 513 | |
| | 2010.09-2012.03 | 5MT | F | R | Hatchback FWD CBZB | | GDS61301 | Drive Shaft | | 36 | | 50.5 | 59 | 771 | |
| | 2010.09-2012.03 | 5MT/7AT | F | L/R | Hatchback FWD CBZB | | GCO83024 | Outer Joint | | 36 | 30 | 50.75 | 59 | 55.5 | I |
| | 2010.09-2012.03 | 5MT/7DCT | F | L/R | Hatchback FWD CBZB | | GCI53002 | Inner Joint | | | 33 | | | 34 | |
| | 2010.09-2012.03 | 7DCT | F | L | Hatchback FWD CBZB | | GDS61311 | Drive Shaft | | 36 | | 50.5 | 59 | 492 | |
| | 2010.09-2012.03 | 7DCT | F | R | Hatchback FWD CBZB | | GDS61308 | Drive Shaft | | 36 | | 50.5 | 59 | 786 | |
| | 2010.09-2012.03 | 7DCT/5MT | F | L/R | Hatchback FWD CBZB | | GCI82447 | Inner Joint | | | 33 | | | 34 | |
| | 2010.09-2012.03 | MT | F | L | Hatchback FWD CBZB | | GDS61274 | Drive Shaft | | 36 | | 50.5 | 59 | 514 | |
| | 2010.09-2012.03 | | F | L/R | Hatchback FWD CBZB | | GCO54006 | Outer Joint | | 36 | 30 | 52 | 59 | 55.5 | I |
| | 2010.09-2012.03 | | F | L/R | Hatchback FWD CBZB | | GCI83011 | Inner Joint | | | 33 | | | 34 | |
| 1.2 (81 kw) | 2015.09-2017.06 | 5MT | F | R | Hatchback FWD CJZD | | GDS61301 | Drive Shaft | | 36 | | 50.5 | 59 | 771 | |
| | 2015.09-2017.06 | 6MT | F | L | Hatchback FWD CJZD | | GDS61297 | Drive Shaft | | 36 | | 50.5 | 59 | 513 | |
| | 2015.09-2017.06 | 6MT | F | L/R | Hatchback FWD CJZD | | GCO83024 | Outer Joint | | 36 | 30 | 50.75 | 59 | 55.5 | I |
| | 2015.09-2017.06 | 6MT | F | L/R | Hatchback FWD CJZD | | GCI53002 | Inner Joint | | | 33 | | | 34 | |
| | 2015.09-2017.06 | 6MT | F | L/R | Hatchback FWD CJZD | | GCI82447 | Inner Joint | | | 33 | | | 34 | |
| | 2015.09-2017.06 | | F | L/R | Hatchback FWD CJZD | | GCO54006 | Outer Joint | | 36 | 30 | 52 | 59 | 55.5 | I |
| | 2015.09-2017.06 | | F | L/R | Hatchback FWD CJZD | | GCI83011 | Inner Joint | | | 33 | | | 34 | |
| 1.4 (40 kw) | 1998.01-1998.05 | AT/MT | F | L/R | Hatchback FWD ANX | | GCO53006 | Outer Joint | | 22 | 30 | 50 | 78.5 | 52 | I |
| 1.4 (44 kw) | 1993.09-2003.08 | 5MT | F | L | Hatchback FWD ABD/AEX/AKK/AKV/ANW/APQ/AUD | | GDS53004 | Drive Shaft | | 22 | | 50 | 78.5 | 562 | |
| | 1993.09-2003.08 | 5MT | F | L/R | Hatchback FWD ABD/AEX/AKK/AKV/ANW/APQ/AUD | | GCO53008 | Outer Joint | | 22 | 30 | 53 | 78.5 | 51 | I |
| | 1993.09-2003.08 | MT | F | L/R | Hatchback FWD ABD/AEX/AKK/AKV/ANW/APQ/AUD | Date to:2000.12 | GCI53001 | Inner Joint | | | 33 | | | 32 | |
| | 1993.09-2003.08 | | F | L/R | Hatchback FWD ABD/AEX/AKK/AKV/ANW/APQ/AUD | | GCO53006 | Outer Joint | | 22 | 30 | 50 | 78.5 | 52 | I |
| 1.4 (51 kw) | 2005.05-2009.11 | 5MT | F | L | Hatchback FWD BNM | | GDS61078 | Drive Shaft | | 36 | | 50.7 | 58.5 | 501 | |
| | 2005.05-2009.11 | 5MT | F | R | Hatchback FWD BNM | | GDS61223 | Drive Shaft | | 36 | | 52 | 59 | 757 | |
| | 2005.05-2009.11 | 5MT | F | L/R | Hatchback FWD BNM | | GCO83024 | Outer Joint | | 36 | 30 | 50.75 | 59 | 55.5 | I |
| | 2005.05-2009.11 | MT | F | R | Hatchback FWD BNM | | GDS61063 | Drive Shaft | | 36 | | 50.7 | 58.5 | 751 | |
| | 2005.05-2009.11 | MT | F | R | Hatchback FWD BNM | | GCO54006 | Outer Joint | | 36 | 30 | 52 | 59 | 55.5 | I |
| | 2005.05-2009.11 | MT | F | L/R | Hatchback FWD BNM | | GCI83005 | Inner Joint | | | 33 | | | 32 | |
| | 2005.05-2009.11 | | F | L/R | Hatchback FWD BNM | | GCI83008 | Inner Joint | | | 33 | | | 32 | |
| 1.4 (55 kw) | 1999.09-2002.05 | 5MT | F | L | Hatchback FWD APE/AUA | | GDS53004 | Drive Shaft | | 22 | | 50 | 78.5 | 562 | |
| | 1999.09-2002.05 | 5MT | F | L/R | Hatchback FWD APE/AUA | | GCO53008 | Outer Joint | | 22 | 30 | 53 | 78.5 | 51 | I |
| | 1999.09-2002.05 | MT | F | L/R | Hatchback FWD APE/AUA | | GCI53001 | Inner Joint | | | 33 | | | 32 | |
| | 2002.02-2007.12 | 4AT | F | L | Hatchback FWD BBY;BKY | | GDS81921 | Drive Shaft | | 36 | | 52 | 59 | 494 | |
| | 2002.02-2007.12 | 4AT | F | R | Hatchback FWD BBY;BKY | | GDS61252 | Drive Shaft | | 36 | | 53.7 | 58.5 | 730 | |
| | 2002.02-2007.12 | 4AT | F | L | Hatchback FWD BBY;BKY | Chassis no. from:6L3255001 | GCO54006 | Outer Joint | | 36 | 30 | 52 | 59 | 55.5 | I |
| | 2002.02-2007.12 | 4AT | F | L/R | Hatchback FWD BBY;BKY | | GCO83024 | Outer Joint | | 36 | 30 | 50.75 | 59 | 55.5 | I |
| | 2002.02-2007.12 | 4AT | F | L/R | Hatchback FWD BBY;BKY | | GCI61005 | Inner Joint | | | 30 | | | 57.6 | |
| | 2002.02-2007.12 | 5AT | F | R | Hatchback FWD BBY;BKY | | GCO61070 | Outer Joint | | 36 | 30 | 53.7 | 58.5 | 55 | I |

| | YEAR | TRANSM. | F/R | L/R | BODY STYLE & DRIVE TYPE & ENGINE | REMARKS | G-AP Ref. | PRODUCT | ABS | Technical Specifications A | B | C | H | L | P |
|---|---|---|---|---|---|---|---|---|---|---|---|---|---|---|---|
| **SEAT** **Ibiza** | | | | | | | | | | | | | | | |
| 1.4 (55 kw) | 2002.02-2007.12 | 5MT | F | L | Hatchback FWD BBY;BKY | | GDS83063 | Drive Shaft | | 36 | | 50.7 | 58.5 | 501 | |
| | 2002.02-2007.12 | 5MT | F | R | Hatchback FWD BBY;BKY | | GDS61063 | Drive Shaft | | 36 | | 50.7 | 58.5 | 751 | |
| | 2002.02-2007.12 | 5MT | F | L/R | Hatchback FWD BBY;BKY | Date from:2005.06,Chassis no. from:6L_6_000001 | GCO83027 | Outer Joint | | 36 | 30 | 50.7 | 58.5 | 47.5 | I |
| | 2002.02-2007.12 | 5MT | F | L/R | Hatchback FWD BBY;BKY | | GCI83008 | Inner Joint | | | 33 | | | 32 | |
| | 2002.02-2007.12 | MT | F | L/R | Hatchback FWD BBY;BKY | | GCI83005 | Inner Joint | | | 33 | | | 32 | |
| | 2002.05-2005.12 | 5MT | F | L | Hatchback FWD AMF | AAR | GDS61098 | Drive Shaft | | 36 | | 50.5 | 59 | 472 | |
| | 2002.05-2005.12 | 5MT | F | R | Hatchback FWD AMF | AAR | GDS61099 | Drive Shaft | | 36 | | 50.5 | 59 | 759 | |
| | 2002.05-2005.12 | 5MT | F | L/R | Hatchback FWD AMF | For steel rims:Date from:2005.06,Chassis no. from:6L_6_000001;For light alloy rims | GCO83024 | Outer Joint | | 36 | 30 | 50.75 | 59 | 55.5 | I |
| | 2002.05-2005.12 | 5MT | F | L/R | Hatchback FWD AMF | | GCI61006 | Inner Joint | | | 30 | | | 57.6 | |
| | 2015.05-2017.06 | 5MT | F | L | Hatchback FWD CUSA | | GDS82039 | Drive Shaft | | 36 | | 52 | 59 | 549 | |
| | 2015.05-2017.06 | 5MT | F | R | Hatchback FWD CUSA | | GDS82360 | Drive Shaft | | 36 | | 52 | 59 | 729 | |
| | 2015.05-2017.06 | 5MT | F | L/R | Hatchback FWD CUSA | | GCO83024 | Outer Joint | | 36 | 30 | 50.75 | 59 | 55.5 | I |
| | 2015.05-2017.06 | 5MT | F | L/R | Hatchback FWD CUSA | | GCI53002 | Inner Joint | | | 33 | | | 34 | |
| | 2015.05-2017.06 | 5MT | F | L/R | Hatchback FWD CUSA | | GCI82447 | Inner Joint | | | 33 | | | 34 | |
| | 2015.05-2017.06 | | F | L/R | Hatchback FWD CUSA | | GCO54006 | Outer Joint | | 36 | 30 | 52 | 59 | 55.5 | I |
| | 2015.05-2017.06 | | F | L/R | Hatchback FWD CUSA | | GCI83011 | Inner Joint | | | 33 | | | 34 | |
| 1.4 (59 kw) | 2005.06-2009.11 | 5MT | F | L | Hatchback FWD BMS;BNV | | GDS61098 | Drive Shaft | | 36 | | 50.5 | 59 | 472 | |
| | 2005.06-2009.11 | 5MT | F | R | Hatchback FWD BMS;BNV | | GDS61099 | Drive Shaft | | 36 | | 50.5 | 59 | 759 | |
| | 2005.06-2009.11 | 5MT | F | L/R | Hatchback FWD BMS;BNV | For steel rims:Date from:2005.06,Chassis no. from:6L_6_000001;For light alloy rims | GCO83024 | Outer Joint | | 36 | 30 | 50.75 | 59 | 55.5 | I |
| | 2005.06-2009.11 | 5MT | F | L/R | Hatchback FWD BMS;BNV | AAR | GCI61006 | Inner Joint | | | 30 | | | 57.6 | |
| | 2008.07-2010.06 | 5MT | F | L | Hatchback FWD BMS | | GDS56954 | Drive Shaft | | 36 | | 52 | 59 | 484 | |
| | 2008.07-2010.06 | 5MT | F | R | Hatchback FWD BMS | | GDS56553 | Drive Shaft | | 36 | | 52 | 59 | 770 | |
| | 2008.07-2010.06 | 5MT | F | L/R | Hatchback FWD BMS | | GCO83024 | Outer Joint | | 36 | 30 | 50.75 | 59 | 55.5 | I |
| | 2008.07-2010.06 | MT | F | L | Hatchback FWD BMS | | GCO54006 | Outer Joint | | 36 | 30 | 52 | 59 | 55.5 | I |
| | 2008.07-2010.06 | | F | L/R | Hatchback FWD BMS | | GCI61006 | Inner Joint | | | 30 | | | 57.6 | |
| 1.4 (63 kw) | 2006.05-2009.11 | 5MT | F | L | Hatchback FWD BXW | | GDS83063 | Drive Shaft | | 36 | | 50.7 | 58.5 | 501 | |
| | 2006.05-2009.11 | 5MT | F | R | Hatchback FWD BXW | | GDS61063 | Drive Shaft | | 36 | | 50.7 | 58.5 | 751 | |
| | 2006.05-2009.11 | 5MT | F | L/R | Hatchback FWD BXW | | GCO83027 | Outer Joint | | 36 | 30 | 50.7 | 58.5 | 47.5 | I |
| | 2006.05-2009.11 | 5MT | F | L/R | Hatchback FWD BXW | | GCI83008 | Inner Joint | | | 33 | | | 32 | |
| | 2006.05-2009.11 | AT | F | | Hatchback FWD BXW | | GCO83078 | Outer Joint | 45W | 38 | 27 | 59.5 | 34.5 | 63 | M |
| | 2006.05-2009.11 | AT/MT | F | L/R | Hatchback FWD BXW | Date from:2007.01;Date to:2008.12 | GCI83005 | Inner Joint | | | 33 | | | 32 | |
| | 2008.03-2011.05 | 5MT | F | L | Hatchback FWD BXW | | GDS83330 | Drive Shaft | | 36 | | 50.7 | 58.5 | 515 | |
| | 2008.03-2011.05 | 5MT | F | R | Hatchback FWD BXW | | GDS61288 | Drive Shaft | | 36 | | 50.7 | 58.5 | 765 | |
| | 2008.03-2011.05 | 5MT | F | R | Hatchback FWD BXW | | GCO83027 | Outer Joint | | 36 | 30 | 50.7 | 58.5 | 47.5 | I |
| | 2008.03-2011.05 | 5MT | F | R | Hatchback FWD BXW | | GCI83008 | Inner Joint | | | 33 | | | 32 | |
| | 2008.03-2015.05 | 5MT | F | L | Hatchback FWD BXW;CGGB | | GDS83330 | Drive Shaft | | 36 | | 50.7 | 58.5 | 515 | |
| | 2008.03-2015.05 | 5MT | F | R | Hatchback FWD BXW;CGGB | | GDS61288 | Drive Shaft | | 36 | | 50.7 | 58.5 | 765 | |
| | 2008.03-2015.05 | 5MT | F | L/R | Hatchback FWD BXW;CGGB | | GCI83008 | Inner Joint | | | 33 | | | 32 | |
| | 2008.03-2015.05 | 7AT | F | L | Hatchback FWD BXW;CGGB | | GDS61150 | Drive Shaft | | 36 | 26 | 52 | 75 | 557 | |
| | 2008.03-2015.05 | 7AT | F | L | Hatchback FWD BXW;CGGB | | GCO54006 | Outer Joint | | 36 | 30 | 52 | 59 | 55.5 | I |
| | 2008.03-2015.05 | AT/MT | F | L/R | Hatchback FWD BXW;CGGB | | GCO83027 | Outer Joint | | 36 | 30 | 50.7 | 58.5 | 47.5 | I |
| | 2008.03-2015.05 | MT | F | L/R | Hatchback FWD BXW;CGGB | | GCI83005 | Inner Joint | | | 33 | | | 32 | |
| 1.4 (66 kw) | 2015.05-2017.06 | 5MT | F | L | Hatchback FWD CUSB | | GDS82039 | Drive Shaft | | 36 | | 52 | 59 | 549 | |
| | 2015.05-2017.06 | 5MT | F | R | Hatchback FWD CUSB | | GDS82360 | Drive Shaft | | 36 | | 52 | 59 | 729 | |
| | 2015.05-2017.06 | 5MT | F | L/R | Hatchback FWD CUSB | | GCO54006 | Outer Joint | | 36 | 30 | 52 | 59 | 55.5 | I |
| | 2015.05-2017.06 | 5MT | F | L/R | Hatchback FWD CUSB | | GCO83024 | Outer Joint | | 36 | 30 | 50.75 | 59 | 55.5 | I |
| | 2015.05-2017.06 | 5MT | F | L/R | Hatchback FWD CUSB | | GCI82447 | Inner Joint | | | 33 | | | 34 | |
| | 2015.05-2017.06 | 7AT/5MT | F | L | Hatchback FWD CUSB | | GCI83016 | Inner Joint | | | 28 | | | 32 | |
| | 2015.05-2017.06 | 7DCT | F | L | Hatchback FWD CUSB | | GDS81926 | Drive Shaft | | 36 | | 52 | 75 | 550 | |
| | 2015.05-2017.06 | 7DCT | F | R | Hatchback FWD CUSB | | GDS82359 | Drive Shaft | | 36 | 40 | 52 | 75 | 755 | |
| | 2015.05-2017.06 | 7DCT | F | L/R | Hatchback FWD CUSB | | GCO61081 | Outer Joint | | 36 | 27 | 52 | 75 | 65 | I |
| | 2015.05-2017.06 | 7DCT | F | R | Hatchback FWD CUSB | | GCI61054 | Inner Joint | | 40 | 28 | 46.9 | 41 | 101.7 | |
| 1.4 (74 kw) | 1997.06-2002.05 | 5MT | F | L | Hatchback FWD AFH/AQQ/AUB | | GDS53004 | Drive Shaft | | 22 | | 50 | 78.5 | 562 | |
| | 1997.06-2002.05 | 5MT | F | L/R | Hatchback FWD AFH/AQQ/AUB | | GCO53008 | Outer Joint | | 22 | 30 | 53 | 78.5 | 51 | I |
| | 1997.06-2002.05 | MT | F | L/R | Hatchback FWD AFH/AQQ/AUB | | GCI53001 | Inner Joint | | | 33 | | | 32 | |
| | 2002.02-2009.11 | 5MT | F | L | Hatchback FWD AUB;BBZ | | GDS83063 | Drive Shaft | | 36 | | 50.7 | 58.5 | 501 | |
| | 2002.02-2009.11 | 5MT | F | R | Hatchback FWD AUB;BBZ | | GDS61063 | Drive Shaft | | 36 | | 50.7 | 58.5 | 751 | |
| | 2002.02-2009.11 | 5MT | F | L/R | Hatchback FWD AUB;BBZ | Date from:2005.06,Chassis no. from:6L_6_000001 | GCO83027 | Outer Joint | | 36 | 30 | 50.7 | 58.5 | 47.5 | I |
| | 2002.02-2009.11 | 5MT | F | L/R | Hatchback FWD AUB;BBZ | | GCI83008 | Inner Joint | | | 33 | | | 32 | |
| | 2002.02-2009.11 | AT/MT | F | L/R | Hatchback FWD AUB;BBZ | | GCI83005 | Inner Joint | | | 33 | | | 32 | |
| 1.4 (77 kw) | 2015.05-2017.06 | 5MT | F | L | Hatchback FWD CUTA;CYZA | | GDS82039 | Drive Shaft | | 36 | | 52 | 59 | 549 | |
| | 2015.05-2017.06 | 5MT | F | R | Hatchback FWD CUTA;CYZA | | GDS82360 | Drive Shaft | | 36 | | 52 | 59 | 729 | |
| | 2015.05-2017.06 | 5MT | F | L/R | Hatchback FWD CUTA;CYZA | | GCO83024 | Outer Joint | | 36 | 30 | 50.75 | 59 | 55.5 | I |
| | 2015.05-2017.06 | 5MT | F | L/R | Hatchback FWD CUTA;CYZA | | GCI53002 | Inner Joint | | | 33 | | | 34 | |
| | 2015.05-2017.06 | 5MT | F | L/R | Hatchback FWD CUTA;CYZA | | GCI82447 | Inner Joint | | | 33 | | | 34 | |

| | YEAR | TRANSM. | F/R | L/R | BODY STYLE & DRIVE TYPE & ENGINE | REMARKS | G-AP Ref. | PRODUCT | ABS | Technical Specifications A | B | C | H | L | P |
|---|---|---|---|---|---|---|---|---|---|---|---|---|---|---|---|
| **SEAT** | | | | | | | | | | | | | | | |
| **Ibiza** | | | | | | | | | | | | | | | |
| 1.4 (77 kw) | 2015.05-2017.06 | | F | L/R | Hatchback FWD CUTA;CYZA | | GCO54006 | Outer Joint | | 36 | 30 | 52 | 59 | 55.5 | I |
| | 2015.05-2017.06 | | F | L/R | Hatchback FWD CUTA;CYZA | | GCI83011 | Inner Joint | | | 33 | | | 34 | |
| 1.4 (103 kw) | 2013.10-2015.05 | 6MT | F | L/R | Hatchback FWD CPTA | | GCO61081 | Outer Joint | | 36 | 27 | 52 | 75 | 65 | I |
| | 2013.10-2015.05 | 6MT | F | L | Hatchback FWD CPTA | | GCI61069 | Inner Joint | | | 28 | | | 32 | |
| | 2013.10-2015.05 | 6MT | F | L/R | Hatchback FWD CPTA | | GCI83016 | Inner Joint | | | 28 | | | 32 | |
| 1.4 (110 kw) | 2009.06-2015.05 | 7AT | F | L | Hatchback FWD CAVF;CNUB;CTJB;CTHF | | GDS61260 | Drive Shaft | | 36 | | 52 | 75 | 498 | |
| | 2009.06-2015.05 | 7AT | F | L/R | Hatchback FWD CAVF;CNUB;CTJB;CTHF | | GCI61069 | Inner Joint | | | 28 | | | 32 | |
| | 2009.06-2015.05 | 7DCT | F | R | Hatchback FWD CAVF;CNUB;CTJB;CTHF | | GDS61261 | Drive Shaft | | 36 | | 52 | 75 | 785 | |
| | 2009.06-2015.05 | 7DCT | F | L/R | Hatchback FWD CAVF;CNUB;CTJB;CTHF | | GCO61081 | Outer Joint | | 36 | 27 | 52 | 75 | 65 | I |
| | 2009.06-2015.05 | | F | L/R | Hatchback FWD CAVF;CNUB;CTJB;CTHF | | GCI83016 | Inner Joint | | | 28 | | | 32 | |
| | 2015.11-2017.06 | 6MT | F | L/R | Hatchback FWD CZEA | | GCO61081 | Outer Joint | | 36 | 27 | 52 | 75 | 65 | I |
| | 2015.11-2017.06 | 6MT | F | L | Hatchback FWD CZEA | | GCI61069 | Inner Joint | | | 28 | | | 32 | |
| | 2015.11-2017.06 | 6MT | F | L/R | Hatchback FWD CZEA | | GCI83016 | Inner Joint | | | 28 | | | 32 | |
| 1.5 (110 kw) | 2017.07- | 6MT | F | L/R | Hatchback FWD DADA;DPCA;DXDB | | GCO81743 | Outer Joint | | 36 | 33 | 52 | 64.5 | 59 | I |
| | 2017.07- | 6MT | F | L/R | Hatchback FWD DADA;DPCA;DXDB | | GCI82447 | Inner Joint | | | 33 | | | 34 | |
| | 2017.07- | 7DCT | F | L/R | Hatchback FWD DADA;DPCA;DXDB | | GCO82548 | Outer Joint | | 36 | 27 | 52 | 64.5 | 65 | M |
| | 2017.07- | 7DCT | F | L | Hatchback FWD DADA;DPCA;DXDB | | GCI83016 | Inner Joint | | | 28 | | | 32 | |
| 1.6 (55 kw) | 1993.03-2002.02 | 5MT | F | L | Hatchback FWD ABU/AEE/ALM | | GDS53004 | Drive Shaft | | 22 | | 50 | 78.5 | 562 | |
| | 1993.03-2002.02 | 5MT | F | L/R | Hatchback FWD ABU/AEE/ALM | | GCO53008 | Outer Joint | | 22 | 30 | 53 | 78.5 | 51 | I |
| | 1993.03-2002.02 | MT | F | L/R | Hatchback FWD ABU/AEE/ALM | | GCI53001 | Inner Joint | | | 33 | | | 32 | |
| | 1993.03-2002.02 | | F | | Hatchback FWD ABU/AEE/ALM | | GCO53006 | Outer Joint | | 22 | 30 | 50 | 78.5 | 52 | I |
| | 1994.09-1999.06 | 4AT/5MT | F | L | Hatchback FWD 1F | For Engine Code:1F | GDS53001 | Drive Shaft | | 22 | | 53 | 78.5 | 535 | |
| | 1994.09-1999.06 | 4AT/5MT | F | R | Hatchback FWD 1F | Date To:1996.12,For Engine Code:1F | GDS53002 | Drive Shaft | | 22 | | 53.2 | 78 | 769 | |
| | 1994.09-1999.06 | AT/MT | F | L/R | Hatchback FWD 1F | | GCO53006 | Outer Joint | | 22 | 30 | 50 | 78.5 | 52 | I |
| 1.6 (59 kw) | 2017.11- | 5MT | F | L | Hatchback FWD DGTC | | GDS84181 | Drive Shaft | | 36 | | 52 | 64.5 | 532 | |
| | 2017.11- | 5MT | F | R | Hatchback FWD DGTC | | GDS84315 | Drive Shaft | | 36 | | 52 | 64.5 | 825 | |
| | 2017.11- | 5MT | F | L/R | Hatchback FWD DGTC | | GCO81743 | Outer Joint | | 36 | 33 | 52 | 64.5 | 59 | I |
| | 2017.11- | 5MT | F | L/R | Hatchback FWD DGTC | | GCI82447 | Inner Joint | | | 33 | | | 34 | |
| | 2017.11- | 5MT | F | L/R | Hatchback FWD DGTC | | GCI83011 | Inner Joint | | | 33 | | | 34 | |
| 1.6 (60 kw) | 2011.05-2015.05 | 5MT | F | L | Hatchback FWD CNKA | | GDS61297 | Drive Shaft | | 36 | | 50.5 | 59 | 513 | |
| | 2011.05-2015.05 | 5MT | F | R | Hatchback FWD CNKA | | GDS61301 | Drive Shaft | | 36 | | 50.5 | 59 | 771 | |
| | 2011.05-2015.05 | 5MT | F | L/R | Hatchback FWD CNKA | | GCO83024 | Outer Joint | | 36 | 30 | 50.75 | 59 | 55.5 | I |
| | 2011.05-2015.05 | 5MT | F | L/R | Hatchback FWD CNKA | | GCI53002 | Inner Joint | | | 33 | | | 34 | |
| | 2011.05-2015.05 | 5MT | F | L/R | Hatchback FWD CNKA | | GCI82447 | Inner Joint | | | 33 | | | 34 | |
| | 2011.05-2015.05 | MT | F | L | Hatchback FWD CNKA | | GDS61274 | Drive Shaft | | 36 | | 50.5 | 59 | 514 | |
| | 2011.05-2015.05 | MT | F | L | Hatchback FWD CNKA | | GCO54006 | Outer Joint | | 36 | 30 | 52 | 59 | 55.5 | I |
| | 2011.05-2015.05 | MT | F | L/R | Hatchback FWD CNKA | | GCI83006 | Inner Joint | | | 33 | | | 34 | |
| | 2011.05-2015.05 | | F | L/R | Hatchback FWD CNKA | | GCI83011 | Inner Joint | | | 33 | | | 34 | |
| 1.6 (66 kw) | 2009.05-2015.05 | 5MT | F | L | Hatchback FWD CAYB | | GDS61184 | Drive Shaft | | 36 | | 52 | 59 | 496 | |
| | 2009.05-2015.05 | 5MT | F | R | Hatchback FWD CAYB | | GDS61185 | Drive Shaft | | 36 | | 52 | 59 | 785 | |
| | 2009.05-2015.05 | 5MT | F | L/R | Hatchback FWD CAYB | | GCO83024 | Outer Joint | | 36 | 30 | 50.75 | 59 | 55.5 | I |
| | 2009.05-2015.05 | 5MT | F | L/R | Hatchback FWD CAYB | | GCI82447 | Inner Joint | | | 33 | | | 34 | |
| | 2009.05-2015.05 | 5MT/7AT | F | L | Hatchback FWD CAYB | | GCO54006 | Outer Joint | | 36 | 30 | 52 | 59 | 55.5 | I |
| | 2009.05-2015.05 | 7AT/5MT | F | L/R | Hatchback FWD CAYB | | GCI83016 | Inner Joint | | | 28 | | | 32 | |
| | 2009.05-2015.05 | 7DCT | F | L | Hatchback FWD CAYB | | GDS61260 | Drive Shaft | | 36 | | 52 | 75 | 498 | |
| | 2009.05-2015.05 | 7DCT | F | R | Hatchback FWD CAYB | | GDS61261 | Drive Shaft | | 36 | | 52 | 75 | 785 | |
| | 2009.05-2015.05 | 7DCT | F | L/R | Hatchback FWD CAYB | | GCO61081 | Outer Joint | | 36 | 27 | 52 | 75 | 65 | I |
| | 2009.05-2015.05 | 7DCT | F | L/R | Hatchback FWD CAYB | | GCI61069 | Inner Joint | | | 28 | | | 32 | |
| 1.6 (70 kw) | 2017.09- | 5MT | F | R | Hatchback FWD DGTD | | GDS84315 | Drive Shaft | | 36 | | 52 | 64.5 | 825 | |
| | 2017.09- | 5MT | F | L/R | Hatchback FWD DGTD | | GCO81743 | Outer Joint | | 36 | 33 | 52 | 64.5 | 59 | I |
| | 2017.09- | 5MT/7DCT | F | L | Hatchback FWD DGTD | | GDS84181 | Drive Shaft | | 36 | | 52 | 64.5 | 532 | |
| | 2017.09- | 7DCT | F | R | Hatchback FWD DGTD | | GDS84337 | Drive Shaft | | 36 | | 52 | 64.5 | 812 | |
| | 2017.09- | 7DCT/5MT | F | L/R | Hatchback FWD DGTD | | GCI82447 | Inner Joint | | | 33 | | | 34 | |
| 1.6 (74 kw) | 1996.04-2002.02 | AT | F | L/R | Hatchback FWD AEH/AFT/AKL/APF/AUR | | GCO53007 | Outer Joint | | 22 | 30 | 53.2 | 78 | 61 | I |
| | 1996.04-2002.02 | AT/MT | F | L/R | Hatchback FWD AEH/AFT/AKL/APF/AUR | | GCI83005 | Inner Joint | | | 33 | | | 32 | |
| | 1996.04-2002.02 | MT | F | L | Hatchback FWD AEH/AFT/AKL/APF/AUR | | GDS53004 | Drive Shaft | | 22 | | 50 | 78.5 | 562 | |
| | 1996.04-2002.02 | MT | F | R | Hatchback FWD AEH/AFT/AKL/APF/AUR | | GDS53005 | Drive Shaft | | 22 | | 53 | 78.5 | 774 | |
| | 1996.04-2002.02 | MT | F | L/R | Hatchback FWD AEH/AFT/AKL/APF/AUR | | GCI53001 | Inner Joint | | | 33 | | | 32 | |
| | 1996.04-2002.02 | | F | | Hatchback FWD AEH/AFT/AKL/APF/AUR | | GCO53006 | Outer Joint | | 22 | 30 | 50 | 78.5 | 52 | I |
| | 2003.02-2009.11 | 5MT | F | L | Hatchback FWD BAH | | GDS54018 | Drive Shaft | | 36 | | 50.5 | 59 | 500 | |
| | 2003.02-2009.11 | 5MT | F | R | Hatchback FWD BAH | | GDS61305 | Drive Shaft | | 36 | | 50.5 | 59 | 757 | |
| | 2003.02-2009.11 | 5MT | F | L/R | Hatchback FWD BAH | | GCO83024 | Outer Joint | | 36 | 30 | 50.75 | 59 | 55.5 | I |
| | 2003.02-2009.11 | 5MT | F | L/R | Hatchback FWD BAH | | GCI82447 | Inner Joint | | | 33 | | | 34 | |
| | 2003.02-2009.11 | MT | F | L/R | Hatchback FWD BAH | | GCI83006 | Inner Joint | | | 33 | | | 34 | |
| 1.6 (77 kw) | 2006.11-2009.11 | 5MT | F | L | Hatchback FWD BTS | | GDS54018 | Drive Shaft | | 36 | | 50.5 | 59 | 500 | |

| | YEAR | TRANSM. | F/R | L/R | BODY STYLE & DRIVE TYPE & ENGINE | REMARKS | G-AP Ref. | PRODUCT | ABS | Technical Specifications A | B | C | H | L | P |
|---|---|---|---|---|---|---|---|---|---|---|---|---|---|---|---|
| **SEAT** | | | | | | | | | | | | | | | |
| **Ibiza** | | | | | | | | | | | | | | | |
| 1.6 (77 kw) | 2006.11-2009.11 | 5MT | F | R | Hatchback FWD BTS | | GDS61305 | Drive Shaft | | 36 | | 50.5 | 59 | 757 | |
| | 2006.11-2009.11 | 5MT | F | L/R | Hatchback FWD BTS | | GCI82447 | Inner Joint | | | 33 | | | 34 | |
| | 2006.11-2009.11 | 5MT/6AT | F | L/R | Hatchback FWD BTS | Transmission:5MT;Transmission:6AT,Date to:2008.10 | GCO83024 | Outer Joint | | 36 | 30 | 50.75 | 59 | 55.5 | I |
| | 2006.11-2009.11 | 6AT | F | L | Hatchback FWD BTS | | GDS61150 | Drive Shaft | | 36 | 26 | 52 | 75 | 557 | |
| | 2006.11-2009.11 | 6AT | F | R | Hatchback FWD BTS | Date to:2008.10 | GDS61133 | Drive Shaft | | 36 | 26 | 52 | 75 | 859 | |
| | 2006.11-2009.11 | 6AT | F | R | Hatchback FWD BTS | Date from:2008.11 | GDS81524 | Drive Shaft | | 36 | 26 | 52 | 75 | 856 | |
| | 2006.11-2009.11 | 6AT | F | L/R | Hatchback FWD BTS | Date from:2008.11 | GCO61074 | Outer Joint | | 36 | 30 | 52 | 75 | 55.5 | I |
| | 2006.11-2009.11 | 6AT | F | L/R | Hatchback FWD BTS | Date from:2008.11,Type:UF100 | GCO83079 | Outer Joint | | 36 | 30 | 52 | 75 | 55.5 | I |
| | 2006.11-2009.11 | 6AT | F | L | Hatchback FWD BTS | Date to:2008.10 | GCI61039 | Inner Joint | | 26 | 22 | 31 | 68.5 | 88.5 | |
| | 2006.11-2009.11 | 6AT | F | R | Hatchback FWD BTS | Date to:2008.10 | GCI61011 | Inner Joint | | 26 | 32 | 31 | 68.5 | 85 | |
| | 2006.11-2009.11 | 6AT | F | R | Hatchback FWD BTS | Date to:2008.10 | GCI61050 | Inner Joint | | 26 | 32 | 31 | 68.5 | 89 | |
| | 2006.11-2009.11 | MT | F | L | Hatchback FWD BTS | | GDS61274 | Drive Shaft | | 36 | | 50.5 | 59 | 514 | |
| | 2006.11-2009.11 | MT | F | L | Hatchback FWD BTS | | GDS61297 | Drive Shaft | | 36 | | 50.5 | 59 | 513 | |
| | 2006.11-2009.11 | MT | F | L | Hatchback FWD BTS | | GCO54006 | Outer Joint | | 36 | 30 | 52 | 59 | 55.5 | I |
| | 2008.05-2012.03 | 5MT | F | L | Hatchback FWD BTS | | GDS61297 | Drive Shaft | | 36 | | 50.5 | 59 | 513 | |
| | 2008.05-2012.03 | 5MT | F | R | Hatchback FWD BTS | | GDS61301 | Drive Shaft | | 36 | | 50.5 | 59 | 771 | |
| | 2008.05-2012.03 | 5MT | F | L/R | Hatchback FWD BTS | | GCI82447 | Inner Joint | | | 33 | | | 34 | |
| | 2008.05-2012.03 | 5MT/7AT | F | L/R | Hatchback FWD BTS | | GCO83024 | Outer Joint | | 36 | 30 | 50.75 | 59 | 55.5 | I |
| | 2008.05-2012.03 | 5MT/7DCT | F | L/R | Hatchback FWD BTS | | GCI53002 | Inner Joint | | | 33 | | | 34 | |
| | 2008.05-2012.03 | 7DCT | F | L | Hatchback FWD BTS | | GDS61311 | Drive Shaft | | 36 | | 50.5 | 59 | 492 | |
| | 2008.05-2012.03 | 7DCT | F | R | Hatchback FWD BTS | | GDS61308 | Drive Shaft | | 36 | | 50.5 | 59 | 786 | |
| | 2008.05-2012.03 | 7DCT | F | L/R | Hatchback FWD BTS | | GCO54006 | Outer Joint | | 36 | 30 | 52 | 59 | 55.5 | I |
| | 2008.05-2012.03 | MT | F | L | Hatchback FWD BTS | | GDS61274 | Drive Shaft | | 36 | | 50.5 | 59 | 514 | |
| | 2008.05-2012.03 | | F | L/R | Hatchback FWD BTS | | GCI83011 | Inner Joint | | | 33 | | | 34 | |
| | 2009.05-2015.05 | 5MT | F | L | Hatchback FWD CAYC;CLNA | | GDS61184 | Drive Shaft | | 36 | | 52 | 59 | 496 | |
| | 2009.05-2015.05 | 5MT | F | R | Hatchback FWD CAYC;CLNA | | GDS61185 | Drive Shaft | | 36 | | 52 | 59 | 785 | |
| | 2009.05-2015.05 | 5MT | F | L/R | Hatchback FWD CAYC;CLNA | | GCO83024 | Outer Joint | | 36 | 30 | 50.75 | 59 | 55.5 | I |
| | 2009.05-2015.05 | 5MT | F | L/R | Hatchback FWD CAYC;CLNA | | GCI82447 | Inner Joint | | | 33 | | | 34 | |
| | 2009.05-2015.05 | MT | F | L/R | Hatchback FWD CAYC;CLNA | | GCI83011 | Inner Joint | | | 33 | | | 34 | |
| | 2009.05-2015.05 | | F | L | Hatchback FWD CAYC;CLNA | | GCO54006 | Outer Joint | | 36 | 30 | 52 | 59 | 55.5 | I |
| 1.6 (81 kw) | 2015.07-2017.06 | 6AT | F | L | Hatchback FWD CWVA | | GDS83842 | Drive Shaft | | 36 | 26 | 52 | 75 | 566 | |
| | 2015.07-2017.06 | 6AT | F | R | Hatchback FWD CWVA | | GDS83843 | Drive Shaft | | 36 | 26 | 52 | 75 | 866 | |
| | 2015.07-2017.06 | 6AT | F | L/R | Hatchback FWD CWVA | Type:UF100 | GCO83079 | Outer Joint | | 36 | 30 | 52 | 75 | 55.5 | I |
| | 2015.07-2017.06 | 6AT | F | L/R | Hatchback FWD CWVA | | GCI81396 | Inner Joint | | 26 | 22 | 31 | 68.5 | 86 | |
| | 2017.05- | 5MT | F | L/R | Hatchback FWD CWVA | | GCO83024 | Outer Joint | | 36 | 30 | 50.75 | 59 | 55.5 | I |
| | 2017.05- | 5MT | F | L/R | Hatchback FWD CWVA | | GCI82447 | Inner Joint | | | 33 | | | 34 | |
| | 2017.05- | 6AT | F | L | Hatchback FWD CWVA | Date from:2018.10 | GDS84613 | Drive Shaft | | 36 | 26 | 52 | 64.5 | 597 | |
| | 2017.05- | 6AT | F | R | Hatchback FWD CWVA | | GDS84612 | Drive Shaft | | 36 | 26 | 52 | 64.5 | 891 | |
| | 2017.05- | 6AT | F | L | Hatchback FWD CWVA | | GCO81743 | Outer Joint | | 36 | 33 | 52 | 64.5 | 59 | I |
| | 2017.05- | 6AT | F | R | Hatchback FWD CWVA | | GCO81744 | Outer Joint | | 36 | 30 | 52 | 64.5 | 55.5 | M |
| | 2017.05- | 6AT | F | L/R | Hatchback FWD CWVA | | GCI61011 | Inner Joint | | 26 | 32 | 31 | 68.5 | 85 | |
| | 2017.05- | 6AT | F | L/R | Hatchback FWD CWVA | | GCI61050 | Inner Joint | | 26 | 32 | 31 | 68.5 | 89 | |
| 1.6 (85 kw) | 2017.12- | 6MT | F | L | Hatchback FWD DGTA | | GDS84181 | Drive Shaft | | 36 | | 52 | 64.5 | 532 | |
| | 2017.12- | 6MT | F | R | Hatchback FWD DGTA | | GDS84315 | Drive Shaft | | 36 | | 52 | 64.5 | 825 | |
| | 2017.12- | 6MT | F | L/R | Hatchback FWD DGTA | | GCO81743 | Outer Joint | | 36 | 33 | 52 | 64.5 | 59 | I |
| | 2017.12- | 6MT | F | L/R | Hatchback FWD DGTA | | GCI82447 | Inner Joint | | | 33 | | | 34 | |
| | 2017.12- | 6MT | F | L/R | Hatchback FWD DGTA | | GCI83011 | Inner Joint | | | 33 | | | 34 | |
| 1.8 (66 kw) | 1993.02-1999.08 | AT/MT | F | L/R | Hatchback FWD ABS/ACC/ADZ | | GCO53007 | Outer Joint | | 22 | 30 | 53.2 | 78 | 61 | I |
| | 1993.02-1999.08 | AT/MT | F | R | Hatchback FWD ABS/ACC/ADZ | | GCI83009 | Inner Joint | | | 33 | | | 34 | |
| | 1993.02-1999.08 | MT | F | L | Hatchback FWD ABS/ACC/ADZ | | GDS53001 | Drive Shaft | | 22 | | 53 | 78.5 | 535 | |
| | 1993.02-1999.08 | MT | F | R | Hatchback FWD ABS/ACC/ADZ | | GDS53002 | Drive Shaft | | 22 | | 53.2 | 78 | 769 | |
| | 1993.02-1999.08 | MT | F | R | Hatchback FWD ABS/ACC/ADZ | | GDS61009 | Drive Shaft | | 22 | | 53.2 | 78 | 789 | |
| | 1993.02-1999.08 | MT | F | L/R | Hatchback FWD ABS/ACC/ADZ | | GCI83011 | Inner Joint | | | 33 | | | 34 | |
| | 1993.02-1999.08 | | F | | Hatchback FWD ABS/ACC/ADZ | | GCO53004 | Outer Joint | | 22 | 30 | 51 | 78 | 61 | I |
| 1.8 (95 kw) | 1994.02-1996.06 | MT | F | L | Hatchback FWD ADL | | GDS53001 | Drive Shaft | | 22 | | 53 | 78.5 | 535 | |
| | 1994.02-1996.06 | MT | F | R | Hatchback FWD ADL | Date from:1994.02 | GDS53002 | Drive Shaft | | 22 | | 53.2 | 78 | 769 | |
| | 1994.02-1996.06 | MT | F | L/R | Hatchback FWD ADL | Date from:1994.02 | GCO53007 | Outer Joint | | 22 | 30 | 53.2 | 78 | 61 | I |
| | 1994.02-1996.06 | MT | F | R | Hatchback FWD ADL | Date from:1994.02 | GCI83009 | Inner Joint | | | 33 | | | 34 | |
| | 1994.02-1996.06 | MT | F | L/R | Hatchback FWD ADL | | GCI83011 | Inner Joint | | | 33 | | | 34 | |
| | 1994.02-1996.06 | | F | | Hatchback FWD ADL | | GCO53004 | Outer Joint | | 22 | 30 | 51 | 78 | 61 | I |
| 1.8 (110 kw) | 2003.12-2008.05 | 5MT | F | L | Hatchback FWD BJX;BKV | | GDS61098 | Drive Shaft | | 36 | | 50.5 | 59 | 472 | |
| | 2003.12-2008.05 | 5MT | F | L | Hatchback FWD BJX;BKV | Chassis no. from:6L6066001 | GDS61248 | Drive Shaft | | 36 | | 52 | 59 | 480 | |
| | 2003.12-2008.05 | 5MT | F | R | Hatchback FWD BJX;BKV | Chassis no. to:6L6066000 | GDS61099 | Drive Shaft | | 36 | | 50.5 | 59 | 759 | |
| | 2003.12-2008.05 | 5MT | F | L/R | Hatchback FWD BJX;BKV | Date from:2005.06,Chassis no. from:6L_6_000001 | GCO83024 | Outer Joint | | 36 | 30 | 50.75 | 59 | 55.5 | I |
| | 2003.12-2008.05 | 5MT | F | L/R | Hatchback FWD BJX;BKV | | GCI61006 | Inner Joint | | | 30 | | | 57.6 | |

| | YEAR | TRANSM. | F/R | L/R | BODY STYLE & DRIVE TYPE & ENGINE | REMARKS | G-AP Ref. | PRODUCT | ABS | Technical Specifications A | B | C | H | L | P |
|---|---|---|---|---|---|---|---|---|---|---|---|---|---|---|---|
| **SEAT** | | | | | | | | | | | | | | | |
| **Ibiza** | | | | | | | | | | | | | | | |
| 1.8 (110 kw) | 2003.12-2008.05 | 5MT | F | L/R | Hatchback FWD BJX;BKV | From Chassis:6L_6_066001 | GCI82447 | Inner Joint | | | 33 | | | 34 | |
| | 2003.12-2008.05 | 6MT | F | R | Hatchback FWD BJX;BKV | Chassis no. from:6L6066001 | GDS61301 | Drive Shaft | | 36 | | 50.5 | 59 | 771 | |
| | 2003.12-2008.05 | MT | F | L | Hatchback FWD BJX;BKV | | GCO54006 | Outer Joint | | 36 | 30 | 52 | 59 | 55.5 | I |
| | 2003.12-2008.05 | MT | F | L/R | Hatchback FWD BJX;BKV | Date From:2005.09 | GCI83006 | Inner Joint | | | 33 | | | 34 | |
| 1.8 (115 kw) | 1999.12-2002.05 | 5MT | F | L/R | Hatchback FWD AQX/AYP | | GCO53008 | Outer Joint | | 22 | 30 | 53 | 78.5 | 51 | I |
| | 1999.12-2002.05 | AT | F | L | Hatchback FWD AQX/AYP | | GDS41521 | Drive Shaft | | 29 | 27 | 56.1 | 102 | 667 | |
| | 1999.12-2002.05 | MT | F | L | Hatchback FWD AQX/AYP | | GDS53001 | Drive Shaft | | 22 | | 53 | 78.5 | 535 | |
| | 1999.12-2002.05 | MT | F | L/R | Hatchback FWD AQX/AYP | | GCO53004 | Outer Joint | | 22 | 30 | 51 | 78 | 61 | I |
| | 1999.12-2002.05 | MT | F | L/R | Hatchback FWD AQX/AYP | | GCO53007 | Outer Joint | | 22 | 30 | 53.2 | 78 | 61 | I |
| | 1999.12-2002.05 | MT | F | R | Hatchback FWD AQX/AYP | | GCI83009 | Inner Joint | | | 33 | | | 34 | |
| | 1999.12-2002.05 | MT | F | L/R | Hatchback FWD AQX/AYP | | GCI83011 | Inner Joint | | | 33 | | | 34 | |
| 1.8 (132 kw) | 2004.01-2008.02 | 5MT | F | L | Hatchback FWD BBU;BLZ | | GDS61098 | Drive Shaft | | 36 | | 50.5 | 59 | 472 | |
| | 2004.01-2008.02 | 5MT | F | L | Hatchback FWD BBU;BLZ | Chassis no. from:6L6066001 | GDS61248 | Drive Shaft | | 36 | | 52 | 59 | 480 | |
| | 2004.01-2008.02 | 5MT | F | R | Hatchback FWD BBU;BLZ | Chassis no. to:6L6066000 | GDS61099 | Drive Shaft | | 36 | | 50.5 | 59 | 759 | |
| | 2004.01-2008.02 | 5MT | F | R | Hatchback FWD BBU;BLZ | Chassis no. from:6L6066001 | GDS61301 | Drive Shaft | | 36 | | 50.5 | 59 | 771 | |
| | 2004.01-2008.02 | 5MT | F | L/R | Hatchback FWD BBU;BLZ | Date from:2005.06,Chassis no. from:6L_6_000001 | GCO83024 | Outer Joint | | 36 | 30 | 50.75 | 59 | 55.5 | I |
| | 2004.01-2008.02 | 5MT | F | L/R | Hatchback FWD BBU;BLZ | | GCI61006 | Inner Joint | | | 30 | | | 57.6 | |
| | 2004.01-2008.02 | 5MT | F | L/R | Hatchback FWD BBU;BLZ | From Chassis:6L_6_066001 | GCI82447 | Inner Joint | | | 33 | | | 34 | |
| | 2004.01-2008.02 | MT | F | L | Hatchback FWD BBU;BLZ | | GCO54006 | Outer Joint | | 36 | 30 | 52 | 59 | 55.5 | I |
| | 2004.01-2008.02 | MT | F | L/R | Hatchback FWD BBU;BLZ | Date From:2005.09 | GCI83006 | Inner Joint | | | 33 | | | 34 | |
| 1.9 (47 kw) | 1996.08-1999.08 | MT | F | L | Hatchback FWD AEY | | GDS53003 | Drive Shaft | | 22 | | 53 | 78.5 | 539.5 | |
| | 1996.08-1999.08 | MT | F | R | Hatchback FWD AEY | | GDS53005 | Drive Shaft | | 22 | | 53 | 78.5 | 774 | |
| | 1996.08-1999.08 | MT | F | L/R | Hatchback FWD AEY | | GCO53008 | Outer Joint | | 22 | 30 | 53 | 78.5 | 51 | I |
| | 1996.08-1999.08 | MT | F | L/R | Hatchback FWD AEY | | GCI83005 | Inner Joint | | | 33 | | | 32 | |
| | 1996.08-1999.08 | | F | | Hatchback FWD AEY | | GCO53006 | Outer Joint | | 22 | 30 | 50 | 78.5 | 52 | I |
| | 2002.02-2005.12 | 5MT | F | L | Hatchback FWD ASY | | GDS83063 | Drive Shaft | | 36 | | 50.7 | 58.5 | 501 | |
| | 2002.02-2005.12 | 5MT | F | R | Hatchback FWD ASY | | GDS61063 | Drive Shaft | | 36 | | 50.7 | 58.5 | 751 | |
| | 2002.02-2005.12 | 5MT | F | L/R | Hatchback FWD ASY | Date from:2005.06,Chassis no. from:6L_6_000001 | GCO83027 | Outer Joint | | 36 | 30 | 50.7 | 58.5 | 47.5 | I |
| | 2002.02-2005.12 | AT/MT | F | L/R | Hatchback FWD ASY | | GCI83005 | Inner Joint | | | 33 | | | 32 | |
| | 2002.02-2005.12 | | F | L/R | Hatchback FWD ASY | | GCI83008 | Inner Joint | | | 33 | | | 32 | |
| 1.9 (50 kw) | 1999.04-2002.05 | AT | F | R | Hatchback FWD AGP/AQM | | GCI83005 | Inner Joint | | | 33 | | | 32 | |
| | 1999.04-2002.05 | MT | F | L | Hatchback FWD AGP/AQM | | GDS53003 | Drive Shaft | | 22 | | 53 | 78.5 | 539.5 | |
| | 1999.04-2002.05 | MT | F | R | Hatchback FWD AGP/AQM | | GDS53005 | Drive Shaft | | 22 | | 53 | 78.5 | 774 | |
| | 1999.04-2002.05 | MT | F | L/R | Hatchback FWD AGP/AQM | | GCO53008 | Outer Joint | | 22 | 30 | 53 | 78.5 | 51 | I |
| | 1999.04-2002.05 | MT | F | L/R | Hatchback FWD AGP/AQM | | GCI83005 | Inner Joint | | | 33 | | | 32 | |
| | 1999.04-2002.05 | | F | L/R | Hatchback FWD AGP/AQM | | GCO53006 | Outer Joint | | 22 | 30 | 50 | 78.5 | 52 | I |
| 1.9 (55 kw) | 1993.02-1996.06 | AT/MT | F | L/R | Hatchback FWD AAZ | | GCO53006 | Outer Joint | | 22 | 30 | 50 | 78.5 | 52 | I |
| | 1993.02-1996.06 | MT | F | L | Hatchback FWD AAZ | | GDS53001 | Drive Shaft | | 22 | | 53 | 78.5 | 535 | |
| | 1993.02-1996.06 | MT | F | R | Hatchback FWD AAZ | | GDS53002 | Drive Shaft | | 22 | | 53.2 | 78 | 769 | |
| | 1993.02-1996.06 | MT | F | L/R | Hatchback FWD AAZ | | GCO53007 | Outer Joint | | 22 | 30 | 53.2 | 78 | 61 | I |
| | 1993.02-1996.06 | MT | F | R | Hatchback FWD AAZ | | GCI83009 | Inner Joint | | | 33 | | | 34 | |
| | 1993.02-1996.06 | MT | F | L/R | Hatchback FWD AAZ | | GCI83011 | Inner Joint | | | 33 | | | 34 | |
| 1.9 (66 kw) | 1996.07-2002.05 | 5MT | F | L/R | Hatchback FWD 1Z/AGR/AHU/ALH | | GCO53007 | Outer Joint | | 22 | 30 | 53.2 | 78 | 61 | I |
| | 1996.07-2002.05 | MT | F | L | Hatchback FWD 1Z/AGR/AHU/ALH | | GDS53001 | Drive Shaft | | 22 | | 53 | 78.5 | 535 | |
| | 1996.07-2002.05 | MT | F | R | Hatchback FWD 1Z/AGR/AHU/ALH | | GDS53002 | Drive Shaft | | 22 | | 53.2 | 78 | 769 | |
| | 1996.07-2002.05 | MT | F | R | Hatchback FWD 1Z/AGR/AHU/ALH | | GCI83009 | Inner Joint | | | 33 | | | 34 | |
| | 1996.07-2002.05 | MT | F | L/R | Hatchback FWD 1Z/AGR/AHU/ALH | Date To:2000.12 | GCI83011 | Inner Joint | | | 33 | | | 34 | |
| | 1996.07-2002.05 | | F | L/R | Hatchback FWD 1Z/AGR/AHU/ALH | | GCO53004 | Outer Joint | | 22 | 30 | 51 | 78 | 61 | I |
| | 2008.07-2010.06 | 5MT | F | L | Hatchback FWD BXJ | | GDS56954 | Drive Shaft | | 36 | | 52 | 59 | 484 | |
| | 2008.07-2010.06 | 5MT | F | R | Hatchback FWD BXJ | | GDS56553 | Drive Shaft | | 36 | | 52 | 59 | 770 | |
| | 2008.07-2010.06 | 5MT | F | L/R | Hatchback FWD BXJ | | GCO83024 | Outer Joint | | 36 | 30 | 50.75 | 59 | 55.5 | I |
| | 2008.07-2010.06 | AT/MT | F | L/R | Hatchback FWD BXJ | | GCI83011 | Inner Joint | | | 33 | | | 34 | |
| | 2008.07-2010.06 | | F | L/R | Hatchback FWD BXJ | | GCI61006 | Inner Joint | | | 30 | | | 57.6 | |
| 1.9 (74 kw) | 2002.02-2009.11 | 5MT | F | L | Hatchback FWD ATD;AXR;BMT | | GDS61098 | Drive Shaft | | 36 | | 50.5 | 59 | 472 | |
| | 2002.02-2009.11 | 5MT | F | R | Hatchback FWD ATD;AXR;BMT | AAR | GDS61099 | Drive Shaft | | 36 | | 50.5 | 59 | 759 | |
| | 2002.02-2009.11 | 5MT | F | L/R | Hatchback FWD ATD;AXR;BMT | For steel rims,Date from:2005.06,Chassis no. from:6L_6_000001;For light alloy rims | GCO83024 | Outer Joint | | 36 | 30 | 50.75 | 59 | 55.5 | I |
| | 2002.02-2009.11 | 5MT | F | L/R | Hatchback FWD ATD;AXR;BMT | | GCI61006 | Inner Joint | | | 30 | | | 57.6 | |
| 1.9 (77 kw) | 2008.03-2010.06 | 5MT | F | L | Hatchback FWD BLS | | GDS56954 | Drive Shaft | | 36 | | 52 | 59 | 484 | |
| | 2008.03-2010.06 | 5MT | F | R | Hatchback FWD BLS | | GDS56553 | Drive Shaft | | 36 | | 52 | 59 | 770 | |
| | 2008.03-2010.06 | 5MT | F | L/R | Hatchback FWD BLS | | GCO83024 | Outer Joint | | 36 | 30 | 50.75 | 59 | 55.5 | I |
| | 2008.03-2010.06 | 5MT | F | L/R | Hatchback FWD BLS | | GCI61006 | Inner Joint | | | 30 | | | 57.6 | |
| 1.9 (81 kw) | 1997.03-2002.05 | 5MT | F | L/R | Hatchback FWD AFN/ASV | | GCO53007 | Outer Joint | | 22 | 30 | 53.2 | 78 | 61 | I |
| | 1997.03-2002.05 | MT | F | L | Hatchback FWD AFN/ASV | | GDS53001 | Drive Shaft | | 22 | | 53 | 78.5 | 535 | |
| | 1997.03-2002.05 | MT | F | | Hatchback FWD AFN/ASV | | GCO53004 | Outer Joint | | 22 | 30 | 51 | 78 | 61 | I |
| | 1997.03-2002.05 | MT | F | R | Hatchback FWD AFN/ASV | | GCI83009 | Inner Joint | | | 33 | | | 34 | |

| | YEAR | TRANSM. | F/R | L/R | BODY STYLE & DRIVE TYPE & ENGINE | REMARKS | G-AP Ref. | PRODUCT | ABS | Technical Specifications A | B | C | H | L | P |
|---|---|---|---|---|---|---|---|---|---|---|---|---|---|---|---|
| **SEAT** | | | | | | | | | | | | | | | |
| **Ibiza** | | | | | | | | | | | | | | | |
| 1.9 (81 kw) | 1997.03-2002.05 | MT | F | L/R | Hatchback FWD AFN/ASV | Date to:2000.12 | GCI83011 | Inner Joint | | | 33 | | | 34 | |
| 1.9 (96 kw) | 2002.02-2009.11 | 6MT | F | L | Hatchback FWD ASZ;BLT | | GDS61204 | Drive Shaft | | 36 | | 50.5 | 75 | 461 | |
| | 2002.02-2009.11 | 6MT | F | R | Hatchback FWD ASZ;BLT | | GDS61183 | Drive Shaft | | 36 | | 50.5 | 75 | 769 | |
| | 2002.02-2009.11 | 6MT | F | L/R | Hatchback FWD ASZ;BLT | | GCO53002 | Outer Joint | | 36 | 27 | 50.75 | 75 | 65 | I |
| | 2002.02-2009.11 | 6MT | F | L/R | Hatchback FWD ASZ;BLT | with Nylon spacer and Disc circlip | GCO83041 | Outer Joint | | 36 | 27 | 50.5 | 75 | 65 | I |
| | 2002.02-2009.11 | 6MT | F | L/R | Hatchback FWD ASZ;BLT | | GCI61002 | Inner Joint | | | 28 | | | 31.8 | |
| 1.9 (118 kw) | 2004.03-2008.02 | 6MT | F | L | Hatchback FWD BPX;BUK | | GDS61204 | Drive Shaft | | 36 | | 50.5 | 75 | 461 | |
| | 2004.03-2008.02 | 6MT | F | R | Hatchback FWD BPX;BUK | | GDS61183 | Drive Shaft | | 36 | | 50.5 | 75 | 769 | |
| | 2004.03-2008.02 | 6MT | F | L/R | Hatchback FWD BPX;BUK | | GCO53002 | Outer Joint | | 36 | 27 | 50.75 | 75 | 65 | I |
| | 2004.03-2008.02 | 6MT | F | L/R | Hatchback FWD BPX;BUK | with Nylon spacer and Disc circlip | GCO83041 | Outer Joint | | 36 | 27 | 50.5 | 75 | 65 | I |
| | 2004.03-2008.02 | 6MT | F | L/R | Hatchback FWD BPX;BUK | | GCI61002 | Inner Joint | | | 28 | | | 31.8 | |
| 2.0 (85 kw) | 1993.02-1999.06 | MT | F | L | Hatchback FWD 2E/AGG | | GDS53001 | Drive Shaft | | 22 | | 53 | 78.5 | 535 | |
| | 1993.02-1999.06 | MT | F | R | Hatchback FWD 2E/AGG | | GDS53002 | Drive Shaft | | 22 | | 53.2 | 78 | 769 | |
| | 1993.02-1999.06 | MT | F | L/R | Hatchback FWD 2E/AGG | | GCO53007 | Outer Joint | | 22 | 30 | 53.2 | 78 | 61 | I |
| | 1993.02-1999.06 | MT | F | R | Hatchback FWD 2E/AGG | | GCI83009 | Inner Joint | | | 33 | | | 34 | |
| | 1993.02-1999.06 | MT | F | L/R | Hatchback FWD 2E/AGG | | GCI83011 | Inner Joint | | | 33 | | | 34 | |
| | 1993.02-1999.06 | | F | | Hatchback FWD 2E/AGG | | GCO53004 | Outer Joint | | 22 | 30 | 51 | 78 | 61 | I |
| | 2002.04-2009.11 | 5MT | F | L | Hatchback FWD AZL;BBX | | GDS54018 | Drive Shaft | | 36 | | 50.5 | 59 | 500 | |
| | 2002.04-2009.11 | 5MT | F | R | Hatchback FWD AZL;BBX | | GDS61305 | Drive Shaft | | 36 | | 50.5 | 59 | 757 | |
| | 2002.04-2009.11 | 5MT | F | L/R | Hatchback FWD AZL;BBX | | GCO83024 | Outer Joint | | 36 | 30 | 50.75 | 59 | 55.5 | I |
| | 2002.04-2009.11 | 5MT | F | L/R | Hatchback FWD AZL;BBX | | GCI82447 | Inner Joint | | | 33 | | | 34 | |
| | 2002.04-2009.11 | MT | F | L/R | Hatchback FWD AZL;BBX | | GCI83006 | Inner Joint | | | 33 | | | 34 | |
| | 2008.10-2015.05 | 5MT | F | L/R | Hatchback FWD CEKA | | GCO83024 | Outer Joint | | 36 | 30 | 50.75 | 59 | 55.5 | I |
| | 2008.10-2015.05 | 5MT | F | L/R | Hatchback FWD CEKA | | GCI82447 | Inner Joint | | | 33 | | | 34 | |
| | 2008.10-2015.05 | 6MT | F | R | Hatchback FWD CEKA | | GDS61301 | Drive Shaft | | 36 | | 50.5 | 59 | 771 | |
| | 2008.10-2015.05 | MT | F | L | Hatchback FWD CEKA | | GDS61297 | Drive Shaft | | 36 | | 50.5 | 59 | 513 | |
| | 2008.10-2015.05 | MT | F | L | Hatchback FWD CEKA | | GCO54006 | Outer Joint | | 36 | 30 | 52 | 59 | 55.5 | I |
| | 2008.10-2015.05 | MT | F | L | Hatchback FWD CEKA | | GCI53002 | Inner Joint | | | 33 | | | 34 | |
| | 2008.10-2015.05 | MT | F | L/R | Hatchback FWD CEKA | | GCI83006 | Inner Joint | | | 33 | | | 34 | |
| 2.0 (105 kw) | 2010.01-2015.05 | 6MT | F | L/R | Hatchback FWD CFHD | | GCO61081 | Outer Joint | | 36 | 27 | 52 | 75 | 65 | I |
| | 2010.01-2015.05 | 6MT | F | L | Hatchback FWD CFHD | | GCI61069 | Inner Joint | | | 28 | | | 32 | |
| | 2010.01-2015.05 | 6MT | F | L/R | Hatchback FWD CFHD | | GCI83016 | Inner Joint | | | 28 | | | 32 | |
| 2.0 (110 kw) | 1996.07-1999.06 | MT | F | L | Hatchback FWD ABF | | GDS53001 | Drive Shaft | | 22 | | 53 | 78.5 | 535 | |
| | 1996.07-1999.06 | MT | F | L/R | Hatchback FWD ABF | | GCO83070 | Outer Joint | | 36 | 30 | 53 | 78 | 60 | I |
| | 1996.07-1999.06 | MT | F | L/R | Hatchback FWD ABF | | GCI83011 | Inner Joint | | | 33 | | | 34 | |
| | 1996.07-1999.06 | | F | | Hatchback FWD ABF | | GCO53004 | Outer Joint | | 22 | 30 | 51 | 78 | 61 | I |
| **Ibiza SC** | | | | | | | | | | | | | | | |
| 1.0 (55 kw) | 2015.05-2016.12 | 5MT | F | L | Hatchback FWD CHYB | | GDS82038 | Drive Shaft | | 36 | 28 | 52 | 58.5 | 629 | |
| | 2015.05-2016.12 | 5MT | F | R | Hatchback FWD CHYB | | GDS82040 | Drive Shaft | | 36 | 28 | 52 | 58.5 | 821 | |
| | 2015.05-2016.12 | 5MT | F | L/R | Hatchback FWD CHYB | | GCI81611 | Inner Joint | | 28 | 28 | 39.95 | 58 | 84 | |
| 1.0 (70 kw) | 2015.05-2016.12 | 5MT | F | L | Hatchback FWD CHZB | | GDS81922 | Drive Shaft | | 36 | 33 | 52 | 59 | 581 | |
| | 2015.05-2016.12 | 5MT | F | R | Hatchback FWD CHZB | | GDS81924 | Drive Shaft | | 36 | 33 | 52 | 59 | 855 | |
| | 2015.05-2016.12 | 5MT | F | L/R | Hatchback FWD CHZB | | GCI81546 | Inner Joint | | 33 | 32 | 39.9 | 58.5 | 105 | |
| | 2015.05-2016.12 | 6MT | F | L/R | Hatchback FWD CHZB | | GCO54006 | Outer Joint | | 36 | 30 | 52 | 59 | 55.5 | I |
| | 2015.05-2016.12 | 7AT | F | L | Hatchback FWD CHZB | | GDS61150 | Drive Shaft | | 36 | 26 | 52 | 75 | 557 | |
| | 2015.05-2016.12 | MT | F | L/R | Hatchback FWD CHZB | | GCO83024 | Outer Joint | | 36 | 30 | 50.75 | 59 | 55.5 | I |
| 1.0 (81 kw) | 2015.05-2016.12 | 6MT | F | L | Hatchback FWD CHZC | | GDS81922 | Drive Shaft | | 36 | 33 | 52 | 59 | 581 | |
| | 2015.05-2016.12 | 6MT | F | R | Hatchback FWD CHZC | | GDS81924 | Drive Shaft | | 36 | 33 | 52 | 59 | 855 | |
| | 2015.05-2016.12 | 6MT | F | L/R | Hatchback FWD CHZC | | GCO54006 | Outer Joint | | 36 | 30 | 52 | 59 | 55.5 | I |
| | 2015.05-2016.12 | 6MT | F | L/R | Hatchback FWD CHZC | | GCI81546 | Inner Joint | | 33 | 32 | 39.9 | 58.5 | 105 | |
| | 2015.05-2016.12 | 7DCT | F | L | Hatchback FWD CHZC | | GDS82228 | Drive Shaft | | 36 | | 52 | 75 | 475 | |
| | 2015.05-2016.12 | 7DCT | F | R | Hatchback FWD CHZC | | GDS82358 | Drive Shaft | | 36 | | 52 | 75 | 762 | |
| | 2015.05-2016.12 | 7DCT | F | L/R | Hatchback FWD CHZC | | GCO61081 | Outer Joint | | 36 | 27 | 52 | 75 | 65 | I |
| | 2015.05-2016.12 | 7DCT | F | L/R | Hatchback FWD CHZC | | GCI81689 | Inner Joint | | | 32 | | | 89 | |
| | 2015.05-2016.12 | MT | F | L/R | Hatchback FWD CHZC | | GCO83024 | Outer Joint | | 36 | 30 | 50.75 | 59 | 55.5 | I |
| 1.2 (44 kw) | 2009.07-2015.05 | 5MT | F | L | Hatchback FWD CGPB | | GDS83330 | Drive Shaft | | 36 | | 50.7 | 58.5 | 515 | |
| | 2009.07-2015.05 | 5MT | F | R | Hatchback FWD CGPB | | GDS61288 | Drive Shaft | | 36 | | 50.7 | 58.5 | 765 | |
| | 2009.07-2015.05 | 5MT | F | L/R | Hatchback FWD CGPB | | GCI83008 | Inner Joint | | | 33 | | | 32 | |
| 1.2 (51 kw) | 2008.04-2015.05 | 5MT | F | L | Hatchback Van FWD CGPA | | GDS83330 | Drive Shaft | | 36 | | 50.7 | 58.5 | 515 | |
| | 2008.04-2015.05 | 5MT | F | R | Hatchback Van FWD CGPA | | GDS61288 | Drive Shaft | | 36 | | 50.7 | 58.5 | 765 | |
| | 2008.04-2015.05 | | F | L/R | Hatchback Van FWD CGPA | | GCI83008 | Inner Joint | | | 33 | | | 32 | |
| | 2008.07-2015.05 | 5MT | F | L | Hatchback FWD BZG;CGPA | | GDS83330 | Drive Shaft | | 36 | | 50.7 | 58.5 | 515 | |
| | 2008.07-2015.05 | 5MT | F | R | Hatchback FWD BZG;CGPA | | GDS61288 | Drive Shaft | | 36 | | 50.7 | 58.5 | 765 | |
| | 2008.07-2015.05 | 5MT | F | L/R | Hatchback FWD BZG;CGPA | | GCI83008 | Inner Joint | | | 33 | | | 32 | |
| 1.2 (55 kw) | 2010.05-2015.05 | 5MT | F | L | Hatchback FWD CFWA | | GDS61184 | Drive Shaft | | 36 | | 52 | 59 | 496 | |

| | YEAR | TRANSM. | F/R | L/R | BODY STYLE & DRIVE TYPE & ENGINE | REMARKS | G-AP Ref. | PRODUCT | ABS | Technical Specifications | | | | | |
|---|---|---|---|---|---|---|---|---|---|---|---|---|---|---|---|
| | | | | | | | | | | A | B | C | H | L | P |
| **SEAT** | | | | | | | | | | | | | | | |
| **Ibiza SC** | | | | | | | | | | | | | | | |
| 1.2 (55 kw) | 2010.05-2015.05 | 5MT | F | R | Hatchback FWD CFWA | | GDS61185 | Drive Shaft | | 36 | | 52 | 59 | 785 | |
| | 2010.05-2015.05 | 5MT | F | L/R | Hatchback FWD CFWA | | GCO83024 | Outer Joint | | 36 | 30 | 50.75 | 59 | 55.5 | I |
| | 2010.05-2015.05 | | F | L | Hatchback FWD CFWA | | GCO54006 | Outer Joint | | 36 | 30 | 52 | 59 | 55.5 | I |
| | 2010.05-2015.05 | | F | L/R | Hatchback FWD CFWA | | GCI83011 | Inner Joint | | | 33 | | | 34 | |
| | 2010.05-2015.05 | 5MT | F | L/R | Hatchback Van FWD CFWA | | GCO83024 | Outer Joint | | 36 | 30 | 50.75 | 59 | 55.5 | I |
| | 2010.05-2015.05 | 5MT | F | L/R | Hatchback Van FWD CFWA | | GCI82447 | Inner Joint | | | 33 | | | 34 | |
| | 2010.05-2015.05 | | F | L | Hatchback Van FWD CFWA | | GDS61184 | Drive Shaft | | 36 | | 52 | 59 | 496 | |
| | 2010.05-2015.05 | | F | R | Hatchback Van FWD CFWA | | GDS61185 | Drive Shaft | | 36 | | 52 | 59 | 785 | |
| 1.2 (63 kw) | 2012.08-2015.05 | 5MT | F | L | Hatchback FWD CBZA | | GDS61297 | Drive Shaft | | 36 | | 50.5 | 59 | 513 | |
| | 2012.08-2015.05 | 5MT | F | L/R | Hatchback FWD CBZA | | GCO83024 | Outer Joint | | 36 | 30 | 50.75 | 59 | 55.5 | I |
| | 2012.08-2015.05 | 5MT | F | L/R | Hatchback FWD CBZA | | GCI82447 | Inner Joint | | | 33 | | | 34 | |
| | 2012.08-2015.05 | 6MT | F | R | Hatchback FWD CBZA | | GDS61301 | Drive Shaft | | 36 | | 50.5 | 59 | 771 | |
| | 2012.08-2015.05 | AT | F | L | Hatchback FWD CBZA | | GCI53002 | Inner Joint | | | 33 | | | 34 | |
| | 2012.08-2015.05 | MT | F | L | Hatchback FWD CBZA | | GDS61274 | Drive Shaft | | 36 | | 50.5 | 59 | 514 | |
| | 2012.08-2015.05 | MT | F | L | Hatchback FWD CBZA | | GCO54006 | Outer Joint | | 36 | 30 | 52 | 59 | 55.5 | I |
| 1.2 (66 kw) | 2015.05-2016.12 | 5MT | F | L | Hatchback FWD CJZC | | GDS61297 | Drive Shaft | | 36 | | 50.5 | 59 | 513 | |
| | 2015.05-2016.12 | 5MT | F | R | Hatchback FWD CJZC | | GDS61301 | Drive Shaft | | 36 | | 50.5 | 59 | 771 | |
| | 2015.05-2016.12 | 5MT | F | L/R | Hatchback FWD CJZC | | GCO83024 | Outer Joint | | 36 | 30 | 50.75 | 59 | 55.5 | I |
| | 2015.05-2016.12 | 5MT | F | L/R | Hatchback FWD CJZC | | GCI53002 | Inner Joint | | | 33 | | | 34 | |
| | 2015.05-2016.12 | 5MT | F | L/R | Hatchback FWD CJZC | | GCI82447 | Inner Joint | | | 33 | | | 34 | |
| | 2015.05-2016.12 | | F | L/R | Hatchback FWD CJZC | | GCO54006 | Outer Joint | | 36 | 30 | 52 | 59 | 55.5 | I |
| | 2015.05-2016.12 | | F | L/R | Hatchback FWD CJZC | | GCI83011 | Inner Joint | | | 33 | | | 34 | |
| 1.2 (77 kw) | 2010.09-2015.05 | 5MT | F | L | Hatchback FWD CBZB | | GDS61297 | Drive Shaft | | 36 | | 50.5 | 59 | 513 | |
| | 2010.09-2015.05 | 5MT | F | R | Hatchback FWD CBZB | | GDS61301 | Drive Shaft | | 36 | | 50.5 | 59 | 771 | |
| | 2010.09-2015.05 | 5MT/7AT | F | L/R | Hatchback FWD CBZB | | GCO83024 | Outer Joint | | 36 | 30 | 50.75 | 59 | 55.5 | I |
| | 2010.09-2015.05 | 5MT/7DCT | F | L/R | Hatchback FWD CBZB | | GCI53002 | Inner Joint | | | 33 | | | 34 | |
| | 2010.09-2015.05 | 7AT | F | L | Hatchback FWD CBZB | | GDS61201 | Drive Shaft | | 36 | | 59.5 | 40.5 | 535 | |
| | 2010.09-2015.05 | 7DCT | F | L | Hatchback FWD CBZB | | GDS61311 | Drive Shaft | | 36 | | 50.5 | 59 | 492 | |
| | 2010.09-2015.05 | 7DCT | F | R | Hatchback FWD CBZB | | GDS61308 | Drive Shaft | | 36 | | 50.5 | 59 | 786 | |
| | 2010.09-2015.05 | 7DCT/5MT | F | L/R | Hatchback FWD CBZB | | GCI82447 | Inner Joint | | | 33 | | | 34 | |
| | 2010.09-2015.05 | MT | F | L | Hatchback FWD CBZB | | GDS61274 | Drive Shaft | | 36 | | 50.5 | 59 | 514 | |
| | 2010.09-2015.05 | | F | L/R | Hatchback FWD CBZB | | GCO54006 | Outer Joint | | 36 | 30 | 52 | 59 | 55.5 | I |
| | 2010.09-2015.05 | | F | L/R | Hatchback FWD CBZB | | GCI83011 | Inner Joint | | | 33 | | | 34 | |
| 1.2 (81 kw) | 2015.09-2016.12 | 5MT | F | R | Hatchback FWD CJZD | | GDS61301 | Drive Shaft | | 36 | | 50.5 | 59 | 771 | |
| | 2015.09-2016.12 | 6MT | F | L | Hatchback FWD CJZD | | GDS61297 | Drive Shaft | | 36 | | 50.5 | 59 | 513 | |
| | 2015.09-2016.12 | 6MT | F | L/R | Hatchback FWD CJZD | | GCO83024 | Outer Joint | | 36 | 30 | 50.75 | 59 | 55.5 | I |
| | 2015.09-2016.12 | 6MT | F | L/R | Hatchback FWD CJZD | | GCI53002 | Inner Joint | | | 33 | | | 34 | |
| | 2015.09-2016.12 | 6MT | F | L/R | Hatchback FWD CJZD | | GCI82447 | Inner Joint | | | 33 | | | 34 | |
| | 2015.09-2016.12 | | F | L/R | Hatchback FWD CJZD | | GCO54006 | Outer Joint | | 36 | 30 | 52 | 59 | 55.5 | I |
| | 2015.09-2016.12 | | F | L/R | Hatchback FWD CJZD | | GCI83011 | Inner Joint | | | 33 | | | 34 | |
| 1.4 (55 kw) | 2015.05-2016.12 | 5MT | F | L | Hatchback FWD CUSA | | GDS82039 | Drive Shaft | | 36 | | 52 | 59 | 549 | |
| | 2015.05-2016.12 | 5MT | F | R | Hatchback FWD CUSA | | GDS82360 | Drive Shaft | | 36 | | 52 | 59 | 729 | |
| | 2015.05-2016.12 | 5MT | F | L/R | Hatchback FWD CUSA | | GCO83024 | Outer Joint | | 36 | 30 | 50.75 | 59 | 55.5 | I |
| | 2015.05-2016.12 | 5MT | F | L/R | Hatchback FWD CUSA | | GCI82447 | Inner Joint | | | 33 | | | 34 | |
| | 2015.05-2016.12 | | F | L/R | Hatchback FWD CUSA | | GCO54006 | Outer Joint | | 36 | 30 | 52 | 59 | 55.5 | I |
| 1.4 (59 kw) | 2008.07-2010.06 | 5MT | F | L | Hatchback FWD BMS | | GDS56954 | Drive Shaft | | 36 | | 52 | 59 | 484 | |
| | 2008.07-2010.06 | 5MT | F | R | Hatchback FWD BMS | | GDS56553 | Drive Shaft | | 36 | | 52 | 59 | 770 | |
| | 2008.07-2010.06 | 5MT | F | L/R | Hatchback FWD BMS | | GCO83024 | Outer Joint | | 36 | 30 | 50.75 | 59 | 55.5 | I |
| | 2008.07-2010.06 | | F | L | Hatchback FWD BMS | | GCO54006 | Outer Joint | | 36 | 30 | 52 | 59 | 55.5 | I |
| | 2008.07-2010.06 | | F | L/R | Hatchback FWD BMS | | GCI61006 | Inner Joint | | | 30 | | | 57.6 | |
| 1.4 (63 kw) | 2008.07-2011.05 | 5MT | F | L | Hatchback FWD BXW | | GDS83330 | Drive Shaft | | 36 | | 50.7 | 58.5 | 515 | |
| | 2008.07-2011.05 | 5MT | F | R | Hatchback FWD BXW | | GDS61288 | Drive Shaft | | 36 | | 50.7 | 58.5 | 765 | |
| | 2008.07-2011.05 | 5MT | F | R | Hatchback FWD BXW | | GCI83008 | Inner Joint | | | 33 | | | 32 | |
| | 2008.07-2011.05 | MT | F | L/R | Hatchback FWD BXW | | GCO83027 | Outer Joint | | 36 | 30 | 50.7 | 58.5 | 47.5 | I |
| | 2008.07-2015.05 | 5MT | F | L | Hatchback FWD BXW;CGGB | | GDS83330 | Drive Shaft | | 36 | | 50.7 | 58.5 | 515 | |
| | 2008.07-2015.05 | 5MT | F | R | Hatchback FWD BXW;CGGB | | GDS61288 | Drive Shaft | | 36 | | 50.7 | 58.5 | 765 | |
| | 2008.07-2015.05 | 5MT | F | L/R | Hatchback FWD BXW;CGGB | | GCO83027 | Outer Joint | | 36 | 30 | 50.7 | 58.5 | 47.5 | I |
| | 2008.07-2015.05 | 5MT | F | R | Hatchback FWD BXW;CGGB | | GCI83008 | Inner Joint | | | 33 | | | 32 | |
| 1.4 (66 kw) | 2015.05-2016.12 | 5MT | F | L | Hatchback FWD CUSB | | GDS82039 | Drive Shaft | | 36 | | 52 | 59 | 549 | |
| | 2015.05-2016.12 | 5MT | F | R | Hatchback FWD CUSB | | GDS82360 | Drive Shaft | | 36 | | 52 | 59 | 729 | |
| | 2015.05-2016.12 | 5MT | F | L/R | Hatchback FWD CUSB | | GCO54006 | Outer Joint | | 36 | 30 | 52 | 59 | 55.5 | I |
| | 2015.05-2016.12 | 5MT | F | L/R | Hatchback FWD CUSB | | GCO83024 | Outer Joint | | 36 | 30 | 50.75 | 59 | 55.5 | I |
| | 2015.05-2016.12 | 5MT | F | L/R | Hatchback FWD CUSB | | GCI82447 | Inner Joint | | | 33 | | | 34 | |
| | 2015.05-2016.12 | 7AT/5MT | F | L | Hatchback FWD CUSB | | GCI83016 | Inner Joint | | | 28 | | | 32 | |
| | 2015.05-2016.12 | 7DCT | F | L | Hatchback FWD CUSB | | GDS81926 | Drive Shaft | | 36 | | 52 | 75 | 550 | |

| | YEAR | TRANSM. | F/R | L/R | BODY STYLE & DRIVE TYPE & ENGINE | REMARKS | G-AP Ref. | PRODUCT | ABS | Technical Specifications A | B | C | H | L | P |
|---|---|---|---|---|---|---|---|---|---|---|---|---|---|---|---|
| **SEAT** **Ibiza SC** | | | | | | | | | | | | | | | |
| 1.4 (66 kw) | 2015.05-2016.12 | 7DCT | F | R | Hatchback FWD CUSB | | GDS82359 | Drive Shaft | | 36 | 40 | 52 | 75 | 755 | |
| | 2015.05-2016.12 | 7DCT | F | L/R | Hatchback FWD CUSB | | GCO61081 | Outer Joint | | 36 | 27 | 52 | 75 | 65 | I |
| | 2015.05-2016.12 | 7DCT | F | R | Hatchback FWD CUSB | | GCI61054 | Inner Joint | | 40 | 28 | 46.9 | 41 | 101.7 | |
| 1.4 (77 kw) | 2015.05-2016.12 | 5MT | F | L | Hatchback FWD CUTA;CYZA | | GDS82039 | Drive Shaft | | 36 | | 52 | 59 | 549 | |
| | 2015.05-2016.12 | 5MT | F | R | Hatchback FWD CUTA;CYZA | | GDS82360 | Drive Shaft | | 36 | | 52 | 59 | 729 | |
| | 2015.05-2016.12 | 5MT | F | L/R | Hatchback FWD CUTA;CYZA | | GCO83024 | Outer Joint | | 36 | 30 | 50.75 | 59 | 55.5 | I |
| | 2015.05-2016.12 | 5MT | F | L/R | Hatchback FWD CUTA;CYZA | | GCI82447 | Inner Joint | | | 33 | | | 34 | |
| | 2015.05-2016.12 | | F | L/R | Hatchback FWD CUTA;CYZA | | GCO54006 | Outer Joint | | 36 | 30 | 52 | 59 | 55.5 | I |
| 1.4 (103 kw) | 2013.10-2015.05 | 6MT | F | L/R | Hatchback FWD CPTA | | GCO61081 | Outer Joint | | 36 | 27 | 52 | 75 | 65 | I |
| | 2013.10-2015.05 | 6MT | F | L | Hatchback FWD CPTA | | GCI61069 | Inner Joint | | | 28 | | | 32 | |
| | 2013.10-2015.05 | 6MT | F | L/R | Hatchback FWD CPTA | | GCI83016 | Inner Joint | | | 28 | | | 32 | |
| 1.4 (110 kw) | 2009.01-2015.05 | 7AT | F | L | Hatchback FWD CAVF;CNUB;CTJB;CTHF | | GDS61260 | Drive Shaft | | 36 | | 52 | 75 | 498 | |
| | 2009.01-2015.05 | 7AT | F | L/R | Hatchback FWD CAVF;CNUB;CTJB;CTHF | | GCI61069 | Inner Joint | | | 28 | | | 32 | |
| | 2009.01-2015.05 | 7DCT | F | R | Hatchback FWD CAVF;CNUB;CTJB;CTHF | | GDS61261 | Drive Shaft | | 36 | | 52 | 75 | 785 | |
| | 2009.01-2015.05 | 7DCT | F | L/R | Hatchback FWD CAVF;CNUB;CTJB;CTHF | | GCO61081 | Outer Joint | | 36 | 27 | 52 | 75 | 65 | I |
| | 2009.01-2015.05 | | F | L/R | Hatchback FWD CAVF;CNUB;CTJB;CTHF | | GCI83016 | Inner Joint | | | 28 | | | 32 | |
| | 2015.11-2016.12 | 6MT | F | L/R | Hatchback FWD CZEA | | GCO61081 | Outer Joint | | 36 | 27 | 52 | 75 | 65 | I |
| | 2015.11-2016.12 | 6MT | F | L | Hatchback FWD CZEA | | GCI61069 | Inner Joint | | | 28 | | | 32 | |
| | 2015.11-2016.12 | 6MT | F | L/R | Hatchback FWD CZEA | | GCI83016 | Inner Joint | | | 28 | | | 32 | |
| 1.4 (132 kw) | 2009.06-2015.05 | 7AT | F | L | Hatchback FWD CAVE;CTHE;CTJC | | GDS61260 | Drive Shaft | | 36 | | 52 | 75 | 498 | |
| | 2009.06-2015.05 | 7AT | F | L/R | Hatchback FWD CAVE;CTHE;CTJC | | GCI61069 | Inner Joint | | | 28 | | | 32 | |
| | 2009.06-2015.05 | 7DCT | F | R | Hatchback FWD CAVE;CTHE;CTJC | | GDS61261 | Drive Shaft | | 36 | | 52 | 75 | 785 | |
| | 2009.06-2015.05 | 7DCT | F | L/R | Hatchback FWD CAVE;CTHE;CTJC | | GCO61081 | Outer Joint | | 36 | 27 | 52 | 75 | 65 | I |
| | 2009.06-2015.05 | | F | L/R | Hatchback FWD CAVE;CTHE;CTJC | | GCI83016 | Inner Joint | | | 28 | | | 32 | |
| 1.6 (60 kw) | 2011.05-2015.05 | 5MT | F | L | Hatchback FWD CNKA | | GDS61297 | Drive Shaft | | 36 | | 50.5 | 59 | 513 | |
| | 2011.05-2015.05 | 5MT | F | R | Hatchback FWD CNKA | | GDS61301 | Drive Shaft | | 36 | | 50.5 | 59 | 771 | |
| | 2011.05-2015.05 | 5MT | F | L/R | Hatchback FWD CNKA | | GCO83024 | Outer Joint | | 36 | 30 | 50.75 | 59 | 55.5 | I |
| | 2011.05-2015.05 | 5MT | F | L/R | Hatchback FWD CNKA | | GCI53002 | Inner Joint | | | 33 | | | 34 | |
| | 2011.05-2015.05 | 5MT | F | L/R | Hatchback FWD CNKA | | GCI82447 | Inner Joint | | | 33 | | | 34 | |
| | 2011.05-2015.05 | MT | F | L | Hatchback FWD CNKA | | GDS61274 | Drive Shaft | | 36 | | 50.5 | 59 | 514 | |
| | 2011.05-2015.05 | MT | F | L | Hatchback FWD CNKA | | GCO54006 | Outer Joint | | 36 | 30 | 52 | 59 | 55.5 | I |
| | 2011.05-2015.05 | MT | F | L/R | Hatchback FWD CNKA | | GCI83006 | Inner Joint | | | 33 | | | 34 | |
| | 2011.05-2015.05 | | F | L/R | Hatchback FWD CNKA | | GCI83011 | Inner Joint | | | 33 | | | 34 | |
| 1.6 (66 kw) | 2009.05-2015.05 | 5MT | F | L | Hatchback FWD CAYB | | GDS61184 | Drive Shaft | | 36 | | 52 | 59 | 496 | |
| | 2009.05-2015.05 | 5MT | F | R | Hatchback FWD CAYB | | GDS61185 | Drive Shaft | | 36 | | 52 | 59 | 785 | |
| | 2009.05-2015.05 | 5MT | F | L/R | Hatchback FWD CAYB | | GCO83024 | Outer Joint | | 36 | 30 | 50.75 | 59 | 55.5 | I |
| | 2009.05-2015.05 | 5MT | F | L/R | Hatchback FWD CAYB | | GCI82447 | Inner Joint | | | 33 | | | 34 | |
| | 2009.05-2015.05 | 5MT/7AT | F | L | Hatchback FWD CAYB | | GCO54006 | Outer Joint | | 36 | 30 | 52 | 59 | 55.5 | I |
| | 2009.05-2015.05 | 7AT/5MT | F | L/R | Hatchback FWD CAYB | | GCI83016 | Inner Joint | | | 28 | | | 32 | |
| | 2009.05-2015.05 | 7DCT | F | L | Hatchback FWD CAYB | | GDS61260 | Drive Shaft | | 36 | | 52 | 75 | 498 | |
| | 2009.05-2015.05 | 7DCT | F | R | Hatchback FWD CAYB | | GDS61261 | Drive Shaft | | 36 | | 52 | 75 | 785 | |
| | 2009.05-2015.05 | 7DCT | F | L/R | Hatchback FWD CAYB | | GCO61081 | Outer Joint | | 36 | 27 | 52 | 75 | 65 | I |
| | 2009.05-2015.05 | 5MT | F | L | Hatchback Van FWD CAYB | | GDS61184 | Drive Shaft | | 36 | | 52 | 59 | 496 | |
| | 2009.05-2015.05 | 5MT | F | R | Hatchback Van FWD CAYB | | GDS61185 | Drive Shaft | | 36 | | 52 | 59 | 785 | |
| | 2009.05-2015.05 | 5MT | F | L/R | Hatchback Van FWD CAYB | | GCO83024 | Outer Joint | | 36 | 30 | 50.75 | 59 | 55.5 | I |
| | 2009.05-2015.05 | 5MT | F | L/R | Hatchback Van FWD CAYB | | GCI82447 | Inner Joint | | | 33 | | | 34 | |
| 1.6 (77 kw) | 2008.07-2015.05 | 5MT | F | L | Hatchback FWD BTS | | GDS61297 | Drive Shaft | | 36 | | 50.5 | 59 | 513 | |
| | 2008.07-2015.05 | 5MT | F | R | Hatchback FWD BTS | | GDS61301 | Drive Shaft | | 36 | | 50.5 | 59 | 771 | |
| | 2008.07-2015.05 | 5MT | F | L/R | Hatchback FWD BTS | | GCO83024 | Outer Joint | | 36 | 30 | 50.75 | 59 | 55.5 | I |
| | 2008.07-2015.05 | 7AT/5MT | F | L/R | Hatchback FWD BTS | | GCI82447 | Inner Joint | | | 33 | | | 34 | |
| | 2008.07-2015.05 | 7DCT | F | L | Hatchback FWD BTS | | GDS61311 | Drive Shaft | | 36 | | 50.5 | 59 | 492 | |
| | 2008.07-2015.05 | 7DCT | F | R | Hatchback FWD BTS | | GDS61308 | Drive Shaft | | 36 | | 50.5 | 59 | 786 | |
| | 2008.07-2015.05 | 7DCT | F | L/R | Hatchback FWD BTS | | GCO54006 | Outer Joint | | 36 | 30 | 52 | 59 | 55.5 | I |
| | 2009.05-2015.05 | 5MT | F | L | Hatchback FWD CAYC | | GDS61184 | Drive Shaft | | 36 | | 52 | 59 | 496 | |
| | 2009.05-2015.05 | 5MT | F | R | Hatchback FWD CAYC | | GDS61185 | Drive Shaft | | 36 | | 52 | 59 | 785 | |
| | 2009.05-2015.05 | 5MT | F | L/R | Hatchback FWD CAYC | | GCO83024 | Outer Joint | | 36 | 30 | 50.75 | 59 | 55.5 | I |
| | 2009.05-2015.05 | 5MT | F | L/R | Hatchback FWD CAYC | | GCI82447 | Inner Joint | | | 33 | | | 34 | |
| | 2009.05-2015.05 | | F | L | Hatchback FWD CAYC | | GCO54006 | Outer Joint | | 36 | 30 | 52 | 59 | 55.5 | I |
| | 2009.05-2015.05 | | F | L/R | Hatchback FWD CAYC | | GCI83011 | Inner Joint | | | 33 | | | 34 | |
| 1.6 (81 kw) | 2015.07-2016.12 | 6AT | F | L | Hatchback FWD CWVA | | GDS83842 | Drive Shaft | | 36 | 26 | 52 | 75 | 566 | |
| | 2015.07-2016.12 | 6AT | F | R | Hatchback FWD CWVA | | GDS83843 | Drive Shaft | | 36 | 26 | 52 | 75 | 866 | |
| | 2015.07-2016.12 | 6AT | F | L/R | Hatchback FWD CWVA | | GCO83079 | Outer Joint | | 36 | 30 | 52 | 75 | 55.5 | I |
| | 2015.07-2016.12 | 6AT | F | L/R | Hatchback FWD CWVA | | GCI61039 | Inner Joint | | 26 | 22 | 31 | 68.5 | 88.5 | |
| 1.8 (141 kw) | 2015.11-2016.12 | 6MT | F | L/R | Hatchback FWD DAJA | | GCO61081 | Outer Joint | | 36 | 27 | 52 | 75 | 65 | I |
| | 2015.11-2016.12 | 6MT | F | L | Hatchback FWD DAJA | | GCI61069 | Inner Joint | | | 28 | | | 32 | |

| | YEAR | TRANSM. | F/R | L/R | BODY STYLE & DRIVE TYPE & ENGINE | REMARKS | G-AP Ref. | PRODUCT | ABS | Technical Specifications A | B | C | H | L | P |
|---|---|---|---|---|---|---|---|---|---|---|---|---|---|---|---|
| **SEAT** | | | | | | | | | | | | | | | |
| **Ibiza SC** | | | | | | | | | | | | | | | |
| 1.8 (141 kw) | 2015.11-2016.12 | 6MT | F | L/R | Hatchback FWD DAJA | | GCI83016 | Inner Joint | | | 28 | | | 32 | |
| | 2015.11-2016.12 | 7AT | F | L | Hatchback FWD DAJA | | GDS61260 | Drive Shaft | | 36 | | 52 | 75 | 498 | |
| | 2015.11-2016.12 | 7AT | F | L | Hatchback FWD DAJA | | GCI61069 | Inner Joint | | | 28 | | | 32 | |
| 1.9 (66 kw) | 2008.06-2010.06 | 5MT | F | L | Hatchback FWD BXJ | | GDS56954 | Drive Shaft | | 36 | | 52 | 59 | 484 | |
| | 2008.06-2010.06 | 5MT | F | R | Hatchback FWD BXJ | | GDS56553 | Drive Shaft | | 36 | | 52 | 59 | 770 | |
| | 2008.06-2010.06 | 5MT | F | L/R | Hatchback FWD BXJ | | GCO83024 | Outer Joint | | 36 | 30 | 50.75 | 59 | 55.5 | I |
| | 2008.06-2010.06 | AT/MT | F | L/R | Hatchback FWD BXJ | | GCI83011 | Inner Joint | | | 33 | | | 34 | |
| | 2008.06-2010.06 | | F | L/R | Hatchback FWD BXJ | | GCI61006 | Inner Joint | | | 30 | | | 57.6 | |
| 1.9 (77 kw) | 2008.07-2010.06 | 5MT | F | L | Hatchback FWD BLS | | GDS56954 | Drive Shaft | | 36 | | 52 | 59 | 484 | |
| | 2008.07-2010.06 | 5MT | F | R | Hatchback FWD BLS | | GDS56553 | Drive Shaft | | 36 | | 52 | 59 | 770 | |
| | 2008.07-2010.06 | 5MT | F | L/R | Hatchback FWD BLS | | GCO83024 | Outer Joint | | 36 | 30 | 50.75 | 59 | 55.5 | I |
| | 2008.07-2010.06 | 5MT | F | L/R | Hatchback FWD BLS | | GCI61006 | Inner Joint | | | 30 | | | 57.6 | |
| 2.0 (105 kw) | 2010.01-2015.05 | 6MT | F | L/R | Hatchback FWD CFHD | | GCO61081 | Outer Joint | | 36 | 27 | 52 | 75 | 65 | I |
| | 2010.01-2015.05 | 6MT | F | L | Hatchback FWD CFHD | | GCI61069 | Inner Joint | | | 28 | | | 32 | |
| | 2010.01-2015.05 | 6MT | F | L/R | Hatchback FWD CFHD | | GCI83016 | Inner Joint | | | 28 | | | 32 | |
| **Ibiza ST** | | | | | | | | | | | | | | | |
| 1.0 (55 kw) | 2015.05-2016.07 | 5MT | F | L | Estate FWD CHYB | | GDS82038 | Drive Shaft | | 36 | 28 | 52 | 58.5 | 629 | |
| | 2015.05-2016.07 | 5MT | F | L | Estate FWD CHYB | | GCI81611 | Inner Joint | | 28 | 28 | 39.95 | 58 | 84 | |
| | 2015.05-2016.07 | MT | F | R | Estate FWD CHYB | | GDS82040 | Drive Shaft | | 36 | 28 | 52 | 58.5 | 821 | |
| | 2015.05-2016.07 | MT | F | L/R | Estate FWD CHYB | | GCO83027 | Outer Joint | | 36 | 30 | 50.7 | 58.5 | 47.5 | I |
| 1.0 (70 kw) | 2015.05-2016.07 | 5MT | F | L | Estate FWD CHZB | | GDS81922 | Drive Shaft | | 36 | 33 | 52 | 59 | 581 | |
| | 2015.05-2016.07 | 5MT | F | R | Estate FWD CHZB | | GDS81924 | Drive Shaft | | 36 | 33 | 52 | 59 | 855 | |
| | 2015.05-2016.07 | 5MT | F | L/R | Estate FWD CHZB | | GCI81546 | Inner Joint | | 33 | 32 | 39.9 | 58.5 | 105 | |
| | 2015.05-2016.07 | 6MT | F | L/R | Estate FWD CHZB | | GCO54006 | Outer Joint | | 36 | 30 | 52 | 59 | 55.5 | I |
| | 2015.05-2016.07 | MT | F | L/R | Estate FWD CHZB | | GCO83024 | Outer Joint | | 36 | 30 | 50.75 | 59 | 55.5 | I |
| 1.0 (81 kw) | 2015.05-2016.07 | 6MT | F | L | Estate FWD CHZC | | GDS81922 | Drive Shaft | | 36 | 33 | 52 | 59 | 581 | |
| | 2015.05-2016.07 | 6MT | F | R | Estate FWD CHZC | | GDS81924 | Drive Shaft | | 36 | 33 | 52 | 59 | 855 | |
| | 2015.05-2016.07 | 6MT | F | L/R | Estate FWD CHZC | | GCO54006 | Outer Joint | | 36 | 30 | 52 | 59 | 55.5 | I |
| | 2015.05-2016.07 | 6MT | F | L/R | Estate FWD CHZC | | GCI81546 | Inner Joint | | 33 | 32 | 39.9 | 58.5 | 105 | |
| | 2015.05-2016.07 | 7DCT | F | L | Estate FWD CHZC | | GDS82228 | Drive Shaft | | 36 | | 52 | 75 | 475 | |
| | 2015.05-2016.07 | 7DCT | F | R | Estate FWD CHZC | | GDS82358 | Drive Shaft | | 36 | | 52 | 75 | 762 | |
| | 2015.05-2016.07 | 7DCT | F | L/R | Estate FWD CHZC | | GCO61081 | Outer Joint | | 36 | 27 | 52 | 75 | 65 | I |
| | 2015.05-2016.07 | 7DCT | F | L/R | Estate FWD CHZC | | GCI81689 | Inner Joint | | | 32 | | | 89 | |
| | 2015.05-2016.07 | MT | F | L/R | Estate FWD CHZC | | GCO83024 | Outer Joint | | 36 | 30 | 50.75 | 59 | 55.5 | I |
| 1.2 (44 kw) | 2010.05-2015.05 | 5MT | F | L | Estate FWD CGPB | | GDS83330 | Drive Shaft | | 36 | | 50.7 | 58.5 | 515 | |
| | 2010.05-2015.05 | 5MT | F | R | Estate FWD CGPB | | GDS61288 | Drive Shaft | | 36 | | 50.7 | 58.5 | 765 | |
| | 2010.05-2015.05 | MT | F | L/R | Estate FWD CGPB | | GCO83027 | Outer Joint | | 36 | 30 | 50.7 | 58.5 | 47.5 | I |
| | 2010.05-2015.05 | MT | F | L/R | Estate FWD CGPB | | GCI83005 | Inner Joint | | | 33 | | | 32 | |
| | 2010.05-2015.05 | | F | L/R | Estate FWD CGPB | | GCI83008 | Inner Joint | | | 33 | | | 32 | |
| 1.2 (51 kw) | 2010.05-2015.05 | 5MT | F | L | Estate FWD BZG;CGPA;CJLB | | GDS83330 | Drive Shaft | | 36 | | 50.7 | 58.5 | 515 | |
| | 2010.05-2015.05 | 5MT | F | R | Estate FWD BZG;CGPA;CJLB | | GDS61288 | Drive Shaft | | 36 | | 50.7 | 58.5 | 765 | |
| | 2010.05-2015.05 | MT | F | L/R | Estate FWD BZG;CGPA;CJLB | | GCO83027 | Outer Joint | | 36 | 30 | 50.7 | 58.5 | 47.5 | I |
| | 2010.05-2015.05 | MT | F | L/R | Estate FWD BZG;CGPA;CJLB | | GCI83005 | Inner Joint | | | 33 | | | 32 | |
| | 2010.05-2015.05 | | F | L/R | Estate FWD BZG;CGPA;CJLB | | GCI83008 | Inner Joint | | | 33 | | | 32 | |
| 1.2 (55 kw) | 2010.04-2015.05 | 5MT | F | L | Estate FWD CFWA | | GDS61184 | Drive Shaft | | 36 | | 52 | 59 | 496 | |
| | 2010.04-2015.05 | 5MT | F | R | Estate FWD CFWA | | GDS61185 | Drive Shaft | | 36 | | 52 | 59 | 785 | |
| | 2010.04-2015.05 | 5MT | F | L/R | Estate FWD CFWA | | GCO83024 | Outer Joint | | 36 | 30 | 50.75 | 59 | 55.5 | I |
| | 2010.04-2015.05 | 5MT | F | L/R | Estate FWD CFWA | | GCI82447 | Inner Joint | | | 33 | | | 34 | |
| | 2010.04-2015.05 | MT | F | L/R | Estate FWD CFWA | | GCI83011 | Inner Joint | | | 33 | | | 34 | |
| | 2010.04-2015.05 | | F | L | Estate FWD CFWA | | GCO54006 | Outer Joint | | 36 | 30 | 52 | 59 | 55.5 | I |
| 1.2 (63 kw) | 2012.09-2015.05 | 5MT | F | L | Estate FWD CBZA | | GDS61297 | Drive Shaft | | 36 | | 50.5 | 59 | 513 | |
| | 2012.09-2015.05 | 5MT | F | R | Estate FWD CBZA | | GDS61301 | Drive Shaft | | 36 | | 50.5 | 59 | 771 | |
| | 2012.09-2015.05 | 5MT | F | L/R | Estate FWD CBZA | | GCO83024 | Outer Joint | | 36 | 30 | 50.75 | 59 | 55.5 | I |
| | 2012.09-2015.05 | 5MT | F | L/R | Estate FWD CBZA | | GCI82447 | Inner Joint | | | 33 | | | 34 | |
| | 2012.09-2015.05 | MT | F | L | Estate FWD CBZA | | GDS61274 | Drive Shaft | | 36 | | 50.5 | 59 | 514 | |
| | 2012.09-2015.05 | MT | F | L | Estate FWD CBZA | | GCO54006 | Outer Joint | | 36 | 30 | 52 | 59 | 55.5 | I |
| | 2012.09-2015.05 | MT | F | L/R | Estate FWD CBZA | | GCI83011 | Inner Joint | | | 33 | | | 34 | |
| 1.2 (66 kw) | 2015.05-2016.07 | 5MT | F | L | Estate FWD CJZC | | GDS61297 | Drive Shaft | | 36 | | 50.5 | 59 | 513 | |
| | 2015.05-2016.07 | 5MT | F | R | Estate FWD CJZC | | GDS61301 | Drive Shaft | | 36 | | 50.5 | 59 | 771 | |
| | 2015.05-2016.07 | 5MT | F | L/R | Estate FWD CJZC | | GCO83024 | Outer Joint | | 36 | 30 | 50.75 | 59 | 55.5 | I |
| | 2015.05-2016.07 | 5MT | F | L/R | Estate FWD CJZC | | GCI53002 | Inner Joint | | | 33 | | | 34 | |
| | 2015.05-2016.07 | 5MT | F | L/R | Estate FWD CJZC | | GCI82447 | Inner Joint | | | 33 | | | 34 | |
| | 2015.05-2016.07 | | F | L/R | Estate FWD CJZC | | GCO54006 | Outer Joint | | 36 | 30 | 52 | 59 | 55.5 | I |
| | 2015.05-2016.07 | | F | L/R | Estate FWD CJZC | | GCI83011 | Inner Joint | | | 33 | | | 34 | |
| 1.2 (77 kw) | 2010.09-2015.05 | 5MT | F | L | Estate FWD CBZB | | GDS61297 | Drive Shaft | | 36 | | 50.5 | 59 | 513 | |

| | YEAR | TRANSM. | F/R | L/R | BODY STYLE & DRIVE TYPE & ENGINE | REMARKS | G-AP Ref. | PRODUCT | ABS | Technical Specifications A | B | C | H | L | P |
|---|---|---|---|---|---|---|---|---|---|---|---|---|---|---|---|
| **SEAT** **Ibiza ST** | | | | | | | | | | | | | | | |
| 1.2 (77 kw) | 2010.09-2015.05 | 5MT | F | R | Estate FWD CBZB | | GDS61301 | Drive Shaft | | 36 | | 50.5 | 59 | 771 | |
| | 2010.09-2015.05 | 5MT/7AT | F | L/R | Estate FWD CBZB | | GCO83024 | Outer Joint | | 36 | 30 | 50.75 | 59 | 55.5 | I |
| | 2010.09-2015.05 | 5MT/7DCT | F | L/R | Estate FWD CBZB | | GCI53002 | Inner Joint | | | 33 | | | 34 | |
| | 2010.09-2015.05 | 7DCT | F | L | Estate FWD CBZB | | GDS61311 | Drive Shaft | | 36 | | 50.5 | 59 | 492 | |
| | 2010.09-2015.05 | 7DCT | F | R | Estate FWD CBZB | | GDS61308 | Drive Shaft | | 36 | | 50.5 | 59 | 786 | |
| | 2010.09-2015.05 | 7DCT/5MT | F | L/R | Estate FWD CBZB | | GCI82447 | Inner Joint | | | 33 | | | 34 | |
| | 2010.09-2015.05 | MT | F | L | Estate FWD CBZB | | GDS61274 | Drive Shaft | | 36 | | 50.5 | 59 | 514 | |
| | 2010.09-2015.05 | | F | L/R | Estate FWD CBZB | | GCO54006 | Outer Joint | | 36 | 30 | 52 | 59 | 55.5 | I |
| | 2010.09-2015.05 | | F | L/R | Estate FWD CBZB | | GCI83011 | Inner Joint | | | 33 | | | 34 | |
| 1.2 (81 kw) | 2015.09-2016.07 | 5MT | F | R | Estate FWD CJZD | | GDS61301 | Drive Shaft | | 36 | | 50.5 | 59 | 771 | |
| | 2015.09-2016.07 | 6MT | F | L | Estate FWD CJZD | | GDS61297 | Drive Shaft | | 36 | | 50.5 | 59 | 513 | |
| | 2015.09-2016.07 | 6MT | F | L/R | Estate FWD CJZD | | GCO83024 | Outer Joint | | 36 | 30 | 50.75 | 59 | 55.5 | I |
| | 2015.09-2016.07 | 6MT | F | L/R | Estate FWD CJZD | | GCI53002 | Inner Joint | | | 33 | | | 34 | |
| | 2015.09-2016.07 | 6MT | F | L/R | Estate FWD CJZD | | GCI82447 | Inner Joint | | | 33 | | | 34 | |
| | 2015.09-2016.07 | | F | L/R | Estate FWD CJZD | | GCO54006 | Outer Joint | | 36 | 30 | 52 | 59 | 55.5 | I |
| | 2015.09-2016.07 | | F | L/R | Estate FWD CJZD | | GCI83011 | Inner Joint | | | 33 | | | 34 | |
| 1.4 (55 kw) | 2015.05-2016.07 | 5MT | F | L | Estate FWD CUSA | | GDS82039 | Drive Shaft | | 36 | | 52 | 59 | 549 | |
| | 2015.05-2016.07 | 5MT | F | R | Estate FWD CUSA | | GDS82360 | Drive Shaft | | 36 | | 52 | 59 | 729 | |
| | 2015.05-2016.07 | 5MT | F | L/R | Estate FWD CUSA | | GCO54006 | Outer Joint | | 36 | 30 | 52 | 59 | 55.5 | I |
| | 2015.05-2016.07 | 5MT | F | L/R | Estate FWD CUSA | | GCO83024 | Outer Joint | | 36 | 30 | 50.75 | 59 | 55.5 | I |
| | 2015.05-2016.07 | 5MT | F | L/R | Estate FWD CUSA | | GCI53002 | Inner Joint | | | 33 | | | 34 | |
| | 2015.05-2016.07 | 5MT | F | L/R | Estate FWD CUSA | | GCI82447 | Inner Joint | | | 33 | | | 34 | |
| | 2015.05-2016.07 | | F | L/R | Estate FWD CUSA | | GCI83011 | Inner Joint | | | 33 | | | 34 | |
| 1.4 (63 kw) | 2010.03-2015.05 | 5MT | F | L | Estate FWD CGGB | | GDS83330 | Drive Shaft | | 36 | | 50.7 | 58.5 | 515 | |
| | 2010.03-2015.05 | 5MT | F | R | Estate FWD CGGB | | GDS61288 | Drive Shaft | | 36 | | 50.7 | 58.5 | 765 | |
| | 2010.03-2015.05 | AT/MT | F | L/R | Estate FWD CGGB | | GCO83027 | Outer Joint | | 36 | 30 | 50.7 | 58.5 | 47.5 | I |
| | 2010.03-2015.05 | MT | F | L/R | Estate FWD CGGB | | GCI83005 | Inner Joint | | | 33 | | | 32 | |
| | 2010.03-2015.05 | MT | F | L/R | Estate FWD CGGB | | GCI83008 | Inner Joint | | | 33 | | | 32 | |
| 1.4 (66 kw) | 2015.05-2016.07 | 5MT | F | L | Estate FWD CUSB | | GDS82039 | Drive Shaft | | 36 | | 52 | 59 | 549 | |
| | 2015.05-2016.07 | 5MT | F | R | Estate FWD CUSB | | GDS82360 | Drive Shaft | | 36 | | 52 | 59 | 729 | |
| | 2015.05-2016.07 | 5MT | F | L/R | Estate FWD CUSB | | GCO54006 | Outer Joint | | 36 | 30 | 52 | 59 | 55.5 | I |
| | 2015.05-2016.07 | 5MT | F | L/R | Estate FWD CUSB | | GCO83024 | Outer Joint | | 36 | 30 | 50.75 | 59 | 55.5 | I |
| | 2015.05-2016.07 | 5MT | F | L/R | Estate FWD CUSB | | GCI82447 | Inner Joint | | | 33 | | | 34 | |
| | 2015.05-2016.07 | 7AT/5MT | F | L | Estate FWD CUSB | | GCI83016 | Inner Joint | | | 28 | | | 32 | |
| | 2015.05-2016.07 | 7DCT | F | L | Estate FWD CUSB | | GDS81926 | Drive Shaft | | 36 | | 52 | 75 | 550 | |
| | 2015.05-2016.07 | 7DCT | F | R | Estate FWD CUSB | | GDS82359 | Drive Shaft | | 36 | 40 | 52 | 75 | 755 | |
| | 2015.05-2016.07 | 7DCT | F | L/R | Estate FWD CUSB | | GCO61081 | Outer Joint | | 36 | 27 | 52 | 75 | 65 | I |
| | 2015.05-2016.07 | 7DCT | F | R | Estate FWD CUSB | | GCI61054 | Inner Joint | | 40 | 28 | 46.9 | 41 | 101.7 | |
| 1.4 (77 kw) | 2015.05-2016.07 | 5MT | F | L | Estate FWD CUTA;CYZA | | GDS82039 | Drive Shaft | | 36 | | 52 | 59 | 549 | |
| | 2015.05-2016.07 | 5MT | F | R | Estate FWD CUTA;CYZA | | GDS82360 | Drive Shaft | | 36 | | 52 | 59 | 729 | |
| | 2015.05-2016.07 | 5MT | F | L/R | Estate FWD CUTA;CYZA | | GCO54006 | Outer Joint | | 36 | 30 | 52 | 59 | 55.5 | I |
| | 2015.05-2016.07 | 5MT | F | L/R | Estate FWD CUTA;CYZA | | GCO83024 | Outer Joint | | 36 | 30 | 50.75 | 59 | 55.5 | I |
| | 2015.05-2016.07 | 5MT | F | L/R | Estate FWD CUTA;CYZA | | GCI53002 | Inner Joint | | | 33 | | | 34 | |
| | 2015.05-2016.07 | 5MT | F | L/R | Estate FWD CUTA;CYZA | | GCI82447 | Inner Joint | | | 33 | | | 34 | |
| | 2015.05-2016.07 | | F | L/R | Estate FWD CUTA;CYZA | | GCI83011 | Inner Joint | | | 33 | | | 34 | |
| 1.4 (103 kw) | 2013.10-2015.05 | 6MT | F | L/R | Estate FWD CPTA | | GCO61081 | Outer Joint | | 36 | 27 | 52 | 75 | 65 | I |
| | 2013.10-2015.05 | 6MT | F | L | Estate FWD CPTA | | GCI61069 | Inner Joint | | | 28 | | | 32 | |
| | 2013.10-2015.05 | 6MT | F | L/R | Estate FWD CPTA | | GCI83016 | Inner Joint | | | 28 | | | 32 | |
| 1.4 (110 kw) | 2012.02-2015.05 | 7AT | F | L | Estate FWD CAVF;CNUB;CTJB;CTHF | | GDS61260 | Drive Shaft | | 36 | | 52 | 75 | 498 | |
| | 2012.02-2015.05 | 7AT | F | L/R | Estate FWD CAVF;CNUB;CTJB;CTHF | | GCI61069 | Inner Joint | | | 28 | | | 32 | |
| | 2012.02-2015.05 | 7DCT | F | R | Estate FWD CAVF;CNUB;CTJB;CTHF | | GDS61261 | Drive Shaft | | 36 | | 52 | 75 | 785 | |
| | 2012.02-2015.05 | 7DCT | F | L/R | Estate FWD CAVF;CNUB;CTJB;CTHF | | GCO61081 | Outer Joint | | 36 | 27 | 52 | 75 | 65 | I |
| | 2012.02-2015.05 | | F | L/R | Estate FWD CAVF;CNUB;CTJB;CTHF | | GCI83016 | Inner Joint | | | 28 | | | 32 | |
| | 2015.11-2016.07 | 6MT | F | L/R | Estate FWD CZEA | | GCO61081 | Outer Joint | | 36 | 27 | 52 | 75 | 65 | I |
| | 2015.11-2016.07 | 6MT | F | L | Estate FWD CZEA | | GCI61069 | Inner Joint | | | 28 | | | 32 | |
| | 2015.11-2016.07 | 6MT | F | L/R | Estate FWD CZEA | | GCI83016 | Inner Joint | | | 28 | | | 32 | |
| 1.6 (66 kw) | 2010.03-2015.05 | 5MT | F | L | Estate FWD CAYB | | GDS61184 | Drive Shaft | | 36 | | 52 | 59 | 496 | |
| | 2010.03-2015.05 | 5MT | F | R | Estate FWD CAYB | | GDS61185 | Drive Shaft | | 36 | | 52 | 59 | 785 | |
| | 2010.03-2015.05 | 5MT | F | L/R | Estate FWD CAYB | | GCO83024 | Outer Joint | | 36 | 30 | 50.75 | 59 | 55.5 | I |
| | 2010.03-2015.05 | 5MT | F | L/R | Estate FWD CAYB | | GCI82447 | Inner Joint | | | 33 | | | 34 | |
| | 2010.03-2015.05 | 7AT/5MT | F | L/R | Estate FWD CAYB | | GCI83016 | Inner Joint | | | 28 | | | 32 | |
| | 2010.03-2015.05 | 7DCT | F | L | Estate FWD CAYB | | GDS61260 | Drive Shaft | | 36 | | 52 | 75 | 498 | |
| | 2010.03-2015.05 | 7DCT | F | R | Estate FWD CAYB | | GDS61261 | Drive Shaft | | 36 | | 52 | 75 | 785 | |
| | 2010.03-2015.05 | 7DCT | F | L/R | Estate FWD CAYB | | GCO61081 | Outer Joint | | 36 | 27 | 52 | 75 | 65 | I |
| | 2010.03-2015.05 | MT | F | L | Estate FWD CAYB | | GCO54006 | Outer Joint | | 36 | 30 | 52 | 59 | 55.5 | I |

| | YEAR | TRANSM. | F/R | L/R | BODY STYLE & DRIVE TYPE & ENGINE | REMARKS | G-AP Ref. | PRODUCT | ABS | Technical Specifications A | B | C | H | L | P |
|---|---|---|---|---|---|---|---|---|---|---|---|---|---|---|---|
| **SEAT** | | | | | | | | | | | | | | | |
| **Ibiza ST** | | | | | | | | | | | | | | | |
| 1.6 (77 kw) | 2010.03-2015.05 | 5MT | F | L | Estate FWD CAYC;CLNA | | GDS61184 | Drive Shaft | | 36 | | 52 | 59 | 496 | |
| | 2010.03-2015.05 | 5MT | F | R | Estate FWD CAYC;CLNA | | GDS61185 | Drive Shaft | | 36 | | 52 | 59 | 785 | |
| | 2010.03-2015.05 | 5MT | F | L/R | Estate FWD CAYC;CLNA | | GCO83024 | Outer Joint | | 36 | 30 | 50.75 | 59 | 55.5 | I |
| | 2010.03-2015.05 | 5MT | F | L/R | Estate FWD CAYC;CLNA | | GCI82447 | Inner Joint | | | 33 | | | 34 | |
| | 2010.03-2015.05 | MT | F | L | Estate FWD CAYC;CLNA | | GCO54006 | Outer Joint | | 36 | 30 | 52 | 59 | 55.5 | I |
| | 2010.03-2015.05 | MT/5MT | F | L/R | Estate FWD CAYC;CLNA | | GCI83011 | Inner Joint | | | 33 | | | 34 | |
| | 2012.02-2015.05 | 5MT | F | L | Estate FWD BTS | | GDS61297 | Drive Shaft | | 36 | | 50.5 | 59 | 513 | |
| | 2012.02-2015.05 | 5MT | F | R | Estate FWD BTS | | GDS61301 | Drive Shaft | | 36 | | 50.5 | 59 | 771 | |
| | 2012.02-2015.05 | 5MT/7AT | F | L/R | Estate FWD BTS | | GCO83024 | Outer Joint | | 36 | 30 | 50.75 | 59 | 55.5 | I |
| | 2012.02-2015.05 | 5MT/7DCT | F | L/R | Estate FWD BTS | | GCI53002 | Inner Joint | | | 33 | | | 34 | |
| | 2012.02-2015.05 | 7DCT | F | L | Estate FWD BTS | | GDS61311 | Drive Shaft | | 36 | | 50.5 | 59 | 492 | |
| | 2012.02-2015.05 | 7DCT | F | R | Estate FWD BTS | | GDS61308 | Drive Shaft | | 36 | | 50.5 | 59 | 786 | |
| | 2012.02-2015.05 | 7DCT | F | L/R | Estate FWD BTS | | GCO54006 | Outer Joint | | 36 | 30 | 52 | 59 | 55.5 | I |
| | 2012.02-2015.05 | 7DCT/5MT | F | L/R | Estate FWD BTS | | GCI82447 | Inner Joint | | | 33 | | | 34 | |
| | 2012.02-2015.05 | | F | L/R | Estate FWD BTS | | GCI83011 | Inner Joint | | | 33 | | | 34 | |
| **Inca** | | | | | | | | | | | | | | | |
| 1.4 (44 kw) | 1995.11-2003.06 | 5MT | F | L | Estate Van FWD AEX/AKV/APQ/AUD | | GDS53004 | Drive Shaft | | 22 | | 50 | 78.5 | 562 | |
| | 1995.11-2003.06 | 5MT | F | L/R | Estate Van FWD AEX/AKV/APQ/AUD | | GCO53008 | Outer Joint | | 22 | 30 | 53 | 78.5 | 51 | I |
| | 1995.11-2003.06 | MT | F | L/R | Estate Van FWD AEX/AKV/APQ/AUD | | GCI53001 | Inner Joint | | | 33 | | | 32 | |
| | 1995.11-2003.06 | | F | | Estate Van FWD AEX/AKV/APQ/AUD | | GCO53006 | Outer Joint | | 22 | 30 | 50 | 78.5 | 52 | I |
| 1.4 (55 kw) | 2000.09-2003.06 | 5MT | F | L | Estate Van FWD AUA | | GDS53004 | Drive Shaft | | 22 | | 50 | 78.5 | 562 | |
| | 2000.09-2003.06 | 5MT | F | L/R | Estate Van FWD AUA | | GCO53008 | Outer Joint | | 22 | 30 | 53 | 78.5 | 51 | I |
| | 2000.09-2003.06 | MT | F | L/R | Estate Van FWD AUA | Date From:2000.09 | GCI53001 | Inner Joint | | | 33 | | | 32 | |
| | 2000.09-2003.06 | | F | | Estate Van FWD AUA | | GCO53006 | Outer Joint | | 22 | 30 | 50 | 78.5 | 52 | I |
| | 2000.09-2003.06 | | F | L/R | Estate Van FWD AUA | | GCI53001 | Inner Joint | | | 33 | | | 32 | |
| 1.6 (55 kw) | 1995.11-1997.05 | 5MT | F | L | Estate Van FWD 1F | | GDS53003 | Drive Shaft | | 22 | | 53 | 78.5 | 539.5 | |
| | 1995.11-1997.05 | 5MT | F | L/R | Estate Van FWD 1F | Vehicle Production Country:France | GCO53007 | Outer Joint | | 22 | 30 | 53.2 | 78 | 61 | I |
| | 1995.11-1997.05 | 5MT | F | L/R | Estate Van FWD 1F | | GCO53008 | Outer Joint | | 22 | 30 | 53 | 78.5 | 51 | I |
| | 1995.11-1997.05 | 5MT | F | L | Estate Van FWD 1F | | GCI83011 | Inner Joint | | | 33 | | | 34 | |
| | 1995.11-1997.05 | 5MT | F | R | Estate Van FWD 1F | | GCI83009 | Inner Joint | | | 33 | | | 34 | |
| | 1995.11-1997.05 | MT | F | R | Estate Van FWD 1F | | GDS53005 | Drive Shaft | | 22 | | 53 | 78.5 | 774 | |
| | 1995.11-1997.05 | MT | F | L/R | Estate Van FWD 1F | Date to:1997.05 | GCI83005 | Inner Joint | | | 33 | | | 32 | |
| | 1995.11-1997.05 | | F | L | Estate Van FWD 1F | Country Version:France | GDS53001 | Drive Shaft | | 22 | | 53 | 78.5 | 535 | |
| | 1997.06-2000.09 | 5MT | F | L | Estate Van FWD AEE | | GDS53004 | Drive Shaft | | 22 | | 50 | 78.5 | 562 | |
| | 1997.06-2000.09 | 5MT | F | L/R | Estate Van FWD AEE | | GCO53008 | Outer Joint | | 22 | 30 | 53 | 78.5 | 51 | I |
| | 1997.06-2000.09 | MT | F | L/R | Estate Van FWD AEE | | GCI53001 | Inner Joint | | | 33 | | | 32 | |
| | 1997.06-2000.09 | MT | F | L/R | Estate Van FWD AEE | | GCI83005 | Inner Joint | | | 33 | | | 32 | |
| 1.7 (42 kw) | 1996.07-2000.09 | 5MT | F | L | Estate Van FWD AHB | | GDS53003 | Drive Shaft | | 22 | | 53 | 78.5 | 539.5 | |
| | 1996.07-2000.09 | 5MT | F | R | Estate Van FWD AHB | | GDS53005 | Drive Shaft | | 22 | | 53 | 78.5 | 774 | |
| | 1996.07-2000.09 | 5MT | F | L/R | Estate Van FWD AHB | | GCO53008 | Outer Joint | | 22 | 30 | 53 | 78.5 | 51 | I |
| | 1996.07-2000.09 | MT | F | L/R | Estate Van FWD AHB | Date to:2000.09 | GCO53007 | Outer Joint | | 22 | 30 | 53.2 | 78 | 61 | I |
| | 1996.07-2000.09 | MT | F | L/R | Estate Van FWD AHB | Date to:2000.09 | GCI83005 | Inner Joint | | | 33 | | | 32 | |
| 1.9 (47 kw) | 1995.11-2003.06 | 5MT | F | L | Combi Van FWD 1Y/AEY/AYQ | | GDS53003 | Drive Shaft | | 22 | | 53 | 78.5 | 539.5 | |
| | 1995.11-2003.06 | 5MT | F | R | Combi Van FWD 1Y/AEY/AYQ | For Engine code:1Y/AEY/AYQ | GDS53005 | Drive Shaft | | 22 | | 53 | 78.5 | 774 | |
| | 1995.11-2003.06 | 5MT | F | L/R | Combi Van FWD 1Y/AEY/AYQ | | GCI83005 | Inner Joint | | | 33 | | | 32 | |
| | 1995.11-2003.06 | MT | F | L/R | Combi Van FWD 1Y/AEY/AYQ | for OE number:1H0498099 | GCO53007 | Outer Joint | | 22 | 30 | 53.2 | 78 | 61 | I |
| | 1995.11-2003.06 | MT | F | L/R | Combi Van FWD 1Y/AEY/AYQ | | GCI83005 | Inner Joint | | | 33 | | | 32 | |
| | 1995.11-2003.06 | MT/5MT | F | L | Combi Van FWD 1Y/AEY/AYQ | | GDS53003 | Drive Shaft | | 22 | | 53 | 78.5 | 539.5 | |
| | 1995.11-2003.06 | MT/5MT | F | R | Combi Van FWD 1Y/AEY/AYQ | | GDS53005 | Drive Shaft | | 22 | | 53 | 78.5 | 774 | |
| | 1995.11-2003.06 | MT/5MT | F | L/R | Combi Van FWD 1Y/AEY/AYQ | | GCO53008 | Outer Joint | | 22 | 30 | 53 | 78.5 | 51 | I |
| | 1995.11-2003.06 | | F | | Combi Van FWD 1Y/AEY/AYQ | | GCO53006 | Outer Joint | | 22 | 30 | 50 | 78.5 | 52 | I |
| **Leon** | | | | | | | | | | | | | | | |
| 1.0 (63 kw) | 2018.09-2020.08 | 5MT | F | L | Hatchback FWD DKLB | | GDS82231 | Drive Shaft | | 36 | | 59.5 | 40 | 486 | |
| | 2018.09-2020.08 | 5MT | F | R | Hatchback FWD DKLB | | GDS82230 | Drive Shaft | | 36 | | 59.5 | 40 | 789 | |
| | 2018.09-2020.08 | 5MT | F | L/R | Hatchback FWD DKLB | | GCI81689 | Inner Joint | | | 32 | | | 89 | |
| 1.0 (66 kw) | 2020.03- | 5MT | F | L | Hatchback FWD DLAB | | GDS82231 | Drive Shaft | | 36 | | 59.5 | 40 | 486 | |
| | 2020.03- | 5MT | F | R | Hatchback FWD DLAB | | GDS82229 | Drive Shaft | | 36 | | 59.5 | 40 | 767 | |
| | 2020.03- | 5MT | F | L/R | Hatchback FWD DLAB | | GCO61059 | Outer Joint | | 36 | 33 | 59.5 | 40 | 59.5 | I |
| | 2020.03- | 5MT | F | L | Hatchback FWD DLAB | | GCI81689 | Inner Joint | | | 32 | | | 89 | |
| 1.0 (81 kw) | 2020.03- | 6MT | F | L | Hatchback FWD DLAA | | GDS82231 | Drive Shaft | | 36 | | 59.5 | 40 | 486 | |
| | 2020.03- | 6MT | F | R | Hatchback FWD DLAA | | GDS82229 | Drive Shaft | | 36 | | 59.5 | 40 | 767 | |
| | 2020.03- | 6MT | F | L/R | Hatchback FWD DLAA | | GCO61059 | Outer Joint | | 36 | 33 | 59.5 | 40 | 59.5 | I |
| | 2020.03- | 6MT | F | L | Hatchback FWD DLAA | | GCI81689 | Inner Joint | | | 32 | | | 89 | |
| | 2020.08- | 7DCT | F | L | Hatchback FWD DLAA | | GDS57830 | Drive Shaft | | 36 | | 59.5 | 40 | 492 | |
| | 2020.08- | 7DCT | F | R | Hatchback FWD DLAA | | GDS57831 | Drive Shaft | | 36 | | 59.5 | 40 | 758 | |

| | YEAR | TRANSM. | F/R | L/R | BODY STYLE & DRIVE TYPE & ENGINE | REMARKS | G-AP Ref. | PRODUCT | ABS | Technical Specifications A | B | C | H | L | P |
|---|---|---|---|---|---|---|---|---|---|---|---|---|---|---|---|
| **SEAT** | | | | | | | | | | | | | | | |
| **Leon** | | | | | | | | | | | | | | | |
| 1.0 (81 kw) | 2020.08- | 7DCT | F | L/R | Hatchback FWD DLAA | | GCO61059 | Outer Joint | | 36 | 33 | 59.5 | 40 | 59.5 | I |
| | 2020.08- | 7DCT | F | L/R | Hatchback FWD DLAA | | GCI81689 | Inner Joint | | | 32 | | | 89 | |
| 1.0 (85 kw) | 2015.05-2020.08 | 6MT | F | L | Hatchback FWD CHZD;DKRF | | GDS82231 | Drive Shaft | | 36 | | 59.5 | 40 | 486 | |
| | 2015.05-2020.08 | 6MT | F | R | Hatchback FWD CHZD;DKRF | | GDS82230 | Drive Shaft | | 36 | | 59.5 | 40 | 789 | |
| | 2015.05-2020.08 | 6MT | F | L/R | Hatchback FWD CHZD;DKRF | | GCO61059 | Outer Joint | | 36 | 33 | 59.5 | 40 | 59.5 | I |
| | 2015.05-2020.08 | 6MT/7DCT | F | L/R | Hatchback FWD CHZD;DKRF | | GCI81689 | Inner Joint | | | 32 | | | 89 | |
| | 2015.05-2020.08 | 7DCT | F | R | Hatchback FWD CHZD;DKRF | | GDS82229 | Drive Shaft | | 36 | | 59.5 | 40 | 767 | |
| | 2015.05-2020.08 | 7DCT | F | R | Hatchback FWD CHZD;DKRF | | GCO61059 | Outer Joint | | 36 | 33 | 59.5 | 40 | 59.5 | I |
| | 2015.05-2020.08 | 6MT | F | L | Hatchback Van FWD CHZD | | GDS82231 | Drive Shaft | | 36 | | 59.5 | 40 | 486 | |
| | 2015.05-2020.08 | 6MT | F | R | Hatchback Van FWD CHZD | | GDS82230 | Drive Shaft | | 36 | | 59.5 | 40 | 789 | |
| | 2015.05-2020.08 | 6MT | F | L/R | Hatchback Van FWD CHZD | | GCO61059 | Outer Joint | | 36 | 33 | 59.5 | 40 | 59.5 | I |
| | 2015.05-2020.08 | 6MT/7DCT | F | L/R | Hatchback Van FWD CHZD | | GCI81689 | Inner Joint | | | 32 | | | 89 | |
| | 2015.05-2020.08 | 7DCT | F | R | Hatchback Van FWD CHZD | | GDS82229 | Drive Shaft | | 36 | | 59.5 | 40 | 767 | |
| | 2015.05-2020.08 | 7DCT | F | R | Hatchback Van FWD CHZD | | GCO61059 | Outer Joint | | 36 | 33 | 59.5 | 40 | 59.5 | I |
| 1.2 (63 kw) | 2012.12-2018.08 | 5MT | F | L | Hatchback FWD CJZB;CYVA | For PR code:1PA/1PE/2H4 | GDS83373 | Drive Shaft | | 36 | | 59.5 | 38 | 511 | |
| | 2012.12-2018.08 | 5MT | F | R | Hatchback FWD CJZB;CYVA | | GDS61096 | Drive Shaft | | 36 | | 59.5 | 40.5 | 799 | |
| | 2012.12-2018.08 | 5MT | F | L/R | Hatchback FWD CJZB;CYVA | | GCI82447 | Inner Joint | | | 33 | | | 34 | |
| | 2012.12-2018.08 | AT/MT | F | L/R | Hatchback FWD CJZB;CYVA | | GCI83011 | Inner Joint | | | 33 | | | 34 | |
| | 2012.12-2018.08 | MT | F | L | Hatchback FWD CJZB;CYVA | | GDS83294 | Drive Shaft | | 36 | | 59.5 | 38 | 519 | |
| | 2012.12-2018.08 | MT | F | R | Hatchback FWD CJZB;CYVA | | GDS61042 | Drive Shaft | | 36 | | 59.5 | 40.5 | 814 | |
| | 2012.12-2018.08 | MT | F | R | Hatchback FWD CJZB;CYVA | | GDS61307 | Drive Shaft | | 36 | | 59.5 | 40 | 819 | |
| | 2012.12-2018.08 | MT | F | L/R | Hatchback FWD CJZB;CYVA | | GCO83037 | Outer Joint | | 36 | 30 | 59.5 | 40.5 | 56 | I |
| | 2012.12-2018.08 | | F | L | Hatchback FWD CJZB;CYVA | | GDS61097 | Drive Shaft | | 36 | | 59.5 | 40.5 | 543 | |
| | 2013.01-2018.08 | 5MT | F | R | Hatchback Van FWD CJZB;CYVA | | GDS61096 | Drive Shaft | | 36 | | 59.5 | 40.5 | 799 | |
| | 2013.01-2018.08 | 5MT | F | L/R | Hatchback Van FWD CJZB;CYVA | | GCO83037 | Outer Joint | | 36 | 30 | 59.5 | 40.5 | 56 | I |
| | 2013.01-2018.08 | 7DCT/5MT/6MT | F | L/R | Hatchback Van FWD CJZB;CYVA | | GCI82447 | Inner Joint | | | 33 | | | 34 | |
| | 2013.01-2018.08 | AT/MT | F | L/R | Hatchback Van FWD CJZB;CYVA | | GCI83011 | Inner Joint | | | 33 | | | 34 | |
| | 2013.01-2018.08 | MT | F | L | Hatchback Van FWD CJZB;CYVA | | GDS83294 | Drive Shaft | | 36 | | 59.5 | 38 | 519 | |
| | 2013.01-2018.08 | MT | F | R | Hatchback Van FWD CJZB;CYVA | | GDS61042 | Drive Shaft | | 36 | | 59.5 | 40.5 | 814 | |
| | 2013.01-2018.08 | | F | L | Hatchback Van FWD CJZB;CYVA | | GDS61097 | Drive Shaft | | 36 | | 59.5 | 40.5 | 543 | |
| 1.2 (77 kw) | 2010.02-2012.12 | 5MT/6MT | F | L | Hatchback FWD CBZB | | GDS61201 | Drive Shaft | | 36 | | 59.5 | 40.5 | 535 | |
| | 2010.02-2012.12 | 5MT/6MT | F | R | Hatchback FWD CBZB | | GDS61096 | Drive Shaft | | 36 | | 59.5 | 40.5 | 799 | |
| | 2010.02-2012.12 | 5MT/6MT | F | L/R | Hatchback FWD CBZB | | GCO83037 | Outer Joint | | 36 | 30 | 59.5 | 40.5 | 56 | I |
| | 2010.02-2012.12 | 5MT/6MT | F | L | Hatchback FWD CBZB | | GCI53002 | Inner Joint | | | 33 | | | 34 | |
| | 2010.02-2012.12 | 5MT/6MT | F | L/R | Hatchback FWD CBZB | | GCI82447 | Inner Joint | | | 33 | | | 34 | |
| | 2013.01-2020.08 | 5MT/6MT | F | L | Hatchback FWD CJZA | | GDS83373 | Drive Shaft | | 36 | | 59.5 | 38 | 511 | |
| | 2013.01-2020.08 | 5MT/6MT | F | R | Hatchback FWD CJZA | | GDS61307 | Drive Shaft | | 36 | | 59.5 | 40 | 819 | |
| | 2013.01-2020.08 | 5MT/6MT/7AT | F | L/R | Hatchback FWD CJZA | | GCO83037 | Outer Joint | | 36 | 30 | 59.5 | 40.5 | 56 | I |
| | 2013.01-2020.08 | 7AT/5MT/6MT | F | L/R | Hatchback FWD CJZA | | GCO61059 | Outer Joint | | 36 | 33 | 59.5 | 40 | 59.5 | I |
| | 2013.01-2020.08 | 7DCT | F | L | Hatchback FWD CJZA | | GDS61282 | Drive Shaft | | 36 | | 59.5 | 40 | 523 | |
| | 2013.01-2020.08 | 7DCT | F | R | Hatchback FWD CJZA | | GDS61096 | Drive Shaft | | 36 | | 59.5 | 40.5 | 799 | |
| | 2013.01-2020.08 | 7DCT/5MT/6MT | F | L/R | Hatchback FWD CJZA | | GCI82447 | Inner Joint | | | 33 | | | 34 | |
| | 2013.01-2020.08 | AT/MT | F | L/R | Hatchback FWD CJZA | | GCI83011 | Inner Joint | | | 33 | | | 34 | |
| | 2013.01-2020.08 | MT | F | L | Hatchback FWD CJZA | | GDS83294 | Drive Shaft | | 36 | | 59.5 | 38 | 519 | |
| | 2013.01-2020.08 | MT | F | R | Hatchback FWD CJZA | | GDS61042 | Drive Shaft | | 36 | | 59.5 | 40.5 | 814 | |
| 1.2 (81 kw) | 2014.04-2018.08 | 6MT | F | L | Hatchback Van FWD CYVB | | GDS83373 | Drive Shaft | | 36 | | 59.5 | 38 | 511 | |
| | 2014.04-2018.08 | 6MT | F | R | Hatchback Van FWD CYVB | | GDS61307 | Drive Shaft | | 36 | | 59.5 | 40 | 819 | |
| | 2014.04-2018.08 | 6MT | F | L/R | Hatchback Van FWD CYVB | | GCO83037 | Outer Joint | | 36 | 30 | 59.5 | 40.5 | 56 | I |
| | 2014.04-2018.08 | 6MT | F | R | Hatchback Van FWD CYVB | | GCI53002 | Inner Joint | | | 33 | | | 34 | |
| | 2014.04-2018.08 | 7DCT | F | L | Hatchback Van FWD CYVB | | GDS61282 | Drive Shaft | | 36 | | 59.5 | 40 | 523 | |
| | 2014.04-2018.08 | 7DCT | F | R | Hatchback Van FWD CYVB | | GDS61096 | Drive Shaft | | 36 | | 59.5 | 40.5 | 799 | |
| | 2014.04-2018.08 | 7DCT | F | L/R | Hatchback Van FWD CYVB | | GCO61059 | Outer Joint | | 36 | 33 | 59.5 | 40 | 59.5 | I |
| | 2014.04-2018.08 | 7DCT | F | L | Hatchback Van FWD CYVB | | GCI53002 | Inner Joint | | | 33 | | | 34 | |
| | 2014.04-2018.08 | 7DCT/6MT | F | L/R | Hatchback Van FWD CYVB | | GCI82447 | Inner Joint | | | 33 | | | 34 | |
| | 2014.04-2018.08 | | F | L/R | Hatchback Van FWD CYVB | | GCI83011 | Inner Joint | | | 33 | | | 34 | |
| | 2014.04-2020.08 | 5MT/6MT | F | L | Hatchback FWD CYVB | | GDS83373 | Drive Shaft | | 36 | | 59.5 | 38 | 511 | |
| | 2014.04-2020.08 | 5MT/6MT | F | R | Hatchback FWD CYVB | | GDS61307 | Drive Shaft | | 36 | | 59.5 | 40 | 819 | |
| | 2014.04-2020.08 | 5MT/6MT | F | L/R | Hatchback FWD CYVB | | GCO83037 | Outer Joint | | 36 | 30 | 59.5 | 40.5 | 56 | I |
| | 2014.04-2020.08 | 5MT/6MT | F | R | Hatchback FWD CYVB | | GCI53002 | Inner Joint | | | 33 | | | 34 | |
| | 2014.04-2020.08 | 7DCT | F | L | Hatchback FWD CYVB | | GDS61282 | Drive Shaft | | 36 | | 59.5 | 40 | 523 | |
| | 2014.04-2020.08 | 7DCT | F | R | Hatchback FWD CYVB | | GDS61096 | Drive Shaft | | 36 | | 59.5 | 40.5 | 799 | |
| | 2014.04-2020.08 | 7DCT | F | L/R | Hatchback FWD CYVB | | GCO61059 | Outer Joint | | 36 | 33 | 59.5 | 40 | 59.5 | I |
| | 2014.04-2020.08 | 7DCT | F | L | Hatchback FWD CYVB | | GCI53002 | Inner Joint | | | 33 | | | 34 | |
| | 2014.04-2020.08 | 7DCT/5MT/6MT | F | L/R | Hatchback FWD CYVB | | GCI82447 | Inner Joint | | | 33 | | | 34 | |
| 1.4 (55 kw) | 1999.11-2005.10 | 5MT | F | L | Hatchback FWD AHW/APE/AXP/BCA | | GDS61045 | Drive Shaft | | 36 | | 53 | 78.5 | 555 | |

| | YEAR | TRANSM. | F/R | L/R | BODY STYLE & DRIVE TYPE & ENGINE | REMARKS | G-AP Ref. | PRODUCT | ABS | Technical Specifications A | B | C | H | L | P |
|---|---|---|---|---|---|---|---|---|---|---|---|---|---|---|---|
| **SEAT** | | | | | | | | | | | | | | | |
| **Leon** | | | | | | | | | | | | | | | |
| 1.4 (55 kw) | 1999.11-2005.10 | 5MT | F | R | Hatchback FWD AHW/APE/AXP/BCA | | GDS83046 | Drive Shaft | | 36 | | 53 | 78.5 | 822 | |
| | 1999.11-2005.10 | 5MT | F | L/R | Hatchback FWD AHW/APE/AXP/BCA | | GCO83033 | Outer Joint | | 36 | 30 | 53 | 78.5 | 51 | I |
| | 1999.11-2005.10 | MT/5MT | F | L/R | Hatchback FWD AHW/APE/AXP/BCA | | GCI83008 | Inner Joint | | | 33 | | | 32 | |
| 1.4 (63 kw) | 2006.06-2012.12 | 5MT | F | L | Hatchback FWD BXW;CGGB | | GDS53007 | Drive Shaft | | 36 | | 59.5 | 40 | 559 | |
| | 2006.06-2012.12 | 5MT | F | R | Hatchback FWD BXW;CGGB | | GDS53008 | Drive Shaft | | 36 | | 59.5 | 40 | 782 | |
| | 2006.06-2012.12 | 5MT | F | L/R | Hatchback FWD BXW;CGGB | | GCO53001 | Outer Joint | | 36 | 30 | 59.5 | 40 | 49 | I |
| | 2006.06-2012.12 | MT/5MT | F | L/R | Hatchback FWD BXW;CGGB | | GCI83008 | Inner Joint | | | 33 | | | 32 | |
| 1.4 (81 kw) | 2013.02-2018.08 | 6MT | F | R | Hatchback FWD CPWA | | GDS61307 | Drive Shaft | | 36 | | 59.5 | 40 | 819 | |
| | 2013.02-2018.08 | 6MT | F | R | Hatchback FWD CPWA | | GCO83037 | Outer Joint | | 36 | 30 | 59.5 | 40.5 | 56 | I |
| | 2013.02-2018.08 | 6MT | F | L/R | Hatchback FWD CPWA | | GCI53002 | Inner Joint | | | 33 | | | 34 | |
| | 2013.02-2018.08 | 6MT/7DCT | F | L | Hatchback FWD CPWA | No Economy | GDS61282 | Drive Shaft | | 36 | | 59.5 | 40 | 523 | |
| | 2013.02-2018.08 | 6MT/7DCT | F | L | Hatchback FWD CPWA | | GCO61059 | Outer Joint | | 36 | 33 | 59.5 | 40 | 59.5 | I |
| | 2013.02-2018.08 | 7DCT | F | L | Hatchback FWD CPWA | Economy | GDS83294 | Drive Shaft | | 36 | | 59.5 | 38 | 519 | |
| | 2013.02-2018.08 | 7DCT | F | R | Hatchback FWD CPWA | | GDS61096 | Drive Shaft | | 36 | | 59.5 | 40.5 | 799 | |
| | 2013.02-2018.08 | 7DCT | F | L | Hatchback FWD CPWA | | GCI53002 | Inner Joint | | | 33 | | | 34 | |
| | 2013.02-2018.08 | 7DCT/6MT | F | L/R | Hatchback FWD CPWA | | GCI82447 | Inner Joint | | | 33 | | | 34 | |
| | 2013.02-2018.08 | | F | L/R | Hatchback FWD CPWA | Date From:2013.11 | GCI83011 | Inner Joint | | | 33 | | | 34 | |
| 1.4 (90 kw) | 2012.09-2016.10 | 6MT | F | L | Hatchback Van FWD CMBA;CXSA | | GDS61282 | Drive Shaft | | 36 | | 59.5 | 40 | 523 | |
| | 2012.09-2016.10 | 6MT | F | R | Hatchback Van FWD CMBA;CXSA | | GDS61307 | Drive Shaft | | 36 | | 59.5 | 40 | 819 | |
| | 2012.09-2016.10 | 6MT | F | L/R | Hatchback Van FWD CMBA;CXSA | | GCO61059 | Outer Joint | | 36 | 33 | 59.5 | 40 | 59.5 | I |
| | 2012.09-2016.10 | 7DCT/5MT/6MT | F | L/R | Hatchback Van FWD CMBA;CXSA | | GCI82447 | Inner Joint | | | 33 | | | 34 | |
| | 2012.11-2016.10 | 6MT | F | L | Hatchback FWD CMBA;CXSA | | GDS61282 | Drive Shaft | | 36 | | 59.5 | 40 | 523 | |
| | 2012.11-2016.10 | 6MT | F | R | Hatchback FWD CMBA;CXSA | | GDS61307 | Drive Shaft | | 36 | | 59.5 | 40 | 819 | |
| | 2012.11-2016.10 | 6MT | F | L/R | Hatchback FWD CMBA;CXSA | | GCO61059 | Outer Joint | | 36 | 33 | 59.5 | 40 | 59.5 | I |
| | 2012.11-2016.10 | 6MT | F | L/R | Hatchback FWD CMBA;CXSA | | GCI82447 | Inner Joint | | | 33 | | | 34 | |
| 1.4 (92 kw) | 2007.11-2012.12 | 6MT | F | L | Hatchback FWD CAXC | | GDS61201 | Drive Shaft | | 36 | | 59.5 | 40.5 | 535 | |
| | 2007.11-2012.12 | 6MT | F | R | Hatchback FWD CAXC | | GDS61096 | Drive Shaft | | 36 | | 59.5 | 40.5 | 799 | |
| | 2007.11-2012.12 | 6MT | F | L/R | Hatchback FWD CAXC | | GCO83037 | Outer Joint | | 36 | 30 | 59.5 | 40.5 | 56 | I |
| | 2007.11-2012.12 | 6MT | F | L/R | Hatchback FWD CAXC | | GCI53002 | Inner Joint | | | 33 | | | 34 | |
| | 2007.11-2012.12 | 6MT | F | L/R | Hatchback FWD CAXC | | GCI82447 | Inner Joint | | | 33 | | | 34 | |
| | 2014.05-2020.08 | 6MT | F | L | Hatchback FWD CZCA | | GDS61282 | Drive Shaft | | 36 | | 59.5 | 40 | 523 | |
| | 2014.05-2020.08 | 6MT | F | R | Hatchback FWD CZCA | | GDS61307 | Drive Shaft | | 36 | | 59.5 | 40 | 819 | |
| | 2014.05-2020.08 | 6MT | F | R | Hatchback FWD CZCA | For Engine code:CHPA;Trans. code:MQ200 | GCO83037 | Outer Joint | | 36 | 30 | 59.5 | 40.5 | 56 | I |
| | 2014.05-2020.08 | 6MT | F | L/R | Hatchback FWD CZCA | | GCO61059 | Outer Joint | | 36 | 33 | 59.5 | 40 | 59.5 | I |
| | 2014.05-2020.08 | 6MT | F | L/R | Hatchback FWD CZCA | For Engine code:CHPA;Trans. code:MQ200 | GCI53002 | Inner Joint | | | 33 | | | 34 | |
| | 2014.05-2020.08 | 6MT | F | L/R | Hatchback FWD CZCA | | GCI82447 | Inner Joint | | | 33 | | | 34 | |
| 1.4 (103 kw) | 2012.09-2016.10 | 6MT | F | L | Hatchback Van FWD CHPA;CPTA | Trans. code:MQ250,No Economy;Trans. code:MQ200 | GDS61282 | Drive Shaft | | 36 | | 59.5 | 40 | 523 | |
| | 2012.09-2016.10 | 6MT | F | R | Hatchback Van FWD CHPA;CPTA | Trans. code:MQ250 | GDS61283 | Drive Shaft | | 36 | | 59.5 | 40 | 815 | |
| | 2012.09-2016.10 | 6MT | F | R | Hatchback Van FWD CHPA;CPTA | For Engine code:CHPA;Trans. code:MQ200 | GDS61307 | Drive Shaft | | 36 | | 59.5 | 40 | 819 | |
| | 2012.09-2016.10 | 6MT | F | L/R | Hatchback Van FWD CHPA;CPTA | | GCO61059 | Outer Joint | | 36 | 33 | 59.5 | 40 | 59.5 | I |
| | 2012.09-2016.10 | 7DCT/5MT/6MT | F | L/R | Hatchback Van FWD CHPA;CPTA | | GCI82447 | Inner Joint | | | 33 | | | 34 | |
| | 2012.09-2016.10 | MT | F | L | Hatchback Van FWD CHPA;CPTA | Trans. code:MQ250,Economy | GDS83294 | Drive Shaft | | 36 | | 59.5 | 38 | 519 | |
| | 2012.09-2020.08 | 6AT/7AT/6MT | F | L/R | Hatchback FWD CHPA;CPTA | | GCO61059 | Outer Joint | | 36 | 33 | 59.5 | 40 | 59.5 | I |
| | 2012.09-2020.08 | 6AT/7AT/6MT | F | L/R | Hatchback FWD CHPA;CPTA | | GCO83101 | Outer Joint | | 36 | 27 | 59.5 | 40 | 65 | M |
| | 2012.09-2020.08 | 6AT/7AT/6MT | F | L/R | Hatchback FWD CHPA;CPTA | | GCI83016 | Inner Joint | | | 28 | | | 32 | |
| | 2012.09-2020.08 | 6MT | F | L | Hatchback FWD CHPA;CPTA | For Engine Code:CHPA,Trans. code:MQ200/MQ250 | GDS61282 | Drive Shaft | | 36 | | 59.5 | 40 | 523 | |
| | 2012.09-2020.08 | 6MT | F | R | Hatchback FWD CHPA;CPTA | For Engine Code:CHPA,Trans. code:MQ250 | GDS61283 | Drive Shaft | | 36 | | 59.5 | 40 | 815 | |
| | 2012.09-2020.08 | 6MT | F | R | Hatchback FWD CHPA;CPTA | For Engine Code:CHPA,Trans. code:MQ200 | GDS61307 | Drive Shaft | | 36 | | 59.5 | 40 | 819 | |
| | 2012.09-2020.08 | 6MT | F | L/R | Hatchback FWD CHPA;CPTA | | GCI82447 | Inner Joint | | | 33 | | | 34 | |
| | 2012.09-2020.08 | 7DCT | F | L | Hatchback FWD CHPA;CPTA | For Engine Code:CHPA/CPTA | GDS61100 | Drive Shaft | | 36 | | 59.5 | 40 | 513 | |
| | 2012.09-2020.08 | 7DCT | F | R | Hatchback FWD CHPA;CPTA | For Engine Code:CHPA/CPTA | GDS83313 | Drive Shaft | | 36 | | 59.5 | 40 | 792 | |
| | 2012.09-2020.08 | MT | F | L | Hatchback FWD CHPA;CPTA | | GDS83294 | Drive Shaft | | 36 | | 59.5 | 38 | 519 | |
| | 2012.09-2020.08 | MT | F | L | Hatchback FWD CHPA;CPTA | | GCO83037 | Outer Joint | | 36 | 30 | 59.5 | 40.5 | 56 | I |
| 1.4 (110 kw) | 2014.05-2020.08 | 6MT | F | L | Hatchback FWD CZEA;CZDA | For Engine code:CZDA,no Economy;For Engine code:CZEA | GDS61282 | Drive Shaft | | 36 | | 59.5 | 40 | 523 | |
| | 2014.05-2020.08 | 6MT | F | L | Hatchback FWD CZEA;CZDA | For Engine code:CZDA,Economy | GDS83294 | Drive Shaft | | 36 | | 59.5 | 38 | 519 | |
| | 2014.05-2020.08 | 6MT | F | R | Hatchback FWD CZEA;CZDA | | GDS61283 | Drive Shaft | | 36 | | 59.5 | 40 | 815 | |
| | 2014.05-2020.08 | 6MT | F | L/R | Hatchback FWD CZEA;CZDA | | GCO61059 | Outer Joint | | 36 | 33 | 59.5 | 40 | 59.5 | I |
| | 2014.05-2020.08 | 6MT | F | L | Hatchback FWD CZEA;CZDA | For Engine Code:CZEA,Trans. code:MQ250 | GCI53002 | Inner Joint | | | 33 | | | 34 | |
| | 2014.05-2020.08 | 6MT | F | L/R | Hatchback FWD CZEA;CZDA | | GCI82447 | Inner Joint | | | 33 | | | 34 | |
| | 2014.05-2020.08 | 7DCT | F | L | Hatchback FWD CZEA;CZDA | | GDS61100 | Drive Shaft | | 36 | | 59.5 | 40 | 513 | |
| | 2014.05-2020.08 | 7DCT | F | R | Hatchback FWD CZEA;CZDA | | GDS83313 | Drive Shaft | | 36 | | 59.5 | 40 | 792 | |
| | 2014.05-2020.08 | 7DCT | F | L/R | Hatchback FWD CZEA;CZDA | | GCO83101 | Outer Joint | | 36 | 27 | 59.5 | 40 | 65 | M |
| | 2014.05-2020.08 | 7DCT | F | L/R | Hatchback FWD CZEA;CZDA | | GCI83016 | Inner Joint | | | 28 | | | 32 | |
| | 2014.05-2020.08 | 6MT | F | L | Hatchback Van FWD CZEA | | GDS61282 | Drive Shaft | | 36 | | 59.5 | 40 | 523 | |
| | 2014.05-2020.08 | 6MT | F | R | Hatchback Van FWD CZEA | | GDS61283 | Drive Shaft | | 36 | | 59.5 | 40 | 815 | |

| | YEAR | TRANSM. | F/R | L/R | BODY STYLE & DRIVE TYPE & ENGINE | REMARKS | G-AP Ref. | PRODUCT | ABS | Technical Specifications | | | | | |
|---|---|---|---|---|---|---|---|---|---|---|---|---|---|---|---|
| | | | | | | | | | | A | B | C | H | L | P |
| **SEAT** | | | | | | | | | | | | | | | |
| **Leon** | | | | | | | | | | | | | | | |
| 1.4 (110 kw) | 2014.05-2020.08 | 6MT | F | L/R | Hatchback Van FWD CZEA | | GCO61059 | Outer Joint | | 36 | 33 | 59.5 | 40 | 59.5 | I |
| | 2014.05-2020.08 | 6MT | F | L/R | Hatchback Van FWD CZEA | | GCI82447 | Inner Joint | | | 33 | | | 34 | |
| | 2014.05-2020.08 | 7AT/6MT | F | L/R | Hatchback Van FWD CZEA | | GCI83016 | Inner Joint | | | 28 | | | 32 | |
| | 2014.05-2020.08 | 7DCT | F | L | Hatchback Van FWD CZEA | | GDS61100 | Drive Shaft | | 36 | | 59.5 | 40 | 513 | |
| | 2014.05-2020.08 | 7DCT | F | R | Hatchback Van FWD CZEA | | GDS83313 | Drive Shaft | | 36 | | 59.5 | 40 | 792 | |
| | 2014.05-2020.08 | 7DCT | F | L/R | Hatchback Van FWD CZEA | | GCO83101 | Outer Joint | | 36 | 27 | 59.5 | 40 | 65 | M |
| 1.4 (150 kw) | 2020.05- | 6AT | F | L | Hatchback FWD DGEA | | GDS81985 | Drive Shaft | | 36 | 37 | 59.5 | 40 | 546 | |
| | 2020.05- | 6AT | F | R | Hatchback FWD DGEA | | GDS83612 | Drive Shaft | | 36 | 37 | 59.5 | 40 | 907 | |
| | 2020.05- | 6AT | F | R | Hatchback FWD DGEA | | GCO83101 | Outer Joint | | 36 | 27 | 59.5 | 40 | 65 | M |
| | 2020.05- | 6AT | F | R | Hatchback FWD DGEA | | GCI82108 | Inner Joint | | 37 | 34 | 40 | 77.5 | 103.5 | |
| | 2020.05- | 6DCT | F | L | Hatchback FWD DGEA | | GCI81158 | Inner Joint | | 37 | 34 | 34.5 | 65.5 | 83 | |
| 1.5 (85 kw) | 2024.05- | 6MT | F | L | Hatchback FWD DXDE | | GDS84408 | Drive Shaft | | 36 | | 59.5 | 40 | 499 | |
| | 2024.05- | 6MT | F | R | Hatchback FWD DXDE | | GDS84417 | Drive Shaft | | 36 | | 59.5 | 40 | 783 | |
| | 2024.05- | 7DCT | F | L | Hatchback FWD DXDE | | GDS61100 | Drive Shaft | | 36 | | 59.5 | 40 | 513 | |
| | 2024.05- | 7DCT | F | R | Hatchback FWD DXDE | | GDS84503 | Drive Shaft | | 36 | 40 | 59.5 | 40 | 817 | |
| | 2024.05- | 7DCT | F | L | Hatchback FWD DXDE | Bellows Material:Plastic | GCI83016 | Inner Joint | | | 28 | | | 32 | |
| 1.5 (96 kw) | 2018.09-2020.08 | 6MT | F | L | Hatchback FWD DACA;DPBA | | GDS61282 | Drive Shaft | | 36 | | 59.5 | 40 | 523 | |
| | 2018.09-2020.08 | 6MT | F | R | Hatchback FWD DACA;DPBA | | GDS84416 | Drive Shaft | | 36 | | 59.5 | 40 | 800 | |
| | 2018.09-2020.08 | 6MT | F | L/R | Hatchback FWD DACA;DPBA | | GCO61059 | Outer Joint | | 36 | 33 | 59.5 | 40 | 59.5 | I |
| | 2018.09-2020.08 | 6MT | F | L/R | Hatchback FWD DACA;DPBA | | GCI53002 | Inner Joint | | | 33 | | | 34 | |
| | 2018.09-2020.08 | 6MT | F | L/R | Hatchback FWD DACA;DPBA | | GCI82447 | Inner Joint | | | 33 | | | 34 | |
| | 2018.10-2020.08 | 6MT | F | L | Hatchback FWD DHFA | | GDS61282 | Drive Shaft | | 36 | | 59.5 | 40 | 523 | |
| | 2018.10-2020.08 | 6MT | F | R | Hatchback FWD DHFA | | GDS84416 | Drive Shaft | | 36 | | 59.5 | 40 | 800 | |
| | 2018.10-2020.08 | 6MT | F | L/R | Hatchback FWD DHFA | | GCO61059 | Outer Joint | | 36 | 33 | 59.5 | 40 | 59.5 | I |
| | 2018.10-2020.08 | 6MT | F | R | Hatchback FWD DHFA | | GCI53002 | Inner Joint | | | 33 | | | 34 | |
| | 2018.10-2020.08 | 6MT | F | L/R | Hatchback FWD DHFA | | GCI82447 | Inner Joint | | | 33 | | | 34 | |
| | 2018.10-2020.08 | 7DCT | F | L | Hatchback FWD DHFA | | GDS61100 | Drive Shaft | | 36 | | 59.5 | 40 | 513 | |
| | 2018.10-2020.08 | 7DCT | F | R | Hatchback FWD DHFA | | GDS84503 | Drive Shaft | | 36 | 40 | 59.5 | 40 | 817 | |
| | 2018.10-2020.08 | 7DCT | F | L | Hatchback FWD DHFA | | GCO83101 | Outer Joint | | 36 | 27 | 59.5 | 40 | 65 | M |
| | 2018.10-2020.08 | 7DCT | F | R | Hatchback FWD DHFA | | GCO61059 | Outer Joint | | 36 | 33 | 59.5 | 40 | 59.5 | I |
| | 2018.10-2020.08 | 7DCT | F | L | Hatchback FWD DHFA | | GCI83016 | Inner Joint | | | 28 | | | 32 | |
| | 2018.10-2020.08 | 7DCT | F | R | Hatchback FWD DHFA | | GCI61090 | Inner Joint | | 40 | 28 | 46.9 | | 133.2 | |
| | 2019.11- | 6MT | F | L | Hatchback FWD DPBA | | GDS61282 | Drive Shaft | | 36 | | 59.5 | 40 | 523 | |
| | 2019.11- | 6MT | F | R | Hatchback FWD DPBA | | GDS84416 | Drive Shaft | | 36 | | 59.5 | 40 | 800 | |
| | 2019.11- | 6MT | F | R | Hatchback FWD DPBA | | GCO61059 | Outer Joint | | 36 | 33 | 59.5 | 40 | 59.5 | I |
| | 2019.11- | 6MT | F | R | Hatchback FWD DPBA | | GCI53002 | Inner Joint | | | 33 | | | 34 | |
| | 2019.11- | 6MT | F | L/R | Hatchback FWD DPBA | | GCI82447 | Inner Joint | | | 33 | | | 34 | |
| | 2020.08- | 6MT | F | R | Hatchback FWD DHFA | | GDS61096 | Drive Shaft | | 36 | | 59.5 | 40.5 | 799 | |
| | 2020.08- | 6MT/7DCT | F | L | Hatchback FWD DHFA | | GDS61282 | Drive Shaft | | 36 | | 59.5 | 40 | 523 | |
| | 2020.08- | 6MT/7DCT | F | L/R | Hatchback FWD DHFA | | GCO61059 | Outer Joint | | 36 | 33 | 59.5 | 40 | 59.5 | I |
| | 2020.08- | 6MT/7DCT | F | L/R | Hatchback FWD DHFA | | GCI53002 | Inner Joint | | | 33 | | | 34 | |
| | 2020.08- | 7DCT | F | R | Hatchback FWD DHFA | | GDS84417 | Drive Shaft | | 36 | | 59.5 | 40 | 783 | |
| 1.5 (110 kw) | 2018.09-2020.08 | 6MT | F | L | Hatchback FWD DADA;DPCA | | GDS61282 | Drive Shaft | | 36 | | 59.5 | 40 | 523 | |
| | 2018.09-2020.08 | 6MT | F | R | Hatchback FWD DADA;DPCA | | GDS58110 | Drive Shaft | | 36 | | 59.5 | 40 | 793 | |
| | 2018.09-2020.08 | 6MT | F | L/R | Hatchback FWD DADA;DPCA | | GCO61059 | Outer Joint | | 36 | 33 | 59.5 | 40 | 59.5 | I |
| | 2018.09-2020.08 | 6MT | F | L/R | Hatchback FWD DADA;DPCA | | GCI82447 | Inner Joint | | | 33 | | | 34 | |
| | 2018.09-2020.08 | 7AT/6MT | F | L | Hatchback FWD DADA;DPCA | | GCI83016 | Inner Joint | | | 28 | | | 32 | |
| | 2018.09-2020.08 | 7DCT | F | L | Hatchback FWD DADA;DPCA | | GDS61100 | Drive Shaft | | 36 | | 59.5 | 40 | 513 | |
| | 2018.09-2020.08 | 7DCT | F | R | Hatchback FWD DADA;DPCA | | GDS84503 | Drive Shaft | | 36 | 40 | 59.5 | 40 | 817 | |
| | 2018.09-2020.08 | 7DCT | F | L/R | Hatchback FWD DADA;DPCA | | GCO83101 | Outer Joint | | 36 | 27 | 59.5 | 40 | 65 | M |
| | 2018.09-2020.08 | 7DCT | F | R | Hatchback FWD DADA;DPCA | | GCI61090 | Inner Joint | | 40 | 28 | 46.9 | | 133.2 | |
| | 2019.11- | 7AT | F | L | Hatchback FWD DFYA;DXDB | | GDS61100 | Drive Shaft | | 36 | | 59.5 | 40 | 513 | |
| | 2019.11- | 7AT | F | L | Hatchback FWD DFYA;DXDB | | GCO83101 | Outer Joint | | 36 | 27 | 59.5 | 40 | 65 | M |
| | 2019.11- | 7AT | F | R | Hatchback FWD DFYA;DXDB | | GCO61059 | Outer Joint | | 36 | 33 | 59.5 | 40 | 59.5 | I |
| | 2019.11- | 7AT | F | L | Hatchback FWD DFYA;DXDB | | GCI83016 | Inner Joint | | | 28 | | | 32 | |
| | 2019.11- | 7AT | F | R | Hatchback FWD DFYA;DXDB | | GCI61090 | Inner Joint | | 40 | 28 | 46.9 | | 133.2 | |
| | 2019.11- | 7DCT | F | R | Hatchback FWD DFYA;DXDB | | GDS84503 | Drive Shaft | | 36 | 40 | 59.5 | 40 | 817 | |
| | 2019.11- | 6MT | F | L | Hatchback FWD DPCA;DXDB | | GDS84408 | Drive Shaft | | 36 | | 59.5 | 40 | 499 | |
| | 2019.11- | 6MT | F | R | Hatchback FWD DPCA;DXDB | | GDS84417 | Drive Shaft | | 36 | | 59.5 | 40 | 783 | |
| | 2019.11- | 6MT | F | L/R | Hatchback FWD DPCA;DXDB | | GCO61059 | Outer Joint | | 36 | 33 | 59.5 | 40 | 59.5 | I |
| | 2019.11- | 6MT | F | L/R | Hatchback FWD DPCA;DXDB | | GCI53002 | Inner Joint | | | 33 | | | 34 | |
| | 2019.11- | 6MT | F | L/R | Hatchback FWD DPCA;DXDB | | GCI82447 | Inner Joint | | | 33 | | | 34 | |
| 1.5 (150 kw) | 2024.10- | 6DCT | F | L | Hatchback FWD DUCB, EANB | | GCI81158 | Inner Joint | | 37 | 34 | 34.5 | 65.5 | 83 | |
| 1.6 (66 kw) | 2010.11-2012.12 | 5MT | F | L | Hatchback FWD CAYB | | GDS83294 | Drive Shaft | | 36 | | 59.5 | 38 | 519 | |
| | 2010.11-2012.12 | 5MT | F | R | Hatchback FWD CAYB | | GDS61042 | Drive Shaft | | 36 | | 59.5 | 40.5 | 814 | |

| | YEAR | TRANSM. | F/R | L/R | BODY STYLE & DRIVE TYPE & ENGINE | REMARKS | G-AP Ref. | PRODUCT | ABS | Technical Specifications A | B | C | H | L | P |
|---|---|---|---|---|---|---|---|---|---|---|---|---|---|---|---|
| **SEAT** | | | | | | | | | | | | | | | |
| **Leon** | | | | | | | | | | | | | | | |
| 1.6 (66 kw) | 2010.11-2012.12 | 5MT | F | R | Hatchback FWD CAYB | | GDS61283 | Drive Shaft | | 36 | | 59.5 | 40 | 815 | |
| | 2010.11-2012.12 | 5MT | F | L/R | Hatchback FWD CAYB | Date to:2011.05 | GCO83037 | Outer Joint | | 36 | 30 | 59.5 | 40.5 | 56 | I |
| | 2010.11-2012.12 | 5MT | F | L/R | Hatchback FWD CAYB | | GCI82447 | Inner Joint | | | 33 | | | 34 | |
| | 2010.11-2012.12 | MT | F | L/R | Hatchback FWD CAYB | | GCI83011 | Inner Joint | | | 33 | | | 34 | |
| | 2012.11-2016.10 | 5MT | F | L | Hatchback Van FWD CLHB | | GDS83294 | Drive Shaft | | 36 | | 59.5 | 38 | 519 | |
| | 2012.11-2016.10 | 5MT | F | R | Hatchback Van FWD CLHB | | GDS61042 | Drive Shaft | | 36 | | 59.5 | 40.5 | 814 | |
| | 2012.11-2016.10 | 5MT | F | R | Hatchback Van FWD CLHB | | GDS61283 | Drive Shaft | | 36 | | 59.5 | 40 | 815 | |
| | 2012.11-2016.10 | 5MT | F | L/R | Hatchback Van FWD CLHB | Date to:2011.05 | GCO83037 | Outer Joint | | 36 | 30 | 59.5 | 40.5 | 56 | I |
| | 2012.11-2016.10 | 5MT | F | R | Hatchback Van FWD CLHB | | GCI53002 | Inner Joint | | | 33 | | | 34 | |
| | 2012.11-2016.10 | 5MT | F | L/R | Hatchback Van FWD CLHB | | GCI82447 | Inner Joint | | | 33 | | | 34 | |
| | 2012.11-2016.10 | | F | L/R | Hatchback Van FWD CLHB | | GCI83011 | Inner Joint | | | 33 | | | 34 | |
| | 2012.11-2018.08 | 5MT | F | L | Hatchback FWD CLHB;DDYB;CXXA | | GDS83294 | Drive Shaft | | 36 | | 59.5 | 38 | 519 | |
| | 2012.11-2018.08 | 5MT | F | R | Hatchback FWD CLHB;DDYB;CXXA | | GDS61042 | Drive Shaft | | 36 | | 59.5 | 40.5 | 814 | |
| | 2012.11-2018.08 | 5MT | F | R | Hatchback FWD CLHB;DDYB;CXXA | | GDS61283 | Drive Shaft | | 36 | | 59.5 | 40 | 815 | |
| | 2012.11-2018.08 | 5MT | F | L/R | Hatchback FWD CLHB;DDYB;CXXA | Date to:2011.05 | GCO83037 | Outer Joint | | 36 | 30 | 59.5 | 40.5 | 56 | I |
| | 2012.11-2018.08 | 5MT | F | R | Hatchback FWD CLHB;DDYB;CXXA | | GCI53002 | Inner Joint | | | 33 | | | 34 | |
| | 2012.11-2018.08 | 5MT | F | L/R | Hatchback FWD CLHB;DDYB;CXXA | | GCI82447 | Inner Joint | | | 33 | | | 34 | |
| | 2012.11-2018.08 | | F | L/R | Hatchback FWD CLHB;DDYB;CXXA | | GCI83011 | Inner Joint | | | 33 | | | 34 | |
| 1.6 (74 kw) | 1998.10-2005.10 | 4AT | F | L | Hatchback FWD AEH/AKL | | GDS61020 | Drive Shaft | | 36 | | 53.2 | 77.5 | 547 | |
| | 1998.10-2005.10 | 4AT | F | R | Hatchback FWD AEH/AKL | | GDS83011 | Drive Shaft | | 36 | | 53.2 | 77.5 | 810.5 | |
| | 1998.10-2005.10 | 4AT | F | L/R | Hatchback FWD AEH/AKL | | GCO83070 | Outer Joint | | 36 | 30 | 53 | 78 | 60 | I |
| | 1998.10-2005.10 | 4AT/5MT | F | R | Hatchback FWD AEH/AKL | For vehicles with heavy duty suspension | GCI83009 | Inner Joint | | | 33 | | | 34 | |
| | 1998.10-2005.10 | 4AT/5MT | F | L/R | Hatchback FWD AEH/AKL | | GCI83008 | Inner Joint | | | 33 | | | 32 | |
| | 1998.10-2005.10 | 5MT | F | L | Hatchback FWD AEH/AKL | | GDS61045 | Drive Shaft | | 36 | | 53 | 78.5 | 555 | |
| | 1998.10-2005.10 | 5MT | F | L | Hatchback FWD AEH/AKL | for vehicles with heavy duty suspension | GDS61314 | Drive Shaft | | 36 | | 53 | 78 | 558 | |
| | 1998.10-2005.10 | 5MT | F | R | Hatchback FWD AEH/AKL | For vehicles with heavy duty suspension | GDS83004 | Drive Shaft | | 36 | | 53.2 | 77.5 | 822 | |
| | 1998.10-2005.10 | 5MT | F | R | Hatchback FWD AEH/AKL | | GDS83046 | Drive Shaft | | 36 | | 53 | 78.5 | 822 | |
| | 1998.10-2005.10 | 5MT | F | L/R | Hatchback FWD AEH/AKL | | GCO83033 | Outer Joint | | 36 | 30 | 53 | 78.5 | 51 | I |
| | 1998.10-2005.10 | 5MT | F | L | Hatchback FWD AEH/AKL | For vehicles with heavy duty suspension | GCI82447 | Inner Joint | | | 33 | | | 34 | |
| 1.6 (75 kw) | 2005.07-2012.12 | 5MT | F | L | Hatchback FWD BSE;BSF;CCSA | | GDS61097 | Drive Shaft | | 36 | | 59.5 | 40.5 | 543 | |
| | 2005.07-2012.12 | 5MT | F | R | Hatchback FWD BSE;BSF;CCSA | | GDS61096 | Drive Shaft | | 36 | | 59.5 | 40.5 | 799 | |
| | 2005.07-2012.12 | 7AT/5MT | F | L/R | Hatchback FWD BSE;BSF;CCSA | | GCO83037 | Outer Joint | | 36 | 30 | 59.5 | 40.5 | 56 | I |
| | 2005.07-2012.12 | 7DCT | F | L | Hatchback FWD BSE;BSF;CCSA | | GDS83294 | Drive Shaft | | 36 | | 59.5 | 38 | 519 | |
| | 2005.07-2012.12 | 7DCT | F | R | Hatchback FWD BSE;BSF;CCSA | | GDS61042 | Drive Shaft | | 36 | | 59.5 | 40.5 | 814 | |
| | 2005.07-2012.12 | 7DCT/5MT | F | L/R | Hatchback FWD BSE;BSF;CCSA | | GCI82447 | Inner Joint | | | 33 | | | 34 | |
| | 2005.07-2013.08 | 5MT | F | L | Hatchback FWD BSE;CCSA;CMXA | | GDS61097 | Drive Shaft | | 36 | | 59.5 | 40.5 | 543 | |
| | 2005.07-2013.08 | 5MT | F | R | Hatchback FWD BSE;CCSA;CMXA | | GDS61096 | Drive Shaft | | 36 | | 59.5 | 40.5 | 799 | |
| | 2005.07-2013.08 | 5MT | F | L/R | Hatchback FWD BSE;CCSA;CMXA | | GCO83037 | Outer Joint | | 36 | 30 | 59.5 | 40.5 | 56 | I |
| | 2005.07-2013.08 | 5MT | F | L/R | Hatchback FWD BSE;CCSA;CMXA | | GCI82447 | Inner Joint | | | 33 | | | 34 | |
| | 2005.07-2013.08 | | F | L/R | Hatchback FWD BSE;CCSA;CMXA | | GCI83011 | Inner Joint | | | 33 | | | 34 | |
| | 2009.12-2012.12 | 5MT | F | L | Hatchback FWD CHGA | | GDS61097 | Drive Shaft | | 36 | | 59.5 | 40.5 | 543 | |
| | 2009.12-2012.12 | 5MT | F | R | Hatchback FWD CHGA | | GDS61096 | Drive Shaft | | 36 | | 59.5 | 40.5 | 799 | |
| | 2009.12-2012.12 | 5MT | F | L/R | Hatchback FWD CHGA | | GCO83037 | Outer Joint | | 36 | 30 | 59.5 | 40.5 | 56 | I |
| | 2009.12-2012.12 | 5MT | F | L/R | Hatchback FWD CHGA | | GCI82447 | Inner Joint | | | 33 | | | 34 | |
| | 2009.12-2012.12 | MT | F | L/R | Hatchback FWD CHGA | | GCI83006 | Inner Joint | | | 33 | | | 34 | |
| | 2009.12-2012.12 | | F | L/R | Hatchback FWD CHGA | | GCI83011 | Inner Joint | | | 33 | | | 34 | |
| 1.6 (77 kw) | 2000.06-2006.06 | 4AT | F | L/R | Hatchback FWD AUS/AZD/BCB | | GCO83070 | Outer Joint | | 36 | 30 | 53 | 78 | 60 | I |
| | 2000.06-2006.06 | 5MT | F | L | Hatchback FWD AUS/AZD/BCB | | GDS61312 | Drive Shaft | | 36 | | 53 | 78 | 546 | |
| | 2000.06-2006.06 | 5MT | F | R | Hatchback FWD AUS/AZD/BCB | | GDS61203 | Drive Shaft | | 36 | | 53.2 | 77.5 | 810 | |
| | 2000.06-2006.06 | 5MT | F | L/R | Hatchback FWD AUS/AZD/BCB | | GCI61005 | Inner Joint | | | 30 | | | 57.6 | |
| | 2000.06-2006.06 | AT | F | L | Hatchback FWD AUS/AZD/BCB | | GDS61020 | Drive Shaft | | 36 | | 53.2 | 77.5 | 547 | |
| | 2010.02-2012.12 | 5MT | F | L | Hatchback FWD CAYC | Date to:2011.05 | GDS83294 | Drive Shaft | | 36 | | 59.5 | 38 | 519 | |
| | 2010.02-2012.12 | 5MT | F | R | Hatchback FWD CAYC | Date to:2011.05 | GDS61042 | Drive Shaft | | 36 | | 59.5 | 40.5 | 814 | |
| | 2010.02-2012.12 | 5MT | F | R | Hatchback FWD CAYC | Date from:2011.06 | GDS61283 | Drive Shaft | | 36 | | 59.5 | 40 | 815 | |
| | 2010.02-2012.12 | 5MT | F | L/R | Hatchback FWD CAYC | Date to:2011.05 | GCO83037 | Outer Joint | | 36 | 30 | 59.5 | 40.5 | 56 | I |
| | 2010.02-2012.12 | 5MT | F | L/R | Hatchback FWD CAYC | | GCI82447 | Inner Joint | | | 33 | | | 34 | |
| | 2010.02-2012.12 | 5MT/7DCT | F | L | Hatchback FWD CAYC | Date from:2011.06 | GDS61282 | Drive Shaft | | 36 | | 59.5 | 40 | 523 | |
| | 2010.02-2012.12 | 5MT/7DCT | F | L/R | Hatchback FWD CAYC | Date from:2011.06 | GCO61059 | Outer Joint | | 36 | 33 | 59.5 | 40 | 59.5 | I |
| | 2010.02-2012.12 | 7DCT | F | L | Hatchback FWD CAYC | Date to:2011.05 | GDS61100 | Drive Shaft | | 36 | | 59.5 | 40 | 513 | |
| | 2010.02-2012.12 | 7DCT | F | R | Hatchback FWD CAYC | Date from:2011.06 | GDS61096 | Drive Shaft | | 36 | | 59.5 | 40.5 | 799 | |
| | 2010.02-2012.12 | 7DCT | F | R | Hatchback FWD CAYC | Date to:2011.05 | GDS61339 | Drive Shaft | | 36 | | 59.5 | 40 | 794 | |
| | 2010.02-2012.12 | 7DCT | F | L/R | Hatchback FWD CAYC | Date to:2011.05 | GCO83002 | Outer Joint | | 36 | 27 | 59.5 | 40 | 66 | I |
| | 2010.02-2012.12 | 7DCT | F | L/R | Hatchback FWD CAYC | Date from:2011.06 | GCI82447 | Inner Joint | | | 33 | | | 34 | |
| | 2010.02-2012.12 | 7DCT | F | L/R | Hatchback FWD CAYC | Date to:2011.05 | GCI83016 | Inner Joint | | | 28 | | | 32 | |
| | 2012.09-2016.10 | 5MT | F | R | Hatchback Van FWD CLHA | | GDS61283 | Drive Shaft | | 36 | | 59.5 | 40 | 815 | |

| | YEAR | TRANSM. | F/R | L/R | BODY STYLE & DRIVE TYPE & ENGINE | REMARKS | G-AP Ref. | PRODUCT | ABS | Technical Specifications A | B | C | H | L | P |
|---|---|---|---|---|---|---|---|---|---|---|---|---|---|---|---|
| **SEAT** | | | | | | | | | | | | | | | |
| **Leon** | | | | | | | | | | | | | | | |
| 1.6 (77 kw) | 2012.09-2016.10 | 5MT | F | L/R | Hatchback Van FWD CLHA | | GCI53002 | Inner Joint | | | 33 | | | 34 | |
| | 2012.09-2016.10 | 5MT/6MT/7DCT | F | L | Hatchback Van FWD CLHA | No Economy | GDS61282 | Drive Shaft | | 36 | | 59.5 | 40 | 523 | |
| | 2012.09-2016.10 | 5MT/6MT/7DCT | F | L | Hatchback Van FWD CLHA | Economy | GDS83294 | Drive Shaft | | 36 | | 59.5 | 38 | 519 | |
| | 2012.09-2016.10 | 7DCT | F | R | Hatchback Van FWD CLHA | | GDS61096 | Drive Shaft | | 36 | | 59.5 | 40.5 | 799 | |
| | 2012.09-2016.10 | 7DCT | F | L | Hatchback Van FWD CLHA | | GCI53002 | Inner Joint | | | 33 | | | 34 | |
| | 2012.09-2016.10 | 7DCT/5MT/6MT | F | L/R | Hatchback Van FWD CLHA | | GCI82447 | Inner Joint | | | 33 | | | 34 | |
| | 2012.09-2016.10 | | F | L/R | Hatchback Van FWD CLHA | | GCO61059 | Outer Joint | | 36 | 33 | 59.5 | 40 | 59.5 | I |
| | 2012.09-2016.10 | | F | L/R | Hatchback Van FWD CLHA | | GCI83011 | Inner Joint | | | 33 | | | 34 | |
| | 2012.09-2020.08 | 5MT | F | R | Hatchback FWD CLHA | Inner teeth of wheel side:30 | GDS61042 | Drive Shaft | | 36 | | 59.5 | 40.5 | 814 | |
| | 2012.09-2020.08 | 5MT | F | R | Hatchback FWD CLHA | Inner teeth of wheel side:33 | GDS61283 | Drive Shaft | | 36 | | 59.5 | 40 | 815 | |
| | 2012.09-2020.08 | 5MT | F | L/R | Hatchback FWD CLHA | | GCI53002 | Inner Joint | | | 33 | | | 34 | |
| | 2012.09-2020.08 | 5MT/7DCT | F | L | Hatchback FWD CLHA | No Economy | GDS61282 | Drive Shaft | | 36 | | 59.5 | 40 | 523 | |
| | 2012.09-2020.08 | 7DCT | F | R | Hatchback FWD CLHA | | GDS61096 | Drive Shaft | | 36 | | 59.5 | 40.5 | 799 | |
| | 2012.09-2020.08 | 7DCT | F | L | Hatchback FWD CLHA | | GCI53002 | Inner Joint | | | 33 | | | 34 | |
| | 2012.09-2020.08 | 7DCT/5MT | F | L/R | Hatchback FWD CLHA | | GCI82447 | Inner Joint | | | 33 | | | 34 | |
| | 2012.09-2020.08 | MT | F | L | Hatchback FWD CLHA | Economy | GDS83294 | Drive Shaft | | 36 | | 59.5 | 38 | 519 | |
| | 2012.09-2020.08 | MT | F | L | Hatchback FWD CLHA | | GCO83037 | Outer Joint | | 36 | 30 | 59.5 | 40.5 | 56 | I |
| | 2012.09-2020.08 | | F | L/R | Hatchback FWD CLHA | | GCO61059 | Outer Joint | | 36 | 33 | 59.5 | 40 | 59.5 | I |
| | 2012.09-2020.08 | | F | L/R | Hatchback FWD CLHA | | GCI83011 | Inner Joint | | | 33 | | | 34 | |
| 1.6 (81 kw) | 2013.09-2016.10 | 5MT/6MT | F | R | Hatchback Van FWD CRKB;CXXB;DBKA | | GDS61283 | Drive Shaft | | 36 | | 59.5 | 40 | 815 | |
| | 2013.09-2016.10 | 5MT/6MT | F | L/R | Hatchback Van FWD CRKB;CXXB;DBKA | | GCI53002 | Inner Joint | | | 33 | | | 34 | |
| | 2013.09-2016.10 | 5MT/6MT/7DCT | F | L | Hatchback Van FWD CRKB;CXXB;DBKA | | GDS61282 | Drive Shaft | | 36 | | 59.5 | 40 | 523 | |
| | 2013.09-2016.10 | 7DCT | F | R | Hatchback Van FWD CRKB;CXXB;DBKA | | GDS61096 | Drive Shaft | | 36 | | 59.5 | 40.5 | 799 | |
| | 2013.09-2016.10 | 7DCT | F | L | Hatchback Van FWD CRKB;CXXB;DBKA | | GCI53002 | Inner Joint | | | 33 | | | 34 | |
| | 2013.09-2016.10 | 7DCT/5MT/6MT | F | L/R | Hatchback Van FWD CRKB;CXXB;DBKA | | GCI82447 | Inner Joint | | | 33 | | | 34 | |
| | 2013.09-2016.10 | | F | L/R | Hatchback Van FWD CRKB;CXXB;DBKA | | GCO61059 | Outer Joint | | 36 | 33 | 59.5 | 40 | 59.5 | I |
| | 2013.09-2016.10 | | F | L/R | Hatchback Van FWD CRKB;CXXB;DBKA | | GCI83011 | Inner Joint | | | 33 | | | 34 | |
| | 2013.09-2020.08 | 5MT | F | L | Hatchback FWD CRKB;CXXB;DBKA | Economy | GDS83294 | Drive Shaft | | 36 | | 59.5 | 38 | 519 | |
| | 2013.09-2020.08 | 5MT | F | L | Hatchback FWD CRKB;CXXB;DBKA | | GCO83037 | Outer Joint | | 36 | 30 | 59.5 | 40.5 | 56 | I |
| | 2013.09-2020.08 | 5MT/6MT | F | R | Hatchback FWD CRKB;CXXB;DBKA | | GDS61283 | Drive Shaft | | 36 | | 59.5 | 40 | 815 | |
| | 2013.09-2020.08 | 5MT/6MT | F | L/R | Hatchback FWD CRKB;CXXB;DBKA | | GCI53002 | Inner Joint | | | 33 | | | 34 | |
| | 2013.09-2020.08 | 5MT/6MT/7DCT | F | L | Hatchback FWD CRKB;CXXB;DBKA | No Economy | GDS61282 | Drive Shaft | | 36 | | 59.5 | 40 | 523 | |
| | 2013.09-2020.08 | 5MT/6MT/7DCT | F | L/R | Hatchback FWD CRKB;CXXB;DBKA | | GCI82447 | Inner Joint | | | 33 | | | 34 | |
| | 2013.09-2020.08 | 7DCT | F | R | Hatchback FWD CRKB;CXXB;DBKA | | GDS61096 | Drive Shaft | | 36 | | 59.5 | 40.5 | 799 | |
| | 2013.09-2020.08 | 7DCT | F | L | Hatchback FWD CRKB;CXXB;DBKA | | GCI53002 | Inner Joint | | | 33 | | | 34 | |
| | 2013.09-2020.08 | | F | L/R | Hatchback FWD CRKB;CXXB;DBKA | | GCO61059 | Outer Joint | | 36 | 33 | 59.5 | 40 | 59.5 | I |
| | 2013.09-2020.08 | | F | L/R | Hatchback FWD CRKB;CXXB;DBKA | | GCI83011 | Inner Joint | | | 33 | | | 34 | |
| | 2020.11- | 6AT | F | L | Hatchback FWD DWYA | | GDS83318 | Drive Shaft | | 36 | 26 | 59.5 | 38 | 581 | |
| | 2020.11- | 6AT | F | R | Hatchback FWD DWYA | | GDS61094 | Drive Shaft | | 36 | 26 | 59.5 | 40.5 | 884 | |
| 1.6 (85 kw) | 2016.11-2020.08 | 5MT | F | R | Hatchback FWD DDYA;DGTE | | GDS61042 | Drive Shaft | | 36 | | 59.5 | 40.5 | 814 | |
| | 2016.11-2020.08 | 5MT | F | L/R | Hatchback FWD DDYA;DGTE | | GCI53002 | Inner Joint | | | 33 | | | 34 | |
| | 2016.11-2020.08 | 5MT/6MT/7DCT | F | L | Hatchback FWD DDYA;DGTE | | GDS61282 | Drive Shaft | | 36 | | 59.5 | 40 | 523 | |
| | 2016.11-2020.08 | 5MT/6MT/7DCT | F | L/R | Hatchback FWD DDYA;DGTE | | GCI82447 | Inner Joint | | | 33 | | | 34 | |
| | 2016.11-2020.08 | 6MT | F | R | Hatchback FWD DDYA;DGTE | | GDS61283 | Drive Shaft | | 36 | | 59.5 | 40 | 815 | |
| | 2016.11-2020.08 | 6MT/7DCT | F | L | Hatchback FWD DDYA;DGTE | | GCI53002 | Inner Joint | | | 33 | | | 34 | |
| | 2016.11-2020.08 | 7DCT | F | R | Hatchback FWD DDYA;DGTE | | GDS61096 | Drive Shaft | | 36 | | 59.5 | 40.5 | 799 | |
| | 2016.11-2020.08 | MT/DCT | F | L/R | Hatchback FWD DDYA;DGTE | | GCO61059 | Outer Joint | | 36 | 33 | 59.5 | 40 | 59.5 | I |
| | 2016.11-2020.08 | | F | L/R | Hatchback FWD DDYA;DGTE | | GCI83011 | Inner Joint | | | 33 | | | 34 | |
| | 2016.11-2020.08 | 5MT | F | R | Hatchback Van FWD DDYA | | GDS61042 | Drive Shaft | | 36 | | 59.5 | 40.5 | 814 | |
| | 2016.11-2020.08 | 5MT | F | R | Hatchback Van FWD DDYA | | GDS61283 | Drive Shaft | | 36 | | 59.5 | 40 | 815 | |
| | 2016.11-2020.08 | 5MT | F | L/R | Hatchback Van FWD DDYA | | GCI53002 | Inner Joint | | | 33 | | | 34 | |
| | 2016.11-2020.08 | 5MT/7DCT | F | L | Hatchback Van FWD DDYA | | GDS61282 | Drive Shaft | | 36 | | 59.5 | 40 | 523 | |
| | 2016.11-2020.08 | 7DCT | F | R | Hatchback Van FWD DDYA | | GDS61096 | Drive Shaft | | 36 | | 59.5 | 40.5 | 799 | |
| | 2016.11-2020.08 | 7DCT | F | L | Hatchback Van FWD DDYA | | GCI53002 | Inner Joint | | | 33 | | | 34 | |
| | 2016.11-2020.08 | 7DCT/5MT | F | L/R | Hatchback Van FWD DDYA | | GCI82447 | Inner Joint | | | 33 | | | 34 | |
| | 2016.11-2020.08 | MT/DCT | F | L/R | Hatchback Van FWD DDYA | | GCO61059 | Outer Joint | | 36 | 33 | 59.5 | 40 | 59.5 | I |
| | 2016.11-2020.08 | | F | L/R | Hatchback Van FWD DDYA | | GCI83011 | Inner Joint | | | 33 | | | 34 | |
| 1.8 (92 kw) | 1999.11-2006.06 | 4AT/5MT | F | L | Hatchback FWD AGN/APG | | GCI82447 | Inner Joint | | | 33 | | | 34 | |
| | 1999.11-2006.06 | AT | F | L | Hatchback FWD AGN/APG | | GDS61020 | Drive Shaft | | 36 | | 53.2 | 77.5 | 547 | |
| | 1999.11-2006.06 | AT | F | R | Hatchback FWD AGN/APG | | GDS83011 | Drive Shaft | | 36 | | 53.2 | 77.5 | 810.5 | |
| | 1999.11-2006.06 | MT | F | L | Hatchback FWD AGN/APG | for vehicles with power steering | GDS61314 | Drive Shaft | | 36 | | 53 | 78 | 558 | |
| | 1999.11-2006.06 | MT | F | L | Hatchback FWD AGN/APG | | GDS99116 | Drive Shaft | | 36 | | 53.2 | 77.5 | 548.5 | |
| | 1999.11-2006.06 | MT | F | R | Hatchback FWD AGN/APG | | GDS83004 | Drive Shaft | | 36 | | 53.2 | 77.5 | 822 | |
| | 1999.11-2006.06 | MT | F | L/R | Hatchback FWD AGN/APG | | GCO83070 | Outer Joint | | 36 | 30 | 53 | 78 | 60 | I |
| | 1999.11-2006.06 | MT | F | R | Hatchback FWD AGN/APG | | GCI83009 | Inner Joint | | | 33 | | | 34 | |

| | YEAR | TRANSM. | F/R | L/R | BODY STYLE & DRIVE TYPE & ENGINE | REMARKS | G-AP Ref. | PRODUCT | ABS | Technical Specifications A | B | C | H | L | P |
|---|---|---|---|---|---|---|---|---|---|---|---|---|---|---|---|
| **SEAT** | | | | | | | | | | | | | | | |
| **Leon** | | | | | | | | | | | | | | | |
| 1.8 (118 kw) | 2007.06-2012.12 | 6MT | F | L | Hatchback FWD BZB;CDAA | Date to:2009.11 | GDS61100 | Drive Shaft | | 36 | | 59.5 | 40 | 513 | |
| | 2007.06-2012.12 | 6MT | F | L | Hatchback FWD BZB;CDAA | Date from:2009.12 | GDS61282 | Drive Shaft | | 36 | | 59.5 | 40 | 523 | |
| | 2007.06-2012.12 | 6MT | F | R | Hatchback FWD BZB;CDAA | Date from:2009.11,Date to:2010.10 | GDS61283 | Drive Shaft | | 36 | | 59.5 | 40 | 815 | |
| | 2007.06-2012.12 | 6MT | F | R | Hatchback FWD BZB;CDAA | Date to:2009.10,Date from:2010.11 | GDS61341 | Drive Shaft | | 36 | | 59.5 | 40 | 806 | |
| | 2007.06-2012.12 | 6MT | F | L | Hatchback FWD BZB;CDAA | Date from:2009.11,Date to:2010.10 | GCO61059 | Outer Joint | | 36 | 33 | 59.5 | 40 | 59.5 | I |
| | 2007.06-2012.12 | 6MT | F | L/R | Hatchback FWD BZB;CDAA | Date to:2009.10,Date from:2010.11 | GCO83002 | Outer Joint | | 36 | 27 | 59.5 | 40 | 66 | I |
| | 2007.06-2012.12 | 6MT | F | L/R | Hatchback FWD BZB;CDAA | Date from:2009.11;Date to:2010.05 | GCI82447 | Inner Joint | | | 33 | | | 34 | |
| | 2007.06-2012.12 | 7AT/6MT | F | L/R | Hatchback FWD BZB;CDAA | | GCI83016 | Inner Joint | | | 28 | | | 32 | |
| | 2007.06-2012.12 | 7DCT | F | R | Hatchback FWD BZB;CDAA | | GDS83313 | Drive Shaft | | 36 | | 59.5 | 40 | 792 | |
| | 2007.06-2012.12 | 7DCT | F | L | Hatchback FWD BZB;CDAA | | GCO83101 | Outer Joint | | 36 | 27 | 59.5 | 40 | 65 | M |
| 1.8 (132 kw) | 1999.08-2005.10 | 6MT | F | L | Hatchback FWD APP/AUQ | Chassis no. to:1M_1B030000,without headlamp levelling | GDS56276 | Drive Shaft | | 36 | | 53 | 77.5 | 520 | |
| | 1999.08-2005.10 | 6MT | F | R | Hatchback FWD APP/AUQ | | GDS61121 | Drive Shaft | | 36 | | 53 | 77.5 | 806 | |
| | 1999.08-2005.10 | 6MT | F | R | Hatchback FWD APP/AUQ | Chassis no. to:1M1B030000 | GDS83011 | Drive Shaft | | 36 | | 53.2 | 77.5 | 810.5 | |
| | 1999.08-2005.10 | 6MT | F | L/R | Hatchback FWD APP/AUQ | | GCO83035 | Outer Joint | | 36 | 27 | 53 | 77.5 | 65 | I |
| | 1999.08-2005.10 | 6MT | F | L | Hatchback FWD APP/AUQ | Chassis no. to:1M_1B030000,without headlamp levelling | GCI61010 | Inner Joint | | | 28 | | | 32 | |
| | 1999.08-2005.10 | 6MT | F | L/R | Hatchback FWD APP/AUQ | Chassis no. to:1M3099000 | GCI83001 | Inner Joint | | | 28 | | | 32 | |
| | 1999.08-2005.10 | 6MT | F | L/R | Hatchback FWD APP/AUQ | Chassis no. from:1M_3_109001 | GCI83016 | Inner Joint | | | 28 | | | 32 | |
| | 1999.08-2005.10 | AT | F | L | Hatchback FWD APP/AUQ | Chassis no. from:1MY032501 | GDS61020 | Drive Shaft | | 36 | | 53.2 | 77.5 | 547 | |
| | 2000.03-2004.04 | 6MT | F | L | Hatchback 4WD AJQ/ARY | | GDS61123 | Drive Shaft | | 36 | | 53 | 77.5 | 520 | |
| | 2000.03-2004.04 | 6MT | F | R | Hatchback 4WD AJQ/ARY | | GDS61186 | Drive Shaft | | 36 | | 53 | 77.5 | 653 | |
| | 2000.03-2004.04 | 6MT | F | L/R | Hatchback 4WD AJQ/ARY | | GCO83035 | Outer Joint | | 36 | 27 | 53 | 77.5 | 65 | I |
| | 2000.03-2004.04 | 6MT | F | L/R | Hatchback 4WD AJQ/ARY | Chassis no. to:1M3099000 | GCI83001 | Inner Joint | | | 28 | | | 32 | |
| | 2000.03-2004.04 | 6MT | F | L/R | Hatchback 4WD AJQ/ARY | Chassis no. from:1M3099001 | GCI83016 | Inner Joint | | | 28 | | | 32 | |
| | 2000.03-2004.04 | 6MT | R | L | Hatchback 4WD AJQ/ARY | | GDS82364 | Drive Shaft | | 36 | | 53 | 78.5 | 651 | |
| | 2000.03-2004.04 | 6MT | R | R | Hatchback 4WD AJQ/ARY | | GDS81587 | Drive Shaft | | 36 | | 53 | 78.5 | 522 | |
| | 2000.03-2004.04 | 6MT | R | L/R | Hatchback 4WD AJQ/ARY | | GCO83033 | Outer Joint | | 36 | 30 | 53 | 78.5 | 51 | I |
| | 2000.03-2004.04 | 6MT | R | L/R | Hatchback 4WD AJQ/ARY | | GCI82447 | Inner Joint | | | 33 | | | 34 | |
| | 2013.02-2018.08 | 6MT | F | L | Hatchback FWD CJSA | | GDS61100 | Drive Shaft | | 36 | | 59.5 | 40 | 513 | |
| | 2013.02-2018.08 | 6MT | F | R | Hatchback FWD CJSA | | GDS61101 | Drive Shaft | | 36 | | 59.5 | 40 | 803 | |
| | 2013.02-2018.08 | 6MT | F | L/R | Hatchback FWD CJSA | | GCO83101 | Outer Joint | | 36 | 27 | 59.5 | 40 | 65 | M |
| | 2013.02-2018.08 | 7AT/6MT | F | L/R | Hatchback FWD CJSA | | GCI83016 | Inner Joint | | | 28 | | | 32 | |
| | 2013.02-2018.08 | 7DCT | F | R | Hatchback FWD CJSA | Date to:2016.02 | GDS61147 | Drive Shaft | | 36 | | 59.5 | 40 | 795 | |
| | 2013.02-2018.08 | 7DCT | F | R | Hatchback FWD CJSA | Date from:2016.03 | GDS83313 | Drive Shaft | | 36 | | 59.5 | 40 | 792 | |
| | 2013.02-2018.08 | 7DCT | F | L | Hatchback FWD CJSA | | GCI61069 | Inner Joint | | | 28 | | | 32 | |
| | 2013.02-2018.08 | 6MT | F | L | Hatchback Van FWD CJSA | | GDS61100 | Drive Shaft | | 36 | | 59.5 | 40 | 513 | |
| | 2013.02-2018.08 | 6MT | F | R | Hatchback Van FWD CJSA | | GDS61101 | Drive Shaft | | 36 | | 59.5 | 40 | 803 | |
| | 2013.02-2018.08 | 6MT | F | L/R | Hatchback Van FWD CJSA | | GCO83101 | Outer Joint | | 36 | 27 | 59.5 | 40 | 65 | M |
| | 2013.02-2018.08 | 7DCT | F | R | Hatchback Van FWD CJSA | Date to:2016.02 | GDS61147 | Drive Shaft | | 36 | | 59.5 | 40 | 795 | |
| | 2013.02-2018.08 | 7DCT | F | R | Hatchback Van FWD CJSA | Date from:2016.03 | GDS83313 | Drive Shaft | | 36 | | 59.5 | 40 | 792 | |
| | 2013.02-2018.08 | 7DCT | F | L | Hatchback Van FWD CJSA | Facelift | GCI61069 | Inner Joint | | | 28 | | | 32 | |
| | 2013.02-2018.08 | 7DCT/6MT | F | L/R | Hatchback Van FWD CJSA | Transmission:7DCT,Posission:Right | GCI83016 | Inner Joint | | | 28 | | | 32 | |
| 1.8 (154 kw) | 2002.05-2003.05 | 6MT | F | L | Hatchback FWD AMK | | GDS56276 | Drive Shaft | | 36 | | 53 | 77.5 | 520 | |
| | 2002.05-2003.05 | 6MT | F | R | Hatchback FWD AMK | | GDS61121 | Drive Shaft | | 36 | | 53 | 77.5 | 806 | |
| | 2002.05-2003.05 | 6MT | F | L/R | Hatchback FWD AMK | | GCO83035 | Outer Joint | | 36 | 27 | 53 | 77.5 | 65 | I |
| | 2002.05-2003.05 | 6MT | F | L/R | Hatchback FWD AMK | Chassis no. to:1M3099000 | GCI83001 | Inner Joint | | | 28 | | | 32 | |
| | 2002.05-2003.05 | 6MT | F | L/R | Hatchback FWD AMK | Date to:2009.10 | GCI83016 | Inner Joint | | | 28 | | | 32 | |
| 1.8 (165 kw) | 2003.05-2006.06 | 6MT | F | L | Hatchback FWD BAM | | GDS81913 | Drive Shaft | | 36 | | 53 | 40 | 480 | |
| | 2003.05-2006.06 | 6MT | F | R | Hatchback FWD BAM | | GDS61088 | Drive Shaft | | 36 | | 53 | 40 | 769 | |
| | 2003.05-2006.06 | 6MT | F | L | Hatchback FWD BAM | | GCI61069 | Inner Joint | | | 28 | | | 32 | |
| | 2003.05-2006.06 | | F | L/R | Hatchback FWD BAM | | GCO61021 | Outer Joint | | 36 | 27 | 53 | 40 | 65 | I |
| 1.9 (50 kw) | 2000.06-2003.10 | 5MT | F | L | Hatchback FWD AQM | | GDS61045 | Drive Shaft | | 36 | | 53 | 78.5 | 555 | |
| | 2000.06-2003.10 | 5MT | F | R | Hatchback FWD AQM | | GDS83046 | Drive Shaft | | 36 | | 53 | 78.5 | 822 | |
| | 2000.06-2003.10 | 5MT | F | L/R | Hatchback FWD AQM | | GCO83033 | Outer Joint | | 36 | 30 | 53 | 78.5 | 51 | I |
| | 2000.06-2003.10 | 5MT | F | L/R | Hatchback FWD AQM | | GCI83008 | Inner Joint | | | 33 | | | 32 | |
| 1.9 (66 kw) | 1999.03-2005.10 | 5MT | F | L | Hatchback FWD AGR/ALH | | GDS83006 | Drive Shaft | | 36 | | 53.2 | 77.5 | 557 | |
| | 1999.03-2005.10 | 5MT | F | R | Hatchback FWD AGR/ALH | | GDS83004 | Drive Shaft | | 36 | | 53.2 | 77.5 | 822 | |
| | 1999.03-2005.10 | 5MT | F | L/R | Hatchback FWD AGR/ALH | | GCO83070 | Outer Joint | | 36 | 30 | 53 | 78 | 60 | I |
| | 1999.03-2005.10 | 5MT | F | L | Hatchback FWD AGR/ALH | | GCI83011 | Inner Joint | | | 33 | | | 34 | |
| | 1999.03-2005.10 | 5MT | F | R | Hatchback FWD AGR/ALH | | GCI83009 | Inner Joint | | | 33 | | | 34 | |
| | 1999.03-2005.10 | 5MT | F | L/R | Hatchback FWD AGR/ALH | | GCI83006 | Inner Joint | | | 33 | | | 34 | |
| | 2007.06-2010.12 | 5MT | F | L | Hatchback FWD BXF | | GDS83294 | Drive Shaft | | 36 | | 59.5 | 38 | 519 | |
| | 2007.06-2010.12 | 5MT | F | R | Hatchback FWD BXF | | GDS61042 | Drive Shaft | | 36 | | 59.5 | 40.5 | 814 | |
| | 2007.06-2010.12 | 5MT | F | L/R | Hatchback FWD BXF | | GCO83037 | Outer Joint | | 36 | 30 | 59.5 | 40.5 | 56 | I |
| | 2007.06-2010.12 | 5MT | F | L/R | Hatchback FWD BXF | | GCI82447 | Inner Joint | | | 33 | | | 34 | |
| | 2007.06-2010.12 | MT | F | L/R | Hatchback FWD BXF | | GCI83011 | Inner Joint | | | 33 | | | 34 | |

| | YEAR | TRANSM. | F/R | L/R | BODY STYLE & DRIVE TYPE & ENGINE | REMARKS | G-AP Ref. | PRODUCT | ABS | Technical Specifications A | B | C | H | L | P |
|---|---|---|---|---|---|---|---|---|---|---|---|---|---|---|---|
| **SEAT** | | | | | | | | | | | | | | | |
| **Leon** | | | | | | | | | | | | | | | |
| 1.9 (74 kw) | 2005.10-2006.06 | 5MT | F | L | Hatchback FWD AXR | | GDS83006 | Drive Shaft | | 36 | | 53.2 | 77.5 | 557 | |
| | 2005.10-2006.06 | 5MT | F | R | Hatchback FWD AXR | | GDS83004 | Drive Shaft | | 36 | | 53.2 | 77.5 | 822 | |
| | 2005.10-2006.06 | 5MT | F | L/R | Hatchback FWD AXR | | GCO83070 | Outer Joint | | 36 | 30 | 53 | 78 | 60 | I |
| | 2005.10-2006.06 | 5MT | F | L | Hatchback FWD AXR | | GCI82447 | Inner Joint | | | 33 | | | 34 | |
| | 2005.10-2006.06 | 5MT | F | R | Hatchback FWD AXR | | GCI83009 | Inner Joint | | | 33 | | | 34 | |
| | 2005.10-2006.06 | MT | F | L/R | Hatchback FWD AXR | | GCI83006 | Inner Joint | | | 33 | | | 34 | |
| 1.9 (77 kw) | 2005.07-2010.12 | 5MT | F | L | Hatchback FWD BKC;BLS;BXE | To Chassis:1P_8_093000;From Chassis:1P_8_093001 | GDS83294 | Drive Shaft | | 36 | | 59.5 | 38 | 519 | |
| | 2005.07-2010.12 | 5MT | F | R | Hatchback FWD BKC;BLS;BXE | | GDS61042 | Drive Shaft | | 36 | | 59.5 | 40.5 | 814 | |
| | 2005.07-2010.12 | 5MT | F | L/R | Hatchback FWD BKC;BLS;BXE | | GCO83037 | Outer Joint | | 36 | 30 | 59.5 | 40.5 | 56 | I |
| | 2005.07-2010.12 | 5MT | F | R | Hatchback FWD BKC;BLS;BXE | | GCI53002 | Inner Joint | | | 33 | | | 34 | |
| | 2005.07-2010.12 | 5MT | F | L/R | Hatchback FWD BKC;BLS;BXE | | GCI82447 | Inner Joint | | | 33 | | | 34 | |
| | 2005.07-2010.12 | 6DCT | F | L | Hatchback FWD BKC;BLS;BXE | | GDS54013 | Drive Shaft | | 36 | | 59.5 | 40 | 479.5 | |
| | 2005.07-2010.12 | 6DCT | F | R | Hatchback FWD BKC;BLS;BXE | | GDS54011 | Drive Shaft | | 36 | | 59.5 | 40 | 755 | |
| | 2005.07-2010.12 | 6DCT | F | L/R | Hatchback FWD BKC;BLS;BXE | | GCO83002 | Outer Joint | | 36 | 27 | 59.5 | 40 | 66 | I |
| | 2005.07-2010.12 | 6DCT | F | L/R | Hatchback FWD BKC;BLS;BXE | | GCI54004 | Inner Joint | | | 34 | | | 81 | |
| | 2005.07-2010.12 | 6DCT | F | L/R | Hatchback FWD BKC;BLS;BXE | Original Tripod Design | GCI61057 | Inner Joint | | | 34 | | | 89 | |
| | 2005.07-2010.12 | AT | F | L | Hatchback FWD BKC;BLS;BXE | | GDS83241 | Drive Shaft | | 36 | | 59.5 | 40 | 475 | |
| 1.9 (81 kw) | 1999.10-2005.10 | 4AT | F | L | Hatchback FWD AHF/ASV | | GDS61020 | Drive Shaft | | 36 | | 53.2 | 77.5 | 547 | |
| | 1999.10-2005.10 | 4AT | F | R | Hatchback FWD AHF/ASV | | GDS83011 | Drive Shaft | | 36 | | 53.2 | 77.5 | 810.5 | |
| | 1999.10-2005.10 | 4AT | F | L/R | Hatchback FWD AHF/ASV | | GCI61006 | Inner Joint | | | 30 | | | 57.6 | |
| | 1999.10-2005.10 | 4AT/5MT | F | L/R | Hatchback FWD AHF/ASV | | GCO83070 | Outer Joint | | 36 | 30 | 53 | 78 | 60 | I |
| | 1999.10-2005.10 | 5MT | F | L | Hatchback FWD AHF/ASV | | GDS83006 | Drive Shaft | | 36 | | 53.2 | 77.5 | 557 | |
| | 1999.10-2005.10 | 5MT | F | R | Hatchback FWD AHF/ASV | | GDS83004 | Drive Shaft | | 36 | | 53.2 | 77.5 | 822 | |
| | 1999.10-2005.10 | 5MT | F | L | Hatchback FWD AHF/ASV | | GCI83011 | Inner Joint | | | 33 | | | 34 | |
| | 1999.10-2005.10 | 5MT | F | R | Hatchback FWD AHF/ASV | | GCI83009 | Inner Joint | | | 33 | | | 34 | |
| | 1999.10-2005.10 | 5MT | F | L/R | Hatchback FWD AHF/ASV | | GCI83006 | Inner Joint | | | 33 | | | 34 | |
| 1.9 (96 kw) | 2003.05-2006.06 | 6MT | F | L | Hatchback FWD ASZ | Chassis no. to:1M_3_109000 | GDS56276 | Drive Shaft | | 36 | | 53 | 77.5 | 520 | |
| | 2003.05-2006.06 | 6MT | F | R | Hatchback FWD ASZ | | GDS61121 | Drive Shaft | | 36 | | 53 | 77.5 | 806 | |
| | 2003.05-2006.06 | 6MT | F | L/R | Hatchback FWD ASZ | | GCO83035 | Outer Joint | | 36 | 27 | 53 | 77.5 | 65 | I |
| | 2003.05-2006.06 | 6MT | F | L/R | Hatchback FWD ASZ | Chassis no. to:1M3099000 | GCI83001 | Inner Joint | | | 28 | | | 32 | |
| | 2003.05-2006.06 | 6MT | F | L/R | Hatchback FWD ASZ | Chassis no. from:1M3109001 | GCI83016 | Inner Joint | | | 28 | | | 32 | |
| | 2003.05-2006.06 | AT | F | L | Hatchback FWD ASZ | | GDS61244 | Drive Shaft | | 36 | | 53 | 77.5 | 523 | |
| | 2003.05-2006.06 | AT | F | R | Hatchback FWD ASZ | | GDS61243 | Drive Shaft | | 36 | | 53 | 77.5 | 813 | |
| | 2003.05-2006.06 | AT | F | L/R | Hatchback FWD ASZ | | GCO83070 | Outer Joint | | 36 | 30 | 53 | 78 | 60 | I |
| | 2003.05-2006.06 | AT | F | L/R | Hatchback FWD ASZ | | GCI61044 | Inner Joint | | | 34 | | | 85 | |
| 1.9 (110 kw) | 2000.08-2006.06 | 6MT | F | L | Hatchback 4WD ARL | | GDS61123 | Drive Shaft | | 36 | | 53 | 77.5 | 520 | |
| | 2000.08-2006.06 | 6MT | F | R | Hatchback 4WD ARL | | GDS61186 | Drive Shaft | | 36 | | 53 | 77.5 | 653 | |
| | 2000.08-2006.06 | 6MT | F | L/R | Hatchback 4WD ARL | | GCO83035 | Outer Joint | | 36 | 27 | 53 | 77.5 | 65 | I |
| | 2000.08-2006.06 | 6MT | F | L/R | Hatchback 4WD ARL | Chassis no. to:1M3099000 | GCI83001 | Inner Joint | | | 28 | | | 32 | |
| | 2000.08-2006.06 | 6MT | F | L/R | Hatchback 4WD ARL | Chassis no. from:1M309901 | GCI83016 | Inner Joint | | | 28 | | | 32 | |
| | 2000.08-2006.06 | 6MT | R | L | Hatchback 4WD ARL | | GDS82364 | Drive Shaft | | 36 | | 53 | 78.5 | 651 | |
| | 2000.08-2006.06 | 6MT | R | R | Hatchback 4WD ARL | | GDS81587 | Drive Shaft | | 36 | | 53 | 78.5 | 522 | |
| | 2000.08-2006.06 | 6MT | R | L/R | Hatchback 4WD ARL | | GCO83033 | Outer Joint | | 36 | 30 | 53 | 78.5 | 51 | I |
| | 2000.08-2006.06 | 6MT | R | L/R | Hatchback 4WD ARL | | GCI53002 | Inner Joint | | | 33 | | | 34 | |
| | 2000.08-2006.06 | 6MT | R | L/R | Hatchback 4WD ARL | | GCI82447 | Inner Joint | | | 33 | | | 34 | |
| | 2000.09-2006.06 | 6MT | F | L | Hatchback FWD ARL | Chassis no. to:1M_3_109000,without headlamp levelling | GDS56276 | Drive Shaft | | 36 | | 53 | 77.5 | 520 | |
| | 2000.09-2006.06 | 6MT | F | R | Hatchback FWD ARL | | GDS61121 | Drive Shaft | | 36 | | 53 | 77.5 | 806 | |
| | 2000.09-2006.06 | 6MT | F | L/R | Hatchback FWD ARL | | GCO83035 | Outer Joint | | 36 | 27 | 53 | 77.5 | 65 | I |
| | 2000.09-2006.06 | 6MT | F | L/R | Hatchback FWD ARL | Chassis no. to:1M3099000 | GCI83001 | Inner Joint | | | 28 | | | 32 | |
| | 2000.09-2006.06 | 6MT | F | L/R | Hatchback FWD ARL | Chassis no. from:1M3109001 | GCI83016 | Inner Joint | | | 28 | | | 32 | |
| 2.0 (81 kw) | 2013.05-2020.08 | 5MT | F | L | Hatchback FWD CRVA;CRLD | | GDS61282 | Drive Shaft | | 36 | | 59.5 | 40 | 523 | |
| | 2013.05-2020.08 | 5MT | F | L | Hatchback FWD CRVA;CRLD | | GDS83294 | Drive Shaft | | 36 | | 59.5 | 38 | 519 | |
| | 2013.05-2020.08 | 5MT | F | R | Hatchback FWD CRVA;CRLD | | GDS61283 | Drive Shaft | | 36 | | 59.5 | 40 | 815 | |
| | 2013.05-2020.08 | 5MT | F | L | Hatchback FWD CRVA;CRLD | | GCO83037 | Outer Joint | | 36 | 30 | 59.5 | 40.5 | 56 | I |
| | 2013.05-2020.08 | 5MT | F | L/R | Hatchback FWD CRVA;CRLD | | GCO61059 | Outer Joint | | 36 | 33 | 59.5 | 40 | 59.5 | I |
| | 2013.05-2020.08 | 5MT | F | L/R | Hatchback FWD CRVA;CRLD | | GCI53002 | Inner Joint | | | 33 | | | 34 | |
| | 2013.05-2020.08 | 5MT | F | L/R | Hatchback FWD CRVA;CRLD | | GCI82447 | Inner Joint | | | 33 | | | 34 | |
| | 2013.05-2020.08 | | F | L/R | Hatchback FWD CRVA;CRLD | | GCI83011 | Inner Joint | | | 33 | | | 34 | |
| 2.0 (85 kw) | 2019.11- | 6MT | F | L | Hatchback FWD DSUD;DTRD;DXRC | Date from:2021.06 | GDS83295 | Drive Shaft | | 36 | | 59.5 | 40 | 491 | |
| | 2019.11- | 6MT | F | R | Hatchback FWD DSUD;DTRD;DXRC | | GDS81891 | Drive Shaft | | 36 | | 59.5 | 40 | 781 | |
| | 2019.11- | 6MT | F | L/R | Hatchback FWD DSUD;DTRD;DXRC | | GCO83101 | Outer Joint | | 36 | 27 | 59.5 | 40 | 65 | M |
| | 2019.11- | 6MT | F | R | Hatchback FWD DSUD;DTRD;DXRC | | GDS98007 | Stub Axle-Flange | | 37 | | | 88 | 148 | |
| 2.0 (100 kw) | 2005.07-2010.05 | 6AT/6MT | F | L/R | Hatchback FWD AZV | | GCI54004 | Inner Joint | | | 34 | | | 81 | |
| | 2005.07-2010.05 | 6AT/6MT | F | L/R | Hatchback FWD AZV | Original Tripod Design | GCI61057 | Inner Joint | | | 34 | | | 89 | |
| | 2005.07-2010.05 | 6AT/6MT | F | L/R | Hatchback FWD AZV | | GCI83016 | Inner Joint | | | 28 | | | 32 | |

| | YEAR | TRANSM. | F/R | L/R | BODY STYLE & DRIVE TYPE & ENGINE | REMARKS | G-AP Ref. | PRODUCT | ABS | Technical Specifications A | B | C | H | L | P |
|---|---|---|---|---|---|---|---|---|---|---|---|---|---|---|---|
| **SEAT** | | | | | | | | | | | | | | | |
| **Leon** | | | | | | | | | | | | | | | |
| 2.0 (100 kw) | 2005.07-2010.05 | 6DCT | F | L | Hatchback FWD AZV | | GDS54013 | Drive Shaft | | 36 | | 59.5 | 40 | 479.5 | |
| | 2005.07-2010.05 | 6DCT | F | R | Hatchback FWD AZV | | GDS54011 | Drive Shaft | | 36 | | 59.5 | 40 | 755 | |
| | 2005.07-2010.05 | 6MT | F | L | Hatchback FWD AZV | | GDS83295 | Drive Shaft | | 36 | | 59.5 | 40 | 491 | |
| | 2005.07-2010.05 | 6MT | F | R | Hatchback FWD AZV | | GDS83313 | Drive Shaft | | 36 | | 59.5 | 40 | 792 | |
| | 2005.07-2010.05 | 6MT | F | L | Hatchback FWD AZV | | GCO61059 | Outer Joint | | 36 | 33 | 59.5 | 40 | 59.5 | I |
| | 2005.07-2010.05 | AT | F | L | Hatchback FWD AZV | | GDS83241 | Drive Shaft | | 36 | | 59.5 | 40 | 475 | |
| | 2005.07-2010.05 | MT | F | R | Hatchback FWD AZV | | GDS61126 | Drive Shaft | | 36 | | 59.5 | 40 | 793 | |
| | 2005.07-2010.05 | MT | F | R | Hatchback FWD AZV | | GDS83236 | Drive Shaft | | 36 | | 59.5 | 40 | 484 | |
| | 2005.07-2010.05 | | F | L/R | Hatchback FWD AZV | | GCO83002 | Outer Joint | | 36 | 27 | 59.5 | 40 | 66 | I |
| 2.0 (103 kw) | 2005.07-2012.12 | 6DCT | F | L | Hatchback FWD BKD;CFHC;CLCB | | GDS54013 | Drive Shaft | | 36 | | 59.5 | 40 | 479.5 | |
| | 2005.07-2012.12 | 6DCT | F | L | Hatchback FWD BKD;CFHC;CLCB | | GDS83241 | Drive Shaft | | 36 | | 59.5 | 40 | 475 | |
| | 2005.07-2012.12 | 6DCT | F | R | Hatchback FWD BKD;CFHC;CLCB | | GDS54011 | Drive Shaft | | 36 | | 59.5 | 40 | 755 | |
| | 2005.07-2012.12 | 6DCT | F | L/R | Hatchback FWD BKD;CFHC;CLCB | Date from:2009.08 | GCO83002 | Outer Joint | | 36 | 27 | 59.5 | 40 | 66 | I |
| | 2005.07-2012.12 | 6DCT | F | L/R | Hatchback FWD BKD;CFHC;CLCB | TJ | GCI54004 | Inner Joint | | | 34 | | | 81 | |
| | 2005.07-2012.12 | 6DCT | F | L/R | Hatchback FWD BKD;CFHC;CLCB | AAR | GCI61057 | Inner Joint | | | 34 | | | 89 | |
| | 2005.07-2012.12 | 6MT | F | L | Hatchback FWD BKD;CFHC;CLCB | | GDS83295 | Drive Shaft | | 36 | | 59.5 | 40 | 491 | |
| | 2005.07-2012.12 | 6MT | F | R | Hatchback FWD BKD;CFHC;CLCB | Chassis no. to:1P_A_085000 | GDS83313 | Drive Shaft | | 36 | | 59.5 | 40 | 792 | |
| | 2005.07-2012.12 | 6MT | F | L/R | Hatchback FWD BKD;CFHC;CLCB | | GCI83016 | Inner Joint | | | 28 | | | 32 | |
| | 2005.07-2012.12 | MT | F | R | Hatchback FWD BKD;CFHC;CLCB | Chassis no. from:1P_B_000001 | GDS61126 | Drive Shaft | | 36 | | 59.5 | 40 | 793 | |
| | 2005.07-2012.12 | MT | F | R | Hatchback FWD BKD;CFHC;CLCB | Chassis no. to:1P-6-000000 | GDS83236 | Drive Shaft | | 36 | | 59.5 | 40 | 484 | |
| | 2005.10-2010.10 | 6DCT | F | L | Hatchback FWD BMM | | GDS54013 | Drive Shaft | | 36 | | 59.5 | 40 | 479.5 | |
| | 2005.10-2010.10 | 6DCT | F | R | Hatchback FWD BMM | | GDS54011 | Drive Shaft | | 36 | | 59.5 | 40 | 755 | |
| | 2005.10-2010.10 | 6DCT | F | L/R | Hatchback FWD BMM | Date from:2009.08 | GCO83002 | Outer Joint | | 36 | 27 | 59.5 | 40 | 66 | I |
| | 2005.10-2010.10 | 6DCT | F | L/R | Hatchback FWD BMM | TJ | GCI54004 | Inner Joint | | | 34 | | | 81 | |
| | 2005.10-2010.10 | 6DCT | F | L/R | Hatchback FWD BMM | AAR | GCI61057 | Inner Joint | | | 34 | | | 89 | |
| | 2005.10-2010.10 | 6MT | F | L | Hatchback FWD BMM | Inner teeth of tranm.side:28 | GDS83295 | Drive Shaft | | 36 | | 59.5 | 40 | 491 | |
| | 2005.10-2010.10 | 6MT | F | R | Hatchback FWD BMM | | GDS83313 | Drive Shaft | | 36 | | 59.5 | 40 | 792 | |
| | 2005.10-2010.10 | 6MT | F | L/R | Hatchback FWD BMM | | GCI83016 | Inner Joint | | | 28 | | | 32 | |
| | 2005.10-2010.10 | MT | F | L | Hatchback FWD BMM | Inner teeth of tranm.side:33 | GDS83236 | Drive Shaft | | 36 | | 59.5 | 40 | 484 | |
| | 2005.10-2010.10 | MT | F | R | Hatchback FWD BMM | | GDS61126 | Drive Shaft | | 36 | | 59.5 | 40 | 793 | |
| 2.0 (105 kw) | 2013.05-2020.08 | 6MT | F | L | Hatchback FWD CRVC | | GDS83295 | Drive Shaft | | 36 | | 59.5 | 40 | 491 | |
| | 2013.05-2020.08 | 6MT | F | R | Hatchback FWD CRVC | | GDS83313 | Drive Shaft | | 36 | | 59.5 | 40 | 792 | |
| | 2013.05-2020.08 | 6MT | F | L/R | Hatchback FWD CRVC | | GCI83016 | Inner Joint | | | 28 | | | 32 | |
| | 2013.05-2020.08 | AT | F | L | Hatchback FWD CRVC | | GDS61285 | Drive Shaft | | 36 | | 59.5 | 40 | 472 | |
| | 2013.05-2020.08 | AT | F | L/R | Hatchback FWD CRVC | | GCO83101 | Outer Joint | | 36 | 27 | 59.5 | 40 | 65 | M |
| | 2013.05-2020.08 | | F | L | Hatchback FWD CRVC | | GCI61069 | Inner Joint | | | 28 | | | 32 | |
| | 2021.06- | 6MT | F | L | Hatchback FWD CRVC | | GDS83295 | Drive Shaft | | 36 | | 59.5 | 40 | 491 | |
| | 2021.06- | 6MT | F | R | Hatchback FWD CRVC | | GDS83313 | Drive Shaft | | 36 | | 59.5 | 40 | 792 | |
| | 2021.06- | 7DCT | F | L | Hatchback FWD CRVC | | GDS81265 | Drive Shaft | | 36 | 37 | 59.5 | 40 | 557 | |
| | 2021.06- | 7DCT | F | R | Hatchback FWD CRVC | | GDS83612 | Drive Shaft | | 36 | 37 | 59.5 | 40 | 907 | |
| | 2021.06- | 7DCT | F | L | Hatchback FWD CRVC | | GCI81158 | Inner Joint | | 37 | 34 | 34.5 | 65.5 | 83 | |
| 2.0 (110 kw) | 2005.07-2010.05 | 6AT | F | L | Hatchback FWD BLR;BLY;BVY;BVZ | | GDS61093 | Drive Shaft | | 36 | 26 | 59.5 | 40.5 | 587.5 | |
| | 2005.07-2010.05 | 6AT | F | L | Hatchback FWD BLR;BLY;BVY;BVZ | | GDS61111 | Drive Shaft | | 36 | 26 | 59.5 | 40 | 584 | |
| | 2005.07-2010.05 | 6AT | F | R | Hatchback FWD BLR;BLY;BVY;BVZ | | GDS61094 | Drive Shaft | | 36 | 26 | 59.5 | 40.5 | 884 | |
| | 2005.07-2010.05 | 6AT | F | L/R | Hatchback FWD BLR;BLY;BVY;BVZ | | GCI61011 | Inner Joint | | 26 | 32 | 31 | 68.5 | 85 | |
| | 2005.07-2010.05 | 6AT | F | L/R | Hatchback FWD BLR;BLY;BVY;BVZ | | GCI61050 | Inner Joint | | 26 | 32 | 31 | 68.5 | 89 | |
| | 2005.07-2010.05 | 6AT/6MT | F | L/R | Hatchback FWD BLR;BLY;BVY;BVZ | | GCO83037 | Outer Joint | | 36 | 30 | 59.5 | 40.5 | 56 | I |
| | 2005.07-2010.05 | 6MT | F | L | Hatchback FWD BLR;BLY;BVY;BVZ | | GDS83294 | Drive Shaft | | 36 | | 59.5 | 38 | 519 | |
| | 2005.07-2010.05 | 6MT | F | R | Hatchback FWD BLR;BLY;BVY;BVZ | | GDS61042 | Drive Shaft | | 36 | | 59.5 | 40.5 | 814 | |
| | 2005.07-2010.05 | 6MT | F | L/R | Hatchback FWD BLR;BLY;BVY;BVZ | | GCI82447 | Inner Joint | | | 33 | | | 34 | |
| | 2012.10-2018.08 | 6DCT | F | L | Hatchback Van FWD CKFC;CRMB | | GDS61285 | Drive Shaft | | 36 | | 59.5 | 40 | 472 | |
| | 2012.10-2018.08 | 6DCT | F | R | Hatchback Van FWD CKFC;CRMB | | GDS83354 | Drive Shaft | | 36 | | 59.5 | 40 | 763 | |
| | 2012.10-2018.08 | 6DCT | F | L/R | Hatchback Van FWD CKFC;CRMB | Date from:2010.06;Chassis no. from:1PB000001 | GCI61057 | Inner Joint | | | 34 | | | 89 | |
| | 2012.10-2018.08 | 6DCT/6MT | F | L/R | Hatchback Van FWD CKFC;CRMB | Transmission:6DCT;Engine code:CKFC/CRMB;Transmission:6MT | GCO83101 | Outer Joint | | 36 | 27 | 59.5 | 40 | 65 | M |
| | 2012.10-2018.08 | 6MT | F | L | Hatchback Van FWD CKFC;CRMB | | GDS83295 | Drive Shaft | | 36 | | 59.5 | 40 | 491 | |
| | 2012.10-2018.08 | 6MT | F | R | Hatchback Van FWD CKFC;CRMB | | GDS83313 | Drive Shaft | | 36 | | 59.5 | 40 | 792 | |
| | 2012.10-2018.08 | 6MT | F | L/R | Hatchback Van FWD CKFC;CRMB | | GCI83016 | Inner Joint | | | 28 | | | 32 | |
| | 2012.10-2018.08 | | F | L | Hatchback Van FWD CKFC;CRMB | | GCI61069 | Inner Joint | | | 28 | | | 32 | |
| | 2012.10-2020.08 | 6AT | F | L | Hatchback FWD CKFC;CRMB;DFFA | | GDS83241 | Drive Shaft | | 36 | | 59.5 | 40 | 475 | |
| | 2012.10-2020.08 | 6AT | F | R | Hatchback FWD CKFC;CRMB;DFFA | | GDS54011 | Drive Shaft | | 36 | | 59.5 | 40 | 755 | |
| | 2012.10-2020.08 | 6DCT | F | L | Hatchback FWD CKFC;CRMB;DFFA | | GDS61285 | Drive Shaft | | 36 | | 59.5 | 40 | 472 | |
| | 2012.10-2020.08 | 6DCT | F | R | Hatchback FWD CKFC;CRMB;DFFA | | GDS83354 | Drive Shaft | | 36 | | 59.5 | 40 | 763 | |
| | 2012.10-2020.08 | 6DCT | F | L/R | Hatchback FWD CKFC;CRMB;DFFA | | GCI61057 | Inner Joint | | | 34 | | | 89 | |
| | 2012.10-2020.08 | 6MT | F | L | Hatchback FWD CKFC;CRMB;DFFA | | GDS83295 | Drive Shaft | | 36 | | 59.5 | 40 | 491 | |
| | 2012.10-2020.08 | 6MT | F | R | Hatchback FWD CKFC;CRMB;DFFA | | GDS83313 | Drive Shaft | | 36 | | 59.5 | 40 | 792 | |

| | YEAR | TRANSM. | F/R | L/R | BODY STYLE & DRIVE TYPE & ENGINE | REMARKS | G-AP Ref. | PRODUCT | ABS | Technical Specifications A | B | C | H | L | P |
|---|---|---|---|---|---|---|---|---|---|---|---|---|---|---|---|
| **SEAT** | | | | | | | | | | | | | | | |
| **Leon** | | | | | | | | | | | | | | | |
| 2.0 (110 kw) | 2012.10-2020.08 | 6MT | F | L | Hatchback FWD CKFC;CRMB;DFFA | | GCI61069 | Inner Joint | | | 28 | | | 32 | |
| | 2012.10-2020.08 | 6MT | F | L/R | Hatchback FWD CKFC;CRMB;DFFA | | GCI83016 | Inner Joint | | | 28 | | | 32 | |
| | 2012.10-2020.08 | 6MT/6DCT/7DCT | F | L/R | Hatchback FWD CKFC;CRMB;DFFA | | GCO83101 | Outer Joint | | 36 | 27 | 59.5 | 40 | 65 | M |
| | 2012.10-2020.08 | 7DCT | F | L | Hatchback FWD CKFC;CRMB;DFFA | | GDS81265 | Drive Shaft | | 36 | 37 | 59.5 | 40 | 557 | |
| | 2012.10-2020.08 | 7DCT | F | R | Hatchback FWD CKFC;CRMB;DFFA | | GDS83612 | Drive Shaft | | 36 | 37 | 59.5 | 40 | 907 | |
| | 2012.10-2020.08 | 7DCT | F | L | Hatchback FWD CKFC;CRMB;DFFA | | GCI81158 | Inner Joint | | 37 | 34 | 34.5 | 65.5 | 83 | |
| | 2012.10-2020.08 | 7DCT | F | R | Hatchback FWD CKFC;CRMB;DFFA | | GCI82108 | Inner Joint | | 37 | 34 | 40 | 77.5 | 103.5 | |
| | 2012.10-2020.08 | MT | F | R | Hatchback FWD CKFC;CRMB;DFFA | | GDS61126 | Drive Shaft | | 36 | | 59.5 | 40 | 793 | |
| | 2019.11- | 6MT | F | L | Hatchback FWD DSTB;DTTC;DTTA;DXRB | | GDS83295 | Drive Shaft | | 36 | | 59.5 | 40 | 491 | |
| | 2019.11- | 6MT | F | R | Hatchback FWD DSTB;DTTC;DTTA;DXRB | | GDS81891 | Drive Shaft | | 36 | | 59.5 | 40 | 781 | |
| | 2019.11- | 7DCT | F | L | Hatchback FWD DSTB;DTTC;DTTA;DXRB | | GDS81265 | Drive Shaft | | 36 | 37 | 59.5 | 40 | 557 | |
| | 2019.11- | 7DCT | F | R | Hatchback FWD DSTB;DTTC;DTTA;DXRB | | GDS83612 | Drive Shaft | | 36 | 37 | 59.5 | 40 | 907 | |
| | 2019.11- | 7DCT | F | R | Hatchback FWD DSTB;DTTC;DTTA;DXRB | | GCO83101 | Outer Joint | | 36 | 27 | 59.5 | 40 | 65 | M |
| | 2019.11- | 7DCT | F | R | Hatchback FWD DSTB;DTTC;DTTA;DXRB | | GCI82108 | Inner Joint | | 37 | 34 | 40 | 77.5 | 103.5 | |
| | 2019.11- | 7DCT | F | L/R | Hatchback FWD DSTB;DTTC;DTTA;DXRB | | GCI81158 | Inner Joint | | 37 | 34 | 34.5 | 65.5 | 83 | |
| 2.0 (125 kw) | 2006.05-2012.12 | 6DCT | F | L | Hatchback FWD BMN;CEGA;CFJA | | GDS83381 | Drive Shaft | | 36 | | 59.5 | 40 | 483 | |
| | 2006.05-2012.12 | 6DCT | F | R | Hatchback FWD BMN;CEGA;CFJA | | GDS54011 | Drive Shaft | | 36 | | 59.5 | 40 | 755 | |
| | 2006.05-2012.12 | 6DCT | F | L/R | Hatchback FWD BMN;CEGA;CFJA | TJ | GCI54004 | Inner Joint | | | 34 | | | 81 | |
| | 2006.05-2012.12 | 6DCT | F | L/R | Hatchback FWD BMN;CEGA;CFJA | AAR | GCI61057 | Inner Joint | | | 34 | | | 89 | |
| | 2006.05-2012.12 | 6MT | F | L | Hatchback FWD BMN;CEGA;CFJA | Inner teeth of tranm.side:28 | GDS83295 | Drive Shaft | | 36 | | 59.5 | 40 | 491 | |
| | 2006.05-2012.12 | 6MT | F | R | Hatchback FWD BMN;CEGA;CFJA | Date to:2007.12 | GDS61126 | Drive Shaft | | 36 | | 59.5 | 40 | 793 | |
| | 2006.05-2012.12 | 6MT | F | R | Hatchback FWD BMN;CEGA;CFJA | Date from:2008.01 | GDS83313 | Drive Shaft | | 36 | | 59.5 | 40 | 792 | |
| | 2006.05-2012.12 | 6MT | F | L/R | Hatchback FWD BMN;CEGA;CFJA | | GCI83016 | Inner Joint | | | 28 | | | 32 | |
| | 2006.05-2012.12 | AT/MT | F | L/R | Hatchback FWD BMN;CEGA;CFJA | | GCO83101 | Outer Joint | | 36 | 27 | 59.5 | 40 | 65 | M |
| | 2006.05-2012.12 | MT | F | L | Hatchback FWD BMN;CEGA;CFJA | Inner teeth of tranm.side:33 | GDS83236 | Drive Shaft | | 36 | | 59.5 | 40 | 484 | |
| 2.0 (135 kw) | 2012.09-2020.08 | 6DCT | F | L | Hatchback FWD CUPA;CUNA;DJGA | AAR | GDS61285 | Drive Shaft | | 36 | | 59.5 | 40 | 472 | |
| | 2012.09-2020.08 | 6DCT | F | R | Hatchback FWD CUPA;CUNA;DJGA | AAR | GDS83354 | Drive Shaft | | 36 | | 59.5 | 40 | 763 | |
| | 2012.09-2020.08 | 6DCT | F | L/R | Hatchback FWD CUPA;CUNA;DJGA | Date from:2010.06;Chassis no. from:1PB000001 | GCI61057 | Inner Joint | | | 34 | | | 89 | |
| | 2012.09-2020.08 | 6MT | F | L | Hatchback FWD CUPA;CUNA;DJGA | | GDS83295 | Drive Shaft | | 36 | | 59.5 | 40 | 491 | |
| | 2012.09-2020.08 | 6MT | F | R | Hatchback FWD CUPA;CUNA;DJGA | Date from:2016.03 | GDS83313 | Drive Shaft | | 36 | | 59.5 | 40 | 792 | |
| | 2012.09-2020.08 | 6MT | F | L/R | Hatchback FWD CUPA;CUNA;DJGA | | GCI83016 | Inner Joint | | | 28 | | | 32 | |
| | 2012.09-2020.08 | 6MT/6DCT/7DCT | F | L/R | Hatchback FWD CUPA;CUNA;DJGA | | GCO83101 | Outer Joint | | 36 | 27 | 59.5 | 40 | 65 | M |
| | 2012.09-2020.08 | 7DCT | F | L | Hatchback FWD CUPA;CUNA;DJGA | | GDS81265 | Drive Shaft | | 36 | 37 | 59.5 | 40 | 557 | |
| | 2012.09-2020.08 | 7DCT | F | R | Hatchback FWD CUPA;CUNA;DJGA | | GDS83612 | Drive Shaft | | 36 | 37 | 59.5 | 40 | 907 | |
| | 2012.09-2020.08 | 7DCT | F | L | Hatchback FWD CUPA;CUNA;DJGA | | GCI81158 | Inner Joint | | 37 | 34 | 34.5 | 65.5 | 83 | |
| | 2012.09-2020.08 | 7DCT | F | R | Hatchback FWD CUPA;CUNA;DJGA | | GCI82108 | Inner Joint | | 37 | 34 | 40 | 77.5 | 103.5 | |
| | 2012.09-2020.08 | AT/6DCT | F | L | Hatchback FWD CUPA;CUNA;DJGA | TJ | GDS83241 | Drive Shaft | | 36 | | 59.5 | 40 | 475 | |
| | 2012.09-2020.08 | AT/6DCT | F | R | Hatchback FWD CUPA;CUNA;DJGA | TJ | GDS54011 | Drive Shaft | | 36 | | 59.5 | 40 | 755 | |
| | 2012.09-2020.08 | MT | F | R | Hatchback FWD CUPA;CUNA;DJGA | | GDS61126 | Drive Shaft | | 36 | | 59.5 | 40 | 793 | |
| | 2013.02-2018.08 | 6DCT | F | L | Hatchback Van FWD CUPA;CUNA | | GDS61285 | Drive Shaft | | 36 | | 59.5 | 40 | 472 | |
| | 2013.02-2018.08 | 6DCT | F | R | Hatchback Van FWD CUPA;CUNA | | GDS83354 | Drive Shaft | | 36 | | 59.5 | 40 | 763 | |
| | 2013.02-2018.08 | 6DCT | F | L/R | Hatchback Van FWD CUPA;CUNA | Date from:2010.06;Chassis no. from:1PB000001 | GCI61057 | Inner Joint | | | 34 | | | 89 | |
| | 2013.02-2018.08 | 6MT | F | L | Hatchback Van FWD CUPA;CUNA | | GDS83295 | Drive Shaft | | 36 | | 59.5 | 40 | 491 | |
| | 2013.02-2018.08 | 6MT | F | R | Hatchback Van FWD CUPA;CUNA | | GDS83313 | Drive Shaft | | 36 | | 59.5 | 40 | 792 | |
| | 2013.02-2018.08 | 6MT | F | L/R | Hatchback Van FWD CUPA;CUNA | | GCI83016 | Inner Joint | | | 28 | | | 32 | |
| | 2013.02-2018.08 | 6MT/6DCT | F | L/R | Hatchback Van FWD CUPA;CUNA | | GCO83101 | Outer Joint | | 36 | 27 | 59.5 | 40 | 65 | M |
| 2.0 (136 kw) | 2005.09-2006.05 | 6DCT | F | R | Hatchback FWD BWA | | GDS81891 | Drive Shaft | | 36 | | 59.5 | 40 | 781 | |
| | 2005.09-2006.05 | 6DCT | F | L/R | Hatchback FWD BWA | Transmission:6MT;Transmission:6DCT,Date to:2010.05 | GCO83002 | Outer Joint | | 36 | 27 | 59.5 | 40 | 66 | I |
| | 2005.09-2006.05 | 6DCT | F | R | Hatchback FWD BWA | | GCI61069 | Inner Joint | | | 28 | | | 32 | |
| | 2005.09-2006.05 | 6MT | F | R | Hatchback FWD BWA | | GDS61126 | Drive Shaft | | 36 | | 59.5 | 40 | 793 | |
| | 2005.09-2006.05 | 6MT/6DCT | F | L | Hatchback FWD BWA | | GDS83295 | Drive Shaft | | 36 | | 59.5 | 40 | 491 | |
| | 2005.09-2006.05 | MT | F | L | Hatchback FWD BWA | | GDS83236 | Drive Shaft | | 36 | | 59.5 | 40 | 484 | |
| | 2005.09-2006.05 | | F | L/R | Hatchback FWD BWA | | GCI83016 | Inner Joint | | | 28 | | | 32 | |
| 2.0 (140 kw) | 2018.09-2020.08 | 7AT | F | R | Hatchback FWD DKZA | Wheel Hub Diam:27,For PR code:1Y2 | GDS81892 | Drive Shaft | | 36 | | 59.5 | 40 | 602 | |
| | 2018.09-2020.08 | 7AT | F | L | Hatchback FWD DKZA | | GCI83028 | Inner Joint | | 37 | 28 | | 65.5 | 90.2 | |
| | 2018.09-2020.08 | 7DCT | F | L | Hatchback FWD DKZA | | GDS84237 | Drive Shaft | | 36 | 37 | 59.5 | 40 | 560 | |
| | 2021.03- | 7DCT | F | L | Hatchback FWD CZPB;DNNA | | GDS84237 | Drive Shaft | | 36 | 37 | 59.5 | 40 | 560 | |
| | 2021.03- | 7DCT | F | L/R | Hatchback FWD CZPB;DNNA | | GCO83101 | Outer Joint | | 36 | 27 | 59.5 | 40 | 65 | M |
| | 2021.03- | 7DCT | F | L | Hatchback FWD CZPB;DNNA | | GCI83028 | Inner Joint | | 37 | 28 | | 65.5 | 90.2 | |
| | 2021.03- | 7DCT | F | R | Hatchback FWD CZPB;DNNA | | GCI61069 | Inner Joint | | | 28 | | | 32 | |
| 2.0 (147 kw) | 2005.05-2009.03 | 6DCT | F | R | Hatchback FWD BWA | | GDS81891 | Drive Shaft | | 36 | | 59.5 | 40 | 781 | |
| | 2005.05-2009.03 | 6DCT | F | L/R | Hatchback FWD BWA | Transmission:6MT;Transmission:6DCT,Date to:2010.05 | GCO83002 | Outer Joint | | 36 | 27 | 59.5 | 40 | 66 | I |
| | 2005.05-2009.03 | 6DCT | F | R | Hatchback FWD BWA | | GCI61069 | Inner Joint | | | 28 | | | 32 | |
| | 2005.05-2009.03 | 6MT | F | L | Hatchback FWD BWA | | GDS83295 | Drive Shaft | | 36 | | 59.5 | 40 | 491 | |
| | 2005.05-2009.03 | 6MT | F | R | Hatchback FWD BWA | | GDS61126 | Drive Shaft | | 36 | | 59.5 | 40 | 793 | |

| | YEAR | TRANSM. | F/R | L/R | BODY STYLE & DRIVE TYPE & ENGINE | REMARKS | G-AP Ref. | PRODUCT | ABS | Technical Specifications A | B | C | H | L | P |
|---|---|---|---|---|---|---|---|---|---|---|---|---|---|---|---|
| **SEAT** | | | | | | | | | | | | | | | |
| **Leon** | | | | | | | | | | | | | | | |
| 2.0 (147 kw) | 2005.05-2009.03 | | F | L | Hatchback FWD BWA | | GDS83236 | Drive Shaft | | 36 | | 59.5 | 40 | 484 | |
| | 2005.05-2009.03 | | F | L/R | Hatchback FWD BWA | | GCI83016 | Inner Joint | | | 28 | | | 32 | |
| 2.0 (155 kw) | 2009.06-2012.12 | 6DCT | F | R | Hatchback FWD CCZB | | GDS81891 | Drive Shaft | | 36 | | 59.5 | 40 | 781 | |
| | 2009.06-2012.12 | 6DCT | F | L/R | Hatchback FWD CCZB | Transmission:6MT;Transmission:6DCT,Date to:2010.05 | GCO83002 | Outer Joint | | 36 | 27 | 59.5 | 40 | 66 | I |
| | 2009.06-2012.12 | 6DCT | F | L/R | Hatchback FWD CCZB | Date from:2010.06 | GCO83101 | Outer Joint | | 36 | 27 | 59.5 | 40 | 65 | M |
| | 2009.06-2012.12 | 6DCT | F | L | Hatchback FWD CCZB | | GDS98006 | Stub Axle-Flange | | 37 | | | 67 | 123.5 | |
| | 2009.06-2012.12 | 6MT | F | R | Hatchback FWD CCZB | | GDS61147 | Drive Shaft | | 36 | | 59.5 | 40 | 795 | |
| | 2009.06-2012.12 | 6MT/6DCT | F | L | Hatchback FWD CCZB | | GDS83295 | Drive Shaft | | 36 | | 59.5 | 40 | 491 | |
| | 2009.06-2012.12 | MT/Semi-AT | F | L | Hatchback FWD CCZB | | GDS83236 | Drive Shaft | | 36 | | 59.5 | 40 | 484 | |
| | 2009.06-2012.12 | | F | L/R | Hatchback FWD CCZB | | GCI83016 | Inner Joint | | | 28 | | | 32 | |
| 2.0 (177 kw) | 2006.11-2011.05 | 6MT | F | L | Hatchback FWD BWJ;CDLD | | GDS83295 | Drive Shaft | | 36 | | 59.5 | 40 | 491 | |
| | 2006.11-2011.05 | 6MT | F | R | Hatchback FWD BWJ;CDLD | | GDS61126 | Drive Shaft | | 36 | | 59.5 | 40 | 793 | |
| | 2006.11-2011.05 | 6MT | F | L/R | Hatchback FWD BWJ;CDLD | | GCO83002 | Outer Joint | | 36 | 27 | 59.5 | 40 | 66 | I |
| | 2006.11-2011.05 | MT | F | L | Hatchback FWD BWJ;CDLD | | GDS83236 | Drive Shaft | | 36 | | 59.5 | 40 | 484 | |
| | 2006.11-2011.05 | | F | L/R | Hatchback FWD BWJ;CDLD | | GCI83016 | Inner Joint | | | 28 | | | 32 | |
| 2.0 (195 kw) | 2009.09-2012.12 | 6MT | F | L | Hatchback FWD CDLA | | GDS83295 | Drive Shaft | | 36 | | 59.5 | 40 | 491 | |
| | 2009.09-2012.12 | 6MT | F | R | Hatchback FWD CDLA | | GDS61126 | Drive Shaft | | 36 | | 59.5 | 40 | 793 | |
| | 2009.09-2012.12 | 6MT | F | L/R | Hatchback FWD CDLA | | GCO83002 | Outer Joint | | 36 | 27 | 59.5 | 40 | 66 | I |
| | 2009.09-2012.12 | Semi-AT | F | L | Hatchback FWD CDLA | | GDS83236 | Drive Shaft | | 36 | | 59.5 | 40 | 484 | |
| | 2009.09-2012.12 | | F | L/R | Hatchback FWD CDLA | For PR code:TD6 | GCO83101 | Outer Joint | | 36 | 27 | 59.5 | 40 | 65 | M |
| | 2009.09-2012.12 | | F | L/R | Hatchback FWD CDLA | | GCI83016 | Inner Joint | | | 28 | | | 32 | |
| | 2013.10-2020.08 | 6AT/6MT | F | L | Hatchback FWD CJXE | | GDS83295 | Drive Shaft | | 36 | | 59.5 | 40 | 491 | |
| | 2013.10-2020.08 | 6AT/6MT | F | R | Hatchback FWD CJXE | For PR code:1Y2 | GDS81892 | Drive Shaft | | 36 | | 59.5 | 40 | 602 | |
| | 2013.10-2020.08 | 6AT/6MT | F | L | Hatchback FWD CJXE | | GCI61069 | Inner Joint | | | 28 | | | 32 | |
| | 2013.10-2020.08 | 6DCT | F | R | Hatchback FWD CJXE | | GDS81891 | Drive Shaft | | 36 | | 59.5 | 40 | 781 | |
| | 2013.10-2020.08 | 6DCT | F | R | Hatchback FWD CJXE | | GCI61069 | Inner Joint | | | 28 | | | 32 | |
| | 2013.10-2020.08 | 6MT | F | R | Hatchback FWD CJXE | For PR code:1Y3,For vehicles with ASR | GDS61147 | Drive Shaft | | 36 | | 59.5 | 40 | 795 | |
| | 2013.10-2020.08 | 6MT/6DCT | F | L/R | Hatchback FWD CJXE | | GCO83101 | Outer Joint | | 36 | 27 | 59.5 | 40 | 65 | M |
| 2.0 (206 kw) | 2013.10-2020.08 | 6AT/6MT | F | L | Hatchback FWD CJXA | | GDS83295 | Drive Shaft | | 36 | | 59.5 | 40 | 491 | |
| | 2013.10-2020.08 | 6AT/6MT | F | L | Hatchback FWD CJXA | | GCI61069 | Inner Joint | | | 28 | | | 32 | |
| | 2013.10-2020.08 | 6DCT | F | R | Hatchback FWD CJXA | For PR code:1Y3,For vehicles with ASR | GDS81891 | Drive Shaft | | 36 | | 59.5 | 40 | 781 | |
| | 2013.10-2020.08 | 6DCT | F | R | Hatchback FWD CJXA | | GCI61069 | Inner Joint | | | 28 | | | 32 | |
| | 2013.10-2020.08 | 6MT | F | R | Hatchback FWD CJXA | For PR code:1Y3,For vehicles with ASR | GDS61147 | Drive Shaft | | 36 | | 59.5 | 40 | 795 | |
| | 2013.10-2020.08 | 6MT | F | R | Hatchback FWD CJXA | For PR code:1Y2 | GDS81892 | Drive Shaft | | 36 | | 59.5 | 40 | 602 | |
| | 2013.10-2020.08 | 6MT/6DCT | F | L/R | Hatchback FWD CJXA | | GCO83101 | Outer Joint | | 36 | 27 | 59.5 | 40 | 65 | M |
| 2.0 (213 kw) | 2015.09-2016.10 | 6AT/6MT | F | L | Hatchback Van FWD CJXH | | GDS83295 | Drive Shaft | | 36 | | 59.5 | 40 | 491 | |
| | 2015.09-2016.10 | 6AT/6MT | F | L | Hatchback Van FWD CJXH | | GCI61069 | Inner Joint | | | 28 | | | 32 | |
| | 2015.09-2016.10 | 6DCT | F | R | Hatchback Van FWD CJXH | For PR code:1Y3 | GDS81891 | Drive Shaft | | 36 | | 59.5 | 40 | 781 | |
| | 2015.09-2016.10 | 6DCT | F | L/R | Hatchback Van FWD CJXH | | GCO83101 | Outer Joint | | 36 | 27 | 59.5 | 40 | 65 | M |
| | 2015.09-2016.10 | 6DCT | F | R | Hatchback Van FWD CJXH | | GCI61069 | Inner Joint | | | 28 | | | 32 | |
| | 2015.09-2016.10 | 6MT | F | R | Hatchback Van FWD CJXH | For PR code:1Y3,For vehicles with ASR | GDS61147 | Drive Shaft | | 36 | | 59.5 | 40 | 795 | |
| | 2015.09-2016.10 | 6MT | F | R | Hatchback Van FWD CJXH | For PR code:1Y2 | GDS81892 | Drive Shaft | | 36 | | 59.5 | 40 | 602 | |
| | 2015.10-2020.08 | 6AT/6MT/7AT | F | R | Hatchback FWD CJXH;DNUC | For PR code:1Y2 | GDS81892 | Drive Shaft | | 36 | | 59.5 | 40 | 602 | |
| | 2015.10-2020.08 | 6DCT | F | L | Hatchback FWD CJXH;DNUC | | GDS83295 | Drive Shaft | | 36 | | 59.5 | 40 | 491 | |
| | 2015.10-2020.08 | 6DCT | F | R | Hatchback FWD CJXH;DNUC | For PR code:1Y3,For vehicles with electronic limited slip diff. | GDS81891 | Drive Shaft | | 36 | | 59.5 | 40 | 781 | |
| | 2015.10-2020.08 | 6DCT | F | L/R | Hatchback FWD CJXH;DNUC | Date from:2010.06 | GCO83101 | Outer Joint | | 36 | 27 | 59.5 | 40 | 65 | M |
| | 2015.10-2020.08 | 6DCT | F | L/R | Hatchback FWD CJXH;DNUC | | GCI61069 | Inner Joint | | | 28 | | | 32 | |
| | 2015.10-2020.08 | 6MT | F | R | Hatchback FWD CJXH;DNUC | For PR code:1Y3,For vehicles with electronic limited slip diff. | GDS61147 | Drive Shaft | | 36 | | 59.5 | 40 | 795 | |
| | 2015.10-2020.08 | 7DCT | F | L | Hatchback FWD CJXH;DNUC | | GDS84237 | Drive Shaft | | 36 | 37 | 59.5 | 40 | 560 | |
| | 2015.10-2020.08 | 7DCT | F | L | Hatchback FWD CJXH;DNUC | | GCI83028 | Inner Joint | | 37 | 28 | | 65.5 | 90.2 | |
| 2.0 (221 kw) | 2017.01-2018.08 | 6AT/6MT | F | L | Hatchback FWD CJXC | | GDS83295 | Drive Shaft | | 36 | | 59.5 | 40 | 491 | |
| | 2017.01-2018.08 | 6AT/6MT | F | R | Hatchback FWD CJXC | Wheel Hub Diam [mm]:42,Date to:2017.09;Wheel Hub Diam [mm]:27,Date from:2017.10,For PR code:1Y3 | GDS81892 | Drive Shaft | | 36 | | 59.5 | 40 | 602 | |
| | 2017.01-2018.08 | 6AT/6MT | F | L | Hatchback FWD CJXC | | GCI61069 | Inner Joint | | | 28 | | | 32 | |
| | 2017.01-2018.08 | 6AT/6MT/6DCT | F | L/R | Hatchback FWD CJXC | | GCO83101 | Outer Joint | | 36 | 27 | 59.5 | 40 | 65 | M |
| | 2017.01-2018.08 | 6DCT | F | R | Hatchback FWD CJXC | | GDS81891 | Drive Shaft | | 36 | | 59.5 | 40 | 781 | |
| | 2017.01-2018.08 | 6DCT | F | R | Hatchback FWD CJXC | | GCI61069 | Inner Joint | | | 28 | | | 32 | |
| | 2017.01-2018.08 | 6AT/6MT | F | L | Hatchback Van FWD CJXC | | GDS83295 | Drive Shaft | | 36 | | 59.5 | 40 | 491 | |
| | 2017.01-2018.08 | 6AT/6MT | F | L | Hatchback Van FWD CJXC | | GCI61069 | Inner Joint | | | 28 | | | 32 | |
| | 2017.01-2018.08 | 6AT/6MT/6DCT | F | L/R | Hatchback Van FWD CJXC | | GCO83101 | Outer Joint | | 36 | 27 | 59.5 | 40 | 65 | M |
| | 2017.01-2018.08 | 6DCT | F | R | Hatchback Van FWD CJXC | For PR code:1Y3 | GDS81891 | Drive Shaft | | 36 | | 59.5 | 40 | 781 | |
| | 2017.01-2018.08 | 6DCT | F | R | Hatchback Van FWD CJXC | | GCI61069 | Inner Joint | | | 28 | | | 32 | |
| | 2017.01-2018.08 | 7DCT | F | R | Hatchback Van FWD CJXC | Wheel Hub Diam [mm]:42,Date to:2017.09,For PR code:1Y3;Wheel Hub Diam [mm]:27,Date from:2017.10,For PR code:1Y3 | GDS81892 | Drive Shaft | | 36 | | 59.5 | 40 | 602 | |
| 2.0 (228 kw) | 2017.11-2018.08 | 6MT | F | L | Hatchback FWD CJXG | | GDS83295 | Drive Shaft | | 36 | | 59.5 | 40 | 491 | |
| | 2017.11-2018.08 | 6MT | F | R | Hatchback FWD CJXG | Wheel Hub Diam [mm]:27 | GDS81892 | Drive Shaft | | 36 | | 59.5 | 40 | 602 | |
| | 2017.11-2018.08 | 6MT | F | L | Hatchback FWD CJXG | | GCO83101 | Outer Joint | | 36 | 27 | 59.5 | 40 | 65 | M |

| | YEAR | TRANSM. | F/R | L/R | BODY STYLE & DRIVE TYPE & ENGINE | REMARKS | G-AP Ref. | PRODUCT | ABS | Technical Specifications A | B | C | H | L | P |
|---|---|---|---|---|---|---|---|---|---|---|---|---|---|---|---|
| **SEAT** | | | | | | | | | | | | | | | |
| **Leon** | | | | | | | | | | | | | | | |
| 2.0 (228 kw) | 2017.11-2018.08 | 6MT | F | L | Hatchback FWD CJXG | | GCI61069 | Inner Joint | | | 28 | | | 32 | |
| 2.8 (150 kw) | 2000.10-2006.06 | 6MT | F | L | Hatchback 4WD AUE/BDE | | GDS61123 | Drive Shaft | | 36 | | 53 | 77.5 | 520 | |
| | 2000.10-2006.06 | 6MT | F | R | Hatchback 4WD AUE/BDE | | GDS61186 | Drive Shaft | | 36 | | 53 | 77.5 | 653 | |
| | 2000.10-2006.06 | 6MT | F | L/R | Hatchback 4WD AUE/BDE | | GCO83035 | Outer Joint | | 36 | 27 | 53 | 77.5 | 65 | I |
| | 2000.10-2006.06 | 6MT | F | L/R | Hatchback 4WD AUE/BDE | Chassis no. to:1M3099000 | GCI83001 | Inner Joint | | | 28 | | | 32 | |
| | 2000.10-2006.06 | 6MT | F | L/R | Hatchback 4WD AUE/BDE | Chassis no. from:1M3099001 | GCI83016 | Inner Joint | | | 28 | | | 32 | |
| | 2000.10-2006.06 | 6MT | R | L | Hatchback 4WD AUE/BDE | | GDS82364 | Drive Shaft | | 36 | | 53 | 78.5 | 651 | |
| | 2000.10-2006.06 | 6MT | R | R | Hatchback 4WD AUE/BDE | | GDS81587 | Drive Shaft | | 36 | | 53 | 78.5 | 522 | |
| | 2000.10-2006.06 | 6MT | R | L/R | Hatchback 4WD AUE/BDE | | GCO83033 | Outer Joint | | 36 | 30 | 53 | 78.5 | 51 | I |
| | 2000.10-2006.06 | 6MT | R | L/R | Hatchback 4WD AUE/BDE | | GCI82447 | Inner Joint | | | 33 | | | 34 | |
| | 2002.05-2004.04 | 6MT | F | L | Hatchback FWD BDE | | GDS61123 | Drive Shaft | | 36 | | 53 | 77.5 | 520 | |
| | 2002.05-2004.04 | 6MT | F | R | Hatchback FWD BDE | | GDS61186 | Drive Shaft | | 36 | | 53 | 77.5 | 653 | |
| | 2002.05-2004.04 | 6MT | F | L/R | Hatchback FWD BDE | | GCO83035 | Outer Joint | | 36 | 27 | 53 | 77.5 | 65 | I |
| | 2002.05-2004.04 | 6MT | F | L/R | Hatchback FWD BDE | Chassis no. to:1M3099000 | GCI83001 | Inner Joint | | | 28 | | | 32 | |
| | 2002.05-2004.04 | 6MT | F | L/R | Hatchback FWD BDE | Chassis no. from:1M3099001 | GCI83016 | Inner Joint | | | 28 | | | 32 | |
| **Leon SC** | | | | | | | | | | | | | | | |
| 1.0 (85 kw) | 2015.05-2018.08 | 6MT | F | L | Coupe FWD CHZD | | GDS82231 | Drive Shaft | | 36 | | 59.5 | 40 | 486 | |
| | 2015.05-2018.08 | 6MT | F | R | Coupe FWD CHZD | | GDS82230 | Drive Shaft | | 36 | | 59.5 | 40 | 789 | |
| | 2015.05-2018.08 | 6MT | F | L/R | Coupe FWD CHZD | | GCO61059 | Outer Joint | | 36 | 33 | 59.5 | 40 | 59.5 | I |
| | 2015.05-2018.08 | 6MT/7DCT | F | L/R | Coupe FWD CHZD | | GCI81689 | Inner Joint | | | 32 | | | 89 | |
| | 2015.05-2018.08 | 7DCT | F | R | Coupe FWD CHZD | | GDS82229 | Drive Shaft | | 36 | | 59.5 | 40 | 767 | |
| | 2015.05-2018.08 | 7DCT | F | R | Coupe FWD CHZD | | GCO61059 | Outer Joint | | 36 | 33 | 59.5 | 40 | 59.5 | I |
| 1.2 (63 kw) | 2013.01-2018.08 | 5MT | F | L | Coupe FWD CJZB;CYVA | For PR code:1PA/1PE/2H4 | GDS83373 | Drive Shaft | | 36 | | 59.5 | 38 | 511 | |
| | 2013.01-2018.08 | 5MT | F | R | Coupe FWD CJZB;CYVA | | GDS61096 | Drive Shaft | | 36 | | 59.5 | 40.5 | 799 | |
| | 2013.01-2018.08 | 5MT | F | L/R | Coupe FWD CJZB;CYVA | | GCI82447 | Inner Joint | | | 33 | | | 34 | |
| | 2013.01-2018.08 | 5MT/6MT | F | L/R | Coupe FWD CJZB;CYVA | | GCO83037 | Outer Joint | | 36 | 30 | 59.5 | 40.5 | 56 | I |
| | 2013.01-2018.08 | AT/MT | F | L/R | Coupe FWD CJZB;CYVA | | GCI83011 | Inner Joint | | | 33 | | | 34 | |
| | 2013.01-2018.08 | MT | F | L | Coupe FWD CJZB;CYVA | | GDS83294 | Drive Shaft | | 36 | | 59.5 | 38 | 519 | |
| | 2013.01-2018.08 | MT | F | R | Coupe FWD CJZB;CYVA | | GDS61042 | Drive Shaft | | 36 | | 59.5 | 40.5 | 814 | |
| | 2013.01-2018.08 | MT | F | R | Coupe FWD CJZB;CYVA | | GDS61307 | Drive Shaft | | 36 | | 59.5 | 40 | 819 | |
| | 2013.01-2018.08 | | F | L | Coupe FWD CJZB;CYVA | | GDS61097 | Drive Shaft | | 36 | | 59.5 | 40.5 | 543 | |
| 1.2 (77 kw) | 2013.02-2014.04 | 5MT/6MT | F | L | Coupe FWD CJZA | | GDS83373 | Drive Shaft | | 36 | | 59.5 | 38 | 511 | |
| | 2013.02-2014.04 | 5MT/6MT | F | R | Coupe FWD CJZA | | GDS61307 | Drive Shaft | | 36 | | 59.5 | 40 | 819 | |
| | 2013.02-2014.04 | 5MT/6MT/7AT | F | L/R | Coupe FWD CJZA | | GCO83037 | Outer Joint | | 36 | 30 | 59.5 | 40.5 | 56 | I |
| | 2013.02-2014.04 | 7AT/5MT/6MT | F | L/R | Coupe FWD CJZA | | GCO61059 | Outer Joint | | 36 | 33 | 59.5 | 40 | 59.5 | I |
| | 2013.02-2014.04 | 7DCT | F | L | Coupe FWD CJZA | | GDS61282 | Drive Shaft | | 36 | | 59.5 | 40 | 523 | |
| | 2013.02-2014.04 | 7DCT | F | R | Coupe FWD CJZA | | GDS61096 | Drive Shaft | | 36 | | 59.5 | 40.5 | 799 | |
| | 2013.02-2014.04 | 7DCT/5MT/6MT | F | L/R | Coupe FWD CJZA | | GCI82447 | Inner Joint | | | 33 | | | 34 | |
| | 2013.02-2014.04 | AT/MT | F | L/R | Coupe FWD CJZA | | GCI83011 | Inner Joint | | | 33 | | | 34 | |
| | 2013.02-2014.04 | MT | F | L | Coupe FWD CJZA | | GDS83294 | Drive Shaft | | 36 | | 59.5 | 38 | 519 | |
| | 2013.02-2014.04 | MT | F | R | Coupe FWD CJZA | | GDS61042 | Drive Shaft | | 36 | | 59.5 | 40.5 | 814 | |
| 1.2 (81 kw) | 2014.05-2018.08 | 5MT/6MT | F | L | Coupe FWD CYVB | | GDS83373 | Drive Shaft | | 36 | | 59.5 | 38 | 511 | |
| | 2014.05-2018.08 | 5MT/6MT | F | R | Coupe FWD CYVB | | GDS61307 | Drive Shaft | | 36 | | 59.5 | 40 | 819 | |
| | 2014.05-2018.08 | 5MT/6MT | F | L/R | Coupe FWD CYVB | | GCO83037 | Outer Joint | | 36 | 30 | 59.5 | 40.5 | 56 | I |
| | 2014.05-2018.08 | 5MT/6MT | F | R | Coupe FWD CYVB | | GCI53002 | Inner Joint | | | 33 | | | 34 | |
| | 2014.05-2018.08 | 5MT/6MT/7DCT | F | L/R | Coupe FWD CYVB | | GCI82447 | Inner Joint | | | 33 | | | 34 | |
| | 2014.05-2018.08 | 7DCT | F | L | Coupe FWD CYVB | | GDS61282 | Drive Shaft | | 36 | | 59.5 | 40 | 523 | |
| | 2014.05-2018.08 | 7DCT | F | R | Coupe FWD CYVB | | GDS61096 | Drive Shaft | | 36 | | 59.5 | 40.5 | 799 | |
| | 2014.05-2018.08 | 7DCT | F | L/R | Coupe FWD CYVB | | GCO61059 | Outer Joint | | 36 | 33 | 59.5 | 40 | 59.5 | I |
| | 2014.05-2018.08 | 7DCT | F | L | Coupe FWD CYVB | | GCI53002 | Inner Joint | | | 33 | | | 34 | |
| | 2014.05-2018.08 | | F | L/R | Coupe FWD CYVB | | GCI83011 | Inner Joint | | | 33 | | | 34 | |
| 1.4 (90 kw) | 2013.02-2015.06 | 6MT | F | L | Coupe FWD CMBA;CXSA | | GDS61282 | Drive Shaft | | 36 | | 59.5 | 40 | 523 | |
| | 2013.02-2015.06 | 6MT | F | R | Coupe FWD CMBA;CXSA | | GDS61307 | Drive Shaft | | 36 | | 59.5 | 40 | 819 | |
| | 2013.02-2015.06 | 6MT | F | L/R | Coupe FWD CMBA;CXSA | | GCO61059 | Outer Joint | | 36 | 33 | 59.5 | 40 | 59.5 | I |
| | 2013.02-2015.06 | 6MT | F | L/R | Coupe FWD CMBA;CXSA | | GCI82447 | Inner Joint | | | 33 | | | 34 | |
| 1.4 (92 kw) | 2014.05-2018.08 | 6MT | F | L | Coupe FWD CZCA | | GDS61282 | Drive Shaft | | 36 | | 59.5 | 40 | 523 | |
| | 2014.05-2018.08 | 6MT | F | R | Coupe FWD CZCA | | GDS61307 | Drive Shaft | | 36 | | 59.5 | 40 | 819 | |
| | 2014.05-2018.08 | 6MT | F | L/R | Coupe FWD CZCA | | GCO61059 | Outer Joint | | 36 | 33 | 59.5 | 40 | 59.5 | I |
| | 2014.05-2018.08 | 6MT | F | L/R | Coupe FWD CZCA | | GCI82447 | Inner Joint | | | 33 | | | 34 | |
| 1.4 (103 kw) | 2013.02-2016.11 | 6MT | F | L | Coupe FWD CHPA;CPTA | | GDS61282 | Drive Shaft | | 36 | | 59.5 | 40 | 523 | |
| | 2013.02-2016.11 | 6MT | F | R | Coupe FWD CHPA;CPTA | For Engine code:CHPA;Trans. code:MQ250 | GDS61283 | Drive Shaft | | 36 | | 59.5 | 40 | 815 | |
| | 2013.02-2016.11 | 6MT | F | R | Coupe FWD CHPA;CPTA | For Engine code:CHPA;Trans. code:MQ200 | GDS61307 | Drive Shaft | | 36 | | 59.5 | 40 | 819 | |
| | 2013.02-2016.11 | 6MT | F | L/R | Coupe FWD CHPA;CPTA | | GCI82447 | Inner Joint | | | 33 | | | 34 | |
| | 2013.02-2016.11 | 7AT/6MT | F | L/R | Coupe FWD CHPA;CPTA | | GCO61059 | Outer Joint | | 36 | 33 | 59.5 | 40 | 59.5 | I |
| | 2013.02-2016.11 | 7AT/6MT | F | L/R | Coupe FWD CHPA;CPTA | | GCO83101 | Outer Joint | | 36 | 27 | 59.5 | 40 | 65 | M |

| | YEAR | TRANSM. | F/R | L/R | BODY STYLE & DRIVE TYPE & ENGINE | REMARKS | G-AP Ref. | PRODUCT | ABS | Technical Specifications A | B | C | H | L | P |
|---|---|---|---|---|---|---|---|---|---|---|---|---|---|---|---|
| **SEAT** **Leon SC** | | | | | | | | | | | | | | | |
| 1.4 (103 kw) | 2013.02-2016.11 | 7AT/6MT | F | L/R | Coupe FWD CHPA;CPTA | | GCI83016 | Inner Joint | | | 28 | | | 32 | |
| | 2013.02-2016.11 | 7DCT | F | L | Coupe FWD CHPA;CPTA | | GDS61100 | Drive Shaft | | 36 | | 59.5 | 40 | 513 | |
| | 2013.02-2016.11 | 7DCT | F | R | Coupe FWD CHPA;CPTA | | GDS83313 | Drive Shaft | | 36 | | 59.5 | 40 | 792 | |
| | 2013.02-2016.11 | MT | F | L | Coupe FWD CHPA;CPTA | | GDS83294 | Drive Shaft | | 36 | | 59.5 | 38 | 519 | |
| | 2013.02-2016.11 | MT | F | L | Coupe FWD CHPA;CPTA | | GCO83037 | Outer Joint | | 36 | 30 | 59.5 | 40.5 | 56 | I |
| 1.4 (110 kw) | 2014.05-2018.08 | 6MT | F | L | Coupe FWD CZEA | | GDS61282 | Drive Shaft | | 36 | | 59.5 | 40 | 523 | |
| | 2014.05-2018.08 | 6MT | F | R | Coupe FWD CZEA | | GDS61283 | Drive Shaft | | 36 | | 59.5 | 40 | 815 | |
| | 2014.05-2018.08 | 6MT | F | L/R | Coupe FWD CZEA | | GCO61059 | Outer Joint | | 36 | 33 | 59.5 | 40 | 59.5 | I |
| | 2014.05-2018.08 | 6MT | F | L/R | Coupe FWD CZEA | | GCI82447 | Inner Joint | | | 33 | | | 34 | |
| | 2014.05-2018.08 | 7AT/6MT | F | L/R | Coupe FWD CZEA | | GCI83016 | Inner Joint | | | 28 | | | 32 | |
| | 2014.05-2018.08 | 7DCT | F | L | Coupe FWD CZEA | | GDS61100 | Drive Shaft | | 36 | | 59.5 | 40 | 513 | |
| | 2014.05-2018.08 | 7DCT | F | R | Coupe FWD CZEA | | GDS83313 | Drive Shaft | | 36 | | 59.5 | 40 | 792 | |
| | 2014.05-2018.08 | 7DCT | F | L/R | Coupe FWD CZEA | | GCO83101 | Outer Joint | | 36 | 27 | 59.5 | 40 | 65 | M |
| 1.6 (66 kw) | 2013.02-2018.08 | 5MT | F | L | Coupe FWD CLHB;DDYB;CXXA | | GDS83294 | Drive Shaft | | 36 | | 59.5 | 38 | 519 | |
| | 2013.02-2018.08 | 5MT | F | R | Coupe FWD CLHB;DDYB;CXXA | | GDS61042 | Drive Shaft | | 36 | | 59.5 | 40.5 | 814 | |
| | 2013.02-2018.08 | 5MT | F | R | Coupe FWD CLHB;DDYB;CXXA | | GDS61283 | Drive Shaft | | 36 | | 59.5 | 40 | 815 | |
| | 2013.02-2018.08 | 5MT | F | L/R | Coupe FWD CLHB;DDYB;CXXA | | GCO83037 | Outer Joint | | 36 | 30 | 59.5 | 40.5 | 56 | I |
| | 2013.02-2018.08 | 5MT | F | R | Coupe FWD CLHB;DDYB;CXXA | | GCI53002 | Inner Joint | | | 33 | | | 34 | |
| | 2013.02-2018.08 | 5MT | F | L/R | Coupe FWD CLHB;DDYB;CXXA | | GCI82447 | Inner Joint | | | 33 | | | 34 | |
| | 2013.02-2018.08 | | F | L/R | Coupe FWD CLHB;DDYB;CXXA | | GCI83011 | Inner Joint | | | 33 | | | 34 | |
| 1.6 (77 kw) | 2013.02-2018.08 | 5MT | F | R | Coupe FWD CLHA | | GDS61042 | Drive Shaft | | 36 | | 59.5 | 40.5 | 814 | |
| | 2013.02-2018.08 | 5MT | F | R | Coupe FWD CLHA | | GDS61283 | Drive Shaft | | 36 | | 59.5 | 40 | 815 | |
| | 2013.02-2018.08 | 5MT | F | L/R | Coupe FWD CLHA | | GCO61059 | Outer Joint | | 36 | 33 | 59.5 | 40 | 59.5 | I |
| | 2013.02-2018.08 | 5MT | F | L/R | Coupe FWD CLHA | | GCI53002 | Inner Joint | | | 33 | | | 34 | |
| | 2013.02-2018.08 | 5MT/7DCT | F | L | Coupe FWD CLHA | | GDS61282 | Drive Shaft | | 36 | | 59.5 | 40 | 523 | |
| | 2013.02-2018.08 | 7DCT | F | R | Coupe FWD CLHA | | GDS61096 | Drive Shaft | | 36 | | 59.5 | 40.5 | 799 | |
| | 2013.02-2018.08 | 7DCT | F | L | Coupe FWD CLHA | | GCI53002 | Inner Joint | | | 33 | | | 34 | |
| | 2013.02-2018.08 | 7DCT/5MT | F | L/R | Coupe FWD CLHA | | GCI82447 | Inner Joint | | | 33 | | | 34 | |
| | 2013.02-2018.08 | MT | F | L | Coupe FWD CLHA | | GDS83294 | Drive Shaft | | 36 | | 59.5 | 38 | 519 | |
| | 2013.02-2018.08 | MT | F | L | Coupe FWD CLHA | | GCO83037 | Outer Joint | | 36 | 30 | 59.5 | 40.5 | 56 | I |
| | 2013.02-2018.08 | | F | L/R | Coupe FWD CLHA | | GCI83011 | Inner Joint | | | 33 | | | 34 | |
| 1.6 (81 kw) | 2013.09-2016.11 | 5MT | F | L | Coupe FWD CRKB;CXXB;DBKA | | GDS83294 | Drive Shaft | | 36 | | 59.5 | 38 | 519 | |
| | 2013.09-2016.11 | 5MT | F | L | Coupe FWD CRKB;CXXB;DBKA | | GCO83037 | Outer Joint | | 36 | 30 | 59.5 | 40.5 | 56 | I |
| | 2013.09-2016.11 | 5MT | F | L/R | Coupe FWD CRKB;CXXB;DBKA | | GCO61059 | Outer Joint | | 36 | 33 | 59.5 | 40 | 59.5 | I |
| | 2013.09-2016.11 | 5MT/6MT | F | R | Coupe FWD CRKB;CXXB;DBKA | | GDS61283 | Drive Shaft | | 36 | | 59.5 | 40 | 815 | |
| | 2013.09-2016.11 | 5MT/6MT | F | L/R | Coupe FWD CRKB;CXXB;DBKA | | GCI53002 | Inner Joint | | | 33 | | | 34 | |
| | 2013.09-2016.11 | 5MT/6MT/7DCT | F | L | Coupe FWD CRKB;CXXB;DBKA | | GDS61282 | Drive Shaft | | 36 | | 59.5 | 40 | 523 | |
| | 2013.09-2016.11 | 5MT/6MT/7DCT | F | L/R | Coupe FWD CRKB;CXXB;DBKA | | GCI82447 | Inner Joint | | | 33 | | | 34 | |
| | 2013.09-2016.11 | 7DCT | F | R | Coupe FWD CRKB;CXXB;DBKA | | GDS61096 | Drive Shaft | | 36 | | 59.5 | 40.5 | 799 | |
| | 2013.09-2016.11 | 7DCT | F | L | Coupe FWD CRKB;CXXB;DBKA | | GCI53002 | Inner Joint | | | 33 | | | 34 | |
| | 2013.09-2016.11 | | F | L/R | Coupe FWD CRKB;CXXB;DBKA | | GCI83011 | Inner Joint | | | 33 | | | 34 | |
| 1.6 (85 kw) | 2016.11-2018.08 | 5MT | F | R | Coupe FWD DDYA | | GDS61042 | Drive Shaft | | 36 | | 59.5 | 40.5 | 814 | |
| | 2016.11-2018.08 | 5MT | F | R | Coupe FWD DDYA | | GDS61283 | Drive Shaft | | 36 | | 59.5 | 40 | 815 | |
| | 2016.11-2018.08 | 5MT | F | L/R | Coupe FWD DDYA | | GCI53002 | Inner Joint | | | 33 | | | 34 | |
| | 2016.11-2018.08 | 5MT/7DCT | F | L | Coupe FWD DDYA | | GDS61282 | Drive Shaft | | 36 | | 59.5 | 40 | 523 | |
| | 2016.11-2018.08 | 5MT/7DCT | F | L/R | Coupe FWD DDYA | | GCO61059 | Outer Joint | | 36 | 33 | 59.5 | 40 | 59.5 | I |
| | 2016.11-2018.08 | 7DCT | F | R | Coupe FWD DDYA | | GDS61096 | Drive Shaft | | 36 | | 59.5 | 40.5 | 799 | |
| | 2016.11-2018.08 | 7DCT | F | L | Coupe FWD DDYA | | GCI53002 | Inner Joint | | | 33 | | | 34 | |
| | 2016.11-2018.08 | 7DCT/5MT | F | L/R | Coupe FWD DDYA | | GCI82447 | Inner Joint | | | 33 | | | 34 | |
| | 2016.11-2018.08 | | F | L/R | Coupe FWD DDYA | | GCI83011 | Inner Joint | | | 33 | | | 34 | |
| 1.8 (132 kw) | 2013.02-2018.08 | 6MT | F | L | Coupe FWD CJSA | | GDS61100 | Drive Shaft | | 36 | | 59.5 | 40 | 513 | |
| | 2013.02-2018.08 | 6MT | F | R | Coupe FWD CJSA | | GDS61101 | Drive Shaft | | 36 | | 59.5 | 40 | 803 | |
| | 2013.02-2018.08 | 6MT | F | L/R | Coupe FWD CJSA | | GCO83101 | Outer Joint | | 36 | 27 | 59.5 | 40 | 65 | M |
| | 2013.02-2018.08 | 7AT/6MT | F | L/R | Coupe FWD CJSA | Transmission:7DCT,Posission:Right | GCI83016 | Inner Joint | | | 28 | | | 32 | |
| | 2013.02-2018.08 | 7DCT | F | R | Coupe FWD CJSA | Date to:2016.02 | GDS61147 | Drive Shaft | | 36 | | 59.5 | 40 | 795 | |
| | 2013.02-2018.08 | 7DCT | F | R | Coupe FWD CJSA | Date from:2016.03 | GDS83313 | Drive Shaft | | 36 | | 59.5 | 40 | 792 | |
| | 2013.02-2018.08 | 7DCT | F | L | Coupe FWD CJSA | Facelift | GCI61069 | Inner Joint | | | 28 | | | 32 | |
| 2.0 (81 kw) | 2013.02-2018.08 | 5MT | F | L | Coupe FWD CRVA | | GDS61282 | Drive Shaft | | 36 | | 59.5 | 40 | 523 | |
| | 2013.02-2018.08 | 5MT | F | R | Coupe FWD CRVA | | GDS61283 | Drive Shaft | | 36 | | 59.5 | 40 | 815 | |
| | 2013.02-2018.08 | 5MT | F | L/R | Coupe FWD CRVA | | GCO61059 | Outer Joint | | 36 | 33 | 59.5 | 40 | 59.5 | I |
| | 2013.02-2018.08 | 5MT | F | L/R | Coupe FWD CRVA | | GCI82447 | Inner Joint | | | 33 | | | 34 | |
| 2.0 (105 kw) | 2013.05-2018.08 | 6MT | F | L | Coupe FWD CRVC | | GDS83295 | Drive Shaft | | 36 | | 59.5 | 40 | 491 | |
| | 2013.05-2018.08 | 6MT | F | R | Coupe FWD CRVC | | GDS83313 | Drive Shaft | | 36 | | 59.5 | 40 | 792 | |
| | 2013.05-2018.08 | 6MT | F | L/R | Coupe FWD CRVC | | GCI83016 | Inner Joint | | | 28 | | | 32 | |
| | 2013.05-2018.08 | AT | F | L | Coupe FWD CRVC | | GDS61285 | Drive Shaft | | 36 | | 59.5 | 40 | 472 | |

| | YEAR | TRANSM. | F/R | L/R | BODY STYLE & DRIVE TYPE & ENGINE | REMARKS | G-AP Ref. | PRODUCT | ABS | Technical Specifications A | B | C | H | L | P |
|---|---|---|---|---|---|---|---|---|---|---|---|---|---|---|---|
| **SEAT** | | | | | | | | | | | | | | | |
| **Leon SC** | | | | | | | | | | | | | | | |
| 2.0 (105 kw) | 2013.05-2018.08 | AT/6MT | F | L/R | Coupe FWD CRVC | | GCO83101 | Outer Joint | | 36 | 27 | 59.5 | 40 | 65 | M |
| | 2013.05-2018.08 | | F | L | Coupe FWD CRVC | | GCI61069 | Inner Joint | | | 28 | | | 32 | |
| 2.0 (110 kw) | 2013.02-2018.08 | 6AT/6MT | F | L/R | Coupe FWD CKFC;CRMB | | GCO83101 | Outer Joint | | 36 | 27 | 59.5 | 40 | 65 | M |
| | 2013.02-2018.08 | 6DCT | F | L | Coupe FWD CKFC;CRMB | | GDS61285 | Drive Shaft | | 36 | | 59.5 | 40 | 472 | |
| | 2013.02-2018.08 | 6DCT | F | R | Coupe FWD CKFC;CRMB | | GDS83354 | Drive Shaft | | 36 | | 59.5 | 40 | 763 | |
| | 2013.02-2018.08 | 6MT | F | L | Coupe FWD CKFC;CRMB | | GDS83295 | Drive Shaft | | 36 | | 59.5 | 40 | 491 | |
| | 2013.02-2018.08 | 6MT | F | R | Coupe FWD CKFC;CRMB | | GDS83313 | Drive Shaft | | 36 | | 59.5 | 40 | 792 | |
| | 2013.02-2018.08 | 6MT | F | L/R | Coupe FWD CKFC;CRMB | | GCI83016 | Inner Joint | | | 28 | | | 32 | |
| | 2013.02-2018.08 | AT | F | L | Coupe FWD CKFC;CRMB | | GDS83241 | Drive Shaft | | 36 | | 59.5 | 40 | 475 | |
| | 2013.02-2018.08 | AT | F | R | Coupe FWD CKFC;CRMB | | GDS54011 | Drive Shaft | | 36 | | 59.5 | 40 | 755 | |
| | 2013.02-2018.08 | AT/6DCT | F | L/R | Coupe FWD CKFC;CRMB | | GCI61057 | Inner Joint | | | 34 | | | 89 | |
| | 2013.02-2018.08 | MT | F | R | Coupe FWD CKFC;CRMB | | GDS61126 | Drive Shaft | | 36 | | 59.5 | 40 | 793 | |
| | 2013.02-2018.08 | | F | L | Coupe FWD CKFC;CRMB | | GCI61069 | Inner Joint | | | 28 | | | 32 | |
| 2.0 (135 kw) | 2013.03-2018.08 | 6DCT | F | L | Coupe FWD CUPA;CUNA | | GDS61285 | Drive Shaft | | 36 | | 59.5 | 40 | 472 | |
| | 2013.03-2018.08 | 6DCT | F | R | Coupe FWD CUPA;CUNA | | GDS83354 | Drive Shaft | | 36 | | 59.5 | 40 | 763 | |
| | 2013.03-2018.08 | 6DCT | F | L/R | Coupe FWD CUPA;CUNA | | GCI61057 | Inner Joint | | | 34 | | | 89 | |
| | 2013.03-2018.08 | 6MT | F | L | Coupe FWD CUPA;CUNA | | GDS83295 | Drive Shaft | | 36 | | 59.5 | 40 | 491 | |
| | 2013.03-2018.08 | 6MT | F | R | Coupe FWD CUPA;CUNA | | GDS83313 | Drive Shaft | | 36 | | 59.5 | 40 | 792 | |
| | 2013.03-2018.08 | 6MT | F | L/R | Coupe FWD CUPA;CUNA | | GCI83016 | Inner Joint | | | 28 | | | 32 | |
| | 2013.03-2018.08 | 6MT/6DCT | F | L/R | Coupe FWD CUPA;CUNA | Transmission:6DCT;For Engine code:CRMB;Transmission:6MT | GCO83101 | Outer Joint | | 36 | 27 | 59.5 | 40 | 65 | M |
| 2.0 (195 kw) | 2013.10-2016.11 | 6AT/6MT | F | L | Coupe FWD CJXE | | GDS83295 | Drive Shaft | | 36 | | 59.5 | 40 | 491 | |
| | 2013.10-2016.11 | 6AT/6MT | F | R | Coupe FWD CJXE | For PR code:1Y2 | GDS81892 | Drive Shaft | | 36 | | 59.5 | 40 | 602 | |
| | 2013.10-2016.11 | 6AT/6MT | F | L | Coupe FWD CJXE | | GCI61069 | Inner Joint | | | 28 | | | 32 | |
| | 2013.10-2016.11 | 6DCT | F | R | Coupe FWD CJXE | For PR code:1Y3,For vehicles with ASR | GDS81891 | Drive Shaft | | 36 | | 59.5 | 40 | 781 | |
| | 2013.10-2016.11 | 6DCT | F | R | Coupe FWD CJXE | | GCI61069 | Inner Joint | | | 28 | | | 32 | |
| | 2013.10-2016.11 | 6MT | F | R | Coupe FWD CJXE | For PR code:1Y3,For vehicles with ASR | GDS61147 | Drive Shaft | | 36 | | 59.5 | 40 | 795 | |
| | 2013.10-2016.11 | 6MT/6DCT | F | L/R | Coupe FWD CJXE | | GCO83101 | Outer Joint | | 36 | 27 | 59.5 | 40 | 65 | M |
| 2.0 (206 kw) | 2013.10-2016.11 | 6AT/6MT | F | L | Coupe FWD CJXA | | GDS83295 | Drive Shaft | | 36 | | 59.5 | 40 | 491 | |
| | 2013.10-2016.11 | 6AT/6MT | F | R | Coupe FWD CJXA | For PR code:1Y2 | GDS81892 | Drive Shaft | | 36 | | 59.5 | 40 | 602 | |
| | 2013.10-2016.11 | 6AT/6MT | F | L | Coupe FWD CJXA | | GCI61069 | Inner Joint | | | 28 | | | 32 | |
| | 2013.10-2016.11 | 6DCT | F | R | Coupe FWD CJXA | For PR code:1Y3,For vehicles with ASR | GDS81891 | Drive Shaft | | 36 | | 59.5 | 40 | 781 | |
| | 2013.10-2016.11 | 6DCT | F | R | Coupe FWD CJXA | | GCI61069 | Inner Joint | | | 28 | | | 32 | |
| | 2013.10-2016.11 | 6MT | F | R | Coupe FWD CJXA | For PR code:1Y3,For vehicles with ASR | GDS61147 | Drive Shaft | | 36 | | 59.5 | 40 | 795 | |
| | 2013.10-2016.11 | 6MT/6DCT | F | L/R | Coupe FWD CJXA | | GCO83101 | Outer Joint | | 36 | 27 | 59.5 | 40 | 65 | M |
| 2.0 (213 kw) | 2015.10-2016.11 | 6AT/6MT | F | L | Coupe FWD CJXH | | GDS83295 | Drive Shaft | | 36 | | 59.5 | 40 | 491 | |
| | 2015.10-2016.11 | 6AT/6MT | F | R | Coupe FWD CJXH | For PR code:1Y2 | GDS81892 | Drive Shaft | | 36 | | 59.5 | 40 | 602 | |
| | 2015.10-2016.11 | 6AT/6MT | F | L | Coupe FWD CJXH | | GCI61069 | Inner Joint | | | 28 | | | 32 | |
| | 2015.10-2016.11 | 6DCT | F | R | Coupe FWD CJXH | For PR code:1Y3,For vehicles with ASR | GDS81891 | Drive Shaft | | 36 | | 59.5 | 40 | 781 | |
| | 2015.10-2016.11 | 6DCT | F | R | Coupe FWD CJXH | | GCI61069 | Inner Joint | | | 28 | | | 32 | |
| | 2015.10-2016.11 | 6MT | F | R | Coupe FWD CJXH | For PR code:1Y3,For vehicles with ASR | GDS61147 | Drive Shaft | | 36 | | 59.5 | 40 | 795 | |
| | 2015.10-2016.11 | DCT/6MT/6DCT | F | L/R | Coupe FWD CJXH | | GCO83101 | Outer Joint | | 36 | 27 | 59.5 | 40 | 65 | M |
| 2.0 (221 kw) | 2017.01-2018.08 | 6AT/6MT | F | L | Coupe FWD CJXC | | GDS83295 | Drive Shaft | | 36 | | 59.5 | 40 | 491 | |
| | 2017.01-2018.08 | 6AT/6MT | F | R | Coupe FWD CJXC | Wheel Hub Diam [mm]:42;Date:to:2017.08;Wheel Hub Diam [mm]:27;Date:from:2017.10;For PR code:1Y2 | GDS81892 | Drive Shaft | | 36 | | 59.5 | 40 | 602 | |
| | 2017.01-2018.08 | 6AT/6MT | F | L | Coupe FWD CJXC | | GCI61069 | Inner Joint | | | 28 | | | 32 | |
| | 2017.01-2018.08 | 6AT/6MT/6DCT | F | L/R | Coupe FWD CJXC | | GCO83101 | Outer Joint | | 36 | 27 | 59.5 | 40 | 65 | M |
| | 2017.01-2018.08 | 6DCT | F | R | Coupe FWD CJXC | | GDS81891 | Drive Shaft | | 36 | | 59.5 | 40 | 781 | |
| | 2017.01-2018.08 | 6DCT | F | R | Coupe FWD CJXC | | GCI61069 | Inner Joint | | | 28 | | | 32 | |
| **Leon Sportstourer** | | | | | | | | | | | | | | | |
| 1.0 (66 kw) | 2020.03- | 5MT | F | L | Estate FWD DLAB | | GDS82231 | Drive Shaft | | 36 | | 59.5 | 40 | 486 | |
| | 2020.03- | 5MT | F | R | Estate FWD DLAB | | GDS82229 | Drive Shaft | | 36 | | 59.5 | 40 | 767 | |
| | 2020.03- | 5MT | F | L/R | Estate FWD DLAB | | GCO61059 | Outer Joint | | 36 | 33 | 59.5 | 40 | 59.5 | I |
| | 2020.03- | 5MT | F | L | Estate FWD DLAB | | GCI81689 | Inner Joint | | | 32 | | | 89 | |
| 1.0 (81 kw) | 2020.03- | 6MT | F | L | Estate FWD DLAA | | GDS82231 | Drive Shaft | | 36 | | 59.5 | 40 | 486 | |
| | 2020.03- | 6MT | F | R | Estate FWD DLAA | | GDS82229 | Drive Shaft | | 36 | | 59.5 | 40 | 767 | |
| | 2020.03- | 6MT/7DCT | F | L/R | Estate FWD DLAA | | GCO61059 | Outer Joint | | 36 | 33 | 59.5 | 40 | 59.5 | I |
| | 2020.03- | 7DCT | F | L | Estate FWD DLAA | | GDS57830 | Drive Shaft | | 36 | | 59.5 | 40 | 492 | |
| | 2020.03- | 7DCT | F | R | Estate FWD DLAA | | GDS57831 | Drive Shaft | | 36 | | 59.5 | 40 | 758 | |
| | 2020.03- | 7DCT | F | L/R | Estate FWD DLAA | | GCI81689 | Inner Joint | | | 32 | | | 89 | |
| | 2020.08- | 7DCT | F | L | Estate FWD DLAA | | GDS57830 | Drive Shaft | | 36 | | 59.5 | 40 | 492 | |
| | 2020.08- | 7DCT | F | R | Estate FWD DLAA | | GDS57831 | Drive Shaft | | 36 | | 59.5 | 40 | 758 | |
| | 2020.08- | 7DCT | F | L/R | Estate FWD DLAA | | GCO61059 | Outer Joint | | 36 | 33 | 59.5 | 40 | 59.5 | I |
| | 2020.08- | 7DCT | F | L/R | Estate FWD DLAA | | GCI81689 | Inner Joint | | | 32 | | | 89 | |
| 1.4 (150 kw) | 2020.05- | 6AT | F | L | Estate FWD DGEA | | GDS81985 | Drive Shaft | | 36 | 37 | 59.5 | 40 | 546 | |
| | 2020.05- | 6AT | F | R | Estate FWD DGEA | | GDS83612 | Drive Shaft | | 36 | 37 | 59.5 | 40 | 907 | |
| | 2020.05- | 6AT | F | R | Estate FWD DGEA | | GCO83101 | Outer Joint | | 36 | 27 | 59.5 | 40 | 65 | M |

| | YEAR | TRANSM. | F/R | L/R | BODY STYLE & DRIVE TYPE & ENGINE | REMARKS | G-AP Ref. | PRODUCT | ABS | Technical Specifications A | B | C | H | L | P |
|---|---|---|---|---|---|---|---|---|---|---|---|---|---|---|---|
| **SEAT** | | | | | | | | | | | | | | | |
| **Leon Sportstourer** | | | | | | | | | | | | | | | |
| 1.4 (150 kw) | 2020.05- | 6AT | F | R | Estate FWD DGEA | | GCI82108 | Inner Joint | | 37 | 34 | 40 | 77.5 | 103.5 | |
| | 2020.05- | 6DCT | F | L | Estate FWD DGEA | | GCI81158 | Inner Joint | | 37 | 34 | 34.5 | 65.5 | 83 | |
| 1.5 (85 kw) | 2024.05- | 6MT | F | L | Estate FWD DXDE | | GDS84408 | Drive Shaft | | 36 | | 59.5 | 40 | 499 | |
| | 2024.05- | 6MT | F | R | Estate FWD DXDE | | GDS84417 | Drive Shaft | | 36 | | 59.5 | 40 | 783 | |
| | 2024.05- | 7DCT | F | L | Estate FWD DXDE | | GDS61100 | Drive Shaft | | 36 | | 59.5 | 40 | 513 | |
| | 2024.05- | 7DCT | F | R | Estate FWD DXDE | | GDS84503 | Drive Shaft | | 36 | 40 | 59.5 | 40 | 817 | |
| | 2024.05- | 7DCT | F | L | Estate FWD DXDE | Bellows Material:Plastic | GCI83016 | Inner Joint | | | 28 | | | 32 | |
| 1.5 (96 kw) | 2020.03- | 6MT | F | L | Estate FWD DPBA | | GDS61282 | Drive Shaft | | 36 | | 59.5 | 40 | 523 | |
| | 2020.03- | 6MT | F | R | Estate FWD DPBA | | GDS84416 | Drive Shaft | | 36 | | 59.5 | 40 | 800 | |
| | 2020.03- | 6MT | F | R | Estate FWD DPBA | | GCO61059 | Outer Joint | | 36 | 33 | 59.5 | 40 | 59.5 | I |
| | 2020.03- | 6MT | F | R | Estate FWD DPBA | | GCI53002 | Inner Joint | | | 33 | | | 34 | |
| | 2020.03- | 6MT | F | L/R | Estate FWD DPBA | | GCI82447 | Inner Joint | | | 33 | | | 34 | |
| | 2021.05- | 6MT | F | R | Estate FWD DHFA | | GDS61096 | Drive Shaft | | 36 | | 59.5 | 40.5 | 799 | |
| | 2021.05- | 6MT/7DCT | F | L | Estate FWD DHFA | | GDS61282 | Drive Shaft | | 36 | | 59.5 | 40 | 523 | |
| | 2021.05- | 6MT/7DCT | F | L/R | Estate FWD DHFA | | GCO61059 | Outer Joint | | 36 | 33 | 59.5 | 40 | 59.5 | I |
| | 2021.05- | 6MT/7DCT | F | L/R | Estate FWD DHFA | | GCI53002 | Inner Joint | | | 33 | | | 34 | |
| | 2021.05- | 7DCT | F | R | Estate FWD DHFA | | GDS84417 | Drive Shaft | | 36 | | 59.5 | 40 | 783 | |
| 1.5 (110 kw) | 2020.03- | 7AT | F | L | Estate FWD DFYA;DXDB | | GDS61100 | Drive Shaft | | 36 | | 59.5 | 40 | 513 | |
| | 2020.03- | 7AT | F | L | Estate FWD DFYA;DXDB | | GCO83101 | Outer Joint | | 36 | 27 | 59.5 | 40 | 65 | M |
| | 2020.03- | 7AT | F | R | Estate FWD DFYA;DXDB | | GCO61059 | Outer Joint | | 36 | 33 | 59.5 | 40 | 59.5 | I |
| | 2020.03- | 7AT | F | L | Estate FWD DFYA;DXDB | | GCI83016 | Inner Joint | | | 28 | | | 32 | |
| | 2020.03- | 7AT | F | R | Estate FWD DFYA;DXDB | | GCI61090 | Inner Joint | | 40 | 28 | 46.9 | | 133.2 | |
| | 2020.03- | 7DCT | F | R | Estate FWD DFYA;DXDB | | GDS84503 | Drive Shaft | | 36 | 40 | 59.5 | 40 | 817 | |
| | 2020.03- | 6MT | F | L | Estate FWD DPCA;DXDB | | GDS84408 | Drive Shaft | | 36 | | 59.5 | 40 | 499 | |
| | 2020.03- | 6MT | F | R | Estate FWD DPCA;DXDB | | GDS84417 | Drive Shaft | | 36 | | 59.5 | 40 | 783 | |
| | 2020.03- | 6MT | F | L/R | Estate FWD DPCA;DXDB | | GCO61059 | Outer Joint | | 36 | 33 | 59.5 | 40 | 59.5 | I |
| | 2020.03- | 6MT | F | L/R | Estate FWD DPCA;DXDB | | GCI53002 | Inner Joint | | | 33 | | | 34 | |
| | 2020.03- | 6MT | F | L/R | Estate FWD DPCA;DXDB | | GCI82447 | Inner Joint | | | 33 | | | 34 | |
| 1.5 (150 kw) | 2024.10- | 6DCT | F | L | Estate FWD DUCB, EANB | | GCI81158 | Inner Joint | | 37 | 34 | 34.5 | 65.5 | 83 | |
| 1.6 (81 kw) | 2021.03- | 6AT | F | L | Estate FWD CWVA;DWYA | | GDS83318 | Drive Shaft | | 36 | 26 | 59.5 | 38 | 581 | |
| | 2021.03- | 6AT | F | R | Estate FWD CWVA;DWYA | | GDS61094 | Drive Shaft | | 36 | 26 | 59.5 | 40.5 | 884 | |
| 2.0 (85 kw) | 2020.11- | 6MT | F | L | Estate FWD DTRD;DXRC | Date from:2021.06 | GDS83295 | Drive Shaft | | 36 | | 59.5 | 40 | 491 | |
| | 2020.11- | 6MT | F | R | Estate FWD DTRD;DXRC | | GDS81891 | Drive Shaft | | 36 | | 59.5 | 40 | 781 | |
| | 2020.11- | 6MT | F | L/R | Estate FWD DTRD;DXRC | | GCO83101 | Outer Joint | | 36 | 27 | 59.5 | 40 | 65 | M |
| | 2020.11- | 6MT | F | R | Estate FWD DTRD;DXRC | | GDS98007 | Stub Axle-Flange | | 37 | | | 88 | 148 | |
| 2.0 (110 kw) | 2020.04- | 6MT | F | L | Estate FWD DSTB;DTTC;DTTA;DXRB | | GDS83295 | Drive Shaft | | 36 | | 59.5 | 40 | 491 | |
| | 2020.04- | 6MT | F | R | Estate FWD DSTB;DTTC;DTTA;DXRB | | GDS81891 | Drive Shaft | | 36 | | 59.5 | 40 | 781 | |
| | 2020.04- | 7DCT | F | L | Estate FWD DSTB;DTTC;DTTA;DXRB | | GDS81265 | Drive Shaft | | 36 | 37 | 59.5 | 40 | 557 | |
| | 2020.04- | 7DCT | F | R | Estate FWD DSTB;DTTC;DTTA;DXRB | | GDS83612 | Drive Shaft | | 36 | 37 | 59.5 | 40 | 907 | |
| | 2020.04- | 7DCT | F | R | Estate FWD DSTB;DTTC;DTTA;DXRB | | GCO83101 | Outer Joint | | 36 | 27 | 59.5 | 40 | 65 | M |
| | 2020.04- | 7DCT | F | L | Estate FWD DSTB;DTTC;DTTA;DXRB | | GCI81158 | Inner Joint | | 37 | 34 | 34.5 | 65.5 | 83 | |
| | 2020.04- | 7DCT | F | R | Estate FWD DSTB;DTTC;DTTA;DXRB | | GCI82108 | Inner Joint | | 37 | 34 | 40 | 77.5 | 103.5 | |
| | 2020.11- | 7AT | F | L | Estate 4WD DTTC | | GDS81265 | Drive Shaft | | 36 | 37 | 59.5 | 40 | 557 | |
| | 2020.11- | 7AT | F | R | Estate 4WD DTTC | | GDS81893 | Drive Shaft | | 36 | | 59.5 | 40 | 575 | |
| | 2020.11- | 7AT | F | L | Estate 4WD DTTC | | GCI81158 | Inner Joint | | 37 | 34 | 34.5 | 65.5 | 83 | |
| | 2020.11- | 7AT | R | L | Estate 4WD DTTC | | GDS61286 | Drive Shaft | | 36 | | 59.5 | 40 | 587 | |
| | 2020.11- | 7AT | R | R | Estate 4WD DTTC | | GDS61287 | Drive Shaft | | 36 | | 59.5 | 40 | 632 | |
| 2.0 (140 kw) | 2021.03- | 7DCT | F | L | Estate FWD DNNA | | GDS84237 | Drive Shaft | | 36 | 37 | 59.5 | 40 | 560 | |
| | 2021.03- | 7DCT | F | L/R | Estate FWD DNNA | | GCO83101 | Outer Joint | | 36 | 27 | 59.5 | 40 | 65 | M |
| | 2021.03- | 7DCT | F | L | Estate FWD DNNA | | GCI83028 | Inner Joint | | 37 | 28 | | 65.5 | 90.2 | |
| | 2021.03- | 7DCT | F | R | Estate FWD DNNA | | GCI61069 | Inner Joint | | | 28 | | | 32 | |
| **Leon ST** | | | | | | | | | | | | | | | |
| 1.0 (63 kw) | 2018.09-2020.08 | 5MT | F | L | Estate FWD DKLB | | GDS82231 | Drive Shaft | | 36 | | 59.5 | 40 | 486 | |
| | 2018.09-2020.08 | 5MT | F | R | Estate FWD DKLB | | GDS82230 | Drive Shaft | | 36 | | 59.5 | 40 | 789 | |
| | 2018.09-2020.08 | 5MT | F | L/R | Estate FWD DKLB | | GCI81689 | Inner Joint | | | 32 | | | 89 | |
| 1.0 (85 kw) | 2015.05-2020.08 | 6MT | F | L | Estate FWD CHZD;DKRF | | GDS82231 | Drive Shaft | | 36 | | 59.5 | 40 | 486 | |
| | 2015.05-2020.08 | 6MT | F | R | Estate FWD CHZD;DKRF | | GDS82230 | Drive Shaft | | 36 | | 59.5 | 40 | 789 | |
| | 2015.05-2020.08 | 6MT | F | L/R | Estate FWD CHZD;DKRF | | GCO61059 | Outer Joint | | 36 | 33 | 59.5 | 40 | 59.5 | I |
| | 2015.05-2020.08 | 6MT | F | L/R | Estate FWD CHZD;DKRF | | GCI81689 | Inner Joint | | | 32 | | | 89 | |
| | 2015.05-2020.08 | 7DCT | F | R | Estate FWD CHZD;DKRF | | GDS82229 | Drive Shaft | | 36 | | 59.5 | 40 | 767 | |
| | 2015.05-2020.08 | 7DCT | F | R | Estate FWD CHZD;DKRF | | GCO61059 | Outer Joint | | 36 | 33 | 59.5 | 40 | 59.5 | I |
| | 2015.05-2020.08 | 6MT | F | L | Estate Van FWD CHZD | | GDS82231 | Drive Shaft | | 36 | | 59.5 | 40 | 486 | |
| | 2015.05-2020.08 | 6MT | F | R | Estate Van FWD CHZD | | GDS82230 | Drive Shaft | | 36 | | 59.5 | 40 | 789 | |
| | 2015.05-2020.08 | 6MT | F | L/R | Estate Van FWD CHZD | | GCO61059 | Outer Joint | | 36 | 33 | 59.5 | 40 | 59.5 | I |
| | 2015.05-2020.08 | 6MT/7DCT | F | L/R | Estate Van FWD CHZD | | GCI81689 | Inner Joint | | | 32 | | | 89 | |

| | YEAR | TRANSM. | F/R | L/R | BODY STYLE & DRIVE TYPE & ENGINE | REMARKS | G-AP Ref. | PRODUCT | ABS | Technical Specifications A | B | C | H | L | P |
|---|---|---|---|---|---|---|---|---|---|---|---|---|---|---|---|
| **SEAT** **Leon ST** | | | | | | | | | | | | | | | |
| 1.0 (85 kw) | 2015.05-2020.08 | 7DCT | F | R | Estate Van FWD CHZD | | GDS82229 | Drive Shaft | | 36 | | 59.5 | 40 | 767 | |
| | 2015.05-2020.08 | 7DCT | F | R | Estate Van FWD CHZD | | GCO61059 | Outer Joint | | 36 | 33 | 59.5 | 40 | 59.5 | I |
| 1.2 (63 kw) | 2013.01-2018.08 | 5MT | F | R | Estate Van FWD CJZB;CYVA | | GDS61096 | Drive Shaft | | 36 | | 59.5 | 40.5 | 799 | |
| | 2013.01-2018.08 | 7DCT/5MT/6MT | F | L/R | Estate Van FWD CJZB;CYVA | | GCI82447 | Inner Joint | | | 33 | | | 34 | |
| | 2013.01-2018.08 | AT/MT | F | L/R | Estate Van FWD CJZB;CYVA | | GCI83011 | Inner Joint | | | 33 | | | 34 | |
| | 2013.01-2018.08 | MT | F | L | Estate Van FWD CJZB;CYVA | | GDS83294 | Drive Shaft | | 36 | | 59.5 | 38 | 519 | |
| | 2013.01-2018.08 | MT | F | R | Estate Van FWD CJZB;CYVA | | GDS61042 | Drive Shaft | | 36 | | 59.5 | 40.5 | 814 | |
| | 2013.01-2018.08 | MT | F | L/R | Estate Van FWD CJZB;CYVA | | GCO83037 | Outer Joint | | 36 | 30 | 59.5 | 40.5 | 56 | I |
| | 2013.01-2018.08 | | F | L | Estate Van FWD CJZB;CYVA | | GDS61097 | Drive Shaft | | 36 | | 59.5 | 40.5 | 543 | |
| | 2013.11-2018.08 | 5MT | F | R | Estate FWD CJZB;CYVA | | GDS61096 | Drive Shaft | | 36 | | 59.5 | 40.5 | 799 | |
| | 2013.11-2018.08 | 5MT | F | L/R | Estate FWD CJZB;CYVA | | GCI82447 | Inner Joint | | | 33 | | | 34 | |
| | 2013.11-2018.08 | AT/MT | F | L/R | Estate FWD CJZB;CYVA | Date from:2014.01 | GCI83011 | Inner Joint | | | 33 | | | 34 | |
| | 2013.11-2018.08 | MT | F | L | Estate FWD CJZB;CYVA | Date from:2014.01 | GDS83294 | Drive Shaft | | 36 | | 59.5 | 38 | 519 | |
| | 2013.11-2018.08 | MT | F | L | Estate FWD CJZB;CYVA | | GDS83373 | Drive Shaft | | 36 | | 59.5 | 38 | 511 | |
| | 2013.11-2018.08 | MT | F | R | Estate FWD CJZB;CYVA | Date from:2014.01 | GDS61042 | Drive Shaft | | 36 | | 59.5 | 40.5 | 814 | |
| | 2013.11-2018.08 | MT | F | L/R | Estate FWD CJZB;CYVA | | GCO83037 | Outer Joint | | 36 | 30 | 59.5 | 40.5 | 56 | I |
| | 2013.11-2018.08 | | F | L | Estate FWD CJZB;CYVA | | GDS61097 | Drive Shaft | | 36 | | 59.5 | 40.5 | 543 | |
| 1.2 (77 kw) | 2013.08-2020.08 | 5MT/6MT | F | L | Estate FWD CJZA | | GDS83373 | Drive Shaft | | 36 | | 59.5 | 38 | 511 | |
| | 2013.08-2020.08 | 5MT/6MT | F | R | Estate FWD CJZA | | GDS61307 | Drive Shaft | | 36 | | 59.5 | 40 | 819 | |
| | 2013.08-2020.08 | 5MT/6MT | F | L/R | Estate FWD CJZA | | GCO83037 | Outer Joint | | 36 | 30 | 59.5 | 40.5 | 56 | I |
| | 2013.08-2020.08 | 7DCT | F | L | Estate FWD CJZA | | GDS61282 | Drive Shaft | | 36 | | 59.5 | 40 | 523 | |
| | 2013.08-2020.08 | 7DCT | F | R | Estate FWD CJZA | | GDS61096 | Drive Shaft | | 36 | | 59.5 | 40.5 | 799 | |
| | 2013.08-2020.08 | 7DCT | F | L/R | Estate FWD CJZA | | GCO61059 | Outer Joint | | 36 | 33 | 59.5 | 40 | 59.5 | I |
| | 2013.08-2020.08 | 7DCT/5MT/6MT | F | L/R | Estate FWD CJZA | | GCI82447 | Inner Joint | | | 33 | | | 34 | |
| | 2013.08-2020.08 | AT/MT | F | L/R | Estate FWD CJZA | Date from:2014.01 | GCI83011 | Inner Joint | | | 33 | | | 34 | |
| | 2013.08-2020.08 | MT | F | L | Estate FWD CJZA | Date from:2014.01 | GDS83294 | Drive Shaft | | 36 | | 59.5 | 38 | 519 | |
| | 2013.08-2020.08 | MT | F | R | Estate FWD CJZA | Date from:2014.01 | GDS61042 | Drive Shaft | | 36 | | 59.5 | 40.5 | 814 | |
| 1.2 (81 kw) | 2014.05-2018.08 | 6MT | F | L | Estate Van FWD CYVB | | GDS83373 | Drive Shaft | | 36 | | 59.5 | 38 | 511 | |
| | 2014.05-2018.08 | 6MT | F | R | Estate Van FWD CYVB | | GDS61307 | Drive Shaft | | 36 | | 59.5 | 40 | 819 | |
| | 2014.05-2018.08 | 6MT | F | L/R | Estate Van FWD CYVB | | GCO83037 | Outer Joint | | 36 | 30 | 59.5 | 40.5 | 56 | I |
| | 2014.05-2018.08 | 6MT | F | R | Estate Van FWD CYVB | | GCI53002 | Inner Joint | | | 33 | | | 34 | |
| | 2014.05-2018.08 | 7DCT | F | L | Estate Van FWD CYVB | | GDS61282 | Drive Shaft | | 36 | | 59.5 | 40 | 523 | |
| | 2014.05-2018.08 | 7DCT | F | R | Estate Van FWD CYVB | | GDS61096 | Drive Shaft | | 36 | | 59.5 | 40.5 | 799 | |
| | 2014.05-2018.08 | 7DCT | F | L/R | Estate Van FWD CYVB | | GCO61059 | Outer Joint | | 36 | 33 | 59.5 | 40 | 59.5 | I |
| | 2014.05-2018.08 | 7DCT | F | L | Estate Van FWD CYVB | | GCI53002 | Inner Joint | | | 33 | | | 34 | |
| | 2014.05-2018.08 | 7DCT/6MT | F | L/R | Estate Van FWD CYVB | | GCI82447 | Inner Joint | | | 33 | | | 34 | |
| | 2014.05-2018.08 | | F | L/R | Estate Van FWD CYVB | | GCI83011 | Inner Joint | | | 33 | | | 34 | |
| | 2014.05-2020.08 | 5MT/6MT | F | L | Estate FWD CYVB | | GDS83373 | Drive Shaft | | 36 | | 59.5 | 38 | 511 | |
| | 2014.05-2020.08 | 5MT/6MT | F | R | Estate FWD CYVB | | GDS61307 | Drive Shaft | | 36 | | 59.5 | 40 | 819 | |
| | 2014.05-2020.08 | 5MT/6MT | F | L/R | Estate FWD CYVB | | GCO83037 | Outer Joint | | 36 | 30 | 59.5 | 40.5 | 56 | I |
| | 2014.05-2020.08 | 5MT/6MT | F | R | Estate FWD CYVB | | GCI53002 | Inner Joint | | | 33 | | | 34 | |
| | 2014.05-2020.08 | 5MT/6MT/7DCT | F | L/R | Estate FWD CYVB | | GCI82447 | Inner Joint | | | 33 | | | 34 | |
| | 2014.05-2020.08 | 7DCT | F | L | Estate FWD CYVB | | GDS61282 | Drive Shaft | | 36 | | 59.5 | 40 | 523 | |
| | 2014.05-2020.08 | 7DCT | F | R | Estate FWD CYVB | | GDS61096 | Drive Shaft | | 36 | | 59.5 | 40.5 | 799 | |
| | 2014.05-2020.08 | 7DCT | F | L/R | Estate FWD CYVB | | GCO61059 | Outer Joint | | 36 | 33 | 59.5 | 40 | 59.5 | I |
| | 2014.05-2020.08 | 7DCT | F | L | Estate FWD CYVB | | GCI53002 | Inner Joint | | | 33 | | | 34 | |
| | 2014.05-2020.08 | AT | F | L | Estate FWD CYVB | | GDS83294 | Drive Shaft | | 36 | | 59.5 | 38 | 519 | |
| | 2014.05-2020.08 | | F | L/R | Estate FWD CYVB | | GCI83011 | Inner Joint | | | 33 | | | 34 | |
| 1.4 (81 kw) | 2013.10-2018.08 | 6MT | F | R | Estate FWD CPWA | | GDS61307 | Drive Shaft | | 36 | | 59.5 | 40 | 819 | |
| | 2013.10-2018.08 | 6MT | F | R | Estate FWD CPWA | | GCO83037 | Outer Joint | | 36 | 30 | 59.5 | 40.5 | 56 | I |
| | 2013.10-2018.08 | 6MT | F | L/R | Estate FWD CPWA | | GCI53002 | Inner Joint | | | 33 | | | 34 | |
| | 2013.10-2018.08 | 6MT/7DCT | F | L | Estate FWD CPWA | | GDS61282 | Drive Shaft | | 36 | | 59.5 | 40 | 523 | |
| | 2013.10-2018.08 | 6MT/7DCT | F | L | Estate FWD CPWA | | GCO61059 | Outer Joint | | 36 | 33 | 59.5 | 40 | 59.5 | I |
| | 2013.10-2018.08 | 7DCT | F | R | Estate FWD CPWA | | GDS61096 | Drive Shaft | | 36 | | 59.5 | 40.5 | 799 | |
| | 2013.10-2018.08 | 7DCT | F | L | Estate FWD CPWA | | GCI53002 | Inner Joint | | | 33 | | | 34 | |
| | 2013.10-2018.08 | 7DCT/6MT | F | L/R | Estate FWD CPWA | | GCI82447 | Inner Joint | | | 33 | | | 34 | |
| | 2013.10-2018.08 | | F | L/R | Estate FWD CPWA | Date From:2014.08 | GCI83011 | Inner Joint | | | 33 | | | 34 | |
| 1.4 (90 kw) | 2012.09-2015.06 | 6MT | F | L | Estate FWD CMBA;CXSA | For Engine code:CHPA;Trans. code:MQ200 | GDS61282 | Drive Shaft | | 36 | | 59.5 | 40 | 523 | |
| | 2012.09-2015.06 | 6MT | F | R | Estate FWD CMBA;CXSA | For Engine code:CHPA;Trans. code:MQ200 | GDS61307 | Drive Shaft | | 36 | | 59.5 | 40 | 819 | |
| | 2012.09-2015.06 | 6MT | F | L/R | Estate FWD CMBA;CXSA | | GCO61059 | Outer Joint | | 36 | 33 | 59.5 | 40 | 59.5 | I |
| | 2012.09-2015.06 | 6MT | F | L/R | Estate FWD CMBA;CXSA | | GCI82447 | Inner Joint | | | 33 | | | 34 | |
| | 2012.09-2015.06 | MT | F | L/R | Estate FWD CMBA;CXSA | | GCI83006 | Inner Joint | | | 33 | | | 34 | |
| 1.4 (92 kw) | 2014.05-2018.08 | 6MT | F | L | Estate FWD CZCA | | GDS61282 | Drive Shaft | | 36 | | 59.5 | 40 | 523 | |
| | 2014.05-2018.08 | 6MT | F | R | Estate FWD CZCA | | GDS61307 | Drive Shaft | | 36 | | 59.5 | 40 | 819 | |
| | 2014.05-2018.08 | 6MT | F | L/R | Estate FWD CZCA | | GCO61059 | Outer Joint | | 36 | 33 | 59.5 | 40 | 59.5 | I |

| | YEAR | TRANSM. | F/R | L/R | BODY STYLE & DRIVE TYPE & ENGINE | REMARKS | G-AP Ref. | PRODUCT | ABS | Technical Specifications A | B | C | H | L | P |
|---|---|---|---|---|---|---|---|---|---|---|---|---|---|---|---|
| **SEAT** **Leon ST** | | | | | | | | | | | | | | | |
| 1.4 (92 kw) | 2014.05-2018.08 | 6MT | F | L/R | Estate FWD CZCA | | GCI82447 | Inner Joint | | | 33 | | | 34 | |
| 1.4 (103 kw) | 2013.10-2020.08 | 6MT | F | L | Estate FWD CHPA;CPTA | | GDS61282 | Drive Shaft | | 36 | | 59.5 | 40 | 523 | |
| | 2013.10-2020.08 | 6MT | F | R | Estate FWD CHPA;CPTA | For Engine code:CHPA;Trans. code:MQ250 | GDS61283 | Drive Shaft | | 36 | | 59.5 | 40 | 815 | |
| | 2013.10-2020.08 | 6MT | F | R | Estate FWD CHPA;CPTA | For Engine code:CHPA;Trans. code:MQ200 | GDS61307 | Drive Shaft | | 36 | | 59.5 | 40 | 819 | |
| | 2013.10-2020.08 | 6MT | F | L/R | Estate FWD CHPA;CPTA | | GCO61059 | Outer Joint | | 36 | 33 | 59.5 | 40 | 59.5 | I |
| | 2013.10-2020.08 | 6MT | F | L/R | Estate FWD CHPA;CPTA | | GCI82447 | Inner Joint | | | 33 | | | 34 | |
| | 2013.10-2020.08 | 7AT/6MT | F | L/R | Estate FWD CHPA;CPTA | | GCI83016 | Inner Joint | | | 28 | | | 32 | |
| | 2013.10-2020.08 | 7DCT | F | L | Estate FWD CHPA;CPTA | | GDS61100 | Drive Shaft | | 36 | | 59.5 | 40 | 513 | |
| | 2013.10-2020.08 | 7DCT | F | R | Estate FWD CHPA;CPTA | | GDS83313 | Drive Shaft | | 36 | | 59.5 | 40 | 792 | |
| | 2013.10-2020.08 | 7DCT | F | L/R | Estate FWD CHPA;CPTA | | GCO83101 | Outer Joint | | 36 | 27 | 59.5 | 40 | 65 | M |
| | 2013.10-2020.08 | MT | F | L | Estate FWD CHPA;CPTA | | GDS83294 | Drive Shaft | | 36 | | 59.5 | 38 | 519 | |
| | 2013.10-2020.08 | MT | F | L | Estate FWD CHPA;CPTA | | GCO83037 | Outer Joint | | 36 | 30 | 59.5 | 40.5 | 56 | I |
| 1.4 (110 kw) | 2014.05-2020.08 | 6MT | F | L | Estate FWD CZEA | | GDS61282 | Drive Shaft | | 36 | | 59.5 | 40 | 523 | |
| | 2014.05-2020.08 | 6MT | F | R | Estate FWD CZEA | | GDS61283 | Drive Shaft | | 36 | | 59.5 | 40 | 815 | |
| | 2014.05-2020.08 | 6MT | F | L/R | Estate FWD CZEA | | GCO61059 | Outer Joint | | 36 | 33 | 59.5 | 40 | 59.5 | I |
| | 2014.05-2020.08 | 6MT | F | L/R | Estate FWD CZEA | | GCI53002 | Inner Joint | | | 33 | | | 34 | |
| | 2014.05-2020.08 | 6MT | F | L/R | Estate FWD CZEA | | GCI82447 | Inner Joint | | | 33 | | | 34 | |
| | 2014.05-2020.08 | 7AT/6MT | F | L/R | Estate FWD CZEA | | GCI83016 | Inner Joint | | | 28 | | | 32 | |
| | 2014.05-2020.08 | 7DCT | F | L | Estate FWD CZEA | | GDS61100 | Drive Shaft | | 36 | | 59.5 | 40 | 513 | |
| | 2014.05-2020.08 | 7DCT | F | R | Estate FWD CZEA | | GDS83313 | Drive Shaft | | 36 | | 59.5 | 40 | 792 | |
| | 2014.05-2020.08 | 7DCT | F | L/R | Estate FWD CZEA | | GCO83101 | Outer Joint | | 36 | 27 | 59.5 | 40 | 65 | M |
| | 2014.05-2020.08 | 6MT | F | L | Estate Van FWD CZEA;CZDA | | GDS61282 | Drive Shaft | | 36 | | 59.5 | 40 | 523 | |
| | 2014.05-2020.08 | 6MT | F | R | Estate Van FWD CZEA;CZDA | | GDS61283 | Drive Shaft | | 36 | | 59.5 | 40 | 815 | |
| | 2014.05-2020.08 | 6MT | F | L/R | Estate Van FWD CZEA;CZDA | | GCO61059 | Outer Joint | | 36 | 33 | 59.5 | 40 | 59.5 | I |
| | 2014.05-2020.08 | 6MT | F | L/R | Estate Van FWD CZEA;CZDA | | GCI82447 | Inner Joint | | | 33 | | | 34 | |
| | 2014.05-2020.08 | 7AT/6MT | F | L/R | Estate Van FWD CZEA;CZDA | | GCI83016 | Inner Joint | | | 28 | | | 32 | |
| | 2014.05-2020.08 | 7DCT | F | L | Estate Van FWD CZEA;CZDA | | GDS61100 | Drive Shaft | | 36 | | 59.5 | 40 | 513 | |
| | 2014.05-2020.08 | 7DCT | F | R | Estate Van FWD CZEA;CZDA | | GDS83313 | Drive Shaft | | 36 | | 59.5 | 40 | 792 | |
| | 2014.05-2020.08 | 7DCT | F | L/R | Estate Van FWD CZEA;CZDA | | GCO83101 | Outer Joint | | 36 | 27 | 59.5 | 40 | 65 | M |
| 1.5 (96 kw) | 2018.09-2020.08 | 6MT | F | L | Estate FWD DACA;DPBA | | GDS61282 | Drive Shaft | | 36 | | 59.5 | 40 | 523 | |
| | 2018.09-2020.08 | 6MT | F | R | Estate FWD DACA;DPBA | | GDS84416 | Drive Shaft | | 36 | | 59.5 | 40 | 800 | |
| | 2018.09-2020.08 | 6MT | F | L/R | Estate FWD DACA;DPBA | | GCO61059 | Outer Joint | | 36 | 33 | 59.5 | 40 | 59.5 | I |
| | 2018.09-2020.08 | 6MT | F | L/R | Estate FWD DACA;DPBA | | GCI53002 | Inner Joint | | | 33 | | | 34 | |
| | 2018.09-2020.08 | 6MT | F | L/R | Estate FWD DACA;DPBA | | GCI82447 | Inner Joint | | | 33 | | | 34 | |
| | 2018.10-2020.08 | 6MT | F | L | Estate FWD DHFA | | GDS61282 | Drive Shaft | | 36 | | 59.5 | 40 | 523 | |
| | 2018.10-2020.08 | 6MT | F | R | Estate FWD DHFA | | GDS84416 | Drive Shaft | | 36 | | 59.5 | 40 | 800 | |
| | 2018.10-2020.08 | 6MT | F | L/R | Estate FWD DHFA | | GCO61059 | Outer Joint | | 36 | 33 | 59.5 | 40 | 59.5 | I |
| | 2018.10-2020.08 | 6MT | F | R | Estate FWD DHFA | | GCI53002 | Inner Joint | | | 33 | | | 34 | |
| | 2018.10-2020.08 | 6MT | F | L/R | Estate FWD DHFA | | GCI82447 | Inner Joint | | | 33 | | | 34 | |
| | 2018.10-2020.08 | 7DCT | F | L | Estate FWD DHFA | | GDS61100 | Drive Shaft | | 36 | | 59.5 | 40 | 513 | |
| | 2018.10-2020.08 | 7DCT | F | R | Estate FWD DHFA | | GDS84503 | Drive Shaft | | 36 | 40 | 59.5 | 40 | 817 | |
| | 2018.10-2020.08 | 7DCT | F | L | Estate FWD DHFA | | GCO83101 | Outer Joint | | 36 | 27 | 59.5 | 40 | 65 | M |
| | 2018.10-2020.08 | 7DCT | F | R | Estate FWD DHFA | | GCO61059 | Outer Joint | | 36 | 33 | 59.5 | 40 | 59.5 | I |
| | 2018.10-2020.08 | 7DCT | F | L | Estate FWD DHFA | | GCI83016 | Inner Joint | | | 28 | | | 32 | |
| | 2018.10-2020.08 | 7DCT | F | R | Estate FWD DHFA | | GCI61090 | Inner Joint | | 40 | 28 | 46.9 | | 133.2 | |
| 1.5 (110 kw) | 2018.09-2020.08 | 6MT | F | L | Estate FWD DADA;DPCA | | GDS61282 | Drive Shaft | | 36 | | 59.5 | 40 | 523 | |
| | 2018.09-2020.08 | 6MT | F | R | Estate FWD DADA;DPCA | | GDS58110 | Drive Shaft | | 36 | | 59.5 | 40 | 793 | |
| | 2018.09-2020.08 | 6MT | F | L/R | Estate FWD DADA;DPCA | | GCO61059 | Outer Joint | | 36 | 33 | 59.5 | 40 | 59.5 | I |
| | 2018.09-2020.08 | 6MT | F | L/R | Estate FWD DADA;DPCA | | GCI82447 | Inner Joint | | | 33 | | | 34 | |
| | 2018.09-2020.08 | 7AT/6MT | F | L | Estate FWD DADA;DPCA | | GCI83016 | Inner Joint | | | 28 | | | 32 | |
| | 2018.09-2020.08 | 7DCT | F | L | Estate FWD DADA;DPCA | | GDS61100 | Drive Shaft | | 36 | | 59.5 | 40 | 513 | |
| | 2018.09-2020.08 | 7DCT | F | R | Estate FWD DADA;DPCA | | GDS84503 | Drive Shaft | | 36 | 40 | 59.5 | 40 | 817 | |
| | 2018.09-2020.08 | 7DCT | F | L/R | Estate FWD DADA;DPCA | | GCO83101 | Outer Joint | | 36 | 27 | 59.5 | 40 | 65 | M |
| | 2018.09-2020.08 | 7DCT | F | R | Estate FWD DADA;DPCA | | GCI61090 | Inner Joint | | 40 | 28 | 46.9 | | 133.2 | |
| 1.6 (66 kw) | 2013.11-2018.08 | 5MT | F | L | Estate FWD CLHB;DDYB;CXXA | | GDS83294 | Drive Shaft | | 36 | | 59.5 | 38 | 519 | |
| | 2013.11-2018.08 | 5MT | F | R | Estate FWD CLHB;DDYB;CXXA | | GDS61042 | Drive Shaft | | 36 | | 59.5 | 40.5 | 814 | |
| | 2013.11-2018.08 | 5MT | F | R | Estate FWD CLHB;DDYB;CXXA | | GDS61283 | Drive Shaft | | 36 | | 59.5 | 40 | 815 | |
| | 2013.11-2018.08 | 5MT | F | L/R | Estate FWD CLHB;DDYB;CXXA | | GCI82447 | Inner Joint | | | 33 | | | 34 | |
| | 2013.11-2018.08 | MT | F | L/R | Estate FWD CLHB;DDYB;CXXA | | GCO83037 | Outer Joint | | 36 | 30 | 59.5 | 40.5 | 56 | I |
| | 2013.11-2018.08 | MT/5MT | F | R | Estate FWD CLHB;DDYB;CXXA | | GCI53002 | Inner Joint | | | 33 | | | 34 | |
| | 2013.11-2018.08 | | F | L/R | Estate FWD CLHB;DDYB;CXXA | | GCI83011 | Inner Joint | | | 33 | | | 34 | |
| 1.6 (77 kw) | 2013.10-2020.08 | 5MT | F | L | Estate FWD CLHA | | GDS61282 | Drive Shaft | | 36 | | 59.5 | 40 | 523 | |
| | 2013.10-2020.08 | 5MT | F | R | Estate FWD CLHA | | GDS61042 | Drive Shaft | | 36 | | 59.5 | 40.5 | 814 | |
| | 2013.10-2020.08 | 5MT | F | R | Estate FWD CLHA | | GDS61283 | Drive Shaft | | 36 | | 59.5 | 40 | 815 | |
| | 2013.10-2020.08 | 5MT | F | L/R | Estate FWD CLHA | | GCO61059 | Outer Joint | | 36 | 33 | 59.5 | 40 | 59.5 | I |

| | YEAR | TRANSM. | F/R | L/R | BODY STYLE & DRIVE TYPE & ENGINE | REMARKS | G-AP Ref. | PRODUCT | ABS | Technical Specifications A | B | C | H | L | P |
|---|---|---|---|---|---|---|---|---|---|---|---|---|---|---|---|
| **SEAT** **Leon ST** | | | | | | | | | | | | | | | |
| 1.6 (77 kw) | 2013.10-2020.08 | 5MT | F | L/R | Estate FWD CLHA | | GCI53002 | Inner Joint | | | 33 | | | 34 | |
| | 2013.10-2020.08 | 7DCT | F | R | Estate FWD CLHA | | GDS61096 | Drive Shaft | | 36 | | 59.5 | 40.5 | 799 | |
| | 2013.10-2020.08 | 7DCT/5MT | F | L/R | Estate FWD CLHA | | GCI82447 | Inner Joint | | | 33 | | | 34 | |
| | 2013.10-2020.08 | MT | F | L | Estate FWD CLHA | | GDS83294 | Drive Shaft | | 36 | | 59.5 | 38 | 519 | |
| | 2013.10-2020.08 | MT | F | L | Estate FWD CLHA | | GCO83037 | Outer Joint | | 36 | 30 | 59.5 | 40.5 | 56 | I |
| | 2013.10-2020.08 | | F | L/R | Estate FWD CLHA | | GCI83011 | Inner Joint | | | 33 | | | 34 | |
| | 2014.04-2020.08 | 6AT/6MT | F | R | Estate 4WD CLHA | | GDS81892 | Drive Shaft | | 36 | | 59.5 | 40 | 602 | |
| | 2014.04-2020.08 | 6MT | F | L | Estate 4WD CLHA | | GDS83295 | Drive Shaft | | 36 | | 59.5 | 40 | 491 | |
| | 2014.04-2020.08 | 6MT | F | L | Estate 4WD CLHA | | GCO83101 | Outer Joint | | 36 | 27 | 59.5 | 40 | 65 | M |
| | 2014.04-2020.08 | 6MT | F | L | Estate 4WD CLHA | | GCI61069 | Inner Joint | | | 28 | | | 32 | |
| | 2014.04-2020.08 | | F | L/R | Estate 4WD CLHA | | GCI83016 | Inner Joint | | | 28 | | | 32 | |
| | 2014.04-2020.08 | 6MT | R | L | Estate 4WD CLHA | | GDS61286 | Drive Shaft | | 36 | | 59.5 | 40 | 587 | |
| | 2014.04-2020.08 | 6MT | R | R | Estate 4WD CLHA | | GDS61287 | Drive Shaft | | 36 | | 59.5 | 40 | 632 | |
| | 2014.04-2020.08 | 6MT | R | L/R | Estate 4WD CLHA | | GCI35026 | Outer Joint | | 36 | 33 | 59.5 | 40 | 61 | |
| | 2014.04-2020.08 | 6MT | R | L/R | Estate 4WD CLHA | | GCI61103 | Inner Joint | | | 33 | | | 32 | |
| 1.6 (81 kw) | 2013.09-2020.08 | 5MT | F | L | Estate FWD CRKB;CXXB;DBKA | | GDS83294 | Drive Shaft | | 36 | | 59.5 | 38 | 519 | |
| | 2013.09-2020.08 | 5MT | F | L | Estate FWD CRKB;CXXB;DBKA | | GCO83037 | Outer Joint | | 36 | 30 | 59.5 | 40.5 | 56 | I |
| | 2013.09-2020.08 | 5MT | F | L/R | Estate FWD CRKB;CXXB;DBKA | | GCO61059 | Outer Joint | | 36 | 33 | 59.5 | 40 | 59.5 | I |
| | 2013.09-2020.08 | 5MT/6MT | F | R | Estate FWD CRKB;CXXB;DBKA | | GDS61283 | Drive Shaft | | 36 | | 59.5 | 40 | 815 | |
| | 2013.09-2020.08 | 5MT/6MT | F | L/R | Estate FWD CRKB;CXXB;DBKA | | GCI53002 | Inner Joint | | | 33 | | | 34 | |
| | 2013.09-2020.08 | 5MT/6MT/7DCT | F | L | Estate FWD CRKB;CXXB;DBKA | | GDS61282 | Drive Shaft | | 36 | | 59.5 | 40 | 523 | |
| | 2013.09-2020.08 | 5MT/6MT/7DCT | F | L/R | Estate FWD CRKB;CXXB;DBKA | | GCI82447 | Inner Joint | | | 33 | | | 34 | |
| | 2013.09-2020.08 | 7DCT | F | R | Estate FWD CRKB;CXXB;DBKA | | GDS61096 | Drive Shaft | | 36 | | 59.5 | 40.5 | 799 | |
| | 2013.09-2020.08 | 7DCT | F | L | Estate FWD CRKB;CXXB;DBKA | | GCI53002 | Inner Joint | | | 33 | | | 34 | |
| | 2013.09-2020.08 | | F | L/R | Estate FWD CRKB;CXXB;DBKA | | GCI83011 | Inner Joint | | | 33 | | | 34 | |
| | 2013.09-2020.08 | 5MT | F | L/R | Estate Van FWD CRKB;CXXB;DBKA | | GCO61059 | Outer Joint | | 36 | 33 | 59.5 | 40 | 59.5 | I |
| | 2013.09-2020.08 | 5MT/6MT/7DCT | F | L | Estate Van FWD CRKB;CXXB;DBKA | No Economy | GDS61282 | Drive Shaft | | 36 | | 59.5 | 40 | 523 | |
| | 2013.09-2020.08 | 5MT/6MT/7DCT | F | L | Estate Van FWD CRKB;CXXB;DBKA | Economy | GDS83294 | Drive Shaft | | 36 | | 59.5 | 38 | 519 | |
| | 2013.09-2020.08 | 6MT | F | R | Estate Van FWD CRKB;CXXB;DBKA | | GDS61283 | Drive Shaft | | 36 | | 59.5 | 40 | 815 | |
| | 2013.09-2020.08 | 6MT | F | L/R | Estate Van FWD CRKB;CXXB;DBKA | | GCI53002 | Inner Joint | | | 33 | | | 34 | |
| | 2013.09-2020.08 | 7DCT | F | R | Estate Van FWD CRKB;CXXB;DBKA | | GDS61096 | Drive Shaft | | 36 | | 59.5 | 40.5 | 799 | |
| | 2013.09-2020.08 | 7DCT | F | L | Estate Van FWD CRKB;CXXB;DBKA | | GCI53002 | Inner Joint | | | 33 | | | 34 | |
| | 2013.09-2020.08 | 7DCT/5MT/6MT | F | L/R | Estate Van FWD CRKB;CXXB;DBKA | | GCI82447 | Inner Joint | | | 33 | | | 34 | |
| | 2013.09-2020.08 | | F | L/R | Estate Van FWD CRKB;CXXB;DBKA | | GCI83011 | Inner Joint | | | 33 | | | 34 | |
| | 2014.11-2020.08 | 6AT/6MT | F | R | Estate 4WD CXXB | | GDS81892 | Drive Shaft | | 36 | | 59.5 | 40 | 602 | |
| | 2014.11-2020.08 | 6MT | F | L | Estate 4WD CXXB | | GDS83295 | Drive Shaft | | 36 | | 59.5 | 40 | 491 | |
| | 2014.11-2020.08 | 6MT | F | L | Estate 4WD CXXB | | GCO83101 | Outer Joint | | 36 | 27 | 59.5 | 40 | 65 | M |
| | 2014.11-2020.08 | 6MT | F | L | Estate 4WD CXXB | | GCI61069 | Inner Joint | | | 28 | | | 32 | |
| | 2014.11-2020.08 | | F | L/R | Estate 4WD CXXB | | GCI83016 | Inner Joint | | | 28 | | | 32 | |
| | 2014.11-2020.08 | 6MT | R | L | Estate 4WD CXXB | | GDS61286 | Drive Shaft | | 36 | | 59.5 | 40 | 587 | |
| | 2014.11-2020.08 | 6MT | R | R | Estate 4WD CXXB | | GDS61287 | Drive Shaft | | 36 | | 59.5 | 40 | 632 | |
| | 2014.11-2020.08 | 6MT | R | L/R | Estate 4WD CXXB | | GCI35026 | Outer Joint | | 36 | 33 | 59.5 | 40 | 61 | |
| | 2014.11-2020.08 | 6MT | R | L/R | Estate 4WD CXXB | | GCI61103 | Inner Joint | | | 33 | | | 32 | |
| 1.6 (85 kw) | 2016.11-2020.08 | 5MT | F | R | Estate FWD DDYA;DGTE | | GDS61042 | Drive Shaft | | 36 | | 59.5 | 40.5 | 814 | |
| | 2016.11-2020.08 | 5MT | F | R | Estate FWD DDYA;DGTE | | GDS61283 | Drive Shaft | | 36 | | 59.5 | 40 | 815 | |
| | 2016.11-2020.08 | 5MT | F | L/R | Estate FWD DDYA;DGTE | | GCI53002 | Inner Joint | | | 33 | | | 34 | |
| | 2016.11-2020.08 | 5MT/7DCT | F | L | Estate FWD DDYA;DGTE | | GDS61282 | Drive Shaft | | 36 | | 59.5 | 40 | 523 | |
| | 2016.11-2020.08 | 5MT/7DCT | F | L/R | Estate FWD DDYA;DGTE | | GCO61059 | Outer Joint | | 36 | 33 | 59.5 | 40 | 59.5 | I |
| | 2016.11-2020.08 | 7DCT | F | R | Estate FWD DDYA;DGTE | | GDS61096 | Drive Shaft | | 36 | | 59.5 | 40.5 | 799 | |
| | 2016.11-2020.08 | 7DCT | F | L | Estate FWD DDYA;DGTE | | GCI53002 | Inner Joint | | | 33 | | | 34 | |
| | 2016.11-2020.08 | 7DCT/5MT | F | L/R | Estate FWD DDYA;DGTE | | GCI82447 | Inner Joint | | | 33 | | | 34 | |
| | 2016.11-2020.08 | | F | L/R | Estate FWD DDYA;DGTE | | GCI83011 | Inner Joint | | | 33 | | | 34 | |
| | 2016.11-2020.08 | 5MT | F | R | Estate Van FWD DDYA | | GDS61042 | Drive Shaft | | 36 | | 59.5 | 40.5 | 814 | |
| | 2016.11-2020.08 | 5MT | F | R | Estate Van FWD DDYA | | GDS61283 | Drive Shaft | | 36 | | 59.5 | 40 | 815 | |
| | 2016.11-2020.08 | 5MT | F | L/R | Estate Van FWD DDYA | | GCI53002 | Inner Joint | | | 33 | | | 34 | |
| | 2016.11-2020.08 | 5MT/7DCT | F | L | Estate Van FWD DDYA | | GDS61282 | Drive Shaft | | 36 | | 59.5 | 40 | 523 | |
| | 2016.11-2020.08 | 5MT/7DCT | F | L/R | Estate Van FWD DDYA | | GCO61059 | Outer Joint | | 36 | 33 | 59.5 | 40 | 59.5 | I |
| | 2016.11-2020.08 | 7DCT | F | R | Estate Van FWD DDYA | | GDS61096 | Drive Shaft | | 36 | | 59.5 | 40.5 | 799 | |
| | 2016.11-2020.08 | 7DCT | F | L | Estate Van FWD DDYA | | GCI53002 | Inner Joint | | | 33 | | | 34 | |
| | 2016.11-2020.08 | 7DCT/5MT | F | L/R | Estate Van FWD DDYA | | GCI82447 | Inner Joint | | | 33 | | | 34 | |
| | 2016.11-2020.08 | | F | L/R | Estate Van FWD DDYA | | GCI83011 | Inner Joint | | | 33 | | | 34 | |
| | 2018.07-2020.08 | 6MT | R | L | Estate 4WD DGTE | | GDS61286 | Drive Shaft | | 36 | | 59.5 | 40 | 587 | |
| | 2018.07-2020.08 | 6MT | R | R | Estate 4WD DGTE | | GDS61287 | Drive Shaft | | 36 | | 59.5 | 40 | 632 | |
| | 2018.07-2020.08 | 6MT | R | L/R | Estate 4WD DGTE | | GCI35026 | Outer Joint | | 36 | 33 | 59.5 | 40 | 61 | |
| | 2018.07-2020.08 | 6MT | R | L/R | Estate 4WD DGTE | | GCI61103 | Inner Joint | | | 33 | | | 32 | |

| | YEAR | TRANSM. | F/R | L/R | BODY STYLE & DRIVE TYPE & ENGINE | REMARKS | G-AP Ref. | PRODUCT | ABS | Technical Specifications A | B | C | H | L | P |
|---|---|---|---|---|---|---|---|---|---|---|---|---|---|---|---|
| **SEAT** **Leon ST** | | | | | | | | | | | | | | | |
| 1.8 (132 kw) | 2013.10-2018.08 | 6MT | F | L | Estate FWD CJSA | | GDS61100 | Drive Shaft | | 36 | | 59.5 | 40 | 513 | |
| | 2013.10-2018.08 | 6MT | F | R | Estate FWD CJSA | | GDS61101 | Drive Shaft | | 36 | | 59.5 | 40 | 803 | |
| | 2013.10-2018.08 | 6MT | F | L/R | Estate FWD CJSA | | GCO83101 | Outer Joint | | 36 | 27 | 59.5 | 40 | 65 | M |
| | 2013.10-2018.08 | 7AT/6MT | F | L/R | Estate FWD CJSA | | GCI83016 | Inner Joint | | | 28 | | | 32 | |
| | 2013.10-2018.08 | 7DCT | F | R | Estate FWD CJSA | Date to:2016.02 | GDS61147 | Drive Shaft | | 36 | | 59.5 | 40 | 795 | |
| | 2013.10-2018.08 | 7DCT | F | R | Estate FWD CJSA | Date from:2016.03 | GDS83313 | Drive Shaft | | 36 | | 59.5 | 40 | 792 | |
| | 2013.10-2018.08 | 7DCT | F | L | Estate FWD CJSA | | GCI61069 | Inner Joint | | | 28 | | | 32 | |
| | 2013.10-2018.08 | 6MT | F | L | Estate Van FWD CJSA | | GDS61100 | Drive Shaft | | 36 | | 59.5 | 40 | 513 | |
| | 2013.10-2018.08 | 6MT | F | R | Estate Van FWD CJSA | | GDS61101 | Drive Shaft | | 36 | | 59.5 | 40 | 803 | |
| | 2013.10-2018.08 | 7AT/6MT | F | L/R | Estate Van FWD CJSA | Transmission:7DCT,Posission:Right | GCI83016 | Inner Joint | | | 28 | | | 32 | |
| | 2013.10-2018.08 | 7DCT | F | R | Estate Van FWD CJSA | Date to:2016.02 | GDS61147 | Drive Shaft | | 36 | | 59.5 | 40 | 795 | |
| | 2013.10-2018.08 | 7DCT | F | R | Estate Van FWD CJSA | Date from:2016.03 | GDS83313 | Drive Shaft | | 36 | | 59.5 | 40 | 792 | |
| | 2013.10-2018.08 | 7DCT | F | L | Estate Van FWD CJSA | Facelift | GCI61069 | Inner Joint | | | 28 | | | 32 | |
| | 2013.10-2018.08 | DCT/6MT | F | L/R | Estate Van FWD CJSA | | GCO83101 | Outer Joint | | 36 | 27 | 59.5 | 40 | 65 | M |
| | 2014.11-2018.08 | 6AT | F | L | Estate 4WD CJSA;CJSB | | GDS83295 | Drive Shaft | | 36 | | 59.5 | 40 | 491 | |
| | 2014.11-2018.08 | 6AT/6MT | F | R | Estate 4WD CJSA;CJSB | | GDS81892 | Drive Shaft | | 36 | | 59.5 | 40 | 602 | |
| | 2014.11-2018.08 | 6MT | F | L/R | Estate 4WD CJSA;CJSB | | GCI83016 | Inner Joint | | | 28 | | | 32 | |
| | 2014.11-2018.08 | AT/6MT | F | L/R | Estate 4WD CJSA;CJSB | | GCO83101 | Outer Joint | | 36 | 27 | 59.5 | 40 | 65 | M |
| | 2014.11-2018.08 | | F | L | Estate 4WD CJSA;CJSB | | GCI61069 | Inner Joint | | | 28 | | | 32 | |
| | 2014.11-2018.08 | 6AT | R | L | Estate 4WD CJSA;CJSB | | GDS61286 | Drive Shaft | | 36 | | 59.5 | 40 | 587 | |
| | 2014.11-2018.08 | 6AT | R | R | Estate 4WD CJSA;CJSB | | GDS61287 | Drive Shaft | | 36 | | 59.5 | 40 | 632 | |
| | 2014.11-2018.08 | 6AT | R | L/R | Estate 4WD CJSA;CJSB | | GCI35026 | Outer Joint | | 36 | 33 | 59.5 | 40 | 61 | |
| | 2014.11-2018.08 | 6DCT | R | L/R | Estate 4WD CJSA;CJSB | | GCI61103 | Inner Joint | | | 33 | | | 32 | |
| | 2014.11-2018.08 | 6DCT | R | L/R | Estate 4WD CJSA;CJSB | | GCI83008 | Inner Joint | | | 33 | | | 32 | |
| 2.0 (81 kw) | 2013.02-2016.12 | 5MT | F | L | Estate FWD CRVA;CRLD | | GDS61282 | Drive Shaft | | 36 | | 59.5 | 40 | 523 | |
| | 2013.02-2016.12 | 5MT | F | L | Estate FWD CRVA;CRLD | | GDS83294 | Drive Shaft | | 36 | | 59.5 | 38 | 519 | |
| | 2013.02-2016.12 | 5MT | F | R | Estate FWD CRVA;CRLD | | GDS61283 | Drive Shaft | | 36 | | 59.5 | 40 | 815 | |
| | 2013.02-2016.12 | 5MT | F | L | Estate FWD CRVA;CRLD | | GCO83037 | Outer Joint | | 36 | 30 | 59.5 | 40.5 | 56 | I |
| | 2013.02-2016.12 | 5MT | F | L/R | Estate FWD CRVA;CRLD | | GCO61059 | Outer Joint | | 36 | 33 | 59.5 | 40 | 59.5 | I |
| | 2013.02-2016.12 | 5MT | F | L/R | Estate FWD CRVA;CRLD | | GCI53002 | Inner Joint | | | 33 | | | 34 | |
| | 2013.02-2016.12 | 5MT | F | L/R | Estate FWD CRVA;CRLD | | GCI82447 | Inner Joint | | | 33 | | | 34 | |
| | 2013.02-2016.12 | | F | L/R | Estate FWD CRVA;CRLD | | GCI83011 | Inner Joint | | | 33 | | | 34 | |
| 2.0 (105 kw) | 2013.10-2018.08 | 6MT | F | L | Estate FWD CRVC | | GDS83295 | Drive Shaft | | 36 | | 59.5 | 40 | 491 | |
| | 2013.10-2018.08 | 6MT | F | R | Estate FWD CRVC | | GDS83313 | Drive Shaft | | 36 | | 59.5 | 40 | 792 | |
| | 2013.10-2018.08 | 6MT | F | L/R | Estate FWD CRVC | | GCO83101 | Outer Joint | | 36 | 27 | 59.5 | 40 | 65 | M |
| | 2013.10-2018.08 | 6MT | F | L | Estate FWD CRVC | | GCI61069 | Inner Joint | | | 28 | | | 32 | |
| | 2013.10-2018.08 | 6MT | F | L/R | Estate FWD CRVC | | GCI83016 | Inner Joint | | | 28 | | | 32 | |
| | 2013.10-2018.08 | AT | F | L | Estate FWD CRVC | | GDS61285 | Drive Shaft | | 36 | | 59.5 | 40 | 472 | |
| 2.0 (110 kw) | 2013.04-2018.08 | 6DCT | F | L | Estate Van FWD CKFC;CRMB;CRLB;CRBC | | GDS61285 | Drive Shaft | | 36 | | 59.5 | 40 | 472 | |
| | 2013.04-2018.08 | 6DCT | F | R | Estate Van FWD CKFC;CRMB;CRLB;CRBC | | GDS83354 | Drive Shaft | | 36 | | 59.5 | 40 | 763 | |
| | 2013.04-2018.08 | 6DCT | F | L/R | Estate Van FWD CKFC;CRMB;CRLB;CRBC | | GCI61057 | Inner Joint | | | 34 | | | 89 | |
| | 2013.04-2018.08 | 6MT | F | L | Estate Van FWD CKFC;CRMB;CRLB;CRBC | | GDS83295 | Drive Shaft | | 36 | | 59.5 | 40 | 491 | |
| | 2013.04-2018.08 | 6MT | F | R | Estate Van FWD CKFC;CRMB;CRLB;CRBC | | GDS83313 | Drive Shaft | | 36 | | 59.5 | 40 | 792 | |
| | 2013.04-2018.08 | 6MT | F | L | Estate Van FWD CKFC;CRMB;CRLB;CRBC | | GCI61069 | Inner Joint | | | 28 | | | 32 | |
| | 2013.04-2018.08 | 6MT | F | L/R | Estate Van FWD CKFC;CRMB;CRLB;CRBC | | GCI83016 | Inner Joint | | | 28 | | | 32 | |
| | 2013.04-2018.08 | 6MT/6DCT | F | L/R | Estate Van FWD CKFC;CRMB;CRLB;CRBC | Transmission:6DCT,Engine code:CRBC/CKFC/CRMB/CRLB;Transmission:6MT | GCO83101 | Outer Joint | | 36 | 27 | 59.5 | 40 | 65 | M |
| | 2013.10-2020.08 | 6AT | F | L | Estate FWD CKFC;CRMB;CRLB;CRBC;DFFA;DFGA | | GDS83241 | Drive Shaft | | 36 | | 59.5 | 40 | 475 | |
| | 2013.10-2020.08 | 6AT | F | R | Estate FWD CKFC;CRMB;CRLB;CRBC;DFFA;DFGA | | GDS54011 | Drive Shaft | | 36 | | 59.5 | 40 | 755 | |
| | 2013.10-2020.08 | 6DCT | F | L | Estate FWD CKFC;CRMB;CRLB;CRBC;DFFA;DFGA | | GDS61285 | Drive Shaft | | 36 | | 59.5 | 40 | 472 | |
| | 2013.10-2020.08 | 6DCT | F | R | Estate FWD CKFC;CRMB;CRLB;CRBC;DFFA;DFGA | | GDS83354 | Drive Shaft | | 36 | | 59.5 | 40 | 763 | |
| | 2013.10-2020.08 | 6DCT | F | L/R | Estate FWD CKFC;CRMB;CRLB;CRBC;DFFA;DFGA | | GCI61057 | Inner Joint | | | 34 | | | 89 | |
| | 2013.10-2020.08 | 6MT | F | L | Estate FWD CKFC;CRMB;CRLB;CRBC;DFFA;DFGA | | GDS83295 | Drive Shaft | | 36 | | 59.5 | 40 | 491 | |
| | 2013.10-2020.08 | 6MT | F | R | Estate FWD CKFC;CRMB;CRLB;CRBC;DFFA;DFGA | | GDS83313 | Drive Shaft | | 36 | | 59.5 | 40 | 792 | |
| | 2013.10-2020.08 | 6MT | F | L | Estate FWD CKFC;CRMB;CRLB;CRBC;DFFA;DFGA | | GCI61069 | Inner Joint | | | 28 | | | 32 | |
| | 2013.10-2020.08 | 6MT | F | L/R | Estate FWD CKFC;CRMB;CRLB;CRBC;DFFA;DFGA | | GCI83016 | Inner Joint | | | 28 | | | 32 | |
| | 2013.10-2020.08 | 6MT/6DCT/7DCT | F | L/R | Estate FWD CKFC;CRMB;CRLB;CRBC;DFFA;DFGA | | GCO83101 | Outer Joint | | 36 | 27 | 59.5 | 40 | 65 | M |
| | 2013.10-2020.08 | 7DCT | F | L | Estate FWD CKFC;CRMB;CRLB;CRBC;DFFA;DFGA | | GDS81265 | Drive Shaft | | 36 | 37 | 59.5 | 40 | 557 | |
| | 2013.10-2020.08 | 7DCT | F | R | Estate FWD CKFC;CRMB;CRLB;CRBC;DFFA;DFGA | | GDS83612 | Drive Shaft | | 36 | 37 | 59.5 | 40 | 907 | |
| | 2013.10-2020.08 | 7DCT | F | L | Estate FWD CKFC;CRMB;CRLB;CRBC;DFFA;DFGA | | GCI81158 | Inner Joint | | 37 | 34 | 34.5 | 65.5 | 83 | |
| | 2013.10-2020.08 | 7DCT | F | R | Estate FWD CKFC;CRMB;CRLB;CRBC;DFFA;DFGA | | GCI82108 | Inner Joint | | 37 | 34 | 40 | 77.5 | 103.5 | |
| | 2013.10-2020.08 | MT | F | R | Estate FWD CKFC;CRMB;CRLB;CRBC;DFFA;DFGA | | GDS61126 | Drive Shaft | | 36 | | 59.5 | 40 | 793 | |
| | 2014.04-2020.08 | 6AT/6MT | F | R | Estate 4WD CRMB;CRLB;CRBC;DFGA;DCYA | | GDS81892 | Drive Shaft | | 36 | | 59.5 | 40 | 602 | |
| | 2014.04-2020.08 | 6DCT | F | L/R | Estate 4WD CRMB;CRLB;CRBC;DFGA;DCYA | | GCI61057 | Inner Joint | | | 34 | | | 89 | |
| | 2014.04-2020.08 | 6MT | F | L | Estate 4WD CRMB;CRLB;CRBC;DFGA;DCYA | | GDS83295 | Drive Shaft | | 36 | | 59.5 | 40 | 491 | |
| | 2014.04-2020.08 | 6MT | F | L/R | Estate 4WD CRMB;CRLB;CRBC;DFGA;DCYA | | GCO83101 | Outer Joint | | 36 | 27 | 59.5 | 40 | 65 | M |

| | YEAR | TRANSM. | F/R | L/R | BODY STYLE & DRIVE TYPE & ENGINE | REMARKS | G-AP Ref. | PRODUCT | ABS | Technical Specifications A | B | C | H | L | P |
|---|---|---|---|---|---|---|---|---|---|---|---|---|---|---|---|
| **SEAT** **Leon ST** | | | | | | | | | | | | | | | |
| 2.0 (110 kw) | 2014.04-2020.08 | 6MT | F | L | Estate 4WD CRMB;CRLB;CRBC;DFGA;DCYA | | GCI61069 | Inner Joint | | | 28 | | | 32 | |
| | 2014.04-2020.08 | 6MT | F | L/R | Estate 4WD CRMB;CRLB;CRBC;DFGA;DCYA | | GCI83016 | Inner Joint | | | 28 | | | 32 | |
| | 2014.04-2020.08 | 7DCT | F | L | Estate 4WD CRMB;CRLB;CRBC;DFGA;DCYA | | GDS81265 | Drive Shaft | | 36 | 37 | 59.5 | 40 | 557 | |
| | 2014.04-2020.08 | 7DCT | F | R | Estate 4WD CRMB;CRLB;CRBC;DFGA;DCYA | Date From:2017.10 | GDS81893 | Drive Shaft | | 36 | | 59.5 | 40 | 575 | |
| | 2014.04-2020.08 | 7DCT | F | L | Estate 4WD CRMB;CRLB;CRBC;DFGA;DCYA | | GCI81158 | Inner Joint | | 37 | 34 | 34.5 | 65.5 | 83 | |
| | 2014.04-2020.08 | 7AT/6MT | R | L | Estate 4WD CRMB;CRLB;CRBC;DFGA;DCYA | | GDS61286 | Drive Shaft | | 36 | | 59.5 | 40 | 587 | |
| | 2014.04-2020.08 | 7AT/6MT | R | R | Estate 4WD CRMB;CRLB;CRBC;DFGA;DCYA | | GDS61287 | Drive Shaft | | 36 | | 59.5 | 40 | 632 | |
| | 2014.04-2020.08 | 7AT/6MT | R | L/R | Estate 4WD CRMB;CRLB;CRBC;DFGA;DCYA | | GCI35026 | Outer Joint | | 36 | 33 | 59.5 | 40 | 61 | |
| | 2014.04-2020.08 | 7DCT/6MT | R | L/R | Estate 4WD CRMB;CRLB;CRBC;DFGA;DCYA | | GCI61103 | Inner Joint | | | 33 | | | 32 | |
| | 2014.04-2020.08 | 7DCT/6MT | R | L/R | Estate 4WD CRMB;CRLB;CRBC;DFGA;DCYA | | GCI83008 | Inner Joint | | | 33 | | | 32 | |
| | 2014.09-2018.08 | 6AT/6MT | F | R | Estate Van 4WD CRLB;CRBC | | GDS81892 | Drive Shaft | | 36 | | 59.5 | 40 | 602 | |
| | 2014.09-2018.08 | 6MT | F | L | Estate Van 4WD CRLB;CRBC | | GDS83295 | Drive Shaft | | 36 | | 59.5 | 40 | 491 | |
| | 2014.09-2018.08 | 6MT | F | L/R | Estate Van 4WD CRLB;CRBC | | GCO83101 | Outer Joint | | 36 | 27 | 59.5 | 40 | 65 | M |
| | 2014.09-2018.08 | 6MT | F | L | Estate Van 4WD CRLB;CRBC | | GCI61069 | Inner Joint | | | 28 | | | 32 | |
| | 2014.09-2018.08 | 6MT | F | L/R | Estate Van 4WD CRLB;CRBC | | GCI83016 | Inner Joint | | | 28 | | | 32 | |
| | 2014.09-2018.08 | 6MT | R | L | Estate Van 4WD CRLB;CRBC | | GDS61286 | Drive Shaft | | 36 | | 59.5 | 40 | 587 | |
| | 2014.09-2018.08 | 6MT | R | R | Estate Van 4WD CRLB;CRBC | | GDS61287 | Drive Shaft | | 36 | | 59.5 | 40 | 632 | |
| | 2014.09-2018.08 | 6MT | R | L/R | Estate Van 4WD CRLB;CRBC | | GCI35026 | Outer Joint | | 36 | 33 | 59.5 | 40 | 61 | |
| | 2014.09-2018.08 | 6MT | R | L/R | Estate Van 4WD CRLB;CRBC | | GCI61103 | Inner Joint | | | 33 | | | 32 | |
| | 2014.09-2018.08 | 6MT | R | L/R | Estate Van 4WD CRLB;CRBC | | GCI83008 | Inner Joint | | | 33 | | | 32 | |
| 2.0 (135 kw) | 2013.08-2018.08 | 6DCT | F | L | Estate Van FWD CUPA;CUNA | | GDS61285 | Drive Shaft | | 36 | | 59.5 | 40 | 472 | |
| | 2013.08-2018.08 | 6DCT | F | R | Estate Van FWD CUPA;CUNA | | GDS83354 | Drive Shaft | | 36 | | 59.5 | 40 | 763 | |
| | 2013.08-2018.08 | 6DCT | F | L/R | Estate Van FWD CUPA;CUNA | | GCI61057 | Inner Joint | | | 34 | | | 89 | |
| | 2013.08-2018.08 | 6MT | F | L | Estate Van FWD CUPA;CUNA | | GDS83295 | Drive Shaft | | 36 | | 59.5 | 40 | 491 | |
| | 2013.08-2018.08 | 6MT | F | R | Estate Van FWD CUPA;CUNA | | GDS83313 | Drive Shaft | | 36 | | 59.5 | 40 | 792 | |
| | 2013.08-2018.08 | 6MT | F | L/R | Estate Van FWD CUPA;CUNA | | GCI83016 | Inner Joint | | | 28 | | | 32 | |
| | 2013.08-2018.08 | 6MT/6DCT | F | L/R | Estate Van FWD CUPA;CUNA | | GCO83101 | Outer Joint | | 36 | 27 | 59.5 | 40 | 65 | M |
| | 2013.08-2020.08 | 6DCT | F | L | Estate FWD CUPA;CUNA;DJGA | | GDS61285 | Drive Shaft | | 36 | | 59.5 | 40 | 472 | |
| | 2013.08-2020.08 | 6DCT | F | R | Estate FWD CUPA;CUNA;DJGA | | GDS83354 | Drive Shaft | | 36 | | 59.5 | 40 | 763 | |
| | 2013.08-2020.08 | 6DCT | F | L/R | Estate FWD CUPA;CUNA;DJGA | | GCI61057 | Inner Joint | | | 34 | | | 89 | |
| | 2013.08-2020.08 | 6MT | F | L | Estate FWD CUPA;CUNA;DJGA | | GDS83295 | Drive Shaft | | 36 | | 59.5 | 40 | 491 | |
| | 2013.08-2020.08 | 6MT | F | R | Estate FWD CUPA;CUNA;DJGA | | GDS83313 | Drive Shaft | | 36 | | 59.5 | 40 | 792 | |
| | 2013.08-2020.08 | 6MT | F | L/R | Estate FWD CUPA;CUNA;DJGA | | GCI83016 | Inner Joint | | | 28 | | | 32 | |
| | 2013.08-2020.08 | 6MT/6DCT/7DCT | F | L/R | Estate FWD CUPA;CUNA;DJGA | | GCO83101 | Outer Joint | | 36 | 27 | 59.5 | 40 | 65 | M |
| | 2013.08-2020.08 | 7DCT | F | L | Estate FWD CUPA;CUNA;DJGA | | GDS81265 | Drive Shaft | | 36 | 37 | 59.5 | 40 | 557 | |
| | 2013.08-2020.08 | 7DCT | F | R | Estate FWD CUPA;CUNA;DJGA | | GDS83612 | Drive Shaft | | 36 | 37 | 59.5 | 40 | 907 | |
| | 2013.08-2020.08 | 7DCT | F | L | Estate FWD CUPA;CUNA;DJGA | | GCI81158 | Inner Joint | | 37 | 34 | 34.5 | 65.5 | 83 | |
| | 2013.08-2020.08 | 7DCT | F | R | Estate FWD CUPA;CUNA;DJGA | | GCI82108 | Inner Joint | | 37 | 34 | 40 | 77.5 | 103.5 | |
| | 2014.10-2018.08 | 6AT | F | L | Estate Van 4WD CUNA | | GDS61285 | Drive Shaft | | 36 | | 59.5 | 40 | 472 | |
| | 2014.10-2018.08 | 6AT | F | R | Estate Van 4WD CUNA | Date to:2017.09;AAR | GDS81893 | Drive Shaft | | 36 | | 59.5 | 40 | 575 | |
| | 2014.10-2018.08 | 6DCT | F | L/R | Estate Van 4WD CUNA | | GCI61057 | Inner Joint | | | 34 | | | 89 | |
| | 2014.10-2018.08 | 6MT | F | L | Estate Van 4WD CUNA | | GDS83295 | Drive Shaft | | 36 | | 59.5 | 40 | 491 | |
| | 2014.10-2018.08 | 6MT | F | L | Estate Van 4WD CUNA | | GCI61069 | Inner Joint | | | 28 | | | 32 | |
| | 2014.10-2018.08 | 6MT | F | L/R | Estate Van 4WD CUNA | | GCI83016 | Inner Joint | | | 28 | | | 32 | |
| | 2014.10-2018.08 | DCT | F | L/R | Estate Van 4WD CUNA | | GCO83101 | Outer Joint | | 36 | 27 | 59.5 | 40 | 65 | M |
| | 2014.10-2018.08 | 6AT | R | L | Estate Van 4WD CUNA | | GDS61286 | Drive Shaft | | 36 | | 59.5 | 40 | 587 | |
| | 2014.10-2018.08 | 6AT | R | R | Estate Van 4WD CUNA | | GDS61287 | Drive Shaft | | 36 | | 59.5 | 40 | 632 | |
| | 2014.10-2018.08 | 6AT | R | L/R | Estate Van 4WD CUNA | | GCI35026 | Outer Joint | | 36 | 33 | 59.5 | 40 | 61 | |
| | 2014.10-2018.08 | 6DCT | R | L/R | Estate Van 4WD CUNA | | GCI61103 | Inner Joint | | | 33 | | | 32 | |
| | 2014.10-2018.08 | 6DCT | R | L/R | Estate Van 4WD CUNA | | GCI83008 | Inner Joint | | | 33 | | | 32 | |
| | 2014.11-2018.08 | 6AT | F | L | Estate 4WD CUNA;DJGA | | GDS61285 | Drive Shaft | | 36 | | 59.5 | 40 | 472 | |
| | 2014.11-2018.08 | 6AT | F | R | Estate 4WD CUNA;DJGA | Date to:2017.09 | GDS81893 | Drive Shaft | | 36 | | 59.5 | 40 | 575 | |
| | 2014.11-2018.08 | 6DCT | F | L/R | Estate 4WD CUNA;DJGA | | GCI61057 | Inner Joint | | | 34 | | | 89 | |
| | 2014.11-2018.08 | 6MT | F | L | Estate 4WD CUNA;DJGA | | GDS83295 | Drive Shaft | | 36 | | 59.5 | 40 | 491 | |
| | 2014.11-2018.08 | 6MT | F | L | Estate 4WD CUNA;DJGA | | GCI61069 | Inner Joint | | | 28 | | | 32 | |
| | 2014.11-2018.08 | 6MT | F | L/R | Estate 4WD CUNA;DJGA | | GCI83016 | Inner Joint | | | 28 | | | 32 | |
| | 2014.11-2018.08 | AT | F | L/R | Estate 4WD CUNA;DJGA | | GCO83101 | Outer Joint | | 36 | 27 | 59.5 | 40 | 65 | M |
| | 2014.11-2018.08 | 6AT | R | L | Estate 4WD CUNA;DJGA | | GDS61286 | Drive Shaft | | 36 | | 59.5 | 40 | 587 | |
| | 2014.11-2018.08 | 6AT | R | R | Estate 4WD CUNA;DJGA | | GDS61287 | Drive Shaft | | 36 | | 59.5 | 40 | 632 | |
| | 2014.11-2018.08 | 6AT | R | L/R | Estate 4WD CUNA;DJGA | | GCI35026 | Outer Joint | | 36 | 33 | 59.5 | 40 | 61 | |
| | 2014.11-2018.08 | 6DCT | R | L/R | Estate 4WD CUNA;DJGA | | GCI61103 | Inner Joint | | | 33 | | | 32 | |
| | 2014.11-2018.08 | 6DCT | R | L/R | Estate 4WD CUNA;DJGA | | GCI83008 | Inner Joint | | | 33 | | | 32 | |
| 2.0 (140 kw) | 2018.07-2020.08 | 7AT | F | R | Estate FWD DKZA | Wheel Hub Diam:27,For PR code:1Y2 | GDS81892 | Drive Shaft | | 36 | | 59.5 | 40 | 602 | |
| | 2018.07-2020.08 | 7AT | F | L | Estate FWD DKZA | | GCI83028 | Inner Joint | | 37 | 28 | | 65.5 | 90.2 | |
| | 2018.07-2020.08 | 7DCT | F | L | Estate FWD DKZA | | GDS84237 | Drive Shaft | | 36 | 37 | 59.5 | 40 | 560 | |

| | YEAR | TRANSM. | F/R | L/R | BODY STYLE & DRIVE TYPE & ENGINE | REMARKS | G-AP Ref. | PRODUCT | ABS | Technical Specifications A | B | C | H | L | P |
|---|---|---|---|---|---|---|---|---|---|---|---|---|---|---|---|
| **SEAT** **Leon ST** | | | | | | | | | | | | | | | |
| 2.0 (140 kw) | 2018.09-2020.08 | 7AT | F | R | Estate 4WD DKZA | Wheel Hub Diam:27 | GDS81892 | Drive Shaft | | 36 | | 59.5 | 40 | 602 | |
| | 2018.09-2020.08 | 7AT | F | R | Estate 4WD DKZA | | GCI82456 | Inner Joint | | | 28 | | | 32 | |
| | 2018.09-2020.08 | 7DCT | F | L | Estate 4WD DKZA | | GDS84237 | Drive Shaft | | 36 | 37 | 59.5 | 40 | 560 | |
| | 2018.09-2020.08 | 7DCT | R | L | Estate 4WD DKZA | | GDS61286 | Drive Shaft | | 36 | | 59.5 | 40 | 587 | |
| | 2018.09-2020.08 | 7DCT | R | R | Estate 4WD DKZA | | GDS61287 | Drive Shaft | | 36 | | 59.5 | 40 | 632 | |
| | 2018.09-2020.08 | 7DCT | R | L/R | Estate 4WD DKZA | | GCI35026 | Outer Joint | | 36 | 33 | 59.5 | 40 | 61 | |
| | 2018.09-2020.08 | 7DCT | R | L/R | Estate 4WD DKZA | | GCI61103 | Inner Joint | | | 33 | | | 32 | |
| | 2018.09-2020.08 | 7DCT | R | L/R | Estate 4WD DKZA | | GCI83008 | Inner Joint | | | 33 | | | 32 | |
| 2.0 (195 kw) | 2013.10-2020.08 | 6AT/6MT | F | L | Estate FWD CJXE | | GDS83295 | Drive Shaft | | 36 | | 59.5 | 40 | 491 | |
| | 2013.10-2020.08 | 6AT/6MT | F | R | Estate FWD CJXE | For PR code:1Y2 | GDS81892 | Drive Shaft | | 36 | | 59.5 | 40 | 602 | |
| | 2013.10-2020.08 | 6AT/6MT | F | L | Estate FWD CJXE | | GCI61069 | Inner Joint | | | 28 | | | 32 | |
| | 2013.10-2020.08 | 6DCT | F | R | Estate FWD CJXE | For PR code:1Y3,For vehicles with ASR | GDS81891 | Drive Shaft | | 36 | | 59.5 | 40 | 781 | |
| | 2013.10-2020.08 | 6DCT | F | R | Estate FWD CJXE | | GCI61069 | Inner Joint | | | 28 | | | 32 | |
| | 2013.10-2020.08 | 6MT | F | R | Estate FWD CJXE | For PR code:1Y3,For vehicles with ASR | GDS61126 | Drive Shaft | | 36 | | 59.5 | 40 | 793 | |
| | 2013.10-2020.08 | 6MT | F | R | Estate FWD CJXE | For PR code:1Y3,For vehicles with ASR | GDS61147 | Drive Shaft | | 36 | | 59.5 | 40 | 795 | |
| | 2013.10-2020.08 | AT/MT/6MT/6DCT | F | L/R | Estate FWD CJXE | | GCO83101 | Outer Joint | | 36 | 27 | 59.5 | 40 | 65 | M |
| 2.0 (206 kw) | 2013.10-2020.08 | 6AT/6MT | F | L | Estate FWD CJXA | | GDS83295 | Drive Shaft | | 36 | | 59.5 | 40 | 491 | |
| | 2013.10-2020.08 | 6AT/6MT | F | L | Estate FWD CJXA | | GCI61069 | Inner Joint | | | 28 | | | 32 | |
| | 2013.10-2020.08 | 6DCT | F | R | Estate FWD CJXA | For PR code:1Y3,For vehicles with ASR | GDS81891 | Drive Shaft | | 36 | | 59.5 | 40 | 781 | |
| | 2013.10-2020.08 | 6DCT | F | R | Estate FWD CJXA | | GCI61069 | Inner Joint | | | 28 | | | 32 | |
| | 2013.10-2020.08 | 6MT | F | R | Estate FWD CJXA | For PR code:1Y3,For vehicles with ASR | GDS61147 | Drive Shaft | | 36 | | 59.5 | 40 | 795 | |
| | 2013.10-2020.08 | 6MT | F | R | Estate FWD CJXA | For PR code:1Y2 | GDS81892 | Drive Shaft | | 36 | | 59.5 | 40 | 602 | |
| | 2013.10-2020.08 | AT/MT/6MT/6DCT | F | L/R | Estate FWD CJXA | | GCO83101 | Outer Joint | | 36 | 27 | 59.5 | 40 | 65 | M |
| | 2013.10-2020.08 | 6AT/6MT | F | L | Estate Van FWD CJXA | | GDS83295 | Drive Shaft | | 36 | | 59.5 | 40 | 491 | |
| | 2013.10-2020.08 | 6AT/6MT | F | L | Estate Van FWD CJXA | | GCI61069 | Inner Joint | | | 28 | | | 32 | |
| | 2013.10-2020.08 | 6DCT | F | R | Estate Van FWD CJXA | For PR code:1Y3,For vehicles with ASR | GDS81891 | Drive Shaft | | 36 | | 59.5 | 40 | 781 | |
| | 2013.10-2020.08 | 6DCT | F | R | Estate Van FWD CJXA | | GCI61069 | Inner Joint | | | 28 | | | 32 | |
| | 2013.10-2020.08 | 6MT | F | R | Estate Van FWD CJXA | For PR code:1Y3,For vehicles with ASR | GDS61147 | Drive Shaft | | 36 | | 59.5 | 40 | 795 | |
| | 2013.10-2020.08 | 6MT | F | R | Estate Van FWD CJXA | For PR code:1Y2 | GDS81892 | Drive Shaft | | 36 | | 59.5 | 40 | 602 | |
| | 2013.10-2020.08 | DCT/6MT/6DCT | F | L/R | Estate Van FWD CJXA | | GCO83101 | Outer Joint | | 36 | 27 | 59.5 | 40 | 65 | M |
| 2.0 (213 kw) | 2015.10-2020.08 | 6AT/7AT/6MT | F | R | Estate FWD CJXH;DNUC | For PR code:1Y2 | GDS81892 | Drive Shaft | | 36 | | 59.5 | 40 | 602 | |
| | 2015.10-2020.08 | 6DCT | F | L | Estate FWD CJXH;DNUC | | GDS83295 | Drive Shaft | | 36 | | 59.5 | 40 | 491 | |
| | 2015.10-2020.08 | 6DCT | F | R | Estate FWD CJXH;DNUC | For PR code:1Y3,For vehicles with electronic limited slip diff. | GDS81891 | Drive Shaft | | 36 | | 59.5 | 40 | 781 | |
| | 2015.10-2020.08 | 6DCT | F | L/R | Estate FWD CJXH;DNUC | | GCI61069 | Inner Joint | | | 28 | | | 32 | |
| | 2015.10-2020.08 | 6MT | F | R | Estate FWD CJXH;DNUC | For PR code:1Y3,For vehicles with electronic limited slip diff. | GDS61147 | Drive Shaft | | 36 | | 59.5 | 40 | 795 | |
| | 2015.10-2020.08 | 6MT/6DCT | F | L/R | Estate FWD CJXH;DNUC | | GCO83101 | Outer Joint | | 36 | 27 | 59.5 | 40 | 65 | M |
| | 2015.10-2020.08 | 7DCT | F | L | Estate FWD CJXH;DNUC | | GDS84237 | Drive Shaft | | 36 | 37 | 59.5 | 40 | 560 | |
| | 2015.10-2020.08 | 7DCT | F | L | Estate FWD CJXH;DNUC | | GCI83028 | Inner Joint | | 37 | 28 | | 65.5 | 90.2 | |
| 2.0 (221 kw) | 2016.11-2018.08 | 6AT/6MT | F | L | Estate FWD CJXC | | GDS83295 | Drive Shaft | | 36 | | 59.5 | 40 | 491 | |
| | 2016.11-2018.08 | 6AT/6MT | F | L | Estate FWD CJXC | | GCI61069 | Inner Joint | | | 28 | | | 32 | |
| | 2016.11-2018.08 | 6AT/6MT/6DCT | F | L/R | Estate FWD CJXC | | GCO83101 | Outer Joint | | 36 | 27 | 59.5 | 40 | 65 | M |
| | 2016.11-2018.08 | 6DCT | F | R | Estate FWD CJXC | | GDS81891 | Drive Shaft | | 36 | | 59.5 | 40 | 781 | |
| | 2016.11-2018.08 | 6DCT | F | R | Estate FWD CJXC | | GCI61069 | Inner Joint | | | 28 | | | 32 | |
| | 2016.11-2018.08 | 6MT | F | R | Estate FWD CJXC | Wheel Hub Diam [mm]:42;Date to 2017.09;Wheel Hub Diam [mm]:27;Date from 2017.10;For PR code:1Y2 | GDS81892 | Drive Shaft | | 36 | | 59.5 | 40 | 602 | |
| | 2016.11-2018.08 | 6AT | F | L | Estate Van 4WD CJXC | | GDS83295 | Drive Shaft | | 36 | | 59.5 | 40 | 491 | |
| | 2016.11-2018.08 | 6AT | F | R | Estate Van 4WD CJXC | Wheel Hub Diam [mm]:42 | GDS81892 | Drive Shaft | | 36 | | 59.5 | 40 | 602 | |
| | 2016.11-2018.08 | 6AT | F | L | Estate Van 4WD CJXC | | GCO83101 | Outer Joint | | 36 | 27 | 59.5 | 40 | 65 | M |
| | 2016.11-2018.08 | 6AT | F | L | Estate Van 4WD CJXC | | GCI61069 | Inner Joint | | | 28 | | | 32 | |
| | 2016.11-2018.08 | 6AT | R | L | Estate Van 4WD CJXC | | GDS61286 | Drive Shaft | | 36 | | 59.5 | 40 | 587 | |
| | 2016.11-2018.08 | 6AT | R | R | Estate Van 4WD CJXC | | GDS61287 | Drive Shaft | | 36 | | 59.5 | 40 | 632 | |
| | 2016.11-2018.08 | 6AT | R | L/R | Estate Van 4WD CJXC | | GCI35026 | Outer Joint | | 36 | 33 | 59.5 | 40 | 61 | |
| | 2016.11-2018.08 | 6AT | R | L/R | Estate Van 4WD CJXC | | GCI61103 | Inner Joint | | | 33 | | | 32 | |
| | 2016.11-2018.08 | 6AT/6MT | F | L | Estate Van FWD CJXC | | GDS83295 | Drive Shaft | | 36 | | 59.5 | 40 | 491 | |
| | 2016.11-2018.08 | 6AT/6MT | F | L | Estate Van FWD CJXC | | GCI61069 | Inner Joint | | | 28 | | | 32 | |
| | 2016.11-2018.08 | 6AT/6MT/6DCT | F | L/R | Estate Van FWD CJXC | | GCO83101 | Outer Joint | | 36 | 27 | 59.5 | 40 | 65 | M |
| | 2016.11-2018.08 | 6DCT | F | R | Estate Van FWD CJXC | For PR code:1Y3 | GDS81891 | Drive Shaft | | 36 | | 59.5 | 40 | 781 | |
| | 2016.11-2018.08 | 6DCT | F | R | Estate Van FWD CJXC | | GCI61069 | Inner Joint | | | 28 | | | 32 | |
| | 2016.11-2018.08 | 7DCT | F | R | Estate Van FWD CJXC | Wheel Hub Diam [mm]:42;Date to 2017.09;For PR code:1Y2;Wheel Hub Diam [mm]:27;Date from 2017.10;For PR code:1Y2 | GDS81892 | Drive Shaft | | 36 | | 59.5 | 40 | 602 | |
| | 2016.11-2020.08 | 6AT | F | R | Estate 4WD CJXC;DNUE | Wheel Hub Diam [mm]:42;Wheel Hub Diam [mm]:27 | GDS81892 | Drive Shaft | | 36 | | 59.5 | 40 | 602 | |
| | 2016.11-2020.08 | 6AT/7AT | F | L | Estate 4WD CJXC;DNUE | | GCO83101 | Outer Joint | | 36 | 27 | 59.5 | 40 | 65 | M |
| | 2016.11-2020.08 | 6AT/7AT | F | L | Estate 4WD CJXC;DNUE | | GCI61069 | Inner Joint | | | 28 | | | 32 | |
| | 2016.11-2020.08 | 6DCT | F | L | Estate 4WD CJXC;DNUE | | GDS83295 | Drive Shaft | | 36 | | 59.5 | 40 | 491 | |
| | 2016.11-2020.08 | 7DCT | F | L | Estate 4WD CJXC;DNUE | | GDS84237 | Drive Shaft | | 36 | 37 | 59.5 | 40 | 560 | |
| | 2016.11-2020.08 | 7DCT | F | L | Estate 4WD CJXC;DNUE | | GCI83028 | Inner Joint | | 37 | 28 | | 65.5 | 90.2 | |
| | 2016.11-2020.08 | 6AT/7AT | R | L | Estate 4WD CJXC;DNUE | | GDS61286 | Drive Shaft | | 36 | | 59.5 | 40 | 587 | |

| | YEAR | TRANSM. | F/R | L/R | BODY STYLE & DRIVE TYPE & ENGINE | REMARKS | G-AP Ref. | PRODUCT | ABS | Technical Specifications A | B | C | H | L | P |
|---|---|---|---|---|---|---|---|---|---|---|---|---|---|---|---|
| **SEAT** | | | | | | | | | | | | | | | |
| **Leon ST** | | | | | | | | | | | | | | | |
| 2.0 (221 kw) | 2016.11-2020.08 | 6AT/7AT | R | R | Estate 4WD CJXC;DNUE | | GDS61287 | Drive Shaft | | 36 | | 59.5 | 40 | 632 | |
| | 2016.11-2020.08 | 6AT/7AT | R | L/R | Estate 4WD CJXC;DNUE | | GCI35026 | Outer Joint | | 36 | 33 | 59.5 | 40 | 61 | |
| | 2016.11-2020.08 | 6AT/7AT | R | L/R | Estate 4WD CJXC;DNUE | | GCI61103 | Inner Joint | | | 33 | | | 32 | |
| **Marbella** | | | | | | | | | | | | | | | |
| 0.9 (30 kw) | 1995.05-1999.05 | MT | F | L/R | Hatchback FWD 08NCB | | GCO84001 | Outer Joint | | 20 | 20 | 43.1 | 90.5 | 60.5 | O |
| 0.9 (32 kw) | 1996.11-1999.05 | MT | F | L/R | Hatchback FWD 08NCB | | GCO84001 | Outer Joint | | 20 | 20 | 43.1 | 90.5 | 60.5 | O |
| **Mii** | | | | | | | | | | | | | | | |
| 1.0 (44 kw) | 2011.10-2019.07 | 5MT | F | L | Hatchback FWD CHYA | Date to:2015.10 | GDS50543 | Drive Shaft | | 22 | 28 | 46 | 78 | 814 | |
| | 2011.10-2019.07 | 5MT | F | L | Hatchback FWD CHYA | Date from:2015.11 | GDS81526 | Drive Shaft | | 22 | 28 | 46 | 78 | 654 | |
| | 2011.10-2019.07 | 5MT | F | R | Hatchback FWD CHYA | Date to:2015.10 | GDS50567 | Drive Shaft | | 22 | 28 | 46 | 78 | 650 | |
| | 2011.10-2019.07 | 5MT | F | R | Hatchback FWD CHYA | Date from:2015.11 | GDS82399 | Drive Shaft | | 22 | 28 | 46 | 78 | 817 | |
| | 2011.10-2019.07 | 5MT | F | L/R | Hatchback FWD CHYA | Date to:2015.10 | GCO50170 | Outer Joint | | 22 | 26 | 46 | 78 | 53 | M |
| | 2011.10-2019.07 | 5MT | F | L/R | Hatchback FWD CHYA | Date from:2015.11 | GCO81356 | Outer Joint | | 22 | 23 | 46 | 78 | 58 | M |
| | 2011.10-2019.07 | 5MT | F | L/R | Hatchback FWD CHYA | Date from:2015.11 | GCI81393 | Inner Joint | | 28 | 22 | 39.95 | 58 | 84.5 | |
| 1.0 (50 kw) | 2012.10-2019.07 | 5MT | F | L | Hatchback FWD CPGA | Date to:2015.10 | GDS50543 | Drive Shaft | | 22 | 28 | 46 | 78 | 814 | |
| | 2012.10-2019.07 | 5MT | F | L | Hatchback FWD CPGA | Date from:2015.11 | GDS81526 | Drive Shaft | | 22 | 28 | 46 | 78 | 654 | |
| | 2012.10-2019.07 | 5MT | F | R | Hatchback FWD CPGA | Date to:2015.10 | GDS50567 | Drive Shaft | | 22 | 28 | 46 | 78 | 650 | |
| | 2012.10-2019.07 | 5MT | F | R | Hatchback FWD CPGA | Date from:2015.11 | GDS82399 | Drive Shaft | | 22 | 28 | 46 | 78 | 817 | |
| | 2012.10-2019.07 | 5MT | F | L/R | Hatchback FWD CPGA | Date to:2015.10 | GCO50170 | Outer Joint | | 22 | 26 | 46 | 78 | 53 | M |
| | 2012.10-2019.07 | 5MT | F | L/R | Hatchback FWD CPGA | Date from:2015.11 | GCO81356 | Outer Joint | | 22 | 23 | 46 | 78 | 58 | M |
| | 2012.10-2019.07 | 5MT | F | L/R | Hatchback FWD CPGA | Date from:2015.11 | GCI81393 | Inner Joint | | 28 | 22 | 39.95 | 58 | 84.5 | |
| 1.0 (55 kw) | 2011.10-2019.07 | 5MT | F | L | Hatchback FWD CHYB | Date to:2015.10 | GDS50543 | Drive Shaft | | 22 | 28 | 46 | 78 | 814 | |
| | 2011.10-2019.07 | 5MT | F | L | Hatchback FWD CHYB | Date from:2015.11 | GDS81526 | Drive Shaft | | 22 | 28 | 46 | 78 | 654 | |
| | 2011.10-2019.07 | 5MT | F | R | Hatchback FWD CHYB | Date to:2015.10 | GDS50567 | Drive Shaft | | 22 | 28 | 46 | 78 | 650 | |
| | 2011.10-2019.07 | 5MT | F | R | Hatchback FWD CHYB | Date from:2015.11 | GDS82399 | Drive Shaft | | 22 | 28 | 46 | 78 | 817 | |
| | 2011.10-2019.07 | 5MT | F | L/R | Hatchback FWD CHYB | Date to:2015.10 | GCO50170 | Outer Joint | | 22 | 26 | 46 | 78 | 53 | M |
| | 2011.10-2019.07 | 5MT | F | L/R | Hatchback FWD CHYB | Date from:2015.11 | GCO81356 | Outer Joint | | 22 | 23 | 46 | 78 | 58 | M |
| | 2011.10-2019.07 | 5MT | F | L/R | Hatchback FWD CHYB | Date from:2015.11 | GCI81393 | Inner Joint | | 28 | 22 | 39.95 | 58 | 84.5 | |
| EV (61 kw) | 2020.01- | ET | F | L | Hatchback FWD EBMA | | GDS56201 | Drive Shaft | | 22 | 33 | 46 | 78 | 702 | |
| | 2020.01- | ET | F | R | Hatchback FWD EBMA | | GDS56200 | Drive Shaft | | 22 | 33 | 46 | 78 | 743 | |
| | 2020.01- | ET | F | L/R | Hatchback FWD EBMA | | GCO83202 | Outer Joint | | 22 | 30 | 46 | 78 | 61 | I |
| | 2020.01- | ET | F | L/R | Hatchback FWD EBMA | | GCI81546 | Inner Joint | | 33 | 32 | 39.9 | 58.5 | 105 | |
| **Tarraco** | | | | | | | | | | | | | | | |
| 1.4 (180 kw) | 2021.02-2024.05 | 6AT | F | R | SUV FWD DGEA | | GDS57844 | Drive Shaft | | 36 | 37 | 59.5 | 40 | 929 | |
| | 2021.02-2024.05 | 6AT | F | L/R | SUV FWD DGEA | | GCO83101 | Outer Joint | | 36 | 27 | 59.5 | 40 | 65 | M |
| | 2021.02-2024.05 | 6AT | F | L | SUV FWD DGEA | | GCI81158 | Inner Joint | | 37 | 34 | 34.5 | 65.5 | 83 | |
| | 2021.02-2024.05 | 6AT | F | R | SUV FWD DGEA | | GCI82108 | Inner Joint | | 37 | 34 | 40 | 77.5 | 103.5 | |
| | 2021.02-2024.05 | 7DCT | F | L | SUV FWD DGEA | | GDS81265 | Drive Shaft | | 36 | 37 | 59.5 | 40 | 557 | |
| 1.5 (110 kw) | 2018.09-2024.05 | 6MT | F | L | SUV FWD DADA;DPCA;DXDB | | GDS81896 | Drive Shaft | | 36 | | 59.5 | 40 | 500 | |
| | 2018.09-2024.05 | 6MT | F | R | SUV FWD DADA;DPCA;DXDB | For PR code:0EN | GDS82386 | Drive Shaft | | 36 | | 59.5 | 40 | 806 | |
| | 2018.09-2024.05 | 6MT | F | R | SUV FWD DADA;DPCA;DXDB | For PR code:0ED | GDS83313 | Drive Shaft | | 36 | | 59.5 | 40 | 792 | |
| | 2018.09-2024.05 | 6MT | F | L/R | SUV FWD DADA;DPCA;DXDB | | GCI61069 | Inner Joint | | | 28 | | | 32 | |
| | 2018.09-2024.05 | 6MT | F | L/R | SUV FWD DADA;DPCA;DXDB | | GCI83016 | Inner Joint | | | 28 | | | 32 | |
| | 2018.09-2024.05 | 6MT/7DCT | F | L/R | SUV FWD DADA;DPCA;DXDB | | GCO83101 | Outer Joint | | 36 | 27 | 59.5 | 40 | 65 | M |
| | 2018.09-2024.05 | 7DCT | F | L | SUV FWD DADA;DPCA;DXDB | | GDS83323 | Drive Shaft | | 36 | 37 | 59.5 | 40 | 570 | |
| | 2018.09-2024.05 | 7DCT | F | R | SUV FWD DADA;DPCA;DXDB | | GDS84510 | Drive Shaft | | 36 | 37 | 59.5 | 40 | 925 | |
| | 2018.09-2024.05 | 7DCT | F | L | SUV FWD DADA;DPCA;DXDB | | GCI83028 | Inner Joint | | 37 | 28 | | 65.5 | 90.2 | |
| 2.0 (110 kw) | 2018.09-2024.05 | 7AT | F | L | SUV 4WD DFGA | | GDS82351 | Drive Shaft | | 36 | 37 | 59.5 | 40 | 568 | |
| | 2018.09-2024.05 | 7AT | F | R | SUV 4WD DFGA | | GDS61346 | Drive Shaft | | 36 | | 59.5 | 40 | 589 | |
| | 2018.09-2024.05 | 7AT | F | L/R | SUV 4WD DFGA | | GCO83101 | Outer Joint | | 36 | 27 | 59.5 | 40 | 65 | M |
| | 2018.09-2024.05 | 7AT | F | L | SUV 4WD DFGA | | GCI81158 | Inner Joint | | 37 | 34 | 34.5 | 65.5 | 83 | |
| | 2018.09-2024.05 | 7AT | F | R | SUV 4WD DFGA | | GCI61057 | Inner Joint | | | 34 | | | 89 | |
| | 2018.09-2024.05 | 7AT | R | L | SUV 4WD DFGA | For PR code:0BG | GDS61331 | Drive Shaft | | 36 | | 59.5 | 40 | 606 | |
| | 2018.09-2024.05 | 7AT | R | L | SUV 4WD DFGA | For PR code:0BH | GDS61334 | Drive Shaft | | 36 | | 59.5 | 40 | 598 | |
| | 2018.09-2024.05 | 7AT | R | R | SUV 4WD DFGA | For PR code:0BG | GDS61332 | Drive Shaft | | 36 | | 59.5 | 40 | 650 | |
| | 2018.09-2024.05 | 7AT | R | R | SUV 4WD DFGA | For PR code:0BH | GDS61335 | Drive Shaft | | 36 | | 59.5 | 40 | 638 | |
| | 2018.09-2024.05 | 7AT | R | L/R | SUV 4WD DFGA | | GCI35026 | Outer Joint | | 36 | 33 | 59.5 | 40 | 61 | |
| | 2018.09-2024.05 | 7AT | R | L/R | SUV 4WD DFGA | | GCI61103 | Inner Joint | | | 33 | | | 32 | |
| | 2018.09-2024.05 | 7DCT | R | L/R | SUV 4WD DFGA | For PR code:0BH | GCI82447 | Inner Joint | | | 33 | | | 34 | |
| | 2018.09-2024.05 | | R | L/R | SUV 4WD DFGA | For PR code:0BH | GCI83011 | Inner Joint | | | 33 | | | 34 | |
| | 2018.09-2024.05 | 6MT | F | L | SUV FWD DFGA;DTSA;DTSB | | GDS81896 | Drive Shaft | | 36 | | 59.5 | 40 | 500 | |
| | 2018.09-2024.05 | 6MT | F | R | SUV FWD DFGA;DTSA;DTSB | | GDS61101 | Drive Shaft | | 36 | | 59.5 | 40 | 803 | |
| | 2018.09-2024.05 | 6MT | F | L/R | SUV FWD DFGA;DTSA;DTSB | | GCI83016 | Inner Joint | | | 28 | | | 32 | |
| | 2018.09-2024.05 | 7DCT | F | L | SUV FWD DFGA;DTSA;DTSB | | GDS82351 | Drive Shaft | | 36 | 37 | 59.5 | 40 | 568 | |
| | 2018.09-2024.05 | 7DCT | F | R | SUV FWD DFGA;DTSA;DTSB | | GDS83613 | Drive Shaft | | 36 | 37 | 59.5 | 40 | 921 | |

| | YEAR | TRANSM. | F/R | L/R | BODY STYLE & DRIVE TYPE & ENGINE | REMARKS | G-AP Ref. | PRODUCT | ABS | Technical Specifications A | B | C | H | L | P |
|---|---|---|---|---|---|---|---|---|---|---|---|---|---|---|---|
| **SEAT** | | | | | | | | | | | | | | | |
| **Tarraco** | | | | | | | | | | | | | | | |
| 2.0 (110 kw) | 2018.09-2024.05 | 7DCT | F | L | SUV FWD DFGA;DTSA;DTSB | | GCI81158 | Inner Joint | | 37 | 34 | 34.5 | 65.5 | 83 | |
| | 2018.09-2024.05 | 7DCT | F | R | SUV FWD DFGA;DTSA;DTSB | | GCI82108 | Inner Joint | | 37 | 34 | 40 | 77.5 | 103.5 | |
| | 2018.09-2024.05 | | F | L/R | SUV FWD DFGA;DTSA;DTSB | | GCO83101 | Outer Joint | | 36 | 27 | 59.5 | 40 | 65 | M |
| 2.0 (140 kw) | 2018.09-2024.05 | 7AT | F | L | SUV 4WD DFHA | | GDS82351 | Drive Shaft | | 36 | 37 | 59.5 | 40 | 568 | |
| | 2018.09-2024.05 | 7AT | F | R | SUV 4WD DFHA | | GDS61346 | Drive Shaft | | 36 | | 59.5 | 40 | 589 | |
| | 2018.09-2024.05 | 7AT | F | L/R | SUV 4WD DFHA | | GCO83101 | Outer Joint | | 36 | 27 | 59.5 | 40 | 65 | M |
| | 2018.09-2024.05 | 7AT | F | L | SUV 4WD DFHA | | GCI81158 | Inner Joint | | 37 | 34 | 34.5 | 65.5 | 83 | |
| | 2018.09-2024.05 | 7AT | F | R | SUV 4WD DFHA | | GCI61057 | Inner Joint | | | 34 | | | 89 | |
| | 2018.09-2024.05 | 7AT | R | L | SUV 4WD DFHA | For PR code:0BG | GDS61331 | Drive Shaft | | 36 | | 59.5 | 40 | 606 | |
| | 2018.09-2024.05 | 7AT | R | L | SUV 4WD DFHA | For PR code:0BH | GDS61334 | Drive Shaft | | 36 | | 59.5 | 40 | 598 | |
| | 2018.09-2024.05 | 7AT | R | R | SUV 4WD DFHA | For PR code:0BG | GDS61332 | Drive Shaft | | 36 | | 59.5 | 40 | 650 | |
| | 2018.09-2024.05 | 7AT | R | R | SUV 4WD DFHA | For PR code:0BH | GDS61335 | Drive Shaft | | 36 | | 59.5 | 40 | 638 | |
| | 2018.09-2024.05 | 7AT | R | L/R | SUV 4WD DFHA | | GCI35026 | Outer Joint | | 36 | 33 | 59.5 | 40 | 61 | |
| | 2018.09-2024.05 | 7AT | R | L/R | SUV 4WD DFHA | | GCI61103 | Inner Joint | | | 33 | | | 32 | |
| | 2018.09-2024.05 | 7DCT | R | L/R | SUV 4WD DFHA | For PR code:0BH | GCI82447 | Inner Joint | | | 33 | | | 34 | |
| | 2018.09-2024.05 | | R | L/R | SUV 4WD DFHA | For PR code:0BH | GCI83011 | Inner Joint | | | 33 | | | 34 | |
| | 2018.09-2024.05 | 7AT | F | R | SUV 4WD DKZA | | GDS81889 | Drive Shaft | | 36 | | 59.5 | 40 | 614 | |
| | 2018.09-2024.05 | 7AT | F | R | SUV 4WD DKZA | | GCO83101 | Outer Joint | | 36 | 27 | 59.5 | 40 | 65 | M |
| | 2018.09-2024.05 | 7AT | F | R | SUV 4WD DKZA | | GCI61069 | Inner Joint | | | 28 | | | 32 | |
| | 2018.09-2024.05 | 7AT | R | L | SUV 4WD DKZA | For PR code:0BG | GDS61331 | Drive Shaft | | 36 | | 59.5 | 40 | 606 | |
| | 2018.09-2024.05 | 7AT | R | L | SUV 4WD DKZA | For PR code:0BH | GDS61334 | Drive Shaft | | 36 | | 59.5 | 40 | 598 | |
| | 2018.09-2024.05 | 7AT | R | R | SUV 4WD DKZA | For PR code:0BG | GDS61332 | Drive Shaft | | 36 | | 59.5 | 40 | 650 | |
| | 2018.09-2024.05 | 7AT | R | R | SUV 4WD DKZA | For PR code:0BH | GDS61335 | Drive Shaft | | 36 | | 59.5 | 40 | 638 | |
| | 2018.09-2024.05 | 7AT | R | L/R | SUV 4WD DKZA | | GCI35026 | Outer Joint | | 36 | 33 | 59.5 | 40 | 61 | |
| | 2018.09-2024.05 | 7AT | R | L/R | SUV 4WD DKZA | | GCI61103 | Inner Joint | | | 33 | | | 32 | |
| | 2018.09-2024.05 | 7DCT | R | L/R | SUV 4WD DKZA | For PR code:0BH | GCI82447 | Inner Joint | | | 33 | | | 34 | |
| | 2018.09-2024.05 | | R | L/R | SUV 4WD DKZA | For PR code:0BH | GCI83011 | Inner Joint | | | 33 | | | 34 | |
| | 2020.11-2024.05 | 7DCT | F | R | SUV 4WD DNNA | | GDS81889 | Drive Shaft | | 36 | | 59.5 | 40 | 614 | |
| | 2020.11-2024.05 | 7DCT | R | L | SUV 4WD DNNA | For PR code:0BH | GDS61334 | Drive Shaft | | 36 | | 59.5 | 40 | 598 | |
| | 2020.11-2024.05 | 7DCT | R | R | SUV 4WD DNNA | For PR code:0BH | GDS61335 | Drive Shaft | | 36 | | 59.5 | 40 | 638 | |
| | 2020.11-2024.05 | 7DCT | R | L/R | SUV 4WD DNNA | | GCI61103 | Inner Joint | | | 33 | | | 32 | |
| 2.0 (147 kw) | 2020.07-2024.05 | 7AT | F | R | SUV 4WD DTUA | | GDS61346 | Drive Shaft | | 36 | | 59.5 | 40 | 589 | |
| | 2020.07-2024.05 | 7AT | R | L | SUV 4WD DTUA | For PR code:0BG | GDS61331 | Drive Shaft | | 36 | | 59.5 | 40 | 606 | |
| | 2020.07-2024.05 | 7AT | R | L | SUV 4WD DTUA | For PR code:0BH | GDS61334 | Drive Shaft | | 36 | | 59.5 | 40 | 598 | |
| | 2020.07-2024.05 | 7AT | R | R | SUV 4WD DTUA | For PR code:0BG | GDS61332 | Drive Shaft | | 36 | | 59.5 | 40 | 650 | |
| | 2020.07-2024.05 | 7AT | R | R | SUV 4WD DTUA | For PR code:0BH | GDS61335 | Drive Shaft | | 36 | | 59.5 | 40 | 638 | |
| | 2020.07-2024.05 | 7AT | R | L/R | SUV 4WD DTUA | | GCI35026 | Outer Joint | | 36 | 33 | 59.5 | 40 | 61 | |
| | 2020.07-2024.05 | 7DCT | R | L/R | SUV 4WD DTUA | | GCI61103 | Inner Joint | | | 33 | | | 32 | |
| | 2020.07-2024.05 | 7DCT | R | L/R | SUV 4WD DTUA | | GCI83008 | Inner Joint | | | 33 | | | 32 | |
| 2.0 (180 kw) | 2021.01-2024.05 | 7AT | F | L | SUV 4WD DNPA | | GDS82351 | Drive Shaft | | 36 | 37 | 59.5 | 40 | 568 | |
| | 2021.01-2024.05 | 7AT | F | L | SUV 4WD DNPA | | GCO83101 | Outer Joint | | 36 | 27 | 59.5 | 40 | 65 | M |
| | 2021.01-2024.05 | 7AT | F | L | SUV 4WD DNPA | | GCI81158 | Inner Joint | | 37 | 34 | 34.5 | 65.5 | 83 | |
| | 2021.01-2024.05 | 7AT | F | R | SUV 4WD DNPA | | GCI61057 | Inner Joint | | | 34 | | | 89 | |
| | 2021.01-2024.05 | 7AT | R | L/R | SUV 4WD DNPA | | GCI35026 | Outer Joint | | 36 | 33 | 59.5 | 40 | 61 | |
| | 2021.01-2024.05 | 7DCT | R | L | SUV 4WD DNPA | | GDS61331 | Drive Shaft | | 36 | | 59.5 | 40 | 606 | |
| | 2021.01-2024.05 | 7DCT | R | R | SUV 4WD DNPA | | GDS61332 | Drive Shaft | | 36 | | 59.5 | 40 | 650 | |
| | 2021.01-2024.05 | 7DCT | R | L/R | SUV 4WD DNPA | | GCI61103 | Inner Joint | | | 33 | | | 32 | |
| | 2021.01-2024.05 | 7DCT | R | L/R | SUV 4WD DNPA | | GCI83008 | Inner Joint | | | 33 | | | 32 | |
| **Toledo** | | | | | | | | | | | | | | | |
| 1.0 (70 kw) | 2017.05-2019.04 | 5MT | F | L | Hatchback FWD CHZB;DKLD | | GDS81922 | Drive Shaft | | 36 | 33 | 52 | 59 | 581 | |
| | 2017.05-2019.04 | 5MT | F | R | Hatchback FWD CHZB;DKLD | | GDS81924 | Drive Shaft | | 36 | 33 | 52 | 59 | 855 | |
| | 2017.05-2019.04 | 5MT | F | L/R | Hatchback FWD CHZB;DKLD | | GCO83024 | Outer Joint | | 36 | 30 | 50.75 | 59 | 55.5 | I |
| | 2017.05-2019.04 | 5MT | F | L/R | Hatchback FWD CHZB;DKLD | | GCI81546 | Inner Joint | | 33 | 32 | 39.9 | 58.5 | 105 | |
| 1.0 (81 kw) | 2017.05-2019.04 | 6MT | F | L | Hatchback FWD CHZC;DKRC | | GDS81922 | Drive Shaft | | 36 | 33 | 52 | 59 | 581 | |
| | 2017.05-2019.04 | 6MT | F | R | Hatchback FWD CHZC;DKRC | | GDS81924 | Drive Shaft | | 36 | 33 | 52 | 59 | 855 | |
| | 2017.05-2019.04 | 6MT | F | L/R | Hatchback FWD CHZC;DKRC | | GCO54006 | Outer Joint | | 36 | 30 | 52 | 59 | 55.5 | I |
| | 2017.05-2019.04 | 6MT | F | L/R | Hatchback FWD CHZC;DKRC | | GCO83024 | Outer Joint | | 36 | 30 | 50.75 | 59 | 55.5 | I |
| | 2017.05-2019.04 | 6MT | F | L/R | Hatchback FWD CHZC;DKRC | | GCI81546 | Inner Joint | | 33 | 32 | 39.9 | 58.5 | 105 | |
| | 2017.05-2019.04 | 7DCT | F | L | Hatchback FWD CHZC;DKRC | | GDS82228 | Drive Shaft | | 36 | | 52 | 75 | 475 | |
| | 2017.05-2019.04 | 7DCT | F | R | Hatchback FWD CHZC;DKRC | | GDS82358 | Drive Shaft | | 36 | | 52 | 75 | 762 | |
| | 2017.05-2019.04 | 7DCT | F | L/R | Hatchback FWD CHZC;DKRC | | GCO61081 | Outer Joint | | 36 | 27 | 52 | 75 | 65 | I |
| 1.2 (55 kw) | 2012.07-2015.06 | 5MT | F | L | Hatchback FWD CGPC | | GDS83330 | Drive Shaft | | 36 | | 50.7 | 58.5 | 515 | |
| | 2012.07-2015.06 | 5MT | F | R | Hatchback FWD CGPC | | GDS61288 | Drive Shaft | | 36 | | 50.7 | 58.5 | 765 | |
| | 2012.07-2015.06 | MT | F | L/R | Hatchback FWD CGPC | | GCO83027 | Outer Joint | | 36 | 30 | 50.7 | 58.5 | 47.5 | I |
| | 2012.07-2015.06 | MT | F | L/R | Hatchback FWD CGPC | | GCI83005 | Inner Joint | | | 33 | | | 32 | |

| | YEAR | TRANSM. | F/R | L/R | BODY STYLE & DRIVE TYPE & ENGINE | REMARKS | G-AP Ref. | PRODUCT | ABS | Technical Specifications A | B | C | H | L | P |
|---|---|---|---|---|---|---|---|---|---|---|---|---|---|---|---|
| **SEAT** **Toledo** | | | | | | | | | | | | | | | |
| 1.2 (55 kw) | 2012.07-2015.06 | | F | L/R | Hatchback FWD CGPC | | GCI83008 | Inner Joint | | | 33 | | | 32 | |
| 1.2 (63 kw) | 2012.07-2015.06 | 5MT | F | L | Hatchback FWD CBZA | | GDS61297 | Drive Shaft | | 36 | | 50.5 | 59 | 513 | |
| | 2012.07-2015.06 | 5MT | F | R | Hatchback FWD CBZA | | GDS61301 | Drive Shaft | | 36 | | 50.5 | 59 | 771 | |
| | 2012.07-2015.06 | 5MT | F | L/R | Hatchback FWD CBZA | | GCO83024 | Outer Joint | | 36 | 30 | 50.75 | 59 | 55.5 | I |
| | 2012.07-2015.06 | 5MT | F | L/R | Hatchback FWD CBZA | | GCI82447 | Inner Joint | | | 33 | | | 34 | |
| | 2012.07-2015.06 | MT | F | L/R | Hatchback FWD CBZA | | GCI83006 | Inner Joint | | | 33 | | | 34 | |
| | 2012.07-2015.06 | MT | F | L/R | Hatchback FWD CBZA | | GCI83011 | Inner Joint | | | 33 | | | 34 | |
| 1.2 (66 kw) | 2015.05-2017.05 | 5MT | F | L | Hatchback FWD CJZC | | GDS61297 | Drive Shaft | | 36 | | 50.5 | 59 | 513 | |
| | 2015.05-2017.05 | 5MT | F | R | Hatchback FWD CJZC | | GDS61301 | Drive Shaft | | 36 | | 50.5 | 59 | 771 | |
| | 2015.05-2017.05 | 5MT | F | L/R | Hatchback FWD CJZC | | GCO83024 | Outer Joint | | 36 | 30 | 50.75 | 59 | 55.5 | I |
| | 2015.05-2017.05 | 5MT | F | L/R | Hatchback FWD CJZC | | GCI82447 | Inner Joint | | | 33 | | | 34 | |
| | 2015.05-2017.05 | MT | F | L/R | Hatchback FWD CJZC | | GCI83011 | Inner Joint | | | 33 | | | 34 | |
| 1.2 (77 kw) | 2012.07-2015.06 | 5MT | F | R | Hatchback FWD CBZB | | GDS61301 | Drive Shaft | | 36 | | 50.5 | 59 | 771 | |
| | 2012.07-2015.06 | 6MT | F | L | Hatchback FWD CBZB | | GDS61297 | Drive Shaft | | 36 | | 50.5 | 59 | 513 | |
| | 2012.07-2015.06 | 6MT | F | L/R | Hatchback FWD CBZB | | GCO83024 | Outer Joint | | 36 | 30 | 50.75 | 59 | 55.5 | I |
| | 2012.07-2015.06 | 6MT | F | L/R | Hatchback FWD CBZB | | GCI82447 | Inner Joint | | | 33 | | | 34 | |
| | 2012.07-2015.06 | MT | F | L/R | Hatchback FWD CBZB | | GCI83011 | Inner Joint | | | 33 | | | 34 | |
| 1.2 (81 kw) | 2015.05-2017.05 | 5MT | F | R | Hatchback FWD CJZD | | GDS61301 | Drive Shaft | | 36 | | 50.5 | 59 | 771 | |
| | 2015.05-2017.05 | 6MT | F | L | Hatchback FWD CJZD | | GDS61297 | Drive Shaft | | 36 | | 50.5 | 59 | 513 | |
| | 2015.05-2017.05 | 6MT | F | L/R | Hatchback FWD CJZD | | GCO83024 | Outer Joint | | 36 | 30 | 50.75 | 59 | 55.5 | I |
| | 2015.05-2017.05 | 6MT | F | L/R | Hatchback FWD CJZD | | GCI82447 | Inner Joint | | | 33 | | | 34 | |
| | 2015.05-2017.05 | MT | F | L/R | Hatchback FWD CJZD | | GCI83011 | Inner Joint | | | 33 | | | 34 | |
| 1.4 (55 kw) | 2000.01-2002.05 | 5MT | F | L | Saloon FWD AHW/APE/AXP/BCA | | GDS61045 | Drive Shaft | | 36 | | 53 | 78.5 | 555 | |
| | 2000.01-2002.05 | 5MT | F | R | Saloon FWD AHW/APE/AXP/BCA | | GDS83046 | Drive Shaft | | 36 | | 53 | 78.5 | 822 | |
| | 2000.01-2002.05 | MT | F | L/R | Saloon FWD AHW/APE/AXP/BCA | | GCO83033 | Outer Joint | | 36 | 30 | 53 | 78.5 | 51 | I |
| | 2000.01-2002.05 | MT | F | L/R | Saloon FWD AHW/APE/AXP/BCA | | GCI83006 | Inner Joint | | | 33 | | | 34 | |
| | 2000.01-2002.05 | MT | F | L/R | Saloon FWD AHW/APE/AXP/BCA | | GCI83008 | Inner Joint | | | 33 | | | 32 | |
| 1.4 (63 kw) | 2006.05-2009.05 | 5MT | F | L/R | MPV FWD BXW | | GCO53001 | Outer Joint | | 36 | 30 | 59.5 | 40 | 49 | I |
| | 2006.05-2009.05 | MT | F | R | MPV FWD BXW | | GDS61237 | Stub Axle,differential | | 23 | 37 | | | 142.5 | |
| | 2006.05-2009.05 | | F | L | MPV FWD BXW | | GDS53007 | Drive Shaft | | 36 | | 59.5 | 40 | 559 | |
| | 2006.05-2009.05 | | F | R | MPV FWD BXW | | GDS53008 | Drive Shaft | | 36 | | 59.5 | 40 | 782 | |
| | 2006.05-2009.05 | | F | L/R | MPV FWD BXW | | GCI83008 | Inner Joint | | | 33 | | | 32 | |
| 1.4 (66 kw) | 2015.05-2019.04 | 5MT | F | L | Hatchback FWD CUSB | | GDS82039 | Drive Shaft | | 36 | | 52 | 59 | 549 | |
| | 2015.05-2019.04 | 5MT | F | R | Hatchback FWD CUSB | | GDS82360 | Drive Shaft | | 36 | | 52 | 59 | 729 | |
| | 2015.05-2019.04 | 5MT | F | L/R | Hatchback FWD CUSB | | GCO83024 | Outer Joint | | 36 | 30 | 50.75 | 59 | 55.5 | I |
| | 2015.05-2019.04 | 5MT | F | L/R | Hatchback FWD CUSB | | GCI82447 | Inner Joint | | | 33 | | | 34 | |
| | 2015.05-2019.04 | 7AT/5MT | F | L | Hatchback FWD CUSB | | GCI83016 | Inner Joint | | | 28 | | | 32 | |
| | 2015.05-2019.04 | 7DCT | F | L | Hatchback FWD CUSB | | GDS81926 | Drive Shaft | | 36 | | 52 | 75 | 550 | |
| | 2015.05-2019.04 | 7DCT | F | R | Hatchback FWD CUSB | | GDS82359 | Drive Shaft | | 36 | 40 | 52 | 75 | 755 | |
| | 2015.05-2019.04 | 7DCT | F | L/R | Hatchback FWD CUSB | | GCO61081 | Outer Joint | | 36 | 27 | 52 | 75 | 65 | I |
| | 2015.05-2019.04 | 7DCT | F | R | Hatchback FWD CUSB | | GCI61054 | Inner Joint | | 40 | 28 | 46.9 | 41 | 101.7 | |
| 1.4 (90 kw) | 2012.07-2015.06 | 7AT | F | R | Hatchback FWD CAXA | | GDS61308 | Drive Shaft | | 36 | | 50.5 | 59 | 786 | |
| | 2012.07-2015.06 | 7AT | F | L/R | Hatchback FWD CAXA | | GCO83024 | Outer Joint | | 36 | 30 | 50.75 | 59 | 55.5 | I |
| | 2012.07-2015.06 | 7AT | F | L/R | Hatchback FWD CAXA | | GCI53002 | Inner Joint | | | 33 | | | 34 | |
| | 2012.07-2015.06 | 7DCT | F | L | Hatchback FWD CAXA | | GDS61311 | Drive Shaft | | 36 | | 50.5 | 59 | 492 | |
| | 2012.07-2015.06 | 7DCT | F | L/R | Hatchback FWD CAXA | | GCI82447 | Inner Joint | | | 33 | | | 34 | |
| | 2012.07-2015.06 | AT | F | L/R | Hatchback FWD CAXA | | GCI83006 | Inner Joint | | | 33 | | | 34 | |
| | 2012.07-2015.06 | | F | L/R | Hatchback FWD CAXA | | GCI83011 | Inner Joint | | | 33 | | | 34 | |
| 1.4 (92 kw) | 2007.11-2009.05 | 6MT | F | L | MPV FWD CAXC | | GDS61201 | Drive Shaft | | 36 | | 59.5 | 40.5 | 535 | |
| | 2007.11-2009.05 | 6MT | F | R | MPV FWD CAXC | | GDS61096 | Drive Shaft | | 36 | | 59.5 | 40.5 | 799 | |
| | 2007.11-2009.05 | 6MT | F | L/R | MPV FWD CAXC | | GCO83037 | Outer Joint | | 36 | 30 | 59.5 | 40.5 | 56 | I |
| | 2007.11-2009.05 | 6MT | F | L/R | MPV FWD CAXC | | GCI82447 | Inner Joint | | | 33 | | | 34 | |
| | 2007.11-2009.05 | MT | F | L/R | MPV FWD CAXC | | GCI83006 | Inner Joint | | | 33 | | | 34 | |
| | 2007.11-2009.05 | | F | L/R | MPV FWD CAXC | | GCI83011 | Inner Joint | | | 33 | | | 34 | |
| | 2015.05-2019.04 | 7AT | F | L/R | Hatchback FWD CZCA | | GCO83024 | Outer Joint | | 36 | 30 | 50.75 | 59 | 55.5 | I |
| | 2015.05-2019.04 | 7AT | F | L | Hatchback FWD CZCA | | GCI53002 | Inner Joint | | | 33 | | | 34 | |
| | 2015.05-2019.04 | 7DCT | F | L | Hatchback FWD CZCA | Date to:2017.03 | GDS61311 | Drive Shaft | | 36 | | 50.5 | 59 | 492 | |
| | 2015.05-2019.04 | 7DCT | F | L | Hatchback FWD CZCA | Date from:2017.03 | GDS83988 | Drive Shaft | | 36 | | 52 | 64.5 | 500 | |
| | 2015.05-2019.04 | 7DCT | F | R | Hatchback FWD CZCA | | GDS57507 | Drive Shaft | | 36 | | 52 | 64.5 | 781 | |
| | 2015.05-2019.04 | 7DCT | F | L/R | Hatchback FWD CZCA | | GCI82447 | Inner Joint | | | 33 | | | 34 | |
| | 2015.05-2019.04 | | F | L/R | Hatchback FWD CZCA | | GCI83011 | Inner Joint | | | 33 | | | 34 | |
| 1.6 (52 kw) | 1991.05-1999.03 | MT | F | L | Hatchback FWD 1F | | GDS53001 | Drive Shaft | | 22 | | 53 | 78.5 | 535 | |
| | 1991.05-1999.03 | MT | F | R | Hatchback FWD 1F | | GDS53002 | Drive Shaft | | 22 | | 53.2 | 78 | 769 | |
| | 1991.05-1999.03 | MT | F | L/R | Hatchback FWD 1F | | GCO53007 | Outer Joint | | 22 | 30 | 53.2 | 78 | 61 | I |
| | 1991.05-1999.03 | MT | F | R | Hatchback FWD 1F | | GCI83009 | Inner Joint | | | 33 | | | 34 | |

| | YEAR | TRANSM. | F/R | L/R | BODY STYLE & DRIVE TYPE & ENGINE | REMARKS | G-AP Ref. | PRODUCT | ABS | Technical Specifications A | B | C | H | L | P |
|---|---|---|---|---|---|---|---|---|---|---|---|---|---|---|---|
| **SEAT** | | | | | | | | | | | | | | | |
| **Toledo** | | | | | | | | | | | | | | | |
| 1.6 (52 kw) | 1991.05-1999.03 | MT | F | L/R | Hatchback FWD 1F | | GCI83011 | Inner Joint | | | 33 | | | 34 | |
| | 1991.05-1999.03 | | F | | Hatchback FWD 1F | | GCO53004 | Outer Joint | | 22 | 30 | 51 | 78 | 61 | I |
| 1.6 (54 kw) | 1991.05-1996.09 | MT | F | L | Hatchback FWD ABN/EZ | | GDS53001 | Drive Shaft | | 22 | | 53 | 78.5 | 535 | |
| | 1991.05-1996.09 | MT | F | R | Hatchback FWD ABN/EZ | Date to:1996.09 | GDS53002 | Drive Shaft | | 22 | | 53.2 | 78 | 769 | |
| | 1991.05-1996.09 | MT | F | L/R | Hatchback FWD ABN/EZ | Date to:1996.09 | GCO53007 | Outer Joint | | 22 | 30 | 53.2 | 78 | 61 | I |
| | 1991.05-1996.09 | MT | F | | Hatchback FWD ABN/EZ | | GCO53004 | Outer Joint | | 22 | 30 | 51 | 78 | 61 | I |
| | 1991.05-1996.09 | MT | F | R | Hatchback FWD ABN/EZ | Date to:1996.09 | GCI83009 | Inner Joint | | | 33 | | | 34 | |
| | 1991.05-1996.09 | MT | F | L/R | Hatchback FWD ABN/EZ | | GCI83011 | Inner Joint | | | 33 | | | 34 | |
| 1.6 (55 kw) | 1993.01-1999.03 | MT | F | L | Hatchback FWD 1F | | GDS53001 | Drive Shaft | | 22 | | 53 | 78.5 | 535 | |
| | 1993.01-1999.03 | MT | F | R | Hatchback FWD 1F | | GDS53002 | Drive Shaft | | 22 | | 53.2 | 78 | 769 | |
| | 1993.01-1999.03 | MT | F | L/R | Hatchback FWD 1F | | GCO53007 | Outer Joint | | 22 | 30 | 53.2 | 78 | 61 | I |
| | 1993.01-1999.03 | MT | F | R | Hatchback FWD 1F | | GCI83009 | Inner Joint | | | 33 | | | 34 | |
| | 1993.01-1999.03 | MT | F | L/R | Hatchback FWD 1F | | GCI83011 | Inner Joint | | | 33 | | | 34 | |
| | 1993.01-1999.03 | | F | | Hatchback FWD 1F | | GCO53004 | Outer Joint | | 22 | 30 | 51 | 78 | 61 | I |
| 1.6 (66 kw) | 2013.06-2015.06 | 5MT | F | L | Hatchback FWD CAYB | | GDS61184 | Drive Shaft | | 36 | | 52 | 59 | 496 | |
| | 2013.06-2015.06 | 5MT | F | R | Hatchback FWD CAYB | | GDS61185 | Drive Shaft | | 36 | | 52 | 59 | 785 | |
| | 2013.06-2015.06 | 5MT | F | L/R | Hatchback FWD CAYB | | GCO83024 | Outer Joint | | 36 | 30 | 50.75 | 59 | 55.5 | I |
| | 2013.06-2015.06 | 5MT | F | L/R | Hatchback FWD CAYB | | GCI82447 | Inner Joint | | | 33 | | | 34 | |
| | 2013.06-2015.06 | 5MT/7AT | F | L | Hatchback FWD CAYB | | GCO54006 | Outer Joint | | 36 | 30 | 52 | 59 | 55.5 | I |
| | 2013.06-2015.06 | 7AT/5MT | F | L/R | Hatchback FWD CAYB | | GCI83016 | Inner Joint | | | 28 | | | 32 | |
| | 2013.06-2015.06 | 7DCT | F | L | Hatchback FWD CAYB | | GDS61260 | Drive Shaft | | 36 | | 52 | 75 | 498 | |
| | 2013.06-2015.06 | 7DCT | F | R | Hatchback FWD CAYB | | GDS61261 | Drive Shaft | | 36 | | 52 | 75 | 785 | |
| | 2013.06-2015.06 | 7DCT | F | L/R | Hatchback FWD CAYB | | GCO61081 | Outer Joint | | 36 | 27 | 52 | 75 | 65 | I |
| 1.6 (74 kw) | 1996.09-1999.03 | MT | F | L | Hatchback FWD AFT | | GDS53001 | Drive Shaft | | 22 | | 53 | 78.5 | 535 | |
| | 1996.09-1999.03 | MT | F | L | Hatchback FWD AFT | | GDS61045 | Drive Shaft | | 36 | | 53 | 78.5 | 555 | |
| | 1996.09-1999.03 | MT | F | R | Hatchback FWD AFT | | GDS83046 | Drive Shaft | | 36 | | 53 | 78.5 | 822 | |
| | 1996.09-1999.03 | MT | F | L/R | Hatchback FWD AFT | | GCO53008 | Outer Joint | | 22 | 30 | 53 | 78.5 | 51 | I |
| | 1996.09-1999.03 | MT | F | | Hatchback FWD AFT | | GCO53004 | Outer Joint | | 22 | 30 | 51 | 78 | 61 | I |
| | 1996.09-1999.03 | MT | F | R | Hatchback FWD AFT | | GCI83009 | Inner Joint | | | 33 | | | 34 | |
| | 1996.09-1999.03 | MT | F | L/R | Hatchback FWD AFT | | GCI83008 | Inner Joint | | | 33 | | | 32 | |
| | 1998.10-2005.10 | 4AT/5MT | F | L/R | Saloon FWD AEH/AKL | Not for Powersteering | GCI83008 | Inner Joint | | | 33 | | | 32 | |
| | 1998.10-2005.10 | AT | F | L | Saloon FWD AEH/AKL | | GDS61020 | Drive Shaft | | 36 | | 53.2 | 77.5 | 547 | |
| | 1998.10-2005.10 | AT | F | R | Saloon FWD AEH/AKL | | GDS83011 | Drive Shaft | | 36 | | 53.2 | 77.5 | 810.5 | |
| | 1998.10-2005.10 | AT | F | L/R | Saloon FWD AEH/AKL | | GCO83070 | Outer Joint | | 36 | 30 | 53 | 78 | 60 | I |
| | 1998.10-2005.10 | MT | F | L | Saloon FWD AEH/AKL | for vehicles without power steering | GDS61045 | Drive Shaft | | 36 | | 53 | 78.5 | 555 | |
| | 1998.10-2005.10 | MT | F | L | Saloon FWD AEH/AKL | for vehicles with power steering | GDS61314 | Drive Shaft | | 36 | | 53 | 78 | 558 | |
| | 1998.10-2005.10 | MT | F | R | Saloon FWD AEH/AKL | Powersteer | GDS83004 | Drive Shaft | | 36 | | 53.2 | 77.5 | 822 | |
| | 1998.10-2005.10 | MT | F | R | Saloon FWD AEH/AKL | | GDS83046 | Drive Shaft | | 36 | | 53 | 78.5 | 822 | |
| | 1998.10-2005.10 | MT | F | L/R | Saloon FWD AEH/AKL | for vehicles without power steering | GCO83033 | Outer Joint | | 36 | 30 | 53 | 78.5 | 51 | I |
| | 1998.10-2005.10 | | F | R | Saloon FWD AEH/AKL | For Engine Code:AKL;Equipment Variant:RA | GCI83009 | Inner Joint | | | 33 | | | 34 | |
| 1.6 (75 kw) | 2004.10-2009.05 | 5MT | F | L | MPV FWD BGU;BSE;BSF;CCSA | | GDS61097 | Drive Shaft | | 36 | | 59.5 | 40.5 | 543 | |
| | 2004.10-2009.05 | 5MT | F | R | MPV FWD BGU;BSE;BSF;CCSA | | GDS61096 | Drive Shaft | | 36 | | 59.5 | 40.5 | 799 | |
| | 2004.10-2009.05 | 5MT | F | L/R | MPV FWD BGU;BSE;BSF;CCSA | | GCO83037 | Outer Joint | | 36 | 30 | 59.5 | 40.5 | 56 | I |
| | 2004.10-2009.05 | 5MT | F | L/R | MPV FWD BGU;BSE;BSF;CCSA | | GCI82447 | Inner Joint | | | 33 | | | 34 | |
| | 2004.10-2009.05 | MT | F | R | MPV FWD BGU;BSE;BSF;CCSA | | GDS61237 | Stub Axle,differential | | 23 | 37 | | | 142.5 | |
| | 2004.10-2009.05 | MT/5MT | F | L/R | MPV FWD BGU;BSE;BSF;CCSA | | GCI83011 | Inner Joint | | | 33 | | | 34 | |
| 1.6 (77 kw) | 2000.06-2006.06 | 5MT | F | L | Saloon FWD AUS/AZD/BCB | | GDS61312 | Drive Shaft | | 36 | | 53 | 78 | 546 | |
| | 2000.06-2006.06 | 5MT | F | R | Saloon FWD AUS/AZD/BCB | | GDS61203 | Drive Shaft | | 36 | | 53.2 | 77.5 | 810 | |
| | 2000.06-2006.06 | MT | F | L/R | Saloon FWD AUS/AZD/BCB | Date from:2001.01 | GCO83070 | Outer Joint | | 36 | 30 | 53 | 78 | 60 | I |
| | 2000.06-2006.06 | MT | F | L/R | Saloon FWD AUS/AZD/BCB | Date from:2001.01 | GCI61005 | Inner Joint | | | 30 | | | 57.6 | |
| | 2012.07-2015.06 | 5MT | F | L | Hatchback FWD CAYC;CLNA | | GDS61184 | Drive Shaft | | 36 | | 52 | 59 | 496 | |
| | 2012.07-2015.06 | 5MT | F | R | Hatchback FWD CAYC;CLNA | | GDS61185 | Drive Shaft | | 36 | | 52 | 59 | 785 | |
| | 2012.07-2015.06 | 5MT | F | L/R | Hatchback FWD CAYC;CLNA | | GCO83024 | Outer Joint | | 36 | 30 | 50.75 | 59 | 55.5 | I |
| | 2012.07-2015.06 | 5MT | F | L/R | Hatchback FWD CAYC;CLNA | | GCI82447 | Inner Joint | | | 33 | | | 34 | |
| | 2012.07-2015.06 | MT/5MT | F | L/R | Hatchback FWD CAYC;CLNA | | GCI83011 | Inner Joint | | | 33 | | | 34 | |
| | 2012.07-2015.06 | | F | L | Hatchback FWD CAYC;CLNA | | GCO54006 | Outer Joint | | 36 | 30 | 52 | 59 | 55.5 | I |
| | 2013.07-2015.06 | 5MT | F | L | Hatchback FWD CFNA | | GDS61297 | Drive Shaft | | 36 | | 50.5 | 59 | 513 | |
| | 2013.07-2015.06 | 5MT | F | R | Hatchback FWD CFNA | | GDS61301 | Drive Shaft | | 36 | | 50.5 | 59 | 771 | |
| | 2013.07-2015.06 | 5MT | F | L/R | Hatchback FWD CFNA | | GCO83024 | Outer Joint | | 36 | 30 | 50.75 | 59 | 55.5 | I |
| | 2013.07-2015.06 | 5MT | F | L/R | Hatchback FWD CFNA | | GCI82447 | Inner Joint | | | 33 | | | 34 | |
| | 2013.07-2015.06 | 6AT | F | L | Hatchback FWD CFNA | | GDS83842 | Drive Shaft | | 36 | 26 | 52 | 75 | 566 | |
| | 2013.07-2015.06 | 6AT | F | R | Hatchback FWD CFNA | | GDS83843 | Drive Shaft | | 36 | 26 | 52 | 75 | 866 | |
| | 2013.07-2015.06 | 6AT | F | L/R | Hatchback FWD CFNA | Type:UF100 | GCO83079 | Outer Joint | | 36 | 30 | 52 | 75 | 55.5 | I |
| | 2013.07-2015.06 | 6AT | F | L/R | Hatchback FWD CFNA | | GCI81396 | Inner Joint | | 26 | 22 | 31 | 68.5 | 86 | |
| | 2013.07-2015.06 | 6AT/5MT | F | L/R | Hatchback FWD CFNA | | GCO61074 | Outer Joint | | 36 | 30 | 52 | 75 | 55.5 | I |

| | YEAR | TRANSM. | F/R | L/R | BODY STYLE & DRIVE TYPE & ENGINE | REMARKS | G-AP Ref. | PRODUCT | ABS | Technical Specifications A | B | C | H | L | P |
|---|---|---|---|---|---|---|---|---|---|---|---|---|---|---|---|
| **SEAT** **Toledo** | | | | | | | | | | | | | | | |
| 1.6 (77 kw) | 2013.07-2015.06 | 6AT/5MT | F | L/R | Hatchback FWD CFNA | | GCI61039 | Inner Joint | | 26 | 22 | 31 | 68.5 | 88.5 | |
| 1.6 (81 kw) | 2015.05-2019.04 | 5MT | F | L | Hatchback FWD CWVA | | GDS61297 | Drive Shaft | | 36 | | 50.5 | 59 | 513 | |
| | 2015.05-2019.04 | 5MT | F | L/R | Hatchback FWD CWVA | | GCO83024 | Outer Joint | | 36 | 30 | 50.75 | 59 | 55.5 | I |
| | 2015.05-2019.04 | 5MT | F | L/R | Hatchback FWD CWVA | | GCI82447 | Inner Joint | | | 33 | | | 34 | |
| | 2015.05-2019.04 | 6AT | F | L | Hatchback FWD CWVA | | GDS83842 | Drive Shaft | | 36 | 26 | 52 | 75 | 566 | |
| | 2015.05-2019.04 | 6AT | F | R | Hatchback FWD CWVA | | GDS83843 | Drive Shaft | | 36 | 26 | 52 | 75 | 866 | |
| | 2015.05-2019.04 | 6AT | F | L/R | Hatchback FWD CWVA | | GCO61074 | Outer Joint | | 36 | 30 | 52 | 75 | 55.5 | I |
| | 2015.05-2019.04 | 6AT | F | L/R | Hatchback FWD CWVA | Type:UF100 | GCO83079 | Outer Joint | | 36 | 30 | 52 | 75 | 55.5 | I |
| | 2015.05-2019.04 | 6AT | F | L/R | Hatchback FWD CWVA | | GCI81396 | Inner Joint | | 26 | 22 | 31 | 68.5 | 86 | |
| | 2015.05-2019.04 | 6AT/5MT | F | L/R | Hatchback FWD CWVA | | GCI61039 | Inner Joint | | 26 | 22 | 31 | 68.5 | 88.5 | |
| | 2015.05-2019.04 | 6MT | F | R | Hatchback FWD CWVA | | GDS61301 | Drive Shaft | | 36 | | 50.5 | 59 | 771 | |
| 1.6 (85 kw) | 2015.05-2019.04 | 5MT | F | L | Hatchback FWD CXMA | | GDS61184 | Drive Shaft | | 36 | | 52 | 59 | 496 | |
| | 2015.05-2019.04 | 5MT | F | R | Hatchback FWD CXMA | | GDS61185 | Drive Shaft | | 36 | | 52 | 59 | 785 | |
| | 2015.05-2019.04 | 5MT | F | L/R | Hatchback FWD CXMA | | GCO83024 | Outer Joint | | 36 | 30 | 50.75 | 59 | 55.5 | I |
| | 2015.05-2019.04 | 5MT | F | L/R | Hatchback FWD CXMA | | GCI82447 | Inner Joint | | | 33 | | | 34 | |
| | 2015.05-2019.04 | MT/5MT | F | L/R | Hatchback FWD CXMA | | GCI83011 | Inner Joint | | | 33 | | | 34 | |
| | 2015.05-2019.04 | | F | L | Hatchback FWD CXMA | | GCO54006 | Outer Joint | | 36 | 30 | 52 | 59 | 55.5 | I |
| 1.8 (65 kw) | 1991.05-1996.09 | AT/MT | F | L/R | Hatchback FWD RP | Date to:1996.09 | GCO53007 | Outer Joint | | 22 | 30 | 53.2 | 78 | 61 | I |
| | 1991.05-1996.09 | AT/MT | F | R | Hatchback FWD RP | Date to:1996.09 | GCI83009 | Inner Joint | | | 33 | | | 34 | |
| | 1991.05-1996.09 | MT | F | L | Hatchback FWD RP | | GDS53001 | Drive Shaft | | 22 | | 53 | 78.5 | 535 | |
| | 1991.05-1996.09 | MT | F | R | Hatchback FWD RP | Date to:1996.09 | GDS53002 | Drive Shaft | | 22 | | 53.2 | 78 | 769 | |
| | 1991.05-1996.09 | MT | F | L/R | Hatchback FWD RP | | GCI83011 | Inner Joint | | | 33 | | | 34 | |
| | 1991.05-1996.09 | | F | | Hatchback FWD RP | | GCO53004 | Outer Joint | | 22 | 30 | 51 | 78 | 61 | I |
| 1.8 (66 kw) | 1991.05-1999.03 | AT/MT | F | L/R | Hatchback FWD ABS/ACC/ADZ | | GCO53007 | Outer Joint | | 22 | 30 | 53.2 | 78 | 61 | I |
| | 1991.05-1999.03 | AT/MT | F | R | Hatchback FWD ABS/ACC/ADZ | | GCI83009 | Inner Joint | | | 33 | | | 34 | |
| | 1991.05-1999.03 | MT | F | L | Hatchback FWD ABS/ACC/ADZ | | GDS53001 | Drive Shaft | | 22 | | 53 | 78.5 | 535 | |
| | 1991.05-1999.03 | MT | F | R | Hatchback FWD ABS/ACC/ADZ | | GDS53002 | Drive Shaft | | 22 | | 53.2 | 78 | 769 | |
| | 1991.05-1999.03 | MT | F | R | Hatchback FWD ABS/ACC/ADZ | | GDS61009 | Drive Shaft | | 22 | | 53.2 | 78 | 789 | |
| | 1991.05-1999.03 | MT | F | L/R | Hatchback FWD ABS/ACC/ADZ | | GCI83011 | Inner Joint | | | 33 | | | 34 | |
| 1.8 (92 kw) | 1998.10-2005.10 | 4AT/5MT | F | L | Saloon FWD AGN/APG | | GCI82447 | Inner Joint | | | 33 | | | 34 | |
| | 1998.10-2005.10 | AT | F | L | Saloon FWD AGN/APG | | GDS61020 | Drive Shaft | | 36 | | 53.2 | 77.5 | 547 | |
| | 1998.10-2005.10 | AT | F | R | Saloon FWD AGN/APG | | GDS83011 | Drive Shaft | | 36 | | 53.2 | 77.5 | 810.5 | |
| | 1998.10-2005.10 | AT | F | L/R | Saloon FWD AGN/APG | | GCI61006 | Inner Joint | | | 30 | | | 57.6 | |
| | 1998.10-2005.10 | AT/MT | F | L/R | Saloon FWD AGN/APG | | GCO83070 | Outer Joint | | 36 | 30 | 53 | 78 | 60 | I |
| | 1998.10-2005.10 | MT | F | L | Saloon FWD AGN/APG | | GDS61314 | Drive Shaft | | 36 | | 53 | 78 | 558 | |
| | 1998.10-2005.10 | MT | F | L | Saloon FWD AGN/APG | | GDS83006 | Drive Shaft | | 36 | | 53.2 | 77.5 | 557 | |
| | 1998.10-2005.10 | MT | F | R | Saloon FWD AGN/APG | | GDS83004 | Drive Shaft | | 36 | | 53.2 | 77.5 | 822 | |
| | 1998.10-2005.10 | MT | F | R | Saloon FWD AGN/APG | | GCI83009 | Inner Joint | | | 33 | | | 34 | |
| 1.8 (118 kw) | 2007.01-2009.05 | 6MT | F | R | MPV FWD BYT;BZB;CDAA | Inner teeth of tranm.side:33 | GDS61101 | Drive Shaft | | 36 | | 59.5 | 40 | 803 | |
| | 2007.01-2009.05 | 6MT | F | R | MPV FWD BYT;BZB;CDAA | Inner teeth of tranm.side:28 | GDS61341 | Drive Shaft | | 36 | | 59.5 | 40 | 806 | |
| | 2007.01-2009.05 | 6MT | F | L/R | MPV FWD BYT;BZB;CDAA | | GCI83016 | Inner Joint | | | 28 | | | 32 | |
| | 2007.01-2009.05 | 7AT/6MT | F | L | MPV FWD BYT;BZB;CDAA | | GDS61100 | Drive Shaft | | 36 | | 59.5 | 40 | 513 | |
| | 2007.01-2009.05 | 7AT/6MT | F | L/R | MPV FWD BYT;BZB;CDAA | | GCO83002 | Outer Joint | | 36 | 27 | 59.5 | 40 | 66 | I |
| | 2007.01-2009.05 | 7AT/6MT | F | R | MPV FWD BYT;BZB;CDAA | | GCI61069 | Inner Joint | | | 28 | | | 32 | |
| | 2007.01-2009.05 | 7DCT | F | R | MPV FWD BYT;BZB;CDAA | | GDS83313 | Drive Shaft | | 36 | | 59.5 | 40 | 792 | |
| | 2007.01-2009.05 | 7DCT | F | L/R | MPV FWD BYT;BZB;CDAA | | GCO83101 | Outer Joint | | 36 | 27 | 59.5 | 40 | 65 | M |
| 1.8 (132 kw) | 1999.08-2005.10 | 6MT | F | L | Saloon FWD APP/ARY/AUQ | Date to:2001.12,without headlamp levelling | GDS56276 | Drive Shaft | | 36 | | 53 | 77.5 | 520 | |
| | 1999.08-2005.10 | 6MT | F | R | Saloon FWD APP/ARY/AUQ | | GDS61121 | Drive Shaft | | 36 | | 53 | 77.5 | 806 | |
| | 1999.08-2005.10 | 6MT | F | L/R | Saloon FWD APP/ARY/AUQ | | GCO83035 | Outer Joint | | 36 | 27 | 53 | 77.5 | 65 | I |
| | 1999.08-2005.10 | 6MT | F | L | Saloon FWD APP/ARY/AUQ | Date to:2001.12,without headlamp levelling | GCI61010 | Inner Joint | | | 28 | | | 32 | |
| | 1999.08-2005.10 | 6MT | F | L/R | Saloon FWD APP/ARY/AUQ | Chassis no. to:1M3109000 | GCI83001 | Inner Joint | | | 28 | | | 32 | |
| | 1999.08-2005.10 | 6MT | F | L/R | Saloon FWD APP/ARY/AUQ | Chassis no. from:1M3109001 | GCI83016 | Inner Joint | | | 28 | | | 32 | |
| | 1999.08-2005.10 | AT | F | L | Saloon FWD APP/ARY/AUQ | Vehicle Equipment:for vehicles with headlamp levelling | GDS61020 | Drive Shaft | | 36 | | 53.2 | 77.5 | 547 | |
| 1.9 (50 kw) | 1991.05-1999.03 | MT | F | L | Hatchback FWD 1Y | | GDS53001 | Drive Shaft | | 22 | | 53 | 78.5 | 535 | |
| | 1991.05-1999.03 | MT | F | L | Hatchback FWD 1Y | | GDS53003 | Drive Shaft | | 22 | | 53 | 78.5 | 539.5 | |
| | 1991.05-1999.03 | MT | F | R | Hatchback FWD 1Y | for taxis | GDS53002 | Drive Shaft | | 22 | | 53.2 | 78 | 769 | |
| | 1991.05-1999.03 | MT | F | R | Hatchback FWD 1Y | | GDS53005 | Drive Shaft | | 22 | | 53 | 78.5 | 774 | |
| | 1991.05-1999.03 | MT | F | L/R | Hatchback FWD 1Y | for taxis | GCO53007 | Outer Joint | | 22 | 30 | 53.2 | 78 | 61 | I |
| | 1991.05-1999.03 | MT | F | L/R | Hatchback FWD 1Y | | GCO53008 | Outer Joint | | 22 | 30 | 53 | 78.5 | 51 | I |
| | 1991.05-1999.03 | MT | F | L | Hatchback FWD 1Y | | GCI83011 | Inner Joint | | | 33 | | | 34 | |
| | 1991.05-1999.03 | MT | F | R | Hatchback FWD 1Y | for taxis | GCI83009 | Inner Joint | | | 33 | | | 34 | |
| | 1991.05-1999.03 | MT | F | L/R | Hatchback FWD 1Y | | GCI83005 | Inner Joint | | | 33 | | | 32 | |
| | 1991.05-1999.03 | | F | | Hatchback FWD 1Y | | GCO53006 | Outer Joint | | 22 | 30 | 50 | 78.5 | 52 | I |
| 1.9 (55 kw) | 1991.05-1997.04 | MT | F | L | Hatchback FWD AAZ | | GDS53001 | Drive Shaft | | 22 | | 53 | 78.5 | 535 | |
| | 1991.05-1997.04 | MT | F | R | Hatchback FWD AAZ | Date to:1997.04 | GDS53002 | Drive Shaft | | 22 | | 53.2 | 78 | 769 | |

| | YEAR | TRANSM. | F/R | L/R | BODY STYLE & DRIVE TYPE & ENGINE | REMARKS | G-AP Ref. | PRODUCT | ABS | Technical Specifications A | B | C | H | L | P |
|---|---|---|---|---|---|---|---|---|---|---|---|---|---|---|---|
| **SEAT** **Toledo** | | | | | | | | | | | | | | | |
| 1.9 (55 kw) | 1991.05-1997.04 | MT | F | L/R | Hatchback FWD AAZ | Date to:1997.04 | GCO53007 | Outer Joint | | 22 | 30 | 53.2 | 78 | 61 | I |
| | 1991.05-1997.04 | MT | F | | Hatchback FWD AAZ | | GCO53004 | Outer Joint | | 22 | 30 | 51 | 78 | 61 | I |
| | 1991.05-1997.04 | MT | F | R | Hatchback FWD AAZ | Date to:1997.04 | GCI83009 | Inner Joint | | | 33 | | | 34 | |
| | 1991.05-1997.04 | MT | F | L/R | Hatchback FWD AAZ | | GCI83011 | Inner Joint | | | 33 | | | 34 | |
| 1.9 (66 kw) | 1995.04-1999.03 | MT | F | L | Hatchback FWD 1Z/AHU | | GDS53001 | Drive Shaft | | 22 | | 53 | 78.5 | 535 | |
| | 1995.04-1999.03 | MT | F | L/R | Hatchback FWD 1Z/AHU | | GCO53007 | Outer Joint | | 22 | 30 | 53.2 | 78 | 61 | I |
| | 1995.04-1999.03 | MT | F | | Hatchback FWD 1Z/AHU | | GCO53004 | Outer Joint | | 22 | 30 | 51 | 78 | 61 | I |
| | 1995.04-1999.03 | MT | F | R | Hatchback FWD 1Z/AHU | | GCI83009 | Inner Joint | | | 33 | | | 34 | |
| | 1995.04-1999.03 | MT | F | L/R | Hatchback FWD 1Z/AHU | | GCI83011 | Inner Joint | | | 33 | | | 34 | |
| | 1999.03-2004.07 | 5MT | F | L | Saloon FWD AGR/ALH | | GDS83006 | Drive Shaft | | 36 | | 53.2 | 77.5 | 557 | |
| | 1999.03-2004.07 | 5MT | F | R | Saloon FWD AGR/ALH | | GDS83004 | Drive Shaft | | 36 | | 53.2 | 77.5 | 822 | |
| | 1999.03-2004.07 | 5MT | F | L/R | Saloon FWD AGR/ALH | | GCO83070 | Outer Joint | | 36 | 30 | 53 | 78 | 60 | I |
| | 1999.03-2004.07 | 5MT | F | L | Saloon FWD AGR/ALH | | GCI83011 | Inner Joint | | | 33 | | | 34 | |
| | 1999.03-2004.07 | 5MT | F | R | Saloon FWD AGR/ALH | | GCI83009 | Inner Joint | | | 33 | | | 34 | |
| | 1999.03-2004.07 | MT | F | L/R | Saloon FWD AGR/ALH | | GCI83006 | Inner Joint | | | 33 | | | 34 | |
| 1.9 (74 kw) | 2005.08-2006.05 | 5MT | F | L | Saloon FWD AXR | | GDS83006 | Drive Shaft | | 36 | | 53.2 | 77.5 | 557 | |
| | 2005.08-2006.05 | 5MT | F | R | Saloon FWD AXR | | GDS83004 | Drive Shaft | | 36 | | 53.2 | 77.5 | 822 | |
| | 2005.08-2006.05 | 5MT | F | L/R | Saloon FWD AXR | | GCO83070 | Outer Joint | | 36 | 30 | 53 | 78 | 60 | I |
| | 2005.08-2006.05 | 5MT | F | L | Saloon FWD AXR | | GCI82447 | Inner Joint | | | 33 | | | 34 | |
| | 2005.08-2006.05 | 5MT | F | R | Saloon FWD AXR | | GCI83009 | Inner Joint | | | 33 | | | 34 | |
| 1.9 (77 kw) | 2004.10-2009.05 | 6AT/5MT | F | L | MPV FWD BKC;BJB;BLS;BXE | | GDS83294 | Drive Shaft | | 36 | | 59.5 | 38 | 519 | |
| | 2004.10-2009.05 | 6AT/5MT | F | R | MPV FWD BKC;BJB;BLS;BXE | | GDS61042 | Drive Shaft | | 36 | | 59.5 | 40.5 | 814 | |
| | 2004.10-2009.05 | 6AT/5MT | F | L/R | MPV FWD BKC;BJB;BLS;BXE | | GCO83037 | Outer Joint | | 36 | 30 | 59.5 | 40.5 | 56 | I |
| | 2004.10-2009.05 | 6AT/5MT | F | L/R | MPV FWD BKC;BJB;BLS;BXE | | GCI82447 | Inner Joint | | | 33 | | | 34 | |
| | 2004.10-2009.05 | 6DCT | F | L | MPV FWD BKC;BJB;BLS;BXE | | GDS83381 | Drive Shaft | | 36 | | 59.5 | 40 | 483 | |
| | 2004.10-2009.05 | 6DCT | F | R | MPV FWD BKC;BJB;BLS;BXE | Date to:2007.12 | GDS54011 | Drive Shaft | | 36 | | 59.5 | 40 | 755 | |
| | 2004.10-2009.05 | 6DCT | F | R | MPV FWD BKC;BJB;BLS;BXE | | GDS83354 | Drive Shaft | | 36 | | 59.5 | 40 | 763 | |
| | 2004.10-2009.05 | 6DCT | F | L/R | MPV FWD BKC;BJB;BLS;BXE | | GCO83101 | Outer Joint | | 36 | 27 | 59.5 | 40 | 65 | M |
| | 2004.10-2009.05 | 6DCT | F | L/R | MPV FWD BKC;BJB;BLS;BXE | | GCI61057 | Inner Joint | | | 34 | | | 89 | |
| | 2004.10-2009.05 | AT | F | L | MPV FWD BKC;BJB;BLS;BXE | | GDS83241 | Drive Shaft | | 36 | | 59.5 | 40 | 475 | |
| | 2004.10-2009.05 | AT | F | L | MPV FWD BKC;BJB;BLS;BXE | | GCI54004 | Inner Joint | | | 34 | | | 81 | |
| | 2004.10-2009.05 | MT | F | L/R | MPV FWD BKC;BJB;BLS;BXE | | GCI83011 | Inner Joint | | | 33 | | | 34 | |
| 1.9 (81 kw) | 1996.09-1999.03 | MT | F | L | Hatchback FWD AFN | | GDS53001 | Drive Shaft | | 22 | | 53 | 78.5 | 535 | |
| | 1996.09-1999.03 | MT | F | L/R | Hatchback FWD AFN | | GCO53007 | Outer Joint | | 22 | 30 | 53.2 | 78 | 61 | I |
| | 1996.09-1999.03 | MT | F | | Hatchback FWD AFN | | GCO53004 | Outer Joint | | 22 | 30 | 51 | 78 | 61 | I |
| | 1996.09-1999.03 | MT | F | R | Hatchback FWD AFN | | GCI83009 | Inner Joint | | | 33 | | | 34 | |
| | 1996.09-1999.03 | MT | F | L/R | Hatchback FWD AFN | | GCI83011 | Inner Joint | | | 33 | | | 34 | |
| | 1999.05-2004.07 | 5MT | F | L | Saloon FWD AHF/ASV | | GDS83006 | Drive Shaft | | 36 | | 53.2 | 77.5 | 557 | |
| | 1999.05-2004.07 | 5MT | F | R | Saloon FWD AHF/ASV | | GDS83004 | Drive Shaft | | 36 | | 53.2 | 77.5 | 822 | |
| | 1999.05-2004.07 | 5MT | F | L/R | Saloon FWD AHF/ASV | | GCO83070 | Outer Joint | | 36 | 30 | 53 | 78 | 60 | I |
| | 1999.05-2004.07 | 5MT | F | L | Saloon FWD AHF/ASV | | GCI83011 | Inner Joint | | | 33 | | | 34 | |
| | 1999.05-2004.07 | 5MT | F | R | Saloon FWD AHF/ASV | | GCI83009 | Inner Joint | | | 33 | | | 34 | |
| 1.9 (96 kw) | 2003.05-2006.06 | 6MT | F | L | Saloon FWD ASZ | Chassis no. to:1M_3_109000 | GDS56276 | Drive Shaft | | 36 | | 53 | 77.5 | 520 | |
| | 2003.05-2006.06 | 6MT | F | R | Saloon FWD ASZ | | GDS61121 | Drive Shaft | | 36 | | 53 | 77.5 | 806 | |
| | 2003.05-2006.06 | 6MT | F | L/R | Saloon FWD ASZ | | GCO83035 | Outer Joint | | 36 | 27 | 53 | 77.5 | 65 | I |
| | 2003.05-2006.06 | 6MT | F | L | Saloon FWD ASZ | Chassis no. to:1M_3_109000 | GCI61010 | Inner Joint | | | 28 | | | 32 | |
| | 2003.05-2006.06 | 6MT | F | L/R | Saloon FWD ASZ | Chassis no. to:1M3099001 | GCI83001 | Inner Joint | | | 28 | | | 32 | |
| | 2003.05-2006.06 | 6MT | F | L/R | Saloon FWD ASZ | Chassis no. from:1M3109001 | GCI83016 | Inner Joint | | | 28 | | | 32 | |
| 1.9 (110 kw) | 2000.10-2005.10 | 6MT | R | L/R | Saloon 4WD ARL | | GCO83033 | Outer Joint | | 36 | 30 | 53 | 78.5 | 51 | I |
| | 2000.10-2005.10 | 6MT | R | L/R | Saloon 4WD ARL | | GCI53002 | Inner Joint | | | 33 | | | 34 | |
| | 2000.10-2005.10 | 6MT | F | L | Saloon FWD ARL | Chassis no. to:1M_3_109000 | GDS56276 | Drive Shaft | | 36 | | 53 | 77.5 | 520 | |
| | 2000.10-2005.10 | 6MT | F | R | Saloon FWD ARL | | GDS61121 | Drive Shaft | | 36 | | 53 | 77.5 | 806 | |
| | 2000.10-2005.10 | 6MT | F | L/R | Saloon FWD ARL | | GCO83035 | Outer Joint | | 36 | 27 | 53 | 77.5 | 65 | I |
| | 2000.10-2005.10 | 6MT | F | L/R | Saloon FWD ARL | Chassis no. to:1M3099001 | GCI83001 | Inner Joint | | | 28 | | | 32 | |
| | 2000.10-2005.10 | 6MT | F | L/R | Saloon FWD ARL | Chassis no. from:1M3109001 | GCI83016 | Inner Joint | | | 28 | | | 32 | |
| 2.0 (85 kw) | 1991.05-1998.10 | AT | F | | Hatchback FWD 2E/AGG | | GCO53006 | Outer Joint | | 22 | 30 | 50 | 78.5 | 52 | I |
| | 1991.05-1998.10 | MT | F | L | Hatchback FWD 2E/AGG | | GDS53001 | Drive Shaft | | 22 | | 53 | 78.5 | 535 | |
| | 1991.05-1998.10 | MT | F | R | Hatchback FWD 2E/AGG | Date to:1998.10 | GDS53002 | Drive Shaft | | 22 | | 53.2 | 78 | 769 | |
| | 1991.05-1998.10 | MT | F | L/R | Hatchback FWD 2E/AGG | Date to:1998.10 | GCO53007 | Outer Joint | | 22 | 30 | 53.2 | 78 | 61 | I |
| | 1991.05-1998.10 | MT | F | | Hatchback FWD 2E/AGG | | GCO53004 | Outer Joint | | 22 | 30 | 51 | 78 | 61 | I |
| | 1991.05-1998.10 | MT | F | R | Hatchback FWD 2E/AGG | Date to:1998.10 | GCI83009 | Inner Joint | | | 33 | | | 34 | |
| | 1991.05-1998.10 | MT | F | L/R | Hatchback FWD 2E/AGG | | GCI83011 | Inner Joint | | | 33 | | | 34 | |
| 2.0 (100 kw) | 2004.09-2009.05 | 6AT/6MT | F | L/R | MPV FWD AZV | | GCO83002 | Outer Joint | | 36 | 27 | 59.5 | 40 | 66 | I |
| | 2004.09-2009.05 | 6AT/6MT | F | L/R | MPV FWD AZV | | GCI54004 | Inner Joint | | | 34 | | | 81 | |
| | 2004.09-2009.05 | 6AT/6MT | F | L/R | MPV FWD AZV | Original Tripod Design | GCI61057 | Inner Joint | | | 34 | | | 89 | |

| | YEAR | TRANSM. | F/R | L/R | BODY STYLE & DRIVE TYPE & ENGINE | REMARKS | G-AP Ref. | PRODUCT | ABS | Technical Specifications A | B | C | H | L | P |
|---|---|---|---|---|---|---|---|---|---|---|---|---|---|---|---|
| **SEAT** | | | | | | | | | | | | | | | |
| **Toledo** | | | | | | | | | | | | | | | |
| 2.0 (100 kw) | 2004.09-2009.05 | 6AT/6MT | F | L/R | MPV FWD AZV | | GCI83016 | Inner Joint | | | 28 | | | 32 | |
| | 2004.09-2009.05 | 6DCT | F | L | MPV FWD AZV | For taxis | GDS83381 | Drive Shaft | | 36 | | 59.5 | 40 | 483 | |
| | 2004.09-2009.05 | 6DCT | F | R | MPV FWD AZV | | GDS83354 | Drive Shaft | | 36 | | 59.5 | 40 | 763 | |
| | 2004.09-2009.05 | AT | F | L | MPV FWD AZV | Not for taxis | GDS54013 | Drive Shaft | | 36 | | 59.5 | 40 | 479.5 | |
| | 2004.09-2009.05 | AT | F | L | MPV FWD AZV | | GDS83241 | Drive Shaft | | 36 | | 59.5 | 40 | 475 | |
| | 2004.09-2009.05 | AT | F | R | MPV FWD AZV | | GDS54011 | Drive Shaft | | 36 | | 59.5 | 40 | 755 | |
| | 2004.09-2009.05 | AT | F | L/R | MPV FWD AZV | For taxis;Date to:2008.02;Chassis no. to:5P8060181;Date from:2008.03;Chassis no. from:5P8060182 | GCO83101 | Outer Joint | | 36 | 27 | 59.5 | 40 | 65 | M |
| | 2004.09-2009.05 | MT | F | L | MPV FWD AZV | | GDS83295 | Drive Shaft | | 36 | | 59.5 | 40 | 491 | |
| | 2004.09-2009.05 | MT | F | R | MPV FWD AZV | Chassis no. from:5P-5-047 001 | GDS61126 | Drive Shaft | | 36 | | 59.5 | 40 | 793 | |
| | 2004.09-2009.05 | MT | F | R | MPV FWD AZV | | GDS83236 | Drive Shaft | | 36 | | 59.5 | 40 | 484 | |
| | 2004.09-2009.05 | MT | F | R | MPV FWD AZV | | GDS83313 | Drive Shaft | | 36 | | 59.5 | 40 | 792 | |
| | 2004.09-2009.05 | MT | F | R | MPV FWD AZV | | GDS61237 | Stub Axle,differential | | 23 | 37 | | | 142.5 | |
| 2.0 (103 kw) | 2004.04-2009.05 | 6DCT | F | L | MPV FWD BKD | For taxis | GDS83381 | Drive Shaft | | 36 | | 59.5 | 40 | 483 | |
| | 2004.04-2009.05 | 6DCT | F | R | MPV FWD BKD | | GDS83354 | Drive Shaft | | 36 | | 59.5 | 40 | 763 | |
| | 2004.04-2009.05 | 6DCT | F | R | MPV FWD BKD | Date to:2004.08,Posision:Right | GCI83041 | Inner Joint | | 23 | 34 | | 319 | 88 | |
| | 2004.04-2009.05 | 6DCT | F | L/R | MPV FWD BKD | Date to:2004.08,Posision:Left;Date from:2004.09,Posision:Left/Right;For taxis | GCI54004 | Inner Joint | | | 34 | | | 81 | |
| | 2004.04-2009.05 | 6DCT | F | L/R | MPV FWD BKD | Date to:2004.08,Posision:Left;Date from:2004.09,Posision:Left/Right;For taxis | GCI61057 | Inner Joint | | | 34 | | | 89 | |
| | 2004.04-2009.05 | 6MT | F | L/R | MPV FWD BKD | | GCI83016 | Inner Joint | | | 28 | | | 32 | |
| | 2004.04-2009.05 | AT | F | L | MPV FWD BKD | Not for taxis | GDS54013 | Drive Shaft | | 36 | | 59.5 | 40 | 479.5 | |
| | 2004.04-2009.05 | AT | F | L | MPV FWD BKD | | GDS83241 | Drive Shaft | | 36 | | 59.5 | 40 | 475 | |
| | 2004.04-2009.05 | AT | F | R | MPV FWD BKD | | GDS54011 | Drive Shaft | | 36 | | 59.5 | 40 | 755 | |
| | 2004.04-2009.05 | AT | F | R | MPV FWD BKD | Date to:2004.10 | GDS83355 | Drive Shaft | | 36 | 23 | 59.5 | 40 | 799 | |
| | 2004.04-2009.05 | AT | F | L/R | MPV FWD BKD | For taxis;Date to:2008.02;Chassis no. to:5P8060181;Date from:2008.03;Chassis no. from:5P8060182 | GCO83101 | Outer Joint | | 36 | 27 | 59.5 | 40 | 65 | M |
| | 2004.04-2009.05 | MT | F | L | MPV FWD BKD | | GDS83295 | Drive Shaft | | 36 | | 59.5 | 40 | 491 | |
| | 2004.04-2009.05 | MT | F | R | MPV FWD BKD | Chassis no. from:5P5047_001 | GDS61126 | Drive Shaft | | 36 | | 59.5 | 40 | 793 | |
| | 2004.04-2009.05 | MT | F | R | MPV FWD BKD | | GDS83236 | Drive Shaft | | 36 | | 59.5 | 40 | 484 | |
| | 2004.04-2009.05 | MT | F | R | MPV FWD BKD | | GDS83313 | Drive Shaft | | 36 | | 59.5 | 40 | 792 | |
| | 2004.04-2009.05 | MT | F | R | MPV FWD BKD | | GDS61237 | Stub Axle,differential | | 23 | 37 | | | 142.5 | |
| | 2004.04-2009.05 | SAT/6MT | F | L/R | MPV FWD BKD | | GCO83002 | Outer Joint | | 36 | 27 | 59.5 | 40 | 66 | I |
| | 2005.11-2009.05 | 6AT/6MT | F | L/R | MPV FWD BMM | | GCO83002 | Outer Joint | | 36 | 27 | 59.5 | 40 | 66 | I |
| | 2005.11-2009.05 | 6AT/6MT | F | L/R | MPV FWD BMM | | GCI54004 | Inner Joint | | | 34 | | | 81 | |
| | 2005.11-2009.05 | 6AT/6MT | F | L/R | MPV FWD BMM | Original Tripod Design | GCI61057 | Inner Joint | | | 34 | | | 89 | |
| | 2005.11-2009.05 | 6AT/6MT | F | L/R | MPV FWD BMM | | GCI83016 | Inner Joint | | | 28 | | | 32 | |
| | 2005.11-2009.05 | 6DCT | F | L | MPV FWD BMM | For taxis | GDS83381 | Drive Shaft | | 36 | | 59.5 | 40 | 483 | |
| | 2005.11-2009.05 | 6DCT | F | R | MPV FWD BMM | | GDS83354 | Drive Shaft | | 36 | | 59.5 | 40 | 763 | |
| | 2005.11-2009.05 | AT | F | L | MPV FWD BMM | Not for taxis | GDS54013 | Drive Shaft | | 36 | | 59.5 | 40 | 479.5 | |
| | 2005.11-2009.05 | AT | F | L | MPV FWD BMM | | GDS83241 | Drive Shaft | | 36 | | 59.5 | 40 | 475 | |
| | 2005.11-2009.05 | AT | F | R | MPV FWD BMM | | GDS54011 | Drive Shaft | | 36 | | 59.5 | 40 | 755 | |
| | 2005.11-2009.05 | AT | F | L/R | MPV FWD BMM | For taxis;Date to:2008.02;Chassis no. to:5P8060181;Date from:2008.03;Chassis no. from:5P8060182 | GCO83101 | Outer Joint | | 36 | 27 | 59.5 | 40 | 65 | M |
| | 2005.11-2009.05 | MT | F | L | MPV FWD BMM | | GDS83236 | Drive Shaft | | 36 | | 59.5 | 40 | 484 | |
| | 2005.11-2009.05 | MT | F | L | MPV FWD BMM | | GDS83295 | Drive Shaft | | 36 | | 59.5 | 40 | 491 | |
| | 2005.11-2009.05 | MT | F | R | MPV FWD BMM | | GDS61126 | Drive Shaft | | 36 | | 59.5 | 40 | 793 | |
| | 2005.11-2009.05 | MT | F | R | MPV FWD BMM | | GDS83313 | Drive Shaft | | 36 | | 59.5 | 40 | 792 | |
| | 2005.11-2009.05 | MT | F | R | MPV FWD BMM | | GDS61237 | Stub Axle,differential | | 23 | 37 | | | 142.5 | |
| 2.0 (110 kw) | 1994.03-1999.03 | AT | F | | Hatchback FWD ABF | | GCO53006 | Outer Joint | | 22 | 30 | 50 | 78.5 | 52 | I |
| | 1994.03-1999.03 | MT | F | L | Hatchback FWD ABF | | GDS53001 | Drive Shaft | | 22 | | 53 | 78.5 | 535 | |
| | 1994.03-1999.03 | MT | F | L | Hatchback FWD ABF | | GDS99116 | Drive Shaft | | 36 | | 53.2 | 77.5 | 548.5 | |
| | 1994.03-1999.03 | MT | F | R | Hatchback FWD ABF | | GDS99112 | Drive Shaft | | 36 | | 53.2 | 77.5 | 783 | |
| | 1994.03-1999.03 | MT | F | L/R | Hatchback FWD ABF | Date from:1994.03 | GCO83070 | Outer Joint | | 36 | 30 | 53 | 78 | 60 | I |
| | 1994.03-1999.03 | MT | F | | Hatchback FWD ABF | | GCO53004 | Outer Joint | | 22 | 30 | 51 | 78 | 61 | I |
| | 1994.03-1999.03 | MT | F | R | Hatchback FWD ABF | Date from:1994.03 | GCI83009 | Inner Joint | | | 33 | | | 34 | |
| | 1994.03-1999.03 | MT | F | L/R | Hatchback FWD ABF | | GCI83011 | Inner Joint | | | 33 | | | 34 | |
| | 2004.10-2009.05 | 6AT | F | L/R | MPV FWD BLR;BLY;BVY;BVZ | | GCI61011 | Inner Joint | | 26 | 32 | 31 | 68.5 | 85 | |
| | 2004.10-2009.05 | 6AT | F | L/R | MPV FWD BLR;BLY;BVY;BVZ | | GCI61050 | Inner Joint | | 26 | 32 | 31 | 68.5 | 89 | |
| | 2004.10-2009.05 | 6AT/6MT | F | L/R | MPV FWD BLR;BLY;BVY;BVZ | | GCO83037 | Outer Joint | | 36 | 30 | 59.5 | 40.5 | 56 | I |
| | 2004.10-2009.05 | AT | F | L | MPV FWD BLR;BLY;BVY;BVZ | | GDS61093 | Drive Shaft | | 36 | 26 | 59.5 | 40.5 | 587.5 | |
| | 2004.10-2009.05 | AT | F | R | MPV FWD BLR;BLY;BVY;BVZ | | GDS61094 | Drive Shaft | | 36 | 26 | 59.5 | 40.5 | 884 | |
| | 2004.10-2009.05 | MT | F | L | MPV FWD BLR;BLY;BVY;BVZ | | GDS83294 | Drive Shaft | | 36 | | 59.5 | 38 | 519 | |
| | 2004.10-2009.05 | MT | F | R | MPV FWD BLR;BLY;BVY;BVZ | | GDS61042 | Drive Shaft | | 36 | | 59.5 | 40.5 | 814 | |
| | 2004.10-2009.05 | MT | F | L/R | MPV FWD BLR;BLY;BVY;BVZ | | GCI82447 | Inner Joint | | | 33 | | | 34 | |
| | 2004.10-2009.05 | MT | F | R | MPV FWD BLR;BLY;BVY;BVZ | | GDS61237 | Stub Axle,differential | | 23 | 37 | | | 142.5 | |
| 2.0 (125 kw) | 2006.01-2009.05 | AT | F | L/R | MPV FWD BMN;CEGA | Date to:2008.02;For taxis;Chassis no. to:5P8060181 | GCO83101 | Outer Joint | | 36 | 27 | 59.5 | 40 | 65 | M |
| | 2006.01-2009.05 | MT | F | L | MPV FWD BMN;CEGA | | GDS83236 | Drive Shaft | | 36 | | 59.5 | 40 | 484 | |
| | 2006.01-2009.05 | MT | F | L | MPV FWD BMN;CEGA | | GDS83295 | Drive Shaft | | 36 | | 59.5 | 40 | 491 | |
| | 2006.01-2009.05 | MT | F | R | MPV FWD BMN;CEGA | | GDS61126 | Drive Shaft | | 36 | | 59.5 | 40 | 793 | |

| | YEAR | TRANSM. | F/R | L/R | BODY STYLE & DRIVE TYPE & ENGINE | REMARKS | G-AP Ref. | PRODUCT | ABS | Technical Specifications A | B | C | H | L | P |
|---|---|---|---|---|---|---|---|---|---|---|---|---|---|---|---|
| **SEAT** | | | | | | | | | | | | | | | |
| **Toledo** | | | | | | | | | | | | | | | |
| 2.0 (125 kw) | 2006.01-2009.05 | MT | F | R | MPV FWD BMN;CEGA | | GDS83313 | Drive Shaft | | 36 | | 59.5 | 40 | 792 | |
| | 2006.01-2009.05 | MT | F | L/R | MPV FWD BMN;CEGA | | GCI83016 | Inner Joint | | | 28 | | | 32 | |
| | 2006.01-2009.05 | MT | F | R | MPV FWD BMN;CEGA | | GDS61237 | Stub Axle,differential | | 23 | 37 | | | 142.5 | |
| 2.0 (147 kw) | 2005.11-2009.05 | 6AT/6MT | F | L | MPV FWD BWA | | GDS83295 | Drive Shaft | | 36 | | 59.5 | 40 | 491 | |
| | 2005.11-2009.05 | 6AT/6MT | F | R | MPV FWD BWA | | GDS61339 | Drive Shaft | | 36 | | 59.5 | 40 | 794 | |
| | 2005.11-2009.05 | 6DCT | F | R | MPV FWD BWA | | GDS81891 | Drive Shaft | | 36 | | 59.5 | 40 | 781 | |
| | 2005.11-2009.05 | MT | F | R | MPV FWD BWA | | GDS61237 | Stub Axle,differential | | 23 | 37 | | | 142.5 | |
| | 2005.11-2009.05 | | F | L/R | MPV FWD BWA | | GCO83002 | Outer Joint | | 36 | 27 | 59.5 | 40 | 66 | I |
| | 2005.11-2009.05 | | F | L/R | MPV FWD BWA | | GCI83016 | Inner Joint | | | 28 | | | 32 | |
| 2.3 (110 kw) | 1998.10-2000.10 | 5MT | F | L | Saloon FWD AGZ | | GDS61020 | Drive Shaft | | 36 | | 53.2 | 77.5 | 547 | |
| | 1998.10-2000.10 | 5MT | F | R | Saloon FWD AGZ | | GDS83011 | Drive Shaft | | 36 | | 53.2 | 77.5 | 810.5 | |
| | 1998.10-2000.10 | 5MT | F | L/R | Saloon FWD AGZ | | GCO83070 | Outer Joint | | 36 | 30 | 53 | 78 | 60 | I |
| | 1998.10-2000.10 | 5MT | F | L/R | Saloon FWD AGZ | | GCI61006 | Inner Joint | | | 30 | | | 57.6 | |
| 2.3 (125 kw) | 2000.09-2003.11 | 5MT | F | L | Saloon FWD AQN | | GDS61020 | Drive Shaft | | 36 | | 53.2 | 77.5 | 547 | |
| | 2000.09-2003.11 | 5MT | F | R | Saloon FWD AQN | | GDS83011 | Drive Shaft | | 36 | | 53.2 | 77.5 | 810.5 | |
| | 2000.09-2003.11 | AT | F | L | Saloon FWD AQN | | GDS61244 | Drive Shaft | | 36 | | 53 | 77.5 | 523 | |
| | 2000.09-2003.11 | AT | F | R | Saloon FWD AQN | | GDS61243 | Drive Shaft | | 36 | | 53 | 77.5 | 813 | |
| | 2000.09-2003.11 | AT | F | L/R | Saloon FWD AQN | | GCI61044 | Inner Joint | | | 34 | | | 85 | |
| | 2000.09-2003.11 | MT | F | L/R | Saloon FWD AQN | | GCO83070 | Outer Joint | | 36 | 30 | 53 | 78 | 60 | I |
| | 2000.09-2003.11 | MT | F | L/R | Saloon FWD AQN | | GCI83006 | Inner Joint | | | 33 | | | 34 | |
| **SKODA** | | | | | | | | | | | | | | | |
| **Citigo** | | | | | | | | | | | | | | | |
| 1.0 (44 kw) | 2011.10-2019.08 | 5MT | F | L | Hatchback FWD CHYA | Date to:2015.10 | GDS50543 | Drive Shaft | | 22 | 28 | 46 | 78 | 814 | |
| | 2011.10-2019.08 | 5MT | F | L | Hatchback FWD CHYA | Date from:2015.11 | GDS81526 | Drive Shaft | | 22 | 28 | 46 | 78 | 654 | |
| | 2011.10-2019.08 | 5MT | F | R | Hatchback FWD CHYA | Date to:2015.10 | GDS50567 | Drive Shaft | | 22 | 28 | 46 | 78 | 650 | |
| | 2011.10-2019.08 | 5MT | F | R | Hatchback FWD CHYA | Date from:2015.11 | GDS82399 | Drive Shaft | | 22 | 28 | 46 | 78 | 817 | |
| | 2011.10-2019.08 | 5MT | F | L/R | Hatchback FWD CHYA | Date to:2015.10 | GCO50170 | Outer Joint | | 22 | 26 | 46 | 78 | 53 | M |
| | 2011.10-2019.08 | 5MT | F | L/R | Hatchback FWD CHYA | Date from:2015.11 | GCO81356 | Outer Joint | | 22 | 23 | 46 | 78 | 58 | M |
| | 2011.10-2019.08 | 5MT | F | L/R | Hatchback FWD CHYA | Date from:2015.11 | GCI81393 | Inner Joint | | 28 | 22 | 39.95 | 58 | 84.5 | |
| 1.0 (50 kw) | 2012.11-2019.08 | 5MT | F | L | Hatchback FWD CPGA | Date to:2015.10 | GDS50543 | Drive Shaft | | 22 | 28 | 46 | 78 | 814 | |
| | 2012.11-2019.08 | 5MT | F | L | Hatchback FWD CPGA | Date from:2015.11 | GDS81526 | Drive Shaft | | 22 | 28 | 46 | 78 | 654 | |
| | 2012.11-2019.08 | 5MT | F | R | Hatchback FWD CPGA | Date to:2015.10 | GDS50567 | Drive Shaft | | 22 | 28 | 46 | 78 | 650 | |
| | 2012.11-2019.08 | 5MT | F | R | Hatchback FWD CPGA | Date from:2015.11 | GDS82399 | Drive Shaft | | 22 | 28 | 46 | 78 | 817 | |
| | 2012.11-2019.08 | 5MT | F | L/R | Hatchback FWD CPGA | Date to:2015.10 | GCO50170 | Outer Joint | | 22 | 26 | 46 | 78 | 53 | M |
| | 2012.11-2019.08 | 5MT | F | L/R | Hatchback FWD CPGA | Date from:2015.11 | GCO81356 | Outer Joint | | 22 | 23 | 46 | 78 | 58 | M |
| | 2012.11-2019.08 | 5MT | F | L/R | Hatchback FWD CPGA | Date from:2015.11 | GCI81393 | Inner Joint | | 28 | 22 | 39.95 | 58 | 84.5 | |
| 1.0 (55 kw) | 2011.10-2019.08 | 5MT | F | L | Hatchback FWD CHYB | Date to:2015.10 | GDS50543 | Drive Shaft | | 22 | 28 | 46 | 78 | 814 | |
| | 2011.10-2019.08 | 5MT | F | L | Hatchback FWD CHYB | Date from:2015.11 | GDS81526 | Drive Shaft | | 22 | 28 | 46 | 78 | 654 | |
| | 2011.10-2019.08 | 5MT | F | R | Hatchback FWD CHYB | Date to:2015.10 | GDS50567 | Drive Shaft | | 22 | 28 | 46 | 78 | 650 | |
| | 2011.10-2019.08 | 5MT | F | R | Hatchback FWD CHYB | Date from:2015.11 | GDS82399 | Drive Shaft | | 22 | 28 | 46 | 78 | 817 | |
| | 2011.10-2019.08 | 5MT | F | L/R | Hatchback FWD CHYB | Date to:2015.10 | GCO50170 | Outer Joint | | 22 | 26 | 46 | 78 | 53 | M |
| | 2011.10-2019.08 | 5MT | F | L/R | Hatchback FWD CHYB | Date from:2015.11 | GCO81356 | Outer Joint | | 22 | 23 | 46 | 78 | 58 | M |
| | 2011.10-2019.08 | 5MT | F | L/R | Hatchback FWD CHYB | Date from:2015.11 | GCI81393 | Inner Joint | | 28 | 22 | 39.95 | 58 | 84.5 | |
| **Cube Van** | | | | | | | | | | | | | | | |
| 1.3 (50 kw) | 1997.03-1998.06 | 5MT | F | L | Estate Van FWD AMH | | GDS54001 | Drive Shaft | | 22 | 22 | 45 | 82 | 599 | |
| | 1997.03-1998.06 | 5MT | F | R | Estate Van FWD AMH | | GDS54002 | Drive Shaft | | 22 | 22 | 45 | 82 | 861 | |
| | 1997.03-1998.06 | 5MT | F | L/R | Estate Van FWD AMH | | GCO54001 | Outer Joint | | 22 | 22 | 45 | 82 | 53.5 | I |
| | 1997.03-1998.06 | 5MT | F | L/R | Estate Van FWD AMH | | GCI54003 | Inner Joint | | 22 | 30 | 40 | 60.2 | 94.5 | |
| 1.6 (55 kw) | 1998.06-2001.12 | 5MT | F | L | Estate Van FWD AEE | | GDS54001 | Drive Shaft | | 22 | 22 | 45 | 82 | 599 | |
| | 1998.06-2001.12 | 5MT | F | R | Estate Van FWD AEE | | GDS54002 | Drive Shaft | | 22 | 22 | 45 | 82 | 861 | |
| | 1998.06-2001.12 | 5MT | F | L/R | Estate Van FWD AEE | | GCO54001 | Outer Joint | | 22 | 22 | 45 | 82 | 53.5 | I |
| | 1998.06-2001.12 | 5MT | F | L/R | Estate Van FWD AEE | | GCI54003 | Inner Joint | | 22 | 30 | 40 | 60.2 | 94.5 | |
| **E-Citigo** | | | | | | | | | | | | | | | |
| EV (61 kw) | 2019.09-2021.09 | ET | F | L | Hatchback FWD EBMA | | GDS56201 | Drive Shaft | | 22 | 33 | 46 | 78 | 702 | |
| | 2019.09-2021.09 | ET | F | R | Hatchback FWD EBMA | | GDS56200 | Drive Shaft | | 22 | 33 | 46 | 78 | 743 | |
| | 2019.09-2021.09 | ET | F | L/R | Hatchback FWD EBMA | | GCO83202 | Outer Joint | | 22 | 30 | 46 | 78 | 61 | I |
| | 2019.09-2021.09 | ET | F | L/R | Hatchback FWD EBMA | | GCI81546 | Inner Joint | | 33 | 32 | 39.9 | 58.5 | 105 | |
| **Elroq** | | | | | | | | | | | | | | | |
| EV (125 kw) | 2024.11- | ET | R | L | SUV RWD EDCA | For PR code:N06 | GDS56955 | Drive Shaft | | 38 | 37 | 59.5 | 34 | 634 | |
| | 2024.11- | ET | R | L | SUV RWD EDCA | For PR code:N22/T65 | GDS58102 | Drive Shaft | | 38 | 42 | 59.5 | 34 | 639 | |
| | 2024.11- | ET | R | R | SUV RWD EDCA | For PR code:N06 | GDS56956 | Drive Shaft | | 38 | 37 | 59.5 | 34 | 859 | |
| | 2024.11- | ET | R | R | SUV RWD EDCA | For PR code:N22/T65 | GDS58101 | Drive Shaft | | 38 | 42 | 59.5 | 34 | 853 | |
| | 2024.11- | ET | R | L/R | SUV RWD EDCA | For PR code:N06 | GCO83488 | Outer Joint | | 38 | 28 | 59.5 | 34 | 81 | |
| | 2024.11- | ET | R | L/R | SUV RWD EDCA | For PR code:N22/T65 | GCO83846 | Outer Joint | | 38 | 27 | 59.5 | 34 | 65 | M |
| | 2024.11- | ET | R | L/R | SUV RWD EDCA | For PR code:N06 | GCI83571 | Inner Joint | | 37 | 28 | 39.95 | 69 | 85.5 | |

| | YEAR | TRANSM. | F/R | L/R | BODY STYLE & DRIVE TYPE & ENGINE | REMARKS | G-AP Ref. | PRODUCT | ABS | Technical Specifications A | B | C | H | L | P |
|---|---|---|---|---|---|---|---|---|---|---|---|---|---|---|---|
| **SKODA** | | | | | | | | | | | | | | | |
| **Elroq** | | | | | | | | | | | | | | | |
| EV (150 kw) | 2024.11- | ET | R | L | SUV RWD | For PR code:N06 | GDS56955 | Drive Shaft | | 38 | 37 | 59.5 | 34 | 634 | |
| | 2024.11- | ET | R | L | SUV RWD | For PR code:N22/T65 | GDS58102 | Drive Shaft | | 38 | 42 | 59.5 | 34 | 639 | |
| | 2024.11- | ET | R | R | SUV RWD | For PR code:N06 | GDS56956 | Drive Shaft | | 38 | 37 | 59.5 | 34 | 859 | |
| | 2024.11- | ET | R | R | SUV RWD | For PR code:N22/T65 | GDS58101 | Drive Shaft | | 38 | 42 | 59.5 | 34 | 853 | |
| | 2024.11- | ET | R | L/R | SUV RWD | For PR code:N06 | GCO83488 | Outer Joint | | 38 | 28 | 59.5 | 34 | 81 | |
| | 2024.11- | ET | R | L/R | SUV RWD | For PR code:N22/T65 | GCO83846 | Outer Joint | | 38 | 27 | 59.5 | 34 | 65 | M |
| | 2024.11- | ET | R | L/R | SUV RWD | For PR code:N06 | GCI83571 | Inner Joint | | 37 | 28 | 39.95 | 69 | 85.5 | |
| EV (210 kw) | 2024.11- | ET | R | L | SUV RWD EDFA | For PR code:N06 | GDS56955 | Drive Shaft | | 38 | 37 | 59.5 | 34 | 634 | |
| | 2024.11- | ET | R | L | SUV RWD EDFA | For PR code:N22/T65 | GDS58102 | Drive Shaft | | 38 | 42 | 59.5 | 34 | 639 | |
| | 2024.11- | ET | R | R | SUV RWD EDFA | For PR code:N06 | GDS56956 | Drive Shaft | | 38 | 37 | 59.5 | 34 | 859 | |
| | 2024.11- | ET | R | R | SUV RWD EDFA | For PR code:N22/T65 | GDS58101 | Drive Shaft | | 38 | 42 | 59.5 | 34 | 853 | |
| | 2024.11- | ET | R | L/R | SUV RWD EDFA | For PR code:N06 | GCO83488 | Outer Joint | | 38 | 28 | 59.5 | 34 | 81 | |
| | 2024.11- | ET | R | L/R | SUV RWD EDFA | For PR code:N22/T65 | GCO83846 | Outer Joint | | 38 | 27 | 59.5 | 34 | 65 | M |
| | 2024.11- | ET | R | L/R | SUV RWD EDFA | For PR code:N06 | GCI83571 | Inner Joint | | 37 | 28 | 39.95 | 69 | 85.5 | |
| EV (220 kw) | 2024.11- | ET | F | L | SUV 4WD | For left-hand drive vehicles | GDS56405 | Drive Shaft | | 38 | 33 | 59.5 | 40.5 | 663 | |
| | 2024.11- | ET | F | L | SUV 4WD | For right-hand drive vehicles | GDS57677 | Drive Shaft | | 38 | 33 | 59.5 | 40.5 | 565 | |
| | 2024.11- | ET | F | R | SUV 4WD | For left-hand drive vehicles | GDS56971 | Drive Shaft | | 38 | 33 | 59.5 | 40.5 | 622 | |
| | 2024.11- | ET | F | R | SUV 4WD | For right-hand drive vehicles | GDS57678 | Drive Shaft | | 38 | 33 | 59.5 | 40.5 | 721 | |
| | 2024.11- | ET | F | L/R | SUV 4WD | | GCO83674 | Outer Joint | | 38 | 33 | 59.5 | 40.5 | 59 | I |
| | 2024.11- | ET | F | L/R | SUV 4WD | | GCI81546 | Inner Joint | | 33 | 32 | 39.9 | 58.5 | 105 | |
| | 2024.11- | ET | R | L | SUV 4WD | For PR code:N06 | GDS56955 | Drive Shaft | | 38 | 37 | 59.5 | 34 | 634 | |
| | 2024.11- | ET | R | L | SUV 4WD | For PR code:N22/T65 | GDS58102 | Drive Shaft | | 38 | 42 | 59.5 | 34 | 639 | |
| | 2024.11- | ET | R | R | SUV 4WD | For PR code:N06 | GDS56956 | Drive Shaft | | 38 | 37 | 59.5 | 34 | 859 | |
| | 2024.11- | ET | R | R | SUV 4WD | For PR code:N22/T65 | GDS58101 | Drive Shaft | | 38 | 42 | 59.5 | 34 | 853 | |
| | 2024.11- | ET | R | L/R | SUV 4WD | For PR code:N06 | GCO83488 | Outer Joint | | 38 | 28 | 59.5 | 34 | 81 | |
| | 2024.11- | ET | R | L/R | SUV 4WD | For PR code:N22/T65 | GCO83846 | Outer Joint | | 38 | 27 | 59.5 | 34 | 65 | M |
| | 2024.11- | ET | R | L/R | SUV 4WD | For PR code:N06 | GCI83571 | Inner Joint | | 37 | 28 | 39.95 | 69 | 85.5 | |
| EV (250 kw) | 2025.04- | ET | F | L | SUV 4WD EDDA, EDFA | For left-hand drive vehicles | GDS56405 | Drive Shaft | | 38 | 33 | 59.5 | 40.5 | 663 | |
| | 2025.04- | ET | F | L | SUV 4WD EDDA, EDFA | For right-hand drive vehicles | GDS57677 | Drive Shaft | | 38 | 33 | 59.5 | 40.5 | 565 | |
| | 2025.04- | ET | F | R | SUV 4WD EDDA, EDFA | For left-hand drive vehicles | GDS56971 | Drive Shaft | | 38 | 33 | 59.5 | 40.5 | 622 | |
| | 2025.04- | ET | F | R | SUV 4WD EDDA, EDFA | For right-hand drive vehicles | GDS57678 | Drive Shaft | | 38 | 33 | 59.5 | 40.5 | 721 | |
| | 2025.04- | ET | F | L/R | SUV 4WD EDDA, EDFA | | GCO83674 | Outer Joint | | 38 | 33 | 59.5 | 40.5 | 59 | I |
| | 2025.04- | ET | F | L/R | SUV 4WD EDDA, EDFA | | GCI81546 | Inner Joint | | 33 | 32 | 39.9 | 58.5 | 105 | |
| | 2025.04- | ET | R | L | SUV 4WD EDDA, EDFA | For PR code:N06 | GDS56955 | Drive Shaft | | 38 | 37 | 59.5 | 34 | 634 | |
| | 2025.04- | ET | R | L | SUV 4WD EDDA, EDFA | For PR code:N22/T65 | GDS58102 | Drive Shaft | | 38 | 42 | 59.5 | 34 | 639 | |
| | 2025.04- | ET | R | R | SUV 4WD EDDA, EDFA | For PR code:N06 | GDS56956 | Drive Shaft | | 38 | 37 | 59.5 | 34 | 859 | |
| | 2025.04- | ET | R | R | SUV 4WD EDDA, EDFA | For PR code:N22/T65 | GDS58101 | Drive Shaft | | 38 | 42 | 59.5 | 34 | 853 | |
| | 2025.04- | ET | R | L/R | SUV 4WD EDDA, EDFA | For PR code:N06 | GCO83488 | Outer Joint | | 38 | 28 | 59.5 | 34 | 81 | |
| | 2025.04- | ET | R | L/R | SUV 4WD EDDA, EDFA | For PR code:N22/T65 | GCO83846 | Outer Joint | | 38 | 27 | 59.5 | 34 | 65 | M |
| | 2025.04- | ET | R | L/R | SUV 4WD EDDA, EDFA | For PR code:N06 | GCI83571 | Inner Joint | | 37 | 28 | 39.95 | 69 | 85.5 | |
| **Enyaq iV** | | | | | | | | | | | | | | | |
| EV (109 kw) | 2020.10- | ET | R | L | SUV RWD EBJA | Date to:2023.10;Date from:2023.11,For PR code:N06 | GDS56955 | Drive Shaft | | 38 | 37 | 59.5 | 34 | 634 | |
| | 2020.10- | ET | R | L | SUV RWD EBJA | Date from:2023.11,For PR code:N22/T65 | GDS58102 | Drive Shaft | | 38 | 42 | 59.5 | 34 | 639 | |
| | 2020.10- | ET | R | R | SUV RWD EBJA | Date to:2023.10;Date from:2023.11,For PR code:N06 | GDS56956 | Drive Shaft | | 38 | 37 | 59.5 | 34 | 859 | |
| | 2020.10- | ET | R | R | SUV RWD EBJA | Date from:2023.11,For PR code:N22/T65 | GDS58101 | Drive Shaft | | 38 | 42 | 59.5 | 34 | 853 | |
| | 2020.10- | ET | R | L/R | SUV RWD EBJA | Date to:2023.10;Date from:2023.11,For PR code:N06 | GCO83488 | Outer Joint | | 38 | 28 | 59.5 | 34 | 81 | |
| | 2020.10- | ET | R | L/R | SUV RWD EBJA | Date from:2023.11,For PR code:N22/T65 | GCO83846 | Outer Joint | | 38 | 27 | 59.5 | 34 | 65 | M |
| | 2020.10- | ET | R | L/R | SUV RWD EBJA | Date to:2023.10;Date from:2023.11,For PR code:N06 | GCI83571 | Inner Joint | | 37 | 28 | 39.95 | 69 | 85.5 | |
| EV (125 kw) | 2024.07- | ET | R | L | SUV RWD EDCA | For PR code:N06 | GDS56955 | Drive Shaft | | 38 | 37 | 59.5 | 34 | 634 | |
| | 2024.07- | ET | R | L | SUV RWD EDCA | For PR code:N22/T65 | GDS58102 | Drive Shaft | | 38 | 42 | 59.5 | 34 | 639 | |
| | 2024.07- | ET | R | R | SUV RWD EDCA | For PR code:N06 | GDS56956 | Drive Shaft | | 38 | 37 | 59.5 | 34 | 859 | |
| | 2024.07- | ET | R | R | SUV RWD EDCA | For PR code:N22/T65 | GDS58101 | Drive Shaft | | 38 | 42 | 59.5 | 34 | 853 | |
| | 2024.07- | ET | R | L/R | SUV RWD EDCA | For PR code:N06 | GCO83488 | Outer Joint | | 38 | 28 | 59.5 | 34 | 81 | |
| | 2024.07- | ET | R | L/R | SUV RWD EDCA | For PR code:N22/T65 | GCO83846 | Outer Joint | | 38 | 27 | 59.5 | 34 | 65 | M |
| | 2024.07- | ET | R | L/R | SUV RWD EDCA | For PR code:N06 | GCI83571 | Inner Joint | | 37 | 28 | 39.95 | 69 | 85.5 | |
| EV (132 kw) | 2020.10- | ET | R | L | SUV RWD EBJC | Date to:2023.10;Date from:2023.11,For PR code:N06 | GDS56955 | Drive Shaft | | 38 | 37 | 59.5 | 34 | 634 | |
| | 2020.10- | ET | R | L | SUV RWD EBJC | Date from:2023.11,For PR code:N22/T65 | GDS58102 | Drive Shaft | | 38 | 42 | 59.5 | 34 | 639 | |
| | 2020.10- | ET | R | R | SUV RWD EBJC | Date to:2023.10;Date from:2023.11,For PR code:N06 | GDS56956 | Drive Shaft | | 38 | 37 | 59.5 | 34 | 859 | |
| | 2020.10- | ET | R | R | SUV RWD EBJC | Date from:2023.11,For PR code:N22/T65 | GDS58101 | Drive Shaft | | 38 | 42 | 59.5 | 34 | 853 | |
| | 2020.10- | ET | R | L/R | SUV RWD EBJC | Date to:2023.10;Date from:2023.11,For PR code:N06 | GCO83488 | Outer Joint | | 38 | 28 | 59.5 | 34 | 81 | |
| | 2020.10- | ET | R | L/R | SUV RWD EBJC | Date from:2023.11,For PR code:N22/T65 | GCO83846 | Outer Joint | | 38 | 27 | 59.5 | 34 | 65 | M |
| | 2020.10- | ET | R | L/R | SUV RWD EBJC | Date to:2023.10;Date from:2023.11,For PR code:N06 | GCI83571 | Inner Joint | | 37 | 28 | 39.95 | 69 | 85.5 | |
| | 2021.07- | ET | R | L | SUV RWD EBJC | Date to:2023.10;Date from:2023.11,For PR code:N06 | GDS56955 | Drive Shaft | | 38 | 37 | 59.5 | 34 | 634 | |
| | 2021.07- | ET | R | L | SUV RWD EBJC | Date from:2023.11,For PR code:N22/T65 | GDS58102 | Drive Shaft | | 38 | 42 | 59.5 | 34 | 639 | |
| | 2021.07- | ET | R | R | SUV RWD EBJC | Date to:2023.10;Date from:2023.11,For PR code:N06 | GDS56956 | Drive Shaft | | 38 | 37 | 59.5 | 34 | 859 | |

| | YEAR | TRANSM. | F/R | L/R | BODY STYLE & DRIVE TYPE & ENGINE | REMARKS | G-AP Ref. | PRODUCT | ABS | Technical Specifications A | B | C | H | L | P |
|---|---|---|---|---|---|---|---|---|---|---|---|---|---|---|---|
| **SKODA** **Enyaq iV** | | | | | | | | | | | | | | | |
| EV (132 kw) | 2021.07- | ET | R | R | SUV RWD EBJC | Date from:2023.11,For PR code:N22/T65 | GDS58101 | Drive Shaft | | 38 | 42 | 59.5 | 34 | 853 | |
| | 2021.07- | ET | R | L/R | SUV RWD EBJC | Date to:2023.10;Date from:2023.11,For PR code:N06 | GCO83488 | Outer Joint | | 38 | 28 | 59.5 | 34 | 81 | |
| | 2021.07- | ET | R | L/R | SUV RWD EBJC | Date from:2023.11,For PR code:N22/T65 | GCO83846 | Outer Joint | | 38 | 27 | 59.5 | 34 | 65 | M |
| | 2021.07- | ET | R | L/R | SUV RWD EBJC | Date to:2023.10;Date from:2023.11,For PR code:N06 | GCI83571 | Inner Joint | | 37 | 28 | 39.95 | 69 | 85.5 | |
| EV (150 kw) | 2020.10- | ET | R | L | SUV RWD EBJA | Date to:2023.10;Date from:2023.11,For PR code:N06 | GDS56955 | Drive Shaft | | 38 | 37 | 59.5 | 34 | 634 | |
| | 2020.10- | ET | R | L | SUV RWD EBJA | Date from:2023.11,For PR code:N22/T65 | GDS58102 | Drive Shaft | | 38 | 42 | 59.5 | 34 | 639 | |
| | 2020.10- | ET | R | R | SUV RWD EBJA | Date to:2023.10;Date from:2023.11,For PR code:N06 | GDS56956 | Drive Shaft | | 38 | 37 | 59.5 | 34 | 859 | |
| | 2020.10- | ET | R | R | SUV RWD EBJA | Date from:2023.11,For PR code:N22/T65 | GDS58101 | Drive Shaft | | 38 | 42 | 59.5 | 34 | 853 | |
| | 2020.10- | ET | R | L/R | SUV RWD EBJA | Date to:2023.10;Date from:2023.11,For PR code:N06 | GCO83488 | Outer Joint | | 38 | 28 | 59.5 | 34 | 81 | |
| | 2020.10- | ET | R | L/R | SUV RWD EBJA | Date from:2023.11,For PR code:N22/T65 | GCO83846 | Outer Joint | | 38 | 27 | 59.5 | 34 | 65 | M |
| | 2020.10- | ET | R | L/R | SUV RWD EBJA | Date to:2023.10;Date from:2023.11,For PR code:N06 | GCI83571 | Inner Joint | | 37 | 28 | 39.95 | 69 | 85.5 | |
| | 2021.07- | ET | R | L | SUV RWD EBJA | Date to:2023.10;Date from:2023.11,For PR code:N06 | GDS56955 | Drive Shaft | | 38 | 37 | 59.5 | 34 | 634 | |
| | 2021.07- | ET | R | L | SUV RWD EBJA | Date from:2023.11,For PR code:N22/T65 | GDS58102 | Drive Shaft | | 38 | 42 | 59.5 | 34 | 639 | |
| | 2021.07- | ET | R | R | SUV RWD EBJA | Date to:2023.10;Date from:2023.11,For PR code:N06 | GDS56956 | Drive Shaft | | 38 | 37 | 59.5 | 34 | 859 | |
| | 2021.07- | ET | R | R | SUV RWD EBJA | Date from:2023.11,For PR code:N22/T65 | GDS58101 | Drive Shaft | | 38 | 42 | 59.5 | 34 | 853 | |
| | 2021.07- | ET | R | L/R | SUV RWD EBJA | Date to:2023.10;Date from:2023.11,For PR code:N06 | GCO83488 | Outer Joint | | 38 | 28 | 59.5 | 34 | 81 | |
| | 2021.07- | ET | R | L/R | SUV RWD EBJA | Date from:2023.11,For PR code:N22/T65 | GCO83846 | Outer Joint | | 38 | 27 | 59.5 | 34 | 65 | M |
| | 2021.07- | ET | R | L/R | SUV RWD EBJA | Date to:2023.10;Date from:2023.11,For PR code:N06 | GCI83571 | Inner Joint | | 37 | 28 | 39.95 | 69 | 85.5 | |
| | 2025.01- | ET | R | L | SUV RWD EDCC | Date to:2023.10;Date from:2023.11,For PR code:N06 | GDS56955 | Drive Shaft | | 38 | 37 | 59.5 | 34 | 634 | |
| | 2025.01- | ET | R | L | SUV RWD EDCC | Date from:2023.11,For PR code:N22/T65 | GDS58102 | Drive Shaft | | 38 | 42 | 59.5 | 34 | 639 | |
| | 2025.01- | ET | R | R | SUV RWD EDCC | Date to:2023.10;Date from:2023.11,For PR code:N06 | GDS56956 | Drive Shaft | | 38 | 37 | 59.5 | 34 | 859 | |
| | 2025.01- | ET | R | R | SUV RWD EDCC | Date from:2023.11,For PR code:N22/T65 | GDS58101 | Drive Shaft | | 38 | 42 | 59.5 | 34 | 853 | |
| | 2025.01- | ET | R | L/R | SUV RWD EDCC | Date to:2023.10;Date from:2023.11,For PR code:N06 | GCO83488 | Outer Joint | | 38 | 28 | 59.5 | 34 | 81 | |
| | 2025.01- | ET | R | L/R | SUV RWD EDCC | Date from:2023.11,For PR code:N22/T65 | GCO83846 | Outer Joint | | 38 | 27 | 59.5 | 34 | 65 | M |
| | 2025.01- | ET | R | L/R | SUV RWD EDCC | Date to:2023.10;Date from:2023.11,For PR code:N06 | GCI83571 | Inner Joint | | 37 | 28 | 39.95 | 69 | 85.5 | |
| EV (195 kw) | 2021.07- | ET | F | L | SUV 4WD EBJA;EBRA | For left-hand drive vehicles | GDS56405 | Drive Shaft | | 38 | 33 | 59.5 | 40.5 | 663 | |
| | 2021.07- | ET | F | L | SUV 4WD EBJA;EBRA | For right-hand drive vehicles | GDS57677 | Drive Shaft | | 38 | 33 | 59.5 | 40.5 | 565 | |
| | 2021.07- | ET | F | R | SUV 4WD EBJA;EBRA | For left-hand drive vehicles | GDS56971 | Drive Shaft | | 38 | 33 | 59.5 | 40.5 | 622 | |
| | 2021.07- | ET | F | R | SUV 4WD EBJA;EBRA | For right-hand drive vehicles | GDS57678 | Drive Shaft | | 38 | 33 | 59.5 | 40.5 | 721 | |
| | 2021.07- | ET | F | L/R | SUV 4WD EBJA;EBRA | | GCO83674 | Outer Joint | | 38 | 33 | 59.5 | 40.5 | 59 | I |
| | 2021.07- | ET | F | L/R | SUV 4WD EBJA;EBRA | | GCI81546 | Inner Joint | | 33 | 32 | 39.9 | 58.5 | 105 | |
| | 2021.07- | ET | R | L | SUV 4WD EBJA;EBRA | Date to:2023.10;Date from:2023.11,For PR code:N06 | GDS56955 | Drive Shaft | | 38 | 37 | 59.5 | 34 | 634 | |
| | 2021.07- | ET | R | L | SUV 4WD EBJA;EBRA | Date from:2023.11,For PR code:N22/T65 | GDS58102 | Drive Shaft | | 38 | 42 | 59.5 | 34 | 639 | |
| | 2021.07- | ET | R | R | SUV 4WD EBJA;EBRA | Date to:2023.10;Date from:2023.11,For PR code:N06 | GDS56956 | Drive Shaft | | 38 | 37 | 59.5 | 34 | 859 | |
| | 2021.07- | ET | R | R | SUV 4WD EBJA;EBRA | Date from:2023.11,For PR code:N22/T65 | GDS58101 | Drive Shaft | | 38 | 42 | 59.5 | 34 | 853 | |
| | 2021.07- | ET | R | L/R | SUV 4WD EBJA;EBRA | Date to:2023.10;Date from:2023.11,For PR code:N06 | GCO83488 | Outer Joint | | 38 | 28 | 59.5 | 34 | 81 | |
| | 2021.07- | ET | R | L/R | SUV 4WD EBJA;EBRA | Date from:2023.11,For PR code:N22/T65 | GCO83846 | Outer Joint | | 38 | 27 | 59.5 | 34 | 65 | M |
| | 2021.07- | ET | R | L/R | SUV 4WD EBJA;EBRA | Date to:2023.10;Date from:2023.11,For PR code:N06 | GCI83571 | Inner Joint | | 37 | 28 | 39.95 | 69 | 85.5 | |
| | 2021.10- | ET | F | L | SUV 4WD EBJA;EBRA | For left-hand drive vehicles | GDS56405 | Drive Shaft | | 38 | 33 | 59.5 | 40.5 | 663 | |
| | 2021.10- | ET | F | L | SUV 4WD EBJA;EBRA | For right-hand drive vehicles | GDS57677 | Drive Shaft | | 38 | 33 | 59.5 | 40.5 | 565 | |
| | 2021.10- | ET | F | R | SUV 4WD EBJA;EBRA | For left-hand drive vehicles | GDS56971 | Drive Shaft | | 38 | 33 | 59.5 | 40.5 | 622 | |
| | 2021.10- | ET | F | R | SUV 4WD EBJA;EBRA | For right-hand drive vehicles | GDS57678 | Drive Shaft | | 38 | 33 | 59.5 | 40.5 | 721 | |
| | 2021.10- | ET | F | L/R | SUV 4WD EBJA;EBRA | | GCO83674 | Outer Joint | | 38 | 33 | 59.5 | 40.5 | 59 | I |
| | 2021.10- | ET | F | L/R | SUV 4WD EBJA;EBRA | | GCI81546 | Inner Joint | | 33 | 32 | 39.9 | 58.5 | 105 | |
| | 2021.10- | ET | R | L | SUV 4WD EBJA;EBRA | Date to:2023.10;Date from:2023.11,For PR code:N06 | GDS56955 | Drive Shaft | | 38 | 37 | 59.5 | 34 | 634 | |
| | 2021.10- | ET | R | L | SUV 4WD EBJA;EBRA | Date from:2023.11,For PR code:N22/T65 | GDS58102 | Drive Shaft | | 38 | 42 | 59.5 | 34 | 639 | |
| | 2021.10- | ET | R | R | SUV 4WD EBJA;EBRA | Date to:2023.10;Date from:2023.11,For PR code:N06 | GDS56956 | Drive Shaft | | 38 | 37 | 59.5 | 34 | 859 | |
| | 2021.10- | ET | R | R | SUV 4WD EBJA;EBRA | Date from:2023.11,For PR code:N22/T65 | GDS58101 | Drive Shaft | | 38 | 42 | 59.5 | 34 | 853 | |
| | 2021.10- | ET | R | L/R | SUV 4WD EBJA;EBRA | Date to:2023.10;Date from:2023.11,For PR code:N06 | GCO83488 | Outer Joint | | 38 | 28 | 59.5 | 34 | 81 | |
| | 2021.10- | ET | R | L/R | SUV 4WD EBJA;EBRA | Date from:2023.11,For PR code:N22/T65 | GCO83846 | Outer Joint | | 38 | 27 | 59.5 | 34 | 65 | M |
| | 2021.10- | ET | R | L/R | SUV 4WD EBJA;EBRA | Date to:2023.10;Date from:2023.11,For PR code:N06 | GCI83571 | Inner Joint | | 37 | 28 | 39.95 | 69 | 85.5 | |
| EV (210 kw) | 2023.10- | ET | F | L | SUV 4WD EDDA, EDFA | For left-hand drive vehicles | GDS56405 | Drive Shaft | | 38 | 33 | 59.5 | 40.5 | 663 | |
| | 2023.10- | ET | F | L | SUV 4WD EDDA, EDFA | For right-hand drive vehicles | GDS57677 | Drive Shaft | | 38 | 33 | 59.5 | 40.5 | 565 | |
| | 2023.10- | ET | F | R | SUV 4WD EDDA, EDFA | For left-hand drive vehicles | GDS56971 | Drive Shaft | | 38 | 33 | 59.5 | 40.5 | 622 | |
| | 2023.10- | ET | F | R | SUV 4WD EDDA, EDFA | For right-hand drive vehicles | GDS57678 | Drive Shaft | | 38 | 33 | 59.5 | 40.5 | 721 | |
| | 2023.10- | ET | F | L/R | SUV 4WD EDDA, EDFA | | GCO83674 | Outer Joint | | 38 | 33 | 59.5 | 40.5 | 59 | I |
| | 2023.10- | ET | F | L/R | SUV 4WD EDDA, EDFA | | GCI81546 | Inner Joint | | 33 | 32 | 39.9 | 58.5 | 105 | |
| | 2023.10- | ET | R | L | SUV 4WD EDDA, EDFA | For PR code:N06 | GDS56955 | Drive Shaft | | 38 | 37 | 59.5 | 34 | 634 | |
| | 2023.10- | ET | R | L | SUV 4WD EDDA, EDFA | For PR code:N22/T65 | GDS58102 | Drive Shaft | | 38 | 42 | 59.5 | 34 | 639 | |
| | 2023.10- | ET | R | R | SUV 4WD EDDA, EDFA | For PR code:N06 | GDS56956 | Drive Shaft | | 38 | 37 | 59.5 | 34 | 859 | |
| | 2023.10- | ET | R | R | SUV 4WD EDDA, EDFA | For PR code:N22/T65 | GDS58101 | Drive Shaft | | 38 | 42 | 59.5 | 34 | 853 | |
| | 2023.10- | ET | R | L/R | SUV 4WD EDDA, EDFA | For PR code:N06 | GCO83488 | Outer Joint | | 38 | 28 | 59.5 | 34 | 81 | |
| | 2023.10- | ET | R | L/R | SUV 4WD EDDA, EDFA | For PR code:N22/T65 | GCO83846 | Outer Joint | | 38 | 27 | 59.5 | 34 | 65 | M |
| | 2023.10- | ET | R | L/R | SUV 4WD EDDA, EDFA | For PR code:N06 | GCI83571 | Inner Joint | | 37 | 28 | 39.95 | 69 | 85.5 | |
| | 2023.10- | ET | R | L | SUV RWD EDFA | For PR code:N06 | GDS56955 | Drive Shaft | | 38 | 37 | 59.5 | 34 | 634 | |

| | YEAR | TRANSM. | F/R | L/R | BODY STYLE & DRIVE TYPE & ENGINE | REMARKS | G-AP Ref. | PRODUCT | ABS | Technical Specifications A | B | C | H | L | P |
|---|---|---|---|---|---|---|---|---|---|---|---|---|---|---|---|
| **SKODA** | | | | | | | | | | | | | | | |
| **Enyaq iV** | | | | | | | | | | | | | | | |
| EV (210 kw) | 2023.10- | ET | R | L | SUV RWD EDFA | For PR code:N22/T65 | GDS58102 | Drive Shaft | | 38 | 42 | 59.5 | 34 | 639 | |
| | 2023.10- | ET | R | R | SUV RWD EDFA | For PR code:N06 | GDS56956 | Drive Shaft | | 38 | 37 | 59.5 | 34 | 859 | |
| | 2023.10- | ET | R | R | SUV RWD EDFA | For PR code:N22/T65 | GDS58101 | Drive Shaft | | 38 | 42 | 59.5 | 34 | 853 | |
| | 2023.10- | ET | R | L/R | SUV RWD EDFA | For PR code:N06 | GCO83488 | Outer Joint | | 38 | 28 | 59.5 | 34 | 81 | |
| | 2023.10- | ET | R | L/R | SUV RWD EDFA | For PR code:N22/T65 | GCO83846 | Outer Joint | | 38 | 27 | 59.5 | 34 | 65 | M |
| | 2023.10- | ET | R | L/R | SUV RWD EDFA | For PR code:N06 | GCI83571 | Inner Joint | | 37 | 28 | 39.95 | 69 | 85.5 | |
| EV (220 kw) | 2021.07- | ET | F | L | SUV 4WD EBJA;EBRA | For left-hand drive vehicles | GDS56405 | Drive Shaft | | 38 | 33 | 59.5 | 40.5 | 663 | |
| | 2021.07- | ET | F | L | SUV 4WD EBJA;EBRA | For right-hand drive vehicles | GDS57677 | Drive Shaft | | 38 | 33 | 59.5 | 40.5 | 565 | |
| | 2021.07- | ET | F | R | SUV 4WD EBJA;EBRA | For left-hand drive vehicles | GDS56971 | Drive Shaft | | 38 | 33 | 59.5 | 40.5 | 622 | |
| | 2021.07- | ET | F | R | SUV 4WD EBJA;EBRA | For right-hand drive vehicles | GDS57678 | Drive Shaft | | 38 | 33 | 59.5 | 40.5 | 721 | |
| | 2021.07- | ET | F | L/R | SUV 4WD EBJA;EBRA | | GCO83674 | Outer Joint | | 38 | 33 | 59.5 | 40.5 | 59 | I |
| | 2021.07- | ET | F | L/R | SUV 4WD EBJA;EBRA | | GCI81546 | Inner Joint | | 33 | 32 | 39.9 | 58.5 | 105 | |
| | 2021.07- | ET | R | L | SUV 4WD EBJA;EBRA | Date to:2023.10;Date from:2023.11,For PR code:N06 | GDS56955 | Drive Shaft | | 38 | 37 | 59.5 | 34 | 634 | |
| | 2021.07- | ET | R | L | SUV 4WD EBJA;EBRA | Date from:2023.11,For PR code:N22/T65 | GDS58102 | Drive Shaft | | 38 | 42 | 59.5 | 34 | 639 | |
| | 2021.07- | ET | R | R | SUV 4WD EBJA;EBRA | Date to:2023.10;Date from:2023.11,For PR code:N06 | GDS56956 | Drive Shaft | | 38 | 37 | 59.5 | 34 | 859 | |
| | 2021.07- | ET | R | R | SUV 4WD EBJA;EBRA | Date from:2023.11,For PR code:N22/T65 | GDS58101 | Drive Shaft | | 38 | 42 | 59.5 | 34 | 853 | |
| | 2021.07- | ET | R | L/R | SUV 4WD EBJA;EBRA | Date to:2023.10;Date from:2023.11,For PR code:N06 | GCO83488 | Outer Joint | | 38 | 28 | 59.5 | 34 | 81 | |
| | 2021.07- | ET | R | L/R | SUV 4WD EBJA;EBRA | Date from:2023.11,For PR code:N22/T65 | GCO83846 | Outer Joint | | 38 | 27 | 59.5 | 34 | 65 | M |
| | 2021.07- | ET | R | L/R | SUV 4WD EBJA;EBRA | Date to:2023.10;Date from:2023.11,For PR code:N06 | GCI83571 | Inner Joint | | 37 | 28 | 39.95 | 69 | 85.5 | |
| | 2023.07- | ET | F | L | SUV 4WD EBJA;EBRA | For left-hand drive vehicles | GDS56405 | Drive Shaft | | 38 | 33 | 59.5 | 40.5 | 663 | |
| | 2023.07- | ET | F | L | SUV 4WD EBJA;EBRA | For right-hand drive vehicles | GDS57677 | Drive Shaft | | 38 | 33 | 59.5 | 40.5 | 565 | |
| | 2023.07- | ET | F | R | SUV 4WD EBJA;EBRA | For left-hand drive vehicles | GDS56971 | Drive Shaft | | 38 | 33 | 59.5 | 40.5 | 622 | |
| | 2023.07- | ET | F | R | SUV 4WD EBJA;EBRA | For right-hand drive vehicles | GDS57678 | Drive Shaft | | 38 | 33 | 59.5 | 40.5 | 721 | |
| | 2023.07- | ET | F | L/R | SUV 4WD EBJA;EBRA | | GCO83674 | Outer Joint | | 38 | 33 | 59.5 | 40.5 | 59 | I |
| | 2023.07- | ET | F | L/R | SUV 4WD EBJA;EBRA | | GCI81546 | Inner Joint | | 33 | 32 | 39.9 | 58.5 | 105 | |
| | 2023.07- | ET | R | L | SUV 4WD EBJA;EBRA | Date to:2023.10;Date from:2023.11,For PR code:N06 | GDS56955 | Drive Shaft | | 38 | 37 | 59.5 | 34 | 634 | |
| | 2023.07- | ET | R | L | SUV 4WD EBJA;EBRA | Date from:2023.11,For PR code:N22/T65 | GDS58102 | Drive Shaft | | 38 | 42 | 59.5 | 34 | 639 | |
| | 2023.07- | ET | R | R | SUV 4WD EBJA;EBRA | Date to:2023.10;Date from:2023.11,For PR code:N06 | GDS56956 | Drive Shaft | | 38 | 37 | 59.5 | 34 | 859 | |
| | 2023.07- | ET | R | R | SUV 4WD EBJA;EBRA | Date from:2023.11,For PR code:N22/T65 | GDS58101 | Drive Shaft | | 38 | 42 | 59.5 | 34 | 853 | |
| | 2023.07- | ET | R | L/R | SUV 4WD EBJA;EBRA | Date to:2023.10;Date from:2023.11,For PR code:N06 | GCO83488 | Outer Joint | | 38 | 28 | 59.5 | 34 | 81 | |
| | 2023.07- | ET | R | L/R | SUV 4WD EBJA;EBRA | Date from:2023.11,For PR code:N22/T65 | GCO83846 | Outer Joint | | 38 | 27 | 59.5 | 34 | 65 | M |
| | 2023.07- | ET | R | L/R | SUV 4WD EBJA;EBRA | Date to:2023.10;Date from:2023.11,For PR code:N06 | GCI83571 | Inner Joint | | 37 | 28 | 39.95 | 69 | 85.5 | |
| EV (250 kw) | 2021.10- | ET | F | L | SUV 4WD EDDA, EDFA | For left-hand drive vehicles | GDS56405 | Drive Shaft | | 38 | 33 | 59.5 | 40.5 | 663 | |
| | 2021.10- | ET | F | L | SUV 4WD EDDA, EDFA | For right-hand drive vehicles | GDS57677 | Drive Shaft | | 38 | 33 | 59.5 | 40.5 | 565 | |
| | 2021.10- | ET | F | R | SUV 4WD EDDA, EDFA | For left-hand drive vehicles | GDS56971 | Drive Shaft | | 38 | 33 | 59.5 | 40.5 | 622 | |
| | 2021.10- | ET | F | R | SUV 4WD EDDA, EDFA | For right-hand drive vehicles | GDS57678 | Drive Shaft | | 38 | 33 | 59.5 | 40.5 | 721 | |
| | 2021.10- | ET | F | L/R | SUV 4WD EDDA, EDFA | | GCO83674 | Outer Joint | | 38 | 33 | 59.5 | 40.5 | 59 | I |
| | 2021.10- | ET | F | L/R | SUV 4WD EDDA, EDFA | | GCI81546 | Inner Joint | | 33 | 32 | 39.9 | 58.5 | 105 | |
| | 2021.10- | ET | R | L | SUV 4WD EDDA, EDFA | Date to:2023.10;Date from:2023.11,For PR code:N06 | GDS56955 | Drive Shaft | | 38 | 37 | 59.5 | 34 | 634 | |
| | 2021.10- | ET | R | L | SUV 4WD EDDA, EDFA | Date from:2023.11,For PR code:N22/T65 | GDS58102 | Drive Shaft | | 38 | 42 | 59.5 | 34 | 639 | |
| | 2021.10- | ET | R | R | SUV 4WD EDDA, EDFA | Date to:2023.10;Date from:2023.11,For PR code:N06 | GDS56956 | Drive Shaft | | 38 | 37 | 59.5 | 34 | 859 | |
| | 2021.10- | ET | R | R | SUV 4WD EDDA, EDFA | Date from:2023.11,For PR code:N22/T65 | GDS58101 | Drive Shaft | | 38 | 42 | 59.5 | 34 | 853 | |
| | 2021.10- | ET | R | L/R | SUV 4WD EDDA, EDFA | Date to:2023.10;Date from:2023.11,For PR code:N06 | GCO83488 | Outer Joint | | 38 | 28 | 59.5 | 34 | 81 | |
| | 2021.10- | ET | R | L/R | SUV 4WD EDDA, EDFA | Date from:2023.11,For PR code:N22/T65 | GCO83846 | Outer Joint | | 38 | 27 | 59.5 | 34 | 65 | M |
| | 2021.10- | ET | R | L/R | SUV 4WD EDDA, EDFA | Date to:2023.10;Date from:2023.11,For PR code:N06 | GCI83571 | Inner Joint | | 37 | 28 | 39.95 | 69 | 85.5 | |
| | 2023.10- | ET | F | L | SUV 4WD EDDA, EDFA | For left-hand drive vehicles | GDS56405 | Drive Shaft | | 38 | 33 | 59.5 | 40.5 | 663 | |
| | 2023.10- | ET | F | L | SUV 4WD EDDA, EDFA | For right-hand drive vehicles | GDS57677 | Drive Shaft | | 38 | 33 | 59.5 | 40.5 | 565 | |
| | 2023.10- | ET | F | R | SUV 4WD EDDA, EDFA | For left-hand drive vehicles | GDS56971 | Drive Shaft | | 38 | 33 | 59.5 | 40.5 | 622 | |
| | 2023.10- | ET | F | R | SUV 4WD EDDA, EDFA | For right-hand drive vehicles | GDS57678 | Drive Shaft | | 38 | 33 | 59.5 | 40.5 | 721 | |
| | 2023.10- | ET | F | L/R | SUV 4WD EDDA, EDFA | | GCO83674 | Outer Joint | | 38 | 33 | 59.5 | 40.5 | 59 | I |
| | 2023.10- | ET | F | L/R | SUV 4WD EDDA, EDFA | | GCI81546 | Inner Joint | | 33 | 32 | 39.9 | 58.5 | 105 | |
| | 2023.10- | ET | R | L | SUV 4WD EDDA, EDFA | For PR code:N06 | GDS56955 | Drive Shaft | | 38 | 37 | 59.5 | 34 | 634 | |
| | 2023.10- | ET | R | L | SUV 4WD EDDA, EDFA | For PR code:N22/T65 | GDS58102 | Drive Shaft | | 38 | 42 | 59.5 | 34 | 639 | |
| | 2023.10- | ET | R | R | SUV 4WD EDDA, EDFA | For PR code:N06 | GDS56956 | Drive Shaft | | 38 | 37 | 59.5 | 34 | 859 | |
| | 2023.10- | ET | R | R | SUV 4WD EDDA, EDFA | For PR code:N22/T65 | GDS58101 | Drive Shaft | | 38 | 42 | 59.5 | 34 | 853 | |
| | 2023.10- | ET | R | L/R | SUV 4WD EDDA, EDFA | For PR code:N06 | GCO83488 | Outer Joint | | 38 | 28 | 59.5 | 34 | 81 | |
| | 2023.10- | ET | R | L/R | SUV 4WD EDDA, EDFA | For PR code:N22/T65 | GCO83846 | Outer Joint | | 38 | 27 | 59.5 | 34 | 65 | M |
| | 2023.10- | ET | R | L/R | SUV 4WD EDDA, EDFA | For PR code:N06 | GCI83571 | Inner Joint | | 37 | 28 | 39.95 | 69 | 85.5 | |
| **Fabia** | | | | | | | | | | | | | | | |
| 1.0 (37 kw) | 1999.12-2002.08 | 5MT | F | L/R | Hatchback FWD ARV;AQV | For vehicles without power steering | GCO54002 | Outer Joint | | 20 | 30 | 52 | 59.5 | 49.5 | I |
| | 1999.12-2002.08 | AT/MT | F | L | Hatchback FWD ARV;AQV | Vehicle Equipment:for vehicles with power steering | GDS83063 | Drive Shaft | | 36 | | 50.7 | 58.5 | 501 | |
| | 1999.12-2002.08 | AT/MT | F | L/R | Hatchback FWD ARV;AQV | | GCI83005 | Inner Joint | | | 33 | | | 32 | |
| 1.0 (44 kw) | 2014.08-2021.06 | 5MT | F | L | Hatchback FWD CHYA;CHYE | | GDS82038 | Drive Shaft | | 36 | 28 | 52 | 58.5 | 629 | |
| | 2014.08-2021.06 | 5MT | F | L | Hatchback FWD CHYA;CHYE | | GCI81611 | Inner Joint | | 28 | 28 | 39.95 | 58 | 84 | |
| | 2014.08-2021.06 | MT | F | R | Hatchback FWD CHYA;CHYE | | GDS82040 | Drive Shaft | | 36 | 28 | 52 | 58.5 | 821 | |

| | YEAR | TRANSM. | F/R | L/R | BODY STYLE & DRIVE TYPE & ENGINE | REMARKS | G-AP Ref. | PRODUCT | ABS | Technical Specifications A | B | C | H | L | P |
|---|---|---|---|---|---|---|---|---|---|---|---|---|---|---|---|
| **SKODA** **Fabia** | | | | | | | | | | | | | | | |
| 1.0 (44 kw) | 2014.08-2021.06 | MT | F | L/R | Hatchback FWD CHYA;CHYE | | GCO83027 | Outer Joint | | 36 | 30 | 50.7 | 58.5 | 47.5 | I |
| | 2014.10-2022.12 | 5MT | F | L | Estate FWD CHYA;CHYE | | GDS82038 | Drive Shaft | | 36 | 28 | 52 | 58.5 | 629 | |
| | 2014.10-2022.12 | 5MT | F | L | Estate FWD CHYA;CHYE | | GCI81611 | Inner Joint | | 28 | 28 | 39.95 | 58 | 84 | |
| | 2014.10-2022.12 | AT/MT | F | L/R | Estate FWD CHYA;CHYE | | GCO83027 | Outer Joint | | 36 | 30 | 50.7 | 58.5 | 47.5 | I |
| | 2014.10-2022.12 | MT | F | R | Estate FWD CHYA;CHYE | | GDS82040 | Drive Shaft | | 36 | 28 | 52 | 58.5 | 821 | |
| | 2014.10-2022.12 | 5MT | F | L | Estate Van FWD CHYA | | GDS82038 | Drive Shaft | | 36 | 28 | 52 | 58.5 | 629 | |
| | 2014.10-2022.12 | 5MT | F | R | Estate Van FWD CHYA | | GDS82040 | Drive Shaft | | 36 | 28 | 52 | 58.5 | 821 | |
| | 2014.10-2022.12 | 5MT | F | L/R | Estate Van FWD CHYA | | GCI81611 | Inner Joint | | 28 | 28 | 39.95 | 58 | 84 | |
| 1.0 (48 kw) | 2021.08- | 5MT | F | L | Hatchback FWD DSGA | | GDS84459 | Drive Shaft | | 36 | 33 | 52 | 76 | 636 | |
| | 2021.08- | 5MT | F | R | Hatchback FWD DSGA | | GDS84456 | Drive Shaft | | 36 | 33 | 52 | 76 | 908 | |
| | 2021.08- | 5MT | F | L/R | Hatchback FWD DSGA | | GCO82705 | Outer Joint | | 36 | 23 | 52 | 76 | 54 | M |
| | 2021.08- | 5MT | F | L/R | Hatchback FWD DSGA | | GCI82767 | Inner Joint | | 33 | 22 | 40 | 59 | 88 | |
| 1.0 (55 kw) | 2014.08-2021.06 | 5MT | F | L | Hatchback FWD CHYB | | GDS82038 | Drive Shaft | | 36 | 28 | 52 | 58.5 | 629 | |
| | 2014.08-2021.06 | 5MT | F | L | Hatchback FWD CHYB | | GCI81611 | Inner Joint | | 28 | 28 | 39.95 | 58 | 84 | |
| | 2014.08-2021.06 | AT/MT | F | L/R | Hatchback FWD CHYB | | GCO83027 | Outer Joint | | 36 | 30 | 50.7 | 58.5 | 47.5 | I |
| | 2014.08-2021.06 | MT | F | R | Hatchback FWD CHYB | | GDS82040 | Drive Shaft | | 36 | 28 | 52 | 58.5 | 821 | |
| | 2014.10-2022.12 | 5MT | F | L | Estate FWD CHYB | | GDS82038 | Drive Shaft | | 36 | 28 | 52 | 58.5 | 629 | |
| | 2014.10-2022.12 | 5MT | F | L | Estate FWD CHYB | | GCI81611 | Inner Joint | | 28 | 28 | 39.95 | 58 | 84 | |
| | 2014.10-2022.12 | AT/MT | F | L/R | Estate FWD CHYB | | GCO83027 | Outer Joint | | 36 | 30 | 50.7 | 58.5 | 47.5 | I |
| | 2014.10-2022.12 | MT | F | R | Estate FWD CHYB | | GDS82040 | Drive Shaft | | 36 | 28 | 52 | 58.5 | 821 | |
| | 2014.10-2022.12 | 5MT | F | L | Estate Van FWD CHYB | | GDS82038 | Drive Shaft | | 36 | 28 | 52 | 58.5 | 629 | |
| | 2014.10-2022.12 | 5MT | F | R | Estate Van FWD CHYB | | GDS82040 | Drive Shaft | | 36 | 28 | 52 | 58.5 | 821 | |
| | 2014.10-2022.12 | 5MT | F | L/R | Estate Van FWD CHYB | | GCI81611 | Inner Joint | | 28 | 28 | 39.95 | 58 | 84 | |
| 1.0 (59 kw) | 2021.06- | 5MT | F | L | Hatchback FWD DSGD | | GDS84459 | Drive Shaft | | 36 | 33 | 52 | 76 | 636 | |
| | 2021.06- | 5MT | F | R | Hatchback FWD DSGD | | GDS84456 | Drive Shaft | | 36 | 33 | 52 | 76 | 908 | |
| | 2021.06- | 5MT | F | L/R | Hatchback FWD DSGD | | GCO82705 | Outer Joint | | 36 | 23 | 52 | 76 | 54 | M |
| | 2021.06- | 5MT | F | L/R | Hatchback FWD DSGD | | GCI82767 | Inner Joint | | 33 | 22 | 40 | 59 | 88 | |
| 1.0 (70 kw) | 2014.08-2021.06 | 5MT | F | L | Hatchback FWD CHZB;DKLD | | GDS81922 | Drive Shaft | | 36 | 33 | 52 | 59 | 581 | |
| | 2014.08-2021.06 | 5MT | F | R | Hatchback FWD CHZB;DKLD | | GDS81924 | Drive Shaft | | 36 | 33 | 52 | 59 | 855 | |
| | 2014.08-2021.06 | 5MT | F | L/R | Hatchback FWD CHZB;DKLD | | GCO54006 | Outer Joint | | 36 | 30 | 52 | 59 | 55.5 | I |
| | 2014.08-2021.06 | 5MT | F | L/R | Hatchback FWD CHZB;DKLD | | GCI81546 | Inner Joint | | 33 | 32 | 39.9 | 58.5 | 105 | |
| | 2014.08-2021.06 | 7DCT | F | L | Hatchback FWD CHZB;DKLD | | GDS82228 | Drive Shaft | | 36 | | 52 | 75 | 475 | |
| | 2014.08-2021.06 | 7DCT | F | R | Hatchback FWD CHZB;DKLD | | GDS82358 | Drive Shaft | | 36 | | 52 | 75 | 762 | |
| | 2014.08-2021.06 | 7DCT | F | L/R | Hatchback FWD CHZB;DKLD | | GCO61081 | Outer Joint | | 36 | 27 | 52 | 75 | 65 | I |
| | 2014.08-2021.06 | MT | F | L/R | Hatchback FWD CHZB;DKLD | | GCO83024 | Outer Joint | | 36 | 30 | 50.75 | 59 | 55.5 | I |
| | 2014.08-2022.12 | 5MT | F | L | Estate FWD CHZB;DKLD | | GDS81922 | Drive Shaft | | 36 | 33 | 52 | 59 | 581 | |
| | 2014.08-2022.12 | 5MT | F | R | Estate FWD CHZB;DKLD | | GDS81924 | Drive Shaft | | 36 | 33 | 52 | 59 | 855 | |
| | 2014.08-2022.12 | 5MT | F | L/R | Estate FWD CHZB;DKLD | | GCO54006 | Outer Joint | | 36 | 30 | 52 | 59 | 55.5 | I |
| | 2014.08-2022.12 | 5MT | F | L/R | Estate FWD CHZB;DKLD | | GCI81546 | Inner Joint | | 33 | 32 | 39.9 | 58.5 | 105 | |
| | 2014.08-2022.12 | 7DCT | F | L | Estate FWD CHZB;DKLD | | GDS82228 | Drive Shaft | | 36 | | 52 | 75 | 475 | |
| | 2014.08-2022.12 | 7DCT | F | R | Estate FWD CHZB;DKLD | | GDS82358 | Drive Shaft | | 36 | | 52 | 75 | 762 | |
| | 2014.08-2022.12 | 7DCT | F | L/R | Estate FWD CHZB;DKLD | | GCO61081 | Outer Joint | | 36 | 27 | 52 | 75 | 65 | I |
| | 2014.08-2022.12 | MT | F | L/R | Estate FWD CHZB;DKLD | | GCO83024 | Outer Joint | | 36 | 30 | 50.75 | 59 | 55.5 | I |
| | 2021.06- | 5MT | F | L | Hatchback FWD DLAC;DUSB | | GDS84011 | Drive Shaft | | 36 | 33 | 52 | 64.5 | 620 | |
| | 2021.06- | 5MT | F | R | Hatchback FWD DLAC;DUSB | | GDS83825 | Drive Shaft | | 36 | 33 | 52 | 64.5 | 896 | |
| | 2021.06- | 5MT | F | L/R | Hatchback FWD DLAC;DUSB | | GCO81744 | Outer Joint | | 36 | 30 | 52 | 64.5 | 55.5 | M |
| | 2021.06- | 5MT | F | L | Hatchback FWD DLAC;DUSB | | GCI82449 | Inner Joint | | 33 | 30 | 39.9 | 58.5 | 105 | |
| | 2021.06- | 5MT | F | R | Hatchback FWD DLAC;DUSB | | GCI82384 | Inner Joint | | 33 | 30 | 39.95 | 58.5 | 91.5 | |
| 1.0 (81 kw) | 2014.08-2021.06 | 6MT | F | L | Hatchback FWD CHZC;DKRC | | GDS81922 | Drive Shaft | | 36 | 33 | 52 | 59 | 581 | |
| | 2014.08-2021.06 | 6MT | F | R | Hatchback FWD CHZC;DKRC | | GDS81924 | Drive Shaft | | 36 | 33 | 52 | 59 | 855 | |
| | 2014.08-2021.06 | 6MT | F | L/R | Hatchback FWD CHZC;DKRC | | GCO54006 | Outer Joint | | 36 | 30 | 52 | 59 | 55.5 | I |
| | 2014.08-2021.06 | 6MT | F | L/R | Hatchback FWD CHZC;DKRC | | GCO83024 | Outer Joint | | 36 | 30 | 50.75 | 59 | 55.5 | I |
| | 2014.08-2021.06 | 6MT | F | L/R | Hatchback FWD CHZC;DKRC | | GCI81546 | Inner Joint | | 33 | 32 | 39.9 | 58.5 | 105 | |
| | 2014.08-2021.06 | 7DCT | F | L | Hatchback FWD CHZC;DKRC | | GDS82228 | Drive Shaft | | 36 | | 52 | 75 | 475 | |
| | 2014.08-2021.06 | 7DCT | F | R | Hatchback FWD CHZC;DKRC | | GDS82358 | Drive Shaft | | 36 | | 52 | 75 | 762 | |
| | 2014.08-2021.06 | 7DCT | F | L/R | Hatchback FWD CHZC;DKRC | | GCO61081 | Outer Joint | | 36 | 27 | 52 | 75 | 65 | I |
| | 2014.08-2021.06 | 7DCT | F | L/R | Hatchback FWD CHZC;DKRC | | GCI81689 | Inner Joint | | | 32 | | | 89 | |
| | 2014.08-2022.12 | 6MT | F | L | Estate FWD CHZC;DKRC | | GDS81922 | Drive Shaft | | 36 | 33 | 52 | 59 | 581 | |
| | 2014.08-2022.12 | 6MT | F | R | Estate FWD CHZC;DKRC | | GDS81924 | Drive Shaft | | 36 | 33 | 52 | 59 | 855 | |
| | 2014.08-2022.12 | 6MT | F | L/R | Estate FWD CHZC;DKRC | | GCO54006 | Outer Joint | | 36 | 30 | 52 | 59 | 55.5 | I |
| | 2014.08-2022.12 | 6MT | F | L/R | Estate FWD CHZC;DKRC | | GCO83024 | Outer Joint | | 36 | 30 | 50.75 | 59 | 55.5 | I |
| | 2014.08-2022.12 | 6MT | F | L/R | Estate FWD CHZC;DKRC | | GCI81546 | Inner Joint | | 33 | 32 | 39.9 | 58.5 | 105 | |
| | 2014.08-2022.12 | 7DCT | F | L | Estate FWD CHZC;DKRC | | GDS82228 | Drive Shaft | | 36 | | 52 | 75 | 475 | |
| | 2014.08-2022.12 | 7DCT | F | R | Estate FWD CHZC;DKRC | | GDS82358 | Drive Shaft | | 36 | | 52 | 75 | 762 | |
| | 2014.08-2022.12 | 7DCT | F | L/R | Estate FWD CHZC;DKRC | | GCO61081 | Outer Joint | | 36 | 27 | 52 | 75 | 65 | I |

| | YEAR | TRANSM. | F/R | L/R | BODY STYLE & DRIVE TYPE & ENGINE | REMARKS | G-AP Ref. | PRODUCT | ABS | Technical Specifications A | B | C | H | L | P |
|---|---|---|---|---|---|---|---|---|---|---|---|---|---|---|---|
| **SKODA** **Fabia** | | | | | | | | | | | | | | | |
| 1.0 (81 kw) | 2014.08-2022.12 | 7DCT | F | L/R | Estate FWD CHZC;DKRC | | GCI81689 | Inner Joint | | | 32 | | | 89 | |
| | 2021.06- | 6MT | F | L | Hatchback FWD DLAA | | GDS84558 | Drive Shaft | | 36 | | 52 | 64.5 | 496 | |
| | 2021.06- | 6MT | F | R | Hatchback FWD DLAA | | GDS82233 | Drive Shaft | | 36 | | 52 | 64.5 | 778 | |
| | 2021.06- | 6MT | F | L/R | Hatchback FWD DLAA | | GCO81744 | Outer Joint | | 36 | 30 | 52 | 64.5 | 55.5 | M |
| | 2021.06- | 6MT | F | R | Hatchback FWD DLAA | | GCI81690 | Inner Joint | | | 30 | | | 89 | |
| | 2021.06- | 7DCT | F | L | Hatchback FWD DLAA | | GDS84563 | Drive Shaft | | 36 | | 52 | 64.5 | 506 | |
| | 2021.06- | 7DCT | F | R | Hatchback FWD DLAA | | GDS57885 | Drive Shaft | | 36 | | 52 | 64.5 | 765 | |
| | 2021.06- | 7DCT | F | L | Hatchback FWD DLAA | | GCO82548 | Outer Joint | | 36 | 27 | 52 | 64.5 | 65 | M |
| | 2021.06- | 7DCT | F | R | Hatchback FWD DLAA | | GCO81743 | Outer Joint | | 36 | 33 | 52 | 64.5 | 59 | I |
| | 2021.06- | 7DCT | F | L | Hatchback FWD DLAA | | GCI81689 | Inner Joint | | | 32 | | | 89 | |
| 1.0 (85 kw) | 2024.01- | 6MT | F | L | Hatchback FWD DUSA | | GDS84558 | Drive Shaft | | 36 | | 52 | 64.5 | 496 | |
| | 2024.01- | 6MT | F | R | Hatchback FWD DUSA | | GDS82233 | Drive Shaft | | 36 | | 52 | 64.5 | 778 | |
| | 2024.01- | 6MT | F | L/R | Hatchback FWD DUSA | | GCO81744 | Outer Joint | | 36 | 30 | 52 | 64.5 | 55.5 | M |
| | 2024.01- | 6MT | F | L/R | Hatchback FWD DUSA | | GCI81690 | Inner Joint | | | 30 | | | 89 | |
| | 2024.01- | 7DCT | F | L | Hatchback FWD DUSA | | GDS84563 | Drive Shaft | | 36 | | 52 | 64.5 | 506 | |
| | 2024.01- | 7DCT | F | R | Hatchback FWD DUSA | | GDS57885 | Drive Shaft | | 36 | | 52 | 64.5 | 765 | |
| | 2024.01- | 7DCT | F | L | Hatchback FWD DUSA | | GCO82548 | Outer Joint | | 36 | 27 | 52 | 64.5 | 65 | M |
| | 2024.01- | 7DCT | F | R | Hatchback FWD DUSA | | GCO81743 | Outer Joint | | 36 | 33 | 52 | 64.5 | 59 | I |
| | 2024.01- | 7DCT | F | L | Hatchback FWD DUSA | | GCI81689 | Inner Joint | | | 32 | | | 89 | |
| 1.2 (40 kw) | 2001.07-2007.04 | 5MT | F | L | Hatchback FWD AWY;BMD | | GDS83063 | Drive Shaft | | 36 | | 50.7 | 58.5 | 501 | |
| | 2001.07-2007.04 | 5MT | F | R | Hatchback FWD AWY;BMD | | GDS61063 | Drive Shaft | | 36 | | 50.7 | 58.5 | 751 | |
| | 2001.07-2007.04 | 5MT | F | L/R | Hatchback FWD AWY;BMD | | GCO83027 | Outer Joint | | 36 | 30 | 50.7 | 58.5 | 47.5 | I |
| | 2001.07-2007.04 | AT/MT | F | L/R | Hatchback FWD AWY;BMD | Date from:2002.01 | GCI83005 | Inner Joint | | | 33 | | | 32 | |
| | 2001.07-2007.04 | MT | F | L/R | Hatchback FWD AWY;BMD | | GCI83008 | Inner Joint | | | 33 | | | 32 | |
| | 2001.07-2007.12 | 5MT | F | L | Estate FWD AWY;BMD | | GDS83063 | Drive Shaft | | 36 | | 50.7 | 58.5 | 501 | |
| | 2001.07-2007.12 | 5MT | F | R | Estate FWD AWY;BMD | | GDS61063 | Drive Shaft | | 36 | | 50.7 | 58.5 | 751 | |
| | 2001.07-2007.12 | 5MT | F | L/R | Estate FWD AWY;BMD | | GCO83027 | Outer Joint | | 36 | 30 | 50.7 | 58.5 | 47.5 | I |
| | 2001.07-2007.12 | AT/MT | F | L/R | Estate FWD AWY;BMD | | GCI83005 | Inner Joint | | | 33 | | | 32 | |
| | 2001.07-2007.12 | | F | L/R | Estate FWD AWY;BMD | | GCI83008 | Inner Joint | | | 33 | | | 32 | |
| | 2001.07-2007.12 | 5MT | F | L | Estate Van FWD AWY;BMD | | GDS83063 | Drive Shaft | | 36 | | 50.7 | 58.5 | 501 | |
| | 2001.07-2007.12 | 5MT | F | R | Estate Van FWD AWY;BMD | | GDS61063 | Drive Shaft | | 36 | | 50.7 | 58.5 | 751 | |
| | 2001.07-2007.12 | 5MT | F | L/R | Estate Van FWD AWY;BMD | | GCO83027 | Outer Joint | | 36 | 30 | 50.7 | 58.5 | 47.5 | I |
| | 2001.07-2007.12 | AT/MT | F | L/R | Estate Van FWD AWY;BMD | | GCI83005 | Inner Joint | | | 33 | | | 32 | |
| | 2001.07-2007.12 | | F | L/R | Estate Van FWD AWY;BMD | | GCI83008 | Inner Joint | | | 33 | | | 32 | |
| | 2001.07-2007.12 | 5MT | F | L | Saloon FWD AWY;BMD | | GDS83063 | Drive Shaft | | 36 | | 50.7 | 58.5 | 501 | |
| | 2001.07-2007.12 | 5MT | F | R | Saloon FWD AWY;BMD | | GDS61063 | Drive Shaft | | 36 | | 50.7 | 58.5 | 751 | |
| | 2001.07-2007.12 | 5MT | F | L/R | Saloon FWD AWY;BMD | | GCO83027 | Outer Joint | | 36 | 30 | 50.7 | 58.5 | 47.5 | I |
| | 2001.07-2007.12 | AT/MT | F | L/R | Saloon FWD AWY;BMD | | GCI83005 | Inner Joint | | | 33 | | | 32 | |
| | 2001.07-2007.12 | | F | L/R | Saloon FWD AWY;BMD | | GCI83008 | Inner Joint | | | 33 | | | 32 | |
| 1.2 (44 kw) | 2006.12-2014.12 | 5MT | F | L | Hatchback FWD BBM;CHFA | | GDS83063 | Drive Shaft | | 36 | | 50.7 | 58.5 | 501 | |
| | 2006.12-2014.12 | 5MT | F | R | Hatchback FWD BBM;CHFA | | GDS61063 | Drive Shaft | | 36 | | 50.7 | 58.5 | 751 | |
| | 2006.12-2014.12 | 5MT | F | L/R | Hatchback FWD BBM;CHFA | Chassis no. to:5J_AA500302/5J_A317967 3/5J_AK507692/5J_AB500694 | GCO83027 | Outer Joint | | 36 | 30 | 50.7 | 58.5 | 47.5 | I |
| | 2006.12-2014.12 | AT/MT | F | L/R | Hatchback FWD BBM;CHFA | | GCI83005 | Inner Joint | | | 33 | | | 32 | |
| | 2006.12-2014.12 | | F | L/R | Hatchback FWD BBM;CHFA | | GCI83008 | Inner Joint | | | 33 | | | 32 | |
| | 2007.10-2014.11 | 5MT | F | L | Estate FWD BBM;CHFA | | GDS83063 | Drive Shaft | | 36 | | 50.7 | 58.5 | 501 | |
| | 2007.10-2014.11 | 5MT | F | R | Estate FWD BBM;CHFA | | GDS61063 | Drive Shaft | | 36 | | 50.7 | 58.5 | 751 | |
| | 2007.10-2014.11 | 5MT | F | L/R | Estate FWD BBM;CHFA | Chassis no. to:5J_AA500302/5J_A317967 3/5J_AK507692/5J_AB500694 | GCO83027 | Outer Joint | | 36 | 30 | 50.7 | 58.5 | 47.5 | I |
| | 2007.10-2014.11 | AT/MT | F | L/R | Estate FWD BBM;CHFA | | GCI83005 | Inner Joint | | | 33 | | | 32 | |
| | 2007.10-2014.11 | | F | L/R | Estate FWD BBM;CHFA | | GCI83008 | Inner Joint | | | 33 | | | 32 | |
| | 2009.03-2011.11 | 5MT | F | L | Estate FWD CHFA | | GDS83063 | Drive Shaft | | 36 | | 50.7 | 58.5 | 501 | |
| | 2009.03-2011.11 | 5MT | F | R | Estate FWD CHFA | | GDS61063 | Drive Shaft | | 36 | | 50.7 | 58.5 | 751 | |
| | 2009.03-2011.11 | 5MT | F | L/R | Estate FWD CHFA | Chassis no. to:5J_AA500302/5J_A317967 3/5J_AK507692/5J_AB500694 | GCO83027 | Outer Joint | | 36 | 30 | 50.7 | 58.5 | 47.5 | I |
| | 2009.03-2011.11 | | F | L/R | Estate FWD CHFA | | GCI83008 | Inner Joint | | | 33 | | | 32 | |
| | 2009.03-2011.11 | 5MT | F | L | Hatchback FWD CHFA | | GDS83063 | Drive Shaft | | 36 | | 50.7 | 58.5 | 501 | |
| | 2009.03-2011.11 | 5MT | F | R | Hatchback FWD CHFA | | GDS61063 | Drive Shaft | | 36 | | 50.7 | 58.5 | 751 | |
| | 2009.03-2011.11 | 5MT | F | L/R | Hatchback FWD CHFA | Chassis no. to:5J_AA500302/5J_A317967 3/5J_AK507692/5J_AB500694 | GCO83027 | Outer Joint | | 36 | 30 | 50.7 | 58.5 | 47.5 | I |
| | 2009.03-2011.11 | | F | L/R | Hatchback FWD CHFA | | GCI83008 | Inner Joint | | | 33 | | | 32 | |
| | 2011.11-2014.12 | 5MT | F | L | Estate FWD CGPB | | GDS83063 | Drive Shaft | | 36 | | 50.7 | 58.5 | 501 | |
| | 2011.11-2014.12 | MT | F | L | Estate FWD CGPB | | GDS83330 | Drive Shaft | | 36 | | 50.7 | 58.5 | 515 | |
| | 2011.11-2014.12 | MT | F | R | Estate FWD CGPB | | GDS61288 | Drive Shaft | | 36 | | 50.7 | 58.5 | 765 | |
| | 2011.11-2014.12 | MT | F | L/R | Estate FWD CGPB | | GCO83027 | Outer Joint | | 36 | 30 | 50.7 | 58.5 | 47.5 | I |
| | 2011.11-2014.12 | MT | F | L/R | Estate FWD CGPB | | GCI83005 | Inner Joint | | | 33 | | | 32 | |
| | 2011.11-2014.12 | | F | R | Estate FWD CGPB | | GDS61063 | Drive Shaft | | 36 | | 50.7 | 58.5 | 751 | |
| | 2011.11-2014.12 | | F | L/R | Estate FWD CGPB | | GCI83008 | Inner Joint | | | 33 | | | 32 | |
| | 2011.11-2014.12 | 5MT | F | L | Hatchback FWD CGPB | | GDS83063 | Drive Shaft | | 36 | | 50.7 | 58.5 | 501 | |

| | YEAR | TRANSM. | F/R | L/R | BODY STYLE & DRIVE TYPE & ENGINE | REMARKS | G-AP Ref. | PRODUCT | ABS | Technical Specifications A | B | C | H | L | P |
|---|---|---|---|---|---|---|---|---|---|---|---|---|---|---|---|
| **SKODA** **Fabia** | | | | | | | | | | | | | | | |
| 1.2 (44 kw) | 2011.11-2014.12 | 5MT | F | R | Hatchback FWD CGPB | | GDS61063 | Drive Shaft | | 36 | | 50.7 | 58.5 | 751 | |
| | 2011.11-2014.12 | MT | F | L/R | Hatchback FWD CGPB | | GCI83008 | Inner Joint | | | 33 | | | 32 | |
| 1.2 (47 kw) | 2003.01-2007.12 | 5MT | F | L | Estate FWD AZQ;BME | | GDS83063 | Drive Shaft | | 36 | | 50.7 | 58.5 | 501 | |
| | 2003.01-2007.12 | 5MT | F | R | Estate FWD AZQ;BME | | GDS61063 | Drive Shaft | | 36 | | 50.7 | 58.5 | 751 | |
| | 2003.01-2007.12 | 5MT | F | L/R | Estate FWD AZQ;BME | | GCO83027 | Outer Joint | | 36 | 30 | 50.7 | 58.5 | 47.5 | I |
| | 2003.01-2007.12 | AT/MT | F | L/R | Estate FWD AZQ;BME | | GCI83005 | Inner Joint | | | 33 | | | 32 | |
| | 2003.01-2007.12 | | F | L/R | Estate FWD AZQ;BME | | GCI83008 | Inner Joint | | | 33 | | | 32 | |
| | 2003.01-2007.12 | 5MT | F | L | Estate Van FWD AZQ;BME | | GDS83063 | Drive Shaft | | 36 | | 50.7 | 58.5 | 501 | |
| | 2003.01-2007.12 | 5MT | F | R | Estate Van FWD AZQ;BME | | GDS61063 | Drive Shaft | | 36 | | 50.7 | 58.5 | 751 | |
| | 2003.01-2007.12 | 5MT | F | L/R | Estate Van FWD AZQ;BME | | GCO83027 | Outer Joint | | 36 | 30 | 50.7 | 58.5 | 47.5 | I |
| | 2003.01-2007.12 | AT/MT | F | L/R | Estate Van FWD AZQ;BME | | GCI83005 | Inner Joint | | | 33 | | | 32 | |
| | 2003.01-2007.12 | | F | L/R | Estate Van FWD AZQ;BME | | GCI83008 | Inner Joint | | | 33 | | | 32 | |
| | 2003.01-2007.12 | 5MT | F | L | Saloon FWD AZQ;BME | | GDS83063 | Drive Shaft | | 36 | | 50.7 | 58.5 | 501 | |
| | 2003.01-2007.12 | 5MT | F | R | Saloon FWD AZQ;BME | | GDS61063 | Drive Shaft | | 36 | | 50.7 | 58.5 | 751 | |
| | 2003.01-2007.12 | 5MT | F | L/R | Saloon FWD AZQ;BME | | GCO83027 | Outer Joint | | 36 | 30 | 50.7 | 58.5 | 47.5 | I |
| | 2003.01-2007.12 | AT/MT | F | L/R | Saloon FWD AZQ;BME | | GCI83005 | Inner Joint | | | 33 | | | 32 | |
| | 2003.01-2007.12 | | F | L/R | Saloon FWD AZQ;BME | | GCI83008 | Inner Joint | | | 33 | | | 32 | |
| | 2003.01-2008.03 | 5MT | F | L | Hatchback FWD AZQ;BME | | GDS83063 | Drive Shaft | | 36 | | 50.7 | 58.5 | 501 | |
| | 2003.01-2008.03 | 5MT | F | R | Hatchback FWD AZQ;BME | | GDS61063 | Drive Shaft | | 36 | | 50.7 | 58.5 | 751 | |
| | 2003.01-2008.03 | 5MT | F | L/R | Hatchback FWD AZQ;BME | | GCO83027 | Outer Joint | | 36 | 30 | 50.7 | 58.5 | 47.5 | I |
| | 2003.01-2008.03 | AT/MT | F | L/R | Hatchback FWD AZQ;BME | | GCI83005 | Inner Joint | | | 33 | | | 32 | |
| | 2003.01-2008.03 | | F | L/R | Hatchback FWD AZQ;BME | | GCI83008 | Inner Joint | | | 33 | | | 32 | |
| 1.2 (51 kw) | 2007.01-2014.12 | 5MT | F | L | Hatchback FWD BZG;CEVA;CGPA;CHTA | | GDS83063 | Drive Shaft | | 36 | | 50.7 | 58.5 | 501 | |
| | 2007.01-2014.12 | 5MT | F | R | Hatchback FWD BZG;CEVA;CGPA;CHTA | | GDS61063 | Drive Shaft | | 36 | | 50.7 | 58.5 | 751 | |
| | 2007.01-2014.12 | 5MT | F | L/R | Hatchback FWD BZG;CEVA;CGPA;CHTA | For Engine code:BZG/CEVA | GCO83027 | Outer Joint | | 36 | 30 | 50.7 | 58.5 | 47.5 | I |
| | 2007.01-2014.12 | AT/MT | F | L/R | Hatchback FWD BZG;CEVA;CGPA;CHTA | | GCI83005 | Inner Joint | | | 33 | | | 32 | |
| | 2007.01-2014.12 | | F | L/R | Hatchback FWD BZG;CEVA;CGPA;CHTA | | GCI83008 | Inner Joint | | | 33 | | | 32 | |
| | 2007.07-2014.11 | MT | F | L | Hatchback FWD CGPA | | GDS83063 | Drive Shaft | | 36 | | 50.7 | 58.5 | 501 | |
| | 2007.07-2014.11 | MT | F | R | Hatchback FWD CGPA | | GDS61063 | Drive Shaft | | 36 | | 50.7 | 58.5 | 751 | |
| | 2007.07-2014.11 | MT | F | L/R | Hatchback FWD CGPA | | GCO83027 | Outer Joint | | 36 | 30 | 50.7 | 58.5 | 47.5 | I |
| | 2007.07-2014.11 | MT | F | L/R | Hatchback FWD CGPA | | GCI83008 | Inner Joint | | | 33 | | | 32 | |
| | 2007.10-2014.11 | MT | F | L | Estate FWD CGPA | | GDS83063 | Drive Shaft | | 36 | | 50.7 | 58.5 | 501 | |
| | 2007.10-2014.11 | MT | F | R | Estate FWD CGPA | | GDS61063 | Drive Shaft | | 36 | | 50.7 | 58.5 | 751 | |
| | 2007.10-2014.11 | MT | F | L/R | Estate FWD CGPA | | GCO83027 | Outer Joint | | 36 | 30 | 50.7 | 58.5 | 47.5 | I |
| | 2007.10-2014.11 | MT | F | L/R | Estate FWD CGPA | | GCI83008 | Inner Joint | | | 33 | | | 32 | |
| | 2007.10-2014.12 | 5MT | F | L | Estate FWD BZG;CEVA;CGPA;CHTA | | GDS83063 | Drive Shaft | | 36 | | 50.7 | 58.5 | 501 | |
| | 2007.10-2014.12 | 5MT | F | R | Estate FWD BZG;CEVA;CGPA;CHTA | | GDS61063 | Drive Shaft | | 36 | | 50.7 | 58.5 | 751 | |
| | 2007.10-2014.12 | 5MT | F | L/R | Estate FWD BZG;CEVA;CGPA;CHTA | For Engine code:BZG/CEVA | GCO83027 | Outer Joint | | 36 | 30 | 50.7 | 58.5 | 47.5 | I |
| | 2007.10-2014.12 | | F | L/R | Estate FWD BZG;CEVA;CGPA;CHTA | | GCI83008 | Inner Joint | | | 33 | | | 32 | |
| 1.2 (55 kw) | 2010.05-2014.12 | 5MT | F | L | Estate FWD CFWA | | GDS61248 | Drive Shaft | | 36 | | 52 | 59 | 480 | |
| | 2010.05-2014.12 | 5MT | F | R | Estate FWD CFWA | | GDS61301 | Drive Shaft | | 36 | | 50.5 | 59 | 771 | |
| | 2010.05-2014.12 | 5MT | F | L/R | Estate FWD CFWA | | GCO83024 | Outer Joint | | 36 | 30 | 50.75 | 59 | 55.5 | I |
| | 2010.05-2014.12 | 5MT | F | L/R | Estate FWD CFWA | | GCI82447 | Inner Joint | | | 33 | | | 34 | |
| | 2010.05-2014.12 | MT | F | L | Estate FWD CFWA | | GDS61302 | Drive Shaft | | 36 | | 50.5 | 59 | 479 | |
| | 2010.05-2014.12 | MT | F | L | Estate FWD CFWA | | GCO54006 | Outer Joint | | 36 | 30 | 52 | 59 | 55.5 | I |
| | 2010.05-2014.12 | MT | F | L/R | Estate FWD CFWA | | GCI83011 | Inner Joint | | | 33 | | | 34 | |
| | 2010.05-2014.12 | 5MT | F | L | Hatchback FWD CFWA | | GDS61248 | Drive Shaft | | 36 | | 52 | 59 | 480 | |
| | 2010.05-2014.12 | 5MT | F | R | Hatchback FWD CFWA | | GDS61301 | Drive Shaft | | 36 | | 50.5 | 59 | 771 | |
| | 2010.05-2014.12 | 5MT | F | L/R | Hatchback FWD CFWA | | GCO83024 | Outer Joint | | 36 | 30 | 50.75 | 59 | 55.5 | I |
| | 2010.05-2014.12 | 5MT | F | L/R | Hatchback FWD CFWA | | GCI82447 | Inner Joint | | | 33 | | | 34 | |
| | 2010.05-2014.12 | MT | F | L | Hatchback FWD CFWA | | GDS61302 | Drive Shaft | | 36 | | 50.5 | 59 | 479 | |
| | 2010.05-2014.12 | MT | F | L | Hatchback FWD CFWA | | GCO54006 | Outer Joint | | 36 | 30 | 52 | 59 | 55.5 | I |
| | 2010.05-2014.12 | MT | F | L/R | Hatchback FWD CFWA | | GCI83006 | Inner Joint | | | 33 | | | 34 | |
| | 2010.05-2014.12 | MT | F | L/R | Hatchback FWD CFWA | | GCI83011 | Inner Joint | | | 33 | | | 34 | |
| 1.2 (63 kw) | 2010.03-2014.12 | 5MT | F | L | Hatchback FWD CBZA | | GDS54018 | Drive Shaft | | 36 | | 50.5 | 59 | 500 | |
| | 2010.03-2014.12 | 5MT | F | R | Hatchback FWD CBZA | | GDS61305 | Drive Shaft | | 36 | | 50.5 | 59 | 757 | |
| | 2010.03-2014.12 | 5MT | F | L/R | Hatchback FWD CBZA | | GCO83024 | Outer Joint | | 36 | 30 | 50.75 | 59 | 55.5 | I |
| | 2010.03-2014.12 | 5MT | F | L/R | Hatchback FWD CBZA | | GCI53002 | Inner Joint | | | 33 | | | 34 | |
| | 2010.03-2014.12 | 5MT | F | L/R | Hatchback FWD CBZA | | GCI82447 | Inner Joint | | | 33 | | | 34 | |
| | 2010.03-2014.12 | AT | F | L | Hatchback FWD CBZA | | GDS61302 | Drive Shaft | | 36 | | 50.5 | 59 | 479 | |
| | 2010.03-2014.12 | AT | F | R | Hatchback FWD CBZA | | GCI53002 | Inner Joint | | | 33 | | | 34 | |
| | 2010.03-2014.12 | MT | F | L/R | Hatchback FWD CBZA | | GCI83011 | Inner Joint | | | 33 | | | 34 | |
| 1.2 (66 kw) | 2014.08-2021.06 | 5MT | F | L | Hatchback FWD CJZC | | GDS61297 | Drive Shaft | | 36 | | 50.5 | 59 | 513 | |
| | 2014.08-2021.06 | 5MT | F | L/R | Hatchback FWD CJZC | | GCO83024 | Outer Joint | | 36 | 30 | 50.75 | 59 | 55.5 | I |
| | 2014.08-2021.06 | 5MT | F | L/R | Hatchback FWD CJZC | | GCI53002 | Inner Joint | | | 33 | | | 34 | |

| | YEAR | TRANSM. | F/R | L/R | BODY STYLE & DRIVE TYPE & ENGINE | REMARKS | G-AP Ref. | PRODUCT | ABS | Technical Specifications A | B | C | H | L | P |
|---|---|---|---|---|---|---|---|---|---|---|---|---|---|---|---|
| **SKODA** **Fabia** | | | | | | | | | | | | | | | |
| 1.2 (66 kw) | 2014.08-2021.06 | 5MT | F | L/R | Hatchback FWD CJZC | | GCI82447 | Inner Joint | | | 33 | | | 34 | |
| | 2014.08-2021.06 | 6MT | F | R | Hatchback FWD CJZC | | GDS61301 | Drive Shaft | | 36 | | 50.5 | 59 | 771 | |
| | 2014.08-2021.06 | MT | F | L | Hatchback FWD CJZC | | GCO54006 | Outer Joint | | 36 | 30 | 52 | 59 | 55.5 | I |
| | 2014.08-2021.06 | MT | F | L/R | Hatchback FWD CJZC | Date from:2015.01 | GCI83011 | Inner Joint | | | 33 | | | 34 | |
| | 2014.10-2022.12 | 5MT | F | L | Estate FWD CJZC | | GDS61297 | Drive Shaft | | 36 | | 50.5 | 59 | 513 | |
| | 2014.10-2022.12 | 5MT | F | R | Estate FWD CJZC | | GDS61301 | Drive Shaft | | 36 | | 50.5 | 59 | 771 | |
| | 2014.10-2022.12 | 5MT | F | L/R | Estate FWD CJZC | | GCO83024 | Outer Joint | | 36 | 30 | 50.75 | 59 | 55.5 | I |
| | 2014.10-2022.12 | 5MT | F | L/R | Estate FWD CJZC | | GCI53002 | Inner Joint | | | 33 | | | 34 | |
| | 2014.10-2022.12 | 5MT | F | L/R | Estate FWD CJZC | | GCI82447 | Inner Joint | | | 33 | | | 34 | |
| | 2014.10-2022.12 | MT | F | L | Estate FWD CJZC | | GCO54006 | Outer Joint | | 36 | 30 | 52 | 59 | 55.5 | I |
| | 2014.10-2022.12 | MT | F | L/R | Estate FWD CJZC | Date from:2015.01 | GCI83011 | Inner Joint | | | 33 | | | 34 | |
| | 2014.10-2022.12 | 5MT | F | L | Estate Van FWD CJZC | | GDS61297 | Drive Shaft | | 36 | | 50.5 | 59 | 513 | |
| | 2014.10-2022.12 | 5MT | F | R | Estate Van FWD CJZC | | GDS61301 | Drive Shaft | | 36 | | 50.5 | 59 | 771 | |
| | 2014.10-2022.12 | 5MT | F | L/R | Estate Van FWD CJZC | | GCO83024 | Outer Joint | | 36 | 30 | 50.75 | 59 | 55.5 | I |
| | 2014.10-2022.12 | 5MT | F | L/R | Estate Van FWD CJZC | | GCI82447 | Inner Joint | | | 33 | | | 34 | |
| 1.2 (77 kw) | 2010.03-2014.12 | 5MT | F | R | Hatchback FWD CBZB | | GDS61301 | Drive Shaft | | 36 | | 50.5 | 59 | 771 | |
| | 2010.03-2014.12 | 5MT/7AT | F | L/R | Hatchback FWD CBZB | | GCO83024 | Outer Joint | | 36 | 30 | 50.75 | 59 | 55.5 | I |
| | 2010.03-2014.12 | 7DCT/5MT | F | L/R | Hatchback FWD CBZB | | GCI82447 | Inner Joint | | | 33 | | | 34 | |
| | 2010.03-2014.12 | AT | F | L | Hatchback FWD CBZB | | GDS61302 | Drive Shaft | | 36 | | 50.5 | 59 | 479 | |
| | 2010.03-2014.12 | MT | F | L | Hatchback FWD CBZB | | GDS54018 | Drive Shaft | | 36 | | 50.5 | 59 | 500 | |
| | 2010.03-2014.12 | MT | F | R | Hatchback FWD CBZB | | GDS61305 | Drive Shaft | | 36 | | 50.5 | 59 | 757 | |
| | 2010.03-2014.12 | MT | F | L/R | Hatchback FWD CBZB | | GCI83011 | Inner Joint | | | 33 | | | 34 | |
| 1.2 (81 kw) | 2014.08-2021.06 | 6MT | F | L | Hatchback FWD CJZD | | GDS61297 | Drive Shaft | | 36 | | 50.5 | 59 | 513 | |
| | 2014.08-2021.06 | 6MT | F | R | Hatchback FWD CJZD | | GDS61301 | Drive Shaft | | 36 | | 50.5 | 59 | 771 | |
| | 2014.08-2021.06 | 6MT | F | L/R | Hatchback FWD CJZD | | GCO83024 | Outer Joint | | 36 | 30 | 50.75 | 59 | 55.5 | I |
| | 2014.08-2021.06 | 6MT/7DCT | F | L/R | Hatchback FWD CJZD | | GCI53002 | Inner Joint | | | 33 | | | 34 | |
| | 2014.08-2021.06 | 7DCT | F | L | Hatchback FWD CJZD | | GDS61311 | Drive Shaft | | 36 | | 50.5 | 59 | 492 | |
| | 2014.08-2021.06 | 7DCT | F | R | Hatchback FWD CJZD | | GDS57507 | Drive Shaft | | 36 | | 52 | 64.5 | 781 | |
| | 2014.08-2021.06 | 7DCT | F | L/R | Hatchback FWD CJZD | Date to:2017.02 | GCO54006 | Outer Joint | | 36 | 30 | 52 | 59 | 55.5 | I |
| | 2014.08-2021.06 | 7DCT | F | L/R | Hatchback FWD CJZD | Date from:2017.03 | GCO61081 | Outer Joint | | 36 | 27 | 52 | 75 | 65 | I |
| | 2014.08-2021.06 | 7DCT/6MT | F | L/R | Hatchback FWD CJZD | | GCI82447 | Inner Joint | | | 33 | | | 34 | |
| | 2014.08-2021.06 | MT | F | L/R | Hatchback FWD CJZD | Date from:2015.01 | GCI83011 | Inner Joint | | | 33 | | | 34 | |
| | 2014.10-2022.12 | 5MT | F | R | Estate FWD CJZD | | GDS61301 | Drive Shaft | | 36 | | 50.5 | 59 | 771 | |
| | 2014.10-2022.12 | 6MT | F | L | Estate FWD CJZD | | GDS61297 | Drive Shaft | | 36 | | 50.5 | 59 | 513 | |
| | 2014.10-2022.12 | 6MT | F | L/R | Estate FWD CJZD | | GCO83024 | Outer Joint | | 36 | 30 | 50.75 | 59 | 55.5 | I |
| | 2014.10-2022.12 | 7DCT | F | L | Estate FWD CJZD | | GDS61311 | Drive Shaft | | 36 | | 50.5 | 59 | 492 | |
| | 2014.10-2022.12 | 7DCT | F | R | Estate FWD CJZD | | GDS57507 | Drive Shaft | | 36 | | 52 | 64.5 | 781 | |
| | 2014.10-2022.12 | 7DCT | F | L/R | Estate FWD CJZD | Date to:2017.02 | GCO54006 | Outer Joint | | 36 | 30 | 52 | 59 | 55.5 | I |
| | 2014.10-2022.12 | 7DCT | F | L/R | Estate FWD CJZD | Date from:2017.03 | GCO61081 | Outer Joint | | 36 | 27 | 52 | 75 | 65 | I |
| | 2014.10-2022.12 | 7DCT/6MT | F | L/R | Estate FWD CJZD | | GCI82447 | Inner Joint | | | 33 | | | 34 | |
| | 2014.10-2022.12 | MT | F | L/R | Estate FWD CJZD | Date from:2015.01 | GCI83011 | Inner Joint | | | 33 | | | 34 | |
| | 2014.10-2022.12 | 5MT | F | L | Estate Van FWD CJZD | | GDS61297 | Drive Shaft | | 36 | | 50.5 | 59 | 513 | |
| | 2014.10-2022.12 | 5MT | F | R | Estate Van FWD CJZD | | GDS61301 | Drive Shaft | | 36 | | 50.5 | 59 | 771 | |
| | 2014.10-2022.12 | | F | L/R | Estate Van FWD CJZD | | GCO83024 | Outer Joint | | 36 | 30 | 50.75 | 59 | 55.5 | I |
| 1.4 (44 kw) | 2000.04-2002.08 | 5MT | F | R | Saloon FWD AZE;AZF | | GDS61063 | Drive Shaft | | 36 | | 50.7 | 58.5 | 751 | |
| | 2000.04-2002.08 | 5MT | F | L/R | Saloon FWD AZE;AZF | For PR code:1N2/1N5,For vehicles with power steering | GCO83027 | Outer Joint | | 36 | 30 | 50.7 | 58.5 | 47.5 | I |
| | 2000.04-2002.08 | MT | F | L/R | Saloon FWD AZE;AZF | | GCI83005 | Inner Joint | | | 33 | | | 32 | |
| | 2000.04-2003.03 | 5MT | F | R | Estate FWD AZE;AZF | | GDS61063 | Drive Shaft | | 36 | | 50.7 | 58.5 | 751 | |
| | 2000.04-2003.03 | 5MT | F | L/R | Estate FWD AZE;AZF | For PR code:1N2/1N5,For vehicles with power steering | GCO83027 | Outer Joint | | 36 | 30 | 50.7 | 58.5 | 47.5 | I |
| | 2000.04-2003.03 | MT | F | L/R | Estate FWD AZE;AZF | | GCI83005 | Inner Joint | | | 33 | | | 32 | |
| | 2000.04-2003.03 | 5MT | F | R | Estate Van FWD AZE;AZF | | GDS61063 | Drive Shaft | | 36 | | 50.7 | 58.5 | 751 | |
| | 2000.04-2003.03 | 5MT | F | L/R | Estate Van FWD AZE;AZF | For PR code:1N2/1N5,For vehicles with power steering | GCO83027 | Outer Joint | | 36 | 30 | 50.7 | 58.5 | 47.5 | I |
| | 2000.04-2003.03 | 5MT | F | L/R | Estate Van FWD AZE;AZF | | GCI83005 | Inner Joint | | | 33 | | | 32 | |
| | 2000.04-2003.03 | 5MT | F | L/R | Estate Van FWD AZE;AZF | | GCI83008 | Inner Joint | | | 33 | | | 32 | |
| | 2000.08-2002.08 | 5MT | F | R | Hatchback FWD AZE;AZF | | GDS61063 | Drive Shaft | | 36 | | 50.7 | 58.5 | 751 | |
| | 2000.08-2002.08 | 5MT | F | L/R | Hatchback FWD AZE;AZF | For PR code:1N2/1N5,For vehicles with power steering | GCO83027 | Outer Joint | | 36 | 30 | 50.7 | 58.5 | 47.5 | I |
| | 2000.08-2002.08 | MT | F | L/R | Hatchback FWD AZE;AZF | | GCI83005 | Inner Joint | | | 33 | | | 32 | |
| 1.4 (50 kw) | 1999.08-2003.05 | 5MT | F | R | Hatchback FWD ATZ;AME;AQW | | GDS61063 | Drive Shaft | | 36 | | 50.7 | 58.5 | 751 | |
| | 1999.08-2003.05 | 5MT | F | L/R | Hatchback FWD ATZ;AME;AQW | For PR code:1N2/1N5,For vehicles with power steering | GCO83027 | Outer Joint | | 36 | 30 | 50.7 | 58.5 | 47.5 | I |
| | 1999.08-2003.05 | MT | F | L/R | Hatchback FWD ATZ;AME;AQW | | GCI83005 | Inner Joint | | | 33 | | | 32 | |
| | 2000.04-2003.05 | 5MT | F | R | Estate FWD ATZ;AME;AQW | | GDS61063 | Drive Shaft | | 36 | | 50.7 | 58.5 | 751 | |
| | 2000.04-2003.05 | 5MT | F | L/R | Estate FWD ATZ;AME;AQW | For PR code:1N2/1N5,For vehicles with power steering | GCO83027 | Outer Joint | | 36 | 30 | 50.7 | 58.5 | 47.5 | I |
| | 2000.04-2003.05 | MT | F | L/R | Estate FWD ATZ;AME;AQW | | GCI83005 | Inner Joint | | | 33 | | | 32 | |
| | 2001.07-2003.05 | 5MT | F | R | Estate Van FWD ATZ;AME;AQW | | GDS61063 | Drive Shaft | | 36 | | 50.7 | 58.5 | 751 | |
| | 2001.07-2003.05 | 5MT | F | L/R | Estate Van FWD ATZ;AME;AQW | For PR code:1N2/1N5,For vehicles with power steering | GCO83027 | Outer Joint | | 36 | 30 | 50.7 | 58.5 | 47.5 | I |

| | YEAR | TRANSM. | F/R | L/R | BODY STYLE & DRIVE TYPE & ENGINE | REMARKS | G-AP Ref. | PRODUCT | ABS | Technical Specifications A | B | C | H | L | P |
|---|---|---|---|---|---|---|---|---|---|---|---|---|---|---|---|
| **SKODA** **Fabia** | | | | | | | | | | | | | | | |
| 1.4 (50 kw) | 2001.07-2003.05 | MT | F | L/R | Estate Van FWD ATZ;AME;AQW | | GCI83005 | Inner Joint | | | 33 | | | 32 | |
| | 2001.07-2003.05 | 5MT | F | R | Saloon FWD ATZ;AME;AQW | | GDS61063 | Drive Shaft | | 36 | | 50.7 | 58.5 | 751 | |
| | 2001.07-2003.05 | 5MT | F | L/R | Saloon FWD ATZ;AME;AQW | For PR code:1N2/1N5,For vehicles with power steering | GCO83027 | Outer Joint | | 36 | 30 | 50.7 | 58.5 | 47.5 | I |
| | 2001.07-2003.05 | MT | F | L/R | Saloon FWD ATZ;AME;AQW | | GCI83005 | Inner Joint | | | 33 | | | 32 | |
| 1.4 (51 kw) | 2005.10-2007.12 | 5MT | F | L | Estate FWD BNM | | GDS61078 | Drive Shaft | | 36 | | 50.7 | 58.5 | 501 | |
| | 2005.10-2007.12 | 5MT | F | R | Estate FWD BNM | | GDS61223 | Drive Shaft | | 36 | | 52 | 59 | 757 | |
| | 2005.10-2007.12 | 5MT | F | L/R | Estate FWD BNM | | GCO83024 | Outer Joint | | 36 | 30 | 50.75 | 59 | 55.5 | I |
| | 2005.10-2007.12 | MT | F | R | Estate FWD BNM | | GDS61063 | Drive Shaft | | 36 | | 50.7 | 58.5 | 751 | |
| | 2005.10-2007.12 | MT | F | R | Estate FWD BNM | | GCO54006 | Outer Joint | | 36 | 30 | 52 | 59 | 55.5 | I |
| | 2005.10-2007.12 | | F | L/R | Estate FWD BNM | | GCI83008 | Inner Joint | | | 33 | | | 32 | |
| | 2005.10-2007.12 | 5MT | F | L | Estate Van FWD BNM | | GDS61078 | Drive Shaft | | 36 | | 50.7 | 58.5 | 501 | |
| | 2005.10-2007.12 | 5MT | F | R | Estate Van FWD BNM | | GDS61223 | Drive Shaft | | 36 | | 52 | 59 | 757 | |
| | 2005.10-2007.12 | 5MT | F | L/R | Estate Van FWD BNM | | GCO83024 | Outer Joint | | 36 | 30 | 50.75 | 59 | 55.5 | I |
| | 2005.10-2007.12 | MT | F | R | Estate Van FWD BNM | | GDS61063 | Drive Shaft | | 36 | | 50.7 | 58.5 | 751 | |
| | 2005.10-2007.12 | MT | F | R | Estate Van FWD BNM | | GCO54006 | Outer Joint | | 36 | 30 | 52 | 59 | 55.5 | I |
| | 2005.10-2007.12 | | F | L/R | Estate Van FWD BNM | | GCI83008 | Inner Joint | | | 33 | | | 32 | |
| | 2005.10-2007.12 | 5MT | F | L | Saloon FWD BNM | | GDS61078 | Drive Shaft | | 36 | | 50.7 | 58.5 | 501 | |
| | 2005.10-2007.12 | 5MT | F | R | Saloon FWD BNM | | GDS61223 | Drive Shaft | | 36 | | 52 | 59 | 757 | |
| | 2005.10-2007.12 | 5MT | F | L/R | Saloon FWD BNM | | GCO83024 | Outer Joint | | 36 | 30 | 50.75 | 59 | 55.5 | I |
| | 2005.10-2007.12 | MT | F | R | Saloon FWD BNM | | GDS61063 | Drive Shaft | | 36 | | 50.7 | 58.5 | 751 | |
| | 2005.10-2007.12 | MT | F | R | Saloon FWD BNM | | GCO54006 | Outer Joint | | 36 | 30 | 52 | 59 | 55.5 | I |
| | 2005.10-2007.12 | | F | L/R | Saloon FWD BNM | | GCI83008 | Inner Joint | | | 33 | | | 32 | |
| | 2005.10-2008.03 | 5MT | F | L | Hatchback FWD BNM | | GDS61078 | Drive Shaft | | 36 | | 50.7 | 58.5 | 501 | |
| | 2005.10-2008.03 | 5MT | F | R | Hatchback FWD BNM | | GDS61223 | Drive Shaft | | 36 | | 52 | 59 | 757 | |
| | 2005.10-2008.03 | 5MT | F | L/R | Hatchback FWD BNM | | GCO83024 | Outer Joint | | 36 | 30 | 50.75 | 59 | 55.5 | I |
| | 2005.10-2008.03 | MT | F | R | Hatchback FWD BNM | | GDS61063 | Drive Shaft | | 36 | | 50.7 | 58.5 | 751 | |
| | 2005.10-2008.03 | MT | F | R | Hatchback FWD BNM | Date to:2007.04 | GCO54006 | Outer Joint | | 36 | 30 | 52 | 59 | 55.5 | I |
| | 2005.10-2008.03 | | F | L/R | Hatchback FWD BNM | | GCI83008 | Inner Joint | | | 33 | | | 32 | |
| | 2007.02-2010.03 | 5MT | F | L | Hatchback FWD BNM | | GDS61078 | Drive Shaft | | 36 | | 50.7 | 58.5 | 501 | |
| | 2007.02-2010.03 | 5MT | F | R | Hatchback FWD BNM | | GDS61223 | Drive Shaft | | 36 | | 52 | 59 | 757 | |
| | 2007.02-2010.03 | 5MT | F | L/R | Hatchback FWD BNM | | GCO83024 | Outer Joint | | 36 | 30 | 50.75 | 59 | 55.5 | I |
| | 2007.02-2010.03 | MT | F | R | Hatchback FWD BNM | | GCO54006 | Outer Joint | | 36 | 30 | 52 | 59 | 55.5 | I |
| | 2007.02-2010.03 | MT | F | L/R | Hatchback FWD BNM | | GCI83005 | Inner Joint | | | 33 | | | 32 | |
| | 2007.02-2010.03 | | F | L/R | Hatchback FWD BNM | | GCI83008 | Inner Joint | | | 33 | | | 32 | |
| | 2007.10-2010.03 | 5MT | F | L | Estate FWD BNM | | GDS61078 | Drive Shaft | | 36 | | 50.7 | 58.5 | 501 | |
| | 2007.10-2010.03 | 5MT | F | R | Estate FWD BNM | | GDS61223 | Drive Shaft | | 36 | | 52 | 59 | 757 | |
| | 2007.10-2010.03 | 5MT | F | L/R | Estate FWD BNM | | GCO83024 | Outer Joint | | 36 | 30 | 50.75 | 59 | 55.5 | I |
| | 2007.10-2010.03 | MT | F | R | Estate FWD BNM | | GDS61063 | Drive Shaft | | 36 | | 50.7 | 58.5 | 751 | |
| | 2007.10-2010.03 | MT | F | R | Estate FWD BNM | | GCO54006 | Outer Joint | | 36 | 30 | 52 | 59 | 55.5 | I |
| | 2007.10-2010.03 | MT | F | L/R | Estate FWD BNM | | GCI83005 | Inner Joint | | | 33 | | | 32 | |
| | 2007.10-2010.03 | | F | L/R | Estate FWD BNM | | GCI83008 | Inner Joint | | | 33 | | | 32 | |
| 1.4 (55 kw) | 1999.10-2007.12 | 4AT | F | L/R | Saloon FWD AUA;BBY;BKY | | GCO83024 | Outer Joint | | 36 | 30 | 50.75 | 59 | 55.5 | I |
| | 1999.10-2007.12 | 5MT | F | L/R | Saloon FWD AUA;BBY;BKY | | GCO83027 | Outer Joint | | 36 | 30 | 50.7 | 58.5 | 47.5 | I |
| | 1999.10-2007.12 | AT | F | L | Saloon FWD AUA;BBY;BKY | | GDS81921 | Drive Shaft | | 36 | | 52 | 59 | 494 | |
| | 1999.10-2007.12 | AT | F | R | Saloon FWD AUA;BBY;BKY | | GDS61252 | Drive Shaft | | 36 | | 53.7 | 58.5 | 730 | |
| | 1999.10-2007.12 | AT | F | R | Saloon FWD AUA;BBY;BKY | | GCO61070 | Outer Joint | | 36 | 30 | 53.7 | 58.5 | 55 | I |
| | 1999.10-2007.12 | AT | F | L/R | Saloon FWD AUA;BBY;BKY | for vehicles with automatic transmission | GCI61005 | Inner Joint | | | 30 | | | 57.6 | |
| | 1999.10-2007.12 | MT | F | L | Saloon FWD AUA;BBY;BKY | | GDS83063 | Drive Shaft | | 36 | | 50.7 | 58.5 | 501 | |
| | 1999.10-2007.12 | MT | F | R | Saloon FWD AUA;BBY;BKY | | GDS61063 | Drive Shaft | | 36 | | 50.7 | 58.5 | 751 | |
| | 1999.10-2007.12 | MT | F | L/R | Saloon FWD AUA;BBY;BKY | | GCI83005 | Inner Joint | | | 33 | | | 32 | |
| | 1999.10-2007.12 | | F | L/R | Saloon FWD AUA;BBY;BKY | | GCI83008 | Inner Joint | | | 33 | | | 32 | |
| | 1999.12-2008.03 | 4AT | F | L/R | Hatchback FWD AUA;BBY;BKY | | GCO83024 | Outer Joint | | 36 | 30 | 50.75 | 59 | 55.5 | I |
| | 1999.12-2008.03 | 4AT | F | L/R | Hatchback FWD AUA;BBY;BKY | For Engine Code:BKY | GCI61005 | Inner Joint | | | 30 | | | 57.6 | |
| | 1999.12-2008.03 | 5MT | F | L/R | Hatchback FWD AUA;BBY;BKY | | GCO83027 | Outer Joint | | 36 | 30 | 50.7 | 58.5 | 47.5 | I |
| | 1999.12-2008.03 | 5MT | F | L/R | Hatchback FWD AUA;BBY;BKY | For Engine Code:AUA/BBY/BKY | GCI83008 | Inner Joint | | | 33 | | | 32 | |
| | 1999.12-2008.03 | AT | F | L | Hatchback FWD AUA;BBY;BKY | | GDS81921 | Drive Shaft | | 36 | | 52 | 59 | 494 | |
| | 1999.12-2008.03 | AT | F | R | Hatchback FWD AUA;BBY;BKY | | GDS61252 | Drive Shaft | | 36 | | 53.7 | 58.5 | 730 | |
| | 1999.12-2008.03 | AT | F | L | Hatchback FWD AUA;BBY;BKY | Date to:2002.09;Chassis no. to:6Y3668733 | GCO54006 | Outer Joint | | 36 | 30 | 52 | 59 | 55.5 | I |
| | 1999.12-2008.03 | AT | F | R | Hatchback FWD AUA;BBY;BKY | Date to:2007.04 | GCO61070 | Outer Joint | | 36 | 30 | 53.7 | 58.5 | 55 | I |
| | 1999.12-2008.03 | MT | F | L | Hatchback FWD AUA;BBY;BKY | | GDS83063 | Drive Shaft | | 36 | | 50.7 | 58.5 | 501 | |
| | 1999.12-2008.03 | MT | F | R | Hatchback FWD AUA;BBY;BKY | | GDS61063 | Drive Shaft | | 36 | | 50.7 | 58.5 | 751 | |
| | 1999.12-2008.03 | MT | F | L/R | Hatchback FWD AUA;BBY;BKY | | GCI83005 | Inner Joint | | | 33 | | | 32 | |
| | 2000.05-2007.12 | 4AT | F | L/R | Estate FWD AUA;BBY;BKY | | GCO83024 | Outer Joint | | 36 | 30 | 50.75 | 59 | 55.5 | I |
| | 2000.05-2007.12 | 5MT | F | L/R | Estate FWD AUA;BBY;BKY | | GCO83027 | Outer Joint | | 36 | 30 | 50.7 | 58.5 | 47.5 | I |
| | 2000.05-2007.12 | 5MT | F | L/R | Estate FWD AUA;BBY;BKY | | GCI83008 | Inner Joint | | | 33 | | | 32 | |

| | YEAR | TRANSM. | F/R | L/R | BODY STYLE & DRIVE TYPE & ENGINE | REMARKS | G-AP Ref. | PRODUCT | ABS | Technical Specifications A | B | C | H | L | P |
|---|---|---|---|---|---|---|---|---|---|---|---|---|---|---|---|
| **SKODA** | | | | | | | | | | | | | | | |
| **Fabia** | | | | | | | | | | | | | | | |
| 1.4 (55 kw) | 2000.05-2007.12 | AT | F | L | Estate FWD AUA;BBY;BKY | | GDS81921 | Drive Shaft | | 36 | | 52 | 59 | 494 | |
| | 2000.05-2007.12 | AT | F | R | Estate FWD AUA;BBY;BKY | | GDS61252 | Drive Shaft | | 36 | | 53.7 | 58.5 | 730 | |
| | 2000.05-2007.12 | AT | F | L | Estate FWD AUA;BBY;BKY | | GCO54006 | Outer Joint | | 36 | 30 | 52 | 59 | 55.5 | I |
| | 2000.05-2007.12 | AT | F | R | Estate FWD AUA;BBY;BKY | | GCO61070 | Outer Joint | | 36 | 30 | 53.7 | 58.5 | 55 | I |
| | 2000.05-2007.12 | AT | F | L/R | Estate FWD AUA;BBY;BKY | | GCI61005 | Inner Joint | | | 30 | | | 57.6 | |
| | 2000.05-2007.12 | MT | F | L | Estate FWD AUA;BBY;BKY | | GDS83063 | Drive Shaft | | 36 | | 50.7 | 58.5 | 501 | |
| | 2000.05-2007.12 | MT | F | R | Estate FWD AUA;BBY;BKY | | GDS61063 | Drive Shaft | | 36 | | 50.7 | 58.5 | 751 | |
| | 2000.05-2007.12 | MT | F | L/R | Estate FWD AUA;BBY;BKY | | GCI83005 | Inner Joint | | | 33 | | | 32 | |
| | 2003.04-2007.12 | 5MT | F | L | Estate FWD AMF | | GDS61098 | Drive Shaft | | 36 | | 50.5 | 59 | 472 | |
| | 2003.04-2007.12 | 5MT | F | R | Estate FWD AMF | | GDS61099 | Drive Shaft | | 36 | | 50.5 | 59 | 759 | |
| | 2003.04-2007.12 | 5MT | F | L/R | Estate FWD AMF | | GCO83024 | Outer Joint | | 36 | 30 | 50.75 | 59 | 55.5 | I |
| | 2003.04-2007.12 | MT | F | L | Estate FWD AMF | | GCO54006 | Outer Joint | | 36 | 30 | 52 | 59 | 55.5 | I |
| | 2003.04-2007.12 | | F | L/R | Estate FWD AMF | | GCI61006 | Inner Joint | | | 30 | | | 57.6 | |
| | 2003.04-2007.12 | 5MT | F | L | Saloon FWD AMF | | GDS61098 | Drive Shaft | | 36 | | 50.5 | 59 | 472 | |
| | 2003.04-2007.12 | 5MT | F | R | Saloon FWD AMF | | GDS61099 | Drive Shaft | | 36 | | 50.5 | 59 | 759 | |
| | 2003.04-2007.12 | 5MT | F | L/R | Saloon FWD AMF | | GCO83024 | Outer Joint | | 36 | 30 | 50.75 | 59 | 55.5 | I |
| | 2003.04-2007.12 | MT | F | L | Saloon FWD AMF | | GCO54006 | Outer Joint | | 36 | 30 | 52 | 59 | 55.5 | I |
| | 2003.04-2007.12 | | F | L/R | Saloon FWD AMF | | GCI61006 | Inner Joint | | | 30 | | | 57.6 | |
| | 2003.04-2008.03 | 5MT | F | L | Hatchback FWD AMF | | GDS61098 | Drive Shaft | | 36 | | 50.5 | 59 | 472 | |
| | 2003.04-2008.03 | 5MT | F | R | Hatchback FWD AMF | | GDS61099 | Drive Shaft | | 36 | | 50.5 | 59 | 759 | |
| | 2003.04-2008.03 | 5MT | F | L/R | Hatchback FWD AMF | | GCO83024 | Outer Joint | | 36 | 30 | 50.75 | 59 | 55.5 | I |
| | 2003.04-2008.03 | MT | F | L | Hatchback FWD AMF | | GCO54006 | Outer Joint | | 36 | 30 | 52 | 59 | 55.5 | I |
| | 2003.04-2008.03 | | F | L/R | Hatchback FWD AMF | | GCI61006 | Inner Joint | | | 30 | | | 57.6 | |
| | 2004.05-2007.12 | 4AT | F | L/R | Estate Van FWD BKY | | GCO83024 | Outer Joint | | 36 | 30 | 50.75 | 59 | 55.5 | I |
| | 2004.05-2007.12 | 5MT | F | L/R | Estate Van FWD BKY | | GCO83027 | Outer Joint | | 36 | 30 | 50.7 | 58.5 | 47.5 | I |
| | 2004.05-2007.12 | AT | F | L | Estate Van FWD BKY | | GDS81921 | Drive Shaft | | 36 | | 52 | 59 | 494 | |
| | 2004.05-2007.12 | AT | F | R | Estate Van FWD BKY | | GDS61252 | Drive Shaft | | 36 | | 53.7 | 58.5 | 730 | |
| | 2004.05-2007.12 | AT | F | L/R | Estate Van FWD BKY | | GCI61005 | Inner Joint | | | 30 | | | 57.6 | |
| | 2004.05-2007.12 | MT | F | L | Estate Van FWD BKY | | GDS83063 | Drive Shaft | | 36 | | 50.7 | 58.5 | 501 | |
| | 2004.05-2007.12 | MT | F | R | Estate Van FWD BKY | | GDS61063 | Drive Shaft | | 36 | | 50.7 | 58.5 | 751 | |
| | 2004.05-2007.12 | | F | L/R | Estate Van FWD BKY | | GCI83008 | Inner Joint | | | 33 | | | 32 | |
| | 2004.08-2005.10 | 5MT | F | L | Estate Van FWD AMF | | GDS61098 | Drive Shaft | | 36 | | 50.5 | 59 | 472 | |
| | 2004.08-2005.10 | 5MT | F | R | Estate Van FWD AMF | | GDS61099 | Drive Shaft | | 36 | | 50.5 | 59 | 759 | |
| | 2004.08-2005.10 | 5MT | F | L/R | Estate Van FWD AMF | | GCO83024 | Outer Joint | | 36 | 30 | 50.75 | 59 | 55.5 | I |
| | 2004.08-2005.10 | | F | L/R | Estate Van FWD AMF | | GCI61006 | Inner Joint | | | 30 | | | 57.6 | |
| | 2015.05-2021.06 | 5MT | F | L | Hatchback FWD CUSA | | GDS82039 | Drive Shaft | | 36 | | 52 | 59 | 549 | |
| | 2015.05-2021.06 | 5MT | F | R | Hatchback FWD CUSA | | GDS82360 | Drive Shaft | | 36 | | 52 | 59 | 729 | |
| | 2015.05-2021.06 | 5MT | F | L/R | Hatchback FWD CUSA | | GCO83024 | Outer Joint | | 36 | 30 | 50.75 | 59 | 55.5 | I |
| | 2015.05-2021.06 | 5MT | F | L/R | Hatchback FWD CUSA | | GCI82447 | Inner Joint | | | 33 | | | 34 | |
| | 2015.05-2022.12 | 5MT | F | L | Estate FWD CUSA | | GDS82039 | Drive Shaft | | 36 | | 52 | 59 | 549 | |
| | 2015.05-2022.12 | 5MT | F | R | Estate FWD CUSA | | GDS82360 | Drive Shaft | | 36 | | 52 | 59 | 729 | |
| | 2015.05-2022.12 | 5MT | F | L/R | Estate FWD CUSA | | GCO83024 | Outer Joint | | 36 | 30 | 50.75 | 59 | 55.5 | I |
| | 2015.05-2022.12 | 5MT | F | L/R | Estate FWD CUSA | | GCI82447 | Inner Joint | | | 33 | | | 34 | |
| | 2015.05-2022.12 | 5MT | F | L | Estate Van FWD CUSA | | GDS82039 | Drive Shaft | | 36 | | 52 | 59 | 549 | |
| | 2015.05-2022.12 | 5MT | F | R | Estate Van FWD CUSA | | GDS82360 | Drive Shaft | | 36 | | 52 | 59 | 729 | |
| | 2015.05-2022.12 | | F | L/R | Estate Van FWD CUSA | | GCO83024 | Outer Joint | | 36 | 30 | 50.75 | 59 | 55.5 | I |
| 1.4 (59 kw) | 2005.10-2007.12 | 5MT | F | L | Estate FWD BNV | | GDS61098 | Drive Shaft | | 36 | | 50.5 | 59 | 472 | |
| | 2005.10-2007.12 | 5MT | F | R | Estate FWD BNV | | GDS61099 | Drive Shaft | | 36 | | 50.5 | 59 | 759 | |
| | 2005.10-2007.12 | 5MT | F | L/R | Estate FWD BNV | | GCO83024 | Outer Joint | | 36 | 30 | 50.75 | 59 | 55.5 | I |
| | 2005.10-2007.12 | MT | F | L | Estate FWD BNV | | GCO54006 | Outer Joint | | 36 | 30 | 52 | 59 | 55.5 | I |
| | 2005.10-2007.12 | | F | L/R | Estate FWD BNV | | GCI61006 | Inner Joint | | | 30 | | | 57.6 | |
| | 2005.10-2007.12 | 5MT | F | L | Saloon FWD BNV | | GDS61098 | Drive Shaft | | 36 | | 50.5 | 59 | 472 | |
| | 2005.10-2007.12 | 5MT | F | R | Saloon FWD BNV | | GDS61099 | Drive Shaft | | 36 | | 50.5 | 59 | 759 | |
| | 2005.10-2007.12 | 5MT | F | L/R | Saloon FWD BNV | | GCO83024 | Outer Joint | | 36 | 30 | 50.75 | 59 | 55.5 | I |
| | 2005.10-2007.12 | MT | F | L | Saloon FWD BNV | | GCO54006 | Outer Joint | | 36 | 30 | 52 | 59 | 55.5 | I |
| | 2005.10-2007.12 | | F | L/R | Saloon FWD BNV | | GCI61006 | Inner Joint | | | 30 | | | 57.6 | |
| | 2005.10-2008.03 | 5MT | F | L | Hatchback FWD BNV | | GDS61098 | Drive Shaft | | 36 | | 50.5 | 59 | 472 | |
| | 2005.10-2008.03 | 5MT | F | R | Hatchback FWD BNV | | GDS61099 | Drive Shaft | | 36 | | 50.5 | 59 | 759 | |
| | 2005.10-2008.03 | 5MT | F | L/R | Hatchback FWD BNV | | GCO83024 | Outer Joint | | 36 | 30 | 50.75 | 59 | 55.5 | I |
| | 2005.10-2008.03 | MT | F | L | Hatchback FWD BNV | | GCO54006 | Outer Joint | | 36 | 30 | 52 | 59 | 55.5 | I |
| | 2005.10-2008.03 | | F | L/R | Hatchback FWD BNV | | GCI61006 | Inner Joint | | | 30 | | | 57.6 | |
| | 2006.04-2007.12 | 5MT | F | L | Estate FWD BUD | | GDS83063 | Drive Shaft | | 36 | | 50.7 | 58.5 | 501 | |
| | 2006.04-2007.12 | 5MT | F | R | Estate FWD BUD | | GDS61063 | Drive Shaft | | 36 | | 50.7 | 58.5 | 751 | |
| | 2006.04-2007.12 | 5MT | F | L/R | Estate FWD BUD | | GCO83027 | Outer Joint | | 36 | 30 | 50.7 | 58.5 | 47.5 | I |
| | 2006.04-2007.12 | | F | L/R | Estate FWD BUD | | GCI83008 | Inner Joint | | | 33 | | | 32 | |

| | YEAR | TRANSM. | F/R | L/R | BODY STYLE & DRIVE TYPE & ENGINE | REMARKS | G-AP Ref. | PRODUCT | ABS | Technical Specifications A | B | C | H | L | P |
|---|---|---|---|---|---|---|---|---|---|---|---|---|---|---|---|
| **SKODA** **Fabia** | | | | | | | | | | | | | | | |
| 1.4 (59 kw) | 2006.04-2007.12 | 5MT | F | L | Saloon FWD BUD | | GDS83063 | Drive Shaft | | 36 | | 50.7 | 58.5 | 501 | |
| | 2006.04-2007.12 | 5MT | F | R | Saloon FWD BUD | | GDS61063 | Drive Shaft | | 36 | | 50.7 | 58.5 | 751 | |
| | 2006.04-2007.12 | 5MT | F | L/R | Saloon FWD BUD | | GCO83027 | Outer Joint | | 36 | 30 | 50.7 | 58.5 | 47.5 | I |
| | 2006.04-2007.12 | | F | L/R | Saloon FWD BUD | | GCI83008 | Inner Joint | | | 33 | | | 32 | |
| | 2007.01-2010.03 | 5MT | F | L | Hatchback FWD BNV;BMS | | GDS61098 | Drive Shaft | | 36 | | 50.5 | 59 | 472 | |
| | 2007.01-2010.03 | 5MT | F | R | Hatchback FWD BNV;BMS | | GDS61099 | Drive Shaft | | 36 | | 50.5 | 59 | 759 | |
| | 2007.01-2010.03 | 5MT | F | L/R | Hatchback FWD BNV;BMS | | GCO83024 | Outer Joint | | 36 | 30 | 50.75 | 59 | 55.5 | I |
| | 2007.01-2010.03 | MT | F | L | Hatchback FWD BNV;BMS | | GCO54006 | Outer Joint | | 36 | 30 | 52 | 59 | 55.5 | I |
| | 2007.01-2010.03 | | F | L/R | Hatchback FWD BNV;BMS | | GCI61006 | Inner Joint | | | 30 | | | 57.6 | |
| 1.4 (63 kw) | 2007.01-2014.11 | 5MT | F | L | Hatchback FWD BXW;CGGB | For Engine code:BXW | GDS83063 | Drive Shaft | | 36 | | 50.7 | 58.5 | 501 | |
| | 2007.01-2014.11 | 5MT | F | R | Hatchback FWD BXW;CGGB | For Engine code:BXW | GDS61063 | Drive Shaft | | 36 | | 50.7 | 58.5 | 751 | |
| | 2007.01-2014.11 | 5MT | F | L/R | Hatchback FWD BXW;CGGB | For Engine code:BXW | GCO83027 | Outer Joint | | 36 | 30 | 50.7 | 58.5 | 47.5 | I |
| | 2007.01-2014.11 | 5MT | F | L/R | Hatchback FWD BXW;CGGB | | GCI83008 | Inner Joint | | | 33 | | | 32 | |
| | 2007.01-2014.12 | 5MT | F | L | Hatchback FWD BXW, CGGB | | GDS83063 | Drive Shaft | | 36 | | 50.7 | 58.5 | 501 | |
| | 2007.01-2014.12 | 5MT | F | R | Hatchback FWD BXW, CGGB | | GDS61063 | Drive Shaft | | 36 | | 50.7 | 58.5 | 751 | |
| | 2007.01-2014.12 | 5MT | F | L/R | Hatchback FWD BXW, CGGB | For Engine code:BXW | GCO83027 | Outer Joint | | 36 | 30 | 50.7 | 58.5 | 47.5 | I |
| | 2007.01-2014.12 | AT/MT | F | L/R | Hatchback FWD BXW, CGGB | | GCI83005 | Inner Joint | | | 33 | | | 32 | |
| | 2007.01-2014.12 | MT | F | L/R | Hatchback FWD BXW, CGGB | | GCI83008 | Inner Joint | | | 33 | | | 32 | |
| | 2007.10-2014.11 | 5MT | F | L | Estate FWD BXW;CGGB | For Engine code:BXW | GDS83063 | Drive Shaft | | 36 | | 50.7 | 58.5 | 501 | |
| | 2007.10-2014.11 | 5MT | F | R | Estate FWD BXW;CGGB | For Engine code:BXW | GDS61063 | Drive Shaft | | 36 | | 50.7 | 58.5 | 751 | |
| | 2007.10-2014.11 | 5MT | F | L/R | Estate FWD BXW;CGGB | For Engine code:BXW | GCO83027 | Outer Joint | | 36 | 30 | 50.7 | 58.5 | 47.5 | I |
| | 2007.10-2014.11 | 5MT | F | L/R | Estate FWD BXW;CGGB | | GCI83008 | Inner Joint | | | 33 | | | 32 | |
| 1.4 (66 kw) | 2014.08-2021.06 | 5MT | F | L | Hatchback FWD CUSB | | GDS82039 | Drive Shaft | | 36 | | 52 | 59 | 549 | |
| | 2014.08-2021.06 | 5MT | F | R | Hatchback FWD CUSB | | GDS82360 | Drive Shaft | | 36 | | 52 | 59 | 729 | |
| | 2014.08-2021.06 | 5MT | F | L/R | Hatchback FWD CUSB | | GCO83024 | Outer Joint | | 36 | 30 | 50.75 | 59 | 55.5 | I |
| | 2014.08-2021.06 | 5MT | F | L/R | Hatchback FWD CUSB | | GCI82447 | Inner Joint | | | 33 | | | 34 | |
| | 2014.08-2021.06 | 7AT/5MT | F | L | Hatchback FWD CUSB | | GCI83016 | Inner Joint | | | 28 | | | 32 | |
| | 2014.08-2021.06 | 7DCT | F | L | Hatchback FWD CUSB | | GDS81926 | Drive Shaft | | 36 | | 52 | 75 | 550 | |
| | 2014.08-2021.06 | 7DCT | F | R | Hatchback FWD CUSB | | GDS82359 | Drive Shaft | | 36 | 40 | 52 | 75 | 755 | |
| | 2014.08-2021.06 | 7DCT | F | L/R | Hatchback FWD CUSB | | GCO61081 | Outer Joint | | 36 | 27 | 52 | 75 | 65 | I |
| | 2014.08-2021.06 | 7DCT | F | R | Hatchback FWD CUSB | | GCI61054 | Inner Joint | | 40 | 28 | 46.9 | 41 | 101.7 | |
| | 2014.10-2022.12 | 5MT | F | L | Estate FWD CUSB | | GDS82039 | Drive Shaft | | 36 | | 52 | 59 | 549 | |
| | 2014.10-2022.12 | 5MT | F | R | Estate FWD CUSB | | GDS82360 | Drive Shaft | | 36 | | 52 | 59 | 729 | |
| | 2014.10-2022.12 | 5MT | F | L/R | Estate FWD CUSB | | GCO83024 | Outer Joint | | 36 | 30 | 50.75 | 59 | 55.5 | I |
| | 2014.10-2022.12 | 5MT | F | L/R | Estate FWD CUSB | | GCI82447 | Inner Joint | | | 33 | | | 34 | |
| | 2014.10-2022.12 | 7AT/5MT | F | L | Estate FWD CUSB | | GCI83016 | Inner Joint | | | 28 | | | 32 | |
| | 2014.10-2022.12 | 7DCT | F | L | Estate FWD CUSB | | GDS81926 | Drive Shaft | | 36 | | 52 | 75 | 550 | |
| | 2014.10-2022.12 | 7DCT | F | R | Estate FWD CUSB | | GDS82359 | Drive Shaft | | 36 | 40 | 52 | 75 | 755 | |
| | 2014.10-2022.12 | 7DCT | F | L/R | Estate FWD CUSB | | GCO61081 | Outer Joint | | 36 | 27 | 52 | 75 | 65 | I |
| | 2014.10-2022.12 | 7DCT | F | R | Estate FWD CUSB | | GCI61054 | Inner Joint | | 40 | 28 | 46.9 | 41 | 101.7 | |
| | 2014.10-2022.12 | 5MT | F | L | Estate Van FWD CUSB | | GDS82039 | Drive Shaft | | 36 | | 52 | 59 | 549 | |
| | 2014.10-2022.12 | 5MT | F | R | Estate Van FWD CUSB | | GDS82360 | Drive Shaft | | 36 | | 52 | 59 | 729 | |
| | 2014.10-2022.12 | 5MT | F | L/R | Estate Van FWD CUSB | | GCO83024 | Outer Joint | | 36 | 30 | 50.75 | 59 | 55.5 | I |
| | 2014.10-2022.12 | 5MT | F | L/R | Estate Van FWD CUSB | | GCI82447 | Inner Joint | | | 33 | | | 34 | |
| 1.4 (74 kw) | 1999.12-2007.12 | 5MT | F | L/R | Saloon FWD AUB;BBZ | | GCO83027 | Outer Joint | | 36 | 30 | 50.7 | 58.5 | 47.5 | I |
| | 1999.12-2007.12 | AT/MT | F | L/R | Saloon FWD AUB;BBZ | | GCI83005 | Inner Joint | | | 33 | | | 32 | |
| | 1999.12-2007.12 | MT | F | L | Saloon FWD AUB;BBZ | | GDS83063 | Drive Shaft | | 36 | | 50.7 | 58.5 | 501 | |
| | 1999.12-2007.12 | MT | F | R | Saloon FWD AUB;BBZ | | GDS61063 | Drive Shaft | | 36 | | 50.7 | 58.5 | 751 | |
| | 1999.12-2007.12 | | F | L/R | Saloon FWD AUB;BBZ | | GCI83008 | Inner Joint | | | 33 | | | 32 | |
| | 1999.12-2008.03 | 5MT | F | L | Hatchback FWD AUB;BBZ | | GDS83063 | Drive Shaft | | 36 | | 50.7 | 58.5 | 501 | |
| | 1999.12-2008.03 | 5MT | F | R | Hatchback FWD AUB;BBZ | | GDS61063 | Drive Shaft | | 36 | | 50.7 | 58.5 | 751 | |
| | 1999.12-2008.03 | 5MT | F | L/R | Hatchback FWD AUB;BBZ | | GCO83027 | Outer Joint | | 36 | 30 | 50.7 | 58.5 | 47.5 | I |
| | 1999.12-2008.03 | AT/MT | F | L/R | Hatchback FWD AUB;BBZ | | GCI83005 | Inner Joint | | | 33 | | | 32 | |
| | 1999.12-2008.03 | | F | L/R | Hatchback FWD AUB;BBZ | | GCI83008 | Inner Joint | | | 33 | | | 32 | |
| | 2000.04-2007.12 | 5MT | F | L | Estate FWD AUB;BBZ | | GDS83063 | Drive Shaft | | 36 | | 50.7 | 58.5 | 501 | |
| | 2000.04-2007.12 | 5MT | F | R | Estate FWD AUB;BBZ | | GDS61063 | Drive Shaft | | 36 | | 50.7 | 58.5 | 751 | |
| | 2000.04-2007.12 | 5MT | F | L/R | Estate FWD AUB;BBZ | | GCO83027 | Outer Joint | | 36 | 30 | 50.7 | 58.5 | 47.5 | I |
| | 2000.04-2007.12 | AT/MT | F | L/R | Estate FWD AUB;BBZ | | GCI83005 | Inner Joint | | | 33 | | | 32 | |
| | 2000.04-2007.12 | | F | L/R | Estate FWD AUB;BBZ | | GCI83008 | Inner Joint | | | 33 | | | 32 | |
| 1.4 (77 kw) | 2014.08-2021.06 | 5MT | F | L | Hatchback FWD CUTA | | GDS82039 | Drive Shaft | | 36 | | 52 | 59 | 549 | |
| | 2014.08-2021.06 | 5MT | F | R | Hatchback FWD CUTA | | GDS82360 | Drive Shaft | | 36 | | 52 | 59 | 729 | |
| | 2014.08-2021.06 | 5MT | F | L/R | Hatchback FWD CUTA | | GCO83024 | Outer Joint | | 36 | 30 | 50.75 | 59 | 55.5 | I |
| | 2014.08-2021.06 | 5MT | F | L/R | Hatchback FWD CUTA | | GCI82447 | Inner Joint | | | 33 | | | 34 | |
| | 2014.10-2022.12 | 5MT | F | L | Estate FWD CUTA | | GDS82039 | Drive Shaft | | 36 | | 52 | 59 | 549 | |
| | 2014.10-2022.12 | 5MT | F | R | Estate FWD CUTA | | GDS82360 | Drive Shaft | | 36 | | 52 | 59 | 729 | |

| | YEAR | TRANSM. | F/R | L/R | BODY STYLE & DRIVE TYPE & ENGINE | REMARKS | G-AP Ref. | PRODUCT | ABS | Technical Specifications A | B | C | H | L | P |
|---|---|---|---|---|---|---|---|---|---|---|---|---|---|---|---|
| **SKODA** **Fabia** | | | | | | | | | | | | | | | |
| 1.4 (77 kw) | 2014.10-2022.12 | 5MT | F | L/R | Estate FWD CUTA | | GCO83024 | Outer Joint | | 36 | 30 | 50.75 | 59 | 55.5 | I |
| | 2014.10-2022.12 | 5MT | F | L/R | Estate FWD CUTA | | GCI82447 | Inner Joint | | | 33 | | | 34 | |
| | 2014.10-2022.12 | 5MT | F | L | Estate Van FWD CUTA | | GDS82039 | Drive Shaft | | 36 | | 52 | 59 | 549 | |
| | 2014.10-2022.12 | 5MT | F | R | Estate Van FWD CUTA | | GDS82360 | Drive Shaft | | 36 | | 52 | 59 | 729 | |
| | 2014.10-2022.12 | 5MT | F | L/R | Estate Van FWD CUTA | | GCO83024 | Outer Joint | | 36 | 30 | 50.75 | 59 | 55.5 | I |
| | 2014.10-2022.12 | 5MT | F | L/R | Estate Van FWD CUTA | | GCI82447 | Inner Joint | | | 33 | | | 34 | |
| 1.4 (92 kw) | 2018.02-2021.06 | 7DCT | F | L | Hatchback FWD CZCA | Date to:2017.03 | GDS61311 | Drive Shaft | | 36 | | 50.5 | 59 | 492 | |
| | 2018.02-2021.06 | 7DCT | F | L | Hatchback FWD CZCA | Date from:2017.03 | GDS83988 | Drive Shaft | | 36 | | 52 | 64.5 | 500 | |
| | 2018.02-2021.06 | 7DCT | F | R | Hatchback FWD CZCA | | GDS57507 | Drive Shaft | | 36 | | 52 | 64.5 | 781 | |
| | 2018.02-2021.06 | 7DCT | F | L/R | Hatchback FWD CZCA | | GCI82447 | Inner Joint | | | 33 | | | 34 | |
| | 2018.02-2021.06 | | F | L/R | Hatchback FWD CZCA | | GCO54006 | Outer Joint | | 36 | 30 | 52 | 59 | 55.5 | I |
| | 2018.02-2021.06 | | F | L/R | Hatchback FWD CZCA | | GCO83024 | Outer Joint | | 36 | 30 | 50.75 | 59 | 55.5 | I |
| 1.4 (132 kw) | 2010.05-2014.12 | 7AT | F | L | Estate FWD CAVE;CTHE | | GDS82227 | Drive Shaft | | 36 | | 52 | 75 | 485 | |
| | 2010.05-2014.12 | 7AT | F | R | Estate FWD CAVE;CTHE | | GDS82259 | Drive Shaft | | 36 | | 52 | 75 | 770 | |
| | 2010.05-2014.12 | 7AT | F | L/R | Estate FWD CAVE;CTHE | | GCI61069 | Inner Joint | | | 28 | | | 32 | |
| | 2010.05-2014.12 | 7DCT | F | L/R | Estate FWD CAVE;CTHE | | GCO61081 | Outer Joint | | 36 | 27 | 52 | 75 | 65 | I |
| | 2010.05-2014.12 | | F | L/R | Estate FWD CAVE;CTHE | | GCI83016 | Inner Joint | | | 28 | | | 32 | |
| | 2010.05-2014.12 | 7AT | F | L | Hatchback FWD CAVE;CTHE | | GDS82227 | Drive Shaft | | 36 | | 52 | 75 | 485 | |
| | 2010.05-2014.12 | 7AT | F | R | Hatchback FWD CAVE;CTHE | | GDS82259 | Drive Shaft | | 36 | | 52 | 75 | 770 | |
| | 2010.05-2014.12 | 7AT | F | L/R | Hatchback FWD CAVE;CTHE | | GCI61069 | Inner Joint | | | 28 | | | 32 | |
| | 2010.05-2014.12 | 7DCT | F | L/R | Hatchback FWD CAVE;CTHE | | GCO61081 | Outer Joint | | 36 | 27 | 52 | 75 | 65 | I |
| | 2010.05-2014.12 | | F | L/R | Hatchback FWD CAVE;CTHE | | GCI83016 | Inner Joint | | | 28 | | | 32 | |
| 1.5 (110 kw) | 2021.11- | 7AT | F | L | Hatchback FWD DPCA;DXDB | | GCI83016 | Inner Joint | | | 28 | | | 32 | |
| | 2021.11- | 7DCT | F | L/R | Hatchback FWD DPCA;DXDB | | GCO82548 | Outer Joint | | 36 | 27 | 52 | 64.5 | 65 | M |
| 1.5 (130 kw) | 2021.11- | 7DCT | F | L | Hatchback FWD DXDG | Bellows Material:Plastic | GCI83016 | Inner Joint | | | 28 | | | 32 | |
| 1.6 (55 kw) | 2010.04-2014.12 | 5MT | F | R | Hatchback FWD CAYA | | GDS61301 | Drive Shaft | | 36 | | 50.5 | 59 | 771 | |
| | 2010.04-2014.12 | 5MT | F | L/R | Hatchback FWD CAYA | | GCO83024 | Outer Joint | | 36 | 30 | 50.75 | 59 | 55.5 | I |
| | 2010.04-2014.12 | MT | F | L | Hatchback FWD CAYA | | GDS61248 | Drive Shaft | | 36 | | 52 | 59 | 480 | |
| | 2010.04-2014.12 | MT | F | L/R | Hatchback FWD CAYA | | GCI82447 | Inner Joint | | | 33 | | | 34 | |
| | 2010.04-2014.12 | | F | L | Hatchback FWD CAYA | | GDS61302 | Drive Shaft | | 36 | | 50.5 | 59 | 479 | |
| | 2010.04-2014.12 | | F | L | Hatchback FWD CAYA | | GCO54006 | Outer Joint | | 36 | 30 | 52 | 59 | 55.5 | I |
| | 2013.10-2014.11 | 5MT | F | L | Estate Van FWD CAYA | | GDS61248 | Drive Shaft | | 36 | | 52 | 59 | 480 | |
| | 2013.10-2014.11 | 5MT | F | R | Estate Van FWD CAYA | | GDS61301 | Drive Shaft | | 36 | | 50.5 | 59 | 771 | |
| | 2013.10-2014.11 | 5MT | F | L/R | Estate Van FWD CAYA | | GCO83024 | Outer Joint | | 36 | 30 | 50.75 | 59 | 55.5 | I |
| | 2013.10-2014.11 | 5MT | F | L/R | Estate Van FWD CAYA | | GCI82447 | Inner Joint | | | 33 | | | 34 | |
| 1.6 (66 kw) | 2010.03-2014.12 | 5MT | F | R | Hatchback FWD CAYB | | GDS61301 | Drive Shaft | | 36 | | 50.5 | 59 | 771 | |
| | 2010.03-2014.12 | 5MT | F | L/R | Hatchback FWD CAYB | | GCO83024 | Outer Joint | | 36 | 30 | 50.75 | 59 | 55.5 | I |
| | 2010.03-2014.12 | MT | F | L | Hatchback FWD CAYB | | GDS61248 | Drive Shaft | | 36 | | 52 | 59 | 480 | |
| | 2010.03-2014.12 | MT | F | L/R | Hatchback FWD CAYB | | GCI82447 | Inner Joint | | | 33 | | | 34 | |
| | 2010.03-2014.12 | | F | L | Hatchback FWD CAYB | | GDS61302 | Drive Shaft | | 36 | | 50.5 | 59 | 479 | |
| | 2010.03-2014.12 | | F | L | Hatchback FWD CAYB | | GCO54006 | Outer Joint | | 36 | 30 | 52 | 59 | 55.5 | I |
| 1.6 (77 kw) | 2007.04-2014.12 | 5MT | F | L | Hatchback FWD BTS, CLSA, CFNA | | GDS54018 | Drive Shaft | | 36 | | 50.5 | 59 | 500 | |
| | 2007.04-2014.12 | 5MT | F | L/R | Hatchback FWD BTS, CLSA, CFNA | | GCI82447 | Inner Joint | | | 33 | | | 34 | |
| | 2007.04-2014.12 | 5MT/6AT | F | L/R | Hatchback FWD BTS, CLSA, CFNA | Transmission:5MT;Transmission:6AT,Date to:2008.07 | GCO83024 | Outer Joint | | 36 | 30 | 50.75 | 59 | 55.5 | I |
| | 2007.04-2014.12 | 6AT | F | R | Hatchback FWD BTS, CLSA, CFNA | AAR | GDS81524 | Drive Shaft | | 36 | 26 | 52 | 75 | 856 | |
| | 2007.04-2014.12 | 6AT | F | L | Hatchback FWD BTS, CLSA, CFNA | | GCI61039 | Inner Joint | | 26 | 22 | 31 | 68.5 | 88.5 | |
| | 2007.04-2014.12 | 6AT | F | R | Hatchback FWD BTS, CLSA, CFNA | Model:Model,Date to:2008.07 | GCI61011 | Inner Joint | | 26 | 32 | 31 | 68.5 | 85 | |
| | 2007.04-2014.12 | 6AT | F | R | Hatchback FWD BTS, CLSA, CFNA | Model:Model,Date to:2008.07 | GCI61050 | Inner Joint | | 26 | 32 | 31 | 68.5 | 89 | |
| | 2007.04-2014.12 | AT | F | L | Hatchback FWD BTS, CLSA, CFNA | | GDS61150 | Drive Shaft | | 36 | 26 | 52 | 75 | 557 | |
| | 2007.04-2014.12 | AT | F | R | Hatchback FWD BTS, CLSA, CFNA | TJ | GDS61133 | Drive Shaft | | 36 | 26 | 52 | 75 | 859 | |
| | 2007.04-2014.12 | AT | F | L/R | Hatchback FWD BTS, CLSA, CFNA | | GCO61010 | Outer Joint | | 36 | 30 | 52 | 75 | 55.5 | I |
| | 2007.04-2014.12 | AT | F | L/R | Hatchback FWD BTS, CLSA, CFNA | Date from:2008.04 | GCO61074 | Outer Joint | | 36 | 30 | 52 | 75 | 55.5 | I |
| | 2007.04-2014.12 | AT | F | L/R | Hatchback FWD BTS, CLSA, CFNA | Date from:2008.04,Type:UF100 | GCO83079 | Outer Joint | | 36 | 30 | 52 | 75 | 55.5 | I |
| | 2007.04-2014.12 | MT | F | R | Hatchback FWD BTS, CLSA, CFNA | | GDS61063 | Drive Shaft | | 36 | | 50.7 | 58.5 | 751 | |
| | 2007.04-2014.12 | MT | F | R | Hatchback FWD BTS, CLSA, CFNA | | GDS61305 | Drive Shaft | | 36 | | 50.5 | 59 | 757 | |
| | 2007.04-2014.12 | MT | F | R | Hatchback FWD BTS, CLSA, CFNA | | GCI53002 | Inner Joint | | | 33 | | | 34 | |
| | 2007.04-2014.12 | | F | L | Hatchback FWD BTS, CLSA, CFNA | | GCO54006 | Outer Joint | | 36 | 30 | 52 | 59 | 55.5 | I |
| | 2010.03-2014.12 | 5MT | F | R | Hatchback FWD CAYC | | GDS61301 | Drive Shaft | | 36 | | 50.5 | 59 | 771 | |
| | 2010.03-2014.12 | 5MT | F | L/R | Hatchback FWD CAYC | | GCO83024 | Outer Joint | | 36 | 30 | 50.75 | 59 | 55.5 | I |
| | 2010.03-2014.12 | MT | F | L | Hatchback FWD CAYC | | GDS61248 | Drive Shaft | | 36 | | 52 | 59 | 480 | |
| | 2010.03-2014.12 | MT | F | L/R | Hatchback FWD CAYC | | GCI82447 | Inner Joint | | | 33 | | | 34 | |
| | 2010.03-2014.12 | | F | L | Hatchback FWD CAYC | | GDS61302 | Drive Shaft | | 36 | | 50.5 | 59 | 479 | |
| | 2010.03-2014.12 | | F | L | Hatchback FWD CAYC | | GCO54006 | Outer Joint | | 36 | 30 | 52 | 59 | 55.5 | I |
| 1.6 (81 kw) | 2015.01-2021.06 | 5MT | F | L | Hatchback FWD CWVA | | GDS61297 | Drive Shaft | | 36 | | 50.5 | 59 | 513 | |
| | 2015.01-2021.06 | 5MT | F | R | Hatchback FWD CWVA | | GDS61301 | Drive Shaft | | 36 | | 50.5 | 59 | 771 | |

| | YEAR | TRANSM. | F/R | L/R | BODY STYLE & DRIVE TYPE & ENGINE | REMARKS | G-AP Ref. | PRODUCT | ABS | Technical Specifications A | B | C | H | L | P |
|---|---|---|---|---|---|---|---|---|---|---|---|---|---|---|---|
| **SKODA** **Fabia** | | | | | | | | | | | | | | | |
| 1.6 (81 kw) | 2015.01-2021.06 | 5MT | F | L/R | Hatchback FWD CWVA | | GCO83024 | Outer Joint | | 36 | 30 | 50.75 | 59 | 55.5 | I |
| | 2015.01-2021.06 | 5MT | F | L/R | Hatchback FWD CWVA | | GCI82447 | Inner Joint | | | 33 | | | 34 | |
| | 2015.01-2021.06 | 6AT | F | L | Hatchback FWD CWVA | | GDS83842 | Drive Shaft | | 36 | 26 | 52 | 75 | 566 | |
| | 2015.01-2021.06 | 6AT | F | R | Hatchback FWD CWVA | | GDS83843 | Drive Shaft | | 36 | 26 | 52 | 75 | 866 | |
| | 2015.01-2021.06 | 6AT | F | L/R | Hatchback FWD CWVA | | GCO61074 | Outer Joint | | 36 | 30 | 52 | 75 | 55.5 | I |
| | 2015.01-2021.06 | 6AT | F | L/R | Hatchback FWD CWVA | Type:UF100 | GCO83079 | Outer Joint | | 36 | 30 | 52 | 75 | 55.5 | I |
| | 2015.01-2021.06 | 6AT | F | L/R | Hatchback FWD CWVA | | GCI81396 | Inner Joint | | 26 | 22 | 31 | 68.5 | 86 | |
| | 2015.01-2021.06 | 6AT/5MT | F | L/R | Hatchback FWD CWVA | | GCI61039 | Inner Joint | | 26 | 22 | 31 | 68.5 | 88.5 | |
| | 2015.01-2021.06 | MT | F | L | Hatchback FWD CWVA | | GCO54006 | Outer Joint | | 36 | 30 | 52 | 59 | 55.5 | I |
| | 2015.01-2022.12 | 5MT | F | L | Estate FWD CWVA | | GDS61297 | Drive Shaft | | 36 | | 50.5 | 59 | 513 | |
| | 2015.01-2022.12 | 5MT | F | L/R | Estate FWD CWVA | | GCO83024 | Outer Joint | | 36 | 30 | 50.75 | 59 | 55.5 | I |
| | 2015.01-2022.12 | 5MT | F | L/R | Estate FWD CWVA | | GCI82447 | Inner Joint | | | 33 | | | 34 | |
| | 2015.01-2022.12 | 6AT | F | L | Estate FWD CWVA | | GDS83842 | Drive Shaft | | 36 | 26 | 52 | 75 | 566 | |
| | 2015.01-2022.12 | 6AT | F | R | Estate FWD CWVA | | GDS83843 | Drive Shaft | | 36 | 26 | 52 | 75 | 866 | |
| | 2015.01-2022.12 | 6AT | F | L/R | Estate FWD CWVA | | GCO61074 | Outer Joint | | 36 | 30 | 52 | 75 | 55.5 | I |
| | 2015.01-2022.12 | 6AT | F | L/R | Estate FWD CWVA | Type:UF100 | GCO83079 | Outer Joint | | 36 | 30 | 52 | 75 | 55.5 | I |
| | 2015.01-2022.12 | 6AT | F | L/R | Estate FWD CWVA | | GCI81396 | Inner Joint | | 26 | 22 | 31 | 68.5 | 86 | |
| | 2015.01-2022.12 | 6AT/5MT | F | L/R | Estate FWD CWVA | | GCI61039 | Inner Joint | | 26 | 22 | 31 | 68.5 | 88.5 | |
| | 2015.01-2022.12 | 7DCT | F | R | Estate FWD CWVA | | GDS61301 | Drive Shaft | | 36 | | 50.5 | 59 | 771 | |
| | 2015.01-2022.12 | MT | F | L | Estate FWD CWVA | | GCO54006 | Outer Joint | | 36 | 30 | 52 | 59 | 55.5 | I |
| | 2021.06- | 5MT | F | L/R | Hatchback FWD DWYA | | GCO83024 | Outer Joint | | 36 | 30 | 50.75 | 59 | 55.5 | I |
| | 2021.06- | 5MT | F | L/R | Hatchback FWD DWYA | | GCI82447 | Inner Joint | | | 33 | | | 34 | |
| | 2021.06- | 6AT | F | L | Hatchback FWD DWYA | | GDS84613 | Drive Shaft | | 36 | 26 | 52 | 64.5 | 597 | |
| | 2021.06- | 6AT | F | L/R | Hatchback FWD DWYA | | GCO81744 | Outer Joint | | 36 | 30 | 52 | 64.5 | 55.5 | M |
| | 2021.06- | 6AT | F | L/R | Hatchback FWD DWYA | | GCI61011 | Inner Joint | | 26 | 32 | 31 | 68.5 | 85 | |
| | 2021.06- | 6AT | F | L/R | Hatchback FWD DWYA | | GCI61050 | Inner Joint | | 26 | 32 | 31 | 68.5 | 89 | |
| 1.9 (47 kw) | 1999.11-2007.12 | 5MT | F | L | Saloon FWD ASY | | GDS83063 | Drive Shaft | | 36 | | 50.7 | 58.5 | 501 | |
| | 1999.11-2007.12 | 5MT | F | R | Saloon FWD ASY | | GDS61063 | Drive Shaft | | 36 | | 50.7 | 58.5 | 751 | |
| | 1999.11-2007.12 | 5MT | F | L/R | Saloon FWD ASY | For PR code:1N0,For vehicles without power steering | GCO54002 | Outer Joint | | 20 | 30 | 52 | 59.5 | 49.5 | I |
| | 1999.11-2007.12 | 5MT | F | L/R | Saloon FWD ASY | For PR code:1N2/1N4/1N5,For vehicles with power steering | GCO83027 | Outer Joint | | 36 | 30 | 50.7 | 58.5 | 47.5 | I |
| | 1999.11-2007.12 | 5MT | F | L/R | Saloon FWD ASY | For PR code:1N2/1N4/1N5;PS/MS:Powersteer | GCI83008 | Inner Joint | | | 33 | | | 32 | |
| | 1999.11-2007.12 | AT/MT | F | L/R | Saloon FWD ASY | | GCI83005 | Inner Joint | | | 33 | | | 32 | |
| | 1999.12-2008.03 | 5MT | F | L | Hatchback FWD ASY | | GDS83063 | Drive Shaft | | 36 | | 50.7 | 58.5 | 501 | |
| | 1999.12-2008.03 | 5MT | F | R | Hatchback FWD ASY | | GDS61063 | Drive Shaft | | 36 | | 50.7 | 58.5 | 751 | |
| | 1999.12-2008.03 | 5MT | F | L/R | Hatchback FWD ASY | For PR code:1N0,For vehicles without power steering | GCO54002 | Outer Joint | | 20 | 30 | 52 | 59.5 | 49.5 | I |
| | 1999.12-2008.03 | 5MT | F | L/R | Hatchback FWD ASY | For PR code:1N2/1N4/1N5,For vehicles with power steering | GCO83027 | Outer Joint | | 36 | 30 | 50.7 | 58.5 | 47.5 | I |
| | 1999.12-2008.03 | 5MT | F | L/R | Hatchback FWD ASY | For PR code:1N2/1N4/1N5;PS/MS:Powersteer | GCI83008 | Inner Joint | | | 33 | | | 32 | |
| | 1999.12-2008.03 | AT/MT | F | L/R | Hatchback FWD ASY | | GCI83005 | Inner Joint | | | 33 | | | 32 | |
| | 2000.04-2007.12 | 5MT | F | L | Estate FWD ASY | | GDS83063 | Drive Shaft | | 36 | | 50.7 | 58.5 | 501 | |
| | 2000.04-2007.12 | 5MT | F | R | Estate FWD ASY | | GDS61063 | Drive Shaft | | 36 | | 50.7 | 58.5 | 751 | |
| | 2000.04-2007.12 | 5MT | F | L/R | Estate FWD ASY | For PR code:1N0,For vehicles without power steering | GCO54002 | Outer Joint | | 20 | 30 | 52 | 59.5 | 49.5 | I |
| | 2000.04-2007.12 | 5MT | F | L/R | Estate FWD ASY | For PR code:1N2/1N4/1N5,For vehicles with power steering | GCO83027 | Outer Joint | | 36 | 30 | 50.7 | 58.5 | 47.5 | I |
| | 2000.04-2007.12 | 5MT | F | L/R | Estate FWD ASY | For PR code:1N2/1N4/1N5;PS/MS:Powersteer | GCI83008 | Inner Joint | | | 33 | | | 32 | |
| | 2000.04-2007.12 | AT/MT | F | L/R | Estate FWD ASY | | GCI83005 | Inner Joint | | | 33 | | | 32 | |
| | 2001.07-2007.12 | 5MT | F | L | Estate Van FWD ASY | | GDS83063 | Drive Shaft | | 36 | | 50.7 | 58.5 | 501 | |
| | 2001.07-2007.12 | 5MT | F | R | Estate Van FWD ASY | | GDS61063 | Drive Shaft | | 36 | | 50.7 | 58.5 | 751 | |
| | 2001.07-2007.12 | 5MT | F | L/R | Estate Van FWD ASY | For PR code:1N0,For vehicles without power steering | GCO54002 | Outer Joint | | 20 | 30 | 52 | 59.5 | 49.5 | I |
| | 2001.07-2007.12 | 5MT | F | L/R | Estate Van FWD ASY | For PR code:1N2/1N4/1N5,For vehicles with power steering | GCO83027 | Outer Joint | | 36 | 30 | 50.7 | 58.5 | 47.5 | I |
| | 2001.07-2007.12 | AT/MT | F | L/R | Estate Van FWD ASY | | GCI83005 | Inner Joint | | | 33 | | | 32 | |
| | 2001.07-2007.12 | | F | L/R | Estate Van FWD ASY | For PR code:1N2/1N4/1N5;PS/MS:Powersteer | GCI83008 | Inner Joint | | | 33 | | | 32 | |
| 1.9 (74 kw) | 2000.01-2007.12 | 5MT | F | L | Estate Van FWD ATD;AXR | | GDS61098 | Drive Shaft | | 36 | | 50.5 | 59 | 472 | |
| | 2000.01-2007.12 | 5MT | F | R | Estate Van FWD ATD;AXR | | GDS61099 | Drive Shaft | | 36 | | 50.5 | 59 | 759 | |
| | 2000.01-2007.12 | 5MT | F | L/R | Estate Van FWD ATD;AXR | | GCO83024 | Outer Joint | | 36 | 30 | 50.75 | 59 | 55.5 | I |
| | 2000.01-2007.12 | | F | L/R | Estate Van FWD ATD;AXR | | GCI61006 | Inner Joint | | | 30 | | | 57.6 | |
| | 2000.01-2007.12 | 5MT | F | L | Saloon FWD ATD;AXR | | GDS61098 | Drive Shaft | | 36 | | 50.5 | 59 | 472 | |
| | 2000.01-2007.12 | 5MT | F | R | Saloon FWD ATD;AXR | | GDS61099 | Drive Shaft | | 36 | | 50.5 | 59 | 759 | |
| | 2000.01-2007.12 | 5MT | F | L/R | Saloon FWD ATD;AXR | | GCO83024 | Outer Joint | | 36 | 30 | 50.75 | 59 | 55.5 | I |
| | 2000.01-2007.12 | MT | F | L | Saloon FWD ATD;AXR | | GCO54006 | Outer Joint | | 36 | 30 | 52 | 59 | 55.5 | I |
| | 2000.01-2007.12 | | F | L/R | Saloon FWD ATD;AXR | | GCI61006 | Inner Joint | | | 30 | | | 57.6 | |
| | 2000.01-2008.03 | 5MT | F | L | Hatchback FWD ATD;AXR | | GDS61098 | Drive Shaft | | 36 | | 50.5 | 59 | 472 | |
| | 2000.01-2008.03 | 5MT | F | R | Hatchback FWD ATD;AXR | | GDS61099 | Drive Shaft | | 36 | | 50.5 | 59 | 759 | |
| | 2000.01-2008.03 | 5MT | F | L/R | Hatchback FWD ATD;AXR | | GCO83024 | Outer Joint | | 36 | 30 | 50.75 | 59 | 55.5 | I |
| | 2000.01-2008.03 | MT | F | L | Hatchback FWD ATD;AXR | | GCO54006 | Outer Joint | | 36 | 30 | 52 | 59 | 55.5 | I |
| | 2000.01-2008.03 | | F | L/R | Hatchback FWD ATD;AXR | | GCI61006 | Inner Joint | | | 30 | | | 57.6 | |
| | 2000.04-2007.12 | 5MT | F | L | Estate FWD ATD;AXR | | GDS61098 | Drive Shaft | | 36 | | 50.5 | 59 | 472 | |

| | YEAR | TRANSM. | F/R | L/R | BODY STYLE & DRIVE TYPE & ENGINE | REMARKS | G-AP Ref. | PRODUCT | ABS | Technical Specifications A | B | C | H | L | P |
|---|---|---|---|---|---|---|---|---|---|---|---|---|---|---|---|
| **SKODA** | | | | | | | | | | | | | | | |
| **Fabia** | | | | | | | | | | | | | | | |
| 1.9 (74 kw) | 2000.04-2007.12 | 5MT | F | R | Estate FWD ATD;AXR | | GDS61099 | Drive Shaft | | 36 | | 50.5 | 59 | 759 | |
| | 2000.04-2007.12 | 5MT | F | L/R | Estate FWD ATD;AXR | | GCO83024 | Outer Joint | | 36 | 30 | 50.75 | 59 | 55.5 | I |
| | 2000.04-2007.12 | MT | F | L | Estate FWD ATD;AXR | | GCO54006 | Outer Joint | | 36 | 30 | 52 | 59 | 55.5 | I |
| | 2000.04-2007.12 | | F | L/R | Estate FWD ATD;AXR | | GCI61006 | Inner Joint | | | 30 | | | 57.6 | |
| 1.9 (77 kw) | 2007.04-2010.03 | 5MT | F | L/R | Hatchback FWD BLS;BSW | | GCO83024 | Outer Joint | | 36 | 30 | 50.75 | 59 | 55.5 | I |
| | 2007.04-2010.03 | MT | F | L | Hatchback FWD BLS;BSW | | GDS61098 | Drive Shaft | | 36 | | 50.5 | 59 | 472 | |
| | 2007.04-2010.03 | MT | F | R | Hatchback FWD BLS;BSW | | GDS61099 | Drive Shaft | | 36 | | 50.5 | 59 | 759 | |
| | 2007.04-2010.03 | MT | F | L | Hatchback FWD BLS;BSW | | GCO54006 | Outer Joint | | 36 | 30 | 52 | 59 | 55.5 | I |
| | 2007.04-2010.03 | | F | L/R | Hatchback FWD BLS;BSW | | GCI61006 | Inner Joint | | | 30 | | | 57.6 | |
| 1.9 (96 kw) | 2003.06-2008.03 | 6MT | F | L | Hatchback FWD ASZ;BLT | | GDS61204 | Drive Shaft | | 36 | | 50.5 | 75 | 461 | |
| | 2003.06-2008.03 | 6MT | F | R | Hatchback FWD ASZ;BLT | | GDS61183 | Drive Shaft | | 36 | | 50.5 | 75 | 769 | |
| | 2003.06-2008.03 | 6MT | F | L/R | Hatchback FWD ASZ;BLT | | GCO53002 | Outer Joint | | 36 | 27 | 50.75 | 75 | 65 | I |
| | 2003.06-2008.03 | 6MT | F | L/R | Hatchback FWD ASZ;BLT | with Nylon spacer and Disc circlip | GCO83041 | Outer Joint | | 36 | 27 | 50.5 | 75 | 65 | I |
| | 2003.06-2008.03 | 6MT | F | L/R | Hatchback FWD ASZ;BLT | | GCI61002 | Inner Joint | | | 28 | | | 31.8 | |
| 2.0 (85 kw) | 1999.12-2007.12 | 5MT | F | L | Saloon FWD AZL | | GDS54018 | Drive Shaft | | 36 | | 50.5 | 59 | 500 | |
| | 1999.12-2007.12 | 5MT | F | R | Saloon FWD AZL | | GDS61305 | Drive Shaft | | 36 | | 50.5 | 59 | 757 | |
| | 1999.12-2007.12 | 5MT | F | L/R | Saloon FWD AZL | | GCO83024 | Outer Joint | | 36 | 30 | 50.75 | 59 | 55.5 | I |
| | 1999.12-2007.12 | 5MT | F | L | Saloon FWD AZL | | GCI53002 | Inner Joint | | | 33 | | | 34 | |
| | 1999.12-2008.03 | 5MT | F | L | Hatchback FWD AZL | | GDS54018 | Drive Shaft | | 36 | | 50.5 | 59 | 500 | |
| | 1999.12-2008.03 | 5MT | F | R | Hatchback FWD AZL | | GDS61305 | Drive Shaft | | 36 | | 50.5 | 59 | 757 | |
| | 1999.12-2008.03 | 5MT | F | L/R | Hatchback FWD AZL | | GCO83024 | Outer Joint | | 36 | 30 | 50.75 | 59 | 55.5 | I |
| | 1999.12-2008.03 | 5MT | F | L | Hatchback FWD AZL | | GCI53002 | Inner Joint | | | 33 | | | 34 | |
| | 2000.04-2007.12 | 5MT | F | L | Estate FWD AZL | | GDS54018 | Drive Shaft | | 36 | | 50.5 | 59 | 500 | |
| | 2000.04-2007.12 | 5MT | F | R | Estate FWD AZL | | GDS61305 | Drive Shaft | | 36 | | 50.5 | 59 | 757 | |
| | 2000.04-2007.12 | 5MT | F | L/R | Estate FWD AZL | | GCO83024 | Outer Joint | | 36 | 30 | 50.75 | 59 | 55.5 | I |
| | 2000.04-2007.12 | 5MT | F | L | Estate FWD AZL | | GCI53002 | Inner Joint | | | 33 | | | 34 | |
| **Fabia Combi** | | | | | | | | | | | | | | | |
| 1.2 (63 kw) | 2010.03-2014.12 | 5MT | F | L | Estate FWD CBZA | | GDS54018 | Drive Shaft | | 36 | | 50.5 | 59 | 500 | |
| | 2010.03-2014.12 | 5MT | F | R | Estate FWD CBZA | | GDS61305 | Drive Shaft | | 36 | | 50.5 | 59 | 757 | |
| | 2010.03-2014.12 | 5MT | F | L/R | Estate FWD CBZA | | GCO83024 | Outer Joint | | 36 | 30 | 50.75 | 59 | 55.5 | I |
| | 2010.03-2014.12 | 5MT | F | L/R | Estate FWD CBZA | | GCI53002 | Inner Joint | | | 33 | | | 34 | |
| | 2010.03-2014.12 | 5MT | F | L/R | Estate FWD CBZA | | GCI82447 | Inner Joint | | | 33 | | | 34 | |
| | 2010.03-2014.12 | AT | F | L | Estate FWD CBZA | | GDS61302 | Drive Shaft | | 36 | | 50.5 | 59 | 479 | |
| | 2010.03-2014.12 | MT | F | L/R | Estate FWD CBZA | | GCI83011 | Inner Joint | | | 33 | | | 34 | |
| 1.2 (77 kw) | 2010.03-2014.12 | 5MT/7AT | F | L/R | Estate FWD CBZB | | GCO83024 | Outer Joint | | 36 | 30 | 50.75 | 59 | 55.5 | I |
| | 2010.03-2014.12 | 6MT | F | R | Estate FWD CBZB | | GDS61301 | Drive Shaft | | 36 | | 50.5 | 59 | 771 | |
| | 2010.03-2014.12 | 7DCT/5MT | F | L/R | Estate FWD CBZB | | GCI82447 | Inner Joint | | | 33 | | | 34 | |
| | 2010.03-2014.12 | AT | F | L | Estate FWD CBZB | | GDS61302 | Drive Shaft | | 36 | | 50.5 | 59 | 479 | |
| | 2010.03-2014.12 | MT | F | L | Estate FWD CBZB | | GDS54018 | Drive Shaft | | 36 | | 50.5 | 59 | 500 | |
| | 2010.03-2014.12 | MT | F | R | Estate FWD CBZB | | GDS61305 | Drive Shaft | | 36 | | 50.5 | 59 | 757 | |
| | 2010.03-2014.12 | MT | F | L/R | Estate FWD CBZB | | GCI83011 | Inner Joint | | | 33 | | | 34 | |
| 1.4 (59 kw) | 2007.10-2010.03 | 5MT | F | L | Estate FWD BMS, BNV | | GDS61098 | Drive Shaft | | 36 | | 50.5 | 59 | 472 | |
| | 2007.10-2010.03 | 5MT | F | R | Estate FWD BMS, BNV | | GDS61099 | Drive Shaft | | 36 | | 50.5 | 59 | 759 | |
| | 2007.10-2010.03 | 5MT | F | L/R | Estate FWD BMS, BNV | | GCO83024 | Outer Joint | | 36 | 30 | 50.75 | 59 | 55.5 | I |
| | 2007.10-2010.03 | MT | F | L | Estate FWD BMS, BNV | | GCO54006 | Outer Joint | | 36 | 30 | 52 | 59 | 55.5 | I |
| | 2007.10-2010.03 | | F | L/R | Estate FWD BMS, BNV | | GCI61006 | Inner Joint | | | 30 | | | 57.6 | |
| 1.4 (63 kw) | 2007.10-2014.12 | 5MT | F | L | Estate FWD BXW, CGGB | | GDS83063 | Drive Shaft | | 36 | | 50.7 | 58.5 | 501 | |
| | 2007.10-2014.12 | 5MT | F | R | Estate FWD BXW, CGGB | | GDS61063 | Drive Shaft | | 36 | | 50.7 | 58.5 | 751 | |
| | 2007.10-2014.12 | 5MT | F | L/R | Estate FWD BXW, CGGB | For Engine code:BXW | GCO83027 | Outer Joint | | 36 | 30 | 50.7 | 58.5 | 47.5 | I |
| | 2007.10-2014.12 | MT | F | L/R | Estate FWD BXW, CGGB | | GCI83008 | Inner Joint | | | 33 | | | 32 | |
| 1.6 (55 kw) | 2010.04-2014.12 | 5MT | F | R | Estate FWD CAYA | | GDS61301 | Drive Shaft | | 36 | | 50.5 | 59 | 771 | |
| | 2010.04-2014.12 | 5MT | F | L/R | Estate FWD CAYA | | GCO83024 | Outer Joint | | 36 | 30 | 50.75 | 59 | 55.5 | I |
| | 2010.04-2014.12 | MT | F | L | Estate FWD CAYA | | GDS61248 | Drive Shaft | | 36 | | 52 | 59 | 480 | |
| | 2010.04-2014.12 | MT | F | L/R | Estate FWD CAYA | | GCI82447 | Inner Joint | | | 33 | | | 34 | |
| | 2010.04-2014.12 | | F | L | Estate FWD CAYA | | GDS61302 | Drive Shaft | | 36 | | 50.5 | 59 | 479 | |
| | 2010.04-2014.12 | | F | L | Estate FWD CAYA | | GCO54006 | Outer Joint | | 36 | 30 | 52 | 59 | 55.5 | I |
| 1.6 (66 kw) | 2010.03-2014.12 | 5MT | F | R | Estate FWD CAYB | | GDS61301 | Drive Shaft | | 36 | | 50.5 | 59 | 771 | |
| | 2010.03-2014.12 | 5MT | F | L/R | Estate FWD CAYB | | GCO83024 | Outer Joint | | 36 | 30 | 50.75 | 59 | 55.5 | I |
| | 2010.03-2014.12 | MT | F | L | Estate FWD CAYB | | GDS61248 | Drive Shaft | | 36 | | 52 | 59 | 480 | |
| | 2010.03-2014.12 | MT | F | L/R | Estate FWD CAYB | | GCI82447 | Inner Joint | | | 33 | | | 34 | |
| | 2010.03-2014.12 | | F | L | Estate FWD CAYB | | GDS61302 | Drive Shaft | | 36 | | 50.5 | 59 | 479 | |
| | 2010.03-2014.12 | | F | L | Estate FWD CAYB | | GCO54006 | Outer Joint | | 36 | 30 | 52 | 59 | 55.5 | I |
| 1.6 (77 kw) | 2007.10-2014.12 | 5MT | F | L | Estate FWD BTS, CFNA | | GDS54018 | Drive Shaft | | 36 | | 50.5 | 59 | 500 | |
| | 2007.10-2014.12 | 5MT | F | L/R | Estate FWD BTS, CFNA | | GCI82447 | Inner Joint | | | 33 | | | 34 | |
| | 2007.10-2014.12 | 5MT/6AT | F | L/R | Estate FWD BTS, CFNA | Transmission:5MT;Transmission:6AT,Date to:2008.07 | GCO83024 | Outer Joint | | 36 | 30 | 50.75 | 59 | 55.5 | I |

| | YEAR | TRANSM. | F/R | L/R | BODY STYLE & DRIVE TYPE & ENGINE | REMARKS | G-AP Ref. | PRODUCT | ABS | Technical Specifications A | B | C | H | L | P |
|---|---|---|---|---|---|---|---|---|---|---|---|---|---|---|---|
| **SKODA** | | | | | | | | | | | | | | | |
| **Fabia Combi** | | | | | | | | | | | | | | | |
| 1.6 (77 kw) | 2007.10-2014.12 | 6AT | F | R | Estate FWD BTS, CFNA | AAR | GDS81524 | Drive Shaft | | 36 | 26 | 52 | 75 | 856 | |
| | 2007.10-2014.12 | 6AT | F | L/R | Estate FWD BTS, CFNA | Date from:2008.04 | GCO61074 | Outer Joint | | 36 | 30 | 52 | 75 | 55.5 | I |
| | 2007.10-2014.12 | 6AT | F | L | Estate FWD BTS, CFNA | | GCI61039 | Inner Joint | | 26 | 22 | 31 | 68.5 | 88.5 | |
| | 2007.10-2014.12 | 6AT | F | R | Estate FWD BTS, CFNA | Model:Model,Date to:2008.07 | GCI61011 | Inner Joint | | 26 | 32 | 31 | 68.5 | 85 | |
| | 2007.10-2014.12 | 6AT | F | R | Estate FWD BTS, CFNA | Model:Model,Date to:2008.07 | GCI61050 | Inner Joint | | 26 | 32 | 31 | 68.5 | 89 | |
| | 2007.10-2014.12 | AT | F | L | Estate FWD BTS, CFNA | | GDS61150 | Drive Shaft | | 36 | 26 | 52 | 75 | 557 | |
| | 2007.10-2014.12 | AT | F | R | Estate FWD BTS, CFNA | TJ | GDS61133 | Drive Shaft | | 36 | 26 | 52 | 75 | 859 | |
| | 2007.10-2014.12 | AT | F | L | Estate FWD BTS, CFNA | | GCO54006 | Outer Joint | | 36 | 30 | 52 | 59 | 55.5 | I |
| | 2007.10-2014.12 | AT | F | L/R | Estate FWD BTS, CFNA | | GCO61010 | Outer Joint | | 36 | 30 | 52 | 75 | 55.5 | I |
| | 2007.10-2014.12 | AT | F | L/R | Estate FWD BTS, CFNA | Date from:2008.04,Type:UF100 | GCO83079 | Outer Joint | | 36 | 30 | 52 | 75 | 55.5 | I |
| | 2007.10-2014.12 | MT | F | R | Estate FWD BTS, CFNA | | GDS61063 | Drive Shaft | | 36 | | 50.7 | 58.5 | 751 | |
| | 2007.10-2014.12 | MT | F | R | Estate FWD BTS, CFNA | | GDS61305 | Drive Shaft | | 36 | | 50.5 | 59 | 757 | |
| | 2010.03-2014.12 | 5MT | F | R | Estate FWD CAYC | | GDS61301 | Drive Shaft | | 36 | | 50.5 | 59 | 771 | |
| | 2010.03-2014.12 | 5MT | F | L/R | Estate FWD CAYC | | GCO83024 | Outer Joint | | 36 | 30 | 50.75 | 59 | 55.5 | I |
| | 2010.03-2014.12 | MT | F | L | Estate FWD CAYC | | GDS61248 | Drive Shaft | | 36 | | 52 | 59 | 480 | |
| | 2010.03-2014.12 | MT | F | L/R | Estate FWD CAYC | | GCI82447 | Inner Joint | | | 33 | | | 34 | |
| | 2010.03-2014.12 | | F | L | Estate FWD CAYC | | GDS61302 | Drive Shaft | | 36 | | 50.5 | 59 | 479 | |
| | 2010.03-2014.12 | | F | L | Estate FWD CAYC | | GCO54006 | Outer Joint | | 36 | 30 | 52 | 59 | 55.5 | I |
| 1.9 (77 kw) | 2007.10-2010.03 | 5MT | F | L | Estate FWD BLS, BSW | | GDS61098 | Drive Shaft | | 36 | | 50.5 | 59 | 472 | |
| | 2007.10-2010.03 | 5MT | F | R | Estate FWD BLS, BSW | | GDS61099 | Drive Shaft | | 36 | | 50.5 | 59 | 759 | |
| | 2007.10-2010.03 | 5MT | F | L/R | Estate FWD BLS, BSW | | GCO83024 | Outer Joint | | 36 | 30 | 50.75 | 59 | 55.5 | I |
| | 2007.10-2010.03 | MT | F | L | Estate FWD BLS, BSW | | GCO54006 | Outer Joint | | 36 | 30 | 52 | 59 | 55.5 | I |
| | 2007.10-2010.03 | | F | L/R | Estate FWD BLS, BSW | | GCI61006 | Inner Joint | | | 30 | | | 57.6 | |
| **Favorit** | | | | | | | | | | | | | | | |
| 1.3 (50 kw) | 1992.12-1997.06 | AT/MT | F | L | Pickup FWD 781.13650, 136 I | | GDS54001 | Drive Shaft | | 22 | 22 | 45 | 82 | 599 | |
| | 1992.12-1997.06 | MT | F | R | Pickup FWD 781.13650, 136 I | Date To:1996.10;Type:Pick Up (136) | GDS54002 | Drive Shaft | | 22 | 22 | 45 | 82 | 861 | |
| | 1992.12-1997.06 | MT | F | L/R | Pickup FWD 781.13650, 136 I | Date To:1996.10;Type:Pick Up (136) | GCO54001 | Outer Joint | | 22 | 22 | 45 | 82 | 53.5 | I |
| | 1992.12-1997.06 | MT | F | L | Pickup FWD 781.13650, 136 I | Date to:1996.10 | GCI54002 | Inner Joint | | 22 | 22 | 40 | 60.2 | 94.5 | |
| | 1992.12-1997.06 | MT | F | | Pickup FWD 781.13650, 136 I | | GCI54003 | Inner Joint | | 22 | 30 | 40 | 60.2 | 94.5 | |
| **Felicia** | | | | | | | | | | | | | | | |
| 1.3 (40 kw) | 1994.10-2001.06 | 5MT | F | L/R | Hatchback FWD 135/135I/AMG | Teeth:30,Without differential lock,Date to:1998.09 | GCI54003 | Inner Joint | | 22 | 30 | 40 | 60.2 | 94.5 | |
| | 1994.10-2001.06 | AT/MT/5MT | F | L | Hatchback FWD 135/135I/AMG | | GDS54001 | Drive Shaft | | 22 | 22 | 45 | 82 | 599 | |
| | 1994.10-2001.06 | MT | F | L | Hatchback FWD 135/135I/AMG | | GCI54002 | Inner Joint | | 22 | 22 | 40 | 60.2 | 94.5 | |
| | 1994.10-2001.06 | MT/5MT | F | R | Hatchback FWD 135/135I/AMG | | GDS54002 | Drive Shaft | | 22 | 22 | 45 | 82 | 861 | |
| | 1994.10-2001.06 | MT/5MT | F | L/R | Hatchback FWD 135/135I/AMG | | GCO54001 | Outer Joint | | 22 | 22 | 45 | 82 | 53.5 | I |
| | 1994.10-2001.06 | | F | L/R | Hatchback FWD 135/135I/AMG | | GCI54003 | Inner Joint | | 22 | 30 | 40 | 60.2 | 94.5 | |
| 1.3 (43 kw) | 1994.10-2001.06 | 5MT | F | L | Hatchback FWD 135/AMJ | | GDS54001 | Drive Shaft | | 22 | 22 | 45 | 82 | 599 | |
| | 1994.10-2001.06 | 5MT | F | R | Hatchback FWD 135/AMJ | | GDS54002 | Drive Shaft | | 22 | 22 | 45 | 82 | 861 | |
| | 1994.10-2001.06 | 5MT | F | L/R | Hatchback FWD 135/AMJ | | GCO54001 | Outer Joint | | 22 | 22 | 45 | 82 | 53.5 | I |
| | 1994.10-2001.06 | 5MT | F | L/R | Hatchback FWD 135/AMJ | Teeth:30,Without differential lock,Date to:1998.09 | GCI54003 | Inner Joint | | 22 | 30 | 40 | 60.2 | 94.5 | |
| | 1994.10-2001.06 | AT/MT/5MT | F | L | Hatchback FWD 135/AMJ | | GDS54001 | Drive Shaft | | 22 | 22 | 45 | 82 | 599 | |
| | 1994.10-2001.06 | MT | F | L | Hatchback FWD 135/AMJ | | GCI54002 | Inner Joint | | 22 | 22 | 40 | 60.2 | 94.5 | |
| | 1994.10-2001.06 | MT/5MT | F | R | Hatchback FWD 135/AMJ | | GDS54002 | Drive Shaft | | 22 | 22 | 45 | 82 | 861 | |
| | 1994.10-2001.06 | MT/5MT | F | L/R | Hatchback FWD 135/AMJ | | GCO54001 | Outer Joint | | 22 | 22 | 45 | 82 | 53.5 | I |
| | 1994.10-2001.06 | | F | L/R | Hatchback FWD 135/AMJ | | GCI54003 | Inner Joint | | 22 | 30 | 40 | 60.2 | 94.5 | |
| 1.3 (50 kw) | 1994.10-2001.08 | 5MT | F | L | Hatchback FWD 136B/AMH | | GDS54001 | Drive Shaft | | 22 | 22 | 45 | 82 | 599 | |
| | 1994.10-2001.08 | 5MT | F | R | Hatchback FWD 136B/AMH | | GDS54002 | Drive Shaft | | 22 | 22 | 45 | 82 | 861 | |
| | 1994.10-2001.08 | 5MT | F | L/R | Hatchback FWD 136B/AMH | | GCO54001 | Outer Joint | | 22 | 22 | 45 | 82 | 53.5 | I |
| | 1994.10-2001.08 | 5MT | F | L | Hatchback FWD 136B/AMH | | GCI54002 | Inner Joint | | 22 | 22 | 40 | 60.2 | 94.5 | |
| | 1994.10-2001.08 | 5MT | F | L/R | Hatchback FWD 136B/AMH | | GCI54003 | Inner Joint | | 22 | 30 | 40 | 60.2 | 94.5 | |
| 1.6 (55 kw) | 1995.08-2001.06 | 5MT | F | L/R | Hatchback FWD AEE | Teeth:30,Without differential lock,Date to:1998.09 | GCI54003 | Inner Joint | | 22 | 30 | 40 | 60.2 | 94.5 | |
| | 1995.08-2001.06 | AT/MT/5MT | F | L | Hatchback FWD AEE | | GDS54001 | Drive Shaft | | 22 | 22 | 45 | 82 | 599 | |
| | 1995.08-2001.06 | MT | F | L | Hatchback FWD AEE | | GCI54002 | Inner Joint | | 22 | 22 | 40 | 60.2 | 94.5 | |
| | 1995.08-2001.06 | MT/5MT | F | R | Hatchback FWD AEE | | GDS54002 | Drive Shaft | | 22 | 22 | 45 | 82 | 861 | |
| | 1995.08-2001.06 | MT/5MT | F | L/R | Hatchback FWD AEE | | GCO54001 | Outer Joint | | 22 | 22 | 45 | 82 | 53.5 | I |
| | 1995.08-2001.06 | | F | L/R | Hatchback FWD AEE | | GCI54003 | Inner Joint | | 22 | 30 | 40 | 60.2 | 94.5 | |
| 1.9 (47 kw) | 1995.10-2001.06 | 5MT | F | L/R | Hatchback FWD AEF | Teeth:30,Without differential lock,Date to:1998.09 | GCI54003 | Inner Joint | | 22 | 30 | 40 | 60.2 | 94.5 | |
| | 1995.10-2001.06 | AT/MT/5MT | F | L | Hatchback FWD AEF | | GDS54001 | Drive Shaft | | 22 | 22 | 45 | 82 | 599 | |
| | 1995.10-2001.06 | MT | F | L | Hatchback FWD AEF | | GCI54002 | Inner Joint | | 22 | 22 | 40 | 60.2 | 94.5 | |
| | 1995.10-2001.06 | MT/5MT | F | R | Hatchback FWD AEF | | GDS54002 | Drive Shaft | | 22 | 22 | 45 | 82 | 861 | |
| | 1995.10-2001.06 | MT/5MT | F | L/R | Hatchback FWD AEF | | GCO54001 | Outer Joint | | 22 | 22 | 45 | 82 | 53.5 | I |
| | 1995.10-2001.06 | | F | L/R | Hatchback FWD AEF | | GCI54003 | Inner Joint | | 22 | 30 | 40 | 60.2 | 94.5 | |
| **Felicia Cube Van** | | | | | | | | | | | | | | | |
| 1.9 (47 kw) | 1997.03-2001.12 | 5MT | F | L | Estate Van FWD AEF | | GDS54001 | Drive Shaft | | 22 | 22 | 45 | 82 | 599 | |
| | 1997.03-2001.12 | 5MT | F | R | Estate Van FWD AEF | | GDS54002 | Drive Shaft | | 22 | 22 | 45 | 82 | 861 | |

| | YEAR | TRANSM. | F/R | L/R | BODY STYLE & DRIVE TYPE & ENGINE | REMARKS | G-AP Ref. | PRODUCT | ABS | Technical Specifications A | B | C | H | L | P |
|---|---|---|---|---|---|---|---|---|---|---|---|---|---|---|---|
| **SKODA** | | | | | | | | | | | | | | | |
| **Felicia Cube Van** | | | | | | | | | | | | | | | |
| 1.9 (47 kw) | 1997.03-2001.12 | 5MT | F | L/R | Estate Van FWD AEF | | GCO54001 | Outer Joint | | 22 | 22 | 45 | 82 | 53.5 | I |
| | 1997.03-2001.12 | 5MT | F | L/R | Estate Van FWD AEF | | GCI54003 | Inner Joint | | 22 | 30 | 40 | 60.2 | 94.5 | |
| **Felicia Estate/Combi** | | | | | | | | | | | | | | | |
| 1.3 (40 kw) | 1995.08-2001.08 | 5MT | F | L | Estate FWD 135/AMG | | GDS54001 | Drive Shaft | | 22 | 22 | 45 | 82 | 599 | |
| | 1995.08-2001.08 | 5MT | F | R | Estate FWD 135/AMG | | GDS54002 | Drive Shaft | | 22 | 22 | 45 | 82 | 861 | |
| | 1995.08-2001.08 | 5MT | F | L/R | Estate FWD 135/AMG | | GCO54001 | Outer Joint | | 22 | 22 | 45 | 82 | 53.5 | I |
| | 1995.08-2001.08 | 5MT | F | L/R | Estate FWD 135/AMG | | GCI54003 | Inner Joint | | 22 | 30 | 40 | 60.2 | 94.5 | |
| | 1995.08-2001.08 | MT | F | L | Estate FWD 135/AMG | | GCI54002 | Inner Joint | | 22 | 22 | 40 | 60.2 | 94.5 | |
| 1.3 (43 kw) | 1995.08-2001.08 | 5MT | F | L | Estate FWD 135/AMJ | | GDS54001 | Drive Shaft | | 22 | 22 | 45 | 82 | 599 | |
| | 1995.08-2001.08 | 5MT | F | R | Estate FWD 135/AMJ | | GDS54002 | Drive Shaft | | 22 | 22 | 45 | 82 | 861 | |
| | 1995.08-2001.08 | 5MT | F | L/R | Estate FWD 135/AMJ | | GCO54001 | Outer Joint | | 22 | 22 | 45 | 82 | 53.5 | I |
| | 1995.08-2001.08 | 5MT | F | L/R | Estate FWD 135/AMJ | | GCI54003 | Inner Joint | | 22 | 30 | 40 | 60.2 | 94.5 | |
| | 1995.08-2001.08 | MT | F | L | Estate FWD 135/AMJ | | GCI54002 | Inner Joint | | 22 | 22 | 40 | 60.2 | 94.5 | |
| 1.3 (50 kw) | 1995.08-2001.06 | 5MT | F | L/R | Estate FWD 136I/781136B/781136M/AMH | Teeth:30,Without differential lock,Date to:1998.09 | GCI54003 | Inner Joint | | 22 | 30 | 40 | 60.2 | 94.5 | |
| | 1995.08-2001.06 | AT/MT/5MT | F | L | Estate FWD 136I/781136B/781136M/AMH | | GDS54001 | Drive Shaft | | 22 | 22 | 45 | 82 | 599 | |
| | 1995.08-2001.06 | MT | F | L | Estate FWD 136I/781136B/781136M/AMH | | GCI54002 | Inner Joint | | 22 | 22 | 40 | 60.2 | 94.5 | |
| | 1995.08-2001.06 | MT/5MT | F | R | Estate FWD 136I/781136B/781136M/AMH | | GDS54002 | Drive Shaft | | 22 | 22 | 45 | 82 | 861 | |
| | 1995.08-2001.06 | MT/5MT | F | L/R | Estate FWD 136I/781136B/781136M/AMH | | GCO54001 | Outer Joint | | 22 | 22 | 45 | 82 | 53.5 | I |
| | 1995.08-2001.06 | | F | L/R | Estate FWD 136I/781136B/781136M/AMH | | GCI54003 | Inner Joint | | 22 | 30 | 40 | 60.2 | 94.5 | |
| 1.6 (55 kw) | 1995.08-2001.06 | 5MT | F | L/R | Estate FWD AEE | Teeth:30,Without differential lock,Date to:1998.09 | GCI54003 | Inner Joint | | 22 | 30 | 40 | 60.2 | 94.5 | |
| | 1995.08-2001.06 | AT/MT | F | L | Estate FWD AEE | | GDS54001 | Drive Shaft | | 22 | 22 | 45 | 82 | 599 | |
| | 1995.08-2001.06 | MT | F | R | Estate FWD AEE | | GDS54002 | Drive Shaft | | 22 | 22 | 45 | 82 | 861 | |
| | 1995.08-2001.06 | MT | F | L | Estate FWD AEE | | GCI54002 | Inner Joint | | 22 | 22 | 40 | 60.2 | 94.5 | |
| | 1995.08-2001.06 | MT/5MT | F | L/R | Estate FWD AEE | | GCO54001 | Outer Joint | | 22 | 22 | 45 | 82 | 53.5 | I |
| | 1995.08-2001.06 | | F | L/R | Estate FWD AEE | | GCI54003 | Inner Joint | | 22 | 30 | 40 | 60.2 | 94.5 | |
| 1.9 (47 kw) | 1995.10-2001.06 | 5MT | F | L/R | Estate FWD AEF | Teeth:30,Without differential lock,Date to:1998.09 | GCI54003 | Inner Joint | | 22 | 30 | 40 | 60.2 | 94.5 | |
| | 1995.10-2001.06 | AT/MT/5MT | F | L | Estate FWD AEF | | GDS54001 | Drive Shaft | | 22 | 22 | 45 | 82 | 599 | |
| | 1995.10-2001.06 | MT | F | L | Estate FWD AEF | | GCI54002 | Inner Joint | | 22 | 22 | 40 | 60.2 | 94.5 | |
| | 1995.10-2001.06 | MT/5MT | F | R | Estate FWD AEF | | GDS54002 | Drive Shaft | | 22 | 22 | 45 | 82 | 861 | |
| | 1995.10-2001.06 | MT/5MT | F | L/R | Estate FWD AEF | | GCO54001 | Outer Joint | | 22 | 22 | 45 | 82 | 53.5 | I |
| | 1995.10-2001.06 | | F | L/R | Estate FWD AEF | | GCI54003 | Inner Joint | | 22 | 30 | 40 | 60.2 | 94.5 | |
| **Felicia Pick Up** | | | | | | | | | | | | | | | |
| 1.3 (40 kw) | 1995.10-2000.10 | 5MT | F | L | Pickup FWD 135I/AMG | | GDS54001 | Drive Shaft | | 22 | 22 | 45 | 82 | 599 | |
| | 1995.10-2000.10 | 5MT | F | R | Pickup FWD 135I/AMG | | GDS54002 | Drive Shaft | | 22 | 22 | 45 | 82 | 861 | |
| | 1995.10-2000.10 | 5MT | F | L/R | Pickup FWD 135I/AMG | | GCO54001 | Outer Joint | | 22 | 22 | 45 | 82 | 53.5 | I |
| | 1995.10-2000.10 | 5MT | F | L/R | Pickup FWD 135I/AMG | | GCI54003 | Inner Joint | | 22 | 30 | 40 | 60.2 | 94.5 | |
| | 1995.10-2000.10 | MT | F | L | Pickup FWD 135I/AMG | Date to:2000.10 | GCI54002 | Inner Joint | | 22 | 22 | 40 | 60.2 | 94.5 | |
| 1.3 (50 kw) | 1995.10-2001.03 | 5MT | F | L | Pickup FWD 136I/AMH | | GDS54001 | Drive Shaft | | 22 | 22 | 45 | 82 | 599 | |
| | 1995.10-2001.03 | 5MT | F | R | Pickup FWD 136I/AMH | | GDS54002 | Drive Shaft | | 22 | 22 | 45 | 82 | 861 | |
| | 1995.10-2001.03 | 5MT | F | L/R | Pickup FWD 136I/AMH | | GCO54001 | Outer Joint | | 22 | 22 | 45 | 82 | 53.5 | I |
| | 1995.10-2001.03 | 5MT | F | L/R | Pickup FWD 136I/AMH | | GCI54003 | Inner Joint | | 22 | 30 | 40 | 60.2 | 94.5 | |
| | 1995.10-2001.03 | MT | F | L | Pickup FWD 136I/AMH | Date to:2001.03 | GCI54002 | Inner Joint | | 22 | 22 | 40 | 60.2 | 94.5 | |
| 1.6 (55 kw) | 1996.08-2001.03 | 5MT | F | L | Pickup FWD AEE | | GDS54001 | Drive Shaft | | 22 | 22 | 45 | 82 | 599 | |
| | 1996.08-2001.03 | 5MT | F | R | Pickup FWD AEE | | GDS54002 | Drive Shaft | | 22 | 22 | 45 | 82 | 861 | |
| | 1996.08-2001.03 | 5MT | F | L/R | Pickup FWD AEE | | GCO54001 | Outer Joint | | 22 | 22 | 45 | 82 | 53.5 | I |
| | 1996.08-2001.03 | 5MT | F | L/R | Pickup FWD AEE | | GCI54003 | Inner Joint | | 22 | 30 | 40 | 60.2 | 94.5 | |
| | 1996.08-2001.03 | MT | F | L | Pickup FWD AEE | Date to:2001.03 | GCI54002 | Inner Joint | | 22 | 22 | 40 | 60.2 | 94.5 | |
| 1.9 (47 kw) | 1996.08-2002.04 | 5MT | F | L | Pickup FWD AEF | | GDS54001 | Drive Shaft | | 22 | 22 | 45 | 82 | 599 | |
| | 1996.08-2002.04 | 5MT | F | R | Pickup FWD AEF | | GDS54002 | Drive Shaft | | 22 | 22 | 45 | 82 | 861 | |
| | 1996.08-2002.04 | 5MT | F | L/R | Pickup FWD AEF | | GCO54001 | Outer Joint | | 22 | 22 | 45 | 82 | 53.5 | I |
| | 1996.08-2002.04 | 5MT | F | L/R | Pickup FWD AEF | | GCI54003 | Inner Joint | | 22 | 30 | 40 | 60.2 | 94.5 | |
| | 1996.08-2002.04 | MT | F | L | Pickup FWD AEF | | GCI54002 | Inner Joint | | 22 | 22 | 40 | 60.2 | 94.5 | |
| **Felicia Van** | | | | | | | | | | | | | | | |
| 1.3 (43 kw) | 1995.11-2000.11 | 5MT | F | L | Estate Van FWD 135/AMJ | | GDS54001 | Drive Shaft | | 22 | 22 | 45 | 82 | 599 | |
| | 1995.11-2000.11 | 5MT | F | R | Estate Van FWD 135/AMJ | | GDS54002 | Drive Shaft | | 22 | 22 | 45 | 82 | 861 | |
| | 1995.11-2000.11 | 5MT | F | L/R | Estate Van FWD 135/AMJ | | GCO54001 | Outer Joint | | 22 | 22 | 45 | 82 | 53.5 | I |
| | 1995.11-2000.11 | 5MT | F | L/R | Estate Van FWD 135/AMJ | | GCI54003 | Inner Joint | | 22 | 30 | 40 | 60.2 | 94.5 | |
| **Kamiq** | | | | | | | | | | | | | | | |
| 1.0 (66 kw) | 2019.11- | 6MT | F | L | SUV FWD DBYA | | GDS84558 | Drive Shaft | | 36 | | 52 | 64.5 | 496 | |
| | 2019.11- | 6MT | F | R | SUV FWD DBYA | | GDS84562 | Drive Shaft | | 36 | | 52 | 64.5 | 799 | |
| | 2019.11- | 6MT | F | L/R | SUV FWD DBYA | | GCO81744 | Outer Joint | | 36 | 30 | 52 | 64.5 | 55.5 | M |
| | 2019.11- | 6MT | F | L/R | SUV FWD DBYA | | GCI81690 | Inner Joint | | | 30 | | | 89 | |
| 1.0 (70 kw) | 2019.07- | 5MT | F | L | SUV FWD DKLA;DLAC;DUSB | | GDS84011 | Drive Shaft | | 36 | 33 | 52 | 64.5 | 620 | |
| | 2019.07- | 5MT | F | R | SUV FWD DKLA;DLAC;DUSB | | GDS57823 | Drive Shaft | | 36 | 33 | 52 | 64.5 | 900 | |
| | 2019.07- | 5MT | F | L/R | SUV FWD DKLA;DLAC;DUSB | | GCO81744 | Outer Joint | | 36 | 30 | 52 | 64.5 | 55.5 | M |

| | YEAR | TRANSM. | F/R | L/R | BODY STYLE & DRIVE TYPE & ENGINE | REMARKS | G-AP Ref. | PRODUCT | ABS | Technical Specifications A | B | C | H | L | P |
|---|---|---|---|---|---|---|---|---|---|---|---|---|---|---|---|
| **SKODA** | | | | | | | | | | | | | | | |
| **Kamiq** | | | | | | | | | | | | | | | |
| 1.0 (70 kw) | 2019.07- | 5MT | F | L/R | SUV FWD DKLA;DLAC;DUSB | | GCI82449 | Inner Joint | | 33 | 30 | 39.9 | 58.5 | 105 | |
| 1.0 (81 kw) | 2020.08- | 6MT | F | L | SUV FWD DLAA | | GDS84563 | Drive Shaft | | 36 | | 52 | 64.5 | 506 | |
| | 2020.08- | 6MT | F | R | SUV FWD DLAA | | GDS82233 | Drive Shaft | | 36 | | 52 | 64.5 | 778 | |
| | 2020.08- | 6MT | F | R | SUV FWD DLAA | | GCO81744 | Outer Joint | | 36 | 30 | 52 | 64.5 | 55.5 | M |
| | 2020.08- | 6MT | F | R | SUV FWD DLAA | | GCI81690 | Inner Joint | | | 30 | | | 89 | |
| | 2020.08- | 6MT/7DCT | F | L | SUV FWD DLAA | | GCO82548 | Outer Joint | | 36 | 27 | 52 | 64.5 | 65 | M |
| | 2020.08- | 7DCT | F | R | SUV FWD DLAA | | GDS57885 | Drive Shaft | | 36 | | 52 | 64.5 | 765 | |
| | 2020.08- | 7DCT | F | R | SUV FWD DLAA | | GCO81743 | Outer Joint | | 36 | 33 | 52 | 64.5 | 59 | I |
| | 2020.08- | 7DCT | F | R | SUV FWD DLAA | | GCI81689 | Inner Joint | | | 32 | | | 89 | |
| 1.0 (85 kw) | 2019.07- | 6MT | F | L | SUV FWD DKRF;DKJA;DXUA;DUSA | | GDS84558 | Drive Shaft | | 36 | | 52 | 64.5 | 496 | |
| | 2019.07- | 6MT | F | R | SUV FWD DKRF;DKJA;DXUA;DUSA | | GDS84562 | Drive Shaft | | 36 | | 52 | 64.5 | 799 | |
| | 2019.07- | 6MT | F | L/R | SUV FWD DKRF;DKJA;DXUA;DUSA | | GCO81744 | Outer Joint | | 36 | 30 | 52 | 64.5 | 55.5 | M |
| | 2019.07- | 6MT | F | L/R | SUV FWD DKRF;DKJA;DXUA;DUSA | | GCI82449 | Inner Joint | | 33 | 30 | 39.9 | 58.5 | 105 | |
| | 2019.07- | 7DCT | F | L | SUV FWD DKRF;DKJA;DXUA;DUSA | | GDS82232 | Drive Shaft | | 36 | | 52 | 64.5 | 500 | |
| | 2019.07- | 7DCT | F | R | SUV FWD DKRF;DKJA;DXUA;DUSA | | GDS82233 | Drive Shaft | | 36 | | 52 | 64.5 | 778 | |
| | 2019.07- | 7DCT | F | L | SUV FWD DKRF;DKJA;DXUA;DUSA | | GCO81743 | Outer Joint | | 36 | 33 | 52 | 64.5 | 59 | I |
| | 2019.07- | 7DCT | F | R | SUV FWD DKRF;DKJA;DXUA;DUSA | | GCO81744 | Outer Joint | | 36 | 30 | 52 | 64.5 | 55.5 | M |
| | 2019.07- | 7DCT | F | L | SUV FWD DKRF;DKJA;DXUA;DUSA | | GCI81689 | Inner Joint | | | 32 | | | 89 | |
| | 2019.07- | 7DCT | F | R | SUV FWD DKRF;DKJA;DXUA;DUSA | | GCI81690 | Inner Joint | | | 30 | | | 89 | |
| 1.5 (110 kw) | 2019.07- | 6MT | F | L | SUV FWD DADA;DPCA;DXDB | | GDS58319 | Drive Shaft | | 36 | | 52 | 64.5 | 526 | |
| | 2019.07- | 6MT | F | L | SUV FWD DADA;DPCA;DXDB | | GCI61069 | Inner Joint | | | 28 | | | 32 | |
| | 2019.07- | 6MT | F | L/R | SUV FWD DADA;DPCA;DXDB | | GCI83016 | Inner Joint | | | 28 | | | 32 | |
| | 2019.07- | 7AT/6MT | F | L/R | SUV FWD DADA;DPCA;DXDB | | GCO82548 | Outer Joint | | 36 | 27 | 52 | 64.5 | 65 | M |
| 1.6 (70 kw) | 2019.09- | 5MT | F | L | SUV FWD DGTD | | GDS84235 | Drive Shaft | | 36 | | 52 | 64.5 | 523 | |
| | 2019.09- | 5MT | F | R | SUV FWD DGTD | | GDS84315 | Drive Shaft | | 36 | | 52 | 64.5 | 825 | |
| | 2019.09- | 5MT | F | L | SUV FWD DGTD | | GCO82548 | Outer Joint | | 36 | 27 | 52 | 64.5 | 65 | M |
| | 2019.09- | 5MT | F | L | SUV FWD DGTD | | GCI82456 | Inner Joint | | | 28 | | | 32 | |
| | 2019.09- | 5MT | F | R | SUV FWD DGTD | | GCI82447 | Inner Joint | | | 33 | | | 34 | |
| 1.6 (81 kw) | 2019.07- | 5MT | F | L/R | SUV FWD CWVA;DWYA | | GCO83024 | Outer Joint | | 36 | 30 | 50.75 | 59 | 55.5 | I |
| | 2019.07- | 5MT | F | L/R | SUV FWD CWVA;DWYA | | GCI82447 | Inner Joint | | | 33 | | | 34 | |
| | 2019.07- | 6AT | F | L | SUV FWD CWVA;DWYA | | GDS84613 | Drive Shaft | | 36 | 26 | 52 | 64.5 | 597 | |
| | 2019.07- | 6AT | F | R | SUV FWD CWVA;DWYA | | GDS84612 | Drive Shaft | | 36 | 26 | 52 | 64.5 | 891 | |
| | 2019.07- | 6AT | F | L | SUV FWD CWVA;DWYA | | GCO81743 | Outer Joint | | 36 | 33 | 52 | 64.5 | 59 | I |
| | 2019.07- | 6AT | F | L/R | SUV FWD CWVA;DWYA | | GCO81744 | Outer Joint | | 36 | 30 | 52 | 64.5 | 55.5 | M |
| | 2019.07- | 6AT | F | L/R | SUV FWD CWVA;DWYA | | GCI61011 | Inner Joint | | 26 | 32 | 31 | 68.5 | 85 | |
| | 2019.07- | 6AT | F | L/R | SUV FWD CWVA;DWYA | | GCI61050 | Inner Joint | | 26 | 32 | 31 | 68.5 | 89 | |
| 1.6 (85 kw) | 2019.07- | 6MT | F | L | SUV FWD DGTA | | GDS84181 | Drive Shaft | | 36 | | 52 | 64.5 | 532 | |
| | 2019.07- | 6MT | F | R | SUV FWD DGTA | | GDS84315 | Drive Shaft | | 36 | | 52 | 64.5 | 825 | |
| | 2019.07- | 6MT | F | L/R | SUV FWD DGTA | | GCO81743 | Outer Joint | | 36 | 33 | 52 | 64.5 | 59 | I |
| | 2019.07- | 6MT | F | L/R | SUV FWD DGTA | | GCI82447 | Inner Joint | | | 33 | | | 34 | |
| | 2019.07- | 6MT | F | L/R | SUV FWD DGTA | | GCI83011 | Inner Joint | | | 33 | | | 34 | |
| | 2019.07- | 7DCT | F | L | SUV FWD DGTA | | GDS84235 | Drive Shaft | | 36 | | 52 | 64.5 | 523 | |
| | 2019.07- | 7DCT | F | R | SUV FWD DGTA | | GDS84337 | Drive Shaft | | 36 | | 52 | 64.5 | 812 | |
| | 2019.07- | 7DCT | F | R | SUV FWD DGTA | | GCO81743 | Outer Joint | | 36 | 33 | 52 | 64.5 | 59 | I |
| | 2019.07- | 7DCT | F | L | SUV FWD DGTA | | GCI83016 | Inner Joint | | | 28 | | | 32 | |
| **Karoq** | | | | | | | | | | | | | | | |
| 1.0 (81 kw) | 2020.09- | 6MT | F | L | SUV FWD DLAA | | GDS84505 | Drive Shaft | | 36 | | 59.5 | 40 | 506 | |
| | 2020.09- | 6MT | F | R | SUV FWD DLAA | | GDS84501 | Drive Shaft | | 36 | | 59.5 | 40 | 785 | |
| | 2020.09- | 6MT | F | L/R | SUV FWD DLAA | | GCO83101 | Outer Joint | | 36 | 27 | 59.5 | 40 | 65 | M |
| | 2020.09- | 6MT | F | L/R | SUV FWD DLAA | | GCI81689 | Inner Joint | | | 32 | | | 89 | |
| 1.0 (85 kw) | 2017.07- | 6MT | F | L | SUV FWD CHZJ;DKRF;DUSA | | GDS84505 | Drive Shaft | | 36 | | 59.5 | 40 | 506 | |
| | 2017.07- | 6MT | F | R | SUV FWD CHZJ;DKRF;DUSA | | GDS84504 | Drive Shaft | | 36 | | 59.5 | 40 | 808 | |
| | 2017.07- | 6MT/7DCT | F | L/R | SUV FWD CHZJ;DKRF;DUSA | | GCO83101 | Outer Joint | | 36 | 27 | 59.5 | 40 | 65 | M |
| | 2017.07- | 6MT/7DCT | F | L/R | SUV FWD CHZJ;DKRF;DUSA | | GCI81689 | Inner Joint | | | 32 | | | 89 | |
| | 2017.07- | 7DCT | F | L | SUV FWD CHZJ;DKRF;DUSA | | GDS84502 | Drive Shaft | | 36 | | 59.5 | 40 | 500 | |
| | 2017.07- | 7DCT | F | R | SUV FWD CHZJ;DKRF;DUSA | | GDS84501 | Drive Shaft | | 36 | | 59.5 | 40 | 785 | |
| 1.4 (110 kw) | 2019.09- | 6AT | F | L/R | SUV 4WD CZEA | | GCI83016 | Inner Joint | | | 28 | | | 32 | |
| | 2019.09- | 6MT/6DCT | F | L | SUV 4WD CZEA | | GDS81896 | Drive Shaft | | 36 | | 59.5 | 40 | 500 | |
| | 2019.09- | 7DCT | F | R | SUV 4WD CZEA | | GDS82352 | Drive Shaft | | 36 | | 59.5 | 40 | 614 | |
| | 2019.09- | 7DCT | F | R | SUV 4WD CZEA | | GCO83101 | Outer Joint | | 36 | 27 | 59.5 | 40 | 65 | M |
| | 2019.09- | 7DCT | F | R | SUV 4WD CZEA | | GCI61069 | Inner Joint | | | 28 | | | 32 | |
| | 2019.09- | 6AT | R | L/R | SUV 4WD CZEA | | GCI35026 | Outer Joint | | 36 | 33 | 59.5 | 40 | 61 | |
| | 2019.09- | 6AT | R | L/R | SUV 4WD CZEA | | GCI61103 | Inner Joint | | | 33 | | | 32 | |
| | 2019.09- | 6AT | R | L/R | SUV 4WD CZEA | | GCI83008 | Inner Joint | | | 33 | | | 32 | |
| | 2019.09- | 6DCT | R | L | SUV 4WD CZEA | | GDS61331 | Drive Shaft | | 36 | | 59.5 | 40 | 606 | |

| | YEAR | TRANSM. | F/R | L/R | BODY STYLE & DRIVE TYPE & ENGINE | REMARKS | G-AP Ref. | PRODUCT | ABS | Technical Specifications A | B | C | H | L | P |
|---|---|---|---|---|---|---|---|---|---|---|---|---|---|---|---|
| **SKODA** **Karoq** | | | | | | | | | | | | | | | |
| 1.4 (110 kw) | 2019.09- | 6DCT | R | R | SUV 4WD CZEA | | GDS61332 | Drive Shaft | | 36 | | 59.5 | 40 | 650 | |
| 1.5 (110 kw) | 2017.07- | 6MT | F | L | SUV 4WD DPCA, DADA | | GDS81896 | Drive Shaft | | 36 | | 59.5 | 40 | 500 | |
| | 2017.07- | 6MT | F | L/R | SUV 4WD DPCA, DADA | | GCI61069 | Inner Joint | | | 28 | | | 32 | |
| | 2017.07- | 6MT/7DCT | F | R | SUV 4WD DPCA, DADA | | GDS82352 | Drive Shaft | | 36 | | 59.5 | 40 | 614 | |
| | 2017.07- | 6MT/7DCT | F | L/R | SUV 4WD DPCA, DADA | | GCO83101 | Outer Joint | | 36 | 27 | 59.5 | 40 | 65 | M |
| | 2017.07- | 6MT/7DCT | F | L/R | SUV 4WD DPCA, DADA | | GCI83016 | Inner Joint | | | 28 | | | 32 | |
| | 2017.07- | 7DCT | F | L | SUV 4WD DPCA, DADA | | GDS83323 | Drive Shaft | | 36 | 37 | 59.5 | 40 | 570 | |
| | 2017.07- | 7DCT | F | R | SUV 4WD DPCA, DADA | | GCI61069 | Inner Joint | | | 28 | | | 32 | |
| | 2017.07- | 7AT/6MT | R | L | SUV 4WD DPCA, DADA | | GDS61331 | Drive Shaft | | 36 | | 59.5 | 40 | 606 | |
| | 2017.07- | 7AT/6MT | R | R | SUV 4WD DPCA, DADA | | GDS61332 | Drive Shaft | | 36 | | 59.5 | 40 | 650 | |
| | 2017.07- | 7AT/6MT | R | L/R | SUV 4WD DPCA, DADA | | GCI35026 | Outer Joint | | 36 | 33 | 59.5 | 40 | 61 | |
| | 2017.07- | 7AT/6MT | R | L/R | SUV 4WD DPCA, DADA | | GCI61103 | Inner Joint | | | 33 | | | 32 | |
| | 2017.07- | 6MT | F | L | SUV FWD DADA;DPCA;DXDB | For PR code:0ED | GDS81896 | Drive Shaft | | 36 | | 59.5 | 40 | 500 | |
| | 2017.07- | 6MT | F | R | SUV FWD DADA;DPCA;DXDB | | GDS82386 | Drive Shaft | | 36 | | 59.5 | 40 | 806 | |
| | 2017.07- | 6MT | F | R | SUV FWD DADA;DPCA;DXDB | For PR code:0ED | GDS83313 | Drive Shaft | | 36 | | 59.5 | 40 | 792 | |
| | 2017.07- | 6MT | F | L/R | SUV FWD DADA;DPCA;DXDB | | GCI83016 | Inner Joint | | | 28 | | | 32 | |
| | 2017.07- | 6MT/7DCT | F | L | SUV FWD DADA;DPCA;DXDB | Transmission:6MT,For PR code:0EJ/0ED;Transmission:7DCT | GDS82387 | Drive Shaft | | 36 | | 59.5 | 40 | 523 | |
| | 2017.07- | 6MT/7DCT | F | L/R | SUV FWD DADA;DPCA;DXDB | | GCO83101 | Outer Joint | | 36 | 27 | 59.5 | 40 | 65 | M |
| | 2017.07- | 7DCT | F | R | SUV FWD DADA;DPCA;DXDB | | GDS84498 | Drive Shaft | | 36 | 40 | 59.5 | 40 | 834 | |
| | 2017.07- | 7DCT | F | L | SUV FWD DADA;DPCA;DXDB | | GCI83016 | Inner Joint | | | 28 | | | 32 | |
| 1.6 (81 kw) | 2017.07- | 5MT | F | L | SUV FWD CWVA;DWYA | | GDS82391 | Drive Shaft | | 36 | | 59.5 | 40 | 528 | |
| | 2017.07- | 5MT | F | R | SUV FWD CWVA;DWYA | | GDS82390 | Drive Shaft | | 36 | | 59.5 | 40 | 830 | |
| | 2017.07- | 5MT | F | L/R | SUV FWD CWVA;DWYA | | GCO81355 | Outer Joint | | 36 | 34 | 59.5 | 40 | 59.5 | M |
| | 2017.07- | 5MT | F | L/R | SUV FWD CWVA;DWYA | | GCI81398 | Inner Joint | | | 34 | | | 34 | |
| 1.6 (85 kw) | 2017.07- | 6MT | F | R | SUV FWD DDYA;DGTE | | GDS81525 | Drive Shaft | | 36 | | 59.5 | 40 | 825 | |
| | 2017.07- | 6MT | F | R | SUV FWD DDYA;DGTE | | GCO81355 | Outer Joint | | 36 | 34 | 59.5 | 40 | 59.5 | M |
| | 2017.07- | 6MT/7DCT | F | L | SUV FWD DDYA;DGTE | | GDS61201 | Drive Shaft | | 36 | | 59.5 | 40.5 | 535 | |
| | 2017.07- | 6MT/7DCT | F | L/R | SUV FWD DDYA;DGTE | | GCI81398 | Inner Joint | | | 34 | | | 34 | |
| | 2017.07- | 7DCT | F | R | SUV FWD DDYA;DGTE | | GDS61283 | Drive Shaft | | 36 | | 59.5 | 40 | 815 | |
| | 2017.07- | 7DCT | F | R | SUV FWD DDYA;DGTE | | GCO61059 | Outer Joint | | 36 | 33 | 59.5 | 40 | 59.5 | I |
| 2.0 (85 kw) | 2020.11- | 6MT | F | L | SUV FWD DTRB;DTRD;DXRC | | GDS81896 | Drive Shaft | | 36 | | 59.5 | 40 | 500 | |
| | 2020.11- | 6MT | F | R | SUV FWD DTRB;DTRD;DXRC | | GDS61101 | Drive Shaft | | 36 | | 59.5 | 40 | 803 | |
| | 2020.11- | 6MT | F | L/R | SUV FWD DTRB;DTRD;DXRC | | GCO83101 | Outer Joint | | 36 | 27 | 59.5 | 40 | 65 | M |
| | 2020.11- | 6MT | F | L/R | SUV FWD DTRB;DTRD;DXRC | | GCI83016 | Inner Joint | | | 28 | | | 32 | |
| | 2020.11- | 7DCT | F | L | SUV FWD DTRB;DTRD;DXRC | | GDS61201 | Drive Shaft | | 36 | | 59.5 | 40.5 | 535 | |
| | 2020.11- | 7DCT | F | L/R | SUV FWD DTRB;DTRD;DXRC | | GCO81355 | Outer Joint | | 36 | 34 | 59.5 | 40 | 59.5 | M |
| | 2020.11- | 7DCT | F | L/R | SUV FWD DTRB;DTRD;DXRC | | GCI81398 | Inner Joint | | | 34 | | | 34 | |
| 2.0 (110 kw) | 2017.07- | 6MT | F | L | SUV 4WD DFFA, DXRB, DTTC | | GDS81896 | Drive Shaft | | 36 | | 59.5 | 40 | 500 | |
| | 2017.07- | 6MT | F | R | SUV 4WD DFFA, DXRB, DTTC | | GDS81889 | Drive Shaft | | 36 | | 59.5 | 40 | 614 | |
| | 2017.07- | 6MT | F | L/R | SUV 4WD DFFA, DXRB, DTTC | Model:Karoq | GCI61069 | Inner Joint | | | 28 | | | 32 | |
| | 2017.07- | 6MT | F | L/R | SUV 4WD DFFA, DXRB, DTTC | Model:Karoq | GCI83016 | Inner Joint | | | 28 | | | 32 | |
| | 2017.07- | 6MT/7DCT | F | L/R | SUV 4WD DFFA, DXRB, DTTC | | GCO83101 | Outer Joint | | 36 | 27 | 59.5 | 40 | 65 | M |
| | 2017.07- | 7DCT | F | L | SUV 4WD DFFA, DXRB, DTTC | | GDS82351 | Drive Shaft | | 36 | 37 | 59.5 | 40 | 568 | |
| | 2017.07- | 7DCT | F | R | SUV 4WD DFFA, DXRB, DTTC | | GDS61346 | Drive Shaft | | 36 | | 59.5 | 40 | 589 | |
| | 2017.07- | 7DCT | F | L | SUV 4WD DFFA, DXRB, DTTC | | GCI81158 | Inner Joint | | 37 | 34 | 34.5 | 65.5 | 83 | |
| | 2017.07- | 7DCT | F | R | SUV 4WD DFFA, DXRB, DTTC | | GCI61057 | Inner Joint | | | 34 | | | 89 | |
| | 2017.07- | 6MT/7DCT | R | L | SUV 4WD DFFA, DXRB, DTTC | | GDS61331 | Drive Shaft | | 36 | | 59.5 | 40 | 606 | |
| | 2017.07- | 6MT/7DCT | R | R | SUV 4WD DFFA, DXRB, DTTC | | GDS61332 | Drive Shaft | | 36 | | 59.5 | 40 | 650 | |
| | 2017.07- | 6MT/7DCT | R | L/R | SUV 4WD DFFA, DXRB, DTTC | | GCI35026 | Outer Joint | | 36 | 33 | 59.5 | 40 | 61 | |
| | 2017.07- | 6MT/7DCT | R | L/R | SUV 4WD DFFA, DXRB, DTTC | | GCI61103 | Inner Joint | | | 33 | | | 32 | |
| | 2017.07- | 6MT | F | L | SUV FWD DFFA;DTTA;DXRB | | GDS81896 | Drive Shaft | | 36 | | 59.5 | 40 | 500 | |
| | 2017.07- | 6MT | F | R | SUV FWD DFFA;DTTA;DXRB | | GDS61101 | Drive Shaft | | 36 | | 59.5 | 40 | 803 | |
| | 2017.07- | | F | L/R | SUV FWD DFFA;DTTA;DXRB | | GCO83101 | Outer Joint | | 36 | 27 | 59.5 | 40 | 65 | M |
| | 2017.07- | | F | L/R | SUV FWD DFFA;DTTA;DXRB | | GCI83016 | Inner Joint | | | 28 | | | 32 | |
| 2.0 (140 kw) | 2017.07- | 7DCT | F | L | SUV 4WD DFHA | | GDS82351 | Drive Shaft | | 36 | 37 | 59.5 | 40 | 568 | |
| | 2017.07- | 7DCT | F | R | SUV 4WD DFHA | | GDS61346 | Drive Shaft | | 36 | | 59.5 | 40 | 589 | |
| | 2017.07- | 7DCT | F | L/R | SUV 4WD DFHA | | GCO83101 | Outer Joint | | 36 | 27 | 59.5 | 40 | 65 | M |
| | 2017.07- | 7DCT | F | L | SUV 4WD DFHA | | GCI81158 | Inner Joint | | 37 | 34 | 34.5 | 65.5 | 83 | |
| | 2017.07- | 7DCT | F | R | SUV 4WD DFHA | | GCI61057 | Inner Joint | | | 34 | | | 89 | |
| | 2017.07- | 7DCT | R | R | SUV 4WD DFHA | | GDS61332 | Drive Shaft | | 36 | | 59.5 | 40 | 650 | |
| | 2017.07- | 7DCT | R | L/R | SUV 4WD DFHA | | GCI35026 | Outer Joint | | 36 | 33 | 59.5 | 40 | 61 | |
| | 2017.07- | 7DCT | R | L/R | SUV 4WD DFHA | | GCI61103 | Inner Joint | | | 33 | | | 32 | |
| | 2017.07- | 7DCT | R | L/R | SUV 4WD DFHA | | GCI83008 | Inner Joint | | | 33 | | | 32 | |
| | 2017.07- | AT | R | L | SUV 4WD DFHA | | GDS61331 | Drive Shaft | | 36 | | 59.5 | 40 | 606 | |
| | 2018.11- | 7AT | F | R | SUV 4WD DKZA | Wheel Hub Diam:27 | GDS81892 | Drive Shaft | | 36 | | 59.5 | 40 | 602 | |

| | YEAR | TRANSM. | F/R | L/R | BODY STYLE & DRIVE TYPE & ENGINE | REMARKS | G-AP Ref. | PRODUCT | ABS | Technical Specifications A | B | C | H | L | P |
|---|---|---|---|---|---|---|---|---|---|---|---|---|---|---|---|
| **SKODA** | | | | | | | | | | | | | | | |
| **Karoq** | | | | | | | | | | | | | | | |
| 2.0 (140 kw) | 2018.11- | 7AT | F | L | SUV 4WD DKZA | | GCI83028 | Inner Joint | | 37 | 28 | | 65.5 | 90.2 | |
| | 2018.11- | 7AT | F | R | SUV 4WD DKZA | | GCI61069 | Inner Joint | | | 28 | | | 32 | |
| | 2018.11- | 7DCT | F | L | SUV 4WD DKZA | | GDS84237 | Drive Shaft | | 36 | 37 | 59.5 | 40 | 560 | |
| | 2018.11- | 7AT | R | L | SUV 4WD DKZA | | GDS61331 | Drive Shaft | | 36 | | 59.5 | 40 | 606 | |
| | 2018.11- | 7AT | R | R | SUV 4WD DKZA | | GDS61332 | Drive Shaft | | 36 | | 59.5 | 40 | 650 | |
| | 2018.11- | 7AT | R | L/R | SUV 4WD DKZA | | GCI35026 | Outer Joint | | 36 | 33 | 59.5 | 40 | 61 | |
| | 2018.11- | 7DCT | R | L/R | SUV 4WD DKZA | | GCI61103 | Inner Joint | | | 33 | | | 32 | |
| | 2018.11- | 7DCT | R | L/R | SUV 4WD DKZA | | GCI83008 | Inner Joint | | | 33 | | | 32 | |
| | 2020.11- | 7DCT | F | L | SUV 4WD DNNA | | GDS84237 | Drive Shaft | | 36 | 37 | 59.5 | 40 | 560 | |
| | 2020.11- | 7DCT | F | R | SUV 4WD DNNA | | GDS81892 | Drive Shaft | | 36 | | 59.5 | 40 | 602 | |
| | 2020.11- | 7DCT | F | L/R | SUV 4WD DNNA | | GCO83101 | Outer Joint | | 36 | 27 | 59.5 | 40 | 65 | M |
| | 2020.11- | 7DCT | F | L | SUV 4WD DNNA | | GCI83028 | Inner Joint | | 37 | 28 | | 65.5 | 90.2 | |
| | 2020.11- | 7DCT | F | R | SUV 4WD DNNA | | GCI61069 | Inner Joint | | | 28 | | | 32 | |
| | 2020.11- | 7DCT | R | L | SUV 4WD DNNA | | GDS61331 | Drive Shaft | | 36 | | 59.5 | 40 | 606 | |
| | 2020.11- | 7DCT | R | R | SUV 4WD DNNA | | GDS61332 | Drive Shaft | | 36 | | 59.5 | 40 | 650 | |
| | 2020.11- | 7DCT | R | L/R | SUV 4WD DNNA | | GCI35026 | Outer Joint | | 36 | 33 | 59.5 | 40 | 61 | |
| | 2020.11- | 7DCT | R | L/R | SUV 4WD DNNA | | GCI61103 | Inner Joint | | | 33 | | | 32 | |
| | 2020.11- | 7DCT | R | L/R | SUV 4WD DNNA | | GCI83008 | Inner Joint | | | 33 | | | 32 | |
| **Kodiaq** | | | | | | | | | | | | | | | |
| 1.4 (92 kw) | 2016.10- | 6MT | F | L | SUV FWD CZCA;CZDB | | GDS81896 | Drive Shaft | | 36 | | 59.5 | 40 | 500 | |
| | 2016.10- | 6MT | F | R | SUV FWD CZCA;CZDB | For Engine code:CZCA | GDS61101 | Drive Shaft | | 36 | | 59.5 | 40 | 803 | |
| | 2016.10- | 6MT | F | R | SUV FWD CZCA;CZDB | For Engine code:CZDB | GDS82386 | Drive Shaft | | 36 | | 59.5 | 40 | 806 | |
| | 2016.10- | 6MT | F | L | SUV FWD CZCA;CZDB | | GCO83101 | Outer Joint | | 36 | 27 | 59.5 | 40 | 65 | M |
| | 2016.10- | 6MT | F | L | SUV FWD CZCA;CZDB | | GCI61069 | Inner Joint | | | 28 | | | 32 | |
| | 2016.10- | | F | L/R | SUV FWD CZCA;CZDB | | GCI83016 | Inner Joint | | | 28 | | | 32 | |
| 1.4 (110 kw) | 2016.10- | 6AT/6MT | F | L | SUV 4WD CZEA, CZDA | | GDS81896 | Drive Shaft | | 36 | | 59.5 | 40 | 500 | |
| | 2016.10- | 6AT/6MT | F | L/R | SUV 4WD CZEA, CZDA | | GCO83101 | Outer Joint | | 36 | 27 | 59.5 | 40 | 65 | M |
| | 2016.10- | 6AT/6MT | F | L/R | SUV 4WD CZEA, CZDA | | GCI61069 | Inner Joint | | | 28 | | | 32 | |
| | 2016.10- | 6DCT/6MT | F | R | SUV 4WD CZEA, CZDA | | GDS82352 | Drive Shaft | | 36 | | 59.5 | 40 | 614 | |
| | 2016.10- | | F | L/R | SUV 4WD CZEA, CZDA | | GCI83016 | Inner Joint | | | 28 | | | 32 | |
| | 2016.10- | 6AT/6MT | R | L | SUV 4WD CZEA, CZDA | | GDS61331 | Drive Shaft | | 36 | | 59.5 | 40 | 606 | |
| | 2016.10- | 6AT/6MT | R | R | SUV 4WD CZEA, CZDA | | GDS61332 | Drive Shaft | | 36 | | 59.5 | 40 | 650 | |
| | 2016.10- | 6AT/6MT | R | L/R | SUV 4WD CZEA, CZDA | | GCI35026 | Outer Joint | | 36 | 33 | 59.5 | 40 | 61 | |
| | 2016.10- | 6AT/6MT | R | L/R | SUV 4WD CZEA, CZDA | | GCI61103 | Inner Joint | | | 33 | | | 32 | |
| | 2016.10- | 6AT | F | L | SUV FWD CZDA;CZEA | | GDS81896 | Drive Shaft | | 36 | | 59.5 | 40 | 500 | |
| | 2016.10- | 6DCT | F | R | SUV FWD CZDA;CZEA | | GDS83313 | Drive Shaft | | 36 | | 59.5 | 40 | 792 | |
| | 2016.10- | | F | L/R | SUV FWD CZDA;CZEA | | GCO83101 | Outer Joint | | 36 | 27 | 59.5 | 40 | 65 | M |
| | 2016.10- | | F | L/R | SUV FWD CZDA;CZEA | | GCI83016 | Inner Joint | | | 28 | | | 32 | |
| | 2024.04- | 7DCT | F | L | SUV FWD DJKA | | GDS82351 | Drive Shaft | | 36 | 37 | 59.5 | 40 | 568 | |
| | 2024.04- | 7DCT | F | L | SUV FWD DJKA | | GCI81158 | Inner Joint | | 37 | 34 | 34.5 | 65.5 | 83 | |
| 1.5 (110 kw) | 2018.07- | 7DCT | F | L | SUV 4WD DADA;DPCA | | GDS83323 | Drive Shaft | | 36 | 37 | 59.5 | 40 | 570 | |
| | 2018.07- | 7DCT | F | R | SUV 4WD DADA;DPCA | | GDS82352 | Drive Shaft | | 36 | | 59.5 | 40 | 614 | |
| | 2018.07- | 7DCT | F | L/R | SUV 4WD DADA;DPCA | | GCO83101 | Outer Joint | | 36 | 27 | 59.5 | 40 | 65 | M |
| | 2018.07- | 7DCT | F | L/R | SUV 4WD DADA;DPCA | | GCI83016 | Inner Joint | | | 28 | | | 32 | |
| | 2018.07- | 7AT | R | L/R | SUV 4WD DADA;DPCA | | GCI35026 | Outer Joint | | 36 | 33 | 59.5 | 40 | 61 | |
| | 2018.07- | 7DCT | R | L | SUV 4WD DADA;DPCA | | GDS61331 | Drive Shaft | | 36 | | 59.5 | 40 | 606 | |
| | 2018.07- | 7DCT | R | R | SUV 4WD DADA;DPCA | | GDS61332 | Drive Shaft | | 36 | | 59.5 | 40 | 650 | |
| | 2018.07- | 7DCT | R | L/R | SUV 4WD DADA;DPCA | | GCI61103 | Inner Joint | | | 33 | | | 32 | |
| | 2018.07- | 7DCT | R | L/R | SUV 4WD DADA;DPCA | | GCI83008 | Inner Joint | | | 33 | | | 32 | |
| | 2018.07- | 6MT | F | L | SUV FWD DADA;DPCA | | GDS81896 | Drive Shaft | | 36 | | 59.5 | 40 | 500 | |
| | 2018.07- | 6MT | F | R | SUV FWD DADA;DPCA | | GDS82386 | Drive Shaft | | 36 | | 59.5 | 40 | 806 | |
| | 2018.07- | 6MT | F | L/R | SUV FWD DADA;DPCA | | GCI83016 | Inner Joint | | | 28 | | | 32 | |
| | 2018.07- | 6MT/7DCT | F | L/R | SUV FWD DADA;DPCA | | GCO83101 | Outer Joint | | 36 | 27 | 59.5 | 40 | 65 | M |
| | 2018.07- | 7DCT | F | L | SUV FWD DADA;DPCA | | GDS83323 | Drive Shaft | | 36 | 37 | 59.5 | 40 | 570 | |
| | 2018.07- | 7DCT | F | R | SUV FWD DADA;DPCA | | GDS84510 | Drive Shaft | | 36 | 37 | 59.5 | 40 | 925 | |
| | 2018.07- | 7DCT | F | L | SUV FWD DADA;DPCA | | GCI83028 | Inner Joint | | 37 | 28 | | 65.5 | 90.2 | |
| | 2018.07- | 6MT | F | L | SUV Van FWD DADA/DPCA | | GDS81896 | Drive Shaft | | 36 | | 59.5 | 40 | 500 | |
| | 2018.07- | 6MT | F | R | SUV Van FWD DADA/DPCA | | GDS82386 | Drive Shaft | | 36 | | 59.5 | 40 | 806 | |
| | 2018.07- | 6MT | F | L/R | SUV Van FWD DADA/DPCA | Bellows Material:Plastic | GCI83016 | Inner Joint | | | 28 | | | 32 | |
| | 2018.07- | 7DCT | F | L | SUV Van FWD DADA/DPCA | | GDS83323 | Drive Shaft | | 36 | 37 | 59.5 | 40 | 570 | |
| | 2024.01- | 6DCT/7DCT | F | R | SUV FWD DXDB | | GDS58238 | Drive Shaft | | 36 | 37 | 59.5 | 40 | 919 | |
| | 2024.01- | 6DCT/7DCT | F | L/R | SUV FWD DXDB | | GCO83101 | Outer Joint | | 36 | 27 | 59.5 | 40 | 65 | M |
| | 2024.01- | 6DCT/7DCT | F | R | SUV FWD DXDB | | GCI82108 | Inner Joint | | 37 | 34 | 40 | 77.5 | 103.5 | |
| | 2024.01- | 7DCT | F | L | SUV FWD DXDB | | GDS82351 | Drive Shaft | | 36 | 37 | 59.5 | 40 | 568 | |
| | 2024.01- | 7DCT | F | L | SUV FWD DXDB | | GCI81158 | Inner Joint | | 37 | 34 | 34.5 | 65.5 | 83 | |

| | YEAR | TRANSM. | F/R | L/R | BODY STYLE & DRIVE TYPE & ENGINE | REMARKS | G-AP Ref. | PRODUCT | ABS | Technical Specifications A | B | C | H | L | P |
|---|---|---|---|---|---|---|---|---|---|---|---|---|---|---|---|
| **SKODA** **Kodiaq** | | | | | | | | | | | | | | | |
| 1.5 (150 kw) | 2024.04- | 6DCT | F | L | SUV FWD DUCB | | GDS81265 | Drive Shaft | | 36 | 37 | 59.5 | 40 | 557 | |
| | 2024.04- | 6DCT | F | R | SUV FWD DUCB | | GDS57844 | Drive Shaft | | 36 | 37 | 59.5 | 40 | 929 | |
| | 2024.04- | 6DCT | F | L | SUV FWD DUCB | | GCI81158 | Inner Joint | | 37 | 34 | 34.5 | 65.5 | 83 | |
| 2.0 (85 kw) | 2018.07- | 6MT | F | R | SUV FWD DFGC | | GDS61101 | Drive Shaft | | 36 | | 59.5 | 40 | 803 | |
| | 2018.07- | 6MT/6DCT | F | L | SUV FWD DFGC | | GDS81896 | Drive Shaft | | 36 | | 59.5 | 40 | 500 | |
| | 2018.07- | AT/MT | F | L/R | SUV FWD DFGC | Bellows Material:Plastic | GCI83016 | Inner Joint | | | 28 | | | 32 | |
| 2.0 (110 kw) | 2016.10- | 6MT | F | L | SUV 4WD DTSB, DBGC, DFGA | | GDS81896 | Drive Shaft | | 36 | | 59.5 | 40 | 500 | |
| | 2016.10- | 6MT | F | R | SUV 4WD DTSB, DBGC, DFGA | | GDS81889 | Drive Shaft | | 36 | | 59.5 | 40 | 614 | |
| | 2016.10- | 6MT | F | L/R | SUV 4WD DTSB, DBGC, DFGA | | GCI61069 | Inner Joint | | | 28 | | | 32 | |
| | 2016.10- | 6MT | F | L/R | SUV 4WD DTSB, DBGC, DFGA | | GCI83016 | Inner Joint | | | 28 | | | 32 | |
| | 2016.10- | 6MT/7DCT | F | L/R | SUV 4WD DTSB, DBGC, DFGA | | GCO83101 | Outer Joint | | 36 | 27 | 59.5 | 40 | 65 | M |
| | 2016.10- | 7DCT | F | L | SUV 4WD DTSB, DBGC, DFGA | | GDS82351 | Drive Shaft | | 36 | 37 | 59.5 | 40 | 568 | |
| | 2016.10- | 7DCT | F | R | SUV 4WD DTSB, DBGC, DFGA | | GDS61166 | Drive Shaft | | 36 | 40 | 59.5 | 40 | 611 | |
| | 2016.10- | 7DCT | F | L | SUV 4WD DTSB, DBGC, DFGA | | GCI81158 | Inner Joint | | 37 | 34 | 34.5 | 65.5 | 83 | |
| | 2016.10- | 7DCT | F | R | SUV 4WD DTSB, DBGC, DFGA | | GCI61048 | Inner Joint | | 40 | 34 | 46.9 | | 127.5 | |
| | 2016.10- | 6MT/7DCT | R | L | SUV 4WD DTSB, DBGC, DFGA | | GDS61331 | Drive Shaft | | 36 | | 59.5 | 40 | 606 | |
| | 2016.10- | 6MT/7DCT | R | R | SUV 4WD DTSB, DBGC, DFGA | | GDS61332 | Drive Shaft | | 36 | | 59.5 | 40 | 650 | |
| | 2016.10- | 6MT/7DCT | R | L/R | SUV 4WD DTSB, DBGC, DFGA | | GCI35026 | Outer Joint | | 36 | 33 | 59.5 | 40 | 61 | |
| | 2016.10- | 6MT/7DCT | R | L/R | SUV 4WD DTSB, DBGC, DFGA | | GCI61103 | Inner Joint | | | 33 | | | 32 | |
| | 2016.10- | 7AT | F | L | SUV FWD DFGA;DBGC;DTSB | | GDS82351 | Drive Shaft | | 36 | 37 | 59.5 | 40 | 568 | |
| | 2016.10- | 7AT | F | L | SUV FWD DFGA;DBGC;DTSB | | GCI81158 | Inner Joint | | 37 | 34 | 34.5 | 65.5 | 83 | |
| | 2016.10- | 7DCT | F | R | SUV FWD DFGA;DBGC;DTSB | | GDS83613 | Drive Shaft | | 36 | 37 | 59.5 | 40 | 921 | |
| | 2016.10- | 7DCT | F | L/R | SUV FWD DFGA;DBGC;DTSB | | GCO83101 | Outer Joint | | 36 | 27 | 59.5 | 40 | 65 | M |
| | 2016.10- | 7DCT | F | R | SUV FWD DFGA;DBGC;DTSB | | GCI82108 | Inner Joint | | 37 | 34 | 40 | 77.5 | 103.5 | |
| | 2017.03- | 6MT | F | L | SUV Van 4WD DFGA | | GDS81896 | Drive Shaft | | 36 | | 59.5 | 40 | 500 | |
| | 2017.03- | 6MT | F | R | SUV Van 4WD DFGA | | GDS81889 | Drive Shaft | | 36 | | 59.5 | 40 | 614 | |
| | 2017.03- | 6MT | F | L/R | SUV Van 4WD DFGA | Bellows Material:Plastic | GCI83016 | Inner Joint | | | 28 | | | 32 | |
| | 2017.03- | 7DCT | F | L | SUV Van 4WD DFGA | | GDS82351 | Drive Shaft | | 36 | 37 | 59.5 | 40 | 568 | |
| | 2017.03- | 7DCT | F | R | SUV Van 4WD DFGA | | GDS61166 | Drive Shaft | | 36 | 40 | 59.5 | 40 | 611 | |
| | 2017.03- | 7DCT | F | L | SUV Van 4WD DFGA | | GCI81158 | Inner Joint | | 37 | 34 | 34.5 | 65.5 | 83 | |
| | 2017.03- | 7DCT | F | R | SUV Van 4WD DFGA | TJ | GCI61048 | Inner Joint | | 40 | 34 | 46.9 | | 127.5 | |
| | 2017.03- | 7DCT | F | R | SUV Van 4WD DFGA | AAR | GCI61084 | Inner Joint | | 40 | 34 | 46.9 | | 128 | |
| | 2017.03- | 7DCT | R | L/R | SUV Van 4WD DFGA | | GCI61103 | Inner Joint | | | 33 | | | 32 | |
| | 2017.03- | 7DCT | F | L | SUV Van FWD DFGA | | GDS82351 | Drive Shaft | | 36 | 37 | 59.5 | 40 | 568 | |
| | 2017.03- | 7DCT | F | R | SUV Van FWD DFGA | | GDS83613 | Drive Shaft | | 36 | 37 | 59.5 | 40 | 921 | |
| | 2017.03- | AT | F | L | SUV Van FWD DFGA | | GCI81158 | Inner Joint | | 37 | 34 | 34.5 | 65.5 | 83 | |
| | 2024.01- | 7DCT | F | L | SUV FWD DXPA | | GDS82351 | Drive Shaft | | 36 | 37 | 59.5 | 40 | 568 | |
| | 2024.01- | 7DCT | F | R | SUV FWD DXPA | | GDS83613 | Drive Shaft | | 36 | 37 | 59.5 | 40 | 921 | |
| | 2024.01- | 7DCT | F | L/R | SUV FWD DXPA | | GCO83101 | Outer Joint | | 36 | 27 | 59.5 | 40 | 65 | M |
| | 2024.01- | 7DCT | F | L | SUV FWD DXPA | | GCI81158 | Inner Joint | | 37 | 34 | 34.5 | 65.5 | 83 | |
| | 2024.01- | 7DCT | F | R | SUV FWD DXPA | | GCI82108 | Inner Joint | | 37 | 34 | 40 | 77.5 | 103.5 | |
| | 2024.08- | 7DCT | F | L | SUV 4WD DFGA | | GDS82351 | Drive Shaft | | 36 | 37 | 59.5 | 40 | 568 | |
| | 2024.08- | 7DCT | F | R | SUV 4WD DFGA | With flange | GDS61346 | Drive Shaft | | 36 | | 59.5 | 40 | 589 | |
| | 2024.08- | 7DCT | F | L | SUV 4WD DFGA | | GCI81158 | Inner Joint | | 37 | 34 | 34.5 | 65.5 | 83 | |
| | 2024.08- | 7DCT | F | R | SUV 4WD DFGA | | GCI61057 | Inner Joint | | | 34 | | | 89 | |
| 2.0 (130 kw) | 2017.04- | 7DCT | F | L | SUV 4WD CRGB | | GDS82351 | Drive Shaft | | 36 | 37 | 59.5 | 40 | 568 | |
| | 2017.04- | 7DCT | F | R | SUV 4WD CRGB | For PR code:0EX | GDS61166 | Drive Shaft | | 36 | 40 | 59.5 | 40 | 611 | |
| | 2017.04- | 7DCT | F | R | SUV 4WD CRGB | For PR code:0IJ;With flange | GDS61346 | Drive Shaft | | 36 | | 59.5 | 40 | 589 | |
| | 2017.04- | 7DCT | F | L | SUV 4WD CRGB | | GCI81158 | Inner Joint | | 37 | 34 | 34.5 | 65.5 | 83 | |
| | 2017.04- | 7DCT | F | R | SUV 4WD CRGB | For PR code:0EX;TJ | GCI61048 | Inner Joint | | 40 | 34 | 46.9 | | 127.5 | |
| | 2017.04- | 7DCT | F | R | SUV 4WD CRGB | For PR code:0EX;AAR | GCI61084 | Inner Joint | | 40 | 34 | 46.9 | | 128 | |
| | 2017.04- | 7DCT | R | L/R | SUV 4WD CRGB | | GCI61103 | Inner Joint | | | 33 | | | 32 | |
| 2.0 (132 kw) | 2016.10- | 7AT | F | L | SUV 4WD CZPA | | GDS82351 | Drive Shaft | | 36 | 37 | 59.5 | 40 | 568 | |
| | 2016.10- | 7AT | F | R | SUV 4WD CZPA | | GDS61166 | Drive Shaft | | 36 | 40 | 59.5 | 40 | 611 | |
| | 2016.10- | 7AT | F | L | SUV 4WD CZPA | | GCO83101 | Outer Joint | | 36 | 27 | 59.5 | 40 | 65 | M |
| | 2016.10- | 7AT | F | L | SUV 4WD CZPA | | GCI81158 | Inner Joint | | 37 | 34 | 34.5 | 65.5 | 83 | |
| | 2016.10- | 7AT | F | R | SUV 4WD CZPA | | GCI61048 | Inner Joint | | 40 | 34 | 46.9 | | 127.5 | |
| | 2016.10- | 7AT | R | L | SUV 4WD CZPA | | GDS61331 | Drive Shaft | | 36 | | 59.5 | 40 | 606 | |
| | 2016.10- | 7AT | R | R | SUV 4WD CZPA | | GDS61332 | Drive Shaft | | 36 | | 59.5 | 40 | 650 | |
| | 2016.10- | 7AT | R | L/R | SUV 4WD CZPA | | GCI35026 | Outer Joint | | 36 | 33 | 59.5 | 40 | 61 | |
| | 2016.10- | 7AT | R | L/R | SUV 4WD CZPA | | GCI61103 | Inner Joint | | | 33 | | | 32 | |
| 2.0 (140 kw) | 2016.10- | 7AT | F | L | SUV 4WD DFHA | | GDS82351 | Drive Shaft | | 36 | 37 | 59.5 | 40 | 568 | |
| | 2016.10- | 7AT | F | R | SUV 4WD DFHA | | GDS61166 | Drive Shaft | | 36 | 40 | 59.5 | 40 | 611 | |
| | 2016.10- | 7AT | F | L/R | SUV 4WD DFHA | | GCO83101 | Outer Joint | | 36 | 27 | 59.5 | 40 | 65 | M |
| | 2016.10- | 7DCT | F | L | SUV 4WD DFHA | | GCI81158 | Inner Joint | | 37 | 34 | 34.5 | 65.5 | 83 | |

| | YEAR | TRANSM. | F/R | L/R | BODY STYLE & DRIVE TYPE & ENGINE | REMARKS | G-AP Ref. | PRODUCT | ABS | Technical Specifications A | B | C | H | L | P |
|---|---|---|---|---|---|---|---|---|---|---|---|---|---|---|---|
| **SKODA** **Kodiaq** | | | | | | | | | | | | | | | |
| 2.0 (140 kw) | 2016.10- | 7DCT | F | R | SUV 4WD DFHA | | GCI61048 | Inner Joint | | 40 | 34 | 46.9 | | 127.5 | |
| | 2016.10- | 7AT | R | L | SUV 4WD DFHA | | GDS61331 | Drive Shaft | | 36 | | 59.5 | 40 | 606 | |
| | 2016.10- | 7AT | R | R | SUV 4WD DFHA | | GDS61332 | Drive Shaft | | 36 | | 59.5 | 40 | 650 | |
| | 2016.10- | 7AT | R | L/R | SUV 4WD DFHA | | GCI35026 | Outer Joint | | 36 | 33 | 59.5 | 40 | 61 | |
| | 2016.10- | 7AT | R | L/R | SUV 4WD DFHA | | GCI61103 | Inner Joint | | | 33 | | | 32 | |
| | 2016.10- | 7DCT | F | L | SUV Van 4WD DFHA | | GDS82351 | Drive Shaft | | 36 | 37 | 59.5 | 40 | 568 | |
| | 2016.10- | 7DCT | F | R | SUV Van 4WD DFHA | | GDS61166 | Drive Shaft | | 36 | 40 | 59.5 | 40 | 611 | |
| | 2016.10- | 7DCT | F | R | SUV Van 4WD DFHA | TJ | GCI61048 | Inner Joint | | 40 | 34 | 46.9 | | 127.5 | |
| | 2016.10- | 7DCT | F | R | SUV Van 4WD DFHA | AAR | GCI61084 | Inner Joint | | 40 | 34 | 46.9 | | 128 | |
| | 2016.10- | AT | F | L | SUV Van 4WD DFHA | | GCI81158 | Inner Joint | | 37 | 34 | 34.5 | 65.5 | 83 | |
| | 2016.10- | 7DCT | R | L/R | SUV Van 4WD DFHA | | GCI61103 | Inner Joint | | | 33 | | | 32 | |
| | 2018.12- | 7DCT | F | L | SUV Van 4WD DKZA | | GDS82351 | Drive Shaft | | 36 | 37 | 59.5 | 40 | 568 | |
| | 2018.12- | 7DCT | F | R | SUV Van 4WD DKZA | | GDS61166 | Drive Shaft | | 36 | 40 | 59.5 | 40 | 611 | |
| | 2018.12- | 7DCT | F | R | SUV Van 4WD DKZA | TJ | GCI61048 | Inner Joint | | 40 | 34 | 46.9 | | 127.5 | |
| | 2018.12- | 7DCT | F | R | SUV Van 4WD DKZA | AAR | GCI61084 | Inner Joint | | 40 | 34 | 46.9 | | 128 | |
| | 2018.12- | AT | F | L | SUV Van 4WD DKZA | | GCI81158 | Inner Joint | | 37 | 34 | 34.5 | 65.5 | 83 | |
| | 2018.12- | 7DCT | R | L/R | SUV Van 4WD DKZA | | GCI61103 | Inner Joint | | | 33 | | | 32 | |
| | 2019.02- | 7AT | F | L | SUV 4WD DKZA | | GDS82351 | Drive Shaft | | 36 | 37 | 59.5 | 40 | 568 | |
| | 2019.02- | 7AT | F | L | SUV 4WD DKZA | | GCO83101 | Outer Joint | | 36 | 27 | 59.5 | 40 | 65 | M |
| | 2019.02- | 7AT | F | L | SUV 4WD DKZA | | GCI81158 | Inner Joint | | 37 | 34 | 34.5 | 65.5 | 83 | |
| | 2019.02- | 7AT | F | R | SUV 4WD DKZA | | GCI61048 | Inner Joint | | 40 | 34 | 46.9 | | 127.5 | |
| | 2019.02- | | F | R | SUV 4WD DKZA | | GDS61166 | Drive Shaft | | 36 | 40 | 59.5 | 40 | 611 | |
| | 2019.02- | 7DCT | R | L | SUV 4WD DKZA | | GDS61331 | Drive Shaft | | 36 | | 59.5 | 40 | 606 | |
| | 2019.02- | 7DCT | R | R | SUV 4WD DKZA | | GDS61332 | Drive Shaft | | 36 | | 59.5 | 40 | 650 | |
| | 2019.02- | 7DCT | R | L/R | SUV 4WD DKZA | | GCI35026 | Outer Joint | | 36 | 33 | 59.5 | 40 | 61 | |
| | 2019.02- | | R | L/R | SUV 4WD DKZA | | GCI61103 | Inner Joint | | | 33 | | | 32 | |
| | 2020.11- | 7DCT | F | L | SUV 4WD DNNA | | GDS82351 | Drive Shaft | | 36 | 37 | 59.5 | 40 | 568 | |
| | 2020.11- | 7DCT | F | R | SUV 4WD DNNA | | GDS61166 | Drive Shaft | | 36 | 40 | 59.5 | 40 | 611 | |
| | 2020.11- | 7DCT | F | L | SUV 4WD DNNA | | GCI81158 | Inner Joint | | 37 | 34 | 34.5 | 65.5 | 83 | |
| | 2020.11- | 7DCT | F | R | SUV 4WD DNNA | TJ | GCI61048 | Inner Joint | | 40 | 34 | 46.9 | | 127.5 | |
| | 2020.11- | 7DCT | F | R | SUV 4WD DNNA | AAR | GCI61084 | Inner Joint | | 40 | 34 | 46.9 | | 128 | |
| | 2020.11- | 7DCT | R | L/R | SUV 4WD DNNA | | GCI61103 | Inner Joint | | | 33 | | | 32 | |
| 2.0 (142 kw) | 2024.01- | 7DCT | F | L/R | SUV 4WD DXNB | | GCO83101 | Outer Joint | | 36 | 27 | 59.5 | 40 | 65 | M |
| | 2024.01- | 7DCT | F | L | SUV 4WD DXNB | | GCI81158 | Inner Joint | | 37 | 34 | 34.5 | 65.5 | 83 | |
| | 2024.01- | 7DCT | R | L | SUV 4WD DXNB | | GDS61331 | Drive Shaft | | 36 | | 59.5 | 40 | 606 | |
| | 2024.01- | 7DCT | R | R | SUV 4WD DXNB | | GDS61332 | Drive Shaft | | 36 | | 59.5 | 40 | 650 | |
| | 2024.01- | 7DCT | R | L/R | SUV 4WD DXNB | | GCI35026 | Outer Joint | | 36 | 33 | 59.5 | 40 | 61 | |
| | 2024.01- | 7DCT | R | L/R | SUV 4WD DXNB | | GCI61103 | Inner Joint | | | 33 | | | 32 | |
| 2.0 (147 kw) | 2020.06- | 7DCT | F | L | SUV 4WD DTUA | | GDS82351 | Drive Shaft | | 36 | 37 | 59.5 | 40 | 568 | |
| | 2020.06- | 7DCT | F | R | SUV 4WD DTUA | | GDS61346 | Drive Shaft | | 36 | | 59.5 | 40 | 589 | |
| | 2020.06- | 7DCT | F | L | SUV 4WD DTUA | | GCI81158 | Inner Joint | | 37 | 34 | 34.5 | 65.5 | 83 | |
| | 2020.06- | 7AT | R | L | SUV 4WD DTUA | | GDS61331 | Drive Shaft | | 36 | | 59.5 | 40 | 606 | |
| | 2020.06- | 7AT | R | R | SUV 4WD DTUA | | GDS61332 | Drive Shaft | | 36 | | 59.5 | 40 | 650 | |
| | 2020.06- | 7DCT | R | L/R | SUV 4WD DTUA | | GCI35026 | Outer Joint | | 36 | 33 | 59.5 | 40 | 61 | |
| | 2020.06- | 7DCT | R | L/R | SUV 4WD DTUA | | GCI61103 | Inner Joint | | | 33 | | | 32 | |
| | 2020.06- | 7DCT | R | L/R | SUV 4WD DTUA | | GCI83008 | Inner Joint | | | 33 | | | 32 | |
| | 2020.06- | 7DCT | F | L | SUV Van 4WD DTUA | | GDS82351 | Drive Shaft | | 36 | 37 | 59.5 | 40 | 568 | |
| | 2020.06- | 7DCT | F | R | SUV Van 4WD DTUA | With flange | GDS61346 | Drive Shaft | | 36 | | 59.5 | 40 | 589 | |
| | 2020.06- | AT | F | L | SUV Van 4WD DTUA | | GCI81158 | Inner Joint | | 37 | 34 | 34.5 | 65.5 | 83 | |
| | 2020.06- | AT | F | R | SUV Van 4WD DTUA | | GCI61057 | Inner Joint | | | 34 | | | 89 | |
| | 2020.06- | 7DCT | R | L/R | SUV Van 4WD DTUA | | GCI61103 | Inner Joint | | | 33 | | | 32 | |
| 2.0 (150 kw) | 2024.11- | 7DCT | F | L | SUV 4WD DNNE | | GDS82351 | Drive Shaft | | 36 | 37 | 59.5 | 40 | 568 | |
| | 2024.11- | 7DCT | F | R | SUV 4WD DNNE | | GDS81889 | Drive Shaft | | 36 | | 59.5 | 40 | 614 | |
| | 2024.11- | 7DCT | F | L | SUV 4WD DNNE | | GCI81158 | Inner Joint | | 37 | 34 | 34.5 | 65.5 | 83 | |
| 2.0 (176 kw) | 2018.07- | 7DCT | F | L | SUV Van 4WD CUAA | | GDS82351 | Drive Shaft | | 36 | 37 | 59.5 | 40 | 568 | |
| | 2018.07- | 7DCT | F | R | SUV Van 4WD CUAA | TJ | GCI61048 | Inner Joint | | 40 | 34 | 46.9 | | 127.5 | |
| | 2018.07- | 7DCT | F | R | SUV Van 4WD CUAA | AAR | GCI61084 | Inner Joint | | 40 | 34 | 46.9 | | 128 | |
| | 2018.07- | AT | F | L | SUV Van 4WD CUAA | | GCI81158 | Inner Joint | | 37 | 34 | 34.5 | 65.5 | 83 | |
| | 2018.07- | 7DCT | R | L | SUV Van 4WD CUAA | | GDS61334 | Drive Shaft | | 36 | | 59.5 | 40 | 598 | |
| | 2018.07- | 7DCT | R | R | SUV Van 4WD CUAA | | GDS61335 | Drive Shaft | | 36 | | 59.5 | 40 | 638 | |
| | 2018.07- | 7DCT | R | L/R | SUV Van 4WD CUAA | | GCI61103 | Inner Joint | | | 33 | | | 32 | |
| | 2018.11- | 7AT | F | L | SUV 4WD CUAA | | GDS82351 | Drive Shaft | | 36 | 37 | 59.5 | 40 | 568 | |
| | 2018.11- | 7AT | F | R | SUV 4WD CUAA | | GDS84257 | Drive Shaft | | 36 | 40 | 59.5 | 40 | 609 | |
| | 2018.11- | 7AT | F | L/R | SUV 4WD CUAA | | GCO83101 | Outer Joint | | 36 | 27 | 59.5 | 40 | 65 | M |
| | 2018.11- | 7AT | F | L | SUV 4WD CUAA | | GCI81158 | Inner Joint | | 37 | 34 | 34.5 | 65.5 | 83 | |

| | YEAR | TRANSM. | F/R | L/R | BODY STYLE & DRIVE TYPE & ENGINE | REMARKS | G-AP Ref. | PRODUCT | ABS | Technical Specifications A | B | C | H | L | P |
|---|---|---|---|---|---|---|---|---|---|---|---|---|---|---|---|
| **SKODA** | | | | | | | | | | | | | | | |
| **Kodiaq** | | | | | | | | | | | | | | | |
| 2.0 (176 kw) | 2018.11- | 7AT | F | R | SUV 4WD CUAA | TJ | GCI61048 | Inner Joint | | 40 | 34 | 46.9 | | 127.5 | |
| | 2018.11- | 7AT | F | R | SUV 4WD CUAA | | GCI61084 | Inner Joint | | 40 | 34 | 46.9 | | 128 | |
| | 2018.11- | 7AT | R | L | SUV 4WD CUAA | | GDS61334 | Drive Shaft | | 36 | | 59.5 | 40 | 598 | |
| | 2018.11- | 7AT | R | R | SUV 4WD CUAA | | GDS61335 | Drive Shaft | | 36 | | 59.5 | 40 | 638 | |
| | 2018.11- | 7AT | R | L/R | SUV 4WD CUAA | | GCI61103 | Inner Joint | | | 33 | | | 32 | |
| | 2018.11- | 7DCT | R | L/R | SUV 4WD CUAA | | GCI35026 | Outer Joint | | 36 | 33 | 59.5 | 40 | 61 | |
| 2.0 (180 kw) | 2021.06- | 7AT | F | L | SUV 4WD DNPA | | GDS82351 | Drive Shaft | | 36 | 37 | 59.5 | 40 | 568 | |
| | 2021.06- | 7AT | F | L/R | SUV 4WD DNPA | | GCO83101 | Outer Joint | | 36 | 27 | 59.5 | 40 | 65 | M |
| | 2021.06- | 7AT | F | L | SUV 4WD DNPA | | GCI81158 | Inner Joint | | 37 | 34 | 34.5 | 65.5 | 83 | |
| | 2021.06- | 7AT | F | R | SUV 4WD DNPA | | GCI61057 | Inner Joint | | | 34 | | | 89 | |
| | 2021.06- | 7AT | R | L | SUV 4WD DNPA | | GDS61334 | Drive Shaft | | 36 | | 59.5 | 40 | 598 | |
| | 2021.06- | 7AT | R | R | SUV 4WD DNPA | | GDS61335 | Drive Shaft | | 36 | | 59.5 | 40 | 638 | |
| | 2021.06- | 7AT | R | L/R | SUV 4WD DNPA | | GCI35026 | Outer Joint | | 36 | 33 | 59.5 | 40 | 61 | |
| | 2021.06- | 7AT | R | L/R | SUV 4WD DNPA | | GCI82447 | Inner Joint | | | 33 | | | 34 | |
| 2.0 (195 kw) | 2025.01- | 7DCT | F | L | SUV 4WD DNPB | | GDS82351 | Drive Shaft | | 36 | 37 | 59.5 | 40 | 568 | |
| | 2025.01- | 7DCT | F | R | SUV 4WD DNPB | | GDS81889 | Drive Shaft | | 36 | | 59.5 | 40 | 614 | |
| | 2025.01- | 7DCT | F | L | SUV 4WD DNPB | | GCI81158 | Inner Joint | | 37 | 34 | 34.5 | 65.5 | 83 | |
| **Octavia** | | | | | | | | | | | | | | | |
| 1.0 (81 kw) | 2020.06- | 6MT | F | L | Estate FWD DLAA | | GDS82231 | Drive Shaft | | 36 | | 59.5 | 40 | 486 | |
| | 2020.06- | 6MT | F | R | Estate FWD DLAA | | GDS82229 | Drive Shaft | | 36 | | 59.5 | 40 | 767 | |
| | 2020.06- | 6MT | F | L | Estate FWD DLAA | | GCI81689 | Inner Joint | | | 32 | | | 89 | |
| | 2020.06- | 7DCT | F | L | Estate FWD DLAA | | GDS57830 | Drive Shaft | | 36 | | 59.5 | 40 | 492 | |
| | 2020.06- | 7DCT | F | R | Estate FWD DLAA | | GDS57831 | Drive Shaft | | 36 | | 59.5 | 40 | 758 | |
| | 2020.06- | 7DCT | F | L/R | Estate FWD DLAA | | GCO61059 | Outer Joint | | 36 | 33 | 59.5 | 40 | 59.5 | I |
| | 2020.06- | 7DCT | F | R | Estate FWD DLAA | | GCI81689 | Inner Joint | | | 32 | | | 89 | |
| | 2020.06- | 7DCT/6MT | F | L/R | Estate FWD DLAA | | GCO61059 | Outer Joint | | 36 | 33 | 59.5 | 40 | 59.5 | I |
| | 2020.06- | 6MT | F | L | Hatchback FWD DLAA | | GDS82231 | Drive Shaft | | 36 | | 59.5 | 40 | 486 | |
| | 2020.06- | 6MT | F | R | Hatchback FWD DLAA | | GDS82229 | Drive Shaft | | 36 | | 59.5 | 40 | 767 | |
| | 2020.06- | 6MT | F | L | Hatchback FWD DLAA | | GCI81689 | Inner Joint | | | 32 | | | 89 | |
| | 2020.06- | 6MT/7DCT | F | L/R | Hatchback FWD DLAA | | GCO61059 | Outer Joint | | 36 | 33 | 59.5 | 40 | 59.5 | I |
| | 2020.06- | 7DCT | F | L | Hatchback FWD DLAA | | GDS57830 | Drive Shaft | | 36 | | 59.5 | 40 | 492 | |
| | 2020.06- | 7DCT | F | R | Hatchback FWD DLAA | | GDS57831 | Drive Shaft | | 36 | | 59.5 | 40 | 758 | |
| | 2020.06- | 7DCT | F | L/R | Hatchback FWD DLAA | | GCO61059 | Outer Joint | | 36 | 33 | 59.5 | 40 | 59.5 | I |
| | 2020.06- | 7DCT | F | R | Hatchback FWD DLAA | | GCI81689 | Inner Joint | | | 32 | | | 89 | |
| 1.0 (85 kw) | 2016.05-2020.10 | 6MT | F | L | Estate FWD CHZD;DKRA;DKRF | | GDS82231 | Drive Shaft | | 36 | | 59.5 | 40 | 486 | |
| | 2016.05-2020.10 | 6MT | F | R | Estate FWD CHZD;DKRA;DKRF | | GDS82230 | Drive Shaft | | 36 | | 59.5 | 40 | 789 | |
| | 2016.05-2020.10 | 6MT | F | L/R | Estate FWD CHZD;DKRA;DKRF | | GCO61059 | Outer Joint | | 36 | 33 | 59.5 | 40 | 59.5 | I |
| | 2016.05-2020.10 | 6MT/7DCT | F | L/R | Estate FWD CHZD;DKRA;DKRF | | GCI81689 | Inner Joint | | | 32 | | | 89 | |
| | 2016.05-2020.10 | 7DCT | F | R | Estate FWD CHZD;DKRA;DKRF | | GDS82229 | Drive Shaft | | 36 | | 59.5 | 40 | 767 | |
| | 2016.05-2020.10 | 7DCT | F | R | Estate FWD CHZD;DKRA;DKRF | | GCO61059 | Outer Joint | | 36 | 33 | 59.5 | 40 | 59.5 | I |
| | 2016.05-2020.10 | 6MT | F | L | Hatchback FWD CHZD;DKRA;DKRF | | GDS82231 | Drive Shaft | | 36 | | 59.5 | 40 | 486 | |
| | 2016.05-2020.10 | 6MT | F | R | Hatchback FWD CHZD;DKRA;DKRF | | GDS82230 | Drive Shaft | | 36 | | 59.5 | 40 | 789 | |
| | 2016.05-2020.10 | 6MT | F | L/R | Hatchback FWD CHZD;DKRA;DKRF | | GCO61059 | Outer Joint | | 36 | 33 | 59.5 | 40 | 59.5 | I |
| | 2016.05-2020.10 | 6MT/7DCT | F | L/R | Hatchback FWD CHZD;DKRA;DKRF | | GCI81689 | Inner Joint | | | 32 | | | 89 | |
| | 2016.05-2020.10 | 7DCT | F | R | Hatchback FWD CHZD;DKRA;DKRF | | GDS82229 | Drive Shaft | | 36 | | 59.5 | 40 | 767 | |
| | 2016.05-2020.10 | 7DCT | F | R | Hatchback FWD CHZD;DKRA;DKRF | | GCO61059 | Outer Joint | | 36 | 33 | 59.5 | 40 | 59.5 | I |
| 1.2 (63 kw) | 2012.11-2017.02 | 5MT | F | R | Estate FWD CJZB;CYVA | | GDS61096 | Drive Shaft | | 36 | | 59.5 | 40.5 | 799 | |
| | 2012.11-2017.02 | 5MT | F | L/R | Estate FWD CJZB;CYVA | | GCO83037 | Outer Joint | | 36 | 30 | 59.5 | 40.5 | 56 | I |
| | 2012.11-2017.02 | 5MT | F | L/R | Estate FWD CJZB;CYVA | | GCI82447 | Inner Joint | | | 33 | | | 34 | |
| | 2012.11-2017.02 | AT/MT | F | L/R | Estate FWD CJZB;CYVA | Date from:2013.01 | GCI83011 | Inner Joint | | | 33 | | | 34 | |
| | 2012.11-2017.02 | MT | F | L | Estate FWD CJZB;CYVA | Date from:2013.01 | GDS83294 | Drive Shaft | | 36 | | 59.5 | 38 | 519 | |
| | 2012.11-2017.02 | MT | F | L | Estate FWD CJZB;CYVA | | GDS83373 | Drive Shaft | | 36 | | 59.5 | 38 | 511 | |
| | 2012.11-2017.02 | MT | F | R | Estate FWD CJZB;CYVA | Date from:2013.01 | GDS61042 | Drive Shaft | | 36 | | 59.5 | 40.5 | 814 | |
| | 2012.11-2017.02 | MT | F | L/R | Estate FWD CJZB;CYVA | | GCI83006 | Inner Joint | | | 33 | | | 34 | |
| | 2012.11-2017.02 | | F | L | Estate FWD CJZB;CYVA | | GDS61097 | Drive Shaft | | 36 | | 59.5 | 40.5 | 543 | |
| | 2012.11-2017.02 | 5MT | F | L | Hatchback FWD CJZB;CYVA | | GDS61097 | Drive Shaft | | 36 | | 59.5 | 40.5 | 543 | |
| | 2012.11-2017.02 | 5MT | F | R | Hatchback FWD CJZB;CYVA | | GDS61096 | Drive Shaft | | 36 | | 59.5 | 40.5 | 799 | |
| | 2012.11-2017.02 | 5MT | F | L/R | Hatchback FWD CJZB;CYVA | | GCO83037 | Outer Joint | | 36 | 30 | 59.5 | 40.5 | 56 | I |
| | 2012.11-2017.02 | 5MT | F | L/R | Hatchback FWD CJZB;CYVA | | GCI82447 | Inner Joint | | | 33 | | | 34 | |
| | 2012.11-2017.02 | AT/MT | F | L/R | Hatchback FWD CJZB;CYVA | | GCI83011 | Inner Joint | | | 33 | | | 34 | |
| | 2012.11-2017.02 | MT | F | L/R | Hatchback FWD CJZB;CYVA | | GCI83006 | Inner Joint | | | 33 | | | 34 | |
| 1.2 (77 kw) | 2010.02-2013.04 | 6MT | F | L/R | Estate FWD CBZB | | GCO83037 | Outer Joint | | 36 | 30 | 59.5 | 40.5 | 56 | I |
| | 2010.02-2013.04 | 7AT/6MT | F | L | Estate FWD CBZB | | GDS61201 | Drive Shaft | | 36 | | 59.5 | 40.5 | 535 | |
| | 2010.02-2013.04 | 7AT/6MT | F | R | Estate FWD CBZB | | GDS61096 | Drive Shaft | | 36 | | 59.5 | 40.5 | 799 | |
| | 2010.02-2013.04 | 7DCT | F | L/R | Estate FWD CBZB | | GCO61059 | Outer Joint | | 36 | 33 | 59.5 | 40 | 59.5 | I |

| | YEAR | TRANSM. | F/R | L/R | BODY STYLE & DRIVE TYPE & ENGINE | REMARKS | G-AP Ref. | PRODUCT | ABS | Technical Specifications A | B | C | H | L | P |
|---|---|---|---|---|---|---|---|---|---|---|---|---|---|---|---|
| **SKODA** **Octavia** | | | | | | | | | | | | | | | |
| 1.2 (77 kw) | 2010.02-2013.04 | 7DCT/6MT | F | L/R | Estate FWD CBZB | | GCI82447 | Inner Joint | | | 33 | | | 34 | |
| | 2010.02-2013.04 | MT | F | L/R | Estate FWD CBZB | | GCI83011 | Inner Joint | | | 33 | | | 34 | |
| | 2010.02-2013.04 | | F | L | Estate FWD CBZB | | GDS83373 | Drive Shaft | | 36 | | 59.5 | 38 | 511 | |
| | 2010.02-2013.06 | 6MT | F | L/R | Hatchback FWD CBZB | | GCO83037 | Outer Joint | | 36 | 30 | 59.5 | 40.5 | 56 | I |
| | 2010.02-2013.06 | 7AT/6MT | F | L | Hatchback FWD CBZB | | GDS61201 | Drive Shaft | | 36 | | 59.5 | 40.5 | 535 | |
| | 2010.02-2013.06 | 7AT/6MT | F | R | Hatchback FWD CBZB | | GDS61096 | Drive Shaft | | 36 | | 59.5 | 40.5 | 799 | |
| | 2010.02-2013.06 | 7DCT | F | L/R | Hatchback FWD CBZB | | GCO61059 | Outer Joint | | 36 | 33 | 59.5 | 40 | 59.5 | I |
| | 2010.02-2013.06 | 7DCT/6MT | F | L/R | Hatchback FWD CBZB | | GCI82447 | Inner Joint | | | 33 | | | 34 | |
| | 2010.02-2013.06 | MT | F | L/R | Hatchback FWD CBZB | | GCI83011 | Inner Joint | | | 33 | | | 34 | |
| | 2010.02-2013.06 | | F | L | Hatchback FWD CBZB | | GDS83373 | Drive Shaft | | 36 | | 59.5 | 38 | 511 | |
| | 2012.11-2017.02 | 5MT/6MT | F | L | Estate FWD CJZA | | GDS83373 | Drive Shaft | | 36 | | 59.5 | 38 | 511 | |
| | 2012.11-2017.02 | 5MT/6MT | F | R | Estate FWD CJZA | | GDS61307 | Drive Shaft | | 36 | | 59.5 | 40 | 819 | |
| | 2012.11-2017.02 | 5MT/6MT/7AT | F | L/R | Estate FWD CJZA | | GCO83037 | Outer Joint | | 36 | 30 | 59.5 | 40.5 | 56 | I |
| | 2012.11-2017.02 | 7AT/5MT/6MT | F | L/R | Estate FWD CJZA | | GCO61059 | Outer Joint | | 36 | 33 | 59.5 | 40 | 59.5 | I |
| | 2012.11-2017.02 | 7DCT | F | L | Estate FWD CJZA | | GDS61282 | Drive Shaft | | 36 | | 59.5 | 40 | 523 | |
| | 2012.11-2017.02 | 7DCT | F | R | Estate FWD CJZA | | GDS61096 | Drive Shaft | | 36 | | 59.5 | 40.5 | 799 | |
| | 2012.11-2017.02 | 7DCT/5MT/6MT | F | L/R | Estate FWD CJZA | | GCI82447 | Inner Joint | | | 33 | | | 34 | |
| | 2012.11-2017.02 | AT/MT | F | L/R | Estate FWD CJZA | | GCI83011 | Inner Joint | | | 33 | | | 34 | |
| | 2012.11-2017.02 | MT | F | L | Estate FWD CJZA | | GDS83294 | Drive Shaft | | 36 | | 59.5 | 38 | 519 | |
| | 2012.11-2017.02 | MT | F | R | Estate FWD CJZA | | GDS61042 | Drive Shaft | | 36 | | 59.5 | 40.5 | 814 | |
| | 2012.11-2017.02 | 5MT/6MT | F | L | Hatchback FWD CJZA | | GDS83373 | Drive Shaft | | 36 | | 59.5 | 38 | 511 | |
| | 2012.11-2017.02 | 5MT/6MT | F | R | Hatchback FWD CJZA | | GDS61307 | Drive Shaft | | 36 | | 59.5 | 40 | 819 | |
| | 2012.11-2017.02 | 5MT/6MT/7AT | F | L/R | Hatchback FWD CJZA | | GCO83037 | Outer Joint | | 36 | 30 | 59.5 | 40.5 | 56 | I |
| | 2012.11-2017.02 | 7AT/5MT/6MT | F | L/R | Hatchback FWD CJZA | | GCO61059 | Outer Joint | | 36 | 33 | 59.5 | 40 | 59.5 | I |
| | 2012.11-2017.02 | 7DCT | F | L | Hatchback FWD CJZA | | GDS61282 | Drive Shaft | | 36 | | 59.5 | 40 | 523 | |
| | 2012.11-2017.02 | 7DCT | F | R | Hatchback FWD CJZA | | GDS61096 | Drive Shaft | | 36 | | 59.5 | 40.5 | 799 | |
| | 2012.11-2017.02 | 7DCT/5MT/6MT | F | L/R | Hatchback FWD CJZA | | GCI82447 | Inner Joint | | | 33 | | | 34 | |
| | 2012.11-2017.02 | AT/MT | F | L/R | Hatchback FWD CJZA | | GCI83011 | Inner Joint | | | 33 | | | 34 | |
| | 2012.11-2017.02 | MT | F | L | Hatchback FWD CJZA | | GDS83294 | Drive Shaft | | 36 | | 59.5 | 38 | 519 | |
| | 2012.11-2017.02 | MT | F | R | Hatchback FWD CJZA | | GDS61042 | Drive Shaft | | 36 | | 59.5 | 40.5 | 814 | |
| 1.2 (81 kw) | 2015.05-2017.02 | 6MT | F | L | Estate FWD CYVB | | GDS83373 | Drive Shaft | | 36 | | 59.5 | 38 | 511 | |
| | 2015.05-2017.02 | 6MT | F | R | Estate FWD CYVB | | GDS61307 | Drive Shaft | | 36 | | 59.5 | 40 | 819 | |
| | 2015.05-2017.02 | 6MT | F | L/R | Estate FWD CYVB | | GCO83037 | Outer Joint | | 36 | 30 | 59.5 | 40.5 | 56 | I |
| | 2015.05-2017.02 | 6MT | F | R | Estate FWD CYVB | | GCI53002 | Inner Joint | | | 33 | | | 34 | |
| | 2015.05-2017.02 | 7DCT | F | L | Estate FWD CYVB | | GDS61282 | Drive Shaft | | 36 | | 59.5 | 40 | 523 | |
| | 2015.05-2017.02 | 7DCT | F | R | Estate FWD CYVB | | GDS61096 | Drive Shaft | | 36 | | 59.5 | 40.5 | 799 | |
| | 2015.05-2017.02 | 7DCT | F | L/R | Estate FWD CYVB | | GCO61059 | Outer Joint | | 36 | 33 | 59.5 | 40 | 59.5 | I |
| | 2015.05-2017.02 | 7DCT | F | L | Estate FWD CYVB | | GCI53002 | Inner Joint | | | 33 | | | 34 | |
| | 2015.05-2017.02 | 7DCT/6MT | F | L/R | Estate FWD CYVB | | GCI82447 | Inner Joint | | | 33 | | | 34 | |
| | 2015.05-2017.02 | | F | L/R | Estate FWD CYVB | | GCI83011 | Inner Joint | | | 33 | | | 34 | |
| | 2015.05-2017.02 | 6MT | F | L | Hatchback FWD CYVB | | GDS83373 | Drive Shaft | | 36 | | 59.5 | 38 | 511 | |
| | 2015.05-2017.02 | 6MT | F | R | Hatchback FWD CYVB | | GDS61307 | Drive Shaft | | 36 | | 59.5 | 40 | 819 | |
| | 2015.05-2017.02 | 6MT | F | L/R | Hatchback FWD CYVB | | GCO83037 | Outer Joint | | 36 | 30 | 59.5 | 40.5 | 56 | I |
| | 2015.05-2017.02 | 6MT | F | R | Hatchback FWD CYVB | | GCI53002 | Inner Joint | | | 33 | | | 34 | |
| | 2015.05-2017.02 | 7DCT | F | L | Hatchback FWD CYVB | | GDS61282 | Drive Shaft | | 36 | | 59.5 | 40 | 523 | |
| | 2015.05-2017.02 | 7DCT | F | R | Hatchback FWD CYVB | | GDS61096 | Drive Shaft | | 36 | | 59.5 | 40.5 | 799 | |
| | 2015.05-2017.02 | 7DCT | F | L/R | Hatchback FWD CYVB | | GCO61059 | Outer Joint | | 36 | 33 | 59.5 | 40 | 59.5 | I |
| | 2015.05-2017.02 | 7DCT | F | L | Hatchback FWD CYVB | | GCI53002 | Inner Joint | | | 33 | | | 34 | |
| | 2015.05-2017.02 | 7DCT/6MT | F | L/R | Hatchback FWD CYVB | | GCI82447 | Inner Joint | | | 33 | | | 34 | |
| | 2015.05-2017.02 | | F | L/R | Hatchback FWD CYVB | | GCI83011 | Inner Joint | | | 33 | | | 34 | |
| 1.4 (44 kw) | 1999.02-2001.03 | MT | F | L/R | Hatchback FWD AMD | | GCO83033 | Outer Joint | | 36 | 30 | 53 | 78.5 | 51 | I |
| | 1999.02-2001.03 | MT | F | L/R | Hatchback FWD AMD | | GCI83006 | Inner Joint | | | 33 | | | 34 | |
| | 1999.02-2001.03 | | F | L | Hatchback FWD AMD | | GDS61045 | Drive Shaft | | 36 | | 53 | 78.5 | 555 | |
| | 1999.02-2001.03 | | F | R | Hatchback FWD AMD | | GDS83046 | Drive Shaft | | 36 | | 53 | 78.5 | 822 | |
| | 1999.02-2001.03 | | F | L/R | Hatchback FWD AMD | | GCI53001 | Inner Joint | | | 33 | | | 32 | |
| 1.4 (55 kw) | 2000.08-2010.12 | 5MT | F | L | Estate FWD AXP/BCA | | GDS61045 | Drive Shaft | | 36 | | 53 | 78.5 | 555 | |
| | 2000.08-2010.12 | 5MT | F | R | Estate FWD AXP/BCA | | GDS83046 | Drive Shaft | | 36 | | 53 | 78.5 | 822 | |
| | 2000.08-2010.12 | MT | F | L/R | Estate FWD AXP/BCA | | GCO83033 | Outer Joint | | 36 | 30 | 53 | 78.5 | 51 | I |
| | 2000.08-2010.12 | | F | R | Estate FWD AXP/BCA | | GDS53008 | Drive Shaft | | 36 | | 59.5 | 40 | 782 | |
| | 2000.08-2010.12 | | F | L/R | Estate FWD AXP/BCA | | GCI83008 | Inner Joint | | | 33 | | | 32 | |
| | 2000.08-2010.12 | 5MT | F | L | Hatchback FWD AXP/BCA | | GDS61045 | Drive Shaft | | 36 | | 53 | 78.5 | 555 | |
| | 2000.08-2010.12 | 5MT | F | R | Hatchback FWD AXP/BCA | | GDS83046 | Drive Shaft | | 36 | | 53 | 78.5 | 822 | |
| | 2000.08-2010.12 | MT | F | L/R | Hatchback FWD AXP/BCA | | GCO83033 | Outer Joint | | 36 | 30 | 53 | 78.5 | 51 | I |
| | 2000.08-2010.12 | MT | F | L/R | Hatchback FWD AXP/BCA | | GCI83008 | Inner Joint | | | 33 | | | 32 | |
| | 2000.08-2010.12 | | F | R | Hatchback FWD AXP/BCA | | GDS53008 | Drive Shaft | | 36 | | 59.5 | 40 | 782 | |

| | YEAR | TRANSM. | F/R | L/R | BODY STYLE & DRIVE TYPE & ENGINE | REMARKS | G-AP Ref. | PRODUCT | ABS | Technical Specifications A | B | C | H | L | P |
|---|---|---|---|---|---|---|---|---|---|---|---|---|---|---|---|
| **SKODA** **Octavia** | | | | | | | | | | | | | | | |
| 1.4 (55 kw) | 2004.05-2006.05 | 5MT | F | L | Estate FWD BCA | | GDS53007 | Drive Shaft | | 36 | | 59.5 | 40 | 559 | |
| | 2004.05-2006.05 | 5MT | F | R | Estate FWD BCA | | GDS53008 | Drive Shaft | | 36 | | 59.5 | 40 | 782 | |
| | 2004.05-2006.05 | 5MT | F | L/R | Estate FWD BCA | | GCO53001 | Outer Joint | | 36 | 30 | 59.5 | 40 | 49 | I |
| | 2004.05-2006.05 | MT | F | L/R | Estate FWD BCA | | GCI83008 | Inner Joint | | | 33 | | | 32 | |
| | 2004.05-2006.05 | 5MT | F | L | Hatchback FWD BCA | | GDS53007 | Drive Shaft | | 36 | | 59.5 | 40 | 559 | |
| | 2004.05-2006.05 | 5MT | F | R | Hatchback FWD BCA | | GDS53008 | Drive Shaft | | 36 | | 59.5 | 40 | 782 | |
| | 2004.05-2006.05 | 5MT | F | L/R | Hatchback FWD BCA | | GCO53001 | Outer Joint | | 36 | 30 | 59.5 | 40 | 49 | I |
| | 2004.05-2006.05 | MT | F | L/R | Hatchback FWD BCA | | GCI83008 | Inner Joint | | | 33 | | | 32 | |
| | 2004.05-2006.05 | | F | L | Hatchback FWD BCA | Date To:2004.09;Chassis no. to:1U50000001 | GDS61045 | Drive Shaft | | 36 | | 53 | 78.5 | 555 | |
| | 2004.05-2006.05 | | F | R | Hatchback FWD BCA | Date To:2004.09;Chassis no. to:1U50000001 | GDS83046 | Drive Shaft | | 36 | | 53 | 78.5 | 822 | |
| 1.4 (59 kw) | 2004.06-2013.04 | 5MT | F | L | Hatchback FWD BUD;CGGA | | GDS53007 | Drive Shaft | | 36 | | 59.5 | 40 | 559 | |
| | 2004.06-2013.04 | 5MT | F | R | Hatchback FWD BUD;CGGA | | GDS53008 | Drive Shaft | | 36 | | 59.5 | 40 | 782 | |
| | 2004.06-2013.04 | 5MT | F | L/R | Hatchback FWD BUD;CGGA | | GCO53001 | Outer Joint | | 36 | 30 | 59.5 | 40 | 49 | I |
| | 2004.06-2013.04 | MT | F | L/R | Hatchback FWD BUD;CGGA | Date from:2007.01 | GCI83008 | Inner Joint | | | 33 | | | 32 | |
| | 2006.05-2013.06 | 5MT | F | L | Estate FWD BUD;CGGA | | GDS53007 | Drive Shaft | | 36 | | 59.5 | 40 | 559 | |
| | 2006.05-2013.06 | 5MT | F | R | Estate FWD BUD;CGGA | | GDS53008 | Drive Shaft | | 36 | | 59.5 | 40 | 782 | |
| | 2006.05-2013.06 | 5MT | F | L/R | Estate FWD BUD;CGGA | | GCO53001 | Outer Joint | | 36 | 30 | 59.5 | 40 | 49 | I |
| | 2006.05-2013.06 | MT | F | L/R | Estate FWD BUD;CGGA | | GCI83008 | Inner Joint | | | 33 | | | 32 | |
| 1.4 (81 kw) | 2012.11-2017.02 | 6MT | F | R | Estate FWD CPWA | | GDS61307 | Drive Shaft | | 36 | | 59.5 | 40 | 819 | |
| | 2012.11-2017.02 | 6MT | F | R | Estate FWD CPWA | | GCO83037 | Outer Joint | | 36 | 30 | 59.5 | 40.5 | 56 | I |
| | 2012.11-2017.02 | 6MT | F | L/R | Estate FWD CPWA | | GCI53002 | Inner Joint | | | 33 | | | 34 | |
| | 2012.11-2017.02 | 6MT/7DCT | F | L | Estate FWD CPWA | | GDS61282 | Drive Shaft | | 36 | | 59.5 | 40 | 523 | |
| | 2012.11-2017.02 | 6MT/7DCT | F | L | Estate FWD CPWA | | GCO61059 | Outer Joint | | 36 | 33 | 59.5 | 40 | 59.5 | I |
| | 2012.11-2017.02 | 7DCT | F | R | Estate FWD CPWA | | GDS61096 | Drive Shaft | | 36 | | 59.5 | 40.5 | 799 | |
| | 2012.11-2017.02 | 7DCT | F | L | Estate FWD CPWA | | GCI53002 | Inner Joint | | | 33 | | | 34 | |
| | 2012.11-2017.02 | 7DCT/6MT | F | L/R | Estate FWD CPWA | | GCI82447 | Inner Joint | | | 33 | | | 34 | |
| | 2012.11-2017.02 | MT/7AT | F | L | Estate FWD CPWA | | GDS83294 | Drive Shaft | | 36 | | 59.5 | 38 | 519 | |
| | 2012.11-2017.02 | | F | L/R | Estate FWD CPWA | | GCI83011 | Inner Joint | | | 33 | | | 34 | |
| | 2013.11-2017.02 | 6MT | F | R | Hatchback FWD CPWA | | GDS61307 | Drive Shaft | | 36 | | 59.5 | 40 | 819 | |
| | 2013.11-2017.02 | 6MT | F | R | Hatchback FWD CPWA | | GCO83037 | Outer Joint | | 36 | 30 | 59.5 | 40.5 | 56 | I |
| | 2013.11-2017.02 | 6MT | F | L/R | Hatchback FWD CPWA | | GCI53002 | Inner Joint | | | 33 | | | 34 | |
| | 2013.11-2017.02 | 6MT/7DCT | F | L | Hatchback FWD CPWA | | GDS61282 | Drive Shaft | | 36 | | 59.5 | 40 | 523 | |
| | 2013.11-2017.02 | 6MT/7DCT | F | L | Hatchback FWD CPWA | | GCO61059 | Outer Joint | | 36 | 33 | 59.5 | 40 | 59.5 | I |
| | 2013.11-2017.02 | 7DCT | F | R | Hatchback FWD CPWA | | GDS61096 | Drive Shaft | | 36 | | 59.5 | 40.5 | 799 | |
| | 2013.11-2017.02 | 7DCT | F | L | Hatchback FWD CPWA | | GCI53002 | Inner Joint | | | 33 | | | 34 | |
| | 2013.11-2017.02 | 7DCT/6MT | F | L/R | Hatchback FWD CPWA | | GCI82447 | Inner Joint | | | 33 | | | 34 | |
| | 2013.11-2017.02 | MT | F | L/R | Hatchback FWD CPWA | | GCI83006 | Inner Joint | | | 33 | | | 34 | |
| | 2013.11-2017.02 | MT/7AT | F | L | Hatchback FWD CPWA | | GDS83294 | Drive Shaft | | 36 | | 59.5 | 38 | 519 | |
| | 2013.11-2017.02 | | F | L/R | Hatchback FWD CPWA | | GCI83011 | Inner Joint | | | 33 | | | 34 | |
| 1.4 (90 kw) | 2008.11-2013.06 | 6MT | F | L/R | Estate FWD CAXA | | GCO83037 | Outer Joint | | 36 | 30 | 59.5 | 40.5 | 56 | I |
| | 2008.11-2013.06 | 7AT/6MT | F | L/R | Estate FWD CAXA | | GCI83016 | Inner Joint | | | 28 | | | 32 | |
| | 2008.11-2013.06 | 7DCT | F | L/R | Estate FWD CAXA | Date from:2011.06 | GCO61059 | Outer Joint | | 36 | 33 | 59.5 | 40 | 59.5 | I |
| | 2008.11-2013.06 | 7DCT | F | L/R | Estate FWD CAXA | Date to:2011.05 | GCO83002 | Outer Joint | | 36 | 27 | 59.5 | 40 | 66 | I |
| | 2008.11-2013.06 | AT | F | L | Estate FWD CAXA | | GDS61281 | Drive Shaft | | 36 | | 59.5 | 40 | 528 | |
| | 2008.11-2013.06 | AT | F | R | Estate FWD CAXA | | GDS81653 | Drive Shaft | | 36 | | 59.5 | 40 | 785 | |
| | 2008.11-2013.06 | AT | F | L/R | Estate FWD CAXA | | GCI61069 | Inner Joint | | | 28 | | | 32 | |
| | 2008.11-2013.06 | MT | F | L | Estate FWD CAXA | | GDS61201 | Drive Shaft | | 36 | | 59.5 | 40.5 | 535 | |
| | 2008.11-2013.06 | MT | F | R | Estate FWD CAXA | | GDS61096 | Drive Shaft | | 36 | | 59.5 | 40.5 | 799 | |
| | 2008.11-2013.06 | MT | F | L/R | Estate FWD CAXA | | GCI82447 | Inner Joint | | | 33 | | | 34 | |
| | 2008.11-2013.06 | 6MT | F | L/R | Hatchback FWD CAXA | | GCO83037 | Outer Joint | | 36 | 30 | 59.5 | 40.5 | 56 | I |
| | 2008.11-2013.06 | 7AT/6MT | F | L/R | Hatchback FWD CAXA | | GCI83016 | Inner Joint | | | 28 | | | 32 | |
| | 2008.11-2013.06 | 7DCT | F | L | Hatchback FWD CAXA | | GDS61281 | Drive Shaft | | 36 | | 59.5 | 40 | 528 | |
| | 2008.11-2013.06 | 7DCT | F | R | Hatchback FWD CAXA | | GDS81653 | Drive Shaft | | 36 | | 59.5 | 40 | 785 | |
| | 2008.11-2013.06 | 7DCT | F | L/R | Hatchback FWD CAXA | Date from:2011.06 | GCO61059 | Outer Joint | | 36 | 33 | 59.5 | 40 | 59.5 | I |
| | 2008.11-2013.06 | 7DCT | F | L/R | Hatchback FWD CAXA | Date to:2011.05 | GCO83002 | Outer Joint | | 36 | 27 | 59.5 | 40 | 66 | I |
| | 2008.11-2013.06 | AT | F | L/R | Hatchback FWD CAXA | | GCI61069 | Inner Joint | | | 28 | | | 32 | |
| | 2008.11-2013.06 | MT | F | L | Hatchback FWD CAXA | | GDS61201 | Drive Shaft | | 36 | | 59.5 | 40.5 | 535 | |
| | 2008.11-2013.06 | MT | F | R | Hatchback FWD CAXA | | GDS61096 | Drive Shaft | | 36 | | 59.5 | 40.5 | 799 | |
| | 2008.11-2013.06 | MT | F | L/R | Hatchback FWD CAXA | | GCI82447 | Inner Joint | | | 33 | | | 34 | |
| 1.4 (103 kw) | 2012.11-2017.02 | 6AT | F | L | Estate FWD CHPA | | GDS83294 | Drive Shaft | | 36 | | 59.5 | 38 | 519 | |
| | 2012.11-2017.02 | 6AT | F | L | Estate FWD CHPA | | GCO83037 | Outer Joint | | 36 | 30 | 59.5 | 40.5 | 56 | I |
| | 2012.11-2017.02 | 6MT | F | L | Estate FWD CHPA | | GDS61282 | Drive Shaft | | 36 | | 59.5 | 40 | 523 | |
| | 2012.11-2017.02 | 6MT | F | R | Estate FWD CHPA | | GDS61283 | Drive Shaft | | 36 | | 59.5 | 40 | 815 | |
| | 2012.11-2017.02 | 6MT | F | L/R | Estate FWD CHPA | | GCI82447 | Inner Joint | | | 33 | | | 34 | |
| | 2012.11-2017.02 | 7AT/6MT | F | L/R | Estate FWD CHPA | | GCO61059 | Outer Joint | | 36 | 33 | 59.5 | 40 | 59.5 | I |

| | YEAR | TRANSM. | F/R | L/R | BODY STYLE & DRIVE TYPE & ENGINE | REMARKS | G-AP Ref. | PRODUCT | ABS | Technical Specifications A | B | C | H | L | P |
|---|---|---|---|---|---|---|---|---|---|---|---|---|---|---|---|
| **SKODA** **Octavia** | | | | | | | | | | | | | | | |
| 1.4 (103 kw) | 2012.11-2017.02 | 7AT/6MT | F | L/R | Estate FWD CHPA | | GCO83101 | Outer Joint | | 36 | 27 | 59.5 | 40 | 65 | M |
| | 2012.11-2017.02 | 7AT/6MT | F | L/R | Estate FWD CHPA | | GCI83016 | Inner Joint | | | 28 | | | 32 | |
| | 2012.11-2017.02 | 7DCT | F | L | Estate FWD CHPA | | GDS61100 | Drive Shaft | | 36 | | 59.5 | 40 | 513 | |
| | 2012.11-2017.02 | 7DCT | F | R | Estate FWD CHPA | | GDS83313 | Drive Shaft | | 36 | | 59.5 | 40 | 792 | |
| | 2012.11-2017.02 | 6AT | F | L | Hatchback FWD CHPA | | GDS83294 | Drive Shaft | | 36 | | 59.5 | 38 | 519 | |
| | 2012.11-2017.02 | 6AT | F | L | Hatchback FWD CHPA | | GCO83037 | Outer Joint | | 36 | 30 | 59.5 | 40.5 | 56 | I |
| | 2012.11-2017.02 | 6MT | F | L | Hatchback FWD CHPA | | GDS61282 | Drive Shaft | | 36 | | 59.5 | 40 | 523 | |
| | 2012.11-2017.02 | 6MT | F | R | Hatchback FWD CHPA | | GDS61283 | Drive Shaft | | 36 | | 59.5 | 40 | 815 | |
| | 2012.11-2017.02 | 6MT | F | L/R | Hatchback FWD CHPA | | GCI53002 | Inner Joint | | | 33 | | | 34 | |
| | 2012.11-2017.02 | 6MT | F | L/R | Hatchback FWD CHPA | | GCI82447 | Inner Joint | | | 33 | | | 34 | |
| | 2012.11-2017.02 | 7AT/6MT | F | L/R | Hatchback FWD CHPA | | GCO61059 | Outer Joint | | 36 | 33 | 59.5 | 40 | 59.5 | I |
| | 2012.11-2017.02 | 7AT/6MT | F | L/R | Hatchback FWD CHPA | | GCO83101 | Outer Joint | | 36 | 27 | 59.5 | 40 | 65 | M |
| | 2012.11-2017.02 | 7AT/6MT | F | L/R | Hatchback FWD CHPA | | GCI83016 | Inner Joint | | | 28 | | | 32 | |
| | 2012.11-2017.02 | 7DCT | F | L | Hatchback FWD CHPA | | GDS61100 | Drive Shaft | | 36 | | 59.5 | 40 | 513 | |
| | 2012.11-2017.02 | 7DCT | F | R | Hatchback FWD CHPA | | GDS83313 | Drive Shaft | | 36 | | 59.5 | 40 | 792 | |
| 1.4 (110 kw) | 2014.08-2020.10 | 6MT | F | L | Estate FWD CZDA;CHPB | | GDS61282 | Drive Shaft | | 36 | | 59.5 | 40 | 523 | |
| | 2014.08-2020.10 | 6MT | F | R | Estate FWD CZDA;CHPB | | GDS61283 | Drive Shaft | | 36 | | 59.5 | 40 | 815 | |
| | 2014.08-2020.10 | 6MT | F | L/R | Estate FWD CZDA;CHPB | | GCO61059 | Outer Joint | | 36 | 33 | 59.5 | 40 | 59.5 | I |
| | 2014.08-2020.10 | 6MT | F | L/R | Estate FWD CZDA;CHPB | | GCI53002 | Inner Joint | | | 33 | | | 34 | |
| | 2014.08-2020.10 | 6MT | F | L/R | Estate FWD CZDA;CHPB | | GCI82447 | Inner Joint | | | 33 | | | 34 | |
| | 2014.08-2020.10 | 7DCT | F | L | Estate FWD CZDA;CHPB | | GDS61100 | Drive Shaft | | 36 | | 59.5 | 40 | 513 | |
| | 2014.08-2020.10 | 7DCT | F | R | Estate FWD CZDA;CHPB | | GDS83313 | Drive Shaft | | 36 | | 59.5 | 40 | 792 | |
| | 2014.08-2020.10 | 7DCT | F | L/R | Estate FWD CZDA;CHPB | | GCO83101 | Outer Joint | | 36 | 27 | 59.5 | 40 | 65 | M |
| | 2014.08-2020.10 | 7DCT | F | L/R | Estate FWD CZDA;CHPB | | GCI83016 | Inner Joint | | | 28 | | | 32 | |
| | 2014.08-2020.10 | 6MT | F | L | Hatchback FWD CZDA;CHPB | Inner teeth of wheel side:33 | GDS61282 | Drive Shaft | | 36 | | 59.5 | 40 | 523 | |
| | 2014.08-2020.10 | 6MT | F | R | Hatchback FWD CZDA;CHPB | | GDS61283 | Drive Shaft | | 36 | | 59.5 | 40 | 815 | |
| | 2014.08-2020.10 | 6MT | F | L/R | Hatchback FWD CZDA;CHPB | | GCO61059 | Outer Joint | | 36 | 33 | 59.5 | 40 | 59.5 | I |
| | 2014.08-2020.10 | 6MT | F | L/R | Hatchback FWD CZDA;CHPB | | GCI53002 | Inner Joint | | | 33 | | | 34 | |
| | 2014.08-2020.10 | 6MT | F | L/R | Hatchback FWD CZDA;CHPB | | GCI82447 | Inner Joint | | | 33 | | | 34 | |
| | 2014.08-2020.10 | 7AT/6MT | F | L/R | Hatchback FWD CZDA;CHPB | | GCI83016 | Inner Joint | | | 28 | | | 32 | |
| | 2014.08-2020.10 | 7DCT | F | L | Hatchback FWD CZDA;CHPB | | GDS61100 | Drive Shaft | | 36 | | 59.5 | 40 | 513 | |
| | 2014.08-2020.10 | 7DCT | F | R | Hatchback FWD CZDA;CHPB | | GDS83313 | Drive Shaft | | 36 | | 59.5 | 40 | 792 | |
| | 2014.08-2020.10 | 7DCT | F | L/R | Hatchback FWD CZDA;CHPB | | GCO83101 | Outer Joint | | 36 | 27 | 59.5 | 40 | 65 | M |
| | 2014.08-2020.10 | MT/6AT | F | L | Hatchback FWD CZDA;CHPB | Inner teeth of wheel side:30 | GDS83294 | Drive Shaft | | 36 | | 59.5 | 38 | 519 | |
| | 2014.08-2020.10 | MT/6AT | F | L | Hatchback FWD CZDA;CHPB | | GCO83037 | Outer Joint | | 36 | 30 | 59.5 | 40.5 | 56 | I |
| | 2020.06- | 6MT | F | L/R | Estate FWD DJKA | | GCO61059 | Outer Joint | | 36 | 33 | 59.5 | 40 | 59.5 | I |
| | 2020.06- | 8AT | F | L/R | Estate FWD DJKA | | GCO83101 | Outer Joint | | 36 | 27 | 59.5 | 40 | 65 | M |
| | 2021.01- | 6MT | F | L/R | Hatchback FWD DJKA | | GCO61059 | Outer Joint | | 36 | 33 | 59.5 | 40 | 59.5 | I |
| | 2021.01- | 8AT | F | L/R | Hatchback FWD DJKA | | GCO83101 | Outer Joint | | 36 | 27 | 59.5 | 40 | 65 | M |
| 1.4 (150 kw) | 2020.06- | 6AT | F | R | Estate FWD DGEA | | GDS83612 | Drive Shaft | | 36 | 37 | 59.5 | 40 | 907 | |
| | 2020.06- | 6AT | F | R | Estate FWD DGEA | | GCO83101 | Outer Joint | | 36 | 27 | 59.5 | 40 | 65 | M |
| | 2020.06- | 6AT | F | R | Estate FWD DGEA | | GCI82108 | Inner Joint | | 37 | 34 | 40 | 77.5 | 103.5 | |
| | 2020.06- | 6DCT | F | L | Estate FWD DGEA | | GDS81985 | Drive Shaft | | 36 | 37 | 59.5 | 40 | 546 | |
| | 2020.06- | 6DCT | F | L | Estate FWD DGEA | | GCI81158 | Inner Joint | | 37 | 34 | 34.5 | 65.5 | 83 | |
| | 2020.06- | 6AT | F | R | Hatchback FWD DGEA | | GDS83612 | Drive Shaft | | 36 | 37 | 59.5 | 40 | 907 | |
| | 2020.06- | 6AT | F | R | Hatchback FWD DGEA | | GCO83101 | Outer Joint | | 36 | 27 | 59.5 | 40 | 65 | M |
| | 2020.06- | 6AT | F | R | Hatchback FWD DGEA | | GCI82108 | Inner Joint | | 37 | 34 | 40 | 77.5 | 103.5 | |
| | 2020.06- | 6DCT | F | L | Hatchback FWD DGEA | | GDS81985 | Drive Shaft | | 36 | 37 | 59.5 | 40 | 546 | |
| | 2020.06- | 6DCT | F | L | Hatchback FWD DGEA | | GCI81158 | Inner Joint | | 37 | 34 | 34.5 | 65.5 | 83 | |
| 1.4 (180 kw) | 2020.06- | 6DCT | F | L | Estate FWD DGEA | | GDS81985 | Drive Shaft | | 36 | 37 | 59.5 | 40 | 546 | |
| | 2020.06- | 6DCT | F | R | Estate FWD DGEA | | GDS83612 | Drive Shaft | | 36 | 37 | 59.5 | 40 | 907 | |
| | 2020.06- | 6DCT | F | R | Estate FWD DGEA | | GCO83101 | Outer Joint | | 36 | 27 | 59.5 | 40 | 65 | M |
| | 2020.06- | 6DCT | F | L | Estate FWD DGEA | | GCI81158 | Inner Joint | | 37 | 34 | 34.5 | 65.5 | 83 | |
| | 2020.06- | 6DCT | F | R | Estate FWD DGEA | | GCI82108 | Inner Joint | | 37 | 34 | 40 | 77.5 | 103.5 | |
| | 2020.06- | 6AT | F | R | Hatchback FWD DGEA | | GDS83612 | Drive Shaft | | 36 | 37 | 59.5 | 40 | 907 | |
| | 2020.06- | 6AT | F | R | Hatchback FWD DGEA | | GCO83101 | Outer Joint | | 36 | 27 | 59.5 | 40 | 65 | M |
| | 2020.06- | 6AT | F | R | Hatchback FWD DGEA | | GCI82108 | Inner Joint | | 37 | 34 | 40 | 77.5 | 103.5 | |
| | 2020.06- | 6DCT | F | L | Hatchback FWD DGEA | | GDS81985 | Drive Shaft | | 36 | 37 | 59.5 | 40 | 546 | |
| | 2020.06- | 6DCT | F | L | Hatchback FWD DGEA | | GCI81158 | Inner Joint | | 37 | 34 | 34.5 | 65.5 | 83 | |
| 1.5 (85 kw) | 2024.04- | 6MT | F | L | Estate FWD DXDE | | GDS84408 | Drive Shaft | | 36 | | 59.5 | 40 | 499 | |
| | 2024.04- | 6MT | F | R | Estate FWD DXDE | | GDS84417 | Drive Shaft | | 36 | | 59.5 | 40 | 783 | |
| | 2024.04- | 6MT | F | L/R | Estate FWD DXDE | | GCO61059 | Outer Joint | | 36 | 33 | 59.5 | 40 | 59.5 | I |
| | 2024.04- | 6MT | F | L/R | Estate FWD DXDE | | GCI82447 | Inner Joint | | | 33 | | | 34 | |
| | 2024.04- | 7DCT | F | L | Estate FWD DXDE | | GDS61100 | Drive Shaft | | 36 | | 59.5 | 40 | 513 | |
| | 2024.04- | 7DCT | F | R | Estate FWD DXDE | | GDS84503 | Drive Shaft | | 36 | 40 | 59.5 | 40 | 817 | |

| | YEAR | TRANSM. | F/R | L/R | BODY STYLE & DRIVE TYPE & ENGINE | REMARKS | G-AP Ref. | PRODUCT | ABS | Technical Specifications | | | | | |
|---|---|---|---|---|---|---|---|---|---|---|---|---|---|---|---|
| | | | | | | | | | | A | B | C | H | L | P |
| **SKODA** **Octavia** | | | | | | | | | | | | | | | |
| 1.5 (85 kw) | 2024.04- | 7DCT | F | L | Estate FWD DXDE | | GCO83002 | Outer Joint | | 36 | 27 | 59.5 | 40 | 66 | I |
| | 2024.04- | 7DCT | F | R | Estate FWD DXDE | | GCO61059 | Outer Joint | | 36 | 33 | 59.5 | 40 | 59.5 | I |
| | 2024.04- | 6MT | F | L | Hatchback FWD DXDE | | GDS84408 | Drive Shaft | | 36 | | 59.5 | 40 | 499 | |
| | 2024.04- | 6MT | F | R | Hatchback FWD DXDE | | GDS84417 | Drive Shaft | | 36 | | 59.5 | 40 | 783 | |
| | 2024.04- | 6MT | F | L/R | Hatchback FWD DXDE | | GCO61059 | Outer Joint | | 36 | 33 | 59.5 | 40 | 59.5 | I |
| | 2024.04- | 6MT | F | L/R | Hatchback FWD DXDE | | GCI82447 | Inner Joint | | | 33 | | | 34 | |
| | 2024.04- | 7DCT | F | L | Hatchback FWD DXDE | | GDS61100 | Drive Shaft | | 36 | | 59.5 | 40 | 513 | |
| | 2024.04- | 7DCT | F | R | Hatchback FWD DXDE | | GDS84503 | Drive Shaft | | 36 | 40 | 59.5 | 40 | 817 | |
| | 2024.04- | 7DCT | F | L | Hatchback FWD DXDE | | GCO83002 | Outer Joint | | 36 | 27 | 59.5 | 40 | 66 | I |
| | 2024.04- | 7DCT | F | R | Hatchback FWD DXDE | | GCO61059 | Outer Joint | | 36 | 33 | 59.5 | 40 | 59.5 | I |
| 1.5 (96 kw) | 2019.01-2020.10 | 7AT | F | L | Estate FWD DHFA | | GDS61282 | Drive Shaft | | 36 | | 59.5 | 40 | 523 | |
| | 2019.01-2020.10 | 7AT | F | R | Estate FWD DHFA | | GDS84417 | Drive Shaft | | 36 | | 59.5 | 40 | 783 | |
| | 2019.01-2020.10 | 7AT | F | L/R | Estate FWD DHFA | | GCO61059 | Outer Joint | | 36 | 33 | 59.5 | 40 | 59.5 | I |
| | 2019.01-2020.10 | 7AT | F | L/R | Estate FWD DHFA | | GCI53002 | Inner Joint | | | 33 | | | 34 | |
| | 2019.01-2020.10 | 7AT | F | L/R | Estate FWD DHFA | | GCI83011 | Inner Joint | | | 33 | | | 34 | |
| | 2019.01-2020.10 | 7DCT | F | L/R | Estate FWD DHFA | | GCI82447 | Inner Joint | | | 33 | | | 34 | |
| | 2020.06- | 6MT | F | R | Estate FWD DHFA | | GDS61096 | Drive Shaft | | 36 | | 59.5 | 40.5 | 799 | |
| | 2020.06- | 6MT/7DCT | F | L/R | Estate FWD DHFA | | GCI82447 | Inner Joint | | | 33 | | | 34 | |
| | 2020.06- | 7DCT | F | R | Estate FWD DHFA | | GDS84417 | Drive Shaft | | 36 | | 59.5 | 40 | 783 | |
| | 2020.06- | 7DCT | F | R | Estate FWD DHFA | | GCO61059 | Outer Joint | | 36 | 33 | 59.5 | 40 | 59.5 | I |
| | 2020.06- | 7DCT | F | R | Estate FWD DHFA | | GCI53002 | Inner Joint | | | 33 | | | 34 | |
| | 2020.06- | 7DCT/6MT | F | L | Estate FWD DHFA | | GDS61282 | Drive Shaft | | 36 | | 59.5 | 40 | 523 | |
| | 2020.06- | 6MT | F | R | Hatchback FWD DHFA | | GDS61096 | Drive Shaft | | 36 | | 59.5 | 40.5 | 799 | |
| | 2020.06- | 6MT/7DCT | F | L/R | Hatchback FWD DHFA | | GCI82447 | Inner Joint | | | 33 | | | 34 | |
| | 2020.06- | 7DCT | F | R | Hatchback FWD DHFA | | GDS84417 | Drive Shaft | | 36 | | 59.5 | 40 | 783 | |
| | 2020.06- | 7DCT | F | R | Hatchback FWD DHFA | | GCO61059 | Outer Joint | | 36 | 33 | 59.5 | 40 | 59.5 | I |
| | 2020.06- | 7DCT | F | R | Hatchback FWD DHFA | | GCI53002 | Inner Joint | | | 33 | | | 34 | |
| | 2020.06- | 7DCT/6MT | F | L | Hatchback FWD DHFA | | GDS61282 | Drive Shaft | | 36 | | 59.5 | 40 | 523 | |
| 1.5 (110 kw) | 2017.02-2020.10 | 6MT | F | L | Estate FWD DADA;DPCA | | GDS61282 | Drive Shaft | | 36 | | 59.5 | 40 | 523 | |
| | 2017.02-2020.10 | 6MT | F | R | Estate FWD DADA;DPCA | | GDS58110 | Drive Shaft | | 36 | | 59.5 | 40 | 793 | |
| | 2017.02-2020.10 | 6MT | F | L/R | Estate FWD DADA;DPCA | | GCO61059 | Outer Joint | | 36 | 33 | 59.5 | 40 | 59.5 | I |
| | 2017.02-2020.10 | 6MT | F | L/R | Estate FWD DADA;DPCA | | GCI82447 | Inner Joint | | | 33 | | | 34 | |
| | 2017.02-2020.10 | 7AT/6MT | F | L | Estate FWD DADA;DPCA | | GCI83016 | Inner Joint | | | 28 | | | 32 | |
| | 2017.02-2020.10 | 7DCT | F | L | Estate FWD DADA;DPCA | | GDS61100 | Drive Shaft | | 36 | | 59.5 | 40 | 513 | |
| | 2017.02-2020.10 | 7DCT | F | R | Estate FWD DADA;DPCA | | GDS84503 | Drive Shaft | | 36 | 40 | 59.5 | 40 | 817 | |
| | 2017.02-2020.10 | 7DCT | F | L/R | Estate FWD DADA;DPCA | | GCO83101 | Outer Joint | | 36 | 27 | 59.5 | 40 | 65 | M |
| | 2017.02-2020.10 | 7DCT | F | R | Estate FWD DADA;DPCA | | GCI61090 | Inner Joint | | 40 | 28 | 46.9 | | 133.2 | |
| | 2017.02-2020.10 | 6MT | F | L | Hatchback FWD DADA;DPCA | | GDS61282 | Drive Shaft | | 36 | | 59.5 | 40 | 523 | |
| | 2017.02-2020.10 | 6MT | F | R | Hatchback FWD DADA;DPCA | | GDS58110 | Drive Shaft | | 36 | | 59.5 | 40 | 793 | |
| | 2017.02-2020.10 | 6MT | F | L/R | Hatchback FWD DADA;DPCA | | GCO61059 | Outer Joint | | 36 | 33 | 59.5 | 40 | 59.5 | I |
| | 2017.02-2020.10 | 6MT | F | L/R | Hatchback FWD DADA;DPCA | | GCI82447 | Inner Joint | | | 33 | | | 34 | |
| | 2017.02-2020.10 | 7AT/6MT | F | L | Hatchback FWD DADA;DPCA | | GCI83016 | Inner Joint | | | 28 | | | 32 | |
| | 2017.02-2020.10 | 7DCT | F | L | Hatchback FWD DADA;DPCA | | GDS61100 | Drive Shaft | | 36 | | 59.5 | 40 | 513 | |
| | 2017.02-2020.10 | 7DCT | F | R | Hatchback FWD DADA;DPCA | | GDS84503 | Drive Shaft | | 36 | 40 | 59.5 | 40 | 817 | |
| | 2017.02-2020.10 | 7DCT | F | L/R | Hatchback FWD DADA;DPCA | | GCO83101 | Outer Joint | | 36 | 27 | 59.5 | 40 | 65 | M |
| | 2017.02-2020.10 | 7DCT | F | R | Hatchback FWD DADA;DPCA | | GCI61090 | Inner Joint | | 40 | 28 | 46.9 | | 133.2 | |
| | 2019.11- | 6MT | F | L | Estate FWD DPCA;DXDB | | GDS84408 | Drive Shaft | | 36 | | 59.5 | 40 | 499 | |
| | 2019.11- | 6MT | F | R | Estate FWD DPCA;DXDB | | GDS84417 | Drive Shaft | | 36 | | 59.5 | 40 | 783 | |
| | 2019.11- | 6MT | F | L/R | Estate FWD DPCA;DXDB | | GCO61059 | Outer Joint | | 36 | 33 | 59.5 | 40 | 59.5 | I |
| | 2019.11- | 6MT | F | L/R | Estate FWD DPCA;DXDB | | GCI53002 | Inner Joint | | | 33 | | | 34 | |
| | 2019.11- | 6MT | F | L/R | Estate FWD DPCA;DXDB | | GCI82447 | Inner Joint | | | 33 | | | 34 | |
| | 2020.01- | 6MT | F | L | Hatchback FWD DPCA;DXDB | | GDS84408 | Drive Shaft | | 36 | | 59.5 | 40 | 499 | |
| | 2020.01- | 6MT | F | R | Hatchback FWD DPCA;DXDB | | GDS84417 | Drive Shaft | | 36 | | 59.5 | 40 | 783 | |
| | 2020.01- | 6MT | F | L/R | Hatchback FWD DPCA;DXDB | | GCO61059 | Outer Joint | | 36 | 33 | 59.5 | 40 | 59.5 | I |
| | 2020.01- | 6MT | F | L/R | Hatchback FWD DPCA;DXDB | | GCI53002 | Inner Joint | | | 33 | | | 34 | |
| | 2020.01- | 6MT | F | L/R | Hatchback FWD DPCA;DXDB | | GCI82447 | Inner Joint | | | 33 | | | 34 | |
| | 2020.11- | 7AT | F | L | Estate FWD DFYA;DXDB | | GDS61100 | Drive Shaft | | 36 | | 59.5 | 40 | 513 | |
| | 2020.11- | 7AT | F | L/R | Estate FWD DFYA;DXDB | | GCO83101 | Outer Joint | | 36 | 27 | 59.5 | 40 | 65 | M |
| | 2020.11- | 7AT | F | L | Estate FWD DFYA;DXDB | | GCI82456 | Inner Joint | | | 28 | | | 32 | |
| | 2020.11- | 7DCT | F | R | Estate FWD DFYA;DXDB | | GDS84503 | Drive Shaft | | 36 | 40 | 59.5 | 40 | 817 | |
| | 2020.11- | 7DCT | F | R | Estate FWD DFYA;DXDB | | GCO61059 | Outer Joint | | 36 | 33 | 59.5 | 40 | 59.5 | I |
| | 2020.11- | 7AT | F | L | Hatchback FWD DFYA;DXDB | | GDS61100 | Drive Shaft | | 36 | | 59.5 | 40 | 513 | |
| | 2020.11- | 7AT | F | L/R | Hatchback FWD DFYA;DXDB | | GCO83101 | Outer Joint | | 36 | 27 | 59.5 | 40 | 65 | M |
| | 2020.11- | 7AT | F | L | Hatchback FWD DFYA;DXDB | | GCI82456 | Inner Joint | | | 28 | | | 32 | |
| | 2020.11- | 7DCT | F | R | Hatchback FWD DFYA;DXDB | | GDS84503 | Drive Shaft | | 36 | 40 | 59.5 | 40 | 817 | |

| | YEAR | TRANSM. | F/R | L/R | BODY STYLE & DRIVE TYPE & ENGINE | REMARKS | G-AP Ref. | PRODUCT | ABS | Technical Specifications A | B | C | H | L | P |
|---|---|---|---|---|---|---|---|---|---|---|---|---|---|---|---|
| **SKODA** **Octavia** | | | | | | | | | | | | | | | |
| 1.5 (110 kw) | 2020.11- | 7DCT | F | R | Hatchback FWD DFYA;DXDB | | GCO61059 | Outer Joint | | 36 | 33 | 59.5 | 40 | 59.5 | I |
| 1.6 (55 kw) | 1996.07-2004.09 | 5MT | F | L | Estate FWD AEE | | GDS61045 | Drive Shaft | | 36 | | 53 | 78.5 | 555 | |
| | 1996.07-2004.09 | 5MT | F | R | Estate FWD AEE | | GDS83046 | Drive Shaft | | 36 | | 53 | 78.5 | 822 | |
| | 1996.07-2004.09 | AT | F | L/R | Estate FWD AEE | | GCO83070 | Outer Joint | | 36 | 30 | 53 | 78 | 60 | I |
| | 1996.07-2004.09 | AT | F | L/R | Estate FWD AEE | | GCI83011 | Inner Joint | | | 33 | | | 34 | |
| | 1996.07-2004.09 | MT | F | L/R | Estate FWD AEE | | GCO83033 | Outer Joint | | 36 | 30 | 53 | 78.5 | 51 | I |
| | 1996.07-2004.09 | MT | F | L/R | Estate FWD AEE | | GCI83005 | Inner Joint | | | 33 | | | 32 | |
| | 1996.07-2004.09 | MT | F | L/R | Estate FWD AEE | | GCI83008 | Inner Joint | | | 33 | | | 32 | |
| | 1996.10-2004.09 | 5MT | F | L | Hatchback FWD AEE | | GDS61045 | Drive Shaft | | 36 | | 53 | 78.5 | 555 | |
| | 1996.10-2004.09 | 5MT | F | R | Hatchback FWD AEE | | GDS83046 | Drive Shaft | | 36 | | 53 | 78.5 | 822 | |
| | 1996.10-2004.09 | AT | F | L/R | Hatchback FWD AEE | Date from:1997.01 | GCO83070 | Outer Joint | | 36 | 30 | 53 | 78 | 60 | I |
| | 1996.10-2004.09 | AT | F | L/R | Hatchback FWD AEE | Date from:1997.01 | GCI83011 | Inner Joint | | | 33 | | | 34 | |
| | 1996.10-2004.09 | MT | F | L/R | Hatchback FWD AEE | | GCO83033 | Outer Joint | | 36 | 30 | 53 | 78.5 | 51 | I |
| | 1996.10-2004.09 | MT | F | L/R | Hatchback FWD AEE | | GCI83005 | Inner Joint | | | 33 | | | 32 | |
| | 1996.10-2004.09 | MT | F | L/R | Hatchback FWD AEE | Date from:1997.01 | GCI83008 | Inner Joint | | | 33 | | | 32 | |
| 1.6 (66 kw) | 2012.11-2020.10 | 5MT | F | L | Estate FWD CLHB;DDYB;CXXA | Engine code:CRKA/CXXA | GDS61282 | Drive Shaft | | 36 | | 59.5 | 40 | 523 | |
| | 2012.11-2020.10 | 5MT | F | L | Estate FWD CLHB;DDYB;CXXA | Engine code:CLHB | GDS83294 | Drive Shaft | | 36 | | 59.5 | 38 | 519 | |
| | 2012.11-2020.10 | 5MT | F | R | Estate FWD CLHB;DDYB;CXXA | Engine code:CLHB | GDS61042 | Drive Shaft | | 36 | | 59.5 | 40.5 | 814 | |
| | 2012.11-2020.10 | 5MT | F | R | Estate FWD CLHB;DDYB;CXXA | Engine code:CRKA/CXXA | GDS61283 | Drive Shaft | | 36 | | 59.5 | 40 | 815 | |
| | 2012.11-2020.10 | 5MT | F | L/R | Estate FWD CLHB;DDYB;CXXA | | GCI82447 | Inner Joint | | | 33 | | | 34 | |
| | 2012.11-2020.10 | 5MT | F | L/R | Estate FWD CLHB;DDYB;CXXA | | GCI83011 | Inner Joint | | | 33 | | | 34 | |
| | 2012.11-2020.10 | 5MT/6MT | F | L/R | Estate FWD CLHB;DDYB;CXXA | For Engine Code:CRKA/CXXA | GCO61059 | Outer Joint | | 36 | 33 | 59.5 | 40 | 59.5 | I |
| | 2012.11-2020.10 | 5MT/6MT | F | L/R | Estate FWD CLHB;DDYB;CXXA | Engine code:CLHB | GCO83037 | Outer Joint | | 36 | 30 | 59.5 | 40.5 | 56 | I |
| | 2012.11-2020.10 | MT | F | L/R | Estate FWD CLHB;DDYB;CXXA | | GCI83006 | Inner Joint | | | 33 | | | 34 | |
| | 2012.11-2020.10 | 5MT | F | L | Hatchback FWD CLHB;DDYB;CXXA | Engine code:CRKA/CXXA | GDS61282 | Drive Shaft | | 36 | | 59.5 | 40 | 523 | |
| | 2012.11-2020.10 | 5MT | F | L | Hatchback FWD CLHB;DDYB;CXXA | Engine code:CLHB | GDS83294 | Drive Shaft | | 36 | | 59.5 | 38 | 519 | |
| | 2012.11-2020.10 | 5MT | F | R | Hatchback FWD CLHB;DDYB;CXXA | Engine code:CLHB | GDS61042 | Drive Shaft | | 36 | | 59.5 | 40.5 | 814 | |
| | 2012.11-2020.10 | 5MT | F | R | Hatchback FWD CLHB;DDYB;CXXA | Engine code:CRKA/CXXA | GDS61283 | Drive Shaft | | 36 | | 59.5 | 40 | 815 | |
| | 2012.11-2020.10 | 5MT | F | L/R | Hatchback FWD CLHB;DDYB;CXXA | | GCI82447 | Inner Joint | | | 33 | | | 34 | |
| | 2012.11-2020.10 | 5MT | F | L/R | Hatchback FWD CLHB;DDYB;CXXA | | GCI83011 | Inner Joint | | | 33 | | | 34 | |
| | 2012.11-2020.10 | 5MT/6MT | F | L/R | Hatchback FWD CLHB;DDYB;CXXA | For Engine Code:CRKA/CXXA | GCO61059 | Outer Joint | | 36 | 33 | 59.5 | 40 | 59.5 | I |
| | 2012.11-2020.10 | 5MT/6MT | F | L/R | Hatchback FWD CLHB;DDYB;CXXA | Engine code:CLHB | GCO83037 | Outer Joint | | 36 | 30 | 59.5 | 40.5 | 56 | I |
| | 2012.11-2020.10 | MT | F | L/R | Hatchback FWD CLHB;DDYB;CXXA | | GCI83006 | Inner Joint | | | 33 | | | 34 | |
| 1.6 (74 kw) | 1997.02-2007.12 | AT | F | L | Estate FWD AEH/AKL | | GDS61020 | Drive Shaft | | 36 | | 53.2 | 77.5 | 547 | |
| | 1997.02-2007.12 | AT | F | R | Estate FWD AEH/AKL | | GDS83011 | Drive Shaft | | 36 | | 53.2 | 77.5 | 810.5 | |
| | 1997.02-2007.12 | AT | F | L/R | Estate FWD AEH/AKL | | GCO83070 | Outer Joint | | 36 | 30 | 53 | 78 | 60 | I |
| | 1997.02-2007.12 | AT | F | L/R | Estate FWD AEH/AKL | | GCI83011 | Inner Joint | | | 33 | | | 34 | |
| | 1997.02-2007.12 | MT | F | L | Estate FWD AEH/AKL | | GDS61045 | Drive Shaft | | 36 | | 53 | 78.5 | 555 | |
| | 1997.02-2007.12 | MT | F | R | Estate FWD AEH/AKL | | GDS83046 | Drive Shaft | | 36 | | 53 | 78.5 | 822 | |
| | 1997.02-2007.12 | MT | F | L/R | Estate FWD AEH/AKL | | GCO83033 | Outer Joint | | 36 | 30 | 53 | 78.5 | 51 | I |
| | 1997.02-2007.12 | MT | F | L/R | Estate FWD AEH/AKL | | GCI83005 | Inner Joint | | | 33 | | | 32 | |
| | 1997.02-2007.12 | MT | F | L/R | Estate FWD AEH/AKL | | GCI83008 | Inner Joint | | | 33 | | | 32 | |
| | 1997.02-2007.12 | AT | F | L | Hatchback FWD AEH/AKL | | GDS61020 | Drive Shaft | | 36 | | 53.2 | 77.5 | 547 | |
| | 1997.02-2007.12 | AT | F | R | Hatchback FWD AEH/AKL | | GDS83011 | Drive Shaft | | 36 | | 53.2 | 77.5 | 810.5 | |
| | 1997.02-2007.12 | AT | F | L/R | Hatchback FWD AEH/AKL | | GCO83070 | Outer Joint | | 36 | 30 | 53 | 78 | 60 | I |
| | 1997.02-2007.12 | AT | F | L/R | Hatchback FWD AEH/AKL | | GCI83011 | Inner Joint | | | 33 | | | 34 | |
| | 1997.02-2007.12 | MT | F | L | Hatchback FWD AEH/AKL | | GDS61045 | Drive Shaft | | 36 | | 53 | 78.5 | 555 | |
| | 1997.02-2007.12 | MT | F | R | Hatchback FWD AEH/AKL | | GDS83046 | Drive Shaft | | 36 | | 53 | 78.5 | 822 | |
| | 1997.02-2007.12 | MT | F | L/R | Hatchback FWD AEH/AKL | | GCO83033 | Outer Joint | | 36 | 30 | 53 | 78.5 | 51 | I |
| | 1997.02-2007.12 | MT | F | L/R | Hatchback FWD AEH/AKL | | GCI83005 | Inner Joint | | | 33 | | | 32 | |
| | 1997.02-2007.12 | MT | F | L/R | Hatchback FWD AEH/AKL | | GCI83008 | Inner Joint | | | 33 | | | 32 | |
| 1.6 (75 kw) | 2000.08-2010.12 | 4AT/5MT | F | L/R | Estate FWD AVU/BFQ | | GCI61006 | Inner Joint | | | 30 | | | 57.6 | |
| | 2000.08-2010.12 | 4AT/5MT | F | L/R | Estate FWD AVU/BFQ | | GCI83008 | Inner Joint | | | 33 | | | 32 | |
| | 2000.08-2010.12 | AT | F | L | Estate FWD AVU/BFQ | | GDS61020 | Drive Shaft | | 36 | | 53.2 | 77.5 | 547 | |
| | 2000.08-2010.12 | AT | F | R | Estate FWD AVU/BFQ | | GDS83011 | Drive Shaft | | 36 | | 53.2 | 77.5 | 810.5 | |
| | 2000.08-2010.12 | AT | F | L/R | Estate FWD AVU/BFQ | | GCO83070 | Outer Joint | | 36 | 30 | 53 | 78 | 60 | I |
| | 2000.08-2010.12 | MT | F | L | Estate FWD AVU/BFQ | | GDS61045 | Drive Shaft | | 36 | | 53 | 78.5 | 555 | |
| | 2000.08-2010.12 | MT | F | R | Estate FWD AVU/BFQ | | GDS83046 | Drive Shaft | | 36 | | 53 | 78.5 | 822 | |
| | 2000.08-2010.12 | MT | F | L/R | Estate FWD AVU/BFQ | | GCO83033 | Outer Joint | | 36 | 30 | 53 | 78.5 | 51 | I |
| | 2000.08-2010.12 | AT | F | L | Hatchback FWD AVU/BFQ | | GDS61020 | Drive Shaft | | 36 | | 53.2 | 77.5 | 547 | |
| | 2000.08-2010.12 | AT | F | R | Hatchback FWD AVU/BFQ | | GDS83011 | Drive Shaft | | 36 | | 53.2 | 77.5 | 810.5 | |
| | 2000.08-2010.12 | AT | F | L/R | Hatchback FWD AVU/BFQ | | GCO83070 | Outer Joint | | 36 | 30 | 53 | 78 | 60 | I |
| | 2000.08-2010.12 | AT | F | L/R | Hatchback FWD AVU/BFQ | | GCI61006 | Inner Joint | | | 30 | | | 57.6 | |
| | 2000.08-2010.12 | MT | F | L | Hatchback FWD AVU/BFQ | | GDS61045 | Drive Shaft | | 36 | | 53 | 78.5 | 555 | |
| | 2000.08-2010.12 | MT | F | R | Hatchback FWD AVU/BFQ | | GDS83046 | Drive Shaft | | 36 | | 53 | 78.5 | 822 | |

| | YEAR | TRANSM. | F/R | L/R | BODY STYLE & DRIVE TYPE & ENGINE | REMARKS | G-AP Ref. | PRODUCT | ABS | Technical Specifications A | B | C | H | L | P |
|---|---|---|---|---|---|---|---|---|---|---|---|---|---|---|---|
| **SKODA** **Octavia** | | | | | | | | | | | | | | | |
| 1.6 (75 kw) | 2000.08-2010.12 | MT | F | L/R | Hatchback FWD AVU/BFQ | | GCO83033 | Outer Joint | | 36 | 30 | 53 | 78.5 | 51 | I |
| | 2000.08-2010.12 | MT | F | L/R | Hatchback FWD AVU/BFQ | | GCI83008 | Inner Joint | | | 33 | | | 32 | |
| | 2004.06-2013.06 | 6AT | F | L | Hatchback FWD BGU;BSE;BSF;CCSA | | GDS83318 | Drive Shaft | | 36 | 26 | 59.5 | 38 | 581 | |
| | 2004.06-2013.06 | 6AT | F | R | Hatchback FWD BGU;BSE;BSF;CCSA | | GDS61094 | Drive Shaft | | 36 | 26 | 59.5 | 40.5 | 884 | |
| | 2004.06-2013.06 | 6AT | F | R | Hatchback FWD BGU;BSE;BSF;CCSA | Date from:2005.09 | GDS83346 | Drive Shaft | | 36 | 26 | 59.5 | 38 | 879 | |
| | 2004.06-2013.06 | 6AT | F | L/R | Hatchback FWD BGU;BSE;BSF;CCSA | | GCI61011 | Inner Joint | | 26 | 32 | 31 | 68.5 | 85 | |
| | 2004.06-2013.06 | 6AT | F | L/R | Hatchback FWD BGU;BSE;BSF;CCSA | | GCI61050 | Inner Joint | | 26 | 32 | 31 | 68.5 | 89 | |
| | 2004.06-2013.06 | 6AT/5MT | F | L/R | Hatchback FWD BGU;BSE;BSF;CCSA | | GCO83037 | Outer Joint | | 36 | 30 | 59.5 | 40.5 | 56 | I |
| | 2004.06-2013.06 | MT | F | L | Hatchback FWD BGU;BSE;BSF;CCSA | | GDS61097 | Drive Shaft | | 36 | | 59.5 | 40.5 | 543 | |
| | 2004.06-2013.06 | MT | F | L | Hatchback FWD BGU;BSE;BSF;CCSA | | GDS83294 | Drive Shaft | | 36 | | 59.5 | 38 | 519 | |
| | 2004.06-2013.06 | MT | F | R | Hatchback FWD BGU;BSE;BSF;CCSA | | GDS61096 | Drive Shaft | | 36 | | 59.5 | 40.5 | 799 | |
| | 2004.06-2013.06 | MT | F | L/R | Hatchback FWD BGU;BSE;BSF;CCSA | | GCI82447 | Inner Joint | | | 33 | | | 34 | |
| | 2004.09-2013.06 | 6AT | F | L | Estate FWD BGU;BSE;BSF;CCSA | | GDS83318 | Drive Shaft | | 36 | 26 | 59.5 | 38 | 581 | |
| | 2004.09-2013.06 | 6AT | F | R | Estate FWD BGU;BSE;BSF;CCSA | | GDS61094 | Drive Shaft | | 36 | 26 | 59.5 | 40.5 | 884 | |
| | 2004.09-2013.06 | 6AT | F | R | Estate FWD BGU;BSE;BSF;CCSA | Date from:2005.09 | GDS83346 | Drive Shaft | | 36 | 26 | 59.5 | 38 | 879 | |
| | 2004.09-2013.06 | 6AT | F | L/R | Estate FWD BGU;BSE;BSF;CCSA | | GCI61011 | Inner Joint | | 26 | 32 | 31 | 68.5 | 85 | |
| | 2004.09-2013.06 | 6AT | F | L/R | Estate FWD BGU;BSE;BSF;CCSA | | GCI61050 | Inner Joint | | 26 | 32 | 31 | 68.5 | 89 | |
| | 2004.09-2013.06 | 6AT/5MT | F | L/R | Estate FWD BGU;BSE;BSF;CCSA | | GCO83037 | Outer Joint | | 36 | 30 | 59.5 | 40.5 | 56 | I |
| | 2004.09-2013.06 | MT | F | L | Estate FWD BGU;BSE;BSF;CCSA | | GDS61097 | Drive Shaft | | 36 | | 59.5 | 40.5 | 543 | |
| | 2004.09-2013.06 | MT | F | L | Estate FWD BGU;BSE;BSF;CCSA | | GDS83294 | Drive Shaft | | 36 | | 59.5 | 38 | 519 | |
| | 2004.09-2013.06 | MT | F | R | Estate FWD BGU;BSE;BSF;CCSA | | GDS61096 | Drive Shaft | | 36 | | 59.5 | 40.5 | 799 | |
| | 2004.09-2013.06 | MT | F | L/R | Estate FWD BGU;BSE;BSF;CCSA | | GCI82447 | Inner Joint | | | 33 | | | 34 | |
| | 2008.01-2013.06 | 5MT | F | L | Estate FWD CCSA;CMXA | | GDS61097 | Drive Shaft | | 36 | | 59.5 | 40.5 | 543 | |
| | 2008.01-2013.06 | 5MT | F | R | Estate FWD CCSA;CMXA | | GDS61096 | Drive Shaft | | 36 | | 59.5 | 40.5 | 799 | |
| | 2008.01-2013.06 | 5MT | F | L/R | Estate FWD CCSA;CMXA | | GCO83037 | Outer Joint | | 36 | 30 | 59.5 | 40.5 | 56 | I |
| | 2008.01-2013.06 | 5MT | F | L/R | Estate FWD CCSA;CMXA | | GCI82447 | Inner Joint | | | 33 | | | 34 | |
| | 2008.01-2013.06 | MT | F | L | Estate FWD CCSA;CMXA | | GDS83294 | Drive Shaft | | 36 | | 59.5 | 38 | 519 | |
| | 2008.01-2013.06 | MT | F | L/R | Estate FWD CCSA;CMXA | | GCI83006 | Inner Joint | | | 33 | | | 34 | |
| | 2008.01-2013.06 | | F | L/R | Estate FWD CCSA;CMXA | Date To:2012.11 | GCI83011 | Inner Joint | | | 33 | | | 34 | |
| | 2008.01-2013.06 | 5MT | F | L | Hatchback FWD CCSA;CMXA | | GDS61097 | Drive Shaft | | 36 | | 59.5 | 40.5 | 543 | |
| | 2008.01-2013.06 | 5MT | F | R | Hatchback FWD CCSA;CMXA | | GDS61096 | Drive Shaft | | 36 | | 59.5 | 40.5 | 799 | |
| | 2008.01-2013.06 | 5MT | F | L/R | Hatchback FWD CCSA;CMXA | | GCO83037 | Outer Joint | | 36 | 30 | 59.5 | 40.5 | 56 | I |
| | 2008.01-2013.06 | 5MT | F | L/R | Hatchback FWD CCSA;CMXA | | GCI82447 | Inner Joint | | | 33 | | | 34 | |
| | 2008.01-2013.06 | MT | F | L | Hatchback FWD CCSA;CMXA | | GDS83294 | Drive Shaft | | 36 | | 59.5 | 38 | 519 | |
| | 2008.01-2013.06 | MT | F | L/R | Hatchback FWD CCSA;CMXA | | GCI83006 | Inner Joint | | | 33 | | | 34 | |
| | 2008.01-2013.06 | | F | L/R | Hatchback FWD CCSA;CMXA | | GCI83011 | Inner Joint | | | 33 | | | 34 | |
| | 2009.08-2012.11 | 5MT | F | L | Estate FWD CHGA | | GDS61097 | Drive Shaft | | 36 | | 59.5 | 40.5 | 543 | |
| | 2009.08-2012.11 | 5MT | F | R | Estate FWD CHGA | | GDS61096 | Drive Shaft | | 36 | | 59.5 | 40.5 | 799 | |
| | 2009.08-2012.11 | 5MT | F | L/R | Estate FWD CHGA | | GCO83037 | Outer Joint | | 36 | 30 | 59.5 | 40.5 | 56 | I |
| | 2009.08-2012.11 | 5MT | F | L/R | Estate FWD CHGA | | GCI82447 | Inner Joint | | | 33 | | | 34 | |
| | 2009.08-2012.11 | MT | F | L | Estate FWD CHGA | | GDS83294 | Drive Shaft | | 36 | | 59.5 | 38 | 519 | |
| | 2009.08-2012.11 | MT | F | L/R | Estate FWD CHGA | | GCI83006 | Inner Joint | | | 33 | | | 34 | |
| | 2009.08-2012.11 | | F | L/R | Estate FWD CHGA | | GCI83011 | Inner Joint | | | 33 | | | 34 | |
| | 2009.08-2012.11 | 5MT | F | L/R | Hatchback FWD BSE;CHGA | | GCO83037 | Outer Joint | | 36 | 30 | 59.5 | 40.5 | 56 | I |
| | 2009.08-2012.11 | MT | F | L | Hatchback FWD BSE;CHGA | | GDS61097 | Drive Shaft | | 36 | | 59.5 | 40.5 | 543 | |
| | 2009.08-2012.11 | MT | F | L | Hatchback FWD BSE;CHGA | | GDS83294 | Drive Shaft | | 36 | | 59.5 | 38 | 519 | |
| | 2009.08-2012.11 | MT | F | R | Hatchback FWD BSE;CHGA | | GDS61096 | Drive Shaft | | 36 | | 59.5 | 40.5 | 799 | |
| | 2009.08-2012.11 | MT | F | L/R | Hatchback FWD BSE;CHGA | | GCI82447 | Inner Joint | | | 33 | | | 34 | |
| | 2009.08-2012.11 | MT | F | L/R | Hatchback FWD BSE;CHGA | | GCI83006 | Inner Joint | | | 33 | | | 34 | |
| | 2009.08-2012.11 | MT | F | L/R | Hatchback FWD BSE;CHGA | | GCI83011 | Inner Joint | | | 33 | | | 34 | |
| 1.6 (77 kw) | 2009.06-2013.02 | 6MT | F | L | Estate 4WD CAYC | | GDS83295 | Drive Shaft | | 36 | | 59.5 | 40 | 491 | |
| | 2009.06-2013.02 | 6MT | F | R | Estate 4WD CAYC | | GDS83266 | Drive Shaft | | 36 | | 59.5 | 40 | 601 | |
| | 2009.06-2013.02 | MT | F | L | Estate 4WD CAYC | | GDS83236 | Drive Shaft | | 36 | | 59.5 | 40 | 484 | |
| | 2009.06-2013.02 | | F | L/R | Estate 4WD CAYC | | GCO83002 | Outer Joint | | 36 | 27 | 59.5 | 40 | 66 | I |
| | 2009.06-2013.02 | | F | L/R | Estate 4WD CAYC | | GCI83016 | Inner Joint | | | 28 | | | 32 | |
| | 2009.06-2013.02 | 6MT | R | L | Estate 4WD CAYC | | GDS61284 | Drive Shaft | | 36 | | 59.5 | 40 | 594 | |
| | 2009.06-2013.02 | 6MT | R | R | Estate 4WD CAYC | | GDS61293 | Drive Shaft | | 36 | | 59.5 | 40 | 631 | |
| | 2009.06-2013.02 | 6MT | R | L/R | Estate 4WD CAYC | | GCI35026 | Outer Joint | | 36 | 33 | 59.5 | 40 | 61 | |
| | 2009.06-2013.02 | 6MT | R | L/R | Estate 4WD CAYC | | GCI53002 | Inner Joint | | | 33 | | | 34 | |
| | 2009.06-2013.02 | 6MT | R | L/R | Estate 4WD CAYC | | GCI82447 | Inner Joint | | | 33 | | | 34 | |
| | 2009.06-2013.04 | 5MT | F | R | Estate FWD CAYC | Date from:2011.06;Inner teeth of wheel side:33 | GDS61283 | Drive Shaft | | 36 | | 59.5 | 40 | 815 | |
| | 2009.06-2013.04 | 5MT | F | R | Estate FWD CAYC | Date from:2011.06 | GCI53002 | Inner Joint | | | 33 | | | 34 | |
| | 2009.06-2013.04 | 7AT/5MT | F | L/R | Estate FWD CAYC | | GCI83016 | Inner Joint | | | 28 | | | 32 | |
| | 2009.06-2013.04 | 7DCT | F | L | Estate FWD CAYC | Date to:2011.05 | GDS61100 | Drive Shaft | | 36 | | 59.5 | 40 | 513 | |
| | 2009.06-2013.04 | 7DCT | F | L | Estate FWD CAYC | Date from:2011.06 | GDS61282 | Drive Shaft | | 36 | | 59.5 | 40 | 523 | |

| | YEAR | TRANSM. | F/R | L/R | BODY STYLE & DRIVE TYPE & ENGINE | REMARKS | G-AP Ref. | PRODUCT | ABS | Technical Specifications A | B | C | H | L | P |
|---|---|---|---|---|---|---|---|---|---|---|---|---|---|---|---|
| **SKODA** **Octavia** | | | | | | | | | | | | | | | |
| 1.6 (77 kw) | 2009.06-2013.04 | 7DCT | F | R | Estate FWD CAYC | Date from:2011.06 | GDS61096 | Drive Shaft | | 36 | | 59.5 | 40.5 | 799 | |
| | 2009.06-2013.04 | 7DCT | F | R | Estate FWD CAYC | Date To:2011.05;Hollow shaft | GDS61339 | Drive Shaft | | 36 | | 59.5 | 40 | 794 | |
| | 2009.06-2013.04 | 7DCT | F | R | Estate FWD CAYC | Date to:2011.05;Solid shaft | GDS83313 | Drive Shaft | | 36 | | 59.5 | 40 | 792 | |
| | 2009.06-2013.04 | 7DCT | F | L/R | Estate FWD CAYC | Date to:2011.05 | GCO83002 | Outer Joint | | 36 | 27 | 59.5 | 40 | 66 | I |
| | 2009.06-2013.04 | 7DCT | F | | Estate FWD CAYC | Date from:2011.06 | GCO61059 | Outer Joint | | 36 | 33 | 59.5 | 40 | 59.5 | I |
| | 2009.06-2013.04 | 7DCT | F | L | Estate FWD CAYC | | GCI53002 | Inner Joint | | | 33 | | | 34 | |
| | 2009.06-2013.04 | 7DCT | F | R | Estate FWD CAYC | Date to:2011.05 | GCI61069 | Inner Joint | | | 28 | | | 32 | |
| | 2009.06-2013.04 | MT | F | L | Estate FWD CAYC | | GDS83294 | Drive Shaft | | 36 | | 59.5 | 38 | 519 | |
| | 2009.06-2013.04 | MT | F | R | Estate FWD CAYC | Inner teeth of wheel side:30 | GDS61042 | Drive Shaft | | 36 | | 59.5 | 40.5 | 814 | |
| | 2009.06-2013.04 | MT | F | L/R | Estate FWD CAYC | | GCO83037 | Outer Joint | | 36 | 30 | 59.5 | 40.5 | 56 | I |
| | 2009.06-2013.04 | MT | F | R | Estate FWD CAYC | Date to:2013.03 | GCI53002 | Inner Joint | | | 33 | | | 34 | |
| | 2009.06-2013.04 | MT | F | L/R | Estate FWD CAYC | | GCI82447 | Inner Joint | | | 33 | | | 34 | |
| | 2009.06-2013.04 | Semi-AT | F | L | Estate FWD CAYC | | GDS83236 | Drive Shaft | | 36 | | 59.5 | 40 | 484 | |
| | 2009.06-2013.04 | Semi-AT | F | | Estate FWD CAYC | | GCO83100 | Outer Joint | | 36 | 33 | 59.5 | 38 | 56 | I |
| | 2009.06-2013.04 | 5MT | F | L | Hatchback FWD CAYC | | GDS83294 | Drive Shaft | | 36 | | 59.5 | 38 | 519 | |
| | 2009.06-2013.04 | 5MT | F | R | Hatchback FWD CAYC | | GDS61042 | Drive Shaft | | 36 | | 59.5 | 40.5 | 814 | |
| | 2009.06-2013.04 | 7AT/5MT | F | L/R | Hatchback FWD CAYC | | GCI83016 | Inner Joint | | | 28 | | | 32 | |
| | 2009.06-2013.04 | 7AT/6MT | F | | Hatchback FWD CAYC | | GCO83100 | Outer Joint | | 36 | 33 | 59.5 | 38 | 56 | I |
| | 2009.06-2013.04 | 7DCT | F | L | Hatchback FWD CAYC | Date to:2011.05 | GDS61100 | Drive Shaft | | 36 | | 59.5 | 40 | 513 | |
| | 2009.06-2013.04 | 7DCT | F | L | Hatchback FWD CAYC | Date from:2011.06 | GDS61282 | Drive Shaft | | 36 | | 59.5 | 40 | 523 | |
| | 2009.06-2013.04 | 7DCT | F | R | Hatchback FWD CAYC | Date from:2011.06 | GDS61096 | Drive Shaft | | 36 | | 59.5 | 40.5 | 799 | |
| | 2009.06-2013.04 | 7DCT | F | R | Hatchback FWD CAYC | Date to:2011.05 | GDS83313 | Drive Shaft | | 36 | | 59.5 | 40 | 792 | |
| | 2009.06-2013.04 | AT | F | L/R | Hatchback FWD CAYC | Date to:2011.05 | GCO83002 | Outer Joint | | 36 | 27 | 59.5 | 40 | 66 | I |
| | 2009.06-2013.04 | MT | F | L/R | Hatchback FWD CAYC | | GCO83037 | Outer Joint | | 36 | 30 | 59.5 | 40.5 | 56 | I |
| | 2009.06-2013.04 | MT | F | L/R | Hatchback FWD CAYC | | GCI82447 | Inner Joint | | | 33 | | | 34 | |
| | 2009.06-2013.04 | | F | | Hatchback FWD CAYC | | GCO61059 | Outer Joint | | 36 | 33 | 59.5 | 40 | 59.5 | I |
| | 2012.11-2015.05 | 6AT/6MT | F | R | Estate 4WD CLHA | | GDS81892 | Drive Shaft | | 36 | | 59.5 | 40 | 602 | |
| | 2012.11-2015.05 | 6MT | F | L | Estate 4WD CLHA | | GDS83295 | Drive Shaft | | 36 | | 59.5 | 40 | 491 | |
| | 2012.11-2015.05 | 6MT | F | L/R | Estate 4WD CLHA | | GCO83101 | Outer Joint | | 36 | 27 | 59.5 | 40 | 65 | M |
| | 2012.11-2015.05 | 6MT | F | L/R | Estate 4WD CLHA | | GCI61069 | Inner Joint | | | 28 | | | 32 | |
| | 2012.11-2015.05 | MT | F | L | Estate 4WD CLHA | | GCO83037 | Outer Joint | | 36 | 30 | 59.5 | 40.5 | 56 | I |
| | 2012.11-2015.05 | | F | L/R | Estate 4WD CLHA | | GCI83016 | Inner Joint | | | 28 | | | 32 | |
| | 2012.11-2015.05 | 6MT | R | L | Estate 4WD CLHA | | GDS61286 | Drive Shaft | | 36 | | 59.5 | 40 | 587 | |
| | 2012.11-2015.05 | 6MT | R | R | Estate 4WD CLHA | | GDS61287 | Drive Shaft | | 36 | | 59.5 | 40 | 632 | |
| | 2012.11-2015.05 | 6MT | R | L/R | Estate 4WD CLHA | | GCI35026 | Outer Joint | | 36 | 33 | 59.5 | 40 | 61 | |
| | 2012.11-2015.05 | 6MT | R | L/R | Estate 4WD CLHA | | GCI61103 | Inner Joint | | | 33 | | | 32 | |
| | 2012.11-2015.05 | 5MT | F | R | Estate FWD CLHA | | GDS61283 | Drive Shaft | | 36 | | 59.5 | 40 | 815 | |
| | 2012.11-2015.05 | 5MT | F | L/R | Estate FWD CLHA | | GCI53002 | Inner Joint | | | 33 | | | 34 | |
| | 2012.11-2015.05 | 5MT/7AT | F | R | Estate FWD CLHA | Date from:2013.03,Date to:2013.04 | GCO83037 | Outer Joint | | 36 | 30 | 59.5 | 40.5 | 56 | I |
| | 2012.11-2015.05 | 5MT/7DCT | F | L | Estate FWD CLHA | Inner teeth of wheel side:33 | GDS61282 | Drive Shaft | | 36 | | 59.5 | 40 | 523 | |
| | 2012.11-2015.05 | 7AT/5MT | F | L/R | Estate FWD CLHA | Date to:2013.02,Date from:2013.05 | GCO61059 | Outer Joint | | 36 | 33 | 59.5 | 40 | 59.5 | I |
| | 2012.11-2015.05 | 7DCT | F | R | Estate FWD CLHA | | GDS61096 | Drive Shaft | | 36 | | 59.5 | 40.5 | 799 | |
| | 2012.11-2015.05 | 7DCT | F | L | Estate FWD CLHA | | GCI53002 | Inner Joint | | | 33 | | | 34 | |
| | 2012.11-2015.05 | 7DCT/5MT | F | L/R | Estate FWD CLHA | | GCI82447 | Inner Joint | | | 33 | | | 34 | |
| | 2012.11-2015.05 | AT | F | R | Estate FWD CLHA | Date from:2011.06 | GCI53002 | Inner Joint | | | 33 | | | 34 | |
| | 2012.11-2015.05 | MT | F | L | Estate FWD CLHA | Inner teeth of wheel side:30 | GDS83294 | Drive Shaft | | 36 | | 59.5 | 38 | 519 | |
| | 2012.11-2015.05 | | F | L/R | Estate FWD CLHA | | GCI83011 | Inner Joint | | | 33 | | | 34 | |
| | 2012.11-2015.05 | 5MT | F | R | Hatchback FWD CLHA | | GDS61283 | Drive Shaft | | 36 | | 59.5 | 40 | 815 | |
| | 2012.11-2015.05 | 5MT | F | L/R | Hatchback FWD CLHA | | GCI53002 | Inner Joint | | | 33 | | | 34 | |
| | 2012.11-2015.05 | 5MT/6MT/7AT | F | R | Hatchback FWD CLHA | Date from:2013.03,Date to:2013.04 | GCO83037 | Outer Joint | | 36 | 30 | 59.5 | 40.5 | 56 | I |
| | 2012.11-2015.05 | 5MT/6MT/7DCT | F | L/R | Hatchback FWD CLHA | | GCI82447 | Inner Joint | | | 33 | | | 34 | |
| | 2012.11-2015.05 | 5MT/7DCT | F | L | Hatchback FWD CLHA | | GDS61282 | Drive Shaft | | 36 | | 59.5 | 40 | 523 | |
| | 2012.11-2015.05 | 7AT/5MT/6MT | F | L/R | Hatchback FWD CLHA | Date to:2013.02,Date from:2013.05 | GCO61059 | Outer Joint | | 36 | 33 | 59.5 | 40 | 59.5 | I |
| | 2012.11-2015.05 | 7DCT | F | R | Hatchback FWD CLHA | | GDS61096 | Drive Shaft | | 36 | | 59.5 | 40.5 | 799 | |
| | 2012.11-2015.05 | 7DCT | F | L | Hatchback FWD CLHA | | GCI53002 | Inner Joint | | | 33 | | | 34 | |
| | 2012.11-2015.05 | MT | F | L | Hatchback FWD CLHA | | GDS83294 | Drive Shaft | | 36 | | 59.5 | 38 | 519 | |
| | 2012.11-2015.05 | | F | L/R | Hatchback FWD CLHA | | GCI83011 | Inner Joint | | | 33 | | | 34 | |
| | 2013.05-2015.05 | 6AT/6MT | F | R | Hatchback 4WD CLHA | | GDS81892 | Drive Shaft | | 36 | | 59.5 | 40 | 602 | |
| | 2013.05-2015.05 | 6MT | F | L | Hatchback 4WD CLHA | | GDS83295 | Drive Shaft | | 36 | | 59.5 | 40 | 491 | |
| | 2013.05-2015.05 | 6MT | F | L/R | Hatchback 4WD CLHA | | GCO83101 | Outer Joint | | 36 | 27 | 59.5 | 40 | 65 | M |
| | 2013.05-2015.05 | 6MT | F | L/R | Hatchback 4WD CLHA | | GCI61069 | Inner Joint | | | 28 | | | 32 | |
| | 2013.05-2015.05 | | F | L/R | Hatchback 4WD CLHA | | GCI83016 | Inner Joint | | | 28 | | | 32 | |
| | 2013.05-2015.05 | 6MT | R | L | Hatchback 4WD CLHA | | GDS61286 | Drive Shaft | | 36 | | 59.5 | 40 | 587 | |
| | 2013.05-2015.05 | 6MT | R | R | Hatchback 4WD CLHA | | GDS61287 | Drive Shaft | | 36 | | 59.5 | 40 | 632 | |
| | 2013.05-2015.05 | 6MT | R | L/R | Hatchback 4WD CLHA | | GCI35026 | Outer Joint | | 36 | 33 | 59.5 | 40 | 61 | |

| | YEAR | TRANSM. | F/R | L/R | BODY STYLE & DRIVE TYPE & ENGINE | REMARKS | G-AP Ref. | PRODUCT | ABS | Technical Specifications A | B | C | H | L | P |
|---|---|---|---|---|---|---|---|---|---|---|---|---|---|---|---|
| **SKODA** **Octavia** | | | | | | | | | | | | | | | |
| 1.6 (77 kw) | 2013.05-2015.05 | 6MT | R | L/R | Hatchback 4WD CLHA | | GCI61103 | Inner Joint | | | 33 | | | 32 | |
| 1.6 (81 kw) | 2013.05-2017.02 | 5MT/6MT | F | R | Estate FWD CRKB;CXXB;DBKA | | GDS61283 | Drive Shaft | | 36 | | 59.5 | 40 | 815 | |
| | 2013.05-2017.02 | 5MT/6MT | F | L/R | Estate FWD CRKB;CXXB;DBKA | | GCO61059 | Outer Joint | | 36 | 33 | 59.5 | 40 | 59.5 | I |
| | 2013.05-2017.02 | 5MT/6MT | F | L/R | Estate FWD CRKB;CXXB;DBKA | | GCI53002 | Inner Joint | | | 33 | | | 34 | |
| | 2013.05-2017.02 | 5MT/6MT/7DCT | F | L | Estate FWD CRKB;CXXB;DBKA | Inner teeth of wheel side:33 | GDS61282 | Drive Shaft | | 36 | | 59.5 | 40 | 523 | |
| | 2013.05-2017.02 | 7DCT | F | R | Estate FWD CRKB;CXXB;DBKA | | GDS61096 | Drive Shaft | | 36 | | 59.5 | 40.5 | 799 | |
| | 2013.05-2017.02 | 7DCT | F | L | Estate FWD CRKB;CXXB;DBKA | | GCO61059 | Outer Joint | | 36 | 33 | 59.5 | 40 | 59.5 | I |
| | 2013.05-2017.02 | 7DCT | F | L | Estate FWD CRKB;CXXB;DBKA | | GCI53002 | Inner Joint | | | 33 | | | 34 | |
| | 2013.05-2017.02 | 7DCT/5MT/6MT | F | L/R | Estate FWD CRKB;CXXB;DBKA | | GCI82447 | Inner Joint | | | 33 | | | 34 | |
| | 2013.05-2017.02 | MT | F | L | Estate FWD CRKB;CXXB;DBKA | Inner teeth of wheel side:30 | GDS83294 | Drive Shaft | | 36 | | 59.5 | 38 | 519 | |
| | 2013.05-2017.02 | MT | F | L | Estate FWD CRKB;CXXB;DBKA | | GCO83037 | Outer Joint | | 36 | 30 | 59.5 | 40.5 | 56 | I |
| | 2013.05-2017.02 | | F | L/R | Estate FWD CRKB;CXXB;DBKA | | GCI83011 | Inner Joint | | | 33 | | | 34 | |
| | 2013.05-2017.02 | 5MT/6MT | F | R | Hatchback FWD CRKB;CXXB;DBKA | | GDS61283 | Drive Shaft | | 36 | | 59.5 | 40 | 815 | |
| | 2013.05-2017.02 | 5MT/6MT | F | L/R | Hatchback FWD CRKB;CXXB;DBKA | | GCO61059 | Outer Joint | | 36 | 33 | 59.5 | 40 | 59.5 | I |
| | 2013.05-2017.02 | 5MT/6MT | F | L/R | Hatchback FWD CRKB;CXXB;DBKA | | GCI53002 | Inner Joint | | | 33 | | | 34 | |
| | 2013.05-2017.02 | 7AT | F | L | Hatchback FWD CRKB;CXXB;DBKA | | GCO61059 | Outer Joint | | 36 | 33 | 59.5 | 40 | 59.5 | I |
| | 2013.05-2017.02 | 7AT | F | L | Hatchback FWD CRKB;CXXB;DBKA | | GCI53002 | Inner Joint | | | 33 | | | 34 | |
| | 2013.05-2017.02 | 7AT/5MT/6MT | F | L | Hatchback FWD CRKB;CXXB;DBKA | | GDS61282 | Drive Shaft | | 36 | | 59.5 | 40 | 523 | |
| | 2013.05-2017.02 | 7DCT | F | R | Hatchback FWD CRKB;CXXB;DBKA | | GDS61096 | Drive Shaft | | 36 | | 59.5 | 40.5 | 799 | |
| | 2013.05-2017.02 | 7DCT/5MT/6MT | F | L/R | Hatchback FWD CRKB;CXXB;DBKA | | GCI82447 | Inner Joint | | | 33 | | | 34 | |
| | 2013.05-2017.02 | MT | F | L | Hatchback FWD CRKB;CXXB;DBKA | | GDS83294 | Drive Shaft | | 36 | | 59.5 | 38 | 519 | |
| | 2013.05-2017.02 | MT | F | L | Hatchback FWD CRKB;CXXB;DBKA | | GCO83037 | Outer Joint | | 36 | 30 | 59.5 | 40.5 | 56 | I |
| | 2013.05-2017.02 | | F | L/R | Hatchback FWD CRKB;CXXB;DBKA | | GCI83011 | Inner Joint | | | 33 | | | 34 | |
| | 2014.01-2017.02 | 5MT | F | L | Estate FWD CWVA | | GDS61097 | Drive Shaft | | 36 | | 59.5 | 40.5 | 543 | |
| | 2014.01-2017.02 | 5MT | F | R | Estate FWD CWVA | | GDS61096 | Drive Shaft | | 36 | | 59.5 | 40.5 | 799 | |
| | 2014.01-2017.02 | 5MT | F | L/R | Estate FWD CWVA | | GCI82447 | Inner Joint | | | 33 | | | 34 | |
| | 2014.01-2017.02 | 6AT/5MT | F | L/R | Estate FWD CWVA | | GCO83037 | Outer Joint | | 36 | 30 | 59.5 | 40.5 | 56 | I |
| | 2014.01-2017.02 | 6DCT | F | L | Estate FWD CWVA | | GDS83318 | Drive Shaft | | 36 | 26 | 59.5 | 38 | 581 | |
| | 2014.01-2017.02 | 6DCT | F | R | Estate FWD CWVA | | GDS61094 | Drive Shaft | | 36 | 26 | 59.5 | 40.5 | 884 | |
| | 2014.01-2017.02 | 6DCT | F | L/R | Estate FWD CWVA | | GCI61011 | Inner Joint | | 26 | 32 | 31 | 68.5 | 85 | |
| | 2014.01-2017.02 | 6DCT | F | L/R | Estate FWD CWVA | | GCI61050 | Inner Joint | | 26 | 32 | 31 | 68.5 | 89 | |
| | 2014.01-2017.02 | AT | F | L | Estate FWD CWVA | | GDS61093 | Drive Shaft | | 36 | 26 | 59.5 | 40.5 | 587.5 | |
| | 2014.01-2017.02 | MT | F | L | Estate FWD CWVA | | GDS83294 | Drive Shaft | | 36 | | 59.5 | 38 | 519 | |
| | 2014.01-2017.02 | MT | F | | Estate FWD CWVA | | GCO83100 | Outer Joint | | 36 | 33 | 59.5 | 38 | 56 | I |
| | 2014.01-2020.10 | 5MT | F | L | Hatchback FWD CWVA | | GDS61097 | Drive Shaft | | 36 | | 59.5 | 40.5 | 543 | |
| | 2014.01-2020.10 | 5MT | F | R | Hatchback FWD CWVA | | GDS61096 | Drive Shaft | | 36 | | 59.5 | 40.5 | 799 | |
| | 2014.01-2020.10 | 5MT | F | L/R | Hatchback FWD CWVA | | GCI82447 | Inner Joint | | | 33 | | | 34 | |
| | 2014.01-2020.10 | 6AT/5MT | F | L/R | Hatchback FWD CWVA | | GCO83037 | Outer Joint | | 36 | 30 | 59.5 | 40.5 | 56 | I |
| | 2014.01-2020.10 | 6DCT | F | L | Hatchback FWD CWVA | | GDS83318 | Drive Shaft | | 36 | 26 | 59.5 | 38 | 581 | |
| | 2014.01-2020.10 | 6DCT | F | R | Hatchback FWD CWVA | | GDS61094 | Drive Shaft | | 36 | 26 | 59.5 | 40.5 | 884 | |
| | 2014.01-2020.10 | 6DCT | F | L/R | Hatchback FWD CWVA | | GCI61011 | Inner Joint | | 26 | 32 | 31 | 68.5 | 85 | |
| | 2014.01-2020.10 | 6DCT | F | L/R | Hatchback FWD CWVA | | GCI61050 | Inner Joint | | 26 | 32 | 31 | 68.5 | 89 | |
| | 2014.01-2020.10 | MT | F | L | Hatchback FWD CWVA | | GDS83294 | Drive Shaft | | 36 | | 59.5 | 38 | 519 | |
| | 2014.01-2020.10 | MT | F | | Hatchback FWD CWVA | | GCO83100 | Outer Joint | | 36 | 33 | 59.5 | 38 | 56 | I |
| | 2015.05-2017.02 | 6MT | F | L | Hatchback 4WD CRKB;CXXB | | GDS83295 | Drive Shaft | | 36 | | 59.5 | 40 | 491 | |
| | 2015.05-2017.02 | 6MT | F | R | Hatchback 4WD CRKB;CXXB | | GDS81892 | Drive Shaft | | 36 | | 59.5 | 40 | 602 | |
| | 2015.05-2017.02 | 6MT | F | L | Hatchback 4WD CRKB;CXXB | | GCO83101 | Outer Joint | | 36 | 27 | 59.5 | 40 | 65 | M |
| | 2015.05-2017.02 | 6MT | F | R | Hatchback 4WD CRKB;CXXB | | GCI35026 | Outer Joint | | 36 | 33 | 59.5 | 40 | 61 | |
| | 2015.05-2017.02 | 6MT | F | L | Hatchback 4WD CRKB;CXXB | | GCI61069 | Inner Joint | | | 28 | | | 32 | |
| | 2015.05-2017.02 | 6MT | F | R | Hatchback 4WD CRKB;CXXB | | GCI61103 | Inner Joint | | | 33 | | | 32 | |
| | 2015.05-2017.02 | | F | L/R | Hatchback 4WD CRKB;CXXB | | GCI83016 | Inner Joint | | | 28 | | | 32 | |
| | 2015.05-2017.02 | 6MT | R | L | Hatchback 4WD CRKB;CXXB | Not For facelift | GDS61286 | Drive Shaft | | 36 | | 59.5 | 40 | 587 | |
| | 2015.05-2017.02 | 6MT | R | L | Hatchback 4WD CRKB;CXXB | For facelift | GDS61331 | Drive Shaft | | 36 | | 59.5 | 40 | 606 | |
| | 2015.05-2017.02 | 6MT | R | R | Hatchback 4WD CRKB;CXXB | Not For facelift | GDS61287 | Drive Shaft | | 36 | | 59.5 | 40 | 632 | |
| | 2015.05-2017.02 | 6MT | R | R | Hatchback 4WD CRKB;CXXB | For facelift | GDS61332 | Drive Shaft | | 36 | | 59.5 | 40 | 650 | |
| | 2015.05-2017.02 | 6MT | R | L/R | Hatchback 4WD CRKB;CXXB | | GCI35026 | Outer Joint | | 36 | 33 | 59.5 | 40 | 61 | |
| | 2015.05-2017.02 | 6MT | R | L/R | Hatchback 4WD CRKB;CXXB | | GCI61103 | Inner Joint | | | 33 | | | 32 | |
| | 2020.07- | 5MT | F | L | Hatchback FWD CWVA;DWYA | | GDS61097 | Drive Shaft | | 36 | | 59.5 | 40.5 | 543 | |
| | 2020.07- | 5MT | F | R | Hatchback FWD CWVA;DWYA | | GDS61096 | Drive Shaft | | 36 | | 59.5 | 40.5 | 799 | |
| | 2020.07- | 5MT | F | L/R | Hatchback FWD CWVA;DWYA | | GCO83037 | Outer Joint | | 36 | 30 | 59.5 | 40.5 | 56 | I |
| | 2020.07- | 5MT | F | L/R | Hatchback FWD CWVA;DWYA | | GCI82447 | Inner Joint | | | 33 | | | 34 | |
| | 2020.07- | 6AT | F | L | Hatchback FWD CWVA;DWYA | | GDS61093 | Drive Shaft | | 36 | 26 | 59.5 | 40.5 | 587.5 | |
| | 2020.07- | 6AT | F | L | Hatchback FWD CWVA;DWYA | | GDS83318 | Drive Shaft | | 36 | 26 | 59.5 | 38 | 581 | |
| | 2020.07- | 6AT | F | R | Hatchback FWD CWVA;DWYA | | GDS61094 | Drive Shaft | | 36 | 26 | 59.5 | 40.5 | 884 | |
| | 2020.09- | 6AT | F | L | Estate FWD CWVA;DWYA | | GDS83318 | Drive Shaft | | 36 | 26 | 59.5 | 38 | 581 | |

| | YEAR | TRANSM. | F/R | L/R | BODY STYLE & DRIVE TYPE & ENGINE | REMARKS | G-AP Ref. | PRODUCT | ABS | Technical Specifications A | B | C | H | L | P |
|---|---|---|---|---|---|---|---|---|---|---|---|---|---|---|---|
| **SKODA** **Octavia** | | | | | | | | | | | | | | | |
| 1.6 (81 kw) | 2020.09- | 6AT | F | R | Estate FWD CWVA;DWYA | | GDS61094 | Drive Shaft | | 36 | 26 | 59.5 | 40.5 | 884 | |
| 1.6 (85 kw) | 2004.02-2008.10 | 6AT | F | L | Estate FWD BLF | | GDS81582 | Drive Shaft | | 36 | 26 | 59.5 | 40 | 597 | |
| | 2004.02-2008.10 | 6AT | F | L/R | Estate FWD BLF | | GCI61011 | Inner Joint | | 26 | 32 | 31 | 68.5 | 85 | |
| | 2004.02-2008.10 | 6AT | F | L/R | Estate FWD BLF | | GCI61050 | Inner Joint | | 26 | 32 | 31 | 68.5 | 89 | |
| | 2004.02-2008.10 | 6AT/5MT | F | L/R | Estate FWD BLF | | GCO83037 | Outer Joint | | 36 | 30 | 59.5 | 40.5 | 56 | I |
| | 2004.02-2008.10 | AT | F | R | Estate FWD BLF | | GDS81583 | Drive Shaft | | 36 | 26 | 59.5 | 40 | 873 | |
| | 2004.02-2008.10 | MT | F | L | Estate FWD BLF | | GDS83319 | Drive Shaft | | 36 | | 59.5 | 38 | 557 | |
| | 2004.02-2008.10 | MT | F | R | Estate FWD BLF | | GDS61211 | Drive Shaft | | 36 | | 59.5 | 40.5 | 784 | |
| | 2004.02-2008.10 | MT | F | L/R | Estate FWD BLF | | GCI82447 | Inner Joint | | | 33 | | | 34 | |
| | 2004.02-2008.10 | 5MT | F | L/R | Hatchback FWD BLF | | GCI82447 | Inner Joint | | | 33 | | | 34 | |
| | 2004.02-2008.10 | 6AT | F | L | Hatchback FWD BLF | | GDS81582 | Drive Shaft | | 36 | 26 | 59.5 | 40 | 597 | |
| | 2004.02-2008.10 | 6AT | F | L/R | Hatchback FWD BLF | | GCI61011 | Inner Joint | | 26 | 32 | 31 | 68.5 | 85 | |
| | 2004.02-2008.10 | 6AT | F | L/R | Hatchback FWD BLF | | GCI61050 | Inner Joint | | 26 | 32 | 31 | 68.5 | 89 | |
| | 2004.02-2008.10 | 6AT/5MT | F | L/R | Hatchback FWD BLF | | GCO83037 | Outer Joint | | 36 | 30 | 59.5 | 40.5 | 56 | I |
| | 2004.02-2008.10 | AT | F | R | Hatchback FWD BLF | | GDS81583 | Drive Shaft | | 36 | 26 | 59.5 | 40 | 873 | |
| | 2004.02-2008.10 | MT | F | L | Hatchback FWD BLF | | GDS83319 | Drive Shaft | | 36 | | 59.5 | 38 | 557 | |
| | 2004.02-2008.10 | MT | F | R | Hatchback FWD BLF | | GDS61211 | Drive Shaft | | 36 | | 59.5 | 40.5 | 784 | |
| | 2017.02-2020.10 | 6MT | F | L | Estate 4WD DGTE | | GDS83295 | Drive Shaft | | 36 | | 59.5 | 40 | 491 | |
| | 2017.02-2020.10 | 6MT | F | R | Estate 4WD DGTE | | GDS81892 | Drive Shaft | | 36 | | 59.5 | 40 | 602 | |
| | 2017.02-2020.10 | 6MT | F | L | Estate 4WD DGTE | | GCO83101 | Outer Joint | | 36 | 27 | 59.5 | 40 | 65 | M |
| | 2017.02-2020.10 | 6MT | F | L | Estate 4WD DGTE | | GCI61069 | Inner Joint | | | 28 | | | 32 | |
| | 2017.02-2020.10 | | F | L/R | Estate 4WD DGTE | | GCI83016 | Inner Joint | | | 28 | | | 32 | |
| | 2017.02-2020.10 | 6MT | R | L | Estate 4WD DGTE | Not For facelift | GDS61286 | Drive Shaft | | 36 | | 59.5 | 40 | 587 | |
| | 2017.02-2020.10 | 6MT | R | L | Estate 4WD DGTE | For facelift | GDS61331 | Drive Shaft | | 36 | | 59.5 | 40 | 606 | |
| | 2017.02-2020.10 | 6MT | R | R | Estate 4WD DGTE | Not For facelift | GDS61287 | Drive Shaft | | 36 | | 59.5 | 40 | 632 | |
| | 2017.02-2020.10 | 6MT | R | R | Estate 4WD DGTE | For facelift | GDS61332 | Drive Shaft | | 36 | | 59.5 | 40 | 650 | |
| | 2017.02-2020.10 | 6MT | R | L/R | Estate 4WD DGTE | | GCI35026 | Outer Joint | | 36 | 33 | 59.5 | 40 | 61 | |
| | 2017.02-2020.10 | 6MT | R | L/R | Estate 4WD DGTE | Facelift:No | GCI61103 | Inner Joint | | | 33 | | | 32 | |
| | 2017.02-2020.10 | 5MT | F | R | Estate FWD DDYA;DGTA;DGTE | | GDS61283 | Drive Shaft | | 36 | | 59.5 | 40 | 815 | |
| | 2017.02-2020.10 | 5MT | F | L/R | Estate FWD DDYA;DGTA;DGTE | | GCO61059 | Outer Joint | | 36 | 33 | 59.5 | 40 | 59.5 | I |
| | 2017.02-2020.10 | 5MT | F | L/R | Estate FWD DDYA;DGTA;DGTE | | GCI53002 | Inner Joint | | | 33 | | | 34 | |
| | 2017.02-2020.10 | 5MT/7DCT | F | L | Estate FWD DDYA;DGTA;DGTE | | GDS61282 | Drive Shaft | | 36 | | 59.5 | 40 | 523 | |
| | 2017.02-2020.10 | 7AT | F | L | Estate FWD DDYA;DGTA;DGTE | | GCI53002 | Inner Joint | | | 33 | | | 34 | |
| | 2017.02-2020.10 | 7DCT | F | R | Estate FWD DDYA;DGTA;DGTE | | GDS61096 | Drive Shaft | | 36 | | 59.5 | 40.5 | 799 | |
| | 2017.02-2020.10 | 7DCT | F | L | Estate FWD DDYA;DGTA;DGTE | | GCO61059 | Outer Joint | | 36 | 33 | 59.5 | 40 | 59.5 | I |
| | 2017.02-2020.10 | 7DCT/5MT | F | L/R | Estate FWD DDYA;DGTA;DGTE | | GCI82447 | Inner Joint | | | 33 | | | 34 | |
| | 2017.02-2020.10 | AT | F | R | Estate FWD DDYA;DGTA;DGTE | Date from:2011.06 | GCI53002 | Inner Joint | | | 33 | | | 34 | |
| | 2017.02-2020.10 | | F | L/R | Estate FWD DDYA;DGTA;DGTE | | GCI83011 | Inner Joint | | | 33 | | | 34 | |
| | 2017.02-2020.10 | 6MT | F | L | Hatchback 4WD DGTE | | GDS83295 | Drive Shaft | | 36 | | 59.5 | 40 | 491 | |
| | 2017.02-2020.10 | 6MT | F | R | Hatchback 4WD DGTE | | GDS81892 | Drive Shaft | | 36 | | 59.5 | 40 | 602 | |
| | 2017.02-2020.10 | 6MT | F | L | Hatchback 4WD DGTE | | GCO83101 | Outer Joint | | 36 | 27 | 59.5 | 40 | 65 | M |
| | 2017.02-2020.10 | 6MT | F | L | Hatchback 4WD DGTE | | GCI61069 | Inner Joint | | | 28 | | | 32 | |
| | 2017.02-2020.10 | 6MT | F | L/R | Hatchback 4WD DGTE | | GCI83016 | Inner Joint | | | 28 | | | 32 | |
| | 2017.02-2020.10 | 6MT | R | L | Hatchback 4WD DGTE | Not For facelift | GDS61286 | Drive Shaft | | 36 | | 59.5 | 40 | 587 | |
| | 2017.02-2020.10 | 6MT | R | L | Hatchback 4WD DGTE | For facelift | GDS61331 | Drive Shaft | | 36 | | 59.5 | 40 | 606 | |
| | 2017.02-2020.10 | 6MT | R | R | Hatchback 4WD DGTE | Not For facelift | GDS61287 | Drive Shaft | | 36 | | 59.5 | 40 | 632 | |
| | 2017.02-2020.10 | 6MT | R | R | Hatchback 4WD DGTE | For facelift | GDS61332 | Drive Shaft | | 36 | | 59.5 | 40 | 650 | |
| | 2017.02-2020.10 | 6MT | R | L/R | Hatchback 4WD DGTE | | GCI35026 | Outer Joint | | 36 | 33 | 59.5 | 40 | 61 | |
| | 2017.02-2020.10 | 6MT | R | L/R | Hatchback 4WD DGTE | Facelift:No | GCI61103 | Inner Joint | | | 33 | | | 32 | |
| | 2017.02-2020.10 | 5MT | F | R | Hatchback FWD DDYA;DGTE | | GDS61283 | Drive Shaft | | 36 | | 59.5 | 40 | 815 | |
| | 2017.02-2020.10 | 5MT | F | L/R | Hatchback FWD DDYA;DGTE | | GCO61059 | Outer Joint | | 36 | 33 | 59.5 | 40 | 59.5 | I |
| | 2017.02-2020.10 | 5MT | F | L/R | Hatchback FWD DDYA;DGTE | | GCI53002 | Inner Joint | | | 33 | | | 34 | |
| | 2017.02-2020.10 | 7AT | F | L | Hatchback FWD DDYA;DGTE | | GCO61059 | Outer Joint | | 36 | 33 | 59.5 | 40 | 59.5 | I |
| | 2017.02-2020.10 | 7AT | F | L | Hatchback FWD DDYA;DGTE | | GCI53002 | Inner Joint | | | 33 | | | 34 | |
| | 2017.02-2020.10 | 7AT/5MT | F | L | Hatchback FWD DDYA;DGTE | | GDS61282 | Drive Shaft | | 36 | | 59.5 | 40 | 523 | |
| | 2017.02-2020.10 | 7DCT | F | R | Hatchback FWD DDYA;DGTE | | GDS61096 | Drive Shaft | | 36 | | 59.5 | 40.5 | 799 | |
| | 2017.02-2020.10 | 7DCT/5MT | F | L/R | Hatchback FWD DDYA;DGTE | | GCI82447 | Inner Joint | | | 33 | | | 34 | |
| | 2017.02-2020.10 | | F | L/R | Hatchback FWD DDYA;DGTE | | GCI83011 | Inner Joint | | | 33 | | | 34 | |
| 1.8 (92 kw) | 1996.10-1999.04 | AT | F | L | Hatchback FWD AGN | | GDS61020 | Drive Shaft | | 36 | | 53.2 | 77.5 | 547 | |
| | 1996.10-1999.04 | AT | F | R | Hatchback FWD AGN | | GDS83011 | Drive Shaft | | 36 | | 53.2 | 77.5 | 810.5 | |
| | 1996.10-1999.04 | AT | F | L/R | Hatchback FWD AGN | | GCI61006 | Inner Joint | | | 30 | | | 57.6 | |
| | 1996.10-1999.04 | AT/MT | F | L/R | Hatchback FWD AGN | | GCO83070 | Outer Joint | | 36 | 30 | 53 | 78 | 60 | I |
| | 1996.10-1999.04 | MT | F | L | Hatchback FWD AGN | | GDS61314 | Drive Shaft | | 36 | | 53 | 78 | 558 | |
| | 1996.10-1999.04 | MT | F | L | Hatchback FWD AGN | | GDS83006 | Drive Shaft | | 36 | | 53.2 | 77.5 | 557 | |
| | 1996.10-1999.04 | MT | F | R | Hatchback FWD AGN | | GDS83004 | Drive Shaft | | 36 | | 53.2 | 77.5 | 822 | |

| | YEAR | TRANSM. | F/R | L/R | BODY STYLE & DRIVE TYPE & ENGINE | REMARKS | G-AP Ref. | PRODUCT | ABS | Technical Specifications A | B | C | H | L | P |
|---|---|---|---|---|---|---|---|---|---|---|---|---|---|---|---|
| **SKODA** **Octavia** | | | | | | | | | | | | | | | |
| 1.8 (92 kw) | 1996.10-1999.04 | MT | F | R | Hatchback FWD AGN | Chassis no. from:1UX134201 | GCI83009 | Inner Joint | | | 33 | | | 34 | |
| | 1996.10-1999.04 | MT | F | L/R | Hatchback FWD AGN | Chassis no. to:1UW134200 | GCI82447 | Inner Joint | | | 33 | | | 34 | |
| | 1996.10-1999.04 | MT | F | L/R | Hatchback FWD AGN | | GCI83006 | Inner Joint | | | 33 | | | 34 | |
| | 1998.05-1999.04 | AT | F | L | Estate FWD AGN | | GDS61020 | Drive Shaft | | 36 | | 53.2 | 77.5 | 547 | |
| | 1998.05-1999.04 | AT | F | R | Estate FWD AGN | | GDS83011 | Drive Shaft | | 36 | | 53.2 | 77.5 | 810.5 | |
| | 1998.05-1999.04 | AT | F | L/R | Estate FWD AGN | | GCI61006 | Inner Joint | | | 30 | | | 57.6 | |
| | 1998.05-1999.04 | AT/MT | F | L/R | Estate FWD AGN | | GCO83070 | Outer Joint | | 36 | 30 | 53 | 78 | 60 | I |
| | 1998.05-1999.04 | MT | F | L | Estate FWD AGN | | GDS61314 | Drive Shaft | | 36 | | 53 | 78 | 558 | |
| | 1998.05-1999.04 | MT | F | L | Estate FWD AGN | | GDS83006 | Drive Shaft | | 36 | | 53.2 | 77.5 | 557 | |
| | 1998.05-1999.04 | MT | F | R | Estate FWD AGN | | GDS83004 | Drive Shaft | | 36 | | 53.2 | 77.5 | 822 | |
| | 1998.05-1999.04 | MT | F | R | Estate FWD AGN | Chassis no. from:1UX134201 | GCI83009 | Inner Joint | | | 33 | | | 34 | |
| | 1998.05-1999.04 | MT | F | L/R | Estate FWD AGN | Chassis no. to:1UW134200 | GCI82447 | Inner Joint | | | 33 | | | 34 | |
| | 1998.05-1999.04 | MT | F | L/R | Estate FWD AGN | | GCI83006 | Inner Joint | | | 33 | | | 34 | |
| 1.8 (110 kw) | 1997.12-2010.12 | 4AT/5MT | F | L | Hatchback FWD AGU/ARX/ARZ/AUM | | GDS61020 | Drive Shaft | | 36 | | 53.2 | 77.5 | 547 | |
| | 1997.12-2010.12 | 4AT/5MT | F | R | Hatchback FWD AGU/ARX/ARZ/AUM | Chassis no. to:1U_Y_325000 | GDS61203 | Drive Shaft | | 36 | | 53.2 | 77.5 | 810 | |
| | 1997.12-2010.12 | 4AT/5MT | F | R | Hatchback FWD AGU/ARX/ARZ/AUM | Chassis no. from:1U_Y_325001 | GDS83011 | Drive Shaft | | 36 | | 53.2 | 77.5 | 810.5 | |
| | 1997.12-2010.12 | AT/MT | F | L/R | Hatchback FWD AGU/ARX/ARZ/AUM | Date from:1997.12 | GCO83070 | Outer Joint | | 36 | 30 | 53 | 78 | 60 | I |
| | 1997.12-2010.12 | | F | L/R | Hatchback FWD AGU/ARX/ARZ/AUM | | GCI61006 | Inner Joint | | | 30 | | | 57.6 | |
| | 1998.05-2010.12 | 4AT/5MT | F | L | Estate FWD AGU/ARX/ARZ/AUM | | GDS61020 | Drive Shaft | | 36 | | 53.2 | 77.5 | 547 | |
| | 1998.05-2010.12 | 4AT/5MT | F | R | Estate FWD AGU/ARX/ARZ/AUM | Chassis no. to:1U_Y_325000 | GDS61203 | Drive Shaft | | 36 | | 53.2 | 77.5 | 810 | |
| | 1998.05-2010.12 | 4AT/5MT | F | R | Estate FWD AGU/ARX/ARZ/AUM | Chassis no. from:1U_Y_325001 | GDS83011 | Drive Shaft | | 36 | | 53.2 | 77.5 | 810.5 | |
| | 1998.05-2010.12 | AT/MT | F | L/R | Estate FWD AGU/ARX/ARZ/AUM | | GCO83070 | Outer Joint | | 36 | 30 | 53 | 78 | 60 | I |
| | 1998.05-2010.12 | | F | L/R | Estate FWD AGU/ARX/ARZ/AUM | | GCI61006 | Inner Joint | | | 30 | | | 57.6 | |
| | 2000.08-2006.05 | 5MT | F | L | Estate 4WD ARX | | GDS61314 | Drive Shaft | | 36 | | 53 | 78 | 558 | |
| | 2000.08-2006.05 | 5MT | F | R | Estate 4WD ARX | | GDS83004 | Drive Shaft | | 36 | | 53.2 | 77.5 | 822 | |
| | 2000.08-2006.05 | 5MT | F | L/R | Estate 4WD ARX | | GCO83070 | Outer Joint | | 36 | 30 | 53 | 78 | 60 | I |
| | 2000.08-2006.05 | 5MT | F | L | Estate 4WD ARX | | GCI82447 | Inner Joint | | | 33 | | | 34 | |
| | 2000.08-2006.05 | 5MT | F | R | Estate 4WD ARX | | GCI83009 | Inner Joint | | | 33 | | | 34 | |
| | 2000.08-2006.05 | MT | F | L/R | Estate 4WD ARX | | GCI83006 | Inner Joint | | | 33 | | | 34 | |
| | 2000.08-2006.05 | 5MT | R | L | Estate 4WD ARX | | GDS82364 | Drive Shaft | | 36 | | 53 | 78.5 | 651 | |
| | 2000.08-2006.05 | 5MT | R | R | Estate 4WD ARX | | GDS81587 | Drive Shaft | | 36 | | 53 | 78.5 | 522 | |
| | 2000.08-2006.05 | 5MT | R | L/R | Estate 4WD ARX | | GCO83033 | Outer Joint | | 36 | 30 | 53 | 78.5 | 51 | I |
| | 2000.08-2006.05 | 5MT | R | L/R | Estate 4WD ARX | | GCI83003 | Inner Joint | | | 33 | | | 32 | |
| | 2000.08-2006.05 | 5MT | R | L/R | Estate 4WD ARX | | GCI83011 | Inner Joint | | | 33 | | | 34 | |
| | 2000.08-2006.05 | 5MT | F | L | Hatchback 4WD ARX | | GDS61314 | Drive Shaft | | 36 | | 53 | 78 | 558 | |
| | 2000.08-2006.05 | 5MT | F | R | Hatchback 4WD ARX | | GDS83004 | Drive Shaft | | 36 | | 53.2 | 77.5 | 822 | |
| | 2000.08-2006.05 | 5MT | F | L | Hatchback 4WD ARX | | GCI82447 | Inner Joint | | | 33 | | | 34 | |
| | 2000.08-2006.05 | MT | F | L/R | Hatchback 4WD ARX | | GCO83070 | Outer Joint | | 36 | 30 | 53 | 78 | 60 | I |
| | 2000.08-2006.05 | MT | F | R | Hatchback 4WD ARX | | GCI83009 | Inner Joint | | | 33 | | | 34 | |
| | 2000.08-2006.05 | MT | F | L/R | Hatchback 4WD ARX | | GCI83006 | Inner Joint | | | 33 | | | 34 | |
| | 2000.08-2006.05 | | F | L | Hatchback 4WD ARX | | GCI83011 | Inner Joint | | | 33 | | | 34 | |
| | 2000.08-2006.05 | 5MT | R | L | Hatchback 4WD ARX | | GDS82364 | Drive Shaft | | 36 | | 53 | 78.5 | 651 | |
| | 2000.08-2006.05 | 5MT | R | R | Hatchback 4WD ARX | | GDS81587 | Drive Shaft | | 36 | | 53 | 78.5 | 522 | |
| | 2000.08-2006.05 | MT | R | L/R | Hatchback 4WD ARX | | GCO83033 | Outer Joint | | 36 | 30 | 53 | 78.5 | 51 | I |
| | 2000.08-2006.05 | MT | R | L/R | Hatchback 4WD ARX | | GCI83003 | Inner Joint | | | 33 | | | 32 | |
| 1.8 (112 kw) | 2009.03-2013.06 | 6DCT | F | L | Estate FWD CDAB | | GDS61093 | Drive Shaft | | 36 | 26 | 59.5 | 40.5 | 587.5 | |
| | 2009.03-2013.06 | 6DCT | F | L | Estate FWD CDAB | | GDS61111 | Drive Shaft | | 36 | 26 | 59.5 | 40 | 584 | |
| | 2009.03-2013.06 | 6DCT | F | R | Estate FWD CDAB | | GDS61094 | Drive Shaft | | 36 | 26 | 59.5 | 40.5 | 884 | |
| | 2009.03-2013.06 | 6DCT | F | R | Estate FWD CDAB | | GDS61112 | Drive Shaft | | 36 | 26 | 59.5 | 40 | 883 | |
| | 2009.03-2013.06 | 6DCT | F | L/R | Estate FWD CDAB | | GCI61011 | Inner Joint | | 26 | 32 | 31 | 68.5 | 85 | |
| | 2009.03-2013.06 | 6DCT | F | L/R | Estate FWD CDAB | | GCI61050 | Inner Joint | | 26 | 32 | 31 | 68.5 | 89 | |
| | 2009.03-2013.06 | 6MT | F | L | Estate FWD CDAB | Date from:2009.11,Date to:2010.10 | GDS61282 | Drive Shaft | | 36 | | 59.5 | 40 | 523 | |
| | 2009.03-2013.06 | 6MT | F | R | Estate FWD CDAB | Date from:2009.11,Date to:2010.10 | GDS61283 | Drive Shaft | | 36 | | 59.5 | 40 | 815 | |
| | 2009.03-2013.06 | 6MT | F | R | Estate FWD CDAB | Date to:2009.10;Date from:2010.11 | GDS61341 | Drive Shaft | | 36 | | 59.5 | 40 | 806 | |
| | 2009.03-2013.06 | 6MT | F | L/R | Estate FWD CDAB | Date from:2009.11,Date to:2010.10 | GCI82447 | Inner Joint | | | 33 | | | 34 | |
| | 2009.03-2013.06 | 6MT/7DCT | F | L | Estate FWD CDAB | Transmission:6MT,Date to:2009.10,Date from:2010.11 | GDS61100 | Drive Shaft | | 36 | | 59.5 | 40 | 513 | |
| | 2009.03-2013.06 | 6MT/7DCT | F | L/R | Estate FWD CDAB | Transmission:6MT,Date to:2009.10,Date from:2010.11 | GCI83016 | Inner Joint | | | 28 | | | 32 | |
| | 2009.03-2013.06 | 7DCT | F | R | Estate FWD CDAB | | GDS83313 | Drive Shaft | | 36 | | 59.5 | 40 | 792 | |
| | 2009.03-2013.06 | 7DCT | F | L/R | Estate FWD CDAB | | GCO83101 | Outer Joint | | 36 | 27 | 59.5 | 40 | 65 | M |
| | 2009.03-2013.06 | MT | F | L | Estate FWD CDAB | | GCO83037 | Outer Joint | | 36 | 30 | 59.5 | 40.5 | 56 | I |
| | 2009.03-2013.06 | MT | F | L/R | Estate FWD CDAB | Date to:2009.10 | GCO83002 | Outer Joint | | 36 | 27 | 59.5 | 40 | 66 | I |
| | 2009.03-2013.06 | | F | | Estate FWD CDAB | Date From:2009.11,Date To:2009.11 | GCO61059 | Outer Joint | | 36 | 33 | 59.5 | 40 | 59.5 | I |
| | 2009.03-2013.06 | 6DCT | F | L | Hatchback FWD CDAB | | GDS61111 | Drive Shaft | | 36 | 26 | 59.5 | 40 | 584 | |
| | 2009.03-2013.06 | 6DCT | F | R | Hatchback FWD CDAB | | GDS61112 | Drive Shaft | | 36 | 26 | 59.5 | 40 | 883 | |
| | 2009.03-2013.06 | 6DCT | F | L/R | Hatchback FWD CDAB | | GCI61011 | Inner Joint | | 26 | 32 | 31 | 68.5 | 85 | |

| | YEAR | TRANSM. | F/R | L/R | BODY STYLE & DRIVE TYPE & ENGINE | REMARKS | G-AP Ref. | PRODUCT | ABS | Technical Specifications | | | | | |
|---|---|---|---|---|---|---|---|---|---|---|---|---|---|---|---|
| | | | | | | | | | | A | B | C | H | L | P |
| **SKODA** **Octavia** | | | | | | | | | | | | | | | |
| 1.8 (112 kw) | 2009.03-2013.06 | 6DCT | F | L/R | Hatchback FWD CDAB | | GCI61050 | Inner Joint | | 26 | 32 | 31 | 68.5 | 89 | |
| | 2009.03-2013.06 | 6MT | F | L | Hatchback FWD CDAB | Date from:2009.11,Date to:2010.10 | GDS61282 | Drive Shaft | | 36 | | 59.5 | 40 | 523 | |
| | 2009.03-2013.06 | 6MT | F | R | Hatchback FWD CDAB | Date from:2009.11,Date to:2010.10 | GDS61283 | Drive Shaft | | 36 | | 59.5 | 40 | 815 | |
| | 2009.03-2013.06 | 6MT | F | R | Hatchback FWD CDAB | Date to:2009.10;Date from:2010.11 | GDS61341 | Drive Shaft | | 36 | | 59.5 | 40 | 806 | |
| | 2009.03-2013.06 | 6MT | F | L/R | Hatchback FWD CDAB | Date from:2009.11,Date to:2010.10 | GCO61059 | Outer Joint | | 36 | 33 | 59.5 | 40 | 59.5 | I |
| | 2009.03-2013.06 | 6MT | F | L/R | Hatchback FWD CDAB | Date from:2009.11,Date to:2010.10 | GCI53002 | Inner Joint | | | 33 | | | 34 | |
| | 2009.03-2013.06 | 6MT/6DCT | F | L/R | Hatchback FWD CDAB | Transmission:6MT,Date to:2009.10,Date from:2010.11 | GCO83002 | Outer Joint | | 36 | 27 | 59.5 | 40 | 66 | I |
| | 2009.03-2013.06 | 6MT/7DCT | F | L | Hatchback FWD CDAB | Transmission:6MT,Date to:2009.10,Date from:2010.11;Transmission:7DCT | GDS61100 | Drive Shaft | | 36 | | 59.5 | 40 | 513 | |
| | 2009.03-2013.06 | 6MT/7DCT | F | L/R | Hatchback FWD CDAB | Transmission:6MT,Date to:2009.10,Date from:2010.11 | GCI83016 | Inner Joint | | | 28 | | | 32 | |
| | 2009.03-2013.06 | 7DCT | F | R | Hatchback FWD CDAB | | GDS83313 | Drive Shaft | | 36 | | 59.5 | 40 | 792 | |
| | 2009.03-2013.06 | 7DCT | F | L/R | Hatchback FWD CDAB | | GCO83101 | Outer Joint | | 36 | 27 | 59.5 | 40 | 65 | M |
| 1.8 (118 kw) | 2007.06-2013.04 | 6MT | F | R | Estate FWD BZB;CDAA | Date from:2009.11,Date to:2010.10 | GDS61283 | Drive Shaft | | 36 | | 59.5 | 40 | 815 | |
| | 2007.06-2013.04 | 6MT | F | R | Estate FWD BZB;CDAA | Date to:2009.10,Date from:2010.11 | GDS61341 | Drive Shaft | | 36 | | 59.5 | 40 | 806 | |
| | 2007.06-2013.04 | 7AT/6MT | F | L/R | Estate FWD BZB;CDAA | | GCI83016 | Inner Joint | | | 28 | | | 32 | |
| | 2007.06-2013.04 | AT | F | L | Estate FWD BZB;CDAA | | GDS61100 | Drive Shaft | | 36 | | 59.5 | 40 | 513 | |
| | 2007.06-2013.04 | AT | F | L | Estate FWD BZB;CDAA | | GDS83236 | Drive Shaft | | 36 | | 59.5 | 40 | 484 | |
| | 2007.06-2013.04 | AT | F | R | Estate FWD BZB;CDAA | | GDS83313 | Drive Shaft | | 36 | | 59.5 | 40 | 792 | |
| | 2007.06-2013.04 | AT | F | L | Estate FWD BZB;CDAA | | GCO83101 | Outer Joint | | 36 | 27 | 59.5 | 40 | 65 | M |
| | 2007.06-2013.04 | MT | F | L | Estate FWD BZB;CDAA | Date from:2009.11 | GDS61282 | Drive Shaft | | 36 | | 59.5 | 40 | 523 | |
| | 2007.06-2013.04 | MT | F | L | Estate FWD BZB;CDAA | | GDS83294 | Drive Shaft | | 36 | | 59.5 | 38 | 519 | |
| | 2007.06-2013.04 | MT | F | L | Estate FWD BZB;CDAA | Date from:2009.11,Date to:2010.10 | GCO61059 | Outer Joint | | 36 | 33 | 59.5 | 40 | 59.5 | I |
| | 2007.06-2013.04 | MT | F | L | Estate FWD BZB;CDAA | | GCO83037 | Outer Joint | | 36 | 30 | 59.5 | 40.5 | 56 | I |
| | 2007.06-2013.04 | MT | F | L/R | Estate FWD BZB;CDAA | Date to:2009.10,Date from:2010.11 | GCO83002 | Outer Joint | | 36 | 27 | 59.5 | 40 | 66 | I |
| | 2007.06-2013.04 | MT | F | L/R | Estate FWD BZB;CDAA | Date from:2009.11,Date to:2010.10 | GCI82447 | Inner Joint | | | 33 | | | 34 | |
| | 2007.06-2013.04 | 6MT | F | L | Hatchback FWD BZB;CDAA | Date from:2009.11,Date to:2010.10 | GDS61282 | Drive Shaft | | 36 | | 59.5 | 40 | 523 | |
| | 2007.06-2013.04 | 6MT | F | R | Hatchback FWD BZB;CDAA | Date from:2009.11,Date to:2010.10 | GDS61283 | Drive Shaft | | 36 | | 59.5 | 40 | 815 | |
| | 2007.06-2013.04 | 6MT | F | R | Hatchback FWD BZB;CDAA | Date to:2009.10,Date from:2010.11 | GDS61341 | Drive Shaft | | 36 | | 59.5 | 40 | 806 | |
| | 2007.06-2013.04 | 6MT | F | L/R | Hatchback FWD BZB;CDAA | Date from:2009.11,Date to:2010.10 | GCO61059 | Outer Joint | | 36 | 33 | 59.5 | 40 | 59.5 | I |
| | 2007.06-2013.04 | 6MT | F | R | Hatchback FWD BZB;CDAA | Date to:2009.10,Date from:2010.11 | GCI61069 | Inner Joint | | | 28 | | | 32 | |
| | 2007.06-2013.04 | 6MT | F | L/R | Hatchback FWD BZB;CDAA | Date from:2009.11,Date to:2010.10 | GCI82447 | Inner Joint | | | 33 | | | 34 | |
| | 2007.06-2013.04 | 6MT/7DCT | F | L | Hatchback FWD BZB;CDAA | Transmission:6MT,Date to:2009.10,Date from:2010.11 | GDS61100 | Drive Shaft | | 36 | | 59.5 | 40 | 513 | |
| | 2007.06-2013.04 | 7DCT | F | R | Hatchback FWD BZB;CDAA | | GDS83313 | Drive Shaft | | 36 | | 59.5 | 40 | 792 | |
| | 2007.06-2013.04 | 7DCT | F | L/R | Hatchback FWD BZB;CDAA | | GCI83016 | Inner Joint | | | 28 | | | 32 | |
| | 2007.06-2013.04 | AT | F | L/R | Hatchback FWD BZB;CDAA | For Engine Code:CDAA | GCO83101 | Outer Joint | | 36 | 27 | 59.5 | 40 | 65 | M |
| | 2007.06-2013.04 | MT | F | L | Hatchback FWD BZB;CDAA | | GCO83037 | Outer Joint | | 36 | 30 | 59.5 | 40.5 | 56 | I |
| | 2007.06-2013.04 | MT | F | L/R | Hatchback FWD BZB;CDAA | For Engine Code:BZB | GCO83002 | Outer Joint | | 36 | 27 | 59.5 | 40 | 66 | I |
| 1.8 (132 kw) | 2000.12-2006.01 | 5MT | F | L | Estate FWD AUQ | | GDS61020 | Drive Shaft | | 36 | | 53.2 | 77.5 | 547 | |
| | 2000.12-2006.01 | 5MT | F | R | Estate FWD AUQ | | GDS83011 | Drive Shaft | | 36 | | 53.2 | 77.5 | 810.5 | |
| | 2000.12-2006.01 | MT | F | L/R | Estate FWD AUQ | | GCO83070 | Outer Joint | | 36 | 30 | 53 | 78 | 60 | I |
| | 2000.12-2006.01 | | F | L/R | Estate FWD AUQ | | GCI61006 | Inner Joint | | | 30 | | | 57.6 | |
| | 2000.12-2006.01 | 5MT | F | L | Hatchback FWD AUQ | | GDS61020 | Drive Shaft | | 36 | | 53.2 | 77.5 | 547 | |
| | 2000.12-2006.01 | 5MT | F | R | Hatchback FWD AUQ | | GDS83011 | Drive Shaft | | 36 | | 53.2 | 77.5 | 810.5 | |
| | 2000.12-2006.01 | MT | F | L/R | Hatchback FWD AUQ | | GCO83070 | Outer Joint | | 36 | 30 | 53 | 78 | 60 | I |
| | 2000.12-2006.01 | | F | L/R | Hatchback FWD AUQ | | GCI61006 | Inner Joint | | | 30 | | | 57.6 | |
| | 2012.11-2020.10 | 6MT | F | L | Estate FWD CJSB;CJSA | | GDS61100 | Drive Shaft | | 36 | | 59.5 | 40 | 513 | |
| | 2012.11-2020.10 | 6MT | F | R | Estate FWD CJSB;CJSA | | GDS61101 | Drive Shaft | | 36 | | 59.5 | 40 | 803 | |
| | 2012.11-2020.10 | 6MT/7DCT | F | L/R | Estate FWD CJSB;CJSA | | GCO83101 | Outer Joint | | 36 | 27 | 59.5 | 40 | 65 | M |
| | 2012.11-2020.10 | 6MT/7DCT | F | L/R | Estate FWD CJSB;CJSA | | GCI83016 | Inner Joint | | | 28 | | | 32 | |
| | 2012.11-2020.10 | 7DCT | F | R | Estate FWD CJSB;CJSA | | GDS83313 | Drive Shaft | | 36 | | 59.5 | 40 | 792 | |
| | 2012.11-2020.10 | 6MT | F | L | Hatchback FWD CJSA | | GDS61100 | Drive Shaft | | 36 | | 59.5 | 40 | 513 | |
| | 2012.11-2020.10 | 6MT | F | R | Hatchback FWD CJSA | | GDS61101 | Drive Shaft | | 36 | | 59.5 | 40 | 803 | |
| | 2012.11-2020.10 | 7AT/6MT | F | L/R | Hatchback FWD CJSA | | GCO83101 | Outer Joint | | 36 | 27 | 59.5 | 40 | 65 | M |
| | 2012.11-2020.10 | 7DCT | F | R | Hatchback FWD CJSA | | GDS83313 | Drive Shaft | | 36 | | 59.5 | 40 | 792 | |
| | 2012.11-2020.10 | | F | L/R | Hatchback FWD CJSA | | GCI83016 | Inner Joint | | | 28 | | | 32 | |
| | 2014.05-2020.10 | 6AT | F | L | Hatchback 4WD CJSB | | GDS83295 | Drive Shaft | | 36 | | 59.5 | 40 | 491 | |
| | 2014.05-2020.10 | 6AT | F | R | Hatchback 4WD CJSB | | GDS81892 | Drive Shaft | | 36 | | 59.5 | 40 | 602 | |
| | 2014.05-2020.10 | 6AT | F | L | Hatchback 4WD CJSB | | GCI61069 | Inner Joint | | | 28 | | | 32 | |
| | 2014.05-2020.10 | 6MT | F | L/R | Hatchback 4WD CJSB | | GCO83101 | Outer Joint | | 36 | 27 | 59.5 | 40 | 65 | M |
| | 2014.05-2020.10 | 6AT | R | L | Hatchback 4WD CJSB | Not For facelift | GDS61286 | Drive Shaft | | 36 | | 59.5 | 40 | 587 | |
| | 2014.05-2020.10 | 6AT | R | L | Hatchback 4WD CJSB | For facelift | GDS61331 | Drive Shaft | | 36 | | 59.5 | 40 | 606 | |
| | 2014.05-2020.10 | 6AT | R | R | Hatchback 4WD CJSB | NO Facelift | GDS61287 | Drive Shaft | | 36 | | 59.5 | 40 | 632 | |
| | 2014.05-2020.10 | 6AT | R | R | Hatchback 4WD CJSB | Facelift | GDS61332 | Drive Shaft | | 36 | | 59.5 | 40 | 650 | |
| | 2014.05-2020.10 | 6AT | R | L/R | Hatchback 4WD CJSB | | GCI61103 | Inner Joint | | | 33 | | | 32 | |
| | 2014.05-2020.10 | 6DCT | R | L/R | Hatchback 4WD CJSB | | GCI35026 | Outer Joint | | 36 | 33 | 59.5 | 40 | 61 | |
| 1.9 (50 kw) | 1997.05-2003.12 | 5MT | F | L | Hatchback FWD AGP/AQM | | GDS61045 | Drive Shaft | | 36 | | 53 | 78.5 | 555 | |

| | YEAR | TRANSM. | F/R | L/R | BODY STYLE & DRIVE TYPE & ENGINE | REMARKS | G-AP Ref. | PRODUCT | ABS | Technical Specifications A | B | C | H | L | P |
|---|---|---|---|---|---|---|---|---|---|---|---|---|---|---|---|
| **SKODA** **Octavia** | | | | | | | | | | | | | | | |
| 1.9 (50 kw) | 1997.05-2003.12 | 5MT | F | R | Hatchback FWD AGP/AQM | | GDS83046 | Drive Shaft | | 36 | | 53 | 78.5 | 822 | |
| | 1997.05-2003.12 | MT | F | L/R | Hatchback FWD AGP/AQM | | GCO83033 | Outer Joint | | 36 | 30 | 53 | 78.5 | 51 | I |
| | 1997.05-2003.12 | MT | F | L/R | Hatchback FWD AGP/AQM | | GCI83005 | Inner Joint | | | 33 | | | 32 | |
| | 1997.05-2003.12 | MT | F | L/R | Hatchback FWD AGP/AQM | | GCI83006 | Inner Joint | | | 33 | | | 34 | |
| | 1997.05-2003.12 | MT | F | L/R | Hatchback FWD AGP/AQM | | GCI83008 | Inner Joint | | | 33 | | | 32 | |
| | 1998.08-2003.12 | 5MT | F | L | Estate FWD AGP/AQM | | GDS61045 | Drive Shaft | | 36 | | 53 | 78.5 | 555 | |
| | 1998.08-2003.12 | 5MT | F | R | Estate FWD AGP/AQM | | GDS83046 | Drive Shaft | | 36 | | 53 | 78.5 | 822 | |
| | 1998.08-2003.12 | MT | F | L/R | Estate FWD AGP/AQM | | GCO83033 | Outer Joint | | 36 | 30 | 53 | 78.5 | 51 | I |
| | 1998.08-2003.12 | MT | F | L/R | Estate FWD AGP/AQM | | GCI83005 | Inner Joint | | | 33 | | | 32 | |
| | 1998.08-2003.12 | MT | F | L/R | Estate FWD AGP/AQM | | GCI83008 | Inner Joint | | | 33 | | | 32 | |
| | 2000.08-2003.12 | 5MT | F | L | Estate Van FWD AQM | | GDS61045 | Drive Shaft | | 36 | | 53 | 78.5 | 555 | |
| | 2000.08-2003.12 | 5MT | F | R | Estate Van FWD AQM | | GDS83046 | Drive Shaft | | 36 | | 53 | 78.5 | 822 | |
| | 2000.08-2003.12 | | F | L/R | Estate Van FWD AQM | | GCO83033 | Outer Joint | | 36 | 30 | 53 | 78.5 | 51 | I |
| | 2000.08-2003.12 | | F | L/R | Estate Van FWD AQM | | GCI83008 | Inner Joint | | | 33 | | | 32 | |
| 1.9 (66 kw) | 1996.10-2010.03 | AT | F | L | Estate FWD AGR/ALH | | GDS61020 | Drive Shaft | | 36 | | 53.2 | 77.5 | 547 | |
| | 1996.10-2010.03 | AT | F | R | Estate FWD AGR/ALH | | GDS83011 | Drive Shaft | | 36 | | 53.2 | 77.5 | 810.5 | |
| | 1996.10-2010.03 | AT | F | L/R | Estate FWD AGR/ALH | | GCI61006 | Inner Joint | | | 30 | | | 57.6 | |
| | 1996.10-2010.03 | MT | F | L | Estate FWD AGR/ALH | | GDS83006 | Drive Shaft | | 36 | | 53.2 | 77.5 | 557 | |
| | 1996.10-2010.03 | MT | F | R | Estate FWD AGR/ALH | | GDS83004 | Drive Shaft | | 36 | | 53.2 | 77.5 | 822 | |
| | 1996.10-2010.03 | MT | F | L/R | Estate FWD AGR/ALH | | GCO83070 | Outer Joint | | 36 | 30 | 53 | 78 | 60 | I |
| | 1996.10-2010.03 | MT | F | L | Estate FWD AGR/ALH | for OE No.:1J0498103A | GCI83011 | Inner Joint | | | 33 | | | 34 | |
| | 1996.10-2010.03 | MT | F | R | Estate FWD AGR/ALH | for OE No.:357498104 | GCI83009 | Inner Joint | | | 33 | | | 34 | |
| | 1996.10-2010.03 | AT | F | L | Hatchback FWD AGR/ALH | | GDS61020 | Drive Shaft | | 36 | | 53.2 | 77.5 | 547 | |
| | 1996.10-2010.03 | AT | F | R | Hatchback FWD AGR/ALH | | GDS83011 | Drive Shaft | | 36 | | 53.2 | 77.5 | 810.5 | |
| | 1996.10-2010.03 | AT | F | L/R | Hatchback FWD AGR/ALH | | GCI61006 | Inner Joint | | | 30 | | | 57.6 | |
| | 1996.10-2010.03 | AT/MT | F | L/R | Hatchback FWD AGR/ALH | | GCO83070 | Outer Joint | | 36 | 30 | 53 | 78 | 60 | I |
| | 1996.10-2010.03 | MT | F | L | Hatchback FWD AGR/ALH | | GDS83006 | Drive Shaft | | 36 | | 53.2 | 77.5 | 557 | |
| | 1996.10-2010.03 | MT | F | R | Hatchback FWD AGR/ALH | | GDS83004 | Drive Shaft | | 36 | | 53.2 | 77.5 | 822 | |
| | 1996.10-2010.03 | MT | F | L | Hatchback FWD AGR/ALH | | GCI83011 | Inner Joint | | | 33 | | | 34 | |
| | 1996.10-2010.03 | MT | F | R | Hatchback FWD AGR/ALH | | GCI83009 | Inner Joint | | | 33 | | | 34 | |
| | 1999.11-2006.02 | 5MT | F | L | Estate 4WD AGR | | GDS61314 | Drive Shaft | | 36 | | 53 | 78 | 558 | |
| | 1999.11-2006.02 | 5MT | F | L/R | Estate 4WD AGR | | GCO83070 | Outer Joint | | 36 | 30 | 53 | 78 | 60 | I |
| | 1999.11-2006.02 | 5MT | F | R | Estate 4WD AGR | | GCI83009 | Inner Joint | | | 33 | | | 34 | |
| | 1999.11-2006.02 | 5MT | F | L/R | Estate 4WD AGR | | GCI82447 | Inner Joint | | | 33 | | | 34 | |
| | 1999.11-2006.02 | 5MT | F | L/R | Estate 4WD AGR | | GCI83006 | Inner Joint | | | 33 | | | 34 | |
| | 1999.11-2006.02 | MT | F | L | Estate 4WD AGR | | GDS83006 | Drive Shaft | | 36 | | 53.2 | 77.5 | 557 | |
| | 1999.11-2006.02 | MT | F | R | Estate 4WD AGR | | GDS83004 | Drive Shaft | | 36 | | 53.2 | 77.5 | 822 | |
| | 1999.11-2006.02 | 5MT | R | L | Estate 4WD AGR | | GDS82364 | Drive Shaft | | 36 | | 53 | 78.5 | 651 | |
| | 1999.11-2006.02 | 5MT | R | R | Estate 4WD AGR | | GDS81587 | Drive Shaft | | 36 | | 53 | 78.5 | 522 | |
| | 1999.11-2006.02 | 5MT | R | L/R | Estate 4WD AGR | | GCO83033 | Outer Joint | | 36 | 30 | 53 | 78.5 | 51 | I |
| | 1999.11-2006.02 | 5MT | R | L/R | Estate 4WD AGR | | GCI53002 | Inner Joint | | | 33 | | | 34 | |
| | 1999.11-2006.02 | 5MT | R | L/R | Estate 4WD AGR | | GCI83011 | Inner Joint | | | 33 | | | 34 | |
| | 2000.08-2010.03 | 4AT/5MT | F | L | Estate Van FWD ALH | | GDS83006 | Drive Shaft | | 36 | | 53.2 | 77.5 | 557 | |
| | 2000.08-2010.03 | 4AT/5MT | F | R | Estate Van FWD ALH | | GDS83004 | Drive Shaft | | 36 | | 53.2 | 77.5 | 822 | |
| | 2000.08-2010.03 | 5MT | F | L/R | Estate Van FWD ALH | | GCO83070 | Outer Joint | | 36 | 30 | 53 | 78 | 60 | I |
| | 2000.08-2010.03 | 5MT | F | L | Estate Van FWD ALH | | GCI83011 | Inner Joint | | | 33 | | | 34 | |
| | 2000.08-2010.03 | 5MT | F | R | Estate Van FWD ALH | | GCI83009 | Inner Joint | | | 33 | | | 34 | |
| | 2000.08-2010.03 | 5MT | F | L/R | Estate Van FWD ALH | | GCI83006 | Inner Joint | | | 33 | | | 34 | |
| 1.9 (74 kw) | 2000.08-2006.01 | 6MT | F | L | Estate 4WD ATD | | GDS61123 | Drive Shaft | | 36 | | 53 | 77.5 | 520 | |
| | 2000.08-2006.01 | 6MT | F | R | Estate 4WD ATD | | GDS61186 | Drive Shaft | | 36 | | 53 | 77.5 | 653 | |
| | 2000.08-2006.01 | 6MT | F | L/R | Estate 4WD ATD | | GCO83035 | Outer Joint | | 36 | 27 | 53 | 77.5 | 65 | I |
| | 2000.08-2006.01 | | F | L/R | Estate 4WD ATD | | GCI83001 | Inner Joint | | | 28 | | | 32 | |
| | 2000.08-2006.01 | 6MT | R | L | Estate 4WD ATD | | GDS82364 | Drive Shaft | | 36 | | 53 | 78.5 | 651 | |
| | 2000.08-2006.01 | 6MT | R | R | Estate 4WD ATD | | GDS81587 | Drive Shaft | | 36 | | 53 | 78.5 | 522 | |
| | 2000.08-2006.01 | 6MT | R | L/R | Estate 4WD ATD | | GCI83003 | Inner Joint | | | 33 | | | 32 | |
| | 2000.08-2006.01 | 6MT | R | L/R | Estate 4WD ATD | | GCI83011 | Inner Joint | | | 33 | | | 34 | |
| | 2000.08-2006.01 | | R | L/R | Estate 4WD ATD | | GCO83033 | Outer Joint | | 36 | 30 | 53 | 78.5 | 51 | I |
| | 2000.08-2010.12 | 5MT | F | L | Estate FWD AXR | | GDS83006 | Drive Shaft | | 36 | | 53.2 | 77.5 | 557 | |
| | 2000.08-2010.12 | 5MT | F | R | Estate FWD AXR | | GDS83004 | Drive Shaft | | 36 | | 53.2 | 77.5 | 822 | |
| | 2000.08-2010.12 | 5MT | F | L/R | Estate FWD AXR | | GCO83070 | Outer Joint | | 36 | 30 | 53 | 78 | 60 | I |
| | 2000.08-2010.12 | 5MT | F | L | Estate FWD AXR | | GCI82447 | Inner Joint | | | 33 | | | 34 | |
| | 2000.08-2010.12 | 5MT | F | R | Estate FWD AXR | | GCI83009 | Inner Joint | | | 33 | | | 34 | |
| | 2000.08-2010.12 | MT | F | L/R | Estate FWD AXR | | GCI83006 | Inner Joint | | | 33 | | | 34 | |
| | 2005.10-2010.12 | 5MT | F | L | Hatchback FWD AXR | | GDS83006 | Drive Shaft | | 36 | | 53.2 | 77.5 | 557 | |
| | 2005.10-2010.12 | 5MT | F | R | Hatchback FWD AXR | | GDS83004 | Drive Shaft | | 36 | | 53.2 | 77.5 | 822 | |

| | YEAR | TRANSM. | F/R | L/R | BODY STYLE & DRIVE TYPE & ENGINE | REMARKS | G-AP Ref. | PRODUCT | ABS | Technical Specifications A | B | C | H | L | P |
|---|---|---|---|---|---|---|---|---|---|---|---|---|---|---|---|
| **SKODA** **Octavia** | | | | | | | | | | | | | | | |
| 1.9 (74 kw) | 2005.10-2010.12 | 5MT | F | L/R | Hatchback FWD AXR | | GCO83070 | Outer Joint | | 36 | 30 | 53 | 78 | 60 | I |
| | 2005.10-2010.12 | 5MT | F | L | Hatchback FWD AXR | | GCI82447 | Inner Joint | | | 33 | | | 34 | |
| | 2005.10-2010.12 | 5MT | F | R | Hatchback FWD AXR | | GCI83009 | Inner Joint | | | 33 | | | 34 | |
| | 2005.10-2010.12 | MT | F | L/R | Hatchback FWD AXR | | GCI83006 | Inner Joint | | | 33 | | | 34 | |
| 1.9 (77 kw) | 2004.06-2010.12 | 5MT | F | L/R | Hatchback FWD BKC;BJB;BLS;BXE | | GCO83037 | Outer Joint | | 36 | 30 | 59.5 | 40.5 | 56 | I |
| | 2004.06-2010.12 | 6AT | F | L/R | Hatchback FWD BKC;BJB;BLS;BXE | transm. type:DSG | GCO83002 | Outer Joint | | 36 | 27 | 59.5 | 40 | 66 | I |
| | 2004.06-2010.12 | 6DCT | F | L/R | Hatchback FWD BKC;BJB;BLS;BXE | TJ | GCI54004 | Inner Joint | | | 34 | | | 81 | |
| | 2004.06-2010.12 | 6DCT | F | L/R | Hatchback FWD BKC;BJB;BLS;BXE | AAR | GCI61057 | Inner Joint | | | 34 | | | 89 | |
| | 2004.06-2010.12 | AT | F | L | Hatchback FWD BKC;BJB;BLS;BXE | For Engine code:BKD/CBDB | GDS54013 | Drive Shaft | | 36 | | 59.5 | 40 | 479.5 | |
| | 2004.06-2010.12 | AT | F | L | Hatchback FWD BKC;BJB;BLS;BXE | | GDS83241 | Drive Shaft | | 36 | | 59.5 | 40 | 475 | |
| | 2004.06-2010.12 | AT | F | R | Hatchback FWD BKC;BJB;BLS;BXE | | GDS54011 | Drive Shaft | | 36 | | 59.5 | 40 | 755 | |
| | 2004.06-2010.12 | MT | F | L | Hatchback FWD BKC;BJB;BLS;BXE | | GDS83294 | Drive Shaft | | 36 | | 59.5 | 38 | 519 | |
| | 2004.06-2010.12 | MT | F | R | Hatchback FWD BKC;BJB;BLS;BXE | | GDS61042 | Drive Shaft | | 36 | | 59.5 | 40.5 | 814 | |
| | 2004.06-2010.12 | MT | F | L/R | Hatchback FWD BKC;BJB;BLS;BXE | | GCI82447 | Inner Joint | | | 33 | | | 34 | |
| | 2004.09-2010.12 | 5MT | F | L/R | Estate FWD BKC;BJB;BLS;BXE | | GCO83037 | Outer Joint | | 36 | 30 | 59.5 | 40.5 | 56 | I |
| | 2004.09-2010.12 | 6DCT | F | L/R | Estate FWD BKC;BJB;BLS;BXE | TJ | GCI54004 | Inner Joint | | | 34 | | | 81 | |
| | 2004.09-2010.12 | 6DCT | F | L/R | Estate FWD BKC;BJB;BLS;BXE | AAR | GCI61057 | Inner Joint | | | 34 | | | 89 | |
| | 2004.09-2010.12 | AT | F | L | Estate FWD BKC;BJB;BLS;BXE | For Engine code:BKD/CBDB | GDS54013 | Drive Shaft | | 36 | | 59.5 | 40 | 479.5 | |
| | 2004.09-2010.12 | AT | F | L | Estate FWD BKC;BJB;BLS;BXE | | GDS83241 | Drive Shaft | | 36 | | 59.5 | 40 | 475 | |
| | 2004.09-2010.12 | AT | F | R | Estate FWD BKC;BJB;BLS;BXE | | GDS54011 | Drive Shaft | | 36 | | 59.5 | 40 | 755 | |
| | 2004.09-2010.12 | AT | F | L/R | Estate FWD BKC;BJB;BLS;BXE | | GCO83002 | Outer Joint | | 36 | 27 | 59.5 | 40 | 66 | I |
| | 2004.09-2010.12 | MT | F | L | Estate FWD BKC;BJB;BLS;BXE | | GDS83294 | Drive Shaft | | 36 | | 59.5 | 38 | 519 | |
| | 2004.09-2010.12 | MT | F | R | Estate FWD BKC;BJB;BLS;BXE | | GDS61042 | Drive Shaft | | 36 | | 59.5 | 40.5 | 814 | |
| | 2004.09-2010.12 | MT | F | R | Estate FWD BKC;BJB;BLS;BXE | | GCI53002 | Inner Joint | | | 33 | | | 34 | |
| | 2004.09-2010.12 | MT | F | L/R | Estate FWD BKC;BJB;BLS;BXE | | GCI82447 | Inner Joint | | | 33 | | | 34 | |
| | 2004.11-2010.12 | 6MT | F | L | Estate 4WD BKC;BLS;BXE | | GDS83295 | Drive Shaft | | 36 | | 59.5 | 40 | 491 | |
| | 2004.11-2010.12 | 6MT | F | R | Estate 4WD BKC;BLS;BXE | | GDS83266 | Drive Shaft | | 36 | | 59.5 | 40 | 601 | |
| | 2004.11-2010.12 | MT | F | L | Estate 4WD BKC;BLS;BXE | | GDS83236 | Drive Shaft | | 36 | | 59.5 | 40 | 484 | |
| | 2004.11-2010.12 | MT | F | L | Estate 4WD BKC;BLS;BXE | | GDS83294 | Drive Shaft | | 36 | | 59.5 | 38 | 519 | |
| | 2004.11-2010.12 | MT | F | R | Estate 4WD BKC;BLS;BXE | | GDS61042 | Drive Shaft | | 36 | | 59.5 | 40.5 | 814 | |
| | 2004.11-2010.12 | | F | L/R | Estate 4WD BKC;BLS;BXE | | GCO83002 | Outer Joint | | 36 | 27 | 59.5 | 40 | 66 | I |
| | 2004.11-2010.12 | | F | L/R | Estate 4WD BKC;BLS;BXE | | GCI83016 | Inner Joint | | | 28 | | | 32 | |
| | 2004.11-2010.12 | 6MT | R | L | Estate 4WD BKC;BLS;BXE | | GDS61284 | Drive Shaft | | 36 | | 59.5 | 40 | 594 | |
| | 2004.11-2010.12 | 6MT | R | R | Estate 4WD BKC;BLS;BXE | | GDS61293 | Drive Shaft | | 36 | | 59.5 | 40 | 631 | |
| | 2004.11-2010.12 | 6MT | R | L/R | Estate 4WD BKC;BLS;BXE | | GCI35026 | Outer Joint | | 36 | 33 | 59.5 | 40 | 61 | |
| | 2004.11-2010.12 | 6MT | R | L/R | Estate 4WD BKC;BLS;BXE | Date To:2007.06/07,Chassis no. to:1Z7A153447 | GCO83037 | Outer Joint | | 36 | 30 | 59.5 | 40.5 | 56 | I |
| | 2004.11-2010.12 | 6MT | R | L/R | Estate 4WD BKC;BLS;BXE | | GCI53002 | Inner Joint | | | 33 | | | 34 | |
| | 2004.11-2010.12 | 6MT | R | L/R | Estate 4WD BKC;BLS;BXE | | GCI82447 | Inner Joint | | | 33 | | | 34 | |
| 1.9 (81 kw) | 1997.08-2006.01 | 5MT | F | L | Hatchback FWD AHF/ASV | | GDS83006 | Drive Shaft | | 36 | | 53.2 | 77.5 | 557 | |
| | 1997.08-2006.01 | 5MT | F | R | Hatchback FWD AHF/ASV | | GDS83004 | Drive Shaft | | 36 | | 53.2 | 77.5 | 822 | |
| | 1997.08-2006.01 | 5MT | F | L/R | Hatchback FWD AHF/ASV | | GCO83070 | Outer Joint | | 36 | 30 | 53 | 78 | 60 | I |
| | 1997.08-2006.01 | 5MT | F | L | Hatchback FWD AHF/ASV | | GCI83011 | Inner Joint | | | 33 | | | 34 | |
| | 1997.08-2006.01 | 5MT | F | R | Hatchback FWD AHF/ASV | | GCI83009 | Inner Joint | | | 33 | | | 34 | |
| | 1997.08-2006.01 | 5MT | F | L/R | Hatchback FWD AHF/ASV | | GCI83006 | Inner Joint | | | 33 | | | 34 | |
| | 1998.05-2006.01 | 5MT | F | L | Estate FWD AHF/ASV | | GDS83006 | Drive Shaft | | 36 | | 53.2 | 77.5 | 557 | |
| | 1998.05-2006.01 | 5MT | F | R | Estate FWD AHF/ASV | | GDS83004 | Drive Shaft | | 36 | | 53.2 | 77.5 | 822 | |
| | 1998.05-2006.01 | 5MT | F | L/R | Estate FWD AHF/ASV | | GCO83070 | Outer Joint | | 36 | 30 | 53 | 78 | 60 | I |
| | 1998.05-2006.01 | 5MT | F | L | Estate FWD AHF/ASV | | GCI83011 | Inner Joint | | | 33 | | | 34 | |
| | 1998.05-2006.01 | 5MT | F | R | Estate FWD AHF/ASV | | GCI83009 | Inner Joint | | | 33 | | | 34 | |
| 1.9 (96 kw) | 2002.09-2004.09 | 6MT | F | L | Estate FWD ASZ | | GDS56276 | Drive Shaft | | 36 | | 53 | 77.5 | 520 | |
| | 2002.09-2004.09 | 6MT | F | R | Estate FWD ASZ | | GDS61121 | Drive Shaft | | 36 | | 53 | 77.5 | 806 | |
| | 2002.09-2004.09 | 6MT | F | L/R | Estate FWD ASZ | | GCO83035 | Outer Joint | | 36 | 27 | 53 | 77.5 | 65 | I |
| | 2002.09-2004.09 | 6MT | F | L/R | Estate FWD ASZ | | GCI83016 | Inner Joint | | | 28 | | | 32 | |
| | 2002.09-2004.09 | AT | F | L | Estate FWD ASZ | | GDS61244 | Drive Shaft | | 36 | | 53 | 77.5 | 523 | |
| | 2002.09-2004.09 | AT | F | R | Estate FWD ASZ | | GDS61243 | Drive Shaft | | 36 | | 53 | 77.5 | 813 | |
| | 2002.09-2004.09 | AT | F | L/R | Estate FWD ASZ | | GCO83070 | Outer Joint | | 36 | 30 | 53 | 78 | 60 | I |
| | 2002.09-2004.09 | AT | F | L/R | Estate FWD ASZ | | GCI61044 | Inner Joint | | | 34 | | | 85 | |
| | 2002.09-2004.09 | 6MT | F | L | Hatchback FWD ASZ | | GDS56276 | Drive Shaft | | 36 | | 53 | 77.5 | 520 | |
| | 2002.09-2004.09 | 6MT | F | R | Hatchback FWD ASZ | | GDS61121 | Drive Shaft | | 36 | | 53 | 77.5 | 806 | |
| | 2002.09-2004.09 | 6MT | F | L/R | Hatchback FWD ASZ | | GCO83035 | Outer Joint | | 36 | 27 | 53 | 77.5 | 65 | I |
| | 2002.09-2004.09 | 6MT | F | L/R | Hatchback FWD ASZ | | GCI83016 | Inner Joint | | | 28 | | | 32 | |
| | 2002.09-2004.09 | AT | F | L | Hatchback FWD ASZ | | GDS61244 | Drive Shaft | | 36 | | 53 | 77.5 | 523 | |
| | 2002.09-2004.09 | AT | F | R | Hatchback FWD ASZ | | GDS61243 | Drive Shaft | | 36 | | 53 | 77.5 | 813 | |
| | 2002.09-2004.09 | AT | F | L/R | Hatchback FWD ASZ | | GCO83070 | Outer Joint | | 36 | 30 | 53 | 78 | 60 | I |
| | 2002.09-2004.09 | AT | F | L/R | Hatchback FWD ASZ | | GCI61044 | Inner Joint | | | 34 | | | 85 | |

| | YEAR | TRANSM. | F/R | L/R | BODY STYLE & DRIVE TYPE & ENGINE | REMARKS | G-AP Ref. | PRODUCT | ABS | Technical Specifications A | B | C | H | L | P |
|---|---|---|---|---|---|---|---|---|---|---|---|---|---|---|---|
| **SKODA** **Octavia** | | | | | | | | | | | | | | | |
| 2.0 (81 kw) | 2010.03-2013.06 | 5MT | F | L | Estate FWD CFHF;CLCA | | GDS83294 | Drive Shaft | | 36 | | 59.5 | 38 | 519 | |
| | 2010.03-2013.06 | 5MT | F | R | Estate FWD CFHF;CLCA | | GDS61042 | Drive Shaft | | 36 | | 59.5 | 40.5 | 814 | |
| | 2010.03-2013.06 | 5MT | F | L/R | Estate FWD CFHF;CLCA | | GCO83037 | Outer Joint | | 36 | 30 | 59.5 | 40.5 | 56 | I |
| | 2010.03-2013.06 | 5MT | F | L/R | Estate FWD CFHF;CLCA | | GCI82447 | Inner Joint | | | 33 | | | 34 | |
| | 2010.03-2013.06 | 6MT | F | L | Estate FWD CFHF;CLCA | For PR code:1PD/1PF/1PA | GDS83295 | Drive Shaft | | 36 | | 59.5 | 40 | 491 | |
| | 2010.03-2013.06 | 6MT | F | R | Estate FWD CFHF;CLCA | | GDS83313 | Drive Shaft | | 36 | | 59.5 | 40 | 792 | |
| | 2010.03-2013.06 | 6MT | F | L/R | Estate FWD CFHF;CLCA | | GCO83002 | Outer Joint | | 36 | 27 | 59.5 | 40 | 66 | I |
| | 2010.03-2013.06 | 6MT | F | L/R | Estate FWD CFHF;CLCA | | GCI83016 | Inner Joint | | | 28 | | | 32 | |
| | 2010.03-2013.06 | 5MT | F | L | Hatchback FWD CFHF;CLCA | | GDS83294 | Drive Shaft | | 36 | | 59.5 | 38 | 519 | |
| | 2010.03-2013.06 | 5MT | F | R | Hatchback FWD CFHF;CLCA | | GDS61042 | Drive Shaft | | 36 | | 59.5 | 40.5 | 814 | |
| | 2010.03-2013.06 | 5MT | F | L/R | Hatchback FWD CFHF;CLCA | | GCO83037 | Outer Joint | | 36 | 30 | 59.5 | 40.5 | 56 | I |
| | 2010.03-2013.06 | 5MT | F | L/R | Hatchback FWD CFHF;CLCA | | GCI82447 | Inner Joint | | | 33 | | | 34 | |
| | 2010.03-2013.06 | 6DCT | F | L | Hatchback FWD CFHF;CLCA | | GDS54013 | Drive Shaft | | 36 | | 59.5 | 40 | 479.5 | |
| | 2010.03-2013.06 | 6DCT | F | R | Hatchback FWD CFHF;CLCA | | GDS54011 | Drive Shaft | | 36 | | 59.5 | 40 | 755 | |
| | 2010.03-2013.06 | 6DCT | F | L/R | Hatchback FWD CFHF;CLCA | | GCI54004 | Inner Joint | | | 34 | | | 81 | |
| | 2010.03-2013.06 | 6DCT | F | L/R | Hatchback FWD CFHF;CLCA | | GCI61057 | Inner Joint | | | 34 | | | 89 | |
| | 2010.03-2013.06 | 6MT | F | L | Hatchback FWD CFHF;CLCA | For PR code:1PD/1PF/1PA | GDS83295 | Drive Shaft | | 36 | | 59.5 | 40 | 491 | |
| | 2010.03-2013.06 | 6MT | F | R | Hatchback FWD CFHF;CLCA | | GDS83313 | Drive Shaft | | 36 | | 59.5 | 40 | 792 | |
| | 2010.03-2013.06 | 6MT | F | L/R | Hatchback FWD CFHF;CLCA | | GCI83016 | Inner Joint | | | 28 | | | 32 | |
| | 2010.03-2013.06 | 6MT/6DCT | F | L/R | Hatchback FWD CFHF;CLCA | | GCO83002 | Outer Joint | | 36 | 27 | 59.5 | 40 | 66 | I |
| | 2011.05-2013.02 | 6MT | F | L | Estate 4WD CFHF | | GDS83295 | Drive Shaft | | 36 | | 59.5 | 40 | 491 | |
| | 2011.05-2013.02 | 6MT | F | R | Estate 4WD CFHF | | GDS83313 | Drive Shaft | | 36 | | 59.5 | 40 | 792 | |
| | 2011.05-2013.02 | MT | F | L | Estate 4WD CFHF | | GDS83236 | Drive Shaft | | 36 | | 59.5 | 40 | 484 | |
| | 2011.05-2013.02 | | F | L/R | Estate 4WD CFHF | | GCO83002 | Outer Joint | | 36 | 27 | 59.5 | 40 | 66 | I |
| | 2011.05-2013.02 | | F | L/R | Estate 4WD CFHF | | GCI83016 | Inner Joint | | | 28 | | | 32 | |
| | 2011.05-2013.02 | 6MT | R | L | Estate 4WD CFHF | | GDS61284 | Drive Shaft | | 36 | | 59.5 | 40 | 594 | |
| | 2011.05-2013.02 | 6MT | R | R | Estate 4WD CFHF | | GDS61293 | Drive Shaft | | 36 | | 59.5 | 40 | 631 | |
| | 2011.05-2013.02 | 6MT | R | L/R | Estate 4WD CFHF | | GCI35026 | Outer Joint | | 36 | 33 | 59.5 | 40 | 61 | |
| | 2011.05-2013.02 | 6MT | R | L/R | Estate 4WD CFHF | | GCI53002 | Inner Joint | | | 33 | | | 34 | |
| | 2011.05-2013.02 | 6MT | R | L/R | Estate 4WD CFHF | | GCI82447 | Inner Joint | | | 33 | | | 34 | |
| 2.0 (85 kw) | 1999.05-2007.05 | AT | F | L | Estate FWD AEG/APK/AQY/AZH/AZJ | | GDS61020 | Drive Shaft | | 36 | | 53.2 | 77.5 | 547 | |
| | 1999.05-2007.05 | AT | F | R | Estate FWD AEG/APK/AQY/AZH/AZJ | | GDS83011 | Drive Shaft | | 36 | | 53.2 | 77.5 | 810.5 | |
| | 1999.05-2007.05 | AT | F | L/R | Estate FWD AEG/APK/AQY/AZH/AZJ | | GCI61006 | Inner Joint | | | 30 | | | 57.6 | |
| | 1999.05-2007.05 | AT/MT | F | L/R | Estate FWD AEG/APK/AQY/AZH/AZJ | | GCO83070 | Outer Joint | | 36 | 30 | 53 | 78 | 60 | I |
| | 1999.05-2007.05 | MT | F | L | Estate FWD AEG/APK/AQY/AZH/AZJ | | GDS61314 | Drive Shaft | | 36 | | 53 | 78 | 558 | |
| | 1999.05-2007.05 | MT | F | R | Estate FWD AEG/APK/AQY/AZH/AZJ | | GDS83004 | Drive Shaft | | 36 | | 53.2 | 77.5 | 822 | |
| | 1999.05-2007.05 | MT | F | L | Estate FWD AEG/APK/AQY/AZH/AZJ | | GCI82447 | Inner Joint | | | 33 | | | 34 | |
| | 1999.05-2007.05 | MT | F | R | Estate FWD AEG/APK/AQY/AZH/AZJ | | GCI83009 | Inner Joint | | | 33 | | | 34 | |
| | 1999.05-2007.05 | AT | F | L | Hatchback FWD AEG/APK/AQY/AZH/AZJ | | GDS61020 | Drive Shaft | | 36 | | 53.2 | 77.5 | 547 | |
| | 1999.05-2007.05 | AT | F | R | Hatchback FWD AEG/APK/AQY/AZH/AZJ | | GDS83011 | Drive Shaft | | 36 | | 53.2 | 77.5 | 810.5 | |
| | 1999.05-2007.05 | AT | F | L/R | Hatchback FWD AEG/APK/AQY/AZH/AZJ | | GCI61006 | Inner Joint | | | 30 | | | 57.6 | |
| | 1999.05-2007.05 | AT/MT | F | L/R | Hatchback FWD AEG/APK/AQY/AZH/AZJ | | GCO83070 | Outer Joint | | 36 | 30 | 53 | 78 | 60 | I |
| | 1999.05-2007.05 | MT | F | L | Hatchback FWD AEG/APK/AQY/AZH/AZJ | | GDS61314 | Drive Shaft | | 36 | | 53 | 78 | 558 | |
| | 1999.05-2007.05 | MT | F | R | Hatchback FWD AEG/APK/AQY/AZH/AZJ | | GDS83004 | Drive Shaft | | 36 | | 53.2 | 77.5 | 822 | |
| | 1999.05-2007.05 | MT | F | L | Hatchback FWD AEG/APK/AQY/AZH/AZJ | | GCI82447 | Inner Joint | | | 33 | | | 34 | |
| | 1999.05-2007.05 | MT | F | R | Hatchback FWD AEG/APK/AQY/AZH/AZJ | | GCI83006 | Inner Joint | | | 33 | | | 34 | |
| | 1999.05-2007.05 | MT | F | R | Hatchback FWD AEG/APK/AQY/AZH/AZJ | | GCI83009 | Inner Joint | | | 33 | | | 34 | |
| | 1999.11-2004.09 | 5MT | F | L | Estate 4WD AZH/AZJ | | GDS61314 | Drive Shaft | | 36 | | 53 | 78 | 558 | |
| | 1999.11-2004.09 | 5MT | F | L/R | Estate 4WD AZH/AZJ | | GCO83070 | Outer Joint | | 36 | 30 | 53 | 78 | 60 | I |
| | 1999.11-2004.09 | 5MT | F | R | Estate 4WD AZH/AZJ | | GCI83009 | Inner Joint | | | 33 | | | 34 | |
| | 1999.11-2004.09 | 5MT | F | L/R | Estate 4WD AZH/AZJ | | GCI82447 | Inner Joint | | | 33 | | | 34 | |
| | 1999.11-2004.09 | 5MT | F | L/R | Estate 4WD AZH/AZJ | | GCI83006 | Inner Joint | | | 33 | | | 34 | |
| | 1999.11-2004.09 | MT | F | L | Estate 4WD AZH/AZJ | | GDS83006 | Drive Shaft | | 36 | | 53.2 | 77.5 | 557 | |
| | 1999.11-2004.09 | MT | F | R | Estate 4WD AZH/AZJ | | GDS83004 | Drive Shaft | | 36 | | 53.2 | 77.5 | 822 | |
| | 1999.11-2004.09 | 5MT | R | L | Estate 4WD AZH/AZJ | | GDS82364 | Drive Shaft | | 36 | | 53 | 78.5 | 651 | |
| | 1999.11-2004.09 | 5MT | R | R | Estate 4WD AZH/AZJ | | GDS81587 | Drive Shaft | | 36 | | 53 | 78.5 | 522 | |
| | 1999.11-2004.09 | 5MT | R | L/R | Estate 4WD AZH/AZJ | | GCO83033 | Outer Joint | | 36 | 30 | 53 | 78.5 | 51 | I |
| | 1999.11-2004.09 | 5MT | R | L/R | Estate 4WD AZH/AZJ | | GCI53002 | Inner Joint | | | 33 | | | 34 | |
| | 1999.11-2004.09 | 5MT | R | L/R | Estate 4WD AZH/AZJ | | GCI83011 | Inner Joint | | | 33 | | | 34 | |
| | 2019.11- | 6MT | F | L | Estate FWD DSUD;DTRB;DTRD;DXRC | | GDS83295 | Drive Shaft | | 36 | | 59.5 | 40 | 491 | |
| | 2019.11- | 6MT | F | R | Estate FWD DSUD;DTRB;DTRD;DXRC | | GDS81891 | Drive Shaft | | 36 | | 59.5 | 40 | 781 | |
| | 2019.11- | 6MT | F | R | Estate FWD DSUD;DTRB;DTRD;DXRC | | GCI61069 | Inner Joint | | | 28 | | | 32 | |
| | 2019.11- | 6MT | F | L/R | Estate FWD DSUD;DTRB;DTRD;DXRC | | GCI82456 | Inner Joint | | | 28 | | | 32 | |
| | 2019.11- | 6MT | F | R | Estate FWD DSUD;DTRB;DTRD;DXRC | | GDS98007 | Stub Axle-Flange | | 37 | | | 88 | 148 | |
| | 2019.11- | 7DCT | F | L | Estate FWD DSUD;DTRB;DTRD;DXRC | For PR code:0EG,Trans. code:DQ200 | GDS61282 | Drive Shaft | | 36 | | 59.5 | 40 | 523 | |

| | YEAR | TRANSM. | F/R | L/R | BODY STYLE & DRIVE TYPE & ENGINE | REMARKS | G-AP Ref. | PRODUCT | ABS | Technical Specifications A | B | C | H | L | P |
|---|---|---|---|---|---|---|---|---|---|---|---|---|---|---|---|
| **SKODA** **Octavia** | | | | | | | | | | | | | | | |
| 2.0 (85 kw) | 2019.11- | 7DCT | F | L | Estate FWD DSUD;DTRB;DTRD;DXRC | For PR code:0IJ,Trans. code:DQ381 | GDS81265 | Drive Shaft | | 36 | 37 | 59.5 | 40 | 557 | |
| | 2019.11- | 7DCT | F | R | Estate FWD DSUD;DTRB;DTRD;DXRC | For PR code:0IJ,Trans. code:DQ381 | GDS83612 | Drive Shaft | | 36 | 37 | 59.5 | 40 | 907 | |
| | 2019.11- | 7DCT | F | R | Estate FWD DSUD;DTRB;DTRD;DXRC | For PR code:0EG,Trans. code:DQ200 | GDS84417 | Drive Shaft | | 36 | | 59.5 | 40 | 783 | |
| | 2019.11- | 7DCT | F | R | Estate FWD DSUD;DTRB;DTRD;DXRC | For PR code:0EG,Trans. code:DQ200 | GCO61059 | Outer Joint | | 36 | 33 | 59.5 | 40 | 59.5 | I |
| | 2019.11- | 7DCT | F | R | Estate FWD DSUD;DTRB;DTRD;DXRC | For PR code:0IJ,Trans. code:DQ381 | GCO83101 | Outer Joint | | 36 | 27 | 59.5 | 40 | 65 | M |
| | 2019.11- | 7DCT | F | R | Estate FWD DSUD;DTRB;DTRD;DXRC | For PR code:0EG,Trans. code:DQ200 | GCI53002 | Inner Joint | | | 33 | | | 34 | |
| | 2019.11- | 7DCT | F | R | Estate FWD DSUD;DTRB;DTRD;DXRC | For PR code:0IJ,Trans. code:DQ381 | GCI82108 | Inner Joint | | 37 | 34 | 40 | 77.5 | 103.5 | |
| | 2019.11- | 7DCT | F | L/R | Estate FWD DSUD;DTRB;DTRD;DXRC | For PR code:0IJ,Trans. code:DQ381 | GCI81158 | Inner Joint | | 37 | 34 | 34.5 | 65.5 | 83 | |
| | 2019.11- | 7DCT | F | L/R | Estate FWD DSUD;DTRB;DTRD;DXRC | For PR code:0EG,Trans. code:DQ200 | GCI82447 | Inner Joint | | | 33 | | | 34 | |
| | 2020.03- | 6MT | F | L | Hatchback FWD DSUD;DTRB;DTRD;DXRC | | GDS83295 | Drive Shaft | | 36 | | 59.5 | 40 | 491 | |
| | 2020.03- | 6MT | F | R | Hatchback FWD DSUD;DTRB;DTRD;DXRC | | GDS81891 | Drive Shaft | | 36 | | 59.5 | 40 | 781 | |
| | 2020.03- | 6MT | F | R | Hatchback FWD DSUD;DTRB;DTRD;DXRC | | GCI61069 | Inner Joint | | | 28 | | | 32 | |
| | 2020.03- | 6MT | F | L/R | Hatchback FWD DSUD;DTRB;DTRD;DXRC | | GCI82456 | Inner Joint | | | 28 | | | 32 | |
| | 2020.03- | 6MT | F | R | Hatchback FWD DSUD;DTRB;DTRD;DXRC | | GDS98007 | Stub Axle-Flange | | 37 | | | 88 | 148 | |
| | 2020.03- | 7DCT | F | L | Hatchback FWD DSUD;DTRB;DTRD;DXRC | For PR code:0EG,Trans. code:DQ200 | GDS61282 | Drive Shaft | | 36 | | 59.5 | 40 | 523 | |
| | 2020.03- | 7DCT | F | L | Hatchback FWD DSUD;DTRB;DTRD;DXRC | For PR code:0IJ,Trans. code:DQ381 | GDS81265 | Drive Shaft | | 36 | 37 | 59.5 | 40 | 557 | |
| | 2020.03- | 7DCT | F | R | Hatchback FWD DSUD;DTRB;DTRD;DXRC | For PR code:0IJ,Trans. code:DQ381 | GDS83612 | Drive Shaft | | 36 | 37 | 59.5 | 40 | 907 | |
| | 2020.03- | 7DCT | F | R | Hatchback FWD DSUD;DTRB;DTRD;DXRC | For PR code:0EG,Trans. code:DQ200 | GDS84417 | Drive Shaft | | 36 | | 59.5 | 40 | 783 | |
| | 2020.03- | 7DCT | F | R | Hatchback FWD DSUD;DTRB;DTRD;DXRC | For PR code:0EG,Trans. code:DQ200 | GCO61059 | Outer Joint | | 36 | 33 | 59.5 | 40 | 59.5 | I |
| | 2020.03- | 7DCT | F | R | Hatchback FWD DSUD;DTRB;DTRD;DXRC | For PR code:0IJ,Trans. code:DQ381 | GCO83101 | Outer Joint | | 36 | 27 | 59.5 | 40 | 65 | M |
| | 2020.03- | 7DCT | F | L | Hatchback FWD DSUD;DTRB;DTRD;DXRC | For PR code:0IJ,Trans. code:DQ381 | GCI81158 | Inner Joint | | 37 | 34 | 34.5 | 65.5 | 83 | |
| | 2020.03- | 7DCT | F | L | Hatchback FWD DSUD;DTRB;DTRD;DXRC | For PR code:0EG,Trans. code:DQ200 | GCI82447 | Inner Joint | | | 33 | | | 34 | |
| | 2020.03- | 7DCT | F | R | Hatchback FWD DSUD;DTRB;DTRD;DXRC | For PR code:0EG,Trans. code:DQ200 | GCI53002 | Inner Joint | | | 33 | | | 34 | |
| | 2020.03- | 7DCT | F | R | Hatchback FWD DSUD;DTRB;DTRD;DXRC | For PR code:0IJ,Trans. code:DQ381 | GCI82108 | Inner Joint | | 37 | 34 | 40 | 77.5 | 103.5 | |
| 2.0 (100 kw) | 2004.02-2010.05 | 6DCT | F | R | Estate FWD AZV | Date to:2004.10,Posision:Right | GCI83041 | Inner Joint | | 23 | 34 | | 319 | 88 | |
| | 2004.02-2010.05 | 6DCT | F | L/R | Estate FWD AZV | Date to:2004.10,Posision:Left;Date from:2004.11,Posision:Left/Right | GCI54004 | Inner Joint | | | 34 | | | 81 | |
| | 2004.02-2010.05 | 6DCT | F | L/R | Estate FWD AZV | Date to:2004.10,Posision:Left;Date from:2004.11,Posision:Left/Right | GCI61057 | Inner Joint | | | 34 | | | 89 | |
| | 2004.02-2010.05 | 6MT | F | L/R | Estate FWD AZV | | GCI83016 | Inner Joint | | | 28 | | | 32 | |
| | 2004.02-2010.05 | AT | F | L | Estate FWD AZV | | GDS54013 | Drive Shaft | | 36 | | 59.5 | 40 | 479.5 | |
| | 2004.02-2010.05 | AT | F | L | Estate FWD AZV | | GDS83241 | Drive Shaft | | 36 | | 59.5 | 40 | 475 | |
| | 2004.02-2010.05 | AT | F | R | Estate FWD AZV | Date from:2004.11 | GDS54011 | Drive Shaft | | 36 | | 59.5 | 40 | 755 | |
| | 2004.02-2010.05 | AT | F | R | Estate FWD AZV | Date to:2004.10 | GDS83355 | Drive Shaft | | 36 | 23 | 59.5 | 40 | 799 | |
| | 2004.02-2010.05 | MT | F | L | Estate FWD AZV | Date from:2004.11 | GDS83295 | Drive Shaft | | 36 | | 59.5 | 40 | 491 | |
| | 2004.02-2010.05 | MT | F | R | Estate FWD AZV | Date from:2004.11 | GDS61126 | Drive Shaft | | 36 | | 59.5 | 40 | 793 | |
| | 2004.02-2010.05 | MT | F | R | Estate FWD AZV | Date from:2004.11 | GDS83313 | Drive Shaft | | 36 | | 59.5 | 40 | 792 | |
| | 2004.02-2010.05 | MT | F | L/R | Estate FWD AZV | date to:2004.10 | GDS83295 | Drive Shaft | | 36 | | 59.5 | 40 | 491 | |
| | 2004.02-2010.05 | | F | L | Estate FWD AZV | | GDS83236 | Drive Shaft | | 36 | | 59.5 | 40 | 484 | |
| | 2004.02-2010.05 | | F | L/R | Estate FWD AZV | | GCO83002 | Outer Joint | | 36 | 27 | 59.5 | 40 | 66 | I |
| | 2004.02-2010.05 | 6DCT | F | R | Hatchback FWD AZV | Date to:2004.10,Posision:Right | GCI83041 | Inner Joint | | 23 | 34 | | 319 | 88 | |
| | 2004.02-2010.05 | 6DCT | F | L/R | Hatchback FWD AZV | Date to:2004.10,Posision:Left;Date from:2004.11,Posision:Left/Right | GCI54004 | Inner Joint | | | 34 | | | 81 | |
| | 2004.02-2010.05 | 6DCT | F | L/R | Hatchback FWD AZV | Date to:2004.10,Posision:Left;Date from:2004.11,Posision:Left/Right | GCI61057 | Inner Joint | | | 34 | | | 89 | |
| | 2004.02-2010.05 | 6MT | F | L/R | Hatchback FWD AZV | | GCI83016 | Inner Joint | | | 28 | | | 32 | |
| | 2004.02-2010.05 | AT | F | L | Hatchback FWD AZV | | GDS54013 | Drive Shaft | | 36 | | 59.5 | 40 | 479.5 | |
| | 2004.02-2010.05 | AT | F | L | Hatchback FWD AZV | | GDS83241 | Drive Shaft | | 36 | | 59.5 | 40 | 475 | |
| | 2004.02-2010.05 | AT | F | R | Hatchback FWD AZV | | GDS54011 | Drive Shaft | | 36 | | 59.5 | 40 | 755 | |
| | 2004.02-2010.05 | AT | F | R | Hatchback FWD AZV | Date to:2004.10 | GDS83355 | Drive Shaft | | 36 | 23 | 59.5 | 40 | 799 | |
| | 2004.02-2010.05 | MT | F | L | Hatchback FWD AZV | | GDS83295 | Drive Shaft | | 36 | | 59.5 | 40 | 491 | |
| | 2004.02-2010.05 | MT | F | R | Hatchback FWD AZV | Date from:2004.11 | GDS61126 | Drive Shaft | | 36 | | 59.5 | 40 | 793 | |
| | 2004.02-2010.05 | MT | F | R | Hatchback FWD AZV | | GDS83236 | Drive Shaft | | 36 | | 59.5 | 40 | 484 | |
| | 2004.02-2010.05 | MT | F | R | Hatchback FWD AZV | | GDS83313 | Drive Shaft | | 36 | | 59.5 | 40 | 792 | |
| | 2004.02-2010.05 | | F | L/R | Hatchback FWD AZV | | GCO83002 | Outer Joint | | 36 | 27 | 59.5 | 40 | 66 | I |
| 2.0 (103 kw) | 2004.02-2013.04 | 6DCT | F | R | Hatchback FWD BKD;CFHC;CLCB | For Engine code:BKD,Date to:2004.10,Posision:Right | GCI83041 | Inner Joint | | 23 | 34 | | 319 | 88 | |
| | 2004.02-2013.04 | 6DCT | F | L/R | Hatchback FWD BKD;CFHC;CLCB | For Engine code:BKD,Date to:2004.10,Posision:Left;Date from:2004.11,Posision:Left/Right;For Engine code:CFHC,Date to:2004.10,Posision:Left;Date from:2004.11,Posision:Left/Right | GCI54004 | Inner Joint | | | 34 | | | 81 | |
| | 2004.02-2013.04 | 6DCT | F | L/R | Hatchback FWD BKD;CFHC;CLCB | For Engine code:BKD,Date to:2004.10,Posision:Left;Date from:2004.11,Posision:Left/Right;For Engine code:CFHC,Date to:2004.10,Posision:Left;Date from:2004.11,Posision:Left/Right | GCI61057 | Inner Joint | | | 34 | | | 89 | |
| | 2004.02-2013.04 | 6MT | F | R | Hatchback FWD BKD;CFHC;CLCB | | GDS83313 | Drive Shaft | | 36 | | 59.5 | 40 | 792 | |
| | 2004.02-2013.04 | AT | F | L | Hatchback FWD BKD;CFHC;CLCB | | GDS54013 | Drive Shaft | | 36 | | 59.5 | 40 | 479.5 | |
| | 2004.02-2013.04 | AT | F | L | Hatchback FWD BKD;CFHC;CLCB | | GDS83241 | Drive Shaft | | 36 | | 59.5 | 40 | 475 | |
| | 2004.02-2013.04 | AT | F | R | Hatchback FWD BKD;CFHC;CLCB | | GDS54011 | Drive Shaft | | 36 | | 59.5 | 40 | 755 | |
| | 2004.02-2013.04 | AT | F | R | Hatchback FWD BKD;CFHC;CLCB | Date to:2004.10 | GDS83355 | Drive Shaft | | 36 | 23 | 59.5 | 40 | 799 | |
| | 2004.02-2013.04 | AT | F | L/R | Hatchback FWD BKD;CFHC;CLCB | GrooveType:Middle | GCO83101 | Outer Joint | | 36 | 27 | 59.5 | 40 | 65 | M |
| | 2004.02-2013.04 | AT/MT | F | L/R | Hatchback FWD BKD;CFHC;CLCB | GrooveType:Inner | GCO83002 | Outer Joint | | 36 | 27 | 59.5 | 40 | 66 | I |
| | 2004.02-2013.04 | MT | F | L | Hatchback FWD BKD;CFHC;CLCB | | GDS83295 | Drive Shaft | | 36 | | 59.5 | 40 | 491 | |
| | 2004.02-2013.04 | MT | F | R | Hatchback FWD BKD;CFHC;CLCB | | GDS61126 | Drive Shaft | | 36 | | 59.5 | 40 | 793 | |
| | 2004.02-2013.04 | MT | F | R | Hatchback FWD BKD;CFHC;CLCB | | GDS83236 | Drive Shaft | | 36 | | 59.5 | 40 | 484 | |
| | 2004.02-2013.04 | MT | F | L/R | Hatchback FWD BKD;CFHC;CLCB | | GCI61002 | Inner Joint | | | 28 | | | 31.8 | |

| | YEAR | TRANSM. | F/R | L/R | BODY STYLE & DRIVE TYPE & ENGINE | REMARKS | G-AP Ref. | PRODUCT | ABS | Technical Specifications A | B | C | H | L | P |
|---|---|---|---|---|---|---|---|---|---|---|---|---|---|---|---|
| **SKODA** **Octavia** | | | | | | | | | | | | | | | |
| 2.0 (103 kw) | 2004.02-2013.04 | MT | F | L/R | Hatchback FWD BKD;CFHC;CLCB | | GCI61041 | Inner Joint | | | 28 | | | 32 | |
| | 2004.02-2013.04 | MT | F | L/R | Hatchback FWD BKD;CFHC;CLCB | | GCI83016 | Inner Joint | | | 28 | | | 32 | |
| | 2004.02-2013.05 | 6DCT | F | R | Estate FWD BKD;CFHC;CLCB | For Engine code:BKD,Date to:2004.10,Posision:Right | GCI83041 | Inner Joint | | 23 | 34 | | 319 | 88 | |
| | 2004.02-2013.05 | 6DCT | F | L/R | Estate FWD BKD;CFHC;CLCB | | GCI54004 | Inner Joint | | | 34 | | | 81 | |
| | 2004.02-2013.05 | 6DCT | F | L/R | Estate FWD BKD;CFHC;CLCB | | GCI61057 | Inner Joint | | | 34 | | | 89 | |
| | 2004.02-2013.05 | 6MT | F | L/R | Estate FWD BKD;CFHC;CLCB | | GCI83016 | Inner Joint | | | 28 | | | 32 | |
| | 2004.02-2013.05 | AT | F | L | Estate FWD BKD;CFHC;CLCB | | GDS54013 | Drive Shaft | | 36 | | 59.5 | 40 | 479.5 | |
| | 2004.02-2013.05 | AT | F | L | Estate FWD BKD;CFHC;CLCB | For Engine code:CFHC/CLCB | GDS83241 | Drive Shaft | | 36 | | 59.5 | 40 | 475 | |
| | 2004.02-2013.05 | AT | F | R | Estate FWD BKD;CFHC;CLCB | For Engine Code:CFHC/CLCB | GDS54011 | Drive Shaft | | 36 | | 59.5 | 40 | 755 | |
| | 2004.02-2013.05 | AT | F | R | Estate FWD BKD;CFHC;CLCB | Engine code:BKD;Date to:2004.10 | GDS83355 | Drive Shaft | | 36 | 23 | 59.5 | 40 | 799 | |
| | 2004.02-2013.05 | AT | F | L/R | Estate FWD BKD;CFHC;CLCB | For Engine code:BKD,Date from:2004.11\|Normal | GDS54011 | Drive Shaft | | 36 | | 59.5 | 40 | 755 | |
| | 2004.02-2013.05 | MT | F | L | Estate FWD BKD;CFHC;CLCB | Inner teeth of tranm.side:33 | GDS83236 | Drive Shaft | | 36 | | 59.5 | 40 | 484 | |
| | 2004.02-2013.05 | MT | F | L | Estate FWD BKD;CFHC;CLCB | For Engine code:CFHC;For PR code:1PA;Inner teeth of tranm.side:28 | GDS83295 | Drive Shaft | | 36 | | 59.5 | 40 | 491 | |
| | 2004.02-2013.05 | MT | F | R | Estate FWD BKD;CFHC;CLCB | Date from:2004.11 | GDS61126 | Drive Shaft | | 36 | | 59.5 | 40 | 793 | |
| | 2004.02-2013.05 | MT | F | R | Estate FWD BKD;CFHC;CLCB | | GDS83313 | Drive Shaft | | 36 | | 59.5 | 40 | 792 | |
| | 2004.02-2013.05 | MT | F | L | Estate FWD BKD;CFHC;CLCB | For Engine code:CFHC;For PR code:1PA;Groove Type:Middle | GCO83101 | Outer Joint | | 36 | 27 | 59.5 | 40 | 65 | M |
| | 2004.02-2013.05 | MT | F | L | Estate FWD BKD;CFHC;CLCB | For Engine code:CFHC;For PR code:1PA | GCI61069 | Inner Joint | | | 28 | | | 32 | |
| | 2004.02-2013.05 | | F | L/R | Estate FWD BKD;CFHC;CLCB | Groove Type:Inner | GCO83002 | Outer Joint | | 36 | 27 | 59.5 | 40 | 66 | I |
| | 2005.11-2010.05 | 6AT/6MT | F | L/R | Estate FWD BMM | | GCI54004 | Inner Joint | | | 34 | | | 81 | |
| | 2005.11-2010.05 | 6AT/6MT | F | L/R | Estate FWD BMM | Original Tripod Design | GCI61057 | Inner Joint | | | 34 | | | 89 | |
| | 2005.11-2010.05 | 6AT/6MT | F | L/R | Estate FWD BMM | | GCI83016 | Inner Joint | | | 28 | | | 32 | |
| | 2005.11-2010.05 | AT | F | L | Estate FWD BMM | | GDS54013 | Drive Shaft | | 36 | | 59.5 | 40 | 479.5 | |
| | 2005.11-2010.05 | AT | F | L | Estate FWD BMM | | GDS83241 | Drive Shaft | | 36 | | 59.5 | 40 | 475 | |
| | 2005.11-2010.05 | AT | F | R | Estate FWD BMM | | GDS54011 | Drive Shaft | | 36 | | 59.5 | 40 | 755 | |
| | 2005.11-2010.05 | MT | F | L | Estate FWD BMM | | GDS83295 | Drive Shaft | | 36 | | 59.5 | 40 | 491 | |
| | 2005.11-2010.05 | MT | F | R | Estate FWD BMM | | GDS83313 | Drive Shaft | | 36 | | 59.5 | 40 | 792 | |
| | 2005.11-2010.05 | | F | L | Estate FWD BMM | | GDS83236 | Drive Shaft | | 36 | | 59.5 | 40 | 484 | |
| | 2005.11-2010.05 | | F | L/R | Estate FWD BMM | | GCO83002 | Outer Joint | | 36 | 27 | 59.5 | 40 | 66 | I |
| | 2005.11-2010.05 | 6AT/6MT | F | L/R | Hatchback FWD BMM | | GCI54004 | Inner Joint | | | 34 | | | 81 | |
| | 2005.11-2010.05 | 6AT/6MT | F | L/R | Hatchback FWD BMM | Original Tripod Design | GCI61057 | Inner Joint | | | 34 | | | 89 | |
| | 2005.11-2010.05 | 6AT/6MT | F | L/R | Hatchback FWD BMM | | GCI83016 | Inner Joint | | | 28 | | | 32 | |
| | 2005.11-2010.05 | AT | F | L | Hatchback FWD BMM | | GDS54013 | Drive Shaft | | 36 | | 59.5 | 40 | 479.5 | |
| | 2005.11-2010.05 | AT | F | L | Hatchback FWD BMM | | GDS83241 | Drive Shaft | | 36 | | 59.5 | 40 | 475 | |
| | 2005.11-2010.05 | AT | F | R | Hatchback FWD BMM | | GDS54011 | Drive Shaft | | 36 | | 59.5 | 40 | 755 | |
| | 2005.11-2010.05 | MT | F | L | Hatchback FWD BMM | | GDS83236 | Drive Shaft | | 36 | | 59.5 | 40 | 484 | |
| | 2005.11-2010.05 | MT | F | L | Hatchback FWD BMM | | GDS83295 | Drive Shaft | | 36 | | 59.5 | 40 | 491 | |
| | 2005.11-2010.05 | MT | F | R | Hatchback FWD BMM | | GDS61126 | Drive Shaft | | 36 | | 59.5 | 40 | 793 | |
| | 2005.11-2010.05 | MT | F | R | Hatchback FWD BMM | | GDS83313 | Drive Shaft | | 36 | | 59.5 | 40 | 792 | |
| | 2005.11-2010.05 | | F | L/R | Hatchback FWD BMM | | GCO83002 | Outer Joint | | 36 | 27 | 59.5 | 40 | 66 | I |
| 2.0 (105 kw) | 2012.11-2017.02 | 6AT/6MT | F | L/R | Estate FWD CRVC;CKFB | | GCI54004 | Inner Joint | | | 34 | | | 81 | |
| | 2012.11-2017.02 | 6AT/6MT | F | L/R | Estate FWD CRVC;CKFB | Original Tripod Design | GCI61057 | Inner Joint | | | 34 | | | 89 | |
| | 2012.11-2017.02 | 6AT/6MT | F | L/R | Estate FWD CRVC;CKFB | | GCI83016 | Inner Joint | | | 28 | | | 32 | |
| | 2012.11-2017.02 | 6DCT | F | L | Estate FWD CRVC;CKFB | | GDS61285 | Drive Shaft | | 36 | | 59.5 | 40 | 472 | |
| | 2012.11-2017.02 | 6DCT | F | R | Estate FWD CRVC;CKFB | | GDS83354 | Drive Shaft | | 36 | | 59.5 | 40 | 763 | |
| | 2012.11-2017.02 | 6MT | F | L | Estate FWD CRVC;CKFB | | GDS83295 | Drive Shaft | | 36 | | 59.5 | 40 | 491 | |
| | 2012.11-2017.02 | 6MT | F | R | Estate FWD CRVC;CKFB | | GDS83313 | Drive Shaft | | 36 | | 59.5 | 40 | 792 | |
| | 2012.11-2017.02 | 6MT | F | L | Estate FWD CRVC;CKFB | | GCI61069 | Inner Joint | | | 28 | | | 32 | |
| | 2012.11-2017.02 | 6MT/6DCT | F | L/R | Estate FWD CRVC;CKFB | | GCO83101 | Outer Joint | | 36 | 27 | 59.5 | 40 | 65 | M |
| | 2012.11-2017.02 | 6AT/6MT | F | L/R | Hatchback FWD CRVC;CKFB | | GCI54004 | Inner Joint | | | 34 | | | 81 | |
| | 2012.11-2017.02 | 6AT/6MT | F | L/R | Hatchback FWD CRVC;CKFB | Original Tripod Design | GCI61057 | Inner Joint | | | 34 | | | 89 | |
| | 2012.11-2017.02 | 6AT/6MT | F | L/R | Hatchback FWD CRVC;CKFB | | GCI83016 | Inner Joint | | | 28 | | | 32 | |
| | 2012.11-2017.02 | 6DCT | F | L | Hatchback FWD CRVC;CKFB | | GDS61285 | Drive Shaft | | 36 | | 59.5 | 40 | 472 | |
| | 2012.11-2017.02 | 6DCT | F | R | Hatchback FWD CRVC;CKFB | | GDS83354 | Drive Shaft | | 36 | | 59.5 | 40 | 763 | |
| | 2012.11-2017.02 | 6MT | F | L | Hatchback FWD CRVC;CKFB | | GDS83295 | Drive Shaft | | 36 | | 59.5 | 40 | 491 | |
| | 2012.11-2017.02 | 6MT | F | R | Hatchback FWD CRVC;CKFB | | GDS83313 | Drive Shaft | | 36 | | 59.5 | 40 | 792 | |
| | 2012.11-2017.02 | 6MT | F | L | Hatchback FWD CRVC;CKFB | | GCI61069 | Inner Joint | | | 28 | | | 32 | |
| | 2012.11-2017.02 | 6MT/6DCT | F | L/R | Hatchback FWD CRVC;CKFB | | GCO83101 | Outer Joint | | 36 | 27 | 59.5 | 40 | 65 | M |
| | 2020.06- | 7AT | F | R | Estate FWD CRVC | | GDS83612 | Drive Shaft | | 36 | 37 | 59.5 | 40 | 907 | |
| | 2020.06- | 7AT | F | R | Estate FWD CRVC | | GCO83101 | Outer Joint | | 36 | 27 | 59.5 | 40 | 65 | M |
| | 2020.06- | 7AT | F | R | Estate FWD CRVC | | GCI82108 | Inner Joint | | 37 | 34 | 40 | 77.5 | 103.5 | |
| | 2020.06- | 7DCT | F | L | Estate FWD CRVC | | GDS81265 | Drive Shaft | | 36 | 37 | 59.5 | 40 | 557 | |
| | 2020.06- | 7DCT | F | L | Estate FWD CRVC | | GCI81158 | Inner Joint | | 37 | 34 | 34.5 | 65.5 | 83 | |
| | 2020.06- | 7AT | F | R | Hatchback FWD CRVC | | GDS83612 | Drive Shaft | | 36 | 37 | 59.5 | 40 | 907 | |
| | 2020.06- | 7AT | F | R | Hatchback FWD CRVC | | GCO83101 | Outer Joint | | 36 | 27 | 59.5 | 40 | 65 | M |
| | 2020.06- | 7AT | F | R | Hatchback FWD CRVC | | GCI82108 | Inner Joint | | 37 | 34 | 40 | 77.5 | 103.5 | |

| | YEAR | TRANSM. | F/R | L/R | BODY STYLE & DRIVE TYPE & ENGINE | REMARKS | G-AP Ref. | PRODUCT | ABS | Technical Specifications A | B | C | H | L | P |
|---|---|---|---|---|---|---|---|---|---|---|---|---|---|---|---|
| **SKODA** **Octavia** | | | | | | | | | | | | | | | |
| 2.0 (105 kw) | 2020.06- | 7DCT | F | L | Hatchback FWD CRVC | | GDS81265 | Drive Shaft | | 36 | 37 | 59.5 | 40 | 557 | |
| | 2020.06- | 7DCT | F | L | Hatchback FWD CRVC | | GCI81158 | Inner Joint | | 37 | 34 | 34.5 | 65.5 | 83 | |
| 2.0 (110 kw) | 2004.11-2008.10 | 6AT/5MT/6MT | F | L/R | Estate FWD BLY;BLR;BVY;BVZ | | GCO83037 | Outer Joint | | 36 | 30 | 59.5 | 40.5 | 56 | I |
| | 2004.11-2008.10 | 6DCT | F | L/R | Estate FWD BLY;BLR;BVY;BVZ | | GCI61011 | Inner Joint | | 26 | 32 | 31 | 68.5 | 85 | |
| | 2004.11-2008.10 | 6DCT | F | L/R | Estate FWD BLY;BLR;BVY;BVZ | | GCI61050 | Inner Joint | | 26 | 32 | 31 | 68.5 | 89 | |
| | 2004.11-2008.10 | AT | F | L | Estate FWD BLY;BLR;BVY;BVZ | | GDS61093 | Drive Shaft | | 36 | 26 | 59.5 | 40.5 | 587.5 | |
| | 2004.11-2008.10 | AT | F | R | Estate FWD BLY;BLR;BVY;BVZ | | GDS61094 | Drive Shaft | | 36 | 26 | 59.5 | 40.5 | 884 | |
| | 2004.11-2008.10 | MT | F | L | Estate FWD BLY;BLR;BVY;BVZ | | GDS83294 | Drive Shaft | | 36 | | 59.5 | 38 | 519 | |
| | 2004.11-2008.10 | MT | F | R | Estate FWD BLY;BLR;BVY;BVZ | | GDS61042 | Drive Shaft | | 36 | | 59.5 | 40.5 | 814 | |
| | 2004.11-2008.10 | MT | F | L/R | Estate FWD BLY;BLR;BVY;BVZ | | GCI82447 | Inner Joint | | | 33 | | | 34 | |
| | 2004.11-2008.10 | 6AT/6MT | F | L/R | Hatchback FWD BLY;BLR;BVY;BVZ | | GCO83037 | Outer Joint | | 36 | 30 | 59.5 | 40.5 | 56 | I |
| | 2004.11-2008.10 | 6DCT | F | L/R | Hatchback FWD BLY;BLR;BVY;BVZ | | GCI61011 | Inner Joint | | 26 | 32 | 31 | 68.5 | 85 | |
| | 2004.11-2008.10 | 6DCT | F | L/R | Hatchback FWD BLY;BLR;BVY;BVZ | | GCI61050 | Inner Joint | | 26 | 32 | 31 | 68.5 | 89 | |
| | 2004.11-2008.10 | 6MT | F | L/R | Hatchback FWD BLY;BLR;BVY;BVZ | | GCI82447 | Inner Joint | | | 33 | | | 34 | |
| | 2004.11-2008.10 | AT | F | L | Hatchback FWD BLY;BLR;BVY;BVZ | | GDS61093 | Drive Shaft | | 36 | 26 | 59.5 | 40.5 | 587.5 | |
| | 2004.11-2008.10 | AT | F | R | Hatchback FWD BLY;BLR;BVY;BVZ | | GDS61094 | Drive Shaft | | 36 | 26 | 59.5 | 40.5 | 884 | |
| | 2004.11-2008.10 | MT | F | L | Hatchback FWD BLY;BLR;BVY;BVZ | | GDS83294 | Drive Shaft | | 36 | | 59.5 | 38 | 519 | |
| | 2004.11-2008.10 | MT | F | R | Hatchback FWD BLY;BLR;BVY;BVZ | | GDS61042 | Drive Shaft | | 36 | | 59.5 | 40.5 | 814 | |
| | 2012.11-2020.10 | 6DCT | F | L | Estate FWD CKFC;CRMB;DFFA;CYKA;DCYA | | GDS61285 | Drive Shaft | | 36 | | 59.5 | 40 | 472 | |
| | 2012.11-2020.10 | 6DCT | F | R | Estate FWD CKFC;CRMB;DFFA;CYKA;DCYA | | GDS83354 | Drive Shaft | | 36 | | 59.5 | 40 | 763 | |
| | 2012.11-2020.10 | 6DCT | F | L/R | Estate FWD CKFC;CRMB;DFFA;CYKA;DCYA | TJ | GCI54004 | Inner Joint | | | 34 | | | 81 | |
| | 2012.11-2020.10 | 6DCT | F | L/R | Estate FWD CKFC;CRMB;DFFA;CYKA;DCYA | AAR | GCI61057 | Inner Joint | | | 34 | | | 89 | |
| | 2012.11-2020.10 | 6MT | F | L | Estate FWD CKFC;CRMB;DFFA;CYKA;DCYA | | GDS83295 | Drive Shaft | | 36 | | 59.5 | 40 | 491 | |
| | 2012.11-2020.10 | 6MT | F | R | Estate FWD CKFC;CRMB;DFFA;CYKA;DCYA | | GDS83313 | Drive Shaft | | 36 | | 59.5 | 40 | 792 | |
| | 2012.11-2020.10 | 6MT | F | L | Estate FWD CKFC;CRMB;DFFA;CYKA;DCYA | | GCI61069 | Inner Joint | | | 28 | | | 32 | |
| | 2012.11-2020.10 | 6MT | F | L/R | Estate FWD CKFC;CRMB;DFFA;CYKA;DCYA | | GCI83016 | Inner Joint | | | 28 | | | 32 | |
| | 2012.11-2020.10 | 6MT/6DCT/7DCT | F | L/R | Estate FWD CKFC;CRMB;DFFA;CYKA;DCYA | | GCO83101 | Outer Joint | | 36 | 27 | 59.5 | 40 | 65 | M |
| | 2012.11-2020.10 | 7DCT | F | L | Estate FWD CKFC;CRMB;DFFA;CYKA;DCYA | | GDS81265 | Drive Shaft | | 36 | 37 | 59.5 | 40 | 557 | |
| | 2012.11-2020.10 | 7DCT | F | R | Estate FWD CKFC;CRMB;DFFA;CYKA;DCYA | | GDS83612 | Drive Shaft | | 36 | 37 | 59.5 | 40 | 907 | |
| | 2012.11-2020.10 | 7DCT | F | L | Estate FWD CKFC;CRMB;DFFA;CYKA;DCYA | | GCI81158 | Inner Joint | | 37 | 34 | 34.5 | 65.5 | 83 | |
| | 2012.11-2020.10 | 7DCT | F | R | Estate FWD CKFC;CRMB;DFFA;CYKA;DCYA | | GCI82108 | Inner Joint | | 37 | 34 | 40 | 77.5 | 103.5 | |
| | 2012.11-2020.10 | 6DCT | F | L | Hatchback FWD CKFC;CRMB;DFFA;CYKA;DCYA | | GDS61285 | Drive Shaft | | 36 | | 59.5 | 40 | 472 | |
| | 2012.11-2020.10 | 6DCT | F | R | Hatchback FWD CKFC;CRMB;DFFA;CYKA;DCYA | | GDS83354 | Drive Shaft | | 36 | | 59.5 | 40 | 763 | |
| | 2012.11-2020.10 | 6DCT | F | L/R | Hatchback FWD CKFC;CRMB;DFFA;CYKA;DCYA | TJ | GCI54004 | Inner Joint | | | 34 | | | 81 | |
| | 2012.11-2020.10 | 6DCT | F | L/R | Hatchback FWD CKFC;CRMB;DFFA;CYKA;DCYA | AAR | GCI61057 | Inner Joint | | | 34 | | | 89 | |
| | 2012.11-2020.10 | 6MT | F | L | Hatchback FWD CKFC;CRMB;DFFA;CYKA;DCYA | | GDS83295 | Drive Shaft | | 36 | | 59.5 | 40 | 491 | |
| | 2012.11-2020.10 | 6MT | F | R | Hatchback FWD CKFC;CRMB;DFFA;CYKA;DCYA | | GDS83313 | Drive Shaft | | 36 | | 59.5 | 40 | 792 | |
| | 2012.11-2020.10 | 6MT | F | L | Hatchback FWD CKFC;CRMB;DFFA;CYKA;DCYA | | GCI61069 | Inner Joint | | | 28 | | | 32 | |
| | 2012.11-2020.10 | 6MT | F | L/R | Hatchback FWD CKFC;CRMB;DFFA;CYKA;DCYA | | GCI83016 | Inner Joint | | | 28 | | | 32 | |
| | 2012.11-2020.10 | 6MT/6DCT/7DCT | F | L/R | Hatchback FWD CKFC;CRMB;DFFA;CYKA;DCYA | | GCO83101 | Outer Joint | | 36 | 27 | 59.5 | 40 | 65 | M |
| | 2012.11-2020.10 | 7DCT | F | L | Hatchback FWD CKFC;CRMB;DFFA;CYKA;DCYA | | GDS81265 | Drive Shaft | | 36 | 37 | 59.5 | 40 | 557 | |
| | 2012.11-2020.10 | 7DCT | F | R | Hatchback FWD CKFC;CRMB;DFFA;CYKA;DCYA | | GDS83612 | Drive Shaft | | 36 | 37 | 59.5 | 40 | 907 | |
| | 2012.11-2020.10 | 7DCT | F | L | Hatchback FWD CKFC;CRMB;DFFA;CYKA;DCYA | | GCI81158 | Inner Joint | | 37 | 34 | 34.5 | 65.5 | 83 | |
| | 2012.11-2020.10 | 7DCT | F | R | Hatchback FWD CKFC;CRMB;DFFA;CYKA;DCYA | | GCI82108 | Inner Joint | | 37 | 34 | 40 | 77.5 | 103.5 | |
| | 2012.11-2020.10 | AT | F | L | Hatchback FWD CKFC;CRMB;DFFA;CYKA;DCYA | | GDS83241 | Drive Shaft | | 36 | | 59.5 | 40 | 475 | |
| | 2012.11-2020.10 | AT | F | R | Hatchback FWD CKFC;CRMB;DFFA;CYKA;DCYA | | GDS54011 | Drive Shaft | | 36 | | 59.5 | 40 | 755 | |
| | 2012.11-2020.10 | MT | F | R | Hatchback FWD CKFC;CRMB;DFFA;CYKA;DCYA | | GDS61126 | Drive Shaft | | 36 | | 59.5 | 40 | 793 | |
| | 2013.05-2020.10 | 6MT | F | L | Hatchback 4WD CKFC;CRMB;DFFA;DCYA | | GDS83295 | Drive Shaft | | 36 | | 59.5 | 40 | 491 | |
| | 2013.05-2020.10 | 6MT | F | R | Hatchback 4WD CKFC;CRMB;DFFA;DCYA | | GDS81892 | Drive Shaft | | 36 | | 59.5 | 40 | 602 | |
| | 2013.05-2020.10 | 6MT | F | R | Hatchback 4WD CKFC;CRMB;DFFA;DCYA | | GDS83266 | Drive Shaft | | 36 | | 59.5 | 40 | 601 | |
| | 2013.05-2020.10 | 6MT | F | L | Hatchback 4WD CKFC;CRMB;DFFA;DCYA | | GCI61069 | Inner Joint | | | 28 | | | 32 | |
| | 2013.05-2020.10 | 6MT | F | L/R | Hatchback 4WD CKFC;CRMB;DFFA;DCYA | | GCI83016 | Inner Joint | | | 28 | | | 32 | |
| | 2013.05-2020.10 | 6MT/6DCT | F | L/R | Hatchback 4WD CKFC;CRMB;DFFA;DCYA | | GCO83101 | Outer Joint | | 36 | 27 | 59.5 | 40 | 65 | M |
| | 2013.05-2020.10 | 7DCT | F | L | Hatchback 4WD CKFC;CRMB;DFFA;DCYA | | GDS81265 | Drive Shaft | | 36 | 37 | 59.5 | 40 | 557 | |
| | 2013.05-2020.10 | 7DCT | F | R | Hatchback 4WD CKFC;CRMB;DFFA;DCYA | | GDS81893 | Drive Shaft | | 36 | | 59.5 | 40 | 575 | |
| | 2013.05-2020.10 | 7DCT | F | L | Hatchback 4WD CKFC;CRMB;DFFA;DCYA | | GCI81158 | Inner Joint | | 37 | 34 | 34.5 | 65.5 | 83 | |
| | 2013.05-2020.10 | 7DCT | F | R | Hatchback 4WD CKFC;CRMB;DFFA;DCYA | | GCI61057 | Inner Joint | | | 34 | | | 89 | |
| | 2013.05-2020.10 | 6MT/7AT | R | L | Hatchback 4WD CKFC;CRMB;DFFA;DCYA | Not For facelift | GDS61286 | Drive Shaft | | 36 | | 59.5 | 40 | 587 | |
| | 2013.05-2020.10 | 6MT/7AT | R | L | Hatchback 4WD CKFC;CRMB;DFFA;DCYA | For facelift | GDS61331 | Drive Shaft | | 36 | | 59.5 | 40 | 606 | |
| | 2013.05-2020.10 | 6MT/7AT | R | R | Hatchback 4WD CKFC;CRMB;DFFA;DCYA | Not For facelift | GDS61287 | Drive Shaft | | 36 | | 59.5 | 40 | 632 | |
| | 2013.05-2020.10 | 6MT/7AT | R | R | Hatchback 4WD CKFC;CRMB;DFFA;DCYA | For facelift | GDS61332 | Drive Shaft | | 36 | | 59.5 | 40 | 650 | |
| | 2013.05-2020.10 | 7AT/6MT | R | L/R | Hatchback 4WD CKFC;CRMB;DFFA;DCYA | | GCI35026 | Outer Joint | | 36 | 33 | 59.5 | 40 | 61 | |
| | 2013.05-2020.10 | | R | L/R | Hatchback 4WD CKFC;CRMB;DFFA;DCYA | Facelift:No | GCI61103 | Inner Joint | | | 33 | | | 32 | |
| | 2019.11- | 6MT | F | L | Estate FWD DSTB;DTTC;DTTA;DXRB;DSTA | | GDS83295 | Drive Shaft | | 36 | | 59.5 | 40 | 491 | |
| | 2019.11- | 6MT | F | R | Estate FWD DSTB;DTTC;DTTA;DXRB;DSTA | | GDS81891 | Drive Shaft | | 36 | | 59.5 | 40 | 781 | |

| | YEAR | TRANSM. | F/R | L/R | BODY STYLE & DRIVE TYPE & ENGINE | REMARKS | G-AP Ref. | PRODUCT | ABS | Technical Specifications A | B | C | H | L | P |
|---|---|---|---|---|---|---|---|---|---|---|---|---|---|---|---|
| **SKODA** **Octavia** | | | | | | | | | | | | | | | |
| 2.0 (110 kw) | 2019.11- | 7DCT | F | L | Estate FWD DSTB;DTTC;DTTA;DXRB;DSTA | For PR code:0EG,Trans. code:DQ200 | GDS61282 | Drive Shaft | | 36 | | 59.5 | 40 | 523 | |
| | 2019.11- | 7DCT | F | L | Estate FWD DSTB;DTTC;DTTA;DXRB;DSTA | For PR code:0IJ,Trans. code:DQ381 | GDS81265 | Drive Shaft | | 36 | 37 | 59.5 | 40 | 557 | |
| | 2019.11- | 7DCT | F | R | Estate FWD DSTB;DTTC;DTTA;DXRB;DSTA | For PR code:0IJ,Trans. code:DQ381 | GDS83612 | Drive Shaft | | 36 | 37 | 59.5 | 40 | 907 | |
| | 2019.11- | 7DCT | F | R | Estate FWD DSTB;DTTC;DTTA;DXRB;DSTA | For PR code:0EG,Trans. code:DQ200 | GDS84417 | Drive Shaft | | 36 | | 59.5 | 40 | 783 | |
| | 2019.11- | 7DCT | F | L/R | Estate FWD DSTB;DTTC;DTTA;DXRB;DSTA | For PR code:0EG,Trans. code:DQ200 | GCO61059 | Outer Joint | | 36 | 33 | 59.5 | 40 | 59.5 | I |
| | 2019.11- | 7DCT | F | L | Estate FWD DSTB;DTTC;DTTA;DXRB;DSTA | | GCI81158 | Inner Joint | | 37 | 34 | 34.5 | 65.5 | 83 | |
| | 2019.11- | 7DCT | F | R | Estate FWD DSTB;DTTC;DTTA;DXRB;DSTA | For PR code:0IJ,Trans. code:DQ381 | GCI82108 | Inner Joint | | 37 | 34 | 40 | 77.5 | 103.5 | |
| | 2019.11- | 7DCT | F | L/R | Estate FWD DSTB;DTTC;DTTA;DXRB;DSTA | For PR code:0EG,Trans. code:DQ200 | GCI82447 | Inner Joint | | | 33 | | | 34 | |
| | 2019.11- | 7DCT/6MT | F | L/R | Estate FWD DSTB;DTTC;DTTA;DXRB;DSTA | Transmission:7DCT,For PR code:0IJ,Trans. code:DQ381;Transmission:6MT | GCO83101 | Outer Joint | | 36 | 27 | 59.5 | 40 | 65 | M |
| | 2020.01- | 6MT | F | L | Hatchback FWD DSTB;DTTC;DTTA;DXRB;DSTA | | GDS83295 | Drive Shaft | | 36 | | 59.5 | 40 | 491 | |
| | 2020.01- | 6MT | F | R | Hatchback FWD DSTB;DTTC;DTTA;DXRB;DSTA | | GDS81891 | Drive Shaft | | 36 | | 59.5 | 40 | 781 | |
| | 2020.01- | 7DCT | F | L | Hatchback FWD DSTB;DTTC;DTTA;DXRB;DSTA | For PR code:0EG,Trans. code:DQ200 | GDS61282 | Drive Shaft | | 36 | | 59.5 | 40 | 523 | |
| | 2020.01- | 7DCT | F | L | Hatchback FWD DSTB;DTTC;DTTA;DXRB;DSTA | For PR code:0IJ,Trans. code:DQ381 | GDS81265 | Drive Shaft | | 36 | 37 | 59.5 | 40 | 557 | |
| | 2020.01- | 7DCT | F | R | Hatchback FWD DSTB;DTTC;DTTA;DXRB;DSTA | For PR code:0IJ,Trans. code:DQ381 | GDS83612 | Drive Shaft | | 36 | 37 | 59.5 | 40 | 907 | |
| | 2020.01- | 7DCT | F | R | Hatchback FWD DSTB;DTTC;DTTA;DXRB;DSTA | For PR code:0EG,Trans. code:DQ200 | GDS84417 | Drive Shaft | | 36 | | 59.5 | 40 | 783 | |
| | 2020.01- | 7DCT | F | L/R | Hatchback FWD DSTB;DTTC;DTTA;DXRB;DSTA | For PR code:0EG,Trans. code:DQ200 | GCO61059 | Outer Joint | | 36 | 33 | 59.5 | 40 | 59.5 | I |
| | 2020.01- | 7DCT | F | L | Hatchback FWD DSTB;DTTC;DTTA;DXRB;DSTA | | GCI81158 | Inner Joint | | 37 | 34 | 34.5 | 65.5 | 83 | |
| | 2020.01- | 7DCT | F | R | Hatchback FWD DSTB;DTTC;DTTA;DXRB;DSTA | For PR code:0IJ,Trans. code:DQ381 | GCI82108 | Inner Joint | | 37 | 34 | 40 | 77.5 | 103.5 | |
| | 2020.01- | 7DCT | F | L/R | Hatchback FWD DSTB;DTTC;DTTA;DXRB;DSTA | For PR code:0EG,Trans. code:DQ200 | GCI82447 | Inner Joint | | | 33 | | | 34 | |
| | 2020.01- | 7DCT/6MT | F | L/R | Hatchback FWD DSTB;DTTC;DTTA;DXRB;DSTA | Transmission:6MT,Transmission:7DCT,For PR code:0IJ,Trans. code:DQ381 | GCO83101 | Outer Joint | | 36 | 27 | 59.5 | 40 | 65 | M |
| | 2020.09- | 7AT/6MT | F | L | Estate 4WD DTTC;DTTA | | GDS81265 | Drive Shaft | | 36 | 37 | 59.5 | 40 | 557 | |
| | 2020.09- | 7AT/6MT | F | R | Estate 4WD DTTC;DTTA | | GDS81893 | Drive Shaft | | 36 | | 59.5 | 40 | 575 | |
| | 2020.09- | 7AT/6MT | F | L | Estate 4WD DTTC;DTTA | | GCI81158 | Inner Joint | | 37 | 34 | 34.5 | 65.5 | 83 | |
| | 2020.09- | 7AT/6MT | R | L | Estate 4WD DTTC;DTTA | | GDS61331 | Drive Shaft | | 36 | | 59.5 | 40 | 606 | |
| | 2020.09- | 7AT/6MT | R | R | Estate 4WD DTTC;DTTA | | GDS61332 | Drive Shaft | | 36 | | 59.5 | 40 | 650 | |
| | 2020.09- | 7AT/6MT | R | L/R | Estate 4WD DTTC;DTTA | | GCI35026 | Outer Joint | | 36 | 33 | 59.5 | 40 | 61 | |
| | 2020.09- | 7DCT/6MT | R | L/R | Estate 4WD DTTC;DTTA | | GCI61103 | Inner Joint | | | 33 | | | 32 | |
| | 2020.09- | 7DCT/6MT | R | L/R | Estate 4WD DTTC;DTTA | | GCI83008 | Inner Joint | | | 33 | | | 32 | |
| | 2020.09- | 7DCT | F | L | Hatchback 4WD DTTC | | GDS81265 | Drive Shaft | | 36 | 37 | 59.5 | 40 | 557 | |
| | 2020.09- | 7DCT | F | R | Hatchback 4WD DTTC | | GDS81893 | Drive Shaft | | 36 | | 59.5 | 40 | 575 | |
| | 2020.09- | 7DCT | F | L/R | Hatchback 4WD DTTC | | GCO83101 | Outer Joint | | 36 | 27 | 59.5 | 40 | 65 | M |
| | 2020.09- | 7DCT | F | L | Hatchback 4WD DTTC | | GCI81158 | Inner Joint | | 37 | 34 | 34.5 | 65.5 | 83 | |
| | 2020.09- | 7DCT | F | R | Hatchback 4WD DTTC | | GCI61057 | Inner Joint | | | 34 | | | 89 | |
| | 2020.09- | 7DCT | R | L | Hatchback 4WD DTTC | | GDS61331 | Drive Shaft | | 36 | | 59.5 | 40 | 606 | |
| | 2020.09- | 7DCT | R | R | Hatchback 4WD DTTC | | GDS61332 | Drive Shaft | | 36 | | 59.5 | 40 | 650 | |
| | 2020.09- | 7DCT | R | L/R | Hatchback 4WD DTTC | | GCI35026 | Outer Joint | | 36 | 33 | 59.5 | 40 | 61 | |
| | 2020.09- | 7DCT | R | L/R | Hatchback 4WD DTTC | | GCI61103 | Inner Joint | | | 33 | | | 32 | |
| | 2020.09- | 7DCT | R | L/R | Hatchback 4WD DTTC | | GCI83008 | Inner Joint | | | 33 | | | 32 | |
| 2.0 (125 kw) | 2006.04-2013.02 | 6DCT | F | L | Estate FWD BMN;CEGA | | GDS83381 | Drive Shaft | | 36 | | 59.5 | 40 | 483 | |
| | 2006.04-2013.02 | 6DCT | F | R | Estate FWD BMN;CEGA | Date from:2008.10,Chassis no. from:1Z_8A0000012_8A1000000,1Z_8A1000000,1Z_8A1000000,1Z_8A1000000,1Z_8A1000000,1Z_8A1000000 | GDS54011 | Drive Shaft | | 36 | | 59.5 | 40 | 755 | |
| | 2006.04-2013.02 | 6DCT | F | R | Estate FWD BMN;CEGA | Date from:2008.11,Chassis no. from:1Z_8A156314 | GDS83354 | Drive Shaft | | 36 | | 59.5 | 40 | 763 | |
| | 2006.04-2013.02 | 6DCT | F | L/R | Estate FWD BMN;CEGA | TJ | GCI54004 | Inner Joint | | | 34 | | | 81 | |
| | 2006.04-2013.02 | 6DCT | F | L/R | Estate FWD BMN;CEGA | AAR | GCI61057 | Inner Joint | | | 34 | | | 89 | |
| | 2006.04-2013.02 | 6MT | F | R | Estate FWD BMN;CEGA | For Engine code:BMN | GDS61126 | Drive Shaft | | 36 | | 59.5 | 40 | 793 | |
| | 2006.04-2013.02 | 6MT | F | R | Estate FWD BMN;CEGA | For Engine Code:CEGA | GDS61147 | Drive Shaft | | 36 | | 59.5 | 40 | 795 | |
| | 2006.04-2013.02 | 6MT | F | L/R | Estate FWD BMN;CEGA | | GCI83016 | Inner Joint | | | 28 | | | 32 | |
| | 2006.04-2013.02 | AT | F | L/R | Estate FWD BMN;CEGA | | GCO83101 | Outer Joint | | 36 | 27 | 59.5 | 40 | 65 | M |
| | 2006.04-2013.02 | MT | F | L | Estate FWD BMN;CEGA | Inner teeth of tranm.side:33 | GDS83236 | Drive Shaft | | 36 | | 59.5 | 40 | 484 | |
| | 2006.04-2013.02 | MT | F | L | Estate FWD BMN;CEGA | Inner teeth of tranm.side:28 | GDS83295 | Drive Shaft | | 36 | | 59.5 | 40 | 491 | |
| | 2006.04-2013.02 | MT | F | L/R | Estate FWD BMN;CEGA | | GCO83037 | Outer Joint | | 36 | 30 | 59.5 | 40.5 | 56 | I |
| | 2006.04-2013.02 | 6AT/6MT | F | L/R | Hatchback FWD BMN;CEGA | | GCI54004 | Inner Joint | | | 34 | | | 81 | |
| | 2006.04-2013.02 | 6AT/6MT | F | L/R | Hatchback FWD BMN;CEGA | Original Tripod Design | GCI61057 | Inner Joint | | | 34 | | | 89 | |
| | 2006.04-2013.02 | 6AT/6MT | F | L/R | Hatchback FWD BMN;CEGA | | GCI83016 | Inner Joint | | | 28 | | | 32 | |
| | 2006.04-2013.02 | 6DCT | F | L | Hatchback FWD BMN;CEGA | | GDS83381 | Drive Shaft | | 36 | | 59.5 | 40 | 483 | |
| | 2006.04-2013.02 | 6DCT | F | R | Hatchback FWD BMN;CEGA | Date from:2008.10,Chassis no. from:1Z_8A0000012_8A1000000,1Z_8A1000000,1Z_8A1000000,1Z_8A1000000,1Z_8A1000000,1Z_8A1000000 | GDS54011 | Drive Shaft | | 36 | | 59.5 | 40 | 755 | |
| | 2006.04-2013.02 | 6DCT | F | R | Hatchback FWD BMN;CEGA | Date from:2008.11,Chassis no. from:1Z_8A156314 | GDS83354 | Drive Shaft | | 36 | | 59.5 | 40 | 763 | |
| | 2006.04-2013.02 | 6MT | F | R | Hatchback FWD BMN;CEGA | For Engine code:BMN | GDS61126 | Drive Shaft | | 36 | | 59.5 | 40 | 793 | |
| | 2006.04-2013.02 | 6MT | F | R | Hatchback FWD BMN;CEGA | For Engine code:CEGA | GDS61147 | Drive Shaft | | 36 | | 59.5 | 40 | 795 | |
| | 2006.04-2013.02 | AT | F | L | Hatchback FWD BMN;CEGA | | GDS83241 | Drive Shaft | | 36 | | 59.5 | 40 | 475 | |
| | 2006.04-2013.02 | AT | F | L/R | Hatchback FWD BMN;CEGA | | GCO83101 | Outer Joint | | 36 | 27 | 59.5 | 40 | 65 | M |
| | 2006.04-2013.02 | MT | F | L | Hatchback FWD BMN;CEGA | | GDS83236 | Drive Shaft | | 36 | | 59.5 | 40 | 484 | |
| | 2006.04-2013.02 | MT | F | L | Hatchback FWD BMN;CEGA | | GDS83295 | Drive Shaft | | 36 | | 59.5 | 40 | 491 | |
| | 2006.04-2013.02 | MT | F | L/R | Hatchback FWD BMN;CEGA | | GCO83037 | Outer Joint | | 36 | 30 | 59.5 | 40.5 | 56 | I |
| 2.0 (135 kw) | 2013.05-2020.10 | 6DCT | F | L | Estate FWD CUPA;CUNA;DJGA | | GDS61285 | Drive Shaft | | 36 | | 59.5 | 40 | 472 | |
| | 2013.05-2020.10 | 6DCT | F | R | Estate FWD CUPA;CUNA;DJGA | | GDS83354 | Drive Shaft | | 36 | | 59.5 | 40 | 763 | |

| | YEAR | TRANSM. | F/R | L/R | BODY STYLE & DRIVE TYPE & ENGINE | REMARKS | G-AP Ref. | PRODUCT | ABS | Technical Specifications A | B | C | H | L | P |
|---|---|---|---|---|---|---|---|---|---|---|---|---|---|---|---|
| **SKODA** **Octavia** | | | | | | | | | | | | | | | |
| 2.0 (135 kw) | 2013.05-2020.10 | 6DCT | F | L/R | Estate FWD CUPA;CUNA;DJGA | TJ | GCI54004 | Inner Joint | | | 34 | | | 81 | |
| | 2013.05-2020.10 | 6DCT | F | L/R | Estate FWD CUPA;CUNA;DJGA | AAR | GCI61057 | Inner Joint | | | 34 | | | 89 | |
| | 2013.05-2020.10 | 6MT | F | L | Estate FWD CUPA;CUNA;DJGA | | GDS83295 | Drive Shaft | | 36 | | 59.5 | 40 | 491 | |
| | 2013.05-2020.10 | 6MT | F | R | Estate FWD CUPA;CUNA;DJGA | | GDS83313 | Drive Shaft | | 36 | | 59.5 | 40 | 792 | |
| | 2013.05-2020.10 | 6MT | F | L/R | Estate FWD CUPA;CUNA;DJGA | | GCI83016 | Inner Joint | | | 28 | | | 32 | |
| | 2013.05-2020.10 | 7DCT | F | L | Estate FWD CUPA;CUNA;DJGA | | GDS81265 | Drive Shaft | | 36 | 37 | 59.5 | 40 | 557 | |
| | 2013.05-2020.10 | 7DCT | F | R | Estate FWD CUPA;CUNA;DJGA | | GDS83612 | Drive Shaft | | 36 | 37 | 59.5 | 40 | 907 | |
| | 2013.05-2020.10 | 7DCT | F | L/R | Estate FWD CUPA;CUNA;DJGA | | GCO83101 | Outer Joint | | 36 | 27 | 59.5 | 40 | 65 | M |
| | 2013.05-2020.10 | 7DCT | F | L | Estate FWD CUPA;CUNA;DJGA | | GCI81158 | Inner Joint | | 37 | 34 | 34.5 | 65.5 | 83 | |
| | 2013.05-2020.10 | 7DCT | F | R | Estate FWD CUPA;CUNA;DJGA | | GCI82108 | Inner Joint | | 37 | 34 | 40 | 77.5 | 103.5 | |
| | 2013.05-2020.10 | 6DCT | F | L | Hatchback 4WD CUPA;CUNA;DJGA | | GDS61285 | Drive Shaft | | 36 | | 59.5 | 40 | 472 | |
| | 2013.05-2020.10 | 6DCT | F | L/R | Hatchback 4WD CUPA;CUNA;DJGA | | GCI54004 | Inner Joint | | | 34 | | | 81 | |
| | 2013.05-2020.10 | 6DCT | F | L/R | Hatchback 4WD CUPA;CUNA;DJGA | | GCI61057 | Inner Joint | | | 34 | | | 89 | |
| | 2013.05-2020.10 | 6DCT/7DCT | F | R | Hatchback 4WD CUPA;CUNA;DJGA | | GDS81893 | Drive Shaft | | 36 | | 59.5 | 40 | 575 | |
| | 2013.05-2020.10 | 6DCT/7DCT | F | L/R | Hatchback 4WD CUPA;CUNA;DJGA | | GCO83101 | Outer Joint | | 36 | 27 | 59.5 | 40 | 65 | M |
| | 2013.05-2020.10 | 7DCT | F | L | Hatchback 4WD CUPA;CUNA;DJGA | | GDS81265 | Drive Shaft | | 36 | 37 | 59.5 | 40 | 557 | |
| | 2013.05-2020.10 | 7DCT | F | L | Hatchback 4WD CUPA;CUNA;DJGA | | GCI81158 | Inner Joint | | 37 | 34 | 34.5 | 65.5 | 83 | |
| | 2013.05-2020.10 | 7DCT | F | R | Hatchback 4WD CUPA;CUNA;DJGA | | GCI61057 | Inner Joint | | | 34 | | | 89 | |
| | 2013.05-2020.10 | 6DCT | R | L | Hatchback 4WD CUPA;CUNA;DJGA | NO Facelift | GDS61286 | Drive Shaft | | 36 | | 59.5 | 40 | 587 | |
| | 2013.05-2020.10 | 6DCT | R | L | Hatchback 4WD CUPA;CUNA;DJGA | Facelift | GDS61331 | Drive Shaft | | 36 | | 59.5 | 40 | 606 | |
| | 2013.05-2020.10 | 6DCT | R | R | Hatchback 4WD CUPA;CUNA;DJGA | NO Facelift | GDS61287 | Drive Shaft | | 36 | | 59.5 | 40 | 632 | |
| | 2013.05-2020.10 | 6DCT | R | R | Hatchback 4WD CUPA;CUNA;DJGA | Facelift | GDS61332 | Drive Shaft | | 36 | | 59.5 | 40 | 650 | |
| | 2013.05-2020.10 | 6DCT | R | L/R | Hatchback 4WD CUPA;CUNA;DJGA | | GCI35026 | Outer Joint | | 36 | 33 | 59.5 | 40 | 61 | |
| | 2013.05-2020.10 | 6DCT | R | L/R | Hatchback 4WD CUPA;CUNA;DJGA | Facelift:No | GCI61103 | Inner Joint | | | 33 | | | 32 | |
| | 2013.05-2020.10 | 6AT/7AT/6MT | F | L/R | Hatchback FWD CUPA;CUNA;DJGA | | GCI54004 | Inner Joint | | | 34 | | | 81 | |
| | 2013.05-2020.10 | 6AT/7AT/6MT | F | L/R | Hatchback FWD CUPA;CUNA;DJGA | Original Tripod Design | GCI61057 | Inner Joint | | | 34 | | | 89 | |
| | 2013.05-2020.10 | 6AT/7AT/6MT | F | L/R | Hatchback FWD CUPA;CUNA;DJGA | | GCI83016 | Inner Joint | | | 28 | | | 32 | |
| | 2013.05-2020.10 | 6DCT | F | L | Hatchback FWD CUPA;CUNA;DJGA | | GDS61285 | Drive Shaft | | 36 | | 59.5 | 40 | 472 | |
| | 2013.05-2020.10 | 6DCT | F | R | Hatchback FWD CUPA;CUNA;DJGA | | GDS83354 | Drive Shaft | | 36 | | 59.5 | 40 | 763 | |
| | 2013.05-2020.10 | 6MT | F | L | Hatchback FWD CUPA;CUNA;DJGA | | GDS83295 | Drive Shaft | | 36 | | 59.5 | 40 | 491 | |
| | 2013.05-2020.10 | 6MT | F | R | Hatchback FWD CUPA;CUNA;DJGA | | GDS83313 | Drive Shaft | | 36 | | 59.5 | 40 | 792 | |
| | 2013.05-2020.10 | DCT | F | L/R | Hatchback FWD CUPA;CUNA;DJGA | | GCO83101 | Outer Joint | | 36 | 27 | 59.5 | 40 | 65 | M |
| 2.0 (140 kw) | 2017.02-2020.10 | 7AT | F | R | Estate FWD DKZA | Wheel Hub Diam:42 | GDS81892 | Drive Shaft | | 36 | | 59.5 | 40 | 602 | |
| | 2017.02-2020.10 | 7AT | F | L/R | Estate FWD DKZA | | GCO83101 | Outer Joint | | 36 | 27 | 59.5 | 40 | 65 | M |
| | 2017.02-2020.10 | 7AT | F | L | Estate FWD DKZA | | GCI83028 | Inner Joint | | 37 | 28 | | 65.5 | 90.2 | |
| | 2017.02-2020.10 | 7AT | F | R | Estate FWD DKZA | | GCI61069 | Inner Joint | | | 28 | | | 32 | |
| | 2017.02-2020.10 | 7DCT | F | L | Estate FWD DKZA | | GDS84237 | Drive Shaft | | 36 | 37 | 59.5 | 40 | 560 | |
| | 2017.02-2020.10 | 7AT | F | R | Hatchback FWD DKZA | Wheel Hub Diam:42 | GDS81892 | Drive Shaft | | 36 | | 59.5 | 40 | 602 | |
| | 2017.02-2020.10 | 7AT | F | L | Hatchback FWD DKZA | | GCI83028 | Inner Joint | | 37 | 28 | | 65.5 | 90.2 | |
| | 2017.02-2020.10 | 7AT | F | R | Hatchback FWD DKZA | | GCI61069 | Inner Joint | | | 28 | | | 32 | |
| | 2017.02-2020.10 | 7DCT | F | L | Hatchback FWD DKZA | | GDS84237 | Drive Shaft | | 36 | 37 | 59.5 | 40 | 560 | |
| | 2019.02-2020.10 | 7AT | F | R | Hatchback 4WD DKZA | Wheel Hub Diam:42 | GDS81892 | Drive Shaft | | 36 | | 59.5 | 40 | 602 | |
| | 2019.02-2020.10 | 7AT | F | L | Hatchback 4WD DKZA | | GCI83028 | Inner Joint | | 37 | 28 | | 65.5 | 90.2 | |
| | 2019.02-2020.10 | 7AT | F | R | Hatchback 4WD DKZA | | GCI61069 | Inner Joint | | | 28 | | | 32 | |
| | 2019.02-2020.10 | 7DCT | F | L | Hatchback 4WD DKZA | | GDS84237 | Drive Shaft | | 36 | 37 | 59.5 | 40 | 560 | |
| | 2019.02-2020.10 | 7AT | R | L | Hatchback 4WD DKZA | | GDS61331 | Drive Shaft | | 36 | | 59.5 | 40 | 606 | |
| | 2019.02-2020.10 | 7AT | R | R | Hatchback 4WD DKZA | | GDS61332 | Drive Shaft | | 36 | | 59.5 | 40 | 650 | |
| | 2019.02-2020.10 | 7AT | R | L/R | Hatchback 4WD DKZA | | GCI35026 | Outer Joint | | 36 | 33 | 59.5 | 40 | 61 | |
| | 2019.02-2020.10 | 7DCT | R | L/R | Hatchback 4WD DKZA | | GCI61103 | Inner Joint | | | 33 | | | 32 | |
| | 2019.02-2020.10 | 7DCT | R | L/R | Hatchback 4WD DKZA | | GCI83008 | Inner Joint | | | 33 | | | 32 | |
| | 2020.07- | 7AT | F | L/R | Hatchback 4WD DNNA | | GCO83101 | Outer Joint | | 36 | 27 | 59.5 | 40 | 65 | M |
| | 2020.07- | 7DCT | F | L | Hatchback 4WD DNNA | | GDS84237 | Drive Shaft | | 36 | 37 | 59.5 | 40 | 560 | |
| | 2020.07- | 7DCT | F | R | Hatchback 4WD DNNA | Wheel Hub Diam:27 | GDS81892 | Drive Shaft | | 36 | | 59.5 | 40 | 602 | |
| | 2020.07- | 7AT | R | L | Hatchback 4WD DNNA | | GDS61331 | Drive Shaft | | 36 | | 59.5 | 40 | 606 | |
| | 2020.07- | 7AT | R | R | Hatchback 4WD DNNA | | GDS61332 | Drive Shaft | | 36 | | 59.5 | 40 | 650 | |
| | 2020.07- | 7AT | R | L/R | Hatchback 4WD DNNA | | GCI35026 | Outer Joint | | 36 | 33 | 59.5 | 40 | 61 | |
| | 2020.07- | 7AT | R | L/R | Hatchback 4WD DNNA | | GCI61103 | Inner Joint | | | 33 | | | 32 | |
| | 2020.07- | 7AT | R | L/R | Hatchback 4WD DNNA | | GCI83008 | Inner Joint | | | 33 | | | 32 | |
| | 2020.09- | 7DCT | F | L | Estate 4WD DNNA | | GDS84237 | Drive Shaft | | 36 | 37 | 59.5 | 40 | 560 | |
| | 2020.09- | 7DCT | F | R | Estate 4WD DNNA | Wheel Hub Diam:27 | GDS81892 | Drive Shaft | | 36 | | 59.5 | 40 | 602 | |
| | 2020.09- | 7AT | R | L | Estate 4WD DNNA | | GDS61331 | Drive Shaft | | 36 | | 59.5 | 40 | 606 | |
| | 2020.09- | 7AT | R | R | Estate 4WD DNNA | | GDS61332 | Drive Shaft | | 36 | | 59.5 | 40 | 650 | |
| | 2020.09- | 7AT | R | L/R | Estate 4WD DNNA | | GCI35026 | Outer Joint | | 36 | 33 | 59.5 | 40 | 61 | |
| | 2020.09- | 7AT | R | L/R | Estate 4WD DNNA | | GCI61103 | Inner Joint | | | 33 | | | 32 | |
| | 2020.09- | 7AT | R | L/R | Estate 4WD DNNA | | GCI83008 | Inner Joint | | | 33 | | | 32 | |

| | YEAR | TRANSM. | F/R | L/R | BODY STYLE & DRIVE TYPE & ENGINE | REMARKS | G-AP Ref. | PRODUCT | ABS | Technical Specifications | | | | | |
|---|---|---|---|---|---|---|---|---|---|---|---|---|---|---|---|
| | | | | | | | | | | A | B | C | H | L | P |
| **SKODA** | | | | | | | | | | | | | | | |
| **Octavia** | | | | | | | | | | | | | | | |
| 2.0 (147 kw) | 2005.10-2013.02 | 6MT | F | R | Estate FWD BWA;CCZA | Date to:2009.11 | GDS61126 | Drive Shaft | | 36 | | 59.5 | 40 | 793 | |
| | 2005.10-2013.02 | 6MT | F | R | Estate FWD BWA;CCZA | Date from:2009.12 | GDS83313 | Drive Shaft | | 36 | | 59.5 | 40 | 792 | |
| | 2005.10-2013.02 | AT | F | R | Estate FWD BWA;CCZA | | GDS81653 | Drive Shaft | | 36 | | 59.5 | 40 | 785 | |
| | 2005.10-2013.02 | AT | F | R | Estate FWD BWA;CCZA | | GCI61069 | Inner Joint | | | 28 | | | 32 | |
| | 2005.10-2013.02 | AT/MT | F | L | Estate FWD BWA;CCZA | | GDS83295 | Drive Shaft | | 36 | | 59.5 | 40 | 491 | |
| | 2005.10-2013.02 | AT/MT | F | L/R | Estate FWD BWA;CCZA | Date to:2009.11,Transmission:MT;Date to:2010.06,Transmission:AT | GCO83002 | Outer Joint | | 36 | 27 | 59.5 | 40 | 66 | I |
| | 2005.10-2013.02 | AT/MT | F | L/R | Estate FWD BWA;CCZA | Date from:2009.12,Transmission:MT;Date from:2010.07,Transmission:AT | GCO83101 | Outer Joint | | 36 | 27 | 59.5 | 40 | 65 | M |
| | 2005.10-2013.02 | MT | F | L | Estate FWD BWA;CCZA | Date to:2009.11 | GCI53002 | Inner Joint | | | 33 | | | 34 | |
| | 2005.10-2013.02 | | F | L | Estate FWD BWA;CCZA | | GDS83236 | Drive Shaft | | 36 | | 59.5 | 40 | 484 | |
| | 2005.10-2013.02 | | F | L/R | Estate FWD BWA;CCZA | | GCI83016 | Inner Joint | | | 28 | | | 32 | |
| | 2005.10-2013.02 | 6DCT | F | R | Hatchback FWD BWA;CCZA | | GDS81653 | Drive Shaft | | 36 | | 59.5 | 40 | 785 | |
| | 2005.10-2013.02 | 6MT | F | R | Hatchback FWD BWA;CCZA | Date to:2009.11 | GDS61126 | Drive Shaft | | 36 | | 59.5 | 40 | 793 | |
| | 2005.10-2013.02 | 6MT | F | R | Hatchback FWD BWA;CCZA | Date from:2009.12 | GDS83313 | Drive Shaft | | 36 | | 59.5 | 40 | 792 | |
| | 2005.10-2013.02 | AT | F | R | Hatchback FWD BWA;CCZA | | GCI61069 | Inner Joint | | | 28 | | | 32 | |
| | 2005.10-2013.02 | AT/MT | F | L | Hatchback FWD BWA;CCZA | | GDS83295 | Drive Shaft | | 36 | | 59.5 | 40 | 491 | |
| | 2005.10-2013.02 | AT/MT | F | L/R | Hatchback FWD BWA;CCZA | Date to:2009.11,Transmission:MT;Date to:2010.06,Transmission:AT | GCO83002 | Outer Joint | | 36 | 27 | 59.5 | 40 | 66 | I |
| | 2005.10-2013.02 | AT/MT | F | L/R | Hatchback FWD BWA;CCZA | Date from:2009.12,Transmission:MT;Date from:2010.07,Transmission:AT | GCO83101 | Outer Joint | | 36 | 27 | 59.5 | 40 | 65 | M |
| | 2005.10-2013.02 | MT | F | L | Hatchback FWD BWA;CCZA | | GDS83236 | Drive Shaft | | 36 | | 59.5 | 40 | 484 | |
| | 2005.10-2013.02 | MT | F | L | Hatchback FWD BWA;CCZA | Date to:2009.11 | GCI53002 | Inner Joint | | | 33 | | | 34 | |
| | 2005.10-2013.02 | | F | L/R | Hatchback FWD BWA;CCZA | | GCI83016 | Inner Joint | | | 28 | | | 32 | |
| | 2020.07- | 7AT | F | R | Estate FWD DTUA | | GDS83612 | Drive Shaft | | 36 | 37 | 59.5 | 40 | 907 | |
| | 2020.07- | 7AT | F | R | Estate FWD DTUA | | GCO83101 | Outer Joint | | 36 | 27 | 59.5 | 40 | 65 | M |
| | 2020.07- | 7AT | F | L | Estate FWD DTUA | | GCI81158 | Inner Joint | | 37 | 34 | 34.5 | 65.5 | 83 | |
| | 2020.07- | 7AT | F | R | Estate FWD DTUA | | GCI82108 | Inner Joint | | 37 | 34 | 40 | 77.5 | 103.5 | |
| | 2020.07- | 7DCT | F | L | Estate FWD DTUA | | GDS81265 | Drive Shaft | | 36 | 37 | 59.5 | 40 | 557 | |
| | 2020.07- | 7AT | F | L | Hatchback 4WD DTUA | | GDS81265 | Drive Shaft | | 36 | 37 | 59.5 | 40 | 557 | |
| | 2020.07- | 7AT | F | R | Hatchback 4WD DTUA | | GDS81893 | Drive Shaft | | 36 | | 59.5 | 40 | 575 | |
| | 2020.07- | 7AT | F | L | Hatchback 4WD DTUA | | GCI81158 | Inner Joint | | 37 | 34 | 34.5 | 65.5 | 83 | |
| | 2020.07- | 7AT | R | L | Hatchback 4WD DTUA | | GDS61331 | Drive Shaft | | 36 | | 59.5 | 40 | 606 | |
| | 2020.07- | 7AT | R | R | Hatchback 4WD DTUA | | GDS61332 | Drive Shaft | | 36 | | 59.5 | 40 | 650 | |
| | 2020.07- | 7AT | R | L/R | Hatchback 4WD DTUA | | GCI35026 | Outer Joint | | 36 | 33 | 59.5 | 40 | 61 | |
| | 2020.07- | 7DCT | R | L/R | Hatchback 4WD DTUA | | GCI61103 | Inner Joint | | | 33 | | | 32 | |
| | 2020.07- | 7DCT | R | L/R | Hatchback 4WD DTUA | | GCI83008 | Inner Joint | | | 33 | | | 32 | |
| | 2020.07- | 7AT | F | R | Hatchback FWD DTUA | | GDS83612 | Drive Shaft | | 36 | 37 | 59.5 | 40 | 907 | |
| | 2020.07- | 7AT | F | R | Hatchback FWD DTUA | | GCO83101 | Outer Joint | | 36 | 27 | 59.5 | 40 | 65 | M |
| | 2020.07- | 7AT | F | L | Hatchback FWD DTUA | | GCI81158 | Inner Joint | | 37 | 34 | 34.5 | 65.5 | 83 | |
| | 2020.07- | 7AT | F | R | Hatchback FWD DTUA | | GCI82108 | Inner Joint | | 37 | 34 | 40 | 77.5 | 103.5 | |
| | 2020.07- | 7DCT | F | L | Hatchback FWD DTUA | | GDS81265 | Drive Shaft | | 36 | 37 | 59.5 | 40 | 557 | |
| 2.0 (150 kw) | 2025.01- | 7DCT | F | L | Estate 4WD DNNE | | GDS84237 | Drive Shaft | | 36 | 37 | 59.5 | 40 | 560 | |
| | 2025.01- | 7DCT | F | R | Estate 4WD DNNE | | GDS81892 | Drive Shaft | | 36 | | 59.5 | 40 | 602 | |
| | 2025.01- | 7DCT | R | L/R | Estate 4WD DNNE | | GCI61103 | Inner Joint | | | 33 | | | 32 | |
| | 2025.01- | 7DCT | F | L | Hatchback 4WD DNNE | | GDS84237 | Drive Shaft | | 36 | 37 | 59.5 | 40 | 560 | |
| | 2025.01- | 7DCT | F | R | Hatchback 4WD DNNE | | GDS81892 | Drive Shaft | | 36 | | 59.5 | 40 | 602 | |
| | 2025.01- | 7DCT | R | L/R | Hatchback 4WD DNNE | | GCI61103 | Inner Joint | | | 33 | | | 32 | |
| 2.0 (162 kw) | 2012.11-2017.02 | 6AT/6MT | F | L | Estate FWD CHHB | | GCI61069 | Inner Joint | | | 28 | | | 32 | |
| | 2012.11-2017.02 | 6DCT | F | L | Estate FWD CHHB | | GDS83295 | Drive Shaft | | 36 | | 59.5 | 40 | 491 | |
| | 2012.11-2017.02 | 6DCT | F | R | Estate FWD CHHB | | GDS81891 | Drive Shaft | | 36 | | 59.5 | 40 | 781 | |
| | 2012.11-2017.02 | 6DCT | F | R | Estate FWD CHHB | | GCI61069 | Inner Joint | | | 28 | | | 32 | |
| | 2012.11-2017.02 | 6MT | F | R | Estate FWD CHHB | | GDS61126 | Drive Shaft | | 36 | | 59.5 | 40 | 793 | |
| | 2012.11-2017.02 | MT | F | L/R | Estate FWD CHHB | | GCO83101 | Outer Joint | | 36 | 27 | 59.5 | 40 | 65 | M |
| | 2013.05-2017.02 | 6AT/6MT | F | L | Hatchback FWD CHHB | | GDS83295 | Drive Shaft | | 36 | | 59.5 | 40 | 491 | |
| | 2013.05-2017.02 | 6AT/6MT | F | L | Hatchback FWD CHHB | | GCI61069 | Inner Joint | | | 28 | | | 32 | |
| | 2013.05-2017.02 | 6DCT | F | R | Hatchback FWD CHHB | | GDS81891 | Drive Shaft | | 36 | | 59.5 | 40 | 781 | |
| | 2013.05-2017.02 | 6DCT | F | R | Hatchback FWD CHHB | | GCI61069 | Inner Joint | | | 28 | | | 32 | |
| | 2013.05-2017.02 | 6MT | F | R | Hatchback FWD CHHB | | GDS61126 | Drive Shaft | | 36 | | 59.5 | 40 | 793 | |
| | 2013.05-2017.02 | MT | F | L/R | Hatchback FWD CHHB | | GCO83101 | Outer Joint | | 36 | 27 | 59.5 | 40 | 65 | M |
| 2.0 (169 kw) | 2015.05-2020.10 | 6AT/6MT | F | L | Estate FWD CHHA | | GDS83295 | Drive Shaft | | 36 | | 59.5 | 40 | 491 | |
| | 2015.05-2020.10 | 6AT/6MT | F | L | Estate FWD CHHA | | GCI61069 | Inner Joint | | | 28 | | | 32 | |
| | 2015.05-2020.10 | 6DCT | F | R | Estate FWD CHHA | | GDS81891 | Drive Shaft | | 36 | | 59.5 | 40 | 781 | |
| | 2015.05-2020.10 | 6DCT | F | R | Estate FWD CHHA | | GCI61069 | Inner Joint | | | 28 | | | 32 | |
| | 2015.05-2020.10 | 6MT | F | R | Estate FWD CHHA | Date to:2015.05 | GDS61147 | Drive Shaft | | 36 | | 59.5 | 40 | 795 | |
| | 2015.05-2020.10 | 6MT | F | R | Estate FWD CHHA | Date from:2015.06 | GDS81892 | Drive Shaft | | 36 | | 59.5 | 40 | 602 | |
| | 2015.05-2020.10 | AT/MT | F | L/R | Estate FWD CHHA | | GCO83101 | Outer Joint | | 36 | 27 | 59.5 | 40 | 65 | M |
| | 2015.05-2020.10 | 6DCT | F | R | Hatchback FWD CHHA | | GDS81891 | Drive Shaft | | 36 | | 59.5 | 40 | 781 | |
| | 2015.05-2020.10 | 6DCT | F | R | Hatchback FWD CHHA | | GCI61069 | Inner Joint | | | 28 | | | 32 | |

| | YEAR | TRANSM. | F/R | L/R | BODY STYLE & DRIVE TYPE & ENGINE | REMARKS | G-AP Ref. | PRODUCT | ABS | Technical Specifications A | B | C | H | L | P |
|---|---|---|---|---|---|---|---|---|---|---|---|---|---|---|---|
| **SKODA** | | | | | | | | | | | | | | | |
| **Octavia** | | | | | | | | | | | | | | | |
| 2.0 (169 kw) | 2015.05-2020.10 | 6MT | F | L | Hatchback FWD CHHA | | GDS83295 | Drive Shaft | | 36 | | 59.5 | 40 | 491 | |
| | 2015.05-2020.10 | 6MT | F | R | Hatchback FWD CHHA | Date to:2015.05 | GDS61147 | Drive Shaft | | 36 | | 59.5 | 40 | 795 | |
| | 2015.05-2020.10 | 6MT | F | R | Hatchback FWD CHHA | Date from:2015.06 | GDS81892 | Drive Shaft | | 36 | | 59.5 | 40 | 602 | |
| | 2015.05-2020.10 | 6MT | F | L | Hatchback FWD CHHA | | GCI61069 | Inner Joint | | | 28 | | | 32 | |
| | 2015.05-2020.10 | AT/MT | F | L/R | Hatchback FWD CHHA | | GCO83101 | Outer Joint | | 36 | 27 | 59.5 | 40 | 65 | M |
| 2.0 (180 kw) | 2017.02-2020.10 | 6MT | F | L | Estate FWD DLBA;DHGA;DKTB | | GDS83295 | Drive Shaft | | 36 | | 59.5 | 40 | 491 | |
| | 2017.02-2020.10 | 6MT | F | L/R | Estate FWD DLBA;DHGA;DKTB | | GCO83101 | Outer Joint | | 36 | 27 | 59.5 | 40 | 65 | M |
| | 2017.02-2020.10 | 6MT | F | L | Estate FWD DLBA;DHGA;DKTB | | GCI61069 | Inner Joint | | | 28 | | | 32 | |
| | 2017.02-2020.10 | 7AT/6MT | F | R | Estate FWD DLBA;DHGA;DKTB | Wheel Hub Diam [mm]:42 | GDS81892 | Drive Shaft | | 36 | | 59.5 | 40 | 602 | |
| | 2017.02-2020.10 | 7DCT | F | L | Estate FWD DLBA;DHGA;DKTB | | GDS84237 | Drive Shaft | | 36 | 37 | 59.5 | 40 | 560 | |
| | 2017.02-2020.10 | 7DCT | F | L | Estate FWD DLBA;DHGA;DKTB | | GCI83028 | Inner Joint | | 37 | 28 | | 65.5 | 90.2 | |
| | 2017.02-2020.10 | 6MT | F | L | Hatchback FWD DLBA;DHGA;DKTB | | GDS83295 | Drive Shaft | | 36 | | 59.5 | 40 | 491 | |
| | 2017.02-2020.10 | 6MT | F | L/R | Hatchback FWD DLBA;DHGA;DKTB | | GCO83101 | Outer Joint | | 36 | 27 | 59.5 | 40 | 65 | M |
| | 2017.02-2020.10 | 6MT | F | L | Hatchback FWD DLBA;DHGA;DKTB | | GCI61069 | Inner Joint | | | 28 | | | 32 | |
| | 2017.02-2020.10 | 7AT/6MT | F | R | Hatchback FWD DLBA;DHGA;DKTB | Wheel Hub Diam [mm]:42 | GDS81892 | Drive Shaft | | 36 | | 59.5 | 40 | 602 | |
| | 2017.02-2020.10 | 7DCT | F | L | Hatchback FWD DLBA;DHGA;DKTB | | GDS84237 | Drive Shaft | | 36 | 37 | 59.5 | 40 | 560 | |
| | 2017.02-2020.10 | 7DCT | F | L | Hatchback FWD DLBA;DHGA;DKTB | | GCI83028 | Inner Joint | | 37 | 28 | | 65.5 | 90.2 | |
| | 2020.03- | 6MT | F | L | Estate FWD DLBA;DNPA | | GDS83295 | Drive Shaft | | 36 | | 59.5 | 40 | 491 | |
| | 2020.03- | 7AT/6MT | F | L/R | Estate FWD DLBA;DNPA | | GCO83101 | Outer Joint | | 36 | 27 | 59.5 | 40 | 65 | M |
| | 2020.03- | 7DCT | F | L | Estate FWD DLBA;DNPA | | GDS84237 | Drive Shaft | | 36 | 37 | 59.5 | 40 | 560 | |
| | 2020.03- | 7DCT | F | R | Estate FWD DLBA;DNPA | Wheel Hub Diam:27 | GDS81892 | Drive Shaft | | 36 | | 59.5 | 40 | 602 | |
| | 2020.03- | 7DCT | F | L | Estate FWD DLBA;DNPA | | GCI83028 | Inner Joint | | 37 | 28 | | 65.5 | 90.2 | |
| | 2020.03- | 7DCT | F | R | Estate FWD DLBA;DNPA | | GCI61069 | Inner Joint | | | 28 | | | 32 | |
| | 2020.03- | 6MT | F | L | Hatchback FWD DLBA;DNPA | | GDS83295 | Drive Shaft | | 36 | | 59.5 | 40 | 491 | |
| | 2020.03- | 7AT/6MT | F | L/R | Hatchback FWD DLBA;DNPA | | GCO83101 | Outer Joint | | 36 | 27 | 59.5 | 40 | 65 | M |
| | 2020.03- | 7DCT | F | L | Hatchback FWD DLBA;DNPA | | GDS84237 | Drive Shaft | | 36 | 37 | 59.5 | 40 | 560 | |
| | 2020.03- | 7DCT | F | L | Hatchback FWD DLBA;DNPA | | GCI83028 | Inner Joint | | 37 | 28 | | 65.5 | 90.2 | |
| | 2020.03- | 7DCT/6MT | F | R | Hatchback FWD DLBA;DNPA | Wheel Hub Diam:27 | GDS81892 | Drive Shaft | | 36 | | 59.5 | 40 | 602 | |
| | 2020.03- | 7DCT/6MT | F | R | Hatchback FWD DLBA;DNPA | | GCI61069 | Inner Joint | | | 28 | | | 32 | |
| 2.0 (195 kw) | 2024.08- | 7DCT | F | L | Estate FWD DNPD | | GDS84237 | Drive Shaft | | 36 | 37 | 59.5 | 40 | 560 | |
| | 2024.08- | 7DCT | F | R | Estate FWD DNPD | | GDS81892 | Drive Shaft | | 36 | | 59.5 | 40 | 602 | |
| | 2024.08- | 7DCT | F | L | Estate FWD DNPD | | GCO83101 | Outer Joint | | 36 | 27 | 59.5 | 40 | 65 | M |
| | 2024.08- | 7DCT | F | R | Estate FWD DNPD | | GCI61069 | Inner Joint | | | 28 | | | 32 | |
| | 2024.08- | 7DCT | F | L | Hatchback FWD DNPD | | GDS84237 | Drive Shaft | | 36 | 37 | 59.5 | 40 | 560 | |
| | 2024.08- | 7DCT | F | R | Hatchback FWD DNPD | | GDS81892 | Drive Shaft | | 36 | | 59.5 | 40 | 602 | |
| | 2024.08- | 7DCT | F | L | Hatchback FWD DNPD | | GCO83101 | Outer Joint | | 36 | 27 | 59.5 | 40 | 65 | M |
| | 2024.08- | 7DCT | F | R | Hatchback FWD DNPD | | GCI61069 | Inner Joint | | | 28 | | | 32 | |
| **Octavia Combi** | | | | | | | | | | | | | | | |
| 1.6 (81 kw) | 2015.05-2017.02 | 6MT | F | L | Estate 4WD CXXB, DBKA, CRKB | | GDS83295 | Drive Shaft | | 36 | | 59.5 | 40 | 491 | |
| | 2015.05-2017.02 | 6MT | F | R | Estate 4WD CXXB, DBKA, CRKB | | GDS81892 | Drive Shaft | | 36 | | 59.5 | 40 | 602 | |
| | 2015.05-2017.02 | 6MT | F | L | Estate 4WD CXXB, DBKA, CRKB | | GCO83101 | Outer Joint | | 36 | 27 | 59.5 | 40 | 65 | M |
| | 2015.05-2017.02 | 6MT | F | R | Estate 4WD CXXB, DBKA, CRKB | | GCI35026 | Outer Joint | | 36 | 33 | 59.5 | 40 | 61 | |
| | 2015.05-2017.02 | 6MT | F | L | Estate 4WD CXXB, DBKA, CRKB | | GCI61069 | Inner Joint | | | 28 | | | 32 | |
| | 2015.05-2017.02 | 6MT | F | R | Estate 4WD CXXB, DBKA, CRKB | | GCI61103 | Inner Joint | | | 33 | | | 32 | |
| | 2015.05-2017.02 | | F | L/R | Estate 4WD CXXB, DBKA, CRKB | | GCI83016 | Inner Joint | | | 28 | | | 32 | |
| | 2015.05-2017.02 | 6MT | R | L | Estate 4WD CXXB, DBKA, CRKB | Not For facelift | GDS61286 | Drive Shaft | | 36 | | 59.5 | 40 | 587 | |
| | 2015.05-2017.02 | 6MT | R | L | Estate 4WD CXXB, DBKA, CRKB | For facelift | GDS61331 | Drive Shaft | | 36 | | 59.5 | 40 | 606 | |
| | 2015.05-2017.02 | 6MT | R | R | Estate 4WD CXXB, DBKA, CRKB | Not For facelift | GDS61287 | Drive Shaft | | 36 | | 59.5 | 40 | 632 | |
| | 2015.05-2017.02 | 6MT | R | R | Estate 4WD CXXB, DBKA, CRKB | For facelift | GDS61332 | Drive Shaft | | 36 | | 59.5 | 40 | 650 | |
| | 2015.05-2017.02 | 6MT | R | L/R | Estate 4WD CXXB, DBKA, CRKB | | GCI35026 | Outer Joint | | 36 | 33 | 59.5 | 40 | 61 | |
| | 2015.05-2017.02 | 6MT | R | L/R | Estate 4WD CXXB, DBKA, CRKB | | GCI61103 | Inner Joint | | | 33 | | | 32 | |
| 1.8 (112 kw) | 2009.03-2013.02 | 6MT | F | L | Estate 4WD CDAB | | GDS83295 | Drive Shaft | | 36 | | 59.5 | 40 | 491 | |
| | 2009.03-2013.02 | 6MT | F | R | Estate 4WD CDAB | | GDS83266 | Drive Shaft | | 36 | | 59.5 | 40 | 601 | |
| | 2009.03-2013.02 | AT/MT | F | L | Estate 4WD CDAB | | GDS83236 | Drive Shaft | | 36 | | 59.5 | 40 | 484 | |
| | 2009.03-2013.02 | MT | F | L/R | Estate 4WD CDAB | | GCO83002 | Outer Joint | | 36 | 27 | 59.5 | 40 | 66 | I |
| | 2009.03-2013.02 | | F | L/R | Estate 4WD CDAB | | GCI83016 | Inner Joint | | | 28 | | | 32 | |
| | 2009.03-2013.02 | 6MT | R | L | Estate 4WD CDAB | | GDS61284 | Drive Shaft | | 36 | | 59.5 | 40 | 594 | |
| | 2009.03-2013.02 | 6MT | R | R | Estate 4WD CDAB | | GDS61293 | Drive Shaft | | 36 | | 59.5 | 40 | 631 | |
| | 2009.03-2013.02 | 6MT | R | L/R | Estate 4WD CDAB | | GCI35026 | Outer Joint | | 36 | 33 | 59.5 | 40 | 61 | |
| | 2009.03-2013.02 | 6MT | R | L/R | Estate 4WD CDAB | | GCI82447 | Inner Joint | | | 33 | | | 34 | |
| 1.8 (118 kw) | 2008.11-2013.02 | 7AT/6MT | F | L | Estate 4WD CDAA | | GDS83295 | Drive Shaft | | 36 | | 59.5 | 40 | 491 | |
| | 2008.11-2013.02 | 7AT/6MT | F | R | Estate 4WD CDAA | | GDS83266 | Drive Shaft | | 36 | | 59.5 | 40 | 601 | |
| | 2008.11-2013.02 | 7AT/6MT | F | L/R | Estate 4WD CDAA | | GCI83016 | Inner Joint | | | 28 | | | 32 | |
| | 2008.11-2013.02 | AT/MT | F | L | Estate 4WD CDAA | | GDS83236 | Drive Shaft | | 36 | | 59.5 | 40 | 484 | |
| | 2008.11-2013.02 | | F | L/R | Estate 4WD CDAA | | GCO83002 | Outer Joint | | 36 | 27 | 59.5 | 40 | 66 | I |

| | YEAR | TRANSM. | F/R | L/R | BODY STYLE & DRIVE TYPE & ENGINE | REMARKS | G-AP Ref. | PRODUCT | ABS | Technical Specifications A | B | C | H | L | P |
|---|---|---|---|---|---|---|---|---|---|---|---|---|---|---|---|
| **SKODA** **Octavia Combi** | | | | | | | | | | | | | | | |
| 1.8 (118 kw) | 2008.11-2013.02 | | F | L/R | Estate 4WD CDAA | | GCO83101 | Outer Joint | | 36 | 27 | 59.5 | 40 | 65 | M |
| | 2008.11-2013.02 | 6MT | R | L/R | Estate 4WD CDAA | | GCI82447 | Inner Joint | | | 33 | | | 34 | |
| | 2008.11-2013.02 | 7AT/6MT | R | L | Estate 4WD CDAA | | GDS61284 | Drive Shaft | | 36 | | 59.5 | 40 | 594 | |
| | 2008.11-2013.02 | 7AT/6MT | R | R | Estate 4WD CDAA | | GDS61293 | Drive Shaft | | 36 | | 59.5 | 40 | 631 | |
| | 2008.11-2013.02 | 7AT/6MT | R | L/R | Estate 4WD CDAA | | GCI35026 | Outer Joint | | 36 | 33 | 59.5 | 40 | 61 | |
| | 2008.11-2013.02 | 7AT/6MT | R | L/R | Estate 4WD CDAA | | GCI53002 | Inner Joint | | | 33 | | | 34 | |
| 2.0 (103 kw) | 2006.07-2010.05 | 6MT | F | L | Estate 4WD BMM | | GDS83295 | Drive Shaft | | 36 | | 59.5 | 40 | 491 | |
| | 2006.07-2010.05 | 6MT | F | R | Estate 4WD BMM | | GDS83266 | Drive Shaft | | 36 | | 59.5 | 40 | 601 | |
| | 2006.07-2010.05 | MT | F | L | Estate 4WD BMM | | GDS83236 | Drive Shaft | | 36 | | 59.5 | 40 | 484 | |
| | 2006.07-2010.05 | MT | F | L | Estate 4WD BMM | | GCO61059 | Outer Joint | | 36 | 33 | 59.5 | 40 | 59.5 | I |
| | 2006.07-2010.05 | | F | L/R | Estate 4WD BMM | | GCO83002 | Outer Joint | | 36 | 27 | 59.5 | 40 | 66 | I |
| | 2006.07-2010.05 | | F | L/R | Estate 4WD BMM | | GCI83016 | Inner Joint | | | 28 | | | 32 | |
| | 2006.07-2010.05 | 6MT | R | L | Estate 4WD BMM | | GDS61284 | Drive Shaft | | 36 | | 59.5 | 40 | 594 | |
| | 2006.07-2010.05 | 6MT | R | R | Estate 4WD BMM | | GDS61293 | Drive Shaft | | 36 | | 59.5 | 40 | 631 | |
| | 2006.07-2010.05 | 6MT | R | L/R | Estate 4WD BMM | | GCI35026 | Outer Joint | | 36 | 33 | 59.5 | 40 | 61 | |
| | 2006.07-2010.05 | 6MT | R | L/R | Estate 4WD BMM | | GCI53002 | Inner Joint | | | 33 | | | 34 | |
| | 2006.07-2010.05 | 6MT | R | L/R | Estate 4WD BMM | | GCI82447 | Inner Joint | | | 33 | | | 34 | |
| | 2006.07-2010.05 | 6MT | F/R | L/R | Estate 4WD BMM | | GCO83037 | Outer Joint | | 36 | 30 | 59.5 | 40.5 | 56 | I |
| | 2010.05-2013.02 | AT/MT | F | L | Estate 4WD CFHC, CLCB, BKD | Alloy Wheels | GDS83295 | Drive Shaft | | 36 | | 59.5 | 40 | 491 | |
| | 2010.05-2013.02 | AT/MT | F | R | Estate 4WD CFHC, CLCB, BKD | Model:Octavia Scout | GDS83266 | Drive Shaft | | 36 | | 59.5 | 40 | 601 | |
| | 2010.05-2013.02 | AT/MT | F | R | Estate 4WD CFHC, CLCB, BKD | | GDS83313 | Drive Shaft | | 36 | | 59.5 | 40 | 792 | |
| | 2010.05-2013.02 | AT/MT | F | L/R | Estate 4WD CFHC, CLCB, BKD | | GCO83002 | Outer Joint | | 36 | 27 | 59.5 | 40 | 66 | I |
| | 2010.05-2013.02 | AT/MT | F | L/R | Estate 4WD CFHC, CLCB, BKD | | GCI61002 | Inner Joint | | | 28 | | | 31.8 | |
| | 2010.05-2013.02 | AT/MT | F | L/R | Estate 4WD CFHC, CLCB, BKD | | GCI61041 | Inner Joint | | | 28 | | | 32 | |
| | 2010.05-2013.02 | AT/MT | F | L/R | Estate 4WD CFHC, CLCB, BKD | | GCI83016 | Inner Joint | | | 28 | | | 32 | |
| | 2010.05-2013.02 | MT | F | L | Estate 4WD CFHC, CLCB, BKD | | GDS83236 | Drive Shaft | | 36 | | 59.5 | 40 | 484 | |
| | 2010.05-2013.02 | MT | F | L | Estate 4WD CFHC, CLCB, BKD | | GCO61059 | Outer Joint | | 36 | 33 | 59.5 | 40 | 59.5 | I |
| | 2010.05-2013.02 | 6AT/6MT | R | L/R | Estate 4WD CFHC, CLCB, BKD | | GCO83037 | Outer Joint | | 36 | 30 | 59.5 | 40.5 | 56 | I |
| | 2010.05-2013.02 | AT/MT | R | L | Estate 4WD CFHC, CLCB, BKD | | GDS61284 | Drive Shaft | | 36 | | 59.5 | 40 | 594 | |
| | 2010.05-2013.02 | AT/MT | R | R | Estate 4WD CFHC, CLCB, BKD | | GDS61293 | Drive Shaft | | 36 | | 59.5 | 40 | 631 | |
| | 2010.05-2013.02 | AT/MT | R | L/R | Estate 4WD CFHC, CLCB, BKD | | GCI35026 | Outer Joint | | 36 | 33 | 59.5 | 40 | 61 | |
| | 2010.05-2013.02 | AT/MT | R | L/R | Estate 4WD CFHC, CLCB, BKD | | GCI53002 | Inner Joint | | | 33 | | | 34 | |
| | 2010.05-2013.02 | AT/MT | R | L/R | Estate 4WD CFHC, CLCB, BKD | | GCI82447 | Inner Joint | | | 33 | | | 34 | |
| 2.0 (110 kw) | 2004.11-2009.04 | 6MT | F | L | Estate 4WD BLY, BLX, BVX | | GDS83294 | Drive Shaft | | 36 | | 59.5 | 38 | 519 | |
| | 2004.11-2009.04 | 6MT | F | R | Estate 4WD BLY, BLX, BVX | | GDS61096 | Drive Shaft | | 36 | | 59.5 | 40.5 | 799 | |
| | 2004.11-2009.04 | 6MT | F | R | Estate 4WD BLY, BLX, BVX | | GDS81583 | Drive Shaft | | 36 | 26 | 59.5 | 40 | 873 | |
| | 2004.11-2009.04 | 6MT | R | L | Estate 4WD BLY, BLX, BVX | | GDS61284 | Drive Shaft | | 36 | | 59.5 | 40 | 594 | |
| | 2004.11-2009.04 | 6MT | R | R | Estate 4WD BLY, BLX, BVX | | GDS61293 | Drive Shaft | | 36 | | 59.5 | 40 | 631 | |
| | 2004.11-2009.04 | 6MT | R | L/R | Estate 4WD BLY, BLX, BVX | | GCI35026 | Outer Joint | | 36 | 33 | 59.5 | 40 | 61 | |
| | 2004.11-2009.04 | 6MT | F/R | L/R | Estate 4WD BLY, BLX, BVX | | GCO83037 | Outer Joint | | 36 | 30 | 59.5 | 40.5 | 56 | I |
| | 2004.11-2009.04 | 6MT | F/R | L/R | Estate 4WD BLY, BLX, BVX | | GCI82447 | Inner Joint | | | 33 | | | 34 | |
| | 2012.11-2020.10 | 6MT | F | L | Estate 4WD CKFC, DCYA, CRMB, DFFA | | GDS83295 | Drive Shaft | | 36 | | 59.5 | 40 | 491 | |
| | 2012.11-2020.10 | 6MT | F | R | Estate 4WD CKFC, DCYA, CRMB, DFFA | | GDS81892 | Drive Shaft | | 36 | | 59.5 | 40 | 602 | |
| | 2012.11-2020.10 | 6MT | F | L/R | Estate 4WD CKFC, DCYA, CRMB, DFFA | | GCI61069 | Inner Joint | | | 28 | | | 32 | |
| | 2012.11-2020.10 | 6MT | F | L/R | Estate 4WD CKFC, DCYA, CRMB, DFFA | | GCI83016 | Inner Joint | | | 28 | | | 32 | |
| | 2012.11-2020.10 | 6MT/7DCT | F | L/R | Estate 4WD CKFC, DCYA, CRMB, DFFA | | GCO83101 | Outer Joint | | 36 | 27 | 59.5 | 40 | 65 | M |
| | 2012.11-2020.10 | 7DCT | F | L | Estate 4WD CKFC, DCYA, CRMB, DFFA | | GDS81265 | Drive Shaft | | 36 | 37 | 59.5 | 40 | 557 | |
| | 2012.11-2020.10 | 7DCT | F | R | Estate 4WD CKFC, DCYA, CRMB, DFFA | | GDS81893 | Drive Shaft | | 36 | | 59.5 | 40 | 575 | |
| | 2012.11-2020.10 | 7DCT | F | L | Estate 4WD CKFC, DCYA, CRMB, DFFA | | GCI81158 | Inner Joint | | 37 | 34 | 34.5 | 65.5 | 83 | |
| | 2012.11-2020.10 | 7DCT | F | R | Estate 4WD CKFC, DCYA, CRMB, DFFA | | GCI61057 | Inner Joint | | | 34 | | | 89 | |
| | 2012.11-2020.10 | 6MT/7AT | R | L | Estate 4WD CKFC, DCYA, CRMB, DFFA | Not For facelift | GDS61286 | Drive Shaft | | 36 | | 59.5 | 40 | 587 | |
| | 2012.11-2020.10 | 6MT/7AT | R | L | Estate 4WD CKFC, DCYA, CRMB, DFFA | For facelift | GDS61331 | Drive Shaft | | 36 | | 59.5 | 40 | 606 | |
| | 2012.11-2020.10 | 6MT/7AT | R | R | Estate 4WD CKFC, DCYA, CRMB, DFFA | Not For facelift | GDS61287 | Drive Shaft | | 36 | | 59.5 | 40 | 632 | |
| | 2012.11-2020.10 | 6MT/7AT | R | R | Estate 4WD CKFC, DCYA, CRMB, DFFA | For facelift | GDS61332 | Drive Shaft | | 36 | | 59.5 | 40 | 650 | |
| | 2012.11-2020.10 | 6MT/7DCT | R | L/R | Estate 4WD CKFC, DCYA, CRMB, DFFA | | GCI35026 | Outer Joint | | 36 | 33 | 59.5 | 40 | 61 | |
| | 2012.11-2020.10 | 6MT/7DCT | R | L/R | Estate 4WD CKFC, DCYA, CRMB, DFFA | | GCI61103 | Inner Joint | | | 33 | | | 32 | |
| 2.0 (135 kw) | 2013.05-2020.10 | 6DCT | F | L | Estate 4WD CUNA, DJGA, CUPA | | GDS61285 | Drive Shaft | | 36 | | 59.5 | 40 | 472 | |
| | 2013.05-2020.10 | 6DCT | F | L/R | Estate 4WD CUNA, DJGA, CUPA | | GCO83101 | Outer Joint | | 36 | 27 | 59.5 | 40 | 65 | M |
| | 2013.05-2020.10 | 6DCT | F | L/R | Estate 4WD CUNA, DJGA, CUPA | TJ | GCI54004 | Inner Joint | | | 34 | | | 81 | |
| | 2013.05-2020.10 | 6DCT | F | L/R | Estate 4WD CUNA, DJGA, CUPA | AAR | GCI61057 | Inner Joint | | | 34 | | | 89 | |
| | 2013.05-2020.10 | 6DCT/7DCT | F | R | Estate 4WD CUNA, DJGA, CUPA | | GDS81893 | Drive Shaft | | 36 | | 59.5 | 40 | 575 | |
| | 2013.05-2020.10 | 6DCT/7DCT | F | L/R | Estate 4WD CUNA, DJGA, CUPA | | GCI35026 | Outer Joint | | 36 | 33 | 59.5 | 40 | 61 | |
| | 2013.05-2020.10 | 7DCT | F | L | Estate 4WD CUNA, DJGA, CUPA | | GDS81265 | Drive Shaft | | 36 | 37 | 59.5 | 40 | 557 | |
| | 2013.05-2020.10 | 7DCT | F | L | Estate 4WD CUNA, DJGA, CUPA | | GCI81158 | Inner Joint | | 37 | 34 | 34.5 | 65.5 | 83 | |
| | 2013.05-2020.10 | 7DCT | F | R | Estate 4WD CUNA, DJGA, CUPA | AAR | GCI61057 | Inner Joint | | | 34 | | | 89 | |

| | YEAR | TRANSM. | F/R | L/R | BODY STYLE & DRIVE TYPE & ENGINE | REMARKS | G-AP Ref. | PRODUCT | ABS | Technical Specifications A | B | C | H | L | P |
|---|---|---|---|---|---|---|---|---|---|---|---|---|---|---|---|
| **SKODA** | | | | | | | | | | | | | | | |
| **Octavia Combi** | | | | | | | | | | | | | | | |
| 2.0 (135 kw) | 2013.05-2020.10 | 6AT/7AT | R | L | Estate 4WD CUNA, DJGA, CUPA | Not For facelift | GDS61286 | Drive Shaft | | 36 | | 59.5 | 40 | 587 | |
| | 2013.05-2020.10 | 6AT/7AT | R | L | Estate 4WD CUNA, DJGA, CUPA | For facelift | GDS61331 | Drive Shaft | | 36 | | 59.5 | 40 | 606 | |
| | 2013.05-2020.10 | 6AT/7AT | R | R | Estate 4WD CUNA, DJGA, CUPA | Not For facelift | GDS61287 | Drive Shaft | | 36 | | 59.5 | 40 | 632 | |
| | 2013.05-2020.10 | 6AT/7AT | R | R | Estate 4WD CUNA, DJGA, CUPA | For facelift | GDS61332 | Drive Shaft | | 36 | | 59.5 | 40 | 650 | |
| | 2013.05-2020.10 | 6DCT/7DCT | R | L/R | Estate 4WD CUNA, DJGA, CUPA | | GCI61103 | Inner Joint | | | 33 | | | 32 | |
| 2.0 (140 kw) | 2019.02-2020.10 | 7AT | F | R | Estate 4WD DKZA | Wheel Hub Diam:42 | GDS81892 | Drive Shaft | | 36 | | 59.5 | 40 | 602 | |
| | 2019.02-2020.10 | 7AT | F | L | Estate 4WD DKZA | | GCI83028 | Inner Joint | | 37 | 28 | | 65.5 | 90.2 | |
| | 2019.02-2020.10 | 7AT | F | R | Estate 4WD DKZA | | GCI61069 | Inner Joint | | | 28 | | | 32 | |
| | 2019.02-2020.10 | 7DCT | F | L | Estate 4WD DKZA | | GDS84237 | Drive Shaft | | 36 | 37 | 59.5 | 40 | 560 | |
| | 2019.02-2020.10 | 7AT | R | L | Estate 4WD DKZA | | GDS61331 | Drive Shaft | | 36 | | 59.5 | 40 | 606 | |
| | 2019.02-2020.10 | 7AT | R | R | Estate 4WD DKZA | | GDS61332 | Drive Shaft | | 36 | | 59.5 | 40 | 650 | |
| | 2019.02-2020.10 | 7AT | R | L/R | Estate 4WD DKZA | | GCI35026 | Outer Joint | | 36 | 33 | 59.5 | 40 | 61 | |
| | 2019.02-2020.10 | 7DCT | R | L/R | Estate 4WD DKZA | | GCI61103 | Inner Joint | | | 33 | | | 32 | |
| | 2019.02-2020.10 | 7DCT | R | L/R | Estate 4WD DKZA | | GCI83008 | Inner Joint | | | 33 | | | 32 | |
| 2.0 (147 kw) | 2020.07- | 7AT | F | L | Estate 4WD DTUA | | GDS81265 | Drive Shaft | | 36 | 37 | 59.5 | 40 | 557 | |
| | 2020.07- | 7AT | F | R | Estate 4WD DTUA | | GDS81893 | Drive Shaft | | 36 | | 59.5 | 40 | 575 | |
| | 2020.07- | 7AT | F | L | Estate 4WD DTUA | | GCI81158 | Inner Joint | | 37 | 34 | 34.5 | 65.5 | 83 | |
| | 2020.07- | 7AT | R | L | Estate 4WD DTUA | | GDS61331 | Drive Shaft | | 36 | | 59.5 | 40 | 606 | |
| | 2020.07- | 7AT | R | R | Estate 4WD DTUA | | GDS61332 | Drive Shaft | | 36 | | 59.5 | 40 | 650 | |
| | 2020.07- | 7AT | R | L/R | Estate 4WD DTUA | | GCI35026 | Outer Joint | | 36 | 33 | 59.5 | 40 | 61 | |
| | 2020.07- | 7DCT | R | L/R | Estate 4WD DTUA | | GCI61103 | Inner Joint | | | 33 | | | 32 | |
| | 2020.07- | 7DCT | R | L/R | Estate 4WD DTUA | | GCI83008 | Inner Joint | | | 33 | | | 32 | |
| **Octavia Combi** | | | | | | | | | | | | | | | |
| 1.8 (132 kw) | 2012.11-2017.02 | 6AT | F | L | Estate 4WD CJSB | | GDS83295 | Drive Shaft | | 36 | | 59.5 | 40 | 491 | |
| | 2012.11-2017.02 | 6AT | F | R | Estate 4WD CJSB | | GDS81892 | Drive Shaft | | 36 | | 59.5 | 40 | 602 | |
| | 2012.11-2017.02 | 6AT | F | L | Estate 4WD CJSB | | GCI61069 | Inner Joint | | | 28 | | | 32 | |
| | 2012.11-2017.02 | 6DCT | F | L | Estate 4WD CJSB | | GDS98006 | Stub Axle-Flange | | 37 | | | 67 | 123.5 | |
| | 2012.11-2017.02 | 6MT | F | L/R | Estate 4WD CJSB | | GCO83101 | Outer Joint | | 36 | 27 | 59.5 | 40 | 65 | M |
| | 2012.11-2017.02 | 6AT | R | L | Estate 4WD CJSB | Not For facelift | GDS61286 | Drive Shaft | | 36 | | 59.5 | 40 | 587 | |
| | 2012.11-2017.02 | 6AT | R | L | Estate 4WD CJSB | For facelift | GDS61331 | Drive Shaft | | 36 | | 59.5 | 40 | 606 | |
| | 2012.11-2017.02 | 6AT | R | R | Estate 4WD CJSB | NO Facelift | GDS61287 | Drive Shaft | | 36 | | 59.5 | 40 | 632 | |
| | 2012.11-2017.02 | 6AT | R | R | Estate 4WD CJSB | Facelift | GDS61332 | Drive Shaft | | 36 | | 59.5 | 40 | 650 | |
| | 2012.11-2017.02 | 6AT | R | L/R | Estate 4WD CJSB | | GCI61103 | Inner Joint | | | 33 | | | 32 | |
| **Rapid** | | | | | | | | | | | | | | | |
| 1.0 (70 kw) | 2017.06-2019.12 | 5MT | F | L | Hatchback FWD CHZB;DKLD | | GDS81922 | Drive Shaft | | 36 | 33 | 52 | 59 | 581 | |
| | 2017.06-2019.12 | 5MT | F | R | Hatchback FWD CHZB;DKLD | | GDS81924 | Drive Shaft | | 36 | 33 | 52 | 59 | 855 | |
| | 2017.06-2019.12 | 5MT | F | L/R | Hatchback FWD CHZB;DKLD | | GCO54006 | Outer Joint | | 36 | 30 | 52 | 59 | 55.5 | I |
| | 2017.06-2019.12 | 5MT | F | L/R | Hatchback FWD CHZB;DKLD | | GCO83024 | Outer Joint | | 36 | 30 | 50.75 | 59 | 55.5 | I |
| | 2017.06-2019.12 | 5MT | F | L/R | Hatchback FWD CHZB;DKLD | | GCI81546 | Inner Joint | | 33 | 32 | 39.9 | 58.5 | 105 | |
| | 2017.06-2019.12 | 7DCT | F | L | Hatchback FWD CHZB;DKLD | | GDS82228 | Drive Shaft | | 36 | | 52 | 75 | 475 | |
| | 2017.06-2019.12 | 7DCT | F | R | Hatchback FWD CHZB;DKLD | | GDS82358 | Drive Shaft | | 36 | | 52 | 75 | 762 | |
| | 2017.06-2019.12 | 7DCT | F | L/R | Hatchback FWD CHZB;DKLD | | GCO61081 | Outer Joint | | 36 | 27 | 52 | 75 | 65 | I |
| | 2017.06-2019.12 | 7DCT | F | L/R | Hatchback FWD CHZB;DKLD | | GCI81689 | Inner Joint | | | 32 | | | 89 | |
| 1.0 (81 kw) | 2017.06-2019.12 | 5MT | F | L/R | Hatchback FWD CHZC;DKRC | | GCO54006 | Outer Joint | | 36 | 30 | 52 | 59 | 55.5 | I |
| | 2017.06-2019.12 | 6MT | F | L | Hatchback FWD CHZC;DKRC | | GDS81922 | Drive Shaft | | 36 | 33 | 52 | 59 | 581 | |
| | 2017.06-2019.12 | 6MT | F | R | Hatchback FWD CHZC;DKRC | | GDS81924 | Drive Shaft | | 36 | 33 | 52 | 59 | 855 | |
| | 2017.06-2019.12 | 6MT/7AT | F | L/R | Hatchback FWD CHZC;DKRC | | GCO83024 | Outer Joint | | 36 | 30 | 50.75 | 59 | 55.5 | I |
| | 2017.06-2019.12 | 7AT/6MT | F | L/R | Hatchback FWD CHZC;DKRC | | GCI81546 | Inner Joint | | 33 | 32 | 39.9 | 58.5 | 105 | |
| | 2017.06-2019.12 | 7DCT | F | L | Hatchback FWD CHZC;DKRC | | GDS82228 | Drive Shaft | | 36 | | 52 | 75 | 475 | |
| | 2017.06-2019.12 | 7DCT | F | R | Hatchback FWD CHZC;DKRC | | GDS82358 | Drive Shaft | | 36 | | 52 | 75 | 762 | |
| | 2017.06-2019.12 | 7DCT | F | L/R | Hatchback FWD CHZC;DKRC | | GCO61081 | Outer Joint | | 36 | 27 | 52 | 75 | 65 | I |
| 1.2 (55 kw) | 2012.07-2015.06 | 5MT | F | L | Hatchback FWD CGPC | | GDS83330 | Drive Shaft | | 36 | | 50.7 | 58.5 | 515 | |
| | 2012.07-2015.06 | 5MT | F | R | Hatchback FWD CGPC | | GDS61288 | Drive Shaft | | 36 | | 50.7 | 58.5 | 765 | |
| | 2012.07-2015.06 | 5MT | F | R | Hatchback FWD CGPC | | GCI83008 | Inner Joint | | | 33 | | | 32 | |
| | 2012.07-2015.06 | MT | F | L/R | Hatchback FWD CGPC | | GCO83027 | Outer Joint | | 36 | 30 | 50.7 | 58.5 | 47.5 | I |
| | 2012.07-2015.06 | MT | F | L/R | Hatchback FWD CGPC | | GCI83005 | Inner Joint | | | 33 | | | 32 | |
| | 2012.07-2015.06 | MT/5MT | F | R | Hatchback FWD CGPC | | GDS61288 | Drive Shaft | | 36 | | 50.7 | 58.5 | 765 | |
| | 2012.07-2015.06 | | F | L/R | Hatchback FWD CGPC | | GCI83008 | Inner Joint | | | 33 | | | 32 | |
| 1.2 (63 kw) | 2012.07-2015.05 | 5MT | F | L | Hatchback FWD CBZA | | GDS61297 | Drive Shaft | | 36 | | 50.5 | 59 | 513 | |
| | 2012.07-2015.05 | 5MT | F | R | Hatchback FWD CBZA | | GDS61301 | Drive Shaft | | 36 | | 50.5 | 59 | 771 | |
| | 2012.07-2015.05 | 5MT | F | L/R | Hatchback FWD CBZA | | GCO83024 | Outer Joint | | 36 | 30 | 50.75 | 59 | 55.5 | I |
| | 2012.07-2015.05 | 5MT | F | L/R | Hatchback FWD CBZA | | GCI82447 | Inner Joint | | | 33 | | | 34 | |
| | 2012.07-2015.05 | 7DCT | F | R | Hatchback FWD CBZA | | GDS61301 | Drive Shaft | | 36 | | 50.5 | 59 | 771 | |
| | 2012.07-2015.05 | 7DCT/5MT/6MT | F | L/R | Hatchback FWD CBZA | | GCI82447 | Inner Joint | | | 33 | | | 34 | |
| | 2012.07-2015.05 | MT | F | L/R | Hatchback FWD CBZA | | GCI83011 | Inner Joint | | | 33 | | | 34 | |

| | YEAR | TRANSM. | F/R | L/R | BODY STYLE & DRIVE TYPE & ENGINE | REMARKS | G-AP Ref. | PRODUCT | ABS | Technical Specifications A | B | C | H | L | P |
|---|---|---|---|---|---|---|---|---|---|---|---|---|---|---|---|
| **SKODA** **Rapid** | | | | | | | | | | | | | | | |
| 1.2 (63 kw) | 2012.07-2015.05 | MT | F | L/R | Hatchback FWD CBZA | Date from:2013.01 | GCI83011 | Inner Joint | | | 33 | | | 34 | |
| 1.2 (66 kw) | 2015.05-2019.12 | 5MT | F | L | Hatchback FWD CJZC | | GDS61297 | Drive Shaft | | 36 | | 50.5 | 59 | 513 | |
| | 2015.05-2019.12 | 5MT | F | R | Hatchback FWD CJZC | | GDS61301 | Drive Shaft | | 36 | | 50.5 | 59 | 771 | |
| | 2015.05-2019.12 | 5MT | F | L/R | Hatchback FWD CJZC | | GCO83024 | Outer Joint | | 36 | 30 | 50.75 | 59 | 55.5 | I |
| | 2015.05-2019.12 | 7DCT | F | L | Hatchback FWD CJZC | Date to:2017.02 | GDS61311 | Drive Shaft | | 36 | | 50.5 | 59 | 492 | |
| | 2015.05-2019.12 | 7DCT | F | L | Hatchback FWD CJZC | Date from:2017.03 | GDS83988 | Drive Shaft | | 36 | | 52 | 64.5 | 500 | |
| | 2015.05-2019.12 | 7DCT | F | R | Hatchback FWD CJZC | | GDS57507 | Drive Shaft | | 36 | | 52 | 64.5 | 781 | |
| | 2015.05-2019.12 | 7DCT | F | L/R | Hatchback FWD CJZC | Date from:2017.03 | GCO61081 | Outer Joint | | 36 | 27 | 52 | 75 | 65 | I |
| | 2015.05-2019.12 | 7DCT/5MT | F | L/R | Hatchback FWD CJZC | | GCI82447 | Inner Joint | | | 33 | | | 34 | |
| | 2015.05-2019.12 | MT | F | L/R | Hatchback FWD CJZC | | GCI83011 | Inner Joint | | | 33 | | | 34 | |
| 1.2 (77 kw) | 2012.07-2015.05 | 6MT | F | L | Hatchback FWD CBZB | | GDS61297 | Drive Shaft | | 36 | | 50.5 | 59 | 513 | |
| | 2012.07-2015.05 | 6MT | F | R | Hatchback FWD CBZB | | GDS61301 | Drive Shaft | | 36 | | 50.5 | 59 | 771 | |
| | 2012.07-2015.05 | 6MT | F | L/R | Hatchback FWD CBZB | | GCO83024 | Outer Joint | | 36 | 30 | 50.75 | 59 | 55.5 | I |
| | 2012.07-2015.05 | 6MT | F | L/R | Hatchback FWD CBZB | | GCI82447 | Inner Joint | | | 33 | | | 34 | |
| | 2012.07-2015.05 | MT | F | L/R | Hatchback FWD CBZB | | GCI83011 | Inner Joint | | | 33 | | | 34 | |
| 1.2 (81 kw) | 2015.05-2019.12 | 6MT | F | L | Hatchback FWD CJZD | | GDS61297 | Drive Shaft | | 36 | | 50.5 | 59 | 513 | |
| | 2015.05-2019.12 | 6MT | F | R | Hatchback FWD CJZD | | GDS61301 | Drive Shaft | | 36 | | 50.5 | 59 | 771 | |
| | 2015.05-2019.12 | 6MT | F | L/R | Hatchback FWD CJZD | | GCO83024 | Outer Joint | | 36 | 30 | 50.75 | 59 | 55.5 | I |
| | 2015.05-2019.12 | 6MT | F | L/R | Hatchback FWD CJZD | | GCI82447 | Inner Joint | | | 33 | | | 34 | |
| | 2015.05-2019.12 | MT | F | L/R | Hatchback FWD CJZD | | GCI83011 | Inner Joint | | | 33 | | | 34 | |
| 1.4 (66 kw) | 2015.05-2019.12 | 5MT | F | L | Hatchback FWD CUSB | | GDS82039 | Drive Shaft | | 36 | | 52 | 59 | 549 | |
| | 2015.05-2019.12 | 5MT | F | R | Hatchback FWD CUSB | | GDS82360 | Drive Shaft | | 36 | | 52 | 59 | 729 | |
| | 2015.05-2019.12 | 5MT | F | L/R | Hatchback FWD CUSB | | GCO83024 | Outer Joint | | 36 | 30 | 50.75 | 59 | 55.5 | I |
| | 2015.05-2019.12 | 5MT | F | L/R | Hatchback FWD CUSB | | GCI82447 | Inner Joint | | | 33 | | | 34 | |
| | 2015.05-2019.12 | 7AT/5MT | F | L | Hatchback FWD CUSB | | GCI83016 | Inner Joint | | | 28 | | | 32 | |
| | 2015.05-2019.12 | 7DCT | F | L | Hatchback FWD CUSB | | GDS81926 | Drive Shaft | | 36 | | 52 | 75 | 550 | |
| | 2015.05-2019.12 | 7DCT | F | R | Hatchback FWD CUSB | | GDS82359 | Drive Shaft | | 36 | 40 | 52 | 75 | 755 | |
| | 2015.05-2019.12 | 7DCT | F | L/R | Hatchback FWD CUSB | | GCO61081 | Outer Joint | | 36 | 27 | 52 | 75 | 65 | I |
| | 2015.05-2019.12 | 7DCT | F | R | Hatchback FWD CUSB | | GCI61054 | Inner Joint | | 40 | 28 | 46.9 | 41 | 101.7 | |
| 1.4 (90 kw) | 2012.07-2015.06 | 7AT | F | R | Hatchback FWD CAXA | | GDS61308 | Drive Shaft | | 36 | | 50.5 | 59 | 786 | |
| | 2012.07-2015.06 | 7AT | F | L/R | Hatchback FWD CAXA | | GCO83024 | Outer Joint | | 36 | 30 | 50.75 | 59 | 55.5 | I |
| | 2012.07-2015.06 | 7DCT | F | L | Hatchback FWD CAXA | | GDS61311 | Drive Shaft | | 36 | | 50.5 | 59 | 492 | |
| | 2012.07-2015.06 | 7DCT | F | L/R | Hatchback FWD CAXA | | GCI82447 | Inner Joint | | | 33 | | | 34 | |
| | 2012.07-2015.06 | AT | F | L/R | Hatchback FWD CAXA | | GCI83006 | Inner Joint | | | 33 | | | 34 | |
| | 2012.07-2015.06 | MT | F | L | Hatchback FWD CAXA | | GDS61297 | Drive Shaft | | 36 | | 50.5 | 59 | 513 | |
| | 2012.07-2015.06 | MT | F | L/R | Hatchback FWD CAXA | | GCI83011 | Inner Joint | | | 33 | | | 34 | |
| 1.4 (92 kw) | 2015.05-2022.03 | 7AT | F | L/R | Hatchback FWD CZCA | | GCI53002 | Inner Joint | | | 33 | | | 34 | |
| | 2015.05-2022.03 | 7DCT | F | L | Hatchback FWD CZCA | Date to:2017.02 | GDS61311 | Drive Shaft | | 36 | | 50.5 | 59 | 492 | |
| | 2015.05-2022.03 | 7DCT | F | L | Hatchback FWD CZCA | Date from:2017.03 | GDS83988 | Drive Shaft | | 36 | | 52 | 64.5 | 500 | |
| | 2015.05-2022.03 | 7DCT | F | R | Hatchback FWD CZCA | | GDS57507 | Drive Shaft | | 36 | | 52 | 64.5 | 781 | |
| | 2015.05-2022.03 | 7DCT | F | L/R | Hatchback FWD CZCA | Date to:2017.02 | GCO54006 | Outer Joint | | 36 | 30 | 52 | 59 | 55.5 | I |
| | 2015.05-2022.03 | 7DCT | F | L/R | Hatchback FWD CZCA | Date from:2017.03 | GCO61081 | Outer Joint | | 36 | 27 | 52 | 75 | 65 | I |
| | 2015.05-2022.03 | 7DCT | F | L/R | Hatchback FWD CZCA | | GCI82447 | Inner Joint | | | 33 | | | 34 | |
| | 2015.05-2022.03 | AT | F | L/R | Hatchback FWD CZCA | | GCO83024 | Outer Joint | | 36 | 30 | 50.75 | 59 | 55.5 | I |
| | 2015.05-2022.03 | | F | L/R | Hatchback FWD CZCA | | GCI83011 | Inner Joint | | | 33 | | | 34 | |
| 1.6 (66 kw) | 2013.08-2015.05 | 5MT | F | L | Hatchback FWD CAYB | | GDS61184 | Drive Shaft | | 36 | | 52 | 59 | 496 | |
| | 2013.08-2015.05 | 5MT | F | R | Hatchback FWD CAYB | | GDS61185 | Drive Shaft | | 36 | | 52 | 59 | 785 | |
| | 2013.08-2015.05 | 5MT | F | L/R | Hatchback FWD CAYB | | GCO83024 | Outer Joint | | 36 | 30 | 50.75 | 59 | 55.5 | I |
| | 2013.08-2015.05 | 5MT | F | L/R | Hatchback FWD CAYB | | GCI82447 | Inner Joint | | | 33 | | | 34 | |
| | 2013.08-2015.05 | 7AT/5MT | F | L/R | Hatchback FWD CAYB | | GCI83016 | Inner Joint | | | 28 | | | 32 | |
| | 2013.08-2015.05 | 7DCT | F | L | Hatchback FWD CAYB | | GDS61260 | Drive Shaft | | 36 | | 52 | 75 | 498 | |
| | 2013.08-2015.05 | 7DCT | F | R | Hatchback FWD CAYB | | GDS61261 | Drive Shaft | | 36 | | 52 | 75 | 785 | |
| | 2013.08-2015.05 | 7DCT | F | L/R | Hatchback FWD CAYB | | GCO61081 | Outer Joint | | 36 | 27 | 52 | 75 | 65 | I |
| | 2013.08-2015.05 | MT | F | L | Hatchback FWD CAYB | | GCO54006 | Outer Joint | | 36 | 30 | 52 | 59 | 55.5 | I |
| | 2015.06-2022.03 | 5MT | F | L | Hatchback FWD CWVB | | GDS61297 | Drive Shaft | | 36 | | 50.5 | 59 | 513 | |
| | 2015.06-2022.03 | 5MT | F | R | Hatchback FWD CWVB | | GDS61301 | Drive Shaft | | 36 | | 50.5 | 59 | 771 | |
| | 2015.06-2022.03 | 5MT | F | L/R | Hatchback FWD CWVB | | GCO83024 | Outer Joint | | 36 | 30 | 50.75 | 59 | 55.5 | I |
| | 2015.06-2022.03 | 5MT | F | L/R | Hatchback FWD CWVB | | GCI53002 | Inner Joint | | | 33 | | | 34 | |
| | 2015.06-2022.03 | 5MT | F | L/R | Hatchback FWD CWVB | | GCI82447 | Inner Joint | | | 33 | | | 34 | |
| 1.6 (77 kw) | 2012.07-2015.06 | 5MT | F | L | Hatchback FWD CFNA | | GDS61297 | Drive Shaft | | 36 | | 50.5 | 59 | 513 | |
| | 2012.07-2015.06 | 5MT | F | R | Hatchback FWD CFNA | | GDS61301 | Drive Shaft | | 36 | | 50.5 | 59 | 771 | |
| | 2012.07-2015.06 | 5MT | F | L/R | Hatchback FWD CFNA | | GCO83024 | Outer Joint | | 36 | 30 | 50.75 | 59 | 55.5 | I |
| | 2012.07-2015.06 | 5MT | F | L/R | Hatchback FWD CFNA | | GCI82447 | Inner Joint | | | 33 | | | 34 | |
| | 2012.07-2015.06 | 6AT | F | L | Hatchback FWD CFNA | | GDS83842 | Drive Shaft | | 36 | 26 | 52 | 75 | 566 | |
| | 2012.07-2015.06 | 6AT | F | R | Hatchback FWD CFNA | | GDS83843 | Drive Shaft | | 36 | 26 | 52 | 75 | 866 | |

| | YEAR | TRANSM. | F/R | L/R | BODY STYLE & DRIVE TYPE & ENGINE | REMARKS | G-AP Ref. | PRODUCT | ABS | Technical Specifications A | B | C | H | L | P |
|---|---|---|---|---|---|---|---|---|---|---|---|---|---|---|---|
| **SKODA** | | | | | | | | | | | | | | | |
| **Rapid** | | | | | | | | | | | | | | | |
| 1.6 (77 kw) | 2012.07-2015.06 | 6AT | F | L/R | Hatchback FWD CFNA | Type:UF100 | GCO83079 | Outer Joint | | 36 | 30 | 52 | 75 | 55.5 | I |
| | 2012.07-2015.06 | 6AT | F | L/R | Hatchback FWD CFNA | | GCI81396 | Inner Joint | | 26 | 22 | 31 | 68.5 | 86 | |
| | 2012.07-2015.06 | 6AT/5MT | F | L/R | Hatchback FWD CFNA | | GCO61074 | Outer Joint | | 36 | 30 | 52 | 75 | 55.5 | I |
| | 2012.07-2015.06 | 6AT/5MT | F | L/R | Hatchback FWD CFNA | | GCI61039 | Inner Joint | | 26 | 22 | 31 | 68.5 | 88.5 | |
| | 2012.07-2019.12 | 5MT | F | L | Hatchback FWD CAYC;CLNA | | GDS61184 | Drive Shaft | | 36 | | 52 | 59 | 496 | |
| | 2012.07-2019.12 | 5MT | F | R | Hatchback FWD CAYC;CLNA | | GDS61185 | Drive Shaft | | 36 | | 52 | 59 | 785 | |
| | 2012.07-2019.12 | 5MT | F | L/R | Hatchback FWD CAYC;CLNA | | GCO83024 | Outer Joint | | 36 | 30 | 50.75 | 59 | 55.5 | I |
| | 2012.07-2019.12 | 5MT | F | L/R | Hatchback FWD CAYC;CLNA | | GCI82447 | Inner Joint | | | 33 | | | 34 | |
| | 2012.07-2019.12 | MT | F | L | Hatchback FWD CAYC;CLNA | | GCO54006 | Outer Joint | | 36 | 30 | 52 | 59 | 55.5 | I |
| | 2012.07-2019.12 | MT | F | L/R | Hatchback FWD CAYC;CLNA | | GCI83011 | Inner Joint | | | 33 | | | 34 | |
| 1.6 (81 kw) | 2015.05-2022.03 | 5MT | F | L | Hatchback FWD CWVA | | GDS61297 | Drive Shaft | | 36 | | 50.5 | 59 | 513 | |
| | 2015.05-2022.03 | 5MT | F | R | Hatchback FWD CWVA | | GDS61301 | Drive Shaft | | 36 | | 50.5 | 59 | 771 | |
| | 2015.05-2022.03 | 5MT | F | L/R | Hatchback FWD CWVA | | GCO83024 | Outer Joint | | 36 | 30 | 50.75 | 59 | 55.5 | I |
| | 2015.05-2022.03 | 5MT | F | L/R | Hatchback FWD CWVA | | GCI53002 | Inner Joint | | | 33 | | | 34 | |
| | 2015.05-2022.03 | 5MT | F | L/R | Hatchback FWD CWVA | | GCI82447 | Inner Joint | | | 33 | | | 34 | |
| | 2015.05-2022.03 | 6AT | F | L | Hatchback FWD CWVA | | GDS83842 | Drive Shaft | | 36 | 26 | 52 | 75 | 566 | |
| | 2015.05-2022.03 | 6AT | F | R | Hatchback FWD CWVA | | GDS83843 | Drive Shaft | | 36 | 26 | 52 | 75 | 866 | |
| | 2015.05-2022.03 | 6AT | F | L/R | Hatchback FWD CWVA | TPE | GCO61074 | Outer Joint | | 36 | 30 | 52 | 75 | 55.5 | I |
| | 2015.05-2022.03 | 6AT | F | L/R | Hatchback FWD CWVA | Type:UF100;CR | GCO83079 | Outer Joint | | 36 | 30 | 52 | 75 | 55.5 | I |
| | 2015.05-2022.03 | 6AT | F | L/R | Hatchback FWD CWVA | | GCI61039 | Inner Joint | | 26 | 22 | 31 | 68.5 | 88.5 | |
| | 2015.05-2022.03 | 6AT | F | L/R | Hatchback FWD CWVA | | GCI81396 | Inner Joint | | 26 | 22 | 31 | 68.5 | 86 | |
| 1.6 (85 kw) | 2015.05-2019.12 | 5MT | F | L | Hatchback FWD CXMA | | GDS61184 | Drive Shaft | | 36 | | 52 | 59 | 496 | |
| | 2015.05-2019.12 | 5MT | F | R | Hatchback FWD CXMA | | GDS61185 | Drive Shaft | | 36 | | 52 | 59 | 785 | |
| | 2015.05-2019.12 | 5MT | F | L/R | Hatchback FWD CXMA | | GCO83024 | Outer Joint | | 36 | 30 | 50.75 | 59 | 55.5 | I |
| | 2015.05-2019.12 | 5MT | F | L/R | Hatchback FWD CXMA | | GCI82447 | Inner Joint | | | 33 | | | 34 | |
| | 2015.05-2019.12 | MT | F | L | Hatchback FWD CXMA | | GCO54006 | Outer Joint | | 36 | 30 | 52 | 59 | 55.5 | I |
| | 2015.05-2019.12 | MT | F | L/R | Hatchback FWD CXMA | | GCI83011 | Inner Joint | | | 33 | | | 34 | |
| **Rapid Spaceback** | | | | | | | | | | | | | | | |
| 1.0 (70 kw) | 2017.06-2019.12 | 5MT | F | L | Hatchback FWD CHZB;DKLD | | GDS81922 | Drive Shaft | | 36 | 33 | 52 | 59 | 581 | |
| | 2017.06-2019.12 | 5MT | F | R | Hatchback FWD CHZB;DKLD | | GDS81924 | Drive Shaft | | 36 | 33 | 52 | 59 | 855 | |
| | 2017.06-2019.12 | 5MT | F | L/R | Hatchback FWD CHZB;DKLD | | GCO54006 | Outer Joint | | 36 | 30 | 52 | 59 | 55.5 | I |
| | 2017.06-2019.12 | 5MT | F | L/R | Hatchback FWD CHZB;DKLD | | GCO83024 | Outer Joint | | 36 | 30 | 50.75 | 59 | 55.5 | I |
| | 2017.06-2019.12 | 5MT | F | L/R | Hatchback FWD CHZB;DKLD | | GCI81546 | Inner Joint | | 33 | 32 | 39.9 | 58.5 | 105 | |
| | 2017.06-2019.12 | 7DCT | F | L | Hatchback FWD CHZB;DKLD | | GDS82228 | Drive Shaft | | 36 | | 52 | 75 | 475 | |
| | 2017.06-2019.12 | 7DCT | F | R | Hatchback FWD CHZB;DKLD | | GDS82358 | Drive Shaft | | 36 | | 52 | 75 | 762 | |
| | 2017.06-2019.12 | 7DCT | F | L/R | Hatchback FWD CHZB;DKLD | | GCO61081 | Outer Joint | | 36 | 27 | 52 | 75 | 65 | I |
| | 2017.06-2019.12 | 7DCT | F | L/R | Hatchback FWD CHZB;DKLD | | GCI81689 | Inner Joint | | | 32 | | | 89 | |
| 1.0 (81 kw) | 2017.06-2019.12 | 5MT | F | L/R | Hatchback FWD CHZC;DKRC | | GCO54006 | Outer Joint | | 36 | 30 | 52 | 59 | 55.5 | I |
| | 2017.06-2019.12 | 6MT | F | R | Hatchback FWD CHZC;DKRC | | GDS81924 | Drive Shaft | | 36 | 33 | 52 | 59 | 855 | |
| | 2017.06-2019.12 | 6MT/7AT | F | L/R | Hatchback FWD CHZC;DKRC | | GCO83024 | Outer Joint | | 36 | 30 | 50.75 | 59 | 55.5 | I |
| | 2017.06-2019.12 | 7AT/6MT | F | L | Hatchback FWD CHZC;DKRC | | GDS81922 | Drive Shaft | | 36 | 33 | 52 | 59 | 581 | |
| | 2017.06-2019.12 | 7AT/6MT | F | L/R | Hatchback FWD CHZC;DKRC | | GCI81546 | Inner Joint | | 33 | 32 | 39.9 | 58.5 | 105 | |
| | 2017.06-2019.12 | 7DCT | F | L | Hatchback FWD CHZC;DKRC | | GDS82228 | Drive Shaft | | 36 | | 52 | 75 | 475 | |
| | 2017.06-2019.12 | 7DCT | F | R | Hatchback FWD CHZC;DKRC | | GDS82358 | Drive Shaft | | 36 | | 52 | 75 | 762 | |
| | 2017.06-2019.12 | 7DCT | F | L/R | Hatchback FWD CHZC;DKRC | | GCO61081 | Outer Joint | | 36 | 27 | 52 | 75 | 65 | I |
| 1.2 (55 kw) | 2012.07-2015.06 | 5MT | F | L | Hatchback FWD CGPC | | GDS83330 | Drive Shaft | | 36 | | 50.7 | 58.5 | 515 | |
| | 2012.07-2015.06 | 5MT | F | R | Hatchback FWD CGPC | | GDS61288 | Drive Shaft | | 36 | | 50.7 | 58.5 | 765 | |
| | 2012.07-2015.06 | 5MT | F | R | Hatchback FWD CGPC | | GCI83008 | Inner Joint | | | 33 | | | 32 | |
| | 2012.07-2015.06 | MT | F | L/R | Hatchback FWD CGPC | | GCO83027 | Outer Joint | | 36 | 30 | 50.7 | 58.5 | 47.5 | I |
| | 2012.07-2015.06 | MT/5MT | F | R | Hatchback FWD CGPC | | GDS61288 | Drive Shaft | | 36 | | 50.7 | 58.5 | 765 | |
| 1.2 (63 kw) | 2012.07-2015.05 | 5MT | F | L | Hatchback FWD CBZA | | GDS61297 | Drive Shaft | | 36 | | 50.5 | 59 | 513 | |
| | 2012.07-2015.05 | 5MT | F | R | Hatchback FWD CBZA | | GDS61301 | Drive Shaft | | 36 | | 50.5 | 59 | 771 | |
| | 2012.07-2015.05 | 5MT | F | L/R | Hatchback FWD CBZA | | GCO83024 | Outer Joint | | 36 | 30 | 50.75 | 59 | 55.5 | I |
| | 2012.07-2015.05 | 5MT | F | L/R | Hatchback FWD CBZA | | GCI82447 | Inner Joint | | | 33 | | | 34 | |
| | 2012.07-2015.05 | 7DCT/5MT/6MT | F | L/R | Hatchback FWD CBZA | | GCI82447 | Inner Joint | | | 33 | | | 34 | |
| | 2012.07-2015.05 | MT | F | L/R | Hatchback FWD CBZA | | GCI83011 | Inner Joint | | | 33 | | | 34 | |
| | 2012.07-2015.05 | MT | F | L/R | Hatchback FWD CBZA | Date from:2013.01 | GCI83011 | Inner Joint | | | 33 | | | 34 | |
| 1.2 (66 kw) | 2015.05-2019.12 | 5MT | F | L | Hatchback FWD CJZC | | GDS61297 | Drive Shaft | | 36 | | 50.5 | 59 | 513 | |
| | 2015.05-2019.12 | 5MT | F | R | Hatchback FWD CJZC | | GDS61301 | Drive Shaft | | 36 | | 50.5 | 59 | 771 | |
| | 2015.05-2019.12 | 5MT | F | L/R | Hatchback FWD CJZC | | GCO83024 | Outer Joint | | 36 | 30 | 50.75 | 59 | 55.5 | I |
| | 2015.05-2019.12 | 7DCT | F | L | Hatchback FWD CJZC | Date to:2017.02 | GDS61311 | Drive Shaft | | 36 | | 50.5 | 59 | 492 | |
| | 2015.05-2019.12 | 7DCT | F | L | Hatchback FWD CJZC | Date from:2017.03 | GDS83988 | Drive Shaft | | 36 | | 52 | 64.5 | 500 | |
| | 2015.05-2019.12 | 7DCT | F | R | Hatchback FWD CJZC | | GDS57507 | Drive Shaft | | 36 | | 52 | 64.5 | 781 | |
| | 2015.05-2019.12 | 7DCT | F | L/R | Hatchback FWD CJZC | Date to:2017.02 | GCO54006 | Outer Joint | | 36 | 30 | 52 | 59 | 55.5 | I |
| | 2015.05-2019.12 | 7DCT | F | L/R | Hatchback FWD CJZC | Date from:2017.03 | GCO61081 | Outer Joint | | 36 | 27 | 52 | 75 | 65 | I |

| | YEAR | TRANSM. | F/R | L/R | BODY STYLE & DRIVE TYPE & ENGINE | REMARKS | G-AP Ref. | PRODUCT | ABS | Technical Specifications A | B | C | H | L | P |
|---|---|---|---|---|---|---|---|---|---|---|---|---|---|---|---|
| **SKODA** **Rapid Spaceback** | | | | | | | | | | | | | | | |
| 1.2 (66 kw) | 2015.05-2019.12 | 7DCT/5MT | F | L/R | Hatchback FWD CJZC | | GCI82447 | Inner Joint | | | 33 | | | 34 | |
| | 2015.05-2019.12 | MT | F | L/R | Hatchback FWD CJZC | | GCI83011 | Inner Joint | | | 33 | | | 34 | |
| 1.2 (77 kw) | 2012.07-2015.05 | 6MT | F | L | Hatchback FWD CBZB | | GDS61297 | Drive Shaft | | 36 | | 50.5 | 59 | 513 | |
| | 2012.07-2015.05 | 6MT | F | R | Hatchback FWD CBZB | | GDS61301 | Drive Shaft | | 36 | | 50.5 | 59 | 771 | |
| | 2012.07-2015.05 | 6MT | F | L/R | Hatchback FWD CBZB | | GCO83024 | Outer Joint | | 36 | 30 | 50.75 | 59 | 55.5 | I |
| | 2012.07-2015.05 | 6MT | F | L/R | Hatchback FWD CBZB | | GCI82447 | Inner Joint | | | 33 | | | 34 | |
| | 2012.07-2015.05 | MT | F | L/R | Hatchback FWD CBZB | | GCI83011 | Inner Joint | | | 33 | | | 34 | |
| 1.2 (81 kw) | 2015.05-2019.12 | 6MT | F | L | Hatchback FWD CJZD | | GDS61297 | Drive Shaft | | 36 | | 50.5 | 59 | 513 | |
| | 2015.05-2019.12 | 6MT | F | R | Hatchback FWD CJZD | | GDS61301 | Drive Shaft | | 36 | | 50.5 | 59 | 771 | |
| | 2015.05-2019.12 | 6MT | F | L/R | Hatchback FWD CJZD | | GCO83024 | Outer Joint | | 36 | 30 | 50.75 | 59 | 55.5 | I |
| | 2015.05-2019.12 | 6MT | F | L/R | Hatchback FWD CJZD | | GCI82447 | Inner Joint | | | 33 | | | 34 | |
| | 2015.05-2019.12 | MT | F | L/R | Hatchback FWD CJZD | | GCI83011 | Inner Joint | | | 33 | | | 34 | |
| 1.4 (66 kw) | 2015.05-2019.12 | 5MT | F | L | Hatchback FWD CUSB | | GDS82039 | Drive Shaft | | 36 | | 52 | 59 | 549 | |
| | 2015.05-2019.12 | 5MT | F | R | Hatchback FWD CUSB | | GDS82360 | Drive Shaft | | 36 | | 52 | 59 | 729 | |
| | 2015.05-2019.12 | 5MT | F | L/R | Hatchback FWD CUSB | | GCO83024 | Outer Joint | | 36 | 30 | 50.75 | 59 | 55.5 | I |
| | 2015.05-2019.12 | 5MT | F | L/R | Hatchback FWD CUSB | | GCI82447 | Inner Joint | | | 33 | | | 34 | |
| | 2015.05-2019.12 | 7AT/5MT | F | L | Hatchback FWD CUSB | | GCI83016 | Inner Joint | | | 28 | | | 32 | |
| | 2015.05-2019.12 | 7DCT | F | L | Hatchback FWD CUSB | | GDS81926 | Drive Shaft | | 36 | | 52 | 75 | 550 | |
| | 2015.05-2019.12 | 7DCT | F | R | Hatchback FWD CUSB | | GDS82359 | Drive Shaft | | 36 | 40 | 52 | 75 | 755 | |
| | 2015.05-2019.12 | 7DCT | F | L/R | Hatchback FWD CUSB | | GCO61081 | Outer Joint | | 36 | 27 | 52 | 75 | 65 | I |
| | 2015.05-2019.12 | 7DCT | F | R | Hatchback FWD CUSB | | GCI61054 | Inner Joint | | 40 | 28 | 46.9 | 41 | 101.7 | |
| 1.4 (90 kw) | 2012.07-2015.06 | 7AT | F | R | Hatchback FWD CAXA | | GDS61308 | Drive Shaft | | 36 | | 50.5 | 59 | 786 | |
| | 2012.07-2015.06 | 7AT | F | L/R | Hatchback FWD CAXA | | GCO83024 | Outer Joint | | 36 | 30 | 50.75 | 59 | 55.5 | I |
| | 2012.07-2015.06 | 7DCT | F | L | Hatchback FWD CAXA | | GDS61311 | Drive Shaft | | 36 | | 50.5 | 59 | 492 | |
| | 2012.07-2015.06 | 7DCT | F | L/R | Hatchback FWD CAXA | | GCI82447 | Inner Joint | | | 33 | | | 34 | |
| | 2012.07-2015.06 | MT | F | L | Hatchback FWD CAXA | | GDS61297 | Drive Shaft | | 36 | | 50.5 | 59 | 513 | |
| | 2012.07-2015.06 | MT | F | L/R | Hatchback FWD CAXA | | GCI83011 | Inner Joint | | | 33 | | | 34 | |
| 1.4 (92 kw) | 2015.05-2019.12 | 7AT | F | L/R | Hatchback FWD CZCA | | GCI53002 | Inner Joint | | | 33 | | | 34 | |
| | 2015.05-2019.12 | 7DCT | F | L | Hatchback FWD CZCA | Date to:2017.02 | GDS61311 | Drive Shaft | | 36 | | 50.5 | 59 | 492 | |
| | 2015.05-2019.12 | 7DCT | F | L | Hatchback FWD CZCA | Date from:2017.03 | GDS83988 | Drive Shaft | | 36 | | 52 | 64.5 | 500 | |
| | 2015.05-2019.12 | 7DCT | F | R | Hatchback FWD CZCA | | GDS57507 | Drive Shaft | | 36 | | 52 | 64.5 | 781 | |
| | 2015.05-2019.12 | 7DCT | F | L/R | Hatchback FWD CZCA | Date to:2017.02 | GCO54006 | Outer Joint | | 36 | 30 | 52 | 59 | 55.5 | I |
| | 2015.05-2019.12 | 7DCT | F | L/R | Hatchback FWD CZCA | Date from:2017.03 | GCO61081 | Outer Joint | | 36 | 27 | 52 | 75 | 65 | I |
| | 2015.05-2019.12 | 7DCT | F | L/R | Hatchback FWD CZCA | | GCI82447 | Inner Joint | | | 33 | | | 34 | |
| | 2015.05-2019.12 | AT | F | L/R | Hatchback FWD CZCA | | GCO83024 | Outer Joint | | 36 | 30 | 50.75 | 59 | 55.5 | I |
| | 2015.05-2019.12 | | F | L/R | Hatchback FWD CZCA | | GCI83011 | Inner Joint | | | 33 | | | 34 | |
| 1.6 (66 kw) | 2013.08-2015.05 | 5MT | F | L | Hatchback FWD CAYB | | GDS61184 | Drive Shaft | | 36 | | 52 | 59 | 496 | |
| | 2013.08-2015.05 | 5MT | F | R | Hatchback FWD CAYB | | GDS61185 | Drive Shaft | | 36 | | 52 | 59 | 785 | |
| | 2013.08-2015.05 | 5MT | F | L/R | Hatchback FWD CAYB | | GCO83024 | Outer Joint | | 36 | 30 | 50.75 | 59 | 55.5 | I |
| | 2013.08-2015.05 | 5MT | F | L/R | Hatchback FWD CAYB | | GCI82447 | Inner Joint | | | 33 | | | 34 | |
| | 2013.08-2015.05 | 7AT/5MT | F | L/R | Hatchback FWD CAYB | | GCI83016 | Inner Joint | | | 28 | | | 32 | |
| | 2013.08-2015.05 | 7DCT | F | L | Hatchback FWD CAYB | | GDS61260 | Drive Shaft | | 36 | | 52 | 75 | 498 | |
| | 2013.08-2015.05 | 7DCT | F | R | Hatchback FWD CAYB | | GDS61261 | Drive Shaft | | 36 | | 52 | 75 | 785 | |
| | 2013.08-2015.05 | 7DCT | F | L/R | Hatchback FWD CAYB | | GCO61081 | Outer Joint | | 36 | 27 | 52 | 75 | 65 | I |
| | 2013.08-2015.05 | MT | F | L | Hatchback FWD CAYB | | GCO54006 | Outer Joint | | 36 | 30 | 52 | 59 | 55.5 | I |
| 1.6 (77 kw) | 2012.07-2015.06 | 5MT | F | L | Hatchback FWD CFNA | | GDS61297 | Drive Shaft | | 36 | | 50.5 | 59 | 513 | |
| | 2012.07-2015.06 | 5MT | F | R | Hatchback FWD CFNA | | GDS61301 | Drive Shaft | | 36 | | 50.5 | 59 | 771 | |
| | 2012.07-2015.06 | 5MT | F | L/R | Hatchback FWD CFNA | | GCO83024 | Outer Joint | | 36 | 30 | 50.75 | 59 | 55.5 | I |
| | 2012.07-2015.06 | 5MT | F | L/R | Hatchback FWD CFNA | | GCI82447 | Inner Joint | | | 33 | | | 34 | |
| | 2012.07-2015.06 | 6AT | F | L | Hatchback FWD CFNA | | GDS83842 | Drive Shaft | | 36 | 26 | 52 | 75 | 566 | |
| | 2012.07-2015.06 | 6AT | F | R | Hatchback FWD CFNA | | GDS83843 | Drive Shaft | | 36 | 26 | 52 | 75 | 866 | |
| | 2012.07-2015.06 | 6AT | F | L/R | Hatchback FWD CFNA | | GCO61074 | Outer Joint | | 36 | 30 | 52 | 75 | 55.5 | I |
| | 2012.07-2015.06 | 6AT | F | L/R | Hatchback FWD CFNA | Type:UF100 | GCO83079 | Outer Joint | | 36 | 30 | 52 | 75 | 55.5 | I |
| | 2012.07-2015.06 | 6AT | F | L/R | Hatchback FWD CFNA | | GCI81396 | Inner Joint | | 26 | 22 | 31 | 68.5 | 86 | |
| | 2012.07-2015.06 | 6AT/5MT | F | L/R | Hatchback FWD CFNA | | GCI61039 | Inner Joint | | 26 | 22 | 31 | 68.5 | 88.5 | |
| | 2012.07-2019.12 | 5MT | F | L | Hatchback FWD CAYC;CLNA | | GDS61184 | Drive Shaft | | 36 | | 52 | 59 | 496 | |
| | 2012.07-2019.12 | 5MT | F | R | Hatchback FWD CAYC;CLNA | | GDS61185 | Drive Shaft | | 36 | | 52 | 59 | 785 | |
| | 2012.07-2019.12 | 5MT | F | L/R | Hatchback FWD CAYC;CLNA | | GCO83024 | Outer Joint | | 36 | 30 | 50.75 | 59 | 55.5 | I |
| | 2012.07-2019.12 | 5MT | F | L/R | Hatchback FWD CAYC;CLNA | | GCI82447 | Inner Joint | | | 33 | | | 34 | |
| | 2012.07-2019.12 | MT | F | L | Hatchback FWD CAYC;CLNA | | GCO54006 | Outer Joint | | 36 | 30 | 52 | 59 | 55.5 | I |
| | 2012.07-2019.12 | MT/5MT | F | L/R | Hatchback FWD CAYC;CLNA | | GCI83011 | Inner Joint | | | 33 | | | 34 | |
| 1.6 (81 kw) | 2015.05-2019.12 | 5MT | F | L | Hatchback FWD CWVA | | GDS61297 | Drive Shaft | | 36 | | 50.5 | 59 | 513 | |
| | 2015.05-2019.12 | 5MT | F | R | Hatchback FWD CWVA | | GDS61301 | Drive Shaft | | 36 | | 50.5 | 59 | 771 | |
| | 2015.05-2019.12 | 5MT | F | L/R | Hatchback FWD CWVA | | GCO83024 | Outer Joint | | 36 | 30 | 50.75 | 59 | 55.5 | I |
| | 2015.05-2019.12 | 5MT | F | L/R | Hatchback FWD CWVA | | GCI82447 | Inner Joint | | | 33 | | | 34 | |

| | YEAR | TRANSM. | F/R | L/R | BODY STYLE & DRIVE TYPE & ENGINE | REMARKS | G-AP Ref. | PRODUCT | ABS | Technical Specifications A | B | C | H | L | P |
|---|---|---|---|---|---|---|---|---|---|---|---|---|---|---|---|
| **SKODA** | | | | | | | | | | | | | | | |
| **Rapid Spaceback** | | | | | | | | | | | | | | | |
| 1.6 (81 kw) | 2015.05-2019.12 | 6AT | F | L | Hatchback FWD CWVA | | GDS83842 | Drive Shaft | | 36 | 26 | 52 | 75 | 566 | |
| | 2015.05-2019.12 | 6AT | F | R | Hatchback FWD CWVA | | GDS83843 | Drive Shaft | | 36 | 26 | 52 | 75 | 866 | |
| | 2015.05-2019.12 | 6AT | F | L/R | Hatchback FWD CWVA | TPE | GCO61074 | Outer Joint | | 36 | 30 | 52 | 75 | 55.5 | I |
| | 2015.05-2019.12 | 6AT | F | L/R | Hatchback FWD CWVA | Type:UF100;CR | GCO83079 | Outer Joint | | 36 | 30 | 52 | 75 | 55.5 | I |
| | 2015.05-2019.12 | 6AT | F | L/R | Hatchback FWD CWVA | TJ | GCI61039 | Inner Joint | | 26 | 22 | 31 | 68.5 | 88.5 | |
| | 2015.05-2019.12 | 6AT | F | L/R | Hatchback FWD CWVA | | GCI81396 | Inner Joint | | 26 | 22 | 31 | 68.5 | 86 | |
| 1.6 (85 kw) | 2015.05-2019.12 | 5MT | F | L | Hatchback FWD CXMA | | GDS61184 | Drive Shaft | | 36 | | 52 | 59 | 496 | |
| | 2015.05-2019.12 | 5MT | F | R | Hatchback FWD CXMA | | GDS61185 | Drive Shaft | | 36 | | 52 | 59 | 785 | |
| | 2015.05-2019.12 | 5MT | F | L/R | Hatchback FWD CXMA | | GCO83024 | Outer Joint | | 36 | 30 | 50.75 | 59 | 55.5 | I |
| | 2015.05-2019.12 | 5MT | F | L/R | Hatchback FWD CXMA | | GCI82447 | Inner Joint | | | 33 | | | 34 | |
| | 2015.05-2019.12 | MT | F | L | Hatchback FWD CXMA | | GCO54006 | Outer Joint | | 36 | 30 | 52 | 59 | 55.5 | I |
| | 2015.05-2019.12 | MT/5MT | F | L/R | Hatchback FWD CXMA | | GCI83011 | Inner Joint | | | 33 | | | 34 | |
| **Roomster** | | | | | | | | | | | | | | | |
| 1.2 (47 kw) | 2006.05-2007.01 | 5MT | F | L | MPV FWD BME | | GDS83063 | Drive Shaft | | 36 | | 50.7 | 58.5 | 501 | |
| | 2006.05-2007.01 | 5MT | F | R | MPV FWD BME | | GDS61063 | Drive Shaft | | 36 | | 50.7 | 58.5 | 751 | |
| | 2006.05-2007.01 | 5MT | F | L/R | MPV FWD BME | | GCO83027 | Outer Joint | | 36 | 30 | 50.7 | 58.5 | 47.5 | I |
| | 2006.05-2007.01 | AT/MT | F | L/R | MPV FWD BME | | GCI83005 | Inner Joint | | | 33 | | | 32 | |
| | 2006.05-2007.01 | | F | L/R | MPV FWD BME | | GCI83008 | Inner Joint | | | 33 | | | 32 | |
| 1.2 (51 kw) | 2007.01-2015.05 | 5MT | F | L | MPV FWD BZG;CGPA | | GDS83063 | Drive Shaft | | 36 | | 50.7 | 58.5 | 501 | |
| | 2007.01-2015.05 | 5MT | F | R | MPV FWD BZG;CGPA | | GDS61063 | Drive Shaft | | 36 | | 50.7 | 58.5 | 751 | |
| | 2007.01-2015.05 | 5MT | F | L/R | MPV FWD BZG;CGPA | Chassis no. to:5J_AK601000/5J_A5038654 | GCO83027 | Outer Joint | | 36 | 30 | 50.7 | 58.5 | 47.5 | I |
| | 2007.01-2015.05 | AT/MT | F | L/R | MPV FWD BZG;CGPA | | GCI83005 | Inner Joint | | | 33 | | | 32 | |
| | 2007.01-2015.05 | | F | L/R | MPV FWD BZG;CGPA | | GCI83008 | Inner Joint | | | 33 | | | 32 | |
| | 2009.03-2015.05 | 5MT | F | L | MPV FWD CGPA | | GDS83063 | Drive Shaft | | 36 | | 50.7 | 58.5 | 501 | |
| | 2009.03-2015.05 | 5MT | F | R | MPV FWD CGPA | | GDS61063 | Drive Shaft | | 36 | | 50.7 | 58.5 | 751 | |
| | 2009.03-2015.05 | 5MT | F | L/R | MPV FWD CGPA | Chassis no. to:5J_AK601000/5J_A5038654 | GCO83027 | Outer Joint | | 36 | 30 | 50.7 | 58.5 | 47.5 | I |
| | 2009.03-2015.05 | | F | L/R | MPV FWD CGPA | | GCI83008 | Inner Joint | | | 33 | | | 32 | |
| 1.2 (55 kw) | 2010.03-2015.05 | 5MT | F | L | MPV FWD CFWA | | GDS61248 | Drive Shaft | | 36 | | 52 | 59 | 480 | |
| | 2010.03-2015.05 | 5MT | F | R | MPV FWD CFWA | | GDS61301 | Drive Shaft | | 36 | | 50.5 | 59 | 771 | |
| | 2010.03-2015.05 | 5MT | F | L/R | MPV FWD CFWA | | GCO83024 | Outer Joint | | 36 | 30 | 50.75 | 59 | 55.5 | I |
| | 2010.03-2015.05 | 5MT | F | L/R | MPV FWD CFWA | | GCI82447 | Inner Joint | | | 33 | | | 34 | |
| | 2010.03-2015.05 | MT | F | L | MPV FWD CFWA | | GDS61302 | Drive Shaft | | 36 | | 50.5 | 59 | 479 | |
| | 2010.03-2015.05 | MT | F | L | MPV FWD CFWA | | GCO54006 | Outer Joint | | 36 | 30 | 52 | 59 | 55.5 | I |
| | 2010.03-2015.05 | MT | F | L/R | MPV FWD CFWA | | GCI83006 | Inner Joint | | | 33 | | | 34 | |
| | 2010.03-2015.05 | MT | F | L/R | MPV FWD CFWA | | GCI83011 | Inner Joint | | | 33 | | | 34 | |
| 1.2 (63 kw) | 2010.03-2015.05 | 5MT | F | L | MPV FWD CBZA | | GDS54018 | Drive Shaft | | 36 | | 50.5 | 59 | 500 | |
| | 2010.03-2015.05 | 5MT | F | R | MPV FWD CBZA | | GDS61305 | Drive Shaft | | 36 | | 50.5 | 59 | 757 | |
| | 2010.03-2015.05 | 5MT | F | L/R | MPV FWD CBZA | | GCO83024 | Outer Joint | | 36 | 30 | 50.75 | 59 | 55.5 | I |
| | 2010.03-2015.05 | 5MT | F | L/R | MPV FWD CBZA | | GCI53002 | Inner Joint | | | 33 | | | 34 | |
| | 2010.03-2015.05 | 5MT | F | L/R | MPV FWD CBZA | | GCI82447 | Inner Joint | | | 33 | | | 34 | |
| | 2010.03-2015.05 | AT | F | L | MPV FWD CBZA | | GDS61302 | Drive Shaft | | 36 | | 50.5 | 59 | 479 | |
| | 2010.03-2015.05 | MT | F | L/R | MPV FWD CBZA | | GCI83011 | Inner Joint | | | 33 | | | 34 | |
| 1.2 (77 kw) | 2010.03-2015.05 | 5MT | F | L | MPV FWD CBZB | | GDS54018 | Drive Shaft | | 36 | | 50.5 | 59 | 500 | |
| | 2010.03-2015.05 | 5MT | F | R | MPV FWD CBZB | | GDS61305 | Drive Shaft | | 36 | | 50.5 | 59 | 757 | |
| | 2010.03-2015.05 | 5MT/7AT | F | L/R | MPV FWD CBZB | | GCO83024 | Outer Joint | | 36 | 30 | 50.75 | 59 | 55.5 | I |
| | 2010.03-2015.05 | 7DCT | F | L | MPV FWD CBZB | | GDS61302 | Drive Shaft | | 36 | | 50.5 | 59 | 479 | |
| | 2010.03-2015.05 | 7DCT | F | R | MPV FWD CBZB | | GDS61301 | Drive Shaft | | 36 | | 50.5 | 59 | 771 | |
| | 2010.03-2015.05 | 7DCT/5MT | F | L/R | MPV FWD CBZB | | GCI82447 | Inner Joint | | | 33 | | | 34 | |
| | 2010.03-2015.05 | MT | F | L/R | MPV FWD CBZB | | GCI83011 | Inner Joint | | | 33 | | | 34 | |
| 1.4 (51 kw) | 2006.07-2010.03 | 5MT | F | L | MPV FWD BNM | | GDS61078 | Drive Shaft | | 36 | | 50.7 | 58.5 | 501 | |
| | 2006.07-2010.03 | 5MT | F | R | MPV FWD BNM | | GDS61223 | Drive Shaft | | 36 | | 52 | 59 | 757 | |
| | 2006.07-2010.03 | 5MT | F | L/R | MPV FWD BNM | | GCO83024 | Outer Joint | | 36 | 30 | 50.75 | 59 | 55.5 | I |
| | 2006.07-2010.03 | MT | F | R | MPV FWD BNM | | GDS61063 | Drive Shaft | | 36 | | 50.7 | 58.5 | 751 | |
| | 2006.07-2010.03 | MT | F | R | MPV FWD BNM | | GCO54006 | Outer Joint | | 36 | 30 | 52 | 59 | 55.5 | I |
| | 2006.07-2010.03 | MT | F | L/R | MPV FWD BNM | | GCI83005 | Inner Joint | | | 33 | | | 32 | |
| | 2006.07-2010.03 | | F | L/R | MPV FWD BNM | | GCI83008 | Inner Joint | | | 33 | | | 32 | |
| 1.4 (59 kw) | 2006.09-2010.03 | 5MT | F | L | MPV FWD BMS, BNV | | GDS61098 | Drive Shaft | | 36 | | 50.5 | 59 | 472 | |
| | 2006.09-2010.03 | 5MT | F | R | MPV FWD BMS, BNV | | GDS61099 | Drive Shaft | | 36 | | 50.5 | 59 | 759 | |
| | 2006.09-2010.03 | 5MT | F | L/R | MPV FWD BMS, BNV | | GCO83024 | Outer Joint | | 36 | 30 | 50.75 | 59 | 55.5 | I |
| | 2006.09-2010.03 | | F | L | MPV FWD BMS, BNV | | GCO54006 | Outer Joint | | 36 | 30 | 52 | 59 | 55.5 | I |
| | 2006.09-2010.03 | | F | L/R | MPV FWD BMS, BNV | | GCI61006 | Inner Joint | | | 30 | | | 57.6 | |
| 1.4 (63 kw) | 2006.09-2015.05 | 5MT | F | L | MPV FWD BXW, CGGB | | GDS83063 | Drive Shaft | | 36 | | 50.7 | 58.5 | 501 | |
| | 2006.09-2015.05 | 5MT | F | R | MPV FWD BXW, CGGB | | GDS61063 | Drive Shaft | | 36 | | 50.7 | 58.5 | 751 | |
| | 2006.09-2015.05 | 5MT | F | L/R | MPV FWD BXW, CGGB | Chassis no. to:5J_AK601000/5J_A5038654 | GCO83027 | Outer Joint | | 36 | 30 | 50.7 | 58.5 | 47.5 | I |
| | 2006.09-2015.05 | AT/MT | F | L/R | MPV FWD BXW, CGGB | | GCI83005 | Inner Joint | | | 33 | | | 32 | |

| | YEAR | TRANSM. | F/R | L/R | BODY STYLE & DRIVE TYPE & ENGINE | REMARKS | G-AP Ref. | PRODUCT | ABS | Technical Specifications A | B | C | H | L | P |
|---|---|---|---|---|---|---|---|---|---|---|---|---|---|---|---|
| **SKODA** | | | | | | | | | | | | | | | |
| **Roomster** | | | | | | | | | | | | | | | |
| 1.4 (63 kw) | 2006.09-2015.05 | | F | L/R | MPV FWD BXW, CGGB | | GCI83008 | Inner Joint | | | 33 | | | 32 | |
| | 2010.03-2015.05 | 5MT | F | L | MPV FWD BXW, CGGB | | GDS83063 | Drive Shaft | | 36 | | 50.7 | 58.5 | 501 | |
| | 2010.03-2015.05 | 5MT | F | R | MPV FWD BXW, CGGB | | GDS61063 | Drive Shaft | | 36 | | 50.7 | 58.5 | 751 | |
| | 2010.03-2015.05 | 5MT | F | L/R | MPV FWD BXW, CGGB | Chassis no. to:5J_AK601000/5J_A5038654 | GCO83027 | Outer Joint | | 36 | 30 | 50.7 | 58.5 | 47.5 | I |
| | 2010.03-2015.05 | | F | L/R | MPV FWD BXW, CGGB | | GCI83008 | Inner Joint | | | 33 | | | 32 | |
| 1.6 (66 kw) | 2010.03-2015.05 | 5MT | F | L | MPV FWD CAYB | | GDS61248 | Drive Shaft | | 36 | | 52 | 59 | 480 | |
| | 2010.03-2015.05 | 5MT | F | R | MPV FWD CAYB | | GDS61301 | Drive Shaft | | 36 | | 50.5 | 59 | 771 | |
| | 2010.03-2015.05 | 5MT | F | L/R | MPV FWD CAYB | | GCO83024 | Outer Joint | | 36 | 30 | 50.75 | 59 | 55.5 | I |
| | 2010.03-2015.05 | 5MT | F | L/R | MPV FWD CAYB | | GCI82447 | Inner Joint | | | 33 | | | 34 | |
| | 2010.03-2015.05 | MT | F | L | MPV FWD CAYB | | GDS61302 | Drive Shaft | | 36 | | 50.5 | 59 | 479 | |
| | 2010.03-2015.05 | MT | F | L | MPV FWD CAYB | | GCO54006 | Outer Joint | | 36 | 30 | 52 | 59 | 55.5 | I |
| | 2010.03-2015.05 | MT | F | L/R | MPV FWD CAYB | | GCI83011 | Inner Joint | | | 33 | | | 34 | |
| 1.6 (77 kw) | 2006.06-2010.07 | 5MT | F | L | MPV FWD BTS | | GDS54018 | Drive Shaft | | 36 | | 50.5 | 59 | 500 | |
| | 2006.06-2010.07 | 5MT | F | R | MPV FWD BTS | | GDS61305 | Drive Shaft | | 36 | | 50.5 | 59 | 757 | |
| | 2006.06-2010.07 | 5MT | F | L/R | MPV FWD BTS | | GCI82447 | Inner Joint | | | 33 | | | 34 | |
| | 2006.06-2010.07 | 5MT/6AT | F | L/R | MPV FWD BTS | | GCO83024 | Outer Joint | | 36 | 30 | 50.75 | 59 | 55.5 | I |
| | 2006.06-2010.07 | 6AT | F | L | MPV FWD BTS | | GDS61150 | Drive Shaft | | 36 | 26 | 52 | 75 | 557 | |
| | 2006.06-2010.07 | 6AT | F | R | MPV FWD BTS | | GDS61133 | Drive Shaft | | 36 | 26 | 52 | 75 | 859 | |
| | 2006.06-2010.07 | 6AT | F | L/R | MPV FWD BTS | Date from:2007.08 | GCI61011 | Inner Joint | | 26 | 32 | 31 | 68.5 | 85 | |
| | 2006.06-2010.07 | 6AT | F | L/R | MPV FWD BTS | Date to:2007.07 | GCI61039 | Inner Joint | | 26 | 22 | 31 | 68.5 | 88.5 | |
| | 2006.06-2010.07 | 6AT | F | L/R | MPV FWD BTS | Date from:2007.08 | GCI61050 | Inner Joint | | 26 | 32 | 31 | 68.5 | 89 | |
| | 2006.09-2015.05 | 5MT | F | L | MPV FWD BTS, CFNA | | GDS54018 | Drive Shaft | | 36 | | 50.5 | 59 | 500 | |
| | 2006.09-2015.05 | 5MT | F | R | MPV FWD BTS, CFNA | | GDS61305 | Drive Shaft | | 36 | | 50.5 | 59 | 757 | |
| | 2006.09-2015.05 | 5MT | F | L/R | MPV FWD BTS, CFNA | | GCI82447 | Inner Joint | | | 33 | | | 34 | |
| | 2006.09-2015.05 | 5MT/6AT | F | L/R | MPV FWD BTS, CFNA | Transmission:5MT;Transmission:6AT;Chassis no. to:5J_AK601000/5J_A5038654 | GCO83024 | Outer Joint | | 36 | 30 | 50.75 | 59 | 55.5 | I |
| | 2006.09-2015.05 | 6AT | F | L | MPV FWD BTS, CFNA | | GDS61150 | Drive Shaft | | 36 | 26 | 52 | 75 | 557 | |
| | 2006.09-2015.05 | 6AT | F | R | MPV FWD BTS, CFNA | Date from:2010.04;Chassis no. from:5J-B5006000 | GDS61133 | Drive Shaft | | 36 | 26 | 52 | 75 | 859 | |
| | 2006.09-2015.05 | 6AT | F | R | MPV FWD BTS, CFNA | Date From:2010.04;Chassis no. from:5J-B5006000 | GDS81524 | Drive Shaft | | 36 | 26 | 52 | 75 | 856 | |
| | 2006.09-2015.05 | 6AT | F | L | MPV FWD BTS, CFNA | | GCO54006 | Outer Joint | | 36 | 30 | 52 | 59 | 55.5 | I |
| | 2006.09-2015.05 | 6AT | F | L/R | MPV FWD BTS, CFNA | Chassis no. from:5J-B5006000,Date from:2010.04 | GCO61074 | Outer Joint | | 36 | 30 | 52 | 75 | 55.5 | I |
| | 2006.09-2015.05 | 6AT | F | L/R | MPV FWD BTS, CFNA | Date from:2010.04,Chassis no. from:5J-B5006000,Type:UF100 | GCO83079 | Outer Joint | | 36 | 30 | 52 | 75 | 55.5 | I |
| | 2006.09-2015.05 | 6AT | F | L/R | MPV FWD BTS, CFNA | Date from:2007.08,Chassis no. to:5J_AK601000/5J_A5038654 | GCI61011 | Inner Joint | | 26 | 32 | 31 | 68.5 | 85 | |
| | 2006.09-2015.05 | 6AT | F | L/R | MPV FWD BTS, CFNA | Date to:2007.07,Chassis no. from:5J_B5006000/5J_B5006621/5J_B8600000 | GCI61039 | Inner Joint | | 26 | 22 | 31 | 68.5 | 88.5 | |
| | 2006.09-2015.05 | 6AT | F | L/R | MPV FWD BTS, CFNA | Date from:2007.08,Chassis no. to:5J_AK601000/5J_A5038654 | GCI61050 | Inner Joint | | 26 | 32 | 31 | 68.5 | 89 | |
| | 2006.09-2015.05 | MT | F | R | MPV FWD BTS, CFNA | | GDS61063 | Drive Shaft | | 36 | | 50.7 | 58.5 | 751 | |
| | 2010.03-2015.05 | 5MT | F | L | MPV FWD CAYC | | GDS61248 | Drive Shaft | | 36 | | 52 | 59 | 480 | |
| | 2010.03-2015.05 | 5MT | F | R | MPV FWD CAYC | | GDS61301 | Drive Shaft | | 36 | | 50.5 | 59 | 771 | |
| | 2010.03-2015.05 | 5MT | F | L/R | MPV FWD CAYC | | GCO83024 | Outer Joint | | 36 | 30 | 50.75 | 59 | 55.5 | I |
| | 2010.03-2015.05 | 5MT | F | L/R | MPV FWD CAYC | | GCI82447 | Inner Joint | | | 33 | | | 34 | |
| | 2010.03-2015.05 | MT | F | L | MPV FWD CAYC | | GDS61302 | Drive Shaft | | 36 | | 50.5 | 59 | 479 | |
| | 2010.03-2015.05 | MT | F | L | MPV FWD CAYC | | GCO54006 | Outer Joint | | 36 | 30 | 52 | 59 | 55.5 | I |
| | 2010.03-2015.05 | MT | F | L/R | MPV FWD CAYC | | GCI83011 | Inner Joint | | | 33 | | | 34 | |
| 1.9 (74 kw) | 2006.03-2006.05 | 5MT | F | L | MPV FWD AXR | | GDS61098 | Drive Shaft | | 36 | | 50.5 | 59 | 472 | |
| | 2006.03-2006.05 | 5MT | F | R | MPV FWD AXR | | GDS61099 | Drive Shaft | | 36 | | 50.5 | 59 | 759 | |
| | 2006.03-2006.05 | 5MT | F | L/R | MPV FWD AXR | | GCO83024 | Outer Joint | | 36 | 30 | 50.75 | 59 | 55.5 | I |
| | 2006.03-2006.05 | | F | L | MPV FWD AXR | | GCO54006 | Outer Joint | | 36 | 30 | 52 | 59 | 55.5 | I |
| | 2006.03-2006.05 | | F | L/R | MPV FWD AXR | | GCI61006 | Inner Joint | | | 30 | | | 57.6 | |
| 1.9 (77 kw) | 2006.09-2010.03 | 5MT | F | L | MPV FWD BLS, BSW | | GDS61098 | Drive Shaft | | 36 | | 50.5 | 59 | 472 | |
| | 2006.09-2010.03 | 5MT | F | R | MPV FWD BLS, BSW | | GDS61099 | Drive Shaft | | 36 | | 50.5 | 59 | 759 | |
| | 2006.09-2010.03 | 5MT | F | L/R | MPV FWD BLS, BSW | | GCO83024 | Outer Joint | | 36 | 30 | 50.75 | 59 | 55.5 | I |
| | 2006.09-2010.03 | MT | F | L | MPV FWD BLS, BSW | | GCO54006 | Outer Joint | | 36 | 30 | 52 | 59 | 55.5 | I |
| | 2006.09-2010.03 | | F | L/R | MPV FWD BLS, BSW | | GCI61006 | Inner Joint | | | 30 | | | 57.6 | |
| **Roomster Praktik** | | | | | | | | | | | | | | | |
| 1.2 (51 kw) | 2007.03-2015.05 | 5MT | F | L | Estate Van FWD BZG;CGPA | | GDS83063 | Drive Shaft | | 36 | | 50.7 | 58.5 | 501 | |
| | 2007.03-2015.05 | 5MT | F | R | Estate Van FWD BZG;CGPA | | GDS61063 | Drive Shaft | | 36 | | 50.7 | 58.5 | 751 | |
| | 2007.03-2015.05 | 5MT | F | L/R | Estate Van FWD BZG;CGPA | Chassis no. to:5J_AK601000/5J_A5038654 | GCO83027 | Outer Joint | | 36 | 30 | 50.7 | 58.5 | 47.5 | I |
| | 2007.03-2015.05 | | F | L/R | Estate Van FWD BZG;CGPA | | GCI83008 | Inner Joint | | | 33 | | | 32 | |
| 1.2 (55 kw) | 2010.03-2015.05 | 5MT | F | L | Estate Van FWD CFWA | | GDS61248 | Drive Shaft | | 36 | | 52 | 59 | 480 | |
| | 2010.03-2015.05 | 5MT | F | R | Estate Van FWD CFWA | | GDS61301 | Drive Shaft | | 36 | | 50.5 | 59 | 771 | |
| | 2010.03-2015.05 | 5MT | F | L/R | Estate Van FWD CFWA | | GCO83024 | Outer Joint | | 36 | 30 | 50.75 | 59 | 55.5 | I |
| | 2010.03-2015.05 | 5MT | F | L/R | Estate Van FWD CFWA | | GCI82447 | Inner Joint | | | 33 | | | 34 | |
| | 2010.03-2015.05 | MT | F | L | Estate Van FWD CFWA | | GDS61302 | Drive Shaft | | 36 | | 50.5 | 59 | 479 | |
| | 2010.03-2015.05 | MT | F | L | Estate Van FWD CFWA | | GCO54006 | Outer Joint | | 36 | 30 | 52 | 59 | 55.5 | I |
| | 2010.03-2015.05 | MT | F | L/R | Estate Van FWD CFWA | | GCI83006 | Inner Joint | | | 33 | | | 34 | |
| | 2010.03-2015.05 | MT | F | L/R | Estate Van FWD CFWA | | GCI83011 | Inner Joint | | | 33 | | | 34 | |

| | YEAR | TRANSM. | F/R | L/R | BODY STYLE & DRIVE TYPE & ENGINE | REMARKS | G-AP Ref. | PRODUCT | ABS | Technical Specifications A | B | C | H | L | P |
|---|---|---|---|---|---|---|---|---|---|---|---|---|---|---|---|
| **SKODA** | | | | | | | | | | | | | | | |
| **Roomster Praktik** | | | | | | | | | | | | | | | |
| 1.2 (63 kw) | 2010.03-2015.05 | 5MT | F | L | Estate Van FWD CBZA | | GDS54018 | Drive Shaft | | 36 | | 50.5 | 59 | 500 | |
| | 2010.03-2015.05 | 5MT | F | R | Estate Van FWD CBZA | | GDS61305 | Drive Shaft | | 36 | | 50.5 | 59 | 757 | |
| | 2010.03-2015.05 | 5MT | F | L/R | Estate Van FWD CBZA | | GCO83024 | Outer Joint | | 36 | 30 | 50.75 | 59 | 55.5 | I |
| | 2010.03-2015.05 | 5MT | F | L/R | Estate Van FWD CBZA | | GCI82447 | Inner Joint | | | 33 | | | 34 | |
| | 2010.03-2015.05 | AT | F | L | Estate Van FWD CBZA | | GDS61302 | Drive Shaft | | 36 | | 50.5 | 59 | 479 | |
| | 2010.03-2015.05 | MT | F | L/R | Estate Van FWD CBZA | | GCI83006 | Inner Joint | | | 33 | | | 34 | |
| | 2010.03-2015.05 | MT | F | L/R | Estate Van FWD CBZA | | GCI83011 | Inner Joint | | | 33 | | | 34 | |
| 1.4 (51 kw) | 2007.03-2010.03 | 5MT | F | L | Estate Van FWD BNM | | GDS61078 | Drive Shaft | | 36 | | 50.7 | 58.5 | 501 | |
| | 2007.03-2010.03 | 5MT | F | R | Estate Van FWD BNM | | GDS61223 | Drive Shaft | | 36 | | 52 | 59 | 757 | |
| | 2007.03-2010.03 | 5MT | F | L/R | Estate Van FWD BNM | | GCO83024 | Outer Joint | | 36 | 30 | 50.75 | 59 | 55.5 | I |
| | 2007.03-2010.03 | MT | F | R | Estate Van FWD BNM | | GDS61063 | Drive Shaft | | 36 | | 50.7 | 58.5 | 751 | |
| | 2007.03-2010.03 | MT | F | R | Estate Van FWD BNM | | GCO54006 | Outer Joint | | 36 | 30 | 52 | 59 | 55.5 | I |
| | 2007.03-2010.03 | | F | L/R | Estate Van FWD BNM | | GCI83008 | Inner Joint | | | 33 | | | 32 | |
| 1.4 (59 kw) | 2007.03-2010.03 | 5MT | F | L | Estate Van FWD BNV;BMS | | GDS61098 | Drive Shaft | | 36 | | 50.5 | 59 | 472 | |
| | 2007.03-2010.03 | 5MT | F | R | Estate Van FWD BNV;BMS | | GDS61099 | Drive Shaft | | 36 | | 50.5 | 59 | 759 | |
| | 2007.03-2010.03 | 5MT | F | L/R | Estate Van FWD BNV;BMS | | GCO83024 | Outer Joint | | 36 | 30 | 50.75 | 59 | 55.5 | I |
| | 2007.03-2010.03 | | F | L | Estate Van FWD BNV;BMS | | GCO54006 | Outer Joint | | 36 | 30 | 52 | 59 | 55.5 | I |
| | 2007.03-2010.03 | | F | L/R | Estate Van FWD BNV;BMS | | GCI61006 | Inner Joint | | | 30 | | | 57.6 | |
| 1.4 (63 kw) | 2007.03-2015.05 | 5MT | F | L | Estate Van FWD BXW;CGGB | | GDS83063 | Drive Shaft | | 36 | | 50.7 | 58.5 | 501 | |
| | 2007.03-2015.05 | 5MT | F | R | Estate Van FWD BXW;CGGB | | GDS61063 | Drive Shaft | | 36 | | 50.7 | 58.5 | 751 | |
| | 2007.03-2015.05 | 5MT | F | L/R | Estate Van FWD BXW;CGGB | Chassis no. to:5J_AK601000/5J_A5038654 | GCO83027 | Outer Joint | | 36 | 30 | 50.7 | 58.5 | 47.5 | I |
| | 2007.03-2015.05 | | F | L/R | Estate Van FWD BXW;CGGB | | GCI83008 | Inner Joint | | | 33 | | | 32 | |
| 1.6 (66 kw) | 2010.03-2015.05 | 5MT | F | L | Estate Van FWD CAYB | | GDS61248 | Drive Shaft | | 36 | | 52 | 59 | 480 | |
| | 2010.03-2015.05 | 5MT | F | R | Estate Van FWD CAYB | | GDS61301 | Drive Shaft | | 36 | | 50.5 | 59 | 771 | |
| | 2010.03-2015.05 | 5MT | F | L/R | Estate Van FWD CAYB | | GCO83024 | Outer Joint | | 36 | 30 | 50.75 | 59 | 55.5 | I |
| | 2010.03-2015.05 | 5MT | F | L/R | Estate Van FWD CAYB | | GCI82447 | Inner Joint | | | 33 | | | 34 | |
| | 2010.03-2015.05 | MT | F | L | Estate Van FWD CAYB | | GDS61302 | Drive Shaft | | 36 | | 50.5 | 59 | 479 | |
| | 2010.03-2015.05 | MT | F | L | Estate Van FWD CAYB | | GCO54006 | Outer Joint | | 36 | 30 | 52 | 59 | 55.5 | I |
| | 2010.03-2015.05 | MT | F | L/R | Estate Van FWD CAYB | | GCI53002 | Inner Joint | | | 33 | | | 34 | |
| | 2010.03-2015.05 | MT | F | L/R | Estate Van FWD CAYB | | GCI83006 | Inner Joint | | | 33 | | | 34 | |
| | 2010.03-2015.05 | | F | L/R | Estate Van FWD CAYB | | GCI83011 | Inner Joint | | | 33 | | | 34 | |
| **Scala** | | | | | | | | | | | | | | | |
| 1.0 (66 kw) | 2019.11- | 6MT | F | L | Hatchback FWD DBYA | | GDS84563 | Drive Shaft | | 36 | | 52 | 64.5 | 506 | |
| | 2019.11- | 6MT | F | R | Hatchback FWD DBYA | | GDS84562 | Drive Shaft | | 36 | | 52 | 64.5 | 799 | |
| | 2019.11- | 6MT | F | L | Hatchback FWD DBYA | | GCO82548 | Outer Joint | | 36 | 27 | 52 | 64.5 | 65 | M |
| | 2019.11- | 6MT | F | R | Hatchback FWD DBYA | | GCO81744 | Outer Joint | | 36 | 30 | 52 | 64.5 | 55.5 | M |
| | 2019.11- | 6MT | F | L | Hatchback FWD DBYA | | GCI81689 | Inner Joint | | | 32 | | | 89 | |
| | 2019.11- | 6MT | F | R | Hatchback FWD DBYA | | GCI81690 | Inner Joint | | | 30 | | | 89 | |
| 1.0 (70 kw) | 2019.02- | 5MT | F | L | Hatchback FWD DKLA;DLAC;DUSB | | GDS84011 | Drive Shaft | | 36 | 33 | 52 | 64.5 | 620 | |
| | 2019.02- | 5MT | F | R | Hatchback FWD DKLA;DLAC;DUSB | | GDS57823 | Drive Shaft | | 36 | 33 | 52 | 64.5 | 900 | |
| | 2019.02- | 5MT | F | L/R | Hatchback FWD DKLA;DLAC;DUSB | | GCI82449 | Inner Joint | | 33 | 30 | 39.9 | 58.5 | 105 | |
| | 2019.02- | 5MT/6MT | F | L/R | Hatchback FWD DKLA;DLAC;DUSB | | GCO81744 | Outer Joint | | 36 | 30 | 52 | 64.5 | 55.5 | M |
| 1.0 (81 kw) | 2020.08- | 6MT | F | L | Hatchback FWD DLAA | | GDS84563 | Drive Shaft | | 36 | | 52 | 64.5 | 506 | |
| | 2020.08- | 6MT | F | R | Hatchback FWD DLAA | | GDS82233 | Drive Shaft | | 36 | | 52 | 64.5 | 778 | |
| | 2020.08- | 6MT | F | L | Hatchback FWD DLAA | | GCO82548 | Outer Joint | | 36 | 27 | 52 | 64.5 | 65 | M |
| | 2020.08- | 6MT | F | R | Hatchback FWD DLAA | | GCO81744 | Outer Joint | | 36 | 30 | 52 | 64.5 | 55.5 | M |
| | 2020.08- | 6MT | F | R | Hatchback FWD DLAA | | GCI81690 | Inner Joint | | | 30 | | | 89 | |
| | 2020.08- | 7DCT | F | R | Hatchback FWD DLAA | | GDS57885 | Drive Shaft | | 36 | | 52 | 64.5 | 765 | |
| | 2020.08- | 7DCT | F | R | Hatchback FWD DLAA | | GCO81743 | Outer Joint | | 36 | 33 | 52 | 64.5 | 59 | I |
| | 2020.08- | 7DCT | F | R | Hatchback FWD DLAA | | GCI81689 | Inner Joint | | | 32 | | | 89 | |
| 1.0 (85 kw) | 2019.02- | 6MT | F | L | Hatchback FWD DKRF;DKJA;DXUA;DUSA | | GDS84563 | Drive Shaft | | 36 | | 52 | 64.5 | 506 | |
| | 2019.02- | 6MT | F | R | Hatchback FWD DKRF;DKJA;DXUA;DUSA | | GDS84562 | Drive Shaft | | 36 | | 52 | 64.5 | 799 | |
| | 2019.02- | 6MT | F | L/R | Hatchback FWD DKRF;DKJA;DXUA;DUSA | | GCO81744 | Outer Joint | | 36 | 30 | 52 | 64.5 | 55.5 | M |
| | 2019.02- | 6MT | F | L/R | Hatchback FWD DKRF;DKJA;DXUA;DUSA | | GCI81690 | Inner Joint | | | 30 | | | 89 | |
| | 2019.02- | 7DCT | F | L | Hatchback FWD DKRF;DKJA;DXUA;DUSA | | GDS84317 | Drive Shaft | | 36 | | 52 | 64.5 | 500 | |
| | 2019.02- | 7DCT | F | R | Hatchback FWD DKRF;DKJA;DXUA;DUSA | | GDS82233 | Drive Shaft | | 36 | | 52 | 64.5 | 778 | |
| | 2019.02- | 7DCT | F | L | Hatchback FWD DKRF;DKJA;DXUA;DUSA | | GCO82548 | Outer Joint | | 36 | 27 | 52 | 64.5 | 65 | M |
| | 2019.02- | 7DCT | F | R | Hatchback FWD DKRF;DKJA;DXUA;DUSA | | GCO81743 | Outer Joint | | 36 | 33 | 52 | 64.5 | 59 | I |
| | 2019.02- | 7DCT | F | L/R | Hatchback FWD DKRF;DKJA;DXUA;DUSA | | GCI81689 | Inner Joint | | | 32 | | | 89 | |
| 1.5 (110 kw) | 2019.02- | 6MT | F | L | Hatchback FWD DADA;DPCA;DXDB | | GDS58319 | Drive Shaft | | 36 | | 52 | 64.5 | 526 | |
| | 2019.02- | 6MT | F | L | Hatchback FWD DADA;DPCA;DXDB | For Engine code:DXDB | GCI81689 | Inner Joint | | | 32 | | | 89 | |
| | 2019.02- | 6MT | F | R | Hatchback FWD DADA;DPCA;DXDB | For Engine code:DXDB | GCI82447 | Inner Joint | | | 33 | | | 34 | |
| | 2019.02- | 7AT/6MT | F | L/R | Hatchback FWD DADA;DPCA;DXDB | | GCO82548 | Outer Joint | | 36 | 27 | 52 | 64.5 | 65 | M |
| | 2019.02- | 7DCT | F | L | Hatchback FWD DADA;DPCA;DXDB | | GCI83016 | Inner Joint | | | 28 | | | 32 | |
| 1.6 (70 kw) | 2019.09- | 5MT/6MT | F | R | Hatchback FWD DGTD | | GCO81743 | Outer Joint | | 36 | 33 | 52 | 64.5 | 59 | I |

| | YEAR | TRANSM. | F/R | L/R | BODY STYLE & DRIVE TYPE & ENGINE | REMARKS | G-AP Ref. | PRODUCT | ABS | Technical Specifications A | B | C | H | L | P |
|---|---|---|---|---|---|---|---|---|---|---|---|---|---|---|---|
| **SKODA** | | | | | | | | | | | | | | | |
| **Scala** | | | | | | | | | | | | | | | |
| 1.6 (70 kw) | 2019.09- | 6MT | F | L | Hatchback FWD DGTD | | GDS84235 | Drive Shaft | | 36 | | 52 | 64.5 | 523 | |
| | 2019.09- | 6MT | F | R | Hatchback FWD DGTD | | GDS84315 | Drive Shaft | | 36 | | 52 | 64.5 | 825 | |
| | 2019.09- | 6MT | F | L | Hatchback FWD DGTD | | GCI82456 | Inner Joint | | | 28 | | | 32 | |
| | 2019.09- | 6MT | F | R | Hatchback FWD DGTD | | GCI82447 | Inner Joint | | | 33 | | | 34 | |
| | 2019.09- | 6MT/7DCT | F | L | Hatchback FWD DGTD | | GCO82548 | Outer Joint | | 36 | 27 | 52 | 64.5 | 65 | M |
| 1.6 (81 kw) | 2019.02- | 5MT | F | L/R | Hatchback FWD CWVA;DWYA | | GCO83024 | Outer Joint | | 36 | 30 | 50.75 | 59 | 55.5 | I |
| | 2019.02- | 5MT | F | L/R | Hatchback FWD CWVA;DWYA | | GCI82447 | Inner Joint | | | 33 | | | 34 | |
| | 2019.02- | 6AT | F | L | Hatchback FWD CWVA;DWYA | | GDS84613 | Drive Shaft | | 36 | 26 | 52 | 64.5 | 597 | |
| | 2019.02- | 6AT | F | R | Hatchback FWD CWVA;DWYA | Date to:2019.06 | GDS84612 | Drive Shaft | | 36 | 26 | 52 | 64.5 | 891 | |
| | 2019.02- | 6AT | F | R | Hatchback FWD CWVA;DWYA | Date from:2019.07 | GDS84614 | Drive Shaft | | 36 | 26 | 52 | 64.5 | 895 | |
| | 2019.02- | 6AT | F | R | Hatchback FWD CWVA;DWYA | Date to:2019.06 | GCO81744 | Outer Joint | | 36 | 30 | 52 | 64.5 | 55.5 | M |
| | 2019.02- | 6AT | F | L/R | Hatchback FWD CWVA;DWYA | | GCO81743 | Outer Joint | | 36 | 33 | 52 | 64.5 | 59 | I |
| | 2019.02- | 6AT | F | L/R | Hatchback FWD CWVA;DWYA | | GCI61011 | Inner Joint | | 26 | 32 | 31 | 68.5 | 85 | |
| | 2019.02- | 6AT | F | L/R | Hatchback FWD CWVA;DWYA | | GCI61050 | Inner Joint | | 26 | 32 | 31 | 68.5 | 89 | |
| 1.6 (85 kw) | 2019.02- | 6MT | F | R | Hatchback FWD DGTA | | GDS84315 | Drive Shaft | | 36 | | 52 | 64.5 | 825 | |
| | 2019.02- | 6MT | F | L | Hatchback FWD DGTA | | GCI82456 | Inner Joint | | | 28 | | | 32 | |
| | 2019.02- | 6MT | F | L/R | Hatchback FWD DGTA | | GCI83011 | Inner Joint | | | 33 | | | 34 | |
| | 2019.02- | 6MT/7DCT | F | R | Hatchback FWD DGTA | | GCO81743 | Outer Joint | | 36 | 33 | 52 | 64.5 | 59 | I |
| | 2019.02- | 6MT/7DCT | F | R | Hatchback FWD DGTA | | GCI82447 | Inner Joint | | | 33 | | | 34 | |
| | 2019.02- | 7DCT | F | R | Hatchback FWD DGTA | | GDS84337 | Drive Shaft | | 36 | | 52 | 64.5 | 812 | |
| | 2019.02- | 7DCT | F | L | Hatchback FWD DGTA | | GCI83016 | Inner Joint | | | 28 | | | 32 | |
| | 2019.02- | 7DCT/6MT | F | L | Hatchback FWD DGTA | | GDS84235 | Drive Shaft | | 36 | | 52 | 64.5 | 523 | |
| | 2019.02- | 7DCT/6MT | F | L | Hatchback FWD DGTA | | GCO82548 | Outer Joint | | 36 | 27 | 52 | 64.5 | 65 | M |
| **Superb** | | | | | | | | | | | | | | | |
| 1.4 (92 kw) | 2008.07-2015.05 | 6MT | F | L | Hatchback FWD CAXC | | GDS61201 | Drive Shaft | | 36 | | 59.5 | 40.5 | 535 | |
| | 2008.07-2015.05 | 6MT | F | R | Hatchback FWD CAXC | | GCO83037 | Outer Joint | | 36 | 30 | 59.5 | 40.5 | 56 | I |
| | 2008.07-2015.05 | 6MT | F | L/R | Hatchback FWD CAXC | | GCI82447 | Inner Joint | | | 33 | | | 34 | |
| | 2008.07-2015.05 | MT | F | R | Hatchback FWD CAXC | | GDS61096 | Drive Shaft | | 36 | | 59.5 | 40.5 | 799 | |
| | 2008.07-2015.05 | MT | F | L/R | Hatchback FWD CAXC | | GCI83006 | Inner Joint | | | 33 | | | 34 | |
| | 2008.07-2015.05 | MT | F | L/R | Hatchback FWD CAXC | | GCI83011 | Inner Joint | | | 33 | | | 34 | |
| | 2009.10-2015.05 | 6MT | F | L | Estate FWD CAXC | | GDS61201 | Drive Shaft | | 36 | | 59.5 | 40.5 | 535 | |
| | 2009.10-2015.05 | 6MT | F | R | Estate FWD CAXC | | GCO83037 | Outer Joint | | 36 | 30 | 59.5 | 40.5 | 56 | I |
| | 2009.10-2015.05 | 6MT | F | L/R | Estate FWD CAXC | | GCI82447 | Inner Joint | | | 33 | | | 34 | |
| | 2009.10-2015.05 | MT | F | R | Estate FWD CAXC | | GDS61096 | Drive Shaft | | 36 | | 59.5 | 40.5 | 799 | |
| | 2009.10-2015.05 | MT | F | L/R | Estate FWD CAXC | | GCI83006 | Inner Joint | | | 33 | | | 34 | |
| | 2009.10-2015.05 | MT | F | L/R | Estate FWD CAXC | | GCI83011 | Inner Joint | | | 33 | | | 34 | |
| | 2015.03-2024.06 | 6MT | F | L | Estate FWD CZCA | | GDS82391 | Drive Shaft | | 36 | | 59.5 | 40 | 528 | |
| | 2015.03-2024.06 | 6MT | F | R | Estate FWD CZCA | | GDS82390 | Drive Shaft | | 36 | | 59.5 | 40 | 830 | |
| | 2015.03-2024.06 | 6MT | F | L/R | Estate FWD CZCA | | GCO81355 | Outer Joint | | 36 | 34 | 59.5 | 40 | 59.5 | M |
| | 2015.03-2024.06 | 6MT | F | L/R | Estate FWD CZCA | | GCI81398 | Inner Joint | | | 34 | | | 34 | |
| | 2015.03-2024.06 | 6MT | F | L | Hatchback FWD CZCA | | GDS82391 | Drive Shaft | | 36 | | 59.5 | 40 | 528 | |
| | 2015.03-2024.06 | 6MT | F | R | Hatchback FWD CZCA | | GDS82390 | Drive Shaft | | 36 | | 59.5 | 40 | 830 | |
| | 2015.03-2024.06 | 6MT | F | L/R | Hatchback FWD CZCA | | GCO81355 | Outer Joint | | 36 | 34 | 59.5 | 40 | 59.5 | M |
| | 2015.03-2024.06 | 6MT | F | L/R | Hatchback FWD CZCA | | GCI81398 | Inner Joint | | | 34 | | | 34 | |
| | 2015.03-2024.06 | MT | F | | Hatchback FWD CZCA | | GCO83100 | Outer Joint | | 36 | 33 | 59.5 | 38 | 56 | I |
| 1.4 (110 kw) | 2015.03-2024.06 | 6MT | F | L | Estate 4WD CZEA | | GDS81896 | Drive Shaft | | 36 | | 59.5 | 40 | 500 | |
| | 2015.03-2024.06 | 6MT | F | R | Estate 4WD CZEA | | GDS82352 | Drive Shaft | | 36 | | 59.5 | 40 | 614 | |
| | 2015.03-2024.06 | 6MT | F | L/R | Estate 4WD CZEA | | GCO83101 | Outer Joint | | 36 | 27 | 59.5 | 40 | 65 | M |
| | 2015.03-2024.06 | 6MT | F | L/R | Estate 4WD CZEA | | GCI61069 | Inner Joint | | | 28 | | | 32 | |
| | 2015.03-2024.06 | | F | L/R | Estate 4WD CZEA | | GCI83016 | Inner Joint | | | 28 | | | 32 | |
| | 2015.03-2024.06 | 6MT | R | L | Estate 4WD CZEA | Date from:2015.06 | GDS61331 | Drive Shaft | | 36 | | 59.5 | 40 | 606 | |
| | 2015.03-2024.06 | 6MT | R | L | Estate 4WD CZEA | Date to:2015.05 | GDS61334 | Drive Shaft | | 36 | | 59.5 | 40 | 598 | |
| | 2015.03-2024.06 | 6MT | R | R | Estate 4WD CZEA | Date from:2015.06 | GDS61332 | Drive Shaft | | 36 | | 59.5 | 40 | 650 | |
| | 2015.03-2024.06 | 6MT | R | R | Estate 4WD CZEA | Date to:2015.05 | GDS61335 | Drive Shaft | | 36 | | 59.5 | 40 | 638 | |
| | 2015.03-2024.06 | 6MT | R | R | Estate 4WD CZEA | | GCI35026 | Outer Joint | | 36 | 33 | 59.5 | 40 | 61 | |
| | 2015.03-2024.06 | 6MT | R | R | Estate 4WD CZEA | | GCI61103 | Inner Joint | | | 33 | | | 32 | |
| | 2015.03-2024.06 | 6MT | F | R | Estate FWD CZDA;CZEA | For Engine code:CZDA | GDS81890 | Drive Shaft | | 36 | | 59.5 | 40 | 818 | |
| | 2015.03-2024.06 | 6MT | F | R | Estate FWD CZDA;CZEA | For Engine Code:CZEA | GDS81987 | Drive Shaft | | 36 | | 59.5 | 40 | 817 | |
| | 2015.03-2024.06 | 6MT | F | L/R | Estate FWD CZDA;CZEA | | GCO83101 | Outer Joint | | 36 | 27 | 59.5 | 40 | 65 | M |
| | 2015.03-2024.06 | 6MT | F | L/R | Estate FWD CZDA;CZEA | | GCI61069 | Inner Joint | | | 28 | | | 32 | |
| | 2015.03-2024.06 | 7AT | F | L | Estate FWD CZDA;CZEA | | GCO83101 | Outer Joint | | 36 | 27 | 59.5 | 40 | 65 | M |
| | 2015.03-2024.06 | 7AT | F | L | Estate FWD CZDA;CZEA | | GCI61069 | Inner Joint | | | 28 | | | 32 | |
| | 2015.03-2024.06 | 7AT/6MT | F | L | Estate FWD CZDA;CZEA | | GDS82387 | Drive Shaft | | 36 | | 59.5 | 40 | 523 | |
| | 2015.03-2024.06 | 7DCT | F | R | Estate FWD CZDA;CZEA | For Engine code:CZDA | GDS61101 | Drive Shaft | | 36 | | 59.5 | 40 | 803 | |
| | 2015.03-2024.06 | 7DCT | F | R | Estate FWD CZDA;CZEA | For Engine Code:CZEA | GDS82386 | Drive Shaft | | 36 | | 59.5 | 40 | 806 | |

| | YEAR | TRANSM. | F/R | L/R | BODY STYLE & DRIVE TYPE & ENGINE | REMARKS | G-AP Ref. | PRODUCT | ABS | Technical Specifications | | | | | |
|---|---|---|---|---|---|---|---|---|---|---|---|---|---|---|---|
| | | | | | | | | | | A | B | C | H | L | P |
| **SKODA** | | | | | | | | | | | | | | | |
| **Superb** | | | | | | | | | | | | | | | |
| 1.4 (110 kw) | 2015.03-2024.06 | 7DCT | F | R | Estate FWD CZDA;CZEA | | GCO83101 | Outer Joint | | 36 | 27 | 59.5 | 40 | 65 | M |
| | 2015.03-2024.06 | 7DCT | F | R | Estate FWD CZDA;CZEA | | GCI61069 | Inner Joint | | | 28 | | | 32 | |
| | 2015.03-2024.06 | | F | L/R | Estate FWD CZDA;CZEA | | GCI83016 | Inner Joint | | | 28 | | | 32 | |
| | 2015.03-2024.06 | 6MT | F | L | Hatchback 4WD CZEA | | GDS81896 | Drive Shaft | | 36 | | 59.5 | 40 | 500 | |
| | 2015.03-2024.06 | 6MT | F | R | Hatchback 4WD CZEA | | GDS82352 | Drive Shaft | | 36 | | 59.5 | 40 | 614 | |
| | 2015.03-2024.06 | 6MT | F | L/R | Hatchback 4WD CZEA | | GCO83101 | Outer Joint | | 36 | 27 | 59.5 | 40 | 65 | M |
| | 2015.03-2024.06 | 6MT | F | L/R | Hatchback 4WD CZEA | | GCI61069 | Inner Joint | | | 28 | | | 32 | |
| | 2015.03-2024.06 | | F | L/R | Hatchback 4WD CZEA | | GCI83016 | Inner Joint | | | 28 | | | 32 | |
| | 2015.03-2024.06 | 6MT | R | L | Hatchback 4WD CZEA | | GDS61331 | Drive Shaft | | 36 | | 59.5 | 40 | 606 | |
| | 2015.03-2024.06 | 6MT | R | R | Hatchback 4WD CZEA | | GDS61332 | Drive Shaft | | 36 | | 59.5 | 40 | 650 | |
| | 2015.03-2024.06 | 6MT | R | L/R | Hatchback 4WD CZEA | | GCI35026 | Outer Joint | | 36 | 33 | 59.5 | 40 | 61 | |
| | 2015.03-2024.06 | 6MT | R | L/R | Hatchback 4WD CZEA | | GCI61103 | Inner Joint | | | 33 | | | 32 | |
| | 2015.03-2024.06 | 6MT | F | R | Hatchback FWD CZDA;CZEA | For Engine code:CZDA | GDS81890 | Drive Shaft | | 36 | | 59.5 | 40 | 818 | |
| | 2015.03-2024.06 | 6MT | F | R | Hatchback FWD CZDA;CZEA | For Engine Code:CZEA | GDS81987 | Drive Shaft | | 36 | | 59.5 | 40 | 817 | |
| | 2015.03-2024.06 | 6MT | F | L/R | Hatchback FWD CZDA;CZEA | | GCO83101 | Outer Joint | | 36 | 27 | 59.5 | 40 | 65 | M |
| | 2015.03-2024.06 | 6MT | F | L/R | Hatchback FWD CZDA;CZEA | | GCI61069 | Inner Joint | | | 28 | | | 32 | |
| | 2015.03-2024.06 | 7AT | F | L | Hatchback FWD CZDA;CZEA | | GCO83101 | Outer Joint | | 36 | 27 | 59.5 | 40 | 65 | M |
| | 2015.03-2024.06 | 7AT | F | L | Hatchback FWD CZDA;CZEA | | GCI61069 | Inner Joint | | | 28 | | | 32 | |
| | 2015.03-2024.06 | 7AT/6MT | F | L | Hatchback FWD CZDA;CZEA | | GDS82387 | Drive Shaft | | 36 | | 59.5 | 40 | 523 | |
| | 2015.03-2024.06 | 7DCT | F | R | Hatchback FWD CZDA;CZEA | For Engine code:CZDA | GDS61101 | Drive Shaft | | 36 | | 59.5 | 40 | 803 | |
| | 2015.03-2024.06 | 7DCT | F | R | Hatchback FWD CZDA;CZEA | For Engine Code:CZEA | GDS82386 | Drive Shaft | | 36 | | 59.5 | 40 | 806 | |
| | 2015.03-2024.06 | 7DCT | F | R | Hatchback FWD CZDA;CZEA | | GCO83101 | Outer Joint | | 36 | 27 | 59.5 | 40 | 65 | M |
| | 2015.03-2024.06 | 7DCT | F | R | Hatchback FWD CZDA;CZEA | | GCI61069 | Inner Joint | | | 28 | | | 32 | |
| | 2015.03-2024.06 | | F | L/R | Hatchback FWD CZDA;CZEA | | GCI83016 | Inner Joint | | | 28 | | | 32 | |
| 1.4 (160 kw) | 2019.08-2024.06 | 6AT | F | L/R | Estate FWD DGEB | | GCO83101 | Outer Joint | | 36 | 27 | 59.5 | 40 | 65 | M |
| | 2019.08-2024.06 | 6AT | F | L | Estate FWD DGEB | | GCI81158 | Inner Joint | | 37 | 34 | 34.5 | 65.5 | 83 | |
| | 2019.08-2024.06 | 6AT | F | R | Estate FWD DGEB | | GCI82108 | Inner Joint | | 37 | 34 | 40 | 77.5 | 103.5 | |
| | 2019.08-2024.06 | 6DCT | F | L | Estate FWD DGEB | | GDS81265 | Drive Shaft | | 36 | 37 | 59.5 | 40 | 557 | |
| | 2019.08-2024.06 | 6DCT | F | R | Estate FWD DGEB | | GDS83613 | Drive Shaft | | 36 | 37 | 59.5 | 40 | 921 | |
| | 2019.08-2024.06 | 6AT | F | L/R | Hatchback FWD DGEB | | GCO83101 | Outer Joint | | 36 | 27 | 59.5 | 40 | 65 | M |
| | 2019.08-2024.06 | 6AT | F | L | Hatchback FWD DGEB | | GCI81158 | Inner Joint | | 37 | 34 | 34.5 | 65.5 | 83 | |
| | 2019.08-2024.06 | 6AT | F | R | Hatchback FWD DGEB | | GCI82108 | Inner Joint | | 37 | 34 | 40 | 77.5 | 103.5 | |
| | 2019.08-2024.06 | 6DCT | F | L | Hatchback FWD DGEB | | GDS81265 | Drive Shaft | | 36 | 37 | 59.5 | 40 | 557 | |
| | 2019.08-2024.06 | 6DCT | F | R | Hatchback FWD DGEB | | GDS83613 | Drive Shaft | | 36 | 37 | 59.5 | 40 | 921 | |
| 1.5 (110 kw) | 2015.03-2024.06 | 6MT | F | L | Estate FWD DADA;DPCA | For Engine code:DPCA | GDS61282 | Drive Shaft | | 36 | | 59.5 | 40 | 523 | |
| | 2015.03-2024.06 | 6MT | F | R | Estate FWD DADA;DPCA | For Engine code:DPCA | GDS58110 | Drive Shaft | | 36 | | 59.5 | 40 | 793 | |
| | 2015.03-2024.06 | 6MT | F | R | Estate FWD DADA;DPCA | For Engine code:DADA | GDS82386 | Drive Shaft | | 36 | | 59.5 | 40 | 806 | |
| | 2015.03-2024.06 | 6MT | F | L/R | Estate FWD DADA;DPCA | For Engine code:DPCA | GCO61059 | Outer Joint | | 36 | 33 | 59.5 | 40 | 59.5 | I |
| | 2015.03-2024.06 | 6MT | F | R | Estate FWD DADA;DPCA | For Engine code:DPCA | GCI82447 | Inner Joint | | | 33 | | | 34 | |
| | 2015.03-2024.06 | 6MT | F | L/R | Estate FWD DADA;DPCA | For Engine code:DADA | GCI83016 | Inner Joint | | | 28 | | | 32 | |
| | 2015.03-2024.06 | 6MT/7DCT | F | L | Estate FWD DADA;DPCA | Transmission:6MT;For Engine code:DADA;Transmission:7DCT;For PR code:0EG | GDS82387 | Drive Shaft | | 36 | | 59.5 | 40 | 523 | |
| | 2015.03-2024.06 | 6MT/7DCT | F | L/R | Estate FWD DADA;DPCA | Transmission:6MT;For Engine code:DADA;Transmission:7DCT;For PR code:0EG/0IJ | GCO83101 | Outer Joint | | 36 | 27 | 59.5 | 40 | 65 | M |
| | 2015.03-2024.06 | 7DCT | F | L | Estate FWD DADA;DPCA | For PR code:0IJ | GDS83323 | Drive Shaft | | 36 | 37 | 59.5 | 40 | 570 | |
| | 2015.03-2024.06 | 7DCT | F | R | Estate FWD DADA;DPCA | For PR code:OEG | GDS84498 | Drive Shaft | | 36 | 40 | 59.5 | 40 | 834 | |
| | 2015.03-2024.06 | 7DCT | F | R | Estate FWD DADA;DPCA | For PR code:0IJ | GDS84510 | Drive Shaft | | 36 | 37 | 59.5 | 40 | 925 | |
| | 2015.03-2024.06 | 7DCT | F | L | Estate FWD DADA;DPCA | For PR code:0IJ | GCI83028 | Inner Joint | | 37 | 28 | | 65.5 | 90.2 | |
| | 2015.03-2024.06 | 7DCT | F | R | Estate FWD DADA;DPCA | | GCI61090 | Inner Joint | | 40 | 28 | 46.9 | | 133.2 | |
| | 2017.02-2024.06 | 6MT | F | L | Hatchback FWD DADA;DPCA | For Engine code:DPCA | GDS61282 | Drive Shaft | | 36 | | 59.5 | 40 | 523 | |
| | 2017.02-2024.06 | 6MT | F | R | Hatchback FWD DADA;DPCA | For Engine code:DPCA | GDS58110 | Drive Shaft | | 36 | | 59.5 | 40 | 793 | |
| | 2017.02-2024.06 | 6MT | F | R | Hatchback FWD DADA;DPCA | For Engine code:DADA | GDS82386 | Drive Shaft | | 36 | | 59.5 | 40 | 806 | |
| | 2017.02-2024.06 | 6MT | F | L/R | Hatchback FWD DADA;DPCA | For Engine code:DPCA | GCO61059 | Outer Joint | | 36 | 33 | 59.5 | 40 | 59.5 | I |
| | 2017.02-2024.06 | 6MT | F | R | Hatchback FWD DADA;DPCA | For Engine code:DPCA | GCI82447 | Inner Joint | | | 33 | | | 34 | |
| | 2017.02-2024.06 | 6MT | F | L/R | Hatchback FWD DADA;DPCA | For Engine code:DADA | GCI83016 | Inner Joint | | | 28 | | | 32 | |
| | 2017.02-2024.06 | 6MT/7DCT | F | L | Hatchback FWD DADA;DPCA | Transmission:6MT;For Engine code:DADA;Transmission:7DCT;For PR code:0EG | GDS82387 | Drive Shaft | | 36 | | 59.5 | 40 | 523 | |
| | 2017.02-2024.06 | 6MT/7DCT | F | L/R | Hatchback FWD DADA;DPCA | Transmission:6MT;For Engine code:DADA;Transmission:7DCT;For PR code:0EG/0IJ | GCO83101 | Outer Joint | | 36 | 27 | 59.5 | 40 | 65 | M |
| | 2017.02-2024.06 | 7DCT | F | L | Hatchback FWD DADA;DPCA | For PR code:0IJ | GDS83323 | Drive Shaft | | 36 | 37 | 59.5 | 40 | 570 | |
| | 2017.02-2024.06 | 7DCT | F | R | Hatchback FWD DADA;DPCA | For PR code:OEG | GDS84498 | Drive Shaft | | 36 | 40 | 59.5 | 40 | 834 | |
| | 2017.02-2024.06 | 7DCT | F | R | Hatchback FWD DADA;DPCA | For PR code:0IJ | GDS84510 | Drive Shaft | | 36 | 37 | 59.5 | 40 | 925 | |
| | 2017.02-2024.06 | 7DCT | F | L | Hatchback FWD DADA;DPCA | For PR code:0IJ | GCI83028 | Inner Joint | | 37 | 28 | | 65.5 | 90.2 | |
| | 2017.02-2024.06 | 7DCT | F | R | Hatchback FWD DADA;DPCA | | GCI61090 | Inner Joint | | 40 | 28 | 46.9 | | 133.2 | |
| | 2023.11- | 7AT | F | L | Estate FWD DXDB | | GDS82387 | Drive Shaft | | 36 | | 59.5 | 40 | 523 | |
| | 2023.11- | 7AT | F | R | Estate FWD DXDB | | GDS84498 | Drive Shaft | | 36 | 40 | 59.5 | 40 | 834 | |
| | 2023.11- | 7AT | F | L/R | Estate FWD DXDB | | GCO83101 | Outer Joint | | 36 | 27 | 59.5 | 40 | 65 | M |
| | 2023.11- | 6MT/7DCT | F | L | Saloon FWD DXDB | | GDS82387 | Drive Shaft | | 36 | | 59.5 | 40 | 523 | |
| 1.5 (150 kw) | 2024.04- | 6DCT | F | L | Estate FWD DUCB | | GDS81265 | Drive Shaft | | 36 | 37 | 59.5 | 40 | 557 | |

| | YEAR | TRANSM. | F/R | L/R | BODY STYLE & DRIVE TYPE & ENGINE | REMARKS | G-AP Ref. | PRODUCT | ABS | Technical Specifications A | B | C | H | L | P |
|---|---|---|---|---|---|---|---|---|---|---|---|---|---|---|---|
| **SKODA** **Superb** | | | | | | | | | | | | | | | |
| 1.5 (150 kw) | 2024.04- | 6DCT | F | L | Estate FWD DUCB | | GCI81158 | Inner Joint | | 37 | 34 | 34.5 | 65.5 | 83 | |
| | 2024.04- | 7DCT | F | R | Estate FWD DUCB | | GDS83613 | Drive Shaft | | 36 | 37 | 59.5 | 40 | 921 | |
| | 2025.01- | 6DCT | F | L | Hatchback FWD DUCB,EANB | | GDS81265 | Drive Shaft | | 36 | 37 | 59.5 | 40 | 557 | |
| | 2025.01- | 6DCT | F | L | Hatchback FWD DUCB,EANB | | GCI81158 | Inner Joint | | 37 | 34 | 34.5 | 65.5 | 83 | |
| | 2025.01- | 7DCT | F | R | Hatchback FWD DUCB,EANB | | GDS83613 | Drive Shaft | | 36 | 37 | 59.5 | 40 | 921 | |
| 1.6 (77 kw) | 2010.09-2015.05 | 5MT/6MT | F | L | Estate FWD CAYC | | GDS61282 | Drive Shaft | | 36 | | 59.5 | 40 | 523 | |
| | 2010.09-2015.05 | 5MT/6MT | F | R | Estate FWD CAYC | | GDS61042 | Drive Shaft | | 36 | | 59.5 | 40.5 | 814 | |
| | 2010.09-2015.05 | 5MT/6MT | F | R | Estate FWD CAYC | | GDS61283 | Drive Shaft | | 36 | | 59.5 | 40 | 815 | |
| | 2010.09-2015.05 | 5MT/6MT | F | L/R | Estate FWD CAYC | | GCI82447 | Inner Joint | | | 33 | | | 34 | |
| | 2010.09-2015.05 | 7AT/5MT/6MT | F | L/R | Estate FWD CAYC | | GCO61059 | Outer Joint | | 36 | 33 | 59.5 | 40 | 59.5 | I |
| | 2010.09-2015.05 | 7AT/5MT/6MT | F | L/R | Estate FWD CAYC | | GCO83002 | Outer Joint | | 36 | 27 | 59.5 | 40 | 66 | I |
| | 2010.09-2015.05 | 7AT/5MT/6MT | F | L/R | Estate FWD CAYC | | GCI83016 | Inner Joint | | | 28 | | | 32 | |
| | 2010.09-2015.05 | 7DCT | F | L | Estate FWD CAYC | | GDS61100 | Drive Shaft | | 36 | | 59.5 | 40 | 513 | |
| | 2010.09-2015.05 | 7DCT | F | R | Estate FWD CAYC | | GDS83313 | Drive Shaft | | 36 | | 59.5 | 40 | 792 | |
| | 2010.09-2015.05 | MT | F | L | Estate FWD CAYC | | GDS83294 | Drive Shaft | | 36 | | 59.5 | 38 | 519 | |
| | 2010.09-2015.05 | MT | F | L | Estate FWD CAYC | | GCO83037 | Outer Joint | | 36 | 30 | 59.5 | 40.5 | 56 | I |
| | 2010.09-2015.05 | 5MT/6MT | F | L | Hatchback FWD CAYC | | GDS61282 | Drive Shaft | | 36 | | 59.5 | 40 | 523 | |
| | 2010.09-2015.05 | 5MT/6MT | F | R | Hatchback FWD CAYC | | GDS61042 | Drive Shaft | | 36 | | 59.5 | 40.5 | 814 | |
| | 2010.09-2015.05 | 5MT/6MT | F | R | Hatchback FWD CAYC | | GDS61283 | Drive Shaft | | 36 | | 59.5 | 40 | 815 | |
| | 2010.09-2015.05 | 5MT/6MT | F | L/R | Hatchback FWD CAYC | | GCI82447 | Inner Joint | | | 33 | | | 34 | |
| | 2010.09-2015.05 | 7AT/5MT/6MT | F | L/R | Hatchback FWD CAYC | | GCO61059 | Outer Joint | | 36 | 33 | 59.5 | 40 | 59.5 | I |
| | 2010.09-2015.05 | 7AT/5MT/6MT | F | L/R | Hatchback FWD CAYC | | GCO83002 | Outer Joint | | 36 | 27 | 59.5 | 40 | 66 | I |
| | 2010.09-2015.05 | 7AT/5MT/6MT | F | L/R | Hatchback FWD CAYC | | GCI83016 | Inner Joint | | | 28 | | | 32 | |
| | 2010.09-2015.05 | 7DCT | F | L | Hatchback FWD CAYC | | GDS61100 | Drive Shaft | | 36 | | 59.5 | 40 | 513 | |
| | 2010.09-2015.05 | 7DCT | F | R | Hatchback FWD CAYC | | GDS83313 | Drive Shaft | | 36 | | 59.5 | 40 | 792 | |
| | 2010.09-2015.05 | MT | F | L | Hatchback FWD CAYC | | GDS83294 | Drive Shaft | | 36 | | 59.5 | 38 | 519 | |
| | 2010.09-2015.05 | MT | F | L | Hatchback FWD CAYC | | GCO83037 | Outer Joint | | 36 | 30 | 59.5 | 40.5 | 56 | I |
| 1.6 (88 kw) | 2015.03-2024.06 | 6MT | F | R | Estate FWD DCZA;DCXA | | GDS81525 | Drive Shaft | | 36 | | 59.5 | 40 | 825 | |
| | 2015.03-2024.06 | 6MT | F | R | Estate FWD DCZA;DCXA | | GCO81355 | Outer Joint | | 36 | 34 | 59.5 | 40 | 59.5 | M |
| | 2015.03-2024.06 | 6MT/7DCT | F | L | Estate FWD DCZA;DCXA | | GDS61201 | Drive Shaft | | 36 | | 59.5 | 40.5 | 535 | |
| | 2015.03-2024.06 | 6MT/7DCT | F | L/R | Estate FWD DCZA;DCXA | | GCI81398 | Inner Joint | | | 34 | | | 34 | |
| | 2015.03-2024.06 | 7DCT | F | R | Estate FWD DCZA;DCXA | | GDS61283 | Drive Shaft | | 36 | | 59.5 | 40 | 815 | |
| | 2015.03-2024.06 | 7DCT | F | R | Estate FWD DCZA;DCXA | | GCO61059 | Outer Joint | | 36 | 33 | 59.5 | 40 | 59.5 | I |
| | 2015.03-2024.06 | 6MT | F | R | Hatchback FWD DCZA;DCXA | | GDS81525 | Drive Shaft | | 36 | | 59.5 | 40 | 825 | |
| | 2015.03-2024.06 | 6MT | F | R | Hatchback FWD DCZA;DCXA | | GCO81355 | Outer Joint | | 36 | 34 | 59.5 | 40 | 59.5 | M |
| | 2015.03-2024.06 | 6MT/7DCT | F | L | Hatchback FWD DCZA;DCXA | | GDS61201 | Drive Shaft | | 36 | | 59.5 | 40.5 | 535 | |
| | 2015.03-2024.06 | 6MT/7DCT | F | L/R | Hatchback FWD DCZA;DCXA | | GCI81398 | Inner Joint | | | 34 | | | 34 | |
| | 2015.03-2024.06 | 7DCT | F | R | Hatchback FWD DCZA;DCXA | | GDS61283 | Drive Shaft | | 36 | | 59.5 | 40 | 815 | |
| | 2015.03-2024.06 | 7DCT | F | R | Hatchback FWD DCZA;DCXA | | GCO61059 | Outer Joint | | 36 | 33 | 59.5 | 40 | 59.5 | I |
| 1.8 (110 kw) | 2001.12-2008.03 | 5AT | F | R | Saloon FWD AWT | | GDS83048 | Drive Shaft | 45W | 38 | | 59.5 | 34.5 | 502 | |
| | 2001.12-2008.03 | 5AT | F | L/R | Saloon FWD AWT | | GCI50019 | Inner Joint | | | 34 | | | 59.5 | |
| | 2001.12-2008.03 | 5MT | F | L/R | Saloon FWD AWT | | GCI83001 | Inner Joint | | | 28 | | | 32 | |
| | 2001.12-2008.03 | AT | F | L | Saloon FWD AWT | | GDS83015 | Drive Shaft | 45W | 38 | | 59.5 | 34.5 | 527 | |
| | 2001.12-2008.03 | AT | F | L/R | Saloon FWD AWT | | GCO83019 | Outer Joint | 45W | 38 | 27 | 59.5 | 34.5 | 63 | I |
| | 2001.12-2008.03 | MT | F | L | Saloon FWD AWT | | GDS61122 | Drive Shaft | 45W | 33 | | 53 | 30 | 602 | |
| | 2001.12-2008.03 | MT | F | R | Saloon FWD AWT | | GDS83007 | Drive Shaft | 45W | 33 | | 53 | 30 | 622 | |
| | 2001.12-2008.03 | MT | F | R | Saloon FWD AWT | | GDS83009 | Drive Shaft | 45W | 33 | | 53 | 30 | 617 | |
| | 2001.12-2008.03 | MT | F | L/R | Saloon FWD AWT | | GCO61012 | Outer Joint | 45W | 33 | 30 | 53 | 30 | 62 | I |
| 1.8 (112 kw) | 2009.03-2015.05 | 6MT | F | L | Hatchback 4WD CDAB | | GDS83295 | Drive Shaft | | 36 | | 59.5 | 40 | 491 | |
| | 2009.03-2015.05 | 6MT | F | R | Hatchback 4WD CDAB | | GDS83266 | Drive Shaft | | 36 | | 59.5 | 40 | 601 | |
| | 2009.03-2015.05 | | F | L/R | Hatchback 4WD CDAB | | GCO83002 | Outer Joint | | 36 | 27 | 59.5 | 40 | 66 | I |
| | 2009.03-2015.05 | | F | L/R | Hatchback 4WD CDAB | | GCI83016 | Inner Joint | | | 28 | | | 32 | |
| | 2009.03-2015.05 | 6MT | R | L | Hatchback 4WD CDAB | | GDS61284 | Drive Shaft | | 36 | | 59.5 | 40 | 594 | |
| | 2009.03-2015.05 | 6MT | R | R | Hatchback 4WD CDAB | | GDS61293 | Drive Shaft | | 36 | | 59.5 | 40 | 631 | |
| | 2009.03-2015.05 | 6MT | R | L/R | Hatchback 4WD CDAB | | GCI35026 | Outer Joint | | 36 | 33 | 59.5 | 40 | 61 | |
| | 2009.03-2015.05 | 6MT | R | L/R | Hatchback 4WD CDAB | | GCI53002 | Inner Joint | | | 33 | | | 34 | |
| | 2009.03-2015.05 | 6MT | R | L/R | Hatchback 4WD CDAB | | GCI82447 | Inner Joint | | | 33 | | | 34 | |
| | 2009.03-2015.05 | 6AT | F | L | Hatchback FWD CDAB | | GDS61111 | Drive Shaft | | 36 | 26 | 59.5 | 40 | 584 | |
| | 2009.03-2015.05 | 6AT | F | R | Hatchback FWD CDAB | | GDS61112 | Drive Shaft | | 36 | 26 | 59.5 | 40 | 883 | |
| | 2009.03-2015.05 | 6AT | F | L/R | Hatchback FWD CDAB | | GCI61011 | Inner Joint | | 26 | 32 | 31 | 68.5 | 85 | |
| | 2009.03-2015.05 | 6AT | F | L/R | Hatchback FWD CDAB | | GCI61050 | Inner Joint | | 26 | 32 | 31 | 68.5 | 89 | |
| | 2009.03-2015.05 | 6AT/7AT/6MT | F | L/R | Hatchback FWD CDAB | | GCO83002 | Outer Joint | | 36 | 27 | 59.5 | 40 | 66 | I |
| | 2009.03-2015.05 | 6MT | F | R | Hatchback FWD CDAB | | GDS61341 | Drive Shaft | | 36 | | 59.5 | 40 | 806 | |
| | 2009.03-2015.05 | 6MT/7DCT | F | L | Hatchback FWD CDAB | | GDS61100 | Drive Shaft | | 36 | | 59.5 | 40 | 513 | |
| | 2009.03-2015.05 | 7AT | F | L/R | Hatchback FWD CDAB | | GCO83101 | Outer Joint | | 36 | 27 | 59.5 | 40 | 65 | M |

| | YEAR | TRANSM. | F/R | L/R | BODY STYLE & DRIVE TYPE & ENGINE | REMARKS | G-AP Ref. | PRODUCT | ABS | Technical Specifications A | B | C | H | L | P |
|---|---|---|---|---|---|---|---|---|---|---|---|---|---|---|---|
| **SKODA** | | | | | | | | | | | | | | | |
| **Superb** | | | | | | | | | | | | | | | |
| 1.8 (112 kw) | 2009.03-2015.05 | 7DCT | F | R | Hatchback FWD CDAB | | GDS83313 | Drive Shaft | | 36 | | 59.5 | 40 | 792 | |
| | 2009.03-2015.05 | DCT/MT | F | L/R | Hatchback FWD CDAB | | GCI83016 | Inner Joint | | | 28 | | | 32 | |
| | 2009.10-2015.05 | 6MT | F | L | Estate 4WD CDAB | | GDS83295 | Drive Shaft | | 36 | | 59.5 | 40 | 491 | |
| | 2009.10-2015.05 | 6MT | F | R | Estate 4WD CDAB | | GDS83266 | Drive Shaft | | 36 | | 59.5 | 40 | 601 | |
| | 2009.10-2015.05 | | F | L/R | Estate 4WD CDAB | | GCO83002 | Outer Joint | | 36 | 27 | 59.5 | 40 | 66 | I |
| | 2009.10-2015.05 | | F | L/R | Estate 4WD CDAB | | GCI83016 | Inner Joint | | | 28 | | | 32 | |
| | 2009.10-2015.05 | 6MT | R | L | Estate 4WD CDAB | | GDS61284 | Drive Shaft | | 36 | | 59.5 | 40 | 594 | |
| | 2009.10-2015.05 | 6MT | R | R | Estate 4WD CDAB | | GDS61293 | Drive Shaft | | 36 | | 59.5 | 40 | 631 | |
| | 2009.10-2015.05 | 6MT | R | L/R | Estate 4WD CDAB | | GCI35026 | Outer Joint | | 36 | 33 | 59.5 | 40 | 61 | |
| | 2009.10-2015.05 | 6MT | R | L/R | Estate 4WD CDAB | | GCI53002 | Inner Joint | | | 33 | | | 34 | |
| | 2009.10-2015.05 | 6MT | R | L/R | Estate 4WD CDAB | | GCI82447 | Inner Joint | | | 33 | | | 34 | |
| | 2009.10-2015.05 | 6AT | F | L | Estate FWD CDAB | | GDS61111 | Drive Shaft | | 36 | 26 | 59.5 | 40 | 584 | |
| | 2009.10-2015.05 | 6AT | F | R | Estate FWD CDAB | | GDS61112 | Drive Shaft | | 36 | 26 | 59.5 | 40 | 883 | |
| | 2009.10-2015.05 | 6AT | F | L/R | Estate FWD CDAB | | GCI61011 | Inner Joint | | 26 | 32 | 31 | 68.5 | 85 | |
| | 2009.10-2015.05 | 6AT | F | L/R | Estate FWD CDAB | | GCI61050 | Inner Joint | | 26 | 32 | 31 | 68.5 | 89 | |
| | 2009.10-2015.05 | 6AT/7AT/6MT | F | L/R | Estate FWD CDAB | | GCO83002 | Outer Joint | | 36 | 27 | 59.5 | 40 | 66 | I |
| | 2009.10-2015.05 | 6MT | F | R | Estate FWD CDAB | | GDS61341 | Drive Shaft | | 36 | | 59.5 | 40 | 806 | |
| | 2009.10-2015.05 | 6MT/7DCT | F | L | Estate FWD CDAB | | GDS61100 | Drive Shaft | | 36 | | 59.5 | 40 | 513 | |
| | 2009.10-2015.05 | 7DCT | F | R | Estate FWD CDAB | | GDS83313 | Drive Shaft | | 36 | | 59.5 | 40 | 792 | |
| | 2009.10-2015.05 | 7DCT | F | L/R | Estate FWD CDAB | | GCO83101 | Outer Joint | | 36 | 27 | 59.5 | 40 | 65 | M |
| | 2009.10-2015.05 | DCT/MT | F | L/R | Estate FWD CDAB | | GCI83016 | Inner Joint | | | 28 | | | 32 | |
| 1.8 (118 kw) | 2008.03-2015.05 | 6MT | F | L | Hatchback FWD BZB;CDAA | | GDS61100 | Drive Shaft | | 36 | | 59.5 | 40 | 513 | |
| | 2008.03-2015.05 | 6MT | F | R | Hatchback FWD BZB;CDAA | Inner teeth of tranm.side:33 | GDS61101 | Drive Shaft | | 36 | | 59.5 | 40 | 803 | |
| | 2008.03-2015.05 | 6MT | F | R | Hatchback FWD BZB;CDAA | | GDS61341 | Drive Shaft | | 36 | | 59.5 | 40 | 806 | |
| | 2008.03-2015.05 | 6MT/7DCT | F | L/R | Hatchback FWD BZB;CDAA | Date to:2008.10,transm. type:KHP | GCO83002 | Outer Joint | | 36 | 27 | 59.5 | 40 | 66 | I |
| | 2008.03-2015.05 | 7DCT | F | L | Hatchback FWD BZB;CDAA | date from:2008.11 | GDS61100 | Drive Shaft | | 36 | | 59.5 | 40 | 513 | |
| | 2008.03-2015.05 | 7DCT | F | L | Hatchback FWD BZB;CDAA | | GDS82260 | Drive Shaft | | 36 | 40 | 59.5 | 40 | 519 | |
| | 2008.03-2015.05 | 7DCT | F | R | Hatchback FWD BZB;CDAA | Date to:2008.10 | GDS61147 | Drive Shaft | | 36 | | 59.5 | 40 | 795 | |
| | 2008.03-2015.05 | 7DCT | F | R | Hatchback FWD BZB;CDAA | date from:2008.11 | GDS83313 | Drive Shaft | | 36 | | 59.5 | 40 | 792 | |
| | 2008.03-2015.05 | 7DCT | F | L/R | Hatchback FWD BZB;CDAA | Date to:2008.10,transm. type:LKN;Date from:2008.11 | GCO83101 | Outer Joint | | 36 | 27 | 59.5 | 40 | 65 | M |
| | 2008.03-2015.05 | 7DCT | F | L/R | Hatchback FWD BZB;CDAA | | GCI61054 | Inner Joint | | 40 | 28 | 46.9 | 41 | 101.7 | |
| | 2008.03-2015.05 | | F | L/R | Hatchback FWD BZB;CDAA | | GCI83016 | Inner Joint | | | 28 | | | 32 | |
| | 2008.11-2015.05 | 6MT | F | L | Hatchback 4WD CDAA | | GDS83295 | Drive Shaft | | 36 | | 59.5 | 40 | 491 | |
| | 2008.11-2015.05 | 6MT | F | R | Hatchback 4WD CDAA | | GDS83266 | Drive Shaft | | 36 | | 59.5 | 40 | 601 | |
| | 2008.11-2015.05 | AT | F | L | Hatchback 4WD CDAA | | GDS83236 | Drive Shaft | | 36 | | 59.5 | 40 | 484 | |
| | 2008.11-2015.05 | | F | L/R | Hatchback 4WD CDAA | | GCO83002 | Outer Joint | | 36 | 27 | 59.5 | 40 | 66 | I |
| | 2008.11-2015.05 | | F | L/R | Hatchback 4WD CDAA | | GCI83016 | Inner Joint | | | 28 | | | 32 | |
| | 2008.11-2015.05 | 6MT | R | L | Hatchback 4WD CDAA | | GDS61284 | Drive Shaft | | 36 | | 59.5 | 40 | 594 | |
| | 2008.11-2015.05 | 6MT | R | R | Hatchback 4WD CDAA | | GDS61293 | Drive Shaft | | 36 | | 59.5 | 40 | 631 | |
| | 2008.11-2015.05 | 6MT | R | L/R | Hatchback 4WD CDAA | | GCI35026 | Outer Joint | | 36 | 33 | 59.5 | 40 | 61 | |
| | 2008.11-2015.05 | 6MT | R | L/R | Hatchback 4WD CDAA | | GCI53002 | Inner Joint | | | 33 | | | 34 | |
| | 2008.11-2015.05 | 6MT | R | L/R | Hatchback 4WD CDAA | | GCI82447 | Inner Joint | | | 33 | | | 34 | |
| | 2009.10-2015.05 | 6MT | F | L | Estate 4WD CDAA | | GDS83295 | Drive Shaft | | 36 | | 59.5 | 40 | 491 | |
| | 2009.10-2015.05 | 6MT | F | R | Estate 4WD CDAA | | GDS83266 | Drive Shaft | | 36 | | 59.5 | 40 | 601 | |
| | 2009.10-2015.05 | AT | F | L | Estate 4WD CDAA | | GDS83236 | Drive Shaft | | 36 | | 59.5 | 40 | 484 | |
| | 2009.10-2015.05 | | F | L/R | Estate 4WD CDAA | | GCO83002 | Outer Joint | | 36 | 27 | 59.5 | 40 | 66 | I |
| | 2009.10-2015.05 | | F | L/R | Estate 4WD CDAA | | GCI83016 | Inner Joint | | | 28 | | | 32 | |
| | 2009.10-2015.05 | 6MT | R | L | Estate 4WD CDAA | | GDS61284 | Drive Shaft | | 36 | | 59.5 | 40 | 594 | |
| | 2009.10-2015.05 | 6MT | R | R | Estate 4WD CDAA | | GDS61293 | Drive Shaft | | 36 | | 59.5 | 40 | 631 | |
| | 2009.10-2015.05 | 6MT | R | L/R | Estate 4WD CDAA | | GCI35026 | Outer Joint | | 36 | 33 | 59.5 | 40 | 61 | |
| | 2009.10-2015.05 | 6MT | R | L/R | Estate 4WD CDAA | | GCI53002 | Inner Joint | | | 33 | | | 34 | |
| | 2009.10-2015.05 | 6MT | R | L/R | Estate 4WD CDAA | | GCI82447 | Inner Joint | | | 33 | | | 34 | |
| | 2009.10-2015.05 | 6MT | F | R | Estate FWD CDAA | | GDS61341 | Drive Shaft | | 36 | | 59.5 | 40 | 806 | |
| | 2009.10-2015.05 | 6MT | F | L/R | Estate FWD CDAA | | GCO83002 | Outer Joint | | 36 | 27 | 59.5 | 40 | 66 | I |
| | 2009.10-2015.05 | 6MT | F | R | Estate FWD CDAA | | GCI61069 | Inner Joint | | | 28 | | | 32 | |
| | 2009.10-2015.05 | 6MT/7DCT | F | L | Estate FWD CDAA | | GDS61100 | Drive Shaft | | 36 | | 59.5 | 40 | 513 | |
| | 2009.10-2015.05 | 7DCT | F | R | Estate FWD CDAA | | GDS83313 | Drive Shaft | | 36 | | 59.5 | 40 | 792 | |
| | 2009.10-2015.05 | | F | L/R | Estate FWD CDAA | | GCO83101 | Outer Joint | | 36 | 27 | 59.5 | 40 | 65 | M |
| | 2009.10-2015.05 | | F | L/R | Estate FWD CDAA | | GCI83016 | Inner Joint | | | 28 | | | 32 | |
| 1.8 (132 kw) | 2015.03-2024.06 | 6MT | F | L | Estate FWD CJSA;CJSC | | GDS81896 | Drive Shaft | | 36 | | 59.5 | 40 | 500 | |
| | 2015.03-2024.06 | 7DCT | F | R | Estate FWD CJSA;CJSC | | GDS61101 | Drive Shaft | | 36 | | 59.5 | 40 | 803 | |
| | 2015.03-2024.06 | AT/MT | F | L/R | Estate FWD CJSA;CJSC | | GCO83101 | Outer Joint | | 36 | 27 | 59.5 | 40 | 65 | M |
| | 2015.03-2024.06 | | F | L/R | Estate FWD CJSA;CJSC | | GCI83016 | Inner Joint | | | 28 | | | 32 | |
| | 2015.03-2024.06 | 6MT | F | L | Hatchback FWD CJSA;CJSC | | GDS81896 | Drive Shaft | | 36 | | 59.5 | 40 | 500 | |
| | 2015.03-2024.06 | 7DCT | F | R | Hatchback FWD CJSA;CJSC | | GDS61101 | Drive Shaft | | 36 | | 59.5 | 40 | 803 | |

| | YEAR | TRANSM. | F/R | L/R | BODY STYLE & DRIVE TYPE & ENGINE | REMARKS | G-AP Ref. | PRODUCT | ABS | Technical Specifications A | B | C | H | L | P |
|---|---|---|---|---|---|---|---|---|---|---|---|---|---|---|---|
| **SKODA** | | | | | | | | | | | | | | | |
| **Superb** | | | | | | | | | | | | | | | |
| 1.8 (132 kw) | 2015.03-2024.06 | AT/MT | F | L/R | Hatchback FWD CJSA;CJSC | | GCO83101 | Outer Joint | | 36 | 27 | 59.5 | 40 | 65 | M |
| | 2015.03-2024.06 | | F | L/R | Hatchback FWD CJSA;CJSC | | GCI83016 | Inner Joint | | | 28 | | | 32 | |
| 1.9 (74 kw) | 2002.08-2005.10 | 5MT | F | L | Saloon FWD AVB | | GDS61083 | Drive Shaft | 45W | 33 | | 53 | 30 | 603 | |
| | 2002.08-2005.10 | 5MT | F | R | Saloon FWD AVB | | GDS61082 | Drive Shaft | 45W | 33 | | 53 | 30 | 620 | |
| | 2002.08-2005.10 | MT | F | L | Saloon FWD AVB | | GDS61122 | Drive Shaft | 45W | 33 | | 53 | 30 | 602 | |
| | 2002.08-2005.10 | MT | F | L/R | Saloon FWD AVB | | GCO83021 | Outer Joint | 45W | 33 | 27 | 53 | 30 | 63 | I |
| | 2002.08-2005.10 | MT/5MT | F | L/R | Saloon FWD AVB | | GCI50019 | Inner Joint | | | 34 | | | 59.5 | |
| 1.9 (77 kw) | 2005.10-2007.05 | 5MT | F | L | Saloon FWD BSV | | GDS61083 | Drive Shaft | 45W | 33 | | 53 | 30 | 603 | |
| | 2005.10-2007.05 | 5MT | F | R | Saloon FWD BSV | | GDS61082 | Drive Shaft | 45W | 33 | | 53 | 30 | 620 | |
| | 2005.10-2007.05 | 5MT | F | L/R | Saloon FWD BSV | | GCI50019 | Inner Joint | | | 34 | | | 59.5 | |
| | 2005.10-2007.05 | MT | F | L/R | Saloon FWD BSV | | GCO83021 | Outer Joint | 45W | 33 | 27 | 53 | 30 | 63 | I |
| | 2008.03-2010.11 | 5MT | F | L | Hatchback FWD BLS;BXE | | GDS83294 | Drive Shaft | | 36 | | 59.5 | 38 | 519 | |
| | 2008.03-2010.11 | 5MT | F | R | Hatchback FWD BLS;BXE | | GDS61042 | Drive Shaft | | 36 | | 59.5 | 40.5 | 814 | |
| | 2008.03-2010.11 | 5MT | F | L/R | Hatchback FWD BLS;BXE | | GCO83037 | Outer Joint | | 36 | 30 | 59.5 | 40.5 | 56 | I |
| | 2008.03-2010.11 | 5MT | F | L/R | Hatchback FWD BLS;BXE | | GCI82447 | Inner Joint | | | 33 | | | 34 | |
| | 2008.03-2010.11 | MT | F | L/R | Hatchback FWD BLS;BXE | | GCI83006 | Inner Joint | | | 33 | | | 34 | |
| | 2008.03-2010.11 | | F | L/R | Hatchback FWD BLS;BXE | | GCI83011 | Inner Joint | | | 33 | | | 34 | |
| | 2009.10-2010.11 | 5MT | F | L | Estate FWD BLS;BXE | | GDS83294 | Drive Shaft | | 36 | | 59.5 | 38 | 519 | |
| | 2009.10-2010.11 | 5MT | F | R | Estate FWD BLS;BXE | | GDS61042 | Drive Shaft | | 36 | | 59.5 | 40.5 | 814 | |
| | 2009.10-2010.11 | 5MT | F | L/R | Estate FWD BLS;BXE | | GCO83037 | Outer Joint | | 36 | 30 | 59.5 | 40.5 | 56 | I |
| | 2009.10-2010.11 | 5MT | F | L/R | Estate FWD BLS;BXE | | GCI82447 | Inner Joint | | | 33 | | | 34 | |
| | 2009.10-2010.11 | MT | F | L/R | Estate FWD BLS;BXE | | GCI83006 | Inner Joint | | | 33 | | | 34 | |
| | 2009.10-2010.11 | | F | L/R | Estate FWD BLS;BXE | | GCI83011 | Inner Joint | | | 33 | | | 34 | |
| 1.9 (85 kw) | 2007.01-2008.03 | 5MT | F | L | Saloon FWD BPZ | | GDS61083 | Drive Shaft | 45W | 33 | | 53 | 30 | 603 | |
| | 2007.01-2008.03 | 5MT | F | R | Saloon FWD BPZ | | GDS61082 | Drive Shaft | 45W | 33 | | 53 | 30 | 620 | |
| | 2007.01-2008.03 | 5MT | F | L/R | Saloon FWD BPZ | | GCI50019 | Inner Joint | | | 34 | | | 59.5 | |
| | 2007.01-2008.03 | | F | L/R | Saloon FWD BPZ | | GCO83021 | Outer Joint | 45W | 33 | 27 | 53 | 30 | 63 | I |
| 1.9 (96 kw) | 2001.12-2008.03 | 5AT/5MT | F | L | Saloon FWD AWX;AVF | | GDS83008 | Drive Shaft | 45W | 38 | | 59.5 | 34.5 | 603 | |
| | 2001.12-2008.03 | 5AT/5MT | F | R | Saloon FWD AWX;AVF | | GDS61019 | Drive Shaft | 45W | 38 | | 59.5 | 34.5 | 624 | |
| | 2001.12-2008.03 | AT | F | L | Saloon FWD AWX;AVF | | GDS83015 | Drive Shaft | 45W | 38 | | 59.5 | 34.5 | 527 | |
| | 2001.12-2008.03 | AT | F | R | Saloon FWD AWX;AVF | | GDS83048 | Drive Shaft | 45W | 38 | | 59.5 | 34.5 | 502 | |
| | 2001.12-2008.03 | AT/MT | F | L/R | Saloon FWD AWX;AVF | | GCO83019 | Outer Joint | 45W | 38 | 27 | 59.5 | 34.5 | 63 | I |
| | 2001.12-2008.03 | AT/MT/5AT/5MT | F | L/R | Saloon FWD AWX;AVF | | GCI50019 | Inner Joint | | | 34 | | | 59.5 | |
| 2.0 (85 kw) | 2001.12-2008.03 | 5MT | F | L | Saloon FWD AZM | | GDS83005 | Drive Shaft | 45W | 33 | | 53 | 30 | 614 | |
| | 2001.12-2008.03 | 5MT | F | R | Saloon FWD AZM | | GDS83001 | Drive Shaft | 45W | 33 | | 53 | 30 | 634 | |
| | 2001.12-2008.03 | 5MT | F | L/R | Saloon FWD AZM | | GCO83018 | Outer Joint | 45W | 33 | 30 | 53 | 30 | 62 | I |
| | 2001.12-2008.03 | 5MT | F | L/R | Saloon FWD AZM | | GCI83001 | Inner Joint | | | 28 | | | 32 | |
| 2.0 (90 kw) | 2020.07-2024.06 | 7AT | F | L | Estate FWD DTRA | | GDS61201 | Drive Shaft | | 36 | | 59.5 | 40.5 | 535 | |
| | 2020.07-2024.06 | 7AT | F | L/R | Estate FWD DTRA | | GCO81355 | Outer Joint | | 36 | 34 | 59.5 | 40 | 59.5 | M |
| | 2020.07-2024.06 | 7DCT | F | L/R | Estate FWD DTRA | | GCI81398 | Inner Joint | | | 34 | | | 34 | |
| | 2020.07-2024.06 | 7AT | F | L | Hatchback FWD DTRA | | GDS61201 | Drive Shaft | | 36 | | 59.5 | 40.5 | 535 | |
| | 2020.07-2024.06 | 7AT | F | L/R | Hatchback FWD DTRA | | GCO81355 | Outer Joint | | 36 | 34 | 59.5 | 40 | 59.5 | M |
| | 2020.07-2024.06 | 7DCT | F | L/R | Hatchback FWD DTRA | | GCI81398 | Inner Joint | | | 34 | | | 34 | |
| 2.0 (91 kw) | 2006.02-2008.03 | 6MT | F | L/R | Saloon FWD BWW | | GCO83019 | Outer Joint | 45W | 38 | 27 | 59.5 | 34.5 | 63 | I |
| | 2006.02-2008.03 | 6MT | F | L/R | Saloon FWD BWW | | GCI50019 | Inner Joint | | | 34 | | | 59.5 | |
| 2.0 (103 kw) | 2005.10-2008.03 | 6MT | F | L/R | Saloon FWD BSS | | GCI50019 | Inner Joint | | | 34 | | | 59.5 | |
| | 2005.10-2008.03 | MT | F | L/R | Saloon FWD BSS | | GCO83019 | Outer Joint | 45W | 38 | 27 | 59.5 | 34.5 | 63 | I |
| | 2008.03-2010.05 | 6AT/6MT | F | L/R | Hatchback FWD BMP | | GCI54004 | Inner Joint | | | 34 | | | 81 | |
| | 2008.03-2010.05 | 6AT/6MT | F | L/R | Hatchback FWD BMP | Original Tripod Design | GCI61057 | Inner Joint | | | 34 | | | 89 | |
| | 2008.03-2010.05 | 6AT/6MT | F | L/R | Hatchback FWD BMP | | GCI83016 | Inner Joint | | | 28 | | | 32 | |
| | 2008.03-2010.05 | 6DCT | F | L | Hatchback FWD BMP | | GDS54013 | Drive Shaft | | 36 | | 59.5 | 40 | 479.5 | |
| | 2008.03-2010.05 | 6DCT | F | R | Hatchback FWD BMP | | GDS54011 | Drive Shaft | | 36 | | 59.5 | 40 | 755 | |
| | 2008.03-2010.05 | 6MT | F | L | Hatchback FWD BMP | | GDS83295 | Drive Shaft | | 36 | | 59.5 | 40 | 491 | |
| | 2008.03-2010.05 | 6MT | F | R | Hatchback FWD BMP | Date from:2008.08 | GDS61126 | Drive Shaft | | 36 | | 59.5 | 40 | 793 | |
| | 2008.03-2010.05 | 6MT | F | R | Hatchback FWD BMP | | GDS61147 | Drive Shaft | | 36 | | 59.5 | 40 | 795 | |
| | 2008.03-2010.05 | 6MT | F | R | Hatchback FWD BMP | | GDS83313 | Drive Shaft | | 36 | | 59.5 | 40 | 792 | |
| | 2008.03-2010.05 | 6MT | F | L/R | Hatchback FWD BMP | Date from:2008.08 | GCO83101 | Outer Joint | | 36 | 27 | 59.5 | 40 | 65 | M |
| | 2008.03-2010.05 | 6MT/6DCT | F | L/R | Hatchback FWD BMP | Date to:2008.07 | GCO83002 | Outer Joint | | 36 | 27 | 59.5 | 40 | 66 | I |
| | 2008.03-2010.05 | AT | F | L | Hatchback FWD BMP | | GDS83241 | Drive Shaft | | 36 | | 59.5 | 40 | 475 | |
| | 2008.03-2010.05 | MT | F | L | Hatchback FWD BMP | | GDS83236 | Drive Shaft | | 36 | | 59.5 | 40 | 484 | |
| | 2009.01-2015.05 | 6AT/6MT | F | L/R | Hatchback FWD BKD;CFFB;CLJA | | GCI54004 | Inner Joint | | | 34 | | | 81 | |
| | 2009.01-2015.05 | 6AT/6MT | F | L/R | Hatchback FWD BKD;CFFB;CLJA | Original Tripod Design | GCI61057 | Inner Joint | | | 34 | | | 89 | |
| | 2009.01-2015.05 | 6AT/6MT | F | L/R | Hatchback FWD BKD;CFFB;CLJA | | GCI83016 | Inner Joint | | | 28 | | | 32 | |
| | 2009.01-2015.05 | 6DCT | F | L | Hatchback FWD BKD;CFFB;CLJA | For Engine code:CFFB/CLJA | GDS54013 | Drive Shaft | | 36 | | 59.5 | 40 | 479.5 | |
| | 2009.01-2015.05 | 6DCT | F | R | Hatchback FWD BKD;CFFB;CLJA | | GDS54011 | Drive Shaft | | 36 | | 59.5 | 40 | 755 | |

| | YEAR | TRANSM. | F/R | L/R | BODY STYLE & DRIVE TYPE & ENGINE | REMARKS | G-AP Ref. | PRODUCT | ABS | Technical Specifications A | B | C | H | L | P |
|---|---|---|---|---|---|---|---|---|---|---|---|---|---|---|---|
| **SKODA** **Superb** | | | | | | | | | | | | | | | |
| 2.0 (103 kw) | 2009.01-2015.05 | 6MT | F | L | Hatchback FWD BKD;CFFB;CLJA | | GDS83295 | Drive Shaft | | 36 | | 59.5 | 40 | 491 | |
| | 2009.01-2015.05 | 6MT | F | R | Hatchback FWD BKD;CFFB;CLJA | | GDS61126 | Drive Shaft | | 36 | | 59.5 | 40 | 793 | |
| | 2009.01-2015.05 | 6MT | F | R | Hatchback FWD BKD;CFFB;CLJA | | GDS61147 | Drive Shaft | | 36 | | 59.5 | 40 | 795 | |
| | 2009.01-2015.05 | 6MT | F | R | Hatchback FWD BKD;CFFB;CLJA | | GDS83313 | Drive Shaft | | 36 | | 59.5 | 40 | 792 | |
| | 2009.01-2015.05 | 6MT | F | L/R | Hatchback FWD BKD;CFFB;CLJA | For Engine code:CFFB | GCO83101 | Outer Joint | | 36 | 27 | 59.5 | 40 | 65 | M |
| | 2009.01-2015.05 | 6MT/6DCT | F | L/R | Hatchback FWD BKD;CFFB;CLJA | Transmission:6MT,For Engine code:CLJA;Transmission:6DCT | GCO83002 | Outer Joint | | 36 | 27 | 59.5 | 40 | 66 | I |
| | 2009.01-2015.05 | AT | F | L | Hatchback FWD BKD;CFFB;CLJA | | GDS83241 | Drive Shaft | | 36 | | 59.5 | 40 | 475 | |
| | 2009.01-2015.05 | MT | F | L | Hatchback FWD BKD;CFFB;CLJA | | GDS83236 | Drive Shaft | | 36 | | 59.5 | 40 | 484 | |
| | 2009.10-2010.03 | 6AT/6MT | F | L/R | Estate FWD BMP | | GCI54004 | Inner Joint | | | 34 | | | 81 | |
| | 2009.10-2010.03 | 6AT/6MT | F | L/R | Estate FWD BMP | Original Tripod Design | GCI61057 | Inner Joint | | | 34 | | | 89 | |
| | 2009.10-2010.03 | 6AT/6MT | F | L/R | Estate FWD BMP | | GCI83016 | Inner Joint | | | 28 | | | 32 | |
| | 2009.10-2010.03 | 6DCT | F | L | Estate FWD BMP | | GDS54013 | Drive Shaft | | 36 | | 59.5 | 40 | 479.5 | |
| | 2009.10-2010.03 | 6DCT | F | R | Estate FWD BMP | | GDS54011 | Drive Shaft | | 36 | | 59.5 | 40 | 755 | |
| | 2009.10-2010.03 | 6MT | F | L | Estate FWD BMP | | GDS83295 | Drive Shaft | | 36 | | 59.5 | 40 | 491 | |
| | 2009.10-2010.03 | 6MT | F | R | Estate FWD BMP | Date From:2008.08 | GDS61126 | Drive Shaft | | 36 | | 59.5 | 40 | 793 | |
| | 2009.10-2010.03 | 6MT | F | R | Estate FWD BMP | | GDS61147 | Drive Shaft | | 36 | | 59.5 | 40 | 795 | |
| | 2009.10-2010.03 | 6MT | F | R | Estate FWD BMP | | GDS83313 | Drive Shaft | | 36 | | 59.5 | 40 | 792 | |
| | 2009.10-2010.03 | 6MT | F | L/R | Estate FWD BMP | | GCO83002 | Outer Joint | | 36 | 27 | 59.5 | 40 | 66 | I |
| | 2009.10-2010.03 | AT | F | L | Estate FWD BMP | | GDS83241 | Drive Shaft | | 36 | | 59.5 | 40 | 475 | |
| | 2009.10-2010.03 | MT | F | L | Estate FWD BMP | | GDS83236 | Drive Shaft | | 36 | | 59.5 | 40 | 484 | |
| | 2009.10-2010.03 | MT | F | L/R | Estate FWD BMP | | GCO83101 | Outer Joint | | 36 | 27 | 59.5 | 40 | 65 | M |
| | 2009.10-2015.05 | 6AT/6MT | F | L/R | Estate FWD BKD;CFFB;CLJA | | GCI54004 | Inner Joint | | | 34 | | | 81 | |
| | 2009.10-2015.05 | 6AT/6MT | F | L/R | Estate FWD BKD;CFFB;CLJA | Original Tripod Design | GCI61057 | Inner Joint | | | 34 | | | 89 | |
| | 2009.10-2015.05 | 6AT/6MT | F | L/R | Estate FWD BKD;CFFB;CLJA | | GCI83016 | Inner Joint | | | 28 | | | 32 | |
| | 2009.10-2015.05 | 6DCT | F | L | Estate FWD BKD;CFFB;CLJA | For Engine code:CFFB/CLJA | GDS54013 | Drive Shaft | | 36 | | 59.5 | 40 | 479.5 | |
| | 2009.10-2015.05 | 6DCT | F | R | Estate FWD BKD;CFFB;CLJA | | GDS54011 | Drive Shaft | | 36 | | 59.5 | 40 | 755 | |
| | 2009.10-2015.05 | 6MT | F | L | Estate FWD BKD;CFFB;CLJA | | GDS83295 | Drive Shaft | | 36 | | 59.5 | 40 | 491 | |
| | 2009.10-2015.05 | 6MT | F | R | Estate FWD BKD;CFFB;CLJA | | GDS61126 | Drive Shaft | | 36 | | 59.5 | 40 | 793 | |
| | 2009.10-2015.05 | 6MT | F | R | Estate FWD BKD;CFFB;CLJA | | GDS61147 | Drive Shaft | | 36 | | 59.5 | 40 | 795 | |
| | 2009.10-2015.05 | 6MT | F | R | Estate FWD BKD;CFFB;CLJA | | GDS83313 | Drive Shaft | | 36 | | 59.5 | 40 | 792 | |
| | 2009.10-2015.05 | 6MT/6DCT | F | L/R | Estate FWD BKD;CFFB;CLJA | Transmission:6MT,For Engine code:CLJA;Transmission:6DCT | GCO83002 | Outer Joint | | 36 | 27 | 59.5 | 40 | 66 | I |
| | 2009.10-2015.05 | AT | F | L | Estate FWD BKD;CFFB;CLJA | | GDS83241 | Drive Shaft | | 36 | | 59.5 | 40 | 475 | |
| | 2009.10-2015.05 | MT | F | L/R | Estate FWD BKD;CFFB;CLJA | | GCO83101 | Outer Joint | | 36 | 27 | 59.5 | 40 | 65 | M |
| | 2010.11-2015.05 | 6AT/6MT | F | L/R | Estate 4WD CFFB | | GCI54004 | Inner Joint | | | 34 | | | 81 | |
| | 2010.11-2015.05 | 6AT/6MT | F | L/R | Estate 4WD CFFB | Original Tripod Design | GCI61057 | Inner Joint | | | 34 | | | 89 | |
| | 2010.11-2015.05 | 6AT/6MT | F | L/R | Estate 4WD CFFB | | GCI83016 | Inner Joint | | | 28 | | | 32 | |
| | 2010.11-2015.05 | 6DCT | F | L | Estate 4WD CFFB | | GDS54013 | Drive Shaft | | 36 | | 59.5 | 40 | 479.5 | |
| | 2010.11-2015.05 | 6DCT | F | R | Estate 4WD CFFB | | GDS61295 | Drive Shaft | | 36 | | 59.5 | 40 | 555 | |
| | 2010.11-2015.05 | 6DCT | F | R | Estate 4WD CFFB | | GCO83002 | Outer Joint | | 36 | 27 | 59.5 | 40 | 66 | I |
| | 2010.11-2015.05 | 6MT | F | L | Estate 4WD CFFB | | GDS83295 | Drive Shaft | | 36 | | 59.5 | 40 | 491 | |
| | 2010.11-2015.05 | 6MT | F | R | Estate 4WD CFFB | | GDS83266 | Drive Shaft | | 36 | | 59.5 | 40 | 601 | |
| | 2010.11-2015.05 | 6MT | F | L | Estate 4WD CFFB | | GCO61059 | Outer Joint | | 36 | 33 | 59.5 | 40 | 59.5 | I |
| | 2010.11-2015.05 | 6AT/6MT | R | L | Estate 4WD CFFB | | GDS61284 | Drive Shaft | | 36 | | 59.5 | 40 | 594 | |
| | 2010.11-2015.05 | 6AT/6MT | R | R | Estate 4WD CFFB | | GDS61293 | Drive Shaft | | 36 | | 59.5 | 40 | 631 | |
| | 2010.11-2015.05 | 6AT/6MT | R | L/R | Estate 4WD CFFB | | GCI35026 | Outer Joint | | 36 | 33 | 59.5 | 40 | 61 | |
| | 2010.11-2015.05 | 6AT/6MT | R | L/R | Estate 4WD CFFB | | GCI53002 | Inner Joint | | | 33 | | | 34 | |
| | 2010.11-2015.05 | 6AT/6MT | R | L/R | Estate 4WD CFFB | | GCI82447 | Inner Joint | | | 33 | | | 34 | |
| | 2010.11-2015.05 | 6AT/6MT | F | L/R | Hatchback 4WD CFFB | | GCI54004 | Inner Joint | | | 34 | | | 81 | |
| | 2010.11-2015.05 | 6AT/6MT | F | L/R | Hatchback 4WD CFFB | Original Tripod Design | GCI61057 | Inner Joint | | | 34 | | | 89 | |
| | 2010.11-2015.05 | 6AT/6MT | F | L/R | Hatchback 4WD CFFB | | GCI83016 | Inner Joint | | | 28 | | | 32 | |
| | 2010.11-2015.05 | 6DCT | F | L | Hatchback 4WD CFFB | | GDS54013 | Drive Shaft | | 36 | | 59.5 | 40 | 479.5 | |
| | 2010.11-2015.05 | 6DCT | F | R | Hatchback 4WD CFFB | | GDS61295 | Drive Shaft | | 36 | | 59.5 | 40 | 555 | |
| | 2010.11-2015.05 | 6DCT | F | R | Hatchback 4WD CFFB | | GCO83002 | Outer Joint | | 36 | 27 | 59.5 | 40 | 66 | I |
| | 2010.11-2015.05 | 6MT | F | L | Hatchback 4WD CFFB | | GDS83295 | Drive Shaft | | 36 | | 59.5 | 40 | 491 | |
| | 2010.11-2015.05 | 6MT | F | R | Hatchback 4WD CFFB | | GDS83266 | Drive Shaft | | 36 | | 59.5 | 40 | 601 | |
| | 2010.11-2015.05 | 6MT | F | L | Hatchback 4WD CFFB | | GCO61059 | Outer Joint | | 36 | 33 | 59.5 | 40 | 59.5 | I |
| | 2010.11-2015.05 | 6AT/6MT | R | L | Hatchback 4WD CFFB | | GDS61284 | Drive Shaft | | 36 | | 59.5 | 40 | 594 | |
| | 2010.11-2015.05 | 6AT/6MT | R | R | Hatchback 4WD CFFB | | GDS61293 | Drive Shaft | | 36 | | 59.5 | 40 | 631 | |
| | 2010.11-2015.05 | 6AT/6MT | R | L/R | Hatchback 4WD CFFB | | GCI35026 | Outer Joint | | 36 | 33 | 59.5 | 40 | 61 | |
| | 2010.11-2015.05 | 6AT/6MT | R | L/R | Hatchback 4WD CFFB | | GCI53002 | Inner Joint | | | 33 | | | 34 | |
| | 2010.11-2015.05 | 6AT/6MT | R | L/R | Hatchback 4WD CFFB | | GCI82447 | Inner Joint | | | 33 | | | 34 | |
| 2.0 (110 kw) | 2015.03-2024.06 | 6AT | F | L | Estate 4WD CRLB;DFEA;DFGA | | GDS83381 | Drive Shaft | | 36 | | 59.5 | 40 | 483 | |
| | 2015.03-2024.06 | 6MT | F | L | Estate 4WD CRLB;DFEA;DFGA | | GDS81896 | Drive Shaft | | 36 | | 59.5 | 40 | 500 | |
| | 2015.03-2024.06 | 6MT | F | R | Estate 4WD CRLB;DFEA;DFGA | | GDS81889 | Drive Shaft | | 36 | | 59.5 | 40 | 614 | |
| | 2015.03-2024.06 | 6MT | F | L/R | Estate 4WD CRLB;DFEA;DFGA | | GCI83016 | Inner Joint | | | 28 | | | 32 | |

| | YEAR | TRANSM. | F/R | L/R | BODY STYLE & DRIVE TYPE & ENGINE | REMARKS | G-AP Ref. | PRODUCT | ABS | Technical Specifications A | B | C | H | L | P |
|---|---|---|---|---|---|---|---|---|---|---|---|---|---|---|---|
| **SKODA** **Superb** | | | | | | | | | | | | | | | |
| 2.0 (110 kw) | 2015.03-2024.06 | 6MT/6AT | F | L/R | Estate 4WD CRLB;DFEA;DFGA | | GCO83101 | Outer Joint | | 36 | 27 | 59.5 | 40 | 65 | M |
| | 2015.03-2024.06 | AT/6DCT | F | L/R | Estate 4WD CRLB;DFEA;DFGA | | GCI61057 | Inner Joint | | | 34 | | | 89 | |
| | 2015.03-2024.06 | 6MT | R | L | Estate 4WD CRLB;DFEA;DFGA | Date from:2015.06 | GDS61331 | Drive Shaft | | 36 | | 59.5 | 40 | 606 | |
| | 2015.03-2024.06 | 6MT | R | L | Estate 4WD CRLB;DFEA;DFGA | Date to:2015.05 | GDS61334 | Drive Shaft | | 36 | | 59.5 | 40 | 598 | |
| | 2015.03-2024.06 | 6MT | R | R | Estate 4WD CRLB;DFEA;DFGA | Date from:2015.06 | GDS61332 | Drive Shaft | | 36 | | 59.5 | 40 | 650 | |
| | 2015.03-2024.06 | 6MT | R | R | Estate 4WD CRLB;DFEA;DFGA | Date to:2015.05 | GDS61335 | Drive Shaft | | 36 | | 59.5 | 40 | 638 | |
| | 2015.03-2024.06 | 6MT | R | R | Estate 4WD CRLB;DFEA;DFGA | | GCI35026 | Outer Joint | | 36 | 33 | 59.5 | 40 | 61 | |
| | 2015.03-2024.06 | | R | L/R | Estate 4WD CRLB;DFEA;DFGA | | GCI61103 | Inner Joint | | | 33 | | | 32 | |
| | 2015.03-2024.06 | 6DCT | F | L | Estate FWD CRLB;DFEA;DFGA;DSRA;DSRB;DTSB;DTSA | For PR code:1PA/1PE | GDS83381 | Drive Shaft | | 36 | | 59.5 | 40 | 483 | |
| | 2015.03-2024.06 | 6DCT | F | R | Estate FWD CRLB;DFEA;DFGA;DSRA;DSRB;DTSB;DTSA | | GDS61345 | Drive Shaft | | 36 | | 59.5 | 40 | 774 | |
| | 2015.03-2024.06 | 6MT | F | L | Estate FWD CRLB;DFEA;DFGA;DSRA;DSRB;DTSB;DTSA | | GDS81896 | Drive Shaft | | 36 | | 59.5 | 40 | 500 | |
| | 2015.03-2024.06 | 6MT | F | R | Estate FWD CRLB;DFEA;DFGA;DSRA;DSRB;DTSB;DTSA | | GDS61101 | Drive Shaft | | 36 | | 59.5 | 40 | 803 | |
| | 2015.03-2024.06 | 6MT | F | L/R | Estate FWD CRLB;DFEA;DFGA;DSRA;DSRB;DTSB;DTSA | | GCI83016 | Inner Joint | | | 28 | | | 32 | |
| | 2015.03-2024.06 | 6MT/6DCT/7DCT | F | L/R | Estate FWD CRLB;DFEA;DFGA;DSRA;DSRB;DTSB;DTSA | | GCO83101 | Outer Joint | | 36 | 27 | 59.5 | 40 | 65 | M |
| | 2015.03-2024.06 | 7DCT | F | L | Estate FWD CRLB;DFEA;DFGA;DSRA;DSRB;DTSB;DTSA | | GDS82351 | Drive Shaft | | 36 | 37 | 59.5 | 40 | 568 | |
| | 2015.03-2024.06 | 7DCT | F | R | Estate FWD CRLB;DFEA;DFGA;DSRA;DSRB;DTSB;DTSA | | GDS83613 | Drive Shaft | | 36 | 37 | 59.5 | 40 | 921 | |
| | 2015.03-2024.06 | 7DCT | F | L | Estate FWD CRLB;DFEA;DFGA;DSRA;DSRB;DTSB;DTSA | | GCI81158 | Inner Joint | | 37 | 34 | 34.5 | 65.5 | 83 | |
| | 2015.03-2024.06 | 7DCT | F | R | Estate FWD CRLB;DFEA;DFGA;DSRA;DSRB;DTSB;DTSA | | GCI82108 | Inner Joint | | 37 | 34 | 40 | 77.5 | 103.5 | |
| | 2015.03-2024.06 | AT/6DCT | F | L/R | Estate FWD CRLB;DFEA;DFGA;DSRA;DSRB;DTSB;DTSA | | GCI61057 | Inner Joint | | | 34 | | | 89 | |
| | 2015.03-2024.06 | 6AT | F | L | Hatchback 4WD CRLB;DFEA;DFGA | | GDS83381 | Drive Shaft | | 36 | | 59.5 | 40 | 483 | |
| | 2015.03-2024.06 | 6MT | F | L | Hatchback 4WD CRLB;DFEA;DFGA | | GDS81896 | Drive Shaft | | 36 | | 59.5 | 40 | 500 | |
| | 2015.03-2024.06 | 6MT | F | R | Hatchback 4WD CRLB;DFEA;DFGA | | GDS81889 | Drive Shaft | | 36 | | 59.5 | 40 | 614 | |
| | 2015.03-2024.06 | 6MT | F | L/R | Hatchback 4WD CRLB;DFEA;DFGA | | GCO83101 | Outer Joint | | 36 | 27 | 59.5 | 40 | 65 | M |
| | 2015.03-2024.06 | 6MT | F | L/R | Hatchback 4WD CRLB;DFEA;DFGA | | GCI83016 | Inner Joint | | | 28 | | | 32 | |
| | 2015.03-2024.06 | AT/6DCT | F | L/R | Hatchback 4WD CRLB;DFEA;DFGA | | GCI61057 | Inner Joint | | | 34 | | | 89 | |
| | 2015.03-2024.06 | 6MT | R | L | Hatchback 4WD CRLB;DFEA;DFGA | | GDS61331 | Drive Shaft | | 36 | | 59.5 | 40 | 606 | |
| | 2015.03-2024.06 | 6MT | R | R | Hatchback 4WD CRLB;DFEA;DFGA | | GDS61332 | Drive Shaft | | 36 | | 59.5 | 40 | 650 | |
| | 2015.03-2024.06 | 6MT | R | L/R | Hatchback 4WD CRLB;DFEA;DFGA | | GCI35026 | Outer Joint | | 36 | 33 | 59.5 | 40 | 61 | |
| | 2015.03-2024.06 | | R | L/R | Hatchback 4WD CRLB;DFEA;DFGA | | GCI61103 | Inner Joint | | | 33 | | | 32 | |
| | 2015.03-2024.06 | 6DCT | F | L | Hatchback FWD CRLB;DFEA;DFGA;DSRA;DSRB;DTSB;DTSA | For PR code:1PA/1PE | GDS83381 | Drive Shaft | | 36 | | 59.5 | 40 | 483 | |
| | 2015.03-2024.06 | 6DCT | F | R | Hatchback FWD CRLB;DFEA;DFGA;DSRA;DSRB;DTSB;DTSA | | GDS61345 | Drive Shaft | | 36 | | 59.5 | 40 | 774 | |
| | 2015.03-2024.06 | 6MT | F | L | Hatchback FWD CRLB;DFEA;DFGA;DSRA;DSRB;DTSB;DTSA | | GDS81896 | Drive Shaft | | 36 | | 59.5 | 40 | 500 | |
| | 2015.03-2024.06 | 6MT | F | R | Hatchback FWD CRLB;DFEA;DFGA;DSRA;DSRB;DTSB;DTSA | | GDS61101 | Drive Shaft | | 36 | | 59.5 | 40 | 803 | |
| | 2015.03-2024.06 | 6MT | F | L/R | Hatchback FWD CRLB;DFEA;DFGA;DSRA;DSRB;DTSB;DTSA | | GCI83016 | Inner Joint | | | 28 | | | 32 | |
| | 2015.03-2024.06 | 6MT/6DCT/7DCT | F | L/R | Hatchback FWD CRLB;DFEA;DFGA;DSRA;DSRB;DTSB;DTSA | | GCO83101 | Outer Joint | | 36 | 27 | 59.5 | 40 | 65 | M |
| | 2015.03-2024.06 | 7DCT | F | L | Hatchback FWD CRLB;DFEA;DFGA;DSRA;DSRB;DTSB;DTSA | | GDS82351 | Drive Shaft | | 36 | 37 | 59.5 | 40 | 568 | |
| | 2015.03-2024.06 | 7DCT | F | R | Hatchback FWD CRLB;DFEA;DFGA;DSRA;DSRB;DTSB;DTSA | | GDS83613 | Drive Shaft | | 36 | 37 | 59.5 | 40 | 921 | |
| | 2015.03-2024.06 | 7DCT | F | L | Hatchback FWD CRLB;DFEA;DFGA;DSRA;DSRB;DTSB;DTSA | | GCI81158 | Inner Joint | | 37 | 34 | 34.5 | 65.5 | 83 | |
| | 2015.03-2024.06 | 7DCT | F | R | Hatchback FWD CRLB;DFEA;DFGA;DSRA;DSRB;DTSB;DTSA | | GCI82108 | Inner Joint | | 37 | 34 | 40 | 77.5 | 103.5 | |
| | 2015.03-2024.06 | AT/6DCT | F | L/R | Hatchback FWD CRLB;DFEA;DFGA;DSRA;DSRB;DTSB;DTSA | | GCI61057 | Inner Joint | | | 34 | | | 89 | |
| | 2023.11- | 7AT | F | R | Estate FWD DXPA | | GDS83613 | Drive Shaft | | 36 | 37 | 59.5 | 40 | 921 | |
| | 2023.11- | 7AT | F | L/R | Estate FWD DXPA | | GCO83101 | Outer Joint | | 36 | 27 | 59.5 | 40 | 65 | M |
| | 2023.11- | 7AT | F | L | Estate FWD DXPA | | GCI81158 | Inner Joint | | 37 | 34 | 34.5 | 65.5 | 83 | |
| | 2023.11- | 7DCT | F | R | Saloon FWD DXPA | | GDS83613 | Drive Shaft | | 36 | 37 | 59.5 | 40 | 921 | |
| | 2023.11- | 7DCT | F | L | Saloon FWD DXPA | | GCI81158 | Inner Joint | | 37 | 34 | 34.5 | 65.5 | 83 | |
| 2.0 (125 kw) | 2008.07-2015.05 | 6AT/6MT | F | L/R | Hatchback FWD CBBB;CFGB | | GCI54004 | Inner Joint | | | 34 | | | 81 | |
| | 2008.07-2015.05 | 6AT/6MT | F | L/R | Hatchback FWD CBBB;CFGB | Original Tripod Design | GCI61057 | Inner Joint | | | 34 | | | 89 | |
| | 2008.07-2015.05 | 6AT/6MT | F | L/R | Hatchback FWD CBBB;CFGB | | GCI83016 | Inner Joint | | | 28 | | | 32 | |
| | 2008.07-2015.05 | 6DCT | F | L | Hatchback FWD CBBB;CFGB | For steel rims | GDS54013 | Drive Shaft | | 36 | | 59.5 | 40 | 479.5 | |
| | 2008.07-2015.05 | 6DCT | F | L | Hatchback FWD CBBB;CFGB | For light alloy rims | GDS83381 | Drive Shaft | | 36 | | 59.5 | 40 | 483 | |
| | 2008.07-2015.05 | 6DCT | F | R | Hatchback FWD CBBB;CFGB | | GDS54011 | Drive Shaft | | 36 | | 59.5 | 40 | 755 | |
| | 2008.07-2015.05 | 6MT | F | L | Hatchback FWD CBBB;CFGB | | GDS83295 | Drive Shaft | | 36 | | 59.5 | 40 | 491 | |
| | 2008.07-2015.05 | 6MT | F | R | Hatchback FWD CBBB;CFGB | | GDS61126 | Drive Shaft | | 36 | | 59.5 | 40 | 793 | |
| | 2008.07-2015.05 | 6MT | F | R | Hatchback FWD CBBB;CFGB | | GDS61147 | Drive Shaft | | 36 | | 59.5 | 40 | 795 | |
| | 2008.07-2015.05 | 6MT | F | R | Hatchback FWD CBBB;CFGB | | GDS83313 | Drive Shaft | | 36 | | 59.5 | 40 | 792 | |
| | 2008.07-2015.05 | AT | F | L | Hatchback FWD CBBB;CFGB | | GDS83241 | Drive Shaft | | 36 | | 59.5 | 40 | 475 | |
| | 2008.07-2015.05 | AT/MT | F | L/R | Hatchback FWD CBBB;CFGB | | GCO83101 | Outer Joint | | 36 | 27 | 59.5 | 40 | 65 | M |
| | 2008.07-2015.05 | MT | F | L | Hatchback FWD CBBB;CFGB | | GDS83236 | Drive Shaft | | 36 | | 59.5 | 40 | 484 | |
| | 2008.09-2015.05 | 6AT/6MT | F | L/R | Hatchback 4WD CBBB;CFGB | | GCI54004 | Inner Joint | | | 34 | | | 81 | |
| | 2008.09-2015.05 | 6AT/6MT | F | L/R | Hatchback 4WD CBBB;CFGB | Original Tripod Design | GCI61057 | Inner Joint | | | 34 | | | 89 | |
| | 2008.09-2015.05 | 6AT/6MT | F | L/R | Hatchback 4WD CBBB;CFGB | | GCI83016 | Inner Joint | | | 28 | | | 32 | |
| | 2008.09-2015.05 | 6DCT | F | L | Hatchback 4WD CBBB;CFGB | | GDS54013 | Drive Shaft | | 36 | | 59.5 | 40 | 479.5 | |
| | 2008.09-2015.05 | 6DCT | F | R | Hatchback 4WD CBBB;CFGB | | GDS61295 | Drive Shaft | | 36 | | 59.5 | 40 | 555 | |
| | 2008.09-2015.05 | 6DCT | F | R | Hatchback 4WD CBBB;CFGB | | GCO83002 | Outer Joint | | 36 | 27 | 59.5 | 40 | 66 | I |
| | 2008.09-2015.05 | 6MT | F | L | Hatchback 4WD CBBB;CFGB | | GDS83295 | Drive Shaft | | 36 | | 59.5 | 40 | 491 | |

| | YEAR | TRANSM. | F/R | L/R | BODY STYLE & DRIVE TYPE & ENGINE | REMARKS | G-AP Ref. | PRODUCT | ABS | Technical Specifications A | B | C | H | L | P |
|---|---|---|---|---|---|---|---|---|---|---|---|---|---|---|---|
| **SKODA** | | | | | | | | | | | | | | | |
| **Superb** | | | | | | | | | | | | | | | |
| 2.0 (125 kw) | 2008.09-2015.05 | 6MT | F | R | Hatchback 4WD CBBB;CFGB | | GDS83266 | Drive Shaft | | 36 | | 59.5 | 40 | 601 | |
| | 2008.09-2015.05 | 6MT | F | L | Hatchback 4WD CBBB;CFGB | | GCO61059 | Outer Joint | | 36 | 33 | 59.5 | 40 | 59.5 | I |
| | 2008.09-2015.05 | MT | F | L | Hatchback 4WD CBBB;CFGB | | GDS83236 | Drive Shaft | | 36 | | 59.5 | 40 | 484 | |
| | 2008.09-2015.05 | 6AT/6MT | R | L | Hatchback 4WD CBBB;CFGB | | GDS61284 | Drive Shaft | | 36 | | 59.5 | 40 | 594 | |
| | 2008.09-2015.05 | 6AT/6MT | R | R | Hatchback 4WD CBBB;CFGB | | GDS61293 | Drive Shaft | | 36 | | 59.5 | 40 | 631 | |
| | 2008.09-2015.05 | 6AT/6MT | R | L/R | Hatchback 4WD CBBB;CFGB | | GCI35026 | Outer Joint | | 36 | 33 | 59.5 | 40 | 61 | |
| | 2008.09-2015.05 | 6AT/6MT | R | L/R | Hatchback 4WD CBBB;CFGB | | GCI53002 | Inner Joint | | | 33 | | | 34 | |
| | 2008.09-2015.05 | 6AT/6MT | R | L/R | Hatchback 4WD CBBB;CFGB | | GCI82447 | Inner Joint | | | 33 | | | 34 | |
| | 2009.10-2015.05 | 6AT/6MT | F | L/R | Estate 4WD CBBB;CFGB | | GCI54004 | Inner Joint | | | 34 | | | 81 | |
| | 2009.10-2015.05 | 6AT/6MT | F | L/R | Estate 4WD CBBB;CFGB | Original Tripod Design | GCI61057 | Inner Joint | | | 34 | | | 89 | |
| | 2009.10-2015.05 | 6AT/6MT | F | L/R | Estate 4WD CBBB;CFGB | | GCI83016 | Inner Joint | | | 28 | | | 32 | |
| | 2009.10-2015.05 | 6DCT | F | L | Estate 4WD CBBB;CFGB | | GDS54013 | Drive Shaft | | 36 | | 59.5 | 40 | 479.5 | |
| | 2009.10-2015.05 | 6DCT | F | R | Estate 4WD CBBB;CFGB | | GDS61295 | Drive Shaft | | 36 | | 59.5 | 40 | 555 | |
| | 2009.10-2015.05 | 6DCT | F | R | Estate 4WD CBBB;CFGB | | GCO83002 | Outer Joint | | 36 | 27 | 59.5 | 40 | 66 | I |
| | 2009.10-2015.05 | 6MT | F | L | Estate 4WD CBBB;CFGB | | GDS83295 | Drive Shaft | | 36 | | 59.5 | 40 | 491 | |
| | 2009.10-2015.05 | 6MT | F | R | Estate 4WD CBBB;CFGB | | GDS83266 | Drive Shaft | | 36 | | 59.5 | 40 | 601 | |
| | 2009.10-2015.05 | 6MT | F | L | Estate 4WD CBBB;CFGB | | GCO61059 | Outer Joint | | 36 | 33 | 59.5 | 40 | 59.5 | I |
| | 2009.10-2015.05 | MT | F | L | Estate 4WD CBBB;CFGB | | GDS83236 | Drive Shaft | | 36 | | 59.5 | 40 | 484 | |
| | 2009.10-2015.05 | 6AT/6MT | R | L | Estate 4WD CBBB;CFGB | | GDS61284 | Drive Shaft | | 36 | | 59.5 | 40 | 594 | |
| | 2009.10-2015.05 | 6AT/6MT | R | R | Estate 4WD CBBB;CFGB | | GDS61293 | Drive Shaft | | 36 | | 59.5 | 40 | 631 | |
| | 2009.10-2015.05 | 6AT/6MT | R | L/R | Estate 4WD CBBB;CFGB | | GCI35026 | Outer Joint | | 36 | 33 | 59.5 | 40 | 61 | |
| | 2009.10-2015.05 | 6AT/6MT | R | L/R | Estate 4WD CBBB;CFGB | | GCI53002 | Inner Joint | | | 33 | | | 34 | |
| | 2009.10-2015.05 | 6AT/6MT | R | L/R | Estate 4WD CBBB;CFGB | | GCI82447 | Inner Joint | | | 33 | | | 34 | |
| | 2009.10-2015.05 | 6DCT | F | L | Estate FWD CBBB;CFGB | For steel rims | GDS54013 | Drive Shaft | | 36 | | 59.5 | 40 | 479.5 | |
| | 2009.10-2015.05 | 6DCT | F | L | Estate FWD CBBB;CFGB | For light alloy rims | GDS83381 | Drive Shaft | | 36 | | 59.5 | 40 | 483 | |
| | 2009.10-2015.05 | 6DCT | F | R | Estate FWD CBBB;CFGB | | GDS54011 | Drive Shaft | | 36 | | 59.5 | 40 | 755 | |
| | 2009.10-2015.05 | 6DCT | F | L | Estate FWD CBBB;CFGB | Rims:With alloy rim | GCO83101 | Outer Joint | | 36 | 27 | 59.5 | 40 | 65 | M |
| | 2009.10-2015.05 | 6DCT | F | L/R | Estate FWD CBBB;CFGB | TJ | GCI54004 | Inner Joint | | | 34 | | | 81 | |
| | 2009.10-2015.05 | 6DCT | F | L/R | Estate FWD CBBB;CFGB | AAR | GCI61057 | Inner Joint | | | 34 | | | 89 | |
| | 2009.10-2015.05 | 6MT | F | L | Estate FWD CBBB;CFGB | Inner teeth of tranm.side:28 | GDS83295 | Drive Shaft | | 36 | | 59.5 | 40 | 491 | |
| | 2009.10-2015.05 | 6MT | F | R | Estate FWD CBBB;CFGB | Solid shaft | GDS61126 | Drive Shaft | | 36 | | 59.5 | 40 | 793 | |
| | 2009.10-2015.05 | 6MT | F | R | Estate FWD CBBB;CFGB | Hollow shaft | GDS61147 | Drive Shaft | | 36 | | 59.5 | 40 | 795 | |
| | 2009.10-2015.05 | 6MT | F | R | Estate FWD CBBB;CFGB | Solid shaft | GDS83313 | Drive Shaft | | 36 | | 59.5 | 40 | 792 | |
| | 2009.10-2015.05 | 6MT | F | L/R | Estate FWD CBBB;CFGB | | GCI83016 | Inner Joint | | | 28 | | | 32 | |
| | 2009.10-2015.05 | MT | F | L | Estate FWD CBBB;CFGB | Inner teeth of tranm.side:33 | GDS83236 | Drive Shaft | | 36 | | 59.5 | 40 | 484 | |
| 2.0 (140 kw) | 2015.03-2024.06 | 6DCT | F | L | Estate 4WD DDAA;DFCA;DFHA | For PR code:1PA/1PE | GDS83381 | Drive Shaft | | 36 | | 59.5 | 40 | 483 | |
| | 2015.03-2024.06 | 6DCT | F | L/R | Estate 4WD DDAA;DFCA;DFHA | | GCO83101 | Outer Joint | | 36 | 27 | 59.5 | 40 | 65 | M |
| | 2015.03-2024.06 | 6DCT | F | L/R | Estate 4WD DDAA;DFCA;DFHA | | GCI61057 | Inner Joint | | | 34 | | | 89 | |
| | 2015.03-2024.06 | 6DCT/7DCT | F | R | Estate 4WD DDAA;DFCA;DFHA | | GDS61346 | Drive Shaft | | 36 | | 59.5 | 40 | 589 | |
| | 2015.03-2024.06 | 7DCT | F | L | Estate 4WD DDAA;DFCA;DFHA | | GDS82351 | Drive Shaft | | 36 | 37 | 59.5 | 40 | 568 | |
| | 2015.03-2024.06 | 7DCT | F | L | Estate 4WD DDAA;DFCA;DFHA | | GCI81158 | Inner Joint | | 37 | 34 | 34.5 | 65.5 | 83 | |
| | 2015.03-2024.06 | 6AT/7AT | R | L | Estate 4WD DDAA;DFCA;DFHA | Date from:2015.06 | GDS61331 | Drive Shaft | | 36 | | 59.5 | 40 | 606 | |
| | 2015.03-2024.06 | 6AT/7AT | R | L | Estate 4WD DDAA;DFCA;DFHA | Date to:2015.05 | GDS61334 | Drive Shaft | | 36 | | 59.5 | 40 | 598 | |
| | 2015.03-2024.06 | 6AT/7AT | R | R | Estate 4WD DDAA;DFCA;DFHA | Date from:2015.06 | GDS61332 | Drive Shaft | | 36 | | 59.5 | 40 | 650 | |
| | 2015.03-2024.06 | 6AT/7AT | R | R | Estate 4WD DDAA;DFCA;DFHA | Date to:2015.05 | GDS61335 | Drive Shaft | | 36 | | 59.5 | 40 | 638 | |
| | 2015.03-2024.06 | 6AT/7AT | R | L/R | Estate 4WD DDAA;DFCA;DFHA | | GCI35026 | Outer Joint | | 36 | 33 | 59.5 | 40 | 61 | |
| | 2015.03-2024.06 | 6AT/7AT | R | L/R | Estate 4WD DDAA;DFCA;DFHA | Date to:2015.05 | GCI53002 | Inner Joint | | | 33 | | | 34 | |
| | 2015.03-2024.06 | 6AT/7AT | R | L/R | Estate 4WD DDAA;DFCA;DFHA | | GCI61103 | Inner Joint | | | 33 | | | 32 | |
| | 2015.03-2024.06 | 6DCT | F | L | Estate FWD DDAA;DFCA;DFHA | For PR code:1PA/1PE | GDS83381 | Drive Shaft | | 36 | | 59.5 | 40 | 483 | |
| | 2015.03-2024.06 | 6DCT | F | R | Estate FWD DDAA;DFCA;DFHA | | GDS61345 | Drive Shaft | | 36 | | 59.5 | 40 | 774 | |
| | 2015.03-2024.06 | 6DCT | F | L/R | Estate FWD DDAA;DFCA;DFHA | | GCI61057 | Inner Joint | | | 34 | | | 89 | |
| | 2015.03-2024.06 | 6MT | F | L | Estate FWD DDAA;DFCA;DFHA | | GDS81896 | Drive Shaft | | 36 | | 59.5 | 40 | 500 | |
| | 2015.03-2024.06 | 6MT | F | R | Estate FWD DDAA;DFCA;DFHA | | GDS61101 | Drive Shaft | | 36 | | 59.5 | 40 | 803 | |
| | 2015.03-2024.06 | 6MT | F | L/R | Estate FWD DDAA;DFCA;DFHA | | GCI83016 | Inner Joint | | | 28 | | | 32 | |
| | 2015.03-2024.06 | 6MT/6DCT/7DCT | F | L/R | Estate FWD DDAA;DFCA;DFHA | | GCO83101 | Outer Joint | | 36 | 27 | 59.5 | 40 | 65 | M |
| | 2015.03-2024.06 | 7DCT | F | L | Estate FWD DDAA;DFCA;DFHA | | GDS82351 | Drive Shaft | | 36 | 37 | 59.5 | 40 | 568 | |
| | 2015.03-2024.06 | 7DCT | F | R | Estate FWD DDAA;DFCA;DFHA | | GDS83613 | Drive Shaft | | 36 | 37 | 59.5 | 40 | 921 | |
| | 2015.03-2024.06 | 7DCT | F | L | Estate FWD DDAA;DFCA;DFHA | | GCI81158 | Inner Joint | | 37 | 34 | 34.5 | 65.5 | 83 | |
| | 2015.03-2024.06 | 7DCT | F | R | Estate FWD DDAA;DFCA;DFHA | | GCI82108 | Inner Joint | | 37 | 34 | 40 | 77.5 | 103.5 | |
| | 2015.03-2024.06 | 6AT/7AT | F | R | Hatchback 4WD DDAA;DFCA;DFHA | | GDS61346 | Drive Shaft | | 36 | | 59.5 | 40 | 589 | |
| | 2015.03-2024.06 | 6DCT | F | L | Hatchback 4WD DDAA;DFCA;DFHA | For PR code:1PA/1PE | GDS83381 | Drive Shaft | | 36 | | 59.5 | 40 | 483 | |
| | 2015.03-2024.06 | AT | F | L/R | Hatchback 4WD DDAA;DFCA;DFHA | Date from:2015.08 | GCO83101 | Outer Joint | | 36 | 27 | 59.5 | 40 | 65 | M |
| | 2015.03-2024.06 | AT/6DCT | F | L/R | Hatchback 4WD DDAA;DFCA;DFHA | | GCI61057 | Inner Joint | | | 34 | | | 89 | |
| | 2015.03-2024.06 | 6AT/6MT | R | L/R | Hatchback 4WD DDAA;DFCA;DFHA | | GCI35026 | Outer Joint | | 36 | 33 | 59.5 | 40 | 61 | |
| | 2015.03-2024.06 | 6AT/7AT | R | L | Hatchback 4WD DDAA;DFCA;DFHA | | GDS61331 | Drive Shaft | | 36 | | 59.5 | 40 | 606 | |

| | YEAR | TRANSM. | F/R | L/R | BODY STYLE & DRIVE TYPE & ENGINE | REMARKS | G-AP Ref. | PRODUCT | ABS | Technical Specifications A | B | C | H | L | P |
|---|---|---|---|---|---|---|---|---|---|---|---|---|---|---|---|
| **SKODA** **Superb** | | | | | | | | | | | | | | | |
| 2.0 (140 kw) | 2015.03-2024.06 | 6AT/7AT | R | R | Hatchback 4WD DDAA;DFCA;DFHA | | GDS61332 | Drive Shaft | | 36 | | 59.5 | 40 | 650 | |
| | 2015.03-2024.06 | | R | L/R | Hatchback 4WD DDAA;DFCA;DFHA | | GCI61103 | Inner Joint | | | 33 | | | 32 | |
| | 2015.03-2024.06 | 6DCT | F | L | Hatchback FWD DDAA;DFCA;DFHA | For PR code:1PA/1PE | GDS83381 | Drive Shaft | | 36 | | 59.5 | 40 | 483 | |
| | 2015.03-2024.06 | 6DCT | F | R | Hatchback FWD DDAA;DFCA;DFHA | | GDS61345 | Drive Shaft | | 36 | | 59.5 | 40 | 774 | |
| | 2015.03-2024.06 | 6MT | F | L | Hatchback FWD DDAA;DFCA;DFHA | | GDS81896 | Drive Shaft | | 36 | | 59.5 | 40 | 500 | |
| | 2015.03-2024.06 | 6MT | F | R | Hatchback FWD DDAA;DFCA;DFHA | | GDS61101 | Drive Shaft | | 36 | | 59.5 | 40 | 803 | |
| | 2015.03-2024.06 | 6MT | F | L/R | Hatchback FWD DDAA;DFCA;DFHA | | GCI83016 | Inner Joint | | | 28 | | | 32 | |
| | 2015.03-2024.06 | AT/6DCT | F | L/R | Hatchback FWD DDAA;DFCA;DFHA | | GCI61057 | Inner Joint | | | 34 | | | 89 | |
| | 2015.03-2024.06 | AT/MT | F | L/R | Hatchback FWD DDAA;DFCA;DFHA | | GCO83101 | Outer Joint | | 36 | 27 | 59.5 | 40 | 65 | M |
| | 2019.07-2024.06 | 7AT | F | L | Estate FWD DKZA;CZPB | | GCI83028 | Inner Joint | | 37 | 28 | | 65.5 | 90.2 | |
| | 2019.07-2024.06 | 7AT | F | L | Hatchback FWD DKZA;CZPB | | GCI83028 | Inner Joint | | 37 | 28 | | 65.5 | 90.2 | |
| 2.0 (142 kw) | 2024.02- | 7DCT | F | L | Estate 4WD DXNB | | GDS82351 | Drive Shaft | | 36 | 37 | 59.5 | 40 | 568 | |
| | 2024.02- | 7DCT | F | R | Estate 4WD DXNB | With flange | GDS61346 | Drive Shaft | | 36 | | 59.5 | 40 | 589 | |
| | 2024.02- | 7DCT | F | L | Estate 4WD DXNB | | GCI81158 | Inner Joint | | 37 | 34 | 34.5 | 65.5 | 83 | |
| | 2024.02- | 7DCT | R | L | Estate 4WD DXNB | | GDS61334 | Drive Shaft | | 36 | | 59.5 | 40 | 598 | |
| | 2024.02- | 7DCT | R | R | Estate 4WD DXNB | | GDS61335 | Drive Shaft | | 36 | | 59.5 | 40 | 638 | |
| | 2024.03- | 7DCT | F | L | Saloon 4WD DXNB | | GDS82351 | Drive Shaft | | 36 | 37 | 59.5 | 40 | 568 | |
| | 2024.03- | 7DCT | F | R | Saloon 4WD DXNB | With flange | GDS61346 | Drive Shaft | | 36 | | 59.5 | 40 | 589 | |
| | 2024.03- | 7DCT | F | L | Saloon 4WD DXNB | | GCI81158 | Inner Joint | | 37 | 34 | 34.5 | 65.5 | 83 | |
| | 2024.03- | 7DCT | R | L | Saloon 4WD DXNB | | GDS61334 | Drive Shaft | | 36 | | 59.5 | 40 | 598 | |
| | 2024.03- | 7DCT | R | R | Saloon 4WD DXNB | | GDS61335 | Drive Shaft | | 36 | | 59.5 | 40 | 638 | |
| 2.0 (147 kw) | 2010.05-2015.05 | 6AT | F | L | Estate FWD CCZA | | GDS83295 | Drive Shaft | | 36 | | 59.5 | 40 | 491 | |
| | 2010.05-2015.05 | 6AT | F | R | Estate FWD CCZA | | GDS81653 | Drive Shaft | | 36 | | 59.5 | 40 | 785 | |
| | 2010.05-2015.05 | 6AT | F | R | Estate FWD CCZA | | GCO83002 | Outer Joint | | 36 | 27 | 59.5 | 40 | 66 | I |
| | 2010.05-2015.05 | 6AT | F | R | Estate FWD CCZA | | GCI61069 | Inner Joint | | | 28 | | | 32 | |
| | 2010.05-2015.05 | | F | L/R | Estate FWD CCZA | | GCO83101 | Outer Joint | | 36 | 27 | 59.5 | 40 | 65 | M |
| | 2010.05-2015.05 | | F | L/R | Estate FWD CCZA | | GCI83016 | Inner Joint | | | 28 | | | 32 | |
| | 2010.05-2015.05 | 6AT | F | L | Hatchback FWD CCZA | | GDS83295 | Drive Shaft | | 36 | | 59.5 | 40 | 491 | |
| | 2010.05-2015.05 | 6AT | F | R | Hatchback FWD CCZA | | GDS81653 | Drive Shaft | | 36 | | 59.5 | 40 | 785 | |
| | 2010.05-2015.05 | 6AT | F | R | Hatchback FWD CCZA | | GCO83002 | Outer Joint | | 36 | 27 | 59.5 | 40 | 66 | I |
| | 2010.05-2015.05 | 6AT | F | R | Hatchback FWD CCZA | | GCI61069 | Inner Joint | | | 28 | | | 32 | |
| | 2010.05-2015.05 | | F | L/R | Hatchback FWD CCZA | | GCO83101 | Outer Joint | | 36 | 27 | 59.5 | 40 | 65 | M |
| | 2010.05-2015.05 | | F | L/R | Hatchback FWD CCZA | | GCI83016 | Inner Joint | | | 28 | | | 32 | |
| | 2020.09-2024.06 | 7DCT | F | L | Estate 4WD DTUA | | GDS82351 | Drive Shaft | | 36 | 37 | 59.5 | 40 | 568 | |
| | 2020.09-2024.06 | 7DCT | F | R | Estate 4WD DTUA | | GDS61346 | Drive Shaft | | 36 | | 59.5 | 40 | 589 | |
| | 2020.09-2024.06 | 7DCT | F | L/R | Estate 4WD DTUA | | GCO83101 | Outer Joint | | 36 | 27 | 59.5 | 40 | 65 | M |
| | 2020.09-2024.06 | 7DCT | F | L | Estate 4WD DTUA | | GCI81158 | Inner Joint | | 37 | 34 | 34.5 | 65.5 | 83 | |
| | 2020.09-2024.06 | 7DCT | F | R | Estate 4WD DTUA | | GCI61057 | Inner Joint | | | 34 | | | 89 | |
| | 2020.09-2024.06 | 7DCT | R | L | Estate 4WD DTUA | | GDS61331 | Drive Shaft | | 36 | | 59.5 | 40 | 606 | |
| | 2020.09-2024.06 | 7DCT | R | R | Estate 4WD DTUA | | GDS61332 | Drive Shaft | | 36 | | 59.5 | 40 | 650 | |
| | 2020.09-2024.06 | 7DCT | R | L/R | Estate 4WD DTUA | | GCI35026 | Outer Joint | | 36 | 33 | 59.5 | 40 | 61 | |
| | 2020.09-2024.06 | 7DCT | R | L/R | Estate 4WD DTUA | | GCI61103 | Inner Joint | | | 33 | | | 32 | |
| | 2020.09-2024.06 | 7DCT | F | L | Estate FWD DTUA | | GDS82351 | Drive Shaft | | 36 | 37 | 59.5 | 40 | 568 | |
| | 2020.09-2024.06 | 7DCT | F | R | Estate FWD DTUA | | GDS83613 | Drive Shaft | | 36 | 37 | 59.5 | 40 | 921 | |
| | 2020.09-2024.06 | 7DCT | F | R | Estate FWD DTUA | | GCO83101 | Outer Joint | | 36 | 27 | 59.5 | 40 | 65 | M |
| | 2020.09-2024.06 | 7DCT | F | L | Estate FWD DTUA | | GCI81158 | Inner Joint | | 37 | 34 | 34.5 | 65.5 | 83 | |
| | 2020.09-2024.06 | 7DCT | F | R | Estate FWD DTUA | | GCI82108 | Inner Joint | | 37 | 34 | 40 | 77.5 | 103.5 | |
| | 2020.09-2024.06 | 7DCT | F | L | Hatchback 4WD DTUA | | GDS82351 | Drive Shaft | | 36 | 37 | 59.5 | 40 | 568 | |
| | 2020.09-2024.06 | 7DCT | F | R | Hatchback 4WD DTUA | | GDS61346 | Drive Shaft | | 36 | | 59.5 | 40 | 589 | |
| | 2020.09-2024.06 | 7DCT | F | L/R | Hatchback 4WD DTUA | | GCO83101 | Outer Joint | | 36 | 27 | 59.5 | 40 | 65 | M |
| | 2020.09-2024.06 | 7DCT | F | L | Hatchback 4WD DTUA | | GCI81158 | Inner Joint | | 37 | 34 | 34.5 | 65.5 | 83 | |
| | 2020.09-2024.06 | 7DCT | F | R | Hatchback 4WD DTUA | | GCI61057 | Inner Joint | | | 34 | | | 89 | |
| | 2020.09-2024.06 | 7DCT | R | L | Hatchback 4WD DTUA | | GDS61331 | Drive Shaft | | 36 | | 59.5 | 40 | 606 | |
| | 2020.09-2024.06 | 7DCT | R | R | Hatchback 4WD DTUA | | GDS61332 | Drive Shaft | | 36 | | 59.5 | 40 | 650 | |
| | 2020.09-2024.06 | 7DCT | R | L/R | Hatchback 4WD DTUA | | GCI35026 | Outer Joint | | 36 | 33 | 59.5 | 40 | 61 | |
| | 2020.09-2024.06 | 7DCT | R | L/R | Hatchback 4WD DTUA | | GCI61103 | Inner Joint | | | 33 | | | 32 | |
| | 2020.09-2024.06 | 7DCT | F | L | Hatchback FWD DTUA | | GDS82351 | Drive Shaft | | 36 | 37 | 59.5 | 40 | 568 | |
| | 2020.09-2024.06 | 7DCT | F | R | Hatchback FWD DTUA | | GDS83613 | Drive Shaft | | 36 | 37 | 59.5 | 40 | 921 | |
| | 2020.09-2024.06 | 7DCT | F | R | Hatchback FWD DTUA | | GCO83101 | Outer Joint | | 36 | 27 | 59.5 | 40 | 65 | M |
| | 2020.09-2024.06 | 7DCT | F | L | Hatchback FWD DTUA | | GCI81158 | Inner Joint | | 37 | 34 | 34.5 | 65.5 | 83 | |
| | 2020.09-2024.06 | 7DCT | F | R | Hatchback FWD DTUA | | GCI82108 | Inner Joint | | 37 | 34 | 40 | 77.5 | 103.5 | |
| 2.0 (150 kw) | 2024.11- | 7DCT | F | L | Estate FWD DNNE | | GDS82351 | Drive Shaft | | 36 | 37 | 59.5 | 40 | 568 | |
| | 2024.11- | 7DCT | F | R | Estate FWD DNNE | | GDS83613 | Drive Shaft | | 36 | 37 | 59.5 | 40 | 921 | |
| | 2024.11- | 7DCT | F | L | Estate FWD DNNE | | GCI81158 | Inner Joint | | 37 | 34 | 34.5 | 65.5 | 83 | |
| | 2024.11- | 7DCT | F | L | Hatchback FWD DNNE | | GDS82351 | Drive Shaft | | 36 | 37 | 59.5 | 40 | 568 | |

| | YEAR | TRANSM. | F/R | L/R | BODY STYLE & DRIVE TYPE & ENGINE | REMARKS | G-AP Ref. | PRODUCT | ABS | Technical Specifications A | B | C | H | L | P |
|---|---|---|---|---|---|---|---|---|---|---|---|---|---|---|---|
| **SKODA** **Superb** | | | | | | | | | | | | | | | |
| 2.0 (150 kw) | 2024.11- | 7DCT | F | R | Hatchback FWD DNNE | | GDS83613 | Drive Shaft | | 36 | 37 | 59.5 | 40 | 921 | |
| | 2024.11- | 7DCT | F | L | Hatchback FWD DNNE | | GCI81158 | Inner Joint | | 37 | 34 | 34.5 | 65.5 | 83 | |
| 2.0 (162 kw) | 2015.03-2024.06 | 6AT | F | L | Estate FWD CHHB | | GDS81896 | Drive Shaft | | 36 | | 59.5 | 40 | 500 | |
| | 2015.03-2024.06 | 6AT | F | R | Estate FWD CHHB | | GDS61147 | Drive Shaft | | 36 | | 59.5 | 40 | 795 | |
| | 2015.03-2024.06 | AT | F | L/R | Estate FWD CHHB | | GCO83101 | Outer Joint | | 36 | 27 | 59.5 | 40 | 65 | M |
| | 2015.03-2024.06 | | F | L/R | Estate FWD CHHB | | GCI83016 | Inner Joint | | | 28 | | | 32 | |
| | 2015.03-2024.06 | 6AT | F | L | Hatchback FWD CHHB | | GDS81896 | Drive Shaft | | 36 | | 59.5 | 40 | 500 | |
| | 2015.03-2024.06 | 6AT | F | R | Hatchback FWD CHHB | | GDS61147 | Drive Shaft | | 36 | | 59.5 | 40 | 795 | |
| | 2015.03-2024.06 | AT | F | L/R | Hatchback FWD CHHB | | GCO83101 | Outer Joint | | 36 | 27 | 59.5 | 40 | 65 | M |
| | 2015.03-2024.06 | | F | L/R | Hatchback FWD CHHB | | GCI83016 | Inner Joint | | | 28 | | | 32 | |
| 2.0 (195 kw) | 2024.02- | 7DCT | F | L | Saloon 4WD DNPB | | GDS82351 | Drive Shaft | | 36 | 37 | 59.5 | 40 | 568 | |
| | 2024.02- | 7DCT | F | R | Saloon 4WD DNPB | With flange | GDS61346 | Drive Shaft | | 36 | | 59.5 | 40 | 589 | |
| | 2024.02- | 7DCT | F | L | Saloon 4WD DNPB | | GCI81158 | Inner Joint | | 37 | 34 | 34.5 | 65.5 | 83 | |
| | 2024.05- | 7DCT | F | L | Estate 4WD DNPB | | GDS82351 | Drive Shaft | | 36 | 37 | 59.5 | 40 | 568 | |
| | 2024.05- | 7DCT | F | R | Estate 4WD DNPB | With flange | GDS61346 | Drive Shaft | | 36 | | 59.5 | 40 | 589 | |
| | 2024.05- | 7DCT | F | L | Estate 4WD DNPB | | GCI81158 | Inner Joint | | 37 | 34 | 34.5 | 65.5 | 83 | |
| 2.0 (200 kw) | 2015.03-2024.06 | 7AT | F | R | Estate 4WD DNUA | | GDS81889 | Drive Shaft | | 36 | | 59.5 | 40 | 614 | |
| | 2015.03-2024.06 | 7AT | F | R | Estate 4WD DNUA | | GCO83101 | Outer Joint | | 36 | 27 | 59.5 | 40 | 65 | M |
| | 2015.03-2024.06 | 7AT | F | R | Estate 4WD DNUA | | GCI61069 | Inner Joint | | | 28 | | | 32 | |
| | 2015.03-2024.06 | 7AT | R | L | Estate 4WD DNUA | Date to:2015.05 | GDS61334 | Drive Shaft | | 36 | | 59.5 | 40 | 598 | |
| | 2015.03-2024.06 | 7AT | R | R | Estate 4WD DNUA | Date to:2015.05 | GDS61335 | Drive Shaft | | 36 | | 59.5 | 40 | 638 | |
| | 2015.03-2024.06 | 7AT | R | L/R | Estate 4WD DNUA | | GCI35026 | Outer Joint | | 36 | 33 | 59.5 | 40 | 61 | |
| | 2015.03-2024.06 | | R | L/R | Estate 4WD DNUA | | GCI61103 | Inner Joint | | | 33 | | | 32 | |
| | 2015.03-2024.06 | 7AT | F | R | Hatchback 4WD DNUA | | GDS81889 | Drive Shaft | | 36 | | 59.5 | 40 | 614 | |
| | 2015.03-2024.06 | 7AT | F | R | Hatchback 4WD DNUA | | GCO83101 | Outer Joint | | 36 | 27 | 59.5 | 40 | 65 | M |
| | 2015.03-2024.06 | 7AT | F | R | Hatchback 4WD DNUA | | GCI61069 | Inner Joint | | | 28 | | | 32 | |
| | 2015.03-2024.06 | 7AT | R | L/R | Hatchback 4WD DNUA | | GCI35026 | Outer Joint | | 36 | 33 | 59.5 | 40 | 61 | |
| | 2015.03-2024.06 | 7DCT | R | L | Hatchback 4WD DNUA | Date from:2015.06 | GDS61331 | Drive Shaft | | 36 | | 59.5 | 40 | 606 | |
| | 2015.03-2024.06 | 7DCT | R | R | Hatchback 4WD DNUA | | GDS61332 | Drive Shaft | | 36 | | 59.5 | 40 | 650 | |
| | 2015.03-2024.06 | | R | L/R | Hatchback 4WD DNUA | | GCI61103 | Inner Joint | | | 33 | | | 32 | |
| 2.0 (206 kw) | 2015.03-2024.06 | 6AT | F | R | Estate 4WD DNFE, CJXA | | GDS81889 | Drive Shaft | | 36 | | 59.5 | 40 | 614 | |
| | 2015.03-2024.06 | 6AT | F | R | Estate 4WD DNFE, CJXA | | GCO83101 | Outer Joint | | 36 | 27 | 59.5 | 40 | 65 | M |
| | 2015.03-2024.06 | 6AT | F | R | Estate 4WD DNFE, CJXA | | GCI61069 | Inner Joint | | | 28 | | | 32 | |
| | 2015.03-2024.06 | 6DCT | F | L | Estate 4WD DNFE, CJXA | | GDS81896 | Drive Shaft | | 36 | | 59.5 | 40 | 500 | |
| | 2015.03-2024.06 | 6AT | R | R | Estate 4WD DNFE, CJXA | | GCI35026 | Outer Joint | | 36 | 33 | 59.5 | 40 | 61 | |
| | 2015.03-2024.06 | 6AT | R | R | Estate 4WD DNFE, CJXA | | GCI61103 | Inner Joint | | | 33 | | | 32 | |
| | 2015.03-2024.06 | 6AT/7AT | R | L | Estate 4WD DNFE, CJXA | Date from:2015.06 | GDS61331 | Drive Shaft | | 36 | | 59.5 | 40 | 606 | |
| | 2015.03-2024.06 | 6AT/7AT | R | L | Estate 4WD DNFE, CJXA | Date to:2015.05 | GDS61334 | Drive Shaft | | 36 | | 59.5 | 40 | 598 | |
| | 2015.03-2024.06 | 6AT/7AT | R | R | Estate 4WD DNFE, CJXA | Date from:2015.06 | GDS61332 | Drive Shaft | | 36 | | 59.5 | 40 | 650 | |
| | 2015.03-2024.06 | 6AT/7AT | R | R | Estate 4WD DNFE, CJXA | Date to:2015.05 | GDS61335 | Drive Shaft | | 36 | | 59.5 | 40 | 638 | |
| | 2015.03-2024.06 | 6AT | F | R | Hatchback 4WD CJXA;DNFE | | GDS81889 | Drive Shaft | | 36 | | 59.5 | 40 | 614 | |
| | 2015.03-2024.06 | 6AT | F | R | Hatchback 4WD CJXA;DNFE | | GCO83101 | Outer Joint | | 36 | 27 | 59.5 | 40 | 65 | M |
| | 2015.03-2024.06 | 6AT | F | R | Hatchback 4WD CJXA;DNFE | | GCI61069 | Inner Joint | | | 28 | | | 32 | |
| | 2015.03-2024.06 | 6DCT | F | L | Hatchback 4WD CJXA;DNFE | | GDS81896 | Drive Shaft | | 36 | | 59.5 | 40 | 500 | |
| | 2015.03-2024.06 | 6AT | R | L | Hatchback 4WD CJXA;DNFE | | GDS61331 | Drive Shaft | | 36 | | 59.5 | 40 | 606 | |
| | 2015.03-2024.06 | 6AT | R | R | Hatchback 4WD CJXA;DNFE | | GDS61332 | Drive Shaft | | 36 | | 59.5 | 40 | 650 | |
| | 2015.03-2024.06 | 6AT | R | L/R | Hatchback 4WD CJXA;DNFE | | GCI35026 | Outer Joint | | 36 | 33 | 59.5 | 40 | 61 | |
| | 2015.03-2024.06 | 6AT | R | L/R | Hatchback 4WD CJXA;DNFE | | GCI61103 | Inner Joint | | | 33 | | | 32 | |
| 2.5 (114 kw) | 2001.12-2003.08 | 5AT | F | R | Saloon FWD AYM | | GDS83048 | Drive Shaft | 45W | 38 | | 59.5 | 34.5 | 502 | |
| | 2001.12-2003.08 | AT | F | L | Saloon FWD AYM | | GDS83015 | Drive Shaft | 45W | 38 | | 59.5 | 34.5 | 527 | |
| | 2001.12-2003.08 | AT/MT | F | L/R | Saloon FWD AYM | | GCO83019 | Outer Joint | 45W | 38 | 27 | 59.5 | 34.5 | 63 | I |
| | 2001.12-2003.08 | AT/MT | F | L/R | Saloon FWD AYM | | GCI50019 | Inner Joint | | | 34 | | | 59.5 | |
| | 2001.12-2003.08 | MT | F | L | Saloon FWD AYM | | GDS83008 | Drive Shaft | 45W | 38 | | 59.5 | 34.5 | 603 | |
| | 2001.12-2003.08 | MT | F | R | Saloon FWD AYM | | GDS61019 | Drive Shaft | 45W | 38 | | 59.5 | 34.5 | 624 | |
| 2.5 (120 kw) | 2003.06-2008.03 | 5AT | F | R | Saloon FWD BDG | | GDS83048 | Drive Shaft | 45W | 38 | | 59.5 | 34.5 | 502 | |
| | 2003.06-2008.03 | AT | F | L | Saloon FWD BDG | | GDS83015 | Drive Shaft | 45W | 38 | | 59.5 | 34.5 | 527 | |
| | 2003.06-2008.03 | AT/MT | F | L/R | Saloon FWD BDG | | GCO83019 | Outer Joint | 45W | 38 | 27 | 59.5 | 34.5 | 63 | I |
| | 2003.06-2008.03 | MT | F | L | Saloon FWD BDG | | GDS83008 | Drive Shaft | 45W | 38 | | 59.5 | 34.5 | 603 | |
| | 2003.06-2008.03 | MT | F | R | Saloon FWD BDG | | GDS61019 | Drive Shaft | 45W | 38 | | 59.5 | 34.5 | 624 | |
| | 2003.06-2008.03 | MT | F | L/R | Saloon FWD BDG | | GCI50019 | Inner Joint | | | 34 | | | 59.5 | |
| 2.8 (140 kw) | 2002.06-2008.03 | 5AT | F | L | Saloon FWD BBG | | GDS83015 | Drive Shaft | 45W | 38 | | 59.5 | 34.5 | 527 | |
| | 2002.06-2008.03 | 5AT | F | R | Saloon FWD BBG | | GDS83048 | Drive Shaft | 45W | 38 | | 59.5 | 34.5 | 502 | |
| | 2002.06-2008.03 | 5AT | F | L/R | Saloon FWD BBG | | GCI50019 | Inner Joint | | | 34 | | | 59.5 | |
| | 2002.06-2008.03 | | F | L/R | Saloon FWD BBG | | GCO83019 | Outer Joint | 45W | 38 | 27 | 59.5 | 34.5 | 63 | I |
| 2.8 (142 kw) | 2001.12-2008.03 | 5AT | F | R | Saloon FWD AMX | | GDS83048 | Drive Shaft | 45W | 38 | | 59.5 | 34.5 | 502 | |

| | YEAR | TRANSM. | F/R | L/R | BODY STYLE & DRIVE TYPE & ENGINE | REMARKS | G-AP Ref. | PRODUCT | ABS | Technical Specifications A | B | C | H | L | P |
|---|---|---|---|---|---|---|---|---|---|---|---|---|---|---|---|
| **SKODA** | | | | | | | | | | | | | | | |
| **Superb** | | | | | | | | | | | | | | | |
| 2.8 (142 kw) | 2001.12-2008.03 | 5MT | F | L | Saloon FWD AMX | | GDS83008 | Drive Shaft | 45W | 38 | | 59.5 | 34.5 | 603 | |
| | 2001.12-2008.03 | 5MT | F | R | Saloon FWD AMX | | GDS61019 | Drive Shaft | 45W | 38 | | 59.5 | 34.5 | 624 | |
| | 2001.12-2008.03 | AT | F | L | Saloon FWD AMX | | GDS83015 | Drive Shaft | 45W | 38 | | 59.5 | 34.5 | 527 | |
| | 2001.12-2008.03 | AT/MT | F | L/R | Saloon FWD AMX | | GCO83019 | Outer Joint | 45W | 38 | 27 | 59.5 | 34.5 | 63 | I |
| | 2001.12-2008.03 | AT/MT/5MT | F | L/R | Saloon FWD AMX | | GCI50019 | Inner Joint | | | 34 | | | 59.5 | |
| 3.6 (191 kw) | 2008.11-2015.05 | 6AT | F | L | Hatchback 4WD CDVA | | GDS83295 | Drive Shaft | | 36 | | 59.5 | 40 | 491 | |
| | 2008.11-2015.05 | 6AT | F | R | Hatchback 4WD CDVA | | GDS81892 | Drive Shaft | | 36 | | 59.5 | 40 | 602 | |
| | 2008.11-2015.05 | AT | F | L/R | Hatchback 4WD CDVA | | GCI83006 | Inner Joint | | | 33 | | | 34 | |
| | 2008.11-2015.05 | | F | L/R | Hatchback 4WD CDVA | | GCO83101 | Outer Joint | | 36 | 27 | 59.5 | 40 | 65 | M |
| | 2008.11-2015.05 | | F | L/R | Hatchback 4WD CDVA | | GCI83016 | Inner Joint | | | 28 | | | 32 | |
| | 2008.11-2015.05 | 6AT | R | L | Hatchback 4WD CDVA | | GDS61284 | Drive Shaft | | 36 | | 59.5 | 40 | 594 | |
| | 2008.11-2015.05 | 6AT | R | R | Hatchback 4WD CDVA | | GDS61293 | Drive Shaft | | 36 | | 59.5 | 40 | 631 | |
| | 2008.11-2015.05 | 6AT | R | L/R | Hatchback 4WD CDVA | | GCI35026 | Outer Joint | | 36 | 33 | 59.5 | 40 | 61 | |
| | 2008.11-2015.05 | 6AT | R | L/R | Hatchback 4WD CDVA | | GCI53002 | Inner Joint | | | 33 | | | 34 | |
| | 2008.11-2015.05 | 6AT | R | L/R | Hatchback 4WD CDVA | | GCI82447 | Inner Joint | | | 33 | | | 34 | |
| | 2009.10-2015.05 | 6AT | F | L | Estate 4WD CDVA | | GDS83295 | Drive Shaft | | 36 | | 59.5 | 40 | 491 | |
| | 2009.10-2015.05 | 6AT | F | R | Estate 4WD CDVA | | GDS83266 | Drive Shaft | | 36 | | 59.5 | 40 | 601 | |
| | 2009.10-2015.05 | AT | F | L/R | Estate 4WD CDVA | | GCI83006 | Inner Joint | | | 33 | | | 34 | |
| | 2009.10-2015.05 | | F | L/R | Estate 4WD CDVA | | GCO83101 | Outer Joint | | 36 | 27 | 59.5 | 40 | 65 | M |
| | 2009.10-2015.05 | | F | L/R | Estate 4WD CDVA | | GCI83016 | Inner Joint | | | 28 | | | 32 | |
| | 2009.10-2015.05 | 6AT | R | L | Estate 4WD CDVA | | GDS61284 | Drive Shaft | | 36 | | 59.5 | 40 | 594 | |
| | 2009.10-2015.05 | 6AT | R | R | Estate 4WD CDVA | | GDS61293 | Drive Shaft | | 36 | | 59.5 | 40 | 631 | |
| | 2009.10-2015.05 | 6AT | R | L/R | Estate 4WD CDVA | | GCI35026 | Outer Joint | | 36 | 33 | 59.5 | 40 | 61 | |
| | 2009.10-2015.05 | 6AT | R | L/R | Estate 4WD CDVA | | GCI53002 | Inner Joint | | | 33 | | | 34 | |
| | 2009.10-2015.05 | 6AT | R | L/R | Estate 4WD CDVA | | GCI82447 | Inner Joint | | | 33 | | | 34 | |
| **Yeti** | | | | | | | | | | | | | | | |
| 1.2 (77 kw) | 2009.09-2015.05 | 6MT | F | L/R | SUV FWD CBZB | | GCO83037 | Outer Joint | | 36 | 30 | 59.5 | 40.5 | 56 | I |
| | 2009.09-2015.05 | 7DCT | F | L/R | SUV FWD CBZB | | GCO61059 | Outer Joint | | 36 | 33 | 59.5 | 40 | 59.5 | I |
| | 2009.09-2015.05 | 7DCT/6MT | F | L/R | SUV FWD CBZB | | GCI82447 | Inner Joint | | | 33 | | | 34 | |
| | 2009.09-2015.05 | AT/MT | F | L | SUV FWD CBZB | | GDS61201 | Drive Shaft | | 36 | | 59.5 | 40.5 | 535 | |
| | 2009.09-2015.05 | AT/MT | F | R | SUV FWD CBZB | | GDS61096 | Drive Shaft | | 36 | | 59.5 | 40.5 | 799 | |
| | 2009.09-2015.05 | AT/MT | F | L/R | SUV FWD CBZB | | GCI83011 | Inner Joint | | | 33 | | | 34 | |
| 1.2 (81 kw) | 2015.05-2017.12 | 6MT | F | R | SUV FWD CYVB | | GDS61307 | Drive Shaft | | 36 | | 59.5 | 40 | 819 | |
| | 2015.05-2017.12 | 6MT | F | R | SUV FWD CYVB | | GCO83037 | Outer Joint | | 36 | 30 | 59.5 | 40.5 | 56 | I |
| | 2015.05-2017.12 | 6MT | F | L/R | SUV FWD CYVB | | GCI53002 | Inner Joint | | | 33 | | | 34 | |
| | 2015.05-2017.12 | 7DCT | F | L | SUV FWD CYVB | | GCI53002 | Inner Joint | | | 33 | | | 34 | |
| | 2015.05-2017.12 | 7DCT/6MT | F | L/R | SUV FWD CYVB | | GCI82447 | Inner Joint | | | 33 | | | 34 | |
| | 2015.05-2017.12 | DCT | F | L | SUV FWD CYVB | | GDS61282 | Drive Shaft | | 36 | | 59.5 | 40 | 523 | |
| | 2015.05-2017.12 | DCT | F | R | SUV FWD CYVB | | GDS61096 | Drive Shaft | | 36 | | 59.5 | 40.5 | 799 | |
| | 2015.05-2017.12 | DCT | F | L/R | SUV FWD CYVB | | GCO61059 | Outer Joint | | 36 | 33 | 59.5 | 40 | 59.5 | I |
| | 2015.05-2017.12 | DCT | F | L/R | SUV FWD CYVB | | GCI83011 | Inner Joint | | | 33 | | | 34 | |
| 1.4 (90 kw) | 2010.06-2015.05 | 6MT | F | L | SUV FWD CAXA | | GCO61059 | Outer Joint | | 36 | 33 | 59.5 | 40 | 59.5 | I |
| | 2010.06-2015.05 | 6MT | F | R | SUV FWD CAXA | Date from:2013.03;Date to:2013.05 | GCO83037 | Outer Joint | | 36 | 30 | 59.5 | 40.5 | 56 | I |
| | 2010.06-2015.05 | 7AT/6MT | F | L | SUV FWD CAXA | | GDS61201 | Drive Shaft | | 36 | | 59.5 | 40.5 | 535 | |
| | 2010.06-2015.05 | 7AT/6MT | F | R | SUV FWD CAXA | | GDS61096 | Drive Shaft | | 36 | | 59.5 | 40.5 | 799 | |
| | 2010.06-2015.05 | 7DCT/6MT | F | L/R | SUV FWD CAXA | | GCI82447 | Inner Joint | | | 33 | | | 34 | |
| | 2010.06-2015.05 | AT/MT | F | L/R | SUV FWD CAXA | | GCI83011 | Inner Joint | | | 33 | | | 34 | |
| 1.4 (92 kw) | 2015.05-2017.12 | 6MT | F | R | SUV FWD CZCA | | GDS61101 | Drive Shaft | | 36 | | 59.5 | 40 | 803 | |
| | 2015.05-2017.12 | 6MT/7DCT | F | L | SUV FWD CZCA | | GDS61100 | Drive Shaft | | 36 | | 59.5 | 40 | 513 | |
| | 2015.05-2017.12 | 6MT/7DCT | F | L/R | SUV FWD CZCA | GrooveType:Inner | GCO83002 | Outer Joint | | 36 | 27 | 59.5 | 40 | 66 | I |
| | 2015.05-2017.12 | 6MT/7DCT | F | L/R | SUV FWD CZCA | GrooveType:Middle | GCO83101 | Outer Joint | | 36 | 27 | 59.5 | 40 | 65 | M |
| | 2015.05-2017.12 | 6MT/7DCT | F | L/R | SUV FWD CZCA | | GCI61002 | Inner Joint | | | 28 | | | 31.8 | |
| | 2015.05-2017.12 | 6MT/7DCT | F | L/R | SUV FWD CZCA | Inner teeth:28 | GCI83016 | Inner Joint | | | 28 | | | 32 | |
| | 2015.05-2017.12 | 7DCT | F | R | SUV FWD CZCA | | GDS83313 | Drive Shaft | | 36 | | 59.5 | 40 | 792 | |
| 1.4 (110 kw) | 2015.05-2017.12 | 6MT/6DCT | F | L | SUV 4WD CZDA | | GDS83295 | Drive Shaft | | 36 | | 59.5 | 40 | 491 | |
| | 2015.05-2017.12 | 6MT/6DCT | F | R | SUV 4WD CZDA | | GDS83266 | Drive Shaft | | 36 | | 59.5 | 40 | 601 | |
| | 2015.05-2017.12 | | F | L/R | SUV 4WD CZDA | | GCO83002 | Outer Joint | | 36 | 27 | 59.5 | 40 | 66 | I |
| | 2015.05-2017.12 | | F | L/R | SUV 4WD CZDA | | GCI83016 | Inner Joint | | | 28 | | | 32 | |
| | 2015.05-2017.12 | 6AT/6MT | R | L | SUV 4WD CZDA | | GDS54017 | Drive Shaft | | 36 | | 59.5 | 40 | 609 | |
| | 2015.05-2017.12 | 6AT/6MT | R | R | SUV 4WD CZDA | | GDS61333 | Drive Shaft | | 36 | | 59.5 | 40 | 647 | |
| | 2015.05-2017.12 | 6AT/6MT | R | L/R | SUV 4WD CZDA | | GCI35026 | Outer Joint | | 36 | 33 | 59.5 | 40 | 61 | |
| | 2015.05-2017.12 | 6AT/6MT | R | L/R | SUV 4WD CZDA | | GCI53002 | Inner Joint | | | 33 | | | 34 | |
| | 2015.05-2017.12 | 6AT/6MT | R | L/R | SUV 4WD CZDA | | GCI82447 | Inner Joint | | | 33 | | | 34 | |
| 1.6 (77 kw) | 2010.11-2015.05 | 5MT | F | L/R | SUV FWD CAYC | | GCI82447 | Inner Joint | | | 33 | | | 34 | |
| | 2010.11-2015.05 | 7AT/5MT | F | L | SUV FWD CAYC | | GDS83294 | Drive Shaft | | 36 | | 59.5 | 38 | 519 | |

| | YEAR | TRANSM. | F/R | L/R | BODY STYLE & DRIVE TYPE & ENGINE | REMARKS | G-AP Ref. | PRODUCT | ABS | Technical Specifications A | B | C | H | L | P |
|---|---|---|---|---|---|---|---|---|---|---|---|---|---|---|---|
| **SKODA** **Yeti** | | | | | | | | | | | | | | | |
| 1.6 (77 kw) | 2010.11-2015.05 | 7AT/5MT | F | R | SUV FWD CAYC | | GDS61042 | Drive Shaft | | 36 | | 59.5 | 40.5 | 814 | |
| | 2010.11-2015.05 | 7AT/5MT | F | L/R | SUV FWD CAYC | | GCO83037 | Outer Joint | | 36 | 30 | 59.5 | 40.5 | 56 | I |
| | 2010.11-2015.05 | 7DCT | F | L | SUV FWD CAYC | | GDS61100 | Drive Shaft | | 36 | | 59.5 | 40 | 513 | |
| | 2010.11-2015.05 | 7DCT | F | R | SUV FWD CAYC | | GDS83313 | Drive Shaft | | 36 | | 59.5 | 40 | 792 | |
| | 2010.11-2015.05 | 7DCT | F | L/R | SUV FWD CAYC | | GCO83002 | Outer Joint | | 36 | 27 | 59.5 | 40 | 66 | I |
| | 2010.11-2015.05 | 7DCT | F | L/R | SUV FWD CAYC | | GCI83016 | Inner Joint | | | 28 | | | 32 | |
| | 2010.11-2015.05 | MT | F | L/R | SUV FWD CAYC | | GCI83011 | Inner Joint | | | 33 | | | 34 | |
| 1.6 (81 kw) | 2014.04-2017.12 | 5MT | F | L/R | SUV FWD CWVA | | GCO61059 | Outer Joint | | 36 | 33 | 59.5 | 40 | 59.5 | I |
| | 2014.04-2017.12 | 5MT | F | L/R | SUV FWD CWVA | | GCI82447 | Inner Joint | | | 33 | | | 34 | |
| | 2014.04-2017.12 | 6AT | F | L | SUV FWD CWVA | For PR code:1PE/1PF/1PA/2H4 | GDS83318 | Drive Shaft | | 36 | 26 | 59.5 | 38 | 581 | |
| | 2014.04-2017.12 | 6AT | F | R | SUV FWD CWVA | | GDS61094 | Drive Shaft | | 36 | 26 | 59.5 | 40.5 | 884 | |
| | 2014.04-2017.12 | 6AT | F | L/R | SUV FWD CWVA | | GCO83002 | Outer Joint | | 36 | 27 | 59.5 | 40 | 66 | I |
| | 2014.04-2017.12 | 6AT | F | L/R | SUV FWD CWVA | | GCI61011 | Inner Joint | | 26 | 32 | 31 | 68.5 | 85 | |
| | 2014.04-2017.12 | 6AT | F | L/R | SUV FWD CWVA | | GCI61050 | Inner Joint | | 26 | 32 | 31 | 68.5 | 89 | |
| | 2014.04-2017.12 | AT | F | L/R | SUV FWD CWVA | | GCO83037 | Outer Joint | | 36 | 30 | 59.5 | 40.5 | 56 | I |
| | 2014.04-2017.12 | MT | F | L | SUV FWD CWVA | | GDS61282 | Drive Shaft | | 36 | | 59.5 | 40 | 523 | |
| | 2014.04-2017.12 | MT | F | R | SUV FWD CWVA | | GDS61307 | Drive Shaft | | 36 | | 59.5 | 40 | 819 | |
| 1.8 (112 kw) | 2009.11-2017.12 | 6AT/6MT | F | L | SUV 4WD CDAB | | GDS83295 | Drive Shaft | | 36 | | 59.5 | 40 | 491 | |
| | 2009.11-2017.12 | 6AT/6MT | F | R | SUV 4WD CDAB | | GDS83266 | Drive Shaft | | 36 | | 59.5 | 40 | 601 | |
| | 2009.11-2017.12 | 6AT/6MT | F | L/R | SUV 4WD CDAB | | GCO83002 | Outer Joint | | 36 | 27 | 59.5 | 40 | 66 | I |
| | 2009.11-2017.12 | 6AT/6MT | F | L/R | SUV 4WD CDAB | | GCI61041 | Inner Joint | | | 28 | | | 32 | |
| | 2009.11-2017.12 | 6AT/6MT | F | L/R | SUV 4WD CDAB | | GCI83016 | Inner Joint | | | 28 | | | 32 | |
| | 2009.11-2017.12 | 6DCT | F | L | SUV 4WD CDAB | | GDS98006 | Stub Axle-Flange | | 37 | | | 67 | 123.5 | |
| | 2009.11-2017.12 | 6AT/6MT | R | L | SUV 4WD CDAB | | GDS54017 | Drive Shaft | | 36 | | 59.5 | 40 | 609 | |
| | 2009.11-2017.12 | 6AT/6MT | R | R | SUV 4WD CDAB | Date from:2012.06 | GDS61333 | Drive Shaft | | 36 | | 59.5 | 40 | 647 | |
| | 2009.11-2017.12 | 6AT/6MT | R | R | SUV 4WD CDAB | Date to:2012.05 | GDS81597 | Drive Shaft | | 36 | | 59.5 | 40 | 652 | |
| | 2009.11-2017.12 | 6AT/6MT | R | L | SUV 4WD CDAB | | GCI35026 | Outer Joint | | 36 | 33 | 59.5 | 40 | 61 | |
| | 2009.11-2017.12 | 6AT/6MT | R | R | SUV 4WD CDAB | Date from:2012.06 | GCI35026 | Outer Joint | | 36 | 33 | 59.5 | 40 | 61 | |
| | 2009.11-2017.12 | 6AT/6MT | R | R | SUV 4WD CDAB | Date to:2012.05 | GCO83037 | Outer Joint | | 36 | 30 | 59.5 | 40.5 | 56 | I |
| | 2009.11-2017.12 | 6AT/6MT | R | L/R | SUV 4WD CDAB | | GCI53002 | Inner Joint | | | 33 | | | 34 | |
| | 2009.11-2017.12 | 6AT/6MT | R | L/R | SUV 4WD CDAB | | GCI82447 | Inner Joint | | | 33 | | | 34 | |
| 1.8 (118 kw) | 2009.05-2017.12 | 6MT | F | L | SUV 4WD CDAA | | GDS83295 | Drive Shaft | | 36 | | 59.5 | 40 | 491 | |
| | 2009.05-2017.12 | 6MT | F | R | SUV 4WD CDAA | | GDS83266 | Drive Shaft | | 36 | | 59.5 | 40 | 601 | |
| | 2009.05-2017.12 | | F | L | SUV 4WD CDAA | | GDS83236 | Drive Shaft | | 36 | | 59.5 | 40 | 484 | |
| | 2009.05-2017.12 | | F | L/R | SUV 4WD CDAA | | GCO83002 | Outer Joint | | 36 | 27 | 59.5 | 40 | 66 | I |
| | 2009.05-2017.12 | | F | L/R | SUV 4WD CDAA | | GCI83016 | Inner Joint | | | 28 | | | 32 | |
| | 2009.05-2017.12 | 6MT | R | L | SUV 4WD CDAA | | GDS54017 | Drive Shaft | | 36 | | 59.5 | 40 | 609 | |
| | 2009.05-2017.12 | 6MT | R | R | SUV 4WD CDAA | Date from:2012.06 | GDS61333 | Drive Shaft | | 36 | | 59.5 | 40 | 647 | |
| | 2009.05-2017.12 | 6MT | R | R | SUV 4WD CDAA | Date to:2012.05 | GDS81597 | Drive Shaft | | 36 | | 59.5 | 40 | 652 | |
| | 2009.05-2017.12 | 6MT | R | R | SUV 4WD CDAA | Date to:2012.05 | GCO83037 | Outer Joint | | 36 | 30 | 59.5 | 40.5 | 56 | I |
| | 2009.05-2017.12 | 6MT | R | L/R | SUV 4WD CDAA | | GCI35026 | Outer Joint | | 36 | 33 | 59.5 | 40 | 61 | |
| | 2009.05-2017.12 | 6MT | R | L/R | SUV 4WD CDAA | | GCI53002 | Inner Joint | | | 33 | | | 34 | |
| | 2009.05-2017.12 | 6MT | R | L/R | SUV 4WD CDAA | | GCI82447 | Inner Joint | | | 33 | | | 34 | |
| 2.0 (81 kw) | 2009.11-2017.12 | MT | F | L | SUV 4WD CFHF;DFSA;CUUA | | GDS83236 | Drive Shaft | | 36 | | 59.5 | 40 | 484 | |
| | 2009.11-2017.12 | MT | F | L | SUV 4WD CFHF;DFSA;CUUA | | GDS83295 | Drive Shaft | | 36 | | 59.5 | 40 | 491 | |
| | 2009.11-2017.12 | MT | F | R | SUV 4WD CFHF;DFSA;CUUA | | GDS83266 | Drive Shaft | | 36 | | 59.5 | 40 | 601 | |
| | 2009.11-2017.12 | MT | F | L/R | SUV 4WD CFHF;DFSA;CUUA | | GCO83002 | Outer Joint | | 36 | 27 | 59.5 | 40 | 66 | I |
| | 2009.11-2017.12 | MT | F | L/R | SUV 4WD CFHF;DFSA;CUUA | | GCI83016 | Inner Joint | | | 28 | | | 32 | |
| | 2009.11-2017.12 | MT | R | L | SUV 4WD CFHF;DFSA;CUUA | | GDS54017 | Drive Shaft | | 36 | | 59.5 | 40 | 609 | |
| | 2009.11-2017.12 | MT | R | R | SUV 4WD CFHF;DFSA;CUUA | Date from:2012.07 | GDS61333 | Drive Shaft | | 36 | | 59.5 | 40 | 647 | |
| | 2009.11-2017.12 | MT | R | R | SUV 4WD CFHF;DFSA;CUUA | Date to:2012.06 | GDS81597 | Drive Shaft | | 36 | | 59.5 | 40 | 652 | |
| | 2009.11-2017.12 | MT | R | L | SUV 4WD CFHF;DFSA;CUUA | | GCI35026 | Outer Joint | | 36 | 33 | 59.5 | 40 | 61 | |
| | 2009.11-2017.12 | MT | R | R | SUV 4WD CFHF;DFSA;CUUA | Date from:2012.07 | GCI35026 | Outer Joint | | 36 | 33 | 59.5 | 40 | 61 | |
| | 2009.11-2017.12 | MT | R | R | SUV 4WD CFHF;DFSA;CUUA | Date to:2012.06 | GCO83037 | Outer Joint | | 36 | 30 | 59.5 | 40.5 | 56 | I |
| | 2009.11-2017.12 | MT | R | L/R | SUV 4WD CFHF;DFSA;CUUA | | GCI53002 | Inner Joint | | | 33 | | | 34 | |
| | 2009.11-2017.12 | MT | R | L/R | SUV 4WD CFHF;DFSA;CUUA | | GCI82447 | Inner Joint | | | 33 | | | 34 | |
| | 2009.11-2017.12 | 5MT | F | L | SUV FWD CFHA;CLCA;DFSA;CUUA | For india;Inner teeth of wheel side:27 | GDS61100 | Drive Shaft | | 36 | | 59.5 | 40 | 513 | |
| | 2009.11-2017.12 | 5MT | F | L | SUV FWD CFHA;CLCA;DFSA;CUUA | Inner teeth of wheel side:33 | GDS61282 | Drive Shaft | | 36 | | 59.5 | 40 | 523 | |
| | 2009.11-2017.12 | 5MT | F | L | SUV FWD CFHA;CLCA;DFSA;CUUA | Inner teeth of wheel side:30 | GDS83294 | Drive Shaft | | 36 | | 59.5 | 38 | 519 | |
| | 2009.11-2017.12 | 5MT | F | R | SUV FWD CFHA;CLCA;DFSA;CUUA | For india;Inner teeth of wheel side:27 | GDS61101 | Drive Shaft | | 36 | | 59.5 | 40 | 803 | |
| | 2009.11-2017.12 | 5MT | F | R | SUV FWD CFHA;CLCA;DFSA;CUUA | Inner teeth of wheel side:33 | GDS61283 | Drive Shaft | | 36 | | 59.5 | 40 | 815 | |
| | 2009.11-2017.12 | 5MT | F | L | SUV FWD CFHA;CLCA;DFSA;CUUA | | GCO83037 | Outer Joint | | 36 | 30 | 59.5 | 40.5 | 56 | I |
| | 2009.11-2017.12 | 5MT | F | L/R | SUV FWD CFHA;CLCA;DFSA;CUUA | | GCO61059 | Outer Joint | | 36 | 33 | 59.5 | 40 | 59.5 | I |
| | 2009.11-2017.12 | 5MT | F | L/R | SUV FWD CFHA;CLCA;DFSA;CUUA | | GCI53002 | Inner Joint | | | 33 | | | 34 | |
| | 2009.11-2017.12 | 5MT | F | L/R | SUV FWD CFHA;CLCA;DFSA;CUUA | | GCI82447 | Inner Joint | | | 33 | | | 34 | |

| | YEAR | TRANSM. | F/R | L/R | BODY STYLE & DRIVE TYPE & ENGINE | REMARKS | G-AP Ref. | PRODUCT | ABS | Technical Specifications A | B | C | H | L | P |
|---|---|---|---|---|---|---|---|---|---|---|---|---|---|---|---|
| **SKODA** **Yeti** | | | | | | | | | | | | | | | |
| 2.0 (81 kw) | 2009.11-2017.12 | MT | F | L/R | SUV FWD CFHA;CLCA;DFSA;CUUA | | GCI83011 | Inner Joint | | | 33 | | | 34 | |
| 2.0 (103 kw) | 2009.05-2017.12 | 6DCT | F | L | SUV 4WD CBDB;CFHC;CLCB | For PR code:1PA | GCO83101 | Outer Joint | | 36 | 27 | 59.5 | 40 | 65 | M |
| | 2009.05-2017.12 | 6DCT | F | L | SUV 4WD CBDB;CFHC;CLCB | For PR code:1PA | GCI61069 | Inner Joint | | | 28 | | | 32 | |
| | 2009.05-2017.12 | 6MT/6AT | F | L/R | SUV 4WD CBDB;CFHC;CLCB | | GCO83002 | Outer Joint | | 36 | 27 | 59.5 | 40 | 66 | I |
| | 2009.05-2017.12 | 6MT/6DCT | F | L | SUV 4WD CBDB;CFHC;CLCB | Inner teeth of tranm.side:33 | GDS83236 | Drive Shaft | | 36 | | 59.5 | 40 | 484 | |
| | 2009.05-2017.12 | 6MT/6DCT | F | L | SUV 4WD CBDB;CFHC;CLCB | PR code:1PA;Inner teeth of tranm.side:28 | GDS83295 | Drive Shaft | | 36 | | 59.5 | 40 | 491 | |
| | 2009.05-2017.12 | 6MT/6DCT | F | R | SUV 4WD CBDB;CFHC;CLCB | | GDS83266 | Drive Shaft | | 36 | | 59.5 | 40 | 601 | |
| | 2009.05-2017.12 | | F | L/R | SUV 4WD CBDB;CFHC;CLCB | | GCI83016 | Inner Joint | | | 28 | | | 32 | |
| | 2009.05-2017.12 | 6AT/6MT | R | L | SUV 4WD CBDB;CFHC;CLCB | | GDS54017 | Drive Shaft | | 36 | | 59.5 | 40 | 609 | |
| | 2009.05-2017.12 | 6AT/6MT | R | R | SUV 4WD CBDB;CFHC;CLCB | Date from:2012.06 | GDS61333 | Drive Shaft | | 36 | | 59.5 | 40 | 647 | |
| | 2009.05-2017.12 | 6AT/6MT | R | R | SUV 4WD CBDB;CFHC;CLCB | Date to:2012.05 | GDS81597 | Drive Shaft | | 36 | | 59.5 | 40 | 652 | |
| | 2009.05-2017.12 | 6AT/6MT | R | R | SUV 4WD CBDB;CFHC;CLCB | Date to:2012.05 | GCO83037 | Outer Joint | | 36 | 30 | 59.5 | 40.5 | 56 | I |
| | 2009.05-2017.12 | 6AT/6MT | R | L/R | SUV 4WD CBDB;CFHC;CLCB | Date from:2010 | GCI35026 | Outer Joint | | 36 | 33 | 59.5 | 40 | 61 | |
| | 2009.05-2017.12 | 6AT/6MT | R | L/R | SUV 4WD CBDB;CFHC;CLCB | | GCI53002 | Inner Joint | | | 33 | | | 34 | |
| | 2009.05-2017.12 | 6AT/6MT | R | L/R | SUV 4WD CBDB;CFHC;CLCB | | GCI82447 | Inner Joint | | | 33 | | | 34 | |
| | 2011.11-2017.12 | 6MT | F | L | SUV FWD CFHC;CLCB | | GDS83295 | Drive Shaft | | 36 | | 59.5 | 40 | 491 | |
| | 2011.11-2017.12 | 6MT | F | R | SUV FWD CFHC;CLCB | | GDS61147 | Drive Shaft | | 36 | | 59.5 | 40 | 795 | |
| | 2011.11-2017.12 | MT | F | L | SUV FWD CFHC;CLCB | | GDS83236 | Drive Shaft | | 36 | | 59.5 | 40 | 484 | |
| | 2011.11-2017.12 | MT | F | R | SUV FWD CFHC;CLCB | | GDS61126 | Drive Shaft | | 36 | | 59.5 | 40 | 793 | |
| | 2011.11-2017.12 | | F | R | SUV FWD CFHC;CLCB | | GDS83313 | Drive Shaft | | 36 | | 59.5 | 40 | 792 | |
| | 2011.11-2017.12 | | F | L/R | SUV FWD CFHC;CLCB | | GCO83101 | Outer Joint | | 36 | 27 | 59.5 | 40 | 65 | M |
| | 2011.11-2017.12 | | F | L/R | SUV FWD CFHC;CLCB | | GCI83016 | Inner Joint | | | 28 | | | 32 | |
| 2.0 (110 kw) | 2015.05-2017.12 | 6DCT | F | L | SUV 4WD CUUB;DFSB | | GCO83002 | Outer Joint | | 36 | 27 | 59.5 | 40 | 66 | I |
| | 2015.05-2017.12 | 6DCT | F | L | SUV 4WD CUUB;DFSB | | GCI61041 | Inner Joint | | | 28 | | | 32 | |
| | 2015.05-2017.12 | 6DCT | F | R | SUV 4WD CUUB;DFSB | | GCI61069 | Inner Joint | | | 28 | | | 32 | |
| | 2015.05-2017.12 | 6MT | F | R | SUV 4WD CUUB;DFSB | | GDS83266 | Drive Shaft | | 36 | | 59.5 | 40 | 601 | |
| | 2015.05-2017.12 | 6MT | F | L/R | SUV 4WD CUUB;DFSB | | GCI61069 | Inner Joint | | | 28 | | | 32 | |
| | 2015.05-2017.12 | 6MT/6DCT | F | L | SUV 4WD CUUB;DFSB | | GDS83295 | Drive Shaft | | 36 | | 59.5 | 40 | 491 | |
| | 2015.05-2017.12 | 6MT/6DCT | F | L/R | SUV 4WD CUUB;DFSB | | GCO83101 | Outer Joint | | 36 | 27 | 59.5 | 40 | 65 | M |
| | 2015.05-2017.12 | 6MT/6DCT | F | L/R | SUV 4WD CUUB;DFSB | | GCI83016 | Inner Joint | | | 28 | | | 32 | |
| | 2015.05-2017.12 | Semi-AT | F | L | SUV 4WD CUUB;DFSB | | GDS83241 | Drive Shaft | | 36 | | 59.5 | 40 | 475 | |
| | 2015.05-2017.12 | 6MT/6DCT | R | L | SUV 4WD CUUB;DFSB | | GDS54017 | Drive Shaft | | 36 | | 59.5 | 40 | 609 | |
| | 2015.05-2017.12 | 6MT/6DCT | R | R | SUV 4WD CUUB;DFSB | | GDS61333 | Drive Shaft | | 36 | | 59.5 | 40 | 647 | |
| | 2015.05-2017.12 | 6MT/6DCT | R | L/R | SUV 4WD CUUB;DFSB | | GCI35026 | Outer Joint | | 36 | 33 | 59.5 | 40 | 61 | |
| | 2015.05-2017.12 | 6MT/6DCT | R | L/R | SUV 4WD CUUB;DFSB | | GCI53002 | Inner Joint | | | 33 | | | 34 | |
| | 2015.05-2017.12 | 6MT/6DCT | R | L/R | SUV 4WD CUUB;DFSB | | GCI82447 | Inner Joint | | | 33 | | | 34 | |
| | 2015.05-2017.12 | 6MT | F | R | SUV FWD CUUB;DFSB | | GDS61147 | Drive Shaft | | 36 | | 59.5 | 40 | 795 | |
| | 2015.05-2017.12 | 6MT | F | L/R | SUV FWD CUUB;DFSB | | GCO83002 | Outer Joint | | 36 | 27 | 59.5 | 40 | 66 | I |
| | 2015.05-2017.12 | DCT | F | L/R | SUV FWD CUUB;DFSB | | GCO83101 | Outer Joint | | 36 | 27 | 59.5 | 40 | 65 | M |
| | 2015.05-2017.12 | MT | F | L | SUV FWD CUUB;DFSB | | GDS83295 | Drive Shaft | | 36 | | 59.5 | 40 | 491 | |
| | 2015.05-2017.12 | MT | F | R | SUV FWD CUUB;DFSB | | GDS83266 | Drive Shaft | | 36 | | 59.5 | 40 | 601 | |
| | 2015.05-2017.12 | Semi-AT | F | L | SUV FWD CUUB;DFSB | | GDS83241 | Drive Shaft | | 36 | | 59.5 | 40 | 475 | |
| | 2015.05-2017.12 | Semi-AT | F | L | SUV FWD CUUB;DFSB | | GCI54004 | Inner Joint | | | 34 | | | 81 | |
| | 2015.05-2017.12 | | F | R | SUV FWD CUUB;DFSB | | GDS61126 | Drive Shaft | | 36 | | 59.5 | 40 | 793 | |
| | 2015.05-2017.12 | | F | R | SUV FWD CUUB;DFSB | | GDS83313 | Drive Shaft | | 36 | | 59.5 | 40 | 792 | |
| | 2015.05-2017.12 | | F | L/R | SUV FWD CUUB;DFSB | | GCI83016 | Inner Joint | | | 28 | | | 32 | |
| 2.0 (125 kw) | 2009.11-2015.05 | 6AT/6MT | F | R | SUV 4WD CEGA;CFJA | | GDS83266 | Drive Shaft | | 36 | | 59.5 | 40 | 601 | |
| | 2009.11-2015.05 | 6DCT | F | L | SUV 4WD CEGA;CFJA | For PR code:1PA | GDS83295 | Drive Shaft | | 36 | | 59.5 | 40 | 491 | |
| | 2009.11-2015.05 | 6DCT | F | L | SUV 4WD CEGA;CFJA | For PR code:1PA | GCO83101 | Outer Joint | | 36 | 27 | 59.5 | 40 | 65 | M |
| | 2009.11-2015.05 | 6MT | F | L | SUV 4WD CEGA;CFJA | | GDS83295 | Drive Shaft | | 36 | | 59.5 | 40 | 491 | |
| | 2009.11-2015.05 | | F | L | SUV 4WD CEGA;CFJA | | GDS83236 | Drive Shaft | | 36 | | 59.5 | 40 | 484 | |
| | 2009.11-2015.05 | | F | L/R | SUV 4WD CEGA;CFJA | | GCO83002 | Outer Joint | | 36 | 27 | 59.5 | 40 | 66 | I |
| | 2009.11-2015.05 | | F | L/R | SUV 4WD CEGA;CFJA | | GCI83016 | Inner Joint | | | 28 | | | 32 | |
| | 2009.11-2015.05 | 6AT/6MT | R | L | SUV 4WD CEGA;CFJA | | GDS54017 | Drive Shaft | | 36 | | 59.5 | 40 | 609 | |
| | 2009.11-2015.05 | 6AT/6MT | R | R | SUV 4WD CEGA;CFJA | Date from:2012.06 | GDS61333 | Drive Shaft | | 36 | | 59.5 | 40 | 647 | |
| | 2009.11-2015.05 | 6AT/6MT | R | R | SUV 4WD CEGA;CFJA | Date to:2012.05 | GDS81597 | Drive Shaft | | 36 | | 59.5 | 40 | 652 | |
| | 2009.11-2015.05 | 6AT/6MT | R | R | SUV 4WD CEGA;CFJA | Date to:2012.05 | GCO83037 | Outer Joint | | 36 | 30 | 59.5 | 40.5 | 56 | I |
| | 2009.11-2015.05 | 6AT/6MT | R | L/R | SUV 4WD CEGA;CFJA | | GCI35026 | Outer Joint | | 36 | 33 | 59.5 | 40 | 61 | |
| | 2009.11-2015.05 | 6AT/6MT | R | L/R | SUV 4WD CEGA;CFJA | | GCI53002 | Inner Joint | | | 33 | | | 34 | |
| | 2009.11-2015.05 | 6AT/6MT | R | L/R | SUV 4WD CEGA;CFJA | | GCI82447 | Inner Joint | | | 33 | | | 34 | |
| **SKODA (SVW)** **Octavia** | | | | | | | | | | | | | | | |
| 2.0 (147 kw) | 2010.04-2013.12 | 6DCT | F | L | Hatchback FWD CGMA | | GDS98006 | Stub Axle-Flange | | 37 | | | 67 | 123.5 | |

| | YEAR | TRANSM. | F/R | L/R | BODY STYLE & DRIVE TYPE & ENGINE | REMARKS | G-AP Ref. | PRODUCT | ABS | Technical Specifications A | B | C | H | L | P |
|---|---|---|---|---|---|---|---|---|---|---|---|---|---|---|---|
| **SKODA (SVW)** | | | | | | | | | | | | | | | |
| **Superb** | | | | | | | | | | | | | | | |
| 2.0 (147 kw) | 2009.08-2013.12 | 6DCT | F | L | Hatchback FWD CGMA | | GDS98006 | Stub Axle-Flange | | 37 | | | 67 | 123.5 | |
| **Yeti** | | | | | | | | | | | | | | | |
| 1.8 (118 kw) | 2013.11- | 6DCT | F | L | SUV 4WD CEAA | | GDS98006 | Stub Axle-Flange | | 37 | | | 67 | 123.5 | |
| **SMART** | | | | | | | | | | | | | | | |
| **Cabrio** | | | | | | | | | | | | | | | |
| 0.6 (40 kw) | 2000.03-2003.01 | Semi-AT | R | L | Cabriolet RWD 160910 | Not for SA code:K02 | GDS99190 | Drive Shaft | 42T | 24 | 33 | 50 | 25.5 | 476 | |
| | 2000.03-2003.01 | Semi-AT | R | R | Cabriolet RWD 160910 | Not for SA code:K02 | GDS99191 | Drive Shaft | 42T | 24 | 33 | 50 | 25.5 | 716 | |
| 0.6 (45 kw) | 2003.01-2004.01 | 6AT | R | L | Cabriolet RWD 160910 | | GDS99190 | Drive Shaft | 42T | 24 | 33 | 50 | 25.5 | 476 | |
| | 2003.01-2004.01 | 6AT | R | R | Cabriolet RWD 160910 | | GDS99191 | Drive Shaft | 42T | 24 | 33 | 50 | 25.5 | 716 | |
| 0.6 (52 kw) | 2002.06-2004.01 | AT/Semi-AT | R | L | Cabriolet RWD 160910 | | GDS99190 | Drive Shaft | 42T | 24 | 33 | 50 | 25.5 | 476 | |
| | 2002.06-2004.01 | AT/Semi-AT | R | R | Cabriolet RWD 160910 | | GDS99191 | Drive Shaft | 42T | 24 | 33 | 50 | 25.5 | 716 | |
| 0.7 (45 kw) | 2001.01-2004.01 | 6AT | R | L | Cabriolet RWD 160920 | | GDS99190 | Drive Shaft | 42T | 24 | 33 | 50 | 25.5 | 476 | |
| | 2001.01-2004.01 | 6AT | R | R | Cabriolet RWD 160920 | | GDS99191 | Drive Shaft | 42T | 24 | 33 | 50 | 25.5 | 716 | |
| 0.7 (55 kw) | 2003.05-2004.01 | 6AT | R | L | Cabriolet RWD 160920 | | GDS99190 | Drive Shaft | 42T | 24 | 33 | 50 | 25.5 | 476 | |
| | 2003.05-2004.01 | 6AT | R | R | Cabriolet RWD 160920 | | GDS99191 | Drive Shaft | 42T | 24 | 33 | 50 | 25.5 | 716 | |
| 0.8 (30 kw) | 2001.03-2004.01 | 6AT | R | L | Cabriolet RWD 660940 | | GDS99190 | Drive Shaft | 42T | 24 | 33 | 50 | 25.5 | 476 | |
| | 2001.03-2004.01 | 6AT | R | R | Cabriolet RWD 660940 | | GDS99191 | Drive Shaft | 42T | 24 | 33 | 50 | 25.5 | 716 | |
| **City Coupe** | | | | | | | | | | | | | | | |
| 0.6 (33 kw) | 1998.07-2004.01 | AT/MT | R | L | Hatchback RWD 160910 | | GDS99190 | Drive Shaft | 42T | 24 | 33 | 50 | 25.5 | 476 | |
| | 1998.07-2004.01 | AT/MT | R | R | Hatchback RWD 160910 | | GDS99191 | Drive Shaft | 42T | 24 | 33 | 50 | 25.5 | 716 | |
| 0.6 (40 kw) | 1998.07-2004.01 | 6AT | R | L | Hatchback RWD 160910 | | GDS99190 | Drive Shaft | 42T | 24 | 33 | 50 | 25.5 | 476 | |
| | 1998.07-2004.01 | 6AT | R | R | Hatchback RWD 160910 | | GDS99191 | Drive Shaft | 42T | 24 | 33 | 50 | 25.5 | 716 | |
| 0.6 (45 kw) | 2001.01-2004.01 | Semi-AT | R | L | Hatchback RWD 160910 | | GDS99190 | Drive Shaft | 42T | 24 | 33 | 50 | 25.5 | 476 | |
| | 2001.01-2004.01 | Semi-AT | R | R | Hatchback RWD 160910 | | GDS99191 | Drive Shaft | 42T | 24 | 33 | 50 | 25.5 | 716 | |
| 0.6 (52 kw) | 2002.06-2004.01 | AT/Semi-AT | R | L | Hatchback RWD 160910 | | GDS99190 | Drive Shaft | 42T | 24 | 33 | 50 | 25.5 | 476 | |
| | 2002.06-2004.01 | AT/Semi-AT | R | R | Hatchback RWD 160910 | | GDS99191 | Drive Shaft | 42T | 24 | 33 | 50 | 25.5 | 716 | |
| 0.7 (37 kw) | 2003.01-2004.01 | AT/Semi-AT | R | L | Hatchback RWD 160920 | | GDS99190 | Drive Shaft | 42T | 24 | 33 | 50 | 25.5 | 476 | |
| | 2003.01-2004.01 | AT/Semi-AT | R | R | Hatchback RWD 160920 | | GDS99191 | Drive Shaft | 42T | 24 | 33 | 50 | 25.5 | 716 | |
| 0.7 (45 kw) | 2000.10-2003.10 | AT | R | L | Hatchback RWD 160920 | | GDS99190 | Drive Shaft | 42T | 24 | 33 | 50 | 25.5 | 476 | |
| | 2000.10-2003.10 | AT | R | R | Hatchback RWD 160920 | | GDS99191 | Drive Shaft | 42T | 24 | 33 | 50 | 25.5 | 716 | |
| 0.7 (55 kw) | 2003.05-2004.01 | 6AT | R | L | Hatchback RWD 160920 | | GDS99190 | Drive Shaft | 42T | 24 | 33 | 50 | 25.5 | 476 | |
| | 2003.05-2004.01 | 6AT | R | R | Hatchback RWD 160920 | | GDS99191 | Drive Shaft | 42T | 24 | 33 | 50 | 25.5 | 716 | |
| 0.8 (30 kw) | 1999.12-2004.01 | Semi-AT | R | L | Hatchback RWD 660940 | Not for SA code:K02 | GDS99190 | Drive Shaft | 42T | 24 | 33 | 50 | 25.5 | 476 | |
| | 1999.12-2004.01 | Semi-AT | R | R | Hatchback RWD 660940 | Not for SA code:K02 | GDS99191 | Drive Shaft | 42T | 24 | 33 | 50 | 25.5 | 716 | |
| **Crossblade** | | | | | | | | | | | | | | | |
| 0.6 (52 kw) | 2002.06-2003.12 | SAT | R | L | Convertible RWD M 160.910 | | GDS99190 | Drive Shaft | 42T | 24 | 33 | 50 | 25.5 | 476 | |
| | 2002.06-2003.12 | SAT | R | R | Convertible RWD M 160.910 | | GDS99191 | Drive Shaft | 42T | 24 | 33 | 50 | 25.5 | 716 | |
| **Forfour** | | | | | | | | | | | | | | | |
| 0.9 (66 kw) | 2014.11- | 5MT | R | L | Hatchback RWD M 281.910;H4B 409 | | GDS82518 | Drive Shaft | | 33 | 26 | 49.2 | 44.5 | 570 | |
| | 2014.11- | 5MT | R | R | Hatchback RWD M 281.910;H4B 409 | | GDS82519 | Drive Shaft | | 33 | 26 | 49.2 | 44.5 | 803 | |
| | 2014.11- | 5MT | R | L/R | Hatchback RWD M 281.910;H4B 409 | | GCI81907 | Inner Joint | | 26 | 20 | 39.95 | 64 | 100 | |
| | 2014.11- | 5MT/6DCT | R | L/R | Hatchback RWD M 281.910;H4B 409 | | GCO82066 | Outer Joint | | 33 | 20 | 49.2 | 44.5 | 52 | M |
| | 2014.11- | 6DCT | R | L | Hatchback RWD M 281.910;H4B 409 | | GDS57936 | Drive Shaft | | 33 | 33 | 49.2 | 44.5 | 502 | |
| | 2014.11- | 6DCT | R | R | Hatchback RWD M 281.910;H4B 409 | | GDS57935 | Drive Shaft | | 33 | 33 | 49.2 | 44.5 | 874 | |
| | 2014.11- | 6DCT | R | L | Hatchback RWD M 281.910;H4B 409 | | GCI83945 | Inner Joint | | 33 | 20 | 40 | 60 | 114 | |
| | 2014.11- | 6DCT | R | R | Hatchback RWD M 281.910;H4B 409 | | GCI83944 | Inner Joint | | 33 | 20 | 40 | 85 | 152 | |
| 0.9 (80 kw) | 2016.07- | 6DCT | R | L | Hatchback RWD M 281.910 | | GDS57936 | Drive Shaft | | 33 | 33 | 49.2 | 44.5 | 502 | |
| | 2016.07- | 6DCT | R | R | Hatchback RWD M 281.910 | | GDS57935 | Drive Shaft | | 33 | 33 | 49.2 | 44.5 | 874 | |
| | 2016.07- | 6DCT | R | L/R | Hatchback RWD M 281.910 | | GCO82066 | Outer Joint | | 33 | 20 | 49.2 | 44.5 | 52 | M |
| | 2016.07- | 6DCT | R | L | Hatchback RWD M 281.910 | | GCI83945 | Inner Joint | | 33 | 20 | 40 | 60 | 114 | |
| | 2016.07- | 6DCT | R | R | Hatchback RWD M 281.910 | | GCI83944 | Inner Joint | | 33 | 20 | 40 | 85 | 152 | |
| 1.0 (45 kw) | 2014.11- | 5MT | R | L | Hatchback RWD M 281.920 | | GDS82518 | Drive Shaft | | 33 | 26 | 49.2 | 44.5 | 570 | |
| | 2014.11- | 5MT | R | R | Hatchback RWD M 281.920 | | GDS82519 | Drive Shaft | | 33 | 26 | 49.2 | 44.5 | 803 | |
| | 2014.11- | 5MT | R | L/R | Hatchback RWD M 281.920 | | GCI81907 | Inner Joint | | 26 | 20 | 39.95 | 64 | 100 | |
| | 2014.11- | 5MT/6DCT | R | L/R | Hatchback RWD M 281.920 | | GCO82066 | Outer Joint | | 33 | 20 | 49.2 | 44.5 | 52 | M |
| | 2014.11- | 6DCT | R | L | Hatchback RWD M 281.920 | | GDS57936 | Drive Shaft | | 33 | 33 | 49.2 | 44.5 | 502 | |
| | 2014.11- | 6DCT | R | R | Hatchback RWD M 281.920 | | GDS57935 | Drive Shaft | | 33 | 33 | 49.2 | 44.5 | 874 | |
| | 2014.11- | 6DCT | R | L | Hatchback RWD M 281.920 | | GCI83945 | Inner Joint | | 33 | 20 | 40 | 60 | 114 | |
| | 2014.11- | 6DCT | R | R | Hatchback RWD M 281.920 | | GCI83944 | Inner Joint | | 33 | 20 | 40 | 85 | 152 | |
| 1.0 (52 kw) | 2014.07- | 5MT | R | L | Hatchback RWD M 281.920;H4DA401 | | GDS82518 | Drive Shaft | | 33 | 26 | 49.2 | 44.5 | 570 | |
| | 2014.07- | 5MT | R | R | Hatchback RWD M 281.920;H4DA401 | | GDS82519 | Drive Shaft | | 33 | 26 | 49.2 | 44.5 | 803 | |
| | 2014.07- | 5MT | R | L/R | Hatchback RWD M 281.920;H4DA401 | | GCI81907 | Inner Joint | | 26 | 20 | 39.95 | 64 | 100 | |
| | 2014.07- | 5MT/6DCT | R | L/R | Hatchback RWD M 281.920;H4DA401 | | GCO82066 | Outer Joint | | 33 | 20 | 49.2 | 44.5 | 52 | M |
| | 2014.07- | 6DCT | R | L | Hatchback RWD M 281.920;H4DA401 | | GDS57936 | Drive Shaft | | 33 | 33 | 49.2 | 44.5 | 502 | |
| | 2014.07- | 6DCT | R | R | Hatchback RWD M 281.920;H4DA401 | | GDS57935 | Drive Shaft | | 33 | 33 | 49.2 | 44.5 | 874 | |

| | YEAR | TRANSM. | F/R | L/R | BODY STYLE & DRIVE TYPE & ENGINE | REMARKS | G-AP Ref. | PRODUCT | ABS | Technical Specifications A | B | C | H | L | P |
|---|---|---|---|---|---|---|---|---|---|---|---|---|---|---|---|
| **SMART** | | | | | | | | | | | | | | | |
| **Forfour** | | | | | | | | | | | | | | | |
| 1.0 (52 kw) | 2014.07- | 6DCT | R | L | Hatchback RWD M 281.920;H4DA401 | | GCI83945 | Inner Joint | | 33 | 20 | 40 | 60 | 114 | |
| | 2014.07- | 6DCT | R | R | Hatchback RWD M 281.920;H4DA401 | | GCI83944 | Inner Joint | | 33 | 20 | 40 | 85 | 152 | |
| 1.1 (47 kw) | 2005.02-2006.06 | AT | F | L | Hatchback FWD M 134.911;M 134.910 | | GCO17048 | Outer Joint | | 25 | 21 | 54 | 98 | 59 | I |
| | 2005.02-2006.06 | AT/MT | F | L | Hatchback FWD M 134.911;M 134.910 | | GDS85058 | Drive Shaft | | 25 | 33 | 54 | 98 | 624 | |
| | 2005.02-2006.06 | AT/MT | F | R | Hatchback FWD M 134.911;M 134.910 | | GDS85083 | Drive Shaft | | 25 | 33 | 54 | 98 | 916 | |
| | 2005.02-2006.06 | AT/MT | F | R | Hatchback FWD M 134.911;M 134.910 | | GCI85031 | Inner Joint | | 33 | 21 | 34.9 | 58 | 111.5 | |
| 1.1 (55 kw) | 2004.01-2006.06 | AT | F | L | Hatchback FWD M 134.910 | | GCO17048 | Outer Joint | | 25 | 21 | 54 | 98 | 59 | I |
| | 2004.01-2006.06 | AT/MT | F | L | Hatchback FWD M 134.910 | | GDS85058 | Drive Shaft | | 25 | 33 | 54 | 98 | 624 | |
| | 2004.01-2006.06 | AT/MT | F | R | Hatchback FWD M 134.910 | | GDS85083 | Drive Shaft | | 25 | 33 | 54 | 98 | 916 | |
| | 2004.01-2006.06 | AT/MT | F | R | Hatchback FWD M 134.910 | | GCI85031 | Inner Joint | | 33 | 21 | 34.9 | 58 | 111.5 | |
| 1.3 (70 kw) | 2004.01-2006.06 | AT | F | L | Hatchback FWD M 135.930 | | GCO17048 | Outer Joint | | 25 | 21 | 54 | 98 | 59 | I |
| | 2004.01-2006.06 | AT/MT | F | L | Hatchback FWD M 135.930 | | GDS85058 | Drive Shaft | | 25 | 33 | 54 | 98 | 624 | |
| | 2004.01-2006.06 | AT/MT | F | R | Hatchback FWD M 135.930 | | GDS85083 | Drive Shaft | | 25 | 33 | 54 | 98 | 916 | |
| | 2004.01-2006.06 | AT/MT | F | R | Hatchback FWD M 135.930 | | GCI85031 | Inner Joint | | 33 | 21 | 34.9 | 58 | 111.5 | |
| 1.5 (50 kw) | 2004.09-2006.06 | 5MT | F | L/R | Hatchback FWD OM 639.939 | | GCO39146 | Outer Joint | | 25 | 23 | 53 | 97 | 61 | M |
| | 2004.09-2006.06 | AT/MT | F | R | Hatchback FWD OM 639.939 | | GDS39324 | Drive Shaft | | 25 | 34 | 53 | 97 | 911 | |
| 1.5 (70 kw) | 2004.09-2006.06 | 6AT/5MT | F | L/R | Hatchback FWD OM 639.939 | | GCO39146 | Outer Joint | | 25 | 23 | 53 | 97 | 61 | M |
| | 2004.09-2006.06 | AT/MT | F | R | Hatchback FWD OM 639.939 | | GDS39324 | Drive Shaft | | 25 | 34 | 53 | 97 | 911 | |
| 1.5 (80 kw) | 2004.01-2006.06 | AT/MT | F | L | Hatchback FWD M 135.950 | | GDS85058 | Drive Shaft | | 25 | 33 | 54 | 98 | 624 | |
| | 2004.01-2006.06 | AT/MT | F | R | Hatchback FWD M 135.950 | | GDS85083 | Drive Shaft | | 25 | 33 | 54 | 98 | 916 | |
| | 2004.01-2006.06 | AT/MT | F | L | Hatchback FWD M 135.950 | | GCO17048 | Outer Joint | | 25 | 21 | 54 | 98 | 59 | I |
| | 2004.01-2006.06 | AT/MT | F | R | Hatchback FWD M 135.950 | | GCI85031 | Inner Joint | | 33 | 21 | 34.9 | 58 | 111.5 | |
| 1.5 (90 kw) | 2004.01-2006.06 | AT/MT | F | L | Hatchback FWD M 135.950 | | GDS85058 | Drive Shaft | | 25 | 33 | 54 | 98 | 624 | |
| | 2004.01-2006.06 | AT/MT | F | R | Hatchback FWD M 135.950 | | GDS85083 | Drive Shaft | | 25 | 33 | 54 | 98 | 916 | |
| | 2004.01-2006.06 | AT/MT | F | L | Hatchback FWD M 135.950 | | GCO17048 | Outer Joint | | 25 | 21 | 54 | 98 | 59 | I |
| | 2004.01-2006.06 | AT/MT | F | R | Hatchback FWD M 135.950 | | GCI85031 | Inner Joint | | 33 | 21 | 34.9 | 58 | 111.5 | |
| EV (41 kw) | 2017.05- | ET | R | L | Hatchback RWD 5AL | For SA code:E56 | GDS58206 | Drive Shaft | | 33 | 26 | 49.2 | 44.5 | 503 | |
| | 2017.05- | ET | R | R | Hatchback RWD 5AL | For SA code:E56 | GDS58207 | Drive Shaft | | 33 | 26 | 49.2 | 44.5 | 874 | |
| | 2017.05- | ET | R | L/R | Hatchback RWD 5AL | For SA code:E56 | GCO83864 | Outer Joint | | 33 | 20 | 49.2 | 44.5 | 52 | M |
| | 2017.05- | ET | R | L/R | Hatchback RWD 5AL | For SA code:E56 | GCI81907 | Inner Joint | | 26 | 20 | 39.95 | 64 | 100 | |
| EV (60 kw) | 2017.05- | ET | R | L | Hatchback RWD 5AL | For SA code:E56 | GDS58206 | Drive Shaft | | 33 | 26 | 49.2 | 44.5 | 503 | |
| | 2017.05- | ET | R | R | Hatchback RWD 5AL | For SA code:E56 | GDS58207 | Drive Shaft | | 33 | 26 | 49.2 | 44.5 | 874 | |
| | 2017.05- | ET | R | L/R | Hatchback RWD 5AL | For SA code:E56 | GCO83864 | Outer Joint | | 33 | 20 | 49.2 | 44.5 | 52 | M |
| | 2017.05- | ET | R | L/R | Hatchback RWD 5AL | For SA code:E56 | GCI81907 | Inner Joint | | 26 | 20 | 39.95 | 64 | 100 | |
| **Fortwo Cabrio** | | | | | | | | | | | | | | | |
| 0.6 (45 kw) | 2004.01-2006.12 | AT | R | L | Convertible RWD M 160.910 | | GDS99190 | Drive Shaft | 42T | 24 | 33 | 50 | 25.5 | 476 | |
| | 2004.01-2006.12 | AT | R | R | Convertible RWD M 160.910 | | GDS99191 | Drive Shaft | 42T | 24 | 33 | 50 | 25.5 | 716 | |
| 0.6 (55 kw) | 2004.01-2006.12 | | R | L | Convertible RWD M 160.910 | not for SA code:K02 | GDS99190 | Drive Shaft | 42T | 24 | 33 | 50 | 25.5 | 476 | |
| | 2004.01-2006.12 | | R | R | Convertible RWD M 160.910 | not for SA code:K02 | GDS99191 | Drive Shaft | 42T | 24 | 33 | 50 | 25.5 | 716 | |
| 0.7 (45 kw) | 2004.01-2007.01 | AT/Semi-AT | R | L | Convertible RWD M 160.920 | | GDS99190 | Drive Shaft | 42T | 24 | 33 | 50 | 25.5 | 476 | |
| | 2004.01-2007.01 | AT/Semi-AT | R | R | Convertible RWD M 160.920 | | GDS99191 | Drive Shaft | 42T | 24 | 33 | 50 | 25.5 | 716 | |
| 0.7 (55 kw) | 2004.01-2007.01 | 6AT | R | L | Convertible RWD M 160.920 | | GDS99190 | Drive Shaft | 42T | 24 | 33 | 50 | 25.5 | 476 | |
| | 2004.01-2007.01 | 6AT | R | R | Convertible RWD M 160.920 | | GDS99191 | Drive Shaft | 42T | 24 | 33 | 50 | 25.5 | 716 | |
| 0.8 (30 kw) | 2004.01-2007.01 | 6AT | R | L | Convertible RWD OM 660 DE 8LA;OM 660.940 | | GDS99190 | Drive Shaft | 42T | 24 | 33 | 50 | 25.5 | 476 | |
| | 2004.01-2007.01 | 6AT | R | R | Convertible RWD OM 660 DE 8LA;OM 660.940 | | GDS99191 | Drive Shaft | 42T | 24 | 33 | 50 | 25.5 | 716 | |
| 0.8 (33 kw) | 2007.01- | AT/MT | R | L | Convertible RWD OM 660.950 | | GDS35052 | Drive Shaft | 42T | 33 | 33 | 56.2 | 44 | 521 | |
| | 2007.01- | AT/MT | R | R | Convertible RWD OM 660.950 | | GDS35053 | Drive Shaft | 42T | 33 | 33 | 56.2 | 44 | 763 | |
| | 2007.01- | AT/MT | R | L/R | Convertible RWD OM 660.950 | | GCO55002 | Outer Joint | 42T | 33 | 22 | 56.2 | 44 | 51 | M |
| | 2007.01- | AT/MT | R | L/R | Convertible RWD OM 660.950 | | GCI55001 | Inner Joint | | 33 | 22 | 34.9 | 58 | 111.5 | |
| 0.8 (40 kw) | 2009.08- | AT/MT | R | L | Convertible RWD OM 660.951 | | GDS35052 | Drive Shaft | 42T | 33 | 33 | 56.2 | 44 | 521 | |
| 0.9 (66 kw) | 2015.09- | 5MT | R | L | Convertible RWD M 281.910 | | GDS82518 | Drive Shaft | | 33 | 26 | 49.2 | 44.5 | 570 | |
| | 2015.09- | 5MT | R | R | Convertible RWD M 281.910 | | GDS82519 | Drive Shaft | | 33 | 26 | 49.2 | 44.5 | 803 | |
| | 2015.09- | 5MT | R | L/R | Convertible RWD M 281.910 | | GCI81907 | Inner Joint | | 26 | 20 | 39.95 | 64 | 100 | |
| | 2015.09- | 5MT/6DCT | R | L/R | Convertible RWD M 281.910 | | GCO82066 | Outer Joint | | 33 | 20 | 49.2 | 44.5 | 52 | M |
| | 2015.09- | 6DCT | R | L | Convertible RWD M 281.910 | | GDS57936 | Drive Shaft | | 33 | 33 | 49.2 | 44.5 | 502 | |
| | 2015.09- | 6DCT | R | R | Convertible RWD M 281.910 | | GDS57935 | Drive Shaft | | 33 | 33 | 49.2 | 44.5 | 874 | |
| | 2015.09- | 6DCT | R | L | Convertible RWD M 281.910 | | GCI83945 | Inner Joint | | 33 | 20 | 40 | 60 | 114 | |
| | 2015.09- | 6DCT | R | R | Convertible RWD M 281.910 | | GCI83944 | Inner Joint | | 33 | 20 | 40 | 85 | 152 | |
| 0.9 (80 kw) | 2016.07- | 6DCT | R | L | Convertible RWD M 281.910 | | GDS57936 | Drive Shaft | | 33 | 33 | 49.2 | 44.5 | 502 | |
| | 2016.07- | 6DCT | R | R | Convertible RWD M 281.910 | | GDS57935 | Drive Shaft | | 33 | 33 | 49.2 | 44.5 | 874 | |
| | 2016.07- | 6DCT | R | L/R | Convertible RWD M 281.910 | | GCO82066 | Outer Joint | | 33 | 20 | 49.2 | 44.5 | 52 | M |
| | 2016.07- | 6DCT | R | L | Convertible RWD M 281.910 | | GCI83945 | Inner Joint | | 33 | 20 | 40 | 60 | 114 | |
| | 2016.07- | 6DCT | R | R | Convertible RWD M 281.910 | | GCI83944 | Inner Joint | | 33 | 20 | 40 | 85 | 152 | |
| 1.0 (52 kw) | 2007.01- | AT/MT | R | L | Convertible RWD M 132.910 | Date to:2009.05 | GDS35052 | Drive Shaft | 42T | 33 | 33 | 56.2 | 44 | 521 | |
| | 2007.01- | AT/MT | R | R | Convertible RWD M 132.910 | Date to:2009.05 | GDS35053 | Drive Shaft | 42T | 33 | 33 | 56.2 | 44 | 763 | |

| | YEAR | TRANSM. | F/R | L/R | BODY STYLE & DRIVE TYPE & ENGINE | REMARKS | G-AP Ref. | PRODUCT | ABS | Technical Specifications A | B | C | H | L | P |
|---|---|---|---|---|---|---|---|---|---|---|---|---|---|---|---|
| **SMART** | | | | | | | | | | | | | | | |
| **Fortwo Cabrio** | | | | | | | | | | | | | | | |
| 1.0 (52 kw) | 2007.01- | AT/MT | R | L | Convertible RWD M 132.910 | Date to:2009.05 | GCO55002 | Outer Joint | 42T | 33 | 22 | 56.2 | 44 | 51 | M |
| | 2007.01- | AT/MT | R | L | Convertible RWD M 132.910 | Date to:2009.05 | GCI55001 | Inner Joint | | 33 | 22 | 34.9 | 58 | 111.5 | |
| | 2015.09- | 5MT | R | L | Convertible RWD M 281.920 | | GDS82518 | Drive Shaft | | 33 | 26 | 49.2 | 44.5 | 570 | |
| | 2015.09- | 5MT | R | R | Convertible RWD M 281.920 | | GDS82519 | Drive Shaft | | 33 | 26 | 49.2 | 44.5 | 803 | |
| | 2015.09- | 5MT | R | L/R | Convertible RWD M 281.920 | | GCI81907 | Inner Joint | | 26 | 20 | 39.95 | 64 | 100 | |
| | 2015.09- | 5MT/6DCT | R | L/R | Convertible RWD M 281.920 | | GCO82066 | Outer Joint | | 33 | 20 | 49.2 | 44.5 | 52 | M |
| | 2015.09- | 6DCT | R | L | Convertible RWD M 281.920 | | GDS57936 | Drive Shaft | | 33 | 33 | 49.2 | 44.5 | 502 | |
| | 2015.09- | 6DCT | R | R | Convertible RWD M 281.920 | | GDS57935 | Drive Shaft | | 33 | 33 | 49.2 | 44.5 | 874 | |
| | 2015.09- | 6DCT | R | L | Convertible RWD M 281.920 | | GCI83945 | Inner Joint | | 33 | 20 | 40 | 60 | 114 | |
| | 2015.09- | 6DCT | R | R | Convertible RWD M 281.920 | | GCI83944 | Inner Joint | | 33 | 20 | 40 | 85 | 152 | |
| 1.0 (62 kw) | 2007.01- | AT/MT | R | L | Convertible RWD M 132.930 | Date to:2009.05 | GDS35052 | Drive Shaft | 42T | 33 | 33 | 56.2 | 44 | 521 | |
| | 2007.01- | AT/MT | R | R | Convertible RWD M 132.930 | Date to:2009.05 | GDS35053 | Drive Shaft | 42T | 33 | 33 | 56.2 | 44 | 763 | |
| | 2007.01- | AT/MT | R | L | Convertible RWD M 132.930 | Date to:2009.05 | GCO55002 | Outer Joint | 42T | 33 | 22 | 56.2 | 44 | 51 | M |
| | 2007.01- | AT/MT | R | L | Convertible RWD M 132.930 | Date to:2009.05 | GCI55001 | Inner Joint | | 33 | 22 | 34.9 | 58 | 111.5 | |
| 1.0 (72 kw) | 2008.01- | AT/MT | R | L | Convertible RWD M 132.930 | | GDS35052 | Drive Shaft | 42T | 33 | 33 | 56.2 | 44 | 521 | |
| | 2008.01- | AT/MT | R | R | Convertible RWD M 132.930 | | GDS35053 | Drive Shaft | 42T | 33 | 33 | 56.2 | 44 | 763 | |
| | 2008.01- | AT/MT | R | L/R | Convertible RWD M 132.930 | | GCO55002 | Outer Joint | 42T | 33 | 22 | 56.2 | 44 | 51 | M |
| | 2008.01- | AT/MT | R | L/R | Convertible RWD M 132.930 | | GCI55001 | Inner Joint | | 33 | 22 | 34.9 | 58 | 111.5 | |
| 1.0 (75 kw) | 2010.07- | 5AT | R | L | Convertible RWD M 132.930 | | GDS35052 | Drive Shaft | 42T | 33 | 33 | 56.2 | 44 | 521 | |
| | 2010.07- | 5AT | R | R | Convertible RWD M 132.930 | | GDS35053 | Drive Shaft | 42T | 33 | 33 | 56.2 | 44 | 763 | |
| | 2010.07- | 5AT | R | L/R | Convertible RWD M 132.930 | | GCO55002 | Outer Joint | 42T | 33 | 22 | 56.2 | 44 | 51 | M |
| | 2010.07- | 5AT | R | L/R | Convertible RWD M 132.930 | | GCI55001 | Inner Joint | | 33 | 22 | 34.9 | 58 | 111.5 | |
| 1.0 (88 kw) | 2012.04- | 5AMT | R | L | Convertible RWD M 132.930 | | GDS35052 | Drive Shaft | 42T | 33 | 33 | 56.2 | 44 | 521 | |
| EV (41 kw) | 2017.05- | ET | R | L | Convertible RWD 5AL | For SA code:E56 | GDS58206 | Drive Shaft | | 33 | 26 | 49.2 | 44.5 | 503 | |
| | 2017.05- | ET | R | R | Convertible RWD 5AL | For SA code:E56 | GDS58207 | Drive Shaft | | 33 | 26 | 49.2 | 44.5 | 874 | |
| | 2017.05- | ET | R | L/R | Convertible RWD 5AL | For SA code:E56 | GCO83864 | Outer Joint | | 33 | 20 | 49.2 | 44.5 | 52 | M |
| | 2017.05- | ET | R | L/R | Convertible RWD 5AL | For SA code:E56 | GCI81907 | Inner Joint | | 26 | 20 | 39.95 | 64 | 100 | |
| EV (55 kw) | 2013.01- | ET | R | L | Convertible RWD EV | | GDS35052 | Drive Shaft | 42T | 33 | 33 | 56.2 | 44 | 521 | |
| EV (60 kw) | 2013.01- | ET | R | L | Convertible RWD EV | | GDS35052 | Drive Shaft | 42T | 33 | 33 | 56.2 | 44 | 521 | |
| | 2017.05- | ET | R | L | Convertible RWD 5AL | For SA code:E56 | GDS58206 | Drive Shaft | | 33 | 26 | 49.2 | 44.5 | 503 | |
| | 2017.05- | ET | R | R | Convertible RWD 5AL | For SA code:E56 | GDS58207 | Drive Shaft | | 33 | 26 | 49.2 | 44.5 | 874 | |
| | 2017.05- | ET | R | L/R | Convertible RWD 5AL | For SA code:E56 | GCO83864 | Outer Joint | | 33 | 20 | 49.2 | 44.5 | 52 | M |
| | 2017.05- | ET | R | L/R | Convertible RWD 5AL | For SA code:E56 | GCI81907 | Inner Joint | | 26 | 20 | 39.95 | 64 | 100 | |
| **Fortwo Coupe** | | | | | | | | | | | | | | | |
| 0.6 (45 kw) | 2004.01-2007.02 | AT | R | L | Coupe RWD M 160.910 | | GDS99190 | Drive Shaft | 42T | 24 | 33 | 50 | 25.5 | 476 | |
| | 2004.01-2007.02 | AT | R | R | Coupe RWD M 160.910 | | GDS99191 | Drive Shaft | 42T | 24 | 33 | 50 | 25.5 | 716 | |
| 0.7 (37 kw) | 2004.01-2007.01 | AT/MT | R | L | Coupe RWD M 160.920 | | GDS99190 | Drive Shaft | 42T | 24 | 33 | 50 | 25.5 | 476 | |
| | 2004.01-2007.01 | AT/MT | R | R | Coupe RWD M 160.920 | | GDS99191 | Drive Shaft | 42T | 24 | 33 | 50 | 25.5 | 716 | |
| 0.7 (40 kw) | 2004.01-2007.01 | 6AT | R | L | Coupe RWD M 160.920 | | GDS99190 | Drive Shaft | 42T | 24 | 33 | 50 | 25.5 | 476 | |
| | 2004.01-2007.01 | 6AT | R | R | Coupe RWD M 160.920 | | GDS99191 | Drive Shaft | 42T | 24 | 33 | 50 | 25.5 | 716 | |
| 0.7 (45 kw) | 2004.01-2007.01 | Semi-AT | R | L | Coupe RWD M 160.920 | | GDS99190 | Drive Shaft | 42T | 24 | 33 | 50 | 25.5 | 476 | |
| | 2004.01-2007.01 | Semi-AT | R | R | Coupe RWD M 160.920 | | GDS99191 | Drive Shaft | 42T | 24 | 33 | 50 | 25.5 | 716 | |
| 0.7 (55 kw) | 2004.01-2007.01 | AT | R | L | Coupe RWD M 160.920 | | GDS99190 | Drive Shaft | 42T | 24 | 33 | 50 | 25.5 | 476 | |
| | 2004.01-2007.01 | AT | R | R | Coupe RWD M 160.920 | | GDS99191 | Drive Shaft | 42T | 24 | 33 | 50 | 25.5 | 716 | |
| 0.8 (30 kw) | 2004.01-2007.01 | Semi-AT | R | L | Coupe RWD OM 660.940 | | GDS99190 | Drive Shaft | 42T | 24 | 33 | 50 | 25.5 | 476 | |
| | 2004.01-2007.01 | Semi-AT | R | R | Coupe RWD OM 660.940 | | GDS99191 | Drive Shaft | 42T | 24 | 33 | 50 | 25.5 | 716 | |
| 0.8 (33 kw) | 2007.01- | AT/MT | R | L | Coupe RWD OM 660.950 | Date to:2009.05 | GDS35052 | Drive Shaft | 42T | 33 | 33 | 56.2 | 44 | 521 | |
| | 2007.01- | AT/MT | R | R | Coupe RWD OM 660.950 | Date to:2009.05 | GDS35053 | Drive Shaft | 42T | 33 | 33 | 56.2 | 44 | 763 | |
| | 2007.01- | AT/MT | R | L | Coupe RWD OM 660.950 | Date to:2009.05 | GCO55002 | Outer Joint | 42T | 33 | 22 | 56.2 | 44 | 51 | M |
| | 2007.01- | AT/MT | R | L | Coupe RWD OM 660.950 | Date to:2009.05 | GCI55001 | Inner Joint | | 33 | 22 | 34.9 | 58 | 111.5 | |
| 0.8 (40 kw) | 2009.08- | AT | R | L | Coupe RWD OM 660.951 | | GDS35052 | Drive Shaft | 42T | 33 | 33 | 56.2 | 44 | 521 | |
| | 2009.08- | AT | R | R | Coupe RWD OM 660.951 | | GDS35053 | Drive Shaft | 42T | 33 | 33 | 56.2 | 44 | 763 | |
| | 2009.08- | AT | R | L/R | Coupe RWD OM 660.951 | | GCO55002 | Outer Joint | 42T | 33 | 22 | 56.2 | 44 | 51 | M |
| | 2009.08- | AT | R | L/R | Coupe RWD OM 660.951 | | GCI55001 | Inner Joint | | 33 | 22 | 34.9 | 58 | 111.5 | |
| 0.9 (66 kw) | 2014.09- | 5MT | R | L | Coupe RWD M 281.910 | | GDS82518 | Drive Shaft | | 33 | 26 | 49.2 | 44.5 | 570 | |
| | 2014.09- | 5MT | R | R | Coupe RWD M 281.910 | | GDS82519 | Drive Shaft | | 33 | 26 | 49.2 | 44.5 | 803 | |
| | 2014.09- | 5MT | R | L/R | Coupe RWD M 281.910 | | GCI81907 | Inner Joint | | 26 | 20 | 39.95 | 64 | 100 | |
| | 2014.09- | 5MT/6DCT | R | L/R | Coupe RWD M 281.910 | | GCO82066 | Outer Joint | | 33 | 20 | 49.2 | 44.5 | 52 | M |
| | 2014.09- | 6DCT | R | L | Coupe RWD M 281.910 | | GDS57936 | Drive Shaft | | 33 | 33 | 49.2 | 44.5 | 502 | |
| | 2014.09- | 6DCT | R | R | Coupe RWD M 281.910 | | GDS57935 | Drive Shaft | | 33 | 33 | 49.2 | 44.5 | 874 | |
| | 2014.09- | 6DCT | R | L | Coupe RWD M 281.910 | | GCI83945 | Inner Joint | | 33 | 20 | 40 | 60 | 114 | |
| | 2014.09- | 6DCT | R | R | Coupe RWD M 281.910 | | GCI83944 | Inner Joint | | 33 | 20 | 40 | 85 | 152 | |
| 0.9 (80 kw) | 2016.07- | 6DCT | R | L | Coupe RWD M 281.910 | | GDS57936 | Drive Shaft | | 33 | 33 | 49.2 | 44.5 | 502 | |
| | 2016.07- | 6DCT | R | R | Coupe RWD M 281.910 | | GDS57935 | Drive Shaft | | 33 | 33 | 49.2 | 44.5 | 874 | |
| | 2016.07- | 6DCT | R | L/R | Coupe RWD M 281.910 | | GCO82066 | Outer Joint | | 33 | 20 | 49.2 | 44.5 | 52 | M |

| | YEAR | TRANSM. | F/R | L/R | BODY STYLE & DRIVE TYPE & ENGINE | REMARKS | G-AP Ref. | PRODUCT | ABS | Technical Specifications A | B | C | H | L | P |
|---|---|---|---|---|---|---|---|---|---|---|---|---|---|---|---|
| **SMART** | | | | | | | | | | | | | | | |
| **Fortwo Coupe** | | | | | | | | | | | | | | | |
| 0.9 (80 kw) | 2016.07- | 6DCT | R | L | Coupe RWD M 281.910 | | GCI83945 | Inner Joint | | 33 | 20 | 40 | 60 | 114 | |
| | 2016.07- | 6DCT | R | R | Coupe RWD M 281.910 | | GCI83944 | Inner Joint | | 33 | 20 | 40 | 85 | 152 | |
| 1.0 (45 kw) | 2007.01- | 5AT | R | L | Coupe RWD M 132.910 | Date to:2009.05 | GDS35052 | Drive Shaft | 42T | 33 | 33 | 56.2 | 44 | 521 | |
| | 2007.01- | 5AT | R | R | Coupe RWD M 132.910 | Date to:2009.05 | GDS35053 | Drive Shaft | 42T | 33 | 33 | 56.2 | 44 | 763 | |
| | 2007.01- | 5AT | R | L/R | Coupe RWD M 132.910 | Date to:2009.05 | GCO55002 | Outer Joint | 42T | 33 | 22 | 56.2 | 44 | 51 | M |
| | 2007.01- | 5AT | R | L/R | Coupe RWD M 132.910 | Date to:2009.05 | GCI55001 | Inner Joint | | 33 | 22 | 34.9 | 58 | 111.5 | |
| | 2014.11- | 5MT | R | L | Coupe RWD M 281.920 | | GDS82518 | Drive Shaft | | 33 | 26 | 49.2 | 44.5 | 570 | |
| | 2014.11- | 5MT | R | R | Coupe RWD M 281.920 | | GDS82519 | Drive Shaft | | 33 | 26 | 49.2 | 44.5 | 803 | |
| | 2014.11- | 5MT | R | L/R | Coupe RWD M 281.920 | | GCI81907 | Inner Joint | | 26 | 20 | 39.95 | 64 | 100 | |
| | 2014.11- | 5MT/6DCT | R | L/R | Coupe RWD M 281.920 | | GCO82066 | Outer Joint | | 33 | 20 | 49.2 | 44.5 | 52 | M |
| | 2014.11- | 6DCT | R | L | Coupe RWD M 281.920 | | GDS57936 | Drive Shaft | | 33 | 33 | 49.2 | 44.5 | 502 | |
| | 2014.11- | 6DCT | R | R | Coupe RWD M 281.920 | | GDS57935 | Drive Shaft | | 33 | 33 | 49.2 | 44.5 | 874 | |
| | 2014.11- | 6DCT | R | L | Coupe RWD M 281.920 | | GCI83945 | Inner Joint | | 33 | 20 | 40 | 60 | 114 | |
| | 2014.11- | 6DCT | R | R | Coupe RWD M 281.920 | | GCI83944 | Inner Joint | | 33 | 20 | 40 | 85 | 152 | |
| 1.0 (52 kw) | 2007.01- | 5AT | R | L | Coupe RWD M 132.910 | Date to:2009.05 | GDS35052 | Drive Shaft | 42T | 33 | 33 | 56.2 | 44 | 521 | |
| | 2007.01- | 5AT | R | R | Coupe RWD M 132.910 | Date to:2009.05 | GDS35053 | Drive Shaft | 42T | 33 | 33 | 56.2 | 44 | 763 | |
| | 2007.01- | 5AT | R | L | Coupe RWD M 132.910 | Date to:2009.05 | GCO55002 | Outer Joint | 42T | 33 | 22 | 56.2 | 44 | 51 | M |
| | 2007.01- | 5AT | R | L | Coupe RWD M 132.910 | Date to:2009.05 | GCI55001 | Inner Joint | | 33 | 22 | 34.9 | 58 | 111.5 | |
| | 2014.07- | 5MT | R | L | Coupe RWD M 281.920 | | GDS82518 | Drive Shaft | | 33 | 26 | 49.2 | 44.5 | 570 | |
| | 2014.07- | 5MT | R | R | Coupe RWD M 281.920 | | GDS82519 | Drive Shaft | | 33 | 26 | 49.2 | 44.5 | 803 | |
| | 2014.07- | 5MT | R | L/R | Coupe RWD M 281.920 | | GCI81907 | Inner Joint | | 26 | 20 | 39.95 | 64 | 100 | |
| | 2014.07- | 5MT/6DCT | R | L/R | Coupe RWD M 281.920 | | GCO82066 | Outer Joint | | 33 | 20 | 49.2 | 44.5 | 52 | M |
| | 2014.07- | 6DCT | R | L | Coupe RWD M 281.920 | | GDS57936 | Drive Shaft | | 33 | 33 | 49.2 | 44.5 | 502 | |
| | 2014.07- | 6DCT | R | R | Coupe RWD M 281.920 | | GDS57935 | Drive Shaft | | 33 | 33 | 49.2 | 44.5 | 874 | |
| | 2014.07- | 6DCT | R | L | Coupe RWD M 281.920 | | GCI83945 | Inner Joint | | 33 | 20 | 40 | 60 | 114 | |
| | 2014.07- | 6DCT | R | R | Coupe RWD M 281.920 | | GCI83944 | Inner Joint | | 33 | 20 | 40 | 85 | 152 | |
| 1.0 (62 kw) | 2007.01- | AT/MT | R | L | Coupe RWD M 132.930 | Date to:2009.05 | GDS35052 | Drive Shaft | 42T | 33 | 33 | 56.2 | 44 | 521 | |
| | 2007.01- | AT/MT | R | R | Coupe RWD M 132.930 | Date to:2009.05 | GDS35053 | Drive Shaft | 42T | 33 | 33 | 56.2 | 44 | 763 | |
| | 2007.01- | AT/MT | R | L/R | Coupe RWD M 132.930 | Date to:2009.05 | GCO55002 | Outer Joint | 42T | 33 | 22 | 56.2 | 44 | 51 | M |
| | 2007.01- | AT/MT | R | L/R | Coupe RWD M 132.930 | Date to:2009.05 | GCI55001 | Inner Joint | | 33 | 22 | 34.9 | 58 | 111.5 | |
| 1.0 (72 kw) | 2008.01- | AT/MT | R | L | Coupe RWD M 132.930 | | GDS35052 | Drive Shaft | 42T | 33 | 33 | 56.2 | 44 | 521 | |
| | 2008.01- | AT/MT | R | R | Coupe RWD M 132.930 | | GDS35053 | Drive Shaft | 42T | 33 | 33 | 56.2 | 44 | 763 | |
| | 2008.01- | AT/MT | R | L/R | Coupe RWD M 132.930 | | GCO55002 | Outer Joint | 42T | 33 | 22 | 56.2 | 44 | 51 | M |
| | 2008.01- | AT/MT | R | L/R | Coupe RWD M 132.930 | | GCI55001 | Inner Joint | | 33 | 22 | 34.9 | 58 | 111.5 | |
| 1.0 (75 kw) | 2010.07- | AT/MT | R | L | Coupe RWD M 132.930 | Not For SA code:809 | GDS35052 | Drive Shaft | 42T | 33 | 33 | 56.2 | 44 | 521 | |
| | 2010.07- | AT/MT | R | R | Coupe RWD M 132.930 | | GDS35053 | Drive Shaft | 42T | 33 | 33 | 56.2 | 44 | 763 | |
| | 2010.07- | AT/MT | R | R | Coupe RWD M 132.930 | | GCO55002 | Outer Joint | 42T | 33 | 22 | 56.2 | 44 | 51 | M |
| | 2010.07- | AT/MT | R | R | Coupe RWD M 132.930 | | GCI55001 | Inner Joint | | 33 | 22 | 34.9 | 58 | 111.5 | |
| EV (41 kw) | 2017.05- | ET | R | L | Coupe RWD 5AL | For SA code:E56 | GDS58206 | Drive Shaft | | 33 | 26 | 49.2 | 44.5 | 503 | |
| | 2017.05- | ET | R | R | Coupe RWD 5AL | For SA code:E56 | GDS58207 | Drive Shaft | | 33 | 26 | 49.2 | 44.5 | 874 | |
| | 2017.05- | ET | R | L/R | Coupe RWD 5AL | For SA code:E56 | GCO83864 | Outer Joint | | 33 | 20 | 49.2 | 44.5 | 52 | M |
| | 2017.05- | ET | R | L/R | Coupe RWD 5AL | For SA code:E56 | GCI81907 | Inner Joint | | 26 | 20 | 39.95 | 64 | 100 | |
| EV (55 kw) | 2013.01- | ET | R | L | Coupe RWD EV | | GDS35052 | Drive Shaft | 42T | 33 | 33 | 56.2 | 44 | 521 | |
| EV (60 kw) | 2013.01- | ET | R | L | Coupe RWD EV | | GDS35052 | Drive Shaft | 42T | 33 | 33 | 56.2 | 44 | 521 | |
| | 2017.05- | ET | R | L | Coupe RWD 5AL | For SA code:E56 | GDS58206 | Drive Shaft | | 33 | 26 | 49.2 | 44.5 | 503 | |
| | 2017.05- | ET | R | R | Coupe RWD 5AL | For SA code:E56 | GDS58207 | Drive Shaft | | 33 | 26 | 49.2 | 44.5 | 874 | |
| | 2017.05- | ET | R | L/R | Coupe RWD 5AL | For SA code:E56 | GCO83864 | Outer Joint | | 33 | 20 | 49.2 | 44.5 | 52 | M |
| | 2017.05- | ET | R | L/R | Coupe RWD 5AL | For SA code:E56 | GCI81907 | Inner Joint | | 26 | 20 | 39.95 | 64 | 100 | |
| **Roadster** | | | | | | | | | | | | | | | |
| 0.7 (45 kw) | 2003.07-2006.04 | 6AT | R | L | Cabriolet RWD 160921 | | GDS99190 | Drive Shaft | 42T | 24 | 33 | 50 | 25.5 | 476 | |
| | 2003.07-2006.04 | 6AT | R | R | Cabriolet RWD 160921 | | GDS99191 | Drive Shaft | 42T | 24 | 33 | 50 | 25.5 | 716 | |
| 0.7 (60 kw) | 2003.04-2005.11 | 6AT | R | L | Cabriolet RWD 160922 | | GDS99190 | Drive Shaft | 42T | 24 | 33 | 50 | 25.5 | 476 | |
| | 2003.04-2005.11 | 6AT | R | R | Cabriolet RWD 160922 | | GDS99191 | Drive Shaft | 42T | 24 | 33 | 50 | 25.5 | 716 | |
| 0.7 (74 kw) | 2004.03-2006.04 | 6AT | R | L | Cabriolet RWD 160923 | | GDS99190 | Drive Shaft | 42T | 24 | 33 | 50 | 25.5 | 476 | |
| | 2004.03-2006.04 | 6AT | R | R | Cabriolet RWD 160923 | | GDS99191 | Drive Shaft | 42T | 24 | 33 | 50 | 25.5 | 716 | |
| **Roadster Coupe** | | | | | | | | | | | | | | | |
| 0.7 (45 kw) | 2003.07-2006.04 | 6AT | R | L | Coupe RWD 160922 | | GDS99190 | Drive Shaft | 42T | 24 | 33 | 50 | 25.5 | 476 | |
| | 2003.07-2006.04 | 6AT | R | R | Coupe RWD 160922 | | GDS99191 | Drive Shaft | 42T | 24 | 33 | 50 | 25.5 | 716 | |
| 0.7 (60 kw) | 2003.04-2005.11 | 6AT | R | L | Coupe RWD 160921 | | GDS99190 | Drive Shaft | 42T | 24 | 33 | 50 | 25.5 | 476 | |
| | 2003.04-2005.11 | 6AT | R | R | Coupe RWD 160921 | | GDS99191 | Drive Shaft | 42T | 24 | 33 | 50 | 25.5 | 716 | |
| 0.7 (74 kw) | 2004.03-2006.04 | 6AT | R | L | Coupe RWD 160923 | | GDS99190 | Drive Shaft | 42T | 24 | 33 | 50 | 25.5 | 476 | |
| | 2004.03-2006.04 | 6AT | R | R | Coupe RWD 160923 | | GDS99191 | Drive Shaft | 42T | 24 | 33 | 50 | 25.5 | 716 | |

| | YEAR | TRANSM. | F/R | L/R | BODY STYLE & DRIVE TYPE & ENGINE | REMARKS | G-AP Ref. | PRODUCT | ABS | Technical Specifications A | B | C | H | L | P |
|---|---|---|---|---|---|---|---|---|---|---|---|---|---|---|---|
| **SOUEAST** | | | | | | | | | | | | | | | |
| **Lingyue (V3)** | | | | | | | | | | | | | | | |
| 1.5 (81 kw) | 2008.10- | 5MT | F | R | Saloon FWD 4G15M | Model year to:2013 | GCI39057 | Inner Joint | | 25 | 30 | 41 | 61.5 | 95 | |
| **Lioncel (Lingshuai)** | | | | | | | | | | | | | | | |
| 1.6 (74 kw) | 2003.03-2008.12 | 4AT/5MT | F | R | Saloon FWD DA4G18 | Transmission:4AT,Model year to:2007 | GCI39057 | Inner Joint | | 25 | 30 | 41 | 61.5 | 95 | |
| **SSANGYONG** | | | | | | | | | | | | | | | |
| **Actyon** | | | | | | | | | | | | | | | |
| 2.0 (100 kw) | 2007.07-2013.06 | AT/MT | F | L/R | SUV 4WD D20DT | | GDS81562 | Drive Shaft | | 40 | 27 | 60.5 | 95 | 518 | |
| | 2007.07-2013.06 | AT/MT | F | L/R | SUV 4WD D20DT | | GCO81408 | Outer Joint | | 40 | 34 | 60.5 | 95 | 70 | O |
| | 2007.07-2013.06 | AT/MT | F | L/R | SUV 4WD D20DT | | GCI44022 | Inner Joint | | 27 | 34 | 47.7 | | 130.5 | |
| 2.0 (104 kw) | 2006.10- | 5MT | F | L/R | SUV 4WD D20DT | | GCI44022 | Inner Joint | | 27 | 34 | 47.7 | | 130.5 | |
| 2.0 (110 kw) | 2012.08- | AT | F | L | SUV 4WD D20DTF | | GDS84384 | Drive Shaft | 48T | 28 | 27 | 58 | 86 | 624 | |
| | 2012.08- | AT | F | L/R | SUV 4WD D20DTF | | GCO21070 | Outer Joint | 48T | 28 | 34 | 58.8 | 82 | 65.5 | O |
| | 2012.08- | AT | F | L/R | SUV 4WD D20DTF | | GCI81446 | Inner Joint | | 27 | 26 | | 79 | 92 | |
| | 2012.08- | AT/MT | F | R | SUV 4WD D20DTF | | GDS81556 | Drive Shaft | 48T | 28 | 27 | 58 | 86 | 563 | |
| | 2012.08- | MT | F | L | SUV 4WD D20DTF | | GDS82212 | Drive Shaft | 48T | 28 | 27 | 58 | 86 | 610 | |
| | 2012.08- | MT | F | L/R | SUV 4WD D20DTF | | GCO81458 | Outer Joint | 48T | 28 | 34 | 58 | 85.5 | 65 | M |
| | 2012.08- | 6AT | F | L | SUV 4WD G20 | Date fron:2015.06 | GDS81644 | Drive Shaft | 48T | 28 | 27 | 58 | 85.5 | 625 | |
| | 2012.08- | 6AT/6MT | F | R | SUV 4WD G20 | | GDS81556 | Drive Shaft | 48T | 28 | 27 | 58 | 86 | 563 | |
| | 2012.08- | 6MT | F | L | SUV 4WD G20 | Date to:2014.03 | GDS82212 | Drive Shaft | 48T | 28 | 27 | 58 | 86 | 610 | |
| | 2012.08- | AT | F | L | SUV FWD D20DTF | | GDS84384 | Drive Shaft | 48T | 28 | 27 | 58 | 86 | 624 | |
| | 2012.08- | AT | F | L/R | SUV FWD D20DTF | | GCO21070 | Outer Joint | 48T | 28 | 34 | 58.8 | 82 | 65.5 | O |
| | 2012.08- | AT | F | L/R | SUV FWD D20DTF | | GCI81446 | Inner Joint | | 27 | 26 | | 79 | 92 | |
| | 2012.08- | AT/MT | F | R | SUV FWD D20DTF | | GDS81556 | Drive Shaft | 48T | 28 | 27 | 58 | 86 | 563 | |
| | 2012.08- | MT | F | L | SUV FWD D20DTF | | GDS82212 | Drive Shaft | 48T | 28 | 27 | 58 | 86 | 610 | |
| | 2012.08- | MT | F | L/R | SUV FWD D20DTF | | GCO81458 | Outer Joint | 48T | 28 | 34 | 58 | 85.5 | 65 | M |
| | 2012.08- | MT | F | L | SUV FWD D20DTF | | GCI81670 | Inner Joint | | 27 | 34 | 41 | 67.5 | 118.5 | |
| | 2012.08- | 6AT | F | L | SUV FWD G20 | Date fron:2015.06 | GDS81644 | Drive Shaft | 48T | 28 | 27 | 58 | 85.5 | 625 | |
| | 2012.08- | 6AT/6MT | F | R | SUV FWD G20 | | GDS81556 | Drive Shaft | 48T | 28 | 27 | 58 | 86 | 563 | |
| | 2012.08- | 6MT | F | L | SUV FWD G20 | Date to:2014.03 | GDS82212 | Drive Shaft | 48T | 28 | 27 | 58 | 86 | 610 | |
| | 2012.08- | 6MT | F | L | SUV FWD G20 | Date to:2014.03 | GCI81670 | Inner Joint | | 27 | 34 | 41 | 67.5 | 118.5 | |
| 2.0 (129 kw) | 2012.08- | 6AT/6MT | F | R | SUV FWD D20DTR | | GDS81556 | Drive Shaft | 48T | 28 | 27 | 58 | 86 | 563 | |
| | 2012.08- | AT | F | L | SUV FWD D20DTR | | GDS84384 | Drive Shaft | 48T | 28 | 27 | 58 | 86 | 624 | |
| | 2012.08- | AT | F | L/R | SUV FWD D20DTR | | GCO21070 | Outer Joint | 48T | 28 | 34 | 58.8 | 82 | 65.5 | O |
| | 2012.08- | AT | F | L/R | SUV FWD D20DTR | | GCI81446 | Inner Joint | | 27 | 26 | | 79 | 92 | |
| | 2012.08- | MT | F | L | SUV FWD D20DTR | | GDS82212 | Drive Shaft | 48T | 28 | 27 | 58 | 86 | 610 | |
| | 2012.08- | MT | F | L/R | SUV FWD D20DTR | | GCO81458 | Outer Joint | 48T | 28 | 34 | 58 | 85.5 | 65 | M |
| | 2012.08- | MT | F | L | SUV FWD D20DTR | | GCI81670 | Inner Joint | | 27 | 34 | 41 | 67.5 | 118.5 | |
| | 2013.03- | AT | F | L | SUV 4WD D20DTF | | GDS84384 | Drive Shaft | 48T | 28 | 27 | 58 | 86 | 624 | |
| | 2013.03- | AT | F | L/R | SUV 4WD D20DTF | | GCO21070 | Outer Joint | 48T | 28 | 34 | 58.8 | 82 | 65.5 | O |
| | 2013.03- | AT | F | L/R | SUV 4WD D20DTF | | GCI81446 | Inner Joint | | 27 | 26 | | 79 | 92 | |
| | 2013.03- | AT/MT | F | R | SUV 4WD D20DTF | | GDS81556 | Drive Shaft | 48T | 28 | 27 | 58 | 86 | 563 | |
| | 2013.03- | MT | F | L | SUV 4WD D20DTF | | GDS82212 | Drive Shaft | 48T | 28 | 27 | 58 | 86 | 610 | |
| | 2013.03- | MT | F | L/R | SUV 4WD D20DTF | | GCO81458 | Outer Joint | 48T | 28 | 34 | 58 | 85.5 | 65 | M |
| 2.3 (110 kw) | 2006.11- | 4AT/6AT/5MT | F | L/R | SUV 4WD G23D | | GDS81562 | Drive Shaft | | 40 | 27 | 60.5 | 95 | 518 | |
| | 2006.11- | | F | L/R | SUV 4WD G23D | | GCO81408 | Outer Joint | | 40 | 34 | 60.5 | 95 | 70 | O |
| | 2006.11- | | F | L/R | SUV 4WD G23D | | GCI44022 | Inner Joint | | 27 | 34 | 47.7 | | 130.5 | |
| **Actyon Sports** | | | | | | | | | | | | | | | |
| 2.0 (104 kw) | 2007.04- | | F | | Pickup 4WD D20DT | | GCI44022 | Inner Joint | | 27 | 34 | 47.7 | | 130.5 | |
| 2.0 (110 kw) | 2015.01- | 6AT/6MT | F | L/R | Pickup 4WD D20DTR | | GDS81562 | Drive Shaft | | 40 | 27 | 60.5 | 95 | 518 | |
| | 2015.01- | | F | L/R | Pickup 4WD D20DTR | | GCO81408 | Outer Joint | | 40 | 34 | 60.5 | 95 | 70 | O |
| | 2015.01- | | F | L/R | Pickup 4WD D20DTR | | GCI44022 | Inner Joint | | 27 | 34 | 47.7 | | 130.5 | |
| 2.0 (114 kw) | 2011.09- | 4AT/5MT | F | L/R | Pickup 4WD D20DTR | | GCO81408 | Outer Joint | | 40 | 34 | 60.5 | 95 | 70 | O |
| | 2011.09- | 5AT/6AT/6MT | F | L/R | Pickup 4WD D20DTR | | GDS81562 | Drive Shaft | | 40 | 27 | 60.5 | 95 | 518 | |
| | 2011.09- | | F | L/R | Pickup 4WD D20DTR | | GCI44022 | Inner Joint | | 27 | 34 | 47.7 | | 130.5 | |
| | 2012.01- | 4AT/5MT | F | L/R | Pickup 4WD D20DTR | | GCO81408 | Outer Joint | | 40 | 34 | 60.5 | 95 | 70 | O |
| | 2012.01- | 5AT/6AT/6MT | F | L/R | Pickup 4WD D20DTR | | GDS81562 | Drive Shaft | | 40 | 27 | 60.5 | 95 | 518 | |
| | 2012.01- | | F | L/R | Pickup 4WD D20DTR | | GCI44022 | Inner Joint | | 27 | 34 | 47.7 | | 130.5 | |
| 2.2 (131 kw) | 2015.07- | 6AT/6MT | F | L/R | Pickup 4WD D22DTR(672.980) | | GDS81562 | Drive Shaft | | 40 | 27 | 60.5 | 95 | 518 | |
| | 2015.07- | 6AT/6MT | F | L/R | Pickup 4WD D22DTR(672.980) | | GCI44022 | Inner Joint | | 27 | 34 | 47.7 | | 130.5 | |
| | 2015.07- | AT/MT | F | L/R | Pickup 4WD D22DTR(672.980) | | GCO81408 | Outer Joint | | 40 | 34 | 60.5 | 95 | 70 | O |
| 2.3 (110 kw) | 2011.09- | 5MT | F | L/R | Pickup 4WD G23D | | GDS81562 | Drive Shaft | | 40 | 27 | 60.5 | 95 | 518 | |
| | 2011.09- | 5MT | F | L/R | Pickup 4WD G23D | | GCI44022 | Inner Joint | | 27 | 34 | 47.7 | | 130.5 | |
| | 2011.09- | | F | L/R | Pickup 4WD G23D | | GCO81408 | Outer Joint | | 40 | 34 | 60.5 | 95 | 70 | O |
| | 2012.01- | | F | L/R | Pickup 4WD G23D | | GCO81408 | Outer Joint | | 40 | 34 | 60.5 | 95 | 70 | O |
| | 2012.01- | | F | L/R | Pickup 4WD G23D | | GCI44022 | Inner Joint | | 27 | 34 | 47.7 | | 130.5 | |

| | YEAR | TRANSM. | F/R | L/R | BODY STYLE & DRIVE TYPE & ENGINE | REMARKS | G-AP Ref. | PRODUCT | ABS | Technical Specifications A | B | C | H | L | P |
|---|---|---|---|---|---|---|---|---|---|---|---|---|---|---|---|
| **SSANGYONG** **Korando** | | | | | | | | | | | | | | | |
| 2.0 (94 kw) | 1997.06-2002.10 | | F | L/R | Terrain cab wagon closed 4WD E20M160/E20M161 | | GCO99059 | Outer Joint | | 28 | 35 | 53 | 154 | 79 | O |
| 2.0 (108 kw) | 2012.02- | 6MT | F | L | SUV 4WD G20D | | GDS82212 | Drive Shaft | 48T | 28 | 27 | 58 | 86 | 610 | |
| | 2012.02- | 6MT | F | R | SUV 4WD G20D | | GDS81556 | Drive Shaft | 48T | 28 | 27 | 58 | 86 | 563 | |
| | 2012.02- | 6MT | F | L/R | SUV 4WD G20D | Date to:2014.03 | GCO21070 | Outer Joint | 48T | 28 | 34 | 58.8 | 82 | 65.5 | O |
| | 2012.02- | 6MT | F | L/R | SUV 4WD G20D | Date to:2014.03 | GCO81458 | Outer Joint | 48T | 28 | 34 | 58 | 85.5 | 65 | M |
| | 2012.02- | 6MT | F | L | SUV 4WD G20D | Date to:2014.03 | GCI81670 | Inner Joint | | 27 | 34 | 41 | 67.5 | 118.5 | |
| | 2012.02- | 6MT | F | L | SUV FWD G20D | | GDS82212 | Drive Shaft | 48T | 28 | 27 | 58 | 86 | 610 | |
| | 2012.02- | 6MT | F | R | SUV FWD G20D | | GDS81556 | Drive Shaft | 48T | 28 | 27 | 58 | 86 | 563 | |
| | 2012.02- | 6MT | F | L/R | SUV FWD G20D | Date to:2014.03 | GCO21070 | Outer Joint | 48T | 28 | 34 | 58.8 | 82 | 65.5 | O |
| | 2012.02- | 6MT | F | L/R | SUV FWD G20D | Date to:2014.03 | GCO81458 | Outer Joint | 48T | 28 | 34 | 58 | 85.5 | 65 | M |
| | 2012.02- | 6MT | F | L | SUV FWD G20D | Date to:2014.03 | GCI81670 | Inner Joint | | 27 | 34 | 41 | 67.5 | 118.5 | |
| 2.0 (110 kw) | 2012.02- | 6AT | F | L | SUV 4WD D20DT;D20DTF | Date to:2014.12 | GDS84384 | Drive Shaft | 48T | 28 | 27 | 58 | 86 | 624 | |
| | 2012.02- | 6AT | F | L/R | SUV 4WD D20DT;D20DTF | Date to:2014.12 | GCO21070 | Outer Joint | 48T | 28 | 34 | 58.8 | 82 | 65.5 | O |
| | 2012.02- | 6AT | F | L/R | SUV 4WD D20DT;D20DTF | Date to:2014.12 | GCI81446 | Inner Joint | | 27 | 26 | | 79 | 92 | |
| | 2012.02- | 6AT/6MT | F | L | SUV 4WD D20DT;D20DTF | Transmission:6AT,Date from:2015.06;Transmission:6MT,Date to:2014.03 | GCO81458 | Outer Joint | 48T | 28 | 34 | 58 | 85.5 | 65 | M |
| | 2012.02- | 6MT | F | L | SUV 4WD D20DT;D20DTF | | GDS82212 | Drive Shaft | 48T | 28 | 27 | 58 | 86 | 610 | |
| | 2012.02- | 6MT | F | L | SUV 4WD D20DT;D20DTF | Date to:2014.03 | GCI81670 | Inner Joint | | 27 | 34 | 41 | 67.5 | 118.5 | |
| | 2012.02- | AT/MT | F | R | SUV 4WD D20DT;D20DTF | | GDS81556 | Drive Shaft | 48T | 28 | 27 | 58 | 86 | 563 | |
| | 2012.02- | AT/MT | F | R | SUV 4WD D20DT;D20DTF | | GCO81458 | Outer Joint | 48T | 28 | 34 | 58 | 85.5 | 65 | M |
| | 2012.02- | 6AT | F | L | SUV 4WD G20 | | GDS81644 | Drive Shaft | 48T | 28 | 27 | 58 | 85.5 | 625 | |
| | 2012.02- | 6AT | F | L | SUV 4WD G20 | | GCI81448 | Inner Joint | | 27 | 34 | 30 | 67 | 103 | |
| | 2012.02- | 6MT | F | L | SUV 4WD G20 | | GDS82212 | Drive Shaft | 48T | 28 | 27 | 58 | 86 | 610 | |
| | 2012.02- | 6MT | F | L | SUV 4WD G20 | Date to:2014.03 | GCO81458 | Outer Joint | 48T | 28 | 34 | 58 | 85.5 | 65 | M |
| | 2012.02- | 6MT | F | L | SUV 4WD G20 | Date to:2014.03 | GCI81670 | Inner Joint | | 27 | 34 | 41 | 67.5 | 118.5 | |
| | 2012.02- | AT/MT | F | R | SUV 4WD G20 | | GDS81556 | Drive Shaft | 48T | 28 | 27 | 58 | 86 | 563 | |
| | 2012.02- | AT/MT | F | R | SUV 4WD G20 | Date to:2014.03 | GCO81458 | Outer Joint | 48T | 28 | 34 | 58 | 85.5 | 65 | M |
| | 2012.02- | AT/MT | F | L/R | SUV 4WD G20 | Date to:2014.03 | GCO21070 | Outer Joint | 48T | 28 | 34 | 58.8 | 82 | 65.5 | O |
| | 2012.02- | 6AT | F | L | SUV FWD D20DT;D20DTF | Date to:2014.12 | GDS84384 | Drive Shaft | 48T | 28 | 27 | 58 | 86 | 624 | |
| | 2012.02- | 6AT | F | L/R | SUV FWD D20DT;D20DTF | Date to:2014.12 | GCO21070 | Outer Joint | 48T | 28 | 34 | 58.8 | 82 | 65.5 | O |
| | 2012.02- | 6AT | F | L/R | SUV FWD D20DT;D20DTF | Date to:2014.12 | GCI81446 | Inner Joint | | 27 | 26 | | 79 | 92 | |
| | 2012.02- | 6AT/6MT | F | L | SUV FWD D20DT;D20DTF | Transmission:6AT,Date from:2015.06;Transmission:6MT,Date to:2014.03 | GCO81458 | Outer Joint | 48T | 28 | 34 | 58 | 85.5 | 65 | M |
| | 2012.02- | 6MT | F | L | SUV FWD D20DT;D20DTF | | GDS82212 | Drive Shaft | 48T | 28 | 27 | 58 | 86 | 610 | |
| | 2012.02- | 6MT | F | L | SUV FWD D20DT;D20DTF | Date to:2014.03 | GCI81670 | Inner Joint | | 27 | 34 | 41 | 67.5 | 118.5 | |
| | 2012.02- | AT/MT | F | R | SUV FWD D20DT;D20DTF | | GDS81556 | Drive Shaft | 48T | 28 | 27 | 58 | 86 | 563 | |
| | 2012.02- | AT/MT | F | R | SUV FWD D20DT;D20DTF | | GCO81458 | Outer Joint | 48T | 28 | 34 | 58 | 85.5 | 65 | M |
| | 2012.02- | 6AT | F | L | SUV FWD G20 | | GDS81644 | Drive Shaft | 48T | 28 | 27 | 58 | 85.5 | 625 | |
| | 2012.02- | 6AT | F | L | SUV FWD G20 | | GCI81448 | Inner Joint | | 27 | 34 | 30 | 67 | 103 | |
| | 2012.02- | 6MT | F | L | SUV FWD G20 | | GDS82212 | Drive Shaft | 48T | 28 | 27 | 58 | 86 | 610 | |
| | 2012.02- | 6MT | F | L | SUV FWD G20 | Date to:2014.03 | GCO81458 | Outer Joint | 48T | 28 | 34 | 58 | 85.5 | 65 | M |
| | 2012.02- | 6MT | F | L | SUV FWD G20 | Date to:2014.03 | GCI81670 | Inner Joint | | 27 | 34 | 41 | 67.5 | 118.5 | |
| | 2012.02- | AT/MT | F | R | SUV FWD G20 | | GDS81556 | Drive Shaft | 48T | 28 | 27 | 58 | 86 | 563 | |
| | 2012.02- | AT/MT | F | R | SUV FWD G20 | Date to:2014.03 | GCO81458 | Outer Joint | 48T | 28 | 34 | 58 | 85.5 | 65 | M |
| | 2012.02- | AT/MT | F | L/R | SUV FWD G20 | Date to:2014.03 | GCO21070 | Outer Joint | 48T | 28 | 34 | 58.8 | 82 | 65.5 | O |
| | 2015.05- | 6MT | F | L | SUV FWD G20 | | GDS82212 | Drive Shaft | 48T | 28 | 27 | 58 | 86 | 610 | |
| | 2015.05- | 6MT | F | R | SUV FWD G20 | | GDS81556 | Drive Shaft | 48T | 28 | 27 | 58 | 86 | 563 | |
| | 2015.05- | 6MT | F | L/R | SUV FWD G20 | | GCO81458 | Outer Joint | 48T | 28 | 34 | 58 | 85.5 | 65 | M |
| | 2015.07- | 6AT | F | L | SUV Van 4WD G20 | | GDS81644 | Drive Shaft | 48T | 28 | 27 | 58 | 85.5 | 625 | |
| | 2015.07- | 6AT | F | L | SUV Van 4WD G20 | | GCI81448 | Inner Joint | | 27 | 34 | 30 | 67 | 103 | |
| | 2015.07- | 6MT | F | L | SUV Van 4WD G20 | | GDS82212 | Drive Shaft | 48T | 28 | 27 | 58 | 86 | 610 | |
| | 2015.07- | AT/MT | F | R | SUV Van 4WD G20 | | GDS81556 | Drive Shaft | 48T | 28 | 27 | 58 | 86 | 563 | |
| | 2015.07- | AT/MT | F | L/R | SUV Van 4WD G20 | | GCO81458 | Outer Joint | 48T | 28 | 34 | 58 | 85.5 | 65 | M |
| | 2015.07- | 6AT | F | L | SUV Van FWD G20 | | GDS81644 | Drive Shaft | 48T | 28 | 27 | 58 | 85.5 | 625 | |
| | 2015.07- | 6AT | F | L | SUV Van FWD G20 | | GCI81448 | Inner Joint | | 27 | 34 | 30 | 67 | 103 | |
| | 2015.07- | 6MT | F | L | SUV Van FWD G20 | | GDS82212 | Drive Shaft | 48T | 28 | 27 | 58 | 86 | 610 | |
| | 2015.07- | AT/MT | F | R | SUV Van FWD G20 | | GDS81556 | Drive Shaft | 48T | 28 | 27 | 58 | 86 | 563 | |
| | 2015.07- | AT/MT | F | L/R | SUV Van FWD G20 | | GCO81458 | Outer Joint | 48T | 28 | 34 | 58 | 85.5 | 65 | M |
| | 2015.09- | 6MT | F | L | SUV 4WD G20 | | GDS82212 | Drive Shaft | 48T | 28 | 27 | 58 | 86 | 610 | |
| | 2015.09- | 6MT | F | R | SUV 4WD G20 | | GDS81556 | Drive Shaft | 48T | 28 | 27 | 58 | 86 | 563 | |
| | 2015.09- | 6MT | F | L/R | SUV 4WD G20 | | GCO81458 | Outer Joint | 48T | 28 | 34 | 58 | 85.5 | 65 | M |
| 2.0 (129 kw) | 2010.11- | 6AT | F | L | SUV 4WD D20DTF | Date to:2014.12 | GDS84384 | Drive Shaft | 48T | 28 | 27 | 58 | 86 | 624 | |
| | 2010.11- | 6AT | F | L/R | SUV 4WD D20DTF | Date to:2014.12 | GCO21070 | Outer Joint | 48T | 28 | 34 | 58.8 | 82 | 65.5 | O |
| | 2010.11- | 6AT | F | L/R | SUV 4WD D20DTF | Date to:2014.12 | GCI81446 | Inner Joint | | 27 | 26 | | 79 | 92 | |
| | 2010.11- | 6AT/6MT | F | L | SUV 4WD D20DTF | Transmission:6AT,Date from:2015.06;Transmission:6MT,Date to:2014.03 | GCO81458 | Outer Joint | 48T | 28 | 34 | 58 | 85.5 | 65 | M |
| | 2010.11- | 6MT | F | L | SUV 4WD D20DTF | | GDS82212 | Drive Shaft | 48T | 28 | 27 | 58 | 86 | 610 | |
| | 2010.11- | 6MT | F | L | SUV 4WD D20DTF | Date to:2014.03 | GCI81670 | Inner Joint | | 27 | 34 | 41 | 67.5 | 118.5 | |

| | YEAR | TRANSM. | F/R | L/R | BODY STYLE & DRIVE TYPE & ENGINE | REMARKS | G-AP Ref. | PRODUCT | ABS | Technical Specifications A | B | C | H | L | P |
|---|---|---|---|---|---|---|---|---|---|---|---|---|---|---|---|
| **SSANGYONG** | | | | | | | | | | | | | | | |
| **Korando** | | | | | | | | | | | | | | | |
| 2.0 (129 kw) | 2010.11- | AT/MT | F | R | SUV 4WD D20DTF | | GDS81556 | Drive Shaft | 48T | 28 | 27 | 58 | 86 | 563 | |
| | 2010.11- | AT/MT | F | R | SUV 4WD D20DTF | | GCO81458 | Outer Joint | 48T | 28 | 34 | 58 | 85.5 | 65 | M |
| | 2010.11- | 6AT | F | L | SUV FWD D20DTF | Date to:2014.12 | GDS84384 | Drive Shaft | 48T | 28 | 27 | 58 | 86 | 624 | |
| | 2010.11- | 6AT | F | L/R | SUV FWD D20DTF | Date to:2014.12 | GCO21070 | Outer Joint | 48T | 28 | 34 | 58.8 | 82 | 65.5 | O |
| | 2010.11- | 6AT | F | L/R | SUV FWD D20DTF | Date to:2014.12 | GCI81446 | Inner Joint | | 27 | 26 | | 79 | 92 | |
| | 2010.11- | 6AT/6MT | F | R | SUV FWD D20DTF | Transmission:6AT,Date from:2015.06;Transmission:6MT,Date to:2014.03 | GCO81458 | Outer Joint | 48T | 28 | 34 | 58 | 85.5 | 65 | M |
| | 2010.11- | 6MT | F | L | SUV FWD D20DTF | | GDS82212 | Drive Shaft | 48T | 28 | 27 | 58 | 86 | 610 | |
| | 2010.11- | 6MT/6AT | F | L | SUV FWD D20DTF | Model:Korando,Transmission:6MT,Date to:2014.03;Model:Korando C,Transmission:6AT,Date from:2015.01 | GCI81670 | Inner Joint | | 27 | 34 | 41 | 67.5 | 118.5 | |
| | 2010.11- | AT/MT | F | R | SUV FWD D20DTF | | GDS81556 | Drive Shaft | 48T | 28 | 27 | 58 | 86 | 563 | |
| | 2010.11- | 6AT | F | L | SUV Van 4WD D20DTF | Date to:2014.12 | GDS84384 | Drive Shaft | 48T | 28 | 27 | 58 | 86 | 624 | |
| | 2010.11- | 6AT | F | L/R | SUV Van 4WD D20DTF | Date to:2014.12 | GCO21070 | Outer Joint | 48T | 28 | 34 | 58.8 | 82 | 65.5 | O |
| | 2010.11- | 6AT | F | L/R | SUV Van 4WD D20DTF | Date to:2014.12 | GCI81446 | Inner Joint | | 27 | 26 | | 79 | 92 | |
| | 2010.11- | 6AT/6MT | F | L/R | SUV Van 4WD D20DTF | Transmission:6AT,Date from:2015.06;Transmission:6MT,Date to:2014.03 | GCO81458 | Outer Joint | 48T | 28 | 34 | 58 | 85.5 | 65 | M |
| | 2010.11- | 6MT | F | L | SUV Van 4WD D20DTF | | GDS82212 | Drive Shaft | 48T | 28 | 27 | 58 | 86 | 610 | |
| | 2010.11- | 6MT | F | L | SUV Van 4WD D20DTF | Date to:2014.03 | GCI81670 | Inner Joint | | 27 | 34 | 41 | 67.5 | 118.5 | |
| | 2010.11- | AT/MT | F | R | SUV Van 4WD D20DTF | | GDS81556 | Drive Shaft | 48T | 28 | 27 | 58 | 86 | 563 | |
| | 2010.11- | 6AT | F | L | SUV Van FWD D20DTF | Date to:2014.12 | GDS84384 | Drive Shaft | 48T | 28 | 27 | 58 | 86 | 624 | |
| | 2010.11- | 6AT | F | L/R | SUV Van FWD D20DTF | Date to:2014.12 | GCO21070 | Outer Joint | 48T | 28 | 34 | 58.8 | 82 | 65.5 | O |
| | 2010.11- | 6AT | F | L/R | SUV Van FWD D20DTF | Date to:2014.12 | GCI81446 | Inner Joint | | 27 | 26 | | 79 | 92 | |
| | 2010.11- | 6AT/6MT | F | L/R | SUV Van FWD D20DTF | Transmission:6AT,Date from:2015.06;Transmission:6MT,Date to:2014.03 | GCO81458 | Outer Joint | 48T | 28 | 34 | 58 | 85.5 | 65 | M |
| | 2010.11- | 6MT | F | L | SUV Van FWD D20DTF | | GDS82212 | Drive Shaft | 48T | 28 | 27 | 58 | 86 | 610 | |
| | 2010.11- | 6MT | F | L | SUV Van FWD D20DTF | Date to:2014.03 | GCI81670 | Inner Joint | | 27 | 34 | 41 | 67.5 | 118.5 | |
| | 2010.11- | AT/MT | F | R | SUV Van FWD D20DTF | | GDS81556 | Drive Shaft | 48T | 28 | 27 | 58 | 86 | 563 | |
| 2.2 (50 kw) | 1988.12-1996.12 | | F | | Terrain cab wagon closed 4WD DC23 | Date From:1996.07 | GCO99059 | Outer Joint | | 28 | 35 | 53 | 154 | 79 | O |
| 2.2 (131 kw) | 2015.07- | 6AT | F | R | SUV 4WD D22DTF (672.960) | Date to:2015.12 | GDS81556 | Drive Shaft | 48T | 28 | 27 | 58 | 86 | 563 | |
| | 2015.07- | 6AT | F | R | SUV 4WD D22DTF (672.960) | Date to:2015.12 | GCO81458 | Outer Joint | 48T | 28 | 34 | 58 | 85.5 | 65 | M |
| | 2015.07- | 6MT | F | L | SUV 4WD D22DTF (672.960) | | GDS82212 | Drive Shaft | 48T | 28 | 27 | 58 | 86 | 610 | |
| | 2015.07- | 6MT | F | R | SUV 4WD D22DTF (672.960) | | GDS81556 | Drive Shaft | 48T | 28 | 27 | 58 | 86 | 563 | |
| | 2015.07- | 6MT | F | L/R | SUV 4WD D22DTF (672.960) | | GCO81458 | Outer Joint | 48T | 28 | 34 | 58 | 85.5 | 65 | M |
| | 2015.07- | 6AT | F | R | SUV FWD D22DTF (672.960) | Date to:2015.12 | GDS81556 | Drive Shaft | 48T | 28 | 27 | 58 | 86 | 563 | |
| | 2015.07- | 6AT | F | R | SUV FWD D22DTF (672.960) | Date to:2015.12 | GCO81458 | Outer Joint | 48T | 28 | 34 | 58 | 85.5 | 65 | M |
| | 2015.07- | 6MT | F | L | SUV FWD D22DTF (672.960) | | GDS82212 | Drive Shaft | 48T | 28 | 27 | 58 | 86 | 610 | |
| | 2015.07- | 6MT | F | R | SUV FWD D22DTF (672.960) | | GDS81556 | Drive Shaft | 48T | 28 | 27 | 58 | 86 | 563 | |
| | 2015.07- | 6MT | F | L/R | SUV FWD D22DTF (672.960) | | GCO81458 | Outer Joint | 48T | 28 | 34 | 58 | 85.5 | 65 | M |
| | 2015.07- | 6AT | F | R | SUV Van 4WD D22DTF (672.960) | Date to:2015.12 | GDS81556 | Drive Shaft | 48T | 28 | 27 | 58 | 86 | 563 | |
| | 2015.07- | 6AT | F | R | SUV Van 4WD D22DTF (672.960) | Date to:2015.12 | GCO81458 | Outer Joint | 48T | 28 | 34 | 58 | 85.5 | 65 | M |
| | 2015.07- | 6MT | F | L | SUV Van 4WD D22DTF (672.960) | | GDS82212 | Drive Shaft | 48T | 28 | 27 | 58 | 86 | 610 | |
| | 2015.07- | 6MT | F | R | SUV Van 4WD D22DTF (672.960) | | GDS81556 | Drive Shaft | 48T | 28 | 27 | 58 | 86 | 563 | |
| | 2015.07- | 6MT | F | L/R | SUV Van 4WD D22DTF (672.960) | | GCO81458 | Outer Joint | 48T | 28 | 34 | 58 | 85.5 | 65 | M |
| | 2015.07- | 6AT | F | R | SUV Van FWD D22DTF (672.960) | Date to:2015.12 | GDS81556 | Drive Shaft | 48T | 28 | 27 | 58 | 86 | 563 | |
| | 2015.07- | 6AT | F | R | SUV Van FWD D22DTF (672.960) | Date to:2015.12 | GCO81458 | Outer Joint | 48T | 28 | 34 | 58 | 85.5 | 65 | M |
| | 2015.07- | 6MT | F | L | SUV Van FWD D22DTF (672.960) | | GDS82212 | Drive Shaft | 48T | 28 | 27 | 58 | 86 | 610 | |
| | 2015.07- | 6MT | F | R | SUV Van FWD D22DTF (672.960) | | GDS81556 | Drive Shaft | 48T | 28 | 27 | 58 | 86 | 563 | |
| | 2015.07- | 6MT | F | L/R | SUV Van FWD D22DTF (672.960) | | GCO81458 | Outer Joint | 48T | 28 | 34 | 58 | 85.5 | 65 | M |
| 2.3 (74 kw) | 1998.07-2006.11 | | F | | Terrain cab wagon closed 4WD OM661LA | Date From:1999.05,Date To:2005.09 | GCO99059 | Outer Joint | | 28 | 35 | 53 | 154 | 79 | O |
| 2.3 (103 kw) | 1997.05-2000.02 | | F | L/R | Terrain cab wagon closed 4WD E23 | | GCO99059 | Outer Joint | | 28 | 35 | 53 | 154 | 79 | O |
| | 1997.06-2000.02 | | F | | Terrain cab open 4WD E23M161 | Date From:1999.05 | GCO99059 | Outer Joint | | 28 | 35 | 53 | 154 | 79 | O |
| 2.3 (105 kw) | 1999.01-2006.11 | | F | L/R | Terrain cab wagon closed 4WD E23M161 | | GCO99059 | Outer Joint | | 28 | 35 | 53 | 154 | 79 | O |
| | 1999.02-2006.11 | | F | L/R | Terrain cab open 4WD E23M161 | | GCO99059 | Outer Joint | | 28 | 35 | 53 | 154 | 79 | O |
| 2.3 (110 kw) | 2002.01-2006.06 | | F | L/R | Terrain cab open 4WD E23 | | GCO99059 | Outer Joint | | 28 | 35 | 53 | 154 | 79 | O |
| | 2002.01-2006.06 | | F | L/R | Terrain cab wagon closed 4WD E23 | | GCO99059 | Outer Joint | | 28 | 35 | 53 | 154 | 79 | O |
| 2.9 (72 kw) | 1996.12-2000.10 | | F | | Terrain cab wagon closed 4WD OM662 | Date From:1999.05 | GCO99059 | Outer Joint | | 28 | 35 | 53 | 154 | 79 | O |
| | 1997.06-2000.10 | | F | | Terrain cab open 4WD OM662 | Date From:1999.05 | GCO99059 | Outer Joint | | 28 | 35 | 53 | 154 | 79 | O |
| 2.9 (73 kw) | 1997.06-2000.10 | | F | | Terrain cab wagon closed 4WD OM662 | Date From:1999.05 | GCO99059 | Outer Joint | | 28 | 35 | 53 | 154 | 79 | O |
| 2.9 (88 kw) | 1998.07-2000.02 | | F | | Terrain cab open 4WD OM662LA | Date From:1999.05 | GCO99059 | Outer Joint | | 28 | 35 | 53 | 154 | 79 | O |
| | 1998.07-2006.11 | | F | | Terrain cab wagon closed 4WD OM662LA | Date From:1999.05,Date To:2005.09 | GCO99059 | Outer Joint | | 28 | 35 | 53 | 154 | 79 | O |
| 3.2 (154 kw) | 1996.12-2002.11 | | F | L/R | Terrain cab wagon closed 4WD E32 | | GCO99059 | Outer Joint | | 28 | 35 | 53 | 154 | 79 | O |
| 3.2 (156 kw) | 1999.01-2000.02 | | F | L/R | Terrain cab wagon closed 4WD E32 | | GCO99059 | Outer Joint | | 28 | 35 | 53 | 154 | 79 | O |
| | 1999.01-2002.11 | | F | L/R | Terrain cab open 4WD M104995 | | GCO99059 | Outer Joint | | 28 | 35 | 53 | 154 | 79 | O |
| 3.2 (162 kw) | 1997.06-2006.11 | | F | L/R | Terrain cab open 4WD E32 | | GCO99059 | Outer Joint | | 28 | 35 | 53 | 154 | 79 | O |
| | 1997.06-2006.11 | | F | L/R | Terrain cab wagon closed 4WD E32 | | GCO99059 | Outer Joint | | 28 | 35 | 53 | 154 | 79 | O |
| **Kyron** | | | | | | | | | | | | | | | |
| 2.0 (100 kw) | 2010.01-2014.12 | 4AT/5MT | F | R | SUV 4WD D20DT | | GDS18438 | Drive Shaft | | 28 | 26 | 60 | 110 | 700 | |
| | 2010.01-2014.12 | 4AT/5MT | F | R | SUV 4WD D20DT | | GCI18256 | Inner Joint | | 26 | 24 | 39.95 | 70 | 132 | |
| | 2010.01-2014.12 | AT/MT | F | L/R | SUV 4WD D20DT | Date from:2007.07,Permanent All Wheel Drive | GCO18247 | Outer Joint | | 28 | 24 | 60 | 110 | 65 | M |

| | YEAR | TRANSM. | F/R | L/R | BODY STYLE & DRIVE TYPE & ENGINE | REMARKS | G-AP Ref. | PRODUCT | ABS | Technical Specifications A | B | C | H | L | P |
|---|---|---|---|---|---|---|---|---|---|---|---|---|---|---|---|
| **SSANGYONG** | | | | | | | | | | | | | | | |
| **Kyron** | | | | | | | | | | | | | | | |
| 2.0 (100 kw) | 2010.01-2014.12 | AT/MT | F | L/R | SUV 4WD D20DT | Selectable All Wheel Drive | GCO81408 | Outer Joint | | 40 | 34 | 60.5 | 95 | 70 | O |
| | 2010.01-2014.12 | | F | L | SUV 4WD D20DT | Date From:2007.07;Drive Type:Permanent All Wheel Drive | GDS81345 | Drive Shaft | | 28 | 26 | 60 | 110 | 653 | |
| | 2010.01-2014.12 | | F | L/R | SUV 4WD D20DT | Drive Type:Selectable All Wheel Drive | GDS81562 | Drive Shaft | | 40 | 27 | 60.5 | 95 | 518 | |
| | 2010.01-2014.12 | | F | L/R | SUV 4WD D20DT | Drive Type:Selectable All Wheel Drive | GCI44022 | Inner Joint | | 27 | 34 | 47.7 | | 130.5 | |
| 2.0 (101 kw) | 2005.05-2014.12 | 6AT/5MT | F | R | SUV 4WD D20DT | | GDS18438 | Drive Shaft | | 28 | 26 | 60 | 110 | 700 | |
| | 2005.05-2014.12 | 6AT/5MT | F | R | SUV 4WD D20DT | | GCI18256 | Inner Joint | | 26 | 24 | 39.95 | 70 | 132 | |
| | 2005.05-2014.12 | AT | F | L/R | SUV 4WD D20DT | Date from:2007.07,Permanent All Wheel Drive | GCO18247 | Outer Joint | | 28 | 24 | 60 | 110 | 65 | M |
| | 2005.05-2014.12 | AT | F | L/R | SUV 4WD D20DT | Selectable All Wheel Drive | GCO81408 | Outer Joint | | 40 | 34 | 60.5 | 95 | 70 | O |
| | 2005.05-2014.12 | | F | L | SUV 4WD D20DT | Date From:2007.07;Drive Type:Permanent All Wheel Drive | GDS81345 | Drive Shaft | | 28 | 26 | 60 | 110 | 653 | |
| | 2005.05-2014.12 | | F | L/R | SUV 4WD D20DT | Drive Type:Selectable All Wheel Drive | GDS81562 | Drive Shaft | | 40 | 27 | 60.5 | 95 | 518 | |
| | 2005.05-2014.12 | | F | L/R | SUV 4WD D20DT | Drive Type:Selectable All Wheel Drive | GCI44022 | Inner Joint | | 27 | 34 | 47.7 | | 130.5 | |
| 2.0 (104 kw) | 2005.05-2014.12 | 4AT/5AT/5MT | F | L | SUV 4WD D20DT | Date from:2007.08,Permanent All Wheel Drive,For OE no.:4130009204 | GDS81345 | Drive Shaft | | 28 | 26 | 60 | 110 | 653 | |
| | 2005.05-2014.12 | 4AT/5AT/5MT | F | R | SUV 4WD D20DT | Date from:2007.08,Permanent All Wheel Drive,For OE no.:4130009213 | GDS18438 | Drive Shaft | | 28 | 26 | 60 | 110 | 700 | |
| | 2005.05-2014.12 | 4AT/5AT/5MT | F | L/R | SUV 4WD D20DT | Selectable All Wheel Drive | GDS81562 | Drive Shaft | | 40 | 27 | 60.5 | 95 | 518 | |
| | 2005.05-2014.12 | 4AT/5AT/5MT | F | L/R | SUV 4WD D20DT | Date from:2007.07,Permanent All Wheel Drive | GCO18247 | Outer Joint | | 28 | 24 | 60 | 110 | 65 | M |
| | 2005.05-2014.12 | 4AT/5AT/5MT | F | L/R | SUV 4WD D20DT | Selectable All Wheel Drive | GCO81408 | Outer Joint | | 40 | 34 | 60.5 | 95 | 70 | O |
| | 2005.05-2014.12 | 4AT/5AT/5MT | F | R | SUV 4WD D20DT | Date from:2007.08,Permanent All Wheel Drive | GCI18256 | Inner Joint | | 26 | 24 | 39.95 | 70 | 132 | |
| | 2005.05-2014.12 | 4AT/5AT/5MT | F | L/R | SUV 4WD D20DT | Selectable All Wheel Drive | GCI44022 | Inner Joint | | 27 | 34 | 47.7 | | 130.5 | |
| 2.3 (110 kw) | 2006.11-2014.12 | 4AT/6AT/5MT | F | R | SUV 4WD G23D | Date from:2007.08,Permanent All Wheel Drive,For OE no.:4130009213 | GDS18438 | Drive Shaft | | 28 | 26 | 60 | 110 | 700 | |
| | 2006.11-2014.12 | 4AT/6AT/5MT | F | L/R | SUV 4WD G23D | Date from:2007.08,Permanent All Wheel Drive,For OE no.:4130009204 | GDS81345 | Drive Shaft | | 28 | 26 | 60 | 110 | 653 | |
| | 2006.11-2014.12 | 4AT/6AT/5MT | F | L/R | SUV 4WD G23D | Selectable All Wheel Drive | GDS81562 | Drive Shaft | | 40 | 27 | 60.5 | 95 | 518 | |
| | 2006.11-2014.12 | 4AT/6AT/5MT | F | L/R | SUV 4WD G23D | Date from:2007.08,Permanent All Wheel Drive | GCO18247 | Outer Joint | | 28 | 24 | 60 | 110 | 65 | M |
| | 2006.11-2014.12 | 4AT/6AT/5MT | F | L/R | SUV 4WD G23D | Selectable All Wheel Drive | GCO81408 | Outer Joint | | 40 | 34 | 60.5 | 95 | 70 | O |
| | 2006.11-2014.12 | 4AT/6AT/5MT | F | L/R | SUV 4WD G23D | Date from:2007.08,Permanent All Wheel Drive | GCI18256 | Inner Joint | | 26 | 24 | 39.95 | 70 | 132 | |
| | 2006.11-2014.12 | 4AT/6AT/5MT | F | L/R | SUV 4WD G23D | Selectable All Wheel Drive | GCI44022 | Inner Joint | | 27 | 34 | 47.7 | | 130.5 | |
| 2.7 (120 kw) | 2006.03-2014.12 | 5AT/5MT | F | R | SUV 4WD D27DT | | GDS18438 | Drive Shaft | | 28 | 26 | 60 | 110 | 700 | |
| | 2006.03-2014.12 | 5AT/5MT | F | R | SUV 4WD D27DT | | GCO18247 | Outer Joint | | 28 | 24 | 60 | 110 | 65 | M |
| | 2006.03-2014.12 | 5AT/5MT | F | L/R | SUV 4WD D27DT | Date from:2006.10,Permanent All-wheel Drive,Without ABS sensor ring | GCI18256 | Inner Joint | | 26 | 24 | 39.95 | 70 | 132 | |
| | 2006.03-2014.12 | 5AT/5MT | F | L/R | SUV 4WD D27DT | Selectable All-wheel Drive,With ABS sensor ring | GCI44022 | Inner Joint | | 27 | 34 | 47.7 | | 130.5 | |
| | 2006.03-2014.12 | | F | L | SUV 4WD D27DT | Date From:2007.08;Drive Type:Permanent All Wheel Drive | GDS81345 | Drive Shaft | | 28 | 26 | 60 | 110 | 653 | |
| | 2006.03-2014.12 | | F | L/R | SUV 4WD D27DT | Drive Type:Permanent All Wheel Drive | GDS81562 | Drive Shaft | | 40 | 27 | 60.5 | 95 | 518 | |
| | 2006.03-2014.12 | | F | L/R | SUV 4WD D27DT | Drive Type:Permanent All Wheel Drive | GCO81408 | Outer Joint | | 40 | 34 | 60.5 | 95 | 70 | O |
| | 2006.03-2014.12 | 5AT/5MT | R | L/R | SUV 4WD D27DT | | GCI85048 | Inner Joint | | | 28 | | | 28 | |
| 2.7 (121 kw) | 2005.05-2014.12 | 5AT/5MT | F | R | SUV 4WD D27DT | | GDS18438 | Drive Shaft | | 28 | 26 | 60 | 110 | 700 | |
| | 2005.05-2014.12 | 5AT/5MT | F | L/R | SUV 4WD D27DT | Date from:2007.08,Permanent All Wheel Drive | GCO18247 | Outer Joint | | 28 | 24 | 60 | 110 | 65 | M |
| | 2005.05-2014.12 | 5AT/5MT | F | L/R | SUV 4WD D27DT | Selectable All Wheel Drive | GCO81408 | Outer Joint | | 40 | 34 | 60.5 | 95 | 70 | O |
| | 2005.05-2014.12 | 5AT/5MT | F | L/R | SUV 4WD D27DT | Date from:2006.10,Permanent All-wheel Drive,Without ABS sensor ring | GCI18256 | Inner Joint | | 26 | 24 | 39.95 | 70 | 132 | |
| | 2005.05-2014.12 | 5AT/5MT | F | L/R | SUV 4WD D27DT | Permanent All-wheel Drive,With ABS sensor ring | GCI44022 | Inner Joint | | 27 | 34 | 47.7 | | 130.5 | |
| | 2005.05-2014.12 | | F | L | SUV 4WD D27DT | Date From:2007.08;Drive Type:Permanent All Wheel Drive | GDS81345 | Drive Shaft | | 28 | 26 | 60 | 110 | 653 | |
| | 2005.05-2014.12 | | F | L/R | SUV 4WD D27DT | Drive Type:Permanent All Wheel Drive | GDS81562 | Drive Shaft | | 40 | 27 | 60.5 | 95 | 518 | |
| | 2005.05-2014.12 | 5AT/5MT | R | L/R | SUV 4WD D27DT | | GCI85048 | Inner Joint | | | 28 | | | 28 | |
| 3.2 (162 kw) | 2006.03-2014.12 | 5AT | F | R | SUV 4WD G32D | | GDS18438 | Drive Shaft | | 28 | 26 | 60 | 110 | 700 | |
| | 2006.03-2014.12 | 5AT | F | R | SUV 4WD G32D | | GCO18247 | Outer Joint | | 28 | 24 | 60 | 110 | 65 | M |
| | 2006.03-2014.12 | 5AT | F | L/R | SUV 4WD G32D | Date from:2006.10,Permanent All-wheel Drive,Without ABS sensor ring | GCI18256 | Inner Joint | | 26 | 24 | 39.95 | 70 | 132 | |
| | 2006.03-2014.12 | 5AT | F | L/R | SUV 4WD G32D | Selectable All-wheel Drive,With ABS sensor ring | GCI44022 | Inner Joint | | 27 | 34 | 47.7 | | 130.5 | |
| | 2006.03-2014.12 | | F | L | SUV 4WD G32D | Date From:2007.08;Drive Type:Permanent All Wheel Drive | GDS81345 | Drive Shaft | | 28 | 26 | 60 | 110 | 653 | |
| | 2006.03-2014.12 | | F | L/R | SUV 4WD G32D | Drive Type:Selectable All Wheel Drive | GDS81562 | Drive Shaft | | 40 | 27 | 60.5 | 95 | 518 | |
| | 2006.03-2014.12 | | F | L/R | SUV 4WD G32D | Drive Type:Selectable All Wheel Drive | GCO81408 | Outer Joint | | 40 | 34 | 60.5 | 95 | 70 | O |
| | 2006.03-2014.12 | 5AT | R | L/R | SUV 4WD G32D | | GCI85048 | Inner Joint | | | 28 | | | 28 | |
| **Musso** | | | | | | | | | | | | | | | |
| 2.0 (93 kw) | 1996.04-2005.05 | | F | | Terrain cab wagon closed 4WD E20 | Date From:1998.11 | GCO99059 | Outer Joint | | 28 | 35 | 53 | 154 | 79 | O |
| 2.3 (58 kw) | 1993.03-1997.04 | | F | | Terrain cab wagon closed 4WD OM661 | Date To:1995.10 | GCO99059 | Outer Joint | | 28 | 35 | 53 | 154 | 79 | O |
| 2.3 (59 kw) | 1995.10-1999.04 | | F | | Terrain cab wagon closed 4WD OM661 | Date From:1998.11 | GCO99059 | Outer Joint | | 28 | 35 | 53 | 154 | 79 | O |
| 2.3 (103 kw) | 1996.04-2002.11 | | F | | Terrain cab wagon closed 4WD 161970 | Date From:1998.11,Date To:2000.10 | GCO99059 | Outer Joint | | 28 | 35 | 53 | 154 | 79 | O |
| 2.3 (110 kw) | 2002.12-2006.08 | | F | | Terrain cab wagon closed 4WD E23M161 | Date From:2004.09,Date To:2005.04 | GCO99059 | Outer Joint | | 28 | 35 | 53 | 154 | 79 | O |
| 2.9 (88 kw) | 1998.01-2006.08 | | F | | Terrain cab wagon closed 4WD OM662LA | Date to:2005.04 | GCO99059 | Outer Joint | | 28 | 35 | 53 | 154 | 79 | O |
| 3.2 (162 kw) | 1995.05-2004.09 | | F | | Terrain cab wagon closed 4WD 162990 | Date From:1998.11,Date To:2000.10 | GCO99059 | Outer Joint | | 28 | 35 | 53 | 154 | 79 | O |
| **Rexton** | | | | | | | | | | | | | | | |
| 2.3 (110 kw) | 2002.05-2006.08 | 4AT/5MT | F | L/R | SUV 4WD G23D | | GDS66003 | Drive Shaft | | 28 | 27 | 53 | 154 | 578 | |
| | 2002.05-2006.08 | 4AT/5MT | F | L/R | SUV 4WD G23D | | GCO99059 | Outer Joint | | 28 | 35 | 53 | 154 | 79 | O |
| | 2002.05-2006.08 | 4AT/5MT | F | L/R | SUV 4WD G23D | | GCI21065 | Inner Joint | | 27 | 35 | 47.7 | | 130.5 | |
| | 2002.05-2006.08 | 4AT/5MT | F | L/R | SUV 4WD G23D | | GCI44022 | Inner Joint | | 27 | 34 | 47.7 | | 130.5 | |
| 2.7 (121 kw) | 2005.03-2006.08 | 5MT | R | L/R | SUV RWD D27DT | | GCI85048 | Inner Joint | | | 28 | | | 28 | |
| 2.9 (88 kw) | 2002.04-2006.08 | 4AT/5MT | F | L/R | SUV 4WD OM 662.925 | | GDS66003 | Drive Shaft | | 28 | 27 | 53 | 154 | 578 | |
| | 2002.04-2006.08 | 4AT/5MT | F | L/R | SUV 4WD OM 662.925 | | GCO99059 | Outer Joint | | 28 | 35 | 53 | 154 | 79 | O |

| | YEAR | TRANSM. | F/R | L/R | BODY STYLE & DRIVE TYPE & ENGINE | REMARKS | G-AP Ref. | PRODUCT | ABS | Technical Specifications A | B | C | H | L | P |
|---|---|---|---|---|---|---|---|---|---|---|---|---|---|---|---|
| **SSANGYONG** | | | | | | | | | | | | | | | |
| **Rexton** | | | | | | | | | | | | | | | |
| 2.9 (88 kw) | 2002.04-2006.08 | 4AT/5MT | F | L/R | SUV 4WD OM 662.925 | | GCI21065 | Inner Joint | | 27 | 35 | 47.7 | | 130.5 | |
| | 2002.04-2006.08 | 4AT/5MT | F | L/R | SUV 4WD OM 662.925 | | GCI44022 | Inner Joint | | 27 | 34 | 47.7 | | 130.5 | |
| **Rexton II** | | | | | | | | | | | | | | | |
| 2.7 (118 kw) | 2011.03-2013.04 | 5AT/5MT | F | L | SUV 4WD D27DT | Permanent All Wheel Drive,Not for vehicles with AWD with variable torque dist | GDS81345 | Drive Shaft | | 28 | 26 | 60 | 110 | 653 | |
| | 2011.03-2013.04 | 5AT/5MT | F | R | SUV 4WD D27DT | Permanent All Wheel Drive,Not for vehicles with AWD with variable torque dist | GDS18438 | Drive Shaft | | 28 | 26 | 60 | 110 | 700 | |
| | 2011.03-2013.04 | 5AT/5MT | F | L/R | SUV 4WD D27DT | Selectable All Wheel Drive | GDS81562 | Drive Shaft | | 40 | 27 | 60.5 | 95 | 518 | |
| | 2011.03-2013.04 | 5AT/5MT | F | L/R | SUV 4WD D27DT | Permanent All Wheel Drive,For vehicles with AWD with variable torque dist | GDS83869 | Drive Shaft | | 28 | 27 | 60 | 111 | 542 | |
| | 2011.03-2013.04 | 5AT/5MT | F | L/R | SUV 4WD D27DT | Permanent All Wheel Drive,Not for vehicles with AWD with variable torque dist | GCO18247 | Outer Joint | | 28 | 24 | 60 | 110 | 65 | M |
| | 2011.03-2013.04 | 5AT/5MT | F | L/R | SUV 4WD D27DT | Selectable All Wheel Drive | GCO81408 | Outer Joint | | 40 | 34 | 60.5 | 95 | 70 | O |
| | 2011.03-2013.04 | 5AT/5MT | F | L/R | SUV 4WD D27DT | Permanent All Wheel Drive,For vehicles with AWD with variable torque dist | GCO82526 | Outer Joint | | 28 | 34 | 60 | 111 | 80 | O |
| | 2011.03-2013.04 | 5AT/5MT | F | L/R | SUV 4WD D27DT | Permanent All Wheel Drive,Not for vehicles with AWD with variable torque dist | GCO99158 | Outer Joint | | 28 | 35 | 60 | 111 | 81 | I |
| | 2011.03-2013.04 | 5AT/5MT | F | L/R | SUV 4WD D27DT | Permanent All Wheel Drive,Not for vehicles with AWD with variable torque dist | GCI18256 | Inner Joint | | 26 | 24 | 39.95 | 70 | 132 | |
| | 2011.03-2013.04 | 5AT/5MT | F | L/R | SUV 4WD D27DT | Selectable All Wheel Drive | GCI44022 | Inner Joint | | 27 | 34 | 47.7 | | 130.5 | |
| | 2011.03-2013.04 | 5AT/5MT | F | L/R | SUV 4WD D27DT | Permanent All Wheel Drive,For vehicles with AWD with variable torque dist | GCI82293 | Inner Joint | | 27 | 34 | 47.7 | | 130 | |
| | 2011.03-2013.04 | 5AT/5MT | R | L/R | SUV 4WD D27DT | | GCI85048 | Inner Joint | | | 28 | | | 28 | |
| | 2011.03-2013.04 | 5AT | F | R | SUV Van 4WD D27DT | Permanent All-wheel Drive | GDS18438 | Drive Shaft | | 28 | 26 | 60 | 110 | 700 | |
| | 2011.03-2013.04 | 5AT | F | L/R | SUV Van 4WD D27DT | Selectable All-wheel Drive | GDS81562 | Drive Shaft | | 40 | 27 | 60.5 | 95 | 518 | |
| | 2011.03-2013.04 | 5AT | F | L/R | SUV Van 4WD D27DT | For vehicles with AWD and variable torque dist,Permanent All-wheel Drive,With ABS sensor ring | GDS83869 | Drive Shaft | | 28 | 27 | 60 | 111 | 542 | |
| | 2011.03-2013.04 | 5AT | F | L/R | SUV Van 4WD D27DT | For vehicles with AWD and variable torque dist,Permanent All-wheel Drive,With ABS sensor ring | GCO82526 | Outer Joint | | 28 | 34 | 60 | 111 | 80 | O |
| | 2011.03-2013.04 | 5AT | F | L/R | SUV Van 4WD D27DT | Permanent All-wheel Drive,Without ABS sensor ring | GCI18256 | Inner Joint | | 26 | 24 | 39.95 | 70 | 132 | |
| | 2011.03-2013.04 | 5AT | F | L/R | SUV Van 4WD D27DT | For vehicles with AWD and variable torque dist,Permanent All-wheel Drive,With ABS sensor ring | GCI82293 | Inner Joint | | 27 | 34 | 47.7 | | 130 | |
| | 2011.03-2013.04 | 5AT | R | L/R | SUV Van 4WD D27DT | | GCI85048 | Inner Joint | | | 28 | | | 28 | |
| 2.7 (120 kw) | 2004.08- | 5AT/5MT | F | L | SUV 4WD D27DT | Permanent All Wheel Drive,Not for vehicles with AWD with variable torque dist,Date From 2007.08 | GDS81345 | Drive Shaft | | 28 | 26 | 60 | 110 | 653 | |
| | 2004.08- | 5AT/5MT | F | R | SUV 4WD D27DT | Permanent All Wheel Drive,Not for vehicles with AWD with variable torque dist,Date From 2007.08 | GDS18438 | Drive Shaft | | 28 | 26 | 60 | 110 | 700 | |
| | 2004.08- | 5AT/5MT | F | L/R | SUV 4WD D27DT | Selectable All Wheel Drive | GDS81562 | Drive Shaft | | 40 | 27 | 60.5 | 95 | 518 | |
| | 2004.08- | 5AT/5MT | F | L/R | SUV 4WD D27DT | Permanent All Wheel Drive,For vehicles with AWD with variable torque dist,Date From 2007.08 | GDS83869 | Drive Shaft | | 28 | 27 | 60 | 111 | 542 | |
| | 2004.08- | 5AT/5MT | F | L/R | SUV 4WD D27DT | Permanent All Wheel Drive,Not for vehicles with AWD with variable torque dist,Date From 2007.08 | GCO18247 | Outer Joint | | 28 | 24 | 60 | 110 | 65 | M |
| | 2004.08- | 5AT/5MT | F | L/R | SUV 4WD D27DT | Selectable All Wheel Drive | GCO81408 | Outer Joint | | 40 | 34 | 60.5 | 95 | 70 | O |
| | 2004.08- | 5AT/5MT | F | L/R | SUV 4WD D27DT | Permanent All Wheel Drive,For vehicles with AWD with variable torque dist,Date From 2007.08 | GCO82526 | Outer Joint | | 28 | 34 | 60 | 111 | 80 | O |
| | 2004.08- | 5AT/5MT | F | L/R | SUV 4WD D27DT | Permanent All Wheel Drive,Not for vehicles with AWD with variable torque dist,Date From 2007.08 | GCI18256 | Inner Joint | | 26 | 24 | 39.95 | 70 | 132 | |
| | 2004.08- | 5AT/5MT | F | L/R | SUV 4WD D27DT | Selectable All Wheel Drive | GCI44022 | Inner Joint | | 27 | 34 | 47.7 | | 130.5 | |
| | 2004.08- | 5AT/5MT | F | L/R | SUV 4WD D27DT | Permanent All Wheel Drive,For vehicles with AWD with variable torque dist,Date From 2007.08 | GCI82293 | Inner Joint | | 27 | 34 | 47.7 | | 130 | |
| | 2004.08- | 5AT/5MT | R | L/R | SUV 4WD D27DT | | GCI85048 | Inner Joint | | | 28 | | | 28 | |
| 2.7 (130 kw) | 2003.12-2009.12 | | F | L/R | SUV 4WD D27DT | | GCO99158 | Outer Joint | | 28 | 35 | 60 | 111 | 81 | I |
| 2.7 (132 kw) | 2008.03- | 5AT | F | L | SUV 4WD D27DTP | Permanent All Wheel Drive,Not for vehicles with AWD with variable torque dist | GDS81345 | Drive Shaft | | 28 | 26 | 60 | 110 | 653 | |
| | 2008.03- | 5AT | F | R | SUV 4WD D27DTP | Permanent All Wheel Drive,Not for vehicles with AWD with variable torque dist | GDS18438 | Drive Shaft | | 28 | 26 | 60 | 110 | 700 | |
| | 2008.03- | 5AT | F | L/R | SUV 4WD D27DTP | Selectable All Wheel Drive | GDS81562 | Drive Shaft | | 40 | 27 | 60.5 | 95 | 518 | |
| | 2008.03- | 5AT | F | L/R | SUV 4WD D27DTP | Permanent All Wheel Drive,For vehicles with AWD with variable torque dist | GDS83869 | Drive Shaft | | 28 | 27 | 60 | 111 | 542 | |
| | 2008.03- | 5AT | F | L/R | SUV 4WD D27DTP | Permanent All Wheel Drive,Not for vehicles with AWD with variable torque dist | GCO18247 | Outer Joint | | 28 | 24 | 60 | 110 | 65 | M |
| | 2008.03- | 5AT | F | L/R | SUV 4WD D27DTP | Selectable All Wheel Drive | GCO81408 | Outer Joint | | 40 | 34 | 60.5 | 95 | 70 | O |
| | 2008.03- | 5AT | F | L/R | SUV 4WD D27DTP | Permanent All Wheel Drive,For vehicles with AWD with variable torque dist | GCO82526 | Outer Joint | | 28 | 34 | 60 | 111 | 80 | O |
| | 2008.03- | 5AT | F | L/R | SUV 4WD D27DTP | Permanent All Wheel Drive,Not for vehicles with AWD with variable torque dist | GCO99158 | Outer Joint | | 28 | 35 | 60 | 111 | 81 | I |
| | 2008.03- | 5AT | F | L/R | SUV 4WD D27DTP | Permanent All Wheel Drive,Not for vehicles with AWD with variable torque dist | GCI18256 | Inner Joint | | 26 | 24 | 39.95 | 70 | 132 | |
| | 2008.03- | 5AT | F | L/R | SUV 4WD D27DTP | Selectable All Wheel Drive | GCI44022 | Inner Joint | | 27 | 34 | 47.7 | | 130.5 | |
| | 2008.03- | 5AT | F | L/R | SUV 4WD D27DTP | Permanent All Wheel Drive,For vehicles with AWD with variable torque dist | GCI82293 | Inner Joint | | 27 | 34 | 47.7 | | 130 | |
| | 2008.03- | 5AT | R | L/R | SUV 4WD D27DTP | | GCI85048 | Inner Joint | | | 28 | | | 28 | |
| | 2011.03-2013.04 | 5AT | F | R | SUV Van 4WD D27DTP | Permanent All-wheel Drive | GDS18438 | Drive Shaft | | 28 | 26 | 60 | 110 | 700 | |
| | 2011.03-2013.04 | 5AT | F | L/R | SUV Van 4WD D27DTP | Selectable All-wheel Drive | GDS81562 | Drive Shaft | | 40 | 27 | 60.5 | 95 | 518 | |
| | 2011.03-2013.04 | 5AT | F | L/R | SUV Van 4WD D27DTP | For vehicles with AWD with variable torque dist,Permanent All Wheel Drive | GDS83869 | Drive Shaft | | 28 | 27 | 60 | 111 | 542 | |
| | 2011.03-2013.04 | 5AT | F | L/R | SUV Van 4WD D27DTP | For vehicles with AWD with variable torque dist,Permanent All Wheel Drive | GCO82526 | Outer Joint | | 28 | 34 | 60 | 111 | 80 | O |
| | 2011.03-2013.04 | 5AT | F | L/R | SUV Van 4WD D27DTP | For vehicles without AWD and variable torque dist,Permanent All Wheel Drive | GCI18256 | Inner Joint | | 26 | 24 | 39.95 | 70 | 132 | |
| | 2011.03-2013.04 | 5AT | F | L/R | SUV Van 4WD D27DTP | For vehicles with AWD with variable torque dist,Permanent All Wheel Drive | GCI82293 | Inner Joint | | 27 | 34 | 47.7 | | 130 | |
| | 2011.03-2013.04 | 5AT | R | L/R | SUV Van 4WD D27DTP | | GCI85048 | Inner Joint | | | 28 | | | 28 | |
| **Rexton W** | | | | | | | | | | | | | | | |
| 2.0 (110 kw) | 2013.07-2015.11 | AT/MT | F | L/R | SUV 4WD D20DTR | | GDS81562 | Drive Shaft | | 40 | 27 | 60.5 | 95 | 518 | |
| | 2013.07-2015.11 | AT/MT | F | L/R | SUV 4WD D20DTR | | GCO81408 | Outer Joint | | 40 | 34 | 60.5 | 95 | 70 | O |
| | 2013.07-2015.11 | AT/MT | F | L/R | SUV 4WD D20DTR | | GCI44022 | Inner Joint | | 27 | 34 | 47.7 | | 130.5 | |
| | 2013.07-2015.11 | AT/MT | R | L/R | SUV 4WD D20DTR | Axle:For multilink axle | GCI85048 | Inner Joint | | | 28 | | | 28 | |
| | 2013.07-2015.11 | AT/MT | R | L/R | SUV RWD D20DTR | Axle:For multilink axle | GCI85048 | Inner Joint | | | 28 | | | 28 | |
| **Rexton/Rexton II** | | | | | | | | | | | | | | | |
| 2.7 (121 kw) | 2004.05-2012.05 | 5AT | F | L | SUV 4WD D27DT | Model:Rexton II,Permanent All Wheel Drive,Not for vehicles with AWD with variable torque dist,Date From 2007.08 | GDS81345 | Drive Shaft | | 28 | 26 | 60 | 110 | 653 | |
| | 2004.05-2012.05 | 5AT | F | R | SUV 4WD D27DT | Model:Rexton II,Permanent All Wheel Drive,Not for vehicles with AWD with variable torque dist,Date From 2007.08 | GDS18438 | Drive Shaft | | 28 | 26 | 60 | 110 | 700 | |
| | 2004.05-2012.05 | 5AT | F | L/R | SUV 4WD D27DT | Model:Rexton II,Permanent All Wheel Drive,For vehicles with AWD with variable torque dist,Date From 2007.08 | GDS83869 | Drive Shaft | | 28 | 27 | 60 | 111 | 542 | |
| | 2004.05-2012.05 | 5AT | F | L/R | SUV 4WD D27DT | Model:Rexton II,Permanent All Wheel Drive,Not for vehicles with AWD with variable torque dist,Date From 2007.08 | GCO18247 | Outer Joint | | 28 | 24 | 60 | 110 | 65 | M |
| | 2004.05-2012.05 | 5AT | F | L/R | SUV 4WD D27DT | Model:Rexton II,Permanent All Wheel Drive,For vehicles with AWD with variable torque dist,Date From 2007.08 | GCO82526 | Outer Joint | | 28 | 34 | 60 | 111 | 80 | O |

| | YEAR | TRANSM. | F/R | L/R | BODY STYLE & DRIVE TYPE & ENGINE | REMARKS | G-AP Ref. | PRODUCT | ABS | Technical Specifications A | B | C | H | L | P |
|---|---|---|---|---|---|---|---|---|---|---|---|---|---|---|---|
| **SSANGYONG** | | | | | | | | | | | | | | | |
| **Rexton/Rexton II** | | | | | | | | | | | | | | | |
| 2.7 (121 kw) | 2004.05-2012.05 | 5AT | F | L/R | SUV 4WD D27DT | Model:Rexton II,Permanent All Wheel Drive,Not for vehicles with AWD with variable torque dist,Date From:2007.08 | GCI18256 | Inner Joint | | 26 | 24 | 39.95 | 70 | 132 | |
| | 2004.05-2012.05 | 5AT | F | L/R | SUV 4WD D27DT | Model:Rexton II,Permanent All Wheel Drive,For vehicles with AWD with variable torque dist,Date From:2007.08 | GCI82293 | Inner Joint | | 27 | 34 | 47.7 | | 130 | |
| | 2004.05-2012.05 | 5AT/5MT | F | L/R | SUV 4WD D27DT | Permanent All Wheel Drive,Date to:2006.02 | GDS66003 | Drive Shaft | | 28 | 27 | 53 | 154 | 578 | |
| | 2004.05-2012.05 | 5AT/5MT | F | L/R | SUV 4WD D27DT | Selectable All Wheel Drive,Date to:2006.02 | GDS66004 | Drive Shaft | | 28 | 27 | 60 | 111 | 545 | |
| | 2004.05-2012.05 | 5AT/5MT | F | L/R | SUV 4WD D27DT | Selectable All Wheel Drive,Date from:2006.03 | GDS81562 | Drive Shaft | | 40 | 27 | 60.5 | 95 | 518 | |
| | 2004.05-2012.05 | 5AT/5MT | F | L/R | SUV 4WD D27DT | Selectable All Wheel Drive,Date from:2006.03 | GCO81408 | Outer Joint | | 40 | 34 | 60.5 | 95 | 70 | O |
| | 2004.05-2012.05 | 5AT/5MT | F | L/R | SUV 4WD D27DT | Permanent All Wheel Drive,Date to:2006.02 | GCO99059 | Outer Joint | | 28 | 35 | 53 | 154 | 79 | O |
| | 2004.05-2012.05 | 5AT/5MT | F | L/R | SUV 4WD D27DT | Selectable All Wheel Drive,Date to:2006.02 | GCO99158 | Outer Joint | | 28 | 35 | 60 | 111 | 81 | I |
| | 2004.05-2012.05 | 5AT/5MT | F | L/R | SUV 4WD D27DT | Permanent All Wheel Drive,Date to:2006.02 | GCI21065 | Inner Joint | | 27 | 35 | 47.7 | | 130.5 | |
| | 2004.05-2012.05 | 5AT/5MT | F | L/R | SUV 4WD D27DT | Selectable All Wheel Drive,Date from:2006.03;Permanent All Wheel Drive,Date to:2006.02 | GCI44022 | Inner Joint | | 27 | 34 | 47.7 | | 130.5 | |
| | 2004.05-2012.05 | 5AT/5MT | F | L/R | SUV 4WD D27DT | Selectable All Wheel Drive,Date to:2006.02 | GCI44023 | Inner Joint | | 27 | 35 | 47.7 | | 120 | |
| | 2004.05-2012.05 | 5AT | R | L/R | SUV 4WD D27DT | | GCI85048 | Inner Joint | | | 28 | | | 28 | |
| 2.7 (137 kw) | 2006.06- | 5AT | F | L | SUV 4WD D27DTP | Not for vehicles with AWD with variable torque dist,Permanent All Wheel Drive,Date from:2007.08 | GDS81345 | Drive Shaft | | 28 | 26 | 60 | 110 | 653 | |
| | 2006.06- | 5AT | F | R | SUV 4WD D27DTP | Not for vehicles with AWD with variable torque dist,Permanent All Wheel Drive,Date from:2007.08 | GDS18438 | Drive Shaft | | 28 | 26 | 60 | 110 | 700 | |
| | 2006.06- | 5AT | F | L/R | SUV 4WD D27DTP | Permanent All Wheel Drive | GDS66003 | Drive Shaft | | 28 | 27 | 53 | 154 | 578 | |
| | 2006.06- | 5AT | F | L/R | SUV 4WD D27DTP | Selectable All Wheel Drive | GDS81562 | Drive Shaft | | 40 | 27 | 60.5 | 95 | 518 | |
| | 2006.06- | 5AT | F | L/R | SUV 4WD D27DTP | For vehicles with AWD with variable torque dist,Permanent All Wheel Drive,Date from:2007.08 | GDS83869 | Drive Shaft | | 28 | 27 | 60 | 111 | 542 | |
| | 2006.06- | 5AT | F | L/R | SUV 4WD D27DTP | Not for vehicles with AWD with variable torque dist,Permanent All Wheel Drive,Date from:2007.08 | GCO18247 | Outer Joint | | 28 | 24 | 60 | 110 | 65 | M |
| | 2006.06- | 5AT | F | L/R | SUV 4WD D27DTP | Selectable All Wheel Drive | GCO81408 | Outer Joint | | 40 | 34 | 60.5 | 95 | 70 | O |
| | 2006.06- | 5AT | F | L/R | SUV 4WD D27DTP | For vehicles with AWD with variable torque dist,Permanent All Wheel Drive,Date from:2007.08 | GCO82526 | Outer Joint | | 28 | 34 | 60 | 111 | 80 | O |
| | 2006.06- | 5AT | F | L/R | SUV 4WD D27DTP | Permanent All Wheel Drive | GCO99059 | Outer Joint | | 28 | 35 | 53 | 154 | 79 | O |
| | 2006.06- | 5AT | F | L/R | SUV 4WD D27DTP | Not for vehicles with AWD with variable torque dist,Permanent All Wheel Drive,Date from:2007.08 | GCI18256 | Inner Joint | | 26 | 24 | 39.95 | 70 | 132 | |
| | 2006.06- | 5AT | F | L/R | SUV 4WD D27DTP | Permanent All Wheel Drive | GCI21065 | Inner Joint | | 27 | 35 | 47.7 | | 130.5 | |
| | 2006.06- | 5AT | F | L/R | SUV 4WD D27DTP | | GCI44022 | Inner Joint | | 27 | 34 | 47.7 | | 130.5 | |
| | 2006.06- | 5AT | F | L/R | SUV 4WD D27DTP | For vehicles with AWD with variable torque dist,Permanent All Wheel Drive,Date from:2007.08 | GCI82293 | Inner Joint | | 27 | 34 | 47.7 | | 130 | |
| | 2006.06- | 5AT | R | L/R | SUV 4WD D27DTP | | GCI85048 | Inner Joint | | | 28 | | | 28 | |
| 3.2 (162 kw) | 2002.04- | 4AT/5MT | F | L | SUV 4WD G32D | Selectable All Wheel Drive | GDS81562 | Drive Shaft | | 40 | 27 | 60.5 | 95 | 518 | |
| | 2002.04- | 4AT/5MT | F | L | SUV 4WD G32D | Selectable All Wheel Drive | GCO81408 | Outer Joint | | 40 | 34 | 60.5 | 95 | 70 | O |
| | 2002.04- | 4AT/5MT/5AT | F | L/R | SUV 4WD G32D | Permanent All-wheel Drive,Without ABS sensor ring | GCI18256 | Inner Joint | | 26 | 24 | 39.95 | 70 | 132 | |
| | 2002.04- | 4AT/5MT/5AT | F | L/R | SUV 4WD G32D | Selectable All-wheel Drive,With ABS sensor ring | GCI44022 | Inner Joint | | 27 | 34 | 47.7 | | 130.5 | |
| | 2002.04- | 5AT | F | L | SUV 4WD G32D | Model:Rexton II,Permanent All Wheel Drive;Date From:2007.08 | GDS81345 | Drive Shaft | | 28 | 26 | 60 | 110 | 653 | |
| | 2002.04- | 5AT | F | R | SUV 4WD G32D | Model:Rexton II,Permanent All Wheel Drive;Date From:2007.08 | GDS18438 | Drive Shaft | | 28 | 26 | 60 | 110 | 700 | |
| | 2002.04- | 5AT | F | L/R | SUV 4WD G32D | Model:Rexton II,Permanent All Wheel Drive;Date From:2007.08 | GCO18247 | Outer Joint | | 28 | 24 | 60 | 110 | 65 | M |
| | 2002.04- | AT/MT | F | L/R | SUV 4WD G32D | Date from:2004.01;Date to:2006.12 | GCO99158 | Outer Joint | | 28 | 35 | 60 | 111 | 81 | I |
| | 2002.04- | 4AT/5MT | R | L/R | SUV 4WD G32D | | GCI85048 | Inner Joint | | | 28 | | | 28 | |
| **Rexton/Rexton W** | | | | | | | | | | | | | | | |
| 2.0 (114 kw) | 2012.07-2015.11 | AT/MT | R | L/R | SUV 4WD D20DTR | Axle:For multilink axle | GCI85048 | Inner Joint | | | 28 | | | 28 | |
| | 2012.07-2015.11 | AT/MT | R | L/R | SUV RWD D20DTR | Axle:For multilink axle | GCI85048 | Inner Joint | | | 28 | | | 28 | |
| 2.7 (121 kw) | 2012.07-2017.06 | 5AT/5MT | F | L/R | SUV 4WD D27DT | Permanent All-wheel Drive,Without ABS sensor ring | GCI18256 | Inner Joint | | 26 | 24 | 39.95 | 70 | 132 | |
| | 2012.07-2017.06 | 5AT/5MT | F | L/R | SUV 4WD D27DT | Selectable All-wheel Drive,With ABS sensor ring | GCI44022 | Inner Joint | | 27 | 34 | 47.7 | | 130.5 | |
| | 2012.07-2017.06 | AT/MT | F | L | SUV 4WD D27DT | | GDS81345 | Drive Shaft | | 28 | 26 | 60 | 110 | 653 | |
| | 2012.07-2017.06 | AT/MT | F | R | SUV 4WD D27DT | | GDS18438 | Drive Shaft | | 28 | 26 | 60 | 110 | 700 | |
| | 2012.07-2017.06 | AT/MT | F | L/R | SUV 4WD D27DT | | GCO18247 | Outer Joint | | 28 | 24 | 60 | 110 | 65 | M |
| | 2012.07-2017.06 | AT/MT | R | L/R | SUV 4WD D27DT | Axle:For multilink axle | GCI85048 | Inner Joint | | | 28 | | | 28 | |
| 2.7 (137 kw) | 2012.10-2017.06 | 5AT | F | L | SUV 4WD D27DTP | Not for vehicles with AWD with variable torque dist,Permanent All Wheel Drive | GDS81345 | Drive Shaft | | 28 | 26 | 60 | 110 | 653 | |
| | 2012.10-2017.06 | 5AT | F | R | SUV 4WD D27DTP | Not for vehicles with AWD with variable torque dist,Permanent All Wheel Drive | GDS18438 | Drive Shaft | | 28 | 26 | 60 | 110 | 700 | |
| | 2012.10-2017.06 | 5AT | F | L/R | SUV 4WD D27DTP | Not for vehicles with AWD with variable torque dist,Selectable All Wheel Drive | GDS81562 | Drive Shaft | | 40 | 27 | 60.5 | 95 | 518 | |
| | 2012.10-2017.06 | 5AT | F | L/R | SUV 4WD D27DTP | For vehicles with AWD with variable torque dist | GDS83869 | Drive Shaft | | 28 | 27 | 60 | 111 | 542 | |
| | 2012.10-2017.06 | 5AT | F | L/R | SUV 4WD D27DTP | Not for vehicles with AWD with variable torque dist,Permanent All Wheel Drive | GCO18247 | Outer Joint | | 28 | 24 | 60 | 110 | 65 | M |
| | 2012.10-2017.06 | 5AT | F | L/R | SUV 4WD D27DTP | Not for vehicles with AWD with variable torque dist,Selectable All Wheel Drive | GCO81408 | Outer Joint | | 40 | 34 | 60.5 | 95 | 70 | O |
| | 2012.10-2017.06 | 5AT | F | L/R | SUV 4WD D27DTP | For vehicles with AWD with variable torque dist | GCO82526 | Outer Joint | | 28 | 34 | 60 | 111 | 80 | O |
| | 2012.10-2017.06 | 5AT | F | L/R | SUV 4WD D27DTP | Not for vehicles with AWD with variable torque dist,Permanent All Wheel Drive | GCI18256 | Inner Joint | | 26 | 24 | 39.95 | 70 | 132 | |
| | 2012.10-2017.06 | 5AT | F | L/R | SUV 4WD D27DTP | Not for vehicles with AWD with variable torque dist,Selectable All Wheel Drive | GCI44022 | Inner Joint | | 27 | 34 | 47.7 | | 130.5 | |
| | 2012.10-2017.06 | 5AT | F | L/R | SUV 4WD D27DTP | For vehicles with AWD with variable torque dist | GCI82293 | Inner Joint | | 27 | 34 | 47.7 | | 130 | |
| | 2012.10-2017.06 | AT/MT | R | L/R | SUV 4WD D27DTP | | GCI85048 | Inner Joint | | | 28 | | | 28 | |
| **Rodius** | | | | | | | | | | | | | | | |
| 2.7 (120 kw) | 2005.05- | | F | | MPV 4WD D27DT | Date From:2008.07 | GCO81408 | Outer Joint | | 40 | 34 | 60.5 | 95 | 70 | O |
| 2.7 (121 kw) | 2005.05-2012.12 | 5AT/5MT | F | L/R | MPV 4WD D27DT | | GDS21122 | Drive Shaft | 52T | 28 | 27 | 64.5 | 112 | 566 | |
| | 2005.05-2012.12 | | F | | MPV 4WD D27DT | Date from:2008.07,Date to:2013.01 | GCO81408 | Outer Joint | | 40 | 34 | 60.5 | 95 | 70 | O |
| 3.2 (162 kw) | 2007.07- | | F | | MPV 4WD G32D | Date From:2008.07 | GCO81408 | Outer Joint | | 40 | 34 | 60.5 | 95 | 70 | O |
| **Stavic** | | | | | | | | | | | | | | | |
| 2.7 (121 kw) | 2005.02- | | F | | MPV 4WD D27DT | Date From:2008.07 | GCO81408 | Outer Joint | | 40 | 34 | 60.5 | 95 | 70 | O |
| 3.2 (162 kw) | 2005.02- | | F | | MPV 4WD M162E32 | Date From:2008.07 | GCO81408 | Outer Joint | | 40 | 34 | 60.5 | 95 | 70 | O |

| | YEAR | TRANSM. | F/R | L/R | BODY STYLE & DRIVE TYPE & ENGINE | REMARKS | G-AP Ref. | PRODUCT | ABS | Technical Specifications A | B | C | H | L | P |
|---|---|---|---|---|---|---|---|---|---|---|---|---|---|---|---|
| **SSANGYONG** | | | | | | | | | | | | | | | |
| **Tivoli** | | | | | | | | | | | | | | | |
| 1.6 (83 kw) | 2015.04- | 6AT | F | L | SUV FWD D16DTF | | GDS82310 | Drive Shaft | | 27 | 31 | 52 | 87 | 648 | |
| | 2015.04- | 6AT | F | L | SUV FWD D16DTF | | GCO81801 | Outer Joint | | 27 | 31 | 52 | 87 | 62.5 | M |
| | 2015.04- | 6AT | F | L | SUV FWD D16DTF | | GCI81744 | Inner Joint | | 31 | 31 | 36.2 | 64.5 | 88.5 | |
| 1.6 (85 kw) | 2015.04- | 6AT | F | L | SUV 4WD D16DTF | | GDS82310 | Drive Shaft | | 27 | 31 | 52 | 87 | 648 | |
| | 2015.04- | 6AT | F | L/R | SUV 4WD D16DTF | | GCO81801 | Outer Joint | | 27 | 31 | 52 | 87 | 62.5 | M |
| | 2015.04- | 6AT | F | L | SUV 4WD D16DTF | Date to:2019.05 | GCI81744 | Inner Joint | | 31 | 31 | 36.2 | 64.5 | 88.5 | |
| | 2015.04- | 6AT/6MT | F | R | SUV 4WD D16DTF | Date to:2019.05 | GDS82309 | Drive Shaft | | 27 | 27 | 52 | 87 | 604 | |
| | 2015.04- | 6AT/6MT | F | R | SUV 4WD D16DTF | Date to:2019.05 | GCI81788 | Inner Joint | | 27 | 31 | 41.5 | | 120 | |
| | 2015.04- | 6MT | F | R | SUV 4WD D16DTF | | GCO81801 | Outer Joint | | 27 | 31 | 52 | 87 | 62.5 | M |
| | 2015.04- | 6AT/6MT | R | L/R | SUV 4WD D16DTF | | GDS82312 | Drive Shaft | 48T | 27 | 25 | 52 | 87 | 812 | |
| | 2015.04- | 6AT/6MT | R | L/R | SUV 4WD D16DTF | | GCO81826 | Outer Joint | 48T | 27 | 27 | 52 | 87 | 47.5 | M |
| | 2015.04- | 6AT/6MT | R | L/R | SUV 4WD D16DTF | | GCI81779 | Inner Joint | | 25 | 27 | 35 | 62 | 80.5 | |
| | 2015.04- | 6AT | F | L | SUV FWD D16DTF | | GDS82310 | Drive Shaft | | 27 | 31 | 52 | 87 | 648 | |
| | 2015.04- | 6AT | F | L | SUV FWD D16DTF | | GCO81801 | Outer Joint | | 27 | 31 | 52 | 87 | 62.5 | M |
| | 2015.04- | 6AT | F | L | SUV FWD D16DTF | | GCI81744 | Inner Joint | | 31 | 31 | 36.2 | 64.5 | 88.5 | |
| 1.6 (93 kw) | 2015.04- | 6AT | F | L | SUV FWD G16DF | Date to:2019.05 | GDS81330 | Drive Shaft | | 27 | 26 | 52.5 | 87 | 653 | |
| | 2015.04- | 6AT | F | R | SUV FWD G16DF | Date to:2019.05 | GDS81331 | Drive Shaft | | 27 | 27 | 52.5 | 87 | 610 | |
| 1.6 (94 kw) | 2015.03- | 6AT | F | L | SUV 4WD G16DF | Date to:2019.05 | GDS81330 | Drive Shaft | | 27 | 26 | 52.5 | 87 | 653 | |
| | 2015.03- | 6AT | F | R | SUV 4WD G16DF | Date to:2019.05 | GDS81331 | Drive Shaft | | 27 | 27 | 52.5 | 87 | 610 | |
| | 2015.03- | 6AT/6MT | R | L/R | SUV 4WD G16DF | | GDS82312 | Drive Shaft | 48T | 27 | 25 | 52 | 87 | 812 | |
| | 2015.03- | 6AT/6MT | R | L/R | SUV 4WD G16DF | | GCO81826 | Outer Joint | 48T | 27 | 27 | 52 | 87 | 47.5 | M |
| | 2015.03- | 6AT/6MT | R | L/R | SUV 4WD G16DF | | GCI81779 | Inner Joint | | 25 | 27 | 35 | 62 | 80.5 | |
| | 2015.04- | 6AT | F | L | SUV FWD G16DF | Date to:2019.05 | GDS81330 | Drive Shaft | | 27 | 26 | 52.5 | 87 | 653 | |
| | 2015.04- | 6AT | F | R | SUV FWD G16DF | Date to:2019.05 | GDS81331 | Drive Shaft | | 27 | 27 | 52.5 | 87 | 610 | |
| **Tivoli air** | | | | | | | | | | | | | | | |
| 1.6 (93 kw) | 2016.05- | 6AT | F | L | SUV FWD G16DF | Date to:2019.05 | GDS81330 | Drive Shaft | | 27 | 26 | 52.5 | 87 | 653 | |
| | 2016.05- | 6AT | F | R | SUV FWD G16DF | Date to:2019.05 | GDS81331 | Drive Shaft | | 27 | 27 | 52.5 | 87 | 610 | |
| **XLV** | | | | | | | | | | | | | | | |
| 1.6 (85 kw) | 2016.04- | 6AT | F | L | SUV 4WD D16DTF | | GDS82310 | Drive Shaft | | 27 | 31 | 52 | 87 | 648 | |
| | 2016.04- | 6AT | F | L/R | SUV 4WD D16DTF | | GCO81801 | Outer Joint | | 27 | 31 | 52 | 87 | 62.5 | M |
| | 2016.04- | 6AT | F | L | SUV 4WD D16DTF | Date to:2019.05 | GCI81744 | Inner Joint | | 31 | 31 | 36.2 | 64.5 | 88.5 | |
| | 2016.04- | 6AT/6MT | F | R | SUV 4WD D16DTF | Date to:2019.05 | GDS82309 | Drive Shaft | | 27 | 27 | 52 | 87 | 604 | |
| | 2016.04- | 6AT/6MT | F | R | SUV 4WD D16DTF | Date to:2019.05 | GCI81788 | Inner Joint | | 27 | 31 | 41.5 | | 120 | |
| | 2016.04- | 6MT | F | R | SUV 4WD D16DTF | | GCO81801 | Outer Joint | | 27 | 31 | 52 | 87 | 62.5 | M |
| | 2016.04- | 6AT/6MT | R | L/R | SUV 4WD D16DTF | | GDS82312 | Drive Shaft | 48T | 27 | 25 | 52 | 87 | 812 | |
| | 2016.04- | 6AT/6MT | R | L/R | SUV 4WD D16DTF | | GCO81826 | Outer Joint | 48T | 27 | 27 | 52 | 87 | 47.5 | M |
| | 2016.04- | 6AT/6MT | R | L/R | SUV 4WD D16DTF | | GCI81779 | Inner Joint | | 25 | 27 | 35 | 62 | 80.5 | |
| | 2016.04- | 6AT | F | L | SUV FWD D16DTF | | GDS82310 | Drive Shaft | | 27 | 31 | 52 | 87 | 648 | |
| | 2016.04- | 6AT | F | L | SUV FWD D16DTF | | GCO81801 | Outer Joint | | 27 | 31 | 52 | 87 | 62.5 | M |
| | 2016.04- | 6AT | F | L | SUV FWD D16DTF | | GCI81744 | Inner Joint | | 31 | 31 | 36.2 | 64.5 | 88.5 | |
| | 2016.12- | 6AT | F | L | SUV Van 4WD D16DTF | Date to:2019.05 | GDS82310 | Drive Shaft | | 27 | 31 | 52 | 87 | 648 | |
| | 2016.12- | 6AT/6MT | F | R | SUV Van 4WD D16DTF | Date to:2019.05 | GDS82309 | Drive Shaft | | 27 | 27 | 52 | 87 | 604 | |
| | 2016.12- | 6AT/6MT | F | L/R | SUV Van 4WD D16DTF | Date to:2019.05 | GCO81801 | Outer Joint | | 27 | 31 | 52 | 87 | 62.5 | M |
| | 2016.12- | 6AT/6MT | F | R | SUV Van 4WD D16DTF | Date to:2019.05 | GCI81788 | Inner Joint | | 27 | 31 | 41.5 | | 120 | |
| | 2016.12- | 6AT/6MT | R | L/R | SUV Van 4WD D16DTF | Date to:2019.05 | GDS82312 | Drive Shaft | 48T | 27 | 25 | 52 | 87 | 812 | |
| | 2016.12- | 6AT | F | L | SUV Van FWD D16DTF | Date to:2019.05 | GDS82310 | Drive Shaft | | 27 | 31 | 52 | 87 | 648 | |
| | 2016.12- | 6AT | F | L | SUV Van FWD D16DTF | Date to:2019.05 | GCO81801 | Outer Joint | | 27 | 31 | 52 | 87 | 62.5 | M |
| | 2016.12- | 6AT | F | L | SUV Van FWD D16DTF | Date to:2019.05 | GCI81744 | Inner Joint | | 31 | 31 | 36.2 | 64.5 | 88.5 | |
| 1.6 (94 kw) | 2016.04- | 6AT | F | L | SUV 4WD G16DF | Date to:2019.05 | GDS81330 | Drive Shaft | | 27 | 26 | 52.5 | 87 | 653 | |
| | 2016.04- | 6AT | F | R | SUV 4WD G16DF | Date to:2019.05 | GDS81331 | Drive Shaft | | 27 | 27 | 52.5 | 87 | 610 | |
| | 2016.04- | 6AT | R | L/R | SUV 4WD G16DF | | GDS82312 | Drive Shaft | 48T | 27 | 25 | 52 | 87 | 812 | |
| | 2016.04- | 6AT | R | L/R | SUV 4WD G16DF | | GCO81826 | Outer Joint | 48T | 27 | 27 | 52 | 87 | 47.5 | M |
| | 2016.04- | 6AT | R | L/R | SUV 4WD G16DF | | GCI81779 | Inner Joint | | 25 | 27 | 35 | 62 | 80.5 | |
| | 2016.04- | 6AT | F | L | SUV FWD G16DF | Date to:2019.05 | GDS81330 | Drive Shaft | | 27 | 26 | 52.5 | 87 | 653 | |
| | 2016.04- | 6AT | F | R | SUV FWD G16DF | Date to:2019.05 | GDS81331 | Drive Shaft | | 27 | 27 | 52.5 | 87 | 610 | |
| | 2016.05- | 6AT | F | L | SUV 4WD G16DF | Date to:2019.05 | GDS81330 | Drive Shaft | | 27 | 26 | 52.5 | 87 | 653 | |
| | 2016.05- | 6AT | F | R | SUV 4WD G16DF | Date to:2019.05 | GDS81331 | Drive Shaft | | 27 | 27 | 52.5 | 87 | 610 | |
| | 2016.05- | 6AT | R | L/R | SUV 4WD G16DF | | GDS82312 | Drive Shaft | 48T | 27 | 25 | 52 | 87 | 812 | |
| | 2016.05- | 6AT | R | L/R | SUV 4WD G16DF | | GCO81826 | Outer Joint | 48T | 27 | 27 | 52 | 87 | 47.5 | M |
| | 2016.05- | 6AT | R | L/R | SUV 4WD G16DF | | GCI81779 | Inner Joint | | 25 | 27 | 35 | 62 | 80.5 | |
| | 2016.05- | 6AT | F | L | SUV FWD G16DF | Date to:2019.05 | GDS81330 | Drive Shaft | | 27 | 26 | 52.5 | 87 | 653 | |
| | 2016.05- | 6AT | F | R | SUV FWD G16DF | Date to:2019.05 | GDS81331 | Drive Shaft | | 27 | 27 | 52.5 | 87 | 610 | |
| | 2016.12- | 6AT | F | L | SUV Van 4WD G16DF | Date to:2019.05 | GDS81330 | Drive Shaft | | 27 | 26 | 52.5 | 87 | 653 | |
| | 2016.12- | 6AT | F | R | SUV Van 4WD G16DF | Date to:2019.05 | GDS81331 | Drive Shaft | | 27 | 27 | 52.5 | 87 | 610 | |
| | 2016.12- | 6AT | R | L/R | SUV Van 4WD G16DF | Date to:2019.05 | GDS82312 | Drive Shaft | 48T | 27 | 25 | 52 | 87 | 812 | |

| | YEAR | TRANSM. | F/R | L/R | BODY STYLE & DRIVE TYPE & ENGINE | REMARKS | G-AP Ref. | PRODUCT | ABS | Technical Specifications A | B | C | H | L | P |
|---|---|---|---|---|---|---|---|---|---|---|---|---|---|---|---|
| **SSANGYONG** | | | | | | | | | | | | | | | |
| **XLV** | | | | | | | | | | | | | | | |
| 1.6 (94 kw) | 2016.12- | 6AT | F | L | SUV Van FWD G16DF | Date to:2019.05 | GDS81330 | Drive Shaft | | 27 | 26 | 52.5 | 87 | 653 | |
| | 2016.12- | 6AT | F | R | SUV Van FWD G16DF | Date to:2019.05 | GDS81331 | Drive Shaft | | 27 | 27 | 52.5 | 87 | 610 | |
| **SUBARU** | | | | | | | | | | | | | | | |
| **B9 Tribeca** | | | | | | | | | | | | | | | |
| 3.0 (180 kw) | 2006.10- | 5AT | F | L/R | SUV 4WD EZ30 | | GDS56064 | Drive Shaft | | 27 | 25 | 56 | 86.5 | 825 | |
| | 2006.10- | 5AT | F | L/R | SUV 4WD EZ30 | | GCO56061 | Outer Joint | | 27 | 30 | 56 | 86.5 | 55 | I |
| | 2006.10- | 5AT | F | L/R | SUV 4WD EZ30 | | GCI82426 | Inner Joint | | 25 | 29 | 35 | 77.5 | 108.5 | |
| 3.0 (184 kw) | 2005.01- | 5AT | F | L/R | SUV 4WD EZ30 | | GDS56064 | Drive Shaft | | 27 | 25 | 56 | 86.5 | 825 | |
| | 2005.01- | 5AT | F | L/R | SUV 4WD EZ30 | | GCO56061 | Outer Joint | | 27 | 30 | 56 | 86.5 | 55 | I |
| | 2005.01- | 5AT | F | L/R | SUV 4WD EZ30 | | GCI82426 | Inner Joint | | 25 | 29 | 35 | 77.5 | 108.5 | |
| **Forester** | | | | | | | | | | | | | | | |
| 2.0 (90 kw) | 1997.08-2002.09 | 4AT/5MT | F | L/R | SUV 4WD EJ20J | Date to:1998.07 | GDS83522 | Drive Shaft | | 27 | 25 | 56 | 87 | 682 | |
| | 1997.08-2002.09 | 4AT/5MT | F | L/R | SUV 4WD EJ20J | | GCO56005 | Outer Joint | | 27 | 22 | 56 | 87 | 66 | M |
| | 1997.08-2002.09 | 4AT/5MT | F | L/R | SUV 4WD EJ20J | | GCO56009 | Outer Joint | 44T | 27 | 30 | 56 | 86.5 | 63 | M |
| | 1997.08-2002.09 | 4AT/5MT | F | L/R | SUV 4WD EJ20J | | GCO56026 | Outer Joint | 44T | 27 | 30 | 56 | 86.5 | 63 | I |
| | 1997.08-2002.09 | 4AT/5MT | F | L/R | SUV 4WD EJ20J | | GCO56027 | Outer Joint | 44T | 27 | 23 | 56 | 86.5 | 63 | M |
| | 1997.08-2002.09 | 4AT/5MT | F | L/R | SUV 4WD EJ20J | Date from:1998.05;DOJ | GCI56023 | Inner Joint | | 25 | 29 | 40.1 | | 110.5 | |
| | 1997.08-2002.09 | 4AT/5MT | F | L/R | SUV 4WD EJ20J | Date to:1998.07;PTJ | GCI82257 | Inner Joint | | 25 | 29 | 40 | | 112 | |
| | 1997.08-2002.09 | AT | F | L/R | SUV 4WD EJ20J | | GCO56017 | Outer Joint | | 27 | 30 | 56 | 87 | 58.5 | I |
| | 1997.08-2002.09 | AT | F | L/R | SUV 4WD EJ20J | Date from:1999.08,Date to:2001.10 | GCI56004 | Inner Joint | | 25 | 30 | 40 | | 111.3 | |
| | 1997.08-2002.09 | AT | F | L/R | SUV 4WD EJ20J | | GCI56006 | Inner Joint | | 25 | 22 | 40 | | 110.5 | |
| | 1997.08-2002.09 | AT/MT | F | L/R | SUV 4WD EJ20J | for vehicles | GDS56032 | Drive Shaft | 44T | 27 | 25 | 56 | 86.5 | 682.5 | |
| | 1997.08-2002.09 | 4AT/5MT | R | L/R | SUV 4WD EJ20J | | GDS56024 | Drive Shaft | | 24 | 22 | 50 | 104 | 762 | |
| 2.0 (92 kw) | 1998.09-2002.05 | 5MT | F | L/R | SUV 4WD EJ202 | Date from:2001.11 | GCO56009 | Outer Joint | 44T | 27 | 30 | 56 | 86.5 | 63 | M |
| | 1998.09-2002.05 | 5MT | F | L/R | SUV 4WD EJ202 | Date from:1999.12,Date to:2001.10 | GCO56026 | Outer Joint | 44T | 27 | 30 | 56 | 86.5 | 63 | I |
| | 1998.09-2002.05 | AT/MT | F | L/R | SUV 4WD EJ202 | | GDS56032 | Drive Shaft | 44T | 27 | 25 | 56 | 86.5 | 682.5 | |
| | 1998.09-2002.05 | | F | L/R | SUV 4WD EJ202 | Date From:1998.09;Date To:2002.05 | GCO56005 | Outer Joint | | 27 | 22 | 56 | 87 | 66 | M |
| | 1998.09-2002.05 | | F | L/R | SUV 4WD EJ202 | | GCO56017 | Outer Joint | | 27 | 30 | 56 | 87 | 58.5 | I |
| | 1998.09-2002.05 | | F | | SUV 4WD EJ202 | | GCO56027 | Outer Joint | 44T | 27 | 23 | 56 | 86.5 | 63 | M |
| | 1998.09-2002.05 | | F | | SUV 4WD EJ202 | Date From:1999.08,Date To:2001.10 | GCO56040 | Outer Joint | | 27 | 30 | 56 | 86.5 | 62.7 | M |
| | 1998.09-2002.05 | | F | L/R | SUV 4WD EJ202 | | GCI56004 | Inner Joint | | 25 | 30 | 40 | | 111.3 | |
| | 1998.09-2002.05 | | F | L/R | SUV 4WD EJ202 | | GCI56023 | Inner Joint | | 25 | 29 | 40.1 | | 110.5 | |
| | 1998.09-2002.05 | 5MT | R | L | SUV 4WD EJ202 | | GDS81948 | Drive Shaft | | 27 | 27 | 56 | 104 | 774 | |
| | 1998.09-2002.05 | 5MT | R | L | SUV 4WD EJ202 | Date from:2000.08 | GCO81585 | Outer Joint | | 27 | 32 | 56 | 104 | 67 | I |
| | 1998.09-2002.05 | 5MT | R | L | SUV 4WD EJ202 | | GCI81564 | Inner Joint | | 27 | 32 | 32 | 89 | 91.5 | |
| | 2002.06-2005.05 | AT/MT | F | L/R | SUV 4WD EJ201 | Date from:2003.01 | GDS56014 | Drive Shaft | 44T | 27 | 25 | 56 | 86.5 | 780 | |
| | 2002.06-2005.05 | AT/MT | F | L/R | SUV 4WD EJ201 | | GCO56041 | Outer Joint | 44T | 27 | 23 | 56 | 87 | 61 | M |
| | 2002.06-2005.05 | | F | L/R | SUV 4WD EJ201 | | GCO56026 | Outer Joint | 44T | 27 | 30 | 56 | 86.5 | 63 | I |
| | 2002.06-2005.05 | | F | | SUV 4WD EJ201 | | GCO56027 | Outer Joint | 44T | 27 | 23 | 56 | 86.5 | 63 | M |
| | 2002.06-2005.05 | 4AT/5MT | R | L/R | SUV 4WD EJ201 | Date from:2004.12 | GCI82768 | Inner Joint | | 22 | 19 | 32 | 62 | 102 | |
| 2.0 (107 kw) | 2018.04- | CVT | F | L/R | SUV 4WD FB20X | | GDS56244 | Drive Shaft | | 27 | 25 | 56 | 87 | 818 | |
| | 2018.04- | CVT | F | L/R | SUV 4WD FB20X | | GCO83217 | Outer Joint | | 27 | 32 | 56 | 87 | 56.5 | I |
| | 2018.04- | CVT | F | L/R | SUV 4WD FB20X | | GCI82426 | Inner Joint | | 25 | 29 | 35 | 77.5 | 108.5 | |
| | 2018.04- | CVT | R | L/R | SUV 4WD FB20X | Trim Level:ILC/ISC | GDS56247 | Drive Shaft | | 27 | 22 | 56 | 113.5 | 806 | |
| | 2018.04- | CVT | R | L/R | SUV 4WD FB20X | Trim Level:ILC/ISC | GCO83220 | Outer Joint | | 27 | 19 | 56 | 113.5 | 46.5 | I |
| | 2018.04- | CVT | R | L/R | SUV 4WD FB20X | Trim Level:ILC/ISC | GCI83211 | Inner Joint | | 22 | 19 | 32 | 62 | 102.5 | |
| 2.0 (108 kw) | 2008.09-2013.09 | AT/MT | F | L/R | SUV 4WD EE20Z | | GCO99339 | Outer Joint | | 27 | 32 | 52 | 76.5 | 62.5 | I |
| | 2008.09-2013.09 | AT/MT | F | L/R | SUV 4WD EE20Z | | GCI56027 | Inner Joint | | 25 | 29 | 35 | 77.5 | 105 | |
| | 2008.09-2013.09 | MT | F | L/R | SUV 4WD EE20Z | | GDS81902 | Drive Shaft | | 27 | 25 | 52 | 77 | 794 | |
| | 2008.09-2013.09 | | F | L/R | SUV 4WD EE20Z | Date From:2009.03 | GCO56022 | Outer Joint | | 27 | 30 | 52 | 77 | 54 | I |
| | 2008.09-2013.09 | 4AT/5MT/6MT | R | L/R | SUV 4WD EE20Z | | GDS82268 | Drive Shaft | | 27 | 25 | 56 | 114 | 795 | |
| | 2008.09-2013.09 | 4AT/5MT/6MT | R | L/R | SUV 4WD EE20Z | | GCI56019 | Inner Joint | | 25 | 28 | 32 | 81.5 | 86 | |
| | 2013.03- | CVT/6MT | F | L/R | SUV 4WD EE20Z | Date to:2013.12 | GDS56067 | Drive Shaft | | 27 | 25 | 52 | 76.5 | 807 | |
| | 2013.03- | CVT/6MT | F | L/R | SUV 4WD EE20Z | Date from:2014.01 | GDS82987 | Drive Shaft | | 27 | 25 | 52 | 80.5 | 808 | |
| | 2013.03- | CVT/6MT | F | L/R | SUV 4WD EE20Z | Date from:2014.01 | GCO81193 | Outer Joint | | 27 | 32 | 52 | 80.5 | 62.5 | I |
| | 2013.03- | CVT/6MT | F | L/R | SUV 4WD EE20Z | Date to:2013.12 | GCO99339 | Outer Joint | | 27 | 32 | 52 | 76.5 | 62.5 | I |
| | 2013.03- | CVT/6MT | F | L/R | SUV 4WD EE20Z | | GCI56027 | Inner Joint | | 25 | 29 | 35 | 77.5 | 105 | |
| | 2013.03- | CVT/6MT | R | L/R | SUV 4WD EE20Z | | GDS83893 | Drive Shaft | | 27 | 25 | 56 | 114 | 798 | |
| | 2013.03- | CVT/6MT | R | L/R | SUV 4WD EE20Z | | GCO81456 | Outer Joint | | 27 | 29 | 56 | 114 | 47 | I |
| | 2013.03- | CVT/6MT | R | L/R | SUV 4WD EE20Z | | GCI82397 | Inner Joint | | 25 | 29 | 32 | 81.5 | 86 | |
| 2.0 (110 kw) | 2008.01-2013.09 | AT/MT | F | L/R | SUV 4WD EJ204 | Date to:2009.02,With vibration damper;6 balls,PTJ | GDS56068 | Drive Shaft | | 27 | 25 | 52 | 76.5 | 795 | |
| | 2008.01-2013.09 | AT/MT | F | L/R | SUV 4WD EJ204 | 8 balls | GDS81902 | Drive Shaft | | 27 | 25 | 52 | 77 | 794 | |
| | 2008.01-2013.09 | AT/MT | F | L/R | SUV 4WD EJ204 | Date from:2009.03,Date to:2012.10;6 balls | GCO56022 | Outer Joint | | 27 | 30 | 52 | 77 | 54 | I |
| | 2008.01-2013.09 | AT/MT | F | L/R | SUV 4WD EJ204 | Date from:2009.04;8 balls | GCO81561 | Outer Joint | | 27 | 30 | 52 | 77 | 54 | I |
| | 2008.01-2013.09 | AT/MT | F | L/R | SUV 4WD EJ204 | | GCO99339 | Outer Joint | | 27 | 32 | 52 | 76.5 | 62.5 | I |

| | YEAR | TRANSM. | F/R | L/R | BODY STYLE & DRIVE TYPE & ENGINE | REMARKS | G-AP Ref. | PRODUCT | ABS | Technical Specifications | | | | | |
|---|---|---|---|---|---|---|---|---|---|---|---|---|---|---|---|
| | | | | | | | | | | A | B | C | H | L | P |
| **SUBARU** | | | | | | | | | | | | | | | |
| **Forester** | | | | | | | | | | | | | | | |
| 2.0 (110 kw) | 2008.01-2013.09 | AT/MT | F | L/R | SUV 4WD EJ204 | | GCI56027 | Inner Joint | | 25 | 29 | 35 | 77.5 | 105 | |
| | 2008.01-2013.09 | 4AT | R | L/R | SUV 4WD EJ204 | Date to:2013.01 | GDS84455 | Drive Shaft | | 27 | 22 | 56 | 113.5 | 792 | |
| | 2008.01-2013.09 | 4AT | R | L/R | SUV 4WD EJ204 | | GCO82822 | Outer Joint | | 27 | 19 | 56 | 113.5 | 52 | I |
| | 2008.01-2013.09 | 4AT | R | L/R | SUV 4WD EJ204 | | GCI82768 | Inner Joint | | 22 | 19 | 32 | 62 | 102 | |
| | 2008.01-2013.09 | 5MT | R | L/R | SUV 4WD EJ204 | | GDS82268 | Drive Shaft | | 27 | 25 | 56 | 114 | 795 | |
| | 2008.01-2013.09 | 5MT | R | L/R | SUV 4WD EJ204 | | GCI56019 | Inner Joint | | 25 | 28 | 32 | 81.5 | 86 | |
| | 2009.01-2011.12 | 4AT/5MT | F | L/R | SUV 4WD EJ204 | Date to:2009.02,With vibration damper | GDS56068 | Drive Shaft | | 27 | 25 | 52 | 76.5 | 795 | |
| | 2009.01-2011.12 | 4AT/5MT | F | L/R | SUV 4WD EJ204 | Date from:2009.03 | GDS81902 | Drive Shaft | | 27 | 25 | 52 | 77 | 794 | |
| | 2009.01-2011.12 | 4AT/5MT | F | L/R | SUV 4WD EJ204 | Date from:2009.03 | GCO56022 | Outer Joint | | 27 | 30 | 52 | 77 | 54 | I |
| | 2009.01-2011.12 | 4AT/5MT | F | L/R | SUV 4WD EJ204 | Date from:2009.03 | GCO81561 | Outer Joint | | 27 | 30 | 52 | 77 | 54 | I |
| | 2009.01-2011.12 | 4AT/5MT | F | L/R | SUV 4WD EJ204 | Date to:2009.02 | GCO99339 | Outer Joint | | 27 | 32 | 52 | 76.5 | 62.5 | I |
| | 2009.01-2011.12 | 4AT/5MT | F | L/R | SUV 4WD EJ204 | | GCI56027 | Inner Joint | | 25 | 29 | 35 | 77.5 | 105 | |
| | 2009.01-2011.12 | 4AT | R | L/R | SUV 4WD EJ204 | Date to:2013.01 | GDS84455 | Drive Shaft | | 27 | 22 | 56 | 113.5 | 792 | |
| | 2009.01-2011.12 | 4AT | R | L/R | SUV 4WD EJ204 | | GCO82822 | Outer Joint | | 27 | 19 | 56 | 113.5 | 52 | I |
| | 2009.01-2011.12 | 4AT | R | L/R | SUV 4WD EJ204 | | GCI82768 | Inner Joint | | 22 | 19 | 32 | 62 | 102 | |
| | 2009.01-2011.12 | 5MT | R | L/R | SUV 4WD EJ204 | | GDS82268 | Drive Shaft | | 27 | 25 | 56 | 114 | 795 | |
| | 2009.01-2011.12 | 5MT | R | L/R | SUV 4WD EJ204 | | GCI56019 | Inner Joint | | 25 | 28 | 32 | 81.5 | 86 | |
| | 2010.01- | 4AT/5MT | F | L/R | SUV 4WD FB20 | | GDS81902 | Drive Shaft | | 27 | 25 | 52 | 77 | 794 | |
| | 2010.01- | 4AT/5MT | F | L/R | SUV 4WD FB20 | 6 balls | GCO56022 | Outer Joint | | 27 | 30 | 52 | 77 | 54 | I |
| | 2010.01- | 4AT/5MT | F | L/R | SUV 4WD FB20 | 8 balls | GCO81561 | Outer Joint | | 27 | 30 | 52 | 77 | 54 | I |
| | 2010.01- | 4AT/5MT | F | L/R | SUV 4WD FB20 | | GCI56027 | Inner Joint | | 25 | 29 | 35 | 77.5 | 105 | |
| | 2010.01- | AT/MT | F | L/R | SUV 4WD FB20 | Date to:2013.12 | GCO99339 | Outer Joint | | 27 | 32 | 52 | 76.5 | 62.5 | I |
| | 2010.01- | 4AT | R | L/R | SUV 4WD FB20 | Date to:2013.01 | GDS84455 | Drive Shaft | | 27 | 22 | 56 | 113.5 | 792 | |
| | 2010.01- | 4AT | R | L/R | SUV 4WD FB20 | | GCO82822 | Outer Joint | | 27 | 19 | 56 | 113.5 | 52 | I |
| | 2010.01- | 4AT | R | L/R | SUV 4WD FB20 | | GCI82768 | Inner Joint | | 22 | 19 | 32 | 62 | 102 | |
| | 2010.01- | 5MT | R | L/R | SUV 4WD FB20 | | GDS82268 | Drive Shaft | | 27 | 25 | 56 | 114 | 795 | |
| | 2010.01- | 5MT | R | L/R | SUV 4WD FB20 | | GCI56019 | Inner Joint | | 25 | 28 | 32 | 81.5 | 86 | |
| | 2013.03- | CVT | F | L/R | SUV 4WD FB20 | Date to:2013.12 | GDS56067 | Drive Shaft | | 27 | 25 | 52 | 76.5 | 807 | |
| | 2013.03- | CVT | F | L/R | SUV 4WD FB20 | Date from:2014.01 | GDS82987 | Drive Shaft | | 27 | 25 | 52 | 80.5 | 808 | |
| | 2013.03- | CVT | F | L/R | SUV 4WD FB20 | Date from:2014.01 | GCO81193 | Outer Joint | | 27 | 32 | 52 | 80.5 | 62.5 | I |
| | 2013.03- | CVT | F | L/R | SUV 4WD FB20 | Date to:2013.12 | GCO99339 | Outer Joint | | 27 | 32 | 52 | 76.5 | 62.5 | I |
| | 2013.03- | CVT | F | L/R | SUV 4WD FB20 | | GCI56027 | Inner Joint | | 25 | 29 | 35 | 77.5 | 105 | |
| | 2013.03- | 6MT | R | L/R | SUV 4WD FB20 | | GDS83893 | Drive Shaft | | 27 | 25 | 56 | 114 | 798 | |
| | 2013.03- | 6MT | R | L/R | SUV 4WD FB20 | | GCO81456 | Outer Joint | | 27 | 29 | 56 | 114 | 47 | I |
| | 2013.03- | 6MT | R | L/R | SUV 4WD FB20 | | GCI82397 | Inner Joint | | 25 | 29 | 32 | 81.5 | 86 | |
| | 2013.03- | 6MT | F | L/R | SUV 4WD FB20B | | GCI56027 | Inner Joint | | 25 | 29 | 35 | 77.5 | 105 | |
| | 2013.03- | MT | R | L/R | SUV 4WD FB20B | | GDS83893 | Drive Shaft | | 27 | 25 | 56 | 114 | 798 | |
| | 2013.03- | MT | R | L/R | SUV 4WD FB20B | | GCO81456 | Outer Joint | | 27 | 29 | 56 | 114 | 47 | I |
| | 2013.03- | MT | R | L/R | SUV 4WD FB20B | | GCI82397 | Inner Joint | | 25 | 29 | 32 | 81.5 | 86 | |
| | 2018.04- | CVT | F | L/R | SUV 4WD FB20X;FB20W | | GDS56244 | Drive Shaft | | 27 | 25 | 56 | 87 | 818 | |
| | 2018.04- | CVT | F | L/R | SUV 4WD FB20X;FB20W | | GCO83217 | Outer Joint | | 27 | 32 | 56 | 87 | 56.5 | I |
| | 2018.04- | CVT | F | L/R | SUV 4WD FB20X;FB20W | | GCI82426 | Inner Joint | | 25 | 29 | 35 | 77.5 | 108.5 | |
| | 2018.04- | CVT | R | L/R | SUV 4WD FB20X;FB20W | Trim Level:ILC/ISC | GDS56247 | Drive Shaft | | 27 | 22 | 56 | 113.5 | 806 | |
| | 2018.04- | CVT | R | L/R | SUV 4WD FB20X;FB20W | Trim Level:ILC/ISC | GCO83220 | Outer Joint | | 27 | 19 | 56 | 113.5 | 46.5 | I |
| | 2018.04- | CVT | R | L/R | SUV 4WD FB20X;FB20W | Trim Level:ILC/ISC | GCI83211 | Inner Joint | | 22 | 19 | 32 | 62 | 102.5 | |
| 2.0 (115 kw) | 2018.04- | CVT | F | L/R | SUV 4WD FB20C;FB20D | | GDS56244 | Drive Shaft | | 27 | 25 | 56 | 87 | 818 | |
| | 2018.04- | CVT | F | L/R | SUV 4WD FB20C;FB20D | | GCO83217 | Outer Joint | | 27 | 32 | 56 | 87 | 56.5 | I |
| | 2018.04- | CVT | F | L/R | SUV 4WD FB20C;FB20D | | GCI82426 | Inner Joint | | 25 | 29 | 35 | 77.5 | 108.5 | |
| | 2018.04- | CVT | R | L/R | SUV 4WD FB20C;FB20D | Trim Level:ILC/ISC | GDS56247 | Drive Shaft | | 27 | 22 | 56 | 113.5 | 806 | |
| | 2018.04- | CVT | R | L/R | SUV 4WD FB20C;FB20D | Trim Level:ILC/ISC | GCO83220 | Outer Joint | | 27 | 19 | 56 | 113.5 | 46.5 | I |
| | 2018.04- | CVT | R | L/R | SUV 4WD FB20C;FB20D | Trim Level:ILC/ISC | GCI83211 | Inner Joint | | 22 | 19 | 32 | 62 | 102.5 | |
| 2.0 (116 kw) | 2005.06-2008.05 | 4AT/5MT | F | L/R | SUV 4WD EJ204 | | GDS56014 | Drive Shaft | 44T | 27 | 25 | 56 | 86.5 | 780 | |
| | 2005.06-2008.05 | | F | L/R | SUV 4WD EJ204 | | GCO56026 | Outer Joint | 44T | 27 | 30 | 56 | 86.5 | 63 | I |
| | 2005.06-2008.05 | | F | L/R | SUV 4WD EJ204 | | GCO56027 | Outer Joint | 44T | 27 | 23 | 56 | 86.5 | 63 | M |
| | 2005.06-2008.05 | 4AT/5MT | R | L/R | SUV 4WD EJ204 | | GCI82768 | Inner Joint | | 22 | 19 | 32 | 62 | 102 | |
| 2.0 (125 kw) | 1998.09-2001.04 | 4AT/5MT | F | L/R | SUV 4WD EJ205 | Date to:1999.11 | GCO56005 | Outer Joint | | 27 | 22 | 56 | 87 | 66 | M |
| | 1998.09-2001.04 | 4AT/5MT | F | L/R | SUV 4WD EJ205 | Date from:1999.12 | GCO56026 | Outer Joint | 44T | 27 | 30 | 56 | 86.5 | 63 | I |
| | 1998.09-2001.04 | MT | F | L/R | SUV 4WD EJ205 | | GDS56032 | Drive Shaft | 44T | 27 | 25 | 56 | 86.5 | 682.5 | |
| | 1998.09-2001.04 | MT | F | L/R | SUV 4WD EJ205 | Date to:1999.11 | GDS83522 | Drive Shaft | | 27 | 25 | 56 | 87 | 682 | |
| | 1998.09-2001.04 | MT | F | L/R | SUV 4WD EJ205 | Date to:1999.11 | GCO56017 | Outer Joint | | 27 | 30 | 56 | 87 | 58.5 | I |
| | 1998.09-2001.04 | MT | F | L/R | SUV 4WD EJ205 | Date to:1999.11 | GCI82257 | Inner Joint | | 25 | 29 | 40 | | 112 | |
| | 1998.09-2001.04 | | F | L/R | SUV 4WD EJ205 | Date From:1998.09 | GCO56009 | Outer Joint | 44T | 27 | 30 | 56 | 86.5 | 63 | M |
| | 1998.09-2001.04 | | F | L/R | SUV 4WD EJ205 | Date From:1999.12 | GCI56004 | Inner Joint | | 25 | 30 | 40 | | 111.3 | |
| | 1998.09-2001.04 | | F | L/R | SUV 4WD EJ205 | | GCI56006 | Inner Joint | | 25 | 22 | 40 | | 110.5 | |
| | 1998.09-2001.04 | | F | L/R | SUV 4WD EJ205 | | GCI56023 | Inner Joint | | 25 | 29 | 40.1 | | 110.5 | |

| | YEAR | TRANSM. | F/R | L/R | BODY STYLE & DRIVE TYPE & ENGINE | REMARKS | G-AP Ref. | PRODUCT | ABS | Technical Specifications | | | | | |
|---|---|---|---|---|---|---|---|---|---|---|---|---|---|---|---|
| | | | | | | | | | | A | B | C | H | L | P |
| **SUBARU** | | | | | | | | | | | | | | | |
| **Forester** | | | | | | | | | | | | | | | |
| 2.0 (130 kw) | 2000.10-2002.05 | 4AT/5MT | F | L/R | SUV 4WD EJ205 | Date to:2002.05 | GCO56005 | Outer Joint | | 27 | 22 | 56 | 87 | 66 | M |
| | 2000.10-2002.05 | 4AT/5MT | F | L/R | SUV 4WD EJ205 | Date from:2001.11 | GCO56009 | Outer Joint | 44T | 27 | 30 | 56 | 86.5 | 63 | M |
| | 2000.10-2002.05 | 4AT/5MT | F | L/R | SUV 4WD EJ205 | | GCO56017 | Outer Joint | | 27 | 30 | 56 | 87 | 58.5 | I |
| | 2000.10-2002.05 | 4AT/5MT | F | L/R | SUV 4WD EJ205 | Date to:2001.10 | GCO56026 | Outer Joint | 44T | 27 | 30 | 56 | 86.5 | 63 | I |
| | 2000.10-2002.05 | 4AT/5MT | F | L/R | SUV 4WD EJ205 | | GCO56027 | Outer Joint | 44T | 27 | 23 | 56 | 86.5 | 63 | M |
| | 2000.10-2002.05 | 4AT/5MT | F | L/R | SUV 4WD EJ205 | Date to:2001.10 | GCI56004 | Inner Joint | | 25 | 30 | 40 | | 111.3 | |
| | 2000.10-2002.05 | 4AT/5MT | F | L/R | SUV 4WD EJ205 | | GCI56023 | Inner Joint | | 25 | 29 | 40.1 | | 110.5 | |
| | 2000.10-2002.05 | MT/AT | F | L/R | SUV 4WD EJ205 | | GDS56032 | Drive Shaft | 44T | 27 | 25 | 56 | 86.5 | 682.5 | |
| | 2002.02-2005.05 | AT/MT | F | L/R | SUV 4WD EJ205 | | GDS56014 | Drive Shaft | 44T | 27 | 25 | 56 | 86.5 | 780 | |
| | 2002.02-2005.05 | AT/MT | F | L/R | SUV 4WD EJ205 | | GCO56041 | Outer Joint | 44T | 27 | 23 | 56 | 87 | 61 | M |
| | 2002.02-2005.05 | | F | L/R | SUV 4WD EJ205 | | GCO56005 | Outer Joint | | 27 | 22 | 56 | 87 | 66 | M |
| | 2002.02-2005.05 | | F | L/R | SUV 4WD EJ205 | | GCO56026 | Outer Joint | 44T | 27 | 30 | 56 | 86.5 | 63 | I |
| | 2002.02-2005.05 | 4AT/5MT | R | L | SUV 4WD EJ205 | Date from:2005.01 | GDS56055 | Drive Shaft | | 24 | 25 | 50 | 104 | 769 | |
| | 2002.02-2005.05 | 4AT/5MT | R | L | SUV 4WD EJ205 | Date to:2004.12 | GDS84409 | Drive Shaft | | 24 | 25 | 50 | 103.5 | 768 | |
| | 2002.02-2005.05 | 4AT/5MT | R | R | SUV 4WD EJ205 | Date from:2005.01 | GDS57937 | Drive Shaft | | 24 | 25 | 50 | 103.5 | 778 | |
| | 2002.02-2005.05 | 4AT/5MT | R | R | SUV 4WD EJ205 | Date to:2004.12 | GDS84418 | Drive Shaft | | 24 | 25 | 50 | 103.5 | 778 | |
| | 2002.02-2005.05 | 4AT/5MT | R | L/R | SUV 4WD EJ205 | Date to:2004.12 | GCO82808 | Outer Joint | | 24 | 29 | 50 | 103.5 | 56.5 | I |
| | 2002.02-2005.05 | 4AT/5MT | R | L/R | SUV 4WD EJ205 | Date from:2005.01 | GCI56019 | Inner Joint | | 25 | 28 | 32 | 81.5 | 86 | |
| 2.0 (177 kw) | 2013.03- | CVT | F | L/R | SUV 4WD FA20 | For European,Date to:2013.12 | GDS56067 | Drive Shaft | | 27 | 25 | 52 | 76.5 | 807 | |
| | 2013.03- | CVT | F | L/R | SUV 4WD FA20 | Date from:2014.01 | GDS82987 | Drive Shaft | | 27 | 25 | 52 | 80.5 | 808 | |
| | 2013.03- | CVT | F | L/R | SUV 4WD FA20 | Date from:2014.01 | GCO81193 | Outer Joint | | 27 | 32 | 52 | 80.5 | 62.5 | I |
| | 2013.03- | CVT | F | L/R | SUV 4WD FA20 | Date to:2013.12 | GCO99339 | Outer Joint | | 27 | 32 | 52 | 76.5 | 62.5 | I |
| | 2013.03- | CVT | F | L/R | SUV 4WD FA20 | | GCI56027 | Inner Joint | | 25 | 29 | 35 | 77.5 | 105 | |
| | 2013.03- | CVT | R | L/R | SUV 4WD FA20 | For European | GDS83893 | Drive Shaft | | 27 | 25 | 56 | 114 | 798 | |
| | 2013.03- | CVT | R | L/R | SUV 4WD FA20 | | GCO81456 | Outer Joint | | 27 | 29 | 56 | 114 | 47 | I |
| | 2013.03- | CVT | R | L/R | SUV 4WD FA20 | | GCI82397 | Inner Joint | | 25 | 29 | 32 | 81.5 | 86 | |
| 2.5 (115 kw) | 2002.11-2008.12 | AT/MT | F | L/R | SUV 4WD EJ25 | | GDS56014 | Drive Shaft | 44T | 27 | 25 | 56 | 86.5 | 780 | |
| | 2002.11-2008.12 | AT/MT | F | L/R | SUV 4WD EJ25 | | GCO56041 | Outer Joint | 44T | 27 | 23 | 56 | 87 | 61 | M |
| | 2002.11-2008.12 | | F | L/R | SUV 4WD EJ25 | | GCO56026 | Outer Joint | 44T | 27 | 30 | 56 | 86.5 | 63 | I |
| | 2002.11-2008.12 | 4AT/5MT | R | L | SUV 4WD EJ25 | Date from:2005.01 | GDS56055 | Drive Shaft | | 24 | 25 | 50 | 104 | 769 | |
| | 2002.11-2008.12 | 4AT/5MT | R | R | SUV 4WD EJ25 | Date from:2005.01 | GDS57937 | Drive Shaft | | 24 | 25 | 50 | 103.5 | 778 | |
| | 2002.11-2008.12 | 4AT/5MT | R | R | SUV 4WD EJ25 | Date from:2005.01 | GCO82808 | Outer Joint | | 24 | 29 | 50 | 103.5 | 56.5 | I |
| | 2002.11-2008.12 | 4AT/5MT | R | L/R | SUV 4WD EJ25 | | GCI56019 | Inner Joint | | 25 | 28 | 32 | 81.5 | 86 | |
| 2.5 (126 kw) | 2009.01-2013.09 | AT/MT | F | L/R | SUV 4WD EJ25 | | GDS81902 | Drive Shaft | | 27 | 25 | 52 | 77 | 794 | |
| | 2009.01-2013.09 | AT/MT | F | L/R | SUV 4WD EJ25 | | GCO99339 | Outer Joint | | 27 | 32 | 52 | 76.5 | 62.5 | I |
| | 2009.01-2013.09 | AT/MT | F | L/R | SUV 4WD EJ25 | | GCI56027 | Inner Joint | | 25 | 29 | 35 | 77.5 | 105 | |
| | 2009.01-2013.09 | | F | | SUV 4WD EJ25 | | GDS56068 | Drive Shaft | | 27 | 25 | 52 | 76.5 | 795 | |
| | 2009.01-2013.09 | 4AT/5MT | R | L/R | SUV 4WD EJ25 | | GDS82268 | Drive Shaft | | 27 | 25 | 56 | 114 | 795 | |
| | 2009.01-2013.09 | 4AT/5MT | R | L/R | SUV 4WD EJ25 | | GCI56019 | Inner Joint | | 25 | 28 | 32 | 81.5 | 86 | |
| | 2011.03-2013.09 | 4AT/5MT | F | L/R | SUV 4WD FB25 | | GDS81902 | Drive Shaft | | 27 | 25 | 52 | 77 | 794 | |
| | 2011.03-2013.09 | 4AT/5MT | F | L/R | SUV 4WD FB25 | | GCO56022 | Outer Joint | | 27 | 30 | 52 | 77 | 54 | I |
| | 2011.03-2013.09 | 4AT/5MT | F | L/R | SUV 4WD FB25 | | GCI56027 | Inner Joint | | 25 | 29 | 35 | 77.5 | 105 | |
| | 2011.03-2013.09 | 4AT/5MT | R | L/R | SUV 4WD FB25 | | GDS82268 | Drive Shaft | | 27 | 25 | 56 | 114 | 795 | |
| | 2011.03-2013.09 | 4AT/5MT | R | L/R | SUV 4WD FB25 | | GCI56019 | Inner Joint | | 25 | 28 | 32 | 81.5 | 86 | |
| | 2012.11- | CVT | F | L/R | SUV 4WD FB25 | | GDS82987 | Drive Shaft | | 27 | 25 | 52 | 80.5 | 808 | |
| | 2012.11- | CVT | F | L/R | SUV 4WD FB25 | | GCO81193 | Outer Joint | | 27 | 32 | 52 | 80.5 | 62.5 | I |
| | 2012.11- | CVT | F | L/R | SUV 4WD FB25 | | GCI56027 | Inner Joint | | 25 | 29 | 35 | 77.5 | 105 | |
| 2.5 (129 kw) | 2005.01-2012.10 | 4AT | F | L/R | SUV 4WD EJ253 | | GDS56014 | Drive Shaft | 44T | 27 | 25 | 56 | 86.5 | 780 | |
| | 2005.01-2012.10 | AT | F | L/R | SUV 4WD EJ253 | | GCO56026 | Outer Joint | 44T | 27 | 30 | 56 | 86.5 | 63 | I |
| | 2005.01-2012.10 | AT | F | L/R | SUV 4WD EJ253 | | GCO56041 | Outer Joint | 44T | 27 | 23 | 56 | 87 | 61 | M |
| | 2005.01-2012.10 | 4AT | R | L | SUV 4WD EJ253 | | GDS56055 | Drive Shaft | | 24 | 25 | 50 | 104 | 769 | |
| | 2005.01-2012.10 | 4AT | R | R | SUV 4WD EJ253 | | GDS57937 | Drive Shaft | | 24 | 25 | 50 | 103.5 | 778 | |
| | 2005.01-2012.10 | 4AT | R | R | SUV 4WD EJ253 | | GCO82808 | Outer Joint | | 24 | 29 | 50 | 103.5 | 56.5 | I |
| | 2005.01-2012.10 | 4AT | R | R | SUV 4WD EJ253 | | GCI56019 | Inner Joint | | 25 | 28 | 32 | 81.5 | 86 | |
| 2.5 (136 kw) | 2018.04- | CVT | F | L/R | SUV 4WD FB25C;FB25D | | GDS56244 | Drive Shaft | | 27 | 25 | 56 | 87 | 818 | |
| | 2018.04- | CVT | F | L/R | SUV 4WD FB25C;FB25D | | GCO83217 | Outer Joint | | 27 | 32 | 56 | 87 | 56.5 | I |
| | 2018.04- | CVT | F | L/R | SUV 4WD FB25C;FB25D | | GCI82426 | Inner Joint | | 25 | 29 | 35 | 77.5 | 108.5 | |
| | 2018.04- | CVT | R | L/R | SUV 4WD FB25C;FB25D | Trim Level:ILC/ISC | GDS56247 | Drive Shaft | | 27 | 22 | 56 | 113.5 | 806 | |
| | 2018.04- | CVT | R | L/R | SUV 4WD FB25C;FB25D | Trim Level:ILC/ISC | GCO83220 | Outer Joint | | 27 | 19 | 56 | 113.5 | 46.5 | I |
| | 2018.04- | CVT | R | L/R | SUV 4WD FB25C;FB25D | Trim Level:ILC/ISC | GCI83211 | Inner Joint | | 22 | 19 | 32 | 62 | 102.5 | |
| 2.5 (155 kw) | 2003.12-2005.05 | 4AT | F | L/R | SUV 4WD EJ257 | | GCO56026 | Outer Joint | 44T | 27 | 30 | 56 | 86.5 | 63 | I |
| | 2003.12-2005.05 | 4AT/5MT | F | L/R | SUV 4WD EJ257 | | GCO56027 | Outer Joint | 44T | 27 | 23 | 56 | 86.5 | 63 | M |
| | 2003.12-2005.05 | 4AT/5MT | F | L/R | SUV 4WD EJ257 | Date to:2007.11 | GCO56057 | Outer Joint | 44T | 27 | 32 | 56 | 86.5 | 68.5 | I |
| | 2003.12-2005.05 | AT/MT | F | L/R | SUV 4WD EJ257 | | GDS56014 | Drive Shaft | 44T | 27 | 25 | 56 | 86.5 | 780 | |
| | 2003.12-2005.05 | AT/MT | F | L/R | SUV 4WD EJ257 | | GCO56041 | Outer Joint | 44T | 27 | 23 | 56 | 87 | 61 | M |

| | YEAR | TRANSM. | F/R | L/R | BODY STYLE & DRIVE TYPE & ENGINE | REMARKS | G-AP Ref. | PRODUCT | ABS | Technical Specifications A | B | C | H | L | P |
|---|---|---|---|---|---|---|---|---|---|---|---|---|---|---|---|
| **SUBARU** | | | | | | | | | | | | | | | |
| **Forester** | | | | | | | | | | | | | | | |
| 2.5 (155 kw) | 2003.12-2005.05 | 4AT/5MT | R | L | SUV 4WD EJ257 | Date from:2005.01 | GDS56055 | Drive Shaft | | 24 | 25 | 50 | 104 | 769 | |
| | 2003.12-2005.05 | 4AT/5MT | R | L | SUV 4WD EJ257 | Date to:2004.12 | GDS84409 | Drive Shaft | | 24 | 25 | 50 | 103.5 | 768 | |
| | 2003.12-2005.05 | 4AT/5MT | R | R | SUV 4WD EJ257 | Date from:2005.01 | GDS57937 | Drive Shaft | | 24 | 25 | 50 | 103.5 | 778 | |
| | 2003.12-2005.05 | 4AT/5MT | R | R | SUV 4WD EJ257 | Date to:2004.12 | GDS84418 | Drive Shaft | | 24 | 25 | 50 | 103.5 | 778 | |
| | 2003.12-2005.05 | 4AT/5MT | R | L/R | SUV 4WD EJ257 | Date to:2004.12 | GCO82808 | Outer Joint | | 24 | 29 | 50 | 103.5 | 56.5 | I |
| | 2003.12-2005.05 | 4AT/5MT | R | L/R | SUV 4WD EJ257 | Date from:2005.01 | GCI56019 | Inner Joint | | 25 | 28 | 32 | 81.5 | 86 | |
| 2.5 (169 kw) | 2005.06-2008.05 | AT/MT | F | L/R | SUV 4WD EJ255 | Date from:2006.01 | GDS56014 | Drive Shaft | 44T | 27 | 25 | 56 | 86.5 | 780 | |
| | 2005.06-2008.05 | AT/MT | F | L/R | SUV 4WD EJ255 | | GCO56041 | Outer Joint | 44T | 27 | 23 | 56 | 87 | 61 | M |
| | 2005.06-2008.05 | | F | L/R | SUV 4WD EJ255 | | GCO56026 | Outer Joint | 44T | 27 | 30 | 56 | 86.5 | 63 | I |
| | 2005.06-2008.05 | | F | | SUV 4WD EJ255 | | GCO56027 | Outer Joint | 44T | 27 | 23 | 56 | 86.5 | 63 | M |
| | 2005.06-2008.05 | | F | | SUV 4WD EJ255 | Date to:2007.11 | GCO56057 | Outer Joint | 44T | 27 | 32 | 56 | 86.5 | 68.5 | I |
| | 2005.06-2008.05 | 4AT/5MT | R | L | SUV 4WD EJ255 | | GDS56055 | Drive Shaft | | 24 | 25 | 50 | 104 | 769 | |
| | 2005.06-2008.05 | 4AT/5MT | R | R | SUV 4WD EJ255 | | GDS57937 | Drive Shaft | | 24 | 25 | 50 | 103.5 | 778 | |
| | 2005.06-2008.05 | 4AT/5MT | R | R | SUV 4WD EJ255 | | GCO82808 | Outer Joint | | 24 | 29 | 50 | 103.5 | 56.5 | I |
| | 2005.06-2008.05 | 4AT/5MT | R | L/R | SUV 4WD EJ255 | | GCI56019 | Inner Joint | | 25 | 28 | 32 | 81.5 | 86 | |
| | 2008.06-2013.09 | 4AT/5MT | F | L/R | SUV 4WD EJ255 | | GCI56027 | Inner Joint | | 25 | 29 | 35 | 77.5 | 105 | |
| | 2008.06-2013.09 | AT | F | L/R | SUV 4WD EJ255 | With vibration damper | GDS56068 | Drive Shaft | | 27 | 25 | 52 | 76.5 | 795 | |
| | 2008.06-2013.09 | AT | F | L/R | SUV 4WD EJ255 | | GCO99339 | Outer Joint | | 27 | 32 | 52 | 76.5 | 62.5 | I |
| | 2008.06-2013.09 | 4AT/5MT | R | L/R | SUV 4WD EJ255 | | GDS82268 | Drive Shaft | | 27 | 25 | 56 | 114 | 795 | |
| | 2008.06-2013.09 | 4AT/5MT | R | L/R | SUV 4WD EJ255 | | GCI56019 | Inner Joint | | 25 | 28 | 32 | 81.5 | 86 | |
| 2.5 (171 kw) | 2004.01-2009.12 | 4AT | F | L/R | SUV 4WD EJ255 | | GCO56026 | Outer Joint | 44T | 27 | 30 | 56 | 86.5 | 63 | I |
| | 2004.01-2009.12 | 4AT/5MT | F | L/R | SUV 4WD EJ255 | | GDS56014 | Drive Shaft | 44T | 27 | 25 | 56 | 86.5 | 780 | |
| | 2004.01-2009.12 | | F | | SUV 4WD EJ255 | | GCO56027 | Outer Joint | 44T | 27 | 23 | 56 | 86.5 | 63 | M |
| | 2004.01-2009.12 | 4AT/5MT | R | L | SUV 4WD EJ255 | Date from:2005.01 | GDS56055 | Drive Shaft | | 24 | 25 | 50 | 104 | 769 | |
| | 2004.01-2009.12 | 4AT/5MT | R | L | SUV 4WD EJ255 | Date to:2004.12 | GDS84409 | Drive Shaft | | 24 | 25 | 50 | 103.5 | 768 | |
| | 2004.01-2009.12 | 4AT/5MT | R | R | SUV 4WD EJ255 | Date from:2005.01 | GDS57937 | Drive Shaft | | 24 | 25 | 50 | 103.5 | 778 | |
| | 2004.01-2009.12 | 4AT/5MT | R | R | SUV 4WD EJ255 | Date to:2004.12 | GDS84418 | Drive Shaft | | 24 | 25 | 50 | 103.5 | 778 | |
| | 2004.01-2009.12 | 4AT/5MT | R | L/R | SUV 4WD EJ255 | Date to:2004.12 | GCO82808 | Outer Joint | | 24 | 29 | 50 | 103.5 | 56.5 | I |
| | 2004.01-2009.12 | 4AT/5MT | R | L/R | SUV 4WD EJ255 | Date from:2005.01 | GCI56019 | Inner Joint | | 25 | 28 | 32 | 81.5 | 86 | |
| 2.5 (188 kw) | 2005.05-2005.09 | 5MT | F | L/R | SUV 4WD EJ255 | | GDS56014 | Drive Shaft | 44T | 27 | 25 | 56 | 86.5 | 780 | |
| | 2005.05-2005.09 | | F | L/R | SUV 4WD EJ255 | | GCO56041 | Outer Joint | 44T | 27 | 23 | 56 | 87 | 61 | M |
| | 2005.05-2005.09 | 5MT | R | L | SUV 4WD EJ255 | | GDS56055 | Drive Shaft | | 24 | 25 | 50 | 104 | 769 | |
| | 2005.05-2005.09 | 5MT | R | R | SUV 4WD EJ255 | | GDS57937 | Drive Shaft | | 24 | 25 | 50 | 103.5 | 778 | |
| | 2005.05-2005.09 | 5MT | R | R | SUV 4WD EJ255 | | GCO82808 | Outer Joint | | 24 | 29 | 50 | 103.5 | 56.5 | I |
| | 2005.05-2005.09 | 5MT | R | L/R | SUV 4WD EJ255 | | GCI56019 | Inner Joint | | 25 | 28 | 32 | 81.5 | 86 | |
| 2.5 (193 kw) | 2011.02-2013.09 | AT | F | L/R | SUV 4WD EJ255 | With vibration damper | GDS56068 | Drive Shaft | | 27 | 25 | 52 | 76.5 | 795 | |
| | 2011.02-2013.09 | AT | F | L/R | SUV 4WD EJ255 | | GCO99339 | Outer Joint | | 27 | 32 | 52 | 76.5 | 62.5 | I |
| | 2011.02-2013.09 | AT | F | L/R | SUV 4WD EJ255 | | GCI56027 | Inner Joint | | 25 | 29 | 35 | 77.5 | 105 | |
| | 2011.02-2013.09 | 5AT | R | L/R | SUV 4WD EJ255 | | GDS82268 | Drive Shaft | | 27 | 25 | 56 | 114 | 795 | |
| | 2011.02-2013.09 | 5AT | R | L/R | SUV 4WD EJ255 | | GCI56019 | Inner Joint | | 25 | 28 | 32 | 81.5 | 86 | |
| **Impreza** | | | | | | | | | | | | | | | |
| 1.5 (74 kw) | 2001.06-2005.09 | | F | L/R | Saloon FWD EL15;EL154 | | GCI56013 | Inner Joint | | 25 | 29 | 35 | 77.5 | 110 | |
| 1.5 (77 kw) | 2006.05-2007.03 | 4AT/5MT | F | L/R | Saloon 4WD EL15 | | GCI56013 | Inner Joint | | 25 | 29 | 35 | 77.5 | 110 | |
| | 2006.05-2007.03 | 4AT/5MT | R | L/R | Saloon 4WD EL15 | | GCI82768 | Inner Joint | | 22 | 19 | 32 | 62 | 102 | |
| 1.5 (79 kw) | 2007.09-2012.03 | 4AT/5MT | F | L/R | Hatchback FWD EL15 | PTJ | GDS56013 | Drive Shaft | | 27 | 25 | 52 | 77 | 770 | |
| | 2007.09-2012.03 | | F | L/R | Hatchback FWD EL15 | | GCI56013 | Inner Joint | | 25 | 29 | 35 | 77.5 | 110 | |
| | 2008.02- | 4AT/5MT | F | L/R | Saloon 4WD EL15 | PTJ | GDS56013 | Drive Shaft | | 27 | 25 | 52 | 77 | 770 | |
| | 2008.02- | 4AT/5MT | F | L/R | Saloon 4WD EL15 | | GCI56013 | Inner Joint | | 25 | 29 | 35 | 77.5 | 110 | |
| | 2008.02- | 4AT/5MT | R | L/R | Saloon 4WD EL15 | | GCI82768 | Inner Joint | | 22 | 19 | 32 | 62 | 102 | |
| | 2008.02- | 4AT/5MT | F | L/R | Saloon FWD EL15 | PTJ | GDS56013 | Drive Shaft | | 27 | 25 | 52 | 77 | 770 | |
| | 2008.02- | | F | L/R | Saloon FWD EL15 | | GCI56013 | Inner Joint | | 25 | 29 | 35 | 77.5 | 110 | |
| | 2008.02-2012.03 | 4AT/5MT | F | L/R | Hatchback 4WD EL15 | PTJ | GDS56013 | Drive Shaft | | 27 | 25 | 52 | 77 | 770 | |
| | 2008.02-2012.03 | 4AT/5MT | F | L/R | Hatchback 4WD EL15 | | GCI56013 | Inner Joint | | 25 | 29 | 35 | 77.5 | 110 | |
| | 2008.02-2012.03 | 4AT/5MT | R | L/R | Hatchback 4WD EL15 | | GCI82768 | Inner Joint | | 22 | 19 | 32 | 62 | 102 | |
| | 2010.01-2012.03 | 4AT/5MT | F | L/R | Hatchback 4WD EL154 | PTJ | GDS56013 | Drive Shaft | | 27 | 25 | 52 | 77 | 770 | |
| | 2010.01-2012.03 | 4AT/5MT | F | L/R | Hatchback 4WD EL154 | | GCI56013 | Inner Joint | | 25 | 29 | 35 | 77.5 | 110 | |
| | 2010.01-2012.03 | 4AT/5MT | R | L/R | Hatchback 4WD EL154 | | GCI82768 | Inner Joint | | 22 | 19 | 32 | 62 | 102 | |
| 1.5 (81 kw) | 2005.10-2007.03 | 4AT/5MT | F | L/R | Saloon 4WD EL15 | | GCI56013 | Inner Joint | | 25 | 29 | 35 | 77.5 | 110 | |
| | 2005.10-2007.03 | 4AT/5MT | R | L/R | Saloon 4WD EL15 | | GCI82768 | Inner Joint | | 22 | 19 | 32 | 62 | 102 | |
| | 2005.10-2007.03 | | F | L/R | Saloon FWD EL15 | | GCI56013 | Inner Joint | | 25 | 29 | 35 | 77.5 | 110 | |
| 1.5 (85 kw) | 2008.09-2011.12 | 4AT/5MT | F | L/R | Hatchback 4WD EL154 | PTJ | GDS56013 | Drive Shaft | | 27 | 25 | 52 | 77 | 770 | |
| | 2008.09-2011.12 | 4AT/5MT | F | L/R | Hatchback 4WD EL154 | | GCI56013 | Inner Joint | | 25 | 29 | 35 | 77.5 | 110 | |
| | 2008.09-2011.12 | 4AT/5MT | R | L/R | Hatchback 4WD EL154 | | GCI82768 | Inner Joint | | 22 | 19 | 32 | 62 | 102 | |
| 1.6 (66 kw) | 1993.01-1998.08 | AT | F | L | Saloon 4WD EJ16E | Date to:1999.06 | GCO56017 | Outer Joint | | 27 | 30 | 56 | 87 | 58.5 | I |
| | 1993.01-1998.08 | AT | F | R | Saloon 4WD EJ16E | Date to:1999.06 | GCO56017 | Outer Joint | | 27 | 30 | 56 | 87 | 58.5 | I |

| | YEAR | TRANSM. | F/R | L/R | BODY STYLE & DRIVE TYPE & ENGINE | REMARKS | G-AP Ref. | PRODUCT | ABS | Technical Specifications A | B | C | H | L | P |
|---|---|---|---|---|---|---|---|---|---|---|---|---|---|---|---|
| **SUBARU** | | | | | | | | | | | | | | | |
| **Impreza** | | | | | | | | | | | | | | | |
| 1.6 (66 kw) | 1993.01-1998.08 | AT/MT | F | L/R | Saloon 4WD EJ16E | Date to:1999.06 | GDS83522 | Drive Shaft | | 27 | 25 | 56 | 87 | 682 | |
| | 1993.01-1998.08 | AT/MT | F | L/R | Saloon 4WD EJ16E | Date from:1995.10,Date to:1998.08 | GCO56004 | Outer Joint | | 27 | 30 | 56 | 87 | 68 | M |
| | 1993.01-1998.08 | AT/MT | F | L/R | Saloon 4WD EJ16E | Date from:1993.01;Date to:1995.09 | GCO56005 | Outer Joint | | 27 | 22 | 56 | 87 | 66 | M |
| | 1993.01-1998.08 | AT/MT | F | L/R | Saloon 4WD EJ16E | Date from:1995.04,Date to:1996.11 | GCO56008 | Outer Joint | | 27 | 30 | 56 | 87 | 66 | I |
| | 1993.01-1998.08 | AT/MT | F | L/R | Saloon 4WD EJ16E | Date to:1999.06 | GCI82257 | Inner Joint | | 25 | 29 | 40 | | 112 | |
| | 1993.01-1998.08 | MT | F | L | Saloon 4WD EJ16E | Date to:1999.06 | GCO56017 | Outer Joint | | 27 | 30 | 56 | 87 | 58.5 | I |
| | 1993.01-1998.08 | MT | F | R | Saloon 4WD EJ16E | Date to:1999.06 | GCO56017 | Outer Joint | | 27 | 30 | 56 | 87 | 58.5 | I |
| | 1993.01-1998.08 | | F | | Saloon 4WD EJ16E | Date From:1999.04,Date To:2000.11 | GCO56009 | Outer Joint | 44T | 27 | 30 | 56 | 86.5 | 63 | M |
| | 1993.01-1998.08 | | F | | Saloon 4WD EJ16E | Date From:1996.12,Date To:2000.11 | GCO56040 | Outer Joint | | 27 | 30 | 56 | 86.5 | 62.7 | M |
| | 1993.01-1998.08 | | F | L/R | Saloon 4WD EJ16E | | GCI56006 | Inner Joint | | 25 | 22 | 40 | | 110.5 | |
| | 1993.01-1998.08 | | F | | Saloon 4WD EJ16E | | GCI56004 | Inner Joint | | 25 | 30 | 40 | | 111.3 | |
| | 1993.01-1998.08 | | | | Saloon 4WD EJ16E | Date From:1996.12,Date To:2000.11 | GCI56023 | Inner Joint | | 25 | 29 | 40.1 | | 110.5 | |
| | 1993.01-1998.08 | AT | F | L | Saloon FWD EJ16E | Date to:1999.06 | GCO56017 | Outer Joint | | 27 | 30 | 56 | 87 | 58.5 | I |
| | 1993.01-1998.08 | AT | F | R | Saloon FWD EJ16E | Date to:1999.06 | GCO56017 | Outer Joint | | 27 | 30 | 56 | 87 | 58.5 | I |
| | 1993.01-1998.08 | AT/MT | F | L/R | Saloon FWD EJ16E | Date to:1999.06 | GDS83522 | Drive Shaft | | 27 | 25 | 56 | 87 | 682 | |
| | 1993.01-1998.08 | AT/MT | F | L/R | Saloon FWD EJ16E | Date to:1999.06 | GCI82257 | Inner Joint | | 25 | 29 | 40 | | 112 | |
| | 1993.01-1998.08 | MT | F | L/R | Saloon FWD EJ16E | | GDS56007 | Drive Shaft | | 27 | 23 | 56 | 87 | 686.5 | |
| | 1993.01-1998.08 | MT | F | L | Saloon FWD EJ16E | Date to:1999.06 | GCO56017 | Outer Joint | | 27 | 30 | 56 | 87 | 58.5 | I |
| | 1993.01-1998.08 | MT | F | R | Saloon FWD EJ16E | Date to:1999.06 | GCO56017 | Outer Joint | | 27 | 30 | 56 | 87 | 58.5 | I |
| | 1993.01-1998.08 | MT | F | L/R | Saloon FWD EJ16E | Date from:1993.01;Date to:1998.08 | GCO56005 | Outer Joint | | 27 | 22 | 56 | 87 | 66 | M |
| | 1993.01-1998.08 | | F | | Saloon FWD EJ16E | Date From:1999.04,Date To:2000.11 | GCO56009 | Outer Joint | 44T | 27 | 30 | 56 | 86.5 | 63 | M |
| | 1993.01-1998.08 | | F | | Saloon FWD EJ16E | Date From:1996.12,Date To:2000.11 | GCO56040 | Outer Joint | | 27 | 30 | 56 | 86.5 | 62.7 | M |
| | 1993.01-1998.08 | | F | L/R | Saloon FWD EJ16E | | GCI56006 | Inner Joint | | 25 | 22 | 40 | | 110.5 | |
| | 1993.01-1998.08 | | F | | Saloon FWD EJ16E | | GCI56004 | Inner Joint | | 25 | 30 | 40 | | 111.3 | |
| | 1993.01-1998.08 | | F | | Saloon FWD EJ16E | Date From:1996.12,Date To:2000.11 | GCI56023 | Inner Joint | | 25 | 29 | 40.1 | | 110.5 | |
| | 1995.09-2000.09 | AT | F | L | Coupe FWD EJ16E | Date to:1999.06 | GCO56017 | Outer Joint | | 27 | 30 | 56 | 87 | 58.5 | I |
| | 1995.09-2000.09 | AT | F | R | Coupe FWD EJ16E | Date to:1999.06 | GCO56017 | Outer Joint | | 27 | 30 | 56 | 87 | 58.5 | I |
| | 1995.09-2000.09 | AT/MT | F | L/R | Coupe FWD EJ16E | Date to:1999.06 | GDS83522 | Drive Shaft | | 27 | 25 | 56 | 87 | 682 | |
| | 1995.09-2000.09 | AT/MT | F | L/R | Coupe FWD EJ16E | Date to:1999.06 | GCI82257 | Inner Joint | | 25 | 29 | 40 | | 112 | |
| | 1995.09-2000.09 | MT | F | L/R | Coupe FWD EJ16E | | GDS56007 | Drive Shaft | | 27 | 23 | 56 | 87 | 686.5 | |
| | 1995.09-2000.09 | MT | F | L | Coupe FWD EJ16E | Date to:1999.06 | GCO56017 | Outer Joint | | 27 | 30 | 56 | 87 | 58.5 | I |
| | 1995.09-2000.09 | MT | F | R | Coupe FWD EJ16E | Date to:1999.06 | GCO56017 | Outer Joint | | 27 | 30 | 56 | 87 | 58.5 | I |
| | 1995.09-2000.09 | MT | F | L/R | Coupe FWD EJ16E | Date to:2000.09 | GCO56005 | Outer Joint | | 27 | 22 | 56 | 87 | 66 | M |
| | 1995.09-2000.09 | | F | | Coupe FWD EJ16E | Date From:1999.04,Date To:2000.11 | GCO56009 | Outer Joint | 44T | 27 | 30 | 56 | 86.5 | 63 | M |
| | 1995.09-2000.09 | | F | | Coupe FWD EJ16E | Date From:1999.04,Date To:2000.11 | GCO56040 | Outer Joint | | 27 | 30 | 56 | 86.5 | 62.7 | M |
| | 1995.09-2000.09 | | F | L/R | Coupe FWD EJ16E | | GCI56006 | Inner Joint | | 25 | 22 | 40 | | 110.5 | |
| | 1995.09-2000.09 | | F | | Coupe FWD EJ16E | | GCI56004 | Inner Joint | | 25 | 30 | 40 | | 111.3 | |
| | 1995.09-2000.09 | | F | | Coupe FWD EJ16E | Date To:2000.11 | GCI56023 | Inner Joint | | 25 | 29 | 40.1 | | 110.5 | |
| | 1996.12-2000.12 | AT | F | L | Coupe 4WD EJ161 | Date to:1999.06 | GCO56017 | Outer Joint | | 27 | 30 | 56 | 87 | 58.5 | I |
| | 1996.12-2000.12 | AT | F | R | Coupe 4WD EJ161 | Date to:1999.06 | GCO56017 | Outer Joint | | 27 | 30 | 56 | 87 | 58.5 | I |
| | 1996.12-2000.12 | AT/MT | F | L/R | Coupe 4WD EJ161 | Date to:1999.06 | GDS83522 | Drive Shaft | | 27 | 25 | 56 | 87 | 682 | |
| | 1996.12-2000.12 | AT/MT | F | L/R | Coupe 4WD EJ161 | Date to:1999.06 | GCI82257 | Inner Joint | | 25 | 29 | 40 | | 112 | |
| | 1996.12-2000.12 | MT | F | L/R | Coupe 4WD EJ161 | | GDS56007 | Drive Shaft | | 27 | 23 | 56 | 87 | 686.5 | |
| | 1996.12-2000.12 | MT | F | L | Coupe 4WD EJ161 | Date to:1999.06 | GCO56017 | Outer Joint | | 27 | 30 | 56 | 87 | 58.5 | I |
| | 1996.12-2000.12 | MT | F | R | Coupe 4WD EJ161 | Date to:1999.06 | GCO56017 | Outer Joint | | 27 | 30 | 56 | 87 | 58.5 | I |
| | 1996.12-2000.12 | | F | | Coupe 4WD EJ161 | Date From:1999.04,Date To:2000.11 | GCO56009 | Outer Joint | 44T | 27 | 30 | 56 | 86.5 | 63 | M |
| | 1996.12-2000.12 | | F | | Coupe 4WD EJ161 | Date From:1999.04,Date To:2000.11 | GCO56040 | Outer Joint | | 27 | 30 | 56 | 86.5 | 62.7 | M |
| | 1996.12-2000.12 | | F | L/R | Coupe 4WD EJ161 | | GCI56006 | Inner Joint | | 25 | 22 | 40 | | 110.5 | |
| | 1996.12-2000.12 | | F | | Coupe 4WD EJ161 | | GCI56004 | Inner Joint | | 25 | 30 | 40 | | 111.3 | |
| | 1996.12-2000.12 | | | | Coupe 4WD EJ161 | Date To:2000.11 | GCI56023 | Inner Joint | | 25 | 29 | 40.1 | | 110.5 | |
| 1.6 (70 kw) | 1998.09-2000.09 | AT | F | L | Saloon 4WD EJ161 | Date to:1999.06 | GCO56017 | Outer Joint | | 27 | 30 | 56 | 87 | 58.5 | I |
| | 1998.09-2000.09 | AT | F | R | Saloon 4WD EJ161 | Date to:1999.06 | GCO56017 | Outer Joint | | 27 | 30 | 56 | 87 | 58.5 | I |
| | 1998.09-2000.09 | AT/MT | F | L/R | Saloon 4WD EJ161 | Date to:1999.06 | GDS83522 | Drive Shaft | | 27 | 25 | 56 | 87 | 682 | |
| | 1998.09-2000.09 | AT/MT | F | L/R | Saloon 4WD EJ161 | Date from:1998.09;Date to:2000.09 | GCO56039 | Outer Joint | | 27 | 30 | 56 | 87.1 | 58 | M |
| | 1998.09-2000.09 | AT/MT | F | L/R | Saloon 4WD EJ161 | Date to:1999.06 | GCI82257 | Inner Joint | | 25 | 29 | 40 | | 112 | |
| | 1998.09-2000.09 | MT | F | L | Saloon 4WD EJ161 | Date to:1999.06 | GCO56017 | Outer Joint | | 27 | 30 | 56 | 87 | 58.5 | I |
| | 1998.09-2000.09 | MT | F | R | Saloon 4WD EJ161 | Date to:1999.06 | GCO56017 | Outer Joint | | 27 | 30 | 56 | 87 | 58.5 | I |
| | 1998.09-2000.09 | | F | | Saloon 4WD EJ161 | Date From:1999.04,Date To:2000.11 | GCO56009 | Outer Joint | 44T | 27 | 30 | 56 | 86.5 | 63 | M |
| | 1998.09-2000.09 | | F | | Saloon 4WD EJ161 | Date From:1999.04,Date To:2000.11 | GCO56040 | Outer Joint | | 27 | 30 | 56 | 86.5 | 62.7 | M |
| | 1998.09-2000.09 | | F | L/R | Saloon 4WD EJ161 | | GCI56006 | Inner Joint | | 25 | 22 | 40 | | 110.5 | |
| | 1998.09-2000.09 | | F | | Saloon 4WD EJ161 | | GCI56004 | Inner Joint | | 25 | 30 | 40 | | 111.3 | |
| | 1998.09-2000.09 | | | | Saloon 4WD EJ161 | Date To:2000.11 | GCI56023 | Inner Joint | | 25 | 29 | 40.1 | | 110.5 | |
| | 1998.09-2000.09 | AT | F | L | Saloon FWD EJ161 | Date to:1999.06 | GCO56017 | Outer Joint | | 27 | 30 | 56 | 87 | 58.5 | I |
| | 1998.09-2000.09 | AT | F | R | Saloon FWD EJ161 | Date to:1999.06 | GCO56017 | Outer Joint | | 27 | 30 | 56 | 87 | 58.5 | I |
| | 1998.09-2000.09 | AT/MT | F | L/R | Saloon FWD EJ161 | Date to:1999.06 | GDS83522 | Drive Shaft | | 27 | 25 | 56 | 87 | 682 | |

| | YEAR | TRANSM. | F/R | L/R | BODY STYLE & DRIVE TYPE & ENGINE | REMARKS | G-AP Ref. | PRODUCT | ABS | Technical Specifications | | | | | |
|---|---|---|---|---|---|---|---|---|---|---|---|---|---|---|---|
| | | | | | | | | | | A | B | C | H | L | P |
| **SUBARU** | | | | | | | | | | | | | | | |
| **Impreza** | | | | | | | | | | | | | | | |
| 1.6 (70 kw) | 1998.09-2000.09 | AT/MT | F | L/R | Saloon FWD EJ161 | Date to:1999.06 | GCI82257 | Inner Joint | | 25 | 29 | 40 | | 112 | |
| | 1998.09-2000.09 | MT | F | L/R | Saloon FWD EJ161 | | GDS56007 | Drive Shaft | | 27 | 23 | 56 | 87 | 686.5 | |
| | 1998.09-2000.09 | MT | F | L | Saloon FWD EJ161 | Date to:1999.06 | GCO56017 | Outer Joint | | 27 | 30 | 56 | 87 | 58.5 | I |
| | 1998.09-2000.09 | MT | F | R | Saloon FWD EJ161 | Date to:1999.06 | GCO56017 | Outer Joint | | 27 | 30 | 56 | 87 | 58.5 | I |
| | 1998.09-2000.09 | MT | F | L/R | Saloon FWD EJ161 | Date from:1998.09;Date to:2000.09 | GCO56005 | Outer Joint | | 27 | 22 | 56 | 87 | 66 | M |
| | 1998.09-2000.09 | | F | | Saloon FWD EJ161 | Date From:1999.04,Date To:2000.11 | GCO56009 | Outer Joint | 44T | 27 | 30 | 56 | 86.5 | 63 | M |
| | 1998.09-2000.09 | | F | | Saloon FWD EJ161 | Date From:1999.04,Date To:2000.11 | GCO56040 | Outer Joint | | 27 | 30 | 56 | 86.5 | 62.7 | M |
| | 1998.09-2000.09 | | F | L/R | Saloon FWD EJ161 | | GCI56006 | Inner Joint | | 25 | 22 | 40 | | 110.5 | |
| | 1998.09-2000.09 | | F | | Saloon FWD EJ161 | | GCI56004 | Inner Joint | | 25 | 30 | 40 | | 111.3 | |
| | 1998.09-2000.09 | | F | | Saloon FWD EJ161 | Date To:2000.11 | GCI56023 | Inner Joint | | 25 | 29 | 40.1 | | 110.5 | |
| | 2000.12-2009.06 | 5MT | F | L/R | Saloon 4WD EJ161 | Date From:2003.09,Date To:2006.06;PTJ | GDS56014 | Drive Shaft | 44T | 27 | 25 | 56 | 86.5 | 780 | |
| | 2000.12-2009.06 | 5MT | F | L/R | Saloon 4WD EJ161 | Model year from:2004 | GCI56013 | Inner Joint | | 25 | 29 | 35 | 77.5 | 110 | |
| | 2000.12-2009.06 | 5MT | F | L/R | Saloon 4WD EJ161 | Model year to:2003 | GCI56023 | Inner Joint | | 25 | 29 | 40.1 | | 110.5 | |
| | 2000.12-2009.06 | MT | F | L/R | Saloon 4WD EJ161 | Date to:2006.06 | GCO56067 | Outer Joint | 44T | 27 | 30 | 56 | 86.5 | 56 | M |
| | 2000.12-2009.06 | | F | L/R | Saloon 4WD EJ161 | Date To:2003.08 | GCO56009 | Outer Joint | 44T | 27 | 30 | 56 | 86.5 | 63 | M |
| | 2000.12-2009.06 | | F | | Saloon 4WD EJ161 | | GCO56026 | Outer Joint | 44T | 27 | 30 | 56 | 86.5 | 63 | I |
| | 2000.12-2009.06 | 5MT | R | L/R | Saloon 4WD EJ161 | Date from:2004.12 | GCI82768 | Inner Joint | | 22 | 19 | 32 | 62 | 102 | |
| | 2001.06-2006.09 | 4AT/5MT | F | L/R | Saloon FWD EJ161 | Model year from:2004 | GCI56013 | Inner Joint | | 25 | 29 | 35 | 77.5 | 110 | |
| | 2001.06-2006.09 | 4AT/5MT | F | L/R | Saloon FWD EJ161 | Model year to:2003 | GCI56023 | Inner Joint | | 25 | 29 | 40.1 | | 110.5 | |
| | 2001.06-2006.09 | MT | F | L/R | Saloon FWD EJ161 | Date to:2001.07 | GCO56067 | Outer Joint | 44T | 27 | 30 | 56 | 86.5 | 56 | M |
| | 2001.06-2006.09 | | F | L/R | Saloon FWD EJ161 | Date To:2003.08 | GCO56009 | Outer Joint | 44T | 27 | 30 | 56 | 86.5 | 63 | M |
| 1.6 (84 kw) | 2012.06- | CVT/5MT | F | L/R | Hatchback 4WD FB16B | | GDS81158 | Drive Shaft | | 27 | 25 | 52 | 76.5 | 782 | |
| | 2012.06- | CVT/5MT | F | L/R | Hatchback 4WD FB16B | | GCO81045 | Outer Joint | | 27 | 22 | 52 | 76.5 | 56.5 | I |
| | 2012.06- | CVT/5MT | F | L/R | Hatchback 4WD FB16B | | GCI81072 | Inner Joint | | 25 | 23 | 35 | 77.5 | 97 | |
| | 2012.06- | 5MT | R | L/R | Hatchback 4WD FB16B | | GDS82605 | Drive Shaft | | 27 | 22 | 56 | 113 | 779 | |
| | 2012.06- | 5MT | R | L/R | Hatchback 4WD FB16B | | GCI56019 | Inner Joint | | 25 | 28 | 32 | 81.5 | 86 | |
| | 2012.06- | 5MT/CVT | R | L | Hatchback 4WD FB16B | | GCO82072 | Outer Joint | | 27 | 20 | 56 | 113 | 52 | I |
| | 2012.06- | CVT | R | L/R | Hatchback 4WD FB16B | | GDS56057 | Drive Shaft | | 27 | 25 | 56 | 114 | 777 | |
| | 2012.06- | CVT | R | L | Hatchback 4WD FB16B | | GCI81913 | Inner Joint | | 22 | 20 | 32 | 62 | 97 | |
| | 2012.06-2016.09 | CVT/5MT | F | L/R | Hatchback FWD FB16A;FB16B | | GDS81158 | Drive Shaft | | 27 | 25 | 52 | 76.5 | 782 | |
| | 2012.06-2016.09 | CVT/5MT | F | L/R | Hatchback FWD FB16A;FB16B | | GCO81045 | Outer Joint | | 27 | 22 | 52 | 76.5 | 56.5 | I |
| | 2012.06-2016.09 | CVT/5MT | F | L/R | Hatchback FWD FB16A;FB16B | | GCI81072 | Inner Joint | | 25 | 23 | 35 | 77.5 | 97 | |
| | 2012.06-2016.09 | CVT/5MT | F | L/R | Saloon 4WD FB16A;FB16B | | GDS81158 | Drive Shaft | | 27 | 25 | 52 | 76.5 | 782 | |
| | 2012.06-2016.09 | CVT/5MT | F | L/R | Saloon 4WD FB16A;FB16B | | GCO81045 | Outer Joint | | 27 | 22 | 52 | 76.5 | 56.5 | I |
| | 2012.06-2016.09 | CVT/5MT | F | L/R | Saloon 4WD FB16A;FB16B | | GCI81072 | Inner Joint | | 25 | 23 | 35 | 77.5 | 97 | |
| | 2012.06-2016.09 | 5MT | R | L/R | Saloon 4WD FB16A;FB16B | | GDS56057 | Drive Shaft | | 27 | 25 | 56 | 114 | 777 | |
| | 2012.06-2016.09 | 5MT | R | L/R | Saloon 4WD FB16A;FB16B | | GCI56019 | Inner Joint | | 25 | 28 | 32 | 81.5 | 86 | |
| | 2012.06-2016.09 | CVT | R | L/R | Saloon 4WD FB16A;FB16B | | GDS82605 | Drive Shaft | | 27 | 22 | 56 | 113 | 779 | |
| | 2012.06-2016.09 | CVT | R | L/R | Saloon 4WD FB16A;FB16B | | GCO82072 | Outer Joint | | 27 | 20 | 56 | 113 | 52 | I |
| | 2012.06-2016.09 | CVT | R | L/R | Saloon 4WD FB16A;FB16B | | GCI81913 | Inner Joint | | 22 | 20 | 32 | 62 | 97 | |
| | 2012.06-2016.09 | CVT | F | L/R | Saloon FWD | | GDS81158 | Drive Shaft | | 27 | 25 | 52 | 76.5 | 782 | |
| | 2017.07- | CVT | R | L/R | Hatchback 4WD FB16A | | GDS56247 | Drive Shaft | | 27 | 22 | 56 | 113.5 | 806 | |
| 1.6 (85 kw) | 2016.10- | CVT | R | L/R | Hatchback 4WD FB16A | | GDS56247 | Drive Shaft | | 27 | 22 | 56 | 113.5 | 806 | |
| 1.8 (76 kw) | 1993.01-1996.06 | AT/MT | F | L/R | Saloon 4WD EJ18E | Date from:1995.10,Date to:1996.06 | GCO56004 | Outer Joint | | 27 | 30 | 56 | 87 | 68 | M |
| | 1993.01-1996.06 | AT/MT | F | L/R | Saloon 4WD EJ18E | Date from:1993.01;Date to:1995.09 | GCO56005 | Outer Joint | | 27 | 22 | 56 | 87 | 66 | M |
| | 1993.01-1996.06 | AT/MT | F | L/R | Saloon 4WD EJ18E | Date from:1995.04,Date to:1996.11 | GCO56008 | Outer Joint | | 27 | 30 | 56 | 87 | 66 | I |
| | 1993.01-1996.06 | | F | | Saloon 4WD EJ18E | Date From:1999.04,Date To:2000.11 | GCO56009 | Outer Joint | 44T | 27 | 30 | 56 | 86.5 | 63 | M |
| | 1993.01-1996.06 | | F | | Saloon 4WD EJ18E | Date From:1996.12,Date To:2000.11 | GCO56040 | Outer Joint | | 27 | 30 | 56 | 86.5 | 62.7 | M |
| | 1993.01-1996.06 | | F | | Saloon 4WD EJ18E | | GCI56004 | Inner Joint | | 25 | 30 | 40 | | 111.3 | |
| | 1993.01-1996.06 | | | | Saloon 4WD EJ18E | Date From:1996.03,Date To:2000.11 | GCI56023 | Inner Joint | | 25 | 29 | 40.1 | | 110.5 | |
| 2.0 (80 kw) | 2011.01-2011.12 | 6MT | F | L/R | Hatchback 4WD EE20Z | | GDS56031 | Drive Shaft | | 27 | 25 | 52 | 76.5 | 784 | |
| | 2011.01-2011.12 | | F | L/R | Hatchback 4WD EE20Z | | GCI56013 | Inner Joint | | 25 | 29 | 35 | 77.5 | 110 | |
| | 2011.01-2011.12 | 6MT | R | L/R | Hatchback 4WD EE20Z | | GDS56057 | Drive Shaft | | 27 | 25 | 56 | 114 | 777 | |
| | 2011.01-2011.12 | 6MT | R | L/R | Hatchback 4WD EE20Z | | GCI56019 | Inner Joint | | 25 | 28 | 32 | 81.5 | 86 | |
| 2.0 (85 kw) | 1995.11-1998.08 | AT/MT | F | L/R | Saloon 4WD EJ20E | Date to:1996.11 | GCO56008 | Outer Joint | | 27 | 30 | 56 | 87 | 66 | I |
| | 1995.11-1998.08 | | F | L/R | Saloon 4WD EJ20E | Date To:1998.08 | GCO56009 | Outer Joint | 44T | 27 | 30 | 56 | 86.5 | 63 | M |
| | 1995.11-1998.08 | | F | | Saloon 4WD EJ20E | Date From:1996.12,Date To:2000.11 | GCO56040 | Outer Joint | | 27 | 30 | 56 | 86.5 | 62.7 | M |
| | 1995.11-1998.08 | | F | L/R | Saloon 4WD EJ20E | | GCI56006 | Inner Joint | | 25 | 22 | 40 | | 110.5 | |
| | 1995.11-1998.08 | | F | | Saloon 4WD EJ20E | | GCI56004 | Inner Joint | | 25 | 30 | 40 | | 111.3 | |
| | 1995.11-1998.08 | | | | Saloon 4WD EJ20E | Date From:1996.04,Date To:2000.11 | GCI56023 | Inner Joint | | 25 | 29 | 40.1 | | 110.5 | |
| | 1995.11-2000.09 | AT/MT | F | L/R | Coupe 4WD EJ20E | Date from:1996.12;Date to:1997.06 | GCO56004 | Outer Joint | | 27 | 30 | 56 | 87 | 68 | M |
| | 1995.11-2000.09 | | F | | Coupe 4WD EJ20E | Date From:1999.04,Date To:2000.11 | GCO56009 | Outer Joint | 44T | 27 | 30 | 56 | 86.5 | 63 | M |
| | 1995.11-2000.09 | | F | | Coupe 4WD EJ20E | Date From:1996.12,Date To:2000.11 | GCO56040 | Outer Joint | | 27 | 30 | 56 | 86.5 | 62.7 | M |
| | 1995.11-2000.09 | | F | L/R | Coupe 4WD EJ20E | | GCI56006 | Inner Joint | | 25 | 22 | 40 | | 110.5 | |
| | 1995.11-2000.09 | | F | | Coupe 4WD EJ20E | | GCI56004 | Inner Joint | | 25 | 30 | 40 | | 111.3 | |

| | YEAR | TRANSM. | F/R | L/R | BODY STYLE & DRIVE TYPE & ENGINE | REMARKS | G-AP Ref. | PRODUCT | ABS | Technical Specifications A | B | C | H | L | P |
|---|---|---|---|---|---|---|---|---|---|---|---|---|---|---|---|
| **SUBARU** | | | | | | | | | | | | | | | |
| **Impreza** | | | | | | | | | | | | | | | |
| 2.0 (85 kw) | 1995.11-2000.09 | | | | Coupe 4WD EJ20E | Date From:1996.04,Date To:2000.11 | GCI56023 | Inner Joint | | 25 | 29 | 40.1 | | 110.5 | |
| 2.0 (92 kw) | 1998.06-2000.09 | AT | F | L | Saloon 4WD EJ201 | Date to:1999.06 | GCO56017 | Outer Joint | | 27 | 30 | 56 | 87 | 58.5 | I |
| | 1998.06-2000.09 | AT | F | R | Saloon 4WD EJ201 | Date to:1999.06 | GCO56017 | Outer Joint | | 27 | 30 | 56 | 87 | 58.5 | I |
| | 1998.06-2000.09 | AT/MT | F | L/R | Saloon 4WD EJ201 | Date to:1999.06 | GDS83522 | Drive Shaft | | 27 | 25 | 56 | 87 | 682 | |
| | 1998.06-2000.09 | AT/MT | F | L/R | Saloon 4WD EJ201 | Date to:2000.09 | GCO56039 | Outer Joint | | 27 | 30 | 56 | 87.1 | 58 | M |
| | 1998.06-2000.09 | AT/MT | F | L/R | Saloon 4WD EJ201 | Date to:1999.06 | GCI82257 | Inner Joint | | 25 | 29 | 40 | | 112 | |
| | 1998.06-2000.09 | MT | F | L | Saloon 4WD EJ201 | Date to:1999.06 | GCO56017 | Outer Joint | | 27 | 30 | 56 | 87 | 58.5 | I |
| | 1998.06-2000.09 | MT | F | R | Saloon 4WD EJ201 | Date to:1999.06 | GCO56017 | Outer Joint | | 27 | 30 | 56 | 87 | 58.5 | I |
| | 1998.06-2000.09 | | F | L/R | Saloon 4WD EJ201 | Date To:2000.09 | GCO56009 | Outer Joint | 44T | 27 | 30 | 56 | 86.5 | 63 | M |
| | 1998.06-2000.09 | | F | | Saloon 4WD EJ201 | Date From:1999.04,Date To:2000.11 | GCO56040 | Outer Joint | | 27 | 30 | 56 | 86.5 | 62.7 | M |
| | 1998.06-2000.09 | | F | L/R | Saloon 4WD EJ201 | | GCI56006 | Inner Joint | | 25 | 22 | 40 | | 110.5 | |
| | 1998.06-2000.09 | | F | | Saloon 4WD EJ201 | | GCI56004 | Inner Joint | | 25 | 30 | 40 | | 111.3 | |
| | 1998.06-2000.09 | | | | Saloon 4WD EJ201 | Date To:2000.11 | GCI56023 | Inner Joint | | 25 | 29 | 40.1 | | 110.5 | |
| | 2000.12-2009.06 | 4AT/5MT | F | L/R | Saloon 4WD EJ201 | Date from:2003.08 | GCI56013 | Inner Joint | | 25 | 29 | 35 | 77.5 | 110 | |
| | 2000.12-2009.06 | 4AT/5MT | F | L/R | Saloon 4WD EJ201 | Date to:2003.07 | GCI56023 | Inner Joint | | 25 | 29 | 40.1 | | 110.5 | |
| | 2000.12-2009.06 | 5MT | F | L/R | Saloon 4WD EJ201 | Date From:2003.09,Date To:2006.06;PTJ | GDS56014 | Drive Shaft | 44T | 27 | 25 | 56 | 86.5 | 780 | |
| | 2000.12-2009.06 | AT | F | L/R | Saloon 4WD EJ201 | Date to:2002.10;Date from:2003.09;Date to:2006.06 | GCO56067 | Outer Joint | 44T | 27 | 30 | 56 | 86.5 | 56 | M |
| | 2000.12-2009.06 | MT | F | L/R | Saloon 4WD EJ201 | Date to:2003.08 | GCO56009 | Outer Joint | 44T | 27 | 30 | 56 | 86.5 | 63 | M |
| | 2000.12-2009.06 | MT | F | L/R | Saloon 4WD EJ201 | Date to:2006.06 | GCO56067 | Outer Joint | 44T | 27 | 30 | 56 | 86.5 | 56 | M |
| | 2000.12-2009.06 | | F | | Saloon 4WD EJ201 | Date From:2003.01,Date To:2010.07 | GCO56022 | Outer Joint | | 27 | 30 | 52 | 77 | 54 | I |
| | 2000.12-2009.06 | | F | | Saloon 4WD EJ201 | | GCO56026 | Outer Joint | 44T | 27 | 30 | 56 | 86.5 | 63 | I |
| | 2000.12-2009.06 | | F | | Saloon 4WD EJ201 | Date To:2004.06 | GCO56057 | Outer Joint | 44T | 27 | 32 | 56 | 86.5 | 68.5 | I |
| | 2000.12-2009.06 | | F | | Saloon 4WD EJ201 | Date From:2004.03,Date To:2007.06 | GCO56058 | Outer Joint | 44T | 27 | 32 | 54.5 | 86 | 67 | I |
| | 2000.12-2009.06 | 4AT | R | L/R | Saloon 4WD EJ201 | Date from:2004.12 | GCI82768 | Inner Joint | | 22 | 19 | 32 | 62 | 102 | |
| | 2000.12-2009.06 | 5MT | R | L | Saloon 4WD EJ201 | Date from:2005.03 | GDS56055 | Drive Shaft | | 24 | 25 | 50 | 104 | 769 | |
| | 2000.12-2009.06 | 5MT | R | L | Saloon 4WD EJ201 | Date to:2005.02 | GDS84409 | Drive Shaft | | 24 | 25 | 50 | 103.5 | 768 | |
| | 2000.12-2009.06 | 5MT | R | R | Saloon 4WD EJ201 | Date from:2005.03 | GDS57937 | Drive Shaft | | 24 | 25 | 50 | 103.5 | 778 | |
| | 2000.12-2009.06 | 5MT | R | R | Saloon 4WD EJ201 | Date to:2005.02 | GDS84418 | Drive Shaft | | 24 | 25 | 50 | 103.5 | 778 | |
| | 2000.12-2009.06 | 5MT | R | L/R | Saloon 4WD EJ201 | Date to:2005.02 | GCO82808 | Outer Joint | | 24 | 29 | 50 | 103.5 | 56.5 | I |
| | 2000.12-2009.06 | 5MT | R | L/R | Saloon 4WD EJ201 | Date from:2005.03 | GCI56019 | Inner Joint | | 25 | 28 | 32 | 81.5 | 86 | |
| 2.0 (103 kw) | 2007.04-2009.08 | 4AT | F | L/R | Hatchback 4WD EJ204 | PTJ | GDS56013 | Drive Shaft | | 27 | 25 | 52 | 77 | 770 | |
| | 2007.04-2009.08 | | F | L/R | Hatchback 4WD EJ204 | | GCI56013 | Inner Joint | | 25 | 29 | 35 | 77.5 | 110 | |
| | 2007.04-2009.08 | 4AT | R | L/R | Hatchback 4WD EJ204 | | GDS56057 | Drive Shaft | | 27 | 25 | 56 | 114 | 777 | |
| | 2007.04-2009.08 | 4AT | R | L/R | Hatchback 4WD EJ204 | | GCI56019 | Inner Joint | | 25 | 28 | 32 | 81.5 | 86 | |
| 2.0 (110 kw) | 2008.01-2012.03 | 4AT/5MT | F | L/R | Hatchback 4WD EJ204 | PTJ | GDS56013 | Drive Shaft | | 27 | 25 | 52 | 77 | 770 | |
| | 2008.01-2012.03 | | F | | Hatchback 4WD EJ204 | Date From:2008.04,Date To:2010.07 | GCO56022 | Outer Joint | | 27 | 30 | 52 | 77 | 54 | I |
| | 2008.01-2012.03 | | F | L/R | Hatchback 4WD EJ204 | | GCI56013 | Inner Joint | | 25 | 29 | 35 | 77.5 | 110 | |
| | 2008.01-2012.03 | 4AT/5MT | R | L/R | Hatchback 4WD EJ204 | | GDS56057 | Drive Shaft | | 27 | 25 | 56 | 114 | 777 | |
| | 2008.01-2012.03 | 4AT/5MT | R | L/R | Hatchback 4WD EJ204 | | GCI56019 | Inner Joint | | 25 | 28 | 32 | 81.5 | 86 | |
| | 2009.01-2012.03 | | F | L/R | Hatchback 4WD EE20Z | Date To:2009.10 | GDS56031 | Drive Shaft | | 27 | 25 | 52 | 76.5 | 784 | |
| | 2009.01-2012.03 | | F | L/R | Hatchback 4WD EE20Z | | GCI56013 | Inner Joint | | 25 | 29 | 35 | 77.5 | 110 | |
| | 2009.01-2012.03 | 6MT | R | L/R | Hatchback 4WD EE20Z | | GDS56057 | Drive Shaft | | 27 | 25 | 56 | 114 | 777 | |
| | 2009.01-2012.03 | 6MT | R | L/R | Hatchback 4WD EE20Z | | GCI56019 | Inner Joint | | 25 | 28 | 32 | 81.5 | 86 | |
| | 2009.01-2012.03 | 4AT/5MT | F | L/R | Hatchback 4WD EJ204 | PTJ | GDS56013 | Drive Shaft | | 27 | 25 | 52 | 77 | 770 | |
| | 2009.01-2012.03 | | F | L/R | Hatchback 4WD EJ204 | | GCI56013 | Inner Joint | | 25 | 29 | 35 | 77.5 | 110 | |
| | 2009.01-2012.03 | 4AT/5MT | R | L/R | Hatchback 4WD EJ204 | | GDS56057 | Drive Shaft | | 27 | 25 | 56 | 114 | 777 | |
| | 2009.01-2012.03 | 4AT/5MT | R | L/R | Hatchback 4WD EJ204 | | GCI56019 | Inner Joint | | 25 | 28 | 32 | 81.5 | 86 | |
| | 2011.01- | 4AT/5MT | F | L/R | Saloon 4WD EJ204 | PTJ | GDS56013 | Drive Shaft | | 27 | 25 | 52 | 77 | 770 | |
| | 2011.01- | | F | L/R | Saloon 4WD EJ204 | | GCI56013 | Inner Joint | | 25 | 29 | 35 | 77.5 | 110 | |
| | 2011.01- | 4AT/5MT | R | L/R | Saloon 4WD EJ204 | | GDS56057 | Drive Shaft | | 27 | 25 | 56 | 114 | 777 | |
| | 2011.01- | 4AT/5MT | R | L/R | Saloon 4WD EJ204 | | GCI56019 | Inner Joint | | 25 | 28 | 32 | 81.5 | 86 | |
| | 2011.07- | CVT/5MT/6MT | F | L/R | Saloon 4WD FB20B;FB20A | | GDS81158 | Drive Shaft | | 27 | 25 | 52 | 76.5 | 782 | |
| | 2011.07- | CVT/5MT/6MT | F | L/R | Saloon 4WD FB20B;FB20A | | GCO81045 | Outer Joint | | 27 | 22 | 52 | 76.5 | 56.5 | I |
| | 2011.07- | CVT/5MT/6MT | F | L/R | Saloon 4WD FB20B;FB20A | | GCI81072 | Inner Joint | | 25 | 23 | 35 | 77.5 | 97 | |
| | 2011.07- | 6MT | R | L/R | Saloon 4WD FB20B;FB20A | | GDS56057 | Drive Shaft | | 27 | 25 | 56 | 114 | 777 | |
| | 2011.07- | 6MT | R | L/R | Saloon 4WD FB20B;FB20A | | GCI56019 | Inner Joint | | 25 | 28 | 32 | 81.5 | 86 | |
| | 2011.07- | CVT | R | L/R | Saloon 4WD FB20B;FB20A | | GDS82605 | Drive Shaft | | 27 | 22 | 56 | 113 | 779 | |
| | 2011.07- | CVT | R | L/R | Saloon 4WD FB20B;FB20A | | GCO82072 | Outer Joint | | 27 | 20 | 56 | 113 | 52 | I |
| | 2011.07- | CVT | R | L/R | Saloon 4WD FB20B;FB20A | | GCI81913 | Inner Joint | | 22 | 20 | 32 | 62 | 97 | |
| | 2012.01- | CVT/6MT | F | L/R | Hatchback 4WD FB20 | | GDS81158 | Drive Shaft | | 27 | 25 | 52 | 76.5 | 782 | |
| | 2012.01- | CVT/6MT | F | L/R | Hatchback 4WD FB20 | | GCO81045 | Outer Joint | | 27 | 22 | 52 | 76.5 | 56.5 | I |
| | 2012.01- | CVT/6MT | F | L/R | Hatchback 4WD FB20 | | GCI81072 | Inner Joint | | 25 | 23 | 35 | 77.5 | 97 | |
| | 2012.01- | 6MT | R | L/R | Hatchback 4WD FB20 | | GDS56057 | Drive Shaft | | 27 | 25 | 56 | 114 | 777 | |
| | 2012.01- | 6MT | R | L/R | Hatchback 4WD FB20 | | GCI56019 | Inner Joint | | 25 | 28 | 32 | 81.5 | 86 | |
| | 2012.01- | CVT | R | L/R | Hatchback 4WD FB20 | | GDS82605 | Drive Shaft | | 27 | 22 | 56 | 113 | 779 | |

| | YEAR | TRANSM. | F/R | L/R | BODY STYLE & DRIVE TYPE & ENGINE | REMARKS | G-AP Ref. | PRODUCT | ABS | Technical Specifications A | B | C | H | L | P |
|---|---|---|---|---|---|---|---|---|---|---|---|---|---|---|---|
| **SUBARU** | | | | | | | | | | | | | | | |
| **Impreza** | | | | | | | | | | | | | | | |
| 2.0 (110 kw) | 2012.01- | CVT | R | L/R | Hatchback 4WD FB20 | | GCO82072 | Outer Joint | | 27 | 20 | 56 | 113 | 52 | I |
| | 2012.01- | CVT | R | L/R | Hatchback 4WD FB20 | | GCI81913 | Inner Joint | | 22 | 20 | 32 | 62 | 97 | |
| | 2019.10- | CVT | R | L/R | Hatchback 4WD FB20W | | GDS56247 | Drive Shaft | | 27 | 22 | 56 | 113.5 | 806 | |
| | 2019.10- | CVT | R | L/R | Hatchback 4WD FB20W | | GCO83220 | Outer Joint | | 27 | 19 | 56 | 113.5 | 46.5 | I |
| | 2019.10- | CVT | R | L/R | Hatchback 4WD FB20W | | GCI83211 | Inner Joint | | 22 | 19 | 32 | 62 | 102.5 | |
| 2.0 (115 kw) | 2016.10- | CVT | R | L/R | Hatchback 4WD FB20C | | GDS56247 | Drive Shaft | | 27 | 22 | 56 | 113.5 | 806 | |
| 2.0 (118 kw) | 2005.09-2007.03 | 4AT | F | L/R | Saloon 4WD EJ204 | | GCI56013 | Inner Joint | | 25 | 29 | 35 | 77.5 | 110 | |
| | 2005.09-2007.03 | | F | | Saloon 4WD EJ204 | Date To:2010.07 | GCO56022 | Outer Joint | | 27 | 30 | 52 | 77 | 54 | I |
| | 2005.09-2007.03 | | F | | Saloon 4WD EJ204 | | GCO56026 | Outer Joint | 44T | 27 | 30 | 56 | 86.5 | 63 | I |
| | 2005.09-2007.03 | | F | | Saloon 4WD EJ204 | Date To:2007.04 | GCO56058 | Outer Joint | 44T | 27 | 32 | 54.5 | 86 | 67 | I |
| | 2005.09-2007.03 | | F | | Saloon 4WD EJ204 | Date To:2006.06 | GCO56067 | Outer Joint | 44T | 27 | 30 | 56 | 86.5 | 56 | M |
| | 2005.09-2007.03 | 4AT | R | L/R | Saloon 4WD EJ204 | | GCI82768 | Inner Joint | | 22 | 19 | 32 | 62 | 102 | |
| | 2005.09-2007.03 | 5MT | R | L | Saloon 4WD EJ204 | | GDS56055 | Drive Shaft | | 24 | 25 | 50 | 104 | 769 | |
| | 2005.09-2007.03 | 5MT | R | R | Saloon 4WD EJ204 | | GDS57937 | Drive Shaft | | 24 | 25 | 50 | 103.5 | 778 | |
| | 2005.09-2007.03 | 5MT | R | R | Saloon 4WD EJ204 | | GCO82808 | Outer Joint | | 24 | 29 | 50 | 103.5 | 56.5 | I |
| | 2005.09-2007.03 | 5MT | R | L/R | Saloon 4WD EJ204 | | GCI56019 | Inner Joint | | 25 | 28 | 32 | 81.5 | 86 | |
| 2.0 (155 kw) | 1993.11-1998.08 | AT | F | L | Saloon 4WD EJ20G | Date to:1999.06 | GCO56017 | Outer Joint | | 27 | 30 | 56 | 87 | 58.5 | I |
| | 1993.11-1998.08 | AT | F | R | Saloon 4WD EJ20G | Date to:1999.06 | GCO56017 | Outer Joint | | 27 | 30 | 56 | 87 | 58.5 | I |
| | 1993.11-1998.08 | AT | F | L/R | Saloon 4WD EJ20G | Date from:1995.10,Date to:1998.08 | GCO56004 | Outer Joint | | 27 | 30 | 56 | 87 | 68 | M |
| | 1993.11-1998.08 | AT | F | L/R | Saloon 4WD EJ20G | Date to:1995.09 | GCO56005 | Outer Joint | | 27 | 22 | 56 | 87 | 66 | M |
| | 1993.11-1998.08 | AT/MT | F | L/R | Saloon 4WD EJ20G | Date to:1999.06 | GDS83522 | Drive Shaft | | 27 | 25 | 56 | 87 | 682 | |
| | 1993.11-1998.08 | AT/MT | F | L/R | Saloon 4WD EJ20G | Date from:1995.04,Date to:1998.04 | GCO56008 | Outer Joint | | 27 | 30 | 56 | 87 | 66 | I |
| | 1993.11-1998.08 | AT/MT | F | L/R | Saloon 4WD EJ20G | Date to:1999.06 | GCI82257 | Inner Joint | | 25 | 29 | 40 | | 112 | |
| | 1993.11-1998.08 | MT | F | L | Saloon 4WD EJ20G | Date to:1999.06 | GCO56017 | Outer Joint | | 27 | 30 | 56 | 87 | 58.5 | I |
| | 1993.11-1998.08 | MT | F | R | Saloon 4WD EJ20G | Date to:1999.06 | GCO56017 | Outer Joint | | 27 | 30 | 56 | 87 | 58.5 | I |
| | 1993.11-1998.08 | | F | L/R | Saloon 4WD EJ20G | Date To:1998.08 | GCO56009 | Outer Joint | 44T | 27 | 30 | 56 | 86.5 | 63 | M |
| | 1993.11-1998.08 | | F | L/R | Saloon 4WD EJ20G | | GCI56006 | Inner Joint | | 25 | 22 | 40 | | 110.5 | |
| | 1995.11-2000.09 | AT/MT | F | L/R | Coupe 4WD EJ20G | Date to:2000.09 | GCO56039 | Outer Joint | | 27 | 30 | 56 | 87.1 | 58 | M |
| | 1995.11-2000.09 | | F | L/R | Coupe 4WD EJ20G | Date To:2000.09 | GCO56009 | Outer Joint | 44T | 27 | 30 | 56 | 86.5 | 63 | M |
| | 1995.11-2000.09 | | F | | Coupe 4WD EJ20G | Date From:1999.04,Date To:2000.11 | GCO56040 | Outer Joint | | 27 | 30 | 56 | 86.5 | 62.7 | M |
| | 1995.11-2000.09 | | F | L/R | Coupe 4WD EJ20G | | GCI56006 | Inner Joint | | 25 | 22 | 40 | | 110.5 | |
| | 1995.11-2000.09 | | F | | Coupe 4WD EJ20G | | GCI56004 | Inner Joint | | 25 | 30 | 40 | | 111.3 | |
| | 1995.11-2000.09 | | | | Coupe 4WD EJ20G | Date To:2000.11 | GCI56023 | Inner Joint | | 25 | 29 | 40.1 | | 110.5 | |
| 2.0 (206 kw) | 1998.09-2000.09 | | F | L/R | Coupe 4WD EJ205P | Date to:1999.06 | GDS83522 | Drive Shaft | | 27 | 25 | 56 | 87 | 682 | |
| 2.5 (112 kw) | 2002.12-2005.09 | 4AT | F | L/R | Saloon 4WD EJ251 | Model year from:2004 | GCI56013 | Inner Joint | | 25 | 29 | 35 | 77.5 | 110 | |
| | 2002.12-2005.09 | 4AT | F | L/R | Saloon 4WD EJ251 | Model year to:2003 | GCI56023 | Inner Joint | | 25 | 29 | 40.1 | | 110.5 | |
| | 2002.12-2005.09 | | F | L/R | Saloon 4WD EJ251 | Date To:2003.08 | GCO56067 | Outer Joint | 44T | 27 | 30 | 56 | 86.5 | 56 | M |
| | 2002.12-2005.09 | 4AT | R | L | Saloon 4WD EJ251 | Date from:2005.01 | GDS56055 | Drive Shaft | | 24 | 25 | 50 | 104 | 769 | |
| | 2002.12-2005.09 | 4AT | R | R | Saloon 4WD EJ251 | Date from:2005.01;DOJ | GDS57937 | Drive Shaft | | 24 | 25 | 50 | 103.5 | 778 | |
| | 2002.12-2005.09 | 4AT | R | R | Saloon 4WD EJ251 | Date from:2005.01 | GCO82808 | Outer Joint | | 24 | 29 | 50 | 103.5 | 56.5 | I |
| | 2002.12-2005.09 | 4AT | R | L/R | Saloon 4WD EJ251 | | GCI56019 | Inner Joint | | 25 | 28 | 32 | 81.5 | 86 | |
| 2.5 (130 kw) | 2001.03-2005.09 | 4AT/5MT | F | L/R | Saloon 4WD EJ251 | Model year from:2004 | GCI56013 | Inner Joint | | 25 | 29 | 35 | 77.5 | 110 | |
| | 2001.03-2005.09 | 5MT | F | L/R | Saloon 4WD EJ251 | Date To:2006.06;PTJ | GDS56014 | Drive Shaft | 44T | 27 | 25 | 56 | 86.5 | 780 | |
| | 2001.03-2005.09 | | F | L/R | Saloon 4WD EJ251 | Date To:2006.06 | GCO56067 | Outer Joint | 44T | 27 | 30 | 56 | 86.5 | 56 | M |
| | 2001.03-2005.09 | 4AT/5MT | R | L | Saloon 4WD EJ251 | Transmission:5MT,Date from:2005.03;Transmission:4AT,Date from:2005.01 | GDS56055 | Drive Shaft | | 24 | 25 | 50 | 104 | 769 | |
| | 2001.03-2005.09 | 4AT/5MT | R | R | Saloon 4WD EJ251 | Transmission:5MT,Date from:2005.03;Transmission:4AT,Date from:2005.01 | GDS57937 | Drive Shaft | | 24 | 25 | 50 | 103.5 | 778 | |
| | 2001.03-2005.09 | 4AT/5MT | R | L/R | Saloon 4WD EJ251 | Transmission:4AT,Date from:2005.01;Transmission:5MT,Date from:2005.03 | GCI56019 | Inner Joint | | 25 | 28 | 32 | 81.5 | 86 | |
| | 2001.03-2005.09 | 5MT | R | L | Saloon 4WD EJ251 | Date to:2005.02 | GDS84409 | Drive Shaft | | 24 | 25 | 50 | 103.5 | 768 | |
| | 2001.03-2005.09 | 5MT | R | R | Saloon 4WD EJ251 | Date to:2005.02 | GDS84418 | Drive Shaft | | 24 | 25 | 50 | 103.5 | 778 | |
| | 2001.03-2005.09 | 5MT | R | L/R | Saloon 4WD EJ251 | Date to:2005.02 | GCO82808 | Outer Joint | | 24 | 29 | 50 | 103.5 | 56.5 | I |
| **Impreza Estate/Wagon Plus** | | | | | | | | | | | | | | | |
| 1.5 (66 kw) | 1998.09-2000.09 | | F | L/R | Estate FWD EJ151 | Date to:1999.06 | GDS83522 | Drive Shaft | | 27 | 25 | 56 | 87 | 682 | |
| 1.5 (77 kw) | 2006.05-2007.03 | 4AT/5MT | F | L/R | Estate 4WD EL15 | | GCI56013 | Inner Joint | | 25 | 29 | 35 | 77.5 | 110 | |
| | 2006.05-2007.03 | 4AT/5MT | R | L/R | Estate 4WD EL15 | | GCI82768 | Inner Joint | | 22 | 19 | 32 | 62 | 102 | |
| 1.6 (66 kw) | 1993.01-1998.08 | AT | F | L | Estate 4WD EJ16E | Date to:1999.06 | GCO56017 | Outer Joint | | 27 | 30 | 56 | 87 | 58.5 | I |
| | 1993.01-1998.08 | AT | F | R | Estate 4WD EJ16E | Date to:1999.06 | GCO56017 | Outer Joint | | 27 | 30 | 56 | 87 | 58.5 | I |
| | 1993.01-1998.08 | AT/MT | F | L/R | Estate 4WD EJ16E | Date to:1999.06 | GDS83522 | Drive Shaft | | 27 | 25 | 56 | 87 | 682 | |
| | 1993.01-1998.08 | AT/MT | F | L/R | Estate 4WD EJ16E | Date from:1995.10,Date to:1998.08 | GCO56004 | Outer Joint | | 27 | 30 | 56 | 87 | 68 | M |
| | 1993.01-1998.08 | AT/MT | F | L/R | Estate 4WD EJ16E | Date from:1993.01;Date to:1995.09 | GCO56005 | Outer Joint | | 27 | 22 | 56 | 87 | 66 | M |
| | 1993.01-1998.08 | AT/MT | F | L/R | Estate 4WD EJ16E | Date from:1995.04,Date to:1996.11 | GCO56008 | Outer Joint | | 27 | 30 | 56 | 87 | 66 | I |
| | 1993.01-1998.08 | AT/MT | F | L/R | Estate 4WD EJ16E | Date to:1999.06 | GCI82257 | Inner Joint | | 25 | 29 | 40 | | 112 | |
| | 1993.01-1998.08 | MT | F | L/R | Estate 4WD EJ16E | | GDS56007 | Drive Shaft | | 27 | 23 | 56 | 87 | 686.5 | |
| | 1993.01-1998.08 | MT | F | L | Estate 4WD EJ16E | Date to:1999.06 | GCO56017 | Outer Joint | | 27 | 30 | 56 | 87 | 58.5 | I |
| | 1993.01-1998.08 | MT | F | R | Estate 4WD EJ16E | Date to:1999.06 | GCO56017 | Outer Joint | | 27 | 30 | 56 | 87 | 58.5 | I |
| | 1993.01-1998.08 | | F | | Estate 4WD EJ16E | Date From:1999.04,Date To:2000.11 | GCO56009 | Outer Joint | 44T | 27 | 30 | 56 | 86.5 | 63 | M |

| | YEAR | TRANSM. | F/R | L/R | BODY STYLE & DRIVE TYPE & ENGINE | REMARKS | G-AP Ref. | PRODUCT | ABS | Technical Specifications A | B | C | H | L | P |
|---|---|---|---|---|---|---|---|---|---|---|---|---|---|---|---|
| **SUBARU** | | | | | | | | | | | | | | | |
| **Impreza Estate/Wagon Plus** | | | | | | | | | | | | | | | |
| 1.6 (66 kw) | 1993.01-1998.08 | | F | | Estate 4WD EJ16E | Date From:1996.12,Date To:2000.11 | GCO56040 | Outer Joint | | 27 | 30 | 56 | 86.5 | 62.7 | M |
| | 1993.01-1998.08 | | F | L/R | Estate 4WD EJ16E | | GCI56006 | Inner Joint | | 25 | 22 | 40 | | 110.5 | |
| | 1993.01-1998.08 | | F | | Estate 4WD EJ16E | | GCI56004 | Inner Joint | | 25 | 30 | 40 | | 111.3 | |
| | 1993.01-1998.08 | | | | Estate 4WD EJ16E | Date From:1996.12,Date To:2000.11 | GCI56023 | Inner Joint | | 25 | 29 | 40.1 | | 110.5 | |
| 1.6 (70 kw) | 1998.09-2000.09 | AT | F | L | Estate 4WD EJ161 | Date to:1999.06 | GCO56017 | Outer Joint | | 27 | 30 | 56 | 87 | 58.5 | I |
| | 1998.09-2000.09 | AT | F | R | Estate 4WD EJ161 | Date to:1999.06 | GCO56017 | Outer Joint | | 27 | 30 | 56 | 87 | 58.5 | I |
| | 1998.09-2000.09 | AT/MT | F | L/R | Estate 4WD EJ161 | Date to:1999.06 | GDS83522 | Drive Shaft | | 27 | 25 | 56 | 87 | 682 | |
| | 1998.09-2000.09 | AT/MT | F | L/R | Estate 4WD EJ161 | Date from:1998.09;Date to:2000.09 | GCO56039 | Outer Joint | | 27 | 30 | 56 | 87.1 | 58 | M |
| | 1998.09-2000.09 | AT/MT | F | L/R | Estate 4WD EJ161 | Date to:1999.06 | GCI82257 | Inner Joint | | 25 | 29 | 40 | | 112 | |
| | 1998.09-2000.09 | MT | F | L/R | Estate 4WD EJ161 | | GDS56007 | Drive Shaft | | 27 | 23 | 56 | 87 | 686.5 | |
| | 1998.09-2000.09 | MT | F | L | Estate 4WD EJ161 | Date to:1999.06 | GCO56017 | Outer Joint | | 27 | 30 | 56 | 87 | 58.5 | I |
| | 1998.09-2000.09 | MT | F | R | Estate 4WD EJ161 | Date to:1999.06 | GCO56017 | Outer Joint | | 27 | 30 | 56 | 87 | 58.5 | I |
| | 1998.09-2000.09 | | F | | Estate 4WD EJ161 | Date From:1999.04,Date To:2000.11 | GCO56009 | Outer Joint | 44T | 27 | 30 | 56 | 86.5 | 63 | M |
| | 1998.09-2000.09 | | F | | Estate 4WD EJ161 | Date From:1999.04,Date To:2000.11 | GCO56040 | Outer Joint | | 27 | 30 | 56 | 86.5 | 62.7 | M |
| | 1998.09-2000.09 | | F | L/R | Estate 4WD EJ161 | | GCI56006 | Inner Joint | | 25 | 22 | 40 | | 110.5 | |
| | 1998.09-2000.09 | | F | | Estate 4WD EJ161 | | GCI56004 | Inner Joint | | 25 | 30 | 40 | | 111.3 | |
| | 1998.09-2000.09 | | | | Estate 4WD EJ161 | Date To:2000.11 | GCI56023 | Inner Joint | | 25 | 29 | 40.1 | | 110.5 | |
| | 1998.09-2000.09 | AT | F | L | Estate FWD EJ161 | Date to:1999.11 | GCO56017 | Outer Joint | | 27 | 30 | 56 | 87 | 58.5 | I |
| | 1998.09-2000.09 | AT | F | R | Estate FWD EJ161 | Date to:1999.11 | GCO56017 | Outer Joint | | 27 | 30 | 56 | 87 | 58.5 | I |
| | 1998.09-2000.09 | AT/MT | F | L/R | Estate FWD EJ161 | Date to:1999.11 | GDS83522 | Drive Shaft | | 27 | 25 | 56 | 87 | 682 | |
| | 1998.09-2000.09 | AT/MT | F | L/R | Estate FWD EJ161 | Date to:1999.11 | GCI82257 | Inner Joint | | 25 | 29 | 40 | | 112 | |
| | 1998.09-2000.09 | MT | F | L/R | Estate FWD EJ161 | | GDS56007 | Drive Shaft | | 27 | 23 | 56 | 87 | 686.5 | |
| | 1998.09-2000.09 | MT | F | L | Estate FWD EJ161 | Date to:1999.11 | GCO56017 | Outer Joint | | 27 | 30 | 56 | 87 | 58.5 | I |
| | 1998.09-2000.09 | MT | F | R | Estate FWD EJ161 | Date to:1999.11 | GCO56017 | Outer Joint | | 27 | 30 | 56 | 87 | 58.5 | I |
| | 1998.09-2000.09 | MT | F | L/R | Estate FWD EJ161 | Date from:1998.09;Date to:2000.09 | GCO56005 | Outer Joint | | 27 | 22 | 56 | 87 | 66 | M |
| | 1998.09-2000.09 | | F | | Estate FWD EJ161 | Date From:1999.04,Date To:2000.11 | GCO56009 | Outer Joint | 44T | 27 | 30 | 56 | 86.5 | 63 | M |
| | 1998.09-2000.09 | | F | | Estate FWD EJ161 | Date From:1999.04,Date To:2000.11 | GCO56040 | Outer Joint | | 27 | 30 | 56 | 86.5 | 62.7 | M |
| | 1998.09-2000.09 | | F | L/R | Estate FWD EJ161 | | GCI56006 | Inner Joint | | 25 | 22 | 40 | | 110.5 | |
| | 1998.09-2000.09 | | F | | Estate FWD EJ161 | | GCI56004 | Inner Joint | | 25 | 30 | 40 | | 111.3 | |
| | 1998.09-2000.09 | | F | | Estate FWD EJ161 | Date To:2000.11 | GCI56023 | Inner Joint | | 25 | 29 | 40.1 | | 110.5 | |
| | 2000.10-2006.09 | 4AT | F | L/R | Estate FWD EJ161 | | GCI56023 | Inner Joint | | 25 | 29 | 40.1 | | 110.5 | |
| | 2000.10-2006.09 | 4AT/5MT | F | L/R | Estate FWD EJ161 | | GDS56006 | Drive Shaft | | 27 | 25 | 56 | 87 | 684 | |
| | 2000.12-2006.09 | 4AT | F | L/R | Estate 4WD EJ161 | Model year to:2003 | GDS56006 | Drive Shaft | | 27 | 25 | 56 | 87 | 684 | |
| | 2000.12-2006.09 | 4AT/5MT | F | L/R | Estate 4WD EJ161 | Model year from:2004,Model year to:2006 | GCO56067 | Outer Joint | 44T | 27 | 30 | 56 | 86.5 | 56 | M |
| | 2000.12-2006.09 | 4AT/5MT | F | L/R | Estate 4WD EJ161 | Model year from:2004 | GCI56013 | Inner Joint | | 25 | 29 | 35 | 77.5 | 110 | |
| | 2000.12-2006.09 | 4AT/5MT | F | L/R | Estate 4WD EJ161 | Model year to:2003 | GCI56023 | Inner Joint | | 25 | 29 | 40.1 | | 110.5 | |
| | 2000.12-2006.09 | 5MT | F | L/R | Estate 4WD EJ161 | Model year to:2001 | GDS56006 | Drive Shaft | | 27 | 25 | 56 | 87 | 684 | |
| | 2000.12-2006.09 | 5MT | F | L/R | Estate 4WD EJ161 | Model year to:2003 | GCO56026 | Outer Joint | 44T | 27 | 30 | 56 | 86.5 | 63 | I |
| | 2000.12-2006.09 | MT | F | L/R | Estate 4WD EJ161 | Date from:2003.09,Date to:2006.06 | GDS56014 | Drive Shaft | 44T | 27 | 25 | 56 | 86.5 | 780 | |
| | 2000.12-2006.09 | 4AT/5MT | R | L/R | Estate 4WD EJ161 | Date from:2004.12 | GCI82768 | Inner Joint | | 22 | 19 | 32 | 62 | 102 | |
| 1.8 (76 kw) | 1993.01-1996.06 | AT | F | L | Estate 4WD EJ18E | Date to:1999.06 | GCO56017 | Outer Joint | | 27 | 30 | 56 | 87 | 58.5 | I |
| | 1993.01-1996.06 | AT | F | R | Estate 4WD EJ18E | Date to:1999.06 | GCO56017 | Outer Joint | | 27 | 30 | 56 | 87 | 58.5 | I |
| | 1993.01-1996.06 | AT/MT | F | L/R | Estate 4WD EJ18E | Date to:1999.06 | GDS83522 | Drive Shaft | | 27 | 25 | 56 | 87 | 682 | |
| | 1993.01-1996.06 | AT/MT | F | L/R | Estate 4WD EJ18E | Date from:1995.10,Date to:1996.06 | GCO56004 | Outer Joint | | 27 | 30 | 56 | 87 | 68 | M |
| | 1993.01-1996.06 | AT/MT | F | L/R | Estate 4WD EJ18E | Date from:1993.01;Date to:1995.09 | GCO56005 | Outer Joint | | 27 | 22 | 56 | 87 | 66 | M |
| | 1993.01-1996.06 | AT/MT | F | L/R | Estate 4WD EJ18E | Date from:1995.04,Date to:1996.11 | GCO56008 | Outer Joint | | 27 | 30 | 56 | 87 | 66 | I |
| | 1993.01-1996.06 | AT/MT | F | L/R | Estate 4WD EJ18E | Date to:1999.06 | GCI82257 | Inner Joint | | 25 | 29 | 40 | | 112 | |
| | 1993.01-1996.06 | MT | F | L | Estate 4WD EJ18E | Date to:1999.06 | GCO56017 | Outer Joint | | 27 | 30 | 56 | 87 | 58.5 | I |
| | 1993.01-1996.06 | MT | F | R | Estate 4WD EJ18E | Date to:1999.06 | GCO56017 | Outer Joint | | 27 | 30 | 56 | 87 | 58.5 | I |
| | 1993.01-1996.06 | | F | | Estate 4WD EJ18E | Date From:1999.04 | GCO56009 | Outer Joint | 44T | 27 | 30 | 56 | 86.5 | 63 | M |
| | 1993.01-1996.06 | | F | | Estate 4WD EJ18E | Date From:1996.12,Date To:2000.11 | GCO56040 | Outer Joint | | 27 | 30 | 56 | 86.5 | 62.7 | M |
| | 1993.01-1996.06 | | F | L/R | Estate 4WD EJ18E | | GCI56006 | Inner Joint | | 25 | 22 | 40 | | 110.5 | |
| | 1993.01-1996.06 | | F | | Estate 4WD EJ18E | | GCI56004 | Inner Joint | | 25 | 30 | 40 | | 111.3 | |
| | 1993.01-1996.06 | | | | Estate 4WD EJ18E | Date From:1996.03,Date To:2000.11 | GCI56023 | Inner Joint | | 25 | 29 | 40.1 | | 110.5 | |
| 2.0 (85 kw) | 1995.11-1998.08 | AT | F | L | Estate 4WD EJ20E | Date to:1999.06 | GCO56017 | Outer Joint | | 27 | 30 | 56 | 87 | 58.5 | I |
| | 1995.11-1998.08 | AT | F | R | Estate 4WD EJ20E | Date to:1999.06 | GCO56017 | Outer Joint | | 27 | 30 | 56 | 87 | 58.5 | I |
| | 1995.11-1998.08 | AT/MT | F | L/R | Estate 4WD EJ20E | Date to:1999.06 | GDS83522 | Drive Shaft | | 27 | 25 | 56 | 87 | 682 | |
| | 1995.11-1998.08 | AT/MT | F | L/R | Estate 4WD EJ20E | Date to:1998.08 | GCO56004 | Outer Joint | | 27 | 30 | 56 | 87 | 68 | M |
| | 1995.11-1998.08 | AT/MT | F | L/R | Estate 4WD EJ20E | Date to:1999.06 | GCI82257 | Inner Joint | | 25 | 29 | 40 | | 112 | |
| | 1995.11-1998.08 | MT | F | L | Estate 4WD EJ20E | Date to:1999.06 | GCO56017 | Outer Joint | | 27 | 30 | 56 | 87 | 58.5 | I |
| | 1995.11-1998.08 | MT | F | R | Estate 4WD EJ20E | Date to:1999.06 | GCO56017 | Outer Joint | | 27 | 30 | 56 | 87 | 58.5 | I |
| | 1995.11-1998.08 | | F | L/R | Estate 4WD EJ20E | Date To:1998.08 | GCO56009 | Outer Joint | 44T | 27 | 30 | 56 | 86.5 | 63 | M |
| | 1995.11-1998.08 | | F | | Estate 4WD EJ20E | Date From:1996.12,Date To:2000.11 | GCO56040 | Outer Joint | | 27 | 30 | 56 | 86.5 | 62.7 | M |
| | 1995.11-1998.08 | | F | L/R | Estate 4WD EJ20E | | GCI56006 | Inner Joint | | 25 | 22 | 40 | | 110.5 | |
| | 1995.11-1998.08 | | F | | Estate 4WD EJ20E | | GCI56004 | Inner Joint | | 25 | 30 | 40 | | 111.3 | |

| | YEAR | TRANSM. | F/R | L/R | BODY STYLE & DRIVE TYPE & ENGINE | REMARKS | G-AP Ref. | PRODUCT | ABS | Technical Specifications A | B | C | H | L | P |
|---|---|---|---|---|---|---|---|---|---|---|---|---|---|---|---|
| **SUBARU** | | | | | | | | | | | | | | | |
| **Impreza Estate/Wagon Plus** | | | | | | | | | | | | | | | |
| 2.0 (85 kw) | 1995.11-1998.08 | | | | Estate 4WD EJ20E | Date From:1996.04,Date To:2000.11 | GCI56023 | Inner Joint | | 25 | 29 | 40.1 | | 110.5 | |
| 2.0 (92 kw) | 1998.09-2000.09 | AT | F | L | Estate 4WD EJ201 | Date to:1999.06 | GCO56017 | Outer Joint | | 27 | 30 | 56 | 87 | 58.5 | I |
| | 1998.09-2000.09 | AT | F | R | Estate 4WD EJ201 | Date to:1999.06 | GCO56017 | Outer Joint | | 27 | 30 | 56 | 87 | 58.5 | I |
| | 1998.09-2000.09 | AT/MT | F | L/R | Estate 4WD EJ201 | Date to:1999.06 | GDS83522 | Drive Shaft | | 27 | 25 | 56 | 87 | 682 | |
| | 1998.09-2000.09 | AT/MT | F | L/R | Estate 4WD EJ201 | Date to:1999.06 | GCI82257 | Inner Joint | | 25 | 29 | 40 | | 112 | |
| | 1998.09-2000.09 | MT | F | L | Estate 4WD EJ201 | Date to:1999.06 | GCO56017 | Outer Joint | | 27 | 30 | 56 | 87 | 58.5 | I |
| | 1998.09-2000.09 | MT | F | R | Estate 4WD EJ201 | Date to:1999.06 | GCO56017 | Outer Joint | | 27 | 30 | 56 | 87 | 58.5 | I |
| | 1998.09-2000.09 | MT | F | L/R | Estate 4WD EJ201 | Date from:1998.09;Date to:2000.09 | GCO56005 | Outer Joint | | 27 | 22 | 56 | 87 | 66 | M |
| | 1998.09-2000.09 | | F | L/R | Estate 4WD EJ201 | Date From:1998.09;Date To:2000.09 | GCO56009 | Outer Joint | 44T | 27 | 30 | 56 | 86.5 | 63 | M |
| | 1998.09-2000.09 | | F | | Estate 4WD EJ201 | Date From:1999.04,Date To:2000.11 | GCO56040 | Outer Joint | | 27 | 30 | 56 | 86.5 | 62.7 | M |
| | 1998.09-2000.09 | | F | L/R | Estate 4WD EJ201 | | GCI56006 | Inner Joint | | 25 | 22 | 40 | | 110.5 | |
| | 1998.09-2000.09 | | F | | Estate 4WD EJ201 | | GCI56004 | Inner Joint | | 25 | 30 | 40 | | 111.3 | |
| | 1998.09-2000.09 | | | | Estate 4WD EJ201 | Date To:2000.11 | GCI56023 | Inner Joint | | 25 | 29 | 40.1 | | 110.5 | |
| | 2000.12-2007.12 | 4AT/5MT | F | L | Estate 4WD EJ201 | | GDS56006 | Drive Shaft | | 27 | 25 | 56 | 87 | 684 | |
| | 2000.12-2007.12 | 4AT/5MT | F | L/R | Estate 4WD EJ201 | Date from:2003.08,Date to:2006.06 | GCO56067 | Outer Joint | 44T | 27 | 30 | 56 | 86.5 | 56 | M |
| | 2000.12-2007.12 | 4AT/5MT | F | L/R | Estate 4WD EJ201 | Date from:2003.08 | GCI56013 | Inner Joint | | 25 | 29 | 35 | 77.5 | 110 | |
| | 2000.12-2007.12 | 4AT/5MT | F | L/R | Estate 4WD EJ201 | Date to:2003.07 | GCI56023 | Inner Joint | | 25 | 29 | 40.1 | | 110.5 | |
| | 2000.12-2007.12 | 5MT | F | L/R | Estate 4WD EJ201 | Date to:2003.07 | GCO56026 | Outer Joint | 44T | 27 | 30 | 56 | 86.5 | 63 | I |
| | 2000.12-2007.12 | MT | F | L/R | Estate 4WD EJ201 | Date from:2003.08 | GDS56014 | Drive Shaft | 44T | 27 | 25 | 56 | 86.5 | 780 | |
| | 2000.12-2007.12 | MT | F | L/R | Estate 4WD EJ201 | Date from:2003.08 | GCO56027 | Outer Joint | 44T | 27 | 23 | 56 | 86.5 | 63 | M |
| | 2000.12-2007.12 | 4AT | R | L/R | Estate 4WD EJ201 | Date from:2004.12 | GCI82768 | Inner Joint | | 22 | 19 | 32 | 62 | 102 | |
| | 2000.12-2007.12 | 5MT | R | L/R | Estate 4WD EJ201 | Date from:2005.01 | GCI56019 | Inner Joint | | 25 | 28 | 32 | 81.5 | 86 | |
| 2.0 (118 kw) | 2000.12-2007.06 | 5MT | F | L/R | Estate 4WD EJ20;EJ204 | Model year to:2006 | GDS56014 | Drive Shaft | 44T | 27 | 25 | 56 | 86.5 | 780 | |
| | 2000.12-2007.06 | AT/MT | F | L/R | Estate 4WD EJ20;EJ204 | Date to:2006.06 | GCO56067 | Outer Joint | 44T | 27 | 30 | 56 | 86.5 | 56 | M |
| | 2000.12-2007.06 | MT | F | L/R | Estate 4WD EJ20;EJ204 | Date to:2006.06 | GCO56027 | Outer Joint | 44T | 27 | 23 | 56 | 86.5 | 63 | M |
| | 2000.12-2007.06 | 4AT | R | L/R | Estate 4WD EJ20;EJ204 | | GCI82768 | Inner Joint | | 22 | 19 | 32 | 62 | 102 | |
| | 2000.12-2007.06 | 5MT | R | L/R | Estate 4WD EJ20;EJ204 | | GCI56019 | Inner Joint | | 25 | 28 | 32 | 81.5 | 86 | |
| 2.0 (155 kw) | 1993.11-1998.08 | AT | F | L | Estate 4WD EJ20G | Date to:1999.06 | GCO56017 | Outer Joint | | 27 | 30 | 56 | 87 | 58.5 | I |
| | 1993.11-1998.08 | AT | F | R | Estate 4WD EJ20G | Date to:1999.06 | GCO56017 | Outer Joint | | 27 | 30 | 56 | 87 | 58.5 | I |
| | 1993.11-1998.08 | AT | F | L/R | Estate 4WD EJ20G | Date from:1995.10,Date to:1998.08 | GCO56004 | Outer Joint | | 27 | 30 | 56 | 87 | 68 | M |
| | 1993.11-1998.08 | AT | F | L/R | Estate 4WD EJ20G | Date to:1995.09 | GCO56005 | Outer Joint | | 27 | 22 | 56 | 87 | 66 | M |
| | 1993.11-1998.08 | AT/MT | F | L/R | Estate 4WD EJ20G | Date to:1999.06 | GDS83522 | Drive Shaft | | 27 | 25 | 56 | 87 | 682 | |
| | 1993.11-1998.08 | AT/MT | F | L/R | Estate 4WD EJ20G | Date from:1995.04,Date to:1996.11 | GCO56008 | Outer Joint | | 27 | 30 | 56 | 87 | 66 | I |
| | 1993.11-1998.08 | AT/MT | F | L/R | Estate 4WD EJ20G | Date to:1999.06 | GCI82257 | Inner Joint | | 25 | 29 | 40 | | 112 | |
| | 1993.11-1998.08 | MT | F | L | Estate 4WD EJ20G | Date to:1999.06 | GCO56017 | Outer Joint | | 27 | 30 | 56 | 87 | 58.5 | I |
| | 1993.11-1998.08 | MT | F | R | Estate 4WD EJ20G | Date to:1999.06 | GCO56017 | Outer Joint | | 27 | 30 | 56 | 87 | 58.5 | I |
| | 1993.11-1998.08 | | F | L/R | Estate 4WD EJ20G | Date To:1998.08 | GCO56009 | Outer Joint | 44T | 27 | 30 | 56 | 86.5 | 63 | M |
| | 1993.11-1998.08 | | F | | Estate 4WD EJ20G | Date From:1996.12,Date To:2000.11 | GCO56040 | Outer Joint | | 27 | 30 | 56 | 86.5 | 62.7 | M |
| | 1993.11-1998.08 | | F | L/R | Estate 4WD EJ20G | | GCI56006 | Inner Joint | | 25 | 22 | 40 | | 110.5 | |
| | 1993.11-1998.08 | | F | | Estate 4WD EJ20G | | GCI56004 | Inner Joint | | 25 | 30 | 40 | | 111.3 | |
| | 1993.11-1998.08 | | | | Estate 4WD EJ20G | Date From:1996.04,Date To:2000.11 | GCI56023 | Inner Joint | | 25 | 29 | 40.1 | | 110.5 | |
| 2.0 (160 kw) | 1998.09-2000.09 | AT | F | L | Estate 4WD EJ205 | Date to:1999.06 | GCO56017 | Outer Joint | | 27 | 30 | 56 | 87 | 58.5 | I |
| | 1998.09-2000.09 | AT | F | R | Estate 4WD EJ205 | Date to:1999.06 | GCO56017 | Outer Joint | | 27 | 30 | 56 | 87 | 58.5 | I |
| | 1998.09-2000.09 | AT/MT | F | L/R | Estate 4WD EJ205 | Date to:1999.06 | GDS83522 | Drive Shaft | | 27 | 25 | 56 | 87 | 682 | |
| | 1998.09-2000.09 | AT/MT | F | L/R | Estate 4WD EJ205 | Date from:1998.09;Date to:2000.09 | GCO56039 | Outer Joint | | 27 | 30 | 56 | 87.1 | 58 | M |
| | 1998.09-2000.09 | AT/MT | F | L/R | Estate 4WD EJ205 | Date to:1999.06 | GCI82257 | Inner Joint | | 25 | 29 | 40 | | 112 | |
| | 1998.09-2000.09 | MT | F | L | Estate 4WD EJ205 | Date to:1999.06 | GCO56017 | Outer Joint | | 27 | 30 | 56 | 87 | 58.5 | I |
| | 1998.09-2000.09 | MT | F | R | Estate 4WD EJ205 | Date to:1999.06 | GCO56017 | Outer Joint | | 27 | 30 | 56 | 87 | 58.5 | I |
| | 1998.09-2000.09 | | F | L/R | Estate 4WD EJ205 | Date From:1998.09;Date To:2000.09 | GCO56009 | Outer Joint | 44T | 27 | 30 | 56 | 86.5 | 63 | M |
| | 1998.09-2000.09 | | F | | Estate 4WD EJ205 | Date From:1999.04,Date To:2000.11 | GCO56040 | Outer Joint | | 27 | 30 | 56 | 86.5 | 62.7 | M |
| | 1998.09-2000.09 | | F | L/R | Estate 4WD EJ205 | | GCI56006 | Inner Joint | | 25 | 22 | 40 | | 110.5 | |
| | 1998.09-2000.09 | | F | | Estate 4WD EJ205 | | GCI56004 | Inner Joint | | 25 | 30 | 40 | | 111.3 | |
| | 1998.09-2000.09 | | | | Estate 4WD EJ205 | Date To:2000.11 | GCI56023 | Inner Joint | | 25 | 29 | 40.1 | | 110.5 | |
| **Impreza WRX** | | | | | | | | | | | | | | | |
| 2.0 (160 kw) | 1998.06-2000.12 | AT | F | L | Saloon 4WD EJ205 | Date to:1999.06 | GCO56017 | Outer Joint | | 27 | 30 | 56 | 87 | 58.5 | I |
| | 1998.06-2000.12 | AT | F | R | Saloon 4WD EJ205 | Date to:1999.06 | GCO56017 | Outer Joint | | 27 | 30 | 56 | 87 | 58.5 | I |
| | 1998.06-2000.12 | AT/MT | F | L/R | Saloon 4WD EJ205 | Date to:1999.06 | GDS83522 | Drive Shaft | | 27 | 25 | 56 | 87 | 682 | |
| | 1998.06-2000.12 | AT/MT | F | L/R | Saloon 4WD EJ205 | | GCO56039 | Outer Joint | | 27 | 30 | 56 | 87.1 | 58 | M |
| | 1998.06-2000.12 | AT/MT | F | L/R | Saloon 4WD EJ205 | Date to:1999.06 | GCI82257 | Inner Joint | | 25 | 29 | 40 | | 112 | |
| | 1998.06-2000.12 | MT | F | L | Saloon 4WD EJ205 | Date to:1999.06 | GCO56017 | Outer Joint | | 27 | 30 | 56 | 87 | 58.5 | I |
| | 1998.06-2000.12 | MT | F | R | Saloon 4WD EJ205 | Date to:1999.06 | GCO56017 | Outer Joint | | 27 | 30 | 56 | 87 | 58.5 | I |
| | 1998.06-2000.12 | | F | L/R | Saloon 4WD EJ205 | | GCO56009 | Outer Joint | 44T | 27 | 30 | 56 | 86.5 | 63 | M |
| | 1998.06-2000.12 | | F | | Saloon 4WD EJ205 | Date From:1999.04,Date To:2000.11 | GCO56040 | Outer Joint | | 27 | 30 | 56 | 86.5 | 62.7 | M |
| | 1998.06-2000.12 | | F | L/R | Saloon 4WD EJ205 | | GCI56006 | Inner Joint | | 25 | 22 | 40 | | 110.5 | |
| | 1998.06-2000.12 | | F | | Saloon 4WD EJ205 | | GCI56004 | Inner Joint | | 25 | 30 | 40 | | 111.3 | |

| | YEAR | TRANSM. | F/R | L/R | BODY STYLE & DRIVE TYPE & ENGINE | REMARKS | G-AP Ref. | PRODUCT | ABS | Technical Specifications A | B | C | H | L | P |
|---|---|---|---|---|---|---|---|---|---|---|---|---|---|---|---|
| **SUBARU** | | | | | | | | | | | | | | | |
| **Impreza WRX** | | | | | | | | | | | | | | | |
| 2.0 (160 kw) | 1998.06-2000.12 | | | | Saloon 4WD EJ205 | Date To:2000.11 | GCI56023 | Inner Joint | | 25 | 29 | 40.1 | | 110.5 | |
| | 2000.12-2005.12 | 5MT | F | L/R | Saloon 4WD EJ205 | Date From:2003.09;PTJ | GDS56014 | Drive Shaft | 44T | 27 | 25 | 56 | 86.5 | 780 | |
| | 2000.12-2005.12 | 5MT | F | L/R | Saloon 4WD EJ205 | Model year from:2004 | GCI56013 | Inner Joint | | 25 | 29 | 35 | 77.5 | 110 | |
| | 2000.12-2005.12 | 5MT | F | L/R | Saloon 4WD EJ205 | Model year to:2003 | GCI56023 | Inner Joint | | 25 | 29 | 40.1 | | 110.5 | |
| | 2000.12-2005.12 | MT | F | L/R | Saloon 4WD EJ205 | | GCO56067 | Outer Joint | 44T | 27 | 30 | 56 | 86.5 | 56 | M |
| | 2000.12-2005.12 | | F | L/R | Saloon 4WD EJ205 | Date To:2003.08 | GCO56009 | Outer Joint | 44T | 27 | 30 | 56 | 86.5 | 63 | M |
| | 2000.12-2005.12 | | F | | Saloon 4WD EJ205 | | GCO56026 | Outer Joint | 44T | 27 | 30 | 56 | 86.5 | 63 | I |
| | 2000.12-2005.12 | | F | | Saloon 4WD EJ205 | Date To:2004.06 | GCO56057 | Outer Joint | 44T | 27 | 32 | 56 | 86.5 | 68.5 | I |
| | 2000.12-2005.12 | 5MT | R | L | Saloon 4WD EJ205 | Date from:2005.03 | GDS56055 | Drive Shaft | | 24 | 25 | 50 | 104 | 769 | |
| | 2000.12-2005.12 | 5MT | R | L | Saloon 4WD EJ205 | Date to:2005.02 | GDS84409 | Drive Shaft | | 24 | 25 | 50 | 103.5 | 768 | |
| | 2000.12-2005.12 | 5MT | R | R | Saloon 4WD EJ205 | Date from:2005.03 | GDS57937 | Drive Shaft | | 24 | 25 | 50 | 103.5 | 778 | |
| | 2000.12-2005.12 | 5MT | R | R | Saloon 4WD EJ205 | Date to:2005.02 | GDS84418 | Drive Shaft | | 24 | 25 | 50 | 103.5 | 778 | |
| | 2000.12-2005.12 | 5MT | R | L/R | Saloon 4WD EJ205 | Date to:2005.02 | GCO82808 | Outer Joint | | 24 | 29 | 50 | 103.5 | 56.5 | I |
| | 2000.12-2005.12 | 5MT | R | L/R | Saloon 4WD EJ205 | Date from:2005.03 | GCI56019 | Inner Joint | | 25 | 28 | 32 | 81.5 | 86 | |
| 2.0 (165 kw) | 2002.12-2007.03 | 4AT/5AT | F | L/R | Saloon 4WD EJ205 | Model year from:2004 | GCI56013 | Inner Joint | | 25 | 29 | 35 | 77.5 | 110 | |
| | 2002.12-2007.03 | 4AT/5AT | F | L/R | Saloon 4WD EJ205 | Model year to:2003 | GCI56023 | Inner Joint | | 25 | 29 | 40.1 | | 110.5 | |
| | 2002.12-2007.03 | 5MT | F | L/R | Saloon 4WD EJ205 | Date From:2003.09;PTJ | GDS56014 | Drive Shaft | 44T | 27 | 25 | 56 | 86.5 | 780 | |
| | 2002.12-2007.03 | MT | F | L/R | Saloon 4WD EJ205 | Date to:2003.08;Date from:2003.09 | GCO56067 | Outer Joint | 44T | 27 | 30 | 56 | 86.5 | 56 | M |
| | 2002.12-2007.03 | | F | L/R | Saloon 4WD EJ205 | Date To:2003.08 | GCO56009 | Outer Joint | 44T | 27 | 30 | 56 | 86.5 | 63 | M |
| | 2002.12-2007.03 | | F | | Saloon 4WD EJ205 | | GCO56026 | Outer Joint | 44T | 27 | 30 | 56 | 86.5 | 63 | I |
| | 2002.12-2007.03 | | F | | Saloon 4WD EJ205 | Date To:2004.06 | GCO56057 | Outer Joint | 44T | 27 | 32 | 56 | 86.5 | 68.5 | I |
| | 2002.12-2007.03 | 4AT/5AT | R | L | Saloon 4WD EJ205 | Date from:2005.03 | GDS56055 | Drive Shaft | | 24 | 25 | 50 | 104 | 769 | |
| | 2002.12-2007.03 | 4AT/5AT | R | L/R | Saloon 4WD EJ205 | Date from:2005.03 | GCI56019 | Inner Joint | | 25 | 28 | 32 | 81.5 | 86 | |
| | 2002.12-2007.03 | 4AT/5MT | R | R | Saloon 4WD EJ205 | Date from:2005.03 | GDS57937 | Drive Shaft | | 24 | 25 | 50 | 103.5 | 778 | |
| | 2002.12-2007.03 | 5MT | R | L | Saloon 4WD EJ205 | Date to:2005.02 | GDS84409 | Drive Shaft | | 24 | 25 | 50 | 103.5 | 768 | |
| | 2002.12-2007.03 | 5MT | R | R | Saloon 4WD EJ205 | Date to:2005.02 | GDS84418 | Drive Shaft | | 24 | 25 | 50 | 103.5 | 778 | |
| | 2002.12-2007.03 | 5MT | R | L/R | Saloon 4WD EJ205 | Date to:2005.02 | GCO82808 | Outer Joint | | 24 | 29 | 50 | 103.5 | 56.5 | I |
| 2.0 (168 kw) | 2002.12-2005.09 | 5AT | F | L/R | Saloon 4WD EJ205 | | GCO56067 | Outer Joint | 44T | 27 | 30 | 56 | 86.5 | 56 | M |
| | 2002.12-2005.09 | 5AT | F | L/R | Saloon 4WD EJ205 | Model year from:2004 | GCI56013 | Inner Joint | | 25 | 29 | 35 | 77.5 | 110 | |
| | 2002.12-2005.09 | 5AT | F | L/R | Saloon 4WD EJ205 | Model year to:2003 | GCI56023 | Inner Joint | | 25 | 29 | 40.1 | | 110.5 | |
| | 2002.12-2005.09 | 5MT | F | | Saloon 4WD EJ205 | Date to:2003.08 | GCO56009 | Outer Joint | 44T | 27 | 30 | 56 | 86.5 | 63 | M |
| | 2002.12-2005.09 | | F | | Saloon 4WD EJ205 | | GCO56026 | Outer Joint | 44T | 27 | 30 | 56 | 86.5 | 63 | I |
| | 2002.12-2005.09 | 5AT | R | L | Saloon 4WD EJ205 | Date from:2005.03 | GDS56055 | Drive Shaft | | 24 | 25 | 50 | 104 | 769 | |
| | 2002.12-2005.09 | 5AT | R | L | Saloon 4WD EJ205 | Date to:2005.02 | GDS84409 | Drive Shaft | | 24 | 25 | 50 | 103.5 | 768 | |
| | 2002.12-2005.09 | 5AT | R | R | Saloon 4WD EJ205 | Date from:2005.03 | GDS57937 | Drive Shaft | | 24 | 25 | 50 | 103.5 | 778 | |
| | 2002.12-2005.09 | 5AT | R | R | Saloon 4WD EJ205 | Date to:2005.02 | GDS84418 | Drive Shaft | | 24 | 25 | 50 | 103.5 | 778 | |
| | 2002.12-2005.09 | 5AT | R | L/R | Saloon 4WD EJ205 | Date to:2005.02 | GCO82808 | Outer Joint | | 24 | 29 | 50 | 103.5 | 56.5 | I |
| | 2002.12-2005.09 | 5AT | R | L/R | Saloon 4WD EJ205 | Date from:2005.03 | GCI56019 | Inner Joint | | 25 | 28 | 32 | 81.5 | 86 | |
| 2.0 (184 kw) | 2005.10-2007.03 | 5MT | F | L/R | Saloon 4WD EJ20 (Turbo) | PTJ | GDS56014 | Drive Shaft | 44T | 27 | 25 | 56 | 86.5 | 780 | |
| | 2005.10-2007.03 | MT | F | L/R | Saloon 4WD EJ20 (Turbo) | | GCO56067 | Outer Joint | 44T | 27 | 30 | 56 | 86.5 | 56 | M |
| | 2005.10-2007.03 | | F | L/R | Saloon 4WD EJ20 (Turbo) | Date From:2003.09 | GCI56013 | Inner Joint | | 25 | 29 | 35 | 77.5 | 110 | |
| | 2005.10-2007.03 | 4AT/5AT/5MT | R | L | Saloon 4WD EJ20 (Turbo) | | GDS56055 | Drive Shaft | | 24 | 25 | 50 | 104 | 769 | |
| | 2005.10-2007.03 | 4AT/5AT/5MT | R | R | Saloon 4WD EJ20 (Turbo) | | GDS57937 | Drive Shaft | | 24 | 25 | 50 | 103.5 | 778 | |
| | 2005.10-2007.03 | 4AT/5AT/5MT | R | R | Saloon 4WD EJ20 (Turbo) | | GCO82808 | Outer Joint | | 24 | 29 | 50 | 103.5 | 56.5 | I |
| | 2005.10-2007.03 | 4AT/5AT/6MT | R | L/R | Saloon 4WD EJ20 (Turbo) | | GCI56019 | Inner Joint | | 25 | 28 | 32 | 81.5 | 86 | |
| 2.0 (195 kw) | 2001.11-2005.07 | 6MT | F | L/R | Saloon 4WD EJ207 | PTJ | GDS56069 | Drive Shaft | 44T | 27 | 25 | 56 | 87 | 780 | |
| | 2001.11-2005.07 | 6MT | F | L/R | Saloon 4WD EJ207 | DOJ | GDS81949 | Drive Shaft | 44T | 27 | 25 | 56 | 86.5 | 688 | |
| | 2001.11-2005.07 | 6MT | F | L/R | Saloon 4WD EJ207 | Date from:2003.02,Date to:2003.07 | GCO56057 | Outer Joint | 44T | 27 | 32 | 56 | 86.5 | 68.5 | I |
| | 2001.11-2005.07 | 6MT | F | L/R | Saloon 4WD EJ207 | Date from:2005.04,Date to:2006.06 | GCO56058 | Outer Joint | 44T | 27 | 32 | 54.5 | 86 | 67 | I |
| | 2001.11-2005.07 | 6MT | F | L/R | Saloon 4WD EJ207 | | GCI56004 | Inner Joint | | 25 | 30 | 40 | | 111.3 | |
| | 2001.11-2005.07 | AT/MT | F | L/R | Saloon 4WD EJ207 | Date from:2004.01 | GDS56014 | Drive Shaft | 44T | 27 | 25 | 56 | 86.5 | 780 | |
| | 2001.11-2005.07 | | F | | Saloon 4WD EJ207 | Date To:2006.06 | GCO56067 | Outer Joint | 44T | 27 | 30 | 56 | 86.5 | 56 | M |
| | 2001.11-2005.07 | 6MT | R | L/R | Saloon 4WD EJ207 | Model year to:2004 | GDS81947 | Drive Shaft | | 27 | 27 | 56 | 103.5 | 769 | |
| 2.0 (206 kw) | 1999.04-2000.11 | AT | F | L | Saloon 4WD EJ205 | Date to:1999.06 | GCO56017 | Outer Joint | | 27 | 30 | 56 | 87 | 58.5 | I |
| | 1999.04-2000.11 | AT | F | R | Saloon 4WD EJ205 | Date to:1999.06 | GCO56017 | Outer Joint | | 27 | 30 | 56 | 87 | 58.5 | I |
| | 1999.04-2000.11 | AT/MT | F | L/R | Saloon 4WD EJ205 | Date to:1999.06 | GDS83522 | Drive Shaft | | 27 | 25 | 56 | 87 | 682 | |
| | 1999.04-2000.11 | AT/MT | F | L/R | Saloon 4WD EJ205 | Date to:1999.06 | GCI82257 | Inner Joint | | 25 | 29 | 40 | | 112 | |
| | 1999.04-2000.11 | MT | F | L | Saloon 4WD EJ205 | Date to:1999.06 | GCO56017 | Outer Joint | | 27 | 30 | 56 | 87 | 58.5 | I |
| | 1999.04-2000.11 | MT | F | R | Saloon 4WD EJ205 | Date to:1999.06 | GCO56017 | Outer Joint | | 27 | 30 | 56 | 87 | 58.5 | I |
| | 1999.04-2000.11 | | F | | Saloon 4WD EJ205 | Date From:1999.04 | GCO56009 | Outer Joint | 44T | 27 | 30 | 56 | 86.5 | 63 | M |
| | 1999.04-2000.11 | | F | L/R | Saloon 4WD EJ205 | | GCI56006 | Inner Joint | | 25 | 22 | 40 | | 110.5 | |
| | 1999.04-2000.11 | | F | | Saloon 4WD EJ205 | | GCI56004 | Inner Joint | | 25 | 30 | 40 | | 111.3 | |
| 2.0 (224 kw) | 2001.04-2002.10 | 6MT | F | L/R | Saloon 4WD EJ207 | PTJ | GDS56069 | Drive Shaft | 44T | 27 | 25 | 56 | 87 | 780 | |
| | 2001.04-2002.10 | 6MT | F | L/R | Saloon 4WD EJ207 | DOJ | GDS81949 | Drive Shaft | 44T | 27 | 25 | 56 | 86.5 | 688 | |
| | 2001.04-2002.10 | 6MT | F | L/R | Saloon 4WD EJ207 | | GCO56048 | Outer Joint | 44T | 27 | 32 | 56 | 86.5 | 71.5 | I |

| | YEAR | TRANSM. | F/R | L/R | BODY STYLE & DRIVE TYPE & ENGINE | REMARKS | G-AP Ref. | PRODUCT | ABS | Technical Specifications A | B | C | H | L | P |
|---|---|---|---|---|---|---|---|---|---|---|---|---|---|---|---|
| **SUBARU** | | | | | | | | | | | | | | | |
| **Impreza WRX** | | | | | | | | | | | | | | | |
| 2.0 (224 kw) | 2001.04-2002.10 | 6MT | F | L/R | Saloon 4WD EJ207 | | GCI56004 | Inner Joint | | 25 | 30 | 40 | | 111.3 | |
| | 2001.04-2002.10 | | F | L/R | Saloon 4WD EJ207 | | GCO56057 | Outer Joint | 44T | 27 | 32 | 56 | 86.5 | 68.5 | I |
| | 2001.04-2002.10 | | F | L/R | Saloon 4WD EJ207 | | GCO56058 | Outer Joint | 44T | 27 | 32 | 54.5 | 86 | 67 | I |
| | 2001.04-2002.10 | 6MT | R | L/R | Saloon 4WD EJ207 | | GDS81947 | Drive Shaft | | 27 | 27 | 56 | 103.5 | 769 | |
| | 2001.04-2002.10 | 6MT | R | L/R | Saloon 4WD EJ207 | | GCO81584 | Outer Joint | | 27 | 30 | 56 | 103.5 | 67 | I |
| | 2001.04-2002.10 | 6MT | R | L/R | Saloon 4WD EJ207 | | GCI81442 | Inner Joint | | 27 | 30 | 32 | 89 | 91.5 | |
| 2.0 (235 kw) | 2004.02-2005.07 | 6MT | F | L/R | Saloon 4WD EJ207 | PTJ | GDS56069 | Drive Shaft | 44T | 27 | 25 | 56 | 87 | 780 | |
| | 2004.02-2005.07 | 6MT | F | L/R | Saloon 4WD EJ207 | DOJ | GDS81949 | Drive Shaft | 44T | 27 | 25 | 56 | 86.5 | 688 | |
| | 2004.02-2005.07 | 6MT | F | L/R | Saloon 4WD EJ207 | Date from:2003.02,Date to:2003.07 | GCO56057 | Outer Joint | 44T | 27 | 32 | 56 | 86.5 | 68.5 | I |
| | 2004.02-2005.07 | 6MT | F | L/R | Saloon 4WD EJ207 | Date from:2005.04,Date to:2006.06 | GCO56058 | Outer Joint | 44T | 27 | 32 | 54.5 | 86 | 67 | I |
| | 2004.02-2005.07 | 6MT | F | L/R | Saloon 4WD EJ207 | | GCI56004 | Inner Joint | | 25 | 30 | 40 | | 111.3 | |
| | 2004.02-2005.07 | AT/MT | F | L/R | Saloon 4WD EJ207 | Date from:2005.01 | GDS56014 | Drive Shaft | 44T | 27 | 25 | 56 | 86.5 | 780 | |
| | 2004.02-2005.07 | | F | | Saloon 4WD EJ207 | | GCO56048 | Outer Joint | 44T | 27 | 32 | 56 | 86.5 | 71.5 | I |
| | 2004.02-2005.07 | 6MT | R | L/R | Saloon 4WD EJ207 | Model year to:2004 | GDS81947 | Drive Shaft | | 27 | 27 | 56 | 103.5 | 769 | |
| 2.5 (169 kw) | 2005.09-2008.12 | 4AT/5MT | F | L/R | Saloon 4WD EJ255 | Date To:2006.06;PTJ | GDS56014 | Drive Shaft | 44T | 27 | 25 | 56 | 86.5 | 780 | |
| | 2005.09-2008.12 | MT | F | L/R | Saloon 4WD EJ255 | | GCI56013 | Inner Joint | | 25 | 29 | 35 | 77.5 | 110 | |
| | 2005.09-2008.12 | | F | L/R | Saloon 4WD EJ255 | Date To:2006.06 | GCO56067 | Outer Joint | 44T | 27 | 30 | 56 | 86.5 | 56 | M |
| | 2005.09-2008.12 | | F | | Saloon 4WD EJ255 | Date To:2010.07 | GCO56022 | Outer Joint | | 27 | 30 | 52 | 77 | 54 | I |
| | 2005.09-2008.12 | | F | | Saloon 4WD EJ255 | | GCO56048 | Outer Joint | 44T | 27 | 32 | 56 | 86.5 | 71.5 | I |
| | 2005.09-2008.12 | | F | | Saloon 4WD EJ255 | Date To:2007.06 | GCO56058 | Outer Joint | 44T | 27 | 32 | 54.5 | 86 | 67 | I |
| | 2005.09-2008.12 | 4AT/5MT | R | L | Saloon 4WD EJ255 | | GDS56055 | Drive Shaft | | 24 | 25 | 50 | 104 | 769 | |
| | 2005.09-2008.12 | 4AT/5MT | R | R | Saloon 4WD EJ255 | | GDS57937 | Drive Shaft | | 24 | 25 | 50 | 103.5 | 778 | |
| | 2005.09-2008.12 | 4AT/5MT | R | R | Saloon 4WD EJ255 | | GCO82808 | Outer Joint | | 24 | 29 | 50 | 103.5 | 56.5 | I |
| | 2005.09-2008.12 | 4AT/5MT | R | L/R | Saloon 4WD EJ255 | | GCI56019 | Inner Joint | | 25 | 28 | 32 | 81.5 | 86 | |
| | 2008.01-2011.09 | 5MT | F | L/R | Hatchback 4WD EJ255 | For Modelcode:G22GV | GDS81902 | Drive Shaft | | 27 | 25 | 52 | 77 | 794 | |
| | 2008.01-2011.09 | 5MT | F | L/R | Hatchback 4WD EJ255 | Date from:2008.04 | GCO56022 | Outer Joint | | 27 | 30 | 52 | 77 | 54 | I |
| | 2008.01-2011.09 | 5MT | F | L/R | Hatchback 4WD EJ255 | Date to:2013.01,For Modelcode:G22GV | GCI56027 | Inner Joint | | 25 | 29 | 35 | 77.5 | 105 | |
| | 2008.01-2011.09 | 5MT | F | L/R | Hatchback 4WD EJ255 | Date from:2013.02,For Modelcode:G22GV | GCI82426 | Inner Joint | | 25 | 29 | 35 | 77.5 | 108.5 | |
| | 2008.01-2011.09 | 5MT | R | L/R | Hatchback 4WD EJ255 | Date from:2009.09,For Modelcode:G12GH,For left-hand drive vehicles | GDS56057 | Drive Shaft | | 27 | 25 | 56 | 114 | 777 | |
| | 2008.01-2011.09 | 5MT | R | L/R | Hatchback 4WD EJ255 | | GDS82268 | Drive Shaft | | 27 | 25 | 56 | 114 | 795 | |
| | 2008.01-2011.09 | 5MT | R | L/R | Hatchback 4WD EJ255 | For Modelcode:G22GV,For left-hand drive vehicles | GCI56019 | Inner Joint | | 25 | 28 | 32 | 81.5 | 86 | |
| | 2008.10- | 5MT | F | L/R | Saloon 4WD EJ255 | | GDS81902 | Drive Shaft | | 27 | 25 | 52 | 77 | 794 | |
| | 2008.10- | 5MT | F | L/R | Saloon 4WD EJ255 | | GCO81561 | Outer Joint | | 27 | 30 | 52 | 77 | 54 | I |
| | 2008.10- | 5MT | F | L/R | Saloon 4WD EJ255 | Date to:2013.01 | GCI56027 | Inner Joint | | 25 | 29 | 35 | 77.5 | 105 | |
| | 2008.10- | 5MT | F | L/R | Saloon 4WD EJ255 | Date from:2013.02 | GCI82426 | Inner Joint | | 25 | 29 | 35 | 77.5 | 108.5 | |
| | 2008.10- | 5MT | R | L/R | Saloon 4WD EJ255 | | GDS82268 | Drive Shaft | | 27 | 25 | 56 | 114 | 795 | |
| | 2008.10- | 5MT | R | L/R | Saloon 4WD EJ255 | For left-hand drive vehicles | GCI56019 | Inner Joint | | 25 | 28 | 32 | 81.5 | 86 | |
| 2.5 (195 kw) | 2009.01-2014.12 | 6MT | F | L/R | Saloon 4WD EJ255 | Date to:2013.01 | GCI56027 | Inner Joint | | 25 | 29 | 35 | 77.5 | 105 | |
| | 2009.01-2014.12 | 6MT | F | L/R | Saloon 4WD EJ255 | Date from:2013.02 | GCI82426 | Inner Joint | | 25 | 29 | 35 | 77.5 | 108.5 | |
| | 2009.01-2014.12 | | F | L/R | Saloon 4WD EJ255 | | GDS81902 | Drive Shaft | | 27 | 25 | 52 | 77 | 794 | |
| | 2009.01-2014.12 | | F | L/R | Saloon 4WD EJ255 | Date To:2013.01 | GCO56022 | Outer Joint | | 27 | 30 | 52 | 77 | 54 | I |
| | 2009.01-2014.12 | | F | L/R | Saloon 4WD EJ255 | Date To:2013.01 | GCO81561 | Outer Joint | | 27 | 30 | 52 | 77 | 54 | I |
| | 2009.01-2014.12 | 5MT/6MT | R | L/R | Saloon 4WD EJ255 | | GDS82268 | Drive Shaft | | 27 | 25 | 56 | 114 | 795 | |
| | 2009.01-2014.12 | 6MT | R | L/R | Saloon 4WD EJ255 | For left-hand drive vehicles | GCI56019 | Inner Joint | | 25 | 28 | 32 | 81.5 | 86 | |
| | 2010.07-2013.08 | 6MT | F | L/R | Hatchback 4WD EJ255 | Date to:2013.01 | GCI56027 | Inner Joint | | 25 | 29 | 35 | 77.5 | 105 | |
| | 2010.07-2013.08 | 6MT | F | L/R | Hatchback 4WD EJ255 | Date from:2013.02 | GCI82426 | Inner Joint | | 25 | 29 | 35 | 77.5 | 108.5 | |
| | 2010.07-2013.08 | | F | L/R | Hatchback 4WD EJ255 | | GDS81902 | Drive Shaft | | 27 | 25 | 52 | 77 | 794 | |
| | 2010.07-2013.08 | | F | L/R | Hatchback 4WD EJ255 | Date To:2013.01 | GCO56022 | Outer Joint | | 27 | 30 | 52 | 77 | 54 | I |
| | 2010.07-2013.08 | | F | L/R | Hatchback 4WD EJ255 | Date To:2013.01 | GCO81561 | Outer Joint | | 27 | 30 | 52 | 77 | 54 | I |
| | 2010.07-2013.08 | 5MT/6MT | R | L/R | Hatchback 4WD EJ255 | | GDS82268 | Drive Shaft | | 27 | 25 | 56 | 114 | 795 | |
| | 2010.07-2013.08 | 6MT | R | L/R | Hatchback 4WD EJ255 | For left-hand drive vehicles | GCI56019 | Inner Joint | | 25 | 28 | 32 | 81.5 | 86 | |
| 2.5 (199 kw) | 2007.07- | 5MT | F | L/R | Saloon 4WD EJ255;EJ257 | | GDS81902 | Drive Shaft | | 27 | 25 | 52 | 77 | 794 | |
| | 2007.07- | 5MT | F | L/R | Saloon 4WD EJ255;EJ257 | Date from:2008.04 | GCO56022 | Outer Joint | | 27 | 30 | 52 | 77 | 54 | I |
| | 2007.07- | 5MT | F | L/R | Saloon 4WD EJ255;EJ257 | Date to:2013.01 | GCI56027 | Inner Joint | | 25 | 29 | 35 | 77.5 | 105 | |
| | 2007.07- | 5MT | F | L/R | Saloon 4WD EJ255;EJ257 | Date from:2013.02 | GCI82426 | Inner Joint | | 25 | 29 | 35 | 77.5 | 108.5 | |
| | 2007.07- | 5MT | R | L/R | Saloon 4WD EJ255;EJ257 | | GDS82268 | Drive Shaft | | 27 | 25 | 56 | 114 | 795 | |
| | 2007.07- | 5MT | R | L/R | Saloon 4WD EJ255;EJ257 | For left-hand drive vehicles | GCI56019 | Inner Joint | | 25 | 28 | 32 | 81.5 | 86 | |
| 2.5 (200 kw) | 2007.01-2007.12 | MT | F | L/R | Saloon 4WD EJ255 | | GCI56013 | Inner Joint | | 25 | 29 | 35 | 77.5 | 110 | |
| | 2007.01-2007.12 | 5MT | R | L | Saloon 4WD EJ255 | | GDS56055 | Drive Shaft | | 24 | 25 | 50 | 104 | 769 | |
| | 2007.01-2007.12 | 5MT | R | R | Saloon 4WD EJ255 | | GDS57937 | Drive Shaft | | 24 | 25 | 50 | 103.5 | 778 | |
| | 2007.01-2007.12 | 5MT | R | R | Saloon 4WD EJ255 | | GCO82808 | Outer Joint | | 24 | 29 | 50 | 103.5 | 56.5 | I |
| | 2007.01-2007.12 | 5MT | R | L/R | Saloon 4WD EJ255 | | GCI56019 | Inner Joint | | 25 | 28 | 32 | 81.5 | 86 | |
| 2.5 (206 kw) | 2005.09-2007.12 | 6MT | F | L/R | Saloon 4WD EJ257 | PTJ | GDS56069 | Drive Shaft | 44T | 27 | 25 | 56 | 87 | 780 | |
| | 2005.09-2007.12 | 6MT | F | L/R | Saloon 4WD EJ257 | DOJ | GDS81949 | Drive Shaft | 44T | 27 | 25 | 56 | 86.5 | 688 | |
| | 2005.09-2007.12 | 6MT | F | L/R | Saloon 4WD EJ257 | Date from:2003.02,Date to:2003.07 | GCO56057 | Outer Joint | 44T | 27 | 32 | 56 | 86.5 | 68.5 | I |

| | YEAR | TRANSM. | F/R | L/R | BODY STYLE & DRIVE TYPE & ENGINE | REMARKS | G-AP Ref. | PRODUCT | ABS | Technical Specifications A | B | C | H | L | P |
|---|---|---|---|---|---|---|---|---|---|---|---|---|---|---|---|
| **SUBARU** | | | | | | | | | | | | | | | |
| **Impreza WRX** | | | | | | | | | | | | | | | |
| 2.5 (206 kw) | 2005.09-2007.12 | 6MT | F | L/R | Saloon 4WD EJ257 | Date from:2005.04,Date to:2006.06 | GCO56058 | Outer Joint | 44T | 27 | 32 | 54.5 | 86 | 67 | I |
| | 2005.09-2007.12 | 6MT | F | L/R | Saloon 4WD EJ257 | | GCI56004 | Inner Joint | | 25 | 30 | 40 | | 111.3 | |
| | 2005.09-2007.12 | AT/MT | F | L/R | Saloon 4WD EJ257 | Version:Excluding Widetrack | GDS56014 | Drive Shaft | 44T | 27 | 25 | 56 | 86.5 | 780 | |
| | 2005.09-2007.12 | | F | | Saloon 4WD EJ257 | Date To:2010.07 | GCO56022 | Outer Joint | | 27 | 30 | 52 | 77 | 54 | I |
| | 2005.09-2007.12 | | F | | Saloon 4WD EJ257 | | GCO56048 | Outer Joint | 44T | 27 | 32 | 56 | 86.5 | 71.5 | I |
| | 2005.09-2007.12 | | F | | Saloon 4WD EJ257 | Date To:2006.06 | GCO56067 | Outer Joint | 44T | 27 | 30 | 56 | 86.5 | 56 | M |
| | 2005.09-2007.12 | | F | | Saloon 4WD EJ257 | Date From:2007.04 | GCI56013 | Inner Joint | | 25 | 29 | 35 | 77.5 | 110 | |
| 2.5 (221 kw) | 2005.10-2007.03 | 6MT | F | L/R | Saloon 4WD EJ257 | PTJ | GDS56069 | Drive Shaft | 44T | 27 | 25 | 56 | 87 | 780 | |
| | 2005.10-2007.03 | 6MT | F | L/R | Saloon 4WD EJ257 | DOJ | GDS81949 | Drive Shaft | 44T | 27 | 25 | 56 | 86.5 | 688 | |
| | 2005.10-2007.03 | 6MT | F | L/R | Saloon 4WD EJ257 | Date from:2003.02,Date to:2003.07 | GCO56057 | Outer Joint | 44T | 27 | 32 | 56 | 86.5 | 68.5 | I |
| | 2005.10-2007.03 | 6MT | F | L/R | Saloon 4WD EJ257 | Date from:2005.04,Date to:2006.06 | GCO56058 | Outer Joint | 44T | 27 | 32 | 54.5 | 86 | 67 | I |
| | 2005.10-2007.03 | 6MT | F | L/R | Saloon 4WD EJ257 | | GCI56004 | Inner Joint | | 25 | 30 | 40 | | 111.3 | |
| | 2005.10-2007.03 | | F | | Saloon 4WD EJ257 | Date To:2010.07 | GCO56022 | Outer Joint | | 27 | 30 | 52 | 77 | 54 | I |
| | 2005.10-2007.03 | | F | | Saloon 4WD EJ257 | | GCO56048 | Outer Joint | 44T | 27 | 32 | 56 | 86.5 | 71.5 | I |
| | 2005.10-2007.03 | | F | | Saloon 4WD EJ257 | Date To:2006.06 | GCO56067 | Outer Joint | 44T | 27 | 30 | 56 | 86.5 | 56 | M |
| | 2008.01-2013.08 | | F | L/R | Hatchback 4WD EJ257 | Date From:2008.04 | GCO56022 | Outer Joint | | 27 | 30 | 52 | 77 | 54 | I |
| | 2008.01-2013.08 | 5AT | R | L/R | Hatchback 4WD EJ257 | Date from:2010.07 | GCI56019 | Inner Joint | | 25 | 28 | 32 | 81.5 | 86 | |
| | 2010.10-2014.12 | | F | L/R | Hatchback 4WD EJ257 | Date From:2008.04 | GCO56022 | Outer Joint | | 27 | 30 | 52 | 77 | 54 | I |
| | 2010.10-2014.12 | 5AT | R | L/R | Hatchback 4WD EJ257 | Date from:2010.07 | GCI56019 | Inner Joint | | 25 | 28 | 32 | 81.5 | 86 | |
| | 2011.01- | 5AT | R | L/R | Saloon 4WD EJ257 | Date from:2010.07 | GCI56019 | Inner Joint | | 25 | 28 | 32 | 81.5 | 86 | |
| 2.5 (235 kw) | 2007.02-2007.12 | 6MT | F | L/R | Saloon 4WD EJ257 | PTJ | GDS56069 | Drive Shaft | 44T | 27 | 25 | 56 | 87 | 780 | |
| | 2007.02-2007.12 | MT | F | L/R | Saloon 4WD EJ257 | DOJ | GDS81949 | Drive Shaft | 44T | 27 | 25 | 56 | 86.5 | 688 | |
| | 2007.02-2007.12 | MT | F | L/R | Saloon 4WD EJ257 | | GCO56048 | Outer Joint | 44T | 27 | 32 | 56 | 86.5 | 71.5 | I |
| | 2007.02-2007.12 | MT | F | L/R | Saloon 4WD EJ257 | | GCI56004 | Inner Joint | | 25 | 30 | 40 | | 111.3 | |
| | 2007.02-2007.12 | | F | L/R | Saloon 4WD EJ257 | | GCO56057 | Outer Joint | 44T | 27 | 32 | 56 | 86.5 | 68.5 | I |
| | 2007.02-2007.12 | | F | L/R | Saloon 4WD EJ257 | | GCO56058 | Outer Joint | 44T | 27 | 32 | 54.5 | 86 | 67 | I |
| 2.5 (243 kw) | 2009.05-2010.12 | 5MT | F | L/R | Hatchback 4WD EJ257 | PTJ | GDS56013 | Drive Shaft | | 27 | 25 | 52 | 77 | 770 | |
| | 2009.05-2010.12 | | F | L/R | Hatchback 4WD EJ257 | For Modelcode:G12GH | GCI56013 | Inner Joint | | 25 | 29 | 35 | 77.5 | 110 | |
| | 2009.05-2010.12 | 5MT | R | L/R | Hatchback 4WD EJ257 | For left-hand drive vehicles | GDS56057 | Drive Shaft | | 27 | 25 | 56 | 114 | 777 | |
| | 2009.05-2010.12 | 5MT | R | L/R | Hatchback 4WD EJ257 | For left-hand drive vehicles | GCI56019 | Inner Joint | | 25 | 28 | 32 | 81.5 | 86 | |
| **Impreza WRX Estate/Wagon Plus** | | | | | | | | | | | | | | | |
| 2.0 (160 kw) | 2000.12-2005.12 | 5MT | F | L/R | Estate 4WD EJ205 | Model year to:2001 | GDS56006 | Drive Shaft | | 27 | 25 | 56 | 87 | 684 | |
| | 2000.12-2005.12 | 5MT | F | L/R | Estate 4WD EJ205 | Model year from:2002,Model year to:2003 | GCO56026 | Outer Joint | 44T | 27 | 30 | 56 | 86.5 | 63 | I |
| | 2000.12-2005.12 | 5MT | F | L/R | Estate 4WD EJ205 | Model year from:2002 | GCO56067 | Outer Joint | 44T | 27 | 30 | 56 | 86.5 | 56 | M |
| | 2000.12-2005.12 | 5MT | F | L/R | Estate 4WD EJ205 | Model year from:2004 | GCI56013 | Inner Joint | | 25 | 29 | 35 | 77.5 | 110 | |
| | 2000.12-2005.12 | 5MT | F | L/R | Estate 4WD EJ205 | Model year to:2003 | GCI56023 | Inner Joint | | 25 | 29 | 40.1 | | 110.5 | |
| | 2000.12-2005.12 | MT | F | L/R | Estate 4WD EJ205 | Date from:2003.09 | GDS56014 | Drive Shaft | 44T | 27 | 25 | 56 | 86.5 | 780 | |
| | 2000.12-2005.12 | MT | F | L/R | Estate 4WD EJ205 | Date from:2003.09 | GCO56027 | Outer Joint | 44T | 27 | 23 | 56 | 86.5 | 63 | M |
| | 2000.12-2005.12 | 5MT | R | L/R | Estate 4WD EJ205 | Date from:2005.01 | GCI56019 | Inner Joint | | 25 | 28 | 32 | 81.5 | 86 | |
| 2.0 (165 kw) | 2002.12-2006.09 | 5AT | F | L/R | Estate 4WD EJ205 | 6 balls | GCO56009 | Outer Joint | 44T | 27 | 30 | 56 | 86.5 | 63 | M |
| | 2002.12-2006.09 | 5AT | F | L/R | Estate 4WD EJ205 | Model year from:2004 | GCI56013 | Inner Joint | | 25 | 29 | 35 | 77.5 | 110 | |
| | 2002.12-2006.09 | 5AT | F | L/R | Estate 4WD EJ205 | Model year to:2003 | GCI56023 | Inner Joint | | 25 | 29 | 40.1 | | 110.5 | |
| | 2002.12-2006.09 | AT/MT | F | L/R | Estate 4WD EJ205 | 6 balls | GDS56014 | Drive Shaft | 44T | 27 | 25 | 56 | 86.5 | 780 | |
| | 2002.12-2006.09 | 5AT | R | L/R | Estate 4WD EJ205 | Date from:2005.01 | GCI56019 | Inner Joint | | 25 | 28 | 32 | 81.5 | 86 | |
| 2.5 (169 kw) | 2005.09-2008.12 | 5MT | F | L/R | Estate 4WD EJ255 | Model year to:2006 | GCO56067 | Outer Joint | 44T | 27 | 30 | 56 | 86.5 | 56 | M |
| | 2005.09-2008.12 | MT | F | L/R | Estate 4WD EJ255 | Date to:2006.06 | GDS56014 | Drive Shaft | 44T | 27 | 25 | 56 | 86.5 | 780 | |
| | 2005.09-2008.12 | MT | F | L/R | Estate 4WD EJ255 | Date to:2006.06 | GCO56027 | Outer Joint | 44T | 27 | 23 | 56 | 86.5 | 63 | M |
| | 2005.09-2008.12 | 5MT | R | L/R | Estate 4WD EJ255 | | GCI56019 | Inner Joint | | 25 | 28 | 32 | 81.5 | 86 | |
| 2.5 (198 kw) | 2007.07-2007.12 | MT | F | L/R | Estate 4WD EJ255 | | GCI56013 | Inner Joint | | 25 | 29 | 35 | 77.5 | 110 | |
| | 2007.07-2007.12 | 5MT | R | L/R | Estate 4WD EJ255 | | GCI56019 | Inner Joint | | 25 | 28 | 32 | 81.5 | 86 | |
| 2.5 (221 kw) | 2005.10-2007.03 | | F | | Estate 4WD EJ257 | | GCO56048 | Outer Joint | 44T | 27 | 32 | 56 | 86.5 | 71.5 | I |
| **Justy** | | | | | | | | | | | | | | | |
| 1.0 (51 kw) | 2007.01- | | F | L | Hatchback FWD 1KR-FE | | GCO59268 | Outer Joint | | 24 | 26 | 47 | 85.5 | 47.5 | I |
| | 2007.01- | | F | L/R | Hatchback FWD 1KR-FE | | GCI14017 | Inner Joint | | 23 | 26 | 45 | 52 | 83 | |
| | 2007.09-2012.03 | | F | L | Hatchback FWD 1KR-FE | | GCO59268 | Outer Joint | | 24 | 26 | 47 | 85.5 | 47.5 | I |
| | 2007.09-2012.03 | | F | L/R | Hatchback FWD 1KR-FE | | GCI14017 | Inner Joint | | 23 | 26 | 45 | 52 | 83 | |
| 1.2 (55 kw) | 1990.10-1996.04 | | F | | Hatchback 4WD EF12E | | GCO56006 | Outer Joint | | 27 | 21 | 50 | 110 | 52.5 | M |
| 1.3 (50 kw) | 1995.10-2000.09 | | F | | Hatchback 4WD G13BA | | GCO56006 | Outer Joint | | 27 | 21 | 50 | 110 | 52.5 | M |
| 1.3 (51 kw) | 2003.12-2007.08 | | F | R | Hatchback FWD Z 13 DT | | GCO57079 | Outer Joint | 43T | 25 | 29 | 49 | 76 | 63 | M |
| 1.3 (67 kw) | 2008.03- | MT | F | L | Hatchback 4WD K3-VE | | GCO59268 | Outer Joint | | 24 | 26 | 47 | 85.5 | 47.5 | I |
| | 2008.03- | MT | F | L/R | Hatchback 4WD K3-VE | | GCI14017 | Inner Joint | | 23 | 26 | 45 | 52 | 83 | |
| 1.3 (69 kw) | 2003.09- | AT/MT | F | L/R | Hatchback 4WD M13A | | GCO57062 | Outer Joint | 43T | 25 | 28 | 49 | 76 | 61 | I |
| 1.5 (73 kw) | 2003.09- | 4AT/5MT | F | L | Hatchback 4WD M15A | | GDS99184 | Drive Shaft | 43T | 25 | 22 | 49 | 76 | 610 | |
| | 2003.09- | AT/MT | F | L/R | Hatchback 4WD M15A | | GCO57062 | Outer Joint | 43T | 25 | 28 | 49 | 76 | 61 | I |

| | YEAR | TRANSM. | F/R | L/R | BODY STYLE & DRIVE TYPE & ENGINE | REMARKS | G-AP Ref. | PRODUCT | ABS | Technical Specifications A | B | C | H | L | P |
|---|---|---|---|---|---|---|---|---|---|---|---|---|---|---|---|
| **SUBARU** | | | | | | | | | | | | | | | |
| **Legacy** | | | | | | | | | | | | | | | |
| 1.8 (76 kw) | 1996.05-1998.09 | | F | L/R | Saloon 4WD EJ18E | Date from:1998.05 | GDS83522 | Drive Shaft | | 27 | 25 | 56 | 87 | 682 | |
| 2.0 (85 kw) | 1994.01-1998.09 | AT | F | L | Saloon 4WD EJ20E | Date to:1998.05 | GCO56017 | Outer Joint | | 27 | 30 | 56 | 87 | 58.5 | I |
| | 1994.01-1998.09 | AT | F | R | Saloon 4WD EJ20E | Date to:1998.05 | GCO56017 | Outer Joint | | 27 | 30 | 56 | 87 | 58.5 | I |
| | 1994.01-1998.09 | AT/MT | F | L/R | Saloon 4WD EJ20E | Date to:1998.05 | GDS83522 | Drive Shaft | | 27 | 25 | 56 | 87 | 682 | |
| | 1994.01-1998.09 | AT/MT | F | L/R | Saloon 4WD EJ20E | Date to:1995.07 | GCO56005 | Outer Joint | | 27 | 22 | 56 | 87 | 66 | M |
| | 1994.01-1998.09 | AT/MT | F | L/R | Saloon 4WD EJ20E | Date from:1995.08,Date to:1998.09 | GCO56039 | Outer Joint | | 27 | 30 | 56 | 87.1 | 58 | M |
| | 1994.01-1998.09 | AT/MT | F | L/R | Saloon 4WD EJ20E | Date to:1998.05 | GCI82257 | Inner Joint | | 25 | 29 | 40 | | 112 | |
| | 1994.01-1998.09 | MT | F | L | Saloon 4WD EJ20E | Date to:1998.05 | GCO56017 | Outer Joint | | 27 | 30 | 56 | 87 | 58.5 | I |
| | 1994.01-1998.09 | MT | F | R | Saloon 4WD EJ20E | Date to:1998.05 | GCO56017 | Outer Joint | | 27 | 30 | 56 | 87 | 58.5 | I |
| | 1994.01-1998.09 | | F | L/R | Saloon 4WD EJ20E | Date From:1995.02,Date To:1996.02 | GCO56008 | Outer Joint | | 27 | 30 | 56 | 87 | 66 | I |
| | 1994.01-1998.09 | | F | L/R | Saloon 4WD EJ20E | Date From:1997.02 | GCO56040 | Outer Joint | | 27 | 30 | 56 | 86.5 | 62.7 | M |
| | 1994.01-1998.09 | | F | L/R | Saloon 4WD EJ20E | | GCI56006 | Inner Joint | | 25 | 22 | 40 | | 110.5 | |
| | 1994.01-1998.09 | | | | Saloon 4WD EJ20E | Date From:1995.12 | GCI56023 | Inner Joint | | 25 | 29 | 40.1 | | 110.5 | |
| | 1994.01-1999.03 | AT | F | L | Saloon FWD EJ20E | Date to:1998.05 | GCO56017 | Outer Joint | | 27 | 30 | 56 | 87 | 58.5 | I |
| | 1994.01-1999.03 | AT | F | R | Saloon FWD EJ20E | Date to:1998.05 | GCO56017 | Outer Joint | | 27 | 30 | 56 | 87 | 58.5 | I |
| | 1994.01-1999.03 | AT/MT | F | L/R | Saloon FWD EJ20E | Date to:1998.05 | GDS83522 | Drive Shaft | | 27 | 25 | 56 | 87 | 682 | |
| | 1994.01-1999.03 | AT/MT | F | L/R | Saloon FWD EJ20E | | GCO56003 | Outer Joint | | 27 | 25 | 56 | 87.5 | 72.5 | M |
| | 1994.01-1999.03 | AT/MT | F | L/R | Saloon FWD EJ20E | Date to:1995.07 | GCO56005 | Outer Joint | | 27 | 22 | 56 | 87 | 66 | M |
| | 1994.01-1999.03 | AT/MT | F | L/R | Saloon FWD EJ20E | Date from:1995.08 | GCO56039 | Outer Joint | | 27 | 30 | 56 | 87.1 | 58 | M |
| | 1994.01-1999.03 | AT/MT | F | L/R | Saloon FWD EJ20E | Date to:1998.05 | GCI82257 | Inner Joint | | 25 | 29 | 40 | | 112 | |
| | 1994.01-1999.03 | MT | F | L | Saloon FWD EJ20E | Date to:1998.05 | GCO56017 | Outer Joint | | 27 | 30 | 56 | 87 | 58.5 | I |
| | 1994.01-1999.03 | MT | F | R | Saloon FWD EJ20E | Date to:1998.05 | GCO56017 | Outer Joint | | 27 | 30 | 56 | 87 | 58.5 | I |
| | 1994.01-1999.03 | | F | L/R | Saloon FWD EJ20E | Date From:1997.02 | GCO56040 | Outer Joint | | 27 | 30 | 56 | 86.5 | 62.7 | M |
| | 1994.01-1999.03 | | F | L/R | Saloon FWD EJ20E | | GCI56006 | Inner Joint | | 25 | 22 | 40 | | 110.5 | |
| | 1994.01-1999.03 | | F | | Saloon FWD EJ20E | Date From:1997.02,Date To:1998.11 | GCI56023 | Inner Joint | | 25 | 29 | 40.1 | | 110.5 | |
| 2.0 (92 kw) | 1998.10-2003.08 | 4AT | F | L | Saloon 4WD EJ201 | | GCO56017 | Outer Joint | | 27 | 30 | 56 | 87 | 58.5 | I |
| | 1998.10-2003.08 | 4AT | F | R | Saloon 4WD EJ201 | | GCO56017 | Outer Joint | | 27 | 30 | 56 | 87 | 58.5 | I |
| | 1998.10-2003.08 | 4AT/5MT | F | L/R | Saloon 4WD EJ201 | Date to:1999.06 | GDS83522 | Drive Shaft | | 27 | 25 | 56 | 87 | 682 | |
| | 1998.10-2003.08 | 4AT/5MT | F | L/R | Saloon 4WD EJ201 | Date from:1999.07,Date to:2001.06 | GCI56004 | Inner Joint | | 25 | 30 | 40 | | 111.3 | |
| | 1998.10-2003.08 | 4AT/5MT | F | L/R | Saloon 4WD EJ201 | Date from:2001.07 | GCI56023 | Inner Joint | | 25 | 29 | 40.1 | | 110.5 | |
| | 1998.10-2003.08 | 4AT/5MT | F | L/R | Saloon 4WD EJ201 | Date to:1999.06 | GCI82257 | Inner Joint | | 25 | 29 | 40 | | 112 | |
| | 1998.10-2003.08 | 5MT | F | L | Saloon 4WD EJ201 | | GCO56017 | Outer Joint | | 27 | 30 | 56 | 87 | 58.5 | I |
| | 1998.10-2003.08 | 5MT | F | R | Saloon 4WD EJ201 | | GCO56017 | Outer Joint | | 27 | 30 | 56 | 87 | 58.5 | I |
| | 1998.10-2003.08 | AT | F | L/R | Saloon 4WD EJ201 | Date to:1999.06 | GCO56005 | Outer Joint | | 27 | 22 | 56 | 87 | 66 | M |
| | 1998.10-2003.08 | AT | F | L/R | Saloon 4WD EJ201 | Date from:2001.07 | GCO56009 | Outer Joint | 44T | 27 | 30 | 56 | 86.5 | 63 | M |
| | 1998.10-2003.08 | AT | F | L/R | Saloon 4WD EJ201 | Date to:1999.06 | GCO56040 | Outer Joint | | 27 | 30 | 56 | 86.5 | 62.7 | M |
| | 1998.10-2003.08 | MT | F | L/R | Saloon 4WD EJ201 | Date from:1999.07,Date to:2001.06 | GCO56026 | Outer Joint | 44T | 27 | 30 | 56 | 86.5 | 63 | I |
| | 1998.10-2003.08 | MT/AT | F | L/R | Saloon 4WD EJ201 | | GDS56032 | Drive Shaft | 44T | 27 | 25 | 56 | 86.5 | 682.5 | |
| 2.0 (101 kw) | 2003.09-2005.10 | AT/MT | F | L/R | Saloon 4WD EJ202 | | GDS56013 | Drive Shaft | | 27 | 25 | 52 | 77 | 770 | |
| | 2003.09-2005.10 | AT/MT | F | L/R | Saloon 4WD EJ202 | GrooveType:Middle | GCO56042 | Outer Joint | | 27 | 30 | 52 | 76 | 54 | M |
| | 2003.09-2005.10 | AT/MT | F | L/R | Saloon 4WD EJ202 | | GCI56013 | Inner Joint | | 25 | 29 | 35 | 77.5 | 110 | |
| | 2003.09-2005.10 | 5MT | R | L/R | Saloon 4WD EJ202 | | GDS56052 | Drive Shaft | | 25 | 25 | 52 | 98.5 | 769 | |
| | 2003.09-2005.10 | AT | R | L/R | Saloon 4WD EJ202 | | GCI82768 | Inner Joint | | 22 | 19 | 32 | 62 | 102 | |
| | 2003.09-2005.10 | MT | R | L/R | Saloon 4WD EJ202 | | GCI56019 | Inner Joint | | 25 | 28 | 32 | 81.5 | 86 | |
| 2.0 (108 kw) | 2009.09-2011.12 | CVT/6MT | F | L/R | Saloon 4WD EJ204 | | GDS81902 | Drive Shaft | | 27 | 25 | 52 | 77 | 794 | |
| | 2009.09-2011.12 | CVT/6MT | F | L/R | Saloon 4WD EJ204 | Date to:2013.01;6 balls | GCO56022 | Outer Joint | | 27 | 30 | 52 | 77 | 54 | I |
| | 2009.09-2011.12 | CVT/6MT | F | L/R | Saloon 4WD EJ204 | 8 balls | GCO81561 | Outer Joint | | 27 | 30 | 52 | 77 | 54 | I |
| | 2009.09-2011.12 | CVT/6MT | F | L/R | Saloon 4WD EJ204 | Date to:2013.01 | GCI56027 | Inner Joint | | 25 | 29 | 35 | 77.5 | 105 | |
| | 2009.09-2011.12 | CVT/6MT | F | L/R | Saloon 4WD EJ204 | Date from:2013.02 | GCI82426 | Inner Joint | | 25 | 29 | 35 | 77.5 | 108.5 | |
| | 2009.09-2011.12 | CVT | R | L/R | Saloon 4WD EJ204 | Date to:2013.01 | GDS84455 | Drive Shaft | | 27 | 22 | 56 | 113.5 | 792 | |
| | 2009.09-2011.12 | CVT | R | L/R | Saloon 4WD EJ204 | | GCO82822 | Outer Joint | | 27 | 19 | 56 | 113.5 | 52 | I |
| | 2009.09-2011.12 | CVT | R | L/R | Saloon 4WD EJ204 | | GCI82768 | Inner Joint | | 22 | 19 | 32 | 62 | 102 | |
| | 2009.09-2011.12 | MT | R | L/R | Saloon 4WD EJ204 | | GDS82268 | Drive Shaft | | 27 | 25 | 56 | 114 | 795 | |
| 2.0 (110 kw) | 2007.09-2009.12 | AT/MT | F | L/R | Saloon 4WD EJ204 | | GDS56013 | Drive Shaft | | 27 | 25 | 52 | 77 | 770 | |
| | 2007.09-2009.12 | AT/MT | F | L/R | Saloon 4WD EJ204 | GrooveType:Middle | GCO56042 | Outer Joint | | 27 | 30 | 52 | 76 | 54 | M |
| | 2007.09-2009.12 | AT/MT | F | L/R | Saloon 4WD EJ204 | | GCI56013 | Inner Joint | | 25 | 29 | 35 | 77.5 | 110 | |
| | 2007.09-2009.12 | 5MT | R | L/R | Saloon 4WD EJ204 | | GDS56052 | Drive Shaft | | 25 | 25 | 52 | 98.5 | 769 | |
| | 2007.09-2009.12 | AT | R | L/R | Saloon 4WD EJ204 | | GCI82768 | Inner Joint | | 22 | 19 | 32 | 62 | 102 | |
| | 2007.09-2009.12 | MT | R | L/R | Saloon 4WD EJ204 | | GCI56019 | Inner Joint | | 25 | 28 | 32 | 81.5 | 86 | |
| | 2008.02-2009.12 | AT/MT | F | L/R | Saloon 4WD EE20Z | | GCO99339 | Outer Joint | | 27 | 32 | 52 | 76.5 | 62.5 | I |
| | 2008.02-2009.12 | | F | L/R | Saloon 4WD EE20Z | | GCI56013 | Inner Joint | | 25 | 29 | 35 | 77.5 | 110 | |
| | 2008.02-2009.12 | 5MT | R | L/R | Saloon 4WD EE20Z | | GDS56052 | Drive Shaft | | 25 | 25 | 52 | 98.5 | 769 | |
| | 2008.02-2009.12 | 5MT | R | L/R | Saloon 4WD EE20Z | | GCI56019 | Inner Joint | | 25 | 28 | 32 | 81.5 | 86 | |
| | 2009.09-2014.12 | 6MT | F | L/R | Saloon 4WD EE20Z | | GDS81902 | Drive Shaft | | 27 | 25 | 52 | 77 | 794 | |
| | 2009.09-2014.12 | 6MT | F | L/R | Saloon 4WD EE20Z | Date to:2013.01 | GCI56027 | Inner Joint | | 25 | 29 | 35 | 77.5 | 105 | |

| | YEAR | TRANSM. | F/R | L/R | BODY STYLE & DRIVE TYPE & ENGINE | REMARKS | G-AP Ref. | PRODUCT | ABS | Technical Specifications | | | | | |
|---|---|---|---|---|---|---|---|---|---|---|---|---|---|---|---|
| | | | | | | | | | | A | B | C | H | L | P |
| **SUBARU** | | | | | | | | | | | | | | | |
| **Legacy** | | | | | | | | | | | | | | | |
| 2.0 (110 kw) | 2009.09-2014.12 | 6MT | F | L/R | Saloon 4WD EE20Z | Date from:2013.02 | GCI82426 | Inner Joint | | 25 | 29 | 35 | 77.5 | 108.5 | |
| | 2009.09-2014.12 | AT/MT | F | L/R | Saloon 4WD EE20Z | | GCO99339 | Outer Joint | | 27 | 32 | 52 | 76.5 | 62.5 | I |
| | 2009.09-2014.12 | 6MT | R | L/R | Saloon 4WD EE20Z | | GDS82268 | Drive Shaft | | 27 | 25 | 56 | 114 | 795 | |
| | 2009.09-2014.12 | CVT/6MT | F | L/R | Saloon 4WD EJ204 | | GDS81902 | Drive Shaft | | 27 | 25 | 52 | 77 | 794 | |
| | 2009.09-2014.12 | CVT/6MT | F | L/R | Saloon 4WD EJ204 | 6 balls | GCO56022 | Outer Joint | | 27 | 30 | 52 | 77 | 54 | I |
| | 2009.09-2014.12 | CVT/6MT | F | L/R | Saloon 4WD EJ204 | 8 balls | GCO81561 | Outer Joint | | 27 | 30 | 52 | 77 | 54 | I |
| | 2009.09-2014.12 | CVT/6MT | F | L/R | Saloon 4WD EJ204 | Date to:2013.01 | GCI56027 | Inner Joint | | 25 | 29 | 35 | 77.5 | 105 | |
| | 2009.09-2014.12 | CVT/6MT | F | L/R | Saloon 4WD EJ204 | Date from:2013.02 | GCI82426 | Inner Joint | | 25 | 29 | 35 | 77.5 | 108.5 | |
| | 2009.09-2014.12 | 6MT | R | L/R | Saloon 4WD EJ204 | | GDS82268 | Drive Shaft | | 27 | 25 | 56 | 114 | 795 | |
| | 2009.09-2014.12 | CVT | R | L/R | Saloon 4WD EJ204 | Date to:2013.01 | GDS84455 | Drive Shaft | | 27 | 22 | 56 | 113.5 | 792 | |
| | 2009.09-2014.12 | CVT | R | L/R | Saloon 4WD EJ204 | | GCO82822 | Outer Joint | | 27 | 19 | 56 | 113.5 | 52 | I |
| | 2009.09-2014.12 | CVT | R | L/R | Saloon 4WD EJ204 | | GCI82768 | Inner Joint | | 22 | 19 | 32 | 62 | 102 | |
| 2.0 (118 kw) | 2009.06-2015.12 | CVT | F | L/R | Saloon 4WD EJ204 | Date to:2014.11 | GDS81902 | Drive Shaft | | 27 | 25 | 52 | 77 | 794 | |
| | 2009.06-2015.12 | CVT | F | L/R | Saloon 4WD EJ204 | Date to:2014.11 | GCO56022 | Outer Joint | | 27 | 30 | 52 | 77 | 54 | I |
| | 2009.06-2015.12 | CVT | F | L/R | Saloon 4WD EJ204 | Date to:2014.11 | GCO81561 | Outer Joint | | 27 | 30 | 52 | 77 | 54 | I |
| | 2009.06-2015.12 | CVT | F | L/R | Saloon 4WD EJ204 | Date to:2013.01 | GCI56027 | Inner Joint | | 25 | 29 | 35 | 77.5 | 105 | |
| | 2009.06-2015.12 | CVT | F | L/R | Saloon 4WD EJ204 | Date from:2013.02 | GCI82426 | Inner Joint | | 25 | 29 | 35 | 77.5 | 108.5 | |
| | 2009.06-2015.12 | CVT | R | L/R | Saloon 4WD EJ204 | Date to:2013.01 | GDS84455 | Drive Shaft | | 27 | 22 | 56 | 113.5 | 792 | |
| | 2009.06-2015.12 | CVT | R | L/R | Saloon 4WD EJ204 | | GCO82822 | Outer Joint | | 27 | 19 | 56 | 113.5 | 52 | I |
| | 2009.06-2015.12 | CVT | R | L/R | Saloon 4WD EJ204 | | GCI82768 | Inner Joint | | 22 | 19 | 32 | 62 | 102 | |
| 2.0 (121 kw) | 2005.06-2009.04 | AT | F | L/R | Saloon 4WD EJ204 | | GDS56013 | Drive Shaft | | 27 | 25 | 52 | 77 | 770 | |
| | 2005.06-2009.04 | AT | F | L/R | Saloon 4WD EJ204 | GrooveType:Middle | GCO56042 | Outer Joint | | 27 | 30 | 52 | 76 | 54 | M |
| | 2005.06-2009.04 | AT | F | L/R | Saloon 4WD EJ204 | | GCI56013 | Inner Joint | | 25 | 29 | 35 | 77.5 | 110 | |
| | 2005.06-2009.04 | 5AT | R | L/R | Saloon 4WD EJ204 | For vehicles with ESP | GCI56019 | Inner Joint | | 25 | 28 | 32 | 81.5 | 86 | |
| | 2005.06-2009.04 | 5AT | R | L/R | Saloon 4WD EJ204 | For vehicles without ESP | GCI82768 | Inner Joint | | 22 | 19 | 32 | 62 | 102 | |
| 2.2 (94 kw) | 1994.01-1999.03 | AT | F | L | Saloon 4WD EJ22E | Date to:1998.05 | GCO56017 | Outer Joint | | 27 | 30 | 56 | 87 | 58.5 | I |
| | 1994.01-1999.03 | AT | F | R | Saloon 4WD EJ22E | Date to:1998.05 | GCO56017 | Outer Joint | | 27 | 30 | 56 | 87 | 58.5 | I |
| | 1994.01-1999.03 | AT/MT | F | L/R | Saloon 4WD EJ22E | Date to:1998.05 | GDS83522 | Drive Shaft | | 27 | 25 | 56 | 87 | 682 | |
| | 1994.01-1999.03 | AT/MT | F | L/R | Saloon 4WD EJ22E | Date to:1995.07 | GCO56005 | Outer Joint | | 27 | 22 | 56 | 87 | 66 | M |
| | 1994.01-1999.03 | AT/MT | F | L/R | Saloon 4WD EJ22E | Date from:1995.08 | GCO56039 | Outer Joint | | 27 | 30 | 56 | 87.1 | 58 | M |
| | 1994.01-1999.03 | AT/MT | F | L/R | Saloon 4WD EJ22E | Date to:1998.05 | GCI82257 | Inner Joint | | 25 | 29 | 40 | | 112 | |
| | 1994.01-1999.03 | MT | F | L | Saloon 4WD EJ22E | Date to:1998.05 | GCO56017 | Outer Joint | | 27 | 30 | 56 | 87 | 58.5 | I |
| | 1994.01-1999.03 | MT | F | R | Saloon 4WD EJ22E | Date to:1998.05 | GCO56017 | Outer Joint | | 27 | 30 | 56 | 87 | 58.5 | I |
| | 1994.01-1999.03 | | F | L/R | Saloon 4WD EJ22E | Date From:1995.07 | GCO56008 | Outer Joint | | 27 | 30 | 56 | 87 | 66 | I |
| | 1994.01-1999.03 | | F | L/R | Saloon 4WD EJ22E | Date From:1997.02 | GCO56040 | Outer Joint | | 27 | 30 | 56 | 86.5 | 62.7 | M |
| | 1994.01-1999.03 | | F | L/R | Saloon 4WD EJ22E | | GCI56006 | Inner Joint | | 25 | 22 | 40 | | 110.5 | |
| | 1994.01-1999.03 | | | | Saloon 4WD EJ22E | Date From:1995.12 | GCI56023 | Inner Joint | | 25 | 29 | 40.1 | | 110.5 | |
| 2.2 (96 kw) | 1994.01-1999.03 | AT | F | L | Saloon 4WD EJ22E | Date to:1998.05 | GCO56017 | Outer Joint | | 27 | 30 | 56 | 87 | 58.5 | I |
| | 1994.01-1999.03 | AT | F | R | Saloon 4WD EJ22E | Date to:1998.05 | GCO56017 | Outer Joint | | 27 | 30 | 56 | 87 | 58.5 | I |
| | 1994.01-1999.03 | AT/MT | F | L/R | Saloon 4WD EJ22E | Date to:1998.05 | GDS83522 | Drive Shaft | | 27 | 25 | 56 | 87 | 682 | |
| | 1994.01-1999.03 | AT/MT | F | L/R | Saloon 4WD EJ22E | Date to:1998.05 | GCI82257 | Inner Joint | | 25 | 29 | 40 | | 112 | |
| | 1994.01-1999.03 | MT | F | L | Saloon 4WD EJ22E | Date to:1998.05 | GCO56017 | Outer Joint | | 27 | 30 | 56 | 87 | 58.5 | I |
| | 1994.01-1999.03 | MT | F | R | Saloon 4WD EJ22E | Date to:1998.05 | GCO56017 | Outer Joint | | 27 | 30 | 56 | 87 | 58.5 | I |
| | 1994.01-1999.03 | | F | L/R | Saloon 4WD EJ22E | | GCO56005 | Outer Joint | | 27 | 22 | 56 | 87 | 66 | M |
| | 1994.01-1999.03 | | F | L/R | Saloon 4WD EJ22E | | GCO56008 | Outer Joint | | 27 | 30 | 56 | 87 | 66 | I |
| | 1994.01-1999.03 | | F | L/R | Saloon 4WD EJ22E | | GCO56039 | Outer Joint | | 27 | 30 | 56 | 87.1 | 58 | M |
| | 1994.01-1999.03 | | F | L/R | Saloon 4WD EJ22E | Date From:1997.02 | GCO56040 | Outer Joint | | 27 | 30 | 56 | 86.5 | 62.7 | M |
| | 1994.01-1999.03 | | F | L/R | Saloon 4WD EJ22E | | GCI56006 | Inner Joint | | 25 | 22 | 40 | | 110.5 | |
| 2.5 (110 kw) | 1996.01-1998.12 | AT | F | L/R | Saloon 4WD EJ25D | Date to:1998.05 | GDS83522 | Drive Shaft | | 27 | 25 | 56 | 87 | 682 | |
| | 1996.01-1998.12 | AT | F | L | Saloon 4WD EJ25D | Date to:1998.05 | GCO56017 | Outer Joint | | 27 | 30 | 56 | 87 | 58.5 | I |
| | 1996.01-1998.12 | AT | F | R | Saloon 4WD EJ25D | Date to:1998.05 | GCO56017 | Outer Joint | | 27 | 30 | 56 | 87 | 58.5 | I |
| | 1996.01-1998.12 | AT | F | L/R | Saloon 4WD EJ25D | | GCI56006 | Inner Joint | | 25 | 22 | 40 | | 110.5 | |
| | 1996.01-1998.12 | AT | F | L/R | Saloon 4WD EJ25D | Date to:1998.05 | GCI82257 | Inner Joint | | 25 | 29 | 40 | | 112 | |
| | 1996.01-1998.12 | | F | L/R | Saloon 4WD EJ25D | Date to:1998.12 | GCO56039 | Outer Joint | | 27 | 30 | 56 | 87.1 | 58 | M |
| | 1996.01-1998.12 | | F | L/R | Saloon 4WD EJ25D | Date From:1997.02 | GCO56040 | Outer Joint | | 27 | 30 | 56 | 86.5 | 62.7 | M |
| 2.5 (115 kw) | 1998.10-2003.08 | 4AT/5MT | F | L/R | Saloon 4WD EJ251 | Date from:1999.07,Date to:2001.06 | GCI56004 | Inner Joint | | 25 | 30 | 40 | | 111.3 | |
| | 1998.10-2003.08 | 4AT/5MT | F | L/R | Saloon 4WD EJ251 | Date from:2001.07 | GCI56023 | Inner Joint | | 25 | 29 | 40.1 | | 110.5 | |
| | 1998.10-2003.08 | 4AT/5MT | F | L/R | Saloon 4WD EJ251 | Date to:1999.06 | GCI82257 | Inner Joint | | 25 | 29 | 40 | | 112 | |
| | 1998.10-2003.08 | AT | F | L/R | Saloon 4WD EJ251 | Date to:1999.06;6 balls,PTJ | GDS83522 | Drive Shaft | | 27 | 25 | 56 | 87 | 682 | |
| | 1998.10-2003.08 | AT | F | L | Saloon 4WD EJ251 | | GCO56017 | Outer Joint | | 27 | 30 | 56 | 87 | 58.5 | I |
| | 1998.10-2003.08 | AT | F | R | Saloon 4WD EJ251 | | GCO56017 | Outer Joint | | 27 | 30 | 56 | 87 | 58.5 | I |
| | 1998.10-2003.08 | AT | F | L/R | Saloon 4WD EJ251 | Date to:1999.06 | GCO56005 | Outer Joint | | 27 | 22 | 56 | 87 | 66 | M |
| | 1998.10-2003.08 | AT | F | L/R | Saloon 4WD EJ251 | Date from:1999.07 | GCO56009 | Outer Joint | 44T | 27 | 30 | 56 | 86.5 | 63 | M |
| | 1998.10-2003.08 | MT | F | R | Saloon 4WD EJ251 | Date from:2001.07 | GDS56061 | Drive Shaft | 44T | 27 | 25 | 56 | 86.5 | 682.5 | |
| | 1998.10-2003.08 | MT | F | L/R | Saloon 4WD EJ251 | Date from:1999.07,Date to:2001.06 | GCO56026 | Outer Joint | 44T | 27 | 30 | 56 | 86.5 | 63 | I |

| | YEAR | TRANSM. | F/R | L/R | BODY STYLE & DRIVE TYPE & ENGINE | REMARKS | G-AP Ref. | PRODUCT | ABS | Technical Specifications A | B | C | H | L | P |
|---|---|---|---|---|---|---|---|---|---|---|---|---|---|---|---|
| **SUBARU** | | | | | | | | | | | | | | | |
| **Legacy** | | | | | | | | | | | | | | | |
| 2.5 (115 kw) | 1998.10-2003.08 | MT | F | L/R | Saloon 4WD EJ251 | Date from:2001.07 | GCO56067 | Outer Joint | 44T | 27 | 30 | 56 | 86.5 | 56 | M |
| | 1998.10-2003.08 | MT/AT | F | L/R | Saloon 4WD EJ251 | 6 balls,DOJ | GDS56032 | Drive Shaft | 44T | 27 | 25 | 56 | 86.5 | 682.5 | |
| 2.5 (121 kw) | 2003.09-2009.04 | AT/MT | F | L/R | Saloon 4WD EJ25 | | GDS56013 | Drive Shaft | | 27 | 25 | 52 | 77 | 770 | |
| | 2003.09-2009.04 | AT/MT | F | L/R | Saloon 4WD EJ25 | GrooveType:Middle | GCO56042 | Outer Joint | | 27 | 30 | 52 | 76 | 54 | M |
| | 2003.09-2009.04 | AT/MT | F | L/R | Saloon 4WD EJ25 | | GCI56013 | Inner Joint | | 25 | 29 | 35 | 77.5 | 110 | |
| | 2003.09-2009.04 | 4AT/5MT | R | L/R | Saloon 4WD EJ25 | | GDS56052 | Drive Shaft | | 25 | 25 | 52 | 98.5 | 769 | |
| | 2003.09-2009.04 | 4AT/5MT | R | L/R | Saloon 4WD EJ25 | | GCI56019 | Inner Joint | | 25 | 28 | 32 | 81.5 | 86 | |
| 2.5 (123 kw) | 2009.09-2014.12 | CVT/6MT | F | L/R | Saloon 4WD EJ253 | | GDS81902 | Drive Shaft | | 27 | 25 | 52 | 77 | 794 | |
| | 2009.09-2014.12 | CVT/6MT | F | L/R | Saloon 4WD EJ253 | 6 balls | GCO56022 | Outer Joint | | 27 | 30 | 52 | 77 | 54 | I |
| | 2009.09-2014.12 | CVT/6MT | F | L/R | Saloon 4WD EJ253 | 8 balls | GCO81561 | Outer Joint | | 27 | 30 | 52 | 77 | 54 | I |
| | 2009.09-2014.12 | CVT/6MT | F | L/R | Saloon 4WD EJ253 | Date to:2013.01 | GCI56027 | Inner Joint | | 25 | 29 | 35 | 77.5 | 105 | |
| | 2009.09-2014.12 | CVT/6MT | F | L/R | Saloon 4WD EJ253 | Date from:2013.02 | GCI82426 | Inner Joint | | 25 | 29 | 35 | 77.5 | 108.5 | |
| | 2009.09-2014.12 | 6MT | R | L/R | Saloon 4WD EJ253 | | GDS82268 | Drive Shaft | | 27 | 25 | 56 | 114 | 795 | |
| | 2009.09-2014.12 | CVT | R | L/R | Saloon 4WD EJ253 | Date to:2013.01 | GDS84455 | Drive Shaft | | 27 | 22 | 56 | 113.5 | 792 | |
| | 2009.09-2014.12 | CVT | R | L/R | Saloon 4WD EJ253 | | GCO82822 | Outer Joint | | 27 | 19 | 56 | 113.5 | 52 | I |
| | 2009.09-2014.12 | CVT | R | L/R | Saloon 4WD EJ253 | | GCI82768 | Inner Joint | | 22 | 19 | 32 | 62 | 102 | |
| 2.5 (125 kw) | 2012.01-2014.12 | CVT/6MT | F | L/R | Saloon 4WD EJ253 | | GDS81902 | Drive Shaft | | 27 | 25 | 52 | 77 | 794 | |
| | 2012.01-2014.12 | CVT/6MT | F | L/R | Saloon 4WD EJ253 | 6 balls | GCO56022 | Outer Joint | | 27 | 30 | 52 | 77 | 54 | I |
| | 2012.01-2014.12 | CVT/6MT | F | L/R | Saloon 4WD EJ253 | 8 balls | GCO81561 | Outer Joint | | 27 | 30 | 52 | 77 | 54 | I |
| | 2012.01-2014.12 | CVT/6MT | F | L/R | Saloon 4WD EJ253 | Date to:2013.01 | GCI56027 | Inner Joint | | 25 | 29 | 35 | 77.5 | 105 | |
| | 2012.01-2014.12 | CVT/6MT | F | L/R | Saloon 4WD EJ253 | Date from:2013.02 | GCI82426 | Inner Joint | | 25 | 29 | 35 | 77.5 | 108.5 | |
| | 2012.01-2014.12 | 6MT | R | L/R | Saloon 4WD EJ253 | | GDS82268 | Drive Shaft | | 27 | 25 | 56 | 114 | 795 | |
| | 2012.01-2014.12 | CVT | R | L/R | Saloon 4WD EJ253 | Date to:2013.01 | GDS84455 | Drive Shaft | | 27 | 22 | 56 | 113.5 | 792 | |
| | 2012.01-2014.12 | CVT | R | L/R | Saloon 4WD EJ253 | | GCO82822 | Outer Joint | | 27 | 19 | 56 | 113.5 | 52 | I |
| | 2012.01-2014.12 | CVT | R | L/R | Saloon 4WD EJ253 | | GCI82768 | Inner Joint | | 22 | 19 | 32 | 62 | 102 | |
| 2.5 (127 kw) | 2007.09-2009.12 | AT/MT | F | L/R | Saloon 4WD EJ25 | | GDS56013 | Drive Shaft | | 27 | 25 | 52 | 77 | 770 | |
| | 2007.09-2009.12 | AT/MT | F | L/R | Saloon 4WD EJ25 | GrooveType:Middle | GCO56042 | Outer Joint | | 27 | 30 | 52 | 76 | 54 | M |
| | 2007.09-2009.12 | AT/MT | F | L/R | Saloon 4WD EJ25 | | GCI56013 | Inner Joint | | 25 | 29 | 35 | 77.5 | 110 | |
| | 2007.09-2009.12 | 4AT/5MT | R | L/R | Saloon 4WD EJ25 | | GDS56052 | Drive Shaft | | 25 | 25 | 52 | 98.5 | 769 | |
| | 2007.09-2009.12 | 4AT/5MT | R | L/R | Saloon 4WD EJ25 | | GCI56019 | Inner Joint | | 25 | 28 | 32 | 81.5 | 86 | |
| | 2012.07-2014.12 | AT/CVT | F | L/R | Saloon 4WD FB25;FB25A;FB25B | | GDS81902 | Drive Shaft | | 27 | 25 | 52 | 77 | 794 | |
| | 2012.07-2014.12 | CVT | F | L/R | Saloon 4WD FB25;FB25A;FB25B | | GCO81561 | Outer Joint | | 27 | 30 | 52 | 77 | 54 | I |
| | 2012.07-2014.12 | CVT | F | L/R | Saloon 4WD FB25;FB25A;FB25B | | GCI82426 | Inner Joint | | 25 | 29 | 35 | 77.5 | 108.5 | |
| | 2012.07-2014.12 | CVT | R | L/R | Saloon 4WD FB25;FB25A;FB25B | | GDS82268 | Drive Shaft | | 27 | 25 | 56 | 114 | 795 | |
| | 2012.07-2014.12 | CVT | R | L/R | Saloon 4WD FB25;FB25A;FB25B | Date to:2013.01 | GCO82822 | Outer Joint | | 27 | 19 | 56 | 113.5 | 52 | I |
| | 2012.07-2014.12 | CVT | R | L/R | Saloon 4WD FB25;FB25A;FB25B | | GCI82768 | Inner Joint | | 22 | 19 | 32 | 62 | 102 | |
| 2.5 (129 kw) | 2015.01- | CVT | F | L/R | Saloon 4WD | | GCI82426 | Inner Joint | | 25 | 29 | 35 | 77.5 | 108.5 | |
| | 2015.01- | CVT | R | L/R | Saloon 4WD | | GCI83211 | Inner Joint | | 22 | 19 | 32 | 62 | 102.5 | |
| 2.5 (195 kw) | 2010.07-2014.12 | 5AT/6MT | F | L/R | Saloon 4WD EJ255 | Date to:2013.01 | GCI56027 | Inner Joint | | 25 | 29 | 35 | 77.5 | 105 | |
| | 2010.07-2014.12 | 5AT/6MT | F | L/R | Saloon 4WD EJ255 | Date from:2013.02 | GCI82426 | Inner Joint | | 25 | 29 | 35 | 77.5 | 108.5 | |
| | 2010.07-2014.12 | AT | F | L/R | Saloon 4WD EJ255 | | GCO56022 | Outer Joint | | 27 | 30 | 52 | 77 | 54 | I |
| | 2010.07-2014.12 | AT/MT | F | L/R | Saloon 4WD EJ255 | | GDS81902 | Drive Shaft | | 27 | 25 | 52 | 77 | 794 | |
| | 2010.07-2014.12 | CVT | F | L/R | Saloon 4WD EJ255 | | GCO81561 | Outer Joint | | 27 | 30 | 52 | 77 | 54 | I |
| | 2010.07-2014.12 | 5AT/6MT | R | L/R | Saloon 4WD EJ255 | | GDS82268 | Drive Shaft | | 27 | 25 | 56 | 114 | 795 | |
| 3.0 (180 kw) | 2003.09-2009.08 | AT | F | L/R | Saloon 4WD EZ30 | | GDS56013 | Drive Shaft | | 27 | 25 | 52 | 77 | 770 | |
| | 2003.09-2009.08 | AT/MT | F | L/R | Saloon 4WD EZ30 | GrooveType:Middle | GCO56042 | Outer Joint | | 27 | 30 | 52 | 76 | 54 | M |
| | 2003.09-2009.08 | AT/MT | F | L/R | Saloon 4WD EZ30 | | GCI56013 | Inner Joint | | 25 | 29 | 35 | 77.5 | 110 | |
| | 2003.09-2009.08 | MT | F | L/R | Saloon 4WD EZ30 | Date to:2006.06 | GDS56013 | Drive Shaft | | 27 | 25 | 52 | 77 | 770 | |
| | 2003.09-2009.08 | 5AT/6MT | R | L/R | Saloon 4WD EZ30 | | GDS56052 | Drive Shaft | | 25 | 25 | 52 | 98.5 | 769 | |
| | 2003.09-2009.08 | 5AT/6MT | R | L/R | Saloon 4WD EZ30 | | GCI56019 | Inner Joint | | 25 | 28 | 32 | 81.5 | 86 | |
| 3.6 (191 kw) | 2015.01- | CVT | F | L/R | Saloon 4WD EZ36D | | GCI82426 | Inner Joint | | 25 | 29 | 35 | 77.5 | 108.5 | |
| **Legacy Estate/Wagon** | | | | | | | | | | | | | | | |
| 2.0 (85 kw) | 1994.01-1998.09 | AT | F | L | Estate 4WD EJ20E | Date to:1998.05 | GCO56017 | Outer Joint | | 27 | 30 | 56 | 87 | 58.5 | I |
| | 1994.01-1998.09 | AT | F | R | Estate 4WD EJ20E | Date to:1998.05 | GCO56017 | Outer Joint | | 27 | 30 | 56 | 87 | 58.5 | I |
| | 1994.01-1998.09 | AT/MT | F | L/R | Estate 4WD EJ20E | Date to:1998.05 | GDS83522 | Drive Shaft | | 27 | 25 | 56 | 87 | 682 | |
| | 1994.01-1998.09 | AT/MT | F | L/R | Estate 4WD EJ20E | Date to:1995.07 | GCO56005 | Outer Joint | | 27 | 22 | 56 | 87 | 66 | M |
| | 1994.01-1998.09 | AT/MT | F | L/R | Estate 4WD EJ20E | Date from:1995.08 | GCO56039 | Outer Joint | | 27 | 30 | 56 | 87.1 | 58 | M |
| | 1994.01-1998.09 | AT/MT | F | L/R | Estate 4WD EJ20E | Date to:1998.05 | GCI82257 | Inner Joint | | 25 | 29 | 40 | | 112 | |
| | 1994.01-1998.09 | MT | F | L | Estate 4WD EJ20E | Date to:1998.05 | GCO56017 | Outer Joint | | 27 | 30 | 56 | 87 | 58.5 | I |
| | 1994.01-1998.09 | MT | F | R | Estate 4WD EJ20E | Date to:1998.05 | GCO56017 | Outer Joint | | 27 | 30 | 56 | 87 | 58.5 | I |
| | 1994.01-1998.09 | | F | | Estate 4WD EJ20E | Date From:1997.02 | GCO56040 | Outer Joint | | 27 | 30 | 56 | 86.5 | 62.7 | M |
| | 1994.01-1998.09 | | F | L/R | Estate 4WD EJ20E | | GCI56006 | Inner Joint | | 25 | 22 | 40 | | 110.5 | |
| | 1994.01-1998.09 | | | | Estate 4WD EJ20E | Date From:1995.12 | GCI56023 | Inner Joint | | 25 | 29 | 40.1 | | 110.5 | |
| | 1994.09-1998.11 | AT | F | L | Estate FWD EJ20E | Date to:1998.05 | GCO56017 | Outer Joint | | 27 | 30 | 56 | 87 | 58.5 | I |
| | 1994.09-1998.11 | AT | F | R | Estate FWD EJ20E | Date to:1998.05 | GCO56017 | Outer Joint | | 27 | 30 | 56 | 87 | 58.5 | I |

| | YEAR | TRANSM. | F/R | L/R | BODY STYLE & DRIVE TYPE & ENGINE | REMARKS | G-AP Ref. | PRODUCT | ABS | Technical Specifications A | B | C | H | L | P |
|---|---|---|---|---|---|---|---|---|---|---|---|---|---|---|---|
| **SUBARU** | | | | | | | | | | | | | | | |
| **Legacy Estate/Wagon** | | | | | | | | | | | | | | | |
| 2.0 (85 kw) | 1994.09-1998.11 | AT/MT | F | L/R | Estate FWD EJ20E | Date to:1998.05 | GDS83522 | Drive Shaft | | 27 | 25 | 56 | 87 | 682 | |
| | 1994.09-1998.11 | AT/MT | F | L/R | Estate FWD EJ20E | | GCO56003 | Outer Joint | | 27 | 25 | 56 | 87.5 | 72.5 | M |
| | 1994.09-1998.11 | AT/MT | F | L/R | Estate FWD EJ20E | Date to:1995.07 | GCO56005 | Outer Joint | | 27 | 22 | 56 | 87 | 66 | M |
| | 1994.09-1998.11 | AT/MT | F | L/R | Estate FWD EJ20E | Date to:1998.05 | GCI82257 | Inner Joint | | 25 | 29 | 40 | | 112 | |
| | 1994.09-1998.11 | MT | F | L | Estate FWD EJ20E | Date to:1998.05 | GCO56017 | Outer Joint | | 27 | 30 | 56 | 87 | 58.5 | I |
| | 1994.09-1998.11 | MT | F | R | Estate FWD EJ20E | Date to:1998.05 | GCO56017 | Outer Joint | | 27 | 30 | 56 | 87 | 58.5 | I |
| | 1994.09-1998.11 | | F | L/R | Estate FWD EJ20E | Date From:1997.02 | GCO56040 | Outer Joint | | 27 | 30 | 56 | 86.5 | 62.7 | M |
| | 1994.09-1998.11 | | F | L/R | Estate FWD EJ20E | | GCI56006 | Inner Joint | | 25 | 22 | 40 | | 110.5 | |
| | 1994.09-1998.11 | | F | | Estate FWD EJ20E | Date From:1997.02 | GCI56023 | Inner Joint | | 25 | 29 | 40.1 | | 110.5 | |
| 2.0 (92 kw) | 1998.10-2003.08 | 4AT/5MT | F | L/R | Estate 4WD EJ201 | Date from:1999.07,Date to:2001.06 | GCI56004 | Inner Joint | | 25 | 30 | 40 | | 111.3 | |
| | 1998.10-2003.08 | 4AT/5MT | F | L/R | Estate 4WD EJ201 | Date from:2001.07 | GCI56023 | Inner Joint | | 25 | 29 | 40.1 | | 110.5 | |
| | 1998.10-2003.08 | 4AT/5MT | F | L/R | Estate 4WD EJ201 | Date to:1999.06 | GCI82257 | Inner Joint | | 25 | 29 | 40 | | 112 | |
| | 1998.10-2003.08 | AT | F | L/R | Estate 4WD EJ201 | Date to:1999.06;PTJ | GDS83522 | Drive Shaft | | 27 | 25 | 56 | 87 | 682 | |
| | 1998.10-2003.08 | AT | F | L | Estate 4WD EJ201 | | GCO56017 | Outer Joint | | 27 | 30 | 56 | 87 | 58.5 | I |
| | 1998.10-2003.08 | AT | F | R | Estate 4WD EJ201 | | GCO56017 | Outer Joint | | 27 | 30 | 56 | 87 | 58.5 | I |
| | 1998.10-2003.08 | AT | F | L/R | Estate 4WD EJ201 | Date to:1999.06 | GCO56005 | Outer Joint | | 27 | 22 | 56 | 87 | 66 | M |
| | 1998.10-2003.08 | AT | F | L/R | Estate 4WD EJ201 | Date from:1999.07;6 balls | GCO56009 | Outer Joint | 44T | 27 | 30 | 56 | 86.5 | 63 | M |
| | 1998.10-2003.08 | AT | F | L/R | Estate 4WD EJ201 | Date to:1999.06 | GCO56040 | Outer Joint | | 27 | 30 | 56 | 86.5 | 62.7 | M |
| | 1998.10-2003.08 | MT | F | L/R | Estate 4WD EJ201 | Date from:1999.07,Date to:2001.06;6 balls | GCO56026 | Outer Joint | 44T | 27 | 30 | 56 | 86.5 | 63 | I |
| | 1998.10-2003.08 | MT/AT | F | L/R | Estate 4WD EJ201 | 6 balls,DOJ | GDS56032 | Drive Shaft | 44T | 27 | 25 | 56 | 86.5 | 682.5 | |
| 2.0 (101 kw) | 2003.09-2005.10 | AT/MT | F | L/R | Estate 4WD EJ202 | | GDS56013 | Drive Shaft | | 27 | 25 | 52 | 77 | 770 | |
| | 2003.09-2005.10 | AT/MT | F | L/R | Estate 4WD EJ202 | GrooveType:Middle | GCO56042 | Outer Joint | | 27 | 30 | 52 | 76 | 54 | M |
| | 2003.09-2005.10 | AT/MT | F | L/R | Estate 4WD EJ202 | | GCI56013 | Inner Joint | | 25 | 29 | 35 | 77.5 | 110 | |
| | 2003.09-2005.10 | 5MT | R | L/R | Estate 4WD EJ202 | | GDS56052 | Drive Shaft | | 25 | 25 | 52 | 98.5 | 769 | |
| | 2003.09-2005.10 | AT | R | L/R | Estate 4WD EJ202 | | GCI82768 | Inner Joint | | 22 | 19 | 32 | 62 | 102 | |
| | 2003.09-2005.10 | MT | R | L/R | Estate 4WD EJ202 | | GCI56019 | Inner Joint | | 25 | 28 | 32 | 81.5 | 86 | |
| 2.0 (108 kw) | 2009.09-2011.12 | CVT/6MT | F | L/R | Estate 4WD EJ204 | | GDS81902 | Drive Shaft | | 27 | 25 | 52 | 77 | 794 | |
| | 2009.09-2011.12 | CVT/6MT | F | L/R | Estate 4WD EJ204 | Date to:2013.01;6 balls | GCO56022 | Outer Joint | | 27 | 30 | 52 | 77 | 54 | I |
| | 2009.09-2011.12 | CVT/6MT | F | L/R | Estate 4WD EJ204 | 8 balls | GCO81561 | Outer Joint | | 27 | 30 | 52 | 77 | 54 | I |
| | 2009.09-2011.12 | CVT/6MT | F | L/R | Estate 4WD EJ204 | Date to:2013.01 | GCI56027 | Inner Joint | | 25 | 29 | 35 | 77.5 | 105 | |
| | 2009.09-2011.12 | CVT/6MT | F | L/R | Estate 4WD EJ204 | Date from:2013.02 | GCI82426 | Inner Joint | | 25 | 29 | 35 | 77.5 | 108.5 | |
| | 2009.09-2011.12 | CVT | R | L/R | Estate 4WD EJ204 | Date to:2013.01 | GDS84455 | Drive Shaft | | 27 | 22 | 56 | 113.5 | 792 | |
| | 2009.09-2011.12 | CVT | R | L/R | Estate 4WD EJ204 | | GCO82822 | Outer Joint | | 27 | 19 | 56 | 113.5 | 52 | I |
| | 2009.09-2011.12 | CVT | R | L/R | Estate 4WD EJ204 | | GCI82768 | Inner Joint | | 22 | 19 | 32 | 62 | 102 | |
| | 2009.09-2011.12 | MT | R | L/R | Estate 4WD EJ204 | | GDS82268 | Drive Shaft | | 27 | 25 | 56 | 114 | 795 | |
| | 2013.01-2014.12 | 6MT | F | L/R | Estate 4WD EE20Z | | GDS81902 | Drive Shaft | | 27 | 25 | 52 | 77 | 794 | |
| | 2013.01-2014.12 | 6MT | F | L/R | Estate 4WD EE20Z | | GCO81561 | Outer Joint | | 27 | 30 | 52 | 77 | 54 | I |
| | 2013.01-2014.12 | 6MT | F | L/R | Estate 4WD EE20Z | Date to:2013.01 | GCI56027 | Inner Joint | | 25 | 29 | 35 | 77.5 | 105 | |
| | 2013.01-2014.12 | MT | F | L/R | Estate 4WD EE20Z | Date from:2013.02 | GCI82426 | Inner Joint | | 25 | 29 | 35 | 77.5 | 108.5 | |
| | 2013.01-2014.12 | 6MT | R | L/R | Estate 4WD EE20Z | | GDS82268 | Drive Shaft | | 27 | 25 | 56 | 114 | 795 | |
| | 2013.01-2014.12 | 6MT | R | L/R | Estate 4WD EE20Z | | GCO81456 | Outer Joint | | 27 | 29 | 56 | 114 | 47 | I |
| 2.0 (110 kw) | 2007.09-2009.12 | AT/MT | F | L/R | Estate 4WD EJ204 | | GDS56013 | Drive Shaft | | 27 | 25 | 52 | 77 | 770 | |
| | 2007.09-2009.12 | AT/MT | F | L/R | Estate 4WD EJ204 | GrooveType:Middle | GCO56042 | Outer Joint | | 27 | 30 | 52 | 76 | 54 | M |
| | 2007.09-2009.12 | AT/MT | F | L/R | Estate 4WD EJ204 | | GCI56013 | Inner Joint | | 25 | 29 | 35 | 77.5 | 110 | |
| | 2007.09-2009.12 | 4AT | R | L/R | Estate 4WD EJ204 | For vehicles without ESP | GCI82768 | Inner Joint | | 22 | 19 | 32 | 62 | 102 | |
| | 2007.09-2009.12 | 4AT/5MT | R | L/R | Estate 4WD EJ204 | Transmission:4AT,For vehicles with ESP;Transmission:5MT | GCI56019 | Inner Joint | | 25 | 28 | 32 | 81.5 | 86 | |
| | 2007.09-2009.12 | 5MT | R | L/R | Estate 4WD EJ204 | | GDS56052 | Drive Shaft | | 25 | 25 | 52 | 98.5 | 769 | |
| | 2008.02-2009.12 | AT/MT | F | L/R | Estate 4WD EE20Z | | GCO99339 | Outer Joint | | 27 | 32 | 52 | 76.5 | 62.5 | I |
| | 2008.02-2009.12 | | F | L/R | Estate 4WD EE20Z | | GCI56013 | Inner Joint | | 25 | 29 | 35 | 77.5 | 110 | |
| | 2008.02-2009.12 | 5MT | R | L/R | Estate 4WD EE20Z | | GDS56052 | Drive Shaft | | 25 | 25 | 52 | 98.5 | 769 | |
| | 2008.02-2009.12 | 5MT | R | L/R | Estate 4WD EE20Z | | GCI56019 | Inner Joint | | 25 | 28 | 32 | 81.5 | 86 | |
| | 2009.09-2014.12 | 6MT | F | L/R | Estate 4WD EE20Z | | GDS81902 | Drive Shaft | | 27 | 25 | 52 | 77 | 794 | |
| | 2009.09-2014.12 | 6MT | F | L/R | Estate 4WD EE20Z | Date to:2013.01 | GCI56027 | Inner Joint | | 25 | 29 | 35 | 77.5 | 105 | |
| | 2009.09-2014.12 | 6MT | F | L/R | Estate 4WD EE20Z | Date from:2013.02 | GCI82426 | Inner Joint | | 25 | 29 | 35 | 77.5 | 108.5 | |
| | 2009.09-2014.12 | AT/MT | F | L/R | Estate 4WD EE20Z | | GCO99339 | Outer Joint | | 27 | 32 | 52 | 76.5 | 62.5 | I |
| | 2009.09-2014.12 | 6MT | R | L/R | Estate 4WD EE20Z | | GDS82268 | Drive Shaft | | 27 | 25 | 56 | 114 | 795 | |
| | 2009.09-2014.12 | CVT/6MT | F | L/R | Estate 4WD EJ204 | | GDS81902 | Drive Shaft | | 27 | 25 | 52 | 77 | 794 | |
| | 2009.09-2014.12 | CVT/6MT | F | L/R | Estate 4WD EJ204 | 6 balls | GCO56022 | Outer Joint | | 27 | 30 | 52 | 77 | 54 | I |
| | 2009.09-2014.12 | CVT/6MT | F | L/R | Estate 4WD EJ204 | 8 balls | GCO81561 | Outer Joint | | 27 | 30 | 52 | 77 | 54 | I |
| | 2009.09-2014.12 | CVT/6MT | F | L/R | Estate 4WD EJ204 | Date to:2013.01 | GCI56027 | Inner Joint | | 25 | 29 | 35 | 77.5 | 105 | |
| | 2009.09-2014.12 | CVT/6MT | F | L/R | Estate 4WD EJ204 | Date from:2013.02 | GCI82426 | Inner Joint | | 25 | 29 | 35 | 77.5 | 108.5 | |
| | 2009.09-2014.12 | 6MT | R | L/R | Estate 4WD EJ204 | | GDS82268 | Drive Shaft | | 27 | 25 | 56 | 114 | 795 | |
| | 2009.09-2014.12 | CVT | R | L/R | Estate 4WD EJ204 | Date to:2013.01 | GDS84455 | Drive Shaft | | 27 | 22 | 56 | 113.5 | 792 | |
| | 2009.09-2014.12 | CVT | R | L/R | Estate 4WD EJ204 | | GCO82822 | Outer Joint | | 27 | 19 | 56 | 113.5 | 52 | I |
| | 2009.09-2014.12 | CVT | R | L/R | Estate 4WD EJ204 | | GCI82768 | Inner Joint | | 22 | 19 | 32 | 62 | 102 | |

| | YEAR | TRANSM. | F/R | L/R | BODY STYLE & DRIVE TYPE & ENGINE | REMARKS | G-AP Ref. | PRODUCT | ABS | Technical Specifications | | | | | |
|---|---|---|---|---|---|---|---|---|---|---|---|---|---|---|---|
| | | | | | | | | | | A | B | C | H | L | P |
| **SUBARU** | | | | | | | | | | | | | | | |
| **Legacy Estate/Wagon** | | | | | | | | | | | | | | | |
| 2.0 (110 kw) | 2012.06-2014.12 | CVT | F | L/R | Estate 4WD FB20;FB20A | | GDS81902 | Drive Shaft | | 27 | 25 | 52 | 77 | 794 | |
| | 2012.06-2014.12 | CVT | F | L/R | Estate 4WD FB20;FB20A | 6 balls | GCO56022 | Outer Joint | | 27 | 30 | 52 | 77 | 54 | I |
| | 2012.06-2014.12 | CVT | F | L/R | Estate 4WD FB20;FB20A | 8 balls | GCO81561 | Outer Joint | | 27 | 30 | 52 | 77 | 54 | I |
| | 2012.06-2014.12 | CVT | F | L/R | Estate 4WD FB20;FB20A | | GCI82426 | Inner Joint | | 25 | 29 | 35 | 77.5 | 108.5 | |
| | 2012.06-2014.12 | CVT | R | L/R | Estate 4WD FB20;FB20A | Date to:2013.01 | GDS84455 | Drive Shaft | | 27 | 22 | 56 | 113.5 | 792 | |
| | 2012.06-2014.12 | CVT | R | L/R | Estate 4WD FB20;FB20A | | GCO82822 | Outer Joint | | 27 | 19 | 56 | 113.5 | 52 | I |
| | 2012.06-2014.12 | CVT | R | L/R | Estate 4WD FB20;FB20A | | GCI82768 | Inner Joint | | 22 | 19 | 32 | 62 | 102 | |
| 2.0 (121 kw) | 2005.06-2009.04 | AT | F | L/R | Estate 4WD EJ204 | | GDS56013 | Drive Shaft | | 27 | 25 | 52 | 77 | 770 | |
| | 2005.06-2009.04 | AT | F | L/R | Estate 4WD EJ204 | GrooveType:Middle | GCO56042 | Outer Joint | | 27 | 30 | 52 | 76 | 54 | M |
| | 2005.06-2009.04 | AT | F | L/R | Estate 4WD EJ204 | | GCI56013 | Inner Joint | | 25 | 29 | 35 | 77.5 | 110 | |
| | 2005.06-2009.04 | 5AT | R | L/R | Estate 4WD EJ204 | For vehicles without ESP | GCI82768 | Inner Joint | | 22 | 19 | 32 | 62 | 102 | |
| | 2005.06-2009.04 | 5AT/5MT | R | L/R | Estate 4WD EJ204 | Transmission:5AT,For vehicles with ESP;Transmission:5MT | GCI56019 | Inner Joint | | 25 | 28 | 32 | 81.5 | 86 | |
| | 2005.06-2009.04 | 5MT | R | L/R | Estate 4WD EJ204 | | GDS56052 | Drive Shaft | | 25 | 25 | 52 | 98.5 | 769 | |
| 2.0 (206 kw) | 2002.06-2003.08 | | F | | Estate 4WD EJ208 | Date To:2003.06 | GCO56009 | Outer Joint | 44T | 27 | 30 | 56 | 86.5 | 63 | M |
| 2.2 (94 kw) | 1994.01-1998.12 | AT | F | L | Estate 4WD EJ22E | Date to:1998.05 | GCO56017 | Outer Joint | | 27 | 30 | 56 | 87 | 58.5 | I |
| | 1994.01-1998.12 | AT | F | R | Estate 4WD EJ22E | Date to:1998.05 | GCO56017 | Outer Joint | | 27 | 30 | 56 | 87 | 58.5 | I |
| | 1994.01-1998.12 | AT/MT | F | L/R | Estate 4WD EJ22E | Date to:1998.05 | GDS83522 | Drive Shaft | | 27 | 25 | 56 | 87 | 682 | |
| | 1994.01-1998.12 | AT/MT | F | L/R | Estate 4WD EJ22E | Date to:1995.07 | GCO56005 | Outer Joint | | 27 | 22 | 56 | 87 | 66 | M |
| | 1994.01-1998.12 | AT/MT | F | L/R | Estate 4WD EJ22E | Date from:1995.08 | GCO56039 | Outer Joint | | 27 | 30 | 56 | 87.1 | 58 | M |
| | 1994.01-1998.12 | AT/MT | F | L/R | Estate 4WD EJ22E | Date to:1998.05 | GCI82257 | Inner Joint | | 25 | 29 | 40 | | 112 | |
| | 1994.01-1998.12 | MT | F | L | Estate 4WD EJ22E | Date to:1998.05 | GCO56017 | Outer Joint | | 27 | 30 | 56 | 87 | 58.5 | I |
| | 1994.01-1998.12 | MT | F | R | Estate 4WD EJ22E | Date to:1998.05 | GCO56017 | Outer Joint | | 27 | 30 | 56 | 87 | 58.5 | I |
| | 1994.01-1998.12 | | F | L/R | Estate 4WD EJ22E | | GCO56008 | Outer Joint | | 27 | 30 | 56 | 87 | 66 | I |
| | 1994.01-1998.12 | | F | | Estate 4WD EJ22E | Date From:1997.02 | GCO56040 | Outer Joint | | 27 | 30 | 56 | 86.5 | 62.7 | M |
| | 1994.01-1998.12 | | F | L/R | Estate 4WD EJ22E | | GCI56006 | Inner Joint | | 25 | 22 | 40 | | 110.5 | |
| | 1994.01-1998.12 | | | | Estate 4WD EJ22E | Date From:1997.02 | GCI56023 | Inner Joint | | 25 | 29 | 40.1 | | 110.5 | |
| 2.2 (96 kw) | 1993.09-1998.11 | AT | F | L | Estate 4WD EJ22E | Date to:1998.05 | GCO56017 | Outer Joint | | 27 | 30 | 56 | 87 | 58.5 | I |
| | 1993.09-1998.11 | AT | F | R | Estate 4WD EJ22E | Date to:1998.05 | GCO56017 | Outer Joint | | 27 | 30 | 56 | 87 | 58.5 | I |
| | 1993.09-1998.11 | AT/MT | F | L/R | Estate 4WD EJ22E | Date to:1998.05 | GDS83522 | Drive Shaft | | 27 | 25 | 56 | 87 | 682 | |
| | 1993.09-1998.11 | AT/MT | F | L/R | Estate 4WD EJ22E | Date to:1998.05 | GCI82257 | Inner Joint | | 25 | 29 | 40 | | 112 | |
| | 1993.09-1998.11 | MT | F | L | Estate 4WD EJ22E | Date to:1998.05 | GCO56017 | Outer Joint | | 27 | 30 | 56 | 87 | 58.5 | I |
| | 1993.09-1998.11 | MT | F | R | Estate 4WD EJ22E | Date to:1998.05 | GCO56017 | Outer Joint | | 27 | 30 | 56 | 87 | 58.5 | I |
| | 1993.09-1998.11 | | F | L/R | Estate 4WD EJ22E | | GCO56005 | Outer Joint | | 27 | 22 | 56 | 87 | 66 | M |
| | 1993.09-1998.11 | | F | L/R | Estate 4WD EJ22E | | GCO56008 | Outer Joint | | 27 | 30 | 56 | 87 | 66 | I |
| | 1993.09-1998.11 | | F | L/R | Estate 4WD EJ22E | | GCO56039 | Outer Joint | | 27 | 30 | 56 | 87.1 | 58 | M |
| | 1993.09-1998.11 | | F | | Estate 4WD EJ22E | Date From:1997.02 | GCO56040 | Outer Joint | | 27 | 30 | 56 | 86.5 | 62.7 | M |
| | 1993.09-1998.11 | | F | L/R | Estate 4WD EJ22E | | GCI56006 | Inner Joint | | 25 | 22 | 40 | | 110.5 | |
| | 1993.09-1998.11 | | | | Estate 4WD EJ22E | Date From:1997.02 | GCI56023 | Inner Joint | | 25 | 29 | 40.1 | | 110.5 | |
| 2.5 (110 kw) | 1996.01-1998.11 | AT | F | L/R | Estate 4WD EJ25D | Date to:1998.05 | GDS83522 | Drive Shaft | | 27 | 25 | 56 | 87 | 682 | |
| | 1996.01-1998.11 | AT | F | L | Estate 4WD EJ25D | Date to:1998.05 | GCO56017 | Outer Joint | | 27 | 30 | 56 | 87 | 58.5 | I |
| | 1996.01-1998.11 | AT | F | R | Estate 4WD EJ25D | Date to:1998.05 | GCO56017 | Outer Joint | | 27 | 30 | 56 | 87 | 58.5 | I |
| | 1996.01-1998.11 | AT | F | L/R | Estate 4WD EJ25D | | GCI56006 | Inner Joint | | 25 | 22 | 40 | | 110.5 | |
| | 1996.01-1998.11 | AT | F | L/R | Estate 4WD EJ25D | Date to:1998.05 | GCI82257 | Inner Joint | | 25 | 29 | 40 | | 112 | |
| | 1996.01-1998.11 | | F | L/R | Estate 4WD EJ25D | | GCO56039 | Outer Joint | | 27 | 30 | 56 | 87.1 | 58 | M |
| | 1996.01-1998.11 | | F | L/R | Estate 4WD EJ25D | Date From:1997.02 | GCO56040 | Outer Joint | | 27 | 30 | 56 | 86.5 | 62.7 | M |
| 2.5 (115 kw) | 1998.10-2003.08 | 4AT/5MT | F | L/R | Estate 4WD EJ251 | Date from:1999.07,Date to:2001.06 | GCI56004 | Inner Joint | | 25 | 30 | 40 | | 111.3 | |
| | 1998.10-2003.08 | 4AT/5MT | F | L/R | Estate 4WD EJ251 | Date from:2001.07 | GCI56023 | Inner Joint | | 25 | 29 | 40.1 | | 110.5 | |
| | 1998.10-2003.08 | 4AT/5MT | F | L/R | Estate 4WD EJ251 | Date to:1999.06 | GCI82257 | Inner Joint | | 25 | 29 | 40 | | 112 | |
| | 1998.10-2003.08 | AT | F | L/R | Estate 4WD EJ251 | Date to:1999.03;PTJ | GDS83522 | Drive Shaft | | 27 | 25 | 56 | 87 | 682 | |
| | 1998.10-2003.08 | AT | F | L | Estate 4WD EJ251 | | GCO56017 | Outer Joint | | 27 | 30 | 56 | 87 | 58.5 | I |
| | 1998.10-2003.08 | AT | F | R | Estate 4WD EJ251 | | GCO56017 | Outer Joint | | 27 | 30 | 56 | 87 | 58.5 | I |
| | 1998.10-2003.08 | AT | F | L/R | Estate 4WD EJ251 | Date to:1999.06 | GCO56005 | Outer Joint | | 27 | 22 | 56 | 87 | 66 | M |
| | 1998.10-2003.08 | AT | F | L/R | Estate 4WD EJ251 | Date from:1999.07;6 balls | GCO56009 | Outer Joint | 44T | 27 | 30 | 56 | 86.5 | 63 | M |
| | 1998.10-2003.08 | MT | F | L/R | Estate 4WD EJ251 | Date from:1999.07,Date to:2001.06;6 balls | GCO56026 | Outer Joint | 44T | 27 | 30 | 56 | 86.5 | 63 | I |
| | 1998.10-2003.08 | MT | F | L/R | Estate 4WD EJ251 | Date from:2001.07;6 balls | GCO56067 | Outer Joint | 44T | 27 | 30 | 56 | 86.5 | 56 | M |
| | 1998.10-2003.08 | MT/AT | F | L/R | Estate 4WD EJ251 | 6 balls,DOJ | GDS56032 | Drive Shaft | 44T | 27 | 25 | 56 | 86.5 | 682.5 | |
| 2.5 (121 kw) | 2003.09-2009.04 | AT/MT | F | L/R | Estate 4WD EJ25 | | GDS56013 | Drive Shaft | | 27 | 25 | 52 | 77 | 770 | |
| | 2003.09-2009.04 | AT/MT | F | L/R | Estate 4WD EJ25 | GrooveType:Middle | GCO56042 | Outer Joint | | 27 | 30 | 52 | 76 | 54 | M |
| | 2003.09-2009.04 | AT/MT | F | L/R | Estate 4WD EJ25 | | GCI56013 | Inner Joint | | 25 | 29 | 35 | 77.5 | 110 | |
| | 2003.09-2009.04 | 4AT/5MT | R | L/R | Estate 4WD EJ25 | | GDS56052 | Drive Shaft | | 25 | 25 | 52 | 98.5 | 769 | |
| | 2003.09-2009.04 | 4AT/5MT | R | L/R | Estate 4WD EJ25 | | GCI56019 | Inner Joint | | 25 | 28 | 32 | 81.5 | 86 | |
| 2.5 (123 kw) | 2009.09-2014.12 | CVT/6MT | F | L/R | Estate 4WD EJ253 | | GDS81902 | Drive Shaft | | 27 | 25 | 52 | 77 | 794 | |
| | 2009.09-2014.12 | CVT/6MT | F | L/R | Estate 4WD EJ253 | 6 balls | GCO56022 | Outer Joint | | 27 | 30 | 52 | 77 | 54 | I |
| | 2009.09-2014.12 | CVT/6MT | F | L/R | Estate 4WD EJ253 | 8 balls | GCO81561 | Outer Joint | | 27 | 30 | 52 | 77 | 54 | I |
| | 2009.09-2014.12 | CVT/6MT | F | L/R | Estate 4WD EJ253 | Date to:2013.01 | GCI56027 | Inner Joint | | 25 | 29 | 35 | 77.5 | 105 | |

| | YEAR | TRANSM. | F/R | L/R | BODY STYLE & DRIVE TYPE & ENGINE | REMARKS | G-AP Ref. | PRODUCT | ABS | Technical Specifications A | B | C | H | L | P |
|---|---|---|---|---|---|---|---|---|---|---|---|---|---|---|---|
| **SUBARU** | | | | | | | | | | | | | | | |
| **Legacy Estate/Wagon** | | | | | | | | | | | | | | | |
| 2.5 (123 kw) | 2009.09-2014.12 | CVT/6MT | F | L/R | Estate 4WD EJ253 | Date from:2013.02 | GCI82426 | Inner Joint | | 25 | 29 | 35 | 77.5 | 108.5 | |
| | 2009.09-2014.12 | 6MT | R | L/R | Estate 4WD EJ253 | | GDS82268 | Drive Shaft | | 27 | 25 | 56 | 114 | 795 | |
| | 2009.09-2014.12 | CVT | R | L/R | Estate 4WD EJ253 | Date to:2013.01 | GDS84455 | Drive Shaft | | 27 | 22 | 56 | 113.5 | 792 | |
| | 2009.09-2014.12 | CVT | R | L/R | Estate 4WD EJ253 | | GCO82822 | Outer Joint | | 27 | 19 | 56 | 113.5 | 52 | I |
| | 2009.09-2014.12 | CVT | R | L/R | Estate 4WD EJ253 | | GCI82768 | Inner Joint | | 22 | 19 | 32 | 62 | 102 | |
| 2.5 (125 kw) | 2009.05-2014.12 | CVT/6MT | F | L/R | Estate 4WD EJ25 | | GDS81902 | Drive Shaft | | 27 | 25 | 52 | 77 | 794 | |
| | 2009.05-2014.12 | CVT/6MT | F | L/R | Estate 4WD EJ25 | 6 balls | GCO56022 | Outer Joint | | 27 | 30 | 52 | 77 | 54 | I |
| | 2009.05-2014.12 | CVT/6MT | F | L/R | Estate 4WD EJ25 | 8 balls | GCO81561 | Outer Joint | | 27 | 30 | 52 | 77 | 54 | I |
| | 2009.05-2014.12 | CVT/6MT | F | L/R | Estate 4WD EJ25 | Date to:2013.01 | GCI56027 | Inner Joint | | 25 | 29 | 35 | 77.5 | 105 | |
| | 2009.05-2014.12 | CVT/6MT | F | L/R | Estate 4WD EJ25 | Date from:2013.02 | GCI82426 | Inner Joint | | 25 | 29 | 35 | 77.5 | 108.5 | |
| | 2009.05-2014.12 | 6MT | R | L/R | Estate 4WD EJ25 | | GDS82268 | Drive Shaft | | 27 | 25 | 56 | 114 | 795 | |
| | 2009.05-2014.12 | CVT | R | L/R | Estate 4WD EJ25 | Date to:2013.01 | GDS84455 | Drive Shaft | | 27 | 22 | 56 | 113.5 | 792 | |
| | 2009.05-2014.12 | CVT | R | L/R | Estate 4WD EJ25 | | GCO82822 | Outer Joint | | 27 | 19 | 56 | 113.5 | 52 | I |
| | 2009.05-2014.12 | CVT | R | L/R | Estate 4WD EJ25 | | GCI82768 | Inner Joint | | 22 | 19 | 32 | 62 | 102 | |
| 2.5 (127 kw) | 2008.01-2009.12 | AT/MT | F | L/R | Estate 4WD EJ25 | | GDS56013 | Drive Shaft | | 27 | 25 | 52 | 77 | 770 | |
| | 2008.01-2009.12 | AT/MT | F | L/R | Estate 4WD EJ25 | GrooveType:Middle | GCO56042 | Outer Joint | | 27 | 30 | 52 | 76 | 54 | M |
| | 2008.01-2009.12 | AT/MT | F | L/R | Estate 4WD EJ25 | | GCI56013 | Inner Joint | | 25 | 29 | 35 | 77.5 | 110 | |
| | 2008.01-2009.12 | 4AT/5MT | R | L/R | Estate 4WD EJ25 | | GDS56052 | Drive Shaft | | 25 | 25 | 52 | 98.5 | 769 | |
| | 2008.01-2009.12 | 4AT/5MT | R | L/R | Estate 4WD EJ25 | | GCI56019 | Inner Joint | | 25 | 28 | 32 | 81.5 | 86 | |
| | 2012.07-2014.12 | AT/CVT | F | L/R | Estate 4WD FB25 | | GDS81902 | Drive Shaft | | 27 | 25 | 52 | 77 | 794 | |
| | 2012.07-2014.12 | CVT | F | L/R | Estate 4WD FB25 | | GCO81561 | Outer Joint | | 27 | 30 | 52 | 77 | 54 | I |
| | 2012.07-2014.12 | CVT | F | L/R | Estate 4WD FB25 | | GCI82426 | Inner Joint | | 25 | 29 | 35 | 77.5 | 108.5 | |
| | 2012.07-2014.12 | CVT | R | L/R | Estate 4WD FB25 | | GDS82268 | Drive Shaft | | 27 | 25 | 56 | 114 | 795 | |
| | 2012.07-2014.12 | CVT | R | L/R | Estate 4WD FB25 | Date to:2013.01 | GCO82822 | Outer Joint | | 27 | 19 | 56 | 113.5 | 52 | I |
| | 2012.07-2014.12 | CVT | R | L/R | Estate 4WD FB25 | | GCI82768 | Inner Joint | | 22 | 19 | 32 | 62 | 102 | |
| | 2013.04-2014.12 | AT/CVT | F | L/R | Estate 4WD FB25B | | GDS81902 | Drive Shaft | | 27 | 25 | 52 | 77 | 794 | |
| | 2013.04-2014.12 | CVT | F | L/R | Estate 4WD FB25B | | GCO81561 | Outer Joint | | 27 | 30 | 52 | 77 | 54 | I |
| | 2013.04-2014.12 | CVT | F | L/R | Estate 4WD FB25B | | GCI82426 | Inner Joint | | 25 | 29 | 35 | 77.5 | 108.5 | |
| | 2013.04-2014.12 | CVT | R | L/R | Estate 4WD FB25B | | GDS82268 | Drive Shaft | | 27 | 25 | 56 | 114 | 795 | |
| | 2013.04-2014.12 | CVT | R | L/R | Estate 4WD FB25B | | GCI82768 | Inner Joint | | 22 | 19 | 32 | 62 | 102 | |
| 2.5 (195 kw) | 2010.07-2014.12 | 5AT/6MT | F | L/R | Estate 4WD EJ255 | Date to:2013.01 | GCI56027 | Inner Joint | | 25 | 29 | 35 | 77.5 | 105 | |
| | 2010.07-2014.12 | 5AT/6MT | F | L/R | Estate 4WD EJ255 | Date from:2013.02 | GCI82426 | Inner Joint | | 25 | 29 | 35 | 77.5 | 108.5 | |
| | 2010.07-2014.12 | AT | F | L/R | Estate 4WD EJ255 | | GCO56022 | Outer Joint | | 27 | 30 | 52 | 77 | 54 | I |
| | 2010.07-2014.12 | AT/MT | F | L/R | Estate 4WD EJ255 | | GDS81902 | Drive Shaft | | 27 | 25 | 52 | 77 | 794 | |
| | 2010.07-2014.12 | CVT | F | L/R | Estate 4WD EJ255 | | GCO81561 | Outer Joint | | 27 | 30 | 52 | 77 | 54 | I |
| | 2010.07-2014.12 | 5AT/6MT | R | L/R | Estate 4WD EJ255 | | GDS82268 | Drive Shaft | | 27 | 25 | 56 | 114 | 795 | |
| 3.0 (154 kw) | 2000.08-2003.08 | | F | | Estate 4WD EZ30D | Date To:2003.06 | GCO56009 | Outer Joint | 44T | 27 | 30 | 56 | 86.5 | 63 | M |
| | 2000.08-2003.08 | | F | | Estate 4WD EZ30D | | GCO56026 | Outer Joint | 44T | 27 | 30 | 56 | 86.5 | 63 | I |
| | 2000.08-2003.08 | | F | | Estate 4WD EZ30D | | GCI56004 | Inner Joint | | 25 | 30 | 40 | | 111.3 | |
| | 2000.08-2003.08 | | | | Estate 4WD EZ30D | Date To:2003.06 | GCI56023 | Inner Joint | | 25 | 29 | 40.1 | | 110.5 | |
| 3.0 (180 kw) | 2003.09-2009.08 | AT | F | L/R | Estate 4WD EZ30 | | GDS56013 | Drive Shaft | | 27 | 25 | 52 | 77 | 770 | |
| | 2003.09-2009.08 | AT/MT | F | L/R | Estate 4WD EZ30 | GrooveType:Middle | GCO56042 | Outer Joint | | 27 | 30 | 52 | 76 | 54 | M |
| | 2003.09-2009.08 | AT/MT | F | L/R | Estate 4WD EZ30 | | GCI56013 | Inner Joint | | 25 | 29 | 35 | 77.5 | 110 | |
| | 2003.09-2009.08 | MT | F | L/R | Estate 4WD EZ30 | Date to:2006.06 | GDS56013 | Drive Shaft | | 27 | 25 | 52 | 77 | 770 | |
| | 2003.09-2009.08 | 5AT | R | L/R | Estate 4WD EZ30 | | GCI56019 | Inner Joint | | 25 | 28 | 32 | 81.5 | 86 | |
| | 2003.09-2009.08 | 5AT/6MT | R | L/R | Estate 4WD EZ30 | | GDS56052 | Drive Shaft | | 25 | 25 | 52 | 98.5 | 769 | |
| **Levorg** | | | | | | | | | | | | | | | |
| 1.6 (125 kw) | 2015.09- | CVT | F | L/R | Estate 4WD FB16 | | GDS83933 | Drive Shaft | | 27 | 25 | 56 | 87 | 802 | |
| | 2015.09- | CVT | F | L/R | Estate 4WD FB16 | | GCO82541 | Outer Joint | | 27 | 32 | 56 | 87 | 62.5 | I |
| | 2015.09- | CVT | F | L/R | Estate 4WD FB16 | | GCI82426 | Inner Joint | | 25 | 29 | 35 | 77.5 | 108.5 | |
| 2.0 (110 kw) | 2019.01- | CVT | F | L/R | Estate 4WD FB20B;FB20A | | GDS83933 | Drive Shaft | | 27 | 25 | 56 | 87 | 802 | |
| | 2019.01- | CVT | F | L/R | Estate 4WD FB20B;FB20A | | GCO82541 | Outer Joint | | 27 | 32 | 56 | 87 | 62.5 | I |
| | 2019.01- | CVT | F | L/R | Estate 4WD FB20B;FB20A | | GCI82426 | Inner Joint | | 25 | 29 | 35 | 77.5 | 108.5 | |
| **Outback** | | | | | | | | | | | | | | | |
| 2.0 (108 kw) | 2013.01- | CVT/6MT | F | L/R | Estate 4WD EE20Z | Date to:2013.01 | GDS81902 | Drive Shaft | | 27 | 25 | 52 | 77 | 794 | |
| | 2013.01- | CVT/6MT | F | L/R | Estate 4WD EE20Z | Date to:2013.01 | GCO81561 | Outer Joint | | 27 | 30 | 52 | 77 | 54 | I |
| | 2013.01- | CVT/6MT | F | L/R | Estate 4WD EE20Z | Date to:2013.01 | GCI56027 | Inner Joint | | 25 | 29 | 35 | 77.5 | 105 | |
| | 2013.01- | CVT/6MT | F | L/R | Estate 4WD EE20Z | Date from:2013.02 | GCI82426 | Inner Joint | | 25 | 29 | 35 | 77.5 | 108.5 | |
| | 2013.01- | CVT/6MT | R | L/R | Estate 4WD EE20Z | | GDS82268 | Drive Shaft | | 27 | 25 | 56 | 114 | 795 | |
| | 2013.01- | CVT/6MT | R | L/R | Estate 4WD EE20Z | | GCO81456 | Outer Joint | | 27 | 29 | 56 | 114 | 47 | I |
| 2.0 (110 kw) | 2008.09-2009.09 | AT/MT | F | L/R | Estate 4WD EE20Z | | GCO99339 | Outer Joint | | 27 | 32 | 52 | 76.5 | 62.5 | I |
| | 2008.09-2009.09 | | F | L/R | Estate 4WD EE20Z | | GCI56013 | Inner Joint | | 25 | 29 | 35 | 77.5 | 110 | |
| | 2008.09-2009.09 | 5MT | R | L/R | Estate 4WD EE20Z | | GDS56052 | Drive Shaft | | 25 | 25 | 52 | 98.5 | 769 | |
| | 2008.09-2009.09 | 5MT | R | L/R | Estate 4WD EE20Z | | GCI56019 | Inner Joint | | 25 | 28 | 32 | 81.5 | 86 | |
| | 2009.09- | AT/MT | F | L/R | Estate 4WD EE20Z | | GCO99339 | Outer Joint | | 27 | 32 | 52 | 76.5 | 62.5 | I |

| | YEAR | TRANSM. | F/R | L/R | BODY STYLE & DRIVE TYPE & ENGINE | REMARKS | G-AP Ref. | PRODUCT | ABS | Technical Specifications A | B | C | H | L | P |
|---|---|---|---|---|---|---|---|---|---|---|---|---|---|---|---|
| **SUBARU** **Outback** | | | | | | | | | | | | | | | |
| 2.0 (110 kw) | 2009.09- | CVT/6MT | F | L/R | Estate 4WD EE20Z | | GDS81902 | Drive Shaft | | 27 | 25 | 52 | 77 | 794 | |
| | 2009.09- | CVT/6MT | F | L/R | Estate 4WD EE20Z | Date to:2013.01 | GCI56027 | Inner Joint | | 25 | 29 | 35 | 77.5 | 105 | |
| | 2009.09- | CVT/6MT | F | L/R | Estate 4WD EE20Z | Date from:2013.02 | GCI82426 | Inner Joint | | 25 | 29 | 35 | 77.5 | 108.5 | |
| | 2009.09- | CVT/6MT | R | L/R | Estate 4WD EE20Z | | GDS82268 | Drive Shaft | | 27 | 25 | 56 | 114 | 795 | |
| | 2015.03- | AT | F | L/R | Estate 4WD EE20Z | | GCI82426 | Inner Joint | | 25 | 29 | 35 | 77.5 | 108.5 | |
| 2.5 (110 kw) | 1996.01-1998.09 | | F | | Estate 4WD EJ25D | Date From:1997.02,Date To:1999.06 | GCO56040 | Outer Joint | | 27 | 30 | 56 | 86.5 | 62.7 | M |
| | 1996.01-1998.09 | | | | Estate 4WD EJ25D | Date To:1999.05 | GCI56023 | Inner Joint | | 25 | 29 | 40.1 | | 110.5 | |
| 2.5 (115 kw) | 2000.01-2003.08 | AT | F | L/R | Estate 4WD EJ251 | Date to:2001.06;DOJ | GDS56032 | Drive Shaft | 44T | 27 | 25 | 56 | 86.5 | 682.5 | |
| | 2000.01-2003.08 | AT | F | L/R | Estate 4WD EJ251 | Date to:2001.06;TJ | GDS56061 | Drive Shaft | 44T | 27 | 25 | 56 | 86.5 | 682.5 | |
| | 2000.01-2003.08 | AT | F | L/R | Estate 4WD EJ251 | Date from:2001.07;6 balls | GCO56009 | Outer Joint | 44T | 27 | 30 | 56 | 86.5 | 63 | M |
| | 2000.01-2003.08 | AT | F | L/R | Estate 4WD EJ251 | | GCI56023 | Inner Joint | | 25 | 29 | 40.1 | | 110.5 | |
| | 2000.01-2003.08 | AT/MT | F | L/R | Estate 4WD EJ251 | Date to:2001.06;6 balls | GCO56026 | Outer Joint | 44T | 27 | 30 | 56 | 86.5 | 63 | I |
| | 2000.01-2003.08 | AT/MT | F | L/R | Estate 4WD EJ251 | Date to:2001.06 | GCI56004 | Inner Joint | | 25 | 30 | 40 | | 111.3 | |
| | 2000.01-2003.08 | MT | F | L/R | Estate 4WD EJ251 | Date from:2001.07;6 balls | GCO56067 | Outer Joint | 44T | 27 | 30 | 56 | 86.5 | 56 | M |
| 2.5 (121 kw) | 2003.11-2009.09 | 4AT/5MT | F | L/R | Estate 4WD EJ253 | Date to:2005.03 | GCO56022 | Outer Joint | | 27 | 30 | 52 | 77 | 54 | I |
| | 2003.11-2009.09 | AT/MT | F | L/R | Estate 4WD EJ253 | | GDS56013 | Drive Shaft | | 27 | 25 | 52 | 77 | 770 | |
| | 2003.11-2009.09 | AT/MT | F | L/R | Estate 4WD EJ253 | GrooveType:Middle | GCO56042 | Outer Joint | | 27 | 30 | 52 | 76 | 54 | M |
| | 2003.11-2009.09 | AT/MT | F | L/R | Estate 4WD EJ253 | | GCI56013 | Inner Joint | | 25 | 29 | 35 | 77.5 | 110 | |
| | 2003.11-2009.09 | 4AT/5MT | R | L/R | Estate 4WD EJ253 | | GDS56052 | Drive Shaft | | 25 | 25 | 52 | 98.5 | 769 | |
| | 2003.11-2009.09 | 4AT/5MT | R | L/R | Estate 4WD EJ253 | | GCI56019 | Inner Joint | | 25 | 28 | 32 | 81.5 | 86 | |
| 2.5 (123 kw) | 2009.09- | CVT/6MT | F | L/R | Estate 4WD EJ253 | | GDS81902 | Drive Shaft | | 27 | 25 | 52 | 77 | 794 | |
| | 2009.09- | CVT/6MT | F | L/R | Estate 4WD EJ253 | 6 balls | GCO56022 | Outer Joint | | 27 | 30 | 52 | 77 | 54 | I |
| | 2009.09- | CVT/6MT | F | L/R | Estate 4WD EJ253 | 8 balls | GCO81561 | Outer Joint | | 27 | 30 | 52 | 77 | 54 | I |
| | 2009.09- | CVT/6MT | F | L/R | Estate 4WD EJ253 | Date to:2013.01 | GCI56027 | Inner Joint | | 25 | 29 | 35 | 77.5 | 105 | |
| | 2009.09- | CVT/6MT | F | L/R | Estate 4WD EJ253 | Date from:2013.02 | GCI82426 | Inner Joint | | 25 | 29 | 35 | 77.5 | 108.5 | |
| | 2009.09- | 6MT | R | L/R | Estate 4WD EJ253 | | GDS82268 | Drive Shaft | | 27 | 25 | 56 | 114 | 795 | |
| | 2009.09- | 6MT | R | L/R | Estate 4WD EJ253 | 8 balls | GCO81456 | Outer Joint | | 27 | 29 | 56 | 114 | 47 | I |
| | 2009.09- | CVT | R | L/R | Estate 4WD EJ253 | Date to:2013.01 | GDS84455 | Drive Shaft | | 27 | 22 | 56 | 113.5 | 792 | |
| | 2009.09- | CVT | R | L/R | Estate 4WD EJ253 | | GCO82822 | Outer Joint | | 27 | 19 | 56 | 113.5 | 52 | I |
| | 2009.09- | CVT | R | L/R | Estate 4WD EJ253 | | GCI82768 | Inner Joint | | 22 | 19 | 32 | 62 | 102 | |
| | 2010.01-2014.12 | CVT/6MT | F | L/R | Estate 4WD EJ253 | | GDS81902 | Drive Shaft | | 27 | 25 | 52 | 77 | 794 | |
| | 2010.01-2014.12 | CVT/6MT | F | L/R | Estate 4WD EJ253 | 6 balls | GCO56022 | Outer Joint | | 27 | 30 | 52 | 77 | 54 | I |
| | 2010.01-2014.12 | CVT/6MT | F | L/R | Estate 4WD EJ253 | 8 balls | GCO81561 | Outer Joint | | 27 | 30 | 52 | 77 | 54 | I |
| | 2010.01-2014.12 | CVT/6MT | F | L/R | Estate 4WD EJ253 | Date to:2013.01 | GCI56027 | Inner Joint | | 25 | 29 | 35 | 77.5 | 105 | |
| | 2010.01-2014.12 | CVT/6MT | F | L/R | Estate 4WD EJ253 | Date from:2013.02 | GCI82426 | Inner Joint | | 25 | 29 | 35 | 77.5 | 108.5 | |
| | 2010.01-2014.12 | 6MT | R | L/R | Estate 4WD EJ253 | | GDS82268 | Drive Shaft | | 27 | 25 | 56 | 114 | 795 | |
| | 2010.01-2014.12 | CVT | R | L/R | Estate 4WD EJ253 | Date to:2013.01 | GDS84455 | Drive Shaft | | 27 | 22 | 56 | 113.5 | 792 | |
| | 2010.01-2014.12 | CVT | R | L/R | Estate 4WD EJ253 | | GCO82822 | Outer Joint | | 27 | 19 | 56 | 113.5 | 52 | I |
| | 2010.01-2014.12 | CVT | R | L/R | Estate 4WD EJ253 | | GCI82768 | Inner Joint | | 22 | 19 | 32 | 62 | 102 | |
| 2.5 (124 kw) | 2021.03- | CVT | F | L/R | Estate 4WD FB25C;FB25D | | GDS56064 | Drive Shaft | | 27 | 25 | 56 | 86.5 | 825 | |
| | 2021.03- | CVT | F | L/R | Estate 4WD FB25C;FB25D | | GCI82426 | Inner Joint | | 25 | 29 | 35 | 77.5 | 108.5 | |
| | 2021.03- | CVT | R | L/R | Estate 4WD FB25C;FB25D | | GCI83211 | Inner Joint | | 22 | 19 | 32 | 62 | 102.5 | |
| 2.5 (125 kw) | 2009.05-2014.12 | CVT/6MT | F | L/R | Estate 4WD EJ25 | | GDS81902 | Drive Shaft | | 27 | 25 | 52 | 77 | 794 | |
| | 2009.05-2014.12 | CVT/6MT | F | L/R | Estate 4WD EJ25 | 6 balls | GCO56022 | Outer Joint | | 27 | 30 | 52 | 77 | 54 | I |
| | 2009.05-2014.12 | CVT/6MT | F | L/R | Estate 4WD EJ25 | 8 balls | GCO81561 | Outer Joint | | 27 | 30 | 52 | 77 | 54 | I |
| | 2009.05-2014.12 | CVT/6MT | F | L/R | Estate 4WD EJ25 | Date to:2013.01 | GCI56027 | Inner Joint | | 25 | 29 | 35 | 77.5 | 105 | |
| | 2009.05-2014.12 | CVT/6MT | F | L/R | Estate 4WD EJ25 | Date from:2013.02 | GCI82426 | Inner Joint | | 25 | 29 | 35 | 77.5 | 108.5 | |
| | 2009.05-2014.12 | 6MT | R | L/R | Estate 4WD EJ25 | | GDS82268 | Drive Shaft | | 27 | 25 | 56 | 114 | 795 | |
| | 2009.05-2014.12 | CVT | R | L/R | Estate 4WD EJ25 | Date to:2013.01 | GDS84455 | Drive Shaft | | 27 | 22 | 56 | 113.5 | 792 | |
| | 2009.05-2014.12 | CVT | R | L/R | Estate 4WD EJ25 | | GCO82822 | Outer Joint | | 27 | 19 | 56 | 113.5 | 52 | I |
| | 2009.05-2014.12 | CVT | R | L/R | Estate 4WD EJ25 | | GCI82768 | Inner Joint | | 22 | 19 | 32 | 62 | 102 | |
| 2.5 (127 kw) | 2008.09-2009.06 | AT/MT | F | L/R | Estate 4WD EJ252 | | GDS56013 | Drive Shaft | | 27 | 25 | 52 | 77 | 770 | |
| | 2008.09-2009.06 | AT/MT | F | L/R | Estate 4WD EJ252 | GrooveType:Middle | GCO56042 | Outer Joint | | 27 | 30 | 52 | 76 | 54 | M |
| | 2008.09-2009.06 | AT/MT | F | L/R | Estate 4WD EJ252 | | GCI56013 | Inner Joint | | 25 | 29 | 35 | 77.5 | 110 | |
| | 2008.09-2009.06 | 5AT/CVT | R | L/R | Estate 4WD EJ252 | | GDS56052 | Drive Shaft | | 25 | 25 | 52 | 98.5 | 769 | |
| | 2008.09-2009.06 | AT/MT | R | L/R | Estate 4WD EJ252 | | GCI56019 | Inner Joint | | 25 | 28 | 32 | 81.5 | 86 | |
| | 2008.09-2009.09 | AT/MT | F | L/R | Estate 4WD EJ251;EJ253 | | GDS56013 | Drive Shaft | | 27 | 25 | 52 | 77 | 770 | |
| | 2008.09-2009.09 | AT/MT | F | L/R | Estate 4WD EJ251;EJ253 | GrooveType:Middle | GCO56042 | Outer Joint | | 27 | 30 | 52 | 76 | 54 | M |
| | 2008.09-2009.09 | AT/MT | F | L/R | Estate 4WD EJ251;EJ253 | | GCI56013 | Inner Joint | | 25 | 29 | 35 | 77.5 | 110 | |
| | 2008.09-2009.09 | 4AT/5MT | R | L/R | Estate 4WD EJ251;EJ253 | | GDS56052 | Drive Shaft | | 25 | 25 | 52 | 98.5 | 769 | |
| | 2008.09-2009.09 | 4AT/5MT | R | L/R | Estate 4WD EJ251;EJ253 | | GCI56019 | Inner Joint | | 25 | 28 | 32 | 81.5 | 86 | |
| | 2013.01- | CVT | F | L/R | Estate 4WD FB25B | | GDS81902 | Drive Shaft | | 27 | 25 | 52 | 77 | 794 | |
| | 2013.01- | CVT | F | L/R | Estate 4WD FB25B | 8 balls | GCO81561 | Outer Joint | | 27 | 30 | 52 | 77 | 54 | I |
| | 2013.01- | CVT | F | L/R | Estate 4WD FB25B | | GCI82426 | Inner Joint | | 25 | 29 | 35 | 77.5 | 108.5 | |
| | 2013.01- | CVT | R | L/R | Estate 4WD FB25B | Date to:2013.01 | GDS84455 | Drive Shaft | | 27 | 22 | 56 | 113.5 | 792 | |

| | YEAR | TRANSM. | F/R | L/R | BODY STYLE & DRIVE TYPE & ENGINE | REMARKS | G-AP Ref. | PRODUCT | ABS | Technical Specifications A | B | C | H | L | P |
|---|---|---|---|---|---|---|---|---|---|---|---|---|---|---|---|
| **SUBARU** | | | | | | | | | | | | | | | |
| **Outback** | | | | | | | | | | | | | | | |
| 2.5 (127 kw) | 2013.01- | CVT | R | L/R | Estate 4WD FB25B | | GCO82822 | Outer Joint | | 27 | 19 | 56 | 113.5 | 52 | I |
| | 2013.01- | CVT | R | L/R | Estate 4WD FB25B | | GCI82768 | Inner Joint | | 22 | 19 | 32 | 62 | 102 | |
| | 2013.01-2014.12 | CVT | F | L/R | Estate 4WD FB25B | | GDS81902 | Drive Shaft | | 27 | 25 | 52 | 77 | 794 | |
| | 2013.01-2014.12 | CVT | F | L/R | Estate 4WD FB25B | 8 balls | GCO81561 | Outer Joint | | 27 | 30 | 52 | 77 | 54 | I |
| | 2013.01-2014.12 | CVT | F | L/R | Estate 4WD FB25B | | GCI82426 | Inner Joint | | 25 | 29 | 35 | 77.5 | 108.5 | |
| | 2013.01-2014.12 | CVT | R | L/R | Estate 4WD FB25B | Date to:2013.01 | GDS84455 | Drive Shaft | | 27 | 22 | 56 | 113.5 | 792 | |
| | 2013.01-2014.12 | CVT | R | L/R | Estate 4WD FB25B | | GCO82822 | Outer Joint | | 27 | 19 | 56 | 113.5 | 52 | I |
| | 2013.01-2014.12 | CVT | R | L/R | Estate 4WD FB25B | | GCI82768 | Inner Joint | | 22 | 19 | 32 | 62 | 102 | |
| | 2014.06-2014.12 | CVT | F | L/R | Estate 4WD FB25B | | GCI82426 | Inner Joint | | 25 | 29 | 35 | 77.5 | 108.5 | |
| 2.5 (129 kw) | 2012.01-2014.12 | CVT | F | L/R | Estate 4WD EJ253 | | GDS81902 | Drive Shaft | | 27 | 25 | 52 | 77 | 794 | |
| | 2012.01-2014.12 | CVT | F | L/R | Estate 4WD EJ253 | 6 balls | GCO56022 | Outer Joint | | 27 | 30 | 52 | 77 | 54 | I |
| | 2012.01-2014.12 | CVT | F | L/R | Estate 4WD EJ253 | 8 balls | GCO81561 | Outer Joint | | 27 | 30 | 52 | 77 | 54 | I |
| | 2012.01-2014.12 | CVT | F | L/R | Estate 4WD EJ253 | Date to:2013.01 | GCI56027 | Inner Joint | | 25 | 29 | 35 | 77.5 | 105 | |
| | 2012.01-2014.12 | CVT | F | L/R | Estate 4WD EJ253 | Date from:2013.02 | GCI82426 | Inner Joint | | 25 | 29 | 35 | 77.5 | 108.5 | |
| | 2012.01-2014.12 | CVT | R | L/R | Estate 4WD EJ253 | Date to:2013.01 | GDS84455 | Drive Shaft | | 27 | 22 | 56 | 113.5 | 792 | |
| | 2012.01-2014.12 | CVT | R | L/R | Estate 4WD EJ253 | | GCO82822 | Outer Joint | | 27 | 19 | 56 | 113.5 | 52 | I |
| | 2012.01-2014.12 | CVT | R | L/R | Estate 4WD EJ253 | | GCI82768 | Inner Joint | | 22 | 19 | 32 | 62 | 102 | |
| | 2015.03-2019.12 | CVT | F | L/R | Estate 4WD FB25B;FB25Z | | GCI82426 | Inner Joint | | 25 | 29 | 35 | 77.5 | 108.5 | |
| 2.5 (130 kw) | 2014.07- | | F | L/R | Estate 4WD | | GCI82426 | Inner Joint | | 25 | 29 | 35 | 77.5 | 108.5 | |
| 3.0 (154 kw) | 2000.08-2003.08 | AT | F | L/R | Estate 4WD EZ30D | Date to:2001.06,DOJ | GDS56032 | Drive Shaft | 44T | 27 | 25 | 56 | 86.5 | 682.5 | |
| | 2000.08-2003.08 | AT | F | L/R | Estate 4WD EZ30D | Date to:2001.06,TJ | GDS56061 | Drive Shaft | 44T | 27 | 25 | 56 | 86.5 | 682.5 | |
| | 2000.08-2003.08 | AT | F | L/R | Estate 4WD EZ30D | Date from:2001.07;6 balls | GCO56009 | Outer Joint | 44T | 27 | 30 | 56 | 86.5 | 63 | M |
| | 2000.08-2003.08 | AT | F | L/R | Estate 4WD EZ30D | Date to:2001.06;6 balls | GCO56026 | Outer Joint | 44T | 27 | 30 | 56 | 86.5 | 63 | I |
| | 2000.08-2003.08 | AT | F | L/R | Estate 4WD EZ30D | Date to:2001.06 | GCI56004 | Inner Joint | | 25 | 30 | 40 | | 111.3 | |
| | 2000.08-2003.08 | AT | F | L/R | Estate 4WD EZ30D | | GCI56023 | Inner Joint | | 25 | 29 | 40.1 | | 110.5 | |
| 3.0 (180 kw) | 2003.11-2009.09 | 5AT | F | L/R | Estate 4WD EZ30 | | GCI56013 | Inner Joint | | 25 | 29 | 35 | 77.5 | 110 | |
| | 2003.11-2009.09 | AT/MT | F | L/R | Estate 4WD EZ30 | | GDS56013 | Drive Shaft | | 27 | 25 | 52 | 77 | 770 | |
| | 2003.11-2009.09 | AT/MT | F | L/R | Estate 4WD EZ30 | GrooveType:Middle | GCO56042 | Outer Joint | | 27 | 30 | 52 | 76 | 54 | M |
| | 2003.11-2009.09 | 5AT | R | L/R | Estate 4WD EZ30 | | GDS56052 | Drive Shaft | | 25 | 25 | 52 | 98.5 | 769 | |
| | 2003.11-2009.09 | 5AT | R | L/R | Estate 4WD EZ30 | | GCI56019 | Inner Joint | | 25 | 28 | 32 | 81.5 | 86 | |
| 3.6 (183 kw) | 2011.06-2014.12 | 5AT | F | L/R | Estate 4WD EZ36D | Date To:2013.01 | GDS81902 | Drive Shaft | | 27 | 25 | 52 | 77 | 794 | |
| | 2011.06-2014.12 | 5AT | F | L/R | Estate 4WD EZ36D | Date to:2013.01,6 balls | GCO56022 | Outer Joint | | 27 | 30 | 52 | 77 | 54 | I |
| | 2011.06-2014.12 | 5AT | F | L/R | Estate 4WD EZ36D | Date to:2013.01,8 balls | GCO81561 | Outer Joint | | 27 | 30 | 52 | 77 | 54 | I |
| | 2011.06-2014.12 | 5AT | F | L/R | Estate 4WD EZ36D | Date to:2013.01 | GCI56027 | Inner Joint | | 25 | 29 | 35 | 77.5 | 105 | |
| | 2011.06-2014.12 | 5AT | F | L/R | Estate 4WD EZ36D | Date from:2013.02 | GCI82426 | Inner Joint | | 25 | 29 | 35 | 77.5 | 108.5 | |
| | 2011.06-2014.12 | 5AT | R | L/R | Estate 4WD EZ36D | | GDS82268 | Drive Shaft | | 27 | 25 | 56 | 114 | 795 | |
| | 2011.06-2014.12 | 5AT | R | L/R | Estate 4WD EZ36D | | GCO81456 | Outer Joint | | 27 | 29 | 56 | 114 | 47 | I |
| 3.6 (191 kw) | 2009.09- | 5AT | F | L/R | Estate 4WD EZ36D | Date To:2013.01 | GDS81902 | Drive Shaft | | 27 | 25 | 52 | 77 | 794 | |
| | 2009.09- | 5AT | F | L/R | Estate 4WD EZ36D | Date to:2013.01,6 balls | GCO56022 | Outer Joint | | 27 | 30 | 52 | 77 | 54 | I |
| | 2009.09- | 5AT | F | L/R | Estate 4WD EZ36D | Date to:2013.01,8 balls | GCO81561 | Outer Joint | | 27 | 30 | 52 | 77 | 54 | I |
| | 2009.09- | 5AT | F | L/R | Estate 4WD EZ36D | Date to:2013.01 | GCI56027 | Inner Joint | | 25 | 29 | 35 | 77.5 | 105 | |
| | 2009.09- | 5AT | F | L/R | Estate 4WD EZ36D | Date from:2013.02 | GCI82426 | Inner Joint | | 25 | 29 | 35 | 77.5 | 108.5 | |
| | 2009.09- | 5AT | R | L/R | Estate 4WD EZ36D | | GDS82268 | Drive Shaft | | 27 | 25 | 56 | 114 | 795 | |
| | 2009.09- | 5AT | R | L/R | Estate 4WD EZ36D | | GCO81456 | Outer Joint | | 27 | 29 | 56 | 114 | 47 | I |
| | 2014.10- | CVT | F | L/R | Estate 4WD EZ36D | | GCI82426 | Inner Joint | | 25 | 29 | 35 | 77.5 | 108.5 | |
| **Solterra** | | | | | | | | | | | | | | | |
| EV (160 kw) | 2022.06- | ET | F | L/R | SUV 4WD | | GDS57979 | Drive Shaft | | 30 | 30 | 59.6 | 94.5 | 715 | |
| | 2022.06- | ET | F | L/R | SUV 4WD | | GCO83820 | Outer Joint | | 30 | 27 | 59.6 | 94.5 | 72 | M |
| | 2022.06- | ET | F | L/R | SUV 4WD | | GCI83974 | Inner Joint | | 30 | 29 | 50 | 74.5 | 111 | |
| **Trezia** | | | | | | | | | | | | | | | |
| 1.3 (73 kw) | 2011.03- | 6MT/CVT | F | L | Hatchback FWD 1NR-FE;1NR-FKE | | GDS59202 | Drive Shaft | | 26 | 23 | 55.6 | 96 | 653 | |
| | 2011.03- | 6MT/CVT | F | R | Hatchback FWD 1NR-FE;1NR-FKE | | GDS59201 | Drive Shaft | | 26 | 23 | 55.6 | 96 | 896 | |
| | 2011.03- | 6MT/CVT | F | L/R | Hatchback FWD 1NR-FE;1NR-FKE | | GCO59206 | Outer Joint | | 26 | 23 | 55.6 | 96 | 53 | I |
| | 2011.03- | 6MT/CVT | F | L/R | Hatchback FWD 1NR-FE;1NR-FKE | | GCI99046 | Inner Joint | | 23 | 23 | 34 | 60 | 103.5 | |
| 1.4 (66 kw) | 2011.03- | 6AT/6MT | F | L | Hatchback FWD 1ND-TV | | GCO59244 | Outer Joint | | 26 | 25 | 55.6 | 95.5 | 57 | I |
| | 2011.03- | | F | L | Hatchback FWD 1ND-TV | | GDS59693 | Drive Shaft | | 26 | 20 | 55.6 | 95.5 | 653 | |
| | 2011.03- | | F | R | Hatchback FWD 1ND-TV | | GDS59677 | Drive Shaft | | 26 | 20 | 55.6 | 95.5 | 888 | |
| | 2011.03- | | F | L/R | Hatchback FWD 1ND-TV | | GCI59100 | Inner Joint | | 20 | 25 | 35 | 63.5 | 118 | |
| **Tribeca** | | | | | | | | | | | | | | | |
| 3.6 (188 kw) | 2009.09- | 5AT | F | L/R | SUV 4WD EZ36D | | GDS56064 | Drive Shaft | | 27 | 25 | 56 | 86.5 | 825 | |
| | 2009.09- | 5AT | F | L/R | SUV 4WD EZ36D | | GCO56061 | Outer Joint | | 27 | 30 | 56 | 86.5 | 55 | I |
| | 2009.09- | 5AT | F | L/R | SUV 4WD EZ36D | | GCI82426 | Inner Joint | | 25 | 29 | 35 | 77.5 | 108.5 | |
| 3.6 (190 kw) | 2007.09- | 5AT | F | L/R | SUV 4WD EZ36D | | GDS56064 | Drive Shaft | | 27 | 25 | 56 | 86.5 | 825 | |
| | 2007.09- | 5AT | F | L/R | SUV 4WD EZ36D | | GCO56061 | Outer Joint | | 27 | 30 | 56 | 86.5 | 55 | I |
| | 2007.09- | 5AT | F | L/R | SUV 4WD EZ36D | | GCI82426 | Inner Joint | | 25 | 29 | 35 | 77.5 | 108.5 | |

| | YEAR | TRANSM. | F/R | L/R | BODY STYLE & DRIVE TYPE & ENGINE | REMARKS | G-AP Ref. | PRODUCT | ABS | Technical Specifications A | B | C | H | L | P |
|---|---|---|---|---|---|---|---|---|---|---|---|---|---|---|---|
| **SUBARU** | | | | | | | | | | | | | | | |
| **Vivio** | | | | | | | | | | | | | | | |
| 0.7 (32 kw) | 1992.08-2001.12 | | F | | Hatchback FWD EN07 | | GCO56032 | Outer Joint | | 24 | 18 | 50 | 108 | 47 | M |
| **WRX** | | | | | | | | | | | | | | | |
| 2.0 (197 kw) | 2013.09- | CVT | F | L/R | Saloon 4WD FA20F;FA20E | | GDS83933 | Drive Shaft | | 27 | 25 | 56 | 87 | 802 | |
| | 2013.09- | CVT | F | L/R | Saloon 4WD FA20F;FA20E | | GCO82541 | Outer Joint | | 27 | 32 | 56 | 87 | 62.5 | I |
| | 2013.09- | CVT | F | L/R | Saloon 4WD FA20F;FA20E | | GCI82426 | Inner Joint | | 25 | 29 | 35 | 77.5 | 108.5 | |
| | 2014.06- | | F | L/R | Saloon 4WD FA20F | | GDS83933 | Drive Shaft | | 27 | 25 | 56 | 87 | 802 | |
| **XV** | | | | | | | | | | | | | | | |
| 1.6 (84 kw) | 2012.03-2017.12 | CVT/5MT | F | L/R | SUV 4WD FB16A;FB16B | | GDS81902 | Drive Shaft | | 27 | 25 | 52 | 77 | 794 | |
| | 2012.03-2017.12 | CVT/5MT | F | L/R | SUV 4WD FB16A;FB16B | 6 balls | GCO56022 | Outer Joint | | 27 | 30 | 52 | 77 | 54 | I |
| | 2012.03-2017.12 | CVT/5MT | F | L/R | SUV 4WD FB16A;FB16B | 8 balls | GCO81561 | Outer Joint | | 27 | 30 | 52 | 77 | 54 | I |
| | 2012.03-2017.12 | CVT/5MT | F | L/R | SUV 4WD FB16A;FB16B | Date to:2013.01 | GCI56027 | Inner Joint | | 25 | 29 | 35 | 77.5 | 105 | |
| | 2012.03-2017.12 | CVT/5MT | F | L/R | SUV 4WD FB16A;FB16B | Date from:2013.02 | GCI82426 | Inner Joint | | 25 | 29 | 35 | 77.5 | 108.5 | |
| | 2012.03-2017.12 | 5MT | R | L/R | SUV 4WD FB16A;FB16B | | GDS82268 | Drive Shaft | | 27 | 25 | 56 | 114 | 795 | |
| | 2012.03-2017.12 | CVT | R | L/R | SUV 4WD FB16A;FB16B | Date to:2013.01 | GDS84455 | Drive Shaft | | 27 | 22 | 56 | 113.5 | 792 | |
| | 2012.03-2017.12 | CVT | R | L/R | SUV 4WD FB16A;FB16B | | GCO82822 | Outer Joint | | 27 | 19 | 56 | 113.5 | 52 | I |
| | 2012.03-2017.12 | CVT | R | L/R | SUV 4WD FB16A;FB16B | | GCI82768 | Inner Joint | | 22 | 19 | 32 | 62 | 102 | |
| | 2012.03-2017.12 | CVT/5MT | F | L/R | SUV 4WD FB16B | Date to:2016.11 | GDS81902 | Drive Shaft | | 27 | 25 | 52 | 77 | 794 | |
| | 2012.03-2017.12 | CVT/5MT | F | L/R | SUV 4WD FB16B | 6 balls | GCO56022 | Outer Joint | | 27 | 30 | 52 | 77 | 54 | I |
| | 2012.03-2017.12 | CVT/5MT | F | L/R | SUV 4WD FB16B | 8 balls | GCO81561 | Outer Joint | | 27 | 30 | 52 | 77 | 54 | I |
| | 2012.03-2017.12 | CVT/5MT | F | L/R | SUV 4WD FB16B | Date to:2013.01 | GCI56027 | Inner Joint | | 25 | 29 | 35 | 77.5 | 105 | |
| | 2012.03-2017.12 | CVT/5MT | F | L/R | SUV 4WD FB16B | Date from:2013.02 | GCI82426 | Inner Joint | | 25 | 29 | 35 | 77.5 | 108.5 | |
| | 2012.03-2017.12 | 5MT | R | L/R | SUV 4WD FB16B | | GDS82268 | Drive Shaft | | 27 | 25 | 56 | 114 | 795 | |
| | 2012.03-2017.12 | CVT | R | L/R | SUV 4WD FB16B | Date to:2013.01 | GDS84455 | Drive Shaft | | 27 | 22 | 56 | 113.5 | 792 | |
| | 2012.03-2017.12 | CVT | R | L/R | SUV 4WD FB16B | | GCO82822 | Outer Joint | | 27 | 19 | 56 | 113.5 | 52 | I |
| | 2012.03-2017.12 | CVT | R | L/R | SUV 4WD FB16B | | GCI82768 | Inner Joint | | 22 | 19 | 32 | 62 | 102 | |
| | 2017.08- | CVT | F | L/R | SUV 4WD FB16A | | GDS56245 | Drive Shaft | | 27 | 25 | 52 | 80.5 | 817 | |
| | 2017.08- | CVT | F | L/R | SUV 4WD FB16A | | GCI82426 | Inner Joint | | 25 | 29 | 35 | 77.5 | 108.5 | |
| | 2017.08- | CVT | R | L/R | SUV 4WD FB16A | | GDS56247 | Drive Shaft | | 27 | 22 | 56 | 113.5 | 806 | |
| | 2017.08- | CVT | R | L/R | SUV 4WD FB16A | | GCO83220 | Outer Joint | | 27 | 19 | 56 | 113.5 | 46.5 | I |
| | 2017.08- | CVT | R | L/R | SUV 4WD FB16A | | GCI83211 | Inner Joint | | 22 | 19 | 32 | 62 | 102.5 | |
| 2.0 (80 kw) | 2012.03-2017.12 | 6MT | F | L/R | SUV 4WD EE20Z | Date to:2013.12 | GCI56027 | Inner Joint | | 25 | 29 | 35 | 77.5 | 105 | |
| | 2012.03-2017.12 | 6MT | F | L/R | SUV 4WD EE20Z | Date from:2013.02 | GCI82426 | Inner Joint | | 25 | 29 | 35 | 77.5 | 108.5 | |
| | 2012.03-2017.12 | MT | F | L/R | SUV 4WD EE20Z | | GDS81902 | Drive Shaft | | 27 | 25 | 52 | 77 | 794 | |
| | 2012.03-2017.12 | MT | F | L/R | SUV 4WD EE20Z | | GCO81561 | Outer Joint | | 27 | 30 | 52 | 77 | 54 | I |
| | 2012.03-2017.12 | MT | R | L/R | SUV 4WD EE20Z | | GDS82268 | Drive Shaft | | 27 | 25 | 56 | 114 | 795 | |
| | 2012.03-2017.12 | MT | R | L/R | SUV 4WD EE20Z | | GCO81456 | Outer Joint | | 27 | 29 | 56 | 114 | 47 | I |
| 2.0 (108 kw) | 2012.03-2017.12 | 6MT | F | L/R | SUV 4WD EE20Z | | GDS81902 | Drive Shaft | | 27 | 25 | 52 | 77 | 794 | |
| | 2012.03-2017.12 | 6MT | F | L/R | SUV 4WD EE20Z | Date to:2013.01 | GCI56027 | Inner Joint | | 25 | 29 | 35 | 77.5 | 105 | |
| | 2012.03-2017.12 | 6MT | F | L/R | SUV 4WD EE20Z | Date from:2013.02 | GCI82426 | Inner Joint | | 25 | 29 | 35 | 77.5 | 108.5 | |
| | 2012.03-2017.12 | 6MT | R | L/R | SUV 4WD EE20Z | | GDS82268 | Drive Shaft | | 27 | 25 | 56 | 114 | 795 | |
| | 2012.03-2017.12 | 6MT | R | L/R | SUV 4WD EE20Z | | GCO81456 | Outer Joint | | 27 | 29 | 56 | 114 | 47 | I |
| 2.0 (110 kw) | 2012.03-2017.12 | CVT/6MT | F | L/R | SUV 4WD FB20B | | GDS81902 | Drive Shaft | | 27 | 25 | 52 | 77 | 794 | |
| | 2012.03-2017.12 | CVT/6MT | F | L/R | SUV 4WD FB20B | 6 balls | GCO56022 | Outer Joint | | 27 | 30 | 52 | 77 | 54 | I |
| | 2012.03-2017.12 | CVT/6MT | F | L/R | SUV 4WD FB20B | 8 balls | GCO81561 | Outer Joint | | 27 | 30 | 52 | 77 | 54 | I |
| | 2012.03-2017.12 | CVT/6MT | F | L/R | SUV 4WD FB20B | Date to:2013.01 | GCI56027 | Inner Joint | | 25 | 29 | 35 | 77.5 | 105 | |
| | 2012.03-2017.12 | CVT/6MT | F | L/R | SUV 4WD FB20B | Date from:2013.02 | GCI82426 | Inner Joint | | 25 | 29 | 35 | 77.5 | 108.5 | |
| | 2012.03-2017.12 | 6MT | R | L/R | SUV 4WD FB20B | | GDS82268 | Drive Shaft | | 27 | 25 | 56 | 114 | 795 | |
| | 2012.03-2017.12 | CVT | R | L/R | SUV 4WD FB20B | Date to:2013.01 | GDS84455 | Drive Shaft | | 27 | 22 | 56 | 113.5 | 792 | |
| | 2012.03-2017.12 | CVT | R | L/R | SUV 4WD FB20B | | GCO82822 | Outer Joint | | 27 | 19 | 56 | 113.5 | 52 | I |
| | 2012.03-2017.12 | CVT | R | L/R | SUV 4WD FB20B | | GCI82768 | Inner Joint | | 22 | 19 | 32 | 62 | 102 | |
| | 2012.03-2017.12 | CVT/6MT | F | L/R | SUV 4WD FB20B;FB20A | Date to:2013.01 | GCI56027 | Inner Joint | | 25 | 29 | 35 | 77.5 | 105 | |
| | 2012.03-2017.12 | CVT/6MT | F | L/R | SUV 4WD FB20B;FB20A | Date from:2013.02 | GCI82426 | Inner Joint | | 25 | 29 | 35 | 77.5 | 108.5 | |
| | 2012.03-2017.12 | MT/CVT | F | L/R | SUV 4WD FB20B;FB20A | | GDS81902 | Drive Shaft | | 27 | 25 | 52 | 77 | 794 | |
| | 2012.03-2017.12 | MT/CVT | F | L/R | SUV 4WD FB20B;FB20A | 6 balls | GCO56022 | Outer Joint | | 27 | 30 | 52 | 77 | 54 | I |
| | 2012.03-2017.12 | MT/CVT | F | L/R | SUV 4WD FB20B;FB20A | 8 balls | GCO81561 | Outer Joint | | 27 | 30 | 52 | 77 | 54 | I |
| | 2012.03-2017.12 | CVT | R | L/R | SUV 4WD FB20B;FB20A | Date to:2013.01 | GDS84455 | Drive Shaft | | 27 | 22 | 56 | 113.5 | 792 | |
| | 2012.03-2017.12 | CVT | R | L/R | SUV 4WD FB20B;FB20A | | GCO82822 | Outer Joint | | 27 | 19 | 56 | 113.5 | 52 | I |
| | 2012.03-2017.12 | CVT | R | L/R | SUV 4WD FB20B;FB20A | | GCI82768 | Inner Joint | | 22 | 19 | 32 | 62 | 102 | |
| | 2012.03-2017.12 | MT | R | L/R | SUV 4WD FB20B;FB20A | | GDS82268 | Drive Shaft | | 27 | 25 | 56 | 114 | 795 | |
| | 2012.03-2017.12 | MT | R | L/R | SUV 4WD FB20B;FB20A | | GCO81456 | Outer Joint | | 27 | 29 | 56 | 114 | 47 | I |
| | 2014.01-2017.12 | CVT | F | L/R | SUV 4WD FB20 | Date To:2016.11 | GDS81902 | Drive Shaft | | 27 | 25 | 52 | 77 | 794 | |
| | 2014.01-2017.12 | CVT | F | L/R | SUV 4WD FB20 | | GCI82426 | Inner Joint | | 25 | 29 | 35 | 77.5 | 108.5 | |
| | 2014.01-2017.12 | CVT | R | L/R | SUV 4WD FB20 | | GCO82822 | Outer Joint | | 27 | 19 | 56 | 113.5 | 52 | I |
| | 2014.01-2017.12 | CVT | R | L/R | SUV 4WD FB20 | | GCI82768 | Inner Joint | | 22 | 19 | 32 | 62 | 102 | |
| | 2019.10- | CVT | F | L/R | SUV 4WD FB20C | | GDS56245 | Drive Shaft | | 27 | 25 | 52 | 80.5 | 817 | |

| | YEAR | TRANSM. | F/R | L/R | BODY STYLE & DRIVE TYPE & ENGINE | REMARKS | G-AP Ref. | PRODUCT | ABS | Technical Specifications A | B | C | H | L | P |
|---|---|---|---|---|---|---|---|---|---|---|---|---|---|---|---|
| **SUBARU** | | | | | | | | | | | | | | | |
| **XV** | | | | | | | | | | | | | | | |
| 2.0 (110 kw) | 2019.10- | CVT | F | L/R | SUV 4WD FB20C | | GCO83218 | Outer Joint | | 27 | 32 | 52 | 80.5 | 62.5 | I |
| | 2019.10- | CVT | F | L/R | SUV 4WD FB20C | | GCI82426 | Inner Joint | | 25 | 29 | 35 | 77.5 | 108.5 | |
| | 2019.10- | CVT | R | L/R | SUV 4WD FB20C | | GDS56247 | Drive Shaft | | 27 | 22 | 56 | 113.5 | 806 | |
| | 2019.10- | CVT | R | L/R | SUV 4WD FB20C | | GCO83220 | Outer Joint | | 27 | 19 | 56 | 113.5 | 46.5 | I |
| | 2019.10- | CVT | R | L/R | SUV 4WD FB20C | | GCI83211 | Inner Joint | | 22 | 19 | 32 | 62 | 102.5 | |
| | 2019.10- | CVT | F | L/R | SUV 4WD FB20X;FB20W;FB20V | | GDS56245 | Drive Shaft | | 27 | 25 | 52 | 80.5 | 817 | |
| | 2019.10- | CVT | F | L/R | SUV 4WD FB20X;FB20W;FB20V | | GCO83218 | Outer Joint | | 27 | 32 | 52 | 80.5 | 62.5 | I |
| | 2019.10- | CVT | F | L/R | SUV 4WD FB20X;FB20W;FB20V | | GCI82426 | Inner Joint | | 25 | 29 | 35 | 77.5 | 108.5 | |
| | 2019.10- | CVT | R | L/R | SUV 4WD FB20X;FB20W;FB20V | | GDS56247 | Drive Shaft | | 27 | 22 | 56 | 113.5 | 806 | |
| | 2019.10- | CVT | R | L/R | SUV 4WD FB20X;FB20W;FB20V | | GCO83220 | Outer Joint | | 27 | 19 | 56 | 113.5 | 46.5 | I |
| | 2019.10- | CVT | R | L/R | SUV 4WD FB20X;FB20W;FB20V | | GCI83211 | Inner Joint | | 22 | 19 | 32 | 62 | 102.5 | |
| 2.0 (115 kw) | 2017.04- | CVT | F | L/R | SUV 4WD FB20C;FB20D | | GDS56245 | Drive Shaft | | 27 | 25 | 52 | 80.5 | 817 | |
| | 2017.04- | CVT | F | L/R | SUV 4WD FB20C;FB20D | | GCO83218 | Outer Joint | | 27 | 32 | 52 | 80.5 | 62.5 | I |
| | 2017.04- | CVT | F | L/R | SUV 4WD FB20C;FB20D | | GCI82426 | Inner Joint | | 25 | 29 | 35 | 77.5 | 108.5 | |
| | 2017.04- | CVT | R | L/R | SUV 4WD FB20C;FB20D | | GDS56247 | Drive Shaft | | 27 | 22 | 56 | 113.5 | 806 | |
| | 2017.04- | CVT | R | L/R | SUV 4WD FB20C;FB20D | | GCO83220 | Outer Joint | | 27 | 19 | 56 | 113.5 | 46.5 | I |
| | 2017.04- | CVT | R | L/R | SUV 4WD FB20C;FB20D | | GCI83211 | Inner Joint | | 22 | 19 | 32 | 62 | 102.5 | |
| 2.0 (120 kw) | 2014.07- | CVT | F | L/R | SUV 4WD FB20, FB20-MA1 | Date to:2016.11 | GDS81902 | Drive Shaft | | 27 | 25 | 52 | 77 | 794 | |
| | 2014.07- | CVT | R | L/R | SUV 4WD FB20, FB20-MA1 | | GCI82768 | Inner Joint | | 22 | 19 | 32 | 62 | 102 | |
| **SUZUKI** | | | | | | | | | | | | | | | |
| **Alto** | | | | | | | | | | | | | | | |
| 1.0 (39 kw) | 1994.09-2002.06 | AT | F | L/R | Hatchback FWD G10B | Manufacturer:GKN | GCO57013 | Outer Joint | | 23 | 20 | 49 | 92 | 56.5 | O |
| | 1994.09-2002.06 | AT/MT | F | L | Hatchback FWD G10B | Manufacturer:NTN | GDS57078 | Drive Shaft | | 23 | 22 | 49 | 92 | 590 | |
| | 1994.09-2002.06 | AT/MT | F | R | Hatchback FWD G10B | Manufacturer:NTN | GDS57077 | Drive Shaft | | 23 | 22 | 49 | 92 | 823 | |
| | 1994.09-2002.06 | AT/MT | F | L/R | Hatchback FWD G10B | Manufacturer:NTN | GCO57008 | Outer Joint | | 23 | 20 | 49 | 92 | 54.5 | O |
| | 1994.09-2002.06 | AT/MT | F | L/R | Hatchback FWD G10B | Manufacturer:NTN | GCO57012 | Outer Joint | | 23 | 20 | 49 | 92 | 56.5 | I |
| | 1994.09-2002.06 | MT | F | L/R | Hatchback FWD G10B | Manufacturer:GKN | GCO57001 | Outer Joint | | 23 | 20 | 49 | 92 | 56.5 | I |
| | 1994.09-2002.06 | MT | F | L/R | Hatchback FWD G10B | GrooveType:Middle | GCO57007 | Outer Joint | | 23 | 19 | 49 | 92 | 56.5 | M |
| | 1994.09-2002.06 | MT | F | L/R | Hatchback FWD G10B | Manufacturer:GKN | GCO57048 | Outer Joint | | 23 | 20 | 49 | 92 | 54.5 | O |
| | 1994.09-2002.06 | MT | F | L/R | Hatchback FWD G10B | GrooveType:Outer | GCO99102 | Outer Joint | | 23 | 19 | 49 | 92 | 56.5 | O |
| 1.0 (50 kw) | 2009.01- | MT | F | L | Hatchback FWD K10B | | GDS57211 | Drive Shaft | 43T | 23 | 22 | 49 | 81 | 662 | |
| | 2009.01- | MT | F | R | Hatchback FWD K10B | | GDS57124 | Drive Shaft | 43T | 23 | 22 | 49 | 81 | 819.5 | |
| | 2009.01- | MT | F | L/R | Hatchback FWD K10B | | GCO57112 | Outer Joint | 43T | 23 | 19 | 49 | 81 | 56.5 | I |
| | 2009.04- | 5MT | F | L | Hatchback FWD K10B | | GDS57211 | Drive Shaft | 43T | 23 | 22 | 49 | 81 | 662 | |
| | 2009.04- | 5MT | F | R | Hatchback FWD K10B | | GDS57124 | Drive Shaft | 43T | 23 | 22 | 49 | 81 | 819.5 | |
| | 2009.04- | 5MT | F | L/R | Hatchback FWD K10B | | GCO57112 | Outer Joint | 43T | 23 | 19 | 49 | 81 | 56.5 | I |
| 1.1 (46 kw) | 2002.06-2008.12 | 5MT | F | L | Hatchback FWD F10DN;F10D | | GDS57128 | Drive Shaft | | 23 | 22 | 49 | 77.5 | 570 | |
| | 2002.06-2008.12 | AT/MT | F | L/R | Hatchback FWD F10DN;F10D | | GCO57027 | Outer Joint | | 23 | 19 | 49 | 78 | 57 | O |
| | 2002.06-2008.12 | AT/MT | F | L/R | Hatchback FWD F10DN;F10D | | GCO57061 | Outer Joint | 43T | 23 | 19 | 49 | 77.5 | 57 | O |
| | 2002.06-2008.12 | MT | F | L | Hatchback FWD F10DN;F10D | | GDS32008 | Drive Shaft | | 23 | 22 | 49 | 78 | 567 | |
| | 2002.06-2008.12 | MT | F | L | Hatchback FWD F10DN;F10D | | GDS57119 | Drive Shaft | 43T | 23 | 22 | 49 | 77.5 | 567 | |
| | 2002.06-2008.12 | MT | F | R | Hatchback FWD F10DN;F10D | | GDS32007 | Drive Shaft | | 23 | 22 | 49 | 78 | 800 | |
| | 2002.06-2008.12 | MT | F | R | Hatchback FWD F10DN;F10D | | GDS57120 | Drive Shaft | 43T | 23 | 22 | 49 | 77.5 | 800 | |
| | 2002.06-2008.12 | MT | F | L/R | Hatchback FWD F10DN;F10D | | GCO57083 | Outer Joint | | 23 | 19 | 49 | 77.5 | 57 | O |
| | 2002.06-2008.12 | MT | F | L | Hatchback FWD F10DN;F10D | | GCI57034 | Inner Joint | | 22 | 19 | 35 | 58 | 107 | |
| **Alto V** | | | | | | | | | | | | | | | |
| 1.0 (43 kw) | 2000.01-2002.06 | 3AT/5MT | F | L/R | Hatchback FWD G10BB | inner teeth of wheel side:20 | GCO57008 | Outer Joint | | 23 | 20 | 49 | 92 | 54.5 | O |
| | 2000.01-2002.06 | MT | F | R | Hatchback FWD G10BB | | GCI88018 | Inner Joint | | 22 | 19 | 35 | 51.9 | 93.4 | |
| | 2000.01-2002.06 | | F | | Hatchback FWD G10BB | | GCO99102 | Outer Joint | | 23 | 19 | 49 | 92 | 56.5 | O |
| **Baleno** | | | | | | | | | | | | | | | |
| 1.0 (82 kw) | 2016.02- | 6AT | F | L | Hatchback FWD K10C-T | | GDS57884 | Drive Shaft | | 25 | 26 | 49 | 81.5 | 641 | |
| | 2016.02- | 6AT | F | R | Hatchback FWD K10C-T | | GDS57879 | Drive Shaft | | 25 | 26 | 49 | 81.5 | 913 | |
| | 2016.02- | 6AT | F | L/R | Hatchback FWD K10C-T | | GCO83767 | Outer Joint | | 25 | 29 | 49 | 81.5 | 59 | I |
| | 2016.02- | 6AT | F | L/R | Hatchback FWD K10C-T | | GCI83907 | Inner Joint | | 26 | 29 | 31 | 73.5 | 68 | |
| 1.2 (66 kw) | 2016.02- | 5MT | F | L | Hatchback FWD K12C | | GDS56397 | Drive Shaft | | 25 | 22 | 49 | 82 | 664 | |
| | 2016.02- | 5MT | F | R | Hatchback FWD K12C | | GDS56396 | Drive Shaft | | 25 | 22 | 49 | 82 | 925 | |
| | 2016.02- | 5MT | F | L/R | Hatchback FWD K12C | | GCO82756 | Outer Joint | | 25 | 20 | 49 | 82 | 61 | M |
| | 2016.02- | 5MT | F | L/R | Hatchback FWD K12C | | GCI81260 | Inner Joint | | 22 | 20 | 37.97 | 58 | 86.5 | |
| | 2016.02- | CVT | F | L | Hatchback FWD K12C | | GDS56395 | Drive Shaft | | 25 | 22 | 49 | 82 | 664 | |
| | 2016.02- | CVT | F | R | Hatchback FWD K12C | | GDS56394 | Drive Shaft | | 25 | 22 | 49 | 82 | 925 | |
| | 2016.02- | CVT | F | L/R | Hatchback FWD K12C | | GCI83287 | Inner Joint | | 22 | 20 | 35 | 57.5 | 86.5 | |
| | 2016.02- | CVT/5MT | F | L/R | Hatchback FWD K12C | | GCO82756 | Outer Joint | | 25 | 20 | 49 | 82 | 61 | M |
| 1.3 (52 kw) | 1995.11-1998.10 | 5MT | F | L | Hatchback FWD G13BA | Chassis no. to:160959 | GCI88017 | Inner Joint | | 22 | 19 | 35 | 54.4 | 86 | |
| | 1995.11-1998.10 | AT/MT | F | L/R | Hatchback FWD G13BA | | GCO57037 | Outer Joint | | 25 | 19 | 49 | 76 | 60.5 | I |
| | 1995.11-1998.10 | | F | L | Hatchback FWD G13BA | | GCO57160 | Outer Joint | 42T | 25 | 19 | 49 | 76.5 | 60.5 | M |

| | YEAR | TRANSM. | F/R | L/R | BODY STYLE & DRIVE TYPE & ENGINE | REMARKS | G-AP Ref. | PRODUCT | ABS | Technical Specifications A | B | C | H | L | P |
|---|---|---|---|---|---|---|---|---|---|---|---|---|---|---|---|
| **SUZUKI** | | | | | | | | | | | | | | | |
| **Baleno** | | | | | | | | | | | | | | | |
| 1.3 (52 kw) | 1995.11-1998.10 | | F | R | Hatchback FWD G13BA | Chassis no. to:160000 | GCI57002 | Inner Joint | | 22 | 19 | 40 | | 128.5 | |
| | 1995.11-1998.10 | 5MT | F | L | Saloon FWD G13BA | Chassis no. to:160959 | GCI88017 | Inner Joint | | 22 | 19 | 35 | 54.4 | 86 | |
| | 1995.11-1998.10 | AT/MT | F | L/R | Saloon FWD G13BA | | GCO57037 | Outer Joint | | 25 | 19 | 49 | 76 | 60.5 | I |
| | 1995.11-1998.10 | | F | L | Saloon FWD G13BA | | GCO57160 | Outer Joint | 42T | 25 | 19 | 49 | 76.5 | 60.5 | M |
| | 1995.11-1998.10 | | F | R | Saloon FWD G13BA | Chassis no. to:160000 | GCI57002 | Inner Joint | | 22 | 19 | 40 | | 128.5 | |
| 1.3 (63 kw) | 1995.03-2002.05 | AT/MT | F | L/R | Hatchback FWD G13BB | | GCO57037 | Outer Joint | | 25 | 19 | 49 | 76 | 60.5 | I |
| | 1995.03-2002.05 | AT/MT | F | L/R | Hatchback FWD G13BB | | GCO57160 | Outer Joint | 42T | 25 | 19 | 49 | 76.5 | 60.5 | M |
| | 1995.03-2002.05 | MT | F | R | Hatchback FWD G13BB | Chassis no. to:160000 | GCI57002 | Inner Joint | | 22 | 19 | 40 | | 128.5 | |
| | 1995.03-2002.05 | MT/AT | F | L/R | Hatchback FWD G13BB | | GCI88017 | Inner Joint | | 22 | 19 | 35 | 54.4 | 86 | |
| | 1995.03-2002.05 | AT/MT | F | L/R | Saloon FWD G13BB | | GCO57037 | Outer Joint | | 25 | 19 | 49 | 76 | 60.5 | I |
| | 1995.03-2002.05 | AT/MT | F | L/R | Saloon FWD G13BB | | GCO57160 | Outer Joint | 42T | 25 | 19 | 49 | 76.5 | 60.5 | M |
| | 1995.03-2002.05 | MT | F | R | Saloon FWD G13BB | Chassis no. to:160000 | GCI57002 | Inner Joint | | 22 | 19 | 40 | | 128.5 | |
| | 1995.03-2002.05 | MT/AT | F | L/R | Saloon FWD G13BB | | GCI88017 | Inner Joint | | 22 | 19 | 35 | 54.4 | 86 | |
| 1.6 (72 kw) | 1995.04-2002.05 | AT | F | L | Hatchback FWD G16B | | GDS57084 | Drive Shaft | 42T | 25 | 22 | 49 | 76.5 | 605.5 | |
| | 1995.04-2002.05 | AT | F | R | Hatchback FWD G16B | | GDS57085 | Drive Shaft | 42T | 25 | 22 | 49 | 76.5 | 887 | |
| | 1995.04-2002.05 | AT | F | L/R | Hatchback FWD G16B | | GCO57002 | Outer Joint | 42T | 25 | 20 | 49 | 76.5 | 61 | I |
| | 1995.04-2002.05 | AT/MT | F | L/R | Hatchback FWD G16B | | GCO57021 | Outer Joint | | 25 | 20 | 49 | 76 | 63 | M |
| | 1995.04-2002.05 | AT/MT | F | L/R | Hatchback FWD G16B | Date from:1998.01 | GCO99089 | Outer Joint | | 25 | 20 | 49 | 76 | 61 | M |
| | 1995.04-2002.05 | MT | F | L | Hatchback FWD G16B | | GDS57148 | Drive Shaft | 42T | 25 | 22 | 49 | 76 | 631 | |
| | 1995.04-2002.05 | MT | F | R | Hatchback FWD G16B | | GDS57151 | Drive Shaft | 42T | 25 | 22 | 49 | 76 | 610.5 | |
| | 1995.04-2002.05 | MT | F | R | Hatchback FWD G16B | | GCO57023 | Outer Joint | | 25 | 21 | 49 | 76.5 | 61 | I |
| | 1995.04-2002.05 | MT | F | R | Hatchback FWD G16B | | GCO57040 | Outer Joint | 42T | 25 | 21 | 49 | 76.5 | 61 | I |
| | 1995.04-2002.05 | MT | F | L/R | Hatchback FWD G16B | | GCO57014 | Outer Joint | | 25 | 21 | 49 | 76 | 61 | M |
| | 1995.04-2002.05 | MT | F | L/R | Hatchback FWD G16B | | GCO57015 | Outer Joint | 42T | 25 | 21 | 49 | 76 | 61 | M |
| | 1995.04-2002.05 | MT | F | L | Hatchback FWD G16B | | GCI57022 | Inner Joint | | 22 | 21 | 35 | 54 | 95 | |
| | 1995.04-2002.05 | MT | F | R | Hatchback FWD G16B | | GCI57005 | Inner Joint | | 22 | 21 | 40 | | 128.5 | |
| | 1995.04-2002.05 | MT | F | R | Hatchback FWD G16B | | GCI57023 | Inner Joint | | 22 | 21 | 40 | | 128.5 | |
| | 1995.04-2002.05 | AT | F | L | Saloon FWD G16B | | GDS57084 | Drive Shaft | 42T | 25 | 22 | 49 | 76.5 | 605.5 | |
| | 1995.04-2002.05 | AT | F | R | Saloon FWD G16B | | GDS57085 | Drive Shaft | 42T | 25 | 22 | 49 | 76.5 | 887 | |
| | 1995.04-2002.05 | AT | F | L/R | Saloon FWD G16B | | GCO57002 | Outer Joint | 42T | 25 | 20 | 49 | 76.5 | 61 | I |
| | 1995.04-2002.05 | AT/MT | F | L/R | Saloon FWD G16B | Date from:1998.01 | GCO99089 | Outer Joint | | 25 | 20 | 49 | 76 | 61 | M |
| | 1995.04-2002.05 | MT | F | L | Saloon FWD G16B | | GDS57148 | Drive Shaft | 42T | 25 | 22 | 49 | 76 | 631 | |
| | 1995.04-2002.05 | MT | F | R | Saloon FWD G16B | | GDS57151 | Drive Shaft | 42T | 25 | 22 | 49 | 76 | 610.5 | |
| | 1995.04-2002.05 | MT | F | R | Saloon FWD G16B | | GCO57023 | Outer Joint | | 25 | 21 | 49 | 76.5 | 61 | I |
| | 1995.04-2002.05 | MT | F | R | Saloon FWD G16B | | GCO57040 | Outer Joint | 42T | 25 | 21 | 49 | 76.5 | 61 | I |
| | 1995.04-2002.05 | MT | F | L/R | Saloon FWD G16B | | GCO57014 | Outer Joint | | 25 | 21 | 49 | 76 | 61 | M |
| | 1995.04-2002.05 | MT | F | L/R | Saloon FWD G16B | | GCO57015 | Outer Joint | 42T | 25 | 21 | 49 | 76 | 61 | M |
| | 1995.04-2002.05 | MT | F | L | Saloon FWD G16B | | GCI57022 | Inner Joint | | 22 | 21 | 35 | 54 | 95 | |
| | 1995.04-2002.05 | MT | F | R | Saloon FWD G16B | | GCI57005 | Inner Joint | | 22 | 21 | 40 | | 128.5 | |
| | 1995.04-2002.05 | MT | F | R | Saloon FWD G16B | | GCI57023 | Inner Joint | | 22 | 21 | 40 | | 128.5 | |
| | 1995.07-2002.05 | AT/MT | F | L/R | Hatchback 4WD G16B | | GCO57002 | Outer Joint | 42T | 25 | 20 | 49 | 76.5 | 61 | I |
| | 1995.07-2002.05 | AT/MT | F | L/R | Hatchback 4WD G16B | Date to:1997.12 | GCO57014 | Outer Joint | | 25 | 21 | 49 | 76 | 61 | M |
| | 1995.07-2002.05 | AT/MT | F | L/R | Hatchback 4WD G16B | Date to:1997.12 | GCO57015 | Outer Joint | 42T | 25 | 21 | 49 | 76 | 61 | M |
| | 1995.07-2002.05 | AT/MT | F | L/R | Hatchback 4WD G16B | | GCO57021 | Outer Joint | | 25 | 20 | 49 | 76 | 63 | M |
| | 1995.07-2002.05 | AT/MT | F | L/R | Hatchback 4WD G16B | Date from:1998.01 | GCO99089 | Outer Joint | | 25 | 20 | 49 | 76 | 61 | M |
| | 1995.07-2002.05 | | F | L | Hatchback 4WD G16B | | GCO57016 | Outer Joint | | 25 | 19 | 49 | 76.5 | 61 | M |
| | 1995.07-2002.05 | | F | L | Hatchback 4WD G16B | | GCI57022 | Inner Joint | | 22 | 21 | 35 | 54 | 95 | |
| | 1995.07-2002.05 | | F | R | Hatchback 4WD G16B | | GCI57023 | Inner Joint | | 22 | 21 | 40 | | 128.5 | |
| | 1995.07-2002.05 | AT/MT | F | L/R | Saloon 4WD G16B | | GCO57002 | Outer Joint | 42T | 25 | 20 | 49 | 76.5 | 61 | I |
| | 1995.07-2002.05 | AT/MT | F | L/R | Saloon 4WD G16B | Date to:1997.12 | GCO57014 | Outer Joint | | 25 | 21 | 49 | 76 | 61 | M |
| | 1995.07-2002.05 | AT/MT | F | L/R | Saloon 4WD G16B | Date to:1997.12 | GCO57015 | Outer Joint | 42T | 25 | 21 | 49 | 76 | 61 | M |
| | 1995.07-2002.05 | AT/MT | F | L/R | Saloon 4WD G16B | Date from:1998.01 | GCO99089 | Outer Joint | | 25 | 20 | 49 | 76 | 61 | M |
| | 1995.07-2002.05 | | F | L | Saloon 4WD G16B | | GCO57016 | Outer Joint | | 25 | 19 | 49 | 76.5 | 61 | M |
| | 1995.07-2002.05 | | F | L | Saloon 4WD G16B | | GCI57022 | Inner Joint | | 22 | 21 | 35 | 54 | 95 | |
| | 1995.07-2002.05 | | F | R | Saloon 4WD G16B | | GCI57023 | Inner Joint | | 22 | 21 | 40 | | 128.5 | |
| 1.8 (89 kw) | 1996.03-2002.05 | AT | F | L | Hatchback FWD J18A | | GCO57159 | Outer Joint | 42T | 25 | 21 | 49 | 76.5 | 60.5 | M |
| | 1996.03-2002.05 | AT | F | R | Hatchback FWD J18A | Chassis no. from:140001 | GCO57015 | Outer Joint | 42T | 25 | 21 | 49 | 76 | 61 | M |
| | 1996.03-2002.05 | AT/MT | F | L/R | Hatchback FWD J18A | | GCO57014 | Outer Joint | | 25 | 21 | 49 | 76 | 61 | M |
| | 1996.03-2002.05 | MT | F | L/R | Hatchback FWD J18A | Chassis no. from:140001 | GCO57018 | Outer Joint | | 25 | 22 | 49 | 77 | 73 | M |
| | 1996.03-2002.05 | | F | L/R | Hatchback FWD J18A | | GCO57021 | Outer Joint | | 25 | 20 | 49 | 76 | 63 | M |
| | 1996.03-2002.05 | | F | | Hatchback FWD J18A | | GCO57040 | Outer Joint | 42T | 25 | 21 | 49 | 76.5 | 61 | I |
| | 1996.03-2002.05 | AT | F | L | Saloon FWD J18A | | GCO57159 | Outer Joint | 42T | 25 | 21 | 49 | 76.5 | 60.5 | M |
| | 1996.03-2002.05 | AT | F | R | Saloon FWD J18A | Chassis no. from:140001 | GCO57015 | Outer Joint | 42T | 25 | 21 | 49 | 76 | 61 | M |
| | 1996.03-2002.05 | AT/MT | F | L/R | Saloon FWD J18A | | GCO57014 | Outer Joint | | 25 | 21 | 49 | 76 | 61 | M |
| | 1996.03-2002.05 | MT | F | L | Saloon FWD J18A | | GDS57102 | Drive Shaft | 42T | 25 | 26 | 49 | 76.5 | 593 | |

| | YEAR | TRANSM. | F/R | L/R | BODY STYLE & DRIVE TYPE & ENGINE | REMARKS | G-AP Ref. | PRODUCT | ABS | Technical Specifications A | B | C | H | L | P |
|---|---|---|---|---|---|---|---|---|---|---|---|---|---|---|---|
| **SUZUKI** | | | | | | | | | | | | | | | |
| **Baleno** | | | | | | | | | | | | | | | |
| 1.8 (89 kw) | 1996.03-2002.05 | MT | F | L/R | Saloon FWD J18A | Chassis no. from:140001 | GCO57018 | Outer Joint | | 25 | 22 | 49 | 77 | 73 | M |
| | 1996.03-2002.05 | | F | L/R | Saloon FWD J18A | | GCO57021 | Outer Joint | | 25 | 20 | 49 | 76 | 63 | M |
| | 1996.03-2002.05 | | F | | Saloon FWD J18A | | GCO57040 | Outer Joint | 42T | 25 | 21 | 49 | 76.5 | 61 | I |
| 1.9 (55 kw) | 1998.04-2002.05 | AT/MT | F | L/R | Hatchback FWD CULR/CUMB/DHW | | GCO24050 | Outer Joint | 42T | 25 | 29 | 49 | 75.5 | 61 | I |
| | 1998.04-2002.05 | AT/MT | F | L/R | Saloon FWD CULR/CUMB/DHW | | GCO24050 | Outer Joint | 42T | 25 | 29 | 49 | 75.5 | 61 | I |
| **Baleno Estate/Wagon** | | | | | | | | | | | | | | | |
| 1.3 (63 kw) | 1997.06-2002.05 | 5MT | F | L | Estate FWD G13BB | Chassis no. to:160959 | GCI88017 | Inner Joint | | 22 | 19 | 35 | 54.4 | 86 | |
| | 1997.06-2002.05 | AT/MT | F | L/R | Estate FWD G13BB | | GCO57037 | Outer Joint | | 25 | 19 | 49 | 76 | 60.5 | I |
| | 1997.06-2002.05 | | F | L | Estate FWD G13BB | | GCO57160 | Outer Joint | 42T | 25 | 19 | 49 | 76.5 | 60.5 | M |
| | 1997.06-2002.05 | | F | R | Estate FWD G13BB | Chassis no. to:160000 | GCI57002 | Inner Joint | | 22 | 19 | 40 | | 128.5 | |
| 1.6 (72 kw) | 1996.08-2002.05 | AT/MT | F | L/R | Estate 4WD G16B | | GCO57002 | Outer Joint | 42T | 25 | 20 | 49 | 76.5 | 61 | I |
| | 1996.08-2002.05 | AT/MT | F | L/R | Estate 4WD G16B | Date to:1997.12 | GCO57014 | Outer Joint | | 25 | 21 | 49 | 76 | 61 | M |
| | 1996.08-2002.05 | AT/MT | F | L/R | Estate 4WD G16B | Date to:1997.12 | GCO57015 | Outer Joint | 42T | 25 | 21 | 49 | 76 | 61 | M |
| | 1996.08-2002.05 | AT/MT | F | L/R | Estate 4WD G16B | Date from:1998.01 | GCO99089 | Outer Joint | | 25 | 20 | 49 | 76 | 61 | M |
| | 1996.08-2002.05 | | F | L | Estate 4WD G16B | | GCO57016 | Outer Joint | | 25 | 19 | 49 | 76.5 | 61 | M |
| | 1996.08-2002.05 | | F | L | Estate 4WD G16B | | GCI57022 | Inner Joint | | 22 | 21 | 35 | 54 | 95 | |
| | 1996.08-2002.05 | | F | R | Estate 4WD G16B | | GCI57023 | Inner Joint | | 22 | 21 | 40 | | 128.5 | |
| | 1996.08-2002.05 | AT | F | L | Estate FWD G16B | | GDS57084 | Drive Shaft | 42T | 25 | 22 | 49 | 76.5 | 605.5 | |
| | 1996.08-2002.05 | AT | F | R | Estate FWD G16B | | GDS57085 | Drive Shaft | 42T | 25 | 22 | 49 | 76.5 | 887 | |
| | 1996.08-2002.05 | AT | F | L | Estate FWD G16B | | GCO57002 | Outer Joint | 42T | 25 | 20 | 49 | 76.5 | 61 | I |
| | 1996.08-2002.05 | AT/MT | F | L/R | Estate FWD G16B | | GCO57021 | Outer Joint | | 25 | 20 | 49 | 76 | 63 | M |
| | 1996.08-2002.05 | AT/MT | F | L/R | Estate FWD G16B | Date from:1998.01 | GCO99089 | Outer Joint | | 25 | 20 | 49 | 76 | 61 | M |
| | 1996.08-2002.05 | MT | F | L | Estate FWD G16B | | GDS57148 | Drive Shaft | 42T | 25 | 22 | 49 | 76 | 631 | |
| | 1996.08-2002.05 | MT | F | R | Estate FWD G16B | | GDS57005 | Drive Shaft | | 25 | 22 | 49 | 76 | 888 | |
| | 1996.08-2002.05 | MT | F | R | Estate FWD G16B | | GDS57151 | Drive Shaft | 42T | 25 | 22 | 49 | 76 | 610.5 | |
| | 1996.08-2002.05 | MT | F | R | Estate FWD G16B | | GCO57023 | Outer Joint | | 25 | 21 | 49 | 76.5 | 61 | I |
| | 1996.08-2002.05 | MT | F | R | Estate FWD G16B | | GCO57040 | Outer Joint | 42T | 25 | 21 | 49 | 76.5 | 61 | I |
| | 1996.08-2002.05 | MT | F | L/R | Estate FWD G16B | | GCO57014 | Outer Joint | | 25 | 21 | 49 | 76 | 61 | M |
| | 1996.08-2002.05 | MT | F | L/R | Estate FWD G16B | | GCO57015 | Outer Joint | 42T | 25 | 21 | 49 | 76 | 61 | M |
| | 1996.08-2002.05 | MT | F | L | Estate FWD G16B | | GCI57022 | Inner Joint | | 22 | 21 | 35 | 54 | 95 | |
| | 1996.08-2002.05 | MT | F | R | Estate FWD G16B | | GCI57005 | Inner Joint | | 22 | 21 | 40 | | 128.5 | |
| | 1996.08-2002.05 | MT | F | R | Estate FWD G16B | | GCI57023 | Inner Joint | | 22 | 21 | 40 | | 128.5 | |
| 1.6 (73 kw) | 1996.08-2002.05 | AT | F | L | Estate FWD G16B | | GDS57084 | Drive Shaft | 42T | 25 | 22 | 49 | 76.5 | 605.5 | |
| | 1996.08-2002.05 | AT | F | R | Estate FWD G16B | | GDS57085 | Drive Shaft | 42T | 25 | 22 | 49 | 76.5 | 887 | |
| | 1996.08-2002.05 | AT | F | L | Estate FWD G16B | | GCO57002 | Outer Joint | 42T | 25 | 20 | 49 | 76.5 | 61 | I |
| | 1996.08-2002.05 | MT | F | L | Estate FWD G16B | | GDS57148 | Drive Shaft | 42T | 25 | 22 | 49 | 76 | 631 | |
| | 1996.08-2002.05 | MT | F | R | Estate FWD G16B | | GDS57005 | Drive Shaft | | 25 | 22 | 49 | 76 | 888 | |
| | 1996.08-2002.05 | MT | F | R | Estate FWD G16B | | GDS57151 | Drive Shaft | 42T | 25 | 22 | 49 | 76 | 610.5 | |
| | 1996.08-2002.05 | MT | F | R | Estate FWD G16B | | GCO57023 | Outer Joint | | 25 | 21 | 49 | 76.5 | 61 | I |
| | 1996.08-2002.05 | MT | F | R | Estate FWD G16B | | GCO57040 | Outer Joint | 42T | 25 | 21 | 49 | 76.5 | 61 | I |
| | 1996.08-2002.05 | MT | F | L/R | Estate FWD G16B | | GCO57014 | Outer Joint | | 25 | 21 | 49 | 76 | 61 | M |
| | 1996.08-2002.05 | MT | F | L/R | Estate FWD G16B | | GCO57015 | Outer Joint | 42T | 25 | 21 | 49 | 76 | 61 | M |
| | 1996.08-2002.05 | MT | F | L | Estate FWD G16B | | GCI57022 | Inner Joint | | 22 | 21 | 35 | 54 | 95 | |
| | 1996.08-2002.05 | MT | F | R | Estate FWD G16B | | GCI57005 | Inner Joint | | 22 | 21 | 40 | | 128.5 | |
| | 1996.08-2002.05 | MT | F | R | Estate FWD G16B | | GCI57023 | Inner Joint | | 22 | 21 | 40 | | 128.5 | |
| | 1996.08-2002.05 | | F | L/R | Estate FWD G16B | | GCO57021 | Outer Joint | | 25 | 20 | 49 | 76 | 63 | M |
| 1.8 (89 kw) | 1996.08-2002.05 | AT | F | L | Estate FWD J18A | | GCO57159 | Outer Joint | 42T | 25 | 21 | 49 | 76.5 | 60.5 | M |
| | 1996.08-2002.05 | AT | F | R | Estate FWD J18A | Chassis no. from:140001 | GCO57015 | Outer Joint | 42T | 25 | 21 | 49 | 76 | 61 | M |
| | 1996.08-2002.05 | AT/MT | F | L/R | Estate FWD J18A | | GCO57011 | Outer Joint | | 25 | 22 | 49 | 76.5 | 73 | M |
| | 1996.08-2002.05 | AT/MT | F | L/R | Estate FWD J18A | | GCO57018 | Outer Joint | | 25 | 22 | 49 | 77 | 73 | M |
| | 1996.08-2002.05 | MT | F | L | Estate FWD J18A | | GDS57102 | Drive Shaft | 42T | 25 | 26 | 49 | 76.5 | 593 | |
| | 1996.08-2002.05 | | F | L/R | Estate FWD J18A | | GCO57021 | Outer Joint | | 25 | 20 | 49 | 76 | 63 | M |
| | 1996.08-2002.05 | | F | | Estate FWD J18A | | GCO57040 | Outer Joint | 42T | 25 | 21 | 49 | 76.5 | 61 | I |
| 1.9 (55 kw) | 1999.02-2002.05 | AT/MT | F | L/R | Estate FWD CULR/CUMB/DHW | | GCO24050 | Outer Joint | 42T | 25 | 29 | 49 | 75.5 | 61 | I |
| **Celerio** | | | | | | | | | | | | | | | |
| 1.0 (50 kw) | 2014.03- | 5MT/5AMT | F | L | Hatchback FWD K10B;K10C | | GDS58321 | Drive Shaft | 43T | 23 | 22 | 49 | 81 | 661 | |
| | 2014.03- | 5MT/5AMT | F | R | Hatchback FWD K10B;K10C | | GDS58320 | Drive Shaft | 43T | 23 | 22 | 49 | 81 | 827 | |
| | 2014.03- | 5MT/5AMT | F | L/R | Hatchback FWD K10B;K10C | | GCI84064 | Inner Joint | | 22 | 29 | 40 | 57 | 91.5 | |
| | 2014.03- | 5MT/5AMT/CVT | F | L/R | Hatchback FWD K10B;K10C | | GCO82816 | Outer Joint | 43T | 23 | 29 | 49 | 81 | 56.5 | I |
| **Cultus** | | | | | | | | | | | | | | | |
| 1.6 (68 kw) | 1995.11-2000.05 | AT | F | R | Hatchback FWD G16BA | | GDS57039 | Drive Shaft | | 23 | 22 | 49 | 92 | 767 | |
| | 1995.11-2000.05 | AT | F | L/R | Hatchback FWD G16BA | | GCO57007 | Outer Joint | | 23 | 19 | 49 | 92 | 56.5 | M |
| **Grand Escudo** | | | | | | | | | | | | | | | |
| 2.0 (103 kw) | 2005.10-2015.02 | 4AT/5MT | F | L | Closed Off-Road Vehicle RWD J20A | | GDS57285 | Drive Shaft | | 28 | | 58.3 | 82 | 556 | |
| | 2005.10-2015.02 | 4AT/5MT | F | R | Closed Off-Road Vehicle RWD J20A | | GDS51048 | Drive Shaft | | 28 | 26 | 58.3 | 82 | 617 | |

| | YEAR | TRANSM. | F/R | L/R | BODY STYLE & DRIVE TYPE & ENGINE | REMARKS | G-AP Ref. | PRODUCT | ABS | Technical Specifications | | | | | |
|---|---|---|---|---|---|---|---|---|---|---|---|---|---|---|---|
| | | | | | | | | | | A | B | C | H | L | P |
| **SUZUKI** | | | | | | | | | | | | | | | |
| **Grand Vitara** | | | | | | | | | | | | | | | |
| 1.6 (69 kw) | 1998.03-2003.07 | 4AT/5MT | F | R | Closed Off-Road Vehicle 4WD G16B | | GDS57149 | Drive Shaft | | 26 | 26 | 48 | 116 | 609 | |
| | 1998.03-2003.07 | 4AT/5MT | F | L/R | Closed Off-Road Vehicle 4WD G16B | inner teeth:29 | GCO57017 | Outer Joint | | 26 | 29 | 48 | 116 | 65.5 | I |
| | 1998.03-2003.07 | MT | F | L/R | Closed Off-Road Vehicle 4WD G16B | inner teeth:30 | GCO57009 | Outer Joint | | 26 | 30 | 48 | 116 | 65.5 | I |
| | 1998.03-2003.07 | MT | F | L/R | Closed Off-Road Vehicle 4WD G16B | inner teeth:22 | GCO57010 | Outer Joint | | 26 | 22 | 48 | 116 | 65.5 | I |
| | 1998.08-2004.11 | 4AT/5MT | F | R | Terrain cab open 4WD G16B | | GDS19015 | Drive Shaft | | 26 | 26 | 48 | 116 | 600 | |
| | 1998.08-2004.11 | AT/MT | F | L/R | Terrain cab open 4WD G16B | | GCO57009 | Outer Joint | | 26 | 30 | 48 | 116 | 65.5 | I |
| 1.6 (71 kw) | 2003.09-2005.09 | 4AT/5MT | F | R | Closed Off-Road Vehicle 4WD G16B | | GDS57149 | Drive Shaft | | 26 | 26 | 48 | 116 | 609 | |
| | 2003.09-2005.09 | 4AT/5MT | F | L/R | Closed Off-Road Vehicle 4WD G16B | | GCO57017 | Outer Joint | | 26 | 29 | 48 | 116 | 65.5 | I |
| 1.6 (73 kw) | 2005.09-2015.02 | AT/MT | F | L | Closed Off-Road Vehicle 4WD M16A | | GDS57285 | Drive Shaft | | 28 | | 58.3 | 82 | 556 | |
| | 2005.09-2015.02 | AT/MT | F | R | Closed Off-Road Vehicle 4WD M16A | | GDS51048 | Drive Shaft | | 28 | 26 | 58.3 | 82 | 617 | |
| | 2005.09-2015.02 | AT/MT | F | L/R | Closed Off-Road Vehicle 4WD M16A | inner teeth:22 | GCO57067 | Outer Joint | | 28 | 22 | 58.2 | 82 | 58 | I |
| | 2005.09-2015.02 | AT/MT | F | L/R | Closed Off-Road Vehicle 4WD M16A | inner teeth:24,GrooveType:Middle | GCO99322 | Outer Joint | | 28 | 24 | 58.3 | 82 | 63 | M |
| | 2005.09-2015.02 | AT/MT | F | L | Closed Off-Road Vehicle 4WD M16A | | GCI57127 | Inner Joint | | | 24 | | | 73 | |
| | 2005.09-2015.02 | AT/MT | F | R | Closed Off-Road Vehicle 4WD M16A | | GCI54006 | Inner Joint | | 26 | 22 | 40 | 78.5 | 96 | |
| | 2005.09-2015.02 | 4AT/5MT | R | L/R | Closed Off-Road Vehicle 4WD M16A | Chassis NO. to:JSAJTA74V00500000,Veh Prd Country:Japan | GDS57286 | Drive Shaft | | 28 | | 58.3 | 82 | 601 | |
| | 2005.09-2015.02 | 4AT/5MT | R | L/R | Closed Off-Road Vehicle 4WD M16A | Chassis NO. to:JSAJTA74V00500000,Veh Prd Country:Japan | GCO51029 | Outer Joint | | 28 | 24 | 58.3 | 82 | 63 | I |
| | 2005.09-2015.02 | 4AT/5MT | R | L/R | Closed Off-Road Vehicle 4WD M16A | Chassis NO. to:JSAJTA74V00500000,Veh Prd Country:Japan | GCI57160 | Inner Joint | | | 26 | | | 73 | |
| | 2005.09-2015.02 | AT/MT | F/R | L/R | Closed Off-Road Vehicle 4WD M16A | inner teeth:24,GrooveType:Inner | GCO51029 | Outer Joint | | 28 | 24 | 58.3 | 82 | 63 | I |
| 1.6 (78 kw) | 2005.04-2015.02 | 5MT | F | L | Closed Off-Road Vehicle 4WD M16A | Inner teeth of wheel side:24 | GDS57285 | Drive Shaft | | 28 | | 58.3 | 82 | 556 | |
| | 2005.04-2015.02 | 5MT | F | R | Closed Off-Road Vehicle 4WD M16A | Inner teeth of wheel side:24 | GDS51048 | Drive Shaft | | 28 | 26 | 58.3 | 82 | 617 | |
| | 2005.04-2015.02 | 5MT | F | L/R | Closed Off-Road Vehicle 4WD M16A | inner teeth:22 | GCO57067 | Outer Joint | | 28 | 22 | 58.2 | 82 | 58 | I |
| | 2005.04-2015.02 | 5MT | F | L/R | Closed Off-Road Vehicle 4WD M16A | inner teeth:24,GrooveType:Middle | GCO99322 | Outer Joint | | 28 | 24 | 58.3 | 82 | 63 | M |
| | 2005.04-2015.02 | 5MT | F | L | Closed Off-Road Vehicle 4WD M16A | | GCI57127 | Inner Joint | | | 24 | | | 73 | |
| | 2005.04-2015.02 | 5MT | F | R | Closed Off-Road Vehicle 4WD M16A | | GCI54006 | Inner Joint | | 26 | 22 | 40 | 78.5 | 96 | |
| | 2005.04-2015.02 | MT | F | L | Closed Off-Road Vehicle 4WD M16A | Inner teeth of wheel side:22 | GDS57246 | Drive Shaft | | 28 | | 58.2 | 82 | 560 | |
| | 2005.04-2015.02 | MT | F | R | Closed Off-Road Vehicle 4WD M16A | Inner teeth of wheel side:22 | GDS54014 | Drive Shaft | | 28 | 26 | 58.2 | 82 | 614 | |
| | 2005.04-2015.02 | 5MT | R | L/R | Closed Off-Road Vehicle 4WD M16A | Model:Grand Vitara;Model:Grand Vitara;Chassis NO. to:JSAJTA74V00500000;Veh Prd Country:Japan | GDS57286 | Drive Shaft | | 28 | | 58.3 | 82 | 601 | |
| | 2005.04-2015.02 | 5MT | R | L/R | Closed Off-Road Vehicle 4WD M16A | Model:Grand Vitara;Model:Grand Vitara;Chassis NO. to:JSAJTA74V00500000;Veh Prd Country:Japan | GCI57160 | Inner Joint | | | 26 | | | 73 | |
| | 2005.04-2015.02 | 5MT | F/R | L/R | Closed Off-Road Vehicle 4WD M16A | Model:Grand Vitara;Model:Grand Vitara;Chassis NO. to:JSAJTA74V00500000;Veh Prd Country:Japan | GCO51029 | Outer Joint | | 28 | 24 | 58.3 | 82 | 63 | I |
| | 2005.10- | 5MT | R | L/R | Closed Off-Road Vehicle RWD M16A | | GDS57286 | Drive Shaft | | 28 | | 58.3 | 82 | 601 | |
| | 2005.10- | 5MT | R | L/R | Closed Off-Road Vehicle RWD M16A | | GCO51029 | Outer Joint | | 28 | 24 | 58.3 | 82 | 63 | I |
| | 2005.10- | 5MT | R | L/R | Closed Off-Road Vehicle RWD M16A | | GCI57160 | Inner Joint | | | 26 | | | 73 | |
| 1.9 (95 kw) | 2005.10-2015.02 | 5MT | F | L | Closed Off-Road Vehicle 4WD F9QB;F9QC | Inner teeth of wheel side:24 | GDS57285 | Drive Shaft | | 28 | | 58.3 | 82 | 556 | |
| | 2005.10-2015.02 | 5MT | F | R | Closed Off-Road Vehicle 4WD F9QB;F9QC | Inner teeth of wheel side:24 | GDS51048 | Drive Shaft | | 28 | 26 | 58.3 | 82 | 617 | |
| | 2005.10-2015.02 | 5MT | F | L/R | Closed Off-Road Vehicle 4WD F9QB;F9QC | | GCO51029 | Outer Joint | | 28 | 24 | 58.3 | 82 | 63 | I |
| | 2005.10-2015.02 | 5MT | F | L/R | Closed Off-Road Vehicle 4WD F9QB;F9QC | | GCO57067 | Outer Joint | | 28 | 22 | 58.2 | 82 | 58 | I |
| | 2005.10-2015.02 | 5MT | F | L/R | Closed Off-Road Vehicle 4WD F9QB;F9QC | | GCO99322 | Outer Joint | | 28 | 24 | 58.3 | 82 | 63 | M |
| | 2005.10-2015.02 | 5MT | F | L | Closed Off-Road Vehicle 4WD F9QB;F9QC | | GCI57127 | Inner Joint | | | 24 | | | 73 | |
| | 2005.10-2015.02 | 5MT | F | R | Closed Off-Road Vehicle 4WD F9QB;F9QC | | GCI54006 | Inner Joint | | 26 | 22 | 40 | 78.5 | 96 | |
| | 2005.10-2015.02 | MT | F | L | Closed Off-Road Vehicle 4WD F9QB;F9QC | Inner teeth of wheel side:22 | GDS57246 | Drive Shaft | | 28 | | 58.2 | 82 | 560 | |
| | 2005.10-2015.02 | MT | F | R | Closed Off-Road Vehicle 4WD F9QB;F9QC | Inner teeth of wheel side:22 | GDS54014 | Drive Shaft | | 28 | 26 | 58.2 | 82 | 614 | |
| | 2005.10-2015.02 | MT | F | L | Closed Off-Road Vehicle 4WD F9QB;F9QC | | GCI57172 | Inner Joint | | | 24 | | | 73 | |
| | 2005.10-2015.02 | 5MT | R | L/R | Closed Off-Road Vehicle 4WD F9QB;F9QC | | GDS57286 | Drive Shaft | | 28 | | 58.3 | 82 | 601 | |
| | 2005.10-2015.02 | 5MT | R | L/R | Closed Off-Road Vehicle 4WD F9QB;F9QC | | GCO51029 | Outer Joint | | 28 | 24 | 58.3 | 82 | 63 | I |
| | 2005.10-2015.02 | MT/5MT | R | L/R | Closed Off-Road Vehicle 4WD F9QB;F9QC | | GCI57160 | Inner Joint | | | 26 | | | 73 | |
| 2.0 (64 kw) | 1998.03-2003.07 | AT | F | L/R | Closed Off-Road Vehicle 4WD RF | inner teeth:29 | GCO57017 | Outer Joint | | 26 | 29 | 48 | 116 | 65.5 | I |
| | 1998.03-2003.07 | AT/MT | F | R | Closed Off-Road Vehicle 4WD RF | | GDS57149 | Drive Shaft | | 26 | 26 | 48 | 116 | 609 | |
| | 1998.03-2003.07 | MT | F | L/R | Closed Off-Road Vehicle 4WD RF | inner teeth:30 | GCO57009 | Outer Joint | | 26 | 30 | 48 | 116 | 65.5 | I |
| | 1998.03-2003.07 | MT | F | R | Closed Off-Road Vehicle 4WD RF | | GCI57102 | Inner Joint | | 26 | 30 | 35 | 96 | 72 | |
| 2.0 (80 kw) | 2001.02-2003.10 | AT | F | L/R | Terrain cab wagon closed 4WD RHZ | inner teeth:29 | GCO57017 | Outer Joint | | 26 | 29 | 48 | 116 | 65.5 | I |
| | 2001.02-2003.10 | AT/MT | F | R | Terrain cab wagon closed 4WD RHZ | | GDS57149 | Drive Shaft | | 26 | 26 | 48 | 116 | 609 | |
| | 2001.02-2003.10 | MT | F | L/R | Terrain cab wagon closed 4WD RHZ | inner teeth:30 | GCO57009 | Outer Joint | | 26 | 30 | 48 | 116 | 65.5 | I |
| | 2001.02-2003.10 | MT | F | R | Terrain cab wagon closed 4WD RHZ | | GCI57102 | Inner Joint | | 26 | 30 | 35 | 96 | 72 | |
| | 2001.07-2005.09 | 4AT/5MT | F | R | Closed Off-Road Vehicle 4WD RHW | | GDS57149 | Drive Shaft | | 26 | 26 | 48 | 116 | 609 | |
| | 2001.07-2005.09 | 5MT | F | L/R | Closed Off-Road Vehicle 4WD RHW | | GCO54007 | Outer Joint | | 26 | 32 | 48 | 116 | 65.5 | M |
| 2.0 (94 kw) | 1998.03-2003.07 | AT/MT | F | R | Terrain cab open 4WD J20A | | GDS19015 | Drive Shaft | | 26 | 26 | 48 | 116 | 600 | |
| | 1998.03-2003.07 | AT/MT | F | L/R | Terrain cab open 4WD J20A | | GCO57009 | Outer Joint | | 26 | 30 | 48 | 116 | 65.5 | I |
| | 1998.03-2004.11 | 4AT/5MT | F | R | Terrain cab wagon closed 4WD J20A | | GDS57149 | Drive Shaft | | 26 | 26 | 48 | 116 | 609 | |
| | 1998.03-2004.11 | 4AT/5MT | F | L/R | Terrain cab wagon closed 4WD J20A | inner teeth:29 | GCO57017 | Outer Joint | | 26 | 29 | 48 | 116 | 65.5 | I |
| | 1998.03-2004.11 | MT | F | L/R | Terrain cab wagon closed 4WD J20A | inner teeth:30 | GCO57009 | Outer Joint | | 26 | 30 | 48 | 116 | 65.5 | I |
| 2.0 (97 kw) | 1998.08-2002.11 | 4AT/5MT | F | R | Terrain cab wagon closed 4WD J20A | | GDS57149 | Drive Shaft | | 26 | 26 | 48 | 116 | 609 | |
| | 1998.08-2002.11 | 4AT/5MT | F | L/R | Terrain cab wagon closed 4WD J20A | inner teeth:29 | GCO57017 | Outer Joint | | 26 | 29 | 48 | 116 | 65.5 | I |
| | 1998.08-2002.11 | MT | F | L/R | Terrain cab wagon closed 4WD J20A | inner teeth:30 | GCO57009 | Outer Joint | | 26 | 30 | 48 | 116 | 65.5 | I |
| 2.0 (101 kw) | 2013.03- | | R | L | Closed Off-Road Vehicle 4WD J20A | | GCI57162 | Inner Joint | | 28 | 26 | 40 | 76 | 117.5 | |
| 2.0 (103 kw) | 1998.04-2005.09 | 4AT/5MT | F | R | Terrain cab wagon closed 4WD J20A | | GDS57149 | Drive Shaft | | 26 | 26 | 48 | 116 | 609 | |

| | YEAR | TRANSM. | F/R | L/R | BODY STYLE & DRIVE TYPE & ENGINE | REMARKS | G-AP Ref. | PRODUCT | ABS | Technical Specifications A | B | C | H | L | P |
|---|---|---|---|---|---|---|---|---|---|---|---|---|---|---|---|
| **SUZUKI** | | | | | | | | | | | | | | | |
| **Grand Vitara** | | | | | | | | | | | | | | | |
| 2.0 (103 kw) | 1998.04-2005.09 | 4AT/5MT | F | L/R | Terrain cab wagon closed 4WD J20A | inner teeth:29 | GCO57017 | Outer Joint | | 26 | 29 | 48 | 116 | 65.5 | I |
| | 1998.04-2005.09 | MT | F | L/R | Terrain cab wagon closed 4WD J20A | inner teeth:30 | GCO57009 | Outer Joint | | 26 | 30 | 48 | 116 | 65.5 | I |
| | 2005.10-2015.02 | 4AT/5MT | F | L | Closed Off-Road Vehicle 4WD J20A | Inner teeth of wheel side:22 | GDS57246 | Drive Shaft | | 28 | | 58.2 | 82 | 560 | |
| | 2005.10-2015.02 | 4AT/5MT | F | R | Closed Off-Road Vehicle 4WD J20A | Inner teeth of wheel side:24 | GDS51048 | Drive Shaft | | 28 | 26 | 58.3 | 82 | 617 | |
| | 2005.10-2015.02 | 4AT/5MT | F | R | Closed Off-Road Vehicle 4WD J20A | Inner teeth of wheel side:22 | GDS54014 | Drive Shaft | | 28 | 26 | 58.2 | 82 | 614 | |
| | 2005.10-2015.02 | 4AT/5MT | F | L/R | Closed Off-Road Vehicle 4WD J20A | | GCO57067 | Outer Joint | | 28 | 22 | 58.2 | 82 | 58 | I |
| | 2005.10-2015.02 | 4AT/5MT | F | L/R | Closed Off-Road Vehicle 4WD J20A | | GCO99322 | Outer Joint | | 28 | 24 | 58.3 | 82 | 63 | M |
| | 2005.10-2015.02 | 4AT/5MT | F | L | Closed Off-Road Vehicle 4WD J20A | | GCI57127 | Inner Joint | | | 24 | | | 73 | |
| | 2005.10-2015.02 | 4AT/5MT | F | R | Closed Off-Road Vehicle 4WD J20A | | GCI54006 | Inner Joint | | 26 | 22 | 40 | 78.5 | 96 | |
| | 2005.10-2015.02 | 4AT/5MT | R | L/R | Closed Off-Road Vehicle 4WD J20A | | GDS57286 | Drive Shaft | | 28 | | 58.3 | 82 | 601 | |
| | 2005.10-2015.02 | MT/4AT/5MT | R | L/R | Closed Off-Road Vehicle 4WD J20A | | GCI57160 | Inner Joint | | | 26 | | | 73 | |
| | 2005.10-2015.02 | 4AT/5MT | F/R | L/R | Closed Off-Road Vehicle 4WD J20A | inner teeth:24,GrooveType:Inner | GCO51029 | Outer Joint | | 28 | 24 | 58.3 | 82 | 63 | I |
| 2.4 (122 kw) | 2009.01- | AT/MT | F | L | Closed Off-Road Vehicle 4WD J24B | | GDS57285 | Drive Shaft | | 28 | | 58.3 | 82 | 556 | |
| | 2009.01- | AT/MT | F | R | Closed Off-Road Vehicle 4WD J24B | | GDS51048 | Drive Shaft | | 28 | 26 | 58.3 | 82 | 617 | |
| | 2009.01- | AT/MT | F | L/R | Closed Off-Road Vehicle 4WD J24B | inner teeth:24,GrooveType:Inner | GCO51029 | Outer Joint | | 28 | 24 | 58.3 | 82 | 63 | I |
| | 2009.01- | AT/MT | R | R | Closed Off-Road Vehicle 4WD J24B | | GDS51049 | Drive Shaft | | 28 | | 58.3 | 82 | 601 | |
| | 2009.01- | AT/MT | R | L/R | Closed Off-Road Vehicle 4WD J24B | | GCO51030 | Outer Joint | | 28 | 26 | 58.3 | 82 | 73 | I |
| | 2009.01- | AT/MT | R | L | Closed Off-Road Vehicle 4WD J24B | | GCI57162 | Inner Joint | | 28 | 26 | 40 | 76 | 117.5 | |
| | 2009.01- | AT/MT | R | R | Closed Off-Road Vehicle 4WD J24B | | GCI57172 | Inner Joint | | | 24 | | | 73 | |
| 2.4 (124 kw) | 2009.01- | AT/MT | F | L | Closed Off-Road Vehicle 4WD J24B | | GDS57285 | Drive Shaft | | 28 | | 58.3 | 82 | 556 | |
| | 2009.01- | AT/MT | F | R | Closed Off-Road Vehicle 4WD J24B | | GDS51048 | Drive Shaft | | 28 | 26 | 58.3 | 82 | 617 | |
| | 2009.01- | AT/MT | F | L/R | Closed Off-Road Vehicle 4WD J24B | inner teeth:24,GrooveType:Inner | GCO51029 | Outer Joint | | 28 | 24 | 58.3 | 82 | 63 | I |
| | 2009.01- | AT/MT | R | R | Closed Off-Road Vehicle 4WD J24B | | GDS51049 | Drive Shaft | | 28 | | 58.3 | 82 | 601 | |
| | 2009.01- | AT/MT | R | L/R | Closed Off-Road Vehicle 4WD J24B | | GCO51030 | Outer Joint | | 28 | 26 | 58.3 | 82 | 73 | I |
| | 2009.01- | AT/MT | R | L | Closed Off-Road Vehicle 4WD J24B | | GCI57162 | Inner Joint | | 28 | 26 | 40 | 76 | 117.5 | |
| | 2009.01- | AT/MT | R | R | Closed Off-Road Vehicle 4WD J24B | | GCI57172 | Inner Joint | | | 24 | | | 73 | |
| 2.5 (106 kw) | 1998.04-2003.07 | AT | F | L/R | Closed Off-Road Vehicle 4WD H 25 A | inner teeth:29 | GCO57017 | Outer Joint | | 26 | 29 | 48 | 116 | 65.5 | I |
| | 1998.04-2003.07 | AT/MT | F | R | Closed Off-Road Vehicle 4WD H 25 A | | GDS57149 | Drive Shaft | | 26 | 26 | 48 | 116 | 609 | |
| | 1998.04-2003.07 | MT | F | L/R | Closed Off-Road Vehicle 4WD H 25 A | inner teeth:30,GrooveType:Inner | GCO57009 | Outer Joint | | 26 | 30 | 48 | 116 | 65.5 | I |
| | 1998.04-2003.07 | MT | F | R | Closed Off-Road Vehicle 4WD H 25 A | | GCI57102 | Inner Joint | | 26 | 30 | 35 | 96 | 72 | |
| 2.5 (116 kw) | 2001.04-2005.12 | AT | F | L/R | Terrain cab wagon closed 4WD H25A | inner teeth:29 | GCO57017 | Outer Joint | | 26 | 29 | 48 | 116 | 65.5 | I |
| | 2001.04-2005.12 | AT/MT | F | R | Terrain cab wagon closed 4WD H25A | | GDS57149 | Drive Shaft | | 26 | 26 | 48 | 116 | 609 | |
| | 2001.04-2005.12 | MT | F | L/R | Terrain cab wagon closed 4WD H25A | inner teeth:30 | GCO57009 | Outer Joint | | 26 | 30 | 48 | 116 | 65.5 | I |
| | 2001.04-2005.12 | MT | F | R | Terrain cab wagon closed 4WD H25A | | GCI57102 | Inner Joint | | 26 | 30 | 35 | 96 | 72 | |
| 2.7 (127 kw) | 2001.09-2003.07 | 4AT/5MT | F | R | Closed Off-Road Vehicle 4WD H 27 A | | GDS57149 | Drive Shaft | | 26 | 26 | 48 | 116 | 609 | |
| | 2001.09-2003.07 | 4AT/5MT | F | L/R | Closed Off-Road Vehicle 4WD H 27 A | Chassis no. From:JSAHTX92V00200001 | GCO54007 | Outer Joint | | 26 | 32 | 48 | 116 | 65.5 | M |
| | 2001.09-2003.07 | 4AT/5MT | F | L/R | Closed Off-Road Vehicle 4WD H 27 A | Chassis no. To:JSAHTX92V00200000 | GCO57009 | Outer Joint | | 26 | 30 | 48 | 116 | 65.5 | I |
| | 2001.09-2003.07 | 4AT/5MT | F | R | Closed Off-Road Vehicle 4WD H 27 A | Chassis no. To:JSAHTX92V00200000 | GCI57102 | Inner Joint | | 26 | 30 | 35 | 96 | 72 | |
| 2.7 (135 kw) | 2003.04-2003.07 | 4AT/5MT | F | R | Closed Off-Road Vehicle 4WD H 27 A | | GDS57149 | Drive Shaft | | 26 | 26 | 48 | 116 | 609 | |
| | 2003.04-2003.07 | 4AT/5MT | F | L/R | Closed Off-Road Vehicle 4WD H 27 A | Chassis no. From:JSAHTX92V00200001 | GCO54007 | Outer Joint | | 26 | 32 | 48 | 116 | 65.5 | M |
| | 2003.04-2003.07 | 4AT/5MT | F | L/R | Closed Off-Road Vehicle 4WD H 27 A | Chassis no. To:JSAHTX92V00200000 | GCO57009 | Outer Joint | | 26 | 30 | 48 | 116 | 65.5 | I |
| | 2003.04-2003.07 | 4AT/5MT | F | R | Closed Off-Road Vehicle 4WD H 27 A | Chassis no. To:JSAHTX92V00200000 | GCI57102 | Inner Joint | | 26 | 30 | 35 | 96 | 72 | |
| 2.7 (138 kw) | 2005.09- | | F | | Terrain cab wagon closed 4WD H27A | Date from:2006 | GCO57067 | Outer Joint | | 28 | 22 | 58.2 | 82 | 58 | I |
| | 2005.09- | | F | L | Terrain cab wagon closed 4WD H27A | Date from:2006 | GCI57127 | Inner Joint | | | 24 | | | 73 | |
| | 2005.09- | | F | R | Terrain cab wagon closed 4WD H27A | Date from:2006 | GCI54006 | Inner Joint | | 26 | 22 | 40 | 78.5 | 96 | |
| | 2005.09- | | R | | Terrain cab wagon closed 4WD H27A | Date from:2006 | GCO51029 | Outer Joint | | 28 | 24 | 58.3 | 82 | 63 | I |
| | 2006.01-2008.12 | AT | R | | Terrain cab wagon closed RWD H27A | | GCO51029 | Outer Joint | | 28 | 24 | 58.3 | 82 | 63 | I |
| 3.2 (165 kw) | 2008.06-2015.02 | AT | F | L | Closed Off-Road Vehicle 4WD N32A | | GDS57285 | Drive Shaft | | 28 | | 58.3 | 82 | 556 | |
| | 2008.06-2015.02 | AT | F | R | Closed Off-Road Vehicle 4WD N32A | | GDS51048 | Drive Shaft | | 28 | 26 | 58.3 | 82 | 617 | |
| | 2008.06-2015.02 | AT | F | L/R | Closed Off-Road Vehicle 4WD N32A | inner teeth:24,GrooveType:Inner | GCO51029 | Outer Joint | | 28 | 24 | 58.3 | 82 | 63 | I |
| | 2008.06-2015.02 | AT | R | L | Closed Off-Road Vehicle 4WD N32A | | GCI57162 | Inner Joint | | 28 | 26 | 40 | 76 | 117.5 | |
| | 2008.06-2015.02 | AT | R | R | Closed Off-Road Vehicle 4WD N32A | | GCI57172 | Inner Joint | | | 24 | | | 73 | |
| 3.2 (171 kw) | 2009.01-2015.02 | AT | F | L | Closed Off-Road Vehicle 4WD N32A | | GDS57285 | Drive Shaft | | 28 | | 58.3 | 82 | 556 | |
| | 2009.01-2015.02 | AT | F | R | Closed Off-Road Vehicle 4WD N32A | | GDS51048 | Drive Shaft | | 28 | 26 | 58.3 | 82 | 617 | |
| | 2009.01-2015.02 | AT | F | L/R | Closed Off-Road Vehicle 4WD N32A | inner teeth:24,GrooveType:Inner | GCO51029 | Outer Joint | | 28 | 24 | 58.3 | 82 | 63 | I |
| | 2009.01-2015.02 | AT | R | L | Closed Off-Road Vehicle 4WD N32A | | GCI57162 | Inner Joint | | 28 | 26 | 40 | 76 | 117.5 | |
| | 2009.01-2015.02 | AT | R | R | Closed Off-Road Vehicle 4WD N32A | | GCI57172 | Inner Joint | | | 24 | | | 73 | |
| **Grand Vitara I/Grand Escudo** | | | | | | | | | | | | | | | |
| 1.6 (73 kw) | 2000.02-2002.09 | MT | F | L/R | Closed Off-Road Vehicle 4WD G16B | inner teeth:30 | GCO57009 | Outer Joint | | 26 | 30 | 48 | 116 | 65.5 | I |
| **Ignis** | | | | | | | | | | | | | | | |
| 1.2 (61 kw) | 2020.04-2024.08 | 5MT | F | L | Hatchback 4WD K12D | | GDS58200 | Drive Shaft | | 25 | 22 | 49 | 82 | 623 | |
| | 2020.04-2024.08 | 5MT | F | L/R | Hatchback 4WD K12D | | GCO83862 | Outer Joint | | 25 | 28 | 49 | 82 | 54 | I |
| | 2020.04-2024.08 | 5MT | F | L | Hatchback 4WD K12D | | GCI83426 | Inner Joint | | 22 | 28 | 38 | 58 | 86.5 | |
| | 2020.04-2024.08 | 5MT | F | L | Hatchback FWD K12D | | GDS58200 | Drive Shaft | | 25 | 22 | 49 | 82 | 623 | |
| | 2020.04-2024.08 | 5MT | F | R | Hatchback FWD K12D | | GDS58336 | Drive Shaft | | 25 | 22 | 49 | 82 | 905 | |

| | YEAR | TRANSM. | F/R | L/R | BODY STYLE & DRIVE TYPE & ENGINE | REMARKS | G-AP Ref. | PRODUCT | ABS | Technical Specifications A | B | C | H | L | P |
|---|---|---|---|---|---|---|---|---|---|---|---|---|---|---|---|
| **SUZUKI** | | | | | | | | | | | | | | | |
| **Ignis** | | | | | | | | | | | | | | | |
| 1.2 (61 kw) | 2020.04-2024.08 | 5MT | F | L/R | Hatchback FWD K12D | | GCO83862 | Outer Joint | | 25 | 28 | 49 | 82 | 54 | I |
| | 2020.04-2024.08 | 5MT | F | L/R | Hatchback FWD K12D | | GCI83426 | Inner Joint | | 22 | 28 | 38 | 58 | 86.5 | |
| | 2020.04-2024.08 | CVT | F | L/R | Hatchback FWD K12D | | GCI83096 | Inner Joint | | 22 | 28 | 35 | 57.5 | 86.5 | |
| 1.2 (66 kw) | 2016.02-2020.04 | 5MT | F | L | Hatchback 4WD K12C | | GDS58200 | Drive Shaft | | 25 | 22 | 49 | 82 | 623 | |
| | 2016.02-2020.04 | 5MT | F | L/R | Hatchback 4WD K12C | | GCO83862 | Outer Joint | | 25 | 28 | 49 | 82 | 54 | I |
| | 2016.02-2020.04 | 5MT | F | L | Hatchback 4WD K12C | | GCI83426 | Inner Joint | | 22 | 28 | 38 | 58 | 86.5 | |
| | 2016.02-2020.04 | 5MT | F | L | Hatchback FWD K12C | | GDS58200 | Drive Shaft | | 25 | 22 | 49 | 82 | 623 | |
| | 2016.02-2020.04 | 5MT | F | R | Hatchback FWD K12C | | GDS58336 | Drive Shaft | | 25 | 22 | 49 | 82 | 905 | |
| | 2016.02-2020.04 | 5MT | F | L/R | Hatchback FWD K12C | | GCO83862 | Outer Joint | | 25 | 28 | 49 | 82 | 54 | I |
| | 2016.02-2020.04 | 5MT | F | L/R | Hatchback FWD K12C | | GCI83426 | Inner Joint | | 22 | 28 | 38 | 58 | 86.5 | |
| | 2016.10-2020.03 | 5MT | F | L | Hatchback 4WD K12C | | GDS58200 | Drive Shaft | | 25 | 22 | 49 | 82 | 623 | |
| | 2016.10-2020.03 | 5MT | F | L/R | Hatchback 4WD K12C | | GCO83862 | Outer Joint | | 25 | 28 | 49 | 82 | 54 | I |
| | 2016.10-2020.03 | 5MT | F | L | Hatchback 4WD K12C | | GCI83426 | Inner Joint | | 22 | 28 | 38 | 58 | 86.5 | |
| | 2016.10-2020.03 | 5AT/5MT | F | L | Hatchback FWD K12C | | GDS58200 | Drive Shaft | | 25 | 22 | 49 | 82 | 623 | |
| | 2016.10-2020.03 | 5AT/5MT | F | L/R | Hatchback FWD K12C | | GCO83862 | Outer Joint | | 25 | 28 | 49 | 82 | 54 | I |
| | 2016.10-2020.03 | 5MT | F | R | Hatchback FWD K12C | | GDS58336 | Drive Shaft | | 25 | 22 | 49 | 82 | 905 | |
| | 2016.10-2020.03 | 5MT | F | L/R | Hatchback FWD K12C | | GCI83426 | Inner Joint | | 22 | 28 | 38 | 58 | 86.5 | |
| 1.3 (51 kw) | 2003.09-2012.12 | AT | F | L/R | Hatchback FWD Z13DT | | GCO57079 | Outer Joint | 43T | 25 | 29 | 49 | 76 | 63 | M |
| | 2003.09-2012.12 | AT/MT | F | L | Hatchback FWD Z13DT | | GDS99184 | Drive Shaft | 43T | 25 | 22 | 49 | 76 | 610 | |
| 1.3 (61 kw) | 2000.10-2003.09 | AT/MT | F | L/R | Hatchback 4WD M13A | | GCO57039 | Outer Joint | 43T | 23 | 19 | 49 | 78 | 57 | M |
| | 2000.10-2003.09 | | F | L/R | Hatchback 4WD M13A | | GCO57022 | Outer Joint | | 23 | 19 | 49 | 78 | 57 | M |
| | 2000.10-2003.09 | | F | L/R | Hatchback 4WD M13A | | GCO57024 | Outer Joint | | 23 | 19 | 49 | 78 | 57 | M |
| | 2000.10-2003.09 | AT/MT | F | L/R | Hatchback FWD M13A | | GCO57039 | Outer Joint | 43T | 23 | 19 | 49 | 78 | 57 | M |
| | 2000.10-2003.09 | MT | F | L/R | Hatchback FWD M13A | | GCO57105 | Outer Joint | 43T | 25 | 20 | 49 | 76 | 61 | M |
| | 2000.10-2003.09 | | F | L/R | Hatchback FWD M13A | | GCO57022 | Outer Joint | | 23 | 19 | 49 | 78 | 57 | M |
| | 2000.10-2003.09 | | F | L/R | Hatchback FWD M13A | | GCO57024 | Outer Joint | | 23 | 19 | 49 | 78 | 57 | M |
| 1.3 (69 kw) | 2003.09-2010.12 | AT/MT | F | L | Hatchback 4WD M13A | | GDS99184 | Drive Shaft | 43T | 25 | 22 | 49 | 76 | 610 | |
| | 2003.09-2010.12 | AT/MT | F | L/R | Hatchback 4WD M13A | | GCO57062 | Outer Joint | 43T | 25 | 28 | 49 | 76 | 61 | I |
| | 2003.09-2010.12 | MT | F | R | Hatchback 4WD M13A | | GDS99185 | Drive Shaft | 43T | 25 | 22 | 49 | 76 | 644 | |
| | 2003.09-2011.12 | 5MT | F | R | Hatchback FWD M13A | | GDS83918 | Drive Shaft | 43T | 25 | 22 | 49 | 76 | 607 | |
| | 2003.09-2011.12 | 5MT | F | L/R | Hatchback FWD M13A | | GCO57081 | Outer Joint | | 25 | 28 | 49 | 76 | 63 | I |
| | 2003.09-2011.12 | 5MT | F | L/R | Hatchback FWD M13A | GKN | GCO57105 | Outer Joint | 43T | 25 | 20 | 49 | 76 | 61 | M |
| | 2003.09-2011.12 | 5MT | F | R | Hatchback FWD M13A | | GCI57042 | Inner Joint | | 22 | 28 | 40 | | 124.5 | |
| | 2003.09-2011.12 | AT/MT | F | L | Hatchback FWD M13A | | GDS99184 | Drive Shaft | 43T | 25 | 22 | 49 | 76 | 610 | |
| | 2003.09-2011.12 | AT/MT | F | L/R | Hatchback FWD M13A | without groove in internal component | GCO57062 | Outer Joint | 43T | 25 | 28 | 49 | 76 | 61 | I |
| 1.5 (73 kw) | 2003.08-2011.12 | 4AT/5MT | F | L/R | Hatchback FWD M15A | | GCO57062 | Outer Joint | 43T | 25 | 28 | 49 | 76 | 61 | I |
| | 2003.08-2011.12 | 5MT | F | R | Hatchback FWD M15A | | GDS83918 | Drive Shaft | 43T | 25 | 22 | 49 | 76 | 607 | |
| | 2003.08-2011.12 | 5MT | F | R | Hatchback FWD M15A | | GCI57042 | Inner Joint | | 22 | 28 | 40 | | 124.5 | |
| | 2003.08-2011.12 | MT | F | L | Hatchback FWD M15A | | GDS99184 | Drive Shaft | 43T | 25 | 22 | 49 | 76 | 610 | |
| | 2003.08-2012.12 | 5MT | F | L | Hatchback 4WD M15A | | GDS99184 | Drive Shaft | 43T | 25 | 22 | 49 | 76 | 610 | |
| | 2003.08-2012.12 | 5MT | F | L/R | Hatchback 4WD M15A | | GCO57062 | Outer Joint | 43T | 25 | 28 | 49 | 76 | 61 | I |
| 1.5 (80 kw) | 2003.12-2005.12 | 5MT | F | L | Hatchback FWD M15A | | GDS99184 | Drive Shaft | 43T | 25 | 22 | 49 | 76 | 610 | |
| | 2003.12-2005.12 | 5MT | F | R | Hatchback FWD M15A | | GDS83918 | Drive Shaft | 43T | 25 | 22 | 49 | 76 | 607 | |
| | 2003.12-2005.12 | 5MT | F | L/R | Hatchback FWD M15A | | GCO57062 | Outer Joint | 43T | 25 | 28 | 49 | 76 | 61 | I |
| **Jimny** | | | | | | | | | | | | | | | |
| 1.3 (59 kw) | 1998.09-2001.04 | 5MT | F | L | Terrain cab open 4WD G13BB | Date to:2001.04 | GDS14053 | Drive Shaft | | 26 | 22 | 44 | 115.5 | 882 | |
| | 1998.10-2008.10 | 4AT/5MT | F | L | Terrain cab wagon closed 4WD G13BB | Date to:2008.10 | GDS14053 | Drive Shaft | | 26 | 22 | 44 | 115.5 | 882 | |
| | 1998.10-2008.10 | 4AT/5MT | F | R | Terrain cab wagon closed 4WD G13BB | | GDS83264 | Drive Shaft | | 26 | 22 | 44 | 115.5 | 555 | |
| 1.3 (60 kw) | 2001.05-2004.07 | 4AT/5MT | F | L | Terrain cab wagon closed 4WD M13A | | GDS14053 | Drive Shaft | | 26 | 22 | 44 | 115.5 | 882 | |
| | 2001.05-2004.07 | 4AT/5MT | F | R | Terrain cab wagon closed 4WD M13A | | GDS83264 | Drive Shaft | | 26 | 22 | 44 | 115.5 | 555 | |
| | 2001.05-2004.07 | 4AT/5MT | F | L/R | Terrain cab wagon closed 4WD M13A | | GCO59117 | Outer Joint | | 26 | 19 | 44 | 115.5 | 52 | M |
| | 2001.05-2004.07 | 4AT/5MT | F | L/R | Terrain cab wagon closed 4WD M13A | Date to:2003.12,Chassis no. from:JSAFJB43V00186628 | GCO99354 | Outer Joint | | 26 | 29 | 44 | 115.5 | 52 | I |
| 1.3 (63 kw) | 2000.10- | 4AT/5MT | F | L/R | Terrain cab wagon closed 4WD M13A | | GCO59117 | Outer Joint | | 26 | 19 | 44 | 115.5 | 52 | M |
| | 2000.10- | AT/MT | F | L | Terrain cab wagon closed 4WD M13A | | GDS14053 | Drive Shaft | | 26 | 22 | 44 | 115.5 | 882 | |
| | 2000.10- | AT/MT | F | R | Terrain cab wagon closed 4WD M13A | | GDS83264 | Drive Shaft | | 26 | 22 | 44 | 115.5 | 555 | |
| | 2000.10- | AT/MT | F | L | Terrain cab wagon closed 4WD M13A | | GCO99354 | Outer Joint | | 26 | 29 | 44 | 115.5 | 52 | I |
| 1.5 (48 kw) | 2004.02- | 5MT | F | L | Terrain cab wagon closed 4WD K9K | | GDS14053 | Drive Shaft | | 26 | 22 | 44 | 115.5 | 882 | |
| | 2004.02- | | F | R | Terrain cab wagon closed 4WD K9K | | GDS83264 | Drive Shaft | | 26 | 22 | 44 | 115.5 | 555 | |
| | 2004.02- | | F | L | Terrain cab wagon closed 4WD K9K | | GCO99354 | Outer Joint | | 26 | 29 | 44 | 115.5 | 52 | I |
| 1.5 (63 kw) | 2005.08- | 5MT | F | L | Terrain cab wagon closed 4WD K9K | | GDS14053 | Drive Shaft | | 26 | 22 | 44 | 115.5 | 882 | |
| | 2005.08- | 5MT | F | R | Terrain cab wagon closed 4WD K9K | | GDS83264 | Drive Shaft | | 26 | 22 | 44 | 115.5 | 555 | |
| | 2005.08- | 5MT | F | L | Terrain cab wagon closed 4WD K9K | | GCO99354 | Outer Joint | | 26 | 29 | 44 | 115.5 | 52 | I |
| **Kizashi** | | | | | | | | | | | | | | | |
| 2.4 (129 kw) | 2010.10- | AT/MT | F | L | Saloon FWD J24B | | GCI57171 | Inner Joint | | 27 | 33 | 40 | 62 | 117 | |
| 2.4 (131 kw) | 2010.10-2015.12 | AT/MT | F | L | Saloon 4WD J24B | | GCI57171 | Inner Joint | | 27 | 33 | 40 | 62 | 117 | |

| | YEAR | TRANSM. | F/R | L/R | BODY STYLE & DRIVE TYPE & ENGINE | REMARKS | G-AP Ref. | PRODUCT | ABS | Technical Specifications A | B | C | H | L | P |
|---|---|---|---|---|---|---|---|---|---|---|---|---|---|---|---|
| **SUZUKI** | | | | | | | | | | | | | | | |
| **Kizashi** | | | | | | | | | | | | | | | |
| 2.4 (131 kw) | 2010.10-2015.12 | CVT | F | L | Saloon 4WD J24B | | GDS57280 | Drive Shaft | | 31 | 27 | 58 | 92 | 670 | |
| | 2010.10-2015.12 | CVT | F | R | Saloon 4WD J24B | | GDS82419 | Drive Shaft | | 31 | 28 | 58 | 92 | 716 | |
| | 2010.10-2015.12 | CVT | F | R | Saloon 4WD J24B | | GCO57207 | Outer Joint | | 31 | 33 | 58 | 92 | 64 | I |
| | 2010.10-2015.12 | CVT | F | R | Saloon 4WD J24B | | GCI81789 | Inner Joint | | 28 | 33 | 42 | | 133 | |
| | 2010.10-2015.12 | CVT | R | L | Saloon 4WD J24B | | GDS57295 | Drive Shaft | | 28 | 23 | 58 | 92 | 789 | |
| | 2010.10-2015.12 | CVT | R | R | Saloon 4WD J24B | | GDS57294 | Drive Shaft | | 28 | 23 | 58 | 92 | 832 | |
| | 2010.10-2015.12 | CVT | R | L/R | Saloon 4WD J24B | | GCI57161 | Inner Joint | | 23 | 28 | 35 | 60.5 | 123 | |
| | 2010.10-2015.12 | AT/MT | F | L | Saloon FWD J24B | | GCI57171 | Inner Joint | | 27 | 33 | 40 | 62 | 117 | |
| | 2010.10-2015.12 | CVT | F | L | Saloon FWD J24B | | GDS57280 | Drive Shaft | | 31 | 27 | 58 | 92 | 670 | |
| | 2010.10-2015.12 | CVT | F | L/R | Saloon FWD J24B | | GCO57207 | Outer Joint | | 31 | 33 | 58 | 92 | 64 | I |
| | 2014.01-2014.12 | CVT | F | L | Saloon 4WD J24B | | GDS57280 | Drive Shaft | | 31 | 27 | 58 | 92 | 670 | |
| | 2014.01-2014.12 | CVT | F | R | Saloon 4WD J24B | | GDS82419 | Drive Shaft | | 31 | 28 | 58 | 92 | 716 | |
| | 2014.01-2014.12 | CVT | F | L | Saloon 4WD J24B | | GCO57207 | Outer Joint | | 31 | 33 | 58 | 92 | 64 | I |
| | 2014.01-2014.12 | CVT | F | L | Saloon 4WD J24B | | GCI57171 | Inner Joint | | 27 | 33 | 40 | 62 | 117 | |
| | 2014.01-2014.12 | CVT | F | R | Saloon 4WD J24B | | GCI81789 | Inner Joint | | 28 | 33 | 42 | | 133 | |
| | 2014.01-2014.12 | CVT | R | L | Saloon 4WD J24B | | GDS57295 | Drive Shaft | | 28 | 23 | 58 | 92 | 789 | |
| | 2014.01-2014.12 | CVT | R | R | Saloon 4WD J24B | | GDS57294 | Drive Shaft | | 28 | 23 | 58 | 92 | 832 | |
| | 2014.01-2014.12 | CVT | R | L/R | Saloon 4WD J24B | | GCO57206 | Outer Joint | | 28 | 28 | 58 | 92 | 56 | I |
| | 2014.01-2014.12 | CVT | R | L/R | Saloon 4WD J24B | | GCI57161 | Inner Joint | | 23 | 28 | 35 | 60.5 | 123 | |
| 2.4 (138 kw) | 2010.10- | | R | R | Saloon 4WD J24B | | GCI57161 | Inner Joint | | 23 | 28 | 35 | 60.5 | 123 | |
| **Liana** | | | | | | | | | | | | | | | |
| 1.3 (66 kw) | 2001.07-2007.12 | 5MT | F | L | Hatchback FWD M13A | | GCI57035 | Inner Joint | | 26 | 21 | 38 | 56 | 103 | |
| | 2001.07-2007.12 | 5MT | F | R | Hatchback FWD M13A | | GCI57036 | Inner Joint | | 26 | 21 | 40 | | 125 | |
| | 2001.07-2007.12 | AT/MT | F | L/R | Hatchback FWD M13A | | GCO24050 | Outer Joint | 42T | 25 | 29 | 49 | 75.5 | 61 | I |
| | 2001.07-2007.12 | MT | F | L/R | Hatchback FWD M13A | | GCO57041 | Outer Joint | 42T | 25 | 29 | 49 | 76 | 61 | I |
| | 2001.07-2007.12 | | F | L | Hatchback FWD M13A | | GDS57060 | Drive Shaft | 42T | 25 | 26 | 49 | 76 | 611 | |
| | 2001.07-2007.12 | | F | R | Hatchback FWD M13A | | GDS57061 | Drive Shaft | 42T | 25 | 26 | 49 | 76 | 591.5 | |
| | 2002.03- | 5MT | F | L | Saloon FWD M13A | | GCI57035 | Inner Joint | | 26 | 21 | 38 | 56 | 103 | |
| | 2002.03- | 5MT | F | R | Saloon FWD M13A | | GCI57036 | Inner Joint | | 26 | 21 | 40 | | 125 | |
| | 2002.03- | AT/MT | F | L/R | Saloon FWD M13A | | GCO24050 | Outer Joint | 42T | 25 | 29 | 49 | 75.5 | 61 | I |
| | 2002.03- | MT | F | L/R | Saloon FWD M13A | | GCO57041 | Outer Joint | 42T | 25 | 29 | 49 | 76 | 61 | I |
| | 2002.03- | | F | L | Saloon FWD M13A | | GDS57060 | Drive Shaft | 42T | 25 | 26 | 49 | 76 | 611 | |
| | 2002.03- | | F | R | Saloon FWD M13A | | GDS57061 | Drive Shaft | 42T | 25 | 26 | 49 | 76 | 591.5 | |
| 1.4 (66 kw) | 2004.04- | MT | F | L/R | Saloon FWD 8HY | Date from:2005.01;Date to:2007.12 | GCO24050 | Outer Joint | 42T | 25 | 29 | 49 | 75.5 | 61 | I |
| | 2004.04-2007.12 | MT | F | L/R | Hatchback FWD 8HY | Date from:2005.01 | GCO24050 | Outer Joint | 42T | 25 | 29 | 49 | 75.5 | 61 | I |
| 1.6 (76 kw) | 2001.07-2007.12 | AT/MT | F | L/R | Hatchback 4WD M16A | | GCO19003 | Outer Joint | | 25 | 29 | 49 | 75.5 | 61 | I |
| | 2001.07-2007.12 | AT/MT | F | L/R | Hatchback 4WD M16A | | GCO24050 | Outer Joint | 42T | 25 | 29 | 49 | 75.5 | 61 | I |
| | 2001.07-2007.12 | AT/MT | F | L/R | Hatchback 4WD M16A | | GCO57041 | Outer Joint | 42T | 25 | 29 | 49 | 76 | 61 | I |
| | 2001.07-2007.12 | MT | F | L | Hatchback 4WD M16A | | GDS57060 | Drive Shaft | 42T | 25 | 26 | 49 | 76 | 611 | |
| | 2001.07-2007.12 | MT | F | R | Hatchback 4WD M16A | | GDS57061 | Drive Shaft | 42T | 25 | 26 | 49 | 76 | 591.5 | |
| | 2001.07-2007.12 | MT | F | R | Hatchback 4WD M16A | | GCI57036 | Inner Joint | | 26 | 21 | 40 | | 125 | |
| | 2001.07-2007.12 | | F | L | Hatchback 4WD M16A | | GCI57035 | Inner Joint | | 26 | 21 | 38 | 56 | 103 | |
| | 2001.07-2007.12 | AT/MT | F | L/R | Hatchback FWD M16A | | GCO19003 | Outer Joint | | 25 | 29 | 49 | 75.5 | 61 | I |
| | 2001.07-2007.12 | AT/MT | F | L/R | Hatchback FWD M16A | | GCO24050 | Outer Joint | 42T | 25 | 29 | 49 | 75.5 | 61 | I |
| | 2001.07-2007.12 | AT/MT | F | L/R | Hatchback FWD M16A | | GCO57041 | Outer Joint | 42T | 25 | 29 | 49 | 76 | 61 | I |
| | 2001.07-2007.12 | MT | F | L | Hatchback FWD M16A | | GDS57060 | Drive Shaft | 42T | 25 | 26 | 49 | 76 | 611 | |
| | 2001.07-2007.12 | MT | F | R | Hatchback FWD M16A | | GDS57061 | Drive Shaft | 42T | 25 | 26 | 49 | 76 | 591.5 | |
| | 2001.07-2007.12 | MT | F | L | Hatchback FWD M16A | | GCI57035 | Inner Joint | | 26 | 21 | 38 | 56 | 103 | |
| | 2001.07-2007.12 | MT | F | R | Hatchback FWD M16A | | GCI57036 | Inner Joint | | 26 | 21 | 40 | | 125 | |
| | 2002.03- | AT/MT | F | L/R | Saloon 4WD M16A | | GCO19003 | Outer Joint | | 25 | 29 | 49 | 75.5 | 61 | I |
| | 2002.03- | AT/MT | F | L/R | Saloon 4WD M16A | | GCO24050 | Outer Joint | 42T | 25 | 29 | 49 | 75.5 | 61 | I |
| | 2002.03- | AT/MT | F | L/R | Saloon 4WD M16A | For Modelcode:RH4162/RH4163/RH4164;For Modelcode:RH4165 | GCO57041 | Outer Joint | 42T | 25 | 29 | 49 | 76 | 61 | I |
| | 2002.03- | MT | F | L | Saloon 4WD M16A | | GDS57060 | Drive Shaft | 42T | 25 | 26 | 49 | 76 | 611 | |
| | 2002.03- | MT | F | R | Saloon 4WD M16A | | GDS57061 | Drive Shaft | 42T | 25 | 26 | 49 | 76 | 591.5 | |
| | 2002.03- | MT | F | R | Saloon 4WD M16A | | GCI57036 | Inner Joint | | 26 | 21 | 40 | | 125 | |
| | 2002.03- | | F | L | Saloon 4WD M16A | | GCI57035 | Inner Joint | | 26 | 21 | 38 | 56 | 103 | |
| | 2002.03- | AT/MT | F | L/R | Saloon FWD M16A | | GCO19003 | Outer Joint | | 25 | 29 | 49 | 75.5 | 61 | I |
| | 2002.03- | AT/MT | F | L/R | Saloon FWD M16A | | GCO24050 | Outer Joint | 42T | 25 | 29 | 49 | 75.5 | 61 | I |
| | 2002.03- | AT/MT | F | L/R | Saloon FWD M16A | | GCO57041 | Outer Joint | 42T | 25 | 29 | 49 | 76 | 61 | I |
| | 2002.03- | MT | F | L | Saloon FWD M16A | | GDS57060 | Drive Shaft | 42T | 25 | 26 | 49 | 76 | 611 | |
| | 2002.03- | MT | F | R | Saloon FWD M16A | | GDS57061 | Drive Shaft | 42T | 25 | 26 | 49 | 76 | 591.5 | |
| | 2002.03- | MT | F | L | Saloon FWD M16A | | GCI57035 | Inner Joint | | 26 | 21 | 38 | 56 | 103 | |
| | 2002.03- | MT | F | R | Saloon FWD M16A | | GCI57036 | Inner Joint | | 26 | 21 | 40 | | 125 | |
| 1.6 (78 kw) | 2002.04- | AT/MT | F | L/R | Saloon 4WD M16A | | GCO19003 | Outer Joint | | 25 | 29 | 49 | 75.5 | 61 | I |
| | 2002.04- | AT/MT | F | L/R | Saloon 4WD M16A | | GCO24050 | Outer Joint | 42T | 25 | 29 | 49 | 75.5 | 61 | I |

| | YEAR | TRANSM. | F/R | L/R | BODY STYLE & DRIVE TYPE & ENGINE | REMARKS | G-AP Ref. | PRODUCT | ABS | Technical Specifications A | B | C | H | L | P |
|---|---|---|---|---|---|---|---|---|---|---|---|---|---|---|---|
| **SUZUKI** | | | | | | | | | | | | | | | |
| **Liana** | | | | | | | | | | | | | | | |
| 1.6 (78 kw) | 2002.04- | AT/MT | F | L/R | Saloon 4WD M16A | | GCO57041 | Outer Joint | 42T | 25 | 29 | 49 | 76 | 61 | I |
| | 2002.04- | MT | F | L | Saloon 4WD M16A | | GDS57060 | Drive Shaft | 42T | 25 | 26 | 49 | 76 | 611 | |
| | 2002.04- | MT | F | R | Saloon 4WD M16A | | GDS57061 | Drive Shaft | 42T | 25 | 26 | 49 | 76 | 591.5 | |
| | 2002.04- | MT | F | R | Saloon 4WD M16A | | GCI57036 | Inner Joint | | 26 | 21 | 40 | | 125 | |
| | 2002.04- | | F | L | Saloon 4WD M16A | | GCI57035 | Inner Joint | | 26 | 21 | 38 | 56 | 103 | |
| | 2002.04- | AT/MT | F | L/R | Saloon FWD M16A | | GCO19003 | Outer Joint | | 25 | 29 | 49 | 75.5 | 61 | I |
| | 2002.04- | AT/MT | F | L/R | Saloon FWD M16A | | GCO24050 | Outer Joint | 42T | 25 | 29 | 49 | 75.5 | 61 | I |
| | 2002.04- | AT/MT | F | L/R | Saloon FWD M16A | | GCO57041 | Outer Joint | 42T | 25 | 29 | 49 | 76 | 61 | I |
| | 2002.04- | MT | F | L | Saloon FWD M16A | | GDS57060 | Drive Shaft | 42T | 25 | 26 | 49 | 76 | 611 | |
| | 2002.04- | MT | F | R | Saloon FWD M16A | | GDS57061 | Drive Shaft | 42T | 25 | 26 | 49 | 76 | 591.5 | |
| | 2002.04- | MT | F | L | Saloon FWD M16A | | GCI57035 | Inner Joint | | 26 | 21 | 38 | 56 | 103 | |
| | 2002.04- | MT | F | R | Saloon FWD M16A | | GCI57036 | Inner Joint | | 26 | 21 | 40 | | 125 | |
| | 2002.04-2007.12 | AT/MT | F | L/R | Hatchback 4WD M16A | | GCO19003 | Outer Joint | | 25 | 29 | 49 | 75.5 | 61 | I |
| | 2002.04-2007.12 | AT/MT | F | L/R | Hatchback 4WD M16A | | GCO24050 | Outer Joint | 42T | 25 | 29 | 49 | 75.5 | 61 | I |
| | 2002.04-2007.12 | MT | F | L | Hatchback 4WD M16A | | GDS57060 | Drive Shaft | 42T | 25 | 26 | 49 | 76 | 611 | |
| | 2002.04-2007.12 | MT | F | R | Hatchback 4WD M16A | | GDS57061 | Drive Shaft | 42T | 25 | 26 | 49 | 76 | 591.5 | |
| | 2002.04-2007.12 | MT | F | R | Hatchback 4WD M16A | For Modelcode:RH4162/RH4163/RH4164,For Modelcode:RH4165 | GCO57041 | Outer Joint | 42T | 25 | 29 | 49 | 76 | 61 | I |
| | 2002.04-2007.12 | MT | F | R | Hatchback 4WD M16A | | GCI57036 | Inner Joint | | 26 | 21 | 40 | | 125 | |
| | 2002.04-2007.12 | | F | L | Hatchback 4WD M16A | | GCI57035 | Inner Joint | | 26 | 21 | 38 | 56 | 103 | |
| | 2002.04-2007.12 | AT/MT | F | L/R | Hatchback FWD M16A | | GCO19003 | Outer Joint | | 25 | 29 | 49 | 75.5 | 61 | I |
| | 2002.04-2007.12 | AT/MT | F | L/R | Hatchback FWD M16A | | GCO24050 | Outer Joint | 42T | 25 | 29 | 49 | 75.5 | 61 | I |
| | 2002.04-2007.12 | MT | F | L | Hatchback FWD M16A | | GDS57060 | Drive Shaft | 42T | 25 | 26 | 49 | 76 | 611 | |
| | 2002.04-2007.12 | MT | F | R | Hatchback FWD M16A | | GDS57061 | Drive Shaft | 42T | 25 | 26 | 49 | 76 | 591.5 | |
| | 2002.04-2007.12 | MT | F | R | Hatchback FWD M16A | | GCO57041 | Outer Joint | 42T | 25 | 29 | 49 | 76 | 61 | I |
| | 2002.04-2007.12 | MT | F | L | Hatchback FWD M16A | | GCI57035 | Inner Joint | | 26 | 21 | 38 | 56 | 103 | |
| | 2002.04-2007.12 | MT | F | R | Hatchback FWD M16A | | GCI57036 | Inner Joint | | 26 | 21 | 40 | | 125 | |
| 1.6 (79 kw) | 2005.01- | 5MT | F | L | Saloon FWD M16A | | GCI57035 | Inner Joint | | 26 | 21 | 38 | 56 | 103 | |
| | 2005.01- | 5MT | F | R | Saloon FWD M16A | | GCI57036 | Inner Joint | | 26 | 21 | 40 | | 125 | |
| | 2005.01- | MT | F | L | Saloon FWD M16A | | GDS57060 | Drive Shaft | 42T | 25 | 26 | 49 | 76 | 611 | |
| | 2005.01- | MT | F | R | Saloon FWD M16A | | GDS57061 | Drive Shaft | 42T | 25 | 26 | 49 | 76 | 591.5 | |
| | 2005.01- | MT | F | L/R | Saloon FWD M16A | | GCO19003 | Outer Joint | | 25 | 29 | 49 | 75.5 | 61 | I |
| | 2005.01- | MT | F | L/R | Saloon FWD M16A | Date to:2007.12 | GCO24050 | Outer Joint | 42T | 25 | 29 | 49 | 75.5 | 61 | I |
| | 2005.01- | MT | F | L/R | Saloon FWD M16A | For Modelcode:RH4162/RH4163/RH4164,For Modelcode:RH4165 | GCO57041 | Outer Joint | 42T | 25 | 29 | 49 | 76 | 61 | I |
| | 2005.01-2007.08 | 5MT | F | L | Hatchback FWD M16A | | GCI57035 | Inner Joint | | 26 | 21 | 38 | 56 | 103 | |
| | 2005.01-2007.08 | 5MT | F | R | Hatchback FWD M16A | | GCI57036 | Inner Joint | | 26 | 21 | 40 | | 125 | |
| | 2005.01-2007.08 | MT | F | L | Hatchback FWD M16A | | GDS57060 | Drive Shaft | 42T | 25 | 26 | 49 | 76 | 611 | |
| | 2005.01-2007.08 | MT | F | R | Hatchback FWD M16A | | GDS57061 | Drive Shaft | 42T | 25 | 26 | 49 | 76 | 591.5 | |
| | 2005.01-2007.08 | MT | F | L/R | Hatchback FWD M16A | | GCO19003 | Outer Joint | | 25 | 29 | 49 | 75.5 | 61 | I |
| | 2005.01-2007.08 | MT | F | L/R | Hatchback FWD M16A | | GCO24050 | Outer Joint | 42T | 25 | 29 | 49 | 75.5 | 61 | I |
| | 2005.01-2007.08 | MT | F | L/R | Hatchback FWD M16A | For Modelcode:RH4162/RH4163/RH4164,For Modelcode:RH4165 | GCO57041 | Outer Joint | 42T | 25 | 29 | 49 | 76 | 61 | I |
| | 2005.01-2007.12 | 5MT | F | R | Hatchback 4WD M16A | | GCI57036 | Inner Joint | | 26 | 21 | 40 | | 125 | |
| | 2005.01-2007.12 | MT | F | L | Hatchback 4WD M16A | | GDS57060 | Drive Shaft | 42T | 25 | 26 | 49 | 76 | 611 | |
| | 2005.01-2007.12 | MT | F | R | Hatchback 4WD M16A | | GDS57061 | Drive Shaft | 42T | 25 | 26 | 49 | 76 | 591.5 | |
| | 2005.01-2007.12 | MT | F | R | Hatchback 4WD M16A | For Modelcode:RH4162/RH4163/RH4164,For Modelcode:RH4165 | GCO57041 | Outer Joint | 42T | 25 | 29 | 49 | 76 | 61 | I |
| | 2005.01-2007.12 | | F | L/R | Hatchback 4WD M16A | | GCO19003 | Outer Joint | | 25 | 29 | 49 | 75.5 | 61 | I |
| | 2005.01-2007.12 | | F | | Hatchback 4WD M16A | | GCO24050 | Outer Joint | 42T | 25 | 29 | 49 | 75.5 | 61 | I |
| | 2005.01-2007.12 | | F | L | Hatchback 4WD M16A | | GCI57035 | Inner Joint | | 26 | 21 | 38 | 56 | 103 | |
| | 2005.01-2007.12 | 5MT | F | R | Saloon 4WD M16A | | GCI57036 | Inner Joint | | 26 | 21 | 40 | | 125 | |
| | 2005.01-2007.12 | MT | F | L | Saloon 4WD M16A | | GDS57060 | Drive Shaft | 42T | 25 | 26 | 49 | 76 | 611 | |
| | 2005.01-2007.12 | MT | F | R | Saloon 4WD M16A | | GDS57061 | Drive Shaft | 42T | 25 | 26 | 49 | 76 | 591.5 | |
| | 2005.01-2007.12 | MT | F | R | Saloon 4WD M16A | For Modelcode:RH4162/RH4163/RH4164,For Modelcode:RH4165 | GCO57041 | Outer Joint | 42T | 25 | 29 | 49 | 76 | 61 | I |
| | 2005.01-2007.12 | | F | L/R | Saloon 4WD M16A | | GCO19003 | Outer Joint | | 25 | 29 | 49 | 75.5 | 61 | I |
| | 2005.01-2007.12 | | F | | Saloon 4WD M16A | | GCO24050 | Outer Joint | 42T | 25 | 29 | 49 | 75.5 | 61 | I |
| | 2005.01-2007.12 | | F | L | Saloon 4WD M16A | | GCI57035 | Inner Joint | | 26 | 21 | 38 | 56 | 103 | |
| **S-Cross** | | | | | | | | | | | | | | | |
| 1.4 (81 kw) | 2025.07- | 6AT | F | L | SUV 4WD K14D | | GDS81959 | Drive Shaft | | 28 | 26 | 58 | 85 | 612 | |
| | 2025.07- | 6AT | F | L | SUV 4WD K14D | | GCI81566 | Inner Joint | | 26 | 24 | 31 | 88 | 82.5 | |
| | 2025.07- | 6AT/6MT | F | L/R | SUV 4WD K14D | | GCO57212 | Outer Joint | | 28 | 24 | 58 | 85 | 66 | M |
| | 2025.07- | 6AT | F | L | SUV FWD K14D | | GDS81959 | Drive Shaft | | 28 | 26 | 58 | 85 | 612 | |
| | 2025.07- | 6AT | F | L | SUV FWD K14D | | GCI81566 | Inner Joint | | 26 | 24 | 31 | 88 | 82.5 | |
| | 2025.07- | 6AT/6MT | F | L/R | SUV FWD K14D | | GCO57212 | Outer Joint | | 28 | 24 | 58 | 85 | 66 | M |
| 1.4 (95 kw) | 2022.01- | 6AT | F | L | SUV 4WD K14D | | GDS81959 | Drive Shaft | | 28 | 26 | 58 | 85 | 612 | |
| | 2022.01- | 6AT | F | L | SUV 4WD K14D | | GCI81566 | Inner Joint | | 26 | 24 | 31 | 88 | 82.5 | |
| | 2022.01- | 6AT/6MT | F | L/R | SUV 4WD K14D | | GCO57212 | Outer Joint | | 28 | 24 | 58 | 85 | 66 | M |
| | 2022.01- | 6AT | F | L | SUV FWD K14D | | GDS81959 | Drive Shaft | | 28 | 26 | 58 | 85 | 612 | |

| | YEAR | TRANSM. | F/R | L/R | BODY STYLE & DRIVE TYPE & ENGINE | REMARKS | G-AP Ref. | PRODUCT | ABS | Technical Specifications A | B | C | H | L | P |
|---|---|---|---|---|---|---|---|---|---|---|---|---|---|---|---|
| **SUZUKI** | | | | | | | | | | | | | | | |
| **S-Cross** | | | | | | | | | | | | | | | |
| 1.4 (95 kw) | 2022.01- | 6AT | F | R | SUV FWD K14D | | GDS58297 | Drive Shaft | | 28 | 26 | 58 | 85 | 952 | |
| | 2022.01- | 6AT | F | L | SUV FWD K14D | | GCI81566 | Inner Joint | | 26 | 24 | 31 | 88 | 82.5 | |
| | 2022.01- | 6AT | F | R | SUV FWD K14D | | GCI84054 | Inner Joint | | 26 | 23 | 31 | 87 | 70 | |
| | 2022.01- | 6AT/6MT | F | L/R | SUV FWD K14D | | GCO57212 | Outer Joint | | 28 | 24 | 58 | 85 | 66 | M |
| 1.5 (85 kw) | 2022.01- | 6MT | F | L/R | SUV 4WD K15C | | GCO57212 | Outer Joint | | 28 | 24 | 58 | 85 | 66 | M |
| | 2022.01- | 6MT | F | L/R | SUV FWD K15C | | GCO57212 | Outer Joint | | 28 | 24 | 58 | 85 | 66 | M |
| **Samurai** | | | | | | | | | | | | | | | |
| 1.3 (47 kw) | 1988.11-2004.12 | MT | F | L/R | Closed Off-Road Vehicle 4WD G13A | Date to:1993.10 | GCO57019 | Outer Joint | | 26 | 22 | 47 | 136 | 51 | M |
| 1.3 (51 kw) | 1988.11-2004.12 | MT | F | L/R | Terrain cab wagon closed 4WD G13BA | without boot | GCO57019 | Outer Joint | | 26 | 22 | 47 | 136 | 51 | M |
| | 1988.11-2004.12 | MT | F | L/R | Terrain cab wagon closed 4WD G13BA | Date from:1992.12 | GCO57020 | Outer Joint | | 26 | 22 | 44.5 | 136.5 | 50.5 | I |
| | 1988.11-2004.12 | MT | F | L/R | Terrain cab wagon closed 4WD G13BA | | GCO57033 | Outer Joint | | 26 | 22 | 44.5 | 136.5 | 50.5 | M |
| 1.3 (59 kw) | 2000.01-2004.12 | MT | F | | Terrain cab wagon closed 4WD G13BA | | GCO57033 | Outer Joint | | 26 | 22 | 44.5 | 136.5 | 50.5 | M |
| | 2000.01-2004.12 | | F | L/R | Terrain cab wagon closed 4WD G13BA | | GCO57020 | Outer Joint | | 26 | 22 | 44.5 | 136.5 | 50.5 | I |
| 1.9 (46 kw) | 1998.11-2004.12 | MT | F | | Terrain cab wagon closed 4WD XUD9 | | GCO57033 | Outer Joint | | 26 | 22 | 44.5 | 136.5 | 50.5 | M |
| | 1998.11-2004.12 | | F | L/R | Terrain cab wagon closed 4WD XUD9 | | GCO57020 | Outer Joint | | 26 | 22 | 44.5 | 136.5 | 50.5 | I |
| 1.9 (47 kw) | 1998.11-2004.12 | | F | L/R | Terrain cab wagon closed 4WD NF8Q | Date From:2000.11 | GCO57020 | Outer Joint | | 26 | 22 | 44.5 | 136.5 | 50.5 | I |
| **Splash** | | | | | | | | | | | | | | | |
| 1.0 (48 kw) | 2008.01- | 5MT | F | L | Hatchback FWD K10B | Chassis no. to:500000 | GDS57222 | Drive Shaft | | 25 | 22 | 49 | 81.5 | 641 | |
| | 2008.01- | 5MT | F | L | Hatchback FWD K10B | Chassis no. from:500001 | GDS57296 | Drive Shaft | | 25 | 22 | 49 | 81.5 | 641 | |
| | 2008.01- | 5MT | F | R | Hatchback FWD K10B | Chassis no. to:500000 | GDS57221 | Drive Shaft | | 25 | 22 | 49 | 81.5 | 882 | |
| | 2008.01- | 5MT | F | L/R | Hatchback FWD K10B | | GCO44085 | Outer Joint | | 25 | 20 | 49 | 81.5 | 61 | M |
| | 2008.01- | 5MT | F | L/R | Hatchback FWD K10B | Chassis no. to:500000 | GCI57105 | Inner Joint | | 22 | 19 | 40 | 56.5 | 92 | |
| | 2008.01- | 5MT | F | L/R | Hatchback FWD K10B | Chassis no. from:500001 | GCI57156 | Inner Joint | | 22 | 19 | 40 | 57 | 97.5 | |
| 1.0 (50 kw) | 2011.06- | MT | F | L | Hatchback FWD K10B | | GDS57296 | Drive Shaft | | 25 | 22 | 49 | 81.5 | 641 | |
| | 2011.06- | MT | F | L | Hatchback FWD K10B | | GCO44085 | Outer Joint | | 25 | 20 | 49 | 81.5 | 61 | M |
| | 2011.06- | MT | F | L | Hatchback FWD K10B | | GCI57156 | Inner Joint | | 22 | 19 | 40 | 57 | 97.5 | |
| 1.2 (63 kw) | 2008.01- | AT | F | L | Hatchback FWD K12B | | GDS57298 | Drive Shaft | | 25 | 22 | 49 | 82 | 630 | |
| | 2008.01- | AT | F | L | Hatchback FWD K12B | Chassis no. from:500001 | GCO57103 | Outer Joint | | 25 | 28 | 49 | 82 | 61 | I |
| | 2008.01- | AT | F | L/R | Hatchback FWD K12B | | GCI57157 | Inner Joint | | 22 | 28 | 38 | 59 | 110.5 | |
| | 2008.01- | MT | F | L | Hatchback FWD K12B | Chassis no. to:500000 | GDS57222 | Drive Shaft | | 25 | 22 | 49 | 81.5 | 641 | |
| | 2008.01- | MT | F | L | Hatchback FWD K12B | Chassis no. from:500001 | GDS57296 | Drive Shaft | | 25 | 22 | 49 | 81.5 | 641 | |
| | 2008.01- | MT | F | R | Hatchback FWD K12B | Chassis no. to:500000 | GDS57221 | Drive Shaft | | 25 | 22 | 49 | 81.5 | 882 | |
| | 2008.01- | MT | F | L/R | Hatchback FWD K12B | Chassis no. to:500000 | GCO44085 | Outer Joint | | 25 | 20 | 49 | 81.5 | 61 | M |
| | 2008.04-2014.12 | 5MT | F | L | Hatchback FWD K12B | | GDS57222 | Drive Shaft | | 25 | 22 | 49 | 81.5 | 641 | |
| | 2008.04-2014.12 | 5MT | F | R | Hatchback FWD K12B | | GDS57221 | Drive Shaft | | 25 | 22 | 49 | 81.5 | 882 | |
| | 2008.04-2014.12 | 5MT | F | L/R | Hatchback FWD K12B | Chassis no. to:500000 | GCI57105 | Inner Joint | | 22 | 19 | 40 | 56.5 | 92 | |
| | 2008.04-2014.12 | 5MT | F | L/R | Hatchback FWD K12B | Chassis no. from:500001 | GCI57156 | Inner Joint | | 22 | 19 | 40 | 57 | 97.5 | |
| | 2008.04-2014.12 | MT | F | L/R | Hatchback FWD K12B | Chassis no. to:500000 | GCO44085 | Outer Joint | | 25 | 20 | 49 | 81.5 | 61 | M |
| | 2008.04-2014.12 | | F | L | Hatchback FWD K12B | Chassis no. from:500001 | GDS57296 | Drive Shaft | | 25 | 22 | 49 | 81.5 | 641 | |
| 1.2 (66 kw) | 2011.06- | AT | F | | Hatchback FWD K12B | | GCO57103 | Outer Joint | | 25 | 28 | 49 | 82 | 61 | I |
| | 2011.06- | MT | F | L | Hatchback FWD K12B | | GDS57296 | Drive Shaft | | 25 | 22 | 49 | 81.5 | 641 | |
| | 2011.06- | MT | F | L | Hatchback FWD K12B | | GCO44085 | Outer Joint | | 25 | 20 | 49 | 81.5 | 61 | M |
| | 2011.06- | MT | F | L | Hatchback FWD K12B | | GCI57156 | Inner Joint | | 22 | 19 | 40 | 57 | 97.5 | |
| 1.2 (67 kw) | 2012.08-2016.07 | AT | F | | Hatchback FWD K12B | | GCO57103 | Outer Joint | | 25 | 28 | 49 | 82 | 61 | I |
| | 2012.08-2016.07 | MT | F | L | Hatchback FWD K12B | | GCI57156 | Inner Joint | | 22 | 19 | 40 | 57 | 97.5 | |
| 1.2 (69 kw) | 2010.09- | AT | F | L | Hatchback FWD K12B | | GDS57298 | Drive Shaft | | 25 | 22 | 49 | 82 | 630 | |
| | 2010.09- | AT | F | L | Hatchback FWD K12B | Chassis no. from:500001 | GCO57103 | Outer Joint | | 25 | 28 | 49 | 82 | 61 | I |
| | 2010.09- | AT | F | L/R | Hatchback FWD K12B | | GCI57157 | Inner Joint | | 22 | 28 | 38 | 59 | 110.5 | |
| | 2010.09- | MT | F | L | Hatchback FWD K12B | Chassis no. to:500000 | GDS57222 | Drive Shaft | | 25 | 22 | 49 | 81.5 | 641 | |
| | 2010.09- | MT | F | L | Hatchback FWD K12B | Chassis no. from:500001 | GDS57296 | Drive Shaft | | 25 | 22 | 49 | 81.5 | 641 | |
| | 2010.09- | MT | F | R | Hatchback FWD K12B | Chassis no. to:500000 | GDS57221 | Drive Shaft | | 25 | 22 | 49 | 81.5 | 882 | |
| | 2010.09- | MT | F | L/R | Hatchback FWD K12B | Chassis no. to:500000 | GCO44085 | Outer Joint | | 25 | 20 | 49 | 81.5 | 61 | M |
| | 2010.09- | MT | F | L/R | Hatchback FWD K12B | Chassis no. to:500000 | GCI57105 | Inner Joint | | 22 | 19 | 40 | 56.5 | 92 | |
| | 2010.09- | MT | F | L/R | Hatchback FWD K12B | Chassis no. from:500001 | GCI57156 | Inner Joint | | 22 | 19 | 40 | 57 | 97.5 | |
| 1.3 (55 kw) | 2008.01- | 5MT | F | L | Hatchback FWD D13A;Z 13 DTJ | | GDS57223 | Drive Shaft | | 25 | 26 | 49 | 81.5 | 629 | |
| | 2008.01- | 5MT | F | R | Hatchback FWD D13A;Z 13 DTJ | | GDS57197 | Drive Shaft | | 25 | 22 | 49 | 81.5 | 614 | |
| | 2008.01- | 5MT | F | L/R | Hatchback FWD D13A;Z 13 DTJ | | GCO57100 | Outer Joint | | 25 | 21 | 49 | 82.5 | 64 | M |
| **Swift** | | | | | | | | | | | | | | | |
| 1.0 (37 kw) | 1989.03-2001.05 | 3AT/5MT | F | L/R | Hatchback FWD G10 | | GCO57008 | Outer Joint | | 23 | 20 | 49 | 92 | 54.5 | O |
| | 1989.03-2001.05 | MT | F | L | Hatchback FWD G10 | | GDS57040 | Drive Shaft | | 23 | 22 | 49 | 92 | 678 | |
| | 1989.03-2001.05 | MT | F | R | Hatchback FWD G10 | | GDS57039 | Drive Shaft | | 23 | 22 | 49 | 92 | 767 | |
| | 1989.03-2001.05 | MT | F | L/R | Hatchback FWD G10 | | GCO57007 | Outer Joint | | 23 | 19 | 49 | 92 | 56.5 | M |
| | 1989.03-2001.05 | MT | F | L/R | Hatchback FWD G10 | | GCI99099 | Inner Joint | | 22 | 19 | 35 | 51.5 | 86.5 | |
| 1.0 (39 kw) | 1994.01-2003.12 | MT | F | L | Saloon FWD G10A | | GDS57040 | Drive Shaft | | 23 | 22 | 49 | 92 | 678 | |
| | 1994.01-2003.12 | MT | F | L/R | Saloon FWD G10A | | GCO57007 | Outer Joint | | 23 | 19 | 49 | 92 | 56.5 | M |

| | YEAR | TRANSM. | F/R | L/R | BODY STYLE & DRIVE TYPE & ENGINE | REMARKS | G-AP Ref. | PRODUCT | ABS | Technical Specifications A | B | C | H | L | P |
|---|---|---|---|---|---|---|---|---|---|---|---|---|---|---|---|
| **SUZUKI** **Swift** | | | | | | | | | | | | | | | |
| 1.0 (39 kw) | 1995.01-2005.12 | 3AT/5MT | F | L/R | Hatchback FWD G10A | | GCO57007 | Outer Joint | | 23 | 19 | 49 | 92 | 56.5 | M |
| | 1995.01-2005.12 | 3AT/5MT | F | L/R | Hatchback FWD G10A | inner teeth of wheel side:20 | GCO57008 | Outer Joint | | 23 | 20 | 49 | 92 | 54.5 | O |
| | 1995.01-2005.12 | MT | F | L | Hatchback FWD G10A | Date To:2003.12;type:swift | GDS57040 | Drive Shaft | | 23 | 22 | 49 | 92 | 678 | |
| | 1995.01-2005.12 | MT | F | R | Hatchback FWD G10A | Date To:2003.12;type:swift | GDS57039 | Drive Shaft | | 23 | 22 | 49 | 92 | 767 | |
| | 1995.01-2005.12 | MT | F | L/R | Hatchback FWD G10A | Date From:1995.10;Date To:2003.12;Type:Swift;Vehicle Production Country:Hungary | GCO57001 | Outer Joint | | 23 | 20 | 49 | 92 | 56.5 | I |
| | 1995.01-2005.12 | MT | F | R | Hatchback FWD G10A | | GCI88018 | Inner Joint | | 22 | 19 | 35 | 51.9 | 93.4 | |
| | 1995.01-2005.12 | MT | F | L/R | Hatchback FWD G10A | Date To:2003.12;Type:Swift | GCI99099 | Inner Joint | | 22 | 19 | 35 | 51.5 | 86.5 | |
| 1.2 (61 kw) | 2020.06- | 5MT | R | L/R | Hatchback 4WD K12D | | GCI57166 | Inner Joint | | | 23 | | | 74.5 | |
| | 2020.06- | 5MT | F | L | Hatchback FWD K12D | | GDS57886 | Drive Shaft | | 25 | 22 | 49 | 82 | 669 | |
| | 2020.06- | 5MT | F | R | Hatchback FWD K12D | | GDS56656 | Drive Shaft | | 25 | 22 | 49 | 82 | 924 | |
| | 2020.06- | 5MT | F | L/R | Hatchback FWD K12D | | GCI83426 | Inner Joint | | 22 | 28 | 38 | 58 | 86.5 | |
| | 2020.06- | CVT | F | L | Hatchback FWD K12D | | GDS56122 | Drive Shaft | | 25 | 22 | 49 | 82 | 666 | |
| | 2020.06- | CVT | F | R | Hatchback FWD K12D | | GDS57576 | Drive Shaft | | 25 | 22 | 49 | 82 | 928 | |
| | 2020.06- | CVT | F | L/R | Hatchback FWD K12D | | GCI83096 | Inner Joint | | 22 | 28 | 35 | 57.5 | 86.5 | |
| | 2020.06- | CVT/5MT | F | L/R | Hatchback FWD K12D | | GCO83162 | Outer Joint | | 25 | 28 | 49 | 82 | 60 | I |
| | 2023.12- | 5MT | F | L | Hatchback 4WD Z12E | | GDS57886 | Drive Shaft | | 25 | 22 | 49 | 82 | 669 | |
| | 2023.12- | 5MT | R | L/R | Hatchback 4WD Z12E | | GCI57166 | Inner Joint | | | 23 | | | 74.5 | |
| | 2023.12- | 5MT | F | L | Hatchback FWD Z12E | | GDS57886 | Drive Shaft | | 25 | 22 | 49 | 82 | 669 | |
| | 2023.12- | 5MT | F | L/R | Hatchback FWD Z12E | | GCI83426 | Inner Joint | | 22 | 28 | 38 | 58 | 86.5 | |
| 1.2 (66 kw) | 2010.10-2017.04 | 5MT | F | L | Hatchback 4WD K12B | | GDS57275 | Drive Shaft | | 25 | 26 | 49 | 82 | 641 | |
| | 2010.10-2017.04 | 5MT | F | R | Hatchback 4WD K12B | | GDS57277 | Drive Shaft | | 25 | 26 | 49 | 82 | 660 | |
| | 2010.10-2017.04 | 5MT | F | L/R | Hatchback 4WD K12B | | GCO57103 | Outer Joint | | 25 | 28 | 49 | 82 | 61 | I |
| | 2010.10-2017.04 | 5MT | F | R | Hatchback 4WD K12B | | GCI57151 | Inner Joint | | 26 | 28 | 40 | | 121 | |
| | 2010.10-2017.04 | 5MT | R | L | Hatchback 4WD K12B | | GDS57284 | Drive Shaft | | 24 | | 45 | 89 | 649 | |
| | 2010.10-2017.04 | 5MT | R | R | Hatchback 4WD K12B | | GDS57283 | Drive Shaft | | 24 | | 45 | 89 | 698 | |
| | 2010.10-2017.04 | 5MT | R | L/R | Hatchback 4WD K12B | | GCI57166 | Inner Joint | | | 23 | | | 74.5 | |
| | 2010.10-2017.04 | 4AT | F | L | Hatchback FWD K12B | For Modelcode:AZH412 | GDS82967 | Drive Shaft | | 25 | 22 | 49 | 82 | 648 | |
| | 2010.10-2017.04 | 4AT | F | R | Hatchback FWD K12B | For Modelcode:AZH412 | GDS82968 | Drive Shaft | | 25 | 22 | 49 | 82 | 581 | |
| | 2010.10-2017.04 | 5MT | F | L | Hatchback FWD K12B | For Modelcode:AZG412 | GDS57240 | Drive Shaft | | 25 | 22 | 49 | 82 | 657 | |
| | 2010.10-2017.04 | 5MT | F | L | Hatchback FWD K12B | For Modelcode:AZG412 | GCO57103 | Outer Joint | | 25 | 28 | 49 | 82 | 61 | I |
| | 2010.10-2017.04 | 5MT | F | L | Hatchback FWD K12B | For Modelcode:AZG412 | GCI57123 | Inner Joint | | 22 | 28 | 40 | 57 | 97.5 | |
| | 2010.10-2017.04 | MT | F | R | Hatchback FWD K12B | | GDS57228 | Drive Shaft | | 25 | 22 | 49 | 82 | 893 | |
| | 2010.10-2017.04 | MT | F | R | Hatchback FWD K12B | | GCI57123 | Inner Joint | | 22 | 28 | 40 | 57 | 97.5 | |
| | 2017.04- | 5MT | R | L/R | Hatchback 4WD K12C | Date from:2018.10 | GCI57166 | Inner Joint | | | 23 | | | 74.5 | |
| | 2017.04- | 5MT | R | L/R | Hatchback 4WD K12CS | Date from:2018.10 | GCI57166 | Inner Joint | | | 23 | | | 74.5 | |
| | 2017.04- | 5MT | F | L | Hatchback FWD K12C | | GDS57886 | Drive Shaft | | 25 | 22 | 49 | 82 | 669 | |
| | 2017.04- | 5MT | F | R | Hatchback FWD K12C | | GDS56656 | Drive Shaft | | 25 | 22 | 49 | 82 | 924 | |
| | 2017.04- | 5MT | F | L/R | Hatchback FWD K12C | | GCI83426 | Inner Joint | | 22 | 28 | 38 | 58 | 86.5 | |
| | 2017.04- | CVT | F | L | Hatchback FWD K12C | | GDS56122 | Drive Shaft | | 25 | 22 | 49 | 82 | 666 | |
| | 2017.04- | CVT | F | R | Hatchback FWD K12C | | GDS57576 | Drive Shaft | | 25 | 22 | 49 | 82 | 928 | |
| | 2017.04- | CVT | F | L/R | Hatchback FWD K12C | | GCI83096 | Inner Joint | | 22 | 28 | 35 | 57.5 | 86.5 | |
| | 2017.04- | CVT/5MT | F | L/R | Hatchback FWD K12C | | GCO83162 | Outer Joint | | 25 | 28 | 49 | 82 | 60 | I |
| | 2017.04- | 5MT | F | L | Hatchback FWD K12CS | | GDS57886 | Drive Shaft | | 25 | 22 | 49 | 82 | 669 | |
| | 2017.04- | 5MT | F | R | Hatchback FWD K12CS | | GDS56656 | Drive Shaft | | 25 | 22 | 49 | 82 | 924 | |
| | 2017.04- | 5MT | F | L/R | Hatchback FWD K12CS | | GCO83162 | Outer Joint | | 25 | 28 | 49 | 82 | 60 | I |
| | 2017.04- | 5MT | F | L/R | Hatchback FWD K12CS | | GCI83426 | Inner Joint | | 22 | 28 | 38 | 58 | 86.5 | |
| 1.2 (67 kw) | 2012.08- | 5MT | F | L | Hatchback 4WD K12B | | GDS57275 | Drive Shaft | | 25 | 26 | 49 | 82 | 641 | |
| | 2012.08- | 5MT | F | R | Hatchback 4WD K12B | | GDS57277 | Drive Shaft | | 25 | 26 | 49 | 82 | 660 | |
| | 2012.08- | 5MT | F | L/R | Hatchback 4WD K12B | Inner teeth of wheel side:29 | GCO57213 | Outer Joint | | 25 | 29 | 49 | 82 | 60 | I |
| | 2012.08- | 5MT | F | L | Hatchback 4WD K12B | | GCI57152 | Inner Joint | | 26 | 28 | 38 | 58.5 | 102 | |
| | 2012.08- | 5MT | F | R | Hatchback 4WD K12B | | GCI57151 | Inner Joint | | 26 | 28 | 40 | | 121 | |
| | 2012.08- | MT | F | L/R | Hatchback 4WD K12B | Inner teeth of wheel side:28;Vehicle Production Country:Hungary | GCO57103 | Outer Joint | | 25 | 28 | 49 | 82 | 61 | I |
| | 2012.08- | MT | R | L | Hatchback 4WD K12B | | GDS57284 | Drive Shaft | | 24 | | 45 | 89 | 649 | |
| | 2012.08- | MT | R | R | Hatchback 4WD K12B | | GDS57283 | Drive Shaft | | 24 | | 45 | 89 | 698 | |
| | 2012.08- | MT | R | L/R | Hatchback 4WD K12B | | GCI57166 | Inner Joint | | | 23 | | | 74.5 | |
| | 2012.08- | MT | F | L/R | Hatchback FWD K12B | Vehicle Production Country:Hungary | GCO57103 | Outer Joint | | 25 | 28 | 49 | 82 | 61 | I |
| 1.2 (69 kw) | 2010.10-2017.04 | 4AT | F | L | Hatchback 4WD K12B | | GDS57298 | Drive Shaft | | 25 | 22 | 49 | 82 | 630 | |
| | 2010.10-2017.04 | 4AT | F | R | Hatchback 4WD K12B | | GDS57297 | Drive Shaft | | 25 | 26 | 49 | 82 | 563 | |
| | 2010.10-2017.04 | 4AT/5MT | F | L/R | Hatchback 4WD K12B | | GCO57103 | Outer Joint | | 25 | 28 | 49 | 82 | 61 | I |
| | 2010.10-2017.04 | 5MT | F | L | Hatchback 4WD K12B | | GDS57275 | Drive Shaft | | 25 | 26 | 49 | 82 | 641 | |
| | 2010.10-2017.04 | 5MT | F | R | Hatchback 4WD K12B | | GDS57277 | Drive Shaft | | 25 | 26 | 49 | 82 | 660 | |
| | 2010.10-2017.04 | 5MT | F | R | Hatchback 4WD K12B | | GCI57151 | Inner Joint | | 26 | 28 | 40 | | 121 | |
| | 2010.10-2017.04 | 5MT | R | L | Hatchback 4WD K12B | | GDS57284 | Drive Shaft | | 24 | | 45 | 89 | 649 | |
| | 2010.10-2017.04 | 5MT | R | R | Hatchback 4WD K12B | | GDS57283 | Drive Shaft | | 24 | | 45 | 89 | 698 | |
| | 2010.10-2017.04 | 5MT | R | L/R | Hatchback 4WD K12B | | GCI57166 | Inner Joint | | | 23 | | | 74.5 | |

| | YEAR | TRANSM. | F/R | L/R | BODY STYLE & DRIVE TYPE & ENGINE | REMARKS | G-AP Ref. | PRODUCT | ABS | Technical Specifications A | B | C | H | L | P |
|---|---|---|---|---|---|---|---|---|---|---|---|---|---|---|---|
| **SUZUKI** **Swift** | | | | | | | | | | | | | | | |
| 1.2 (69 kw) | 2010.10-2017.04 | 4AT | F | R | Hatchback FWD K12B | | GDS57297 | Drive Shaft | | 25 | 26 | 49 | 82 | 563 | |
| | 2010.10-2017.04 | 5MT | F | L | Hatchback FWD K12B | | GDS57240 | Drive Shaft | | 25 | 22 | 49 | 82 | 657 | |
| | 2010.10-2017.04 | 5MT | F | L | Hatchback FWD K12B | | GCO57103 | Outer Joint | | 25 | 28 | 49 | 82 | 61 | I |
| | 2010.10-2017.04 | 5MT | F | L/R | Hatchback FWD K12B | | GCI57123 | Inner Joint | | 22 | 28 | 40 | 57 | 97.5 | |
| | 2010.10-2017.04 | AT | F | L | Hatchback FWD K12B | | GCI57157 | Inner Joint | | 22 | 28 | 38 | 59 | 110.5 | |
| | 2010.10-2017.04 | AT | F | R | Hatchback FWD K12B | | GCI57158 | Inner Joint | | 26 | 28 | 40 | | 121 | |
| | 2010.10-2017.04 | MT | F | R | Hatchback FWD K12B | | GDS57228 | Drive Shaft | | 25 | 22 | 49 | 82 | 893 | |
| 1.3 (50 kw) | 1989.03-2001.05 | 5MT | F | L/R | Hatchback 4WD G13BA | | GCO57008 | Outer Joint | | 23 | 20 | 49 | 92 | 54.5 | O |
| | 1989.03-2001.05 | 5MT | F | R | Hatchback 4WD G13BA | | GCI57009 | Inner Joint | | 22 | 19 | 40 | | 127.5 | |
| | 1989.03-2001.05 | MT | F | L | Hatchback 4WD G13BA | | GDS99095 | Drive Shaft | | 23 | 22 | 49 | 92 | 606 | |
| | 1989.03-2001.05 | MT | F | L/R | Hatchback 4WD G13BA | | GCO57007 | Outer Joint | | 23 | 19 | 49 | 92 | 56.5 | M |
| | 1989.03-2001.05 | 3AT/5MT | F | L/R | Hatchback FWD G13BA | inner teeth of wheel side:20 | GCO57008 | Outer Joint | | 23 | 20 | 49 | 92 | 54.5 | O |
| | 1989.03-2001.05 | AT/MT | F | L/R | Hatchback FWD G13BA | | GCO57007 | Outer Joint | | 23 | 19 | 49 | 92 | 56.5 | M |
| | 1989.03-2001.05 | MT | F | L | Hatchback FWD G13BA | | GDS99095 | Drive Shaft | | 23 | 22 | 49 | 92 | 606 | |
| | 1989.03-2001.05 | MT | F | L/R | Hatchback FWD G13BA | Date from:1996.10;Vehicle Production Country:Hungary | GCO57001 | Outer Joint | | 23 | 20 | 49 | 92 | 56.5 | I |
| | 1989.03-2001.05 | MT | F | L | Hatchback FWD G13BA | | GCI99099 | Inner Joint | | 22 | 19 | 35 | 51.5 | 86.5 | |
| | 1989.03-2001.05 | 3AT/5MT | F | L/R | Saloon FWD G13BA | | GCO57008 | Outer Joint | | 23 | 20 | 49 | 92 | 54.5 | O |
| | 1989.03-2001.05 | AT/5MT | F | L/R | Saloon FWD G13BA | inner teeth of wheel side:19 | GCO57007 | Outer Joint | | 23 | 19 | 49 | 92 | 56.5 | M |
| | 1989.03-2001.05 | MT | F | L | Saloon FWD G13BA | | GDS99095 | Drive Shaft | | 23 | 22 | 49 | 92 | 606 | |
| | 1989.03-2001.05 | MT | F | L | Saloon FWD G13BA | | GCI99099 | Inner Joint | | 22 | 19 | 35 | 51.5 | 86.5 | |
| | 1991.09-1996.10 | 3AT/5MT | F | L/R | Cabriolet FWD G13BA | | GCI57009 | Inner Joint | | 22 | 19 | 40 | | 127.5 | |
| | 1991.09-1996.10 | AT/MT | F | L/R | Cabriolet FWD G13BA | | GCO57007 | Outer Joint | | 23 | 19 | 49 | 92 | 56.5 | M |
| | 1991.09-1996.10 | MT | F | L | Cabriolet FWD G13BA | | GDS99095 | Drive Shaft | | 23 | 22 | 49 | 92 | 606 | |
| 1.3 (51 kw) | 1989.03-1996.10 | 5MT | F | R | Hatchback FWD G13BA | | GCI57009 | Inner Joint | | 22 | 19 | 40 | | 127.5 | |
| | 1989.03-1996.10 | MT | F | L | Hatchback FWD G13BA | | GDS99095 | Drive Shaft | | 23 | 22 | 49 | 92 | 606 | |
| | 1989.03-1996.10 | MT | F | R | Hatchback FWD G13BA | | GDS57032 | Drive Shaft | | 23 | 22 | 49 | 92 | 586 | |
| | 2005.08-2012.06 | 5MT | F | R | Hatchback FWD Z13DT | | GDS50470 | Drive Shaft | 43T | 25 | 23 | 49 | 82 | 631 | |
| | 2005.08-2012.06 | MT | F | L/R | Hatchback FWD Z13DT | | GCO57095 | Outer Joint | 43T | 25 | 29 | 49 | 82.5 | 57 | M |
| | 2005.08-2012.06 | MT | F | L/R | Hatchback FWD Z13DT | Chassis no. from:S00500001 | GCO57100 | Outer Joint | | 25 | 21 | 49 | 82.5 | 64 | M |
| 1.3 (55 kw) | 2005.08-2011.12 | 5MT | F | R | Hatchback FWD D13A;Z 13 DTJ | | GDS50470 | Drive Shaft | 43T | 25 | 23 | 49 | 82 | 631 | |
| | 2005.08-2011.12 | MT | F | L/R | Hatchback FWD D13A;Z 13 DTJ | | GCO57095 | Outer Joint | 43T | 25 | 29 | 49 | 82.5 | 57 | M |
| | 2005.08-2011.12 | MT | F | L/R | Hatchback FWD D13A;Z 13 DTJ | Chassis no. from:S00500001 | GCO57100 | Outer Joint | | 25 | 21 | 49 | 82.5 | 64 | M |
| | 2010.10-2017.04 | 5MT | F | L | Hatchback FWD D13A;D13AA | | GDS82638 | Drive Shaft | | 25 | 26 | 49 | 82 | 648 | |
| | 2010.10-2017.04 | 5MT | F | R | Hatchback FWD D13A;D13AA | | GDS57234 | Drive Shaft | | 25 | 26 | 49 | 82 | 630 | |
| | 2010.10-2017.04 | 5MT | F | L | Hatchback FWD D13A;D13AA | | GCI57135 | Inner Joint | | 26 | 22 | 38 | 58.5 | 93.5 | |
| | 2010.10-2017.04 | 5MT | F | R | Hatchback FWD D13A;D13AA | | GCI54010 | Inner Joint | | 26 | 22 | 40 | | 115 | |
| | 2010.10-2017.04 | MT | F | L/R | Hatchback FWD D13A;D13AA | | GCO57100 | Outer Joint | | 25 | 21 | 49 | 82.5 | 64 | M |
| | 2010.10-2017.04 | MT | F | L/R | Hatchback FWD D13A;D13AA | Vehicle Production Country:Hungary | GCO57103 | Outer Joint | | 25 | 28 | 49 | 82 | 61 | I |
| | 2010.10-2017.04 | MT | F | L/R | Hatchback FWD D13A;D13AA | | GCO57114 | Outer Joint | | 25 | 22 | 49 | 82 | 64 | M |
| 1.3 (63 kw) | 2001.06-2003.12 | | F | L/R | Hatchback FWD G13BB | Vehicle Production Country:Hungary | GCO57001 | Outer Joint | | 23 | 20 | 49 | 92 | 56.5 | I |
| | 2001.06-2003.12 | | F | L/R | Hatchback FWD G13BB | vehicle production country:india | GCO57048 | Outer Joint | | 23 | 20 | 49 | 92 | 54.5 | O |
| 1.3 (66 kw) | 2006.01-2012.06 | 5AT | F | R | Hatchback 4WD M13A | Chassis no.:TSM,Vehicle Production Country:Hungary | GDS99080 | Drive Shaft | 43T | 25 | 22 | 49 | 82 | 641.5 | |
| | 2006.01-2012.06 | AT | F | L | Hatchback 4WD M13A | | GDS57004 | Drive Shaft | 43T | 25 | 22 | 49 | 82 | 635 | |
| | 2006.01-2012.06 | AT/MT | F | L/R | Hatchback 4WD M13A | Chassis Number:JSA;Vehicle Production Country:Japan | GCO57042 | Outer Joint | 43T | 25 | 29 | 49 | 82 | 61 | I |
| | 2006.01-2012.06 | MT | F | L | Hatchback 4WD M13A | Chassis no. to:S00500000 | GDS57086 | Drive Shaft | 43T | 25 | 22 | 49 | 82 | 652 | |
| | 2006.01-2012.06 | MT | F | R | Hatchback 4WD M13A | | GCI57085 | Inner Joint | | 22 | 28 | 40 | 54.5 | 82 | |
| | 2006.01-2012.06 | | F | | Hatchback 4WD M13A | | GCO57024 | Outer Joint | | 23 | 19 | 49 | 78 | 57 | M |
| | 2006.01-2012.06 | AT/MT | R | L | Hatchback 4WD M13A | | GDS82624 | Drive Shaft | 43T | 23 | | 49 | 78 | 642 | |
| | 2006.01-2012.06 | AT/MT | R | R | Hatchback 4WD M13A | | GDS82625 | Drive Shaft | 43T | 23 | | 49 | 78 | 711 | |
| 1.3 (67 kw) | 2005.02-2015.12 | MT | F | L | Hatchback FWD M13A | | GDS57086 | Drive Shaft | 43T | 25 | 22 | 49 | 82 | 652 | |
| | 2005.02-2015.12 | MT | F | R | Hatchback FWD M13A | | GDS57183 | Drive Shaft | 43T | 25 | 22 | 49 | 82 | 894 | |
| 1.3 (68 kw) | 2005.02-2012.06 | 5AT | F | R | Hatchback 4WD M13A | Chassis no.:TSM,Vehicle Production Country:Hungary | GDS99080 | Drive Shaft | 43T | 25 | 22 | 49 | 82 | 641.5 | |
| | 2005.02-2012.06 | AT | F | L | Hatchback 4WD M13A | Vehicle Production Country:Japan,Chassis No.:JSA | GDS57004 | Drive Shaft | 43T | 25 | 22 | 49 | 82 | 635 | |
| | 2005.02-2012.06 | AT | F | L/R | Hatchback 4WD M13A | | GCO57042 | Outer Joint | 43T | 25 | 29 | 49 | 82 | 61 | I |
| | 2005.02-2012.06 | AT | F | L | Hatchback 4WD M13A | Vehicle Production Country:Japan,Chassis No.:JSA | GCI57024 | Inner Joint | | 22 | 28 | 38 | 59.5 | 85 | |
| | 2005.02-2012.06 | MT | F | L | Hatchback 4WD M13A | Chassis no. to:S00500000 | GDS57086 | Drive Shaft | 43T | 25 | 22 | 49 | 82 | 652 | |
| | 2005.02-2012.06 | MT | F | R | Hatchback 4WD M13A | Chassis no. to:S00500000 | GDS57183 | Drive Shaft | 43T | 25 | 22 | 49 | 82 | 894 | |
| | 2005.02-2012.06 | MT | F | R | Hatchback 4WD M13A | Chassis no. to:S00500000 | GCI57085 | Inner Joint | | 22 | 28 | 40 | 54.5 | 82 | |
| | 2005.02-2012.06 | AT/MT | R | L | Hatchback 4WD M13A | | GDS82624 | Drive Shaft | 43T | 23 | | 49 | 78 | 642 | |
| | 2005.02-2012.06 | AT/MT | R | R | Hatchback 4WD M13A | | GDS82625 | Drive Shaft | 43T | 23 | | 49 | 78 | 711 | |
| | 2005.02-2012.06 | 5MT | F | L | Hatchback FWD M13A | Chassis no.:TSM,Vehicle Production Country:Hungary,Date to:2007.04 | GDS57086 | Drive Shaft | 43T | 25 | 22 | 49 | 82 | 652 | |
| | 2005.02-2012.06 | 5MT | F | L | Hatchback FWD M13A | Chassis no.:TSM,Vehicle Production Country:Hungary,Date from:2007.05 | GDS57166 | Drive Shaft | | 25 | 22 | 49 | 82 | 651 | |
| | 2005.02-2012.06 | 5MT | F | R | Hatchback FWD M13A | Chassis no.:TSM,Vehicle Production Country:Hungary,Date from:2007.05 | GDS57167 | Drive Shaft | | 25 | 22 | 49 | 82 | 895 | |
| | 2005.02-2012.06 | 5MT | F | R | Hatchback FWD M13A | Chassis no.:TSM,Vehicle Production Country:Hungary,Date to:2007.04 | GDS57183 | Drive Shaft | 43T | 25 | 22 | 49 | 82 | 894 | |
| | 2005.02-2012.06 | 5MT | F | L/R | Hatchback FWD M13A | Chassis no.:TSM,Vehicle Production Country:Hungary,Date from:2007.05 | GCO57103 | Outer Joint | | 25 | 28 | 49 | 82 | 61 | I |

| | YEAR | TRANSM. | F/R | L/R | BODY STYLE & DRIVE TYPE & ENGINE | REMARKS | G-AP Ref. | PRODUCT | ABS | Technical Specifications A | B | C | H | L | P |
|---|---|---|---|---|---|---|---|---|---|---|---|---|---|---|---|
| **SUZUKI** | | | | | | | | | | | | | | | |
| **Swift** | | | | | | | | | | | | | | | |
| 1.3 (68 kw) | 2005.02-2012.06 | 5MT | F | L | Hatchback FWD M13A | Chassis no.:TSM,Vehicle Production Country:Hungary,Date to:2007.04 | GCI57053 | Inner Joint | | 22 | 28 | 35 | 54.5 | 82 | |
| | 2005.02-2012.06 | 5MT | F | L | Hatchback FWD M13A | Chassis no.:TSM,Vehicle Production Country:Hungary,Date from:2007.05 | GCI57082 | Inner Joint | | 22 | 28 | 35 | 54.5 | 82 | |
| | 2005.02-2012.06 | 5MT | F | R | Hatchback FWD M13A | Chassis no.:JSA,Vehicle Production Country:Japan | GCI57085 | Inner Joint | | 22 | 28 | 40 | 54.5 | 82 | |
| | 2005.02-2012.06 | 5MT | F | R | Hatchback FWD M13A | Chassis no.:TSM,Vehicle Production Country:Hungary,Date from:2007.05 | GCI81085 | Inner Joint | | 22 | 28 | 40 | 54.5 | 82 | |
| | 2005.02-2012.06 | AT | F | L | Hatchback FWD M13A | | GDS57004 | Drive Shaft | 43T | 25 | 22 | 49 | 82 | 635 | |
| | 2005.02-2012.06 | AT | F | R | Hatchback FWD M13A | Chassis no.:TSM,Vehicle Production Country:Hungary | GDS99080 | Drive Shaft | 43T | 25 | 22 | 49 | 82 | 641.5 | |
| | 2005.02-2012.06 | AT | F | L/R | Hatchback FWD M13A | | GCO57042 | Outer Joint | 43T | 25 | 29 | 49 | 82 | 61 | I |
| | 2005.02-2012.06 | AT | F | L | Hatchback FWD M13A | | GCI57024 | Inner Joint | | 22 | 28 | 38 | 59.5 | 85 | |
| | 2005.02-2012.06 | Semi-AT | F | L | Hatchback FWD M13A | | GDS57168 | Drive Shaft | | 25 | 22 | 49 | 82 | 630 | |
| | 2005.02-2012.06 | Semi-AT | F | R | Hatchback FWD M13A | | GDS57169 | Drive Shaft | | 25 | 22 | 49 | 82 | 641.5 | |
| | 2008.09-2010.12 | 5AT | F | R | Hatchback FWD M13A | Chassis no.:TSM,Vehicle Production Country:Hungary | GDS99080 | Drive Shaft | 43T | 25 | 22 | 49 | 82 | 641.5 | |
| | 2008.09-2010.12 | 5MT | F | R | Hatchback FWD M13A | Chassis no.:TSM,Vehicle Production Country:Hungary,Date from:2007.05 | GCI81085 | Inner Joint | | 22 | 28 | 40 | 54.5 | 82 | |
| | 2008.09-2010.12 | AT | F | L | Hatchback FWD M13A | | GDS57004 | Drive Shaft | 43T | 25 | 22 | 49 | 82 | 635 | |
| | 2008.09-2010.12 | AT | F | L | Hatchback FWD M13A | | GCI57024 | Inner Joint | | 22 | 28 | 38 | 59.5 | 85 | |
| | 2008.09-2010.12 | AT/MT | F | L/R | Hatchback FWD M13A | Chassis Number:JSA;Vehicle Production Country:Japan | GCO57042 | Outer Joint | 43T | 25 | 29 | 49 | 82 | 61 | I |
| | 2008.09-2010.12 | AT/MT | F | R | Hatchback FWD M13A | | GCI57085 | Inner Joint | | 22 | 28 | 40 | 54.5 | 82 | |
| | 2008.09-2010.12 | MT | F | L | Hatchback FWD M13A | Chassis Number:TSM;Vehicle Production Country:Hungary | GDS57086 | Drive Shaft | 43T | 25 | 22 | 49 | 82 | 652 | |
| | 2008.09-2010.12 | MT | F | R | Hatchback FWD M13A | | GDS57183 | Drive Shaft | 43T | 25 | 22 | 49 | 82 | 894 | |
| | 2008.09-2010.12 | MT | F | L | Hatchback FWD M13A | Chassis Number:TSM;Vehicle Production Country:Hungary | GCO57042 | Outer Joint | 43T | 25 | 29 | 49 | 82 | 61 | I |
| | 2008.09-2010.12 | MT | F | L | Hatchback FWD M13A | Chassis Number:TSM;Vehicle Production Country:Hungary | GCI57053 | Inner Joint | | 22 | 28 | 35 | 54.5 | 82 | |
| 1.3 (74 kw) | 1989.03-2001.05 | AT | F | L/R | Hatchback FWD G13B | | GCO57011 | Outer Joint | | 25 | 22 | 49 | 76.5 | 73 | M |
| | 1989.03-2001.05 | AT | F | L | Hatchback FWD G13B | | GCI99099 | Inner Joint | | 22 | 19 | 35 | 51.5 | 86.5 | |
| | 1989.03-2001.05 | AT/MT | F | L/R | Hatchback FWD G13B | inner teeth of wheel side:19 | GCO57007 | Outer Joint | | 23 | 19 | 49 | 92 | 56.5 | M |
| | 1989.03-2001.05 | MT | F | L | Hatchback FWD G13B | | GDS99095 | Drive Shaft | | 23 | 22 | 49 | 92 | 606 | |
| | 1989.03-2001.05 | | F | | Hatchback FWD G13B | | GCO57018 | Outer Joint | | 25 | 22 | 49 | 77 | 73 | M |
| 1.5 (74 kw) | 2005.02-2011.01 | AT | F | L | Hatchback 4WD M15A | For Engine Code:M15A,Type:1/2,Vehicle Production Country:Hungary | GDS57004 | Drive Shaft | 43T | 25 | 22 | 49 | 82 | 635 | |
| | 2005.02-2011.01 | AT/MT | F | R | Hatchback 4WD M15A | For Engine Code:M15A,Type:1/2,Vehicle Production Country:Hungary | GDS99080 | Drive Shaft | 43T | 25 | 22 | 49 | 82 | 641.5 | |
| 1.5 (75 kw) | 2005.02-2011.12 | 4AT/5MT | F | R | Hatchback FWD M15A | Chassis Number:TSM,Vehicle Production Country:Hungary,Transmission:4AT,Chassis no.:TSM,Vehicle Production Country:Hungary | GDS99080 | Drive Shaft | 43T | 25 | 22 | 49 | 82 | 641.5 | |
| | 2005.02-2011.12 | 5MT | F | L | Hatchback FWD M15A | Chassis no.:JSA,Vehicle Production Country:Japan | GDS57083 | Drive Shaft | 43T | 25 | 22 | 49 | 82 | 642 | |
| | 2005.02-2011.12 | AT | F | L | Hatchback FWD M15A | | GDS57004 | Drive Shaft | 43T | 25 | 22 | 49 | 82 | 635 | |
| | 2005.02-2011.12 | AT | F | L | Hatchback FWD M15A | | GCO57042 | Outer Joint | 43T | 25 | 29 | 49 | 82 | 61 | I |
| | 2005.02-2011.12 | AT | F | L | Hatchback FWD M15A | | GCI57024 | Inner Joint | | 22 | 28 | 38 | 59.5 | 85 | |
| | 2005.02-2011.12 | AT/MT | F | R | Hatchback FWD M15A | | GDS57169 | Drive Shaft | | 25 | 22 | 49 | 82 | 641.5 | |
| | 2005.02-2011.12 | AT/MT | F | L/R | Hatchback FWD M15A | vehicle production country:Hungary | GCO57095 | Outer Joint | 43T | 25 | 29 | 49 | 82.5 | 57 | M |
| 1.6 (68 kw) | 1989.03-1996.10 | | F | | Hatchback 4WD G16B | | GCO57018 | Outer Joint | | 25 | 22 | 49 | 77 | 73 | M |
| | 1990.01-2001.05 | AT/MT | F | L/R | Saloon 4WD G16B | | GCO57003 | Outer Joint | | 23 | 22 | 49 | 92 | 67 | M |
| | 1990.01-2001.05 | AT/MT | F | L/R | Saloon 4WD G16B | | GCO57011 | Outer Joint | | 25 | 22 | 49 | 76.5 | 73 | M |
| | 1990.01-2001.05 | | F | | Saloon 4WD G16B | | GCO57018 | Outer Joint | | 25 | 22 | 49 | 77 | 73 | M |
| | 1990.01-2001.05 | AT | F | L/R | Saloon FWD G16B | | GCO57003 | Outer Joint | | 23 | 22 | 49 | 92 | 67 | M |
| | 1990.01-2001.05 | MT | F | L/R | Saloon FWD G16B | | GCO57011 | Outer Joint | | 25 | 22 | 49 | 76.5 | 73 | M |
| | 1990.01-2001.05 | | F | | Saloon FWD G16B | | GCO57018 | Outer Joint | | 25 | 22 | 49 | 77 | 73 | M |
| 1.6 (92 kw) | 2006.05-2015.12 | 4AT/5MT | F | R | Hatchback FWD M16A | Chassis Number:TSM,Vehicle Production Country:Hungary | GCI57137 | Inner Joint | | 26 | 29 | 40 | | 116.5 | |
| | 2006.05-2015.12 | 5MT | F | L | Hatchback FWD M16A | | GCO57117 | Outer Joint | | 28 | 29 | 58 | 85 | 62 | I |
| | 2006.05-2015.12 | AT/MT | F | L/R | Hatchback FWD M16A | | GCO57092 | Outer Joint | | 28 | 29 | 58 | 86.5 | 63 | I |
| | 2006.05-2015.12 | MT | F | R | Hatchback FWD M16A | Chassis Number:JSA;Vehicle Production Country:Japan | GCO57121 | Outer Joint | | 28 | 29 | 58 | 85 | 62 | I |
| 1.6 (100 kw) | 2012.01-2017.04 | 6MT | F | L | Hatchback FWD M16A | | GDS57293 | Drive Shaft | | 28 | 26 | 58 | 85 | 627 | |
| | 2012.01-2017.04 | 6MT | F | L/R | Hatchback FWD M16A | | GCO57180 | Outer Joint | | 28 | 23 | 58 | 85 | 64 | M |
| | 2012.01-2017.04 | 6MT | F | L | Hatchback FWD M16A | | GCI57135 | Inner Joint | | 26 | 22 | 38 | 58.5 | 93.5 | |
| | 2012.01-2017.04 | MT | F | R | Hatchback FWD M16A | | GDS84283 | Drive Shaft | | 28 | 26 | 58 | 85 | 580 | |
| | 2012.01-2017.04 | MT | F | R | Hatchback FWD M16A | | GCI54010 | Inner Joint | | 26 | 22 | 40 | | 115 | |
| **SX4** | | | | | | | | | | | | | | | |
| 1.5 (73 kw) | 2006.06-2010.07 | 5MT | F | L | Hatchback FWD M15A | Chassis no. from:TSMEYA11S00100001/TSMEYA11S00300001 | GDS57247 | Drive Shaft | | 28 | 26 | 58 | 85 | 612 | |
| | 2006.06-2010.07 | 5MT | F | L | Hatchback FWD M15A | Chassis no. from:TSMEYA11S00450001 | GDS57292 | Drive Shaft | | 28 | 26 | 58 | 85 | 615 | |
| | 2006.06-2010.07 | MT | F | L | Hatchback FWD M15A | | GCO57121 | Outer Joint | | 28 | 29 | 58 | 85 | 62 | I |
| | 2006.06-2010.07 | MT | F | L | Hatchback FWD M15A | | GCI57049 | Inner Joint | | 26 | 29 | 38 | 58 | 98 | |
| | 2006.06-2010.07 | | F | R | Hatchback FWD M15A | | GDS81324 | Drive Shaft | | 28 | 26 | 58 | 85 | 960 | |
| | 2006.06-2010.07 | | F | L/R | Hatchback FWD M15A | | GCO57140 | Outer Joint | | 28 | 29 | 58 | 85 | 62.5 | I |
| 1.5 (81 kw) | 2007.07-2015.12 | 4AT/5MT | F | L | Hatchback FWD M15A | Chassis no. from:TSMEYA11S00100001/TSMEYA11S00300001 | GDS57247 | Drive Shaft | | 28 | 26 | 58 | 85 | 612 | |
| | 2007.07-2015.12 | 4AT/5MT | F | L | Hatchback FWD M15A | Chassis no. from:TSMEYA11S00450001 | GCI57173 | Inner Joint | | 26 | 29 | 38 | 58.5 | 98.5 | |
| | 2007.07-2015.12 | 5MT | F | L | Hatchback FWD M15A | Chassis no. from:TSMEYA11S00450001 | GDS57292 | Drive Shaft | | 28 | 26 | 58 | 85 | 615 | |
| | 2007.07-2015.12 | MT | F | R | Hatchback FWD M15A | Date From:2008.01 | GDS81324 | Drive Shaft | | 28 | 26 | 58 | 85 | 960 | |
| 1.5 (82 kw) | 2010.07- | MT | F | R | Hatchback 4WD M15A | Date From:2011.01 | GDS81324 | Drive Shaft | | 28 | 26 | 58 | 85 | 960 | |
| | 2010.07- | MT | F | L/R | Hatchback 4WD M15A | | GCO57210 | Outer Joint | | 28 | 29 | 58 | 85 | 61.5 | I |
| | 2010.07- | 4AT/5MT | F | L | Hatchback FWD M15A | | GDS57292 | Drive Shaft | | 28 | 26 | 58 | 85 | 615 | |
| | 2010.07- | 4AT/5MT | F | L | Hatchback FWD M15A | | GCO57210 | Outer Joint | | 28 | 29 | 58 | 85 | 61.5 | I |

| | YEAR | TRANSM. | F/R | L/R | BODY STYLE & DRIVE TYPE & ENGINE | REMARKS | G-AP Ref. | PRODUCT | ABS | Technical Specifications | | | | | |
|---|---|---|---|---|---|---|---|---|---|---|---|---|---|---|---|
| | | | | | | | | | | A | B | C | H | L | P |
| **SUZUKI** | | | | | | | | | | | | | | | |
| **SX4** | | | | | | | | | | | | | | | |
| 1.5 (82 kw) | 2010.07- | 4AT/5MT | F | L | Hatchback FWD M15A | | GCI57173 | Inner Joint | | 26 | 29 | 38 | 58.5 | 98.5 | |
| | 2010.07- | MT | F | L | Hatchback FWD M15A | | GDS57247 | Drive Shaft | | 28 | 26 | 58 | 85 | 612 | |
| | 2010.07- | MT | F | R | Hatchback FWD M15A | Date From:2011.01 | GDS81324 | Drive Shaft | | 28 | 26 | 58 | 85 | 960 | |
| | 2010.07- | MT | F | L | Hatchback FWD M15A | | GCO57121 | Outer Joint | | 28 | 29 | 58 | 85 | 62 | I |
| | 2010.07- | MT | F | L | Hatchback FWD M15A | | GCI57049 | Inner Joint | | 26 | 29 | 38 | 58 | 98 | |
| 1.6 (66 kw) | 2007.04- | 5MT | F | L | Hatchback FWD 9HX | | GDS84130 | Drive Shaft | | 28 | 28 | 58 | 85.5 | 602 | |
| | 2007.04- | 5MT | F | L/R | Hatchback FWD 9HX | | GCO82486 | Outer Joint | | 28 | 35 | 58 | 85.5 | 65 | I |
| | 2007.04- | 5MT | F | L | Hatchback FWD 9HX | | GCI82525 | Inner Joint | | 28 | 33 | 42 | 70.5 | 102 | |
| | 2007.04- | 5MT | F | R | Hatchback FWD 9HX | | GCI57168 | Inner Joint | | 26 | 33 | 40 | | 125 | |
| | 2007.04- | MT | F | R | Hatchback FWD 9HX | | GDS56260 | Drive Shaft | | 28 | 26 | 58 | 85.5 | 636 | |
| 1.6 (79 kw) | 2006.06- | 5MT | F | L | Hatchback 4WD M16A | Chassis no: TSM;Chassis no. from TSMEY62-1500-0000-1TSMEY62-1500-0000001 Vehicle Production Country:Hungary | GDS57247 | Drive Shaft | | 28 | 26 | 58 | 85 | 612 | |
| | 2006.06- | 5MT | F | L | Hatchback 4WD M16A | Chassis no: TSM;Chassis no. from TSMEY62-1500-0000-1TSMEY62-1500-0000001 Vehicle Production Country:Hungary | GDS57292 | Drive Shaft | | 28 | 26 | 58 | 85 | 615 | |
| | 2006.06- | 5MT | F | L/R | Hatchback 4WD M16A | | GCO57092 | Outer Joint | | 28 | 29 | 58 | 86.5 | 63 | I |
| | 2006.06- | 5MT | F | R | Hatchback 4WD M16A | | GCI57137 | Inner Joint | | 26 | 29 | 40 | | 116.5 | |
| | 2006.06- | | F | R | Hatchback 4WD M16A | | GDS57290 | Drive Shaft | | 28 | 26 | 58 | 85 | 698 | |
| | 2006.06- | | F | L | Hatchback 4WD M16A | | GCO57140 | Outer Joint | | 28 | 29 | 58 | 85 | 62.5 | I |
| | 2006.06- | 5MT | R | L | Hatchback 4WD M16A | | GDS14074 | Drive Shaft | | 24 | | 45 | 89 | 637 | |
| | 2006.06- | 5MT | R | R | Hatchback 4WD M16A | | GDS14073 | Drive Shaft | | 24 | | 45 | 89 | 731 | |
| | 2006.06- | 5MT | R | L/R | Hatchback 4WD M16A | | GCO14101 | Outer Joint | | 24 | 26 | 45 | 89 | 62.5 | I |
| | 2006.06- | 5MT | R | L/R | Hatchback 4WD M16A | | GCI57142 | Inner Joint | | | 26 | | | 75.5 | |
| | 2006.06- | 4AT | F | L | Hatchback FWD M16A | | GDS82536 | Drive Shaft | | 28 | 22 | 58 | 85 | 615 | |
| | 2006.06- | 5MT | F | L | Hatchback FWD M16A | Chassis no: TSM;Chassis no. from TSMEY62-1500-0000-1TSMEY62-1500-0000001 Vehicle Production Country:Hungary | GDS57247 | Drive Shaft | | 28 | 26 | 58 | 85 | 612 | |
| | 2006.06- | 5MT | F | L | Hatchback FWD M16A | Chassis no: TSM;Chassis no. from TSMEY62-1500-0000-1TSMEY62-1500-0000001 Vehicle Production Country:Hungary | GDS57292 | Drive Shaft | | 28 | 26 | 58 | 85 | 615 | |
| | 2006.06- | AT | F | L/R | Hatchback FWD M16A | 6 balls | GCO57140 | Outer Joint | | 28 | 29 | 58 | 85 | 62.5 | I |
| | 2006.06- | AT | F | L | Hatchback FWD M16A | | GCI81865 | Inner Joint | | 22 | 29 | 38 | 59 | 93 | |
| | 2006.06- | AT | F | R | Hatchback FWD M16A | | GCI57159 | Inner Joint | | 26 | 29 | 40 | | 116.5 | |
| | 2006.06- | AT/MT | F | L/R | Hatchback FWD M16A | 6 balls | GCO57092 | Outer Joint | | 28 | 29 | 58 | 86.5 | 63 | I |
| | 2006.06- | MT | F | R | Hatchback FWD M16A | | GDS57290 | Drive Shaft | | 28 | 26 | 58 | 85 | 698 | |
| | 2006.06- | MT | F | L | Hatchback FWD M16A | 6 balls | GCO57121 | Outer Joint | | 28 | 29 | 58 | 85 | 62 | I |
| | 2006.06- | MT | F | R | Hatchback FWD M16A | | GCO57140 | Outer Joint | | 28 | 29 | 58 | 85 | 62.5 | I |
| | 2006.06- | MT | F | R | Hatchback FWD M16A | 8 balls | GCO57210 | Outer Joint | | 28 | 29 | 58 | 85 | 61.5 | I |
| | 2006.06- | MT | F | R | Hatchback FWD M16A | | GCI57137 | Inner Joint | | 26 | 29 | 40 | | 116.5 | |
| | 2006.06-2012.12 | 5MT | F | L | Hatchback FWD M16A | Chassis no: TSM;Chassis no. from TSMEY62-1500-0000-1TSMEY62-1500-0000001 Vehicle Production Country:Hungary | GDS57247 | Drive Shaft | | 28 | 26 | 58 | 85 | 612 | |
| | 2006.06-2012.12 | 5MT | F | L | Hatchback FWD M16A | Chassis no: TSM;Chassis no. from TSMEY62-1500-0000-1TSMEY62-1500-0000001 Vehicle Production Country:Hungary | GDS57292 | Drive Shaft | | 28 | 26 | 58 | 85 | 615 | |
| | 2006.06-2012.12 | MT | F | R | Hatchback FWD M16A | | GDS57290 | Drive Shaft | | 28 | 26 | 58 | 85 | 698 | |
| | 2006.06-2012.12 | MT | F | R | Hatchback FWD M16A | | GCO57210 | Outer Joint | | 28 | 29 | 58 | 85 | 61.5 | I |
| | 2006.06-2012.12 | MT | F | L/R | Hatchback FWD M16A | | GCO57140 | Outer Joint | | 28 | 29 | 58 | 85 | 62.5 | I |
| | 2006.06-2012.12 | MT | F | R | Hatchback FWD M16A | | GCI57137 | Inner Joint | | 26 | 29 | 40 | | 116.5 | |
| | 2007.10- | AT | F | L | Saloon FWD M16A | | GDS82536 | Drive Shaft | | 28 | 22 | 58 | 85 | 615 | |
| | 2007.10- | AT | F | L | Saloon FWD M16A | | GCO57210 | Outer Joint | | 28 | 29 | 58 | 85 | 61.5 | I |
| | 2007.10- | AT | F | L | Saloon FWD M16A | | GCI81865 | Inner Joint | | 22 | 29 | 38 | 59 | 93 | |
| | 2007.10- | AT/MT | F | R | Saloon FWD M16A | | GCI57159 | Inner Joint | | 26 | 29 | 40 | | 116.5 | |
| | 2007.10- | MT | F | L | Saloon FWD M16A | | GDS57247 | Drive Shaft | | 28 | 26 | 58 | 85 | 612 | |
| | 2007.10- | MT | F | R | Saloon FWD M16A | | GDS57290 | Drive Shaft | | 28 | 26 | 58 | 85 | 698 | |
| | 2007.10- | MT | F | L | Saloon FWD M16A | | GCO57121 | Outer Joint | | 28 | 29 | 58 | 85 | 62 | I |
| | 2007.10- | MT | F | R | Saloon FWD M16A | | GCO57210 | Outer Joint | | 28 | 29 | 58 | 85 | 61.5 | I |
| 1.6 (82 kw) | 2009.07- | 5MT | F | L | Hatchback 4WD M16A | Chassis no: TSM;Chassis no. from TSMEY62-1500-0000-1TSMEY62-1500-0000001 Vehicle Production Country:Hungary | GDS57247 | Drive Shaft | | 28 | 26 | 58 | 85 | 612 | |
| | 2009.07- | 5MT | F | L | Hatchback 4WD M16A | Chassis no: TSM;Chassis no. from TSMEY62-1500-0000-1TSMEY62-1500-0000001 Vehicle Production Country:Hungary | GDS57292 | Drive Shaft | | 28 | 26 | 58 | 85 | 615 | |
| | 2009.07- | AT | F | L | Hatchback 4WD M16A | vehicle production country:Japan;Chassis Number:JSA | GDS82536 | Drive Shaft | | 28 | 22 | 58 | 85 | 615 | |
| | 2009.07- | AT | F | L | Hatchback 4WD M16A | vehicle production country:Japan;Chassis Number:JSA;8 balls | GCO57210 | Outer Joint | | 28 | 29 | 58 | 85 | 61.5 | I |
| | 2009.07- | AT | F | L/R | Hatchback 4WD M16A | 6 balls,without Rim protector | GCO57140 | Outer Joint | | 28 | 29 | 58 | 85 | 62.5 | I |
| | 2009.07- | AT | F | L | Hatchback 4WD M16A | vehicle production country:Hungary;Chassis Number:TSM;vehicle production country:Japan;Chassis Number:JSA | GCI81865 | Inner Joint | | 22 | 29 | 38 | 59 | 93 | |
| | 2009.07- | AT/MT | F | R | Hatchback 4WD M16A | Chassis Number:TSM;Vehicle Production Country:Hungary;Chassis Number:JSA;Vehicle Production Country:Japan;T | GCI57159 | Inner Joint | | 26 | 29 | 40 | | 116.5 | |
| | 2009.07- | MT | F | R | Hatchback 4WD M16A | vehicle production country:Hungary;Chassis Number:TSM | GDS57290 | Drive Shaft | | 28 | 26 | 58 | 85 | 698 | |
| | 2009.07- | MT | F | L | Hatchback 4WD M16A | Chassis Number:TSM;Vehicle Production Country:Hungary;;DOJ | GCI57173 | Inner Joint | | 26 | 29 | 38 | 58.5 | 98.5 | |
| | 2009.07- | MT | F | R | Hatchback 4WD M16A | vehicle production country:Hungary;Chassis Number:TSM | GCI57137 | Inner Joint | | 26 | 29 | 40 | | 116.5 | |
| | 2009.07- | AT/MT | R | L | Hatchback 4WD M16A | vehicle production country:Hungary;Chassis Number:TSM | GDS14074 | Drive Shaft | | 24 | | 45 | 89 | 637 | |
| | 2009.07- | AT/MT | R | R | Hatchback 4WD M16A | vehicle production country:Hungary;Chassis Number:TSM | GDS14073 | Drive Shaft | | 24 | | 45 | 89 | 731 | |
| | 2009.07- | AT/MT | R | R | Hatchback 4WD M16A | Chassis Number:TSM;Vehicle Production Country:Hungary | GCO14101 | Outer Joint | | 24 | 26 | 45 | 89 | 62.5 | I |
| | 2009.07- | AT/MT | R | L/R | Hatchback 4WD M16A | vehicle production country:Hungary;Chassis Number:TSM;DOJ | GCI57142 | Inner Joint | | | 26 | | | 75.5 | |
| | 2010.11-2015.12 | 5MT | F | L | Hatchback FWD M16A | Chassis no: TSM;Chassis no. from TSMEY62-1500-0000-1TSMEY62-1500-0000001 Vehicle Production Country:Hungary | GDS57247 | Drive Shaft | | 28 | 26 | 58 | 85 | 612 | |
| | 2010.11-2015.12 | 5MT | F | L | Hatchback FWD M16A | Chassis no: TSM;Chassis no. from TSMEY62-1500-0000-1TSMEY62-1500-0000001 Vehicle Production Country:Hungary | GDS57292 | Drive Shaft | | 28 | 26 | 58 | 85 | 615 | |
| | 2010.11-2015.12 | AT | F | L | Hatchback FWD M16A | vehicle production country:Japan;Chassis Number:JSA | GDS82536 | Drive Shaft | | 28 | 22 | 58 | 85 | 615 | |
| | 2010.11-2015.12 | AT | F | L | Hatchback FWD M16A | Vehicle Production Country:Japan | GCO57140 | Outer Joint | | 28 | 29 | 58 | 85 | 62.5 | I |
| | 2010.11-2015.12 | AT | F | L | Hatchback FWD M16A | vehicle production country:Japan;Chassis Number:JSA | GCO57210 | Outer Joint | | 28 | 29 | 58 | 85 | 61.5 | I |

| | YEAR | TRANSM. | F/R | L/R | BODY STYLE & DRIVE TYPE & ENGINE | REMARKS | G-AP Ref. | PRODUCT | ABS | Technical Specifications | | | | | |
|---|---|---|---|---|---|---|---|---|---|---|---|---|---|---|---|
| | | | | | | | | | | A | B | C | H | L | P |
| **SUZUKI** | | | | | | | | | | | | | | | |
| **SX4** | | | | | | | | | | | | | | | |
| 1.6 (82 kw) | 2010.11-2015.12 | AT | F | L | Hatchback FWD M16A | vehicle production country:Japan;Chassis Number:JSA;vehicle production country:Hungary;Chassis Number:TSM | GCI81865 | Inner Joint | | 22 | 29 | 38 | 59 | 93 | |
| | 2010.11-2015.12 | AT/MT | F | R | Hatchback FWD M16A | Chassis Number:TSM;Vehicle Production Country:Hungary;Chassis Number:JSA;Vehicle Production Country:Japan | GCI57159 | Inner Joint | | 26 | 29 | 40 | | 116.5 | |
| | 2010.11-2015.12 | MT | F | R | Hatchback FWD M16A | | GDS57290 | Drive Shaft | | 28 | 26 | 58 | 85 | 698 | |
| | 2010.11-2015.12 | MT | F | L | Hatchback FWD M16A | Vehicle Production Country:Hungary | GCI57173 | Inner Joint | | 26 | 29 | 38 | 58.5 | 98.5 | |
| 1.6 (88 kw) | 2007.10- | 4AT | F | L | Saloon FWD M16A | | GDS82536 | Drive Shaft | | 28 | 22 | 58 | 85 | 615 | |
| | 2007.10- | AT | F | L | Saloon FWD M16A | | GCI81865 | Inner Joint | | 22 | 29 | 38 | 59 | 93 | |
| | 2007.10- | AT/MT | F | L/R | Saloon FWD M16A | 6 balls,without Rim protector | GCO57140 | Outer Joint | | 28 | 29 | 58 | 85 | 62.5 | I |
| | 2007.10- | AT/MT | F | R | Saloon FWD M16A | TJ | GCI57159 | Inner Joint | | 26 | 29 | 40 | | 116.5 | |
| | 2007.10- | MT | F | L | Saloon FWD M16A | Date to:2009.07 | GDS57247 | Drive Shaft | | 28 | 26 | 58 | 85 | 612 | |
| | 2007.10- | MT | F | R | Saloon FWD M16A | | GDS57290 | Drive Shaft | | 28 | 26 | 58 | 85 | 698 | |
| | 2007.10- | MT | F | L | Saloon FWD M16A | 8 balls | GCO57210 | Outer Joint | | 28 | 29 | 58 | 85 | 61.5 | I |
| | 2009.07- | 5MT | F | L | Hatchback 4WD M16A | Chassis no.:TSM;Chassis no. from:TSMF1N2-1000001TSMF1N2-1010000;Vehicle Production Country:Hungary | GDS57247 | Drive Shaft | | 28 | 26 | 58 | 85 | 612 | |
| | 2009.07- | 5MT | F | L | Hatchback 4WD M16A | Chassis no.:TSM;Chassis no. from:TSMF1N2-1000001TSMF1N2-1000000;Vehicle Production Country:Hungary | GDS57292 | Drive Shaft | | 28 | 26 | 58 | 85 | 615 | |
| | 2009.07- | 5MT | F | R | Hatchback 4WD M16A | | GDS57290 | Drive Shaft | | 28 | 26 | 58 | 85 | 698 | |
| | 2009.07- | AT | F | L | Hatchback 4WD M16A | | GDS82536 | Drive Shaft | | 28 | 22 | 58 | 85 | 615 | |
| | 2009.07- | AT | F | L | Hatchback 4WD M16A | | GCO57210 | Outer Joint | | 28 | 29 | 58 | 85 | 61.5 | I |
| | 2009.07- | AT | F | L | Hatchback 4WD M16A | | GCI81865 | Inner Joint | | 22 | 29 | 38 | 59 | 93 | |
| | 2009.07- | AT/MT | F | L/R | Hatchback 4WD M16A | | GCO57092 | Outer Joint | | 28 | 29 | 58 | 86.5 | 63 | I |
| | 2009.07- | AT/MT | F | R | Hatchback 4WD M16A | | GCI57159 | Inner Joint | | 26 | 29 | 40 | | 116.5 | |
| | 2009.07- | MT | F | L | Hatchback 4WD M16A | Chassis Number:TSM;Vehicle Production Country:Hungary | GCI57173 | Inner Joint | | 26 | 29 | 38 | 58.5 | 98.5 | |
| | 2009.07- | MT | R | L | Hatchback 4WD M16A | Chassis Number:TSM;Vehicle Production Country:Hungary | GDS14074 | Drive Shaft | | 24 | | 45 | 89 | 637 | |
| | 2009.07- | MT | R | R | Hatchback 4WD M16A | Chassis Number:TSM;Vehicle Production Country:Hungary | GDS14073 | Drive Shaft | | 24 | | 45 | 89 | 731 | |
| | 2009.07- | MT | R | L/R | Hatchback 4WD M16A | Chassis Number:TSM;Vehicle Production Country:Hungary | GCO14101 | Outer Joint | | 24 | 26 | 45 | 89 | 62.5 | I |
| | 2009.07- | AT | F | L | Hatchback FWD M16A | | GDS82536 | Drive Shaft | | 28 | 22 | 58 | 85 | 615 | |
| | 2009.07- | AT | F | L | Hatchback FWD M16A | | GCO57210 | Outer Joint | | 28 | 29 | 58 | 85 | 61.5 | I |
| | 2009.07- | AT | F | L/R | Hatchback FWD M16A | Chassis Number:TSM;Vehicle Production Country:Hungary | GCO57140 | Outer Joint | | 28 | 29 | 58 | 85 | 62.5 | I |
| | 2009.07- | AT | F | L/R | Hatchback FWD M16A | Chassis Number:JSA;Vehicle Production Country:Japan | GCO57140 | Outer Joint | | 28 | 29 | 58 | 85 | 62.5 | I |
| | 2009.07- | AT | F | L | Hatchback FWD M16A | | GCI81865 | Inner Joint | | 22 | 29 | 38 | 59 | 93 | |
| | 2009.07- | AT/MT | F | L/R | Hatchback FWD M16A | | GCO57092 | Outer Joint | | 28 | 29 | 58 | 86.5 | 63 | I |
| | 2009.07- | AT/MT | F | R | Hatchback FWD M16A | | GCI57159 | Inner Joint | | 26 | 29 | 40 | | 116.5 | |
| | 2009.07- | MT | F | L | Hatchback FWD M16A | | GDS57247 | Drive Shaft | | 28 | 26 | 58 | 85 | 612 | |
| | 2009.07- | MT | F | L | Hatchback FWD M16A | Model:SX4 Classic;Chassis no.:TSM;Vehicle Production Country:Hungary | GDS57292 | Drive Shaft | | 28 | 26 | 58 | 85 | 615 | |
| | 2009.07- | MT | F | R | Hatchback FWD M16A | Model:SX4 Classic;Chassis no.:TSM;Vehicle Production Country:Hungary | GDS57290 | Drive Shaft | | 28 | 26 | 58 | 85 | 698 | |
| | 2009.07- | MT | F | R | Hatchback FWD M16A | Chassis Number:JSA;Vehicle Production Country:Japan | GCO57140 | Outer Joint | | 28 | 29 | 58 | 85 | 62.5 | I |
| | 2009.07- | MT | F | L | Hatchback FWD M16A | Chassis Number:TSM;Vehicle Production Country:Hungary | GCI57173 | Inner Joint | | 26 | 29 | 38 | 58.5 | 98.5 | |
| 1.9 (88 kw) | 2006.06- | 6MT | F | L | Hatchback 4WD D19AA | Date to:2007.06 | GDS83780 | Drive Shaft | | 28 | 28 | 58 | 85.5 | 597 | |
| | 2006.06- | 6MT | F | L | Hatchback 4WD D19AA | Date from:2007.07 | GDS84130 | Drive Shaft | | 28 | 28 | 58 | 85.5 | 602 | |
| | 2006.06- | 6MT | F | R | Hatchback 4WD D19AA | Date from:2007.07 | GDS57290 | Drive Shaft | | 28 | 26 | 58 | 85 | 698 | |
| | 2006.06- | 6MT | F | R | Hatchback 4WD D19AA | Date to:2007.06 | GDS83835 | Drive Shaft | | 28 | 26 | 58 | 85.5 | 696 | |
| | 2006.06- | 6MT | F | L/R | Hatchback 4WD D19AA | | GCO82486 | Outer Joint | | 28 | 35 | 58 | 85.5 | 65 | I |
| | 2006.06- | 6MT | F | L | Hatchback 4WD D19AA | Date to:2007.06 | GCI82369 | Inner Joint | | 28 | 33 | 42 | 70.5 | 101.5 | |
| | 2006.06- | 6MT | F | R | Hatchback 4WD D19AA | Date to:2007.06 | GCI82388 | Inner Joint | | 26 | 33 | 40 | | 120.5 | |
| | 2006.06- | 6MT | F | L/R | Hatchback 4WD D19AA | Date from:2007.07 | GCI82525 | Inner Joint | | 28 | 33 | 42 | 70.5 | 102 | |
| | 2006.06- | 6MT | R | L | Hatchback 4WD D19AA | | GDS14074 | Drive Shaft | | 24 | | 45 | 89 | 637 | |
| | 2006.06- | 6MT | R | R | Hatchback 4WD D19AA | | GDS14073 | Drive Shaft | | 24 | | 45 | 89 | 731 | |
| | 2006.06- | 6MT | R | L/R | Hatchback 4WD D19AA | | GCO14101 | Outer Joint | | 24 | 26 | 45 | 89 | 62.5 | I |
| | 2006.06- | 6MT | R | L/R | Hatchback 4WD D19AA | | GCI57142 | Inner Joint | | | 26 | | | 75.5 | |
| | 2006.06- | 6MT | F | L | Hatchback FWD D19AA | Chassis no. to:197057 | GDS83780 | Drive Shaft | | 28 | 28 | 58 | 85.5 | 597 | |
| | 2006.06- | 6MT | F | L | Hatchback FWD D19AA | Chassis no. from:197058 | GDS84130 | Drive Shaft | | 28 | 28 | 58 | 85.5 | 602 | |
| | 2006.06- | 6MT | F | R | Hatchback FWD D19AA | Chassis no. from:197058 | GDS57281 | Drive Shaft | | 28 | 26 | 58 | 85 | 567 | |
| | 2006.06- | 6MT | F | R | Hatchback FWD D19AA | Chassis no. to:197057 | GDS84111 | Drive Shaft | | 28 | 26 | 58 | 85.5 | 567 | |
| | 2006.06- | 6MT | F | R | Hatchback FWD D19AA | Chassis no. from:197058 | GCO99310 | Outer Joint | | 28 | 35 | 58 | 85 | 65 | I |
| | 2006.06- | 6MT | F | L/R | Hatchback FWD D19AA | Chassis no. to:197057;Chassis no. from:197058 | GCO82486 | Outer Joint | | 28 | 35 | 58 | 85.5 | 65 | I |
| | 2006.06- | 6MT | F | L | Hatchback FWD D19AA | Chassis no. to:197057 | GCI82369 | Inner Joint | | 28 | 33 | 42 | 70.5 | 101.5 | |
| | 2006.06- | 6MT | F | R | Hatchback FWD D19AA | Chassis no. from:197058 | GCI57168 | Inner Joint | | 26 | 33 | 40 | | 125 | |
| | 2006.06- | 6MT | F | R | Hatchback FWD D19AA | Chassis no. to:197057 | GCI82388 | Inner Joint | | 26 | 33 | 40 | | 120.5 | |
| | 2006.06- | 6MT | F | L/R | Hatchback FWD D19AA | Chassis no. from:197058 | GCI82525 | Inner Joint | | 28 | 33 | 42 | 70.5 | 102 | |
| 2.0 (99 kw) | 2009.07- | MT | F | L | Hatchback 4WD D20AA | | GDS57299 | Drive Shaft | | 28 | 28 | 58 | 85 | 598 | |
| | 2009.07- | MT | F | R | Hatchback 4WD D20AA | | GDS57300 | Drive Shaft | | 28 | 28 | 58 | 85 | 710 | |
| | 2009.07- | MT | F | L/R | Hatchback 4WD D20AA | Inner teeth of wheel side:33 | GCO57205 | Outer Joint | | 28 | 33 | 58 | 85 | 64.5 | I |
| | 2009.07- | MT | F | L | Hatchback 4WD D20AA | | GCI57164 | Inner Joint | | 28 | 33 | 42 | 70.5 | 102.5 | |
| | 2009.07- | MT | F | R | Hatchback 4WD D20AA | | GCI57163 | Inner Joint | | 28 | 33 | 42 | | 122.5 | |
| | 2009.07- | MT | R | L | Hatchback 4WD D20AA | | GDS14074 | Drive Shaft | | 24 | | 45 | 89 | 637 | |
| | 2009.07- | MT | R | R | Hatchback 4WD D20AA | | GDS14073 | Drive Shaft | | 24 | | 45 | 89 | 731 | |
| | 2009.07- | MT | R | L/R | Hatchback 4WD D20AA | | GCO14101 | Outer Joint | | 24 | 26 | 45 | 89 | 62.5 | I |

| | YEAR | TRANSM. | F/R | L/R | BODY STYLE & DRIVE TYPE & ENGINE | REMARKS | G-AP Ref. | PRODUCT | ABS | Technical Specifications A | B | C | H | L | P |
|---|---|---|---|---|---|---|---|---|---|---|---|---|---|---|---|
| **SUZUKI** | | | | | | | | | | | | | | | |
| **SX4** | | | | | | | | | | | | | | | |
| 2.0 (99 kw) | 2009.07- | MT | R | L/R | Hatchback 4WD D20AA | | GCI57142 | Inner Joint | | | 26 | | | 75.5 | |
| | 2009.07- | MT | F | L | Hatchback FWD D20AA | | GDS57299 | Drive Shaft | | 28 | 28 | 58 | 85 | 598 | |
| | 2009.07- | MT | F | R | Hatchback FWD D20AA | | GDS57301 | Drive Shaft | | 28 | 28 | 58 | 85 | 588 | |
| | 2009.07- | MT | F | L/R | Hatchback FWD D20AA | Inner teeth of wheel side:33 | GCO57205 | Outer Joint | | 28 | 33 | 58 | 85 | 64.5 | I |
| | 2009.07- | MT | F | L | Hatchback FWD D20AA | | GCI57164 | Inner Joint | | 28 | 33 | 42 | 70.5 | 102.5 | |
| | 2009.07- | | F | L | Hatchback FWD D20AA | | GCI57163 | Inner Joint | | 28 | 33 | 42 | | 122.5 | |
| 2.0 (107 kw) | 2006.06- | | R | | Hatchback 4WD J20A | | GCO14101 | Outer Joint | | 24 | 26 | 45 | 89 | 62.5 | I |
| | 2007.10-2010.01 | | F | | Saloon FWD J20A | | GCO57141 | Outer Joint | | 28 | 30 | 58 | 85 | 62.5 | M |
| 2.0 (112 kw) | 2010.01- | | F | | Hatchback 4WD J20B | | GCO57141 | Outer Joint | | 28 | 30 | 58 | 85 | 62.5 | M |
| | 2010.01- | | R | | Hatchback 4WD J20B | | GCO14101 | Outer Joint | | 24 | 26 | 45 | 89 | 62.5 | I |
| **SX4 S-Cross** | | | | | | | | | | | | | | | |
| 1.0 (82 kw) | 2016.08-2022.06 | 6MT | F | L/R | Hatchback 4WD K10C-T | | GCO57212 | Outer Joint | | 28 | 24 | 58 | 85 | 66 | M |
| | 2016.08-2022.06 | 6AT | F | R | Hatchback FWD K10C-T | | GDS58297 | Drive Shaft | | 28 | 26 | 58 | 85 | 952 | |
| | 2016.08-2022.06 | 6AT | F | R | Hatchback FWD K10C-T | | GCI84054 | Inner Joint | | 26 | 23 | 31 | 87 | 70 | |
| | 2016.08-2022.06 | 6AT/6MT | F | L/R | Hatchback FWD K10C-T | | GCO57212 | Outer Joint | | 28 | 24 | 58 | 85 | 66 | M |
| 1.4 (95 kw) | 2019.08-2022.06 | 6AT | F | L | Hatchback 4WD K14D | | GDS81959 | Drive Shaft | | 28 | 26 | 58 | 85 | 612 | |
| | 2019.08-2022.06 | 6AT | F | L | Hatchback 4WD K14D | | GCI81566 | Inner Joint | | 26 | 24 | 31 | 88 | 82.5 | |
| | 2019.08-2022.06 | 6AT/6MT | F | L/R | Hatchback 4WD K14D | | GCO57212 | Outer Joint | | 28 | 24 | 58 | 85 | 66 | M |
| | 2019.08-2022.06 | 6AT | F | L | Hatchback FWD K14D | | GDS81959 | Drive Shaft | | 28 | 26 | 58 | 85 | 612 | |
| | 2019.08-2022.06 | 6AT | F | R | Hatchback FWD K14D | | GDS58297 | Drive Shaft | | 28 | 26 | 58 | 85 | 952 | |
| | 2019.08-2022.06 | 6AT | F | L | Hatchback FWD K14D | | GCI81566 | Inner Joint | | 26 | 24 | 31 | 88 | 82.5 | |
| | 2019.08-2022.06 | 6AT | F | R | Hatchback FWD K14D | | GCI84054 | Inner Joint | | 26 | 23 | 31 | 87 | 70 | |
| | 2019.08-2022.06 | 6AT/6MT | F | L/R | Hatchback FWD K14D | | GCO57212 | Outer Joint | | 28 | 24 | 58 | 85 | 66 | M |
| 1.4 (103 kw) | 2016.08-2022.06 | 6AT | F | L | Hatchback 4WD K14C | | GDS81959 | Drive Shaft | | 28 | 26 | 58 | 85 | 612 | |
| | 2016.08-2022.06 | 6AT | F | L | Hatchback 4WD K14C | | GCI81566 | Inner Joint | | 26 | 24 | 31 | 88 | 82.5 | |
| | 2016.08-2022.06 | 6AT/6MT | F | L/R | Hatchback 4WD K14C | | GCO57212 | Outer Joint | | 28 | 24 | 58 | 85 | 66 | M |
| | 2016.08-2022.06 | 6AT | F | L | Hatchback FWD K14C | | GDS81959 | Drive Shaft | | 28 | 26 | 58 | 85 | 612 | |
| | 2016.08-2022.06 | 6AT | F | R | Hatchback FWD K14C | | GDS58297 | Drive Shaft | | 28 | 26 | 58 | 85 | 952 | |
| | 2016.08-2022.06 | 6AT | F | L | Hatchback FWD K14C | | GCI81566 | Inner Joint | | 26 | 24 | 31 | 88 | 82.5 | |
| | 2016.08-2022.06 | 6AT | F | R | Hatchback FWD K14C | | GCI84054 | Inner Joint | | 26 | 23 | 31 | 87 | 70 | |
| | 2016.08-2022.06 | 6AT/6MT | F | L/R | Hatchback FWD K14C | | GCO57212 | Outer Joint | | 28 | 24 | 58 | 85 | 66 | M |
| 1.6 (86 kw) | 2013.12-2022.06 | AT | F | R | Hatchback 4WD M16A | | GDS57288 | Drive Shaft | | 28 | 28 | 58 | 85 | 706 | |
| | 2013.12-2022.06 | CVT | F | L | Hatchback 4WD M16A | | GDS57287 | Drive Shaft | | 28 | 26 | 58 | 85 | 647 | |
| | 2013.12-2022.06 | CVT | F | L/R | Hatchback 4WD M16A | | GCI57167 | Inner Joint | | 26 | 29 | 40 | 54 | 104.5 | |
| | 2013.12-2022.06 | CVT/5MT | F | R | Hatchback 4WD M16A | | GCI57165 | Inner Joint | | 28 | 29 | 42 | | 121.5 | |
| | 2013.12-2022.06 | CVT/MT | F | L/R | Hatchback 4WD M16A | | GCO57208 | Outer Joint | | 28 | 29 | 58 | 85 | 57 | I |
| | 2013.12-2022.06 | MT | F | L | Hatchback 4WD M16A | | GDS57289 | Drive Shaft | | 28 | 28 | 58 | 85 | 651 | |
| | 2013.12-2022.06 | MT | F | L | Hatchback 4WD M16A | | GCI57170 | Inner Joint | | 28 | 29 | 38 | 58 | 104.5 | |
| | 2013.12-2022.06 | CVT | F | L | Hatchback FWD M16A | | GDS57287 | Drive Shaft | | 28 | 26 | 58 | 85 | 647 | |
| | 2013.12-2022.06 | CVT | F | L/R | Hatchback FWD M16A | | GCI57167 | Inner Joint | | 26 | 29 | 40 | 54 | 104.5 | |
| | 2013.12-2022.06 | CVT/MT | F | L/R | Hatchback FWD M16A | | GCO57208 | Outer Joint | | 28 | 29 | 58 | 85 | 57 | I |
| | 2013.12-2022.06 | MT | F | L | Hatchback FWD M16A | | GDS57289 | Drive Shaft | | 28 | 28 | 58 | 85 | 651 | |
| | 2013.12-2022.06 | MT | F | R | Hatchback FWD M16A | | GDS56559 | Drive Shaft | | 28 | 28 | 58 | 85 | 953 | |
| | 2013.12-2022.06 | MT | F | L | Hatchback FWD M16A | | GCI57170 | Inner Joint | | 28 | 29 | 38 | 58 | 104.5 | |
| | 2013.12-2022.06 | MT | F | R | Hatchback FWD M16A | | GCI83371 | Inner Joint | | 28 | 29 | 38 | 58 | 104.5 | |
| 1.6 (88 kw) | 2013.08-2022.06 | 6MT | F | R | Hatchback 4WD D16AA | | GDS82637 | Drive Shaft | | 28 | 28 | 58 | 85.5 | 718 | |
| | 2013.08-2022.06 | 6MT | F | L/R | Hatchback 4WD D16AA | | GCO82486 | Outer Joint | | 28 | 35 | 58 | 85.5 | 65 | I |
| | 2013.08-2022.06 | MT | F | L | Hatchback 4WD D16AA | | GDS57282 | Drive Shaft | | 28 | 28 | 58 | 85 | 620 | |
| | 2013.08-2022.06 | MT | F | L | Hatchback 4WD D16AA | | GCO99310 | Outer Joint | | 28 | 35 | 58 | 85 | 65 | I |
| | 2013.08-2022.06 | MT | F | L | Hatchback 4WD D16AA | | GCI57169 | Inner Joint | | 28 | 35 | 42 | 70.5 | 104.5 | |
| | 2013.08-2022.06 | AT | F | R | Hatchback 4WD M16A | | GDS57288 | Drive Shaft | | 28 | 28 | 58 | 85 | 706 | |
| | 2013.08-2022.06 | CVT | F | L | Hatchback 4WD M16A | | GDS57287 | Drive Shaft | | 28 | 26 | 58 | 85 | 647 | |
| | 2013.08-2022.06 | CVT | F | L | Hatchback 4WD M16A | | GCI57167 | Inner Joint | | 26 | 29 | 40 | 54 | 104.5 | |
| | 2013.08-2022.06 | CVT/5MT | F | R | Hatchback 4WD M16A | | GCI57165 | Inner Joint | | 28 | 29 | 42 | | 121.5 | |
| | 2013.08-2022.06 | CVT/MT | F | L/R | Hatchback 4WD M16A | | GCO57208 | Outer Joint | | 28 | 29 | 58 | 85 | 57 | I |
| | 2013.08-2022.06 | MT | F | L | Hatchback 4WD M16A | | GDS57289 | Drive Shaft | | 28 | 28 | 58 | 85 | 651 | |
| | 2013.08-2022.06 | MT | F | L | Hatchback 4WD M16A | | GCI57170 | Inner Joint | | 28 | 29 | 38 | 58 | 104.5 | |
| | 2013.08-2022.06 | MT | F | L | Hatchback FWD D16AA | | GDS57282 | Drive Shaft | | 28 | 28 | 58 | 85 | 620 | |
| | 2013.08-2022.06 | MT | F | L | Hatchback FWD D16AA | | GCO99310 | Outer Joint | | 28 | 35 | 58 | 85 | 65 | I |
| | 2013.08-2022.06 | MT | F | L | Hatchback FWD D16AA | | GCI57169 | Inner Joint | | 28 | 35 | 42 | 70.5 | 104.5 | |
| | 2013.08-2022.06 | CVT | F | L | Hatchback FWD M16A | | GDS57287 | Drive Shaft | | 28 | 26 | 58 | 85 | 647 | |
| | 2013.08-2022.06 | CVT | F | L/R | Hatchback FWD M16A | | GCI57167 | Inner Joint | | 26 | 29 | 40 | 54 | 104.5 | |
| | 2013.08-2022.06 | CVT/MT | F | L/R | Hatchback FWD M16A | | GCO57208 | Outer Joint | | 28 | 29 | 58 | 85 | 57 | I |
| | 2013.08-2022.06 | MT | F | L | Hatchback FWD M16A | | GDS57289 | Drive Shaft | | 28 | 28 | 58 | 85 | 651 | |
| | 2013.08-2022.06 | MT | F | R | Hatchback FWD M16A | | GDS56559 | Drive Shaft | | 28 | 28 | 58 | 85 | 953 | |

| | YEAR | TRANSM. | F/R | L/R | BODY STYLE & DRIVE TYPE & ENGINE | REMARKS | G-AP Ref. | PRODUCT | ABS | Technical Specifications | | | | | |
|---|---|---|---|---|---|---|---|---|---|---|---|---|---|---|---|
| | | | | | | | | | | A | B | C | H | L | P |
| **SUZUKI** | | | | | | | | | | | | | | | |
| **SX4 S-Cross** | | | | | | | | | | | | | | | |
| 1.6 (88 kw) | 2013.08-2022.06 | MT | F | L | Hatchback FWD M16A | | GCI57170 | Inner Joint | | 28 | 29 | 38 | 58 | 104.5 | |
| | 2013.08-2022.06 | MT | F | R | Hatchback FWD M16A | | GCI83371 | Inner Joint | | 28 | 29 | 38 | 58 | 104.5 | |
| **Vitara** | | | | | | | | | | | | | | | |
| 1.0 (82 kw) | 2018.10- | 6MT | F | L/R | SUV 4WD K10C-T | | GCO57212 | Outer Joint | | 28 | 24 | 58 | 85 | 66 | M |
| | 2018.10- | 6AT | F | R | SUV FWD K10C-T | | GDS58297 | Drive Shaft | | 28 | 26 | 58 | 85 | 952 | |
| | 2018.10- | 6AT | F | R | SUV FWD K10C-T | | GCI84054 | Inner Joint | | 26 | 23 | 31 | 87 | 70 | |
| | 2018.10- | 6AT/6MT | F | L/R | SUV FWD K10C-T | | GCO57212 | Outer Joint | | 28 | 24 | 58 | 85 | 66 | M |
| 1.4 (81 kw) | 2025.07- | 6MT | F | L/R | SUV FWD K14D | | GCO57212 | Outer Joint | | 28 | 24 | 58 | 85 | 66 | M |
| 1.4 (95 kw) | 2019.07- | 6AT | F | L | SUV 4WD K14D | | GDS81959 | Drive Shaft | | 28 | 26 | 58 | 85 | 612 | |
| | 2019.07- | 6AT | F | L | SUV 4WD K14D | | GCI81566 | Inner Joint | | 26 | 24 | 31 | 88 | 82.5 | |
| | 2019.07- | 6AT/6MT | F | L/R | SUV 4WD K14D | | GCO57212 | Outer Joint | | 28 | 24 | 58 | 85 | 66 | M |
| | 2019.07- | 6AT | F | L | SUV FWD K14D | | GDS81959 | Drive Shaft | | 28 | 26 | 58 | 85 | 612 | |
| | 2019.07- | 6AT | F | R | SUV FWD K14D | | GDS58297 | Drive Shaft | | 28 | 26 | 58 | 85 | 952 | |
| | 2019.07- | 6AT | F | L | SUV FWD K14D | | GCI81566 | Inner Joint | | 26 | 24 | 31 | 88 | 82.5 | |
| | 2019.07- | 6AT | F | R | SUV FWD K14D | | GCI84054 | Inner Joint | | 26 | 23 | 31 | 87 | 70 | |
| | 2019.07- | 6AT/6MT | F | L/R | SUV FWD K14D | | GCO57212 | Outer Joint | | 28 | 24 | 58 | 85 | 66 | M |
| 1.4 (103 kw) | 2015.09-2020.07 | 6AT | F | L | SUV 4WD K14C | | GDS81959 | Drive Shaft | | 28 | 26 | 58 | 85 | 612 | |
| | 2015.09-2020.07 | 6AT | F | L | SUV 4WD K14C | | GCI81566 | Inner Joint | | 26 | 24 | 31 | 88 | 82.5 | |
| | 2015.09-2020.07 | 6AT/6MT | F | L/R | SUV 4WD K14C | | GCO57212 | Outer Joint | | 28 | 24 | 58 | 85 | 66 | M |
| | 2015.09-2020.07 | 6AT | F | L | SUV FWD K14C | | GDS81959 | Drive Shaft | | 28 | 26 | 58 | 85 | 612 | |
| | 2015.09-2020.07 | 6AT | F | R | SUV FWD K14C | | GDS58297 | Drive Shaft | | 28 | 26 | 58 | 85 | 952 | |
| | 2015.09-2020.07 | 6AT | F | L | SUV FWD K14C | | GCI81566 | Inner Joint | | 26 | 24 | 31 | 88 | 82.5 | |
| | 2015.09-2020.07 | 6AT | F | R | SUV FWD K14C | | GCI84054 | Inner Joint | | 26 | 23 | 31 | 87 | 70 | |
| | 2015.09-2020.07 | 6AT/6MT | F | L/R | SUV FWD K14C | | GCO57212 | Outer Joint | | 28 | 24 | 58 | 85 | 66 | M |
| 1.6 (59 kw) | 1988.07-1998.03 | MT | F | L | Closed Off-Road Vehicle 4WD G16A (8V) | | GDS19009 | Drive Shaft | | 26 | | 48 | 116.5 | 492 | |
| | 1988.07-1998.03 | MT | F | R | Closed Off-Road Vehicle 4WD G16A (8V) | | GDS19011 | Drive Shaft | | 26 | 22 | 48 | 116.5 | 597 | |
| | 1988.07-1998.03 | MT | F | L/R | Closed Off-Road Vehicle 4WD G16A (8V) | GrooveType:Inner | GCO57010 | Outer Joint | | 26 | 22 | 48 | 116 | 65.5 | I |
| | 1988.07-1998.03 | MT | F | L/R | Closed Off-Road Vehicle 4WD G16A (8V) | GrooveType:Middle | GCO57035 | Outer Joint | | 26 | 22 | 48 | 116.5 | 65.5 | M |
| 1.6 (71 kw) | 1990.07-1998.03 | AT/MT | F | L | Closed Off-Road Vehicle 4WD G16B | | GDS19009 | Drive Shaft | | 26 | | 48 | 116.5 | 492 | |
| | 1990.07-1998.03 | AT/MT | F | R | Closed Off-Road Vehicle 4WD G16B | | GDS19011 | Drive Shaft | | 26 | 22 | 48 | 116.5 | 597 | |
| | 1990.07-1998.03 | MT | F | L/R | Closed Off-Road Vehicle 4WD G16B | | GCO57010 | Outer Joint | | 26 | 22 | 48 | 116 | 65.5 | I |
| 1.6 (86 kw) | 2015.05- | 5MT | F | L | SUV 4WD M16A | | GDS57289 | Drive Shaft | | 28 | 28 | 58 | 85 | 651 | |
| | 2015.05- | 5MT | F | R | SUV 4WD M16A | | GDS57288 | Drive Shaft | | 28 | 28 | 58 | 85 | 706 | |
| | 2015.05- | 5MT | F | L/R | SUV 4WD M16A | | GCO57208 | Outer Joint | | 28 | 29 | 58 | 85 | 57 | I |
| | 2015.05- | 5MT | F | L | SUV 4WD M16A | | GCI57170 | Inner Joint | | 28 | 29 | 38 | 58 | 104.5 | |
| | 2015.05- | 5MT | F | R | SUV 4WD M16A | | GCI57165 | Inner Joint | | 28 | 29 | 42 | | 121.5 | |
| | 2015.05- | 6AT | F | L | SUV 4WD M16A | | GDS57278 | Drive Shaft | | 28 | 26 | 58 | 85 | 627 | |
| | 2015.05- | 6AT | F | R | SUV 4WD M16A | | GDS57276 | Drive Shaft | | 28 | 28 | 58 | 85 | 709 | |
| | 2015.05- | 6AT | F | L/R | SUV 4WD M16A | | GCO57200 | Outer Joint | | 28 | 22 | 58 | 85 | 60 | M |
| | 2015.05- | 6AT | F | L | SUV 4WD M16A | | GCI57154 | Inner Joint | | 26 | 22 | 31 | 87 | 69 | |
| | 2015.05- | 6AT | F | R | SUV 4WD M16A | | GCI57153 | Inner Joint | | 28 | 22 | 42 | | 117 | |
| | 2015.05- | 5MT | F | L | SUV FWD M16A | | GDS57289 | Drive Shaft | | 28 | 28 | 58 | 85 | 651 | |
| | 2015.05- | 5MT | F | R | SUV FWD M16A | | GDS56559 | Drive Shaft | | 28 | 28 | 58 | 85 | 953 | |
| | 2015.05- | 5MT | F | L/R | SUV FWD M16A | | GCO57208 | Outer Joint | | 28 | 29 | 58 | 85 | 57 | I |
| | 2015.05- | 5MT | F | L | SUV FWD M16A | | GCI57170 | Inner Joint | | 28 | 29 | 38 | 58 | 104.5 | |
| | 2015.05- | 5MT | F | R | SUV FWD M16A | | GCI83371 | Inner Joint | | 28 | 29 | 38 | 58 | 104.5 | |
| | 2015.05- | 6AT | F | L | SUV FWD M16A | | GDS57278 | Drive Shaft | | 28 | 26 | 58 | 85 | 627 | |
| | 2015.05- | 6AT | F | R | SUV FWD M16A | Date from:2016.03 | GDS83689 | Drive Shaft | | 28 | 26 | 58 | 85 | 951 | |
| | 2015.05- | 6AT | F | L/R | SUV FWD M16A | | GCO57200 | Outer Joint | | 28 | 22 | 58 | 85 | 60 | M |
| | 2015.05- | 6AT | F | L | SUV FWD M16A | | GCI57154 | Inner Joint | | 26 | 22 | 31 | 87 | 69 | |
| 1.6 (88 kw) | 2015.02- | 6MT | F | R | SUV 4WD D16AA | | GDS82637 | Drive Shaft | | 28 | 28 | 58 | 85.5 | 718 | |
| | 2015.02- | 5MT | F | L | SUV 4WD M16A | | GDS57289 | Drive Shaft | | 28 | 28 | 58 | 85 | 651 | |
| | 2015.02- | 5MT | F | R | SUV 4WD M16A | | GDS57288 | Drive Shaft | | 28 | 28 | 58 | 85 | 706 | |
| | 2015.02- | 5MT | F | L/R | SUV 4WD M16A | | GCO57208 | Outer Joint | | 28 | 29 | 58 | 85 | 57 | I |
| | 2015.02- | 5MT | F | L | SUV 4WD M16A | | GCI57170 | Inner Joint | | 28 | 29 | 38 | 58 | 104.5 | |
| | 2015.02- | 5MT | F | R | SUV 4WD M16A | | GCI57165 | Inner Joint | | 28 | 29 | 42 | | 121.5 | |
| | 2015.02- | 6AT | F | L | SUV 4WD M16A | | GDS57278 | Drive Shaft | | 28 | 26 | 58 | 85 | 627 | |
| | 2015.02- | 6AT | F | R | SUV 4WD M16A | | GDS57276 | Drive Shaft | | 28 | 28 | 58 | 85 | 709 | |
| | 2015.02- | 6AT | F | L/R | SUV 4WD M16A | | GCO57200 | Outer Joint | | 28 | 22 | 58 | 85 | 60 | M |
| | 2015.02- | 6AT | F | L | SUV 4WD M16A | | GCI57154 | Inner Joint | | 26 | 22 | 31 | 87 | 69 | |
| | 2015.02- | 6AT | F | R | SUV 4WD M16A | | GCI57153 | Inner Joint | | 28 | 22 | 42 | | 117 | |
| | 2015.02- | MT | F | L | SUV FWD D16AA | | GDS57282 | Drive Shaft | | 28 | 28 | 58 | 85 | 620 | |
| | 2015.02- | MT | F | L | SUV FWD D16AA | | GCO99310 | Outer Joint | | 28 | 35 | 58 | 85 | 65 | I |
| | 2015.02- | MT | F | L | SUV FWD D16AA | | GCI57169 | Inner Joint | | 28 | 35 | 42 | 70.5 | 104.5 | |
| | 2015.02- | 5MT | F | L | SUV FWD M16A | | GDS57289 | Drive Shaft | | 28 | 28 | 58 | 85 | 651 | |

| | YEAR | TRANSM. | F/R | L/R | BODY STYLE & DRIVE TYPE & ENGINE | REMARKS | G-AP Ref. | PRODUCT | ABS | Technical Specifications A | B | C | H | L | P |
|---|---|---|---|---|---|---|---|---|---|---|---|---|---|---|---|
| **SUZUKI** | | | | | | | | | | | | | | | |
| **Vitara** | | | | | | | | | | | | | | | |
| 1.6 (88 kw) | 2015.02- | 5MT | F | R | SUV FWD M16A | | GDS56559 | Drive Shaft | | 28 | 28 | 58 | 85 | 953 | |
| | 2015.02- | 5MT | F | L/R | SUV FWD M16A | | GCO57208 | Outer Joint | | 28 | 29 | 58 | 85 | 57 | I |
| | 2015.02- | 5MT | F | L | SUV FWD M16A | | GCI57170 | Inner Joint | | 28 | 29 | 38 | 58 | 104.5 | |
| | 2015.02- | 5MT | F | R | SUV FWD M16A | | GCI83371 | Inner Joint | | 28 | 29 | 38 | 58 | 104.5 | |
| | 2015.02- | 6AT | F | L | SUV FWD M16A | | GDS57278 | Drive Shaft | | 28 | 26 | 58 | 85 | 627 | |
| | 2015.02- | 6AT | F | R | SUV FWD M16A | Date from:2016.03 | GDS83689 | Drive Shaft | | 28 | 26 | 58 | 85 | 951 | |
| | 2015.02- | 6AT | F | L | SUV FWD M16A | | GCO57200 | Outer Joint | | 28 | 22 | 58 | 85 | 60 | M |
| | 2015.02- | 6AT | F | L/R | SUV FWD M16A | | GCI57154 | Inner Joint | | 26 | 22 | 31 | 87 | 69 | |
| 1.6 (93 kw) | 2016.08- | 6AT | F | L | SUV 4WD M16A | | GDS57278 | Drive Shaft | | 28 | 26 | 58 | 85 | 627 | |
| | 2016.08- | 6AT | F | R | SUV 4WD M16A | | GDS57276 | Drive Shaft | | 28 | 28 | 58 | 85 | 709 | |
| | 2016.08- | 6AT | F | L/R | SUV 4WD M16A | | GCO57200 | Outer Joint | | 28 | 22 | 58 | 85 | 60 | M |
| 1.9 (50 kw) | 1995.01-1998.03 | 5MT | F | L/R | Terrain cab open 4WD XUD9 | | GCO57035 | Outer Joint | | 26 | 22 | 48 | 116.5 | 65.5 | M |
| | 1995.01-1998.03 | MT | F | L/R | Terrain cab wagon closed 4WD XUD9 | inner teeth:22 | GCO57010 | Outer Joint | | 26 | 22 | 48 | 116 | 65.5 | I |
| | 1995.01-1998.03 | MT | F | L/R | Terrain cab wagon closed 4WD XUD9 | inner teeth:29 | GCO57017 | Outer Joint | | 26 | 29 | 48 | 116 | 65.5 | I |
| 1.9 (55 kw) | 1996.08-1998.12 | MT | F | L/R | Terrain cab wagon closed 4WD XUD9SD | inner teeth:22 | GCO57010 | Outer Joint | | 26 | 22 | 48 | 116 | 65.5 | I |
| | 1996.08-1998.12 | MT | F | L/R | Terrain cab wagon closed 4WD XUD9SD | inner teeth:29 | GCO57017 | Outer Joint | | 26 | 29 | 48 | 116 | 65.5 | I |
| | 1996.08-1999.03 | MT | F | L/R | Terrain cab open 4WD XUD9SD | | GCO57017 | Outer Joint | | 26 | 29 | 48 | 116 | 65.5 | I |
| 2.0 (52 kw) | 1994.12-1998.03 | MT | F | L/R | Closed Off-Road Vehicle 4WD RF | inner teeth:30 | GCO57009 | Outer Joint | | 26 | 30 | 48 | 116 | 65.5 | I |
| | 1994.12-1998.03 | MT | F | L/R | Closed Off-Road Vehicle 4WD RF | inner teeth:29 | GCO57017 | Outer Joint | | 26 | 29 | 48 | 116 | 65.5 | I |
| 2.0 (64 kw) | 1995.12-1998.03 | MT | F | L/R | Closed Off-Road Vehicle 4WD RF | inner teeth:30 | GCO57009 | Outer Joint | | 26 | 30 | 48 | 116 | 65.5 | I |
| | 1995.12-1998.03 | MT | F | L/R | Closed Off-Road Vehicle 4WD RF | inner teeth:29 | GCO57017 | Outer Joint | | 26 | 29 | 48 | 116 | 65.5 | I |
| 2.0 (97 kw) | 1996.12-1998.03 | MT | F | L/R | Closed Off-Road Vehicle 4WD J20A | inner teeth:30 | GCO57009 | Outer Joint | | 26 | 30 | 48 | 116 | 65.5 | I |
| | 1996.12-1998.03 | MT | F | L/R | Closed Off-Road Vehicle 4WD J20A | inner teeth:29 | GCO57017 | Outer Joint | | 26 | 29 | 48 | 116 | 65.5 | I |
| 2.0 (100 kw) | 1994.12-1998.03 | MT | F | L/R | Closed Off-Road Vehicle 4WD H 20 A | | GCO57017 | Outer Joint | | 26 | 29 | 48 | 116 | 65.5 | I |
| **Vitara Cabrio** | | | | | | | | | | | | | | | |
| 1.6 (71 kw) | 1990.07-1999.03 | MT | F | L | Open Off-Road Vehicle 4WD G16B | | GDS19009 | Drive Shaft | | 26 | | 48 | 116.5 | 492 | |
| | 1990.07-1999.03 | MT | F | R | Open Off-Road Vehicle 4WD G16B | | GDS19011 | Drive Shaft | | 26 | 22 | 48 | 116.5 | 597 | |
| | 1990.07-1999.03 | MT | F | L/R | Open Off-Road Vehicle 4WD G16B | inner teeth:22,GrooveType:Inner | GCO57010 | Outer Joint | | 26 | 22 | 48 | 116 | 65.5 | I |
| | 1990.07-1999.03 | MT | F | L/R | Open Off-Road Vehicle 4WD G16B | inner teeth:22,GrooveType:Middle | GCO57035 | Outer Joint | | 26 | 22 | 48 | 116.5 | 65.5 | M |
| 2.0 (97 kw) | 1996.12-1999.03 | MT | F | L/R | Open Off-Road Vehicle 4WD J20A | inner teeth:30 | GCO57009 | Outer Joint | | 26 | 30 | 48 | 116 | 65.5 | I |
| | 1996.12-1999.03 | MT | F | L/R | Open Off-Road Vehicle 4WD J20A | inner teeth:29 | GCO57017 | Outer Joint | | 26 | 29 | 48 | 116 | 65.5 | I |
| **Vitara/Escudo** | | | | | | | | | | | | | | | |
| 1.4 (81 kw) | 2025.07- | 6AT | F | L | SUV 4WD K14D | | GDS81959 | Drive Shaft | | 28 | 26 | 58 | 85 | 612 | |
| | 2025.07- | 6AT | F | L | SUV 4WD K14D | | GCI81566 | Inner Joint | | 26 | 24 | 31 | 88 | 82.5 | |
| | 2025.07- | 6AT/6MT | F | L/R | SUV 4WD K14D | | GCO57212 | Outer Joint | | 28 | 24 | 58 | 85 | 66 | M |
| 1.4 (95 kw) | 2023.08- | 6MT | F | L/R | SUV 4WD K14D | | GCO57212 | Outer Joint | | 28 | 24 | 58 | 85 | 66 | M |
| 1.6 (70 kw) | 1991.02-1998.03 | AT/MT | F | R | Closed Off-Road Vehicle 4WD G16B | | GDS19011 | Drive Shaft | | 26 | 22 | 48 | 116.5 | 597 | |
| **Wagon R** | | | | | | | | | | | | | | | |
| 1.2 (59 kw) | 2004.06-2005.08 | 5MT | F | R | Hatchback FWD Z 12 XEP | | GDS44043 | Drive Shaft | 43T | 23 | 22 | 49 | 78 | 853 | |
| 1.3 (51 kw) | 2003.09- | MT | F | L | Hatchback FWD Z13DT | | GDS57066 | Drive Shaft | 43T | 23 | 22 | 49 | 78 | 593 | |
| | 2003.09- | | F | L/R | Hatchback FWD Z13DT | | GCO44080 | Outer Joint | 43T | 25 | 21 | 49 | 76 | 66.5 | M |
| 1.3 (56 kw) | 1999.04-2003.08 | MT | F | L/R | Hatchback FWD G13BB | | GCO44001 | Outer Joint | 43T | 23 | 20 | 49 | 78 | 61 | M |
| | 1999.04-2003.08 | MT | F | L/R | Hatchback FWD G13BB | | GCO99110 | Outer Joint | | 23 | 20 | 49 | 78 | 61 | M |
| 1.3 (65 kw) | 2003.09-2010.12 | 5MT | F | L | Hatchback FWD M13A | | GCO44001 | Outer Joint | 43T | 23 | 20 | 49 | 78 | 61 | M |
| | 2003.09-2010.12 | 5MT | F | L | Hatchback FWD M13A | | GCO99110 | Outer Joint | | 23 | 20 | 49 | 78 | 61 | M |
| 1.3 (69 kw) | 2003.09- | 5MT | F | L | Hatchback 4WD M13A | | GCO44001 | Outer Joint | 43T | 23 | 20 | 49 | 78 | 61 | M |
| | 2003.09- | 5MT | F | L | Hatchback 4WD M13A | | GCO99110 | Outer Joint | | 23 | 20 | 49 | 78 | 61 | M |
| **Wagon R+** | | | | | | | | | | | | | | | |
| 1.0 (48 kw) | 1998.02-2000.05 | AT | F | L/R | Hatchback FWD K10A | | GCO56010 | Outer Joint | 41T | 23 | 19 | 49 | 78 | 57 | M |
| | 1998.02-2000.05 | AT | F | L/R | Hatchback FWD K10A | Manufacturer Restriction:NTN Make | GCO57007 | Outer Joint | | 23 | 19 | 49 | 92 | 56.5 | M |
| | 1998.02-2000.05 | AT | F | L/R | Hatchback FWD K10A | | GCO57024 | Outer Joint | | 23 | 19 | 49 | 78 | 57 | M |
| | 1998.02-2000.05 | AT/MT | F | L/R | Hatchback FWD K10A | Date To:2000.01 | GCO57086 | Outer Joint | | 23 | 19 | 44 | 89.6 | 50.7 | M |
| | 1998.02-2000.05 | MT | F | L | Hatchback FWD K10A | | GDS57066 | Drive Shaft | 43T | 23 | 22 | 49 | 78 | 593 | |
| | 1998.02-2000.05 | | F | | Hatchback FWD K10A | | GCO57022 | Outer Joint | | 23 | 19 | 49 | 78 | 57 | M |
| 1.2 (51 kw) | 1998.02-2000.05 | AT/MT | F | L/R | Hatchback FWD K12A | Date from:1998.05,Date to:2000.01 | GCO56010 | Outer Joint | 41T | 23 | 19 | 49 | 78 | 57 | M |
| | 1998.02-2000.05 | AT/MT | F | L/R | Hatchback FWD K12A | | GCO57007 | Outer Joint | | 23 | 19 | 49 | 92 | 56.5 | M |
| | 1998.02-2000.05 | | F | L | Hatchback FWD K12A | | GDS57066 | Drive Shaft | 43T | 23 | 22 | 49 | 78 | 593 | |
| | 1998.02-2000.05 | | F | | Hatchback FWD K12A | | GCO57006 | Outer Joint | | 23 | 19 | 44 | 89.5 | 54.5 | M |
| | 1998.02-2000.05 | | F | | Hatchback FWD K12A | | GCO57022 | Outer Joint | | 23 | 19 | 49 | 78 | 57 | M |
| | 1998.02-2000.05 | | F | | Hatchback FWD K12A | | GCO57024 | Outer Joint | | 23 | 19 | 49 | 78 | 57 | M |
| | 1998.05-2000.01 | AT/MT | F | L/R | Hatchback 4WD K12A | Date From:1998.05;Date To:2000.01;Type:Wagon R | GCO56010 | Outer Joint | 41T | 23 | 19 | 49 | 78 | 57 | M |
| | 1998.05-2000.01 | AT/MT | F | L/R | Hatchback 4WD K12A | | GCO57007 | Outer Joint | | 23 | 19 | 49 | 92 | 56.5 | M |
| | 1998.05-2000.01 | | F | | Hatchback 4WD K12A | | GCO57022 | Outer Joint | | 23 | 19 | 49 | 78 | 57 | M |
| | 1998.05-2000.01 | | F | | Hatchback 4WD K12A | | GCO57024 | Outer Joint | | 23 | 19 | 49 | 78 | 57 | M |
| 1.2 (59 kw) | 2005.01-2008.12 | 5MT | F | R | Hatchback FWD Z12XEP | | GDS44043 | Drive Shaft | 43T | 23 | 22 | 49 | 78 | 853 | |

| | YEAR | TRANSM. | F/R | L/R | BODY STYLE & DRIVE TYPE & ENGINE | REMARKS | G-AP Ref. | PRODUCT | ABS | Technical Specifications A | B | C | H | L | P |
|---|---|---|---|---|---|---|---|---|---|---|---|---|---|---|---|
| **SUZUKI** | | | | | | | | | | | | | | | |
| **Wagon R+** | | | | | | | | | | | | | | | |
| 1.3 (56 kw) | 2001.10- | 5MT | F | L/R | Hatchback 4WD G13BB | | GCO44001 | Outer Joint | 43T | 23 | 20 | 49 | 78 | 61 | M |
| | 2001.10- | 5MT | F | L/R | Hatchback 4WD G13BB | | GCO99110 | Outer Joint | | 23 | 20 | 49 | 78 | 61 | M |
| 1.3 (69 kw) | 2003.09-2006.08 | AT/MT | F | L/R | Hatchback FWD M13A | | GCO44001 | Outer Joint | 43T | 23 | 20 | 49 | 78 | 61 | M |
| | 2003.09-2006.08 | MT | F | L | Hatchback FWD M13A | | GCO99110 | Outer Joint | | 23 | 20 | 49 | 78 | 61 | M |
| **X90** | | | | | | | | | | | | | | | |
| 1.6 (71 kw) | 1995.11-1998.05 | 4AT/5MT | F | L | Terrain cab open 4WD G16B | | GDS19009 | Drive Shaft | | 26 | | 48 | 116.5 | 492 | |
| | 1995.11-1998.05 | 4AT/5MT | F | L/R | Terrain cab open 4WD G16B | GrooveType:Inner | GCO57010 | Outer Joint | | 26 | 22 | 48 | 116 | 65.5 | I |
| | 1995.11-1998.05 | 4AT/5MT | F | L/R | Terrain cab open 4WD G16B | GrooveType:Middle | GCO57035 | Outer Joint | | 26 | 22 | 48 | 116.5 | 65.5 | M |
| | 1995.11-1998.05 | 5MT | F | R | Terrain cab open 4WD G16B | | GDS57050 | Drive Shaft | | 26 | 26 | 48 | 116.5 | 603 | |
| **TANK** | | | | | | | | | | | | | | | |
| **Tank 300** | | | | | | | | | | | | | | | |
| 2.0 (167 kw) | 2021.07- | 8AT | F | L | SUV 4WD E20CB | Model year to:2024 | GDS57422 | Drive Shaft | | 30 | 30 | 55 | 94 | 626 | |
| | 2021.07- | 8AT | F | L | SUV 4WD E20CB | Model year to:2023 | GDS84311 | Drive Shaft | | 28 | 30 | 56 | 93.5 | 613 | |
| | 2021.07- | 8AT | F | R | SUV 4WD E20CB | Model year to:2024 | GDS57421 | Drive Shaft | | 30 | 30 | 55 | 94 | 637 | |
| | 2021.07- | 8AT | F | R | SUV 4WD E20CB | Model year to:2023 | GDS84310 | Drive Shaft | | 28 | 30 | 56 | 93.5 | 627 | |
| | 2021.07- | 8AT | F | L/R | SUV 4WD E20CB | Model year to:2023 | GCO82781 | Outer Joint | | 28 | 28 | 56 | 93.5 | 67.5 | I |
| | 2021.07- | 8AT | F | L/R | SUV 4WD E20CB | Model year to:2024 | GCO83543 | Outer Joint | | 30 | 29 | 55 | 94 | 68 | I |
| | 2021.07- | 8AT | F | L/R | SUV 4WD E20CB | Model year to:2024 | GCI82703 | Inner Joint | | 30 | 29 | 44 | 73.5 | 129 | |
| 3.0 (260 kw) | 2024.03- | 9AT | F | L | SUV 4WD E30Z | | GDS57422 | Drive Shaft | | 30 | 30 | 55 | 94 | 626 | |
| | 2024.03- | 9AT | F | R | SUV 4WD E30Z | | GDS57421 | Drive Shaft | | 30 | 30 | 55 | 94 | 637 | |
| | 2024.03- | 9AT | F | L/R | SUV 4WD E30Z | | GCO83543 | Outer Joint | | 30 | 29 | 55 | 94 | 68 | I |
| | 2024.03- | 9AT | F | L/R | SUV 4WD E30Z | | GCI82703 | Inner Joint | | 30 | 29 | 44 | 73.5 | 129 | |
| **Tank 400** | | | | | | | | | | | | | | | |
| 2.0 (185 kw) | 2025.02- | 9AT | F | L | SUV 4WD E20NA | | GDS57422 | Drive Shaft | | 30 | 30 | 55 | 94 | 626 | |
| | 2025.02- | 9AT | F | R | SUV 4WD E20NA | | GDS57421 | Drive Shaft | | 30 | 30 | 55 | 94 | 637 | |
| | 2025.02- | 9AT | F | L/R | SUV 4WD E20NA | | GCO83543 | Outer Joint | | 30 | 29 | 55 | 94 | 68 | I |
| | 2025.02- | 9AT | F | L/R | SUV 4WD E20NA | | GCI82703 | Inner Joint | | 30 | 29 | 44 | 73.5 | 129 | |
| **Tank 500** | | | | | | | | | | | | | | | |
| 3.0 (260 kw) | 2022.03- | 9AT | F | L | SUV 4WD E30Z | | GDS57422 | Drive Shaft | | 30 | 30 | 55 | 94 | 626 | |
| | 2022.03- | 9AT | F | R | SUV 4WD E30Z | | GDS57421 | Drive Shaft | | 30 | 30 | 55 | 94 | 637 | |
| | 2022.03- | 9AT | F | L/R | SUV 4WD E30Z | | GCO83543 | Outer Joint | | 30 | 29 | 55 | 94 | 68 | I |
| | 2022.03- | 9AT | F | L/R | SUV 4WD E30Z | | GCI82703 | Inner Joint | | 30 | 29 | 44 | 73.5 | 129 | |
| **TESLA** | | | | | | | | | | | | | | | |
| **Model 3** | | | | | | | | | | | | | | | |
| EV (153 kw) | 2022.03- | ET | R | L/R | Saloon 4WD 3D3;3D6 | Date from:2023.09 | GDS57880 | Drive Shaft | | 30 | 29 | 52 | 97.5 | 808 | |
| | 2022.03- | ET | R | L/R | Saloon 4WD 3D3;3D6 | Date to:2023.08 | GDS84028 | Drive Shaft | | 30 | 29 | 52 | 98 | 809 | |
| | 2022.03- | ET | R | L/R | Saloon 4WD 3D3;3D6 | Date from:2023.09 | GCO83768 | Outer Joint | | 30 | 25 | 52 | 97.5 | 59 | I |
| | 2022.03- | ET | R | L/R | Saloon 4WD 3D3;3D6 | Date to:2023.08 | GCI82461 | Inner Joint | | 29 | 33 | 40 | 73 | 100.5 | |
| | 2022.03- | ET | R | L/R | Saloon 4WD 3D3;3D6 | Date from:2023.09 | GCI83304 | Inner Joint | | 29 | 24 | 40 | 72.5 | 121.5 | |
| | 2022.03- | ET | F/R | L/R | Saloon 4WD 3D3;3D6 | Position:Rear,Date to:2023.08 | GDS84027 | Drive Shaft | | 30 | 29 | 52 | 98 | 805 | |
| | 2022.03- | ET | F/R | L/R | Saloon 4WD 3D3;3D6 | Position:Rear,Date to:2023.08 | GCI82460 | Inner Joint | | 29 | 33 | 40 | 73 | 120 | |
| EV (175 kw) | 2019.04- | ET | R | L/R | Saloon RWD 3D6 | Date from:2023.09 | GDS57880 | Drive Shaft | | 30 | 29 | 52 | 97.5 | 808 | |
| | 2019.04- | ET | R | L/R | Saloon RWD 3D6 | Date to:2023.08 | GDS84027 | Drive Shaft | | 30 | 29 | 52 | 98 | 805 | |
| | 2019.04- | ET | R | L/R | Saloon RWD 3D6 | Date to:2023.08 | GDS84028 | Drive Shaft | | 30 | 29 | 52 | 98 | 809 | |
| | 2019.04- | ET | R | L/R | Saloon RWD 3D6 | Date to:2023.08 | GCO82557 | Outer Joint | | 30 | 33 | 52 | 98 | 57 | I |
| | 2019.04- | ET | R | L/R | Saloon RWD 3D6 | Date from:2023.09 | GCO83768 | Outer Joint | | 30 | 25 | 52 | 97.5 | 59 | I |
| | 2019.04- | ET | R | L/R | Saloon RWD 3D6 | Date to:2023.08 | GCI82460 | Inner Joint | | 29 | 33 | 40 | 73 | 120 | |
| | 2019.04- | ET | R | L/R | Saloon RWD 3D6 | Date to:2023.08 | GCI82461 | Inner Joint | | 29 | 33 | 40 | 73 | 100.5 | |
| | 2019.04- | ET | R | L/R | Saloon RWD 3D6 | Date from:2023.09 | GCI83304 | Inner Joint | | 29 | 24 | 40 | 72.5 | 121.5 | |
| EV (188 kw) | 2024.01- | ET | R | L/R | Saloon RWD | Inner teeth of wheel side:25 | GDS57880 | Drive Shaft | | 30 | 29 | 52 | 97.5 | 808 | |
| | 2024.01- | ET | R | L/R | Saloon RWD | Inner teeth of wheel side:33 | GDS84028 | Drive Shaft | | 30 | 29 | 52 | 98 | 809 | |
| | 2024.01- | ET | R | L/R | Saloon RWD | | GCO82557 | Outer Joint | | 30 | 33 | 52 | 98 | 57 | I |
| | 2024.01- | ET | R | L/R | Saloon RWD | | GCO83768 | Outer Joint | | 30 | 25 | 52 | 97.5 | 59 | I |
| | 2024.01- | ET | R | L/R | Saloon RWD | | GCI82461 | Inner Joint | | 29 | 33 | 40 | 73 | 100.5 | |
| | 2024.01- | ET | R | L/R | Saloon RWD | | GCI83304 | Inner Joint | | 29 | 24 | 40 | 72.5 | 121.5 | |
| EV (192 kw) | 2017.01- | ET | R | L/R | Saloon RWD 3D1;3D6 | Date from:2023.09 | GDS57880 | Drive Shaft | | 30 | 29 | 52 | 97.5 | 808 | |
| | 2017.01- | ET | R | L/R | Saloon RWD 3D1;3D6 | Date to:2023.08 | GDS84028 | Drive Shaft | | 30 | 29 | 52 | 98 | 809 | |
| | 2017.01- | ET | R | L/R | Saloon RWD 3D1;3D6 | Date to:2023.08 | GCO82557 | Outer Joint | | 30 | 33 | 52 | 98 | 57 | I |
| | 2017.01- | ET | R | L/R | Saloon RWD 3D1;3D6 | Date from:2023.09 | GCO83768 | Outer Joint | | 30 | 25 | 52 | 97.5 | 59 | I |
| | 2017.01- | ET | R | L/R | Saloon RWD 3D1;3D6 | Date to:2023.08 | GCI82461 | Inner Joint | | 29 | 33 | 40 | 73 | 100.5 | |
| | 2017.01- | ET | R | L/R | Saloon RWD 3D1;3D6 | Date from:2023.09 | GCI83304 | Inner Joint | | 29 | 24 | 40 | 72.5 | 121.5 | |
| | 2017.01- | ET | F/R | L/R | Saloon RWD 3D1;3D6 | Position:Rear,Date to:2023.08 | GDS84027 | Drive Shaft | | 30 | 29 | 52 | 98 | 805 | |
| | 2017.01- | ET | F/R | L/R | Saloon RWD 3D1;3D6 | Position:Rear,Date to:2023.08 | GCI82460 | Inner Joint | | 29 | 33 | 40 | 73 | 120 | |
| EV (194 kw) | 2021.11- | ET | R | L/R | Saloon RWD 3D7 | Date to:2023.08 | GDS84027 | Drive Shaft | | 30 | 29 | 52 | 98 | 805 | |
| | 2021.11- | ET | R | L/R | Saloon RWD 3D7 | Date to:2023.08 | GCI82460 | Inner Joint | | 29 | 33 | 40 | 73 | 120 | |

| | YEAR | TRANSM. | F/R | L/R | BODY STYLE & DRIVE TYPE & ENGINE | REMARKS | G-AP Ref. | PRODUCT | ABS | Technical Specifications | | | | | |
|---|---|---|---|---|---|---|---|---|---|---|---|---|---|---|---|
| | | | | | | | | | | A | B | C | H | L | P |
| **TESLA** **Model 3** | | | | | | | | | | | | | | | |
| EV (194 kw) | 2021.11- | ET | R | L/R | Saloon RWD 3D7 | Date to:2023.08 | GCI82461 | Inner Joint | | 29 | 33 | 40 | 73 | 100.5 | |
| EV (202 kw) | 2020.04- | ET | R | L/R | Saloon RWD 3D1 | Date to:2023.08 | GDS84027 | Drive Shaft | | 30 | 29 | 52 | 98 | 805 | |
| | 2020.04- | ET | R | L/R | Saloon RWD 3D1 | Date to:2023.08 | GCI82460 | Inner Joint | | 29 | 33 | 40 | 73 | 120 | |
| | 2020.04- | ET | R | L/R | Saloon RWD 3D1 | Date to:2023.08 | GCI82461 | Inner Joint | | 29 | 33 | 40 | 73 | 100.5 | |
| EV (208 kw) | 2020.03- | ET | R | L/R | Saloon RWD 3D5;3D7 | Date from:2023.09 | GDS57880 | Drive Shaft | | 30 | 29 | 52 | 97.5 | 808 | |
| | 2020.03- | ET | R | L/R | Saloon RWD 3D5;3D7 | Date to:2023.08 | GDS84027 | Drive Shaft | | 30 | 29 | 52 | 98 | 805 | |
| | 2020.03- | ET | R | L/R | Saloon RWD 3D5;3D7 | Date to:2023.08 | GDS84028 | Drive Shaft | | 30 | 29 | 52 | 98 | 809 | |
| | 2020.03- | ET | R | L/R | Saloon RWD 3D5;3D7 | Date to:2023.08 | GCO82557 | Outer Joint | | 30 | 33 | 52 | 98 | 57 | I |
| | 2020.03- | ET | R | L/R | Saloon RWD 3D5;3D7 | Date from:2023.09 | GCO83768 | Outer Joint | | 30 | 25 | 52 | 97.5 | 59 | I |
| | 2020.03- | ET | R | L/R | Saloon RWD 3D5;3D7 | Date to:2023.08 | GCI82460 | Inner Joint | | 29 | 33 | 40 | 73 | 120 | |
| | 2020.03- | ET | R | L/R | Saloon RWD 3D5;3D7 | Date to:2023.08 | GCI82461 | Inner Joint | | 29 | 33 | 40 | 73 | 100.5 | |
| | 2020.03- | ET | R | L/R | Saloon RWD 3D5;3D7 | Date from:2023.09 | GCI83304 | Inner Joint | | 29 | 24 | 40 | 72.5 | 121.5 | |
| EV (225 kw) | 2019.02- | ET | R | L/R | Saloon RWD 3D1;3D6 | Date from:2023.09 | GDS57880 | Drive Shaft | | 30 | 29 | 52 | 97.5 | 808 | |
| | 2019.02- | ET | R | L/R | Saloon RWD 3D1;3D6 | Date to:2023.08 | GDS84027 | Drive Shaft | | 30 | 29 | 52 | 98 | 805 | |
| | 2019.02- | ET | R | L/R | Saloon RWD 3D1;3D6 | Date to:2023.08 | GDS84028 | Drive Shaft | | 30 | 29 | 52 | 98 | 809 | |
| | 2019.02- | ET | R | L/R | Saloon RWD 3D1;3D6 | Date to:2023.08 | GCO82557 | Outer Joint | | 30 | 33 | 52 | 98 | 57 | I |
| | 2019.02- | ET | R | L/R | Saloon RWD 3D1;3D6 | Date from:2023.09 | GCO83768 | Outer Joint | | 30 | 25 | 52 | 97.5 | 59 | I |
| | 2019.02- | ET | R | L/R | Saloon RWD 3D1;3D6 | Date to:2023.08 | GCI82460 | Inner Joint | | 29 | 33 | 40 | 73 | 120 | |
| | 2019.02- | ET | R | L/R | Saloon RWD 3D1;3D6 | Date to:2023.08 | GCI82461 | Inner Joint | | 29 | 33 | 40 | 73 | 100.5 | |
| | 2019.02- | ET | R | L/R | Saloon RWD 3D1;3D6 | Date from:2023.09 | GCI83304 | Inner Joint | | 29 | 24 | 40 | 72.5 | 121.5 | |
| EV (235 kw) | 2025.05- | ET | R | L/R | Saloon RWD 3D6 | | GDS57880 | Drive Shaft | | 30 | 29 | 52 | 97.5 | 808 | |
| | 2025.05- | ET | R | L/R | Saloon RWD 3D6 | Inner teeth of wheel side:33 | GDS84028 | Drive Shaft | | 30 | 29 | 52 | 98 | 809 | |
| | 2025.05- | ET | R | L/R | Saloon RWD 3D6 | | GCO82557 | Outer Joint | | 30 | 33 | 52 | 98 | 57 | I |
| | 2025.05- | ET | R | L/R | Saloon RWD 3D6 | | GCO83768 | Outer Joint | | 30 | 25 | 52 | 97.5 | 59 | I |
| | 2025.05- | ET | R | L/R | Saloon RWD 3D6 | | GCI82461 | Inner Joint | | 29 | 33 | 40 | 73 | 100.5 | |
| | 2025.05- | ET | R | L/R | Saloon RWD 3D6 | | GCI83304 | Inner Joint | | 29 | 24 | 40 | 72.5 | 121.5 | |
| EV (239 kw) | 2019.12- | ET | R | L/R | Saloon RWD 3D1 | Date from:2023.09 | GDS57880 | Drive Shaft | | 30 | 29 | 52 | 97.5 | 808 | |
| | 2019.12- | ET | R | L/R | Saloon RWD 3D1 | Date to:2023.08 | GDS84027 | Drive Shaft | | 30 | 29 | 52 | 98 | 805 | |
| | 2019.12- | ET | R | L/R | Saloon RWD 3D1 | Date to:2023.08 | GDS84028 | Drive Shaft | | 30 | 29 | 52 | 98 | 809 | |
| | 2019.12- | ET | R | L/R | Saloon RWD 3D1 | Date to:2023.08 | GCO82557 | Outer Joint | | 30 | 33 | 52 | 98 | 57 | I |
| | 2019.12- | ET | R | L/R | Saloon RWD 3D1 | Date from:2023.09 | GCO83768 | Outer Joint | | 30 | 25 | 52 | 97.5 | 59 | I |
| | 2019.12- | ET | R | L/R | Saloon RWD 3D1 | Date to:2023.08 | GCI82460 | Inner Joint | | 29 | 33 | 40 | 73 | 120 | |
| | 2019.12- | ET | R | L/R | Saloon RWD 3D1 | Date to:2023.08 | GCI82461 | Inner Joint | | 29 | 33 | 40 | 73 | 100.5 | |
| | 2019.12- | ET | R | L/R | Saloon RWD 3D1 | Date from:2023.09 | GCI83304 | Inner Joint | | 29 | 24 | 40 | 72.5 | 121.5 | |
| EV (258 kw) | 2018.06- | ET | R | L/R | Saloon 4WD 3D3;3D5;3D7 | Date from:2023.09 | GDS57880 | Drive Shaft | | 30 | 29 | 52 | 97.5 | 808 | |
| | 2018.06- | ET | R | L/R | Saloon 4WD 3D3;3D5;3D7 | Date to:2023.08 | GDS84028 | Drive Shaft | | 30 | 29 | 52 | 98 | 809 | |
| | 2018.06- | ET | R | L/R | Saloon 4WD 3D3;3D5;3D7 | Date from:2023.09 | GCO83768 | Outer Joint | | 30 | 25 | 52 | 97.5 | 59 | I |
| | 2018.06- | ET | R | L/R | Saloon 4WD 3D3;3D5;3D7 | Date to:2023.08 | GCI82461 | Inner Joint | | 29 | 33 | 40 | 73 | 100.5 | |
| | 2018.06- | ET | R | L/R | Saloon 4WD 3D3;3D5;3D7 | Date from:2023.09 | GCI83304 | Inner Joint | | 29 | 24 | 40 | 72.5 | 121.5 | |
| | 2018.06- | ET | F/R | L/R | Saloon 4WD 3D3;3D5;3D7 | Position:Rear,Date to:2023.08 | GDS84027 | Drive Shaft | | 30 | 29 | 52 | 98 | 805 | |
| | 2018.06- | ET | F/R | L/R | Saloon 4WD 3D3;3D5;3D7 | Date to:2023.08 | GCO82557 | Outer Joint | | 30 | 33 | 52 | 98 | 57 | I |
| | 2018.06- | ET | F/R | L/R | Saloon 4WD 3D3;3D5;3D7 | | GCI82460 | Inner Joint | | 29 | 33 | 40 | 73 | 120 | |
| EV (288 kw) | 2024.02- | ET | F | L/R | Saloon 4WD | | GDS84027 | Drive Shaft | | 30 | 29 | 52 | 98 | 805 | |
| | 2024.02- | ET | F | L/R | Saloon 4WD | | GCI82460 | Inner Joint | | 29 | 33 | 40 | 73 | 120 | |
| | 2024.02- | ET | R | L/R | Saloon 4WD | Inner teeth of wheel side:25 | GDS57880 | Drive Shaft | | 30 | 29 | 52 | 97.5 | 808 | |
| | 2024.02- | ET | R | L/R | Saloon 4WD | Inner teeth of wheel side:33 | GDS84028 | Drive Shaft | | 30 | 29 | 52 | 98 | 809 | |
| | 2024.02- | ET | R | L/R | Saloon 4WD | | GCO83768 | Outer Joint | | 30 | 25 | 52 | 97.5 | 59 | I |
| | 2024.02- | ET | R | L/R | Saloon 4WD | | GCI82461 | Inner Joint | | 29 | 33 | 40 | 73 | 100.5 | |
| | 2024.02- | ET | R | L/R | Saloon 4WD | | GCI83304 | Inner Joint | | 29 | 24 | 40 | 72.5 | 121.5 | |
| | 2024.02- | ET | F/R | L/R | Saloon 4WD | | GCO82557 | Outer Joint | | 30 | 33 | 52 | 98 | 57 | I |
| EV (324 kw) | 2019.03- | ET | R | L/R | Saloon 4WD 3D1;3D3 | Date from:2023.09 | GDS57880 | Drive Shaft | | 30 | 29 | 52 | 97.5 | 808 | |
| | 2019.03- | ET | R | L/R | Saloon 4WD 3D1;3D3 | Date to:2023.08 | GDS84028 | Drive Shaft | | 30 | 29 | 52 | 98 | 809 | |
| | 2019.03- | ET | R | L/R | Saloon 4WD 3D1;3D3 | Date to:2023.08 | GCO82557 | Outer Joint | | 30 | 33 | 52 | 98 | 57 | I |
| | 2019.03- | ET | R | L/R | Saloon 4WD 3D1;3D3 | Date from:2023.09 | GCO83768 | Outer Joint | | 30 | 25 | 52 | 97.5 | 59 | I |
| | 2019.03- | ET | R | L/R | Saloon 4WD 3D1;3D3 | Date to:2023.08 | GCI82461 | Inner Joint | | 29 | 33 | 40 | 73 | 100.5 | |
| | 2019.03- | ET | R | L/R | Saloon 4WD 3D1;3D3 | Date from:2023.09 | GCI83304 | Inner Joint | | 29 | 24 | 40 | 72.5 | 121.5 | |
| | 2019.03- | ET | F/R | L/R | Saloon 4WD 3D1;3D3 | Position:Rear,Date to:2023.08 | GDS84027 | Drive Shaft | | 30 | 29 | 52 | 98 | 805 | |
| | 2019.03- | ET | F/R | L/R | Saloon 4WD 3D1;3D3 | Position:Rear,Date to:2023.08 | GCI82460 | Inner Joint | | 29 | 33 | 40 | 73 | 120 | |
| EV (331 kw) | 2023.09- | ET | F | L/R | Saloon 4WD 3D3/3D7 | | GDS84027 | Drive Shaft | | 30 | 29 | 52 | 98 | 805 | |
| | 2023.09- | ET | F | L/R | Saloon 4WD 3D3/3D7 | | GCO82557 | Outer Joint | | 30 | 33 | 52 | 98 | 57 | I |
| | 2023.09- | ET | F | L/R | Saloon 4WD 3D3/3D7 | | GCI82460 | Inner Joint | | 29 | 33 | 40 | 73 | 120 | |
| | 2023.09- | ET | R | L/R | Saloon 4WD 3D3/3D7 | | GDS57880 | Drive Shaft | | 30 | 29 | 52 | 97.5 | 808 | |
| | 2023.09- | ET | R | L/R | Saloon 4WD 3D3/3D7 | | GDS84028 | Drive Shaft | | 30 | 29 | 52 | 98 | 809 | |
| | 2023.09- | ET | R | L/R | Saloon 4WD 3D3/3D7 | | GCO82557 | Outer Joint | | 30 | 33 | 52 | 98 | 57 | I |
| | 2023.09- | ET | R | L/R | Saloon 4WD 3D3/3D7 | | GCO83768 | Outer Joint | | 30 | 25 | 52 | 97.5 | 59 | I |

| | YEAR | TRANSM. | F/R | L/R | BODY STYLE & DRIVE TYPE & ENGINE | REMARKS | G-AP Ref. | PRODUCT | ABS | Technical Specifications | | | | | |
|---|---|---|---|---|---|---|---|---|---|---|---|---|---|---|---|
| | | | | | | | | | | A | B | C | H | L | P |
| **TESLA** **Model 3** | | | | | | | | | | | | | | | |
| EV (331 kw) | 2023.09- | ET | R | L/R | Saloon 4WD 3D3/3D7 | | GCI82461 | Inner Joint | | 29 | 33 | 40 | 73 | 100.5 | |
| | 2023.09- | ET | R | L/R | Saloon 4WD 3D3/3D7 | | GCI83304 | Inner Joint | | 29 | 24 | 40 | 72.5 | 121.5 | |
| EV (340 kw) | 2018.06- | ET | R | L/R | Saloon 4WD 3D1;3D3;3D6 | Date from:2023.09 | GDS57880 | Drive Shaft | | 30 | 29 | 52 | 97.5 | 808 | |
| | 2018.06- | ET | R | L/R | Saloon 4WD 3D1;3D3;3D6 | Date to:2023.08 | GDS84028 | Drive Shaft | | 30 | 29 | 52 | 98 | 809 | |
| | 2018.06- | ET | R | L/R | Saloon 4WD 3D1;3D3;3D6 | Date from:2023.09 | GCO83768 | Outer Joint | | 30 | 25 | 52 | 97.5 | 59 | I |
| | 2018.06- | ET | R | L/R | Saloon 4WD 3D1;3D3;3D6 | Date to:2023.08 | GCI82461 | Inner Joint | | 29 | 33 | 40 | 73 | 100.5 | |
| | 2018.06- | ET | R | L/R | Saloon 4WD 3D1;3D3;3D6 | Date from:2023.09 | GCI83304 | Inner Joint | | 29 | 24 | 40 | 72.5 | 121.5 | |
| | 2018.06- | ET | F/R | L/R | Saloon 4WD 3D1;3D3;3D6 | Position:Rear,Date to:2023.08 | GDS84027 | Drive Shaft | | 30 | 29 | 52 | 98 | 805 | |
| | 2018.06- | ET | F/R | L/R | Saloon 4WD 3D1;3D3;3D6 | Date to:2023.08 | GCO82557 | Outer Joint | | 30 | 33 | 52 | 98 | 57 | I |
| | 2018.06- | ET | F/R | L/R | Saloon 4WD 3D1;3D3;3D6 | | GCI82460 | Inner Joint | | 29 | 33 | 40 | 73 | 120 | |
| EV (343 kw) | 2024.04- | ET | F | L/R | Saloon 4WD 3D3/4D2 | | GDS84027 | Drive Shaft | | 30 | 29 | 52 | 98 | 805 | |
| | 2024.04- | ET | F | L/R | Saloon 4WD 3D3/4D2 | | GCO82557 | Outer Joint | | 30 | 33 | 52 | 98 | 57 | I |
| | 2024.04- | ET | F | L/R | Saloon 4WD 3D3/4D2 | | GCI82460 | Inner Joint | | 29 | 33 | 40 | 73 | 120 | |
| | 2024.04- | ET | R | L/R | Saloon 4WD 3D3/4D2 | | GDS57880 | Drive Shaft | | 30 | 29 | 52 | 97.5 | 808 | |
| | 2024.04- | ET | R | L/R | Saloon 4WD 3D3/4D2 | | GDS84028 | Drive Shaft | | 30 | 29 | 52 | 98 | 809 | |
| | 2024.04- | ET | R | L/R | Saloon 4WD 3D3/4D2 | | GCO82557 | Outer Joint | | 30 | 33 | 52 | 98 | 57 | I |
| | 2024.04- | ET | R | L/R | Saloon 4WD 3D3/4D2 | | GCO83768 | Outer Joint | | 30 | 25 | 52 | 97.5 | 59 | I |
| | 2024.04- | ET | R | L/R | Saloon 4WD 3D3/4D2 | | GCI82461 | Inner Joint | | 29 | 33 | 40 | 73 | 100.5 | |
| | 2024.04- | ET | R | L/R | Saloon 4WD 3D3/4D2 | | GCI83304 | Inner Joint | | 29 | 24 | 40 | 72.5 | 121.5 | |
| EV (350 kw) | 2019.06- | ET | R | L/R | Saloon 4WD 3D3;3D5 | Date from:2023.09 | GDS57880 | Drive Shaft | | 30 | 29 | 52 | 97.5 | 808 | |
| | 2019.06- | ET | R | L/R | Saloon 4WD 3D3;3D5 | Date to:2023.08 | GDS84028 | Drive Shaft | | 30 | 29 | 52 | 98 | 809 | |
| | 2019.06- | ET | R | L/R | Saloon 4WD 3D3;3D5 | Date from:2023.09 | GCO83768 | Outer Joint | | 30 | 25 | 52 | 97.5 | 59 | I |
| | 2019.06- | ET | R | L/R | Saloon 4WD 3D3;3D5 | Date to:2023.08 | GCI82461 | Inner Joint | | 29 | 33 | 40 | 73 | 100.5 | |
| | 2019.06- | ET | R | L/R | Saloon 4WD 3D3;3D5 | Date from:2023.09 | GCI83304 | Inner Joint | | 29 | 24 | 40 | 72.5 | 121.5 | |
| | 2019.06- | ET | F/R | L/R | Saloon 4WD 3D3;3D5 | Position:Rear,Date to:2023.08 | GDS84027 | Drive Shaft | | 30 | 29 | 52 | 98 | 805 | |
| | 2019.06- | ET | F/R | L/R | Saloon 4WD 3D3;3D5 | Date to:2023.08 | GCO82557 | Outer Joint | | 30 | 33 | 52 | 98 | 57 | I |
| | 2019.06- | ET | F/R | L/R | Saloon 4WD 3D3;3D5 | | GCI82460 | Inner Joint | | 29 | 33 | 40 | 73 | 120 | |
| EV (355 kw) | 2019.02- | ET | R | L/R | Saloon 4WD 3D1;3D3 | Date from:2023.09 | GDS57880 | Drive Shaft | | 30 | 29 | 52 | 97.5 | 808 | |
| | 2019.02- | ET | R | L/R | Saloon 4WD 3D1;3D3 | Date to:2023.08 | GDS84028 | Drive Shaft | | 30 | 29 | 52 | 98 | 809 | |
| | 2019.02- | ET | R | L/R | Saloon 4WD 3D1;3D3 | Date from:2023.09 | GCO83768 | Outer Joint | | 30 | 25 | 52 | 97.5 | 59 | I |
| | 2019.02- | ET | R | L/R | Saloon 4WD 3D1;3D3 | Date to:2023.08 | GCI82461 | Inner Joint | | 29 | 33 | 40 | 73 | 100.5 | |
| | 2019.02- | ET | R | L/R | Saloon 4WD 3D1;3D3 | Date from:2023.09 | GCI83304 | Inner Joint | | 29 | 24 | 40 | 72.5 | 121.5 | |
| | 2019.02- | ET | F/R | L/R | Saloon 4WD 3D1;3D3 | Position:Rear,Date to:2023.08 | GDS84027 | Drive Shaft | | 30 | 29 | 52 | 98 | 805 | |
| | 2019.02- | ET | F/R | L/R | Saloon 4WD 3D1;3D3 | Date to:2023.08 | GCO82557 | Outer Joint | | 30 | 33 | 52 | 98 | 57 | I |
| | 2019.02- | ET | F/R | L/R | Saloon 4WD 3D1;3D3 | | GCI82460 | Inner Joint | | 29 | 33 | 40 | 73 | 120 | |
| EV (360 kw) | 2019.06- | ET | R | L/R | Saloon 4WD 3D1;3D3 | Date from:2023.09 | GDS57880 | Drive Shaft | | 30 | 29 | 52 | 97.5 | 808 | |
| | 2019.06- | ET | R | L/R | Saloon 4WD 3D1;3D3 | Date to:2023.08 | GDS84028 | Drive Shaft | | 30 | 29 | 52 | 98 | 809 | |
| | 2019.06- | ET | R | L/R | Saloon 4WD 3D1;3D3 | Date from:2023.09 | GCO83768 | Outer Joint | | 30 | 25 | 52 | 97.5 | 59 | I |
| | 2019.06- | ET | R | L/R | Saloon 4WD 3D1;3D3 | Date to:2023.08 | GCI82461 | Inner Joint | | 29 | 33 | 40 | 73 | 100.5 | |
| | 2019.06- | ET | R | L/R | Saloon 4WD 3D1;3D3 | Date from:2023.09 | GCI83304 | Inner Joint | | 29 | 24 | 40 | 72.5 | 121.5 | |
| | 2019.06- | ET | F/R | L/R | Saloon 4WD 3D1;3D3 | Position:Rear,Date to:2023.08 | GDS84027 | Drive Shaft | | 30 | 29 | 52 | 98 | 805 | |
| | 2019.06- | ET | F/R | L/R | Saloon 4WD 3D1;3D3 | Date to:2023.08 | GCO82557 | Outer Joint | | 30 | 33 | 52 | 98 | 57 | I |
| | 2019.06- | ET | F/R | L/R | Saloon 4WD 3D1;3D3 | | GCI82460 | Inner Joint | | 29 | 33 | 40 | 73 | 120 | |
| EV (361 kw) | 2019.12- | ET | R | L/R | Saloon 4WD 3D3;3D5 | Date from:2023.09 | GDS57880 | Drive Shaft | | 30 | 29 | 52 | 97.5 | 808 | |
| | 2019.12- | ET | R | L/R | Saloon 4WD 3D3;3D5 | Date to:2023.08 | GDS84028 | Drive Shaft | | 30 | 29 | 52 | 98 | 809 | |
| | 2019.12- | ET | R | L/R | Saloon 4WD 3D3;3D5 | Date from:2023.09 | GCO83768 | Outer Joint | | 30 | 25 | 52 | 97.5 | 59 | I |
| | 2019.12- | ET | R | L/R | Saloon 4WD 3D3;3D5 | Date to:2023.08 | GCI82461 | Inner Joint | | 29 | 33 | 40 | 73 | 100.5 | |
| | 2019.12- | ET | R | L/R | Saloon 4WD 3D3;3D5 | Date from:2023.09 | GCI83304 | Inner Joint | | 29 | 24 | 40 | 72.5 | 121.5 | |
| | 2019.12- | ET | F/R | L/R | Saloon 4WD 3D3;3D5 | Position:Rear,Date to:2023.08 | GDS84027 | Drive Shaft | | 30 | 29 | 52 | 98 | 805 | |
| | 2019.12- | ET | F/R | L/R | Saloon 4WD 3D3;3D5 | Date to:2023.08 | GCO82557 | Outer Joint | | 30 | 33 | 52 | 98 | 57 | I |
| | 2019.12- | ET | F/R | L/R | Saloon 4WD 3D3;3D5 | | GCI82460 | Inner Joint | | 29 | 33 | 40 | 73 | 120 | |
| EV (366 kw) | 2020.12- | ET | R | L/R | Saloon 4WD 3D3;3D5;3D7 | Date from:2023.09 | GDS57880 | Drive Shaft | | 30 | 29 | 52 | 97.5 | 808 | |
| | 2020.12- | ET | R | L/R | Saloon 4WD 3D3;3D5;3D7 | Date to:2023.08 | GDS84028 | Drive Shaft | | 30 | 29 | 52 | 98 | 809 | |
| | 2020.12- | ET | R | L/R | Saloon 4WD 3D3;3D5;3D7 | Date from:2023.09 | GCO83768 | Outer Joint | | 30 | 25 | 52 | 97.5 | 59 | I |
| | 2020.12- | ET | R | L/R | Saloon 4WD 3D3;3D5;3D7 | Date to:2023.08 | GCI82461 | Inner Joint | | 29 | 33 | 40 | 73 | 100.5 | |
| | 2020.12- | ET | R | L/R | Saloon 4WD 3D3;3D5;3D7 | Date from:2023.09 | GCI83304 | Inner Joint | | 29 | 24 | 40 | 72.5 | 121.5 | |
| | 2020.12- | ET | F/R | L/R | Saloon 4WD 3D3;3D5;3D7 | Position:Rear,Date to:2023.08 | GDS84027 | Drive Shaft | | 30 | 29 | 52 | 98 | 805 | |
| | 2020.12- | ET | F/R | L/R | Saloon 4WD 3D3;3D5;3D7 | Date to:2023.08 | GCO82557 | Outer Joint | | 30 | 33 | 52 | 98 | 57 | I |
| | 2020.12- | ET | F/R | L/R | Saloon 4WD 3D3;3D5;3D7 | | GCI82460 | Inner Joint | | 29 | 33 | 40 | 73 | 120 | |
| EV (377 kw) | 2019.12- | ET | R | L/R | Saloon 4WD 3D3;3D5 | Date from:2023.09 | GDS57880 | Drive Shaft | | 30 | 29 | 52 | 97.5 | 808 | |
| | 2019.12- | ET | R | L/R | Saloon 4WD 3D3;3D5 | Date to:2023.08 | GDS84028 | Drive Shaft | | 30 | 29 | 52 | 98 | 809 | |
| | 2019.12- | ET | R | L/R | Saloon 4WD 3D3;3D5 | Date from:2023.09 | GCO83768 | Outer Joint | | 30 | 25 | 52 | 97.5 | 59 | I |
| | 2019.12- | ET | R | L/R | Saloon 4WD 3D3;3D5 | Date to:2023.08 | GCI82461 | Inner Joint | | 29 | 33 | 40 | 73 | 100.5 | |
| | 2019.12- | ET | R | L/R | Saloon 4WD 3D3;3D5 | Date from:2023.09 | GCI83304 | Inner Joint | | 29 | 24 | 40 | 72.5 | 121.5 | |
| | 2019.12- | ET | F/R | L/R | Saloon 4WD 3D3;3D5 | Position:Rear,Date to:2023.08 | GDS84027 | Drive Shaft | | 30 | 29 | 52 | 98 | 805 | |

| | YEAR | TRANSM. | F/R | L/R | BODY STYLE & DRIVE TYPE & ENGINE | REMARKS | G-AP Ref. | PRODUCT | ABS | Technical Specifications A | B | C | H | L | P |
|---|---|---|---|---|---|---|---|---|---|---|---|---|---|---|---|
| **TESLA** | | | | | | | | | | | | | | | |
| **Model 3** | | | | | | | | | | | | | | | |
| EV (377 kw) | 2019.12- | ET | F/R | L/R | Saloon 4WD 3D3;3D5 | Date to:2023.08 | GCO82557 | Outer Joint | | 30 | 33 | 52 | 98 | 57 | I |
| | 2019.12- | ET | F/R | L/R | Saloon 4WD 3D3;3D5 | | GCI82460 | Inner Joint | | 29 | 33 | 40 | 73 | 120 | |
| EV (393 kw) | 2022.02- | ET | R | L/R | Saloon 4WD 3D3;3D5 | Date from:2023.09 | GDS57880 | Drive Shaft | | 30 | 29 | 52 | 97.5 | 808 | |
| | 2022.02- | ET | R | L/R | Saloon 4WD 3D3;3D5 | Date to:2023.08 | GDS84028 | Drive Shaft | | 30 | 29 | 52 | 98 | 809 | |
| | 2022.02- | ET | R | L/R | Saloon 4WD 3D3;3D5 | Date from:2023.09 | GCO83768 | Outer Joint | | 30 | 25 | 52 | 97.5 | 59 | I |
| | 2022.02- | ET | R | L/R | Saloon 4WD 3D3;3D5 | Date to:2023.08 | GCI82461 | Inner Joint | | 29 | 33 | 40 | 73 | 100.5 | |
| | 2022.02- | ET | R | L/R | Saloon 4WD 3D3;3D5 | Date from:2023.09 | GCI83304 | Inner Joint | | 29 | 24 | 40 | 72.5 | 121.5 | |
| | 2022.02- | ET | F/R | L/R | Saloon 4WD 3D3;3D5 | Position:Rear,Date to:2023.08 | GDS84027 | Drive Shaft | | 30 | 29 | 52 | 98 | 805 | |
| | 2022.02- | ET | F/R | L/R | Saloon 4WD 3D3;3D5 | Position:Rear,Date to:2023.08 | GCI82460 | Inner Joint | | 29 | 33 | 40 | 73 | 120 | |
| EV (461 kw) | 2024.04- | ET | F | L/R | Saloon 4WD 3D3, 4D2 | | GDS84027 | Drive Shaft | | 30 | 29 | 52 | 98 | 805 | |
| | 2024.04- | ET | F | L/R | Saloon 4WD 3D3, 4D2 | | GCI82460 | Inner Joint | | 29 | 33 | 40 | 73 | 120 | |
| | 2024.04- | ET | R | L/R | Saloon 4WD 3D3, 4D2 | Inner teeth of wheel side:25 | GDS57880 | Drive Shaft | | 30 | 29 | 52 | 97.5 | 808 | |
| | 2024.04- | ET | R | L/R | Saloon 4WD 3D3, 4D2 | Inner teeth of wheel side:33 | GDS84028 | Drive Shaft | | 30 | 29 | 52 | 98 | 809 | |
| | 2024.04- | ET | R | L/R | Saloon 4WD 3D3, 4D2 | | GCO83768 | Outer Joint | | 30 | 25 | 52 | 97.5 | 59 | I |
| | 2024.04- | ET | R | L/R | Saloon 4WD 3D3, 4D2 | | GCI82461 | Inner Joint | | 29 | 33 | 40 | 73 | 100.5 | |
| | 2024.04- | ET | R | L/R | Saloon 4WD 3D3, 4D2 | | GCI83304 | Inner Joint | | 29 | 24 | 40 | 72.5 | 121.5 | |
| | 2024.04- | ET | F/R | L/R | Saloon 4WD 3D3, 4D2 | | GCO82557 | Outer Joint | | 30 | 33 | 52 | 98 | 57 | I |
| **Model S** | | | | | | | | | | | | | | | |
| EV (386 kw) | 2019.06-2026.04 | ET | F | L | Hatchback 4WD L2S | Date from:2021.02 | GDS56390 | Drive Shaft | | 30 | 29 | 61 | 119 | 840 | |
| | 2019.06-2026.04 | ET | F | L | Hatchback 4WD L2S | Date to:2021.01,Equipment code:DU02,DU03 | GDS56391 | Drive Shaft | | 30 | 29 | 61 | 119 | 818 | |
| | 2019.06-2026.04 | ET | F | R | Hatchback 4WD L2S | Date from:2021.02 | GDS56389 | Drive Shaft | | 30 | 29 | 61 | 119 | 908 | |
| | 2019.06-2026.04 | ET | F | R | Hatchback 4WD L2S | Date to:2021.01,Equipment code:DU02/DU03 | GDS56392 | Drive Shaft | | 30 | 29 | 61 | 119 | 886 | |
| | 2019.06-2026.04 | ET | F | L/R | Hatchback 4WD L2S | | GCO83279 | Outer Joint | | 30 | 25 | 61 | 119 | 57 | I |
| | 2019.06-2026.04 | ET | F | L | Hatchback 4WD L2S | | GCI83285 | Inner Joint | | 29 | 25 | 40 | 73 | 135 | |
| | 2019.06-2026.04 | ET | F | R | Hatchback 4WD L2S | | GCI83284 | Inner Joint | | 29 | 25 | 40 | 83.5 | 192 | |
| | 2019.06-2026.04 | ET | R | L/R | Hatchback 4WD L2S | Date from:2021.02,For Long range,for OE:1420167-00-B,Replace in pairs only | GDS57882 | Drive Shaft | | 30 | 29 | 63 | 120 | 873 | |
| | 2019.06-2026.04 | ET | R | L/R | Hatchback 4WD L2S | Date to:2021.01 | GDS81699 | Drive Shaft | | 30 | 29 | 63 | 120 | 868 | |
| | 2019.06-2026.04 | ET | R | L/R | Hatchback 4WD L2S | Date to:2021.01 | GCO81487 | Outer Joint | | 30 | 35 | 63 | 120 | 59.5 | I |
| | 2019.06-2026.04 | ET | R | L/R | Hatchback 4WD L2S | Date from:2021.02,For Long range,for OE:1420161-00-A | GCO83769 | Outer Joint | | 30 | 35 | 63 | 120 | 55 | I |
| | 2019.06-2026.04 | ET | R | L/R | Hatchback 4WD L2S | Date to:2021.01 | GCI81465 | Inner Joint | | 29 | 35 | 44 | 72.5 | 118 | |
| | 2019.06-2026.04 | ET | R | L/R | Hatchback 4WD L2S | Date from:2021.02,For Long range,for OE:1420161-00-A | GCI83908 | Inner Joint | | 29 | 35 | 40 | 73 | 127 | |
| EV (413 kw) | 2019.06-2026.04 | ET | F | L | Hatchback 4WD L2S;3D1 | Date from:2021.02 | GDS56390 | Drive Shaft | | 30 | 29 | 61 | 119 | 840 | |
| | 2019.06-2026.04 | ET | F | L | Hatchback 4WD L2S;3D1 | Date to:2021.01,Equipment code:DU02,DU03 | GDS56391 | Drive Shaft | | 30 | 29 | 61 | 119 | 818 | |
| | 2019.06-2026.04 | ET | F | R | Hatchback 4WD L2S;3D1 | Date from:2021.02 | GDS56389 | Drive Shaft | | 30 | 29 | 61 | 119 | 908 | |
| | 2019.06-2026.04 | ET | F | R | Hatchback 4WD L2S;3D1 | Date to:2021.01,Equipment code:DU02,DU03 | GDS56392 | Drive Shaft | | 30 | 29 | 61 | 119 | 886 | |
| | 2019.06-2026.04 | ET | F | L/R | Hatchback 4WD L2S;3D1 | | GCO83279 | Outer Joint | | 30 | 25 | 61 | 119 | 57 | I |
| | 2019.06-2026.04 | ET | F | L | Hatchback 4WD L2S;3D1 | | GCI83285 | Inner Joint | | 29 | 25 | 40 | 73 | 135 | |
| | 2019.06-2026.04 | ET | F | R | Hatchback 4WD L2S;3D1 | | GCI83284 | Inner Joint | | 29 | 25 | 40 | 83.5 | 192 | |
| | 2019.06-2026.04 | ET | R | L/R | Hatchback 4WD L2S;3D1 | Date from:2021.02,For Long range,for OE:1420167-00-B,Replace in pairs only | GDS57882 | Drive Shaft | | 30 | 29 | 63 | 120 | 873 | |
| | 2019.06-2026.04 | ET | R | L/R | Hatchback 4WD L2S;3D1 | Date to:2021.01 | GDS81699 | Drive Shaft | | 30 | 29 | 63 | 120 | 868 | |
| | 2019.06-2026.04 | ET | R | L/R | Hatchback 4WD L2S;3D1 | Date to:2021.01 | GCO81487 | Outer Joint | | 30 | 35 | 63 | 120 | 59.5 | I |
| | 2019.06-2026.04 | ET | R | L/R | Hatchback 4WD L2S;3D1 | Date from:2021.02,For Long range,for OE:1420161-00-A | GCO83769 | Outer Joint | | 30 | 35 | 63 | 120 | 55 | I |
| | 2019.06-2026.04 | ET | R | L/R | Hatchback 4WD L2S;3D1 | Date to:2021.01 | GCI81465 | Inner Joint | | 29 | 35 | 44 | 72.5 | 118 | |
| | 2019.06-2026.04 | ET | R | L/R | Hatchback 4WD L2S;3D1 | Date from:2021.02,For Long range,for OE:1420161-00-A | GCI83908 | Inner Joint | | 29 | 35 | 40 | 73 | 127 | |
| EV (421 kw) | 2020.09-2026.04 | ET | F | L | Hatchback 4WD L2S;3D1 | Date from:2021.02 | GDS56390 | Drive Shaft | | 30 | 29 | 61 | 119 | 840 | |
| | 2020.09-2026.04 | ET | F | L | Hatchback 4WD L2S;3D1 | Date to:2021.01,Equipment code:DU02,DU03 | GDS56391 | Drive Shaft | | 30 | 29 | 61 | 119 | 818 | |
| | 2020.09-2026.04 | ET | F | R | Hatchback 4WD L2S;3D1 | Date from:2021.02 | GDS56389 | Drive Shaft | | 30 | 29 | 61 | 119 | 908 | |
| | 2020.09-2026.04 | ET | F | R | Hatchback 4WD L2S;3D1 | Date to:2021.01,Equipment code:DU02,DU03 | GDS56392 | Drive Shaft | | 30 | 29 | 61 | 119 | 886 | |
| | 2020.09-2026.04 | ET | F | L/R | Hatchback 4WD L2S;3D1 | | GCO83279 | Outer Joint | | 30 | 25 | 61 | 119 | 57 | I |
| | 2020.09-2026.04 | ET | F | L | Hatchback 4WD L2S;3D1 | | GCI83285 | Inner Joint | | 29 | 25 | 40 | 73 | 135 | |
| | 2020.09-2026.04 | ET | F | R | Hatchback 4WD L2S;3D1 | | GCI83284 | Inner Joint | | 29 | 25 | 40 | 83.5 | 192 | |
| | 2020.09-2026.04 | ET | R | L/R | Hatchback 4WD L2S;3D1 | Date from:2021.02,For Long range,for OE:1420167-00-B,Replace in pairs only | GDS57882 | Drive Shaft | | 30 | 29 | 63 | 120 | 873 | |
| | 2020.09-2026.04 | ET | R | L/R | Hatchback 4WD L2S;3D1 | Date to:2021.01 | GDS81699 | Drive Shaft | | 30 | 29 | 63 | 120 | 868 | |
| | 2020.09-2026.04 | ET | R | L/R | Hatchback 4WD L2S;3D1 | Date to:2021.01 | GCO81487 | Outer Joint | | 30 | 35 | 63 | 120 | 59.5 | I |
| | 2020.09-2026.04 | ET | R | L/R | Hatchback 4WD L2S;3D1 | Date from:2021.02,For Long range,for OE:1420161-00-A | GCO83769 | Outer Joint | | 30 | 35 | 63 | 120 | 55 | I |
| | 2020.09-2026.04 | ET | R | L/R | Hatchback 4WD L2S;3D1 | Date to:2021.01 | GCI81465 | Inner Joint | | 29 | 35 | 44 | 72.5 | 118 | |
| | 2020.09-2026.04 | ET | R | L/R | Hatchback 4WD L2S;3D1 | Date from:2021.02,For Long range,for OE:1420161-00-A | GCI83908 | Inner Joint | | 29 | 35 | 40 | 73 | 127 | |
| EV (493 kw) | 2021.01-2026.04 | ET | F | L | Hatchback 4WD 3D1;3D8 | Date from:2021.02 | GDS56390 | Drive Shaft | | 30 | 29 | 61 | 119 | 840 | |
| | 2021.01-2026.04 | ET | F | R | Hatchback 4WD 3D1;3D8 | Date from:2021.02 | GDS56389 | Drive Shaft | | 30 | 29 | 61 | 119 | 908 | |
| | 2021.01-2026.04 | ET | F | L/R | Hatchback 4WD 3D1;3D8 | | GCO83279 | Outer Joint | | 30 | 25 | 61 | 119 | 57 | I |
| | 2021.01-2026.04 | ET | F | L | Hatchback 4WD 3D1;3D8 | | GCI83285 | Inner Joint | | 29 | 25 | 40 | 73 | 135 | |
| | 2021.01-2026.04 | ET | F | R | Hatchback 4WD 3D1;3D8 | Date to:2021.01 | GCI81467 | Inner Joint | | 27 | 35 | 45.7 | | 144 | |
| | 2021.01-2026.04 | ET | F | R | Hatchback 4WD 3D1;3D8 | | GCI83284 | Inner Joint | | 29 | 25 | 40 | 83.5 | 192 | |
| | 2021.01-2026.04 | ET | R | L/R | Hatchback 4WD 3D1;3D8 | Date from:2021.02,For Long range,for OE:1420167-00-B,Replace in pairs only | GDS57882 | Drive Shaft | | 30 | 29 | 63 | 120 | 873 | |
| | 2021.01-2026.04 | ET | R | L/R | Hatchback 4WD 3D1;3D8 | Date to:2021.01 | GDS81699 | Drive Shaft | | 30 | 29 | 63 | 120 | 868 | |

| | YEAR | TRANSM. | F/R | L/R | BODY STYLE & DRIVE TYPE & ENGINE | REMARKS | G-AP Ref. | PRODUCT | ABS | Technical Specifications A | B | C | H | L | P |
|---|---|---|---|---|---|---|---|---|---|---|---|---|---|---|---|
| **TESLA** | | | | | | | | | | | | | | | |
| **Model S** | | | | | | | | | | | | | | | |
| EV (493 kw) | 2021.01-2026.04 | ET | R | L/R | Hatchback 4WD 3D1;3D8 | Date from:2021.02,For Long range,for OE:1420161-00-A | GCO83769 | Outer Joint | | 30 | 35 | 63 | 120 | 55 | I |
| | 2021.01-2026.04 | ET | R | L/R | Hatchback 4WD 3D1;3D8 | Date to:2021.01 | GCI81465 | Inner Joint | | 29 | 35 | 44 | 72.5 | 118 | |
| | 2021.01-2026.04 | ET | R | L/R | Hatchback 4WD 3D1;3D8 | Date from:2021.02,For Long range,for OE:1420161-00-A | GCI83908 | Inner Joint | | 29 | 35 | 40 | 73 | 127 | |
| | 2021.01-2026.04 | ET | F/R | L/R | Hatchback 4WD 3D1;3D8 | Date to:2021.01 | GCO81487 | Outer Joint | | 30 | 35 | 63 | 120 | 59.5 | I |
| EV (568 kw) | 2019.06-2026.04 | ET | F | L | Hatchback 4WD L1S;L2S | Date from:2021.02 | GDS56390 | Drive Shaft | | 30 | 29 | 61 | 119 | 840 | |
| | 2019.06-2026.04 | ET | F | L | Hatchback 4WD L1S;L2S | Date to:2021.01,Equipment code:DU02/DU03 | GDS56391 | Drive Shaft | | 30 | 29 | 61 | 119 | 818 | |
| | 2019.06-2026.04 | ET | F | R | Hatchback 4WD L1S;L2S | Date from:2021.02 | GDS56389 | Drive Shaft | | 30 | 29 | 61 | 119 | 908 | |
| | 2019.06-2026.04 | ET | F | R | Hatchback 4WD L1S;L2S | Date to:2021.01,Equipment code:DU02/DU03 | GDS56392 | Drive Shaft | | 30 | 29 | 61 | 119 | 886 | |
| | 2019.06-2026.04 | ET | F | L/R | Hatchback 4WD L1S;L2S | | GCO83279 | Outer Joint | | 30 | 25 | 61 | 119 | 57 | I |
| | 2019.06-2026.04 | ET | F | L | Hatchback 4WD L1S;L2S | | GCI83285 | Inner Joint | | 29 | 25 | 40 | 73 | 135 | |
| | 2019.06-2026.04 | ET | F | R | Hatchback 4WD L1S;L2S | | GCI83284 | Inner Joint | | 29 | 25 | 40 | 83.5 | 192 | |
| | 2019.06-2026.04 | ET | R | L/R | Hatchback 4WD L1S;L2S | Date from:2021.02,For Long range,for OE:1420167-00-B,Replace in pairs only | GDS57882 | Drive Shaft | | 30 | 29 | 63 | 120 | 873 | |
| | 2019.06-2026.04 | ET | R | L/R | Hatchback 4WD L1S;L2S | Date to:2021.01 | GDS81699 | Drive Shaft | | 30 | 29 | 63 | 120 | 868 | |
| | 2019.06-2026.04 | ET | R | L/R | Hatchback 4WD L1S;L2S | Date to:2021.01 | GCO81487 | Outer Joint | | 30 | 35 | 63 | 120 | 59.5 | I |
| | 2019.06-2026.04 | ET | R | L/R | Hatchback 4WD L1S;L2S | Date from:2021.02,For Long range,for OE:1420161-00-A | GCO83769 | Outer Joint | | 30 | 35 | 63 | 120 | 55 | I |
| | 2019.06-2026.04 | ET | R | L/R | Hatchback 4WD L1S;L2S | Date to:2021.01 | GCI81465 | Inner Joint | | 29 | 35 | 44 | 72.5 | 118 | |
| | 2019.06-2026.04 | ET | R | L/R | Hatchback 4WD L1S;L2S | Date from:2021.02,For Long range,for OE:1420161-00-A | GCI83908 | Inner Joint | | 29 | 35 | 40 | 73 | 127 | |
| EV (585 kw) | 2019.06-2026.04 | ET | F | L | Hatchback 4WD L1S;3D1 | Date from:2021.02 | GDS56390 | Drive Shaft | | 30 | 29 | 61 | 119 | 840 | |
| | 2019.06-2026.04 | ET | F | L | Hatchback 4WD L1S;3D1 | Date to:2021.01,Equipment code:DU02,DU03 | GDS56391 | Drive Shaft | | 30 | 29 | 61 | 119 | 818 | |
| | 2019.06-2026.04 | ET | F | R | Hatchback 4WD L1S;3D1 | Date from:2021.02 | GDS56389 | Drive Shaft | | 30 | 29 | 61 | 119 | 908 | |
| | 2019.06-2026.04 | ET | F | R | Hatchback 4WD L1S;3D1 | Date to:2021.01,Equipment code:DU02,DU03 | GDS56392 | Drive Shaft | | 30 | 29 | 61 | 119 | 886 | |
| | 2019.06-2026.04 | ET | F | L/R | Hatchback 4WD L1S;3D1 | | GCO83279 | Outer Joint | | 30 | 25 | 61 | 119 | 57 | I |
| | 2019.06-2026.04 | ET | F | L | Hatchback 4WD L1S;3D1 | | GCI83285 | Inner Joint | | 29 | 25 | 40 | 73 | 135 | |
| | 2019.06-2026.04 | ET | F | R | Hatchback 4WD L1S;3D1 | | GCI83284 | Inner Joint | | 29 | 25 | 40 | 83.5 | 192 | |
| | 2019.06-2026.04 | ET | R | L/R | Hatchback 4WD L1S;3D1 | Date from:2021.02,For Long range,for OE:1420167-00-B,Replace in pairs only | GDS57882 | Drive Shaft | | 30 | 29 | 63 | 120 | 873 | |
| | 2019.06-2026.04 | ET | R | L/R | Hatchback 4WD L1S;3D1 | Date to:2021.01 | GDS81699 | Drive Shaft | | 30 | 29 | 63 | 120 | 868 | |
| | 2019.06-2026.04 | ET | R | L/R | Hatchback 4WD L1S;3D1 | Date to:2021.01 | GCO81487 | Outer Joint | | 30 | 35 | 63 | 120 | 59.5 | I |
| | 2019.06-2026.04 | ET | R | L/R | Hatchback 4WD L1S;3D1 | Date from:2021.02,For Long range,for OE:1420161-00-A | GCO83769 | Outer Joint | | 30 | 35 | 63 | 120 | 55 | I |
| | 2019.06-2026.04 | ET | R | L/R | Hatchback 4WD L1S;3D1 | Date to:2021.01 | GCI81465 | Inner Joint | | 29 | 35 | 44 | 72.5 | 118 | |
| | 2019.06-2026.04 | ET | R | L/R | Hatchback 4WD L1S;3D1 | Date from:2021.02,For Long range,for OE:1420161-00-A | GCI83908 | Inner Joint | | 29 | 35 | 40 | 73 | 127 | |
| EV (599 kw) | 2020.09-2026.04 | ET | F | L | Hatchback 4WD L1S;3D1 | Date from:2021.02 | GDS56390 | Drive Shaft | | 30 | 29 | 61 | 119 | 840 | |
| | 2020.09-2026.04 | ET | F | L | Hatchback 4WD L1S;3D1 | Date to:2021.01,Equipment code:DU02/DU03 | GDS56391 | Drive Shaft | | 30 | 29 | 61 | 119 | 818 | |
| | 2020.09-2026.04 | ET | F | R | Hatchback 4WD L1S;3D1 | Date from:2021.02 | GDS56389 | Drive Shaft | | 30 | 29 | 61 | 119 | 908 | |
| | 2020.09-2026.04 | ET | F | R | Hatchback 4WD L1S;3D1 | Date to:2021.01,Equipment code:DU02/DU03 | GDS56392 | Drive Shaft | | 30 | 29 | 61 | 119 | 886 | |
| | 2020.09-2026.04 | ET | F | L/R | Hatchback 4WD L1S;3D1 | | GCO83279 | Outer Joint | | 30 | 25 | 61 | 119 | 57 | I |
| | 2020.09-2026.04 | ET | F | L | Hatchback 4WD L1S;3D1 | | GCI83285 | Inner Joint | | 29 | 25 | 40 | 73 | 135 | |
| | 2020.09-2026.04 | ET | F | R | Hatchback 4WD L1S;3D1 | | GCI83284 | Inner Joint | | 29 | 25 | 40 | 83.5 | 192 | |
| | 2020.09-2026.04 | ET | R | L/R | Hatchback 4WD L1S;3D1 | Date from:2021.02,For Long range,for OE:1420167-00-B,Replace in pairs only | GDS57882 | Drive Shaft | | 30 | 29 | 63 | 120 | 873 | |
| | 2020.09-2026.04 | ET | R | L/R | Hatchback 4WD L1S;3D1 | Date to:2021.01 | GCO81487 | Outer Joint | | 30 | 35 | 63 | 120 | 59.5 | I |
| | 2020.09-2026.04 | ET | R | L/R | Hatchback 4WD L1S;3D1 | Date from:2021.02,For Long range,for OE:1420161-00-A | GCO83769 | Outer Joint | | 30 | 35 | 63 | 120 | 55 | I |
| | 2020.09-2026.04 | ET | R | L/R | Hatchback 4WD L1S;3D1 | Date to:2021.01 | GCI81465 | Inner Joint | | 29 | 35 | 44 | 72.5 | 118 | |
| | 2020.09-2026.04 | ET | R | L/R | Hatchback 4WD L1S;3D1 | Date from:2021.02,For Long range,for OE:1420161-00-A | GCI83908 | Inner Joint | | 29 | 35 | 40 | 73 | 127 | |
| EV (750 kw) | 2021.01-2026.04 | ET | F | L | Hatchback 4WD 5D1;5D2 | Date from:2021.02 | GDS56390 | Drive Shaft | | 30 | 29 | 61 | 119 | 840 | |
| | 2021.01-2026.04 | ET | F | L | Hatchback 4WD 5D1;5D2 | Date to:2021.01 | GDS56391 | Drive Shaft | | 30 | 29 | 61 | 119 | 818 | |
| | 2021.01-2026.04 | ET | F | R | Hatchback 4WD 5D1;5D2 | Date from:2021.02 | GDS56389 | Drive Shaft | | 30 | 29 | 61 | 119 | 908 | |
| | 2021.01-2026.04 | ET | F | R | Hatchback 4WD 5D1;5D2 | Date to:2021.01 | GDS56392 | Drive Shaft | | 30 | 29 | 61 | 119 | 886 | |
| | 2021.01-2026.04 | ET | R | L/R | Hatchback 4WD 5D1;5D2 | Date from:2021.02,For Long range,for OE:1420167-00-B,Replace in pairs only | GDS57882 | Drive Shaft | | 30 | 29 | 63 | 120 | 873 | |
| | 2021.01-2026.04 | ET | R | L/R | Hatchback 4WD 5D1;5D2 | Date to:2021.01 | GDS81699 | Drive Shaft | | 30 | 29 | 63 | 120 | 868 | |
| | 2021.01-2026.04 | ET | R | L/R | Hatchback 4WD 5D1;5D2 | Date from:2021.02,For Long range,for OE:1420161-00-A | GCO83769 | Outer Joint | | 30 | 35 | 63 | 120 | 55 | I |
| | 2021.01-2026.04 | ET | R | L/R | Hatchback 4WD 5D1;5D2 | Date from:2021.02,For Long range,for OE:1420161-00-A | GCI83908 | Inner Joint | | 29 | 35 | 40 | 73 | 127 | |
| **Model S 100D** | | | | | | | | | | | | | | | |
| EV (310 kw) | 2017.06-2026.04 | ET | F | L | Hatchback 4WD L2S | Date from:2021.02 | GDS56390 | Drive Shaft | | 30 | 29 | 61 | 119 | 840 | |
| | 2017.06-2026.04 | ET | F | L | Hatchback 4WD L2S | Date from:2019.05,Date to:2021.01 | GDS56391 | Drive Shaft | | 30 | 29 | 61 | 119 | 818 | |
| | 2017.06-2026.04 | ET | F | R | Hatchback 4WD L2S | Date from:2021.02 | GDS56389 | Drive Shaft | | 30 | 29 | 61 | 119 | 908 | |
| | 2017.06-2026.04 | ET | F | R | Hatchback 4WD L2S | Date from:2019.05,Date to:2021.01 | GDS56392 | Drive Shaft | | 30 | 29 | 61 | 119 | 886 | |
| | 2017.06-2026.04 | ET | F | R | Hatchback 4WD L2S | Date to:2019.04 | GDS81701 | Drive Shaft | | 30 | 27 | 63 | 120 | 715 | |
| | 2017.06-2026.04 | ET | F | L/R | Hatchback 4WD L2S | Date from:2019.05 | GCO83279 | Outer Joint | | 30 | 25 | 61 | 119 | 57 | I |
| | 2017.06-2026.04 | ET | F | L | Hatchback 4WD L2S | Date from:2019.05 | GCI83285 | Inner Joint | | 29 | 25 | 40 | 73 | 135 | |
| | 2017.06-2026.04 | ET | F | R | Hatchback 4WD L2S | Date to:2019.04 | GCI81467 | Inner Joint | | 27 | 35 | 45.7 | | 144 | |
| | 2017.06-2026.04 | ET | F | R | Hatchback 4WD L2S | Date from:2019.05 | GCI83284 | Inner Joint | | 29 | 25 | 40 | 83.5 | 192 | |
| | 2017.06-2026.04 | ET | F | R | Hatchback 4WD L2S | Date to:2021.01 | GDS81703 | Intermediate Shaft | | 27 | 29 | | | 248 | |
| | 2017.06-2026.04 | ET | R | L/R | Hatchback 4WD L2S | Date from:2021.02,For Long range,for OE:1420167-00-B,Replace in pairs only | GDS57882 | Drive Shaft | | 30 | 29 | 63 | 120 | 873 | |
| | 2017.06-2026.04 | ET | R | L/R | Hatchback 4WD L2S | Date to:2021.01 | GDS81699 | Drive Shaft | | 30 | 29 | 63 | 120 | 868 | |
| | 2017.06-2026.04 | ET | R | L/R | Hatchback 4WD L2S | Date from:2021.02,For Long range,for OE:1420161-00-A | GCO83769 | Outer Joint | | 30 | 35 | 63 | 120 | 55 | I |
| | 2017.06-2026.04 | ET | R | L/R | Hatchback 4WD L2S | Date to:2021.01 | GCI81465 | Inner Joint | | 29 | 35 | 44 | 72.5 | 118 | |

| | YEAR | TRANSM. | F/R | L/R | BODY STYLE & DRIVE TYPE & ENGINE | REMARKS | G-AP Ref. | PRODUCT | ABS | Technical Specifications A | B | C | H | L | P |
|---|---|---|---|---|---|---|---|---|---|---|---|---|---|---|---|
| **TESLA** | | | | | | | | | | | | | | | |
| **Model S 100D** | | | | | | | | | | | | | | | |
| EV (310 kw) | 2017.06-2026.04 | ET | R | L/R | Hatchback 4WD L2S | Date from:2021.02,For Long range,for OE:1420161-00-A | GCI83908 | Inner Joint | | 29 | 35 | 40 | 73 | 127 | |
| | 2017.06-2026.04 | ET | F/R | L/R | Hatchback 4WD L2S | Posission:Front,Date to:2019.04;Posission:Rear,Date to:2021.01 | GCO81487 | Outer Joint | | 30 | 35 | 63 | 120 | 59.5 | I |
| EV (386 kw) | 2017.06-2026.04 | ET | F | L | Hatchback 4WD L2S | Date from:2021.02 | GDS56390 | Drive Shaft | | 30 | 29 | 61 | 119 | 840 | |
| | 2017.06-2026.04 | ET | F | L | Hatchback 4WD L2S | Date from:2019.05,Date to:2021.01 | GDS56391 | Drive Shaft | | 30 | 29 | 61 | 119 | 818 | |
| | 2017.06-2026.04 | ET | F | R | Hatchback 4WD L2S | Date from:2021.02 | GDS56389 | Drive Shaft | | 30 | 29 | 61 | 119 | 908 | |
| | 2017.06-2026.04 | ET | F | R | Hatchback 4WD L2S | Date from:2019.05,Date to:2021.01 | GDS56392 | Drive Shaft | | 30 | 29 | 61 | 119 | 886 | |
| | 2017.06-2026.04 | ET | F | R | Hatchback 4WD L2S | Date to:2019.04 | GDS81701 | Drive Shaft | | 30 | 27 | 63 | 120 | 715 | |
| | 2017.06-2026.04 | ET | F | L/R | Hatchback 4WD L2S | Date from:2019.05 | GCO83279 | Outer Joint | | 30 | 25 | 61 | 119 | 57 | I |
| | 2017.06-2026.04 | ET | F | L | Hatchback 4WD L2S | Date from:2019.05 | GCI83285 | Inner Joint | | 29 | 25 | 40 | 73 | 135 | |
| | 2017.06-2026.04 | ET | F | R | Hatchback 4WD L2S | Date to:2019.04 | GCI81467 | Inner Joint | | 27 | 35 | 45.7 | | 144 | |
| | 2017.06-2026.04 | ET | F | R | Hatchback 4WD L2S | Date from:2019.05 | GCI83284 | Inner Joint | | 29 | 25 | 40 | 83.5 | 192 | |
| | 2017.06-2026.04 | ET | F | R | Hatchback 4WD L2S | Date to:2021.01 | GDS81703 | Intermediate Shaft | | 27 | 29 | | | 248 | |
| | 2017.06-2026.04 | ET | R | L/R | Hatchback 4WD L2S | Date from:2021.02,For Long range,for OE:1420167-00-B,Replace in pairs only | GDS57882 | Drive Shaft | | 30 | 29 | 63 | 120 | 873 | |
| | 2017.06-2026.04 | ET | R | L/R | Hatchback 4WD L2S | Date to:2021.01 | GDS81699 | Drive Shaft | | 30 | 29 | 63 | 120 | 868 | |
| | 2017.06-2026.04 | ET | R | L/R | Hatchback 4WD L2S | Date from:2021.02,For Long range,for OE:1420161-00-A | GCO83769 | Outer Joint | | 30 | 35 | 63 | 120 | 55 | I |
| | 2017.06-2026.04 | ET | R | L/R | Hatchback 4WD L2S | Date to:2021.01 | GCI81465 | Inner Joint | | 29 | 35 | 44 | 72.5 | 118 | |
| | 2017.06-2026.04 | ET | R | L/R | Hatchback 4WD L2S | Date from:2021.02,For Long range,for OE:1420161-00-A | GCI83908 | Inner Joint | | 29 | 35 | 40 | 73 | 127 | |
| | 2017.06-2026.04 | ET | F/R | L/R | Hatchback 4WD L2S | Posission:Front,Date to:2019.04;Posission:Rear,Date to:2021.01 | GCO81487 | Outer Joint | | 30 | 35 | 63 | 120 | 59.5 | I |
| **Model S 60** | | | | | | | | | | | | | | | |
| EV (225 kw) | 2013.11-2014.09 | ET | R | L/R | Hatchback RWD L1S | | GDS81699 | Drive Shaft | | 30 | 29 | 63 | 120 | 868 | |
| | 2013.11-2014.09 | ET | R | L/R | Hatchback RWD L1S | | GCO81487 | Outer Joint | | 30 | 35 | 63 | 120 | 59.5 | I |
| | 2013.11-2014.09 | ET | R | L/R | Hatchback RWD L1S | | GCI81465 | Inner Joint | | 29 | 35 | 44 | 72.5 | 118 | |
| EV (235 kw) | 2016.11-2026.04 | ET | R | L/R | Hatchback RWD L1S | Date from:2021.02,For Long range,for OE:1420167-00-B,Replace in pairs only | GDS57882 | Drive Shaft | | 30 | 29 | 63 | 120 | 873 | |
| | 2016.11-2026.04 | ET | R | L/R | Hatchback RWD L1S | Date to:2021.01 | GDS81699 | Drive Shaft | | 30 | 29 | 63 | 120 | 868 | |
| | 2016.11-2026.04 | ET | R | L/R | Hatchback RWD L1S | Date to:2021.01 | GCO81487 | Outer Joint | | 30 | 35 | 63 | 120 | 59.5 | I |
| | 2016.11-2026.04 | ET | R | L/R | Hatchback RWD L1S | Date from:2021.02,For Long range,for OE:1420161-00-A | GCO83769 | Outer Joint | | 30 | 35 | 63 | 120 | 55 | I |
| | 2016.11-2026.04 | ET | R | L/R | Hatchback RWD L1S | Date to:2021.01 | GCI81465 | Inner Joint | | 29 | 35 | 44 | 72.5 | 118 | |
| | 2016.11-2026.04 | ET | R | L/R | Hatchback RWD L1S | Date from:2021.02,For Long range,for OE:1420161-00-A | GCI83908 | Inner Joint | | 29 | 35 | 40 | 73 | 127 | |
| EV (283 kw) | 2014.10-2026.04 | ET | R | L/R | Hatchback RWD L1S | Date from:2021.02,For Long range,for OE:1420167-00-B,Replace in pairs only | GDS57882 | Drive Shaft | | 30 | 29 | 63 | 120 | 873 | |
| | 2014.10-2026.04 | ET | R | L/R | Hatchback RWD L1S | Date to:2021.01 | GDS81699 | Drive Shaft | | 30 | 29 | 63 | 120 | 868 | |
| | 2014.10-2026.04 | ET | R | L/R | Hatchback RWD L1S | Date to:2021.01 | GCO81487 | Outer Joint | | 30 | 35 | 63 | 120 | 59.5 | I |
| | 2014.10-2026.04 | ET | R | L/R | Hatchback RWD L1S | Date from:2021.02,For Long range,for OE:1420161-00-A | GCO83769 | Outer Joint | | 30 | 35 | 63 | 120 | 55 | I |
| | 2014.10-2026.04 | ET | R | L/R | Hatchback RWD L1S | Date to:2021.01 | GCI81465 | Inner Joint | | 29 | 35 | 44 | 72.5 | 118 | |
| | 2014.10-2026.04 | ET | R | L/R | Hatchback RWD L1S | Date from:2021.02,For Long range,for OE:1420161-00-A | GCI83908 | Inner Joint | | 29 | 35 | 40 | 73 | 127 | |
| EV (285 kw) | 2013.11-2026.04 | ET | R | L/R | Hatchback RWD L1S | Date from:2021.02,For Long range,for OE:1420167-00-B,Replace in pairs only | GDS57882 | Drive Shaft | | 30 | 29 | 63 | 120 | 873 | |
| | 2013.11-2026.04 | ET | R | L/R | Hatchback RWD L1S | Date to:2021.01 | GDS81699 | Drive Shaft | | 30 | 29 | 63 | 120 | 868 | |
| | 2013.11-2026.04 | ET | R | L/R | Hatchback RWD L1S | Date to:2021.01 | GCO81487 | Outer Joint | | 30 | 35 | 63 | 120 | 59.5 | I |
| | 2013.11-2026.04 | ET | R | L/R | Hatchback RWD L1S | Date from:2021.02,For Long range,for OE:1420161-00-A | GCO83769 | Outer Joint | | 30 | 35 | 63 | 120 | 55 | I |
| | 2013.11-2026.04 | ET | R | L/R | Hatchback RWD L1S | Date to:2021.01 | GCI81465 | Inner Joint | | 29 | 35 | 44 | 72.5 | 118 | |
| | 2013.11-2026.04 | ET | R | L/R | Hatchback RWD L1S | Date from:2021.02,For Long range,for OE:1420161-00-A | GCI83908 | Inner Joint | | 29 | 35 | 40 | 73 | 127 | |
| EV (350 kw) | 2017.12-2026.04 | ET | R | L/R | Hatchback RWD L1S | Date from:2021.02,For Long range,for OE:1420167-00-B,Replace in pairs only | GDS57882 | Drive Shaft | | 30 | 29 | 63 | 120 | 873 | |
| | 2017.12-2026.04 | ET | R | L/R | Hatchback RWD L1S | Date to:2021.01 | GDS81699 | Drive Shaft | | 30 | 29 | 63 | 120 | 868 | |
| | 2017.12-2026.04 | ET | R | L/R | Hatchback RWD L1S | Date to:2021.01 | GCO81487 | Outer Joint | | 30 | 35 | 63 | 120 | 59.5 | I |
| | 2017.12-2026.04 | ET | R | L/R | Hatchback RWD L1S | Date from:2021.02,For Long range,for OE:1420161-00-A | GCO83769 | Outer Joint | | 30 | 35 | 63 | 120 | 55 | I |
| | 2017.12-2026.04 | ET | R | L/R | Hatchback RWD L1S | Date to:2021.01 | GCI81465 | Inner Joint | | 29 | 35 | 44 | 72.5 | 118 | |
| | 2017.12-2026.04 | ET | R | L/R | Hatchback RWD L1S | Date from:2021.02,For Long range,for OE:1420161-00-A | GCI83908 | Inner Joint | | 29 | 35 | 40 | 73 | 127 | |
| **Model S 60D** | | | | | | | | | | | | | | | |
| EV (245 kw) | 2016.06-2026.04 | ET | F | L | Hatchback 4WD L2S | Date from:2021.02 | GDS56390 | Drive Shaft | | 30 | 29 | 61 | 119 | 840 | |
| | 2016.06-2026.04 | ET | F | L | Hatchback 4WD L2S | Date from:2019.05,Date to:2021.01 | GDS56391 | Drive Shaft | | 30 | 29 | 61 | 119 | 818 | |
| | 2016.06-2026.04 | ET | F | R | Hatchback 4WD L2S | Date from:2021.02 | GDS56389 | Drive Shaft | | 30 | 29 | 61 | 119 | 908 | |
| | 2016.06-2026.04 | ET | F | R | Hatchback 4WD L2S | Date from:2019.05,Date to:2021.01 | GDS56392 | Drive Shaft | | 30 | 29 | 61 | 119 | 886 | |
| | 2016.06-2026.04 | ET | F | R | Hatchback 4WD L2S | Date to:2019.04 | GDS81701 | Drive Shaft | | 30 | 27 | 63 | 120 | 715 | |
| | 2016.06-2026.04 | ET | F | L/R | Hatchback 4WD L2S | Date from:2019.05 | GCO83279 | Outer Joint | | 30 | 25 | 61 | 119 | 57 | I |
| | 2016.06-2026.04 | ET | F | L | Hatchback 4WD L2S | Date from:2019.05 | GCI83285 | Inner Joint | | 29 | 25 | 40 | 73 | 135 | |
| | 2016.06-2026.04 | ET | F | R | Hatchback 4WD L2S | Date to:2019.04 | GCI81467 | Inner Joint | | 27 | 35 | 45.7 | | 144 | |
| | 2016.06-2026.04 | ET | F | R | Hatchback 4WD L2S | Date from:2019.05 | GCI83284 | Inner Joint | | 29 | 25 | 40 | 83.5 | 192 | |
| | 2016.06-2026.04 | ET | F | R | Hatchback 4WD L2S | Date to:2021.01 | GDS81703 | Intermediate Shaft | | 27 | 29 | | | 248 | |
| | 2016.06-2026.04 | ET | R | L/R | Hatchback 4WD L2S | Date from:2021.02,For Long range,for OE:1420167-00-B,Replace in pairs only | GDS57882 | Drive Shaft | | 30 | 29 | 63 | 120 | 873 | |
| | 2016.06-2026.04 | ET | R | L/R | Hatchback 4WD L2S | Date to:2021.01 | GDS81699 | Drive Shaft | | 30 | 29 | 63 | 120 | 868 | |
| | 2016.06-2026.04 | ET | R | L/R | Hatchback 4WD L2S | Date from:2021.02,For Long range,for OE:1420161-00-A | GCO83769 | Outer Joint | | 30 | 35 | 63 | 120 | 55 | I |
| | 2016.06-2026.04 | ET | R | L/R | Hatchback 4WD L2S | Date to:2021.01 | GCI81465 | Inner Joint | | 29 | 35 | 44 | 72.5 | 118 | |
| | 2016.06-2026.04 | ET | R | L/R | Hatchback 4WD L2S | Date from:2021.02,For Long range,for OE:1420161-00-A | GCI83908 | Inner Joint | | 29 | 35 | 40 | 73 | 127 | |
| | 2016.06-2026.04 | ET | F/R | L/R | Hatchback 4WD L2S | Posission:Front,Date to:2019.04;Posission:Rear,Date to:2021.01 | GCO81487 | Outer Joint | | 30 | 35 | 63 | 120 | 59.5 | I |
| EV (276 kw) | 2014.10-2015.04 | ET | F | L | Hatchback 4WD L2S | | GDS81698 | Drive Shaft | | 30 | 29 | 63 | 120 | 773 | |
| | 2014.10-2015.04 | ET | F | R | Hatchback 4WD L2S | | GDS81701 | Drive Shaft | | 30 | 27 | 63 | 120 | 715 | |

| | YEAR | TRANSM. | F/R | L/R | BODY STYLE & DRIVE TYPE & ENGINE | REMARKS | G-AP Ref. | PRODUCT | ABS | Technical Specifications | | | | | |
|---|---|---|---|---|---|---|---|---|---|---|---|---|---|---|---|
| | | | | | | | | | | A | B | C | H | L | P |
| **TESLA** | | | | | | | | | | | | | | | |
| **Model S 60D** | | | | | | | | | | | | | | | |
| EV (276 kw) | 2014.10-2015.04 | ET | F | L | Hatchback 4WD L2S | | GCI81466 | Inner Joint | | 29 | 35 | 44 | 72.5 | 130 | |
| | 2014.10-2015.04 | ET | F | R | Hatchback 4WD L2S | | GCI81467 | Inner Joint | | 27 | 35 | 45.7 | | 144 | |
| | 2014.10-2015.04 | ET | F | R | Hatchback 4WD L2S | | GDS81703 | Intermediate Shaft | | 27 | 29 | | | 248 | |
| | 2014.10-2015.04 | ET | R | L/R | Hatchback 4WD L2S | | GDS81699 | Drive Shaft | | 30 | 29 | 63 | 120 | 868 | |
| | 2014.10-2015.04 | ET | R | L/R | Hatchback 4WD L2S | | GCI81465 | Inner Joint | | 29 | 35 | 44 | 72.5 | 118 | |
| | 2014.10-2015.04 | ET | F/R | L/R | Hatchback 4WD L2S | | GCO81487 | Outer Joint | | 30 | 35 | 63 | 120 | 59.5 | I |
| EV (386 kw) | 2014.10-2026.04 | ET | F | L | Hatchback 4WD L2S | Date from:2021.02 | GDS56390 | Drive Shaft | | 30 | 29 | 61 | 119 | 840 | |
| | 2014.10-2026.04 | ET | F | L | Hatchback 4WD L2S | Date from:2019.05,Date to:2021.01 | GDS56391 | Drive Shaft | | 30 | 29 | 61 | 119 | 818 | |
| | 2014.10-2026.04 | ET | F | L | Hatchback 4WD L2S | Date to:2019.04 | GDS81698 | Drive Shaft | | 30 | 29 | 63 | 120 | 773 | |
| | 2014.10-2026.04 | ET | F | R | Hatchback 4WD L2S | Date from:2021.02 | GDS56389 | Drive Shaft | | 30 | 29 | 61 | 119 | 908 | |
| | 2014.10-2026.04 | ET | F | R | Hatchback 4WD L2S | Date from:2019.05,Date to:2021.01 | GDS56392 | Drive Shaft | | 30 | 29 | 61 | 119 | 886 | |
| | 2014.10-2026.04 | ET | F | R | Hatchback 4WD L2S | Date to:2019.04 | GDS81701 | Drive Shaft | | 30 | 27 | 63 | 120 | 715 | |
| | 2014.10-2026.04 | ET | F | L/R | Hatchback 4WD L2S | Date from:2019.05 | GCO83279 | Outer Joint | | 30 | 25 | 61 | 119 | 57 | I |
| | 2014.10-2026.04 | ET | F | L | Hatchback 4WD L2S | Date to:2019.04 | GCI81466 | Inner Joint | | 29 | 35 | 44 | 72.5 | 130 | |
| | 2014.10-2026.04 | ET | F | L | Hatchback 4WD L2S | Date from:2019.05 | GCI83285 | Inner Joint | | 29 | 25 | 40 | 73 | 135 | |
| | 2014.10-2026.04 | ET | F | R | Hatchback 4WD L2S | Date to:2019.04 | GCI81467 | Inner Joint | | 27 | 35 | 45.7 | | 144 | |
| | 2014.10-2026.04 | ET | F | R | Hatchback 4WD L2S | Date from:2019.05 | GCI83284 | Inner Joint | | 29 | 25 | 40 | 83.5 | 192 | |
| | 2014.10-2026.04 | ET | F | R | Hatchback 4WD L2S | Date to:2021.01 | GDS81703 | Intermediate Shaft | | 27 | 29 | | | 248 | |
| | 2014.10-2026.04 | ET | R | L/R | Hatchback 4WD L2S | Date from:2021.02,For Long range,for OE:1420167-00-B,Replace in pairs only | GDS57882 | Drive Shaft | | 30 | 29 | 63 | 120 | 873 | |
| | 2014.10-2026.04 | ET | R | L/R | Hatchback 4WD L2S | Date to:2021.01 | GDS81699 | Drive Shaft | | 30 | 29 | 63 | 120 | 868 | |
| | 2014.10-2026.04 | ET | R | L/R | Hatchback 4WD L2S | Date from:2021.02,For Long range,for OE:1420161-00-A | GCO83769 | Outer Joint | | 30 | 35 | 63 | 120 | 55 | I |
| | 2014.10-2026.04 | ET | R | L/R | Hatchback 4WD L2S | Date to:2021.01 | GCI81465 | Inner Joint | | 29 | 35 | 44 | 72.5 | 118 | |
| | 2014.10-2026.04 | ET | R | L/R | Hatchback 4WD L2S | Date from:2021.02,For Long range,for OE:1420161-00-A | GCI83908 | Inner Joint | | 29 | 35 | 40 | 73 | 127 | |
| | 2014.10-2026.04 | ET | F/R | L/R | Hatchback 4WD L2S | Posission:Front,Date to:2019.04;Posission:Rear,Date to:2021.01 | GCO81487 | Outer Joint | | 30 | 35 | 63 | 120 | 59.5 | I |
| **Model S 70** | | | | | | | | | | | | | | | |
| EV (235 kw) | 2015.09-2026.04 | ET | R | L/R | Hatchback RWD L1S | Date from:2021.02,For Long range,for OE:1420167-00-B,Replace in pairs only | GDS57882 | Drive Shaft | | 30 | 29 | 63 | 120 | 873 | |
| | 2015.09-2026.04 | ET | R | L/R | Hatchback RWD L1S | Date to:2021.01 | GDS81699 | Drive Shaft | | 30 | 29 | 63 | 120 | 868 | |
| | 2015.09-2026.04 | ET | R | L/R | Hatchback RWD L1S | Date to:2021.01 | GCO81487 | Outer Joint | | 30 | 35 | 63 | 120 | 59.5 | I |
| | 2015.09-2026.04 | ET | R | L/R | Hatchback RWD L1S | Date from:2021.02,For Long range,for OE:1420161-00-A | GCO83769 | Outer Joint | | 30 | 35 | 63 | 120 | 55 | I |
| | 2015.09-2026.04 | ET | R | L/R | Hatchback RWD L1S | Date to:2021.01 | GCI81465 | Inner Joint | | 29 | 35 | 44 | 72.5 | 118 | |
| | 2015.09-2026.04 | ET | R | L/R | Hatchback RWD L1S | Date from:2021.02,For Long range,for OE:1420161-00-A | GCI83908 | Inner Joint | | 29 | 35 | 40 | 73 | 127 | |
| EV (285 kw) | 2015.09-2026.04 | ET | R | L/R | Hatchback RWD L1S | Date from:2021.02,For Long range,for OE:1420167-00-B,Replace in pairs only | GDS57882 | Drive Shaft | | 30 | 29 | 63 | 120 | 873 | |
| | 2015.09-2026.04 | ET | R | L/R | Hatchback RWD L1S | Date to:2021.01 | GDS81699 | Drive Shaft | | 30 | 29 | 63 | 120 | 868 | |
| | 2015.09-2026.04 | ET | R | L/R | Hatchback RWD L1S | Date to:2021.01 | GCO81487 | Outer Joint | | 30 | 35 | 63 | 120 | 59.5 | I |
| | 2015.09-2026.04 | ET | R | L/R | Hatchback RWD L1S | Date from:2021.02,For Long range,for OE:1420161-00-A | GCO83769 | Outer Joint | | 30 | 35 | 63 | 120 | 55 | I |
| | 2015.09-2026.04 | ET | R | L/R | Hatchback RWD L1S | Date to:2021.01 | GCI81465 | Inner Joint | | 29 | 35 | 44 | 72.5 | 118 | |
| | 2015.09-2026.04 | ET | R | L/R | Hatchback RWD L1S | Date from:2021.02,For Long range,for OE:1420161-00-A | GCI83908 | Inner Joint | | 29 | 35 | 40 | 73 | 127 | |
| EV (350 kw) | 2017.12-2026.04 | ET | R | L/R | Hatchback RWD L1S | Date from:2021.02,For Long range,for OE:1420167-00-B,Replace in pairs only | GDS57882 | Drive Shaft | | 30 | 29 | 63 | 120 | 873 | |
| | 2017.12-2026.04 | ET | R | L/R | Hatchback RWD L1S | Date to:2021.01 | GDS81699 | Drive Shaft | | 30 | 29 | 63 | 120 | 868 | |
| | 2017.12-2026.04 | ET | R | L/R | Hatchback RWD L1S | Date to:2021.01 | GCO81487 | Outer Joint | | 30 | 35 | 63 | 120 | 59.5 | I |
| | 2017.12-2026.04 | ET | R | L/R | Hatchback RWD L1S | Date from:2021.02,For Long range,for OE:1420161-00-A | GCO83769 | Outer Joint | | 30 | 35 | 63 | 120 | 55 | I |
| | 2017.12-2026.04 | ET | R | L/R | Hatchback RWD L1S | Date to:2021.01 | GCI81465 | Inner Joint | | 29 | 35 | 44 | 72.5 | 118 | |
| | 2017.12-2026.04 | ET | R | L/R | Hatchback RWD L1S | Date from:2021.02,For Long range,for OE:1420161-00-A | GCI83908 | Inner Joint | | 29 | 35 | 40 | 73 | 127 | |
| **Model S 70D** | | | | | | | | | | | | | | | |
| EV (245 kw) | 2015.04-2026.04 | ET | F | L | Hatchback 4WD L2S | Date from:2021.02 | GDS56390 | Drive Shaft | | 30 | 29 | 61 | 119 | 840 | |
| | 2015.04-2026.04 | ET | F | L | Hatchback 4WD L2S | Date from:2019.05,Date to:2021.01 | GDS56391 | Drive Shaft | | 30 | 29 | 61 | 119 | 818 | |
| | 2015.04-2026.04 | ET | F | L | Hatchback 4WD L2S | Date to:2019.04 | GDS81698 | Drive Shaft | | 30 | 29 | 63 | 120 | 773 | |
| | 2015.04-2026.04 | ET | F | R | Hatchback 4WD L2S | Date from:2021.02 | GDS56389 | Drive Shaft | | 30 | 29 | 61 | 119 | 908 | |
| | 2015.04-2026.04 | ET | F | R | Hatchback 4WD L2S | Date from:2019.05,Date to:2021.01 | GDS56392 | Drive Shaft | | 30 | 29 | 61 | 119 | 886 | |
| | 2015.04-2026.04 | ET | F | R | Hatchback 4WD L2S | Date to:2019.04 | GDS81701 | Drive Shaft | | 30 | 27 | 63 | 120 | 715 | |
| | 2015.04-2026.04 | ET | F | L/R | Hatchback 4WD L2S | Date from:2019.05 | GCO83279 | Outer Joint | | 30 | 25 | 61 | 119 | 57 | I |
| | 2015.04-2026.04 | ET | F | L | Hatchback 4WD L2S | Date to:2019.04 | GCI81466 | Inner Joint | | 29 | 35 | 44 | 72.5 | 130 | |
| | 2015.04-2026.04 | ET | F | L | Hatchback 4WD L2S | Date from:2019.05 | GCI83285 | Inner Joint | | 29 | 25 | 40 | 73 | 135 | |
| | 2015.04-2026.04 | ET | F | R | Hatchback 4WD L2S | Date to:2019.04 | GCI81467 | Inner Joint | | 27 | 35 | 45.7 | | 144 | |
| | 2015.04-2026.04 | ET | F | R | Hatchback 4WD L2S | Date from:2019.05 | GCI83284 | Inner Joint | | 29 | 25 | 40 | 83.5 | 192 | |
| | 2015.04-2026.04 | ET | F | R | Hatchback 4WD L2S | Date to:2021.01 | GDS81703 | Intermediate Shaft | | 27 | 29 | | | 248 | |
| | 2015.04-2026.04 | ET | R | L/R | Hatchback 4WD L2S | Date from:2021.02,For Long range,for OE:1420167-00-B,Replace in pairs only | GDS57882 | Drive Shaft | | 30 | 29 | 63 | 120 | 873 | |
| | 2015.04-2026.04 | ET | R | L/R | Hatchback 4WD L2S | Date to:2021.01 | GDS81699 | Drive Shaft | | 30 | 29 | 63 | 120 | 868 | |
| | 2015.04-2026.04 | ET | R | L/R | Hatchback 4WD L2S | Date from:2021.02,For Long range,for OE:1420161-00-A | GCO83769 | Outer Joint | | 30 | 35 | 63 | 120 | 55 | I |
| | 2015.04-2026.04 | ET | R | L/R | Hatchback 4WD L2S | Date to:2021.01 | GCI81465 | Inner Joint | | 29 | 35 | 44 | 72.5 | 118 | |
| | 2015.04-2026.04 | ET | R | L/R | Hatchback 4WD L2S | Date from:2021.02,For Long range,for OE:1420161-00-A | GCI83908 | Inner Joint | | 29 | 35 | 40 | 73 | 127 | |
| | 2015.04-2026.04 | ET | F/R | L/R | Hatchback 4WD L2S | Posission:Front,Date to:2019.04;Posission:Rear,Date to:2021.01 | GCO81487 | Outer Joint | | 30 | 35 | 63 | 120 | 59.5 | I |
| EV (386 kw) | 2015.09-2026.04 | ET | F | L | Hatchback 4WD L2S | Date from:2021.02 | GDS56390 | Drive Shaft | | 30 | 29 | 61 | 119 | 840 | |
| | 2015.09-2026.04 | ET | F | L | Hatchback 4WD L2S | Date from:2019.05,Date to:2021.01 | GDS56391 | Drive Shaft | | 30 | 29 | 61 | 119 | 818 | |
| | 2015.09-2026.04 | ET | F | L | Hatchback 4WD L2S | Date to:2019.04 | GDS81698 | Drive Shaft | | 30 | 29 | 63 | 120 | 773 | |

| | YEAR | TRANSM. | F/R | L/R | BODY STYLE & DRIVE TYPE & ENGINE | REMARKS | G-AP Ref. | PRODUCT | ABS | Technical Specifications | | | | | |
|---|---|---|---|---|---|---|---|---|---|---|---|---|---|---|---|
| | | | | | | | | | | A | B | C | H | L | P |
| **TESLA** | | | | | | | | | | | | | | | |
| **Model S 70D** | | | | | | | | | | | | | | | |
| EV (386 kw) | 2015.09-2026.04 | ET | F | R | Hatchback 4WD L2S | Date from:2021.02 | GDS56389 | Drive Shaft | | 30 | 29 | 61 | 119 | 908 | |
| | 2015.09-2026.04 | ET | F | R | Hatchback 4WD L2S | Date from:2019.05,Date to:2021.01 | GDS56392 | Drive Shaft | | 30 | 29 | 61 | 119 | 886 | |
| | 2015.09-2026.04 | ET | F | R | Hatchback 4WD L2S | Date to:2019.04 | GDS81701 | Drive Shaft | | 30 | 27 | 63 | 120 | 715 | |
| | 2015.09-2026.04 | ET | F | L/R | Hatchback 4WD L2S | Date from:2019.05 | GCO83279 | Outer Joint | | 30 | 25 | 61 | 119 | 57 | I |
| | 2015.09-2026.04 | ET | F | L | Hatchback 4WD L2S | Date to:2019.04 | GCI81466 | Inner Joint | | 29 | 35 | 44 | 72.5 | 130 | |
| | 2015.09-2026.04 | ET | F | L | Hatchback 4WD L2S | Date from:2019.05 | GCI83285 | Inner Joint | | 29 | 25 | 40 | 73 | 135 | |
| | 2015.09-2026.04 | ET | F | R | Hatchback 4WD L2S | Date to:2019.04 | GCI81467 | Inner Joint | | 27 | 35 | 45.7 | | 144 | |
| | 2015.09-2026.04 | ET | F | R | Hatchback 4WD L2S | Date from:2019.05 | GCI83284 | Inner Joint | | 29 | 25 | 40 | 83.5 | 192 | |
| | 2015.09-2026.04 | ET | F | R | Hatchback 4WD L2S | Date to:2021.01 | GDS81703 | Intermediate Shaft | | 27 | 29 | | | 248 | |
| | 2015.09-2026.04 | ET | R | L/R | Hatchback 4WD L2S | Date from:2021.02,For Long range,for OE:1420167-00-B,Replace in pairs only | GDS57882 | Drive Shaft | | 30 | 29 | 63 | 120 | 873 | |
| | 2015.09-2026.04 | ET | R | L/R | Hatchback 4WD L2S | Date to:2021.01 | GDS81699 | Drive Shaft | | 30 | 29 | 63 | 120 | 868 | |
| | 2015.09-2026.04 | ET | R | L/R | Hatchback 4WD L2S | Date from:2021.02,For Long range,for OE:1420161-00-A | GCO83769 | Outer Joint | | 30 | 35 | 63 | 120 | 55 | I |
| | 2015.09-2026.04 | ET | R | L/R | Hatchback 4WD L2S | Date to:2021.01 | GCI81465 | Inner Joint | | 29 | 35 | 44 | 72.5 | 118 | |
| | 2015.09-2026.04 | ET | R | L/R | Hatchback 4WD L2S | Date from:2021.02,For Long range,for OE:1420161-00-A | GCI83908 | Inner Joint | | 29 | 35 | 40 | 73 | 127 | |
| | 2015.09-2026.04 | ET | F/R | L/R | Hatchback 4WD L2S | Posission:Front,Date to:2019.04;Posission:Rear,Date to:2021.01 | GCO81487 | Outer Joint | | 30 | 35 | 63 | 120 | 59.5 | I |
| **Model S 75** | | | | | | | | | | | | | | | |
| EV (235 kw) | 2016.11-2026.04 | ET | R | L/R | Hatchback RWD L1S | Date from:2021.02,For Long range,for OE:1420167-00-B,Replace in pairs only | GDS57882 | Drive Shaft | | 30 | 29 | 63 | 120 | 873 | |
| | 2016.11-2026.04 | ET | R | L/R | Hatchback RWD L1S | | GDS81699 | Drive Shaft | | 30 | 29 | 63 | 120 | 868 | |
| | 2016.11-2026.04 | ET | R | L/R | Hatchback RWD L1S | Date to:2021.01 | GCO81487 | Outer Joint | | 30 | 35 | 63 | 120 | 59.5 | I |
| | 2016.11-2026.04 | ET | R | L/R | Hatchback RWD L1S | Date from:2021.02,For Long range,for OE:1420161-00-A | GCO83769 | Outer Joint | | 30 | 35 | 63 | 120 | 55 | I |
| | 2016.11-2026.04 | ET | R | L/R | Hatchback RWD L1S | Date to:2021.01 | GCI81465 | Inner Joint | | 29 | 35 | 44 | 72.5 | 118 | |
| | 2016.11-2026.04 | ET | R | L/R | Hatchback RWD L1S | Date from:2021.02,For Long range,for OE:1420161-00-A | GCI83908 | Inner Joint | | 29 | 35 | 40 | 73 | 127 | |
| EV (285 kw) | 2016.11-2026.04 | ET | R | L/R | Hatchback RWD L1S | Date from:2021.02,For Long range,for OE:1420167-00-B,Replace in pairs only | GDS57882 | Drive Shaft | | 30 | 29 | 63 | 120 | 873 | |
| | 2016.11-2026.04 | ET | R | L/R | Hatchback RWD L1S | Date to:2021.01 | GDS81699 | Drive Shaft | | 30 | 29 | 63 | 120 | 868 | |
| | 2016.11-2026.04 | ET | R | L/R | Hatchback RWD L1S | Date to:2021.01 | GCO81487 | Outer Joint | | 30 | 35 | 63 | 120 | 59.5 | I |
| | 2016.11-2026.04 | ET | R | L/R | Hatchback RWD L1S | Date from:2021.02,For Long range,for OE:1420161-00-A | GCO83769 | Outer Joint | | 30 | 35 | 63 | 120 | 55 | I |
| | 2016.11-2026.04 | ET | R | L/R | Hatchback RWD L1S | Date to:2021.01 | GCI81465 | Inner Joint | | 29 | 35 | 44 | 72.5 | 118 | |
| | 2016.11-2026.04 | ET | R | L/R | Hatchback RWD L1S | Date from:2021.02,For Long range,for OE:1420161-00-A | GCI83908 | Inner Joint | | 29 | 35 | 40 | 73 | 127 | |
| EV (350 kw) | 2017.11-2026.04 | ET | R | L/R | Hatchback RWD L1S | Date from:2021.02,For Long range,for OE:1420167-00-B,Replace in pairs only | GDS57882 | Drive Shaft | | 30 | 29 | 63 | 120 | 873 | |
| | 2017.11-2026.04 | ET | R | L/R | Hatchback RWD L1S | Date to:2021.01 | GDS81699 | Drive Shaft | | 30 | 29 | 63 | 120 | 868 | |
| | 2017.11-2026.04 | ET | R | L/R | Hatchback RWD L1S | Date to:2021.01 | GCO81487 | Outer Joint | | 30 | 35 | 63 | 120 | 59.5 | I |
| | 2017.11-2026.04 | ET | R | L/R | Hatchback RWD L1S | Date from:2021.02,For Long range,for OE:1420161-00-A | GCO83769 | Outer Joint | | 30 | 35 | 63 | 120 | 55 | I |
| | 2017.11-2026.04 | ET | R | L/R | Hatchback RWD L1S | Date to:2021.01 | GCI81465 | Inner Joint | | 29 | 35 | 44 | 72.5 | 118 | |
| | 2017.11-2026.04 | ET | R | L/R | Hatchback RWD L1S | Date from:2021.02,For Long range,for OE:1420161-00-A | GCI83908 | Inner Joint | | 29 | 35 | 40 | 73 | 127 | |
| **Model S 75D** | | | | | | | | | | | | | | | |
| EV (245 kw) | 2016.06-2026.04 | ET | F | L | Hatchback 4WD L2S | Date from:2021.02 | GDS56390 | Drive Shaft | | 30 | 29 | 61 | 119 | 840 | |
| | 2016.06-2026.04 | ET | F | L | Hatchback 4WD L2S | Date from:2019.05,Date to:2021.01 | GDS56391 | Drive Shaft | | 30 | 29 | 61 | 119 | 818 | |
| | 2016.06-2026.04 | ET | F | R | Hatchback 4WD L2S | Date from:2021.02 | GDS56389 | Drive Shaft | | 30 | 29 | 61 | 119 | 908 | |
| | 2016.06-2026.04 | ET | F | R | Hatchback 4WD L2S | Date from:2019.05,Date to:2021.01 | GDS56392 | Drive Shaft | | 30 | 29 | 61 | 119 | 886 | |
| | 2016.06-2026.04 | ET | F | R | Hatchback 4WD L2S | Date to:2019.04 | GDS81701 | Drive Shaft | | 30 | 27 | 63 | 120 | 715 | |
| | 2016.06-2026.04 | ET | F | L/R | Hatchback 4WD L2S | Date from:2019.05 | GCO83279 | Outer Joint | | 30 | 25 | 61 | 119 | 57 | I |
| | 2016.06-2026.04 | ET | F | L | Hatchback 4WD L2S | Date from:2019.05 | GCI83285 | Inner Joint | | 29 | 25 | 40 | 73 | 135 | |
| | 2016.06-2026.04 | ET | F | R | Hatchback 4WD L2S | Date to:2019.04 | GCI81467 | Inner Joint | | 27 | 35 | 45.7 | | 144 | |
| | 2016.06-2026.04 | ET | F | R | Hatchback 4WD L2S | Date from:2019.05 | GCI83284 | Inner Joint | | 29 | 25 | 40 | 83.5 | 192 | |
| | 2016.06-2026.04 | ET | F | R | Hatchback 4WD L2S | Date to:2021.01 | GDS81703 | Intermediate Shaft | | 27 | 29 | | | 248 | |
| | 2016.06-2026.04 | ET | R | L/R | Hatchback 4WD L2S | Date from:2021.02,For Long range,for OE:1420167-00-B,Replace in pairs only | GDS57882 | Drive Shaft | | 30 | 29 | 63 | 120 | 873 | |
| | 2016.06-2026.04 | ET | R | L/R | Hatchback 4WD L2S | Date to:2021.01 | GDS81699 | Drive Shaft | | 30 | 29 | 63 | 120 | 868 | |
| | 2016.06-2026.04 | ET | R | L/R | Hatchback 4WD L2S | Date from:2021.02,For Long range,for OE:1420161-00-A | GCO83769 | Outer Joint | | 30 | 35 | 63 | 120 | 55 | I |
| | 2016.06-2026.04 | ET | R | L/R | Hatchback 4WD L2S | Date to:2021.01 | GCI81465 | Inner Joint | | 29 | 35 | 44 | 72.5 | 118 | |
| | 2016.06-2026.04 | ET | R | L/R | Hatchback 4WD L2S | Date from:2021.02,For Long range,for OE:1420161-00-A | GCI83908 | Inner Joint | | 29 | 35 | 40 | 73 | 127 | |
| | 2016.06-2026.04 | ET | F/R | L/R | Hatchback 4WD L2S | Posission:Front,Date to:2019.04;Posission:Rear,Date to:2021.01 | GCO81487 | Outer Joint | | 30 | 35 | 63 | 120 | 59.5 | I |
| EV (386 kw) | 2016.06-2026.04 | ET | F | L | Hatchback 4WD L2S | Date from:2021.02 | GDS56390 | Drive Shaft | | 30 | 29 | 61 | 119 | 840 | |
| | 2016.06-2026.04 | ET | F | L | Hatchback 4WD L2S | Date from:2019.05,Date to:2021.01 | GDS56391 | Drive Shaft | | 30 | 29 | 61 | 119 | 818 | |
| | 2016.06-2026.04 | ET | F | R | Hatchback 4WD L2S | Date from:2021.02 | GDS56389 | Drive Shaft | | 30 | 29 | 61 | 119 | 908 | |
| | 2016.06-2026.04 | ET | F | R | Hatchback 4WD L2S | Date from:2019.05,Date to:2021.01 | GDS56392 | Drive Shaft | | 30 | 29 | 61 | 119 | 886 | |
| | 2016.06-2026.04 | ET | F | R | Hatchback 4WD L2S | Date to:2019.04 | GDS81701 | Drive Shaft | | 30 | 27 | 63 | 120 | 715 | |
| | 2016.06-2026.04 | ET | F | L/R | Hatchback 4WD L2S | Date from:2019.05 | GCO83279 | Outer Joint | | 30 | 25 | 61 | 119 | 57 | I |
| | 2016.06-2026.04 | ET | F | L | Hatchback 4WD L2S | Date from:2019.05 | GCI83285 | Inner Joint | | 29 | 25 | 40 | 73 | 135 | |
| | 2016.06-2026.04 | ET | F | R | Hatchback 4WD L2S | Date to:2019.04 | GCI81467 | Inner Joint | | 27 | 35 | 45.7 | | 144 | |
| | 2016.06-2026.04 | ET | F | R | Hatchback 4WD L2S | Date from:2019.05 | GCI83284 | Inner Joint | | 29 | 25 | 40 | 83.5 | 192 | |
| | 2016.06-2026.04 | ET | F | R | Hatchback 4WD L2S | Date to:2021.01 | GDS81703 | Intermediate Shaft | | 27 | 29 | | | 248 | |
| | 2016.06-2026.04 | ET | R | L/R | Hatchback 4WD L2S | Date from:2021.02,For Long range,for OE:1420167-00-B,Replace in pairs only | GDS57882 | Drive Shaft | | 30 | 29 | 63 | 120 | 873 | |
| | 2016.06-2026.04 | ET | R | L/R | Hatchback 4WD L2S | Date to:2021.01 | GDS81699 | Drive Shaft | | 30 | 29 | 63 | 120 | 868 | |
| | 2016.06-2026.04 | ET | R | L/R | Hatchback 4WD L2S | Date from:2021.02,For Long range,for OE:1420161-00-A | GCO83769 | Outer Joint | | 30 | 35 | 63 | 120 | 55 | I |
| | 2016.06-2026.04 | ET | R | L/R | Hatchback 4WD L2S | Date to:2021.01 | GCI81465 | Inner Joint | | 29 | 35 | 44 | 72.5 | 118 | |

| | YEAR | TRANSM. | F/R | L/R | BODY STYLE & DRIVE TYPE & ENGINE | REMARKS | G-AP Ref. | PRODUCT | ABS | Technical Specifications A | B | C | H | L | P |
|---|---|---|---|---|---|---|---|---|---|---|---|---|---|---|---|
| **TESLA** | | | | | | | | | | | | | | | |
| **Model S 75D** | | | | | | | | | | | | | | | |
| EV (386 kw) | 2016.06-2026.04 | ET | R | L/R | Hatchback 4WD L2S | Date from:2021.02,For Long range,for OE:1420161-00-A | GCI83908 | Inner Joint | | 29 | 35 | 40 | 73 | 127 | |
| | 2016.06-2026.04 | ET | F/R | L/R | Hatchback 4WD L2S | Posission:Front,Date to:2019.04;Posission:Rear,Date to:2021.01 | GCO81487 | Outer Joint | | 30 | 35 | 63 | 120 | 59.5 | I |
| **Model S 85** | | | | | | | | | | | | | | | |
| EV (270 kw) | 2012.09-2016.02 | ET | R | L/R | Hatchback RWD L1S | | GDS81699 | Drive Shaft | | 30 | 29 | 63 | 120 | 868 | |
| | 2012.09-2016.02 | ET | R | L/R | Hatchback RWD L1S | | GCO81487 | Outer Joint | | 30 | 35 | 63 | 120 | 59.5 | I |
| | 2012.09-2016.02 | ET | R | L/R | Hatchback RWD L1S | | GCI81465 | Inner Joint | | 29 | 35 | 44 | 72.5 | 118 | |
| EV (283 kw) | 2015.02-2016.02 | ET | R | L/R | Hatchback RWD L1S | | GDS81699 | Drive Shaft | | 30 | 29 | 63 | 120 | 868 | |
| | 2015.02-2016.02 | ET | R | L/R | Hatchback RWD L1S | | GCO81487 | Outer Joint | | 30 | 35 | 63 | 120 | 59.5 | I |
| | 2015.02-2016.02 | ET | R | L/R | Hatchback RWD L1S | | GCI81465 | Inner Joint | | 29 | 35 | 44 | 72.5 | 118 | |
| EV (285 kw) | 2012.09-2016.02 | ET | R | L/R | Hatchback RWD L1S | | GDS81699 | Drive Shaft | | 30 | 29 | 63 | 120 | 868 | |
| | 2012.09-2016.02 | ET | R | L/R | Hatchback RWD L1S | | GCO81487 | Outer Joint | | 30 | 35 | 63 | 120 | 59.5 | I |
| | 2012.09-2016.02 | ET | R | L/R | Hatchback RWD L1S | | GCI81465 | Inner Joint | | 29 | 35 | 44 | 72.5 | 118 | |
| **Model S 85D** | | | | | | | | | | | | | | | |
| EV (276 kw) | 2014.10-2016.02 | ET | F | L | Hatchback 4WD L2S | | GDS81698 | Drive Shaft | | 30 | 29 | 63 | 120 | 773 | |
| | 2014.10-2016.02 | ET | F | R | Hatchback 4WD L2S | | GDS81701 | Drive Shaft | | 30 | 27 | 63 | 120 | 715 | |
| | 2014.10-2016.02 | ET | F | L | Hatchback 4WD L2S | | GCI81466 | Inner Joint | | 29 | 35 | 44 | 72.5 | 130 | |
| | 2014.10-2016.02 | ET | F | R | Hatchback 4WD L2S | | GCI81467 | Inner Joint | | 27 | 35 | 45.7 | | 144 | |
| | 2014.10-2016.02 | ET | R | L/R | Hatchback 4WD L2S | | GDS81699 | Drive Shaft | | 30 | 29 | 63 | 120 | 868 | |
| | 2014.10-2016.02 | ET | R | L/R | Hatchback 4WD L2S | | GCI81465 | Inner Joint | | 29 | 35 | 44 | 72.5 | 118 | |
| | 2014.10-2016.02 | ET | F/R | L/R | Hatchback 4WD L2S | | GCO81487 | Outer Joint | | 30 | 35 | 63 | 120 | 59.5 | I |
| EV (279 kw) | 2014.10-2016.02 | ET | F | L | Hatchback 4WD L2S | | GDS81698 | Drive Shaft | | 30 | 29 | 63 | 120 | 773 | |
| | 2014.10-2016.02 | ET | F | R | Hatchback 4WD L2S | | GDS81701 | Drive Shaft | | 30 | 27 | 63 | 120 | 715 | |
| | 2014.10-2016.02 | ET | F | L | Hatchback 4WD L2S | | GCI81466 | Inner Joint | | 29 | 35 | 44 | 72.5 | 130 | |
| | 2014.10-2016.02 | ET | F | R | Hatchback 4WD L2S | | GCI81467 | Inner Joint | | 27 | 35 | 45.7 | | 144 | |
| | 2014.10-2016.02 | ET | F | R | Hatchback 4WD L2S | | GDS81703 | Intermediate Shaft | | 27 | 29 | | | 248 | |
| | 2014.10-2016.02 | ET | R | L/R | Hatchback 4WD L2S | | GDS81699 | Drive Shaft | | 30 | 29 | 63 | 120 | 868 | |
| | 2014.10-2016.02 | ET | R | L/R | Hatchback 4WD L2S | | GCI81465 | Inner Joint | | 29 | 35 | 44 | 72.5 | 118 | |
| | 2014.10-2016.02 | ET | F/R | L/R | Hatchback 4WD L2S | | GCO81487 | Outer Joint | | 30 | 35 | 63 | 120 | 59.5 | I |
| EV (290 kw) | 2014.10-2015.07 | ET | F | L | Hatchback 4WD L2S | | GDS81698 | Drive Shaft | | 30 | 29 | 63 | 120 | 773 | |
| | 2014.10-2015.07 | ET | F | R | Hatchback 4WD L2S | | GDS81701 | Drive Shaft | | 30 | 27 | 63 | 120 | 715 | |
| | 2014.10-2015.07 | ET | F | L | Hatchback 4WD L2S | | GCI81466 | Inner Joint | | 29 | 35 | 44 | 72.5 | 130 | |
| | 2014.10-2015.07 | ET | F | R | Hatchback 4WD L2S | | GCI81467 | Inner Joint | | 27 | 35 | 45.7 | | 144 | |
| | 2014.10-2015.07 | ET | F | R | Hatchback 4WD L2S | | GDS81703 | Intermediate Shaft | | 27 | 29 | | | 248 | |
| | 2014.10-2015.07 | ET | R | L/R | Hatchback 4WD L2S | | GDS81699 | Drive Shaft | | 30 | 29 | 63 | 120 | 868 | |
| | 2014.10-2015.07 | ET | R | L/R | Hatchback 4WD L2S | | GCI81465 | Inner Joint | | 29 | 35 | 44 | 72.5 | 118 | |
| | 2014.10-2015.07 | ET | F/R | L/R | Hatchback 4WD L2S | | GCO81487 | Outer Joint | | 30 | 35 | 63 | 120 | 59.5 | I |
| EV (310 kw) | 2014.01-2016.02 | ET | F | L | Hatchback 4WD L2S | | GDS81698 | Drive Shaft | | 30 | 29 | 63 | 120 | 773 | |
| | 2014.01-2016.02 | ET | F | R | Hatchback 4WD L2S | | GDS81701 | Drive Shaft | | 30 | 27 | 63 | 120 | 715 | |
| | 2014.01-2016.02 | ET | F | L | Hatchback 4WD L2S | | GCI81466 | Inner Joint | | 29 | 35 | 44 | 72.5 | 130 | |
| | 2014.01-2016.02 | ET | F | R | Hatchback 4WD L2S | | GCI81467 | Inner Joint | | 27 | 35 | 45.7 | | 144 | |
| | 2014.01-2016.02 | ET | F | R | Hatchback 4WD L2S | | GDS81703 | Intermediate Shaft | | 27 | 29 | | | 248 | |
| | 2014.01-2016.02 | ET | R | L/R | Hatchback 4WD L2S | | GDS81699 | Drive Shaft | | 30 | 29 | 63 | 120 | 868 | |
| | 2014.01-2016.02 | ET | R | L/R | Hatchback 4WD L2S | | GCI81465 | Inner Joint | | 29 | 35 | 44 | 72.5 | 118 | |
| | 2014.01-2016.02 | ET | F/R | L/R | Hatchback 4WD L2S | | GCO81487 | Outer Joint | | 30 | 35 | 63 | 120 | 59.5 | I |
| EV (386 kw) | 2014.10-2016.02 | ET | F | L | Hatchback 4WD L2S | | GDS81698 | Drive Shaft | | 30 | 29 | 63 | 120 | 773 | |
| | 2014.10-2016.02 | ET | F | R | Hatchback 4WD L2S | | GDS81701 | Drive Shaft | | 30 | 27 | 63 | 120 | 715 | |
| | 2014.10-2016.02 | ET | F | L | Hatchback 4WD L2S | | GCI81466 | Inner Joint | | 29 | 35 | 44 | 72.5 | 130 | |
| | 2014.10-2016.02 | ET | F | R | Hatchback 4WD L2S | | GCI81467 | Inner Joint | | 27 | 35 | 45.7 | | 144 | |
| | 2014.10-2016.02 | ET | F | R | Hatchback 4WD L2S | | GDS81703 | Intermediate Shaft | | 27 | 29 | | | 248 | |
| | 2014.10-2016.02 | ET | R | L/R | Hatchback 4WD L2S | | GDS81699 | Drive Shaft | | 30 | 29 | 63 | 120 | 868 | |
| | 2014.10-2016.02 | ET | R | L/R | Hatchback 4WD L2S | | GCI81465 | Inner Joint | | 29 | 35 | 44 | 72.5 | 118 | |
| | 2014.10-2016.02 | ET | F/R | L/R | Hatchback 4WD L2S | | GCO81487 | Outer Joint | | 30 | 35 | 63 | 120 | 59.5 | I |
| **Model S 90** | | | | | | | | | | | | | | | |
| EV (270 kw) | 2012.09-2016.02 | ET | R | L/R | Hatchback RWD L1S | | GDS81699 | Drive Shaft | | 30 | 29 | 63 | 120 | 868 | |
| | 2012.09-2016.02 | ET | R | L/R | Hatchback RWD L1S | | GCO81487 | Outer Joint | | 30 | 35 | 63 | 120 | 59.5 | I |
| | 2012.09-2016.02 | ET | R | L/R | Hatchback RWD L1S | | GCI81465 | Inner Joint | | 29 | 35 | 44 | 72.5 | 118 | |
| EV (285 kw) | 2015.11-2026.04 | ET | R | L/R | Hatchback RWD L1S | Date from:2021.02,For Long range,for OE:1420167-00-B,Replace in pairs only | GDS57882 | Drive Shaft | | 30 | 29 | 63 | 120 | 873 | |
| | 2015.11-2026.04 | ET | R | L/R | Hatchback RWD L1S | Date to:2021.01 | GDS81699 | Drive Shaft | | 30 | 29 | 63 | 120 | 868 | |
| | 2015.11-2026.04 | ET | R | L/R | Hatchback RWD L1S | Date to:2021.01 | GCO81487 | Outer Joint | | 30 | 35 | 63 | 120 | 59.5 | I |
| | 2015.11-2026.04 | ET | R | L/R | Hatchback RWD L1S | Date from:2021.02,For Long range,for OE:1420161-00-A | GCO83769 | Outer Joint | | 30 | 35 | 63 | 120 | 55 | I |
| | 2015.11-2026.04 | ET | R | L/R | Hatchback RWD L1S | Date to:2021.01 | GCI81465 | Inner Joint | | 29 | 35 | 44 | 72.5 | 118 | |
| | 2015.11-2026.04 | ET | R | L/R | Hatchback RWD L1S | Date from:2021.02,For Long range,for OE:1420161-00-A | GCI83908 | Inner Joint | | 29 | 35 | 40 | 73 | 127 | |
| **Model S 90D** | | | | | | | | | | | | | | | |
| EV (310 kw) | 2015.09-2026.04 | ET | F | L | Hatchback 4WD L2S | Date from:2021.02 | GDS56390 | Drive Shaft | | 30 | 29 | 61 | 119 | 840 | |
| | 2015.09-2026.04 | ET | F | L | Hatchback 4WD L2S | Date from:2019.05,Date to:2021.01 | GDS56391 | Drive Shaft | | 30 | 29 | 61 | 119 | 818 | |

| | YEAR | TRANSM. | F/R | L/R | BODY STYLE & DRIVE TYPE & ENGINE | REMARKS | G-AP Ref. | PRODUCT | ABS | Technical Specifications | | | | | |
|---|---|---|---|---|---|---|---|---|---|---|---|---|---|---|---|
| | | | | | | | | | | A | B | C | H | L | P |
| **TESLA** | | | | | | | | | | | | | | | |
| **Model S 90D** | | | | | | | | | | | | | | | |
| EV (310 kw) | 2015.09-2026.04 | ET | F | L | Hatchback 4WD L2S | Date to:2019.04 | GDS81698 | Drive Shaft | | 30 | 29 | 63 | 120 | 773 | |
| | 2015.09-2026.04 | ET | F | R | Hatchback 4WD L2S | Date from:2021.02 | GDS56389 | Drive Shaft | | 30 | 29 | 61 | 119 | 908 | |
| | 2015.09-2026.04 | ET | F | R | Hatchback 4WD L2S | Date from:2019.05,Date to:2021.01 | GDS56392 | Drive Shaft | | 30 | 29 | 61 | 119 | 886 | |
| | 2015.09-2026.04 | ET | F | R | Hatchback 4WD L2S | Date to:2019.04 | GDS81701 | Drive Shaft | | 30 | 27 | 63 | 120 | 715 | |
| | 2015.09-2026.04 | ET | F | L/R | Hatchback 4WD L2S | Date from:2019.05 | GCO83279 | Outer Joint | | 30 | 25 | 61 | 119 | 57 | I |
| | 2015.09-2026.04 | ET | F | L | Hatchback 4WD L2S | Date to:2019.04 | GCI81466 | Inner Joint | | 29 | 35 | 44 | 72.5 | 130 | |
| | 2015.09-2026.04 | ET | F | L | Hatchback 4WD L2S | Date from:2019.05 | GCI83285 | Inner Joint | | 29 | 25 | 40 | 73 | 135 | |
| | 2015.09-2026.04 | ET | F | R | Hatchback 4WD L2S | Date to:2019.04 | GCI81467 | Inner Joint | | 27 | 35 | 45.7 | | 144 | |
| | 2015.09-2026.04 | ET | F | R | Hatchback 4WD L2S | Date from:2019.05 | GCI83284 | Inner Joint | | 29 | 25 | 40 | 83.5 | 192 | |
| | 2015.09-2026.04 | ET | F | R | Hatchback 4WD L2S | Date to:2021.01 | GDS81703 | Intermediate Shaft | | 27 | 29 | | | 248 | |
| | 2015.09-2026.04 | ET | R | L/R | Hatchback 4WD L2S | Date from:2021.02,For Long range,for OE:1420167-00-B,Replace in pairs only | GDS57882 | Drive Shaft | | 30 | 29 | 63 | 120 | 873 | |
| | 2015.09-2026.04 | ET | R | L/R | Hatchback 4WD L2S | Date to:2021.01 | GDS81699 | Drive Shaft | | 30 | 29 | 63 | 120 | 868 | |
| | 2015.09-2026.04 | ET | R | L/R | Hatchback 4WD L2S | Date from:2021.02,For Long range,for OE:1420161-00-A | GCO83769 | Outer Joint | | 30 | 35 | 63 | 120 | 55 | I |
| | 2015.09-2026.04 | ET | R | L/R | Hatchback 4WD L2S | Date to:2021.01 | GCI81465 | Inner Joint | | 29 | 35 | 44 | 72.5 | 118 | |
| | 2015.09-2026.04 | ET | R | L/R | Hatchback 4WD L2S | Date from:2021.02,For Long range,for OE:1420161-00-A | GCI83908 | Inner Joint | | 29 | 35 | 40 | 73 | 127 | |
| | 2015.09-2026.04 | ET | F/R | L/R | Hatchback 4WD L2S | Posission:Front,Date to:2019.04;Posission:Rear,Date to:2021.01 | GCO81487 | Outer Joint | | 30 | 35 | 63 | 120 | 59.5 | I |
| EV (386 kw) | 2015.09-2026.04 | ET | F | L | Hatchback 4WD L2S | Date from:2021.02 | GDS56390 | Drive Shaft | | 30 | 29 | 61 | 119 | 840 | |
| | 2015.09-2026.04 | ET | F | L | Hatchback 4WD L2S | Date from:2019.05,Date to:2021.01 | GDS56391 | Drive Shaft | | 30 | 29 | 61 | 119 | 818 | |
| | 2015.09-2026.04 | ET | F | L | Hatchback 4WD L2S | Date to:2019.04 | GDS81698 | Drive Shaft | | 30 | 29 | 63 | 120 | 773 | |
| | 2015.09-2026.04 | ET | F | R | Hatchback 4WD L2S | Date from:2021.02 | GDS56389 | Drive Shaft | | 30 | 29 | 61 | 119 | 908 | |
| | 2015.09-2026.04 | ET | F | R | Hatchback 4WD L2S | Date from:2019.05,Date to:2021.01 | GDS56392 | Drive Shaft | | 30 | 29 | 61 | 119 | 886 | |
| | 2015.09-2026.04 | ET | F | R | Hatchback 4WD L2S | Date to:2019.04 | GDS81701 | Drive Shaft | | 30 | 27 | 63 | 120 | 715 | |
| | 2015.09-2026.04 | ET | F | L/R | Hatchback 4WD L2S | Date from:2019.05 | GCO83279 | Outer Joint | | 30 | 25 | 61 | 119 | 57 | I |
| | 2015.09-2026.04 | ET | F | L | Hatchback 4WD L2S | Date to:2019.04 | GCI81466 | Inner Joint | | 29 | 35 | 44 | 72.5 | 130 | |
| | 2015.09-2026.04 | ET | F | L | Hatchback 4WD L2S | Date from:2019.05 | GCI83285 | Inner Joint | | 29 | 25 | 40 | 73 | 135 | |
| | 2015.09-2026.04 | ET | F | R | Hatchback 4WD L2S | Date to:2019.04 | GCI81467 | Inner Joint | | 27 | 35 | 45.7 | | 144 | |
| | 2015.09-2026.04 | ET | F | R | Hatchback 4WD L2S | Date from:2019.05 | GCI83284 | Inner Joint | | 29 | 25 | 40 | 83.5 | 192 | |
| | 2015.09-2026.04 | ET | F | R | Hatchback 4WD L2S | Date to:2021.01 | GDS81703 | Intermediate Shaft | | 27 | 29 | | | 248 | |
| | 2015.09-2026.04 | ET | R | L/R | Hatchback 4WD L2S | Date from:2021.02,For Long range,for OE:1420167-00-B,Replace in pairs only | GDS57882 | Drive Shaft | | 30 | 29 | 63 | 120 | 873 | |
| | 2015.09-2026.04 | ET | R | L/R | Hatchback 4WD L2S | Date to:2021.01 | GDS81699 | Drive Shaft | | 30 | 29 | 63 | 120 | 868 | |
| | 2015.09-2026.04 | ET | R | L/R | Hatchback 4WD L2S | Date from:2021.02,For Long range,for OE:1420161-00-A | GCO83769 | Outer Joint | | 30 | 35 | 63 | 120 | 55 | I |
| | 2015.09-2026.04 | ET | R | L/R | Hatchback 4WD L2S | Date to:2021.01 | GCI81465 | Inner Joint | | 29 | 35 | 44 | 72.5 | 118 | |
| | 2015.09-2026.04 | ET | R | L/R | Hatchback 4WD L2S | Date from:2021.02,For Long range,for OE:1420161-00-A | GCI83908 | Inner Joint | | 29 | 35 | 40 | 73 | 127 | |
| | 2015.09-2026.04 | ET | F/R | L/R | Hatchback 4WD L2S | Posission:Front,Date to:2019.04;Posission:Rear,Date to:2021.01 | GCO81487 | Outer Joint | | 30 | 35 | 63 | 120 | 59.5 | I |
| **Model S P100D** | | | | | | | | | | | | | | | |
| EV (450 kw) | 2016.10-2026.04 | ET | F | L | Hatchback 4WD L2S | Date from:2021.02 | GDS56390 | Drive Shaft | | 30 | 29 | 61 | 119 | 840 | |
| | 2016.10-2026.04 | ET | F | L | Hatchback 4WD L2S | Date from:2019.05,Date to:2021.01 | GDS56391 | Drive Shaft | | 30 | 29 | 61 | 119 | 818 | |
| | 2016.10-2026.04 | ET | F | R | Hatchback 4WD L2S | Date from:2021.02 | GDS56389 | Drive Shaft | | 30 | 29 | 61 | 119 | 908 | |
| | 2016.10-2026.04 | ET | F | R | Hatchback 4WD L2S | Date from:2019.05,Date to:2021.01 | GDS56392 | Drive Shaft | | 30 | 29 | 61 | 119 | 886 | |
| | 2016.10-2026.04 | ET | F | R | Hatchback 4WD L2S | Date to:2019.04 | GDS81701 | Drive Shaft | | 30 | 27 | 63 | 120 | 715 | |
| | 2016.10-2026.04 | ET | F | L/R | Hatchback 4WD L2S | Date from:2019.05 | GCO83279 | Outer Joint | | 30 | 25 | 61 | 119 | 57 | I |
| | 2016.10-2026.04 | ET | F | L | Hatchback 4WD L2S | Date from:2019.05 | GCI83285 | Inner Joint | | 29 | 25 | 40 | 73 | 135 | |
| | 2016.10-2026.04 | ET | F | R | Hatchback 4WD L2S | Date to:2019.04 | GCI81467 | Inner Joint | | 27 | 35 | 45.7 | | 144 | |
| | 2016.10-2026.04 | ET | F | R | Hatchback 4WD L2S | Date from:2019.05 | GCI83284 | Inner Joint | | 29 | 25 | 40 | 83.5 | 192 | |
| | 2016.10-2026.04 | ET | F | R | Hatchback 4WD L2S | Date to:2021.01 | GDS81703 | Intermediate Shaft | | 27 | 29 | | | 248 | |
| | 2016.10-2026.04 | ET | R | L/R | Hatchback 4WD L2S | Date from:2021.02,For Long range,for OE:1420167-00-B,Replace in pairs only | GDS57882 | Drive Shaft | | 30 | 29 | 63 | 120 | 873 | |
| | 2016.10-2026.04 | ET | R | L/R | Hatchback 4WD L2S | Date to:2021.01 | GDS81699 | Drive Shaft | | 30 | 29 | 63 | 120 | 868 | |
| | 2016.10-2026.04 | ET | R | L/R | Hatchback 4WD L2S | Date from:2021.02,For Long range,for OE:1420161-00-A | GCO83769 | Outer Joint | | 30 | 35 | 63 | 120 | 55 | I |
| | 2016.10-2026.04 | ET | R | L/R | Hatchback 4WD L2S | Date to:2021.01 | GCI81465 | Inner Joint | | 29 | 35 | 44 | 72.5 | 118 | |
| | 2016.10-2026.04 | ET | R | L/R | Hatchback 4WD L2S | Date from:2021.02,For Long range,for OE:1420161-00-A | GCI83908 | Inner Joint | | 29 | 35 | 40 | 73 | 127 | |
| | 2016.10-2026.04 | ET | F/R | L/R | Hatchback 4WD L2S | Posission:Front,Date to:2019.04;Posission:Rear,Date to:2021.01 | GCO81487 | Outer Joint | | 30 | 35 | 63 | 120 | 59.5 | I |
| EV (568 kw) | 2016.10-2026.04 | ET | F | L | Hatchback 4WD L2S | Date from:2021.02 | GDS56390 | Drive Shaft | | 30 | 29 | 61 | 119 | 840 | |
| | 2016.10-2026.04 | ET | F | L | Hatchback 4WD L2S | Date from:2019.05,Date to:2021.01 | GDS56391 | Drive Shaft | | 30 | 29 | 61 | 119 | 818 | |
| | 2016.10-2026.04 | ET | F | R | Hatchback 4WD L2S | Date from:2021.02 | GDS56389 | Drive Shaft | | 30 | 29 | 61 | 119 | 908 | |
| | 2016.10-2026.04 | ET | F | R | Hatchback 4WD L2S | Date from:2019.05,Date to:2021.01 | GDS56392 | Drive Shaft | | 30 | 29 | 61 | 119 | 886 | |
| | 2016.10-2026.04 | ET | F | R | Hatchback 4WD L2S | Date to:2019.04 | GDS81701 | Drive Shaft | | 30 | 27 | 63 | 120 | 715 | |
| | 2016.10-2026.04 | ET | F | L/R | Hatchback 4WD L2S | Date from:2019.05 | GCO83279 | Outer Joint | | 30 | 25 | 61 | 119 | 57 | I |
| | 2016.10-2026.04 | ET | F | L | Hatchback 4WD L2S | Date from:2019.05 | GCI83285 | Inner Joint | | 29 | 25 | 40 | 73 | 135 | |
| | 2016.10-2026.04 | ET | F | R | Hatchback 4WD L2S | Date to:2019.04 | GCI81467 | Inner Joint | | 27 | 35 | 45.7 | | 144 | |
| | 2016.10-2026.04 | ET | F | R | Hatchback 4WD L2S | Date from:2019.05 | GCI83284 | Inner Joint | | 29 | 25 | 40 | 83.5 | 192 | |
| | 2016.10-2026.04 | ET | F | R | Hatchback 4WD L2S | Date to:2021.01 | GDS81703 | Intermediate Shaft | | 27 | 29 | | | 248 | |
| | 2016.10-2026.04 | ET | R | L/R | Hatchback 4WD L2S | Date from:2021.02,For Long range,for OE:1420167-00-B,Replace in pairs only | GDS57882 | Drive Shaft | | 30 | 29 | 63 | 120 | 873 | |
| | 2016.10-2026.04 | ET | R | L/R | Hatchback 4WD L2S | Date to:2021.01 | GDS81699 | Drive Shaft | | 30 | 29 | 63 | 120 | 868 | |
| | 2016.10-2026.04 | ET | R | L/R | Hatchback 4WD L2S | Date from:2021.02,For Long range,for OE:1420161-00-A | GCO83769 | Outer Joint | | 30 | 35 | 63 | 120 | 55 | I |
| | 2016.10-2026.04 | ET | R | L/R | Hatchback 4WD L2S | Date to:2021.01 | GCI81465 | Inner Joint | | 29 | 35 | 44 | 72.5 | 118 | |

| | YEAR | TRANSM. | F/R | L/R | BODY STYLE & DRIVE TYPE & ENGINE | REMARKS | G-AP Ref. | PRODUCT | ABS | Technical Specifications A | B | C | H | L | P |
|---|---|---|---|---|---|---|---|---|---|---|---|---|---|---|---|
| **TESLA** | | | | | | | | | | | | | | | |
| **Model S P100D** | | | | | | | | | | | | | | | |
| EV (568 kw) | 2016.10-2026.04 | ET | R | L/R | Hatchback 4WD L2S | Date from:2021.02,For Long range,for OE:1420161-00-A | GCI83908 | Inner Joint | | 29 | 35 | 40 | 73 | 127 | |
| | 2016.10-2026.04 | ET | F/R | L/R | Hatchback 4WD L2S | Posission:Front,Date to:2019.04;Posission:Rear,Date to:2021.01 | GCO81487 | Outer Joint | | 30 | 35 | 63 | 120 | 59.5 | I |
| **Model S P85** | | | | | | | | | | | | | | | |
| EV (310 kw) | 2013.11-2014.12 | ET | R | L/R | Hatchback RWD L1S | | GDS81699 | Drive Shaft | | 30 | 29 | 63 | 120 | 868 | |
| | 2013.11-2014.12 | ET | R | L/R | Hatchback RWD L1S | | GCO81487 | Outer Joint | | 30 | 35 | 63 | 120 | 59.5 | I |
| | 2013.11-2014.12 | ET | R | L/R | Hatchback RWD L1S | | GCI81465 | Inner Joint | | 29 | 35 | 44 | 72.5 | 118 | |
| EV (350 kw) | 2013.05-2014.12 | ET | R | L/R | Hatchback RWD L1S | | GDS81699 | Drive Shaft | | 30 | 29 | 63 | 120 | 868 | |
| | 2013.05-2014.12 | ET | R | L/R | Hatchback RWD L1S | | GCO81487 | Outer Joint | | 30 | 35 | 63 | 120 | 59.5 | I |
| | 2013.05-2014.12 | ET | R | L/R | Hatchback RWD L1S | | GCI81465 | Inner Joint | | 29 | 35 | 44 | 72.5 | 118 | |
| **Model S P85D** | | | | | | | | | | | | | | | |
| EV (504 kw) | 2023.01-2026.04 | ET | F | L | Hatchback 4WD L2S | | GDS56390 | Drive Shaft | | 30 | 29 | 61 | 119 | 840 | |
| | 2023.01-2026.04 | ET | F | R | Hatchback 4WD L2S | | GDS56389 | Drive Shaft | | 30 | 29 | 61 | 119 | 908 | |
| | 2023.01-2026.04 | ET | F | L/R | Hatchback 4WD L2S | | GCO83279 | Outer Joint | | 30 | 25 | 61 | 119 | 57 | I |
| | 2023.01-2026.04 | ET | F | L | Hatchback 4WD L2S | | GCI83285 | Inner Joint | | 29 | 25 | 40 | 73 | 135 | |
| | 2023.01-2026.04 | ET | F | R | Hatchback 4WD L2S | | GCI83284 | Inner Joint | | 29 | 25 | 40 | 83.5 | 192 | |
| | 2023.01-2026.04 | ET | R | L/R | Hatchback 4WD L2S | For Long range;for OE:1420167-00-B,Replace in pairs only | GDS57882 | Drive Shaft | | 30 | 29 | 63 | 120 | 873 | |
| | 2023.01-2026.04 | ET | R | L/R | Hatchback 4WD L2S | For Long range,for OE:1420161-00-A | GCO83769 | Outer Joint | | 30 | 35 | 63 | 120 | 55 | I |
| | 2023.01-2026.04 | ET | R | L/R | Hatchback 4WD L2S | For Long range,for OE:1420161-00-A | GCI83908 | Inner Joint | | 29 | 35 | 40 | 73 | 127 | |
| EV (515 kw) | 2014.10-2016.02 | ET | F | L | Hatchback 4WD L2S | | GDS81698 | Drive Shaft | | 30 | 29 | 63 | 120 | 773 | |
| | 2014.10-2016.02 | ET | F | R | Hatchback 4WD L2S | | GDS81701 | Drive Shaft | | 30 | 27 | 63 | 120 | 715 | |
| | 2014.10-2016.02 | ET | F | L | Hatchback 4WD L2S | | GCI81466 | Inner Joint | | 29 | 35 | 44 | 72.5 | 130 | |
| | 2014.10-2016.02 | ET | F | R | Hatchback 4WD L2S | | GCI81467 | Inner Joint | | 27 | 35 | 45.7 | | 144 | |
| | 2014.10-2016.02 | ET | F | R | Hatchback 4WD L2S | | GDS81703 | Intermediate Shaft | | 27 | 29 | | | 248 | |
| | 2014.10-2016.02 | ET | R | L/R | Hatchback 4WD L2S | | GDS81699 | Drive Shaft | | 30 | 29 | 63 | 120 | 868 | |
| | 2014.10-2016.02 | ET | R | L/R | Hatchback 4WD L2S | | GCI81465 | Inner Joint | | 29 | 35 | 44 | 72.5 | 118 | |
| | 2014.10-2016.02 | ET | F/R | L/R | Hatchback 4WD L2S | | GCO81487 | Outer Joint | | 30 | 35 | 63 | 120 | 59.5 | I |
| EV (543 kw) | 2014.10-2015.10 | ET | F | L | Hatchback 4WD L2S | | GDS81698 | Drive Shaft | | 30 | 29 | 63 | 120 | 773 | |
| | 2014.10-2015.10 | ET | F | R | Hatchback 4WD L2S | | GDS81701 | Drive Shaft | | 30 | 27 | 63 | 120 | 715 | |
| | 2014.10-2015.10 | ET | F | L | Hatchback 4WD L2S | | GCI81466 | Inner Joint | | 29 | 35 | 44 | 72.5 | 130 | |
| | 2014.10-2015.10 | ET | F | R | Hatchback 4WD L2S | | GCI81467 | Inner Joint | | 27 | 35 | 45.7 | | 144 | |
| | 2014.10-2015.10 | ET | F | R | Hatchback 4WD L2S | | GDS81703 | Intermediate Shaft | | 27 | 29 | | | 248 | |
| | 2014.10-2015.10 | ET | R | L/R | Hatchback 4WD L2S | | GDS81699 | Drive Shaft | | 30 | 29 | 63 | 120 | 868 | |
| | 2014.10-2015.10 | ET | R | L/R | Hatchback 4WD L2S | | GCI81465 | Inner Joint | | 29 | 35 | 44 | 72.5 | 118 | |
| | 2014.10-2015.10 | ET | F/R | L/R | Hatchback 4WD L2S | | GCO81487 | Outer Joint | | 30 | 35 | 63 | 120 | 59.5 | I |
| EV (568 kw) | 2015.09-2016.02 | ET | F | L | Hatchback 4WD L2S | | GDS81698 | Drive Shaft | | 30 | 29 | 63 | 120 | 773 | |
| | 2015.09-2016.02 | ET | F | R | Hatchback 4WD L2S | | GDS81701 | Drive Shaft | | 30 | 27 | 63 | 120 | 715 | |
| | 2015.09-2016.02 | ET | F | L | Hatchback 4WD L2S | | GCI81466 | Inner Joint | | 29 | 35 | 44 | 72.5 | 130 | |
| | 2015.09-2016.02 | ET | F | R | Hatchback 4WD L2S | | GCI81467 | Inner Joint | | 27 | 35 | 45.7 | | 144 | |
| | 2015.09-2016.02 | ET | F | R | Hatchback 4WD L2S | | GDS81703 | Intermediate Shaft | | 27 | 29 | | | 248 | |
| | 2015.09-2016.02 | ET | R | L/R | Hatchback 4WD L2S | | GDS81699 | Drive Shaft | | 30 | 29 | 63 | 120 | 868 | |
| | 2015.09-2016.02 | ET | R | L/R | Hatchback 4WD L2S | | GCI81465 | Inner Joint | | 29 | 35 | 44 | 72.5 | 118 | |
| | 2015.09-2016.02 | ET | F/R | L/R | Hatchback 4WD L2S | | GCO81487 | Outer Joint | | 30 | 35 | 63 | 120 | 59.5 | I |
| **Model S P90D** | | | | | | | | | | | | | | | |
| EV (345 kw) | 2015.09-2026.04 | ET | F | L | Hatchback 4WD L2S | Date from:2021.02 | GDS56390 | Drive Shaft | | 30 | 29 | 61 | 119 | 840 | |
| | 2015.09-2026.04 | ET | F | L | Hatchback 4WD L2S | Date from:2019.05,Date to:2021.01 | GDS56391 | Drive Shaft | | 30 | 29 | 61 | 119 | 818 | |
| | 2015.09-2026.04 | ET | F | L | Hatchback 4WD L2S | Date to:2019.04 | GDS81698 | Drive Shaft | | 30 | 29 | 63 | 120 | 773 | |
| | 2015.09-2026.04 | ET | F | R | Hatchback 4WD L2S | Date from:2021.02 | GDS56389 | Drive Shaft | | 30 | 29 | 61 | 119 | 908 | |
| | 2015.09-2026.04 | ET | F | R | Hatchback 4WD L2S | Date from:2019.05,Date to:2021.01 | GDS56392 | Drive Shaft | | 30 | 29 | 61 | 119 | 886 | |
| | 2015.09-2026.04 | ET | F | R | Hatchback 4WD L2S | Date to:2019.04 | GDS81701 | Drive Shaft | | 30 | 27 | 63 | 120 | 715 | |
| | 2015.09-2026.04 | ET | F | L/R | Hatchback 4WD L2S | Date from:2019.05 | GCO83279 | Outer Joint | | 30 | 25 | 61 | 119 | 57 | I |
| | 2015.09-2026.04 | ET | F | L | Hatchback 4WD L2S | Date to:2019.04 | GCI81466 | Inner Joint | | 29 | 35 | 44 | 72.5 | 130 | |
| | 2015.09-2026.04 | ET | F | L | Hatchback 4WD L2S | Date from:2019.05 | GCI83285 | Inner Joint | | 29 | 25 | 40 | 73 | 135 | |
| | 2015.09-2026.04 | ET | F | R | Hatchback 4WD L2S | Date to:2019.04 | GCI81467 | Inner Joint | | 27 | 35 | 45.7 | | 144 | |
| | 2015.09-2026.04 | ET | F | R | Hatchback 4WD L2S | Date from:2019.05 | GCI83284 | Inner Joint | | 29 | 25 | 40 | 83.5 | 192 | |
| | 2015.09-2026.04 | ET | R | L/R | Hatchback 4WD L2S | Date from:2021.02,For Long range,for OE:1420167-00-B,Replace in pairs only | GDS57882 | Drive Shaft | | 30 | 29 | 63 | 120 | 873 | |
| | 2015.09-2026.04 | ET | R | L/R | Hatchback 4WD L2S | Date to:2021.01 | GDS81699 | Drive Shaft | | 30 | 29 | 63 | 120 | 868 | |
| | 2015.09-2026.04 | ET | R | L/R | Hatchback 4WD L2S | Date from:2021.02,For Long range,for OE:1420161-00-A | GCO83769 | Outer Joint | | 30 | 35 | 63 | 120 | 55 | I |
| | 2015.09-2026.04 | ET | R | L/R | Hatchback 4WD L2S | Date to:2021.01 | GCI81465 | Inner Joint | | 29 | 35 | 44 | 72.5 | 118 | |
| | 2015.09-2026.04 | ET | R | L/R | Hatchback 4WD L2S | Date from:2021.02,For Long range,for OE:1420161-00-A | GCI83908 | Inner Joint | | 29 | 35 | 40 | 73 | 127 | |
| | 2015.09-2026.04 | ET | F/R | L/R | Hatchback 4WD L2S | Posission:Front,Date to:2019.04;Posission:Rear,Date to:2021.01 | GCO81487 | Outer Joint | | 30 | 35 | 63 | 120 | 59.5 | I |
| EV (346 kw) | 2015.09-2026.04 | ET | F | L | Hatchback 4WD L2S | Date from:2021.02 | GDS56390 | Drive Shaft | | 30 | 29 | 61 | 119 | 840 | |
| | 2015.09-2026.04 | ET | F | L | Hatchback 4WD L2S | Date from:2019.05,Date to:2021.01 | GDS56391 | Drive Shaft | | 30 | 29 | 61 | 119 | 818 | |
| | 2015.09-2026.04 | ET | F | L | Hatchback 4WD L2S | Date to:2019.04 | GDS81698 | Drive Shaft | | 30 | 29 | 63 | 120 | 773 | |
| | 2015.09-2026.04 | ET | F | R | Hatchback 4WD L2S | Date from:2021.02 | GDS56389 | Drive Shaft | | 30 | 29 | 61 | 119 | 908 | |
| | 2015.09-2026.04 | ET | F | R | Hatchback 4WD L2S | Date from:2019.05,Date to:2021.01 | GDS56392 | Drive Shaft | | 30 | 29 | 61 | 119 | 886 | |

| | YEAR | TRANSM. | F/R | L/R | BODY STYLE & DRIVE TYPE & ENGINE | REMARKS | G-AP Ref. | PRODUCT | ABS | Technical Specifications A | B | C | H | L | P |
|---|---|---|---|---|---|---|---|---|---|---|---|---|---|---|---|
| **TESLA** | | | | | | | | | | | | | | | |
| **Model S P90D** | | | | | | | | | | | | | | | |
| EV (346 kw) | 2015.09-2026.04 | ET | F | R | Hatchback 4WD L2S | Date to:2019.04 | GDS81701 | Drive Shaft | | 30 | 27 | 63 | 120 | 715 | |
| | 2015.09-2026.04 | ET | F | L/R | Hatchback 4WD L2S | Date from:2019.05 | GCO83279 | Outer Joint | | 30 | 25 | 61 | 119 | 57 | I |
| | 2015.09-2026.04 | ET | F | L | Hatchback 4WD L2S | Date to:2019.04 | GCI81466 | Inner Joint | | 29 | 35 | 44 | 72.5 | 130 | |
| | 2015.09-2026.04 | ET | F | L | Hatchback 4WD L2S | Date from:2019.05 | GCI83285 | Inner Joint | | 29 | 25 | 40 | 73 | 135 | |
| | 2015.09-2026.04 | ET | F | R | Hatchback 4WD L2S | Date to:2019.04 | GCI81467 | Inner Joint | | 27 | 35 | 45.7 | | 144 | |
| | 2015.09-2026.04 | ET | F | R | Hatchback 4WD L2S | Date from:2019.05 | GCI83284 | Inner Joint | | 29 | 25 | 40 | 83.5 | 192 | |
| | 2015.09-2026.04 | ET | F | R | Hatchback 4WD L2S | Date to:2021.01 | GDS81703 | Intermediate Shaft | | 27 | 29 | | | 248 | |
| | 2015.09-2026.04 | ET | R | L/R | Hatchback 4WD L2S | Date from:2021.02,For Long range,for OE:1420167-00-B,Replace in pairs only | GDS57882 | Drive Shaft | | 30 | 29 | 63 | 120 | 873 | |
| | 2015.09-2026.04 | ET | R | L/R | Hatchback 4WD L2S | Date to:2021.01 | GDS81699 | Drive Shaft | | 30 | 29 | 63 | 120 | 868 | |
| | 2015.09-2026.04 | ET | R | L/R | Hatchback 4WD L2S | Date from:2021.02,For Long range,for OE:1420161-00-A | GCO83769 | Outer Joint | | 30 | 35 | 63 | 120 | 55 | I |
| | 2015.09-2026.04 | ET | R | L/R | Hatchback 4WD L2S | Date to:2021.01 | GCI81465 | Inner Joint | | 29 | 35 | 44 | 72.5 | 118 | |
| | 2015.09-2026.04 | ET | R | L/R | Hatchback 4WD L2S | Date from:2021.02,For Long range,for OE:1420161-00-A | GCI83908 | Inner Joint | | 29 | 35 | 40 | 73 | 127 | |
| | 2015.09-2026.04 | ET | F/R | L/R | Hatchback 4WD L2S | Posission:Front,Date to:2019.04;Posission:Rear,Date to:2021.01 | GCO81487 | Outer Joint | | 30 | 35 | 63 | 120 | 59.5 | I |
| EV (397 kw) | 2015.09-2026.04 | ET | F | L | Hatchback 4WD L2S | Date from:2021.02 | GDS56390 | Drive Shaft | | 30 | 29 | 61 | 119 | 840 | |
| | 2015.09-2026.04 | ET | F | L | Hatchback 4WD L2S | Date from:2019.05,Date to:2021.01 | GDS56391 | Drive Shaft | | 30 | 29 | 61 | 119 | 818 | |
| | 2015.09-2026.04 | ET | F | L | Hatchback 4WD L2S | Date to:2019.04 | GDS81698 | Drive Shaft | | 30 | 29 | 63 | 120 | 773 | |
| | 2015.09-2026.04 | ET | F | R | Hatchback 4WD L2S | Date from:2021.02 | GDS56389 | Drive Shaft | | 30 | 29 | 61 | 119 | 908 | |
| | 2015.09-2026.04 | ET | F | R | Hatchback 4WD L2S | Date from:2019.05,Date to:2021.01 | GDS56392 | Drive Shaft | | 30 | 29 | 61 | 119 | 886 | |
| | 2015.09-2026.04 | ET | F | R | Hatchback 4WD L2S | Date to:2019.04 | GDS81701 | Drive Shaft | | 30 | 27 | 63 | 120 | 715 | |
| | 2015.09-2026.04 | ET | F | L/R | Hatchback 4WD L2S | Date from:2019.05 | GCO83279 | Outer Joint | | 30 | 25 | 61 | 119 | 57 | I |
| | 2015.09-2026.04 | ET | F | L | Hatchback 4WD L2S | Date to:2019.04 | GCI81466 | Inner Joint | | 29 | 35 | 44 | 72.5 | 130 | |
| | 2015.09-2026.04 | ET | F | L | Hatchback 4WD L2S | Date from:2019.05 | GCI83285 | Inner Joint | | 29 | 25 | 40 | 73 | 135 | |
| | 2015.09-2026.04 | ET | F | R | Hatchback 4WD L2S | Date to:2019.04 | GCI81467 | Inner Joint | | 27 | 35 | 45.7 | | 144 | |
| | 2015.09-2026.04 | ET | F | R | Hatchback 4WD L2S | Date from:2019.05 | GCI83284 | Inner Joint | | 29 | 25 | 40 | 83.5 | 192 | |
| | 2015.09-2026.04 | ET | F | R | Hatchback 4WD L2S | Date to:2021.01 | GDS81703 | Intermediate Shaft | | 27 | 29 | | | 248 | |
| | 2015.09-2026.04 | ET | R | L/R | Hatchback 4WD L2S | Date from:2021.02,For Long range,for OE:1420167-00-B,Replace in pairs only | GDS57882 | Drive Shaft | | 30 | 29 | 63 | 120 | 873 | |
| | 2015.09-2026.04 | ET | R | L/R | Hatchback 4WD L2S | Date to:2021.01 | GDS81699 | Drive Shaft | | 30 | 29 | 63 | 120 | 868 | |
| | 2015.09-2026.04 | ET | R | L/R | Hatchback 4WD L2S | Date from:2021.02,For Long range,for OE:1420161-00-A | GCO83769 | Outer Joint | | 30 | 35 | 63 | 120 | 55 | I |
| | 2015.09-2026.04 | ET | R | L/R | Hatchback 4WD L2S | Date to:2021.01 | GCI81465 | Inner Joint | | 29 | 35 | 44 | 72.5 | 118 | |
| | 2015.09-2026.04 | ET | R | L/R | Hatchback 4WD L2S | Date from:2021.02,For Long range,for OE:1420161-00-A | GCI83908 | Inner Joint | | 29 | 35 | 40 | 73 | 127 | |
| | 2015.09-2026.04 | ET | F/R | L/R | Hatchback 4WD L2S | Posission:Front,Date to:2019.04;Posission:Rear,Date to:2021.01 | GCO81487 | Outer Joint | | 30 | 35 | 63 | 120 | 59.5 | I |
| EV (568 kw) | 2015.09-2026.04 | ET | F | L | Hatchback 4WD L2S | Date from:2021.02 | GDS56390 | Drive Shaft | | 30 | 29 | 61 | 119 | 840 | |
| | 2015.09-2026.04 | ET | F | L | Hatchback 4WD L2S | Date from:2019.05,Date to:2021.01 | GDS56391 | Drive Shaft | | 30 | 29 | 61 | 119 | 818 | |
| | 2015.09-2026.04 | ET | F | L | Hatchback 4WD L2S | Date to:2019.04 | GDS81698 | Drive Shaft | | 30 | 29 | 63 | 120 | 773 | |
| | 2015.09-2026.04 | ET | F | R | Hatchback 4WD L2S | Date from:2021.02 | GDS56389 | Drive Shaft | | 30 | 29 | 61 | 119 | 908 | |
| | 2015.09-2026.04 | ET | F | R | Hatchback 4WD L2S | Date from:2019.05,Date to:2021.01 | GDS56392 | Drive Shaft | | 30 | 29 | 61 | 119 | 886 | |
| | 2015.09-2026.04 | ET | F | R | Hatchback 4WD L2S | Date to:2019.04 | GDS81701 | Drive Shaft | | 30 | 27 | 63 | 120 | 715 | |
| | 2015.09-2026.04 | ET | F | L/R | Hatchback 4WD L2S | Date from:2019.05 | GCO83279 | Outer Joint | | 30 | 25 | 61 | 119 | 57 | I |
| | 2015.09-2026.04 | ET | F | L | Hatchback 4WD L2S | Date to:2019.04 | GCI81466 | Inner Joint | | 29 | 35 | 44 | 72.5 | 130 | |
| | 2015.09-2026.04 | ET | F | L | Hatchback 4WD L2S | Date from:2019.05 | GCI83285 | Inner Joint | | 29 | 25 | 40 | 73 | 135 | |
| | 2015.09-2026.04 | ET | F | R | Hatchback 4WD L2S | Date to:2019.04 | GCI81467 | Inner Joint | | 27 | 35 | 45.7 | | 144 | |
| | 2015.09-2026.04 | ET | F | R | Hatchback 4WD L2S | Date from:2019.05 | GCI83284 | Inner Joint | | 29 | 25 | 40 | 83.5 | 192 | |
| | 2015.09-2026.04 | ET | F | R | Hatchback 4WD L2S | Date to:2021.01 | GDS81703 | Intermediate Shaft | | 27 | 29 | | | 248 | |
| | 2015.09-2026.04 | ET | R | L/R | Hatchback 4WD L2S | Date from:2021.02,For Long range,for OE:1420167-00-B,Replace in pairs only | GDS57882 | Drive Shaft | | 30 | 29 | 63 | 120 | 873 | |
| | 2015.09-2026.04 | ET | R | L/R | Hatchback 4WD L2S | Date to:2021.01 | GDS81699 | Drive Shaft | | 30 | 29 | 63 | 120 | 868 | |
| | 2015.09-2026.04 | ET | R | L/R | Hatchback 4WD L2S | Date from:2021.02,For Long range,for OE:1420161-00-A | GCO83769 | Outer Joint | | 30 | 35 | 63 | 120 | 55 | I |
| | 2015.09-2026.04 | ET | R | L/R | Hatchback 4WD L2S | Date to:2021.01 | GCI81465 | Inner Joint | | 29 | 35 | 44 | 72.5 | 118 | |
| | 2015.09-2026.04 | ET | R | L/R | Hatchback 4WD L2S | Date from:2021.02,For Long range,for OE:1420161-00-A | GCI83908 | Inner Joint | | 29 | 35 | 40 | 73 | 127 | |
| | 2015.09-2026.04 | ET | F/R | L/R | Hatchback 4WD L2S | Posission:Front,Date to:2019.04;Posission:Rear,Date to:2021.01 | GCO81487 | Outer Joint | | 30 | 35 | 63 | 120 | 59.5 | I |
| **Model X** | | | | | | | | | | | | | | | |
| EV (312 kw) | 2023.02-2026.04 | ET | F | L | Hatchback 4WD 3D3;3D6 | Not for Old Version | GDS56390 | Drive Shaft | | 30 | 29 | 61 | 119 | 840 | |
| | 2023.02-2026.04 | ET | F | R | Hatchback 4WD 3D3;3D6 | Not for Old Version | GDS56389 | Drive Shaft | | 30 | 29 | 61 | 119 | 908 | |
| | 2023.02-2026.04 | ET | F | L/R | Hatchback 4WD 3D3;3D6 | | GCO81487 | Outer Joint | | 30 | 35 | 63 | 120 | 59.5 | I |
| | 2023.02-2026.04 | ET | F | L/R | Hatchback 4WD 3D3;3D6 | | GCO83279 | Outer Joint | | 30 | 25 | 61 | 119 | 57 | I |
| | 2023.02-2026.04 | ET | F | L | Hatchback 4WD 3D3;3D6 | | GCI81466 | Inner Joint | | 29 | 35 | 44 | 72.5 | 130 | |
| | 2023.02-2026.04 | ET | F | L | Hatchback 4WD 3D3;3D6 | | GCI83285 | Inner Joint | | 29 | 25 | 40 | 73 | 135 | |
| | 2023.02-2026.04 | ET | F | R | Hatchback 4WD 3D3;3D6 | | GCI83284 | Inner Joint | | 29 | 25 | 40 | 83.5 | 192 | |
| | 2023.02-2026.04 | ET | R | L/R | Hatchback 4WD 3D3;3D6 | For Long range,for OE:1420167-00-B,Replace in pairs only | GDS57882 | Drive Shaft | | 30 | 29 | 63 | 120 | 873 | |
| | 2023.02-2026.04 | ET | R | L/R | Hatchback 4WD 3D3;3D6 | For Long range,for OE:1420161-00-A | GCO83769 | Outer Joint | | 30 | 35 | 63 | 120 | 55 | I |
| | 2023.02-2026.04 | ET | R | L/R | Hatchback 4WD 3D3;3D6 | For Long range,for OE:1420161-00-A | GCI83908 | Inner Joint | | 29 | 35 | 40 | 73 | 127 | |
| EV (386 kw) | 2019.06-2026.04 | ET | F | L | Hatchback 4WD L2S | Date from:2019.04 | GDS56390 | Drive Shaft | | 30 | 29 | 61 | 119 | 840 | |
| | 2019.06-2026.04 | ET | F | R | Hatchback 4WD L2S | | GDS56389 | Drive Shaft | | 30 | 29 | 61 | 119 | 908 | |
| | 2019.06-2026.04 | ET | F | L/R | Hatchback 4WD L2S | | GCO83279 | Outer Joint | | 30 | 25 | 61 | 119 | 57 | I |
| | 2019.06-2026.04 | ET | F | L | Hatchback 4WD L2S | | GCI83285 | Inner Joint | | 29 | 25 | 40 | 73 | 135 | |
| | 2019.06-2026.04 | ET | F | R | Hatchback 4WD L2S | | GCI83284 | Inner Joint | | 29 | 25 | 40 | 83.5 | 192 | |

| | YEAR | TRANSM. | F/R | L/R | BODY STYLE & DRIVE TYPE & ENGINE | REMARKS | G-AP Ref. | PRODUCT | ABS | Technical Specifications | | | | | |
|---|---|---|---|---|---|---|---|---|---|---|---|---|---|---|---|
| | | | | | | | | | | A | B | C | H | L | P |
| **TESLA**<br>**Model X** | | | | | | | | | | | | | | | |
| EV (386 kw) | 2019.06-2026.04 | ET | R | L/R | Hatchback 4WD L2S | Date from:2021.03,For Long range,for OE:1420167-00-B,Replace in pairs only | GDS57882 | Drive Shaft | | 30 | 29 | 63 | 120 | 873 | |
| | 2019.06-2026.04 | ET | R | L/R | Hatchback 4WD L2S | Date to:2021.02 | GDS81699 | Drive Shaft | | 30 | 29 | 63 | 120 | 868 | |
| | 2019.06-2026.04 | ET | R | L/R | Hatchback 4WD L2S | Date from:2021.03,For Long range,for OE:1420161-00-A | GCO83769 | Outer Joint | | 30 | 35 | 63 | 120 | 55 | I |
| | 2019.06-2026.04 | ET | R | L/R | Hatchback 4WD L2S | Date to:2021.02 | GCI81465 | Inner Joint | | 29 | 35 | 44 | 72.5 | 118 | |
| | 2019.06-2026.04 | ET | R | L/R | Hatchback 4WD L2S | Date from:2021.03,For Long range,for OE:1420161-00-A | GCI83908 | Inner Joint | | 29 | 35 | 40 | 73 | 127 | |
| | 2019.06-2026.04 | ET | F/R | L/R | Hatchback 4WD L2S | Date to:2021.02 | GCO81487 | Outer Joint | | 30 | 35 | 63 | 120 | 59.5 | I |
| EV (413 kw) | 2019.06-2026.04 | ET | F | L | Hatchback 4WD L2S;3D1 | Date from:2019.04 | GDS56390 | Drive Shaft | | 30 | 29 | 61 | 119 | 840 | |
| | 2019.06-2026.04 | ET | F | R | Hatchback 4WD L2S;3D1 | | GDS56389 | Drive Shaft | | 30 | 29 | 61 | 119 | 908 | |
| | 2019.06-2026.04 | ET | F | L/R | Hatchback 4WD L2S;3D1 | | GCO83279 | Outer Joint | | 30 | 25 | 61 | 119 | 57 | I |
| | 2019.06-2026.04 | ET | F | L | Hatchback 4WD L2S;3D1 | | GCI83285 | Inner Joint | | 29 | 25 | 40 | 73 | 135 | |
| | 2019.06-2026.04 | ET | F | R | Hatchback 4WD L2S;3D1 | | GCI83284 | Inner Joint | | 29 | 25 | 40 | 83.5 | 192 | |
| | 2019.06-2026.04 | ET | R | L/R | Hatchback 4WD L2S;3D1 | Date from:2021.03,For Long range,for OE:1420167-00-B,Replace in pairs only | GDS57882 | Drive Shaft | | 30 | 29 | 63 | 120 | 873 | |
| | 2019.06-2026.04 | ET | R | L/R | Hatchback 4WD L2S;3D1 | Date to:2021.02 | GDS81699 | Drive Shaft | | 30 | 29 | 63 | 120 | 868 | |
| | 2019.06-2026.04 | ET | R | L/R | Hatchback 4WD L2S;3D1 | Date from:2021.03,For Long range,for OE:1420161-00-A | GCO83769 | Outer Joint | | 30 | 35 | 63 | 120 | 55 | I |
| | 2019.06-2026.04 | ET | R | L/R | Hatchback 4WD L2S;3D1 | Date to:2021.02 | GCI81465 | Inner Joint | | 29 | 35 | 44 | 72.5 | 118 | |
| | 2019.06-2026.04 | ET | R | L/R | Hatchback 4WD L2S;3D1 | Date from:2021.03,For Long range,for OE:1420161-00-A | GCI83908 | Inner Joint | | 29 | 35 | 40 | 73 | 127 | |
| | 2019.06-2026.04 | ET | F/R | L/R | Hatchback 4WD L2S;3D1 | Date to:2021.02 | GCO81487 | Outer Joint | | 30 | 35 | 63 | 120 | 59.5 | I |
| EV (421 kw) | 2019.09-2026.04 | ET | F | L | Hatchback 4WD L2S;3D1 | Date from:2019.04 | GDS56390 | Drive Shaft | | 30 | 29 | 61 | 119 | 840 | |
| | 2019.09-2026.04 | ET | F | R | Hatchback 4WD L2S;3D1 | | GDS56389 | Drive Shaft | | 30 | 29 | 61 | 119 | 908 | |
| | 2019.09-2026.04 | ET | F | L/R | Hatchback 4WD L2S;3D1 | | GCO83279 | Outer Joint | | 30 | 25 | 61 | 119 | 57 | I |
| | 2019.09-2026.04 | ET | F | L | Hatchback 4WD L2S;3D1 | | GCI83285 | Inner Joint | | 29 | 25 | 40 | 73 | 135 | |
| | 2019.09-2026.04 | ET | F | R | Hatchback 4WD L2S;3D1 | | GCI83284 | Inner Joint | | 29 | 25 | 40 | 83.5 | 192 | |
| | 2019.09-2026.04 | ET | R | L/R | Hatchback 4WD L2S;3D1 | Date from:2021.03,For Long range,for OE:1420167-00-B,Replace in pairs only | GDS57882 | Drive Shaft | | 30 | 29 | 63 | 120 | 873 | |
| | 2019.09-2026.04 | ET | R | L/R | Hatchback 4WD L2S;3D1 | Date to:2021.02 | GDS81699 | Drive Shaft | | 30 | 29 | 63 | 120 | 868 | |
| | 2019.09-2026.04 | ET | R | L/R | Hatchback 4WD L2S;3D1 | Date to:2021.02 | GCO81487 | Outer Joint | | 30 | 35 | 63 | 120 | 59.5 | I |
| | 2019.09-2026.04 | ET | R | L/R | Hatchback 4WD L2S;3D1 | Date from:2021.03,For Long range,for OE:1420161-00-A | GCO83769 | Outer Joint | | 30 | 35 | 63 | 120 | 55 | I |
| | 2019.09-2026.04 | ET | R | L/R | Hatchback 4WD L2S;3D1 | Date to:2021.02 | GCI81465 | Inner Joint | | 29 | 35 | 44 | 72.5 | 118 | |
| | 2019.09-2026.04 | ET | R | L/R | Hatchback 4WD L2S;3D1 | Date from:2021.03,For Long range,for OE:1420161-00-A | GCI83908 | Inner Joint | | 29 | 35 | 40 | 73 | 127 | |
| EV (493 kw) | 2021.01-2026.04 | ET | F | L | Hatchback 4WD 3D1;3D8 | Not for Old Version | GDS56390 | Drive Shaft | | 30 | 29 | 61 | 119 | 840 | |
| | 2021.01-2026.04 | ET | F | R | Hatchback 4WD 3D1;3D8 | Not for Old Version | GDS56389 | Drive Shaft | | 30 | 29 | 61 | 119 | 908 | |
| | 2021.01-2026.04 | ET | F | L/R | Hatchback 4WD 3D1;3D8 | | GCO83279 | Outer Joint | | 30 | 25 | 61 | 119 | 57 | I |
| | 2021.01-2026.04 | ET | F | L | Hatchback 4WD 3D1;3D8 | | GCI83285 | Inner Joint | | 29 | 25 | 40 | 73 | 135 | |
| | 2021.01-2026.04 | ET | F | R | Hatchback 4WD 3D1;3D8 | | GCI83284 | Inner Joint | | 29 | 25 | 40 | 83.5 | 192 | |
| | 2021.01-2026.04 | ET | R | L/R | Hatchback 4WD 3D1;3D8 | Date from:2021.03,For Long range,for OE:1420167-00-B,Replace in pairs only | GDS57882 | Drive Shaft | | 30 | 29 | 63 | 120 | 873 | |
| | 2021.01-2026.04 | ET | R | L/R | Hatchback 4WD 3D1;3D8 | Date to:2021.02 | GDS81699 | Drive Shaft | | 30 | 29 | 63 | 120 | 868 | |
| | 2021.01-2026.04 | ET | R | L/R | Hatchback 4WD 3D1;3D8 | Date to:2021.02 | GCO81487 | Outer Joint | | 30 | 35 | 63 | 120 | 59.5 | I |
| | 2021.01-2026.04 | ET | R | L/R | Hatchback 4WD 3D1;3D8 | Date from:2021.03,For Long range,for OE:1420161-00-A | GCO83769 | Outer Joint | | 30 | 35 | 63 | 120 | 55 | I |
| | 2021.01-2026.04 | ET | R | L/R | Hatchback 4WD 3D1;3D8 | Date to:2021.02 | GCI81465 | Inner Joint | | 29 | 35 | 44 | 72.5 | 118 | |
| | 2021.01-2026.04 | ET | R | L/R | Hatchback 4WD 3D1;3D8 | Date from:2021.03,For Long range,for OE:1420161-00-A | GCI83908 | Inner Joint | | 29 | 35 | 40 | 73 | 127 | |
| EV (568 kw) | 2019.06-2026.04 | ET | F | L | Hatchback 4WD L1S;L2S | Date from:2019.04 | GDS56390 | Drive Shaft | | 30 | 29 | 61 | 119 | 840 | |
| | 2019.06-2026.04 | ET | F | R | Hatchback 4WD L1S;L2S | | GDS56389 | Drive Shaft | | 30 | 29 | 61 | 119 | 908 | |
| | 2019.06-2026.04 | ET | F | L/R | Hatchback 4WD L1S;L2S | | GCO83279 | Outer Joint | | 30 | 25 | 61 | 119 | 57 | I |
| | 2019.06-2026.04 | ET | F | L | Hatchback 4WD L1S;L2S | | GCI83285 | Inner Joint | | 29 | 25 | 40 | 73 | 135 | |
| | 2019.06-2026.04 | ET | F | R | Hatchback 4WD L1S;L2S | | GCI83284 | Inner Joint | | 29 | 25 | 40 | 83.5 | 192 | |
| | 2019.06-2026.04 | ET | R | L/R | Hatchback 4WD L1S;L2S | Date from:2021.03,For Long range,for OE:1420167-00-B,Replace in pairs only | GDS57882 | Drive Shaft | | 30 | 29 | 63 | 120 | 873 | |
| | 2019.06-2026.04 | ET | R | L/R | Hatchback 4WD L1S;L2S | Date to:2021.02 | GDS81699 | Drive Shaft | | 30 | 29 | 63 | 120 | 868 | |
| | 2019.06-2026.04 | ET | R | L/R | Hatchback 4WD L1S;L2S | Date from:2021.03,For Long range,for OE:1420161-00-A | GCO83769 | Outer Joint | | 30 | 35 | 63 | 120 | 55 | I |
| | 2019.06-2026.04 | ET | R | L/R | Hatchback 4WD L1S;L2S | Date to:2021.02 | GCI81465 | Inner Joint | | 29 | 35 | 44 | 72.5 | 118 | |
| | 2019.06-2026.04 | ET | R | L/R | Hatchback 4WD L1S;L2S | Date from:2021.03,For Long range,for OE:1420161-00-A | GCI83908 | Inner Joint | | 29 | 35 | 40 | 73 | 127 | |
| | 2019.06-2026.04 | ET | F/R | L/R | Hatchback 4WD L1S;L2S | Date to:2021.02 | GCO81487 | Outer Joint | | 30 | 35 | 63 | 120 | 59.5 | I |
| EV (585 kw) | 2019.06-2026.04 | ET | F | L | Hatchback 4WD L1S;3D1 | Date from:2019.04 | GDS56390 | Drive Shaft | | 30 | 29 | 61 | 119 | 840 | |
| | 2019.06-2026.04 | ET | F | R | Hatchback 4WD L1S;3D1 | | GDS56389 | Drive Shaft | | 30 | 29 | 61 | 119 | 908 | |
| | 2019.06-2026.04 | ET | F | L/R | Hatchback 4WD L1S;3D1 | | GCO83279 | Outer Joint | | 30 | 25 | 61 | 119 | 57 | I |
| | 2019.06-2026.04 | ET | F | L | Hatchback 4WD L1S;3D1 | | GCI83285 | Inner Joint | | 29 | 25 | 40 | 73 | 135 | |
| | 2019.06-2026.04 | ET | F | R | Hatchback 4WD L1S;3D1 | | GCI83284 | Inner Joint | | 29 | 25 | 40 | 83.5 | 192 | |
| | 2019.06-2026.04 | ET | R | L/R | Hatchback 4WD L1S;3D1 | Date from:2021.03,For Long range,for OE:1420167-00-B,Replace in pairs only | GDS57882 | Drive Shaft | | 30 | 29 | 63 | 120 | 873 | |
| | 2019.06-2026.04 | ET | R | L/R | Hatchback 4WD L1S;3D1 | Date to:2021.02 | GDS81699 | Drive Shaft | | 30 | 29 | 63 | 120 | 868 | |
| | 2019.06-2026.04 | ET | R | L/R | Hatchback 4WD L1S;3D1 | Date from:2021.03,For Long range,for OE:1420161-00-A | GCO83769 | Outer Joint | | 30 | 35 | 63 | 120 | 55 | I |
| | 2019.06-2026.04 | ET | R | L/R | Hatchback 4WD L1S;3D1 | Date to:2021.02 | GCI81465 | Inner Joint | | 29 | 35 | 44 | 72.5 | 118 | |
| | 2019.06-2026.04 | ET | R | L/R | Hatchback 4WD L1S;3D1 | Date from:2021.03,For Long range,for OE:1420161-00-A | GCI83908 | Inner Joint | | 29 | 35 | 40 | 73 | 127 | |
| | 2019.06-2026.04 | ET | F/R | L/R | Hatchback 4WD L1S;3D1 | Date to:2021.02 | GCO81487 | Outer Joint | | 30 | 35 | 63 | 120 | 59.5 | I |
| EV (599 kw) | 2020.09-2026.04 | ET | F | L | Hatchback 4WD L1S;3D1 | Date from:2019.04 | GDS56390 | Drive Shaft | | 30 | 29 | 61 | 119 | 840 | |
| | 2020.09-2026.04 | ET | F | R | Hatchback 4WD L1S;3D1 | | GDS56389 | Drive Shaft | | 30 | 29 | 61 | 119 | 908 | |
| | 2020.09-2026.04 | ET | F | L/R | Hatchback 4WD L1S;3D1 | | GCO83279 | Outer Joint | | 30 | 25 | 61 | 119 | 57 | I |
| | 2020.09-2026.04 | ET | F | L | Hatchback 4WD L1S;3D1 | | GCI83285 | Inner Joint | | 29 | 25 | 40 | 73 | 135 | |

| | YEAR | TRANSM. | F/R | L/R | BODY STYLE & DRIVE TYPE & ENGINE | REMARKS | G-AP Ref. | PRODUCT | ABS | Technical Specifications A | B | C | H | L | P |
|---|---|---|---|---|---|---|---|---|---|---|---|---|---|---|---|
| **TESLA** | | | | | | | | | | | | | | | |
| **Model X** | | | | | | | | | | | | | | | |
| EV (599 kw) | 2020.09-2026.04 | ET | F | R | Hatchback 4WD L1S;3D1 | | GCI83284 | Inner Joint | | 29 | 25 | 40 | 83.5 | 192 | |
| | 2020.09-2026.04 | ET | R | L/R | Hatchback 4WD L1S;3D1 | Date from:2021.03,For Long range,for OE:1420167-00-B,Replace in pairs only | GDS57882 | Drive Shaft | | 30 | 29 | 63 | 120 | 873 | |
| | 2020.09-2026.04 | ET | R | L/R | Hatchback 4WD L1S;3D1 | Date to:2021.02 | GDS81699 | Drive Shaft | | 30 | 29 | 63 | 120 | 868 | |
| | 2020.09-2026.04 | ET | R | L/R | Hatchback 4WD L1S;3D1 | Date from:2021.03,For Long range,for OE:1420161-00-A | GCO83769 | Outer Joint | | 30 | 35 | 63 | 120 | 55 | I |
| | 2020.09-2026.04 | ET | R | L/R | Hatchback 4WD L1S;3D1 | Date to:2021.02 | GCI81465 | Inner Joint | | 29 | 35 | 44 | 72.5 | 118 | |
| | 2020.09-2026.04 | ET | R | L/R | Hatchback 4WD L1S;3D1 | Date from:2021.03,For Long range,for OE:1420161-00-A | GCI83908 | Inner Joint | | 29 | 35 | 40 | 73 | 127 | |
| | 2020.09-2026.04 | ET | F/R | L/R | Hatchback 4WD L1S;3D1 | Date to:2021.02 | GCO81487 | Outer Joint | | 30 | 35 | 63 | 120 | 59.5 | I |
| EV (750 kw) | 2021.01-2026.04 | ET | F | L | Hatchback 4WD 5D1;5D2 | | GDS56390 | Drive Shaft | | 30 | 29 | 61 | 119 | 840 | |
| | 2021.01-2026.04 | ET | F | R | Hatchback 4WD 5D1;5D2 | | GDS56389 | Drive Shaft | | 30 | 29 | 61 | 119 | 908 | |
| | 2021.01-2026.04 | ET | F | L/R | Hatchback 4WD 5D1;5D2 | | GCO83279 | Outer Joint | | 30 | 25 | 61 | 119 | 57 | I |
| | 2021.01-2026.04 | ET | F | L | Hatchback 4WD 5D1;5D2 | | GCI83285 | Inner Joint | | 29 | 25 | 40 | 73 | 135 | |
| | 2021.01-2026.04 | ET | F | R | Hatchback 4WD 5D1;5D2 | | GCI83284 | Inner Joint | | 29 | 25 | 40 | 83.5 | 192 | |
| | 2021.01-2026.04 | ET | R | L/R | Hatchback 4WD 5D1;5D2 | Date from:2021.03,For Long range,for OE:1420167-00-B,Replace in pairs only | GDS57882 | Drive Shaft | | 30 | 29 | 63 | 120 | 873 | |
| | 2021.01-2026.04 | ET | R | L/R | Hatchback 4WD 5D1;5D2 | Date to:2021.02 | GDS81699 | Drive Shaft | | 30 | 29 | 63 | 120 | 868 | |
| | 2021.01-2026.04 | ET | R | L/R | Hatchback 4WD 5D1;5D2 | Date to:2021.02 | GCO81487 | Outer Joint | | 30 | 35 | 63 | 120 | 59.5 | I |
| | 2021.01-2026.04 | ET | R | L/R | Hatchback 4WD 5D1;5D2 | Date from:2021.03,For Long range,for OE:1420161-00-A | GCO83769 | Outer Joint | | 30 | 35 | 63 | 120 | 55 | I |
| | 2021.01-2026.04 | ET | R | L/R | Hatchback 4WD 5D1;5D2 | Date to:2021.02 | GCI81465 | Inner Joint | | 29 | 35 | 44 | 72.5 | 118 | |
| | 2021.01-2026.04 | ET | R | L/R | Hatchback 4WD 5D1;5D2 | Date from:2021.03,For Long range,for OE:1420161-00-A | GCI83908 | Inner Joint | | 29 | 35 | 40 | 73 | 127 | |
| **Model X 100D** | | | | | | | | | | | | | | | |
| EV (386 kw) | 2017.08-2026.04 | ET | F | L | Hatchback 4WD L2S | Date from:2019.04;Inner teeth of wheel side:25 | GDS56390 | Drive Shaft | | 30 | 29 | 61 | 119 | 840 | |
| | 2017.08-2026.04 | ET | F | L | Hatchback 4WD L2S | Date to:2019.04;Inner teeth of wheel side:25 | GDS56588 | Drive Shaft | | 30 | 29 | 61 | 119 | 793 | |
| | 2017.08-2026.04 | ET | F | L | Hatchback 4WD L2S | Inner teeth of wheel side:35 | GDS81700 | Drive Shaft | | 30 | 29 | 63 | 120 | 793 | |
| | 2017.08-2026.04 | ET | F | R | Hatchback 4WD L2S | Date from:2021.03;Inner teeth of wheel side:25 | GDS56389 | Drive Shaft | | 30 | 29 | 61 | 119 | 908 | |
| | 2017.08-2026.04 | ET | F | R | Hatchback 4WD L2S | Inner teeth of wheel side:35 | GDS81702 | Drive Shaft | | 30 | 27 | 63 | 120 | 735 | |
| | 2017.08-2026.04 | ET | F | L/R | Hatchback 4WD L2S | | GCO83279 | Outer Joint | | 30 | 25 | 61 | 119 | 57 | I |
| | 2017.08-2026.04 | ET | F | L | Hatchback 4WD L2S | | GCI81466 | Inner Joint | | 29 | 35 | 44 | 72.5 | 130 | |
| | 2017.08-2026.04 | ET | F | L | Hatchback 4WD L2S | | GCI83285 | Inner Joint | | 29 | 25 | 40 | 73 | 135 | |
| | 2017.08-2026.04 | ET | F | R | Hatchback 4WD L2S | | GCI81467 | Inner Joint | | 27 | 35 | 45.7 | | 144 | |
| | 2017.08-2026.04 | ET | F | R | Hatchback 4WD L2S | | GCI83284 | Inner Joint | | 29 | 25 | 40 | 83.5 | 192 | |
| | 2017.08-2026.04 | ET | F | R | Hatchback 4WD L2S | | GDS81703 | Intermediate Shaft | | 27 | 29 | | | 248 | |
| | 2017.08-2026.04 | ET | R | L/R | Hatchback 4WD L2S | Date from:2021.03,For Long range,for OE:1420167-00-B,Replace in pairs only | GDS57882 | Drive Shaft | | 30 | 29 | 63 | 120 | 873 | |
| | 2017.08-2026.04 | ET | R | L/R | Hatchback 4WD L2S | Date to:2021.02 | GDS81699 | Drive Shaft | | 30 | 29 | 63 | 120 | 868 | |
| | 2017.08-2026.04 | ET | R | L/R | Hatchback 4WD L2S | Date from:2021.03,For Long range,for OE:1420161-00-A | GCO83769 | Outer Joint | | 30 | 35 | 63 | 120 | 55 | I |
| | 2017.08-2026.04 | ET | R | L/R | Hatchback 4WD L2S | Date to:2021.02 | GCI81465 | Inner Joint | | 29 | 35 | 44 | 72.5 | 118 | |
| | 2017.08-2026.04 | ET | R | L/R | Hatchback 4WD L2S | Date from:2021.03,For Long range,for OE:1420161-00-A | GCI83908 | Inner Joint | | 29 | 35 | 40 | 73 | 127 | |
| | 2017.08-2026.04 | ET | F/R | L/R | Hatchback 4WD L2S | Date to:2021.02 | GCO81487 | Outer Joint | | 30 | 35 | 63 | 120 | 59.5 | I |
| **Model X 60D** | | | | | | | | | | | | | | | |
| EV (386 kw) | 2016.06-2026.04 | ET | F | L | Hatchback 4WD L2S | Date from:2019.04;Inner teeth of wheel side:25 | GDS56390 | Drive Shaft | | 30 | 29 | 61 | 119 | 840 | |
| | 2016.06-2026.04 | ET | F | L | Hatchback 4WD L2S | Date to:2019.04;Inner teeth of wheel side:25 | GDS56588 | Drive Shaft | | 30 | 29 | 61 | 119 | 793 | |
| | 2016.06-2026.04 | ET | F | L | Hatchback 4WD L2S | Inner teeth of wheel side:35 | GDS81700 | Drive Shaft | | 30 | 29 | 63 | 120 | 793 | |
| | 2016.06-2026.04 | ET | F | R | Hatchback 4WD L2S | Date from:2021.03;Inner teeth of wheel side:25 | GDS56389 | Drive Shaft | | 30 | 29 | 61 | 119 | 908 | |
| | 2016.06-2026.04 | ET | F | R | Hatchback 4WD L2S | Inner teeth of wheel side:35 | GDS81702 | Drive Shaft | | 30 | 27 | 63 | 120 | 735 | |
| | 2016.06-2026.04 | ET | F | L/R | Hatchback 4WD L2S | | GCO83279 | Outer Joint | | 30 | 25 | 61 | 119 | 57 | I |
| | 2016.06-2026.04 | ET | F | L | Hatchback 4WD L2S | | GCI81466 | Inner Joint | | 29 | 35 | 44 | 72.5 | 130 | |
| | 2016.06-2026.04 | ET | F | L | Hatchback 4WD L2S | | GCI83285 | Inner Joint | | 29 | 25 | 40 | 73 | 135 | |
| | 2016.06-2026.04 | ET | F | R | Hatchback 4WD L2S | | GCI81467 | Inner Joint | | 27 | 35 | 45.7 | | 144 | |
| | 2016.06-2026.04 | ET | F | R | Hatchback 4WD L2S | | GCI83284 | Inner Joint | | 29 | 25 | 40 | 83.5 | 192 | |
| | 2016.06-2026.04 | ET | F | R | Hatchback 4WD L2S | | GDS81703 | Intermediate Shaft | | 27 | 29 | | | 248 | |
| | 2016.06-2026.04 | ET | R | L/R | Hatchback 4WD L2S | Date from:2021.03,For Long range,for OE:1420167-00-B,Replace in pairs only | GDS57882 | Drive Shaft | | 30 | 29 | 63 | 120 | 873 | |
| | 2016.06-2026.04 | ET | R | L/R | Hatchback 4WD L2S | Date to:2021.02 | GDS81699 | Drive Shaft | | 30 | 29 | 63 | 120 | 868 | |
| | 2016.06-2026.04 | ET | R | L/R | Hatchback 4WD L2S | Date from:2021.03,For Long range,for OE:1420161-00-A | GCO83769 | Outer Joint | | 30 | 35 | 63 | 120 | 55 | I |
| | 2016.06-2026.04 | ET | R | L/R | Hatchback 4WD L2S | Date to:2021.02 | GCI81465 | Inner Joint | | 29 | 35 | 44 | 72.5 | 118 | |
| | 2016.06-2026.04 | ET | R | L/R | Hatchback 4WD L2S | Date from:2021.03,For Long range,for OE:1420161-00-A | GCI83908 | Inner Joint | | 29 | 35 | 40 | 73 | 127 | |
| | 2016.06-2026.04 | ET | F/R | L/R | Hatchback 4WD L2S | Date to:2021.02 | GCO81487 | Outer Joint | | 30 | 35 | 63 | 120 | 59.5 | I |
| **Model X 75D** | | | | | | | | | | | | | | | |
| EV (386 kw) | 2016.06-2026.04 | ET | F | L | Hatchback 4WD L2S | Date from:2019.04;Inner teeth of wheel side:25 | GDS56390 | Drive Shaft | | 30 | 29 | 61 | 119 | 840 | |
| | 2016.06-2026.04 | ET | F | L | Hatchback 4WD L2S | Date to:2019.04;Inner teeth of wheel side:25 | GDS56588 | Drive Shaft | | 30 | 29 | 61 | 119 | 793 | |
| | 2016.06-2026.04 | ET | F | L | Hatchback 4WD L2S | Inner teeth of wheel side:35 | GDS81700 | Drive Shaft | | 30 | 29 | 63 | 120 | 793 | |
| | 2016.06-2026.04 | ET | F | R | Hatchback 4WD L2S | Date from:2021.03;Inner teeth of wheel side:25 | GDS56389 | Drive Shaft | | 30 | 29 | 61 | 119 | 908 | |
| | 2016.06-2026.04 | ET | F | R | Hatchback 4WD L2S | Inner teeth of wheel side:35 | GDS81702 | Drive Shaft | | 30 | 27 | 63 | 120 | 735 | |
| | 2016.06-2026.04 | ET | F | L/R | Hatchback 4WD L2S | | GCO83279 | Outer Joint | | 30 | 25 | 61 | 119 | 57 | I |
| | 2016.06-2026.04 | ET | F | L | Hatchback 4WD L2S | | GCI81466 | Inner Joint | | 29 | 35 | 44 | 72.5 | 130 | |
| | 2016.06-2026.04 | ET | F | L | Hatchback 4WD L2S | | GCI83285 | Inner Joint | | 29 | 25 | 40 | 73 | 135 | |
| | 2016.06-2026.04 | ET | F | R | Hatchback 4WD L2S | | GCI81467 | Inner Joint | | 27 | 35 | 45.7 | | 144 | |
| | 2016.06-2026.04 | ET | F | R | Hatchback 4WD L2S | | GCI83284 | Inner Joint | | 29 | 25 | 40 | 83.5 | 192 | |

| | YEAR | TRANSM. | F/R | L/R | BODY STYLE & DRIVE TYPE & ENGINE | REMARKS | G-AP Ref. | PRODUCT | ABS | Technical Specifications A | B | C | H | L | P |
|---|---|---|---|---|---|---|---|---|---|---|---|---|---|---|---|
| **TESLA** | | | | | | | | | | | | | | | |
| **Model X 75D** | | | | | | | | | | | | | | | |
| EV (386 kw) | 2016.06-2026.04 | ET | F | R | Hatchback 4WD L2S | | GDS81703 | Intermediate Shaft | | 27 | 29 | | | 248 | |
| | 2016.06-2026.04 | ET | R | L/R | Hatchback 4WD L2S | Date from:2021.03,For Long range,for OE:1420167-00-B,Replace in pairs only | GDS57882 | Drive Shaft | | 30 | 29 | 63 | 120 | 873 | |
| | 2016.06-2026.04 | ET | R | L/R | Hatchback 4WD L2S | Date to:2021.02 | GDS81699 | Drive Shaft | | 30 | 29 | 63 | 120 | 868 | |
| | 2016.06-2026.04 | ET | R | L/R | Hatchback 4WD L2S | Date from:2021.03,For Long range,for OE:1420161-00-A | GCO83769 | Outer Joint | | 30 | 35 | 63 | 120 | 55 | I |
| | 2016.06-2026.04 | ET | R | L/R | Hatchback 4WD L2S | Date to:2021.02 | GCI81465 | Inner Joint | | 29 | 35 | 44 | 72.5 | 118 | |
| | 2016.06-2026.04 | ET | R | L/R | Hatchback 4WD L2S | Date from:2021.03,For Long range,for OE:1420161-00-A | GCI83908 | Inner Joint | | 29 | 35 | 40 | 73 | 127 | |
| | 2016.06-2026.04 | ET | F/R | L/R | Hatchback 4WD L2S | Date to:2021.02 | GCO81487 | Outer Joint | | 30 | 35 | 63 | 120 | 59.5 | I |
| **Model X 90D** | | | | | | | | | | | | | | | |
| EV (386 kw) | 2015.09-2026.04 | ET | F | L | Hatchback 4WD L2S | Date from:2019.04;Inner teeth of wheel side:25 | GDS56390 | Drive Shaft | | 30 | 29 | 61 | 119 | 840 | |
| | 2015.09-2026.04 | ET | F | L | Hatchback 4WD L2S | Date to:2019.04;Inner teeth of wheel side:25 | GDS56588 | Drive Shaft | | 30 | 29 | 61 | 119 | 793 | |
| | 2015.09-2026.04 | ET | F | L | Hatchback 4WD L2S | Inner teeth of wheel side:35 | GDS81700 | Drive Shaft | | 30 | 29 | 63 | 120 | 793 | |
| | 2015.09-2026.04 | ET | F | R | Hatchback 4WD L2S | Date from:2021.03;Inner teeth of wheel side:25 | GDS56389 | Drive Shaft | | 30 | 29 | 61 | 119 | 908 | |
| | 2015.09-2026.04 | ET | F | R | Hatchback 4WD L2S | Inner teeth of wheel side:35 | GDS81702 | Drive Shaft | | 30 | 27 | 63 | 120 | 735 | |
| | 2015.09-2026.04 | ET | F | L/R | Hatchback 4WD L2S | | GCO83279 | Outer Joint | | 30 | 25 | 61 | 119 | 57 | I |
| | 2015.09-2026.04 | ET | F | L | Hatchback 4WD L2S | | GCI81466 | Inner Joint | | 29 | 35 | 44 | 72.5 | 130 | |
| | 2015.09-2026.04 | ET | F | L | Hatchback 4WD L2S | | GCI83285 | Inner Joint | | 29 | 25 | 40 | 73 | 135 | |
| | 2015.09-2026.04 | ET | F | R | Hatchback 4WD L2S | | GCI81467 | Inner Joint | | 27 | 35 | 45.7 | | 144 | |
| | 2015.09-2026.04 | ET | F | R | Hatchback 4WD L2S | | GCI83284 | Inner Joint | | 29 | 25 | 40 | 83.5 | 192 | |
| | 2015.09-2026.04 | ET | F | R | Hatchback 4WD L2S | | GDS81703 | Intermediate Shaft | | 27 | 29 | | | 248 | |
| | 2015.09-2026.04 | ET | R | L/R | Hatchback 4WD L2S | Date from:2021.03,For Long range,for OE:1420167-00-B,Replace in pairs only | GDS57882 | Drive Shaft | | 30 | 29 | 63 | 120 | 873 | |
| | 2015.09-2026.04 | ET | R | L/R | Hatchback 4WD L2S | Date to:2021.02 | GDS81699 | Drive Shaft | | 30 | 29 | 63 | 120 | 868 | |
| | 2015.09-2026.04 | ET | R | L/R | Hatchback 4WD L2S | Date from:2021.03,For Long range,for OE:1420161-00-A | GCO83769 | Outer Joint | | 30 | 35 | 63 | 120 | 55 | I |
| | 2015.09-2026.04 | ET | R | L/R | Hatchback 4WD L2S | Date to:2021.02 | GCI81465 | Inner Joint | | 29 | 35 | 44 | 72.5 | 118 | |
| | 2015.09-2026.04 | ET | R | L/R | Hatchback 4WD L2S | Date from:2021.03,For Long range,for OE:1420161-00-A | GCI83908 | Inner Joint | | 29 | 35 | 40 | 73 | 127 | |
| | 2015.09-2026.04 | ET | F/R | L/R | Hatchback 4WD L2S | Date to:2021.02 | GCO81487 | Outer Joint | | 30 | 35 | 63 | 120 | 59.5 | I |
| **Model X P100D** | | | | | | | | | | | | | | | |
| EV (568 kw) | 2016.10-2026.04 | ET | F | L | Hatchback 4WD L2S | Date from:2019.04;Inner teeth of wheel side:25 | GDS56390 | Drive Shaft | | 30 | 29 | 61 | 119 | 840 | |
| | 2016.10-2026.04 | ET | F | L | Hatchback 4WD L2S | Date to:2019.04;Inner teeth of wheel side:25 | GDS56588 | Drive Shaft | | 30 | 29 | 61 | 119 | 793 | |
| | 2016.10-2026.04 | ET | F | L | Hatchback 4WD L2S | Inner teeth of wheel side:35 | GDS81700 | Drive Shaft | | 30 | 29 | 63 | 120 | 793 | |
| | 2016.10-2026.04 | ET | F | R | Hatchback 4WD L2S | Date from:2021.03;Inner teeth of wheel side:25 | GDS56389 | Drive Shaft | | 30 | 29 | 61 | 119 | 908 | |
| | 2016.10-2026.04 | ET | F | R | Hatchback 4WD L2S | Inner teeth of wheel side:35 | GDS81702 | Drive Shaft | | 30 | 27 | 63 | 120 | 735 | |
| | 2016.10-2026.04 | ET | F | L/R | Hatchback 4WD L2S | | GCO83279 | Outer Joint | | 30 | 25 | 61 | 119 | 57 | I |
| | 2016.10-2026.04 | ET | F | L | Hatchback 4WD L2S | | GCI81466 | Inner Joint | | 29 | 35 | 44 | 72.5 | 130 | |
| | 2016.10-2026.04 | ET | F | L | Hatchback 4WD L2S | | GCI83285 | Inner Joint | | 29 | 25 | 40 | 73 | 135 | |
| | 2016.10-2026.04 | ET | F | R | Hatchback 4WD L2S | | GCI81467 | Inner Joint | | 27 | 35 | 45.7 | | 144 | |
| | 2016.10-2026.04 | ET | F | R | Hatchback 4WD L2S | | GCI83284 | Inner Joint | | 29 | 25 | 40 | 83.5 | 192 | |
| | 2016.10-2026.04 | ET | F | R | Hatchback 4WD L2S | | GDS81703 | Intermediate Shaft | | 27 | 29 | | | 248 | |
| | 2016.10-2026.04 | ET | R | L/R | Hatchback 4WD L2S | Date from:2021.03,For Long range,for OE:1420167-00-B,Replace in pairs only | GDS57882 | Drive Shaft | | 30 | 29 | 63 | 120 | 873 | |
| | 2016.10-2026.04 | ET | R | L/R | Hatchback 4WD L2S | Date to:2021.02 | GDS81699 | Drive Shaft | | 30 | 29 | 63 | 120 | 868 | |
| | 2016.10-2026.04 | ET | R | L/R | Hatchback 4WD L2S | Date from:2021.03,For Long range,for OE:1420161-00-A | GCO83769 | Outer Joint | | 30 | 35 | 63 | 120 | 55 | I |
| | 2016.10-2026.04 | ET | R | L/R | Hatchback 4WD L2S | Date to:2021.02 | GCI81465 | Inner Joint | | 29 | 35 | 44 | 72.5 | 118 | |
| | 2016.10-2026.04 | ET | R | L/R | Hatchback 4WD L2S | Date from:2021.03,For Long range,for OE:1420161-00-A | GCI83908 | Inner Joint | | 29 | 35 | 40 | 73 | 127 | |
| | 2016.10-2026.04 | ET | F/R | L/R | Hatchback 4WD L2S | Date to:2021.02 | GCO81487 | Outer Joint | | 30 | 35 | 63 | 120 | 59.5 | I |
| **Model X P90D** | | | | | | | | | | | | | | | |
| EV (568 kw) | 2015.09-2026.04 | ET | F | L | Hatchback 4WD L2S | Date from:2019.04;Inner teeth of wheel side:25 | GDS56390 | Drive Shaft | | 30 | 29 | 61 | 119 | 840 | |
| | 2015.09-2026.04 | ET | F | L | Hatchback 4WD L2S | Date to:2019.04;Inner teeth of wheel side:25 | GDS56588 | Drive Shaft | | 30 | 29 | 61 | 119 | 793 | |
| | 2015.09-2026.04 | ET | F | L | Hatchback 4WD L2S | Inner teeth of wheel side:35 | GDS81700 | Drive Shaft | | 30 | 29 | 63 | 120 | 793 | |
| | 2015.09-2026.04 | ET | F | R | Hatchback 4WD L2S | Date from:2021.03;Inner teeth of wheel side:25 | GDS56389 | Drive Shaft | | 30 | 29 | 61 | 119 | 908 | |
| | 2015.09-2026.04 | ET | F | R | Hatchback 4WD L2S | Inner teeth of wheel side:35 | GDS81702 | Drive Shaft | | 30 | 27 | 63 | 120 | 735 | |
| | 2015.09-2026.04 | ET | F | L/R | Hatchback 4WD L2S | | GCO83279 | Outer Joint | | 30 | 25 | 61 | 119 | 57 | I |
| | 2015.09-2026.04 | ET | F | L | Hatchback 4WD L2S | | GCI81466 | Inner Joint | | 29 | 35 | 44 | 72.5 | 130 | |
| | 2015.09-2026.04 | ET | F | L | Hatchback 4WD L2S | | GCI83285 | Inner Joint | | 29 | 25 | 40 | 73 | 135 | |
| | 2015.09-2026.04 | ET | F | R | Hatchback 4WD L2S | | GCI81467 | Inner Joint | | 27 | 35 | 45.7 | | 144 | |
| | 2015.09-2026.04 | ET | F | R | Hatchback 4WD L2S | | GCI83284 | Inner Joint | | 29 | 25 | 40 | 83.5 | 192 | |
| | 2015.09-2026.04 | ET | F | R | Hatchback 4WD L2S | | GDS81703 | Intermediate Shaft | | 27 | 29 | | | 248 | |
| | 2015.09-2026.04 | ET | R | L/R | Hatchback 4WD L2S | Date from:2021.03,For Long range,for OE:1420167-00-B,Replace in pairs only | GDS57882 | Drive Shaft | | 30 | 29 | 63 | 120 | 873 | |
| | 2015.09-2026.04 | ET | R | L/R | Hatchback 4WD L2S | Date to:2021.02 | GDS81699 | Drive Shaft | | 30 | 29 | 63 | 120 | 868 | |
| | 2015.09-2026.04 | ET | R | L/R | Hatchback 4WD L2S | Date from:2021.03,For Long range,for OE:1420161-00-A | GCO83769 | Outer Joint | | 30 | 35 | 63 | 120 | 55 | I |
| | 2015.09-2026.04 | ET | R | L/R | Hatchback 4WD L2S | Date to:2021.02 | GCI81465 | Inner Joint | | 29 | 35 | 44 | 72.5 | 118 | |
| | 2015.09-2026.04 | ET | R | L/R | Hatchback 4WD L2S | Date from:2021.03,For Long range,for OE:1420161-00-A | GCI83908 | Inner Joint | | 29 | 35 | 40 | 73 | 127 | |
| | 2015.09-2026.04 | ET | F/R | L/R | Hatchback 4WD L2S | Date to:2021.02 | GCO81487 | Outer Joint | | 30 | 35 | 63 | 120 | 59.5 | I |
| **Model Y** | | | | | | | | | | | | | | | |
| EV (188 kw) | 2023.02- | ET | R | L/R | SUV RWD | | GDS56388 | Drive Shaft | | 30 | 29 | 52 | 98 | 850 | |
| | 2023.02- | ET | R | L/R | SUV RWD | | GDS56429 | Drive Shaft | | 30 | 29 | 52 | 97.5 | 848 | |
| | 2023.02- | ET | R | L/R | SUV RWD | | GCO83278 | Outer Joint | | 30 | 26 | 52 | 98 | 58 | I |

| | YEAR | TRANSM. | F/R | L/R | BODY STYLE & DRIVE TYPE & ENGINE | REMARKS | G-AP Ref. | PRODUCT | ABS | Technical Specifications | | | | | |
|---|---|---|---|---|---|---|---|---|---|---|---|---|---|---|---|
| | | | | | | | | | | A | B | C | H | L | P |
| **TESLA**<br>**Model Y** | | | | | | | | | | | | | | | |
| EV (188 kw) | 2023.02- | ET | R | L/R | SUV RWD | | GCO83289 | Outer Joint | | 30 | 24 | 52 | 97.5 | 59 | M |
| | 2023.02- | ET | R | L/R | SUV RWD | | GCI83283 | Inner Joint | | 29 | 26 | 40 | 73 | 114.5 | |
| | 2023.02- | ET | R | L/R | SUV RWD | | GCI83303 | Inner Joint | | 29 | 32 | 40 | 73 | 120 | |
| EV (192 kw) | 2019.03-2025.01 | ET | R | L/R | SUV RWD 3D1;3D6 | Axle Diameter:28MM | GDS56388 | Drive Shaft | | 30 | 29 | 52 | 98 | 850 | |
| | 2019.03-2025.01 | ET | R | L/R | SUV RWD 3D1;3D6 | Axle Diameter:25MM | GDS56429 | Drive Shaft | | 30 | 29 | 52 | 97.5 | 848 | |
| | 2019.03-2025.01 | ET | R | L/R | SUV RWD 3D1;3D6 | Axle Diameter:28MM | GCO83278 | Outer Joint | | 30 | 26 | 52 | 98 | 58 | I |
| | 2019.03-2025.01 | ET | R | L/R | SUV RWD 3D1;3D6 | Axle Diameter:25MM | GCO83289 | Outer Joint | | 30 | 24 | 52 | 97.5 | 59 | M |
| | 2019.03-2025.01 | ET | R | L/R | SUV RWD 3D1;3D6 | Axle Diameter:28MM | GCI83283 | Inner Joint | | 29 | 26 | 40 | 73 | 114.5 | |
| | 2019.03-2025.01 | ET | R | L/R | SUV RWD 3D1;3D6 | Axle Diameter:25MM | GCI83303 | Inner Joint | | 29 | 32 | 40 | 73 | 120 | |
| EV (194 kw) | 2021.11- | ET | R | L/R | SUV RWD 3D7 | Axle Diameter:28MM | GDS56388 | Drive Shaft | | 30 | 29 | 52 | 98 | 850 | |
| | 2021.11- | ET | R | L/R | SUV RWD 3D7 | Axle Diameter:25MM | GDS56429 | Drive Shaft | | 30 | 29 | 52 | 97.5 | 848 | |
| | 2021.11- | ET | R | L/R | SUV RWD 3D7 | Axle Diameter:28MM | GCO83278 | Outer Joint | | 30 | 26 | 52 | 98 | 58 | I |
| | 2021.11- | ET | R | L/R | SUV RWD 3D7 | Axle Diameter:25MM | GCO83289 | Outer Joint | | 30 | 24 | 52 | 97.5 | 59 | M |
| | 2021.11- | ET | R | L/R | SUV RWD 3D7 | Axle Diameter:28MM | GCI83283 | Inner Joint | | 29 | 26 | 40 | 73 | 114.5 | |
| | 2021.11- | ET | R | L/R | SUV RWD 3D7 | Axle Diameter:25MM | GCI83303 | Inner Joint | | 29 | 32 | 40 | 73 | 120 | |
| EV (202 kw) | 2021.11- | ET | R | L/R | SUV RWD 3D1 | Axle Diameter:28MM | GDS56388 | Drive Shaft | | 30 | 29 | 52 | 98 | 850 | |
| | 2021.11- | ET | R | L/R | SUV RWD 3D1 | Axle Diameter:25MM | GDS56429 | Drive Shaft | | 30 | 29 | 52 | 97.5 | 848 | |
| | 2021.11- | ET | R | L/R | SUV RWD 3D1 | Axle Diameter:28MM | GCO83278 | Outer Joint | | 30 | 26 | 52 | 98 | 58 | I |
| | 2021.11- | ET | R | L/R | SUV RWD 3D1 | Axle Diameter:25MM | GCO83289 | Outer Joint | | 30 | 24 | 52 | 97.5 | 59 | M |
| | 2021.11- | ET | R | L/R | SUV RWD 3D1 | Axle Diameter:28MM | GCI83283 | Inner Joint | | 29 | 26 | 40 | 73 | 114.5 | |
| | 2021.11- | ET | R | L/R | SUV RWD 3D1 | Axle Diameter:25MM | GCI83303 | Inner Joint | | 29 | 32 | 40 | 73 | 120 | |
| EV (220 kw) | 2021.07- | ET | R | L/R | SUV RWD 3D6 | Axle Diameter:28MM | GDS56388 | Drive Shaft | | 30 | 29 | 52 | 98 | 850 | |
| | 2021.07- | ET | R | L/R | SUV RWD 3D6 | Axle Diameter:25MM | GDS56429 | Drive Shaft | | 30 | 29 | 52 | 97.5 | 848 | |
| | 2021.07- | ET | R | L/R | SUV RWD 3D6 | Axle Diameter:28MM | GCO83278 | Outer Joint | | 30 | 26 | 52 | 98 | 58 | I |
| | 2021.07- | ET | R | L/R | SUV RWD 3D6 | Axle Diameter:25MM | GCO83289 | Outer Joint | | 30 | 24 | 52 | 97.5 | 59 | M |
| | 2021.07- | ET | R | L/R | SUV RWD 3D6 | Axle Diameter:28MM | GCI83283 | Inner Joint | | 29 | 26 | 40 | 73 | 114.5 | |
| | 2021.07- | ET | R | L/R | SUV RWD 3D6 | Axle Diameter:25MM | GCI83303 | Inner Joint | | 29 | 32 | 40 | 73 | 120 | |
| | 2022.09-2025.01 | ET | R | L/R | SUV RWD 4D1 | | GDS56388 | Drive Shaft | | 30 | 29 | 52 | 98 | 850 | |
| | 2022.09-2025.01 | ET | R | L/R | SUV RWD 4D1 | | GDS56429 | Drive Shaft | | 30 | 29 | 52 | 97.5 | 848 | |
| | 2022.09-2025.01 | ET | R | L/R | SUV RWD 4D1 | | GCO83278 | Outer Joint | | 30 | 26 | 52 | 98 | 58 | I |
| | 2022.09-2025.01 | ET | R | L/R | SUV RWD 4D1 | | GCO83289 | Outer Joint | | 30 | 24 | 52 | 97.5 | 59 | M |
| | 2022.09-2025.01 | ET | R | L/R | SUV RWD 4D1 | | GCI83283 | Inner Joint | | 29 | 26 | 40 | 73 | 114.5 | |
| | 2022.09-2025.01 | ET | R | L/R | SUV RWD 4D1 | | GCI83303 | Inner Joint | | 29 | 32 | 40 | 73 | 120 | |
| | 2025.01- | ET | R | L/R | SUV RWD 4D3 | | GDS56388 | Drive Shaft | | 30 | 29 | 52 | 98 | 850 | |
| | 2025.01- | ET | R | L/R | SUV RWD 4D3 | | GDS56429 | Drive Shaft | | 30 | 29 | 52 | 97.5 | 848 | |
| | 2025.01- | ET | R | L/R | SUV RWD 4D3 | | GCO83278 | Outer Joint | | 30 | 26 | 52 | 98 | 58 | I |
| | 2025.01- | ET | R | L/R | SUV RWD 4D3 | | GCO83289 | Outer Joint | | 30 | 24 | 52 | 97.5 | 59 | M |
| | 2025.01- | ET | R | L/R | SUV RWD 4D3 | | GCI83283 | Inner Joint | | 29 | 26 | 40 | 73 | 114.5 | |
| | 2025.01- | ET | R | L/R | SUV RWD 4D3 | | GCI83303 | Inner Joint | | 29 | 32 | 40 | 73 | 120 | |
| EV (235 kw) | 2023.05- | ET | R | L/R | SUV RWD 3D6 | | GDS56388 | Drive Shaft | | 30 | 29 | 52 | 98 | 850 | |
| | 2023.05- | ET | R | L/R | SUV RWD 3D6 | | GDS56429 | Drive Shaft | | 30 | 29 | 52 | 97.5 | 848 | |
| | 2023.05- | ET | R | L/R | SUV RWD 3D6 | | GCO83278 | Outer Joint | | 30 | 26 | 52 | 98 | 58 | I |
| | 2023.05- | ET | R | L/R | SUV RWD 3D6 | | GCO83289 | Outer Joint | | 30 | 24 | 52 | 97.5 | 59 | M |
| | 2023.05- | ET | R | L/R | SUV RWD 3D6 | | GCI83283 | Inner Joint | | 29 | 26 | 40 | 73 | 114.5 | |
| | 2023.05- | ET | R | L/R | SUV RWD 3D6 | | GCI83303 | Inner Joint | | 29 | 32 | 40 | 73 | 120 | |
| | 2024.04- | ET | R | L/R | SUV RWD 4D1 | | GDS56388 | Drive Shaft | | 30 | 29 | 52 | 98 | 850 | |
| | 2024.04- | ET | R | L/R | SUV RWD 4D1 | | GDS56429 | Drive Shaft | | 30 | 29 | 52 | 97.5 | 848 | |
| | 2024.04- | ET | R | L/R | SUV RWD 4D1 | | GCO83278 | Outer Joint | | 30 | 26 | 52 | 98 | 58 | I |
| | 2024.04- | ET | R | L/R | SUV RWD 4D1 | | GCO83289 | Outer Joint | | 30 | 24 | 52 | 97.5 | 59 | M |
| | 2024.04- | ET | R | L/R | SUV RWD 4D1 | | GCI83283 | Inner Joint | | 29 | 26 | 40 | 73 | 114.5 | |
| | 2024.04- | ET | R | L/R | SUV RWD 4D1 | | GCI83303 | Inner Joint | | 29 | 32 | 40 | 73 | 120 | |
| EV (239 kw) | 2021.04- | ET | R | L/R | SUV RWD 3D1 | Axle Diameter:28MM | GDS56388 | Drive Shaft | | 30 | 29 | 52 | 98 | 850 | |
| | 2021.04- | ET | R | L/R | SUV RWD 3D1 | | GCO83278 | Outer Joint | | 30 | 26 | 52 | 98 | 58 | I |
| | 2021.04- | ET | R | L/R | SUV RWD 3D1 | | GCI83283 | Inner Joint | | 29 | 26 | 40 | 73 | 114.5 | |
| EV (250 kw) | 2024.04- | ET | R | L/R | SUV RWD | | GDS56388 | Drive Shaft | | 30 | 29 | 52 | 98 | 850 | |
| | 2024.04- | ET | R | L/R | SUV RWD | | GDS56429 | Drive Shaft | | 30 | 29 | 52 | 97.5 | 848 | |
| | 2024.04- | ET | R | L/R | SUV RWD | | GCO83278 | Outer Joint | | 30 | 26 | 52 | 98 | 58 | I |
| | 2024.04- | ET | R | L/R | SUV RWD | | GCO83289 | Outer Joint | | 30 | 24 | 52 | 97.5 | 59 | M |
| | 2024.04- | ET | R | L/R | SUV RWD | | GCI83283 | Inner Joint | | 29 | 26 | 40 | 73 | 114.5 | |
| | 2024.04- | ET | R | L/R | SUV RWD | | GCI83303 | Inner Joint | | 29 | 32 | 40 | 73 | 120 | |
| EV (255 kw) | 2021.09-2025.01 | ET | R | L/R | SUV RWD 3D6 | Axle Diameter:28MM | GDS56388 | Drive Shaft | | 30 | 29 | 52 | 98 | 850 | |
| | 2021.09-2025.01 | ET | R | L/R | SUV RWD 3D6 | Axle Diameter:25MM | GDS56429 | Drive Shaft | | 30 | 29 | 52 | 97.5 | 848 | |
| | 2021.09-2025.01 | ET | R | L/R | SUV RWD 3D6 | Axle Diameter:28MM | GCO83278 | Outer Joint | | 30 | 26 | 52 | 98 | 58 | I |
| | 2021.09-2025.01 | ET | R | L/R | SUV RWD 3D6 | Axle Diameter:25MM | GCO83289 | Outer Joint | | 30 | 24 | 52 | 97.5 | 59 | M |
| | 2021.09-2025.01 | ET | R | L/R | SUV RWD 3D6 | Axle Diameter:28MM | GCI83283 | Inner Joint | | 29 | 26 | 40 | 73 | 114.5 | |

| | YEAR | TRANSM. | F/R | L/R | BODY STYLE & DRIVE TYPE & ENGINE | REMARKS | G-AP Ref. | PRODUCT | ABS | Technical Specifications | | | | | |
|---|---|---|---|---|---|---|---|---|---|---|---|---|---|---|---|
| | | | | | | | | | | A | B | C | H | L | P |
| **TESLA** **Model Y** | | | | | | | | | | | | | | | |
| EV (255 kw) | 2021.09-2025.01 | ET | R | L/R | SUV RWD 3D6 | Axle Diameter:25MM | GCI83303 | Inner Joint | | 29 | 32 | 40 | 73 | 120 | |
| | 2024.04-2025.01 | ET | R | L/R | SUV RWD 4D3 | | GDS56388 | Drive Shaft | | 30 | 29 | 52 | 98 | 850 | |
| | 2024.04-2025.01 | ET | R | L/R | SUV RWD 4D3 | | GDS56429 | Drive Shaft | | 30 | 29 | 52 | 97.5 | 848 | |
| | 2024.04-2025.01 | ET | R | L/R | SUV RWD 4D3 | | GCO83278 | Outer Joint | | 30 | 26 | 52 | 98 | 58 | I |
| | 2024.04-2025.01 | ET | R | L/R | SUV RWD 4D3 | | GCO83289 | Outer Joint | | 30 | 24 | 52 | 97.5 | 59 | M |
| | 2024.04-2025.01 | ET | R | L/R | SUV RWD 4D3 | | GCI83283 | Inner Joint | | 29 | 26 | 40 | 73 | 114.5 | |
| | 2024.04-2025.01 | ET | R | L/R | SUV RWD 4D3 | | GCI83303 | Inner Joint | | 29 | 32 | 40 | 73 | 120 | |
| EV (258 kw) | 2019.03-2025.01 | ET | F | L/R | SUV 4WD 3D3;3D5;3D7 | | GDS56430 | Drive Shaft | | 30 | 29 | 52 | 97.5 | 834 | |
| | 2019.03-2025.01 | ET | F | L/R | SUV 4WD 3D3;3D5;3D7 | | GCO83290 | Outer Joint | | 30 | 25 | 52 | 97.5 | 59 | I |
| | 2019.03-2025.01 | ET | F | L/R | SUV 4WD 3D3;3D5;3D7 | | GCI83304 | Inner Joint | | 29 | 24 | 40 | 72.5 | 121.5 | |
| | 2019.03-2025.01 | ET | R | L/R | SUV 4WD 3D3;3D5;3D7 | Axle Diameter:28MM | GDS56388 | Drive Shaft | | 30 | 29 | 52 | 98 | 850 | |
| | 2019.03-2025.01 | ET | R | L/R | SUV 4WD 3D3;3D5;3D7 | Axle Diameter:25MM | GDS56429 | Drive Shaft | | 30 | 29 | 52 | 97.5 | 848 | |
| | 2019.03-2025.01 | ET | R | L/R | SUV 4WD 3D3;3D5;3D7 | Axle Diameter:28MM | GCO83278 | Outer Joint | | 30 | 26 | 52 | 98 | 58 | I |
| | 2019.03-2025.01 | ET | R | L/R | SUV 4WD 3D3;3D5;3D7 | Axle Diameter:25MM | GCO83289 | Outer Joint | | 30 | 24 | 52 | 97.5 | 59 | M |
| | 2019.03-2025.01 | ET | R | L/R | SUV 4WD 3D3;3D5;3D7 | Axle Diameter:28MM | GCI83283 | Inner Joint | | 29 | 26 | 40 | 73 | 114.5 | |
| | 2019.03-2025.01 | ET | R | L/R | SUV 4WD 3D3;3D5;3D7 | Axle Diameter:25MM | GCI83303 | Inner Joint | | 29 | 32 | 40 | 73 | 120 | |
| | 2024.01- | ET | R | L/R | SUV RWD 4D1, 4D3 | | GDS56388 | Drive Shaft | | 30 | 29 | 52 | 98 | 850 | |
| | 2024.01- | ET | R | L/R | SUV RWD 4D1, 4D3 | | GDS56429 | Drive Shaft | | 30 | 29 | 52 | 97.5 | 848 | |
| | 2024.01- | ET | R | L/R | SUV RWD 4D1, 4D3 | | GCO83278 | Outer Joint | | 30 | 26 | 52 | 98 | 58 | I |
| | 2024.01- | ET | R | L/R | SUV RWD 4D1, 4D3 | | GCO83289 | Outer Joint | | 30 | 24 | 52 | 97.5 | 59 | M |
| | 2024.01- | ET | R | L/R | SUV RWD 4D1, 4D3 | | GCI83283 | Inner Joint | | 29 | 26 | 40 | 73 | 114.5 | |
| | 2024.01- | ET | R | L/R | SUV RWD 4D1, 4D3 | | GCI83303 | Inner Joint | | 29 | 32 | 40 | 73 | 120 | |
| EV (274 kw) | 2021.09- | ET | F | L/R | SUV 4WD | | GDS84261 | Drive Shaft | | 25 | 24 | 56 | 83.5 | 657 | |
| | 2021.09- | ET | F | L/R | SUV 4WD | | GCO83290 | Outer Joint | | 30 | 25 | 52 | 97.5 | 59 | I |
| | 2021.09- | ET | F | L/R | SUV 4WD | | GCI83304 | Inner Joint | | 29 | 24 | 40 | 72.5 | 121.5 | |
| | 2021.09- | ET | R | L/R | SUV 4WD | | GDS56388 | Drive Shaft | | 30 | 29 | 52 | 98 | 850 | |
| | 2021.09- | ET | R | L/R | SUV 4WD | | GDS56429 | Drive Shaft | | 30 | 29 | 52 | 97.5 | 848 | |
| | 2021.09- | ET | R | L/R | SUV 4WD | | GCO83278 | Outer Joint | | 30 | 26 | 52 | 98 | 58 | I |
| | 2021.09- | ET | R | L/R | SUV 4WD | | GCO83289 | Outer Joint | | 30 | 24 | 52 | 97.5 | 59 | M |
| | 2021.09- | ET | R | L/R | SUV 4WD | | GCI83283 | Inner Joint | | 29 | 26 | 40 | 73 | 114.5 | |
| | 2021.09- | ET | R | L/R | SUV 4WD | | GCI83303 | Inner Joint | | 29 | 32 | 40 | 73 | 120 | |
| EV (317 kw) | 2021.01- | ET | F | L/R | SUV 4WD 3D3, 3D5 | | GDS56430 | Drive Shaft | | 30 | 29 | 52 | 97.5 | 834 | |
| | 2021.01- | ET | F | L/R | SUV 4WD 3D3, 3D5 | | GCO83290 | Outer Joint | | 30 | 25 | 52 | 97.5 | 59 | I |
| | 2021.01- | ET | F | L/R | SUV 4WD 3D3, 3D5 | | GCI83304 | Inner Joint | | 29 | 24 | 40 | 72.5 | 121.5 | |
| | 2021.01- | ET | R | L/R | SUV 4WD 3D3, 3D5 | Axle Diameter:28MM | GDS56388 | Drive Shaft | | 30 | 29 | 52 | 98 | 850 | |
| | 2021.01- | ET | R | L/R | SUV 4WD 3D3, 3D5 | Axle Diameter:25MM | GDS56429 | Drive Shaft | | 30 | 29 | 52 | 97.5 | 848 | |
| | 2021.01- | ET | R | L/R | SUV 4WD 3D3, 3D5 | Axle Diameter:28MM | GCO83278 | Outer Joint | | 30 | 26 | 52 | 98 | 58 | I |
| | 2021.01- | ET | R | L/R | SUV 4WD 3D3, 3D5 | Axle Diameter:25MM | GCO83289 | Outer Joint | | 30 | 24 | 52 | 97.5 | 59 | M |
| | 2021.01- | ET | R | L/R | SUV 4WD 3D3, 3D5 | Axle Diameter:28MM | GCI83283 | Inner Joint | | 29 | 26 | 40 | 73 | 114.5 | |
| | 2021.01- | ET | R | L/R | SUV 4WD 3D3, 3D5 | Axle Diameter:25MM | GCI83303 | Inner Joint | | 29 | 32 | 40 | 73 | 120 | |
| EV (321 kw) | 2021.09- | ET | F | L/R | SUV 4WD | | GDS84261 | Drive Shaft | | 25 | 24 | 56 | 83.5 | 657 | |
| | 2021.09- | ET | F | L/R | SUV 4WD | | GCO83290 | Outer Joint | | 30 | 25 | 52 | 97.5 | 59 | I |
| | 2021.09- | ET | F | L/R | SUV 4WD | | GCI83304 | Inner Joint | | 29 | 24 | 40 | 72.5 | 121.5 | |
| | 2021.09- | ET | R | L/R | SUV 4WD | | GDS56388 | Drive Shaft | | 30 | 29 | 52 | 98 | 850 | |
| | 2021.09- | ET | R | L/R | SUV 4WD | | GDS56429 | Drive Shaft | | 30 | 29 | 52 | 97.5 | 848 | |
| | 2021.09- | ET | R | L/R | SUV 4WD | | GCO83278 | Outer Joint | | 30 | 26 | 52 | 98 | 58 | I |
| | 2021.09- | ET | R | L/R | SUV 4WD | | GCO83289 | Outer Joint | | 30 | 24 | 52 | 97.5 | 59 | M |
| | 2021.09- | ET | R | L/R | SUV 4WD | | GCI83283 | Inner Joint | | 29 | 26 | 40 | 73 | 114.5 | |
| | 2021.09- | ET | R | L/R | SUV 4WD | | GCI83303 | Inner Joint | | 29 | 32 | 40 | 73 | 120 | |
| EV (331 kw) | 2021.07-2025.01 | ET | F | L/R | SUV 4WD 3D3;3D7 | | GDS56430 | Drive Shaft | | 30 | 29 | 52 | 97.5 | 834 | |
| | 2021.07-2025.01 | ET | F | L/R | SUV 4WD 3D3;3D7 | | GCO83290 | Outer Joint | | 30 | 25 | 52 | 97.5 | 59 | I |
| | 2021.07-2025.01 | ET | F | L/R | SUV 4WD 3D3;3D7 | | GCI83304 | Inner Joint | | 29 | 24 | 40 | 72.5 | 121.5 | |
| | 2021.07-2025.01 | ET | R | L/R | SUV 4WD 3D3;3D7 | Axle Diameter:28MM | GDS56388 | Drive Shaft | | 30 | 29 | 52 | 98 | 850 | |
| | 2021.07-2025.01 | ET | R | L/R | SUV 4WD 3D3;3D7 | Axle Diameter:25MM | GDS56429 | Drive Shaft | | 30 | 29 | 52 | 97.5 | 848 | |
| | 2021.07-2025.01 | ET | R | L/R | SUV 4WD 3D3;3D7 | Axle Diameter:28MM | GCO83278 | Outer Joint | | 30 | 26 | 52 | 98 | 58 | I |
| | 2021.07-2025.01 | ET | R | L/R | SUV 4WD 3D3;3D7 | Axle Diameter:25MM | GCO83289 | Outer Joint | | 30 | 24 | 52 | 97.5 | 59 | M |
| | 2021.07-2025.01 | ET | R | L/R | SUV 4WD 3D3;3D7 | Axle Diameter:28MM | GCI83283 | Inner Joint | | 29 | 26 | 40 | 73 | 114.5 | |
| | 2021.07-2025.01 | ET | R | L/R | SUV 4WD 3D3;3D7 | Axle Diameter:25MM | GCI83303 | Inner Joint | | 29 | 32 | 40 | 73 | 120 | |
| | 2025.01- | ET | R | L/R | SUV 4WD 3D3, 3D7 | | GDS56388 | Drive Shaft | | 30 | 29 | 52 | 98 | 850 | |
| | 2025.01- | ET | R | L/R | SUV 4WD 3D3, 3D7 | | GDS56429 | Drive Shaft | | 30 | 29 | 52 | 97.5 | 848 | |
| | 2025.01- | ET | R | L/R | SUV 4WD 3D3, 3D7 | | GCO83278 | Outer Joint | | 30 | 26 | 52 | 98 | 58 | I |
| | 2025.01- | ET | R | L/R | SUV 4WD 3D3, 3D7 | | GCO83289 | Outer Joint | | 30 | 24 | 52 | 97.5 | 59 | M |
| | 2025.01- | ET | R | L/R | SUV 4WD 3D3, 3D7 | | GCI83283 | Inner Joint | | 29 | 26 | 40 | 73 | 114.5 | |
| | 2025.01- | ET | R | L/R | SUV 4WD 3D3, 3D7 | | GCI83303 | Inner Joint | | 29 | 32 | 40 | 73 | 120 | |
| EV (339 kw) | 2021.01- | ET | F | L/R | SUV 4WD 3D1, 3D3 | | GDS56430 | Drive Shaft | | 30 | 29 | 52 | 97.5 | 834 | |

| | YEAR | TRANSM. | F/R | L/R | BODY STYLE & DRIVE TYPE & ENGINE | REMARKS | G-AP Ref. | PRODUCT | ABS | Technical Specifications A | B | C | H | L | P |
|---|---|---|---|---|---|---|---|---|---|---|---|---|---|---|---|
| **TESLA** **Model Y** | | | | | | | | | | | | | | | |
| EV (339 kw) | 2021.01- | ET | F | L/R | SUV 4WD 3D1, 3D3 | | GCO83290 | Outer Joint | | 30 | 25 | 52 | 97.5 | 59 | I |
| | 2021.01- | ET | F | L/R | SUV 4WD 3D1, 3D3 | | GCI83304 | Inner Joint | | 29 | 24 | 40 | 72.5 | 121.5 | |
| | 2021.01- | ET | R | L/R | SUV 4WD 3D1, 3D3 | Axle Diameter:28MM | GDS56388 | Drive Shaft | | 30 | 29 | 52 | 98 | 850 | |
| | 2021.01- | ET | R | L/R | SUV 4WD 3D1, 3D3 | Axle Diameter:25MM | GDS56429 | Drive Shaft | | 30 | 29 | 52 | 97.5 | 848 | |
| | 2021.01- | ET | R | L/R | SUV 4WD 3D1, 3D3 | Axle Diameter:28MM | GCO83278 | Outer Joint | | 30 | 26 | 52 | 98 | 58 | I |
| | 2021.01- | ET | R | L/R | SUV 4WD 3D1, 3D3 | Axle Diameter:25MM | GCO83289 | Outer Joint | | 30 | 24 | 52 | 97.5 | 59 | M |
| | 2021.01- | ET | R | L/R | SUV 4WD 3D1, 3D3 | Axle Diameter:28MM | GCI83283 | Inner Joint | | 29 | 26 | 40 | 73 | 114.5 | |
| | 2021.01- | ET | R | L/R | SUV 4WD 3D1, 3D3 | Axle Diameter:25MM | GCI83303 | Inner Joint | | 29 | 32 | 40 | 73 | 120 | |
| EV (340 kw) | 2019.03-2025.01 | ET | F | L/R | SUV 4WD 3D1;3D3;3D6 | | GDS56430 | Drive Shaft | | 30 | 29 | 52 | 97.5 | 834 | |
| | 2019.03-2025.01 | ET | F | L/R | SUV 4WD 3D1;3D3;3D6 | | GCO83290 | Outer Joint | | 30 | 25 | 52 | 97.5 | 59 | I |
| | 2019.03-2025.01 | ET | F | L/R | SUV 4WD 3D1;3D3;3D6 | | GCI83304 | Inner Joint | | 29 | 24 | 40 | 72.5 | 121.5 | |
| | 2019.03-2025.01 | ET | R | L/R | SUV 4WD 3D1;3D3;3D6 | Axle Diameter:28MM | GDS56388 | Drive Shaft | | 30 | 29 | 52 | 98 | 850 | |
| | 2019.03-2025.01 | ET | R | L/R | SUV 4WD 3D1;3D3;3D6 | Axle Diameter:25MM | GDS56429 | Drive Shaft | | 30 | 29 | 52 | 97.5 | 848 | |
| | 2019.03-2025.01 | ET | R | L/R | SUV 4WD 3D1;3D3;3D6 | Axle Diameter:28MM | GCO83278 | Outer Joint | | 30 | 26 | 52 | 98 | 58 | I |
| | 2019.03-2025.01 | ET | R | L/R | SUV 4WD 3D1;3D3;3D6 | Axle Diameter:25MM | GCO83289 | Outer Joint | | 30 | 24 | 52 | 97.5 | 59 | M |
| | 2019.03-2025.01 | ET | R | L/R | SUV 4WD 3D1;3D3;3D6 | Axle Diameter:28MM | GCI83283 | Inner Joint | | 29 | 26 | 40 | 73 | 114.5 | |
| | 2019.03-2025.01 | ET | R | L/R | SUV 4WD 3D1;3D3;3D6 | Axle Diameter:25MM | GCI83303 | Inner Joint | | 29 | 32 | 40 | 73 | 120 | |
| EV (357 kw) | 2021.01- | ET | F | L/R | SUV 4WD 3D3, 3D6 | | GDS56430 | Drive Shaft | | 30 | 29 | 52 | 97.5 | 834 | |
| | 2021.01- | ET | F | L/R | SUV 4WD 3D3, 3D6 | | GCO83290 | Outer Joint | | 30 | 25 | 52 | 97.5 | 59 | I |
| | 2021.01- | ET | F | L/R | SUV 4WD 3D3, 3D6 | | GCI83304 | Inner Joint | | 29 | 24 | 40 | 72.5 | 121.5 | |
| | 2021.01- | ET | R | L/R | SUV 4WD 3D3, 3D6 | Axle Diameter:28MM | GDS56388 | Drive Shaft | | 30 | 29 | 52 | 98 | 850 | |
| | 2021.01- | ET | R | L/R | SUV 4WD 3D3, 3D6 | Axle Diameter:25MM | GDS56429 | Drive Shaft | | 30 | 29 | 52 | 97.5 | 848 | |
| | 2021.01- | ET | R | L/R | SUV 4WD 3D3, 3D6 | Axle Diameter:28MM | GCO83278 | Outer Joint | | 30 | 26 | 52 | 98 | 58 | I |
| | 2021.01- | ET | R | L/R | SUV 4WD 3D3, 3D6 | Axle Diameter:25MM | GCO83289 | Outer Joint | | 30 | 24 | 52 | 97.5 | 59 | M |
| | 2021.01- | ET | R | L/R | SUV 4WD 3D3, 3D6 | Axle Diameter:28MM | GCI83283 | Inner Joint | | 29 | 26 | 40 | 73 | 114.5 | |
| | 2021.01- | ET | R | L/R | SUV 4WD 3D3, 3D6 | Axle Diameter:25MM | GCI83303 | Inner Joint | | 29 | 32 | 40 | 73 | 120 | |
| EV (378 kw) | 2021.09- | ET | F | L/R | SUV 4WD | | GDS56430 | Drive Shaft | | 30 | 29 | 52 | 97.5 | 834 | |
| | 2021.09- | ET | F | L/R | SUV 4WD | | GCO83290 | Outer Joint | | 30 | 25 | 52 | 97.5 | 59 | I |
| | 2021.09- | ET | F | L/R | SUV 4WD | | GCI83304 | Inner Joint | | 29 | 24 | 40 | 72.5 | 121.5 | |
| | 2021.09- | ET | R | L/R | SUV 4WD | Axle Diameter:28MM | GDS56388 | Drive Shaft | | 30 | 29 | 52 | 98 | 850 | |
| | 2021.09- | ET | R | L/R | SUV 4WD | Axle Diameter:25MM | GDS56429 | Drive Shaft | | 30 | 29 | 52 | 97.5 | 848 | |
| | 2021.09- | ET | R | L/R | SUV 4WD | Axle Diameter:28MM | GCO83278 | Outer Joint | | 30 | 26 | 52 | 98 | 58 | I |
| | 2021.09- | ET | R | L/R | SUV 4WD | Axle Diameter:25MM | GCO83289 | Outer Joint | | 30 | 24 | 52 | 97.5 | 59 | M |
| | 2021.09- | ET | R | L/R | SUV 4WD | Axle Diameter:28MM | GCI83283 | Inner Joint | | 29 | 26 | 40 | 73 | 114.5 | |
| | 2021.09- | ET | R | L/R | SUV 4WD | Axle Diameter:25MM | GCI83303 | Inner Joint | | 29 | 32 | 40 | 73 | 120 | |
| | 2024.04-2025.01 | ET | F | L/R | SUV 4WD 3D3;4D3 | | GDS84261 | Drive Shaft | | 25 | 24 | 56 | 83.5 | 657 | |
| | 2024.04-2025.01 | ET | F | L/R | SUV 4WD 3D3;4D3 | | GCO83290 | Outer Joint | | 30 | 25 | 52 | 97.5 | 59 | I |
| | 2024.04-2025.01 | ET | F | L/R | SUV 4WD 3D3;4D3 | | GCI83304 | Inner Joint | | 29 | 24 | 40 | 72.5 | 121.5 | |
| | 2024.04-2025.01 | ET | R | L/R | SUV 4WD 3D3;4D3 | | GDS56388 | Drive Shaft | | 30 | 29 | 52 | 98 | 850 | |
| | 2024.04-2025.01 | ET | R | L/R | SUV 4WD 3D3;4D3 | | GDS56429 | Drive Shaft | | 30 | 29 | 52 | 97.5 | 848 | |
| | 2024.04-2025.01 | ET | R | L/R | SUV 4WD 3D3;4D3 | | GCO83278 | Outer Joint | | 30 | 26 | 52 | 98 | 58 | I |
| | 2024.04-2025.01 | ET | R | L/R | SUV 4WD 3D3;4D3 | | GCO83289 | Outer Joint | | 30 | 24 | 52 | 97.5 | 59 | M |
| | 2024.04-2025.01 | ET | R | L/R | SUV 4WD 3D3;4D3 | | GCI83283 | Inner Joint | | 29 | 26 | 40 | 73 | 114.5 | |
| | 2024.04-2025.01 | ET | R | L/R | SUV 4WD 3D3;4D3 | | GCI83303 | Inner Joint | | 29 | 32 | 40 | 73 | 120 | |
| EV (393 kw) | 2021.09-2025.01 | ET | F | L/R | SUV 4WD 3D3;3D6 | | GDS56430 | Drive Shaft | | 30 | 29 | 52 | 97.5 | 834 | |
| | 2021.09-2025.01 | ET | F | L/R | SUV 4WD 3D3;3D6 | | GCO83290 | Outer Joint | | 30 | 25 | 52 | 97.5 | 59 | I |
| | 2021.09-2025.01 | ET | F | L/R | SUV 4WD 3D3;3D6 | | GCI83304 | Inner Joint | | 29 | 24 | 40 | 72.5 | 121.5 | |
| | 2021.09-2025.01 | ET | R | L/R | SUV 4WD 3D3;3D6 | Axle Diameter:28MM | GDS56388 | Drive Shaft | | 30 | 29 | 52 | 98 | 850 | |
| | 2021.09-2025.01 | ET | R | L/R | SUV 4WD 3D3;3D6 | Axle Diameter:25MM | GDS56429 | Drive Shaft | | 30 | 29 | 52 | 97.5 | 848 | |
| | 2021.09-2025.01 | ET | R | L/R | SUV 4WD 3D3;3D6 | Axle Diameter:28MM | GCO83278 | Outer Joint | | 30 | 26 | 52 | 98 | 58 | I |
| | 2021.09-2025.01 | ET | R | L/R | SUV 4WD 3D3;3D6 | Axle Diameter:25MM | GCO83289 | Outer Joint | | 30 | 24 | 52 | 97.5 | 59 | M |
| | 2021.09-2025.01 | ET | R | L/R | SUV 4WD 3D3;3D6 | Axle Diameter:28MM | GCI83283 | Inner Joint | | 29 | 26 | 40 | 73 | 114.5 | |
| | 2021.09-2025.01 | ET | R | L/R | SUV 4WD 3D3;3D6 | Axle Diameter:25MM | GCI83303 | Inner Joint | | 29 | 32 | 40 | 73 | 120 | |
| | 2022.01-2025.01 | ET | F | L/R | SUV 4WD 4D1,3D3 | | GDS56430 | Drive Shaft | | 30 | 29 | 52 | 97.5 | 834 | |
| | 2022.01-2025.01 | ET | R | L/R | SUV 4WD 4D1,3D3 | Diameter [mm]:28 | GDS56388 | Drive Shaft | | 30 | 29 | 52 | 98 | 850 | |
| | 2022.01-2025.01 | ET | R | L/R | SUV 4WD 4D1,3D3 | Diameter [mm]:25 | GDS56429 | Drive Shaft | | 30 | 29 | 52 | 97.5 | 848 | |
| EV (461 kw) | 2024.06-2025.01 | ET | F | L/R | SUV 4WD 3D3/4D2 | | GDS56430 | Drive Shaft | | 30 | 29 | 52 | 97.5 | 834 | |
| | 2024.06-2025.01 | ET | R | L/R | SUV 4WD 3D3/4D2 | Diameter [mm]:28 | GDS56388 | Drive Shaft | | 30 | 29 | 52 | 98 | 850 | |
| | 2024.06-2025.01 | ET | R | L/R | SUV 4WD 3D3/4D2 | Diameter [mm]:25 | GDS56429 | Drive Shaft | | 30 | 29 | 52 | 97.5 | 848 | |
| **TOYOTA** **4 Runner** | | | | | | | | | | | | | | | |
| 2.7 (112 kw) | 1995.11-2002.08 | 5MT | F | L/R | SUV 4WD 3RZ-FE | | GDS59038 | Drive Shaft | | 30 | 27 | 69 | 123 | 620.5 | |
| | 1995.11-2002.08 | 5MT | F | L/R | SUV 4WD 3RZ-FE | | GCO59034 | Outer Joint | | 30 | 27 | 69 | 122.5 | 64.5 | I |
| | 1995.11-2002.08 | 5MT | F | L/R | SUV 4WD 3RZ-FE | | GCI59015 | Inner Joint | | 27 | 24 | 47 | 67 | 116.5 | |
| 3.0 (92 kw) | 1995.11-2000.08 | AT/MT | F | L/R | SUV 4WD 1KZT | | GCO59243 | Outer Joint | | 30 | 27 | 69 | 121 | 65 | I |

| | YEAR | TRANSM. | F/R | L/R | BODY STYLE & DRIVE TYPE & ENGINE | REMARKS | G-AP Ref. | PRODUCT | ABS | Technical Specifications A | B | C | H | L | P |
|---|---|---|---|---|---|---|---|---|---|---|---|---|---|---|---|
| **TOYOTA** | | | | | | | | | | | | | | | |
| **4 Runner** | | | | | | | | | | | | | | | |
| 3.0 (106 kw) | 1990.02-1996.12 | 4AT | F | L/R | SUV 4WD 3VZFE | | GDS59031 | Drive Shaft | | 26 | | 60 | 162 | 487 | |
| | 1990.02-1996.12 | 4AT | F | L/R | SUV 4WD 3VZFE | | GCO59015 | Outer Joint | | 26 | 27 | 60 | 162 | 65.5 | I |
| | 1990.02-1996.12 | 4AT | F | L/R | SUV 4WD 3VZFE | | GCI59014 | Inner Joint | | | 24 | | | 83.3 | |
| 3.4 (136 kw) | 1995.11-2002.11 | 4AT/5MT | F | L/R | SUV 4WD 5VZ-FE | | GDS59038 | Drive Shaft | | 30 | 27 | 69 | 123 | 620.5 | |
| | 1995.11-2002.11 | 4AT/5MT | F | L/R | SUV 4WD 5VZ-FE | | GCO59034 | Outer Joint | | 30 | 27 | 69 | 122.5 | 64.5 | I |
| | 1995.11-2002.11 | 4AT/5MT | F | L/R | SUV 4WD 5VZ-FE | | GCI59015 | Inner Joint | | 27 | 24 | 47 | 67 | 116.5 | |
| 4.0 (174 kw) | 2005.09-2009.09 | 4AT | F | L/R | SUV 4WD 1GR-FE | | GDS59015 | Drive Shaft | | 30 | 30 | 70 | 103.5 | 647 | |
| | 2005.09-2009.09 | 4AT | F | L/R | SUV 4WD 1GR-FE | | GCO59097 | Outer Joint | | 30 | 30 | 70 | 103.5 | 82.5 | I |
| 4.0 (183 kw) | 2003.01-2009.12 | 4AT | F | L/R | SUV 4WD 1GR-FE | | GDS59015 | Drive Shaft | | 30 | 30 | 70 | 103.5 | 647 | |
| | 2003.01-2009.12 | 4AT | F | L/R | SUV 4WD 1GR-FE | | GCO59097 | Outer Joint | | 30 | 30 | 70 | 103.5 | 82.5 | I |
| 4.7 (175 kw) | 2002.08-2006.09 | 4AT | F | L/R | SUV 4WD 2UZ-FE | | GCO59097 | Outer Joint | | 30 | 30 | 70 | 103.5 | 82.5 | I |
| | 2002.08-2006.09 | 5AT | F | L/R | SUV 4WD 2UZ-FE | | GDS59015 | Drive Shaft | | 30 | 30 | 70 | 103.5 | 647 | |
| 4.7 (194 kw) | 2005.01-2009.12 | 4AT | F | L/R | SUV 4WD 2UZ-FE | | GCO59097 | Outer Joint | | 30 | 30 | 70 | 103.5 | 82.5 | I |
| | 2005.01-2009.12 | 5AT | F | L/R | SUV 4WD 2UZ-FE | | GDS59015 | Drive Shaft | | 30 | 30 | 70 | 103.5 | 647 | |
| **4 Runner II/Surf/Hilux Surf** | | | | | | | | | | | | | | | |
| 3.0 (92 kw) | 1993.10-1996.03 | 5MT | F | L/R | SUV 4WD 1KZ-T | | GDS59031 | Drive Shaft | | 26 | | 60 | 162 | 487 | |
| | 1993.10-1996.03 | 5MT | F | L/R | SUV 4WD 1KZ-T | | GCI59014 | Inner Joint | | | 24 | | | 83.3 | |
| | 1993.10-1996.03 | MT | F | L/R | SUV 4WD 1KZ-T | GrooveType:Inner | GCO59015 | Outer Joint | | 26 | 27 | 60 | 162 | 65.5 | I |
| | 1993.10-1996.03 | MT | F | L/R | SUV 4WD 1KZ-T | GrooveType:Middle | GCO59016 | Outer Joint | | 26 | 27 | 60 | 162 | 65.5 | M |
| **Allex** | | | | | | | | | | | | | | | |
| 1.8 (100 kw) | 2001.01-2007.12 | 4AT | F | L | Hatchback FWD 1ZZ-FE | Vehicle Production Country:Japan | GDS59192 | Drive Shaft | 48T | 26 | 20 | 58 | 96 | 641 | |
| | 2001.01-2007.12 | 5MT | F | R | Hatchback FWD 1ZZ-FE | | GDS59191 | Drive Shaft | 48T | 26 | 20 | 58 | 96 | 912 | |
| | 2001.01-2007.12 | 5MT | F | L | Hatchback FWD 1ZZ-FE | | GCO59131 | Outer Joint | 48T | 26 | 24 | 58 | 96 | 55 | I |
| | 2001.01-2007.12 | 5MT | F | L/R | Hatchback FWD 1ZZ-FE | | GCI59046 | Inner Joint | | 20 | 23 | 35 | 63.5 | 115.5 | |
| 1.8 (140 kw) | 2001.01-2006.09 | MT | F | L | Hatchback FWD 2ZZ-GE | for left-hand drive vehicles;Date from:2001.11;Vehicle Production Country:Europe | GCI59166 | Inner Joint | | 20 | 24 | 35 | 63.5 | 108.5 | |
| **Allion** | | | | | | | | | | | | | | | |
| 1.8 (100 kw) | 2001.06-2007.06 | | F | | Saloon FWD 2ZR-FE | | GCO59262 | Outer Joint | 48T | 26 | 24 | 58 | 95 | 51 | I |
| **Alphard** | | | | | | | | | | | | | | | |
| 2.4 (117 kw) | 2003.09-2008.04 | 4AT | F | L | MPV 4WD 2AZFE | | GCO59043 | Outer Joint | 48T | 26 | 27 | 58 | 96 | 62 | I |
| | 2003.09-2008.04 | CVT | F | L | MPV 4WD 2AZFXE | | GDS59051 | Drive Shaft | 48T | 26 | 24 | 63 | 100 | 662 | |
| | 2003.09-2008.04 | CVT | F | R | MPV 4WD 2AZFXE | | GDS59064 | Drive Shaft | 48T | 26 | 24 | 63 | 100 | 961 | |
| | 2003.09-2008.04 | CVT | F | L/R | MPV 4WD 2AZFXE | | GCO59167 | Outer Joint | 48T | 26 | 27 | 63 | 100 | 62 | I |
| | 2003.09-2008.04 | CVT | F | L | MPV 4WD 2AZFXE | | GCI59073 | Inner Joint | | 24 | 27 | 50 | 67 | 110 | |
| | 2003.09-2008.04 | CVT | F | R | MPV 4WD 2AZFXE | | GCI59027 | Inner Joint | | 24 | 27 | 40 | 369 | 99.5 | |
| | 2003.09-2008.04 | 4AT | F | L | MPV FWD 2AZFE | | GDS59051 | Drive Shaft | 48T | 26 | 24 | 63 | 100 | 662 | |
| | 2003.09-2008.04 | 4AT | F | R | MPV FWD 2AZFE | | GDS59064 | Drive Shaft | 48T | 26 | 24 | 63 | 100 | 961 | |
| 2.4 (123 kw) | 2008.04-2014.12 | 4AT | F | L | MPV FWD 2AZ-FE | PTJ | GDS59645 | Drive Shaft | | 26 | 24 | 61.2 | 100 | 660 | |
| | 2008.04-2014.12 | 4AT/CVT | F | R | MPV FWD 2AZ-FE | | GDS59472 | Drive Shaft | | 26 | 24 | 61.2 | 100 | 974 | |
| | 2008.04-2014.12 | 4AT/CVT | F | L/R | MPV FWD 2AZ-FE | | GCO59245 | Outer Joint | | 26 | 27 | 61.2 | 100 | 59 | I |
| | 2008.04-2014.12 | 4AT/CVT | F | L | MPV FWD 2AZ-FE | Manufactured in:Russia | GCI59125 | Inner Joint | | 24 | 27 | 50 | 67 | 109.5 | |
| | 2008.04-2014.12 | 4AT/CVT | F | R | MPV FWD 2AZ-FE | | GCI59078 | Inner Joint | | 24 | 27 | 40 | 370 | 105 | |
| 2.5 (112 kw) | 2015.02- | E-CVT | F | L | MPV 4WD 2AR-FXE | | GDS58267 | Drive Shaft | | 30 | 24 | 61.2 | 100 | 644 | |
| | 2015.02- | E-CVT | F | R | MPV 4WD 2AR-FXE | | GDS58266 | Drive Shaft | | 30 | 24 | 61.2 | 100 | 1000 | |
| | 2015.02- | E-CVT | F | L/R | MPV 4WD 2AR-FXE | | GCO82357 | Outer Joint | | 30 | 27 | 61.2 | 100 | 66 | M |
| | 2015.02- | E-CVT | F | L | MPV 4WD 2AR-FXE | | GCI81534 | Inner Joint | | 24 | 26 | 50 | 83.5 | 108 | |
| | 2015.02- | E-CVT | F | R | MPV 4WD 2AR-FXE | | GCI83224 | Inner Joint | | 24 | 26 | 40 | 382 | 100.5 | |
| 3.0 (162 kw) | 2003.04-2008.04 | 4AT/5AT | F | L | MPV 4WD 1MZFE | | GCO59043 | Outer Joint | 48T | 26 | 27 | 58 | 96 | 62 | I |
| | 2003.04-2008.04 | 4AT | F | L | MPV FWD 1MZFE | | GDS59244 | Drive Shaft | 48T | 30 | 24 | 63 | 100.5 | 648 | |
| 3.5 (202 kw) | 2008.04-2014.12 | 6AT | F | L | MPV FWD 2GR-FE | | GCO59321 | Outer Joint | | 30 | 27 | 61.2 | 100 | 64.5 | M |
| | 2008.04-2014.12 | 6AT | F | L | MPV FWD 2GR-FE | TJ | GCI59073 | Inner Joint | | 24 | 27 | 50 | 67 | 110 | |
| | 2008.04-2014.12 | 6AT | F | L | MPV FWD 2GR-FE | AAR | GCI59125 | Inner Joint | | 24 | 27 | 50 | 67 | 109.5 | |
| | 2008.04-2014.12 | 6AT | F | R | MPV FWD 2GR-FE | | GCI59206 | Inner Joint | | 24 | 27 | 40 | 377 | 104.5 | |
| | 2008.04-2014.12 | AT | F | L | MPV FWD 2GR-FE | | GDS59610 | Drive Shaft | | 30 | 24 | 61.2 | 100 | 648 | |
| | 2008.04-2014.12 | AT | F | R | MPV FWD 2GR-FE | | GDS59608 | Drive Shaft | | 30 | 24 | 61.2 | 100 | 985 | |
| | 2008.04-2014.12 | AT | F | L/R | MPV FWD 2GR-FE | | GCO99320 | Outer Joint | | 30 | 27 | 61.2 | 100 | 64 | I |
| 3.5 (206 kw) | 2008.04-2014.12 | 6AT | F | L | MPV FWD 2GR-FE | | GDS59610 | Drive Shaft | | 30 | 24 | 61.2 | 100 | 648 | |
| | 2008.04-2014.12 | 6AT | F | R | MPV FWD 2GR-FE | | GDS59608 | Drive Shaft | | 30 | 24 | 61.2 | 100 | 985 | |
| | 2008.04-2014.12 | 6AT | F | L | MPV FWD 2GR-FE | | GCO59321 | Outer Joint | | 30 | 27 | 61.2 | 100 | 64.5 | M |
| | 2008.04-2014.12 | 6AT | F | L/R | MPV FWD 2GR-FE | | GCO99320 | Outer Joint | | 30 | 27 | 61.2 | 100 | 64 | I |
| | 2008.04-2014.12 | 6AT | F | L | MPV FWD 2GR-FE | Manufactured in:Russia | GCI59125 | Inner Joint | | 24 | 27 | 50 | 67 | 109.5 | |
| | 2008.04-2014.12 | 6AT | F | R | MPV FWD 2GR-FE | | GCI59206 | Inner Joint | | 24 | 27 | 40 | 377 | 104.5 | |
| **Alphard/Vellfire** | | | | | | | | | | | | | | | |
| 2.4 (125 kw) | 2008.05-2014.12 | CVT | F | L | MPV 4WD 2AZ-FE | | GDS59645 | Drive Shaft | | 26 | 24 | 61.2 | 100 | 660 | |
| | 2008.05-2014.12 | CVT | F | L/R | MPV 4WD 2AZ-FE | | GCO59245 | Outer Joint | | 26 | 27 | 61.2 | 100 | 59 | I |
| | 2008.05-2014.12 | CVT | F | L | MPV 4WD 2AZ-FE | Manufactured in:Russia | GCI59125 | Inner Joint | | 24 | 27 | 50 | 67 | 109.5 | |

| | YEAR | TRANSM. | F/R | L/R | BODY STYLE & DRIVE TYPE & ENGINE | REMARKS | G-AP Ref. | PRODUCT | ABS | Technical Specifications A | B | C | H | L | P |
|---|---|---|---|---|---|---|---|---|---|---|---|---|---|---|---|
| **TOYOTA** | | | | | | | | | | | | | | | |
| **Alphard/Vellfire** | | | | | | | | | | | | | | | |
| 2.4 (125 kw) | 2008.05-2014.12 | CVT | F | R | MPV 4WD 2AZ-FE | | GCI59241 | Inner Joint | | 20 | 27 | 35.5 | 362 | 102.5 | |
| | 2008.05-2014.12 | CVT | R | L/R | MPV 4WD 2AZ-FE | | GCI59203 | Inner Joint | | | 20 | | | 83 | |
| | 2008.05-2014.12 | CVT | F | R | MPV FWD 2AZ-FE | | GDS59472 | Drive Shaft | | 26 | 24 | 61.2 | 100 | 974 | |
| | 2008.05-2014.12 | CVT | F | L/R | MPV FWD 2AZ-FE | | GCO59245 | Outer Joint | | 26 | 27 | 61.2 | 100 | 59 | I |
| | 2008.05-2014.12 | CVT | F | L | MPV FWD 2AZ-FE | Manufactured in:Russia | GCI59125 | Inner Joint | | 24 | 27 | 50 | 67 | 109.5 | |
| | 2008.05-2014.12 | CVT | F | R | MPV FWD 2AZ-FE | | GCI59078 | Inner Joint | | 24 | 27 | 40 | 370 | 105 | |
| | 2008.05-2014.12 | CVT/4AT | F | L | MPV FWD 2AZ-FE | | GDS59645 | Drive Shaft | | 26 | 24 | 61.2 | 100 | 660 | |
| 2.5 (119 kw) | 2019.04- | E-CVT | F | L | MPV 4WD 2ARFXE | | GDS58267 | Drive Shaft | | 30 | 24 | 61.2 | 100 | 644 | |
| | 2019.04- | E-CVT | F | R | MPV 4WD 2ARFXE | | GDS58266 | Drive Shaft | | 30 | 24 | 61.2 | 100 | 1000 | |
| | 2019.04- | E-CVT | F | L/R | MPV 4WD 2ARFXE | | GCO82357 | Outer Joint | | 30 | 27 | 61.2 | 100 | 66 | M |
| | 2019.04- | E-CVT | F | L | MPV 4WD 2ARFXE | | GCI81534 | Inner Joint | | 24 | 26 | 50 | 83.5 | 108 | |
| | 2019.04- | E-CVT | F | R | MPV 4WD 2ARFXE | | GCI83224 | Inner Joint | | 24 | 26 | 40 | 382 | 100.5 | |
| 2.5 (120 kw) | 2020.03- | E-CVT | F | L | MPV 4WD 2ARFXE | | GDS58267 | Drive Shaft | | 30 | 24 | 61.2 | 100 | 644 | |
| | 2020.03- | E-CVT | F | R | MPV 4WD 2ARFXE | | GDS58266 | Drive Shaft | | 30 | 24 | 61.2 | 100 | 1000 | |
| | 2020.03- | E-CVT | F | L/R | MPV 4WD 2ARFXE | | GCO82357 | Outer Joint | | 30 | 27 | 61.2 | 100 | 66 | M |
| | 2020.03- | E-CVT | F | L | MPV 4WD 2ARFXE | | GCI81534 | Inner Joint | | 24 | 26 | 50 | 83.5 | 108 | |
| | 2020.03- | E-CVT | F | R | MPV 4WD 2ARFXE | | GCI83224 | Inner Joint | | 24 | 26 | 40 | 382 | 100.5 | |
| 3.5 (206 kw) | 2008.04-2014.12 | 6AT | F | L | MPV 4WD 2GR-FE | | GDS59610 | Drive Shaft | | 30 | 24 | 61.2 | 100 | 648 | |
| | 2008.04-2014.12 | 6AT | F | R | MPV 4WD 2GR-FE | | GDS59370 | Drive Shaft | | 30 | 24 | 61.2 | 100 | 994 | |
| | 2008.04-2014.12 | 6AT | F | L | MPV 4WD 2GR-FE | | GCO59321 | Outer Joint | | 30 | 27 | 61.2 | 100 | 64.5 | M |
| | 2008.04-2014.12 | 6AT | F | L/R | MPV 4WD 2GR-FE | | GCO99320 | Outer Joint | | 30 | 27 | 61.2 | 100 | 64 | I |
| | 2008.04-2014.12 | 6AT | F | L | MPV 4WD 2GR-FE | Manufactured in:Russia | GCI59125 | Inner Joint | | 24 | 27 | 50 | 67 | 109.5 | |
| | 2008.04-2014.12 | 6AT | F | R | MPV 4WD 2GR-FE | | GCI59108 | Inner Joint | | 24 | 27 | 35.5 | 385 | 105 | |
| | 2008.04-2014.12 | CVT | R | L/R | MPV 4WD 2GR-FE | | GCI59203 | Inner Joint | | | 20 | | | 83 | |
| **Altezza** | | | | | | | | | | | | | | | |
| 2.0 (118 kw) | 1999.01-2005.05 | 4AT | R | L/R | Saloon RWD 1GFE | | GCI39089 | Inner Joint | | | 20 | | | 66.2 | |
| | 1999.01-2005.05 | 6MT | R | L/R | Saloon RWD 1GFE | | GCO59390 | Outer Joint | 48T | 30 | 27 | 63 | 108.5 | 64 | I |
| **Altezza Gita** | | | | | | | | | | | | | | | |
| 2.0 (114 kw) | 1999.01-2001.06 | AT | R | L/R | Estate RWD 1GFE | | GCI39089 | Inner Joint | | | 20 | | | 66.2 | |
| | 2001.01-2005.12 | 4AT | F | L/R | Estate 4WD 1GFE | | GCO59370 | Outer Joint | 48T | 30 | 30 | 56 | 92 | 59 | I |
| | 2001.01-2005.12 | 4AT | R | L/R | Estate 4WD 1GFE | | GCI39089 | Inner Joint | | | 20 | | | 66.2 | |
| 2.0 (118 kw) | 2001.07-2005.07 | 4AT | F | L/R | Estate 4WD 1GFE | | GCO59370 | Outer Joint | 48T | 30 | 30 | 56 | 92 | 59 | I |
| | 2001.07-2005.07 | 4AT | R | L/R | Estate 4WD 1GFE | | GCI39089 | Inner Joint | | | 20 | | | 66.2 | |
| | 2001.07-2005.07 | 4AT | R | L/R | Estate RWD 1GFE | | GCI39089 | Inner Joint | | | 20 | | | 66.2 | |
| **Aurion** | | | | | | | | | | | | | | | |
| 3.5 (200 kw) | 2006.03-2011.09 | 6AT | F | L | Saloon FWD 2GR-FE | | GDS59324 | Drive Shaft | 48T | 30 | 24 | 61 | 100 | 659 | |
| | 2006.03-2011.09 | 6AT | F | R | Saloon FWD 2GR-FE | | GDS59323 | Drive Shaft | 48T | 30 | 24 | 61 | 100 | 978 | |
| | 2006.03-2011.09 | AT | F | L/R | Saloon FWD 2GR-FE | | GCO59214 | Outer Joint | 48T | 30 | 26 | 61 | 100 | 67 | I |
| | 2006.03-2011.09 | AT | F | L | Saloon FWD 2GR-FE | | GCI59082 | Inner Joint | | 24 | 27 | 50 | 67 | 109 | |
| | 2006.03-2011.09 | AT | F | R | Saloon FWD 2GR-FE | | GCI59116 | Inner Joint | | 24 | 27 | 40 | 379 | 105 | |
| | 2011.09- | 6AT | F | L | Saloon FWD 2GR-FE | Veh Prd Country:Japan | GDS59324 | Drive Shaft | 48T | 30 | 24 | 61 | 100 | 659 | |
| | 2011.09- | 6AT | F | R | Saloon FWD 2GR-FE | Veh Prd Country:Japan/USA | GDS59323 | Drive Shaft | 48T | 30 | 24 | 61 | 100 | 978 | |
| | 2011.09- | AT | F | L | Saloon FWD 2GR-FE | Vehicle Production Country:USA | GDS59372 | Drive Shaft | 48T | 30 | 24 | 61 | 99 | 652 | |
| | 2011.09- | AT | F | L | Saloon FWD 2GR-FE | Date from:2012.08,With Shaft | GCO59305 | Outer Joint | 48T | 30 | 26 | 61 | 100 | 68.5 | M |
| | 2011.09- | AT | F | L/R | Saloon FWD 2GR-FE | | GCO59214 | Outer Joint | 48T | 30 | 26 | 61 | 100 | 67 | I |
| | 2011.09- | AT | F | L | Saloon FWD 2GR-FE | | GCI59082 | Inner Joint | | 24 | 27 | 50 | 67 | 109 | |
| | 2011.09- | AT | F | R | Saloon FWD 2GR-FE | | GCI59116 | Inner Joint | | 24 | 27 | 40 | 379 | 105 | |
| **Auris** | | | | | | | | | | | | | | | |
| 1.2 (85 kw) | 2015.03-2018.12 | AT/MT | F | L | Hatchback FWD 8NR-FTS | Inner teeth of wheel side:23 | GDS59268 | Drive Shaft | | 26 | 20 | 61.2 | 95.5 | 665 | |
| | 2015.03-2018.12 | AT/MT | F | R | Hatchback FWD 8NR-FTS | Inner teeth of wheel side:23 | GDS59447 | Drive Shaft | | 26 | 20 | 61.2 | 95.5 | 943 | |
| | 2015.03-2018.12 | CVT | F | L | Hatchback FWD 8NR-FTS | Inner teeth of wheel side:25 | GDS59508 | Drive Shaft | | 26 | 20 | 61.2 | 95.5 | 657 | |
| | 2015.03-2018.12 | CVT/6MT | F | R | Hatchback FWD 8NR-FTS | Inner teeth of wheel side:25 | GDS59509 | Drive Shaft | | 26 | 20 | 61.2 | 95.5 | 944 | |
| | 2015.03-2018.12 | CVT/6MT | F | L/R | Hatchback FWD 8NR-FTS | | GCO59427 | Outer Joint | | 26 | 25 | 61.2 | 95.5 | 61.5 | I |
| | 2015.03-2018.12 | CVT/6MT | F | L | Hatchback FWD 8NR-FTS | | GCI59077 | Inner Joint | | 20 | 23 | 35 | 63.5 | 115.7 | |
| | 2015.03-2018.12 | CVT/6MT | F | L/R | Hatchback FWD 8NR-FTS | | GCI59139 | Inner Joint | | 20 | 23 | 35 | 63.5 | 115 | |
| 1.3 (73 kw) | 2010.01-2012.09 | 6MT | F | L | Hatchback FWD 1NR-FE | | GDS59316 | Drive Shaft | | 26 | 23 | 61.2 | 95.5 | 662 | |
| | 2010.01-2012.09 | 6MT | F | R | Hatchback FWD 1NR-FE | | GDS59317 | Drive Shaft | | 26 | 23 | 61.2 | 95.5 | 941 | |
| | 2010.01-2012.09 | MT | F | L/R | Hatchback FWD 1NR-FE | | GCO59213 | Outer Joint | | 26 | 23 | 61.2 | 95.5 | 54.5 | I |
| | 2010.01-2012.09 | | F | L/R | Hatchback FWD 1NR-FE | | GCI99038 | Inner Joint | | 23 | 23 | 34 | 60 | 113 | |
| | 2012.10-2018.12 | 6MT | F | L | Hatchback FWD 1NR-FE | | GDS81196 | Drive Shaft | | 26 | 23 | 61.2 | 95.5 | 662 | |
| | 2012.10-2018.12 | 6MT | F | R | Hatchback FWD 1NR-FE | | GDS81195 | Drive Shaft | | 26 | 23 | 61.2 | 95.5 | 942 | |
| | 2012.10-2018.12 | 6MT | F | L/R | Hatchback FWD 1NR-FE | | GCO81143 | Outer Joint | | 26 | 23 | 61.2 | 95.5 | 54.5 | I |
| | 2012.10-2018.12 | 6MT | F | L/R | Hatchback FWD 1NR-FE | | GCI99038 | Inner Joint | | 23 | 23 | 34 | 60 | 113 | |
| 1.3 (74 kw) | 2009.05-2012.09 | MT | F | L | Hatchback FWD 1NR-FE | Date to:2010.01 | GDS59316 | Drive Shaft | | 26 | 23 | 61.2 | 95.5 | 662 | |
| | 2009.05-2012.09 | MT | F | R | Hatchback FWD 1NR-FE | Date to:2010.01 | GDS59317 | Drive Shaft | | 26 | 23 | 61.2 | 95.5 | 941 | |

| | YEAR | TRANSM. | F/R | L/R | BODY STYLE & DRIVE TYPE & ENGINE | REMARKS | G-AP Ref. | PRODUCT | ABS | Technical Specifications A | B | C | H | L | P |
|---|---|---|---|---|---|---|---|---|---|---|---|---|---|---|---|
| **TOYOTA** **Auris** | | | | | | | | | | | | | | | |
| 1.3 (74 kw) | 2009.05-2012.09 | MT | F | L/R | Hatchback FWD 1NR-FE | | GCO59213 | Outer Joint | | 26 | 23 | 61.2 | 95.5 | 54.5 | I |
| | 2009.05-2012.09 | MT | F | L/R | Hatchback FWD 1NR-FE | | GCI99038 | Inner Joint | | 23 | 23 | 34 | 60 | 113 | |
| 1.4 (66 kw) | 2007.03-2012.09 | 6AT/5MT/6MT | F | L | Hatchback FWD 1ND-TV | | GDS59268 | Drive Shaft | | 26 | 20 | 61.2 | 95.5 | 665 | |
| | 2007.03-2012.09 | 6AT/5MT/6MT | F | R | Hatchback FWD 1ND-TV | | GDS59447 | Drive Shaft | | 26 | 20 | 61.2 | 95.5 | 943 | |
| | 2007.03-2012.09 | MT | F | L/R | Hatchback FWD 1ND-TV | | GCO59213 | Outer Joint | | 26 | 23 | 61.2 | 95.5 | 54.5 | I |
| | 2007.03-2012.09 | | F | L/R | Hatchback FWD 1ND-TV | | GCI59077 | Inner Joint | | 20 | 23 | 35 | 63.5 | 115.7 | |
| | 2007.03-2012.09 | 6MT | F | L | Hatchback Van FWD 1ND-TV | | GDS59268 | Drive Shaft | | 26 | 20 | 61.2 | 95.5 | 665 | |
| | 2007.03-2012.09 | 6MT | F | R | Hatchback Van FWD 1ND-TV | | GDS59447 | Drive Shaft | | 26 | 20 | 61.2 | 95.5 | 943 | |
| | 2007.03-2012.09 | MT | F | L/R | Hatchback Van FWD 1ND-TV | | GCO59213 | Outer Joint | | 26 | 23 | 61.2 | 95.5 | 54.5 | I |
| | 2007.03-2012.09 | | F | L/R | Hatchback Van FWD 1ND-TV | | GCI59077 | Inner Joint | | 20 | 23 | 35 | 63.5 | 115.7 | |
| | 2012.10-2018.12 | 6AT/6MT | F | L | Hatchback FWD 1ND-TV | | GDS59621 | Drive Shaft | | 26 | 20 | 61.2 | 95.5 | 661 | |
| | 2012.10-2018.12 | 6AT/6MT | F | R | Hatchback FWD 1ND-TV | | GDS59494 | Drive Shaft | | 26 | 20 | 61.2 | 95.5 | 938 | |
| | 2012.10-2018.12 | 6AT/6MT | F | L/R | Hatchback FWD 1ND-TV | | GCO59427 | Outer Joint | | 26 | 25 | 61.2 | 95.5 | 61.5 | I |
| | 2013.03-2018.12 | MT | F | L | Hatchback Van FWD 1ND-TV | | GDS59268 | Drive Shaft | | 26 | 20 | 61.2 | 95.5 | 665 | |
| | 2013.03-2018.12 | MT | F | L | Hatchback Van FWD 1ND-TV | | GDS59621 | Drive Shaft | | 26 | 20 | 61.2 | 95.5 | 661 | |
| | 2013.03-2018.12 | MT | F | R | Hatchback Van FWD 1ND-TV | | GDS59447 | Drive Shaft | | 26 | 20 | 61.2 | 95.5 | 943 | |
| | 2013.03-2018.12 | MT | F | R | Hatchback Van FWD 1ND-TV | | GDS59494 | Drive Shaft | | 26 | 20 | 61.2 | 95.5 | 938 | |
| | 2013.03-2018.12 | MT | F | L | Hatchback Van FWD 1ND-TV | | GCO59213 | Outer Joint | | 26 | 23 | 61.2 | 95.5 | 54.5 | I |
| | 2013.03-2018.12 | MT | F | R | Hatchback Van FWD 1ND-TV | | GCO59427 | Outer Joint | | 26 | 25 | 61.2 | 95.5 | 61.5 | I |
| 1.4 (71 kw) | 2007.03-2012.09 | 5MT | F | L | Hatchback FWD 4ZZ-FE | | GDS59316 | Drive Shaft | | 26 | 23 | 61.2 | 95.5 | 662 | |
| | 2007.03-2012.09 | 5MT | F | R | Hatchback FWD 4ZZ-FE | | GDS59317 | Drive Shaft | | 26 | 23 | 61.2 | 95.5 | 941 | |
| | 2007.03-2012.09 | 5MT | F | L/R | Hatchback FWD 4ZZ-FE | | GCI99038 | Inner Joint | | 23 | 23 | 34 | 60 | 113 | |
| | 2007.03-2012.09 | MT | F | L/R | Hatchback FWD 4ZZ-FE | | GCO59213 | Outer Joint | | 26 | 23 | 61.2 | 95.5 | 54.5 | I |
| 1.5 (77 kw) | 2006.10-2012.09 | | F | L | Hatchback 4WD 1NZ-FE | | GCI59100 | Inner Joint | | 20 | 25 | 35 | 63.5 | 118 | |
| | 2006.10-2012.09 | | R | L/R | Hatchback 4WD 1NZ-FE | | GCI59210 | Inner Joint | | 20 | 18 | 37 | 59.5 | 89 | |
| 1.5 (81 kw) | 2006.10-2012.08 | | F | | Hatchback FWD 1NZ-FE | | GCO59274 | Outer Joint | | 26 | 23 | 55.6 | 96 | 54 | I |
| | 2006.10-2012.08 | | F | | Hatchback FWD 1NZ-FE | | GCI99046 | Inner Joint | | 23 | 23 | 34 | 60 | 103.5 | |
| 1.6 (91 kw) | 2007.03-2012.09 | MT | F | L/R | Hatchback FWD 1ZR-FE | | GCO59213 | Outer Joint | | 26 | 23 | 61.2 | 95.5 | 54.5 | I |
| | 2007.03-2012.09 | SAT/4AT/5MT | F | L | Hatchback FWD 1ZR-FE | Date from:2008.12;Date from:2009.02 | GDS59268 | Drive Shaft | | 26 | 20 | 61.2 | 95.5 | 665 | |
| | 2007.03-2012.09 | SAT/4AT/5MT | F | L | Hatchback FWD 1ZR-FE | Date to:2009.01;Date to:2008.11 | GDS59316 | Drive Shaft | | 26 | 23 | 61.2 | 95.5 | 662 | |
| | 2007.03-2012.09 | SAT/4AT/5MT | F | R | Hatchback FWD 1ZR-FE | Date to:2009.01;Date to:2008.11 | GDS59317 | Drive Shaft | | 26 | 23 | 61.2 | 95.5 | 941 | |
| | 2007.03-2012.09 | SAT/4AT/5MT | F | R | Hatchback FWD 1ZR-FE | Date from:2008.12;Date from:2009.02 | GDS59447 | Drive Shaft | | 26 | 20 | 61.2 | 95.5 | 943 | |
| | 2007.03-2012.09 | | F | L/R | Hatchback FWD 1ZR-FE | | GCI59077 | Inner Joint | | 20 | 23 | 35 | 63.5 | 115.7 | |
| | 2007.03-2012.09 | | F | L/R | Hatchback FWD 1ZR-FE | Date To:2008.12;Vehicle Production Country:Japan | GCI99038 | Inner Joint | | 23 | 23 | 34 | 60 | 113 | |
| 1.6 (97 kw) | 2009.05-2012.09 | MT | F | L | Hatchback FWD 1ZR-FAE | Vehicle Production Country:Japan | GDS59268 | Drive Shaft | | 26 | 20 | 61.2 | 95.5 | 665 | |
| | 2009.05-2012.09 | MT | F | L | Hatchback FWD 1ZR-FAE | Date To:2009.02;Vehicle Production Country:Great Britain/Turkey | GDS59316 | Drive Shaft | | 26 | 23 | 61.2 | 95.5 | 662 | |
| | 2009.05-2012.09 | MT | F | R | Hatchback FWD 1ZR-FAE | Date To:2009.02;Vehicle Production Country:Great Britain/Turkey | GDS59317 | Drive Shaft | | 26 | 23 | 61.2 | 95.5 | 941 | |
| | 2009.05-2012.09 | MT | F | R | Hatchback FWD 1ZR-FAE | Vehicle Production Country:Japan | GDS59447 | Drive Shaft | | 26 | 20 | 61.2 | 95.5 | 943 | |
| | 2009.05-2012.09 | MT | F | L/R | Hatchback FWD 1ZR-FAE | | GCO59213 | Outer Joint | | 26 | 23 | 61.2 | 95.5 | 54.5 | I |
| | 2009.05-2012.09 | | F | L/R | Hatchback FWD 1ZR-FAE | | GCI59077 | Inner Joint | | 20 | 23 | 35 | 63.5 | 115.7 | |
| | 2012.10-2018.12 | CVT/6MT | F | L | Hatchback FWD 1ZR-FAE | | GDS59508 | Drive Shaft | | 26 | 20 | 61.2 | 95.5 | 657 | |
| | 2012.10-2018.12 | CVT/6MT | F | R | Hatchback FWD 1ZR-FAE | | GDS59509 | Drive Shaft | | 26 | 20 | 61.2 | 95.5 | 944 | |
| | 2012.10-2018.12 | CVT/6MT | F | L/R | Hatchback FWD 1ZR-FAE | | GCO59427 | Outer Joint | | 26 | 25 | 61.2 | 95.5 | 61.5 | I |
| | 2012.10-2018.12 | CVT/6MT | F | L | Hatchback FWD 1ZR-FAE | | GCI59077 | Inner Joint | | 20 | 23 | 35 | 63.5 | 115.7 | |
| | 2012.10-2018.12 | CVT/6MT | F | R | Hatchback FWD 1ZR-FAE | | GCI59139 | Inner Joint | | 20 | 23 | 35 | 63.5 | 115 | |
| 1.8 (100 kw) | 2006.10-2009.10 | | F | L/R | Hatchback 4WD 2ZR-FE | | GCO59244 | Outer Joint | | 26 | 25 | 55.6 | 95.5 | 57 | I |
| | 2006.10-2009.10 | | F | L | Hatchback 4WD 2ZR-FE | | GCI59100 | Inner Joint | | 20 | 25 | 35 | 63.5 | 118 | |
| | 2006.10-2012.09 | 6MT | F | L | Hatchback FWD 2ZR-FAE, 2ZR-FE | | GDS59268 | Drive Shaft | | 26 | 20 | 61.2 | 95.5 | 665 | |
| | 2006.10-2012.09 | 6MT | F | R | Hatchback FWD 2ZR-FAE, 2ZR-FE | | GDS59447 | Drive Shaft | | 26 | 20 | 61.2 | 95.5 | 943 | |
| | 2006.10-2012.09 | 6MT | F | L/R | Hatchback FWD 2ZR-FAE, 2ZR-FE | | GCO59213 | Outer Joint | | 26 | 23 | 61.2 | 95.5 | 54.5 | I |
| | 2006.10-2012.09 | 6MT | F | L/R | Hatchback FWD 2ZR-FAE, 2ZR-FE | | GCI59077 | Inner Joint | | 20 | 23 | 35 | 63.5 | 115.7 | |
| | 2006.10-2012.09 | CVT | F | L | Hatchback FWD 2ZR-FAE, 2ZR-FE | | GDS59689 | Drive Shaft | | 26 | 20 | 55.6 | 95.5 | 657 | |
| | 2006.10-2012.09 | CVT | F | R | Hatchback FWD 2ZR-FAE, 2ZR-FE | | GDS59688 | Drive Shaft | | 26 | 20 | 55.6 | 95.5 | 937 | |
| | 2006.10-2012.09 | CVT | F | L/R | Hatchback FWD 2ZR-FAE, 2ZR-FE | | GCO59244 | Outer Joint | | 26 | 25 | 55.6 | 95.5 | 57 | I |
| | 2006.10-2012.09 | CVT | F | L/R | Hatchback FWD 2ZR-FAE, 2ZR-FE | | GCI59100 | Inner Joint | | 20 | 25 | 35 | 63.5 | 118 | |
| | 2010.09-2012.09 | AT | F | R | Hatchback FWD 2ZR-FXE | Date from:2011.01 | GDS59378 | Drive Shaft | | 26 | 24 | 55.6 | 95.5 | 973 | |
| | 2010.09-2012.09 | CVT | F | L | Hatchback FWD 2ZR-FXE | | GDS59639 | Drive Shaft | | 26 | 24 | 55.6 | 95.5 | 624 | |
| | 2010.09-2012.09 | CVT | F | R | Hatchback FWD 2ZR-FXE | | GDS59640 | Drive Shaft | | 26 | 24 | 55.6 | 95.5 | 973 | |
| | 2010.09-2012.09 | CVT | F | L | Hatchback FWD 2ZR-FXE | | GCO59206 | Outer Joint | | 26 | 23 | 55.6 | 96 | 53 | I |
| | 2010.09-2012.09 | CVT | F | L/R | Hatchback FWD 2ZR-FXE | | GCO59244 | Outer Joint | | 26 | 25 | 55.6 | 95.5 | 57 | I |
| | 2010.09-2012.09 | CVT | F | L | Hatchback FWD 2ZR-FXE | TJ | GCI59094 | Inner Joint | | 24 | 25 | 50 | 67 | 105 | |
| | 2010.09-2012.09 | CVT | F | L | Hatchback FWD 2ZR-FXE | AAR | GCI59227 | Inner Joint | | 24 | 25 | 50 | 67 | 109.5 | |
| | 2010.09-2012.09 | CVT | F | R | Hatchback FWD 2ZR-FXE | TJ | GCI59095 | Inner Joint | | 24 | 25 | 40 | 98 | 93 | |
| | 2010.09-2012.09 | CVT | F | R | Hatchback FWD 2ZR-FXE | AAR | GCI59228 | Inner Joint | | 24 | 25 | 40 | 98 | 93 | |
| | 2012.10-2018.12 | AT | F | L/R | Hatchback FWD 2ZR-FXE | Date to:2015.05 | GCO59528 | Outer Joint | | 26 | 32 | 61.2 | 96.5 | 54.5 | I |

| | YEAR | TRANSM. | F/R | L/R | BODY STYLE & DRIVE TYPE & ENGINE | REMARKS | G-AP Ref. | PRODUCT | ABS | Technical Specifications A | B | C | H | L | P |
|---|---|---|---|---|---|---|---|---|---|---|---|---|---|---|---|
| **TOYOTA** | | | | | | | | | | | | | | | |
| **Auris** | | | | | | | | | | | | | | | |
| 1.8 (100 kw) | 2012.10-2018.12 | CVT | F | L | Hatchback FWD 2ZR-FXE | For vehicles without heavy duty suspension | GDS59673 | Drive Shaft | | 26 | 24 | 61.2 | 96.5 | 625 | |
| | 2012.10-2018.12 | CVT | F | L | Hatchback FWD 2ZR-FXE | For vehicles with heavy duty suspension | GDS81236 | Drive Shaft | | 26 | 24 | 61.2 | 96.5 | 627 | |
| | 2012.10-2018.12 | CVT | F | R | Hatchback FWD 2ZR-FXE | | GDS59674 | Drive Shaft | | 26 | 24 | 61.2 | 96.5 | 973 | |
| | 2012.10-2018.12 | CVT | F | L | Hatchback FWD 2ZR-FXE | For vehicles with heavy duty suspension | GCI81145 | Inner Joint | | 24 | 33 | 50 | 67 | 109 | |
| | 2012.10-2018.12 | CVT | F | L | Hatchback FWD 2ZR-FXE | For vehicles without heavy duty suspension | GCI81374 | Inner Joint | | 24 | 32 | 50 | 67 | 108.5 | |
| | 2012.10-2018.12 | CVT | F | R | Hatchback FWD 2ZR-FXE | | GCI81375 | Inner Joint | | 24 | 32 | 40 | 98 | 95.5 | |
| 1.8 (106 kw) | 2009.02-2012.09 | CVT/6MT | F | L | Hatchback FWD 2ZR-FAE | | GDS59268 | Drive Shaft | | 26 | 20 | 61.2 | 95.5 | 665 | |
| | 2009.02-2012.09 | CVT/6MT | F | R | Hatchback FWD 2ZR-FAE | | GDS59447 | Drive Shaft | | 26 | 20 | 61.2 | 95.5 | 943 | |
| | 2009.02-2012.09 | CVT/6MT | F | L/R | Hatchback FWD 2ZR-FAE | | GCO59213 | Outer Joint | | 26 | 23 | 61.2 | 95.5 | 54.5 | I |
| | 2009.02-2012.09 | CVT/6MT | F | L/R | Hatchback FWD 2ZR-FAE | | GCI59077 | Inner Joint | | 20 | 23 | 35 | 63.5 | 115.7 | |
| | 2009.02-2012.09 | | F | L | Hatchback FWD 2ZR-FAE | | GCI59100 | Inner Joint | | 20 | 25 | 35 | 63.5 | 118 | |
| 1.8 (108 kw) | 2009.02-2012.09 | 6MT | F | L | Hatchback FWD 2ZR-FAE | | GCI59100 | Inner Joint | | 20 | 25 | 35 | 63.5 | 118 | |
| | 2009.02-2012.09 | MT | F | L | Hatchback FWD 2ZR-FAE | | GDS59268 | Drive Shaft | | 26 | 20 | 61.2 | 95.5 | 665 | |
| | 2009.02-2012.09 | MT | F | L | Hatchback FWD 2ZR-FAE | | GDS59316 | Drive Shaft | | 26 | 23 | 61.2 | 95.5 | 662 | |
| | 2009.02-2012.09 | MT | F | R | Hatchback FWD 2ZR-FAE | | GDS59317 | Drive Shaft | | 26 | 23 | 61.2 | 95.5 | 941 | |
| | 2009.02-2012.09 | MT | F | R | Hatchback FWD 2ZR-FAE | | GDS59447 | Drive Shaft | | 26 | 20 | 61.2 | 95.5 | 943 | |
| | 2009.02-2012.09 | MT | F | L/R | Hatchback FWD 2ZR-FAE | | GCO59213 | Outer Joint | | 26 | 23 | 61.2 | 95.5 | 54.5 | I |
| | 2009.02-2012.09 | | F | L/R | Hatchback FWD 2ZR-FAE | Vehicle Production Country:Japan | GCI59077 | Inner Joint | | 20 | 23 | 35 | 63.5 | 115.7 | |
| 2.0 (91 kw) | 2012.10-2015.04 | 6MT | F | L | Hatchback FWD 1AD-FTV | | GDS82254 | Drive Shaft | | 30 | 24 | 61.2 | 100 | 610 | |
| | 2012.10-2015.04 | 6MT | F | R | Hatchback FWD 1AD-FTV | | GDS81945 | Drive Shaft | | 30 | 24 | 61.2 | 100 | 990 | |
| | 2012.10-2015.04 | 6MT | F | L/R | Hatchback FWD 1AD-FTV | | GCO81749 | Outer Joint | | 30 | 26 | 61.2 | 100 | 65 | M |
| | 2012.10-2015.04 | 6MT | F | L | Hatchback FWD 1AD-FTV | | GCI81142 | Inner Joint | | 24 | 26 | 50 | 67 | 107 | |
| | 2012.10-2015.04 | 6MT | F | R | Hatchback FWD 1AD-FTV | | GCI81308 | Inner Joint | | 24 | 26 | 40 | 382 | 100.5 | |
| 2.0 (93 kw) | 2006.10-2012.09 | 6MT | F | L | Hatchback FWD 1AD-FTV | | GDS59702 | Drive Shaft | | 30 | 24 | 61.4 | 101 | 613 | |
| | 2006.10-2012.09 | 6MT | F | R | Hatchback FWD 1AD-FTV | | GDS59701 | Drive Shaft | | 30 | 24 | 61.4 | 101 | 987 | |
| | 2006.10-2012.09 | 6MT | F | L/R | Hatchback FWD 1AD-FTV | | GCO59318 | Outer Joint | | 30 | 36 | 61.4 | 101 | 62 | I |
| | 2006.10-2012.09 | 6MT | F | L | Hatchback FWD 1AD-FTV | Date From:2010.07;Date To:2010.06;Vehicle Production Country:Great Britain/Turkey | GCI81145 | Inner Joint | | 24 | 33 | 50 | 67 | 109 | |
| | 2006.10-2012.09 | 6MT | F | R | Hatchback FWD 1AD-FTV | Date From:2010.07;Date To:2010.06;Vehicle Production Country:Great Britain/Turkey | GCI59237 | Inner Joint | | 24 | 33 | 40 | 383 | 97 | |
| 2.2 (130 kw) | 2006.11-2012.09 | 6MT | F | L | Hatchback FWD 2AD-FHV | | GDS59702 | Drive Shaft | | 30 | 24 | 61.4 | 101 | 613 | |
| | 2006.11-2012.09 | 6MT | F | R | Hatchback FWD 2AD-FHV | | GDS59701 | Drive Shaft | | 30 | 24 | 61.4 | 101 | 987 | |
| | 2006.11-2012.09 | 6MT | F | L/R | Hatchback FWD 2AD-FHV | | GCO59318 | Outer Joint | | 30 | 36 | 61.4 | 101 | 62 | I |
| | 2006.11-2012.09 | 6MT | F | L | Hatchback FWD 2AD-FHV | | GCI81145 | Inner Joint | | 24 | 33 | 50 | 67 | 109 | |
| | 2006.11-2012.09 | 6MT | F | R | Hatchback FWD 2AD-FHV | | GCI59237 | Inner Joint | | 24 | 33 | 40 | 383 | 97 | |
| **Auris Touring Sports** | | | | | | | | | | | | | | | |
| 1.2 (85 kw) | 2015.03-2018.12 | AT/MT | F | L | Estate FWD 8NR-FTS | | GDS59268 | Drive Shaft | | 26 | 20 | 61.2 | 95.5 | 665 | |
| | 2015.03-2018.12 | AT/MT | F | R | Estate FWD 8NR-FTS | | GDS59447 | Drive Shaft | | 26 | 20 | 61.2 | 95.5 | 943 | |
| | 2015.03-2018.12 | MT/CVT | F | L | Estate FWD 8NR-FTS | | GDS59508 | Drive Shaft | | 26 | 20 | 61.2 | 95.5 | 657 | |
| | 2015.03-2018.12 | MT/CVT | F | R | Estate FWD 8NR-FTS | | GDS59509 | Drive Shaft | | 26 | 20 | 61.2 | 95.5 | 944 | |
| | 2015.03-2018.12 | | F | L | Estate FWD 8NR-FTS | | GCI59077 | Inner Joint | | 20 | 23 | 35 | 63.5 | 115.7 | |
| | 2015.03-2018.12 | | F | R | Estate FWD 8NR-FTS | | GCI59139 | Inner Joint | | 20 | 23 | 35 | 63.5 | 115 | |
| 1.3 (73 kw) | 2013.07-2018.12 | MT | F | L | Estate FWD 1NR-FE | | GDS81196 | Drive Shaft | | 26 | 23 | 61.2 | 95.5 | 662 | |
| | 2013.07-2018.12 | MT | F | L | Estate FWD 1NR-FE | | GCO81143 | Outer Joint | | 26 | 23 | 61.2 | 95.5 | 54.5 | I |
| | 2013.07-2018.12 | MT | F | L | Estate FWD 1NR-FE | | GCI99038 | Inner Joint | | 23 | 23 | 34 | 60 | 113 | |
| | 2013.07-2018.12 | | F | R | Estate FWD 1NR-FE | | GDS81195 | Drive Shaft | | 26 | 23 | 61.2 | 95.5 | 942 | |
| 1.4 (66 kw) | 2013.07-2018.12 | AT/MT | F | L | Estate FWD 1ND-TV | | GDS59621 | Drive Shaft | | 26 | 20 | 61.2 | 95.5 | 661 | |
| | 2013.07-2018.12 | AT/MT | F | R | Estate FWD 1ND-TV | | GDS59494 | Drive Shaft | | 26 | 20 | 61.2 | 95.5 | 938 | |
| | 2013.07-2018.12 | AT/MT | F | L | Estate FWD 1ND-TV | | GCO59213 | Outer Joint | | 26 | 23 | 61.2 | 95.5 | 54.5 | I |
| | 2013.07-2018.12 | AT/MT | F | R | Estate FWD 1ND-TV | | GCO59427 | Outer Joint | | 26 | 25 | 61.2 | 95.5 | 61.5 | I |
| | 2013.07-2018.12 | MT | F | L | Estate FWD 1ND-TV | Date from:2014.01 | GDS59268 | Drive Shaft | | 26 | 20 | 61.2 | 95.5 | 665 | |
| | 2013.07-2018.12 | MT | F | R | Estate FWD 1ND-TV | Date from:2014.01 | GDS59447 | Drive Shaft | | 26 | 20 | 61.2 | 95.5 | 943 | |
| 1.6 (97 kw) | 2013.07-2018.12 | AT/MT | F | R | Estate FWD 1ZR-FAE | Date from:2014.01 | GDS59447 | Drive Shaft | | 26 | 20 | 61.2 | 95.5 | 943 | |
| | 2013.07-2018.12 | AT/MT/CVT | F | L | Estate FWD 1ZR-FAE | | GDS59508 | Drive Shaft | | 26 | 20 | 61.2 | 95.5 | 657 | |
| | 2013.07-2018.12 | MT | F | L | Estate FWD 1ZR-FAE | Date from:2014.01 | GDS59268 | Drive Shaft | | 26 | 20 | 61.2 | 95.5 | 665 | |
| | 2013.07-2018.12 | MT/CVT | F | R | Estate FWD 1ZR-FAE | | GDS59509 | Drive Shaft | | 26 | 20 | 61.2 | 95.5 | 944 | |
| | 2013.07-2018.12 | | F | L | Estate FWD 1ZR-FAE | | GCI59077 | Inner Joint | | 20 | 23 | 35 | 63.5 | 115.7 | |
| | 2013.07-2018.12 | | F | R | Estate FWD 1ZR-FAE | | GCI59139 | Inner Joint | | 20 | 23 | 35 | 63.5 | 115 | |
| 1.8 (100 kw) | 2013.07-2018.12 | AT/CVT | F | R | Estate FWD 2ZR-FXE | | GDS59674 | Drive Shaft | | 26 | 24 | 61.2 | 96.5 | 973 | |
| | 2013.07-2018.12 | AT/CVT | F | L/R | Estate FWD 2ZR-FXE | Date to:2015.05 | GCO59528 | Outer Joint | | 26 | 32 | 61.2 | 96.5 | 54.5 | I |
| | 2013.07-2018.12 | AT/CVT | F | R | Estate FWD 2ZR-FXE | | GCI81375 | Inner Joint | | 24 | 32 | 40 | 98 | 95.5 | |
| | 2013.07-2018.12 | CVT | F | L | Estate FWD 2ZR-FXE | | GDS59673 | Drive Shaft | | 26 | 24 | 61.2 | 96.5 | 625 | |
| | 2013.07-2018.12 | CVT | F | L | Estate FWD 2ZR-FXE | | GCI81374 | Inner Joint | | 24 | 32 | 50 | 67 | 108.5 | |
| 2.0 (91 kw) | 2013.07-2015.04 | MT | F | L | Estate FWD 1AD-FTV | | GDS82254 | Drive Shaft | | 30 | 24 | 61.2 | 100 | 610 | |
| | 2013.07-2015.04 | MT | F | R | Estate FWD 1AD-FTV | | GDS81945 | Drive Shaft | | 30 | 24 | 61.2 | 100 | 990 | |
| | 2013.07-2015.04 | MT | F | L/R | Estate FWD 1AD-FTV | | GCO81749 | Outer Joint | | 30 | 26 | 61.2 | 100 | 65 | M |
| | 2013.07-2015.04 | MT | F | L | Estate FWD 1AD-FTV | | GCI81142 | Inner Joint | | 24 | 26 | 50 | 67 | 107 | |

| | YEAR | TRANSM. | F/R | L/R | BODY STYLE & DRIVE TYPE & ENGINE | REMARKS | G-AP Ref. | PRODUCT | ABS | Technical Specifications A | B | C | H | L | P |
|---|---|---|---|---|---|---|---|---|---|---|---|---|---|---|---|
| **TOYOTA** | | | | | | | | | | | | | | | |
| **Auris Touring Sports** | | | | | | | | | | | | | | | |
| 2.0 (91 kw) | 2013.07-2015.04 | MT | F | R | Estate FWD 1AD-FTV | | GCI81308 | Inner Joint | | 24 | 26 | 40 | 382 | 100.5 | |
| **Avalon** | | | | | | | | | | | | | | | |
| 2.5 (149 kw) | 2012.09-2018.03 | AT | F | L | Saloon FWD 2AR-FXE | | GDS81875 | Drive Shaft | 48T | 30 | 24 | 61 | 100 | 654 | |
| 2.5 (160 kw) | 2018.04- | CVT | F | L/R | Saloon FWD A25A-FXS | | GCO81749 | Outer Joint | | 30 | 26 | 61.2 | 100 | 65 | M |
| 3.5 (198 kw) | 2005.10-2012.11 | 5AT | F | L | Saloon FWD 2GR-FE | Date to:2007.06 | GDS83785 | Drive Shaft | 48T | 30 | 24 | 70 | 100 | 661 | |
| | 2005.10-2012.11 | 5AT | F | L | Saloon FWD 2GR-FE | Date to:2007.06 | GCI82488 | Inner Joint | | 24 | 35 | 50 | 84 | 107 | |
| | 2005.10-2012.11 | 5AT/6AT | F | L/R | Saloon FWD 2GR-FE | Transmission:6AT,Date from:2007.07;Transmission:5AT,Date to:2007.06 | GCO82454 | Outer Joint | 48T | 30 | 36 | 70 | 100 | 66.5 | I |
| | 2005.10-2012.11 | 6AT | F | L | Saloon FWD 2GR-FE | Date From:2007.07 | GDS83669 | Drive Shaft | 48T | 30 | 24 | 70 | 100 | 660 | |
| | 2005.10-2012.11 | 6AT | F | L | Saloon FWD 2GR-FE | Date from:2007.07 | GCI82327 | Inner Joint | | 24 | 35 | 50 | 67 | 112 | |
| 3.5 (200 kw) | 2005.01-2012.09 | 5AT | F | L | Saloon FWD 2GR-FE | Date to:2007.06 | GDS83785 | Drive Shaft | 48T | 30 | 24 | 70 | 100 | 661 | |
| | 2005.01-2012.09 | 5AT | F | L | Saloon FWD 2GR-FE | Date to:2007.06 | GCI82488 | Inner Joint | | 24 | 35 | 50 | 84 | 107 | |
| | 2005.01-2012.09 | 5AT/6AT | F | L/R | Saloon FWD 2GR-FE | Transmission:6AT,Date from:2007.07;Transmission:5AT,Date to:2007.06 | GCO82454 | Outer Joint | 48T | 30 | 36 | 70 | 100 | 66.5 | I |
| | 2005.01-2012.09 | 6AT | F | L | Saloon FWD 2GR-FE | Date From:2007.07 | GDS83669 | Drive Shaft | 48T | 30 | 24 | 70 | 100 | 660 | |
| | 2005.01-2012.09 | 6AT | F | L | Saloon FWD 2GR-FE | Date from:2007.07 | GCI82327 | Inner Joint | | 24 | 35 | 50 | 67 | 112 | |
| | 2012.09-2018.03 | 6AT | F | L | Saloon FWD 2GR-FE | | GDS59324 | Drive Shaft | 48T | 30 | 24 | 61 | 100 | 659 | |
| | 2012.09-2018.03 | 6AT | F | R | Saloon FWD 2GR-FE | | GDS59323 | Drive Shaft | 48T | 30 | 24 | 61 | 100 | 978 | |
| | 2012.09-2018.03 | 6AT | F | L | Saloon FWD 2GR-FE | With Shaft | GCO59305 | Outer Joint | 48T | 30 | 26 | 61 | 100 | 68.5 | M |
| | 2012.09-2018.03 | 6AT | F | R | Saloon FWD 2GR-FE | | GCO59214 | Outer Joint | 48T | 30 | 26 | 61 | 100 | 67 | I |
| 3.5 (204 kw) | 2012.10-2018.03 | 6AT | F | R | Saloon FWD 2GR-FE | | GCI59116 | Inner Joint | | 24 | 27 | 40 | 379 | 105 | |
| 3.5 (206 kw) | 2005.01-2012.09 | 5AT | F | L | Saloon FWD 2GR-FE | | GDS83785 | Drive Shaft | 48T | 30 | 24 | 70 | 100 | 661 | |
| | 2005.01-2012.09 | 5AT | F | L/R | Saloon FWD 2GR-FE | | GCO82454 | Outer Joint | 48T | 30 | 36 | 70 | 100 | 66.5 | I |
| | 2005.01-2012.09 | 5AT | F | L | Saloon FWD 2GR-FE | | GCI82488 | Inner Joint | | 24 | 35 | 50 | 84 | 107 | |
| **Avensis** | | | | | | | | | | | | | | | |
| 1.6 (74 kw) | 1997.10-2000.06 | 5MT | F | L | Hatchback FWD 4AFE | For vehicles with ABS | GDS99101 | Drive Shaft | 48T | 26 | 23 | 56 | 99 | 619 | |
| | 1997.10-2000.06 | 5MT | F | R | Hatchback FWD 4AFE | For vehicles with ABS,Manufactured in:Great Britain | GDS59271 | Drive Shaft | 48T | 26 | 23 | 56 | 99 | 915 | |
| | 1997.10-2000.06 | AT/MT | F | L/R | Hatchback FWD 4AFE | | GCO59022 | Outer Joint | 48T | 26 | 23 | 56 | 99 | 61 | M |
| | 1997.10-2000.06 | AT/MT | F | L/R | Hatchback FWD 4AFE | Date to:2000.06 | GCO59028 | Outer Joint | 48T | 26 | 22 | 56 | 99 | 61 | M |
| | 1997.10-2000.06 | | F | L | Hatchback FWD 4AFE | | GCI99038 | Inner Joint | | 23 | 23 | 34 | 60 | 113 | |
| | 1997.10-2000.06 | 5MT | F | L | Saloon FWD 4AFE | For vehicles with ABS | GDS99101 | Drive Shaft | 48T | 26 | 23 | 56 | 99 | 619 | |
| | 1997.10-2000.06 | 5MT | F | R | Saloon FWD 4AFE | For vehicles with ABS,Manufactured in:Great Britain | GDS59271 | Drive Shaft | 48T | 26 | 23 | 56 | 99 | 915 | |
| | 1997.10-2000.06 | AT/MT | F | R | Saloon FWD 4AFE | | GCO59022 | Outer Joint | 48T | 26 | 23 | 56 | 99 | 61 | M |
| | 1997.10-2000.06 | AT/MT | F | L/R | Saloon FWD 4AFE | Date to:2000.06 | GCO59028 | Outer Joint | 48T | 26 | 22 | 56 | 99 | 61 | M |
| | 1997.10-2000.06 | | F | L | Saloon FWD 4AFE | | GCI99038 | Inner Joint | | 23 | 23 | 34 | 60 | 113 | |
| 1.6 (81 kw) | 1997.10-2000.06 | 5MT | F | L | Hatchback FWD 4AFE | For vehicles with ABS | GDS99101 | Drive Shaft | 48T | 26 | 23 | 56 | 99 | 619 | |
| | 1997.10-2000.06 | 5MT | F | R | Hatchback FWD 4AFE | For vehicles with ABS,Manufactured in:Great Britain | GDS59271 | Drive Shaft | 48T | 26 | 23 | 56 | 99 | 915 | |
| | 1997.10-2000.06 | AT/MT | F | R | Hatchback FWD 4AFE | | GCO59022 | Outer Joint | 48T | 26 | 23 | 56 | 99 | 61 | M |
| | 1997.10-2000.06 | AT/MT | F | L/R | Hatchback FWD 4AFE | Date to:2000.06 | GCO59028 | Outer Joint | 48T | 26 | 22 | 56 | 99 | 61 | M |
| | 1997.10-2000.06 | | F | L | Hatchback FWD 4AFE | | GCI99038 | Inner Joint | | 23 | 23 | 34 | 60 | 113 | |
| | 1997.10-2000.06 | 5MT | F | L | Saloon FWD 4AFE | For vehicles with ABS | GDS99101 | Drive Shaft | 48T | 26 | 23 | 56 | 99 | 619 | |
| | 1997.10-2000.06 | 5MT | F | R | Saloon FWD 4AFE | For vehicles with ABS,Manufactured in:Great Britain | GDS59271 | Drive Shaft | 48T | 26 | 23 | 56 | 99 | 915 | |
| | 1997.10-2000.06 | AT/MT | F | R | Saloon FWD 4AFE | | GCO59022 | Outer Joint | 48T | 26 | 23 | 56 | 99 | 61 | M |
| | 1997.10-2000.06 | AT/MT | F | L/R | Saloon FWD 4AFE | | GCO59028 | Outer Joint | 48T | 26 | 22 | 56 | 99 | 61 | M |
| | 1997.10-2000.06 | | F | L | Saloon FWD 4AFE | | GCI99038 | Inner Joint | | 23 | 23 | 34 | 60 | 113 | |
| | 2000.07-2003.02 | 5MT | F | R | Hatchback FWD 3ZZFE | | GDS83840 | Drive Shaft | 48T | 26 | 23 | 58 | 95.5 | 924 | |
| | 2000.07-2003.02 | AT/MT | F | L/R | Hatchback FWD 3ZZFE | | GCO59028 | Outer Joint | 48T | 26 | 22 | 56 | 99 | 61 | M |
| | 2000.07-2003.02 | MT | F | L | Hatchback FWD 3ZZFE | | GDS59078 | Drive Shaft | 48T | 26 | 20 | 58 | 96 | 638.5 | |
| | 2000.07-2003.02 | | F | L | Hatchback FWD 3ZZFE | | GCI99038 | Inner Joint | | 23 | 23 | 34 | 60 | 113 | |
| | 2000.07-2003.02 | 5MT | F | R | Saloon FWD 3ZZFE | | GDS83840 | Drive Shaft | 48T | 26 | 23 | 58 | 95.5 | 924 | |
| | 2000.07-2003.02 | AT/MT | F | L/R | Saloon FWD 3ZZFE | | GCO59028 | Outer Joint | 48T | 26 | 22 | 56 | 99 | 61 | M |
| | 2000.07-2003.02 | MT | F | L | Saloon FWD 3ZZFE | | GDS59078 | Drive Shaft | 48T | 26 | 20 | 58 | 96 | 638.5 | |
| | 2000.07-2003.02 | | F | L | Saloon FWD 3ZZFE | | GCI99038 | Inner Joint | | 23 | 23 | 34 | 60 | 113 | |
| | 2003.04-2008.11 | 5MT | F | L | Hatchback FWD 3ZZ-FE | | GDS83501 | Drive Shaft | 48T | 26 | 23 | 58 | 95.5 | 653 | |
| | 2003.04-2008.11 | 5MT | F | R | Hatchback FWD 3ZZ-FE | | GDS83840 | Drive Shaft | 48T | 26 | 23 | 58 | 95.5 | 924 | |
| | 2003.04-2008.11 | 5MT | F | L/R | Hatchback FWD 3ZZ-FE | | GCO59037 | Outer Joint | 48T | 26 | 23 | 58 | 95.5 | 61 | M |
| | 2003.04-2008.11 | 5MT | F | R | Hatchback FWD 3ZZ-FE | | GCI82392 | Inner Joint | | 23 | 23 | 34 | 60 | 113 | |
| | 2003.04-2008.11 | 5MT | F | L/R | Hatchback FWD 3ZZ-FE | | GCI99038 | Inner Joint | | 23 | 23 | 34 | 60 | 113 | |
| | 2003.04-2008.11 | 5MT | F | L | Saloon FWD 3ZZ-FE | | GDS83501 | Drive Shaft | 48T | 26 | 23 | 58 | 95.5 | 653 | |
| | 2003.04-2008.11 | 5MT | F | R | Saloon FWD 3ZZ-FE | | GDS83840 | Drive Shaft | 48T | 26 | 23 | 58 | 95.5 | 924 | |
| | 2003.04-2008.11 | 5MT | F | L/R | Saloon FWD 3ZZ-FE | | GCO59037 | Outer Joint | 48T | 26 | 23 | 58 | 95.5 | 61 | M |
| | 2003.04-2008.11 | 5MT | F | R | Saloon FWD 3ZZ-FE | | GCI82392 | Inner Joint | | 23 | 23 | 34 | 60 | 113 | |
| | 2003.04-2008.11 | 5MT | F | L/R | Saloon FWD 3ZZ-FE | | GCI99038 | Inner Joint | | 23 | 23 | 34 | 60 | 113 | |
| 1.6 (97 kw) | 2008.11-2018.10 | 6MT | F | L | Saloon FWD 1ZR-FAE | | GDS59553 | Drive Shaft | | 26 | 20 | 61.2 | 95.5 | 675 | |
| | 2008.11-2018.10 | 6MT | F | R | Saloon FWD 1ZR-FAE | | GDS59552 | Drive Shaft | | 26 | 20 | 61.2 | 95.5 | 958 | |
| | 2008.11-2018.10 | 6MT | F | R | Saloon FWD 1ZR-FAE | | GCI59139 | Inner Joint | | 20 | 23 | 35 | 63.5 | 115 | |
| | 2008.11-2018.10 | MT | F | L/R | Saloon FWD 1ZR-FAE | | GCO59213 | Outer Joint | | 26 | 23 | 61.2 | 95.5 | 54.5 | I |

| | YEAR | TRANSM. | F/R | L/R | BODY STYLE & DRIVE TYPE & ENGINE | REMARKS | G-AP Ref. | PRODUCT | ABS | Technical Specifications | | | | | |
|---|---|---|---|---|---|---|---|---|---|---|---|---|---|---|---|
| | | | | | | | | | | A | B | C | H | L | P |
| **TOYOTA** | | | | | | | | | | | | | | | |
| **Avensis** | | | | | | | | | | | | | | | |
| 1.8 (81 kw) | 1997.10-2000.06 | 4AT/5MT | F | L | Hatchback FWD 7AFE | | GDS99101 | Drive Shaft | 48T | 26 | 23 | 56 | 99 | 619 | |
| | 1997.10-2000.06 | 4AT/5MT | F | R | Hatchback FWD 7AFE | Manufactured in:Great Britain | GDS59271 | Drive Shaft | 48T | 26 | 23 | 56 | 99 | 915 | |
| | 1997.10-2000.06 | AT/MT | F | R | Hatchback FWD 7AFE | | GCO59022 | Outer Joint | 48T | 26 | 23 | 56 | 99 | 61 | M |
| | 1997.10-2000.06 | AT/MT | F | L/R | Hatchback FWD 7AFE | Date from:1999.01;Date to:2000.06 | GCO59028 | Outer Joint | 48T | 26 | 22 | 56 | 99 | 61 | M |
| | 1997.10-2000.06 | | F | L | Hatchback FWD 7AFE | | GCI99038 | Inner Joint | | 23 | 23 | 34 | 60 | 113 | |
| | 1997.10-2000.06 | 4AT/5MT | F | L | Saloon FWD 7AFE | | GDS99101 | Drive Shaft | 48T | 26 | 23 | 56 | 99 | 619 | |
| | 1997.10-2000.06 | 4AT/5MT | F | R | Saloon FWD 7AFE | Manufactured in:Great Britain | GDS59271 | Drive Shaft | 48T | 26 | 23 | 56 | 99 | 915 | |
| | 1997.10-2000.06 | AT/MT | F | L/R | Saloon FWD 7AFE | | GCO59022 | Outer Joint | 48T | 26 | 23 | 56 | 99 | 61 | M |
| | 1997.10-2000.06 | AT/MT | F | L/R | Saloon FWD 7AFE | Date from:1999.01;Date to:2000.06 | GCO59028 | Outer Joint | 48T | 26 | 22 | 56 | 99 | 61 | M |
| | 1997.10-2000.06 | | F | L | Saloon FWD 7AFE | | GCI99038 | Inner Joint | | 23 | 23 | 34 | 60 | 113 | |
| 1.8 (95 kw) | 2000.07-2003.02 | MT | F | R | Hatchback FWD 1ZZFE | | GDS59172 | Drive Shaft | 48T | 26 | 20 | 56 | 99 | 919 | |
| | 2000.07-2003.02 | MT | F | L/R | Hatchback FWD 1ZZFE | | GCO59022 | Outer Joint | 48T | 26 | 23 | 56 | 99 | 61 | M |
| | 2000.07-2003.02 | MT | F | L | Hatchback FWD 1ZZFE | | GCI59033 | Inner Joint | | 20 | 24 | 35 | 63.5 | 115.7 | |
| | 2000.07-2003.02 | MT | F | R | Hatchback FWD 1ZZFE | | GCI59117 | Inner Joint | | 20 | 24 | 35 | 350.5 | 102.5 | |
| | 2000.07-2003.02 | MT | F | L | Saloon FWD 1ZZFE | | GDS59078 | Drive Shaft | 48T | 26 | 20 | 58 | 96 | 638.5 | |
| | 2000.07-2003.02 | MT | F | R | Saloon FWD 1ZZFE | | GDS59172 | Drive Shaft | 48T | 26 | 20 | 56 | 99 | 919 | |
| | 2000.07-2003.02 | MT | F | R | Saloon FWD 1ZZFE | | GCO59022 | Outer Joint | 48T | 26 | 23 | 56 | 99 | 61 | M |
| | 2000.07-2003.02 | MT | F | L | Saloon FWD 1ZZFE | | GCI59033 | Inner Joint | | 20 | 24 | 35 | 63.5 | 115.7 | |
| | 2000.07-2003.02 | MT | F | R | Saloon FWD 1ZZFE | | GCI59117 | Inner Joint | | 20 | 24 | 35 | 350.5 | 102.5 | |
| | 2003.03-2008.10 | 4AT/5MT | F | L | Hatchback FWD 1ZZ-FE | | GDS59272 | Drive Shaft | 48T | 26 | 20 | 58 | 95.5 | 651.5 | |
| | 2003.03-2008.10 | 4AT/5MT | F | R | Hatchback FWD 1ZZ-FE | | GDS59273 | Drive Shaft | 48T | 26 | 20 | 58 | 95.5 | 925.5 | |
| | 2003.03-2008.10 | 4AT/5MT | F | L/R | Hatchback FWD 1ZZ-FE | | GCO59037 | Outer Joint | 48T | 26 | 23 | 58 | 95.5 | 61 | M |
| | 2003.03-2008.10 | 4AT/5MT | F | L/R | Hatchback FWD 1ZZ-FE | | GCI59077 | Inner Joint | | 20 | 23 | 35 | 63.5 | 115.7 | |
| | 2003.04-2008.11 | AT/MT | F | L | Saloon FWD 1ZZ-FE | | GDS59272 | Drive Shaft | 48T | 26 | 20 | 58 | 95.5 | 651.5 | |
| | 2003.04-2008.11 | AT/MT | F | R | Saloon FWD 1ZZ-FE | | GDS59273 | Drive Shaft | 48T | 26 | 20 | 58 | 95.5 | 925.5 | |
| | 2003.04-2008.11 | AT/MT | F | L/R | Saloon FWD 1ZZ-FE | | GCO59037 | Outer Joint | 48T | 26 | 23 | 58 | 95.5 | 61 | M |
| | 2003.04-2008.11 | AT/MT | F | L/R | Saloon FWD 1ZZ-FE | | GCI59077 | Inner Joint | | 20 | 23 | 35 | 63.5 | 115.7 | |
| 1.8 (108 kw) | 2008.11-2018.10 | AT/MT | F | L/R | Saloon FWD 2ZR-FAE | | GCO59213 | Outer Joint | | 26 | 23 | 61.2 | 95.5 | 54.5 | I |
| | 2008.11-2018.10 | CVT/6MT | F | L | Saloon FWD 2ZR-FAE | | GDS59553 | Drive Shaft | | 26 | 20 | 61.2 | 95.5 | 675 | |
| | 2008.11-2018.10 | CVT/6MT | F | R | Saloon FWD 2ZR-FAE | | GDS59552 | Drive Shaft | | 26 | 20 | 61.2 | 95.5 | 958 | |
| | 2008.11-2018.10 | CVT/6MT | F | R | Saloon FWD 2ZR-FAE | | GCI59139 | Inner Joint | | 20 | 23 | 35 | 63.5 | 115 | |
| 2.0 (61 kw) | 1997.10-1998.05 | 5MT | F | L | Hatchback FWD 2CT | | GCI59040 | Inner Joint | | 20 | 32 | 35 | 63 | 118 | |
| | 1997.10-1998.05 | 5MT | F | L | Saloon FWD 2CT | | GCI59040 | Inner Joint | | 20 | 32 | 35 | 63 | 118 | |
| 2.0 (66 kw) | 1997.10-2000.06 | AT/MT | F | L/R | Hatchback FWD 2CTE | Date to:2000.06 | GCO59028 | Outer Joint | 48T | 26 | 22 | 56 | 99 | 61 | M |
| | 1997.10-2000.06 | MT | F | L/R | Hatchback FWD 2CTE | | GCO59269 | Outer Joint | | 26 | 23 | 56 | 99 | 59 | M |
| | 1997.10-2000.06 | MT | F | L | Hatchback FWD 2CTE | Date from:1997.10,Date to:1997.10 | GCI59040 | Inner Joint | | 20 | 32 | 35 | 63 | 118 | |
| | 1997.10-2000.06 | | F | R | Hatchback FWD 2CTE | | GDS59584 | Drive Shaft | 48T | 26 | 20 | 56 | 99 | 916 | |
| | 1997.10-2000.06 | AT/MT | F | L/R | Saloon FWD 2CTE | Date to:2000.06 | GCO59028 | Outer Joint | 48T | 26 | 22 | 56 | 99 | 61 | M |
| | 1997.10-2000.06 | MT | F | L | Saloon FWD 2CTE | | GDS59078 | Drive Shaft | 48T | 26 | 20 | 58 | 96 | 638.5 | |
| | 1997.10-2000.06 | MT | F | L/R | Saloon FWD 2CTE | | GCO59269 | Outer Joint | | 26 | 23 | 56 | 99 | 59 | M |
| | 1997.10-2000.06 | MT | F | L | Saloon FWD 2CTE | Date from:1997.10,Date to:1997.10 | GCI59040 | Inner Joint | | 20 | 32 | 35 | 63 | 118 | |
| | 1997.10-2000.06 | | F | R | Saloon FWD 2CTE | | GDS59584 | Drive Shaft | 48T | 26 | 20 | 56 | 99 | 916 | |
| 2.0 (81 kw) | 1999.08-2002.08 | MT | F | L/R | Hatchback FWD 1CDFTV | | GCO59024 | Outer Joint | 48T | 26 | 24 | 56 | 99 | 61 | M |
| | 1999.08-2002.08 | MT | F | L/R | Hatchback FWD 1CDFTV | | GCO59086 | Outer Joint | | 26 | 24 | 56 | 99 | 61 | M |
| | 1999.08-2002.08 | MT | F | L | Hatchback FWD 1CDFTV | Date from:2000.07,Date to:2000.07 | GCI59041 | Inner Joint | | 24 | 32 | 50 | 67 | 104 | |
| | 1999.08-2002.08 | | F | L | Hatchback FWD 1CDFTV | Date To:2000.07 | GCI59111 | Inner Joint | | 24 | 32 | 50 | 99 | 106 | |
| | 1999.08-2002.08 | | F | R | Hatchback FWD 1CDFTV | | GCI59184 | Inner Joint | | 24 | 32 | 40 | 369.5 | 107 | |
| | 1999.10-2002.08 | MT | F | L/R | Saloon FWD 1CDFTV | | GCO59024 | Outer Joint | 48T | 26 | 24 | 56 | 99 | 61 | M |
| | 1999.10-2002.08 | MT | F | L/R | Saloon FWD 1CDFTV | | GCO59086 | Outer Joint | | 26 | 24 | 56 | 99 | 61 | M |
| | 1999.10-2002.08 | MT | F | L | Saloon FWD 1CDFTV | Date from:2000.07,Date to:2000.07 | GCI59041 | Inner Joint | | 24 | 32 | 50 | 67 | 104 | |
| | 1999.10-2002.08 | | F | L | Saloon FWD 1CDFTV | Date To:2000.07 | GCI59111 | Inner Joint | | 24 | 32 | 50 | 99 | 106 | |
| | 1999.10-2002.08 | | F | R | Saloon FWD 1CDFTV | | GCI59184 | Inner Joint | | 24 | 32 | 40 | 369.5 | 107 | |
| 2.0 (85 kw) | 2002.09-2003.02 | MT | F | L/R | Hatchback FWD 1CDFTV | | GCO59024 | Outer Joint | 48T | 26 | 24 | 56 | 99 | 61 | M |
| | 2002.09-2003.02 | MT | F | L | Hatchback FWD 1CDFTV | | GCI59041 | Inner Joint | | 24 | 32 | 50 | 67 | 104 | |
| | 2002.09-2003.02 | | F | R | Hatchback FWD 1CDFTV | | GCI59184 | Inner Joint | | 24 | 32 | 40 | 369.5 | 107 | |
| | 2002.09-2003.02 | 5MT | F | R | Saloon FWD 1CDFTV | | GCI59184 | Inner Joint | | 24 | 32 | 40 | 369.5 | 107 | |
| | 2002.09-2003.02 | | F | L/R | Saloon FWD 1CDFTV | Date From:2000.08 | GCO59024 | Outer Joint | 48T | 26 | 24 | 56 | 99 | 61 | M |
| | 2003.04-2008.11 | 5MT | F | L | Hatchback FWD 1CD-FTV | | GDS99107 | Drive Shaft | 48T | 26 | 24 | 58 | 95.5 | 615 | |
| | 2003.04-2008.11 | 5MT | F | R | Hatchback FWD 1CD-FTV | | GDS99106 | Drive Shaft | 48T | 26 | 24 | 58 | 95.5 | 957.5 | |
| | 2003.04-2008.11 | 5MT | F | R | Hatchback FWD 1CD-FTV | Date to:2005.06 | GCO59226 | Outer Joint | 48T | 26 | 25 | 58 | 93 | 63.5 | M |
| | 2003.04-2008.11 | 5MT | F | L/R | Hatchback FWD 1CD-FTV | Date from:2005.10 | GCO59037 | Outer Joint | 48T | 26 | 23 | 58 | 95.5 | 61 | M |
| | 2003.04-2008.11 | 5MT | F | L/R | Hatchback FWD 1CD-FTV | | GCO59182 | Outer Joint | 48T | 26 | 25 | 58 | 95.5 | 61.5 | M |
| | 2003.04-2008.11 | 5MT | F | L | Hatchback FWD 1CD-FTV | | GCI59042 | Inner Joint | | 24 | 26 | 50 | 67 | 109 | |
| | 2003.04-2008.11 | 5MT | F | L | Hatchback FWD 1CD-FTV | | GCI83530 | Inner Joint | | 24 | 26 | 50 | 67 | 109 | |
| | 2003.04-2008.11 | 5MT | F | R | Hatchback FWD 1CD-FTV | TJ | GCI59045 | Inner Joint | | 24 | 26 | 40 | 369 | 99.5 | |

| | YEAR | TRANSM. | F/R | L/R | BODY STYLE & DRIVE TYPE & ENGINE | REMARKS | G-AP Ref. | PRODUCT | ABS | Technical Specifications A | B | C | H | L | P |
|---|---|---|---|---|---|---|---|---|---|---|---|---|---|---|---|
| **TOYOTA** **Avensis** | | | | | | | | | | | | | | | |
| 2.0 (85 kw) | 2003.04-2008.11 | 5MT | F | R | Hatchback FWD 1CD-FTV | | GCI83266 | Inner Joint | | 24 | 26 | 40 | 369 | 96.5 | |
| | 2003.04-2008.11 | 6MT | F | L | Saloon FWD 1CD-FTV | | GDS99107 | Drive Shaft | 48T | 26 | 24 | 58 | 95.5 | 615 | |
| | 2003.04-2008.11 | 6MT | F | R | Saloon FWD 1CD-FTV | | GDS99106 | Drive Shaft | 48T | 26 | 24 | 58 | 95.5 | 957.5 | |
| | 2003.04-2008.11 | 6MT | F | R | Saloon FWD 1CD-FTV | Date to:2005.06 | GCO59226 | Outer Joint | 48T | 26 | 25 | 58 | 93 | 63.5 | M |
| | 2003.04-2008.11 | 6MT | F | L/R | Saloon FWD 1CD-FTV | Date from:2005.10 | GCO59037 | Outer Joint | 48T | 26 | 23 | 58 | 95.5 | 61 | M |
| | 2003.04-2008.11 | 6MT | F | L/R | Saloon FWD 1CD-FTV | | GCO59182 | Outer Joint | 48T | 26 | 25 | 58 | 95.5 | 61.5 | M |
| | 2003.04-2008.11 | 6MT | F | L | Saloon FWD 1CD-FTV | | GCI59042 | Inner Joint | | 24 | 26 | 50 | 67 | 109 | |
| | 2003.04-2008.11 | 6MT | F | L | Saloon FWD 1CD-FTV | | GCI83530 | Inner Joint | | 24 | 26 | 50 | 67 | 109 | |
| | 2003.04-2008.11 | 6MT | F | R | Saloon FWD 1CD-FTV | TJ | GCI59045 | Inner Joint | | 24 | 26 | 40 | 369 | 99.5 | |
| | 2003.04-2008.11 | 6MT | F | R | Saloon FWD 1CD-FTV | | GCI83266 | Inner Joint | | 24 | 26 | 40 | 369 | 96.5 | |
| 2.0 (91 kw) | 2011.11-2018.10 | 6MT | F | L | Saloon FWD 1AD-FTV | | GDS59520 | Drive Shaft | | 30 | 24 | 61.2 | 99.5 | 620 | |
| | 2011.11-2018.10 | 6MT | F | R | Saloon FWD 1AD-FTV | | GDS59589 | Drive Shaft | | 30 | 24 | 61.2 | 99.5 | 1004 | |
| | 2011.11-2018.10 | 6MT | F | L/R | Saloon FWD 1AD-FTV | | GCO59345 | Outer Joint | | 30 | 25 | 61.2 | 99.5 | 62 | M |
| | 2011.11-2018.10 | 6MT | F | L | Saloon FWD 1AD-FTV | | GCI59042 | Inner Joint | | 24 | 26 | 50 | 67 | 109 | |
| | 2011.11-2018.10 | 6MT | F | R | Saloon FWD 1AD-FTV | | GCI59182 | Inner Joint | | 24 | 26 | 40 | 383 | 97 | |
| 2.0 (93 kw) | 2006.03-2008.10 | 5MT | F | L | Saloon FWD 1AD-FTV | | GCI59042 | Inner Joint | | 24 | 26 | 50 | 67 | 109 | |
| | 2006.03-2008.10 | 5MT | F | L | Saloon FWD 1AD-FTV | | GCI83530 | Inner Joint | | 24 | 26 | 50 | 67 | 109 | |
| | 2006.03-2008.10 | 6MT | F | L | Saloon FWD 1AD-FTV | | GDS59207 | Drive Shaft | 48T | 26 | 24 | 58 | 95.5 | 601 | |
| | 2006.03-2008.10 | 6MT | F | R | Saloon FWD 1AD-FTV | | GDS59519 | Drive Shaft | 48T | 26 | 24 | 58 | 95.5 | 972 | |
| | 2006.03-2008.10 | MT | F | | Saloon FWD 1AD-FTV | Date From:2006.05 | GCO59182 | Outer Joint | 48T | 26 | 25 | 58 | 95.5 | 61.5 | M |
| | 2006.03-2008.10 | | F | L/R | Saloon FWD 1AD-FTV | | GCO59226 | Outer Joint | 48T | 26 | 25 | 58 | 93 | 63.5 | M |
| | 2006.03-2008.11 | 6MT | F | L | Hatchback FWD 1AD-FTV | | GDS59207 | Drive Shaft | 48T | 26 | 24 | 58 | 95.5 | 601 | |
| | 2006.03-2008.11 | 6MT | F | R | Hatchback FWD 1AD-FTV | | GDS59519 | Drive Shaft | 48T | 26 | 24 | 58 | 95.5 | 972 | |
| | 2006.03-2008.11 | 6MT | F | L/R | Hatchback FWD 1AD-FTV | | GCO59182 | Outer Joint | 48T | 26 | 25 | 58 | 95.5 | 61.5 | M |
| | 2006.03-2008.11 | 6MT | F | L/R | Hatchback FWD 1AD-FTV | | GCO59226 | Outer Joint | 48T | 26 | 25 | 58 | 93 | 63.5 | M |
| | 2006.03-2008.11 | 6MT | F | L | Hatchback FWD 1AD-FTV | | GCI59042 | Inner Joint | | 24 | 26 | 50 | 67 | 109 | |
| | 2006.03-2008.11 | 6MT | F | L | Hatchback FWD 1AD-FTV | | GCI83530 | Inner Joint | | 24 | 26 | 50 | 67 | 109 | |
| | 2008.11-2011.10 | 6MT | F | L | Saloon FWD 1AD-FTV | | GDS59520 | Drive Shaft | | 30 | 24 | 61.2 | 99.5 | 620 | |
| | 2008.11-2011.10 | 6MT | F | R | Saloon FWD 1AD-FTV | | GDS59589 | Drive Shaft | | 30 | 24 | 61.2 | 99.5 | 1004 | |
| | 2008.11-2011.10 | 6MT | F | L/R | Saloon FWD 1AD-FTV | | GCO59345 | Outer Joint | | 30 | 25 | 61.2 | 99.5 | 62 | M |
| | 2008.11-2011.10 | 6MT | F | L | Saloon FWD 1AD-FTV | | GCI59042 | Inner Joint | | 24 | 26 | 50 | 67 | 109 | |
| | 2008.11-2011.10 | 6MT | F | R | Saloon FWD 1AD-FTV | | GCI59182 | Inner Joint | | 24 | 26 | 40 | 383 | 97 | |
| 2.0 (94 kw) | 1997.10-2000.06 | 4AT/5MT | F | R | Hatchback FWD 3SFE | | GCI59105 | Inner Joint | | 20 | 23 | 35 | 363.5 | 100.5 | |
| | 1997.10-2000.06 | AT/MT | F | L/R | Hatchback FWD 3SFE | | GCO59022 | Outer Joint | 48T | 26 | 23 | 56 | 99 | 61 | M |
| | 1997.10-2000.06 | MT | F | L | Hatchback FWD 3SFE | | GDS99101 | Drive Shaft | 48T | 26 | 23 | 56 | 99 | 619 | |
| | 1997.10-2000.06 | | F | L | Hatchback FWD 3SFE | Date From:1997.10 | GCI59046 | Inner Joint | | 20 | 23 | 35 | 63.5 | 115.5 | |
| | 1997.10-2000.06 | 4AT/5MT | F | R | Saloon FWD 3SFE | | GCI59105 | Inner Joint | | 20 | 23 | 35 | 363.5 | 100.5 | |
| | 1997.10-2000.06 | AT/MT | F | L/R | Saloon FWD 3SFE | | GCO59022 | Outer Joint | 48T | 26 | 23 | 56 | 99 | 61 | M |
| | 1997.10-2000.06 | MT | F | L | Saloon FWD 3SFE | | GDS99101 | Drive Shaft | 48T | 26 | 23 | 56 | 99 | 619 | |
| | 1997.10-2000.06 | | F | L | Saloon FWD 3SFE | Date From:1997.10 | GCI59046 | Inner Joint | | 20 | 23 | 35 | 63.5 | 115.5 | |
| 2.0 (108 kw) | 2003.03-2008.11 | 4AT | F | L | Hatchback FWD 1AZ-FSE | | GDS99107 | Drive Shaft | 48T | 26 | 24 | 58 | 95.5 | 615 | |
| | 2003.03-2008.11 | 4AT/5MT | F | R | Hatchback FWD 1AZ-FSE | | GDS56361 | Drive Shaft | 48T | 26 | 24 | 58 | 95.5 | 941 | |
| | 2003.03-2008.11 | 4AT/5MT | F | L | Hatchback FWD 1AZ-FSE | | GCO59226 | Outer Joint | 48T | 26 | 25 | 58 | 93 | 63.5 | M |
| | 2003.03-2008.11 | 4AT/5MT | F | R | Hatchback FWD 1AZ-FSE | without Rim protector | GCO59182 | Outer Joint | 48T | 26 | 25 | 58 | 95.5 | 61.5 | M |
| | 2003.03-2008.11 | 4AT/5MT | F | L | Hatchback FWD 1AZ-FSE | | GCI59042 | Inner Joint | | 24 | 26 | 50 | 67 | 109 | |
| | 2003.03-2008.11 | 4AT/5MT | F | L | Hatchback FWD 1AZ-FSE | | GCI83530 | Inner Joint | | 24 | 26 | 50 | 67 | 109 | |
| | 2003.03-2008.11 | 4AT/5MT | F | R | Hatchback FWD 1AZ-FSE | TJ | GCI59045 | Inner Joint | | 24 | 26 | 40 | 369 | 99.5 | |
| | 2003.03-2008.11 | 4AT/5MT | F | R | Hatchback FWD 1AZ-FSE | | GCI83266 | Inner Joint | | 24 | 26 | 40 | 369 | 96.5 | |
| | 2003.03-2008.11 | 5MT | F | L | Hatchback FWD 1AZ-FSE | | GDS56861 | Drive Shaft | 48T | 26 | 24 | 58 | 95.5 | 625 | |
| | 2003.04-2008.11 | 4AT | F | L | Saloon FWD 1AZ-FSE | | GDS99107 | Drive Shaft | 48T | 26 | 24 | 58 | 95.5 | 615 | |
| | 2003.04-2008.11 | 4AT/5MT | F | R | Saloon FWD 1AZ-FSE | | GDS56361 | Drive Shaft | 48T | 26 | 24 | 58 | 95.5 | 941 | |
| | 2003.04-2008.11 | 4AT/5MT | F | L | Saloon FWD 1AZ-FSE | | GCO59226 | Outer Joint | 48T | 26 | 25 | 58 | 93 | 63.5 | M |
| | 2003.04-2008.11 | 4AT/5MT | F | R | Saloon FWD 1AZ-FSE | | GCO59182 | Outer Joint | 48T | 26 | 25 | 58 | 95.5 | 61.5 | M |
| | 2003.04-2008.11 | 4AT/5MT | F | L | Saloon FWD 1AZ-FSE | | GCI59042 | Inner Joint | | 24 | 26 | 50 | 67 | 109 | |
| | 2003.04-2008.11 | 4AT/5MT | F | L | Saloon FWD 1AZ-FSE | | GCI83530 | Inner Joint | | 24 | 26 | 50 | 67 | 109 | |
| | 2003.04-2008.11 | 4AT/5MT | F | R | Saloon FWD 1AZ-FSE | TJ | GCI59045 | Inner Joint | | 24 | 26 | 40 | 369 | 99.5 | |
| | 2003.04-2008.11 | 4AT/5MT | F | R | Saloon FWD 1AZ-FSE | | GCI83266 | Inner Joint | | 24 | 26 | 40 | 369 | 96.5 | |
| | 2003.04-2008.11 | 5MT | F | L | Saloon FWD 1AZ-FSE | | GDS56861 | Drive Shaft | 48T | 26 | 24 | 58 | 95.5 | 625 | |
| 2.0 (110 kw) | 2000.07-2003.02 | 4AT/5MT | F | L | Hatchback FWD 1AZFSE | | GCI59040 | Inner Joint | | 20 | 32 | 35 | 63 | 118 | |
| | 2000.07-2003.02 | MT | F | L | Hatchback FWD 1AZFSE | | GDS59078 | Drive Shaft | 48T | 26 | 20 | 58 | 96 | 638.5 | |
| | 2000.07-2003.02 | MT | F | R | Hatchback FWD 1AZFSE | | GDS59172 | Drive Shaft | 48T | 26 | 20 | 56 | 99 | 919 | |
| | 2000.07-2003.02 | 4AT/5MT | F | L | Saloon FWD 1AZFSE | | GCI59040 | Inner Joint | | 20 | 32 | 35 | 63 | 118 | |
| | 2000.07-2003.02 | MT | F | L | Saloon FWD 1AZFSE | | GDS59078 | Drive Shaft | 48T | 26 | 20 | 58 | 96 | 638.5 | |
| | 2000.07-2003.02 | MT | F | R | Saloon FWD 1AZFSE | | GDS59172 | Drive Shaft | 48T | 26 | 20 | 56 | 99 | 919 | |
| 2.0 (112 kw) | 2008.11-2018.10 | AT/MT | F | L/R | Saloon FWD 3ZR-FAE;3ZR-FE | | GCO59213 | Outer Joint | | 26 | 23 | 61.2 | 95.5 | 54.5 | I |

| | YEAR | TRANSM. | F/R | L/R | BODY STYLE & DRIVE TYPE & ENGINE | REMARKS | G-AP Ref. | PRODUCT | ABS | Technical Specifications A | B | C | H | L | P |
|---|---|---|---|---|---|---|---|---|---|---|---|---|---|---|---|
| **TOYOTA** | | | | | | | | | | | | | | | |
| **Avensis** | | | | | | | | | | | | | | | |
| 2.0 (112 kw) | 2008.11-2018.10 | | F | L | Saloon FWD 3ZR-FAE;3ZR-FE | | GDS59659 | Drive Shaft | | 26 | 24 | 61.2 | 95.5 | 661 | |
| | 2008.11-2018.10 | | F | R | Saloon FWD 3ZR-FAE;3ZR-FE | | GDS59658 | Drive Shaft | | 26 | 24 | 61.2 | 95.5 | 958 | |
| 2.0 (114 kw) | 2003.01-2008.11 | 4AT | F | L | Saloon FWD 1AZ-FE | | GDS99107 | Drive Shaft | 48T | 26 | 24 | 58 | 95.5 | 615 | |
| | 2003.01-2008.11 | 4AT/5MT | F | R | Saloon FWD 1AZ-FE | | GDS56361 | Drive Shaft | 48T | 26 | 24 | 58 | 95.5 | 941 | |
| | 2003.01-2008.11 | 4AT/5MT | F | R | Saloon FWD 1AZ-FE | | GCO59182 | Outer Joint | 48T | 26 | 25 | 58 | 95.5 | 61.5 | M |
| | 2003.01-2008.11 | 4AT/5MT | F | L | Saloon FWD 1AZ-FE | | GCI59042 | Inner Joint | | 24 | 26 | 50 | 67 | 109 | |
| | 2003.01-2008.11 | 4AT/5MT | F | L | Saloon FWD 1AZ-FE | | GCI83530 | Inner Joint | | 24 | 26 | 50 | 67 | 109 | |
| | 2003.01-2008.11 | 4AT/5MT | F | R | Saloon FWD 1AZ-FE | TJ | GCI59045 | Inner Joint | | 24 | 26 | 40 | 369 | 99.5 | |
| | 2003.01-2008.11 | 4AT/5MT | F | R | Saloon FWD 1AZ-FE | | GCI83266 | Inner Joint | | 24 | 26 | 40 | 369 | 96.5 | |
| | 2003.01-2008.11 | 5MT | F | L | Saloon FWD 1AZ-FE | | GDS56861 | Drive Shaft | 48T | 26 | 24 | 58 | 95.5 | 625 | |
| 2.2 (110 kw) | 2005.10-2008.11 | 6MT | F | L | Hatchback FWD 2AD-FTV | | GDS59445 | Drive Shaft | 48T | 30 | 24 | 63 | 99 | 600 | |
| | 2005.10-2008.11 | 6MT | F | R | Hatchback FWD 2AD-FTV | | GDS59446 | Drive Shaft | 48T | 30 | 24 | 63 | 99 | 976 | |
| | 2005.10-2008.11 | 6MT | F | L/R | Hatchback FWD 2AD-FTV | | GCO82454 | Outer Joint | 48T | 30 | 36 | 70 | 100 | 66.5 | I |
| | 2005.10-2008.11 | 6MT | F | L | Hatchback FWD 2AD-FTV | | GCI81145 | Inner Joint | | 24 | 33 | 50 | 67 | 109 | |
| | 2005.10-2008.11 | 6MT | F | R | Hatchback FWD 2AD-FTV | | GCI59237 | Inner Joint | | 24 | 33 | 40 | 383 | 97 | |
| | 2005.10-2008.11 | 6MT | F | L | Saloon FWD 2AD-FTV | | GDS59445 | Drive Shaft | 48T | 30 | 24 | 63 | 99 | 600 | |
| | 2005.10-2008.11 | MT | F | R | Saloon FWD 2AD-FTV | | GDS59446 | Drive Shaft | 48T | 30 | 24 | 63 | 99 | 976 | |
| | 2005.10-2008.11 | MT | F | | Saloon FWD 2AD-FTV | | GCO59233 | Outer Joint | 48T | 30 | 36 | 63 | 99 | 67 | I |
| | 2005.10-2008.11 | | F | | Saloon FWD 2AD-FTV | | GCO59254 | Outer Joint | 48T | 30 | 27 | 63 | 100.5 | 64.5 | I |
| | 2005.10-2008.11 | | F | L | Saloon FWD 2AD-FTV | | GCI81145 | Inner Joint | | 24 | 33 | 50 | 67 | 109 | |
| | 2005.10-2008.11 | | F | R | Saloon FWD 2AD-FTV | | GCI59237 | Inner Joint | | 24 | 33 | 40 | 383 | 97 | |
| | 2008.11-2018.10 | 6AT/6MT | F | R | Saloon FWD 2AD-FHV;2AD-FTV | | GDS59660 | Drive Shaft | | 30 | 24 | 61.2 | 100 | 1002 | |
| | 2008.11-2018.10 | 6AT/6MT | F | L | Saloon FWD 2AD-FHV;2AD-FTV | | GCO59365 | Outer Joint | | 30 | 26 | 61.2 | 99.5 | 62 | I |
| | 2008.11-2018.10 | 6AT/6MT | F | R | Saloon FWD 2AD-FHV;2AD-FTV | | GCI81308 | Inner Joint | | 24 | 26 | 40 | 382 | 100.5 | |
| | 2008.11-2018.10 | MT | F | L | Saloon FWD 2AD-FHV;2AD-FTV | | GDS59661 | Drive Shaft | | 30 | 24 | 61.2 | 100 | 628 | |
| | 2008.11-2018.10 | MT | F | L | Saloon FWD 2AD-FHV;2AD-FTV | | GCI81234 | Inner Joint | | 24 | 26 | 50 | 67 | 106.5 | |
| 2.2 (130 kw) | 2005.07-2008.11 | 6MT | F | L | Hatchback FWD 2AD-FHV | | GDS59445 | Drive Shaft | 48T | 30 | 24 | 63 | 99 | 600 | |
| | 2005.07-2008.11 | MT | F | R | Hatchback FWD 2AD-FHV | | GDS59446 | Drive Shaft | 48T | 30 | 24 | 63 | 99 | 976 | |
| | 2005.07-2008.11 | MT | F | | Hatchback FWD 2AD-FHV | | GCO59233 | Outer Joint | 48T | 30 | 36 | 63 | 99 | 67 | I |
| | 2005.07-2008.11 | | F | | Hatchback FWD 2AD-FHV | | GCO59254 | Outer Joint | 48T | 30 | 27 | 63 | 100.5 | 64.5 | I |
| | 2005.07-2008.11 | | F | L | Hatchback FWD 2AD-FHV | | GCI81145 | Inner Joint | | 24 | 33 | 50 | 67 | 109 | |
| | 2005.07-2008.11 | | F | R | Hatchback FWD 2AD-FHV | | GCI59237 | Inner Joint | | 24 | 33 | 40 | 383 | 97 | |
| | 2005.07-2008.11 | 6MT | F | L | Saloon FWD 2AD-FHV | | GDS59445 | Drive Shaft | 48T | 30 | 24 | 63 | 99 | 600 | |
| | 2005.07-2008.11 | MT | F | R | Saloon FWD 2AD-FHV | | GDS59446 | Drive Shaft | 48T | 30 | 24 | 63 | 99 | 976 | |
| | 2005.07-2008.11 | MT | F | | Saloon FWD 2AD-FHV | | GCO59233 | Outer Joint | 48T | 30 | 36 | 63 | 99 | 67 | I |
| | 2005.07-2008.11 | | F | | Saloon FWD 2AD-FHV | | GCO59254 | Outer Joint | 48T | 30 | 27 | 63 | 100.5 | 64.5 | I |
| | 2005.07-2008.11 | | F | L | Saloon FWD 2AD-FHV | | GCI81145 | Inner Joint | | 24 | 33 | 50 | 67 | 109 | |
| | 2005.07-2008.11 | | F | R | Saloon FWD 2AD-FHV | | GCI59237 | Inner Joint | | 24 | 33 | 40 | 383 | 97 | |
| | 2008.11-2018.10 | 6AT/6MT | F | R | Saloon FWD 2AD-FHV | | GDS59660 | Drive Shaft | | 30 | 24 | 61.2 | 100 | 1002 | |
| | 2008.11-2018.10 | 6AT/6MT | F | R | Saloon FWD 2AD-FHV | | GCI81308 | Inner Joint | | 24 | 26 | 40 | 382 | 100.5 | |
| | 2008.11-2018.10 | 6MT | F | L | Saloon FWD 2AD-FHV | | GCO59365 | Outer Joint | | 30 | 26 | 61.2 | 99.5 | 62 | I |
| | 2008.11-2018.10 | MT | F | L | Saloon FWD 2AD-FHV | | GDS59661 | Drive Shaft | | 30 | 24 | 61.2 | 100 | 628 | |
| | 2008.11-2018.10 | MT | F | L | Saloon FWD 2AD-FHV | | GCI81234 | Inner Joint | | 24 | 26 | 50 | 67 | 106.5 | |
| 2.4 (120 kw) | 2003.10-2008.10 | 5AT | F | R | Hatchback FWD 2AZ-FSE | Date From:2005.10 | GCO59182 | Outer Joint | 48T | 26 | 25 | 58 | 95.5 | 61.5 | M |
| | 2003.10-2008.10 | 5AT | F | L | Hatchback FWD 2AZ-FSE | | GCI82420 | Inner Joint | | 24 | 26 | 50 | 83.5 | 102.5 | |
| | 2003.10-2008.10 | | F | R | Hatchback FWD 2AZ-FSE | | GCO99302 | Outer Joint | 48T | 26 | 25 | 58 | 95.5 | 62 | M |
| | 2003.10-2008.10 | 5AT | F | R | Saloon FWD 2AZ-FSE | Date From:2005.10 | GCO59182 | Outer Joint | 48T | 26 | 25 | 58 | 95.5 | 61.5 | M |
| | 2003.10-2008.10 | 5AT | F | L | Saloon FWD 2AZ-FSE | | GCI82420 | Inner Joint | | 24 | 26 | 50 | 83.5 | 102.5 | |
| | 2003.10-2008.10 | | F | R | Saloon FWD 2AZ-FSE | | GCO99302 | Outer Joint | 48T | 26 | 25 | 58 | 95.5 | 62 | M |
| 2.4 (125 kw) | 2003.09-2008.11 | 5AT | F | R | Hatchback FWD 2AZ-FSE | Date From:2005.10 | GCO59182 | Outer Joint | 48T | 26 | 25 | 58 | 95.5 | 61.5 | M |
| | 2003.09-2008.11 | 5AT | F | L | Hatchback FWD 2AZ-FSE | | GCI82420 | Inner Joint | | 24 | 26 | 50 | 83.5 | 102.5 | |
| | 2003.09-2008.11 | | F | R | Hatchback FWD 2AZ-FSE | | GCO99302 | Outer Joint | 48T | 26 | 25 | 58 | 95.5 | 62 | M |
| | 2003.09-2008.11 | 5AT | F | R | Saloon FWD 2AZ-FSE | Date From:2005.10 | GCO59182 | Outer Joint | 48T | 26 | 25 | 58 | 95.5 | 61.5 | M |
| | 2003.09-2008.11 | 5AT | F | L | Saloon FWD 2AZ-FSE | | GCI82420 | Inner Joint | | 24 | 26 | 50 | 83.5 | 102.5 | |
| | 2003.09-2008.11 | | F | R | Saloon FWD 2AZ-FSE | | GCO99302 | Outer Joint | 48T | 26 | 25 | 58 | 95.5 | 62 | M |
| **Avensis Estate/Wagon** | | | | | | | | | | | | | | | |
| 1.6 (74 kw) | 1997.10-2000.07 | 5MT | F | L | Estate FWD 4AFE | For vehicles with ABS | GDS99101 | Drive Shaft | 48T | 26 | 23 | 56 | 99 | 619 | |
| | 1997.10-2000.07 | 5MT | F | R | Estate FWD 4AFE | For vehicles with ABS,Manufactured in:Great Britain | GDS59271 | Drive Shaft | 48T | 26 | 23 | 56 | 99 | 915 | |
| | 1997.10-2000.07 | AT/MT | F | R | Estate FWD 4AFE | | GCO59022 | Outer Joint | 48T | 26 | 23 | 56 | 99 | 61 | M |
| | 1997.10-2000.07 | AT/MT | F | L/R | Estate FWD 4AFE | Date to:2000.07 | GCO59028 | Outer Joint | 48T | 26 | 22 | 56 | 99 | 61 | M |
| | 1997.10-2000.07 | | F | L/R | Estate FWD 4AFE | | GCI99038 | Inner Joint | | 23 | 23 | 34 | 60 | 113 | |
| 1.6 (81 kw) | 1997.10-2000.06 | 5MT | F | L | Estate FWD 4AFE | For vehicles with ABS | GDS99101 | Drive Shaft | 48T | 26 | 23 | 56 | 99 | 619 | |
| | 1997.10-2000.06 | 5MT | F | R | Estate FWD 4AFE | For vehicles with ABS,Manufactured in:Great Britain | GDS59271 | Drive Shaft | 48T | 26 | 23 | 56 | 99 | 915 | |
| | 1997.10-2000.06 | AT/MT | F | R | Estate FWD 4AFE | | GCO59022 | Outer Joint | 48T | 26 | 23 | 56 | 99 | 61 | M |
| | 1997.10-2000.06 | AT/MT | F | L/R | Estate FWD 4AFE | Date to:2000.06 | GCO59028 | Outer Joint | 48T | 26 | 22 | 56 | 99 | 61 | M |

| | YEAR | TRANSM. | F/R | L/R | BODY STYLE & DRIVE TYPE & ENGINE | REMARKS | G-AP Ref. | PRODUCT | ABS | Technical Specifications A | B | C | H | L | P |
|---|---|---|---|---|---|---|---|---|---|---|---|---|---|---|---|
| **TOYOTA** **Avensis Estate/Wagon** | | | | | | | | | | | | | | | |
| 1.6 (81 kw) | 1997.10-2000.06 | | F | L/R | Estate FWD 4AFE | | GCI99038 | Inner Joint | | 23 | 23 | 34 | 60 | 113 | |
| | 2000.07-2003.02 | 5MT | F | R | Estate FWD 3ZZFE | | GDS83840 | Drive Shaft | 48T | 26 | 23 | 58 | 95.5 | 924 | |
| | 2000.07-2003.02 | AT/MT | F | L/R | Estate FWD 3ZZFE | | GCO59028 | Outer Joint | 48T | 26 | 22 | 56 | 99 | 61 | M |
| | 2000.07-2003.02 | MT | F | L | Estate FWD 3ZZFE | | GDS59078 | Drive Shaft | 48T | 26 | 20 | 58 | 96 | 638.5 | |
| | 2000.07-2003.02 | | F | | Estate FWD 3ZZFE | | GCI99038 | Inner Joint | | 23 | 23 | 34 | 60 | 113 | |
| | 2003.04-2008.11 | 5MT | F | L | Estate FWD 3ZZ-FE | | GDS83501 | Drive Shaft | 48T | 26 | 23 | 58 | 95.5 | 653 | |
| | 2003.04-2008.11 | 5MT | F | R | Estate FWD 3ZZ-FE | | GDS83840 | Drive Shaft | 48T | 26 | 23 | 58 | 95.5 | 924 | |
| | 2003.04-2008.11 | 5MT | F | L/R | Estate FWD 3ZZ-FE | | GCO59037 | Outer Joint | 48T | 26 | 23 | 58 | 95.5 | 61 | M |
| | 2003.04-2008.11 | 5MT | F | R | Estate FWD 3ZZ-FE | | GCI82392 | Inner Joint | | 23 | 23 | 34 | 60 | 113 | |
| | 2003.04-2008.11 | 5MT | F | L/R | Estate FWD 3ZZ-FE | | GCI99038 | Inner Joint | | 23 | 23 | 34 | 60 | 113 | |
| 1.6 (97 kw) | 2008.11-2018.10 | 6MT | F | L | Estate FWD 1ZR-FAE | | GDS59553 | Drive Shaft | | 26 | 20 | 61.2 | 95.5 | 675 | |
| | 2008.11-2018.10 | 6MT | F | R | Estate FWD 1ZR-FAE | | GDS59552 | Drive Shaft | | 26 | 20 | 61.2 | 95.5 | 958 | |
| | 2008.11-2018.10 | 6MT | F | R | Estate FWD 1ZR-FAE | | GCI59139 | Inner Joint | | 20 | 23 | 35 | 63.5 | 115 | |
| | 2008.11-2018.10 | MT | F | L/R | Estate FWD 1ZR-FAE | | GCO59213 | Outer Joint | | 26 | 23 | 61.2 | 95.5 | 54.5 | I |
| 1.8 (81 kw) | 1997.10-2000.06 | 4AT/5MT | F | L | Estate FWD 7AFE | | GDS99101 | Drive Shaft | 48T | 26 | 23 | 56 | 99 | 619 | |
| | 1997.10-2000.06 | 4AT/5MT | F | R | Estate FWD 7AFE | Manufactured in:Great Britain | GDS59271 | Drive Shaft | 48T | 26 | 23 | 56 | 99 | 915 | |
| | 1997.10-2000.06 | AT/MT | F | L/R | Estate FWD 7AFE | | GCO59022 | Outer Joint | 48T | 26 | 23 | 56 | 99 | 61 | M |
| | 1997.10-2000.06 | AT/MT | F | L/R | Estate FWD 7AFE | Date from:1999.01;Date to:2000.06 | GCO59028 | Outer Joint | 48T | 26 | 22 | 56 | 99 | 61 | M |
| | 1997.10-2000.06 | | F | L/R | Estate FWD 7AFE | | GCI99038 | Inner Joint | | 23 | 23 | 34 | 60 | 113 | |
| 1.8 (95 kw) | 2000.07-2003.02 | MT | F | R | Estate FWD 1ZZFE | | GDS59172 | Drive Shaft | 48T | 26 | 20 | 56 | 99 | 919 | |
| | 2000.07-2003.02 | MT | F | R | Estate FWD 1ZZFE | | GCO59022 | Outer Joint | 48T | 26 | 23 | 56 | 99 | 61 | M |
| | 2000.07-2003.02 | MT | F | L | Estate FWD 1ZZFE | | GCI59033 | Inner Joint | | 20 | 24 | 35 | 63.5 | 115.7 | |
| | 2000.07-2003.02 | MT | F | R | Estate FWD 1ZZFE | | GCI59117 | Inner Joint | | 20 | 24 | 35 | 350.5 | 102.5 | |
| | 2003.04-2008.11 | AT/MT | F | L | Estate FWD 1ZZ-FE | | GDS59272 | Drive Shaft | 48T | 26 | 20 | 58 | 95.5 | 651.5 | |
| | 2003.04-2008.11 | AT/MT | F | R | Estate FWD 1ZZ-FE | | GDS59273 | Drive Shaft | 48T | 26 | 20 | 58 | 95.5 | 925.5 | |
| | 2003.04-2008.11 | AT/MT | F | L/R | Estate FWD 1ZZ-FE | | GCO59037 | Outer Joint | 48T | 26 | 23 | 58 | 95.5 | 61 | M |
| | 2003.04-2008.11 | AT/MT | F | L/R | Estate FWD 1ZZ-FE | | GCI59077 | Inner Joint | | 20 | 23 | 35 | 63.5 | 115.7 | |
| 1.8 (108 kw) | 2008.11-2018.10 | AT/MT | F | L/R | Estate FWD 2ZR-FAE | | GCO59213 | Outer Joint | | 26 | 23 | 61.2 | 95.5 | 54.5 | I |
| | 2008.11-2018.10 | CVT/6MT | F | L | Estate FWD 2ZR-FAE | | GDS59553 | Drive Shaft | | 26 | 20 | 61.2 | 95.5 | 675 | |
| | 2008.11-2018.10 | CVT/6MT | F | R | Estate FWD 2ZR-FAE | | GDS59552 | Drive Shaft | | 26 | 20 | 61.2 | 95.5 | 958 | |
| | 2008.11-2018.10 | CVT/6MT | F | R | Estate FWD 2ZR-FAE | | GCI59139 | Inner Joint | | 20 | 23 | 35 | 63.5 | 115 | |
| 2.0 (61 kw) | 1997.10-1998.05 | 5MT | F | L | Estate FWD 2CT | | GCI59040 | Inner Joint | | 20 | 32 | 35 | 63 | 118 | |
| 2.0 (66 kw) | 1997.10-2000.06 | AT/MT | F | L/R | Estate FWD 2CTE | Date to:2000.06 | GCO59028 | Outer Joint | 48T | 26 | 22 | 56 | 99 | 61 | M |
| | 1997.10-2000.06 | MT | F | L/R | Estate FWD 2CTE | | GCO59269 | Outer Joint | | 26 | 23 | 56 | 99 | 59 | M |
| | 1997.10-2000.06 | MT | F | L | Estate FWD 2CTE | Date from:1997.10,Date to:1997.10 | GCI59040 | Inner Joint | | 20 | 32 | 35 | 63 | 118 | |
| | 1997.10-2000.06 | | F | R | Estate FWD 2CTE | | GDS59584 | Drive Shaft | 48T | 26 | 20 | 56 | 99 | 916 | |
| 2.0 (81 kw) | 1999.08-2002.08 | MT | F | L/R | Estate FWD 1CDFTV | | GCO59024 | Outer Joint | 48T | 26 | 24 | 56 | 99 | 61 | M |
| | 1999.08-2002.08 | MT | F | L/R | Estate FWD 1CDFTV | | GCO59086 | Outer Joint | | 26 | 24 | 56 | 99 | 61 | M |
| | 1999.08-2002.08 | MT | F | L | Estate FWD 1CDFTV | Date from:2000.07,Date to:2000.07 | GCI59041 | Inner Joint | | 24 | 32 | 50 | 67 | 104 | |
| | 1999.08-2002.08 | | F | L | Estate FWD 1CDFTV | Date To:2000.07 | GCI59111 | Inner Joint | | 24 | 32 | 50 | 99 | 106 | |
| | 1999.08-2002.08 | | F | R | Estate FWD 1CDFTV | | GCI59184 | Inner Joint | | 24 | 32 | 40 | 369.5 | 107 | |
| 2.0 (85 kw) | 2002.09-2003.02 | MT | F | L/R | Estate FWD 1CDFTV | | GCO59024 | Outer Joint | 48T | 26 | 24 | 56 | 99 | 61 | M |
| | 2002.09-2003.02 | MT | F | L | Estate FWD 1CDFTV | | GCI59041 | Inner Joint | | 24 | 32 | 50 | 67 | 104 | |
| | 2002.09-2003.02 | | F | R | Estate FWD 1CDFTV | | GCI59184 | Inner Joint | | 24 | 32 | 40 | 369.5 | 107 | |
| | 2003.04-2008.11 | 5MT | F | L | Estate FWD 1CD-FTV | | GDS99107 | Drive Shaft | 48T | 26 | 24 | 58 | 95.5 | 615 | |
| | 2003.04-2008.11 | 5MT | F | R | Estate FWD 1CD-FTV | | GDS99106 | Drive Shaft | 48T | 26 | 24 | 58 | 95.5 | 957.5 | |
| | 2003.04-2008.11 | 5MT | F | R | Estate FWD 1CD-FTV | Date to:2005.06 | GCO59226 | Outer Joint | 48T | 26 | 25 | 58 | 93 | 63.5 | M |
| | 2003.04-2008.11 | 5MT | F | L/R | Estate FWD 1CD-FTV | Date from:2005.10 | GCO59037 | Outer Joint | 48T | 26 | 23 | 58 | 95.5 | 61 | M |
| | 2003.04-2008.11 | 5MT | F | L/R | Estate FWD 1CD-FTV | | GCO59182 | Outer Joint | 48T | 26 | 25 | 58 | 95.5 | 61.5 | M |
| | 2003.04-2008.11 | 5MT | F | L | Estate FWD 1CD-FTV | | GCI59042 | Inner Joint | | 24 | 26 | 50 | 67 | 109 | |
| | 2003.04-2008.11 | 5MT | F | L | Estate FWD 1CD-FTV | | GCI83530 | Inner Joint | | 24 | 26 | 50 | 67 | 109 | |
| | 2003.04-2008.11 | 5MT | F | R | Estate FWD 1CD-FTV | TJ | GCI59045 | Inner Joint | | 24 | 26 | 40 | 369 | 99.5 | |
| | 2003.04-2008.11 | 5MT | F | R | Estate FWD 1CD-FTV | | GCI83266 | Inner Joint | | 24 | 26 | 40 | 369 | 96.5 | |
| 2.0 (91 kw) | 2011.11-2018.10 | 6MT | F | L | Estate FWD 1AD-FTV | | GDS59520 | Drive Shaft | | 30 | 24 | 61.2 | 99.5 | 620 | |
| | 2011.11-2018.10 | 6MT | F | R | Estate FWD 1AD-FTV | | GDS59589 | Drive Shaft | | 30 | 24 | 61.2 | 99.5 | 1004 | |
| | 2011.11-2018.10 | 6MT | F | L/R | Estate FWD 1AD-FTV | | GCO59345 | Outer Joint | | 30 | 25 | 61.2 | 99.5 | 62 | M |
| | 2011.11-2018.10 | 6MT | F | L | Estate FWD 1AD-FTV | | GCI59042 | Inner Joint | | 24 | 26 | 50 | 67 | 109 | |
| | 2011.11-2018.10 | 6MT | F | R | Estate FWD 1AD-FTV | | GCI59182 | Inner Joint | | 24 | 26 | 40 | 383 | 97 | |
| 2.0 (93 kw) | 2006.03-2008.11 | 5MT | F | L/R | Estate FWD 1AD-FTV | | GCO59182 | Outer Joint | 48T | 26 | 25 | 58 | 95.5 | 61.5 | M |
| | 2006.03-2008.11 | 5MT | F | L/R | Estate FWD 1AD-FTV | | GCO59226 | Outer Joint | 48T | 26 | 25 | 58 | 93 | 63.5 | M |
| | 2006.03-2008.11 | 5MT | F | L | Estate FWD 1AD-FTV | | GCI59042 | Inner Joint | | 24 | 26 | 50 | 67 | 109 | |
| | 2006.03-2008.11 | 5MT | F | L | Estate FWD 1AD-FTV | | GCI83530 | Inner Joint | | 24 | 26 | 50 | 67 | 109 | |
| | 2006.03-2008.11 | 6MT | F | L | Estate FWD 1AD-FTV | | GDS59207 | Drive Shaft | 48T | 26 | 24 | 58 | 95.5 | 601 | |
| | 2006.03-2008.11 | 6MT | F | R | Estate FWD 1AD-FTV | | GDS59519 | Drive Shaft | 48T | 26 | 24 | 58 | 95.5 | 972 | |
| | 2008.11-2018.10 | 6MT | F | L | Estate FWD 1AD-FTV | | GDS59520 | Drive Shaft | | 30 | 24 | 61.2 | 99.5 | 620 | |

| | YEAR | TRANSM. | F/R | L/R | BODY STYLE & DRIVE TYPE & ENGINE | REMARKS | G-AP Ref. | PRODUCT | ABS | Technical Specifications A | B | C | H | L | P |
|---|---|---|---|---|---|---|---|---|---|---|---|---|---|---|---|
| **TOYOTA** | | | | | | | | | | | | | | | |
| **Avensis Estate/Wagon** | | | | | | | | | | | | | | | |
| 2.0 (93 kw) | 2008.11-2018.10 | 6MT | F | R | Estate FWD 1AD-FTV | | GDS59589 | Drive Shaft | | 30 | 24 | 61.2 | 99.5 | 1004 | |
| | 2008.11-2018.10 | 6MT | F | L/R | Estate FWD 1AD-FTV | | GCO59345 | Outer Joint | | 30 | 25 | 61.2 | 99.5 | 62 | M |
| | 2008.11-2018.10 | 6MT | F | L | Estate FWD 1AD-FTV | | GCI59042 | Inner Joint | | 24 | 26 | 50 | 67 | 109 | |
| | 2008.11-2018.10 | 6MT | F | R | Estate FWD 1AD-FTV | | GCI59182 | Inner Joint | | 24 | 26 | 40 | 383 | 97 | |
| 2.0 (94 kw) | 1997.10-2000.06 | 4AT/5MT | F | R | Estate FWD 3SFE | | GCI59105 | Inner Joint | | 20 | 23 | 35 | 363.5 | 100.5 | |
| | 1997.10-2000.06 | AT/MT | F | L/R | Estate FWD 3SFE | | GCO59022 | Outer Joint | 48T | 26 | 23 | 56 | 99 | 61 | M |
| | 1997.10-2000.06 | | F | L | Estate FWD 3SFE | Date From:1997.10 | GCI59046 | Inner Joint | | 20 | 23 | 35 | 63.5 | 115.5 | |
| 2.0 (108 kw) | 2003.04-2008.11 | 4AT | F | L | Estate FWD 1AZ-FSE | | GDS99107 | Drive Shaft | 48T | 26 | 24 | 58 | 95.5 | 615 | |
| | 2003.04-2008.11 | 4AT/5MT | F | R | Estate FWD 1AZ-FSE | | GDS56361 | Drive Shaft | 48T | 26 | 24 | 58 | 95.5 | 941 | |
| | 2003.04-2008.11 | 4AT/5MT | F | L | Estate FWD 1AZ-FSE | | GCO59226 | Outer Joint | 48T | 26 | 25 | 58 | 93 | 63.5 | M |
| | 2003.04-2008.11 | 4AT/5MT | F | R | Estate FWD 1AZ-FSE | without Rim protector | GCO59182 | Outer Joint | 48T | 26 | 25 | 58 | 95.5 | 61.5 | M |
| | 2003.04-2008.11 | 4AT/5MT | F | L | Estate FWD 1AZ-FSE | | GCI59042 | Inner Joint | | 24 | 26 | 50 | 67 | 109 | |
| | 2003.04-2008.11 | 4AT/5MT | F | L | Estate FWD 1AZ-FSE | | GCI83530 | Inner Joint | | 24 | 26 | 50 | 67 | 109 | |
| | 2003.04-2008.11 | 4AT/5MT | F | R | Estate FWD 1AZ-FSE | TJ | GCI59045 | Inner Joint | | 24 | 26 | 40 | 369 | 99.5 | |
| | 2003.04-2008.11 | 4AT/5MT | F | R | Estate FWD 1AZ-FSE | | GCI83266 | Inner Joint | | 24 | 26 | 40 | 369 | 96.5 | |
| | 2003.04-2008.11 | 5MT | F | L | Estate FWD 1AZ-FSE | | GDS56861 | Drive Shaft | 48T | 26 | 24 | 58 | 95.5 | 625 | |
| 2.0 (110 kw) | 2000.07-2003.02 | 4AT/5MT | F | L | Estate FWD 1AZFSE | | GCI59040 | Inner Joint | | 20 | 32 | 35 | 63 | 118 | |
| | 2000.07-2003.02 | MT | F | L | Estate FWD 1AZFSE | | GDS59078 | Drive Shaft | 48T | 26 | 20 | 58 | 96 | 638.5 | |
| | 2000.07-2003.02 | MT | F | R | Estate FWD 1AZFSE | | GDS59172 | Drive Shaft | 48T | 26 | 20 | 56 | 99 | 919 | |
| 2.0 (112 kw) | 2008.11-2018.10 | AT/MT | F | L/R | Estate FWD 3ZR-FAE;3ZR-FE | | GCO59213 | Outer Joint | | 26 | 23 | 61.2 | 95.5 | 54.5 | I |
| | 2008.11-2018.10 | | F | L | Estate FWD 3ZR-FAE;3ZR-FE | | GDS59659 | Drive Shaft | | 26 | 24 | 61.2 | 95.5 | 661 | |
| | 2008.11-2018.10 | | F | R | Estate FWD 3ZR-FAE;3ZR-FE | | GDS59658 | Drive Shaft | | 26 | 24 | 61.2 | 95.5 | 958 | |
| 2.0 (114 kw) | 2003.04-2008.11 | 4AT | F | L | Estate FWD 1AZ-FE | | GDS99107 | Drive Shaft | 48T | 26 | 24 | 58 | 95.5 | 615 | |
| | 2003.04-2008.11 | 4AT/5MT | F | R | Estate FWD 1AZ-FE | | GDS56361 | Drive Shaft | 48T | 26 | 24 | 58 | 95.5 | 941 | |
| | 2003.04-2008.11 | 4AT/5MT | F | L | Estate FWD 1AZ-FE | | GCO59226 | Outer Joint | 48T | 26 | 25 | 58 | 93 | 63.5 | M |
| | 2003.04-2008.11 | 4AT/5MT | F | R | Estate FWD 1AZ-FE | | GCO59182 | Outer Joint | 48T | 26 | 25 | 58 | 95.5 | 61.5 | M |
| | 2003.04-2008.11 | 4AT/5MT | F | L | Estate FWD 1AZ-FE | | GCI59042 | Inner Joint | | 24 | 26 | 50 | 67 | 109 | |
| | 2003.04-2008.11 | 4AT/5MT | F | L | Estate FWD 1AZ-FE | | GCI83530 | Inner Joint | | 24 | 26 | 50 | 67 | 109 | |
| | 2003.04-2008.11 | 4AT/5MT | F | R | Estate FWD 1AZ-FE | TJ | GCI59045 | Inner Joint | | 24 | 26 | 40 | 369 | 99.5 | |
| | 2003.04-2008.11 | 4AT/5MT | F | R | Estate FWD 1AZ-FE | | GCI83266 | Inner Joint | | 24 | 26 | 40 | 369 | 96.5 | |
| | 2003.04-2008.11 | 5MT | F | L | Estate FWD 1AZ-FE | | GDS56861 | Drive Shaft | 48T | 26 | 24 | 58 | 95.5 | 625 | |
| 2.2 (110 kw) | 2005.10-2008.11 | 6MT | F | L | Estate FWD 2AD-FTV | | GDS59445 | Drive Shaft | 48T | 30 | 24 | 63 | 99 | 600 | |
| | 2005.10-2008.11 | 6MT | F | R | Estate FWD 2AD-FTV | | GDS59446 | Drive Shaft | 48T | 30 | 24 | 63 | 99 | 976 | |
| | 2005.10-2008.11 | 6MT | F | L/R | Estate FWD 2AD-FTV | | GCO82454 | Outer Joint | 48T | 30 | 36 | 70 | 100 | 66.5 | I |
| | 2005.10-2008.11 | | F | L | Estate FWD 2AD-FTV | | GCI81145 | Inner Joint | | 24 | 33 | 50 | 67 | 109 | |
| | 2005.10-2008.11 | | F | R | Estate FWD 2AD-FTV | | GCI59237 | Inner Joint | | 24 | 33 | 40 | 383 | 97 | |
| | 2008.11-2018.10 | 6AT/6MT | F | R | Estate FWD 2AD-FHV;2AD-FTV | | GDS59660 | Drive Shaft | | 30 | 24 | 61.2 | 100 | 1002 | |
| | 2008.11-2018.10 | 6AT/6MT | F | L | Estate FWD 2AD-FHV;2AD-FTV | | GCO59365 | Outer Joint | | 30 | 26 | 61.2 | 99.5 | 62 | I |
| | 2008.11-2018.10 | 6AT/6MT | F | R | Estate FWD 2AD-FHV;2AD-FTV | | GCI81308 | Inner Joint | | 24 | 26 | 40 | 382 | 100.5 | |
| | 2008.11-2018.10 | MT | F | L | Estate FWD 2AD-FHV;2AD-FTV | | GDS59661 | Drive Shaft | | 30 | 24 | 61.2 | 100 | 628 | |
| | 2008.11-2018.10 | MT | F | L | Estate FWD 2AD-FHV;2AD-FTV | | GCI81234 | Inner Joint | | 24 | 26 | 50 | 67 | 106.5 | |
| 2.2 (130 kw) | 2005.07-2008.11 | 6MT | F | L | Estate FWD 2AD-FHV | | GDS59445 | Drive Shaft | 48T | 30 | 24 | 63 | 99 | 600 | |
| | 2005.07-2008.11 | 6MT | F | R | Estate FWD 2AD-FHV | | GDS59446 | Drive Shaft | 48T | 30 | 24 | 63 | 99 | 976 | |
| | 2005.07-2008.11 | 6MT | F | L/R | Estate FWD 2AD-FHV | | GCO82454 | Outer Joint | 48T | 30 | 36 | 70 | 100 | 66.5 | I |
| | 2005.07-2008.11 | 6MT | F | L | Estate FWD 2AD-FHV | | GCI81145 | Inner Joint | | 24 | 33 | 50 | 67 | 109 | |
| | 2005.07-2008.11 | 6MT | F | R | Estate FWD 2AD-FHV | | GCI59237 | Inner Joint | | 24 | 33 | 40 | 383 | 97 | |
| | 2008.11-2018.10 | 6AT/6MT | F | R | Estate FWD 2AD-FHV | | GDS59660 | Drive Shaft | | 30 | 24 | 61.2 | 100 | 1002 | |
| | 2008.11-2018.10 | 6AT/6MT | F | R | Estate FWD 2AD-FHV | | GCI81308 | Inner Joint | | 24 | 26 | 40 | 382 | 100.5 | |
| | 2008.11-2018.10 | 6MT | F | L | Estate FWD 2AD-FHV | | GCO59365 | Outer Joint | | 30 | 26 | 61.2 | 99.5 | 62 | I |
| | 2008.11-2018.10 | MT | F | L | Estate FWD 2AD-FHV | | GDS59661 | Drive Shaft | | 30 | 24 | 61.2 | 100 | 628 | |
| | 2008.11-2018.10 | MT | F | L | Estate FWD 2AD-FHV | | GCI81234 | Inner Joint | | 24 | 26 | 50 | 67 | 106.5 | |
| 2.4 (120 kw) | 2003.10-2008.10 | 5AT | F | R | Estate FWD 2AZ-FSE | Date From:2005.10 | GCO59182 | Outer Joint | 48T | 26 | 25 | 58 | 95.5 | 61.5 | M |
| | 2003.10-2008.10 | 5AT | F | L | Estate FWD 2AZ-FSE | | GCI82420 | Inner Joint | | 24 | 26 | 50 | 83.5 | 102.5 | |
| | 2003.10-2008.10 | | F | R | Estate FWD 2AZ-FSE | | GCO99302 | Outer Joint | 48T | 26 | 25 | 58 | 95.5 | 62 | M |
| 2.4 (125 kw) | 2003.09-2008.11 | 5AT | F | R | Estate FWD 2AZ-FSE | Date From:2005.10 | GCO59182 | Outer Joint | 48T | 26 | 25 | 58 | 95.5 | 61.5 | M |
| | 2003.09-2008.11 | 5AT | F | L | Estate FWD 2AZ-FSE | | GCI82420 | Inner Joint | | 24 | 26 | 50 | 83.5 | 102.5 | |
| | 2003.09-2008.11 | | F | R | Estate FWD 2AZ-FSE | | GCO99302 | Outer Joint | 48T | 26 | 25 | 58 | 95.5 | 62 | M |
| **Avensis Verso** | | | | | | | | | | | | | | | |
| 2.0 (85 kw) | 2001.08-2005.08 | 5MT | F | L | MPV FWD 1CD-FTV | | GDS83911 | Drive Shaft | 48T | 30 | 24 | 61 | 100 | 619 | |
| | 2001.08-2005.08 | 5MT | F | L/R | MPV FWD 1CD-FTV | for OE No.:4346049146 | GCO59042 | Outer Joint | 48T | 30 | 27 | 63 | 100.5 | 64.5 | I |
| | 2001.08-2005.08 | 5MT | F | L/R | MPV FWD 1CD-FTV | for OE No.:43470-49225 | GCO59486 | Outer Joint | 48T | 30 | 27 | 61 | 100 | 65 | I |
| | 2001.08-2005.08 | 5MT | F | L | MPV FWD 1CD-FTV | TJ | GCI59073 | Inner Joint | | 24 | 27 | 50 | 67 | 110 | |
| | 2001.08-2005.08 | 5MT | F | L | MPV FWD 1CD-FTV | AAR | GCI59125 | Inner Joint | | 24 | 27 | 50 | 67 | 109.5 | |
| | 2001.08-2005.08 | | F | R | MPV FWD 1CD-FTV | | GDS59379 | Drive Shaft | 48T | 30 | | 63.4 | 99 | 576 | |
| | 2001.08-2005.08 | | F | R | MPV FWD 1CD-FTV | | GCI59078 | Inner Joint | | 24 | 27 | 40 | 370 | 105 | |

| | YEAR | TRANSM. | F/R | L/R | BODY STYLE & DRIVE TYPE & ENGINE | REMARKS | G-AP Ref. | PRODUCT | ABS | Technical Specifications A | B | C | H | L | P |
|---|---|---|---|---|---|---|---|---|---|---|---|---|---|---|---|
| **TOYOTA** | | | | | | | | | | | | | | | |
| **Avensis Verso** | | | | | | | | | | | | | | | |
| 2.0 (110 kw) | 2001.08-2009.11 | 4AT/5MT | F | L | MPV FWD 1AZ-FE | | GCO59043 | Outer Joint | 48T | 26 | 27 | 58 | 96 | 62 | I |
| | 2001.08-2009.11 | 4AT/5MT | F | L | MPV FWD 1AZ-FE | AAR | GCI59125 | Inner Joint | | 24 | 27 | 50 | 67 | 109.5 | |
| | 2001.08-2009.11 | AT | F | L | MPV FWD 1AZ-FE | | GDS59251 | Drive Shaft | 48T | 26 | 24 | 63.3 | 100 | 632 | |
| | 2001.08-2009.11 | AT/MT | F | R | MPV FWD 1AZ-FE | | GDS59250 | Drive Shaft | 48T | 26 | 24 | 63.3 | 100 | 949 | |
| | 2001.08-2009.11 | AT/MT | F | L/R | MPV FWD 1AZ-FE | GrooveType:Middle | GCO59175 | Outer Joint | 48T | 26 | 27 | 63.3 | 100 | 59 | M |
| | 2001.08-2009.11 | AT/MT | F | L/R | MPV FWD 1AZ-FE | GrooveType:Inner | GCO59290 | Outer Joint | 48T | 26 | 27 | 63.3 | 100 | 59.5 | I |
| | 2001.08-2009.11 | AT/MT | F | L | MPV FWD 1AZ-FE | TJ | GCI59073 | Inner Joint | | 24 | 27 | 50 | 67 | 110 | |
| | 2001.08-2009.11 | AT/MT | F | R | MPV FWD 1AZ-FE | | GCI59078 | Inner Joint | | 24 | 27 | 40 | 370 | 105 | |
| | 2001.08-2009.11 | MT | F | L/R | MPV FWD 1AZ-FE | GrooveType:Inner | GCO59167 | Outer Joint | 48T | 26 | 27 | 63 | 100 | 62 | I |
| **Aygo** | | | | | | | | | | | | | | | |
| 1.0 (50 kw) | 2005.07-2014.05 | 5AT/5MT | F | L | Hatchback FWD 1KR-FE | | GDS10232 | Drive Shaft | | 24 | 23 | 49.5 | 91 | 650 | |
| | 2005.07-2014.05 | 5AT/5MT | F | R | Hatchback FWD 1KR-FE | | GDS10231 | Drive Shaft | | 24 | 23 | 49.5 | 91 | 841 | |
| | 2005.07-2014.05 | 5AT/5MT | F | L/R | Hatchback FWD 1KR-FE | | GCO59268 | Outer Joint | | 24 | 26 | 47 | 85.5 | 47.5 | I |
| | 2005.07-2014.05 | 5AT/5MT | F | L/R | Hatchback FWD 1KR-FE | Date to:2013.03 | GCO99128 | Outer Joint | | 24 | 19 | 49.5 | 91 | 46 | M |
| | 2005.07-2014.05 | 5AT/5MT | F | L/R | Hatchback FWD 1KR-FE | | GCO99128 | Outer Joint | | 24 | 19 | 49.5 | 91 | 46 | M |
| | 2005.07-2014.05 | 5AT/5MT | F | L/R | Hatchback FWD 1KR-FE | Date from:2013.04 | GCI59069 | Inner Joint | | 23 | 19 | 34 | 60 | 101 | |
| | 2005.07-2014.05 | AT/MT | F | L | Hatchback FWD 1KR-FE | | GDS10232 | Drive Shaft | | 24 | 23 | 49.5 | 91 | 650 | |
| | 2005.07-2014.05 | AT/MT | F | R | Hatchback FWD 1KR-FE | | GDS10231 | Drive Shaft | | 24 | 23 | 49.5 | 91 | 841 | |
| | 2005.07-2014.05 | MT | F | L | Hatchback Van FWD 1KR-FE | | GDS10232 | Drive Shaft | | 24 | 23 | 49.5 | 91 | 650 | |
| | 2005.07-2014.05 | MT | F | R | Hatchback Van FWD 1KR-FE | | GDS10231 | Drive Shaft | | 24 | 23 | 49.5 | 91 | 841 | |
| | 2005.07-2014.05 | MT | F | L/R | Hatchback Van FWD 1KR-FE | | GCO99128 | Outer Joint | | 24 | 19 | 49.5 | 91 | 46 | M |
| | 2005.07-2014.05 | MT | F | L/R | Hatchback Van FWD 1KR-FE | Date from:2013.05 | GCI59069 | Inner Joint | | 23 | 19 | 34 | 60 | 101 | |
| 1.0 (51 kw) | 2014.05- | 5AT/5MT | F | L | Hatchback FWD 1KR-FE | | GDS82094 | Drive Shaft | | 24 | 23 | 49.5 | 91 | 651 | |
| | 2014.05- | 5AT/5MT | F | R | Hatchback FWD 1KR-FE | | GDS82093 | Drive Shaft | | 24 | 23 | 49.5 | 91 | 841 | |
| | 2014.05- | 5AT/5MT | F | L/R | Hatchback FWD 1KR-FE | | GCO81642 | Outer Joint | | 24 | 20 | 49.5 | 91 | 46 | M |
| | 2014.05- | 5AT/5MT | F | L/R | Hatchback FWD 1KR-FE | | GCI59069 | Inner Joint | | 23 | 19 | 34 | 60 | 101 | |
| 1.0 (53 kw) | 2018.03- | 5MT | F | L | Hatchback FWD 1KR-FE | | GDS82094 | Drive Shaft | | 24 | 23 | 49.5 | 91 | 651 | |
| | 2018.03- | 5MT | F | R | Hatchback FWD 1KR-FE | | GDS82093 | Drive Shaft | | 24 | 23 | 49.5 | 91 | 841 | |
| | 2018.03- | 5MT | F | L/R | Hatchback FWD 1KR-FE | | GCO81642 | Outer Joint | | 24 | 20 | 49.5 | 91 | 46 | M |
| | 2018.03- | 5MT | F | L/R | Hatchback FWD 1KR-FE | | GCI59069 | Inner Joint | | 23 | 19 | 34 | 60 | 101 | |
| 1.2 (60 kw) | 2014.05- | 5MT | F | L/R | Hatchback FWD 1PP | | GCI59069 | Inner Joint | | 23 | 19 | 34 | 60 | 101 | |
| | 2014.05- | MT | F | L | Hatchback FWD 1PP | | GDS81194 | Drive Shaft | | 24 | 22 | 49.5 | 88.5 | 670 | |
| | 2014.05- | MT | F | R | Hatchback FWD 1PP | | GDS81497 | Drive Shaft | | 24 | 22 | 49.5 | 88.5 | 799 | |
| | 2014.05- | MT | F | L/R | Hatchback FWD 1PP | | GCO81068 | Outer Joint | | 24 | 21 | 49.5 | 88.5 | 50 | M |
| 1.4 (40 kw) | 2005.07-2010.08 | 5MT | F | L | Hatchback FWD 2W-ZTV | | GDS59495 | Drive Shaft | | 24 | 23 | 49.5 | 91 | 593 | |
| | 2005.07-2010.08 | 5MT | F | L | Hatchback FWD 2W-ZTV | | GCO45058 | Outer Joint | | 24 | 20 | 49.5 | 91 | 46 | M |
| | 2005.07-2010.08 | 5MT | F | L/R | Hatchback FWD 2W-ZTV | | GCO99128 | Outer Joint | | 24 | 19 | 49.5 | 91 | 46 | M |
| | 2005.07-2010.08 | 5MT | F | L/R | Hatchback FWD 2W-ZTV | | GCI59069 | Inner Joint | | 23 | 19 | 34 | 60 | 101 | |
| | 2005.07-2010.08 | | F | R | Hatchback FWD 2W-ZTV | | GDS81476 | Drive Shaft | | 24 | 23 | 49.5 | 91 | 897 | |
| **Aygo X** | | | | | | | | | | | | | | | |
| 1.0 (53 kw) | 2022.03- | 5MT | F | L | Hatchback FWD 1KR-FE | | GDS58197 | Drive Shaft | | 26 | 23 | 55.6 | 96 | 714 | |
| | 2022.03- | 5MT | F | R | Hatchback FWD 1KR-FE | | GDS58198 | Drive Shaft | | 26 | 23 | 55.6 | 96 | 889 | |
| | 2022.03- | 5MT | F | L/R | Hatchback FWD 1KR-FE | | GCO83860 | Outer Joint | | 26 | 20 | 55.6 | 96 | 46.5 | M |
| | 2022.03- | 5MT | F | L/R | Hatchback FWD 1KR-FE | | GCI59069 | Inner Joint | | 23 | 19 | 34 | 60 | 101 | |
| 1.5 (85 kw) | 2025.10- | CVT | F | L | Hatchback FWD M15A-FXE | | GDS56793 | Drive Shaft | | 26 | 20 | 55.6 | 95 | 696 | |
| | 2025.10- | CVT | F | R | Hatchback FWD M15A-FXE | | GDS56794 | Drive Shaft | | 26 | 20 | 55.6 | 95 | 914 | |
| **bB** | | | | | | | | | | | | | | | |
| 1.3 (57 kw) | 2000.03-2005.12 | 4AT | F | L | MPV FWD 2NZFE | Diameter (mm):22 | GDS59102 | Drive Shaft | 48T | 24 | 23 | 58 | 91 | 640 | |
| | 2000.03-2005.12 | 4AT | F | R | MPV FWD 2NZFE | | GDS59011 | Drive Shaft | 48T | 24 | 23 | 58 | 91 | 881.5 | |
| | 2000.03-2005.12 | 4AT | F | R | MPV FWD 2NZFE | | GDS59077 | Drive Shaft | 48T | 24 | 23 | 56 | 90.5 | 876.5 | |
| | 2000.03-2005.12 | 4AT | F | R | MPV FWD 2NZFE | | GCO59135 | Outer Joint | 48T | 24 | 23 | 56 | 90.5 | 55 | I |
| | 2000.03-2005.12 | 4AT | F | L/R | MPV FWD 2NZFE | | GCO59137 | Outer Joint | 48T | 24 | 23 | 58 | 91 | 52.5 | I |
| 1.5 (80 kw) | 2000.03-2005.12 | 4AT | F | L | MPV FWD 1NZFE | Diameter (mm):22 | GDS59102 | Drive Shaft | 48T | 24 | 23 | 58 | 91 | 640 | |
| | 2000.03-2005.12 | 4AT | F | R | MPV FWD 1NZFE | | GDS59011 | Drive Shaft | 48T | 24 | 23 | 58 | 91 | 881.5 | |
| **Brevis** | | | | | | | | | | | | | | | |
| 2.5 (147 kw) | 1999.10-2002.09 | | F | | Saloon 4WD 1JZ-FSE | | GCO59370 | Outer Joint | 48T | 30 | 30 | 56 | 92 | 59 | I |
| | 1999.10-2002.09 | 4AT | R | R | Saloon 4WD 1JZ-FSE | | GCO59390 | Outer Joint | 48T | 30 | 27 | 63 | 108.5 | 64 | I |
| 3.0 (162 kw) | 1999.10-2007.06 | 5AT | R | R | Saloon RWD 2JZ-FSE | | GCO59390 | Outer Joint | 48T | 30 | 27 | 63 | 108.5 | 64 | I |
| **bZ4X** | | | | | | | | | | | | | | | |
| EV (123 kw) | 2025.09- | | F | L/R | SUV FWD 2XM | | GCI83974 | Inner Joint | | 30 | 29 | 50 | 74.5 | 111 | |
| EV (150 kw) | 2021.12- | ET | F | L/R | SUV FWD | | GDS57979 | Drive Shaft | | 30 | 30 | 59.6 | 94.5 | 715 | |
| | 2021.12- | ET | F | L/R | SUV FWD | | GCO83820 | Outer Joint | | 30 | 27 | 59.6 | 94.5 | 72 | M |
| | 2021.12- | ET | F | L/R | SUV FWD | | GCI83974 | Inner Joint | | 30 | 29 | 50 | 74.5 | 111 | |
| EV (160 kw) | 2021.12- | ET | F | L/R | SUV 4WD | | GDS57979 | Drive Shaft | | 30 | 30 | 59.6 | 94.5 | 715 | |
| | 2021.12- | ET | F | L/R | SUV 4WD | | GCO83820 | Outer Joint | | 30 | 27 | 59.6 | 94.5 | 72 | M |

| | YEAR | TRANSM. | F/R | L/R | BODY STYLE & DRIVE TYPE & ENGINE | REMARKS | G-AP Ref. | PRODUCT | ABS | Technical Specifications A | B | C | H | L | P |
|---|---|---|---|---|---|---|---|---|---|---|---|---|---|---|---|
| **TOYOTA** | | | | | | | | | | | | | | | |
| **bZ4X** | | | | | | | | | | | | | | | |
| EV (160 kw) | 2021.12- | ET | F | L/R | SUV 4WD | | GCI83974 | Inner Joint | | 30 | 29 | 50 | 74.5 | 111 | |
| EV (165 kw) | 2025.08- | | F | L/R | SUV FWD EM | | GCI83974 | Inner Joint | | 30 | 29 | 50 | 74.5 | 111 | |
| **C-HR** | | | | | | | | | | | | | | | |
| 1.2 (85 kw) | 2016.10- | CVT | F | L | SUV 4WD 8NR-FTS | | GDS83776 | Drive Shaft | | 26 | 20 | 61.2 | 96.5 | 683 | |
| | 2016.10- | CVT | F | R | SUV 4WD 8NR-FTS | | GDS83836 | Drive Shaft | | 26 | 20 | 61.2 | 96.5 | 944 | |
| | 2016.10- | CVT | F | L/R | SUV 4WD 8NR-FTS | | GCO82485 | Outer Joint | | 26 | 32 | 61.2 | 96.5 | 54.5 | I |
| | 2016.10- | CVT | F | L | SUV 4WD 8NR-FTS | | GCI82368 | Inner Joint | | 20 | 33 | 35 | 63.5 | 121 | |
| | 2016.10- | CVT | F | R | SUV 4WD 8NR-FTS | | GCI82389 | Inner Joint | | 20 | 33 | 35.5 | 364 | 104 | |
| | 2016.10- | CVT/6MT | F | L | SUV FWD 8NR-FTS | | GDS83776 | Drive Shaft | | 26 | 20 | 61.2 | 96.5 | 683 | |
| | 2016.10- | CVT/6MT | F | R | SUV FWD 8NR-FTS | | GDS83774 | Drive Shaft | | 26 | 20 | 61.2 | 96.5 | 947 | |
| | 2016.10- | CVT/6MT | F | L/R | SUV FWD 8NR-FTS | | GCO82485 | Outer Joint | | 26 | 32 | 61.2 | 96.5 | 54.5 | I |
| | 2016.10- | CVT/6MT | F | L | SUV FWD 8NR-FTS | | GCI82368 | Inner Joint | | 20 | 33 | 35 | 63.5 | 121 | |
| | 2016.10- | CVT/6MT | F | R | SUV FWD 8NR-FTS | | GCI82367 | Inner Joint | | 20 | 32 | 35 | 63.5 | 120 | |
| 1.2 (96 kw) | 2016.10- | CVT | F | L | SUV 4WD 8NR-FTS | | GDS83776 | Drive Shaft | | 26 | 20 | 61.2 | 96.5 | 683 | |
| | 2016.10- | CVT | F | R | SUV 4WD 8NR-FTS | | GDS83836 | Drive Shaft | | 26 | 20 | 61.2 | 96.5 | 944 | |
| | 2016.10- | CVT | F | L/R | SUV 4WD 8NR-FTS | | GCO82485 | Outer Joint | | 26 | 32 | 61.2 | 96.5 | 54.5 | I |
| | 2016.10- | CVT | F | L | SUV 4WD 8NR-FTS | | GCI82368 | Inner Joint | | 20 | 33 | 35 | 63.5 | 121 | |
| | 2016.10- | CVT | F | R | SUV 4WD 8NR-FTS | | GCI82389 | Inner Joint | | 20 | 33 | 35.5 | 364 | 104 | |
| 1.8 (90 kw) | 2016.10- | CVT | F | L | SUV FWD 2ZR-FXE | | GDS82528 | Drive Shaft | | 26 | 24 | 61.2 | 96.5 | 661 | |
| | 2016.10- | CVT | F | R | SUV FWD 2ZR-FXE | | GDS82529 | Drive Shaft | | 26 | 24 | 61.2 | 96.5 | 957 | |
| | 2016.10- | CVT | F | L | SUV FWD 2ZR-FXE | | GCO59528 | Outer Joint | | 26 | 32 | 61.2 | 96.5 | 54.5 | I |
| | 2016.10- | CVT | F | L | SUV FWD 2ZR-FXE | | GCI81145 | Inner Joint | | 24 | 33 | 50 | 67 | 109 | |
| | 2016.10- | CVT | F | R | SUV FWD 2ZR-FXE | | GCI81375 | Inner Joint | | 24 | 32 | 40 | 98 | 95.5 | |
| | 2016.10- | CVT | F | L | SUV Van FWD 2ZR-FXE | | GDS82528 | Drive Shaft | | 26 | 24 | 61.2 | 96.5 | 661 | |
| | 2016.10- | CVT | F | R | SUV Van FWD 2ZR-FXE | Date To:2019.08 | GDS82529 | Drive Shaft | | 26 | 24 | 61.2 | 96.5 | 957 | |
| | 2016.10- | CVT | F | R | SUV Van FWD 2ZR-FXE | Date From:2018.08,Date To:2020.06 | GCO59528 | Outer Joint | | 26 | 32 | 61.2 | 96.5 | 54.5 | I |
| | 2016.10- | CVT | F | L | SUV Van FWD 2ZR-FXE | | GCI81145 | Inner Joint | | 24 | 33 | 50 | 67 | 109 | |
| | 2016.10- | CVT | F | R | SUV Van FWD 2ZR-FXE | | GCI81375 | Inner Joint | | 24 | 32 | 40 | 98 | 95.5 | |
| 1.8 (103 kw) | 2023.10- | AT | F | L | SUV FWD 2ZR-FXE | | GDS58215 | Drive Shaft | | 26 | 24 | 61 | 96 | 662 | |
| | 2023.10- | AT | F | R | SUV FWD 2ZR-FXE | | GDS58061 | Drive Shaft | | 26 | 24 | 61 | 96 | 964 | |
| | 2023.10- | AT | F | L/R | SUV FWD 2ZR-FXE | | GCO83832 | Outer Joint | | 26 | 33 | 61 | 96 | 57 | I |
| | 2023.10- | AT | F | L | SUV FWD 2ZR-FXE | | GCI84036 | Inner Joint | | 24 | 33 | 50 | 67 | 113.5 | |
| | 2023.10- | AT | F | R | SUV FWD 2ZR-FXE | | GCI83994 | Inner Joint | | 24 | 33 | 40 | 97.5 | 96 | |
| 2.0 (109 kw) | 2016.11- | CVT | F | R | SUV FWD 3ZR-FAE | | GCO82485 | Outer Joint | | 26 | 32 | 61.2 | 96.5 | 54.5 | I |
| | 2016.11- | CVT | F | L | SUV FWD 3ZR-FAE | | GCI81145 | Inner Joint | | 24 | 33 | 50 | 67 | 109 | |
| 2.0 (145 kw) | 2023.10- | AT | F | L | SUV 4WD M20A-FXS | | GDS58215 | Drive Shaft | | 26 | 24 | 61 | 96 | 662 | |
| | 2023.10- | AT | F | L | SUV 4WD M20A-FXS | | GCO83832 | Outer Joint | | 26 | 33 | 61 | 96 | 57 | I |
| | 2023.10- | AT | F | L | SUV 4WD M20A-FXS | | GCI84036 | Inner Joint | | 24 | 33 | 50 | 67 | 113.5 | |
| | 2023.10- | AT | F | L | SUV FWD M20A-FXS | | GDS58215 | Drive Shaft | | 26 | 24 | 61 | 96 | 662 | |
| | 2023.10- | AT | F | L | SUV FWD M20A-FXS | | GCO83832 | Outer Joint | | 26 | 33 | 61 | 96 | 57 | I |
| | 2023.10- | AT | F | L | SUV FWD M20A-FXS | | GCI84036 | Inner Joint | | 24 | 33 | 50 | 67 | 113.5 | |
| 2.0 (164 kw) | 2024.01- | AT | F | L | SUV FWD M20A-FXS | | GDS58215 | Drive Shaft | | 26 | 24 | 61 | 96 | 662 | |
| | 2024.01- | AT | F | R | SUV FWD M20A-FXS | | GDS58061 | Drive Shaft | | 26 | 24 | 61 | 96 | 964 | |
| | 2024.01- | AT | F | L/R | SUV FWD M20A-FXS | | GCO83832 | Outer Joint | | 26 | 33 | 61 | 96 | 57 | I |
| | 2024.01- | AT | F | L | SUV FWD M20A-FXS | | GCI84036 | Inner Joint | | 24 | 33 | 50 | 67 | 113.5 | |
| | 2024.01- | AT | F | R | SUV FWD M20A-FXS | | GCI83994 | Inner Joint | | 24 | 33 | 40 | 97.5 | 96 | |
| **Caldina** | | | | | | | | | | | | | | | |
| 1.5 (70 kw) | 1992.11-2002.06 | AT/MT | F | R | Estate FWD 5EFE | | GDS59392 | Drive Shaft | | 26 | 23 | 56 | 96.5 | 926 | |
| 2.0 (54 kw) | 1992.11-1998.04 | | F | R | Estate 4WD 2C | | GCI59160 | Inner Joint | | 23 | 23 | 36 | 75 | 93 | |
| | 1994.06-1997.09 | | F | | Estate FWD 2C | | GCO59120 | Outer Joint | 48T | 26 | 24 | 56 | 95.5 | 55 | I |
| 2.0 (94 kw) | 1992.11-1997.07 | | F | R | Estate 4WD 3SFE | | GCI59160 | Inner Joint | | 23 | 23 | 36 | 75 | 93 | |
| 2.0 (99 kw) | 1992.11-1997.08 | | F | R | Estate 4WD 3SFE | | GCI59160 | Inner Joint | | 23 | 23 | 36 | 75 | 93 | |
| 2.2 (69 kw) | 1997.08-2002.09 | AT | F | | Estate 4WD 3CTE | | GCO59002 | Outer Joint | 48T | 26 | 25 | 56 | 96 | 62 | I |
| | 1997.08-2002.09 | AT | F | | Estate 4WD 3CTE | | GCO59320 | Outer Joint | 48T | 26 | 25 | 56 | 100 | 63 | M |
| | 1997.08-2002.09 | AT | F | L | Estate 4WD 3CTE | | GCI99040 | Inner Joint | | 20 | 25 | 35 | 63.5 | 112 | |
| **Calya** | | | | | | | | | | | | | | | |
| 1.2 (65 kw) | 2016.06- | 4AT/5MT | F | L | MPV FWD 3NR-VE | | GDS81469 | Drive Shaft | | 26 | 23 | 55.6 | 88 | 640 | |
| | 2016.06- | 4AT/5MT | F | R | MPV FWD 3NR-VE | | GDS81468 | Drive Shaft | | 26 | 23 | 55.6 | 88 | 892 | |
| **Cami** | | | | | | | | | | | | | | | |
| 1.3 (61 kw) | 1999.05-2000.09 | MT | F | | Closed Off-Road Vehicle 4WD HC-EJ | | GCO14037 | Outer Joint | 48T | 24 | 19 | 52 | 94 | 81.5 | M |
| 1.3 (63 kw) | 2001.02-2005.12 | MT | F | | Closed Off-Road Vehicle 4WD K3-VE | | GCO14037 | Outer Joint | 48T | 24 | 19 | 52 | 94 | 81.5 | M |
| 1.3 (66 kw) | 2000.05-2005.12 | MT | F | | Terrain cab wagon closed 4WD K3VE | | GCO14037 | Outer Joint | 48T | 24 | 19 | 52 | 94 | 81.5 | M |
| **Camry** | | | | | | | | | | | | | | | |
| 2.0 (100 kw) | 1993.08-1997.09 | | F | R | Saloon 4WD 3S-FE | | GCI59160 | Inner Joint | | 23 | 23 | 36 | 75 | 93 | |
| 2.0 (108 kw) | 2006.05-2011.09 | 4AT | F | R | Saloon FWD 1AZ-FE | | GDS59185 | Drive Shaft | 48T | 26 | 24 | 63 | 100 | 966 | |

| | YEAR | TRANSM. | F/R | L/R | BODY STYLE & DRIVE TYPE & ENGINE | REMARKS | G-AP Ref. | PRODUCT | ABS | Technical Specifications A | B | C | H | L | P |
|---|---|---|---|---|---|---|---|---|---|---|---|---|---|---|---|
| **TOYOTA** **Camry** | | | | | | | | | | | | | | | |
| 2.0 (108 kw) | 2006.05-2011.09 | 4AT | F | R | Saloon FWD 1AZ-FE | | GCO59167 | Outer Joint | 48T | 26 | 27 | 63 | 100 | 62 | I |
| | 2006.05-2011.09 | 4AT | F | L | Saloon FWD 1AZ-FE | TJ | GCI59073 | Inner Joint | | 24 | 27 | 50 | 67 | 110 | |
| | 2006.05-2011.09 | 4AT | F | L | Saloon FWD 1AZ-FE | AAR | GCI59125 | Inner Joint | | 24 | 27 | 50 | 67 | 109.5 | |
| 2.0 (109 kw) | 2011.09-2014.11 | 4AT | F | L | Saloon FWD 1AZ-FE | | GDS59595 | Drive Shaft | 48T | 26 | 24 | 69.5 | 100 | 671 | |
| | 2011.09-2014.11 | 4AT | F | R | Saloon FWD 1AZ-FE | | GDS59594 | Drive Shaft | 48T | 26 | 24 | 69.5 | 100 | 970 | |
| | 2011.09-2014.11 | 4AT | F | L/R | Saloon FWD 1AZ-FE | 6 balls | GCO59359 | Outer Joint | 48T | 26 | 33 | 69.5 | 100 | 61.5 | I |
| | 2011.09-2014.11 | 4AT | F | L | Saloon FWD 1AZ-FE | | GCI59183 | Inner Joint | | 24 | 32 | 50 | 67 | 111 | |
| | 2011.09-2014.11 | 4AT | F | R | Saloon FWD 1AZ-FE | | GCI59184 | Inner Joint | | 24 | 32 | 40 | 369.5 | 107 | |
| | 2011.09-2014.11 | AT | F | L/R | Saloon FWD 1AZ-FE | 8 balls | GCO81154 | Outer Joint | 48T | 26 | 33 | 61 | 99.5 | 61.5 | I |
| 2.0 (110 kw) | 2001.08-2006.11 | 4AT | F | L | Saloon FWD 1AZ-FE | TJ | GCI59073 | Inner Joint | | 24 | 27 | 50 | 67 | 110 | |
| | 2001.08-2006.11 | 4AT | F | L | Saloon FWD 1AZ-FE | AAR | GCI59125 | Inner Joint | | 24 | 27 | 50 | 67 | 109.5 | |
| | 2001.08-2006.11 | AT | F | L | Saloon FWD 1AZ-FE | | GDS59051 | Drive Shaft | 48T | 26 | 24 | 63 | 100 | 662 | |
| | 2001.08-2006.11 | AT | F | L | Saloon FWD 1AZ-FE | | GCO59167 | Outer Joint | 48T | 26 | 27 | 63 | 100 | 62 | I |
| | 2001.08-2006.11 | AT | F | L/R | Saloon FWD 1AZ-FE | | GCO59175 | Outer Joint | 48T | 26 | 27 | 63.3 | 100 | 59 | M |
| | 2001.08-2006.11 | AT | F | L/R | Saloon FWD 1AZ-FE | | GCO59314 | Outer Joint | 48T | 26 | 27 | 61.2 | 100 | 59.5 | I |
| | 2015.01-2018.03 | 6AT | F | L/R | Saloon FWD 6AR-FSE | 6 balls | GCO59359 | Outer Joint | 48T | 26 | 33 | 69.5 | 100 | 61.5 | I |
| | 2015.01-2018.03 | AT | F | L | Saloon FWD 6AR-FSE | | GDS81473 | Drive Shaft | 48T | 26 | 24 | 61 | 99.5 | 659 | |
| | 2015.01-2018.03 | AT | F | R | Saloon FWD 6AR-FSE | | GDS81471 | Drive Shaft | 48T | 26 | 24 | 61 | 99.5 | 976 | |
| | 2015.01-2018.03 | AT | F | L/R | Saloon FWD 6AR-FSE | 8 balls | GCO81154 | Outer Joint | 48T | 26 | 33 | 61 | 99.5 | 61.5 | I |
| | 2015.01-2018.03 | AT | F | L | Saloon FWD 6AR-FSE | | GCI59183 | Inner Joint | | 24 | 32 | 50 | 67 | 111 | |
| | 2015.01-2018.03 | AT | F | R | Saloon FWD 6AR-FSE | | GCI81276 | Inner Joint | | 24 | 32 | 40 | 376.5 | 103.5 | |
| | 2017.10- | 6AT | F | L | Saloon FWD 6AR-FSE | | GDS59678 | Drive Shaft | | 26 | 24 | 61.2 | 100 | 663 | |
| | 2017.10- | 6AT | F | R | Saloon FWD 6AR-FSE | | GDS84074 | Drive Shaft | | 26 | 24 | 61.2 | 100 | 980 | |
| | 2017.10- | 6AT | F | L/R | Saloon FWD 6AR-FSE | | GCO59245 | Outer Joint | | 26 | 27 | 61.2 | 100 | 59 | I |
| | 2017.10- | 6AT | F | L | Saloon FWD 6AR-FSE | | GCI59073 | Inner Joint | | 24 | 27 | 50 | 67 | 110 | |
| | 2017.10- | 6AT | F | R | Saloon FWD 6AR-FSE | | GCI59206 | Inner Joint | | 24 | 27 | 40 | 377 | 104.5 | |
| 2.2 (93 kw) | 1997.08-2002.09 | AT | F | L | Saloon FWD 5SFE | | GCI99040 | Inner Joint | | 20 | 25 | 35 | 63.5 | 112 | |
| | 1997.08-2002.09 | MT | F | L | Saloon FWD 5SFE | | GDS59059 | Drive Shaft | | 26 | 20 | 56 | 99.5 | 676.5 | |
| | 1997.08-2002.09 | MT | F | R | Saloon FWD 5SFE | | GDS59160 | Drive Shaft | 48T | 26 | 20 | 56 | 101 | 932 | |
| | 1997.08-2002.09 | MT | F | L/R | Saloon FWD 5SFE | | GCO59012 | Outer Joint | 48T | 26 | 27 | 56 | 100 | 63 | M |
| | 1997.08-2002.09 | MT | F | L | Saloon FWD 5SFE | | GCI31004 | Inner Joint | | 20 | 27 | 35 | 63.5 | 123 | |
| | 1997.08-2002.09 | | F | | Saloon FWD 5SFE | | GCO59011 | Outer Joint | | 26 | 27 | 56 | 100 | 63 | M |
| 2.2 (96 kw) | 1996.08-2001.11 | 4AT/5MT | F | L | Saloon FWD 5SFE/5SFNE | | GDS59059 | Drive Shaft | | 26 | 20 | 56 | 99.5 | 676.5 | |
| | 1996.08-2001.11 | 4AT/5MT | F | L | Saloon FWD 5SFE/5SFNE | | GDS59159 | Drive Shaft | 48T | 26 | 20 | 56 | 101 | 680 | |
| | 1996.08-2001.11 | 4AT/5MT | F | R | Saloon FWD 5SFE/5SFNE | | GDS59060 | Drive Shaft | | 26 | 20 | 56 | 99.5 | 940 | |
| | 1996.08-2001.11 | 4AT/5MT | F | R | Saloon FWD 5SFE/5SFNE | TYPE B | GDS59160 | Drive Shaft | 48T | 26 | 20 | 56 | 101 | 932 | |
| | 1996.08-2001.11 | 4AT/5MT | F | L/R | Saloon FWD 5SFE/5SFNE | | GCO59004 | Outer Joint | 48T | 26 | 32 | 56 | 101 | 64 | I |
| | 1996.08-2001.11 | AT | F | L | Saloon FWD 5SFE/5SFNE | | GCI99040 | Inner Joint | | 20 | 25 | 35 | 63.5 | 112 | |
| | 1996.08-2001.11 | AT/MT | F | L/R | Saloon FWD 5SFE/5SFNE | Groove Type:Inner | GCO59155 | Outer Joint | 48T | 26 | 27 | 56 | 96 | 67.5 | I |
| | 1996.08-2001.11 | MT | F | L/R | Saloon FWD 5SFE/5SFNE | Groove Type:Inner | GCO31001 | Outer Joint | | 26 | 27 | 56 | 99.5 | 63 | I |
| | 1996.08-2001.11 | | F | R | Saloon FWD 5SFE/5SFNE | | GCO59095 | Outer Joint | | 26 | 24 | 56 | 99 | 61 | M |
| | 1996.08-2001.11 | | F | | Saloon FWD 5SFE/5SFNE | Groove Type:Middle | GCO59011 | Outer Joint | | 26 | 27 | 56 | 100 | 63 | M |
| | 1996.08-2001.11 | | F | L | Saloon FWD 5SFE/5SFNE | | GCI59033 | Inner Joint | | 20 | 24 | 35 | 63.5 | 115.7 | |
| 2.2 (100 kw) | 1991.06-1996.07 | 4AT/5MT | F | L | Saloon FWD 5S-FE | | GDS59059 | Drive Shaft | | 26 | 20 | 56 | 99.5 | 676.5 | |
| | 1991.06-1996.07 | 4AT/5MT | F | R | Saloon FWD 5S-FE | | GDS59060 | Drive Shaft | | 26 | 20 | 56 | 99.5 | 940 | |
| | 1991.06-1996.07 | AT | F | L | Saloon FWD 5S-FE | Date from:1992.08 | GCI99040 | Inner Joint | | 20 | 25 | 35 | 63.5 | 112 | |
| | 1991.06-1996.07 | MT | F | L/R | Saloon FWD 5S-FE | Vehicle Production Country:Japan | GCO31001 | Outer Joint | | 26 | 27 | 56 | 99.5 | 63 | I |
| | 1991.06-1996.07 | MT | F | L/R | Saloon FWD 5S-FE | | GCO59155 | Outer Joint | 48T | 26 | 27 | 56 | 96 | 67.5 | I |
| | 1991.06-1996.07 | | F | | Saloon FWD 5S-FE | | GCO59193 | Outer Joint | | 26 | 32 | 56 | 101 | 66 | I |
| | 1991.06-1996.07 | | F | R | Saloon FWD 5S-FE | | GCI59024 | Inner Joint | | 20 | 27 | 35 | 335 | 112 | |
| | 1991.09-1996.07 | AT | F | L | Estate FWD 5SFE | Date from:1992.09,Vehicle Production Country: North America | GCI99040 | Inner Joint | | 20 | 25 | 35 | 63.5 | 112 | |
| | 1991.09-1996.07 | MT | F | L/R | Estate FWD 5SFE | Vehicle Production Country:Japan | GCO31001 | Outer Joint | | 26 | 27 | 56 | 99.5 | 63 | I |
| | 1991.09-1996.07 | MT | F | L/R | Estate FWD 5SFE | | GCO59011 | Outer Joint | | 26 | 27 | 56 | 100 | 63 | M |
| | 1991.09-1996.07 | MT | F | L/R | Estate FWD 5SFE | | GCO59155 | Outer Joint | 48T | 26 | 27 | 56 | 96 | 67.5 | I |
| 2.4 (105 kw) | 2006.03-2011.07 | CVT | F | R | Saloon FWD 2AZFXE | | GDS59654 | Drive Shaft | 48T | 26 | 24 | 63.3 | 100 | 981 | |
| | 2006.03-2011.07 | CVT | F | R | Saloon FWD 2AZFXE | | GCO59290 | Outer Joint | 48T | 26 | 27 | 63.3 | 100 | 59.5 | I |
| | 2006.03-2011.07 | CVT | F | R | Saloon FWD 2AZFXE | | GCI59206 | Inner Joint | | 24 | 27 | 40 | 377 | 104.5 | |
| 2.4 (112 kw) | 2001.11-2006.11 | 4AT/5MT | F | L | Saloon FWD 2AZ-FE | | GDS59051 | Drive Shaft | 48T | 26 | 24 | 63 | 100 | 662 | |
| | 2001.11-2006.11 | 4AT/5MT | F | L | Saloon FWD 2AZ-FE | AAR | GCI59125 | Inner Joint | | 24 | 27 | 50 | 67 | 109.5 | |
| | 2001.11-2006.11 | AT | F | L | Saloon FWD 2AZ-FE | GrooveType:Inner | GCO59167 | Outer Joint | 48T | 26 | 27 | 63 | 100 | 62 | I |
| | 2001.11-2006.11 | AT | F | L/R | Saloon FWD 2AZ-FE | GrooveType:Middle | GCO59175 | Outer Joint | 48T | 26 | 27 | 63.3 | 100 | 59 | M |
| | 2001.11-2006.11 | AT | F | L/R | Saloon FWD 2AZ-FE | GrooveType:Middle | GCO59188 | Outer Joint | 48T | 26 | 26 | 70 | 100 | 67 | M |
| | 2001.11-2006.11 | AT | F | L/R | Saloon FWD 2AZ-FE | GrooveType:Inner | GCO59314 | Outer Joint | 48T | 26 | 27 | 61.2 | 100 | 59.5 | I |
| | 2001.11-2006.11 | AT | F | L | Saloon FWD 2AZ-FE | | GCI59026 | Inner Joint | | 24 | 26 | 50 | 67 | 104 | |
| | 2001.11-2006.11 | AT | F | L | Saloon FWD 2AZ-FE | TJ | GCI59073 | Inner Joint | | 24 | 27 | 50 | 67 | 110 | |

| | YEAR | TRANSM. | F/R | L/R | BODY STYLE & DRIVE TYPE & ENGINE | REMARKS | G-AP Ref. | PRODUCT | ABS | Technical Specifications A | B | C | H | L | P |
|---|---|---|---|---|---|---|---|---|---|---|---|---|---|---|---|
| **TOYOTA** **Camry** | | | | | | | | | | | | | | | |
| 2.4 (112 kw) | 2001.11-2006.11 | AT/MT | F | R | Saloon FWD 2AZ-FE | Vehicle Production Country:Japan | GDS59212 | Drive Shaft | 48T | 26 | 24 | 61 | 100 | 960 | |
| | 2001.11-2006.11 | | F | L/R | Saloon FWD 2AZ-FE | Country Version:Thailand;GrooveType:Middle | GCO59138 | Outer Joint | 48T | 26 | 24 | 61 | 100 | 67 | M |
| 2.4 (116 kw) | 2006.01-2011.09 | 5AT/5MT | F | R | Saloon FWD 2AZ-FE | Inner teeth of wheel side:27 | GDS59185 | Drive Shaft | 48T | 26 | 24 | 63 | 100 | 966 | |
| | 2006.01-2011.09 | 5AT/5MT | F | R | Saloon FWD 2AZ-FE | Inner teeth of wheel side:26 | GDS59235 | Drive Shaft | 48T | 26 | 24 | 61 | 100 | 968 | |
| | 2006.01-2011.09 | 5AT/5MT | F | R | Saloon FWD 2AZ-FE | Type:LE | GCO59167 | Outer Joint | 48T | 26 | 27 | 63 | 100 | 62 | I |
| | 2006.01-2011.09 | 5AT/5MT | F | L/R | Saloon FWD 2AZ-FE | Type:LE | GCO59290 | Outer Joint | 48T | 26 | 27 | 63.3 | 100 | 59.5 | I |
| | 2006.01-2011.09 | 5AT/5MT | F | L/R | Saloon FWD 2AZ-FE | Type:COMFORT | GCO59407 | Outer Joint | 48T | 26 | 26 | 61 | 100 | 67.5 | M |
| | 2006.01-2011.09 | 5AT/5MT | F | L | Saloon FWD 2AZ-FE | TJ | GCI59073 | Inner Joint | | 24 | 27 | 50 | 67 | 110 | |
| | 2006.01-2011.09 | 5AT/5MT | F | L | Saloon FWD 2AZ-FE | AAR | GCI59125 | Inner Joint | | 24 | 27 | 50 | 67 | 109.5 | |
| | 2006.01-2011.09 | 5MT | F | L | Saloon FWD 2AZ-FE | For LE | GDS59376 | Drive Shaft | 48T | 26 | 24 | 61 | 100 | 665 | |
| | 2006.01-2011.09 | AT | F | L | Saloon FWD 2AZ-FE | TJ | GDS59184 | Drive Shaft | 48T | 26 | 24 | 63 | 100 | 667 | |
| 2.4 (123 kw) | 2006.01-2011.09 | 5AT | F | L | Saloon FWD 2AZ-FE | For LE | GDS59184 | Drive Shaft | 48T | 26 | 24 | 63 | 100 | 667 | |
| | 2006.01-2011.09 | 5AT/5MT | F | R | Saloon FWD 2AZ-FE | For LE | GDS59185 | Drive Shaft | 48T | 26 | 24 | 63 | 100 | 966 | |
| | 2006.01-2011.09 | 5AT/5MT | F | R | Saloon FWD 2AZ-FE | For comfort | GDS59235 | Drive Shaft | 48T | 26 | 24 | 61 | 100 | 968 | |
| | 2006.01-2011.09 | 5AT/5MT | F | R | Saloon FWD 2AZ-FE | | GCO59167 | Outer Joint | 48T | 26 | 27 | 63 | 100 | 62 | I |
| | 2006.01-2011.09 | 5AT/5MT | F | L/R | Saloon FWD 2AZ-FE | | GCO59290 | Outer Joint | 48T | 26 | 27 | 63.3 | 100 | 59.5 | I |
| | 2006.01-2011.09 | 5AT/5MT | F | L/R | Saloon FWD 2AZ-FE | | GCO59407 | Outer Joint | 48T | 26 | 26 | 61 | 100 | 67.5 | M |
| | 2006.01-2011.09 | 5MT | F | L | Saloon FWD 2AZ-FE | For LE | GDS59376 | Drive Shaft | 48T | 26 | 24 | 61 | 100 | 665 | |
| | 2006.01-2011.09 | 5MT | F | L | Saloon FWD 2AZ-FE | TJ | GCI59073 | Inner Joint | | 24 | 27 | 50 | 67 | 110 | |
| | 2006.01-2011.09 | 5MT | F | L | Saloon FWD 2AZ-FE | AAR | GCI59125 | Inner Joint | | 24 | 27 | 50 | 67 | 109.5 | |
| 2.4 (127 kw) | 2006.01-2011.09 | 5AT | F | L | Saloon FWD 2AZ-FE | | GDS59184 | Drive Shaft | 48T | 26 | 24 | 63 | 100 | 667 | |
| | 2006.01-2011.09 | 5AT | F | R | Saloon FWD 2AZ-FE | | GDS59185 | Drive Shaft | 48T | 26 | 24 | 63 | 100 | 966 | |
| | 2006.01-2011.09 | 5AT | F | R | Saloon FWD 2AZ-FE | Type:LE | GCO59167 | Outer Joint | 48T | 26 | 27 | 63 | 100 | 62 | I |
| | 2006.01-2011.09 | 5AT | F | L/R | Saloon FWD 2AZ-FE | | GCO59290 | Outer Joint | 48T | 26 | 27 | 63.3 | 100 | 59.5 | I |
| | 2006.01-2011.09 | 5AT | F | L/R | Saloon FWD 2AZ-FE | | GCO59407 | Outer Joint | 48T | 26 | 26 | 61 | 100 | 67.5 | M |
| | 2006.01-2011.09 | 5AT | F | L | Saloon FWD 2AZ-FE | TJ | GCI59073 | Inner Joint | | 24 | 27 | 50 | 67 | 110 | |
| | 2006.01-2011.09 | 5AT | F | L | Saloon FWD 2AZ-FE | AAR | GCI59125 | Inner Joint | | 24 | 27 | 50 | 67 | 109.5 | |
| | 2006.01-2011.09 | | F | R | Saloon FWD 2AZ-FE | | GCO59294 | Outer Joint | 48T | 26 | 27 | 63 | 97 | 60 | M |
| 2.5 (115 kw) | 2012.09-2018.09 | CVT | F | L | Saloon FWD 2ARFXE | | GDS81303 | Drive Shaft | 48T | 30 | 24 | 61 | 100 | 647 | |
| | 2012.09-2018.09 | CVT | F | R | Saloon FWD 2ARFXE | | GDS81304 | Drive Shaft | 48T | 30 | 24 | 61 | 100 | 985 | |
| | 2012.09-2018.09 | CVT | F | L/R | Saloon FWD 2ARFXE | | GCO59486 | Outer Joint | 48T | 30 | 27 | 61 | 100 | 65 | I |
| | 2012.09-2018.09 | CVT | F | L | Saloon FWD 2ARFXE | | GCI59109 | Inner Joint | | 24 | 27 | 50 | 84 | 109 | |
| | 2012.09-2018.09 | CVT | F | R | Saloon FWD 2ARFXE | | GCI59206 | Inner Joint | | 24 | 27 | 40 | 377 | 104.5 | |
| 2.5 (129 kw) | 2010.01-2011.09 | 6AT | F | R | Saloon FWD 2AR-FE | | GCI59172 | Inner Joint | | 24 | 26 | 40 | 377 | 104.5 | |
| | 2017.12- | CVT | F | L | Saloon FWD A25AFXS | | GCI82129 | Inner Joint | | 24 | 27 | 50 | 67 | 108 | |
| 2.5 (131 kw) | 2011.10-2018.03 | 6AT | F | L | Saloon FWD 2AR-FE | | GDS59624 | Drive Shaft | 48T | 26 | 24 | 61.2 | 100 | 657 | |
| | 2011.10-2018.03 | 6AT | F | R | Saloon FWD 2AR-FE | | GDS59654 | Drive Shaft | 48T | 26 | 24 | 63.3 | 100 | 981 | |
| | 2011.10-2018.03 | 6AT | F | L | Saloon FWD 2AR-FE | 6 balls | GCO59290 | Outer Joint | 48T | 26 | 27 | 63.3 | 100 | 59.5 | I |
| | 2011.10-2018.03 | 6AT | F | R | Saloon FWD 2AR-FE | | GCI59206 | Inner Joint | | 24 | 27 | 40 | 377 | 104.5 | |
| | 2011.10-2018.03 | | F | | Saloon FWD 2AR-FE | 8 balls | GCO81154 | Outer Joint | 48T | 26 | 33 | 61 | 99.5 | 61.5 | I |
| | 2011.10-2018.03 | | F | L | Saloon FWD 2AR-FE | | GCI59183 | Inner Joint | | 24 | 32 | 50 | 67 | 111 | |
| 2.5 (133 kw) | 2011.09-2018.03 | 6AT | F | L | Saloon FWD 2AR-FE | Manufactured in:Japan | GDS59624 | Drive Shaft | 48T | 26 | 24 | 61.2 | 100 | 657 | |
| | 2011.09-2018.03 | 6AT | F | L | Saloon FWD 2AR-FE | Manufactured in:Russia | GDS81473 | Drive Shaft | 48T | 26 | 24 | 61 | 99.5 | 659 | |
| | 2011.09-2018.03 | 6AT | F | R | Saloon FWD 2AR-FE | Manufactured in:Japan | GDS59654 | Drive Shaft | 48T | 26 | 24 | 63.3 | 100 | 981 | |
| | 2011.09-2018.03 | 6AT | F | R | Saloon FWD 2AR-FE | Manufactured in:Russia | GDS81471 | Drive Shaft | 48T | 26 | 24 | 61 | 99.5 | 976 | |
| | 2011.09-2018.03 | 6AT | F | L | Saloon FWD 2AR-FE | | GCO59314 | Outer Joint | 48T | 26 | 27 | 61.2 | 100 | 59.5 | I |
| | 2011.09-2018.03 | 6AT | F | R | Saloon FWD 2AR-FE | | GCO59290 | Outer Joint | 48T | 26 | 27 | 63.3 | 100 | 59.5 | I |
| | 2011.09-2018.03 | 6AT | F | L/R | Saloon FWD 2AR-FE | Manufactured in:Russia | GCO81154 | Outer Joint | 48T | 26 | 33 | 61 | 99.5 | 61.5 | I |
| | 2011.09-2018.03 | 6AT | F | L | Saloon FWD 2AR-FE | Manufactured in:Japan;TJ | GCI59073 | Inner Joint | | 24 | 27 | 50 | 67 | 110 | |
| | 2011.09-2018.03 | 6AT | F | L | Saloon FWD 2AR-FE | Manufactured in:Japan;AAR | GCI59125 | Inner Joint | | 24 | 27 | 50 | 67 | 109.5 | |
| | 2011.09-2018.03 | 6AT | F | L | Saloon FWD 2AR-FE | Manufactured in:Russia | GCI59183 | Inner Joint | | 24 | 32 | 50 | 67 | 111 | |
| | 2011.09-2018.03 | 6AT | F | R | Saloon FWD 2AR-FE | AAR | GCI59206 | Inner Joint | | 24 | 27 | 40 | 377 | 104.5 | |
| | 2011.09-2018.03 | 6AT | F | R | Saloon FWD 2AR-FE | Manufactured in:Russia,PTJ | GCI81276 | Inner Joint | | 24 | 32 | 40 | 376.5 | 103.5 | |
| | 2017.08- | 6AT | F | L | Saloon FWD 2AR-FE | | GDS59678 | Drive Shaft | | 26 | 24 | 61.2 | 100 | 663 | |
| | 2017.08- | 6AT | F | R | Saloon FWD 2AR-FE | | GDS84074 | Drive Shaft | | 26 | 24 | 61.2 | 100 | 980 | |
| | 2017.08- | 6AT | F | L/R | Saloon FWD 2AR-FE | | GCO59245 | Outer Joint | | 26 | 27 | 61.2 | 100 | 59 | I |
| | 2017.08- | 6AT | F | L | Saloon FWD 2AR-FE | | GCI59073 | Inner Joint | | 24 | 27 | 50 | 67 | 110 | |
| | 2017.08- | 6AT | F | R | Saloon FWD 2AR-FE | | GCI59206 | Inner Joint | | 24 | 27 | 40 | 377 | 104.5 | |
| 2.5 (135 kw) | 2012.01-2018.03 | 6AT | F | L | Saloon FWD 2AR-FE | Date to:2017.09;6 balls | GDS59510 | Drive Shaft | 48T | 26 | 24 | 61 | 100 | 669 | |
| | 2012.01-2018.03 | 6AT | F | L | Saloon FWD 2AR-FE | Date to:2015.03;8 balls | GDS81473 | Drive Shaft | 48T | 26 | 24 | 61 | 99.5 | 659 | |
| | 2012.01-2018.03 | 6AT | F | R | Saloon FWD 2AR-FE | Date to:2017.09;6 balls | GDS59511 | Drive Shaft | 48T | 26 | 24 | 61 | 100 | 976 | |
| | 2012.01-2018.03 | 6AT | F | R | Saloon FWD 2AR-FE | Date to:2015.03;8 balls | GDS81471 | Drive Shaft | 48T | 26 | 24 | 61 | 99.5 | 976 | |
| | 2012.01-2018.03 | 6AT | F | L/R | Saloon FWD 2AR-FE | 6 balls,Date to:2017.09 | GCO59235 | Outer Joint | 48T | 26 | 26 | 61 | 100 | 67.5 | M |
| | 2012.01-2018.03 | 6AT | F | L/R | Saloon FWD 2AR-FE | Date to:2015.03;8 balls | GCO81154 | Outer Joint | 48T | 26 | 33 | 61 | 99.5 | 61.5 | I |
| | 2012.01-2018.03 | 6AT | F | L | Saloon FWD 2AR-FE | Date to:2017.09 | GCI59173 | Inner Joint | | 24 | 26 | 50 | 67 | 109.5 | |

| | YEAR | TRANSM. | F/R | L/R | BODY STYLE & DRIVE TYPE & ENGINE | REMARKS | G-AP Ref. | PRODUCT | ABS | Technical Specifications A | B | C | H | L | P |
|---|---|---|---|---|---|---|---|---|---|---|---|---|---|---|---|
| **TOYOTA** **Camry** | | | | | | | | | | | | | | | |
| 2.5 (135 kw) | 2012.01-2018.03 | 6AT | F | L | Saloon FWD 2AR-FE | Date to:2015.03 | GCI59183 | Inner Joint | | 24 | 32 | 50 | 67 | 111 | |
| | 2012.01-2018.03 | 6AT | F | R | Saloon FWD 2AR-FE | Date to:2017.09 | GCI59172 | Inner Joint | | 24 | 26 | 40 | 377 | 104.5 | |
| | 2012.01-2018.03 | 6AT | F | R | Saloon FWD 2AR-FE | Date to:2015.03 | GCI81276 | Inner Joint | | 24 | 32 | 40 | 376.5 | 103.5 | |
| 2.5 (147 kw) | 1996.08-2001.07 | | F | | Estate FWD 2MZ-FE | | GCO59446 | Outer Joint | 48T | 30 | 27 | 56 | 100 | 66 | M |
| | 2017.08- | 8AT | F | L | Saloon FWD A25A-FKS | | GDS83108 | Drive Shaft | | 26 | 24 | 61.2 | 100 | 661 | |
| | 2017.08- | 8AT | F | L/R | Saloon FWD A25A-FKS | | GCO59245 | Outer Joint | | 26 | 27 | 61.2 | 100 | 59 | I |
| | 2017.08- | 8AT | F | L | Saloon FWD A25A-FKS | | GCI82129 | Inner Joint | | 24 | 27 | 50 | 67 | 108 | |
| 2.5 (149 kw) | 2011.09-2017.04 | 6AT | F | L | Saloon FWD 2AR-FXE;2JM | Date to:2017.09 | GDS59510 | Drive Shaft | 48T | 26 | 24 | 61 | 100 | 669 | |
| | 2011.09-2017.04 | 6AT | F | R | Saloon FWD 2AR-FXE;2JM | Date to:2017.09 | GDS59511 | Drive Shaft | 48T | 26 | 24 | 61 | 100 | 976 | |
| | 2011.09-2017.04 | 6AT | F | L/R | Saloon FWD 2AR-FXE;2JM | Date to:2017.09 | GCO59235 | Outer Joint | 48T | 26 | 26 | 61 | 100 | 67.5 | M |
| | 2011.09-2017.04 | 6AT | F | R | Saloon FWD 2AR-FXE;2JM | Date to:2017.09 | GCI59172 | Inner Joint | | 24 | 26 | 40 | 377 | 104.5 | |
| | 2011.09-2017.04 | CVT | F | L | Saloon FWD 2AR-FXE;2JM | | GDS81303 | Drive Shaft | 48T | 30 | 24 | 61 | 100 | 647 | |
| | 2011.09-2017.04 | CVT | F | R | Saloon FWD 2AR-FXE;2JM | | GDS81304 | Drive Shaft | 48T | 30 | 24 | 61 | 100 | 985 | |
| 2.5 (152 kw) | 2017.08- | 8AT | F | L | Saloon FWD A25A-FKS | | GDS83108 | Drive Shaft | | 26 | 24 | 61.2 | 100 | 661 | |
| | 2017.08- | 8AT | F | L/R | Saloon FWD A25A-FKS | | GCO59245 | Outer Joint | | 26 | 27 | 61.2 | 100 | 59 | I |
| | 2017.08- | 8AT | F | L | Saloon FWD A25A-FKS | | GCI82129 | Inner Joint | | 24 | 27 | 50 | 67 | 108 | |
| 2.5 (153 kw) | 2017.12- | CVT | F | L | Saloon FWD A25A-FXS | | GDS84078 | Drive Shaft | | 30 | 24 | 61.2 | 100 | 679 | |
| | 2017.12- | CVT | F | R | Saloon FWD A25A-FXS | | GDS84037 | Drive Shaft | | 30 | 24 | 61.2 | 100 | 978 | |
| | 2017.12- | CVT | F | L | Saloon FWD A25A-FXS | | GCI82129 | Inner Joint | | 24 | 27 | 50 | 67 | 108 | |
| | 2017.12- | CVT | F | R | Saloon FWD A25A-FXS | | GCI82484 | Inner Joint | | 24 | 27 | 40 | 368.5 | 105 | |
| | 2017.12- | | F | L/R | Saloon FWD A25A-FXS | | GCO99320 | Outer Joint | | 30 | 27 | 61.2 | 100 | 64 | I |
| 2.5 (160 kw) | 2017.08- | CVT | F | L | Saloon FWD A25A-FXS | | GDS84078 | Drive Shaft | | 30 | 24 | 61.2 | 100 | 679 | |
| | 2017.08- | CVT | F | R | Saloon FWD A25A-FXS | | GDS84037 | Drive Shaft | | 30 | 24 | 61.2 | 100 | 978 | |
| | 2017.08- | CVT | F | L | Saloon FWD A25A-FXS | | GCO99320 | Outer Joint | | 30 | 27 | 61.2 | 100 | 64 | I |
| | 2017.08- | CVT | F | L | Saloon FWD A25A-FXS | | GCI82129 | Inner Joint | | 24 | 27 | 50 | 67 | 108 | |
| | 2017.08- | CVT | F | R | Saloon FWD A25A-FXS | | GCI82484 | Inner Joint | | 24 | 27 | 40 | 368.5 | 105 | |
| 3.0 (135 kw) | 1996.08-2001.11 | 4AT/5MT | F | R | Saloon FWD 1MZFE | | GDS31001 | Drive Shaft | 48T | 30 | | 56 | 100 | 563 | |
| | 1996.08-2001.11 | 4AT/5MT | F | L/R | Saloon FWD 1MZFE | | GCI31001 | Inner Joint | | | 27 | | | 33.2 | |
| | 1996.08-2001.11 | AT | F | L | Saloon FWD 1MZFE | | GDS59163 | Drive Shaft | 48T | 30 | 24 | 56 | 95.5 | 652.5 | |
| | 1996.08-2001.11 | AT | F | R | Saloon FWD 1MZFE | | GDS59117 | Drive Shaft | 48T | 30 | 24 | 56 | 95.5 | 949.4 | |
| | 1996.08-2001.11 | AT | F | L/R | Saloon FWD 1MZFE | | GCO59446 | Outer Joint | 48T | 30 | 27 | 56 | 100 | 66 | M |
| | 1996.08-2001.11 | AT | F | | Saloon FWD 1MZFE | | GCO59009 | Outer Joint | 48T | 30 | 27 | 56 | 100 | 67.5 | I |
| | 1996.08-2001.11 | MT | F | L | Saloon FWD 1MZFE | | GDS57185 | Drive Shaft | 48T | 30 | 24 | 56 | 95.5 | 669 | |
| | 1996.08-2001.11 | MT | F | R | Saloon FWD 1MZFE | | GDS59401 | Drive Shaft | 48T | 30 | 24 | 56 | 95.5 | 941 | |
| | 1996.08-2001.11 | MT | F | R | Saloon FWD 1MZFE | Vehicle Production Country:USA | GCO59048 | Outer Joint | 48T | 30 | 34 | 56 | 100.5 | 66 | M |
| | 1996.08-2001.11 | MT | F | L/R | Saloon FWD 1MZFE | vehicle production country:USA | GCO59161 | Outer Joint | 48T | 30 | 34 | 56 | 95.5 | 70 | I |
| | 1996.08-2001.11 | | F | R | Saloon FWD 1MZFE | | GCO59173 | Outer Joint | 48T | 30 | 27 | 63.4 | 100 | 64.5 | M |
| 3.0 (137 kw) | 2001.08-2006.11 | 4AT | F | R | Saloon FWD 1MZ-FE | Date to:2002.12 | GDS84113 | Drive Shaft | 48T | 30 | 24 | 61 | 99 | 968 | |
| | 2001.08-2006.11 | 4AT | F | L/R | Saloon FWD 1MZ-FE | | GCO59154 | Outer Joint | 48T | 30 | 27 | 63.4 | 100 | 64.5 | M |
| | 2001.08-2006.11 | 4AT | F | L/R | Saloon FWD 1MZ-FE | Date to:2002.07 | GCO59225 | Outer Joint | 48T | 30 | 26 | 61 | 99 | 67 | M |
| | 2001.08-2006.11 | 4AT | F | L | Saloon FWD 1MZ-FE | | GCI59109 | Inner Joint | | 24 | 27 | 50 | 84 | 109 | |
| | 2001.08-2006.11 | 4AT | F | R | Saloon FWD 1MZ-FE | Date from:2002.12 | GCI59172 | Inner Joint | | 24 | 26 | 40 | 377 | 104.5 | |
| | 2001.08-2006.11 | 4AT | F | R | Saloon FWD 1MZ-FE | | GCI59206 | Inner Joint | | 24 | 27 | 40 | 377 | 104.5 | |
| | 2001.08-2006.11 | 4AT/5AT | F | L | Saloon FWD 1MZ-FE | | GDS59244 | Drive Shaft | 48T | 30 | 24 | 63 | 100.5 | 648 | |
| 3.0 (138 kw) | 1991.06-1996.08 | AT/MT | F | R | Saloon FWD 3VZ-FE | | GDS59027 | Drive Shaft | 48T | 30 | | 56 | 95.5 | 553 | |
| | 1991.06-1996.08 | AT/MT | F | L/R | Saloon FWD 3VZ-FE | Vehicle Production Country:Japan | GCO59065 | Outer Joint | | 30 | 27 | 56 | 100 | 67.5 | I |
| | 1991.06-1996.08 | AT/MT | F | | Saloon FWD 3VZ-FE | | GCO59060 | Outer Joint | | 30 | 34 | 56 | 95.5 | 70 | I |
| | 1991.06-1996.08 | | F | L/R | Saloon FWD 3VZ-FE | | GCO59048 | Outer Joint | 48T | 30 | 34 | 56 | 100.5 | 66 | M |
| | 1991.06-1996.08 | | F | | Saloon FWD 3VZ-FE | | GCO59446 | Outer Joint | 48T | 30 | 27 | 56 | 100 | 66 | M |
| | 1991.09-1996.07 | AT/MT | F | R | Estate FWD 3VZ-FE | | GDS59027 | Drive Shaft | 48T | 30 | | 56 | 95.5 | 553 | |
| | 1991.09-1996.07 | AT/MT | F | L/R | Estate FWD 3VZ-FE | Date From:1993.08;Vehicle Production Country:Japan | GCO59065 | Outer Joint | | 30 | 27 | 56 | 100 | 67.5 | I |
| | 1991.09-1996.07 | AT/MT | F | L/R | Estate FWD 3VZ-FE | Date from:1992.01 | GCO59161 | Outer Joint | 48T | 30 | 34 | 56 | 95.5 | 70 | I |
| | 1991.09-1996.07 | AT/MT | F | | Estate FWD 3VZ-FE | | GCO59060 | Outer Joint | | 30 | 34 | 56 | 95.5 | 70 | I |
| | 1991.09-1996.07 | | F | | Estate FWD 3VZ-FE | | GCO59048 | Outer Joint | 48T | 30 | 34 | 56 | 100.5 | 66 | M |
| 3.0 (140 kw) | 1996.08-2001.11 | 4AT/5MT | F | L | Saloon FWD 1MZFE | | GDS59163 | Drive Shaft | 48T | 30 | 24 | 56 | 95.5 | 652.5 | |
| | 1996.08-2001.11 | 4AT/5MT | F | R | Saloon FWD 1MZFE | | GDS59117 | Drive Shaft | 48T | 30 | 24 | 56 | 95.5 | 949.4 | |
| | 1996.08-2001.11 | | F | L/R | Saloon FWD 1MZFE | | GCO59048 | Outer Joint | 48T | 30 | 34 | 56 | 100.5 | 66 | M |
| | 1996.08-2001.11 | | F | R | Saloon FWD 1MZFE | Date From:2001.07 | GCI59191 | Inner Joint | | 23 | 26 | 34 | 394 | 124 | |
| 3.0 (141 kw) | 2002.09-2006.11 | 5AT | F | L | Saloon FWD 1MZ-FE | | GDS59244 | Drive Shaft | 48T | 30 | 24 | 63 | 100.5 | 648 | |
| 3.3 (165 kw) | 2003.07-2006.02 | 5AT | F | L | Saloon FWD 3MZFE | | GDS59244 | Drive Shaft | 48T | 30 | 24 | 63 | 100.5 | 648 | |
| 3.5 (183 kw) | 2012.12-2018.03 | 6AT | F | L | Saloon FWD 2GR-FE | Veh Prd Country:Japan | GDS59324 | Drive Shaft | 48T | 30 | 24 | 61 | 100 | 659 | |
| | 2012.12-2018.03 | 6AT | F | R | Saloon FWD 2GR-FE | Veh Prd Country:Japan/USA | GDS59323 | Drive Shaft | 48T | 30 | 24 | 61 | 100 | 978 | |
| | 2012.12-2018.03 | 6AT | F | L/R | Saloon FWD 2GR-FE | | GCO59214 | Outer Joint | 48T | 30 | 26 | 61 | 100 | 67 | I |
| | 2012.12-2018.03 | 6AT | F | L | Saloon FWD 2GR-FE | | GCI59082 | Inner Joint | | 24 | 27 | 50 | 67 | 109 | |
| | 2012.12-2018.03 | AT | F | L | Saloon FWD 2GR-FE | Vehicle Production Country:USA | GDS59372 | Drive Shaft | 48T | 30 | 24 | 61 | 99 | 652 | |

| | YEAR | TRANSM. | F/R | L/R | BODY STYLE & DRIVE TYPE & ENGINE | REMARKS | G-AP Ref. | PRODUCT | ABS | Technical Specifications A | B | C | H | L | P |
|---|---|---|---|---|---|---|---|---|---|---|---|---|---|---|---|
| **TOYOTA** | | | | | | | | | | | | | | | |
| **Camry** | | | | | | | | | | | | | | | |
| 3.5 (183 kw) | 2017.10- | 8AT | F | L | Saloon FWD 2GR-FKS | | GDS56904 | Drive Shaft | | 30 | 24 | 61.2 | 100 | 670 | |
| | 2017.10- | 8AT | F | R | Saloon FWD 2GR-FKS | | GDS57410 | Drive Shaft | | 30 | 24 | 61.2 | 100 | 996 | |
| | 2017.10- | 8AT | F | L/R | Saloon FWD 2GR-FKS | | GCO83471 | Outer Joint | | 30 | 27 | 61.2 | 100 | 70 | I |
| | 2017.10- | 8AT | F | L | Saloon FWD 2GR-FKS | | GCI83552 | Inner Joint | | 24 | 27 | 50 | 83.5 | 109 | |
| | 2017.10- | 8AT | F | R | Saloon FWD 2GR-FKS | | GCI82249 | Inner Joint | | 24 | 27 | 40 | 383 | 106 | |
| 3.5 (200 kw) | 2006.01-2011.12 | 6AT | F | L | Saloon FWD 2GR-FE | | GDS59324 | Drive Shaft | 48T | 30 | 24 | 61 | 100 | 659 | |
| | 2006.01-2011.12 | 6AT | F | R | Saloon FWD 2GR-FE | | GDS59323 | Drive Shaft | 48T | 30 | 24 | 61 | 100 | 978 | |
| | 2006.01-2011.12 | 6AT | F | L/R | Saloon FWD 2GR-FE | | GCO59214 | Outer Joint | 48T | 30 | 26 | 61 | 100 | 67 | I |
| | 2006.01-2011.12 | AT | F | | Saloon FWD 2GR-FE | Date To:2009.01 | GCO59290 | Outer Joint | 48T | 26 | 27 | 63.3 | 100 | 59.5 | I |
| | 2006.01-2011.12 | | F | L | Saloon FWD 2GR-FE | | GCI59082 | Inner Joint | | 24 | 27 | 50 | 67 | 109 | |
| | 2006.01-2011.12 | | F | R | Saloon FWD 2GR-FE | | GCI59116 | Inner Joint | | 24 | 27 | 40 | 379 | 105 | |
| 3.5 (204 kw) | 2006.09-2014.12 | 6AT | F | L | Saloon FWD 2GR-FE | | GDS59324 | Drive Shaft | 48T | 30 | 24 | 61 | 100 | 659 | |
| | 2006.09-2014.12 | 6AT | F | R | Saloon FWD 2GR-FE | | GDS59323 | Drive Shaft | 48T | 30 | 24 | 61 | 100 | 978 | |
| | 2006.09-2014.12 | 6AT | F | L/R | Saloon FWD 2GR-FE | | GCO59214 | Outer Joint | 48T | 30 | 26 | 61 | 100 | 67 | I |
| | 2006.09-2014.12 | 6AT | F | L | Saloon FWD 2GR-FE | | GCI59082 | Inner Joint | | 24 | 27 | 50 | 67 | 109 | |
| | 2006.09-2014.12 | 6AT | F | R | Saloon FWD 2GR-FE | | GCI59116 | Inner Joint | | 24 | 27 | 40 | 379 | 105 | |
| | 2011.09-2017.12 | 6AT | F | L | Saloon FWD 2GR-FE | Veh Prd Country:Japan | GDS59324 | Drive Shaft | 48T | 30 | 24 | 61 | 100 | 659 | |
| | 2011.09-2017.12 | 6AT | F | R | Saloon FWD 2GR-FE | Veh Prd Country:Japan/USA | GDS59323 | Drive Shaft | 48T | 30 | 24 | 61 | 100 | 978 | |
| | 2011.09-2017.12 | 6AT | F | L/R | Saloon FWD 2GR-FE | | GCO59214 | Outer Joint | 48T | 30 | 26 | 61 | 100 | 67 | I |
| | 2011.09-2017.12 | 6AT | F | L | Saloon FWD 2GR-FE | | GCI59082 | Inner Joint | | 24 | 27 | 50 | 67 | 109 | |
| | 2011.09-2017.12 | AT | F | L | Saloon FWD 2GR-FE | Vehicle Production Country:USA | GDS59372 | Drive Shaft | 48T | 30 | 24 | 61 | 99 | 652 | |
| **Camry Solara** | | | | | | | | | | | | | | | |
| 2.2 (100 kw) | 1998.06-2002.12 | | F | | Coupe FWD 5SFE | | GCO59193 | Outer Joint | | 26 | 32 | 56 | 101 | 66 | I |
| 3.3 (165 kw) | 2003.10-2008.07 | 5AT | F | L | Coupe FWD 3MZFE | | GDS59244 | Drive Shaft | 48T | 30 | 24 | 63 | 100.5 | 648 | |
| | 2004.01-2008.11 | 5AT | F | L | Convertible FWD 3MZ-FE | | GDS59244 | Drive Shaft | 48T | 30 | 24 | 63 | 100.5 | 648 | |
| **Camry/Scepter** | | | | | | | | | | | | | | | |
| 3.0 (136 kw) | 1991.09-1996.07 | AT/MT | F | R | Estate FWD 3VZ-FE | | GDS59027 | Drive Shaft | 48T | 30 | | 56 | 95.5 | 553 | |
| | 1991.09-1996.07 | | F | | Estate FWD 3VZ-FE | | GCO59048 | Outer Joint | 48T | 30 | 34 | 56 | 100.5 | 66 | M |
| | 1991.09-1996.07 | | F | | Estate FWD 3VZ-FE | | GCO59446 | Outer Joint | 48T | 30 | 27 | 56 | 100 | 66 | M |
| **Carina** | | | | | | | | | | | | | | | |
| 2.0 (65 kw) | 1996.08-1998.08 | | F | R | Saloon 4WD 2C-T | | GCI59160 | Inner Joint | | 23 | 23 | 36 | 75 | 93 | |
| **Carina E** | | | | | | | | | | | | | | | |
| 1.6 (73 kw) | 1992.02-1997.09 | AT/MT | F | L | Hatchback FWD 4AFE | | GDS22003 | Drive Shaft | 48T | 26 | 23 | 56 | 96.5 | 605 | |
| | 1992.02-1997.09 | AT/MT | F | L/R | Hatchback FWD 4AFE | | GCO59005 | Outer Joint | | 26 | 23 | 56 | 95.5 | 55 | I |
| | 1992.02-1997.09 | AT/MT | F | L/R | Hatchback FWD 4AFE | | GCO59006 | Outer Joint | 48T | 26 | 23 | 56 | 95.5 | 55 | I |
| | 1992.02-1997.09 | AT/MT | F | L/R | Hatchback FWD 4AFE | | GCO59020 | Outer Joint | | 26 | 23 | 56 | 96.5 | 55 | I |
| | 1992.02-1997.09 | AT/MT | F | L/R | Hatchback FWD 4AFE | | GCO59021 | Outer Joint | 48T | 26 | 23 | 56 | 96.5 | 55 | I |
| | 1992.02-1997.09 | AT/MT | F | L/R | Hatchback FWD 4AFE | | GCI88015 | Inner Joint | | 23 | 23 | 34 | 84 | 93 | |
| | 1992.02-1997.09 | AT/MT | F | L | Saloon FWD 4AFE | | GDS22003 | Drive Shaft | 48T | 26 | 23 | 56 | 96.5 | 605 | |
| | 1992.02-1997.09 | AT/MT | F | L/R | Saloon FWD 4AFE | | GCO59005 | Outer Joint | | 26 | 23 | 56 | 95.5 | 55 | I |
| | 1992.02-1997.09 | AT/MT | F | L/R | Saloon FWD 4AFE | | GCO59006 | Outer Joint | 48T | 26 | 23 | 56 | 95.5 | 55 | I |
| | 1992.02-1997.09 | AT/MT | F | L/R | Saloon FWD 4AFE | | GCO59020 | Outer Joint | | 26 | 23 | 56 | 96.5 | 55 | I |
| | 1992.02-1997.09 | AT/MT | F | L/R | Saloon FWD 4AFE | | GCO59021 | Outer Joint | 48T | 26 | 23 | 56 | 96.5 | 55 | I |
| | 1992.02-1997.09 | AT/MT | F | L/R | Saloon FWD 4AFE | | GCI88015 | Inner Joint | | 23 | 23 | 34 | 84 | 93 | |
| | 1992.11-1997.09 | AT/MT | F | L | Estate FWD 4AFE | | GDS22003 | Drive Shaft | 48T | 26 | 23 | 56 | 96.5 | 605 | |
| | 1992.11-1997.09 | AT/MT | F | L/R | Estate FWD 4AFE | | GCO59005 | Outer Joint | | 26 | 23 | 56 | 95.5 | 55 | I |
| | 1992.11-1997.09 | AT/MT | F | L/R | Estate FWD 4AFE | | GCO59006 | Outer Joint | 48T | 26 | 23 | 56 | 95.5 | 55 | I |
| | 1992.11-1997.09 | AT/MT | F | L/R | Estate FWD 4AFE | | GCO59020 | Outer Joint | | 26 | 23 | 56 | 96.5 | 55 | I |
| | 1992.11-1997.09 | AT/MT | F | L/R | Estate FWD 4AFE | | GCO59021 | Outer Joint | 48T | 26 | 23 | 56 | 96.5 | 55 | I |
| | 1992.11-1997.09 | AT/MT | F | L/R | Estate FWD 4AFE | | GCI88015 | Inner Joint | | 23 | 23 | 34 | 84 | 93 | |
| 1.6 (78 kw) | 1994.10-1997.09 | AT/MT | F | L | Hatchback FWD 4AFE | | GDS22003 | Drive Shaft | 48T | 26 | 23 | 56 | 96.5 | 605 | |
| | 1994.10-1997.09 | AT/MT | F | L/R | Hatchback FWD 4AFE | | GCO59006 | Outer Joint | 48T | 26 | 23 | 56 | 95.5 | 55 | I |
| | 1994.10-1997.09 | AT/MT | F | L/R | Hatchback FWD 4AFE | | GCO59020 | Outer Joint | | 26 | 23 | 56 | 96.5 | 55 | I |
| | 1994.10-1997.09 | AT/MT | F | L/R | Hatchback FWD 4AFE | | GCO59021 | Outer Joint | 48T | 26 | 23 | 56 | 96.5 | 55 | I |
| | 1994.10-1997.09 | AT/MT | F | L/R | Hatchback FWD 4AFE | | GCI88015 | Inner Joint | | 23 | 23 | 34 | 84 | 93 | |
| | 1994.10-1997.09 | AT/MT | F | L | Saloon FWD 4AFE | | GDS22003 | Drive Shaft | 48T | 26 | 23 | 56 | 96.5 | 605 | |
| | 1994.10-1997.09 | AT/MT | F | L/R | Saloon FWD 4AFE | | GCO59005 | Outer Joint | | 26 | 23 | 56 | 95.5 | 55 | I |
| | 1994.10-1997.09 | AT/MT | F | L/R | Saloon FWD 4AFE | | GCO59006 | Outer Joint | 48T | 26 | 23 | 56 | 95.5 | 55 | I |
| | 1994.10-1997.09 | AT/MT | F | L/R | Saloon FWD 4AFE | | GCO59020 | Outer Joint | | 26 | 23 | 56 | 96.5 | 55 | I |
| | 1994.10-1997.09 | AT/MT | F | L/R | Saloon FWD 4AFE | | GCO59021 | Outer Joint | 48T | 26 | 23 | 56 | 96.5 | 55 | I |
| | 1994.10-1997.09 | AT/MT | F | L/R | Saloon FWD 4AFE | | GCI88015 | Inner Joint | | 23 | 23 | 34 | 84 | 93 | |
| | 1994.10-1997.09 | | F | | Saloon FWD 4AFE | | GCO59163 | Outer Joint | 48T | 26 | 29 | 56 | 99.5 | 62.5 | O |
| 1.6 (79 kw) | 1992.04-1997.09 | AT/MT | F | L | Hatchback FWD 4AFE | | GDS22003 | Drive Shaft | 48T | 26 | 23 | 56 | 96.5 | 605 | |
| | 1992.04-1997.09 | AT/MT | F | L/R | Hatchback FWD 4AFE | | GCO59005 | Outer Joint | | 26 | 23 | 56 | 95.5 | 55 | I |
| | 1992.04-1997.09 | AT/MT | F | L/R | Hatchback FWD 4AFE | | GCO59006 | Outer Joint | 48T | 26 | 23 | 56 | 95.5 | 55 | I |

| | YEAR | TRANSM. | F/R | L/R | BODY STYLE & DRIVE TYPE & ENGINE | REMARKS | G-AP Ref. | PRODUCT | ABS | Technical Specifications A | B | C | H | L | P |
|---|---|---|---|---|---|---|---|---|---|---|---|---|---|---|---|
| **TOYOTA** **Carina E** | | | | | | | | | | | | | | | |
| 1.6 (79 kw) | 1992.04-1997.09 | AT/MT | F | L/R | Hatchback FWD 4AFE | | GCO59020 | Outer Joint | | 26 | 23 | 56 | 96.5 | 55 | I |
| | 1992.04-1997.09 | AT/MT | F | L/R | Hatchback FWD 4AFE | | GCO59021 | Outer Joint | 48T | 26 | 23 | 56 | 96.5 | 55 | I |
| | 1992.04-1997.09 | AT/MT | F | L/R | Hatchback FWD 4AFE | | GCI88015 | Inner Joint | | 23 | 23 | 34 | 84 | 93 | |
| | 1993.01-1997.09 | AT/MT | F | L/R | Estate FWD 4AFE | | GCO59005 | Outer Joint | | 26 | 23 | 56 | 95.5 | 55 | I |
| | 1993.01-1997.09 | AT/MT | F | L/R | Estate FWD 4AFE | | GCO59006 | Outer Joint | 48T | 26 | 23 | 56 | 95.5 | 55 | I |
| | 1993.01-1997.09 | AT/MT | F | L/R | Estate FWD 4AFE | | GCO59020 | Outer Joint | | 26 | 23 | 56 | 96.5 | 55 | I |
| | 1993.01-1997.09 | AT/MT | F | L/R | Estate FWD 4AFE | | GCO59021 | Outer Joint | 48T | 26 | 23 | 56 | 96.5 | 55 | I |
| | 1993.01-1997.09 | AT/MT | F | L | Saloon FWD 4AFE | | GDS22003 | Drive Shaft | 48T | 26 | 23 | 56 | 96.5 | 605 | |
| | 1993.01-1997.09 | AT/MT | F | L/R | Saloon FWD 4AFE | | GCO59005 | Outer Joint | | 26 | 23 | 56 | 95.5 | 55 | I |
| | 1993.01-1997.09 | AT/MT | F | L/R | Saloon FWD 4AFE | | GCO59006 | Outer Joint | 48T | 26 | 23 | 56 | 95.5 | 55 | I |
| | 1993.01-1997.09 | AT/MT | F | L/R | Saloon FWD 4AFE | | GCO59020 | Outer Joint | | 26 | 23 | 56 | 96.5 | 55 | I |
| | 1993.01-1997.09 | AT/MT | F | L/R | Saloon FWD 4AFE | | GCO59021 | Outer Joint | 48T | 26 | 23 | 56 | 96.5 | 55 | I |
| | 1993.01-1997.09 | AT/MT | F | L/R | Saloon FWD 4AFE | | GCI88015 | Inner Joint | | 23 | 23 | 34 | 84 | 93 | |
| 1.6 (85 kw) | 1992.02-1997.09 | AT/MT | F | L | Hatchback FWD 4AFE | | GDS22003 | Drive Shaft | 48T | 26 | 23 | 56 | 96.5 | 605 | |
| | 1992.02-1997.09 | AT/MT | F | L/R | Hatchback FWD 4AFE | | GCO59005 | Outer Joint | | 26 | 23 | 56 | 95.5 | 55 | I |
| | 1992.02-1997.09 | AT/MT | F | L/R | Hatchback FWD 4AFE | | GCO59006 | Outer Joint | 48T | 26 | 23 | 56 | 95.5 | 55 | I |
| | 1992.02-1997.09 | AT/MT | F | L/R | Hatchback FWD 4AFE | | GCO59020 | Outer Joint | | 26 | 23 | 56 | 96.5 | 55 | I |
| | 1992.02-1997.09 | AT/MT | F | L/R | Hatchback FWD 4AFE | | GCO59021 | Outer Joint | 48T | 26 | 23 | 56 | 96.5 | 55 | I |
| | 1992.02-1997.09 | AT/MT | F | L/R | Hatchback FWD 4AFE | | GCI88015 | Inner Joint | | 23 | 23 | 34 | 84 | 93 | |
| | 1992.02-1997.09 | | F | | Hatchback FWD 4AFE | | GCO59163 | Outer Joint | 48T | 26 | 29 | 56 | 99.5 | 62.5 | O |
| | 1992.02-1997.09 | AT/MT | F | L | Saloon FWD 4AFE | | GDS22003 | Drive Shaft | 48T | 26 | 23 | 56 | 96.5 | 605 | |
| | 1992.02-1997.09 | AT/MT | F | L/R | Saloon FWD 4AFE | | GCO59006 | Outer Joint | 48T | 26 | 23 | 56 | 95.5 | 55 | I |
| | 1992.02-1997.09 | AT/MT | F | L/R | Saloon FWD 4AFE | | GCO59020 | Outer Joint | | 26 | 23 | 56 | 96.5 | 55 | I |
| | 1992.02-1997.09 | AT/MT | F | L/R | Saloon FWD 4AFE | | GCO59021 | Outer Joint | 48T | 26 | 23 | 56 | 96.5 | 55 | I |
| | 1992.02-1997.09 | AT/MT | F | L/R | Saloon FWD 4AFE | | GCI88015 | Inner Joint | | 23 | 23 | 34 | 84 | 93 | |
| | 1992.11-1997.09 | MT | F | R | Estate FWD 4AFE | | GDS22002 | Drive Shaft | | 26 | 23 | 56 | 96.5 | 920 | |
| | 1992.11-1997.09 | MT | F | R | Estate FWD 4AFE | | GCI88015 | Inner Joint | | 23 | 23 | 34 | 84 | 93 | |
| | 1992.11-1997.09 | | F | | Estate FWD 4AFE | | GCO59059 | Outer Joint | | 26 | 32 | 56 | 101 | 64 | I |
| | 1992.11-1997.09 | | F | | Estate FWD 4AFE | | GCO59128 | Outer Joint | 48T | 26 | 23 | 56 | 95.5 | 55 | I |
| 1.8 (79 kw) | 1994.12-1997.09 | 5MT | F | L | Hatchback FWD 7AFE | Date to:1995.04 | GDS22003 | Drive Shaft | 48T | 26 | 23 | 56 | 96.5 | 605 | |
| | 1994.12-1997.09 | AT/MT | F | L/R | Hatchback FWD 7AFE | | GCO59005 | Outer Joint | | 26 | 23 | 56 | 95.5 | 55 | I |
| | 1994.12-1997.09 | AT/MT | F | L/R | Hatchback FWD 7AFE | | GCO59006 | Outer Joint | 48T | 26 | 23 | 56 | 95.5 | 55 | I |
| | 1994.12-1997.09 | AT/MT | F | L/R | Hatchback FWD 7AFE | | GCO59020 | Outer Joint | | 26 | 23 | 56 | 96.5 | 55 | I |
| | 1994.12-1997.09 | AT/MT | F | L/R | Hatchback FWD 7AFE | | GCO59021 | Outer Joint | 48T | 26 | 23 | 56 | 96.5 | 55 | I |
| | 1994.12-1997.09 | AT/MT | F | L/R | Hatchback FWD 7AFE | | GCO59062 | Outer Joint | | 26 | 24 | 56 | 95.5 | 55 | I |
| | 1994.12-1997.09 | 5MT | F | L | Saloon FWD 7AFE | Date to:1995.04 | GDS22003 | Drive Shaft | 48T | 26 | 23 | 56 | 96.5 | 605 | |
| | 1994.12-1997.09 | AT/MT | F | L/R | Saloon FWD 7AFE | | GCO59005 | Outer Joint | | 26 | 23 | 56 | 95.5 | 55 | I |
| | 1994.12-1997.09 | AT/MT | F | L/R | Saloon FWD 7AFE | | GCO59006 | Outer Joint | 48T | 26 | 23 | 56 | 95.5 | 55 | I |
| | 1994.12-1997.09 | AT/MT | F | L/R | Saloon FWD 7AFE | | GCO59020 | Outer Joint | | 26 | 23 | 56 | 96.5 | 55 | I |
| | 1994.12-1997.09 | AT/MT | F | L/R | Saloon FWD 7AFE | | GCO59021 | Outer Joint | 48T | 26 | 23 | 56 | 96.5 | 55 | I |
| | 1994.12-1997.09 | AT/MT | F | L/R | Saloon FWD 7AFE | | GCO59062 | Outer Joint | | 26 | 24 | 56 | 95.5 | 55 | I |
| | 1994.12-1998.06 | AT/MT | F | L | Estate FWD 7AFE | | GDS22003 | Drive Shaft | 48T | 26 | 23 | 56 | 96.5 | 605 | |
| | 1994.12-1998.06 | AT/MT | F | L/R | Estate FWD 7AFE | | GCO59005 | Outer Joint | | 26 | 23 | 56 | 95.5 | 55 | I |
| | 1994.12-1998.06 | AT/MT | F | L/R | Estate FWD 7AFE | | GCO59006 | Outer Joint | 48T | 26 | 23 | 56 | 95.5 | 55 | I |
| | 1994.12-1998.06 | AT/MT | F | L/R | Estate FWD 7AFE | | GCO59020 | Outer Joint | | 26 | 23 | 56 | 96.5 | 55 | I |
| | 1994.12-1998.06 | AT/MT | F | L/R | Estate FWD 7AFE | | GCO59021 | Outer Joint | 48T | 26 | 23 | 56 | 96.5 | 55 | I |
| | 1994.12-1998.06 | AT/MT | F | L/R | Estate FWD 7AFE | | GCO59062 | Outer Joint | | 26 | 24 | 56 | 95.5 | 55 | I |
| | 1994.12-1998.06 | AT/MT | F | L/R | Estate FWD 7AFE | | GCI88015 | Inner Joint | | 23 | 23 | 34 | 84 | 93 | |
| 2.0 (54 kw) | 1992.02-1997.09 | 5MT | F | L/R | Hatchback FWD 2C | | GCO99122 | Outer Joint | | 26 | 24 | 56 | 96 | 56 | I |
| | 1992.02-1997.09 | AT/MT | F | L/R | Hatchback FWD 2C | | GCO59001 | Outer Joint | | 26 | 24 | 56 | 95.5 | 55 | I |
| | 1992.02-1997.09 | MT | F | L/R | Hatchback FWD 2C | | GCO59019 | Outer Joint | 48T | 26 | 24 | 56 | 95.5 | 55 | I |
| | 1992.02-1997.09 | MT | F | R | Hatchback FWD 2C | | GCI59105 | Inner Joint | | 20 | 23 | 35 | 363.5 | 100.5 | |
| | 1992.02-1997.09 | | F | L/R | Hatchback FWD 2C | | GCO59062 | Outer Joint | | 26 | 24 | 56 | 95.5 | 55 | I |
| | 1992.02-1997.09 | 5MT | F | L/R | Saloon FWD 2C | | GCO99122 | Outer Joint | | 26 | 24 | 56 | 96 | 56 | I |
| | 1992.02-1997.09 | AT/MT | F | L/R | Saloon FWD 2C | | GCO59001 | Outer Joint | | 26 | 24 | 56 | 95.5 | 55 | I |
| | 1992.02-1997.09 | MT | F | L/R | Saloon FWD 2C | | GCO59019 | Outer Joint | 48T | 26 | 24 | 56 | 95.5 | 55 | I |
| | 1992.02-1997.09 | MT | F | R | Saloon FWD 2C | | GCI59105 | Inner Joint | | 20 | 23 | 35 | 363.5 | 100.5 | |
| | 1992.02-1997.09 | | F | L/R | Saloon FWD 2C | | GCO59062 | Outer Joint | | 26 | 24 | 56 | 95.5 | 55 | I |
| | 1992.11-1997.09 | 5MT | F | L/R | Estate FWD 2C | | GCO99122 | Outer Joint | | 26 | 24 | 56 | 96 | 56 | I |
| | 1992.11-1997.09 | AT/MT | F | L/R | Estate FWD 2C | | GCO59001 | Outer Joint | | 26 | 24 | 56 | 95.5 | 55 | I |
| | 1992.11-1997.09 | MT | F | L/R | Estate FWD 2C | | GCO59019 | Outer Joint | 48T | 26 | 24 | 56 | 95.5 | 55 | I |
| | 1992.11-1997.09 | MT | F | R | Estate FWD 2C | | GCI59105 | Inner Joint | | 20 | 23 | 35 | 363.5 | 100.5 | |
| | 1992.11-1997.09 | | F | L/R | Estate FWD 2C | | GCO59062 | Outer Joint | | 26 | 24 | 56 | 95.5 | 55 | I |
| 2.0 (61 kw) | 1996.02-1997.09 | AT/MT | F | L/R | Estate FWD 2CT | | GCO59001 | Outer Joint | | 26 | 24 | 56 | 95.5 | 55 | I |
| | 1996.02-1997.09 | MT | F | R | Estate FWD 2CT | | GCI59105 | Inner Joint | | 20 | 23 | 35 | 363.5 | 100.5 | |

| | YEAR | TRANSM. | F/R | L/R | BODY STYLE & DRIVE TYPE & ENGINE | REMARKS | G-AP Ref. | PRODUCT | ABS | Technical Specifications A | B | C | H | L | P |
|---|---|---|---|---|---|---|---|---|---|---|---|---|---|---|---|
| **TOYOTA** | | | | | | | | | | | | | | | |
| **Carina E** | | | | | | | | | | | | | | | |
| 2.0 (61 kw) | 1996.02-1997.09 | | F | | Estate FWD 2CT | | GCO59021 | Outer Joint | 48T | 26 | 23 | 56 | 96.5 | 55 | I |
| | 1996.02-1997.09 | AT/MT | F | L/R | Hatchback FWD 2CT | | GCO59001 | Outer Joint | | 26 | 24 | 56 | 95.5 | 55 | I |
| | 1996.02-1997.09 | MT | F | R | Hatchback FWD 2CT | | GCI59105 | Inner Joint | | 20 | 23 | 35 | 363.5 | 100.5 | |
| | 1996.02-1997.09 | | F | | Hatchback FWD 2CT | | GCO59021 | Outer Joint | 48T | 26 | 23 | 56 | 96.5 | 55 | I |
| | 1996.02-1997.09 | AT/MT | F | L/R | Saloon FWD 2CT | | GCO59001 | Outer Joint | | 26 | 24 | 56 | 95.5 | 55 | I |
| | 1996.02-1997.09 | MT | F | R | Saloon FWD 2CT | | GCI59105 | Inner Joint | | 20 | 23 | 35 | 363.5 | 100.5 | |
| | 1996.02-1997.09 | | F | | Saloon FWD 2CT | | GCO59021 | Outer Joint | 48T | 26 | 23 | 56 | 96.5 | 55 | I |
| 2.0 (93 kw) | 1992.12-1997.09 | 5MT | F | L/R | Saloon FWD 3SFE | | GCO99122 | Outer Joint | | 26 | 24 | 56 | 96 | 56 | I |
| | 1992.12-1997.09 | AT/MT | F | L/R | Saloon FWD 3SFE | | GCO59001 | Outer Joint | | 26 | 24 | 56 | 95.5 | 55 | I |
| | 1992.12-1997.09 | MT | F | L/R | Saloon FWD 3SFE | | GCO59019 | Outer Joint | 48T | 26 | 24 | 56 | 95.5 | 55 | I |
| | 1992.12-1997.09 | | F | | Saloon FWD 3SFE | | GCO59059 | Outer Joint | | 26 | 32 | 56 | 101 | 64 | I |
| | 1992.12-1997.09 | | F | | Saloon FWD 3SFE | | GCO59062 | Outer Joint | | 26 | 24 | 56 | 95.5 | 55 | I |
| | 1994.11-1997.09 | 5MT | F | L/R | Estate FWD 3SFE | | GCO99122 | Outer Joint | | 26 | 24 | 56 | 96 | 56 | I |
| | 1994.11-1997.09 | AT/MT | F | L/R | Estate FWD 3SFE | | GCO59001 | Outer Joint | | 26 | 24 | 56 | 95.5 | 55 | I |
| | 1994.11-1997.09 | MT | F | L/R | Estate FWD 3SFE | | GCO59019 | Outer Joint | 48T | 26 | 24 | 56 | 95.5 | 55 | I |
| | 1994.11-1997.09 | | F | | Estate FWD 3SFE | | GCO59059 | Outer Joint | | 26 | 32 | 56 | 101 | 64 | I |
| | 1994.11-1997.09 | | F | | Estate FWD 3SFE | | GCO59062 | Outer Joint | | 26 | 24 | 56 | 95.5 | 55 | I |
| | 1994.11-1997.09 | 5MT | F | L/R | Hatchback FWD 3SFE | | GCO99122 | Outer Joint | | 26 | 24 | 56 | 96 | 56 | I |
| | 1994.11-1997.09 | AT/MT | F | L/R | Hatchback FWD 3SFE | | GCO59001 | Outer Joint | | 26 | 24 | 56 | 95.5 | 55 | I |
| | 1994.11-1997.09 | MT | F | L/R | Hatchback FWD 3SFE | | GCO59019 | Outer Joint | 48T | 26 | 24 | 56 | 95.5 | 55 | I |
| | 1994.11-1997.09 | | F | | Hatchback FWD 3SFE | | GCO59059 | Outer Joint | | 26 | 32 | 56 | 101 | 64 | I |
| | 1994.11-1997.09 | | F | | Hatchback FWD 3SFE | | GCO59062 | Outer Joint | | 26 | 24 | 56 | 95.5 | 55 | I |
| 2.0 (98 kw) | 1992.02-1997.09 | 4AT/5MT | F | L/R | Hatchback FWD 3SFE | | GCO99122 | Outer Joint | | 26 | 24 | 56 | 96 | 56 | I |
| | 1992.02-1997.09 | AT/MT | F | L/R | Hatchback FWD 3SFE | | GCO59001 | Outer Joint | | 26 | 24 | 56 | 95.5 | 55 | I |
| | 1992.02-1997.09 | | F | | Hatchback FWD 3SFE | | GCO59059 | Outer Joint | | 26 | 32 | 56 | 101 | 64 | I |
| | 1992.02-1997.09 | | F | | Hatchback FWD 3SFE | | GCO59062 | Outer Joint | | 26 | 24 | 56 | 95.5 | 55 | I |
| | 1992.02-1997.09 | 4AT/5MT | F | L/R | Saloon FWD 3SFE | | GCO99122 | Outer Joint | | 26 | 24 | 56 | 96 | 56 | I |
| | 1992.02-1997.09 | AT/MT | F | L/R | Saloon FWD 3SFE | | GCO59001 | Outer Joint | | 26 | 24 | 56 | 95.5 | 55 | I |
| | 1992.02-1997.09 | | F | | Saloon FWD 3SFE | | GCO59059 | Outer Joint | | 26 | 32 | 56 | 101 | 64 | I |
| | 1992.02-1997.09 | | F | | Saloon FWD 3SFE | | GCO59062 | Outer Joint | | 26 | 24 | 56 | 95.5 | 55 | I |
| | 1993.01-1997.09 | 4AT/5MT | F | L/R | Estate FWD 3SFE | | GCO99122 | Outer Joint | | 26 | 24 | 56 | 96 | 56 | I |
| | 1993.01-1997.09 | AT/MT | F | L/R | Estate FWD 3SFE | | GCO59001 | Outer Joint | | 26 | 24 | 56 | 95.5 | 55 | I |
| | 1993.01-1997.09 | | F | | Estate FWD 3SFE | | GCO59059 | Outer Joint | | 26 | 32 | 56 | 101 | 64 | I |
| | 1993.01-1997.09 | | F | | Estate FWD 3SFE | | GCO59062 | Outer Joint | | 26 | 24 | 56 | 95.5 | 55 | I |
| 2.0 (129 kw) | 1992.02-1997.09 | MT | F | L | Saloon FWD 3SGE | | GCI99040 | Inner Joint | | 20 | 25 | 35 | 63.5 | 112 | |
| | 1992.02-1997.09 | | F | | Saloon FWD 3SGE | | GCO59003 | Outer Joint | | 26 | 25 | 56 | 95.6 | 61 | M |
| | 1995.07-1997.09 | MT | F | L | Hatchback FWD 3SGE | | GCI99040 | Inner Joint | | 20 | 25 | 35 | 63.5 | 112 | |
| | 1995.07-1997.09 | | F | | Hatchback FWD 3SGE | | GCO59003 | Outer Joint | | 26 | 25 | 56 | 95.6 | 61 | M |
| **Celica** | | | | | | | | | | | | | | | |
| 1.8 (85 kw) | 1993.11-1999.11 | AT/MT | F | L/R | Coupe FWD 7AFE | | GCO59019 | Outer Joint | 48T | 26 | 24 | 56 | 95.5 | 55 | I |
| 1.8 (105 kw) | 1999.08-2005.07 | 4AT | F | L | Coupe FWD 1ZZ-FE | Date from:2002.08,Date to:2005.06 | GDS59150 | Drive Shaft | 48T | 26 | 20 | 56 | 95.5 | 625 | |
| | 1999.08-2005.07 | 4AT | F | R | Coupe FWD 1ZZ-FE | TJ | GDS59224 | Drive Shaft | 48T | 26 | 20 | 56 | 95 | 915 | |
| | 1999.08-2005.07 | AT | F | L/R | Coupe FWD 1ZZ-FE | Date from:2001.05 | GCO59131 | Outer Joint | 48T | 26 | 24 | 58 | 96 | 55 | I |
| | 1999.08-2005.07 | AT/MT | F | L/R | Coupe FWD 1ZZ-FE | | GCO59153 | Outer Joint | 48T | 26 | 24 | 58 | 96 | 52.5 | I |
| | 1999.08-2005.07 | AT/MT | F | L/R | Coupe FWD 1ZZ-FE | | GCO59261 | Outer Joint | 48T | 26 | 25 | 56 | 95 | 61 | I |
| | 1999.08-2005.07 | MT/4AT | F | L | Coupe FWD 1ZZ-FE | Transmission:4AT,Date to:2002.07 | GDS59223 | Drive Shaft | 48T | 26 | 20 | 56 | 95 | 634 | |
| | 1999.08-2005.07 | | F | | Coupe FWD 1ZZ-FE | | GCO59262 | Outer Joint | 48T | 26 | 24 | 58 | 95 | 51 | I |
| 1.8 (141 kw) | 1999.08-2005.09 | 4AT | F | R | Coupe FWD 2ZZ-GE | Date to:2002.07 | GDS59224 | Drive Shaft | 48T | 26 | 20 | 56 | 95 | 915 | |
| | 1999.08-2005.09 | 4AT | F | L/R | Coupe FWD 2ZZ-GE | | GCO59131 | Outer Joint | 48T | 26 | 24 | 58 | 96 | 55 | I |
| | 1999.08-2005.09 | 4AT/6MT | F | R | Coupe FWD 2ZZ-GE | Date from:2000.11 | GCO59182 | Outer Joint | 48T | 26 | 25 | 58 | 95.5 | 61.5 | M |
| | 1999.08-2005.09 | 4AT/6MT | F | L/R | Coupe FWD 2ZZ-GE | | GCO59003 | Outer Joint | | 26 | 25 | 56 | 95.6 | 61 | M |
| | 1999.08-2005.09 | 4AT/6MT | F | L/R | Coupe FWD 2ZZ-GE | | GCO59261 | Outer Joint | 48T | 26 | 25 | 56 | 95 | 61 | I |
| | 1999.08-2005.09 | 4AT/6MT | F | R | Coupe FWD 2ZZ-GE | | GCI59105 | Inner Joint | | 20 | 23 | 35 | 363.5 | 100.5 | |
| | 1999.08-2005.09 | 4AT/MT | F | L | Coupe FWD 2ZZ-GE | Transmission:4AT,Date to:2002.07 | GDS59223 | Drive Shaft | 48T | 26 | 20 | 56 | 95 | 634 | |
| 2.0 (125 kw) | 1993.11-1999.08 | AT/MT | F | L/R | Cabriolet FWD 3SGE | | GCO59002 | Outer Joint | 48T | 26 | 25 | 56 | 96 | 62 | I |
| | 1993.11-1999.08 | | F | L | Cabriolet FWD 3SGE | | GCI99040 | Inner Joint | | 20 | 25 | 35 | 63.5 | 112 | |
| | 1996.04-1999.08 | | F | | Coupe FWD 3SGE | | GCO59003 | Outer Joint | | 26 | 25 | 56 | 95.6 | 61 | M |
| 2.0 (129 kw) | 1993.11-1999.08 | | F | | Coupe FWD 3SGE | | GCO59003 | Outer Joint | | 26 | 25 | 56 | 95.6 | 61 | M |
| | 1994.08-1999.08 | | F | | Cabriolet FWD 3SGE | | GCO59003 | Outer Joint | | 26 | 25 | 56 | 95.6 | 61 | M |
| | 1994.08-1999.08 | | F | L | Cabriolet FWD 3SGE | | GCI99040 | Inner Joint | | 20 | 25 | 35 | 63.5 | 112 | |
| 2.0 (178 kw) | 1994.02-1999.11 | | F | | Coupe 4WD 3SGTE | | GCO59003 | Outer Joint | | 26 | 25 | 56 | 95.6 | 61 | M |
| **Century** | | | | | | | | | | | | | | | |
| 5.0 (206 kw) | 1996.08-2004.12 | 4AT | R | L/R | Saloon RWD 1GZFE | | GCI83880 | Inner Joint | | | 24 | | | 31 | |

| | YEAR | TRANSM. | F/R | L/R | BODY STYLE & DRIVE TYPE & ENGINE | REMARKS | G-AP Ref. | PRODUCT | ABS | Technical Specifications A | B | C | H | L | P |
|---|---|---|---|---|---|---|---|---|---|---|---|---|---|---|---|
| **TOYOTA** | | | | | | | | | | | | | | | |
| **Chaser** | | | | | | | | | | | | | | | |
| 1.8 (88 kw) | 1996.09-2001.05 | 4AT | R | L/R | Saloon RWD 4SFE | | GCI39089 | Inner Joint | | | 20 | | | 66.2 | |
| 2.0 (99 kw) | 1996.09-2001.06 | 4AT | R | L/R | Saloon RWD 1GFE | | GCI39089 | Inner Joint | | | 20 | | | 66.2 | |
| 2.0 (118 kw) | 1996.09-2001.05 | 4AT | R | L/R | Saloon RWD 1GFE | | GCI39089 | Inner Joint | | | 20 | | | 66.2 | |
| 2.4 (71 kw) | 1996.09-1999.07 | 4AT | R | L/R | Saloon RWD 2LTE | | GCI39089 | Inner Joint | | | 20 | | | 66.2 | |
| 2.5 (147 kw) | 1996.10-2001.05 | | R | L/R | Saloon RWD 1JZGE | | GCO59390 | Outer Joint | 48T | 30 | 27 | 63 | 108.5 | 64 | I |
| 3.0 (162 kw) | 1996.09-2001.06 | 4AT | R | L/R | Saloon RWD 2JZGE | Date to:1997.07 | GCI83880 | Inner Joint | | | 24 | | | 31 | |
| **Corolla** | | | | | | | | | | | | | | | |
| 1.3 (53 kw) | 1992.05-1997.04 | AT/MT | F | L | Saloon FWD 2E | | GDS88016 | Drive Shaft | | 26 | 23 | 56 | 96.5 | 599 | |
| | 1992.05-1997.04 | AT/MT | F | L/R | Saloon FWD 2E | | GCO59005 | Outer Joint | | 26 | 23 | 56 | 95.5 | 55 | I |
| | 1992.05-1997.04 | AT/MT | F | L/R | Saloon FWD 2E | | GCO59006 | Outer Joint | 48T | 26 | 23 | 56 | 95.5 | 55 | I |
| | 1992.05-1997.04 | AT/MT | F | L/R | Saloon FWD 2E | | GCO59020 | Outer Joint | | 26 | 23 | 56 | 96.5 | 55 | I |
| | 1992.05-1997.04 | AT/MT | F | L/R | Saloon FWD 2E | | GCI88015 | Inner Joint | | 23 | 23 | 34 | 84 | 93 | |
| 1.3 (55 kw) | 1995.08-1997.04 | AT/MT | F | L/R | Hatchback FWD 4EFE | | GCI88015 | Inner Joint | | 23 | 23 | 34 | 84 | 93 | |
| | 1995.08-1997.04 | MT | F | L | Hatchback FWD 4EFE | | GDS88016 | Drive Shaft | | 26 | 23 | 56 | 96.5 | 599 | |
| | 1995.08-1997.04 | MT | F | L/R | Hatchback FWD 4EFE | | GCO59005 | Outer Joint | | 26 | 23 | 56 | 95.5 | 55 | I |
| | 1995.08-1997.04 | MT | F | L/R | Hatchback FWD 4EFE | | GCO59006 | Outer Joint | 48T | 26 | 23 | 56 | 95.5 | 55 | I |
| | 1995.08-1997.04 | MT | F | L/R | Hatchback FWD 4EFE | | GCO59020 | Outer Joint | | 26 | 23 | 56 | 96.5 | 55 | I |
| | 1995.08-1997.04 | MT | F | L/R | Hatchback FWD 4EFE | | GCO59021 | Outer Joint | 48T | 26 | 23 | 56 | 96.5 | 55 | I |
| | 1995.08-1997.04 | AT/MT | F | L/R | Saloon FWD 4EFE | | GCI88015 | Inner Joint | | 23 | 23 | 34 | 84 | 93 | |
| | 1995.08-1997.04 | MT | F | L | Saloon FWD 4EFE | | GDS88016 | Drive Shaft | | 26 | 23 | 56 | 96.5 | 599 | |
| | 1995.08-1997.04 | MT | F | L/R | Saloon FWD 4EFE | | GCO59005 | Outer Joint | | 26 | 23 | 56 | 95.5 | 55 | I |
| | 1995.08-1997.04 | MT | F | L/R | Saloon FWD 4EFE | | GCO59006 | Outer Joint | 48T | 26 | 23 | 56 | 95.5 | 55 | I |
| | 1995.08-1997.04 | MT | F | L/R | Saloon FWD 4EFE | | GCO59020 | Outer Joint | | 26 | 23 | 56 | 96.5 | 55 | I |
| | 1995.08-1997.04 | MT | F | L/R | Saloon FWD 4EFE | | GCO59021 | Outer Joint | 48T | 26 | 23 | 56 | 96.5 | 55 | I |
| | 1997.05-2001.10 | 5MT | F | L | Saloon FWD 2E | | GDS88016 | Drive Shaft | | 26 | 23 | 56 | 96.5 | 599 | |
| | 1997.05-2001.10 | 5MT | F | L/R | Saloon FWD 2E | | GCO59020 | Outer Joint | | 26 | 23 | 56 | 96.5 | 55 | I |
| | 1997.05-2001.10 | 5MT | F | L | Saloon FWD 2E | | GCI88015 | Inner Joint | | 23 | 23 | 34 | 84 | 93 | |
| | 1997.05-2001.10 | AT/MT | F | R | Saloon FWD 2E | | GDS59392 | Drive Shaft | | 26 | 23 | 56 | 96.5 | 926 | |
| 1.3 (63 kw) | 1997.05-1999.09 | 3AT/5MT | F | L | Hatchback FWD 4EFE | Manufactured in:Japan,For vehicles without ABS | GDS88016 | Drive Shaft | | 26 | 23 | 56 | 96.5 | 599 | |
| | 1997.05-1999.09 | 3AT/5MT | F | L | Hatchback FWD 4EFE | Manufactured in:Great Britain,For vehicles with ABS | GDS99101 | Drive Shaft | 48T | 26 | 23 | 56 | 99 | 619 | |
| | 1997.05-1999.09 | 3AT/5MT | F | R | Hatchback FWD 4EFE | For vehicles with ABS,Manufactured in:Great Britain | GDS59271 | Drive Shaft | 48T | 26 | 23 | 56 | 99 | 915 | |
| | 1997.05-1999.09 | 3AT/5MT | F | R | Hatchback FWD 4EFE | Manufactured in:Japan,For vehicles with ABS | GDS59393 | Drive Shaft | 48T | 26 | 23 | 56 | 96.5 | 926 | |
| | 1997.05-1999.09 | 3AT/5MT/6MT | F | L | Hatchback FWD 4EFE | For vehicles with ABS,Manufactured in:Japan | GDS22003 | Drive Shaft | 48T | 26 | 23 | 56 | 96.5 | 605 | |
| | 1997.05-1999.09 | 3AT/5MT/6MT | F | L | Hatchback FWD 4EFE | Manufactured in:Japan,For vehicles without ABS | GDS88016 | Drive Shaft | | 26 | 23 | 56 | 96.5 | 599 | |
| | 1997.05-1999.09 | 3AT/5MT/6MT | F | R | Hatchback FWD 4EFE | Manufactured in:Japan,For vehicles without ABS | GDS59392 | Drive Shaft | | 26 | 23 | 56 | 96.5 | 926 | |
| | 1997.05-1999.09 | AT | F | L | Hatchback FWD 4EFE | Vehicle Production Country:Great Britain | GCO59022 | Outer Joint | 48T | 26 | 23 | 56 | 99 | 61 | M |
| | 1997.05-1999.09 | AT | F | L | Hatchback FWD 4EFE | Vehicle Production Country:Great Britain | GCI99038 | Inner Joint | | 23 | 23 | 34 | 60 | 113 | |
| | 1997.05-1999.09 | AT/MT | F | L/R | Hatchback FWD 4EFE | Vehicle Production Country:Japan | GCI88015 | Inner Joint | | 23 | 23 | 34 | 84 | 93 | |
| | 1997.05-1999.09 | MT | F | L/R | Hatchback FWD 4EFE | Vehicle Production Country:Japan | GCO59020 | Outer Joint | | 26 | 23 | 56 | 96.5 | 55 | I |
| | 1997.05-1999.09 | MT | F | L/R | Hatchback FWD 4EFE | Vehicle Production Country:Japan | GCO59021 | Outer Joint | 48T | 26 | 23 | 56 | 96.5 | 55 | I |
| | 1997.05-1999.09 | 3AT/5MT | F | L | Saloon FWD 4EFE | Manufactured in:Japan,For vehicles without ABS | GDS88016 | Drive Shaft | | 26 | 23 | 56 | 96.5 | 599 | |
| | 1997.05-1999.09 | 3AT/5MT | F | L | Saloon FWD 4EFE | For vehicles without ABS;Manufactured in:Japan | GDS88016 | Drive Shaft | | 26 | 23 | 56 | 96.5 | 599 | |
| | 1997.05-1999.09 | 3AT/5MT | F | R | Saloon FWD 4EFE | Manufactured in:Japan,For vehicles without ABS | GDS59392 | Drive Shaft | | 26 | 23 | 56 | 96.5 | 926 | |
| | 1997.05-1999.09 | 3AT/5MT | F | R | Saloon FWD 4EFE | For vehicles without ABS;Manufactured in:Japan | GDS59392 | Drive Shaft | | 26 | 23 | 56 | 96.5 | 926 | |
| | 1997.05-1999.09 | 3AT/5MT | F | L/R | Saloon FWD 4EFE | | GCO59020 | Outer Joint | | 26 | 23 | 56 | 96.5 | 55 | I |
| | 1997.05-1999.09 | 3AT/5MT | F | L/R | Saloon FWD 4EFE | | GCO59021 | Outer Joint | 48T | 26 | 23 | 56 | 96.5 | 55 | I |
| | 1997.05-1999.09 | 3AT/5MT | F | L/R | Saloon FWD 4EFE | | GCI88015 | Inner Joint | | 23 | 23 | 34 | 84 | 93 | |
| | 1997.05-1999.09 | 3AT/5MT/6MT | F | L | Saloon FWD 4EFE | For vehicles with ABS,Manufactured in:Japan | GDS22003 | Drive Shaft | 48T | 26 | 23 | 56 | 96.5 | 605 | |
| 1.3 (73 kw) | 2013.06-2018.12 | 6MT | F | R | Saloon FWD 1NR-FE | Date From:2016.05 | GDS81195 | Drive Shaft | | 26 | 23 | 61.2 | 95.5 | 942 | |
| | 2013.06-2018.12 | 6MT | F | L/R | Saloon FWD 1NR-FE | | GCO81143 | Outer Joint | | 26 | 23 | 61.2 | 95.5 | 54.5 | I |
| | 2013.06-2018.12 | MT | F | L | Saloon FWD 1NR-FE | | GDS81196 | Drive Shaft | | 26 | 23 | 61.2 | 95.5 | 662 | |
| | 2013.06-2018.12 | MT | F | L | Saloon FWD 1NR-FE | | GCI99038 | Inner Joint | | 23 | 23 | 34 | 60 | 113 | |
| 1.3 (74 kw) | 2008.12-2014.07 | MT | F | L | Saloon FWD 1NR-FE | Date from:2009.01 | GDS59316 | Drive Shaft | | 26 | 23 | 61.2 | 95.5 | 662 | |
| | 2008.12-2014.07 | MT | F | R | Saloon FWD 1NR-FE | Date from:2009.01 | GDS59317 | Drive Shaft | | 26 | 23 | 61.2 | 95.5 | 941 | |
| | 2008.12-2014.07 | MT | F | L/R | Saloon FWD 1NR-FE | Date from:2009.01 | GCO59213 | Outer Joint | | 26 | 23 | 61.2 | 95.5 | 54.5 | I |
| | 2008.12-2014.07 | | F | L/R | Saloon FWD 1NR-FE | | GCI99038 | Inner Joint | | 23 | 23 | 34 | 60 | 113 | |
| 1.4 (66 kw) | 2004.06-2006.10 | MT | F | L | Saloon FWD 1ND-TV | | GDS83500 | Drive Shaft | 48T | 26 | 20 | 58 | 95.5 | 632 | |
| | 2004.06-2006.10 | MT | F | R | Saloon FWD 1ND-TV | | GDS59183 | Drive Shaft | 48T | 26 | 20 | 58 | 95.5 | 917 | |
| | 2004.06-2006.10 | MT | F | | Saloon FWD 1ND-TV | | GCO59182 | Outer Joint | 48T | 26 | 25 | 58 | 95.5 | 61.5 | M |
| | 2004.06-2006.10 | MT | F | L | Saloon FWD 1ND-TV | | GCI59166 | Inner Joint | | 20 | 24 | 35 | 63.5 | 108.5 | |
| | 2004.06-2006.10 | MT | F | R | Saloon FWD 1ND-TV | | GCI59207 | Inner Joint | | 20 | 24 | 35 | 364 | 94 | |
| | 2004.06-2006.10 | | F | L/R | Saloon FWD 1ND-TV | | GCO59044 | Outer Joint | 48T | 26 | 25 | 63 | 100 | 62 | M |
| | 2004.06-2006.10 | | F | L/R | Saloon FWD 1ND-TV | | GCO59226 | Outer Joint | 48T | 26 | 25 | 58 | 93 | 63.5 | M |
| | 2004.07-2007.02 | MT | F | L | Hatchback FWD 1ND-TV | | GDS83500 | Drive Shaft | 48T | 26 | 20 | 58 | 95.5 | 632 | |
| | 2004.07-2007.02 | MT | F | R | Hatchback FWD 1ND-TV | | GDS59183 | Drive Shaft | 48T | 26 | 20 | 58 | 95.5 | 917 | |

| | YEAR | TRANSM. | F/R | L/R | BODY STYLE & DRIVE TYPE & ENGINE | REMARKS | G-AP Ref. | PRODUCT | ABS | Technical Specifications A | B | C | H | L | P |
|---|---|---|---|---|---|---|---|---|---|---|---|---|---|---|---|
| **TOYOTA** | | | | | | | | | | | | | | | |
| **Corolla** | | | | | | | | | | | | | | | |
| 1.4 (66 kw) | 2004.07-2007.02 | MT | F | | Hatchback FWD 1ND-TV | | GCO59182 | Outer Joint | 48T | 26 | 25 | 58 | 95.5 | 61.5 | M |
| | 2004.07-2007.02 | MT | F | L | Hatchback FWD 1ND-TV | | GCI59166 | Inner Joint | | 20 | 24 | 35 | 63.5 | 108.5 | |
| | 2004.07-2007.02 | MT | F | R | Hatchback FWD 1ND-TV | | GCI59207 | Inner Joint | | 20 | 24 | 35 | 364 | 94 | |
| | 2004.07-2007.02 | | F | L/R | Hatchback FWD 1ND-TV | | GCO59044 | Outer Joint | 48T | 26 | 25 | 63 | 100 | 62 | M |
| | 2004.07-2007.02 | | F | L/R | Hatchback FWD 1ND-TV | | GCO59226 | Outer Joint | 48T | 26 | 25 | 58 | 93 | 63.5 | M |
| | 2006.10-2014.07 | MT | F | L | Saloon FWD 1ND-TV | | GDS59268 | Drive Shaft | | 26 | 20 | 61.2 | 95.5 | 665 | |
| | 2006.10-2014.07 | MT | F | R | Saloon FWD 1ND-TV | | GDS59447 | Drive Shaft | | 26 | 20 | 61.2 | 95.5 | 943 | |
| | 2006.10-2014.07 | MT | F | L/R | Saloon FWD 1ND-TV | | GCO59213 | Outer Joint | | 26 | 23 | 61.2 | 95.5 | 54.5 | I |
| | 2006.10-2014.07 | | F | L/R | Saloon FWD 1ND-TV | | GCI59077 | Inner Joint | | 20 | 23 | 35 | 63.5 | 115.7 | |
| | 2013.06-2018.12 | AT/MT | F | L | Saloon FWD 1ND-TV | | GDS59621 | Drive Shaft | | 26 | 20 | 61.2 | 95.5 | 661 | |
| | 2013.06-2018.12 | AT/MT | F | R | Saloon FWD 1ND-TV | | GDS59494 | Drive Shaft | | 26 | 20 | 61.2 | 95.5 | 938 | |
| | 2013.06-2018.12 | AT/MT | F | L | Saloon FWD 1ND-TV | | GCO59213 | Outer Joint | | 26 | 23 | 61.2 | 95.5 | 54.5 | I |
| | 2013.06-2018.12 | AT/MT | F | R | Saloon FWD 1ND-TV | | GCO59427 | Outer Joint | | 26 | 25 | 61.2 | 95.5 | 61.5 | I |
| | 2013.06-2018.12 | MT | F | L | Saloon FWD 1ND-TV | Date from:2014.01 | GDS59268 | Drive Shaft | | 26 | 20 | 61.2 | 95.5 | 665 | |
| | 2013.06-2018.12 | MT | F | R | Saloon FWD 1ND-TV | Date from:2014.01 | GDS59447 | Drive Shaft | | 26 | 20 | 61.2 | 95.5 | 943 | |
| 1.4 (71 kw) | 1999.10-2001.10 | 5MT | F | R | Saloon FWD 4ZZFE | Manufactured in:Japan,For vehicles without ABS | GDS59392 | Drive Shaft | | 26 | 23 | 56 | 96.5 | 926 | |
| | 1999.10-2001.10 | 5MT/6MT | F | L | Saloon FWD 4ZZFE | For vehicles with ABS,Manufactured in:Japan | GDS22003 | Drive Shaft | 48T | 26 | 23 | 56 | 96.5 | 605 | |
| | 1999.10-2001.10 | 5MT/6MT | F | L | Saloon FWD 4ZZFE | Manufactured in:Japan,For vehicles without ABS | GDS88016 | Drive Shaft | | 26 | 23 | 56 | 96.5 | 599 | |
| | 1999.10-2001.10 | 5MT/6MT | F | L/R | Saloon FWD 4ZZFE | | GCO59006 | Outer Joint | 48T | 26 | 23 | 56 | 95.5 | 55 | I |
| | 1999.10-2001.10 | 5MT/6MT | F | L/R | Saloon FWD 4ZZFE | | GCO59020 | Outer Joint | | 26 | 23 | 56 | 96.5 | 55 | I |
| | 1999.10-2001.10 | 5MT/6MT | F | L/R | Saloon FWD 4ZZFE | | GCO59021 | Outer Joint | 48T | 26 | 23 | 56 | 96.5 | 55 | I |
| | 1999.10-2001.10 | 5MT/6MT | F | L/R | Saloon FWD 4ZZFE | | GCI88015 | Inner Joint | | 23 | 23 | 34 | 84 | 93 | |
| | 1999.10-2002.01 | 5MT | F | R | Hatchback FWD 4ZZFE | For vehicles with ABS,Manufactured in:Great Britain | GDS59271 | Drive Shaft | 48T | 26 | 23 | 56 | 99 | 915 | |
| | 1999.10-2002.01 | 5MT | F | R | Hatchback FWD 4ZZFE | Manufactured in:Japan,For vehicles without ABS | GDS59392 | Drive Shaft | | 26 | 23 | 56 | 96.5 | 926 | |
| | 1999.10-2002.01 | 5MT/6MT | F | L | Hatchback FWD 4ZZFE | For vehicles with ABS,Manufactured in:Japan | GDS22003 | Drive Shaft | 48T | 26 | 23 | 56 | 96.5 | 605 | |
| | 1999.10-2002.01 | 5MT/6MT | F | L | Hatchback FWD 4ZZFE | Manufactured in:Japan,For vehicles without ABS | GDS88016 | Drive Shaft | | 26 | 23 | 56 | 96.5 | 599 | |
| | 1999.10-2002.01 | 5MT/6MT | F | L | Hatchback FWD 4ZZFE | For vehicles without ABS;Manufactured in:Japan | GDS88016 | Drive Shaft | | 26 | 23 | 56 | 96.5 | 599 | |
| | 1999.10-2002.01 | 5MT/6MT | F | L | Hatchback FWD 4ZZFE | Manufactured in:Great Britain,For vehicles with ABS | GDS99101 | Drive Shaft | 48T | 26 | 23 | 56 | 99 | 619 | |
| | 1999.10-2002.01 | 5MT/6MT | F | L | Hatchback FWD 4ZZFE | Vehicle Production Country:Great Britain | GDS99101 | Drive Shaft | 48T | 26 | 23 | 56 | 99 | 619 | |
| | 1999.10-2002.01 | 5MT/6MT | F | R | Hatchback FWD 4ZZFE | For vehicles without ABS;Manufactured in:Japan | GDS59392 | Drive Shaft | | 26 | 23 | 56 | 96.5 | 926 | |
| | 1999.10-2002.01 | 5MT/6MT | F | L | Hatchback FWD 4ZZFE | Vehicle Production Country:Great Britain | GCO59022 | Outer Joint | 48T | 26 | 23 | 56 | 99 | 61 | M |
| | 1999.10-2002.01 | 5MT/6MT | F | L/R | Hatchback FWD 4ZZFE | Vehicle Production Country:Japan | GCO59020 | Outer Joint | | 26 | 23 | 56 | 96.5 | 55 | I |
| | 1999.10-2002.01 | 5MT/6MT | F | L/R | Hatchback FWD 4ZZFE | Vehicle Production Country:Japan | GCO59021 | Outer Joint | 48T | 26 | 23 | 56 | 96.5 | 55 | I |
| | 1999.10-2002.01 | 5MT/6MT | F | L | Hatchback FWD 4ZZFE | Vehicle Production Country:Great Britain | GCI99038 | Inner Joint | | 23 | 23 | 34 | 60 | 113 | |
| | 1999.10-2002.01 | 5MT/6MT | F | L/R | Hatchback FWD 4ZZFE | Vehicle Production Country:Japan | GCI88015 | Inner Joint | | 23 | 23 | 34 | 84 | 93 | |
| | 2001.10-2006.10 | 5MT | F | L | Saloon FWD 4ZZ-FE | Vehicle Production Country:Japan | GDS59069 | Drive Shaft | 48T | 26 | 23 | 58 | 96 | 636.5 | |
| | 2001.10-2006.10 | 5MT | F | L | Saloon FWD 4ZZ-FE | Veh Prd Country:Great Britain | GDS59270 | Drive Shaft | 48T | 26 | 23 | 56 | 99 | 633.5 | |
| | 2001.10-2006.10 | 5MT | F | R | Saloon FWD 4ZZ-FE | Vehicle Production Country:Japan,Manufacturer:Toyota | GDS59080 | Drive Shaft | 48T | 26 | 23 | 58 | 96 | 908 | |
| | 2001.10-2006.10 | 5MT | F | R | Saloon FWD 4ZZ-FE | Vehicle Production Country:Great Britain,Manufacturer:Toyota,Vehicle Production Country:Japan,Vehicle Production Country:Japan | GDS59271 | Drive Shaft | 48T | 26 | 23 | 56 | 99 | 915 | |
| | 2001.10-2006.10 | 5MT | F | L | Saloon FWD 4ZZ-FE | Date to:2004.04;GrooveType:Inner | GCO59460 | Outer Joint | 48T | 26 | 24 | 58 | 96 | 54 | I |
| | 2001.10-2006.10 | 5MT | F | L/R | Saloon FWD 4ZZ-FE | | GCO59022 | Outer Joint | 48T | 26 | 23 | 56 | 99 | 61 | M |
| | 2001.10-2006.10 | 5MT | F | L/R | Saloon FWD 4ZZ-FE | | GCO59037 | Outer Joint | 48T | 26 | 23 | 58 | 95.5 | 61 | M |
| | 2001.10-2006.10 | 5MT | F | L/R | Saloon FWD 4ZZ-FE | Vehicle Production Country:Japan | GCI88015 | Inner Joint | | 23 | 23 | 34 | 84 | 93 | |
| | 2001.10-2006.10 | 5MT | F | L/R | Saloon FWD 4ZZ-FE | Vehicle Production Country:Great Britain | GCI99038 | Inner Joint | | 23 | 23 | 34 | 60 | 113 | |
| | 2001.10-2006.10 | MT | F | L/R | Saloon FWD 4ZZ-FE | for left-hand drive vehicles,Vehicle Production Country: Japan | GCO59082 | Outer Joint | | 26 | 23 | 58 | 96 | 55 | I |
| | 2001.10-2006.10 | MT | F | L/R | Saloon FWD 4ZZ-FE | Date from:2004.05 | GCO59131 | Outer Joint | 48T | 26 | 24 | 58 | 96 | 55 | I |
| | 2001.11-2007.02 | 5MT | F | L | Hatchback FWD 4ZZ-FE | Veh Prd Country:Japan | GDS59069 | Drive Shaft | 48T | 26 | 23 | 58 | 96 | 636.5 | |
| | 2001.11-2007.02 | 5MT | F | L | Hatchback FWD 4ZZ-FE | Veh Prd Country:Great Britain | GDS59270 | Drive Shaft | 48T | 26 | 23 | 56 | 99 | 633.5 | |
| | 2001.11-2007.02 | 5MT | F | R | Hatchback FWD 4ZZ-FE | Vehicle Production Country:Japan | GDS59080 | Drive Shaft | 48T | 26 | 23 | 58 | 96 | 908 | |
| | 2001.11-2007.02 | 5MT | F | R | Hatchback FWD 4ZZ-FE | Veh Prd Country:Great Britain | GDS59271 | Drive Shaft | 48T | 26 | 23 | 56 | 99 | 915 | |
| | 2001.11-2007.02 | 5MT | F | L/R | Hatchback FWD 4ZZ-FE | | GCO59022 | Outer Joint | 48T | 26 | 23 | 56 | 99 | 61 | M |
| | 2001.11-2007.02 | 5MT | F | L/R | Hatchback FWD 4ZZ-FE | | GCO59037 | Outer Joint | 48T | 26 | 23 | 58 | 95.5 | 61 | M |
| | 2001.11-2007.02 | 5MT | F | L/R | Hatchback FWD 4ZZ-FE | | GCI99038 | Inner Joint | | 23 | 23 | 34 | 60 | 113 | |
| | 2001.11-2007.02 | MT | F | L/R | Hatchback FWD 4ZZ-FE | for left-hand drive vehicles,Vehicle Production Country: Japan/Asia | GCO59082 | Outer Joint | | 26 | 23 | 58 | 96 | 55 | I |
| | 2001.11-2007.02 | MT | F | L/R | Hatchback FWD 4ZZ-FE | | GCO59131 | Outer Joint | 48T | 26 | 24 | 58 | 96 | 55 | I |
| | 2006.11-2013.11 | 5MT | F | L | Saloon FWD 4ZZ-FE | | GDS59316 | Drive Shaft | | 26 | 23 | 61.2 | 95.5 | 662 | |
| | 2006.11-2013.11 | 5MT | F | R | Saloon FWD 4ZZ-FE | | GDS59317 | Drive Shaft | | 26 | 23 | 61.2 | 95.5 | 941 | |
| | 2006.11-2013.11 | 5MT | F | L/R | Saloon FWD 4ZZ-FE | | GCI99038 | Inner Joint | | 23 | 23 | 34 | 60 | 113 | |
| | 2006.11-2013.11 | MT | F | L/R | Saloon FWD 4ZZ-FE | | GCO59213 | Outer Joint | | 26 | 23 | 61.2 | 95.5 | 54.5 | I |
| 1.5 (78 kw) | 2001.10-2007.10 | AT/MT | F | L | Saloon FWD 1NZ-FE | | GDS59069 | Drive Shaft | 48T | 26 | 23 | 58 | 96 | 636.5 | |
| 1.5 (92 kw) | 2021.01- | CVT/6MT | F | L | Saloon FWD M15A-FKS | | GDS56819 | Drive Shaft | | 26 | 20 | 61.2 | 95.5 | 677 | |
| | 2021.01- | CVT/6MT | F | L | Saloon FWD M15A-FKS | | GCI83511 | Inner Joint | | 20 | 23 | 35 | 64 | 115 | |
| 1.6 (78 kw) | 1994.09-1999.11 | | F | L | Hatchback FWD 4AFE | | GDS88016 | Drive Shaft | | 26 | 23 | 56 | 96.5 | 599 | |
| | 1994.09-1999.11 | | F | R | Hatchback FWD 4AFE | | GDS59392 | Drive Shaft | | 26 | 23 | 56 | 96.5 | 926 | |
| | 1994.09-1999.11 | | F | | Hatchback FWD 4AFE | Model year:until 12.1997,Version:Costruttore:Saginaw | GCO59163 | Outer Joint | 48T | 26 | 29 | 56 | 99.5 | 62.5 | O |

| | YEAR | TRANSM. | F/R | L/R | BODY STYLE & DRIVE TYPE & ENGINE | REMARKS | G-AP Ref. | PRODUCT | ABS | Technical Specifications A | B | C | H | L | P |
|---|---|---|---|---|---|---|---|---|---|---|---|---|---|---|---|
| **TOYOTA** **Corolla** | | | | | | | | | | | | | | | |
| 1.6 (78 kw) | 1994.09-1999.11 | | F | | Hatchback FWD 4AFE | | GCO59163 | Outer Joint | 48T | 26 | 29 | 56 | 99.5 | 62.5 | O |
| | 1994.09-1999.11 | | F | | Hatchback FWD 4AFE | Date From:1995.08 | GCO59337 | Outer Joint | | 26 | 29 | 56 | 96 | 54 | O |
| 1.6 (79 kw) | 1997.04-2002.06 | 4AT/5MT | F | L | Saloon FWD 4AFE | Vehicle Production Country:Japan,Manufactured in:Japan,For vehicles without ABS | GDS88016 | Drive Shaft | | 26 | 23 | 56 | 96.5 | 599 | |
| | 1997.04-2002.06 | 4AT/5MT | F | L | Saloon FWD 4AFE | | GCO59006 | Outer Joint | 48T | 26 | 23 | 56 | 95.5 | 55 | I |
| | 1997.04-2002.06 | 4AT/5MT | F | L/R | Saloon FWD 4AFE | | GCO59005 | Outer Joint | | 26 | 23 | 56 | 95.5 | 55 | I |
| | 1997.04-2002.06 | 4AT/5MT | F | L/R | Saloon FWD 4AFE | | GCO59020 | Outer Joint | | 26 | 23 | 56 | 96.5 | 55 | I |
| | 1997.04-2002.06 | 4AT/5MT | F | L/R | Saloon FWD 4AFE | | GCO59021 | Outer Joint | 48T | 26 | 23 | 56 | 96.5 | 55 | I |
| | 1997.04-2002.06 | 4AT/5MT | F | L/R | Saloon FWD 4AFE | | GCI88015 | Inner Joint | | 23 | 23 | 34 | 84 | 93 | |
| | 1997.04-2002.06 | 4AT/5MT/6MT | F | L | Saloon FWD 4AFE | Vehicle Production Country:Japan,For vehicles with ABS,Manufactured in:Japan | GDS22003 | Drive Shaft | 48T | 26 | 23 | 56 | 96.5 | 605 | |
| | 1997.05-2000.02 | 4AT/5MT | F | L | Hatchback FWD 4AFE | Manufactured in:Great Britain,For vehicles with ABS | GDS99101 | Drive Shaft | 48T | 26 | 23 | 56 | 99 | 619 | |
| | 1997.05-2000.02 | 4AT/5MT | F | R | Hatchback FWD 4AFE | For vehicles with ABS,Manufactured in:Great Britain | GDS59271 | Drive Shaft | 48T | 26 | 23 | 56 | 99 | 915 | |
| | 1997.05-2000.02 | 4AT/5MT | F | R | Hatchback FWD 4AFE | Manufactured in:Japan,For vehicles with ABS | GDS59393 | Drive Shaft | 48T | 26 | 23 | 56 | 96.5 | 926 | |
| | 1997.05-2000.02 | 4AT/5MT/6MT | F | L | Hatchback FWD 4AFE | For vehicles with ABS,Manufactured in:Japan | GDS22003 | Drive Shaft | 48T | 26 | 23 | 56 | 96.5 | 605 | |
| | 1997.05-2000.02 | 4AT/5MT/6MT | F | L | Hatchback FWD 4AFE | Manufactured in:Japan,For vehicles without ABS | GDS88016 | Drive Shaft | | 26 | 23 | 56 | 96.5 | 599 | |
| | 1997.05-2000.02 | 4AT/5MT/6MT | F | R | Hatchback FWD 4AFE | Manufactured in:Japan,For vehicles with ABS | GDS59392 | Drive Shaft | | 26 | 23 | 56 | 96.5 | 926 | |
| | 1997.05-2000.02 | 5MT/6MT/4AT | F | L | Hatchback FWD 4AFE | For vehicles with ABS,Manufactured in:Japan | GDS22003 | Drive Shaft | 48T | 26 | 23 | 56 | 96.5 | 605 | |
| | 1997.05-2000.02 | AT | F | L | Hatchback FWD 4AFE | Vehicle Production Country:Great Britain | GCO59022 | Outer Joint | 48T | 26 | 23 | 56 | 99 | 61 | M |
| | 1997.05-2000.02 | AT | F | L/R | Hatchback FWD 4AFE | | GCO59005 | Outer Joint | | 26 | 23 | 56 | 95.5 | 55 | I |
| | 1997.05-2000.02 | AT | F | L/R | Hatchback FWD 4AFE | | GCO59006 | Outer Joint | 48T | 26 | 23 | 56 | 95.5 | 55 | I |
| | 1997.05-2000.02 | AT | F | L/R | Hatchback FWD 4AFE | | GCO59020 | Outer Joint | | 26 | 23 | 56 | 96.5 | 55 | I |
| | 1997.05-2000.02 | AT | F | L/R | Hatchback FWD 4AFE | | GCO59021 | Outer Joint | 48T | 26 | 23 | 56 | 96.5 | 55 | I |
| | 1997.05-2000.02 | AT | F | L | Hatchback FWD 4AFE | Vehicle Production Country:Great Britain | GCI99038 | Inner Joint | | 23 | 23 | 34 | 60 | 113 | |
| | 1997.05-2000.02 | AT/MT | F | L/R | Hatchback FWD 4AFE | Vehicle Production Country:Japan | GCI88015 | Inner Joint | | 23 | 23 | 34 | 84 | 93 | |
| 1.6 (80 kw) | 2007.08-2013.06 | 4AT | F | L | Saloon FWD 3ZZFE | | GDS59561 | Drive Shaft | 48T | 26 | 20 | 58 | 96 | 650 | |
| | 2007.08-2013.06 | 4AT | F | L | Saloon FWD 3ZZFE | | GDS59618 | Drive Shaft | | 26 | 20 | 58 | 96 | 650 | |
| | 2007.08-2013.06 | 4AT | F | R | Saloon FWD 3ZZFE | | GDS59562 | Drive Shaft | 48T | 26 | 20 | 58 | 96 | 926 | |
| | 2007.08-2013.06 | 4AT | F | R | Saloon FWD 3ZZFE | | GDS59617 | Drive Shaft | | 26 | 20 | 58 | 96 | 926 | |
| | 2007.08-2013.06 | 4AT | F | L/R | Saloon FWD 3ZZFE | | GCI59046 | Inner Joint | | 20 | 23 | 35 | 63.5 | 115.5 | |
| | 2007.08-2013.06 | 5MT | F | R | Saloon FWD 3ZZFE | | GDS59714 | Drive Shaft | | 26 | 23 | 58 | 96 | 924 | |
| | 2007.12-2013.06 | 4AT | F | L | Saloon FWD 3ZZ-FE | | GDS59561 | Drive Shaft | 48T | 26 | 20 | 58 | 96 | 650 | |
| | 2007.12-2013.06 | 4AT | F | R | Saloon FWD 3ZZ-FE | | GDS59562 | Drive Shaft | 48T | 26 | 20 | 58 | 96 | 926 | |
| | 2007.12-2013.06 | 4AT | F | L/R | Saloon FWD 3ZZ-FE | | GCO59131 | Outer Joint | 48T | 26 | 24 | 58 | 96 | 55 | I |
| | 2007.12-2013.06 | 4AT | F | L/R | Saloon FWD 3ZZ-FE | | GCI59046 | Inner Joint | | 20 | 23 | 35 | 63.5 | 115.5 | |
| 1.6 (81 kw) | 1997.01-2000.02 | 3AT/4AT/5MT | F | L | Saloon FWD 4AFE | | GDS88016 | Drive Shaft | | 26 | 23 | 56 | 96.5 | 599 | |
| | 1997.01-2000.02 | 3AT/4AT/5MT | F | L/R | Saloon FWD 4AFE | | GCO59006 | Outer Joint | 48T | 26 | 23 | 56 | 95.5 | 55 | I |
| | 1997.01-2000.02 | 3AT/4AT/5MT | F | L/R | Saloon FWD 4AFE | | GCO59020 | Outer Joint | | 26 | 23 | 56 | 96.5 | 55 | I |
| | 1997.01-2000.02 | 3AT/4AT/5MT | F | L/R | Saloon FWD 4AFE | | GCO59021 | Outer Joint | 48T | 26 | 23 | 56 | 96.5 | 55 | I |
| | 1997.01-2000.02 | 3AT/4AT/5MT | F | L/R | Saloon FWD 4AFE | | GCI88015 | Inner Joint | | 23 | 23 | 34 | 84 | 93 | |
| | 1997.01-2000.02 | AT/MT | F | R | Saloon FWD 4AFE | | GDS59392 | Drive Shaft | | 26 | 23 | 56 | 96.5 | 926 | |
| | 1997.05-2000.02 | 4AT/5MT | F | L | Hatchback FWD 4AFE | Manufactured in:Japan,For vehicles without ABS | GDS88016 | Drive Shaft | | 26 | 23 | 56 | 96.5 | 599 | |
| | 1997.05-2000.02 | 4AT/5MT | F | L | Hatchback FWD 4AFE | Manufactured in:Great Britain,For vehicles with ABS | GDS99101 | Drive Shaft | 48T | 26 | 23 | 56 | 99 | 619 | |
| | 1997.05-2000.02 | 4AT/5MT | F | R | Hatchback FWD 4AFE | For vehicles with ABS,Manufactured in:Great Britain | GDS59271 | Drive Shaft | 48T | 26 | 23 | 56 | 99 | 915 | |
| | 1997.05-2000.02 | 4AT/5MT | F | R | Hatchback FWD 4AFE | Manufactured in:Japan,For vehicles with ABS | GDS59393 | Drive Shaft | 48T | 26 | 23 | 56 | 96.5 | 926 | |
| | 1997.05-2000.02 | 4AT/5MT/6MT | F | L | Hatchback FWD 4AFE | For vehicles with ABS,Manufactured in:Japan | GDS22003 | Drive Shaft | 48T | 26 | 23 | 56 | 96.5 | 605 | |
| | 1997.05-2000.02 | 4AT/5MT/6MT | F | L | Hatchback FWD 4AFE | Manufactured in:Japan,For vehicles without ABS | GDS88016 | Drive Shaft | | 26 | 23 | 56 | 96.5 | 599 | |
| | 1997.05-2000.02 | 4AT/5MT/6MT | F | R | Hatchback FWD 4AFE | Manufactured in:Japan,For vehicles without ABS | GDS59392 | Drive Shaft | | 26 | 23 | 56 | 96.5 | 926 | |
| | 1997.05-2000.02 | 5MT/6MT/4AT | F | L | Hatchback FWD 4AFE | For vehicles with ABS,Manufactured in:Japan | GDS22003 | Drive Shaft | 48T | 26 | 23 | 56 | 96.5 | 605 | |
| | 1997.05-2000.02 | AT | F | L | Hatchback FWD 4AFE | Vehicle Production Country:Great Britain | GCO59022 | Outer Joint | 48T | 26 | 23 | 56 | 99 | 61 | M |
| | 1997.05-2000.02 | AT | F | L | Hatchback FWD 4AFE | Vehicle Production Country:Great Britain | GCI99038 | Inner Joint | | 23 | 23 | 34 | 60 | 113 | |
| | 1997.05-2000.02 | AT/MT | F | L/R | Hatchback FWD 4AFE | Vehicle Production Country:Japan | GCO59021 | Outer Joint | 48T | 26 | 23 | 56 | 96.5 | 55 | I |
| | 1997.05-2000.02 | AT/MT | F | L/R | Hatchback FWD 4AFE | Vehicle Production Country:Japan | GCI88015 | Inner Joint | | 23 | 23 | 34 | 84 | 93 | |
| | 1997.05-2000.02 | MT | F | L/R | Hatchback FWD 4AFE | Vehicle Production Country:Japan | GCO59020 | Outer Joint | | 26 | 23 | 56 | 96.5 | 55 | I |
| | 1997.05-2000.02 | MT | F | L/R | Hatchback FWD 4AFE | | GCO59028 | Outer Joint | 48T | 26 | 22 | 56 | 99 | 61 | M |
| | 1999.10-2001.12 | 4AT/5MT | F | R | Saloon FWD 3ZZFE | Manufactured in:Japan,For vehicles without ABS | GDS59392 | Drive Shaft | | 26 | 23 | 56 | 96.5 | 926 | |
| | 1999.10-2001.12 | 4AT/5MT/6MT | F | L | Saloon FWD 3ZZFE | For vehicles with ABS,Manufactured in:Japan | GDS22003 | Drive Shaft | 48T | 26 | 23 | 56 | 96.5 | 605 | |
| | 1999.10-2001.12 | 4AT/5MT/6MT | F | L | Saloon FWD 3ZZFE | Manufactured in:Japan,For vehicles without ABS | GDS88016 | Drive Shaft | | 26 | 23 | 56 | 96.5 | 599 | |
| | 1999.10-2001.12 | 4AT/5MT/6MT | F | L/R | Saloon FWD 3ZZFE | | GCO59006 | Outer Joint | 48T | 26 | 23 | 56 | 95.5 | 55 | I |
| | 1999.10-2001.12 | 4AT/5MT/6MT | F | L/R | Saloon FWD 3ZZFE | | GCO59020 | Outer Joint | | 26 | 23 | 56 | 96.5 | 55 | I |
| | 1999.10-2001.12 | 4AT/5MT/6MT | F | L/R | Saloon FWD 3ZZFE | | GCO59021 | Outer Joint | 48T | 26 | 23 | 56 | 96.5 | 55 | I |
| | 1999.10-2001.12 | 4AT/5MT/6MT | F | L/R | Saloon FWD 3ZZFE | | GCI88015 | Inner Joint | | 23 | 23 | 34 | 84 | 93 | |
| | 1999.10-2002.01 | 4AT/5MT | F | R | Hatchback FWD 3ZZFE | Manufactured in:Japan,For vehicles without ABS | GDS59392 | Drive Shaft | | 26 | 23 | 56 | 96.5 | 926 | |
| | 1999.10-2002.01 | 4AT/5MT/6MT | F | L | Hatchback FWD 3ZZFE | For vehicles with ABS,Manufactured in:Japan | GDS22003 | Drive Shaft | 48T | 26 | 23 | 56 | 96.5 | 605 | |
| | 1999.10-2002.01 | 4AT/5MT/6MT | F | L | Hatchback FWD 3ZZFE | Manufactured in:Japan,For vehicles without ABS | GDS88016 | Drive Shaft | | 26 | 23 | 56 | 96.5 | 599 | |
| | 1999.10-2002.01 | 4AT/5MT/6MT | F | L | Hatchback FWD 3ZZFE | For vehicles without ABS;Manufactured in:Japan | GDS88016 | Drive Shaft | | 26 | 23 | 56 | 96.5 | 599 | |
| | 1999.10-2002.01 | 4AT/5MT/6MT | F | L | Hatchback FWD 3ZZFE | Manufactured in:Great Britain,For vehicles with ABS | GDS99101 | Drive Shaft | 48T | 26 | 23 | 56 | 99 | 619 | |

| | YEAR | TRANSM. | F/R | L/R | BODY STYLE & DRIVE TYPE & ENGINE | REMARKS | G-AP Ref. | PRODUCT | ABS | Technical Specifications A | B | C | H | L | P |
|---|---|---|---|---|---|---|---|---|---|---|---|---|---|---|---|
| **TOYOTA** | | | | | | | | | | | | | | | |
| **Corolla** | | | | | | | | | | | | | | | |
| 1.6 (81 kw) | 1999.10-2002.01 | 4AT/5MT/6MT | F | L | Hatchback FWD 3ZZFE | Vehicle Production Country:Great Britain | GDS99101 | Drive Shaft | 48T | 26 | 23 | 56 | 99 | 619 | |
| | 1999.10-2002.01 | 4AT/5MT/6MT | F | R | Hatchback FWD 3ZZFE | For vehicles with ABS,Manufactured in:Great Britain | GDS59271 | Drive Shaft | 48T | 26 | 23 | 56 | 99 | 915 | |
| | 1999.10-2002.01 | 4AT/5MT/6MT | F | R | Hatchback FWD 3ZZFE | For vehicles without ABS;Manufactured in:Japan | GDS59392 | Drive Shaft | | 26 | 23 | 56 | 96.5 | 926 | |
| | 1999.10-2002.01 | 4AT/5MT/6MT | F | L | Hatchback FWD 3ZZFE | Vehicle Production Country:Great Britain | GCO59022 | Outer Joint | 48T | 26 | 23 | 56 | 99 | 61 | M |
| | 1999.10-2002.01 | 4AT/5MT/6MT | F | L/R | Hatchback FWD 3ZZFE | Vehicle Production Country:Japan | GCO59020 | Outer Joint | | 26 | 23 | 56 | 96.5 | 55 | I |
| | 1999.10-2002.01 | 4AT/5MT/6MT | F | L/R | Hatchback FWD 3ZZFE | Vehicle Production Country:Japan | GCO59021 | Outer Joint | 48T | 26 | 23 | 56 | 96.5 | 55 | I |
| | 1999.10-2002.01 | 4AT/5MT/6MT | F | L | Hatchback FWD 3ZZFE | Vehicle Production Country:Great Britain | GCI99038 | Inner Joint | | 23 | 23 | 34 | 60 | 113 | |
| | 1999.10-2002.01 | 4AT/5MT/6MT | F | L/R | Hatchback FWD 3ZZFE | Vehicle Production Country:Japan | GCI88015 | Inner Joint | | 23 | 23 | 34 | 84 | 93 | |
| | 1999.10-2002.01 | | F | L/R | Hatchback FWD 3ZZFE | | GCO59036 | Outer Joint | | 26 | 23 | 58 | 96 | 52.5 | I |
| | 2001.10-2008.03 | 4AT/5MT | F | L | Saloon FWD 3ZZ-FE | Vehicle Production Country:Japan | GDS59069 | Drive Shaft | 48T | 26 | 23 | 58 | 96 | 636.5 | |
| | 2001.10-2008.03 | 4AT/5MT | F | L | Saloon FWD 3ZZ-FE | Veh Prd Country:Great Britain | GDS59270 | Drive Shaft | 48T | 26 | 23 | 56 | 99 | 633.5 | |
| | 2001.10-2008.03 | 4AT/5MT | F | R | Saloon FWD 3ZZ-FE | Vehicle Production Country:Great Britain;Manufacturer:GKN;Vehicle Production Country:Japan;Manufacturer:NTN | GDS59271 | Drive Shaft | 48T | 26 | 23 | 56 | 99 | 915 | |
| | 2001.10-2008.03 | 4AT/5MT | F | L | Saloon FWD 3ZZ-FE | Date to:2004.04 | GCO59460 | Outer Joint | 48T | 26 | 24 | 58 | 96 | 54 | I |
| | 2001.10-2008.03 | 4AT/5MT | F | L/R | Saloon FWD 3ZZ-FE | Groove Type:Middle | GCO59022 | Outer Joint | 48T | 26 | 23 | 56 | 99 | 61 | M |
| | 2001.10-2008.03 | 4AT/5MT | F | L/R | Saloon FWD 3ZZ-FE | Date from:2004.05 | GCO59131 | Outer Joint | 48T | 26 | 24 | 58 | 96 | 55 | I |
| | 2001.10-2008.03 | 4AT/5MT | F | L/R | Saloon FWD 3ZZ-FE | Groove Type:Inner | GCO59136 | Outer Joint | 48T | 26 | 23 | 58 | 96 | 52.5 | I |
| | 2001.10-2008.03 | 4AT/5MT | F | L/R | Saloon FWD 3ZZ-FE | Vehicle Production Country:Japan | GCI88015 | Inner Joint | | 23 | 23 | 34 | 84 | 93 | |
| | 2001.10-2008.03 | 4AT/5MT | F | L/R | Saloon FWD 3ZZ-FE | Vehicle Production Country:Great Britain | GCI99038 | Inner Joint | | 23 | 23 | 34 | 60 | 113 | |
| | 2001.10-2008.03 | 5MT/4AT | F | R | Saloon FWD 3ZZ-FE | Vehicle Production Country:Japan,Manufacturer:Toyota | GDS59080 | Drive Shaft | 48T | 26 | 23 | 58 | 96 | 908 | |
| | 2001.10-2008.03 | MT | F | L/R | Saloon FWD 3ZZ-FE | Groove Type:Middle | GCO59037 | Outer Joint | 48T | 26 | 23 | 58 | 95.5 | 61 | M |
| | 2001.10-2008.03 | MT | F | L/R | Saloon FWD 3ZZ-FE | Vehicle Production Country:Japan/Asia | GCO59082 | Outer Joint | | 26 | 23 | 58 | 96 | 55 | I |
| | 2002.01-2006.12 | 4AT/5MT | F | L | Hatchback FWD 3ZZ-FE | Veh Prd Country:Great Britain | GDS59270 | Drive Shaft | 48T | 26 | 23 | 56 | 99 | 633.5 | |
| | 2002.01-2006.12 | 4AT/5MT | F | R | Hatchback FWD 3ZZ-FE | Vehicle Production Country:Great Britain,Manufacturer:GKN | GDS59271 | Drive Shaft | 48T | 26 | 23 | 56 | 99 | 915 | |
| | 2002.01-2006.12 | 4AT/5MT | F | L/R | Hatchback FWD 3ZZ-FE | | GCO59022 | Outer Joint | 48T | 26 | 23 | 56 | 99 | 61 | M |
| | 2002.01-2006.12 | 4AT/5MT | F | L/R | Hatchback FWD 3ZZ-FE | | GCO59131 | Outer Joint | 48T | 26 | 24 | 58 | 96 | 55 | I |
| | 2002.01-2006.12 | 4AT/5MT | F | L/R | Hatchback FWD 3ZZ-FE | | GCI99038 | Inner Joint | | 23 | 23 | 34 | 60 | 113 | |
| | 2002.01-2006.12 | 5MT/4AT | F | L | Hatchback FWD 3ZZ-FE | Veh Prd Country:Japan | GDS59069 | Drive Shaft | 48T | 26 | 23 | 58 | 96 | 636.5 | |
| | 2002.01-2006.12 | 5MT/4AT | F | R | Hatchback FWD 3ZZ-FE | Vehicle Production Country:Japan | GDS59080 | Drive Shaft | 48T | 26 | 23 | 58 | 96 | 908 | |
| | 2002.01-2006.12 | AT/MT | F | L/R | Hatchback FWD 3ZZ-FE | | GCO59037 | Outer Joint | 48T | 26 | 23 | 58 | 95.5 | 61 | M |
| | 2002.01-2006.12 | MT | F | L/R | Hatchback FWD 3ZZ-FE | for left-hand drive vehicles,Vehicle Production Country:Japan/Asia | GCO59082 | Outer Joint | | 26 | 23 | 58 | 96 | 55 | I |
| 1.6 (84 kw) | 1995.09-1997.04 | AT/MT | F | L/R | Saloon FWD 4AFE | | GCO59005 | Outer Joint | | 26 | 23 | 56 | 95.5 | 55 | I |
| | 1995.09-1997.04 | AT/MT | F | L/R | Saloon FWD 4AFE | | GCO59006 | Outer Joint | 48T | 26 | 23 | 56 | 95.5 | 55 | I |
| | 1995.09-1997.04 | AT/MT | F | L/R | Saloon FWD 4AFE | | GCO59020 | Outer Joint | | 26 | 23 | 56 | 96.5 | 55 | I |
| | 1995.09-1997.04 | AT/MT | F | L/R | Saloon FWD 4AFE | | GCO59021 | Outer Joint | 48T | 26 | 23 | 56 | 96.5 | 55 | I |
| | 1995.09-1997.04 | AT/MT | F | L/R | Saloon FWD 4AFE | | GCI88015 | Inner Joint | | 23 | 23 | 34 | 84 | 93 | |
| | 1995.09-1997.04 | MT | F | L | Saloon FWD 4AFE | | GDS88016 | Drive Shaft | | 26 | 23 | 56 | 96.5 | 599 | |
| | 1995.09-1997.04 | | F | | Saloon FWD 4AFE | | GCO59163 | Outer Joint | 48T | 26 | 29 | 56 | 99.5 | 62.5 | O |
| 1.6 (85 kw) | 1992.05-1997.04 | | F | L | Saloon FWD 4AFE | | GDS88016 | Drive Shaft | | 26 | 23 | 56 | 96.5 | 599 | |
| | 1992.05-1997.04 | | F | R | Saloon FWD 4AFE | | GDS59392 | Drive Shaft | | 26 | 23 | 56 | 96.5 | 926 | |
| | 1992.05-1997.04 | | F | | Saloon FWD 4AFE | Version:Costruttore:Saginaw | GCO59163 | Outer Joint | 48T | 26 | 29 | 56 | 99.5 | 62.5 | O |
| | 1992.05-1997.04 | | F | | Saloon FWD 4AFE | | GCO59163 | Outer Joint | 48T | 26 | 29 | 56 | 99.5 | 62.5 | O |
| | 1992.05-1997.04 | | F | | Saloon FWD 4AFE | Date From:1995.08 | GCO59337 | Outer Joint | | 26 | 29 | 56 | 96 | 54 | O |
| | 1992.05-1997.04 | | F | | Saloon FWD 4AFE | Date From:1992.06 | GCI19001 | Inner Joint | | 23 | 29 | 34 | 84 | 103 | |
| 1.6 (89 kw) | 2013.10-2018.12 | CVT/6MT | F | R | Saloon FWD 1ZR-FE | | GDS81223 | Drive Shaft | 48T | 26 | 20 | 58 | 95.5 | 922 | |
| 1.6 (90 kw) | 2010.07-2014.05 | 4AT | F | L | Saloon FWD 1ZR-FE;1ZR-FAE | | GDS59316 | Drive Shaft | | 26 | 23 | 61.2 | 95.5 | 662 | |
| | 2010.07-2014.05 | 4AT | F | R | Saloon FWD 1ZR-FE;1ZR-FAE | | GDS59317 | Drive Shaft | | 26 | 23 | 61.2 | 95.5 | 941 | |
| | 2010.07-2014.05 | 4AT | F | R | Saloon FWD 1ZR-FE;1ZR-FAE | | GDS59714 | Drive Shaft | | 26 | 23 | 58 | 96 | 924 | |
| | 2010.07-2014.05 | 4AT | F | L/R | Saloon FWD 1ZR-FE;1ZR-FAE | | GCO59131 | Outer Joint | 48T | 26 | 24 | 58 | 96 | 55 | I |
| | 2010.07-2014.05 | 4AT | F | L/R | Saloon FWD 1ZR-FE;1ZR-FAE | | GCI88015 | Inner Joint | | 23 | 23 | 34 | 84 | 93 | |
| | 2010.07-2014.05 | 4AT | F | L/R | Saloon FWD 1ZR-FE;1ZR-FAE | | GCI99038 | Inner Joint | | 23 | 23 | 34 | 60 | 113 | |
| | 2010.07-2014.05 | 4AT/6MT | F | L/R | Saloon FWD 1ZR-FE;1ZR-FAE | | GCO59213 | Outer Joint | | 26 | 23 | 61.2 | 95.5 | 54.5 | I |
| | 2010.07-2014.05 | 6MT | F | L | Saloon FWD 1ZR-FE;1ZR-FAE | | GDS59268 | Drive Shaft | | 26 | 20 | 61.2 | 95.5 | 665 | |
| | 2010.07-2014.05 | 6MT | F | L | Saloon FWD 1ZR-FE;1ZR-FAE | | GDS59618 | Drive Shaft | | 26 | 20 | 58 | 96 | 650 | |
| | 2010.07-2014.05 | 6MT | F | R | Saloon FWD 1ZR-FE;1ZR-FAE | | GDS59447 | Drive Shaft | | 26 | 20 | 61.2 | 95.5 | 943 | |
| | 2010.07-2014.05 | 6MT | F | R | Saloon FWD 1ZR-FE;1ZR-FAE | | GDS59617 | Drive Shaft | | 26 | 20 | 58 | 96 | 926 | |
| | 2010.07-2014.05 | 6MT | F | L/R | Saloon FWD 1ZR-FE;1ZR-FAE | | GCI59077 | Inner Joint | | 20 | 23 | 35 | 63.5 | 115.7 | |
| | 2013.06-2018.12 | 6MT | F | L | Saloon FWD 1ZR-FE;1ZR-FAE | | GCO81144 | Outer Joint | 48T | 26 | 32 | 58 | 95.5 | 56.5 | I |
| | 2013.06-2018.12 | 6MT/CVT | F | L | Saloon FWD 1ZR-FE;1ZR-FAE | | GDS59508 | Drive Shaft | | 26 | 20 | 61.2 | 95.5 | 657 | |
| | 2013.06-2018.12 | AT | F | L | Saloon FWD 1ZR-FE;1ZR-FAE | | GDS81225 | Drive Shaft | 48T | 26 | 23 | 58 | 95.5 | 650 | |
| | 2013.06-2018.12 | AT | F | R | Saloon FWD 1ZR-FE;1ZR-FAE | | GDS81224 | Drive Shaft | 48T | 26 | 23 | 58 | 95.5 | 915 | |
| | 2013.06-2018.12 | AT | F | R | Saloon FWD 1ZR-FE;1ZR-FAE | | GCI81139 | Inner Joint | | 23 | 32 | 34 | 60.5 | 116 | |
| | 2013.06-2018.12 | CVT | F | L | Saloon FWD 1ZR-FE;1ZR-FAE | | GDS59689 | Drive Shaft | | 26 | 20 | 55.6 | 95.5 | 657 | |
| | 2013.06-2018.12 | CVT | F | L | Saloon FWD 1ZR-FE;1ZR-FAE | | GCO59244 | Outer Joint | | 26 | 25 | 55.6 | 95.5 | 57 | I |
| | 2013.06-2018.12 | CVT | F | L | Saloon FWD 1ZR-FE;1ZR-FAE | | GCI59100 | Inner Joint | | 20 | 25 | 35 | 63.5 | 118 | |
| | 2013.06-2018.12 | CVT/4AT/6MT | F | L | Saloon FWD 1ZR-FE;1ZR-FAE | | GDS81222 | Drive Shaft | 48T | 26 | 20 | 58 | 95.5 | 649 | |

| | YEAR | TRANSM. | F/R | L/R | BODY STYLE & DRIVE TYPE & ENGINE | REMARKS | G-AP Ref. | PRODUCT | ABS | Technical Specifications A | B | C | H | L | P |
|---|---|---|---|---|---|---|---|---|---|---|---|---|---|---|---|
| **TOYOTA** **Corolla** | | | | | | | | | | | | | | | |
| 1.6 (90 kw) | 2013.06-2018.12 | CVT/4AT/6MT | F | L/R | Saloon FWD 1ZR-FE;1ZR-FAE | | GCO59427 | Outer Joint | | 26 | 25 | 61.2 | 95.5 | 61.5 | I |
| | 2013.06-2018.12 | CVT/6MT | F | R | Saloon FWD 1ZR-FE;1ZR-FAE | TJ | GDS59509 | Drive Shaft | | 26 | 20 | 61.2 | 95.5 | 944 | |
| | 2013.06-2018.12 | CVT/6MT | F | L | Saloon FWD 1ZR-FE;1ZR-FAE | Date From:2015.06 | GCI59077 | Inner Joint | | 20 | 23 | 35 | 63.5 | 115.7 | |
| | 2013.06-2018.12 | CVT/6MT | F | L/R | Saloon FWD 1ZR-FE;1ZR-FAE | Date To:2016.05 | GCI59139 | Inner Joint | | 20 | 23 | 35 | 63.5 | 115 | |
| | 2013.06-2018.12 | CVT/6MT | F | L/R | Saloon FWD 1ZR-FE;1ZR-FAE | | GCI81138 | Inner Joint | | 20 | 32 | 35 | 63.5 | 119 | |
| | 2019.01- | CVT/6MT | F | L | Saloon FWD 1ZR-FE;1ZR-FAE | | GDS84136 | Drive Shaft | | 26 | 20 | 61.2 | 95.5 | 660 | |
| | 2019.01- | CVT/6MT | F | R | Saloon FWD 1ZR-FE;1ZR-FAE | | GDS84179 | Drive Shaft | | 26 | 20 | 61.2 | 95.5 | 937 | |
| | 2019.01- | CVT/6MT | F | L/R | Saloon FWD 1ZR-FE;1ZR-FAE | | GCI59139 | Inner Joint | | 20 | 23 | 35 | 63.5 | 115 | |
| 1.6 (91 kw) | 2007.01-2014.07 | 4AT | F | L | Saloon FWD 1ZR-FE | | GDS59316 | Drive Shaft | | 26 | 23 | 61.2 | 95.5 | 662 | |
| | 2007.01-2014.07 | 4AT | F | R | Saloon FWD 1ZR-FE | | GDS59317 | Drive Shaft | | 26 | 23 | 61.2 | 95.5 | 941 | |
| | 2007.01-2014.07 | 4AT | F | L/R | Saloon FWD 1ZR-FE | | GCI99038 | Inner Joint | | 23 | 23 | 34 | 60 | 113 | |
| | 2007.01-2014.07 | 4AT/5MT/6MT | F | L/R | Saloon FWD 1ZR-FE | | GCO59213 | Outer Joint | | 26 | 23 | 61.2 | 95.5 | 54.5 | I |
| | 2007.01-2014.07 | 5MT/6MT | F | L | Saloon FWD 1ZR-FE | | GDS59268 | Drive Shaft | | 26 | 20 | 61.2 | 95.5 | 665 | |
| | 2007.01-2014.07 | 5MT/6MT | F | R | Saloon FWD 1ZR-FE | | GDS59447 | Drive Shaft | | 26 | 20 | 61.2 | 95.5 | 943 | |
| | 2007.01-2014.07 | 5MT/6MT | F | L/R | Saloon FWD 1ZR-FE | | GCI59077 | Inner Joint | | 20 | 23 | 35 | 63.5 | 115.7 | |
| 1.6 (97 kw) | 2006.11-2013.11 | 5MT/6MT/6AMT | F | L/R | Saloon FWD 1ZR-FE;1ZR-FAE | | GCI59077 | Inner Joint | | 20 | 23 | 35 | 63.5 | 115.7 | |
| | 2006.11-2013.11 | AT/MT | F | L | Saloon FWD 1ZR-FE;1ZR-FAE | Date from:2007.01 | GDS59316 | Drive Shaft | | 26 | 23 | 61.2 | 95.5 | 662 | |
| | 2006.11-2013.11 | AT/MT | F | R | Saloon FWD 1ZR-FE;1ZR-FAE | Date from:2007.01 | GDS59317 | Drive Shaft | | 26 | 23 | 61.2 | 95.5 | 941 | |
| | 2006.11-2013.11 | AT/MT | F | L/R | Saloon FWD 1ZR-FE;1ZR-FAE | | GCO59213 | Outer Joint | | 26 | 23 | 61.2 | 95.5 | 54.5 | I |
| | 2006.11-2013.11 | MT | F | L | Saloon FWD 1ZR-FE;1ZR-FAE | Date from:2007.01 | GDS59268 | Drive Shaft | | 26 | 20 | 61.2 | 95.5 | 665 | |
| | 2006.11-2013.11 | MT | F | R | Saloon FWD 1ZR-FE;1ZR-FAE | Date from:2007.01 | GDS59447 | Drive Shaft | | 26 | 20 | 61.2 | 95.5 | 943 | |
| | 2006.11-2013.11 | | F | L/R | Saloon FWD 1ZR-FE;1ZR-FAE | | GCI99038 | Inner Joint | | 23 | 23 | 34 | 60 | 113 | |
| | 2013.06-2018.12 | 6MT/CVT | F | L | Saloon FWD 1ZR-FAE | Inner teeth of wheel side:25 | GDS59508 | Drive Shaft | | 26 | 20 | 61.2 | 95.5 | 657 | |
| | 2013.06-2018.12 | AT/MT | F | R | Saloon FWD 1ZR-FAE | Date from:2014.01;Inner teeth of wheel side:23 | GDS59447 | Drive Shaft | | 26 | 20 | 61.2 | 95.5 | 943 | |
| | 2013.06-2018.12 | CVT/6MT | F | L/R | Saloon FWD 1ZR-FAE | | GCO59427 | Outer Joint | | 26 | 25 | 61.2 | 95.5 | 61.5 | I |
| | 2013.06-2018.12 | MT | F | L | Saloon FWD 1ZR-FAE | Date from:2014.01;Inner teeth of wheel side:23 | GDS59268 | Drive Shaft | | 26 | 20 | 61.2 | 95.5 | 665 | |
| | 2013.06-2018.12 | | F | R | Saloon FWD 1ZR-FAE | Inner teeth of wheel side:25 | GDS59509 | Drive Shaft | | 26 | 20 | 61.2 | 95.5 | 944 | |
| | 2013.06-2018.12 | | F | L | Saloon FWD 1ZR-FAE | Date to:2017.10 | GCI59077 | Inner Joint | | 20 | 23 | 35 | 63.5 | 115.7 | |
| | 2013.06-2018.12 | | F | L | Saloon FWD 1ZR-FAE | Date from:2017.11 | GCI59139 | Inner Joint | | 20 | 23 | 35 | 63.5 | 115 | |
| | 2019.01- | CVT/6MT | F | L | Saloon FWD 1ZR-FE;1ZR-FAE | | GDS84136 | Drive Shaft | | 26 | 20 | 61.2 | 95.5 | 660 | |
| | 2019.01- | CVT/6MT | F | R | Saloon FWD 1ZR-FE;1ZR-FAE | | GDS84179 | Drive Shaft | | 26 | 20 | 61.2 | 95.5 | 937 | |
| | 2019.01- | CVT/6MT | F | L/R | Saloon FWD 1ZR-FE;1ZR-FAE | | GCI59139 | Inner Joint | | 20 | 23 | 35 | 63.5 | 115 | |
| 1.6 (100 kw) | 2007.03-2010.12 | 4AT | F | L | Saloon FWD 1ZR-FE | | GDS59316 | Drive Shaft | | 26 | 23 | 61.2 | 95.5 | 662 | |
| | 2007.03-2010.12 | 4AT | F | R | Saloon FWD 1ZR-FE | | GDS59317 | Drive Shaft | | 26 | 23 | 61.2 | 95.5 | 941 | |
| | 2007.03-2010.12 | | F | L/R | Saloon FWD 1ZR-FE | | GCO59213 | Outer Joint | | 26 | 23 | 61.2 | 95.5 | 54.5 | I |
| | 2007.03-2010.12 | | F | L/R | Saloon FWD 1ZR-FE | | GCI99038 | Inner Joint | | 23 | 23 | 34 | 60 | 113 | |
| 1.8 (81 kw) | 1997.10-2001.10 | 4AT/5MT | F | R | Saloon FWD 7AFE | | GDS19017 | Drive Shaft | 48T | 26 | 23 | 56 | 99.5 | 924 | |
| | 1997.10-2001.10 | 4AT/5MT | F | L/R | Saloon FWD 7AFE | | GCI88015 | Inner Joint | | 23 | 23 | 34 | 84 | 93 | |
| | 1997.10-2001.10 | | F | L | Saloon FWD 7AFE | | GCO59001 | Outer Joint | | 26 | 24 | 56 | 95.5 | 55 | I |
| | 1997.10-2001.10 | | F | L | Saloon FWD 7AFE | | GCO59120 | Outer Joint | 48T | 26 | 24 | 56 | 95.5 | 55 | I |
| | 1997.10-2001.10 | | F | L/R | Saloon FWD 7AFE | | GCO59018 | Outer Joint | | 26 | 24 | 56 | 95.5 | 55 | I |
| 1.8 (90 kw) | 2018.10- | CVT | F | L | Hatchback FWD 2ZR-FXE | | GDS84379 | Drive Shaft | | 26 | 24 | 61.2 | 95.5 | 645 | |
| | 2018.10- | CVT | F | R | Hatchback FWD 2ZR-FXE | | GDS84380 | Drive Shaft | | 26 | 24 | 61.2 | 95.5 | 946 | |
| | 2018.10- | CVT | F | L | Hatchback FWD 2ZR-FXE | | GCI82733 | Inner Joint | | 24 | 23 | 50 | 67 | 98 | |
| | 2018.10- | CVT | F | R | Hatchback FWD 2ZR-FXE | | GCI82734 | Inner Joint | | 24 | 23 | 40 | 98 | 87 | |
| | 2019.02- | CVT | F | L | Estate FWD 2ZR-FXE | | GDS84379 | Drive Shaft | | 26 | 24 | 61.2 | 95.5 | 645 | |
| | 2019.02- | CVT | F | R | Estate FWD 2ZR-FXE | | GDS84380 | Drive Shaft | | 26 | 24 | 61.2 | 95.5 | 946 | |
| | 2019.02- | CVT | F | L | Estate FWD 2ZR-FXE | | GCI82733 | Inner Joint | | 24 | 23 | 50 | 67 | 98 | |
| | 2019.02- | CVT | F | R | Estate FWD 2ZR-FXE | | GCI82734 | Inner Joint | | 24 | 23 | 40 | 98 | 87 | |
| | 2019.02- | CVT | F | L | Saloon FWD 2ZR-FXE | | GDS84379 | Drive Shaft | | 26 | 24 | 61.2 | 95.5 | 645 | |
| | 2019.02- | CVT | F | R | Saloon FWD 2ZR-FXE | | GDS84380 | Drive Shaft | | 26 | 24 | 61.2 | 95.5 | 946 | |
| | 2019.02- | CVT | F | L | Saloon FWD 2ZR-FXE | | GCI82733 | Inner Joint | | 24 | 23 | 50 | 67 | 98 | |
| | 2019.02- | CVT | F | R | Saloon FWD 2ZR-FXE | | GCI82734 | Inner Joint | | 24 | 23 | 40 | 98 | 87 | |
| | 2022.06- | CVT | F | L | Estate Van FWD 2ZR-FXE | | GDS84379 | Drive Shaft | | 26 | 24 | 61.2 | 95.5 | 645 | |
| | 2022.06- | CVT | F | R | Estate Van FWD 2ZR-FXE | | GDS84380 | Drive Shaft | | 26 | 24 | 61.2 | 95.5 | 946 | |
| | 2022.06- | CVT | F | L | Estate Van FWD 2ZR-FXE | | GCI82733 | Inner Joint | | 24 | 23 | 50 | 67 | 98 | |
| | 2022.06- | CVT | F | R | Estate Van FWD 2ZR-FXE | | GCI82734 | Inner Joint | | 24 | 23 | 40 | 98 | 87 | |
| 1.8 (92 kw) | 2002.05-2004.05 | AT | F | R | Saloon FWD 1ZZ-FE | | GDS59205 | Drive Shaft | 48T | 26 | 23 | 58 | 95.5 | 909.5 | |
| | 2002.05-2004.05 | AT/MT | F | L | Saloon FWD 1ZZ-FE | | GDS59069 | Drive Shaft | 48T | 26 | 23 | 58 | 96 | 636.5 | |
| 1.8 (93 kw) | 2019.01- | | F | L | Saloon FWD 2ZR-FXE | | GDS84379 | Drive Shaft | | 26 | 24 | 61.2 | 95.5 | 645 | |
| | 2019.01- | | F | R | Saloon FWD 2ZR-FXE | | GDS84380 | Drive Shaft | | 26 | 24 | 61.2 | 95.5 | 946 | |
| 1.8 (97 kw) | 2008.01-2014.07 | | F | | Saloon FWD 2ZRFE | | GCO59428 | Outer Joint | 48T | 26 | 32 | 58 | 96 | 56.5 | I |
| 1.8 (98 kw) | 2013.06-2019.05 | CVT | F | R | Saloon FWD 2ZR-FE | | GDS81223 | Drive Shaft | 48T | 26 | 20 | 58 | 95.5 | 922 | |
| 1.8 (100 kw) | 2001.01-2007.02 | 4AT | F | L | Hatchback 4WD 1ZZ-FE | | GCO59131 | Outer Joint | 48T | 26 | 24 | 58 | 96 | 55 | I |
| | 2001.01-2007.02 | 4AT | F | L | Hatchback 4WD 1ZZ-FE | | GCI59046 | Inner Joint | | 20 | 23 | 35 | 63.5 | 115.5 | |

| | YEAR | TRANSM. | F/R | L/R | BODY STYLE & DRIVE TYPE & ENGINE | REMARKS | G-AP Ref. | PRODUCT | ABS | Technical Specifications A | B | C | H | L | P |
|---|---|---|---|---|---|---|---|---|---|---|---|---|---|---|---|
| **TOYOTA** **Corolla** | | | | | | | | | | | | | | | |
| 1.8 (100 kw) | 2001.01-2007.02 | AT/MT | F | L | Hatchback 4WD 1ZZ-FE | | GDS59069 | Drive Shaft | 48T | 26 | 23 | 58 | 96 | 636.5 | |
| 1.8 (103 kw) | 2013.06-2019.08 | 4AT/5MT | F | R | Saloon FWD 2ZR-FE | Date to:2014.12,6 balls | GCO59428 | Outer Joint | 48T | 26 | 32 | 58 | 96 | 56.5 | I |
| | 2013.06-2019.08 | 6MT | F | L/R | Saloon FWD 2ZR-FE | | GCO59244 | Outer Joint | | 26 | 25 | 55.6 | 95.5 | 57 | I |
| | 2013.06-2019.08 | 6MT | F | L | Saloon FWD 2ZR-FE | | GCI81165 | Inner Joint | | 20 | 25 | 35 | 63.5 | 123 | |
| | 2013.06-2019.08 | CVT | F | L | Saloon FWD 2ZR-FE | Inner teeth of tranm.side:23 | GDS59508 | Drive Shaft | | 26 | 20 | 61.2 | 95.5 | 657 | |
| | 2013.06-2019.08 | CVT | F | R | Saloon FWD 2ZR-FE | TJ | GDS59509 | Drive Shaft | | 26 | 20 | 61.2 | 95.5 | 944 | |
| | 2013.06-2019.08 | CVT | F | L | Saloon FWD 2ZR-FE | | GCO59244 | Outer Joint | | 26 | 25 | 55.6 | 95.5 | 57 | I |
| | 2013.06-2019.08 | CVT | F | R | Saloon FWD 2ZR-FE | | GCO59427 | Outer Joint | | 26 | 25 | 61.2 | 95.5 | 61.5 | I |
| | 2013.06-2019.08 | CVT | F | R | Saloon FWD 2ZR-FE | 8 balls | GCO81144 | Outer Joint | 48T | 26 | 32 | 58 | 95.5 | 56.5 | I |
| | 2013.06-2019.08 | CVT | F | L | Saloon FWD 2ZR-FE | Date to:2016.05,For vehicles with heavy duty suspension;Date from:2016.06 | GCI59077 | Inner Joint | | 20 | 23 | 35 | 63.5 | 115.7 | |
| | 2013.06-2019.08 | CVT | F | L | Saloon FWD 2ZR-FE | Date to:2016.05 | GCI59139 | Inner Joint | | 20 | 23 | 35 | 63.5 | 115 | |
| | 2013.06-2019.08 | CVT | F | R | Saloon FWD 2ZR-FE | | GCI59123 | Inner Joint | | 20 | 30 | 35 | 63.5 | 121 | |
| | 2013.06-2019.08 | CVT | F | R | Saloon FWD 2ZR-FE | | GCI59139 | Inner Joint | | 20 | 23 | 35 | 63.5 | 115 | |
| 1.8 (104 kw) | 2013.01-2018.12 | CVT | F | L | Saloon FWD 2ZRFBE | | GDS59561 | Drive Shaft | 48T | 26 | 20 | 58 | 96 | 650 | |
| | 2013.01-2018.12 | CVT | F | R | Saloon FWD 2ZRFBE | | GDS59562 | Drive Shaft | 48T | 26 | 20 | 58 | 96 | 926 | |
| | 2013.01-2018.12 | CVT | F | L/R | Saloon FWD 2ZRFBE | | GCO59131 | Outer Joint | 48T | 26 | 24 | 58 | 96 | 55 | I |
| | 2013.01-2018.12 | CVT | F | L/R | Saloon FWD 2ZRFBE | | GCI59046 | Inner Joint | | 20 | 23 | 35 | 63.5 | 115.5 | |
| 1.8 (141 kw) | 2001.11-2007.02 | 6MT | F | R | Hatchback FWD 2ZZ-GE | | GCO59182 | Outer Joint | 48T | 26 | 25 | 58 | 95.5 | 61.5 | M |
| | 2001.11-2007.02 | MT | F | R | Hatchback FWD 2ZZ-GE | | GDS59183 | Drive Shaft | 48T | 26 | 20 | 58 | 95.5 | 917 | |
| | 2001.11-2007.02 | MT | F | L | Hatchback FWD 2ZZ-GE | | GCI59166 | Inner Joint | | 20 | 24 | 35 | 63.5 | 108.5 | |
| | 2001.11-2007.02 | MT | F | R | Hatchback FWD 2ZZ-GE | | GCI59207 | Inner Joint | | 20 | 24 | 35 | 364 | 94 | |
| | 2001.11-2007.02 | | F | L/R | Hatchback FWD 2ZZ-GE | | GCO59044 | Outer Joint | 48T | 26 | 25 | 63 | 100 | 62 | M |
| | 2001.11-2007.02 | | F | | Hatchback FWD 2ZZ-GE | | GCO59047 | Outer Joint | | 26 | 24 | 58 | 96 | 52.5 | I |
| 1.8 (160 kw) | 2005.10-2006.12 | 6MT | F | R | Hatchback FWD 2ZZ-GE | | GDS59183 | Drive Shaft | 48T | 26 | 20 | 58 | 95.5 | 917 | |
| | 2005.10-2006.12 | 6MT | F | L | Hatchback FWD 2ZZ-GE | | GCO59044 | Outer Joint | 48T | 26 | 25 | 63 | 100 | 62 | M |
| | 2005.10-2006.12 | 6MT | F | R | Hatchback FWD 2ZZ-GE | | GCO59182 | Outer Joint | 48T | 26 | 25 | 58 | 95.5 | 61.5 | M |
| | 2005.10-2006.12 | MT | F | L | Hatchback FWD 2ZZ-GE | | GCI59166 | Inner Joint | | 20 | 24 | 35 | 63.5 | 108.5 | |
| 1.8 (165 kw) | 2005.02-2007.02 | 6MT | F | R | Hatchback FWD 2ZZ-GE | | GDS59183 | Drive Shaft | 48T | 26 | 20 | 58 | 95.5 | 917 | |
| | 2005.02-2007.02 | 6MT | F | L | Hatchback FWD 2ZZ-GE | | GCO59044 | Outer Joint | 48T | 26 | 25 | 63 | 100 | 62 | M |
| | 2005.02-2007.02 | 6MT | F | R | Hatchback FWD 2ZZ-GE | | GCO59182 | Outer Joint | 48T | 26 | 25 | 58 | 95.5 | 61.5 | M |
| | 2005.02-2007.02 | AT/MT | F | L/R | Hatchback FWD 2ZZ-GE | | GCO59047 | Outer Joint | | 26 | 24 | 58 | 96 | 52.5 | I |
| | 2005.02-2007.02 | MT | F | L | Hatchback FWD 2ZZ-GE | | GCI59166 | Inner Joint | | 20 | 24 | 35 | 63.5 | 108.5 | |
| 1.9 (51 kw) | 2000.02-2002.01 | | F | R | Hatchback FWD 1WZ | | GCI59160 | Inner Joint | | 23 | 23 | 36 | 75 | 93 | |
| 2.0 (53 kw) | 1992.07-1997.04 | AT/MT | F | L/R | Saloon FWD 2C | | GCO59019 | Outer Joint | 48T | 26 | 24 | 56 | 95.5 | 55 | I |
| | 1992.07-1997.04 | | F | L/R | Saloon FWD 2C | | GCO59021 | Outer Joint | 48T | 26 | 23 | 56 | 96.5 | 55 | I |
| | 1997.04-2000.02 | 5MT | F | L | Hatchback FWD 2CE | | GDS59196 | Drive Shaft | 48T | 26 | 20 | 56 | 95.5 | 609 | |
| | 1997.04-2000.02 | 5MT | F | R | Hatchback FWD 2CE | | GDS59195 | Drive Shaft | 48T | 26 | 20 | 56 | 95.5 | 917 | |
| | 1997.04-2000.02 | 5MT | F | L | Hatchback FWD 2CE | | GCO59018 | Outer Joint | | 26 | 24 | 56 | 95.5 | 55 | I |
| | 1997.04-2000.02 | 5MT | F | R | Hatchback FWD 2CE | | GCO59001 | Outer Joint | | 26 | 24 | 56 | 95.5 | 55 | I |
| | 1997.04-2000.02 | 5MT | F | R | Hatchback FWD 2CE | | GCO59020 | Outer Joint | | 26 | 23 | 56 | 96.5 | 55 | I |
| | 1997.04-2000.02 | 5MT | F | L/R | Hatchback FWD 2CE | | GCO59124 | Outer Joint | 48T | 26 | 24 | 56 | 95.5 | 55 | I |
| | 1997.04-2000.02 | 5MT | F | L | Hatchback FWD 2CE | | GCI59005 | Inner Joint | | 20 | 23 | 35 | 63.5 | 115.7 | |
| | 1997.04-2000.02 | 5MT | F | L | Hatchback FWD 2CE | | GCI59046 | Inner Joint | | 20 | 23 | 35 | 63.5 | 115.5 | |
| | 1997.04-2000.02 | AT/MT | F | L/R | Hatchback FWD 2CE | | GCO59019 | Outer Joint | 48T | 26 | 24 | 56 | 95.5 | 55 | I |
| | 1997.05-1999.09 | 5MT | F | L | Saloon FWD 2CE | | GDS59196 | Drive Shaft | 48T | 26 | 20 | 56 | 95.5 | 609 | |
| | 1997.05-1999.09 | 5MT | F | R | Saloon FWD 2CE | | GDS59195 | Drive Shaft | 48T | 26 | 20 | 56 | 95.5 | 917 | |
| | 1997.05-1999.09 | 5MT | F | L | Saloon FWD 2CE | | GCO59018 | Outer Joint | | 26 | 24 | 56 | 95.5 | 55 | I |
| | 1997.05-1999.09 | 5MT | F | R | Saloon FWD 2CE | | GCO59001 | Outer Joint | | 26 | 24 | 56 | 95.5 | 55 | I |
| | 1997.05-1999.09 | 5MT | F | R | Saloon FWD 2CE | | GCO59020 | Outer Joint | | 26 | 23 | 56 | 96.5 | 55 | I |
| | 1997.05-1999.09 | 5MT | F | L/R | Saloon FWD 2CE | | GCO59124 | Outer Joint | 48T | 26 | 24 | 56 | 95.5 | 55 | I |
| | 1997.05-1999.09 | 5MT | F | L | Saloon FWD 2CE | | GCI59005 | Inner Joint | | 20 | 23 | 35 | 63.5 | 115.7 | |
| | 1997.05-1999.09 | 5MT | F | L | Saloon FWD 2CE | | GCI59046 | Inner Joint | | 20 | 23 | 35 | 63.5 | 115.5 | |
| | 1997.05-1999.09 | AT/MT | F | L/R | Saloon FWD 2CE | | GCO59019 | Outer Joint | 48T | 26 | 24 | 56 | 95.5 | 55 | I |
| 2.0 (66 kw) | 2000.08-2001.10 | 5MT | F | L/R | Saloon FWD 1CDFTV | | GCO59002 | Outer Joint | 48T | 26 | 25 | 56 | 96 | 62 | I |
| | 2000.08-2001.10 | | F | | Saloon FWD 1CDFTV | | GCO59003 | Outer Joint | | 26 | 25 | 56 | 95.6 | 61 | M |
| | 2000.09-2002.01 | | F | | Hatchback FWD 1CDFTV | | GCO59003 | Outer Joint | | 26 | 25 | 56 | 95.6 | 61 | M |
| | 2002.01-2006.12 | 5MT | F | R | Hatchback FWD 1CD-FTV | Vehicle Production Country:Great Britain/Japan | GDS59114 | Drive Shaft | 48T | 26 | 24 | 63 | 100 | 948 | |
| | 2002.01-2006.12 | 5MT | F | L | Hatchback FWD 1CD-FTV | | GCO59294 | Outer Joint | 48T | 26 | 27 | 63 | 97 | 60 | M |
| | 2002.01-2006.12 | 5MT | F | L/R | Hatchback FWD 1CD-FTV | | GCO59167 | Outer Joint | 48T | 26 | 27 | 63 | 100 | 62 | I |
| | 2002.01-2006.12 | 5MT | F | L/R | Hatchback FWD 1CD-FTV | | GCO59226 | Outer Joint | 48T | 26 | 25 | 58 | 93 | 63.5 | M |
| | 2002.01-2006.12 | 5MT | F | L | Hatchback FWD 1CD-FTV | Vehicle Production Country:Great Britain;TJ | GCI59042 | Inner Joint | | 24 | 26 | 50 | 67 | 109 | |
| | 2002.01-2006.12 | 5MT | F | L | Hatchback FWD 1CD-FTV | Vehicle Production Country:Japan,Manufactured in:Russia | GCI59125 | Inner Joint | | 24 | 27 | 50 | 67 | 109.5 | |
| | 2002.01-2006.12 | 5MT | F | L | Hatchback FWD 1CD-FTV | Vehicle Production Country:Great Britain;AAR | GCI83530 | Inner Joint | | 24 | 26 | 50 | 67 | 109 | |
| | 2002.01-2006.12 | MT | F | | Hatchback FWD 1CD-FTV | | GCO59182 | Outer Joint | 48T | 26 | 25 | 58 | 95.5 | 61.5 | M |
| | 2002.01-2006.12 | 5MT | F | R | Saloon FWD 1CD-FTV | Vehicle Production Country:Great Britain/Japan | GDS59114 | Drive Shaft | 48T | 26 | 24 | 63 | 100 | 948 | |

| | YEAR | TRANSM. | F/R | L/R | BODY STYLE & DRIVE TYPE & ENGINE | REMARKS | G-AP Ref. | PRODUCT | ABS | Technical Specifications A | B | C | H | L | P |
|---|---|---|---|---|---|---|---|---|---|---|---|---|---|---|---|
| **TOYOTA** | | | | | | | | | | | | | | | |
| **Corolla** | | | | | | | | | | | | | | | |
| 2.0 (66 kw) | 2002.01-2006.12 | 5MT | F | L | Saloon FWD 1CD-FTV | | GCO59294 | Outer Joint | 48T | 26 | 27 | 63 | 97 | 60 | M |
| | 2002.01-2006.12 | 5MT | F | L/R | Saloon FWD 1CD-FTV | | GCO59167 | Outer Joint | 48T | 26 | 27 | 63 | 100 | 62 | I |
| | 2002.01-2006.12 | 5MT | F | L/R | Saloon FWD 1CD-FTV | | GCO59226 | Outer Joint | 48T | 26 | 25 | 58 | 93 | 63.5 | M |
| | 2002.01-2006.12 | 5MT | F | L | Saloon FWD 1CD-FTV | Vehicle Production Country:Great Britain;TJ | GCI59042 | Inner Joint | | 24 | 26 | 50 | 67 | 109 | |
| | 2002.01-2006.12 | 5MT | F | L | Saloon FWD 1CD-FTV | Vehicle Production Country:Japan,Manufactured in:Russia | GCI59125 | Inner Joint | | 24 | 27 | 50 | 67 | 109.5 | |
| | 2002.01-2006.12 | 5MT | F | L | Saloon FWD 1CD-FTV | Vehicle Production Country:Great Britain;AAR | GCI83530 | Inner Joint | | 24 | 26 | 50 | 67 | 109 | |
| | 2002.01-2006.12 | MT | F | | Saloon FWD 1CD-FTV | | GCO59182 | Outer Joint | 48T | 26 | 25 | 58 | 95.5 | 61.5 | M |
| 2.0 (81 kw) | 2002.01-2006.12 | 5MT | F | R | Hatchback FWD 1CD-FTV | Vehicle Production Country:Great Britain/Japan | GDS59114 | Drive Shaft | 48T | 26 | 24 | 63 | 100 | 948 | |
| | 2002.01-2006.12 | 5MT | F | L | Hatchback FWD 1CD-FTV | | GCO59294 | Outer Joint | 48T | 26 | 27 | 63 | 97 | 60 | M |
| | 2002.01-2006.12 | 5MT | F | L/R | Hatchback FWD 1CD-FTV | | GCO59167 | Outer Joint | 48T | 26 | 27 | 63 | 100 | 62 | I |
| | 2002.01-2006.12 | 5MT | F | L/R | Hatchback FWD 1CD-FTV | | GCO59226 | Outer Joint | 48T | 26 | 25 | 58 | 93 | 63.5 | M |
| | 2002.01-2006.12 | 5MT | F | L | Hatchback FWD 1CD-FTV | Vehicle Production Country:Great Britain;TJ | GCI59042 | Inner Joint | | 24 | 26 | 50 | 67 | 109 | |
| | 2002.01-2006.12 | 5MT | F | L | Hatchback FWD 1CD-FTV | Vehicle Production Country:Japan,Manufactured in:Russia | GCI59125 | Inner Joint | | 24 | 27 | 50 | 67 | 109.5 | |
| | 2002.01-2006.12 | 5MT | F | L | Hatchback FWD 1CD-FTV | Vehicle Production Country:Great Britain;AAR | GCI83530 | Inner Joint | | 24 | 26 | 50 | 67 | 109 | |
| | 2002.01-2006.12 | MT | F | | Hatchback FWD 1CD-FTV | | GCO59182 | Outer Joint | 48T | 26 | 25 | 58 | 95.5 | 61.5 | M |
| 2.0 (85 kw) | 2003.05-2007.02 | 5MT | F | L | Hatchback FWD 1CD-FTV | | GCO59294 | Outer Joint | 48T | 26 | 27 | 63 | 97 | 60 | M |
| | 2003.05-2007.02 | 5MT | F | L/R | Hatchback FWD 1CD-FTV | | GCO59167 | Outer Joint | 48T | 26 | 27 | 63 | 100 | 62 | I |
| | 2003.05-2007.02 | 5MT | F | L/R | Hatchback FWD 1CD-FTV | | GCO59226 | Outer Joint | 48T | 26 | 25 | 58 | 93 | 63.5 | M |
| | 2003.05-2007.02 | 5MT | F | L | Hatchback FWD 1CD-FTV | Vehicle Production Country:Great Britain;TJ | GCI59042 | Inner Joint | | 24 | 26 | 50 | 67 | 109 | |
| | 2003.05-2007.02 | 5MT | F | L | Hatchback FWD 1CD-FTV | Vehicle Production Country:Japan,Manufactured in:Russia | GCI59125 | Inner Joint | | 24 | 27 | 50 | 67 | 109.5 | |
| | 2003.05-2007.02 | 5MT | F | L | Hatchback FWD 1CD-FTV | Vehicle Production Country:Great Britain;AAR | GCI83530 | Inner Joint | | 24 | 26 | 50 | 67 | 109 | |
| | 2003.05-2007.02 | MT | F | | Hatchback FWD 1CD-FTV | | GCO59182 | Outer Joint | 48T | 26 | 25 | 58 | 95.5 | 61.5 | M |
| | 2003.05-2007.02 | | F | L | Hatchback FWD 1CD-FTV | | GDS59207 | Drive Shaft | 48T | 26 | 24 | 58 | 95.5 | 601 | |
| | 2003.05-2007.02 | | F | R | Hatchback FWD 1CD-FTV | | GDS59114 | Drive Shaft | 48T | 26 | 24 | 63 | 100 | 948 | |
| | 2004.06-2007.07 | 5MT | F | R | Saloon FWD 1CD-FTV | Vehicle Production Country:Great Britain/Japan | GDS59114 | Drive Shaft | 48T | 26 | 24 | 63 | 100 | 948 | |
| | 2004.06-2007.07 | 5MT | F | L | Saloon FWD 1CD-FTV | | GCO59226 | Outer Joint | 48T | 26 | 25 | 58 | 93 | 63.5 | M |
| | 2004.06-2007.07 | 5MT | F | L/R | Saloon FWD 1CD-FTV | | GCO59182 | Outer Joint | 48T | 26 | 25 | 58 | 95.5 | 61.5 | M |
| | 2004.06-2007.07 | 5MT | F | L | Saloon FWD 1CD-FTV | Vehicle Production Country:Great Britain;TJ | GCI59042 | Inner Joint | | 24 | 26 | 50 | 67 | 109 | |
| | 2004.06-2007.07 | 5MT | F | L | Saloon FWD 1CD-FTV | Vehicle Production Country:Japan,Manufactured in:Russia | GCI59125 | Inner Joint | | 24 | 27 | 50 | 67 | 109.5 | |
| | 2004.06-2007.07 | 5MT | F | L | Saloon FWD 1CD-FTV | Vehicle Production Country:Great Britain;AAR | GCI83530 | Inner Joint | | 24 | 26 | 50 | 67 | 109 | |
| 2.0 (93 kw) | 2006.11-2014.07 | 6MT | F | L/R | Saloon FWD 1AD-FTV | | GCO59206 | Outer Joint | | 26 | 23 | 55.6 | 96 | 53 | I |
| | 2006.11-2014.07 | MT | F | L | Saloon FWD 1AD-FTV | Date from:2007.01 | GDS59702 | Drive Shaft | | 30 | 24 | 61.4 | 101 | 613 | |
| | 2006.11-2014.07 | MT | F | R | Saloon FWD 1AD-FTV | Date from:2007.01 | GDS59701 | Drive Shaft | | 30 | 24 | 61.4 | 101 | 987 | |
| | 2006.11-2014.07 | MT | F | L/R | Saloon FWD 1AD-FTV | Date from:2007.01 | GCO59318 | Outer Joint | | 30 | 36 | 61.4 | 101 | 62 | I |
| | 2006.11-2014.07 | MT | F | L | Saloon FWD 1AD-FTV | Date from:2007.01 | GCI81145 | Inner Joint | | 24 | 33 | 50 | 67 | 109 | |
| | 2006.11-2014.07 | MT | F | R | Saloon FWD 1AD-FTV | Date from:2007.01 | GCI59237 | Inner Joint | | 24 | 33 | 40 | 383 | 97 | |
| 2.0 (132 kw) | 2019.02- | CVT | F | L | Estate FWD M20A-FXS | | GDS84522 | Drive Shaft | | 26 | 24 | 61.2 | 96.5 | 645 | |
| | 2019.02- | CVT | F | R | Estate FWD M20A-FXS | | GDS84206 | Drive Shaft | | 26 | 24 | 61.2 | 96.5 | 941 | |
| | 2019.02- | CVT | F | L/R | Estate FWD M20A-FXS | | GCO82485 | Outer Joint | | 26 | 32 | 61.2 | 96.5 | 54.5 | I |
| | 2019.02- | CVT | F | L | Estate FWD M20A-FXS | | GCI82834 | Inner Joint | | 24 | 32 | 50 | 67 | 108.5 | |
| | 2019.02- | CVT | F | R | Estate FWD M20A-FXS | | GCI82641 | Inner Joint | | 24 | 32 | 40 | 98 | 95.5 | |
| | 2019.02- | CVT | F | L | Hatchback FWD M20A-FXS | | GDS84522 | Drive Shaft | | 26 | 24 | 61.2 | 96.5 | 645 | |
| | 2019.02- | CVT | F | R | Hatchback FWD M20A-FXS | | GDS84206 | Drive Shaft | | 26 | 24 | 61.2 | 96.5 | 941 | |
| | 2019.02- | CVT | F | L/R | Hatchback FWD M20A-FXS | | GCO82485 | Outer Joint | | 26 | 32 | 61.2 | 96.5 | 54.5 | I |
| | 2019.02- | CVT | F | L | Hatchback FWD M20A-FXS | | GCI82834 | Inner Joint | | 24 | 32 | 50 | 67 | 108.5 | |
| | 2019.02- | CVT | F | R | Hatchback FWD M20A-FXS | | GCI82641 | Inner Joint | | 24 | 32 | 40 | 98 | 95.5 | |
| 2.0 (135 kw) | 2021.05- | CVT | F | L | Estate FWD M20A-FXS | | GDS84522 | Drive Shaft | | 26 | 24 | 61.2 | 96.5 | 645 | |
| | 2021.05- | CVT | F | R | Estate FWD M20A-FXS | | GDS84206 | Drive Shaft | | 26 | 24 | 61.2 | 96.5 | 941 | |
| | 2021.05- | CVT | F | L/R | Estate FWD M20A-FXS | | GCO82485 | Outer Joint | | 26 | 32 | 61.2 | 96.5 | 54.5 | I |
| | 2021.05- | CVT | F | L | Estate FWD M20A-FXS | | GCI82834 | Inner Joint | | 24 | 32 | 50 | 67 | 108.5 | |
| | 2021.05- | CVT | F | R | Estate FWD M20A-FXS | | GCI82641 | Inner Joint | | 24 | 32 | 40 | 98 | 95.5 | |
| | 2021.05- | CVT | F | L | Hatchback FWD M20A-FXS | | GDS84522 | Drive Shaft | | 26 | 24 | 61.2 | 96.5 | 645 | |
| | 2021.05- | CVT | F | R | Hatchback FWD M20A-FXS | | GDS84206 | Drive Shaft | | 26 | 24 | 61.2 | 96.5 | 941 | |
| | 2021.05- | CVT | F | L/R | Hatchback FWD M20A-FXS | | GCO82485 | Outer Joint | | 26 | 32 | 61.2 | 96.5 | 54.5 | I |
| | 2021.05- | CVT | F | L | Hatchback FWD M20A-FXS | | GCI82834 | Inner Joint | | 24 | 32 | 50 | 67 | 108.5 | |
| | 2021.05- | CVT | F | R | Hatchback FWD M20A-FXS | | GCI82641 | Inner Joint | | 24 | 32 | 40 | 98 | 95.5 | |
| 2.0 (144 kw) | 2023.01- | CVT | F | L | Estate FWD M20A-FXS | | GCI82834 | Inner Joint | | 24 | 32 | 50 | 67 | 108.5 | |
| | 2023.01- | CVT | F | L | Hatchback FWD M20A-FXS | | GCI82834 | Inner Joint | | 24 | 32 | 50 | 67 | 108.5 | |
| **Corolla Altis** | | | | | | | | | | | | | | | |
| 1.3 (65 kw) | 2000.08-2004.05 | AT/MT | F | L | Saloon FWD 2NZ-FE | | GDS59069 | Drive Shaft | 48T | 26 | 23 | 58 | 96 | 636.5 | |
| | 2000.08-2004.05 | | F | | Saloon FWD 2NZ-FE | | GCI99046 | Inner Joint | | 23 | 23 | 34 | 60 | 103.5 | |
| 1.5 (80 kw) | 2001.11-2004.05 | | F | | Saloon 4WD 1NZ-FE | | GCO59036 | Outer Joint | | 26 | 23 | 58 | 96 | 52.5 | I |
| | 2001.11-2007.07 | AT/MT | F | L | Saloon FWD 1NZ-FE | | GDS59069 | Drive Shaft | 48T | 26 | 23 | 58 | 96 | 636.5 | |
| 1.6 (81 kw) | 2007.08-2013.06 | 5MT | F | R | Saloon FWD 3ZZ-FE | | GDS59714 | Drive Shaft | | 26 | 23 | 58 | 96 | 924 | |
| 1.6 (90 kw) | 2013.06-2018.12 | 6MT | F | L | Saloon FWD 1ZRFECNG | | GDS59618 | Drive Shaft | | 26 | 20 | 58 | 96 | 650 | |

| | YEAR | TRANSM. | F/R | L/R | BODY STYLE & DRIVE TYPE & ENGINE | REMARKS | G-AP Ref. | PRODUCT | ABS | Technical Specifications A | B | C | H | L | P |
|---|---|---|---|---|---|---|---|---|---|---|---|---|---|---|---|
| **TOYOTA** | | | | | | | | | | | | | | | |
| **Corolla Altis** | | | | | | | | | | | | | | | |
| 1.6 (90 kw) | 2013.06-2018.12 | 6MT | F | R | Saloon FWD 1ZRFECNG | | GDS59617 | Drive Shaft | | 26 | 20 | 58 | 96 | 926 | |
| | 2013.06-2018.12 | CVT | F | L | Saloon FWD 1ZRFECNG | | GDS59561 | Drive Shaft | 48T | 26 | 20 | 58 | 96 | 650 | |
| | 2013.06-2018.12 | CVT | F | R | Saloon FWD 1ZRFECNG | | GDS59562 | Drive Shaft | 48T | 26 | 20 | 58 | 96 | 926 | |
| | 2013.06-2018.12 | CVT | F | L/R | Saloon FWD 1ZRFECNG | | GCO59131 | Outer Joint | 48T | 26 | 24 | 58 | 96 | 55 | I |
| 1.6 (92 kw) | 2017.11-2018.12 | 6MT | F | L | Saloon FWD 1ZR-FBE | | GDS59561 | Drive Shaft | 48T | 26 | 20 | 58 | 96 | 650 | |
| | 2017.11-2018.12 | 6MT | F | R | Saloon FWD 1ZR-FBE | | GDS59562 | Drive Shaft | 48T | 26 | 20 | 58 | 96 | 926 | |
| | 2017.11-2018.12 | 6MT | F | L/R | Saloon FWD 1ZR-FBE | | GCO59131 | Outer Joint | 48T | 26 | 24 | 58 | 96 | 55 | I |
| | 2017.11-2018.12 | 6MT | F | L/R | Saloon FWD 1ZR-FBE | | GCI59046 | Inner Joint | | 20 | 23 | 35 | 63.5 | 115.5 | |
| 1.8 (96 kw) | 2001.11-2005.07 | AT | F | R | Saloon FWD 1ZZFE | | GDS59205 | Drive Shaft | 48T | 26 | 23 | 58 | 95.5 | 909.5 | |
| | 2001.11-2005.07 | AT/MT | F | L | Saloon FWD 1ZZFE | | GDS59069 | Drive Shaft | 48T | 26 | 23 | 58 | 96 | 636.5 | |
| 1.8 (103 kw) | 2010.08-2013.06 | CVT | F | L | Saloon FWD 2ZR-FBE, 2ZR-FE | | GDS59561 | Drive Shaft | 48T | 26 | 20 | 58 | 96 | 650 | |
| | 2010.08-2013.06 | CVT | F | R | Saloon FWD 2ZR-FBE, 2ZR-FE | | GDS59562 | Drive Shaft | 48T | 26 | 20 | 58 | 96 | 926 | |
| | 2010.08-2013.06 | CVT | F | L/R | Saloon FWD 2ZR-FBE, 2ZR-FE | | GCO59131 | Outer Joint | 48T | 26 | 24 | 58 | 96 | 55 | I |
| | 2010.08-2013.06 | CVT | F | L/R | Saloon FWD 2ZR-FBE, 2ZR-FE | | GCI59046 | Inner Joint | | 20 | 23 | 35 | 63.5 | 115.5 | |
| 2.0 (107 kw) | 2010.07-2013.06 | AT | F | L | Saloon FWD 3ZR-FE | | GDS59572 | Drive Shaft | 48T | 26 | 24 | 58 | 96 | 622 | |
| | 2010.07-2013.06 | AT | F | L | Saloon FWD 3ZR-FE | | GCO59428 | Outer Joint | 48T | 26 | 32 | 58 | 96 | 56.5 | I |
| | 2010.07-2013.06 | AT/CVT | F | L | Saloon FWD 3ZR-FE | | GCI59142 | Inner Joint | | 24 | 32 | 50 | 67 | 104 | |
| **Corolla Compact** | | | | | | | | | | | | | | | |
| 1.6 (84 kw) | 1992.07-1997.04 | AT/MT | F | L/R | Hatchback FWD 4A-FE | | GCO59020 | Outer Joint | | 26 | 23 | 56 | 96.5 | 55 | I |
| | 1992.07-1997.04 | AT/MT | F | L/R | Hatchback FWD 4A-FE | | GCO59021 | Outer Joint | 48T | 26 | 23 | 56 | 96.5 | 55 | I |
| | 1992.07-1997.04 | AT/MT | F | L/R | Hatchback FWD 4A-FE | | GCO59062 | Outer Joint | | 26 | 24 | 56 | 95.5 | 55 | I |
| | 1992.07-1997.04 | AT/MT | F | L/R | Hatchback FWD 4A-FE | | GCI88015 | Inner Joint | | 23 | 23 | 34 | 84 | 93 | |
| | 1992.07-1997.04 | MT | F | L | Hatchback FWD 4A-FE | | GDS88016 | Drive Shaft | | 26 | 23 | 56 | 96.5 | 599 | |
| | 1992.07-1997.04 | MT | F | L/R | Hatchback FWD 4A-FE | | GCO59005 | Outer Joint | | 26 | 23 | 56 | 95.5 | 55 | I |
| | 1992.07-1997.04 | MT | F | L/R | Hatchback FWD 4A-FE | | GCO59006 | Outer Joint | 48T | 26 | 23 | 56 | 95.5 | 55 | I |
| | 1992.07-1997.04 | | F | | Hatchback FWD 4A-FE | Version:Costruttore:Saginaw | GCO59163 | Outer Joint | 48T | 26 | 29 | 56 | 99.5 | 62.5 | O |
| | 1992.07-1997.04 | | F | | Hatchback FWD 4A-FE | | GCO59163 | Outer Joint | 48T | 26 | 29 | 56 | 99.5 | 62.5 | O |
| 2.0 (53 kw) | 1992.07-1997.04 | AT/MT | F | L/R | Hatchback FWD 2C | | GCO59019 | Outer Joint | 48T | 26 | 24 | 56 | 95.5 | 55 | I |
| | 1992.07-1997.04 | | F | L/R | Hatchback FWD 2C | | GCO59021 | Outer Joint | 48T | 26 | 23 | 56 | 96.5 | 55 | I |
| | 1992.07-1997.04 | | F | L/R | Hatchback FWD 2C | | GCO59062 | Outer Joint | | 26 | 24 | 56 | 95.5 | 55 | I |
| **Corolla Cross** | | | | | | | | | | | | | | | |
| 1.8 (103 kw) | 2023.02- | CVT | F | L | SUV FWD 2ZR-FXE | | GDS57954 | Drive Shaft | | 26 | 24 | 55.6 | 95.5 | 665 | |
| | 2023.02- | CVT | F | R | SUV FWD 2ZR-FXE | | GDS56300 | Drive Shaft | | 26 | 24 | 55.6 | 95.5 | 963 | |
| | 2023.02- | CVT | F | L/R | SUV FWD 2ZR-FXE | | GCO59340 | Outer Joint | | 26 | 25 | 55.6 | 95.5 | 57 | I |
| | 2023.02- | CVT | F | L | SUV FWD 2ZR-FXE | | GCI83357 | Inner Joint | | 24 | 25 | 50 | 67 | 108 | |
| | 2023.02- | CVT | F | R | SUV FWD 2ZR-FXE | | GCI83232 | Inner Joint | | 24 | 25 | 40 | 98 | 93 | |
| 2.0 (132 kw) | 2025.06- | CVT | F | L | SUV 4WD M20A-FXS | | GDS56972 | Drive Shaft | | 26 | 24 | 55.6 | 95.5 | 660 | |
| | 2025.06- | CVT | F | L | SUV FWD M20A-FXS | | GDS56972 | Drive Shaft | | 26 | 24 | 55.6 | 95.5 | 660 | |
| | 2025.06- | CVT | F | R | SUV FWD M20A-FXS | | GDS56300 | Drive Shaft | | 26 | 24 | 55.6 | 95.5 | 963 | |
| | 2025.06- | CVT | F | L/R | SUV FWD M20A-FXS | | GCO59340 | Outer Joint | | 26 | 25 | 55.6 | 95.5 | 57 | I |
| | 2025.06- | CVT | F | L | SUV FWD M20A-FXS | | GCI83357 | Inner Joint | | 24 | 25 | 50 | 67 | 108 | |
| | 2025.06- | CVT | F | R | SUV FWD M20A-FXS | | GCI83232 | Inner Joint | | 24 | 25 | 40 | 98 | 93 | |
| 2.0 (144 kw) | 2022.08- | CVT | F | L | SUV 4WD M20A-FXS | | GDS56972 | Drive Shaft | | 26 | 24 | 55.6 | 95.5 | 660 | |
| | 2022.08- | CVT | F | R | SUV 4WD M20A-FXS | | GDS56300 | Drive Shaft | | 26 | 24 | 55.6 | 95.5 | 963 | |
| | 2022.08- | CVT | F | L/R | SUV 4WD M20A-FXS | | GCO59340 | Outer Joint | | 26 | 25 | 55.6 | 95.5 | 57 | I |
| | 2022.08- | CVT | F | L | SUV 4WD M20A-FXS | | GCI83357 | Inner Joint | | 24 | 25 | 50 | 67 | 108 | |
| | 2022.08- | CVT | F | R | SUV 4WD M20A-FXS | | GCI83232 | Inner Joint | | 24 | 25 | 40 | 98 | 93 | |
| | 2022.08- | CVT | R | L/R | SUV 4WD M20A-FXS | | GCI59203 | Inner Joint | | | 20 | | | 83 | |
| | 2022.08- | CVT | F | L | SUV FWD M20A-FXS | | GDS56972 | Drive Shaft | | 26 | 24 | 55.6 | 95.5 | 660 | |
| | 2022.08- | CVT | F | R | SUV FWD M20A-FXS | | GDS56300 | Drive Shaft | | 26 | 24 | 55.6 | 95.5 | 963 | |
| | 2022.08- | CVT | F | L/R | SUV FWD M20A-FXS | | GCO59340 | Outer Joint | | 26 | 25 | 55.6 | 95.5 | 57 | I |
| | 2022.08- | CVT | F | L | SUV FWD M20A-FXS | | GCI83357 | Inner Joint | | 24 | 25 | 50 | 67 | 108 | |
| | 2022.08- | CVT | F | R | SUV FWD M20A-FXS | | GCI83232 | Inner Joint | | 24 | 25 | 40 | 98 | 93 | |
| **Corolla Estate/Wagon** | | | | | | | | | | | | | | | |
| 1.3 (55 kw) | 1995.08-1997.04 | AT/MT | F | L/R | Estate FWD 4EFE | | GCI88015 | Inner Joint | | 23 | 23 | 34 | 84 | 93 | |
| | 1995.08-1997.04 | MT | F | L | Estate FWD 4EFE | | GDS88016 | Drive Shaft | | 26 | 23 | 56 | 96.5 | 599 | |
| | 1995.08-1997.04 | MT | F | L/R | Estate FWD 4EFE | | GCO59005 | Outer Joint | | 26 | 23 | 56 | 95.5 | 55 | I |
| | 1995.08-1997.04 | MT | F | L/R | Estate FWD 4EFE | | GCO59006 | Outer Joint | 48T | 26 | 23 | 56 | 95.5 | 55 | I |
| | 1995.08-1997.04 | MT | F | L/R | Estate FWD 4EFE | | GCO59020 | Outer Joint | | 26 | 23 | 56 | 96.5 | 55 | I |
| | 1995.08-1997.04 | MT | F | L/R | Estate FWD 4EFE | | GCO59021 | Outer Joint | 48T | 26 | 23 | 56 | 96.5 | 55 | I |
| 1.3 (63 kw) | 1997.05-1999.09 | 3AT/5MT | F | R | Estate FWD 4EFE | Manufactured in:Japan,For vehicles without ABS | GDS59392 | Drive Shaft | | 26 | 23 | 56 | 96.5 | 926 | |
| | 1997.05-1999.09 | 3AT/5MT/6MT | F | L | Estate FWD 4EFE | For vehicles with ABS,Manufactured in:Japan | GDS22003 | Drive Shaft | 48T | 26 | 23 | 56 | 96.5 | 605 | |
| | 1997.05-1999.09 | 3AT/5MT/6MT | F | L | Estate FWD 4EFE | Manufactured in:Japan,For vehicles without ABS | GDS88016 | Drive Shaft | | 26 | 23 | 56 | 96.5 | 599 | |
| | 1997.05-1999.09 | 3AT/5MT/6MT | F | R | Estate FWD 4EFE | | GCO59021 | Outer Joint | 48T | 26 | 23 | 56 | 96.5 | 55 | I |
| | 1997.05-1999.09 | 3AT/5MT/6MT | F | L/R | Estate FWD 4EFE | | GCO59020 | Outer Joint | | 26 | 23 | 56 | 96.5 | 55 | I |

| | YEAR | TRANSM. | F/R | L/R | BODY STYLE & DRIVE TYPE & ENGINE | REMARKS | G-AP Ref. | PRODUCT | ABS | Technical Specifications | | | | | |
|---|---|---|---|---|---|---|---|---|---|---|---|---|---|---|---|
| | | | | | | | | | | A | B | C | H | L | P |
| **TOYOTA**<br>**Corolla Estate/Wagon** | | | | | | | | | | | | | | | |
| 1.3 (63 kw) | 1997.05-1999.09 | 3AT/5MT/6MT | F | L/R | Estate FWD 4EFE | | GCI88015 | Inner Joint | | 23 | 23 | 34 | 84 | 93 | |
| 1.3 (65 kw) | 2002.09-2007.08 | AT/MT | F | L | Estate FWD 2NZFE | | GDS59069 | Drive Shaft | 48T | 26 | 23 | 58 | 96 | 636.5 | |
| 1.4 (66 kw) | 2004.06-2007.10 | MT | F | L | Estate FWD 1ND-TV | | GDS83500 | Drive Shaft | 48T | 26 | 20 | 58 | 95.5 | 632 | |
| | 2004.06-2007.10 | MT | F | R | Estate FWD 1ND-TV | | GDS59183 | Drive Shaft | 48T | 26 | 20 | 58 | 95.5 | 917 | |
| | 2004.06-2007.10 | MT | F | | Estate FWD 1ND-TV | | GCO59182 | Outer Joint | 48T | 26 | 25 | 58 | 95.5 | 61.5 | M |
| | 2004.06-2007.10 | MT | F | L | Estate FWD 1ND-TV | | GCI59166 | Inner Joint | | 20 | 24 | 35 | 63.5 | 108.5 | |
| | 2004.06-2007.10 | MT | F | R | Estate FWD 1ND-TV | | GCI59207 | Inner Joint | | 20 | 24 | 35 | 364 | 94 | |
| | 2004.06-2007.10 | | F | L/R | Estate FWD 1ND-TV | | GCO59044 | Outer Joint | 48T | 26 | 25 | 63 | 100 | 62 | M |
| | 2004.06-2007.10 | | F | L/R | Estate FWD 1ND-TV | | GCO59226 | Outer Joint | 48T | 26 | 25 | 58 | 93 | 63.5 | M |
| 1.4 (71 kw) | 1999.10-2001.10 | 5MT | F | R | Estate FWD 4ZZFE | Manufactured in:Japan,For vehicles without ABS | GDS59392 | Drive Shaft | | 26 | 23 | 56 | 96.5 | 926 | |
| | 1999.10-2001.10 | 5MT/6MT | F | L | Estate FWD 4ZZFE | For vehicles with ABS,Manufactured in:Japan | GDS22003 | Drive Shaft | 48T | 26 | 23 | 56 | 96.5 | 605 | |
| | 1999.10-2001.10 | 5MT/6MT | F | L | Estate FWD 4ZZFE | Manufactured in:Japan,For vehicles without ABS | GDS88016 | Drive Shaft | | 26 | 23 | 56 | 96.5 | 599 | |
| | 1999.10-2001.10 | 5MT/6MT | F | L/R | Estate FWD 4ZZFE | | GCO59006 | Outer Joint | 48T | 26 | 23 | 56 | 95.5 | 55 | I |
| | 1999.10-2001.10 | 5MT/6MT | F | L/R | Estate FWD 4ZZFE | | GCO59020 | Outer Joint | | 26 | 23 | 56 | 96.5 | 55 | I |
| | 1999.10-2001.10 | 5MT/6MT | F | L/R | Estate FWD 4ZZFE | | GCO59021 | Outer Joint | 48T | 26 | 23 | 56 | 96.5 | 55 | I |
| | 1999.10-2001.10 | 5MT/6MT | F | L/R | Estate FWD 4ZZFE | | GCI88015 | Inner Joint | | 23 | 23 | 34 | 84 | 93 | |
| | 2002.01-2007.02 | 5MT | F | L | Estate FWD 4ZZ-FE | Veh Prd Country:Japan | GDS59069 | Drive Shaft | 48T | 26 | 23 | 58 | 96 | 636.5 | |
| | 2002.01-2007.02 | 5MT | F | L | Estate FWD 4ZZ-FE | Veh Prd Country:Great Britain | GDS59270 | Drive Shaft | 48T | 26 | 23 | 56 | 99 | 633.5 | |
| | 2002.01-2007.02 | 5MT | F | R | Estate FWD 4ZZ-FE | Vehicle Production Country:Japan,Manufacturer:Toyota | GDS59080 | Drive Shaft | 48T | 26 | 23 | 58 | 96 | 908 | |
| | 2002.01-2007.02 | 5MT | F | R | Estate FWD 4ZZ-FE | Veh Prd Country:Great Britain,Vehicle Production Country:Japan | GDS59271 | Drive Shaft | 48T | 26 | 23 | 56 | 99 | 915 | |
| | 2002.01-2007.02 | 5MT | F | L/R | Estate FWD 4ZZ-FE | GrooveType:Middle | GCO59022 | Outer Joint | 48T | 26 | 23 | 56 | 99 | 61 | M |
| | 2002.01-2007.02 | 5MT | F | L/R | Estate FWD 4ZZ-FE | GrooveType:Middle | GCO59037 | Outer Joint | 48T | 26 | 23 | 58 | 95.5 | 61 | M |
| | 2002.01-2007.02 | 5MT | F | L/R | Estate FWD 4ZZ-FE | Vehicle Production Country:Japan | GCI88015 | Inner Joint | | 23 | 23 | 34 | 84 | 93 | |
| | 2002.01-2007.02 | 5MT | F | L/R | Estate FWD 4ZZ-FE | Vehicle Production Country:Great Britain | GCI99038 | Inner Joint | | 23 | 23 | 34 | 60 | 113 | |
| | 2002.01-2007.02 | MT | F | L/R | Estate FWD 4ZZ-FE | for left-hand drive vehicles,Vehicle Production Country:Japan | GCO59082 | Outer Joint | | 26 | 23 | 58 | 96 | 55 | I |
| | 2002.01-2007.02 | MT | F | L/R | Estate FWD 4ZZ-FE | GrooveType:Inner | GCO59130 | Outer Joint | 48T | 26 | 23 | 58 | 96 | 55 | I |
| | 2002.01-2007.02 | MT | F | L/R | Estate FWD 4ZZ-FE | | GCO59131 | Outer Joint | 48T | 26 | 24 | 58 | 96 | 55 | I |
| 1.6 (79 kw) | 1997.04-2000.02 | 4AT | F | L/R | Estate FWD 4AFE | | GCO59020 | Outer Joint | | 26 | 23 | 56 | 96.5 | 55 | I |
| | 1997.04-2000.02 | 4AT | F | L/R | Estate FWD 4AFE | | GCO59021 | Outer Joint | 48T | 26 | 23 | 56 | 96.5 | 55 | I |
| | 1997.04-2000.02 | 4AT | F | L/R | Estate FWD 4AFE | | GCI88015 | Inner Joint | | 23 | 23 | 34 | 84 | 93 | |
| | 1997.04-2000.02 | 4AT/5MT | F | L | Estate FWD 4AFE | Manufactured in:Japan,For vehicles without ABS | GDS88016 | Drive Shaft | | 26 | 23 | 56 | 96.5 | 599 | |
| | 1997.04-2000.02 | 4AT/5MT | F | R | Estate FWD 4AFE | Manufactured in:Japan,For vehicles without ABS | GDS59392 | Drive Shaft | | 26 | 23 | 56 | 96.5 | 926 | |
| | 1997.04-2000.02 | 4AT/5MT/6MT | F | L | Estate FWD 4AFE | For vehicles with ABS,Manufactured in:Japan | GDS22003 | Drive Shaft | 48T | 26 | 23 | 56 | 96.5 | 605 | |
| 1.6 (81 kw) | 1997.05-1999.09 | 4AT/5MT | F | L | Estate FWD 4AFE | Manufactured in:Japan,For vehicles without ABS | GDS88016 | Drive Shaft | | 26 | 23 | 56 | 96.5 | 599 | |
| | 1997.05-1999.09 | 4AT/5MT | F | R | Estate FWD 4AFE | Manufactured in:Japan,For vehicles without ABS | GDS59392 | Drive Shaft | | 26 | 23 | 56 | 96.5 | 926 | |
| | 1997.05-1999.09 | 4AT/5MT | F | L/R | Estate FWD 4AFE | | GCO59020 | Outer Joint | | 26 | 23 | 56 | 96.5 | 55 | I |
| | 1997.05-1999.09 | 4AT/5MT | F | L/R | Estate FWD 4AFE | | GCO59021 | Outer Joint | 48T | 26 | 23 | 56 | 96.5 | 55 | I |
| | 1997.05-1999.09 | 4AT/5MT | F | L/R | Estate FWD 4AFE | | GCI88015 | Inner Joint | | 23 | 23 | 34 | 84 | 93 | |
| | 1997.05-1999.09 | 4AT/5MT/6MT | F | L | Estate FWD 4AFE | For vehicles with ABS,Manufactured in:Japan | GDS22003 | Drive Shaft | 48T | 26 | 23 | 56 | 96.5 | 605 | |
| | 1999.10-2001.10 | 4AT/5MT | F | R | Estate FWD 3ZZFE | Manufactured in:Japan,For vehicles without ABS | GDS59392 | Drive Shaft | | 26 | 23 | 56 | 96.5 | 926 | |
| | 1999.10-2001.10 | 4AT/5MT/6MT | F | L | Estate FWD 3ZZFE | For vehicles with ABS,Manufactured in:Japan | GDS22003 | Drive Shaft | 48T | 26 | 23 | 56 | 96.5 | 605 | |
| | 1999.10-2001.10 | 4AT/5MT/6MT | F | L | Estate FWD 3ZZFE | Manufactured in:Japan,For vehicles without ABS | GDS88016 | Drive Shaft | | 26 | 23 | 56 | 96.5 | 599 | |
| | 1999.10-2001.10 | 4AT/5MT/6MT | F | L/R | Estate FWD 3ZZFE | | GCO59006 | Outer Joint | 48T | 26 | 23 | 56 | 95.5 | 55 | I |
| | 1999.10-2001.10 | 4AT/5MT/6MT | F | L/R | Estate FWD 3ZZFE | | GCO59020 | Outer Joint | | 26 | 23 | 56 | 96.5 | 55 | I |
| | 1999.10-2001.10 | 4AT/5MT/6MT | F | L/R | Estate FWD 3ZZFE | | GCO59021 | Outer Joint | 48T | 26 | 23 | 56 | 96.5 | 55 | I |
| | 1999.10-2001.10 | 4AT/5MT/6MT | F | L/R | Estate FWD 3ZZFE | | GCI88015 | Inner Joint | | 23 | 23 | 34 | 84 | 93 | |
| | 2002.01-2007.08 | 4AT/5MT | F | L | Estate FWD 3ZZ-FE | Veh Prd Country:Great Britain | GDS59270 | Drive Shaft | 48T | 26 | 23 | 56 | 99 | 633.5 | |
| | 2002.01-2007.08 | 4AT/5MT | F | R | Estate FWD 3ZZ-FE | Veh Prd Country:Great Britain,Vehicle Production Country:Japan | GDS59271 | Drive Shaft | 48T | 26 | 23 | 56 | 99 | 915 | |
| | 2002.01-2007.08 | 4AT/5MT | F | L/R | Estate FWD 3ZZ-FE | | GCO59022 | Outer Joint | 48T | 26 | 23 | 56 | 99 | 61 | M |
| | 2002.01-2007.08 | 4AT/5MT | F | L/R | Estate FWD 3ZZ-FE | | GCO59037 | Outer Joint | 48T | 26 | 23 | 58 | 95.5 | 61 | M |
| | 2002.01-2007.08 | 4AT/5MT | F | L/R | Estate FWD 3ZZ-FE | | GCO59130 | Outer Joint | 48T | 26 | 23 | 58 | 96 | 55 | I |
| | 2002.01-2007.08 | 4AT/5MT | F | L/R | Estate FWD 3ZZ-FE | Date from:2004.05 | GCO59131 | Outer Joint | 48T | 26 | 24 | 58 | 96 | 55 | I |
| | 2002.01-2007.08 | 4AT/5MT | F | L/R | Estate FWD 3ZZ-FE | Vehicle Production Country:Japan | GCI88015 | Inner Joint | | 23 | 23 | 34 | 84 | 93 | |
| | 2002.01-2007.08 | 4AT/5MT | F | L/R | Estate FWD 3ZZ-FE | Vehicle Production Country:Great Britain | GCI99038 | Inner Joint | | 23 | 23 | 34 | 60 | 113 | |
| | 2002.01-2007.08 | 5MT/4AT | F | L | Estate FWD 3ZZ-FE | Veh Prd Country:Japan | GDS59069 | Drive Shaft | 48T | 26 | 23 | 58 | 96 | 636.5 | |
| | 2002.01-2007.08 | 5MT/4AT | F | R | Estate FWD 3ZZ-FE | Vehicle Production Country:Japan,Manufacturer:Toyota | GDS59080 | Drive Shaft | 48T | 26 | 23 | 58 | 96 | 908 | |
| | 2002.01-2007.08 | MT | F | L/R | Estate FWD 3ZZ-FE | for left-hand drive vehicles,Vehicle Production Country:Japan | GCO59082 | Outer Joint | | 26 | 23 | 58 | 96 | 55 | I |
| 1.6 (84 kw) | 1992.05-1997.04 | MT | F | L | Estate FWD 4AFE | | GDS88016 | Drive Shaft | | 26 | 23 | 56 | 96.5 | 599 | |
| | 1992.05-1997.04 | MT | F | L/R | Estate FWD 4AFE | | GCO59005 | Outer Joint | | 26 | 23 | 56 | 95.5 | 55 | I |
| | 1992.05-1997.04 | MT | F | L/R | Estate FWD 4AFE | | GCO59006 | Outer Joint | 48T | 26 | 23 | 56 | 95.5 | 55 | I |
| | 1992.05-1997.04 | MT | F | L/R | Estate FWD 4AFE | | GCO59020 | Outer Joint | | 26 | 23 | 56 | 96.5 | 55 | I |
| | 1992.05-1997.04 | MT | F | L/R | Estate FWD 4AFE | | GCO59021 | Outer Joint | 48T | 26 | 23 | 56 | 96.5 | 55 | I |
| | 1992.05-1997.04 | MT | F | L/R | Estate FWD 4AFE | | GCO59062 | Outer Joint | | 26 | 24 | 56 | 95.5 | 55 | I |
| | 1992.05-1997.04 | MT | F | L | Estate FWD 4AFE | | GCI88015 | Inner Joint | | 23 | 23 | 34 | 84 | 93 | |
| | 1992.05-1997.04 | | F | | Estate FWD 4AFE | Version:Costruttore:Saginaw | GCO59163 | Outer Joint | 48T | 26 | 29 | 56 | 99.5 | 62.5 | O |

| | YEAR | TRANSM. | F/R | L/R | BODY STYLE & DRIVE TYPE & ENGINE | REMARKS | G-AP Ref. | PRODUCT | ABS | Technical Specifications A | B | C | H | L | P |
|---|---|---|---|---|---|---|---|---|---|---|---|---|---|---|---|
| **TOYOTA** | | | | | | | | | | | | | | | |
| **Corolla Estate/Wagon** | | | | | | | | | | | | | | | |
| 1.6 (84 kw) | 1992.05-1997.04 | | F | | Estate FWD 4AFE | | GCO59163 | Outer Joint | 48T | 26 | 29 | 56 | 99.5 | 62.5 | O |
| 1.8 (81 kw) | 1995.09-1997.04 | AT/MT | F | L/R | Estate 4WD 7AFE | | GCO59019 | Outer Joint | 48T | 26 | 24 | 56 | 95.5 | 55 | I |
| | 1995.09-1997.04 | MT | F | L/R | Estate 4WD 7AFE | | GCO59120 | Outer Joint | 48T | 26 | 24 | 56 | 95.5 | 55 | I |
| | 1997.04-2001.10 | 4AT/5MT | F | L/R | Estate 4WD 7AFE | | GCO59001 | Outer Joint | | 26 | 24 | 56 | 95.5 | 55 | I |
| | 1997.04-2001.10 | 4AT/5MT | F | L/R | Estate 4WD 7AFE | | GCO59006 | Outer Joint | 48T | 26 | 23 | 56 | 95.5 | 55 | I |
| | 1997.04-2001.10 | 4AT/5MT | F | L/R | Estate 4WD 7AFE | | GCO59020 | Outer Joint | | 26 | 23 | 56 | 96.5 | 55 | I |
| | 1997.04-2001.10 | 4AT/5MT | F | L | Estate 4WD 7AFE | | GCI59012 | Inner Joint | | 23 | 23 | 44 | 49.5 | 114.5 | |
| | 1997.04-2001.10 | 4AT/5MT | F | R | Estate 4WD 7AFE | | GCI59160 | Inner Joint | | 23 | 23 | 36 | 75 | 93 | |
| | 1997.04-2001.10 | 4AT/5MT | R | L/R | Estate 4WD 7AFE | | GDS99275 | Drive Shaft | 48T | 26 | | 56 | 96.5 | 643 | |
| | 1997.04-2001.10 | 4AT/5MT | R | L/R | Estate 4WD 7AFE | | GCO59021 | Outer Joint | 48T | 26 | 23 | 56 | 96.5 | 55 | I |
| | 1997.04-2001.10 | 4AT/5MT | R | L/R | Estate 4WD 7AFE | | GCI39089 | Inner Joint | | | 20 | | | 66.2 | |
| | 1997.04-2001.10 | 4AT/5MT | R | L/R | Estate 4WD 7AFE | | GCI59099 | Inner Joint | | | 24 | | | 68.6 | |
| | 1997.10-2001.10 | 4AT/6AT/5MT | F | L/R | Estate FWD 7AFE | | GCO59018 | Outer Joint | | 26 | 24 | 56 | 95.5 | 55 | I |
| | 1997.10-2001.10 | 4AT/6AT/5MT | F | L/R | Estate FWD 7AFE | | GCO59019 | Outer Joint | 48T | 26 | 24 | 56 | 95.5 | 55 | I |
| | 1997.10-2001.10 | 4AT/6AT/5MT | F | L | Estate FWD 7AFE | | GCI59012 | Inner Joint | | 23 | 23 | 44 | 49.5 | 114.5 | |
| | 1997.10-2001.10 | 4AT/6AT/5MT | F | R | Estate FWD 7AFE | | GCI59160 | Inner Joint | | 23 | 23 | 36 | 75 | 93 | |
| 1.8 (100 kw) | 2001.12-2007.12 | AT | F | L | Estate FWD 1ZZ-FE | | GDS59072 | Drive Shaft | 48T | 26 | 23 | 58 | 96 | 633.5 | |
| | 2001.12-2007.12 | AT | F | R | Estate FWD 1ZZ-FE | | GDS59073 | Drive Shaft | 48T | 26 | 23 | 58 | 96 | 915 | |
| | 2001.12-2007.12 | AT/MT | F | L | Estate FWD 1ZZ-FE | | GDS59069 | Drive Shaft | 48T | 26 | 23 | 58 | 96 | 636.5 | |
| 2.0 (53 kw) | 1992.07-1997.04 | AT/MT | F | L/R | Estate FWD 2C | | GCO59019 | Outer Joint | 48T | 26 | 24 | 56 | 95.5 | 55 | I |
| | 1992.07-1997.04 | | F | L/R | Estate FWD 2C | | GCO59021 | Outer Joint | 48T | 26 | 23 | 56 | 96.5 | 55 | I |
| | 1992.07-1997.04 | | F | L/R | Estate FWD 2C | | GCO59062 | Outer Joint | | 26 | 24 | 56 | 95.5 | 55 | I |
| | 1997.05-1999.09 | 5MT | F | L | Estate FWD 2CE | | GDS59196 | Drive Shaft | 48T | 26 | 20 | 56 | 95.5 | 609 | |
| | 1997.05-1999.09 | 5MT | F | R | Estate FWD 2CE | | GDS59195 | Drive Shaft | 48T | 26 | 20 | 56 | 95.5 | 917 | |
| | 1997.05-1999.09 | 5MT | F | L | Estate FWD 2CE | | GCO59018 | Outer Joint | | 26 | 24 | 56 | 95.5 | 55 | I |
| | 1997.05-1999.09 | 5MT | F | L | Estate FWD 2CE | | GCO59019 | Outer Joint | 48T | 26 | 24 | 56 | 95.5 | 55 | I |
| | 1997.05-1999.09 | 5MT | F | R | Estate FWD 2CE | | GCO59001 | Outer Joint | | 26 | 24 | 56 | 95.5 | 55 | I |
| | 1997.05-1999.09 | 5MT | F | R | Estate FWD 2CE | | GCO59020 | Outer Joint | | 26 | 23 | 56 | 96.5 | 55 | I |
| | 1997.05-1999.09 | 5MT | F | L/R | Estate FWD 2CE | | GCO59124 | Outer Joint | 48T | 26 | 24 | 56 | 95.5 | 55 | I |
| | 1997.05-1999.09 | 5MT | F | L | Estate FWD 2CE | | GCI59005 | Inner Joint | | 20 | 23 | 35 | 63.5 | 115.7 | |
| | 1997.05-1999.09 | 5MT | F | L | Estate FWD 2CE | | GCI59046 | Inner Joint | | 20 | 23 | 35 | 63.5 | 115.5 | |
| 2.0 (66 kw) | 2000.09-2001.10 | 5MT | F | L/R | Estate FWD 1CDFTV | | GCO59002 | Outer Joint | 48T | 26 | 25 | 56 | 96 | 62 | I |
| | 2000.09-2001.10 | | F | | Estate FWD 1CDFTV | | GCO59003 | Outer Joint | | 26 | 25 | 56 | 95.6 | 61 | M |
| | 2000.09-2001.10 | 5MT | F | L/R | Estate Van FWD 1CDFTV | | GCO59002 | Outer Joint | 48T | 26 | 25 | 56 | 96 | 62 | I |
| | 2002.01-2007.02 | 5MT | F | R | Estate FWD 1CD-FTV | Vehicle Production Country:Great Britain/Japan | GDS59114 | Drive Shaft | 48T | 26 | 24 | 63 | 100 | 948 | |
| | 2002.01-2007.02 | 5MT | F | L | Estate FWD 1CD-FTV | | GCO59294 | Outer Joint | 48T | 26 | 27 | 63 | 97 | 60 | M |
| | 2002.01-2007.02 | 5MT | F | L/R | Estate FWD 1CD-FTV | | GCO59167 | Outer Joint | 48T | 26 | 27 | 63 | 100 | 62 | I |
| | 2002.01-2007.02 | 5MT | F | L/R | Estate FWD 1CD-FTV | | GCO59226 | Outer Joint | 48T | 26 | 25 | 58 | 93 | 63.5 | M |
| | 2002.01-2007.02 | 5MT | F | L | Estate FWD 1CD-FTV | Vehicle Production Country:Great Britain;TJ | GCI59042 | Inner Joint | | 24 | 26 | 50 | 67 | 109 | |
| | 2002.01-2007.02 | 5MT | F | L | Estate FWD 1CD-FTV | Vehicle Production Country:Japan,Manufactured in:Russia | GCI59125 | Inner Joint | | 24 | 27 | 50 | 67 | 109.5 | |
| | 2002.01-2007.02 | 5MT | F | L | Estate FWD 1CD-FTV | Vehicle Production Country:Great Britain;AAR | GCI83530 | Inner Joint | | 24 | 26 | 50 | 67 | 109 | |
| | 2002.01-2007.02 | MT | F | | Estate FWD 1CD-FTV | | GCO59182 | Outer Joint | 48T | 26 | 25 | 58 | 95.5 | 61.5 | M |
| 2.0 (85 kw) | 2004.04-2007.02 | 5MT | F | R | Estate FWD 1CD-FTV | Vehicle Production Country:Great Britain/Japan | GDS59114 | Drive Shaft | 48T | 26 | 24 | 63 | 100 | 948 | |
| | 2004.04-2007.02 | 5MT | F | L | Estate FWD 1CD-FTV | | GCO59167 | Outer Joint | 48T | 26 | 27 | 63 | 100 | 62 | I |
| | 2004.04-2007.02 | 5MT | F | L | Estate FWD 1CD-FTV | | GCO59294 | Outer Joint | 48T | 26 | 27 | 63 | 97 | 60 | M |
| | 2004.04-2007.02 | 5MT | F | L/R | Estate FWD 1CD-FTV | | GCO59226 | Outer Joint | 48T | 26 | 25 | 58 | 93 | 63.5 | M |
| | 2004.04-2007.02 | 5MT | F | L | Estate FWD 1CD-FTV | Vehicle Production Country:Great Britain;TJ | GCI59042 | Inner Joint | | 24 | 26 | 50 | 67 | 109 | |
| | 2004.04-2007.02 | 5MT | F | L | Estate FWD 1CD-FTV | Vehicle Production Country:Japan,Manufactured in:Russia | GCI59125 | Inner Joint | | 24 | 27 | 50 | 67 | 109.5 | |
| | 2004.04-2007.02 | 5MT | F | L | Estate FWD 1CD-FTV | Vehicle Production Country:Great Britain;AAR | GCI83530 | Inner Joint | | 24 | 26 | 50 | 67 | 109 | |
| | 2004.04-2007.02 | MT | F | | Estate FWD 1CD-FTV | | GCO59182 | Outer Joint | 48T | 26 | 25 | 58 | 95.5 | 61.5 | M |
| **Corolla Fielder** | | | | | | | | | | | | | | | |
| 1.5 (81 kw) | 2001.03-2006.09 | AT/MT | F | L | Estate FWD 1NZFE | | GDS59069 | Drive Shaft | 48T | 26 | 23 | 58 | 96 | 636.5 | |
| | 2001.03-2006.09 | AT/MT | F | L/R | Estate FWD 1NZFE | | GCO59131 | Outer Joint | 48T | 26 | 24 | 58 | 96 | 55 | I |
| | 2006.09-2012.04 | MT | F | L | Estate FWD 1NZ-FE | | GDS81177 | Drive Shaft | 48T | 26 | 24 | 58 | 96 | 622 | |
| | 2006.09-2012.04 | MT | F | L | Estate FWD 1NZ-FE | | GDS81178 | Drive Shaft | | 26 | 24 | 58 | 96 | 622 | |
| | 2006.09-2012.04 | MT | F | L | Estate FWD 1NZ-FE | | GCO59259 | Outer Joint | 48T | 26 | 33 | 58 | 96 | 64.5 | I |
| | 2006.09-2012.04 | MT | F | L | Estate FWD 1NZ-FE | | GCO99116 | Outer Joint | | 26 | 33 | 58 | 96 | 64.5 | I |
| | 2006.09-2012.04 | MT | F | L | Estate FWD 1NZ-FE | | GCI81097 | Inner Joint | | 24 | 25 | 50 | 67 | 103 | |
| 1.8 (100 kw) | 2006.09-2012.04 | MT | F | L | Estate FWD 2ZR-FE | | GDS81177 | Drive Shaft | 48T | 26 | 24 | 58 | 96 | 622 | |
| | 2006.09-2012.04 | MT | F | L | Estate FWD 2ZR-FE | | GDS81178 | Drive Shaft | | 26 | 24 | 58 | 96 | 622 | |
| | 2006.09-2012.04 | MT | F | L | Estate FWD 2ZR-FE | | GCO59259 | Outer Joint | 48T | 26 | 33 | 58 | 96 | 64.5 | I |
| | 2006.09-2012.04 | MT | F | L | Estate FWD 2ZR-FE | | GCO99116 | Outer Joint | | 26 | 33 | 58 | 96 | 64.5 | I |
| | 2006.09-2012.04 | MT | F | L | Estate FWD 2ZR-FE | | GCI81097 | Inner Joint | | 24 | 25 | 50 | 67 | 103 | |
| 1.8 (106 kw) | 2006.09-2012.04 | MT | F | L | Estate FWD 2ZR-FAE | | GDS81177 | Drive Shaft | 48T | 26 | 24 | 58 | 96 | 622 | |
| | 2006.09-2012.04 | MT | F | L | Estate FWD 2ZR-FAE | | GDS81178 | Drive Shaft | | 26 | 24 | 58 | 96 | 622 | |

| | YEAR | TRANSM. | F/R | L/R | BODY STYLE & DRIVE TYPE & ENGINE | REMARKS | G-AP Ref. | PRODUCT | ABS | Technical Specifications A | B | C | H | L | P |
|---|---|---|---|---|---|---|---|---|---|---|---|---|---|---|---|
| **TOYOTA** | | | | | | | | | | | | | | | |
| **Corolla Fielder** | | | | | | | | | | | | | | | |
| 1.8 (106 kw) | 2006.09-2012.04 | MT | F | L | Estate FWD 2ZR-FAE | | GCO59259 | Outer Joint | 48T | 26 | 33 | 58 | 96 | 64.5 | I |
| | 2006.09-2012.04 | MT | F | L | Estate FWD 2ZR-FAE | | GCO99116 | Outer Joint | | 26 | 33 | 58 | 96 | 64.5 | I |
| | 2006.09-2012.04 | MT | F | L | Estate FWD 2ZR-FAE | | GCI81097 | Inner Joint | | 24 | 25 | 50 | 67 | 103 | |
| **Corolla Levin** | | | | | | | | | | | | | | | |
| 1.5 (74 kw) | 1995.06-1998.04 | AT/MT | F | R | Coupe FWD 5AFE | | GDS59392 | Drive Shaft | | 26 | 23 | 56 | 96.5 | 926 | |
| 1.6 (85 kw) | 1991.06-1997.08 | | F | | Coupe FWD 4AFE | | GCO59128 | Outer Joint | 48T | 26 | 23 | 56 | 95.5 | 55 | I |
| 1.6 (121 kw) | 1995.06-2000.07 | MT | F | | Coupe FWD 4A-GE (20V) | | GCO59120 | Outer Joint | 48T | 26 | 24 | 56 | 95.5 | 55 | I |
| 1.6 (125 kw) | 1991.06-1997.08 | | F | | Coupe FWD 4A-GZE | | GCO59128 | Outer Joint | 48T | 26 | 23 | 56 | 95.5 | 55 | I |
| **Corolla Spacio** | | | | | | | | | | | | | | | |
| 1.5 (80 kw) | 2001.07-2004.02 | AT/MT | F | L | MPV FWD 1NZ-FE | | GDS59069 | Drive Shaft | 48T | 26 | 23 | 58 | 96 | 636.5 | |
| 1.8 (99 kw) | 2001.10-2007.05 | AT/MT | F | L | MPV 4WD 1ZZ-FE | | GDS59069 | Drive Shaft | 48T | 26 | 23 | 58 | 96 | 636.5 | |
| **Corolla Verso** | | | | | | | | | | | | | | | |
| 1.6 (81 kw) | 2001.08-2004.05 | 5MT | F | L | MPV FWD 3ZZ-FE | | GDS59078 | Drive Shaft | 48T | 26 | 20 | 58 | 96 | 638.5 | |
| | 2001.08-2004.05 | 5MT | F | R | MPV FWD 3ZZ-FE | Inner teeth of wheel side:23 | GDS59073 | Drive Shaft | 48T | 26 | 23 | 58 | 96 | 915 | |
| | 2001.08-2004.05 | 5MT | F | R | MPV FWD 3ZZ-FE | Inner teeth of wheel side:24 | GDS59080 | Drive Shaft | 48T | 26 | 23 | 58 | 96 | 908 | |
| | 2001.08-2004.05 | 5MT | F | L | MPV FWD 3ZZ-FE | | GCO59460 | Outer Joint | 48T | 26 | 24 | 58 | 96 | 54 | I |
| | 2001.08-2004.05 | 5MT | F | R | MPV FWD 3ZZ-FE | | GCO59131 | Outer Joint | 48T | 26 | 24 | 58 | 96 | 55 | I |
| | 2001.08-2004.05 | 5MT | F | L/R | MPV FWD 3ZZ-FE | | GCO59082 | Outer Joint | | 26 | 23 | 58 | 96 | 55 | I |
| | 2001.08-2004.05 | 5MT | F | L/R | MPV FWD 3ZZ-FE | | GCO59130 | Outer Joint | 48T | 26 | 23 | 58 | 96 | 55 | I |
| | 2001.08-2004.05 | 5MT | F | L/R | MPV FWD 3ZZ-FE | | GCI88015 | Inner Joint | | 23 | 23 | 34 | 84 | 93 | |
| | 2001.08-2004.05 | 5MT/4AT | F | L | MPV FWD 3ZZ-FE | Veh Prd Country:Japan | GDS59069 | Drive Shaft | 48T | 26 | 23 | 58 | 96 | 636.5 | |
| | 2001.08-2004.05 | MT | F | L/R | MPV FWD 3ZZ-FE | | GCO59153 | Outer Joint | 48T | 26 | 24 | 58 | 96 | 52.5 | I |
| | 2004.04-2009.03 | 5MT | F | L | MPV FWD 3ZZ-FE | | GDS59505 | Drive Shaft | 48T | 26 | 20 | 63 | 95.5 | 650 | |
| | 2004.04-2009.03 | 5MT | F | R | MPV FWD 3ZZ-FE | | GDS59531 | Drive Shaft | 48T | 26 | 20 | 63 | 95.5 | 924 | |
| | 2004.04-2009.03 | 5MT | F | L | MPV FWD 3ZZ-FE | AAR | GCI59166 | Inner Joint | | 20 | 24 | 35 | 63.5 | 108.5 | |
| 1.8 (95 kw) | 2004.04-2009.03 | 5AT/5MT | F | L | MPV FWD 1ZZ-FE | Inner teeth of wheel side:25 | GDS59505 | Drive Shaft | 48T | 26 | 20 | 63 | 95.5 | 650 | |
| | 2004.04-2009.03 | 5AT/5MT | F | R | MPV FWD 1ZZ-FE | | GDS59531 | Drive Shaft | 48T | 26 | 20 | 63 | 95.5 | 924 | |
| | 2004.04-2009.03 | 5MT | F | L | MPV FWD 1ZZ-FE | | GCI59166 | Inner Joint | | 20 | 24 | 35 | 63.5 | 108.5 | |
| | 2004.04-2009.03 | AT | F | L/R | MPV FWD 1ZZ-FE | | GCO59153 | Outer Joint | 48T | 26 | 24 | 58 | 96 | 52.5 | I |
| | 2004.04-2009.03 | AT/MT | F | L | MPV FWD 1ZZ-FE | Inner teeth of wheel side:23 | GDS59272 | Drive Shaft | 48T | 26 | 20 | 58 | 95.5 | 651.5 | |
| | 2004.04-2009.03 | | F | L/R | MPV FWD 1ZZ-FE | | GCO59047 | Outer Joint | | 26 | 24 | 58 | 96 | 52.5 | I |
| 1.8 (99 kw) | 2001.12-2004.05 | 4AT/5MT | F | L | MPV FWD 1ZZ-FE | | GDS59078 | Drive Shaft | 48T | 26 | 20 | 58 | 96 | 638.5 | |
| | 2001.12-2004.05 | 4AT/5MT | F | R | MPV FWD 1ZZ-FE | | GDS59191 | Drive Shaft | 48T | 26 | 20 | 58 | 96 | 912 | |
| | 2001.12-2004.05 | 4AT/5MT | F | L/R | MPV FWD 1ZZ-FE | | GCO59131 | Outer Joint | 48T | 26 | 24 | 58 | 96 | 55 | I |
| | 2001.12-2004.05 | AT/MT | F | L/R | MPV FWD 1ZZ-FE | Date from:2002.01 | GCO59153 | Outer Joint | 48T | 26 | 24 | 58 | 96 | 52.5 | I |
| | 2001.12-2004.05 | | F | R | MPV FWD 1ZZ-FE | | GCO59460 | Outer Joint | 48T | 26 | 24 | 58 | 96 | 54 | I |
| | 2001.12-2004.05 | | F | | MPV FWD 1ZZ-FE | | GCO59047 | Outer Joint | | 26 | 24 | 58 | 96 | 52.5 | I |
| | 2001.12-2004.05 | | F | | MPV FWD 1ZZ-FE | | GCO59459 | Outer Joint | 48T | 26 | 23 | 58 | 96 | 54 | I |
| | 2001.12-2004.05 | | F | L | MPV FWD 1ZZ-FE | | GCI59046 | Inner Joint | | 20 | 23 | 35 | 63.5 | 115.5 | |
| | 2001.12-2004.05 | | F | R | MPV FWD 1ZZ-FE | | GCI59105 | Inner Joint | | 20 | 23 | 35 | 363.5 | 100.5 | |
| 2.0 (66 kw) | 2002.01-2004.05 | 5MT | F | R | MPV FWD 1CD-FTV | | GDS59114 | Drive Shaft | 48T | 26 | 24 | 63 | 100 | 948 | |
| | 2002.01-2004.05 | 5MT | F | L/R | MPV FWD 1CD-FTV | Date from:2002.08 | GCO59167 | Outer Joint | 48T | 26 | 27 | 63 | 100 | 62 | I |
| | 2002.01-2004.05 | 5MT | F | L/R | MPV FWD 1CD-FTV | Date to:2002.07 | GCO59294 | Outer Joint | 48T | 26 | 27 | 63 | 97 | 60 | M |
| | 2002.01-2004.05 | 5MT | F | L | MPV FWD 1CD-FTV | Manufactured in:Russia | GCI59125 | Inner Joint | | 24 | 27 | 50 | 67 | 109.5 | |
| | 2002.01-2004.05 | MT | F | R | MPV FWD 1CD-FTV | | GCI59078 | Inner Joint | | 24 | 27 | 40 | 370 | 105 | |
| 2.0 (85 kw) | 2004.04-2009.03 | 5MT | F | L | MPV FWD 1CD-FTV | | GDS59207 | Drive Shaft | 48T | 26 | 24 | 58 | 95.5 | 601 | |
| | 2004.04-2009.03 | 5MT | F | R | MPV FWD 1CD-FTV | | GDS59114 | Drive Shaft | 48T | 26 | 24 | 63 | 100 | 948 | |
| | 2004.04-2009.03 | 5MT | F | R | MPV FWD 1CD-FTV | | GCO59167 | Outer Joint | 48T | 26 | 27 | 63 | 100 | 62 | I |
| | 2004.04-2009.03 | 5MT | F | L | MPV FWD 1CD-FTV | | GCI59042 | Inner Joint | | 24 | 26 | 50 | 67 | 109 | |
| | 2004.04-2009.03 | 5MT | F | L | MPV FWD 1CD-FTV | | GCI83530 | Inner Joint | | 24 | 26 | 50 | 67 | 109 | |
| | 2004.04-2009.03 | 5MT | F | R | MPV FWD 1CD-FTV | | GCI59027 | Inner Joint | | 24 | 27 | 40 | 369 | 99.5 | |
| 2.2 (100 kw) | 2005.10-2009.03 | 6MT | F | L | MPV FWD 2AD-FTV | | GDS59445 | Drive Shaft | 48T | 30 | 24 | 63 | 99 | 600 | |
| | 2005.10-2009.03 | 6MT | F | R | MPV FWD 2AD-FTV | | GDS59446 | Drive Shaft | 48T | 30 | 24 | 63 | 99 | 976 | |
| | 2005.10-2009.03 | 6MT | F | L/R | MPV FWD 2AD-FTV | | GCO82454 | Outer Joint | 48T | 30 | 36 | 70 | 100 | 66.5 | I |
| | 2005.10-2009.03 | 6MT | F | L | MPV FWD 2AD-FTV | | GCI81145 | Inner Joint | | 24 | 33 | 50 | 67 | 109 | |
| | 2005.10-2009.03 | 6MT | F | R | MPV FWD 2AD-FTV | | GCI59237 | Inner Joint | | 24 | 33 | 40 | 383 | 97 | |
| 2.2 (130 kw) | 2005.10-2009.03 | 6MT | F | L | MPV FWD 2AD-FHV | | GDS59445 | Drive Shaft | 48T | 30 | 24 | 63 | 99 | 600 | |
| | 2005.10-2009.03 | 6MT | F | R | MPV FWD 2AD-FHV | | GDS59446 | Drive Shaft | 48T | 30 | 24 | 63 | 99 | 976 | |
| | 2005.10-2009.03 | 6MT | F | L/R | MPV FWD 2AD-FHV | | GCO82454 | Outer Joint | 48T | 30 | 36 | 70 | 100 | 66.5 | I |
| | 2005.10-2009.03 | 6MT | F | L | MPV FWD 2AD-FHV | | GCI81145 | Inner Joint | | 24 | 33 | 50 | 67 | 109 | |
| | 2005.10-2009.03 | 6MT | F | R | MPV FWD 2AD-FHV | | GCI59237 | Inner Joint | | 24 | 33 | 40 | 383 | 97 | |
| **Corolla/Axio/Altis** | | | | | | | | | | | | | | | |
| 1.8 (97 kw) | 2002.09-2005.12 | AT/MT | F | L | Saloon FWD 1ZZ-FE | | GDS59069 | Drive Shaft | 48T | 26 | 23 | 58 | 96 | 636.5 | |
| | 2002.09-2005.12 | | F | | Saloon FWD 1ZZ-FE | Vehicle Production Country:Japan/North America | GCO59265 | Outer Joint | 48T | 26 | 29 | 56 | 96 | 63 | M |

| | YEAR | TRANSM. | F/R | L/R | BODY STYLE & DRIVE TYPE & ENGINE | REMARKS | G-AP Ref. | PRODUCT | ABS | Technical Specifications A | B | C | H | L | P |
|---|---|---|---|---|---|---|---|---|---|---|---|---|---|---|---|
| **TOYOTA** | | | | | | | | | | | | | | | |
| **Corolla/Axio/Altis/Corolla Altis** | | | | | | | | | | | | | | | |
| 1.8 (100 kw) | 2001.11-2006.10 | AT/MT | F | L | Saloon FWD 1ZZ-FE | | GDS59069 | Drive Shaft | 48T | 26 | 23 | 58 | 96 | 636.5 | |
| **Corolla/Corolla Axio/Corolla Altis** | | | | | | | | | | | | | | | |
| 1.8 (100 kw) | 2006.10-2014.07 | CVT | F | L | Saloon FWD 2ZR-FE | | GDS59561 | Drive Shaft | 48T | 26 | 20 | 58 | 96 | 650 | |
| | 2006.10-2014.07 | CVT | F | R | Saloon FWD 2ZR-FE | | GDS59562 | Drive Shaft | 48T | 26 | 20 | 58 | 96 | 926 | |
| | 2006.10-2014.07 | CVT | F | L/R | Saloon FWD 2ZR-FE | | GCO59131 | Outer Joint | 48T | 26 | 24 | 58 | 96 | 55 | I |
| **Corona** | | | | | | | | | | | | | | | |
| 1.8 (92 kw) | 1991.10-1996.01 | 4AT/5MT | F | L/R | Hatchback FWD 4SFE | | GCO99122 | Outer Joint | | 26 | 24 | 56 | 96 | 56 | I |
| | 1991.10-1996.01 | 4AT/5MT | F | L/R | Saloon FWD 4SFE | | GCO99122 | Outer Joint | | 26 | 24 | 56 | 96 | 56 | I |
| 2.0 (54 kw) | 1992.02-1996.01 | | F | L | Saloon FWD 2C | | GCI59005 | Inner Joint | | 20 | 23 | 35 | 63.5 | 115.7 | |
| | 1992.08-1996.01 | MT | F | | Saloon 4WD 2C | | GCO59120 | Outer Joint | 48T | 26 | 24 | 56 | 95.5 | 55 | I |
| | 1992.08-1996.01 | MT | R | | Saloon 4WD 2C | | GCI39089 | Inner Joint | | | 20 | | | 66.2 | |
| 2.0 (99 kw) | 1992.02-1996.01 | | F | R | Saloon 4WD 3S-FE | | GCI59160 | Inner Joint | | 23 | 23 | 36 | 75 | 93 | |
| **Corona EXIV** | | | | | | | | | | | | | | | |
| 2.0 (103 kw) | 1995.09-1999.09 | 4AT/5MT | F | L | Saloon FWD 3SFE | | GDS59126 | Drive Shaft | 48T | 26 | 20 | 56 | 99.5 | 642 | |
| | 1995.09-1999.09 | 4AT/5MT | F | R | Saloon FWD 3SFE | | GDS59127 | Drive Shaft | 48T | 26 | 20 | 56 | 99.5 | 922.5 | |
| | 1995.09-1999.09 | 4AT/5MT | F | L | Saloon FWD 3SFE | | GCO59125 | Outer Joint | 48T | 26 | 27 | 56 | 99.5 | 63 | I |
| 2.0 (125 kw) | 1995.09-1999.09 | 4AT/5MT | F | L | Saloon FWD 3SFE | | GDS59126 | Drive Shaft | 48T | 26 | 20 | 56 | 99.5 | 642 | |
| | 1995.09-1999.09 | 4AT/5MT | F | R | Saloon FWD 3SFE | | GDS59127 | Drive Shaft | 48T | 26 | 20 | 56 | 99.5 | 922.5 | |
| | 1995.09-1999.09 | 4AT/5MT | F | L | Saloon FWD 3SFE | | GCO59125 | Outer Joint | 48T | 26 | 27 | 56 | 99.5 | 63 | I |
| **Corsa** | | | | | | | | | | | | | | | |
| 1.3 (65 kw) | 1994.11-1999.09 | | F | | Hatchback FWD 4EFE | | GCO59017 | Outer Joint | | 26 | 22 | 56 | 95 | 50 | M |
| | 1994.11-1999.09 | | F | | Hatchback FWD 4EFE | | GCO59023 | Outer Joint | | 26 | 23 | 56 | 96.5 | 55 | I |
| | 1994.11-1999.09 | | F | | Hatchback FWD 4EFE | | GCI99046 | Inner Joint | | 23 | 23 | 34 | 60 | 103.5 | |
| | 1994.11-1999.09 | | F | | Saloon FWD 4EFE | | GCO59017 | Outer Joint | | 26 | 22 | 56 | 95 | 50 | M |
| | 1994.11-1999.09 | | F | | Saloon FWD 4EFE | | GCI99046 | Inner Joint | | 23 | 23 | 34 | 60 | 103.5 | |
| 1.5 (40 kw) | 1994.11-1999.09 | | F | | Hatchback FWD 1N | | GCO59017 | Outer Joint | | 26 | 22 | 56 | 95 | 50 | M |
| | 1994.11-1999.09 | | F | | Hatchback FWD 1N | | GCI99046 | Inner Joint | | 23 | 23 | 34 | 60 | 103.5 | |
| | 1994.11-1999.09 | | F | | Saloon FWD 1N | | GCI99046 | Inner Joint | | 23 | 23 | 34 | 60 | 103.5 | |
| 1.5 (70 kw) | 1994.11-1999.09 | | F | | Hatchback FWD 5EFE | | GCI99046 | Inner Joint | | 23 | 23 | 34 | 60 | 103.5 | |
| | 1994.11-1999.09 | | F | | Saloon FWD 5EFE | | GCI99046 | Inner Joint | | 23 | 23 | 34 | 60 | 103.5 | |
| **Cresta** | | | | | | | | | | | | | | | |
| 2.4 (71 kw) | 1996.10-2001.06 | 4AT | R | L/R | Saloon RWD 2LTE | | GCI39089 | Inner Joint | | | 20 | | | 66.2 | |
| **Crown** | | | | | | | | | | | | | | | |
| 3.0 (162 kw) | 1995.08-1999.09 | AT/MT | R | L/R | Saloon RWD 2JZGE | Date to:1997.06 | GCI83880 | Inner Joint | | | 24 | | | 31 | |
| 3.0 (188 kw) | 2003.12-2008.02 | 6AT | F | L | Saloon 4WD 3GR-FSE | | GDS82658 | Drive Shaft | | 30 | 23 | 57 | 82 | 595 | |
| | 2003.12-2008.02 | 6AT | F | R | Saloon 4WD 3GR-FSE | | GDS82602 | Drive Shaft | | 30 | 23 | 57 | 82 | 973 | |
| | 2003.12-2008.02 | 6AT | F | L | Saloon 4WD 3GR-FSE | | GCI59225 | Inner Joint | | 23 | 30 | 35 | 94 | 89.5 | |
| | 2003.12-2008.02 | 6AT | F | R | Saloon 4WD 3GR-FSE | | GCI31007 | Inner Joint | | 23 | 30 | 35 | 358.5 | 171 | |
| | 2003.12-2008.02 | AT | F | L/R | Saloon 4WD 3GR-FSE | | GCO59453 | Outer Joint | | 30 | 30 | 57 | 82 | 55.5 | I |
| **Curren** | | | | | | | | | | | | | | | |
| 2.0 (129 kw) | 1993.11-1996.10 | | F | R | Coupe 4WD 3S-GE | | GCI59160 | Inner Joint | | 23 | 23 | 36 | 75 | 93 | |
| | 1993.11-1998.10 | | F | | Coupe FWD 3SGE | Date From:1994.02 | GCO59002 | Outer Joint | 48T | 26 | 25 | 56 | 96 | 62 | I |
| | 1993.11-1998.10 | | F | L | Coupe FWD 3SGE | | GCI99040 | Inner Joint | | 20 | 25 | 35 | 63.5 | 112 | |
| **Cynos** | | | | | | | | | | | | | | | |
| 1.3 (65 kw) | 1995.08-1999.06 | | F | L/R | Coupe FWD 4EFE | | GCO59177 | Outer Joint | 48T | 26 | 23 | 56 | 95.5 | 55 | I |
| 1.5 (81 kw) | 1995.08-2000.04 | | F | | Coupe FWD 5EFE | | GCO59017 | Outer Joint | | 26 | 22 | 56 | 95 | 50 | M |
| | 1995.08-2000.04 | | F | | Coupe FWD 5EFE | | GCO59023 | Outer Joint | | 26 | 23 | 56 | 96.5 | 55 | I |
| | 1995.08-2000.04 | | F | | Coupe FWD 5EFE | | GCI99046 | Inner Joint | | 23 | 23 | 34 | 60 | 103.5 | |
| | 1997.10-1998.01 | | F | | Cabriolet FWD 5EFE | | GCO59017 | Outer Joint | | 26 | 22 | 56 | 95 | 50 | M |
| | 1997.10-1998.01 | | F | | Cabriolet FWD 5EFE | | GCO59023 | Outer Joint | | 26 | 23 | 56 | 96.5 | 55 | I |
| | 1997.10-1998.01 | | F | | Cabriolet FWD 5EFE | | GCI99046 | Inner Joint | | 23 | 23 | 34 | 60 | 103.5 | |
| 1.5 (85 kw) | 1996.01-1999.12 | | F | | Coupe FWD 5EFE | | GCO59023 | Outer Joint | | 26 | 23 | 56 | 96.5 | 55 | I |
| **Echo** | | | | | | | | | | | | | | | |
| 1.3 (60 kw) | 2003.04-2005.08 | 4AT/5MT | F | L | Saloon FWD 2NZFE | | GDS59102 | Drive Shaft | 48T | 24 | 23 | 58 | 91 | 640 | |
| | 2003.04-2005.08 | 4AT/5MT | F | L | Saloon FWD 2NZFE | | GCI59002 | Inner Joint | | 23 | 23 | 34 | 58.8 | 102.7 | |
| 1.3 (64 kw) | 2003.04-2005.08 | 4AT/5MT | F | L | Saloon FWD 2NZFE | | GDS59102 | Drive Shaft | 48T | 24 | 23 | 58 | 91 | 640 | |
| | 2003.04-2005.08 | 4AT/5MT | F | L | Saloon FWD 2NZFE | | GCI59002 | Inner Joint | | 23 | 23 | 34 | 58.8 | 102.7 | |
| 1.5 (78 kw) | 1999.04-2005.10 | | F | | Saloon FWD 1NZFE | | GCI99046 | Inner Joint | | 23 | 23 | 34 | 60 | 103.5 | |
| **Estima** | | | | | | | | | | | | | | | |
| 2.4 (99 kw) | 1990.05-1999.12 | | F | | MPV 4WD 2TZ-FE | Date From:1991.01 | GCO59089 | Outer Joint | | 26 | 27 | 56 | 98 | 63 | M |
| 2.4 (110 kw) | 2006.06- | | F | R | MPV FWD 2AZ-FXE | | GCI59226 | Inner Joint | | 24 | 27 | 40 | 377 | 104.5 | |
| | 2012.05- | CVT | F | L/R | MPV 4WD 2AZ-FXE | Date to:2017.07 | GCO59245 | Outer Joint | | 26 | 27 | 61.2 | 100 | 59 | I |
| | 2012.05- | CVT | F | L | MPV 4WD 2AZ-FXE | Date To:2017.07 | GCI59109 | Inner Joint | | 24 | 27 | 50 | 84 | 109 | |
| | 2012.05- | CVT | F | R | MPV 4WD 2AZ-FXE | Date to:2017.07 | GCI59206 | Inner Joint | | 24 | 27 | 40 | 377 | 104.5 | |
| | 2012.05- | CVT | F | R | MPV 4WD 2AZ-FXE | Date from:2017.08 | GCI82362 | Inner Joint | | 24 | 27 | 40 | 377 | 105 | |

| | YEAR | TRANSM. | F/R | L/R | BODY STYLE & DRIVE TYPE & ENGINE | REMARKS | G-AP Ref. | PRODUCT | ABS | Technical Specifications A | B | C | H | L | P |
|---|---|---|---|---|---|---|---|---|---|---|---|---|---|---|---|
| **TOYOTA** | | | | | | | | | | | | | | | |
| **Estima** | | | | | | | | | | | | | | | |
| 2.4 (110 kw) | 2012.05- | CVT | R | L/R | MPV 4WD 2AZ-FXE | | GCI59203 | Inner Joint | | | 20 | | | 83 | |
| 2.4 (125 kw) | 2000.02-2006.01 | AT | F | L | MPV 4WD 2AZ-FE | | GDS59051 | Drive Shaft | 48T | 26 | 24 | 63 | 100 | 662 | |
| | 2000.02-2006.01 | AT | F | R | MPV 4WD 2AZ-FE | | GDS59064 | Drive Shaft | 48T | 26 | 24 | 63 | 100 | 961 | |
| | 2000.02-2006.01 | AT | F | L/R | MPV 4WD 2AZ-FE | | GCO59167 | Outer Joint | 48T | 26 | 27 | 63 | 100 | 62 | I |
| | 2000.02-2006.01 | AT | F | L/R | MPV 4WD 2AZ-FE | | GCO59175 | Outer Joint | 48T | 26 | 27 | 63.3 | 100 | 59 | M |
| | 2000.02-2006.01 | AT | F | L/R | MPV 4WD 2AZ-FE | | GCO59314 | Outer Joint | 48T | 26 | 27 | 61.2 | 100 | 59.5 | I |
| | 2000.02-2006.01 | AT | F | L | MPV 4WD 2AZ-FE | TJ | GCI59073 | Inner Joint | | 24 | 27 | 50 | 67 | 110 | |
| | 2000.02-2006.01 | AT | F | L | MPV 4WD 2AZ-FE | AAR | GCI59125 | Inner Joint | | 24 | 27 | 50 | 67 | 109.5 | |
| | 2000.02-2006.01 | AT | F | R | MPV 4WD 2AZ-FE | | GCI59027 | Inner Joint | | 24 | 27 | 40 | 369 | 99.5 | |
| | 2000.02-2006.01 | AT | F | L | MPV FWD 2AZ-FE | | GDS59051 | Drive Shaft | 48T | 26 | 24 | 63 | 100 | 662 | |
| | 2000.02-2006.01 | AT | F | R | MPV FWD 2AZ-FE | | GDS59064 | Drive Shaft | 48T | 26 | 24 | 63 | 100 | 961 | |
| | 2000.02-2006.01 | AT | F | L/R | MPV FWD 2AZ-FE | | GCO59167 | Outer Joint | 48T | 26 | 27 | 63 | 100 | 62 | I |
| | 2000.02-2006.01 | AT | F | L/R | MPV FWD 2AZ-FE | | GCO59175 | Outer Joint | 48T | 26 | 27 | 63.3 | 100 | 59 | M |
| | 2000.02-2006.01 | AT | F | L/R | MPV FWD 2AZ-FE | | GCO59314 | Outer Joint | 48T | 26 | 27 | 61.2 | 100 | 59.5 | I |
| | 2000.02-2006.01 | AT | F | L | MPV FWD 2AZ-FE | TJ | GCI59073 | Inner Joint | | 24 | 27 | 50 | 67 | 110 | |
| | 2000.02-2006.01 | AT | F | L | MPV FWD 2AZ-FE | Manufactured in:Russia | GCI59125 | Inner Joint | | 24 | 27 | 50 | 67 | 109.5 | |
| | 2000.02-2006.01 | AT | F | R | MPV FWD 2AZ-FE | | GCI59027 | Inner Joint | | 24 | 27 | 40 | 369 | 99.5 | |
| 3.0 (162 kw) | 2000.02-2005.12 | | F | | MPV 4WD 1MZFE | | GCO59089 | Outer Joint | | 26 | 27 | 56 | 98 | 63 | M |
| | 2000.02-2005.12 | | F | | MPV 4WD 1MZFE | | GCO59154 | Outer Joint | 48T | 30 | 27 | 63.4 | 100 | 64.5 | M |
| | 2000.02-2005.12 | | F | | MPV 4WD 1MZFE | Date From:2004.11 | GCO59431 | Outer Joint | 48T | 30 | 27 | 61.2 | 100 | 64.5 | M |
| | 2000.02-2005.12 | | F | | MPV 4WD 1MZFE | Date From:2003.04 | GCO59486 | Outer Joint | 48T | 30 | 27 | 61 | 100 | 65 | I |
| | 2000.02-2005.12 | | F | L | MPV 4WD 1MZFE | | GCI59109 | Inner Joint | | 24 | 27 | 50 | 84 | 109 | |
| | 2000.02-2005.12 | | F | | MPV 4WD 1MZFE | | GCI31001 | Inner Joint | | | 27 | | | 33.2 | |
| | 2000.08-2005.12 | | F | | MPV FWD 1MZFE | | GCO59089 | Outer Joint | | 26 | 27 | 56 | 98 | 63 | M |
| | 2000.08-2005.12 | | F | | MPV FWD 1MZFE | | GCO59154 | Outer Joint | 48T | 30 | 27 | 63.4 | 100 | 64.5 | M |
| | 2000.08-2005.12 | | F | | MPV FWD 1MZFE | Date From:2004.11 | GCO59431 | Outer Joint | 48T | 30 | 27 | 61.2 | 100 | 64.5 | M |
| | 2000.08-2005.12 | | F | | MPV FWD 1MZFE | Date From:2003.04 | GCO59486 | Outer Joint | 48T | 30 | 27 | 61 | 100 | 65 | I |
| | 2000.08-2005.12 | | F | L | MPV FWD 1MZFE | | GCI59109 | Inner Joint | | 24 | 27 | 50 | 84 | 109 | |
| | 2000.08-2005.12 | | F | R | MPV FWD 1MZFE | | GCI59206 | Inner Joint | | 24 | 27 | 40 | 377 | 104.5 | |
| | 2000.08-2005.12 | | F | | MPV FWD 1MZFE | | GCI31001 | Inner Joint | | | 27 | | | 33.2 | |
| **FJ Cruiser** | | | | | | | | | | | | | | | |
| 4.0 (176 kw) | 2005.06-2009.10 | 5AT | F | L/R | SUV RWD 1GR-FE | | GDS59015 | Drive Shaft | | 30 | 30 | 70 | 103.5 | 647 | |
| | 2005.06-2009.10 | 5AT | R | L/R | SUV RWD 1GR-FE | | GCO59097 | Outer Joint | | 30 | 30 | 70 | 103.5 | 82.5 | I |
| | 2005.06-2009.10 | 5AT | R | L/R | SUV RWD 1GR-FE | | GCI59049 | Inner Joint | | 30 | 30 | 47 | 75.5 | 125.5 | |
| | 2005.06-2009.12 | AT/MT | F | L/R | SUV 4WD 1GR-FE | | GDS59015 | Drive Shaft | | 30 | 30 | 70 | 103.5 | 647 | |
| | 2005.06-2009.12 | AT/MT | F | L/R | SUV 4WD 1GR-FE | | GCO59097 | Outer Joint | | 30 | 30 | 70 | 103.5 | 82.5 | I |
| | 2005.06-2009.12 | | F | L/R | SUV 4WD 1GR-FE | | GCI59049 | Inner Joint | | 30 | 30 | 47 | 75.5 | 125.5 | |
| 4.0 (178 kw) | 2006.01-2018.01 | 5AT/6MT | F | L/R | SUV 4WD 1GR-FE | Date to:2009.07 | GDS59015 | Drive Shaft | | 30 | 30 | 70 | 103.5 | 647 | |
| | 2006.01-2018.01 | AT/MT | F | L/R | SUV 4WD 1GR-FE | | GCO59097 | Outer Joint | | 30 | 30 | 70 | 103.5 | 82.5 | I |
| | 2006.01-2018.01 | | F | L/R | SUV 4WD 1GR-FE | | GCI59049 | Inner Joint | | 30 | 30 | 47 | 75.5 | 125.5 | |
| 4.0 (191 kw) | 2010.01-2014.06 | AT/MT | F | L/R | SUV 4WD 1GR-FE | | GDS59015 | Drive Shaft | | 30 | 30 | 70 | 103.5 | 647 | |
| | 2010.01-2014.06 | | F | L/R | SUV 4WD 1GR-FE | Date From:2009.08 | GCO59097 | Outer Joint | | 30 | 30 | 70 | 103.5 | 82.5 | I |
| | 2010.01-2014.06 | | F | L/R | SUV 4WD 1GR-FE | Date From:2009.08 | GCI59049 | Inner Joint | | 30 | 30 | 47 | 75.5 | 125.5 | |
| | 2010.01-2014.06 | 5AT | R | L/R | SUV RWD 1GR-FE | | GDS59015 | Drive Shaft | | 30 | 30 | 70 | 103.5 | 647 | |
| | 2010.01-2014.06 | 5AT | R | L/R | SUV RWD 1GR-FE | | GCI59049 | Inner Joint | | 30 | 30 | 47 | 75.5 | 125.5 | |
| | 2010.01-2014.06 | | R | L/R | SUV RWD 1GR-FE | | GCO59097 | Outer Joint | | 30 | 30 | 70 | 103.5 | 82.5 | I |
| 4.0 (200 kw) | 2010.12- | 5AT/6MT | F | L/R | SUV 4WD 1GR-FE | | GDS59015 | Drive Shaft | | 30 | 30 | 70 | 103.5 | 647 | |
| | 2010.12- | 5AT/6MT | F | L/R | SUV 4WD 1GR-FE | | GCO59097 | Outer Joint | | 30 | 30 | 70 | 103.5 | 82.5 | I |
| | 2010.12- | 5AT/6MT | F | L/R | SUV 4WD 1GR-FE | | GCI59049 | Inner Joint | | 30 | 30 | 47 | 75.5 | 125.5 | |
| 4.0 (203 kw) | 2005.06-2018.01 | 5AT | F | L/R | SUV 4WD 1GR-FE | | GDS59015 | Drive Shaft | | 30 | 30 | 70 | 103.5 | 647 | |
| | 2005.06-2018.01 | 5AT | F | L/R | SUV 4WD 1GR-FE | | GCO59097 | Outer Joint | | 30 | 30 | 70 | 103.5 | 82.5 | I |
| | 2005.06-2018.01 | 5AT | F | L/R | SUV 4WD 1GR-FE | | GCI59049 | Inner Joint | | 30 | 30 | 47 | 75.5 | 125.5 | |
| **Fortuner** | | | | | | | | | | | | | | | |
| 2.5 (75 kw) | 2009.01-2015.05 | 4AT | F | L | SUV 4WD 2KD-FTV | Date to:2014.05 | GDS59326 | Drive Shaft | | 30 | 30 | 72.5 | 116 | 629 | |
| | 2009.01-2015.05 | 4AT/5AT/5MT | F | L/R | SUV 4WD 2KD-FTV | Date from:2014.06 | GDS59676 | Drive Shaft | | 30 | 30 | 72.5 | 116 | 632 | |
| | 2009.01-2015.05 | AT/MT | F | L/R | SUV 4WD 2KD-FTV | | GCI81372 | Inner Joint | | 30 | 29 | 47 | 76 | 116 | |
| 2.5 (106 kw) | 2011.07-2015.05 | 4AT | F | L | SUV 4WD 2KD-FTV | Date to:2014.05 | GDS59326 | Drive Shaft | | 30 | 30 | 72.5 | 116 | 629 | |
| | 2011.07-2015.05 | 4AT | F | L/R | SUV 4WD 2KD-FTV | Date from:2014.06 | GDS59676 | Drive Shaft | | 30 | 30 | 72.5 | 116 | 632 | |
| | 2011.07-2015.05 | AT/MT | F | L/R | SUV 4WD 2KD-FTV | | GCI81372 | Inner Joint | | 30 | 29 | 47 | 76 | 116 | |
| 2.7 (118 kw) | 2004.06-2015.05 | 4AT | F | L/R | SUV 4WD 2TRFE | | GDS59326 | Drive Shaft | | 30 | 30 | 72.5 | 116 | 629 | |
| 2.7 (122 kw) | 2015.05- | 6AT/5MT | F | L/R | SUV 4WD 2TR-FE | | GDS59715 | Drive Shaft | | 30 | 30 | 70 | 103.5 | 629 | |
| | 2015.05- | 6AT/5MT | F | L/R | SUV 4WD 2TR-FE | | GCO59496 | Outer Joint | | 30 | 29 | 70 | 103.5 | 82.5 | M |
| | 2015.05- | 6AT/5MT | F | R | SUV 4WD 2TR-FE | | GCI59238 | Inner Joint | | 30 | 28 | 47 | 76 | 125 | |
| 2.8 (130 kw) | 2015.05- | 6AT/6MT | F | L/R | SUV 4WD 1GD-FTV | | GDS59715 | Drive Shaft | | 30 | 30 | 70 | 103.5 | 629 | |
| | 2015.05- | 6AT/6MT | F | L/R | SUV 4WD 1GD-FTV | | GCO59496 | Outer Joint | | 30 | 29 | 70 | 103.5 | 82.5 | M |

| | YEAR | TRANSM. | F/R | L/R | BODY STYLE & DRIVE TYPE & ENGINE | REMARKS | G-AP Ref. | PRODUCT | ABS | Technical Specifications A | B | C | H | L | P |
|---|---|---|---|---|---|---|---|---|---|---|---|---|---|---|---|
| **TOYOTA** | | | | | | | | | | | | | | | |
| **Fortuner** | | | | | | | | | | | | | | | |
| 2.8 (130 kw) | 2015.05- | 6AT/6MT | F | L/R | SUV 4WD 1GD-FTV | | GCI59238 | Inner Joint | | 30 | 28 | 47 | 76 | 125 | |
| 3.0 (120 kw) | 2004.06-2015.05 | 4AT/5MT | F | L/R | SUV 4WD 1KD-FTV | Transmission:5MT,Date to:2014.05 | GDS59326 | Drive Shaft | | 30 | 30 | 72.5 | 116 | 629 | |
| | 2004.06-2015.05 | 5MT | F | L/R | SUV 4WD 1KD-FTV | Date from:2014.06 | GDS59676 | Drive Shaft | | 30 | 30 | 72.5 | 116 | 632 | |
| | 2004.06-2015.05 | 5MT | F | L/R | SUV 4WD 1KD-FTV | | GCI81372 | Inner Joint | | 30 | 29 | 47 | 76 | 116 | |
| 3.0 (125 kw) | 2009.08-2015.05 | 5AT | F | L/R | SUV 4WD 1KD-FTV | For Thailand,date to:2014.05 | GDS59326 | Drive Shaft | | 30 | 30 | 72.5 | 116 | 629 | |
| | 2009.08-2015.05 | 5AT | F | L/R | SUV 4WD 1KD-FTV | Date from:2014.06 | GDS59676 | Drive Shaft | | 30 | 30 | 72.5 | 116 | 632 | |
| | 2009.08-2015.05 | 5AT/5MT | F | L/R | SUV 4WD 1KD-FTV | | GCO59199 | Outer Joint | | 30 | 29 | 72.5 | 116 | 73 | M |
| | 2009.08-2015.05 | 5AT/5MT | F | L/R | SUV 4WD 1KD-FTV | | GCI59039 | Inner Joint | | 30 | 29 | 47 | 76 | 116 | |
| | 2009.08-2015.05 | AT/MT | F | L/R | SUV 4WD 1KD-FTV | | GCI81372 | Inner Joint | | 30 | 29 | 47 | 76 | 116 | |
| 3.0 (126 kw) | 2009.08-2015.05 | 5AT/5MT | F | R | SUV 4WD 1KD-FTV | Date to:2014.05 | GDS59326 | Drive Shaft | | 30 | 30 | 72.5 | 116 | 629 | |
| | 2009.08-2015.05 | 5AT/5MT | F | L/R | SUV 4WD 1KD-FTV | Date from:2014.06 | GDS59676 | Drive Shaft | | 30 | 30 | 72.5 | 116 | 632 | |
| | 2009.08-2015.05 | AT/MT | F | L/R | SUV 4WD 1KD-FTV | | GCI81372 | Inner Joint | | 30 | 29 | 47 | 76 | 116 | |
| | 2011.01-2015.05 | 5MT | F | L/R | SUV RWD 1KDFTV | | GCI81372 | Inner Joint | | 30 | 29 | 47 | 76 | 116 | |
| | 2011.01-2015.05 | | F | L/R | SUV RWD 1KDFTV | | GDS59676 | Drive Shaft | | 30 | 30 | 72.5 | 116 | 632 | |
| | 2011.01-2015.05 | | F | L/R | SUV RWD 1KDFTV | | GCO59199 | Outer Joint | | 30 | 29 | 72.5 | 116 | 73 | M |
| **FunCargo** | | | | | | | | | | | | | | | |
| 1.5 (80 kw) | 2002.08-2005.09 | | F | L/R | MPV FWD 1NZFE | | GCO39105 | Outer Joint | 44T | 25 | 22 | 52.5 | 95 | 58 | M |
| | 2002.08-2005.09 | | F | L/R | MPV FWD 1NZFE | | GCI99046 | Inner Joint | | 23 | 23 | 34 | 60 | 103.5 | |
| **Harrier** | | | | | | | | | | | | | | | |
| 2.4 (118 kw) | 2003.02-2013.12 | AT | F | L | SUV FWD 2AZ-FE | | GDS59051 | Drive Shaft | 48T | 26 | 24 | 63 | 100 | 662 | |
| | 2003.02-2013.12 | AT | F | L | SUV FWD 2AZ-FE | GrooveType:Inner | GCO59167 | Outer Joint | 48T | 26 | 27 | 63 | 100 | 62 | I |
| | 2003.02-2013.12 | AT | F | L/R | SUV FWD 2AZ-FE | GrooveType:Middle | GCO59175 | Outer Joint | 48T | 26 | 27 | 63.3 | 100 | 59 | M |
| | 2003.02-2013.12 | AT | F | L/R | SUV FWD 2AZ-FE | GrooveType:Inner | GCO59314 | Outer Joint | 48T | 26 | 27 | 61.2 | 100 | 59.5 | I |
| | 2003.02-2013.12 | AT | F | L | SUV FWD 2AZ-FE | TJ | GCI59073 | Inner Joint | | 24 | 27 | 50 | 67 | 110 | |
| | 2003.02-2013.12 | AT | F | L | SUV FWD 2AZ-FE | AAR | GCI59125 | Inner Joint | | 24 | 27 | 50 | 67 | 109.5 | |
| | 2003.02-2013.12 | AT | F | R | SUV FWD 2AZ-FE | | GCI59027 | Inner Joint | | 24 | 27 | 40 | 369 | 99.5 | |
| | 2003.10-2012.06 | 4AT | F | L | SUV 4WD 2AZ-FE | | GDS59415 | Drive Shaft | 48T | 26 | 23 | 63 | 100 | 630 | |
| | 2003.10-2012.06 | AT | F | L | SUV 4WD 2AZ-FE | Date to:2003.11 | GCO59167 | Outer Joint | 48T | 26 | 27 | 63 | 100 | 62 | I |
| | 2003.10-2012.06 | AT | F | L/R | SUV 4WD 2AZ-FE | GrooveType:Middle | GCO59175 | Outer Joint | 48T | 26 | 27 | 63.3 | 100 | 59 | M |
| | 2003.10-2012.06 | AT | F | L/R | SUV 4WD 2AZ-FE | GrooveType:Inner | GCO59314 | Outer Joint | 48T | 26 | 27 | 61.2 | 100 | 59.5 | I |
| | 2003.10-2012.06 | AT | F | L | SUV 4WD 2AZ-FE | | GCI59084 | Inner Joint | | 23 | 27 | 50 | 62 | 108.5 | |
| | 2003.10-2012.06 | AT | F | R | SUV 4WD 2AZ-FE | | GCI59079 | Inner Joint | | 23 | 27 | 34 | 394 | 123 | |
| | 2003.10-2012.06 | AT | R | L/R | SUV 4WD 2AZ-FE | | GDS82317 | Drive Shaft | 48T | 26 | 23 | 56 | 100 | 790 | |
| | 2003.10-2012.06 | AT | R | L/R | SUV 4WD 2AZ-FE | | GCO81806 | Outer Joint | 48T | 26 | 23 | 56 | 100 | 64 | M |
| | 2003.10-2012.06 | AT | R | L/R | SUV 4WD 2AZ-FE | | GCI81746 | Inner Joint | | 23 | 23 | 35 | 90.5 | 81.5 | |
| 3.0 (164 kw) | 1997.05-2003.02 | | R | | SUV 4WD 1MZFE | | GCI39089 | Inner Joint | | | 20 | | | 66.2 | |
| | 2003.08-2006.01 | 5AT | F | L | SUV 4WD 1MZ-FE | | GDS59415 | Drive Shaft | 48T | 26 | 23 | 63 | 100 | 630 | |
| | 2003.08-2006.01 | AT | F | R | SUV 4WD 1MZ-FE | | GDS59242 | Drive Shaft | 48T | 26 | 23 | 63.3 | 100 | 1003 | |
| | 2003.08-2006.01 | AT | F | L | SUV 4WD 1MZ-FE | GrooveType:Inner | GCO59167 | Outer Joint | 48T | 26 | 27 | 63 | 100 | 62 | I |
| | 2003.08-2006.01 | AT | F | R | SUV 4WD 1MZ-FE | GrooveType:Inner | GCO59314 | Outer Joint | 48T | 26 | 27 | 61.2 | 100 | 59.5 | I |
| | 2003.08-2006.01 | AT | F | L/R | SUV 4WD 1MZ-FE | GrooveType:Middle | GCO59175 | Outer Joint | 48T | 26 | 27 | 63.3 | 100 | 59 | M |
| | 2003.08-2006.01 | AT | F | L/R | SUV 4WD 1MZ-FE | GrooveType:Inner | GCO59290 | Outer Joint | 48T | 26 | 27 | 63.3 | 100 | 59.5 | I |
| | 2003.08-2006.01 | AT | F | L | SUV 4WD 1MZ-FE | | GCI59084 | Inner Joint | | 23 | 27 | 50 | 62 | 108.5 | |
| | 2003.08-2006.01 | AT | F | R | SUV 4WD 1MZ-FE | | GCI59079 | Inner Joint | | 23 | 27 | 34 | 394 | 123 | |
| | 2003.08-2006.01 | AT | R | L/R | SUV 4WD 1MZ-FE | | GDS82317 | Drive Shaft | 48T | 26 | 23 | 56 | 100 | 790 | |
| | 2003.08-2006.01 | AT | R | L/R | SUV 4WD 1MZ-FE | | GCO81806 | Outer Joint | 48T | 26 | 23 | 56 | 100 | 64 | M |
| | 2003.08-2006.01 | AT | R | L/R | SUV 4WD 1MZ-FE | | GCI81746 | Inner Joint | | 23 | 23 | 35 | 90.5 | 81.5 | |
| | 2003.08-2006.01 | AT | F | L | SUV FWD 1MZ-FE | Date from:2004.12 | GCO59486 | Outer Joint | 48T | 30 | 27 | 61 | 100 | 65 | I |
| | 2003.08-2006.01 | AT | F | L/R | SUV FWD 1MZ-FE | | GCO59154 | Outer Joint | 48T | 30 | 27 | 63.4 | 100 | 64.5 | M |
| | 2003.08-2006.01 | AT | F | L/R | SUV FWD 1MZ-FE | Date to:2004.11 | GCO59225 | Outer Joint | 48T | 30 | 26 | 61 | 99 | 67 | M |
| | 2003.08-2006.01 | AT | F | L/R | SUV FWD 1MZ-FE | Date from:2004.12 | GCO59431 | Outer Joint | 48T | 30 | 27 | 61.2 | 100 | 64.5 | M |
| | 2003.08-2006.01 | AT | F | L | SUV FWD 1MZ-FE | | GCI59109 | Inner Joint | | 24 | 27 | 50 | 84 | 109 | |
| | 2003.08-2006.01 | AT | F | R | SUV FWD 1MZ-FE | | GCI59206 | Inner Joint | | 24 | 27 | 40 | 377 | 104.5 | |
| 3.5 (206 kw) | 2005.04-2008.12 | AT | F | L/R | SUV 4WD 2GR-FE | GrooveType:Middle | GCO59175 | Outer Joint | 48T | 26 | 27 | 63.3 | 100 | 59 | M |
| | 2005.04-2008.12 | CVT | F | R | SUV 4WD 2GR-FE | | GDS59242 | Drive Shaft | 48T | 26 | 23 | 63.3 | 100 | 1003 | |
| | 2005.04-2008.12 | CVT | F | L | SUV 4WD 2GR-FE | GrooveType:Inner | GCO59167 | Outer Joint | 48T | 26 | 27 | 63 | 100 | 62 | I |
| | 2005.04-2008.12 | CVT | F | R | SUV 4WD 2GR-FE | GrooveType:Inner | GCO59314 | Outer Joint | 48T | 26 | 27 | 61.2 | 100 | 59.5 | I |
| | 2005.04-2008.12 | CVT | F | L/R | SUV 4WD 2GR-FE | GrooveType:Inner | GCO59290 | Outer Joint | 48T | 26 | 27 | 63.3 | 100 | 59.5 | I |
| | 2005.04-2008.12 | CVT | F | L | SUV 4WD 2GR-FE | | GCI59084 | Inner Joint | | 23 | 27 | 50 | 62 | 108.5 | |
| | 2005.04-2008.12 | CVT | F | R | SUV 4WD 2GR-FE | | GCI59079 | Inner Joint | | 23 | 27 | 34 | 394 | 123 | |
| | 2005.04-2008.12 | CVT | R | L/R | SUV 4WD 2GR-FE | | GDS82317 | Drive Shaft | 48T | 26 | 23 | 56 | 100 | 790 | |
| | 2005.04-2008.12 | CVT | R | L/R | SUV 4WD 2GR-FE | | GCO81806 | Outer Joint | 48T | 26 | 23 | 56 | 100 | 64 | M |
| | 2005.04-2008.12 | CVT | R | L/R | SUV 4WD 2GR-FE | | GCI81746 | Inner Joint | | 23 | 23 | 35 | 90.5 | 81.5 | |
| | 2005.04-2008.12 | AT | F | L | SUV FWD 2GR-FE | | GDS59244 | Drive Shaft | 48T | 30 | 24 | 63 | 100.5 | 648 | |
| | 2005.04-2008.12 | AT | F | L/R | SUV FWD 2GR-FE | | GCO59304 | Outer Joint | 48T | 30 | 34 | 61 | 100 | 68.5 | M |

| | YEAR | TRANSM. | F/R | L/R | BODY STYLE & DRIVE TYPE & ENGINE | REMARKS | G-AP Ref. | PRODUCT | ABS | Technical Specifications A | B | C | H | L | P |
|---|---|---|---|---|---|---|---|---|---|---|---|---|---|---|---|
| **TOYOTA** | | | | | | | | | | | | | | | |
| **Hiace** | | | | | | | | | | | | | | | |
| 2.4 (55 kw) | 1995.08-2001.08 | 5MT | R | L/R | Bus RWD 2L | Date to:1997.09,With differential lock | GCO75002 | Outer Joint | 48T | 30 | 24 | 63 | 108.5 | 74 | I |
| | 1995.08-2001.08 | 5MT | R | L/R | Van RWD 2L | Date to:1997.09,With differential lock | GCO75002 | Outer Joint | 48T | 30 | 24 | 63 | 108.5 | 74 | I |
| 2.4 (58 kw) | 1995.08-2001.08 | 5MT | R | L/R | Bus RWD 2L | Date to:1997.09,With differential lock | GCO75002 | Outer Joint | 48T | 30 | 24 | 63 | 108.5 | 74 | I |
| | 1995.08-2001.08 | 5MT | R | L/R | Van RWD 2L | Date to:1997.09,With differential lock | GCO75002 | Outer Joint | 48T | 30 | 24 | 63 | 108.5 | 74 | I |
| 2.4 (66 kw) | 1995.08-2001.08 | 5MT | F | L/R | Bus 4WD 2L-T (08.95-.) | GrooveType:Inner | GCO59015 | Outer Joint | | 26 | 27 | 60 | 162 | 65.5 | I |
| | 1995.08-2001.08 | 5MT | F | L/R | Bus 4WD 2L-T (08.95-.) | GrooveType:Middle | GCO59016 | Outer Joint | | 26 | 27 | 60 | 162 | 65.5 | M |
| | 1995.08-2001.08 | 4AT/5MT | R | L/R | Bus RWD 2L-T (08.95-.) | | GCO75002 | Outer Joint | 48T | 30 | 24 | 63 | 108.5 | 74 | I |
| | 1995.08-2001.08 | 5MT | F | L/R | Van 4WD 2L-T (08.95-.) | GrooveType:Middle | GCO59016 | Outer Joint | | 26 | 27 | 60 | 162 | 65.5 | M |
| | 1995.08-2001.08 | AT | F | L/R | Van 4WD 2L-T (08.95-.) | GrooveType:Inner | GCO59015 | Outer Joint | | 26 | 27 | 60 | 162 | 65.5 | I |
| | 1995.08-2001.08 | 5MT | R | L/R | Van RWD 2L-T (08.95-.) | | GCO75002 | Outer Joint | 48T | 30 | 24 | 63 | 108.5 | 74 | I |
| 2.4 (85 kw) | 1989.08-1998.07 | | R | L/R | Bus RWD 2RZ | | GCO75002 | Outer Joint | 48T | 30 | 24 | 63 | 108.5 | 74 | I |
| | 1989.08-1998.07 | 5MT | R | L/R | Van RWD 2RZ | | GCO75002 | Outer Joint | 48T | 30 | 24 | 63 | 108.5 | 74 | I |
| | 1995.08-1998.04 | 5MT | F | L/R | Bus 4WD 2RZ-E | GrooveType:Inner | GCO59015 | Outer Joint | | 26 | 27 | 60 | 162 | 65.5 | I |
| | 1995.08-1998.04 | 5MT | F | L/R | Bus 4WD 2RZ-E | GrooveType:Middle | GCO59016 | Outer Joint | | 26 | 27 | 60 | 162 | 65.5 | M |
| | 1995.08-1998.04 | 5MT | R | L/R | Bus RWD 2RZ-E | | GCO75002 | Outer Joint | 48T | 30 | 24 | 63 | 108.5 | 74 | I |
| | 1995.08-1998.04 | 5MT | F | L/R | Van 4WD 2RZ-E | GrooveType:Middle | GCO59016 | Outer Joint | | 26 | 27 | 60 | 162 | 65.5 | M |
| | 1995.08-1998.04 | MT | F | L/R | Van 4WD 2RZ-E | GrooveType:Inner | GCO59015 | Outer Joint | | 26 | 27 | 60 | 162 | 65.5 | I |
| | 1995.08-2003.11 | 5MT | R | L/R | Van RWD 2RZ-E | | GCO75002 | Outer Joint | 48T | 30 | 24 | 63 | 108.5 | 74 | I |
| 2.5 (65 kw) | 2001.08-2004.08 | 5MT | F | L/R | Van 4WD 2KD-FTV | GrooveType:Inner | GCO59015 | Outer Joint | | 26 | 27 | 60 | 162 | 65.5 | I |
| | 2001.08-2004.08 | 5MT | F | L/R | Van 4WD 2KD-FTV | GrooveType:Middle | GCO59016 | Outer Joint | | 26 | 27 | 60 | 162 | 65.5 | M |
| | 2001.08-2006.08 | 5MT | R | L/R | Bus RWD 2KD-FTV | | GCO75002 | Outer Joint | 48T | 30 | 24 | 63 | 108.5 | 74 | I |
| | 2001.08-2006.08 | 5MT | R | L/R | Van RWD 2KD-FTV | | GCO75002 | Outer Joint | 48T | 30 | 24 | 63 | 108.5 | 74 | I |
| 2.5 (70 kw) | 2006.09-2012.12 | 5MT | R | L/R | Bus RWD 2KD-FTV | | GCO75002 | Outer Joint | 48T | 30 | 24 | 63 | 108.5 | 74 | I |
| | 2006.09-2012.12 | 5MT | R | L/R | Van RWD 2KD-FTV | | GCO75002 | Outer Joint | 48T | 30 | 24 | 63 | 108.5 | 74 | I |
| 2.5 (75 kw) | 2001.08-2006.08 | 4AT/5MT | R | L/R | Bus RWD 2KD-FTV | | GCO75002 | Outer Joint | 48T | 30 | 24 | 63 | 108.5 | 74 | I |
| | 2001.08-2006.08 | 5MT | F | L/R | Van 4WD 2KD-FTV | GrooveType:Middle | GCO59016 | Outer Joint | | 26 | 27 | 60 | 162 | 65.5 | M |
| | 2001.08-2006.08 | MT | F | L/R | Van 4WD 2KD-FTV | GrooveType:Inner | GCO59015 | Outer Joint | | 26 | 27 | 60 | 162 | 65.5 | I |
| | 2001.08-2006.08 | 4AT/5MT | R | L/R | Van RWD 2KD-FTV | | GCO75002 | Outer Joint | 48T | 30 | 24 | 63 | 108.5 | 74 | I |
| | 2001.11-2006.08 | 5MT | F | L/R | Bus 4WD 2KD-FTV | GrooveType:Inner | GCO59015 | Outer Joint | | 26 | 27 | 60 | 162 | 65.5 | I |
| | 2001.11-2006.08 | 5MT | F | L/R | Bus 4WD 2KD-FTV | GrooveType:Middle | GCO59016 | Outer Joint | | 26 | 27 | 60 | 162 | 65.5 | M |
| 2.5 (86 kw) | 2006.08-2012.12 | 5MT | R | L/R | Bus RWD 2KD-FTV | | GCO75002 | Outer Joint | 48T | 30 | 24 | 63 | 108.5 | 74 | I |
| | 2006.09-2012.12 | 5MT | F | L/R | Bus 4WD 2KD-FTV | GrooveType:Inner | GCO59015 | Outer Joint | | 26 | 27 | 60 | 162 | 65.5 | I |
| | 2006.09-2012.12 | 5MT | F | L/R | Bus 4WD 2KD-FTV | GrooveType:Middle | GCO59016 | Outer Joint | | 26 | 27 | 60 | 162 | 65.5 | M |
| | 2006.09-2012.12 | MT | F | L/R | Van 4WD 2KD-FTV | GrooveType:Inner | GCO59015 | Outer Joint | | 26 | 27 | 60 | 162 | 65.5 | I |
| | 2006.09-2012.12 | MT | F | L/R | Van 4WD 2KD-FTV | GrooveType:Middle | GCO59016 | Outer Joint | | 26 | 27 | 60 | 162 | 65.5 | M |
| | 2006.09-2012.12 | 5MT | R | L/R | Van RWD 2KD-FTV | | GCO75002 | Outer Joint | 48T | 30 | 24 | 63 | 108.5 | 74 | I |
| 2.7 (105 kw) | 1997.04-2002.12 | | F | L/R | Bus 4WD 3RZ-FE | | GCO59015 | Outer Joint | | 26 | 27 | 60 | 162 | 65.5 | I |
| | 1997.04-2002.12 | | F | L/R | Bus 4WD 3RZ-FE | | GCO59016 | Outer Joint | | 26 | 27 | 60 | 162 | 65.5 | M |
| | 1998.04-2001.11 | 5MT | R | L/R | Bus RWD 3RZ-FE | | GCO75002 | Outer Joint | 48T | 30 | 24 | 63 | 108.5 | 74 | I |
| | 1998.04-2005.06 | 5MT | R | L/R | Van RWD 3RZ-FE | | GCO75002 | Outer Joint | 48T | 30 | 24 | 63 | 108.5 | 74 | I |
| | 1998.04-2006.08 | 5MT | F | L/R | Bus 4WD 3RZ-FE | GrooveType:Inner | GCO59015 | Outer Joint | | 26 | 27 | 60 | 162 | 65.5 | I |
| | 1998.04-2006.08 | 5MT | F | L/R | Bus 4WD 3RZ-FE | GrooveType:Middle | GCO59016 | Outer Joint | | 26 | 27 | 60 | 162 | 65.5 | M |
| 2.7 (106 kw) | 1998.07-2005.06 | 4AT/5MT | F | L/R | Bus 4WD 3RZ-FE | GrooveType:Inner | GCO59015 | Outer Joint | | 26 | 27 | 60 | 162 | 65.5 | I |
| | 1998.07-2005.06 | 4AT/5MT | F | L/R | Bus 4WD 3RZ-FE | GrooveType:Middle | GCO59016 | Outer Joint | | 26 | 27 | 60 | 162 | 65.5 | M |
| | 1998.07-2005.06 | 5MT | F | L/R | Van 4WD 3RZ-FE | GrooveType:Middle | GCO59016 | Outer Joint | | 26 | 27 | 60 | 162 | 65.5 | M |
| | 1998.07-2005.06 | MT | F | L/R | Van 4WD 3RZ-FE | GrooveType:Inner | GCO59015 | Outer Joint | | 26 | 27 | 60 | 162 | 65.5 | I |
| | 1998.07-2006.12 | 4AT/5MT | R | L/R | Bus RWD 3RZ-FE | | GCO75002 | Outer Joint | 48T | 30 | 24 | 63 | 108.5 | 74 | I |
| **Highlander** | | | | | | | | | | | | | | | |
| 2.4 (115 kw) | 2000.06-2003.09 | 4AT | F | L | SUV 4WD 2AZFE | | GCO59043 | Outer Joint | 48T | 26 | 27 | 58 | 96 | 62 | I |
| 2.5 (180 kw) | 2022.01- | CVT | R | L | SUV 4WD A25A-FXS | | GDS56241 | Drive Shaft | | 26 | 23 | 56 | 95.5 | 803 | |
| | 2022.01- | CVT | R | R | SUV 4WD A25A-FXS | | GDS56240 | Drive Shaft | | 26 | 23 | 56 | 95.5 | 878 | |
| | 2022.01- | CVT | R | L/R | SUV 4WD A25A-FXS | | GCO82932 | Outer Joint | | 26 | 31 | 56 | 95.5 | 54 | I |
| | 2022.01- | CVT | R | L/R | SUV 4WD A25A-FXS | | GCI82919 | Inner Joint | | 23 | 31 | 42 | 60 | 107 | |
| 2.5 (181 kw) | 2019.12- | CVT | R | L | SUV 4WD A25A-FXS | | GDS56241 | Drive Shaft | | 26 | 23 | 56 | 95.5 | 803 | |
| | 2019.12- | CVT | R | R | SUV 4WD A25A-FXS | | GDS56240 | Drive Shaft | | 26 | 23 | 56 | 95.5 | 878 | |
| | 2019.12- | CVT | R | L/R | SUV 4WD A25A-FXS | | GCO82932 | Outer Joint | | 26 | 31 | 56 | 95.5 | 54 | I |
| | 2019.12- | CVT | R | L/R | SUV 4WD A25A-FXS | | GCI82919 | Inner Joint | | 23 | 31 | 42 | 60 | 107 | |
| 2.7 (138 kw) | 2016.09-2019.11 | AT | F | L | SUV FWD 1AR-FE | | GDS81230 | Drive Shaft | 48T | 30 | 24 | 61 | 100 | 675 | |
| | 2016.09-2019.11 | AT | F | R | SUV FWD 1AR-FE | | GDS81231 | Drive Shaft | 48T | 30 | 24 | 61 | 100 | 992 | |
| | 2016.09-2019.11 | AT | F | L/R | SUV FWD 1AR-FE | | GCO59214 | Outer Joint | 48T | 30 | 26 | 61 | 100 | 67 | I |
| | 2016.09-2019.11 | AT | F | L | SUV FWD 1AR-FE | | GCI81142 | Inner Joint | | 24 | 26 | 50 | 67 | 107 | |
| | 2016.09-2019.11 | AT | F | R | SUV FWD 1AR-FE | | GCI81143 | Inner Joint | | 24 | 26 | 40 | 378 | 104 | |
| 2.7 (139 kw) | 2009.01-2014.02 | 6AT | F | L | SUV FWD 1ARFE | | GDS59598 | Drive Shaft | 48T | 30 | 24 | 61 | 100 | 673 | |
| | 2009.01-2014.02 | 6AT | F | R | SUV FWD 1ARFE | | GDS59597 | Drive Shaft | 48T | 30 | 24 | 61 | 100 | 992 | |
| 3.0 (164 kw) | 2000.11-2007.04 | 4AT | F | L | SUV FWD 1MZ-FE | | GDS59278 | Drive Shaft | 48T | 30 | | 63 | 100.5 | 556 | |

| | YEAR | TRANSM. | F/R | L/R | BODY STYLE & DRIVE TYPE & ENGINE | REMARKS | G-AP Ref. | PRODUCT | ABS | Technical Specifications A | B | C | H | L | P |
|---|---|---|---|---|---|---|---|---|---|---|---|---|---|---|---|
| **TOYOTA** | | | | | | | | | | | | | | | |
| **Highlander** | | | | | | | | | | | | | | | |
| 3.0 (164 kw) | 2000.11-2007.04 | 4AT | F | R | SUV FWD 1MZ-FE | | GDS59375 | Drive Shaft | 48T | 30 | | 63 | 100.5 | 578 | |
| | 2000.11-2007.05 | 4AT | F | L | SUV 4WD 1MZFE | | GCO59043 | Outer Joint | 48T | 26 | 27 | 58 | 96 | 62 | I |
| 3.5 (183 kw) | 2014.09-2016.11 | 6AT/8AT | F | L | SUV 4WD 2GR-FE | Date to:2016.10 | GDS59371 | Drive Shaft | 48T | 30 | 24 | 61 | 100 | 676 | |
| | 2014.09-2016.11 | 6AT/8AT | F | L | SUV 4WD 2GR-FE | Date from:2016.11,Date to:2019.08 | GDS83664 | Drive Shaft | 48T | 30 | 24 | 61 | 100 | 676 | |
| | 2014.09-2016.11 | 6AT/8AT | F | R | SUV 4WD 2GR-FE | Date to:2019.08 | GDS81227 | Drive Shaft | 48T | 30 | 24 | 61 | 100 | 995 | |
| | 2014.09-2016.11 | 6AT/8AT | F | L/R | SUV 4WD 2GR-FE | Date to:2019.08 | GCO59214 | Outer Joint | 48T | 30 | 26 | 61 | 100 | 67 | I |
| | 2014.09-2016.11 | 6AT/8AT | F | L | SUV 4WD 2GR-FE | Date to:2016.10 | GCI59082 | Inner Joint | | 24 | 27 | 50 | 67 | 109 | |
| | 2014.09-2016.11 | 6AT/8AT | F | L | SUV 4WD 2GR-FE | Date from:2016.11,Date to:2019.08 | GCI82307 | Inner Joint | | 24 | 27 | 50 | 83.5 | 109 | |
| | 2014.09-2016.11 | 6AT/8AT | F | R | SUV 4WD 2GR-FE | Date to:2019.08 | GCI81140 | Inner Joint | | 24 | 27 | 34 | 349 | 106 | |
| | 2014.09-2016.11 | 6AT/8AT | R | L | SUV 4WD 2GR-FE | | GDS83548 | Drive Shaft | | 26 | 23 | 56 | 95.5 | 830 | |
| | 2014.09-2016.11 | 6AT/8AT | R | R | SUV 4WD 2GR-FE | | GDS83547 | Drive Shaft | | 26 | 23 | 56 | 95.5 | 809 | |
| | 2014.09-2016.11 | 6AT/8AT | R | L/R | SUV 4WD 2GR-FE | | GCO82413 | Outer Joint | | 26 | 29 | 56 | 95.5 | 55.5 | I |
| | 2014.09-2016.11 | 6AT/8AT | R | L/R | SUV 4WD 2GR-FE | | GCI82274 | Inner Joint | | 23 | 29 | 42 | 60.5 | 98 | |
| | 2019.12- | 8AT | R | L | SUV 4WD 2GR-FKS | Trim Level:LIMITED | GDS56100 | Drive Shaft | | 26 | 23 | 56 | 95.5 | 707 | |
| | 2019.12- | 8AT | R | R | SUV 4WD 2GR-FKS | Trim Level:LIMITED | GDS56101 | Drive Shaft | | 26 | 23 | 56 | 95.5 | 693 | |
| | 2019.12- | 8AT | R | L/R | SUV 4WD 2GR-FKS | Trim Level:LIMITED | GCO82932 | Outer Joint | | 26 | 31 | 56 | 95.5 | 54 | I |
| | 2019.12- | 8AT | R | L/R | SUV 4WD 2GR-FKS | Trim Level:LIMITED | GCI82919 | Inner Joint | | 23 | 31 | 42 | 60 | 107 | |
| 3.5 (201 kw) | 2007.05-2014.02 | 5AT | F | L | SUV FWD 2GR-FE | | GDS57853 | Drive Shaft | 48T | 30 | 24 | 61 | 100 | 673 | |
| | 2007.05-2014.02 | 5AT | F | R | SUV FWD 2GR-FE | | GDS81231 | Drive Shaft | 48T | 30 | 24 | 61 | 100 | 992 | |
| | 2007.05-2014.02 | 5AT | F | L/R | SUV FWD 2GR-FE | | GCO59214 | Outer Joint | 48T | 30 | 26 | 61 | 100 | 67 | I |
| | 2007.05-2014.02 | 5AT | F | L | SUV FWD 2GR-FE | | GCI59211 | Inner Joint | | 24 | 27 | 50 | 83.5 | 108 | |
| | 2007.05-2014.02 | 5AT | F | R | SUV FWD 2GR-FE | TJ | GCI59116 | Inner Joint | | 24 | 27 | 40 | 379 | 105 | |
| | 2007.05-2014.02 | 5AT | F | R | SUV FWD 2GR-FE | AAR | GCI81143 | Inner Joint | | 24 | 26 | 40 | 378 | 104 | |
| **Highlander Hybrid** | | | | | | | | | | | | | | | |
| 3.3 (200 kw) | 2005.03-2007.12 | CVT | F | R | SUV FWD 3MZ-FE | | GCO59304 | Outer Joint | 48T | 30 | 34 | 61 | 100 | 68.5 | M |
| | 2005.03-2010.12 | CVT | F | R | SUV 4WD 3MZ-FE | | GCO59304 | Outer Joint | 48T | 30 | 34 | 61 | 100 | 68.5 | M |
| | 2005.03-2010.12 | CVT | R | L/R | SUV 4WD 3MZ-FE | | GDS56832 | Drive Shaft | 48T | 26 | | 56 | 95.5 | 661 | |
| | 2005.03-2010.12 | CVT | R | L/R | SUV 4WD 3MZ-FE | | GCO83449 | Outer Joint | 48T | 26 | 20 | 56 | 95.5 | 48.5 | I |
| | 2005.03-2010.12 | CVT | R | L/R | SUV 4WD 3MZ-FE | | GCI59203 | Inner Joint | | | 20 | | | 83 | |
| **Highlander/Kluger** | | | | | | | | | | | | | | | |
| 3.5 (220 kw) | 2016.09- | 8AT | F | L | SUV FWD 2GR-FKS | Date to:2019.10 | GDS83664 | Drive Shaft | 48T | 30 | 24 | 61 | 100 | 676 | |
| | 2016.09- | 8AT | F | R | SUV FWD 2GR-FKS | Date to:2019.10 | GDS83510 | Drive Shaft | 48T | 30 | 24 | 61 | 100 | 998 | |
| | 2016.09- | 8AT | F | L/R | SUV FWD 2GR-FKS | Date to:2019.10 | GCO59214 | Outer Joint | 48T | 30 | 26 | 61 | 100 | 67 | I |
| | 2016.09- | 8AT | F | L | SUV FWD 2GR-FKS | Date to:2019.10 | GCI82307 | Inner Joint | | 24 | 27 | 50 | 83.5 | 109 | |
| | 2016.09- | 8AT | F | R | SUV FWD 2GR-FKS | Date to:2019.10 | GCI82249 | Inner Joint | | 24 | 27 | 40 | 383 | 106 | |
| **Hilux** | | | | | | | | | | | | | | | |
| 2.4 (55 kw) | 1994.09-1997.07 | MT | F | L/R | Pickup 4WD 2L | GrooveType:Inner | GCO59015 | Outer Joint | | 26 | 27 | 60 | 162 | 65.5 | I |
| | 1994.09-1997.07 | MT | F | L/R | Pickup 4WD 2L | GrooveType:Middle | GCO59016 | Outer Joint | | 26 | 27 | 60 | 162 | 65.5 | M |
| | 1997.08-2005.04 | AT/MT | R | L/R | Pickup RWD 2L | | GCO59015 | Outer Joint | | 26 | 27 | 60 | 162 | 65.5 | I |
| 2.4 (58 kw) | 1991.10-1997.07 | MT | F | L/R | Pickup 4WD 2L | GrooveType:Inner | GCO59015 | Outer Joint | | 26 | 27 | 60 | 162 | 65.5 | I |
| | 1991.10-1997.07 | MT | F | L/R | Pickup 4WD 2L | GrooveType:Middle | GCO59016 | Outer Joint | | 26 | 27 | 60 | 162 | 65.5 | M |
| | 1991.10-1997.07 | MT | F | L/R | Pickup 4WD 2L | Date to:1997.07 | GCO59050 | Outer Joint | | 30 | 27 | 55.5 | 178 | 61 | I |
| 2.4 (66 kw) | 1998.08-2001.07 | 5MT | F | L/R | Pickup 4WD 2LT | For vehicles without ABS | GDS59036 | Drive Shaft | | 26 | | 60 | 162 | 532.5 | |
| | 1998.08-2001.07 | 5MT | F | L/R | Pickup 4WD 2LT | GrooveType:Inner | GCO59015 | Outer Joint | | 26 | 27 | 60 | 162 | 65.5 | I |
| | 1998.08-2001.07 | 5MT | F | L/R | Pickup 4WD 2LT | | GCI59014 | Inner Joint | | | 24 | | | 83.3 | |
| 2.4 (84 kw) | 1989.09-1997.07 | MT | F | L/R | Pickup 4WD 22RE | Date from:1989.09 | GCO59015 | Outer Joint | | 26 | 27 | 60 | 162 | 65.5 | I |
| 2.4 (103 kw) | 1997.08-2001.08 | 5MT | F | L/R | Pickup 4WD 2RZFE | For vehicles without ABS | GDS59036 | Drive Shaft | | 26 | | 60 | 162 | 532.5 | |
| | 1997.08-2001.08 | 5MT | F | L/R | Pickup 4WD 2RZFE | GrooveType:Inner | GCO59015 | Outer Joint | | 26 | 27 | 60 | 162 | 65.5 | I |
| | 1997.08-2001.08 | 5MT | F | L/R | Pickup 4WD 2RZFE | | GCI59014 | Inner Joint | | | 24 | | | 83.3 | |
| 2.4 (110 kw) | 2015.05- | 6MT | F | L/R | Pickup 4WD 2GD-FTV | | GDS59715 | Drive Shaft | | 30 | 30 | 70 | 103.5 | 629 | |
| | 2015.05- | 6MT | F | L/R | Pickup 4WD 2GD-FTV | | GCO59496 | Outer Joint | | 30 | 29 | 70 | 103.5 | 82.5 | M |
| | 2015.05- | 6MT | F | L/R | Pickup 4WD 2GD-FTV | | GCI59238 | Inner Joint | | 30 | 28 | 47 | 76 | 125 | |
| 2.4 (125 kw) | 2018.10- | 6AT/6MT | F | L/R | Pickup 4WD 2GD-FTV | | GDS59715 | Drive Shaft | | 30 | 30 | 70 | 103.5 | 629 | |
| | 2018.10- | 6AT/6MT | F | L/R | Pickup 4WD 2GD-FTV | | GCO59496 | Outer Joint | | 30 | 29 | 70 | 103.5 | 82.5 | M |
| | 2018.10- | | F | L/R | Pickup 4WD 2GD-FTV | Vehicle Production Country:Thailand | GCI59238 | Inner Joint | | 30 | 28 | 47 | 76 | 125 | |
| 2.5 (65 kw) | 2001.11-2005.07 | | R | L/R | Pickup RWD 2KDFTV | | GDS59036 | Drive Shaft | | 26 | | 60 | 162 | 532.5 | |
| 2.5 (75 kw) | 2001.08-2005.08 | 4AT/5MT | F | L/R | Pickup 4WD 2KDFTV | | GDS59219 | Drive Shaft | | 26 | | 60 | 162 | 527.5 | |
| | 2001.08-2005.08 | 4AT/5MT | F | L/R | Pickup 4WD 2KDFTV | GrooveType:Inner | GCO59015 | Outer Joint | | 26 | 27 | 60 | 162 | 65.5 | I |
| | 2001.08-2005.08 | 4AT/5MT | F | L/R | Pickup 4WD 2KDFTV | GrooveType:Middle | GCO59016 | Outer Joint | | 26 | 27 | 60 | 162 | 65.5 | M |
| | 2005.03-2015.05 | 5MT | F | L/R | Pickup 4WD 2KD-FTV | Date from:2011.05 | GDS59168 | Drive Shaft | | 30 | 30 | 72.5 | 116 | 630 | |
| | 2005.03-2015.05 | 5MT | F | L/R | Pickup 4WD 2KD-FTV | Date to:2011.04 | GDS59326 | Drive Shaft | | 30 | 30 | 72.5 | 116 | 629 | |
| | 2005.03-2015.05 | 5MT | F | L/R | Pickup 4WD 2KD-FTV | | GCO59199 | Outer Joint | | 30 | 29 | 72.5 | 116 | 73 | M |
| | 2005.03-2015.05 | 5MT | F | L/R | Pickup 4WD 2KD-FTV | | GCI59039 | Inner Joint | | 30 | 29 | 47 | 76 | 116 | |
| | 2005.03-2015.05 | 5MT | F | L/R | Pickup 4WD 2KD-FTV | | GCI81372 | Inner Joint | | 30 | 29 | 47 | 76 | 116 | |
| | 2005.03-2015.05 | MT | F | L/R | Pickup 4WD 2KD-FTV | | GCO59242 | Outer Joint | | 30 | 29 | 72.7 | 116 | 70 | M |

| | YEAR | TRANSM. | F/R | L/R | BODY STYLE & DRIVE TYPE & ENGINE | REMARKS | G-AP Ref. | PRODUCT | ABS | Technical Specifications A | B | C | H | L | P |
|---|---|---|---|---|---|---|---|---|---|---|---|---|---|---|---|
| **TOYOTA** | | | | | | | | | | | | | | | |
| **Hilux** | | | | | | | | | | | | | | | |
| 2.5 (88 kw) | 2006.06-2015.05 | 5MT | F | L/R | Pickup 4WD 2KD-FTV | Date from:2011.05 | GDS59168 | Drive Shaft | | 30 | 30 | 72.5 | 116 | 630 | |
| | 2006.06-2015.05 | 5MT | F | L/R | Pickup 4WD 2KD-FTV | Date to:2011.04 | GDS59326 | Drive Shaft | | 30 | 30 | 72.5 | 116 | 629 | |
| | 2006.06-2015.05 | 5MT | F | L/R | Pickup 4WD 2KD-FTV | | GCO59199 | Outer Joint | | 30 | 29 | 72.5 | 116 | 73 | M |
| | 2006.06-2015.05 | 5MT | F | L/R | Pickup 4WD 2KD-FTV | | GCI59039 | Inner Joint | | 30 | 29 | 47 | 76 | 116 | |
| | 2006.06-2015.05 | 5MT | F | L/R | Pickup 4WD 2KD-FTV | | GCI81372 | Inner Joint | | 30 | 29 | 47 | 76 | 116 | |
| | 2006.06-2015.05 | MT | F | L/R | Pickup 4WD 2KD-FTV | | GCO59242 | Outer Joint | | 30 | 29 | 72.7 | 116 | 70 | M |
| 2.5 (94 kw) | 2004.11-2005.12 | MT | F | L/R | Pickup 4WD 2KD-FTV | | GDS59326 | Drive Shaft | | 30 | 30 | 72.5 | 116 | 629 | |
| | 2004.11-2005.12 | MT | F | L/R | Pickup 4WD 2KD-FTV | | GCO59199 | Outer Joint | | 30 | 29 | 72.5 | 116 | 73 | M |
| | 2004.11-2005.12 | MT | F | L/R | Pickup 4WD 2KD-FTV | | GCI59039 | Inner Joint | | 30 | 29 | 47 | 76 | 116 | |
| | 2004.11-2005.12 | MT | F | L/R | Pickup 4WD 2KD-FTV | | GCI81372 | Inner Joint | | 30 | 29 | 47 | 76 | 116 | |
| 2.5 (106 kw) | 2007.12-2015.05 | 5MT | F | L/R | Pickup 4WD 2KD-FTV | Date from:2011.05 | GDS59168 | Drive Shaft | | 30 | 30 | 72.5 | 116 | 630 | |
| | 2007.12-2015.05 | 5MT | F | L/R | Pickup 4WD 2KD-FTV | Date to:2011.04 | GDS59326 | Drive Shaft | | 30 | 30 | 72.5 | 116 | 629 | |
| | 2007.12-2015.05 | 5MT | F | L/R | Pickup 4WD 2KD-FTV | | GCO59199 | Outer Joint | | 30 | 29 | 72.5 | 116 | 73 | M |
| | 2007.12-2015.05 | 5MT | F | L/R | Pickup 4WD 2KD-FTV | Date from:2008.01 | GCO59242 | Outer Joint | | 30 | 29 | 72.7 | 116 | 70 | M |
| | 2007.12-2015.05 | 5MT | F | L/R | Pickup 4WD 2KD-FTV | | GCI59039 | Inner Joint | | 30 | 29 | 47 | 76 | 116 | |
| | 2007.12-2015.05 | MT | F | L/R | Pickup 4WD 2KD-FTV | | GCI81372 | Inner Joint | | 30 | 29 | 47 | 76 | 116 | |
| 2.8 (130 kw) | 2015.05-2021.02 | AT | F | L/R | Pickup 4WD 1GD-FTV | | GDS59715 | Drive Shaft | | 30 | 30 | 70 | 103.5 | 629 | |
| | 2015.05-2021.02 | AT | F | L/R | Pickup 4WD 1GD-FTV | | GCO59496 | Outer Joint | | 30 | 29 | 70 | 103.5 | 82.5 | M |
| | 2015.05-2021.02 | AT | F | L/R | Pickup 4WD 1GD-FTV | Vehicle Production Country:Thailand | GCI59238 | Inner Joint | | 30 | 28 | 47 | 76 | 125 | |
| 2.8 (150 kw) | 2020.06- | 6AT/6MT | F | L/R | Pickup 4WD 1GD-FTV | | GDS59715 | Drive Shaft | | 30 | 30 | 70 | 103.5 | 629 | |
| | 2020.06- | 6AT/6MT | F | L/R | Pickup 4WD 1GD-FTV | | GCO59496 | Outer Joint | | 30 | 29 | 70 | 103.5 | 82.5 | M |
| | 2020.06- | 6AT/6MT | F | L/R | Pickup 4WD 1GD-FTV | | GCI59238 | Inner Joint | | 30 | 28 | 47 | 76 | 125 | |
| 2.8 (165 kw) | 2022.10- | | F | L/R | Pickup 4WD 1GDFTV | | GDS59715 | Drive Shaft | | 30 | 30 | 70 | 103.5 | 629 | |
| 3.0 (120 kw) | 2005.03-2015.05 | AT/MT | F | L/R | Pickup 4WD 1KD-FTV | Date from:2011.06,Date to:2012.05 | GDS59168 | Drive Shaft | | 30 | 30 | 72.5 | 116 | 630 | |
| | 2005.03-2015.05 | AT/MT | F | L/R | Pickup 4WD 1KD-FTV | Date to:2011.05 | GDS59326 | Drive Shaft | | 30 | 30 | 72.5 | 116 | 629 | |
| | 2005.03-2015.05 | AT/MT | F | L/R | Pickup 4WD 1KD-FTV | Date from:2012.06 | GDS59676 | Drive Shaft | | 30 | 30 | 72.5 | 116 | 632 | |
| | 2005.03-2015.05 | AT/MT | F | L/R | Pickup 4WD 1KD-FTV | | GCO59199 | Outer Joint | | 30 | 29 | 72.5 | 116 | 73 | M |
| | 2005.03-2015.05 | AT/MT | F | L/R | Pickup 4WD 1KD-FTV | Date to:2012.05 | GCI59039 | Inner Joint | | 30 | 29 | 47 | 76 | 116 | |
| | 2005.03-2015.05 | AT/MT | F | L/R | Pickup 4WD 1KD-FTV | Date From:2012.06 | GCI81372 | Inner Joint | | 30 | 29 | 47 | 76 | 116 | |
| 3.0 (126 kw) | 2005.08-2015.09 | 4AT/5AT/5MT | F | L/R | Pickup 4WD 1KD-FTV | Date from:2011.05,Date to:2012.04 | GDS59168 | Drive Shaft | | 30 | 30 | 72.5 | 116 | 630 | |
| | 2005.08-2015.09 | 4AT/5AT/5MT | F | L/R | Pickup 4WD 1KD-FTV | Date to:2011.04;Vehicle Production Country:Thailand;Date to:2014.05 | GDS59326 | Drive Shaft | | 30 | 30 | 72.5 | 116 | 629 | |
| | 2005.08-2015.09 | 4AT/5AT/5MT | F | L/R | Pickup 4WD 1KD-FTV | for OE No. 434309K023;Date from:2014.06;for OE No. 434309K051;Date from:2012.06 | GDS59676 | Drive Shaft | | 30 | 30 | 72.5 | 116 | 632 | |
| | 2005.08-2015.09 | 4AT/5AT/5MT | F | L/R | Pickup 4WD 1KD-FTV | | GCO59199 | Outer Joint | | 30 | 29 | 72.5 | 116 | 73 | M |
| | 2005.08-2015.09 | 4AT/5AT/5MT | F | L/R | Pickup 4WD 1KD-FTV | | GCI59039 | Inner Joint | | 30 | 29 | 47 | 76 | 116 | |
| | 2005.08-2015.09 | AT/MT | F | L/R | Pickup 4WD 1KD-FTV | | GCI81372 | Inner Joint | | 30 | 29 | 47 | 76 | 116 | |
| | 2005.08-2015.09 | MT | F | L/R | Pickup 4WD 1KD-FTV | | GCO59242 | Outer Joint | | 30 | 29 | 72.7 | 116 | 70 | M |
| 3.0 (145 kw) | 2008.05-2012.12 | AT/MT | F | L/R | Pickup 4WD 1KD-FTV | Date from:2011.06,Date to:2012.05 | GDS59168 | Drive Shaft | | 30 | 30 | 72.5 | 116 | 630 | |
| | 2008.05-2012.12 | AT/MT | F | L/R | Pickup 4WD 1KD-FTV | Date to:2011.05 | GDS59326 | Drive Shaft | | 30 | 30 | 72.5 | 116 | 629 | |
| | 2008.05-2012.12 | AT/MT | F | L/R | Pickup 4WD 1KD-FTV | Date from:2012.06 | GDS59676 | Drive Shaft | | 30 | 30 | 72.5 | 116 | 632 | |
| | 2008.05-2012.12 | AT/MT | F | L/R | Pickup 4WD 1KD-FTV | | GCO59199 | Outer Joint | | 30 | 29 | 72.5 | 116 | 73 | M |
| | 2008.05-2012.12 | AT/MT | F | L/R | Pickup 4WD 1KD-FTV | Date to:2012.05 | GCI59039 | Inner Joint | | 30 | 29 | 47 | 76 | 116 | |
| | 2008.05-2012.12 | AT/MT | F | L/R | Pickup 4WD 1KD-FTV | Date From:2012.06 | GCI81372 | Inner Joint | | 30 | 29 | 47 | 76 | 116 | |
| | 2008.05-2012.12 | MT | F | L/R | Pickup 4WD 1KD-FTV | | GCO59242 | Outer Joint | | 30 | 29 | 72.7 | 116 | 70 | M |
| 3.4 (131 kw) | 2000.08-2005.07 | AT | F | | SUV 4WD 5VZ-FE | | GCI59015 | Inner Joint | | 27 | 24 | 47 | 67 | 116.5 | |
| **Ipsum** | | | | | | | | | | | | | | | |
| 2.0 (99 kw) | 1996.09-2001.05 | 4AT | F | R | MPV FWD 3SFE | Inner teeth of wheel side:24 | GDS59383 | Drive Shaft | 48T | 26 | 20 | 56 | 95.5 | 913.5 | |
| | 1996.09-2001.05 | 4AT | F | L/R | MPV FWD 3SFE | | GCO59001 | Outer Joint | | 26 | 24 | 56 | 95.5 | 55 | I |
| | 1996.09-2001.05 | 4AT | F | L/R | MPV FWD 3SFE | | GCO59019 | Outer Joint | 48T | 26 | 24 | 56 | 95.5 | 55 | I |
| | 1996.09-2001.05 | 4AT | F | L/R | MPV FWD 3SFE | | GCO59120 | Outer Joint | 48T | 26 | 24 | 56 | 95.5 | 55 | I |
| | 1996.09-2001.05 | 4AT | F | L | MPV FWD 3SFE | | GCI59046 | Inner Joint | | 20 | 23 | 35 | 63.5 | 115.5 | |
| | 1996.09-2001.05 | 4AT | F | R | MPV FWD 3SFE | | GCI59105 | Inner Joint | | 20 | 23 | 35 | 363.5 | 100.5 | |
| | 1996.09-2001.05 | 4AT | F | R | MPV FWD 3SFE | | GCI81280 | Inner Joint | | 20 | 23 | 35 | 363 | 100 | |
| 2.4 (115 kw) | 2001.08-2007.08 | 4AT | F | L | MPV FWD 2AZ-FE | TJ | GDS59251 | Drive Shaft | 48T | 26 | 24 | 63.3 | 100 | 632 | |
| | 2001.08-2007.08 | 4AT | F | R | MPV FWD 2AZ-FE | TJ | GDS59250 | Drive Shaft | 48T | 26 | 24 | 63.3 | 100 | 949 | |
| | 2001.08-2007.08 | 4AT | F | R | MPV FWD 2AZ-FE | | GCO59167 | Outer Joint | 48T | 26 | 27 | 63 | 100 | 62 | I |
| | 2001.08-2007.08 | 4AT | F | L/R | MPV FWD 2AZ-FE | | GCO59043 | Outer Joint | 48T | 26 | 27 | 58 | 96 | 62 | I |
| | 2001.08-2007.08 | MT/AT | F | L | MPV FWD 2AZ-FE | Manufactured in:Russia | GCI59125 | Inner Joint | | 24 | 27 | 50 | 67 | 109.5 | |
| **iQ** | | | | | | | | | | | | | | | |
| 1.0 (50 kw) | 2009.01-2015.12 | AT/MT | F | L/R | Hatchback FWD 1KR-FE | Groove Type:Middle | GCO45058 | Outer Joint | | 24 | 20 | 49.5 | 91 | 46 | M |
| | 2009.01-2015.12 | CVT | F | L | Hatchback FWD 1KR-FE | | GDS59667 | Drive Shaft | | 24 | 23 | 49.5 | 92 | 646 | |
| | 2009.01-2015.12 | CVT | F | R | Hatchback FWD 1KR-FE | | GDS82271 | Drive Shaft | | 24 | 23 | 49.5 | 92 | 900 | |
| | 2009.01-2015.12 | CVT | F | L | Hatchback FWD 1KR-FE | | GCI81186 | Inner Joint | | 23 | 20 | 34 | 60 | 105 | |
| | 2009.01-2015.12 | CVT | F | R | Hatchback FWD 1KR-FE | | GCI81710 | Inner Joint | | 23 | 20 | 34 | 310 | 114.5 | |
| | 2009.01-2015.12 | MT | F | L | Hatchback FWD 1KR-FE | | GDS59669 | Drive Shaft | | 24 | 23 | 49.5 | 92 | 650 | |
| | 2009.01-2015.12 | MT | F | R | Hatchback FWD 1KR-FE | | GDS59668 | Drive Shaft | | 24 | 23 | 49.5 | 92 | 903 | |

| | YEAR | TRANSM. | F/R | L/R | BODY STYLE & DRIVE TYPE & ENGINE | REMARKS | G-AP Ref. | PRODUCT | ABS | Technical Specifications A | B | C | H | L | P |
|---|---|---|---|---|---|---|---|---|---|---|---|---|---|---|---|
| **TOYOTA** | | | | | | | | | | | | | | | |
| **iQ** | | | | | | | | | | | | | | | |
| 1.0 (50 kw) | 2009.01-2015.12 | MT | F | L/R | Hatchback FWD 1KR-FE | Groove Type:Inner | GCO59367 | Outer Joint | | 24 | 20 | 49.5 | 92 | 48 | I |
| | 2009.01-2015.12 | MT | F | L | Hatchback FWD 1KR-FE | | GCI81188 | Inner Joint | | 23 | 20 | 34 | 60 | 105 | |
| | 2009.01-2015.12 | MT | F | R | Hatchback FWD 1KR-FE | | GCI81187 | Inner Joint | | 23 | 20 | 34 | 308 | 108 | |
| 1.3 (72 kw) | 2009.01-2015.12 | AT/MT | F | R | Hatchback FWD 1NR-FE | | GDS82095 | Drive Shaft | | 26 | 23 | 55.6 | 95 | 906 | |
| | 2009.01-2015.12 | CVT/6MT | F | L | Hatchback FWD 1NR-FE | | GDS59611 | Drive Shaft | | 26 | 23 | 55.6 | 95 | 653 | |
| | 2009.01-2015.12 | CVT/6MT | F | L/R | Hatchback FWD 1NR-FE | | GCO59219 | Outer Joint | | 26 | 29 | 55.6 | 95 | 52.5 | I |
| | 2009.01-2015.12 | CVT/6MT | F | L | Hatchback FWD 1NR-FE | | GCI59067 | Inner Joint | | 23 | 29 | 34 | 60 | 109 | |
| | 2009.01-2015.12 | | F | L/R | Hatchback FWD 1NR-FE | | GCO59384 | Outer Joint | | 26 | 29 | 55.6 | 96 | 54 | I |
| 1.4 (66 kw) | 2009.01-2015.12 | | F | L | Hatchback FWD 1ND-TV | | GDS82210 | Drive Shaft | | 26 | 20 | 55.6 | 95.5 | 635 | |
| | 2009.01-2015.12 | | F | L | Hatchback FWD 1ND-TV | | GCO59244 | Outer Joint | | 26 | 25 | 55.6 | 95.5 | 57 | I |
| | 2009.01-2015.12 | | F | L/R | Hatchback FWD 1ND-TV | | GCI59100 | Inner Joint | | 20 | 25 | 35 | 63.5 | 118 | |
| **Land Cruiser** | | | | | | | | | | | | | | | |
| 2.4 (66 kw) | 1990.07-1996.05 | MT | F | L | Terrain cab open 4WD 2LT | | GDS59736 | Intermediate Shaft | | 27 | 30 | | | 768 | |
| | 1990.07-1996.05 | MT | F | R | Terrain cab open 4WD 2LT | | GDS59735 | Intermediate Shaft | | 27 | 30 | | | 414.5 | |
| 2.8 (147 kw) | 2018.10- | AT/MT | F | L/R | Closed Off-Road Vehicle 4WD 1GD-FTV | | GDS59015 | Drive Shaft | | 30 | 30 | 70 | 103.5 | 647 | |
| | 2018.10- | AT/MT | F | L/R | Closed Off-Road Vehicle 4WD 1GD-FTV | | GCO59097 | Outer Joint | | 30 | 30 | 70 | 103.5 | 82.5 | I |
| | 2018.10- | AT/MT | F | L/R | Closed Off-Road Vehicle 4WD 1GD-FTV | | GCI59049 | Inner Joint | | 30 | 30 | 47 | 75.5 | 125.5 | |
| | 2018.10- | 6AT/6MT | R | L/R | Closed Off-Road Vehicle 4WD 1GD-FTV | | GDS98004 | Drive Shaft | | | 30 | | | 807 | |
| 2.8 (150 kw) | 2020.07- | 6AT/6MT | F | L/R | Closed Off-Road Vehicle 4WD 1GD-FTV | | GDS59015 | Drive Shaft | | 30 | 30 | 70 | 103.5 | 647 | |
| | 2020.07- | 6AT/6MT | F | L/R | Closed Off-Road Vehicle 4WD 1GD-FTV | | GCO59097 | Outer Joint | | 30 | 30 | 70 | 103.5 | 82.5 | I |
| | 2020.07- | 6AT/6MT | F | L/R | Closed Off-Road Vehicle 4WD 1GD-FTV | | GCI59049 | Inner Joint | | 30 | 30 | 47 | 75.5 | 125.5 | |
| | 2020.07- | 6AT/6MT | R | L/R | Closed Off-Road Vehicle 4WD 1GD-FTV | | GDS98004 | Drive Shaft | | | 30 | | | 807 | |
| 4.0 (202 kw) | 2009.08- | 5AT/6MT | F | L/R | Closed Off-Road Vehicle 4WD 1GR-FE | | GDS59015 | Drive Shaft | | 30 | 30 | 70 | 103.5 | 647 | |
| | 2009.08- | 5AT/6MT | F | L/R | Closed Off-Road Vehicle 4WD 1GR-FE | | GCO59097 | Outer Joint | | 30 | 30 | 70 | 103.5 | 82.5 | I |
| | 2009.08- | 5AT/6MT | F | L/R | Closed Off-Road Vehicle 4WD 1GR-FE | Date to:2010.07 | GCI59049 | Inner Joint | | 30 | 30 | 47 | 75.5 | 125.5 | |
| | 2009.08- | 6AT | R | L/R | Closed Off-Road Vehicle 4WD 1GR-FE | Date from:2015.06 | GDS98004 | Drive Shaft | | | 30 | | | 807 | |
| 4.0 (205 kw) | 2009.08- | AT/MT | F | L/R | Closed Off-Road Vehicle 4WD 1GR-FE | | GDS59015 | Drive Shaft | | 30 | 30 | 70 | 103.5 | 647 | |
| | 2009.08- | AT/MT | F | L/R | Closed Off-Road Vehicle 4WD 1GR-FE | Date from:2010.08 | GCO59097 | Outer Joint | | 30 | 30 | 70 | 103.5 | 82.5 | I |
| | 2009.08- | AT/MT | F | L/R | Closed Off-Road Vehicle 4WD 1GR-FE | Date to:2010.07 | GCI59049 | Inner Joint | | 30 | 30 | 47 | 75.5 | 125.5 | |
| | 2009.08- | 6AT | R | L/R | Closed Off-Road Vehicle 4WD 1GR-FE | Date from:2015.06 | GDS98004 | Drive Shaft | | | 30 | | | 807 | |
| 4.2 (96 kw) | 1990.01- | MT | F | L | Closed Off-Road Vehicle 4WD 1H-Z | for Model code:HZJ70/HZJ73/HZJ77 | GDS59736 | Intermediate Shaft | | 27 | 30 | | | 768 | |
| | 1990.01- | MT | F | R | Closed Off-Road Vehicle 4WD 1H-Z | for Model code:HZJ70/HZJ73/HZJ77 | GDS59735 | Intermediate Shaft | | 27 | 30 | | | 414.5 | |
| | 1990.01- | | F | L/R | Closed Off-Road Vehicle 4WD 1H-Z | | GCO59007 | Outer Joint | | 30 | 27 | 62 | 178 | 63 | I |
| | 1990.01- | 5MT | R | L | Closed Off-Road Vehicle 4WD 1H-Z | for Model code:HZJ79 | GDS59733 | Drive Shaft | | | 32 | | | 933.5 | |
| | 1990.01- | 5MT | R | R | Closed Off-Road Vehicle 4WD 1H-Z | for Model code:HZJ79 | GDS59732 | Drive Shaft | | | 32 | | | 633.5 | |
| | 1990.01- | AT/MT | R | L | Closed Off-Road Vehicle 4WD 1H-Z | for Model code:HZJ75/HZJ73/HZJ77 | GDS59734 | Drive Shaft | | | 30 | | | 935.5 | |
| | 1990.01- | AT/MT | R | R | Closed Off-Road Vehicle 4WD 1H-Z | for Model code:HZJ75/HZJ73/HZJ77 | GDS59731 | Drive Shaft | | | 30 | | | 633 | |
| | 1990.01-2007.02 | | F | | Platform/Chassis 4WD 1H-Z | | GCO59027 | Outer Joint | | 30 | 24 | 59 | 180 | 71 | I |
| 4.2 (99 kw) | 1990.04-1999.07 | AT/MT | R | L | Closed Off-Road Vehicle 4WD 1H-Z | | GDS59734 | Drive Shaft | | | 30 | | | 935.5 | |
| | 1990.04-1999.07 | AT/MT | R | R | Closed Off-Road Vehicle 4WD 1H-Z | | GDS59731 | Drive Shaft | | | 30 | | | 633 | |
| 4.2 (123 kw) | 1990.01-2001.08 | | F | | Open Off-Road Vehicle 4WD 1H-Z | | GCO59027 | Outer Joint | | 30 | 24 | 59 | 180 | 71 | I |
| | 1990.01-2001.08 | AT/MT | R | L | Open Off-Road Vehicle 4WD 1H-Z | | GDS59734 | Drive Shaft | | | 30 | | | 935.5 | |
| | 1990.01-2001.08 | AT/MT | R | R | Open Off-Road Vehicle 4WD 1H-Z | | GDS59731 | Drive Shaft | | | 30 | | | 633 | |
| | 1990.01-2001.08 | MT | F | L/R | Terrain cab wagon closed 4WD 1HZ | | GCO59046 | Outer Joint | | 30 | 24 | 59 | 168.1 | 71.2 | I |
| | 1990.01-2001.08 | MT | R | L | Terrain cab wagon closed 4WD 1HZ | for Model code:HZJ74/HZJ78 | GDS59733 | Drive Shaft | | | 32 | | | 933.5 | |
| | 1990.01-2001.08 | MT | R | L | Terrain cab wagon closed 4WD 1HZ | for Model code:HZJ75 | GDS59734 | Drive Shaft | | | 30 | | | 935.5 | |
| | 1990.01-2001.08 | MT | R | R | Terrain cab wagon closed 4WD 1HZ | for Model code:HZJ75 | GDS59731 | Drive Shaft | | | 30 | | | 633 | |
| | 1990.01-2001.08 | MT | R | R | Terrain cab wagon closed 4WD 1HZ | for Model code:HZJ74/HZJ78 | GDS59732 | Drive Shaft | | | 32 | | | 633.5 | |
| 4.2 (150 kw) | 2001.09-2006.06 | 5MT | R | L | Terrain cab wagon closed 4WD 1HDFTE | | GDS59733 | Drive Shaft | | | 32 | | | 933.5 | |
| | 2001.09-2006.06 | 5MT | R | R | Terrain cab wagon closed 4WD 1HDFTE | | GDS59732 | Drive Shaft | | | 32 | | | 633.5 | |
| 4.5 (158 kw) | 1992.11-1999.11 | 5MT | R | L | Terrain cab wagon closed 4WD 1FZFE | | GDS59734 | Drive Shaft | | | 30 | | | 935.5 | |
| | 1992.11-1999.11 | 5MT | R | R | Terrain cab wagon closed 4WD 1FZFE | | GDS59731 | Drive Shaft | | | 30 | | | 633 | |
| 4.5 (165 kw) | 1990.11-2007.11 | | F | | Platform/Chassis 4WD 1FZ-FE | | GCO59027 | Outer Joint | | 30 | 24 | 59 | 180 | 71 | I |
| **Land Cruiser 100** | | | | | | | | | | | | | | | |
| 4.2 (150 kw) | 1998.01-2007.08 | 4AT/5AT/5MT | F | L/R | Closed Off-Road Vehicle 4WD 1HD-FTE | DOJ | GDS59017 | Drive Shaft | | 30 | 30 | 72.58 | 176 | 711.5 | |
| | 1998.01-2007.08 | 4AT/5AT/5MT | F | L/R | Closed Off-Road Vehicle 4WD 1HD-FTE | | GCO59085 | Outer Joint | | 30 | 30 | 72.58 | 176 | 78 | I |
| | 1998.01-2007.08 | 4AT/5AT/5MT | F | L/R | Closed Off-Road Vehicle 4WD 1HD-FTE | | GCI59107 | Inner Joint | | 30 | 30 | 47 | 77 | 133.5 | |
| 4.5 (173 kw) | 1998.01-2008.07 | | F | | Closed Off-Road Vehicle 4WD 1FZ-FE | | GCO59027 | Outer Joint | | 30 | 24 | 59 | 180 | 71 | I |
| 4.7 (173 kw) | 1998.01-2002.08 | 4AT | F | L/R | Terrain cab wagon closed 4WD 2UZFE | DOJ | GDS59017 | Drive Shaft | | 30 | 30 | 72.58 | 176 | 711.5 | |
| | 1998.01-2002.08 | 4AT | F | L/R | Terrain cab wagon closed 4WD 2UZFE | | GCO59085 | Outer Joint | | 30 | 30 | 72.58 | 176 | 78 | I |
| | 1998.01-2002.08 | 4AT | F | L/R | Terrain cab wagon closed 4WD 2UZFE | | GCI59107 | Inner Joint | | 30 | 30 | 47 | 77 | 133.5 | |
| 4.7 (175 kw) | 2002.02-2007.08 | 5AT | F | L/R | Closed Off-Road Vehicle 4WD 2UZ-FE | DOJ | GDS59017 | Drive Shaft | | 30 | 30 | 72.58 | 176 | 711.5 | |
| | 2002.02-2007.08 | 5AT | F | L/R | Closed Off-Road Vehicle 4WD 2UZ-FE | | GCO59085 | Outer Joint | | 30 | 30 | 72.58 | 176 | 78 | I |
| | 2002.02-2007.08 | 5AT | F | L/R | Closed Off-Road Vehicle 4WD 2UZ-FE | | GCI59107 | Inner Joint | | 30 | 30 | 47 | 77 | 133.5 | |

| | YEAR | TRANSM. | F/R | L/R | BODY STYLE & DRIVE TYPE & ENGINE | REMARKS | G-AP Ref. | PRODUCT | ABS | Technical Specifications A | B | C | H | L | P |
|---|---|---|---|---|---|---|---|---|---|---|---|---|---|---|---|
| **TOYOTA** | | | | | | | | | | | | | | | |
| **Land Cruiser 200** | | | | | | | | | | | | | | | |
| 4.5 (171 kw) | 2013.01- | 6AT | F | L/R | Closed Off-Road Vehicle 4WD 1VD-FTV | | GDS59325 | Drive Shaft | | 36 | 34 | 83 | 121 | 668 | |
| | 2013.01- | 6AT | F | L/R | Closed Off-Road Vehicle 4WD 1VD-FTV | | GCO59303 | Outer Joint | | 36 | 30 | 83 | 121 | 78 | I |
| | 2013.01- | 6AT | F | L/R | Closed Off-Road Vehicle 4WD 1VD-FTV | | GCI59065 | Inner Joint | | 34 | 30 | 47 | 87 | 141 | |
| 4.5 (173 kw) | 2007.08- | 5AT/6AT | F | L/R | Closed Off-Road Vehicle 4WD 1VD-FTV | | GDS59325 | Drive Shaft | | 36 | 34 | 83 | 121 | 668 | |
| | 2007.08- | 5AT/6AT | F | L/R | Closed Off-Road Vehicle 4WD 1VD-FTV | | GCO59303 | Outer Joint | | 36 | 30 | 83 | 121 | 78 | I |
| | 2007.08- | 5AT/6AT | F | L/R | Closed Off-Road Vehicle 4WD 1VD-FTV | | GCI59065 | Inner Joint | | 34 | 30 | 47 | 87 | 141 | |
| 4.5 (183 kw) | 2015.08- | 6AT | F | L/R | Closed Off-Road Vehicle 4WD 1VD-FTV | | GDS59325 | Drive Shaft | | 36 | 34 | 83 | 121 | 668 | |
| | 2015.08- | 6AT | F | L/R | Closed Off-Road Vehicle 4WD 1VD-FTV | | GCO59303 | Outer Joint | | 36 | 30 | 83 | 121 | 78 | I |
| | 2015.08- | 6AT | F | L/R | Closed Off-Road Vehicle 4WD 1VD-FTV | | GCI59065 | Inner Joint | | 34 | 30 | 47 | 87 | 141 | |
| 4.5 (195 kw) | 2007.09- | 6AT | F | L/R | Closed Off-Road Vehicle 4WD 1VD-FTV | | GDS59325 | Drive Shaft | | 36 | 34 | 83 | 121 | 668 | |
| | 2007.09- | 6AT | F | L/R | Closed Off-Road Vehicle 4WD 1VD-FTV | | GCO59303 | Outer Joint | | 36 | 30 | 83 | 121 | 78 | I |
| | 2007.09- | 6AT | F | L/R | Closed Off-Road Vehicle 4WD 1VD-FTV | | GCI59065 | Inner Joint | | 34 | 30 | 47 | 87 | 141 | |
| 4.5 (200 kw) | 2012.01- | 6AT | F | L/R | Closed Off-Road Vehicle 4WD 1VD-FTV | | GDS59325 | Drive Shaft | | 36 | 34 | 83 | 121 | 668 | |
| | 2012.01- | 6AT | F | L/R | Closed Off-Road Vehicle 4WD 1VD-FTV | | GCO59303 | Outer Joint | | 36 | 30 | 83 | 121 | 78 | I |
| | 2012.01- | 6AT | F | L/R | Closed Off-Road Vehicle 4WD 1VD-FTV | | GCI59065 | Inner Joint | | 34 | 30 | 47 | 87 | 141 | |
| 4.5 (210 kw) | 2008.01- | 5AT | F | L/R | Closed Off-Road Vehicle 4WD 1VD-FTV | | GDS59325 | Drive Shaft | | 36 | 34 | 83 | 121 | 668 | |
| | 2008.01- | 5AT | F | L/R | Closed Off-Road Vehicle 4WD 1VD-FTV | | GCO59303 | Outer Joint | | 36 | 30 | 83 | 121 | 78 | I |
| | 2008.01- | 5AT | F | L/R | Closed Off-Road Vehicle 4WD 1VD-FTV | | GCI59065 | Inner Joint | | 34 | 30 | 47 | 87 | 141 | |
| 4.6 (227 kw) | 2010.09- | 6AT | F | L/R | Closed Off-Road Vehicle 4WD 1UR-FE | | GDS59325 | Drive Shaft | | 36 | 34 | 83 | 121 | 668 | |
| | 2010.09- | 6AT | F | L/R | Closed Off-Road Vehicle 4WD 1UR-FE | | GCO59303 | Outer Joint | | 36 | 30 | 83 | 121 | 78 | I |
| | 2010.09- | 6AT | F | L/R | Closed Off-Road Vehicle 4WD 1UR-FE | | GCI59065 | Inner Joint | | 34 | 30 | 47 | 87 | 141 | |
| 4.7 (212 kw) | 2008.01- | 5AT | F | L/R | Closed Off-Road Vehicle 4WD 2UZ-FE | | GDS59325 | Drive Shaft | | 36 | 34 | 83 | 121 | 668 | |
| | 2008.01- | 5AT | F | L/R | Closed Off-Road Vehicle 4WD 2UZ-FE | | GCO59303 | Outer Joint | | 36 | 30 | 83 | 121 | 78 | I |
| | 2008.01- | 5AT | F | L/R | Closed Off-Road Vehicle 4WD 2UZ-FE | | GCI59065 | Inner Joint | | 34 | 30 | 47 | 87 | 141 | |
| **Land Cruiser 300** | | | | | | | | | | | | | | | |
| 3.3 (220 kw) | 2022.02- | 10AT | F | L | Closed Off-Road Vehicle 4WD F33A-FTV | | GDS56711 | Drive Shaft | | 36 | 36 | 83 | 121 | 683 | |
| | 2022.02- | 10AT | F | R | Closed Off-Road Vehicle 4WD F33A-FTV | | GDS56712 | Drive Shaft | | 36 | 36 | 83 | 121 | 731 | |
| | 2022.02- | | F | L/R | Closed Off-Road Vehicle 4WD F33A-FTV | | GCO59303 | Outer Joint | | 36 | 30 | 83 | 121 | 78 | I |
| | 2022.02- | | F | L/R | Closed Off-Road Vehicle 4WD F33A-FTV | | GCI83451 | Inner Joint | | 36 | 30 | 47 | 87 | 128.5 | |
| 3.3 (227 kw) | 2021.07- | 10AT | F | L | Closed Off-Road Vehicle 4WD F33AFTV | | GDS56711 | Drive Shaft | | 36 | 36 | 83 | 121 | 683 | |
| | 2021.07- | 10AT | F | R | Closed Off-Road Vehicle 4WD F33AFTV | | GDS56712 | Drive Shaft | | 36 | 36 | 83 | 121 | 731 | |
| | 2021.07- | 10AT | F | L/R | Closed Off-Road Vehicle 4WD F33AFTV | | GCO59303 | Outer Joint | | 36 | 30 | 83 | 121 | 78 | I |
| | 2021.07- | 10AT | F | L/R | Closed Off-Road Vehicle 4WD F33AFTV | | GCI83451 | Inner Joint | | 36 | 30 | 47 | 87 | 128.5 | |
| 3.4 (305 kw) | 2021.08- | 10AT | F | L | Closed Off-Road Vehicle 4WD V35A-FTS | | GDS56711 | Drive Shaft | | 36 | 36 | 83 | 121 | 683 | |
| | 2021.08- | 10AT | F | R | Closed Off-Road Vehicle 4WD V35A-FTS | | GDS56712 | Drive Shaft | | 36 | 36 | 83 | 121 | 731 | |
| | 2021.08- | 10AT | F | L/R | Closed Off-Road Vehicle 4WD V35A-FTS | | GCO59303 | Outer Joint | | 36 | 30 | 83 | 121 | 78 | I |
| | 2021.08- | 10AT | F | L/R | Closed Off-Road Vehicle 4WD V35A-FTS | | GCI83451 | Inner Joint | | 36 | 30 | 47 | 87 | 128.5 | |
| **Land Cruiser 70** | | | | | | | | | | | | | | | |
| 4.0 (170 kw) | 2007.03- | 5MT | R | L | Closed Off-Road Vehicle 4WD 1GR-FE | | GDS59733 | Drive Shaft | | | 32 | | | 933.5 | |
| | 2007.03- | 5MT | R | R | Closed Off-Road Vehicle 4WD 1GR-FE | | GDS59732 | Drive Shaft | | | 32 | | | 633.5 | |
| 4.2 (100 kw) | 2007.03- | | F | | Platform/Chassis 4WD 1H-Z | | GCO59027 | Outer Joint | | 30 | 24 | 59 | 180 | 71 | I |
| 4.5 (151 kw) | 2007.01- | 5MT | R | L | Closed Off-Road Vehicle 4WD 1VD-FTV | | GDS59733 | Drive Shaft | | | 32 | | | 933.5 | |
| | 2007.01- | 5MT | R | R | Closed Off-Road Vehicle 4WD 1VD-FTV | | GDS59732 | Drive Shaft | | | 32 | | | 633.5 | |
| 4.5 (165 kw) | 1992.08-2009.06 | 5MT | R | L | Closed Off-Road Vehicle 4WD 1FZ-FE | for Model code:FZJ78/FZJ79/FZJ78R | GDS59733 | Drive Shaft | | | 32 | | | 933.5 | |
| | 1992.08-2009.06 | 5MT | R | R | Closed Off-Road Vehicle 4WD 1FZ-FE | for Model code:FZJ78/FZJ79/FZJ78R | GDS59732 | Drive Shaft | | | 32 | | | 633.5 | |
| **Land Cruiser 80** | | | | | | | | | | | | | | | |
| 4.2 (99 kw) | 1990.01-1997.12 | MT | F | L/R | Terrain cab wagon closed 4WD 1HZ | | GCO59041 | Outer Joint | 48T | 30 | 24 | 59 | 176 | 71 | I |
| | 1990.01-1997.12 | MT | F | L/R | Terrain cab wagon closed 4WD 1HZ | Date from:1992.08,Date to:1997.12 | GCO59046 | Outer Joint | | 30 | 24 | 59 | 168.1 | 71.2 | I |
| | 1990.01-1997.12 | MT | F | L/R | Terrain cab wagon closed 4WD 1HZ | | GCO59074 | Outer Joint | | 30 | 24 | 59 | 176 | 71 | I |
| | 1990.01-1997.12 | MT | F | L/R | Terrain cab wagon closed 4WD 1HZ | Date from:1992.08,Date to:1997.12 | GCO59127 | Outer Joint | 48T | 30 | 24 | 59 | 167.5 | 71 | I |
| | 1990.01-1997.12 | | F | | Terrain cab wagon closed 4WD 1HZ | | GCO59064 | Outer Joint | | 30 | 24 | 57 | 169 | 71 | I |
| 4.2 (118 kw) | 1992.10-1997.12 | AT/MT | F | L/R | Terrain cab wagon closed 4WD 1HDT | Date to:1994.12 | GCO59046 | Outer Joint | | 30 | 24 | 59 | 168.1 | 71.2 | I |
| | 1992.10-1997.12 | AT/MT | F | L/R | Terrain cab wagon closed 4WD 1HDT | Date to:1994.12 | GCO59127 | Outer Joint | 48T | 30 | 24 | 59 | 167.5 | 71 | I |
| | 1992.10-1997.12 | MT | F | L/R | Terrain cab wagon closed 4WD 1HDT | | GCO59041 | Outer Joint | 48T | 30 | 24 | 59 | 176 | 71 | I |
| | 1992.10-1997.12 | MT | F | L/R | Terrain cab wagon closed 4WD 1HDT | | GCO59074 | Outer Joint | | 30 | 24 | 59 | 176 | 71 | I |
| | 1992.10-1997.12 | | F | | Terrain cab wagon closed 4WD 1HDT | | GCO59064 | Outer Joint | | 30 | 24 | 57 | 169 | 71 | I |
| 4.2 (123 kw) | 1990.01-1997.12 | AT/MT | F | L/R | Terrain cab wagon closed 4WD 1HDT | Date to:1994.12 | GCO59046 | Outer Joint | | 30 | 24 | 59 | 168.1 | 71.2 | I |
| | 1990.01-1997.12 | AT/MT | F | L/R | Terrain cab wagon closed 4WD 1HDT | Date to:1994.12 | GCO59127 | Outer Joint | 48T | 30 | 24 | 59 | 167.5 | 71 | I |
| | 1990.01-1997.12 | MT | F | L/R | Terrain cab wagon closed 4WD 1HDT | | GCO59041 | Outer Joint | 48T | 30 | 24 | 59 | 176 | 71 | I |
| | 1990.01-1997.12 | MT | F | L/R | Terrain cab wagon closed 4WD 1HDT | | GCO59074 | Outer Joint | | 30 | 24 | 59 | 176 | 71 | I |
| | 1990.01-1997.12 | | F | | Terrain cab wagon closed 4WD 1HDT | | GCO59064 | Outer Joint | | 30 | 24 | 57 | 169 | 71 | I |
| 4.2 (125 kw) | 1995.02-1997.12 | MT | F | L/R | Terrain cab wagon closed 4WD 1HDFT | | GCO59041 | Outer Joint | 48T | 30 | 24 | 59 | 176 | 71 | I |
| | 1995.02-1997.12 | MT | F | L/R | Terrain cab wagon closed 4WD 1HDFT | | GCO59074 | Outer Joint | | 30 | 24 | 59 | 176 | 71 | I |
| 4.5 (151 kw) | 1992.08-1997.12 | MT | F | L/R | Terrain cab wagon closed 4WD 1FZFE | | GCO59041 | Outer Joint | 48T | 30 | 24 | 59 | 176 | 71 | I |
| | 1992.08-1997.12 | MT | F | L/R | Terrain cab wagon closed 4WD 1FZFE | | GCO59074 | Outer Joint | | 30 | 24 | 59 | 176 | 71 | I |

| | YEAR | TRANSM. | F/R | L/R | BODY STYLE & DRIVE TYPE & ENGINE | REMARKS | G-AP Ref. | PRODUCT | ABS | Technical Specifications A | B | C | H | L | P |
|---|---|---|---|---|---|---|---|---|---|---|---|---|---|---|---|
| **TOYOTA** | | | | | | | | | | | | | | | |
| **Land Cruiser 80** | | | | | | | | | | | | | | | |
| 4.5 (151 kw) | 1992.08-1997.12 | | F | | Terrain cab wagon closed 4WD 1FZFE | | GCO59064 | Outer Joint | | 30 | 24 | 57 | 169 | 71 | I |
| **Land Cruiser 90** | | | | | | | | | | | | | | | |
| 3.0 (92 kw) | 1996.04-2002.12 | 4AT/5MT | F | L/R | Closed Off-Road Vehicle 4WD 1KZ-TE | | GDS59038 | Drive Shaft | | 30 | 27 | 69 | 123 | 620.5 | |
| | 1996.04-2002.12 | AT/MT | F | L/R | Closed Off-Road Vehicle 4WD 1KZ-TE | Date To:2000.07 | GCO59034 | Outer Joint | | 30 | 27 | 69 | 122.5 | 64.5 | I |
| | 1996.04-2002.12 | AT/MT | F | L/R | Closed Off-Road Vehicle 4WD 1KZ-TE | | GCO59243 | Outer Joint | | 30 | 27 | 69 | 121 | 65 | I |
| | 1996.04-2002.12 | | F | L/R | Closed Off-Road Vehicle 4WD 1KZ-TE | | GCI59015 | Inner Joint | | 27 | 24 | 47 | 67 | 116.5 | |
| 3.0 (103 kw) | 1996.04-2000.07 | 5MT | F | L/R | Terrain cab wagon closed 4WD 1KZTE | | GDS59038 | Drive Shaft | | 30 | 27 | 69 | 123 | 620.5 | |
| | 1996.04-2000.07 | 5MT | F | L/R | Terrain cab wagon closed 4WD 1KZTE | | GCO59034 | Outer Joint | | 30 | 27 | 69 | 122.5 | 64.5 | I |
| | 1996.04-2000.07 | | F | L/R | Terrain cab wagon closed 4WD 1KZTE | | GCI59015 | Inner Joint | | 27 | 24 | 47 | 67 | 116.5 | |
| 3.0 (120 kw) | 2000.08-2002.08 | 4AT/5MT | F | L/R | Closed Off-Road Vehicle 4WD 1KD-FTV | | GDS59038 | Drive Shaft | | 30 | 27 | 69 | 123 | 620.5 | |
| | 2000.08-2002.08 | 4AT/5MT | F | L/R | Closed Off-Road Vehicle 4WD 1KD-FTV | | GCO59034 | Outer Joint | | 30 | 27 | 69 | 122.5 | 64.5 | I |
| | 2000.08-2002.08 | AT/MT | F | L/R | Closed Off-Road Vehicle 4WD 1KD-FTV | | GCO59243 | Outer Joint | | 30 | 27 | 69 | 121 | 65 | I |
| | 2000.08-2002.08 | | F | L/R | Closed Off-Road Vehicle 4WD 1KD-FTV | | GCI59015 | Inner Joint | | 27 | 24 | 47 | 67 | 116.5 | |
| 3.4 (131 kw) | 1996.03-2002.08 | 4AT/5MT | F | L/R | Closed Off-Road Vehicle 4WD 5VZ-FE | | GDS59038 | Drive Shaft | | 30 | 27 | 69 | 123 | 620.5 | |
| | 1996.03-2002.08 | 4AT/5MT | F | L/R | Closed Off-Road Vehicle 4WD 5VZ-FE | | GCO59034 | Outer Joint | | 30 | 27 | 69 | 122.5 | 64.5 | I |
| | 1996.03-2002.08 | AT/MT | F | L/R | Closed Off-Road Vehicle 4WD 5VZ-FE | | GCO59243 | Outer Joint | | 30 | 27 | 69 | 121 | 65 | I |
| | 1996.03-2002.08 | | F | L/R | Closed Off-Road Vehicle 4WD 5VZ-FE | | GCI59015 | Inner Joint | | 27 | 24 | 47 | 67 | 116.5 | |
| **Land Cruiser Prado** | | | | | | | | | | | | | | | |
| 2.7 (110 kw) | 1995.06-2002.08 | AT/MT | F | L/R | Terrain cab wagon closed 4WD 3RZFE | | GDS59038 | Drive Shaft | | 30 | 27 | 69 | 123 | 620.5 | |
| | 1995.06-2002.08 | AT/MT | F | L/R | Terrain cab wagon closed 4WD 3RZFE | | GCO59034 | Outer Joint | | 30 | 27 | 69 | 122.5 | 64.5 | I |
| | 1995.06-2002.08 | | F | L/R | Terrain cab wagon closed 4WD 3RZFE | | GCI59015 | Inner Joint | | 27 | 24 | 47 | 67 | 116.5 | |
| 2.7 (120 kw) | 2003.11-2010.02 | 4AT | F | L/R | Closed Off-Road Vehicle 4WD 2TR-FE | | GDS59015 | Drive Shaft | | 30 | 30 | 70 | 103.5 | 647 | |
| | 2003.11-2010.02 | 4AT | F | L/R | Closed Off-Road Vehicle 4WD 2TR-FE | | GCO59097 | Outer Joint | | 30 | 30 | 70 | 103.5 | 82.5 | I |
| | 2003.11-2010.02 | 4AT | F | L/R | Closed Off-Road Vehicle 4WD 2TR-FE | | GCI59049 | Inner Joint | | 30 | 30 | 47 | 75.5 | 125.5 | |
| | 2009.08- | AT/MT | F | L/R | Terrain cab wagon closed 4WD 2TRFE | | GDS59015 | Drive Shaft | | 30 | 30 | 70 | 103.5 | 647 | |
| | 2009.08- | 6AT/5MT | R | L/R | Terrain cab wagon closed 4WD 2TRFE | Date from:2017.08 | GDS98004 | Drive Shaft | | | 30 | | | 807 | |
| 2.8 (130 kw) | 2015.06- | AT/MT | F | L/R | Closed Off-Road Vehicle 4WD 1GD-FTV | | GDS59015 | Drive Shaft | | 30 | 30 | 70 | 103.5 | 647 | |
| | 2015.06- | AT/MT | F | L/R | Closed Off-Road Vehicle 4WD 1GD-FTV | | GCO59097 | Outer Joint | | 30 | 30 | 70 | 103.5 | 82.5 | I |
| | 2015.06- | AT/MT | F | L/R | Closed Off-Road Vehicle 4WD 1GD-FTV | | GCI59049 | Inner Joint | | 30 | 30 | 47 | 75.5 | 125.5 | |
| | 2015.06- | 6AT/6MT | R | L/R | Closed Off-Road Vehicle 4WD 1GD-FTV | | GDS98004 | Drive Shaft | | | 30 | | | 807 | |
| 2.8 (169 kw) | 2024.03- | 6AT/6MT | F | L/R | Closed Off-Road Vehicle 4WD 1GD-FTV | | GDS59015 | Drive Shaft | | 30 | 30 | 70 | 103.5 | 647 | |
| | 2024.03- | | F | L/R | Closed Off-Road Vehicle 4WD 1GD-FTV | | GCO59097 | Outer Joint | | 30 | 30 | 70 | 103.5 | 82.5 | I |
| | 2024.03- | | F | L/R | Closed Off-Road Vehicle 4WD 1GD-FTV | | GCI59049 | Inner Joint | | 30 | 30 | 47 | 75.5 | 125.5 | |
| | 2024.03- | 6AT/6MT | R | L/R | Closed Off-Road Vehicle 4WD 1GD-FTV | | GDS98004 | Drive Shaft | | | 30 | | | 807 | |
| 3.0 (70 kw) | 2002.09-2010.02 | 5MT | F | L/R | Closed Off-Road Vehicle 4WD 5L-E | | GDS59015 | Drive Shaft | | 30 | 30 | 70 | 103.5 | 647 | |
| | 2002.09-2010.02 | 5MT | F | L/R | Closed Off-Road Vehicle 4WD 5L-E | | GCO59097 | Outer Joint | | 30 | 30 | 70 | 103.5 | 82.5 | I |
| | 2002.09-2010.02 | 5MT | F | L/R | Closed Off-Road Vehicle 4WD 5L-E | | GCI59049 | Inner Joint | | 30 | 30 | 47 | 75.5 | 125.5 | |
| 3.0 (92 kw) | 2002.09-2009.07 | AT/MT | F | L/R | Terrain cab wagon closed 4WD 1KZTE | | GDS59015 | Drive Shaft | | 30 | 30 | 70 | 103.5 | 647 | |
| | 2002.09-2009.07 | | F | L/R | Terrain cab wagon closed 4WD 1KZTE | | GCO59107 | Outer Joint | | 30 | 30 | 70 | 103.5 | 82.5 | I |
| 3.0 (120 kw) | 2002.09-2009.08 | 4AT/5AT/5MT/6MT | F | L/R | Closed Off-Road Vehicle 4WD 1KD-FTV | | GDS59015 | Drive Shaft | | 30 | 30 | 70 | 103.5 | 647 | |
| | 2002.09-2009.08 | 4AT/5AT/5MT/6MT | F | L/R | Closed Off-Road Vehicle 4WD 1KD-FTV | | GCO59097 | Outer Joint | | 30 | 30 | 70 | 103.5 | 82.5 | I |
| | 2002.09-2009.08 | 4AT/5AT/5MT/6MT | F | L/R | Closed Off-Road Vehicle 4WD 1KD-FTV | | GCI59049 | Inner Joint | | 30 | 30 | 47 | 75.5 | 125.5 | |
| | 2010.01- | 5AT/6MT | R | L/R | Terrain cab wagon closed 4WD 1KDFTV | Transmission:5AT,Date from:2015.06,Date to:2020.06;Transmission:6MT,Date to:202.06 | GDS98004 | Drive Shaft | | | 30 | | | 807 | |
| 3.0 (122 kw) | 2004.07-2009.08 | 5AT/6MT | F | L/R | Closed Off-Road Vehicle 4WD 1KD-FTV | | GDS59015 | Drive Shaft | | 30 | 30 | 70 | 103.5 | 647 | |
| | 2004.07-2009.08 | 5AT/6MT | F | L/R | Closed Off-Road Vehicle 4WD 1KD-FTV | | GCO59097 | Outer Joint | | 30 | 30 | 70 | 103.5 | 82.5 | I |
| | 2004.07-2009.08 | 5AT/6MT | F | L/R | Closed Off-Road Vehicle 4WD 1KD-FTV | | GCI59049 | Inner Joint | | 30 | 30 | 47 | 75.5 | 125.5 | |
| 3.0 (127 kw) | 2002.09-2010.12 | 4AT/5AT/5MT/6MT | F | L/R | Closed Off-Road Vehicle 4WD 1KD-FTV | | GDS59015 | Drive Shaft | | 30 | 30 | 70 | 103.5 | 647 | |
| | 2002.09-2010.12 | 4AT/5AT/5MT/6MT | F | L/R | Closed Off-Road Vehicle 4WD 1KD-FTV | | GCO59097 | Outer Joint | | 30 | 30 | 70 | 103.5 | 82.5 | I |
| | 2002.09-2010.12 | 4AT/5AT/5MT/6MT | F | L/R | Closed Off-Road Vehicle 4WD 1KD-FTV | | GCI59049 | Inner Joint | | 30 | 30 | 47 | 75.5 | 125.5 | |
| | 2009.08- | 5AT/6MT | F | L/R | Closed Off-Road Vehicle 4WD 1KD-FTV | | GDS59015 | Drive Shaft | | 30 | 30 | 70 | 103.5 | 647 | |
| | 2009.08- | 5AT/6MT | F | L/R | Closed Off-Road Vehicle 4WD 1KD-FTV | | GCO59097 | Outer Joint | | 30 | 30 | 70 | 103.5 | 82.5 | I |
| | 2009.08- | 5AT/6MT | F | L/R | Closed Off-Road Vehicle 4WD 1KD-FTV | | GCI59049 | Inner Joint | | 30 | 30 | 47 | 75.5 | 125.5 | |
| | 2009.08- | 5AT/6MT | R | L/R | Closed Off-Road Vehicle 4WD 1KD-FTV | Transmission:5AT,Date from:2015.06,Date to:2020.06;Transmission:6MT,Date to:202.06 | GDS98004 | Drive Shaft | | | 30 | | | 807 | |
| 3.0 (140 kw) | 2009.08- | 5AT/6MT | F | L/R | Closed Off-Road Vehicle 4WD 1KD-FTV | | GDS59015 | Drive Shaft | | 30 | 30 | 70 | 103.5 | 647 | |
| | 2009.08- | 5AT/6MT | F | L/R | Closed Off-Road Vehicle 4WD 1KD-FTV | | GCO59097 | Outer Joint | | 30 | 30 | 70 | 103.5 | 82.5 | I |
| | 2009.08- | 5AT/6MT | F | L/R | Closed Off-Road Vehicle 4WD 1KD-FTV | | GCI59049 | Inner Joint | | 30 | 30 | 47 | 75.5 | 125.5 | |
| | 2009.08- | 5AT/6MT | R | L/R | Closed Off-Road Vehicle 4WD 1KD-FTV | Transmission:5AT,Date from:2015.06,Date to:2020.06;Transmission:6MT,Date to:202.06 | GDS98004 | Drive Shaft | | | 30 | | | 807 | |
| 3.0 (150 kw) | 2006.08-2009.07 | 5AT | F | L/R | Closed Off-Road Vehicle 4WD 1KD-FTV | | GDS59015 | Drive Shaft | | 30 | 30 | 70 | 103.5 | 647 | |
| | 2006.08-2009.07 | 5AT | F | L/R | Closed Off-Road Vehicle 4WD 1KD-FTV | | GCO59097 | Outer Joint | | 30 | 30 | 70 | 103.5 | 82.5 | I |
| | 2006.08-2009.07 | | F | L/R | Closed Off-Road Vehicle 4WD 1KD-FTV | | GCI59049 | Inner Joint | | 30 | 30 | 47 | 75.5 | 125.5 | |
| 3.5 (206 kw) | 2015.09- | 6AT | F | L/R | Closed Off-Road Vehicle 4WD 7GR-FKS | | GDS59015 | Drive Shaft | | 30 | 30 | 70 | 103.5 | 647 | |
| | 2015.09- | | F | L/R | Closed Off-Road Vehicle 4WD 7GR-FKS | | GCO59097 | Outer Joint | | 30 | 30 | 70 | 103.5 | 82.5 | I |
| | 2015.09- | | F | L/R | Closed Off-Road Vehicle 4WD 7GR-FKS | | GCI59049 | Inner Joint | | 30 | 30 | 47 | 75.5 | 125.5 | |
| 4.0 (179 kw) | 2002.09-2010.08 | 4AT/5AT | F | L/R | Closed Off-Road Vehicle 4WD 1GR-FE | | GDS59015 | Drive Shaft | | 30 | 30 | 70 | 103.5 | 647 | |
| | 2002.09-2010.08 | AT | F | L/R | Closed Off-Road Vehicle 4WD 1GR-FE | | GCO59097 | Outer Joint | | 30 | 30 | 70 | 103.5 | 82.5 | I |

| | YEAR | TRANSM. | F/R | L/R | BODY STYLE & DRIVE TYPE & ENGINE | REMARKS | G-AP Ref. | PRODUCT | ABS | Technical Specifications A | B | C | H | L | P |
|---|---|---|---|---|---|---|---|---|---|---|---|---|---|---|---|
| **TOYOTA** | | | | | | | | | | | | | | | |
| **Land Cruiser Prado** | | | | | | | | | | | | | | | |
| 4.0 (179 kw) | 2002.09-2010.08 | AT | F | L/R | Closed Off-Road Vehicle 4WD 1GR-FE | | GCI59049 | Inner Joint | | 30 | 30 | 47 | 75.5 | 125.5 | |
| 4.0 (183 kw) | 2002.12-2010.12 | 4AT/5AT | F | L/R | Closed Off-Road Vehicle 4WD 1GR-FE | | GDS59015 | Drive Shaft | | 30 | 30 | 70 | 103.5 | 647 | |
| | 2002.12-2010.12 | 4AT/5AT | F | L/R | Closed Off-Road Vehicle 4WD 1GR-FE | | GCO59097 | Outer Joint | | 30 | 30 | 70 | 103.5 | 82.5 | I |
| | 2002.12-2010.12 | 4AT/5AT | F | L/R | Closed Off-Road Vehicle 4WD 1GR-FE | | GCI59049 | Inner Joint | | 30 | 30 | 47 | 75.5 | 125.5 | |
| | 2012.11- | 5AT/6AT | F | L/R | Closed Off-Road Vehicle 4WD 1GR-FE | | GDS59015 | Drive Shaft | | 30 | 30 | 70 | 103.5 | 647 | |
| | 2012.11- | 5AT/6AT | F | L/R | Closed Off-Road Vehicle 4WD 1GR-FE | | GCO59097 | Outer Joint | | 30 | 30 | 70 | 103.5 | 82.5 | I |
| | 2012.11- | 5AT/6AT | F | L/R | Closed Off-Road Vehicle 4WD 1GR-FE | | GCI59049 | Inner Joint | | 30 | 30 | 47 | 75.5 | 125.5 | |
| | 2012.11- | 6AT | R | L/R | Closed Off-Road Vehicle 4WD 1GR-FE | Date from:2015.06 | GDS98004 | Drive Shaft | | | 30 | | | 807 | |
| 4.0 (203 kw) | 2010.01- | 6AT | R | L/R | Closed Off-Road Vehicle 4WD 1GR-FE | For Modelcode:GRJ150 | GDS98004 | Drive Shaft | | | 30 | | | 807 | |
| 4.0 (204 kw) | 2013.08- | 6AT | R | L/R | Closed Off-Road Vehicle 4WD 1GR-FE | | GDS98004 | Drive Shaft | | | 30 | | | 807 | |
| 4.0 (207 kw) | 2003.01-2009.07 | 5AT | F | L/R | Closed Off-Road Vehicle 4WD 1GR-FE | | GDS59015 | Drive Shaft | | 30 | 30 | 70 | 103.5 | 647 | |
| | 2003.01-2009.07 | 5AT | F | L/R | Closed Off-Road Vehicle 4WD 1GR-FE | | GCO59097 | Outer Joint | | 30 | 30 | 70 | 103.5 | 82.5 | I |
| | 2003.01-2009.07 | 5AT | F | L/R | Closed Off-Road Vehicle 4WD 1GR-FE | | GCI59049 | Inner Joint | | 30 | 30 | 47 | 75.5 | 125.5 | |
| | 2009.08- | AT/MT | F | L/R | Closed Off-Road Vehicle 4WD 1GR-FE | | GDS59015 | Drive Shaft | | 30 | 30 | 70 | 103.5 | 647 | |
| | 2009.08- | AT/MT | F | L/R | Closed Off-Road Vehicle 4WD 1GR-FE | Date from:2010.08 | GCO59097 | Outer Joint | | 30 | 30 | 70 | 103.5 | 82.5 | I |
| | 2009.08- | AT/MT | F | L/R | Closed Off-Road Vehicle 4WD 1GR-FE | Date to:2010.07 | GCI59049 | Inner Joint | | 30 | 30 | 47 | 75.5 | 125.5 | |
| | 2009.08- | 6AT | R | L/R | Closed Off-Road Vehicle 4WD 1GR-FE | For Modelcode:GRJ150,Date from:2015.06 | GDS98004 | Drive Shaft | | | 30 | | | 807 | |
| **Land Cruiser V8** | | | | | | | | | | | | | | | |
| 4.6 (234 kw) | 2012.01- | 5AT/6AT | F | L/R | Closed Off-Road Vehicle 4WD 1UR-FE | | GDS59325 | Drive Shaft | | 36 | 34 | 83 | 121 | 668 | |
| | 2012.01- | 5AT/6AT | F | L/R | Closed Off-Road Vehicle 4WD 1UR-FE | | GCO59303 | Outer Joint | | 36 | 30 | 83 | 121 | 78 | I |
| | 2012.01- | 5AT/6AT | F | L/R | Closed Off-Road Vehicle 4WD 1UR-FE | | GCI59065 | Inner Joint | | 34 | 30 | 47 | 87 | 141 | |
| 4.7 (232 kw) | 2008.01- | 5AT | F | L/R | Closed Off-Road Vehicle 4WD 2UZ-FE | | GDS59325 | Drive Shaft | | 36 | 34 | 83 | 121 | 668 | |
| | 2008.01- | 5AT | F | L/R | Closed Off-Road Vehicle 4WD 2UZ-FE | | GCO59303 | Outer Joint | | 36 | 30 | 83 | 121 | 78 | I |
| | 2008.01- | 5AT | F | L/R | Closed Off-Road Vehicle 4WD 2UZ-FE | | GCI59065 | Inner Joint | | 34 | 30 | 47 | 87 | 141 | |
| **Land Cruiser Van** | | | | | | | | | | | | | | | |
| 3.0 (140 kw) | 2011.01- | 5AT/6MT | F | L/R | Closed Off-Road Van 4WD 1KD-FTV | | GCI59049 | Inner Joint | | 30 | 30 | 47 | 75.5 | 125.5 | |
| | 2011.01- | AT/MT | F | L/R | Closed Off-Road Van 4WD 1KD-FTV | | GDS59015 | Drive Shaft | | 30 | 30 | 70 | 103.5 | 647 | |
| | 2011.01- | AT/MT | F | L/R | Closed Off-Road Van 4WD 1KD-FTV | | GCO59097 | Outer Joint | | 30 | 30 | 70 | 103.5 | 82.5 | I |
| **Liteace** | | | | | | | | | | | | | | | |
| 2.0 (53 kw) | 1992.01-1996.09 | AT/MT | F | L/R | Bus 4WD 2C | | GCO59045 | Outer Joint | | 26 | 27 | 60 | 140 | 65.5 | I |
| 2.2 (65 kw) | 1993.09-1996.09 | AT/MT | F | L/R | Bus 4WD 3C-T | | GCO59045 | Outer Joint | | 26 | 27 | 60 | 140 | 65.5 | I |
| **Mark II** | | | | | | | | | | | | | | | |
| 2.5 (147 kw) | 2002.10-2004.11 | | R | L/R | Saloon 4WD 1JZGE | | GCO59390 | Outer Joint | 48T | 30 | 27 | 63 | 108.5 | 64 | I |
| **Mark X** | | | | | | | | | | | | | | | |
| 2.5 (149 kw) | 2009.10- | 6AT | F | L | Saloon 4WD 4GR-FSE | | GDS82658 | Drive Shaft | | 30 | 23 | 57 | 82 | 595 | |
| | 2009.10- | 6AT | F | R | Saloon 4WD 4GR-FSE | | GDS82602 | Drive Shaft | | 30 | 23 | 57 | 82 | 973 | |
| | 2009.10- | 6AT | F | L/R | Saloon 4WD 4GR-FSE | | GCO59453 | Outer Joint | | 30 | 30 | 57 | 82 | 55.5 | I |
| | 2009.10- | 6AT | F | L | Saloon 4WD 4GR-FSE | | GCI59225 | Inner Joint | | 23 | 30 | 35 | 94 | 89.5 | |
| | 2009.10- | 6AT | F | R | Saloon 4WD 4GR-FSE | | GCI31007 | Inner Joint | | 23 | 30 | 35 | 358.5 | 171 | |
| | 2009.10- | 6AT | R | L | Saloon 4WD 4GR-FSE | | GDS59653 | Drive Shaft | | 30 | 30 | 58.6 | 115 | 770 | |
| | 2009.10- | 6AT | R | R | Saloon 4WD 4GR-FSE | | GDS59652 | Drive Shaft | | 30 | 30 | 58.6 | 115 | 816 | |
| | 2009.10- | | R | L | Saloon RWD 4GR-FSE | Date to:2015.10 | GDS59653 | Drive Shaft | | 30 | 30 | 58.6 | 115 | 770 | |
| | 2009.10- | | R | R | Saloon RWD 4GR-FSE | Date to:2015.10 | GDS59652 | Drive Shaft | | 30 | 30 | 58.6 | 115 | 816 | |
| **Mark X Zio** | | | | | | | | | | | | | | | |
| 2.4 (120 kw) | 2007.09- | CVT | F | L | MPV 4WD 2AZ-FE | | GDS59583 | Drive Shaft | | 26 | 24 | 61.2 | 100 | 640 | |
| | 2007.09- | CVT | F | L/R | MPV 4WD 2AZ-FE | | GCO59245 | Outer Joint | | 26 | 27 | 61.2 | 100 | 59 | I |
| | 2007.09- | CVT | F | L | MPV 4WD 2AZ-FE | Manufactured in:Russia | GCI59125 | Inner Joint | | 24 | 27 | 50 | 67 | 109.5 | |
| | 2007.09- | CVT | F | R | MPV 4WD 2AZ-FE | | GCI59241 | Inner Joint | | 20 | 27 | 35.5 | 362 | 102.5 | |
| | 2007.09- | CVT | R | L/R | MPV 4WD 2AZ-FE | | GCI59210 | Inner Joint | | 20 | 18 | 37 | 59.5 | 89 | |
| | 2007.09- | CVT | F | L | MPV FWD 2AZ-FE | | GDS59583 | Drive Shaft | | 26 | 24 | 61.2 | 100 | 640 | |
| | 2007.09- | CVT | F | R | MPV FWD 2AZ-FE | | GDS59615 | Drive Shaft | | 26 | 24 | 61.2 | 100 | 957 | |
| | 2007.09- | CVT | F | L/R | MPV FWD 2AZ-FE | | GCO59245 | Outer Joint | | 26 | 27 | 61.2 | 100 | 59 | I |
| | 2007.09- | CVT | F | L | MPV FWD 2AZ-FE | Manufactured in:Russia | GCI59125 | Inner Joint | | 24 | 27 | 50 | 67 | 109.5 | |
| | 2007.09- | CVT | F | R | MPV FWD 2AZ-FE | | GCI59078 | Inner Joint | | 24 | 27 | 40 | 370 | 105 | |
| 3.5 (206 kw) | 2007.09- | 6AT | F | R | MPV FWD 2GR-FE | | GCI59206 | Inner Joint | | 24 | 27 | 40 | 377 | 104.5 | |
| | 2007.09- | MT/AT | F | L | MPV FWD 2GR-FE | Manufactured in:Russia | GCI59125 | Inner Joint | | 24 | 27 | 50 | 67 | 109.5 | |
| | 2007.09- | | F | L/R | MPV FWD 2GR-FE | | GCO99320 | Outer Joint | | 30 | 27 | 61.2 | 100 | 64 | I |
| **Matrix** | | | | | | | | | | | | | | | |
| 1.8 (91 kw) | 2001.09-2004.02 | AT | F | | Hatchback FWD 1ZZFE | | GCO59265 | Outer Joint | 48T | 26 | 29 | 56 | 96 | 63 | M |
| 1.8 (96 kw) | 2002.02-2008.02 | AT | F | | Hatchback FWD 1ZZFE | | GCO59265 | Outer Joint | 48T | 26 | 29 | 56 | 96 | 63 | M |
| 1.8 (97 kw) | 2008.01-2014.05 | 4AT/5MT | F | R | Hatchback FWD 2ZR-FE | | GDS81226 | Drive Shaft | 48T | 26 | 20 | 58 | 95.5 | 922 | |
| | 2008.01-2014.05 | 4AT/5MT | F | L/R | Hatchback FWD 2ZR-FE | | GCI59123 | Inner Joint | | 20 | 30 | 35 | 63.5 | 121 | |
| | 2008.01-2014.05 | AT/MT | F | L/R | Hatchback FWD 2ZR-FE | | GCO59428 | Outer Joint | 48T | 26 | 32 | 58 | 96 | 56.5 | I |
| 1.8 (130 kw) | 2002.09-2006.12 | MT | F | L | Hatchback FWD 2ZZ-GE | Date to:2006.07,Vehicle Production Country:North America | GCI59166 | Inner Joint | | 20 | 24 | 35 | 63.5 | 108.5 | |
| 1.8 (134 kw) | 2002.01-2005.12 | MT | F | L | Hatchback FWD 2ZZGE | Date from:2002.05 | GCI59166 | Inner Joint | | 20 | 24 | 35 | 63.5 | 108.5 | |

| | YEAR | TRANSM. | F/R | L/R | BODY STYLE & DRIVE TYPE & ENGINE | REMARKS | G-AP Ref. | PRODUCT | ABS | Technical Specifications A | B | C | H | L | P |
|---|---|---|---|---|---|---|---|---|---|---|---|---|---|---|---|
| **TOYOTA** | | | | | | | | | | | | | | | |
| **Matrix** | | | | | | | | | | | | | | | |
| 2.4 (117 kw) | 2008.01-2014.05 | 5MT | F | L | Hatchback FWD 2AZ-FE | | GDS81302 | Drive Shaft | 48T | 26 | 24 | 58 | 96 | 624 | |
| | 2008.01-2014.05 | 5MT | F | R | Hatchback FWD 2AZ-FE | | GDS82769 | Drive Shaft | 48T | 26 | 24 | 58 | 96 | 939 | |
| | 2008.01-2014.05 | 5MT | F | L/R | Hatchback FWD 2AZ-FE | | GCO59260 | Outer Joint | 48T | 26 | 24 | 58 | 96 | 55 | M |
| | 2008.01-2014.05 | 5MT | F | L | Hatchback FWD 2AZ-FE | | GCI81180 | Inner Joint | | 24 | 24 | 50 | 67 | 105 | |
| | 2008.01-2014.05 | 5MT | F | R | Hatchback FWD 2AZ-FE | | GCI82018 | Inner Joint | | 24 | 24 | 40 | 369 | 104 | |
| | 2009.01-2010.12 | 5AT | F | L | Hatchback 4WD 2AZ-FE | | GCO59260 | Outer Joint | 48T | 26 | 24 | 58 | 96 | 55 | M |
| | 2009.01-2010.12 | AT/MT | F | L | Hatchback 4WD 2AZ-FE | | GCI81180 | Inner Joint | | 24 | 24 | 50 | 67 | 105 | |
| | 2009.01-2010.12 | AT/MT | F | R | Hatchback 4WD 2AZ-FE | | GCI82018 | Inner Joint | | 24 | 24 | 40 | 369 | 104 | |
| **MR2** | | | | | | | | | | | | | | | |
| 1.8 (103 kw) | 1999.10-2007.06 | 5MT/6MT | R | R | Convertible RWD 1ZZ-FE | Date to:2002.08 | GDS83559 | Drive Shaft | 48T | 26 | 20 | 58 | 96 | 881 | |
| | 1999.10-2007.06 | 5MT/6MT | R | R | Convertible RWD 1ZZ-FE | Date to:2002.08 | GCO59131 | Outer Joint | 48T | 26 | 24 | 58 | 96 | 55 | I |
| | 1999.10-2007.06 | 5MT/6MT | R | R | Convertible RWD 1ZZ-FE | | GCI81280 | Inner Joint | | 20 | 23 | 35 | 363 | 100 | |
| | 1999.10-2007.06 | 6MT | R | L | Convertible RWD 1ZZ-FE | Date to:2002.07 | GDS59078 | Drive Shaft | 48T | 26 | 20 | 58 | 96 | 638.5 | |
| | 1999.10-2007.06 | 6MT | R | L | Convertible RWD 1ZZ-FE | Date from:2002.08 | GDS59150 | Drive Shaft | 48T | 26 | 20 | 56 | 95.5 | 625 | |
| | 1999.10-2007.06 | | R | L | Convertible RWD 1ZZ-FE | | GCI59046 | Inner Joint | | 20 | 23 | 35 | 63.5 | 115.5 | |
| **Nadia** | | | | | | | | | | | | | | | |
| 2.0 (100 kw) | 1998.04-2003.08 | 4AT | F | R | MPV FWD 3SFE | Date To:2001.04 | GCI59105 | Inner Joint | | 20 | 23 | 35 | 363.5 | 100.5 | |
| 2.0 (107 kw) | 1998.04-2003.08 | 4AT | F | R | MPV FWD 3SFSE | Date To:2001.04 | GCI59105 | Inner Joint | | 20 | 23 | 35 | 363.5 | 100.5 | |
| **Noah** | | | | | | | | | | | | | | | |
| 2.0 (103 kw) | 2007.06-2013.12 | AT | F | R | MPV FWD 3ZR-FE | | GCI59128 | Inner Joint | | 24 | 27 | 40 | 369.5 | 105.5 | |
| 2.0 (112 kw) | 2001.11-2007.06 | 4AT | F | L/R | MPV FWD 1AZ-FSE | | GCO59043 | Outer Joint | 48T | 26 | 27 | 58 | 96 | 62 | I |
| **Opa** | | | | | | | | | | | | | | | |
| 1.8 (100 kw) | 2000.04-2003.08 | | F | | Estate FWD 1ZZFE | | GCO59036 | Outer Joint | | 26 | 23 | 58 | 96 | 52.5 | I |
| 2.0 (112 kw) | 2000.08-2005.04 | CVT | F | L/R | Estate FWD 1AZFSE | | GCO59036 | Outer Joint | | 26 | 23 | 58 | 96 | 52.5 | I |
| | 2000.08-2005.04 | CVT | F | L/R | Estate FWD 1AZFSE | | GCO59131 | Outer Joint | 48T | 26 | 24 | 58 | 96 | 55 | I |
| **Paseo** | | | | | | | | | | | | | | | |
| 1.5 (66 kw) | 1995.08-1999.12 | 4AT/5MT | F | L/R | Coupe FWD 5EFE | | GCO59006 | Outer Joint | 48T | 26 | 23 | 56 | 95.5 | 55 | I |
| | 1995.08-1999.12 | 4AT/5MT | F | L/R | Coupe FWD 5EFE | | GCO59017 | Outer Joint | | 26 | 22 | 56 | 95 | 50 | M |
| | 1995.08-1999.12 | 4AT/5MT | F | L/R | Coupe FWD 5EFE | | GCO59022 | Outer Joint | 48T | 26 | 23 | 56 | 99 | 61 | M |
| | 1995.08-1999.12 | 4AT/5MT | F | L/R | Coupe FWD 5EFE | | GCO59023 | Outer Joint | | 26 | 23 | 56 | 96.5 | 55 | I |
| | 1995.08-1999.12 | 4AT/5MT | F | L/R | Coupe FWD 5EFE | | GCI99046 | Inner Joint | | 23 | 23 | 34 | 60 | 103.5 | |
| | 1996.10-1998.01 | | F | | Cabriolet FWD 5EFE | | GCO59023 | Outer Joint | | 26 | 23 | 56 | 96.5 | 55 | I |
| | 1996.10-1998.01 | | F | | Cabriolet FWD 5EFE | | GCO59128 | Outer Joint | 48T | 26 | 23 | 56 | 95.5 | 55 | I |
| | 1996.10-1998.01 | | F | | Cabriolet FWD 5EFE | | GCI99046 | Inner Joint | | 23 | 23 | 34 | 60 | 103.5 | |
| **Picnic** | | | | | | | | | | | | | | | |
| 2.0 (90 kw) | 2000.06-2001.12 | 4AT/5MT | F | R | MPV FWD 3SFE | Inner teeth of wheel side:24 | GDS59383 | Drive Shaft | 48T | 26 | 20 | 56 | 95.5 | 913.5 | |
| | 2000.06-2001.12 | 4AT/5MT | F | L/R | MPV FWD 3SFE | | GCO59001 | Outer Joint | | 26 | 24 | 56 | 95.5 | 55 | I |
| | 2000.06-2001.12 | 4AT/5MT | F | L/R | MPV FWD 3SFE | | GCO59019 | Outer Joint | 48T | 26 | 24 | 56 | 95.5 | 55 | I |
| | 2000.06-2001.12 | 4AT/5MT | F | L/R | MPV FWD 3SFE | | GCO59120 | Outer Joint | 48T | 26 | 24 | 56 | 95.5 | 55 | I |
| | 2000.06-2001.12 | 4AT/5MT | F | L | MPV FWD 3SFE | | GCI59046 | Inner Joint | | 20 | 23 | 35 | 63.5 | 115.5 | |
| | 2000.06-2001.12 | 4AT/5MT | F | R | MPV FWD 3SFE | | GCI59105 | Inner Joint | | 20 | 23 | 35 | 363.5 | 100.5 | |
| | 2000.06-2001.12 | 4AT/5MT | F | R | MPV FWD 3SFE | | GCI81280 | Inner Joint | | 20 | 23 | 35 | 363 | 100 | |
| 2.0 (94 kw) | 1996.08-2000.05 | 4AT/5MT | F | R | MPV FWD 3SFE | Inner teeth of wheel side:24 | GDS59383 | Drive Shaft | 48T | 26 | 20 | 56 | 95.5 | 913.5 | |
| | 1996.08-2000.05 | 4AT/5MT | F | L/R | MPV FWD 3SFE | | GCO59001 | Outer Joint | | 26 | 24 | 56 | 95.5 | 55 | I |
| | 1996.08-2000.05 | 4AT/5MT | F | L/R | MPV FWD 3SFE | | GCO59019 | Outer Joint | 48T | 26 | 24 | 56 | 95.5 | 55 | I |
| | 1996.08-2000.05 | 4AT/5MT | F | L/R | MPV FWD 3SFE | | GCO59120 | Outer Joint | 48T | 26 | 24 | 56 | 95.5 | 55 | I |
| | 1996.08-2000.05 | 4AT/5MT | F | L/R | MPV FWD 3SFE | | GCO99122 | Outer Joint | | 26 | 24 | 56 | 96 | 56 | I |
| | 1996.08-2000.05 | 4AT/5MT | F | L | MPV FWD 3SFE | | GCI59046 | Inner Joint | | 20 | 23 | 35 | 63.5 | 115.5 | |
| | 1996.08-2000.05 | 4AT/5MT | F | R | MPV FWD 3SFE | | GCI59105 | Inner Joint | | 20 | 23 | 35 | 363.5 | 100.5 | |
| | 1996.08-2000.05 | 4AT/5MT | F | R | MPV FWD 3SFE | | GCI81280 | Inner Joint | | 20 | 23 | 35 | 363 | 100 | |
| 2.2 (66 kw) | 1997.09-2001.04 | 5MT | F | L/R | MPV FWD 3CTE | | GCO59019 | Outer Joint | 48T | 26 | 24 | 56 | 95.5 | 55 | I |
| **Platz** | | | | | | | | | | | | | | | |
| 1.3 (63 kw) | 1999.08-2005.08 | | F | | Saloon FWD 2NZ-FE | | GCI99046 | Inner Joint | | 23 | 23 | 34 | 60 | 103.5 | |
| 1.5 (78 kw) | 1999.04-2005.08 | | F | | Saloon FWD 1NZ-FE | | GCI99046 | Inner Joint | | 23 | 23 | 34 | 60 | 103.5 | |
| **Porte** | | | | | | | | | | | | | | | |
| 1.3 (64 kw) | 2004.07-2012.07 | 4AT | F | L | Hatchback FWD 2NZFE | Diameter (mm):22 | GDS59102 | Drive Shaft | 48T | 24 | 23 | 58 | 91 | 640 | |
| | 2004.07-2012.07 | 4AT | F | R | Hatchback FWD 2NZFE | | GDS59011 | Drive Shaft | 48T | 24 | 23 | 58 | 91 | 881.5 | |
| | 2004.07-2012.07 | 4AT | F | R | Hatchback FWD 2NZFE | | GDS59077 | Drive Shaft | 48T | 24 | 23 | 56 | 90.5 | 876.5 | |
| | 2004.07-2012.07 | | F | | Hatchback FWD 2NZFE | | GCI99046 | Inner Joint | | 23 | 23 | 34 | 60 | 103.5 | |
| 1.5 (81 kw) | 2004.07-2012.07 | 4AT | F | L | Hatchback FWD 1NZFE | Diameter (mm):22 | GDS59102 | Drive Shaft | 48T | 24 | 23 | 58 | 91 | 640 | |
| | 2004.07-2012.07 | 4AT | F | R | Hatchback FWD 1NZFE | | GDS59011 | Drive Shaft | 48T | 24 | 23 | 58 | 91 | 881.5 | |
| | 2004.07-2012.07 | | F | | Hatchback FWD 1NZFE | | GCI99046 | Inner Joint | | 23 | 23 | 34 | 60 | 103.5 | |
| **Previa** | | | | | | | | | | | | | | | |
| 2.0 (85 kw) | 2001.03-2006.01 | 5MT | F | L | MPV FWD 1CD-FTV | Date from:2003.04 | GCO59042 | Outer Joint | 48T | 30 | 27 | 63 | 100.5 | 64.5 | I |
| | 2001.03-2006.01 | 5MT | F | L/R | MPV FWD 1CD-FTV | GrooveType:Inner | GCO59254 | Outer Joint | 48T | 30 | 27 | 63 | 100.5 | 64.5 | I |

| | YEAR | TRANSM. | F/R | L/R | BODY STYLE & DRIVE TYPE & ENGINE | REMARKS | G-AP Ref. | PRODUCT | ABS | Technical Specifications A | B | C | H | L | P |
|---|---|---|---|---|---|---|---|---|---|---|---|---|---|---|---|
| **TOYOTA** | | | | | | | | | | | | | | | |
| **Previa** | | | | | | | | | | | | | | | |
| 2.0 (85 kw) | 2001.03-2006.01 | AT | F | L/R | MPV FWD 1CD-FTV | | GCO59175 | Outer Joint | 48T | 26 | 27 | 63.3 | 100 | 59 | M |
| | 2001.03-2006.01 | MT | F | L/R | MPV FWD 1CD-FTV | Date To:2003.04 | GDS59379 | Drive Shaft | 48T | 30 | | 63.4 | 99 | 576 | |
| | 2001.03-2006.01 | MT | F | L/R | MPV FWD 1CD-FTV | GrooveType:Middle | GCO59154 | Outer Joint | 48T | 30 | 27 | 63.4 | 100 | 64.5 | M |
| | 2001.03-2006.01 | MT | F | L/R | MPV FWD 1CD-FTV | | GCI31001 | Inner Joint | | | 27 | | | 33.2 | |
| 2.4 (97 kw) | 1990.05-2000.08 | AT/MT | F | L/R | MPV 4WD 2TZFE | Date From:1990.05 | GCO31001 | Outer Joint | | 26 | 27 | 56 | 99.5 | 63 | I |
| | 1990.05-2000.08 | AT/MT | F | L/R | MPV 4WD 2TZFE | | GCO59011 | Outer Joint | | 26 | 27 | 56 | 100 | 63 | M |
| | 1990.05-2000.08 | | F | | MPV 4WD 2TZFE | Date From:1991.01,Date To:1991.01 | GCO59089 | Outer Joint | | 26 | 27 | 56 | 98 | 63 | M |
| | 1990.05-2000.08 | | F | | MPV 4WD 2TZFE | | GCO59201 | Outer Joint | 48T | 26 | 27 | 56 | 98 | 63 | M |
| 2.4 (115 kw) | 2000.02-2006.02 | 4AT | F | L | MPV FWD 2AZ-FE | Manufactured in:Russia;AAR | GCI59125 | Inner Joint | | 24 | 27 | 50 | 67 | 109.5 | |
| | 2000.02-2006.02 | 5MT | F | L | MPV FWD 2AZ-FE | Date from:2003.04 | GCO59042 | Outer Joint | 48T | 30 | 27 | 63 | 100.5 | 64.5 | I |
| | 2000.02-2006.02 | AT | F | L | MPV FWD 2AZ-FE | | GDS59051 | Drive Shaft | 48T | 26 | 24 | 63 | 100 | 662 | |
| | 2000.02-2006.02 | AT | F | R | MPV FWD 2AZ-FE | | GDS59064 | Drive Shaft | 48T | 26 | 24 | 63 | 100 | 961 | |
| | 2000.02-2006.02 | AT | F | L/R | MPV FWD 2AZ-FE | GrooveType:Inner | GCO59167 | Outer Joint | 48T | 26 | 27 | 63 | 100 | 62 | I |
| | 2000.02-2006.02 | AT | F | L/R | MPV FWD 2AZ-FE | GrooveType:Middle | GCO59175 | Outer Joint | 48T | 26 | 27 | 63.3 | 100 | 59 | M |
| | 2000.02-2006.02 | AT | F | L/R | MPV FWD 2AZ-FE | GrooveType:Inner | GCO59314 | Outer Joint | 48T | 26 | 27 | 61.2 | 100 | 59.5 | I |
| | 2000.02-2006.02 | AT | F | L | MPV FWD 2AZ-FE | TJ | GCI59073 | Inner Joint | | 24 | 27 | 50 | 67 | 110 | |
| | 2000.02-2006.02 | AT | F | R | MPV FWD 2AZ-FE | | GCI59027 | Inner Joint | | 24 | 27 | 40 | 369 | 99.5 | |
| | 2000.02-2006.02 | MT | F | L/R | MPV FWD 2AZ-FE | | GDS59379 | Drive Shaft | 48T | 30 | | 63.4 | 99 | 576 | |
| | 2000.02-2006.02 | MT | F | L/R | MPV FWD 2AZ-FE | GrooveType:Middle | GCO59154 | Outer Joint | 48T | 30 | 27 | 63.4 | 100 | 64.5 | M |
| | 2000.02-2006.02 | MT | F | L/R | MPV FWD 2AZ-FE | GrooveType:Inner | GCO59254 | Outer Joint | 48T | 30 | 27 | 63 | 100.5 | 64.5 | I |
| | 2000.02-2006.02 | MT | F | L/R | MPV FWD 2AZ-FE | | GCI31001 | Inner Joint | | | 27 | | | 33.2 | |
| 2.4 (125 kw) | 2005.10- | 4AT | F | L | MPV FWD 2AZ-FE | | GDS59645 | Drive Shaft | | 26 | 24 | 61.2 | 100 | 660 | |
| | 2005.10- | 4AT | F | R | MPV FWD 2AZ-FE | | GDS59472 | Drive Shaft | | 26 | 24 | 61.2 | 100 | 974 | |
| | 2005.10- | 4AT | F | L/R | MPV FWD 2AZ-FE | | GCO59245 | Outer Joint | | 26 | 27 | 61.2 | 100 | 59 | I |
| | 2005.10- | 4AT | F | L | MPV FWD 2AZ-FE | TJ | GCI59073 | Inner Joint | | 24 | 27 | 50 | 67 | 110 | |
| | 2005.10- | 4AT | F | L | MPV FWD 2AZ-FE | AAR | GCI59125 | Inner Joint | | 24 | 27 | 50 | 67 | 109.5 | |
| | 2005.10- | | F | L | MPV FWD 2AZ-FE | | GCO59383 | Outer Joint | | 26 | 27 | 61.2 | 100 | 59.2 | M |
| | 2005.10- | | F | R | MPV FWD 2AZ-FE | | GCO59081 | Outer Joint | | 26 | 27 | 63 | 100 | 62 | I |
| 3.5 (206 kw) | 2006.01- | 6AT | F | L | MPV FWD 2GR-FE | | GDS59610 | Drive Shaft | | 30 | 24 | 61.2 | 100 | 648 | |
| | 2006.01- | 6AT | F | R | MPV FWD 2GR-FE | | GDS59608 | Drive Shaft | | 30 | 24 | 61.2 | 100 | 985 | |
| | 2006.01- | 6AT | F | L/R | MPV FWD 2GR-FE | Date from:2017.11 | GCO99320 | Outer Joint | | 30 | 27 | 61.2 | 100 | 64 | I |
| | 2006.01- | 6AT | F | L | MPV FWD 2GR-FE | TJ | GCI59073 | Inner Joint | | 24 | 27 | 50 | 67 | 110 | |
| | 2006.01- | 6AT | F | R | MPV FWD 2GR-FE | | GCI59206 | Inner Joint | | 24 | 27 | 40 | 377 | 104.5 | |
| | 2006.01- | 6AT | F | R | MPV FWD 2GR-FE | | GCI59226 | Inner Joint | | 24 | 27 | 40 | 377 | 104.5 | |
| | 2006.01- | 6AT | F | R | MPV FWD 2GR-FE | Date from:2017.11 | GCI82362 | Inner Joint | | 24 | 27 | 40 | 377 | 105 | |
| | 2006.01- | MT/AT | F | L | MPV FWD 2GR-FE | Date to:2017.10,Manufactured in:Russia;AAR | GCI59125 | Inner Joint | | 24 | 27 | 50 | 67 | 109.5 | |
| **Previa I/Estima/Previa** | | | | | | | | | | | | | | | |
| 2.4 (118 kw) | 1993.09-1997.12 | AT | F | | MPV 4WD 2TZ-FZE | | GCO59089 | Outer Joint | | 26 | 27 | 56 | 98 | 63 | M |
| | 1993.09-1997.12 | | F | L/R | MPV 4WD 2TZ-FZE | For Engine Code:2TZFZE | GCO99123 | Outer Joint | | 26 | 27 | 56 | 98 | 68 | I |
| **Prius** | | | | | | | | | | | | | | | |
| 1.5 (82 kw) | 2003.09-2009.12 | CVT | F | L | Hatchback FWD 1NZ-FXE | | GDS59368 | Drive Shaft | 48T | 26 | 20 | 58 | 96 | 657 | |
| | 2003.09-2009.12 | CVT | F | R | Hatchback FWD 1NZ-FXE | | GDS59369 | Drive Shaft | 48T | 26 | 20 | 58 | 96 | 918 | |
| | 2003.09-2009.12 | CVT | F | L/R | Hatchback FWD 1NZ-FXE | | GCO59288 | Outer Joint | 48T | 26 | 23 | 58 | 96 | 52.5 | I |
| | 2003.09-2009.12 | CVT | F | L/R | Hatchback FWD 1NZ-FXE | | GCI59114 | Inner Joint | | 20 | 23 | 35 | 63.5 | 106 | |
| 1.5 (83 kw) | 2003.09-2009.03 | CVT | F | R | Hatchback FWD 1NZFXE | | GDS59369 | Drive Shaft | 48T | 26 | 20 | 58 | 96 | 918 | |
| | 2003.09-2009.03 | CVT | F | R | Hatchback FWD 1NZFXE | | GCO59288 | Outer Joint | 48T | 26 | 23 | 58 | 96 | 52.5 | I |
| | 2003.09-2009.03 | CVT | F | R | Hatchback FWD 1NZFXE | | GCI59114 | Inner Joint | | 20 | 23 | 35 | 63.5 | 106 | |
| 1.5 (85 kw) | 2000.05-2003.08 | CVT | F | R | Saloon FWD 1NZFXE | | GDS59614 | Drive Shaft | 48T | 26 | 20 | 58 | 95.5 | 907 | |
| | 2000.05-2003.08 | CVT | F | L/R | Saloon FWD 1NZFXE | | GCI59046 | Inner Joint | | 20 | 23 | 35 | 63.5 | 115.5 | |
| | 2000.05-2003.08 | | F | R | Saloon FWD 1NZFXE | | GCO59131 | Outer Joint | 48T | 26 | 24 | 58 | 96 | 55 | I |
| 1.8 (72 kw) | 2015.09- | CVT | F | L/R | Hatchback 4WD 2ZRFXE | | GCO59340 | Outer Joint | | 26 | 25 | 55.6 | 95.5 | 57 | I |
| | 2015.09- | AT/CVT | F | L | Hatchback FWD 2ZRFXE | | GDS82319 | Drive Shaft | | 26 | 24 | 55.6 | 95.5 | 650 | |
| | 2015.09- | AT/CVT | F | R | Hatchback FWD 2ZRFXE | | GDS82318 | Drive Shaft | | 26 | 24 | 55.6 | 95.5 | 949 | |
| | 2015.09- | AT/CVT | F | L/R | Hatchback FWD 2ZRFXE | | GCO59340 | Outer Joint | | 26 | 25 | 55.6 | 95.5 | 57 | I |
| | 2015.09- | AT/CVT | F | L | Hatchback FWD 2ZRFXE | | GCI59227 | Inner Joint | | 24 | 25 | 50 | 67 | 109.5 | |
| | 2015.09- | AT/CVT | F | R | Hatchback FWD 2ZRFXE | | GCI59228 | Inner Joint | | 24 | 25 | 40 | 98 | 93 | |
| 1.8 (90 kw) | 2015.09-2022.12 | CVT | F | L | Hatchback 4WD 2ZR-FXE | | GDS82319 | Drive Shaft | | 26 | 24 | 55.6 | 95.5 | 650 | |
| | 2015.09-2022.12 | CVT | F | R | Hatchback 4WD 2ZR-FXE | | GDS82318 | Drive Shaft | | 26 | 24 | 55.6 | 95.5 | 949 | |
| | 2015.09-2022.12 | CVT | F | L | Hatchback 4WD 2ZR-FXE | AAR | GCI59227 | Inner Joint | | 24 | 25 | 50 | 67 | 109.5 | |
| | 2015.09-2022.12 | CVT | F | L | Hatchback 4WD 2ZR-FXE | TJ | GCI59246 | Inner Joint | | 24 | 25 | 50 | 67 | 104 | |
| | 2015.09-2022.12 | CVT | F | R | Hatchback 4WD 2ZR-FXE | | GCI59228 | Inner Joint | | 24 | 25 | 40 | 98 | 93 | |
| | 2015.09-2022.12 | CVT | R | L/R | Hatchback 4WD 2ZR-FXE | | GDS56355 | Drive Shaft | | 26 | | 52 | 99.5 | 589 | |
| | 2015.09-2022.12 | CVT | R | L/R | Hatchback 4WD 2ZR-FXE | | GCO82771 | Outer Joint | | 26 | 19 | 52 | 99.5 | 46 | I |
| | 2015.09-2022.12 | CVT | R | L/R | Hatchback 4WD 2ZR-FXE | | GCI59203 | Inner Joint | | | 20 | | | 83 | |
| | 2015.09-2022.12 | CVT | F | L | Hatchback FWD 2ZR-FXE | | GDS82319 | Drive Shaft | | 26 | 24 | 55.6 | 95.5 | 650 | |

| | YEAR | TRANSM. | F/R | L/R | BODY STYLE & DRIVE TYPE & ENGINE | REMARKS | G-AP Ref. | PRODUCT | ABS | Technical Specifications A | B | C | H | L | P |
|---|---|---|---|---|---|---|---|---|---|---|---|---|---|---|---|
| **TOYOTA** | | | | | | | | | | | | | | | |
| **Prius** | | | | | | | | | | | | | | | |
| 1.8 (90 kw) | 2015.09-2022.12 | CVT | F | R | Hatchback FWD 2ZR-FXE | | GDS82318 | Drive Shaft | | 26 | 24 | 55.6 | 95.5 | 949 | |
| | 2015.09-2022.12 | CVT | F | L | Hatchback FWD 2ZR-FXE | AAR | GCI59227 | Inner Joint | | 24 | 25 | 50 | 67 | 109.5 | |
| | 2015.09-2022.12 | CVT | F | L | Hatchback FWD 2ZR-FXE | TJ | GCI59246 | Inner Joint | | 24 | 25 | 50 | 67 | 104 | |
| | 2015.09-2022.12 | CVT | F | R | Hatchback FWD 2ZR-FXE | | GCI59228 | Inner Joint | | 24 | 25 | 40 | 98 | 93 | |
| | 2016.01-2018.06 | CVT | F | L | Hatchback FWD 2ZR-FXE | | GDS82319 | Drive Shaft | | 26 | 24 | 55.6 | 95.5 | 650 | |
| | 2016.01-2018.06 | CVT | F | R | Hatchback FWD 2ZR-FXE | | GDS82318 | Drive Shaft | | 26 | 24 | 55.6 | 95.5 | 949 | |
| | 2016.01-2018.06 | | F | L | Hatchback FWD 2ZR-FXE | | GCI59227 | Inner Joint | | 24 | 25 | 50 | 67 | 109.5 | |
| | 2016.01-2018.06 | | F | R | Hatchback FWD 2ZR-FXE | | GCI59228 | Inner Joint | | 24 | 25 | 40 | 98 | 93 | |
| 1.8 (100 kw) | 2008.06-2016.06 | CVT | F | L | Hatchback FWD 2ZR-FXE | | GDS59377 | Drive Shaft | | 26 | 24 | 55.6 | 95.5 | 624 | |
| | 2008.06-2016.06 | CVT | F | R | Hatchback FWD 2ZR-FXE | | GDS59378 | Drive Shaft | | 26 | 24 | 55.6 | 95.5 | 973 | |
| | 2008.06-2016.06 | CVT | F | L/R | Hatchback FWD 2ZR-FXE | | GCO59340 | Outer Joint | | 26 | 25 | 55.6 | 95.5 | 57 | I |
| | 2008.06-2016.06 | CVT | F | L | Hatchback FWD 2ZR-FXE | AAR | GCI59227 | Inner Joint | | 24 | 25 | 50 | 67 | 109.5 | |
| | 2008.06-2016.06 | CVT | F | L | Hatchback FWD 2ZR-FXE | TJ | GCI59246 | Inner Joint | | 24 | 25 | 50 | 67 | 104 | |
| | 2008.06-2016.06 | CVT | F | R | Hatchback FWD 2ZR-FXE | TJ | GCI59095 | Inner Joint | | 24 | 25 | 40 | 98 | 93 | |
| | 2008.06-2016.06 | CVT | F | R | Hatchback FWD 2ZR-FXE | AAR | GCI59228 | Inner Joint | | 24 | 25 | 40 | 98 | 93 | |
| | 2009.04-2015.12 | CVT | F | L | Hatchback FWD 2ZR-FXE | TJ | GCI59246 | Inner Joint | | 24 | 25 | 50 | 67 | 104 | |
| 2.0 (164 kw) | 2023.01- | CVT | F | L | Hatchback FWD M20A-FXS | | GDS56972 | Drive Shaft | | 26 | 24 | 55.6 | 95.5 | 660 | |
| | 2023.01- | CVT | F | R | Hatchback FWD M20A-FXS | | GDS56300 | Drive Shaft | | 26 | 24 | 55.6 | 95.5 | 963 | |
| | 2023.01- | CVT | F | L/R | Hatchback FWD M20A-FXS | | GCO59340 | Outer Joint | | 26 | 25 | 55.6 | 95.5 | 57 | I |
| | 2023.01- | CVT | F | L | Hatchback FWD M20A-FXS | | GCI83357 | Inner Joint | | 24 | 25 | 50 | 67 | 108 | |
| | 2023.01- | CVT | F | R | Hatchback FWD M20A-FXS | | GCI83232 | Inner Joint | | 24 | 25 | 40 | 98 | 93 | |
| **Prius C** | | | | | | | | | | | | | | | |
| 1.5 (74 kw) | 2011.09- | CVT | F | L | Hatchback FWD 1NZ-FXE | | GDS59546 | Drive Shaft | | 26 | 20 | 55.6 | 96 | 632 | |
| | 2011.09- | CVT | F | R | Hatchback FWD 1NZ-FXE | | GDS59545 | Drive Shaft | | 26 | 20 | 55.6 | 96 | 910 | |
| | 2011.09- | CVT | F | L/R | Hatchback FWD 1NZ-FXE | | GCO59206 | Outer Joint | | 26 | 23 | 55.6 | 96 | 53 | I |
| | 2011.09- | CVT | F | L | Hatchback FWD 1NZ-FXE | | GCI59114 | Inner Joint | | 20 | 23 | 35 | 63.5 | 106 | |
| | 2011.09- | CVT | F | R | Hatchback FWD 1NZ-FXE | | GCI81156 | Inner Joint | | 20 | 23 | 35 | 63.5 | 113.5 | |
| **Prius PHV** | | | | | | | | | | | | | | | |
| 1.8 (90 kw) | 2016.01-2022.12 | CVT | F | L | Hatchback FWD 2ZR-FXE | | GDS82319 | Drive Shaft | | 26 | 24 | 55.6 | 95.5 | 650 | |
| | 2016.01-2022.12 | CVT | F | R | Hatchback FWD 2ZR-FXE | | GDS82318 | Drive Shaft | | 26 | 24 | 55.6 | 95.5 | 949 | |
| | 2016.01-2022.12 | CVT | F | L/R | Hatchback FWD 2ZR-FXE | | GCO59340 | Outer Joint | | 26 | 25 | 55.6 | 95.5 | 57 | I |
| | 2016.01-2022.12 | CVT | F | L | Hatchback FWD 2ZR-FXE | | GCI59227 | Inner Joint | | 24 | 25 | 50 | 67 | 109.5 | |
| | 2016.01-2022.12 | CVT | F | R | Hatchback FWD 2ZR-FXE | | GCI59228 | Inner Joint | | 24 | 25 | 40 | 98 | 93 | |
| | 2016.01-2022.12 | | F | L | Hatchback FWD 2ZR-FXE | | GCI59246 | Inner Joint | | 24 | 25 | 50 | 67 | 104 | |
| **Prius Plus** | | | | | | | | | | | | | | | |
| 1.8 (100 kw) | 2011.05- | AT | F | R | MPV FWD 2ZR-FXE | | GDS59378 | Drive Shaft | | 26 | 24 | 55.6 | 95.5 | 973 | |
| | 2011.05- | CVT | F | L | MPV FWD 2ZR-FXE | | GDS59639 | Drive Shaft | | 26 | 24 | 55.6 | 95.5 | 624 | |
| | 2011.05- | CVT | F | R | MPV FWD 2ZR-FXE | | GDS59640 | Drive Shaft | | 26 | 24 | 55.6 | 95.5 | 973 | |
| | 2011.05- | CVT | F | L/R | MPV FWD 2ZR-FXE | | GCO59206 | Outer Joint | | 26 | 23 | 55.6 | 96 | 53 | I |
| | 2011.05- | CVT | F | L/R | MPV FWD 2ZR-FXE | | GCO59244 | Outer Joint | | 26 | 25 | 55.6 | 95.5 | 57 | I |
| | 2011.05- | CVT | F | L | MPV FWD 2ZR-FXE | TJ | GCI59094 | Inner Joint | | 24 | 25 | 50 | 67 | 105 | |
| | 2011.05- | CVT | F | L | MPV FWD 2ZR-FXE | AAR | GCI59227 | Inner Joint | | 24 | 25 | 50 | 67 | 109.5 | |
| | 2011.05- | CVT | F | R | MPV FWD 2ZR-FXE | TJ | GCI59095 | Inner Joint | | 24 | 25 | 40 | 98 | 93 | |
| | 2011.05- | CVT | F | R | MPV FWD 2ZR-FXE | AAR | GCI59228 | Inner Joint | | 24 | 25 | 40 | 98 | 93 | |
| **Prius+** | | | | | | | | | | | | | | | |
| 1.8 (100 kw) | 2014.11- | CVT | F | L | Box Body/MPV FWD 2ZR-FXE | | GDS59639 | Drive Shaft | | 26 | 24 | 55.6 | 95.5 | 624 | |
| | 2014.11- | CVT | F | R | Box Body/MPV FWD 2ZR-FXE | | GDS59640 | Drive Shaft | | 26 | 24 | 55.6 | 95.5 | 973 | |
| | 2014.11- | CVT | F | L | Box Body/MPV FWD 2ZR-FXE | | GCO59206 | Outer Joint | | 26 | 23 | 55.6 | 96 | 53 | I |
| | 2014.11- | CVT | F | L | Box Body/MPV FWD 2ZR-FXE | | GCI59227 | Inner Joint | | 24 | 25 | 50 | 67 | 109.5 | |
| | 2014.11- | CVT | F | R | Box Body/MPV FWD 2ZR-FXE | | GCI59228 | Inner Joint | | 24 | 25 | 40 | 98 | 93 | |
| **Proace** | | | | | | | | | | | | | | | |
| 1.5 (75 kw) | 2018.08-2025.04 | 6MT | F | L | Bus FWD 5WZ-TV (DV5RUCD) | | GDS82315 | Drive Shaft | | 28 | 37 | 58.6 | 93 | 719 | |
| | 2018.08-2025.04 | 6MT | F | R | Bus FWD 5WZ-TV (DV5RUCD) | | GDS82316 | Drive Shaft | | 28 | 37 | 58.6 | 93 | 974 | |
| | 2018.08-2025.04 | 6MT | F | L/R | Bus FWD 5WZ-TV (DV5RUCD) | | GCO10098 | Outer Joint | | 28 | 39 | 58.6 | 93 | 63 | I |
| | 2018.08-2025.04 | 6MT | F | R | Bus FWD 5WZ-TV (DV5RUCD) | | GCI81759 | Inner Joint | | 37 | 34 | 31.9 | 302 | 88 | |
| | 2019.05-2025.04 | 6MT | F | L | Van FWD 5WZ-TV (DV5RUCD) | | GDS82315 | Drive Shaft | | 28 | 37 | 58.6 | 93 | 719 | |
| | 2019.05-2025.04 | 6MT | F | R | Van FWD 5WZ-TV (DV5RUCD) | | GDS82316 | Drive Shaft | | 28 | 37 | 58.6 | 93 | 974 | |
| | 2019.05-2025.04 | 6MT | F | L/R | Van FWD 5WZ-TV (DV5RUCD) | | GCO10098 | Outer Joint | | 28 | 39 | 58.6 | 93 | 63 | I |
| | 2019.05-2025.04 | 6MT | F | R | Van FWD 5WZ-TV (DV5RUCD) | | GCI81759 | Inner Joint | | 37 | 34 | 31.9 | 302 | 88 | |
| 1.5 (88 kw) | 2018.08-2025.04 | 6MT | F | L | Bus FWD 5WZ-HV (DV5RUC) | | GDS82315 | Drive Shaft | | 28 | 37 | 58.6 | 93 | 719 | |
| | 2018.08-2025.04 | 6MT | F | R | Bus FWD 5WZ-HV (DV5RUC) | | GDS82316 | Drive Shaft | | 28 | 37 | 58.6 | 93 | 974 | |
| | 2018.08-2025.04 | 6MT | F | L/R | Bus FWD 5WZ-HV (DV5RUC) | | GCO10098 | Outer Joint | | 28 | 39 | 58.6 | 93 | 63 | I |
| | 2018.08-2025.04 | 6MT | F | R | Bus FWD 5WZ-HV (DV5RUC) | | GCI81759 | Inner Joint | | 37 | 34 | 31.9 | 302 | 88 | |
| | 2019.05- | 6MT | F | L | Van FWD 5WZ-HV (DV5RUC) | | GDS82315 | Drive Shaft | | 28 | 37 | 58.6 | 93 | 719 | |
| | 2019.05- | 6MT | F | R | Van FWD 5WZ-HV (DV5RUC) | | GDS82316 | Drive Shaft | | 28 | 37 | 58.6 | 93 | 974 | |

| | YEAR | TRANSM. | F/R | L/R | BODY STYLE & DRIVE TYPE & ENGINE | REMARKS | G-AP Ref. | PRODUCT | ABS | Technical Specifications A | B | C | H | L | P |
|---|---|---|---|---|---|---|---|---|---|---|---|---|---|---|---|
| **TOYOTA** | | | | | | | | | | | | | | | |
| **Proace** | | | | | | | | | | | | | | | |
| 1.5 (88 kw) | 2019.05- | 6MT | F | L/R | Van FWD 5WZ-HV (DV5RUC) | | GCO10098 | Outer Joint | | 28 | 39 | 58.6 | 93 | 63 | I |
| | 2019.05- | 6MT | F | R | Van FWD 5WZ-HV (DV5RUC) | | GCI81759 | Inner Joint | | 37 | 34 | 31.9 | 302 | 88 | |
| 1.6 (66 kw) | 2013.06-2016.03 | MT | F | L | Van FWD 3WZ-TV (DV6UC) | | GDS10238 | Drive Shaft | | 28 | 24 | 58.5 | 92 | 669 | |
| | 2013.06-2016.03 | MT | F | R | Van FWD 3WZ-TV (DV6UC) | | GDS10239 | Drive Shaft | | 28 | 24 | 58.5 | 92 | 955 | |
| | 2013.06-2016.03 | MT | F | L/R | Van FWD 3WZ-TV (DV6UC) | | GCO10124 | Outer Joint | | 28 | 34 | 58.5 | 92 | 55 | I |
| | 2013.06-2016.03 | MT | F | R | Van FWD 3WZ-TV (DV6UC) | | GCI99159 | Inner Joint | | 24 | 34 | 29.8 | 350 | 87.5 | |
| 1.6 (70 kw) | 2016.02-2019.12 | 5MT | F | L/R | Platform/Chassis FWD 3WZ-TV (DV6FDU) | | GCO10098 | Outer Joint | | 28 | 39 | 58.6 | 93 | 63 | I |
| | 2016.02-2020.04 | 5MT | F | L/R | Bus FWD 3WZ-TV (DV6FDU) | | GCO10098 | Outer Joint | | 28 | 39 | 58.6 | 93 | 63 | I |
| | 2016.02-2020.04 | 5MT/6AMT | F | L/R | Van FWD 3WZ-TV (DV6FDU) | | GCO10098 | Outer Joint | | 28 | 39 | 58.6 | 93 | 63 | I |
| 1.6 (85 kw) | 2016.02-2020.04 | 6MT | F | L | Bus FWD 3WZ-HV (DV6FCU) | | GDS82315 | Drive Shaft | | 28 | 37 | 58.6 | 93 | 719 | |
| | 2016.02-2020.04 | 6MT | F | R | Bus FWD 3WZ-HV (DV6FCU) | | GDS82316 | Drive Shaft | | 28 | 37 | 58.6 | 93 | 974 | |
| | 2016.02-2020.04 | 6MT | F | L/R | Bus FWD 3WZ-HV (DV6FCU) | | GCO10098 | Outer Joint | | 28 | 39 | 58.6 | 93 | 63 | I |
| | 2016.02-2020.04 | 6MT | F | R | Bus FWD 3WZ-HV (DV6FCU) | | GCI81759 | Inner Joint | | 37 | 34 | 31.9 | 302 | 88 | |
| | 2016.02-2020.04 | 6MT | F | L | Van FWD 3WZ-HV (DV6FCU) | | GDS82315 | Drive Shaft | | 28 | 37 | 58.6 | 93 | 719 | |
| | 2016.02-2020.04 | 6MT | F | R | Van FWD 3WZ-HV (DV6FCU) | | GDS82316 | Drive Shaft | | 28 | 37 | 58.6 | 93 | 974 | |
| | 2016.02-2020.04 | 6MT | F | L/R | Van FWD 3WZ-HV (DV6FCU) | | GCO10098 | Outer Joint | | 28 | 39 | 58.6 | 93 | 63 | I |
| | 2016.02-2020.04 | 6MT | F | R | Van FWD 3WZ-HV (DV6FCU) | | GCI81759 | Inner Joint | | 37 | 34 | 31.9 | 302 | 88 | |
| 2.0 (90 kw) | 2016.02-2022.12 | 6MT | F | L/R | Platform/Chassis FWD 4WZ-FTV (DW10FE);4WZ-FTV (DW10FEU) | For vehicles with standard suspension | GCO10098 | Outer Joint | | 28 | 39 | 58.6 | 93 | 63 | I |
| | 2016.02-2022.12 | 6MT | F | L/R | Van FWD 4WZ-FTV (DW10FE);4WZ-FTV (DW10FEU) | For vehicles with standard suspension | GCO10098 | Outer Joint | | 28 | 39 | 58.6 | 93 | 63 | I |
| 2.0 (94 kw) | 2013.06-2016.03 | MT | F | L | Van FWD 4WZ-FTV (DW10CD) | | GDS45133 | Drive Shaft | | 28 | 37 | 58.6 | 94 | 653 | |
| | 2013.06-2016.03 | MT | F | R | Van FWD 4WZ-FTV (DW10CD) | | GDS99214 | Drive Shaft | | 28 | 37 | 58.6 | 94 | 978 | |
| | 2013.06-2016.03 | MT | F | L/R | Van FWD 4WZ-FTV (DW10CD) | | GCO10098 | Outer Joint | | 28 | 39 | 58.6 | 93 | 63 | I |
| | 2013.06-2016.03 | MT | F | L | Van FWD 4WZ-FTV (DW10CD) | | GCI45032 | Inner Joint | | 37 | 39 | 40 | 68.5 | 100 | |
| | 2013.06-2016.03 | MT | F | R | Van FWD 4WZ-FTV (DW10CD) | | GCI10041 | Inner Joint | | 37 | 39 | 32 | 399 | 95.5 | |
| 2.0 (106 kw) | 2020.09-2025.04 | 6MT | F | L/R | Bus FWD 4WZ-FTV (DW10FDDU) | For vehicles with standard suspension | GCO10098 | Outer Joint | | 28 | 39 | 58.6 | 93 | 63 | I |
| | 2021.08-2025.04 | 6MT | F | L/R | Platform/Chassis FWD 4WZ-FTV (DW10FDDU) | For vehicles with standard suspension | GCO10098 | Outer Joint | | 28 | 39 | 58.6 | 93 | 63 | I |
| | 2021.08-2025.04 | 6MT | F | L/R | Van FWD 4WZ-FTV (DW10FDDU) | For vehicles with standard suspension | GCO10098 | Outer Joint | | 28 | 39 | 58.6 | 93 | 63 | I |
| 2.0 (110 kw) | 2016.02-2022.12 | 6MT | F | L/R | Bus FWD 4WZ-FTV (DW10FD);4WZ-FTV (DW10FDU) | For vehicles with standard suspension | GCO10098 | Outer Joint | | 28 | 39 | 58.6 | 93 | 63 | I |
| | 2016.02-2022.12 | 6MT | F | L/R | Platform/Chassis FWD 4WZ-FTV (DW10FD);4WZ-FTV (DW10FDU) | For vehicles with standard suspension | GCO10098 | Outer Joint | | 28 | 39 | 58.6 | 93 | 63 | I |
| | 2016.02-2022.12 | 6MT | F | L/R | Van FWD 4WZ-FTV (DW10FD);4WZ-FTV (DW10FDU) | For vehicles with standard suspension | GCO10098 | Outer Joint | | 28 | 39 | 58.6 | 93 | 63 | I |
| 2.0 (120 kw) | 2013.06-2016.03 | AT | F | L | Van FWD 4WZ-FHV (DW10CTED4) | | GDS83137 | Drive Shaft | | 28 | 37 | 59.5 | 94 | 609 | |
| | 2013.06-2016.03 | AT | F | R | Van FWD 4WZ-FHV (DW10CTED4) | | GDS10416 | Drive Shaft | | 28 | 37 | 59 | 91 | 955 | |
| | 2013.06-2016.03 | AT | F | L | Van FWD 4WZ-FHV (DW10CTED4) | | GCO82534 | Outer Joint | | 28 | 36 | 59.5 | 94 | 60.5 | I |
| | 2013.06-2016.03 | AT | F | R | Van FWD 4WZ-FHV (DW10CTED4) | | GCO45074 | Outer Joint | | 28 | 26 | 59 | 91 | 61.5 | M |
| | 2013.06-2016.03 | AT | F | L | Van FWD 4WZ-FHV (DW10CTED4) | | GCI82416 | Inner Joint | | 37 | 36 | 42.3 | 59.5 | 126 | |
| | 2013.06-2016.03 | AT | F | R | Van FWD 4WZ-FHV (DW10CTED4) | | GCI10157 | Inner Joint | | 37 | 26 | | 380 | 100 | |
| | 2013.06-2016.03 | MT | F | L | Van FWD 4WZ-FHV (DW10CTED4) | | GDS45133 | Drive Shaft | | 28 | 37 | 58.6 | 94 | 653 | |
| | 2013.06-2016.03 | MT | F | R | Van FWD 4WZ-FHV (DW10CTED4) | | GDS99214 | Drive Shaft | | 28 | 37 | 58.6 | 94 | 978 | |
| | 2013.06-2016.03 | MT | F | L | Van FWD 4WZ-FHV (DW10CTED4) | | GCO10051 | Outer Joint | | 28 | 39 | 58.6 | 94 | 63 | I |
| | 2013.06-2016.03 | MT | F | R | Van FWD 4WZ-FHV (DW10CTED4) | | GCO10098 | Outer Joint | | 28 | 39 | 58.6 | 93 | 63 | I |
| | 2013.06-2016.03 | MT | F | L | Van FWD 4WZ-FHV (DW10CTED4) | | GCI45032 | Inner Joint | | 37 | 39 | 40 | 68.5 | 100 | |
| | 2013.06-2016.03 | MT | F | R | Van FWD 4WZ-FHV (DW10CTED4) | | GCI10041 | Inner Joint | | 37 | 39 | 32 | 399 | 95.5 | |
| EV (100 kw) | 2020.09-2023.12 | ET | F | R | Van FWD ZKX (ZK01) | | GDS82316 | Drive Shaft | | 28 | 37 | 58.6 | 93 | 974 | |
| | 2021.01-2023.12 | ET | F | R | Bus FWD ZKX (ZK01) | | GDS82316 | Drive Shaft | | 28 | 37 | 58.6 | 93 | 974 | |
| | 2021.04-2023.12 | ET | F | R | Platform/Chassis FWD ZKX (ZK01) | | GDS82316 | Drive Shaft | | 28 | 37 | 58.6 | 93 | 974 | |
| | 2024.01- | ET | F | R | Bus FWD ZKU (ZK02) | | GDS82316 | Drive Shaft | | 28 | 37 | 58.6 | 93 | 974 | |
| | 2024.01- | ET | F | R | Platform/Chassis FWD ZKU (ZK02) | | GDS82316 | Drive Shaft | | 28 | 37 | 58.6 | 93 | 974 | |
| | 2024.01- | ET | F | R | Van FWD ZKU (ZK02) | | GDS82316 | Drive Shaft | | 28 | 37 | 58.6 | 93 | 974 | |
| **Proace City** | | | | | | | | | | | | | | | |
| 1.2 (81 kw) | 2019.10- | 6MT | F | L | Box Body/MPV FWD 2WZ-LV (EB2ADT) | | GDS83616 | Drive Shaft | | 28 | 24 | 58.5 | 92.5 | 681 | |
| | 2019.10- | 6MT | F | R | Box Body/MPV FWD 2WZ-LV (EB2ADT) | | GDS83663 | Drive Shaft | | 28 | 24 | 58.5 | 92.5 | 919 | |
| 1.2 (96 kw) | 2019.10- | 8AT | F | L | Box Body/MPV FWD 2WZ-HV (EB2ADTS) | | GDS84579 | Drive Shaft | | 28 | 37 | 58.5 | 92.5 | 641 | |
| | 2019.10- | 8AT | F | R | Box Body/MPV FWD 2WZ-HV (EB2ADTS) | | GDS84582 | Drive Shaft | | 28 | 37 | 58.5 | 92.5 | 918 | |
| | 2019.10- | 8AT | F | L/R | Box Body/MPV FWD 2WZ-HV (EB2ADTS) | | GCO82273 | Outer Joint | | 28 | 34 | 58.5 | 92.5 | 56 | I |
| | 2019.10- | 8AT | F | L | Box Body/MPV FWD 2WZ-HV (EB2ADTS) | | GCI82119 | Inner Joint | | 37 | 34 | 41.5 | 58.5 | 94 | |
| | 2019.10- | 8AT | F | R | Box Body/MPV FWD 2WZ-HV (EB2ADTS) | | GCI82118 | Inner Joint | | 37 | 34 | | 290 | 88 | |
| 1.5 (55 kw) | 2019.10- | 5MT | F | L | Box Body/MPV FWD 5WZ-LV (DV5RE) | | GDS83616 | Drive Shaft | | 28 | 24 | 58.5 | 92.5 | 681 | |
| | 2019.10- | 6MT | F | R | Box Body/MPV FWD 5WZ-LV (DV5RE) | Trans. code:MB6 | GDS83663 | Drive Shaft | | 28 | 24 | 58.5 | 92.5 | 919 | |
| 1.5 (75 kw) | 2019.10- | 5AT/6MT | F | L | Box Body/MPV FWD 5WZ-TV (DV5RD);5WZ-TV (DV5RCF) | | GDS83616 | Drive Shaft | | 28 | 24 | 58.5 | 92.5 | 681 | |
| | 2019.10- | 6MT | F | R | Box Body/MPV FWD 5WZ-TV (DV5RD);5WZ-TV (DV5RCF) | Trans. code:MB6 | GDS83663 | Drive Shaft | | 28 | 24 | 58.5 | 92.5 | 919 | |
| 1.5 (96 kw) | 2019.10- | 6MT | F | L | Box Body/MPV FWD 5WZ-HV (DV5RC) | | GDS84170 | Drive Shaft | | 28 | 37 | 58.5 | 92.5 | 670 | |
| | 2019.10- | 6MT | F | R | Box Body/MPV FWD 5WZ-HV (DV5RC) | | GDS84336 | Drive Shaft | | 28 | 37 | 58.5 | 92.5 | 930 | |
| | 2019.10- | 6MT | F | L | Box Body/MPV FWD 5WZ-HV (DV5RC) | | GCI82301 | Inner Joint | | 37 | 34 | 40 | 65.5 | 89.5 | |
| | 2019.10- | 6MT | F | R | Box Body/MPV FWD 5WZ-HV (DV5RC) | | GCI82300 | Inner Joint | | 37 | 34 | 31.9 | 302 | 88 | |
| | 2019.10- | 8AT | F | L | Box Body/MPV FWD 5WZ-HV (DV5RC) | | GDS84579 | Drive Shaft | | 28 | 37 | 58.5 | 92.5 | 641 | |

| | YEAR | TRANSM. | F/R | L/R | BODY STYLE & DRIVE TYPE & ENGINE | REMARKS | G-AP Ref. | PRODUCT | ABS | Technical Specifications A | B | C | H | L | P |
|---|---|---|---|---|---|---|---|---|---|---|---|---|---|---|---|
| **TOYOTA** | | | | | | | | | | | | | | | |
| **Proace City** | | | | | | | | | | | | | | | |
| 1.5 (96 kw) | 2019.10- | 8AT | F | R | Box Body/MPV FWD 5WZ-HV (DV5RC) | | GDS84582 | Drive Shaft | | 28 | 37 | 58.5 | 92.5 | 918 | |
| | 2019.10- | 8AT | F | L | Box Body/MPV FWD 5WZ-HV (DV5RC) | | GCI82119 | Inner Joint | | 37 | 34 | 41.5 | 58.5 | 94 | |
| | 2019.10- | 8AT | F | R | Box Body/MPV FWD 5WZ-HV (DV5RC) | | GCI82118 | Inner Joint | | 37 | 34 | | 290 | 88 | |
| | 2019.10- | 8AT/6MT | F | L/R | Box Body/MPV FWD 5WZ-HV (DV5RC) | | GCO82273 | Outer Joint | | 28 | 34 | 58.5 | 92.5 | 56 | I |
| 1.6 (68 kw) | 2022.01- | 5MT | F | L | Box Body/MPV FWD 5WZ-MV (DV6DR) | | GDS83616 | Drive Shaft | | 28 | 24 | 58.5 | 92.5 | 681 | |
| EV (100 kw) | 2021.07-2024.02 | ET | F | L | Box Body/MPV FWD ZKX (ZK01) | | GDS57969 | Drive Shaft | | 28 | 37 | 58.5 | 92.5 | 675 | |
| | 2021.07-2024.02 | ET | F | R | Box Body/MPV FWD ZKX (ZK01) | | GDS58244 | Drive Shaft | | 28 | 37 | 58.5 | 92.5 | 927 | |
| | 2021.07-2024.02 | ET | F | L | Box Body/MPV FWD ZKX (ZK01) | | GCO83814 | Outer Joint | | 28 | 34 | 58.5 | 92.5 | 56 | I |
| | 2021.07-2024.02 | ET | F | L | Box Body/MPV FWD ZKX (ZK01) | | GCI82301 | Inner Joint | | 37 | 34 | 40 | 65.5 | 89.5 | |
| | 2024.03- | ET | F | L | Box Body/MPV FWD ZKU (ZK02) | | GDS57969 | Drive Shaft | | 28 | 37 | 58.5 | 92.5 | 675 | |
| | 2024.03- | ET | F | R | Box Body/MPV FWD ZKU (ZK02) | | GDS58244 | Drive Shaft | | 28 | 37 | 58.5 | 92.5 | 927 | |
| | 2024.03- | ET | F | L | Box Body/MPV FWD ZKU (ZK02) | | GCO83814 | Outer Joint | | 28 | 34 | 58.5 | 92.5 | 56 | I |
| | 2024.03- | ET | F | L | Box Body/MPV FWD ZKU (ZK02) | | GCI82301 | Inner Joint | | 37 | 34 | 40 | 65.5 | 89.5 | |
| **Proace City Verso** | | | | | | | | | | | | | | | |
| 1.2 (81 kw) | 2019.10- | 6MT | F | L | MPV FWD 2WZ-LV (EB2ADT) | | GDS83616 | Drive Shaft | | 28 | 24 | 58.5 | 92.5 | 681 | |
| | 2019.10- | 6MT | F | R | MPV FWD 2WZ-LV (EB2ADT) | Trans. code:MB6,Equipment code:DYJ14 | GDS83663 | Drive Shaft | | 28 | 24 | 58.5 | 92.5 | 919 | |
| 1.2 (96 kw) | 2019.10- | 8AT | F | L | MPV FWD 2WZ-HV (EB2ADTS) | | GDS84579 | Drive Shaft | | 28 | 37 | 58.5 | 92.5 | 641 | |
| | 2019.10- | 8AT | F | R | MPV FWD 2WZ-HV (EB2ADTS) | | GDS84582 | Drive Shaft | | 28 | 37 | 58.5 | 92.5 | 918 | |
| | 2019.10- | 8AT | F | L/R | MPV FWD 2WZ-HV (EB2ADTS) | | GCO82273 | Outer Joint | | 28 | 34 | 58.5 | 92.5 | 56 | I |
| | 2019.10- | 8AT | F | L | MPV FWD 2WZ-HV (EB2ADTS) | | GCI82119 | Inner Joint | | 37 | 34 | 41.5 | 58.5 | 94 | |
| | 2019.10- | 8AT | F | R | MPV FWD 2WZ-HV (EB2ADTS) | | GCI82118 | Inner Joint | | 37 | 34 | | 290 | 88 | |
| 1.5 (75 kw) | 2019.10- | 5AT/6MT | F | L | MPV FWD 5WZ-TV (DV5RD);5WZ-TV (DV5RCF) | | GDS83616 | Drive Shaft | | 28 | 24 | 58.5 | 92.5 | 681 | |
| 1.5 (96 kw) | 2019.10- | 6MT | F | L | MPV FWD 5WZ-HV (DV5RC) | | GDS84170 | Drive Shaft | | 28 | 37 | 58.5 | 92.5 | 670 | |
| | 2019.10- | 6MT | F | R | MPV FWD 5WZ-HV (DV5RC) | | GDS84336 | Drive Shaft | | 28 | 37 | 58.5 | 92.5 | 930 | |
| | 2019.10- | 6MT | F | L | MPV FWD 5WZ-HV (DV5RC) | | GCI82301 | Inner Joint | | 37 | 34 | 40 | 65.5 | 89.5 | |
| | 2019.10- | 6MT | F | R | MPV FWD 5WZ-HV (DV5RC) | | GCI82300 | Inner Joint | | 37 | 34 | 31.9 | 302 | 88 | |
| | 2019.10- | 8AT | F | L | MPV FWD 5WZ-HV (DV5RC) | | GDS84579 | Drive Shaft | | 28 | 37 | 58.5 | 92.5 | 641 | |
| | 2019.10- | 8AT | F | R | MPV FWD 5WZ-HV (DV5RC) | | GDS84582 | Drive Shaft | | 28 | 37 | 58.5 | 92.5 | 918 | |
| | 2019.10- | 8AT | F | L | MPV FWD 5WZ-HV (DV5RC) | | GCI82119 | Inner Joint | | 37 | 34 | 41.5 | 58.5 | 94 | |
| | 2019.10- | 8AT | F | R | MPV FWD 5WZ-HV (DV5RC) | | GCI82118 | Inner Joint | | 37 | 34 | | 290 | 88 | |
| | 2019.10- | 8AT/6MT | F | L/R | MPV FWD 5WZ-HV (DV5RC) | | GCO82273 | Outer Joint | | 28 | 34 | 58.5 | 92.5 | 56 | I |
| 1.6 (68 kw) | 2022.01- | 5MT | F | L | MPV FWD 5WZ-MV (DV6DR) | | GDS83616 | Drive Shaft | | 28 | 24 | 58.5 | 92.5 | 681 | |
| EV (100 kw) | 2021.07-2024.02 | ET | F | L | MPV FWD ZKX (ZK01) | | GDS57969 | Drive Shaft | | 28 | 37 | 58.5 | 92.5 | 675 | |
| | 2021.07-2024.02 | ET | F | R | MPV FWD ZKX (ZK01) | | GDS58244 | Drive Shaft | | 28 | 37 | 58.5 | 92.5 | 927 | |
| | 2021.07-2024.02 | ET | F | L | MPV FWD ZKX (ZK01) | | GCO83814 | Outer Joint | | 28 | 34 | 58.5 | 92.5 | 56 | I |
| | 2021.07-2024.02 | ET | F | L | MPV FWD ZKX (ZK01) | | GCI82301 | Inner Joint | | 37 | 34 | 40 | 65.5 | 89.5 | |
| | 2024.03- | ET | F | L | MPV FWD ZKU (ZK02) | | GDS57969 | Drive Shaft | | 28 | 37 | 58.5 | 92.5 | 675 | |
| | 2024.03- | ET | F | R | MPV FWD ZKU (ZK02) | | GDS58244 | Drive Shaft | | 28 | 37 | 58.5 | 92.5 | 927 | |
| | 2024.03- | ET | F | L | MPV FWD ZKU (ZK02) | | GCO83814 | Outer Joint | | 28 | 34 | 58.5 | 92.5 | 56 | I |
| | 2024.03- | ET | F | L | MPV FWD ZKU (ZK02) | | GCI82301 | Inner Joint | | 37 | 34 | 40 | 65.5 | 89.5 | |
| **Proace Verso** | | | | | | | | | | | | | | | |
| 1.5 (75 kw) | 2018.06-2025.04 | 6MT | F | L | Bus FWD 5WZ-TV (DV5RUCD) | | GDS82315 | Drive Shaft | | 28 | 37 | 58.6 | 93 | 719 | |
| | 2018.06-2025.04 | 6MT | F | R | Bus FWD 5WZ-TV (DV5RUCD) | | GDS82316 | Drive Shaft | | 28 | 37 | 58.6 | 93 | 974 | |
| | 2018.06-2025.04 | 6MT | F | L/R | Bus FWD 5WZ-TV (DV5RUCD) | | GCO10098 | Outer Joint | | 28 | 39 | 58.6 | 93 | 63 | I |
| | 2018.06-2025.04 | 6MT | F | R | Bus FWD 5WZ-TV (DV5RUCD) | | GCI81759 | Inner Joint | | 37 | 34 | 31.9 | 302 | 88 | |
| 1.5 (88 kw) | 2018.06-2025.04 | 6MT | F | L | Bus FWD 5WZ-HV (DV5RUC) | | GDS82315 | Drive Shaft | | 28 | 37 | 58.6 | 93 | 719 | |
| | 2018.06-2025.04 | 6MT | F | R | Bus FWD 5WZ-HV (DV5RUC) | | GDS82316 | Drive Shaft | | 28 | 37 | 58.6 | 93 | 974 | |
| | 2018.06-2025.04 | 6MT | F | L/R | Bus FWD 5WZ-HV (DV5RUC) | | GCO10098 | Outer Joint | | 28 | 39 | 58.6 | 93 | 63 | I |
| | 2018.06-2025.04 | 6MT | F | R | Bus FWD 5WZ-HV (DV5RUC) | | GCI81759 | Inner Joint | | 37 | 34 | 31.9 | 302 | 88 | |
| 1.6 (70 kw) | 2016.02-2019.12 | 5MT/6AMT | F | L/R | Bus FWD 3WZ-TV (DV6FDU) | | GCO10098 | Outer Joint | | 28 | 39 | 58.6 | 93 | 63 | I |
| 1.6 (85 kw) | 2016.02-2020.04 | 6MT | F | L | Bus FWD 3WZ-HV (DV6FCU) | | GDS82315 | Drive Shaft | | 28 | 37 | 58.6 | 93 | 719 | |
| | 2016.02-2020.04 | 6MT | F | R | Bus FWD 3WZ-HV (DV6FCU) | | GDS82316 | Drive Shaft | | 28 | 37 | 58.6 | 93 | 974 | |
| | 2016.02-2020.04 | 6MT | F | L/R | Bus FWD 3WZ-HV (DV6FCU) | | GCO10098 | Outer Joint | | 28 | 39 | 58.6 | 93 | 63 | I |
| | 2016.02-2020.04 | 6MT | F | R | Bus FWD 3WZ-HV (DV6FCU) | | GCI81759 | Inner Joint | | 37 | 34 | 31.9 | 302 | 88 | |
| EV (100 kw) | 2021.01-2023.12 | ET | F | R | Bus FWD ZKX (ZK01) | | GDS82316 | Drive Shaft | | 28 | 37 | 58.6 | 93 | 974 | |
| | 2024.01- | ET | F | R | Bus FWD ZKU (ZK02) | | GDS82316 | Drive Shaft | | 28 | 37 | 58.6 | 93 | 974 | |
| **Ractis** | | | | | | | | | | | | | | | |
| 1.3 (64 kw) | 2005.09-2010.08 | CVT | F | L/R | MPV FWD 2SZ-FE | | GCO59385 | Outer Joint | | 26 | 22 | 55.6 | 96 | 54 | I |
| | 2005.09-2010.08 | CVT | F | L/R | MPV FWD 2SZ-FE | | GCI59003 | Inner Joint | | 23 | 22 | 34 | 60.4 | 103 | |
| 1.3 (70 kw) | 2010.11-2016.10 | CVT | F | L | MPV FWD 1NR-FE | | GDS59202 | Drive Shaft | | 26 | 23 | 55.6 | 96 | 653 | |
| | 2010.11-2016.10 | CVT | F | R | MPV FWD 1NR-FE | | GDS59201 | Drive Shaft | | 26 | 23 | 55.6 | 96 | 896 | |
| | 2010.11-2016.10 | CVT | F | L/R | MPV FWD 1NR-FE | | GCO59206 | Outer Joint | | 26 | 23 | 55.6 | 96 | 53 | I |
| | 2010.11-2016.10 | CVT | F | L/R | MPV FWD 1NR-FE | | GCI99046 | Inner Joint | | 23 | 23 | 34 | 60 | 103.5 | |
| 1.5 (77 kw) | 2010.11-2016.10 | CVT | F | R | MPV 4WD 1NZ-FE | | GDS59627 | Drive Shaft | | 26 | 20 | 55.6 | 96 | 897 | |
| | 2010.11-2016.10 | CVT | F | L | MPV 4WD 1NZ-FE | TJ | GCI59100 | Inner Joint | | 20 | 25 | 35 | 63.5 | 118 | |

| | YEAR | TRANSM. | F/R | L/R | BODY STYLE & DRIVE TYPE & ENGINE | REMARKS | G-AP Ref. | PRODUCT | ABS | Technical Specifications A | B | C | H | L | P |
|---|---|---|---|---|---|---|---|---|---|---|---|---|---|---|---|
| **TOYOTA** | | | | | | | | | | | | | | | |
| **Ractis** | | | | | | | | | | | | | | | |
| 1.5 (77 kw) | 2010.11-2016.10 | CVT | F | L | MPV 4WD 1NZ-FE | AAR | GCI81165 | Inner Joint | | 20 | 25 | 35 | 63.5 | 123 | |
| | 2010.11-2016.10 | CVT | F | R | MPV 4WD 1NZ-FE | | GCI81166 | Inner Joint | | 20 | 25 | 35.5 | 364.5 | 99 | |
| 1.5 (80 kw) | 2010.11-2014.04 | CVT | F | L | MPV FWD 1NZ-FE | | GDS59202 | Drive Shaft | | 26 | 23 | 55.6 | 96 | 653 | |
| | 2010.11-2014.04 | CVT | F | R | MPV FWD 1NZ-FE | | GDS59201 | Drive Shaft | | 26 | 23 | 55.6 | 96 | 896 | |
| | 2010.11-2014.04 | CVT | F | L/R | MPV FWD 1NZ-FE | | GCO59206 | Outer Joint | | 26 | 23 | 55.6 | 96 | 53 | I |
| | 2010.11-2014.04 | CVT | F | L/R | MPV FWD 1NZ-FE | | GCO59274 | Outer Joint | | 26 | 23 | 55.6 | 96 | 54 | I |
| | 2010.11-2014.04 | CVT | F | L/R | MPV FWD 1NZ-FE | | GCI99046 | Inner Joint | | 23 | 23 | 34 | 60 | 103.5 | |
| **Raum** | | | | | | | | | | | | | | | |
| 1.5 (67 kw) | 1997.05-2003.04 | AT | F | L/R | MPV 4WD 5EFE | | GCO59177 | Outer Joint | 48T | 26 | 23 | 56 | 95.5 | 55 | I |
| 1.5 (69 kw) | 1997.08-2003.04 | AT | F | L/R | MPV FWD 5EFE | | GCO59177 | Outer Joint | 48T | 26 | 23 | 56 | 95.5 | 55 | I |
| **Rav 4** | | | | | | | | | | | | | | | |
| 1.8 (92 kw) | 2000.08-2005.11 | AT | F | L | SUV FWD 1ZZ-FE | | GCI59005 | Inner Joint | | 20 | 23 | 35 | 63.5 | 115.7 | |
| | 2000.08-2005.11 | AT | F | R | SUV FWD 1ZZ-FE | | GCI59105 | Inner Joint | | 20 | 23 | 35 | 363.5 | 100.5 | |
| | 2000.08-2005.11 | AT | F | R | SUV FWD 1ZZ-FE | | GCI59168 | Inner Joint | | 20 | 27 | 35 | 363.5 | 110.5 | |
| | 2000.08-2005.11 | MT | F | L/R | SUV FWD 1ZZ-FE | | GCO59175 | Outer Joint | 48T | 26 | 27 | 63.3 | 100 | 59 | M |
| 2.0 (85 kw) | 2001.05-2005.11 | 5MT | F | R | SUV 4WD 1CD-FTV | | GCO59081 | Outer Joint | | 26 | 27 | 63 | 100 | 62 | I |
| | 2001.05-2005.11 | 5MT | F | L/R | SUV 4WD 1CD-FTV | Date from 2001.09 | GCO59167 | Outer Joint | 48T | 26 | 27 | 63 | 100 | 62 | I |
| | 2001.05-2005.11 | 5MT | F | L | SUV 4WD 1CD-FTV | | GCI59084 | Inner Joint | | 23 | 27 | 50 | 62 | 108.5 | |
| | 2001.05-2005.11 | 5MT | F | R | SUV 4WD 1CD-FTV | | GCI59079 | Inner Joint | | 23 | 27 | 34 | 394 | 123 | |
| | 2001.05-2005.11 | 5MT | R | L | SUV 4WD 1CD-FTV | | GDS99275 | Drive Shaft | 48T | 26 | | 56 | 96.5 | 643 | |
| | 2001.05-2005.11 | 5MT | R | R | SUV 4WD 1CD-FTV | | GDS59349 | Drive Shaft | 48T | 26 | | 56 | 96.5 | 690 | |
| | 2001.05-2005.11 | 5MT | R | L/R | SUV 4WD 1CD-FTV | | GCO59021 | Outer Joint | 48T | 26 | 23 | 56 | 96.5 | 55 | I |
| | 2001.05-2005.11 | 5MT | R | L/R | SUV 4WD 1CD-FTV | | GCI59099 | Inner Joint | | | 24 | | | 68.6 | |
| 2.0 (91 kw) | 2012.12-2018.11 | 6MT | F | L | SUV FWD 1AD-FTV | AAR | GCI59125 | Inner Joint | | 24 | 27 | 50 | 67 | 109.5 | |
| | 2012.12-2018.11 | 6MT | F | R | SUV FWD 1AD-FTV | | GCI59206 | Inner Joint | | 24 | 27 | 40 | 377 | 104.5 | |
| | 2012.12-2018.11 | MT | F | L | SUV FWD 1AD-FTV | | GDS59622 | Drive Shaft | | 30 | 24 | 61.2 | 100 | 625 | |
| | 2012.12-2018.11 | MT | F | R | SUV FWD 1AD-FTV | | GDS81235 | Drive Shaft | | 30 | 24 | 61.2 | 100 | 1003 | |
| | 2012.12-2018.11 | MT | F | L/R | SUV FWD 1AD-FTV | | GCO99320 | Outer Joint | | 30 | 27 | 61.2 | 100 | 64 | I |
| | 2012.12-2018.11 | MT | F | L | SUV FWD 1AD-FTV | TJ | GCI59073 | Inner Joint | | 24 | 27 | 50 | 67 | 110 | |
| | 2012.12-2018.11 | MT | F | R | SUV FWD 1AD-FTV | | GCI59226 | Inner Joint | | 24 | 27 | 40 | 377 | 104.5 | |
| | 2012.12-2018.11 | 6MT | F | L | SUV Van FWD 1AD-FTV | | GDS59622 | Drive Shaft | | 30 | 24 | 61.2 | 100 | 625 | |
| | 2012.12-2018.11 | 6MT | F | R | SUV Van FWD 1AD-FTV | | GDS81235 | Drive Shaft | | 30 | 24 | 61.2 | 100 | 1003 | |
| | 2012.12-2018.11 | 6MT | F | L/R | SUV Van FWD 1AD-FTV | | GCO99320 | Outer Joint | | 30 | 27 | 61.2 | 100 | 64 | I |
| | 2012.12-2018.11 | 6MT | F | L | SUV Van FWD 1AD-FTV | Manufactured in:Russia | GCI59125 | Inner Joint | | 24 | 27 | 50 | 67 | 109.5 | |
| | 2012.12-2018.11 | 6MT | F | R | SUV Van FWD 1AD-FTV | | GCI59206 | Inner Joint | | 24 | 27 | 40 | 377 | 104.5 | |
| | 2013.01-2018.11 | 6MT | F | L/R | SUV 4WD 1AD-FTV | | GCO99320 | Outer Joint | | 30 | 27 | 61.2 | 100 | 64 | I |
| | 2013.01-2018.11 | 6MT | F | L | SUV 4WD 1AD-FTV | TJ | GCI59073 | Inner Joint | | 24 | 27 | 50 | 67 | 110 | |
| | 2013.01-2018.11 | 6MT | F | L | SUV 4WD 1AD-FTV | AAR | GCI59125 | Inner Joint | | 24 | 27 | 50 | 67 | 109.5 | |
| | 2013.01-2018.11 | MT | F | L | SUV 4WD 1AD-FTV | | GDS59622 | Drive Shaft | | 30 | 24 | 61.2 | 100 | 625 | |
| | 2013.01-2018.11 | MT | F | R | SUV 4WD 1AD-FTV | | GDS59518 | Drive Shaft | | 30 | 24 | 61.2 | 100 | 1006 | |
| | 2013.01-2018.11 | 6MT | R | L/R | SUV 4WD 1AD-FTV | | GDS59656 | Drive Shaft | | 26 | 20 | 51.9 | 99.5 | 811 | |
| | 2013.01-2018.11 | 6MT | R | L/R | SUV 4WD 1AD-FTV | | GCO59488 | Outer Joint | | 26 | 19 | 51.9 | 99.5 | 49 | I |
| | 2013.01-2018.11 | 6MT | R | L/R | SUV 4WD 1AD-FTV | | GCI59213 | Inner Joint | | 20 | 19 | 37 | 60 | 84 | |
| | 2013.11-2018.11 | 6MT | F | L | SUV Van 4WD 1AD-FTV | | GDS59622 | Drive Shaft | | 30 | 24 | 61.2 | 100 | 625 | |
| | 2013.11-2018.11 | 6MT | F | R | SUV Van 4WD 1AD-FTV | | GDS59518 | Drive Shaft | | 30 | 24 | 61.2 | 100 | 1006 | |
| | 2013.11-2018.11 | 6MT | F | L/R | SUV Van 4WD 1AD-FTV | | GCO99320 | Outer Joint | | 30 | 27 | 61.2 | 100 | 64 | I |
| | 2013.11-2018.11 | 6MT | F | L | SUV Van 4WD 1AD-FTV | Manufactured in:Russia | GCI59125 | Inner Joint | | 24 | 27 | 50 | 67 | 109.5 | |
| | 2013.11-2018.11 | 6MT | R | L/R | SUV Van 4WD 1AD-FTV | | GDS59656 | Drive Shaft | | 26 | 20 | 51.9 | 99.5 | 811 | |
| | 2013.11-2018.11 | 6MT | R | L/R | SUV Van 4WD 1AD-FTV | | GCI59213 | Inner Joint | | 20 | 19 | 37 | 60 | 84 | |
| 2.0 (94 kw) | 1997.12-2000.06 | AT/MT | F | L/R | SUV 4WD 3S-FE | | GCO59019 | Outer Joint | 48T | 26 | 24 | 56 | 95.5 | 55 | I |
| | 1997.12-2000.06 | | F | | SUV 4WD 3S-FE | | GCO59062 | Outer Joint | | 26 | 24 | 56 | 95.5 | 55 | I |
| 2.0 (95 kw) | 1994.04-2000.08 | 4AT/5MT | F | L/R | SUV FWD 3SFE | | GCO99122 | Outer Joint | | 26 | 24 | 56 | 96 | 56 | I |
| | 1994.04-2000.08 | AT | F | L | SUV FWD 3SFE | | GCI59046 | Inner Joint | | 20 | 23 | 35 | 63.5 | 115.5 | |
| | 1994.04-2000.08 | AT | F | R | SUV FWD 3SFE | | GCI59105 | Inner Joint | | 20 | 23 | 35 | 363.5 | 100.5 | |
| | 1994.04-2000.08 | AT | F | R | SUV FWD 3SFE | | GCI81280 | Inner Joint | | 20 | 23 | 35 | 363 | 100 | |
| | 1994.06-2000.08 | 4AT/5MT | F | L/R | SUV 4WD 3SFE | | GCO99122 | Outer Joint | | 26 | 24 | 56 | 96 | 56 | I |
| | 1994.06-2000.08 | AT/MT | F | L/R | SUV 4WD 3SFE | | GCO59001 | Outer Joint | | 26 | 24 | 56 | 95.5 | 55 | I |
| | 1994.06-2000.08 | AT/MT | F | L/R | SUV 4WD 3SFE | Date from:1995.01 | GCO59019 | Outer Joint | 48T | 26 | 24 | 56 | 95.5 | 55 | I |
| | 1994.06-2000.08 | | F | | SUV 4WD 3SFE | | GCO59062 | Outer Joint | | 26 | 24 | 56 | 95.5 | 55 | I |
| | 1994.06-2000.08 | | R | L/R | SUV 4WD 3SFE | | GCO59128 | Outer Joint | 48T | 26 | 23 | 56 | 95.5 | 55 | I |
| | 1994.06-2000.08 | | R | L/R | SUV 4WD 3SFE | | GCO59289 | Outer Joint | 48T | 26 | 23 | 56 | 96.5 | 55 | I |
| 2.0 (105 kw) | 2012.12-2019.09 | 6MT | F | L | SUV FWD 3ZR-FE | TJ | GCI59073 | Inner Joint | | 24 | 27 | 50 | 67 | 110 | |
| | 2012.12-2019.09 | 6MT | F | L | SUV FWD 3ZR-FE | AAR | GCI59125 | Inner Joint | | 24 | 27 | 50 | 67 | 109.5 | |
| | 2012.12-2019.09 | 6MT | F | R | SUV FWD 3ZR-FE | Date to:2017.10 | GCI59078 | Inner Joint | | 24 | 27 | 40 | 370 | 105 | |
| | 2012.12-2019.09 | MT | F | L | SUV FWD 3ZR-FE | | GDS59671 | Drive Shaft | | 30 | 24 | 61.2 | 100 | 665 | |

| | YEAR | TRANSM. | F/R | L/R | BODY STYLE & DRIVE TYPE & ENGINE | REMARKS | G-AP Ref. | PRODUCT | ABS | Technical Specifications A | B | C | H | L | P |
|---|---|---|---|---|---|---|---|---|---|---|---|---|---|---|---|
| **TOYOTA** | | | | | | | | | | | | | | | |
| **Rav 4** | | | | | | | | | | | | | | | |
| 2.0 (105 kw) | 2012.12-2019.09 | MT | F | R | SUV FWD 3ZR-FE | | GDS81234 | Drive Shaft | | 30 | 24 | 61.2 | 100 | 964 | |
| | 2012.12-2019.09 | MT | F | L/R | SUV FWD 3ZR-FE | | GCO99320 | Outer Joint | | 30 | 27 | 61.2 | 100 | 64 | I |
| | 2015.10-2018.11 | 6MT | F | L | SUV FWD 2WW | TJ | GCI59073 | Inner Joint | | 24 | 27 | 50 | 67 | 110 | |
| | 2015.10-2018.11 | 6MT | F | L | SUV FWD 2WW | AAR | GCI59125 | Inner Joint | | 24 | 27 | 50 | 67 | 109.5 | |
| | 2015.10-2018.11 | MT | F | L | SUV FWD 2WW | | GDS59670 | Drive Shaft | | 30 | 24 | 61.2 | 100 | 636 | |
| | 2015.10-2018.11 | MT | F | L | SUV FWD 2WW | | GCO99320 | Outer Joint | | 30 | 27 | 61.2 | 100 | 64 | I |
| | 2015.10-2018.11 | 6MT | F | L | SUV Van FWD 2WW | | GDS59670 | Drive Shaft | | 30 | 24 | 61.2 | 100 | 636 | |
| | 2015.10-2018.11 | 6MT | F | L | SUV Van FWD 2WW | | GCO99320 | Outer Joint | | 30 | 27 | 61.2 | 100 | 64 | I |
| | 2015.10-2018.11 | 6MT | F | L | SUV Van FWD 2WW | Manufactured in:Russia,Date to:2017.10 | GCI59125 | Inner Joint | | 24 | 27 | 50 | 67 | 109.5 | |
| 2.0 (107 kw) | 2012.12-2019.09 | 6MT | F | L | SUV 4WD 3ZR-FE | | GDS59671 | Drive Shaft | | 30 | 24 | 61.2 | 100 | 665 | |
| | 2012.12-2019.09 | 6MT | F | R | SUV 4WD 3ZR-FE | | GDS59672 | Drive Shaft | | 30 | 24 | 61.2 | 100 | 967 | |
| | 2012.12-2019.09 | 6MT | F | L/R | SUV 4WD 3ZR-FE | | GCO99320 | Outer Joint | | 30 | 27 | 61.2 | 100 | 64 | I |
| | 2012.12-2019.09 | 6MT | F | R | SUV 4WD 3ZR-FE | Date to:2017.10;AAR | GCI82193 | Inner Joint | | 24 | 27 | 35.5 | 373 | 105 | |
| | 2012.12-2019.09 | CVT | F | L | SUV 4WD 3ZR-FE | | GDS59678 | Drive Shaft | | 26 | 24 | 61.2 | 100 | 663 | |
| | 2012.12-2019.09 | CVT | F | R | SUV 4WD 3ZR-FE | | GDS59695 | Drive Shaft | | 26 | 20 | 61.2 | 100 | 953 | |
| | 2012.12-2019.09 | CVT | F | L/R | SUV 4WD 3ZR-FE | Date to:2018.06 | GCO59245 | Outer Joint | | 26 | 27 | 61.2 | 100 | 59 | I |
| | 2012.12-2019.09 | CVT | F | R | SUV 4WD 3ZR-FE | Date to:2015.09 | GCI59241 | Inner Joint | | 20 | 27 | 35.5 | 362 | 102.5 | |
| | 2012.12-2019.09 | CVT | F | R | SUV 4WD 3ZR-FE | Date from:2015.10,Date to:2017.07 | GCI82193 | Inner Joint | | 24 | 27 | 35.5 | 373 | 105 | |
| | 2012.12-2019.09 | CVT/6MT | F | L | SUV 4WD 3ZR-FE | TJ | GCI59073 | Inner Joint | | 24 | 27 | 50 | 67 | 110 | |
| | 2012.12-2019.09 | CVT/6MT | F | L | SUV 4WD 3ZR-FE | AAR | GCI59125 | Inner Joint | | 24 | 27 | 50 | 67 | 109.5 | |
| | 2012.12-2019.09 | CVT/6MT | R | L/R | SUV 4WD 3ZR-FE | | GDS59656 | Drive Shaft | | 26 | 20 | 51.9 | 99.5 | 811 | |
| | 2012.12-2019.09 | CVT/6MT | R | L/R | SUV 4WD 3ZR-FE | | GCO59488 | Outer Joint | | 26 | 19 | 51.9 | 99.5 | 49 | I |
| | 2012.12-2019.09 | CVT/6MT | R | L/R | SUV 4WD 3ZR-FE | | GCI59213 | Inner Joint | | 20 | 19 | 37 | 60 | 84 | |
| | 2012.12-2019.09 | 6MT | F | L | SUV FWD 3ZR-FE | | GDS59671 | Drive Shaft | | 30 | 24 | 61.2 | 100 | 665 | |
| | 2012.12-2019.09 | 6MT | F | R | SUV FWD 3ZR-FE | | GDS81234 | Drive Shaft | | 30 | 24 | 61.2 | 100 | 964 | |
| | 2012.12-2019.09 | 6MT | F | L/R | SUV FWD 3ZR-FE | Date to:2017.10 | GCO99320 | Outer Joint | | 30 | 27 | 61.2 | 100 | 64 | I |
| | 2012.12-2019.09 | 6MT | F | R | SUV FWD 3ZR-FE | Date to:2017.10 | GCI59078 | Inner Joint | | 24 | 27 | 40 | 370 | 105 | |
| | 2012.12-2019.09 | AT | F | L | SUV FWD 3ZR-FE | | GDS59678 | Drive Shaft | | 26 | 24 | 61.2 | 100 | 663 | |
| | 2012.12-2019.09 | AT | F | R | SUV FWD 3ZR-FE | | GDS59692 | Drive Shaft | | 26 | 24 | 61.2 | 100 | 962 | |
| | 2012.12-2019.09 | AT | F | R | SUV FWD 3ZR-FE | | GCI59128 | Inner Joint | | 24 | 27 | 40 | 369.5 | 105.5 | |
| | 2012.12-2019.09 | CVT | F | L/R | SUV FWD 3ZR-FE | | GCO59245 | Outer Joint | | 26 | 27 | 61.2 | 100 | 59 | I |
| | 2012.12-2019.09 | CVT/6MT | F | L | SUV FWD 3ZR-FE | TJ | GCI59073 | Inner Joint | | 24 | 27 | 50 | 67 | 110 | |
| | 2012.12-2019.09 | CVT/6MT | F | L | SUV FWD 3ZR-FE | AAR | GCI59125 | Inner Joint | | 24 | 27 | 50 | 67 | 109.5 | |
| 2.0 (109 kw) | 2009.03-2013.06 | 6MT | F | L | SUV 4WD 3ZR-FAE | | GDS59671 | Drive Shaft | | 30 | 24 | 61.2 | 100 | 665 | |
| | 2009.03-2013.06 | 6MT | F | R | SUV 4WD 3ZR-FAE | | GDS59672 | Drive Shaft | | 30 | 24 | 61.2 | 100 | 967 | |
| | 2009.03-2013.06 | 6MT | F | L | SUV 4WD 3ZR-FAE | | GCO99320 | Outer Joint | | 30 | 27 | 61.2 | 100 | 64 | I |
| | 2009.03-2013.06 | 6MT | F | R | SUV 4WD 3ZR-FAE | AAR | GCI82193 | Inner Joint | | 24 | 27 | 35.5 | 373 | 105 | |
| | 2009.03-2013.06 | CVT | F | L | SUV 4WD 3ZR-FAE | | GDS59678 | Drive Shaft | | 26 | 24 | 61.2 | 100 | 663 | |
| | 2009.03-2013.06 | CVT | F | R | SUV 4WD 3ZR-FAE | | GDS59695 | Drive Shaft | | 26 | 20 | 61.2 | 100 | 953 | |
| | 2009.03-2013.06 | CVT | F | L/R | SUV 4WD 3ZR-FAE | | GCO59245 | Outer Joint | | 26 | 27 | 61.2 | 100 | 59 | I |
| | 2009.03-2013.06 | CVT | F | R | SUV 4WD 3ZR-FAE | | GCI59241 | Inner Joint | | 20 | 27 | 35.5 | 362 | 102.5 | |
| | 2009.03-2013.06 | CVT/6MT | F | L | SUV 4WD 3ZR-FAE | TJ | GCI59073 | Inner Joint | | 24 | 27 | 50 | 67 | 110 | |
| | 2009.03-2013.06 | CVT/6MT | F | L | SUV 4WD 3ZR-FAE | AAR | GCI59125 | Inner Joint | | 24 | 27 | 50 | 67 | 109.5 | |
| | 2009.03-2013.06 | CVT/6MT | R | L/R | SUV 4WD 3ZR-FAE | | GDS59637 | Drive Shaft | | 26 | 20 | 51.9 | 99.5 | 810 | |
| | 2009.03-2013.06 | CVT/6MT | R | L/R | SUV 4WD 3ZR-FAE | Date from:2012.09 | GDS59656 | Drive Shaft | | 26 | 20 | 51.9 | 99.5 | 811 | |
| | 2009.03-2013.06 | CVT/6MT | R | L/R | SUV 4WD 3ZR-FAE | | GCO59366 | Outer Joint | | 26 | 18 | 51.9 | 99.5 | 49 | I |
| | 2009.03-2013.06 | CVT/6MT | R | L/R | SUV 4WD 3ZR-FAE | | GCI59210 | Inner Joint | | 20 | 18 | 37 | 59.5 | 89 | |
| | 2009.03-2013.06 | 6MT | F | L | SUV FWD 3ZR-FAE | | GDS59671 | Drive Shaft | | 30 | 24 | 61.2 | 100 | 665 | |
| | 2009.03-2013.06 | 6MT | F | R | SUV FWD 3ZR-FAE | | GDS81234 | Drive Shaft | | 30 | 24 | 61.2 | 100 | 964 | |
| | 2009.03-2013.06 | 6MT | F | L/R | SUV FWD 3ZR-FAE | | GCO99320 | Outer Joint | | 30 | 27 | 61.2 | 100 | 64 | I |
| | 2009.03-2013.06 | 6MT | F | L | SUV FWD 3ZR-FAE | TJ | GCI59073 | Inner Joint | | 24 | 27 | 50 | 67 | 110 | |
| | 2009.03-2013.06 | 6MT | F | L | SUV FWD 3ZR-FAE | AAR | GCI59125 | Inner Joint | | 24 | 27 | 50 | 67 | 109.5 | |
| | 2009.03-2013.06 | 6MT | F | R | SUV FWD 3ZR-FAE | Date to:2017.10 | GCI59078 | Inner Joint | | 24 | 27 | 40 | 370 | 105 | |
| 2.0 (110 kw) | 2000.05-2005.11 | 4AT/5MT | F | R | SUV 4WD 1AZ-FE | | GDS59211 | Drive Shaft | 48T | 26 | 23 | 63 | 100 | 988 | |
| | 2000.05-2005.11 | AT | F | L/R | SUV 4WD 1AZ-FE | GrooveType:Inner | GCO59314 | Outer Joint | 48T | 26 | 27 | 61.2 | 100 | 59.5 | I |
| | 2000.05-2005.11 | AT/MT | F | R | SUV 4WD 1AZ-FE | GrooveType:Middle | GCO59175 | Outer Joint | 48T | 26 | 27 | 63.3 | 100 | 59 | M |
| | 2000.05-2005.11 | AT/MT | F | L/R | SUV 4WD 1AZ-FE | GrooveType:Inner | GCO59167 | Outer Joint | 48T | 26 | 27 | 63 | 100 | 62 | I |
| | 2000.05-2005.11 | AT/MT | F | L | SUV 4WD 1AZ-FE | | GCI59084 | Inner Joint | | 23 | 27 | 50 | 62 | 108.5 | |
| | 2000.05-2005.11 | AT/MT | F | R | SUV 4WD 1AZ-FE | | GCI59079 | Inner Joint | | 23 | 27 | 34 | 394 | 123 | |
| | 2000.05-2005.11 | 4AT/5MT | R | L | SUV 4WD 1AZ-FE | with inner joint | GDS99275 | Drive Shaft | 48T | 26 | | 56 | 96.5 | 643 | |
| | 2000.05-2005.11 | 4AT/5MT | R | R | SUV 4WD 1AZ-FE | with inner joint | GDS59349 | Drive Shaft | 48T | 26 | | 56 | 96.5 | 690 | |
| | 2000.05-2005.11 | 4AT/5MT | R | L/R | SUV 4WD 1AZ-FE | | GCO59021 | Outer Joint | 48T | 26 | 23 | 56 | 96.5 | 55 | I |
| | 2000.05-2005.11 | 4AT/5MT | R | L/R | SUV 4WD 1AZ-FE | | GCI59099 | Inner Joint | | | 24 | | | 68.6 | |
| | 2000.09-2003.12 | 5MT | F | L | SUV FWD 1AZ-FE | | GDS59647 | Drive Shaft | 48T | 26 | 24 | 61.2 | 100 | 627 | |
| | 2000.09-2003.12 | 5MT | F | L | SUV FWD 1AZ-FE | | GDS83751 | Drive Shaft | | 26 | 24 | 61.2 | 100 | 627 | |

| | YEAR | TRANSM. | F/R | L/R | BODY STYLE & DRIVE TYPE & ENGINE | REMARKS | G-AP Ref. | PRODUCT | ABS | Technical Specifications A | B | C | H | L | P |
|---|---|---|---|---|---|---|---|---|---|---|---|---|---|---|---|
| **TOYOTA** **Rav 4** | | | | | | | | | | | | | | | |
| 2.0 (110 kw) | 2000.09-2003.12 | 5MT | F | R | SUV FWD 1AZ-FE | | GDS56714 | Drive Shaft | | 26 | 24 | 61.2 | 100 | 947 | |
| | 2000.09-2003.12 | 5MT | F | R | SUV FWD 1AZ-FE | | GDS56715 | Drive Shaft | 48T | 26 | 24 | 63 | 100 | 947 | |
| | 2000.09-2003.12 | 5MT | F | L | SUV FWD 1AZ-FE | | GCO82477 | Outer Joint | | 26 | 27 | 61.2 | 100 | 59 | I |
| | 2000.09-2003.12 | 5MT | F | L/R | SUV FWD 1AZ-FE | | GCO59167 | Outer Joint | 48T | 26 | 27 | 63 | 100 | 62 | I |
| | 2000.09-2003.12 | 5MT | F | L | SUV FWD 1AZ-FE | | GCI59125 | Inner Joint | | 24 | 27 | 50 | 67 | 109.5 | |
| | 2000.09-2003.12 | 5MT | F | R | SUV FWD 1AZ-FE | | GCI59027 | Inner Joint | | 24 | 27 | 40 | 369 | 99.5 | |
| | 2018.12- | CVT | F | L | SUV 4WD M20A-FKS | | GDS84078 | Drive Shaft | | 30 | 24 | 61.2 | 100 | 679 | |
| | 2018.12- | CVT | F | L/R | SUV 4WD M20A-FKS | | GCO59245 | Outer Joint | | 26 | 27 | 61.2 | 100 | 59 | I |
| | 2018.12- | CVT/6MT | F | L | SUV 4WD M20A-FKS | | GCI82129 | Inner Joint | | 24 | 27 | 50 | 67 | 108 | |
| | 2018.12- | 6MT | F | L | SUV FWD M20A-FKS | | GDS84078 | Drive Shaft | | 30 | 24 | 61.2 | 100 | 679 | |
| | 2018.12- | 6MT | F | R | SUV FWD M20A-FKS | | GDS84037 | Drive Shaft | | 30 | 24 | 61.2 | 100 | 978 | |
| | 2018.12- | 6MT | F | L/R | SUV FWD M20A-FKS | | GCO99320 | Outer Joint | | 30 | 27 | 61.2 | 100 | 64 | I |
| | 2018.12- | CVT | F | L | SUV FWD M20A-FKS | | GDS84344 | Drive Shaft | | 26 | 24 | 61.2 | 100 | 675 | |
| | 2018.12- | CVT | F | R | SUV FWD M20A-FKS | | GDS84345 | Drive Shaft | | 26 | 24 | 61.2 | 100 | 971 | |
| | 2018.12- | CVT | F | L/R | SUV FWD M20A-FKS | | GCO59245 | Outer Joint | | 26 | 27 | 61.2 | 100 | 59 | I |
| | 2018.12- | CVT/6MT | F | L | SUV FWD M20A-FKS | | GCI82129 | Inner Joint | | 24 | 27 | 50 | 67 | 108 | |
| | 2018.12- | CVT/6MT | F | R | SUV FWD M20A-FKS | | GCI82484 | Inner Joint | | 24 | 27 | 40 | 368.5 | 105 | |
| 2.0 (111 kw) | 2012.12-2018.10 | 6MT | F | L | SUV 4WD 3ZR-FAE | Date to:2017.10 | GCO99320 | Outer Joint | | 30 | 27 | 61.2 | 100 | 64 | I |
| | 2012.12-2018.10 | 6MT | F | R | SUV 4WD 3ZR-FAE | Date to:2017.10 | GCI82193 | Inner Joint | | 24 | 27 | 35.5 | 373 | 105 | |
| | 2012.12-2018.10 | AT | F | L | SUV 4WD 3ZR-FAE | | GDS59678 | Drive Shaft | | 26 | 24 | 61.2 | 100 | 663 | |
| | 2012.12-2018.10 | AT | F | R | SUV 4WD 3ZR-FAE | | GDS59695 | Drive Shaft | | 26 | 20 | 61.2 | 100 | 953 | |
| | 2012.12-2018.10 | CVT | F | L/R | SUV 4WD 3ZR-FAE | Date to:2018.06 | GCO59245 | Outer Joint | | 26 | 27 | 61.2 | 100 | 59 | I |
| | 2012.12-2018.10 | CVT | F | R | SUV 4WD 3ZR-FAE | Date to:2015.03 | GCI59241 | Inner Joint | | 20 | 27 | 35.5 | 362 | 102.5 | |
| | 2012.12-2018.10 | CVT | F | R | SUV 4WD 3ZR-FAE | Date from:2015.04,Date to:2017.10 | GCI82193 | Inner Joint | | 24 | 27 | 35.5 | 373 | 105 | |
| | 2012.12-2018.10 | CVT/6MT | F | L | SUV 4WD 3ZR-FAE | TJ | GCI59073 | Inner Joint | | 24 | 27 | 50 | 67 | 110 | |
| | 2012.12-2018.10 | CVT/6MT | F | L | SUV 4WD 3ZR-FAE | AAR | GCI59125 | Inner Joint | | 24 | 27 | 50 | 67 | 109.5 | |
| | 2012.12-2018.10 | MT | F | L | SUV 4WD 3ZR-FAE | | GDS59671 | Drive Shaft | | 30 | 24 | 61.2 | 100 | 665 | |
| | 2012.12-2018.10 | MT | F | R | SUV 4WD 3ZR-FAE | | GDS59672 | Drive Shaft | | 30 | 24 | 61.2 | 100 | 967 | |
| | 2012.12-2018.10 | CVT/6MT | R | L/R | SUV 4WD 3ZR-FAE | | GDS59656 | Drive Shaft | | 26 | 20 | 51.9 | 99.5 | 811 | |
| | 2012.12-2018.10 | CVT/6MT | R | L/R | SUV 4WD 3ZR-FAE | | GCI59213 | Inner Joint | | 20 | 19 | 37 | 60 | 84 | |
| | 2012.12-2018.11 | 6MT | F | L | SUV Van 4WD 3ZR-FAE | | GDS59671 | Drive Shaft | | 30 | 24 | 61.2 | 100 | 665 | |
| | 2012.12-2018.11 | 6MT | F | R | SUV Van 4WD 3ZR-FAE | | GDS59672 | Drive Shaft | | 30 | 24 | 61.2 | 100 | 967 | |
| | 2012.12-2018.11 | 6MT | F | L/R | SUV Van 4WD 3ZR-FAE | Date to:2010.10 | GCO99320 | Outer Joint | | 30 | 27 | 61.2 | 100 | 64 | I |
| | 2012.12-2018.11 | 6MT | F | R | SUV Van 4WD 3ZR-FAE | Date to:2017.10 | GCI82193 | Inner Joint | | 24 | 27 | 35.5 | 373 | 105 | |
| | 2012.12-2018.11 | 6MT/CVT | F | L | SUV Van 4WD 3ZR-FAE | TJ | GCI59073 | Inner Joint | | 24 | 27 | 50 | 67 | 110 | |
| | 2012.12-2018.11 | 6MT/CVT | F | L | SUV Van 4WD 3ZR-FAE | AAR | GCI59125 | Inner Joint | | 24 | 27 | 50 | 67 | 109.5 | |
| | 2012.12-2018.11 | CVT | F | L | SUV Van 4WD 3ZR-FAE | | GDS59678 | Drive Shaft | | 26 | 24 | 61.2 | 100 | 663 | |
| | 2012.12-2018.11 | CVT | F | R | SUV Van 4WD 3ZR-FAE | | GDS59695 | Drive Shaft | | 26 | 20 | 61.2 | 100 | 953 | |
| | 2012.12-2018.11 | CVT | F | L/R | SUV Van 4WD 3ZR-FAE | Date to:2018.06 | GCO59245 | Outer Joint | | 26 | 27 | 61.2 | 100 | 59 | I |
| | 2012.12-2018.11 | CVT | F | R | SUV Van 4WD 3ZR-FAE | Date from:2015.04,Date to:2017.10 | GCI82193 | Inner Joint | | 24 | 27 | 35.5 | 373 | 105 | |
| | 2012.12-2018.11 | CVT/6MT | R | L/R | SUV Van 4WD 3ZR-FAE | | GDS59656 | Drive Shaft | | 26 | 20 | 51.9 | 99.5 | 811 | |
| | 2012.12-2018.11 | CVT/6MT | R | L/R | SUV Van 4WD 3ZR-FAE | | GCI59213 | Inner Joint | | 20 | 19 | 37 | 60 | 84 | |
| 2.0 (112 kw) | 2006.02-2013.06 | 4AT | F | L | SUV 4WD 1AZ-FE | | GDS59524 | Drive Shaft | | 26 | 24 | 61.2 | 100 | 643 | |
| | 2006.02-2013.06 | 4AT | F | R | SUV 4WD 1AZ-FE | | GDS59425 | Drive Shaft | | 26 | 24 | 61.2 | 100 | 990 | |
| | 2006.02-2013.06 | 4AT | F | L/R | SUV 4WD 1AZ-FE | | GCO59245 | Outer Joint | | 26 | 27 | 61.2 | 100 | 59 | I |
| | 2006.02-2013.06 | 4AT | F | L | SUV 4WD 1AZ-FE | | GCI59109 | Inner Joint | | 24 | 27 | 50 | 84 | 109 | |
| | 2006.02-2013.06 | 4AT | F | R | SUV 4WD 1AZ-FE | | GCI59108 | Inner Joint | | 24 | 27 | 35.5 | 385 | 105 | |
| | 2006.02-2013.06 | 5MT | F | L | SUV 4WD 1AZ-FE | | GDS59417 | Drive Shaft | | 30 | 24 | 61.2 | 100 | 656 | |
| | 2006.02-2013.06 | 5MT | F | R | SUV 4WD 1AZ-FE | | GDS83399 | Drive Shaft | | 30 | 24 | 61.2 | 100 | 982 | |
| | 2006.02-2013.06 | 5MT | F | L/R | SUV 4WD 1AZ-FE | | GCO99320 | Outer Joint | | 30 | 27 | 61.2 | 100 | 64 | I |
| | 2006.02-2013.06 | 5MT | F | L | SUV 4WD 1AZ-FE | TJ | GCI59073 | Inner Joint | | 24 | 27 | 50 | 67 | 110 | |
| | 2006.02-2013.06 | 5MT | F | L | SUV 4WD 1AZ-FE | AAR | GCI59125 | Inner Joint | | 24 | 27 | 50 | 67 | 109.5 | |
| | 2006.02-2013.06 | 5MT | F | R | SUV 4WD 1AZ-FE | | GCI82193 | Inner Joint | | 24 | 27 | 35.5 | 373 | 105 | |
| | 2006.02-2013.06 | 4AT/5MT | R | L/R | SUV 4WD 1AZ-FE | Date to:2012.08 | GDS59637 | Drive Shaft | | 26 | 20 | 51.9 | 99.5 | 810 | |
| | 2006.02-2013.06 | 4AT/5MT | R | L/R | SUV 4WD 1AZ-FE | Date from:2012.09 | GDS59656 | Drive Shaft | | 26 | 20 | 51.9 | 99.5 | 811 | |
| | 2006.02-2013.06 | 4AT/5MT | R | L/R | SUV 4WD 1AZ-FE | | GCO59366 | Outer Joint | | 26 | 18 | 51.9 | 99.5 | 49 | I |
| | 2006.02-2013.06 | 4AT/5MT | R | L/R | SUV 4WD 1AZ-FE | | GCI59210 | Inner Joint | | 20 | 18 | 37 | 59.5 | 89 | |
| | 2006.02-2013.06 | MT | R | R | SUV 4WD 1AZ-FE | Date from:2012.09,Date to:2012.12 | GCI59213 | Inner Joint | | 20 | 19 | 37 | 60 | 84 | |
| | 2012.12-2018.11 | 6MT | F | L | SUV Van 4WD 3ZR-FAE | | GDS59671 | Drive Shaft | | 30 | 24 | 61.2 | 100 | 665 | |
| | 2012.12-2018.11 | 6MT | F | R | SUV Van 4WD 3ZR-FAE | | GDS59672 | Drive Shaft | | 30 | 24 | 61.2 | 100 | 967 | |
| | 2012.12-2018.11 | 6MT | F | L/R | SUV Van 4WD 3ZR-FAE | Date to:2010.10 | GCO99320 | Outer Joint | | 30 | 27 | 61.2 | 100 | 64 | I |
| | 2012.12-2018.11 | 6MT/CVT | F | L | SUV Van 4WD 3ZR-FAE | TJ | GCI59073 | Inner Joint | | 24 | 27 | 50 | 67 | 110 | |
| | 2012.12-2018.11 | 6MT/CVT | F | L | SUV Van 4WD 3ZR-FAE | AAR | GCI59125 | Inner Joint | | 24 | 27 | 50 | 67 | 109.5 | |
| | 2012.12-2018.11 | CVT | F | L | SUV Van 4WD 3ZR-FAE | | GDS59678 | Drive Shaft | | 26 | 24 | 61.2 | 100 | 663 | |
| | 2012.12-2018.11 | CVT | F | R | SUV Van 4WD 3ZR-FAE | | GDS59695 | Drive Shaft | | 26 | 20 | 61.2 | 100 | 953 | |

| | YEAR | TRANSM. | F/R | L/R | BODY STYLE & DRIVE TYPE & ENGINE | REMARKS | G-AP Ref. | PRODUCT | ABS | Technical Specifications A | B | C | H | L | P |
|---|---|---|---|---|---|---|---|---|---|---|---|---|---|---|---|
| **TOYOTA** **Rav 4** | | | | | | | | | | | | | | | |
| 2.0 (112 kw) | 2012.12-2018.11 | CVT | F | L/R | SUV Van 4WD 3ZR-FAE | Date to:2018.06 | GCO59245 | Outer Joint | | 26 | 27 | 61.2 | 100 | 59 | I |
| | 2012.12-2018.11 | CVT/6MT | F | R | SUV Van 4WD 3ZR-FAE | Date to:2017.10 | GCI82193 | Inner Joint | | 24 | 27 | 35.5 | 373 | 105 | |
| | 2012.12-2018.11 | CVT/6MT | R | L/R | SUV Van 4WD 3ZR-FAE | | GDS59656 | Drive Shaft | | 26 | 20 | 51.9 | 99.5 | 811 | |
| | 2012.12-2018.11 | CVT/6MT | R | L/R | SUV Van 4WD 3ZR-FAE | | GCI59213 | Inner Joint | | 20 | 19 | 37 | 60 | 84 | |
| | 2015.04-2018.10 | 6MT | F | L | SUV 4WD 3ZR-FAE | Date to:2017.10 | GCO99320 | Outer Joint | | 30 | 27 | 61.2 | 100 | 64 | I |
| | 2015.04-2018.10 | 6MT/CVT | F | L | SUV 4WD 3ZR-FAE | TJ | GCI59073 | Inner Joint | | 24 | 27 | 50 | 67 | 110 | |
| | 2015.04-2018.10 | 6MT/CVT | F | L | SUV 4WD 3ZR-FAE | AAR | GCI59125 | Inner Joint | | 24 | 27 | 50 | 67 | 109.5 | |
| | 2015.04-2018.10 | AT | F | R | SUV 4WD 3ZR-FAE | | GCI59128 | Inner Joint | | 24 | 27 | 40 | 369.5 | 105.5 | |
| | 2015.04-2018.10 | AT/CVT | F | L | SUV 4WD 3ZR-FAE | | GDS59678 | Drive Shaft | | 26 | 24 | 61.2 | 100 | 663 | |
| | 2015.04-2018.10 | AT/CVT | F | R | SUV 4WD 3ZR-FAE | | GDS59695 | Drive Shaft | | 26 | 20 | 61.2 | 100 | 953 | |
| | 2015.04-2018.10 | CVT | F | L/R | SUV 4WD 3ZR-FAE | Date to:2018.06 | GCO59245 | Outer Joint | | 26 | 27 | 61.2 | 100 | 59 | I |
| | 2015.04-2018.10 | CVT/6MT | F | R | SUV 4WD 3ZR-FAE | Date to:2017.10 | GCI82193 | Inner Joint | | 24 | 27 | 35.5 | 373 | 105 | |
| | 2015.04-2018.10 | MT | F | L | SUV 4WD 3ZR-FAE | | GDS59671 | Drive Shaft | | 30 | 24 | 61.2 | 100 | 665 | |
| | 2015.04-2018.10 | MT | F | R | SUV 4WD 3ZR-FAE | | GDS59672 | Drive Shaft | | 30 | 24 | 61.2 | 100 | 967 | |
| | 2015.04-2018.10 | MT | F | R | SUV 4WD 3ZR-FAE | | GDS81234 | Drive Shaft | | 30 | 24 | 61.2 | 100 | 964 | |
| | 2015.04-2018.10 | | F | R | SUV 4WD 3ZR-FAE | | GCI59241 | Inner Joint | | 20 | 27 | 35.5 | 362 | 102.5 | |
| | 2015.04-2018.10 | CVT/6MT | R | L/R | SUV 4WD 3ZR-FAE | | GDS59656 | Drive Shaft | | 26 | 20 | 51.9 | 99.5 | 811 | |
| | 2015.04-2018.10 | | R | L/R | SUV 4WD 3ZR-FAE | | GCO59488 | Outer Joint | | 26 | 19 | 51.9 | 99.5 | 49 | I |
| | 2015.04-2018.10 | | R | L/R | SUV 4WD 3ZR-FAE | | GCI59213 | Inner Joint | | 20 | 19 | 37 | 60 | 84 | |
| 2.0 (116 kw) | 2008.12-2013.06 | 6MT | F | L | SUV 4WD 3ZR-FAE | | GDS59671 | Drive Shaft | | 30 | 24 | 61.2 | 100 | 665 | |
| | 2008.12-2013.06 | 6MT | F | R | SUV 4WD 3ZR-FAE | | GDS59672 | Drive Shaft | | 30 | 24 | 61.2 | 100 | 967 | |
| | 2008.12-2013.06 | 6MT | F | L/R | SUV 4WD 3ZR-FAE | | GCO99320 | Outer Joint | | 30 | 27 | 61.2 | 100 | 64 | I |
| | 2008.12-2013.06 | 6MT | F | R | SUV 4WD 3ZR-FAE | AAR | GCI82193 | Inner Joint | | 24 | 27 | 35.5 | 373 | 105 | |
| | 2008.12-2013.06 | CVT | F | L | SUV 4WD 3ZR-FAE | | GDS59678 | Drive Shaft | | 26 | 24 | 61.2 | 100 | 663 | |
| | 2008.12-2013.06 | CVT | F | R | SUV 4WD 3ZR-FAE | | GDS59695 | Drive Shaft | | 26 | 20 | 61.2 | 100 | 953 | |
| | 2008.12-2013.06 | CVT | F | L/R | SUV 4WD 3ZR-FAE | | GCO59245 | Outer Joint | | 26 | 27 | 61.2 | 100 | 59 | I |
| | 2008.12-2013.06 | CVT | F | R | SUV 4WD 3ZR-FAE | | GCI59241 | Inner Joint | | 20 | 27 | 35.5 | 362 | 102.5 | |
| | 2008.12-2013.06 | CVT/6MT | F | L | SUV 4WD 3ZR-FAE | TJ | GCI59073 | Inner Joint | | 24 | 27 | 50 | 67 | 110 | |
| | 2008.12-2013.06 | CVT/6MT | F | L | SUV 4WD 3ZR-FAE | AAR | GCI59125 | Inner Joint | | 24 | 27 | 50 | 67 | 109.5 | |
| | 2008.12-2013.06 | CVT/6MT | R | L/R | SUV 4WD 3ZR-FAE | Date to:2012.08 | GDS59637 | Drive Shaft | | 26 | 20 | 51.9 | 99.5 | 810 | |
| | 2008.12-2013.06 | CVT/6MT | R | L/R | SUV 4WD 3ZR-FAE | Date from:2012.09 | GDS59656 | Drive Shaft | | 26 | 20 | 51.9 | 99.5 | 811 | |
| | 2008.12-2013.06 | CVT/6MT | R | L/R | SUV 4WD 3ZR-FAE | | GCO59366 | Outer Joint | | 26 | 18 | 51.9 | 99.5 | 49 | I |
| | 2008.12-2013.06 | CVT/6MT | R | L/R | SUV 4WD 3ZR-FAE | | GCI59210 | Inner Joint | | 20 | 18 | 37 | 59.5 | 89 | |
| | 2008.12-2013.06 | 6MT | F | L | SUV FWD 3ZR-FAE | | GDS59671 | Drive Shaft | | 30 | 24 | 61.2 | 100 | 665 | |
| | 2008.12-2013.06 | 6MT | F | L | SUV FWD 3ZR-FAE | | GCO99320 | Outer Joint | | 30 | 27 | 61.2 | 100 | 64 | I |
| | 2008.12-2013.06 | 6MT | F | L | SUV FWD 3ZR-FAE | TJ | GCI59073 | Inner Joint | | 24 | 27 | 50 | 67 | 110 | |
| | 2008.12-2013.06 | 6MT | F | L | SUV FWD 3ZR-FAE | AAR | GCI59125 | Inner Joint | | 24 | 27 | 50 | 67 | 109.5 | |
| | 2008.12-2013.06 | 6MT | F | R | SUV FWD 3ZR-FAE | Date to:2017.10 | GCI59078 | Inner Joint | | 24 | 27 | 40 | 370 | 105 | |
| | 2008.12-2013.06 | | F | R | SUV FWD 3ZR-FAE | | GDS81234 | Drive Shaft | | 30 | 24 | 61.2 | 100 | 964 | |
| 2.0 (127 kw) | 2018.12- | 6MT | F | L | SUV FWD M20A-FKS | | GDS84078 | Drive Shaft | | 30 | 24 | 61.2 | 100 | 679 | |
| | 2018.12- | 6MT | F | R | SUV FWD M20A-FKS | | GDS84037 | Drive Shaft | | 30 | 24 | 61.2 | 100 | 978 | |
| | 2018.12- | 6MT | F | L/R | SUV FWD M20A-FKS | | GCO99320 | Outer Joint | | 30 | 27 | 61.2 | 100 | 64 | I |
| | 2018.12- | CVT | F | L | SUV FWD M20A-FKS | | GDS84344 | Drive Shaft | | 26 | 24 | 61.2 | 100 | 675 | |
| | 2018.12- | CVT | F | R | SUV FWD M20A-FKS | | GDS84345 | Drive Shaft | | 26 | 24 | 61.2 | 100 | 971 | |
| | 2018.12- | CVT | F | L/R | SUV FWD M20A-FKS | | GCO59245 | Outer Joint | | 26 | 27 | 61.2 | 100 | 59 | I |
| | 2018.12- | CVT/6MT | F | L | SUV FWD M20A-FKS | | GCI82129 | Inner Joint | | 24 | 27 | 50 | 67 | 108 | |
| | 2018.12- | CVT/6MT | F | R | SUV FWD M20A-FKS | | GCI82484 | Inner Joint | | 24 | 27 | 40 | 368.5 | 105 | |
| | 2019.02- | CVT | F | L | SUV 4WD M20A-FKS | | GDS84344 | Drive Shaft | | 26 | 24 | 61.2 | 100 | 675 | |
| | 2019.02- | CVT | F | L/R | SUV 4WD M20A-FKS | | GCO59245 | Outer Joint | | 26 | 27 | 61.2 | 100 | 59 | I |
| | 2019.02- | CVT/6MT | F | L | SUV 4WD M20A-FKS | | GCI82129 | Inner Joint | | 24 | 27 | 50 | 67 | 108 | |
| 2.0 (129 kw) | 2018.12- | 6MT | F | L | SUV 4WD M20A-FKS | | GDS84078 | Drive Shaft | | 30 | 24 | 61.2 | 100 | 679 | |
| | 2018.12- | 6MT | F | L/R | SUV 4WD M20A-FKS | | GCO99320 | Outer Joint | | 30 | 27 | 61.2 | 100 | 64 | I |
| | 2018.12- | CVT | F | L | SUV 4WD M20A-FKS | | GDS84344 | Drive Shaft | | 26 | 24 | 61.2 | 100 | 675 | |
| | 2018.12- | CVT | F | L/R | SUV 4WD M20A-FKS | | GCO59245 | Outer Joint | | 26 | 27 | 61.2 | 100 | 59 | I |
| | 2018.12- | CVT/6MT | F | L | SUV 4WD M20A-FKS | | GCI82129 | Inner Joint | | 24 | 27 | 50 | 67 | 108 | |
| | 2018.12- | 6MT | F | L | SUV FWD M20A-FKS | | GDS84078 | Drive Shaft | | 30 | 24 | 61.2 | 100 | 679 | |
| | 2018.12- | 6MT | F | R | SUV FWD M20A-FKS | | GDS84037 | Drive Shaft | | 30 | 24 | 61.2 | 100 | 978 | |
| | 2018.12- | 6MT | F | L/R | SUV FWD M20A-FKS | | GCO99320 | Outer Joint | | 30 | 27 | 61.2 | 100 | 64 | I |
| | 2018.12- | CVT | F | L | SUV FWD M20A-FKS | | GDS84344 | Drive Shaft | | 26 | 24 | 61.2 | 100 | 675 | |
| | 2018.12- | CVT | F | R | SUV FWD M20A-FKS | | GDS84345 | Drive Shaft | | 26 | 24 | 61.2 | 100 | 971 | |
| | 2018.12- | CVT | F | L/R | SUV FWD M20A-FKS | | GCO59245 | Outer Joint | | 26 | 27 | 61.2 | 100 | 59 | I |
| | 2018.12- | CVT/6MT | F | L | SUV FWD M20A-FKS | | GCI82129 | Inner Joint | | 24 | 27 | 50 | 67 | 108 | |
| | 2018.12- | CVT/6MT | F | R | SUV FWD M20A-FKS | | GCI82484 | Inner Joint | | 24 | 27 | 40 | 368.5 | 105 | |
| | 2018.12- | 6MT | F | L | SUV Van 4WD M20A-FKS | | GDS84078 | Drive Shaft | | 30 | 24 | 61.2 | 100 | 679 | |
| | 2018.12- | 6MT | F | L/R | SUV Van 4WD M20A-FKS | | GCO99320 | Outer Joint | | 30 | 27 | 61.2 | 100 | 64 | I |

| | YEAR | TRANSM. | F/R | L/R | BODY STYLE & DRIVE TYPE & ENGINE | REMARKS | G-AP Ref. | PRODUCT | ABS | Technical Specifications A | B | C | H | L | P |
|---|---|---|---|---|---|---|---|---|---|---|---|---|---|---|---|
| **TOYOTA** | | | | | | | | | | | | | | | |
| **Rav 4** | | | | | | | | | | | | | | | |
| 2.0 (129 kw) | 2018.12- | CVT | F | L | SUV Van 4WD M20A-FKS | | GDS84344 | Drive Shaft | | 26 | 24 | 61.2 | 100 | 675 | |
| | 2018.12- | CVT | F | L/R | SUV Van 4WD M20A-FKS | | GCO59245 | Outer Joint | | 26 | 27 | 61.2 | 100 | 59 | I |
| | 2018.12- | CVT/6MT | F | L | SUV Van 4WD M20A-FKS | | GCI82129 | Inner Joint | | 24 | 27 | 50 | 67 | 108 | |
| | 2018.12- | 6MT | F | L | SUV Van FWD M20A-FKS | | GDS84078 | Drive Shaft | | 30 | 24 | 61.2 | 100 | 679 | |
| | 2018.12- | 6MT | F | R | SUV Van FWD M20A-FKS | | GDS84037 | Drive Shaft | | 30 | 24 | 61.2 | 100 | 978 | |
| | 2018.12- | 6MT | F | L/R | SUV Van FWD M20A-FKS | | GCO99320 | Outer Joint | | 30 | 27 | 61.2 | 100 | 64 | I |
| | 2018.12- | CVT | F | L | SUV Van FWD M20A-FKS | | GDS84344 | Drive Shaft | | 26 | 24 | 61.2 | 100 | 675 | |
| | 2018.12- | CVT | F | R | SUV Van FWD M20A-FKS | | GDS84345 | Drive Shaft | | 26 | 24 | 61.2 | 100 | 971 | |
| | 2018.12- | CVT | F | L/R | SUV Van FWD M20A-FKS | | GCO59245 | Outer Joint | | 26 | 27 | 61.2 | 100 | 59 | I |
| | 2018.12- | CVT/6MT | F | L | SUV Van FWD M20A-FKS | | GCI82129 | Inner Joint | | 24 | 27 | 50 | 67 | 108 | |
| | 2018.12- | CVT/6MT | F | R | SUV Van FWD M20A-FKS | | GCI82484 | Inner Joint | | 24 | 27 | 40 | 368.5 | 105 | |
| 2.2 (98 kw) | 2005.11-2010.12 | 6MT | F | L | SUV 4WD 2AD-FTV | | GDS59622 | Drive Shaft | | 30 | 24 | 61.2 | 100 | 625 | |
| | 2005.11-2010.12 | 6MT | F | R | SUV 4WD 2AD-FTV | | GDS59518 | Drive Shaft | | 30 | 24 | 61.2 | 100 | 1006 | |
| | 2005.11-2010.12 | 6MT | F | L | SUV 4WD 2AD-FTV | Date to:2017.10 | GCO99320 | Outer Joint | | 30 | 27 | 61.2 | 100 | 64 | I |
| | 2005.11-2010.12 | 6MT | F | L | SUV 4WD 2AD-FTV | TJ | GCI59073 | Inner Joint | | 24 | 27 | 50 | 67 | 110 | |
| | 2005.11-2010.12 | 6MT | F | L | SUV 4WD 2AD-FTV | AAR | GCI59125 | Inner Joint | | 24 | 27 | 50 | 67 | 109.5 | |
| | 2005.11-2010.12 | 6MT | R | L/R | SUV 4WD 2AD-FTV | | GDS59637 | Drive Shaft | | 26 | 20 | 51.9 | 99.5 | 810 | |
| | 2005.11-2010.12 | 6MT | R | L/R | SUV 4WD 2AD-FTV | | GCO59366 | Outer Joint | | 26 | 18 | 51.9 | 99.5 | 49 | I |
| | 2005.11-2010.12 | 6MT | R | L/R | SUV 4WD 2AD-FTV | | GCI59210 | Inner Joint | | 20 | 18 | 37 | 59.5 | 89 | |
| 2.2 (100 kw) | 2006.02-2012.12 | 6MT | F | L | SUV 4WD 2AD-FTV | | GDS59622 | Drive Shaft | | 30 | 24 | 61.2 | 100 | 625 | |
| | 2006.02-2012.12 | 6MT | F | R | SUV 4WD 2AD-FTV | | GDS59518 | Drive Shaft | | 30 | 24 | 61.2 | 100 | 1006 | |
| | 2006.02-2012.12 | 6MT | F | L/R | SUV 4WD 2AD-FTV | | GCO99320 | Outer Joint | | 30 | 27 | 61.2 | 100 | 64 | I |
| | 2006.02-2012.12 | 6MT | F | L | SUV 4WD 2AD-FTV | TJ | GCI59073 | Inner Joint | | 24 | 27 | 50 | 67 | 110 | |
| | 2006.02-2012.12 | 6MT | F | L | SUV 4WD 2AD-FTV | AAR | GCI59125 | Inner Joint | | 24 | 27 | 50 | 67 | 109.5 | |
| | 2006.02-2012.12 | 6MT | R | L/R | SUV 4WD 2AD-FTV | | GDS59637 | Drive Shaft | | 26 | 20 | 51.9 | 99.5 | 810 | |
| | 2006.02-2012.12 | 6MT | R | L/R | SUV 4WD 2AD-FTV | Date from:2012.09 | GDS59656 | Drive Shaft | | 26 | 20 | 51.9 | 99.5 | 811 | |
| | 2006.02-2012.12 | 6MT | R | L/R | SUV 4WD 2AD-FTV | Date to:2012.08 | GCO59366 | Outer Joint | | 26 | 18 | 51.9 | 99.5 | 49 | I |
| | 2006.02-2012.12 | 6MT | R | L/R | SUV 4WD 2AD-FTV | Date from:2012.09 | GCO59488 | Outer Joint | | 26 | 19 | 51.9 | 99.5 | 49 | I |
| | 2006.02-2012.12 | 6MT | R | L/R | SUV 4WD 2AD-FTV | Date to:2012.08 | GCI59210 | Inner Joint | | 20 | 18 | 37 | 59.5 | 89 | |
| | 2006.02-2012.12 | 6MT | R | L/R | SUV 4WD 2AD-FTV | Date from:2012.09 | GCI59213 | Inner Joint | | 20 | 19 | 37 | 60 | 84 | |
| 2.2 (110 kw) | 2008.12-2013.06 | 6AT | F | L | SUV 4WD 2AD-FHV;2AD-FTV | | GDS59670 | Drive Shaft | | 30 | 24 | 61.2 | 100 | 636 | |
| | 2008.12-2013.06 | 6AT | F | R | SUV 4WD 2AD-FHV;2AD-FTV | | GDS59696 | Drive Shaft | | 30 | 24 | 61.2 | 100 | 1000 | |
| | 2008.12-2013.06 | 6AT | F | L | SUV 4WD 2AD-FHV;2AD-FTV | | GCO59321 | Outer Joint | | 30 | 27 | 61.2 | 100 | 64.5 | M |
| | 2008.12-2013.06 | 6AT | F | R | SUV 4WD 2AD-FHV;2AD-FTV | | GCO99320 | Outer Joint | | 30 | 27 | 61.2 | 100 | 64 | I |
| | 2008.12-2013.06 | 6AT | F | R | SUV 4WD 2AD-FHV;2AD-FTV | | GCI59235 | Inner Joint | | 24 | 27 | 35.5 | 391 | 102 | |
| | 2008.12-2013.06 | 6AT/6MT | F | L | SUV 4WD 2AD-FHV;2AD-FTV | TJ | GCI59073 | Inner Joint | | 24 | 27 | 50 | 67 | 110 | |
| | 2008.12-2013.06 | 6AT/6MT | F | L | SUV 4WD 2AD-FHV;2AD-FTV | AAR | GCI59125 | Inner Joint | | 24 | 27 | 50 | 67 | 109.5 | |
| | 2008.12-2013.06 | 6MT | F | L | SUV 4WD 2AD-FHV;2AD-FTV | | GDS59622 | Drive Shaft | | 30 | 24 | 61.2 | 100 | 625 | |
| | 2008.12-2013.06 | 6MT | F | R | SUV 4WD 2AD-FHV;2AD-FTV | | GDS59518 | Drive Shaft | | 30 | 24 | 61.2 | 100 | 1006 | |
| | 2008.12-2013.06 | 6MT | F | L/R | SUV 4WD 2AD-FHV;2AD-FTV | | GCO99320 | Outer Joint | | 30 | 27 | 61.2 | 100 | 64 | I |
| | 2008.12-2013.06 | 6AT/6MT | R | L/R | SUV 4WD 2AD-FHV;2AD-FTV | | GDS59637 | Drive Shaft | | 26 | 20 | 51.9 | 99.5 | 810 | |
| | 2008.12-2013.06 | 6AT/6MT | R | L/R | SUV 4WD 2AD-FHV;2AD-FTV | Date from:2012.09 | GDS59656 | Drive Shaft | | 26 | 20 | 51.9 | 99.5 | 811 | |
| | 2008.12-2013.06 | 6AT/6MT | R | L/R | SUV 4WD 2AD-FHV;2AD-FTV | Date to:2012.08 | GCO59366 | Outer Joint | | 26 | 18 | 51.9 | 99.5 | 49 | I |
| | 2008.12-2013.06 | 6AT/6MT | R | L/R | SUV 4WD 2AD-FHV;2AD-FTV | Date from:2012.09 | GCO59488 | Outer Joint | | 26 | 19 | 51.9 | 99.5 | 49 | I |
| | 2008.12-2013.06 | 6AT/6MT | R | L/R | SUV 4WD 2AD-FHV;2AD-FTV | Date to:2012.08 | GCI59210 | Inner Joint | | 20 | 18 | 37 | 59.5 | 89 | |
| | 2008.12-2013.06 | MT | R | L/R | SUV 4WD 2AD-FHV;2AD-FTV | Date from:2012.09,Date to:2012.12 | GCI59213 | Inner Joint | | 20 | 19 | 37 | 60 | 84 | |
| | 2008.12-2013.06 | 6AT | F | L | SUV FWD 2AD-FHV;2AD-FTV | | GDS59670 | Drive Shaft | | 30 | 24 | 61.2 | 100 | 636 | |
| | 2008.12-2013.06 | 6MT | F | L | SUV FWD 2AD-FHV;2AD-FTV | | GDS59622 | Drive Shaft | | 30 | 24 | 61.2 | 100 | 625 | |
| | 2008.12-2013.06 | 6MT | F | R | SUV FWD 2AD-FHV;2AD-FTV | | GDS81235 | Drive Shaft | | 30 | 24 | 61.2 | 100 | 1003 | |
| | 2008.12-2013.06 | 6MT | F | L | SUV FWD 2AD-FHV;2AD-FTV | Date to:2017.10 | GCO99320 | Outer Joint | | 30 | 27 | 61.2 | 100 | 64 | I |
| | 2008.12-2013.06 | 6MT | F | L | SUV FWD 2AD-FHV;2AD-FTV | TJ | GCI59073 | Inner Joint | | 24 | 27 | 50 | 67 | 110 | |
| | 2008.12-2013.06 | 6MT | F | L | SUV FWD 2AD-FHV;2AD-FTV | AAR | GCI59125 | Inner Joint | | 24 | 27 | 50 | 67 | 109.5 | |
| | 2008.12-2013.06 | 6MT | F | R | SUV FWD 2AD-FHV;2AD-FTV | | GCI59206 | Inner Joint | | 24 | 27 | 40 | 377 | 104.5 | |
| | 2012.12-2018.11 | 6AT | F | L | SUV Van 4WD 2AD-FTV | Date from:2015.10 | GDS59622 | Drive Shaft | | 30 | 24 | 61.2 | 100 | 625 | |
| | 2012.12-2018.11 | 6AT | F | L | SUV Van 4WD 2AD-FTV | Date to:2015.09 | GDS59670 | Drive Shaft | | 30 | 24 | 61.2 | 100 | 636 | |
| | 2012.12-2018.11 | 6AT | F | R | SUV Van 4WD 2AD-FTV | Date from:2015.10 | GDS59518 | Drive Shaft | | 30 | 24 | 61.2 | 100 | 1006 | |
| | 2012.12-2018.11 | 6AT | F | R | SUV Van 4WD 2AD-FTV | Date to:2015.09 | GDS59696 | Drive Shaft | | 30 | 24 | 61.2 | 100 | 1000 | |
| | 2012.12-2018.11 | 6AT | F | L | SUV Van 4WD 2AD-FTV | Date to:2017.10 | GCO59321 | Outer Joint | | 30 | 27 | 61.2 | 100 | 64.5 | M |
| | 2012.12-2018.11 | 6AT | F | R | SUV Van 4WD 2AD-FTV | Date to:2015.09 | GCI59235 | Inner Joint | | 24 | 27 | 35.5 | 391 | 102 | |
| | 2012.12-2018.11 | 6AT/6MT | F | L | SUV Van 4WD 2AD-FTV | Manufactured in:Russia,Date to:2017.10 | GCI59125 | Inner Joint | | 24 | 27 | 50 | 67 | 109.5 | |
| | 2012.12-2018.11 | 6MT | F | L | SUV Van 4WD 2AD-FTV | Date to:2015.09 | GDS59622 | Drive Shaft | | 30 | 24 | 61.2 | 100 | 625 | |
| | 2012.12-2018.11 | 6MT | F | R | SUV Van 4WD 2AD-FTV | Date to:2015.09 | GDS59518 | Drive Shaft | | 30 | 24 | 61.2 | 100 | 1006 | |
| | 2012.12-2018.11 | 6MT/6AT | F | L/R | SUV Van 4WD 2AD-FTV | Transmission:6AT,Date from:2017.11;Transmission:6MT,Date to:2010.10 | GCO99320 | Outer Joint | | 30 | 27 | 61.2 | 100 | 64 | I |
| | 2012.12-2018.11 | 6AT/6MT | R | L/R | SUV Van 4WD 2AD-FTV | | GDS59656 | Drive Shaft | | 26 | 20 | 51.9 | 99.5 | 811 | |
| | 2012.12-2018.11 | 6AT/6MT | R | L/R | SUV Van 4WD 2AD-FTV | | GCI59213 | Inner Joint | | 20 | 19 | 37 | 60 | 84 | |

| | YEAR | TRANSM. | F/R | L/R | BODY STYLE & DRIVE TYPE & ENGINE | REMARKS | G-AP Ref. | PRODUCT | ABS | Technical Specifications A | B | C | H | L | P |
|---|---|---|---|---|---|---|---|---|---|---|---|---|---|---|---|
| **TOYOTA** | | | | | | | | | | | | | | | |
| **Rav 4** | | | | | | | | | | | | | | | |
| 2.2 (110 kw) | 2012.12-2019.09 | 6AT | F | L | SUV 4WD 2AD-FHV;2AD-FTV | Date to:2015.09 | GDS59670 | Drive Shaft | | 30 | 24 | 61.2 | 100 | 636 | |
| | 2012.12-2019.09 | 6AT | F | R | SUV 4WD 2AD-FHV;2AD-FTV | Date to:2015.09 | GDS59696 | Drive Shaft | | 30 | 24 | 61.2 | 100 | 1000 | |
| | 2012.12-2019.09 | 6AT | F | R | SUV 4WD 2AD-FHV;2AD-FTV | Date to:2015.09 | GCI59235 | Inner Joint | | 24 | 27 | 35.5 | 391 | 102 | |
| | 2012.12-2019.09 | 6AT/6MT | F | L | SUV 4WD 2AD-FHV;2AD-FTV | Transmission:6AT,Date from:2015.09;Transmission:6MT | GDS59622 | Drive Shaft | | 30 | 24 | 61.2 | 100 | 625 | |
| | 2012.12-2019.09 | 6AT/6MT | F | R | SUV 4WD 2AD-FHV;2AD-FTV | Transmission:6AT,Date from:2015.10;Transmission:6MT | GDS59518 | Drive Shaft | | 30 | 24 | 61.2 | 100 | 1006 | |
| | 2012.12-2019.09 | 6AT/6MT | F | L/R | SUV 4WD 2AD-FHV;2AD-FTV | Date to:2017.10 | GCO59321 | Outer Joint | | 30 | 27 | 61.2 | 100 | 64.5 | M |
| | 2012.12-2019.09 | 6AT/6MT | F | L/R | SUV 4WD 2AD-FHV;2AD-FTV | Date from:2017.11 | GCO99320 | Outer Joint | | 30 | 27 | 61.2 | 100 | 64 | I |
| | 2012.12-2019.09 | 6AT/6MT | F | L | SUV 4WD 2AD-FHV;2AD-FTV | TJ | GCI59073 | Inner Joint | | 24 | 27 | 50 | 67 | 110 | |
| | 2012.12-2019.09 | 6AT/6MT | F | L | SUV 4WD 2AD-FHV;2AD-FTV | AAR | GCI59125 | Inner Joint | | 24 | 27 | 50 | 67 | 109.5 | |
| | 2012.12-2019.09 | 6AT/6MT | R | L/R | SUV 4WD 2AD-FHV;2AD-FTV | | GDS59656 | Drive Shaft | | 26 | 20 | 51.9 | 99.5 | 811 | |
| | 2012.12-2019.09 | 6AT/6MT | R | L/R | SUV 4WD 2AD-FHV;2AD-FTV | | GCO59488 | Outer Joint | | 26 | 19 | 51.9 | 99.5 | 49 | I |
| | 2012.12-2019.09 | 6AT/6MT | R | L/R | SUV 4WD 2AD-FHV;2AD-FTV | | GCI59213 | Inner Joint | | 20 | 19 | 37 | 60 | 84 | |
| 2.2 (130 kw) | 2006.02-2013.06 | 6AT | F | L | SUV 4WD 2AD-FHV | | GDS59670 | Drive Shaft | | 30 | 24 | 61.2 | 100 | 636 | |
| | 2006.02-2013.06 | 6AT | F | R | SUV 4WD 2AD-FHV | | GDS59696 | Drive Shaft | | 30 | 24 | 61.2 | 100 | 1000 | |
| | 2006.02-2013.06 | 6AT | F | L | SUV 4WD 2AD-FHV | | GCO59321 | Outer Joint | | 30 | 27 | 61.2 | 100 | 64.5 | M |
| | 2006.02-2013.06 | 6AT | F | R | SUV 4WD 2AD-FHV | | GCI59235 | Inner Joint | | 24 | 27 | 35.5 | 391 | 102 | |
| | 2006.02-2013.06 | 6AT/6MT | F | L | SUV 4WD 2AD-FHV | TJ | GCI59073 | Inner Joint | | 24 | 27 | 50 | 67 | 110 | |
| | 2006.02-2013.06 | 6AT/6MT | F | L | SUV 4WD 2AD-FHV | AAR | GCI59125 | Inner Joint | | 24 | 27 | 50 | 67 | 109.5 | |
| | 2006.02-2013.06 | 6MT | F | L | SUV 4WD 2AD-FHV | | GDS59622 | Drive Shaft | | 30 | 24 | 61.2 | 100 | 625 | |
| | 2006.02-2013.06 | 6MT | F | R | SUV 4WD 2AD-FHV | | GDS59518 | Drive Shaft | | 30 | 24 | 61.2 | 100 | 1006 | |
| | 2006.02-2013.06 | 6MT | F | L/R | SUV 4WD 2AD-FHV | | GCO99320 | Outer Joint | | 30 | 27 | 61.2 | 100 | 64 | I |
| | 2006.02-2013.06 | 6AT/6MT | R | L/R | SUV 4WD 2AD-FHV | | GDS59637 | Drive Shaft | | 26 | 20 | 51.9 | 99.5 | 810 | |
| | 2006.02-2013.06 | 6AT/6MT | R | L/R | SUV 4WD 2AD-FHV | Date from:2012.09 | GDS59656 | Drive Shaft | | 26 | 20 | 51.9 | 99.5 | 811 | |
| | 2006.02-2013.06 | 6AT/6MT | R | L/R | SUV 4WD 2AD-FHV | Date to:2012.08 | GCO59366 | Outer Joint | | 26 | 18 | 51.9 | 99.5 | 49 | I |
| | 2006.02-2013.06 | 6AT/6MT | R | L/R | SUV 4WD 2AD-FHV | Date from:2012.09 | GCO59488 | Outer Joint | | 26 | 19 | 51.9 | 99.5 | 49 | I |
| | 2006.02-2013.06 | 6AT/6MT | R | L/R | SUV 4WD 2AD-FHV | | GCI59210 | Inner Joint | | 20 | 18 | 37 | 59.5 | 89 | |
| | 2006.02-2013.06 | 6MT | R | L/R | SUV 4WD 2AD-FHV | Date from:2012.09,Date to:2012.12 | GCI59213 | Inner Joint | | 20 | 19 | 37 | 60 | 84 | |
| 2.4 (112 kw) | 2003.08-2005.11 | 4AT/5MT | F | R | SUV 4WD 2AZ-FE | | GDS59211 | Drive Shaft | 48T | 26 | 23 | 63 | 100 | 988 | |
| | 2003.08-2005.11 | 4AT/5MT | F | L/R | SUV 4WD 2AZ-FE | | GCO59167 | Outer Joint | 48T | 26 | 27 | 63 | 100 | 62 | I |
| | 2003.08-2005.11 | 4AT/5MT | F | L/R | SUV 4WD 2AZ-FE | | GCO59175 | Outer Joint | 48T | 26 | 27 | 63.3 | 100 | 59 | M |
| | 2003.08-2005.11 | 4AT/5MT | F | L/R | SUV 4WD 2AZ-FE | | GCO59314 | Outer Joint | 48T | 26 | 27 | 61.2 | 100 | 59.5 | I |
| | 2003.08-2005.11 | 4AT/5MT | F | L/R | SUV 4WD 2AZ-FE | | GCO82477 | Outer Joint | | 26 | 27 | 61.2 | 100 | 59 | I |
| | 2003.08-2005.11 | 4AT/5MT | F | L | SUV 4WD 2AZ-FE | | GCI59084 | Inner Joint | | 23 | 27 | 50 | 62 | 108.5 | |
| | 2003.08-2005.11 | 4AT/5MT | F | R | SUV 4WD 2AZ-FE | | GCI59079 | Inner Joint | | 23 | 27 | 34 | 394 | 123 | |
| | 2003.08-2005.11 | 4AT/5MT | R | L | SUV 4WD 2AZ-FE | with inner joint | GDS99275 | Drive Shaft | 48T | 26 | | 56 | 96.5 | 643 | |
| | 2003.08-2005.11 | 4AT/5MT | R | R | SUV 4WD 2AZ-FE | with inner joint | GDS59349 | Drive Shaft | 48T | 26 | | 56 | 96.5 | 690 | |
| | 2003.08-2005.11 | 4AT/5MT | R | L/R | SUV 4WD 2AZ-FE | | GCO59021 | Outer Joint | 48T | 26 | 23 | 56 | 96.5 | 55 | I |
| | 2003.08-2005.11 | 4AT/5MT | R | L/R | SUV 4WD 2AZ-FE | | GCI59099 | Inner Joint | | | 24 | | | 68.6 | |
| 2.4 (120 kw) | 2000.08-2005.11 | 4AT | F | L | SUV FWD 2AZ-FE | | GDS83751 | Drive Shaft | | 26 | 24 | 61.2 | 100 | 627 | |
| | 2000.08-2005.11 | 4AT | F | R | SUV FWD 2AZ-FE | | GDS56714 | Drive Shaft | | 26 | 24 | 61.2 | 100 | 947 | |
| | 2000.08-2005.11 | 5MT | F | L | SUV FWD 2AZ-FE | | GDS59647 | Drive Shaft | 48T | 26 | 24 | 61.2 | 100 | 627 | |
| | 2000.08-2005.11 | 5MT | F | R | SUV FWD 2AZ-FE | | GDS56715 | Drive Shaft | 48T | 26 | 24 | 63 | 100 | 947 | |
| | 2000.08-2005.11 | 5MT | F | R | SUV FWD 2AZ-FE | | GCO59167 | Outer Joint | 48T | 26 | 27 | 63 | 100 | 62 | I |
| | 2000.08-2005.11 | MT/AT | F | L | SUV FWD 2AZ-FE | Manufactured in:Russia | GCI59125 | Inner Joint | | 24 | 27 | 50 | 67 | 109.5 | |
| 2.4 (125 kw) | 2005.11-2013.06 | 4AT | F | L | SUV 4WD 2AZ-FE | | GDS59524 | Drive Shaft | | 26 | 24 | 61.2 | 100 | 643 | |
| | 2005.11-2013.06 | 4AT | F | R | SUV 4WD 2AZ-FE | | GDS59425 | Drive Shaft | | 26 | 24 | 61.2 | 100 | 990 | |
| | 2005.11-2013.06 | 4AT | F | L/R | SUV 4WD 2AZ-FE | | GCO59245 | Outer Joint | | 26 | 27 | 61.2 | 100 | 59 | I |
| | 2005.11-2013.06 | 4AT | F | L | SUV 4WD 2AZ-FE | For Modelcode:ACA31 | GCI59109 | Inner Joint | | 24 | 27 | 50 | 84 | 109 | |
| | 2005.11-2013.06 | 4AT | F | R | SUV 4WD 2AZ-FE | | GCI59108 | Inner Joint | | 24 | 27 | 35.5 | 385 | 105 | |
| | 2005.11-2013.06 | 4AT/5MT | F | R | SUV 4WD 2AZ-FE | For Modelcode:ACA31 | GCI59183 | Inner Joint | | 24 | 32 | 50 | 67 | 111 | |
| | 2005.11-2013.06 | 5MT | F | L | SUV 4WD 2AZ-FE | | GDS59417 | Drive Shaft | | 30 | 24 | 61.2 | 100 | 656 | |
| | 2005.11-2013.06 | 5MT | F | R | SUV 4WD 2AZ-FE | For Modelcode:ACA33 | GDS83399 | Drive Shaft | | 30 | 24 | 61.2 | 100 | 982 | |
| | 2005.11-2013.06 | 5MT | F | L/R | SUV 4WD 2AZ-FE | For Modelcode:ACA33 | GCO99320 | Outer Joint | | 30 | 27 | 61.2 | 100 | 64 | I |
| | 2005.11-2013.06 | 5MT | F | L | SUV 4WD 2AZ-FE | TJ | GCI59073 | Inner Joint | | 24 | 27 | 50 | 67 | 110 | |
| | 2005.11-2013.06 | 5MT | F | L | SUV 4WD 2AZ-FE | AAR | GCI59125 | Inner Joint | | 24 | 27 | 50 | 67 | 109.5 | |
| | 2005.11-2013.06 | 5MT | F | R | SUV 4WD 2AZ-FE | For Modelcode:ACA33 | GCI82193 | Inner Joint | | 24 | 27 | 35.5 | 373 | 105 | |
| | 2005.11-2013.06 | 4AT/5MT | R | L/R | SUV 4WD 2AZ-FE | | GDS59637 | Drive Shaft | | 26 | 20 | 51.9 | 99.5 | 810 | |
| | 2005.11-2013.06 | 4AT/5MT | R | L/R | SUV 4WD 2AZ-FE | Date from:2012.09 | GDS59656 | Drive Shaft | | 26 | 20 | 51.9 | 99.5 | 811 | |
| | 2005.11-2013.06 | 4AT/5MT | R | L/R | SUV 4WD 2AZ-FE | For Modelcode:ACA31/ACA33 | GCO59366 | Outer Joint | | 26 | 18 | 51.9 | 99.5 | 49 | I |
| | 2005.11-2013.06 | 4AT/5MT | R | L/R | SUV 4WD 2AZ-FE | | GCI59210 | Inner Joint | | 20 | 18 | 37 | 59.5 | 89 | |
| | 2005.11-2013.12 | 4AT | F | L | SUV FWD 2AZ-FE | Inner teeth of tranm.side:32 | GDS59645 | Drive Shaft | | 26 | 24 | 61.2 | 100 | 660 | |
| | 2005.11-2013.12 | 4AT | F | R | SUV FWD 2AZ-FE | | GDS59472 | Drive Shaft | | 26 | 24 | 61.2 | 100 | 974 | |
| | 2005.11-2013.12 | 4AT | F | L/R | SUV FWD 2AZ-FE | | GCO59245 | Outer Joint | | 26 | 27 | 61.2 | 100 | 59 | I |
| | 2005.11-2013.12 | 4AT | F | L | SUV FWD 2AZ-FE | TJ | GCI59183 | Inner Joint | | 24 | 32 | 50 | 67 | 111 | |
| | 2005.11-2013.12 | 4AT/5MT | F | R | SUV FWD 2AZ-FE | | GCO99320 | Outer Joint | | 30 | 27 | 61.2 | 100 | 64 | I |

| | YEAR | TRANSM. | F/R | L/R | BODY STYLE & DRIVE TYPE & ENGINE | REMARKS | G-AP Ref. | PRODUCT | ABS | Technical Specifications A | B | C | H | L | P |
|---|---|---|---|---|---|---|---|---|---|---|---|---|---|---|---|
| **TOYOTA** **Rav 4** | | | | | | | | | | | | | | | |
| 2.4 (125 kw) | 2005.11-2013.12 | 4AT/5MT | F | L | SUV FWD 2AZ-FE | TJ | GCI59073 | Inner Joint | | 24 | 27 | 50 | 67 | 110 | |
| | 2005.11-2013.12 | 4AT/5MT | F | L | SUV FWD 2AZ-FE | AAR | GCI59125 | Inner Joint | | 24 | 27 | 50 | 67 | 109.5 | |
| | 2005.11-2013.12 | 4AT/5MT | F | R | SUV FWD 2AZ-FE | TJ | GCI59078 | Inner Joint | | 24 | 27 | 40 | 370 | 105 | |
| | 2005.11-2013.12 | 5MT | F | L | SUV FWD 2AZ-FE | | GDS59417 | Drive Shaft | | 30 | 24 | 61.2 | 100 | 656 | |
| | 2005.11-2013.12 | 5MT | F | R | SUV FWD 2AZ-FE | | GDS81233 | Drive Shaft | | 30 | 24 | 61.2 | 100 | 977 | |
| | 2005.11-2013.12 | 5MT | F | R | SUV FWD 2AZ-FE | AAR | GCI59128 | Inner Joint | | 24 | 27 | 40 | 369.5 | 105.5 | |
| 2.5 (114 kw) | 2015.10-2018.12 | AT/CVT | F | R | SUV 4WD 2ARFXE | | GCO99320 | Outer Joint | | 30 | 27 | 61.2 | 100 | 64 | I |
| 2.5 (131 kw) | 2013.01-2018.12 | MT | F | R | SUV FWD 2AR-FE | | GDS81233 | Drive Shaft | | 30 | 24 | 61.2 | 100 | 977 | |
| | 2013.01-2018.12 | MT | F | R | SUV FWD 2AR-FE | | GCO99320 | Outer Joint | | 30 | 27 | 61.2 | 100 | 64 | I |
| | 2013.01-2018.12 | MT | F | R | SUV FWD 2AR-FE | | GCI59128 | Inner Joint | | 24 | 27 | 40 | 369.5 | 105.5 | |
| 2.5 (132 kw) | 2008.11-2013.06 | 4AT | F | R | SUV FWD 2AR-FE | | GDS59472 | Drive Shaft | | 26 | 24 | 61.2 | 100 | 974 | |
| | 2008.11-2013.06 | 4AT | F | L | SUV FWD 2AR-FE | TJ | GCI59073 | Inner Joint | | 24 | 27 | 50 | 67 | 110 | |
| | 2008.11-2013.06 | 4AT | F | L | SUV FWD 2AR-FE | AAR | GCI59125 | Inner Joint | | 24 | 27 | 50 | 67 | 109.5 | |
| | 2008.11-2013.06 | 4AT/5AT | F | L | SUV FWD 2AR-FE | PTJ | GDS59645 | Drive Shaft | | 26 | 24 | 61.2 | 100 | 660 | |
| | 2008.11-2013.06 | 4AT/5AT | F | L | SUV FWD 2AR-FE | PTJ | GCI59183 | Inner Joint | | 24 | 32 | 50 | 67 | 111 | |
| | 2012.12-2018.10 | 6AT | F | L | SUV 4WD 2AR-FE | Date from:2016.11,Date to:2017.07 | GDS59541 | Drive Shaft | | 30 | 24 | 61.2 | 100 | 655 | |
| | 2012.12-2018.10 | 6AT | F | L | SUV 4WD 2AR-FE | Vehicle Production Country:Japan | GDS59610 | Drive Shaft | | 30 | 24 | 61.2 | 100 | 648 | |
| | 2012.12-2018.10 | 6AT | F | R | SUV 4WD 2AR-FE | Vehicle Production Country:Japan | GDS59370 | Drive Shaft | | 30 | 24 | 61.2 | 100 | 994 | |
| | 2012.12-2018.10 | 6AT | F | R | SUV 4WD 2AR-FE | Date from:2016.11,Date to:2017.07 | GDS81604 | Drive Shaft | | 30 | 24 | 61.2 | 100 | 992 | |
| | 2012.12-2018.10 | 6AT | F | L/R | SUV 4WD 2AR-FE | Date from:2016.11,Date to:2017.07 | GCO59378 | Outer Joint | | 30 | 27 | 61.2 | 100 | 64 | I |
| | 2012.12-2018.10 | 6AT | F | L/R | SUV 4WD 2AR-FE | Date from:2017.11 | GCO99320 | Outer Joint | | 30 | 27 | 61.2 | 100 | 64 | I |
| | 2012.12-2018.10 | 6AT | F | L | SUV 4WD 2AR-FE | TJ | GCI59073 | Inner Joint | | 24 | 27 | 50 | 67 | 110 | |
| | 2012.12-2018.10 | 6AT | F | L | SUV 4WD 2AR-FE | AAR | GCI59125 | Inner Joint | | 24 | 27 | 50 | 67 | 109.5 | |
| | 2012.12-2018.10 | 6AT | F | R | SUV 4WD 2AR-FE | Date to:2017.10,TJ | GCI59108 | Inner Joint | | 24 | 27 | 35.5 | 385 | 105 | |
| | 2012.12-2018.10 | 6AT | F | R | SUV 4WD 2AR-FE | Date from:2016.11,Date to:2017.07,AAR | GCI59127 | Inner Joint | | 24 | 27 | 35.5 | 385 | 107 | |
| | 2012.12-2018.10 | 6AT | R | L/R | SUV 4WD 2AR-FE | | GDS59656 | Drive Shaft | | 26 | 20 | 51.9 | 99.5 | 811 | |
| | 2012.12-2018.10 | 6AT | R | L/R | SUV 4WD 2AR-FE | | GCO59488 | Outer Joint | | 26 | 19 | 51.9 | 99.5 | 49 | I |
| | 2012.12-2018.10 | 6AT | R | L/R | SUV 4WD 2AR-FE | | GCI59213 | Inner Joint | | 20 | 19 | 37 | 60 | 84 | |
| | 2012.12-2018.11 | 6AT | F | L | SUV FWD 2AR-FE | | GDS59610 | Drive Shaft | | 30 | 24 | 61.2 | 100 | 648 | |
| | 2012.12-2018.11 | 6AT | F | R | SUV FWD 2AR-FE | | GDS59685 | Drive Shaft | | 30 | 24 | 61.2 | 100 | 985 | |
| | 2012.12-2018.11 | 6AT | F | R | SUV FWD 2AR-FE | | GCO99320 | Outer Joint | | 30 | 27 | 61.2 | 100 | 64 | I |
| | 2012.12-2018.11 | 6AT | F | L/R | SUV FWD 2AR-FE | Date to:2017.10 | GCO59321 | Outer Joint | | 30 | 27 | 61.2 | 100 | 64.5 | M |
| | 2012.12-2018.11 | 6AT | F | R | SUV FWD 2AR-FE | | GCI59206 | Inner Joint | | 24 | 27 | 40 | 377 | 104.5 | |
| | 2012.12-2018.11 | 6AT/6MT | F | L | SUV FWD 2AR-FE | TJ | GCI59073 | Inner Joint | | 24 | 27 | 50 | 67 | 110 | |
| | 2012.12-2018.11 | 6AT/6MT | F | L | SUV FWD 2AR-FE | AAR | GCI59125 | Inner Joint | | 24 | 27 | 50 | 67 | 109.5 | |
| | 2012.12-2018.11 | 6MT | F | L | SUV FWD 2AR-FE | | GDS59417 | Drive Shaft | | 30 | 24 | 61.2 | 100 | 656 | |
| | 2012.12-2018.11 | 6MT | F | R | SUV FWD 2AR-FE | | GDS81233 | Drive Shaft | | 30 | 24 | 61.2 | 100 | 977 | |
| | 2012.12-2018.11 | 6MT | F | R | SUV FWD 2AR-FE | Date from:2017.11 | GCO99320 | Outer Joint | | 30 | 27 | 61.2 | 100 | 64 | I |
| | 2012.12-2018.11 | 6MT | F | R | SUV FWD 2AR-FE | Date to:2017.10 | GCI59078 | Inner Joint | | 24 | 27 | 40 | 370 | 105 | |
| 2.5 (145 kw) | 2015.11-2018.11 | CVT | F | R | SUV 4WD 2AR-FXE | | GDS59685 | Drive Shaft | | 30 | 24 | 61.2 | 100 | 985 | |
| | 2015.11-2018.11 | CVT | F | L/R | SUV 4WD 2AR-FXE | | GCO99320 | Outer Joint | | 30 | 27 | 61.2 | 100 | 64 | I |
| | 2015.11-2018.11 | | F | L | SUV 4WD 2AR-FXE | | GCI59109 | Inner Joint | | 24 | 27 | 50 | 84 | 109 | |
| | 2015.11-2018.11 | CVT | R | L/R | SUV 4WD 2AR-FXE | | GDS56354 | Drive Shaft | | 26 | | 52 | 99.5 | 675 | |
| | 2015.11-2018.11 | CVT | R | L/R | SUV 4WD 2AR-FXE | | GCO82771 | Outer Joint | | 26 | 19 | 52 | 99.5 | 46 | I |
| | 2015.11-2018.11 | CVT | R | L/R | SUV 4WD 2AR-FXE | | GCI59203 | Inner Joint | | | 20 | | | 83 | |
| | 2015.11-2018.11 | CVT | F | R | SUV FWD 2AR-FXE | | GDS59685 | Drive Shaft | | 30 | 24 | 61.2 | 100 | 985 | |
| | 2015.11-2018.11 | CVT | F | L/R | SUV FWD 2AR-FXE | Date to:2017.10 | GCO99320 | Outer Joint | | 30 | 27 | 61.2 | 100 | 64 | I |
| | 2015.11-2018.11 | CVT | F | L | SUV FWD 2AR-FXE | Date to:2017.10 | GCI59109 | Inner Joint | | 24 | 27 | 50 | 84 | 109 | |
| | 2015.11-2018.11 | CVT | F | R | SUV FWD 2AR-FXE | Date to:2017.10 | GCI59206 | Inner Joint | | 24 | 27 | 40 | 377 | 104.5 | |
| 2.5 (149 kw) | 2018.12- | 8AT | F | L | SUV 4WD A25A-FKS | | GDS83108 | Drive Shaft | | 26 | 24 | 61.2 | 100 | 661 | |
| | 2018.12- | 8AT | F | L/R | SUV 4WD A25A-FKS | | GCO59245 | Outer Joint | | 26 | 27 | 61.2 | 100 | 59 | I |
| | 2018.12- | 8AT | F | L | SUV 4WD A25A-FKS | | GCI82129 | Inner Joint | | 24 | 27 | 50 | 67 | 108 | |
| | 2018.12- | 8AT | R | L/R | SUV 4WD A25A-FKS | | GCI82651 | Inner Joint | | 23 | 29 | 42 | 60.5 | 98 | |
| | 2018.12- | 8AT | F | L | SUV FWD A25A-FKS | | GDS83108 | Drive Shaft | | 26 | 24 | 61.2 | 100 | 661 | |
| | 2018.12- | 8AT | F | L | SUV FWD A25A-FKS | | GCO59245 | Outer Joint | | 26 | 27 | 61.2 | 100 | 59 | I |
| | 2018.12- | 8AT | F | L | SUV FWD A25A-FKS | | GCI82129 | Inner Joint | | 24 | 27 | 50 | 67 | 108 | |
| 2.5 (152 kw) | 2018.12- | 8AT | R | L/R | SUV 4WD A25A-FKS | | GCO82771 | Outer Joint | | 26 | 19 | 52 | 99.5 | 46 | I |
| 2.5 (160 kw) | 2018.12- | CVT | F | L | SUV FWD A25A-FXS | | GDS84078 | Drive Shaft | | 30 | 24 | 61.2 | 100 | 679 | |
| | 2018.12- | CVT | F | R | SUV FWD A25A-FXS | | GDS84037 | Drive Shaft | | 30 | 24 | 61.2 | 100 | 978 | |
| | 2018.12- | CVT | F | L/R | SUV FWD A25A-FXS | | GCO99320 | Outer Joint | | 30 | 27 | 61.2 | 100 | 64 | I |
| | 2018.12- | CVT | F | L | SUV FWD A25A-FXS | | GCI82129 | Inner Joint | | 24 | 27 | 50 | 67 | 108 | |
| | 2018.12- | CVT | F | R | SUV FWD A25A-FXS | | GCI82484 | Inner Joint | | 24 | 27 | 40 | 368.5 | 105 | |
| | 2018.12- | CVT | F | L | SUV Van FWD A25A-FXS | | GDS84078 | Drive Shaft | | 30 | 24 | 61.2 | 100 | 679 | |
| | 2018.12- | CVT | F | R | SUV Van FWD A25A-FXS | | GDS84037 | Drive Shaft | | 30 | 24 | 61.2 | 100 | 978 | |
| | 2018.12- | CVT | F | L/R | SUV Van FWD A25A-FXS | | GCO99320 | Outer Joint | | 30 | 27 | 61.2 | 100 | 64 | I |

| | YEAR | TRANSM. | F/R | L/R | BODY STYLE & DRIVE TYPE & ENGINE | REMARKS | G-AP Ref. | PRODUCT | ABS | Technical Specifications A | B | C | H | L | P |
|---|---|---|---|---|---|---|---|---|---|---|---|---|---|---|---|
| **TOYOTA** | | | | | | | | | | | | | | | |
| **Rav 4** | | | | | | | | | | | | | | | |
| 2.5 (160 kw) | 2018.12- | CVT | F | L | SUV Van FWD A25A-FXS | | GCI82129 | Inner Joint | | 24 | 27 | 50 | 67 | 108 | |
| | 2018.12- | CVT | F | R | SUV Van FWD A25A-FXS | | GCI82484 | Inner Joint | | 24 | 27 | 40 | 368.5 | 105 | |
| 2.5 (163 kw) | 2018.12- | CVT | F | L | SUV 4WD A25A-FXS | Vehicle Production Country:North America | GDS56353 | Drive Shaft | | 30 | 24 | 61.2 | 100.5 | 682 | |
| | 2018.12- | CVT | F | L | SUV 4WD A25A-FXS | Vehicle Production Country:Japan | GDS84078 | Drive Shaft | | 30 | 24 | 61.2 | 100 | 679 | |
| | 2018.12- | CVT | F | R | SUV 4WD A25A-FXS | Vehicle Production Country:North America | GDS56352 | Drive Shaft | | 30 | 24 | 61.2 | 100.5 | 980 | |
| | 2018.12- | CVT | F | R | SUV 4WD A25A-FXS | Vehicle Production Country:Japan | GDS84037 | Drive Shaft | | 30 | 24 | 61.2 | 100 | 978 | |
| | 2018.12- | CVT | F | L/R | SUV 4WD A25A-FXS | Vehicle Production Country:Japan | GCO99320 | Outer Joint | | 30 | 27 | 61.2 | 100 | 64 | I |
| | 2018.12- | CVT | F | L | SUV 4WD A25A-FXS | Vehicle Production Country:Japan | GCI82129 | Inner Joint | | 24 | 27 | 50 | 67 | 108 | |
| | 2018.12- | CVT | F | L | SUV 4WD A25A-FXS | Vehicle Production Country:North America | GCI82747 | Inner Joint | | 24 | 32 | 50 | 67 | 111 | |
| | 2018.12- | CVT | F | R | SUV 4WD A25A-FXS | Vehicle Production Country:Japan | GCI82484 | Inner Joint | | 24 | 27 | 40 | 368.5 | 105 | |
| | 2018.12- | CVT | F | R | SUV 4WD A25A-FXS | Vehicle Production Country:North America | GCI83262 | Inner Joint | | 24 | 32 | 40 | 369 | 102 | |
| | 2018.12- | CVT | R | L | SUV 4WD A25A-FXS | | GDS84231 | Drive Shaft | | 26 | 23 | 56 | 99.5 | 793 | |
| | 2018.12- | CVT | R | R | SUV 4WD A25A-FXS | | GDS84232 | Drive Shaft | | 26 | 23 | 56 | 99.5 | 865 | |
| | 2018.12- | CVT | R | L/R | SUV 4WD A25A-FXS | | GCO82740 | Outer Joint | | 26 | 29 | 56 | 99.5 | 55.5 | I |
| | 2018.12- | CVT | R | L/R | SUV 4WD A25A-FXS | | GCI82651 | Inner Joint | | 23 | 29 | 42 | 60.5 | 98 | |
| | 2018.12- | CVT | F | L | SUV Van 4WD A25A-FXS | | GDS84078 | Drive Shaft | | 30 | 24 | 61.2 | 100 | 679 | |
| | 2018.12- | CVT | F | R | SUV Van 4WD A25A-FXS | | GDS84037 | Drive Shaft | | 30 | 24 | 61.2 | 100 | 978 | |
| | 2018.12- | CVT | F | L/R | SUV Van 4WD A25A-FXS | | GCO99320 | Outer Joint | | 30 | 27 | 61.2 | 100 | 64 | I |
| | 2018.12- | CVT | F | L | SUV Van 4WD A25A-FXS | | GCI82129 | Inner Joint | | 24 | 27 | 50 | 67 | 108 | |
| | 2018.12- | CVT | F | R | SUV Van 4WD A25A-FXS | | GCI82484 | Inner Joint | | 24 | 27 | 40 | 368.5 | 105 | |
| | 2018.12- | CVT | R | L | SUV Van 4WD A25A-FXS | | GDS84231 | Drive Shaft | | 26 | 23 | 56 | 99.5 | 793 | |
| | 2018.12- | CVT | R | R | SUV Van 4WD A25A-FXS | | GDS84232 | Drive Shaft | | 26 | 23 | 56 | 99.5 | 865 | |
| | 2018.12- | CVT | R | L/R | SUV Van 4WD A25A-FXS | | GCO82740 | Outer Joint | | 26 | 29 | 56 | 99.5 | 55.5 | I |
| | 2018.12- | CVT | R | L/R | SUV Van 4WD A25A-FXS | | GCI82651 | Inner Joint | | 23 | 29 | 42 | 60.5 | 98 | |
| 2.5 (225 kw) | 2020.09- | CVT | F | L | SUV 4WD A25A-FXS | | GDS56220 | Drive Shaft | | 30 | 24 | 61.2 | 100 | 665 | |
| | 2020.09- | CVT | F | R | SUV 4WD A25A-FXS | | GDS56219 | Drive Shaft | | 30 | 24 | 61.2 | 100 | 991 | |
| | 2020.09- | CVT | F | L/R | SUV 4WD A25A-FXS | | GCO83209 | Outer Joint | | 30 | 27 | 61.2 | 100 | 69 | I |
| | 2020.09- | CVT | F | L | SUV 4WD A25A-FXS | | GCI83200 | Inner Joint | | 24 | 27 | 50 | 84 | 109 | |
| | 2020.09- | CVT | F | R | SUV 4WD A25A-FXS | | GCI83199 | Inner Joint | | 24 | 27 | 40 | 383 | 105 | |
| | 2020.09- | CVT | R | L | SUV 4WD A25A-FXS | | GDS56221 | Drive Shaft | | 26 | 23 | 56 | 99.5 | 777 | |
| | 2020.09- | CVT | R | R | SUV 4WD A25A-FXS | | GDS56222 | Drive Shaft | | 26 | 23 | 56 | 99.5 | 847 | |
| | 2020.09- | CVT | R | L/R | SUV 4WD A25A-FXS | | GCO82740 | Outer Joint | | 26 | 29 | 56 | 99.5 | 55.5 | I |
| | 2020.09- | CVT | R | L/R | SUV 4WD A25A-FXS | | GCI82651 | Inner Joint | | 23 | 29 | 42 | 60.5 | 98 | |
| 3.5 (201 kw) | 2005.11-2012.12 | 5AT | F | L/R | SUV 4WD 2GR-FE | | GCO99320 | Outer Joint | | 30 | 27 | 61.2 | 100 | 64 | I |
| | 2005.11-2012.12 | | F | R | SUV 4WD 2GR-FE | | GDS59370 | Drive Shaft | | 30 | 24 | 61.2 | 100 | 994 | |
| | 2005.11-2012.12 | | F | L | SUV 4WD 2GR-FE | | GCI59109 | Inner Joint | | 24 | 27 | 50 | 84 | 109 | |
| | 2005.11-2012.12 | | F | R | SUV 4WD 2GR-FE | | GCI59108 | Inner Joint | | 24 | 27 | 35.5 | 385 | 105 | |
| | 2005.11-2012.12 | 5AT | R | L/R | SUV 4WD 2GR-FE | | GDS59637 | Drive Shaft | | 26 | 20 | 51.9 | 99.5 | 810 | |
| | 2005.11-2012.12 | 5AT | R | L/R | SUV 4WD 2GR-FE | Date to:2012.08 | GCO59366 | Outer Joint | | 26 | 18 | 51.9 | 99.5 | 49 | I |
| | 2005.11-2012.12 | 5AT | R | L/R | SUV 4WD 2GR-FE | Date from:2012.09 | GCO59488 | Outer Joint | | 26 | 19 | 51.9 | 99.5 | 49 | I |
| | 2005.11-2012.12 | 5AT | R | L/R | SUV 4WD 2GR-FE | | GCI59210 | Inner Joint | | 20 | 18 | 37 | 59.5 | 89 | |
| | 2005.11-2012.12 | 5AT | R | L/R | SUV 4WD 2GR-FE | Date From:2012.09 | GCI59213 | Inner Joint | | 20 | 19 | 37 | 60 | 84 | |
| | 2005.11-2012.12 | | R | L/R | SUV 4WD 2GR-FE | Date From:2012.09 | GDS59656 | Drive Shaft | | 26 | 20 | 51.9 | 99.5 | 811 | |
| **Rav 4L** | | | | | | | | | | | | | | | |
| 2.0 (99 kw) | 1997.06-1999.09 | 4AT/5MT | F | L/R | SUV FWD 3S-FE | | GCO99122 | Outer Joint | | 26 | 24 | 56 | 96 | 56 | I |
| **SAI** | | | | | | | | | | | | | | | |
| 2.4 (140 kw) | 2009.11- | AT/CVT | F | R | Saloon FWD 2AZ-FXE | Date from:2013.08,Date to:2018.01 | GDS84112 | Drive Shaft | | 26 | 24 | 61.2 | 100 | 968 | |
| | 2009.11- | AT/CVT | F | L/R | Saloon FWD 2AZ-FXE | Date from:2013.08,Date to:2018.01 | GCO59245 | Outer Joint | | 26 | 27 | 61.2 | 100 | 59 | I |
| | 2009.11- | AT/CVT | F | R | Saloon FWD 2AZ-FXE | Date from:2013.08,Date to:2018.01 | GCI82362 | Inner Joint | | 24 | 27 | 40 | 377 | 105 | |
| **Scepter** | | | | | | | | | | | | | | | |
| 2.2 (100 kw) | 1992.11-1996.09 | | F | | Estate FWD 5SFE | | GCO59193 | Outer Joint | | 26 | 32 | 56 | 101 | 66 | I |
| | 1992.11-1996.09 | | F | | Saloon FWD 5SFE | | GCO59193 | Outer Joint | | 26 | 32 | 56 | 101 | 66 | I |
| | 1993.10-1996.06 | | F | | Coupe FWD 5S-FE | | GCO59193 | Outer Joint | | 26 | 32 | 56 | 101 | 66 | I |
| **Sequoia** | | | | | | | | | | | | | | | |
| 4.7 (206 kw) | 2007.11-2014.04 | 5AT/6AT | F | L/R | SUV 4WD 2UZ-FE | | GDS59613 | Drive Shaft | | 36 | 34 | 83 | 121 | 707 | |
| | 2007.11-2014.04 | 5AT/6AT | F | L/R | SUV 4WD 2UZ-FE | | GCO59303 | Outer Joint | | 36 | 30 | 83 | 121 | 78 | I |
| | 2007.11-2014.04 | AT | R | L | SUV 4WD 2UZ-FE | | GDS83998 | Drive Shaft | | 36 | 36 | 83 | 121 | 885 | |
| | 2007.11-2014.04 | AT | R | R | SUV 4WD 2UZ-FE | | GDS83997 | Drive Shaft | | 36 | 36 | 83 | 121 | 923 | |
| | 2007.11-2014.04 | AT | R | L/R | SUV 4WD 2UZ-FE | | GCO82563 | Outer Joint | | 36 | 32 | 83 | 121 | 78 | I |
| | 2007.11-2014.04 | AT | R | L/R | SUV 4WD 2UZ-FE | | GCI82482 | Inner Joint | | 36 | 31 | 47 | 92.5 | 134 | |
| 5.7 (280 kw) | 2007.11- | 6AT | F | L/R | SUV 4WD 3UR-FE | | GDS59613 | Drive Shaft | | 36 | 34 | 83 | 121 | 707 | |
| | 2007.11- | 6AT | F | L/R | SUV 4WD 3UR-FE | | GCO59303 | Outer Joint | | 36 | 30 | 83 | 121 | 78 | I |
| | 2007.11- | 6AT | R | L | SUV 4WD 3UR-FE | Date To:2019.07 | GDS83998 | Drive Shaft | | 36 | 36 | 83 | 121 | 885 | |
| | 2007.11- | 6AT | R | R | SUV 4WD 3UR-FE | Date To:2019.07 | GDS83997 | Drive Shaft | | 36 | 36 | 83 | 121 | 923 | |
| | 2007.11- | 6AT | R | L/R | SUV 4WD 3UR-FE | Date To:2019.07 | GCO82563 | Outer Joint | | 36 | 32 | 83 | 121 | 78 | I |

| | YEAR | TRANSM. | F/R | L/R | BODY STYLE & DRIVE TYPE & ENGINE | REMARKS | G-AP Ref. | PRODUCT | ABS | Technical Specifications A | B | C | H | L | P |
|---|---|---|---|---|---|---|---|---|---|---|---|---|---|---|---|
| **TOYOTA** | | | | | | | | | | | | | | | |
| **Sequoia** | | | | | | | | | | | | | | | |
| 5.7 (280 kw) | 2007.11- | 6AT | R | L/R | SUV 4WD 3UR-FE | Date To:2019.07 | GCI82482 | Inner Joint | | 36 | 31 | 47 | 92.5 | 134 | |
| **Sienna** | | | | | | | | | | | | | | | |
| 2.7 (140 kw) | 2010.09-2013.07 | 6AT | F | R | MPV FWD 1AR-FE | | GCI81143 | Inner Joint | | 24 | 26 | 40 | 378 | 104 | |
| | 2010.09-2013.07 | AT | F | L | MPV FWD 1AR-FE | | GCI81234 | Inner Joint | | 24 | 26 | 50 | 67 | 106.5 | |
| 3.3 (169 kw) | 2003.06-2010.02 | | F | | MPV FWD 3MZFE | | GCO59234 | Outer Joint | 48T | 30 | 27 | 61 | 100 | 72.5 | M |
| 3.5 (196 kw) | 2010.01- | AT | F | L | MPV 4WD 2GR-FE | | GDS83733 | Drive Shaft | 48T | 30 | 24 | 61 | 100 | 722 | |
| | 2010.01- | AT | F | L | MPV 4WD 2GR-FE | | GCO59234 | Outer Joint | 48T | 30 | 27 | 61 | 100 | 72.5 | M |
| | 2010.01- | AT | F | L | MPV 4WD 2GR-FE | Vehicle Production Country:USA | GCI59193 | Inner Joint | | 24 | 27 | 50 | 66.5 | 107 | |
| | 2010.01- | AT | R | L/R | MPV 4WD 2GR-FE | | GDS82460 | Drive Shaft | 48T | 26 | | 56 | 96 | 771 | |
| | 2010.01- | AT | R | L/R | MPV 4WD 2GR-FE | | GCO81934 | Outer Joint | 48T | 26 | 29 | 56 | 96 | 54 | I |
| | 2010.01- | AT | R | L/R | MPV 4WD 2GR-FE | | GCI81825 | Inner Joint | | | 29 | | | 82 | |
| | 2010.02- | 6AT | F | L | MPV FWD 2GR-FE | | GDS83733 | Drive Shaft | 48T | 30 | 24 | 61 | 100 | 722 | |
| | 2010.02- | 6AT | F | R | MPV FWD 2GR-FE | | GDS83734 | Drive Shaft | 48T | 30 | 24 | 61 | 100 | 1042 | |
| | 2010.02- | 6AT | F | L/R | MPV FWD 2GR-FE | | GCO59234 | Outer Joint | 48T | 30 | 27 | 61 | 100 | 72.5 | M |
| | 2010.02- | 6AT | F | L | MPV FWD 2GR-FE | TJ | GCI59082 | Inner Joint | | 24 | 27 | 50 | 67 | 109 | |
| | 2010.02- | 6AT | F | L | MPV FWD 2GR-FE | AAR | GCI59193 | Inner Joint | | 24 | 27 | 50 | 66.5 | 107 | |
| | 2010.02- | 6AT | F | R | MPV FWD 2GR-FE | TJ | GCI59116 | Inner Joint | | 24 | 27 | 40 | 379 | 105 | |
| | 2010.02- | 6AT | F | R | MPV FWD 2GR-FE | AAR | GCI82350 | Inner Joint | | 24 | 27 | 40 | 377 | 106 | |
| 3.5 (198 kw) | 2010.01- | AT | F | L | MPV 4WD 2GR-FE | Date from:2014.04 | GDS83733 | Drive Shaft | 48T | 30 | 24 | 61 | 100 | 722 | |
| | 2010.01- | AT | F | L | MPV 4WD 2GR-FE | | GCO59234 | Outer Joint | 48T | 30 | 27 | 61 | 100 | 72.5 | M |
| | 2010.01- | AT | F | L | MPV 4WD 2GR-FE | Vehicle Production Country:USA | GCI59193 | Inner Joint | | 24 | 27 | 50 | 66.5 | 107 | |
| | 2010.01- | AT | R | L/R | MPV 4WD 2GR-FE | | GDS82460 | Drive Shaft | 48T | 26 | | 56 | 96 | 771 | |
| | 2010.01- | AT | R | L/R | MPV 4WD 2GR-FE | | GCO81934 | Outer Joint | 48T | 26 | 29 | 56 | 96 | 54 | I |
| | 2010.01- | AT | R | L/R | MPV 4WD 2GR-FE | | GCI81825 | Inner Joint | | | 29 | | | 82 | |
| | 2010.01- | 6AT | F | L | MPV FWD 2GR-FE | | GDS83733 | Drive Shaft | 48T | 30 | 24 | 61 | 100 | 722 | |
| | 2010.01- | 6AT | F | R | MPV FWD 2GR-FE | | GDS83734 | Drive Shaft | 48T | 30 | 24 | 61 | 100 | 1042 | |
| | 2010.01- | 6AT | F | L/R | MPV FWD 2GR-FE | | GCO59234 | Outer Joint | 48T | 30 | 27 | 61 | 100 | 72.5 | M |
| | 2010.01- | 6AT | F | L | MPV FWD 2GR-FE | TJ | GCI59082 | Inner Joint | | 24 | 27 | 50 | 67 | 109 | |
| | 2010.01- | 6AT | F | L | MPV FWD 2GR-FE | AAR | GCI59193 | Inner Joint | | 24 | 27 | 50 | 66.5 | 107 | |
| | 2010.01- | 6AT | F | R | MPV FWD 2GR-FE | TJ | GCI59116 | Inner Joint | | 24 | 27 | 40 | 379 | 105 | |
| | 2010.01- | 6AT | F | R | MPV FWD 2GR-FE | AAR | GCI82350 | Inner Joint | | 24 | 27 | 40 | 377 | 106 | |
| 3.5 (220 kw) | 2016.08- | 8AT | F | L | MPV 4WD 2GR-FKS | | GDS83732 | Drive Shaft | 48T | 30 | 24 | 61 | 100 | 728 | |
| | 2016.08- | 8AT | F | R | MPV 4WD 2GR-FKS | | GDS83736 | Drive Shaft | 48T | 30 | 24 | 61 | 100 | 1047 | |
| | 2016.08- | 8AT | F | L | MPV 4WD 2GR-FKS | | GCI82307 | Inner Joint | | 24 | 27 | 50 | 83.5 | 109 | |
| | 2016.08- | 8AT | F | L | MPV FWD 2GR-FKS | | GDS83732 | Drive Shaft | 48T | 30 | 24 | 61 | 100 | 728 | |
| | 2016.08- | 8AT | F | R | MPV FWD 2GR-FKS | | GDS83660 | Drive Shaft | 48T | 30 | 24 | 61 | 100 | 1048 | |
| | 2016.08- | 8AT | F | L | MPV FWD 2GR-FKS | | GCI82307 | Inner Joint | | 24 | 27 | 50 | 83.5 | 109 | |
| | 2016.08- | 8AT | F | R | MPV FWD 2GR-FKS | | GCI82306 | Inner Joint | | 24 | 27 | 40 | 383 | 106 | |
| 3.5 (221 kw) | 2016.09- | 8AT | F | L | MPV 4WD 2GR-FKS | | GDS83732 | Drive Shaft | 48T | 30 | 24 | 61 | 100 | 728 | |
| | 2016.09- | 8AT | F | L | MPV 4WD 2GR-FKS | | GCI82307 | Inner Joint | | 24 | 27 | 50 | 83.5 | 109 | |
| | 2016.09- | 8AT | F | R | MPV 4WD 2GR-FKS | | GCI82306 | Inner Joint | | 24 | 27 | 40 | 383 | 106 | |
| | 2016.09- | 8AT | F | L | MPV FWD 2GR-FKS | | GDS83732 | Drive Shaft | 48T | 30 | 24 | 61 | 100 | 728 | |
| | 2016.09- | 8AT | F | R | MPV FWD 2GR-FKS | | GDS83660 | Drive Shaft | 48T | 30 | 24 | 61 | 100 | 1048 | |
| | 2016.09- | 8AT | F | L | MPV FWD 2GR-FKS | | GCI82307 | Inner Joint | | 24 | 27 | 50 | 83.5 | 109 | |
| | 2016.09- | 8AT | F | R | MPV FWD 2GR-FKS | | GCI82306 | Inner Joint | | 24 | 27 | 40 | 383 | 106 | |
| **Sienta** | | | | | | | | | | | | | | | |
| 1.5 (77 kw) | 2003.05-2015.05 | MT/CVT | F | R | MPV FWD 1NZ-FE | | GDS59011 | Drive Shaft | 48T | 24 | 23 | 58 | 91 | 881.5 | |
| | 2003.05-2015.05 | MT/CVT | F | L/R | MPV FWD 1NZ-FE | | GCO59137 | Outer Joint | 48T | 24 | 23 | 58 | 91 | 52.5 | I |
| | 2003.05-2015.05 | MT/CVT | F | L/R | MPV FWD 1NZ-FE | | GCI59002 | Inner Joint | | 23 | 23 | 34 | 58.8 | 102.7 | |
| **Solara** | | | | | | | | | | | | | | | |
| 2.4 (117 kw) | 2003.07-2008.11 | MT | F | R | Coupe FWD 2AZFE | TJ | GCI59045 | Inner Joint | | 24 | 26 | 40 | 369 | 99.5 | |
| 3.3 (157 kw) | 2004.02-2008.11 | 5AT | F | L | Convertible FWD 3MZ-FE | | GDS59244 | Drive Shaft | 48T | 30 | 24 | 63 | 100.5 | 648 | |
| **Sprinter** | | | | | | | | | | | | | | | |
| 1.3 (65 kw) | 1991.06-2000.11 | AT/MT | F | R | Saloon FWD 4E-FE | | GDS59392 | Drive Shaft | | 26 | 23 | 56 | 96.5 | 926 | |
| 1.6 (81 kw) | 1991.06-2000.12 | | F | | Saloon FWD 4A-FE | | GCI99046 | Inner Joint | | 23 | 23 | 34 | 60 | 103.5 | |
| 2.0 (54 kw) | 1991.06-2000.11 | | F | | Saloon FWD 2C | Date From:1995.05,Date To:1995.05 | GCO59120 | Outer Joint | 48T | 26 | 24 | 56 | 95.5 | 55 | I |
| | 1991.06-2000.11 | | F | L | Saloon FWD 2C | Date From:1995.05 | GCI59005 | Inner Joint | | 20 | 23 | 35 | 63.5 | 115.7 | |
| 2.2 (58 kw) | 1995.04-2002.11 | | F | | Saloon FWD 3CE | | GCO59120 | Outer Joint | 48T | 26 | 24 | 56 | 95.5 | 55 | I |
| | 1998.04-2000.08 | | F | R | Saloon 4WD 3CE | | GCI59160 | Inner Joint | | 23 | 23 | 36 | 75 | 93 | |
| | 1998.04-2000.08 | MT | R | | Saloon 4WD 3CE | | GCI39089 | Inner Joint | | | 20 | | | 66.2 | |
| **Sprinter Carib** | | | | | | | | | | | | | | | |
| 1.6 (85 kw) | 1996.05-2002.05 | | F | R | Estate 4WD 4A-FE | | GCI59160 | Inner Joint | | 23 | 23 | 36 | 75 | 93 | |
| **Sprinter Cielo** | | | | | | | | | | | | | | | |
| 1.3 (65 kw) | 1992.06-2000.11 | AT/MT | F | R | Hatchback FWD 4E-FE | | GDS59392 | Drive Shaft | | 26 | 23 | 56 | 96.5 | 926 | |
| 1.5 (74 kw) | 1997.04-2002.11 | AT/MT | F | R | Hatchback FWD 5A-FE | | GDS59392 | Drive Shaft | | 26 | 23 | 56 | 96.5 | 926 | |

| | YEAR | TRANSM. | F/R | L/R | BODY STYLE & DRIVE TYPE & ENGINE | REMARKS | G-AP Ref. | PRODUCT | ABS | Technical Specifications A | B | C | H | L | P |
|---|---|---|---|---|---|---|---|---|---|---|---|---|---|---|---|
| **TOYOTA** | | | | | | | | | | | | | | | |
| **Sprinter Cielo** | | | | | | | | | | | | | | | |
| 2.0 (54 kw) | 1995.04-2000.11 | | F | | Hatchback FWD 2C | Date From:1995.05,Date To:1995.05 | GCO59120 | Outer Joint | 48T | 26 | 24 | 56 | 95.5 | 55 | I |
| | 1995.04-2000.11 | | F | L | Hatchback FWD 2C | Date From:1995.05 | GCI59005 | Inner Joint | | 20 | 23 | 35 | 63.5 | 115.7 | |
| **Starlet** | | | | | | | | | | | | | | | |
| 1.3 (55 kw) | 1989.12-1996.03 | AT/MT | F | L | Hatchback FWD 2E-E (12.89-04.92) | Date from:1993.12 | GCO59039 | Outer Joint | | 23 | 23 | 56 | 88.5 | 52 | I |
| | 1989.12-1996.03 | AT/MT | F | L/R | Hatchback FWD 2E-E (12.89-04.92) | | GCO59040 | Outer Joint | 48T | 23 | 23 | 56 | 90.5 | 55 | I |
| | 1989.12-1996.03 | AT/MT | F | L/R | Hatchback FWD 2E-E (12.89-04.92) | Date from:1990.03 | GCO59054 | Outer Joint | | 23 | 23 | 56 | 87.5 | 55 | I |
| | 1989.12-1996.03 | | F | L | Hatchback FWD 2E-E (12.89-04.92) | | GCI59023 | Inner Joint | | 23 | 23 | 34 | 60 | 113 | |
| | 1989.12-1996.03 | | F | | Hatchback FWD 2E-E (12.89-04.92) | | GCI99046 | Inner Joint | | 23 | 23 | 34 | 60 | 103.5 | |
| | 1996.01-1999.07 | 3AT/5MT | F | L | Hatchback FWD 4EFE | | GDS59052 | Drive Shaft | | 23 | 23 | 56 | 90.5 | 628 | |
| | 1996.01-1999.07 | AT | F | R | Hatchback FWD 4EFE | | GDS59566 | Drive Shaft | | 23 | 23 | 56 | 90.5 | 847 | |
| | 1996.01-1999.07 | AT/MT | F | L | Hatchback FWD 4EFE | | GCO59039 | Outer Joint | | 23 | 23 | 56 | 88.5 | 52 | I |
| | 1996.01-1999.07 | AT/MT | F | L/R | Hatchback FWD 4EFE | | GCO59040 | Outer Joint | 48T | 23 | 23 | 56 | 90.5 | 55 | I |
| | 1996.01-1999.07 | AT/MT | F | L/R | Hatchback FWD 4EFE | Date to:1999.07 | GCO59054 | Outer Joint | | 23 | 23 | 56 | 87.5 | 55 | I |
| | 1996.01-1999.07 | | F | R | Hatchback FWD 4EFE | | GCI59002 | Inner Joint | | 23 | 23 | 34 | 58.8 | 102.7 | |
| | 1996.01-1999.07 | | F | | Hatchback FWD 4EFE | | GCI99046 | Inner Joint | | 23 | 23 | 34 | 60 | 103.5 | |
| 1.5 (40 kw) | 1989.12-1996.03 | | F | | Hatchback FWD 1N | | GCI59023 | Inner Joint | | 23 | 23 | 34 | 60 | 113 | |
| | 1989.12-1996.03 | | F | | Hatchback FWD 1N | | GCI99046 | Inner Joint | | 23 | 23 | 34 | 60 | 103.5 | |
| **Tercel** | | | | | | | | | | | | | | | |
| 1.5 (70 kw) | 1994.11-1999.09 | | F | L/R | Saloon FWD 5E-FE | | GCO39105 | Outer Joint | 44T | 25 | 22 | 52.5 | 95 | 58 | M |
| | 1994.11-1999.09 | | F | | Saloon FWD 5E-FE | | GCO59017 | Outer Joint | | 26 | 22 | 56 | 95 | 50 | M |
| | 1994.11-1999.09 | | F | | Saloon FWD 5E-FE | | GCO59023 | Outer Joint | | 26 | 23 | 56 | 96.5 | 55 | I |
| **Tundra** | | | | | | | | | | | | | | | |
| 3.4 (140 kw) | 1999.04-2006.10 | | F | L/R | Pickup 4WD 5VZFE | | GDS59101 | Drive Shaft | | 30 | 27 | 69 | 123 | 711.5 | |
| 4.7 (183 kw) | 1999.02-2006.10 | | F | L/R | Pickup 4WD 2UZFE | | GDS59101 | Drive Shaft | | 30 | 27 | 69 | 123 | 711.5 | |
| 4.7 (206 kw) | 2006.11-2009.12 | 5AT | F | L | Pickup 4WD 2UZ-FE | | GDS59613 | Drive Shaft | | 36 | 34 | 83 | 121 | 707 | |
| | 2006.11-2009.12 | 5AT | F | L | Pickup 4WD 2UZ-FE | | GCO59303 | Outer Joint | | 36 | 30 | 83 | 121 | 78 | I |
| 4.7 (207 kw) | 1999.02-2006.10 | 5AT | F | L/R | Pickup 4WD 2UZFE | | GDS59101 | Drive Shaft | | 30 | 27 | 69 | 123 | 711.5 | |
| | 1999.02-2006.10 | | F | L/R | Pickup 4WD 2UZFE | | GDS59101 | Drive Shaft | | 30 | 27 | 69 | 123 | 711.5 | |
| 5.7 (280 kw) | 2009.04-2013.07 | 6AT | F | L/R | Pickup 4WD 3UR-FBE | | GDS59613 | Drive Shaft | | 36 | 34 | 83 | 121 | 707 | |
| | 2009.04-2013.07 | 6AT | F | L/R | Pickup 4WD 3UR-FBE | | GCO59303 | Outer Joint | | 36 | 30 | 83 | 121 | 78 | I |
| 5.7 (284 kw) | 2008.08- | 6AT | F | L/R | Pickup 4WD 3UR-FBE | | GDS59613 | Drive Shaft | | 36 | 34 | 83 | 121 | 707 | |
| | 2008.08- | | F | L/R | Pickup 4WD 3UR-FBE | | GCO59303 | Outer Joint | | 36 | 30 | 83 | 121 | 78 | I |
| **Urban Cruiser** | | | | | | | | | | | | | | | |
| 1.3 (73 kw) | 2009.01-2016.03 | 6MT | F | L | Hatchback FWD 1NR-FE | | GDS59202 | Drive Shaft | | 26 | 23 | 55.6 | 96 | 653 | |
| | 2009.01-2016.03 | 6MT | F | R | Hatchback FWD 1NR-FE | | GDS59201 | Drive Shaft | | 26 | 23 | 55.6 | 96 | 896 | |
| | 2009.01-2016.03 | 6MT | F | L/R | Hatchback FWD 1NR-FE | | GCO59206 | Outer Joint | | 26 | 23 | 55.6 | 96 | 53 | I |
| | 2009.01-2016.03 | 6MT | F | L/R | Hatchback FWD 1NR-FE | | GCI59023 | Inner Joint | | 23 | 23 | 34 | 60 | 113 | |
| | 2009.01-2016.03 | 6MT | F | L/R | Hatchback FWD 1NR-FE | | GCI99046 | Inner Joint | | 23 | 23 | 34 | 60 | 103.5 | |
| 1.3 (74 kw) | 2009.04-2016.03 | 6MT | F | L | Hatchback FWD 1NR-FE | | GDS59202 | Drive Shaft | | 26 | 23 | 55.6 | 96 | 653 | |
| | 2009.04-2016.03 | 6MT | F | R | Hatchback FWD 1NR-FE | | GDS59201 | Drive Shaft | | 26 | 23 | 55.6 | 96 | 896 | |
| | 2009.04-2016.03 | 6MT | F | L/R | Hatchback FWD 1NR-FE | | GCO59206 | Outer Joint | | 26 | 23 | 55.6 | 96 | 53 | I |
| | 2009.04-2016.03 | 6MT | F | L/R | Hatchback FWD 1NR-FE | | GCO59274 | Outer Joint | | 26 | 23 | 55.6 | 96 | 54 | I |
| | 2009.04-2016.03 | 6MT | F | L/R | Hatchback FWD 1NR-FE | | GCI59023 | Inner Joint | | 23 | 23 | 34 | 60 | 113 | |
| | 2009.04-2016.03 | 6MT | F | L/R | Hatchback FWD 1NR-FE | | GCI99046 | Inner Joint | | 23 | 23 | 34 | 60 | 103.5 | |
| 1.4 (66 kw) | 2009.01-2014.04 | 6MT | F | L | Hatchback 4WD 1ND-TV | | GDS59693 | Drive Shaft | | 26 | 20 | 55.6 | 95.5 | 653 | |
| | 2009.01-2014.04 | 6MT | F | R | Hatchback 4WD 1ND-TV | | GDS81197 | Drive Shaft | | 26 | 20 | 55.6 | 95.5 | 900 | |
| | 2009.01-2014.04 | 6MT | F | L/R | Hatchback 4WD 1ND-TV | | GCO59244 | Outer Joint | | 26 | 25 | 55.6 | 95.5 | 57 | I |
| | 2009.01-2014.04 | 6MT | F | L | Hatchback 4WD 1ND-TV | | GCI59100 | Inner Joint | | 20 | 25 | 35 | 63.5 | 118 | |
| | 2009.01-2014.04 | 6MT | F | R | Hatchback 4WD 1ND-TV | | GCI81166 | Inner Joint | | 20 | 25 | 35.5 | 364.5 | 99 | |
| | 2009.01-2014.04 | 6MT | R | L/R | Hatchback 4WD 1ND-TV | | GDS59675 | Drive Shaft | 48T | 26 | 20 | 51.9 | 99.5 | 765 | |
| | 2009.01-2014.04 | 6MT | F | L | Hatchback FWD 1ND-TV | | GDS59693 | Drive Shaft | | 26 | 20 | 55.6 | 95.5 | 653 | |
| | 2009.01-2014.04 | 6MT | F | R | Hatchback FWD 1ND-TV | | GDS59677 | Drive Shaft | | 26 | 20 | 55.6 | 95.5 | 888 | |
| | 2009.01-2014.04 | 6MT | F | L/R | Hatchback FWD 1ND-TV | | GCO59244 | Outer Joint | | 26 | 25 | 55.6 | 95.5 | 57 | I |
| | 2009.01-2014.04 | 6MT | F | L/R | Hatchback FWD 1ND-TV | | GCI59100 | Inner Joint | | 20 | 25 | 35 | 63.5 | 118 | |
| | 2009.01-2014.04 | | F | R | Hatchback FWD 1ND-TV | | GDS81197 | Drive Shaft | | 26 | 20 | 55.6 | 95.5 | 900 | |
| **Venza** | | | | | | | | | | | | | | | |
| 2.7 (135 kw) | 2008.11-2012.04 | AT | F | L | SUV 4WD 1AR-FE | | GDS81230 | Drive Shaft | 48T | 30 | 24 | 61 | 100 | 675 | |
| | 2008.11-2012.04 | AT | F | R | SUV 4WD 1AR-FE | | GDS81229 | Drive Shaft | 48T | 30 | 24 | 61 | 100 | 994 | |
| | 2008.11-2012.04 | AT | F | L/R | SUV 4WD 1AR-FE | | GCO59214 | Outer Joint | 48T | 30 | 26 | 61 | 100 | 67 | I |
| | 2008.11-2012.04 | AT | F | L | SUV 4WD 1AR-FE | | GCI81142 | Inner Joint | | 24 | 26 | 50 | 67 | 107 | |
| | 2008.11-2012.04 | AT | F | R | SUV 4WD 1AR-FE | | GCI81141 | Inner Joint | | 24 | 26 | 34 | 349 | 104 | |
| 2.7 (136 kw) | 2008.11-2016.11 | AT | F | L | SUV 4WD 1AR-FE | | GDS81230 | Drive Shaft | 48T | 30 | 24 | 61 | 100 | 675 | |
| | 2008.11-2016.11 | AT | F | R | SUV 4WD 1AR-FE | | GDS81229 | Drive Shaft | 48T | 30 | 24 | 61 | 100 | 994 | |
| | 2008.11-2016.11 | AT | F | L/R | SUV 4WD 1AR-FE | | GCO59214 | Outer Joint | 48T | 30 | 26 | 61 | 100 | 67 | I |
| | 2008.11-2016.11 | AT | F | L | SUV 4WD 1AR-FE | | GCI81142 | Inner Joint | | 24 | 26 | 50 | 67 | 107 | |

| | YEAR | TRANSM. | F/R | L/R | BODY STYLE & DRIVE TYPE & ENGINE | REMARKS | G-AP Ref. | PRODUCT | ABS | Technical Specifications A | B | C | H | L | P |
|---|---|---|---|---|---|---|---|---|---|---|---|---|---|---|---|
| **TOYOTA** | | | | | | | | | | | | | | | |
| **Venza** | | | | | | | | | | | | | | | |
| 2.7 (136 kw) | 2008.11-2016.11 | AT | F | R | SUV 4WD 1AR-FE | | GCI81141 | Inner Joint | | 24 | 26 | 34 | 349 | 104 | |
| | 2008.11-2016.11 | AT | F | L | SUV FWD 1AR-FE | | GDS81230 | Drive Shaft | 48T | 30 | 24 | 61 | 100 | 675 | |
| | 2008.11-2016.11 | AT | F | R | SUV FWD 1AR-FE | | GDS81229 | Drive Shaft | 48T | 30 | 24 | 61 | 100 | 994 | |
| | 2008.11-2016.11 | AT | F | R | SUV FWD 1AR-FE | | GDS81231 | Drive Shaft | 48T | 30 | 24 | 61 | 100 | 992 | |
| | 2008.11-2016.11 | AT | F | L/R | SUV FWD 1AR-FE | | GCO59214 | Outer Joint | 48T | 30 | 26 | 61 | 100 | 67 | I |
| | 2008.11-2016.11 | AT | F | L | SUV FWD 1AR-FE | | GCI81142 | Inner Joint | | 24 | 26 | 50 | 67 | 107 | |
| | 2008.11-2016.11 | AT | F | R | SUV FWD 1AR-FE | | GCI81141 | Inner Joint | | 24 | 26 | 34 | 349 | 104 | |
| | 2008.11-2016.11 | AT | F | R | SUV FWD 1AR-FE | | GCI81143 | Inner Joint | | 24 | 26 | 40 | 378 | 104 | |
| 3.5 (200 kw) | 2008.11-2016.11 | AT | F | R | SUV 4WD 2GR-FE | | GDS81227 | Drive Shaft | 48T | 30 | 24 | 61 | 100 | 995 | |
| | 2008.11-2016.11 | AT | F | R | SUV 4WD 2GR-FE | | GCI81140 | Inner Joint | | 24 | 27 | 34 | 349 | 106 | |
| | 2008.11-2016.11 | AT | F | R | SUV FWD 2GR-FE | | GDS81231 | Drive Shaft | 48T | 30 | 24 | 61 | 100 | 992 | |
| | 2008.11-2016.11 | AT | F | R | SUV FWD 2GR-FE | | GCO59214 | Outer Joint | 48T | 30 | 26 | 61 | 100 | 67 | I |
| | 2008.11-2016.11 | AT | F | R | SUV FWD 2GR-FE | | GCI81292 | Inner Joint | | 24 | 27 | 40 | 377 | 106.5 | |
| **Verossa** | | | | | | | | | | | | | | | |
| 2.0 (118 kw) | 2000.10-2003.11 | | F | | Saloon 4WD 1GFE | | GCO59370 | Outer Joint | 48T | 30 | 30 | 56 | 92 | 59 | I |
| | 2000.10-2003.11 | AT | R | | Saloon RWD 1GFE | | GCI39089 | Inner Joint | | | 20 | | | 66.2 | |
| **Verso** | | | | | | | | | | | | | | | |
| 1.6 (81 kw) | 2009.04-2018.08 | 6MT | F | L | MPV FWD 1ZR-FAE | | GDS59621 | Drive Shaft | | 26 | 20 | 61.2 | 95.5 | 661 | |
| | 2009.04-2018.08 | 6MT | F | R | MPV FWD 1ZR-FAE | | GDS59633 | Drive Shaft | | 26 | 20 | 61.2 | 95.5 | 945 | |
| | 2009.04-2018.08 | 6MT | F | L/R | MPV FWD 1ZR-FAE | | GCO59213 | Outer Joint | | 26 | 23 | 61.2 | 95.5 | 54.5 | I |
| | 2009.04-2018.08 | | F | | MPV FWD 1ZR-FAE | | GCI59139 | Inner Joint | | 20 | 23 | 35 | 63.5 | 115 | |
| 1.6 (82 kw) | 2013.11-2018.08 | 6MT | F | L | Box Body/MPV FWD 1WW | | GDS82255 | Drive Shaft | | 30 | 24 | 61.2 | 100 | 630 | |
| | 2013.11-2018.08 | 6MT | F | R | Box Body/MPV FWD 1WW | | GDS82253 | Drive Shaft | | 30 | 24 | 61.2 | 100 | 978 | |
| | 2013.11-2018.08 | 6MT | F | L/R | Box Body/MPV FWD 1WW | | GCO81749 | Outer Joint | | 30 | 26 | 61.2 | 100 | 65 | M |
| | 2013.11-2018.08 | 6MT | F | L | Box Body/MPV FWD 1WW | | GCI81703 | Inner Joint | | 24 | 25 | 50 | 67 | 109.5 | |
| | 2013.11-2018.08 | 6MT | F | R | Box Body/MPV FWD 1WW | | GCI81704 | Inner Joint | | 24 | 25 | 40 | 364.5 | 96.5 | |
| | 2013.11-2018.08 | MT | F | L | MPV FWD 1WW | | GDS82255 | Drive Shaft | | 30 | 24 | 61.2 | 100 | 630 | |
| | 2013.11-2018.08 | MT | F | R | MPV FWD 1WW | | GDS82253 | Drive Shaft | | 30 | 24 | 61.2 | 100 | 978 | |
| | 2013.11-2018.08 | MT | F | L/R | MPV FWD 1WW | | GCO81749 | Outer Joint | | 30 | 26 | 61.2 | 100 | 65 | M |
| | 2013.11-2018.08 | MT | F | L | MPV FWD 1WW | | GCI81703 | Inner Joint | | 24 | 25 | 50 | 67 | 109.5 | |
| | 2013.11-2018.08 | MT | F | R | MPV FWD 1WW | | GCI81704 | Inner Joint | | 24 | 25 | 40 | 364.5 | 96.5 | |
| 1.6 (97 kw) | 2009.04-2018.08 | 6MT | F | L | Box Body/MPV FWD 1ZR-FAE | | GDS59621 | Drive Shaft | | 26 | 20 | 61.2 | 95.5 | 661 | |
| | 2009.04-2018.08 | 6MT | F | R | Box Body/MPV FWD 1ZR-FAE | | GDS59633 | Drive Shaft | | 26 | 20 | 61.2 | 95.5 | 945 | |
| | 2009.04-2018.08 | 6MT | F | L/R | Box Body/MPV FWD 1ZR-FAE | | GCO59213 | Outer Joint | | 26 | 23 | 61.2 | 95.5 | 54.5 | I |
| | 2009.04-2018.08 | 6MT | F | L/R | Box Body/MPV FWD 1ZR-FAE | | GCI59139 | Inner Joint | | 20 | 23 | 35 | 63.5 | 115 | |
| | 2009.04-2018.08 | 6MT | F | L | MPV FWD 1ZR-FAE | | GDS59621 | Drive Shaft | | 26 | 20 | 61.2 | 95.5 | 661 | |
| | 2009.04-2018.08 | 6MT | F | R | MPV FWD 1ZR-FAE | | GDS59633 | Drive Shaft | | 26 | 20 | 61.2 | 95.5 | 945 | |
| | 2009.04-2018.08 | MT | F | L | MPV FWD 1ZR-FAE | | GDS59268 | Drive Shaft | | 26 | 20 | 61.2 | 95.5 | 665 | |
| | 2009.04-2018.08 | MT | F | R | MPV FWD 1ZR-FAE | | GDS59447 | Drive Shaft | | 26 | 20 | 61.2 | 95.5 | 943 | |
| | 2009.04-2018.08 | MT | F | L/R | MPV FWD 1ZR-FAE | | GCO59213 | Outer Joint | | 26 | 23 | 61.2 | 95.5 | 54.5 | I |
| | 2009.04-2018.08 | | F | | MPV FWD 1ZR-FAE | | GCI59139 | Inner Joint | | 20 | 23 | 35 | 63.5 | 115 | |
| 1.8 (108 kw) | 2009.04-2018.08 | 6MT | F | R | Box Body/MPV FWD 2ZR-FAE | | GDS59494 | Drive Shaft | | 26 | 20 | 61.2 | 95.5 | 938 | |
| | 2009.04-2018.08 | 6MT | F | R | Box Body/MPV FWD 2ZR-FAE | | GCO59427 | Outer Joint | | 26 | 25 | 61.2 | 95.5 | 61.5 | I |
| | 2009.04-2018.08 | CVT | F | R | Box Body/MPV FWD 2ZR-FAE | | GDS59633 | Drive Shaft | | 26 | 20 | 61.2 | 95.5 | 945 | |
| | 2009.04-2018.08 | CVT | F | L/R | Box Body/MPV FWD 2ZR-FAE | | GCI59139 | Inner Joint | | 20 | 23 | 35 | 63.5 | 115 | |
| | 2009.04-2018.08 | CVT/6MT | F | L | Box Body/MPV FWD 2ZR-FAE | | GDS59621 | Drive Shaft | | 26 | 20 | 61.2 | 95.5 | 661 | |
| | 2009.04-2018.08 | CVT/6MT | F | L/R | Box Body/MPV FWD 2ZR-FAE | | GCO59213 | Outer Joint | | 26 | 23 | 61.2 | 95.5 | 54.5 | I |
| | 2009.04-2018.08 | AT/MT | F | L/R | MPV FWD 2ZR-FAE | | GCO59213 | Outer Joint | | 26 | 23 | 61.2 | 95.5 | 54.5 | I |
| | 2009.04-2018.08 | CVT | F | L | MPV FWD 2ZR-FAE | | GDS59621 | Drive Shaft | | 26 | 20 | 61.2 | 95.5 | 661 | |
| | 2009.04-2018.08 | CVT | F | R | MPV FWD 2ZR-FAE | | GDS59633 | Drive Shaft | | 26 | 20 | 61.2 | 95.5 | 945 | |
| | 2009.04-2018.08 | CVT | F | L/R | MPV FWD 2ZR-FAE | | GCI59139 | Inner Joint | | 20 | 23 | 35 | 63.5 | 115 | |
| | 2009.04-2018.08 | MT | F | L | MPV FWD 2ZR-FAE | | GDS59268 | Drive Shaft | | 26 | 20 | 61.2 | 95.5 | 665 | |
| | 2009.04-2018.08 | MT | F | R | MPV FWD 2ZR-FAE | Inner teeth of wheel side:23 | GDS59447 | Drive Shaft | | 26 | 20 | 61.2 | 95.5 | 943 | |
| | 2009.04-2018.08 | MT | F | R | MPV FWD 2ZR-FAE | Inner teeth of wheel side:25 | GDS59494 | Drive Shaft | | 26 | 20 | 61.2 | 95.5 | 938 | |
| 2.0 (91 kw) | 2012.11-2018.08 | 6MT | F | L | Box Body/MPV FWD 1AD-FTV | | GDS59657 | Drive Shaft | | 30 | 24 | 61.2 | 99.5 | 613 | |
| | 2012.11-2018.08 | 6MT | F | R | Box Body/MPV FWD 1AD-FTV | | GDS59662 | Drive Shaft | | 30 | 24 | 61.2 | 99.5 | 993 | |
| | 2012.11-2018.08 | 6MT | F | L/R | Box Body/MPV FWD 1AD-FTV | | GCO59345 | Outer Joint | | 30 | 25 | 61.2 | 99.5 | 62 | M |
| | 2012.11-2018.08 | 6MT | F | L | Box Body/MPV FWD 1AD-FTV | | GCI59173 | Inner Joint | | 24 | 26 | 50 | 67 | 109.5 | |
| | 2012.11-2018.08 | 6MT | F | R | Box Body/MPV FWD 1AD-FTV | | GCI59182 | Inner Joint | | 24 | 26 | 40 | 383 | 97 | |
| | 2012.11-2018.08 | MT | F | L | MPV FWD 1AD-FTV | | GDS59657 | Drive Shaft | | 30 | 24 | 61.2 | 99.5 | 613 | |
| | 2012.11-2018.08 | MT | F | R | MPV FWD 1AD-FTV | | GDS59662 | Drive Shaft | | 30 | 24 | 61.2 | 99.5 | 993 | |
| | 2012.11-2018.08 | MT | F | L/R | MPV FWD 1AD-FTV | | GCO59345 | Outer Joint | | 30 | 25 | 61.2 | 99.5 | 62 | M |
| | 2012.11-2018.08 | MT | F | L | MPV FWD 1AD-FTV | | GCI59173 | Inner Joint | | 24 | 26 | 50 | 67 | 109.5 | |
| | 2012.11-2018.08 | MT | F | R | MPV FWD 1AD-FTV | | GCI59182 | Inner Joint | | 24 | 26 | 40 | 383 | 97 | |
| 2.0 (93 kw) | 2009.04-2018.08 | MT | F | L | MPV FWD 1AD-FTV | | GDS59657 | Drive Shaft | | 30 | 24 | 61.2 | 99.5 | 613 | |

| | YEAR | TRANSM. | F/R | L/R | BODY STYLE & DRIVE TYPE & ENGINE | REMARKS | G-AP Ref. | PRODUCT | ABS | Technical Specifications A | B | C | H | L | P |
|---|---|---|---|---|---|---|---|---|---|---|---|---|---|---|---|
| **TOYOTA** | | | | | | | | | | | | | | | |
| **Verso** | | | | | | | | | | | | | | | |
| 2.0 (93 kw) | 2009.04-2018.08 | MT | F | R | MPV FWD 1AD-FTV | | GDS59662 | Drive Shaft | | 30 | 24 | 61.2 | 99.5 | 993 | |
| | 2009.04-2018.08 | MT | F | L/R | MPV FWD 1AD-FTV | | GCO59345 | Outer Joint | | 30 | 25 | 61.2 | 99.5 | 62 | M |
| | 2009.04-2018.08 | MT | F | L | MPV FWD 1AD-FTV | | GCI59173 | Inner Joint | | 24 | 26 | 50 | 67 | 109.5 | |
| | 2009.04-2018.08 | MT | F | R | MPV FWD 1AD-FTV | | GCI59182 | Inner Joint | | 24 | 26 | 40 | 383 | 97 | |
| 2.2 (100 kw) | 2009.04-2018.08 | 6AT/6MT | F | L | MPV FWD 2AD-FHV | | GDS81237 | Drive Shaft | | 30 | 24 | 61.2 | 100.5 | 613 | |
| | 2009.04-2018.08 | 6AT/6MT | F | R | MPV FWD 2AD-FHV | | GDS59679 | Drive Shaft | | 30 | 24 | 61.2 | 100.5 | 989 | |
| | 2009.04-2018.08 | 6AT/6MT | F | L/R | MPV FWD 2AD-FHV | | GCO81083 | Outer Joint | | 30 | 33 | 61.2 | 100.5 | 56 | I |
| | 2009.04-2018.08 | 6AT/6MT | F | L | MPV FWD 2AD-FHV | | GCI81145 | Inner Joint | | 24 | 33 | 50 | 67 | 109 | |
| | 2009.04-2018.08 | 6AT/6MT | F | R | MPV FWD 2AD-FHV | | GCI59237 | Inner Joint | | 24 | 33 | 40 | 383 | 97 | |
| 2.2 (110 kw) | 2009.04-2018.08 | 6AT/6MT | F | L | MPV FWD 2AD-FHV | | GDS81237 | Drive Shaft | | 30 | 24 | 61.2 | 100.5 | 613 | |
| | 2009.04-2018.08 | 6AT/6MT | F | R | MPV FWD 2AD-FHV | | GDS59679 | Drive Shaft | | 30 | 24 | 61.2 | 100.5 | 989 | |
| | 2009.04-2018.08 | 6AT/6MT | F | L/R | MPV FWD 2AD-FHV | | GCO81083 | Outer Joint | | 30 | 33 | 61.2 | 100.5 | 56 | I |
| | 2009.04-2018.08 | 6AT/6MT | F | L | MPV FWD 2AD-FHV | | GCI81145 | Inner Joint | | 24 | 33 | 50 | 67 | 109 | |
| | 2009.04-2018.08 | 6AT/6MT | F | R | MPV FWD 2AD-FHV | | GCI59237 | Inner Joint | | 24 | 33 | 40 | 383 | 97 | |
| 2.2 (130 kw) | 2009.04-2018.08 | 6AT/6MT | F | L | Box Body/MPV FWD 2AD-FHV | | GDS81237 | Drive Shaft | | 30 | 24 | 61.2 | 100.5 | 613 | |
| | 2009.04-2018.08 | 6AT/6MT | F | R | Box Body/MPV FWD 2AD-FHV | | GDS59679 | Drive Shaft | | 30 | 24 | 61.2 | 100.5 | 989 | |
| | 2009.04-2018.08 | 6AT/6MT | F | L/R | Box Body/MPV FWD 2AD-FHV | | GCO81083 | Outer Joint | | 30 | 33 | 61.2 | 100.5 | 56 | I |
| | 2009.04-2018.08 | 6AT/6MT | F | L | Box Body/MPV FWD 2AD-FHV | | GCI81145 | Inner Joint | | 24 | 33 | 50 | 67 | 109 | |
| | 2009.04-2018.08 | 6AT/6MT | F | R | Box Body/MPV FWD 2AD-FHV | | GCI59237 | Inner Joint | | 24 | 33 | 40 | 383 | 97 | |
| | 2009.04-2018.08 | 6AT/6MT | F | L | MPV FWD 2AD-FHV | | GDS81237 | Drive Shaft | | 30 | 24 | 61.2 | 100.5 | 613 | |
| | 2009.04-2018.08 | 6AT/6MT | F | R | MPV FWD 2AD-FHV | | GDS59679 | Drive Shaft | | 30 | 24 | 61.2 | 100.5 | 989 | |
| | 2009.04-2018.08 | 6AT/6MT | F | L/R | MPV FWD 2AD-FHV | | GCO81083 | Outer Joint | | 30 | 33 | 61.2 | 100.5 | 56 | I |
| | 2009.04-2018.08 | 6AT/6MT | F | L | MPV FWD 2AD-FHV | | GCI81145 | Inner Joint | | 24 | 33 | 50 | 67 | 109 | |
| | 2009.04-2018.08 | 6AT/6MT | F | R | MPV FWD 2AD-FHV | | GCI59237 | Inner Joint | | 24 | 33 | 40 | 383 | 97 | |
| **Verso S** | | | | | | | | | | | | | | | |
| 1.3 (73 kw) | 2010.11-2016.10 | MT/CVT | F | L | MPV FWD 1NR-FE | | GDS59202 | Drive Shaft | | 26 | 23 | 55.6 | 96 | 653 | |
| | 2010.11-2016.10 | MT/CVT | F | R | MPV FWD 1NR-FE | | GDS59201 | Drive Shaft | | 26 | 23 | 55.6 | 96 | 896 | |
| | 2010.11-2016.10 | MT/CVT | F | L/R | MPV FWD 1NR-FE | | GCO59206 | Outer Joint | | 26 | 23 | 55.6 | 96 | 53 | I |
| | 2010.11-2016.10 | MT/CVT | F | L/R | MPV FWD 1NR-FE | | GCI59023 | Inner Joint | | 23 | 23 | 34 | 60 | 113 | |
| | 2010.11-2016.10 | MT/CVT | F | L/R | MPV FWD 1NR-FE | | GCI99046 | Inner Joint | | 23 | 23 | 34 | 60 | 103.5 | |
| 1.4 (66 kw) | 2010.11-2016.10 | 6AT/6MT | F | L | MPV FWD 1ND-TV | | GDS59693 | Drive Shaft | | 26 | 20 | 55.6 | 95.5 | 653 | |
| | 2010.11-2016.10 | 6AT/6MT | F | R | MPV FWD 1ND-TV | | GDS59677 | Drive Shaft | | 26 | 20 | 55.6 | 95.5 | 888 | |
| | 2010.11-2016.10 | 6AT/6MT | F | L/R | MPV FWD 1ND-TV | | GCO59244 | Outer Joint | | 26 | 25 | 55.6 | 95.5 | 57 | I |
| | 2010.11-2016.10 | 6AT/6MT | F | L/R | MPV FWD 1ND-TV | | GCI59100 | Inner Joint | | 20 | 25 | 35 | 63.5 | 118 | |
| **Vios/Soluna Vios** | | | | | | | | | | | | | | | |
| 1.5 (81 kw) | 2002.12-2006.09 | AT/MT | F | R | Saloon FWD 1NZFE | | GDS59076 | Drive Shaft | 48T | 24 | 23 | 56 | 90.5 | 637.5 | |
| | 2002.12-2006.09 | AT/MT | F | R | Saloon FWD 1NZFE | | GCO59135 | Outer Joint | 48T | 24 | 23 | 56 | 90.5 | 55 | I |
| | 2002.12-2006.09 | AT/MT | F | R | Saloon FWD 1NZFE | | GCI59023 | Inner Joint | | 23 | 23 | 34 | 60 | 113 | |
| **Vista** | | | | | | | | | | | | | | | |
| 2.0 (99 kw) | 1994.06-1998.06 | | F | R | Saloon 4WD 3SFE | | GCI59160 | Inner Joint | | 23 | 23 | 36 | 75 | 93 | |
| 2.0 (107 kw) | 2001.06-2003.08 | AT | F | L/R | Saloon FWD 3SFSE | | GCO59131 | Outer Joint | 48T | 26 | 24 | 58 | 96 | 55 | I |
| **Vista/Camry** | | | | | | | | | | | | | | | |
| 2.0 (96 kw) | 1994.01-1998.05 | | F | R | Saloon 4WD 3S-FE | | GCI59160 | Inner Joint | | 23 | 23 | 36 | 75 | 93 | |
| **Vitz** | | | | | | | | | | | | | | | |
| 1.0 (52 kw) | 2005.11-2010.11 | 5MT | F | L | Hatchback FWD 1KR-FE | | GDS59206 | Drive Shaft | | 26 | 23 | 55.6 | 95 | 670 | |
| | 2005.11-2010.11 | 5MT | F | R | Hatchback FWD 1KR-FE | | GDS59208 | Drive Shaft | | 26 | 23 | 55.6 | 95 | 884 | |
| | 2005.11-2010.11 | 5MT | F | L/R | Hatchback FWD 1KR-FE | Vehicle Production Country:Japan,Date from:2007.01,Date to:2008.07,Vehicle Production Country:France,Date from:2007.02 | GCO59232 | Outer Joint | | 26 | 20 | 55.6 | 95 | 46 | M |
| | 2005.11-2010.11 | 5MT | F | L/R | Hatchback FWD 1KR-FE | Date from:2008.08,Vehicle Production Country:Japan | GCO59297 | Outer Joint | | 26 | 20 | 55.6 | 95 | 46 | I |
| | 2005.11-2010.11 | 5MT | F | L/R | Hatchback FWD 1KR-FE | Date to:2007.03,Veh Prd Country:Japan | GCO59308 | Outer Joint | | 26 | 20 | 55.6 | 96 | 54 | M |
| | 2005.11-2010.11 | 5MT | F | L/R | Hatchback FWD 1KR-FE | Vehicle Production Country:France,Date to:2007.01 | GCO59332 | Outer Joint | | 26 | 19 | 55.6 | 95 | 46 | M |
| | 2005.11-2010.11 | 5MT | F | L/R | Hatchback FWD 1KR-FE | Date from:2007.02,Vehicle Production Country:France,Date from:2007.04,Vehicle Production Country:Japan | GCI59092 | Inner Joint | | 23 | 20 | 34 | 60 | 101 | |
| 1.3 (64 kw) | 2007.08-2010.11 | 4AT/5MT | F | L/R | Hatchback 4WD 2NZFE | | GCO59274 | Outer Joint | | 26 | 23 | 55.6 | 96 | 54 | I |
| | 2007.08-2010.11 | AT/MT | F | R | Hatchback 4WD 2NZFE | | GDS59294 | Drive Shaft | | 26 | 23 | 55.6 | 96 | 897.5 | |
| | 2007.08-2010.11 | AT/MT | F | R | Hatchback 4WD 2NZFE | | GCO59238 | Outer Joint | | 26 | 22 | 55.6 | 96 | 46.5 | I |
| | 2007.08-2010.11 | AT/MT | F | R | Hatchback 4WD 2NZFE | | GCI59003 | Inner Joint | | 23 | 22 | 34 | 60.4 | 103 | |
| 1.3 (70 kw) | 2010.12- | AT/MT | F | L | Hatchback 4WD 1NRFE | | GDS59295 | Drive Shaft | | 26 | 23 | 55.6 | 96 | 656.5 | |
| | 2010.12- | | F | L/R | Hatchback FWD 1NRFE | | GCI59092 | Inner Joint | | 23 | 20 | 34 | 60 | 101 | |
| 1.5 (80 kw) | 2010.12-2020.01 | 5MT | F | L | Hatchback FWD 1NZ-FE | | GDS59202 | Drive Shaft | | 26 | 23 | 55.6 | 96 | 653 | |
| | 2010.12-2020.01 | 5MT | F | R | Hatchback FWD 1NZ-FE | | GDS59201 | Drive Shaft | | 26 | 23 | 55.6 | 96 | 896 | |
| | 2010.12-2020.01 | 5MT | F | L/R | Hatchback FWD 1NZ-FE | | GCO59206 | Outer Joint | | 26 | 23 | 55.6 | 96 | 53 | I |
| | 2010.12-2020.01 | 5MT | F | L/R | Hatchback FWD 1NZ-FE | | GCI99046 | Inner Joint | | 23 | 23 | 34 | 60 | 103.5 | |
| **Voxy** | | | | | | | | | | | | | | | |
| 2.0 (112 kw) | 2013.10- | AT | F | R | MPV FWD 3ZR-FAE | | GCI59128 | Inner Joint | | 24 | 27 | 40 | 369.5 | 105.5 | |
| 2.0 (114 kw) | 2007.06-2013.12 | AT | F | R | MPV 4WD 3ZR-FAE | | GCI59128 | Inner Joint | | 24 | 27 | 40 | 369.5 | 105.5 | |
| 2.0 (116 kw) | 2007.06-2013.12 | AT | F | R | MPV FWD 3ZR-FAE | | GCI59128 | Inner Joint | | 24 | 27 | 40 | 369.5 | 105.5 | |

| | YEAR | TRANSM. | F/R | L/R | BODY STYLE & DRIVE TYPE & ENGINE | REMARKS | G-AP Ref. | PRODUCT | ABS | Technical Specifications A | B | C | H | L | P |
|---|---|---|---|---|---|---|---|---|---|---|---|---|---|---|---|
| **TOYOTA** | | | | | | | | | | | | | | | |
| **Will Cypha** | | | | | | | | | | | | | | | |
| 1.3 (62 kw) | 2001.05-2005.10 | AT | F | | Hatchback FWD 2NZFE | Date From:2002.09 | GCO59035 | Outer Joint | 48T | 24 | 22 | 58 | 91 | 47 | I |
| | 2001.05-2005.10 | AT | F | | Hatchback FWD 2NZFE | Date From:2002.09 | GCI59023 | Inner Joint | | 23 | 23 | 34 | 60 | 113 | |
| | 2001.05-2005.10 | | F | | Hatchback FWD 2NZFE | | GCI99046 | Inner Joint | | 23 | 23 | 34 | 60 | 103.5 | |
| 1.5 (78 kw) | 2001.05-2005.10 | AT/MT | F | L | Hatchback 4WD 1NZFE | | GDS59069 | Drive Shaft | 48T | 26 | 23 | 58 | 96 | 636.5 | |
| **Will VS** | | | | | | | | | | | | | | | |
| 1.5 (81 kw) | 2001.03-2004.04 | AT/MT | F | L | Hatchback FWD 1NZ-FE | | GDS59069 | Drive Shaft | 48T | 26 | 23 | 58 | 96 | 636.5 | |
| | 2001.03-2004.04 | | F | | Hatchback FWD 1NZ-FE | | GCI99046 | Inner Joint | | 23 | 23 | 34 | 60 | 103.5 | |
| **Windom** | | | | | | | | | | | | | | | |
| 2.5 (147 kw) | 1996.10-2001.07 | | F | | Saloon FWD 2MZFE | | GCO59446 | Outer Joint | 48T | 30 | 27 | 56 | 100 | 66 | M |
| 3.0 (155 kw) | 1996.10-2001.07 | | F | | Saloon FWD 1MZFE | | GCO59446 | Outer Joint | 48T | 30 | 27 | 56 | 100 | 66 | M |
| **Wish** | | | | | | | | | | | | | | | |
| 1.8 (97 kw) | 2003.04-2009.03 | 4AT | F | L | MPV FWD 1ZZFE | | GDS59192 | Drive Shaft | 48T | 26 | 20 | 58 | 96 | 641 | |
| | 2003.04-2009.03 | 4AT | F | R | MPV FWD 1ZZFE | | GDS59191 | Drive Shaft | 48T | 26 | 20 | 58 | 96 | 912 | |
| 1.8 (98 kw) | 2009.04-2012.03 | AT/CVT | F | L | MPV 4WD 2ZR-FAE | | GCO59357 | Outer Joint | 48T | 26 | 25 | 58 | 95.5 | 56.5 | I |
| **WISH** | | | | | | | | | | | | | | | |
| 1.8 (106 kw) | 2009.04-2018.05 | CVT | F | L | MPV FWD 2ZR-FAE | Type:18S | GDS59405 | Drive Shaft | 48T | 26 | 20 | 58 | 95.5 | 646 | |
| | 2009.04-2018.05 | CVT | F | L | MPV FWD 2ZR-FAE | Type:18X | GDS59687 | Drive Shaft | 48T | 26 | 20 | 58 | 95.5 | 639 | |
| | 2009.04-2018.05 | CVT | F | R | MPV FWD 2ZR-FAE | Type:18S | GDS59404 | Drive Shaft | 48T | 26 | 20 | 58 | 95.5 | 922 | |
| | 2009.04-2018.05 | CVT | F | R | MPV FWD 2ZR-FAE | Type:18X | GDS59614 | Drive Shaft | 48T | 26 | 20 | 58 | 95.5 | 907 | |
| | 2009.04-2018.05 | CVT | F | L/R | MPV FWD 2ZR-FAE | | GCO59357 | Outer Joint | 48T | 26 | 25 | 58 | 95.5 | 56.5 | I |
| | 2009.04-2018.05 | CVT | F | L/R | MPV FWD 2ZR-FAE | Type:18S/18X | GCI59100 | Inner Joint | | 20 | 25 | 35 | 63.5 | 118 | |
| **Wish** | | | | | | | | | | | | | | | |
| 2.0 (107 kw) | 2009.04- | AT | F | R | MPV FWD 3ZR-FAE, 3ZR-FE | | GCI59128 | Inner Joint | | 24 | 27 | 40 | 369.5 | 105.5 | |
| 2.0 (116 kw) | 2009.04-2018.05 | AT | F | R | MPV FWD 3ZR-FAE | | GCI59128 | Inner Joint | | 24 | 27 | 40 | 369.5 | 105.5 | |
| **Yaris** | | | | | | | | | | | | | | | |
| 1.0 (48 kw) | 2003.03-2005.09 | 5MT | F | L | Hatchback FWD 1SZFE | | GDS59057 | Drive Shaft | | 24 | 23 | 56 | 90 | 635 | |
| | 2003.03-2005.09 | 5MT | F | L | Hatchback FWD 1SZFE | Inner teeth of wheel side:22 | GDS59209 | Drive Shaft | 48T | 24 | 23 | 56 | 90 | 635 | |
| | 2003.03-2005.09 | 5MT/SAT | F | R | Hatchback FWD 1SZFE | | GDS57728 | Drive Shaft | 48T | 24 | 23 | 56 | 90 | 865 | |
| | 2003.03-2005.09 | SAT/5MT | F | L | Hatchback FWD 1SZFE | Inner teeth of wheel side:19 | GDS99181 | Drive Shaft | 48T | 24 | 23 | 58 | 91 | 650 | |
| | 2003.03-2005.09 | SAT/5MT | F | L/R | Hatchback FWD 1SZFE | | GCO59026 | Outer Joint | 48T | 24 | 26 | 58 | 90.5 | 46.5 | I |
| | 2003.03-2005.09 | SAT/5MT | F | L/R | Hatchback FWD 1SZFE | VIN:JTD | GCO59152 | Outer Joint | 48T | 24 | 19 | 58 | 91 | 46.5 | I |
| | 2003.03-2005.09 | SAT/5MT | F | L/R | Hatchback FWD 1SZFE | | GCO99282 | Outer Joint | 48T | 24 | 28 | 56 | 90 | 53 | O |
| | 2003.03-2005.09 | SAT/5MT | F | L/R | Hatchback FWD 1SZFE | | GCI59063 | Inner Joint | | 23 | 19 | 38 | 59 | 99 | |
| 1.0 (50 kw) | 1999.04-2005.09 | 5AT/5MT | F | L | Hatchback FWD 1SZ-FE | Inner teeth of wheel side:19 | GDS99181 | Drive Shaft | 48T | 24 | 23 | 58 | 91 | 650 | |
| | 1999.04-2005.09 | 5AT/5MT | F | R | Hatchback FWD 1SZ-FE | Vehicle Production Country:France;Date to:2001.12,Vehicle Production Country:Japan | GDS57728 | Drive Shaft | 48T | 24 | 23 | 56 | 90 | 865 | |
| | 1999.04-2005.09 | 5AT/5MT | F | R | Hatchback FWD 1SZ-FE | Date to:2003.01,Vehicle Production Country:France/Japan | GDS59208 | Drive Shaft | | 26 | 23 | 55.6 | 95 | 884 | |
| | 1999.04-2005.09 | 5AT/5MT | F | R | Hatchback FWD 1SZ-FE | Date from:2002.01,Vehicle Production Country:Japan | GDS99180 | Drive Shaft | 48T | 24 | 23 | 58 | 91 | 864 | |
| | 1999.04-2005.09 | 5AT/5MT | F | L/R | Hatchback FWD 1SZ-FE | Date to:2001.12,Vehicle Production Country:Japan | GCO59025 | Outer Joint | | 24 | 26 | 58 | 90.5 | 46.5 | I |
| | 1999.04-2005.09 | 5AT/5MT | F | L/R | Hatchback FWD 1SZ-FE | Date to:2001.12,Vehicle Production Country:Japan | GCO59026 | Outer Joint | 48T | 24 | 26 | 58 | 90.5 | 46.5 | I |
| | 1999.04-2005.09 | 5AT/5MT | F | L/R | Hatchback FWD 1SZ-FE | Date from:2002.01,Not For Japan | GCO59152 | Outer Joint | 48T | 24 | 19 | 58 | 91 | 46.5 | I |
| | 1999.04-2005.09 | 5AT/5MT | F | L/R | Hatchback FWD 1SZ-FE | Date from:2002.01,Vehicle Production Country:Japan | GCO59211 | Outer Joint | | 24 | 19 | 58 | 91 | 46.5 | I |
| | 1999.04-2005.09 | 5AT/5MT | F | L/R | Hatchback FWD 1SZ-FE | Vehicle Production Country:France | GCO59326 | Outer Joint | | 24 | 28 | 56 | 90.5 | 54.2 | O |
| | 1999.04-2005.09 | 5AT/5MT | F | L/R | Hatchback FWD 1SZ-FE | Date from:2002.01,Vehicle Production Country:Japan | GCO59334 | Outer Joint | 48T | 24 | 19 | 58 | 90.7 | 46.7 | I |
| | 1999.04-2005.09 | 5AT/5MT | F | L/R | Hatchback FWD 1SZ-FE | Date to:2001.12,Vehicle Production Country:Japan | GCI59063 | Inner Joint | | 23 | 19 | 38 | 59 | 99 | |
| | 1999.04-2005.09 | 5MT | F | L/R | Hatchback FWD 1SZ-FE | Vehicle Production Country:France | GCI83826 | Inner Joint | | 23 | 28 | 38 | 59 | 105.5 | |
| | 1999.04-2005.09 | MT | F | L | Hatchback FWD 1SZ-FE | | GDS59057 | Drive Shaft | | 24 | 23 | 56 | 90 | 635 | |
| | 1999.04-2005.09 | MT | F | L | Hatchback FWD 1SZ-FE | Inner teeth of wheel side:22 | GDS59209 | Drive Shaft | 48T | 24 | 23 | 56 | 90 | 635 | |
| | 1999.04-2005.09 | MT | F | L/R | Hatchback FWD 1SZ-FE | Vehicle Production Country:France | GCO99282 | Outer Joint | 48T | 24 | 28 | 56 | 90 | 53 | O |
| 1.0 (51 kw) | 2005.08-2011.12 | 5MT | F | L | Hatchback FWD 1KR-FE | | GDS59206 | Drive Shaft | | 26 | 23 | 55.6 | 95 | 670 | |
| | 2005.08-2011.12 | 5MT | F | R | Hatchback FWD 1KR-FE | Vehicle Production Country:France;Date to:2007.04,Vehicle Production Country:Japan | GDS59208 | Drive Shaft | | 26 | 23 | 55.6 | 95 | 884 | |
| | 2005.08-2011.12 | 5MT | F | L/R | Hatchback FWD 1KR-FE | Date from:2007.03,Vehicle Production Country:France | GCO59168 | Outer Joint | 48T | 24 | 22 | 56 | 90 | 48.5 | M |
| | 2005.08-2011.12 | 5MT | F | L/R | Hatchback FWD 1KR-FE | Date to:2007.04,VIN:JT;Date from:2008.08,VIN:JT | GCO59222 | Outer Joint | | 26 | 19 | 55.6 | 96 | 46.5 | I |
| | 2005.08-2011.12 | 5MT | F | L/R | Hatchback FWD 1KR-FE | VIN:JTD | GCO59231 | Outer Joint | | 26 | 19 | 55.6 | 96 | 46.5 | I |
| | 2005.08-2011.12 | 5MT | F | L/R | Hatchback FWD 1KR-FE | Date to:2007.04,VIN:JT;Date from:2008.08,VIN:JT | GCO59297 | Outer Joint | | 26 | 20 | 55.6 | 95 | 46 | I |
| | 2005.08-2011.12 | 5MT | F | L/R | Hatchback FWD 1KR-FE | Date to:2007.04,Vehicle Production Country:Japan | GCO59308 | Outer Joint | | 26 | 20 | 55.6 | 96 | 54 | M |
| | 2005.08-2011.12 | 5MT | F | L/R | Hatchback FWD 1KR-FE | Date to:2007.02,VIN:VNK | GCO59332 | Outer Joint | | 26 | 19 | 55.6 | 95 | 46 | M |
| | 2005.08-2011.12 | 5MT | F | L/R | Hatchback FWD 1KR-FE | Date from:2007.03,Vehicle Production Country:France;Date from:2007.03,Vehicle Production Country:Japan | GCI59092 | Inner Joint | | 23 | 20 | 34 | 60 | 101 | |
| | 2006.01-2011.12 | 5MT | F | L | Hatchback FWD 1KR-FE | | GDS59206 | Drive Shaft | | 26 | 23 | 55.6 | 95 | 670 | |
| | 2006.01-2011.12 | 5MT | F | R | Hatchback FWD 1KR-FE | | GDS59208 | Drive Shaft | | 26 | 23 | 55.6 | 95 | 884 | |
| | 2006.01-2011.12 | MT | F | L/R | Hatchback FWD 1KR-FE | Date from:2007.03,Vehicle Production Country:France | GCO59168 | Outer Joint | 48T | 24 | 22 | 56 | 90 | 48.5 | M |
| | 2006.01-2011.12 | MT | F | L/R | Hatchback FWD 1KR-FE | Date to:2007.04;Vehicle Production Country:Japan | GCO59308 | Outer Joint | | 26 | 20 | 55.6 | 96 | 54 | M |
| | 2006.01-2011.12 | MT | F | L/R | Hatchback FWD 1KR-FE | Date from:2007.03,Vehicle Production Country:France;Date from:2007.03,Vehicle Production Country:Japan | GCI59092 | Inner Joint | | 23 | 20 | 34 | 60 | 101 | |
| | 2010.12-2020.06 | 5MT | F | L | Hatchback FWD 1KR-FE | Date from:2011.01 | GDS59206 | Drive Shaft | | 26 | 23 | 55.6 | 95 | 670 | |
| | 2010.12-2020.06 | 5MT/CVT | F | L | Hatchback FWD 1KR-FE | Date to:2016.03;Date from:2016.04,For vehicles with heavy duty suspension | GDS59680 | Drive Shaft | | 26 | 23 | 55.6 | 96 | 670 | |
| | 2010.12-2020.06 | 5MT/CVT | F | R | Hatchback FWD 1KR-FE | Date to:2016.03;Date from:2016.04,For vehicles with heavy duty suspension | GDS59665 | Drive Shaft | | 26 | 23 | 55.6 | 96 | 886 | |

| | YEAR | TRANSM. | F/R | L/R | BODY STYLE & DRIVE TYPE & ENGINE | REMARKS | G-AP Ref. | PRODUCT | ABS | Technical Specifications A | B | C | H | L | P |
|---|---|---|---|---|---|---|---|---|---|---|---|---|---|---|---|
| **TOYOTA** | | | | | | | | | | | | | | | |
| **Yaris** | | | | | | | | | | | | | | | |
| 1.0 (51 kw) | 2010.12-2020.06 | 5MT/CVT | F | L/R | Hatchback FWD 1KR-FE | Date to:2016.03;Date from:2016.04;For vehicles with heavy duty suspension | GCO59510 | Outer Joint | | 26 | 21 | 55.6 | 96 | 51.5 | M |
| | 2010.12-2020.06 | 5MT/CVT | F | L/R | Hatchback FWD 1KR-FE | Date from:2016.04;For vehicles without heavy duty suspension | GCI59069 | Inner Joint | | 23 | 19 | 34 | 60 | 101 | |
| | 2010.12-2020.06 | 5MT/CVT | F | L/R | Hatchback FWD 1KR-FE | Date to:2016.03;Date from:2016.04;Date to:2018.11For vehicles with heavy duty suspension | GCI59092 | Inner Joint | | 23 | 20 | 34 | 60 | 101 | |
| | 2014.07-2020.06 | 5MT | F | L | Hatchback Van FWD 1KR-FE | | GDS59680 | Drive Shaft | | 26 | 23 | 55.6 | 96 | 670 | |
| | 2014.07-2020.06 | 5MT | F | R | Hatchback Van FWD 1KR-FE | | GDS59665 | Drive Shaft | | 26 | 23 | 55.6 | 96 | 886 | |
| | 2014.07-2020.06 | 5MT | F | L/R | Hatchback Van FWD 1KR-FE | | GCO59510 | Outer Joint | | 26 | 21 | 55.6 | 96 | 51.5 | M |
| | 2014.07-2020.06 | 5MT | F | L/R | Hatchback Van FWD 1KR-FE | Date From:2016.04 | GCI59069 | Inner Joint | | 23 | 19 | 34 | 60 | 101 | |
| | 2014.07-2020.06 | 5MT | F | L/R | Hatchback Van FWD 1KR-FE | | GCI59092 | Inner Joint | | 23 | 20 | 34 | 60 | 101 | |
| | 2014.07-2020.06 | MT | F | L | Hatchback Van FWD 1KR-FE | Date from:2015.01 | GDS59206 | Drive Shaft | | 26 | 23 | 55.6 | 95 | 670 | |
| 1.0 (53 kw) | 2018.06-2020.06 | 5MT | F | L | Hatchback FWD 1KR-FE | Inner teeth of wheel side:21 | GDS59680 | Drive Shaft | | 26 | 23 | 55.6 | 96 | 670 | |
| | 2018.06-2020.06 | 5MT | F | R | Hatchback FWD 1KR-FE | | GDS59665 | Drive Shaft | | 26 | 23 | 55.6 | 96 | 886 | |
| | 2018.06-2020.06 | 5MT | F | L/R | Hatchback FWD 1KR-FE | | GCO59510 | Outer Joint | | 26 | 21 | 55.6 | 96 | 51.5 | M |
| | 2018.06-2020.06 | 5MT | F | L/R | Hatchback FWD 1KR-FE | Date From:2016.04 | GCI59069 | Inner Joint | | 23 | 19 | 34 | 60 | 101 | |
| | 2018.06-2020.06 | 5MT | F | L/R | Hatchback FWD 1KR-FE | | GCI59092 | Inner Joint | | 23 | 20 | 34 | 60 | 101 | |
| | 2018.06-2020.06 | MT | F | L | Hatchback FWD 1KR-FE | Date from:2019.01;Inner teeth of wheel side:20 | GDS59206 | Drive Shaft | | 26 | 23 | 55.6 | 95 | 670 | |
| | 2018.06-2020.06 | 5MT | F | L | Hatchback Van FWD 1KR-FE | For vehicles with heavy duty suspension | GDS59680 | Drive Shaft | | 26 | 23 | 55.6 | 96 | 670 | |
| | 2018.06-2020.06 | 5MT | F | R | Hatchback Van FWD 1KR-FE | For vehicles with heavy duty suspension | GDS59665 | Drive Shaft | | 26 | 23 | 55.6 | 96 | 886 | |
| | 2018.06-2020.06 | 5MT | F | L/R | Hatchback Van FWD 1KR-FE | For vehicles with heavy duty suspension | GCO59510 | Outer Joint | | 26 | 21 | 55.6 | 96 | 51.5 | M |
| | 2018.06-2020.06 | 5MT | F | L/R | Hatchback Van FWD 1KR-FE | Date From:2016.04 | GCI59069 | Inner Joint | | 23 | 19 | 34 | 60 | 101 | |
| | 2018.06-2020.06 | 5MT | F | L/R | Hatchback Van FWD 1KR-FE | For vehicles with heavy duty suspension | GCI59092 | Inner Joint | | 23 | 20 | 34 | 60 | 101 | |
| | 2018.06-2020.06 | MT | F | L | Hatchback Van FWD 1KR-FE | Date from:2019.01 | GDS59206 | Drive Shaft | | 26 | 23 | 55.6 | 95 | 670 | |
| | 2020.02- | 5MT | F | L | Hatchback FWD 1KR-FE | | GDS84524 | Drive Shaft | | 26 | 23 | 55.6 | 96 | 715 | |
| | 2020.02- | 5MT | F | R | Hatchback FWD 1KR-FE | | GDS59665 | Drive Shaft | | 26 | 23 | 55.6 | 96 | 886 | |
| | 2020.02- | 5MT | F | L/R | Hatchback FWD 1KR-FE | | GCO59510 | Outer Joint | | 26 | 21 | 55.6 | 96 | 51.5 | M |
| | 2020.02- | 5MT | F | L/R | Hatchback FWD 1KR-FE | | GCI59092 | Inner Joint | | 23 | 20 | 34 | 60 | 101 | |
| 1.3 (63 kw) | 1999.08-2005.11 | 4AT/5MT | F | L | Hatchback FWD 2NZ-FE | | GDS59057 | Drive Shaft | | 24 | 23 | 56 | 90 | 635 | |
| | 1999.08-2005.11 | 4AT/5MT | F | L/R | Hatchback FWD 2NZ-FE | Date To:2002.06 | GCO59029 | Outer Joint | | 24 | 22 | 56 | 90 | 48.5 | M |
| | 1999.08-2005.11 | 4AT/5MT | F | L/R | Hatchback FWD 2NZ-FE | | GCO59035 | Outer Joint | 48T | 24 | 22 | 58 | 91 | 47 | I |
| | 1999.08-2005.11 | 4AT/5MT | F | L/R | Hatchback FWD 2NZ-FE | | GCO59078 | Outer Joint | | 24 | 22 | 56 | 90 | 48.5 | I |
| | 1999.08-2005.11 | 4AT/5MT | F | L/R | Hatchback FWD 2NZ-FE | | GCO59129 | Outer Joint | 48T | 24 | 22 | 56 | 90 | 48.5 | I |
| | 1999.08-2005.11 | 4AT/5MT | F | L/R | Hatchback FWD 2NZ-FE | Date From:2002.07 | GCO59190 | Outer Joint | | 24 | 22 | 58 | 90 | 47 | I |
| | 1999.08-2005.11 | 4AT/5MT | F | L/R | Hatchback FWD 2NZ-FE | | GCI59017 | Inner Joint | | 23 | 22 | 34 | 58.8 | 102.7 | |
| | 1999.08-2005.11 | 5MT/4AT | F | R | Hatchback FWD 2NZ-FE | Date to:2002.11 | GDS59146 | Drive Shaft | | 24 | 23 | 56 | 90 | 875 | |
| | 1999.08-2005.11 | AT/MT | F | L | Hatchback FWD 2NZ-FE | | GDS59102 | Drive Shaft | 48T | 24 | 23 | 58 | 91 | 640 | |
| | 1999.08-2005.11 | AT/MT | F | R | Hatchback FWD 2NZ-FE | | GDS59011 | Drive Shaft | 48T | 24 | 23 | 58 | 91 | 881.5 | |
| | 1999.08-2005.11 | AT/MT | F | L/R | Hatchback FWD 2NZ-FE | | GCI59002 | Inner Joint | | 23 | 23 | 34 | 58.8 | 102.7 | |
| | 2005.11-2012.12 | AT/MT | F | L | Hatchback FWD 2NZFE | | GDS59206 | Drive Shaft | | 26 | 23 | 55.6 | 95 | 670 | |
| | 2005.11-2012.12 | AT/MT | F | R | Hatchback FWD 2NZFE | | GDS59294 | Drive Shaft | | 26 | 23 | 55.6 | 96 | 897.5 | |
| | 2005.11-2012.12 | AT/MT | F | L/R | Hatchback FWD 2NZFE | | GCO59449 | Outer Joint | | 26 | 22 | 55.6 | 96 | 51 | I |
| | 2005.11-2012.12 | MT | F | L/R | Hatchback FWD 2NZFE | Date to:2010.04,for left-hand drive vehicles | GCO59238 | Outer Joint | | 26 | 22 | 55.6 | 96 | 46.5 | I |
| | 2005.11-2012.12 | MT | F | | Hatchback FWD 2NZFE | Date to:2011.07,for left-hand drive vehicles | GCI59023 | Inner Joint | | 23 | 23 | 34 | 60 | 113 | |
| | 2005.11-2012.12 | | F | | Hatchback FWD 2NZFE | Date to:2011.08,for left-hand drive vehicles | GCO59206 | Outer Joint | | 26 | 23 | 55.6 | 96 | 53 | I |
| | 2005.11-2012.12 | | F | | Hatchback FWD 2NZFE | | GCO59274 | Outer Joint | | 26 | 23 | 55.6 | 96 | 54 | I |
| | 2006.01-2013.04 | AT | F | L | Saloon FWD 2NZ-FE | | GDS59202 | Drive Shaft | | 26 | 23 | 55.6 | 96 | 653 | |
| | 2006.01-2013.04 | AT | F | R | Saloon FWD 2NZ-FE | | GDS59201 | Drive Shaft | | 26 | 23 | 55.6 | 96 | 896 | |
| | 2006.01-2013.04 | AT | F | L/R | Saloon FWD 2NZ-FE | | GCO59206 | Outer Joint | | 26 | 23 | 55.6 | 96 | 53 | I |
| | 2006.01-2013.04 | AT | F | L/R | Saloon FWD 2NZ-FE | | GCO59238 | Outer Joint | | 26 | 22 | 55.6 | 96 | 46.5 | I |
| | 2006.01-2013.04 | AT | F | L/R | Saloon FWD 2NZ-FE | | GCO59274 | Outer Joint | | 26 | 23 | 55.6 | 96 | 54 | I |
| | 2006.01-2013.04 | AT | F | L/R | Saloon FWD 2NZ-FE | | GCI59023 | Inner Joint | | 23 | 23 | 34 | 60 | 113 | |
| | 2006.01-2013.04 | AT | F | L/R | Saloon FWD 2NZ-FE | | GCI99046 | Inner Joint | | 23 | 23 | 34 | 60 | 103.5 | |
| 1.3 (64 kw) | 2002.05-2005.08 | 4AT/5MT | F | L | Hatchback FWD 2SZFE | Inner teeth of wheel side:22 | GDS59209 | Drive Shaft | 48T | 24 | 23 | 56 | 90 | 635 | |
| | 2002.05-2005.08 | AT/MT | F | L | Hatchback FWD 2SZFE | Inner teeth of wheel side:23 | GDS59102 | Drive Shaft | 48T | 24 | 23 | 58 | 91 | 640 | |
| | 2002.05-2005.08 | AT/MT | F | R | Hatchback FWD 2SZFE | | GDS59011 | Drive Shaft | 48T | 24 | 23 | 58 | 91 | 881.5 | |
| | 2002.05-2005.08 | AT/MT | F | R | Hatchback FWD 2SZFE | | GDS59077 | Drive Shaft | 48T | 24 | 23 | 56 | 90.5 | 876.5 | |
| | 2002.05-2005.08 | AT/MT | F | R | Hatchback FWD 2SZFE | | GCI59002 | Inner Joint | | 23 | 23 | 34 | 58.8 | 102.7 | |
| | 2002.05-2005.08 | MT | F | L/R | Hatchback FWD 2SZFE | Vehicle Production Country:France;Groove Type:Outer | GCO99282 | Outer Joint | 48T | 24 | 28 | 56 | 90 | 53 | O |
| | 2002.05-2005.08 | | F | | Hatchback FWD 2SZFE | Groove Type:Middle | GCO59029 | Outer Joint | | 24 | 22 | 56 | 90 | 48.5 | M |
| | 2002.05-2005.08 | | F | | Hatchback FWD 2SZFE | Groove Type:Inner | GCO59129 | Outer Joint | 48T | 24 | 22 | 56 | 90 | 48.5 | I |
| | 2005.08-2010.11 | SAT/5MT | F | L | Hatchback FWD 2SZ-FE | | GDS59206 | Drive Shaft | | 26 | 23 | 55.6 | 95 | 670 | |
| | 2005.08-2010.11 | SAT/5MT | F | R | Hatchback FWD 2SZ-FE | | GDS59208 | Drive Shaft | | 26 | 23 | 55.6 | 95 | 884 | |
| | 2005.08-2010.11 | SAT/5MT | F | L/R | Hatchback FWD 2SZ-FE | | GCO59232 | Outer Joint | | 26 | 20 | 55.6 | 95 | 46 | M |
| | 2005.08-2010.11 | SAT/5MT | F | L/R | Hatchback FWD 2SZ-FE | | GCI59092 | Inner Joint | | 23 | 20 | 34 | 60 | 101 | |
| 1.3 (73 kw) | 2010.07-2011.05 | 6AT/6MT | F | L | Hatchback FWD 1NR-FE | | GDS59206 | Drive Shaft | | 26 | 23 | 55.6 | 95 | 670 | |
| | 2010.07-2011.05 | 6AT/6MT | F | L/R | Hatchback FWD 1NR-FE | | GCO59270 | Outer Joint | | 26 | 24 | 55.6 | 95 | 56 | M |
| | 2010.07-2011.05 | 6AT/6MT | F | L/R | Hatchback FWD 1NR-FE | | GCI59092 | Inner Joint | | 23 | 20 | 34 | 60 | 101 | |

| | YEAR | TRANSM. | F/R | L/R | BODY STYLE & DRIVE TYPE & ENGINE | REMARKS | G-AP Ref. | PRODUCT | ABS | Technical Specifications A | B | C | H | L | P |
|---|---|---|---|---|---|---|---|---|---|---|---|---|---|---|---|
| **TOYOTA** **Yaris** | | | | | | | | | | | | | | | |
| 1.3 (73 kw) | 2011.09-2017.03 | 6MT | F | L | Hatchback FWD 1NR-FE | Date From:2013.08;Vehicle Production Country:France | GDS59681 | Drive Shaft | | 26 | 23 | 55.6 | 96 | 657 | |
| | 2011.09-2017.03 | 6MT | F | R | Hatchback FWD 1NR-FE | Date From:2013.08;Vehicle Production Country:France | GDS59666 | Drive Shaft | | 26 | 23 | 55.6 | 96 | 899 | |
| | 2011.09-2017.03 | 6MT | F | L/R | Hatchback FWD 1NR-FE | Date From:2013.08;Vehicle Production Country:France | GCO59510 | Outer Joint | | 26 | 21 | 55.6 | 96 | 51.5 | M |
| | 2011.09-2017.03 | CVT/6MT | F | L | Hatchback FWD 1NR-FE | Trans. code:6MT,Date To:2013.07;Trans. code:CVT | GDS59343 | Drive Shaft | | 26 | 23 | 55.6 | 95 | 658 | |
| | 2011.09-2017.03 | CVT/6MT | F | R | Hatchback FWD 1NR-FE | Trans. code:6MT,Date To:2013.07;Trans. code:CVT | GDS59345 | Drive Shaft | | 26 | 23 | 55.6 | 95 | 897 | |
| | 2011.09-2017.03 | CVT/6MT | F | L/R | Hatchback FWD 1NR-FE | Trans. code:6MT,Date To:2013.07;Trans. code:CVT | GCO59270 | Outer Joint | | 26 | 24 | 55.6 | 95 | 56 | M |
| | 2011.09-2017.03 | CVT/6MT | F | L/R | Hatchback FWD 1NR-FE | Trans. code:6MT,Date To:2013.07;Trans. code:CVT | GCI59092 | Inner Joint | | 23 | 20 | 34 | 60 | 101 | |
| | 2012.10-2017.03 | 6MT | F | L | Hatchback Van FWD 1NR-FE | Date to:2013.07;Vehicle Production Country:France;Vehicle Production Country:Japan | GDS59343 | Drive Shaft | | 26 | 23 | 55.6 | 95 | 658 | |
| | 2012.10-2017.03 | 6MT | F | L | Hatchback Van FWD 1NR-FE | Date from:2013.08,Vehicle Production Country:France | GDS59681 | Drive Shaft | | 26 | 23 | 55.6 | 96 | 657 | |
| | 2012.10-2017.03 | 6MT | F | R | Hatchback Van FWD 1NR-FE | Date to:2013.07;Vehicle Production Country:France | GDS59345 | Drive Shaft | | 26 | 23 | 55.6 | 95 | 897 | |
| | 2012.10-2017.03 | 6MT | F | R | Hatchback Van FWD 1NR-FE | Date from:2013.08;Date to:2014.06;Vehicle Production Country:France | GDS59666 | Drive Shaft | | 26 | 23 | 55.6 | 96 | 899 | |
| | 2012.10-2017.03 | 6MT | F | L/R | Hatchback Van FWD 1NR-FE | Date from:2013.08;Date to:2014.06;Vehicle Production Country:France | GCO59510 | Outer Joint | | 26 | 21 | 55.6 | 96 | 51.5 | M |
| | 2012.10-2017.03 | 6MT | F | L/R | Hatchback Van FWD 1NR-FE | Date from:2013.08;Date to:2014.06;Vehicle Production Country:France | GCI59092 | Inner Joint | | 23 | 20 | 34 | 60 | 101 | |
| 1.3 (74 kw) | 2008.11-2011.12 | 6AT/6MT | F | R | Hatchback FWD 1NR-FE | Date from:2010.06 | GCO59270 | Outer Joint | | 26 | 24 | 55.6 | 95 | 56 | M |
| | 2008.11-2011.12 | 6AT/6MT | F | L/R | Hatchback FWD 1NR-FE | | GCI59092 | Inner Joint | | 23 | 20 | 34 | 60 | 101 | |
| | 2008.11-2011.12 | AT/MT | F | L | Hatchback FWD 1NR-FE | | GDS59206 | Drive Shaft | | 26 | 23 | 55.6 | 95 | 670 | |
| | 2008.11-2011.12 | AT/MT | F | R | Hatchback FWD 1NR-FE | | GDS59208 | Drive Shaft | | 26 | 23 | 55.6 | 95 | 884 | |
| 1.4 (55 kw) | 2001.10-2005.08 | 5MT | F | L | Hatchback FWD 1NDTV | Vehicle Production Country:Japan | GDS59102 | Drive Shaft | 48T | 24 | 23 | 58 | 91 | 640 | |
| | 2001.10-2005.08 | 5MT | F | R | Hatchback FWD 1NDTV | Vehicle Production Country:Japan | GDS59011 | Drive Shaft | 48T | 24 | 23 | 58 | 91 | 881.5 | |
| | 2001.10-2005.08 | 5MT | F | L/R | Hatchback FWD 1NDTV | Vehicle Production Country:Japan | GCO59038 | Outer Joint | | 24 | 23 | 58 | 91 | 52.5 | I |
| | 2001.10-2005.08 | 5MT | F | L/R | Hatchback FWD 1NDTV | Vehicle Production Country:Japan | GCO59137 | Outer Joint | 48T | 24 | 23 | 58 | 91 | 52.5 | I |
| | 2001.10-2005.08 | 5MT | F | L/R | Hatchback FWD 1NDTV | Vehicle Production Country:France | GCO99282 | Outer Joint | 48T | 24 | 28 | 56 | 90 | 53 | O |
| | 2001.10-2005.08 | 5MT | F | L/R | Hatchback FWD 1NDTV | Vehicle Production Country:Japan,Non-Original design | GCI59002 | Inner Joint | | 23 | 23 | 34 | 58.8 | 102.7 | |
| | 2001.10-2005.08 | 5MT | F | L/R | Hatchback FWD 1NDTV | Vehicle Production Country:Japan,Original design | GCI99046 | Inner Joint | | 23 | 23 | 34 | 60 | 103.5 | |
| | 2001.10-2005.08 | MT | F | R | Hatchback FWD 1NDTV | | GDS59077 | Drive Shaft | 48T | 24 | 23 | 56 | 90.5 | 876.5 | |
| | 2001.10-2005.08 | MT | F | L/R | Hatchback FWD 1NDTV | | GCO59135 | Outer Joint | 48T | 24 | 23 | 56 | 90.5 | 55 | I |
| | 2001.10-2005.08 | MT | F | R | Hatchback FWD 1NDTV | | GCI59023 | Inner Joint | | 23 | 23 | 34 | 60 | 113 | |
| 1.4 (66 kw) | 2005.08-2012.12 | SAT/5MT/6MT | F | L | Hatchback FWD 1ND-TV | Date from:2006.01 Date to:2011.12 | GDS59352 | Drive Shaft | | 26 | 24 | 55.6 | 95 | 546 | |
| | 2005.08-2012.12 | SAT/5MT/6MT | F | L | Hatchback FWD 1ND-TV | | GDS59635 | Drive Shaft | | 26 | 20 | 55.6 | 95 | 655 | |
| | 2005.08-2012.12 | SAT/5MT/6MT | F | R | Hatchback FWD 1ND-TV | Date from:2006.01 Date to:2011.12 | GDS59354 | Drive Shaft | | 26 | 24 | 55.6 | 95 | 787 | |
| | 2005.08-2012.12 | SAT/5MT/6MT | F | R | Hatchback FWD 1ND-TV | | GDS59636 | Drive Shaft | | 26 | 20 | 55.6 | 95 | 896 | |
| | 2005.08-2012.12 | SAT/5MT/6MT | F | L/R | Hatchback FWD 1ND-TV | | GCO59270 | Outer Joint | | 26 | 24 | 55.6 | 95 | 56 | M |
| | 2005.08-2012.12 | SAT/5MT/6MT | F | L/R | Hatchback FWD 1ND-TV | | GCI59077 | Inner Joint | | 20 | 23 | 35 | 63.5 | 115.7 | |
| | 2005.08-2012.12 | SAT/5MT/6MT | F | L/R | Hatchback FWD 1ND-TV | | GCI99046 | Inner Joint | | 23 | 23 | 34 | 60 | 103.5 | |
| | 2011.09-2018.05 | 6AT/6MT | F | L | Hatchback FWD 1ND-TV | | GDS59700 | Drive Shaft | | 26 | 20 | 55.6 | 95 | 657 | |
| | 2011.09-2018.05 | 6AT/6MT | F | R | Hatchback FWD 1ND-TV | | GDS59699 | Drive Shaft | | 26 | 20 | 55.6 | 95 | 897 | |
| | 2011.09-2018.05 | 6AT/6MT | F | L/R | Hatchback FWD 1ND-TV | | GCO59270 | Outer Joint | | 26 | 24 | 55.6 | 95 | 56 | M |
| | 2011.09-2018.05 | 6AT/6MT | F | L/R | Hatchback FWD 1ND-TV | | GCI59077 | Inner Joint | | 20 | 23 | 35 | 63.5 | 115.7 | |
| | 2014.07-2018.05 | 6MT | F | L/R | Hatchback Van FWD 1ND-TV | | GCO59270 | Outer Joint | | 26 | 24 | 55.6 | 95 | 56 | M |
| | 2014.07-2018.05 | MT | F | L | Hatchback Van FWD 1ND-TV | | GDS59700 | Drive Shaft | | 26 | 20 | 55.6 | 95 | 657 | |
| | 2014.07-2018.05 | MT | F | R | Hatchback Van FWD 1ND-TV | | GDS59699 | Drive Shaft | | 26 | 20 | 55.6 | 95 | 897 | |
| | 2014.07-2018.05 | MT | F | L/R | Hatchback Van FWD 1ND-TV | | GCI59077 | Inner Joint | | 20 | 23 | 35 | 63.5 | 115.7 | |
| 1.5 (74 kw) | 2012.03-2020.06 | CVT | F | L | Hatchback FWD 1NZ-FXE | | GDS82320 | Drive Shaft | | 26 | 20 | 55.6 | 95 | 632 | |
| | 2012.03-2020.06 | CVT | F | R | Hatchback FWD 1NZ-FXE | | GDS82435 | Drive Shaft | | 26 | 20 | 55.6 | 95 | 914 | |
| | 2012.03-2020.06 | CVT | F | L/R | Hatchback FWD 1NZ-FXE | | GCO59270 | Outer Joint | | 26 | 24 | 55.6 | 95 | 56 | M |
| | 2012.03-2020.06 | CVT | F | L/R | Hatchback FWD 1NZ-FXE | | GCO81824 | Outer Joint | | 26 | 21 | 55.6 | 95 | 52.5 | I |
| | 2012.03-2020.06 | CVT | F | L | Hatchback FWD 1NZ-FXE | | GCI59077 | Inner Joint | | 20 | 23 | 35 | 63.5 | 115.7 | |
| | 2012.03-2020.06 | CVT | F | L | Hatchback FWD 1NZ-FXE | | GCI81176 | Inner Joint | | 20 | 23 | 35 | 63.5 | 108.5 | |
| | 2012.03-2020.06 | CVT | F | R | Hatchback FWD 1NZ-FXE | | GCI59236 | Inner Joint | | 20 | 23 | 35 | 63.5 | 121 | |
| | 2015.04-2017.03 | CVT | F | L | Hatchback FWD 1NZ-FXE | Date From:2017.03 | GDS82320 | Drive Shaft | | 26 | 20 | 55.6 | 95 | 632 | |
| | 2015.04-2017.03 | CVT | F | R | Hatchback FWD 1NZ-FXE | Date From:2017.03 | GDS82435 | Drive Shaft | | 26 | 20 | 55.6 | 95 | 914 | |
| | 2015.04-2017.03 | CVT | F | L | Hatchback FWD 1NZ-FXE | Date To:2017.02 | GCO59270 | Outer Joint | | 26 | 24 | 55.6 | 95 | 56 | M |
| | 2015.04-2017.03 | CVT | F | L | Hatchback FWD 1NZ-FXE | | GCI59077 | Inner Joint | | 20 | 23 | 35 | 63.5 | 115.7 | |
| | 2015.04-2017.03 | CVT | F | R | Hatchback FWD 1NZ-FXE | | GCI59236 | Inner Joint | | 20 | 23 | 35 | 63.5 | 121 | |
| | 2015.04-2020.06 | CVT | F | L/R | Hatchback Van FWD 1NZ-FXE | | GCO59270 | Outer Joint | | 26 | 24 | 55.6 | 95 | 56 | M |
| | 2015.04-2020.06 | | F | L | Hatchback Van FWD 1NZ-FXE | | GDS82320 | Drive Shaft | | 26 | 20 | 55.6 | 95 | 632 | |
| | 2015.04-2020.06 | | F | R | Hatchback Van FWD 1NZ-FXE | | GDS82435 | Drive Shaft | | 26 | 20 | 55.6 | 95 | 914 | |
| | 2015.04-2020.06 | | F | L | Hatchback Van FWD 1NZ-FXE | | GCI59077 | Inner Joint | | 20 | 23 | 35 | 63.5 | 115.7 | |
| | 2015.04-2020.06 | | F | R | Hatchback Van FWD 1NZ-FXE | | GCI59236 | Inner Joint | | 20 | 23 | 35 | 63.5 | 121 | |
| 1.5 (77 kw) | 2003.01-2005.11 | 5MT | F | L | Hatchback FWD 1NZ-FE | | GDS59102 | Drive Shaft | 48T | 24 | 23 | 58 | 91 | 640 | |
| | 2003.01-2005.11 | MT | F | R | Hatchback FWD 1NZ-FE | | GDS59011 | Drive Shaft | 48T | 24 | 23 | 58 | 91 | 881.5 | |
| | 2003.01-2005.11 | MT | F | L/R | Hatchback FWD 1NZ-FE | | GCO59137 | Outer Joint | 48T | 24 | 23 | 58 | 91 | 52.5 | I |
| | 2003.01-2005.11 | MT | F | L/R | Hatchback FWD 1NZ-FE | Non-Original design | GCI59002 | Inner Joint | | 23 | 23 | 34 | 58.8 | 102.7 | |
| | 2003.01-2005.11 | MT | F | L/R | Hatchback FWD 1NZ-FE | Original design | GCI99046 | Inner Joint | | 23 | 23 | 34 | 60 | 103.5 | |
| 1.5 (78 kw) | 2001.04-2005.09 | 4AT/5MT | F | L | Hatchback FWD 1NZ-FE | | GDS59102 | Drive Shaft | 48T | 24 | 23 | 58 | 91 | 640 | |

| | YEAR | TRANSM. | F/R | L/R | BODY STYLE & DRIVE TYPE & ENGINE | REMARKS | G-AP Ref. | PRODUCT | ABS | Technical Specifications A | B | C | H | L | P |
|---|---|---|---|---|---|---|---|---|---|---|---|---|---|---|---|
| **TOYOTA** | | | | | | | | | | | | | | | |
| **Yaris** | | | | | | | | | | | | | | | |
| 1.5 (78 kw) | 2001.04-2005.09 | 5MT | F | L/R | Hatchback FWD 1NZ-FE | | GCI59023 | Inner Joint | | 23 | 23 | 34 | 60 | 113 | |
| | 2001.04-2005.09 | MT | F | R | Hatchback FWD 1NZ-FE | | GDS59011 | Drive Shaft | 48T | 24 | 23 | 58 | 91 | 881.5 | |
| | 2001.04-2005.09 | MT | F | L/R | Hatchback FWD 1NZ-FE | | GCO59137 | Outer Joint | 48T | 24 | 23 | 58 | 91 | 52.5 | I |
| | 2001.04-2005.09 | MT | F | L/R | Hatchback FWD 1NZ-FE | Non-Original design | GCI59002 | Inner Joint | | 23 | 23 | 34 | 58.8 | 102.7 | |
| | 2001.04-2005.09 | MT | F | L/R | Hatchback FWD 1NZ-FE | Original design | GCI99046 | Inner Joint | | 23 | 23 | 34 | 60 | 103.5 | |
| 1.5 (80 kw) | 2005.11-2014.12 | 4AT/5MT | F | L | Hatchback FWD 1NZFE | | GDS59611 | Drive Shaft | | 26 | 23 | 55.6 | 95 | 653 | |
| 1.5 (82 kw) | 2017.03-2020.06 | 6MT | F | L | Hatchback FWD 2NR-FKE | | GDS59681 | Drive Shaft | | 26 | 23 | 55.6 | 96 | 657 | |
| | 2017.03-2020.06 | 6MT | F | R | Hatchback FWD 2NR-FKE | | GDS59666 | Drive Shaft | | 26 | 23 | 55.6 | 96 | 899 | |
| | 2017.03-2020.06 | 6MT | F | L/R | Hatchback FWD 2NR-FKE | | GCO59510 | Outer Joint | | 26 | 21 | 55.6 | 96 | 51.5 | M |
| | 2017.03-2020.06 | CVT | F | L | Hatchback FWD 2NR-FKE | | GDS83635 | Drive Shaft | | 26 | 23 | 55.6 | 95 | 657 | |
| | 2017.03-2020.06 | CVT | F | R | Hatchback FWD 2NR-FKE | | GDS83636 | Drive Shaft | | 26 | 23 | 55.6 | 95 | 896 | |
| | 2017.03-2020.06 | CVT | F | L/R | Hatchback FWD 2NR-FKE | | GCO81824 | Outer Joint | | 26 | 21 | 55.6 | 95 | 52.5 | I |
| | 2017.03-2020.06 | CVT/6MT | F | L/R | Hatchback FWD 2NR-FKE | | GCI59092 | Inner Joint | | 23 | 20 | 34 | 60 | 101 | |
| | 2017.03-2020.06 | 6MT | F | L | Hatchback Van FWD 2NR-FKE | | GDS59681 | Drive Shaft | | 26 | 23 | 55.6 | 96 | 657 | |
| | 2017.03-2020.06 | 6MT | F | R | Hatchback Van FWD 2NR-FKE | | GDS59666 | Drive Shaft | | 26 | 23 | 55.6 | 96 | 899 | |
| | 2017.03-2020.06 | 6MT | F | L/R | Hatchback Van FWD 2NR-FKE | | GCO59510 | Outer Joint | | 26 | 21 | 55.6 | 96 | 51.5 | M |
| | 2017.03-2020.06 | CVT | F | L | Hatchback Van FWD 2NR-FKE | | GDS83635 | Drive Shaft | | 26 | 23 | 55.6 | 95 | 657 | |
| | 2017.03-2020.06 | CVT | F | R | Hatchback Van FWD 2NR-FKE | | GDS83636 | Drive Shaft | | 26 | 23 | 55.6 | 95 | 896 | |
| | 2017.03-2020.06 | CVT | F | L/R | Hatchback Van FWD 2NR-FKE | | GCO81824 | Outer Joint | | 26 | 21 | 55.6 | 95 | 52.5 | I |
| | 2017.03-2020.06 | CVT/6MT | F | L/R | Hatchback Van FWD 2NR-FKE | | GCI59092 | Inner Joint | | 23 | 20 | 34 | 60 | 101 | |
| 1.5 (85 kw) | 2020.02- | CVT | F | L | Hatchback FWD M15A-FXE | For Modelcode:MXPH11 | GDS56793 | Drive Shaft | | 26 | 20 | 55.6 | 95 | 696 | |
| | 2020.02- | CVT | F | L | Hatchback FWD M15A-FXE | For Modelcode:MXPH10 | GDS57337 | Drive Shaft | | 26 | 20 | 55.6 | 96 | 669 | |
| | 2020.02- | CVT | F | R | Hatchback FWD M15A-FXE | For Modelcode:MXPH11 | GDS56794 | Drive Shaft | | 26 | 20 | 55.6 | 95 | 914 | |
| | 2020.02- | CVT | F | R | Hatchback FWD M15A-FXE | For Modelcode:MXPH10 | GDS57338 | Drive Shaft | | 26 | 20 | 55.6 | 96 | 879 | |
| | 2020.02- | CVT | F | L/R | Hatchback FWD M15A-FXE | For Modelcode:MXPA10/MXPH10 | GCO83506 | Outer Joint | | 26 | 23 | 55.6 | 96 | 53 | I |
| | 2020.02- | CVT | F | L/R | Hatchback FWD M15A-FXE | For Modelcode:MXPH11 | GCI83494 | Inner Joint | | 20 | 21 | 35 | 64 | 95 | |
| | 2020.02- | CVT | F | L/R | Hatchback FWD M15A-FXE | For Modelcode:MXPA10/MXPH10 | GCI83605 | Inner Joint | | 20 | 23 | 35 | 63.5 | 106 | |
| | 2025.06- | CVT | F | L | Hatchback FWD M15A-FXE | Modelcode:MXPH11 | GDS56793 | Drive Shaft | | 26 | 20 | 55.6 | 95 | 696 | |
| | 2025.06- | CVT | F | L | Hatchback FWD M15A-FXE | Modelcode:MXPH10 | GDS57337 | Drive Shaft | | 26 | 20 | 55.6 | 96 | 669 | |
| | 2025.06- | CVT | F | R | Hatchback FWD M15A-FXE | Modelcode:MXPH11 | GDS56794 | Drive Shaft | | 26 | 20 | 55.6 | 95 | 914 | |
| | 2025.06- | CVT | F | R | Hatchback FWD M15A-FXE | Modelcode:MXPH10 | GDS57338 | Drive Shaft | | 26 | 20 | 55.6 | 96 | 879 | |
| | 2025.06- | | F | L | Hatchback FWD M15A-FXE | For Modelcod:MXPH11 | GCI83494 | Inner Joint | | 20 | 21 | 35 | 64 | 95 | |
| | 2025.06- | | F | L/R | Hatchback FWD M15A-FXE | | GCI83605 | Inner Joint | | 20 | 23 | 35 | 63.5 | 106 | |
| 1.5 (88 kw) | 2020.02- | CVT | F | L | Hatchback FWD M15A-FKS | For Modelcode:MXPA10 | GDS57337 | Drive Shaft | | 26 | 20 | 55.6 | 96 | 669 | |
| | 2020.02- | CVT | F | R | Hatchback FWD M15A-FKS | For Modelcode:MXPA10 | GDS57338 | Drive Shaft | | 26 | 20 | 55.6 | 96 | 879 | |
| | 2020.02- | CVT | F | L/R | Hatchback FWD M15A-FKS | For Modelcode:MXPA10 | GCO83506 | Outer Joint | | 26 | 23 | 55.6 | 96 | 53 | I |
| | 2020.02- | CVT | F | L/R | Hatchback FWD M15A-FKS | For Modelcode:MXPA10 | GCI83605 | Inner Joint | | 20 | 23 | 35 | 63.5 | 106 | |
| 1.5 (96 kw) | 2024.01- | E-CVT | F | L | Hatchback FWD M15A-FXE | | GDS57966 | Drive Shaft | | 26 | 24 | 55.6 | 95 | 694 | |
| | 2024.01- | E-CVT | F | R | Hatchback FWD M15A-FXE | | GDS57965 | Drive Shaft | | 26 | 24 | 55.6 | 95 | 914 | |
| | 2024.01- | E-CVT | F | L | Hatchback FWD M15A-FXE | | GCI83966 | Inner Joint | | 24 | 21 | 50 | 67 | 89 | |
| 1.5 (110 kw) | 2000.03-2005.07 | MT | F | L/R | Hatchback FWD 1NZ-FE | | GCO59135 | Outer Joint | 48T | 24 | 23 | 56 | 90.5 | 55 | I |
| | 2000.03-2005.07 | MT | F | L/R | Hatchback FWD 1NZ-FE | Date from:2003.03 | GCO59137 | Outer Joint | 48T | 24 | 23 | 58 | 91 | 52.5 | I |
| | 2000.03-2005.07 | | F | | Hatchback FWD 1NZ-FE | | GDS50001 | Drive Shaft | | 21 | 30 | 49.8 | 83.5 | 639.5 | |
| | 2000.03-2005.07 | | F | | Hatchback FWD 1NZ-FE | | GCI99046 | Inner Joint | | 23 | 23 | 34 | 60 | 103.5 | |
| 1.6 (192 kw) | 2020.02- | 6MT | F | L | Hatchback 4WD G16E-GTS | | GCI81234 | Inner Joint | | 24 | 26 | 50 | 67 | 106.5 | |
| 1.8 (98 kw) | 2007.01-2011.12 | MT | F | L | Hatchback FWD 2ZR-FE | | GDS82210 | Drive Shaft | | 26 | 20 | 55.6 | 95.5 | 635 | |
| | 2007.01-2011.12 | MT | F | L | Hatchback FWD 2ZR-FE | | GCO59244 | Outer Joint | | 26 | 25 | 55.6 | 95.5 | 57 | I |
| | 2007.01-2011.12 | MT | F | L | Hatchback FWD 2ZR-FE | | GCI81165 | Inner Joint | | 20 | 25 | 35 | 63.5 | 123 | |
| | 2007.01-2011.12 | | F | R | Hatchback FWD 2ZR-FE | | GCI59100 | Inner Joint | | 20 | 25 | 35 | 63.5 | 118 | |
| 1.8 (156 kw) | 2017.09-2020.06 | 6MT | F | L/R | Hatchback FWD 2ZR-FE (SC) | | GCI59077 | Inner Joint | | 20 | 23 | 35 | 63.5 | 115.7 | |
| **Yaris Cross** | | | | | | | | | | | | | | | |
| 1.5 (85 kw) | 2020.09- | CVT | F | L | SUV 4WD M15A-FXE | | GDS58098 | Drive Shaft | | 26 | 20 | 55.6 | 95 | 696 | |
| | 2020.09- | CVT | F | R | SUV 4WD M15A-FXE | | GDS58099 | Drive Shaft | | 26 | 20 | 55.6 | 95 | 911 | |
| | 2020.09- | CVT | F | R | SUV 4WD M15A-FXE | | GCO83845 | Outer Joint | | 26 | 23 | 55.6 | 95 | 58 | I |
| | 2020.09- | CVT | F | L | SUV 4WD M15A-FXE | | GCI82788 | Inner Joint | | 20 | 24 | 35 | 63.5 | 117.5 | |
| | 2020.09- | CVT | F | R | SUV 4WD M15A-FXE | | GCI83511 | Inner Joint | | 20 | 23 | 35 | 64 | 115 | |
| | 2020.09- | CVT | R | L/R | SUV 4WD M15A-FXE | | GDS56355 | Drive Shaft | | 26 | | 52 | 99.5 | 589 | |
| | 2020.09- | CVT | R | L/R | SUV 4WD M15A-FXE | | GCO82771 | Outer Joint | | 26 | 19 | 52 | 99.5 | 46 | I |
| | 2020.09- | CVT | R | L/R | SUV 4WD M15A-FXE | | GCI59203 | Inner Joint | | | 20 | | | 83 | |
| | 2020.09- | CVT | F | L | SUV FWD M15A-FXE | | GDS58098 | Drive Shaft | | 26 | 20 | 55.6 | 95 | 696 | |
| | 2020.09- | CVT | F | R | SUV FWD M15A-FXE | | GDS58099 | Drive Shaft | | 26 | 20 | 55.6 | 95 | 911 | |
| | 2020.09- | CVT | F | R | SUV FWD M15A-FXE | | GCO83845 | Outer Joint | | 26 | 23 | 55.6 | 95 | 58 | I |
| | 2020.09- | CVT | F | L | SUV FWD M15A-FXE | | GCI82788 | Inner Joint | | 20 | 24 | 35 | 63.5 | 117.5 | |
| | 2020.09- | CVT | F | R | SUV FWD M15A-FXE | | GCI83511 | Inner Joint | | 20 | 23 | 35 | 64 | 115 | |
| 1.5 (92 kw) | 2020.09- | CVT/6MT | F | R | SUV FWD M15A-FKS | | GCI83511 | Inner Joint | | 20 | 23 | 35 | 64 | 115 | |

| | YEAR | TRANSM. | F/R | L/R | BODY STYLE & DRIVE TYPE & ENGINE | REMARKS | G-AP Ref. | PRODUCT | ABS | Technical Specifications A | B | C | H | L | P |
|---|---|---|---|---|---|---|---|---|---|---|---|---|---|---|---|
| **TOYOTA** | | | | | | | | | | | | | | | |
| **Yaris Cross** | | | | | | | | | | | | | | | |
| 1.5 (96 kw) | 2024.01- | CVT | R | L/R | SUV 4WD M15A-FXE | | GDS56355 | Drive Shaft | | 26 | | 52 | 99.5 | 589 | |
| | 2024.01- | CVT | R | L/R | SUV 4WD M15A-FXE | | GCO82771 | Outer Joint | | 26 | 19 | 52 | 99.5 | 46 | I |
| | 2024.01- | CVT | R | L/R | SUV 4WD M15A-FXE | | GCI59203 | Inner Joint | | | 20 | | | 83 | |
| **Yaris Verso** | | | | | | | | | | | | | | | |
| 1.3 (62 kw) | 2002.11-2005.09 | 4AT/5MT | F | L/R | MPV FWD 2NZ-FE | without ABS,GrooveType:Middle,without Rim protector | GCO59029 | Outer Joint | | 24 | 22 | 56 | 90 | 48.5 | M |
| | 2002.11-2005.09 | 4AT/5MT | F | L/R | MPV FWD 2NZ-FE | with ABS,Inner teeth:22,Seal diam.:58 | GCO59035 | Outer Joint | 48T | 24 | 22 | 58 | 91 | 47 | I |
| | 2002.11-2005.09 | 4AT/5MT | F | L/R | MPV FWD 2NZ-FE | without ABS | GCO59038 | Outer Joint | | 24 | 23 | 58 | 91 | 52.5 | I |
| | 2002.11-2005.09 | 4AT/5MT | F | L/R | MPV FWD 2NZ-FE | without ABS,GrooveType:Inner,with Rim protector | GCO59078 | Outer Joint | | 24 | 22 | 56 | 90 | 48.5 | I |
| | 2002.11-2005.09 | 4AT/5MT | F | L/R | MPV FWD 2NZ-FE | with ABS,Inner teeth:22,Seal diam.:56 | GCO59129 | Outer Joint | 48T | 24 | 22 | 56 | 90 | 48.5 | I |
| | 2002.11-2005.09 | 4AT/5MT | F | L/R | MPV FWD 2NZ-FE | with ABS,Inner teeth:23 | GCO59137 | Outer Joint | 48T | 24 | 23 | 58 | 91 | 52.5 | I |
| | 2002.11-2005.09 | 4AT/5MT | F | L/R | MPV FWD 2NZ-FE | without ABS,GrooveType:Inner,without Rim protector,Non-Original design | GCO59190 | Outer Joint | | 24 | 22 | 58 | 90 | 47 | I |
| | 2002.11-2005.09 | 4AT/5MT | F | L/R | MPV FWD 2NZ-FE | Non-Original design;Inner teeth:23 | GCI59002 | Inner Joint | | 23 | 23 | 34 | 58.8 | 102.7 | |
| | 2002.11-2005.09 | 4AT/5MT | F | L/R | MPV FWD 2NZ-FE | Inner teeth:22 | GCI59017 | Inner Joint | | 23 | 22 | 34 | 58.8 | 102.7 | |
| | 2002.11-2005.09 | 4AT/5MT | F | L/R | MPV FWD 2NZ-FE | Original design;Inner teeth:23 | GCI99046 | Inner Joint | | 23 | 23 | 34 | 60 | 103.5 | |
| | 2002.11-2005.09 | AT/MT | F | L | MPV FWD 2NZ-FE | without ABS | GDS59057 | Drive Shaft | | 24 | 23 | 56 | 90 | 635 | |
| | 2002.11-2005.09 | AT/MT | F | L | MPV FWD 2NZ-FE | with ABS | GDS59102 | Drive Shaft | 48T | 24 | 23 | 58 | 91 | 640 | |
| | 2002.11-2005.09 | AT/MT | F | R | MPV FWD 2NZ-FE | with ABS;For OE no.:4341052070 | GDS59011 | Drive Shaft | 48T | 24 | 23 | 58 | 91 | 881.5 | |
| | 2002.11-2005.09 | AT/MT | F | R | MPV FWD 2NZ-FE | with ABS;For OE no.:4341052130 | GDS59077 | Drive Shaft | 48T | 24 | 23 | 56 | 90.5 | 876.5 | |
| | 2002.11-2005.09 | AT/MT | F | L/R | MPV FWD 2NZ-FE | Trim Level:B | GCO59211 | Outer Joint | | 24 | 19 | 58 | 91 | 46.5 | I |
| | 2002.11-2005.09 | AT/MT | F | L/R | MPV FWD 2NZ-FE | | GCI59003 | Inner Joint | | 23 | 22 | 34 | 60.4 | 103 | |
| | 2002.11-2005.09 | AT/MT | F | L/R | MPV FWD 2NZ-FE | | GCI59023 | Inner Joint | | 23 | 23 | 34 | 60 | 113 | |
| 1.3 (63 kw) | 1999.08-2002.10 | AT/MT | F | L | MPV FWD 2NZ-FE | without ABS | GDS59057 | Drive Shaft | | 24 | 23 | 56 | 90 | 635 | |
| | 1999.08-2002.10 | AT/MT | F | L | MPV FWD 2NZ-FE | with ABS | GDS59102 | Drive Shaft | 48T | 24 | 23 | 58 | 91 | 640 | |
| | 1999.08-2002.10 | AT/MT | F | R | MPV FWD 2NZ-FE | with ABS;For OE no.:4341052070 | GDS59011 | Drive Shaft | 48T | 24 | 23 | 58 | 91 | 881.5 | |
| | 1999.08-2002.10 | AT/MT | F | R | MPV FWD 2NZ-FE | with ABS;For OE no.:4341052130 | GDS59077 | Drive Shaft | 48T | 24 | 23 | 56 | 90.5 | 876.5 | |
| | 1999.08-2002.10 | AT/MT | F | L/R | MPV FWD 2NZ-FE | without ABS,GrooveType:Middle,without Rim protector | GCO59029 | Outer Joint | | 24 | 22 | 56 | 90 | 48.5 | M |
| | 1999.08-2002.10 | AT/MT | F | L/R | MPV FWD 2NZ-FE | with ABS,Inner teeth:22,Seal diam.:58 | GCO59035 | Outer Joint | 48T | 24 | 22 | 58 | 91 | 47 | I |
| | 1999.08-2002.10 | AT/MT | F | L/R | MPV FWD 2NZ-FE | without ABS;Inner teeth:23 | GCO59038 | Outer Joint | | 24 | 23 | 58 | 91 | 52.5 | I |
| | 1999.08-2002.10 | AT/MT | F | L/R | MPV FWD 2NZ-FE | without ABS,GrooveType:Inner,with Rim protector | GCO59078 | Outer Joint | | 24 | 22 | 56 | 90 | 48.5 | I |
| | 1999.08-2002.10 | AT/MT | F | L/R | MPV FWD 2NZ-FE | with ABS,Inner teeth:22,Seal diam.:56 | GCO59129 | Outer Joint | 48T | 24 | 22 | 56 | 90 | 48.5 | I |
| | 1999.08-2002.10 | AT/MT | F | L/R | MPV FWD 2NZ-FE | with ABS,Inner teeth:23 | GCO59137 | Outer Joint | 48T | 24 | 23 | 58 | 91 | 52.5 | I |
| | 1999.08-2002.10 | AT/MT | F | L/R | MPV FWD 2NZ-FE | without ABS,GrooveType:Inner,without Rim protector,Non-Original design | GCO59190 | Outer Joint | | 24 | 22 | 58 | 90 | 47 | I |
| | 1999.08-2002.10 | AT/MT | F | L/R | MPV FWD 2NZ-FE | Non-Original design;Inner teeth:23 | GCI59002 | Inner Joint | | 23 | 23 | 34 | 58.8 | 102.7 | |
| | 1999.08-2002.10 | AT/MT | F | L/R | MPV FWD 2NZ-FE | | GCI59003 | Inner Joint | | 23 | 22 | 34 | 60.4 | 103 | |
| | 1999.08-2002.10 | AT/MT | F | L/R | MPV FWD 2NZ-FE | Inner teeth:22 | GCI59017 | Inner Joint | | 23 | 22 | 34 | 58.8 | 102.7 | |
| | 1999.08-2002.10 | AT/MT | F | L/R | MPV FWD 2NZ-FE | | GCI59023 | Inner Joint | | 23 | 23 | 34 | 60 | 113 | |
| | 1999.08-2002.10 | AT/MT | F | L/R | MPV FWD 2NZ-FE | Original design;Inner teeth:23 | GCI99046 | Inner Joint | | 23 | 23 | 34 | 60 | 103.5 | |
| 1.4 (55 kw) | 2000.09-2005.09 | MT | F | L | MPV FWD 1ND-TV | | GDS59102 | Drive Shaft | 48T | 24 | 23 | 58 | 91 | 640 | |
| | 2000.09-2005.09 | MT | F | R | MPV FWD 1ND-TV | | GDS59011 | Drive Shaft | 48T | 24 | 23 | 58 | 91 | 881.5 | |
| | 2000.09-2005.09 | MT | F | R | MPV FWD 1ND-TV | | GDS59077 | Drive Shaft | 48T | 24 | 23 | 56 | 90.5 | 876.5 | |
| | 2000.09-2005.09 | MT | F | L/R | MPV FWD 1ND-TV | | GCO59038 | Outer Joint | | 24 | 23 | 58 | 91 | 52.5 | I |
| | 2000.09-2005.09 | MT | F | L/R | MPV FWD 1ND-TV | | GCO59135 | Outer Joint | 48T | 24 | 23 | 56 | 90.5 | 55 | I |
| | 2000.09-2005.09 | MT | F | L/R | MPV FWD 1ND-TV | | GCO59137 | Outer Joint | 48T | 24 | 23 | 58 | 91 | 52.5 | I |
| | 2000.09-2005.09 | MT | F | R | MPV FWD 1ND-TV | | GCI59023 | Inner Joint | | 23 | 23 | 34 | 60 | 113 | |
| | 2000.09-2005.09 | MT | F | L/R | MPV FWD 1ND-TV | Non-Original design | GCI59002 | Inner Joint | | 23 | 23 | 34 | 58.8 | 102.7 | |
| | 2000.09-2005.09 | MT | F | L/R | MPV FWD 1ND-TV | Original design | GCI99046 | Inner Joint | | 23 | 23 | 34 | 60 | 103.5 | |
| 1.5 (77 kw) | 2000.03-2005.09 | MT | F | L | MPV FWD 1NZ-FE | | GDS59102 | Drive Shaft | 48T | 24 | 23 | 58 | 91 | 640 | |
| | 2000.03-2005.09 | MT | F | R | MPV FWD 1NZ-FE | | GDS59011 | Drive Shaft | 48T | 24 | 23 | 58 | 91 | 881.5 | |
| | 2000.03-2005.09 | MT | F | L/R | MPV FWD 1NZ-FE | | GCO59038 | Outer Joint | | 24 | 23 | 58 | 91 | 52.5 | I |
| | 2000.03-2005.09 | MT | F | L/R | MPV FWD 1NZ-FE | | GCO59137 | Outer Joint | 48T | 24 | 23 | 58 | 91 | 52.5 | I |
| | 2000.03-2005.09 | MT | F | L/R | MPV FWD 1NZ-FE | | GCI59002 | Inner Joint | | 23 | 23 | 34 | 58.8 | 102.7 | |
| | 2000.03-2005.09 | MT | F | L/R | MPV FWD 1NZ-FE | | GCI59023 | Inner Joint | | 23 | 23 | 34 | 60 | 113 | |
| 1.5 (78 kw) | 2000.03-2005.09 | 5MT | F | L | MPV FWD 1NZ-FE | | GDS59102 | Drive Shaft | 48T | 24 | 23 | 58 | 91 | 640 | |
| | 2000.03-2005.09 | 5MT | F | R | MPV FWD 1NZ-FE | | GDS59011 | Drive Shaft | 48T | 24 | 23 | 58 | 91 | 881.5 | |
| | 2000.03-2005.09 | 5MT | F | L/R | MPV FWD 1NZ-FE | | GCO59038 | Outer Joint | | 24 | 23 | 58 | 91 | 52.5 | I |
| | 2000.03-2005.09 | 5MT | F | L/R | MPV FWD 1NZ-FE | | GCO59137 | Outer Joint | 48T | 24 | 23 | 58 | 91 | 52.5 | I |
| | 2000.03-2005.09 | 5MT | F | L/R | MPV FWD 1NZ-FE | | GCI59002 | Inner Joint | | 23 | 23 | 34 | 58.8 | 102.7 | |
| | 2000.03-2005.09 | 5MT | F | L/R | MPV FWD 1NZ-FE | | GCI59023 | Inner Joint | | 23 | 23 | 34 | 60 | 113 | |
| **Yaris Verso Van** | | | | | | | | | | | | | | | |
| 1.3 (62 kw) | 2003.04-2005.09 | 5MT | F | L | Hatchback Van FWD 2NZ-FE | | GDS59102 | Drive Shaft | 48T | 24 | 23 | 58 | 91 | 640 | |
| | 2003.04-2005.09 | 5MT | F | R | Hatchback Van FWD 2NZ-FE | Type:A | GDS59011 | Drive Shaft | 48T | 24 | 23 | 58 | 91 | 881.5 | |
| | 2003.04-2005.09 | 5MT | F | R | Hatchback Van FWD 2NZ-FE | Type:B | GDS59077 | Drive Shaft | 48T | 24 | 23 | 56 | 90.5 | 876.5 | |
| | 2003.04-2005.09 | 5MT | F | L/R | Hatchback Van FWD 2NZ-FE | Type:B | GCO59035 | Outer Joint | 48T | 24 | 22 | 58 | 91 | 47 | I |
| | 2003.04-2005.09 | 5MT | F | L/R | Hatchback Van FWD 2NZ-FE | Type:A | GCO59038 | Outer Joint | | 24 | 23 | 58 | 91 | 52.5 | I |
| | 2003.04-2005.09 | 5MT | F | L/R | Hatchback Van FWD 2NZ-FE | Type:B | GCO59078 | Outer Joint | | 24 | 22 | 56 | 90 | 48.5 | I |

| | YEAR | TRANSM. | F/R | L/R | BODY STYLE & DRIVE TYPE & ENGINE | REMARKS | G-AP Ref. | PRODUCT | ABS | Technical Specifications A | B | C | H | L | P |
|---|---|---|---|---|---|---|---|---|---|---|---|---|---|---|---|
| **TOYOTA** | | | | | | | | | | | | | | | |
| **Yaris Verso Van** | | | | | | | | | | | | | | | |
| 1.3 (62 kw) | 2003.04-2005.09 | 5MT | F | L/R | Hatchback Van FWD 2NZ-FE | Type:B | GCO59129 | Outer Joint | 48T | 24 | 22 | 56 | 90 | 48.5 | I |
| | 2003.04-2005.09 | 5MT | F | L/R | Hatchback Van FWD 2NZ-FE | Type:A | GCO59137 | Outer Joint | 48T | 24 | 23 | 58 | 91 | 52.5 | I |
| | 2003.04-2005.09 | 5MT | F | L/R | Hatchback Van FWD 2NZ-FE | Type:B | GCO59190 | Outer Joint | | 24 | 22 | 58 | 90 | 47 | I |
| | 2003.04-2005.09 | 5MT | F | L | Hatchback Van FWD 2NZ-FE | | GCI59003 | Inner Joint | | 23 | 22 | 34 | 60.4 | 103 | |
| | 2003.04-2005.09 | 5MT | F | R | Hatchback Van FWD 2NZ-FE | Type:B | GCI59023 | Inner Joint | | 23 | 23 | 34 | 60 | 113 | |
| | 2003.04-2005.09 | 5MT | F | L/R | Hatchback Van FWD 2NZ-FE | Type:A,Non-Original design | GCI59002 | Inner Joint | | 23 | 23 | 34 | 58.8 | 102.7 | |
| | 2003.04-2005.09 | 5MT | F | L/R | Hatchback Van FWD 2NZ-FE | Type:B | GCI59017 | Inner Joint | | 23 | 22 | 34 | 58.8 | 102.7 | |
| | 2003.04-2005.09 | 5MT | F | L/R | Hatchback Van FWD 2NZ-FE | Type:A,Original design | GCI99046 | Inner Joint | | 23 | 23 | 34 | 60 | 103.5 | |
| | 2003.04-2005.09 | AT/MT | F | L | Hatchback Van FWD 2NZ-FE | without ABS | GDS59057 | Drive Shaft | | 24 | 23 | 56 | 90 | 635 | |
| 1.3 (63 kw) | 2000.03-2005.09 | AT/MT | F | L | Hatchback Van FWD 2NZ-FE | Type:B | GDS59057 | Drive Shaft | | 24 | 23 | 56 | 90 | 635 | |
| | 2000.03-2005.09 | AT/MT | F | L | Hatchback Van FWD 2NZ-FE | Type:A | GDS59102 | Drive Shaft | 48T | 24 | 23 | 58 | 91 | 640 | |
| | 2000.03-2005.09 | AT/MT | F | R | Hatchback Van FWD 2NZ-FE | Type:A | GDS59011 | Drive Shaft | 48T | 24 | 23 | 58 | 91 | 881.5 | |
| | 2000.03-2005.09 | AT/MT | F | R | Hatchback Van FWD 2NZ-FE | Type:B | GDS59077 | Drive Shaft | 48T | 24 | 23 | 56 | 90.5 | 876.5 | |
| | 2000.03-2005.09 | AT/MT | F | R | Hatchback Van FWD 2NZ-FE | Type:B | GCO59135 | Outer Joint | 48T | 24 | 23 | 56 | 90.5 | 55 | I |
| | 2000.03-2005.09 | AT/MT | F | L/R | Hatchback Van FWD 2NZ-FE | Type:B | GCO59035 | Outer Joint | 48T | 24 | 22 | 58 | 91 | 47 | I |
| | 2000.03-2005.09 | AT/MT | F | L/R | Hatchback Van FWD 2NZ-FE | Type:A | GCO59038 | Outer Joint | | 24 | 23 | 58 | 91 | 52.5 | I |
| | 2000.03-2005.09 | AT/MT | F | L/R | Hatchback Van FWD 2NZ-FE | Type:B | GCO59078 | Outer Joint | | 24 | 22 | 56 | 90 | 48.5 | I |
| | 2000.03-2005.09 | AT/MT | F | L/R | Hatchback Van FWD 2NZ-FE | Type:B | GCO59129 | Outer Joint | 48T | 24 | 22 | 56 | 90 | 48.5 | I |
| | 2000.03-2005.09 | AT/MT | F | L/R | Hatchback Van FWD 2NZ-FE | Type:A | GCO59137 | Outer Joint | 48T | 24 | 23 | 58 | 91 | 52.5 | I |
| | 2000.03-2005.09 | AT/MT | F | L/R | Hatchback Van FWD 2NZ-FE | Type:B | GCO59190 | Outer Joint | | 24 | 22 | 58 | 90 | 47 | I |
| | 2000.03-2005.09 | AT/MT | F | R | Hatchback Van FWD 2NZ-FE | Type:B | GCI59023 | Inner Joint | | 23 | 23 | 34 | 60 | 113 | |
| | 2000.03-2005.09 | AT/MT | F | L/R | Hatchback Van FWD 2NZ-FE | Type:A,Non-Original design | GCI59002 | Inner Joint | | 23 | 23 | 34 | 58.8 | 102.7 | |
| | 2000.03-2005.09 | AT/MT | F | L/R | Hatchback Van FWD 2NZ-FE | | GCI59003 | Inner Joint | | 23 | 22 | 34 | 60.4 | 103 | |
| | 2000.03-2005.09 | AT/MT | F | L/R | Hatchback Van FWD 2NZ-FE | Type:B | GCI59017 | Inner Joint | | 23 | 22 | 34 | 58.8 | 102.7 | |
| | 2000.03-2005.09 | AT/MT | F | L/R | Hatchback Van FWD 2NZ-FE | Type:A,Original design | GCI99046 | Inner Joint | | 23 | 23 | 34 | 60 | 103.5 | |
| 1.4 (55 kw) | 2001.10-2005.09 | 5MT | F | L | Hatchback Van FWD 1ND-TV | | GDS59102 | Drive Shaft | 48T | 24 | 23 | 58 | 91 | 640 | |
| | 2001.10-2005.09 | 5MT | F | R | Hatchback Van FWD 1ND-TV | | GDS59011 | Drive Shaft | 48T | 24 | 23 | 58 | 91 | 881.5 | |
| | 2001.10-2005.09 | 5MT | F | L/R | Hatchback Van FWD 1ND-TV | | GCO59038 | Outer Joint | | 24 | 23 | 58 | 91 | 52.5 | I |
| | 2001.10-2005.09 | 5MT | F | L/R | Hatchback Van FWD 1ND-TV | | GCO59137 | Outer Joint | 48T | 24 | 23 | 58 | 91 | 52.5 | I |
| | 2001.10-2005.09 | 5MT | F | L/R | Hatchback Van FWD 1ND-TV | Non-Original design | GCI59002 | Inner Joint | | 23 | 23 | 34 | 58.8 | 102.7 | |
| | 2001.10-2005.09 | 5MT | F | L/R | Hatchback Van FWD 1ND-TV | | GCI59023 | Inner Joint | | 23 | 23 | 34 | 60 | 113 | |
| 1.5 (78 kw) | 2000.03-2003.03 | 5MT | F | L | Hatchback Van FWD 1NZ-FE | | GDS59102 | Drive Shaft | 48T | 24 | 23 | 58 | 91 | 640 | |
| | 2000.03-2003.03 | 5MT | F | R | Hatchback Van FWD 1NZ-FE | | GDS59011 | Drive Shaft | 48T | 24 | 23 | 58 | 91 | 881.5 | |
| | 2000.03-2003.03 | 5MT | F | L/R | Hatchback Van FWD 1NZ-FE | | GCO59038 | Outer Joint | | 24 | 23 | 58 | 91 | 52.5 | I |
| | 2000.03-2003.03 | 5MT | F | L/R | Hatchback Van FWD 1NZ-FE | | GCO59137 | Outer Joint | 48T | 24 | 23 | 58 | 91 | 52.5 | I |
| | 2000.03-2003.03 | 5MT | F | L/R | Hatchback Van FWD 1NZ-FE | Non-Original design | GCI59002 | Inner Joint | | 23 | 23 | 34 | 58.8 | 102.7 | |
| | 2000.03-2003.03 | 5MT | F | L/R | Hatchback Van FWD 1NZ-FE | | GCI59023 | Inner Joint | | 23 | 23 | 34 | 60 | 113 | |
| **Yaris/Vios** | | | | | | | | | | | | | | | |
| 1.3 (64 kw) | 2005.09-2013.04 | AT/MT | F | L | Saloon 4WD 2NZ-FE | | GDS59295 | Drive Shaft | | 26 | 23 | 55.6 | 96 | 656.5 | |
| | 2005.09-2013.10 | AT/MT | F | L | Saloon FWD 2NZ-FE, 2SZ-FE | | GDS59295 | Drive Shaft | | 26 | 23 | 55.6 | 96 | 656.5 | |
| | 2005.09-2013.10 | AT/MT | F | R | Saloon FWD 2NZ-FE, 2SZ-FE | | GDS59294 | Drive Shaft | | 26 | 23 | 55.6 | 96 | 897.5 | |
| | 2005.09-2013.10 | CVT | F | L/R | Saloon FWD 2NZ-FE, 2SZ-FE | | GCO59385 | Outer Joint | | 26 | 22 | 55.6 | 96 | 54 | I |
| 1.5 (80 kw) | 2006.01-2013.12 | 4AT/5MT | F | L | Saloon FWD 1NZ-FE | | GDS59202 | Drive Shaft | | 26 | 23 | 55.6 | 96 | 653 | |
| | 2006.01-2013.12 | 4AT/5MT | F | R | Saloon FWD 1NZ-FE | | GDS59201 | Drive Shaft | | 26 | 23 | 55.6 | 96 | 896 | |
| | 2006.01-2013.12 | 4AT/5MT | F | L/R | Saloon FWD 1NZ-FE | | GCO59206 | Outer Joint | | 26 | 23 | 55.6 | 96 | 53 | I |
| | 2006.01-2013.12 | 4AT/5MT | F | L/R | Saloon FWD 1NZ-FE | | GCI99046 | Inner Joint | | 23 | 23 | 34 | 60 | 103.5 | |
| **Zelas** | | | | | | | | | | | | | | | |
| 2.5 (131 kw) | 2010.08-2016.06 | 6AT | F | R | Coupe FWD 2AR-FE | Date to:2013.04 | GCI82362 | Inner Joint | | 24 | 27 | 40 | 377 | 105 | |
| **TOYOTA (FAW)** | | | | | | | | | | | | | | | |
| **Avalon** | | | | | | | | | | | | | | | |
| 2.0 (131 kw) | 2019.09- | CVT | F | L/R | Saloon FWD M20A-FKS | | GCO59245 | Outer Joint | | 26 | 27 | 61.2 | 100 | 59 | I |
| | 2019.09- | CVT | F | L | Saloon FWD M20A-FKS | | GCI59125 | Inner Joint | | 24 | 27 | 50 | 67 | 109.5 | |
| **Corolla** | | | | | | | | | | | | | | | |
| 1.6 (90 kw) | 2007.05-2014.12 | | F | L | Saloon FWD 1ZR-FE | | GDS59538 | Drive Shaft | | 26 | 23 | 55.6 | 95.5 | 655 | |
| **Rav 4** | | | | | | | | | | | | | | | |
| 2.0 (110 kw) | 2009.04-2013.08 | AT | F | L | SUV 4WD 1AZ-FE | | GDS59524 | Drive Shaft | | 26 | 24 | 61.2 | 100 | 643 | |
| | 2009.04-2013.08 | AT | F | R | SUV 4WD 1AZ-FE | | GDS59523 | Drive Shaft | | 26 | 24 | 61.2 | 100 | 988 | |
| | 2009.04-2013.08 | MT | F | L | SUV 4WD 1AZ-FE | | GDS59541 | Drive Shaft | | 30 | 24 | 61.2 | 100 | 655 | |
| | 2009.04-2013.08 | MT | F | R | SUV 4WD 1AZ-FE | | GDS59536 | Drive Shaft | | 30 | 24 | 61.2 | 100 | 980 | |
| | 2009.04-2013.08 | 4AT | F | L | SUV FWD 1AZ-FE | | GDS59524 | Drive Shaft | | 26 | 24 | 61.2 | 100 | 643 | |
| | 2009.04-2013.08 | 4AT | F | L | SUV FWD 1AZ-FE | | GDS59539 | Drive Shaft | | 26 | 24 | 61.2 | 100 | 656 | |
| | 2009.04-2013.08 | 4AT | F | R | SUV FWD 1AZ-FE | | GDS59523 | Drive Shaft | | 26 | 24 | 61.2 | 100 | 988 | |
| | 2009.04-2013.08 | 4AT | F | R | SUV FWD 1AZ-FE | | GDS59540 | Drive Shaft | | 26 | 24 | 61.2 | 100 | 972 | |
| | 2009.04-2013.08 | 5MT | F | L | SUV FWD 1AZ-FE | | GDS59541 | Drive Shaft | | 30 | 24 | 61.2 | 100 | 655 | |
| | 2009.04-2013.08 | 5MT | F | R | SUV FWD 1AZ-FE | | GDS59536 | Drive Shaft | | 30 | 24 | 61.2 | 100 | 980 | |

| | YEAR | TRANSM. | F/R | L/R | BODY STYLE & DRIVE TYPE & ENGINE | REMARKS | G-AP Ref. | PRODUCT | ABS | Technical Specifications A | B | C | H | L | P |
|---|---|---|---|---|---|---|---|---|---|---|---|---|---|---|---|
| **TOYOTA (FAW)** | | | | | | | | | | | | | | | |
| **Rav 4** | | | | | | | | | | | | | | | |
| 2.0 (110 kw) | 2009.04-2013.08 | 5MT | F | R | SUV FWD 1AZ-FE | | GDS59542 | Drive Shaft | | 30 | 24 | 61.2 | 100 | 977 | |
| 2.0 (126 kw) | 2019.10- | CVT | F | R | SUV FWD M20D-FKS | | GDS59472 | Drive Shaft | | 26 | 24 | 61.2 | 100 | 974 | |
| | 2019.10- | CVT | F | L/R | SUV FWD M20D-FKS | | GCO59245 | Outer Joint | | 26 | 27 | 61.2 | 100 | 59 | I |
| | 2019.10- | CVT | F | L | SUV FWD M20D-FKS | | GCI59125 | Inner Joint | | 24 | 27 | 50 | 67 | 109.5 | |
| | 2019.10- | CVT | F | R | SUV FWD M20D-FKS | | GCI59078 | Inner Joint | | 24 | 27 | 40 | 370 | 105 | |
| 2.4 (125 kw) | 2009.04-2013.08 | AT | F | L | SUV 4WD 2AZ-FE | | GDS59524 | Drive Shaft | | 26 | 24 | 61.2 | 100 | 643 | |
| | 2009.04-2013.08 | AT | F | R | SUV 4WD 2AZ-FE | | GDS59523 | Drive Shaft | | 26 | 24 | 61.2 | 100 | 988 | |
| | 2009.04-2013.08 | MT | F | L | SUV 4WD 2AZ-FE | | GDS59541 | Drive Shaft | | 30 | 24 | 61.2 | 100 | 655 | |
| | 2009.04-2013.08 | MT | F | R | SUV 4WD 2AZ-FE | | GDS59536 | Drive Shaft | | 30 | 24 | 61.2 | 100 | 980 | |
| **TOYOTA (GAC)** | | | | | | | | | | | | | | | |
| **Camry** | | | | | | | | | | | | | | | |
| 2.0 (131 kw) | 2019.02- | CVT | F | L/R | Saloon FWD M20C-FKS | Date to:2021.02 | GCO59245 | Outer Joint | | 26 | 27 | 61.2 | 100 | 59 | I |
| | 2019.02- | CVT | F | L | Saloon FWD M20C-FKS | Date to:2021.02 | GCI59125 | Inner Joint | | 24 | 27 | 50 | 67 | 109.5 | |
| **Highlander** | | | | | | | | | | | | | | | |
| 3.5 (201 kw) | 2009.05-2015.12 | 5AT | F | L | Closed Off-Road Vehicle 4WD 2GR-FE | | GDS59521 | Drive Shaft | 48T | 26 | 23 | 61 | 100 | 653 | |
| | 2009.05-2015.12 | 5AT | F | R | Closed Off-Road Vehicle 4WD 2GR-FE | | GDS59522 | Drive Shaft | 48T | 26 | 23 | 61 | 100 | 1027 | |
| | 2009.05-2015.12 | 5AT | R | L/R | Closed Off-Road Vehicle 4WD 2GR-FE | | GCI82670 | Inner Joint | | 23 | 30 | 35 | 68 | 115 | |
| **Wildlander** | | | | | | | | | | | | | | | |
| 2.0 (126 kw) | 2020.02- | CVT | F | L/R | SUV 4WD M20C-FKS | | GCO59245 | Outer Joint | | 26 | 27 | 61.2 | 100 | 59 | I |
| | 2020.02- | CVT | F | L | SUV 4WD M20C-FKS | | GCI59125 | Inner Joint | | 24 | 27 | 50 | 67 | 109.5 | |
| | 2020.02- | CVT | F | R | SUV FWD M20C-FKS | | GDS59472 | Drive Shaft | | 26 | 24 | 61.2 | 100 | 974 | |
| | 2020.02- | CVT | F | L/R | SUV FWD M20C-FKS | | GCO59245 | Outer Joint | | 26 | 27 | 61.2 | 100 | 59 | I |
| | 2020.02- | CVT | F | L | SUV FWD M20C-FKS | | GCI59125 | Inner Joint | | 24 | 27 | 50 | 67 | 109.5 | |
| | 2020.02- | CVT | F | R | SUV FWD M20C-FKS | | GCI59078 | Inner Joint | | 24 | 27 | 40 | 370 | 105 | |
| **VAUXHALL** | | | | | | | | | | | | | | | |
| **Adam** | | | | | | | | | | | | | | | |
| 1.0 (85 kw) | 2014.07-2018.11 | 6MT | F | L | Hatchback FWD B 10 XFT;D 10 XFT | Chassis no. to:F6058502 | GDS57709 | Drive Shaft | | 22 | 25 | 51 | 79 | 605 | |
| | 2014.07-2018.11 | 6MT | F | L | Hatchback FWD B 10 XFT;D 10 XFT | Chassis no. to:F6058502 | GCO17070 | Outer Joint | | 22 | 22 | 51 | 79 | 57.5 | M |
| | 2014.07-2018.11 | 6MT | F | L/R | Hatchback FWD B 10 XFT;D 10 XFT | Chassis no. from:F6058503 | GCO81547 | Outer Joint | | 25 | 22 | 51 | 84 | 57 | M |
| | 2014.07-2018.11 | 6MT | F | L | Hatchback FWD B 10 XFT;D 10 XFT | Chassis no. to:F6058502 | GCI83814 | Inner Joint | | 25 | 22 | 34.9 | 57 | 103 | |
| 1.2 (51 kw) | 2012.10-2019.04 | 5MT | F | L | Hatchback FWD A 12 XEL;B 12 XEL;D 12 XEL | | GDS44079 | Drive Shaft | | 22 | 22 | 51 | 79.5 | 615 | |
| | 2012.10-2019.04 | 5MT | F | R | Hatchback FWD A 12 XEL;B 12 XEL;D 12 XEL | | GDS44078 | Drive Shaft | | 22 | 22 | 51 | 79.5 | 918 | |
| | 2012.10-2019.04 | MT | F | L | Hatchback FWD A 12 XEL;B 12 XEL;D 12 XEL | | GDS60023 | Drive Shaft | | 22 | 22 | 51.2 | 79.5 | 615 | |
| | 2012.10-2019.04 | MT | F | L/R | Hatchback FWD A 12 XEL;B 12 XEL;D 12 XEL | | GCO17089 | Outer Joint | | 22 | 20 | 51 | 79.5 | 51 | M |
| | 2012.10-2019.04 | MT | F | L | Hatchback FWD A 12 XEL;B 12 XEL;D 12 XEL | | GCI44013 | Inner Joint | | 22 | 21 | 35 | 57.5 | 93 | |
| 1.4 (64 kw) | 2012.10-2019.02 | 5AT/5MT | F | L/R | Hatchback FWD A 14 XEL;B 14 XEL;D 14 XEL | Date to:2014.12;Chassis no. to:E6999999 | GCO17052 | Outer Joint | | 22 | 21 | 51.2 | 79.5 | 54 | M |
| | 2012.10-2019.02 | 5AT/5MT | F | L/R | Hatchback FWD A 14 XEL;B 14 XEL;D 14 XEL | Date to:2014.12;Chassis no. to:E6999999 | GCI44013 | Inner Joint | | 22 | 21 | 35 | 57.5 | 93 | |
| | 2012.10-2019.02 | AT/MT | F | L/R | Hatchback FWD A 14 XEL;B 14 XEL;D 14 XEL | | GCO17014 | Outer Joint | | 22 | 21 | 51 | 79.5 | 54 | M |
| | 2012.10-2019.02 | MT | F | L | Hatchback FWD A 14 XEL;B 14 XEL;D 14 XEL | | GDS60023 | Drive Shaft | | 22 | 22 | 51.2 | 79.5 | 615 | |
| | 2012.10-2019.02 | MT | F | R | Hatchback FWD A 14 XEL;B 14 XEL;D 14 XEL | | GCO17089 | Outer Joint | | 22 | 20 | 51 | 79.5 | 51 | M |
| | 2012.10-2019.02 | Semi-AT/5MT | F | L | Hatchback FWD A 14 XEL;B 14 XEL;D 14 XEL | | GDS44079 | Drive Shaft | | 22 | 22 | 51 | 79.5 | 615 | |
| | 2012.10-2019.02 | Semi-AT/5MT | F | R | Hatchback FWD A 14 XEL;B 14 XEL;D 14 XEL | | GDS44078 | Drive Shaft | | 22 | 22 | 51 | 79.5 | 918 | |
| 1.4 (74 kw) | 2012.10-2019.02 | 5AT/5MT | F | L/R | Hatchback FWD A 14 XER;B 14 XER | Date to:2014.12;Chassis no. to:E6999999 | GCO17052 | Outer Joint | | 22 | 21 | 51.2 | 79.5 | 54 | M |
| | 2012.10-2019.02 | 5AT/5MT | F | L/R | Hatchback FWD A 14 XER;B 14 XER | Date to:2014.12;Chassis no. to:E6999999 | GCI44013 | Inner Joint | | 22 | 21 | 35 | 57.5 | 93 | |
| | 2012.10-2019.02 | 5MT | F | L | Hatchback FWD A 14 XER;B 14 XER | | GDS44079 | Drive Shaft | | 22 | 22 | 51 | 79.5 | 615 | |
| | 2012.10-2019.02 | 5MT | F | R | Hatchback FWD A 14 XER;B 14 XER | | GDS44078 | Drive Shaft | | 22 | 22 | 51 | 79.5 | 918 | |
| | 2012.10-2019.02 | AT/MT | F | L/R | Hatchback FWD A 14 XER;B 14 XER | | GCO17014 | Outer Joint | | 22 | 21 | 51 | 79.5 | 54 | M |
| | 2012.10-2019.02 | MT | F | L | Hatchback FWD A 14 XER;B 14 XER | | GDS60023 | Drive Shaft | | 22 | 22 | 51.2 | 79.5 | 615 | |
| | 2012.10-2019.02 | MT | F | R | Hatchback FWD A 14 XER;B 14 XER | | GCO17089 | Outer Joint | | 22 | 20 | 51 | 79.5 | 51 | M |
| 1.4 (110 kw) | 2014.11-2019.01 | 6MT | F | L | Hatchback FWD B 14 NEH | | GDS17070 | Drive Shaft | | 25 | 25 | 51 | 84.5 | 576 | |
| | 2014.11-2019.01 | 6MT | F | R | Hatchback FWD B 14 NEH | | GDS84125 | Drive Shaft | | 25 | 25 | 51 | 84.5 | 948 | |
| | 2014.11-2019.01 | 6MT | F | L/R | Hatchback FWD B 14 NEH | | GCO17053 | Outer Joint | | 25 | 23 | 51 | 84.5 | 60 | M |
| | 2014.11-2019.01 | 6MT | F | L/R | Hatchback FWD B 14 NEH | | GCI44014 | Inner Joint | | 25 | 23 | 34.9 | 57.5 | 102 | |
| **Agila** | | | | | | | | | | | | | | | |
| 1.0 (43 kw) | 2000.09-2005.08 | MT | F | L | Hatchback FWD Z 10 XE | | GDS57087 | Drive Shaft | 43T | 23 | 22 | 49 | 78 | 638 | |
| | 2000.09-2005.08 | MT | F | R | Hatchback FWD Z 10 XE | | GDS44043 | Drive Shaft | 43T | 23 | 22 | 49 | 78 | 853 | |
| | 2000.09-2005.08 | MT | F | L/R | Hatchback FWD Z 10 XE | | GCO44001 | Outer Joint | 43T | 23 | 20 | 49 | 78 | 61 | M |
| | 2000.09-2005.08 | MT | F | L/R | Hatchback FWD Z 10 XE | | GCO99110 | Outer Joint | | 23 | 20 | 49 | 78 | 61 | M |
| | 2000.09-2005.08 | MT | F | L | Hatchback FWD Z 10 XE | | GCI57092 | Inner Joint | | 22 | 20 | 35 | 47 | 83 | |
| | 2000.09-2005.08 | MT | F | R | Hatchback FWD Z 10 XE | | GCI44019 | Inner Joint | | 22 | 20 | 30 | 54 | 123 | |
| 1.0 (44 kw) | 2000.02-2006.11 | MT | F | L | Hatchback FWD Z 10 XEP | | GDS57087 | Drive Shaft | 43T | 23 | 22 | 49 | 78 | 638 | |
| | 2000.02-2006.11 | MT | F | L/R | Hatchback FWD Z 10 XEP | | GCO44001 | Outer Joint | 43T | 23 | 20 | 49 | 78 | 61 | M |
| | 2000.02-2006.11 | MT | F | L | Hatchback FWD Z 10 XEP | | GCI57092 | Inner Joint | | 22 | 20 | 35 | 47 | 83 | |
| | 2000.02-2006.11 | MT | F | R | Hatchback FWD Z 10 XEP | | GCI44019 | Inner Joint | | 22 | 20 | 30 | 54 | 123 | |
| 1.0 (48 kw) | 2008.01-2014.11 | 5MT | F | L | Hatchback FWD K10B | | GDS57222 | Drive Shaft | | 25 | 22 | 49 | 81.5 | 641 | |

| | YEAR | TRANSM. | F/R | L/R | BODY STYLE & DRIVE TYPE & ENGINE | REMARKS | G-AP Ref. | PRODUCT | ABS | Technical Specifications A | B | C | H | L | P |
|---|---|---|---|---|---|---|---|---|---|---|---|---|---|---|---|
| **VAUXHALL** | | | | | | | | | | | | | | | |
| **Agila** | | | | | | | | | | | | | | | |
| 1.0 (48 kw) | 2008.01-2014.11 | 5MT | F | R | Hatchback FWD K10B | | GDS57221 | Drive Shaft | | 25 | 22 | 49 | 81.5 | 882 | |
| | 2008.01-2014.11 | 5MT | F | L/R | Hatchback FWD K10B | | GCO44085 | Outer Joint | | 25 | 20 | 49 | 81.5 | 61 | M |
| | 2008.01-2014.11 | MT | F | L | Hatchback FWD K10B | | GCI57156 | Inner Joint | | 22 | 19 | 40 | 57 | 97.5 | |
| 1.0 (50 kw) | 2011.08-2014.11 | 5MT | F | R | Hatchback FWD K10B | | GDS57221 | Drive Shaft | | 25 | 22 | 49 | 81.5 | 882 | |
| | 2011.08-2014.11 | MT | F | L | Hatchback FWD K10B | | GCI57156 | Inner Joint | | 22 | 19 | 40 | 57 | 97.5 | |
| 1.2 (55 kw) | 2000.09-2008.03 | 5MT | F | L | Hatchback FWD Z 12 XE | | GDS83210 | Drive Shaft | 43T | 23 | 22 | 49 | 78 | 606 | |
| | 2000.09-2008.03 | 5MT | F | R | Hatchback FWD Z 12 XE | | GDS44043 | Drive Shaft | 43T | 23 | 22 | 49 | 78 | 853 | |
| | 2000.09-2008.03 | 5MT | F | L/R | Hatchback FWD Z 12 XE | | GCO44001 | Outer Joint | 43T | 23 | 20 | 49 | 78 | 61 | M |
| | 2000.09-2008.03 | 5MT | F | L/R | Hatchback FWD Z 12 XE | | GCO99110 | Outer Joint | | 23 | 20 | 49 | 78 | 61 | M |
| | 2000.09-2008.03 | 5MT | F | L | Hatchback FWD Z 12 XE | | GCI57092 | Inner Joint | | 22 | 20 | 35 | 47 | 83 | |
| | 2000.09-2008.03 | 5MT | F | R | Hatchback FWD Z 12 XE | | GCI44019 | Inner Joint | | 22 | 20 | 30 | 54 | 123 | |
| 1.2 (59 kw) | 2004.07-2006.11 | 5MT | F | L | Hatchback FWD Z 12 XEP | | GDS83922 | Drive Shaft | 43T | 23 | 22 | 49 | 78 | 600 | |
| | 2004.07-2006.11 | 5MT | F | R | Hatchback FWD Z 12 XEP | | GDS84079 | Drive Shaft | 43T | 23 | 22 | 49 | 78 | 864 | |
| | 2004.07-2006.11 | 5MT | F | L | Hatchback FWD Z 12 XEP | | GCI44013 | Inner Joint | | 22 | 21 | 35 | 57.5 | 93 | |
| | 2004.07-2006.11 | AT/MT | F | L/R | Hatchback FWD Z 12 XEP | | GCO44001 | Outer Joint | 43T | 23 | 20 | 49 | 78 | 61 | M |
| 1.2 (63 kw) | 2008.01-2014.11 | MT | F | L | Hatchback FWD K12B | | GDS57222 | Drive Shaft | | 25 | 22 | 49 | 81.5 | 641 | |
| | 2008.01-2014.11 | MT | F | R | Hatchback FWD K12B | | GDS57221 | Drive Shaft | | 25 | 22 | 49 | 81.5 | 882 | |
| | 2008.01-2014.11 | MT | F | L | Hatchback FWD K12B | Date to:2010.07;Chassis no. to:AM999999 | GCO44085 | Outer Joint | | 25 | 20 | 49 | 81.5 | 61 | M |
| | 2008.01-2014.11 | MT | F | R | Hatchback FWD K12B | | GCO44085 | Outer Joint | | 25 | 20 | 49 | 81.5 | 61 | M |
| | 2008.01-2014.11 | MT | F | L | Hatchback FWD K12B | | GCI57156 | Inner Joint | | 22 | 19 | 40 | 57 | 97.5 | |
| 1.2 (69 kw) | 2008.01-2014.11 | MT | F | L | Hatchback FWD K12B | | GDS57222 | Drive Shaft | | 25 | 22 | 49 | 81.5 | 641 | |
| | 2008.01-2014.11 | MT | F | R | Hatchback FWD K12B | | GDS57221 | Drive Shaft | | 25 | 22 | 49 | 81.5 | 882 | |
| | 2008.01-2014.11 | MT | F | L/R | Hatchback FWD K12B | Date from:2010.06;Date to:2010.07;Chassis no. to:AM999999 | GCO44085 | Outer Joint | | 25 | 20 | 49 | 81.5 | 61 | M |
| | 2008.01-2014.11 | MT | F | L | Hatchback FWD K12B | | GCI57156 | Inner Joint | | 22 | 19 | 40 | 57 | 97.5 | |
| 1.3 (55 kw) | 2008.01-2014.11 | 5MT | F | L | Hatchback FWD Z 13 DTJ;D13A | | GDS57223 | Drive Shaft | | 25 | 26 | 49 | 81.5 | 629 | |
| | 2008.01-2014.11 | 5MT | F | R | Hatchback FWD Z 13 DTJ;D13A | | GDS57197 | Drive Shaft | | 25 | 22 | 49 | 81.5 | 614 | |
| | 2008.01-2014.11 | 5MT | F | L/R | Hatchback FWD Z 13 DTJ;D13A | | GCO57100 | Outer Joint | | 25 | 21 | 49 | 82.5 | 64 | M |
| **Ampera** | | | | | | | | | | | | | | | |
| 1.4 (111 kw) | 2012.03- | ET | F | L | Hatchback FWD A 14 XFL;4ET50 | | GDS83771 | Drive Shaft | | 30 | 34 | 52.3 | 94 | 508 | |
| | 2012.03- | ET | F | R | Hatchback FWD A 14 XFL;4ET50 | | GDS57907 | Drive Shaft | | 30 | 34 | 52.3 | 94 | 512 | |
| | 2012.03- | ET | F | L/R | Hatchback FWD A 14 XFL;4ET50 | | GCO81171 | Outer Joint | | 30 | 23 | 52.3 | 94 | 59.5 | M |
| | 2012.03- | ET | F | L | Hatchback FWD A 14 XFL;4ET50 | | GCI82371 | Inner Joint | | 34 | 24 | 35 | | 131.5 | |
| | 2012.03- | ET | F | R | Hatchback FWD A 14 XFL;4ET50 | | GCI83915 | Inner Joint | | 34 | 24 | 38 | | 136 | |
| **Antara** | | | | | | | | | | | | | | | |
| 2.0 (93 kw) | 2006.08-2015.04 | 5MT | F | L | SUV FWD Z 20 DM | | GDS88093 | Drive Shaft | | 30 | 27 | 54 | 105.5 | 618.5 | |
| | 2006.08-2015.04 | 5MT | F | R | SUV FWD Z 20 DM | | GDS88094 | Drive Shaft | | 30 | 27 | 54 | 105.5 | 542 | |
| | 2006.08-2015.04 | 5MT | F | L/R | SUV FWD Z 20 DM | | GCO22009 | Outer Joint | | 30 | 34 | 54 | 105.5 | 64.5 | O |
| | 2006.08-2015.04 | 5MT | F | R | SUV FWD Z 20 DM | | GCI88035 | Inner Joint | | 27 | 34 | 43.3 | | 128 | |
| | 2006.08-2015.04 | MT | F | L | SUV FWD Z 20 DM | | GCI88034 | Inner Joint | | 27 | 34 | 35 | 68.5 | 111.5 | |
| 2.0 (110 kw) | 2006.08-2015.04 | 5AT/5MT | F | L/R | SUV 4WD Z 20 DMH | | GCO22009 | Outer Joint | | 30 | 34 | 54 | 105.5 | 64.5 | O |
| | 2006.08-2015.04 | 5AT/5MT | F | R | SUV 4WD Z 20 DMH | | GCI88035 | Inner Joint | | 27 | 34 | 43.3 | | 128 | |
| | 2006.08-2015.04 | AT | F | L | SUV 4WD Z 20 DMH | | GDS22008 | Drive Shaft | | 30 | 27 | 54 | 105.5 | 629.5 | |
| | 2006.08-2015.04 | AT | F | R | SUV 4WD Z 20 DMH | | GDS22009 | Drive Shaft | | 30 | 27 | 54 | 105.5 | 551 | |
| | 2006.08-2015.04 | AT | F | L | SUV 4WD Z 20 DMH | | GCI21023 | Inner Joint | | 27 | 34 | 35 | 104 | 87 | |
| | 2006.08-2015.04 | MT | F | L | SUV 4WD Z 20 DMH | | GDS88093 | Drive Shaft | | 30 | 27 | 54 | 105.5 | 618.5 | |
| | 2006.08-2015.04 | MT | F | R | SUV 4WD Z 20 DMH | | GDS88094 | Drive Shaft | | 30 | 27 | 54 | 105.5 | 542 | |
| | 2006.08-2015.04 | MT | F | L | SUV 4WD Z 20 DMH | | GCI88034 | Inner Joint | | 27 | 34 | 35 | 68.5 | 111.5 | |
| | 2006.08-2015.04 | 5AT/5MT | R | L | SUV 4WD Z 20 DMH | | GDS44107 | Drive Shaft | | 30 | 34 | 55 | 105.5 | 756 | |
| | 2006.08-2015.04 | 5AT/5MT | R | R | SUV 4WD Z 20 DMH | | GDS44106 | Drive Shaft | | 30 | 34 | 55 | 105.5 | 859 | |
| | 2006.08-2015.04 | 5AT/5MT | R | L/R | SUV 4WD Z 20 DMH | | GCO21047 | Outer Joint | | 30 | 22 | 55 | 105.5 | 53.5 | O |
| | 2006.08-2015.04 | 5AT/5MT | R | L/R | SUV 4WD Z 20 DMH | | GCI12009 | Inner Joint | | 34 | 22 | 35 | 56.5 | 111.5 | |
| | 2006.08-2015.04 | 5AT/5MT | F | L/R | SUV FWD Z 20 DMH | | GCO22009 | Outer Joint | | 30 | 34 | 54 | 105.5 | 64.5 | O |
| | 2006.08-2015.04 | 5AT/5MT | F | R | SUV FWD Z 20 DMH | | GCI88035 | Inner Joint | | 27 | 34 | 43.3 | | 128 | |
| | 2006.08-2015.04 | AT | F | L | SUV FWD Z 20 DMH | | GDS22008 | Drive Shaft | | 30 | 27 | 54 | 105.5 | 629.5 | |
| | 2006.08-2015.04 | AT | F | R | SUV FWD Z 20 DMH | | GDS22009 | Drive Shaft | | 30 | 27 | 54 | 105.5 | 551 | |
| | 2006.08-2015.04 | AT | F | L | SUV FWD Z 20 DMH | | GCI21023 | Inner Joint | | 27 | 34 | 35 | 104 | 87 | |
| | 2006.08-2015.04 | MT | F | L | SUV FWD Z 20 DMH | | GDS88093 | Drive Shaft | | 30 | 27 | 54 | 105.5 | 618.5 | |
| | 2006.08-2015.04 | MT | F | R | SUV FWD Z 20 DMH | | GDS88094 | Drive Shaft | | 30 | 27 | 54 | 105.5 | 542 | |
| | 2006.08-2015.04 | MT | F | L | SUV FWD Z 20 DMH | | GCI88034 | Inner Joint | | 27 | 34 | 35 | 68.5 | 111.5 | |
| 2.2 (120 kw) | 2010.12-2015.04 | AT | F | L | SUV 4WD A 22 DM | | GDS83815 | Drive Shaft | | 30 | 34 | 56 | 105 | 666 | |
| | 2010.12-2015.04 | AT | F | R | SUV 4WD A 22 DM | | GDS83816 | Drive Shaft | | 30 | 27 | 56 | 105 | 546 | |
| | 2010.12-2015.04 | AT | F | L/R | SUV 4WD A 22 DM | | GCO81163 | Outer Joint | | 30 | 34 | 56 | 105 | 64.5 | M |
| | 2010.12-2015.04 | AT | F | L | SUV 4WD A 22 DM | | GCI21041 | Inner Joint | | 34 | 34 | 35 | 138 | 92 | |
| | 2010.12-2015.04 | AT | F | R | SUV 4WD A 22 DM | | GCI82378 | Inner Joint | | 27 | 34 | 42 | | 134 | |
| | 2010.12-2015.04 | MT | F | L | SUV 4WD A 22 DM | | GDS88093 | Drive Shaft | | 30 | 27 | 54 | 105.5 | 618.5 | |

| | YEAR | TRANSM. | F/R | L/R | BODY STYLE & DRIVE TYPE & ENGINE | REMARKS | G-AP Ref. | PRODUCT | ABS | Technical Specifications A | B | C | H | L | P |
|---|---|---|---|---|---|---|---|---|---|---|---|---|---|---|---|
| **VAUXHALL** | | | | | | | | | | | | | | | |
| **Antara** | | | | | | | | | | | | | | | |
| 2.2 (120 kw) | 2010.12-2015.04 | MT | F | R | SUV 4WD A 22 DM | | GDS88094 | Drive Shaft | | 30 | 27 | 54 | 105.5 | 542 | |
| | 2010.12-2015.04 | MT | F | L | SUV 4WD A 22 DM | | GCI88034 | Inner Joint | | 27 | 34 | 35 | 68.5 | 111.5 | |
| | 2010.12-2015.04 | MT | F | R | SUV 4WD A 22 DM | | GCI88035 | Inner Joint | | 27 | 34 | 43.3 | | 128 | |
| | 2010.12-2015.04 | 6AT/6MT | R | R | SUV 4WD A 22 DM | | GDS44106 | Drive Shaft | | 30 | 34 | 55 | 105.5 | 859 | |
| | 2010.12-2015.04 | AT/MT | R | L | SUV 4WD A 22 DM | | GDS44107 | Drive Shaft | | 30 | 34 | 55 | 105.5 | 756 | |
| | 2010.12-2015.04 | AT/MT | R | L/R | SUV 4WD A 22 DM | | GCO21047 | Outer Joint | | 30 | 22 | 55 | 105.5 | 53.5 | O |
| | 2010.12-2015.04 | AT/MT | R | L/R | SUV 4WD A 22 DM | | GCI12009 | Inner Joint | | 34 | 22 | 35 | 56.5 | 111.5 | |
| | 2010.12-2015.04 | 5AT | F | | SUV FWD A 22 DM | | GCO22009 | Outer Joint | | 30 | 34 | 54 | 105.5 | 64.5 | O |
| | 2010.12-2015.04 | AT | F | L | SUV FWD A 22 DM | | GDS83815 | Drive Shaft | | 30 | 34 | 56 | 105 | 666 | |
| | 2010.12-2015.04 | AT | F | R | SUV FWD A 22 DM | | GDS83816 | Drive Shaft | | 30 | 27 | 56 | 105 | 546 | |
| | 2010.12-2015.04 | AT | F | L/R | SUV FWD A 22 DM | | GCO81163 | Outer Joint | | 30 | 34 | 56 | 105 | 64.5 | M |
| | 2010.12-2015.04 | AT | F | L | SUV FWD A 22 DM | | GCI21041 | Inner Joint | | 34 | 34 | 35 | 138 | 92 | |
| | 2010.12-2015.04 | AT | F | R | SUV FWD A 22 DM | | GCI82378 | Inner Joint | | 27 | 34 | 42 | | 134 | |
| | 2010.12-2015.04 | MT | F | L | SUV FWD A 22 DM | | GDS88093 | Drive Shaft | | 30 | 27 | 54 | 105.5 | 618.5 | |
| | 2010.12-2015.04 | MT | F | R | SUV FWD A 22 DM | | GDS88094 | Drive Shaft | | 30 | 27 | 54 | 105.5 | 542 | |
| | 2010.12-2015.04 | MT | F | L | SUV FWD A 22 DM | | GCI88034 | Inner Joint | | 27 | 34 | 35 | 68.5 | 111.5 | |
| | 2010.12-2015.04 | MT | F | R | SUV FWD A 22 DM | | GCI88035 | Inner Joint | | 27 | 34 | 43.3 | | 128 | |
| 2.2 (135 kw) | 2010.12-2015.04 | 5AT | F | | SUV 4WD A 22 DMH | | GCO22009 | Outer Joint | | 30 | 34 | 54 | 105.5 | 64.5 | O |
| | 2010.12-2015.04 | AT | F | L | SUV 4WD A 22 DMH | | GDS83815 | Drive Shaft | | 30 | 34 | 56 | 105 | 666 | |
| | 2010.12-2015.04 | AT | F | R | SUV 4WD A 22 DMH | | GDS83816 | Drive Shaft | | 30 | 27 | 56 | 105 | 546 | |
| | 2010.12-2015.04 | AT | F | L/R | SUV 4WD A 22 DMH | | GCO81163 | Outer Joint | | 30 | 34 | 56 | 105 | 64.5 | M |
| | 2010.12-2015.04 | AT | F | L | SUV 4WD A 22 DMH | | GCI21041 | Inner Joint | | 34 | 34 | 35 | 138 | 92 | |
| | 2010.12-2015.04 | AT | F | R | SUV 4WD A 22 DMH | | GCI82378 | Inner Joint | | 27 | 34 | 42 | | 134 | |
| | 2010.12-2015.04 | MT | F | L | SUV 4WD A 22 DMH | | GDS88093 | Drive Shaft | | 30 | 27 | 54 | 105.5 | 618.5 | |
| | 2010.12-2015.04 | MT | F | R | SUV 4WD A 22 DMH | | GDS88094 | Drive Shaft | | 30 | 27 | 54 | 105.5 | 542 | |
| | 2010.12-2015.04 | MT | F | L | SUV 4WD A 22 DMH | | GCI88034 | Inner Joint | | 27 | 34 | 35 | 68.5 | 111.5 | |
| | 2010.12-2015.04 | MT | F | R | SUV 4WD A 22 DMH | | GCI88035 | Inner Joint | | 27 | 34 | 43.3 | | 128 | |
| | 2010.12-2015.04 | 6AT/6MT | R | L | SUV 4WD A 22 DMH | | GDS44107 | Drive Shaft | | 30 | 34 | 55 | 105.5 | 756 | |
| | 2010.12-2015.04 | 6AT/6MT | R | R | SUV 4WD A 22 DMH | | GDS44106 | Drive Shaft | | 30 | 34 | 55 | 105.5 | 859 | |
| | 2010.12-2015.04 | 6AT/6MT | R | L/R | SUV 4WD A 22 DMH | | GCO21047 | Outer Joint | | 30 | 22 | 55 | 105.5 | 53.5 | O |
| | 2010.12-2015.04 | 6AT/6MT | R | L/R | SUV 4WD A 22 DMH | | GCI12009 | Inner Joint | | 34 | 22 | 35 | 56.5 | 111.5 | |
| 2.4 (103 kw) | 2006.08-2015.04 | 5AT/5MT | F | L/R | SUV 4WD Z 24 XE | | GCO22009 | Outer Joint | | 30 | 34 | 54 | 105.5 | 64.5 | O |
| | 2006.08-2015.04 | 5AT/5MT | F | R | SUV 4WD Z 24 XE | | GCI88035 | Inner Joint | | 27 | 34 | 43.3 | | 128 | |
| | 2006.08-2015.04 | AT | F | L | SUV 4WD Z 24 XE | | GDS22008 | Drive Shaft | | 30 | 27 | 54 | 105.5 | 629.5 | |
| | 2006.08-2015.04 | AT | F | R | SUV 4WD Z 24 XE | | GDS22009 | Drive Shaft | | 30 | 27 | 54 | 105.5 | 551 | |
| | 2006.08-2015.04 | AT | F | L | SUV 4WD Z 24 XE | | GCI21023 | Inner Joint | | 27 | 34 | 35 | 104 | 87 | |
| | 2006.08-2015.04 | MT | F | L | SUV 4WD Z 24 XE | | GDS88093 | Drive Shaft | | 30 | 27 | 54 | 105.5 | 618.5 | |
| | 2006.08-2015.04 | MT | F | R | SUV 4WD Z 24 XE | | GDS88094 | Drive Shaft | | 30 | 27 | 54 | 105.5 | 542 | |
| | 2006.08-2015.04 | MT | F | L | SUV 4WD Z 24 XE | | GCI88034 | Inner Joint | | 27 | 34 | 35 | 68.5 | 111.5 | |
| | 2006.08-2015.04 | 5AT/5MT | R | L | SUV 4WD Z 24 XE | | GDS44107 | Drive Shaft | | 30 | 34 | 55 | 105.5 | 756 | |
| | 2006.08-2015.04 | 5AT/5MT | R | R | SUV 4WD Z 24 XE | | GDS44106 | Drive Shaft | | 30 | 34 | 55 | 105.5 | 859 | |
| | 2006.08-2015.04 | 5AT/5MT | R | L/R | SUV 4WD Z 24 XE | | GCO21047 | Outer Joint | | 30 | 22 | 55 | 105.5 | 53.5 | O |
| | 2006.08-2015.04 | 5AT/5MT | R | L/R | SUV 4WD Z 24 XE | | GCI12009 | Inner Joint | | 34 | 22 | 35 | 56.5 | 111.5 | |
| | 2006.08-2015.04 | 5MT | F | L | SUV FWD Z 24 XE | | GDS88093 | Drive Shaft | | 30 | 27 | 54 | 105.5 | 618.5 | |
| | 2006.08-2015.04 | 5MT | F | R | SUV FWD Z 24 XE | | GDS88094 | Drive Shaft | | 30 | 27 | 54 | 105.5 | 542 | |
| | 2006.08-2015.04 | 5MT | F | L/R | SUV FWD Z 24 XE | | GCO22009 | Outer Joint | | 30 | 34 | 54 | 105.5 | 64.5 | O |
| | 2006.08-2015.04 | 5MT | F | R | SUV FWD Z 24 XE | | GCI88035 | Inner Joint | | 27 | 34 | 43.3 | | 128 | |
| | 2006.08-2015.04 | MT | F | L | SUV FWD Z 24 XE | | GCI88034 | Inner Joint | | 27 | 34 | 35 | 68.5 | 111.5 | |
| 2.4 (123 kw) | 2010.12-2015.04 | MT | F | R | SUV 4WD A 24 XE;A 24 XF | | GDS86076 | Drive Shaft | | 30 | 27 | 56 | 105 | 550 | |
| | 2010.12-2015.04 | MT | F | L/R | SUV 4WD A 24 XE;A 24 XF | | GCO81163 | Outer Joint | | 30 | 34 | 56 | 105 | 64.5 | M |
| | 2010.12-2015.04 | MT | R | R | SUV 4WD A 24 XE;A 24 XF | | GDS44106 | Drive Shaft | | 30 | 34 | 55 | 105.5 | 859 | |
| | 2010.12-2015.04 | | R | L/R | SUV 4WD A 24 XE;A 24 XF | | GCI12009 | Inner Joint | | 34 | 22 | 35 | 56.5 | 111.5 | |
| | 2010.12-2015.04 | 6MT | F | R | SUV FWD A 24 XE;A 24 XF | | GDS86076 | Drive Shaft | | 30 | 27 | 56 | 105 | 550 | |
| | 2010.12-2015.04 | 6MT | F | L/R | SUV FWD A 24 XE;A 24 XF | | GCO81163 | Outer Joint | | 30 | 34 | 56 | 105 | 64.5 | M |
| **Arena** | | | | | | | | | | | | | | | |
| 1.9 (44 kw) | 1998.03-2001.08 | MT | F | L/R | Bus FWD F8Q 600, F8Q 606 | Date from:1998.09;Date to:2001.04 | GDS44006 | Drive Shaft | | 25 | 27 | 56.3 | 110.5 | 713.5 | |
| | 1998.03-2001.08 | MT | F | | Bus FWD F8Q 600, F8Q 606 | | GDS50183 | Drive Shaft | | 25 | 27 | 56.3 | 110.5 | 716 | |
| | 1998.03-2001.08 | MT | F | L/R | Van FWD F8Q 600, F8Q 606 | | GDS44006 | Drive Shaft | | 25 | 27 | 56.3 | 110.5 | 713.5 | |
| | 1998.03-2001.08 | MT | F | L/R | Van FWD F8Q 600, F8Q 606 | | GDS50183 | Drive Shaft | | 25 | 27 | 56.3 | 110.5 | 716 | |
| 2.5 (55 kw) | 1998.03-2001.08 | MT | F | L/R | Bus FWD S8U 758, S8U 780, S8U 782 | Date to:2001.04 | GDS44006 | Drive Shaft | | 25 | 27 | 56.3 | 110.5 | 713.5 | |
| | 1998.03-2001.08 | MT | F | L/R | Van FWD S8U 758, S8U 780, S8U 782 | Date to:2001.04 | GDS44006 | Drive Shaft | | 25 | 27 | 56.3 | 110.5 | 713.5 | |
| **Astra** | | | | | | | | | | | | | | | |
| 1.0 (77 kw) | 2016.04-2019.08 | 5AMT/5MT | F | L/R | Estate FWD B 10 XFL;D 10 XFL | | GCO81640 | Outer Joint | | 33 | 22 | 52.3 | 94 | 55 | M |
| | 2016.04-2019.08 | 5MT | F | L | Estate FWD B 10 XFL;D 10 XFL | Chassis no. to:H8999999/HG999999,EXC.RPO ABW | GCI81613 | Inner Joint | | 22 | 23 | 35 | 57.5 | 104.5 | |
| | 2016.04-2019.08 | 5MT/5AMT | F | L | Estate FWD B 10 XFL;D 10 XFL | Chassis no. to:H8999999/HG999999,EXC.RPO ABW | GDS82041 | Drive Shaft | | 33 | 22 | 52.3 | 94 | 643 | |

| | YEAR | TRANSM. | F/R | L/R | BODY STYLE & DRIVE TYPE & ENGINE | REMARKS | G-AP Ref. | PRODUCT | ABS | Technical Specifications A | B | C | H | L | P |
|---|---|---|---|---|---|---|---|---|---|---|---|---|---|---|---|
| **VAUXHALL** **Astra** | | | | | | | | | | | | | | | |
| 1.0 (77 kw) | 2016.04-2019.08 | 5MT/5AMT | F | L | Estate FWD B 10 XFL;D 10 XFL | Chassis no. to:H8999999/HG999999,FOR RPO ABW,Chassis no. from:J8000001/J5000001 | GDS83854 | Drive Shaft | | 33 | 22 | 52.3 | 94 | 637 | |
| | 2016.04-2019.08 | 5MT/5AMT | F | R | Estate FWD B 10 XFL;D 10 XFL | Chassis no. to:H8999999/HG999999,FOR RPO ABW,Chassis no. from:J8000001/J5000001 | GDS83853 | Drive Shaft | | 33 | 22 | 52.3 | 94 | 956 | |
| | 2016.04-2019.08 | 5AMT/5MT | F | L | Hatchback FWD B 10 XFL;D 10 XFL | Chassis no. to:H8999999/HG999999,EXC.RPO ABW | GDS82041 | Drive Shaft | | 33 | 22 | 52.3 | 94 | 643 | |
| | 2016.04-2019.08 | 5AMT/5MT | F | L | Hatchback FWD B 10 XFL;D 10 XFL | Chassis no. to:H8999999/HG999999,FOR RPO ABW,Chassis no. from:J8000001/J5000001 | GDS83854 | Drive Shaft | | 33 | 22 | 52.3 | 94 | 637 | |
| | 2016.04-2019.08 | 5AMT/5MT | F | R | Hatchback FWD B 10 XFL;D 10 XFL | Chassis no. to:H8999999/HG999999,FOR RPO ABW,Chassis no. from:J8000001/J5000001 | GDS83853 | Drive Shaft | | 33 | 22 | 52.3 | 94 | 956 | |
| | 2016.04-2019.08 | 5AMT/5MT | F | L/R | Hatchback FWD B 10 XFL;D 10 XFL | | GCO81640 | Outer Joint | | 33 | 22 | 52.3 | 94 | 55 | M |
| | 2016.04-2019.08 | 5MT | F | L | Hatchback FWD B 10 XFL;D 10 XFL | Chassis no. to:H8999999/HG999999,EXC.RPO ABW | GCI81613 | Inner Joint | | 22 | 23 | 35 | 57.5 | 104.5 | |
| 1.2 (81 kw) | 2021.10- | 6MT | F | L | Estate FWD HNP (EB2ADT) | | GDS83616 | Drive Shaft | | 28 | 24 | 58.5 | 92.5 | 681 | |
| | 2021.10- | 6MT | F | R | Estate FWD HNP (EB2ADT) | | GDS84457 | Drive Shaft | | 28 | 24 | 58.5 | 92.5 | 921 | |
| | 2021.10- | 6MT | F | R | Estate FWD HNP (EB2ADT) | | GCO81397 | Outer Joint | | 28 | 34 | 58.5 | 92.5 | 56 | I |
| | 2021.10- | 6MT | F | R | Estate FWD HNP (EB2ADT) | | GCI82769 | Inner Joint | | 24 | 34 | 40 | 61 | 103 | |
| | 2021.10- | 6MT | F | L | Hatchback FWD HNP (EB2ADT) | | GDS83616 | Drive Shaft | | 28 | 24 | 58.5 | 92.5 | 681 | |
| | 2021.10- | 6MT | F | R | Hatchback FWD HNP (EB2ADT) | | GDS84457 | Drive Shaft | | 28 | 24 | 58.5 | 92.5 | 921 | |
| | 2021.10- | 6MT | F | R | Hatchback FWD HNP (EB2ADT) | | GCO81397 | Outer Joint | | 28 | 34 | 58.5 | 92.5 | 56 | I |
| | 2021.10- | 6MT | F | R | Hatchback FWD HNP (EB2ADT) | | GCI82769 | Inner Joint | | 24 | 34 | 40 | 61 | 103 | |
| 1.2 (96 kw) | 2021.10- | 6MT | F | L | Estate FWD HNS (EB2ADTS) | | GDS83616 | Drive Shaft | | 28 | 24 | 58.5 | 92.5 | 681 | |
| | 2021.10- | 6MT | F | R | Estate FWD HNS (EB2ADTS) | | GDS84457 | Drive Shaft | | 28 | 24 | 58.5 | 92.5 | 921 | |
| | 2021.10- | 6MT | F | R | Estate FWD HNS (EB2ADTS) | | GCO81397 | Outer Joint | | 28 | 34 | 58.5 | 92.5 | 56 | I |
| | 2021.10- | 6MT | F | R | Estate FWD HNS (EB2ADTS) | | GCI82769 | Inner Joint | | 24 | 34 | 40 | 61 | 103 | |
| | 2021.10- | 8AT | F | L | Estate FWD HNS (EB2ADTS) | | GDS84579 | Drive Shaft | | 28 | 37 | 58.5 | 92.5 | 641 | |
| | 2021.10- | 8AT | F | L/R | Estate FWD HNS (EB2ADTS) | | GCO82273 | Outer Joint | | 28 | 34 | 58.5 | 92.5 | 56 | I |
| | 2021.10- | 6MT | F | L | Hatchback FWD HNS (EB2ADTS) | | GDS83616 | Drive Shaft | | 28 | 24 | 58.5 | 92.5 | 681 | |
| | 2021.10- | 6MT | F | R | Hatchback FWD HNS (EB2ADTS) | | GDS84457 | Drive Shaft | | 28 | 24 | 58.5 | 92.5 | 921 | |
| | 2021.10- | 6MT | F | R | Hatchback FWD HNS (EB2ADTS) | | GCO81397 | Outer Joint | | 28 | 34 | 58.5 | 92.5 | 56 | I |
| | 2021.10- | 6MT | F | R | Hatchback FWD HNS (EB2ADTS) | | GCI82769 | Inner Joint | | 24 | 34 | 40 | 61 | 103 | |
| | 2021.10- | 8AT | F | L | Hatchback FWD HNS (EB2ADTS) | | GDS84579 | Drive Shaft | | 28 | 37 | 58.5 | 92.5 | 641 | |
| | 2021.10- | 8AT | F | L/R | Hatchback FWD HNS (EB2ADTS) | | GCO82273 | Outer Joint | | 28 | 34 | 58.5 | 92.5 | 56 | I |
| 1.2 (100 kw) | 2023.10- | 6DCT | F | R | Hatchback FWD HPY (EB2LTDH2) | | GDS83109 | Drive Shaft | | 28 | 37 | 58.5 | 92.5 | 933 | |
| | 2023.10- | 6DCT | F | R | Hatchback FWD HPY (EB2LTDH2) | | GCI82118 | Inner Joint | | 37 | 34 | | 290 | 88 | |
| 1.2 (107 kw) | 2025.04- | 6DCT | F | R | Hatchback FWD | | GDS83109 | Drive Shaft | | 28 | 37 | 58.5 | 92.5 | 933 | |
| | 2025.04- | 6DCT | F | R | Hatchback FWD | | GCI82118 | Inner Joint | | 37 | 34 | | 290 | 88 | |
| 1.3 (66 kw) | 2004.01-2009.05 | 6MT | F | L | Hatchback FWD Z 13 DTH | | GDS44052 | Drive Shaft | | 33 | 25 | 53 | 93.5 | 573 | |
| | 2004.01-2009.05 | 6MT | F | R | Hatchback FWD Z 13 DTH | | GDS44051 | Drive Shaft | | 33 | 34 | 53 | 93.5 | 570 | |
| | 2004.01-2009.05 | 6MT | F | L | Hatchback FWD Z 13 DTH | | GCI44008 | Inner Joint | | 25 | 25 | 34.9 | 57.5 | 113.2 | |
| | 2004.01-2009.05 | AT/MT | F | L/R | Hatchback FWD Z 13 DTH | | GCO44028 | Outer Joint | | 33 | 24 | 53 | 93.5 | 63.5 | M |
| | 2004.01-2009.05 | MT | F | L | Hatchback FWD Z 13 DTH | | GDS60020 | Drive Shaft | | 33 | 25 | 52.5 | 94 | 561 | |
| | 2004.01-2009.05 | MT | F | L | Hatchback FWD Z 13 DTH | | GCI21018 | Inner Joint | | 25 | 34 | 35 | 58 | 116 | |
| | 2004.01-2009.05 | | F | R | Hatchback FWD Z 13 DTH | | GCI44005 | Inner Joint | | 34 | 25 | 35 | | 130.2 | |
| | 2004.01-2009.05 | | F | R | Hatchback FWD Z 13 DTH | | GCI44011 | Inner Joint | | 34 | 25 | 37.5 | | 130.2 | |
| | 2004.08-2009.03 | 6MT | F | L | Estate FWD Z 13 DTH | | GDS44052 | Drive Shaft | | 33 | 25 | 53 | 93.5 | 573 | |
| | 2004.08-2009.03 | 6MT | F | R | Estate FWD Z 13 DTH | | GDS44051 | Drive Shaft | | 33 | 34 | 53 | 93.5 | 570 | |
| | 2004.08-2009.03 | 6MT | F | L/R | Estate FWD Z 13 DTH | | GCO44028 | Outer Joint | | 33 | 24 | 53 | 93.5 | 63.5 | M |
| | 2004.08-2009.03 | 6MT | F | L | Estate FWD Z 13 DTH | | GCI44008 | Inner Joint | | 25 | 25 | 34.9 | 57.5 | 113.2 | |
| | 2004.08-2009.03 | 6MT | F | R | Estate FWD Z 13 DTH | | GCI44011 | Inner Joint | | 34 | 25 | 37.5 | | 130.2 | |
| 1.3 (70 kw) | 2009.12-2015.10 | 5MT | F | L | Hatchback FWD A 13 DTE | | GDS83209 | Drive Shaft | | 33 | 22 | 52.5 | 94 | 619 | |
| | 2009.12-2015.10 | 5MT | F | R | Hatchback FWD A 13 DTE | | GDS84082 | Drive Shaft | | 33 | 22 | 52.3 | 94 | 983 | |
| | 2009.12-2015.10 | 5MT | F | L/R | Hatchback FWD A 13 DTE | | GCO44088 | Outer Joint | | 33 | 23 | 52.3 | 94 | 59.5 | M |
| | 2009.12-2015.10 | 5MT | F | L | Hatchback FWD A 13 DTE | | GCI99026 | Inner Joint | | 22 | 25 | 35 | 57 | 111.7 | |
| | 2009.12-2015.10 | 5MT | F | R | Hatchback FWD A 13 DTE | | GCI44017 | Inner Joint | | 22 | 23 | 35 | 57.5 | 116 | |
| | 2010.10-2015.10 | 5MT | F | L | Estate FWD A 13 DTE | | GDS83209 | Drive Shaft | | 33 | 22 | 52.5 | 94 | 619 | |
| | 2010.10-2015.10 | 5MT | F | R | Estate FWD A 13 DTE | | GDS84082 | Drive Shaft | | 33 | 22 | 52.3 | 94 | 983 | |
| | 2010.10-2015.10 | 5MT | F | R | Estate FWD A 13 DTE | | GCO44088 | Outer Joint | | 33 | 23 | 52.3 | 94 | 59.5 | M |
| | 2010.10-2015.10 | 5MT | F | L | Estate FWD A 13 DTE | | GCI99026 | Inner Joint | | 22 | 25 | 35 | 57 | 111.7 | |
| | 2010.10-2015.10 | 5MT | F | R | Estate FWD A 13 DTE | | GCI44017 | Inner Joint | | 22 | 23 | 35 | 57.5 | 116 | |
| 1.4 (44 kw) | 1991.09-1998.02 | MT | F | L | Estate FWD C14NZ/X14NZ | Chassis no. to:P-2732833 | GDS44002 | Drive Shaft | 29T | 22 | 22 | 52 | 95 | 585 | |
| | 1991.09-1998.02 | MT | F | R | Estate FWD C14NZ/X14NZ | Chassis no. to:P-2732833 | GDS60002 | Drive Shaft | 29T | 22 | 22 | 52 | 95 | 926 | |
| | 1991.09-1998.02 | MT | F | L/R | Estate FWD C14NZ/X14NZ | Date from:1994.01 | GCO44007 | Outer Joint | 29T | 22 | 22 | 52 | 94.5 | 50 | O |
| | 1991.09-1998.02 | MT | F | L/R | Estate FWD C14NZ/X14NZ | Chassis no. to:P-2732833 | GCO44051 | Outer Joint | 29T | 22 | 22 | 52 | 95 | 50 | O |
| | 1991.09-1998.02 | MT | F | L/R | Estate FWD C14NZ/X14NZ | | GCI44004 | Inner Joint | | 22 | 22 | 34.95 | 57.5 | 103 | |
| | 1991.09-1998.02 | | F | | Estate FWD C14NZ/X14NZ | | GCO44023 | Outer Joint | | 22 | 22 | 52 | 95 | 50 | O |
| | 1991.09-1998.02 | MT | F | L | Hatchback FWD C14NZ/X14NZ | Chassis no. to:P-2732833 | GDS44002 | Drive Shaft | 29T | 22 | 22 | 52 | 95 | 585 | |
| | 1991.09-1998.02 | MT | F | R | Hatchback FWD C14NZ/X14NZ | Chassis no. to:P-2732833 | GDS60002 | Drive Shaft | 29T | 22 | 22 | 52 | 95 | 926 | |
| | 1991.09-1998.02 | MT | F | L/R | Hatchback FWD C14NZ/X14NZ | Date from:1994.01 | GCO44007 | Outer Joint | 29T | 22 | 22 | 52 | 94.5 | 50 | O |
| | 1991.09-1998.02 | MT | F | L/R | Hatchback FWD C14NZ/X14NZ | Chassis no. to:P-2732833 | GCO44051 | Outer Joint | 29T | 22 | 22 | 52 | 95 | 50 | O |
| | 1991.09-1998.02 | MT | F | L/R | Hatchback FWD C14NZ/X14NZ | | GCI44004 | Inner Joint | | 22 | 22 | 34.95 | 57.5 | 103 | |

| | YEAR | TRANSM. | F/R | L/R | BODY STYLE & DRIVE TYPE & ENGINE | REMARKS | G-AP Ref. | PRODUCT | ABS | Technical Specifications A | B | C | H | L | P |
|---|---|---|---|---|---|---|---|---|---|---|---|---|---|---|---|
| **VAUXHALL** **Astra** | | | | | | | | | | | | | | | |
| 1.4 (44 kw) | 1991.09-1998.02 | | F | | Hatchback FWD C14NZ/X14NZ | | GCO44023 | Outer Joint | | 22 | 22 | 52 | 95 | 50 | O |
| | 1992.04-1998.09 | MT | F | L | Saloon FWD C14NZ | Chassis no. to:P-2732833 | GDS44002 | Drive Shaft | 29T | 22 | 22 | 52 | 95 | 585 | |
| | 1992.04-1998.09 | MT | F | R | Saloon FWD C14NZ | Chassis no. to:P-2732833 | GDS60002 | Drive Shaft | 29T | 22 | 22 | 52 | 95 | 926 | |
| | 1992.04-1998.09 | MT | F | L/R | Saloon FWD C14NZ | | GCO44007 | Outer Joint | 29T | 22 | 22 | 52 | 94.5 | 50 | O |
| | 1992.04-1998.09 | MT | F | L/R | Saloon FWD C14NZ | Chassis no. to:P-2732833 | GCO44051 | Outer Joint | 29T | 22 | 22 | 52 | 95 | 50 | O |
| | 1992.04-1998.09 | MT | F | L/R | Saloon FWD C14NZ | | GCI44004 | Inner Joint | | 22 | 22 | 34.95 | 57.5 | 103 | |
| | 1992.04-1998.09 | | F | | Saloon FWD C14NZ | | GCO44023 | Outer Joint | | 22 | 22 | 52 | 95 | 50 | O |
| 1.4 (55 kw) | 1991.09-1998.02 | AT/MT | F | R | Hatchback FWD 14NV | | GDS60002 | Drive Shaft | 29T | 22 | 22 | 52 | 95 | 926 | |
| | 1991.09-1998.02 | AT/MT | F | L/R | Hatchback FWD 14NV | | GCO44051 | Outer Joint | 29T | 22 | 22 | 52 | 95 | 50 | O |
| | 1991.09-1998.02 | AT/MT | F | L/R | Hatchback FWD 14NV | | GCI44004 | Inner Joint | | 22 | 22 | 34.95 | 57.5 | 103 | |
| | 1991.09-1998.02 | | F | | Hatchback FWD 14NV | | GCO44023 | Outer Joint | | 22 | 22 | 52 | 95 | 50 | O |
| 1.4 (60 kw) | 1991.09-1996.08 | MT | F | L | Estate FWD C14SE | Date from:1991.09;Date to:1996.08;Chassis no. to:P-2732833 | GDS44002 | Drive Shaft | 29T | 22 | 22 | 52 | 95 | 585 | |
| | 1991.09-1996.08 | MT | F | R | Estate FWD C14SE | Date from:1991.09;Date to:1996.08;Chassis no. to:P-2732833 | GDS60002 | Drive Shaft | 29T | 22 | 22 | 52 | 95 | 926 | |
| | 1991.09-1996.08 | MT | F | L/R | Estate FWD C14SE | Date from:1994.01;Date to:1996.08 | GCO44007 | Outer Joint | 29T | 22 | 22 | 52 | 94.5 | 50 | O |
| | 1991.09-1996.08 | MT | F | L/R | Estate FWD C14SE | | GCO44051 | Outer Joint | 29T | 22 | 22 | 52 | 95 | 50 | O |
| | 1991.09-1996.08 | MT | F | L/R | Estate FWD C14SE | Date from:1991.09;Date to:1996.08 | GCI44004 | Inner Joint | | 22 | 22 | 34.95 | 57.5 | 103 | |
| | 1991.09-1996.08 | | F | | Estate FWD C14SE | | GCO44023 | Outer Joint | | 22 | 22 | 52 | 95 | 50 | O |
| | 1991.09-1996.08 | MT | F | L | Saloon FWD C14SE | Date to:1996.08;Chassis no. to:P-2732833 | GDS44002 | Drive Shaft | 29T | 22 | 22 | 52 | 95 | 585 | |
| | 1991.09-1996.08 | MT | F | R | Saloon FWD C14SE | Date to:1996.08;Chassis no. to:P-2732833 | GDS60002 | Drive Shaft | 29T | 22 | 22 | 52 | 95 | 926 | |
| | 1991.09-1996.08 | MT | F | L/R | Saloon FWD C14SE | Date from:1994.01;Date to:1996.08 | GCO44007 | Outer Joint | 29T | 22 | 22 | 52 | 94.5 | 50 | O |
| | 1991.09-1996.08 | MT | F | L/R | Saloon FWD C14SE | Chassis no. to:P-2732833,Date to:1996.08 | GCO44051 | Outer Joint | 29T | 22 | 22 | 52 | 95 | 50 | O |
| | 1991.09-1996.08 | MT | F | L/R | Saloon FWD C14SE | Date to:1996.08 | GCI44004 | Inner Joint | | 22 | 22 | 34.95 | 57.5 | 103 | |
| | 1991.09-1996.08 | | F | | Saloon FWD C14SE | | GCO44023 | Outer Joint | | 22 | 22 | 52 | 95 | 50 | O |
| | 1992.09-1996.08 | MT | F | L | Hatchback FWD C14SE | Date from:1992.09;Date to:1996.08;Chassis no. to:P-2732833 | GDS44002 | Drive Shaft | 29T | 22 | 22 | 52 | 95 | 585 | |
| | 1992.09-1996.08 | MT | F | R | Hatchback FWD C14SE | Date from:1992.09;Date to:1996.08;Chassis no. to:P-2732833 | GDS60002 | Drive Shaft | 29T | 22 | 22 | 52 | 95 | 926 | |
| | 1992.09-1996.08 | MT | F | L/R | Hatchback FWD C14SE | Date from:1994.01;Date to:1996.08 | GCO44007 | Outer Joint | 29T | 22 | 22 | 52 | 94.5 | 50 | O |
| | 1992.09-1996.08 | MT | F | L/R | Hatchback FWD C14SE | Date from:1992.09;Date to:1996.08;Chassis no. to:P-2732833 | GCO44051 | Outer Joint | 29T | 22 | 22 | 52 | 95 | 50 | O |
| | 1992.09-1996.08 | MT | F | L/R | Hatchback FWD C14SE | Date from:1992.09;Date to:1996.08 | GCI44004 | Inner Joint | | 22 | 22 | 34.95 | 57.5 | 103 | |
| | 1992.09-1996.08 | | F | | Hatchback FWD C14SE | | GCO44023 | Outer Joint | | 22 | 22 | 52 | 95 | 50 | O |
| 1.4 (64 kw) | 2009.12-2015.10 | 5MT | F | L | Hatchback FWD A 14 XEL | | GDS44064 | Drive Shaft | | 33 | 22 | 53 | 95 | 618 | |
| | 2009.12-2015.10 | 5MT | F | R | Hatchback FWD A 14 XEL | | GDS44065 | Drive Shaft | | 33 | 22 | 53 | 95 | 983 | |
| | 2009.12-2015.10 | AT | F | L/R | Hatchback FWD A 14 XEL | | GCO88047 | Outer Joint | | 33 | 23 | 52.5 | 94 | 59.5 | M |
| | 2009.12-2015.10 | MT | F | L/R | Hatchback FWD A 14 XEL | | GCI44004 | Inner Joint | | 22 | 22 | 34.95 | 57.5 | 103 | |
| | 2009.12-2015.10 | | F | | Hatchback FWD A 14 XEL | | GCO44003 | Outer Joint | | 33 | 22 | 53 | 95 | 54.5 | M |
| | 2009.12-2015.10 | | F | L | Hatchback FWD A 14 XEL | Date To:2015.10 | GCI21014 | Inner Joint | | 22 | 22 | 35 | 57.5 | 105.5 | |
| | 2010.10-2015.10 | 5MT | F | L | Estate FWD A 14 XEL | | GDS44064 | Drive Shaft | | 33 | 22 | 53 | 95 | 618 | |
| | 2010.10-2015.10 | 5MT | F | R | Estate FWD A 14 XEL | | GDS44065 | Drive Shaft | | 33 | 22 | 53 | 95 | 983 | |
| | 2010.10-2015.10 | | F | | Estate FWD A 14 XEL | | GCO44003 | Outer Joint | | 33 | 22 | 53 | 95 | 54.5 | M |
| | 2010.10-2015.10 | | F | L | Estate FWD A 14 XEL | Date To:2015.10 | GCI21014 | Inner Joint | | 22 | 22 | 35 | 57.5 | 105.5 | |
| 1.4 (66 kw) | 1996.02-1998.02 | 4AT/5MT | F | L | Hatchback FWD X14XE | | GDS44002 | Drive Shaft | 29T | 22 | 22 | 52 | 95 | 585 | |
| | 1996.02-1998.02 | 4AT/5MT | F | R | Hatchback FWD X14XE | | GDS60002 | Drive Shaft | 29T | 22 | 22 | 52 | 95 | 926 | |
| | 1996.02-1998.02 | AT/MT | F | L/R | Hatchback FWD X14XE | | GCO44007 | Outer Joint | 29T | 22 | 22 | 52 | 94.5 | 50 | O |
| | 1996.02-1998.02 | AT/MT | F | L/R | Hatchback FWD X14XE | | GCO44051 | Outer Joint | 29T | 22 | 22 | 52 | 95 | 50 | O |
| | 1996.02-1998.02 | AT/MT | F | L/R | Hatchback FWD X14XE | | GCI44004 | Inner Joint | | 22 | 22 | 34.95 | 57.5 | 103 | |
| | 1996.02-1998.02 | | F | | Hatchback FWD X14XE | | GCO44023 | Outer Joint | | 22 | 22 | 52 | 95 | 50 | O |
| | 1996.02-1998.09 | AT/MT | F | L/R | Saloon FWD X 14 XE | | GCO44051 | Outer Joint | 29T | 22 | 22 | 52 | 95 | 50 | O |
| | 1996.02-1998.09 | AT/MT | F | L/R | Saloon FWD X 14 XE | | GCI44004 | Inner Joint | | 22 | 22 | 34.95 | 57.5 | 103 | |
| | 1996.02-1998.09 | | F | L | Saloon FWD X 14 XE | | GDS44002 | Drive Shaft | 29T | 22 | 22 | 52 | 95 | 585 | |
| | 1996.02-1998.09 | | F | R | Saloon FWD X 14 XE | | GDS60002 | Drive Shaft | 29T | 22 | 22 | 52 | 95 | 926 | |
| | 1996.09-1998.01 | 4AT/5MT | F | L | Estate FWD X14XE | | GDS44002 | Drive Shaft | 29T | 22 | 22 | 52 | 95 | 585 | |
| | 1996.09-1998.01 | 4AT/5MT | F | R | Estate FWD X14XE | | GDS60002 | Drive Shaft | 29T | 22 | 22 | 52 | 95 | 926 | |
| | 1996.09-1998.01 | AT/MT | F | L/R | Estate FWD X14XE | Date from:1996.09 | GCO44007 | Outer Joint | 29T | 22 | 22 | 52 | 94.5 | 50 | O |
| | 1996.09-1998.01 | AT/MT | F | L/R | Estate FWD X14XE | | GCO44051 | Outer Joint | 29T | 22 | 22 | 52 | 95 | 50 | O |
| | 1996.09-1998.01 | AT/MT | F | L/R | Estate FWD X14XE | | GCI44004 | Inner Joint | | 22 | 22 | 34.95 | 57.5 | 103 | |
| | 1996.09-1998.01 | | F | | Estate FWD X14XE | | GCO44023 | Outer Joint | | 22 | 22 | 52 | 95 | 50 | O |
| | 1998.02-2005.03 | 4AT/5MT | F | L | Hatchback FWD X14XE/Z14XE | | GDS60013 | Drive Shaft | | 33 | 22 | 52 | 103 | 595 | |
| | 1998.02-2005.03 | 4AT/5MT | F | R | Hatchback FWD X14XE/Z14XE | | GDS44033 | Drive Shaft | | 33 | 22 | 52 | 103 | 950.5 | |
| | 1998.02-2005.03 | AT/MT | F | L/R | Hatchback FWD X14XE/Z14XE | | GCO44011 | Outer Joint | 29T | 33 | 22 | 52 | 103 | 50.5 | O |
| | 1998.02-2005.03 | AT/MT | F | L/R | Hatchback FWD X14XE/Z14XE | | GCO44030 | Outer Joint | | 33 | 22 | 52 | 103 | 50.5 | O |
| | 1998.02-2005.03 | AT/MT | F | L/R | Hatchback FWD X14XE/Z14XE | | GCI44004 | Inner Joint | | 22 | 22 | 34.95 | 57.5 | 103 | |
| | 1998.02-2005.03 | MT | F | L | Hatchback FWD X14XE/Z14XE | | GCI21014 | Inner Joint | | 22 | 22 | 35 | 57.5 | 105.5 | |
| | 1998.02-2005.03 | | F | L/R | Hatchback FWD X14XE/Z14XE | | GCO44009 | Outer Joint | | 33 | 22 | 52 | 103 | 50.5 | O |
| | 1998.02-2005.03 | | F | | Hatchback FWD X14XE/Z14XE | | GCO44010 | Outer Joint | 29T | 33 | 22 | 52 | 103 | 50.5 | O |
| | 1998.02-2005.05 | 5MT | F | L | Estate FWD X14XE/Z14XE | | GDS60013 | Drive Shaft | | 33 | 22 | 52 | 103 | 595 | |
| | 1998.02-2005.05 | 5MT | F | R | Estate FWD X14XE/Z14XE | | GDS44033 | Drive Shaft | | 33 | 22 | 52 | 103 | 950.5 | |

| | YEAR | TRANSM. | F/R | L/R | BODY STYLE & DRIVE TYPE & ENGINE | REMARKS | G-AP Ref. | PRODUCT | ABS | Technical Specifications A | B | C | H | L | P |
|---|---|---|---|---|---|---|---|---|---|---|---|---|---|---|---|
| **VAUXHALL** | | | | | | | | | | | | | | | |
| **Astra** | | | | | | | | | | | | | | | |
| 1.4 (66 kw) | 1998.02-2005.05 | AT/MT | F | L/R | Estate FWD X14XE/Z14XE | | GCO44011 | Outer Joint | 29T | 33 | 22 | 52 | 103 | 50.5 | O |
| | 1998.02-2005.05 | AT/MT | F | L/R | Estate FWD X14XE/Z14XE | | GCO44030 | Outer Joint | | 33 | 22 | 52 | 103 | 50.5 | O |
| | 1998.02-2005.05 | MT | F | L | Estate FWD X14XE/Z14XE | | GCI21014 | Inner Joint | | 22 | 22 | 35 | 57.5 | 105.5 | |
| | 1998.02-2005.05 | | F | L/R | Estate FWD X14XE/Z14XE | | GCO44009 | Outer Joint | | 33 | 22 | 52 | 103 | 50.5 | O |
| | 1998.02-2005.05 | | F | L/R | Estate FWD X14XE/Z14XE | | GCI44004 | Inner Joint | | 22 | 22 | 34.95 | 57.5 | 103 | |
| | 1998.09-2005.05 | 5MT | F | L | Saloon FWD X14XE/Z14XE | | GDS60013 | Drive Shaft | | 33 | 22 | 52 | 103 | 595 | |
| | 1998.09-2005.05 | 5MT | F | R | Saloon FWD X14XE/Z14XE | | GDS44033 | Drive Shaft | | 33 | 22 | 52 | 103 | 950.5 | |
| | 1998.09-2005.05 | AT/MT | F | L/R | Saloon FWD X14XE/Z14XE | | GCO44011 | Outer Joint | 29T | 33 | 22 | 52 | 103 | 50.5 | O |
| | 1998.09-2005.05 | AT/MT | F | L/R | Saloon FWD X14XE/Z14XE | | GCO44030 | Outer Joint | | 33 | 22 | 52 | 103 | 50.5 | O |
| | 1998.09-2005.05 | AT/MT | F | L/R | Saloon FWD X14XE/Z14XE | | GCI44004 | Inner Joint | | 22 | 22 | 34.95 | 57.5 | 103 | |
| | 1998.09-2005.05 | MT | F | L | Saloon FWD X14XE/Z14XE | | GCI21014 | Inner Joint | | 22 | 22 | 35 | 57.5 | 105.5 | |
| | 1998.09-2005.05 | | F | L/R | Saloon FWD X14XE/Z14XE | | GCO44009 | Outer Joint | | 33 | 22 | 52 | 103 | 50.5 | O |
| | 1998.09-2005.05 | | F | | Saloon FWD X14XE/Z14XE | | GCO44010 | Outer Joint | 29T | 33 | 22 | 52 | 103 | 50.5 | O |
| | 1999.09-2003.06 | MT | F | L | Estate FWD X14XE/Z14XE | | GDS60013 | Drive Shaft | | 33 | 22 | 52 | 103 | 595 | |
| | 1999.09-2003.06 | MT | F | R | Estate FWD X14XE/Z14XE | | GDS44033 | Drive Shaft | | 33 | 22 | 52 | 103 | 950.5 | |
| | 1999.09-2003.06 | MT | F | L/R | Estate FWD X14XE/Z14XE | | GCO44009 | Outer Joint | | 33 | 22 | 52 | 103 | 50.5 | O |
| | 1999.09-2003.06 | MT | F | L/R | Estate FWD X14XE/Z14XE | | GCO44030 | Outer Joint | | 33 | 22 | 52 | 103 | 50.5 | O |
| | 1999.09-2003.06 | MT | F | L | Estate FWD X14XE/Z14XE | | GCI21014 | Inner Joint | | 22 | 22 | 35 | 57.5 | 105.5 | |
| | 1999.09-2003.06 | MT | F | L/R | Estate FWD X14XE/Z14XE | | GCI44004 | Inner Joint | | 22 | 22 | 34.95 | 57.5 | 103 | |
| | 1999.09-2003.06 | MT | F | L | Hatchback FWD X14XE/Z14XE | | GDS60013 | Drive Shaft | | 33 | 22 | 52 | 103 | 595 | |
| | 1999.09-2003.06 | MT | F | R | Hatchback FWD X14XE/Z14XE | | GDS44033 | Drive Shaft | | 33 | 22 | 52 | 103 | 950.5 | |
| | 1999.09-2003.06 | MT | F | L/R | Hatchback FWD X14XE/Z14XE | | GCO44009 | Outer Joint | | 33 | 22 | 52 | 103 | 50.5 | O |
| | 1999.09-2003.06 | MT | F | L/R | Hatchback FWD X14XE/Z14XE | | GCO44030 | Outer Joint | | 33 | 22 | 52 | 103 | 50.5 | O |
| | 1999.09-2003.06 | MT | F | L | Hatchback FWD X14XE/Z14XE | | GCI21014 | Inner Joint | | 22 | 22 | 35 | 57.5 | 105.5 | |
| | 1999.09-2003.06 | MT | F | L/R | Hatchback FWD X14XE/Z14XE | | GCI44004 | Inner Joint | | 22 | 22 | 34.95 | 57.5 | 103 | |
| | 2004.01-2009.05 | 5MT | F | L | Hatchback FWD Z 14 XEP | | GDS44028 | Drive Shaft | | 33 | 22 | 53 | 95 | 590 | |
| | 2004.01-2009.05 | 5MT | F | R | Hatchback FWD Z 14 XEP | | GDS44030 | Drive Shaft | | 33 | 22 | 53 | 95 | 952 | |
| | 2004.01-2009.05 | 5MT | F | L/R | Hatchback FWD Z 14 XEP | | GCO44003 | Outer Joint | | 33 | 22 | 53 | 95 | 54.5 | M |
| | 2004.01-2009.05 | 5MT | F | L/R | Hatchback FWD Z 14 XEP | | GCI21014 | Inner Joint | | 22 | 22 | 35 | 57.5 | 105.5 | |
| | 2004.08-2009.03 | 5MT | F | L | Estate FWD Z 14 XEP | | GDS44028 | Drive Shaft | | 33 | 22 | 53 | 95 | 590 | |
| | 2004.08-2009.03 | 5MT | F | R | Estate FWD Z 14 XEP | | GDS44030 | Drive Shaft | | 33 | 22 | 53 | 95 | 952 | |
| | 2004.08-2009.03 | MT | F | L/R | Estate FWD Z 14 XEP | | GCO44003 | Outer Joint | | 33 | 22 | 53 | 95 | 54.5 | M |
| | 2004.08-2009.03 | MT | F | L | Estate FWD Z 14 XEP | | GCI21014 | Inner Joint | | 22 | 22 | 35 | 57.5 | 105.5 | |
| | 2004.08-2009.03 | MT | F | L/R | Estate FWD Z 14 XEP | | GCI44004 | Inner Joint | | 22 | 22 | 34.95 | 57.5 | 103 | |
| 1.4 (74 kw) | 2009.12-2015.10 | 5MT | F | L | Hatchback FWD A 14 XER;B 14 XER | | GDS44064 | Drive Shaft | | 33 | 22 | 53 | 95 | 618 | |
| | 2009.12-2015.10 | 5MT | F | R | Hatchback FWD A 14 XER;B 14 XER | | GDS44065 | Drive Shaft | | 33 | 22 | 53 | 95 | 983 | |
| | 2009.12-2015.10 | 5MT | F | L/R | Hatchback FWD A 14 XER;B 14 XER | | GCO44003 | Outer Joint | | 33 | 22 | 53 | 95 | 54.5 | M |
| | 2009.12-2015.10 | 5MT | F | L/R | Hatchback FWD A 14 XER;B 14 XER | | GCI21014 | Inner Joint | | 22 | 22 | 35 | 57.5 | 105.5 | |
| | 2010.10-2015.10 | 5MT | F | L | Estate FWD A 14 XER;B 14 XER | | GDS44064 | Drive Shaft | | 33 | 22 | 53 | 95 | 618 | |
| | 2010.10-2015.10 | 5MT | F | R | Estate FWD A 14 XER;B 14 XER | | GDS44065 | Drive Shaft | | 33 | 22 | 53 | 95 | 983 | |
| | 2010.10-2015.10 | 5MT | F | L/R | Estate FWD A 14 XER;B 14 XER | | GCO44003 | Outer Joint | | 33 | 22 | 53 | 95 | 54.5 | M |
| | 2010.10-2015.10 | 5MT | F | L/R | Estate FWD A 14 XER;B 14 XER | | GCI21014 | Inner Joint | | 22 | 22 | 35 | 57.5 | 105.5 | |
| | 2016.04-2018.05 | 5MT | F | L | Estate FWD B 14 XE | | GDS82041 | Drive Shaft | | 33 | 22 | 52.3 | 94 | 643 | |
| | 2016.04-2018.05 | 5MT | F | L/R | Estate FWD B 14 XE | | GCO81640 | Outer Joint | | 33 | 22 | 52.3 | 94 | 55 | M |
| | 2016.04-2018.05 | 5MT | F | L | Estate FWD B 14 XE | | GCI81613 | Inner Joint | | 22 | 23 | 35 | 57.5 | 104.5 | |
| | 2016.04-2018.05 | 5MT | F | L | Hatchback FWD B 14 XE | | GDS82041 | Drive Shaft | | 33 | 22 | 52.3 | 94 | 643 | |
| | 2016.04-2018.05 | 5MT | F | L/R | Hatchback FWD B 14 XE | | GCO81640 | Outer Joint | | 33 | 22 | 52.3 | 94 | 55 | M |
| | 2016.04-2018.05 | 5MT | F | L | Hatchback FWD B 14 XE | | GCI81613 | Inner Joint | | 22 | 23 | 35 | 57.5 | 104.5 | |
| 1.4 (88 kw) | 2010.08-2015.10 | 6MT | F | L | Hatchback FWD A 14 NEL | | GDS82083 | Drive Shaft | | 33 | 25 | 53 | 93.5 | 596 | |
| | 2010.08-2015.10 | 6MT | F | R | Hatchback FWD A 14 NEL | Chassis no. to:C0/C1033260/C3/C8028481/CG040398 | GDS21109 | Drive Shaft | | 33 | 34 | 53 | 93.5 | 588 | |
| | 2010.08-2015.10 | 6MT | F | R | Hatchback FWD A 14 NEL | Chassis no. from:C0/C1033261/C3/C8028482/CG040399 | GDS56692 | Drive Shaft | | 33 | 25 | 53 | 94 | 996 | |
| | 2010.08-2015.10 | 6MT | F | L/R | Hatchback FWD A 14 NEL | | GCO44028 | Outer Joint | | 33 | 24 | 53 | 93.5 | 63.5 | M |
| | 2010.08-2015.10 | 6MT | F | R | Hatchback FWD A 14 NEL | Chassis no. to:C0/C1111453/C3/C8090456/CG110884 | GCI44005 | Inner Joint | | 34 | 25 | 35 | | 130.2 | |
| | 2010.08-2015.10 | 6MT | F | L/R | Hatchback FWD A 14 NEL | Chassis no. from:C0/C1111454/C3/C8090457/CG110885 | GCI44008 | Inner Joint | | 25 | 25 | 34.9 | 57.5 | 113.2 | |
| | 2010.08-2015.10 | AT | F | L/R | Hatchback FWD A 14 NEL | Date from:2011.01 | GCO88047 | Outer Joint | | 33 | 23 | 52.5 | 94 | 59.5 | M |
| 1.4 (92 kw) | 2016.04-2018.05 | 6MT | F | L | Estate FWD B 14 XFL | | GDS82395 | Drive Shaft | | 33 | 25 | 52.2 | 94 | 621 | |
| | 2016.04-2018.05 | 6MT | F | R | Estate FWD B 14 XFL | Trans. code:M22;For RPO/POC:MFX | GDS58213 | Drive Shaft | | 33 | 25 | 52.2 | 94 | 961 | |
| | 2016.04-2018.05 | 6MT | F | R | Estate FWD B 14 XFL | Trans. code:M32;For RPO/POC:M60/MGW | GDS82396 | Drive Shaft | | 33 | 25 | 52.2 | 94 | 976 | |
| | 2016.04-2018.05 | 6MT | F | L/R | Estate FWD B 14 XFL | | GCO81814 | Outer Joint | | 33 | 24 | 52.2 | 94 | 64 | M |
| | 2016.04-2018.05 | 6MT | F | L/R | Estate FWD B 14 XFL | | GCI81767 | Inner Joint | | 25 | 24 | 34.9 | 57 | 109 | |
| | 2016.04-2018.05 | 6MT | F | L | Hatchback FWD B 14 XFL | | GDS82395 | Drive Shaft | | 33 | 25 | 52.2 | 94 | 621 | |
| | 2016.04-2018.05 | 6MT | F | R | Hatchback FWD B 14 XFL | Trans. code:M22;For RPO/POC:MFX | GDS58213 | Drive Shaft | | 33 | 25 | 52.2 | 94 | 961 | |
| | 2016.04-2018.05 | 6MT | F | R | Hatchback FWD B 14 XFL | Trans. code:M32;For RPO/POC:M60/MGW | GDS82396 | Drive Shaft | | 33 | 25 | 52.2 | 94 | 976 | |
| | 2016.04-2018.05 | 6MT | F | L/R | Hatchback FWD B 14 XFL | | GCO81814 | Outer Joint | | 33 | 24 | 52.2 | 94 | 64 | M |
| | 2016.04-2018.05 | 6MT | F | L/R | Hatchback FWD B 14 XFL | | GCI81767 | Inner Joint | | 25 | 24 | 34.9 | 57 | 109 | |

| | YEAR | TRANSM. | F/R | L/R | BODY STYLE & DRIVE TYPE & ENGINE | REMARKS | G-AP Ref. | PRODUCT | ABS | Technical Specifications A | B | C | H | L | P |
|---|---|---|---|---|---|---|---|---|---|---|---|---|---|---|---|
| **VAUXHALL** **Astra** | | | | | | | | | | | | | | | |
| 1.4 (103 kw) | 2009.12-2015.10 | 6AT | F | R | Hatchback FWD A 14 NET;B 14 NET;D 14 NET | | GDS88077 | Drive Shaft | | 33 | 34 | 52.5 | 94 | 951 | |
| | 2009.12-2015.10 | 6AT | F | L/R | Hatchback FWD A 14 NET;B 14 NET;D 14 NET | | GCO44088 | Outer Joint | | 33 | 23 | 52.3 | 94 | 59.5 | M |
| | 2009.12-2015.10 | 6AT | F | L | Hatchback FWD A 14 NET;B 14 NET;D 14 NET | | GCI81774 | Inner Joint | | 34 | 23 | 35 | 136.5 | 84.5 | |
| | 2009.12-2015.10 | 6AT | F | R | Hatchback FWD A 14 NET;B 14 NET;D 14 NET | Chassis no. from:H0;Chassis no. from:HG141606 | GCI88030 | Inner Joint | | 34 | 23 | 35 | 56 | 107.5 | |
| | 2009.12-2015.10 | 6AT | F | R | Hatchback FWD A 14 NET;B 14 NET;D 14 NET | | GCI88054 | Inner Joint | | 34 | 23 | 37.5 | | 121.5 | |
| | 2009.12-2015.10 | 6MT | F | R | Hatchback FWD A 14 NET;B 14 NET;D 14 NET | Chassis no. to:C0/C111453/C3/C8060456/CG110884 | GDS21109 | Drive Shaft | | 33 | 34 | 53 | 93.5 | 588 | |
| | 2009.12-2015.10 | 6MT | F | R | Hatchback FWD A 14 NET;B 14 NET;D 14 NET | Chassis no. from:C0/C1111454/C3/C8090457/CG110885 | GDS56692 | Drive Shaft | | 33 | 25 | 53 | 94 | 996 | |
| | 2009.12-2015.10 | 6MT | F | L/R | Hatchback FWD A 14 NET;B 14 NET;D 14 NET | | GCO44028 | Outer Joint | | 33 | 24 | 53 | 93.5 | 63.5 | M |
| | 2009.12-2015.10 | 6MT | F | L/R | Hatchback FWD A 14 NET;B 14 NET;D 14 NET | | GCI44008 | Inner Joint | | 25 | 25 | 34.9 | 57.5 | 113.2 | |
| | 2009.12-2015.10 | AT | F | L | Hatchback FWD A 14 NET;B 14 NET;D 14 NET | | GDS82389 | Drive Shaft | | 33 | 34 | 52.5 | 94 | 641 | |
| | 2009.12-2015.10 | AT | F | L/R | Hatchback FWD A 14 NET;B 14 NET;D 14 NET | | GCO88047 | Outer Joint | | 33 | 23 | 52.5 | 94 | 59.5 | M |
| | 2009.12-2015.10 | MT | F | L | Hatchback FWD A 14 NET;B 14 NET;D 14 NET | | GDS82083 | Drive Shaft | | 33 | 25 | 53 | 93.5 | 596 | |
| | 2009.12-2015.10 | MT | F | R | Hatchback FWD A 14 NET;B 14 NET;D 14 NET | | GCI44005 | Inner Joint | | 34 | 25 | 35 | | 130.2 | |
| | 2010.10-2015.10 | 6AT | F | R | Estate FWD A 14 NET | | GDS88077 | Drive Shaft | | 33 | 34 | 52.5 | 94 | 951 | |
| | 2010.10-2015.10 | 6AT | F | L | Estate FWD A 14 NET | | GCI81774 | Inner Joint | | 34 | 23 | 35 | 136.5 | 84.5 | |
| | 2010.10-2015.10 | 6AT | F | R | Estate FWD A 14 NET | Chassis no. from:H0;Chassis no. from:HG141606 | GCI88030 | Inner Joint | | 34 | 23 | 35 | 56 | 107.5 | |
| | 2010.10-2015.10 | 6MT | F | R | Estate FWD A 14 NET | Chassis no. to:C0/C111453/C3/C8060456/CG110884 | GDS21109 | Drive Shaft | | 33 | 34 | 53 | 93.5 | 588 | |
| | 2010.10-2015.10 | 6MT | F | R | Estate FWD A 14 NET | Chassis no. from:C0/C1111454/C3/C8090457/CG110885 | GDS56692 | Drive Shaft | | 33 | 25 | 53 | 94 | 996 | |
| | 2010.10-2015.10 | 6MT | F | L/R | Estate FWD A 14 NET | | GCO44028 | Outer Joint | | 33 | 24 | 53 | 93.5 | 63.5 | M |
| | 2010.10-2015.10 | 6MT | F | L/R | Estate FWD A 14 NET | | GCI44008 | Inner Joint | | 25 | 25 | 34.9 | 57.5 | 113.2 | |
| | 2010.10-2015.10 | AT | F | L | Estate FWD A 14 NET | | GDS82389 | Drive Shaft | | 33 | 34 | 52.5 | 94 | 641 | |
| | 2010.10-2015.10 | AT | F | L/R | Estate FWD A 14 NET | | GCO44088 | Outer Joint | | 33 | 23 | 52.3 | 94 | 59.5 | M |
| | 2010.10-2015.10 | AT | F | R | Estate FWD A 14 NET | | GCI88054 | Inner Joint | | 34 | 23 | 37.5 | | 121.5 | |
| | 2010.10-2015.10 | MT | F | L | Estate FWD A 14 NET | | GDS82083 | Drive Shaft | | 33 | 25 | 53 | 93.5 | 596 | |
| | 2010.10-2015.10 | MT | F | R | Estate FWD A 14 NET | | GCI44005 | Inner Joint | | 34 | 25 | 35 | | 130.2 | |
| | 2012.06-2015.10 | 6AT | F | R | Saloon FWD A14NET | Chassis no. from:H0;Chassis no. from:HG141606 | GCI88030 | Inner Joint | | 34 | 23 | 35 | 56 | 107.5 | |
| | 2012.06-2015.10 | 6MT | F | R | Saloon FWD A14NET | Chassis no. to:C0/C111453/C3/C8060456/CG110884 | GDS21109 | Drive Shaft | | 33 | 34 | 53 | 93.5 | 588 | |
| | 2012.06-2015.10 | 6MT | F | L/R | Saloon FWD A14NET | | GCI44008 | Inner Joint | | 25 | 25 | 34.9 | 57.5 | 113.2 | |
| | 2012.06-2015.10 | AT | F | L | Saloon FWD A14NET | | GDS82389 | Drive Shaft | | 33 | 34 | 52.5 | 94 | 641 | |
| | 2012.06-2015.10 | AT | F | L/R | Saloon FWD A14NET | | GCO44088 | Outer Joint | | 33 | 23 | 52.3 | 94 | 59.5 | M |
| | 2012.06-2015.10 | AT | F | R | Saloon FWD A14NET | | GCI88054 | Inner Joint | | 34 | 23 | 37.5 | | 121.5 | |
| | 2012.06-2015.10 | MT | F | L | Saloon FWD A14NET | | GDS82083 | Drive Shaft | | 33 | 25 | 53 | 93.5 | 596 | |
| | 2012.06-2015.10 | MT | F | L/R | Saloon FWD A14NET | | GCO44028 | Outer Joint | | 33 | 24 | 53 | 93.5 | 63.5 | M |
| | 2012.06-2015.10 | | F | L | Saloon FWD A14NET | Chassis no. from:E0000001/E1000001/E3000001/E8000001/EG000001 | GDS21076 | Drive Shaft | | 30 | 25 | 52.5 | 94 | 601 | |
| 1.4 (110 kw) | 2016.04-2019.08 | 6AT | F | L | Estate FWD B 14 XFT;D 14 XFT | | GDS82000 | Drive Shaft | | 33 | 22 | 52.3 | 94 | 655 | |
| | 2016.04-2019.08 | 6AT | F | R | Estate FWD B 14 XFT;D 14 XFT | | GDS82790 | Drive Shaft | | 33 | 22 | 52.3 | 94 | 935 | |
| | 2016.04-2019.08 | 6AT | F | L/R | Estate FWD B 14 XFT;D 14 XFT | | GCO44088 | Outer Joint | | 33 | 23 | 52.3 | 94 | 59.5 | M |
| | 2016.04-2019.08 | 6AT | F | L | Estate FWD B 14 XFT;D 14 XFT | | GCI81210 | Inner Joint | | 22 | 23 | 35 | 131.5 | 84.5 | |
| | 2016.04-2019.08 | 6AT | F | R | Estate FWD B 14 XFT;D 14 XFT | | GCI81411 | Inner Joint | | 22 | 23 | 35 | 57.5 | 102 | |
| | 2016.04-2019.08 | 6MT | F | L | Estate FWD B 14 XFT;D 14 XFT | | GDS82395 | Drive Shaft | | 33 | 25 | 52.2 | 94 | 621 | |
| | 2016.04-2019.08 | 6MT | F | R | Estate FWD B 14 XFT;D 14 XFT | Trans. code:M22;For RPO/POC:MFX | GDS58213 | Drive Shaft | | 33 | 25 | 52.2 | 94 | 961 | |
| | 2016.04-2019.08 | 6MT | F | R | Estate FWD B 14 XFT;D 14 XFT | Trans. code:M32;For RPO/POC:M60/MGW | GDS82396 | Drive Shaft | | 33 | 25 | 52.2 | 94 | 976 | |
| | 2016.04-2019.08 | 6MT | F | L/R | Estate FWD B 14 XFT;D 14 XFT | | GCO81814 | Outer Joint | | 33 | 24 | 52.2 | 94 | 64 | M |
| | 2016.04-2019.08 | 6MT | F | L/R | Estate FWD B 14 XFT;D 14 XFT | | GCI81767 | Inner Joint | | 25 | 24 | 34.9 | 57 | 109 | |
| | 2016.04-2019.08 | 6AT | F | L | Hatchback FWD B 14 XFT;D 14 XFT | | GDS82000 | Drive Shaft | | 33 | 22 | 52.3 | 94 | 655 | |
| | 2016.04-2019.08 | 6AT | F | R | Hatchback FWD B 14 XFT;D 14 XFT | | GDS82790 | Drive Shaft | | 33 | 22 | 52.3 | 94 | 935 | |
| | 2016.04-2019.08 | 6AT | F | L/R | Hatchback FWD B 14 XFT;D 14 XFT | | GCO44088 | Outer Joint | | 33 | 23 | 52.3 | 94 | 59.5 | M |
| | 2016.04-2019.08 | 6AT | F | L | Hatchback FWD B 14 XFT;D 14 XFT | | GCI81210 | Inner Joint | | 22 | 23 | 35 | 131.5 | 84.5 | |
| | 2016.04-2019.08 | 6AT | F | R | Hatchback FWD B 14 XFT;D 14 XFT | | GCI81411 | Inner Joint | | 22 | 23 | 35 | 57.5 | 102 | |
| | 2016.04-2019.08 | 6MT | F | L | Hatchback FWD B 14 XFT;D 14 XFT | | GDS82395 | Drive Shaft | | 33 | 25 | 52.2 | 94 | 621 | |
| | 2016.04-2019.08 | 6MT | F | R | Hatchback FWD B 14 XFT;D 14 XFT | Trans. code:M22;For RPO/POC:MFX | GDS58213 | Drive Shaft | | 33 | 25 | 52.2 | 94 | 961 | |
| | 2016.04-2019.08 | 6MT | F | R | Hatchback FWD B 14 XFT;D 14 XFT | Trans. code:M32;For RPO/POC:M60/MGW | GDS82396 | Drive Shaft | | 33 | 25 | 52.2 | 94 | 976 | |
| | 2016.04-2019.08 | 6MT | F | L/R | Hatchback FWD B 14 XFT;D 14 XFT | For RPO/POC:M60/MGW;Trans. code:M32 | GCO81814 | Outer Joint | | 33 | 24 | 52.2 | 94 | 64 | M |
| | 2016.04-2019.08 | 6MT | F | L/R | Hatchback FWD B 14 XFT;D 14 XFT | For RPO/POC:M60/MGW;Trans. code:M32 | GCI81767 | Inner Joint | | 25 | 24 | 34.9 | 57 | 109 | |
| 1.5 (96 kw) | 2021.10- | 6MT | F | L | Estate FWD YHZ (DV5RC) | | GDS84550 | Drive Shaft | | 28 | 37 | 58.5 | 92.5 | 663 | |
| | 2021.10- | 6MT | F | R | Estate FWD YHZ (DV5RC) | | GDS84336 | Drive Shaft | | 28 | 37 | 58.5 | 92.5 | 930 | |
| | 2021.10- | 6MT | F | L | Estate FWD YHZ (DV5RC) | | GCI82301 | Inner Joint | | 37 | 34 | 40 | 65.5 | 89.5 | |
| | 2021.10- | 6MT | F | R | Estate FWD YHZ (DV5RC) | | GCI82300 | Inner Joint | | 37 | 34 | 31.9 | 302 | 88 | |
| | 2021.10- | 6MT/8AT | F | L/R | Estate FWD YHZ (DV5RC) | | GCO82273 | Outer Joint | | 28 | 34 | 58.5 | 92.5 | 56 | I |
| | 2021.10- | 8AT | F | L | Estate FWD YHZ (DV5RC) | | GDS84579 | Drive Shaft | | 28 | 37 | 58.5 | 92.5 | 641 | |
| | 2021.10- | 6MT | F | L | Hatchback FWD YHZ (DV5RC) | | GDS84550 | Drive Shaft | | 28 | 37 | 58.5 | 92.5 | 663 | |
| | 2021.10- | 6MT | F | R | Hatchback FWD YHZ (DV5RC) | | GDS84336 | Drive Shaft | | 28 | 37 | 58.5 | 92.5 | 930 | |
| | 2021.10- | 6MT | F | L | Hatchback FWD YHZ (DV5RC) | | GCI82301 | Inner Joint | | 37 | 34 | 40 | 65.5 | 89.5 | |
| | 2021.10- | 6MT | F | R | Hatchback FWD YHZ (DV5RC) | | GCI82300 | Inner Joint | | 37 | 34 | 31.9 | 302 | 88 | |
| | 2021.10- | 6MT/8AT | F | L/R | Hatchback FWD YHZ (DV5RC) | | GCO82273 | Outer Joint | | 28 | 34 | 58.5 | 92.5 | 56 | I |

| | YEAR | TRANSM. | F/R | L/R | BODY STYLE & DRIVE TYPE & ENGINE | REMARKS | G-AP Ref. | PRODUCT | ABS | Technical Specifications A | B | C | H | L | P |
|---|---|---|---|---|---|---|---|---|---|---|---|---|---|---|---|
| **VAUXHALL** **Astra** | | | | | | | | | | | | | | | |
| 1.5 (96 kw) | 2021.10- | 8AT | F | L | Hatchback FWD YHZ (DV5RC) | | GDS84579 | Drive Shaft | | 28 | 37 | 58.5 | 92.5 | 641 | |
| 1.6 (52 kw) | 1994.07-1996.08 | AT | F | L/R | Hatchback FWD X16SZ | | GCO44068 | Outer Joint | 29T | 22 | 30 | 52 | 94.5 | 55 | I |
| | 1994.07-1996.08 | AT/MT | F | L/R | Hatchback FWD X16SZ | Date from:1994.07;Date to:1996.08 | GCO44007 | Outer Joint | 29T | 22 | 22 | 52 | 94.5 | 50 | O |
| | 1994.07-1996.08 | AT/MT | F | L/R | Hatchback FWD X16SZ | Date from:1995.01 | GCO44051 | Outer Joint | 29T | 22 | 22 | 52 | 95 | 50 | O |
| | 1994.07-1996.08 | MT | F | R | Hatchback FWD X16SZ | Date from:1995.01 | GDS60002 | Drive Shaft | 29T | 22 | 22 | 52 | 95 | 926 | |
| | 1994.07-1996.08 | MT | F | L/R | Hatchback FWD X16SZ | Date from:1994.07;Date to:1996.08 | GCI44004 | Inner Joint | | 22 | 22 | 34.95 | 57.5 | 103 | |
| | 1994.07-1996.08 | | F | | Hatchback FWD X16SZ | | GCO44023 | Outer Joint | | 22 | 22 | 52 | 95 | 50 | O |
| | 1994.09-1996.08 | AT/MT | F | L/R | Saloon FWD X16SZ | | GCO44007 | Outer Joint | 29T | 22 | 22 | 52 | 94.5 | 50 | O |
| | 1994.09-1996.08 | AT/MT | F | L/R | Saloon FWD X16SZ | | GCO44051 | Outer Joint | 29T | 22 | 22 | 52 | 95 | 50 | O |
| | 1994.09-1996.08 | MT | F | R | Saloon FWD X16SZ | | GDS60002 | Drive Shaft | 29T | 22 | 22 | 52 | 95 | 926 | |
| | 1994.09-1996.08 | MT | F | L/R | Saloon FWD X16SZ | | GCI44004 | Inner Joint | | 22 | 22 | 34.95 | 57.5 | 103 | |
| | 1994.09-1996.08 | | F | | Saloon FWD X16SZ | | GCO44023 | Outer Joint | | 22 | 22 | 52 | 95 | 50 | O |
| | 1994.09-1996.08 | | F | | Saloon FWD X16SZ | | GCO44068 | Outer Joint | 29T | 22 | 30 | 52 | 94.5 | 55 | I |
| | 1995.09-1996.08 | AT | F | L/R | Estate FWD X16SZ | | GCO44068 | Outer Joint | 29T | 22 | 30 | 52 | 94.5 | 55 | I |
| | 1995.09-1996.08 | AT/MT | F | L/R | Estate FWD X16SZ | Date from:1995.09;Date to:1996.08 | GCO44007 | Outer Joint | 29T | 22 | 22 | 52 | 94.5 | 50 | O |
| | 1995.09-1996.08 | AT/MT | F | L/R | Estate FWD X16SZ | | GCO44051 | Outer Joint | 29T | 22 | 22 | 52 | 95 | 50 | O |
| | 1995.09-1996.08 | MT | F | R | Estate FWD X16SZ | | GDS60002 | Drive Shaft | 29T | 22 | 22 | 52 | 95 | 926 | |
| | 1995.09-1996.08 | MT | F | L/R | Estate FWD X16SZ | Date from:1995.09;Date to:1996.08 | GCI44004 | Inner Joint | | 22 | 22 | 34.95 | 57.5 | 103 | |
| | 1995.09-1996.08 | | F | | Estate FWD X16SZ | | GCO44023 | Outer Joint | | 22 | 22 | 52 | 95 | 50 | O |
| 1.6 (55 kw) | 1991.09-1998.02 | AT | F | L/R | Hatchback FWD 16NZR/C16NZ/E16NZ/X16SZR | | GCO44068 | Outer Joint | 29T | 22 | 30 | 52 | 94.5 | 55 | I |
| | 1991.09-1998.02 | AT/MT | F | L/R | Hatchback FWD 16NZR/C16NZ/E16NZ/X16SZR | | GCO44007 | Outer Joint | 29T | 22 | 22 | 52 | 94.5 | 50 | O |
| | 1991.09-1998.02 | AT/MT | F | L/R | Hatchback FWD 16NZR/C16NZ/E16NZ/X16SZR | Chassis no. to:P-2732833 | GCO44051 | Outer Joint | 29T | 22 | 22 | 52 | 95 | 50 | O |
| | 1991.09-1998.02 | MT | F | L | Hatchback FWD 16NZR/C16NZ/E16NZ/X16SZR | Chassis no. to:P-2732833 | GDS44002 | Drive Shaft | 29T | 22 | 22 | 52 | 95 | 585 | |
| | 1991.09-1998.02 | MT | F | R | Hatchback FWD 16NZR/C16NZ/E16NZ/X16SZR | Chassis no. to:P-2732833 | GDS60002 | Drive Shaft | 29T | 22 | 22 | 52 | 95 | 926 | |
| | 1991.09-1998.02 | MT | F | L/R | Hatchback FWD 16NZR/C16NZ/E16NZ/X16SZR | | GCI44004 | Inner Joint | | 22 | 22 | 34.95 | 57.5 | 103 | |
| | 1991.09-1998.02 | | F | | Hatchback FWD 16NZR/C16NZ/E16NZ/X16SZR | | GCO44023 | Outer Joint | | 22 | 22 | 52 | 95 | 50 | O |
| | 1991.09-1998.12 | AT | F | L/R | Estate FWD C16NZ/E16NZ/X16SZR | | GCO44068 | Outer Joint | 29T | 22 | 30 | 52 | 94.5 | 55 | I |
| | 1991.09-1998.12 | AT/MT | F | L/R | Estate FWD C16NZ/E16NZ/X16SZR | | GCO44007 | Outer Joint | 29T | 22 | 22 | 52 | 94.5 | 50 | O |
| | 1991.09-1998.12 | AT/MT | F | L/R | Estate FWD C16NZ/E16NZ/X16SZR | Chassis no. to:P-2732833 | GCO44051 | Outer Joint | 29T | 22 | 22 | 52 | 95 | 50 | O |
| | 1991.09-1998.12 | MT | F | L | Estate FWD C16NZ/E16NZ/X16SZR | Chassis no. to:P-2732833 | GDS44002 | Drive Shaft | 29T | 22 | 22 | 52 | 95 | 585 | |
| | 1991.09-1998.12 | MT | F | R | Estate FWD C16NZ/E16NZ/X16SZR | Chassis no. to:P-2732833 | GDS60002 | Drive Shaft | 29T | 22 | 22 | 52 | 95 | 926 | |
| | 1991.09-1998.12 | MT | F | L/R | Estate FWD C16NZ/E16NZ/X16SZR | | GCI44004 | Inner Joint | | 22 | 22 | 34.95 | 57.5 | 103 | |
| | 1991.09-1998.12 | | F | | Estate FWD C16NZ/E16NZ/X16SZR | | GCO44023 | Outer Joint | | 22 | 22 | 52 | 95 | 50 | O |
| | 1992.03-1998.09 | AT/MT | F | L/R | Saloon FWD C16NZ/X16SZR | | GCO44007 | Outer Joint | 29T | 22 | 22 | 52 | 94.5 | 50 | O |
| | 1992.03-1998.09 | AT/MT | F | L/R | Saloon FWD C16NZ/X16SZR | Chassis no. to:P-2732833 | GCO44051 | Outer Joint | 29T | 22 | 22 | 52 | 95 | 50 | O |
| | 1992.03-1998.09 | AT/MT | F | L/R | Saloon FWD C16NZ/X16SZR | | GCI44004 | Inner Joint | | 22 | 22 | 34.95 | 57.5 | 103 | |
| | 1992.03-1998.09 | MT | F | L | Saloon FWD C16NZ/X16SZR | Chassis no. to:P-2732833 | GDS44002 | Drive Shaft | 29T | 22 | 22 | 52 | 95 | 585 | |
| | 1992.03-1998.09 | MT | F | R | Saloon FWD C16NZ/X16SZR | Chassis no. to:P-2732833 | GDS60002 | Drive Shaft | 29T | 22 | 22 | 52 | 95 | 926 | |
| | 1992.03-1998.09 | | F | | Saloon FWD C16NZ/X16SZR | | GCO44023 | Outer Joint | | 22 | 22 | 52 | 95 | 50 | O |
| | 1992.03-1998.09 | | F | | Saloon FWD C16NZ/X16SZR | | GCO44068 | Outer Joint | 29T | 22 | 30 | 52 | 94.5 | 55 | I |
| | 1998.02-2000.08 | 5MT | F | L | Estate FWD X16SZR | | GDS60013 | Drive Shaft | | 33 | 22 | 52 | 103 | 595 | |
| | 1998.02-2000.08 | 5MT | F | R | Estate FWD X16SZR | | GDS44033 | Drive Shaft | | 33 | 22 | 52 | 103 | 950.5 | |
| | 1998.02-2000.08 | MT | F | L/R | Estate FWD X16SZR | | GCO44011 | Outer Joint | 29T | 33 | 22 | 52 | 103 | 50.5 | O |
| | 1998.02-2000.08 | MT | F | L/R | Estate FWD X16SZR | | GCO44030 | Outer Joint | | 33 | 22 | 52 | 103 | 50.5 | O |
| | 1998.02-2000.08 | MT | F | L | Estate FWD X16SZR | Date to:2000.08 | GCI21014 | Inner Joint | | 22 | 22 | 35 | 57.5 | 105.5 | |
| | 1998.02-2000.08 | MT | F | L/R | Estate FWD X16SZR | | GCI44004 | Inner Joint | | 22 | 22 | 34.95 | 57.5 | 103 | |
| | 1998.02-2000.08 | | F | L/R | Estate FWD X16SZR | | GCO44009 | Outer Joint | | 33 | 22 | 52 | 103 | 50.5 | O |
| | 1998.02-2000.08 | 4AT/5MT | F | L | Hatchback FWD X16SZR | | GDS60013 | Drive Shaft | | 33 | 22 | 52 | 103 | 595 | |
| | 1998.02-2000.08 | 4AT/5MT | F | R | Hatchback FWD X16SZR | | GDS44033 | Drive Shaft | | 33 | 22 | 52 | 103 | 950.5 | |
| | 1998.02-2000.08 | AT/MT | F | L/R | Hatchback FWD X16SZR | | GCO44030 | Outer Joint | | 33 | 22 | 52 | 103 | 50.5 | O |
| | 1998.02-2000.08 | MT | F | L/R | Hatchback FWD X16SZR | | GCO44011 | Outer Joint | 29T | 33 | 22 | 52 | 103 | 50.5 | O |
| | 1998.02-2000.08 | MT | F | L | Hatchback FWD X16SZR | | GCI21014 | Inner Joint | | 22 | 22 | 35 | 57.5 | 105.5 | |
| | 1998.02-2000.08 | MT | F | L/R | Hatchback FWD X16SZR | | GCI44004 | Inner Joint | | 22 | 22 | 34.95 | 57.5 | 103 | |
| | 1998.02-2000.08 | | F | L/R | Hatchback FWD X16SZR | | GCO44009 | Outer Joint | | 33 | 22 | 52 | 103 | 50.5 | O |
| | 1998.02-2000.08 | | F | | Hatchback FWD X16SZR | | GCO44010 | Outer Joint | 29T | 33 | 22 | 52 | 103 | 50.5 | O |
| | 1998.02-2000.08 | 4AT/5MT | F | L | Saloon FWD X16SZR | | GDS60013 | Drive Shaft | | 33 | 22 | 52 | 103 | 595 | |
| | 1998.02-2000.08 | 4AT/5MT | F | R | Saloon FWD X16SZR | | GDS44033 | Drive Shaft | | 33 | 22 | 52 | 103 | 950.5 | |
| | 1998.02-2000.08 | AT/MT | F | L/R | Saloon FWD X16SZR | | GCO44030 | Outer Joint | | 33 | 22 | 52 | 103 | 50.5 | O |
| | 1998.02-2000.08 | MT | F | L/R | Saloon FWD X16SZR | | GCO44011 | Outer Joint | 29T | 33 | 22 | 52 | 103 | 50.5 | O |
| | 1998.02-2000.08 | MT | F | L | Saloon FWD X16SZR | | GCI21014 | Inner Joint | | 22 | 22 | 35 | 57.5 | 105.5 | |
| | 1998.02-2000.08 | MT | F | L/R | Saloon FWD X16SZR | | GCI44004 | Inner Joint | | 22 | 22 | 34.95 | 57.5 | 103 | |
| | 1998.02-2000.08 | | F | L/R | Saloon FWD X16SZR | | GCO44009 | Outer Joint | | 33 | 22 | 52 | 103 | 50.5 | O |
| | 1998.02-2000.12 | 4AT/5MT | F | L | Estate FWD X16SZR | | GDS60013 | Drive Shaft | | 33 | 22 | 52 | 103 | 595 | |
| | 1998.02-2000.12 | 4AT/5MT | F | R | Estate FWD X16SZR | | GDS44033 | Drive Shaft | | 33 | 22 | 52 | 103 | 950.5 | |
| | 1998.02-2000.12 | 5MT | F | L/R | Estate FWD X16SZR | | GCO44030 | Outer Joint | | 33 | 22 | 52 | 103 | 50.5 | O |

| | YEAR | TRANSM. | F/R | L/R | BODY STYLE & DRIVE TYPE & ENGINE | REMARKS | G-AP Ref. | PRODUCT | ABS | Technical Specifications | | | | | |
|---|---|---|---|---|---|---|---|---|---|---|---|---|---|---|---|
| | | | | | | | | | | A | B | C | H | L | P |
| **VAUXHALL** | | | | | | | | | | | | | | | |
| **Astra** | | | | | | | | | | | | | | | |
| 1.6 (55 kw) | 1998.02-2000.12 | MT | F | L | Estate FWD X16SZR | | GCI21014 | Inner Joint | | 22 | 22 | 35 | 57.5 | 105.5 | |
| | 1998.02-2000.12 | MT/5MT | F | L/R | Estate FWD X16SZR | | GCI44004 | Inner Joint | | 22 | 22 | 34.95 | 57.5 | 103 | |
| | 1998.02-2000.12 | | F | L/R | Estate FWD X16SZR | | GCO44009 | Outer Joint | | 33 | 22 | 52 | 103 | 50.5 | O |
| | 1998.02-2000.12 | 4AT/5MT | F | L | Hatchback FWD X16SZR | | GDS60013 | Drive Shaft | | 33 | 22 | 52 | 103 | 595 | |
| | 1998.02-2000.12 | 4AT/5MT | F | R | Hatchback FWD X16SZR | | GDS44033 | Drive Shaft | | 33 | 22 | 52 | 103 | 950.5 | |
| | 1998.02-2000.12 | 5MT | F | L/R | Hatchback FWD X16SZR | | GCO44030 | Outer Joint | | 33 | 22 | 52 | 103 | 50.5 | O |
| | 1998.02-2000.12 | 5MT | F | L/R | Hatchback FWD X16SZR | | GCI44004 | Inner Joint | | 22 | 22 | 34.95 | 57.5 | 103 | |
| | 1998.02-2000.12 | | F | L/R | Hatchback FWD X16SZR | | GCO44009 | Outer Joint | | 33 | 22 | 52 | 103 | 50.5 | O |
| | 1998.02-2000.12 | | F | L | Hatchback FWD X16SZR | | GCI21014 | Inner Joint | | 22 | 22 | 35 | 57.5 | 105.5 | |
| | 1998.02-2000.12 | 4AT/5MT | F | L | Saloon FWD X16SZR | | GDS60013 | Drive Shaft | | 33 | 22 | 52 | 103 | 595 | |
| | 1998.02-2000.12 | 4AT/5MT | F | R | Saloon FWD X16SZR | | GDS44033 | Drive Shaft | | 33 | 22 | 52 | 103 | 950.5 | |
| | 1998.02-2000.12 | 5MT | F | L/R | Saloon FWD X16SZR | | GCO44030 | Outer Joint | | 33 | 22 | 52 | 103 | 50.5 | O |
| | 1998.02-2000.12 | 5MT | F | L/R | Saloon FWD X16SZR | | GCI44004 | Inner Joint | | 22 | 22 | 34.95 | 57.5 | 103 | |
| | 1998.02-2000.12 | | F | L/R | Saloon FWD X16SZR | | GCO44009 | Outer Joint | | 33 | 22 | 52 | 103 | 50.5 | O |
| | 1998.02-2000.12 | | F | L | Saloon FWD X16SZR | | GCI21014 | Inner Joint | | 22 | 22 | 35 | 57.5 | 105.5 | |
| 1.6 (62 kw) | 2000.07-2005.05 | 5MT | F | L/R | Hatchback FWD Z16SE | | GCO44030 | Outer Joint | | 33 | 22 | 52 | 103 | 50.5 | O |
| | 2000.07-2005.05 | MT | F | L | Hatchback FWD Z16SE | | GDS60013 | Drive Shaft | | 33 | 22 | 52 | 103 | 595 | |
| | 2000.07-2005.05 | MT | F | R | Hatchback FWD Z16SE | | GDS44033 | Drive Shaft | | 33 | 22 | 52 | 103 | 950.5 | |
| | 2000.07-2005.05 | MT | F | L/R | Hatchback FWD Z16SE | | GCO44009 | Outer Joint | | 33 | 22 | 52 | 103 | 50.5 | O |
| | 2000.07-2005.05 | MT | F | L | Hatchback FWD Z16SE | | GCI21014 | Inner Joint | | 22 | 22 | 35 | 57.5 | 105.5 | |
| | 2000.07-2005.05 | MT/5MT | F | L/R | Hatchback FWD Z16SE | | GCI44004 | Inner Joint | | 22 | 22 | 34.95 | 57.5 | 103 | |
| | 2000.07-2005.05 | | F | | Hatchback FWD Z16SE | | GCO44010 | Outer Joint | 29T | 33 | 22 | 52 | 103 | 50.5 | O |
| | 2000.07-2005.05 | 5MT | F | L/R | Saloon FWD Z16SE | | GCO44030 | Outer Joint | | 33 | 22 | 52 | 103 | 50.5 | O |
| | 2000.07-2005.05 | MT | F | L | Saloon FWD Z16SE | | GDS60013 | Drive Shaft | | 33 | 22 | 52 | 103 | 595 | |
| | 2000.07-2005.05 | MT | F | R | Saloon FWD Z16SE | | GDS44033 | Drive Shaft | | 33 | 22 | 52 | 103 | 950.5 | |
| | 2000.07-2005.05 | MT | F | L/R | Saloon FWD Z16SE | | GCO44009 | Outer Joint | | 33 | 22 | 52 | 103 | 50.5 | O |
| | 2000.07-2005.05 | MT | F | L | Saloon FWD Z16SE | | GCI21014 | Inner Joint | | 22 | 22 | 35 | 57.5 | 105.5 | |
| | 2000.07-2005.05 | MT/5MT | F | L/R | Saloon FWD Z16SE | | GCI44004 | Inner Joint | | 22 | 22 | 34.95 | 57.5 | 103 | |
| | 2000.07-2005.05 | | F | | Saloon FWD Z16SE | | GCO44010 | Outer Joint | 29T | 33 | 22 | 52 | 103 | 50.5 | O |
| | 2000.09-2003.12 | 5MT | F | L/R | Estate FWD Z16SE | | GCO44030 | Outer Joint | | 33 | 22 | 52 | 103 | 50.5 | O |
| | 2000.09-2003.12 | 5MT | F | L/R | Estate FWD Z16SE | | GCI44004 | Inner Joint | | 22 | 22 | 34.95 | 57.5 | 103 | |
| | 2000.09-2003.12 | MT | F | L | Estate FWD Z16SE | | GDS60013 | Drive Shaft | | 33 | 22 | 52 | 103 | 595 | |
| | 2000.09-2003.12 | MT | F | R | Estate FWD Z16SE | | GDS44033 | Drive Shaft | | 33 | 22 | 52 | 103 | 950.5 | |
| | 2000.09-2003.12 | MT | F | L/R | Estate FWD Z16SE | | GCO44009 | Outer Joint | | 33 | 22 | 52 | 103 | 50.5 | O |
| | 2000.09-2003.12 | MT | F | L | Estate FWD Z16SE | Date to:2003.12 | GCI21014 | Inner Joint | | 22 | 22 | 35 | 57.5 | 105.5 | |
| | 2000.09-2005.03 | 4AT/5MT | F | L | Estate FWD Z16SE | | GDS60013 | Drive Shaft | | 33 | 22 | 52 | 103 | 595 | |
| | 2000.09-2005.03 | 4AT/5MT | F | R | Estate FWD Z16SE | | GDS44033 | Drive Shaft | | 33 | 22 | 52 | 103 | 950.5 | |
| | 2000.09-2005.03 | 4AT/5MT | F | L/R | Estate FWD Z16SE | | GCO44009 | Outer Joint | | 33 | 22 | 52 | 103 | 50.5 | O |
| | 2000.09-2005.03 | 4AT/5MT | F | L/R | Estate FWD Z16SE | | GCO44010 | Outer Joint | 29T | 33 | 22 | 52 | 103 | 50.5 | O |
| | 2000.09-2005.03 | 4AT/5MT | F | L/R | Estate FWD Z16SE | | GCO44011 | Outer Joint | 29T | 33 | 22 | 52 | 103 | 50.5 | O |
| | 2000.09-2005.03 | 4AT/5MT | F | L/R | Estate FWD Z16SE | | GCO44030 | Outer Joint | | 33 | 22 | 52 | 103 | 50.5 | O |
| | 2000.09-2005.03 | 4AT/5MT | F | L/R | Estate FWD Z16SE | | GCI44004 | Inner Joint | | 22 | 22 | 34.95 | 57.5 | 103 | |
| | 2000.09-2005.03 | 4AT/5MT | F | L | Hatchback FWD Z16SE | | GDS60013 | Drive Shaft | | 33 | 22 | 52 | 103 | 595 | |
| | 2000.09-2005.03 | 4AT/5MT | F | R | Hatchback FWD Z16SE | | GDS44033 | Drive Shaft | | 33 | 22 | 52 | 103 | 950.5 | |
| | 2000.09-2005.03 | AT/MT | F | L/R | Hatchback FWD Z16SE | | GCO44030 | Outer Joint | | 33 | 22 | 52 | 103 | 50.5 | O |
| | 2000.09-2005.03 | MT | F | L/R | Hatchback FWD Z16SE | | GCO44011 | Outer Joint | 29T | 33 | 22 | 52 | 103 | 50.5 | O |
| | 2000.09-2005.03 | MT | F | L | Hatchback FWD Z16SE | | GCI21014 | Inner Joint | | 22 | 22 | 35 | 57.5 | 105.5 | |
| | 2000.09-2005.03 | MT | F | L/R | Hatchback FWD Z16SE | | GCI44004 | Inner Joint | | 22 | 22 | 34.95 | 57.5 | 103 | |
| | 2000.09-2005.03 | | F | L/R | Hatchback FWD Z16SE | | GCO44009 | Outer Joint | | 33 | 22 | 52 | 103 | 50.5 | O |
| | 2000.09-2005.03 | | F | | Hatchback FWD Z16SE | | GCO44010 | Outer Joint | 29T | 33 | 22 | 52 | 103 | 50.5 | O |
| | 2000.09-2005.05 | 4AT/5MT | F | L | Saloon FWD Z16SE | | GDS60013 | Drive Shaft | | 33 | 22 | 52 | 103 | 595 | |
| | 2000.09-2005.05 | 4AT/5MT | F | R | Saloon FWD Z16SE | | GDS44033 | Drive Shaft | | 33 | 22 | 52 | 103 | 950.5 | |
| | 2000.09-2005.05 | AT/MT | F | L/R | Saloon FWD Z16SE | | GCO44030 | Outer Joint | | 33 | 22 | 52 | 103 | 50.5 | O |
| | 2000.09-2005.05 | MT | F | L/R | Saloon FWD Z16SE | | GCO44011 | Outer Joint | 29T | 33 | 22 | 52 | 103 | 50.5 | O |
| | 2000.09-2005.05 | MT | F | L | Saloon FWD Z16SE | | GCI21014 | Inner Joint | | 22 | 22 | 35 | 57.5 | 105.5 | |
| | 2000.09-2005.05 | MT | F | L/R | Saloon FWD Z16SE | | GCI44004 | Inner Joint | | 22 | 22 | 34.95 | 57.5 | 103 | |
| | 2000.09-2005.05 | | F | L/R | Saloon FWD Z16SE | | GCO44009 | Outer Joint | | 33 | 22 | 52 | 103 | 50.5 | O |
| | 2000.09-2005.05 | | F | | Saloon FWD Z16SE | | GCO44010 | Outer Joint | 29T | 33 | 22 | 52 | 103 | 50.5 | O |
| 1.6 (63 kw) | 1998.03-2004.04 | 4AT/5MT | F | L | Estate FWD Z16SE | | GDS60013 | Drive Shaft | | 33 | 22 | 52 | 103 | 595 | |
| | 1998.03-2004.04 | 4AT/5MT | F | R | Estate FWD Z16SE | | GDS44033 | Drive Shaft | | 33 | 22 | 52 | 103 | 950.5 | |
| | 1998.03-2004.04 | 5MT | F | L/R | Estate FWD Z16SE | | GCO44030 | Outer Joint | | 33 | 22 | 52 | 103 | 50.5 | O |
| | 1998.03-2004.04 | 5MT | F | L/R | Estate FWD Z16SE | | GCI44004 | Inner Joint | | 22 | 22 | 34.95 | 57.5 | 103 | |
| | 1998.03-2004.04 | | F | L/R | Estate FWD Z16SE | | GCO44009 | Outer Joint | | 33 | 22 | 52 | 103 | 50.5 | O |
| | 1998.03-2004.04 | | F | | Estate FWD Z16SE | | GCO44010 | Outer Joint | 29T | 33 | 22 | 52 | 103 | 50.5 | O |
| | 1998.03-2004.04 | | F | L | Estate FWD Z16SE | | GCI21014 | Inner Joint | | 22 | 22 | 35 | 57.5 | 105.5 | |

| | YEAR | TRANSM. | F/R | L/R | BODY STYLE & DRIVE TYPE & ENGINE | REMARKS | G-AP Ref. | PRODUCT | ABS | Technical Specifications | | | | | |
|---|---|---|---|---|---|---|---|---|---|---|---|---|---|---|---|
| | | | | | | | | | | A | B | C | H | L | P |
| **VAUXHALL** | | | | | | | | | | | | | | | |
| **Astra** | | | | | | | | | | | | | | | |
| 1.6 (63 kw) | 2002.08-2005.03 | 4AT/5MT | F | L | Hatchback FWD Z16SE | | GDS60013 | Drive Shaft | | 33 | 22 | 52 | 103 | 595 | |
| | 2002.08-2005.03 | 4AT/5MT | F | R | Hatchback FWD Z16SE | | GDS44033 | Drive Shaft | | 33 | 22 | 52 | 103 | 950.5 | |
| | 2002.08-2005.03 | 5MT | F | L/R | Hatchback FWD Z16SE | | GCO44030 | Outer Joint | | 33 | 22 | 52 | 103 | 50.5 | O |
| | 2002.08-2005.03 | 5MT | F | L | Hatchback FWD Z16SE | | GCI21014 | Inner Joint | | 22 | 22 | 35 | 57.5 | 105.5 | |
| | 2002.08-2005.03 | 5MT | F | L/R | Hatchback FWD Z16SE | | GCI44004 | Inner Joint | | 22 | 22 | 34.95 | 57.5 | 103 | |
| | 2002.08-2005.03 | | F | L/R | Hatchback FWD Z16SE | | GCO44009 | Outer Joint | | 33 | 22 | 52 | 103 | 50.5 | O |
| | 2002.08-2005.03 | | F | | Hatchback FWD Z16SE | | GCO44010 | Outer Joint | 29T | 33 | 22 | 52 | 103 | 50.5 | O |
| | 2002.08-2005.05 | 4AT/5MT | F | L | Saloon FWD Z16SE | | GDS60013 | Drive Shaft | | 33 | 22 | 52 | 103 | 595 | |
| | 2002.08-2005.05 | 4AT/5MT | F | R | Saloon FWD Z16SE | | GDS44033 | Drive Shaft | | 33 | 22 | 52 | 103 | 950.5 | |
| | 2002.08-2005.05 | 5MT | F | L/R | Saloon FWD Z16SE | | GCO44030 | Outer Joint | | 33 | 22 | 52 | 103 | 50.5 | O |
| | 2002.08-2005.05 | 5MT | F | L/R | Saloon FWD Z16SE | | GCI44004 | Inner Joint | | 22 | 22 | 34.95 | 57.5 | 103 | |
| | 2002.08-2005.05 | | F | L/R | Saloon FWD Z16SE | | GCO44009 | Outer Joint | | 33 | 22 | 52 | 103 | 50.5 | O |
| | 2002.08-2005.05 | | F | | Saloon FWD Z16SE | | GCO44010 | Outer Joint | 29T | 33 | 22 | 52 | 103 | 50.5 | O |
| | 2002.08-2005.05 | | F | L | Saloon FWD Z16SE | | GCI21014 | Inner Joint | | 22 | 22 | 35 | 57.5 | 105.5 | |
| 1.6 (70 kw) | 2015.10-2018.05 | 6MT | F | L | Hatchback FWD B 16 DTE | | GDS82395 | Drive Shaft | | 33 | 25 | 52.2 | 94 | 621 | |
| | 2015.10-2018.05 | 6MT | F | R | Hatchback FWD B 16 DTE | | GDS83852 | Drive Shaft | | 33 | 25 | 52.2 | 94 | 976 | |
| | 2015.10-2018.05 | 6MT | F | L | Hatchback FWD B 16 DTE | | GCO81814 | Outer Joint | | 33 | 24 | 52.2 | 94 | 64 | M |
| | 2015.10-2018.05 | 6MT | F | L | Hatchback FWD B 16 DTE | | GCI81767 | Inner Joint | | 25 | 24 | 34.9 | 57 | 109 | |
| | 2016.04-2018.05 | 6MT | F | L | Estate FWD B 16 DTE | | GDS82395 | Drive Shaft | | 33 | 25 | 52.2 | 94 | 621 | |
| | 2016.04-2018.05 | 6MT | F | R | Estate FWD B 16 DTE | | GDS83852 | Drive Shaft | | 33 | 25 | 52.2 | 94 | 976 | |
| | 2016.04-2018.05 | 6MT | F | L | Estate FWD B 16 DTE | | GCO81814 | Outer Joint | | 33 | 24 | 52.2 | 94 | 64 | M |
| | 2016.04-2018.05 | 6MT | F | L | Estate FWD B 16 DTE | | GCI81767 | Inner Joint | | 25 | 24 | 34.9 | 57 | 109 | |
| 1.6 (74 kw) | 1992.03-1998.02 | AT/MT | F | L | Hatchback FWD C16SE | | GDS44002 | Drive Shaft | 29T | 22 | 22 | 52 | 95 | 585 | |
| | 1992.03-1998.02 | AT/MT | F | R | Hatchback FWD C16SE | | GDS60002 | Drive Shaft | 29T | 22 | 22 | 52 | 95 | 926 | |
| | 1992.03-1998.02 | AT/MT | F | L/R | Hatchback FWD C16SE | Chassis no. from:P2732833-P3027101PKPKPBPEPFPP2271968/P2030366/P3602001 | GCO44007 | Outer Joint | 29T | 22 | 22 | 52 | 94.5 | 50 | O |
| | 1992.03-1998.02 | AT/MT | F | L/R | Hatchback FWD C16SE | | GCO44046 | Outer Joint | | 22 | 28 | 52.2 | 97.5 | 55 | O |
| | 1992.03-1998.02 | AT/MT | F | L/R | Hatchback FWD C16SE | Chassis no. to:P2732833/P3027765/P4PKPLPNPEPFPP2271968/P2030945/P3589986 | GCO44051 | Outer Joint | 29T | 22 | 22 | 52 | 95 | 50 | O |
| | 1992.03-1998.02 | MT | F | L/R | Hatchback FWD C16SE | | GCI44004 | Inner Joint | | 22 | 22 | 34.95 | 57.5 | 103 | |
| | 1992.03-1998.02 | | F | | Hatchback FWD C16SE | | GCO44023 | Outer Joint | | 22 | 22 | 52 | 95 | 50 | O |
| | 1992.03-1998.02 | | F | | Hatchback FWD C16SE | | GCO44068 | Outer Joint | 29T | 22 | 30 | 52 | 94.5 | 55 | I |
| | 1994.01-1998.02 | AT/MT | F | L/R | Hatchback FWD X16XEL | | GCO44007 | Outer Joint | 29T | 22 | 22 | 52 | 94.5 | 50 | O |
| | 1994.01-1998.02 | MT | F | L | Hatchback FWD X16XEL | Chassis no. to:P-2732833 | GDS44002 | Drive Shaft | 29T | 22 | 22 | 52 | 95 | 585 | |
| | 1994.01-1998.02 | MT | F | R | Hatchback FWD X16XEL | Chassis no. to:P-2732833 | GDS60002 | Drive Shaft | 29T | 22 | 22 | 52 | 95 | 926 | |
| | 1994.01-1998.02 | MT | F | L/R | Hatchback FWD X16XEL | | GCO44051 | Outer Joint | 29T | 22 | 22 | 52 | 95 | 50 | O |
| | 1994.01-1998.02 | MT | F | L/R | Hatchback FWD X16XEL | | GCI44004 | Inner Joint | | 22 | 22 | 34.95 | 57.5 | 103 | |
| | 1994.01-1998.02 | | F | | Hatchback FWD X16XEL | | GCO44023 | Outer Joint | | 22 | 22 | 52 | 95 | 50 | O |
| | 1994.01-1998.02 | | F | | Hatchback FWD X16XEL | | GCO44068 | Outer Joint | 29T | 22 | 30 | 52 | 94.5 | 55 | I |
| | 1994.09-1998.01 | AT/MT | F | L/R | Estate FWD X16XEL | Date from:1994.09 | GCO44007 | Outer Joint | 29T | 22 | 22 | 52 | 94.5 | 50 | O |
| | 1994.09-1998.01 | AT/MT | F | L/R | Estate FWD X16XEL | | GCO44051 | Outer Joint | 29T | 22 | 22 | 52 | 95 | 50 | O |
| | 1994.09-1998.01 | MT | F | R | Estate FWD X16XEL | | GDS60002 | Drive Shaft | 29T | 22 | 22 | 52 | 95 | 926 | |
| | 1994.09-1998.01 | MT | F | L/R | Estate FWD X16XEL | Date from:1994.09 | GCI44004 | Inner Joint | | 22 | 22 | 34.95 | 57.5 | 103 | |
| | 1994.09-1998.01 | | F | | Estate FWD X16XEL | | GCO44023 | Outer Joint | | 22 | 22 | 52 | 95 | 50 | O |
| | 1994.09-1998.01 | | F | | Estate FWD X16XEL | | GCO44068 | Outer Joint | 29T | 22 | 30 | 52 | 94.5 | 55 | I |
| | 1994.09-1998.01 | AT/MT | F | L/R | Saloon FWD X16XEL | Date to:1998.01 | GCO44007 | Outer Joint | 29T | 22 | 22 | 52 | 94.5 | 50 | O |
| | 1994.09-1998.01 | AT/MT | F | L/R | Saloon FWD X16XEL | | GCO44051 | Outer Joint | 29T | 22 | 22 | 52 | 95 | 50 | O |
| | 1994.09-1998.01 | MT | F | R | Saloon FWD X16XEL | | GDS60002 | Drive Shaft | 29T | 22 | 22 | 52 | 95 | 926 | |
| | 1994.09-1998.01 | MT | F | L/R | Saloon FWD X16XEL | Date to:1998.01 | GCI44004 | Inner Joint | | 22 | 22 | 34.95 | 57.5 | 103 | |
| | 1994.09-1998.01 | | F | | Saloon FWD X16XEL | | GCO44023 | Outer Joint | | 22 | 22 | 52 | 95 | 50 | O |
| | 1994.09-1998.01 | | F | | Saloon FWD X16XEL | | GCO44068 | Outer Joint | 29T | 22 | 30 | 52 | 94.5 | 55 | I |
| | 1998.02-2005.05 | 4AT/5MT | F | L | Estate FWD X16XEL/Z16XE | | GDS60013 | Drive Shaft | | 33 | 22 | 52 | 103 | 595 | |
| | 1998.02-2005.05 | 4AT/5MT | F | R | Estate FWD X16XEL/Z16XE | | GDS44033 | Drive Shaft | | 33 | 22 | 52 | 103 | 950.5 | |
| | 1998.02-2005.05 | 4AT/5MT | F | L/R | Estate FWD X16XEL/Z16XE | M20×1.5 | GCO44009 | Outer Joint | | 33 | 22 | 52 | 103 | 50.5 | O |
| | 1998.02-2005.05 | 4AT/5MT | F | L/R | Estate FWD X16XEL/Z16XE | M20×1.5 | GCO44010 | Outer Joint | 29T | 33 | 22 | 52 | 103 | 50.5 | O |
| | 1998.02-2005.05 | 4AT/5MT | F | L/R | Estate FWD X16XEL/Z16XE | M20×1 | GCO44011 | Outer Joint | 29T | 33 | 22 | 52 | 103 | 50.5 | O |
| | 1998.02-2005.05 | 4AT/5MT | F | L/R | Estate FWD X16XEL/Z16XE | M20×1 | GCO44030 | Outer Joint | | 33 | 22 | 52 | 103 | 50.5 | O |
| | 1998.02-2005.05 | 4AT/5MT | F | L/R | Estate FWD X16XEL/Z16XE | | GCI44004 | Inner Joint | | 22 | 22 | 34.95 | 57.5 | 103 | |
| | 1998.02-2005.05 | 4AT/5MT | F | L | Hatchback FWD X16XEL/Z16XE | | GDS60013 | Drive Shaft | | 33 | 22 | 52 | 103 | 595 | |
| | 1998.02-2005.05 | 4AT/5MT | F | R | Hatchback FWD X16XEL/Z16XE | | GDS44033 | Drive Shaft | | 33 | 22 | 52 | 103 | 950.5 | |
| | 1998.02-2005.05 | 4AT/5MT | F | L/R | Hatchback FWD X16XEL/Z16XE | M20×1.5 | GCO44009 | Outer Joint | | 33 | 22 | 52 | 103 | 50.5 | O |
| | 1998.02-2005.05 | 4AT/5MT | F | L/R | Hatchback FWD X16XEL/Z16XE | M20×1.5 | GCO44010 | Outer Joint | 29T | 33 | 22 | 52 | 103 | 50.5 | O |
| | 1998.02-2005.05 | 4AT/5MT | F | L/R | Hatchback FWD X16XEL/Z16XE | M20×1 | GCO44011 | Outer Joint | 29T | 33 | 22 | 52 | 103 | 50.5 | O |
| | 1998.02-2005.05 | 4AT/5MT | F | L/R | Hatchback FWD X16XEL/Z16XE | M20×1 | GCO44030 | Outer Joint | | 33 | 22 | 52 | 103 | 50.5 | O |
| | 1998.02-2005.05 | 4AT/5MT | F | L/R | Hatchback FWD X16XEL/Z16XE | | GCI44004 | Inner Joint | | 22 | 22 | 34.95 | 57.5 | 103 | |
| | 1998.09-2005.05 | 4AT/5MT | F | L | Saloon FWD X16XEL/Z16XE | | GDS60013 | Drive Shaft | | 33 | 22 | 52 | 103 | 595 | |
| | 1998.09-2005.05 | 4AT/5MT | F | R | Saloon FWD X16XEL/Z16XE | | GDS44033 | Drive Shaft | | 33 | 22 | 52 | 103 | 950.5 | |

| | YEAR | TRANSM. | F/R | L/R | BODY STYLE & DRIVE TYPE & ENGINE | REMARKS | G-AP Ref. | PRODUCT | ABS | Technical Specifications A | B | C | H | L | P |
|---|---|---|---|---|---|---|---|---|---|---|---|---|---|---|---|
| **VAUXHALL** **Astra** | | | | | | | | | | | | | | | |
| 1.6 (74 kw) | 1998.09-2005.05 | 4AT/5MT | F | L/R | Saloon FWD X16XEL/Z16XE | M20×1.5 | GCO44009 | Outer Joint | | 33 | 22 | 52 | 103 | 50.5 | O |
| | 1998.09-2005.05 | 4AT/5MT | F | L/R | Saloon FWD X16XEL/Z16XE | M20×1 | GCO44011 | Outer Joint | 29T | 33 | 22 | 52 | 103 | 50.5 | O |
| | 1998.09-2005.05 | 4AT/5MT | F | L/R | Saloon FWD X16XEL/Z16XE | M20×1 | GCO44030 | Outer Joint | | 33 | 22 | 52 | 103 | 50.5 | O |
| | 1998.09-2005.05 | 4AT/5MT | F | L/R | Saloon FWD X16XEL/Z16XE | | GCI44004 | Inner Joint | | 22 | 22 | 34.95 | 57.5 | 103 | |
| | 1999.09-2004.08 | 5MT | F | L | Estate FWD X16XEL/Z16XE | | GDS60013 | Drive Shaft | | 33 | 22 | 52 | 103 | 595 | |
| | 1999.09-2004.08 | 5MT | F | R | Estate FWD X16XEL/Z16XE | | GDS44033 | Drive Shaft | | 33 | 22 | 52 | 103 | 950.5 | |
| | 1999.09-2004.08 | 5MT | F | L/R | Estate FWD X16XEL/Z16XE | | GCO44009 | Outer Joint | | 33 | 22 | 52 | 103 | 50.5 | O |
| | 1999.09-2004.08 | 5MT | F | L/R | Estate FWD X16XEL/Z16XE | | GCO44030 | Outer Joint | | 33 | 22 | 52 | 103 | 50.5 | O |
| | 1999.09-2004.08 | 5MT | F | L | Estate FWD X16XEL/Z16XE | | GCI21014 | Inner Joint | | 22 | 22 | 35 | 57.5 | 105.5 | |
| | 1999.09-2004.08 | 5MT | F | L/R | Estate FWD X16XEL/Z16XE | | GCI44004 | Inner Joint | | 22 | 22 | 34.95 | 57.5 | 103 | |
| | 1999.09-2004.08 | 5MT | F | L/R | Hatchback FWD X16XEL/Z16XE | | GCO44030 | Outer Joint | | 33 | 22 | 52 | 103 | 50.5 | O |
| | 1999.09-2004.08 | MT | F | L | Hatchback FWD X16XEL/Z16XE | | GDS60013 | Drive Shaft | | 33 | 22 | 52 | 103 | 595 | |
| | 1999.09-2004.08 | MT | F | R | Hatchback FWD X16XEL/Z16XE | | GDS44033 | Drive Shaft | | 33 | 22 | 52 | 103 | 950.5 | |
| | 1999.09-2004.08 | MT | F | L/R | Hatchback FWD X16XEL/Z16XE | | GCO44009 | Outer Joint | | 33 | 22 | 52 | 103 | 50.5 | O |
| | 1999.09-2004.08 | MT | F | L | Hatchback FWD X16XEL/Z16XE | | GCI21014 | Inner Joint | | 22 | 22 | 35 | 57.5 | 105.5 | |
| | 1999.09-2004.08 | MT/5MT | F | L/R | Hatchback FWD X16XEL/Z16XE | | GCI44004 | Inner Joint | | 22 | 22 | 34.95 | 57.5 | 103 | |
| | 1999.09-2004.08 | 5MT | F | L/R | Saloon FWD X16XEL/Z16XE | | GCO44030 | Outer Joint | | 33 | 22 | 52 | 103 | 50.5 | O |
| | 1999.09-2004.08 | MT | F | L | Saloon FWD X16XEL/Z16XE | | GDS60013 | Drive Shaft | | 33 | 22 | 52 | 103 | 595 | |
| | 1999.09-2004.08 | MT | F | R | Saloon FWD X16XEL/Z16XE | | GDS44033 | Drive Shaft | | 33 | 22 | 52 | 103 | 950.5 | |
| | 1999.09-2004.08 | MT | F | L/R | Saloon FWD X16XEL/Z16XE | | GCO44009 | Outer Joint | | 33 | 22 | 52 | 103 | 50.5 | O |
| | 1999.09-2004.08 | MT | F | L | Saloon FWD X16XEL/Z16XE | | GCI21014 | Inner Joint | | 22 | 22 | 35 | 57.5 | 105.5 | |
| | 1999.09-2004.08 | MT/5MT | F | L/R | Saloon FWD X16XEL/Z16XE | | GCI44004 | Inner Joint | | 22 | 22 | 34.95 | 57.5 | 103 | |
| 1.6 (76 kw) | 2002.12-2004.07 | 5MT | F | L | Estate FWD Z16XEP | | GDS60013 | Drive Shaft | | 33 | 22 | 52 | 103 | 595 | |
| | 2002.12-2004.07 | 5MT | F | R | Estate FWD Z16XEP | | GDS44033 | Drive Shaft | | 33 | 22 | 52 | 103 | 950.5 | |
| | 2002.12-2004.07 | | F | L/R | Estate FWD Z16XEP | | GCO44009 | Outer Joint | | 33 | 22 | 52 | 103 | 50.5 | O |
| | 2002.12-2004.07 | | F | L/R | Estate FWD Z16XEP | | GCO44030 | Outer Joint | | 33 | 22 | 52 | 103 | 50.5 | O |
| | 2002.12-2004.07 | | F | | Estate FWD Z16XEP | | GCO44010 | Outer Joint | 29T | 33 | 22 | 52 | 103 | 50.5 | O |
| | 2002.12-2004.07 | | F | L | Estate FWD Z16XEP | Date To:2004.07 | GCI21014 | Inner Joint | | 22 | 22 | 35 | 57.5 | 105.5 | |
| | 2002.12-2004.07 | | F | L/R | Estate FWD Z16XEP | | GCI44004 | Inner Joint | | 22 | 22 | 34.95 | 57.5 | 103 | |
| | 2002.12-2005.05 | AT/MT | F | L | Hatchback FWD Z16XEP | | GDS60013 | Drive Shaft | | 33 | 22 | 52 | 103 | 595 | |
| | 2002.12-2005.05 | AT/MT | F | R | Hatchback FWD Z16XEP | | GDS44033 | Drive Shaft | | 33 | 22 | 52 | 103 | 950.5 | |
| | 2002.12-2005.05 | AT/MT | F | L/R | Hatchback FWD Z16XEP | M20×1.5 | GCO44009 | Outer Joint | | 33 | 22 | 52 | 103 | 50.5 | O |
| | 2002.12-2005.05 | AT/MT | F | L/R | Hatchback FWD Z16XEP | M20×1 | GCO44030 | Outer Joint | | 33 | 22 | 52 | 103 | 50.5 | O |
| | 2002.12-2005.05 | AT/MT | F | L/R | Hatchback FWD Z16XEP | | GCI44004 | Inner Joint | | 22 | 22 | 34.95 | 57.5 | 103 | |
| 1.6 (77 kw) | 2004.01-2009.05 | MT | F | L/R | Hatchback FWD Z 16 XEP;Z 16 XE1 | | GCO44003 | Outer Joint | | 33 | 22 | 53 | 95 | 54.5 | M |
| | 2004.01-2009.05 | MT | F | L | Hatchback FWD Z 16 XEP;Z 16 XE1 | | GCI21014 | Inner Joint | | 22 | 22 | 35 | 57.5 | 105.5 | |
| | 2004.01-2009.05 | MT | F | L/R | Hatchback FWD Z 16 XEP;Z 16 XE1 | | GCI44004 | Inner Joint | | 22 | 22 | 34.95 | 57.5 | 103 | |
| | 2004.01-2009.05 | SAT/4AT/5MT | F | L | Hatchback FWD Z 16 XEP;Z 16 XE1 | | GDS44028 | Drive Shaft | | 33 | 22 | 53 | 95 | 590 | |
| | 2004.01-2009.05 | SAT/4AT/5MT | F | R | Hatchback FWD Z 16 XEP;Z 16 XE1 | | GDS44030 | Drive Shaft | | 33 | 22 | 53 | 95 | 952 | |
| | 2004.08-2009.03 | 4AT/5AT/5MT | F | L | Estate FWD Z 16 XEP;Z 16 XE1 | | GDS44028 | Drive Shaft | | 33 | 22 | 53 | 95 | 590 | |
| | 2004.08-2009.03 | 4AT/5AT/5MT | F | R | Estate FWD Z 16 XEP;Z 16 XE1 | | GDS44030 | Drive Shaft | | 33 | 22 | 53 | 95 | 952 | |
| | 2004.08-2009.03 | MT | F | L/R | Estate FWD Z 16 XEP;Z 16 XE1 | | GCO44003 | Outer Joint | | 33 | 22 | 53 | 95 | 54.5 | M |
| | 2004.08-2009.03 | MT | F | L | Estate FWD Z 16 XEP;Z 16 XE1 | | GCI21014 | Inner Joint | | 22 | 22 | 35 | 57.5 | 105.5 | |
| | 2004.08-2009.03 | MT | F | L/R | Estate FWD Z 16 XEP;Z 16 XE1 | | GCI44004 | Inner Joint | | 22 | 22 | 34.95 | 57.5 | 103 | |
| 1.6 (81 kw) | 2013.11-2015.10 | 6MT | F | L | Hatchback FWD B 16 DTL | | GDS21076 | Drive Shaft | | 30 | 25 | 52.5 | 94 | 601 | |
| | 2013.11-2015.10 | 6MT | F | R | Hatchback FWD B 16 DTL | | GDS21032 | Drive Shaft | | 30 | 27 | 53.8 | 94.5 | 605 | |
| | 2013.11-2015.10 | 6MT | F | L/R | Hatchback FWD B 16 DTL | | GCO17051 | Outer Joint | | 30 | 26 | 53.8 | 94.5 | 65.5 | M |
| | 2013.11-2015.10 | 6MT | F | L/R | Hatchback FWD B 16 DTL | | GCO21049 | Outer Joint | | 30 | 26 | 52.5 | 94 | 65.5 | M |
| | 2013.11-2015.10 | 6MT | F | L/R | Hatchback FWD B 16 DTL | | GCO88046 | Outer Joint | | 30 | 26 | 52.5 | 94.5 | 65.5 | M |
| | 2013.11-2015.10 | 6MT | F | R | Hatchback FWD B 16 DTL | | GCI21030 | Inner Joint | | 27 | 26 | 35 | 78 | 112.5 | |
| | 2014.01-2015.10 | 6MT | F | L | Estate FWD B 16 DTL | | GDS21076 | Drive Shaft | | 30 | 25 | 52.5 | 94 | 601 | |
| | 2014.01-2015.10 | 6MT | F | R | Estate FWD B 16 DTL | | GDS21032 | Drive Shaft | | 30 | 27 | 53.8 | 94.5 | 605 | |
| | 2014.01-2015.10 | 6MT | F | L/R | Estate FWD B 16 DTL | | GCO17051 | Outer Joint | | 30 | 26 | 53.8 | 94.5 | 65.5 | M |
| | 2014.01-2015.10 | 6MT | F | L/R | Estate FWD B 16 DTL | | GCO21049 | Outer Joint | | 30 | 26 | 52.5 | 94 | 65.5 | M |
| | 2014.01-2015.10 | 6MT | F | L/R | Estate FWD B 16 DTL | | GCO88046 | Outer Joint | | 30 | 26 | 52.5 | 94.5 | 65.5 | M |
| | 2014.01-2015.10 | 6MT | F | R | Estate FWD B 16 DTL | | GCI21030 | Inner Joint | | 27 | 26 | 35 | 78 | 112.5 | |
| | 2015.06-2019.08 | 6MT | F | L | Hatchback FWD B 16 DTE;B 16 DTU;D 16 DTN;D 16 DTI | | GDS82395 | Drive Shaft | | 33 | 25 | 52.2 | 94 | 621 | |
| | 2015.06-2019.08 | 6MT | F | R | Hatchback FWD B 16 DTE;B 16 DTU;D 16 DTN;D 16 DTI | For Engine code:B16DTE;For RPO/POC code:MZ4;Trans. code:M32 | GDS83852 | Drive Shaft | | 33 | 25 | 52.2 | 94 | 976 | |
| | 2015.06-2019.08 | 6MT | F | L | Hatchback FWD B 16 DTE;B 16 DTU;D 16 DTN;D 16 DTI | | GCO81814 | Outer Joint | | 33 | 24 | 52.2 | 94 | 64 | M |
| | 2015.06-2019.08 | 6MT | F | L | Hatchback FWD B 16 DTE;B 16 DTU;D 16 DTN;D 16 DTI | | GCI81767 | Inner Joint | | 25 | 24 | 34.9 | 57 | 109 | |
| | 2015.07-2021.12 | 6MT | F | L | Estate FWD B 16 DTE;B 16 DTU;D 16 DTN;D 16 DTI | For Engine code:B16DTE | GDS82395 | Drive Shaft | | 33 | 25 | 52.2 | 94 | 621 | |
| | 2015.07-2021.12 | 6MT | F | R | Estate FWD B 16 DTE;B 16 DTU;D 16 DTN;D 16 DTI | For Engine code:B16DTE | GDS83852 | Drive Shaft | | 33 | 25 | 52.2 | 94 | 976 | |
| | 2015.07-2021.12 | 6MT | F | L/R | Estate FWD B 16 DTE;B 16 DTU;D 16 DTN;D 16 DTI | For Engine code:B16DTE | GCO81814 | Outer Joint | | 33 | 24 | 52.2 | 94 | 64 | M |
| | 2015.07-2021.12 | 6MT | F | L | Estate FWD B 16 DTE;B 16 DTU;D 16 DTN;D 16 DTI | For Engine code:B16DTE | GCI81767 | Inner Joint | | 25 | 24 | 34.9 | 57 | 109 | |
| 1.6 (85 kw) | 2004.01-2009.05 | 5AT/5MT | F | L | Hatchback FWD Z 16 XER;A 16 XER | | GDS44028 | Drive Shaft | | 33 | 22 | 53 | 95 | 590 | |

| Vehicle | YEAR | TRANSM. | F/R | L/R | BODY STYLE & DRIVE TYPE & ENGINE | REMARKS | G-AP Ref. | PRODUCT | ABS | A | B | C | H | L | P |
|---|---|---|---|---|---|---|---|---|---|---|---|---|---|---|---|
| **VAUXHALL** Astra | | | | | | | | | | | | | | | |
| 1.6 (85 kw) | 2004.01-2009.05 | 5AT/5MT | F | R | Hatchback FWD Z 16 XER;A 16 XER | | GDS44030 | Drive Shaft | | 33 | 22 | 53 | 95 | 952 | |
| | 2004.01-2009.05 | 5AT/5MT | F | L/R | Hatchback FWD Z 16 XER;A 16 XER | | GCO44003 | Outer Joint | | 33 | 22 | 53 | 95 | 54.5 | M |
| | 2004.01-2009.05 | 5AT/5MT | F | L/R | Hatchback FWD Z 16 XER;A 16 XER | | GCI21014 | Inner Joint | | 22 | 22 | 35 | 57.5 | 105.5 | |
| | 2004.08-2011.03 | 5MT/SAT | F | L | Estate FWD Z 16 XER | | GDS44028 | Drive Shaft | | 33 | 22 | 53 | 95 | 590 | |
| | 2004.08-2011.03 | 5MT/SAT | F | R | Estate FWD Z 16 XER | | GDS44030 | Drive Shaft | | 33 | 22 | 53 | 95 | 952 | |
| | 2004.08-2011.03 | 5MT/SAT | F | L/R | Estate FWD Z 16 XER | | GCO44003 | Outer Joint | | 33 | 22 | 53 | 95 | 54.5 | M |
| | 2004.08-2011.03 | 5MT/SAT | F | L/R | Estate FWD Z 16 XER | | GCI21014 | Inner Joint | | 22 | 22 | 35 | 57.5 | 105.5 | |
| | 2009.12-2015.10 | 5MT | F | L | Hatchback FWD A 16 XER;B 16 XER | | GDS44064 | Drive Shaft | | 33 | 22 | 53 | 95 | 618 | |
| | 2009.12-2015.10 | 5MT | F | R | Hatchback FWD A 16 XER;B 16 XER | | GDS44065 | Drive Shaft | | 33 | 22 | 53 | 95 | 983 | |
| | 2009.12-2015.10 | 5MT | F | L/R | Hatchback FWD A 16 XER;B 16 XER | | GCO44003 | Outer Joint | | 33 | 22 | 53 | 95 | 54.5 | M |
| | 2009.12-2015.10 | 5MT | F | L/R | Hatchback FWD A 16 XER;B 16 XER | | GCI21014 | Inner Joint | | 22 | 22 | 35 | 57.5 | 105.5 | |
| | 2009.12-2015.10 | 5MT | F | L/R | Hatchback FWD A 16 XER;B 16 XER | | GCI44004 | Inner Joint | | 22 | 22 | 34.95 | 57.5 | 103 | |
| | 2009.12-2015.10 | 6AT | F | L | Hatchback FWD A 16 XER;B 16 XER | Date from:2013.01,Chassis no. from:D0000001/D1000001/D3000001/D8000001/DG000001 | GDS81619 | Drive Shaft | | 33 | 22 | 52.3 | 94 | 633 | |
| | 2009.12-2015.10 | 6AT | F | L | Hatchback FWD A 16 XER;B 16 XER | Date to:2012.12,Chassis no. to:C0999999/C1999999/C3999999/C8999999/CG999999 | GDS82389 | Drive Shaft | | 33 | 34 | 52.5 | 94 | 641 | |
| | 2009.12-2015.10 | 6AT | F | R | Hatchback FWD A 16 XER;B 16 XER | Date from:2013.01,Chassis no. from:D0000001/D1000001/D3000001/D8000001/DG000001 | GDS81620 | Drive Shaft | | 33 | 22 | 52.3 | 94 | 958 | |
| | 2009.12-2015.10 | 6AT | F | R | Hatchback FWD A 16 XER;B 16 XER | Date to:2012.12 | GDS88077 | Drive Shaft | | 33 | 34 | 52.5 | 94 | 951 | |
| | 2009.12-2015.10 | 6AT | F | L/R | Hatchback FWD A 16 XER;B 16 XER | with Rim protector | GCO44088 | Outer Joint | | 33 | 23 | 52.3 | 94 | 59.5 | M |
| | 2009.12-2015.10 | 6AT | F | L/R | Hatchback FWD A 16 XER;B 16 XER | without Rim protector | GCO88047 | Outer Joint | | 33 | 23 | 52.5 | 94 | 59.5 | M |
| | 2009.12-2015.10 | 6AT | F | L | Hatchback FWD A 16 XER;B 16 XER | Date from:2013.01,Chassis no. from:D0000001/D1000001/D3000001/D8000001/DG000001 | GCI81210 | Inner Joint | | 22 | 23 | 35 | 131.5 | 84.5 | |
| | 2009.12-2015.10 | 6AT | F | L | Hatchback FWD A 16 XER;B 16 XER | Date to:2012.12 | GCI81774 | Inner Joint | | 34 | 23 | 35 | 136.5 | 84.5 | |
| | 2009.12-2015.10 | 6AT | F | R | Hatchback FWD A 16 XER;B 16 XER | Date from:2013.01,TJ | GCI21029 | Inner Joint | | 22 | 23 | 35 | 57.5 | 102.5 | |
| | 2009.12-2015.10 | 6AT | F | R | Hatchback FWD A 16 XER;B 16 XER | Date from:2013.01,AAR | GCI81411 | Inner Joint | | 22 | 23 | 35 | 57.5 | 102 | |
| | 2009.12-2015.10 | 6AT | F | R | Hatchback FWD A 16 XER;B 16 XER | Date to:2012.12,Chassis no. to:C0999999/C1999999/C3999999/C8999999/CG999999 | GCI88030 | Inner Joint | | 34 | 23 | 35 | 56 | 107.5 | |
| | 2010.10-2015.10 | 5MT | F | L | Estate FWD A 16 XER;B 16 XER | | GDS44064 | Drive Shaft | | 33 | 22 | 53 | 95 | 618 | |
| | 2010.10-2015.10 | 5MT | F | R | Estate FWD A 16 XER;B 16 XER | | GDS44065 | Drive Shaft | | 33 | 22 | 53 | 95 | 983 | |
| | 2010.10-2015.10 | 5MT | F | L/R | Estate FWD A 16 XER;B 16 XER | | GCO44003 | Outer Joint | | 33 | 22 | 53 | 95 | 54.5 | M |
| | 2010.10-2015.10 | 5MT | F | L/R | Estate FWD A 16 XER;B 16 XER | | GCI21014 | Inner Joint | | 22 | 22 | 35 | 57.5 | 105.5 | |
| | 2010.10-2015.10 | 5MT | F | L/R | Estate FWD A 16 XER;B 16 XER | | GCI44004 | Inner Joint | | 22 | 22 | 34.95 | 57.5 | 103 | |
| | 2010.10-2015.10 | 6AT | F | L | Estate FWD A 16 XER;B 16 XER | Date from:2013.01,Chassis no. from:D0000001/D1000001/D3000001/D8000001/DG000001 | GDS81619 | Drive Shaft | | 33 | 22 | 52.3 | 94 | 633 | |
| | 2010.10-2015.10 | 6AT | F | L | Estate FWD A 16 XER;B 16 XER | Date to:2012.12,Chassis no. to:C0999999/C1999999/C3999999/C8999999/CG999999 | GDS82389 | Drive Shaft | | 33 | 34 | 52.5 | 94 | 641 | |
| | 2010.10-2015.10 | 6AT | F | R | Estate FWD A 16 XER;B 16 XER | Date from:2013.01,Chassis no. from:D0000001/D1000001/D3000001/D8000001/DG000001 | GDS81620 | Drive Shaft | | 33 | 22 | 52.3 | 94 | 958 | |
| | 2010.10-2015.10 | 6AT | F | R | Estate FWD A 16 XER;B 16 XER | Date to:2012.12 | GDS88077 | Drive Shaft | | 33 | 34 | 52.5 | 94 | 951 | |
| | 2010.10-2015.10 | 6AT | F | L/R | Estate FWD A 16 XER;B 16 XER | with Rim protector | GCO44088 | Outer Joint | | 33 | 23 | 52.3 | 94 | 59.5 | M |
| | 2010.10-2015.10 | 6AT | F | L/R | Estate FWD A 16 XER;B 16 XER | without Rim protector | GCO88047 | Outer Joint | | 33 | 23 | 52.5 | 94 | 59.5 | M |
| | 2010.10-2015.10 | 6AT | F | L | Estate FWD A 16 XER;B 16 XER | Date from:2013.01,Chassis no. from:D0000001/D1000001/D3000001/D8000001/DG000001 | GCI81210 | Inner Joint | | 22 | 23 | 35 | 131.5 | 84.5 | |
| | 2010.10-2015.10 | 6AT | F | L | Estate FWD A 16 XER;B 16 XER | Date to:2012.12 | GCI81774 | Inner Joint | | 34 | 23 | 35 | 136.5 | 84.5 | |
| | 2010.10-2015.10 | 6AT | F | R | Estate FWD A 16 XER;B 16 XER | Date from:2013.01,TJ | GCI21029 | Inner Joint | | 22 | 23 | 35 | 57.5 | 102.5 | |
| | 2010.10-2015.10 | 6AT | F | R | Estate FWD A 16 XER;B 16 XER | Date from:2013.01,AAR | GCI81411 | Inner Joint | | 22 | 23 | 35 | 57.5 | 102 | |
| | 2010.10-2015.10 | 6AT | F | R | Estate FWD A 16 XER;B 16 XER | Date to:2012.12,Chassis no. to:C0999999/C1999999/C3999999/C8999999/CG999999 | GCI88030 | Inner Joint | | 34 | 23 | 35 | 56 | 107.5 | |
| | 2012.06-2015.10 | 5MT | F | L | Saloon FWD A16XER | | GDS44064 | Drive Shaft | | 33 | 22 | 53 | 95 | 618 | |
| | 2012.06-2015.10 | 5MT | F | R | Saloon FWD A16XER | | GDS44065 | Drive Shaft | | 33 | 22 | 53 | 95 | 983 | |
| | 2012.06-2015.10 | 5MT | F | L/R | Saloon FWD A16XER | | GCO44003 | Outer Joint | | 33 | 22 | 53 | 95 | 54.5 | M |
| | 2012.06-2015.10 | 5MT | F | L/R | Saloon FWD A16XER | | GCI21014 | Inner Joint | | 22 | 22 | 35 | 57.5 | 105.5 | |
| | 2012.06-2015.10 | 6AT | F | L | Saloon FWD A16XER | Date from:2013.01,Chassis no. from:D0000001/D1000001/D3000001/D8000001/DG000001 | GDS81619 | Drive Shaft | | 33 | 22 | 52.3 | 94 | 633 | |
| | 2012.06-2015.10 | 6AT | F | L | Saloon FWD A16XER | Date to:2012.12,Chassis no. to:C0999999/C1999999/C3999999/C8999999/CG999999 | GDS82389 | Drive Shaft | | 33 | 34 | 52.5 | 94 | 641 | |
| | 2012.06-2015.10 | 6AT | F | R | Saloon FWD A16XER | Date from:2013.01,Chassis no. from:D0000001/D1000001/D3000001/D8000001/DG000001 | GDS81620 | Drive Shaft | | 33 | 22 | 52.3 | 94 | 958 | |
| | 2012.06-2015.10 | 6AT | F | L/R | Saloon FWD A16XER | with Rim protector | GCO44088 | Outer Joint | | 33 | 23 | 52.3 | 94 | 59.5 | M |
| | 2012.06-2015.10 | 6AT | F | L/R | Saloon FWD A16XER | without Rim protector | GCO88047 | Outer Joint | | 33 | 23 | 52.5 | 94 | 59.5 | M |
| | 2012.06-2015.10 | 6AT | F | L | Saloon FWD A16XER | Date from:2013.01,Chassis no. from:D0000001/D1000001/D3000001/D8000001/DG000001 | GCI81210 | Inner Joint | | 22 | 23 | 35 | 131.5 | 84.5 | |
| | 2012.06-2015.10 | 6AT | F | L | Saloon FWD A16XER | Date to:2012.12 | GCI81774 | Inner Joint | | 34 | 23 | 35 | 136.5 | 84.5 | |
| | 2012.06-2015.10 | 6AT | F | R | Saloon FWD A16XER | Date to:2012.12,Chassis no. to:C0999999/C1999999/C3999999/C8999999/CG999999 | GCI88030 | Inner Joint | | 34 | 23 | 35 | 56 | 107.5 | |
| 1.6 (100 kw) | 2013.11-2015.10 | 6MT | F | R | Hatchback FWD B 16 DTH | | GDS21032 | Drive Shaft | | 30 | 27 | 53.8 | 94.5 | 605 | |
| | 2013.11-2015.10 | 6MT | F | L/R | Hatchback FWD B 16 DTH | | GCO17051 | Outer Joint | | 30 | 26 | 53.8 | 94.5 | 65.5 | M |
| | 2013.11-2015.10 | 6MT | F | L/R | Hatchback FWD B 16 DTH | | GCO21049 | Outer Joint | | 30 | 26 | 52.5 | 94 | 65.5 | M |
| | 2013.11-2015.10 | 6MT | F | L/R | Hatchback FWD B 16 DTH | | GCO88046 | Outer Joint | | 30 | 26 | 52.5 | 94.5 | 65.5 | M |
| | 2013.11-2015.10 | 6MT | F | R | Hatchback FWD B 16 DTH | | GCI21030 | Inner Joint | | 27 | 26 | 35 | 78 | 112.5 | |
| | 2013.11-2015.10 | MT | F | L | Hatchback FWD B 16 DTH | | GDS21076 | Drive Shaft | | 30 | 25 | 52.5 | 94 | 601 | |
| | 2014.01-2015.10 | 6MT | F | R | Estate FWD B 16 DTH | | GDS21032 | Drive Shaft | | 30 | 27 | 53.8 | 94.5 | 605 | |
| | 2014.01-2015.10 | 6MT | F | L/R | Estate FWD B 16 DTH | | GCO17051 | Outer Joint | | 30 | 26 | 53.8 | 94.5 | 65.5 | M |
| | 2014.01-2015.10 | 6MT | F | L/R | Estate FWD B 16 DTH | | GCO21049 | Outer Joint | | 30 | 26 | 52.5 | 94 | 65.5 | M |
| | 2014.01-2015.10 | 6MT | F | L/R | Estate FWD B 16 DTH | | GCO88046 | Outer Joint | | 30 | 26 | 52.5 | 94.5 | 65.5 | M |
| | 2014.01-2015.10 | 6MT | F | R | Estate FWD B 16 DTH | | GCI21030 | Inner Joint | | 27 | 26 | 35 | 78 | 112.5 | |
| | 2014.01-2015.10 | MT | F | L | Estate FWD B 16 DTH | | GDS21076 | Drive Shaft | | 30 | 25 | 52.5 | 94 | 601 | |
| | 2015.06-2019.08 | 6AT | F | L | Hatchback FWD B 16 DTH;D 16 DTH | | GDS82393 | Drive Shaft | | 33 | 34 | 52.3 | 94 | 661 | |
| | 2015.06-2019.08 | 6AT | F | R | Hatchback FWD B 16 DTH;D 16 DTH | | GDS82394 | Drive Shaft | | 33 | 34 | 52.3 | 94 | 928 | |

| | YEAR | TRANSM. | F/R | L/R | BODY STYLE & DRIVE TYPE & ENGINE | REMARKS | G-AP Ref. | PRODUCT | ABS | Technical Specifications A | B | C | H | L | P |
|---|---|---|---|---|---|---|---|---|---|---|---|---|---|---|---|
| **VAUXHALL** **Astra** | | | | | | | | | | | | | | | |
| 1.6 (100 kw) | 2015.06-2019.08 | 6AT | F | L/R | Hatchback FWD B 16 DTH;D 16 DTH | | GCO44088 | Outer Joint | | 33 | 23 | 52.3 | 94 | 59.5 | M |
| | 2015.06-2019.08 | 6AT | F | L | Hatchback FWD B 16 DTH;D 16 DTH | | GCI81774 | Inner Joint | | 34 | 23 | 35 | 136.5 | 84.5 | |
| | 2015.06-2019.08 | 6AT | F | R | Hatchback FWD B 16 DTH;D 16 DTH | | GCI81780 | Inner Joint | | 34 | 23 | 35 | 56 | 106.5 | |
| | 2015.06-2019.08 | 6MT | F | L | Hatchback FWD B 16 DTH;D 16 DTH | | GDS58211 | Drive Shaft | | 33 | 25 | 52.2 | 94 | 621 | |
| | 2015.06-2019.08 | 6MT | F | R | Hatchback FWD B 16 DTH;D 16 DTH | | GDS58212 | Drive Shaft | | 33 | 25 | 52.2 | 94 | 976 | |
| | 2015.06-2019.08 | 6MT | F | L/R | Hatchback FWD B 16 DTH;D 16 DTH | | GCO83865 | Outer Joint | | 33 | 25 | 52.2 | 94 | 64 | M |
| | 2016.04-2019.08 | 6AT | F | L | Estate FWD B 16 DTH;D 16 DTH | | GDS82393 | Drive Shaft | | 33 | 34 | 52.3 | 94 | 661 | |
| | 2016.04-2019.08 | 6AT | F | R | Estate FWD B 16 DTH;D 16 DTH | | GDS82394 | Drive Shaft | | 33 | 34 | 52.3 | 94 | 928 | |
| | 2016.04-2019.08 | 6AT | F | L/R | Estate FWD B 16 DTH;D 16 DTH | | GCO44088 | Outer Joint | | 33 | 23 | 52.3 | 94 | 59.5 | M |
| | 2016.04-2019.08 | 6AT | F | L | Estate FWD B 16 DTH;D 16 DTH | | GCI81774 | Inner Joint | | 34 | 23 | 35 | 136.5 | 84.5 | |
| | 2016.04-2019.08 | 6AT | F | R | Estate FWD B 16 DTH;D 16 DTH | | GCI81780 | Inner Joint | | 34 | 23 | 35 | 56 | 106.5 | |
| | 2016.04-2019.08 | 6MT | F | L | Estate FWD B 16 DTH;D 16 DTH | | GDS58211 | Drive Shaft | | 33 | 25 | 52.2 | 94 | 621 | |
| | 2016.04-2019.08 | 6MT | F | R | Estate FWD B 16 DTH;D 16 DTH | | GDS58212 | Drive Shaft | | 33 | 25 | 52.2 | 94 | 976 | |
| | 2016.04-2019.08 | 6MT | F | L/R | Estate FWD B 16 DTH;D 16 DTH | | GCO83865 | Outer Joint | | 33 | 25 | 52.2 | 94 | 64 | M |
| 1.6 (110 kw) | 2018.07-2019.02 | 6MT | F | L | Estate FWD D 16 DTR | | GDS58211 | Drive Shaft | | 33 | 25 | 52.2 | 94 | 621 | |
| | 2018.07-2019.02 | 6MT | F | R | Estate FWD D 16 DTR | | GDS58212 | Drive Shaft | | 33 | 25 | 52.2 | 94 | 976 | |
| | 2018.07-2019.02 | 6MT | F | L/R | Estate FWD D 16 DTR | | GCO83865 | Outer Joint | | 33 | 25 | 52.2 | 94 | 64 | M |
| | 2018.07-2019.02 | 6MT | F | L | Hatchback FWD D 16 DTR | | GDS58211 | Drive Shaft | | 33 | 25 | 52.2 | 94 | 621 | |
| | 2018.07-2019.02 | 6MT | F | R | Hatchback FWD D 16 DTR | | GDS58212 | Drive Shaft | | 33 | 25 | 52.2 | 94 | 976 | |
| | 2018.07-2019.02 | 6MT | F | L/R | Hatchback FWD D 16 DTR | | GCO83865 | Outer Joint | | 33 | 25 | 52.2 | 94 | 64 | M |
| 1.6 (118 kw) | 2015.11-2018.05 | 6MT | F | L/R | Hatchback FWD B 16 DTR | | GCO83865 | Outer Joint | | 33 | 25 | 52.2 | 94 | 64 | M |
| | 2016.04-2018.05 | 6MT | F | L/R | Estate FWD B 16 DTR | | GCO83865 | Outer Joint | | 33 | 25 | 52.2 | 94 | 64 | M |
| 1.6 (125 kw) | 2012.12-2015.10 | 6AT | F | L | Estate FWD A 16 XHT;B 16 SHL | | GDS61137 | Drive Shaft | | 30 | 34 | 52.5 | 94.5 | 640 | |
| | 2012.12-2015.10 | 6AT | F | R | Estate FWD A 16 XHT;B 16 SHL | | GDS61138 | Drive Shaft | | 30 | 27 | 52.5 | 94.5 | 598 | |
| | 2012.12-2015.10 | 6AT/6MT | F | L/R | Estate FWD A 16 XHT;B 16 SHL | | GCO88046 | Outer Joint | | 30 | 26 | 52.5 | 94.5 | 65.5 | M |
| | 2012.12-2015.10 | 6MT | F | L | Estate FWD A 16 XHT;B 16 SHL | | GDS21076 | Drive Shaft | | 30 | 25 | 52.5 | 94 | 601 | |
| | 2012.12-2015.10 | 6MT | F | R | Estate FWD A 16 XHT;B 16 SHL | | GDS21032 | Drive Shaft | | 30 | 27 | 53.8 | 94.5 | 605 | |
| | 2012.12-2015.10 | 6MT | F | R | Estate FWD A 16 XHT;B 16 SHL | | GCI21030 | Inner Joint | | 27 | 26 | 35 | 78 | 112.5 | |
| | 2012.12-2015.10 | MT | F | L/R | Estate FWD A 16 XHT;B 16 SHL | | GCO17051 | Outer Joint | | 30 | 26 | 53.8 | 94.5 | 65.5 | M |
| | 2012.12-2015.10 | MT | F | L/R | Estate FWD A 16 XHT;B 16 SHL | | GCO21049 | Outer Joint | | 30 | 26 | 52.5 | 94 | 65.5 | M |
| | 2012.12-2015.10 | 6AT | F | L | Hatchback FWD A 16 XHT;B 16 SHL | | GDS61137 | Drive Shaft | | 30 | 34 | 52.5 | 94.5 | 640 | |
| | 2012.12-2015.10 | 6AT | F | R | Hatchback FWD A 16 XHT;B 16 SHL | | GDS61138 | Drive Shaft | | 30 | 27 | 52.5 | 94.5 | 598 | |
| | 2012.12-2015.10 | 6AT/6MT | F | L/R | Hatchback FWD A 16 XHT;B 16 SHL | | GCO88046 | Outer Joint | | 30 | 26 | 52.5 | 94.5 | 65.5 | M |
| | 2012.12-2015.10 | 6MT | F | L | Hatchback FWD A 16 XHT;B 16 SHL | | GDS21076 | Drive Shaft | | 30 | 25 | 52.5 | 94 | 601 | |
| | 2012.12-2015.10 | 6MT | F | R | Hatchback FWD A 16 XHT;B 16 SHL | | GDS21032 | Drive Shaft | | 30 | 27 | 53.8 | 94.5 | 605 | |
| | 2012.12-2015.10 | 6MT | F | R | Hatchback FWD A 16 XHT;B 16 SHL | | GCI21030 | Inner Joint | | 27 | 26 | 35 | 78 | 112.5 | |
| | 2012.12-2015.10 | MT | F | L/R | Hatchback FWD A 16 XHT;B 16 SHL | | GCO17051 | Outer Joint | | 30 | 26 | 53.8 | 94.5 | 65.5 | M |
| | 2012.12-2015.10 | MT | F | L/R | Hatchback FWD A 16 XHT;B 16 SHL | | GCO21049 | Outer Joint | | 30 | 26 | 52.5 | 94 | 65.5 | M |
| 1.6 (132 kw) | 2004.08-2009.03 | MT | F | L/R | Estate FWD Z 16 LET;A 16 LET | | GCO44028 | Outer Joint | | 33 | 24 | 53 | 93.5 | 63.5 | M |
| | 2004.08-2009.03 | | F | L/R | Estate FWD Z 16 LET;A 16 LET | | GCI44005 | Inner Joint | | 34 | 25 | 35 | | 130.2 | |
| | 2006.09-2009.09 | | F | L/R | Hatchback FWD Z 16 LET;A 16 LET | | GCO44028 | Outer Joint | | 33 | 24 | 53 | 93.5 | 63.5 | M |
| | 2006.09-2009.09 | | F | L/R | Hatchback FWD Z 16 LET;A 16 LET | | GCI44005 | Inner Joint | | 34 | 25 | 35 | | 130.2 | |
| | 2009.12-2015.10 | 6AT | F | L | Hatchback FWD A 16 LET | | GDS61137 | Drive Shaft | | 30 | 34 | 52.5 | 94.5 | 640 | |
| | 2009.12-2015.10 | 6AT | F | R | Hatchback FWD A 16 LET | | GDS61138 | Drive Shaft | | 30 | 27 | 52.5 | 94.5 | 598 | |
| | 2009.12-2015.10 | 6AT/6MT | F | L/R | Hatchback FWD A 16 LET | | GCO17051 | Outer Joint | | 30 | 26 | 53.8 | 94.5 | 65.5 | M |
| | 2009.12-2015.10 | 6AT/6MT | F | L/R | Hatchback FWD A 16 LET | | GCO21049 | Outer Joint | | 30 | 26 | 52.5 | 94 | 65.5 | M |
| | 2009.12-2015.10 | 6AT/6MT | F | L/R | Hatchback FWD A 16 LET | | GCO88046 | Outer Joint | | 30 | 26 | 52.5 | 94.5 | 65.5 | M |
| | 2009.12-2015.10 | 6MT | F | L | Hatchback FWD A 16 LET | | GDS21076 | Drive Shaft | | 30 | 25 | 52.5 | 94 | 601 | |
| | 2009.12-2015.10 | 6MT | F | R | Hatchback FWD A 16 LET | | GDS21074 | Drive Shaft | | 30 | 34 | 52.5 | 94 | 589 | |
| | 2009.12-2015.10 | 6MT | F | R | Hatchback FWD A 16 LET | | GDS83228 | Drive Shaft | | 30 | 25 | 52.5 | 94 | 996 | |
| | 2009.12-2015.10 | 6MT | F | R | Hatchback FWD A 16 LET | | GCI88026 | Inner Joint | | 34 | 26 | 37.5 | | 100 | |
| | 2010.10-2015.10 | 6AT | F | L | Estate FWD A 16 LET | | GDS61137 | Drive Shaft | | 30 | 34 | 52.5 | 94.5 | 640 | |
| | 2010.10-2015.10 | 6AT | F | R | Estate FWD A 16 LET | | GDS61138 | Drive Shaft | | 30 | 27 | 52.5 | 94.5 | 598 | |
| | 2010.10-2015.10 | 6AT/6MT | F | L/R | Estate FWD A 16 LET | | GCO17051 | Outer Joint | | 30 | 26 | 53.8 | 94.5 | 65.5 | M |
| | 2010.10-2015.10 | 6AT/6MT | F | L/R | Estate FWD A 16 LET | | GCO21049 | Outer Joint | | 30 | 26 | 52.5 | 94 | 65.5 | M |
| | 2010.10-2015.10 | 6AT/6MT | F | L/R | Estate FWD A 16 LET | | GCO88046 | Outer Joint | | 30 | 26 | 52.5 | 94.5 | 65.5 | M |
| | 2010.10-2015.10 | 6MT | F | R | Estate FWD A 16 LET | | GDS21074 | Drive Shaft | | 30 | 34 | 52.5 | 94 | 589 | |
| | 2010.10-2015.10 | 6MT | F | R | Estate FWD A 16 LET | | GDS83228 | Drive Shaft | | 30 | 25 | 52.5 | 94 | 996 | |
| | 2010.10-2015.10 | 6MT | F | R | Estate FWD A 16 LET | | GCI88026 | Inner Joint | | 34 | 26 | 37.5 | | 100 | |
| | 2010.10-2015.10 | MT | F | L | Estate FWD A 16 LET | | GDS21076 | Drive Shaft | | 30 | 25 | 52.5 | 94 | 601 | |
| | 2012.06-2015.10 | 6AT | F | L | Saloon FWD A16LET | | GCI86021 | Inner Joint | | 34 | 26 | 35 | 136.5 | 87 | |
| | 2012.06-2015.10 | 6AT | F | R | Saloon FWD A16LET | | GCI21016 | Inner Joint | | 27 | 26 | 35 | 78.5 | 112 | |
| | 2012.06-2015.10 | MT | F | R | Saloon FWD A16LET | | GCI88026 | Inner Joint | | 34 | 26 | 37.5 | | 100 | |
| 1.6 (147 kw) | 2016.04-2019.02 | 6MT | F | L | Estate FWD B 16 SHT;D 16 SHT | | GDS82395 | Drive Shaft | | 33 | 25 | 52.2 | 94 | 621 | |
| | 2016.04-2019.02 | 6MT | F | L | Estate FWD B 16 SHT;D 16 SHT | | GCO81814 | Outer Joint | | 33 | 24 | 52.2 | 94 | 64 | M |

| | YEAR | TRANSM. | F/R | L/R | BODY STYLE & DRIVE TYPE & ENGINE | REMARKS | G-AP Ref. | PRODUCT | ABS | Technical Specifications A | B | C | H | L | P |
|---|---|---|---|---|---|---|---|---|---|---|---|---|---|---|---|
| **VAUXHALL** | | | | | | | | | | | | | | | |
| **Astra** | | | | | | | | | | | | | | | |
| 1.6 (147 kw) | 2016.04-2019.02 | 6MT | F | L | Estate FWD B 16 SHT;D 16 SHT | | GCI81767 | Inner Joint | | 25 | 24 | 34.9 | 57 | 109 | |
| | 2016.04-2019.02 | 6MT | F | L | Hatchback FWD B 16 SHT;D 16 SHT | | GDS82395 | Drive Shaft | | 33 | 25 | 52.2 | 94 | 621 | |
| | 2016.04-2019.02 | 6MT | F | L | Hatchback FWD B 16 SHT;D 16 SHT | | GCO81814 | Outer Joint | | 33 | 24 | 52.2 | 94 | 64 | M |
| | 2016.04-2019.02 | 6MT | F | L | Hatchback FWD B 16 SHT;D 16 SHT | | GCI81767 | Inner Joint | | 25 | 24 | 34.9 | 57 | 109 | |
| 1.7 (42 kw) | 1991.09-1996.07 | 5MT | F | L | Hatchback FWD 17D | Chassis no. from:P2733478/P5273485/P8202126 | GDS44002 | Drive Shaft | 29T | 22 | 22 | 52 | 95 | 585 | |
| | 1991.09-1996.07 | 5MT | F | R | Hatchback FWD 17D | Chassis no. from:P2733478/P5273485/P8202126 | GDS60002 | Drive Shaft | 29T | 22 | 22 | 52 | 95 | 926 | |
| | 1991.09-1996.07 | AT/MT | F | L/R | Hatchback FWD 17D | Date to:1996.07 | GCO44056 | Outer Joint | 29T | 33 | 25 | 52 | 109 | 61 | O |
| | 1991.09-1996.07 | MT | F | L/R | Hatchback FWD 17D | Date to:1996.07 | GCI44004 | Inner Joint | | 22 | 22 | 34.95 | 57.5 | 103 | |
| | 1991.09-1996.07 | | F | | Hatchback FWD 17D | | GCO44023 | Outer Joint | | 22 | 22 | 52 | 95 | 50 | O |
| 1.7 (44 kw) | 1992.07-1998.09 | 5MT | F | L | Saloon FWD 17DR | Chassis no. from:P2733478/P5273485/P8202126 | GDS44002 | Drive Shaft | 29T | 22 | 22 | 52 | 95 | 585 | |
| | 1992.07-1998.09 | 5MT | F | R | Saloon FWD 17DR | Chassis no. from:P2733478/P5273485/P8202126 | GDS60002 | Drive Shaft | 29T | 22 | 22 | 52 | 95 | 926 | |
| | 1992.07-1998.09 | AT/MT | F | L/R | Saloon FWD 17DR | Date from:1994.01 | GCO44007 | Outer Joint | 29T | 22 | 22 | 52 | 94.5 | 50 | O |
| | 1992.07-1998.09 | AT/MT | F | L/R | Saloon FWD 17DR | Chassis no. to:P-2732833 | GCO44056 | Outer Joint | 29T | 33 | 25 | 52 | 109 | 61 | O |
| | 1992.07-1998.09 | AT/MT | F | L/R | Saloon FWD 17DR | | GCI44004 | Inner Joint | | 22 | 22 | 34.95 | 57.5 | 103 | |
| | 1992.07-1998.09 | | F | | Saloon FWD 17DR | | GCO44023 | Outer Joint | | 22 | 22 | 52 | 95 | 50 | O |
| 1.7 (50 kw) | 1994.08-1998.09 | AT/MT | F | R | Saloon FWD X17DTL | Chassis no. from:N500001 | GDS44059 | Drive Shaft | 29T | 33 | 34 | 52 | 109 | 938 | |
| | 1994.08-1998.09 | AT/MT | F | L/R | Saloon FWD X17DTL | Chassis no. from:N500001 | GCO44056 | Outer Joint | 29T | 33 | 25 | 52 | 109 | 61 | O |
| | 1994.08-1998.09 | AT/MT | F | L/R | Saloon FWD X17DTL | Chassis no. from:N500001 | GCI44002 | Inner Joint | | 34 | 25 | 35 | 56.2 | 114.8 | |
| | 1994.08-1998.09 | MT | F | L | Saloon FWD X17DTL | Chassis no. from:N500001 | GDS44011 | Drive Shaft | 29T | 33 | 34 | 52 | 109 | 594.5 | |
| | 1994.08-1998.09 | | F | | Saloon FWD X17DTL | | GCO44023 | Outer Joint | | 22 | 22 | 52 | 95 | 50 | O |
| | 1994.09-1998.01 | AT/MT | F | R | Estate FWD X17DTL | Chassis no. from:N500001 | GDS44059 | Drive Shaft | 29T | 33 | 34 | 52 | 109 | 938 | |
| | 1994.09-1998.01 | AT/MT | F | L/R | Estate FWD X17DTL | Chassis no. from:N500001,Date from:1994.09 | GCO44056 | Outer Joint | 29T | 33 | 25 | 52 | 109 | 61 | O |
| | 1994.09-1998.01 | AT/MT | F | L/R | Estate FWD X17DTL | Chassis no. from:N500001 | GCI44002 | Inner Joint | | 34 | 25 | 35 | 56.2 | 114.8 | |
| | 1994.09-1998.01 | MT | F | L | Estate FWD X17DTL | Chassis no. from:N500001 | GDS44011 | Drive Shaft | 29T | 33 | 34 | 52 | 109 | 594.5 | |
| | 1994.09-1998.01 | | F | | Estate FWD X17DTL | | GCO44023 | Outer Joint | | 22 | 22 | 52 | 95 | 50 | O |
| | 1994.09-1998.01 | AT/MT | F | R | Hatchback FWD X17DTL | Chassis no. from:N500001 | GDS44059 | Drive Shaft | 29T | 33 | 34 | 52 | 109 | 938 | |
| | 1994.09-1998.01 | AT/MT | F | L/R | Hatchback FWD X17DTL | Chassis no. from:N500001 | GCO44056 | Outer Joint | 29T | 33 | 25 | 52 | 109 | 61 | O |
| | 1994.09-1998.01 | AT/MT | F | L/R | Hatchback FWD X17DTL | Chassis no. from:N500001 | GCI44002 | Inner Joint | | 34 | 25 | 35 | 56.2 | 114.8 | |
| | 1994.09-1998.01 | MT | F | L | Hatchback FWD X17DTL | Chassis no. from:N500001 | GDS44011 | Drive Shaft | 29T | 33 | 34 | 52 | 109 | 594.5 | |
| | 1994.09-1998.01 | | F | | Hatchback FWD X17DTL | | GCO88003 | Outer Joint | | 33 | 25 | 52 | 109 | 61 | O |
| | 1998.02-2000.08 | 5MT | F | L | Estate FWD X17DTL | | GDS60013 | Drive Shaft | | 33 | 22 | 52 | 103 | 595 | |
| | 1998.02-2000.08 | 5MT | F | R | Estate FWD X17DTL | | GDS44033 | Drive Shaft | | 33 | 22 | 52 | 103 | 950.5 | |
| | 1998.02-2000.08 | AT/MT | F | L/R | Estate FWD X17DTL | | GCO44030 | Outer Joint | | 33 | 22 | 52 | 103 | 50.5 | O |
| | 1998.02-2000.08 | MT | F | L/R | Estate FWD X17DTL | | GCO44011 | Outer Joint | 29T | 33 | 22 | 52 | 103 | 50.5 | O |
| | 1998.02-2000.08 | MT | F | L | Estate FWD X17DTL | | GCI21014 | Inner Joint | | 22 | 22 | 35 | 57.5 | 105.5 | |
| | 1998.02-2000.08 | MT | F | L/R | Estate FWD X17DTL | | GCI44004 | Inner Joint | | 22 | 22 | 34.95 | 57.5 | 103 | |
| | 1998.02-2000.08 | | F | L/R | Estate FWD X17DTL | | GCO44009 | Outer Joint | | 33 | 22 | 52 | 103 | 50.5 | O |
| | 1998.02-2000.08 | | F | | Estate FWD X17DTL | | GCO44010 | Outer Joint | 29T | 33 | 22 | 52 | 103 | 50.5 | O |
| | 1998.02-2000.08 | 5MT | F | L | Hatchback FWD X17DTL | | GDS60013 | Drive Shaft | | 33 | 22 | 52 | 103 | 595 | |
| | 1998.02-2000.08 | 5MT | F | R | Hatchback FWD X17DTL | | GDS44033 | Drive Shaft | | 33 | 22 | 52 | 103 | 950.5 | |
| | 1998.02-2000.08 | AT/MT | F | L/R | Hatchback FWD X17DTL | | GCO44030 | Outer Joint | | 33 | 22 | 52 | 103 | 50.5 | O |
| | 1998.02-2000.08 | MT | F | L/R | Hatchback FWD X17DTL | | GCO44011 | Outer Joint | 29T | 33 | 22 | 52 | 103 | 50.5 | O |
| | 1998.02-2000.08 | MT | F | L | Hatchback FWD X17DTL | | GCI21014 | Inner Joint | | 22 | 22 | 35 | 57.5 | 105.5 | |
| | 1998.02-2000.08 | MT | F | L/R | Hatchback FWD X17DTL | | GCI44004 | Inner Joint | | 22 | 22 | 34.95 | 57.5 | 103 | |
| | 1998.02-2000.08 | | F | L/R | Hatchback FWD X17DTL | | GCO44009 | Outer Joint | | 33 | 22 | 52 | 103 | 50.5 | O |
| | 1998.02-2000.08 | | F | | Hatchback FWD X17DTL | | GCO44010 | Outer Joint | 29T | 33 | 22 | 52 | 103 | 50.5 | O |
| | 1998.02-2000.08 | 5MT | F | L | Saloon FWD X17DTL | | GDS60013 | Drive Shaft | | 33 | 22 | 52 | 103 | 595 | |
| | 1998.02-2000.08 | 5MT | F | R | Saloon FWD X17DTL | | GDS44033 | Drive Shaft | | 33 | 22 | 52 | 103 | 950.5 | |
| | 1998.02-2000.08 | AT/MT | F | L/R | Saloon FWD X17DTL | | GCO44030 | Outer Joint | | 33 | 22 | 52 | 103 | 50.5 | O |
| | 1998.02-2000.08 | MT | F | L/R | Saloon FWD X17DTL | | GCO44011 | Outer Joint | 29T | 33 | 22 | 52 | 103 | 50.5 | O |
| | 1998.02-2000.08 | MT | F | L | Saloon FWD X17DTL | | GCI21014 | Inner Joint | | 22 | 22 | 35 | 57.5 | 105.5 | |
| | 1998.02-2000.08 | MT | F | L/R | Saloon FWD X17DTL | | GCI44004 | Inner Joint | | 22 | 22 | 34.95 | 57.5 | 103 | |
| | 1998.02-2000.08 | | F | L/R | Saloon FWD X17DTL | | GCO44009 | Outer Joint | | 33 | 22 | 52 | 103 | 50.5 | O |
| 1.7 (55 kw) | 2000.09-2004.07 | 4AT/5MT | F | R | Saloon FWD Y17DT | | GDS60035 | Drive Shaft | | 33 | 22 | 52 | 109 | 961 | |
| | 2000.09-2004.07 | AT/MT | F | L/R | Saloon FWD Y17DT | Date from:2000.09;Date to:2004.07 | GCO44006 | Outer Joint | 29T | 33 | 25 | 52 | 103.5 | 61 | O |
| | 2000.09-2004.07 | MT | F | R | Saloon FWD Y17DT | | GCO44049 | Outer Joint | | 33 | 25 | 52 | 109 | 61 | O |
| | 2000.09-2004.07 | | F | L | Saloon FWD Y17DT | | GDS60013 | Drive Shaft | | 33 | 22 | 52 | 103 | 595 | |
| | 2000.09-2004.07 | | F | L/R | Saloon FWD Y17DT | | GCI99026 | Inner Joint | | 22 | 25 | 35 | 57 | 111.7 | |
| | 2000.09-2005.03 | 4AT/5MT | F | R | Hatchback FWD Y17DT | | GDS60035 | Drive Shaft | | 33 | 22 | 52 | 109 | 961 | |
| | 2000.09-2005.03 | AT/MT | F | L/R | Hatchback FWD Y17DT | Date from:2000.09 | GCO44006 | Outer Joint | 29T | 33 | 25 | 52 | 103.5 | 61 | O |
| | 2000.09-2005.03 | MT | F | R | Hatchback FWD Y17DT | | GCO44049 | Outer Joint | | 33 | 25 | 52 | 109 | 61 | O |
| | 2000.09-2005.03 | | F | L | Hatchback FWD Y17DT | | GDS60013 | Drive Shaft | | 33 | 22 | 52 | 103 | 595 | |
| | 2000.09-2005.03 | | F | L/R | Hatchback FWD Y17DT | | GCI99026 | Inner Joint | | 22 | 25 | 35 | 57 | 111.7 | |
| | 2000.09-2005.05 | 4AT/5MT | F | R | Estate FWD Y17DT | | GDS60035 | Drive Shaft | | 33 | 22 | 52 | 109 | 961 | |
| | 2000.09-2005.05 | AT/MT | F | L/R | Estate FWD Y17DT | Date from:2000.09 | GCO44006 | Outer Joint | 29T | 33 | 25 | 52 | 103.5 | 61 | O |

| | YEAR | TRANSM. | F/R | L/R | BODY STYLE & DRIVE TYPE & ENGINE | REMARKS | G-AP Ref. | PRODUCT | ABS | Technical Specifications A | B | C | H | L | P |
|---|---|---|---|---|---|---|---|---|---|---|---|---|---|---|---|
| **VAUXHALL** **Astra** | | | | | | | | | | | | | | | |
| 1.7 (55 kw) | 2000.09-2005.05 | MT | F | R | Estate FWD Y17DT | | GCO44049 | Outer Joint | | 33 | 25 | 52 | 109 | 61 | O |
| | 2000.09-2005.05 | | F | L | Estate FWD Y17DT | | GDS60013 | Drive Shaft | | 33 | 22 | 52 | 103 | 595 | |
| | 2000.09-2005.05 | | F | L/R | Estate FWD Y17DT | | GCI99026 | Inner Joint | | 22 | 25 | 35 | 57 | 111.7 | |
| 1.7 (59 kw) | 2003.04-2005.03 | 5MT | F | R | Hatchback FWD Z17DTL | | GDS60035 | Drive Shaft | | 33 | 22 | 52 | 109 | 961 | |
| | 2003.04-2005.03 | AT/MT | F | L/R | Hatchback FWD Z17DTL | | GCO44006 | Outer Joint | 29T | 33 | 25 | 52 | 103.5 | 61 | O |
| | 2003.04-2005.03 | AT/MT | F | L/R | Hatchback FWD Z17DTL | | GCO44030 | Outer Joint | | 33 | 22 | 52 | 103 | 50.5 | O |
| | 2003.04-2005.03 | MT | F | R | Hatchback FWD Z17DTL | | GCO44049 | Outer Joint | | 33 | 25 | 52 | 109 | 61 | O |
| | 2003.04-2005.03 | | F | L | Hatchback FWD Z17DTL | | GDS60013 | Drive Shaft | | 33 | 22 | 52 | 103 | 595 | |
| | 2003.04-2005.03 | | F | L/R | Hatchback FWD Z17DTL | | GCI99026 | Inner Joint | | 22 | 25 | 35 | 57 | 111.7 | |
| | 2003.04-2005.05 | 5MT | F | R | Estate FWD Z17DTL | | GDS60035 | Drive Shaft | | 33 | 22 | 52 | 109 | 961 | |
| | 2003.04-2005.05 | AT/MT | F | L/R | Estate FWD Z17DTL | | GCO44006 | Outer Joint | 29T | 33 | 25 | 52 | 103.5 | 61 | O |
| | 2003.04-2005.05 | AT/MT | F | L/R | Estate FWD Z17DTL | | GCO44030 | Outer Joint | | 33 | 22 | 52 | 103 | 50.5 | O |
| | 2003.04-2005.05 | MT | F | R | Estate FWD Z17DTL | | GCO44049 | Outer Joint | | 33 | 25 | 52 | 109 | 61 | O |
| | 2003.04-2005.05 | | F | L | Estate FWD Z17DTL | | GDS60013 | Drive Shaft | | 33 | 22 | 52 | 103 | 595 | |
| | 2003.04-2005.05 | | F | L/R | Estate FWD Z17DTL | | GCI99026 | Inner Joint | | 22 | 25 | 35 | 57 | 111.7 | |
| | 2003.04-2005.05 | 5MT | F | R | Saloon FWD Z17DTL | | GDS60035 | Drive Shaft | | 33 | 22 | 52 | 109 | 961 | |
| | 2003.04-2005.05 | AT/MT | F | L/R | Saloon FWD Z17DTL | | GCO44006 | Outer Joint | 29T | 33 | 25 | 52 | 103.5 | 61 | O |
| | 2003.04-2005.05 | AT/MT | F | L/R | Saloon FWD Z17DTL | | GCO44030 | Outer Joint | | 33 | 22 | 52 | 103 | 50.5 | O |
| | 2003.04-2005.05 | MT | F | R | Saloon FWD Z17DTL | | GCO44049 | Outer Joint | | 33 | 25 | 52 | 109 | 61 | O |
| | 2003.04-2005.05 | | F | L | Saloon FWD Z17DTL | | GDS60013 | Drive Shaft | | 33 | 22 | 52 | 103 | 595 | |
| | 2003.04-2005.05 | | F | L/R | Saloon FWD Z17DTL | | GCI99026 | Inner Joint | | 22 | 25 | 35 | 57 | 111.7 | |
| | 2004.01-2009.05 | 5MT | F | L | Hatchback FWD Z 17 DTL | | GDS21063 | Drive Shaft | | 33 | 22 | 53 | 93.5 | 586 | |
| | 2004.01-2009.05 | 5MT | F | R | Hatchback FWD Z 17 DTL | | GDS21055 | Drive Shaft | | 33 | 22 | 53 | 93.5 | 950 | |
| | 2004.01-2009.05 | MT | F | L/R | Hatchback FWD Z 17 DTL | | GCO44028 | Outer Joint | | 33 | 24 | 53 | 93.5 | 63.5 | M |
| | 2004.01-2009.05 | | F | L/R | Hatchback FWD Z 17 DTL | | GCI99026 | Inner Joint | | 22 | 25 | 35 | 57 | 111.7 | |
| | 2004.08-2009.05 | 5MT | F | L | Estate FWD Z 17 DTL | | GDS21063 | Drive Shaft | | 33 | 22 | 53 | 93.5 | 586 | |
| | 2004.08-2009.05 | 5MT | F | R | Estate FWD Z 17 DTL | | GDS21055 | Drive Shaft | | 33 | 22 | 53 | 93.5 | 950 | |
| | 2004.08-2009.05 | | F | L/R | Estate FWD Z 17 DTL | | GCO44028 | Outer Joint | | 33 | 24 | 53 | 93.5 | 63.5 | M |
| | 2004.08-2009.05 | | F | R | Estate FWD Z 17 DTL | | GCI44005 | Inner Joint | | 34 | 25 | 35 | | 130.2 | |
| | 2004.08-2009.05 | | F | L/R | Estate FWD Z 17 DTL | | GCI99026 | Inner Joint | | 22 | 25 | 35 | 57 | 111.7 | |
| 1.7 (60 kw) | 1991.12-1998.02 | 5MT | F | L/R | Estate FWD 17TD | | GCO88003 | Outer Joint | | 33 | 25 | 52 | 109 | 61 | O |
| | 1991.12-1998.02 | AT/MT | F | L/R | Estate FWD 17TD | | GCO44056 | Outer Joint | 29T | 33 | 25 | 52 | 109 | 61 | O |
| | 1991.12-1998.02 | MT | F | L | Estate FWD 17TD | | GDS44011 | Drive Shaft | 29T | 33 | 34 | 52 | 109 | 594.5 | |
| | 1991.12-1998.02 | MT | F | R | Estate FWD 17TD | | GDS44059 | Drive Shaft | 29T | 33 | 34 | 52 | 109 | 938 | |
| | 1991.12-1998.02 | MT | F | L/R | Estate FWD 17TD | | GCI44002 | Inner Joint | | 34 | 25 | 35 | 56.2 | 114.8 | |
| | 1991.12-1998.02 | AT/MT | F | L/R | Hatchback FWD 17TD | | GCO44056 | Outer Joint | 29T | 33 | 25 | 52 | 109 | 61 | O |
| | 1991.12-1998.02 | MT | F | L | Hatchback FWD 17TD | | GDS44011 | Drive Shaft | 29T | 33 | 34 | 52 | 109 | 594.5 | |
| | 1991.12-1998.02 | MT | F | R | Hatchback FWD 17TD | | GDS44059 | Drive Shaft | 29T | 33 | 34 | 52 | 109 | 938 | |
| | 1991.12-1998.02 | MT | F | L/R | Hatchback FWD 17TD | | GCI44002 | Inner Joint | | 34 | 25 | 35 | 56.2 | 114.8 | |
| | 1991.12-1998.02 | | F | | Hatchback FWD 17TD | | GCO88003 | Outer Joint | | 33 | 25 | 52 | 109 | 61 | O |
| | 1991.12-1998.09 | AT/MT | F | L/R | Saloon FWD 17TD | | GCO44056 | Outer Joint | 29T | 33 | 25 | 52 | 109 | 61 | O |
| | 1991.12-1998.09 | MT | F | L | Saloon FWD 17TD | | GDS44011 | Drive Shaft | 29T | 33 | 34 | 52 | 109 | 594.5 | |
| | 1991.12-1998.09 | MT | F | R | Saloon FWD 17TD | | GDS44059 | Drive Shaft | 29T | 33 | 34 | 52 | 109 | 938 | |
| | 1991.12-1998.09 | MT | F | L/R | Saloon FWD 17TD | | GCI44002 | Inner Joint | | 34 | 25 | 35 | 56.2 | 114.8 | |
| | 1991.12-1998.09 | | F | | Saloon FWD 17TD | | GCO88003 | Outer Joint | | 33 | 25 | 52 | 109 | 61 | O |
| 1.7 (74 kw) | 2004.01-2009.05 | 5MT | F | L | Hatchback FWD Z 17 DTH | | GDS44029 | Drive Shaft | | 33 | 34 | 53 | 93.5 | 594 | |
| | 2004.01-2009.05 | 5MT/6MT | F | R | Hatchback FWD Z 17 DTH | | GDS44031 | Drive Shaft | | 33 | 34 | 53 | 93.5 | 559 | |
| | 2004.01-2009.05 | 5MT/6MT | F | L | Hatchback FWD Z 17 DTH | | GCI44002 | Inner Joint | | 34 | 25 | 35 | 56.2 | 114.8 | |
| | 2004.01-2009.05 | 5MT/6MT | F | L | Hatchback FWD Z 17 DTH | | GCI44008 | Inner Joint | | 25 | 25 | 34.9 | 57.5 | 113.2 | |
| | 2004.01-2009.05 | 6MT | F | L | Hatchback FWD Z 17 DTH | | GDS44052 | Drive Shaft | | 33 | 25 | 53 | 93.5 | 573 | |
| | 2004.01-2009.05 | AT/MT | F | L/R | Hatchback FWD Z 17 DTH | | GCO44028 | Outer Joint | | 33 | 24 | 53 | 93.5 | 63.5 | M |
| | 2004.01-2009.05 | | F | R | Hatchback FWD Z 17 DTH | | GCI44005 | Inner Joint | | 34 | 25 | 35 | | 130.2 | |
| | 2004.08-2009.03 | 5MT | F | L | Estate FWD Z 17 DTH | | GDS44029 | Drive Shaft | | 33 | 34 | 53 | 93.5 | 594 | |
| | 2004.08-2009.03 | 5MT | F | R | Estate FWD Z 17 DTH | | GDS44031 | Drive Shaft | | 33 | 34 | 53 | 93.5 | 559 | |
| | 2004.08-2009.03 | 5MT | F | L/R | Estate FWD Z 17 DTH | | GCO44028 | Outer Joint | | 33 | 24 | 53 | 93.5 | 63.5 | M |
| | 2004.08-2009.03 | 5MT | F | L | Estate FWD Z 17 DTH | | GCI21011 | Inner Joint | | 34 | 25 | 35 | 56.5 | 114.7 | |
| | 2004.08-2009.03 | 5MT | F | R | Estate FWD Z 17 DTH | | GCI44011 | Inner Joint | | 34 | 25 | 37.5 | | 130.2 | |
| | 2010.10-2015.10 | 6MT | F | L | Hatchback FWD A 17 DTL | | GDS21076 | Drive Shaft | | 30 | 25 | 52.5 | 94 | 601 | |
| | 2010.10-2015.10 | 6MT | F | R | Hatchback FWD A 17 DTL | Chassis no. from:D0/D1109965/D3/D8061302/DG | GDS83136 | Drive Shaft | | 30 | 25 | 52.5 | 94 | 993 | |
| | 2010.10-2015.10 | 6MT | F | L/R | Hatchback FWD A 17 DTL | Chassis no. to:D0/D1109964/D3/D8061301/DG | GCO17051 | Outer Joint | | 30 | 26 | 53.8 | 94.5 | 65.5 | M |
| | 2010.10-2015.10 | 6MT | F | L/R | Hatchback FWD A 17 DTL | Chassis no. from:D0/D1109965/D3/D8061302 | GCO21038 | Outer Joint | | 30 | 24 | 52 | 94 | 64 | M |
| | 2010.10-2015.10 | 6MT | F | L/R | Hatchback FWD A 17 DTL | Chassis no. to:D0/D1109964/D3/D8061301/DG | GCO21049 | Outer Joint | | 30 | 26 | 52.5 | 94 | 65.5 | M |
| | 2010.10-2015.10 | 6MT | F | L/R | Hatchback FWD A 17 DTL | Chassis no. to:D0/D1109964/D3/D8061301/DG | GCO88046 | Outer Joint | | 30 | 26 | 52.5 | 94.5 | 65.5 | M |
| | 2010.10-2015.10 | 6MT | F | R | Hatchback FWD A 17 DTL | Chassis no. from:D0/D1109965/D3/D8061302/DG | GCI88026 | Inner Joint | | 34 | 26 | 37.5 | | 100 | |
| | 2010.10-2015.10 | 6MT | F | L/R | Hatchback FWD A 17 DTL | Chassis no. from:D0/D1109965/D3/D8061302/DG | GCI44008 | Inner Joint | | 25 | 25 | 34.9 | 57.5 | 113.2 | |

| | YEAR | TRANSM. | F/R | L/R | BODY STYLE & DRIVE TYPE & ENGINE | REMARKS | G-AP Ref. | PRODUCT | ABS | Technical Specifications A | B | C | H | L | P |
|---|---|---|---|---|---|---|---|---|---|---|---|---|---|---|---|
| **VAUXHALL** **Astra** | | | | | | | | | | | | | | | |
| 1.7 (81 kw) | 2004.01-2011.03 | 6MT | F | L | Hatchback FWD Z 17 DTJ;A 17 DTJ | | GDS21051 | Drive Shaft | | 33 | 25 | 52.5 | 94 | 579 | |
| | 2004.01-2011.03 | 6MT | F | R | Hatchback FWD Z 17 DTJ;A 17 DTJ | | GDS44099 | Drive Shaft | | 33 | 34 | 52.5 | 94 | 563 | |
| | 2004.01-2011.03 | AT/MT | F | L/R | Hatchback FWD Z 17 DTJ;A 17 DTJ | Date from:2008.01 | GCO44027 | Outer Joint | | 33 | 26 | 52.5 | 94 | 65.5 | M |
| | 2004.01-2011.03 | MT | F | L | Hatchback FWD Z 17 DTJ;A 17 DTJ | | GCI99186 | Inner Joint | | 25 | 28 | 34.9 | 57.5 | 111 | |
| | 2004.01-2011.03 | MT | F | R | Hatchback FWD Z 17 DTJ;A 17 DTJ | | GCI44016 | Inner Joint | | 34 | 28 | 37.5 | | 129.2 | |
| | 2004.01-2011.03 | | F | | Hatchback FWD Z 17 DTJ;A 17 DTJ | | GCO99024 | Outer Joint | | 33 | 26 | 52.5 | 94 | 65.5 | M |
| | 2004.01-2011.03 | | F | R | Hatchback FWD Z 17 DTJ;A 17 DTJ | | GCI44005 | Inner Joint | | 34 | 25 | 35 | | 130.2 | |
| | 2004.08-2012.10 | 6MT | F | L | Estate FWD Z 17 DTJ;A 17 DTJ | | GDS21051 | Drive Shaft | | 33 | 25 | 52.5 | 94 | 579 | |
| | 2004.08-2012.10 | 6MT | F | R | Estate FWD Z 17 DTJ;A 17 DTJ | | GDS44099 | Drive Shaft | | 33 | 34 | 52.5 | 94 | 563 | |
| | 2004.08-2012.10 | AT/MT | F | L/R | Estate FWD Z 17 DTJ;A 17 DTJ | Date to:2009.12 | GCO44027 | Outer Joint | | 33 | 26 | 52.5 | 94 | 65.5 | M |
| | 2004.08-2012.10 | MT | F | L | Estate FWD Z 17 DTJ;A 17 DTJ | Date to:2011.03 | GCI99186 | Inner Joint | | 25 | 28 | 34.9 | 57.5 | 111 | |
| | 2004.08-2012.10 | MT | F | R | Estate FWD Z 17 DTJ;A 17 DTJ | | GCI44005 | Inner Joint | | 34 | 25 | 35 | | 130.2 | |
| | 2004.08-2012.10 | MT | F | R | Estate FWD Z 17 DTJ;A 17 DTJ | Date to:2011.03 | GCI44016 | Inner Joint | | 34 | 28 | 37.5 | | 129.2 | |
| | 2004.08-2012.10 | | F | | Estate FWD Z 17 DTJ;A 17 DTJ | | GCO99024 | Outer Joint | | 33 | 26 | 52.5 | 94 | 65.5 | M |
| | 2009.12-2015.10 | 6MT | F | R | Hatchback FWD A 17 DTJ;A 17 DTC;A 17 DTE | [illegible] | GDS83136 | Drive Shaft | | 30 | 25 | 52.5 | 94 | 993 | |
| | 2009.12-2015.10 | 6MT | F | R | Hatchback FWD A 17 DTJ;A 17 DTC;A 17 DTE | For Engine code:A17DTE;Chassis no. to:D0/D1110089/D3/D8061301/DG | GDS83228 | Drive Shaft | | 30 | 25 | 52.5 | 94 | 996 | |
| | 2009.12-2015.10 | 6MT | F | L | Hatchback FWD A 17 DTJ;A 17 DTC;A 17 DTE | For Engine code:A17DTC/A17DTJ;Chassis no. to:D0/D1109964/D3/D8061301/DG | GCO88046 | Outer Joint | | 30 | 26 | 52.5 | 94.5 | 65.5 | M |
| | 2009.12-2015.10 | 6MT | F | L/R | Hatchback FWD A 17 DTJ;A 17 DTC;A 17 DTE | For Engine code:A17DTC/A17DTJ;Chassis no. to:D0/D1109964/D3/D8061301/DG | GCO17051 | Outer Joint | | 30 | 26 | 53.8 | 94.5 | 65.5 | M |
| | 2009.12-2015.10 | 6MT | F | L/R | Hatchback FWD A 17 DTJ;A 17 DTC;A 17 DTE | For Engine code:A17DTC/A17DTJ;Chassis no. from:D0/D1109965/D3/D8061302 | GCO21038 | Outer Joint | | 30 | 24 | 52 | 94 | 64 | M |
| | 2009.12-2015.10 | 6MT | F | L/R | Hatchback FWD A 17 DTJ;A 17 DTC;A 17 DTE | For Engine code:A17DTC/A17DTJ;Chassis no. to:D0/D1109964/D3/D8061301/DG | GCO21049 | Outer Joint | | 30 | 26 | 52.5 | 94 | 65.5 | M |
| | 2009.12-2015.10 | 6MT | F | R | Hatchback FWD A 17 DTJ;A 17 DTC;A 17 DTE | For Engine code:A17DTC/A17DTJ;Chassis no. from:D0/D1109965/D3/D8061302/DG | GCI88026 | Inner Joint | | 34 | 26 | 37.5 | | 100 | |
| | 2009.12-2015.10 | 6MT | F | L/R | Hatchback FWD A 17 DTJ;A 17 DTC;A 17 DTE | For Engine code:A17DTC/A17DTJ;Chassis no. from:D0/D1109965/D3/D8061302/DG | GCI44008 | Inner Joint | | 25 | 25 | 34.9 | 57.5 | 113.2 | |
| | 2009.12-2015.10 | MT | F | R | Hatchback FWD A 17 DTJ;A 17 DTC;A 17 DTE | | GDS21074 | Drive Shaft | | 30 | 34 | 52.5 | 94 | 589 | |
| | 2009.12-2015.10 | | F | L | Hatchback FWD A 17 DTJ;A 17 DTC;A 17 DTE | For Engine Code:A17DTS;Chassis no. from:D0/D1109965/D3/D8061302/DG | GDS21076 | Drive Shaft | | 30 | 25 | 52.5 | 94 | 601 | |
| | 2010.10-2015.10 | 6MT | F | L | Estate FWD A 17 DTJ;A 17 DTC;A 17 DTE | For Engine code:A17DTC/A17DTJ | GDS21076 | Drive Shaft | | 30 | 25 | 52.5 | 94 | 601 | |
| | 2010.10-2015.10 | 6MT | F | R | Estate FWD A 17 DTJ;A 17 DTC;A 17 DTE | For Engine code:A17DTE;Chassis no. to:D0/D1110089/D3/D8061301/DG | GDS21074 | Drive Shaft | | 30 | 34 | 52.5 | 94 | 589 | |
| | 2010.10-2015.10 | 6MT | F | R | Estate FWD A 17 DTJ;A 17 DTC;A 17 DTE | [illegible] | GDS83136 | Drive Shaft | | 30 | 25 | 52.5 | 94 | 993 | |
| | 2010.10-2015.10 | 6MT | F | R | Estate FWD A 17 DTJ;A 17 DTC;A 17 DTE | For Engine code:A17DTE;Chassis no. to:D0/D1110089/D3/D8061301/DG | GDS83228 | Drive Shaft | | 30 | 25 | 52.5 | 94 | 996 | |
| | 2010.10-2015.10 | 6MT | F | L | Estate FWD A 17 DTJ;A 17 DTC;A 17 DTE | For Engine code:A17DTC/A17DTJ;Chassis no. to:D0/D1109964/D3/D8061301/DG | GCO88046 | Outer Joint | | 30 | 26 | 52.5 | 94.5 | 65.5 | M |
| | 2010.10-2015.10 | 6MT | F | L/R | Estate FWD A 17 DTJ;A 17 DTC;A 17 DTE | For Engine code:A17DTC/A17DTJ;Chassis no. to:D0/D1109964/D3/D8061301/DG | GCO17051 | Outer Joint | | 30 | 26 | 53.8 | 94.5 | 65.5 | M |
| | 2010.10-2015.10 | 6MT | F | L/R | Estate FWD A 17 DTJ;A 17 DTC;A 17 DTE | For Engine code:A17DTC/A17DTJ;Chassis no. from:D0/D1109965/D3/D8061302 | GCO21038 | Outer Joint | | 30 | 24 | 52 | 94 | 64 | M |
| | 2010.10-2015.10 | 6MT | F | L/R | Estate FWD A 17 DTJ;A 17 DTC;A 17 DTE | For Engine code:A17DTC/A17DTJ;Chassis no. to:D0/D1109964/D3/D8061301/DG | GCO21049 | Outer Joint | | 30 | 26 | 52.5 | 94 | 65.5 | M |
| | 2010.10-2015.10 | 6MT | F | R | Estate FWD A 17 DTJ;A 17 DTC;A 17 DTE | For Engine code:A17DTC/A17DTJ;Chassis no. from:D0/D1109965/D3/D8061302/DG | GCI88026 | Inner Joint | | 34 | 26 | 37.5 | | 100 | |
| | 2010.10-2015.10 | 6MT | F | L/R | Estate FWD A 17 DTJ;A 17 DTC;A 17 DTE | For Engine code:A17DTC/A17DTJ;Chassis no. from:D0/D1109965/D3/D8061302/DG | GCI44008 | Inner Joint | | 25 | 25 | 34.9 | 57.5 | 113.2 | |
| | 2012.06-2015.10 | 6MT | F | R | Saloon FWD A17DTC/A17DTE/A17DTJ | For Engine code:A17DTC/A17DTJ;Chassis no. from:D0/D1109965/D3/D8061302/DG | GCO21049 | Outer Joint | | 30 | 26 | 52.5 | 94 | 65.5 | M |
| | 2012.06-2015.10 | 6MT | F | R | Saloon FWD A17DTC/A17DTE/A17DTJ | For Engine code:A17DTC/A17DTJ;Chassis no. from:D0/D1109965/D3/D8061302/DG | GCI88026 | Inner Joint | | 34 | 26 | 37.5 | | 100 | |
| 1.7 (92 kw) | 2009.12-2015.10 | 6MT | F | L | Hatchback FWD A 17 DTR | | GDS21076 | Drive Shaft | | 30 | 25 | 52.5 | 94 | 601 | |
| | 2009.12-2015.10 | 6MT | F | R | Hatchback FWD A 17 DTR | Chassis no. from:D0/D1109965/D3/D8061302/DG | GDS83136 | Drive Shaft | | 30 | 25 | 52.5 | 94 | 993 | |
| | 2009.12-2015.10 | 6MT | F | L/R | Hatchback FWD A 17 DTR | Chassis no. to:D0/D1109964/D3/D8061301/DG | GCO17051 | Outer Joint | | 30 | 26 | 53.8 | 94.5 | 65.5 | M |
| | 2009.12-2015.10 | 6MT | F | L/R | Hatchback FWD A 17 DTR | Chassis no. from:D0/D1109965/D3/D8061302 | GCO21038 | Outer Joint | | 30 | 24 | 52 | 94 | 64 | M |
| | 2009.12-2015.10 | 6MT | F | L/R | Hatchback FWD A 17 DTR | Chassis no. to:D0/D1109964/D3/D8061301/DG | GCO21049 | Outer Joint | | 30 | 26 | 52.5 | 94 | 65.5 | M |
| | 2009.12-2015.10 | 6MT | F | L/R | Hatchback FWD A 17 DTR | Chassis no. to:D0/D1109964/D3/D8061301/DG | GCO88046 | Outer Joint | | 30 | 26 | 52.5 | 94.5 | 65.5 | M |
| | 2009.12-2015.10 | 6MT | F | R | Hatchback FWD A 17 DTR | Chassis no. from:D0/D1109965/D3/D8061302/DG | GCI88026 | Inner Joint | | 34 | 26 | 37.5 | | 100 | |
| | 2009.12-2015.10 | 6MT | F | L/R | Hatchback FWD A 17 DTR | Chassis no. from:D0/D1109965/D3/D8061302/DG | GCI44008 | Inner Joint | | 25 | 25 | 34.9 | 57.5 | 113.2 | |
| | 2010.10-2015.10 | 6MT | F | L | Estate FWD A 17 DTR | | GDS21076 | Drive Shaft | | 30 | 25 | 52.5 | 94 | 601 | |
| | 2010.10-2015.10 | 6MT | F | R | Estate FWD A 17 DTR | Chassis no. from:D0/D1109965/D3/D8061302/DG | GDS83136 | Drive Shaft | | 30 | 25 | 52.5 | 94 | 993 | |
| | 2010.10-2015.10 | 6MT | F | L/R | Estate FWD A 17 DTR | Chassis no. to:D0/D1109964/D3/D8061301/DG | GCO17051 | Outer Joint | | 30 | 26 | 53.8 | 94.5 | 65.5 | M |
| | 2010.10-2015.10 | 6MT | F | L/R | Estate FWD A 17 DTR | Chassis no. from:D0/D1109965/D3/D8061302 | GCO21038 | Outer Joint | | 30 | 24 | 52 | 94 | 64 | M |
| | 2010.10-2015.10 | 6MT | F | L/R | Estate FWD A 17 DTR | Chassis no. to:D0/D1109964/D3/D8061301/DG | GCO21049 | Outer Joint | | 30 | 26 | 52.5 | 94 | 65.5 | M |
| | 2010.10-2015.10 | 6MT | F | L/R | Estate FWD A 17 DTR | Chassis no. to:D0/D1109964/D3/D8061301/DG | GCO88046 | Outer Joint | | 30 | 26 | 52.5 | 94.5 | 65.5 | M |
| | 2010.10-2015.10 | 6MT | F | R | Estate FWD A 17 DTR | Chassis no. from:D0/D1109965/D3/D8061302/DG | GCI88026 | Inner Joint | | 34 | 26 | 37.5 | | 100 | |
| | 2010.10-2015.10 | 6MT | F | L/R | Estate FWD A 17 DTR | Chassis no. from:D0/D1109965/D3/D8061302/DG | GCI44008 | Inner Joint | | 25 | 25 | 34.9 | 57.5 | 113.2 | |
| 1.7 (96 kw) | 2011.06-2015.10 | 6MT | F | L | Estate FWD A 17 DTS;A 17 DTF | | GDS21076 | Drive Shaft | | 30 | 25 | 52.5 | 94 | 601 | |
| | 2011.06-2015.10 | 6MT | F | R | Estate FWD A 17 DTS;A 17 DTF | [illegible] | GDS83136 | Drive Shaft | | 30 | 25 | 52.5 | 94 | 993 | |
| | 2011.06-2015.10 | 6MT | F | R | Estate FWD A 17 DTS;A 17 DTF | For Engine code:A17DTF;Chassis no. to:D0/D1110089/D3/D8061301/DG | GDS83228 | Drive Shaft | | 30 | 25 | 52.5 | 94 | 996 | |
| | 2011.06-2015.10 | 6MT | F | L/R | Estate FWD A 17 DTS;A 17 DTF | For Engine code:A17DTS;Chassis no. to:D0/D1109964/D3/D8061301/DG | GCO17051 | Outer Joint | | 30 | 26 | 53.8 | 94.5 | 65.5 | M |
| | 2011.06-2015.10 | 6MT | F | L/R | Estate FWD A 17 DTS;A 17 DTF | For Engine code:A17DTS;Chassis no. from:D0/D1109965/D3/D8061302 | GCO21038 | Outer Joint | | 30 | 24 | 52 | 94 | 64 | M |
| | 2011.06-2015.10 | 6MT | F | L/R | Estate FWD A 17 DTS;A 17 DTF | For Engine code:A17DTS;Chassis no. to:D0/D1109964/D3/D8061301/DG | GCO21049 | Outer Joint | | 30 | 26 | 52.5 | 94 | 65.5 | M |
| | 2011.06-2015.10 | 6MT | F | L/R | Estate FWD A 17 DTS;A 17 DTF | For Engine code:A17DTS;Chassis no. to:D0/D1109964/D3/D8061301/DG | GCO88046 | Outer Joint | | 30 | 26 | 52.5 | 94.5 | 65.5 | M |
| | 2011.06-2015.10 | 6MT | F | R | Estate FWD A 17 DTS;A 17 DTF | For Engine code:A17DTS;Chassis no. from:D0/D1109965/D3/D8061302/DG | GCI88026 | Inner Joint | | 34 | 26 | 37.5 | | 100 | |
| | 2011.06-2015.10 | 6MT | F | L/R | Estate FWD A 17 DTS;A 17 DTF | For Engine code:A17DTS;Chassis no. from:D0/D1109965/D3/D8061302/DG | GCI44008 | Inner Joint | | 25 | 25 | 34.9 | 57.5 | 113.2 | |
| | 2011.06-2015.10 | 6MT | F | L | Hatchback FWD A 17 DTS;A 17 DTF | | GDS21076 | Drive Shaft | | 30 | 25 | 52.5 | 94 | 601 | |
| | 2011.06-2015.10 | 6MT | F | R | Hatchback FWD A 17 DTS;A 17 DTF | [illegible] | GDS83136 | Drive Shaft | | 30 | 25 | 52.5 | 94 | 993 | |
| | 2011.06-2015.10 | 6MT | F | R | Hatchback FWD A 17 DTS;A 17 DTF | For Engine code:A17DTF;Chassis no. to:D0/D1110089/D3/D8061301/DG | GDS83228 | Drive Shaft | | 30 | 25 | 52.5 | 94 | 996 | |
| | 2011.06-2015.10 | 6MT | F | L | Hatchback FWD A 17 DTS;A 17 DTF | For Engine code:A17DTS;Chassis no. to:D0/D1109964/D3/D8061301/DG | GCO88046 | Outer Joint | | 30 | 26 | 52.5 | 94.5 | 65.5 | M |

| | YEAR | TRANSM. | F/R | L/R | BODY STYLE & DRIVE TYPE & ENGINE | REMARKS | G-AP Ref. | PRODUCT | ABS | Technical Specifications A | B | C | H | L | P |
|---|---|---|---|---|---|---|---|---|---|---|---|---|---|---|---|
| **VAUXHALL** **Astra** | | | | | | | | | | | | | | | |
| 1.7 (96 kw) | 2011.06-2015.10 | 6MT | F | L/R | Hatchback FWD A 17 DTS;A 17 DTF | For Engine code:A17DTS,Chassis no. to:D0/D1109964/D3/D8061301-DG | GCO17051 | Outer Joint | | 30 | 26 | 53.8 | 94.5 | 65.5 | M |
| | 2011.06-2015.10 | 6MT | F | L/R | Hatchback FWD A 17 DTS;A 17 DTF | For Engine code:A17DTS,Chassis no. from:D0/D1109965/D3/D8061302 | GCO21038 | Outer Joint | | 30 | 24 | 52 | 94 | 64 | M |
| | 2011.06-2015.10 | 6MT | F | L/R | Hatchback FWD A 17 DTS;A 17 DTF | For Engine code:A17DTS,Chassis no. to:D0/D1109964/D3/D8061301-DG | GCO21049 | Outer Joint | | 30 | 26 | 52.5 | 94 | 65.5 | M |
| | 2011.06-2015.10 | 6MT | F | R | Hatchback FWD A 17 DTS;A 17 DTF | For Engine code:A17DTS,Chassis no. from:D0/D1109965/D3/D8061302-DG | GCI88026 | Inner Joint | | 34 | 26 | 37.5 | | 100 | |
| | 2011.06-2015.10 | 6MT | F | L/R | Hatchback FWD A 17 DTS;A 17 DTF | For Engine code:A17DTS,Chassis no. from:D0/D1109965/D3/D8061302-DG | GCI44008 | Inner Joint | | 25 | 25 | 34.9 | 57.5 | 113.2 | |
| | 2012.06-2015.10 | 6MT | F | R | Saloon FWD A17DTF/A17DTS | For Engine code:A17DTS,Chassis no. from:D0/D1109965/D3/D8061302-DG | GCO21049 | Outer Joint | | 30 | 26 | 52.5 | 94 | 65.5 | M |
| | 2012.06-2015.10 | 6MT | F | R | Saloon FWD A17DTF/A17DTS | For Engine code:A17DTS,Chassis no. from:D0/D1109965/D3/D8061302-DG | GCI88026 | Inner Joint | | 34 | 26 | 37.5 | | 100 | |
| 1.8 (66 kw) | 1991.09-1998.02 | AT/MT | F | L | Estate FWD C 18 NZ | | GDS44011 | Drive Shaft | 29T | 33 | 34 | 52 | 109 | 594.5 | |
| | 1991.09-1998.02 | AT/MT | F | R | Estate FWD C 18 NZ | | GDS44059 | Drive Shaft | 29T | 33 | 34 | 52 | 109 | 938 | |
| | 1991.09-1998.02 | AT/MT | F | L/R | Estate FWD C 18 NZ | | GCI44002 | Inner Joint | | 34 | 25 | 35 | 56.2 | 114.8 | |
| | 1991.09-1998.02 | | F | L/R | Estate FWD C 18 NZ | | GCO44056 | Outer Joint | 29T | 33 | 25 | 52 | 109 | 61 | O |
| | 1991.09-1998.02 | AT/MT | F | L | Hatchback FWD C 18 NZ | | GDS44011 | Drive Shaft | 29T | 33 | 34 | 52 | 109 | 594.5 | |
| | 1991.09-1998.02 | AT/MT | F | R | Hatchback FWD C 18 NZ | | GDS44059 | Drive Shaft | 29T | 33 | 34 | 52 | 109 | 938 | |
| | 1991.09-1998.02 | AT/MT | F | L/R | Hatchback FWD C 18 NZ | | GCI44002 | Inner Joint | | 34 | 25 | 35 | 56.2 | 114.8 | |
| | 1991.09-1998.02 | | F | L/R | Hatchback FWD C 18 NZ | | GCO44056 | Outer Joint | 29T | 33 | 25 | 52 | 109 | 61 | O |
| | 1992.03-1998.09 | AT/MT | F | L | Saloon FWD C 18 NZ | | GDS44011 | Drive Shaft | 29T | 33 | 34 | 52 | 109 | 594.5 | |
| | 1992.03-1998.09 | AT/MT | F | R | Saloon FWD C 18 NZ | | GDS44059 | Drive Shaft | 29T | 33 | 34 | 52 | 109 | 938 | |
| | 1992.03-1998.09 | AT/MT | F | L/R | Saloon FWD C 18 NZ | | GCI44002 | Inner Joint | | 34 | 25 | 35 | 56.2 | 114.8 | |
| | 1992.03-1998.09 | | F | L/R | Saloon FWD C 18 NZ | | GCO44056 | Outer Joint | 29T | 33 | 25 | 52 | 109 | 61 | O |
| 1.8 (82 kw) | 1995.09-1998.02 | | F | | Saloon FWD 18SE | | GCO88003 | Outer Joint | | 33 | 25 | 52 | 109 | 61 | O |
| 1.8 (85 kw) | 1993.10-1996.08 | AT/MT | F | L | Saloon FWD C18XEL | | GDS44011 | Drive Shaft | 29T | 33 | 34 | 52 | 109 | 594.5 | |
| | 1993.10-1996.08 | MT | F | L/R | Saloon FWD C18XEL | Date to:1996.08 | GCI44002 | Inner Joint | | 34 | 25 | 35 | 56.2 | 114.8 | |
| | 1993.10-1996.08 | | F | | Saloon FWD C18XEL | | GCO88003 | Outer Joint | | 33 | 25 | 52 | 109 | 61 | O |
| | 1994.09-1998.01 | AT/MT | F | L | Hatchback FWD C18XEL | | GDS44011 | Drive Shaft | 29T | 33 | 34 | 52 | 109 | 594.5 | |
| | 1994.09-1998.01 | MT | F | L/R | Hatchback FWD C18XEL | | GCI44002 | Inner Joint | | 34 | 25 | 35 | 56.2 | 114.8 | |
| | 1994.09-1998.01 | | F | | Hatchback FWD C18XEL | | GCO88003 | Outer Joint | | 33 | 25 | 52 | 109 | 61 | O |
| | 1994.09-1998.02 | AT/MT | F | L | Estate FWD C18XEL | | GDS44011 | Drive Shaft | 29T | 33 | 34 | 52 | 109 | 594.5 | |
| | 1994.09-1998.02 | MT | F | L/R | Estate FWD C18XEL | | GCI44002 | Inner Joint | | 34 | 25 | 35 | 56.2 | 114.8 | |
| | 1994.09-1998.02 | | F | | Estate FWD C18XEL | | GCO88003 | Outer Joint | | 33 | 25 | 52 | 109 | 61 | O |
| | 1998.02-2000.08 | 4AT/5MT | F | R | Estate FWD X18XE1 | | GDS60035 | Drive Shaft | | 33 | 22 | 52 | 109 | 961 | |
| | 1998.02-2000.08 | AT/MT | F | L/R | Estate FWD X18XE1 | | GCO44006 | Outer Joint | 29T | 33 | 25 | 52 | 103.5 | 61 | O |
| | 1998.02-2000.08 | MT | F | R | Estate FWD X18XE1 | | GCO44049 | Outer Joint | | 33 | 25 | 52 | 109 | 61 | O |
| | 1998.02-2000.08 | | F | L | Estate FWD X18XE1 | | GDS60013 | Drive Shaft | | 33 | 22 | 52 | 103 | 595 | |
| | 1998.02-2000.08 | | F | L/R | Estate FWD X18XE1 | | GCI99026 | Inner Joint | | 22 | 25 | 35 | 57 | 111.7 | |
| | 1998.02-2000.08 | 4AT/5MT | F | R | Hatchback FWD X18XE1 | | GDS60035 | Drive Shaft | | 33 | 22 | 52 | 109 | 961 | |
| | 1998.02-2000.08 | AT/MT | F | L/R | Hatchback FWD X18XE1 | | GCO44006 | Outer Joint | 29T | 33 | 25 | 52 | 103.5 | 61 | O |
| | 1998.02-2000.08 | MT | F | R | Hatchback FWD X18XE1 | | GCO44049 | Outer Joint | | 33 | 25 | 52 | 109 | 61 | O |
| | 1998.02-2000.08 | | F | L | Hatchback FWD X18XE1 | | GDS60013 | Drive Shaft | | 33 | 22 | 52 | 103 | 595 | |
| | 1998.02-2000.08 | | F | L/R | Hatchback FWD X18XE1 | | GCI99026 | Inner Joint | | 22 | 25 | 35 | 57 | 111.7 | |
| | 1998.11-2000.07 | 4AT/5MT | F | R | Saloon FWD X18XE1 | | GDS60035 | Drive Shaft | | 33 | 22 | 52 | 109 | 961 | |
| | 1998.11-2000.07 | AT/MT | F | L/R | Saloon FWD X18XE1 | Date from:1998.11;Date to:2000.07 | GCO44006 | Outer Joint | 29T | 33 | 25 | 52 | 103.5 | 61 | O |
| | 1998.11-2000.07 | MT | F | R | Saloon FWD X18XE1 | | GCO44049 | Outer Joint | | 33 | 25 | 52 | 109 | 61 | O |
| | 1998.11-2000.07 | | F | L | Saloon FWD X18XE1 | | GDS60013 | Drive Shaft | | 33 | 22 | 52 | 103 | 595 | |
| | 1998.11-2000.07 | | F | L/R | Saloon FWD X18XE1 | | GCI99026 | Inner Joint | | 22 | 25 | 35 | 57 | 111.7 | |
| 1.8 (87 kw) | 2001.08-2005.03 | AT/MT | F | L | Hatchback FWD Z18XE | | GDS60013 | Drive Shaft | | 33 | 22 | 52 | 103 | 595 | |
| | 2001.08-2005.03 | AT/MT | F | R | Hatchback FWD Z18XE | | GDS60035 | Drive Shaft | | 33 | 22 | 52 | 109 | 961 | |
| | 2001.08-2005.03 | AT/MT | F | L/R | Hatchback FWD Z18XE | | GCO44006 | Outer Joint | 29T | 33 | 25 | 52 | 103.5 | 61 | O |
| | 2001.08-2005.03 | MT | F | R | Hatchback FWD Z18XE | | GCO44049 | Outer Joint | | 33 | 25 | 52 | 109 | 61 | O |
| | 2001.08-2005.03 | MT | F | L/R | Hatchback FWD Z18XE | | GCI99026 | Inner Joint | | 22 | 25 | 35 | 57 | 111.7 | |
| | 2001.08-2005.05 | 4AT/5MT | F | R | Estate FWD Z18XE | | GDS60035 | Drive Shaft | | 33 | 22 | 52 | 109 | 961 | |
| | 2001.08-2005.05 | AT/MT | F | L | Estate FWD Z18XE | | GDS60013 | Drive Shaft | | 33 | 22 | 52 | 103 | 595 | |
| | 2001.08-2005.05 | AT/MT | F | L/R | Estate FWD Z18XE | | GCO44006 | Outer Joint | 29T | 33 | 25 | 52 | 103.5 | 61 | O |
| | 2001.08-2005.05 | MT | F | R | Estate FWD Z18XE | | GCO44049 | Outer Joint | | 33 | 25 | 52 | 109 | 61 | O |
| | 2001.08-2005.05 | MT | F | L/R | Estate FWD Z18XE | | GCI99026 | Inner Joint | | 22 | 25 | 35 | 57 | 111.7 | |
| | 2002.07-2004.07 | 4AT/5MT | F | R | Saloon FWD Z18XE | | GDS60035 | Drive Shaft | | 33 | 22 | 52 | 109 | 961 | |
| | 2002.07-2004.07 | AT/MT | F | L | Saloon FWD Z18XE | | GDS60013 | Drive Shaft | | 33 | 22 | 52 | 103 | 595 | |
| | 2002.07-2004.07 | AT/MT | F | L/R | Saloon FWD Z18XE | | GCO44006 | Outer Joint | 29T | 33 | 25 | 52 | 103.5 | 61 | O |
| | 2002.07-2004.07 | MT | F | R | Saloon FWD Z18XE | | GCO44049 | Outer Joint | | 33 | 25 | 52 | 109 | 61 | O |
| | 2002.07-2004.07 | MT | F | L/R | Saloon FWD Z18XE | | GCI99026 | Inner Joint | | 22 | 25 | 35 | 57 | 111.7 | |
| 1.8 (92 kw) | 1993.09-1998.02 | AT/MT | F | L | Hatchback FWD C18XE | | GDS44011 | Drive Shaft | 29T | 33 | 34 | 52 | 109 | 594.5 | |
| | 1993.09-1998.02 | MT | F | L/R | Hatchback FWD C18XE | | GCI44002 | Inner Joint | | 34 | 25 | 35 | 56.2 | 114.8 | |
| | 1993.09-1998.02 | | F | | Hatchback FWD C18XE | | GCO88003 | Outer Joint | | 33 | 25 | 52 | 109 | 61 | O |
| | 1994.09-1998.02 | AT/MT | F | L | Estate FWD C18XE | | GDS44011 | Drive Shaft | 29T | 33 | 34 | 52 | 109 | 594.5 | |
| | 1994.09-1998.02 | MT | F | L/R | Estate FWD C18XE | | GCI44002 | Inner Joint | | 34 | 25 | 35 | 56.2 | 114.8 | |
| | 1994.09-1998.02 | | F | | Estate FWD C18XE | | GCO88003 | Outer Joint | | 33 | 25 | 52 | 109 | 61 | O |

| | YEAR | TRANSM. | F/R | L/R | BODY STYLE & DRIVE TYPE & ENGINE | REMARKS | G-AP Ref. | PRODUCT | ABS | Technical Specifications A | B | C | H | L | P |
|---|---|---|---|---|---|---|---|---|---|---|---|---|---|---|---|
| **VAUXHALL** | | | | | | | | | | | | | | | |
| **Astra** | | | | | | | | | | | | | | | |
| 1.8 (92 kw) | 2000.09-2004.08 | 4AT/5MT | F | R | Estate FWD Z18XE | | GDS60035 | Drive Shaft | | 33 | 22 | 52 | 109 | 961 | |
| | 2000.09-2004.08 | AT/MT | F | L/R | Estate FWD Z18XE | Date to:2004.08 | GCO44006 | Outer Joint | 29T | 33 | 25 | 52 | 103.5 | 61 | O |
| | 2000.09-2004.08 | MT | F | R | Estate FWD Z18XE | | GCO44049 | Outer Joint | | 33 | 25 | 52 | 109 | 61 | O |
| | 2000.09-2004.08 | | F | L | Estate FWD Z18XE | | GDS60013 | Drive Shaft | | 33 | 22 | 52 | 103 | 595 | |
| | 2000.09-2004.08 | | F | L/R | Estate FWD Z18XE | | GCI99026 | Inner Joint | | 22 | 25 | 35 | 57 | 111.7 | |
| | 2000.09-2004.08 | 4AT/5MT | F | R | Saloon FWD Z18XE | | GDS60035 | Drive Shaft | | 33 | 22 | 52 | 109 | 961 | |
| | 2000.09-2004.08 | AT/MT | F | L/R | Saloon FWD Z18XE | Date from:2000.09 | GCO44006 | Outer Joint | 29T | 33 | 25 | 52 | 103.5 | 61 | O |
| | 2000.09-2004.08 | MT | F | R | Saloon FWD Z18XE | | GCO44049 | Outer Joint | | 33 | 25 | 52 | 109 | 61 | O |
| | 2000.09-2004.08 | | F | L | Saloon FWD Z18XE | | GDS60013 | Drive Shaft | | 33 | 22 | 52 | 103 | 595 | |
| | 2000.09-2004.08 | | F | L/R | Saloon FWD Z18XE | | GCI99026 | Inner Joint | | 22 | 25 | 35 | 57 | 111.7 | |
| | 2000.09-2005.03 | 4AT/5MT | F | R | Hatchback FWD Z18XE | | GDS60035 | Drive Shaft | | 33 | 22 | 52 | 109 | 961 | |
| | 2000.09-2005.03 | AT/MT | F | L/R | Hatchback FWD Z18XE | | GCO44006 | Outer Joint | 29T | 33 | 25 | 52 | 103.5 | 61 | O |
| | 2000.09-2005.03 | MT | F | R | Hatchback FWD Z18XE | | GCO44049 | Outer Joint | | 33 | 25 | 52 | 109 | 61 | O |
| | 2000.09-2005.03 | | F | L | Hatchback FWD Z18XE | | GDS60013 | Drive Shaft | | 33 | 22 | 52 | 103 | 595 | |
| | 2000.09-2005.03 | | F | L/R | Hatchback FWD Z18XE | | GCI99026 | Inner Joint | | 22 | 25 | 35 | 57 | 111.7 | |
| | 2002.07-2003.12 | AT/MT | F | L | Estate FWD Z18XE | | GDS60013 | Drive Shaft | | 33 | 22 | 52 | 103 | 595 | |
| | 2002.07-2003.12 | AT/MT | F | L/R | Estate FWD Z18XE | | GCO44006 | Outer Joint | 29T | 33 | 25 | 52 | 103.5 | 61 | O |
| | 2002.07-2003.12 | AT/MT | F | L/R | Estate FWD Z18XE | | GCO44049 | Outer Joint | | 33 | 25 | 52 | 109 | 61 | O |
| | 2002.07-2003.12 | MT | F | R | Estate FWD Z18XE | | GDS60035 | Drive Shaft | | 33 | 22 | 52 | 109 | 961 | |
| | 2002.07-2003.12 | MT | F | L/R | Estate FWD Z18XE | | GCI99026 | Inner Joint | | 22 | 25 | 35 | 57 | 111.7 | |
| | 2002.07-2003.12 | AT/MT | F | L | Hatchback FWD Z18XE | | GDS60013 | Drive Shaft | | 33 | 22 | 52 | 103 | 595 | |
| | 2002.07-2003.12 | AT/MT | F | L/R | Hatchback FWD Z18XE | | GCO44006 | Outer Joint | 29T | 33 | 25 | 52 | 103.5 | 61 | O |
| | 2002.07-2003.12 | AT/MT | F | L/R | Hatchback FWD Z18XE | | GCO44049 | Outer Joint | | 33 | 25 | 52 | 109 | 61 | O |
| | 2002.07-2003.12 | MT | F | R | Hatchback FWD Z18XE | | GDS60035 | Drive Shaft | | 33 | 22 | 52 | 109 | 961 | |
| | 2002.07-2003.12 | MT | F | L/R | Hatchback FWD Z18XE | | GCI99026 | Inner Joint | | 22 | 25 | 35 | 57 | 111.7 | |
| | 2002.07-2003.12 | AT/MT | F | L | Saloon FWD Z18XE | | GDS60013 | Drive Shaft | | 33 | 22 | 52 | 103 | 595 | |
| | 2002.07-2003.12 | AT/MT | F | L/R | Saloon FWD Z18XE | | GCO44006 | Outer Joint | 29T | 33 | 25 | 52 | 103.5 | 61 | O |
| | 2002.07-2003.12 | AT/MT | F | L/R | Saloon FWD Z18XE | | GCO44049 | Outer Joint | | 33 | 25 | 52 | 109 | 61 | O |
| | 2002.07-2003.12 | MT | F | R | Saloon FWD Z18XE | | GDS60035 | Drive Shaft | | 33 | 22 | 52 | 109 | 961 | |
| | 2002.07-2003.12 | MT | F | L/R | Saloon FWD Z18XE | | GCI99026 | Inner Joint | | 22 | 25 | 35 | 57 | 111.7 | |
| | 2004.01-2009.05 | 4AT | F | L | Hatchback FWD Z 18 XE | | GDS44097 | Drive Shaft | | 33 | 22 | 53 | 93.5 | 588 | |
| | 2004.01-2009.05 | 4AT | F | R | Hatchback FWD Z 18 XE | | GDS44098 | Drive Shaft | | 33 | 22 | 53 | 93.5 | 950 | |
| | 2004.01-2009.05 | 5MT | F | L | Hatchback FWD Z 18 XE | | GDS21063 | Drive Shaft | | 33 | 22 | 53 | 93.5 | 586 | |
| | 2004.01-2009.05 | 5MT | F | R | Hatchback FWD Z 18 XE | | GDS21055 | Drive Shaft | | 33 | 22 | 53 | 93.5 | 950 | |
| | 2004.01-2009.05 | 5MT | F | L | Hatchback FWD Z 18 XE | | GCI99026 | Inner Joint | | 22 | 25 | 35 | 57 | 111.7 | |
| | 2004.01-2009.05 | AT/MT | F | L/R | Hatchback FWD Z 18 XE | | GCO44028 | Outer Joint | | 33 | 24 | 53 | 93.5 | 63.5 | M |
| | 2004.10-2009.03 | 4AT | F | L | Estate FWD Z 18 XE | | GDS44097 | Drive Shaft | | 33 | 22 | 53 | 93.5 | 588 | |
| | 2004.10-2009.03 | 4AT | F | R | Estate FWD Z 18 XE | | GDS44098 | Drive Shaft | | 33 | 22 | 53 | 93.5 | 950 | |
| | 2004.10-2009.03 | 5MT | F | L | Estate FWD Z 18 XE | | GDS21063 | Drive Shaft | | 33 | 22 | 53 | 93.5 | 586 | |
| | 2004.10-2009.03 | 5MT | F | R | Estate FWD Z 18 XE | | GDS21055 | Drive Shaft | | 33 | 22 | 53 | 93.5 | 950 | |
| | 2004.10-2009.03 | 5MT | F | L | Estate FWD Z 18 XE | | GCI99026 | Inner Joint | | 22 | 25 | 35 | 57 | 111.7 | |
| | 2004.10-2009.03 | AT/MT | F | L/R | Estate FWD Z 18 XE | | GCO44028 | Outer Joint | | 33 | 24 | 53 | 93.5 | 63.5 | M |
| 1.8 (103 kw) | 2004.01-2009.05 | 4AT | F | L | Hatchback FWD Z 18 XER;A 18 XER | | GDS44097 | Drive Shaft | | 33 | 22 | 53 | 93.5 | 588 | |
| | 2004.01-2009.05 | 4AT | F | R | Hatchback FWD Z 18 XER;A 18 XER | | GDS44098 | Drive Shaft | | 33 | 22 | 53 | 93.5 | 950 | |
| | 2004.01-2009.05 | 4AT/5MT | F | L/R | Hatchback FWD Z 18 XER;A 18 XER | | GCO44028 | Outer Joint | | 33 | 24 | 53 | 93.5 | 63.5 | M |
| | 2004.01-2009.05 | 5MT | F | L | Hatchback FWD Z 18 XER;A 18 XER | | GDS21063 | Drive Shaft | | 33 | 22 | 53 | 93.5 | 586 | |
| | 2004.01-2009.05 | 5MT | F | R | Hatchback FWD Z 18 XER;A 18 XER | | GDS21055 | Drive Shaft | | 33 | 22 | 53 | 93.5 | 950 | |
| | 2004.01-2009.05 | 5MT | F | L/R | Hatchback FWD Z 18 XER;A 18 XER | | GCI99026 | Inner Joint | | 22 | 25 | 35 | 57 | 111.7 | |
| | 2005.12-2010.10 | 4AT | F | L | Estate FWD Z 18 XER;A 18 XER | | GDS44097 | Drive Shaft | | 33 | 22 | 53 | 93.5 | 588 | |
| | 2005.12-2010.10 | 4AT | F | R | Estate FWD Z 18 XER;A 18 XER | | GDS44098 | Drive Shaft | | 33 | 22 | 53 | 93.5 | 950 | |
| | 2005.12-2010.10 | 5MT | F | L | Estate FWD Z 18 XER;A 18 XER | | GDS21063 | Drive Shaft | | 33 | 22 | 53 | 93.5 | 586 | |
| | 2005.12-2010.10 | 5MT | F | R | Estate FWD Z 18 XER;A 18 XER | | GDS21055 | Drive Shaft | | 33 | 22 | 53 | 93.5 | 950 | |
| | 2005.12-2010.10 | 5MT | F | L | Estate FWD Z 18 XER;A 18 XER | | GCI99026 | Inner Joint | | 22 | 25 | 35 | 57 | 111.7 | |
| | 2005.12-2010.10 | | F | L/R | Estate FWD Z 18 XER;A 18 XER | | GCO44028 | Outer Joint | | 33 | 24 | 53 | 93.5 | 63.5 | M |
| 1.9 (88 kw) | 2004.01-2009.05 | 6AT | F | L | Hatchback FWD Z 19 DT | Chassis no. from:72024736/75049581/78023183/8B000001 | GDS21111 | Drive Shaft | | 33 | 27 | 52.5 | 94 | 562 | |
| | 2004.01-2009.05 | 6AT | F | L | Hatchback FWD Z 19 DT | Chassis no. to:72024735/75049580/78023182 | GDS60034 | Drive Shaft | | 33 | 27 | 52.5 | 94 | 564 | |
| | 2004.01-2009.05 | 6AT | F | R | Hatchback FWD Z 19 DT | | GDS21110 | Drive Shaft | | 33 | 27 | 52.5 | 94 | 576 | |
| | 2004.01-2009.05 | 6MT | F | L | Hatchback FWD Z 19 DT | Date from:2007.08 | GDS21051 | Drive Shaft | | 33 | 25 | 52.5 | 94 | 579 | |
| | 2004.01-2009.05 | 6MT | F | L | Hatchback FWD Z 19 DT | Date to:2007.07 | GDS21073 | Drive Shaft | | 33 | 25 | 52.5 | 94 | 578 | |
| | 2004.01-2009.05 | 6MT | F | R | Hatchback FWD Z 19 DT | | GDS21056 | Drive Shaft | | 33 | 34 | 52.5 | 94 | 595 | |
| | 2004.01-2009.05 | 6MT | F | R | Hatchback FWD Z 19 DT | Date to:2007.07,Chassis no. to:72025241/75043819/78007657/7G | GCI99187 | Inner Joint | | 34 | 34 | 37.5 | | 124 | |
| | 2004.01-2009.05 | MT | F | L | Hatchback FWD Z 19 DT | | GDS21071 | Drive Shaft | | 30 | 25 | 53.8 | 94.5 | 576 | |
| | 2004.01-2009.05 | MT | F | R | Hatchback FWD Z 19 DT | | GDS21062 | Drive Shaft | | 30 | 34 | 53.8 | 94.5 | 595 | |
| | 2004.01-2009.05 | MT | F | L/R | Hatchback FWD Z 19 DT | | GCO44027 | Outer Joint | | 33 | 26 | 52.5 | 94 | 65.5 | M |
| | 2004.01-2009.05 | MT | F | L | Hatchback FWD Z 19 DT | | GCI21018 | Inner Joint | | 25 | 34 | 35 | 58 | 116 | |

| | YEAR | TRANSM. | F/R | L/R | BODY STYLE & DRIVE TYPE & ENGINE | REMARKS | G-AP Ref. | PRODUCT | ABS | Technical Specifications A | B | C | H | L | P |
|---|---|---|---|---|---|---|---|---|---|---|---|---|---|---|---|
| **VAUXHALL** **Astra** | | | | | | | | | | | | | | | |
| 1.9 (88 kw) | 2004.01-2009.05 | MT | F | L | Hatchback FWD Z 19 DT | | GCI99186 | Inner Joint | | 25 | 28 | 34.9 | 57.5 | 111 | |
| | 2004.01-2009.05 | | F | | Hatchback FWD Z 19 DT | | GCO99024 | Outer Joint | | 33 | 26 | 52.5 | 94 | 65.5 | M |
| | 2004.01-2009.05 | 6AT | F | L | Hatchback FWD Z 19 DTJ | Chassis no. from:72024736/75049581/78023183/8B000001 | GDS21111 | Drive Shaft | | 33 | 27 | 52.5 | 94 | 562 | |
| | 2004.01-2009.05 | 6AT | F | L | Hatchback FWD Z 19 DTJ | Chassis no. to:72024735/75049580/78023182 | GDS60034 | Drive Shaft | | 33 | 27 | 52.5 | 94 | 564 | |
| | 2004.01-2009.05 | 6AT | F | R | Hatchback FWD Z 19 DTJ | | GDS21110 | Drive Shaft | | 33 | 27 | 52.5 | 94 | 576 | |
| | 2004.01-2009.05 | 6MT | F | L | Hatchback FWD Z 19 DTJ | Date from:2007.08 | GDS21051 | Drive Shaft | | 33 | 25 | 52.5 | 94 | 579 | |
| | 2004.01-2009.05 | 6MT | F | L | Hatchback FWD Z 19 DTJ | Date to:2007.07 | GDS21073 | Drive Shaft | | 33 | 25 | 52.5 | 94 | 578 | |
| | 2004.01-2009.05 | 6MT | F | R | Hatchback FWD Z 19 DTJ | | GDS21056 | Drive Shaft | | 33 | 34 | 52.5 | 94 | 595 | |
| | 2004.01-2009.05 | 6MT | F | R | Hatchback FWD Z 19 DTJ | Date to:2007.07,Chassis no. to:72025241/75043819/78007657/7G | GCI99187 | Inner Joint | | 34 | 34 | 37.5 | | 124 | |
| | 2004.01-2009.05 | MT | F | L | Hatchback FWD Z 19 DTJ | | GDS21071 | Drive Shaft | | 30 | 25 | 53.8 | 94.5 | 576 | |
| | 2004.01-2009.05 | MT | F | R | Hatchback FWD Z 19 DTJ | | GDS21062 | Drive Shaft | | 30 | 34 | 53.8 | 94.5 | 595 | |
| | 2004.01-2009.05 | MT | F | L/R | Hatchback FWD Z 19 DTJ | | GCO44027 | Outer Joint | | 33 | 26 | 52.5 | 94 | 65.5 | M |
| | 2004.01-2009.05 | MT | F | L | Hatchback FWD Z 19 DTJ | | GCI21018 | Inner Joint | | 25 | 34 | 35 | 58 | 116 | |
| | 2004.01-2009.05 | MT | F | L | Hatchback FWD Z 19 DTJ | | GCI99186 | Inner Joint | | 25 | 28 | 34.9 | 57.5 | 111 | |
| | 2004.01-2009.05 | | F | | Hatchback FWD Z 19 DTJ | | GCO99024 | Outer Joint | | 33 | 26 | 52.5 | 94 | 65.5 | M |
| | 2004.08-2009.03 | 6AT | F | L | Estate FWD Z 19 DT | Chassis no. from:72024736/75049581/78023183/8B000001 | GDS21111 | Drive Shaft | | 33 | 27 | 52.5 | 94 | 562 | |
| | 2004.08-2009.03 | 6AT | F | L | Estate FWD Z 19 DT | Chassis no. to:72024735/75049580/78023182 | GDS60034 | Drive Shaft | | 33 | 27 | 52.5 | 94 | 564 | |
| | 2004.08-2009.03 | 6AT | F | R | Estate FWD Z 19 DT | | GDS21110 | Drive Shaft | | 33 | 27 | 52.5 | 94 | 576 | |
| | 2004.08-2009.03 | 6MT | F | L | Estate FWD Z 19 DT | Date from:2007.08 | GDS21051 | Drive Shaft | | 33 | 25 | 52.5 | 94 | 579 | |
| | 2004.08-2009.03 | 6MT | F | L | Estate FWD Z 19 DT | Date to:2007.07 | GDS21073 | Drive Shaft | | 33 | 25 | 52.5 | 94 | 578 | |
| | 2004.08-2009.03 | 6MT | F | R | Estate FWD Z 19 DT | | GDS21056 | Drive Shaft | | 33 | 34 | 52.5 | 94 | 595 | |
| | 2004.08-2009.03 | 6MT | F | R | Estate FWD Z 19 DT | Date to:2007.07,Chassis no. to:72025241/75043819/78007657/7G | GCI99187 | Inner Joint | | 34 | 34 | 37.5 | | 124 | |
| | 2004.08-2009.03 | MT | F | L | Estate FWD Z 19 DT | | GDS21071 | Drive Shaft | | 30 | 25 | 53.8 | 94.5 | 576 | |
| | 2004.08-2009.03 | MT | F | R | Estate FWD Z 19 DT | | GDS21062 | Drive Shaft | | 30 | 34 | 53.8 | 94.5 | 595 | |
| | 2004.08-2009.03 | MT | F | L/R | Estate FWD Z 19 DT | | GCO44027 | Outer Joint | | 33 | 26 | 52.5 | 94 | 65.5 | M |
| | 2004.08-2009.03 | MT | F | L | Estate FWD Z 19 DT | | GCI21018 | Inner Joint | | 25 | 34 | 35 | 58 | 116 | |
| | 2004.08-2009.03 | MT | F | L | Estate FWD Z 19 DT | | GCI99186 | Inner Joint | | 25 | 28 | 34.9 | 57.5 | 111 | |
| | 2004.08-2009.03 | | F | | Estate FWD Z 19 DT | | GCO99024 | Outer Joint | | 33 | 26 | 52.5 | 94 | 65.5 | M |
| | 2004.08-2009.03 | 6AT | F | L | Estate FWD Z 19 DTJ | Chassis no. from:72024736/75049581/78023183/8B000001,Date from:2007.08 | GDS21111 | Drive Shaft | | 33 | 27 | 52.5 | 94 | 562 | |
| | 2004.08-2009.03 | 6AT | F | L | Estate FWD Z 19 DTJ | Chassis no. to:72024735/75049580/78023182,Date to:2007.07 | GDS60034 | Drive Shaft | | 33 | 27 | 52.5 | 94 | 564 | |
| | 2004.08-2009.03 | 6AT | F | R | Estate FWD Z 19 DTJ | | GDS21110 | Drive Shaft | | 33 | 27 | 52.5 | 94 | 576 | |
| | 2004.08-2009.03 | 6AT | F | L | Estate FWD Z 19 DTJ | Date from:2007.08,Chassis no. from:72024736/75049581/78023183/7G/8B000001 | GCI86015 | Inner Joint | | 27 | 26 | 35 | 78.5 | 109.5 | |
| | 2004.08-2009.03 | 6MT | F | L | Estate FWD Z 19 DTJ | Date from:2007.08 | GDS21051 | Drive Shaft | | 33 | 25 | 52.5 | 94 | 579 | |
| | 2004.08-2009.03 | 6MT | F | L | Estate FWD Z 19 DTJ | Date to:2007.07 | GDS21073 | Drive Shaft | | 33 | 25 | 52.5 | 94 | 578 | |
| | 2004.08-2009.03 | 6MT | F | R | Estate FWD Z 19 DTJ | | GDS21056 | Drive Shaft | | 33 | 34 | 52.5 | 94 | 595 | |
| | 2004.08-2009.03 | 6MT | F | R | Estate FWD Z 19 DTJ | Date to:2007.07,Chassis no. to:72025241/75043819/78007657/7G | GCI99187 | Inner Joint | | 34 | 34 | 37.5 | | 124 | |
| | 2004.08-2009.03 | MT | F | L/R | Estate FWD Z 19 DTJ | | GCO44027 | Outer Joint | | 33 | 26 | 52.5 | 94 | 65.5 | M |
| | 2004.08-2009.03 | MT | F | L | Estate FWD Z 19 DTJ | Date to:2007.07 | GCI21018 | Inner Joint | | 25 | 34 | 35 | 58 | 116 | |
| | 2004.08-2009.03 | MT | F | L | Estate FWD Z 19 DTJ | Date from:2007.08 | GCI99186 | Inner Joint | | 25 | 28 | 34.9 | 57.5 | 111 | |
| 1.9 (110 kw) | 2004.01-2009.05 | 6MT | F | L | Hatchback FWD Z 19 DTH | Date from:2007.08 | GDS21035 | Drive Shaft | | 30 | 25 | 53.8 | 94.5 | 581 | |
| | 2004.01-2009.05 | 6MT | F | L | Hatchback FWD Z 19 DTH | Date to:2007.07 | GDS21071 | Drive Shaft | | 30 | 25 | 53.8 | 94.5 | 576 | |
| | 2004.01-2009.05 | 6MT | F | R | Hatchback FWD Z 19 DTH | Date to:2007.07 | GDS21062 | Drive Shaft | | 30 | 34 | 53.8 | 94.5 | 595 | |
| | 2004.01-2009.05 | 6MT | F | R | Hatchback FWD Z 19 DTH | Date from:2007.08,Chassis no. from:72024736/75041476/78008876 | GDS82084 | Drive Shaft | | 30 | 34 | 53.8 | 94.5 | 598 | |
| | 2004.01-2009.05 | 6MT | F | R | Hatchback FWD Z 19 DTH | Date to:2007.07,Chassis no. to:72024735/75041475/78008876/7G | GCI99187 | Inner Joint | | 34 | 34 | 37.5 | | 124 | |
| | 2004.01-2009.05 | MT | F | L/R | Hatchback FWD Z 19 DTH | | GCO17051 | Outer Joint | | 30 | 26 | 53.8 | 94.5 | 65.5 | M |
| | 2004.01-2009.05 | MT | F | L | Hatchback FWD Z 19 DTH | | GCI21018 | Inner Joint | | 25 | 34 | 35 | 58 | 116 | |
| | 2004.01-2009.05 | MT | F | L | Hatchback FWD Z 19 DTH | | GCI99186 | Inner Joint | | 25 | 28 | 34.9 | 57.5 | 111 | |
| | 2004.01-2009.05 | | F | R | Hatchback FWD Z 19 DTH | Date To:2007.07,Chassis no. to:72024735/75041475/78008875/7G | GDS21056 | Drive Shaft | | 33 | 34 | 52.5 | 94 | 595 | |
| | 2004.08-2009.03 | 6MT | F | L | Estate FWD Z 19 DTH | Date from:2007.08 | GDS21035 | Drive Shaft | | 30 | 25 | 53.8 | 94.5 | 581 | |
| | 2004.08-2009.03 | 6MT | F | L | Estate FWD Z 19 DTH | Date to:2007.07 | GDS21071 | Drive Shaft | | 30 | 25 | 53.8 | 94.5 | 576 | |
| | 2004.08-2009.03 | 6MT | F | R | Estate FWD Z 19 DTH | Date to:2007.07 | GDS21062 | Drive Shaft | | 30 | 34 | 53.8 | 94.5 | 595 | |
| | 2004.08-2009.03 | 6MT | F | R | Estate FWD Z 19 DTH | Date from:2007.08,Chassis no. from:72024736/75041476/78008876 | GDS82084 | Drive Shaft | | 30 | 34 | 53.8 | 94.5 | 598 | |
| | 2004.08-2009.03 | 6MT | F | R | Estate FWD Z 19 DTH | Date to:2007.07,Chassis no. to:72024735/75041475/78008875/7G | GCI99187 | Inner Joint | | 34 | 34 | 37.5 | | 124 | |
| | 2004.08-2009.03 | MT | F | L/R | Estate FWD Z 19 DTH | | GCO17051 | Outer Joint | | 30 | 26 | 53.8 | 94.5 | 65.5 | M |
| | 2004.08-2009.03 | MT | F | L | Estate FWD Z 19 DTH | | GCI21018 | Inner Joint | | 25 | 34 | 35 | 58 | 116 | |
| | 2004.08-2009.03 | MT | F | L | Estate FWD Z 19 DTH | | GCI99186 | Inner Joint | | 25 | 28 | 34.9 | 57.5 | 111 | |
| | 2004.08-2009.03 | | F | R | Estate FWD Z 19 DTH | Date To:2007.07,Chassis no. to:72024735/75041475/78008875/7G | GDS21056 | Drive Shaft | | 33 | 34 | 52.5 | 94 | 595 | |
| 2.0 (60 kw) | 1998.02-2002.09 | 4AT/5MT | F | L | Estate FWD X20DTL/Y20DTL | | GDS44044 | Drive Shaft | | 33 | 34 | 52 | 103.5 | 595 | |
| | 1998.02-2002.09 | 4AT/5MT | F | R | Estate FWD X20DTL/Y20DTL | | GDS88011 | Drive Shaft | | 33 | 34 | 52 | 104 | 959 | |
| | 1998.02-2002.09 | 4AT/5MT | F | L | Estate FWD X20DTL/Y20DTL | | GCO44032 | Outer Joint | | 33 | 25 | 52 | 103.5 | 61 | O |
| | 1998.02-2002.09 | MT | F | R | Estate FWD X20DTL/Y20DTL | | GCO44049 | Outer Joint | | 33 | 25 | 52 | 109 | 61 | O |
| | 1998.02-2002.09 | | F | L/R | Estate FWD X20DTL/Y20DTL | | GCO44006 | Outer Joint | 29T | 33 | 25 | 52 | 103.5 | 61 | O |
| | 1998.02-2002.09 | | F | L/R | Estate FWD X20DTL/Y20DTL | | GCI44002 | Inner Joint | | 34 | 25 | 35 | 56.2 | 114.8 | |
| | 1998.02-2004.07 | 4AT/5MT | F | L | Saloon FWD X20DTL/Y20DTL | | GDS44044 | Drive Shaft | | 33 | 34 | 52 | 103.5 | 595 | |
| | 1998.02-2004.07 | 4AT/5MT | F | R | Saloon FWD X20DTL/Y20DTL | | GDS88011 | Drive Shaft | | 33 | 34 | 52 | 104 | 959 | |

| | YEAR | TRANSM. | F/R | L/R | BODY STYLE & DRIVE TYPE & ENGINE | REMARKS | G-AP Ref. | PRODUCT | ABS | Technical Specifications | | | | | |
|---|---|---|---|---|---|---|---|---|---|---|---|---|---|---|---|
| | | | | | | | | | | A | B | C | H | L | P |
| **VAUXHALL** | | | | | | | | | | | | | | | |
| **Astra** | | | | | | | | | | | | | | | |
| 2.0 (60 kw) | 1998.02-2004.07 | 4AT/5MT | F | L | Saloon FWD X20DTL/Y20DTL | | GCO44032 | Outer Joint | | 33 | 25 | 52 | 103.5 | 61 | O |
| | 1998.02-2004.07 | AT/MT | F | L/R | Saloon FWD X20DTL/Y20DTL | | GCO44006 | Outer Joint | 29T | 33 | 25 | 52 | 103.5 | 61 | O |
| | 1998.02-2004.07 | MT | F | R | Saloon FWD X20DTL/Y20DTL | | GCO44049 | Outer Joint | | 33 | 25 | 52 | 109 | 61 | O |
| | 1998.02-2004.07 | | F | L/R | Saloon FWD X20DTL/Y20DTL | | GCI44002 | Inner Joint | | 34 | 25 | 35 | 56.2 | 114.8 | |
| | 1998.02-2005.03 | 4AT/5MT | F | L | Hatchback FWD X20DTL/Y20DTL | | GDS44044 | Drive Shaft | | 33 | 34 | 52 | 103.5 | 595 | |
| | 1998.02-2005.03 | 4AT/5MT | F | R | Hatchback FWD X20DTL/Y20DTL | | GDS88011 | Drive Shaft | | 33 | 34 | 52 | 104 | 959 | |
| | 1998.02-2005.03 | 4AT/5MT | F | L | Hatchback FWD X20DTL/Y20DTL | | GCO44032 | Outer Joint | | 33 | 25 | 52 | 103.5 | 61 | O |
| | 1998.02-2005.03 | AT/MT | F | L/R | Hatchback FWD X20DTL/Y20DTL | | GCO44006 | Outer Joint | 29T | 33 | 25 | 52 | 103.5 | 61 | O |
| | 1998.02-2005.03 | MT | F | R | Hatchback FWD X20DTL/Y20DTL | | GCO44049 | Outer Joint | | 33 | 25 | 52 | 109 | 61 | O |
| | 1998.02-2005.03 | | F | L/R | Hatchback FWD X20DTL/Y20DTL | | GCI44002 | Inner Joint | | 34 | 25 | 35 | 56.2 | 114.8 | |
| 2.0 (74 kw) | 1999.08-2005.05 | 4AT/5MT | F | L | Saloon FWD Y20DTH | | GDS44044 | Drive Shaft | | 33 | 34 | 52 | 103.5 | 595 | |
| | 1999.08-2005.05 | 4AT/5MT | F | R | Saloon FWD Y20DTH | | GDS88011 | Drive Shaft | | 33 | 34 | 52 | 104 | 959 | |
| | 1999.08-2005.05 | 4AT/5MT | F | L | Saloon FWD Y20DTH | | GCO44032 | Outer Joint | | 33 | 25 | 52 | 103.5 | 61 | O |
| | 1999.08-2005.05 | AT/MT | F | L/R | Saloon FWD Y20DTH | Date from:1999.08 | GCO44006 | Outer Joint | 29T | 33 | 25 | 52 | 103.5 | 61 | O |
| | 1999.08-2005.05 | MT | F | R | Saloon FWD Y20DTH | | GCO44049 | Outer Joint | | 33 | 25 | 52 | 109 | 61 | O |
| | 1999.08-2005.05 | | F | L/R | Saloon FWD Y20DTH | | GCI44002 | Inner Joint | | 34 | 25 | 35 | 56.2 | 114.8 | |
| | 2000.09-2005.03 | 5MT | F | L | Estate FWD Y20DTH | | GDS44044 | Drive Shaft | | 33 | 34 | 52 | 103.5 | 595 | |
| | 2000.09-2005.03 | 5MT | F | R | Estate FWD Y20DTH | | GDS88011 | Drive Shaft | | 33 | 34 | 52 | 104 | 959 | |
| | 2000.09-2005.03 | 5MT | F | L | Estate FWD Y20DTH | | GCO44032 | Outer Joint | | 33 | 25 | 52 | 103.5 | 61 | O |
| | 2000.09-2005.03 | AT/MT | F | L/R | Estate FWD Y20DTH | Date from:2000.09 | GCO44006 | Outer Joint | 29T | 33 | 25 | 52 | 103.5 | 61 | O |
| | 2000.09-2005.03 | MT | F | R | Estate FWD Y20DTH | | GCO44049 | Outer Joint | | 33 | 25 | 52 | 109 | 61 | O |
| | 2000.09-2005.03 | | F | L/R | Estate FWD Y20DTH | | GCI44002 | Inner Joint | | 34 | 25 | 35 | 56.2 | 114.8 | |
| | 2000.09-2005.03 | 5MT | F | L | Hatchback FWD Y20DTH | | GDS44044 | Drive Shaft | | 33 | 34 | 52 | 103.5 | 595 | |
| | 2000.09-2005.03 | 5MT | F | R | Hatchback FWD Y20DTH | | GDS88011 | Drive Shaft | | 33 | 34 | 52 | 104 | 959 | |
| | 2000.09-2005.03 | 5MT | F | L | Hatchback FWD Y20DTH | | GCO44032 | Outer Joint | | 33 | 25 | 52 | 103.5 | 61 | O |
| | 2000.09-2005.03 | AT/MT | F | L/R | Hatchback FWD Y20DTH | Date from:2000.09 | GCO44006 | Outer Joint | 29T | 33 | 25 | 52 | 103.5 | 61 | O |
| | 2000.09-2005.03 | MT | F | R | Hatchback FWD Y20DTH | | GCO44049 | Outer Joint | | 33 | 25 | 52 | 109 | 61 | O |
| | 2000.09-2005.03 | | F | L/R | Hatchback FWD Y20DTH | | GCI44002 | Inner Joint | | 34 | 25 | 35 | 56.2 | 114.8 | |
| 2.0 (85 kw) | 1991.09-1998.02 | AT/MT | F | L/R | Estate FWD C20NE | | GCO44056 | Outer Joint | 29T | 33 | 25 | 52 | 109 | 61 | O |
| | 1991.09-1998.02 | MT | F | L | Estate FWD C20NE | | GDS44011 | Drive Shaft | 29T | 33 | 34 | 52 | 109 | 594.5 | |
| | 1991.09-1998.02 | MT | F | R | Estate FWD C20NE | | GDS44059 | Drive Shaft | 29T | 33 | 34 | 52 | 109 | 938 | |
| | 1991.09-1998.02 | MT | F | L/R | Estate FWD C20NE | | GCI44002 | Inner Joint | | 34 | 25 | 35 | 56.2 | 114.8 | |
| | 1991.09-1998.02 | | F | | Estate FWD C20NE | | GCO88003 | Outer Joint | | 33 | 25 | 52 | 109 | 61 | O |
| | 1991.09-1998.02 | AT/MT | F | L/R | Hatchback FWD C20NE | | GCO44056 | Outer Joint | 29T | 33 | 25 | 52 | 109 | 61 | O |
| | 1991.09-1998.02 | MT | F | L | Hatchback FWD C20NE | | GDS44011 | Drive Shaft | 29T | 33 | 34 | 52 | 109 | 594.5 | |
| | 1991.09-1998.02 | MT | F | R | Hatchback FWD C20NE | | GDS44059 | Drive Shaft | 29T | 33 | 34 | 52 | 109 | 938 | |
| | 1991.09-1998.02 | MT | F | L/R | Hatchback FWD C20NE | | GCI44002 | Inner Joint | | 34 | 25 | 35 | 56.2 | 114.8 | |
| | 1991.09-1998.02 | | F | | Hatchback FWD C20NE | | GCO88003 | Outer Joint | | 33 | 25 | 52 | 109 | 61 | O |
| | 1992.03-1998.09 | AT/MT | F | L/R | Saloon FWD C20NE | | GCO44056 | Outer Joint | 29T | 33 | 25 | 52 | 109 | 61 | O |
| | 1992.03-1998.09 | MT | F | L | Saloon FWD C20NE | | GDS44011 | Drive Shaft | 29T | 33 | 34 | 52 | 109 | 594.5 | |
| | 1992.03-1998.09 | MT | F | R | Saloon FWD C20NE | | GDS44059 | Drive Shaft | 29T | 33 | 34 | 52 | 109 | 938 | |
| | 1992.03-1998.09 | MT | F | L/R | Saloon FWD C20NE | | GCI44002 | Inner Joint | | 34 | 25 | 35 | 56.2 | 114.8 | |
| | 1992.03-1998.09 | | F | | Saloon FWD C20NE | | GCO88003 | Outer Joint | | 33 | 25 | 52 | 109 | 61 | O |
| 2.0 (100 kw) | 1994.09-1998.09 | AT/MT | F | L | Saloon FWD X20XEV | | GDS44011 | Drive Shaft | 29T | 33 | 34 | 52 | 109 | 594.5 | |
| | 1994.09-1998.09 | AT/MT | F | L/R | Saloon FWD X20XEV | Chassis no. from:N500001 | GCO44056 | Outer Joint | 29T | 33 | 25 | 52 | 109 | 61 | O |
| | 1994.09-1998.09 | AT/MT | F | L | Saloon FWD X20XEV | | GCI44002 | Inner Joint | | 34 | 25 | 35 | 56.2 | 114.8 | |
| | 1994.09-1998.09 | | F | | Saloon FWD X20XEV | | GCO88003 | Outer Joint | | 33 | 25 | 52 | 109 | 61 | O |
| | 1995.04-1998.02 | AT/MT | F | L | Hatchback FWD X20XEV | | GDS44011 | Drive Shaft | 29T | 33 | 34 | 52 | 109 | 594.5 | |
| | 1995.04-1998.02 | AT/MT | F | L/R | Hatchback FWD X20XEV | Chassis no. from:N500001,Date from:1995.04 | GCO44056 | Outer Joint | 29T | 33 | 25 | 52 | 109 | 61 | O |
| | 1995.04-1998.02 | AT/MT | F | L | Hatchback FWD X20XEV | | GCI44002 | Inner Joint | | 34 | 25 | 35 | 56.2 | 114.8 | |
| | 1995.04-1998.02 | | F | | Hatchback FWD X20XEV | | GCO88003 | Outer Joint | | 33 | 25 | 52 | 109 | 61 | O |
| | 1995.09-1998.01 | AT/MT | F | L | Estate FWD X20XEV | | GDS44011 | Drive Shaft | 29T | 33 | 34 | 52 | 109 | 594.5 | |
| | 1995.09-1998.01 | AT/MT | F | L/R | Estate FWD X20XEV | Chassis no. from:N500001,Date from:1995.09 | GCO44056 | Outer Joint | 29T | 33 | 25 | 52 | 109 | 61 | O |
| | 1995.09-1998.01 | AT/MT | F | L | Estate FWD X20XEV | | GCI44002 | Inner Joint | | 34 | 25 | 35 | 56.2 | 114.8 | |
| | 1995.09-1998.01 | | F | | Estate FWD X20XEV | | GCO88003 | Outer Joint | | 33 | 25 | 52 | 109 | 61 | O |
| | 1998.09-2005.05 | 5MT | F | L | Saloon FWD X20XEV | | GDS44044 | Drive Shaft | | 33 | 34 | 52 | 103.5 | 595 | |
| | 1998.09-2005.05 | 5MT | F | R | Saloon FWD X20XEV | | GDS88011 | Drive Shaft | | 33 | 34 | 52 | 104 | 959 | |
| | 1998.09-2005.05 | 5MT | F | L | Saloon FWD X20XEV | | GCO44032 | Outer Joint | | 33 | 25 | 52 | 103.5 | 61 | O |
| | 1998.09-2005.05 | AT/MT | F | L/R | Saloon FWD X20XEV | | GCO44006 | Outer Joint | 29T | 33 | 25 | 52 | 103.5 | 61 | O |
| | 1998.09-2005.05 | MT | F | R | Saloon FWD X20XEV | | GCO44049 | Outer Joint | | 33 | 25 | 52 | 109 | 61 | O |
| | 1998.09-2005.05 | | F | L/R | Saloon FWD X20XEV | | GCI44002 | Inner Joint | | 34 | 25 | 35 | 56.2 | 114.8 | |
| | 1999.08-2005.05 | 5MT | F | L | Hatchback FWD X20XEV | Date from:1999.08 | GDS44044 | Drive Shaft | | 33 | 34 | 52 | 103.5 | 595 | |
| | 1999.08-2005.05 | 5MT | F | R | Hatchback FWD X20XEV | | GDS88011 | Drive Shaft | | 33 | 34 | 52 | 104 | 959 | |
| | 1999.08-2005.05 | 5MT | F | L | Hatchback FWD X20XEV | Date from:1999.08 | GCO44032 | Outer Joint | | 33 | 25 | 52 | 103.5 | 61 | O |
| | 1999.08-2005.05 | MT | F | R | Hatchback FWD X20XEV | | GCO44049 | Outer Joint | | 33 | 25 | 52 | 109 | 61 | O |

| | YEAR | TRANSM. | F/R | L/R | BODY STYLE & DRIVE TYPE & ENGINE | REMARKS | G-AP Ref. | PRODUCT | ABS | Technical Specifications A | B | C | H | L | P |
|---|---|---|---|---|---|---|---|---|---|---|---|---|---|---|---|
| **VAUXHALL** | | | | | | | | | | | | | | | |
| **Astra** | | | | | | | | | | | | | | | |
| 2.0 (100 kw) | 1999.08-2005.05 | | F | L/R | Hatchback FWD X20XEV | | GCO44006 | Outer Joint | 29T | 33 | 25 | 52 | 103.5 | 61 | O |
| | 1999.08-2005.05 | | F | L/R | Hatchback FWD X20XEV | | GCI44002 | Inner Joint | | 34 | 25 | 35 | 56.2 | 114.8 | |
| 2.0 (110 kw) | 1991.09-1998.02 | MT | F | L | Hatchback FWD C20XE | | GDS44011 | Drive Shaft | 29T | 33 | 34 | 52 | 109 | 594.5 | |
| | 1991.09-1998.02 | MT | F | R | Hatchback FWD C20XE | | GDS44059 | Drive Shaft | 29T | 33 | 34 | 52 | 109 | 938 | |
| | 1991.09-1998.02 | MT | F | L/R | Hatchback FWD C20XE | | GCO44056 | Outer Joint | 29T | 33 | 25 | 52 | 109 | 61 | O |
| | 1991.09-1998.02 | MT | F | L/R | Hatchback FWD C20XE | | GCI44002 | Inner Joint | | 34 | 25 | 35 | 56.2 | 114.8 | |
| | 1991.09-1998.02 | | F | | Hatchback FWD C20XE | | GCO88003 | Outer Joint | | 33 | 25 | 52 | 109 | 61 | O |
| 2.0 (118 kw) | 2009.12-2011.06 | 6AT | F | L | Hatchback FWD A 20 DTH | Chassis no. from:C0/C1033261/C3/C8028482/CG040399 | GDS83986 | Drive Shaft | | 30 | 27 | 52.5 | 94 | 591 | |
| | 2009.12-2011.06 | 6AT | F | R | Hatchback FWD A 20 DTH | | GDS61138 | Drive Shaft | | 30 | 27 | 52.5 | 94.5 | 598 | |
| | 2009.12-2011.06 | 6AT | F | L | Hatchback FWD A 20 DTH | | GCI86015 | Inner Joint | | 27 | 26 | 35 | 78.5 | 109.5 | |
| | 2009.12-2011.06 | 6AT/6MT | F | L/R | Hatchback FWD A 20 DTH | | GCO17051 | Outer Joint | | 30 | 26 | 53.8 | 94.5 | 65.5 | M |
| | 2009.12-2011.06 | 6AT/6MT | F | L/R | Hatchback FWD A 20 DTH | | GCO21049 | Outer Joint | | 30 | 26 | 52.5 | 94 | 65.5 | M |
| | 2009.12-2011.06 | 6AT/6MT | F | L/R | Hatchback FWD A 20 DTH | | GCO88046 | Outer Joint | | 30 | 26 | 52.5 | 94.5 | 65.5 | M |
| | 2009.12-2011.06 | 6MT | F | L | Hatchback FWD A 20 DTH | | GDS21075 | Drive Shaft | | 30 | 27 | 52.5 | 94 | 602 | |
| | 2009.12-2011.06 | 6MT | F | R | Hatchback FWD A 20 DTH | | GDS21032 | Drive Shaft | | 30 | 27 | 53.8 | 94.5 | 605 | |
| | 2009.12-2011.06 | 6MT | F | L/R | Hatchback FWD A 20 DTH | | GCI21030 | Inner Joint | | 27 | 26 | 35 | 78 | 112.5 | |
| | 2009.12-2011.06 | MT | F | L | Hatchback FWD A 20 DTH | | GDS21036 | Drive Shaft | | 30 | 27 | 55.4 | 100 | 602 | |
| | 2010.10-2011.06 | 6AT | F | L | Estate FWD A 20 DTH | Chassis no. from:C0/C1033261/C3/C8028482/CG040399 | GDS83986 | Drive Shaft | | 30 | 27 | 52.5 | 94 | 591 | |
| | 2010.10-2011.06 | 6AT | F | R | Estate FWD A 20 DTH | | GDS61138 | Drive Shaft | | 30 | 27 | 52.5 | 94.5 | 598 | |
| | 2010.10-2011.06 | 6AT | F | L | Estate FWD A 20 DTH | | GCI86015 | Inner Joint | | 27 | 26 | 35 | 78.5 | 109.5 | |
| | 2010.10-2011.06 | 6AT/6MT | F | L/R | Estate FWD A 20 DTH | | GCO17051 | Outer Joint | | 30 | 26 | 53.8 | 94.5 | 65.5 | M |
| | 2010.10-2011.06 | 6AT/6MT | F | L/R | Estate FWD A 20 DTH | | GCO21049 | Outer Joint | | 30 | 26 | 52.5 | 94 | 65.5 | M |
| | 2010.10-2011.06 | 6AT/6MT | F | L/R | Estate FWD A 20 DTH | | GCO88046 | Outer Joint | | 30 | 26 | 52.5 | 94.5 | 65.5 | M |
| | 2010.10-2011.06 | 6MT | F | L | Estate FWD A 20 DTH | | GDS21075 | Drive Shaft | | 30 | 27 | 52.5 | 94 | 602 | |
| | 2010.10-2011.06 | 6MT | F | R | Estate FWD A 20 DTH | | GDS21032 | Drive Shaft | | 30 | 27 | 53.8 | 94.5 | 605 | |
| | 2010.10-2011.06 | 6MT | F | L/R | Estate FWD A 20 DTH | | GCI21030 | Inner Joint | | 27 | 26 | 35 | 78 | 112.5 | |
| | 2010.10-2011.06 | MT | F | L | Estate FWD A 20 DTH | | GDS21036 | Drive Shaft | | 30 | 27 | 55.4 | 100 | 602 | |
| 2.0 (121 kw) | 2011.08-2015.10 | 6AT | F | L | Estate FWD A 20 DTH | Chassis no. from:C0/C1033261/C3/C8028482/CG040399 | GDS83986 | Drive Shaft | | 30 | 27 | 52.5 | 94 | 591 | |
| | 2011.08-2015.10 | 6AT | F | L | Estate FWD A 20 DTH | | GCI86015 | Inner Joint | | 27 | 26 | 35 | 78.5 | 109.5 | |
| | 2011.08-2015.10 | 6AT/6MT | F | L/R | Estate FWD A 20 DTH | | GCO17051 | Outer Joint | | 30 | 26 | 53.8 | 94.5 | 65.5 | M |
| | 2011.08-2015.10 | 6AT/6MT | F | L/R | Estate FWD A 20 DTH | | GCO21049 | Outer Joint | | 30 | 26 | 52.5 | 94 | 65.5 | M |
| | 2011.08-2015.10 | 6AT/6MT | F | L/R | Estate FWD A 20 DTH | | GCO88046 | Outer Joint | | 30 | 26 | 52.5 | 94.5 | 65.5 | M |
| | 2011.08-2015.10 | 6MT | F | L | Estate FWD A 20 DTH | | GDS21075 | Drive Shaft | | 30 | 27 | 52.5 | 94 | 602 | |
| | 2011.08-2015.10 | 6MT | F | L/R | Estate FWD A 20 DTH | | GCI21030 | Inner Joint | | 27 | 26 | 35 | 78 | 112.5 | |
| | 2011.08-2015.10 | 6AT | F | L | Hatchback FWD A 20 DTH | Chassis no. from:C0/C1033261/C3/C8028482/CG040399 | GDS83986 | Drive Shaft | | 30 | 27 | 52.5 | 94 | 591 | |
| | 2011.08-2015.10 | 6AT | F | L | Hatchback FWD A 20 DTH | | GCI86015 | Inner Joint | | 27 | 26 | 35 | 78.5 | 109.5 | |
| | 2011.08-2015.10 | 6AT/6MT | F | L/R | Hatchback FWD A 20 DTH | | GCO17051 | Outer Joint | | 30 | 26 | 53.8 | 94.5 | 65.5 | M |
| | 2011.08-2015.10 | 6AT/6MT | F | L/R | Hatchback FWD A 20 DTH | | GCO21049 | Outer Joint | | 30 | 26 | 52.5 | 94 | 65.5 | M |
| | 2011.08-2015.10 | 6AT/6MT | F | L/R | Hatchback FWD A 20 DTH | | GCO88046 | Outer Joint | | 30 | 26 | 52.5 | 94.5 | 65.5 | M |
| | 2011.08-2015.10 | 6MT | F | L | Hatchback FWD A 20 DTH | | GDS21075 | Drive Shaft | | 30 | 27 | 52.5 | 94 | 602 | |
| | 2011.08-2015.10 | 6MT | F | L/R | Hatchback FWD A 20 DTH | | GCI21030 | Inner Joint | | 27 | 26 | 35 | 78 | 112.5 | |
| 2.0 (125 kw) | 2004.01-2009.05 | 6MT | F | R | Hatchback FWD Z 20 LEL | | GDS21056 | Drive Shaft | | 33 | 34 | 52.5 | 94 | 595 | |
| | 2004.01-2009.05 | 6MT | F | R | Hatchback FWD Z 20 LEL | | GCI99187 | Inner Joint | | 34 | 34 | 37.5 | | 124 | |
| | 2004.01-2009.05 | AT/MT | F | L/R | Hatchback FWD Z 20 LEL | | GCO44027 | Outer Joint | | 33 | 26 | 52.5 | 94 | 65.5 | M |
| | 2004.01-2009.05 | | F | | Hatchback FWD Z 20 LEL | | GCO99024 | Outer Joint | | 33 | 26 | 52.5 | 94 | 65.5 | M |
| | 2004.08-2010.10 | 6MT | F | R | Estate FWD Z 20 LEL | | GDS21056 | Drive Shaft | | 33 | 34 | 52.5 | 94 | 595 | |
| | 2004.08-2010.10 | 6MT | F | R | Estate FWD Z 20 LEL | | GCI99187 | Inner Joint | | 34 | 34 | 37.5 | | 124 | |
| | 2004.08-2010.10 | AT/MT | F | L/R | Estate FWD Z 20 LEL | | GCO44027 | Outer Joint | | 33 | 26 | 52.5 | 94 | 65.5 | M |
| | 2004.08-2010.10 | | F | | Estate FWD Z 20 LEL | | GCO99024 | Outer Joint | | 33 | 26 | 52.5 | 94 | 65.5 | M |
| 2.0 (141 kw) | 2001.11-2005.05 | 5MT | F | R | Hatchback FWD Z20LET | | GDS44082 | Drive Shaft | | 33 | 34 | 55 | 104 | 663 | |
| | 2001.11-2005.05 | MT | F | L | Hatchback FWD Z20LET | | GDS44025 | Drive Shaft | | 33 | 34 | 55 | 104 | 593 | |
| | 2001.11-2005.05 | MT | F | L/R | Hatchback FWD Z20LET | | GCO99061 | Outer Joint | | 33 | 35 | 55 | 104 | 67.5 | I |
| | 2001.11-2005.05 | MT | F | L | Hatchback FWD Z20LET | | GCI44018 | Inner Joint | | 34 | 35 | 35 | 56 | 119.5 | |
| | 2001.11-2005.05 | | F | L | Hatchback FWD Z20LET | | GCO44065 | Outer Joint | 29T | 33 | 35 | 55 | 104 | 67.5 | I |
| 2.0 (147 kw) | 2003.08-2005.03 | 5MT | F | L | Hatchback FWD Z20LET | | GDS44025 | Drive Shaft | | 33 | 34 | 55 | 104 | 593 | |
| | 2003.08-2005.03 | 5MT | F | R | Hatchback FWD Z20LET | | GDS44082 | Drive Shaft | | 33 | 34 | 55 | 104 | 663 | |
| | 2003.08-2005.03 | 5MT | F | L | Hatchback FWD Z20LET | | GCO44065 | Outer Joint | 29T | 33 | 35 | 55 | 104 | 67.5 | I |
| | 2003.08-2005.03 | 5MT | F | R | Hatchback FWD Z20LET | | GCO99061 | Outer Joint | | 33 | 35 | 55 | 104 | 67.5 | I |
| | 2003.08-2005.03 | 5MT | F | R | Hatchback FWD Z20LET | | GCI44025 | Inner Joint | | 34 | 35 | 37.5 | | 129 | |
| | 2004.01-2009.05 | 6MT | F | R | Hatchback FWD Z 20 LER | | GDS21056 | Drive Shaft | | 33 | 34 | 52.5 | 94 | 595 | |
| | 2004.01-2009.05 | 6MT | F | R | Hatchback FWD Z 20 LER | | GCI99187 | Inner Joint | | 34 | 34 | 37.5 | | 124 | |
| | 2004.01-2009.05 | AT/MT | F | L/R | Hatchback FWD Z 20 LER | | GCO44027 | Outer Joint | | 33 | 26 | 52.5 | 94 | 65.5 | M |
| | 2004.01-2009.05 | | F | | Hatchback FWD Z 20 LER | | GCO99024 | Outer Joint | | 33 | 26 | 52.5 | 94 | 65.5 | M |
| | 2004.08-2010.10 | 6MT | F | R | Estate FWD Z 20 LER | | GDS21056 | Drive Shaft | | 33 | 34 | 52.5 | 94 | 595 | |
| | 2004.08-2010.10 | 6MT | F | R | Estate FWD Z 20 LER | | GCI99187 | Inner Joint | | 34 | 34 | 37.5 | | 124 | |

| | YEAR | TRANSM. | F/R | L/R | BODY STYLE & DRIVE TYPE & ENGINE | REMARKS | G-AP Ref. | PRODUCT | ABS | Technical Specifications A | B | C | H | L | P |
|---|---|---|---|---|---|---|---|---|---|---|---|---|---|---|---|
| **VAUXHALL** | | | | | | | | | | | | | | | |
| **Astra** | | | | | | | | | | | | | | | |
| 2.0 (147 kw) | 2004.08-2010.10 | AT/MT | F | L/R | Estate FWD Z 20 LER | | GCO44027 | Outer Joint | | 33 | 26 | 52.5 | 94 | 65.5 | M |
| | 2004.08-2010.10 | | F | | Estate FWD Z 20 LER | | GCO99024 | Outer Joint | | 33 | 26 | 52.5 | 94 | 65.5 | M |
| 2.0 (177 kw) | 2004.01-2009.05 | 6MT | F | R | Hatchback FWD Z 20 LEH | Date to:2007.07 | GDS21062 | Drive Shaft | | 30 | 34 | 53.8 | 94.5 | 595 | |
| | 2004.01-2009.05 | 6MT | F | R | Hatchback FWD Z 20 LEH | Date from:2007.08,Chassis no. from:72/75041476/78 | GDS82084 | Drive Shaft | | 30 | 34 | 53.8 | 94.5 | 598 | |
| | 2004.01-2009.05 | 6MT | F | R | Hatchback FWD Z 20 LEH | Date from:2007.08,Chassis no. from:72/75041476/78 | GCI44016 | Inner Joint | | 34 | 28 | 37.5 | | 129.2 | |
| | 2004.01-2009.05 | 6MT | F | R | Hatchback FWD Z 20 LEH | Date to:2007.07 | GCI99187 | Inner Joint | | 34 | 34 | 37.5 | | 124 | |
| | 2004.01-2009.05 | | F | R | Hatchback FWD Z 20 LEH | Date To:2007.07,Chassis no. to:72,Chassis no. to:75041475,Chassis no. to:78,Chassis no. to:79 | GDS21056 | Drive Shaft | | 33 | 34 | 52.5 | 94 | 595 | |
| | 2004.01-2009.05 | | F | L/R | Hatchback FWD Z 20 LEH | | GCO17051 | Outer Joint | | 30 | 26 | 53.8 | 94.5 | 65.5 | M |
| 2.2 (108 kw) | 2000.09-2005.03 | 4AT/5MT | F | L | Hatchback FWD Z22SE | | GDS44044 | Drive Shaft | | 33 | 34 | 52 | 103.5 | 595 | |
| | 2000.09-2005.03 | 4AT/5MT | F | R | Hatchback FWD Z22SE | | GDS88011 | Drive Shaft | | 33 | 34 | 52 | 104 | 959 | |
| | 2000.09-2005.03 | 4AT/5MT | F | L | Hatchback FWD Z22SE | | GCO44032 | Outer Joint | | 33 | 25 | 52 | 103.5 | 61 | O |
| | 2000.09-2005.03 | AT/MT | F | L/R | Hatchback FWD Z22SE | | GCO44006 | Outer Joint | 29T | 33 | 25 | 52 | 103.5 | 61 | O |
| | 2000.09-2005.03 | MT | F | R | Hatchback FWD Z22SE | | GCO44049 | Outer Joint | | 33 | 25 | 52 | 109 | 61 | O |
| | 2000.09-2005.03 | | F | L/R | Hatchback FWD Z22SE | | GCI44002 | Inner Joint | | 34 | 25 | 35 | 56.2 | 114.8 | |
| | 2001.01-2005.05 | 4AT/5MT | F | L | Estate FWD Z22SE | | GDS44044 | Drive Shaft | | 33 | 34 | 52 | 103.5 | 595 | |
| | 2001.01-2005.05 | 4AT/5MT | F | R | Estate FWD Z22SE | | GDS88011 | Drive Shaft | | 33 | 34 | 52 | 104 | 959 | |
| | 2001.01-2005.05 | 4AT/5MT | F | L | Estate FWD Z22SE | | GCO44032 | Outer Joint | | 33 | 25 | 52 | 103.5 | 61 | O |
| | 2001.01-2005.05 | AT/MT | F | L/R | Estate FWD Z22SE | | GCO44006 | Outer Joint | 29T | 33 | 25 | 52 | 103.5 | 61 | O |
| | 2001.01-2005.05 | MT | F | R | Estate FWD Z22SE | | GCO44049 | Outer Joint | | 33 | 25 | 52 | 109 | 61 | O |
| | 2001.01-2005.05 | | F | L/R | Estate FWD Z22SE | | GCI44002 | Inner Joint | | 34 | 25 | 35 | 56.2 | 114.8 | |
| **Astra Cabrio** | | | | | | | | | | | | | | | |
| 1.6 (52 kw) | 1994.09-1996.08 | AT/MT | F | L/R | Cabriolet FWD X16SZ | Date from:1994.09 | GCO44007 | Outer Joint | 29T | 22 | 22 | 52 | 94.5 | 50 | O |
| | 1994.09-1996.08 | AT/MT | F | L/R | Cabriolet FWD X16SZ | | GCO44051 | Outer Joint | 29T | 22 | 22 | 52 | 95 | 50 | O |
| | 1994.09-1996.08 | MT | F | R | Cabriolet FWD X16SZ | | GDS60002 | Drive Shaft | 29T | 22 | 22 | 52 | 95 | 926 | |
| | 1994.09-1996.08 | MT | F | L/R | Cabriolet FWD X16SZ | Date from:1994.09 | GCI44004 | Inner Joint | | 22 | 22 | 34.95 | 57.5 | 103 | |
| | 1994.09-1996.08 | | F | | Cabriolet FWD X16SZ | | GCO44023 | Outer Joint | | 22 | 22 | 52 | 95 | 50 | O |
| | 1994.09-1996.08 | | F | | Cabriolet FWD X16SZ | | GCO44068 | Outer Joint | 29T | 22 | 30 | 52 | 94.5 | 55 | I |
| 1.6 (55 kw) | 1996.01-2001.01 | AT/MT | F | L/R | Cabriolet FWD X16SZR | | GCO44007 | Outer Joint | 29T | 22 | 22 | 52 | 94.5 | 50 | O |
| | 1996.01-2001.01 | MT | F | R | Cabriolet FWD X16SZR | | GDS60002 | Drive Shaft | 29T | 22 | 22 | 52 | 95 | 926 | |
| | 1996.01-2001.01 | MT | F | L/R | Cabriolet FWD X16SZR | | GCO44051 | Outer Joint | 29T | 22 | 22 | 52 | 95 | 50 | O |
| | 1996.01-2001.01 | MT | F | L/R | Cabriolet FWD X16SZR | | GCI44004 | Inner Joint | | 22 | 22 | 34.95 | 57.5 | 103 | |
| | 1996.01-2001.01 | | F | | Cabriolet FWD X16SZR | | GCO44068 | Outer Joint | 29T | 22 | 30 | 52 | 94.5 | 55 | I |
| 1.6 (74 kw) | 2001.02-2004.03 | 5MT | F | L | Cabriolet FWD Z16XE | | GDS60013 | Drive Shaft | | 33 | 22 | 52 | 103 | 595 | |
| | 2001.02-2004.03 | 5MT | F | R | Cabriolet FWD Z16XE | | GDS44033 | Drive Shaft | | 33 | 22 | 52 | 103 | 950.5 | |
| | 2001.02-2004.03 | AT/MT | F | L/R | Cabriolet FWD Z16XE | | GCO44011 | Outer Joint | 29T | 33 | 22 | 52 | 103 | 50.5 | O |
| | 2001.02-2004.03 | AT/MT | F | L/R | Cabriolet FWD Z16XE | | GCO44030 | Outer Joint | | 33 | 22 | 52 | 103 | 50.5 | O |
| | 2001.02-2004.03 | AT/MT | F | L/R | Cabriolet FWD Z16XE | | GCI44004 | Inner Joint | | 22 | 22 | 34.95 | 57.5 | 103 | |
| | 2001.02-2004.03 | MT | F | L | Cabriolet FWD Z16XE | Date to:2004.03 | GCI21014 | Inner Joint | | 22 | 22 | 35 | 57.5 | 105.5 | |
| | 2001.02-2004.03 | | F | L/R | Cabriolet FWD Z16XE | | GCO44009 | Outer Joint | | 33 | 22 | 52 | 103 | 50.5 | O |
| | 2001.02-2004.03 | | F | | Cabriolet FWD Z16XE | | GCO44010 | Outer Joint | 29T | 33 | 22 | 52 | 103 | 50.5 | O |
| 1.6 (76 kw) | 2003.03-2006.05 | 5MT | F | L | Cabriolet FWD Z16XEP | | GDS60013 | Drive Shaft | | 33 | 22 | 52 | 103 | 595 | |
| | 2003.03-2006.05 | 5MT | F | R | Cabriolet FWD Z16XEP | | GDS44033 | Drive Shaft | | 33 | 22 | 52 | 103 | 950.5 | |
| | 2003.03-2006.05 | | F | | Cabriolet FWD Z16XEP | | GCO44010 | Outer Joint | 29T | 33 | 22 | 52 | 103 | 50.5 | O |
| | 2003.03-2006.05 | | F | L | Cabriolet FWD Z16XEP | | GCI21014 | Inner Joint | | 22 | 22 | 35 | 57.5 | 105.5 | |
| | 2003.03-2006.05 | | F | L/R | Cabriolet FWD Z16XEP | | GCI44004 | Inner Joint | | 22 | 22 | 34.95 | 57.5 | 103 | |
| 1.6 (77 kw) | 2005.09-2010.11 | MT | F | L/R | Convertible FWD Z 16 XEP | Date to:2007.09 | GCO44003 | Outer Joint | | 33 | 22 | 53 | 95 | 54.5 | M |
| | 2005.09-2010.11 | MT | F | L | Convertible FWD Z 16 XEP | Date to:2007.09 | GCI21014 | Inner Joint | | 22 | 22 | 35 | 57.5 | 105.5 | |
| | 2005.09-2010.11 | SAT/5MT | F | L | Convertible FWD Z 16 XEP | | GDS44028 | Drive Shaft | | 33 | 22 | 53 | 95 | 590 | |
| | 2005.09-2010.11 | SAT/5MT | F | R | Convertible FWD Z 16 XEP | | GDS44030 | Drive Shaft | | 33 | 22 | 53 | 95 | 952 | |
| 1.6 (85 kw) | 2006.10-2011.08 | | F | L | Convertible FWD Z 16 XER;A 16 XER | | GDS44028 | Drive Shaft | | 33 | 22 | 53 | 95 | 590 | |
| | 2006.10-2011.08 | | F | R | Convertible FWD Z 16 XER;A 16 XER | for left-hand drive vehicles | GDS44030 | Drive Shaft | | 33 | 22 | 53 | 95 | 952 | |
| | 2006.10-2011.08 | | F | L/R | Convertible FWD Z 16 XER;A 16 XER | | GCO44003 | Outer Joint | | 33 | 22 | 53 | 95 | 54.5 | M |
| | 2006.10-2011.08 | | F | L | Convertible FWD Z 16 XER;A 16 XER | | GCI21014 | Inner Joint | | 22 | 22 | 35 | 57.5 | 105.5 | |
| 1.8 (85 kw) | 1994.09-2001.01 | 5MT | F | L/R | Cabriolet FWD C18XEL/X18XE | | GCO44056 | Outer Joint | 29T | 33 | 25 | 52 | 109 | 61 | O |
| | 1994.09-2001.01 | AT/MT | F | L | Cabriolet FWD C18XEL/X18XE | | GDS44011 | Drive Shaft | 29T | 33 | 34 | 52 | 109 | 594.5 | |
| | 1994.09-2001.01 | AT/MT | F | R | Cabriolet FWD C18XEL/X18XE | | GDS44059 | Drive Shaft | 29T | 33 | 34 | 52 | 109 | 938 | |
| | 1994.09-2001.01 | MT | F | L/R | Cabriolet FWD C18XEL/X18XE | | GCI44002 | Inner Joint | | 34 | 25 | 35 | 56.2 | 114.8 | |
| 1.8 (92 kw) | 1994.09-1996.08 | | F | | Cabriolet FWD C18XE | | GCO88003 | Outer Joint | | 33 | 25 | 52 | 109 | 61 | O |
| | 2001.02-2006.07 | 5MT | F | R | Cabriolet FWD Z18XE | | GDS60035 | Drive Shaft | | 33 | 22 | 52 | 109 | 961 | |
| | 2001.02-2006.07 | AT/MT | F | L/R | Cabriolet FWD Z18XE | | GCO44006 | Outer Joint | 29T | 33 | 25 | 52 | 103.5 | 61 | O |
| | 2001.02-2006.07 | MT | F | R | Cabriolet FWD Z18XE | | GCO44049 | Outer Joint | | 33 | 25 | 52 | 109 | 61 | O |
| | 2001.02-2006.07 | | F | L | Cabriolet FWD Z18XE | | GDS60013 | Drive Shaft | | 33 | 22 | 52 | 103 | 595 | |
| | 2001.02-2006.07 | | F | L/R | Cabriolet FWD Z18XE | | GCI99026 | Inner Joint | | 22 | 25 | 35 | 57 | 111.7 | |
| 1.8 (103 kw) | 2008.05-2010.11 | 4AT | F | L | Convertible FWD Z 18 XER;A 18 XER | | GDS44097 | Drive Shaft | | 33 | 22 | 53 | 93.5 | 588 | |
| | 2008.05-2010.11 | 4AT | F | R | Convertible FWD Z 18 XER;A 18 XER | | GDS44098 | Drive Shaft | | 33 | 22 | 53 | 93.5 | 950 | |

| | YEAR | TRANSM. | F/R | L/R | BODY STYLE & DRIVE TYPE & ENGINE | REMARKS | G-AP Ref. | PRODUCT | ABS | Technical Specifications A | B | C | H | L | P |
|---|---|---|---|---|---|---|---|---|---|---|---|---|---|---|---|
| **VAUXHALL** | | | | | | | | | | | | | | | |
| **Astra Cabrio** | | | | | | | | | | | | | | | |
| 1.8 (103 kw) | 2008.05-2010.11 | 5MT | F | L | Convertible FWD Z 18 XER;A 18 XER | | GDS21063 | Drive Shaft | | 33 | 22 | 53 | 93.5 | 586 | |
| | 2008.05-2010.11 | 5MT | F | R | Convertible FWD Z 18 XER;A 18 XER | | GDS21055 | Drive Shaft | | 33 | 22 | 53 | 93.5 | 950 | |
| | 2008.05-2010.11 | 5MT | F | L | Convertible FWD Z 18 XER;A 18 XER | | GCI99026 | Inner Joint | | 22 | 25 | 35 | 57 | 111.7 | |
| | 2008.05-2010.11 | | F | L/R | Convertible FWD Z 18 XER;A 18 XER | | GCO44028 | Outer Joint | | 33 | 24 | 53 | 93.5 | 63.5 | M |
| 1.9 (110 kw) | 2006.01-2010.11 | 6MT | F | L | Convertible FWD Z 19 DTH | Date from:2007.08 | GDS21035 | Drive Shaft | | 30 | 25 | 53.8 | 94.5 | 581 | |
| | 2006.01-2010.11 | 6MT | F | L | Convertible FWD Z 19 DTH | Date to:2007.07 | GDS21071 | Drive Shaft | | 30 | 25 | 53.8 | 94.5 | 576 | |
| | 2006.01-2010.11 | 6MT | F | R | Convertible FWD Z 19 DTH | Date to:2007.07 | GDS21062 | Drive Shaft | | 30 | 34 | 53.8 | 94.5 | 595 | |
| | 2006.01-2010.11 | 6MT | F | R | Convertible FWD Z 19 DTH | Date from:2007.08;Chassis no. from:72024736/75041476/78008876 | GDS82084 | Drive Shaft | | 30 | 34 | 53.8 | 94.5 | 598 | |
| | 2006.01-2010.11 | 6MT | F | R | Convertible FWD Z 19 DTH | Date to:2007.07;Chassis no. to:72024735/75041475/78008875/7G | GCI99187 | Inner Joint | | 34 | 34 | 37.5 | | 124 | |
| | 2006.01-2010.11 | MT | F | L | Convertible FWD Z 19 DTH | | GCI21018 | Inner Joint | | 25 | 34 | 35 | 58 | 116 | |
| | 2006.01-2010.11 | MT | F | L | Convertible FWD Z 19 DTH | | GCI99186 | Inner Joint | | 25 | 28 | 34.9 | 57.5 | 111 | |
| | 2006.01-2010.11 | | F | R | Convertible FWD Z 19 DTH | Date To:2007.07;Chassis no. to:72024735/75041475/78008875/7G | GDS21056 | Drive Shaft | | 33 | 34 | 52.5 | 94 | 595 | |
| | 2006.01-2010.11 | | F | L/R | Convertible FWD Z 19 DTH | | GCO17051 | Outer Joint | | 30 | 26 | 53.8 | 94.5 | 65.5 | M |
| 2.0 (100 kw) | 1994.01-1998.02 | | F | | Cabriolet FWD X20XEV | | GCO88003 | Outer Joint | | 33 | 25 | 52 | 109 | 61 | O |
| 2.0 (125 kw) | 2006.02-2010.11 | 6MT | F | R | Convertible FWD Z 20 LEL | | GDS21056 | Drive Shaft | | 33 | 34 | 52.5 | 94 | 595 | |
| | 2006.02-2010.11 | 6MT | F | R | Convertible FWD Z 20 LEL | | GCI99187 | Inner Joint | | 34 | 34 | 37.5 | | 124 | |
| | 2006.02-2010.11 | | F | L/R | Convertible FWD Z 20 LEL | | GCO44027 | Outer Joint | | 33 | 26 | 52.5 | 94 | 65.5 | M |
| | 2006.02-2010.11 | | F | | Convertible FWD Z 20 LEL | | GCO99024 | Outer Joint | | 33 | 26 | 52.5 | 94 | 65.5 | M |
| 2.0 (141 kw) | 2002.03-2003.07 | 5MT | F | R | Cabriolet FWD Z20LET | | GDS44082 | Drive Shaft | | 33 | 34 | 55 | 104 | 663 | |
| | 2002.03-2003.07 | MT | F | L | Cabriolet FWD Z20LET | | GDS44025 | Drive Shaft | | 33 | 34 | 55 | 104 | 593 | |
| | 2002.03-2003.07 | MT | F | L/R | Cabriolet FWD Z20LET | | GCO99061 | Outer Joint | | 33 | 35 | 55 | 104 | 67.5 | I |
| | 2002.03-2003.07 | MT | F | L | Cabriolet FWD Z20LET | | GCI44018 | Inner Joint | | 34 | 35 | 35 | 56 | 119.5 | |
| | 2002.03-2003.07 | | F | L | Cabriolet FWD Z20LET | | GCO44065 | Outer Joint | 29T | 33 | 35 | 55 | 104 | 67.5 | I |
| 2.0 (147 kw) | 2003.08-2006.07 | 5MT | F | R | Cabriolet FWD Z20LET | | GDS44082 | Drive Shaft | | 33 | 34 | 55 | 104 | 663 | |
| | 2003.08-2006.07 | MT | F | L | Cabriolet FWD Z20LET | | GDS44025 | Drive Shaft | | 33 | 34 | 55 | 104 | 593 | |
| | 2003.08-2006.07 | MT | F | L/R | Cabriolet FWD Z20LET | | GCO99061 | Outer Joint | | 33 | 35 | 55 | 104 | 67.5 | I |
| | 2003.08-2006.07 | MT | F | L | Cabriolet FWD Z20LET | | GCI44018 | Inner Joint | | 34 | 35 | 35 | 56 | 119.5 | |
| | 2003.08-2006.07 | | F | L | Cabriolet FWD Z20LET | | GCO44065 | Outer Joint | 29T | 33 | 35 | 55 | 104 | 67.5 | I |
| | 2006.01-2010.11 | 6MT | F | R | Convertible FWD Z 20 LER | | GDS21056 | Drive Shaft | | 33 | 34 | 52.5 | 94 | 595 | |
| | 2006.01-2010.11 | 6MT | F | R | Convertible FWD Z 20 LER | | GCI99187 | Inner Joint | | 34 | 34 | 37.5 | | 124 | |
| | 2006.01-2010.11 | | F | L/R | Convertible FWD Z 20 LER | | GCO44027 | Outer Joint | | 33 | 26 | 52.5 | 94 | 65.5 | M |
| | 2006.01-2010.11 | | F | | Convertible FWD Z 20 LER | | GCO99024 | Outer Joint | | 33 | 26 | 52.5 | 94 | 65.5 | M |
| 2.2 (108 kw) | 2001.02-2006.07 | 4AT/5MT | F | L | Cabriolet FWD Z22SE | | GDS44044 | Drive Shaft | | 33 | 34 | 52 | 103.5 | 595 | |
| | 2001.02-2006.07 | 4AT/5MT | F | R | Cabriolet FWD Z22SE | | GDS88011 | Drive Shaft | | 33 | 34 | 52 | 104 | 959 | |
| | 2001.02-2006.07 | 4AT/5MT | F | L | Cabriolet FWD Z22SE | | GCO44032 | Outer Joint | | 33 | 25 | 52 | 103.5 | 61 | O |
| | 2001.02-2006.07 | AT/MT | F | L/R | Cabriolet FWD Z22SE | | GCO44006 | Outer Joint | 29T | 33 | 25 | 52 | 103.5 | 61 | O |
| | 2001.02-2006.07 | MT | F | R | Cabriolet FWD Z22SE | | GCO44049 | Outer Joint | | 33 | 25 | 52 | 109 | 61 | O |
| | 2001.02-2006.07 | | F | L/R | Cabriolet FWD Z22SE | | GCI44002 | Inner Joint | | 34 | 25 | 35 | 56.2 | 114.8 | |
| **Astra Coupe** | | | | | | | | | | | | | | | |
| 1.6 (76 kw) | 2000.03-2005.08 | 4AT/5MT | F | L | Coupe FWD Z16XEP | | GDS60013 | Drive Shaft | | 33 | 22 | 52 | 103 | 595 | |
| | 2000.03-2005.08 | 4AT/5MT | F | R | Coupe FWD Z16XEP | | GDS44033 | Drive Shaft | | 33 | 22 | 52 | 103 | 950.5 | |
| | 2000.03-2005.08 | | F | L/R | Coupe FWD Z16XEP | | GCO44009 | Outer Joint | | 33 | 22 | 52 | 103 | 50.5 | O |
| | 2000.03-2005.08 | | F | L/R | Coupe FWD Z16XEP | | GCO44030 | Outer Joint | | 33 | 22 | 52 | 103 | 50.5 | O |
| | 2000.03-2005.08 | | F | | Coupe FWD Z16XEP | | GCO44010 | Outer Joint | 29T | 33 | 22 | 52 | 103 | 50.5 | O |
| | 2000.03-2005.08 | | F | L | Coupe FWD Z16XEP | | GCI21014 | Inner Joint | | 22 | 22 | 35 | 57.5 | 105.5 | |
| | 2000.03-2005.08 | | F | L/R | Coupe FWD Z16XEP | | GCI44004 | Inner Joint | | 22 | 22 | 34.95 | 57.5 | 103 | |
| 1.8 (85 kw) | 2000.03-2005.08 | 4AT/5MT | F | R | Coupe FWD X18XE1 | | GDS60035 | Drive Shaft | | 33 | 22 | 52 | 109 | 961 | |
| | 2000.03-2005.08 | AT/MT | F | L/R | Coupe FWD X18XE1 | | GCO44006 | Outer Joint | 29T | 33 | 25 | 52 | 103.5 | 61 | O |
| | 2000.03-2005.08 | MT | F | R | Coupe FWD X18XE1 | | GCO44049 | Outer Joint | | 33 | 25 | 52 | 109 | 61 | O |
| | 2000.03-2005.08 | | F | L | Coupe FWD X18XE1 | | GDS60013 | Drive Shaft | | 33 | 22 | 52 | 103 | 595 | |
| | 2000.03-2005.08 | | F | L/R | Coupe FWD X18XE1 | | GCI99026 | Inner Joint | | 22 | 25 | 35 | 57 | 111.7 | |
| 1.8 (87 kw) | 2002.09-2005.05 | 5MT | F | R | Coupe FWD Z18XE | | GDS60035 | Drive Shaft | | 33 | 22 | 52 | 109 | 961 | |
| | 2002.09-2005.05 | AT/MT | F | L/R | Coupe FWD Z18XE | Date to:2005.05 | GCO44006 | Outer Joint | 29T | 33 | 25 | 52 | 103.5 | 61 | O |
| | 2002.09-2005.05 | MT | F | R | Coupe FWD Z18XE | | GCO44049 | Outer Joint | | 33 | 25 | 52 | 109 | 61 | O |
| | 2002.09-2005.05 | MT | F | L/R | Coupe FWD Z18XE | | GCI99026 | Inner Joint | | 22 | 25 | 35 | 57 | 111.7 | |
| | 2002.09-2005.05 | | F | L | Coupe FWD Z18XE | | GDS60013 | Drive Shaft | | 33 | 22 | 52 | 103 | 595 | |
| 1.8 (92 kw) | 2000.09-2005.05 | 4AT/5MT | F | R | Coupe FWD Z18XE | | GDS60035 | Drive Shaft | | 33 | 22 | 52 | 109 | 961 | |
| | 2000.09-2005.05 | AT/MT | F | L/R | Coupe FWD Z18XE | Date to:2005.05 | GCO44006 | Outer Joint | 29T | 33 | 25 | 52 | 103.5 | 61 | O |
| | 2000.09-2005.05 | MT | F | R | Coupe FWD Z18XE | | GCO44049 | Outer Joint | | 33 | 25 | 52 | 109 | 61 | O |
| | 2000.09-2005.05 | | F | L | Coupe FWD Z18XE | | GDS60013 | Drive Shaft | | 33 | 22 | 52 | 103 | 595 | |
| | 2000.09-2005.05 | | F | L/R | Coupe FWD Z18XE | | GCI99026 | Inner Joint | | 22 | 25 | 35 | 57 | 111.7 | |
| | 2002.07-2004.08 | MT | F | R | Coupe FWD Z18XE | | GDS60035 | Drive Shaft | | 33 | 22 | 52 | 109 | 961 | |
| | 2002.07-2004.08 | MT | F | L/R | Coupe FWD Z18XE | | GCO44006 | Outer Joint | 29T | 33 | 25 | 52 | 103.5 | 61 | O |
| | 2002.07-2004.08 | MT | F | L/R | Coupe FWD Z18XE | | GCI99026 | Inner Joint | | 22 | 25 | 35 | 57 | 111.7 | |
| | 2002.07-2004.08 | | F | L | Coupe FWD Z18XE | | GDS60013 | Drive Shaft | | 33 | 22 | 52 | 103 | 595 | |

| | YEAR | TRANSM. | F/R | L/R | BODY STYLE & DRIVE TYPE & ENGINE | REMARKS | G-AP Ref. | PRODUCT | ABS | Technical Specifications A | B | C | H | L | P |
|---|---|---|---|---|---|---|---|---|---|---|---|---|---|---|---|
| **VAUXHALL** | | | | | | | | | | | | | | | |
| **Astra Coupe** | | | | | | | | | | | | | | | |
| 1.8 (92 kw) | 2002.07-2004.08 | | F | L/R | Coupe FWD Z18XE | | GCO44049 | Outer Joint | | 33 | 25 | 52 | 109 | 61 | O |
| 2.0 (140 kw) | 2000.09-2005.05 | 5MT | F | R | Coupe FWD Z20LET | | GDS44082 | Drive Shaft | | 33 | 34 | 55 | 104 | 663 | |
| | 2000.09-2005.05 | MT | F | L | Coupe FWD Z20LET | | GDS44025 | Drive Shaft | | 33 | 34 | 55 | 104 | 593 | |
| | 2000.09-2005.05 | MT | F | L/R | Coupe FWD Z20LET | | GCO99061 | Outer Joint | | 33 | 35 | 55 | 104 | 67.5 | I |
| | 2000.09-2005.05 | MT | F | L | Coupe FWD Z20LET | | GCI44018 | Inner Joint | | 34 | 35 | 35 | 56 | 119.5 | |
| | 2000.09-2005.05 | | F | L | Coupe FWD Z20LET | | GCO44065 | Outer Joint | 29T | 33 | 35 | 55 | 104 | 67.5 | I |
| 2.2 (108 kw) | 2000.03-2005.05 | 4AT/5MT | F | L | Coupe FWD Z22SE | | GDS44044 | Drive Shaft | | 33 | 34 | 52 | 103.5 | 595 | |
| | 2000.03-2005.05 | 4AT/5MT | F | R | Coupe FWD Z22SE | | GDS88011 | Drive Shaft | | 33 | 34 | 52 | 104 | 959 | |
| | 2000.03-2005.05 | 4AT/5MT | F | L | Coupe FWD Z22SE | | GCO44032 | Outer Joint | | 33 | 25 | 52 | 103.5 | 61 | O |
| | 2000.03-2005.05 | AT/MT | F | L/R | Coupe FWD Z22SE | Date to:2005.05 | GCO44006 | Outer Joint | 29T | 33 | 25 | 52 | 103.5 | 61 | O |
| | 2000.03-2005.05 | MT | F | R | Coupe FWD Z22SE | | GCO44049 | Outer Joint | | 33 | 25 | 52 | 109 | 61 | O |
| | 2000.03-2005.05 | | F | L/R | Coupe FWD Z22SE | | GCI44002 | Inner Joint | | 34 | 25 | 35 | 56.2 | 114.8 | |
| **Astra GTC** | | | | | | | | | | | | | | | |
| 1.4 (74 kw) | 2011.10-2018.10 | AT | F | L/R | Hatchback FWD A 14 XER | | GCO88047 | Outer Joint | | 33 | 23 | 52.5 | 94 | 59.5 | M |
| | 2011.10-2018.10 | MT | F | L | Hatchback FWD A 14 XER | | GDS44064 | Drive Shaft | | 33 | 22 | 53 | 95 | 618 | |
| | 2011.10-2018.10 | MT | F | L/R | Hatchback FWD A 14 XER | | GCI44004 | Inner Joint | | 22 | 22 | 34.95 | 57.5 | 103 | |
| | 2011.10-2018.10 | | F | | Hatchback FWD A 14 XER | | GDS44065 | Drive Shaft | | 33 | 22 | 53 | 95 | 983 | |
| 1.4 (88 kw) | 2011.10-2018.10 | 6AT | F | L/R | Hatchback FWD A 14 NEL;B 14 NEL | | GCO81305 | Outer Joint | | 30 | 23 | 52.3 | 94 | 59.5 | M |
| | 2011.10-2018.10 | 6AT | F | L | Hatchback FWD A 14 NEL;B 14 NEL | | GCI81774 | Inner Joint | | 34 | 23 | 35 | 136.5 | 84.5 | |
| | 2011.10-2018.10 | 6MT | F | L | Hatchback FWD A 14 NEL;B 14 NEL | | GDS83226 | Drive Shaft | | 30 | 25 | 52.5 | 94 | 623 | |
| | 2011.10-2018.10 | 6MT | F | R | Hatchback FWD A 14 NEL;B 14 NEL | | GDS83227 | Drive Shaft | | 30 | 25 | 52.5 | 94 | 1018 | |
| | 2011.10-2018.10 | 6MT | F | L/R | Hatchback FWD A 14 NEL;B 14 NEL | | GCO17051 | Outer Joint | | 30 | 26 | 53.8 | 94.5 | 65.5 | M |
| | 2011.10-2018.10 | 6MT | F | L/R | Hatchback FWD A 14 NEL;B 14 NEL | | GCO21049 | Outer Joint | | 30 | 26 | 52.5 | 94 | 65.5 | M |
| | 2011.10-2018.10 | 6MT | F | L/R | Hatchback FWD A 14 NEL;B 14 NEL | | GCO88046 | Outer Joint | | 30 | 26 | 52.5 | 94.5 | 65.5 | M |
| | 2011.10-2018.10 | 6MT | F | L | Hatchback FWD A 14 NEL;B 14 NEL | | GCI82188 | Inner Joint | | 25 | 26 | 34.9 | 57.5 | 108 | |
| | 2011.10-2018.10 | 6MT | F | R | Hatchback FWD A 14 NEL;B 14 NEL | | GCI82194 | Inner Joint | | 34 | 26 | 37.5 | | 124 | |
| | 2011.10-2018.10 | MT | F | L | Hatchback FWD A 14 NEL;B 14 NEL | | GDS82083 | Drive Shaft | | 33 | 25 | 53 | 93.5 | 596 | |
| 1.4 (103 kw) | 2011.10-2018.04 | 6AT | F | L/R | Hatchback FWD A 14 NET;B 14 NET | | GCO81305 | Outer Joint | | 30 | 23 | 52.3 | 94 | 59.5 | M |
| | 2011.10-2018.04 | 6AT | F | L | Hatchback FWD A 14 NET;B 14 NET | | GCI81774 | Inner Joint | | 34 | 23 | 35 | 136.5 | 84.5 | |
| | 2011.10-2018.04 | 6MT | F | L | Hatchback FWD A 14 NET;B 14 NET | | GDS83226 | Drive Shaft | | 30 | 25 | 52.5 | 94 | 623 | |
| | 2011.10-2018.04 | 6MT | F | R | Hatchback FWD A 14 NET;B 14 NET | | GDS83227 | Drive Shaft | | 30 | 25 | 52.5 | 94 | 1018 | |
| | 2011.10-2018.04 | 6MT | F | L/R | Hatchback FWD A 14 NET;B 14 NET | | GCO17051 | Outer Joint | | 30 | 26 | 53.8 | 94.5 | 65.5 | M |
| | 2011.10-2018.04 | 6MT | F | L/R | Hatchback FWD A 14 NET;B 14 NET | | GCO21049 | Outer Joint | | 30 | 26 | 52.5 | 94 | 65.5 | M |
| | 2011.10-2018.04 | 6MT | F | L/R | Hatchback FWD A 14 NET;B 14 NET | | GCO88046 | Outer Joint | | 30 | 26 | 52.5 | 94.5 | 65.5 | M |
| | 2011.10-2018.04 | 6MT | F | L | Hatchback FWD A 14 NET;B 14 NET | | GCI82188 | Inner Joint | | 25 | 26 | 34.9 | 57.5 | 108 | |
| | 2011.10-2018.04 | 6MT | F | R | Hatchback FWD A 14 NET;B 14 NET | | GCI82194 | Inner Joint | | 34 | 26 | 37.5 | | 124 | |
| | 2011.10-2018.04 | MT | F | R | Hatchback FWD A 14 NET;B 14 NET | | GDS21109 | Drive Shaft | | 33 | 34 | 53 | 93.5 | 588 | |
| | 2011.10-2018.04 | MT | F | R | Hatchback FWD A 14 NET;B 14 NET | | GCI44005 | Inner Joint | | 34 | 25 | 35 | | 130.2 | |
| 1.6 (81 kw) | 2014.07-2018.10 | 6MT | F | L | Hatchback FWD B 16 DTL | | GDS83226 | Drive Shaft | | 30 | 25 | 52.5 | 94 | 623 | |
| | 2014.07-2018.10 | 6MT | F | R | Hatchback FWD B 16 DTL | | GDS21093 | Drive Shaft | | 30 | 27 | 52.5 | 94 | 625 | |
| | 2014.07-2018.10 | 6MT | F | L/R | Hatchback FWD B 16 DTL | | GCO17051 | Outer Joint | | 30 | 26 | 53.8 | 94.5 | 65.5 | M |
| | 2014.07-2018.10 | 6MT | F | L/R | Hatchback FWD B 16 DTL | | GCO21049 | Outer Joint | | 30 | 26 | 52.5 | 94 | 65.5 | M |
| | 2014.07-2018.10 | 6MT | F | L/R | Hatchback FWD B 16 DTL | | GCO88046 | Outer Joint | | 30 | 26 | 52.5 | 94.5 | 65.5 | M |
| | 2014.07-2018.10 | 6MT | F | L | Hatchback FWD B 16 DTL | | GCI82188 | Inner Joint | | 25 | 26 | 34.9 | 57.5 | 108 | |
| | 2014.07-2018.10 | 6MT | F | R | Hatchback FWD B 16 DTL | | GCI21016 | Inner Joint | | 27 | 26 | 35 | 78.5 | 112 | |
| 1.6 (100 kw) | 2014.07-2018.10 | 6MT | F | L | Hatchback FWD B 16 DTH | | GDS83226 | Drive Shaft | | 30 | 25 | 52.5 | 94 | 623 | |
| | 2014.07-2018.10 | 6MT | F | R | Hatchback FWD B 16 DTH | | GDS21093 | Drive Shaft | | 30 | 27 | 52.5 | 94 | 625 | |
| | 2014.07-2018.10 | 6MT | F | L/R | Hatchback FWD B 16 DTH | | GCO17051 | Outer Joint | | 30 | 26 | 53.8 | 94.5 | 65.5 | M |
| | 2014.07-2018.10 | 6MT | F | L/R | Hatchback FWD B 16 DTH | | GCO21049 | Outer Joint | | 30 | 26 | 52.5 | 94 | 65.5 | M |
| | 2014.07-2018.10 | 6MT | F | L/R | Hatchback FWD B 16 DTH | | GCO88046 | Outer Joint | | 30 | 26 | 52.5 | 94.5 | 65.5 | M |
| | 2014.07-2018.10 | 6MT | F | L | Hatchback FWD B 16 DTH | | GCI82188 | Inner Joint | | 25 | 26 | 34.9 | 57.5 | 108 | |
| | 2014.07-2018.10 | 6MT | F | R | Hatchback FWD B 16 DTH | | GCI21016 | Inner Joint | | 27 | 26 | 35 | 78.5 | 112 | |
| 1.6 (125 kw) | 2013.09-2018.10 | 6AT/6MT | F | L/R | Hatchback FWD A 16 XHT;B 16 SHL | | GCO88046 | Outer Joint | | 30 | 26 | 52.5 | 94.5 | 65.5 | M |
| | 2013.09-2018.10 | 6MT | F | L | Hatchback FWD A 16 XHT;B 16 SHL | | GDS83226 | Drive Shaft | | 30 | 25 | 52.5 | 94 | 623 | |
| | 2013.09-2018.10 | 6MT | F | R | Hatchback FWD A 16 XHT;B 16 SHL | | GDS21093 | Drive Shaft | | 30 | 27 | 52.5 | 94 | 625 | |
| | 2013.09-2018.10 | 6MT | F | R | Hatchback FWD A 16 XHT;B 16 SHL | | GCI21016 | Inner Joint | | 27 | 26 | 35 | 78.5 | 112 | |
| | 2013.09-2018.10 | MT | F | L/R | Hatchback FWD A 16 XHT;B 16 SHL | | GCO17051 | Outer Joint | | 30 | 26 | 53.8 | 94.5 | 65.5 | M |
| | 2013.09-2018.10 | MT | F | L/R | Hatchback FWD A 16 XHT;B 16 SHL | | GCO21049 | Outer Joint | | 30 | 26 | 52.5 | 94 | 65.5 | M |
| 1.6 (132 kw) | 2011.10-2018.10 | 6MT | F | L | Hatchback FWD A 16 LET | | GDS83226 | Drive Shaft | | 30 | 25 | 52.5 | 94 | 623 | |
| | 2011.10-2018.10 | 6MT | F | R | Hatchback FWD A 16 LET | | GDS83227 | Drive Shaft | | 30 | 25 | 52.5 | 94 | 1018 | |
| | 2011.10-2018.10 | 6MT | F | L/R | Hatchback FWD A 16 LET | | GCO17051 | Outer Joint | | 30 | 26 | 53.8 | 94.5 | 65.5 | M |
| | 2011.10-2018.10 | 6MT | F | L/R | Hatchback FWD A 16 LET | | GCO21049 | Outer Joint | | 30 | 26 | 52.5 | 94 | 65.5 | M |
| | 2011.10-2018.10 | 6MT | F | L/R | Hatchback FWD A 16 LET | | GCO88046 | Outer Joint | | 30 | 26 | 52.5 | 94.5 | 65.5 | M |
| | 2011.10-2018.10 | 6MT | F | L | Hatchback FWD A 16 LET | | GCI82188 | Inner Joint | | 25 | 26 | 34.9 | 57.5 | 108 | |
| | 2011.10-2018.10 | 6MT | F | R | Hatchback FWD A 16 LET | | GCI82194 | Inner Joint | | 34 | 26 | 37.5 | | 124 | |

| | YEAR | TRANSM. | F/R | L/R | BODY STYLE & DRIVE TYPE & ENGINE | REMARKS | G-AP Ref. | PRODUCT | ABS | Technical Specifications A | B | C | H | L | P |
|---|---|---|---|---|---|---|---|---|---|---|---|---|---|---|---|
| **VAUXHALL** | | | | | | | | | | | | | | | |
| **Astra GTC** | | | | | | | | | | | | | | | |
| 1.6 (132 kw) | 2011.10-2018.10 | AT | F | L/R | Hatchback FWD A 16 LET | | GCO88047 | Outer Joint | | 33 | 23 | 52.5 | 94 | 59.5 | M |
| | 2011.10-2018.10 | MT | F | R | Hatchback FWD A 16 LET | | GDS21074 | Drive Shaft | | 30 | 34 | 52.5 | 94 | 589 | |
| 1.6 (147 kw) | 2013.09-2018.10 | 6MT | F | L | Hatchback FWD A 16 SHT;B 16 SHT | | GDS83226 | Drive Shaft | | 30 | 25 | 52.5 | 94 | 623 | |
| | 2013.09-2018.10 | 6MT | F | R | Hatchback FWD A 16 SHT;B 16 SHT | | GDS21093 | Drive Shaft | | 30 | 27 | 52.5 | 94 | 625 | |
| | 2013.09-2018.10 | 6MT | F | L/R | Hatchback FWD A 16 SHT;B 16 SHT | | GCO17051 | Outer Joint | | 30 | 26 | 53.8 | 94.5 | 65.5 | M |
| | 2013.09-2018.10 | 6MT | F | L/R | Hatchback FWD A 16 SHT;B 16 SHT | | GCO21049 | Outer Joint | | 30 | 26 | 52.5 | 94 | 65.5 | M |
| | 2013.09-2018.10 | 6MT | F | L/R | Hatchback FWD A 16 SHT;B 16 SHT | | GCO88046 | Outer Joint | | 30 | 26 | 52.5 | 94.5 | 65.5 | M |
| | 2013.09-2018.10 | 6MT | F | L | Hatchback FWD A 16 SHT;B 16 SHT | | GCI82188 | Inner Joint | | 25 | 26 | 34.9 | 57.5 | 108 | |
| | 2013.09-2018.10 | 6MT | F | R | Hatchback FWD A 16 SHT;B 16 SHT | | GCI21016 | Inner Joint | | 27 | 26 | 35 | 78.5 | 112 | |
| 1.7 (81 kw) | 2011.10-2018.10 | 6MT | F | L | Hatchback FWD A 17 DTJ;A 17 DTC;A 17 DTE | For Engine code:A17DTC | GDS83226 | Drive Shaft | | 30 | 25 | 52.5 | 94 | 623 | |
| | 2011.10-2018.10 | 6MT | F | R | Hatchback FWD A 17 DTJ;A 17 DTC;A 17 DTE | For Engine code:A17DTC | GDS83227 | Drive Shaft | | 30 | 25 | 52.5 | 94 | 1018 | |
| | 2011.10-2018.10 | 6MT | F | L/R | Hatchback FWD A 17 DTJ;A 17 DTC;A 17 DTE | | GCO17051 | Outer Joint | | 30 | 26 | 53.8 | 94.5 | 65.5 | M |
| | 2011.10-2018.10 | 6MT | F | L/R | Hatchback FWD A 17 DTJ;A 17 DTC;A 17 DTE | | GCO21049 | Outer Joint | | 30 | 26 | 52.5 | 94 | 65.5 | M |
| | 2011.10-2018.10 | 6MT | F | L/R | Hatchback FWD A 17 DTJ;A 17 DTC;A 17 DTE | | GCO88046 | Outer Joint | | 30 | 26 | 52.5 | 94.5 | 65.5 | M |
| | 2011.10-2018.10 | 6MT | F | L | Hatchback FWD A 17 DTJ;A 17 DTC;A 17 DTE | For Engine code:A17DTC | GCI82188 | Inner Joint | | 25 | 26 | 34.9 | 57.5 | 108 | |
| | 2011.10-2018.10 | 6MT | F | R | Hatchback FWD A 17 DTJ;A 17 DTC;A 17 DTE | For Engine code:A17DTC | GCI82194 | Inner Joint | | 34 | 26 | 37.5 | | 124 | |
| | 2011.10-2018.10 | 6MT | F | L/R | Hatchback FWD A 17 DTJ;A 17 DTC;A 17 DTE | For Enginecode:A17DTE | GCI88026 | Inner Joint | | 34 | 26 | 37.5 | | 100 | |
| | 2011.10-2018.10 | MT | F | R | Hatchback FWD A 17 DTJ;A 17 DTC;A 17 DTE | | GDS21074 | Drive Shaft | | 30 | 34 | 52.5 | 94 | 589 | |
| 1.7 (96 kw) | 2011.10-2018.10 | 6MT | F | L | Hatchback FWD A 17 DTS;A 17 DTF | For Engine code:A17DTS | GDS83226 | Drive Shaft | | 30 | 25 | 52.5 | 94 | 623 | |
| | 2011.10-2018.10 | 6MT | F | R | Hatchback FWD A 17 DTS;A 17 DTF | For Engine code:A17DTS | GDS83227 | Drive Shaft | | 30 | 25 | 52.5 | 94 | 1018 | |
| | 2011.10-2018.10 | 6MT | F | L/R | Hatchback FWD A 17 DTS;A 17 DTF | | GCO17051 | Outer Joint | | 30 | 26 | 53.8 | 94.5 | 65.5 | M |
| | 2011.10-2018.10 | 6MT | F | L/R | Hatchback FWD A 17 DTS;A 17 DTF | | GCO21049 | Outer Joint | | 30 | 26 | 52.5 | 94 | 65.5 | M |
| | 2011.10-2018.10 | 6MT | F | L/R | Hatchback FWD A 17 DTS;A 17 DTF | | GCO88046 | Outer Joint | | 30 | 26 | 52.5 | 94.5 | 65.5 | M |
| | 2011.10-2018.10 | 6MT | F | L | Hatchback FWD A 17 DTS;A 17 DTF | For Engine code:A17DTS | GCI82188 | Inner Joint | | 25 | 26 | 34.9 | 57.5 | 108 | |
| | 2011.10-2018.10 | 6MT | F | R | Hatchback FWD A 17 DTS;A 17 DTF | For Engine code:A17DTS | GCI82194 | Inner Joint | | 34 | 26 | 37.5 | | 124 | |
| | 2011.10-2018.10 | 6MT | F | L/R | Hatchback FWD A 17 DTS;A 17 DTF | For Enginecode:A17DTE | GCI88026 | Inner Joint | | 34 | 26 | 37.5 | | 100 | |
| 2.0 (121 kw) | 2011.10-2018.10 | 6AT | F | L | Hatchback FWD A 20 DTH | | GDS82388 | Drive Shaft | | 30 | 27 | 52.5 | 94 | 609 | |
| | 2011.10-2018.10 | 6AT | F | L | Hatchback FWD A 20 DTH | | GCI86015 | Inner Joint | | 27 | 26 | 35 | 78.5 | 109.5 | |
| | 2011.10-2018.10 | 6AT/6MT | F | R | Hatchback FWD A 20 DTH | | GDS21093 | Drive Shaft | | 30 | 27 | 52.5 | 94 | 625 | |
| | 2011.10-2018.10 | 6AT/6MT | F | L/R | Hatchback FWD A 20 DTH | | GCO17051 | Outer Joint | | 30 | 26 | 53.8 | 94.5 | 65.5 | M |
| | 2011.10-2018.10 | 6AT/6MT | F | L/R | Hatchback FWD A 20 DTH | | GCO21049 | Outer Joint | | 30 | 26 | 52.5 | 94 | 65.5 | M |
| | 2011.10-2018.10 | 6AT/6MT | F | L/R | Hatchback FWD A 20 DTH | | GCO88046 | Outer Joint | | 30 | 26 | 52.5 | 94.5 | 65.5 | M |
| | 2011.10-2018.10 | 6AT/6MT | F | R | Hatchback FWD A 20 DTH | | GCI21016 | Inner Joint | | 27 | 26 | 35 | 78.5 | 112 | |
| 2.0 (143 kw) | 2012.12-2018.10 | 6MT | F | R | Hatchback FWD A 20 DTR | | GDS21093 | Drive Shaft | | 30 | 27 | 52.5 | 94 | 625 | |
| | 2012.12-2018.10 | 6MT | F | L/R | Hatchback FWD A 20 DTR | | GCO17051 | Outer Joint | | 30 | 26 | 53.8 | 94.5 | 65.5 | M |
| | 2012.12-2018.10 | 6MT | F | L/R | Hatchback FWD A 20 DTR | | GCO21049 | Outer Joint | | 30 | 26 | 52.5 | 94 | 65.5 | M |
| | 2012.12-2018.10 | 6MT | F | L/R | Hatchback FWD A 20 DTR | | GCO88046 | Outer Joint | | 30 | 26 | 52.5 | 94.5 | 65.5 | M |
| | 2012.12-2018.10 | 6MT | F | R | Hatchback FWD A 20 DTR | | GCI21016 | Inner Joint | | 27 | 26 | 35 | 78.5 | 112 | |
| 2.0 (206 kw) | 2012.04-2018.10 | 6MT | F | L/R | Hatchback FWD A 20 NFT;B 20 NFT | | GCO21057 | Outer Joint | | 30 | 27 | 59.1 | 94 | 65 | M |
| **Astra Sport Hatch** | | | | | | | | | | | | | | | |
| 1.3 (66 kw) | 2005.04-2010.11 | 6MT | F | L | Hatchback FWD Z 13 DTH | | GDS44052 | Drive Shaft | | 33 | 25 | 53 | 93.5 | 573 | |
| | 2005.04-2010.11 | 6MT | F | R | Hatchback FWD Z 13 DTH | | GDS44051 | Drive Shaft | | 33 | 34 | 53 | 93.5 | 570 | |
| | 2005.04-2010.11 | 6MT | F | L | Hatchback FWD Z 13 DTH | | GCI44008 | Inner Joint | | 25 | 25 | 34.9 | 57.5 | 113.2 | |
| | 2005.04-2010.11 | MT | F | L | Hatchback FWD Z 13 DTH | | GDS60020 | Drive Shaft | | 33 | 25 | 52.5 | 94 | 561 | |
| | 2005.04-2010.11 | MT | F | L | Hatchback FWD Z 13 DTH | | GCI21018 | Inner Joint | | 25 | 34 | 35 | 58 | 116 | |
| | 2005.04-2010.11 | | F | L/R | Hatchback FWD Z 13 DTH | | GCO44028 | Outer Joint | | 33 | 24 | 53 | 93.5 | 63.5 | M |
| | 2005.04-2010.11 | | F | R | Hatchback FWD Z 13 DTH | | GCI44005 | Inner Joint | | 34 | 25 | 35 | | 130.2 | |
| | 2005.04-2010.11 | | F | R | Hatchback FWD Z 13 DTH | | GCI44011 | Inner Joint | | 34 | 25 | 37.5 | | 130.2 | |
| 1.4 (66 kw) | 2005.03-2010.11 | 5MT | F | L | Hatchback FWD Z 14 XEP | | GDS44028 | Drive Shaft | | 33 | 22 | 53 | 95 | 590 | |
| | 2005.03-2010.11 | 5MT | F | R | Hatchback FWD Z 14 XEP | | GDS44030 | Drive Shaft | | 33 | 22 | 53 | 95 | 952 | |
| | 2005.03-2010.11 | 5MT | F | L/R | Hatchback FWD Z 14 XEP | | GCO44003 | Outer Joint | | 33 | 22 | 53 | 95 | 54.5 | M |
| | 2005.03-2010.11 | 5MT | F | L/R | Hatchback FWD Z 14 XEP | | GCI21014 | Inner Joint | | 22 | 22 | 35 | 57.5 | 105.5 | |
| 1.6 (77 kw) | 2005.02-2010.11 | MT | F | L/R | Hatchback FWD Z 16 XEP | | GCI44004 | Inner Joint | | 22 | 22 | 34.95 | 57.5 | 103 | |
| | 2005.02-2010.11 | SAT/5MT | F | L | Hatchback FWD Z 16 XEP | | GDS44028 | Drive Shaft | | 33 | 22 | 53 | 95 | 590 | |
| | 2005.02-2010.11 | SAT/5MT | F | R | Hatchback FWD Z 16 XEP | | GDS44030 | Drive Shaft | | 33 | 22 | 53 | 95 | 952 | |
| | 2005.02-2010.11 | | F | L/R | Hatchback FWD Z 16 XEP | Date To:2006.09 | GCO44003 | Outer Joint | | 33 | 22 | 53 | 95 | 54.5 | M |
| | 2005.02-2010.11 | | F | L | Hatchback FWD Z 16 XEP | Date To:2006.09 | GCI21014 | Inner Joint | | 22 | 22 | 35 | 57.5 | 105.5 | |
| 1.6 (85 kw) | 2006.12-2010.11 | 5AT/5MT | F | L | Hatchback FWD Z 16 XER;A 16 XER | | GDS44028 | Drive Shaft | | 33 | 22 | 53 | 95 | 590 | |
| | 2006.12-2010.11 | 5AT/5MT | F | R | Hatchback FWD Z 16 XER;A 16 XER | | GDS44030 | Drive Shaft | | 33 | 22 | 53 | 95 | 952 | |
| | 2006.12-2010.11 | 5AT/5MT | F | L/R | Hatchback FWD Z 16 XER;A 16 XER | | GCO44003 | Outer Joint | | 33 | 22 | 53 | 95 | 54.5 | M |
| | 2006.12-2010.11 | 5AT/5MT | F | L/R | Hatchback FWD Z 16 XER;A 16 XER | | GCI21014 | Inner Joint | | 22 | 22 | 35 | 57.5 | 105.5 | |
| 1.6 (132 kw) | 2006.10-2010.11 | | F | L/R | Hatchback FWD Z 16 LET;A 16 LET | | GCO44028 | Outer Joint | | 33 | 24 | 53 | 93.5 | 63.5 | M |
| | 2006.10-2010.11 | | F | L/R | Hatchback FWD Z 16 LET;A 16 LET | | GCI44005 | Inner Joint | | 34 | 25 | 35 | | 130.2 | |
| 1.7 (74 kw) | 2005.02-2010.11 | 5MT | F | L | Hatchback FWD Z 17 DTH | | GDS44029 | Drive Shaft | | 33 | 34 | 53 | 93.5 | 594 | |
| | 2005.02-2010.11 | 5MT/6MT | F | R | Hatchback FWD Z 17 DTH | | GDS44031 | Drive Shaft | | 33 | 34 | 53 | 93.5 | 559 | |

| | YEAR | TRANSM. | F/R | L/R | BODY STYLE & DRIVE TYPE & ENGINE | REMARKS | G-AP Ref. | PRODUCT | ABS | Technical Specifications A | B | C | H | L | P |
|---|---|---|---|---|---|---|---|---|---|---|---|---|---|---|---|
| **VAUXHALL** **Astra Sport Hatch** | | | | | | | | | | | | | | | |
| 1.7 (74 kw) | 2005.02-2010.11 | 5MT/6MT | F | L | Hatchback FWD Z 17 DTH | | GCI44002 | Inner Joint | | 34 | 25 | 35 | 56.2 | 114.8 | |
| | 2005.02-2010.11 | 5MT/6MT | F | L | Hatchback FWD Z 17 DTH | | GCI44008 | Inner Joint | | 25 | 25 | 34.9 | 57.5 | 113.2 | |
| | 2005.02-2010.11 | 6MT | F | L | Hatchback FWD Z 17 DTH | | GDS44052 | Drive Shaft | | 33 | 25 | 53 | 93.5 | 573 | |
| | 2005.02-2010.11 | | F | L/R | Hatchback FWD Z 17 DTH | | GCO44028 | Outer Joint | | 33 | 24 | 53 | 93.5 | 63.5 | M |
| | 2005.02-2010.11 | | F | R | Hatchback FWD Z 17 DTH | | GCI44005 | Inner Joint | | 34 | 25 | 35 | | 130.2 | |
| 1.7 (81 kw) | 2007.02-2009.11 | 5AT | F | R | Hatchback FWD Z 17 DTJ;A 17 DTJ | | GCI44005 | Inner Joint | | 34 | 25 | 35 | | 130.2 | |
| | 2007.02-2009.11 | 6MT | F | L | Hatchback FWD Z 17 DTJ;A 17 DTJ | | GDS21051 | Drive Shaft | | 33 | 25 | 52.5 | 94 | 579 | |
| | 2007.02-2009.11 | 6MT | F | R | Hatchback FWD Z 17 DTJ;A 17 DTJ | | GDS44099 | Drive Shaft | | 33 | 34 | 52.5 | 94 | 563 | |
| | 2007.02-2009.11 | MT | F | L | Hatchback FWD Z 17 DTJ;A 17 DTJ | Date to:2009.11 | GCI99186 | Inner Joint | | 25 | 28 | 34.9 | 57.5 | 111 | |
| | 2007.02-2009.11 | MT | F | R | Hatchback FWD Z 17 DTJ;A 17 DTJ | Date to:2009.11 | GCI44016 | Inner Joint | | 34 | 28 | 37.5 | | 129.2 | |
| | 2007.02-2009.11 | | F | L/R | Hatchback FWD Z 17 DTJ;A 17 DTJ | | GCO44027 | Outer Joint | | 33 | 26 | 52.5 | 94 | 65.5 | M |
| 1.8 (92 kw) | 2005.02-2010.11 | 4AT | F | L | Hatchback FWD Z 18 XE | | GDS44097 | Drive Shaft | | 33 | 22 | 53 | 93.5 | 588 | |
| | 2005.02-2010.11 | 4AT | F | R | Hatchback FWD Z 18 XE | | GDS44098 | Drive Shaft | | 33 | 22 | 53 | 93.5 | 950 | |
| | 2005.02-2010.11 | 5MT | F | L | Hatchback FWD Z 18 XE | | GDS21063 | Drive Shaft | | 33 | 22 | 53 | 93.5 | 586 | |
| | 2005.02-2010.11 | 5MT | F | R | Hatchback FWD Z 18 XE | | GDS21055 | Drive Shaft | | 33 | 22 | 53 | 93.5 | 950 | |
| | 2005.02-2010.11 | 5MT | F | L/R | Hatchback FWD Z 18 XE | | GCI99026 | Inner Joint | | 22 | 25 | 35 | 57 | 111.7 | |
| | 2005.02-2010.11 | | F | L/R | Hatchback FWD Z 18 XE | | GCO44028 | Outer Joint | | 33 | 24 | 53 | 93.5 | 63.5 | M |
| 1.8 (103 kw) | 2007.03-2010.11 | 4AT | F | L | Hatchback FWD Z 18 XER;A 18 XER | | GDS44097 | Drive Shaft | | 33 | 22 | 53 | 93.5 | 588 | |
| | 2007.03-2010.11 | 4AT | F | R | Hatchback FWD Z 18 XER;A 18 XER | | GDS44098 | Drive Shaft | | 33 | 22 | 53 | 93.5 | 950 | |
| | 2007.03-2010.11 | 4AT/5MT | F | L/R | Hatchback FWD Z 18 XER;A 18 XER | | GCO44028 | Outer Joint | | 33 | 24 | 53 | 93.5 | 63.5 | M |
| | 2007.03-2010.11 | 5MT | F | L | Hatchback FWD Z 18 XER;A 18 XER | | GDS21063 | Drive Shaft | | 33 | 22 | 53 | 93.5 | 586 | |
| | 2007.03-2010.11 | 5MT | F | R | Hatchback FWD Z 18 XER;A 18 XER | | GDS21055 | Drive Shaft | | 33 | 22 | 53 | 93.5 | 950 | |
| | 2007.03-2010.11 | 5MT | F | L/R | Hatchback FWD Z 18 XER;A 18 XER | | GCI99026 | Inner Joint | | 22 | 25 | 35 | 57 | 111.7 | |
| 1.9 (74 kw) | 2005.08-2010.11 | 6MT | F | L | Hatchback FWD Z 19 DTL | Date from:2007.08 | GDS21051 | Drive Shaft | | 33 | 25 | 52.5 | 94 | 579 | |
| | 2005.08-2010.11 | 6MT | F | L | Hatchback FWD Z 19 DTL | Date to:2007.07 | GDS21073 | Drive Shaft | | 33 | 25 | 52.5 | 94 | 578 | |
| | 2005.08-2010.11 | 6MT | F | R | Hatchback FWD Z 19 DTL | | GDS21056 | Drive Shaft | | 33 | 34 | 52.5 | 94 | 595 | |
| | 2005.08-2010.11 | 6MT | F | R | Hatchback FWD Z 19 DTL | Date to:2007.07,Chassis no. to:72025241/75043819/78007657/7G | GCI99187 | Inner Joint | | 34 | 34 | 37.5 | | 124 | |
| | 2005.08-2010.11 | AT | F | L | Hatchback FWD Z 19 DTL | Chassis no. from:72024736 | GDS21111 | Drive Shaft | | 33 | 27 | 52.5 | 94 | 562 | |
| | 2005.08-2010.11 | AT | F | L | Hatchback FWD Z 19 DTL | Chassis no. to:72024735 | GDS60034 | Drive Shaft | | 33 | 27 | 52.5 | 94 | 564 | |
| | 2005.08-2010.11 | AT | F | R | Hatchback FWD Z 19 DTL | | GDS21110 | Drive Shaft | | 33 | 27 | 52.5 | 94 | 576 | |
| | 2005.08-2010.11 | AT | F | L | Hatchback FWD Z 19 DTL | | GCO44027 | Outer Joint | | 33 | 26 | 52.5 | 94 | 65.5 | M |
| | 2005.08-2010.11 | MT | F | L | Hatchback FWD Z 19 DTL | | GCI21018 | Inner Joint | | 25 | 34 | 35 | 58 | 116 | |
| | 2005.08-2010.11 | MT | F | L | Hatchback FWD Z 19 DTL | | GCI99186 | Inner Joint | | 25 | 28 | 34.9 | 57.5 | 111 | |
| | 2005.08-2010.11 | | F | | Hatchback FWD Z 19 DTL | | GCO99024 | Outer Joint | | 33 | 26 | 52.5 | 94 | 65.5 | M |
| 1.9 (88 kw) | 2005.02-2010.11 | 6AT | F | L | Hatchback FWD Z 19 DT | Chassis no. from:72024736/75049581/78023183/8B000001 | GDS21111 | Drive Shaft | | 33 | 27 | 52.5 | 94 | 562 | |
| | 2005.02-2010.11 | 6AT | F | L | Hatchback FWD Z 19 DT | Chassis no. to:72024735/75049580/78023182 | GDS60034 | Drive Shaft | | 33 | 27 | 52.5 | 94 | 564 | |
| | 2005.02-2010.11 | 6AT | F | R | Hatchback FWD Z 19 DT | | GDS21110 | Drive Shaft | | 33 | 27 | 52.5 | 94 | 576 | |
| | 2005.02-2010.11 | 6MT | F | L | Hatchback FWD Z 19 DT | Date from:2007.08 | GDS21051 | Drive Shaft | | 33 | 25 | 52.5 | 94 | 579 | |
| | 2005.02-2010.11 | 6MT | F | L | Hatchback FWD Z 19 DT | Date to:2007.07 | GDS21073 | Drive Shaft | | 33 | 25 | 52.5 | 94 | 578 | |
| | 2005.02-2010.11 | 6MT | F | R | Hatchback FWD Z 19 DT | | GDS21056 | Drive Shaft | | 33 | 34 | 52.5 | 94 | 595 | |
| | 2005.02-2010.11 | 6MT | F | R | Hatchback FWD Z 19 DT | Date to:2007.07,Chassis no. to:72025241/75043819/78007657/7G | GCI99187 | Inner Joint | | 34 | 34 | 37.5 | | 124 | |
| | 2005.02-2010.11 | MT | F | L | Hatchback FWD Z 19 DT | | GDS21071 | Drive Shaft | | 30 | 25 | 53.8 | 94.5 | 576 | |
| | 2005.02-2010.11 | MT | F | R | Hatchback FWD Z 19 DT | | GDS21062 | Drive Shaft | | 30 | 34 | 53.8 | 94.5 | 595 | |
| | 2005.02-2010.11 | MT | F | L/R | Hatchback FWD Z 19 DT | | GCO44027 | Outer Joint | | 33 | 26 | 52.5 | 94 | 65.5 | M |
| | 2005.02-2010.11 | MT | F | L | Hatchback FWD Z 19 DT | | GCI21018 | Inner Joint | | 25 | 34 | 35 | 58 | 116 | |
| | 2005.02-2010.11 | MT | F | L | Hatchback FWD Z 19 DT | | GCI99186 | Inner Joint | | 25 | 28 | 34.9 | 57.5 | 111 | |
| | 2005.02-2010.11 | | F | | Hatchback FWD Z 19 DT | | GCO99024 | Outer Joint | | 33 | 26 | 52.5 | 94 | 65.5 | M |
| 1.9 (110 kw) | 2005.02-2010.11 | 6MT | F | L | Hatchback FWD Z 19 DTH | Date from:2007.08,Chassis no. from:72024736/75041476/75041869/78008876/8B000001 | GDS21035 | Drive Shaft | | 30 | 25 | 53.8 | 94.5 | 581 | |
| | 2005.02-2010.11 | 6MT | F | L | Hatchback FWD Z 19 DTH | Date to:2007.07,Chassis no. to:72024735/75041475/75041867/78008875 | GDS21071 | Drive Shaft | | 30 | 25 | 53.8 | 94.5 | 576 | |
| | 2005.02-2010.11 | 6MT | F | R | Hatchback FWD Z 19 DTH | Date to:2007.07,Chassis no. to:72024735/75041475/78008875/7G | GDS21056 | Drive Shaft | | 33 | 34 | 52.5 | 94 | 595 | |
| | 2005.02-2010.11 | 6MT | F | R | Hatchback FWD Z 19 DTH | Date to:2007.07,Chassis no. to:72024735/75041475/75041867/78008875 | GDS21062 | Drive Shaft | | 30 | 34 | 53.8 | 94.5 | 595 | |
| | 2005.02-2010.11 | 6MT | F | R | Hatchback FWD Z 19 DTH | Date from:2007.08,Chassis no. from:72024736/75041476/78008876 | GDS82084 | Drive Shaft | | 30 | 34 | 53.8 | 94.5 | 598 | |
| | 2005.02-2010.11 | 6MT | F | L/R | Hatchback FWD Z 19 DTH | | GCO17051 | Outer Joint | | 30 | 26 | 53.8 | 94.5 | 65.5 | M |
| | 2005.02-2010.11 | 6MT | F | L | Hatchback FWD Z 19 DTH | Date to:2007.07,Chassis no. to:72024735/75041475/75041867/78008875 | GCI21018 | Inner Joint | | 25 | 34 | 35 | 58 | 116 | |
| | 2005.02-2010.11 | 6MT | F | L | Hatchback FWD Z 19 DTH | Date from:2007.08,Chassis no. from:72024736/75041476/75041869/78008876/8B000001 | GCI99186 | Inner Joint | | 25 | 28 | 34.9 | 57.5 | 111 | |
| | 2005.02-2010.11 | 6MT | F | R | Hatchback FWD Z 19 DTH | Date from:2007.08,Chassis no. from:72024736/75041476/75041869/78008876/8B000001 | GCI44016 | Inner Joint | | 34 | 28 | 37.5 | | 129.2 | |
| | 2005.02-2010.11 | 6MT | F | R | Hatchback FWD Z 19 DTH | Date to:2007.07,Chassis no. to:72024735/75041475/75041867/78008875 | GCI99187 | Inner Joint | | 34 | 34 | 37.5 | | 124 | |
| 2.0 (125 kw) | 2005.02-2010.11 | 6MT | F | R | Hatchback FWD Z 20 LEL | | GDS21056 | Drive Shaft | | 33 | 34 | 52.5 | 94 | 595 | |
| | 2005.02-2010.11 | 6MT | F | R | Hatchback FWD Z 20 LEL | | GCI99187 | Inner Joint | | 34 | 34 | 37.5 | | 124 | |
| | 2005.02-2010.11 | | F | L/R | Hatchback FWD Z 20 LEL | | GCO44027 | Outer Joint | | 33 | 26 | 52.5 | 94 | 65.5 | M |
| | 2005.02-2010.11 | | F | | Hatchback FWD Z 20 LEL | | GCO99024 | Outer Joint | | 33 | 26 | 52.5 | 94 | 65.5 | M |
| 2.0 (176 kw) | 2009.02-2010.11 | 6MT | F | R | Hatchback FWD Z 20 LEH | | GDS82084 | Drive Shaft | | 30 | 34 | 53.8 | 94.5 | 598 | |
| | 2009.02-2010.11 | 6MT | F | L/R | Hatchback FWD Z 20 LEH | | GCO17051 | Outer Joint | | 30 | 26 | 53.8 | 94.5 | 65.5 | M |
| | 2009.02-2010.11 | 6MT | F | R | Hatchback FWD Z 20 LEH | | GCI44016 | Inner Joint | | 34 | 28 | 37.5 | | 129.2 | |

| | YEAR | TRANSM. | F/R | L/R | BODY STYLE & DRIVE TYPE & ENGINE | REMARKS | G-AP Ref. | PRODUCT | ABS | Technical Specifications A | B | C | H | L | P |
|---|---|---|---|---|---|---|---|---|---|---|---|---|---|---|---|
| **VAUXHALL** | | | | | | | | | | | | | | | |
| **Astra Sports Tourer** | | | | | | | | | | | | | | | |
| 1.2 (100 kw) | 2023.10- | 6DCT | F | R | Estate FWD HPY (EB2LTDH2) | | GDS83109 | Drive Shaft | | 28 | 37 | 58.5 | 92.5 | 933 | |
| | 2023.10- | 6DCT | F | R | Estate FWD HPY (EB2LTDH2) | | GCI82118 | Inner Joint | | 37 | 34 | | 290 | 88 | |
| 1.2 (107 kw) | 2025.04- | 6DCT | F | R | Estate FWD | | GDS83109 | Drive Shaft | | 28 | 37 | 58.5 | 92.5 | 933 | |
| | 2025.04- | 6DCT | F | R | Estate FWD | | GCI82118 | Inner Joint | | 37 | 34 | | 290 | 88 | |
| **Astra Van** | | | | | | | | | | | | | | | |
| 1.3 (66 kw) | 2005.08- | 6MT | F | L | Estate Van FWD Z 13 DTH | | GDS44052 | Drive Shaft | | 33 | 25 | 53 | 93.5 | 573 | |
| | 2005.08- | 6MT | F | R | Estate Van FWD Z 13 DTH | | GDS44051 | Drive Shaft | | 33 | 34 | 53 | 93.5 | 570 | |
| | 2005.08- | 6MT | F | L | Estate Van FWD Z 13 DTH | | GCI44008 | Inner Joint | | 25 | 25 | 34.9 | 57.5 | 113.2 | |
| | 2005.08- | MT | F | L | Estate Van FWD Z 13 DTH | | GDS60020 | Drive Shaft | | 33 | 25 | 52.5 | 94 | 561 | |
| | 2005.08- | MT | F | L | Estate Van FWD Z 13 DTH | | GCI21018 | Inner Joint | | 25 | 34 | 35 | 58 | 116 | |
| | 2005.08- | | F | L/R | Estate Van FWD Z 13 DTH | | GCO44028 | Outer Joint | | 33 | 24 | 53 | 93.5 | 63.5 | M |
| | 2005.08- | | F | R | Estate Van FWD Z 13 DTH | | GCI44005 | Inner Joint | | 34 | 25 | 35 | | 130.2 | |
| | 2005.08- | | F | R | Estate Van FWD Z 13 DTH | | GCI44011 | Inner Joint | | 34 | 25 | 37.5 | | 130.2 | |
| 1.4 (66 kw) | 2000.09-2005.05 | 5MT | F | L | Estate Van FWD Z14XE | | GDS60013 | Drive Shaft | | 33 | 22 | 52 | 103 | 595 | |
| | 2000.09-2005.05 | 5MT | F | R | Estate Van FWD Z14XE | | GDS44033 | Drive Shaft | | 33 | 22 | 52 | 103 | 950.5 | |
| | 2000.09-2005.05 | | F | L/R | Estate Van FWD Z14XE | | GCO44009 | Outer Joint | | 33 | 22 | 52 | 103 | 50.5 | O |
| | 2000.09-2005.05 | | F | L/R | Estate Van FWD Z14XE | | GCO44030 | Outer Joint | | 33 | 22 | 52 | 103 | 50.5 | O |
| | 2000.09-2005.05 | | F | L | Estate Van FWD Z14XE | | GCI21014 | Inner Joint | | 22 | 22 | 35 | 57.5 | 105.5 | |
| | 2000.09-2005.05 | | F | L/R | Estate Van FWD Z14XE | | GCI44004 | Inner Joint | | 22 | 22 | 34.95 | 57.5 | 103 | |
| | 2005.03- | 5MT | F | L | Estate Van FWD Z 14 XEP | | GDS44028 | Drive Shaft | | 33 | 22 | 53 | 95 | 590 | |
| | 2005.03- | 5MT | F | R | Estate Van FWD Z 14 XEP | | GDS44030 | Drive Shaft | | 33 | 22 | 53 | 95 | 952 | |
| | 2005.03- | | F | L/R | Estate Van FWD Z 14 XEP | | GCO44003 | Outer Joint | | 33 | 22 | 53 | 95 | 54.5 | M |
| | 2005.03- | | F | L | Estate Van FWD Z 14 XEP | Date To:2011.10 | GCI21014 | Inner Joint | | 22 | 22 | 35 | 57.5 | 105.5 | |
| 1.6 (52 kw) | 1994.09-1996.08 | MT | F | R | Estate Van FWD X16SZ | | GDS60002 | Drive Shaft | 29T | 22 | 22 | 52 | 95 | 926 | |
| | 1994.09-1996.08 | MT | F | L/R | Estate Van FWD X16SZ | | GCO44051 | Outer Joint | 29T | 22 | 22 | 52 | 95 | 50 | O |
| | 1994.09-1996.08 | MT | F | L/R | Estate Van FWD X16SZ | | GCI44004 | Inner Joint | | 22 | 22 | 34.95 | 57.5 | 103 | |
| | 1994.09-1996.08 | | F | | Estate Van FWD X16SZ | | GCO44023 | Outer Joint | | 22 | 22 | 52 | 95 | 50 | O |
| 1.6 (55 kw) | 1991.10-1998.08 | MT | F | R | Estate Van FWD C16NZ | | GDS60002 | Drive Shaft | 29T | 22 | 22 | 52 | 95 | 926 | |
| | 1991.10-1998.08 | MT | F | L/R | Estate Van FWD C16NZ | | GCO44051 | Outer Joint | 29T | 22 | 22 | 52 | 95 | 50 | O |
| | 1991.10-1998.08 | MT | F | L/R | Estate Van FWD C16NZ | | GCI44004 | Inner Joint | | 22 | 22 | 34.95 | 57.5 | 103 | |
| | 1991.10-1998.08 | | F | | Estate Van FWD C16NZ | | GCO44023 | Outer Joint | | 22 | 22 | 52 | 95 | 50 | O |
| | 1998.02-2000.12 | 5MT | F | L | Estate Van FWD X16SZR | | GDS60013 | Drive Shaft | | 33 | 22 | 52 | 103 | 595 | |
| | 1998.02-2000.12 | 5MT | F | R | Estate Van FWD X16SZR | | GDS44033 | Drive Shaft | | 33 | 22 | 52 | 103 | 950.5 | |
| | 1998.02-2000.12 | | F | L/R | Estate Van FWD X16SZR | | GCO44009 | Outer Joint | | 33 | 22 | 52 | 103 | 50.5 | O |
| | 1998.02-2000.12 | | F | L/R | Estate Van FWD X16SZR | | GCO44030 | Outer Joint | | 33 | 22 | 52 | 103 | 50.5 | O |
| | 1998.02-2000.12 | | F | L | Estate Van FWD X16SZR | | GCI21014 | Inner Joint | | 22 | 22 | 35 | 57.5 | 105.5 | |
| | 1998.02-2000.12 | | F | L/R | Estate Van FWD X16SZR | | GCI44004 | Inner Joint | | 22 | 22 | 34.95 | 57.5 | 103 | |
| | 1998.09-2000.08 | 4AT/5MT | F | L | Estate Van FWD X16SZR | | GDS60013 | Drive Shaft | | 33 | 22 | 52 | 103 | 595 | |
| | 1998.09-2000.08 | 4AT/5MT | F | R | Estate Van FWD X16SZR | | GDS44033 | Drive Shaft | | 33 | 22 | 52 | 103 | 950.5 | |
| | 1998.09-2000.08 | MT | F | L/R | Estate Van FWD X16SZR | | GCO44011 | Outer Joint | 29T | 33 | 22 | 52 | 103 | 50.5 | O |
| | 1998.09-2000.08 | MT | F | L/R | Estate Van FWD X16SZR | | GCO44030 | Outer Joint | | 33 | 22 | 52 | 103 | 50.5 | O |
| | 1998.09-2000.08 | MT | F | L/R | Estate Van FWD X16SZR | | GCI44004 | Inner Joint | | 22 | 22 | 34.95 | 57.5 | 103 | |
| | 1998.09-2000.08 | | F | L/R | Estate Van FWD X16SZR | | GCO44009 | Outer Joint | | 33 | 22 | 52 | 103 | 50.5 | O |
| | 1998.09-2000.08 | | F | L | Estate Van FWD X16SZR | | GCI21014 | Inner Joint | | 22 | 22 | 35 | 57.5 | 105.5 | |
| 1.6 (62 kw) | 2000.09-2004.10 | MT | F | L | Estate Van FWD Z16SE | | GDS60013 | Drive Shaft | | 33 | 22 | 52 | 103 | 595 | |
| | 2000.09-2004.10 | MT | F | R | Estate Van FWD Z16SE | | GDS44033 | Drive Shaft | | 33 | 22 | 52 | 103 | 950.5 | |
| | 2000.09-2004.10 | MT | F | L/R | Estate Van FWD Z16SE | | GCO44009 | Outer Joint | | 33 | 22 | 52 | 103 | 50.5 | O |
| | 2000.09-2004.10 | MT | F | L | Estate Van FWD Z16SE | | GCI21014 | Inner Joint | | 22 | 22 | 35 | 57.5 | 105.5 | |
| | 2000.09-2004.10 | MT | F | L/R | Estate Van FWD Z16SE | | GCI44004 | Inner Joint | | 22 | 22 | 34.95 | 57.5 | 103 | |
| | 2000.09-2004.10 | | F | L/R | Estate Van FWD Z16SE | | GCO44030 | Outer Joint | | 33 | 22 | 52 | 103 | 50.5 | O |
| | 2001.04-2005.05 | 4AT/5MT | F | L | Estate Van FWD Z16SE | | GDS60013 | Drive Shaft | | 33 | 22 | 52 | 103 | 595 | |
| | 2001.04-2005.05 | 4AT/5MT | F | R | Estate Van FWD Z16SE | | GDS44033 | Drive Shaft | | 33 | 22 | 52 | 103 | 950.5 | |
| | 2001.04-2005.05 | MT | F | L/R | Estate Van FWD Z16SE | | GCO44011 | Outer Joint | 29T | 33 | 22 | 52 | 103 | 50.5 | O |
| | 2001.04-2005.05 | MT | F | L/R | Estate Van FWD Z16SE | | GCO44030 | Outer Joint | | 33 | 22 | 52 | 103 | 50.5 | O |
| | 2001.04-2005.05 | MT | F | L/R | Estate Van FWD Z16SE | | GCI44004 | Inner Joint | | 22 | 22 | 34.95 | 57.5 | 103 | |
| | 2001.04-2005.05 | | F | L/R | Estate Van FWD Z16SE | | GCO44009 | Outer Joint | | 33 | 22 | 52 | 103 | 50.5 | O |
| | 2001.04-2005.05 | | F | | Estate Van FWD Z16SE | | GCO44010 | Outer Joint | 29T | 33 | 22 | 52 | 103 | 50.5 | O |
| | 2001.04-2005.05 | | F | L | Estate Van FWD Z16SE | Date From:2001.04,Date To:2005.05 | GCI21014 | Inner Joint | | 22 | 22 | 35 | 57.5 | 105.5 | |
| 1.6 (74 kw) | 2000.07-2005.08 | | F | L | Estate Van FWD Z16XE/Z16XEP | | GDS60013 | Drive Shaft | | 33 | 22 | 52 | 103 | 595 | |
| | 2000.07-2005.08 | | F | R | Estate Van FWD Z16XE/Z16XEP | | GDS44033 | Drive Shaft | | 33 | 22 | 52 | 103 | 950.5 | |
| | 2000.07-2005.08 | | F | L/R | Estate Van FWD Z16XE/Z16XEP | | GCO44009 | Outer Joint | | 33 | 22 | 52 | 103 | 50.5 | O |
| | 2000.07-2005.08 | | F | L/R | Estate Van FWD Z16XE/Z16XEP | | GCO44030 | Outer Joint | | 33 | 22 | 52 | 103 | 50.5 | O |
| | 2000.07-2005.08 | | F | L/R | Estate Van FWD Z16XE/Z16XEP | | GCI44004 | Inner Joint | | 22 | 22 | 34.95 | 57.5 | 103 | |
| 1.6 (76 kw) | 2005.03- | MT | F | L/R | Estate Van FWD Z 16 XEP;Z 16 XE1 | Date to:2009.12 | GCI44004 | Inner Joint | | 22 | 22 | 34.95 | 57.5 | 103 | |
| | 2005.03- | SAT/5MT | F | L | Estate Van FWD Z 16 XEP;Z 16 XE1 | | GDS44028 | Drive Shaft | | 33 | 22 | 53 | 95 | 590 | |

| | YEAR | TRANSM. | F/R | L/R | BODY STYLE & DRIVE TYPE & ENGINE | REMARKS | G-AP Ref. | PRODUCT | ABS | Technical Specifications A | B | C | H | L | P |
|---|---|---|---|---|---|---|---|---|---|---|---|---|---|---|---|
| **VAUXHALL** **Astra Van** | | | | | | | | | | | | | | | |
| 1.6 (76 kw) | 2005.03- | SAT/5MT | F | R | Estate Van FWD Z 16 XEP;Z 16 XE1 | | GDS44030 | Drive Shaft | | 33 | 22 | 53 | 95 | 952 | |
| | 2005.03- | | F | L/R | Estate Van FWD Z 16 XEP;Z 16 XE1 | | GCO44003 | Outer Joint | | 33 | 22 | 53 | 95 | 54.5 | M |
| | 2005.03- | | F | L | Estate Van FWD Z 16 XEP;Z 16 XE1 | Date To:2011.10 | GCI21014 | Inner Joint | | 22 | 22 | 35 | 57.5 | 105.5 | |
| 1.6 (77 kw) | 2004.10-2005.12 | MT | F | L | Estate Van FWD Z16XEP | | GDS60013 | Drive Shaft | | 33 | 22 | 52 | 103 | 595 | |
| | 2004.10-2005.12 | MT | F | R | Estate Van FWD Z16XEP | | GDS44033 | Drive Shaft | | 33 | 22 | 52 | 103 | 950.5 | |
| | 2004.10-2005.12 | MT | F | L/R | Estate Van FWD Z16XEP | | GCO44009 | Outer Joint | | 33 | 22 | 52 | 103 | 50.5 | O |
| | 2004.10-2005.12 | MT | F | L | Estate Van FWD Z16XEP | | GCI21014 | Inner Joint | | 22 | 22 | 35 | 57.5 | 105.5 | |
| | 2004.10-2005.12 | MT | F | L/R | Estate Van FWD Z16XEP | | GCI44004 | Inner Joint | | 22 | 22 | 34.95 | 57.5 | 103 | |
| | 2004.10-2005.12 | | F | L/R | Estate Van FWD Z16XEP | | GCO44030 | Outer Joint | | 33 | 22 | 52 | 103 | 50.5 | O |
| 1.7 (50 kw) | 1994.09-1998.08 | AT/MT | F | R | Estate Van FWD X17DTL | Chassis no. from:N500001 | GDS44059 | Drive Shaft | 29T | 33 | 34 | 52 | 109 | 938 | |
| | 1994.09-1998.08 | AT/MT | F | L/R | Estate Van FWD X17DTL | Chassis no. from:N500001 | GCI44002 | Inner Joint | | 34 | 25 | 35 | 56.2 | 114.8 | |
| | 1994.09-1998.08 | MT | F | L | Estate Van FWD X17DTL | Chassis no. from:N500001 | GDS44011 | Drive Shaft | 29T | 33 | 34 | 52 | 109 | 594.5 | |
| | 1994.09-1998.08 | | F | | Estate Van FWD X17DTL | | GCO88003 | Outer Joint | | 33 | 25 | 52 | 109 | 61 | O |
| | 1998.09-2000.08 | 5MT | F | L | Estate Van FWD X17DTL | | GDS60013 | Drive Shaft | | 33 | 22 | 52 | 103 | 595 | |
| | 1998.09-2000.08 | 5MT | F | R | Estate Van FWD X17DTL | | GDS44033 | Drive Shaft | | 33 | 22 | 52 | 103 | 950.5 | |
| | 1998.09-2000.08 | MT | F | L/R | Estate Van FWD X17DTL | Date to:2001.12 | GCO44011 | Outer Joint | 29T | 33 | 22 | 52 | 103 | 50.5 | O |
| | 1998.09-2000.08 | MT | F | L/R | Estate Van FWD X17DTL | Date to:2001.12 | GCO44030 | Outer Joint | | 33 | 22 | 52 | 103 | 50.5 | O |
| | 1998.09-2000.08 | MT | F | L/R | Estate Van FWD X17DTL | Date to:2001.12 | GCI44004 | Inner Joint | | 22 | 22 | 34.95 | 57.5 | 103 | |
| | 1998.09-2000.08 | | F | L/R | Estate Van FWD X17DTL | | GCO44009 | Outer Joint | | 33 | 22 | 52 | 103 | 50.5 | O |
| | 1998.09-2000.08 | | F | | Estate Van FWD X17DTL | | GCO44010 | Outer Joint | 29T | 33 | 22 | 52 | 103 | 50.5 | O |
| | 1998.09-2000.08 | | F | L | Estate Van FWD X17DTL | Date To:2000.08 | GCI21014 | Inner Joint | | 22 | 22 | 35 | 57.5 | 105.5 | |
| 1.7 (55 kw) | 2000.06-2005.05 | AT/MT | F | L/R | Estate Van FWD Y17DT | Date to:2005.05 | GCO44006 | Outer Joint | 29T | 33 | 25 | 52 | 103.5 | 61 | O |
| | 2000.06-2005.05 | | F | L | Estate Van FWD Y17DT | | GDS60013 | Drive Shaft | | 33 | 22 | 52 | 103 | 595 | |
| | 2000.06-2005.05 | | F | R | Estate Van FWD Y17DT | | GDS60035 | Drive Shaft | | 33 | 22 | 52 | 109 | 961 | |
| | 2000.06-2005.05 | | F | L/R | Estate Van FWD Y17DT | | GCO44049 | Outer Joint | | 33 | 25 | 52 | 109 | 61 | O |
| | 2000.06-2005.05 | | F | L/R | Estate Van FWD Y17DT | | GCI99026 | Inner Joint | | 22 | 25 | 35 | 57 | 111.7 | |
| 1.7 (59 kw) | 2003.07-2005.02 | 5MT | F | R | Estate Van FWD Z17DTL | | GDS60035 | Drive Shaft | | 33 | 22 | 52 | 109 | 961 | |
| | 2003.07-2005.02 | AT/MT | F | L/R | Estate Van FWD Z17DTL | Date to:2005.02 | GCO44006 | Outer Joint | 29T | 33 | 25 | 52 | 103.5 | 61 | O |
| | 2003.07-2005.02 | AT/MT | F | L/R | Estate Van FWD Z17DTL | | GCO44030 | Outer Joint | | 33 | 22 | 52 | 103 | 50.5 | O |
| | 2003.07-2005.02 | | F | L | Estate Van FWD Z17DTL | | GDS60013 | Drive Shaft | | 33 | 22 | 52 | 103 | 595 | |
| | 2003.07-2005.02 | | F | L/R | Estate Van FWD Z17DTL | | GCO44049 | Outer Joint | | 33 | 25 | 52 | 109 | 61 | O |
| | 2003.07-2005.02 | | F | L/R | Estate Van FWD Z17DTL | | GCI99026 | Inner Joint | | 22 | 25 | 35 | 57 | 111.7 | |
| | 2005.03-2006.07 | 5MT | F | L | Estate Van FWD Z 17 DTL | | GDS21063 | Drive Shaft | | 33 | 22 | 53 | 93.5 | 586 | |
| | 2005.03-2006.07 | 5MT | F | R | Estate Van FWD Z 17 DTL | | GDS21055 | Drive Shaft | | 33 | 22 | 53 | 93.5 | 950 | |
| | 2005.03-2006.07 | MT | F | L/R | Estate Van FWD Z 17 DTL | | GCO44028 | Outer Joint | | 33 | 24 | 53 | 93.5 | 63.5 | M |
| | 2005.03-2006.07 | | F | R | Estate Van FWD Z 17 DTL | | GCI44005 | Inner Joint | | 34 | 25 | 35 | | 130.2 | |
| | 2005.03-2006.07 | | F | L/R | Estate Van FWD Z 17 DTL | | GCI99026 | Inner Joint | | 22 | 25 | 35 | 57 | 111.7 | |
| 1.7 (74 kw) | 2005.03-2011.11 | 5AT | F | L | Estate Van FWD Z 17 DTH | | GDS44029 | Drive Shaft | | 33 | 34 | 53 | 93.5 | 594 | |
| | 2005.03-2011.11 | 6MT | F | L | Estate Van FWD Z 17 DTH | | GDS44052 | Drive Shaft | | 33 | 25 | 53 | 93.5 | 573 | |
| | 2005.03-2011.11 | 6MT | F | R | Estate Van FWD Z 17 DTH | | GDS44031 | Drive Shaft | | 33 | 34 | 53 | 93.5 | 559 | |
| | 2005.03-2011.11 | 6MT | F | L | Estate Van FWD Z 17 DTH | | GCI44008 | Inner Joint | | 25 | 25 | 34.9 | 57.5 | 113.2 | |
| | 2005.03-2011.11 | MT | F | L | Estate Van FWD Z 17 DTH | | GCI21018 | Inner Joint | | 25 | 34 | 35 | 58 | 116 | |
| | 2005.03-2011.11 | MT | F | L | Estate Van FWD Z 17 DTH | | GCI99186 | Inner Joint | | 25 | 28 | 34.9 | 57.5 | 111 | |
| | 2005.03-2011.11 | | F | L | Estate Van FWD Z 17 DTH | Chassis no. from:75025242;Chassis no. from:75042282;Chassis no. from:78007658/8000001 | GDS21051 | Drive Shaft | | 33 | 25 | 52.5 | 94 | 579 | |
| | 2005.03-2011.11 | | F | L | Estate Van FWD Z 17 DTH | Chassis no. to:72025241;Chassis no. to:75042281;Chassis no. to:78007657 | GDS21073 | Drive Shaft | | 33 | 25 | 52.5 | 94 | 578 | |
| | 2005.03-2011.11 | | F | R | Estate Van FWD Z 17 DTH | Chassis no. to:72025241;Chassis no. to:75043819;Chassis no. to:78007657 | GDS21056 | Drive Shaft | | 33 | 34 | 52.5 | 94 | 595 | |
| | 2005.03-2011.11 | | F | R | Estate Van FWD Z 17 DTH | Chassis no. from:75025242;Chassis no. from:75042282;Chassis no. from:78007658 | GDS21056 | Drive Shaft | | 33 | 34 | 52.5 | 94 | 595 | |
| | 2005.03-2011.11 | | F | R | Estate Van FWD Z 17 DTH | Chassis no. from:75025242;Chassis no. from:75042282;Chassis no. from:8B000001 | GDS21056 | Drive Shaft | | 33 | 34 | 52.5 | 94 | 595 | |
| | 2005.03-2011.11 | | F | L/R | Estate Van FWD Z 17 DTH | | GCO44027 | Outer Joint | | 33 | 26 | 52.5 | 94 | 65.5 | M |
| | 2005.03-2011.11 | | F | L/R | Estate Van FWD Z 17 DTH | | GCO44028 | Outer Joint | | 33 | 24 | 53 | 93.5 | 63.5 | M |
| | 2005.03-2011.11 | | F | R | Estate Van FWD Z 17 DTH | | GCI44005 | Inner Joint | | 34 | 25 | 35 | | 130.2 | |
| 1.7 (81 kw) | 2011.06-2013.12 | 6MT | F | L | Estate Van FWD Z 17 DTJ;A 17 DTJ | | GDS21051 | Drive Shaft | | 33 | 25 | 52.5 | 94 | 579 | |
| | 2011.06-2013.12 | 6MT | F | R | Estate Van FWD Z 17 DTJ;A 17 DTJ | | GDS44099 | Drive Shaft | | 33 | 34 | 52.5 | 94 | 563 | |
| | 2011.06-2013.12 | MT | F | L/R | Estate Van FWD Z 17 DTJ;A 17 DTJ | | GCO44027 | Outer Joint | | 33 | 26 | 52.5 | 94 | 65.5 | M |
| | 2011.06-2013.12 | MT | F | L | Estate Van FWD Z 17 DTJ;A 17 DTJ | | GCI99186 | Inner Joint | | 25 | 28 | 34.9 | 57.5 | 111 | |
| | 2011.06-2013.12 | MT | F | R | Estate Van FWD Z 17 DTJ;A 17 DTJ | | GCI44016 | Inner Joint | | 34 | 28 | 37.5 | | 129.2 | |
| | 2011.06-2013.12 | | F | | Estate Van FWD Z 17 DTJ;A 17 DTJ | | GCO99024 | Outer Joint | | 33 | 26 | 52.5 | 94 | 65.5 | M |
| | 2011.06-2013.12 | | F | R | Estate Van FWD Z 17 DTJ;A 17 DTJ | | GCI44005 | Inner Joint | | 34 | 25 | 35 | | 130.2 | |
| 1.7 (92 kw) | 2011.11- | 6MT | F | L | Estate Van FWD A 17 DTR;Z 17 DTR | | GDS21051 | Drive Shaft | | 33 | 25 | 52.5 | 94 | 579 | |
| | 2011.11- | 6MT | F | R | Estate Van FWD A 17 DTR;Z 17 DTR | | GDS44099 | Drive Shaft | | 33 | 34 | 52.5 | 94 | 563 | |
| | 2011.11- | MT | F | L/R | Estate Van FWD A 17 DTR;Z 17 DTR | Date to:2013.12 | GCO44027 | Outer Joint | | 33 | 26 | 52.5 | 94 | 65.5 | M |
| | 2011.11- | MT | F | L | Estate Van FWD A 17 DTR;Z 17 DTR | Date to:2013.12 | GCI99186 | Inner Joint | | 25 | 28 | 34.9 | 57.5 | 111 | |
| | 2011.11- | MT | F | R | Estate Van FWD A 17 DTR;Z 17 DTR | Date to:2013.12 | GCI44016 | Inner Joint | | 34 | 28 | 37.5 | | 129.2 | |
| | 2011.11- | | F | | Estate Van FWD A 17 DTR;Z 17 DTR | | GCO99024 | Outer Joint | | 33 | 26 | 52.5 | 94 | 65.5 | M |
| | 2011.11- | | F | R | Estate Van FWD A 17 DTR;Z 17 DTR | | GCI44005 | Inner Joint | | 34 | 25 | 35 | | 130.2 | |

| | YEAR | TRANSM. | F/R | L/R | BODY STYLE & DRIVE TYPE & ENGINE | REMARKS | G-AP Ref. | PRODUCT | ABS | Technical Specifications A | B | C | H | L | P |
|---|---|---|---|---|---|---|---|---|---|---|---|---|---|---|---|
| **VAUXHALL** | | | | | | | | | | | | | | | |
| **Astra Van** | | | | | | | | | | | | | | | |
| 1.9 (88 kw) | 2005.03-2011.11 | 6AT | F | L | Estate Van FWD Z 19 DT | Chassis no. from:72024736/75049580/178023183/8B000001,Date from:2007.08 | GDS21111 | Drive Shaft | | 33 | 27 | 52.5 | 94 | 562 | |
| | 2005.03-2011.11 | 6AT | F | L | Estate Van FWD Z 19 DT | Chassis no. to:72024735/75049580/178023182,Date to:2007.07 | GDS60034 | Drive Shaft | | 33 | 27 | 52.5 | 94 | 564 | |
| | 2005.03-2011.11 | 6AT | F | R | Estate Van FWD Z 19 DT | | GDS21110 | Drive Shaft | | 33 | 27 | 52.5 | 94 | 576 | |
| | 2005.03-2011.11 | 6AT | F | L | Estate Van FWD Z 19 DT | Date from:2007.08,Chassis no. from:72024736/75049581/178023183/7G/8B000001 | GCI86015 | Inner Joint | | 27 | 26 | 35 | 78.5 | 109.5 | |
| | 2005.03-2011.11 | 6MT | F | L | Estate Van FWD Z 19 DT | Date from:2007.08 | GDS21051 | Drive Shaft | | 33 | 25 | 52.5 | 94 | 579 | |
| | 2005.03-2011.11 | 6MT | F | L | Estate Van FWD Z 19 DT | Date to:2007.07 | GDS21073 | Drive Shaft | | 33 | 25 | 52.5 | 94 | 578 | |
| | 2005.03-2011.11 | 6MT | F | R | Estate Van FWD Z 19 DT | | GDS21056 | Drive Shaft | | 33 | 34 | 52.5 | 94 | 595 | |
| | 2005.03-2011.11 | 6MT | F | R | Estate Van FWD Z 19 DT | Date to:2007.07,Chassis no. to:72025241/75043819/7800765/7G | GCI99187 | Inner Joint | | 34 | 34 | 37.5 | | 124 | |
| | 2005.03-2011.11 | AT | F | L | Estate Van FWD Z 19 DT | | GCO44027 | Outer Joint | | 33 | 26 | 52.5 | 94 | 65.5 | M |
| | 2005.03-2011.11 | MT | F | L | Estate Van FWD Z 19 DT | | GCI21018 | Inner Joint | | 25 | 34 | 35 | 58 | 116 | |
| | 2005.03-2011.11 | MT | F | L | Estate Van FWD Z 19 DT | | GCI99186 | Inner Joint | | 25 | 28 | 34.9 | 57.5 | 111 | |
| | 2005.03-2011.11 | | F | | Estate Van FWD Z 19 DT | | GCO99024 | Outer Joint | | 33 | 26 | 52.5 | 94 | 65.5 | M |
| 1.9 (110 kw) | 2005.03-2011.11 | 6MT | F | L | Estate Van FWD Z 19 DTH | Date from:2007.08 | GDS21035 | Drive Shaft | | 30 | 25 | 53.8 | 94.5 | 581 | |
| | 2005.03-2011.11 | 6MT | F | L | Estate Van FWD Z 19 DTH | Date to:2007.07 | GDS21071 | Drive Shaft | | 30 | 25 | 53.8 | 94.5 | 576 | |
| | 2005.03-2011.11 | 6MT | F | R | Estate Van FWD Z 19 DTH | Date to:2007.07 | GDS21062 | Drive Shaft | | 30 | 34 | 53.8 | 94.5 | 595 | |
| | 2005.03-2011.11 | 6MT | F | R | Estate Van FWD Z 19 DTH | Date from:2007.08,Chassis no. from:72024736/75041476/78008876 | GDS82084 | Drive Shaft | | 30 | 34 | 53.8 | 94.5 | 598 | |
| | 2005.03-2011.11 | 6MT | F | R | Estate Van FWD Z 19 DTH | Date to:2007.07,Chassis no. to:72024735/75041475/78008875/7G | GCI99187 | Inner Joint | | 34 | 34 | 37.5 | | 124 | |
| | 2005.03-2011.11 | MT | F | L | Estate Van FWD Z 19 DTH | | GCI21018 | Inner Joint | | 25 | 34 | 35 | 58 | 116 | |
| | 2005.03-2011.11 | MT | F | L | Estate Van FWD Z 19 DTH | | GCI99186 | Inner Joint | | 25 | 28 | 34.9 | 57.5 | 111 | |
| | 2005.03-2011.11 | | F | R | Estate Van FWD Z 19 DTH | Date To:2007.07,Chassis no. to:72024735/75041475/78008875/7G | GDS21056 | Drive Shaft | | 33 | 34 | 52.5 | 94 | 595 | |
| | 2005.03-2011.11 | | F | L/R | Estate Van FWD Z 19 DTH | | GCO17051 | Outer Joint | | 30 | 26 | 53.8 | 94.5 | 65.5 | M |
| 2.0 (60 kw) | 1998.09-2005.05 | 4AT/5MT | F | L | Estate Van FWD X20DTL/Y20DTL | | GDS44044 | Drive Shaft | | 33 | 34 | 52 | 103.5 | 595 | |
| | 1998.09-2005.05 | 4AT/5MT | F | R | Estate Van FWD X20DTL/Y20DTL | | GDS88011 | Drive Shaft | | 33 | 34 | 52 | 104 | 959 | |
| | 1998.09-2005.05 | 4AT/5MT | F | L | Estate Van FWD X20DTL/Y20DTL | | GCO44032 | Outer Joint | | 33 | 25 | 52 | 103.5 | 61 | O |
| | 1998.09-2005.05 | AT/MT | F | L/R | Estate Van FWD X20DTL/Y20DTL | Date to:2005.05 | GCO44006 | Outer Joint | 29T | 33 | 25 | 52 | 103.5 | 61 | O |
| | 1998.09-2005.05 | MT | F | R | Estate Van FWD X20DTL/Y20DTL | | GCO44049 | Outer Joint | | 33 | 25 | 52 | 109 | 61 | O |
| | 1998.09-2005.05 | | F | L/R | Estate Van FWD X20DTL/Y20DTL | | GCI44002 | Inner Joint | | 34 | 25 | 35 | 56.2 | 114.8 | |
| 2.0 (74 kw) | 2000.09-2005.05 | 5MT | F | L | Estate Van FWD Y20DTH | | GDS44044 | Drive Shaft | | 33 | 34 | 52 | 103.5 | 595 | |
| | 2000.09-2005.05 | 5MT | F | R | Estate Van FWD Y20DTH | | GDS88011 | Drive Shaft | | 33 | 34 | 52 | 104 | 959 | |
| | 2000.09-2005.05 | 5MT | F | L | Estate Van FWD Y20DTH | | GCO44032 | Outer Joint | | 33 | 25 | 52 | 103.5 | 61 | O |
| | 2000.09-2005.05 | AT/MT | F | L/R | Estate Van FWD Y20DTH | Date to:2005.05 | GCO44006 | Outer Joint | 29T | 33 | 25 | 52 | 103.5 | 61 | O |
| | 2000.09-2005.05 | AT/MT | F | L/R | Estate Van FWD Y20DTH | | GCO44049 | Outer Joint | | 33 | 25 | 52 | 109 | 61 | O |
| | 2000.09-2005.05 | | F | L/R | Estate Van FWD Y20DTH | | GCI44002 | Inner Joint | | 34 | 25 | 35 | 56.2 | 114.8 | |
| **Calibra** | | | | | | | | | | | | | | | |
| 2.0 (85 kw) | 1990.04-1996.12 | AT/MT | F | L/R | Coupe FWD C20NE | | GCO44056 | Outer Joint | 29T | 33 | 25 | 52 | 109 | 61 | O |
| | 1990.04-1996.12 | AT/MT | F | L/R | Coupe FWD C20NE | | GCO44057 | Outer Joint | 43T | 33 | 25 | 52 | 109 | 61 | O |
| | 1990.04-1996.12 | MT | F | L | Coupe FWD C20NE | | GDS44011 | Drive Shaft | 29T | 33 | 34 | 52 | 109 | 594.5 | |
| | 1990.04-1996.12 | MT | F | L | Coupe FWD C20NE | Date to:1991.07 | GDS44014 | Drive Shaft | 43T | 33 | 34 | 52 | 103.5 | 587 | |
| | 1990.04-1996.12 | MT | F | R | Coupe FWD C20NE | | GDS44059 | Drive Shaft | 29T | 33 | 34 | 52 | 109 | 938 | |
| | 1990.04-1996.12 | MT | F | L/R | Coupe FWD C20NE | Date to:1996.12 | GCI44002 | Inner Joint | | 34 | 25 | 35 | 56.2 | 114.8 | |
| | 1990.04-1996.12 | | F | R | Coupe FWD C20NE | | GCI44005 | Inner Joint | | 34 | 25 | 35 | | 130.2 | |
| 2.0 (100 kw) | 1994.02-1997.07 | MT | F | L | Coupe 4WD X20XEV | | GDS44011 | Drive Shaft | 29T | 33 | 34 | 52 | 109 | 594.5 | |
| | 1994.02-1997.07 | MT | F | L/R | Coupe 4WD X20XEV | | GCO44056 | Outer Joint | 29T | 33 | 25 | 52 | 109 | 61 | O |
| | 1994.02-1997.07 | MT | F | L/R | Coupe 4WD X20XEV | | GCO44057 | Outer Joint | 43T | 33 | 25 | 52 | 109 | 61 | O |
| | 1994.02-1997.07 | | F | R | Coupe 4WD X20XEV | | GCI44005 | Inner Joint | | 34 | 25 | 35 | | 130.2 | |
| | 1994.09-1998.05 | MT | F | L | Coupe FWD X20XEV | | GDS44011 | Drive Shaft | 29T | 33 | 34 | 52 | 109 | 594.5 | |
| | 1994.09-1998.05 | MT | F | L/R | Coupe FWD X20XEV | | GCO44056 | Outer Joint | 29T | 33 | 25 | 52 | 109 | 61 | O |
| | 1994.09-1998.05 | MT | F | L/R | Coupe FWD X20XEV | | GCO44057 | Outer Joint | 43T | 33 | 25 | 52 | 109 | 61 | O |
| | 1994.09-1998.05 | | F | R | Coupe FWD X20XEV | | GCI44005 | Inner Joint | | 34 | 25 | 35 | | 130.2 | |
| 2.0 (150 kw) | 1991.08-1996.02 | MT | F | L | Coupe 4WD C20LET | | GDS44011 | Drive Shaft | 29T | 33 | 34 | 52 | 109 | 594.5 | |
| | 1991.08-1996.02 | MT | F | R | Coupe 4WD C20LET | | GDS44059 | Drive Shaft | 29T | 33 | 34 | 52 | 109 | 938 | |
| | 1991.08-1996.02 | MT | F | L/R | Coupe 4WD C20LET | Date to:1996.02 | GCO44056 | Outer Joint | 29T | 33 | 25 | 52 | 109 | 61 | O |
| | 1991.08-1996.02 | MT | F | L | Coupe 4WD C20LET | Date to:1996.02 | GCI44002 | Inner Joint | | 34 | 25 | 35 | 56.2 | 114.8 | |
| | 1991.08-1996.02 | | F | R | Coupe 4WD C20LET | | GCI44005 | Inner Joint | | 34 | 25 | 35 | | 130.2 | |
| 2.5 (125 kw) | 1993.09-1998.05 | AT/MT | F | L | Coupe FWD C25XE/X25XE | | GDS44011 | Drive Shaft | 29T | 33 | 34 | 52 | 109 | 594.5 | |
| | 1993.09-1998.05 | MT | F | L | Coupe FWD C25XE/X25XE | Date from:1993.09 | GCI44002 | Inner Joint | | 34 | 25 | 35 | 56.2 | 114.8 | |
| | 1993.09-1998.05 | | F | R | Coupe FWD C25XE/X25XE | | GCI44005 | Inner Joint | | 34 | 25 | 35 | | 130.2 | |
| **Cascada** | | | | | | | | | | | | | | | |
| 1.4 (103 kw) | 2013.02- | 6MT | F | L | Convertible FWD A 14 NET;B 14 NET | | GDS83226 | Drive Shaft | | 30 | 25 | 52.5 | 94 | 623 | |
| | 2013.02- | 6MT | F | R | Convertible FWD A 14 NET;B 14 NET | | GDS83227 | Drive Shaft | | 30 | 25 | 52.5 | 94 | 1018 | |
| | 2013.02- | 6MT | F | L/R | Convertible FWD A 14 NET;B 14 NET | | GCO17051 | Outer Joint | | 30 | 26 | 53.8 | 94.5 | 65.5 | M |
| | 2013.02- | 6MT | F | L/R | Convertible FWD A 14 NET;B 14 NET | | GCO21049 | Outer Joint | | 30 | 26 | 52.5 | 94 | 65.5 | M |
| | 2013.02- | 6MT | F | L/R | Convertible FWD A 14 NET;B 14 NET | | GCO88046 | Outer Joint | | 30 | 26 | 52.5 | 94.5 | 65.5 | M |
| | 2013.02- | 6MT | F | L | Convertible FWD A 14 NET;B 14 NET | | GCI82188 | Inner Joint | | 25 | 26 | 34.9 | 57.5 | 108 | |
| | 2013.02- | 6MT | F | R | Convertible FWD A 14 NET;B 14 NET | | GCI82194 | Inner Joint | | 34 | 26 | 37.5 | | 124 | |

| | YEAR | TRANSM. | F/R | L/R | BODY STYLE & DRIVE TYPE & ENGINE | REMARKS | G-AP Ref. | PRODUCT | ABS | Technical Specifications A | B | C | H | L | P |
|---|---|---|---|---|---|---|---|---|---|---|---|---|---|---|---|
| **VAUXHALL** | | | | | | | | | | | | | | | |
| **Cascada** | | | | | | | | | | | | | | | |
| 1.6 (100 kw) | 2018.05-2019.04 | 6AT | F | L | Convertible FWD D 16 SHJ | Chassis no. to::B32752 | GDS82258 | Drive Shaft | | 30 | 34 | 52.5 | 94 | 666 | |
| | 2018.05-2019.04 | 6AT | F | L | Convertible FWD D 16 SHJ | Chassis no. to::B32752 | GCI86021 | Inner Joint | | 34 | 26 | 35 | 136.5 | 87 | |
| | 2018.05-2019.04 | 6AT/6MT | F | L/R | Convertible FWD D 16 SHJ | | GCO88046 | Outer Joint | | 30 | 26 | 52.5 | 94.5 | 65.5 | M |
| | 2018.05-2019.04 | 6MT | F | L | Convertible FWD D 16 SHJ | | GDS83226 | Drive Shaft | | 30 | 25 | 52.5 | 94 | 623 | |
| | 2018.05-2019.04 | 6MT | F | R | Convertible FWD D 16 SHJ | | GDS21093 | Drive Shaft | | 30 | 27 | 52.5 | 94 | 625 | |
| | 2018.05-2019.04 | 6MT | F | R | Convertible FWD D 16 SHJ | | GCI21016 | Inner Joint | | 27 | 26 | 35 | 78.5 | 112 | |
| | 2018.05-2019.04 | MT | F | L/R | Convertible FWD D 16 SHJ | | GCO17051 | Outer Joint | | 30 | 26 | 53.8 | 94.5 | 65.5 | M |
| | 2018.05-2019.04 | MT | F | L/R | Convertible FWD D 16 SHJ | | GCO21049 | Outer Joint | | 30 | 26 | 52.5 | 94 | 65.5 | M |
| 1.6 (125 kw) | 2013.02- | 6AT | F | L | Convertible FWD A 16 XHT;B 16 SHL;D 16 SHL | | GDS82258 | Drive Shaft | | 30 | 34 | 52.5 | 94 | 666 | |
| | 2013.02- | 6AT | F | R | Convertible FWD A 16 XHT;B 16 SHL;D 16 SHL | | GDS21093 | Drive Shaft | | 30 | 27 | 52.5 | 94 | 625 | |
| | 2013.02- | 6AT | F | L/R | Convertible FWD A 16 XHT;B 16 SHL;D 16 SHL | | GCO17051 | Outer Joint | | 30 | 26 | 53.8 | 94.5 | 65.5 | M |
| | 2013.02- | 6AT | F | L/R | Convertible FWD A 16 XHT;B 16 SHL;D 16 SHL | | GCO21049 | Outer Joint | | 30 | 26 | 52.5 | 94 | 65.5 | M |
| | 2013.02- | 6AT | F | L/R | Convertible FWD A 16 XHT;B 16 SHL;D 16 SHL | | GCO88046 | Outer Joint | | 30 | 26 | 52.5 | 94.5 | 65.5 | M |
| | 2013.02- | 6AT | F | L | Convertible FWD A 16 XHT;B 16 SHL;D 16 SHL | | GCI86021 | Inner Joint | | 34 | 26 | 35 | 136.5 | 87 | |
| | 2013.02- | 6AT | F | R | Convertible FWD A 16 XHT;B 16 SHL;D 16 SHL | | GCI21016 | Inner Joint | | 27 | 26 | 35 | 78.5 | 112 | |
| 1.6 (147 kw) | 2013.11- | 6MT | F | L | Convertible FWD A 16 SHT;B 16 SHT;D 16 SHT | | GDS83226 | Drive Shaft | | 30 | 25 | 52.5 | 94 | 623 | |
| | 2013.11- | 6MT | F | R | Convertible FWD A 16 SHT;B 16 SHT;D 16 SHT | | GDS21093 | Drive Shaft | | 30 | 27 | 52.5 | 94 | 625 | |
| | 2013.11- | 6MT | F | L/R | Convertible FWD A 16 SHT;B 16 SHT;D 16 SHT | | GCO17051 | Outer Joint | | 30 | 26 | 53.8 | 94.5 | 65.5 | M |
| | 2013.11- | 6MT | F | L/R | Convertible FWD A 16 SHT;B 16 SHT;D 16 SHT | | GCO21049 | Outer Joint | | 30 | 26 | 52.5 | 94 | 65.5 | M |
| | 2013.11- | 6MT | F | L/R | Convertible FWD A 16 SHT;B 16 SHT;D 16 SHT | | GCO88046 | Outer Joint | | 30 | 26 | 52.5 | 94.5 | 65.5 | M |
| | 2013.11- | 6MT | F | L | Convertible FWD A 16 SHT;B 16 SHT;D 16 SHT | | GCI82188 | Inner Joint | | 25 | 26 | 34.9 | 57.5 | 108 | |
| | 2013.11- | 6MT | F | R | Convertible FWD A 16 SHT;B 16 SHT;D 16 SHT | | GCI21016 | Inner Joint | | 27 | 26 | 35 | 78.5 | 112 | |
| 2.0 (121 kw) | 2013.02- | 6AT | F | L | Convertible FWD A 20 DTH | | GDS82388 | Drive Shaft | | 30 | 27 | 52.5 | 94 | 609 | |
| | 2013.02- | 6AT | F | L/R | Convertible FWD A 20 DTH | | GCO17051 | Outer Joint | | 30 | 26 | 53.8 | 94.5 | 65.5 | M |
| | 2013.02- | 6AT | F | L/R | Convertible FWD A 20 DTH | | GCO21049 | Outer Joint | | 30 | 26 | 52.5 | 94 | 65.5 | M |
| | 2013.02- | 6AT | F | L/R | Convertible FWD A 20 DTH | | GCO88046 | Outer Joint | | 30 | 26 | 52.5 | 94.5 | 65.5 | M |
| | 2013.02- | 6AT | F | L | Convertible FWD A 20 DTH | | GCI86015 | Inner Joint | | 27 | 26 | 35 | 78.5 | 109.5 | |
| | 2013.02- | 6AT/6MT | F | R | Convertible FWD A 20 DTH | | GDS21093 | Drive Shaft | | 30 | 27 | 52.5 | 94 | 625 | |
| | 2013.02- | 6AT/6MT | F | R | Convertible FWD A 20 DTH | | GCI21016 | Inner Joint | | 27 | 26 | 35 | 78.5 | 112 | |
| | 2013.02- | 6MT | F | L/R | Convertible FWD A 20 DTH | | GCO21057 | Outer Joint | | 30 | 27 | 59.1 | 94 | 65 | M |
| 2.0 (125 kw) | 2015.07- | 6MT | F | L | Convertible FWD B 20 DTH | | GDS21093 | Drive Shaft | | 30 | 27 | 52.5 | 94 | 625 | |
| | 2015.07- | 6MT | F | L | Convertible FWD B 20 DTH | | GCO88046 | Outer Joint | | 30 | 26 | 52.5 | 94.5 | 65.5 | M |
| | 2015.07- | 6MT | F | L/R | Convertible FWD B 20 DTH | | GCO17051 | Outer Joint | | 30 | 26 | 53.8 | 94.5 | 65.5 | M |
| | 2015.07- | 6MT | F | L/R | Convertible FWD B 20 DTH | | GCO21049 | Outer Joint | | 30 | 26 | 52.5 | 94 | 65.5 | M |
| | 2015.07- | 6MT | F | L | Convertible FWD B 20 DTH | | GCI21016 | Inner Joint | | 27 | 26 | 35 | 78.5 | 112 | |
| 2.0 (143 kw) | 2013.02- | 6MT | F | R | Convertible FWD A 20 DTR | | GDS21093 | Drive Shaft | | 30 | 27 | 52.5 | 94 | 625 | |
| | 2013.02- | 6MT | F | R | Convertible FWD A 20 DTR | | GCO88046 | Outer Joint | | 30 | 26 | 52.5 | 94.5 | 65.5 | M |
| | 2013.02- | 6MT | F | L/R | Convertible FWD A 20 DTR | | GCO17051 | Outer Joint | | 30 | 26 | 53.8 | 94.5 | 65.5 | M |
| | 2013.02- | 6MT | F | L/R | Convertible FWD A 20 DTR | | GCO21049 | Outer Joint | | 30 | 26 | 52.5 | 94 | 65.5 | M |
| | 2013.02- | 6MT | F | R | Convertible FWD A 20 DTR | | GCI21016 | Inner Joint | | 27 | 26 | 35 | 78.5 | 112 | |
| **Combo** | | | | | | | | | | | | | | | |
| 1.2 (81 kw) | 2018.06- | 5MT | F | R | MPV FWD D 12 XHL (EB2ADT) | | GDS83663 | Drive Shaft | | 28 | 24 | 58.5 | 92.5 | 919 | |
| | 2018.06- | 6MT | F | L | MPV FWD D 12 XHL (EB2ADT) | | GDS83616 | Drive Shaft | | 28 | 24 | 58.5 | 92.5 | 681 | |
| | 2018.06- | 6MT | F | L/R | MPV FWD D 12 XHL (EB2ADT) | | GCO82273 | Outer Joint | | 28 | 34 | 58.5 | 92.5 | 56 | I |
| | 2018.06- | 6MT | F | L | MPV FWD D 12 XHL (EB2ADT) | | GCI82131 | Inner Joint | | 24 | 34 | 40 | 62 | 89 | |
| | 2018.06- | 6MT | F | R | MPV FWD D 12 XHL (EB2ADT) | | GCI82320 | Inner Joint | | 24 | 34 | 29.8 | 290 | 88 | |
| | 2019.02- | 6MT | F | L | Box Body/MPV FWD D 12 XHL (EB2ADT) | | GDS83616 | Drive Shaft | | 28 | 24 | 58.5 | 92.5 | 681 | |
| | 2019.02- | 6MT | F | R | Box Body/MPV FWD D 12 XHL (EB2ADT) | For left-hand drive vehicles | GDS84457 | Drive Shaft | | 28 | 24 | 58.5 | 92.5 | 921 | |
| | 2019.02- | 6MT | F | L | Box Body/MPV FWD D 12 XHL (EB2ADT) | | GCO82273 | Outer Joint | | 28 | 34 | 58.5 | 92.5 | 56 | I |
| | 2019.02- | 6MT | F | R | Box Body/MPV FWD D 12 XHL (EB2ADT) | | GCO81397 | Outer Joint | | 28 | 34 | 58.5 | 92.5 | 56 | I |
| | 2019.02- | 6MT | F | L | Box Body/MPV FWD D 12 XHL (EB2ADT) | | GCI82131 | Inner Joint | | 24 | 34 | 40 | 62 | 89 | |
| | 2019.02- | 6MT | F | R | Box Body/MPV FWD D 12 XHL (EB2ADT) | For left-hand drive vehicles | GCI82769 | Inner Joint | | 24 | 34 | 40 | 61 | 103 | |
| 1.2 (96 kw) | 2019.07- | 8AT | F | L | MPV FWD F 12 XHT (EB2ADTS) | | GDS84579 | Drive Shaft | | 28 | 37 | 58.5 | 92.5 | 641 | |
| | 2019.07- | 8AT | F | R | MPV FWD F 12 XHT (EB2ADTS) | | GDS84582 | Drive Shaft | | 28 | 37 | 58.5 | 92.5 | 918 | |
| | 2019.07- | 8AT | F | L/R | MPV FWD F 12 XHT (EB2ADTS) | | GCO82273 | Outer Joint | | 28 | 34 | 58.5 | 92.5 | 56 | I |
| | 2019.07- | 8AT | F | L | MPV FWD F 12 XHT (EB2ADTS) | | GCI82119 | Inner Joint | | 37 | 34 | 41.5 | 58.5 | 94 | |
| | 2019.07- | 8AT | F | R | MPV FWD F 12 XHT (EB2ADTS) | | GCI82118 | Inner Joint | | 37 | 34 | | 290 | 88 | |
| 1.3 (51 kw) | 2004.09-2006.09 | 5MT | F | L | MPV FWD Z 13 DT | | GDS82091 | Drive Shaft | 29T | 22 | 22 | 52 | 97.5 | 580 | |
| | 2004.09-2006.09 | 5MT | F | R | MPV FWD Z 13 DT | | GDS82092 | Drive Shaft | 29T | 22 | 22 | 52 | 97.5 | 930 | |
| | 2004.09-2006.09 | AT/MT | F | L | MPV FWD Z 13 DT | | GDS99069 | Drive Shaft | 29T | 22 | 22 | 52 | 97.5 | 584 | |
| | 2004.09-2006.09 | MT | F | L | MPV FWD Z 13 DT | | GDS44027 | Drive Shaft | 29T | 22 | 22 | 52 | 98 | 580 | |
| | 2004.09-2006.09 | MT | F | R | MPV FWD Z 13 DT | | GDS44026 | Drive Shaft | 29T | 22 | 22 | 52 | 98 | 930 | |
| | 2004.09-2006.09 | MT | F | R | MPV FWD Z 13 DT | | GDS44075 | Drive Shaft | 29T | 22 | 22 | 52 | 97.5 | 926 | |
| | 2004.09-2006.09 | MT | F | L/R | MPV FWD Z 13 DT | | GCO44002 | Outer Joint | 29T | 22 | 23 | 52 | 97.5 | 61 | M |
| | 2004.09-2006.09 | MT | F | L/R | MPV FWD Z 13 DT | | GCI44009 | Inner Joint | | 22 | 23 | 35 | 57.5 | 96 | |

| | YEAR | TRANSM. | F/R | L/R | BODY STYLE & DRIVE TYPE & ENGINE | REMARKS | G-AP Ref. | PRODUCT | ABS | Technical Specifications A | B | C | H | L | P |
|---|---|---|---|---|---|---|---|---|---|---|---|---|---|---|---|
| **VAUXHALL** | | | | | | | | | | | | | | | |
| **Combo** | | | | | | | | | | | | | | | |
| 1.3 (51 kw) | 2004.09-2012.02 | 5MT | F | L | Box Body/MPV FWD Z 13 DT;Y 13 DT | | GDS44027 | Drive Shaft | 29T | 22 | 22 | 52 | 98 | 580 | |
| | 2004.09-2012.02 | 5MT | F | L | Box Body/MPV FWD Z 13 DT;Y 13 DT | | GDS82091 | Drive Shaft | 29T | 22 | 22 | 52 | 97.5 | 580 | |
| | 2004.09-2012.02 | 5MT | F | R | Box Body/MPV FWD Z 13 DT;Y 13 DT | | GDS44026 | Drive Shaft | 29T | 22 | 22 | 52 | 98 | 930 | |
| | 2004.09-2012.02 | 5MT | F | R | Box Body/MPV FWD Z 13 DT;Y 13 DT | | GDS82092 | Drive Shaft | 29T | 22 | 22 | 52 | 97.5 | 930 | |
| | 2004.09-2012.02 | 5MT | F | L/R | Box Body/MPV FWD Z 13 DT;Y 13 DT | | GCO44002 | Outer Joint | 29T | 22 | 23 | 52 | 97.5 | 61 | M |
| | 2004.09-2012.02 | AT/MT | F | L | Box Body/MPV FWD Z 13 DT;Y 13 DT | | GDS99069 | Drive Shaft | 29T | 22 | 22 | 52 | 97.5 | 584 | |
| | 2004.09-2012.02 | MT | F | R | Box Body/MPV FWD Z 13 DT;Y 13 DT | | GDS44075 | Drive Shaft | 29T | 22 | 22 | 52 | 97.5 | 926 | |
| | 2004.09-2012.02 | MT | F | L/R | Box Body/MPV FWD Z 13 DT;Y 13 DT | | GCI44009 | Inner Joint | | 22 | 23 | 35 | 57.5 | 96 | |
| 1.3 (55 kw) | 2005.10-2011.11 | 5AT/5MT | F | L | Box Body/MPV FWD Z 13 DTJ | | GDS82091 | Drive Shaft | 29T | 22 | 22 | 52 | 97.5 | 580 | |
| | 2005.10-2011.11 | 5AT/5MT | F | R | Box Body/MPV FWD Z 13 DTJ | | GDS82092 | Drive Shaft | 29T | 22 | 22 | 52 | 97.5 | 930 | |
| | 2005.10-2011.11 | AT/MT | F | L | Box Body/MPV FWD Z 13 DTJ | | GDS99069 | Drive Shaft | 29T | 22 | 22 | 52 | 97.5 | 584 | |
| | 2005.10-2011.11 | CVT/5MT | F | L | Box Body/MPV FWD Z 13 DTJ | | GDS44027 | Drive Shaft | 29T | 22 | 22 | 52 | 98 | 580 | |
| | 2005.10-2011.11 | CVT/5MT | F | R | Box Body/MPV FWD Z 13 DTJ | | GDS44026 | Drive Shaft | 29T | 22 | 22 | 52 | 98 | 930 | |
| | 2005.10-2011.11 | CVT/5MT | F | L/R | Box Body/MPV FWD Z 13 DTJ | | GCO44002 | Outer Joint | 29T | 22 | 23 | 52 | 97.5 | 61 | M |
| | 2005.10-2011.11 | MT | F | R | Box Body/MPV FWD Z 13 DTJ | | GDS44075 | Drive Shaft | 29T | 22 | 22 | 52 | 97.5 | 926 | |
| | 2005.10-2011.11 | MT | F | L/R | Box Body/MPV FWD Z 13 DTJ | | GCI44009 | Inner Joint | | 22 | 23 | 35 | 57.5 | 96 | |
| | 2006.07-2012.02 | AT/MT | F | L | MPV FWD Z 13 DTJ | | GDS99069 | Drive Shaft | 29T | 22 | 22 | 52 | 97.5 | 584 | |
| | 2006.07-2012.02 | CVT/5MT | F | L | MPV FWD Z 13 DTJ | | GDS44027 | Drive Shaft | 29T | 22 | 22 | 52 | 98 | 580 | |
| | 2006.07-2012.02 | CVT/5MT | F | L | MPV FWD Z 13 DTJ | | GDS82091 | Drive Shaft | 29T | 22 | 22 | 52 | 97.5 | 580 | |
| | 2006.07-2012.02 | CVT/5MT | F | R | MPV FWD Z 13 DTJ | | GDS44026 | Drive Shaft | 29T | 22 | 22 | 52 | 98 | 930 | |
| | 2006.07-2012.02 | CVT/5MT | F | R | MPV FWD Z 13 DTJ | | GDS82092 | Drive Shaft | 29T | 22 | 22 | 52 | 97.5 | 930 | |
| | 2006.07-2012.02 | CVT/5MT | F | L/R | MPV FWD Z 13 DTJ | | GCO44002 | Outer Joint | 29T | 22 | 23 | 52 | 97.5 | 61 | M |
| | 2006.07-2012.02 | MT | F | R | MPV FWD Z 13 DTJ | Date to:2010.09 | GDS44075 | Drive Shaft | 29T | 22 | 22 | 52 | 97.5 | 926 | |
| | 2006.07-2012.02 | MT | F | L/R | MPV FWD Z 13 DTJ | | GCI44009 | Inner Joint | | 22 | 23 | 35 | 57.5 | 96 | |
| 1.3 (66 kw) | 2011.11- | 5MT | F | L | Box Body/MPV FWD A 13 FD | | GDS17078 | Drive Shaft | | 25 | 24 | 51 | 84.5 | 602 | |
| | 2011.11- | 5MT | F | L | Box Body/MPV FWD A 13 FD | | GCO17063 | Outer Joint | | 25 | 25 | 51.1 | 84.5 | 61 | M |
| | 2011.11- | 5MT | F | L | Box Body/MPV FWD A 13 FD | | GCI17025 | Inner Joint | | 24 | 24 | 29.7 | 86.5 | 93 | |
| 1.3 (70 kw) | 2016.03- | 5MT | F | L | Box Body/MPV FWD A 13 FD | | GDS17078 | Drive Shaft | | 25 | 24 | 51 | 84.5 | 602 | |
| | 2016.03- | 5MT | F | R | Box Body/MPV FWD A 13 FD | | GDS17079 | Drive Shaft | | 25 | 24 | 51 | 84.5 | 970 | |
| | 2016.03- | 5MT | F | L/R | Box Body/MPV FWD A 13 FD | | GCO17063 | Outer Joint | | 25 | 25 | 51.1 | 84.5 | 61 | M |
| | 2016.03- | 5MT | F | L | Box Body/MPV FWD A 13 FD | | GCI17025 | Inner Joint | | 24 | 24 | 29.7 | 86.5 | 93 | |
| 1.4 (44 kw) | 1994.07-2001.10 | 5MT | F | L | MPV Van FWD C14NZ/X14SZ | | GDS44001 | Drive Shaft | 29T | 22 | 22 | 52 | 95 | 573 | |
| | 1994.07-2001.10 | 5MT | F | R | MPV Van FWD C14NZ/X14SZ | | GDS60002 | Drive Shaft | 29T | 22 | 22 | 52 | 95 | 926 | |
| | 1994.07-2001.10 | MT | F | L/R | MPV Van FWD C14NZ/X14SZ | | GCO44020 | Outer Joint | 29T | 22 | 28 | 52 | 97.5 | 57.5 | O |
| | 1994.07-2001.10 | | F | | MPV Van FWD C14NZ/X14SZ | | GCO44018 | Outer Joint | | 22 | 28 | 52.2 | 97.5 | 55 | O |
| | 1994.07-2001.10 | | F | | MPV Van FWD C14NZ/X14SZ | | GCO44019 | Outer Joint | 29T | 22 | 28 | 52 | 97.5 | 57.5 | O |
| 1.4 (66 kw) | 2004.01-2011.11 | 5MT | F | L | Box Body/MPV FWD Z 14 XEP | | GDS44027 | Drive Shaft | 29T | 22 | 22 | 52 | 98 | 580 | |
| | 2004.01-2011.11 | 5MT | F | R | Box Body/MPV FWD Z 14 XEP | | GDS44026 | Drive Shaft | 29T | 22 | 22 | 52 | 98 | 930 | |
| | 2004.01-2011.11 | 5MT | F | R | Box Body/MPV FWD Z 14 XEP | | GDS99205 | Drive Shaft | | 22 | 22 | 52 | 97.5 | 930 | |
| | 2004.01-2011.11 | 5MT | F | L/R | Box Body/MPV FWD Z 14 XEP | | GCI44003 | Inner Joint | | 22 | 28 | 34.95 | 57.5 | 83.5 | |
| | 2004.01-2011.11 | MT | F | L | Box Body/MPV FWD Z 14 XEP | | GDS99069 | Drive Shaft | 29T | 22 | 22 | 52 | 97.5 | 584 | |
| | 2004.01-2011.11 | MT | F | R | Box Body/MPV FWD Z 14 XEP | | GDS44075 | Drive Shaft | 29T | 22 | 22 | 52 | 97.5 | 926 | |
| | 2004.01-2011.11 | MT | F | R | Box Body/MPV FWD Z 14 XEP | | GCO44018 | Outer Joint | | 22 | 28 | 52.2 | 97.5 | 55 | O |
| | 2004.01-2011.11 | MT | F | R | Box Body/MPV FWD Z 14 XEP | | GCO44043 | Outer Joint | | 22 | 28 | 52 | 97.5 | 57.5 | O |
| | 2004.01-2011.11 | MT | F | L/R | Box Body/MPV FWD Z 14 XEP | | GCO44019 | Outer Joint | 29T | 22 | 28 | 52 | 97.5 | 57.5 | O |
| | 2004.01-2011.11 | MT | F | L/R | Box Body/MPV FWD Z 14 XEP | | GCO44020 | Outer Joint | 29T | 22 | 28 | 52 | 97.5 | 57.5 | O |
| | 2004.01-2011.11 | MT | F | R | Box Body/MPV FWD Z 14 XEP | | GCI60001 | Inner Joint | | 22 | 28 | 34.9 | 57.5 | 96.5 | |
| | 2004.10-2010.09 | 5MT | F | L | MPV FWD Z 14 XEP | | GDS44027 | Drive Shaft | 29T | 22 | 22 | 52 | 98 | 580 | |
| | 2004.10-2010.09 | 5MT | F | R | MPV FWD Z 14 XEP | | GDS44026 | Drive Shaft | 29T | 22 | 22 | 52 | 98 | 930 | |
| | 2004.10-2010.09 | 5MT | F | L/R | MPV FWD Z 14 XEP | | GCI44003 | Inner Joint | | 22 | 28 | 34.95 | 57.5 | 83.5 | |
| | 2004.10-2010.09 | MT | F | L | MPV FWD Z 14 XEP | | GDS99069 | Drive Shaft | 29T | 22 | 22 | 52 | 97.5 | 584 | |
| | 2004.10-2010.09 | MT | F | L/R | MPV FWD Z 14 XEP | | GCO44018 | Outer Joint | | 22 | 28 | 52.2 | 97.5 | 55 | O |
| | 2004.10-2010.09 | MT | F | L/R | MPV FWD Z 14 XEP | | GCO44019 | Outer Joint | 29T | 22 | 28 | 52 | 97.5 | 57.5 | O |
| | 2004.10-2010.09 | | F | R | MPV FWD Z 14 XEP | | GDS44075 | Drive Shaft | 29T | 22 | 22 | 52 | 97.5 | 926 | |
| | 2004.10-2010.09 | | F | L/R | MPV FWD Z 14 XEP | | GCO44020 | Outer Joint | 29T | 22 | 28 | 52 | 97.5 | 57.5 | O |
| 1.4 (70 kw) | 2011.11- | 5MT | F | L/R | Box Body/MPV FWD A 14 FP | | GCO17026 | Outer Joint | | 25 | 22 | 51 | 84 | 57 | M |
| | 2011.11- | 5MT | F | L/R | Box Body/MPV FWD A 14 FP | | GCI17027 | Inner Joint | | 22 | 22 | 36 | 61.5 | 93.5 | |
| 1.5 (56 kw) | 2018.08- | 5MT | F | R | Box Body/MPV FWD D 15 DTL (DV5RE) | | GDS84457 | Drive Shaft | | 28 | 24 | 58.5 | 92.5 | 921 | |
| | 2018.08- | 5MT | F | L | Box Body/MPV FWD D 15 DTL (DV5RE) | | GCO82273 | Outer Joint | | 28 | 34 | 58.5 | 92.5 | 56 | I |
| | 2018.08- | 5MT | F | R | Box Body/MPV FWD D 15 DTL (DV5RE) | | GCO81397 | Outer Joint | | 28 | 34 | 58.5 | 92.5 | 56 | I |
| | 2018.08- | 5MT | F | L | Box Body/MPV FWD D 15 DTL (DV5RE) | | GCI82131 | Inner Joint | | 24 | 34 | 40 | 62 | 89 | |
| | 2018.08- | 5MT | F | R | Box Body/MPV FWD D 15 DTL (DV5RE) | | GCI82769 | Inner Joint | | 24 | 34 | 40 | 61 | 103 | |
| | 2018.08- | 6MT | F | R | Box Body/MPV FWD D 15 DTL (DV5RE) | Trans. code:MB6 | GDS83663 | Drive Shaft | | 28 | 24 | 58.5 | 92.5 | 919 | |
| | 2018.08- | 6MT/5MT | F | L | Box Body/MPV FWD D 15 DTL (DV5RE) | Trans. code:MB6 | GDS83616 | Drive Shaft | | 28 | 24 | 58.5 | 92.5 | 681 | |
| 1.5 (75 kw) | 2018.06- | 5MT | F | L | MPV FWD D 15 DT (DV5RD);D 15 DT (DV5RCF) | | GDS83616 | Drive Shaft | | 28 | 24 | 58.5 | 92.5 | 681 | |

| | YEAR | TRANSM. | F/R | L/R | BODY STYLE & DRIVE TYPE & ENGINE | REMARKS | G-AP Ref. | PRODUCT | ABS | Technical Specifications A | B | C | H | L | P |
|---|---|---|---|---|---|---|---|---|---|---|---|---|---|---|---|
| **VAUXHALL** **Combo** | | | | | | | | | | | | | | | |
| 1.5 (75 kw) | 2018.06- | 5MT | F | R | MPV FWD D 15 DT (DV5RD);D 15 DT (DV5RCF) | For left-hand drive vehicles | GDS84457 | Drive Shaft | | 28 | 24 | 58.5 | 92.5 | 921 | |
| | 2018.06- | 5MT | F | L | MPV FWD D 15 DT (DV5RD);D 15 DT (DV5RCF) | | GCO82273 | Outer Joint | | 28 | 34 | 58.5 | 92.5 | 56 | I |
| | 2018.06- | 5MT | F | R | MPV FWD D 15 DT (DV5RD);D 15 DT (DV5RCF) | | GCO81397 | Outer Joint | | 28 | 34 | 58.5 | 92.5 | 56 | I |
| | 2018.06- | 5MT | F | L | MPV FWD D 15 DT (DV5RD);D 15 DT (DV5RCF) | | GCI82131 | Inner Joint | | 24 | 34 | 40 | 62 | 89 | |
| | 2018.06- | 5MT | F | R | MPV FWD D 15 DT (DV5RD);D 15 DT (DV5RCF) | For left-hand drive vehicles | GCI82769 | Inner Joint | | 24 | 34 | 40 | 61 | 103 | |
| | 2018.08- | 5MT | F | L | Box Body/MPV FWD D 15 DT (DV5RD);D 15 DT (DV5RCF) | | GDS83616 | Drive Shaft | | 28 | 24 | 58.5 | 92.5 | 681 | |
| | 2018.08- | 5MT | F | R | Box Body/MPV FWD D 15 DT (DV5RD);D 15 DT (DV5RCF) | | GDS84457 | Drive Shaft | | 28 | 24 | 58.5 | 92.5 | 921 | |
| | 2018.08- | 5MT | F | L | Box Body/MPV FWD D 15 DT (DV5RD);D 15 DT (DV5RCF) | | GCO82273 | Outer Joint | | 28 | 34 | 58.5 | 92.5 | 56 | I |
| | 2018.08- | 5MT | F | R | Box Body/MPV FWD D 15 DT (DV5RD);D 15 DT (DV5RCF) | | GCO81397 | Outer Joint | | 28 | 34 | 58.5 | 92.5 | 56 | I |
| | 2018.08- | 5MT | F | L | Box Body/MPV FWD D 15 DT (DV5RD);D 15 DT (DV5RCF) | | GCI82131 | Inner Joint | | 24 | 34 | 40 | 62 | 89 | |
| | 2018.08- | 5MT | F | R | Box Body/MPV FWD D 15 DT (DV5RD);D 15 DT (DV5RCF) | | GCI82769 | Inner Joint | | 24 | 34 | 40 | 61 | 103 | |
| 1.5 (96 kw) | 2018.06- | 6MT | F | L | MPV FWD D 15 DTH (DV5RC) | | GDS84170 | Drive Shaft | | 28 | 37 | 58.5 | 92.5 | 670 | |
| | 2018.06- | 6MT | F | R | MPV FWD D 15 DTH (DV5RC) | | GDS84336 | Drive Shaft | | 28 | 37 | 58.5 | 92.5 | 930 | |
| | 2018.06- | 6MT | F | L/R | MPV FWD D 15 DTH (DV5RC) | | GCO82273 | Outer Joint | | 28 | 34 | 58.5 | 92.5 | 56 | I |
| | 2018.06- | 6MT | F | L | MPV FWD D 15 DTH (DV5RC) | | GCI82301 | Inner Joint | | 37 | 34 | 40 | 65.5 | 89.5 | |
| | 2018.06- | 6MT | F | R | MPV FWD D 15 DTH (DV5RC) | | GCI82300 | Inner Joint | | 37 | 34 | 31.9 | 302 | 88 | |
| | 2018.06- | 8AT | F | L | MPV FWD D 15 DTH (DV5RC) | | GDS84579 | Drive Shaft | | 28 | 37 | 58.5 | 92.5 | 641 | |
| | 2018.06- | 8AT | F | R | MPV FWD D 15 DTH (DV5RC) | | GDS84582 | Drive Shaft | | 28 | 37 | 58.5 | 92.5 | 918 | |
| | 2018.06- | 8AT | F | L | MPV FWD D 15 DTH (DV5RC) | | GCI82119 | Inner Joint | | 37 | 34 | 41.5 | 58.5 | 94 | |
| | 2018.06- | 8AT | F | R | MPV FWD D 15 DTH (DV5RC) | | GCI82118 | Inner Joint | | 37 | 34 | | 290 | 88 | |
| | 2018.08- | 6MT | F | L | Box Body/MPV FWD D 15 DTH (DV5RC) | Trans. code:MB6 | GDS83616 | Drive Shaft | | 28 | 24 | 58.5 | 92.5 | 681 | |
| | 2018.08- | 6MT | F | L | Box Body/MPV FWD D 15 DTH (DV5RC) | Trans. code:ML6C | GDS84170 | Drive Shaft | | 28 | 37 | 58.5 | 92.5 | 670 | |
| | 2018.08- | 6MT | F | R | Box Body/MPV FWD D 15 DTH (DV5RC) | Trans. code:ML6C | GDS84336 | Drive Shaft | | 28 | 37 | 58.5 | 92.5 | 930 | |
| | 2018.08- | 6MT | F | R | Box Body/MPV FWD D 15 DTH (DV5RC) | Trans. code:MB6 | GDS84457 | Drive Shaft | | 28 | 24 | 58.5 | 92.5 | 921 | |
| | 2018.08- | 6MT | F | L/R | Box Body/MPV FWD D 15 DTH (DV5RC) | | GCO82273 | Outer Joint | | 28 | 34 | 58.5 | 92.5 | 56 | I |
| | 2018.08- | 6MT | F | L | Box Body/MPV FWD D 15 DTH (DV5RC) | | GCI82301 | Inner Joint | | 37 | 34 | 40 | 65.5 | 89.5 | |
| | 2018.08- | 6MT | F | R | Box Body/MPV FWD D 15 DTH (DV5RC) | Trans. code:ML6C | GCI82300 | Inner Joint | | 37 | 34 | 31.9 | 302 | 88 | |
| | 2018.08- | 6MT | F | R | Box Body/MPV FWD D 15 DTH (DV5RC) | Trans. code:MB6 | GCI82769 | Inner Joint | | 24 | 34 | 40 | 61 | 103 | |
| | 2018.08- | 8AT | F | L | Box Body/MPV FWD D 15 DTH (DV5RC) | | GDS84579 | Drive Shaft | | 28 | 37 | 58.5 | 92.5 | 641 | |
| | 2018.08- | 8AT | F | R | Box Body/MPV FWD D 15 DTH (DV5RC) | | GDS84582 | Drive Shaft | | 28 | 37 | 58.5 | 92.5 | 918 | |
| | 2018.08- | 8AT | F | L | Box Body/MPV FWD D 15 DTH (DV5RC) | | GCI82119 | Inner Joint | | 37 | 34 | 41.5 | 58.5 | 94 | |
| | 2018.08- | 8AT | F | R | Box Body/MPV FWD D 15 DTH (DV5RC) | | GCI82118 | Inner Joint | | 37 | 34 | | 290 | 88 | |
| 1.6 (55 kw) | 2018.06-2021.04 | 5MT | F | L | Box Body/MPV FWD B 16 DTL (DV6FE) | | GDS83616 | Drive Shaft | | 28 | 24 | 58.5 | 92.5 | 681 | |
| | 2018.06-2021.04 | 5MT | F | R | Box Body/MPV FWD B 16 DTL (DV6FE) | | GDS83663 | Drive Shaft | | 28 | 24 | 58.5 | 92.5 | 919 | |
| | 2018.06-2021.04 | 5MT | F | L/R | Box Body/MPV FWD B 16 DTL (DV6FE) | | GCO82273 | Outer Joint | | 28 | 34 | 58.5 | 92.5 | 56 | I |
| | 2018.06-2021.04 | 5MT | F | L | Box Body/MPV FWD B 16 DTL (DV6FE) | | GCI82131 | Inner Joint | | 24 | 34 | 40 | 62 | 89 | |
| | 2018.06-2021.04 | 5MT | F | R | Box Body/MPV FWD B 16 DTL (DV6FE) | | GCI82320 | Inner Joint | | 24 | 34 | 29.8 | 290 | 88 | |
| | 2018.06-2021.04 | 5MT | F | R | Box Body/MPV FWD B 16 DTL (DV6FE) | | GCI82769 | Inner Joint | | 24 | 34 | 40 | 61 | 103 | |
| 1.6 (62 kw) | 2001.09-2004.10 | 5MT | F | L | Box Body/MPV FWD Z 16 SE | | GDS44027 | Drive Shaft | 29T | 22 | 22 | 52 | 98 | 580 | |
| | 2001.09-2004.10 | 5MT | F | R | Box Body/MPV FWD Z 16 SE | | GDS44026 | Drive Shaft | 29T | 22 | 22 | 52 | 98 | 930 | |
| | 2001.09-2004.10 | 5MT | F | L/R | Box Body/MPV FWD Z 16 SE | | GCI44003 | Inner Joint | | 22 | 28 | 34.95 | 57.5 | 83.5 | |
| | 2001.09-2004.10 | MT | F | L | Box Body/MPV FWD Z 16 SE | | GDS99069 | Drive Shaft | 29T | 22 | 22 | 52 | 97.5 | 584 | |
| | 2001.09-2004.10 | MT | F | R | Box Body/MPV FWD Z 16 SE | | GCO44018 | Outer Joint | | 22 | 28 | 52.2 | 97.5 | 55 | O |
| | 2001.09-2004.10 | MT | F | L/R | Box Body/MPV FWD Z 16 SE | | GCO44019 | Outer Joint | 29T | 22 | 28 | 52 | 97.5 | 57.5 | O |
| | 2001.09-2004.10 | | F | R | Box Body/MPV FWD Z 16 SE | | GDS44075 | Drive Shaft | 29T | 22 | 22 | 52 | 97.5 | 926 | |
| | 2001.09-2004.10 | | F | L/R | Box Body/MPV FWD Z 16 SE | | GCO44020 | Outer Joint | 29T | 22 | 28 | 52 | 97.5 | 57.5 | O |
| 1.6 (64 kw) | 2001.10-2004.06 | MT | F | L | MPV FWD Z 16 SE | | GDS44027 | Drive Shaft | 29T | 22 | 22 | 52 | 98 | 580 | |
| | 2001.10-2004.06 | MT | F | L | MPV FWD Z 16 SE | | GDS99069 | Drive Shaft | 29T | 22 | 22 | 52 | 97.5 | 584 | |
| | 2001.10-2004.06 | MT | F | R | MPV FWD Z 16 SE | | GDS44026 | Drive Shaft | 29T | 22 | 22 | 52 | 98 | 930 | |
| | 2001.10-2004.06 | MT | F | R | MPV FWD Z 16 SE | | GDS44075 | Drive Shaft | 29T | 22 | 22 | 52 | 97.5 | 926 | |
| | 2001.10-2004.06 | MT | F | L/R | MPV FWD Z 16 SE | | GCO44018 | Outer Joint | | 22 | 28 | 52.2 | 97.5 | 55 | O |
| | 2001.10-2004.06 | MT | F | L/R | MPV FWD Z 16 SE | | GCO44019 | Outer Joint | 29T | 22 | 28 | 52 | 97.5 | 57.5 | O |
| | 2001.10-2004.06 | MT | F | L/R | MPV FWD Z 16 SE | | GCI44003 | Inner Joint | | 22 | 28 | 34.95 | 57.5 | 83.5 | |
| | 2001.10-2004.06 | | F | L/R | MPV FWD Z 16 SE | | GCO44020 | Outer Joint | 29T | 22 | 28 | 52 | 97.5 | 57.5 | O |
| | 2001.10-2011.11 | 5MT | F | L | Box Body/MPV FWD Z 16 SE | | GDS44027 | Drive Shaft | 29T | 22 | 22 | 52 | 98 | 580 | |
| | 2001.10-2011.11 | 5MT | F | R | Box Body/MPV FWD Z 16 SE | | GDS44026 | Drive Shaft | 29T | 22 | 22 | 52 | 98 | 930 | |
| | 2001.10-2011.11 | 5MT | F | R | Box Body/MPV FWD Z 16 SE | | GDS99205 | Drive Shaft | | 22 | 22 | 52 | 97.5 | 930 | |
| | 2001.10-2011.11 | 5MT | F | L/R | Box Body/MPV FWD Z 16 SE | | GCI44003 | Inner Joint | | 22 | 28 | 34.95 | 57.5 | 83.5 | |
| | 2001.10-2011.11 | MT | F | L | Box Body/MPV FWD Z 16 SE | | GDS99069 | Drive Shaft | 29T | 22 | 22 | 52 | 97.5 | 584 | |
| | 2001.10-2011.11 | MT | F | R | Box Body/MPV FWD Z 16 SE | | GDS44075 | Drive Shaft | 29T | 22 | 22 | 52 | 97.5 | 926 | |
| | 2001.10-2011.11 | MT | F | R | Box Body/MPV FWD Z 16 SE | | GCO44018 | Outer Joint | | 22 | 28 | 52.2 | 97.5 | 55 | O |
| | 2001.10-2011.11 | MT | F | R | Box Body/MPV FWD Z 16 SE | | GCO44043 | Outer Joint | | 22 | 28 | 52 | 97.5 | 57.5 | O |
| | 2001.10-2011.11 | MT | F | L/R | Box Body/MPV FWD Z 16 SE | | GCO44019 | Outer Joint | 29T | 22 | 28 | 52 | 97.5 | 57.5 | O |
| | 2001.10-2011.11 | MT | F | L/R | Box Body/MPV FWD Z 16 SE | | GCO44020 | Outer Joint | 29T | 22 | 28 | 52 | 97.5 | 57.5 | O |
| | 2001.10-2011.11 | MT | F | R | Box Body/MPV FWD Z 16 SE | | GCI60001 | Inner Joint | | 22 | 28 | 34.9 | 57.5 | 96.5 | |

| | YEAR | TRANSM. | F/R | L/R | BODY STYLE & DRIVE TYPE & ENGINE | REMARKS | G-AP Ref. | PRODUCT | ABS | Technical Specifications | | | | | |
|---|---|---|---|---|---|---|---|---|---|---|---|---|---|---|---|
| | | | | | | | | | | A | B | C | H | L | P |
| **VAUXHALL** | | | | | | | | | | | | | | | |
| **Combo** | | | | | | | | | | | | | | | |
| 1.6 (66 kw) | 2011.11- | 5AT | F | L | Box Body/MPV FWD A 16 FDL | | GCI83548 | Inner Joint | | 24 | 24 | 29.75 | 86.5 | 99.5 | |
| | 2011.11- | MT | F | L | Box Body/MPV FWD A 16 FDL | Date from:2012.01;Shock Absorber System:Normal Suspension | GDS17076 | Drive Shaft | | 25 | 25 | 51 | 84.5 | 596 | |
| | 2011.11- | MT | F | R | Box Body/MPV FWD A 16 FDL | Date from:2012.01;Shock Absorber System:Normal Suspension | GDS17081 | Drive Shaft | | 25 | 25 | 51 | 84.5 | 966.5 | |
| | 2011.11- | MT | F | L/R | Box Body/MPV FWD A 16 FDL | Date from:2012.01;Shock Absorber System:Normal Suspension | GCO82025 | Outer Joint | | 25 | 26 | 51 | 84.5 | 64.5 | M |
| | 2011.11- | MT | F | R | Box Body/MPV FWD A 16 FDL | Date from:2012.01;Shock Absorber System:Normal Suspension | GCI18100 | Inner Joint | | 25 | 26 | 29.7 | 434 | 108 | |
| 1.6 (69 kw) | 2006.06-2010.09 | MT | F | L/R | MPV FWD Z 16 YNG | | GCO44020 | Outer Joint | 29T | 22 | 28 | 52 | 97.5 | 57.5 | O |
| | 2006.06-2012.02 | 5MT | F | L | Box Body/MPV FWD Z 16 YNG;Y 16 YNG | | GDS44027 | Drive Shaft | 29T | 22 | 22 | 52 | 98 | 580 | |
| | 2006.06-2012.02 | 5MT | F | R | Box Body/MPV FWD Z 16 YNG;Y 16 YNG | | GDS44026 | Drive Shaft | 29T | 22 | 22 | 52 | 98 | 930 | |
| | 2006.06-2012.02 | 5MT | F | L/R | Box Body/MPV FWD Z 16 YNG;Y 16 YNG | | GCI44003 | Inner Joint | | 22 | 28 | 34.95 | 57.5 | 83.5 | |
| | 2006.06-2012.02 | MT | F | L | Box Body/MPV FWD Z 16 YNG;Y 16 YNG | | GDS99069 | Drive Shaft | 29T | 22 | 22 | 52 | 97.5 | 584 | |
| | 2006.06-2012.02 | MT | F | L/R | Box Body/MPV FWD Z 16 YNG;Y 16 YNG | | GCO44018 | Outer Joint | | 22 | 28 | 52.2 | 97.5 | 55 | O |
| | 2006.06-2012.02 | MT | F | L/R | Box Body/MPV FWD Z 16 YNG;Y 16 YNG | | GCO44019 | Outer Joint | 29T | 22 | 28 | 52 | 97.5 | 57.5 | O |
| | 2006.06-2012.02 | MT | F | L/R | Box Body/MPV FWD Z 16 YNG;Y 16 YNG | | GCO44020 | Outer Joint | 29T | 22 | 28 | 52 | 97.5 | 57.5 | O |
| | 2006.06-2012.02 | | F | R | Box Body/MPV FWD Z 16 YNG;Y 16 YNG | | GDS44075 | Drive Shaft | 29T | 22 | 22 | 52 | 97.5 | 926 | |
| 1.6 (71 kw) | 2005.04-2012.02 | 5MT | F | L | Box Body/MPV FWD Z 16 YNG | | GDS44027 | Drive Shaft | 29T | 22 | 22 | 52 | 98 | 580 | |
| | 2005.04-2012.02 | 5MT | F | R | Box Body/MPV FWD Z 16 YNG | | GDS44026 | Drive Shaft | 29T | 22 | 22 | 52 | 98 | 930 | |
| | 2005.04-2012.02 | 5MT | F | L/R | Box Body/MPV FWD Z 16 YNG | | GCI44003 | Inner Joint | | 22 | 28 | 34.95 | 57.5 | 83.5 | |
| | 2005.04-2012.02 | MT | F | L | Box Body/MPV FWD Z 16 YNG | | GDS99069 | Drive Shaft | 29T | 22 | 22 | 52 | 97.5 | 584 | |
| | 2005.04-2012.02 | MT | F | L/R | Box Body/MPV FWD Z 16 YNG | | GCO44018 | Outer Joint | | 22 | 28 | 52.2 | 97.5 | 55 | O |
| | 2005.04-2012.02 | MT | F | L/R | Box Body/MPV FWD Z 16 YNG | | GCO44019 | Outer Joint | 29T | 22 | 28 | 52 | 97.5 | 57.5 | O |
| | 2005.04-2012.02 | MT | F | L/R | Box Body/MPV FWD Z 16 YNG | | GCO44020 | Outer Joint | 29T | 22 | 28 | 52 | 97.5 | 57.5 | O |
| | 2005.04-2012.02 | | F | R | Box Body/MPV FWD Z 16 YNG | | GDS44075 | Drive Shaft | 29T | 22 | 22 | 52 | 97.5 | 926 | |
| | 2005.04-2012.02 | MT | F | L/R | MPV FWD Z 16 YNG | | GCO44020 | Outer Joint | 29T | 22 | 28 | 52 | 97.5 | 57.5 | O |
| 1.6 (73 kw) | 2018.06-2020.04 | 5MT | F | L | Box Body/MPV FWD B 16 DT (DV6FD) | | GDS83616 | Drive Shaft | | 28 | 24 | 58.5 | 92.5 | 681 | |
| | 2018.06-2020.04 | 5MT | F | R | Box Body/MPV FWD B 16 DT (DV6FD) | | GDS83663 | Drive Shaft | | 28 | 24 | 58.5 | 92.5 | 919 | |
| | 2018.06-2020.04 | 5MT | F | L/R | Box Body/MPV FWD B 16 DT (DV6FD) | | GCO82273 | Outer Joint | | 28 | 34 | 58.5 | 92.5 | 56 | I |
| | 2018.06-2020.04 | 5MT | F | L | Box Body/MPV FWD B 16 DT (DV6FD) | | GCI82131 | Inner Joint | | 24 | 34 | 40 | 62 | 89 | |
| | 2018.06-2020.04 | 5MT | F | R | Box Body/MPV FWD B 16 DT (DV6FD) | | GCI82320 | Inner Joint | | 24 | 34 | 29.8 | 290 | 88 | |
| | 2018.06-2020.04 | 5MT | F | R | Box Body/MPV FWD B 16 DT (DV6FD) | | GCI82769 | Inner Joint | | 24 | 34 | 40 | 61 | 103 | |
| 1.6 (74 kw) | 2011.11- | MT | F | L | MPV Van FWD A 16 FDH | Date from:2012.01;Shock Absorber System:Normal Suspension | GDS17076 | Drive Shaft | | 25 | 25 | 51 | 84.5 | 596 | |
| | 2011.11- | MT | F | R | MPV Van FWD A 16 FDH | Date from:2012.01;Shock Absorber System:Normal Suspension | GDS17081 | Drive Shaft | | 25 | 25 | 51 | 84.5 | 966.5 | |
| | 2011.11- | MT | F | L/R | MPV Van FWD A 16 FDH | Date from:2012.01;Shock Absorber System:Normal Suspension | GCO82025 | Outer Joint | | 25 | 26 | 51 | 84.5 | 64.5 | M |
| | 2011.11- | MT | F | R | MPV Van FWD A 16 FDH | Date from:2012.01;Shock Absorber System:Normal Suspension | GCI18100 | Inner Joint | | 25 | 26 | 29.7 | 434 | 108 | |
| 1.6 (77 kw) | 2011.11- | 6MT | F | L | Box Body/MPV FWD A 16 FDH | Exhaust Emis:Euro 5,For vehicles with heavy duty suspension,For increased payload | GDS17152 | Drive Shaft | | 27 | 25 | 59 | 84.5 | 596 | |
| | 2011.11- | 6MT | F | L | Box Body/MPV FWD A 16 FDH | | GCI17031 | Inner Joint | | 25 | 26 | 32 | 59 | 110.5 | |
| | 2011.11- | MT | F | L | Box Body/MPV FWD A 16 FDH | Date from:2012.01;Shock Absorber System:Normal Suspension | GDS17076 | Drive Shaft | | 25 | 25 | 51 | 84.5 | 596 | |
| | 2011.11- | MT | F | R | Box Body/MPV FWD A 16 FDH | Date from:2012.01;Shock Absorber System:Normal Suspension | GDS17081 | Drive Shaft | | 25 | 25 | 51 | 84.5 | 966.5 | |
| | 2011.11- | MT | F | L/R | Box Body/MPV FWD A 16 FDH | Date from:2012.01;Shock Absorber System:Normal Suspension | GCO82025 | Outer Joint | | 25 | 26 | 51 | 84.5 | 64.5 | M |
| | 2011.11- | MT | F | R | Box Body/MPV FWD A 16 FDH | Date from:2012.01;Shock Absorber System:Normal Suspension | GCI18100 | Inner Joint | | 25 | 26 | 29.7 | 434 | 108 | |
| 1.7 (44 kw) | 1993.09-2001.10 | 5MT | F | L | MPV Van FWD X17D | | GDS44001 | Drive Shaft | 29T | 22 | 22 | 52 | 95 | 573 | |
| | 1993.09-2001.10 | 5MT | F | R | MPV Van FWD X17D | | GDS60002 | Drive Shaft | 29T | 22 | 22 | 52 | 95 | 926 | |
| | 1993.09-2001.10 | MT | F | L/R | MPV Van FWD X17D | | GCO44020 | Outer Joint | 29T | 22 | 28 | 52 | 97.5 | 57.5 | O |
| | 1993.09-2001.10 | | F | | MPV Van FWD X17D | | GCO44018 | Outer Joint | | 22 | 28 | 52.2 | 97.5 | 55 | O |
| | 1993.09-2001.10 | | F | | MPV Van FWD X17D | | GCO44019 | Outer Joint | 29T | 22 | 28 | 52 | 97.5 | 57.5 | O |
| 1.7 (48 kw) | 2001.09-2004.06 | 5MT | F | L | MPV FWD Y 17 DTL | | GDS99204 | Drive Shaft | | 22 | 22 | 52 | 97.5 | 584 | |
| | 2001.09-2004.06 | MT | F | L | MPV FWD Y 17 DTL | Chassis no. from:23000001 | GDS44027 | Drive Shaft | 29T | 22 | 22 | 52 | 98 | 580 | |
| | 2001.09-2004.06 | MT | F | L | MPV FWD Y 17 DTL | | GDS99069 | Drive Shaft | 29T | 22 | 22 | 52 | 97.5 | 584 | |
| | 2001.09-2004.06 | MT | F | R | MPV FWD Y 17 DTL | Chassis no. from:23000001 | GDS44026 | Drive Shaft | 29T | 22 | 22 | 52 | 98 | 930 | |
| | 2001.09-2004.06 | MT | F | R | MPV FWD Y 17 DTL | | GDS44075 | Drive Shaft | 29T | 22 | 22 | 52 | 97.5 | 926 | |
| | 2001.09-2004.06 | MT | F | L | MPV FWD Y 17 DTL | | GCO44043 | Outer Joint | | 22 | 28 | 52 | 97.5 | 57.5 | O |
| | 2001.09-2004.06 | MT | F | R | MPV FWD Y 17 DTL | | GCO44018 | Outer Joint | | 22 | 28 | 52.2 | 97.5 | 55 | O |
| | 2001.09-2004.06 | MT | F | L/R | MPV FWD Y 17 DTL | | GCO44019 | Outer Joint | 29T | 22 | 28 | 52 | 97.5 | 57.5 | O |
| | 2001.09-2004.06 | MT | F | L/R | MPV FWD Y 17 DTL | | GCO44020 | Outer Joint | 29T | 22 | 28 | 52 | 97.5 | 57.5 | O |
| | 2001.09-2004.06 | MT | F | L/R | MPV FWD Y 17 DTL | Chassis no. from:23000001 | GCI44003 | Inner Joint | | 22 | 28 | 34.95 | 57.5 | 83.5 | |
| | 2001.09-2011.11 | 5MT | F | L | Box Body/MPV FWD Y 17 DTL | Chassis no. from:23000001 | GDS44027 | Drive Shaft | 29T | 22 | 22 | 52 | 98 | 580 | |
| | 2001.09-2011.11 | 5MT | F | L | Box Body/MPV FWD Y 17 DTL | | GDS99204 | Drive Shaft | | 22 | 22 | 52 | 97.5 | 584 | |
| | 2001.09-2011.11 | 5MT | F | R | Box Body/MPV FWD Y 17 DTL | Chassis no. from:23000001 | GDS44026 | Drive Shaft | 29T | 22 | 22 | 52 | 98 | 930 | |
| | 2001.09-2011.11 | 5MT | F | R | Box Body/MPV FWD Y 17 DTL | | GDS99205 | Drive Shaft | | 22 | 22 | 52 | 97.5 | 930 | |
| | 2001.09-2011.11 | 5MT | F | L/R | Box Body/MPV FWD Y 17 DTL | Chassis no. from:23000001 | GCI44003 | Inner Joint | | 22 | 28 | 34.95 | 57.5 | 83.5 | |
| | 2001.09-2011.11 | MT | F | L | Box Body/MPV FWD Y 17 DTL | | GDS99069 | Drive Shaft | 29T | 22 | 22 | 52 | 97.5 | 584 | |
| | 2001.09-2011.11 | MT | F | R | Box Body/MPV FWD Y 17 DTL | | GDS44075 | Drive Shaft | 29T | 22 | 22 | 52 | 97.5 | 926 | |
| | 2001.09-2011.11 | MT | F | R | Box Body/MPV FWD Y 17 DTL | | GCO44043 | Outer Joint | | 22 | 28 | 52 | 97.5 | 57.5 | O |
| | 2001.09-2011.11 | MT | F | L/R | Box Body/MPV FWD Y 17 DTL | | GCO44018 | Outer Joint | | 22 | 28 | 52.2 | 97.5 | 55 | O |
| | 2001.09-2011.11 | MT | F | L/R | Box Body/MPV FWD Y 17 DTL | | GCO44019 | Outer Joint | 29T | 22 | 28 | 52 | 97.5 | 57.5 | O |
| | 2001.09-2011.11 | MT | F | L/R | Box Body/MPV FWD Y 17 DTL | | GCO44020 | Outer Joint | 29T | 22 | 28 | 52 | 97.5 | 57.5 | O |

| | YEAR | TRANSM. | F/R | L/R | BODY STYLE & DRIVE TYPE & ENGINE | REMARKS | G-AP Ref. | PRODUCT | ABS | Technical Specifications A | B | C | H | L | P |
|---|---|---|---|---|---|---|---|---|---|---|---|---|---|---|---|
| **VAUXHALL** | | | | | | | | | | | | | | | |
| **Combo** | | | | | | | | | | | | | | | |
| 1.7 (48 kw) | 2001.09-2011.11 | MT | F | R | Box Body/MPV FWD Y 17 DTL | | GCI60001 | Inner Joint | | 22 | 28 | 34.9 | 57.5 | 96.5 | |
| | 2001.09-2011.11 | | F | | Box Body/MPV FWD Y 17 DTL | | GCO44044 | Outer Joint | | 22 | 28 | 52 | 97.5 | 57.5 | O |
| 1.7 (55 kw) | 2001.10-2011.11 | 5MT | F | L | Box Body/MPV FWD Y 17 DT | | GDS44027 | Drive Shaft | 29T | 22 | 22 | 52 | 98 | 580 | |
| | 2001.10-2011.11 | 5MT | F | L | Box Body/MPV FWD Y 17 DT | | GDS82091 | Drive Shaft | 29T | 22 | 22 | 52 | 97.5 | 580 | |
| | 2001.10-2011.11 | 5MT | F | R | Box Body/MPV FWD Y 17 DT | | GDS44026 | Drive Shaft | 29T | 22 | 22 | 52 | 98 | 930 | |
| | 2001.10-2011.11 | 5MT | F | R | Box Body/MPV FWD Y 17 DT | | GDS82092 | Drive Shaft | 29T | 22 | 22 | 52 | 97.5 | 930 | |
| | 2001.10-2011.11 | 5MT | F | L/R | Box Body/MPV FWD Y 17 DT | | GCO44002 | Outer Joint | 29T | 22 | 23 | 52 | 97.5 | 61 | M |
| | 2001.10-2011.11 | MT | F | L | Box Body/MPV FWD Y 17 DT | | GDS99069 | Drive Shaft | 29T | 22 | 22 | 52 | 97.5 | 584 | |
| | 2001.10-2011.11 | MT | F | R | Box Body/MPV FWD Y 17 DT | | GDS44075 | Drive Shaft | 29T | 22 | 22 | 52 | 97.5 | 926 | |
| | 2001.10-2011.11 | MT | F | R | Box Body/MPV FWD Y 17 DT | | GCO44018 | Outer Joint | | 22 | 28 | 52.2 | 97.5 | 55 | O |
| | 2001.10-2011.11 | MT | F | L/R | Box Body/MPV FWD Y 17 DT | | GCO44019 | Outer Joint | 29T | 22 | 28 | 52 | 97.5 | 57.5 | O |
| | 2001.10-2011.11 | MT | F | L/R | Box Body/MPV FWD Y 17 DT | | GCO44020 | Outer Joint | 29T | 22 | 28 | 52 | 97.5 | 57.5 | O |
| | 2001.10-2011.11 | | F | L/R | Box Body/MPV FWD Y 17 DT | | GCI44009 | Inner Joint | | 22 | 23 | 35 | 57.5 | 96 | |
| | 2001.10-2012.02 | 5MT | F | L | MPV FWD Y 17 DT | | GDS82091 | Drive Shaft | 29T | 22 | 22 | 52 | 97.5 | 580 | |
| | 2001.10-2012.02 | 5MT | F | R | MPV FWD Y 17 DT | | GDS82092 | Drive Shaft | 29T | 22 | 22 | 52 | 97.5 | 930 | |
| | 2001.10-2012.02 | MT | F | L | MPV FWD Y 17 DT | | GDS44027 | Drive Shaft | 29T | 22 | 22 | 52 | 98 | 580 | |
| | 2001.10-2012.02 | MT | F | L | MPV FWD Y 17 DT | | GDS99069 | Drive Shaft | 29T | 22 | 22 | 52 | 97.5 | 584 | |
| | 2001.10-2012.02 | MT | F | R | MPV FWD Y 17 DT | | GDS44026 | Drive Shaft | 29T | 22 | 22 | 52 | 98 | 930 | |
| | 2001.10-2012.02 | MT | F | R | MPV FWD Y 17 DT | | GDS44075 | Drive Shaft | 29T | 22 | 22 | 52 | 97.5 | 926 | |
| | 2001.10-2012.02 | MT | F | L/R | MPV FWD Y 17 DT | | GCO44002 | Outer Joint | 29T | 22 | 23 | 52 | 97.5 | 61 | M |
| | 2001.10-2012.02 | MT | F | L/R | MPV FWD Y 17 DT | | GCI44009 | Inner Joint | | 22 | 23 | 35 | 57.5 | 96 | |
| 1.7 (74 kw) | 2004.12-2010.09 | 5MT | F | L | MPV FWD Z 17 DTH | | GDS44032 | Drive Shaft | 29T | 33 | 34 | 52 | 104 | 587.5 | |
| | 2004.12-2010.09 | 5MT | F | R | MPV FWD Z 17 DTH | | GDS60021 | Drive Shaft | 29T | 33 | 34 | 52 | 104 | 612 | |
| | 2004.12-2010.09 | 5MT | F | L/R | MPV FWD Z 17 DTH | | GCO44004 | Outer Joint | 29T | 33 | 24 | 52 | 104 | 64 | M |
| | 2004.12-2010.09 | 5MT | F | L | MPV FWD Z 17 DTH | | GCI21034 | Inner Joint | | 34 | 24 | 35 | 56.5 | 102 | |
| | 2004.12-2010.09 | 5MT | F | R | MPV FWD Z 17 DTH | | GCI60003 | Inner Joint | | 34 | 24 | 35.5 | | 117.5 | |
| | 2004.12-2011.11 | 5MT | F | L | Box Body/MPV FWD Z 17 DTH | | GDS44032 | Drive Shaft | 29T | 33 | 34 | 52 | 104 | 587.5 | |
| | 2004.12-2011.11 | 5MT | F | R | Box Body/MPV FWD Z 17 DTH | | GDS60021 | Drive Shaft | 29T | 33 | 34 | 52 | 104 | 612 | |
| | 2004.12-2011.11 | 5MT | F | L/R | Box Body/MPV FWD Z 17 DTH | | GCO44004 | Outer Joint | 29T | 33 | 24 | 52 | 104 | 64 | M |
| | 2004.12-2011.11 | 5MT | F | L | Box Body/MPV FWD Z 17 DTH | | GCI21034 | Inner Joint | | 34 | 24 | 35 | 56.5 | 102 | |
| | 2004.12-2011.11 | MT | F | R | Box Body/MPV FWD Z 17 DTH | | GCI60003 | Inner Joint | | 34 | 24 | 35.5 | | 117.5 | |
| **Combo-e** | | | | | | | | | | | | | | | |
| EV (100 kw) | 2021.06-2024.04 | ET | F | L | MPV FWD ZKX (ZK01) | | GDS57969 | Drive Shaft | | 28 | 37 | 58.5 | 92.5 | 675 | |
| | 2021.06-2024.04 | ET | F | R | MPV FWD ZKX (ZK01) | | GDS58244 | Drive Shaft | | 28 | 37 | 58.5 | 92.5 | 927 | |
| | 2021.06-2024.04 | ET | F | L | MPV FWD ZKX (ZK01) | | GCO83814 | Outer Joint | | 28 | 34 | 58.5 | 92.5 | 56 | I |
| | 2021.06-2024.04 | ET | F | L | MPV FWD ZKX (ZK01) | | GCI82301 | Inner Joint | | 37 | 34 | 40 | 65.5 | 89.5 | |
| | 2021.07-2024.04 | ET | F | L | Box Body/MPV FWD ZKX (ZK01) | | GDS57969 | Drive Shaft | | 28 | 37 | 58.5 | 92.5 | 675 | |
| | 2021.07-2024.04 | ET | F | R | Box Body/MPV FWD ZKX (ZK01) | | GDS58244 | Drive Shaft | | 28 | 37 | 58.5 | 92.5 | 927 | |
| | 2021.07-2024.04 | ET | F | L | Box Body/MPV FWD ZKX (ZK01) | | GCO83814 | Outer Joint | | 28 | 34 | 58.5 | 92.5 | 56 | I |
| | 2021.07-2024.04 | ET | F | L | Box Body/MPV FWD ZKX (ZK01) | | GCI82301 | Inner Joint | | 37 | 34 | 40 | 65.5 | 89.5 | |
| | 2024.05- | ET | F | L | Box Body/MPV FWD ZKU (ZK02) | | GDS57969 | Drive Shaft | | 28 | 37 | 58.5 | 92.5 | 675 | |
| | 2024.05- | ET | F | R | Box Body/MPV FWD ZKU (ZK02) | | GDS58244 | Drive Shaft | | 28 | 37 | 58.5 | 92.5 | 927 | |
| | 2024.05- | ET | F | L | Box Body/MPV FWD ZKU (ZK02) | | GCO83814 | Outer Joint | | 28 | 34 | 58.5 | 92.5 | 56 | I |
| | 2024.05- | ET | F | L | Box Body/MPV FWD ZKU (ZK02) | | GCI82301 | Inner Joint | | 37 | 34 | 40 | 65.5 | 89.5 | |
| | 2024.05- | ET | F | L | MPV FWD ZKU (ZK02) | | GDS57969 | Drive Shaft | | 28 | 37 | 58.5 | 92.5 | 675 | |
| | 2024.05- | ET | F | R | MPV FWD ZKU (ZK02) | | GDS58244 | Drive Shaft | | 28 | 37 | 58.5 | 92.5 | 927 | |
| | 2024.05- | ET | F | L | MPV FWD ZKU (ZK02) | | GCO83814 | Outer Joint | | 28 | 34 | 58.5 | 92.5 | 56 | I |
| | 2024.05- | ET | F | L | MPV FWD ZKU (ZK02) | | GCI82301 | Inner Joint | | 37 | 34 | 40 | 65.5 | 89.5 | |
| **Corsa** | | | | | | | | | | | | | | | |
| 1.0 (40 kw) | 1997.06-2000.08 | 5MT | F | L | Hatchback FWD X10XE | | GDS44036 | Drive Shaft | 29T | 22 | 22 | 52 | 95 | 565 | |
| | 1997.06-2000.08 | 5MT | F | R | Hatchback FWD X10XE | | GDS60002 | Drive Shaft | 29T | 22 | 22 | 52 | 95 | 926 | |
| | 1997.06-2000.08 | 5MT | F | L/R | Hatchback FWD X10XE | | GCO44013 | Outer Joint | 29T | 22 | 28 | 52 | 98 | 52 | O |
| | 1997.06-2000.08 | 5MT | F | L/R | Hatchback FWD X10XE | | GCO44014 | Outer Joint | 29T | 22 | 28 | 52 | 98 | 60 | I |
| | 1997.06-2000.08 | 5MT | F | L/R | Hatchback FWD X10XE | | GCI44004 | Inner Joint | | 22 | 22 | 34.95 | 57.5 | 103 | |
| | 1997.06-2000.08 | MT | F | L/R | Hatchback FWD X10XE | | GCO44018 | Outer Joint | | 22 | 28 | 52.2 | 97.5 | 55 | O |
| | 1997.06-2000.08 | MT | F | L/R | Hatchback FWD X10XE | | GCO44019 | Outer Joint | 29T | 22 | 28 | 52 | 97.5 | 57.5 | O |
| | 1997.06-2000.08 | MT | F | L/R | Hatchback FWD X10XE | | GCO44031 | Outer Joint | | 22 | 28 | 52 | 95.5 | 57.5 | I |
| 1.0 (43 kw) | 2000.09-2003.10 | 5MT/SAT | F | L/R | Hatchback FWD Z 10 XE | | GCI60001 | Inner Joint | | 22 | 28 | 34.9 | 57.5 | 96.5 | |
| | 2000.09-2003.10 | AT/MT | F | R | Hatchback FWD Z 10 XE | | GDS44075 | Drive Shaft | 29T | 22 | 22 | 52 | 97.5 | 926 | |
| | 2000.09-2003.10 | AT/MT/SAT/5MT | F | L | Hatchback FWD Z 10 XE | | GDS44027 | Drive Shaft | 29T | 22 | 22 | 52 | 98 | 580 | |
| | 2000.09-2003.10 | MT | F | L | Hatchback FWD Z 10 XE | | GDS99069 | Drive Shaft | 29T | 22 | 22 | 52 | 97.5 | 584 | |
| | 2000.09-2003.10 | MT | F | R | Hatchback FWD Z 10 XE | | GCO44018 | Outer Joint | | 22 | 28 | 52.2 | 97.5 | 55 | O |
| | 2000.09-2003.10 | MT | F | L/R | Hatchback FWD Z 10 XE | | GCO44019 | Outer Joint | 29T | 22 | 28 | 52 | 97.5 | 57.5 | O |
| | 2000.09-2003.10 | SAT/5MT | F | R | Hatchback FWD Z 10 XE | | GDS44026 | Drive Shaft | 29T | 22 | 22 | 52 | 98 | 930 | |
| | 2000.09-2003.10 | | F | L/R | Hatchback FWD Z 10 XE | | GCO44013 | Outer Joint | 29T | 22 | 28 | 52 | 98 | 52 | O |

| | YEAR | TRANSM. | F/R | L/R | BODY STYLE & DRIVE TYPE & ENGINE | REMARKS | G-AP Ref. | PRODUCT | ABS | Technical Specifications A | B | C | H | L | P |
|---|---|---|---|---|---|---|---|---|---|---|---|---|---|---|---|
| **VAUXHALL** | | | | | | | | | | | | | | | |
| **Corsa** | | | | | | | | | | | | | | | |
| 1.0 (43 kw) | 2000.09-2003.10 | | F | | Hatchback FWD Z 10 XE | | GCO44071 | Outer Joint | | 22 | 28 | 52 | 98 | 52 | O |
| 1.0 (44 kw) | 2003.11-2006.10 | 5MT/SAT | F | L/R | Hatchback FWD Z 10 XEP | | GCI60001 | Inner Joint | | 22 | 28 | 34.9 | 57.5 | 96.5 | |
| | 2003.11-2006.10 | MT/Semi-AT | F | L | Hatchback FWD Z 10 XEP | | GDS99069 | Drive Shaft | 29T | 22 | 22 | 52 | 97.5 | 584 | |
| | 2003.11-2006.10 | MT/Semi-AT | F | L/R | Hatchback FWD Z 10 XEP | | GCO44018 | Outer Joint | | 22 | 28 | 52.2 | 97.5 | 55 | O |
| | 2003.11-2006.10 | MT/Semi-AT | F | L/R | Hatchback FWD Z 10 XEP | | GCO44019 | Outer Joint | 29T | 22 | 28 | 52 | 97.5 | 57.5 | O |
| | 2003.11-2006.10 | SAT/5MT | F | L | Hatchback FWD Z 10 XEP | | GDS44027 | Drive Shaft | 29T | 22 | 22 | 52 | 98 | 580 | |
| | 2003.11-2006.10 | SAT/5MT | F | R | Hatchback FWD Z 10 XEP | | GDS44026 | Drive Shaft | 29T | 22 | 22 | 52 | 98 | 930 | |
| | 2003.11-2006.10 | | F | L | Hatchback FWD Z 10 XEP | | GDS44036 | Drive Shaft | 29T | 22 | 22 | 52 | 95 | 565 | |
| | 2003.11-2006.10 | | F | R | Hatchback FWD Z 10 XEP | | GDS44075 | Drive Shaft | 29T | 22 | 22 | 52 | 97.5 | 926 | |
| | 2003.11-2006.10 | | F | R | Hatchback FWD Z 10 XEP | | GDS60002 | Drive Shaft | 29T | 22 | 22 | 52 | 95 | 926 | |
| | 2003.11-2006.10 | | F | L/R | Hatchback FWD Z 10 XEP | | GCO44013 | Outer Joint | 29T | 22 | 28 | 52 | 98 | 52 | O |
| | 2003.11-2006.10 | | F | L/R | Hatchback FWD Z 10 XEP | | GCO44014 | Outer Joint | 29T | 22 | 28 | 52 | 98 | 60 | I |
| | 2006.08-2014.08 | 5MT | F | L | Hatchback FWD Z 10 XEP | | GDS44079 | Drive Shaft | | 22 | 22 | 51 | 79.5 | 615 | |
| | 2006.08-2014.08 | 5MT | F | R | Hatchback FWD Z 10 XEP | | GDS44078 | Drive Shaft | | 22 | 22 | 51 | 79.5 | 918 | |
| | 2006.08-2014.08 | 5MT | F | L/R | Hatchback FWD Z 10 XEP | Chassis no. to:84239420 | GCO17052 | Outer Joint | | 22 | 21 | 51.2 | 79.5 | 54 | M |
| | 2006.08-2014.08 | 5MT | F | L/R | Hatchback FWD Z 10 XEP | Chassis no. from:84239421 | GCO99018 | Outer Joint | | 22 | 27 | 51 | 79.5 | 54 | O |
| | 2006.08-2014.08 | AT/MT | F | L/R | Hatchback FWD Z 10 XEP | Chassis no. to:84239420 | GCO17014 | Outer Joint | | 22 | 21 | 51 | 79.5 | 54 | M |
| | 2006.08-2014.08 | AT/MT | F | L/R | Hatchback FWD Z 10 XEP | Chassis no. from:84239421;Manufacturer Restriction:GKN Make | GCO17089 | Outer Joint | | 22 | 20 | 51 | 79.5 | 51 | M |
| | 2006.08-2014.08 | MT | F | L | Hatchback FWD Z 10 XEP | | GDS60023 | Drive Shaft | | 22 | 22 | 51.2 | 79.5 | 615 | |
| | 2006.08-2014.08 | | F | L/R | Hatchback FWD Z 10 XEP | Chassis no. to:84239420;Chassis no. to:86099860 | GCI44013 | Inner Joint | | 22 | 21 | 35 | 57.5 | 93 | |
| 1.0 (48 kw) | 2010.01-2014.08 | AT/MT | F | L/R | Hatchback FWD A 10 XEP | | GCO17089 | Outer Joint | | 22 | 20 | 51 | 79.5 | 51 | M |
| | 2010.01-2014.08 | MT | F | L | Hatchback FWD A 10 XEP | | GDS44079 | Drive Shaft | | 22 | 22 | 51 | 79.5 | 615 | |
| | 2010.01-2014.08 | MT | F | L | Hatchback FWD A 10 XEP | | GDS60023 | Drive Shaft | | 22 | 22 | 51.2 | 79.5 | 615 | |
| | 2010.01-2014.08 | MT | F | R | Hatchback FWD A 10 XEP | | GDS44078 | Drive Shaft | | 22 | 22 | 51 | 79.5 | 918 | |
| | 2010.01-2014.08 | MT | F | L | Hatchback FWD A 10 XEP | | GCI44013 | Inner Joint | | 22 | 21 | 35 | 57.5 | 93 | |
| 1.0 (66 kw) | 2014.08- | 6MT | F | L | Hatchback FWD B 10 XFL;D 10 XFL;F 10 XFL | Chassis no. to:F4168927/F6058386 | GDS57709 | Drive Shaft | | 22 | 25 | 51 | 79 | 605 | |
| | 2014.08- | 6MT | F | L | Hatchback FWD B 10 XFL;D 10 XFL;F 10 XFL | Chassis no. to:F4168927/F6058386 | GCO17070 | Outer Joint | | 22 | 22 | 51 | 79 | 57.5 | M |
| | 2014.08- | 6MT | F | L/R | Hatchback FWD B 10 XFL;D 10 XFL;F 10 XFL | Chassis no. from:F4168928/F6058387 | GCO81547 | Outer Joint | | 25 | 22 | 51 | 84 | 57 | M |
| | 2014.08- | 6MT | F | L | Hatchback FWD B 10 XFL;D 10 XFL;F 10 XFL | Chassis no. to:F4168927/F6058386 | GCI83814 | Inner Joint | | 25 | 22 | 34.9 | 57 | 103 | |
| 1.0 (85 kw) | 2014.08- | 6MT | F | L | Hatchback FWD B 10 XFT;D 10 XFT | Chassis no. to:F4168927/F6058386 | GDS57709 | Drive Shaft | | 22 | 25 | 51 | 79 | 605 | |
| | 2014.08- | 6MT | F | L | Hatchback FWD B 10 XFT;D 10 XFT | Chassis no. to:F4168927/F6058386 | GCO17070 | Outer Joint | | 22 | 22 | 51 | 79 | 57.5 | M |
| | 2014.08- | 6MT | F | L/R | Hatchback FWD B 10 XFT;D 10 XFT | Chassis no. from:F4168928/F6058387 | GCO81547 | Outer Joint | | 25 | 22 | 51 | 84 | 57 | M |
| | 2014.08- | 6MT | F | L | Hatchback FWD B 10 XFT;D 10 XFT | Chassis no. to:F4168927/F6058386 | GCI83814 | Inner Joint | | 25 | 22 | 34.9 | 57 | 103 | |
| 1.2 (33 kw) | 1993.04-2000.08 | 4MT/5MT | F | L | Hatchback FWD C12NZ/X12SZ | | GDS44001 | Drive Shaft | 29T | 22 | 22 | 52 | 95 | 573 | |
| | 1993.04-2000.08 | 4MT/5MT | F | R | Hatchback FWD C12NZ/X12SZ | | GDS60002 | Drive Shaft | 29T | 22 | 22 | 52 | 95 | 926 | |
| | 1993.04-2000.08 | AT/MT | F | L/R | Hatchback FWD C12NZ/X12SZ | | GCO44046 | Outer Joint | | 22 | 28 | 52.2 | 97.5 | 55 | O |
| | 1993.04-2000.08 | MT | F | L/R | Hatchback FWD C12NZ/X12SZ | | GCO44020 | Outer Joint | 29T | 22 | 28 | 52 | 97.5 | 57.5 | O |
| | 1993.04-2000.08 | | F | | Hatchback FWD C12NZ/X12SZ | | GCO44018 | Outer Joint | | 22 | 28 | 52.2 | 97.5 | 55 | O |
| | 1993.04-2000.08 | | F | | Hatchback FWD C12NZ/X12SZ | | GCO44019 | Outer Joint | 29T | 22 | 28 | 52 | 97.5 | 57.5 | O |
| 1.2 (48 kw) | 1998.08-2000.08 | 4AT/5MT | F | R | Hatchback FWD X12XE | | GDS60002 | Drive Shaft | 29T | 22 | 22 | 52 | 95 | 926 | |
| | 1998.08-2000.08 | MT | F | L | Hatchback FWD X12XE | Date from:1998.08 | GDS44001 | Drive Shaft | 29T | 22 | 22 | 52 | 95 | 573 | |
| | 1998.08-2000.08 | MT | F | L/R | Hatchback FWD X12XE | Date from:1998.08 | GCO44020 | Outer Joint | 29T | 22 | 28 | 52 | 97.5 | 57.5 | O |
| | 1998.08-2000.08 | | F | | Hatchback FWD X12XE | | GCO44018 | Outer Joint | | 22 | 28 | 52.2 | 97.5 | 55 | O |
| | 1998.08-2000.08 | | F | | Hatchback FWD X12XE | | GCO44019 | Outer Joint | 29T | 22 | 28 | 52 | 97.5 | 57.5 | O |
| | 1998.08-2000.08 | | F | | Hatchback FWD X12XE | | GCI44003 | Inner Joint | | 22 | 28 | 34.95 | 57.5 | 83.5 | |
| 1.2 (51 kw) | 2010.06-2014.08 | 5MT | F | L | Hatchback FWD A 12 XEL | | GDS44079 | Drive Shaft | | 22 | 22 | 51 | 79.5 | 615 | |
| | 2010.06-2014.08 | 5MT | F | R | Hatchback FWD A 12 XEL | | GDS44078 | Drive Shaft | | 22 | 22 | 51 | 79.5 | 918 | |
| | 2010.06-2014.08 | AT/MT | F | L | Hatchback FWD A 12 XEL | | GDS60023 | Drive Shaft | | 22 | 22 | 51.2 | 79.5 | 615 | |
| | 2010.06-2014.08 | AT/MT | F | L/R | Hatchback FWD A 12 XEL | Date from:2011.01 | GCO17089 | Outer Joint | | 22 | 20 | 51 | 79.5 | 51 | M |
| | 2010.06-2014.08 | AT/MT | F | L | Hatchback FWD A 12 XEL | | GCI44013 | Inner Joint | | 22 | 21 | 35 | 57.5 | 93 | |
| | 2014.08- | MT | F | L | Hatchback FWD B 12 XEL | | GDS44079 | Drive Shaft | | 22 | 22 | 51 | 79.5 | 615 | |
| | 2014.08- | MT | F | L | Hatchback FWD B 12 XEL | | GDS60023 | Drive Shaft | | 22 | 22 | 51.2 | 79.5 | 615 | |
| | 2014.08- | MT | F | R | Hatchback FWD B 12 XEL | | GDS44078 | Drive Shaft | | 22 | 22 | 51 | 79.5 | 918 | |
| | 2014.08- | MT | F | L/R | Hatchback FWD B 12 XEL | | GCO17089 | Outer Joint | | 22 | 20 | 51 | 79.5 | 51 | M |
| | 2014.08- | MT | F | L | Hatchback FWD B 12 XEL | | GCI44013 | Inner Joint | | 22 | 21 | 35 | 57.5 | 93 | |
| 1.2 (55 kw) | 2000.09-2006.10 | 5MT | F | L/R | Hatchback FWD Z 12 XE | Chassis no. from:13999999/14999999/16999999 | GCI60001 | Inner Joint | | 22 | 28 | 34.9 | 57.5 | 96.5 | |
| | 2000.09-2006.10 | AT/MT | F | R | Hatchback FWD Z 12 XE | Chassis no. from:23000001/24000001/26000001;TJ | GDS44075 | Drive Shaft | 29T | 22 | 22 | 52 | 97.5 | 926 | |
| | 2000.09-2006.10 | AT/MT/SAT/5MT | F | L | Hatchback FWD Z 12 XE | Chassis no. from:23000001,24000001,26000001;Date to:2004.07;VL | GDS44027 | Drive Shaft | 29T | 22 | 22 | 52 | 98 | 580 | |
| | 2000.09-2006.10 | MT/Semi-AT | F | L | Hatchback FWD Z 12 XE | Chassis no. from:23000001,24000001,26000001;TJ | GDS99069 | Drive Shaft | 29T | 22 | 22 | 52 | 97.5 | 584 | |
| | 2000.09-2006.10 | MT/Semi-AT | F | R | Hatchback FWD Z 12 XE | | GCO44018 | Outer Joint | | 22 | 28 | 52.2 | 97.5 | 55 | O |
| | 2000.09-2006.10 | MT/Semi-AT | F | L/R | Hatchback FWD Z 12 XE | | GCO44019 | Outer Joint | 29T | 22 | 28 | 52 | 97.5 | 57.5 | O |
| | 2000.09-2006.10 | SAT/5MT | F | L | Hatchback FWD Z 12 XE | Chassis no. to:13999999/14999999/16999999;Date To:2004.07 | GDS44095 | Drive Shaft | 29T | 22 | 22 | 52 | 97 | 566 | |
| | 2000.09-2006.10 | SAT/5MT | F | R | Hatchback FWD Z 12 XE | Chassis no. from:23000001,24000001,26000001;Date to:2004.07;VL | GDS44026 | Drive Shaft | 29T | 22 | 22 | 52 | 98 | 930 | |
| | 2000.09-2006.10 | SAT/5MT | F | R | Hatchback FWD Z 12 XE | Chassis no. to:13999999/14999999/16999999;Date To:2004.07 | GDS44096 | Drive Shaft | 29T | 22 | 22 | 52 | 97 | 917 | |
| | 2000.09-2006.10 | SAT/5MT | F | L/R | Hatchback FWD Z 12 XE | Chassis no. from:23000001 | GCO44071 | Outer Joint | | 22 | 28 | 52 | 98 | 52 | O |

| | YEAR | TRANSM. | F/R | L/R | BODY STYLE & DRIVE TYPE & ENGINE | REMARKS | G-AP Ref. | PRODUCT | ABS | Technical Specifications A | B | C | H | L | P |
|---|---|---|---|---|---|---|---|---|---|---|---|---|---|---|---|
| **VAUXHALL** | | | | | | | | | | | | | | | |
| **Corsa** | | | | | | | | | | | | | | | |
| 1.2 (55 kw) | 2000.09-2006.10 | | F | L/R | Hatchback FWD Z 12 XE | | GCO44013 | Outer Joint | 29T | 22 | 28 | 52 | 98 | 52 | O |
| | 2001.08-2006.10 | 5MT | F | L | Hatchback FWD Z 12 XE | Chassis no. from:23000001/24000001/26000001;Date To:2004.07 | GDS44027 | Drive Shaft | 29T | 22 | 22 | 52 | 98 | 580 | |
| | 2001.08-2006.10 | 5MT | F | L | Hatchback FWD Z 12 XE | Chassis no. to:13999999/14999999/16999999;Date To:2004.07 | GDS44095 | Drive Shaft | 29T | 22 | 22 | 52 | 97 | 566 | |
| | 2001.08-2006.10 | 5MT | F | R | Hatchback FWD Z 12 XE | Chassis no. from:23000001/24000001/26000001;Date To:2004.07 | GDS44026 | Drive Shaft | 29T | 22 | 22 | 52 | 98 | 930 | |
| | 2001.08-2006.10 | 5MT | F | R | Hatchback FWD Z 12 XE | Chassis no. to:13999999/14999999/16999999;Date To:2004.07 | GDS44096 | Drive Shaft | 29T | 22 | 22 | 52 | 97 | 917 | |
| | 2001.08-2006.10 | 5MT | F | L/R | Hatchback FWD Z 12 XE | Chassis no. from:13999999/14999999/16999999 | GCI60001 | Inner Joint | | 22 | 28 | 34.9 | 57.5 | 96.5 | |
| | 2001.08-2006.10 | MT | F | R | Hatchback FWD Z 12 XE | Chassis no. from:23000001/26000001/24000001 | GDS44075 | Drive Shaft | 29T | 22 | 22 | 52 | 97.5 | 926 | |
| | 2001.08-2006.10 | MT/Semi-AT | F | L | Hatchback FWD Z 12 XE | | GDS99069 | Drive Shaft | 29T | 22 | 22 | 52 | 97.5 | 584 | |
| | 2001.08-2006.10 | MT/Semi-AT | F | L/R | Hatchback FWD Z 12 XE | | GCO44018 | Outer Joint | | 22 | 28 | 52.2 | 97.5 | 55 | O |
| | 2001.08-2006.10 | MT/Semi-AT | F | L/R | Hatchback FWD Z 12 XE | | GCO44019 | Outer Joint | 29T | 22 | 28 | 52 | 97.5 | 57.5 | O |
| | 2001.08-2006.10 | | F | L/R | Hatchback FWD Z 12 XE | | GCO44013 | Outer Joint | 29T | 22 | 28 | 52 | 98 | 52 | O |
| | 2001.08-2006.10 | | F | | Hatchback FWD Z 12 XE | | GCO44071 | Outer Joint | | 22 | 28 | 52 | 98 | 52 | O |
| | 2019.07- | 5MT | F | L | Hatchback FWD F 12 XEL (EB2FAD) | | GDS83112 | Drive Shaft | | 21 | 22 | 48.2 | 85.5 | 671 | |
| | 2019.07- | 5MT | F | R | Hatchback FWD F 12 XEL (EB2FAD) | | GDS83068 | Drive Shaft | | 21 | 22 | 48.2 | 85.5 | 890 | |
| | 2019.07- | 5MT | F | L/R | Hatchback FWD F 12 XEL (EB2FAD) | | GCO82279 | Outer Joint | | 25 | 34 | 55.7 | 84 | 55.5 | I |
| | 2019.07- | 5MT | F | L | Hatchback FWD F 12 XEL (EB2FAD) | | GCI82131 | Inner Joint | | 24 | 34 | 40 | 62 | 89 | |
| | 2019.07- | 5MT | F | R | Hatchback FWD F 12 XEL (EB2FAD) | | GCI82130 | Inner Joint | | 24 | 34 | 29.8 | 291 | 88 | |
| 1.2 (59 kw) | 2004.07-2006.10 | 5MT/SAT | F | L/R | Hatchback FWD Z 12 XEP | | GCI60001 | Inner Joint | | 22 | 28 | 34.9 | 57.5 | 96.5 | |
| | 2004.07-2006.10 | MT/Semi-AT | F | L | Hatchback FWD Z 12 XEP | TJ | GDS99069 | Drive Shaft | 29T | 22 | 22 | 52 | 97.5 | 584 | |
| | 2004.07-2006.10 | MT/Semi-AT | F | L/R | Hatchback FWD Z 12 XEP | | GCO44018 | Outer Joint | | 22 | 28 | 52.2 | 97.5 | 55 | O |
| | 2004.07-2006.10 | MT/Semi-AT | F | L/R | Hatchback FWD Z 12 XEP | | GCO44019 | Outer Joint | 29T | 22 | 28 | 52 | 97.5 | 57.5 | O |
| | 2004.07-2006.10 | SAT/5MT | F | L | Hatchback FWD Z 12 XEP | VL | GDS44027 | Drive Shaft | 29T | 22 | 22 | 52 | 98 | 580 | |
| | 2004.07-2006.10 | SAT/5MT | F | R | Hatchback FWD Z 12 XEP | VL | GDS44026 | Drive Shaft | 29T | 22 | 22 | 52 | 98 | 930 | |
| | 2004.07-2006.10 | | F | R | Hatchback FWD Z 12 XEP | TJ | GDS44075 | Drive Shaft | 29T | 22 | 22 | 52 | 97.5 | 926 | |
| | 2004.07-2006.10 | | F | L/R | Hatchback FWD Z 12 XEP | | GCO44013 | Outer Joint | 29T | 22 | 28 | 52 | 98 | 52 | O |
| | 2006.08-2014.08 | AT/MT | F | L/R | Hatchback FWD Z 12 XEP | Chassis no. to:84239420 | GCO17014 | Outer Joint | | 22 | 21 | 51 | 79.5 | 54 | M |
| | 2006.08-2014.08 | AT/MT | F | L/R | Hatchback FWD Z 12 XEP | Chassis no. from:84239421;Manufacturer Restriction:GKN Make | GCO17089 | Outer Joint | | 22 | 20 | 51 | 79.5 | 51 | M |
| | 2006.08-2014.08 | MT/Semi-AT | F | L | Hatchback FWD Z 12 XEP | | GDS44079 | Drive Shaft | | 22 | 22 | 51 | 79.5 | 615 | |
| | 2006.08-2014.08 | MT/Semi-AT | F | L | Hatchback FWD Z 12 XEP | | GDS60023 | Drive Shaft | | 22 | 22 | 51.2 | 79.5 | 615 | |
| | 2006.08-2014.08 | MT/Semi-AT | F | R | Hatchback FWD Z 12 XEP | | GDS44078 | Drive Shaft | | 22 | 22 | 51 | 79.5 | 918 | |
| | 2006.08-2014.08 | MT/Semi-AT | F | L/R | Hatchback FWD Z 12 XEP | Chassis no. to:84239420 | GCO17052 | Outer Joint | | 22 | 21 | 51.2 | 79.5 | 54 | M |
| | 2006.08-2014.08 | MT/Semi-AT | F | L/R | Hatchback FWD Z 12 XEP | Chassis no. from:84239421 | GCO99018 | Outer Joint | | 22 | 27 | 51 | 79.5 | 54 | O |
| | 2006.08-2014.08 | | F | L/R | Hatchback FWD Z 12 XEP | Chassis no. to:84239420;Chassis no. to:86099860 | GCI44013 | Inner Joint | | 22 | 21 | 35 | 57.5 | 93 | |
| | 2009.09-2014.08 | AT/MT | F | L | Hatchback FWD Z 12 XEP | | GDS60023 | Drive Shaft | | 22 | 22 | 51.2 | 79.5 | 615 | |
| | 2009.09-2014.08 | AT/MT | F | L/R | Hatchback FWD Z 12 XEP | | GCO17089 | Outer Joint | | 22 | 20 | 51 | 79.5 | 51 | M |
| | 2009.09-2014.08 | MT/Semi-AT | F | L | Hatchback FWD Z 12 XEP | | GDS44079 | Drive Shaft | | 22 | 22 | 51 | 79.5 | 615 | |
| | 2009.09-2014.08 | MT/Semi-AT | F | R | Hatchback FWD Z 12 XEP | | GDS44078 | Drive Shaft | | 22 | 22 | 51 | 79.5 | 918 | |
| | 2009.09-2014.08 | MT/Semi-AT | F | L/R | Hatchback FWD Z 12 XEP | | GCO17034 | Outer Joint | | 22 | 21 | 51 | 79.5 | 54 | M |
| | 2009.09-2014.08 | MT/Semi-AT | F | L/R | Hatchback FWD Z 12 XEP | | GCO99018 | Outer Joint | | 22 | 27 | 51 | 79.5 | 54 | O |
| | 2009.09-2014.08 | | F | L/R | Hatchback FWD Z 12 XEP | Chassis no. to:84239420 | GCO17052 | Outer Joint | | 22 | 21 | 51.2 | 79.5 | 54 | M |
| | 2009.09-2014.08 | | F | L/R | Hatchback FWD Z 12 XEP | Chassis no. to:84239420;Chassis no. to:86099860 | GCI44013 | Inner Joint | | 22 | 21 | 35 | 57.5 | 93 | |
| 1.2 (63 kw) | 2009.12-2014.08 | 5AT/5MT | F | L | Hatchback FWD A 12 XER | | GDS44079 | Drive Shaft | | 22 | 22 | 51 | 79.5 | 615 | |
| | 2009.12-2014.08 | 5AT/5MT | F | R | Hatchback FWD A 12 XER | | GDS44078 | Drive Shaft | | 22 | 22 | 51 | 79.5 | 918 | |
| | 2009.12-2014.08 | 5AT/5MT | F | L | Hatchback FWD A 12 XER | | GCO17089 | Outer Joint | | 22 | 20 | 51 | 79.5 | 51 | M |
| | 2009.12-2014.08 | MT | F | L | Hatchback FWD A 12 XER | | GDS60023 | Drive Shaft | | 22 | 22 | 51.2 | 79.5 | 615 | |
| | 2009.12-2014.08 | MT | F | L | Hatchback FWD A 12 XER | | GCI44013 | Inner Joint | | 22 | 21 | 35 | 57.5 | 93 | |
| | 2011.08-2014.08 | 5MT | F | L | Hatchback FWD A 12 XER | | GDS44079 | Drive Shaft | | 22 | 22 | 51 | 79.5 | 615 | |
| | 2011.08-2014.08 | 5MT | F | R | Hatchback FWD A 12 XER | | GDS44078 | Drive Shaft | | 22 | 22 | 51 | 79.5 | 918 | |
| | 2011.08-2014.08 | AT/MT | F | L/R | Hatchback FWD A 12 XER | | GCO17089 | Outer Joint | | 22 | 20 | 51 | 79.5 | 51 | M |
| | 2011.08-2014.08 | MT | F | L | Hatchback FWD A 12 XER | | GDS60023 | Drive Shaft | | 22 | 22 | 51.2 | 79.5 | 615 | |
| | 2011.08-2014.08 | MT | F | L | Hatchback FWD A 12 XER | | GCI44013 | Inner Joint | | 22 | 21 | 35 | 57.5 | 93 | |
| 1.2 (74 kw) | 2019.07- | 6MT | F | L | Hatchback FWD F 12 XHL (EB2ADTD) | | GDS83116 | Drive Shaft | | 25 | 24 | 55.7 | 84 | 655 | |
| | 2019.07- | 6MT | F | R | Hatchback FWD F 12 XHL (EB2ADTD) | | GDS83115 | Drive Shaft | | 25 | 24 | 55.7 | 84 | 880 | |
| | 2019.07- | 6MT | F | L | Hatchback FWD F 12 XHL (EB2ADTD) | | GCI82131 | Inner Joint | | 24 | 34 | 40 | 62 | 89 | |
| | 2019.07- | 6MT | F | R | Hatchback FWD F 12 XHL (EB2ADTD) | | GCI82130 | Inner Joint | | 24 | 34 | 29.8 | 291 | 88 | |
| | 2019.07- | 8AT | F | L | Hatchback FWD F 12 XHL (EB2ADTD) | | GDS83113 | Drive Shaft | | 25 | 37 | 55.7 | 84 | 623 | |
| | 2019.07- | 8AT | F | R | Hatchback FWD F 12 XHL (EB2ADTD) | | GDS83114 | Drive Shaft | | 25 | 37 | 55.7 | 84 | 880 | |
| | 2019.07- | 8AT | F | L | Hatchback FWD F 12 XHL (EB2ADTD) | | GCI82119 | Inner Joint | | 37 | 34 | 41.5 | 58.5 | 94 | |
| | 2019.07- | 8AT | F | R | Hatchback FWD F 12 XHL (EB2ADTD) | | GCI82118 | Inner Joint | | 37 | 34 | | 290 | 88 | |
| | 2019.07- | 8AT/6MT | F | L/R | Hatchback FWD F 12 XHL (EB2ADTD) | | GCO82279 | Outer Joint | | 25 | 34 | 55.7 | 84 | 55.5 | I |
| 1.2 (96 kw) | 2020.11- | 8AT | F | L | Hatchback FWD F 12 XHT (EB2ADTS) | | GDS83113 | Drive Shaft | | 25 | 37 | 55.7 | 84 | 623 | |
| | 2020.11- | 8AT | F | R | Hatchback FWD F 12 XHT (EB2ADTS) | | GDS83114 | Drive Shaft | | 25 | 37 | 55.7 | 84 | 880 | |
| | 2020.11- | 8AT | F | L/R | Hatchback FWD F 12 XHT (EB2ADTS) | | GCO82279 | Outer Joint | | 25 | 34 | 55.7 | 84 | 55.5 | I |
| | 2020.11- | 8AT | F | L | Hatchback FWD F 12 XHT (EB2ADTS) | | GCI82119 | Inner Joint | | 37 | 34 | 41.5 | 58.5 | 94 | |
| | 2020.11- | 8AT | F | R | Hatchback FWD F 12 XHT (EB2ADTS) | | GCI82118 | Inner Joint | | 37 | 34 | | 290 | 88 | |

| | YEAR | TRANSM. | F/R | L/R | BODY STYLE & DRIVE TYPE & ENGINE | REMARKS | G-AP Ref. | PRODUCT | ABS | Technical Specifications A | B | C | H | L | P |
|---|---|---|---|---|---|---|---|---|---|---|---|---|---|---|---|
| **VAUXHALL** | | | | | | | | | | | | | | | |
| **Corsa** | | | | | | | | | | | | | | | |
| 1.2 (100 kw) | 2024.01- | 6DCT | F | R | Hatchback FWD HPY (EB2LTDH2) | | GDS83114 | Drive Shaft | | 25 | 37 | 55.7 | 84 | 880 | |
| | 2024.01- | 6DCT | F | R | Hatchback FWD HPY (EB2LTDH2) | | GCI82118 | Inner Joint | | 37 | 34 | | 290 | 88 | |
| 1.3 (51 kw) | 2003.10-2007.04 | 5MT/SAT | F | L | Hatchback FWD Z 13 DT;Y 13 DT | | GDS82091 | Drive Shaft | 29T | 22 | 22 | 52 | 97.5 | 580 | |
| | 2003.10-2007.04 | 5MT/SAT | F | R | Hatchback FWD Z 13 DT;Y 13 DT | | GDS82092 | Drive Shaft | 29T | 22 | 22 | 52 | 97.5 | 930 | |
| | 2003.10-2007.04 | 5MT/SAT | F | L/R | Hatchback FWD Z 13 DT;Y 13 DT | | GCI44009 | Inner Joint | | 22 | 23 | 35 | 57.5 | 96 | |
| | 2003.10-2007.04 | AT/MT | F | L | Hatchback FWD Z 13 DT;Y 13 DT | | GDS99069 | Drive Shaft | 29T | 22 | 22 | 52 | 97.5 | 584 | |
| | 2003.10-2007.04 | AT/MT | F | L/R | Hatchback FWD Z 13 DT;Y 13 DT | Date from:2004.01 | GCO44020 | Outer Joint | 29T | 22 | 28 | 52 | 97.5 | 57.5 | O |
| | 2003.10-2007.04 | MT | F | R | Hatchback FWD Z 13 DT;Y 13 DT | | GDS44075 | Drive Shaft | 29T | 22 | 22 | 52 | 97.5 | 926 | |
| | 2003.10-2007.04 | MT | F | R | Hatchback FWD Z 13 DT;Y 13 DT | | GCO44018 | Outer Joint | | 22 | 28 | 52.2 | 97.5 | 55 | O |
| | 2003.10-2007.04 | MT | F | R | Hatchback FWD Z 13 DT;Y 13 DT | | GCO44043 | Outer Joint | | 22 | 28 | 52 | 97.5 | 57.5 | O |
| | 2003.10-2007.04 | MT/Semi-AT | F | L/R | Hatchback FWD Z 13 DT;Y 13 DT | | GCO44019 | Outer Joint | 29T | 22 | 28 | 52 | 97.5 | 57.5 | O |
| | 2003.10-2007.04 | SAT/5MT | F | L | Hatchback FWD Z 13 DT;Y 13 DT | | GDS44027 | Drive Shaft | 29T | 22 | 22 | 52 | 98 | 580 | |
| | 2003.10-2007.04 | SAT/5MT | F | R | Hatchback FWD Z 13 DT;Y 13 DT | | GDS44026 | Drive Shaft | 29T | 22 | 22 | 52 | 98 | 930 | |
| | 2003.10-2007.04 | SAT/5MT | F | R | Hatchback FWD Z 13 DT;Y 13 DT | | GDS99205 | Drive Shaft | | 22 | 22 | 52 | 97.5 | 930 | |
| 1.3 (55 kw) | 2006.08-2014.08 | 5MT | F | L | Hatchback FWD Z 13 DTJ;A 13 DTC | | GDS44040 | Drive Shaft | | 25 | 22 | 51 | 84.5 | 616 | |
| | 2006.08-2014.08 | 5MT | F | R | Hatchback FWD Z 13 DTJ;A 13 DTC | For Engine code:Z13DTJ | GDS44042 | Drive Shaft | | 25 | 22 | 51 | 84.5 | 920 | |
| | 2006.08-2014.08 | 5MT | F | R | Hatchback FWD Z 13 DTJ;A 13 DTC | For Engine code:A13DTC | GDS84460 | Drive Shaft | | 25 | 22 | 51 | 84 | 923 | |
| | 2006.08-2014.08 | 5MT | F | L/R | Hatchback FWD Z 13 DTJ;A 13 DTC | For Engine code:Z13DTJ | GCO17053 | Outer Joint | | 25 | 23 | 51 | 84.5 | 60 | M |
| | 2006.08-2014.08 | 5MT | F | L/R | Hatchback FWD Z 13 DTJ;A 13 DTC | For Engine code:A13DTC | GCO81547 | Outer Joint | | 25 | 22 | 51 | 84 | 57 | M |
| | 2006.08-2014.08 | 5MT | F | L | Hatchback FWD Z 13 DTJ;A 13 DTC | For Engine code:Z13DTJ | GCI44009 | Inner Joint | | 22 | 23 | 35 | 57.5 | 96 | |
| | 2006.08-2014.08 | 5MT | F | R | Hatchback FWD Z 13 DTJ;A 13 DTC | For Engine code:Z13DTJ | GCI44017 | Inner Joint | | 22 | 23 | 35 | 57.5 | 116 | |
| | 2014.08- | 5MT | F | R | Hatchback FWD B 13 DTC;B 13 DTN | | GDS84460 | Drive Shaft | | 25 | 22 | 51 | 84 | 923 | |
| | 2014.08- | 5MT | F | L/R | Hatchback FWD B 13 DTC;B 13 DTN | | GCO81547 | Outer Joint | | 25 | 22 | 51 | 84 | 57 | M |
| | 2014.08- | 5MT | F | R | Hatchback FWD B 13 DTC;B 13 DTN | | GCI44013 | Inner Joint | | 22 | 21 | 35 | 57.5 | 93 | |
| | 2014.08- | MT | F | L | Hatchback FWD B 13 DTC;B 13 DTN | | GDS82511 | Drive Shaft | | 25 | 22 | 51 | 84 | 607 | |
| 1.3 (66 kw) | 2006.08-2014.08 | 6MT | F | L | Hatchback FWD Z 13 DTH | | GDS17070 | Drive Shaft | | 25 | 25 | 51 | 84.5 | 576 | |
| | 2006.08-2014.08 | 6MT | F | L | Hatchback FWD Z 13 DTH | | GCI44014 | Inner Joint | | 25 | 23 | 34.9 | 57.5 | 102 | |
| | 2006.08-2014.08 | MT/Semi-AT | F | R | Hatchback FWD Z 13 DTH | | GDS17071 | Drive Shaft | | 25 | 25 | 51 | 84.5 | 952 | |
| | 2006.08-2014.08 | MT/Semi-AT | F | L/R | Hatchback FWD Z 13 DTH | | GCO17053 | Outer Joint | | 25 | 23 | 51 | 84.5 | 60 | M |
| | 2006.08-2014.08 | MT/Semi-AT | F | R | Hatchback FWD Z 13 DTH | | GCI44012 | Inner Joint | | 25 | 23 | 34.9 | 56.5 | 118 | |
| 1.3 (70 kw) | 2010.07-2014.08 | 5MT | F | L | Hatchback FWD A 13 DTE;Z 13 DTE;A 13 DTR | For Engine code:A13DTE/Z13DTE | GDS44040 | Drive Shaft | | 25 | 22 | 51 | 84.5 | 616 | |
| | 2010.07-2014.08 | 5MT | F | R | Hatchback FWD A 13 DTE;Z 13 DTE;A 13 DTR | For Engine code:A13DTE/Z13DTE | GDS84460 | Drive Shaft | | 25 | 22 | 51 | 84 | 923 | |
| | 2010.07-2014.08 | 5MT | F | L/R | Hatchback FWD A 13 DTE;Z 13 DTE;A 13 DTR | For Engine code:A13DTE/Z13DTE | GCO81547 | Outer Joint | | 25 | 22 | 51 | 84 | 57 | M |
| | 2010.07-2014.08 | 6MT | F | L | Hatchback FWD A 13 DTE;Z 13 DTE;A 13 DTR | For Engine code:A13DTR | GDS17070 | Drive Shaft | | 25 | 25 | 51 | 84.5 | 576 | |
| | 2010.07-2014.08 | 6MT | F | R | Hatchback FWD A 13 DTE;Z 13 DTE;A 13 DTR | For Engine code:A13DTR | GDS17071 | Drive Shaft | | 25 | 25 | 51 | 84.5 | 952 | |
| | 2010.07-2014.08 | 6MT | F | L/R | Hatchback FWD A 13 DTE;Z 13 DTE;A 13 DTR | For Engine code:A13DTR | GCO17053 | Outer Joint | | 25 | 23 | 51 | 84.5 | 60 | M |
| | 2010.07-2014.08 | 6MT | F | L | Hatchback FWD A 13 DTE;Z 13 DTE;A 13 DTR | | GCI44014 | Inner Joint | | 25 | 23 | 34.9 | 57.5 | 102 | |
| | 2010.07-2014.08 | 6MT | F | R | Hatchback FWD A 13 DTE;Z 13 DTE;A 13 DTR | | GCI44012 | Inner Joint | | 25 | 23 | 34.9 | 56.5 | 118 | |
| | 2014.08- | 5AT/5MT | F | R | Hatchback FWD B 13 DTE;B 13 DTR | | GDS84460 | Drive Shaft | | 25 | 22 | 51 | 84 | 923 | |
| | 2014.08- | 5AT/5MT | F | L/R | Hatchback FWD B 13 DTE;B 13 DTR | | GCO81547 | Outer Joint | | 25 | 22 | 51 | 84 | 57 | M |
| | 2014.08- | 5AT/5MT | F | R | Hatchback FWD B 13 DTE;B 13 DTR | | GCI44013 | Inner Joint | | 22 | 21 | 35 | 57.5 | 93 | |
| | 2014.08- | MT | F | L | Hatchback FWD B 13 DTE;B 13 DTR | | GDS82511 | Drive Shaft | | 25 | 22 | 51 | 84 | 607 | |
| 1.4 (44 kw) | 1993.04-2000.08 | 4AT/5MT | F | L | Hatchback FWD C14NZ/X14SZ | | GDS44001 | Drive Shaft | 29T | 22 | 22 | 52 | 95 | 573 | |
| | 1993.04-2000.08 | 4AT/5MT | F | R | Hatchback FWD C14NZ/X14SZ | | GDS60002 | Drive Shaft | 29T | 22 | 22 | 52 | 95 | 926 | |
| | 1993.04-2000.08 | AT/MT | F | L/R | Hatchback FWD C14NZ/X14SZ | | GCO44046 | Outer Joint | | 22 | 28 | 52.2 | 97.5 | 55 | O |
| | 1993.04-2000.08 | MT | F | L/R | Hatchback FWD C14NZ/X14SZ | | GCO44020 | Outer Joint | 29T | 22 | 28 | 52 | 97.5 | 57.5 | O |
| | 1993.04-2000.08 | | F | | Hatchback FWD C14NZ/X14SZ | | GCO44018 | Outer Joint | | 22 | 28 | 52.2 | 97.5 | 55 | O |
| | 1993.04-2000.08 | | F | | Hatchback FWD C14NZ/X14SZ | | GCO44019 | Outer Joint | 29T | 22 | 28 | 52 | 97.5 | 57.5 | O |
| 1.4 (55 kw) | 2014.09- | 5MT | F | L/R | Hatchback FWD B 14 XEJ;D 14 XEJ | | GCO17052 | Outer Joint | | 22 | 21 | 51.2 | 79.5 | 54 | M |
| | 2014.09- | AT/MT | F | L/R | Hatchback FWD B 14 XEJ;D 14 XEJ | | GCO17014 | Outer Joint | | 22 | 21 | 51 | 79.5 | 54 | M |
| | 2014.09- | MT | F | L | Hatchback FWD B 14 XEJ;D 14 XEJ | | GDS44079 | Drive Shaft | | 22 | 22 | 51 | 79.5 | 615 | |
| | 2014.09- | MT | F | L | Hatchback FWD B 14 XEJ;D 14 XEJ | | GDS60023 | Drive Shaft | | 22 | 22 | 51.2 | 79.5 | 615 | |
| | 2014.09- | MT | F | R | Hatchback FWD B 14 XEJ;D 14 XEJ | | GDS44078 | Drive Shaft | | 22 | 22 | 51 | 79.5 | 918 | |
| | 2014.09- | MT | F | L/R | Hatchback FWD B 14 XEJ;D 14 XEJ | | GCO17053 | Outer Joint | | 25 | 23 | 51 | 84.5 | 60 | M |
| | 2014.09- | MT | F | L/R | Hatchback FWD B 14 XEJ;D 14 XEJ | | GCO17089 | Outer Joint | | 22 | 20 | 51 | 79.5 | 51 | M |
| | 2014.09- | MT | F | L | Hatchback FWD B 14 XEJ;D 14 XEJ | | GCI44013 | Inner Joint | | 22 | 21 | 35 | 57.5 | 93 | |
| 1.4 (60 kw) | 1993.04-1996.12 | 5MT | F | L | Hatchback FWD C14SE | | GDS44001 | Drive Shaft | 29T | 22 | 22 | 52 | 95 | 573 | |
| | 1993.04-1996.12 | 5MT | F | R | Hatchback FWD C14SE | | GDS60002 | Drive Shaft | 29T | 22 | 22 | 52 | 95 | 926 | |
| | 1993.04-1996.12 | AT/MT | F | L/R | Hatchback FWD C14SE | | GCO44046 | Outer Joint | | 22 | 28 | 52.2 | 97.5 | 55 | O |
| | 1993.04-1996.12 | MT | F | L/R | Hatchback FWD C14SE | Date to:1996.12 | GCO44020 | Outer Joint | 29T | 22 | 28 | 52 | 97.5 | 57.5 | O |
| | 1993.04-1996.12 | | F | | Hatchback FWD C14SE | | GCO44018 | Outer Joint | | 22 | 28 | 52.2 | 97.5 | 55 | O |
| | 1993.04-1996.12 | | F | | Hatchback FWD C14SE | | GCO44019 | Outer Joint | 29T | 22 | 28 | 52 | 97.5 | 57.5 | O |
| 1.4 (66 kw) | 1994.08-2000.08 | 4AT/5MT | F | L | Hatchback FWD X14XE | | GDS44001 | Drive Shaft | 29T | 22 | 22 | 52 | 95 | 573 | |
| | 1994.08-2000.08 | 4AT/5MT | F | R | Hatchback FWD X14XE | | GDS60002 | Drive Shaft | 29T | 22 | 22 | 52 | 95 | 926 | |
| | 1994.08-2000.08 | AT/MT | F | L/R | Hatchback FWD X14XE | | GCO44046 | Outer Joint | | 22 | 28 | 52.2 | 97.5 | 55 | O |

| | YEAR | TRANSM. | F/R | L/R | BODY STYLE & DRIVE TYPE & ENGINE | REMARKS | G-AP Ref. | PRODUCT | ABS | Technical Specifications A | B | C | H | L | P |
|---|---|---|---|---|---|---|---|---|---|---|---|---|---|---|---|
| **VAUXHALL** | | | | | | | | | | | | | | | |
| **Corsa** | | | | | | | | | | | | | | | |
| 1.4 (66 kw) | 1994.08-2000.08 | MT | F | L/R | Hatchback FWD X14XE | | GCO44020 | Outer Joint | 29T | 22 | 28 | 52 | 97.5 | 57.5 | O |
| | 2000.09-2006.10 | 5MT | F | L/R | Hatchback FWD Z 14 XE | Chassis no. to:13999999/14999999/16999999 | GCI60001 | Inner Joint | | 22 | 28 | 34.9 | 57.5 | 96.5 | |
| | 2000.09-2006.10 | 5MT/SAT | F | L | Hatchback FWD Z 14 XE | Chassis no. to:13999999/14999999/16999999 | GDS82091 | Drive Shaft | 29T | 22 | 22 | 52 | 97.5 | 580 | |
| | 2000.09-2006.10 | AT/MT | F | L/R | Hatchback FWD Z 14 XE | | GCO44020 | Outer Joint | 29T | 22 | 28 | 52 | 97.5 | 57.5 | O |
| | 2000.09-2006.10 | MT | F | L | Hatchback FWD Z 14 XE | | GDS44001 | Drive Shaft | 29T | 22 | 22 | 52 | 95 | 573 | |
| | 2000.09-2006.10 | MT | F | R | Hatchback FWD Z 14 XE | | GDS44075 | Drive Shaft | 29T | 22 | 22 | 52 | 97.5 | 926 | |
| | 2000.09-2006.10 | MT | F | R | Hatchback FWD Z 14 XE | | GDS60002 | Drive Shaft | 29T | 22 | 22 | 52 | 95 | 926 | |
| | 2000.09-2006.10 | MT | F | R | Hatchback FWD Z 14 XE | | GCO44043 | Outer Joint | | 22 | 28 | 52 | 97.5 | 57.5 | O |
| | 2000.09-2006.10 | MT | F | L/R | Hatchback FWD Z 14 XE | | GCO44044 | Outer Joint | | 22 | 28 | 52 | 97.5 | 57.5 | O |
| | 2000.09-2006.10 | MT/Semi-AT | F | L | Hatchback FWD Z 14 XE | | GDS99069 | Drive Shaft | 29T | 22 | 22 | 52 | 97.5 | 584 | |
| | 2000.09-2006.10 | MT/Semi-AT | F | R | Hatchback FWD Z 14 XE | | GCO44018 | Outer Joint | | 22 | 28 | 52.2 | 97.5 | 55 | O |
| | 2000.09-2006.10 | MT/Semi-AT | F | L/R | Hatchback FWD Z 14 XE | | GCO44019 | Outer Joint | 29T | 22 | 28 | 52 | 97.5 | 57.5 | O |
| | 2000.09-2006.10 | SAT/5MT | F | L | Hatchback FWD Z 14 XE | | GDS44027 | Drive Shaft | 29T | 22 | 22 | 52 | 98 | 580 | |
| | 2000.09-2006.10 | SAT/5MT | F | R | Hatchback FWD Z 14 XE | | GDS44026 | Drive Shaft | 29T | 22 | 22 | 52 | 98 | 930 | |
| | 2000.09-2006.10 | SAT/5MT | F | R | Hatchback FWD Z 14 XE | | GDS99205 | Drive Shaft | | 22 | 22 | 52 | 97.5 | 930 | |
| | 2003.06-2006.10 | 5MT/SAT | F | R | Hatchback FWD Z 14 XEP | | GCI60001 | Inner Joint | | 22 | 28 | 34.9 | 57.5 | 96.5 | |
| | 2003.06-2006.10 | AT/MT | F | L/R | Hatchback FWD Z 14 XEP | | GCO44020 | Outer Joint | 29T | 22 | 28 | 52 | 97.5 | 57.5 | O |
| | 2003.06-2006.10 | MT/Semi-AT | F | L | Hatchback FWD Z 14 XEP | | GDS99069 | Drive Shaft | 29T | 22 | 22 | 52 | 97.5 | 584 | |
| | 2003.06-2006.10 | MT/Semi-AT | F | L/R | Hatchback FWD Z 14 XEP | | GCO44018 | Outer Joint | | 22 | 28 | 52.2 | 97.5 | 55 | O |
| | 2003.06-2006.10 | MT/Semi-AT | F | L/R | Hatchback FWD Z 14 XEP | | GCO44019 | Outer Joint | 29T | 22 | 28 | 52 | 97.5 | 57.5 | O |
| | 2003.06-2006.10 | SAT/5MT | F | L | Hatchback FWD Z 14 XEP | | GDS44027 | Drive Shaft | 29T | 22 | 22 | 52 | 98 | 580 | |
| | 2003.06-2006.10 | SAT/5MT | F | R | Hatchback FWD Z 14 XEP | | GDS44026 | Drive Shaft | 29T | 22 | 22 | 52 | 98 | 930 | |
| | 2003.06-2006.10 | SAT/5MT | F | L/R | Hatchback FWD Z 14 XEP | | GCI44003 | Inner Joint | | 22 | 28 | 34.95 | 57.5 | 83.5 | |
| | 2003.06-2006.10 | | F | R | Hatchback FWD Z 14 XEP | | GDS44075 | Drive Shaft | 29T | 22 | 22 | 52 | 97.5 | 926 | |
| | 2006.07-2014.08 | AT/MT | F | L | Hatchback FWD Z 14 XEP | | GDS44079 | Drive Shaft | | 22 | 22 | 51 | 79.5 | 615 | |
| | 2006.07-2014.08 | AT/MT | F | L | Hatchback FWD Z 14 XEP | | GDS60023 | Drive Shaft | | 22 | 22 | 51.2 | 79.5 | 615 | |
| | 2006.07-2014.08 | AT/MT | F | R | Hatchback FWD Z 14 XEP | | GDS44078 | Drive Shaft | | 22 | 22 | 51 | 79.5 | 918 | |
| | 2006.07-2014.08 | MT | F | R | Hatchback FWD Z 14 XEP | | GCO17089 | Outer Joint | | 22 | 20 | 51 | 79.5 | 51 | M |
| | 2006.07-2014.08 | | F | L/R | Hatchback FWD Z 14 XEP | | GCO17052 | Outer Joint | | 22 | 21 | 51.2 | 79.5 | 54 | M |
| | 2006.07-2014.08 | | F | L/R | Hatchback FWD Z 14 XEP | | GCI44013 | Inner Joint | | 22 | 21 | 35 | 57.5 | 93 | |
| | 2006.08-2014.08 | 5MT | F | L | Hatchback FWD Z 14 XEP | | GDS60023 | Drive Shaft | | 22 | 22 | 51.2 | 79.5 | 615 | |
| | 2006.08-2014.08 | AT/MT | F | L | Hatchback FWD Z 14 XEP | | GDS44079 | Drive Shaft | | 22 | 22 | 51 | 79.5 | 615 | |
| | 2006.08-2014.08 | AT/MT | F | R | Hatchback FWD Z 14 XEP | | GDS44078 | Drive Shaft | | 22 | 22 | 51 | 79.5 | 918 | |
| | 2006.08-2014.08 | AT/MT | F | L/R | Hatchback FWD Z 14 XEP | | GCO17014 | Outer Joint | | 22 | 21 | 51 | 79.5 | 54 | M |
| | 2006.08-2014.08 | MT | F | R | Hatchback FWD Z 14 XEP | | GCO17089 | Outer Joint | | 22 | 20 | 51 | 79.5 | 51 | M |
| | 2006.08-2014.08 | | F | L/R | Hatchback FWD Z 14 XEP | | GCO17052 | Outer Joint | | 22 | 21 | 51.2 | 79.5 | 54 | M |
| | 2006.08-2014.08 | | F | L/R | Hatchback FWD Z 14 XEP | | GCI44013 | Inner Joint | | 22 | 21 | 35 | 57.5 | 93 | |
| | 2014.08- | 5AMT/5MT | F | L/R | Hatchback FWD B 14 XEL;D 14 XEL | | GCO17052 | Outer Joint | | 22 | 21 | 51.2 | 79.5 | 54 | M |
| | 2014.08- | 5AMT/5MT | F | L/R | Hatchback FWD B 14 XEL;D 14 XEL | | GCI44013 | Inner Joint | | 22 | 21 | 35 | 57.5 | 93 | |
| | 2014.08- | 5AT/5AMT | F | L | Hatchback FWD B 14 XEL;D 14 XEL | | GDS44079 | Drive Shaft | | 22 | 22 | 51 | 79.5 | 615 | |
| | 2014.08- | 5MT/5AMT | F | R | Hatchback FWD B 14 XEL;D 14 XEL | | GDS44078 | Drive Shaft | | 22 | 22 | 51 | 79.5 | 918 | |
| | 2014.08- | 6AT | F | L | Hatchback FWD B 14 XEL;D 14 XEL | | GDS82520 | Drive Shaft | | 22 | 22 | 51 | 79.5 | 641 | |
| | 2014.08- | 6AT | F | R | Hatchback FWD B 14 XEL;D 14 XEL | From Chassis:G4176600/G6069631 | GDS82397 | Drive Shaft | | 22 | 22 | 51 | 79.5 | 886 | |
| | 2014.08- | 6AT | F | L/R | Hatchback FWD B 14 XEL;D 14 XEL | | GCO81515 | Outer Joint | | 22 | 23 | 51 | 79.5 | 60 | M |
| | 2014.08- | 6AT | F | R | Hatchback FWD B 14 XEL;D 14 XEL | From Chassis:G4176600/G6069631 | GCI81411 | Inner Joint | | 22 | 23 | 35 | 57.5 | 102 | |
| | 2014.08- | MT | F | L | Hatchback FWD B 14 XEL;D 14 XEL | | GDS60023 | Drive Shaft | | 22 | 22 | 51.2 | 79.5 | 615 | |
| 1.4 (74 kw) | 2010.01-2014.08 | AT/MT | F | L | Hatchback FWD A 14 XER | | GDS44079 | Drive Shaft | | 22 | 22 | 51 | 79.5 | 615 | |
| | 2010.01-2014.08 | AT/MT | F | L | Hatchback FWD A 14 XER | | GDS60023 | Drive Shaft | | 22 | 22 | 51.2 | 79.5 | 615 | |
| | 2010.01-2014.08 | AT/MT | F | R | Hatchback FWD A 14 XER | | GDS44078 | Drive Shaft | | 22 | 22 | 51 | 79.5 | 918 | |
| | 2010.01-2014.08 | AT/MT | F | L/R | Hatchback FWD A 14 XER | | GCO17014 | Outer Joint | | 22 | 21 | 51 | 79.5 | 54 | M |
| | 2010.01-2014.08 | AT/MT | F | L/R | Hatchback FWD A 14 XER | | GCO17052 | Outer Joint | | 22 | 21 | 51.2 | 79.5 | 54 | M |
| | 2010.01-2014.08 | AT/MT | F | L/R | Hatchback FWD A 14 XER | | GCO17089 | Outer Joint | | 22 | 20 | 51 | 79.5 | 51 | M |
| | 2010.01-2014.08 | | F | L/R | Hatchback FWD A 14 XER | | GCI44013 | Inner Joint | | 22 | 21 | 35 | 57.5 | 93 | |
| | 2014.08- | 6MT | F | L | Hatchback FWD B 14 NEJ;D 14 NEJ | | GDS17070 | Drive Shaft | | 25 | 25 | 51 | 84.5 | 576 | |
| | 2014.08- | 6MT | F | R | Hatchback FWD B 14 NEJ;D 14 NEJ | | GDS84125 | Drive Shaft | | 25 | 25 | 51 | 84.5 | 948 | |
| | 2014.08- | 6MT | F | L/R | Hatchback FWD B 14 NEJ;D 14 NEJ | | GCO17053 | Outer Joint | | 25 | 23 | 51 | 84.5 | 60 | M |
| | 2014.08- | 6MT | F | L/R | Hatchback FWD B 14 NEJ;D 14 NEJ | | GCI44014 | Inner Joint | | 25 | 23 | 34.9 | 57.5 | 102 | |
| 1.4 (88 kw) | 2012.08-2014.08 | 5MT | F | R | Hatchback FWD A 14 NEL | | GDS44042 | Drive Shaft | | 25 | 22 | 51 | 84.5 | 920 | |
| | 2012.08-2014.08 | 5MT | F | L/R | Hatchback FWD A 14 NEL | | GCO17053 | Outer Joint | | 25 | 23 | 51 | 84.5 | 60 | M |
| | 2012.08-2014.08 | 5MT | F | L | Hatchback FWD A 14 NEL | | GCI44009 | Inner Joint | | 22 | 23 | 35 | 57.5 | 96 | |
| | 2012.08-2014.08 | 5MT | F | R | Hatchback FWD A 14 NEL | | GCI44017 | Inner Joint | | 22 | 23 | 35 | 57.5 | 116 | |
| 1.4 (110 kw) | 2015.07- | 6MT | F | L | Hatchback FWD B 14 NEH | | GDS17070 | Drive Shaft | | 25 | 25 | 51 | 84.5 | 576 | |
| | 2015.07- | 6MT | F | R | Hatchback FWD B 14 NEH | | GDS84125 | Drive Shaft | | 25 | 25 | 51 | 84.5 | 948 | |
| | 2015.07- | 6MT | F | L/R | Hatchback FWD B 14 NEH | | GCO17053 | Outer Joint | | 25 | 23 | 51 | 84.5 | 60 | M |
| | 2015.07- | 6MT | F | L/R | Hatchback FWD B 14 NEH | | GCI44014 | Inner Joint | | 25 | 23 | 34.9 | 57.5 | 102 | |

| | YEAR | TRANSM. | F/R | L/R | BODY STYLE & DRIVE TYPE & ENGINE | REMARKS | G-AP Ref. | PRODUCT | ABS | Technical Specifications A | B | C | H | L | P |
|---|---|---|---|---|---|---|---|---|---|---|---|---|---|---|---|
| **VAUXHALL** | | | | | | | | | | | | | | | |
| **Corsa** | | | | | | | | | | | | | | | |
| 1.5 (37 kw) | 1993.03-1997.09 | 5MT | F | L | Hatchback FWD 15D | | GDS44001 | Drive Shaft | 29T | 22 | 22 | 52 | 95 | 573 | |
| | 1993.03-1997.09 | 5MT | F | R | Hatchback FWD 15D | | GDS60002 | Drive Shaft | 29T | 22 | 22 | 52 | 95 | 926 | |
| | 1993.03-1997.09 | MT | F | L/R | Hatchback FWD 15D | Date from:1993.03 | GCO44020 | Outer Joint | 29T | 22 | 28 | 52 | 97.5 | 57.5 | O |
| | 1993.03-1997.09 | MT | F | L/R | Hatchback FWD 15D | | GCO44046 | Outer Joint | | 22 | 28 | 52.2 | 97.5 | 55 | O |
| | 1993.03-1997.09 | | F | | Hatchback FWD 15D | | GCO44018 | Outer Joint | | 22 | 28 | 52.2 | 97.5 | 55 | O |
| | 1993.03-1997.09 | | F | | Hatchback FWD 15D | | GCO44019 | Outer Joint | 29T | 22 | 28 | 52 | 97.5 | 57.5 | O |
| 1.5 (49 kw) | 1993.03-2000.08 | 5MT | F | L | Hatchback FWD 15TD/X15TD | | GDS44001 | Drive Shaft | 29T | 22 | 22 | 52 | 95 | 573 | |
| | 1993.03-2000.08 | 5MT | F | R | Hatchback FWD 15TD/X15TD | | GDS60002 | Drive Shaft | 29T | 22 | 22 | 52 | 95 | 926 | |
| | 1993.03-2000.08 | MT | F | L/R | Hatchback FWD 15TD/X15TD | | GCO44020 | Outer Joint | 29T | 22 | 28 | 52 | 97.5 | 57.5 | O |
| | 1993.03-2000.08 | MT | F | L/R | Hatchback FWD 15TD/X15TD | | GCO44046 | Outer Joint | | 22 | 28 | 52.2 | 97.5 | 55 | O |
| | 1993.03-2000.08 | | F | | Hatchback FWD 15TD/X15TD | | GCO44018 | Outer Joint | | 22 | 28 | 52.2 | 97.5 | 55 | O |
| | 1993.03-2000.08 | | F | | Hatchback FWD 15TD/X15TD | | GCO44019 | Outer Joint | 29T | 22 | 28 | 52 | 97.5 | 57.5 | O |
| 1.5 (75 kw) | 2019.07- | 6MT | F | L | Hatchback FWD D 15 DT (DV5RD);D 15 DT (DV5RCF) | | GDS83116 | Drive Shaft | | 25 | 24 | 55.7 | 84 | 655 | |
| | 2019.07- | 6MT | F | R | Hatchback FWD D 15 DT (DV5RD);D 15 DT (DV5RCF) | | GDS83115 | Drive Shaft | | 25 | 24 | 55.7 | 84 | 880 | |
| | 2019.07- | 6MT | F | L/R | Hatchback FWD D 15 DT (DV5RD);D 15 DT (DV5RCF) | | GCO82279 | Outer Joint | | 25 | 34 | 55.7 | 84 | 55.5 | I |
| | 2019.07- | 6MT | F | L | Hatchback FWD D 15 DT (DV5RD);D 15 DT (DV5RCF) | | GCI82131 | Inner Joint | | 24 | 34 | 40 | 62 | 89 | |
| | 2019.07- | 6MT | F | R | Hatchback FWD D 15 DT (DV5RD);D 15 DT (DV5RCF) | | GCI82130 | Inner Joint | | 24 | 34 | 29.8 | 291 | 88 | |
| 1.6 (78 kw) | 1993.04-2000.09 | AT/MT | F | L | Hatchback FWD X16XE | | GDS44027 | Drive Shaft | 29T | 22 | 22 | 52 | 98 | 580 | |
| | 1993.04-2000.09 | AT/MT | F | R | Hatchback FWD X16XE | | GDS44075 | Drive Shaft | 29T | 22 | 22 | 52 | 97.5 | 926 | |
| | 1993.04-2000.09 | AT/MT | F | L/R | Hatchback FWD X16XE | | GCO44007 | Outer Joint | 29T | 22 | 22 | 52 | 94.5 | 50 | O |
| | 1993.04-2000.09 | MT | F | L/R | Hatchback FWD X16XE | | GCI44004 | Inner Joint | | 22 | 22 | 34.95 | 57.5 | 103 | |
| | 1993.04-2000.09 | | F | | Hatchback FWD X16XE | | GCI44003 | Inner Joint | | 22 | 28 | 34.95 | 57.5 | 83.5 | |
| 1.6 (80 kw) | 1993.03-2000.09 | MT | F | L | Hatchback FWD C16XE | | GDS44027 | Drive Shaft | 29T | 22 | 22 | 52 | 98 | 580 | |
| | 1993.03-2000.09 | MT | F | R | Hatchback FWD C16XE | | GDS44075 | Drive Shaft | 29T | 22 | 22 | 52 | 97.5 | 926 | |
| | 1993.03-2000.09 | MT | F | L/R | Hatchback FWD C16XE | | GCO44007 | Outer Joint | 29T | 22 | 22 | 52 | 94.5 | 50 | O |
| | 1993.03-2000.09 | MT | F | L/R | Hatchback FWD C16XE | | GCI44004 | Inner Joint | | 22 | 22 | 34.95 | 57.5 | 103 | |
| | 1993.03-2000.09 | | F | | Hatchback FWD C16XE | | GCI44003 | Inner Joint | | 22 | 28 | 34.95 | 57.5 | 83.5 | |
| 1.6 (110 kw) | 2007.05-2014.08 | 6MT | F | L/R | Hatchback FWD A 16 LEL;Z 16 LEL | | GCO60006 | Outer Joint | | 25 | 35 | 51 | 84.5 | 63 | I |
| | 2007.05-2014.08 | 6MT | F | L | Hatchback FWD A 16 LEL;Z 16 LEL | | GCI60004 | Inner Joint | | 25 | 35 | 34.9 | 57.5 | 113 | |
| | 2007.05-2014.08 | 6MT | F | R | Hatchback FWD A 16 LEL;Z 16 LEL | | GCI60005 | Inner Joint | | 34 | 35 | 37.5 | | 129 | |
| | 2007.05-2014.08 | MT | F | R | Hatchback FWD A 16 LEL;Z 16 LEL | | GDS60024 | Drive Shaft | | 25 | 34 | 51 | 84.5 | 608 | |
| | 2007.05-2014.08 | | F | L | Hatchback FWD A 16 LEL;Z 16 LEL | | GDS60025 | Drive Shaft | | 25 | 25 | 51 | 84.5 | 579.5 | |
| 1.6 (141 kw) | 2006.11-2014.08 | 6MT | F | L | Hatchback FWD Z 16 LER;A 16 LER;B 16 LER | | GDS60025 | Drive Shaft | | 25 | 25 | 51 | 84.5 | 579.5 | |
| | 2006.11-2014.08 | 6MT | F | R | Hatchback FWD Z 16 LER;A 16 LER;B 16 LER | | GDS60024 | Drive Shaft | | 25 | 34 | 51 | 84.5 | 608 | |
| | 2006.11-2014.08 | 6MT | F | L/R | Hatchback FWD Z 16 LER;A 16 LER;B 16 LER | | GCO60006 | Outer Joint | | 25 | 35 | 51 | 84.5 | 63 | I |
| | 2006.11-2014.08 | 6MT | F | L | Hatchback FWD Z 16 LER;A 16 LER;B 16 LER | | GCI60004 | Inner Joint | | 25 | 35 | 34.9 | 57.5 | 113 | |
| | 2006.11-2014.08 | 6MT | F | R | Hatchback FWD Z 16 LER;A 16 LER;B 16 LER | | GCI60005 | Inner Joint | | 34 | 35 | 37.5 | | 129 | |
| 1.6 (150 kw) | 2011.06-2014.08 | 6MT | F | L | Hatchback FWD A 16 LES | | GDS60025 | Drive Shaft | | 25 | 25 | 51 | 84.5 | 579.5 | |
| | 2011.06-2014.08 | 6MT | F | R | Hatchback FWD A 16 LES | | GDS60024 | Drive Shaft | | 25 | 34 | 51 | 84.5 | 608 | |
| | 2011.06-2014.08 | 6MT | F | L/R | Hatchback FWD A 16 LES | | GCO60006 | Outer Joint | | 25 | 35 | 51 | 84.5 | 63 | I |
| | 2011.06-2014.08 | 6MT | F | L | Hatchback FWD A 16 LES | | GCI60004 | Inner Joint | | 25 | 35 | 34.9 | 57.5 | 113 | |
| | 2011.06-2014.08 | 6MT | F | R | Hatchback FWD A 16 LES | | GCI60005 | Inner Joint | | 34 | 35 | 37.5 | | 129 | |
| 1.6 (151 kw) | 2015.04- | 6MT | F | L | Hatchback FWD B 16 LES | | GCI60004 | Inner Joint | | 25 | 35 | 34.9 | 57.5 | 113 | |
| | 2015.04- | 6MT | F | R | Hatchback FWD B 16 LES | | GCI60005 | Inner Joint | | 34 | 35 | 37.5 | | 129 | |
| | 2015.04- | MT | F | L | Hatchback FWD B 16 LES | | GDS60025 | Drive Shaft | | 25 | 25 | 51 | 84.5 | 579.5 | |
| | 2015.04- | MT | F | L/R | Hatchback FWD B 16 LES | | GCO60006 | Outer Joint | | 25 | 35 | 51 | 84.5 | 63 | I |
| 1.6 (154 kw) | 2011.06-2014.08 | 6MT | F | L | Hatchback FWD A 16 LES | | GDS60025 | Drive Shaft | | 25 | 25 | 51 | 84.5 | 579.5 | |
| | 2011.06-2014.08 | 6MT | F | R | Hatchback FWD A 16 LES | | GDS60024 | Drive Shaft | | 25 | 34 | 51 | 84.5 | 608 | |
| | 2011.06-2014.08 | 6MT | F | L/R | Hatchback FWD A 16 LES | | GCO60006 | Outer Joint | | 25 | 35 | 51 | 84.5 | 63 | I |
| | 2011.06-2014.08 | 6MT | F | L | Hatchback FWD A 16 LES | | GCI60004 | Inner Joint | | 25 | 35 | 34.9 | 57.5 | 113 | |
| | 2011.06-2014.08 | 6MT | F | R | Hatchback FWD A 16 LES | | GCI60005 | Inner Joint | | 34 | 35 | 37.5 | | 129 | |
| 1.6 (155 kw) | 2011.06-2012.03 | 6MT | F | L | Hatchback FWD A 16 LES | | GDS60025 | Drive Shaft | | 25 | 25 | 51 | 84.5 | 579.5 | |
| | 2011.06-2012.03 | 6MT | F | R | Hatchback FWD A 16 LES | | GDS60024 | Drive Shaft | | 25 | 34 | 51 | 84.5 | 608 | |
| | 2011.06-2012.03 | 6MT | F | L/R | Hatchback FWD A 16 LES | | GCO60006 | Outer Joint | | 25 | 35 | 51 | 84.5 | 63 | I |
| | 2011.06-2012.03 | 6MT | F | L | Hatchback FWD A 16 LES | | GCI60004 | Inner Joint | | 25 | 35 | 34.9 | 57.5 | 113 | |
| | 2011.06-2012.03 | 6MT | F | R | Hatchback FWD A 16 LES | | GCI60005 | Inner Joint | | 34 | 35 | 37.5 | | 129 | |
| 1.7 (44 kw) | 1996.05-2000.08 | 5MT | F | L | Hatchback FWD X17D | | GDS44001 | Drive Shaft | 29T | 22 | 22 | 52 | 95 | 573 | |
| | 1996.05-2000.08 | 5MT | F | R | Hatchback FWD X17D | | GDS60002 | Drive Shaft | 29T | 22 | 22 | 52 | 95 | 926 | |
| | 1996.05-2000.08 | AT/MT | F | L/R | Hatchback FWD X17D | | GCO44046 | Outer Joint | | 22 | 28 | 52.2 | 97.5 | 55 | O |
| | 1996.05-2000.08 | MT | F | L/R | Hatchback FWD X17D | Date from:1996.05 | GCO44020 | Outer Joint | 29T | 22 | 28 | 52 | 97.5 | 57.5 | O |
| | 1996.05-2000.08 | | F | | Hatchback FWD X17D | | GCO44018 | Outer Joint | | 22 | 28 | 52.2 | 97.5 | 55 | O |
| | 1996.05-2000.08 | | F | | Hatchback FWD X17D | | GCO44019 | Outer Joint | 29T | 22 | 28 | 52 | 97.5 | 57.5 | O |
| 1.7 (48 kw) | 2000.08-2006.09 | 5MT | F | L | Hatchback FWD Y 17 DTL | Chassis no. from:23000001 | GDS44027 | Drive Shaft | 29T | 22 | 22 | 52 | 98 | 580 | |
| | 2000.08-2006.09 | 5MT | F | L | Hatchback FWD Y 17 DTL | Chassis no. to:13999999/14999999/16999999 | GDS82091 | Drive Shaft | 29T | 22 | 22 | 52 | 97.5 | 580 | |
| | 2000.08-2006.09 | 5MT | F | L | Hatchback FWD Y 17 DTL | Chassis no. from:23000001 | GDS99204 | Drive Shaft | | 22 | 22 | 52 | 97.5 | 584 | |

| | YEAR | TRANSM. | F/R | L/R | BODY STYLE & DRIVE TYPE & ENGINE | REMARKS | G-AP Ref. | PRODUCT | ABS | Technical Specifications A | B | C | H | L | P |
|---|---|---|---|---|---|---|---|---|---|---|---|---|---|---|---|
| **VAUXHALL** | | | | | | | | | | | | | | | |
| **Corsa** | | | | | | | | | | | | | | | |
| 1.7 (48 kw) | 2000.08-2006.09 | 5MT | F | R | Hatchback FWD Y 17 DTL | Chassis no. from:23000001 | GDS44026 | Drive Shaft | 29T | 22 | 22 | 52 | 98 | 930 | |
| | 2000.08-2006.09 | 5MT | F | R | Hatchback FWD Y 17 DTL | Chassis no. to:13999999 | GDS44060 | Drive Shaft | | 22 | 22 | 52 | 98 | 930 | |
| | 2000.08-2006.09 | 5MT | F | R | Hatchback FWD Y 17 DTL | Chassis no. from:23000001 | GDS99205 | Drive Shaft | | 22 | 22 | 52 | 97.5 | 930 | |
| | 2000.08-2006.09 | 5MT | F | L/R | Hatchback FWD Y 17 DTL | Chassis no. to:13999999/14999999/16999999 | GCI60001 | Inner Joint | | 22 | 28 | 34.9 | 57.5 | 96.5 | |
| | 2000.08-2006.09 | AT/MT | F | L/R | Hatchback FWD Y 17 DTL | | GCO44020 | Outer Joint | 29T | 22 | 28 | 52 | 97.5 | 57.5 | O |
| | 2000.08-2006.09 | MT | F | L | Hatchback FWD Y 17 DTL | | GDS99069 | Drive Shaft | 29T | 22 | 22 | 52 | 97.5 | 584 | |
| | 2000.08-2006.09 | MT | F | R | Hatchback FWD Y 17 DTL | Chassis no. from:26000001 | GDS44075 | Drive Shaft | 29T | 22 | 22 | 52 | 97.5 | 926 | |
| | 2000.08-2006.09 | MT | F | R | Hatchback FWD Y 17 DTL | | GCO44018 | Outer Joint | | 22 | 28 | 52.2 | 97.5 | 55 | O |
| | 2000.08-2006.09 | MT | F | R | Hatchback FWD Y 17 DTL | | GCO44043 | Outer Joint | | 22 | 28 | 52 | 97.5 | 57.5 | O |
| | 2000.08-2006.09 | MT | F | L/R | Hatchback FWD Y 17 DTL | | GCO44019 | Outer Joint | 29T | 22 | 28 | 52 | 97.5 | 57.5 | O |
| | 2000.08-2006.09 | MT | F | L/R | Hatchback FWD Y 17 DTL | | GCO44044 | Outer Joint | | 22 | 28 | 52 | 97.5 | 57.5 | O |
| 1.7 (55 kw) | 2000.08-2006.09 | 5MT | F | L | Hatchback FWD Y 17 DT | Chassis no. from:23000001 | GDS44027 | Drive Shaft | 29T | 22 | 22 | 52 | 98 | 580 | |
| | 2000.08-2006.09 | 5MT | F | L | Hatchback FWD Y 17 DT | Chassis no. to:13999999/14999999/16999999 | GDS82091 | Drive Shaft | 29T | 22 | 22 | 52 | 97.5 | 580 | |
| | 2000.08-2006.09 | 5MT | F | L | Hatchback FWD Y 17 DT | Chassis no. from:23000001 | GDS99204 | Drive Shaft | | 22 | 22 | 52 | 97.5 | 584 | |
| | 2000.08-2006.09 | 5MT | F | R | Hatchback FWD Y 17 DT | Chassis no. from:23000001 | GDS44026 | Drive Shaft | 29T | 22 | 22 | 52 | 98 | 930 | |
| | 2000.08-2006.09 | 5MT | F | R | Hatchback FWD Y 17 DT | Chassis no. to:13999999 | GDS44060 | Drive Shaft | | 22 | 22 | 52 | 98 | 930 | |
| | 2000.08-2006.09 | 5MT | F | R | Hatchback FWD Y 17 DT | Chassis no. from:23000001 | GDS99205 | Drive Shaft | | 22 | 22 | 52 | 97.5 | 930 | |
| | 2000.08-2006.09 | 5MT | F | L/R | Hatchback FWD Y 17 DT | Chassis no. to:13999999/14999999/16999999 | GCI60001 | Inner Joint | | 22 | 28 | 34.9 | 57.5 | 96.5 | |
| | 2000.08-2006.09 | MT | F | L | Hatchback FWD Y 17 DT | | GDS99069 | Drive Shaft | 29T | 22 | 22 | 52 | 97.5 | 584 | |
| | 2000.08-2006.09 | MT | F | R | Hatchback FWD Y 17 DT | Chassis no. from:26000001 | GDS44075 | Drive Shaft | 29T | 22 | 22 | 52 | 97.5 | 926 | |
| | 2000.08-2006.09 | MT | F | R | Hatchback FWD Y 17 DT | | GCO44018 | Outer Joint | | 22 | 28 | 52.2 | 97.5 | 55 | O |
| | 2000.08-2006.09 | MT | F | R | Hatchback FWD Y 17 DT | | GCO44043 | Outer Joint | | 22 | 28 | 52 | 97.5 | 57.5 | O |
| | 2000.08-2006.09 | MT | F | L/R | Hatchback FWD Y 17 DT | | GCO44019 | Outer Joint | 29T | 22 | 28 | 52 | 97.5 | 57.5 | O |
| | 2000.08-2006.09 | MT | F | L/R | Hatchback FWD Y 17 DT | Date to:2003.10 | GCO44020 | Outer Joint | 29T | 22 | 28 | 52 | 97.5 | 57.5 | O |
| | 2000.08-2006.09 | MT | F | L/R | Hatchback FWD Y 17 DT | | GCO44044 | Outer Joint | | 22 | 28 | 52 | 97.5 | 57.5 | O |
| 1.7 (74 kw) | 2000.08-2006.09 | 5MT | F | L | Hatchback FWD Z 17 DTH | Date from:2003.10;Date to:2005.11 | GDS44032 | Drive Shaft | 29T | 33 | 34 | 52 | 104 | 587.5 | |
| | 2000.08-2006.09 | 5MT | F | R | Hatchback FWD Z 17 DTH | Date from:2003.10;Date to:2005.11 | GDS60021 | Drive Shaft | 29T | 33 | 34 | 52 | 104 | 612 | |
| | 2000.08-2006.09 | 5MT | F | L/R | Hatchback FWD Z 17 DTH | | GCO44004 | Outer Joint | 29T | 33 | 24 | 52 | 104 | 64 | M |
| | 2000.08-2006.09 | 5MT | F | L | Hatchback FWD Z 17 DTH | | GCI21034 | Inner Joint | | 34 | 24 | 35 | 56.5 | 102 | |
| | 2000.08-2006.09 | MT | F | L | Hatchback FWD Z 17 DTH | Chassis no. to:23000001,Trans. code:F08/F68 | GDS99204 | Drive Shaft | | 22 | 22 | 52 | 97.5 | 584 | |
| | 2000.08-2006.09 | MT | F | R | Hatchback FWD Z 17 DTH | Chassis no. to:13999999,Trans. code:F08/F68 | GDS44060 | Drive Shaft | | 22 | 22 | 52 | 98 | 930 | |
| | 2000.08-2006.09 | MT | F | L | Hatchback FWD Z 17 DTH | | GCO44043 | Outer Joint | | 22 | 28 | 52 | 97.5 | 57.5 | O |
| | 2000.08-2006.09 | MT | F | R | Hatchback FWD Z 17 DTH | Date from:2003.10,Date to:2005.11 | GCI60003 | Inner Joint | | 34 | 24 | 35.5 | | 117.5 | |
| 1.7 (92 kw) | 2006.11-2014.08 | 6MT | F | L | Hatchback FWD Z 17 DTR | | GDS60025 | Drive Shaft | | 25 | 25 | 51 | 84.5 | 579.5 | |
| | 2006.11-2014.08 | 6MT | F | R | Hatchback FWD Z 17 DTR | | GDS84083 | Drive Shaft | | 25 | 34 | 51 | 84.5 | 548 | |
| | 2006.11-2014.08 | 6MT | F | L/R | Hatchback FWD Z 17 DTR | | GCO60006 | Outer Joint | | 25 | 35 | 51 | 84.5 | 63 | I |
| | 2006.11-2014.08 | 6MT | F | L | Hatchback FWD Z 17 DTR | | GCI60004 | Inner Joint | | 25 | 35 | 34.9 | 57.5 | 113 | |
| | 2006.11-2014.08 | 6MT | F | R | Hatchback FWD Z 17 DTR | | GCI60005 | Inner Joint | | 34 | 35 | 37.5 | | 129 | |
| 1.7 (96 kw) | 2007.03-2014.08 | 6MT | F | L | Hatchback FWD A 17 DTS | | GDS60025 | Drive Shaft | | 25 | 25 | 51 | 84.5 | 579.5 | |
| | 2007.03-2014.08 | 6MT | F | R | Hatchback FWD A 17 DTS | | GDS84083 | Drive Shaft | | 25 | 34 | 51 | 84.5 | 548 | |
| | 2007.03-2014.08 | 6MT | F | L/R | Hatchback FWD A 17 DTS | | GCO60006 | Outer Joint | | 25 | 35 | 51 | 84.5 | 63 | I |
| | 2007.03-2014.08 | 6MT | F | L | Hatchback FWD A 17 DTS | | GCI60004 | Inner Joint | | 25 | 35 | 34.9 | 57.5 | 113 | |
| | 2007.03-2014.08 | 6MT | F | R | Hatchback FWD A 17 DTS | | GCI60005 | Inner Joint | | 34 | 35 | 37.5 | | 129 | |
| 1.8 (92 kw) | 2000.08-2006.09 | 5MT | F | L | Hatchback FWD Z 18 XE | | GDS44027 | Drive Shaft | 29T | 22 | 22 | 52 | 98 | 580 | |
| | 2000.08-2006.09 | 5MT | F | L | Hatchback FWD Z 18 XE | Chassis no. from:23000001/24000001/26000001 | GDS82091 | Drive Shaft | 29T | 22 | 22 | 52 | 97.5 | 580 | |
| | 2000.08-2006.09 | 5MT | F | R | Hatchback FWD Z 18 XE | | GDS44026 | Drive Shaft | 29T | 22 | 22 | 52 | 98 | 930 | |
| | 2000.08-2006.09 | 5MT | F | R | Hatchback FWD Z 18 XE | Chassis no. from:23000001/24000001/26000001 | GDS82092 | Drive Shaft | 29T | 22 | 22 | 52 | 97.5 | 930 | |
| | 2000.08-2006.09 | 5MT | F | L/R | Hatchback FWD Z 18 XE | | GCO44002 | Outer Joint | 29T | 22 | 23 | 52 | 97.5 | 61 | M |
| | 2000.08-2006.09 | 5MT | F | L/R | Hatchback FWD Z 18 XE | Chassis no. from:23000001/24000001/26000001 | GCI44009 | Inner Joint | | 22 | 23 | 35 | 57.5 | 96 | |
| | 2000.08-2006.09 | 5MT | F | L/R | Hatchback FWD Z 18 XE | Chassis no. to:13999999/14999999/16999999 | GCI99026 | Inner Joint | | 22 | 25 | 35 | 57 | 111.7 | |
| | 2000.08-2006.09 | MT | F | L | Hatchback FWD Z 18 XE | | GDS99069 | Drive Shaft | 29T | 22 | 22 | 52 | 97.5 | 584 | |
| | 2000.08-2006.09 | MT | F | R | Hatchback FWD Z 18 XE | Chassis no. from:23000001/24000001/26000001 | GDS44075 | Drive Shaft | 29T | 22 | 22 | 52 | 97.5 | 926 | |
| EV (100 kw) | 2019.07- | ET | F | L | Hatchback FWD ZKX (ZK01) | Date from:2022.07 | GDS57917 | Drive Shaft | | 25 | 24 | 55.7 | 84.5 | 655 | |
| | 2019.07- | ET | F | L | Hatchback FWD ZKX (ZK01) | Date to:2022.06 | GDS84261 | Drive Shaft | | 25 | 24 | 56 | 83.5 | 657 | |
| | 2019.07- | ET | F | R | Hatchback FWD ZKX (ZK01) | Date from:2022.07 | GDS57916 | Drive Shaft | | 25 | 24 | 55.7 | 84.5 | 880 | |
| | 2019.07- | ET | F | R | Hatchback FWD ZKX (ZK01) | Date to:2022.06 | GDS84314 | Drive Shaft | | 25 | 24 | 56 | 83.5 | 886 | |
| | 2019.07- | ET | F | L/R | Hatchback FWD ZKX (ZK01) | Date to:2022.06 | GCO82749 | Outer Joint | | 25 | 23 | 56 | 83.5 | 50 | I |
| | 2019.07- | ET | F | L/R | Hatchback FWD ZKX (ZK01) | Date from:2022.07 | GCO83785 | Outer Joint | | 25 | 34 | 55.7 | 84.5 | 55.5 | I |
| | 2019.07- | ET | F | R | Hatchback FWD ZKX (ZK01) | Date to:2022.06 | GCI10141 | Inner Joint | | 24 | 23 | 29.85 | 291 | 95 | |
| EV (115 kw) | 2023.03- | ET | F | L | Hatchback FWD ZKW (ZK02) | Solid shaft | GDS57917 | Drive Shaft | | 25 | 24 | 55.7 | 84.5 | 655 | |
| | 2023.03- | ET | F | L | Hatchback FWD ZKW (ZK02) | Hollow shaft | GDS84261 | Drive Shaft | | 25 | 24 | 56 | 83.5 | 657 | |
| | 2023.03- | ET | F | R | Hatchback FWD ZKW (ZK02) | Solid shaft | GDS57916 | Drive Shaft | | 25 | 24 | 55.7 | 84.5 | 880 | |
| | 2023.03- | ET | F | R | Hatchback FWD ZKW (ZK02) | Hollow shaft | GDS84314 | Drive Shaft | | 25 | 24 | 56 | 83.5 | 886 | |
| | 2023.03- | ET | F | L/R | Hatchback FWD ZKW (ZK02) | Inner teeth:23 | GCO82749 | Outer Joint | | 25 | 23 | 56 | 83.5 | 50 | I |
| | 2023.03- | ET | F | L/R | Hatchback FWD ZKW (ZK02) | | GCO83785 | Outer Joint | | 25 | 34 | 55.7 | 84.5 | 55.5 | I |

| | YEAR | TRANSM. | F/R | L/R | BODY STYLE & DRIVE TYPE & ENGINE | REMARKS | G-AP Ref. | PRODUCT | ABS | Technical Specifications A | B | C | H | L | P |
|---|---|---|---|---|---|---|---|---|---|---|---|---|---|---|---|
| **VAUXHALL** | | | | | | | | | | | | | | | |
| **Corsa** | | | | | | | | | | | | | | | |
| EV (115 kw) | 2023.03- | ET | F | R | Hatchback FWD ZKW (ZK02) | | GCI10141 | Inner Joint | | 24 | 23 | 29.85 | 291 | 95 | |
| **Corsa F** | | | | | | | | | | | | | | | |
| 1.2 (74 kw) | 2024.10- | 6DCT | F | R | Hatchback FWD HPX (EB2LTEDH2) | | GDS83114 | Drive Shaft | | 25 | 37 | 55.7 | 84 | 880 | |
| | 2024.10- | 6DCT | F | R | Hatchback FWD HPX (EB2LTEDH2) | | GCI82118 | Inner Joint | | 37 | 34 | | 290 | 88 | |
| 1.2 (81 kw) | 2025.06- | 6DCT | F | R | Hatchback FWD | | GDS83114 | Drive Shaft | | 25 | 37 | 55.7 | 84 | 880 | |
| | 2025.06- | 6DCT | F | R | Hatchback FWD | | GCI82118 | Inner Joint | | 37 | 34 | | 290 | 88 | |
| 1.2 (107 kw) | 2025.06- | 6DCT | F | R | Hatchback FWD HPY (EB2LTDH2) | | GDS83114 | Drive Shaft | | 25 | 37 | 55.7 | 84 | 880 | |
| | 2025.06- | 6DCT | F | R | Hatchback FWD HPY (EB2LTDH2) | | GCI82118 | Inner Joint | | 37 | 34 | | 290 | 88 | |
| **Corsa Van** | | | | | | | | | | | | | | | |
| 1.2 (51 kw) | 2010.01- | 5MT | F | L | Hatchback Van FWD A 12 XEL | | GDS44079 | Drive Shaft | | 22 | 22 | 51 | 79.5 | 615 | |
| | 2010.01- | 5MT | F | R | Hatchback Van FWD A 12 XEL | | GDS44078 | Drive Shaft | | 22 | 22 | 51 | 79.5 | 918 | |
| | 2010.01- | AT/MT | F | L | Hatchback Van FWD A 12 XEL | | GDS60023 | Drive Shaft | | 22 | 22 | 51.2 | 79.5 | 615 | |
| | 2010.01- | AT/MT | F | L | Hatchback Van FWD A 12 XEL | | GCI44013 | Inner Joint | | 22 | 21 | 35 | 57.5 | 93 | |
| | 2010.01- | MT | F | L | Hatchback Van FWD A 12 XEL | Date to:2014.08 | GCO17089 | Outer Joint | | 22 | 20 | 51 | 79.5 | 51 | M |
| | 2014.10- | MT | F | L | Hatchback Van FWD B 12 XEL | | GDS44079 | Drive Shaft | | 22 | 22 | 51 | 79.5 | 615 | |
| | 2014.10- | MT | F | R | Hatchback Van FWD B 12 XEL | | GDS44078 | Drive Shaft | | 22 | 22 | 51 | 79.5 | 918 | |
| | 2014.10- | MT | F | L/R | Hatchback Van FWD B 12 XEL | | GCO17089 | Outer Joint | | 22 | 20 | 51 | 79.5 | 51 | M |
| 1.2 (55 kw) | 2000.09-2006.06 | 5MT | F | L | Hatchback Van FWD Z 12 XE | Chassis no. to:13999999/14999999/16999999 | GDS44095 | Drive Shaft | 29T | 22 | 22 | 52 | 97 | 566 | |
| | 2000.09-2006.06 | 5MT | F | R | Hatchback Van FWD Z 12 XE | Chassis no. from:23000001/24000001/26000001;Date From:2001.08 | GDS44026 | Drive Shaft | 29T | 22 | 22 | 52 | 98 | 930 | |
| | 2000.09-2006.06 | 5MT | F | R | Hatchback Van FWD Z 12 XE | Chassis no. to:13999999/14999999/16999999 | GDS44096 | Drive Shaft | 29T | 22 | 22 | 52 | 97 | 917 | |
| | 2000.09-2006.06 | 5MT | F | L/R | Hatchback Van FWD Z 12 XE | Date To:2001.07,Chassis no. to:13999999/14999999/16999999 | GCI60001 | Inner Joint | | 22 | 28 | 34.9 | 57.5 | 96.5 | |
| | 2000.09-2006.06 | AT/5MT | F | L | Hatchback Van FWD Z 12 XE | Chassis no. from:23000001/24000001/26000001;Date From:2001.08 | GDS44027 | Drive Shaft | 29T | 22 | 22 | 52 | 98 | 580 | |
| | 2000.09-2006.06 | AT/MT | F | R | Hatchback Van FWD Z 12 XE | Chassis no. from:23000001;Chassis no. from:24000001;Chassis no. from:26000001 | GDS44075 | Drive Shaft | 29T | 22 | 22 | 52 | 97.5 | 926 | |
| | 2000.09-2006.06 | MT | F | L/R | Hatchback Van FWD Z 12 XE | | GCO44018 | Outer Joint | | 22 | 28 | 52.2 | 97.5 | 55 | O |
| | 2000.09-2006.06 | MT | F | L/R | Hatchback Van FWD Z 12 XE | | GCO44019 | Outer Joint | 29T | 22 | 28 | 52 | 97.5 | 57.5 | O |
| | 2000.09-2006.06 | MT/Semi-AT | F | L | Hatchback Van FWD Z 12 XE | | GDS99069 | Drive Shaft | 29T | 22 | 22 | 52 | 97.5 | 584 | |
| | 2000.09-2006.06 | | F | L/R | Hatchback Van FWD Z 12 XE | | GCO44013 | Outer Joint | 29T | 22 | 28 | 52 | 98 | 52 | O |
| | 2000.09-2006.06 | | F | | Hatchback Van FWD Z 12 XE | | GCO44071 | Outer Joint | | 22 | 28 | 52 | 98 | 52 | O |
| | 2001.08-2006.06 | 5MT | F | L | Hatchback Van FWD Z 12 XE | Chassis no. from:23000001/24000001/26000001 | GDS44027 | Drive Shaft | 29T | 22 | 22 | 52 | 98 | 580 | |
| | 2001.08-2006.06 | 5MT | F | L | Hatchback Van FWD Z 12 XE | Chassis no. to:13999999/14999999/16999999 | GDS44095 | Drive Shaft | 29T | 22 | 22 | 52 | 97 | 566 | |
| | 2001.08-2006.06 | 5MT | F | R | Hatchback Van FWD Z 12 XE | Chassis no. from:23000001/24000001/26000001 | GDS44026 | Drive Shaft | 29T | 22 | 22 | 52 | 98 | 930 | |
| | 2001.08-2006.06 | 5MT | F | R | Hatchback Van FWD Z 12 XE | Chassis no. to:13999999/14999999/16999999 | GDS44096 | Drive Shaft | 29T | 22 | 22 | 52 | 97 | 917 | |
| | 2001.08-2006.06 | 5MT | F | L/R | Hatchback Van FWD Z 12 XE | Chassis no. from:13999999/14999999/16999999 | GCI60001 | Inner Joint | | 22 | 28 | 34.9 | 57.5 | 96.5 | |
| | 2001.08-2006.06 | MT | F | R | Hatchback Van FWD Z 12 XE | Chassis no. from:23000001/26000001/24000001 | GDS44075 | Drive Shaft | 29T | 22 | 22 | 52 | 97.5 | 926 | |
| | 2001.08-2006.06 | MT | F | R | Hatchback Van FWD Z 12 XE | | GCO44018 | Outer Joint | | 22 | 28 | 52.2 | 97.5 | 55 | O |
| | 2001.08-2006.06 | MT | F | L/R | Hatchback Van FWD Z 12 XE | | GCO44019 | Outer Joint | 29T | 22 | 28 | 52 | 97.5 | 57.5 | O |
| | 2001.08-2006.06 | MT/Semi-AT | F | L | Hatchback Van FWD Z 12 XE | | GDS99069 | Drive Shaft | 29T | 22 | 22 | 52 | 97.5 | 584 | |
| | 2001.08-2006.06 | | F | L/R | Hatchback Van FWD Z 12 XE | | GCO44013 | Outer Joint | 29T | 22 | 28 | 52 | 98 | 52 | O |
| | 2001.08-2006.06 | | F | | Hatchback Van FWD Z 12 XE | | GCO44071 | Outer Joint | | 22 | 28 | 52 | 98 | 52 | O |
| 1.2 (59 kw) | 2004.07-2005.12 | 5MT | F | L | Hatchback Van FWD Z 12 XEP | | GDS44027 | Drive Shaft | 29T | 22 | 22 | 52 | 98 | 580 | |
| | 2004.07-2005.12 | 5MT | F | R | Hatchback Van FWD Z 12 XEP | | GDS44026 | Drive Shaft | 29T | 22 | 22 | 52 | 98 | 930 | |
| | 2004.07-2005.12 | 5MT | F | L/R | Hatchback Van FWD Z 12 XEP | | GCI60001 | Inner Joint | | 22 | 28 | 34.9 | 57.5 | 96.5 | |
| | 2004.07-2005.12 | | F | R | Hatchback Van FWD Z 12 XEP | | GDS44075 | Drive Shaft | 29T | 22 | 22 | 52 | 97.5 | 926 | |
| | 2004.07-2005.12 | | F | L/R | Hatchback Van FWD Z 12 XEP | | GCO44013 | Outer Joint | 29T | 22 | 28 | 52 | 98 | 52 | O |
| | 2004.07-2006.11 | 5MT | F | L/R | Hatchback Van FWD Z 12 XEP | | GCI60001 | Inner Joint | | 22 | 28 | 34.9 | 57.5 | 96.5 | |
| | 2004.07-2006.11 | MT | F | L | Hatchback Van FWD Z 12 XEP | | GDS44027 | Drive Shaft | 29T | 22 | 22 | 52 | 98 | 580 | |
| | 2004.07-2006.11 | MT | F | R | Hatchback Van FWD Z 12 XEP | | GDS44026 | Drive Shaft | 29T | 22 | 22 | 52 | 98 | 930 | |
| | 2004.07-2006.11 | MT | F | R | Hatchback Van FWD Z 12 XEP | | GDS44075 | Drive Shaft | 29T | 22 | 22 | 52 | 97.5 | 926 | |
| | 2004.07-2006.11 | MT | F | L/R | Hatchback Van FWD Z 12 XEP | | GCO44013 | Outer Joint | 29T | 22 | 28 | 52 | 98 | 52 | O |
| | 2009.07- | 5MT | F | L | Hatchback Van FWD Z 12 XEP | | GDS44079 | Drive Shaft | | 22 | 22 | 51 | 79.5 | 615 | |
| | 2009.07- | 5MT | F | R | Hatchback Van FWD Z 12 XEP | | GDS44078 | Drive Shaft | | 22 | 22 | 51 | 79.5 | 918 | |
| | 2009.07- | 5MT | F | R | Hatchback Van FWD Z 12 XEP | Date to:2014.08 | GCO17089 | Outer Joint | | 22 | 20 | 51 | 79.5 | 51 | M |
| | 2009.07- | 5MT | F | L/R | Hatchback Van FWD Z 12 XEP | Chassis no. to:84239420 | GCO17052 | Outer Joint | | 22 | 21 | 51.2 | 79.5 | 54 | M |
| | 2009.07- | 5MT | F | L/R | Hatchback Van FWD Z 12 XEP | Chassis no. from:84239421 | GCO99018 | Outer Joint | | 22 | 27 | 51 | 79.5 | 54 | O |
| | 2009.07- | AT/MT | F | L | Hatchback Van FWD Z 12 XEP | | GDS60023 | Drive Shaft | | 22 | 22 | 51.2 | 79.5 | 615 | |
| | 2009.07- | | F | L/R | Hatchback Van FWD Z 12 XEP | Chassis no. to:84239420;Chassis no. to:86099860 | GCI44013 | Inner Joint | | 22 | 21 | 35 | 57.5 | 93 | |
| 1.3 (52 kw) | 2004.04-2006.06 | 5MT | F | L | Hatchback Van FWD Z 13 DT | | GDS44027 | Drive Shaft | 29T | 22 | 22 | 52 | 98 | 580 | |
| | 2004.04-2006.06 | 5MT | F | L | Hatchback Van FWD Z 13 DT | | GDS82091 | Drive Shaft | 29T | 22 | 22 | 52 | 97.5 | 580 | |
| | 2004.04-2006.06 | 5MT | F | R | Hatchback Van FWD Z 13 DT | | GDS44026 | Drive Shaft | 29T | 22 | 22 | 52 | 98 | 930 | |
| | 2004.04-2006.06 | 5MT | F | R | Hatchback Van FWD Z 13 DT | | GDS82092 | Drive Shaft | 29T | 22 | 22 | 52 | 97.5 | 930 | |
| | 2004.04-2006.06 | 5MT | F | R | Hatchback Van FWD Z 13 DT | | GDS99205 | Drive Shaft | | 22 | 22 | 52 | 97.5 | 930 | |
| | 2004.04-2006.06 | 5MT | F | L/R | Hatchback Van FWD Z 13 DT | | GCI44009 | Inner Joint | | 22 | 23 | 35 | 57.5 | 96 | |
| | 2004.04-2006.06 | AT/MT | F | L | Hatchback Van FWD Z 13 DT | | GDS99069 | Drive Shaft | 29T | 22 | 22 | 52 | 97.5 | 584 | |
| | 2004.04-2006.06 | AT/MT | F | L/R | Hatchback Van FWD Z 13 DT | | GCO44020 | Outer Joint | 29T | 22 | 28 | 52 | 97.5 | 57.5 | O |
| | 2004.04-2006.06 | MT | F | R | Hatchback Van FWD Z 13 DT | | GDS44075 | Drive Shaft | 29T | 22 | 22 | 52 | 97.5 | 926 | |

| | YEAR | TRANSM. | F/R | L/R | BODY STYLE & DRIVE TYPE & ENGINE | REMARKS | G-AP Ref. | PRODUCT | ABS | Technical Specifications A | B | C | H | L | P |
|---|---|---|---|---|---|---|---|---|---|---|---|---|---|---|---|
| **VAUXHALL** | | | | | | | | | | | | | | | |
| **Corsa Van** | | | | | | | | | | | | | | | |
| 1.3 (52 kw) | 2004.04-2006.06 | MT | F | R | Hatchback Van FWD Z 13 DT | | GCO44018 | Outer Joint | | 22 | 28 | 52.2 | 97.5 | 55 | O |
| | 2004.04-2006.06 | MT | F | R | Hatchback Van FWD Z 13 DT | | GCO44043 | Outer Joint | | 22 | 28 | 52 | 97.5 | 57.5 | O |
| | 2004.04-2006.06 | MT | F | L/R | Hatchback Van FWD Z 13 DT | | GCO44019 | Outer Joint | 29T | 22 | 28 | 52 | 97.5 | 57.5 | O |
| 1.3 (55 kw) | 2006.07- | 5MT | F | L | Hatchback Van FWD Z 13 DTJ;A 13 DTC | | GDS44040 | Drive Shaft | | 25 | 22 | 51 | 84.5 | 616 | |
| | 2006.07- | 5MT | F | R | Hatchback Van FWD Z 13 DTJ;A 13 DTC | For Engine code:Z13DTJ | GDS44042 | Drive Shaft | | 25 | 22 | 51 | 84.5 | 920 | |
| | 2006.07- | 5MT | F | R | Hatchback Van FWD Z 13 DTJ;A 13 DTC | For Engine code:A13DTC | GDS84460 | Drive Shaft | | 25 | 22 | 51 | 84 | 923 | |
| | 2006.07- | 5MT | F | L/R | Hatchback Van FWD Z 13 DTJ;A 13 DTC | For Engine code:Z13DTJ | GCO17053 | Outer Joint | | 25 | 23 | 51 | 84.5 | 60 | M |
| | 2006.07- | 5MT | F | L/R | Hatchback Van FWD Z 13 DTJ;A 13 DTC | For Engine code:A13DTC | GCO81547 | Outer Joint | | 25 | 22 | 51 | 84 | 57 | M |
| | 2006.07- | 5MT | F | L | Hatchback Van FWD Z 13 DTJ;A 13 DTC | For Engine code:Z13DTJ | GCI44009 | Inner Joint | | 22 | 23 | 35 | 57.5 | 96 | |
| | 2006.07- | 5MT | F | R | Hatchback Van FWD Z 13 DTJ;A 13 DTC | For Engine code:Z13DTJ | GCI44017 | Inner Joint | | 22 | 23 | 35 | 57.5 | 116 | |
| | 2014.10- | 5MT | F | R | Hatchback Van FWD B 13 DTC;B 13 DTN | | GDS84460 | Drive Shaft | | 25 | 22 | 51 | 84 | 923 | |
| | 2014.10- | 5MT | F | L/R | Hatchback Van FWD B 13 DTC;B 13 DTN | | GCO81547 | Outer Joint | | 25 | 22 | 51 | 84 | 57 | M |
| | 2014.10- | 5MT | F | R | Hatchback Van FWD B 13 DTC;B 13 DTN | | GCI44013 | Inner Joint | | 22 | 21 | 35 | 57.5 | 93 | |
| | 2014.10- | MT | F | L | Hatchback Van FWD B 13 DTC;B 13 DTN | | GDS82511 | Drive Shaft | | 25 | 22 | 51 | 84 | 607 | |
| 1.3 (66 kw) | 2006.07- | 6MT | F | L | Hatchback Van FWD Z 13 DTH | | GDS17070 | Drive Shaft | | 25 | 25 | 51 | 84.5 | 576 | |
| | 2006.07- | 6MT | F | R | Hatchback Van FWD Z 13 DTH | | GDS17071 | Drive Shaft | | 25 | 25 | 51 | 84.5 | 952 | |
| | 2006.07- | 6MT | F | L/R | Hatchback Van FWD Z 13 DTH | | GCO17053 | Outer Joint | | 25 | 23 | 51 | 84.5 | 60 | M |
| | 2006.07- | 6MT | F | L | Hatchback Van FWD Z 13 DTH | | GCI44014 | Inner Joint | | 25 | 23 | 34.9 | 57.5 | 102 | |
| | 2006.07- | 6MT | F | R | Hatchback Van FWD Z 13 DTH | | GCI44012 | Inner Joint | | 25 | 23 | 34.9 | 56.5 | 118 | |
| 1.3 (70 kw) | 2006.07- | 5MT | F | L | Hatchback Van FWD A 13 DTE;Z 13 DTE;A 13 DTR | For Engine code:A13DTE/Z13DTE | GDS44040 | Drive Shaft | | 25 | 22 | 51 | 84.5 | 616 | |
| | 2006.07- | 5MT | F | R | Hatchback Van FWD A 13 DTE;Z 13 DTE;A 13 DTR | For Engine code:A13DTE/Z13DTE | GDS84460 | Drive Shaft | | 25 | 22 | 51 | 84 | 923 | |
| | 2006.07- | 5MT | F | L/R | Hatchback Van FWD A 13 DTE;Z 13 DTE;A 13 DTR | For Engine code:A13DTE/Z13DTE | GCO81547 | Outer Joint | | 25 | 22 | 51 | 84 | 57 | M |
| | 2006.07- | 6MT | F | L | Hatchback Van FWD A 13 DTE;Z 13 DTE;A 13 DTR | For Engine code:A13DTR | GDS17070 | Drive Shaft | | 25 | 25 | 51 | 84.5 | 576 | |
| | 2006.07- | 6MT | F | R | Hatchback Van FWD A 13 DTE;Z 13 DTE;A 13 DTR | For Engine code:A13DTR | GDS17071 | Drive Shaft | | 25 | 25 | 51 | 84.5 | 952 | |
| | 2006.07- | 6MT | F | L/R | Hatchback Van FWD A 13 DTE;Z 13 DTE;A 13 DTR | For Engine code:A13DTR | GCO17053 | Outer Joint | | 25 | 23 | 51 | 84.5 | 60 | M |
| | 2006.07- | 6MT | F | L | Hatchback Van FWD A 13 DTE;Z 13 DTE;A 13 DTR | | GCI44014 | Inner Joint | | 25 | 23 | 34.9 | 57.5 | 102 | |
| | 2006.07- | 6MT | F | R | Hatchback Van FWD A 13 DTE;Z 13 DTE;A 13 DTR | | GCI44012 | Inner Joint | | 25 | 23 | 34.9 | 56.5 | 118 | |
| | 2014.10- | 5AMT | F | L/R | Hatchback Van FWD B 13 DTE;B 13 DTR | | GCO81547 | Outer Joint | | 25 | 22 | 51 | 84 | 57 | M |
| | 2014.10- | 5MT/5AMT | F | R | Hatchback Van FWD B 13 DTE;B 13 DTR | | GDS84460 | Drive Shaft | | 25 | 22 | 51 | 84 | 923 | |
| | 2014.10- | 5MT/5AMT | F | R | Hatchback Van FWD B 13 DTE;B 13 DTR | | GCI44013 | Inner Joint | | 22 | 21 | 35 | 57.5 | 93 | |
| | 2014.10- | 6MT | F | L/R | Hatchback Van FWD B 13 DTE;B 13 DTR | | GCO17053 | Outer Joint | | 25 | 23 | 51 | 84.5 | 60 | M |
| | 2014.10- | MT | F | L | Hatchback Van FWD B 13 DTE;B 13 DTR | | GDS82511 | Drive Shaft | | 25 | 22 | 51 | 84 | 607 | |
| 1.4 (44 kw) | 1993.09-2001.12 | 5MT | F | L | Hatchback Van FWD C14NZ/X14SZ | | GDS44001 | Drive Shaft | 29T | 22 | 22 | 52 | 95 | 573 | |
| | 1993.09-2001.12 | 5MT | F | R | Hatchback Van FWD C14NZ/X14SZ | | GDS60002 | Drive Shaft | 29T | 22 | 22 | 52 | 95 | 926 | |
| | 1993.09-2001.12 | 5MT | F | L/R | Hatchback Van FWD C14NZ/X14SZ | | GCI44003 | Inner Joint | | 22 | 28 | 34.95 | 57.5 | 83.5 | |
| | 1993.09-2001.12 | AT/MT | F | L/R | Hatchback Van FWD C14NZ/X14SZ | | GCO44046 | Outer Joint | | 22 | 28 | 52.2 | 97.5 | 55 | O |
| | 1993.09-2001.12 | | F | | Hatchback Van FWD C14NZ/X14SZ | | GCO44018 | Outer Joint | | 22 | 28 | 52.2 | 97.5 | 55 | O |
| | 1993.09-2001.12 | | F | | Hatchback Van FWD C14NZ/X14SZ | | GCO44019 | Outer Joint | 29T | 22 | 28 | 52 | 97.5 | 57.5 | O |
| 1.4 (66 kw) | 2003.11-2006.06 | 5MT | F | L | Hatchback Van FWD Z 14 XEP | | GDS44027 | Drive Shaft | 29T | 22 | 22 | 52 | 98 | 580 | |
| | 2003.11-2006.06 | 5MT | F | R | Hatchback Van FWD Z 14 XEP | | GDS44026 | Drive Shaft | 29T | 22 | 22 | 52 | 98 | 930 | |
| | 2003.11-2006.06 | 5MT | F | L/R | Hatchback Van FWD Z 14 XEP | | GCI44003 | Inner Joint | | 22 | 28 | 34.95 | 57.5 | 83.5 | |
| | 2003.11-2006.06 | MT | F | L | Hatchback Van FWD Z 14 XEP | | GDS99069 | Drive Shaft | 29T | 22 | 22 | 52 | 97.5 | 584 | |
| | 2003.11-2006.06 | MT | F | R | Hatchback Van FWD Z 14 XEP | | GCO44018 | Outer Joint | | 22 | 28 | 52.2 | 97.5 | 55 | O |
| | 2003.11-2006.06 | MT | F | L/R | Hatchback Van FWD Z 14 XEP | | GCO44019 | Outer Joint | 29T | 22 | 28 | 52 | 97.5 | 57.5 | O |
| | 2003.11-2006.06 | | F | R | Hatchback Van FWD Z 14 XEP | | GDS44075 | Drive Shaft | 29T | 22 | 22 | 52 | 97.5 | 926 | |
| | 2003.11-2006.06 | | F | L/R | Hatchback Van FWD Z 14 XEP | | GCO44020 | Outer Joint | 29T | 22 | 28 | 52 | 97.5 | 57.5 | O |
| 1.7 (44 kw) | 1994.01-2001.12 | 5MT | F | L | Hatchback Van FWD X17D | | GDS44001 | Drive Shaft | 29T | 22 | 22 | 52 | 95 | 573 | |
| | 1994.01-2001.12 | 5MT | F | R | Hatchback Van FWD X17D | | GDS60002 | Drive Shaft | 29T | 22 | 22 | 52 | 95 | 926 | |
| | 1994.01-2001.12 | 5MT | F | L/R | Hatchback Van FWD X17D | | GCI44003 | Inner Joint | | 22 | 28 | 34.95 | 57.5 | 83.5 | |
| | 1994.01-2001.12 | AT/MT | F | L/R | Hatchback Van FWD X17D | | GCO44046 | Outer Joint | | 22 | 28 | 52.2 | 97.5 | 55 | O |
| | 1994.01-2001.12 | | F | | Hatchback Van FWD X17D | | GCO44018 | Outer Joint | | 22 | 28 | 52.2 | 97.5 | 55 | O |
| | 1994.01-2001.12 | | F | | Hatchback Van FWD X17D | | GCO44019 | Outer Joint | 29T | 22 | 28 | 52 | 97.5 | 57.5 | O |
| 1.7 (48 kw) | 2000.09-2006.06 | 5MT | F | L | Hatchback Van FWD Y 17 DTL | Chassis no. to:13999999/14999999/16999999 | GDS82091 | Drive Shaft | 29T | 22 | 22 | 52 | 97.5 | 580 | |
| | 2000.09-2006.06 | 5MT | F | L | Hatchback Van FWD Y 17 DTL | Chassis no. from:23000001 | GDS99204 | Drive Shaft | | 22 | 22 | 52 | 97.5 | 584 | |
| | 2000.09-2006.06 | 5MT | F | R | Hatchback Van FWD Y 17 DTL | Chassis no. from:23000001 | GDS44026 | Drive Shaft | 29T | 22 | 22 | 52 | 98 | 930 | |
| | 2000.09-2006.06 | 5MT | F | R | Hatchback Van FWD Y 17 DTL | Chassis no. to:13999999 | GDS44060 | Drive Shaft | | 22 | 22 | 52 | 98 | 930 | |
| | 2000.09-2006.06 | 5MT | F | R | Hatchback Van FWD Y 17 DTL | Chassis no. from:23000001 | GDS99205 | Drive Shaft | | 22 | 22 | 52 | 97.5 | 930 | |
| | 2000.09-2006.06 | 5MT | F | L/R | Hatchback Van FWD Y 17 DTL | Chassis no. from:23000001 | GDS44027 | Drive Shaft | 29T | 22 | 22 | 52 | 98 | 580 | |
| | 2000.09-2006.06 | 5MT | F | L/R | Hatchback Van FWD Y 17 DTL | Date To:2001.12,Chassis no. to:13999999/14999999/16999999 | GCI60001 | Inner Joint | | 22 | 28 | 34.9 | 57.5 | 96.5 | |
| | 2000.09-2006.06 | AT/MT | F | L/R | Hatchback Van FWD Y 17 DTL | | GCO44020 | Outer Joint | 29T | 22 | 28 | 52 | 97.5 | 57.5 | O |
| | 2000.09-2006.06 | MT | F | L | Hatchback Van FWD Y 17 DTL | | GDS99069 | Drive Shaft | 29T | 22 | 22 | 52 | 97.5 | 584 | |
| | 2000.09-2006.06 | MT | F | R | Hatchback Van FWD Y 17 DTL | Date from:2002.01,Chassis no. to:23000001/24000001/26000001 | GDS44075 | Drive Shaft | 29T | 22 | 22 | 52 | 97.5 | 926 | |
| | 2000.09-2006.06 | MT | F | R | Hatchback Van FWD Y 17 DTL | | GCO44043 | Outer Joint | | 22 | 28 | 52 | 97.5 | 57.5 | O |
| | 2000.09-2006.06 | MT | F | L/R | Hatchback Van FWD Y 17 DTL | | GCO44018 | Outer Joint | | 22 | 28 | 52.2 | 97.5 | 55 | O |
| | 2000.09-2006.06 | MT | F | L/R | Hatchback Van FWD Y 17 DTL | | GCO44019 | Outer Joint | 29T | 22 | 28 | 52 | 97.5 | 57.5 | O |

| | YEAR | TRANSM. | F/R | L/R | BODY STYLE & DRIVE TYPE & ENGINE | REMARKS | G-AP Ref. | PRODUCT | ABS | Technical Specifications A | B | C | H | L | P |
|---|---|---|---|---|---|---|---|---|---|---|---|---|---|---|---|
| **VAUXHALL** | | | | | | | | | | | | | | | |
| **Corsa Van** | | | | | | | | | | | | | | | |
| 1.7 (48 kw) | 2000.09-2006.06 | MT | F | L/R | Hatchback Van FWD Y 17 DTL | | GCO44044 | Outer Joint | | 22 | 28 | 52 | 97.5 | 57.5 | O |
| 1.7 (55 kw) | 2000.09-2006.06 | 5MT | F | L | Hatchback Van FWD Y 17 DT | Chassis no. to:13999999/14999999/16999999 | GDS82091 | Drive Shaft | 29T | 22 | 22 | 52 | 97.5 | 580 | |
| | 2000.09-2006.06 | 5MT | F | L | Hatchback Van FWD Y 17 DT | Chassis no. from:23000001 | GDS99204 | Drive Shaft | | 22 | 22 | 52 | 97.5 | 584 | |
| | 2000.09-2006.06 | 5MT | F | R | Hatchback Van FWD Y 17 DT | Chassis no. from:23000001 | GDS44026 | Drive Shaft | 29T | 22 | 22 | 52 | 98 | 930 | |
| | 2000.09-2006.06 | 5MT | F | R | Hatchback Van FWD Y 17 DT | Chassis no. to:13999999 | GDS44060 | Drive Shaft | | 22 | 22 | 52 | 98 | 930 | |
| | 2000.09-2006.06 | 5MT | F | R | Hatchback Van FWD Y 17 DT | Chassis no. from:23000001 | GDS99205 | Drive Shaft | | 22 | 22 | 52 | 97.5 | 930 | |
| | 2000.09-2006.06 | 5MT | F | L/R | Hatchback Van FWD Y 17 DT | Chassis no. from:23000001 | GDS44027 | Drive Shaft | 29T | 22 | 22 | 52 | 98 | 580 | |
| | 2000.09-2006.06 | 5MT | F | L/R | Hatchback Van FWD Y 17 DT | Date To:2001.12,Chassis no. to:13999999/14999999/16999999 | GCI60001 | Inner Joint | | 22 | 28 | 34.9 | 57.5 | 96.5 | |
| | 2000.09-2006.06 | AT/MT | F | L/R | Hatchback Van FWD Y 17 DT | | GCO44020 | Outer Joint | 29T | 22 | 28 | 52 | 97.5 | 57.5 | O |
| | 2000.09-2006.06 | MT | F | L | Hatchback Van FWD Y 17 DT | | GDS99069 | Drive Shaft | 29T | 22 | 22 | 52 | 97.5 | 584 | |
| | 2000.09-2006.06 | MT | F | R | Hatchback Van FWD Y 17 DT | Date from:2002.01,Chassis no. to:23000001/24000001/26000001 | GDS44075 | Drive Shaft | 29T | 22 | 22 | 52 | 97.5 | 926 | |
| | 2000.09-2006.06 | MT | F | R | Hatchback Van FWD Y 17 DT | | GCO44018 | Outer Joint | | 22 | 28 | 52.2 | 97.5 | 55 | O |
| | 2000.09-2006.06 | MT | F | R | Hatchback Van FWD Y 17 DT | | GCO44043 | Outer Joint | | 22 | 28 | 52 | 97.5 | 57.5 | O |
| | 2000.09-2006.06 | MT | F | L/R | Hatchback Van FWD Y 17 DT | | GCO44019 | Outer Joint | 29T | 22 | 28 | 52 | 97.5 | 57.5 | O |
| | 2000.09-2006.06 | MT | F | L/R | Hatchback Van FWD Y 17 DT | | GCO44044 | Outer Joint | | 22 | 28 | 52 | 97.5 | 57.5 | O |
| **Crossland** | | | | | | | | | | | | | | | |
| 1.5 (81 kw) | 2020.10- | 6MT | F | L | SUV FWD F 15 DT (DV5RCE) | | GDS84007 | Drive Shaft | | 25 | 24 | 58.5 | 79 | 654 | |
| | 2020.10- | 6MT | F | R | SUV FWD F 15 DT (DV5RCE) | | GDS83947 | Drive Shaft | | 25 | 24 | 58.5 | 79 | 878 | |
| **Crossland X** | | | | | | | | | | | | | | | |
| 1.5 (75 kw) | 2018.06- | 6MT | F | L | SUV FWD D 15 DT (DV5RD) | | GDS84007 | Drive Shaft | | 25 | 24 | 58.5 | 79 | 654 | |
| | 2018.06- | 6MT | F | R | SUV FWD D 15 DT (DV5RD) | | GDS83947 | Drive Shaft | | 25 | 24 | 58.5 | 79 | 878 | |
| | 2018.06- | 6MT | F | L/R | SUV FWD D 15 DT (DV5RD) | | GCO82355 | Outer Joint | | 25 | 34 | 58.5 | 79 | 55.5 | I |
| | 2018.06- | 6MT | F | L | SUV FWD D 15 DT (DV5RD) | | GCI82131 | Inner Joint | | 24 | 34 | 40 | 62 | 89 | |
| | 2018.06- | 6MT | F | R | SUV FWD D 15 DT (DV5RD) | | GCI82374 | Inner Joint | | 24 | 34 | 29.8 | 291 | 88 | |
| 1.6 (73 kw) | 2017.03-2018.05 | 5MT | F | L | SUV FWD B 16 DT (DV6FD) | | GDS84007 | Drive Shaft | | 25 | 24 | 58.5 | 79 | 654 | |
| | 2017.03-2018.05 | 5MT | F | R | SUV FWD B 16 DT (DV6FD) | | GDS83947 | Drive Shaft | | 25 | 24 | 58.5 | 79 | 878 | |
| | 2017.03-2018.05 | 5MT | F | L/R | SUV FWD B 16 DT (DV6FD) | | GCO82355 | Outer Joint | | 25 | 34 | 58.5 | 79 | 55.5 | I |
| | 2017.03-2018.05 | 5MT | F | L | SUV FWD B 16 DT (DV6FD) | | GCI82131 | Inner Joint | | 24 | 34 | 40 | 62 | 89 | |
| | 2017.03-2018.05 | 5MT | F | R | SUV FWD B 16 DT (DV6FD) | | GCI82374 | Inner Joint | | 24 | 34 | 29.8 | 291 | 88 | |
| 1.6 (88 kw) | 2017.03-2018.05 | 6MT | F | L | SUV FWD B 16 DTH (DV6FC) | | GDS84126 | Drive Shaft | | 25 | 24 | 58.5 | 79 | 644 | |
| | 2017.03-2018.05 | 6MT | F | R | SUV FWD B 16 DTH (DV6FC) | | GDS84129 | Drive Shaft | | 25 | 24 | 58.5 | 79 | 893 | |
| **Crossland/Crossland X** | | | | | | | | | | | | | | | |
| 1.2 (61 kw) | 2017.03- | 5MT | F | L/R | SUV FWD D 12 XE (EB2FA), F 12 XE (EB2FA), B 12 XE (EB2F) | | GCO99366 | Outer Joint | | 25 | 34 | 58.5 | 79 | 55 | I |
| 1.2 (81 kw) | 2017.03- | 5MT/6MT | F | L | SUV FWD D 12 XHL (EB2ADT), B 12 XHL (EB2DT), F 12 XHL (EB2ADT) | | GDS84007 | Drive Shaft | | 25 | 24 | 58.5 | 79 | 654 | |
| | 2017.03- | 5MT/6MT | F | R | SUV FWD D 12 XHL (EB2ADT), B 12 XHL (EB2DT), F 12 XHL (EB2ADT) | | GDS83947 | Drive Shaft | | 25 | 24 | 58.5 | 79 | 878 | |
| | 2017.03- | 6AT | F | L | SUV FWD D 12 XHL (EB2ADT), B 12 XHL (EB2DT), F 12 XHL (EB2ADT) | | GDS83614 | Drive Shaft | | 25 | 37 | 58.5 | 79 | 615 | |
| | 2017.03- | 6AT | F | R | SUV FWD D 12 XHL (EB2ADT), B 12 XHL (EB2DT), F 12 XHL (EB2ADT) | | GDS83615 | Drive Shaft | | 25 | 37 | 58.5 | 79 | 880 | |
| | 2017.03- | 6AT | F | L | SUV FWD D 12 XHL (EB2ADT), B 12 XHL (EB2DT), F 12 XHL (EB2ADT) | | GCO10148 | Outer Joint | | 25 | 34 | 58.5 | 79 | 55.5 | I |
| | 2017.03- | 6AT | F | L | SUV FWD D 12 XHL (EB2ADT), B 12 XHL (EB2DT), F 12 XHL (EB2ADT) | | GCO82355 | Outer Joint | | 25 | 34 | 58.5 | 79 | 55.5 | I |
| | 2017.03- | 6AT | F | R | SUV FWD D 12 XHL (EB2ADT), B 12 XHL (EB2DT), F 12 XHL (EB2ADT) | | GCO82351 | Outer Joint | | 25 | 34 | 58.5 | 79 | 55.5 | I |
| | 2017.03- | 6AT | F | L | SUV FWD D 12 XHL (EB2ADT), B 12 XHL (EB2DT), F 12 XHL (EB2ADT) | | GCI82119 | Inner Joint | | 37 | 34 | 41.5 | 58.5 | 94 | |
| | 2017.03- | 6AT | F | R | SUV FWD D 12 XHL (EB2ADT), B 12 XHL (EB2DT), F 12 XHL (EB2ADT) | | GCI82182 | Inner Joint | | 37 | 34 | | 290 | 88 | |
| 1.2 (96 kw) | 2017.03- | 6AT | F | L | SUV FWD D 12 XHT (EB2ADTS), B 12 XHT (EB2DTS), F 12 XHT (EB2ADTS) | | GDS83614 | Drive Shaft | | 25 | 37 | 58.5 | 79 | 615 | |
| | 2017.03- | 6AT | F | R | SUV FWD D 12 XHT (EB2ADTS), B 12 XHT (EB2DTS), F 12 XHT (EB2ADTS) | | GDS83615 | Drive Shaft | | 25 | 37 | 58.5 | 79 | 880 | |
| | 2017.03- | 6AT | F | L | SUV FWD D 12 XHT (EB2ADTS), B 12 XHT (EB2DTS), F 12 XHT (EB2ADTS) | | GCO82355 | Outer Joint | | 25 | 34 | 58.5 | 79 | 55.5 | I |
| | 2017.03- | 6AT | F | R | SUV FWD D 12 XHT (EB2ADTS), B 12 XHT (EB2DTS), F 12 XHT (EB2ADTS) | | GCO82351 | Outer Joint | | 25 | 34 | 58.5 | 79 | 55.5 | I |
| | 2017.03- | 6AT | F | L | SUV FWD D 12 XHT (EB2ADTS), B 12 XHT (EB2DTS), F 12 XHT (EB2ADTS) | | GCI82119 | Inner Joint | | 37 | 34 | 41.5 | 58.5 | 94 | |
| | 2017.03- | 6AT | F | R | SUV FWD D 12 XHT (EB2ADTS), B 12 XHT (EB2DTS), F 12 XHT (EB2ADTS) | | GCI82182 | Inner Joint | | 37 | 34 | | 290 | 88 | |
| | 2017.03- | 6MT | F | L | SUV FWD D 12 XHT (EB2ADTS), B 12 XHT (EB2DTS), F 12 XHT (EB2ADTS) | For Engine code:D12XHT(EB2ADTS)/F12XHT(EB2ADTS) | GDS84007 | Drive Shaft | | 25 | 24 | 58.5 | 79 | 654 | |
| | 2017.03- | 6MT | F | L | SUV FWD D 12 XHT (EB2ADTS), B 12 XHT (EB2DTS), F 12 XHT (EB2ADTS) | For Engine code:B12XHT(EB2DTS) | GDS84126 | Drive Shaft | | 25 | 24 | 58.5 | 79 | 644 | |
| | 2017.03- | 6MT | F | R | SUV FWD D 12 XHT (EB2ADTS), B 12 XHT (EB2DTS), F 12 XHT (EB2ADTS) | For Enginecode:D12XHT(EB2ADTS)/F12XHT(EB2ADTS) | GDS83947 | Drive Shaft | | 25 | 24 | 58.5 | 79 | 878 | |
| | 2017.03- | 6MT | F | R | SUV FWD D 12 XHT (EB2ADTS), B 12 XHT (EB2DTS), F 12 XHT (EB2ADTS) | For Engine code:B12XHT(EB2DTS) | GDS84129 | Drive Shaft | | 25 | 24 | 58.5 | 79 | 893 | |
| 1.5 (88 kw) | 2018.08- | 6AT | F | L | SUV FWD D 15 DTH (DV5RC) | | GDS83614 | Drive Shaft | | 25 | 37 | 58.5 | 79 | 615 | |
| | 2018.08- | 6AT | F | R | SUV FWD D 15 DTH (DV5RC) | | GDS83615 | Drive Shaft | | 25 | 37 | 58.5 | 79 | 880 | |
| | 2018.08- | 6AT | F | L | SUV FWD D 15 DTH (DV5RC) | | GCO82355 | Outer Joint | | 25 | 34 | 58.5 | 79 | 55.5 | I |
| | 2018.08- | 6AT | F | R | SUV FWD D 15 DTH (DV5RC) | | GCO82351 | Outer Joint | | 25 | 34 | 58.5 | 79 | 55.5 | I |
| | 2018.08- | 6AT | F | L | SUV FWD D 15 DTH (DV5RC) | | GCI82119 | Inner Joint | | 37 | 34 | 41.5 | 58.5 | 94 | |
| | 2018.08- | 6AT | F | R | SUV FWD D 15 DTH (DV5RC) | | GCI82182 | Inner Joint | | 37 | 34 | | 290 | 88 | |
| **Frontera** | | | | | | | | | | | | | | | |
| 1.2 (74 kw) | 2024.07- | 6DCT | F | R | SUV FWD HPX(EB2LTEDH2) | | GDS56753 | Drive Shaft | | 25 | 37 | 55.7 | 84 | 911 | |
| | 2024.07- | | F | R | SUV FWD HPX(EB2LTEDH2) | | GCI83474 | Inner Joint | | 37 | 34 | 29.8 | 290 | 99 | |
| 1.2 (81 kw) | 2025.04- | 6DCT | F | R | SUV FWD HPX (EB2LTEDH2) | | GDS56753 | Drive Shaft | | 25 | 37 | 55.7 | 84 | 911 | |
| 1.2 (100 kw) | 2024.07- | 6DCT | F | R | SUV FWD HPY(EB2LTDH2) | | GDS56753 | Drive Shaft | | 25 | 37 | 55.7 | 84 | 911 | |
| | 2024.07- | | F | R | SUV FWD HPY(EB2LTDH2) | | GCI83474 | Inner Joint | | 37 | 34 | 29.8 | 290 | 99 | |
| 1.2 (107 kw) | 2025.04- | 6DCT | F | R | SUV FWD HPY (EB2LTDH2) | | GDS56753 | Drive Shaft | | 25 | 37 | 55.7 | 84 | 911 | |

| | YEAR | TRANSM. | F/R | L/R | BODY STYLE & DRIVE TYPE & ENGINE | REMARKS | G-AP Ref. | PRODUCT | ABS | Technical Specifications A | B | C | H | L | P |
|---|---|---|---|---|---|---|---|---|---|---|---|---|---|---|---|
| **VAUXHALL** | | | | | | | | | | | | | | | |
| **Frontera** | | | | | | | | | | | | | | | |
| 2.0 (85 kw) | 1992.02-1998.08 | AT/MT | F | L/R | Terrain cab open 4WD C20NE/X20SE | | GCO26003 | Outer Joint | | 17 | 26 | 53 | 144 | 70.5 | M |
| 2.2 (85 kw) | 1998.09-2000.08 | MT | F | L/R | Terrain cab wagon closed 4WD X22DTH/Y22DTH | | GCO26004 | Outer Joint | | 17 | 33 | 53 | 144 | 69.5 | I |
| 2.2 (100 kw) | 1995.04-1998.08 | | F | | Terrain cab wagon closed 4WD X22XE | | GCO26004 | Outer Joint | | 17 | 33 | 53 | 144 | 69.5 | I |
| | 1998.09-2004.10 | | F | | Terrain cab wagon closed 4WD X22SE/Y22SE | | GCO26004 | Outer Joint | | 17 | 33 | 53 | 144 | 69.5 | I |
| 2.3 (74 kw) | 1992.03-1998.10 | | F | | Terrain cab wagon closed 4WD 23DTR | | GCO26004 | Outer Joint | | 17 | 33 | 53 | 144 | 69.5 | I |
| 2.5 (85 kw) | 1996.08-1998.06 | AT/MT | F | L/R | Terrain cab wagon closed 4WD VM41B | | GCO26003 | Outer Joint | | 17 | 26 | 53 | 144 | 70.5 | M |
| | 1996.08-1998.06 | | F | | Terrain cab wagon closed 4WD VM41B | | GCO26004 | Outer Joint | | 17 | 33 | 53 | 144 | 69.5 | I |
| | 1996.09-1998.08 | | F | | Terrain cab open 4WD VM41B | | GCO26004 | Outer Joint | | 17 | 33 | 53 | 144 | 69.5 | I |
| 2.8 (83 kw) | 1995.03-1997.02 | AT/MT | F | L/R | Terrain cab open 4WD 4JB1T | | GCO26004 | Outer Joint | | 17 | 33 | 53 | 144 | 69.5 | I |
| | 1995.03-1997.02 | AT/MT | F | L/R | Terrain cab wagon closed 4WD 4JB1T | | GCO26004 | Outer Joint | | 17 | 33 | 53 | 144 | 69.5 | I |
| 3.2 (151 kw) | 1998.09-2004.10 | | F | | Terrain cab wagon closed 4WD 6VD1(DOHC) | | GCO26004 | Outer Joint | | 17 | 33 | 53 | 144 | 69.5 | I |
| **Grandland X** | | | | | | | | | | | | | | | |
| 1.6 (88 kw) | 2017.06-2021.07 | 6AT | F | L | SUV FWD B 16 DTH (DV6FC) | | GDS83076 | Drive Shaft | | 28 | 37 | 58.5 | 93 | 655 | |
| | 2017.06-2021.07 | 6AT | F | R | SUV FWD B 16 DTH (DV6FC) | | GDS83077 | Drive Shaft | | 28 | 37 | 58.5 | 93 | 928 | |
| | 2017.06-2021.07 | 6AT | F | L/R | SUV FWD B 16 DTH (DV6FC) | | GCO10199 | Outer Joint | | 28 | 23 | 58.5 | 93 | 50.5 | I |
| | 2017.06-2021.07 | 6AT | F | L | SUV FWD B 16 DTH (DV6FC) | | GCI10139 | Inner Joint | | 37 | 23 | 40.3 | 59 | 95 | |
| | 2017.06-2021.07 | 6AT | F | R | SUV FWD B 16 DTH (DV6FC) | | GCI45038 | Inner Joint | | 37 | 23 | | 284 | 95 | |
| | 2017.06-2021.07 | 6MT | F | L | SUV FWD B 16 DTH (DV6FC) | | GDS83608 | Drive Shaft | | 28 | 37 | 58.5 | 92.5 | 683 | |
| | 2017.06-2021.07 | 6MT | F | R | SUV FWD B 16 DTH (DV6FC) | | GDS83607 | Drive Shaft | | 28 | 37 | 58.5 | 92.5 | 944 | |
| | 2017.06-2021.07 | 6MT | F | L/R | SUV FWD B 16 DTH (DV6FC) | | GCO82273 | Outer Joint | | 28 | 34 | 58.5 | 92.5 | 56 | I |
| | 2017.06-2021.07 | 6MT | F | L | SUV FWD B 16 DTH (DV6FC) | | GCI82301 | Inner Joint | | 37 | 34 | 40 | 65.5 | 89.5 | |
| | 2017.06-2021.07 | 6MT | F | R | SUV FWD B 16 DTH (DV6FC) | | GCI82300 | Inner Joint | | 37 | 34 | 31.9 | 302 | 88 | |
| 2.0 (130 kw) | 2017.10-2021.07 | 6MT | F | L | SUV FWD D 20 DTH (DW10FC) | | GDS58210 | Drive Shaft | | 28 | 37 | 58.5 | 92 | 667 | |
| | 2017.10-2021.07 | 6MT | F | R | SUV FWD D 20 DTH (DW10FC) | | GDS58209 | Drive Shaft | | 28 | 37 | 58.5 | 92 | 969 | |
| | 2017.10-2021.07 | 6MT | F | L | SUV FWD D 20 DTH (DW10FC) | | GCI82363 | Inner Joint | | 37 | 36 | 40 | 68 | 108 | |
| | 2017.10-2021.07 | 6MT | F | R | SUV FWD D 20 DTH (DW10FC) | | GCI82364 | Inner Joint | | 37 | 36 | 32 | 400 | 108 | |
| | 2017.10-2021.07 | 8AT | F | L | SUV FWD D 20 DTH (DW10FC) | | GDS83646 | Drive Shaft | | 28 | 37 | 58.5 | 92 | 622 | |
| | 2017.10-2021.07 | 8AT | F | R | SUV FWD D 20 DTH (DW10FC) | | GDS83652 | Drive Shaft | | 28 | 37 | 58.5 | 92 | 951 | |
| | 2017.10-2021.07 | 8AT | F | L | SUV FWD D 20 DTH (DW10FC) | | GCI82321 | Inner Joint | | 37 | 36 | 42.5 | 59.5 | 108 | |
| | 2017.10-2021.07 | 8AT | F | R | SUV FWD D 20 DTH (DW10FC) | | GCI82322 | Inner Joint | | 37 | 36 | | 379 | 108.5 | |
| | 2017.10-2021.07 | 8AT/6MT | F | L/R | SUV FWD D 20 DTH (DW10FC) | | GCO82449 | Outer Joint | | 28 | 36 | 58.5 | 92 | 60 | I |
| **Grandland/Grandland X** | | | | | | | | | | | | | | | |
| 1.2 (96 kw) | 2017.06- | 6AT/8AT | F | L | SUV FWD D 12 XHT (EB2ADTS), B 12 XHT (EB2DTS), F 12 XHT (EB2ADTS) | | GDS83076 | Drive Shaft | | 28 | 37 | 58.5 | 93 | 655 | |
| | 2017.06- | 6AT/8AT | F | R | SUV FWD D 12 XHT (EB2ADTS), B 12 XHT (EB2DTS), F 12 XHT (EB2ADTS) | | GDS83077 | Drive Shaft | | 28 | 37 | 58.5 | 93 | 928 | |
| | 2017.06- | 6AT/8AT | F | L/R | SUV FWD D 12 XHT (EB2ADTS), B 12 XHT (EB2DTS), F 12 XHT (EB2ADTS) | | GCO10199 | Outer Joint | | 28 | 23 | 58.5 | 93 | 50.5 | I |
| | 2017.06- | 6AT/8AT | F | L | SUV FWD D 12 XHT (EB2ADTS), B 12 XHT (EB2DTS), F 12 XHT (EB2ADTS) | | GCI10139 | Inner Joint | | 37 | 23 | 40.3 | 59 | 95 | |
| | 2017.06- | 6AT/8AT | F | R | SUV FWD D 12 XHT (EB2ADTS), B 12 XHT (EB2DTS), F 12 XHT (EB2ADTS) | | GCI45038 | Inner Joint | | 37 | 23 | | 284 | 95 | |
| | 2017.06- | 6MT | F | L | SUV FWD D 12 XHT (EB2ADTS), B 12 XHT (EB2DTS), F 12 XHT (EB2ADTS) | For Engine Code:D12XHT(EB2ADTS) | GDS83067 | Drive Shaft | | 28 | 24 | 58.5 | 92.5 | 696 | |
| | 2017.06- | 6MT | F | L | SUV FWD D 12 XHT (EB2ADTS), B 12 XHT (EB2DTS), F 12 XHT (EB2ADTS) | For Engine code:B12XHT(EB2DTS) | GDS83617 | Drive Shaft | | 28 | 24 | 58.5 | 92.5 | 688 | |
| | 2017.06- | 6MT | F | R | SUV FWD D 12 XHT (EB2ADTS), B 12 XHT (EB2DTS), F 12 XHT (EB2ADTS) | For Engine code:B12XHT(EB2DTS) | GDS83618 | Drive Shaft | | 28 | 24 | 58.5 | 92.5 | 950 | |
| | 2017.06- | 6MT | F | R | SUV FWD D 12 XHT (EB2ADTS), B 12 XHT (EB2DTS), F 12 XHT (EB2ADTS) | | GDS84363 | Drive Shaft | | 28 | 24 | 58.5 | 92.5 | 933 | |
| | 2017.06- | 6MT | F | L/R | SUV FWD D 12 XHT (EB2ADTS), B 12 XHT (EB2DTS), F 12 XHT (EB2ADTS) | For Engine code:D12XHT(EB2ADTS)/B12XHT(EB2DTS) | GCO82273 | Outer Joint | | 28 | 34 | 58.5 | 92.5 | 56 | I |
| | 2017.06- | 6MT | F | L | SUV FWD D 12 XHT (EB2ADTS), B 12 XHT (EB2DTS), F 12 XHT (EB2ADTS) | For Engine Code:D12XHT(EB2ADTS) | GCI82131 | Inner Joint | | 24 | 34 | 40 | 62 | 89 | |
| | 2017.06- | 6MT | F | L | SUV FWD D 12 XHT (EB2ADTS), B 12 XHT (EB2DTS), F 12 XHT (EB2ADTS) | For Engine code:B12XHT(EB2DTS) | GCI82181 | Inner Joint | | 24 | 34 | 40 | 52.5 | 90 | |
| | 2017.06- | 6MT | F | R | SUV FWD D 12 XHT (EB2ADTS), B 12 XHT (EB2DTS), F 12 XHT (EB2ADTS) | For Engine code:D12XHT(EB2ADTS) | GCI82320 | Inner Joint | | 24 | 34 | 29.8 | 290 | 88 | |
| | 2017.06- | 6MT | F | R | SUV FWD D 12 XHT (EB2ADTS), B 12 XHT (EB2DTS), F 12 XHT (EB2ADTS) | For Engine code:B12XHT(EB2DTS) | GCI82323 | Inner Joint | | 24 | 34 | 29.8 | 306 | 88 | |
| 1.5 (96 kw) | 2018.04- | 6MT | F | L | SUV FWD D 15 DTH (DV5RC) | | GDS83608 | Drive Shaft | | 28 | 37 | 58.5 | 92.5 | 683 | |
| | 2018.04- | 6MT | F | R | SUV FWD D 15 DTH (DV5RC) | | GDS83607 | Drive Shaft | | 28 | 37 | 58.5 | 92.5 | 944 | |
| | 2018.04- | 6MT | F | L/R | SUV FWD D 15 DTH (DV5RC) | | GCO82273 | Outer Joint | | 28 | 34 | 58.5 | 92.5 | 56 | I |
| | 2018.04- | 6MT | F | L | SUV FWD D 15 DTH (DV5RC) | | GCI82301 | Inner Joint | | 37 | 34 | 40 | 65.5 | 89.5 | |
| | 2018.04- | 6MT | F | R | SUV FWD D 15 DTH (DV5RC) | | GCI82300 | Inner Joint | | 37 | 34 | 31.9 | 302 | 88 | |
| | 2018.04- | 8AT | F | L | SUV FWD D 15 DTH (DV5RC) | | GDS83076 | Drive Shaft | | 28 | 37 | 58.5 | 93 | 655 | |
| | 2018.04- | 8AT | F | R | SUV FWD D 15 DTH (DV5RC) | | GDS83077 | Drive Shaft | | 28 | 37 | 58.5 | 93 | 928 | |
| | 2018.04- | 8AT | F | L/R | SUV FWD D 15 DTH (DV5RC) | | GCO10199 | Outer Joint | | 28 | 23 | 58.5 | 93 | 50.5 | I |
| | 2018.04- | 8AT | F | L | SUV FWD D 15 DTH (DV5RC) | | GCI10139 | Inner Joint | | 37 | 23 | 40.3 | 59 | 95 | |
| | 2018.04- | 8AT | F | R | SUV FWD D 15 DTH (DV5RC) | | GCI45038 | Inner Joint | | 37 | 23 | | 284 | 95 | |
| 1.6 (133 kw) | 2019.12- | 8AT | F | L | SUV FWD D 16 XHT (EP6FADTXD) | | GDS83076 | Drive Shaft | | 28 | 37 | 58.5 | 93 | 655 | |
| | 2019.12- | 8AT | F | R | SUV FWD D 16 XHT (EP6FADTXD) | | GDS83077 | Drive Shaft | | 28 | 37 | 58.5 | 93 | 928 | |
| | 2019.12- | 8AT | F | L/R | SUV FWD D 16 XHT (EP6FADTXD) | | GCO10199 | Outer Joint | | 28 | 23 | 58.5 | 93 | 50.5 | I |
| | 2019.12- | 8AT | F | L | SUV FWD D 16 XHT (EP6FADTXD) | | GCI10139 | Inner Joint | | 37 | 23 | 40.3 | 59 | 95 | |
| | 2019.12- | 8AT | F | R | SUV FWD D 16 XHT (EP6FADTXD) | | GCI45038 | Inner Joint | | 37 | 23 | | 284 | 95 | |
| **Insignia** | | | | | | | | | | | | | | | |
| 1.4 (103 kw) | 2011.04-2017.05 | 6MT | F | L/R | Hatchback FWD A 14 NET;B 14 NET | | GCO17051 | Outer Joint | | 30 | 26 | 53.8 | 94.5 | 65.5 | M |
| | 2011.04-2017.05 | 6MT | F | L/R | Hatchback FWD A 14 NET;B 14 NET | | GCO21049 | Outer Joint | | 30 | 26 | 52.5 | 94 | 65.5 | M |
| | 2011.04-2017.05 | 6MT | F | L/R | Hatchback FWD A 14 NET;B 14 NET | | GCO88046 | Outer Joint | | 30 | 26 | 52.5 | 94.5 | 65.5 | M |

| | YEAR | TRANSM. | F/R | L/R | BODY STYLE & DRIVE TYPE & ENGINE | REMARKS | G-AP Ref. | PRODUCT | ABS | Technical Specifications | | | | | |
|---|---|---|---|---|---|---|---|---|---|---|---|---|---|---|---|
| | | | | | | | | | | A | B | C | H | L | P |
| **VAUXHALL** | | | | | | | | | | | | | | | |
| **Insignia** | | | | | | | | | | | | | | | |
| 1.4 (103 kw) | 2011.04-2017.05 | 6MT | F | R | Hatchback FWD A 14 NET;B 14 NET | | GCI88026 | Inner Joint | | 34 | 26 | 37.5 | | 100 | |
| | 2011.04-2017.05 | MT | F | L | Hatchback FWD A 14 NET;B 14 NET | | GDS21043 | Drive Shaft | | 30 | 25 | 52.5 | 94.5 | 624.5 | |
| | 2011.04-2017.05 | 6MT | F | L/R | Saloon FWD A 14 NET | | GCO17051 | Outer Joint | | 30 | 26 | 53.8 | 94.5 | 65.5 | M |
| | 2011.04-2017.05 | 6MT | F | L/R | Saloon FWD A 14 NET | | GCO21049 | Outer Joint | | 30 | 26 | 52.5 | 94 | 65.5 | M |
| | 2011.04-2017.05 | 6MT | F | L/R | Saloon FWD A 14 NET | | GCO88046 | Outer Joint | | 30 | 26 | 52.5 | 94.5 | 65.5 | M |
| | 2011.04-2017.05 | 6MT | F | R | Saloon FWD A 14 NET | | GCI88026 | Inner Joint | | 34 | 26 | 37.5 | | 100 | |
| | 2011.04-2017.05 | MT | F | L | Saloon FWD A 14 NET | | GDS21043 | Drive Shaft | | 30 | 25 | 52.5 | 94.5 | 624.5 | |
| | 2012.07-2017.05 | 6AT/6MT | F | L/R | Hatchback FWD A 14 NET | | GCO88046 | Outer Joint | | 30 | 26 | 52.5 | 94.5 | 65.5 | M |
| | 2012.07-2017.05 | MT | F | L | Hatchback FWD A 14 NET | | GDS21043 | Drive Shaft | | 30 | 25 | 52.5 | 94.5 | 624.5 | |
| | 2012.07-2017.05 | MT | F | L/R | Hatchback FWD A 14 NET | | GCO17051 | Outer Joint | | 30 | 26 | 53.8 | 94.5 | 65.5 | M |
| | 2012.07-2017.05 | MT | F | L/R | Hatchback FWD A 14 NET | | GCO21049 | Outer Joint | | 30 | 26 | 52.5 | 94 | 65.5 | M |
| | 2012.07-2017.05 | 6AT/6MT | F | L/R | Saloon FWD A 14 NET | | GCO88046 | Outer Joint | | 30 | 26 | 52.5 | 94.5 | 65.5 | M |
| | 2012.07-2017.05 | MT | F | L | Saloon FWD A 14 NET | | GDS21043 | Drive Shaft | | 30 | 25 | 52.5 | 94.5 | 624.5 | |
| | 2012.07-2017.05 | MT | F | L/R | Saloon FWD A 14 NET | | GCO17051 | Outer Joint | | 30 | 26 | 53.8 | 94.5 | 65.5 | M |
| | 2012.07-2017.05 | MT | F | L/R | Saloon FWD A 14 NET | | GCO21049 | Outer Joint | | 30 | 26 | 52.5 | 94 | 65.5 | M |
| 1.5 (103 kw) | 2017.03- | 6MT | F | L | Hatchback FWD B 15 SFL;D 15 SFL | | GDS82470 | Drive Shaft | | 30 | 25 | 60.5 | 94.5 | 630 | |
| | 2017.03- | 6MT | F | R | Hatchback FWD B 15 SFL;D 15 SFL | | GDS82471 | Drive Shaft | | 30 | 25 | 60.5 | 94.5 | 990 | |
| | 2017.03- | 6MT | F | L/R | Hatchback FWD B 15 SFL;D 15 SFL | | GCO81945 | Outer Joint | | 30 | 35 | 60.5 | 94.5 | 60 | M |
| | 2017.03- | 6MT | F | L/R | Hatchback FWD B 15 SFL;D 15 SFL | | GCI81831 | Inner Joint | | 25 | 35 | 35 | 57.5 | 130 | |
| 1.5 (121 kw) | 2017.03- | 6AT | F | L | Hatchback FWD B 15 SFT;D 15 SFT | | GDS83622 | Drive Shaft | | 30 | 34 | 60.5 | 94.5 | 677 | |
| | 2017.03- | 6AT | F | L/R | Hatchback FWD B 15 SFT;D 15 SFT | | GCO81945 | Outer Joint | | 30 | 35 | 60.5 | 94.5 | 60 | M |
| | 2017.03- | 6AT | F | L | Hatchback FWD B 15 SFT;D 15 SFT | | GCI82318 | Inner Joint | | 34 | 35 | 35 | 137 | 100.5 | |
| | 2017.03- | 6MT | F | L | Hatchback FWD B 15 SFT;D 15 SFT | | GDS82470 | Drive Shaft | | 30 | 25 | 60.5 | 94.5 | 630 | |
| | 2017.03- | 6MT | F | R | Hatchback FWD B 15 SFT;D 15 SFT | | GDS82471 | Drive Shaft | | 30 | 25 | 60.5 | 94.5 | 990 | |
| | 2017.03- | 6MT | F | L/R | Hatchback FWD B 15 SFT;D 15 SFT | | GCI81831 | Inner Joint | | 25 | 35 | 35 | 57.5 | 130 | |
| 1.6 (81 kw) | 2017.03- | 6MT | F | L | Hatchback FWD B 16 DTE;D 16 DTE;D 16 DTN | | GDS82470 | Drive Shaft | | 30 | 25 | 60.5 | 94.5 | 630 | |
| | 2017.03- | 6MT | F | R | Hatchback FWD B 16 DTE;D 16 DTE;D 16 DTN | | GDS83817 | Drive Shaft | | 30 | 27 | 60.5 | 94.5 | 580 | |
| | 2017.03- | 6MT | F | L/R | Hatchback FWD B 16 DTE;D 16 DTE;D 16 DTN | | GCO81945 | Outer Joint | | 30 | 35 | 60.5 | 94.5 | 60 | M |
| | 2017.03- | 6MT | F | L | Hatchback FWD B 16 DTE;D 16 DTE;D 16 DTN | | GCI81831 | Inner Joint | | 25 | 35 | 35 | 57.5 | 130 | |
| | 2017.03- | 6MT | F | R | Hatchback FWD B 16 DTE;D 16 DTE;D 16 DTN | | GCI82319 | Inner Joint | | 27 | 35 | 42 | | 139 | |
| 1.6 (85 kw) | 2008.07-2012.07 | 6MT | F | L | Hatchback FWD A 16 XER | | GDS21050 | Drive Shaft | | 30 | 25 | 52 | 94 | 622 | |
| | 2008.07-2012.07 | 6MT | F | L/R | Hatchback FWD A 16 XER | | GCO21038 | Outer Joint | | 30 | 24 | 52 | 94 | 64 | M |
| | 2008.07-2012.07 | 6MT | F | L/R | Hatchback FWD A 16 XER | | GCI44008 | Inner Joint | | 25 | 25 | 34.9 | 57.5 | 113.2 | |
| | 2008.07-2012.07 | | F | R | Hatchback FWD A 16 XER | Date To:2011.12;Chassis no. to:B1999999 | GDS21054 | Drive Shaft | | 30 | 25 | 52 | 94 | 1008 | |
| | 2008.07-2012.07 | 6MT | F | L | Saloon FWD A 16 XER | | GDS21050 | Drive Shaft | | 30 | 25 | 52 | 94 | 622 | |
| | 2008.07-2012.07 | 6MT | F | L/R | Saloon FWD A 16 XER | | GCO21038 | Outer Joint | | 30 | 24 | 52 | 94 | 64 | M |
| | 2008.07-2012.07 | 6MT | F | L/R | Saloon FWD A 16 XER | | GCI44008 | Inner Joint | | 25 | 25 | 34.9 | 57.5 | 113.2 | |
| | 2008.07-2012.07 | | F | R | Saloon FWD A 16 XER | Date To:2011.12;Chassis no. to:B1999999 | GDS21054 | Drive Shaft | | 30 | 25 | 52 | 94 | 1008 | |
| 1.6 (100 kw) | 2015.07-2017.05 | 6AT | F | L | Hatchback FWD B 16 DTH | | GDS82258 | Drive Shaft | | 30 | 34 | 52.5 | 94 | 666 | |
| | 2015.07-2017.05 | 6AT | F | R | Hatchback FWD B 16 DTH | | GDS56650 | Drive Shaft | | 30 | 34 | 52.5 | 94 | 599 | |
| | 2015.07-2017.05 | 6AT | F | L | Hatchback FWD B 16 DTH | | GCI86021 | Inner Joint | | 34 | 26 | 35 | 136.5 | 87 | |
| | 2015.07-2017.05 | 6AT | F | R | Hatchback FWD B 16 DTH | | GCI82194 | Inner Joint | | 34 | 26 | 37.5 | | 124 | |
| | 2015.07-2017.05 | 6AT/6MT | F | L/R | Hatchback FWD B 16 DTH | | GCO17051 | Outer Joint | | 30 | 26 | 53.8 | 94.5 | 65.5 | M |
| | 2015.07-2017.05 | 6AT/6MT | F | L/R | Hatchback FWD B 16 DTH | | GCO21049 | Outer Joint | | 30 | 26 | 52.5 | 94 | 65.5 | M |
| | 2015.07-2017.05 | 6AT/6MT | F | L/R | Hatchback FWD B 16 DTH | | GCO88046 | Outer Joint | | 30 | 26 | 52.5 | 94.5 | 65.5 | M |
| | 2015.07-2017.05 | 6MT | F | L | Hatchback FWD B 16 DTH | | GDS21043 | Drive Shaft | | 30 | 25 | 52.5 | 94.5 | 624.5 | |
| | 2015.07-2017.05 | 6MT | F | R | Hatchback FWD B 16 DTH | Chassis no. to:B1999999 | GDS60027 | Drive Shaft | | 30 | 27 | 52.5 | 94.5 | 619 | |
| | 2015.07-2017.05 | 6MT | F | R | Hatchback FWD B 16 DTH | Chassis no. from:C1000001 | GDS84292 | Drive Shaft | | 30 | 27 | 52.5 | 94 | 618 | |
| | 2015.07-2017.05 | 6MT | F | R | Hatchback FWD B 16 DTH | | GCI21030 | Inner Joint | | 27 | 26 | 35 | 78 | 112.5 | |
| | 2015.07-2017.05 | AT | F | R | Hatchback FWD B 16 DTH | | GDS21045 | Drive Shaft | | 30 | 27 | 52.5 | 94.5 | 615 | |
| | 2015.07-2017.05 | 6AT | F | L | Saloon FWD B 16 DTH | | GDS82258 | Drive Shaft | | 30 | 34 | 52.5 | 94 | 666 | |
| | 2015.07-2017.05 | 6AT | F | R | Saloon FWD B 16 DTH | | GDS56650 | Drive Shaft | | 30 | 34 | 52.5 | 94 | 599 | |
| | 2015.07-2017.05 | 6AT | F | L | Saloon FWD B 16 DTH | | GCI86021 | Inner Joint | | 34 | 26 | 35 | 136.5 | 87 | |
| | 2015.07-2017.05 | 6AT | F | R | Saloon FWD B 16 DTH | | GCI82194 | Inner Joint | | 34 | 26 | 37.5 | | 124 | |
| | 2015.07-2017.05 | 6AT/6MT | F | L/R | Saloon FWD B 16 DTH | | GCO17051 | Outer Joint | | 30 | 26 | 53.8 | 94.5 | 65.5 | M |
| | 2015.07-2017.05 | 6AT/6MT | F | L/R | Saloon FWD B 16 DTH | | GCO21049 | Outer Joint | | 30 | 26 | 52.5 | 94 | 65.5 | M |
| | 2015.07-2017.05 | 6AT/6MT | F | L/R | Saloon FWD B 16 DTH | | GCO88046 | Outer Joint | | 30 | 26 | 52.5 | 94.5 | 65.5 | M |
| | 2015.07-2017.05 | 6MT | F | L | Saloon FWD B 16 DTH | | GDS21043 | Drive Shaft | | 30 | 25 | 52.5 | 94.5 | 624.5 | |
| | 2015.07-2017.05 | 6MT | F | R | Saloon FWD B 16 DTH | Chassis no. to:B1999999 | GDS60027 | Drive Shaft | | 30 | 27 | 52.5 | 94.5 | 619 | |
| | 2015.07-2017.05 | 6MT | F | R | Saloon FWD B 16 DTH | Chassis no. from:C1000001 | GDS84292 | Drive Shaft | | 30 | 27 | 52.5 | 94 | 618 | |
| | 2015.07-2017.05 | 6MT | F | R | Saloon FWD B 16 DTH | | GCI21030 | Inner Joint | | 27 | 26 | 35 | 78 | 112.5 | |
| | 2017.03- | 6AT | F | L | Hatchback FWD B 16 DTH;D 16 DTH | | GDS83622 | Drive Shaft | | 30 | 34 | 60.5 | 94.5 | 677 | |
| | 2017.03- | 6AT | F | L | Hatchback FWD B 16 DTH;D 16 DTH | | GCI82318 | Inner Joint | | 34 | 35 | 35 | 137 | 100.5 | |
| | 2017.03- | 6MT | F | L | Hatchback FWD B 16 DTH;D 16 DTH | | GDS82470 | Drive Shaft | | 30 | 25 | 60.5 | 94.5 | 630 | |
| | 2017.03- | 6MT | F | R | Hatchback FWD B 16 DTH;D 16 DTH | | GDS83817 | Drive Shaft | | 30 | 27 | 60.5 | 94.5 | 580 | |

| | YEAR | TRANSM. | F/R | L/R | BODY STYLE & DRIVE TYPE & ENGINE | REMARKS | G-AP Ref. | PRODUCT | ABS | Technical Specifications A | B | C | H | L | P |
|---|---|---|---|---|---|---|---|---|---|---|---|---|---|---|---|
| **VAUXHALL** | | | | | | | | | | | | | | | |
| **Insignia** | | | | | | | | | | | | | | | |
| 1.6 (100 kw) | 2017.03- | 6MT | F | L | Hatchback FWD B 16 DTH;D 16 DTH | | GCI81831 | Inner Joint | | 25 | 35 | 35 | 57.5 | 130 | |
| | 2017.03- | 6MT | F | R | Hatchback FWD B 16 DTH;D 16 DTH | | GCI82319 | Inner Joint | | 27 | 35 | 42 | | 139 | |
| | 2017.03- | 6MT/6AT | F | L/R | Hatchback FWD B 16 DTH;D 16 DTH | | GCO81945 | Outer Joint | | 30 | 35 | 60.5 | 94.5 | 60 | M |
| 1.6 (125 kw) | 2013.03-2017.05 | 6AT | F | L | Saloon FWD A 16 XHT;B 16 SHL | Chassis no. to::B32752 | GDS82258 | Drive Shaft | | 30 | 34 | 52.5 | 94 | 666 | |
| | 2013.03-2017.05 | 6AT | F | R | Saloon FWD A 16 XHT;B 16 SHL | | GDS21045 | Drive Shaft | | 30 | 27 | 52.5 | 94.5 | 615 | |
| | 2013.03-2017.05 | 6AT | F | R | Saloon FWD A 16 XHT;B 16 SHL | | GCI86015 | Inner Joint | | 27 | 26 | 35 | 78.5 | 109.5 | |
| | 2013.03-2017.05 | 6AT/6MT | F | L/R | Saloon FWD A 16 XHT;B 16 SHL | | GCO88046 | Outer Joint | | 30 | 26 | 52.5 | 94.5 | 65.5 | M |
| | 2013.03-2017.05 | 6MT | F | L | Saloon FWD A 16 XHT;B 16 SHL | | GDS21043 | Drive Shaft | | 30 | 25 | 52.5 | 94.5 | 624.5 | |
| | 2013.03-2017.05 | 6MT | F | R | Saloon FWD A 16 XHT;B 16 SHL | Chassis no. from:C1000001 | GDS84292 | Drive Shaft | | 30 | 27 | 52.5 | 94 | 618 | |
| | 2013.03-2017.05 | 6MT | F | R | Saloon FWD A 16 XHT;B 16 SHL | | GCI21030 | Inner Joint | | 27 | 26 | 35 | 78 | 112.5 | |
| | 2013.03-2017.05 | MT | F | L/R | Saloon FWD A 16 XHT;B 16 SHL | | GCO17051 | Outer Joint | | 30 | 26 | 53.8 | 94.5 | 65.5 | M |
| | 2013.03-2017.05 | MT | F | L/R | Saloon FWD A 16 XHT;B 16 SHL | | GCO21049 | Outer Joint | | 30 | 26 | 52.5 | 94 | 65.5 | M |
| | 2013.07-2017.05 | 6AT | F | L | Hatchback FWD A 16 XHT;B 16 SHL | | GDS82258 | Drive Shaft | | 30 | 34 | 52.5 | 94 | 666 | |
| | 2013.07-2017.05 | 6AT | F | R | Hatchback FWD A 16 XHT;B 16 SHL | | GDS21045 | Drive Shaft | | 30 | 27 | 52.5 | 94.5 | 615 | |
| | 2013.07-2017.05 | 6AT | F | R | Hatchback FWD A 16 XHT;B 16 SHL | | GCI86015 | Inner Joint | | 27 | 26 | 35 | 78.5 | 109.5 | |
| | 2013.07-2017.05 | 6AT/6MT | F | L/R | Hatchback FWD A 16 XHT;B 16 SHL | | GCO17051 | Outer Joint | | 30 | 26 | 53.8 | 94.5 | 65.5 | M |
| | 2013.07-2017.05 | 6AT/6MT | F | L/R | Hatchback FWD A 16 XHT;B 16 SHL | | GCO21049 | Outer Joint | | 30 | 26 | 52.5 | 94 | 65.5 | M |
| | 2013.07-2017.05 | 6AT/6MT | F | L/R | Hatchback FWD A 16 XHT;B 16 SHL | | GCO88046 | Outer Joint | | 30 | 26 | 52.5 | 94.5 | 65.5 | M |
| | 2013.07-2017.05 | 6MT | F | R | Hatchback FWD A 16 XHT;B 16 SHL | Chassis no. from:C1000001 | GDS84292 | Drive Shaft | | 30 | 27 | 52.5 | 94 | 618 | |
| | 2013.07-2017.05 | 6MT | F | R | Hatchback FWD A 16 XHT;B 16 SHL | | GCI21030 | Inner Joint | | 27 | 26 | 35 | 78 | 112.5 | |
| | 2013.07-2017.05 | AT | F | R | Hatchback FWD A 16 XHT;B 16 SHL | | GDS82085 | Drive Shaft | | 30 | 27 | 52.5 | 94 | 615 | |
| | 2013.07-2017.05 | AT | F | L | Hatchback FWD A 16 XHT;B 16 SHL | | GCI86021 | Inner Joint | | 34 | 26 | 35 | 136.5 | 87 | |
| | 2013.07-2017.05 | MT | F | L | Hatchback FWD A 16 XHT;B 16 SHL | | GDS21043 | Drive Shaft | | 30 | 25 | 52.5 | 94.5 | 624.5 | |
| | 2013.07-2017.05 | MT | F | R | Hatchback FWD A 16 XHT;B 16 SHL | Chassis no. to:B1999999 | GDS60027 | Drive Shaft | | 30 | 27 | 52.5 | 94.5 | 619 | |
| 1.6 (132 kw) | 2009.01-2017.05 | 6MT | F | L/R | Hatchback FWD A 16 LET | | GCO17051 | Outer Joint | | 30 | 26 | 53.8 | 94.5 | 65.5 | M |
| | 2009.01-2017.05 | 6MT | F | L/R | Hatchback FWD A 16 LET | | GCO21049 | Outer Joint | | 30 | 26 | 52.5 | 94 | 65.5 | M |
| | 2009.01-2017.05 | 6MT | F | L/R | Hatchback FWD A 16 LET | | GCO88046 | Outer Joint | | 30 | 26 | 52.5 | 94.5 | 65.5 | M |
| | 2009.01-2017.05 | 6MT | F | R | Hatchback FWD A 16 LET | | GCI88026 | Inner Joint | | 34 | 26 | 37.5 | | 100 | |
| | 2009.01-2017.05 | MT | F | L | Hatchback FWD A 16 LET | | GDS21043 | Drive Shaft | | 30 | 25 | 52.5 | 94.5 | 624.5 | |
| | 2009.01-2017.05 | 6MT | F | L/R | Saloon FWD A 16 LET | | GCO17051 | Outer Joint | | 30 | 26 | 53.8 | 94.5 | 65.5 | M |
| | 2009.01-2017.05 | 6MT | F | L/R | Saloon FWD A 16 LET | | GCO21049 | Outer Joint | | 30 | 26 | 52.5 | 94 | 65.5 | M |
| | 2009.01-2017.05 | 6MT | F | L/R | Saloon FWD A 16 LET | | GCO88046 | Outer Joint | | 30 | 26 | 52.5 | 94.5 | 65.5 | M |
| | 2009.01-2017.05 | 6MT | F | R | Saloon FWD A 16 LET | | GCI88026 | Inner Joint | | 34 | 26 | 37.5 | | 100 | |
| | 2009.01-2017.05 | MT | F | L | Saloon FWD A 16 LET | | GDS21043 | Drive Shaft | | 30 | 25 | 52.5 | 94.5 | 624.5 | |
| 1.6 (147 kw) | 2018.06- | 6AT | F | L | Hatchback FWD D 16 SHT | | GDS83622 | Drive Shaft | | 30 | 34 | 60.5 | 94.5 | 677 | |
| | 2018.06- | 6AT | F | L/R | Hatchback FWD D 16 SHT | | GCO81945 | Outer Joint | | 30 | 35 | 60.5 | 94.5 | 60 | M |
| | 2018.06- | 6AT | F | L | Hatchback FWD D 16 SHT | | GCI82318 | Inner Joint | | 34 | 35 | 35 | 137 | 100.5 | |
| | 2018.06- | 6MT | F | L | Hatchback FWD D 16 SHT | | GDS82470 | Drive Shaft | | 30 | 25 | 60.5 | 94.5 | 630 | |
| | 2018.06- | 6MT | F | L | Hatchback FWD D 16 SHT | | GCI81831 | Inner Joint | | 25 | 35 | 35 | 57.5 | 130 | |
| 1.8 (103 kw) | 2008.07-2017.05 | 6MT | F | L/R | Hatchback FWD A 18 XER;B 18 XER | | GCO21038 | Outer Joint | | 30 | 24 | 52 | 94 | 64 | M |
| | 2008.07-2017.05 | 6MT | F | L/R | Hatchback FWD A 18 XER;B 18 XER | | GCI44008 | Inner Joint | | 25 | 25 | 34.9 | 57.5 | 113.2 | |
| | 2008.07-2017.05 | MT | F | L | Hatchback FWD A 18 XER;B 18 XER | | GDS21050 | Drive Shaft | | 30 | 25 | 52 | 94 | 622 | |
| | 2008.07-2017.05 | MT | F | R | Hatchback FWD A 18 XER;B 18 XER | | GDS21054 | Drive Shaft | | 30 | 25 | 52 | 94 | 1008 | |
| | 2008.07-2017.05 | 6MT | F | L/R | Saloon FWD A 18 XER | | GCO21038 | Outer Joint | | 30 | 24 | 52 | 94 | 64 | M |
| | 2008.07-2017.05 | 6MT | F | L/R | Saloon FWD A 18 XER | | GCI44008 | Inner Joint | | 25 | 25 | 34.9 | 57.5 | 113.2 | |
| | 2008.07-2017.05 | MT | F | L | Saloon FWD A 18 XER | | GDS21050 | Drive Shaft | | 30 | 25 | 52 | 94 | 622 | |
| | 2008.07-2017.05 | MT | F | R | Saloon FWD A 18 XER | | GDS21054 | Drive Shaft | | 30 | 25 | 52 | 94 | 1008 | |
| 2.0 (88 kw) | 2012.03-2016.03 | 6MT | F | L/R | Hatchback FWD A 20 DTE | Chassis no. to:B1999999 | GDS60027 | Drive Shaft | | 30 | 27 | 52.5 | 94.5 | 619 | |
| | 2012.03-2016.03 | 6MT | F | L/R | Hatchback FWD A 20 DTE | Chassis no. from:C1000001 | GDS84292 | Drive Shaft | | 30 | 27 | 52.5 | 94 | 618 | |
| | 2012.03-2016.03 | 6MT | F | L/R | Hatchback FWD A 20 DTE | | GCO17051 | Outer Joint | | 30 | 26 | 53.8 | 94.5 | 65.5 | M |
| | 2012.03-2016.03 | 6MT | F | L/R | Hatchback FWD A 20 DTE | | GCO21049 | Outer Joint | | 30 | 26 | 52.5 | 94 | 65.5 | M |
| | 2012.03-2016.03 | 6MT | F | L/R | Hatchback FWD A 20 DTE | | GCO88046 | Outer Joint | | 30 | 26 | 52.5 | 94.5 | 65.5 | M |
| | 2012.03-2016.03 | 6MT | F | L/R | Hatchback FWD A 20 DTE | | GCI21030 | Inner Joint | | 27 | 26 | 35 | 78 | 112.5 | |
| 2.0 (96 kw) | 2008.07-2014.12 | 6AT | F | L | Hatchback FWD A 20 DTJ;A 20 DT | Date To:2011.12,Chassis no. to:B1999999 | GDS21045 | Drive Shaft | | 30 | 27 | 52.5 | 94.5 | 615 | |
| | 2008.07-2014.12 | 6AT | F | R | Hatchback FWD A 20 DTJ;A 20 DT | Date From:2012.01,Chassis no. from:C1000001,Date To:2011.12,Chassis no. to:B1999999 | GDS21045 | Drive Shaft | | 30 | 27 | 52.5 | 94.5 | 615 | |
| | 2008.07-2014.12 | 6AT | F | L/R | Hatchback FWD A 20 DTJ;A 20 DT | Date To:2011.12,Chassis no. to:B1999999 | GDS82085 | Drive Shaft | | 30 | 27 | 52.5 | 94 | 615 | |
| | 2008.07-2014.12 | 6AT | F | L/R | Hatchback FWD A 20 DTJ;A 20 DT | | GCO88046 | Outer Joint | | 30 | 26 | 52.5 | 94.5 | 65.5 | M |
| | 2008.07-2014.12 | 6AT | F | L/R | Hatchback FWD A 20 DTJ;A 20 DT | | GCI86015 | Inner Joint | | 27 | 26 | 35 | 78.5 | 109.5 | |
| | 2008.07-2014.12 | 6AT/6MT | F | L/R | Hatchback FWD A 20 DTJ;A 20 DT | Transmission:6MT,For Engine code:A20DTJ | GCO17051 | Outer Joint | | 30 | 26 | 53.8 | 94.5 | 65.5 | M |
| | 2008.07-2014.12 | 6MT | F | L | Hatchback FWD A 20 DTJ;A 20 DT | Chassis no. to:D1061030 | GDS60026 | Drive Shaft | | 30 | 25 | 52.5 | 94.5 | 631 | |
| | 2008.07-2014.12 | 6MT | F | R | Hatchback FWD A 20 DTJ;A 20 DT | For car needless intermediate shaft | GDS57620 | Drive Shaft | | 30 | 25 | 52.5 | 94 | 1002 | |
| | 2008.07-2014.12 | 6MT | F | R | Hatchback FWD A 20 DTJ;A 20 DT | For car need intermediate shaft | GDS60027 | Drive Shaft | | 30 | 27 | 52.5 | 94.5 | 619 | |
| | 2008.07-2014.12 | 6MT | F | L/R | Hatchback FWD A 20 DTJ;A 20 DT | For Engine code:A20DT | GCO21038 | Outer Joint | | 30 | 24 | 52 | 94 | 64 | M |
| | 2008.07-2014.12 | 6MT | F | L | Hatchback FWD A 20 DTJ;A 20 DT | For Engine code:A20DT | GCI44008 | Inner Joint | | 25 | 25 | 34.9 | 57.5 | 113.2 | |
| | 2008.07-2014.12 | 6MT | F | R | Hatchback FWD A 20 DTJ;A 20 DT | | GCI21030 | Inner Joint | | 27 | 26 | 35 | 78 | 112.5 | |

| | YEAR | TRANSM. | F/R | L/R | BODY STYLE & DRIVE TYPE & ENGINE | REMARKS | G-AP Ref. | PRODUCT | ABS | Technical Specifications A | B | C | H | L | P |
|---|---|---|---|---|---|---|---|---|---|---|---|---|---|---|---|
| **VAUXHALL** | | | | | | | | | | | | | | | |
| **Insignia** | | | | | | | | | | | | | | | |
| 2.0 (96 kw) | 2008.07-2014.12 | 6MT/6AT | F | L/R | Hatchback FWD A 20 DTJ;A 20 DT | Transmission:6MT,For Engine code:A20DTJ | GCO21049 | Outer Joint | | 30 | 26 | 52.5 | 94 | 65.5 | M |
| | 2008.07-2014.12 | 6AT | F | L | Saloon FWD A 20 DTJ;A 20 DT | Date To:2011.12,Chassis no. to:B1999999 | GDS21045 | Drive Shaft | | 30 | 27 | 52.5 | 94.5 | 615 | |
| | 2008.07-2014.12 | 6AT | F | R | Saloon FWD A 20 DTJ;A 20 DT | Date From:2012.01,Chassis no. from:C1000001,Date To:2011.12,Chassis no. to:B1999999 | GDS21045 | Drive Shaft | | 30 | 27 | 52.5 | 94.5 | 615 | |
| | 2008.07-2014.12 | 6AT | F | L/R | Saloon FWD A 20 DTJ;A 20 DT | Date To:2011.12,Chassis no. to:B1999999 | GDS82085 | Drive Shaft | | 30 | 27 | 52.5 | 94 | 615 | |
| | 2008.07-2014.12 | 6AT | F | L/R | Saloon FWD A 20 DTJ;A 20 DT | | GCO88046 | Outer Joint | | 30 | 26 | 52.5 | 94.5 | 65.5 | M |
| | 2008.07-2014.12 | 6AT | F | L/R | Saloon FWD A 20 DTJ;A 20 DT | | GCI86015 | Inner Joint | | 27 | 26 | 35 | 78.5 | 109.5 | |
| | 2008.07-2014.12 | 6AT/6MT | F | L/R | Saloon FWD A 20 DTJ;A 20 DT | Transmission:6MT,For Engine code:A20DTJ | GCO17051 | Outer Joint | | 30 | 26 | 53.8 | 94.5 | 65.5 | M |
| | 2008.07-2014.12 | 6MT | F | L | Saloon FWD A 20 DTJ;A 20 DT | Chassis no. to:D1061030 | GDS60026 | Drive Shaft | | 30 | 25 | 52.5 | 94.5 | 631 | |
| | 2008.07-2014.12 | 6MT | F | R | Saloon FWD A 20 DTJ;A 20 DT | For car needless intermediate shaft | GDS57620 | Drive Shaft | | 30 | 25 | 52.5 | 94 | 1002 | |
| | 2008.07-2014.12 | 6MT | F | R | Saloon FWD A 20 DTJ;A 20 DT | For car need intermediate shaft | GDS60027 | Drive Shaft | | 30 | 27 | 52.5 | 94.5 | 619 | |
| | 2008.07-2014.12 | 6MT | F | L/R | Saloon FWD A 20 DTJ;A 20 DT | For Engine code:A20DT | GCO21038 | Outer Joint | | 30 | 24 | 52 | 94 | 64 | M |
| | 2008.07-2014.12 | 6MT | F | L | Saloon FWD A 20 DTJ;A 20 DT | For Engine code:A20DT | GCI44008 | Inner Joint | | 25 | 25 | 34.9 | 57.5 | 113.2 | |
| | 2008.07-2014.12 | 6MT | F | R | Saloon FWD A 20 DTJ;A 20 DT | | GCI21030 | Inner Joint | | 27 | 26 | 35 | 78 | 112.5 | |
| | 2008.07-2014.12 | 6MT/6AT | F | L/R | Saloon FWD A 20 DTJ;A 20 DT | Transmission:6MT,For Engine code:A20DTJ | GCO21049 | Outer Joint | | 30 | 26 | 52.5 | 94 | 65.5 | M |
| 2.0 (103 kw) | 2013.07-2017.05 | 6MT | F | L/R | Hatchback FWD A 20 DTE | Chassis no. to:B1999999 | GDS60027 | Drive Shaft | | 30 | 27 | 52.5 | 94.5 | 619 | |
| | 2013.07-2017.05 | 6MT | F | L/R | Hatchback FWD A 20 DTE | Chassis no. from:C1000001 | GDS84292 | Drive Shaft | | 30 | 27 | 52.5 | 94 | 618 | |
| | 2013.07-2017.05 | 6MT | F | L/R | Hatchback FWD A 20 DTE | | GCO17051 | Outer Joint | | 30 | 26 | 53.8 | 94.5 | 65.5 | M |
| | 2013.07-2017.05 | 6MT | F | L/R | Hatchback FWD A 20 DTE | | GCO21049 | Outer Joint | | 30 | 26 | 52.5 | 94 | 65.5 | M |
| | 2013.07-2017.05 | 6MT | F | L/R | Hatchback FWD A 20 DTE | | GCO88046 | Outer Joint | | 30 | 26 | 52.5 | 94.5 | 65.5 | M |
| | 2013.07-2017.05 | 6MT | F | L/R | Hatchback FWD A 20 DTE | | GCI21030 | Inner Joint | | 27 | 26 | 35 | 78 | 112.5 | |
| | 2013.07-2017.05 | 6MT | F | L/R | Saloon FWD A 20 DTE | Chassis no. to:B1999999 | GDS60027 | Drive Shaft | | 30 | 27 | 52.5 | 94.5 | 619 | |
| | 2013.07-2017.05 | 6MT | F | L/R | Saloon FWD A 20 DTE | Chassis no. from:C1000001 | GDS84292 | Drive Shaft | | 30 | 27 | 52.5 | 94 | 618 | |
| | 2013.07-2017.05 | 6MT | F | L/R | Saloon FWD A 20 DTE | | GCO17051 | Outer Joint | | 30 | 26 | 53.8 | 94.5 | 65.5 | M |
| | 2013.07-2017.05 | 6MT | F | L/R | Saloon FWD A 20 DTE | | GCO21049 | Outer Joint | | 30 | 26 | 52.5 | 94 | 65.5 | M |
| | 2013.07-2017.05 | 6MT | F | L/R | Saloon FWD A 20 DTE | | GCO88046 | Outer Joint | | 30 | 26 | 52.5 | 94.5 | 65.5 | M |
| | 2013.07-2017.05 | 6MT | F | L/R | Saloon FWD A 20 DTE | | GCI21030 | Inner Joint | | 27 | 26 | 35 | 78 | 112.5 | |
| 2.0 (118 kw) | 2008.07-2017.05 | 6AT | F | L/R | Hatchback 4WD A 20 DTH | Date To:2011.12,Chassis no. to:B1999999 | GDS21045 | Drive Shaft | | 30 | 27 | 52.5 | 94.5 | 615 | |
| | 2008.07-2017.05 | 6AT | F | L/R | Hatchback 4WD A 20 DTH | | GCI86015 | Inner Joint | | 27 | 26 | 35 | 78.5 | 109.5 | |
| | 2008.07-2017.05 | 6AT/6MT | F | L/R | Hatchback 4WD A 20 DTH | | GCO17051 | Outer Joint | | 30 | 26 | 53.8 | 94.5 | 65.5 | M |
| | 2008.07-2017.05 | 6AT/6MT | F | L/R | Hatchback 4WD A 20 DTH | | GCO21049 | Outer Joint | | 30 | 26 | 52.5 | 94 | 65.5 | M |
| | 2008.07-2017.05 | 6AT/6MT | F | L/R | Hatchback 4WD A 20 DTH | | GCO88046 | Outer Joint | | 30 | 26 | 52.5 | 94.5 | 65.5 | M |
| | 2008.07-2017.05 | 6MT | F | L/R | Hatchback 4WD A 20 DTH | Chassis no. from:C1000001 | GDS84292 | Drive Shaft | | 30 | 27 | 52.5 | 94 | 618 | |
| | 2008.07-2017.05 | 6MT | F | L | Hatchback 4WD A 20 DTH | | GCI21030 | Inner Joint | | 27 | 26 | 35 | 78 | 112.5 | |
| | 2008.07-2017.05 | AT | F | L/R | Hatchback 4WD A 20 DTH | | GDS82085 | Drive Shaft | | 30 | 27 | 52.5 | 94 | 615 | |
| | 2008.07-2017.05 | MT | F | L/R | Hatchback 4WD A 20 DTH | Chassis no. to:B1999999 | GDS60027 | Drive Shaft | | 30 | 27 | 52.5 | 94.5 | 619 | |
| | 2008.07-2017.05 | 6AT/6MT | R | L/R | Hatchback 4WD A 20 DTH | With differential lock | GCO81305 | Outer Joint | | 30 | 23 | 52.3 | 94 | 59.5 | M |
| | 2008.07-2017.05 | AT/MT | R | L | Hatchback 4WD A 20 DTH | Veh Equip:For vehicles with lectronic ltd slip differential | GDS82261 | Drive Shaft | | 30 | 34 | 52.3 | 94 | 791 | |
| | 2008.07-2017.05 | AT/MT | R | R | Hatchback 4WD A 20 DTH | | GDS81333 | Drive Shaft | | 30 | 34 | 52.3 | 94 | 842 | |
| | 2008.07-2017.05 | AT/MT | R | L | Hatchback 4WD A 20 DTH | Veh Equip:For vehicles with lectronic ltd slip differential | GCI81196 | Inner Joint | | 34 | 23 | 35 | 113.5 | 110 | |
| | 2008.07-2017.05 | AT/MT | R | R | Hatchback 4WD A 20 DTH | | GCI81197 | Inner Joint | | 34 | 23 | 35 | 82.5 | 109 | |
| | 2008.07-2017.05 | 6AT | F | L | Hatchback FWD A 20 DTH | Date To:2011.12,Chassis no. to:B1999999 | GDS21045 | Drive Shaft | | 30 | 27 | 52.5 | 94.5 | 615 | |
| | 2008.07-2017.05 | 6AT | F | R | Hatchback FWD A 20 DTH | Date From:2012.01,Chassis no. from:C1000001,Date To:2011.12,Chassis no. to:B1999999 | GDS21045 | Drive Shaft | | 30 | 27 | 52.5 | 94.5 | 615 | |
| | 2008.07-2017.05 | 6AT | F | L/R | Hatchback FWD A 20 DTH | Date To:2011.12,Chassis no. to:B1999999 | GDS82085 | Drive Shaft | | 30 | 27 | 52.5 | 94 | 615 | |
| | 2008.07-2017.05 | 6AT | F | L/R | Hatchback FWD A 20 DTH | | GCI86015 | Inner Joint | | 27 | 26 | 35 | 78.5 | 109.5 | |
| | 2008.07-2017.05 | 6AT/6MT | F | L | Hatchback FWD A 20 DTH | | GCO88046 | Outer Joint | | 30 | 26 | 52.5 | 94.5 | 65.5 | M |
| | 2008.07-2017.05 | 6AT/6MT | F | L/R | Hatchback FWD A 20 DTH | | GCO17051 | Outer Joint | | 30 | 26 | 53.8 | 94.5 | 65.5 | M |
| | 2008.07-2017.05 | 6AT/6MT | F | L/R | Hatchback FWD A 20 DTH | | GCO21049 | Outer Joint | | 30 | 26 | 52.5 | 94 | 65.5 | M |
| | 2008.07-2017.05 | 6MT | F | L/R | Hatchback FWD A 20 DTH | Chassis no. from:C1000001 | GDS84292 | Drive Shaft | | 30 | 27 | 52.5 | 94 | 618 | |
| | 2008.07-2017.05 | 6MT | F | L/R | Hatchback FWD A 20 DTH | | GCI21030 | Inner Joint | | 27 | 26 | 35 | 78 | 112.5 | |
| | 2008.07-2017.05 | MT | F | L/R | Hatchback FWD A 20 DTH | Chassis no. to:B1999999 | GDS60027 | Drive Shaft | | 30 | 27 | 52.5 | 94.5 | 619 | |
| | 2008.07-2017.05 | 6AT | F | L/R | Saloon 4WD A 20 DTH | Date To:2011.12,Chassis no. to:B1999999 | GDS21045 | Drive Shaft | | 30 | 27 | 52.5 | 94.5 | 615 | |
| | 2008.07-2017.05 | 6AT | F | L/R | Saloon 4WD A 20 DTH | | GCI86015 | Inner Joint | | 27 | 26 | 35 | 78.5 | 109.5 | |
| | 2008.07-2017.05 | 6AT/6MT | F | L/R | Saloon 4WD A 20 DTH | | GCO17051 | Outer Joint | | 30 | 26 | 53.8 | 94.5 | 65.5 | M |
| | 2008.07-2017.05 | 6AT/6MT | F | L/R | Saloon 4WD A 20 DTH | | GCO21049 | Outer Joint | | 30 | 26 | 52.5 | 94 | 65.5 | M |
| | 2008.07-2017.05 | 6AT/6MT | F | L/R | Saloon 4WD A 20 DTH | | GCO88046 | Outer Joint | | 30 | 26 | 52.5 | 94.5 | 65.5 | M |
| | 2008.07-2017.05 | 6MT | F | L/R | Saloon 4WD A 20 DTH | Chassis no. from:C1000001 | GDS84292 | Drive Shaft | | 30 | 27 | 52.5 | 94 | 618 | |
| | 2008.07-2017.05 | 6MT | F | L | Saloon 4WD A 20 DTH | | GCI21030 | Inner Joint | | 27 | 26 | 35 | 78 | 112.5 | |
| | 2008.07-2017.05 | AT | F | L/R | Saloon 4WD A 20 DTH | | GDS82085 | Drive Shaft | | 30 | 27 | 52.5 | 94 | 615 | |
| | 2008.07-2017.05 | MT | F | L/R | Saloon 4WD A 20 DTH | Chassis no. to:B1999999 | GDS60027 | Drive Shaft | | 30 | 27 | 52.5 | 94.5 | 619 | |
| | 2008.07-2017.05 | 6AT/6MT | R | L/R | Saloon 4WD A 20 DTH | With differential lock | GCO81305 | Outer Joint | | 30 | 23 | 52.3 | 94 | 59.5 | M |
| | 2008.07-2017.05 | AT/MT | R | L | Saloon 4WD A 20 DTH | Veh Equip:For vehicles with lectronic ltd slip differential | GDS82261 | Drive Shaft | | 30 | 34 | 52.3 | 94 | 791 | |
| | 2008.07-2017.05 | AT/MT | R | R | Saloon 4WD A 20 DTH | | GDS81333 | Drive Shaft | | 30 | 34 | 52.3 | 94 | 842 | |
| | 2008.07-2017.05 | AT/MT | R | L | Saloon 4WD A 20 DTH | Veh Equip:For vehicles with lectronic ltd slip differential | GCI81196 | Inner Joint | | 34 | 23 | 35 | 113.5 | 110 | |
| | 2008.07-2017.05 | AT/MT | R | R | Saloon 4WD A 20 DTH | | GCI81197 | Inner Joint | | 34 | 23 | 35 | 82.5 | 109 | |
| | 2008.07-2017.05 | 6AT | F | L | Saloon FWD A 20 DTH | Date To:2011.12,Chassis no. to:B1999999 | GDS21045 | Drive Shaft | | 30 | 27 | 52.5 | 94.5 | 615 | |

| | YEAR | TRANSM. | F/R | L/R | BODY STYLE & DRIVE TYPE & ENGINE | REMARKS | G-AP Ref. | PRODUCT | ABS | Technical Specifications A | B | C | H | L | P |
|---|---|---|---|---|---|---|---|---|---|---|---|---|---|---|---|
| **VAUXHALL** **Insignia** | | | | | | | | | | | | | | | |
| 2.0 (118 kw) | 2008.07-2017.05 | 6AT | F | R | Saloon FWD A 20 DTH | Date:From:2012.01,Chassis no. from:C1000001;Date To:2011.12,Chassis no. to:B1999999 | GDS21045 | Drive Shaft | | 30 | 27 | 52.5 | 94.5 | 615 | |
| | 2008.07-2017.05 | 6AT | F | L/R | Saloon FWD A 20 DTH | Date To:2011.12,Chassis no. to:B1999999 | GDS82085 | Drive Shaft | | 30 | 27 | 52.5 | 94 | 615 | |
| | 2008.07-2017.05 | 6AT | F | L/R | Saloon FWD A 20 DTH | | GCI86015 | Inner Joint | | 27 | 26 | 35 | 78.5 | 109.5 | |
| | 2008.07-2017.05 | 6AT/6MT | F | L | Saloon FWD A 20 DTH | | GCO88046 | Outer Joint | | 30 | 26 | 52.5 | 94.5 | 65.5 | M |
| | 2008.07-2017.05 | 6AT/6MT | F | L/R | Saloon FWD A 20 DTH | | GCO17051 | Outer Joint | | 30 | 26 | 53.8 | 94.5 | 65.5 | M |
| | 2008.07-2017.05 | 6AT/6MT | F | L/R | Saloon FWD A 20 DTH | | GCO21049 | Outer Joint | | 30 | 26 | 52.5 | 94 | 65.5 | M |
| | 2008.07-2017.05 | 6MT | F | L/R | Saloon FWD A 20 DTH | Chassis no. from:C1000001 | GDS84292 | Drive Shaft | | 30 | 27 | 52.5 | 94 | 618 | |
| | 2008.07-2017.05 | 6MT | F | L/R | Saloon FWD A 20 DTH | | GCI21030 | Inner Joint | | 27 | 26 | 35 | 78 | 112.5 | |
| | 2008.07-2017.05 | MT | F | L/R | Saloon FWD A 20 DTH | Chassis no. to:B1999999 | GDS60027 | Drive Shaft | | 30 | 27 | 52.5 | 94.5 | 619 | |
| 2.0 (120 kw) | 2013.07-2017.05 | 6AT | F | L/R | Hatchback FWD A 20 DTH | without Rim protector | GDS21045 | Drive Shaft | | 30 | 27 | 52.5 | 94.5 | 615 | |
| | 2013.07-2017.05 | 6AT | F | L/R | Hatchback FWD A 20 DTH | | GDS82085 | Drive Shaft | | 30 | 27 | 52.5 | 94 | 615 | |
| | 2013.07-2017.05 | 6AT | F | L/R | Hatchback FWD A 20 DTH | | GCI21016 | Inner Joint | | 27 | 26 | 35 | 78.5 | 112 | |
| | 2013.07-2017.05 | 6AT | F | L/R | Hatchback FWD A 20 DTH | AAR | GCI86015 | Inner Joint | | 27 | 26 | 35 | 78.5 | 109.5 | |
| | 2013.07-2017.05 | 6AT/6MT | F | L/R | Hatchback FWD A 20 DTH | | GCO17051 | Outer Joint | | 30 | 26 | 53.8 | 94.5 | 65.5 | M |
| | 2013.07-2017.05 | 6AT/6MT | F | L/R | Hatchback FWD A 20 DTH | | GCO21049 | Outer Joint | | 30 | 26 | 52.5 | 94 | 65.5 | M |
| | 2013.07-2017.05 | 6AT/6MT | F | L/R | Hatchback FWD A 20 DTH | | GCO88046 | Outer Joint | | 30 | 26 | 52.5 | 94.5 | 65.5 | M |
| | 2013.07-2017.05 | 6MT | F | L/R | Hatchback FWD A 20 DTH | Chassis no. to:B1999999 | GDS60027 | Drive Shaft | | 30 | 27 | 52.5 | 94.5 | 619 | |
| | 2013.07-2017.05 | 6MT | F | L/R | Hatchback FWD A 20 DTH | Chassis no. from:C1000001 | GDS84292 | Drive Shaft | | 30 | 27 | 52.5 | 94 | 618 | |
| | 2013.07-2017.05 | 6MT | F | L/R | Hatchback FWD A 20 DTH | | GCI21030 | Inner Joint | | 27 | 26 | 35 | 78 | 112.5 | |
| | 2013.07-2017.05 | 6AT | F | R | Saloon FWD A 20 DTH | | GDS21045 | Drive Shaft | | 30 | 27 | 52.5 | 94.5 | 615 | |
| | 2013.07-2017.05 | 6AT | F | L/R | Saloon FWD A 20 DTH | | GCI86015 | Inner Joint | | 27 | 26 | 35 | 78.5 | 109.5 | |
| | 2013.07-2017.05 | 6AT/6MT | F | L | Saloon FWD A 20 DTH | | GCO88046 | Outer Joint | | 30 | 26 | 52.5 | 94.5 | 65.5 | M |
| | 2013.07-2017.05 | 6AT/6MT | F | L/R | Saloon FWD A 20 DTH | | GCO17051 | Outer Joint | | 30 | 26 | 53.8 | 94.5 | 65.5 | M |
| | 2013.07-2017.05 | 6AT/6MT | F | L/R | Saloon FWD A 20 DTH | | GCO21049 | Outer Joint | | 30 | 26 | 52.5 | 94 | 65.5 | M |
| | 2013.07-2017.05 | 6MT | F | L/R | Saloon FWD A 20 DTH | Chassis no. from:C1000001 | GDS84292 | Drive Shaft | | 30 | 27 | 52.5 | 94 | 618 | |
| | 2013.07-2017.05 | 6MT | F | L/R | Saloon FWD A 20 DTH | | GCI21030 | Inner Joint | | 27 | 26 | 35 | 78 | 112.5 | |
| | 2013.07-2017.05 | AT | F | L/R | Saloon FWD A 20 DTH | | GDS82085 | Drive Shaft | | 30 | 27 | 52.5 | 94 | 615 | |
| | 2013.07-2017.05 | MT | F | L/R | Saloon FWD A 20 DTH | Chassis no. to:B1999999 | GDS60027 | Drive Shaft | | 30 | 27 | 52.5 | 94.5 | 619 | |
| 2.0 (125 kw) | 2014.11-2017.05 | 6AT/6MT | F | L/R | Hatchback 4WD B 20 DTH | | GCO88046 | Outer Joint | | 30 | 26 | 52.5 | 94.5 | 65.5 | M |
| | 2014.11-2017.05 | 6MT/6AT | F | R | Hatchback 4WD B 20 DTH | | GDS60027 | Drive Shaft | | 30 | 27 | 52.5 | 94.5 | 619 | |
| | 2014.11-2017.05 | MT | F | L/R | Hatchback 4WD B 20 DTH | | GCO17051 | Outer Joint | | 30 | 26 | 53.8 | 94.5 | 65.5 | M |
| | 2014.11-2017.05 | MT | F | L/R | Hatchback 4WD B 20 DTH | | GCO21049 | Outer Joint | | 30 | 26 | 52.5 | 94 | 65.5 | M |
| | 2014.11-2017.05 | MT | F | L/R | Hatchback 4WD B 20 DTH | | GCI21030 | Inner Joint | | 27 | 26 | 35 | 78 | 112.5 | |
| | 2014.11-2017.05 | AT/MT | R | L | Hatchback 4WD B 20 DTH | Veh Equip:For vehicles with lectronic ltd slip differential | GDS82261 | Drive Shaft | | 30 | 34 | 52.3 | 94 | 791 | |
| | 2014.11-2017.05 | AT/MT | R | L | Hatchback 4WD B 20 DTH | Veh Equip:For vehicles with lectronic ltd slip differential | GCI81196 | Inner Joint | | 34 | 23 | 35 | 113.5 | 110 | |
| | 2014.11-2017.05 | MT | R | R | Hatchback 4WD B 20 DTH | | GDS81333 | Drive Shaft | | 30 | 34 | 52.3 | 94 | 842 | |
| | 2014.11-2017.05 | MT | R | L/R | Hatchback 4WD B 20 DTH | With differential lock | GCO81305 | Outer Joint | | 30 | 23 | 52.3 | 94 | 59.5 | M |
| | 2014.11-2017.05 | MT | R | R | Hatchback 4WD B 20 DTH | | GCI81197 | Inner Joint | | 34 | 23 | 35 | 82.5 | 109 | |
| | 2014.11-2017.05 | 6AT | F | R | Hatchback FWD B 20 DTH | | GDS21045 | Drive Shaft | | 30 | 27 | 52.5 | 94.5 | 615 | |
| | 2014.11-2017.05 | 6AT | F | L/R | Hatchback FWD B 20 DTH | | GCI86015 | Inner Joint | | 27 | 26 | 35 | 78.5 | 109.5 | |
| | 2014.11-2017.05 | 6AT/6MT | F | L/R | Hatchback FWD B 20 DTH | | GCO17051 | Outer Joint | | 30 | 26 | 53.8 | 94.5 | 65.5 | M |
| | 2014.11-2017.05 | 6AT/6MT | F | L/R | Hatchback FWD B 20 DTH | | GCO21049 | Outer Joint | | 30 | 26 | 52.5 | 94 | 65.5 | M |
| | 2014.11-2017.05 | 6AT/6MT | F | L/R | Hatchback FWD B 20 DTH | | GCO88046 | Outer Joint | | 30 | 26 | 52.5 | 94.5 | 65.5 | M |
| | 2014.11-2017.05 | 6MT | F | R | Hatchback FWD B 20 DTH | For RPO/POC:GNA,Chassis no. from:C1000001 | GDS84292 | Drive Shaft | | 30 | 27 | 52.5 | 94 | 618 | |
| | 2014.11-2017.05 | 6MT | F | L/R | Hatchback FWD B 20 DTH | | GCI21030 | Inner Joint | | 27 | 26 | 35 | 78 | 112.5 | |
| | 2014.11-2017.05 | AT | F | L/R | Hatchback FWD B 20 DTH | | GDS82085 | Drive Shaft | | 30 | 27 | 52.5 | 94 | 615 | |
| | 2014.11-2017.05 | MT | F | R | Hatchback FWD B 20 DTH | Chassis no. to:B1999999,For RPO/POC:GNA | GDS60027 | Drive Shaft | | 30 | 27 | 52.5 | 94.5 | 619 | |
| | 2014.11-2017.05 | 6AT/6MT | F | L/R | Saloon 4WD B 20 DTH | | GCO88046 | Outer Joint | | 30 | 26 | 52.5 | 94.5 | 65.5 | M |
| | 2014.11-2017.05 | 6MT/6AT | F | R | Saloon 4WD B 20 DTH | | GDS60027 | Drive Shaft | | 30 | 27 | 52.5 | 94.5 | 619 | |
| | 2014.11-2017.05 | MT | F | L/R | Saloon 4WD B 20 DTH | | GCO17051 | Outer Joint | | 30 | 26 | 53.8 | 94.5 | 65.5 | M |
| | 2014.11-2017.05 | MT | F | L/R | Saloon 4WD B 20 DTH | | GCO21049 | Outer Joint | | 30 | 26 | 52.5 | 94 | 65.5 | M |
| | 2014.11-2017.05 | MT | F | L/R | Saloon 4WD B 20 DTH | | GCI21030 | Inner Joint | | 27 | 26 | 35 | 78 | 112.5 | |
| | 2014.11-2017.05 | AT/MT | R | L | Saloon 4WD B 20 DTH | Veh Equip:For vehicles with lectronic ltd slip differential | GDS82261 | Drive Shaft | | 30 | 34 | 52.3 | 94 | 791 | |
| | 2014.11-2017.05 | AT/MT | R | L | Saloon 4WD B 20 DTH | Veh Equip:For vehicles with lectronic ltd slip differential | GCI81196 | Inner Joint | | 34 | 23 | 35 | 113.5 | 110 | |
| | 2014.11-2017.05 | MT | R | R | Saloon 4WD B 20 DTH | | GDS81333 | Drive Shaft | | 30 | 34 | 52.3 | 94 | 842 | |
| | 2014.11-2017.05 | MT | R | L/R | Saloon 4WD B 20 DTH | With differential lock | GCO81305 | Outer Joint | | 30 | 23 | 52.3 | 94 | 59.5 | M |
| | 2014.11-2017.05 | MT | R | R | Saloon 4WD B 20 DTH | | GCI81197 | Inner Joint | | 34 | 23 | 35 | 82.5 | 109 | |
| | 2014.11-2017.05 | 6MT | F | R | Saloon FWD B 20 DTH | For RPO/POC:GNB | GDS60027 | Drive Shaft | | 30 | 27 | 52.5 | 94.5 | 619 | |
| | 2014.11-2017.05 | 6MT | F | R | Saloon FWD B 20 DTH | For RPO/POC:GNA,Chassis no. from:C1000001 | GDS84292 | Drive Shaft | | 30 | 27 | 52.5 | 94 | 618 | |
| | 2014.11-2017.05 | 6MT | F | L/R | Saloon FWD B 20 DTH | | GCO17051 | Outer Joint | | 30 | 26 | 53.8 | 94.5 | 65.5 | M |
| | 2014.11-2017.05 | 6MT | F | L/R | Saloon FWD B 20 DTH | | GCO21049 | Outer Joint | | 30 | 26 | 52.5 | 94 | 65.5 | M |
| | 2014.11-2017.05 | 6MT | F | L/R | Saloon FWD B 20 DTH | | GCO88046 | Outer Joint | | 30 | 26 | 52.5 | 94.5 | 65.5 | M |
| | 2014.11-2017.05 | 6MT | F | L/R | Saloon FWD B 20 DTH | | GCI21030 | Inner Joint | | 27 | 26 | 35 | 78 | 112.5 | |
| | 2017.03- | 6MT | F | L | Hatchback FWD B 20 DTH;D 20 DTH | | GDS83818 | Drive Shaft | | 30 | 27 | 60.5 | 94.5 | 615 | |
| | 2017.03- | 6MT | F | L | Hatchback FWD B 20 DTH;D 20 DTH | | GCI82377 | Inner Joint | | 27 | 35 | 35 | 101 | 100.5 | |

| | YEAR | TRANSM. | F/R | L/R | BODY STYLE & DRIVE TYPE & ENGINE | REMARKS | G-AP Ref. | PRODUCT | ABS | Technical Specifications A | B | C | H | L | P |
|---|---|---|---|---|---|---|---|---|---|---|---|---|---|---|---|
| **VAUXHALL** | | | | | | | | | | | | | | | |
| **Insignia** | | | | | | | | | | | | | | | |
| 2.0 (125 kw) | 2017.03- | 6MT/8AT | F | L/R | Hatchback FWD B 20 DTH;D 20 DTH | | GCO81945 | Outer Joint | | 30 | 35 | 60.5 | 94.5 | 60 | M |
| | 2017.03- | 6MT/8AT | F | R | Hatchback FWD B 20 DTH;D 20 DTH | | GCI82319 | Inner Joint | | 27 | 35 | 42 | | 139 | |
| | 2017.03- | 8AT | F | L | Hatchback FWD B 20 DTH;D 20 DTH | | GDS56988 | Drive Shaft | | 30 | 27 | 60.5 | 94.5 | 621 | |
| | 2017.03- | 8AT/6MT | F | R | Hatchback FWD B 20 DTH;D 20 DTH | | GDS83927 | Drive Shaft | | 30 | 27 | 60.5 | 94.5 | 595 | |
| 2.0 (128 kw) | 2020.02- | 8AT | F | L | Hatchback 4WD F 20 DVH | | GDS56988 | Drive Shaft | | 30 | 27 | 60.5 | 94.5 | 621 | |
| | 2020.02- | 8AT | F | R | Hatchback 4WD F 20 DVH | | GDS83653 | Drive Shaft | | 30 | 27 | 60.5 | 94.5 | 559 | |
| | 2020.02- | 8AT | F | L | Hatchback 4WD F 20 DVH | | GCI82377 | Inner Joint | | 27 | 35 | 35 | 101 | 100.5 | |
| | 2020.02- | 8AT | F | R | Hatchback 4WD F 20 DVH | | GCI82319 | Inner Joint | | 27 | 35 | 42 | | 139 | |
| | 2020.02- | AT | F | L/R | Hatchback 4WD F 20 DVH | | GCO81945 | Outer Joint | | 30 | 35 | 60.5 | 94.5 | 60 | M |
| | 2020.02- | 6MT | F | L | Hatchback FWD F 20 DVH | | GDS82470 | Drive Shaft | | 30 | 25 | 60.5 | 94.5 | 630 | |
| | 2020.02- | 6MT/8AT | F | R | Hatchback FWD F 20 DVH | | GDS83653 | Drive Shaft | | 30 | 27 | 60.5 | 94.5 | 559 | |
| | 2020.02- | 6MT/8AT | F | L/R | Hatchback FWD F 20 DVH | | GCO81945 | Outer Joint | | 30 | 35 | 60.5 | 94.5 | 60 | M |
| | 2020.02- | 6MT/8AT | F | R | Hatchback FWD F 20 DVH | | GCI82319 | Inner Joint | | 27 | 35 | 42 | | 139 | |
| | 2020.02- | 8AT | F | L | Hatchback FWD F 20 DVH | | GDS56988 | Drive Shaft | | 30 | 27 | 60.5 | 94.5 | 621 | |
| | 2020.02- | 8AT | F | L | Hatchback FWD F 20 DVH | | GCI82377 | Inner Joint | | 27 | 35 | 35 | 101 | 100.5 | |
| 2.0 (140 kw) | 2008.10-2017.05 | 6AT | F | L | Hatchback FWD A 20 DTR | Date To:2011.12,Chassis no. to:B1999999 | GDS21045 | Drive Shaft | | 30 | 27 | 52.5 | 94.5 | 615 | |
| | 2008.10-2017.05 | 6AT | F | R | Hatchback FWD A 20 DTR | Date From:2012.01,Chassis no. from:C1000001,Date To:2011.12,Chassis no. to:B1999999 | GDS21045 | Drive Shaft | | 30 | 27 | 52.5 | 94.5 | 615 | |
| | 2008.10-2017.05 | 6AT | F | L/R | Hatchback FWD A 20 DTR | Date To:2011.12,Chassis no. to:B1999999 | GDS82085 | Drive Shaft | | 30 | 27 | 52.5 | 94 | 615 | |
| | 2008.10-2017.05 | 6AT | F | L/R | Hatchback FWD A 20 DTR | | GCO17051 | Outer Joint | | 30 | 26 | 53.8 | 94.5 | 65.5 | M |
| | 2008.10-2017.05 | 6AT | F | L/R | Hatchback FWD A 20 DTR | | GCO21049 | Outer Joint | | 30 | 26 | 52.5 | 94 | 65.5 | M |
| | 2008.10-2017.05 | 6AT | F | L/R | Hatchback FWD A 20 DTR | | GCO88046 | Outer Joint | | 30 | 26 | 52.5 | 94.5 | 65.5 | M |
| | 2008.10-2017.05 | 6AT | F | L/R | Hatchback FWD A 20 DTR | | GCI86015 | Inner Joint | | 27 | 26 | 35 | 78.5 | 109.5 | |
| | 2008.10-2017.05 | 6MT | F | L/R | Hatchback FWD A 20 DTR | | GCO21057 | Outer Joint | | 30 | 27 | 59.1 | 94 | 65 | M |
| | 2008.11-2017.05 | 6AT | F | L | Saloon FWD A 20 DTR | Date To:2011.12,Chassis no. to:B1999999 | GDS21045 | Drive Shaft | | 30 | 27 | 52.5 | 94.5 | 615 | |
| | 2008.11-2017.05 | 6AT | F | R | Saloon FWD A 20 DTR | Date From:2012.01,Chassis no. from:C1000001,Date To:2011.12,Chassis no. to:B1999999 | GDS21045 | Drive Shaft | | 30 | 27 | 52.5 | 94.5 | 615 | |
| | 2008.11-2017.05 | 6AT | F | L/R | Saloon FWD A 20 DTR | Date To:2011.12,Chassis no. to:B1999999 | GDS82085 | Drive Shaft | | 30 | 27 | 52.5 | 94 | 615 | |
| | 2008.11-2017.05 | 6AT | F | L/R | Saloon FWD A 20 DTR | | GCO17051 | Outer Joint | | 30 | 26 | 53.8 | 94.5 | 65.5 | M |
| | 2008.11-2017.05 | 6AT | F | L/R | Saloon FWD A 20 DTR | | GCO21049 | Outer Joint | | 30 | 26 | 52.5 | 94 | 65.5 | M |
| | 2008.11-2017.05 | 6AT | F | L/R | Saloon FWD A 20 DTR | | GCO88046 | Outer Joint | | 30 | 26 | 52.5 | 94.5 | 65.5 | M |
| | 2008.11-2017.05 | 6AT | F | L/R | Saloon FWD A 20 DTR | | GCI86015 | Inner Joint | | 27 | 26 | 35 | 78.5 | 109.5 | |
| | 2008.11-2017.05 | 6MT | F | L/R | Saloon FWD A 20 DTR | | GCO21057 | Outer Joint | | 30 | 27 | 59.1 | 94 | 65 | M |
| | 2009.05-2017.05 | 6AT | F | L | Hatchback 4WD A 20 DTR | Date To:2011.12,Chassis no. to:B1999999 | GDS21045 | Drive Shaft | | 30 | 27 | 52.5 | 94.5 | 615 | |
| | 2009.05-2017.05 | 6AT | F | R | Hatchback 4WD A 20 DTR | Date From:2012.01,Chassis no. from:C1000001,Date To:2011.12,Chassis no. to:B1999999 | GDS21045 | Drive Shaft | | 30 | 27 | 52.5 | 94.5 | 615 | |
| | 2009.05-2017.05 | 6AT | F | L/R | Hatchback 4WD A 20 DTR | Date To:2011.12,Chassis no. to:B1999999 | GDS82085 | Drive Shaft | | 30 | 27 | 52.5 | 94 | 615 | |
| | 2009.05-2017.05 | 6AT/6MT | F | L/R | Hatchback 4WD A 20 DTR | | GCO88046 | Outer Joint | | 30 | 26 | 52.5 | 94.5 | 65.5 | M |
| | 2009.05-2017.05 | 6MT | F | L/R | Hatchback 4WD A 20 DTR | For RPO/POC:GNA | GCI21030 | Inner Joint | | 27 | 26 | 35 | 78 | 112.5 | |
| | 2009.05-2017.05 | 6MT/6AT | F | L/R | Hatchback 4WD A 20 DTR | Transmission:6MT,For RPO/POC:GNB | GCI86015 | Inner Joint | | 27 | 26 | 35 | 78.5 | 109.5 | |
| | 2009.05-2017.05 | MT | F | L/R | Hatchback 4WD A 20 DTR | | GCO17051 | Outer Joint | | 30 | 26 | 53.8 | 94.5 | 65.5 | M |
| | 2009.05-2017.05 | MT | F | L/R | Hatchback 4WD A 20 DTR | | GCO21049 | Outer Joint | | 30 | 26 | 52.5 | 94 | 65.5 | M |
| | 2009.05-2017.05 | AT/MT | R | L | Hatchback 4WD A 20 DTR | Veh Equip:For vehicles with lectronic ltd slip differential | GDS82261 | Drive Shaft | | 30 | 34 | 52.3 | 94 | 791 | |
| | 2009.05-2017.05 | AT/MT | R | R | Hatchback 4WD A 20 DTR | | GDS81333 | Drive Shaft | | 30 | 34 | 52.3 | 94 | 842 | |
| | 2009.05-2017.05 | AT/MT | R | L/R | Hatchback 4WD A 20 DTR | With differential lock | GCO81305 | Outer Joint | | 30 | 23 | 52.3 | 94 | 59.5 | M |
| | 2009.05-2017.05 | AT/MT | R | L | Hatchback 4WD A 20 DTR | Veh Equip:For vehicles with lectronic ltd slip differential | GCI81196 | Inner Joint | | 34 | 23 | 35 | 113.5 | 110 | |
| | 2009.05-2017.05 | AT/MT | R | R | Hatchback 4WD A 20 DTR | | GCI81197 | Inner Joint | | 34 | 23 | 35 | 82.5 | 109 | |
| | 2009.05-2017.05 | 6AT | F | L | Saloon 4WD A 20 DTR | Date To:2011.12,Chassis no. to:B1999999 | GDS21045 | Drive Shaft | | 30 | 27 | 52.5 | 94.5 | 615 | |
| | 2009.05-2017.05 | 6AT | F | R | Saloon 4WD A 20 DTR | Date From:2012.01,Chassis no. from:C1000001,Date To:2011.12,Chassis no. to:B1999999 | GDS21045 | Drive Shaft | | 30 | 27 | 52.5 | 94.5 | 615 | |
| | 2009.05-2017.05 | 6AT | F | L/R | Saloon 4WD A 20 DTR | Date To:2011.12,Chassis no. to:B1999999 | GDS82085 | Drive Shaft | | 30 | 27 | 52.5 | 94 | 615 | |
| | 2009.05-2017.05 | 6AT/6MT | F | L/R | Saloon 4WD A 20 DTR | | GCO88046 | Outer Joint | | 30 | 26 | 52.5 | 94.5 | 65.5 | M |
| | 2009.05-2017.05 | 6MT | F | L/R | Saloon 4WD A 20 DTR | For RPO/POC:GNA | GCI21030 | Inner Joint | | 27 | 26 | 35 | 78 | 112.5 | |
| | 2009.05-2017.05 | 6MT/6AT | F | L/R | Saloon 4WD A 20 DTR | Transmission:6MT,For RPO/POC:GNB | GCI86015 | Inner Joint | | 27 | 26 | 35 | 78.5 | 109.5 | |
| | 2009.05-2017.05 | MT | F | L/R | Saloon 4WD A 20 DTR | | GCO17051 | Outer Joint | | 30 | 26 | 53.8 | 94.5 | 65.5 | M |
| | 2009.05-2017.05 | MT | F | L/R | Saloon 4WD A 20 DTR | | GCO21049 | Outer Joint | | 30 | 26 | 52.5 | 94 | 65.5 | M |
| | 2009.05-2017.05 | AT/MT | R | L | Saloon 4WD A 20 DTR | Veh Equip:For vehicles with lectronic ltd slip differential | GDS82261 | Drive Shaft | | 30 | 34 | 52.3 | 94 | 791 | |
| | 2009.05-2017.05 | AT/MT | R | R | Saloon 4WD A 20 DTR | | GDS81333 | Drive Shaft | | 30 | 34 | 52.3 | 94 | 842 | |
| | 2009.05-2017.05 | AT/MT | R | L/R | Saloon 4WD A 20 DTR | With differential lock | GCO81305 | Outer Joint | | 30 | 23 | 52.3 | 94 | 59.5 | M |
| | 2009.05-2017.05 | AT/MT | R | L | Saloon 4WD A 20 DTR | Veh Equip:For vehicles with lectronic ltd slip differential | GCI81196 | Inner Joint | | 34 | 23 | 35 | 113.5 | 110 | |
| | 2009.05-2017.05 | AT/MT | R | R | Saloon 4WD A 20 DTR | | GCI81197 | Inner Joint | | 34 | 23 | 35 | 82.5 | 109 | |
| 2.0 (143 kw) | 2012.03-2017.05 | 6AT | F | R | Hatchback 4WD A 20 DTR | | GDS21045 | Drive Shaft | | 30 | 27 | 52.5 | 94.5 | 615 | |
| | 2012.03-2017.05 | 6AT/6MT | F | L/R | Hatchback 4WD A 20 DTR | | GCO17051 | Outer Joint | | 30 | 26 | 53.8 | 94.5 | 65.5 | M |
| | 2012.03-2017.05 | 6AT/6MT | F | L/R | Hatchback 4WD A 20 DTR | | GCO21049 | Outer Joint | | 30 | 26 | 52.5 | 94 | 65.5 | M |
| | 2012.03-2017.05 | 6AT/6MT | F | L/R | Hatchback 4WD A 20 DTR | | GCO88046 | Outer Joint | | 30 | 26 | 52.5 | 94.5 | 65.5 | M |
| | 2012.03-2017.05 | 6MT | F | L/R | Hatchback 4WD A 20 DTR | For RPO/POC:GNA | GCI21030 | Inner Joint | | 27 | 26 | 35 | 78 | 112.5 | |
| | 2012.03-2017.05 | 6MT/6AT | F | L/R | Hatchback 4WD A 20 DTR | Transmission:6MT,For RPO/POC:GNB | GCI86015 | Inner Joint | | 27 | 26 | 35 | 78.5 | 109.5 | |
| | 2012.03-2017.05 | AT | F | L/R | Hatchback 4WD A 20 DTR | | GDS82085 | Drive Shaft | | 30 | 27 | 52.5 | 94 | 615 | |
| | 2012.03-2017.05 | 6AT/6MT | R | L/R | Hatchback 4WD A 20 DTR | With differential lock | GCO81305 | Outer Joint | | 30 | 23 | 52.3 | 94 | 59.5 | M |

| | YEAR | TRANSM. | F/R | L/R | BODY STYLE & DRIVE TYPE & ENGINE | REMARKS | G-AP Ref. | PRODUCT | ABS | Technical Specifications | | | | | |
|---|---|---|---|---|---|---|---|---|---|---|---|---|---|---|---|
| | | | | | | | | | | A | B | C | H | L | P |
| **VAUXHALL** | | | | | | | | | | | | | | | |
| **Insignia** | | | | | | | | | | | | | | | |
| 2.0 (143 kw) | 2012.03-2017.05 | AT/MT | R | L | Hatchback 4WD A 20 DTR | Veh Equip:For vehicles with lectronic ltd slip differential | GDS82261 | Drive Shaft | | 30 | 34 | 52.3 | 94 | 791 | |
| | 2012.03-2017.05 | AT/MT | R | R | Hatchback 4WD A 20 DTR | | GDS81333 | Drive Shaft | | 30 | 34 | 52.3 | 94 | 842 | |
| | 2012.03-2017.05 | AT/MT | R | L | Hatchback 4WD A 20 DTR | Veh Equip:For vehicles with lectronic ltd slip differential | GCI81196 | Inner Joint | | 34 | 23 | 35 | 113.5 | 110 | |
| | 2012.03-2017.05 | AT/MT | R | R | Hatchback 4WD A 20 DTR | | GCI81197 | Inner Joint | | 34 | 23 | 35 | 82.5 | 109 | |
| | 2012.03-2017.05 | 6AT | F | R | Hatchback FWD A 20 DTR | | GDS21045 | Drive Shaft | | 30 | 27 | 52.5 | 94.5 | 615 | |
| | 2012.03-2017.05 | 6AT | F | L/R | Hatchback FWD A 20 DTR | | GCO17051 | Outer Joint | | 30 | 26 | 53.8 | 94.5 | 65.5 | M |
| | 2012.03-2017.05 | 6AT | F | L/R | Hatchback FWD A 20 DTR | | GCO21049 | Outer Joint | | 30 | 26 | 52.5 | 94 | 65.5 | M |
| | 2012.03-2017.05 | 6AT | F | L/R | Hatchback FWD A 20 DTR | | GCO88046 | Outer Joint | | 30 | 26 | 52.5 | 94.5 | 65.5 | M |
| | 2012.03-2017.05 | 6AT | F | L/R | Hatchback FWD A 20 DTR | | GCI86015 | Inner Joint | | 27 | 26 | 35 | 78.5 | 109.5 | |
| | 2012.03-2017.05 | 6MT | F | L/R | Hatchback FWD A 20 DTR | | GCO21057 | Outer Joint | | 30 | 27 | 59.1 | 94 | 65 | M |
| | 2012.03-2017.05 | AT | F | L/R | Hatchback FWD A 20 DTR | | GDS82085 | Drive Shaft | | 30 | 27 | 52.5 | 94 | 615 | |
| | 2012.03-2017.05 | 6AT | F | R | Saloon 4WD A 20 DTR | | GDS21045 | Drive Shaft | | 30 | 27 | 52.5 | 94.5 | 615 | |
| | 2012.03-2017.05 | 6AT/6MT | F | L/R | Saloon 4WD A 20 DTR | | GCO17051 | Outer Joint | | 30 | 26 | 53.8 | 94.5 | 65.5 | M |
| | 2012.03-2017.05 | 6AT/6MT | F | L/R | Saloon 4WD A 20 DTR | | GCO21049 | Outer Joint | | 30 | 26 | 52.5 | 94 | 65.5 | M |
| | 2012.03-2017.05 | 6AT/6MT | F | L/R | Saloon 4WD A 20 DTR | | GCO88046 | Outer Joint | | 30 | 26 | 52.5 | 94.5 | 65.5 | M |
| | 2012.03-2017.05 | 6MT | F | L/R | Saloon 4WD A 20 DTR | For RPO/POC:GNA | GCI21030 | Inner Joint | | 27 | 26 | 35 | 78 | 112.5 | |
| | 2012.03-2017.05 | 6MT/6AT | F | L/R | Saloon 4WD A 20 DTR | Transmission:6MT,For RPO/POC:GNB | GCI86015 | Inner Joint | | 27 | 26 | 35 | 78.5 | 109.5 | |
| | 2012.03-2017.05 | AT | F | L/R | Saloon 4WD A 20 DTR | | GDS82085 | Drive Shaft | | 30 | 27 | 52.5 | 94 | 615 | |
| | 2012.03-2017.05 | 6AT/6MT | R | L/R | Saloon 4WD A 20 DTR | With differential lock | GCO81305 | Outer Joint | | 30 | 23 | 52.3 | 94 | 59.5 | M |
| | 2012.03-2017.05 | AT/MT | R | L | Saloon 4WD A 20 DTR | Veh Equip:For vehicles with lectronic ltd slip differential | GDS82261 | Drive Shaft | | 30 | 34 | 52.3 | 94 | 791 | |
| | 2012.03-2017.05 | AT/MT | R | R | Saloon 4WD A 20 DTR | | GDS81333 | Drive Shaft | | 30 | 34 | 52.3 | 94 | 842 | |
| | 2012.03-2017.05 | AT/MT | R | L | Saloon 4WD A 20 DTR | Veh Equip:For vehicles with lectronic ltd slip differential | GCI81196 | Inner Joint | | 34 | 23 | 35 | 113.5 | 110 | |
| | 2012.03-2017.05 | AT/MT | R | R | Saloon 4WD A 20 DTR | | GCI81197 | Inner Joint | | 34 | 23 | 35 | 82.5 | 109 | |
| | 2012.03-2017.05 | 6AT | F | R | Saloon FWD A 20 DTR | | GDS21045 | Drive Shaft | | 30 | 27 | 52.5 | 94.5 | 615 | |
| | 2012.03-2017.05 | 6AT | F | L/R | Saloon FWD A 20 DTR | | GCO17051 | Outer Joint | | 30 | 26 | 53.8 | 94.5 | 65.5 | M |
| | 2012.03-2017.05 | 6AT | F | L/R | Saloon FWD A 20 DTR | | GCO21049 | Outer Joint | | 30 | 26 | 52.5 | 94 | 65.5 | M |
| | 2012.03-2017.05 | 6AT | F | L/R | Saloon FWD A 20 DTR | | GCO88046 | Outer Joint | | 30 | 26 | 52.5 | 94.5 | 65.5 | M |
| | 2012.03-2017.05 | 6AT | F | L/R | Saloon FWD A 20 DTR | | GCI86015 | Inner Joint | | 27 | 26 | 35 | 78.5 | 109.5 | |
| | 2012.03-2017.05 | 6MT | F | L/R | Saloon FWD A 20 DTR | | GCO21057 | Outer Joint | | 30 | 27 | 59.1 | 94 | 65 | M |
| | 2012.03-2017.05 | AT | F | L/R | Saloon FWD A 20 DTR | | GDS82085 | Drive Shaft | | 30 | 27 | 52.5 | 94 | 615 | |
| 2.0 (147 kw) | 2020.04- | 9AT | F | R | Hatchback FWD F20SHT | | GDS83653 | Drive Shaft | | 30 | 27 | 60.5 | 94.5 | 559 | |
| | 2020.04- | 9AT | F | R | Hatchback FWD F20SHT | | GCI82319 | Inner Joint | | 27 | 35 | 42 | | 139 | |
| | 2020.04- | AT | F | L/R | Hatchback FWD F20SHT | | GCO81945 | Outer Joint | | 30 | 35 | 60.5 | 94.5 | 60 | M |
| 2.0 (162 kw) | 2008.07-2017.05 | 6AT | F | L/R | Hatchback 4WD A 20 NHT | | GDS21045 | Drive Shaft | | 30 | 27 | 52.5 | 94.5 | 615 | |
| | 2008.07-2017.05 | 6AT | F | L/R | Hatchback 4WD A 20 NHT | | GCI86015 | Inner Joint | | 27 | 26 | 35 | 78.5 | 109.5 | |
| | 2008.07-2017.05 | 6AT/6MT | F | L/R | Hatchback 4WD A 20 NHT | | GCO17051 | Outer Joint | | 30 | 26 | 53.8 | 94.5 | 65.5 | M |
| | 2008.07-2017.05 | 6AT/6MT | F | L/R | Hatchback 4WD A 20 NHT | | GCO21049 | Outer Joint | | 30 | 26 | 52.5 | 94 | 65.5 | M |
| | 2008.07-2017.05 | 6AT/6MT | F | L/R | Hatchback 4WD A 20 NHT | | GCO88046 | Outer Joint | | 30 | 26 | 52.5 | 94.5 | 65.5 | M |
| | 2008.07-2017.05 | 6MT | F | L/R | Hatchback 4WD A 20 NHT | | GDS84292 | Drive Shaft | | 30 | 27 | 52.5 | 94 | 618 | |
| | 2008.07-2017.05 | 6MT | F | L/R | Hatchback 4WD A 20 NHT | | GCI21030 | Inner Joint | | 27 | 26 | 35 | 78 | 112.5 | |
| | 2008.07-2017.05 | AT | F | L/R | Hatchback 4WD A 20 NHT | | GDS82085 | Drive Shaft | | 30 | 27 | 52.5 | 94 | 615 | |
| | 2008.07-2017.05 | 6AT/6MT | R | L/R | Hatchback 4WD A 20 NHT | For vehicles with electronic ltd slip differential | GCO81305 | Outer Joint | | 30 | 23 | 52.3 | 94 | 59.5 | M |
| | 2008.07-2017.05 | AT/MT | R | L | Hatchback 4WD A 20 NHT | Veh Equip:For vehicles with lectronic ltd slip differential | GDS82261 | Drive Shaft | | 30 | 34 | 52.3 | 94 | 791 | |
| | 2008.07-2017.05 | AT/MT | R | R | Hatchback 4WD A 20 NHT | For vehicles with lectronic ltd slip differential | GDS81333 | Drive Shaft | | 30 | 34 | 52.3 | 94 | 842 | |
| | 2008.07-2017.05 | AT/MT | R | L | Hatchback 4WD A 20 NHT | Veh Equip:For vehicles with lectronic ltd slip differential | GCI81196 | Inner Joint | | 34 | 23 | 35 | 113.5 | 110 | |
| | 2008.07-2017.05 | AT/MT | R | R | Hatchback 4WD A 20 NHT | For vehicles with lectronic ltd slip differential | GCI81197 | Inner Joint | | 34 | 23 | 35 | 82.5 | 109 | |
| | 2008.07-2017.05 | 6AT | F | L/R | Hatchback FWD A 20 NHT;A 20 NFT | | GDS21045 | Drive Shaft | | 30 | 27 | 52.5 | 94.5 | 615 | |
| | 2008.07-2017.05 | 6AT | F | L/R | Hatchback FWD A 20 NHT;A 20 NFT | | GCI86015 | Inner Joint | | 27 | 26 | 35 | 78.5 | 109.5 | |
| | 2008.07-2017.05 | 6AT/6MT | F | L/R | Hatchback FWD A 20 NHT;A 20 NFT | | GCO17051 | Outer Joint | | 30 | 26 | 53.8 | 94.5 | 65.5 | M |
| | 2008.07-2017.05 | 6AT/6MT | F | L/R | Hatchback FWD A 20 NHT;A 20 NFT | | GCO21049 | Outer Joint | | 30 | 26 | 52.5 | 94 | 65.5 | M |
| | 2008.07-2017.05 | 6AT/6MT | F | L/R | Hatchback FWD A 20 NHT;A 20 NFT | | GCO88046 | Outer Joint | | 30 | 26 | 52.5 | 94.5 | 65.5 | M |
| | 2008.07-2017.05 | 6MT | F | L/R | Hatchback FWD A 20 NHT;A 20 NFT | Chassis no. from:C1000001 | GDS84292 | Drive Shaft | | 30 | 27 | 52.5 | 94 | 618 | |
| | 2008.07-2017.05 | 6MT | F | L/R | Hatchback FWD A 20 NHT;A 20 NFT | | GCI21030 | Inner Joint | | 27 | 26 | 35 | 78 | 112.5 | |
| | 2008.07-2017.05 | AT | F | L | Hatchback FWD A 20 NHT;A 20 NFT | | GDS82085 | Drive Shaft | | 30 | 27 | 52.5 | 94 | 615 | |
| | 2008.07-2017.05 | MT | F | L/R | Hatchback FWD A 20 NHT;A 20 NFT | Chassis no. to:B1999999 | GDS60027 | Drive Shaft | | 30 | 27 | 52.5 | 94.5 | 619 | |
| | 2008.07-2017.05 | 6AT | F | L/R | Saloon 4WD A 20 NHT | | GDS21045 | Drive Shaft | | 30 | 27 | 52.5 | 94.5 | 615 | |
| | 2008.07-2017.05 | 6AT | F | L/R | Saloon 4WD A 20 NHT | | GCI86015 | Inner Joint | | 27 | 26 | 35 | 78.5 | 109.5 | |
| | 2008.07-2017.05 | 6AT/6MT | F | L/R | Saloon 4WD A 20 NHT | | GCO17051 | Outer Joint | | 30 | 26 | 53.8 | 94.5 | 65.5 | M |
| | 2008.07-2017.05 | 6AT/6MT | F | L/R | Saloon 4WD A 20 NHT | | GCO21049 | Outer Joint | | 30 | 26 | 52.5 | 94 | 65.5 | M |
| | 2008.07-2017.05 | 6AT/6MT | F | L/R | Saloon 4WD A 20 NHT | | GCO88046 | Outer Joint | | 30 | 26 | 52.5 | 94.5 | 65.5 | M |
| | 2008.07-2017.05 | 6MT | F | L/R | Saloon 4WD A 20 NHT | | GDS84292 | Drive Shaft | | 30 | 27 | 52.5 | 94 | 618 | |
| | 2008.07-2017.05 | 6MT | F | L/R | Saloon 4WD A 20 NHT | | GCI21030 | Inner Joint | | 27 | 26 | 35 | 78 | 112.5 | |
| | 2008.07-2017.05 | AT | F | L/R | Saloon 4WD A 20 NHT | | GDS82085 | Drive Shaft | | 30 | 27 | 52.5 | 94 | 615 | |
| | 2008.07-2017.05 | 6AT/6MT | R | L/R | Saloon 4WD A 20 NHT | For vehicles with electronic ltd slip differential | GCO81305 | Outer Joint | | 30 | 23 | 52.3 | 94 | 59.5 | M |
| | 2008.07-2017.05 | AT/MT | R | L | Saloon 4WD A 20 NHT | Veh Equip:For vehicles with lectronic ltd slip differential | GDS82261 | Drive Shaft | | 30 | 34 | 52.3 | 94 | 791 | |

| | YEAR | TRANSM. | F/R | L/R | BODY STYLE & DRIVE TYPE & ENGINE | REMARKS | G-AP Ref. | PRODUCT | ABS | Technical Specifications A | B | C | H | L | P |
|---|---|---|---|---|---|---|---|---|---|---|---|---|---|---|---|
| **VAUXHALL** | | | | | | | | | | | | | | | |
| **Insignia** | | | | | | | | | | | | | | | |
| 2.0 (162 kw) | 2008.07-2017.05 | AT/MT | R | R | Saloon 4WD A 20 NHT | For vehicles with lectronic ltd slip differential | GDS81333 | Drive Shaft | | 30 | 34 | 52.3 | 94 | 842 | |
| | 2008.07-2017.05 | AT/MT | R | L | Saloon 4WD A 20 NHT | Veh Equip:For vehicles with lectronic ltd slip differential | GCI81196 | Inner Joint | | 34 | 23 | 35 | 113.5 | 110 | |
| | 2008.07-2017.05 | AT/MT | R | R | Saloon 4WD A 20 NHT | For vehicles with lectronic ltd slip differential | GCI81197 | Inner Joint | | 34 | 23 | 35 | 82.5 | 109 | |
| | 2008.07-2017.05 | 6AT | F | L/R | Saloon FWD A 20 NHT;A 20 NFT | | GDS21045 | Drive Shaft | | 30 | 27 | 52.5 | 94.5 | 615 | |
| | 2008.07-2017.05 | 6AT | F | L/R | Saloon FWD A 20 NHT;A 20 NFT | | GCI86015 | Inner Joint | | 27 | 26 | 35 | 78.5 | 109.5 | |
| | 2008.07-2017.05 | 6AT/6MT | F | L/R | Saloon FWD A 20 NHT;A 20 NFT | | GCO17051 | Outer Joint | | 30 | 26 | 53.8 | 94.5 | 65.5 | M |
| | 2008.07-2017.05 | 6AT/6MT | F | L/R | Saloon FWD A 20 NHT;A 20 NFT | | GCO21049 | Outer Joint | | 30 | 26 | 52.5 | 94 | 65.5 | M |
| | 2008.07-2017.05 | 6AT/6MT | F | L/R | Saloon FWD A 20 NHT;A 20 NFT | | GCO88046 | Outer Joint | | 30 | 26 | 52.5 | 94.5 | 65.5 | M |
| | 2008.07-2017.05 | 6MT | F | L/R | Saloon FWD A 20 NHT;A 20 NFT | Chassis no. from:C1000001 | GDS84292 | Drive Shaft | | 30 | 27 | 52.5 | 94 | 618 | |
| | 2008.07-2017.05 | 6MT | F | L/R | Saloon FWD A 20 NHT;A 20 NFT | | GCI21030 | Inner Joint | | 27 | 26 | 35 | 78 | 112.5 | |
| | 2008.07-2017.05 | AT | F | L | Saloon FWD A 20 NHT;A 20 NFT | | GDS82085 | Drive Shaft | | 30 | 27 | 52.5 | 94 | 615 | |
| | 2008.07-2017.05 | MT | F | L/R | Saloon FWD A 20 NHT;A 20 NFT | Chassis no. to:B1999999 | GDS60027 | Drive Shaft | | 30 | 27 | 52.5 | 94.5 | 619 | |
| 2.0 (169 kw) | 2020.04- | 9AT | F | R | Hatchback 4WD F20SHT | | GDS83653 | Drive Shaft | | 30 | 27 | 60.5 | 94.5 | 559 | |
| | 2020.04- | 9AT | F | R | Hatchback 4WD F20SHT | | GCI82319 | Inner Joint | | 27 | 35 | 42 | | 139 | |
| | 2020.04- | AT | F | L/R | Hatchback 4WD F20SHT | | GCO81945 | Outer Joint | | 30 | 35 | 60.5 | 94.5 | 60 | M |
| 2.0 (184 kw) | 2011.07-2017.05 | 6AT/6MT | F | L/R | Hatchback 4WD A 20 NHT;A 20 NFT;B 20 NHT | | GCO88046 | Outer Joint | | 30 | 26 | 52.5 | 94.5 | 65.5 | M |
| | 2011.07-2017.05 | 6MT | F | L/R | Hatchback 4WD A 20 NHT;A 20 NFT;B 20 NHT | For RPO/POC:MK6 | GDS60027 | Drive Shaft | | 30 | 27 | 52.5 | 94.5 | 619 | |
| | 2011.07-2017.05 | 6MT | F | L/R | Hatchback 4WD A 20 NHT;A 20 NFT;B 20 NHT | For RPO/POC:MR6,Chassis no. from:C1000001 | GDS84292 | Drive Shaft | | 30 | 27 | 52.5 | 94 | 618 | |
| | 2011.07-2017.05 | 6MT | F | L/R | Hatchback 4WD A 20 NHT;A 20 NFT;B 20 NHT | | GCI21030 | Inner Joint | | 27 | 26 | 35 | 78 | 112.5 | |
| | 2011.07-2017.05 | MT | F | L/R | Hatchback 4WD A 20 NHT;A 20 NFT;B 20 NHT | | GCO17051 | Outer Joint | | 30 | 26 | 53.8 | 94.5 | 65.5 | M |
| | 2011.07-2017.05 | MT | F | L/R | Hatchback 4WD A 20 NHT;A 20 NFT;B 20 NHT | | GCO21049 | Outer Joint | | 30 | 26 | 52.5 | 94 | 65.5 | M |
| | 2011.07-2017.05 | 6MT/6AT | R | R | Hatchback 4WD A 20 NHT;A 20 NFT;B 20 NHT | | GDS81333 | Drive Shaft | | 30 | 34 | 52.3 | 94 | 842 | |
| | 2011.07-2017.05 | AT/MT | R | L/R | Hatchback 4WD A 20 NHT;A 20 NFT;B 20 NHT | For vehicles with electronic ltd slip differential | GCO81305 | Outer Joint | | 30 | 23 | 52.3 | 94 | 59.5 | M |
| | 2011.07-2017.05 | 6AT/6MT | F | L/R | Hatchback FWD A 20 NHT;B 20 NHT | | GCO17051 | Outer Joint | | 30 | 26 | 53.8 | 94.5 | 65.5 | M |
| | 2011.07-2017.05 | 6AT/6MT | F | L/R | Hatchback FWD A 20 NHT;B 20 NHT | | GCO21049 | Outer Joint | | 30 | 26 | 52.5 | 94 | 65.5 | M |
| | 2011.07-2017.05 | 6AT/6MT | F | L/R | Hatchback FWD A 20 NHT;B 20 NHT | | GCO88046 | Outer Joint | | 30 | 26 | 52.5 | 94.5 | 65.5 | M |
| | 2011.07-2017.05 | 6MT | F | L/R | Hatchback FWD A 20 NHT;B 20 NHT | For RPO/POC:MR6,Chassis no. from:C1000001 | GDS84292 | Drive Shaft | | 30 | 27 | 52.5 | 94 | 618 | |
| | 2011.07-2017.05 | 6MT | F | L/R | Hatchback FWD A 20 NHT;B 20 NHT | | GCI21030 | Inner Joint | | 27 | 26 | 35 | 78 | 112.5 | |
| | 2011.07-2017.05 | AT | F | L | Hatchback FWD A 20 NHT;B 20 NHT | | GDS82085 | Drive Shaft | | 30 | 27 | 52.5 | 94 | 615 | |
| | 2011.07-2017.05 | AT | F | L | Hatchback FWD A 20 NHT;B 20 NHT | | GCI86015 | Inner Joint | | 27 | 26 | 35 | 78.5 | 109.5 | |
| | 2011.07-2017.05 | MT | F | L/R | Hatchback FWD A 20 NHT;B 20 NHT | Chassis no. to:B1999999,For RPO/POC:MR6 | GDS60027 | Drive Shaft | | 30 | 27 | 52.5 | 94.5 | 619 | |
| | 2011.09-2017.05 | 6AT/6MT | F | L/R | Saloon 4WD A 20 NHT;A 20 NFT;B 20 NHT | | GCO88046 | Outer Joint | | 30 | 26 | 52.5 | 94.5 | 65.5 | M |
| | 2011.09-2017.05 | 6MT | F | L/R | Saloon 4WD A 20 NHT;A 20 NFT;B 20 NHT | For RPO/POC:MR6,Chassis no. from:C1000001 | GDS84292 | Drive Shaft | | 30 | 27 | 52.5 | 94 | 618 | |
| | 2011.09-2017.05 | 6MT | F | L/R | Saloon 4WD A 20 NHT;A 20 NFT;B 20 NHT | | GCI21030 | Inner Joint | | 27 | 26 | 35 | 78 | 112.5 | |
| | 2011.09-2017.05 | AT | F | L/R | Saloon 4WD A 20 NHT;A 20 NFT;B 20 NHT | Date from:2013.07 | GDS21045 | Drive Shaft | | 30 | 27 | 52.5 | 94.5 | 615 | |
| | 2011.09-2017.05 | AT | F | L/R | Saloon 4WD A 20 NHT;A 20 NFT;B 20 NHT | | GDS82085 | Drive Shaft | | 30 | 27 | 52.5 | 94 | 615 | |
| | 2011.09-2017.05 | AT | F | L/R | Saloon 4WD A 20 NHT;A 20 NFT;B 20 NHT | | GCI86015 | Inner Joint | | 27 | 26 | 35 | 78.5 | 109.5 | |
| | 2011.09-2017.05 | MT | F | L/R | Saloon 4WD A 20 NHT;A 20 NFT;B 20 NHT | Chassis no. to:B1999999,For RPO/POC:MR6 | GDS60027 | Drive Shaft | | 30 | 27 | 52.5 | 94.5 | 619 | |
| | 2011.09-2017.05 | MT | F | L/R | Saloon 4WD A 20 NHT;A 20 NFT;B 20 NHT | | GCO17051 | Outer Joint | | 30 | 26 | 53.8 | 94.5 | 65.5 | M |
| | 2011.09-2017.05 | MT | F | L/R | Saloon 4WD A 20 NHT;A 20 NFT;B 20 NHT | | GCO21049 | Outer Joint | | 30 | 26 | 52.5 | 94 | 65.5 | M |
| | 2011.09-2017.05 | AT/MT | R | L | Saloon 4WD A 20 NHT;A 20 NFT;B 20 NHT | Veh Equip:For vehicles with lectronic ltd slip differential | GDS82261 | Drive Shaft | | 30 | 34 | 52.3 | 94 | 791 | |
| | 2011.09-2017.05 | AT/MT | R | R | Saloon 4WD A 20 NHT;A 20 NFT;B 20 NHT | | GDS81333 | Drive Shaft | | 30 | 34 | 52.3 | 94 | 842 | |
| | 2011.09-2017.05 | AT/MT | R | L/R | Saloon 4WD A 20 NHT;A 20 NFT;B 20 NHT | For vehicles with electronic ltd slip differential | GCO81305 | Outer Joint | | 30 | 23 | 52.3 | 94 | 59.5 | M |
| | 2011.09-2017.05 | AT/MT | R | L | Saloon 4WD A 20 NHT;A 20 NFT;B 20 NHT | Veh Equip:For vehicles with lectronic ltd slip differential | GCI81196 | Inner Joint | | 34 | 23 | 35 | 113.5 | 110 | |
| | 2011.09-2017.05 | AT/MT | R | R | Saloon 4WD A 20 NHT;A 20 NFT;B 20 NHT | | GCI81197 | Inner Joint | | 34 | 23 | 35 | 82.5 | 109 | |
| | 2011.09-2017.05 | 6AT/6MT | F | L/R | Saloon FWD A 20 NHT;B 20 NHT | | GCO17051 | Outer Joint | | 30 | 26 | 53.8 | 94.5 | 65.5 | M |
| | 2011.09-2017.05 | 6AT/6MT | F | L/R | Saloon FWD A 20 NHT;B 20 NHT | | GCO21049 | Outer Joint | | 30 | 26 | 52.5 | 94 | 65.5 | M |
| | 2011.09-2017.05 | 6AT/6MT | F | L/R | Saloon FWD A 20 NHT;B 20 NHT | | GCO88046 | Outer Joint | | 30 | 26 | 52.5 | 94.5 | 65.5 | M |
| | 2011.09-2017.05 | 6MT | F | L/R | Saloon FWD A 20 NHT;B 20 NHT | For RPO/POC:MR6,Chassis no. from:C1000001 | GDS84292 | Drive Shaft | | 30 | 27 | 52.5 | 94 | 618 | |
| | 2011.09-2017.05 | 6MT | F | L/R | Saloon FWD A 20 NHT;B 20 NHT | | GCI21030 | Inner Joint | | 27 | 26 | 35 | 78 | 112.5 | |
| | 2011.09-2017.05 | AT | F | L | Saloon FWD A 20 NHT;B 20 NHT | | GDS82085 | Drive Shaft | | 30 | 27 | 52.5 | 94 | 615 | |
| | 2011.09-2017.05 | AT | F | L | Saloon FWD A 20 NHT;B 20 NHT | | GCI86015 | Inner Joint | | 27 | 26 | 35 | 78.5 | 109.5 | |
| | 2011.09-2017.05 | MT | F | L/R | Saloon FWD A 20 NHT;B 20 NHT | Chassis no. to:B1999999,For RPO/POC:MR6 | GDS60027 | Drive Shaft | | 30 | 27 | 52.5 | 94.5 | 619 | |
| 2.0 (191 kw) | 2017.03- | 8AT | F | L | Hatchback 4WD B 20 NFT | | GDS56988 | Drive Shaft | | 30 | 27 | 60.5 | 94.5 | 621 | |
| | 2017.03- | 8AT | F | R | Hatchback 4WD B 20 NFT | | GDS83653 | Drive Shaft | | 30 | 27 | 60.5 | 94.5 | 559 | |
| | 2017.03- | 8AT | F | L/R | Hatchback 4WD B 20 NFT | | GCO81945 | Outer Joint | | 30 | 35 | 60.5 | 94.5 | 60 | M |
| | 2017.03- | 8AT | F | L | Hatchback 4WD B 20 NFT | | GCI82377 | Inner Joint | | 27 | 35 | 35 | 101 | 100.5 | |
| | 2017.03- | 8AT | F | R | Hatchback 4WD B 20 NFT | | GCI82319 | Inner Joint | | 27 | 35 | 42 | | 139 | |
| 2.8 (191 kw) | 2008.07-2017.05 | 6AT | F | L | Hatchback 4WD A 28 NET | Date To:2010.12,Chassis no. to:A1999999 | GDS21045 | Drive Shaft | | 30 | 27 | 52.5 | 94.5 | 615 | |
| | 2008.07-2017.05 | 6AT | F | R | Hatchback 4WD A 28 NET | | GDS21045 | Drive Shaft | | 30 | 27 | 52.5 | 94.5 | 615 | |
| | 2008.07-2017.05 | 6AT | F | L/R | Hatchback 4WD A 28 NET | Date from:2010.01,Chassis no. from:A1000001 | GCO17051 | Outer Joint | | 30 | 26 | 53.8 | 94.5 | 65.5 | M |
| | 2008.07-2017.05 | 6AT | F | L/R | Hatchback 4WD A 28 NET | Date from:2010.01,Chassis no. from:A1000001 | GCO21049 | Outer Joint | | 30 | 26 | 52.5 | 94 | 65.5 | M |
| | 2008.07-2017.05 | 6AT | F | L/R | Hatchback 4WD A 28 NET | Date from:2010.01,Chassis no. from:A1000001 | GCO88046 | Outer Joint | | 30 | 26 | 52.5 | 94.5 | 65.5 | M |
| | 2008.07-2017.05 | 6AT | F | L/R | Hatchback 4WD A 28 NET | Date from:2010.01,Chassis no. from:A1000001 | GCI86015 | Inner Joint | | 27 | 26 | 35 | 78.5 | 109.5 | |
| | 2008.07-2017.05 | 6AT/6MT | F | L/R | Hatchback 4WD A 28 NET | Transmission:6AT,Date to:2009.12,Chassis no. to:9199999991999999 | GCO21057 | Outer Joint | | 30 | 27 | 59.1 | 94 | 65 | M |

| | YEAR | TRANSM. | F/R | L/R | BODY STYLE & DRIVE TYPE & ENGINE | REMARKS | G-AP Ref. | PRODUCT | ABS | Technical Specifications A | B | C | H | L | P |
|---|---|---|---|---|---|---|---|---|---|---|---|---|---|---|---|
| **VAUXHALL** | | | | | | | | | | | | | | | |
| **Insignia** | | | | | | | | | | | | | | | |
| 2.8 (191 kw) | 2008.07-2017.05 | AT | F | L/R | Hatchback 4WD A 28 NET | | GDS82085 | Drive Shaft | | 30 | 27 | 52.5 | 94 | 615 | |
| | 2008.07-2017.05 | 6AT/6MT | R | L/R | Hatchback 4WD A 28 NET | For vehicles with electronic ltd slip differential | GCO81305 | Outer Joint | | 30 | 23 | 52.3 | 94 | 59.5 | M |
| | 2008.07-2017.05 | AT/MT | R | L | Hatchback 4WD A 28 NET | Veh Equip:For vehicles with lectronic ltd slip differential | GDS82261 | Drive Shaft | | 30 | 34 | 52.3 | 94 | 791 | |
| | 2008.07-2017.05 | AT/MT | R | R | Hatchback 4WD A 28 NET | | GDS81333 | Drive Shaft | | 30 | 34 | 52.3 | 94 | 842 | |
| | 2008.07-2017.05 | AT/MT | R | L | Hatchback 4WD A 28 NET | Veh Equip:For vehicles with lectronic ltd slip differential | GCI81196 | Inner Joint | | 34 | 23 | 35 | 113.5 | 110 | |
| | 2008.07-2017.05 | AT/MT | R | R | Hatchback 4WD A 28 NET | | GCI81197 | Inner Joint | | 34 | 23 | 35 | 82.5 | 109 | |
| | 2008.07-2017.05 | 6AT | F | L | Saloon 4WD A 28 NET | Date To:2010.12,Chassis no. to:A1999999 | GDS21045 | Drive Shaft | | 30 | 27 | 52.5 | 94.5 | 615 | |
| | 2008.07-2017.05 | 6AT | F | R | Saloon 4WD A 28 NET | | GDS21045 | Drive Shaft | | 30 | 27 | 52.5 | 94.5 | 615 | |
| | 2008.07-2017.05 | 6AT | F | L/R | Saloon 4WD A 28 NET | Date from:2010.01,Chassis no. from:A1000001 | GCO17051 | Outer Joint | | 30 | 26 | 53.8 | 94.5 | 65.5 | M |
| | 2008.07-2017.05 | 6AT | F | L/R | Saloon 4WD A 28 NET | Date from:2010.01,Chassis no. from:A1000001 | GCO21049 | Outer Joint | | 30 | 26 | 52.5 | 94 | 65.5 | M |
| | 2008.07-2017.05 | 6AT | F | L/R | Saloon 4WD A 28 NET | Date from:2010.01,Chassis no. from:A1000001 | GCO88046 | Outer Joint | | 30 | 26 | 52.5 | 94.5 | 65.5 | M |
| | 2008.07-2017.05 | 6AT | F | L/R | Saloon 4WD A 28 NET | Date from:2010.01,Chassis no. from:A1000001 | GCI86015 | Inner Joint | | 27 | 26 | 35 | 78.5 | 109.5 | |
| | 2008.07-2017.05 | 6AT/6MT | F | L/R | Saloon 4WD A 28 NET | Transmission:6AT,Date to:2009.12,Chassis no. to:9199999991999999 | GCO21057 | Outer Joint | | 30 | 27 | 59.1 | 94 | 65 | M |
| | 2008.07-2017.05 | AT | F | L/R | Saloon 4WD A 28 NET | | GDS82085 | Drive Shaft | | 30 | 27 | 52.5 | 94 | 615 | |
| | 2008.07-2017.05 | 6AT/6MT | R | L/R | Saloon 4WD A 28 NET | For vehicles with electronic ltd slip differential | GCO81305 | Outer Joint | | 30 | 23 | 52.3 | 94 | 59.5 | M |
| | 2008.07-2017.05 | AT/MT | R | L | Saloon 4WD A 28 NET | Veh Equip:For vehicles with lectronic ltd slip differential | GDS82261 | Drive Shaft | | 30 | 34 | 52.3 | 94 | 791 | |
| | 2008.07-2017.05 | AT/MT | R | R | Saloon 4WD A 28 NET | | GDS81333 | Drive Shaft | | 30 | 34 | 52.3 | 94 | 842 | |
| | 2008.07-2017.05 | AT/MT | R | L | Saloon 4WD A 28 NET | Veh Equip:For vehicles with lectronic ltd slip differential | GCI81196 | Inner Joint | | 34 | 23 | 35 | 113.5 | 110 | |
| | 2008.07-2017.05 | AT/MT | R | R | Saloon 4WD A 28 NET | | GCI81197 | Inner Joint | | 34 | 23 | 35 | 82.5 | 109 | |
| 2.8 (239 kw) | 2009.07-2017.05 | 6AT/6MT | F | L/R | Hatchback 4WD A 28 NER;B 28 NER | | GCO21057 | Outer Joint | | 30 | 27 | 59.1 | 94 | 65 | M |
| | 2009.07-2017.05 | 6AT/6MT | R | L/R | Hatchback 4WD A 28 NER;B 28 NER | For vehicles with electronic ltd slip differential | GCO81305 | Outer Joint | | 30 | 23 | 52.3 | 94 | 59.5 | M |
| | 2009.07-2017.05 | AT/MT | R | L | Hatchback 4WD A 28 NER;B 28 NER | For vehicles with lectronic ltd slip differential | GDS82261 | Drive Shaft | | 30 | 34 | 52.3 | 94 | 791 | |
| | 2009.07-2017.05 | AT/MT | R | R | Hatchback 4WD A 28 NER;B 28 NER | | GDS81333 | Drive Shaft | | 30 | 34 | 52.3 | 94 | 842 | |
| | 2009.07-2017.05 | AT/MT | R | L | Hatchback 4WD A 28 NER;B 28 NER | For vehicles with lectronic ltd slip differential | GCI81196 | Inner Joint | | 34 | 23 | 35 | 113.5 | 110 | |
| | 2009.07-2017.05 | AT/MT | R | R | Hatchback 4WD A 28 NER;B 28 NER | | GCI81197 | Inner Joint | | 34 | 23 | 35 | 82.5 | 109 | |
| | 2009.07-2017.05 | 6AT/6MT | F | L/R | Saloon 4WD A 28 NER | | GCO21057 | Outer Joint | | 30 | 27 | 59.1 | 94 | 65 | M |
| | 2009.07-2017.05 | 6AT/6MT | R | L/R | Saloon 4WD A 28 NER | For vehicles with electronic ltd slip differential | GCO81305 | Outer Joint | | 30 | 23 | 52.3 | 94 | 59.5 | M |
| | 2009.07-2017.05 | AT/MT | R | L | Saloon 4WD A 28 NER | For vehicles with lectronic ltd slip differential | GDS82261 | Drive Shaft | | 30 | 34 | 52.3 | 94 | 791 | |
| | 2009.07-2017.05 | AT/MT | R | R | Saloon 4WD A 28 NER | | GDS81333 | Drive Shaft | | 30 | 34 | 52.3 | 94 | 842 | |
| | 2009.07-2017.05 | AT/MT | R | L | Saloon 4WD A 28 NER | For vehicles with lectronic ltd slip differential | GCI81196 | Inner Joint | | 34 | 23 | 35 | 113.5 | 110 | |
| | 2009.07-2017.05 | AT/MT | R | R | Saloon 4WD A 28 NER | | GCI81197 | Inner Joint | | 34 | 23 | 35 | 82.5 | 109 | |
| **Insignia Country Tourer** | | | | | | | | | | | | | | | |
| 2.0 (120 kw) | 2013.07-2017.05 | 6AT | F | L/R | Estate 4WD A 20 DTH | | GCI86015 | Inner Joint | | 27 | 26 | 35 | 78.5 | 109.5 | |
| | 2013.07-2017.05 | 6AT/6MT | F | L/R | Estate 4WD A 20 DTH | | GCO17051 | Outer Joint | | 30 | 26 | 53.8 | 94.5 | 65.5 | M |
| | 2013.07-2017.05 | 6AT/6MT | F | L/R | Estate 4WD A 20 DTH | | GCO21049 | Outer Joint | | 30 | 26 | 52.5 | 94 | 65.5 | M |
| | 2013.07-2017.05 | 6AT/6MT | F | L/R | Estate 4WD A 20 DTH | | GCO88046 | Outer Joint | | 30 | 26 | 52.5 | 94.5 | 65.5 | M |
| | 2013.07-2017.05 | 6MT | F | L/R | Estate 4WD A 20 DTH | Chassis no. from:C1000001 | GDS84292 | Drive Shaft | | 30 | 27 | 52.5 | 94 | 618 | |
| | 2013.07-2017.05 | 6MT | F | L | Estate 4WD A 20 DTH | | GCI21030 | Inner Joint | | 27 | 26 | 35 | 78 | 112.5 | |
| | 2013.07-2017.05 | AT | F | L/R | Estate 4WD A 20 DTH | | GDS82085 | Drive Shaft | | 30 | 27 | 52.5 | 94 | 615 | |
| | 2013.07-2017.05 | MT | F | L/R | Estate 4WD A 20 DTH | Chassis no. to:B1999999 | GDS60027 | Drive Shaft | | 30 | 27 | 52.5 | 94.5 | 619 | |
| | 2013.07-2017.05 | 6AT/6MT | R | L/R | Estate 4WD A 20 DTH | With differential lock | GCO81305 | Outer Joint | | 30 | 23 | 52.3 | 94 | 59.5 | M |
| | 2013.07-2017.05 | AT/MT | R | L | Estate 4WD A 20 DTH | Veh Equip:For vehicles with lectronic ltd slip differential | GDS82261 | Drive Shaft | | 30 | 34 | 52.3 | 94 | 791 | |
| | 2013.07-2017.05 | AT/MT | R | R | Estate 4WD A 20 DTH | | GDS81333 | Drive Shaft | | 30 | 34 | 52.3 | 94 | 842 | |
| | 2013.07-2017.05 | AT/MT | R | L | Estate 4WD A 20 DTH | Veh Equip:For vehicles with lectronic ltd slip differential | GCI81196 | Inner Joint | | 34 | 23 | 35 | 113.5 | 110 | |
| | 2013.07-2017.05 | AT/MT | R | R | Estate 4WD A 20 DTH | | GCI81197 | Inner Joint | | 34 | 23 | 35 | 82.5 | 109 | |
| | 2013.07-2017.05 | 6AT | F | R | Estate FWD A 20 DTH | | GDS21045 | Drive Shaft | | 30 | 27 | 52.5 | 94.5 | 615 | |
| | 2013.07-2017.05 | 6AT | F | L | Estate FWD A 20 DTH | | GCO88046 | Outer Joint | | 30 | 26 | 52.5 | 94.5 | 65.5 | M |
| | 2013.07-2017.05 | 6AT | F | L/R | Estate FWD A 20 DTH | | GCO17051 | Outer Joint | | 30 | 26 | 53.8 | 94.5 | 65.5 | M |
| | 2013.07-2017.05 | 6AT | F | L/R | Estate FWD A 20 DTH | | GCO21049 | Outer Joint | | 30 | 26 | 52.5 | 94 | 65.5 | M |
| | 2013.07-2017.05 | 6AT | F | L/R | Estate FWD A 20 DTH | | GCI86015 | Inner Joint | | 27 | 26 | 35 | 78.5 | 109.5 | |
| | 2013.07-2017.05 | AT | F | L/R | Estate FWD A 20 DTH | | GDS82085 | Drive Shaft | | 30 | 27 | 52.5 | 94 | 615 | |
| 2.0 (125 kw) | 2014.11-2017.05 | 6MT | F | R | Estate 4WD B 20 DTH | | GDS60027 | Drive Shaft | | 30 | 27 | 52.5 | 94.5 | 619 | |
| | 2014.11-2017.05 | 6MT | F | L/R | Estate 4WD B 20 DTH | | GCO17051 | Outer Joint | | 30 | 26 | 53.8 | 94.5 | 65.5 | M |
| | 2014.11-2017.05 | 6MT | F | L/R | Estate 4WD B 20 DTH | | GCO21049 | Outer Joint | | 30 | 26 | 52.5 | 94 | 65.5 | M |
| | 2014.11-2017.05 | 6MT | F | L/R | Estate 4WD B 20 DTH | | GCO88046 | Outer Joint | | 30 | 26 | 52.5 | 94.5 | 65.5 | M |
| | 2014.11-2017.05 | 6MT | F | L/R | Estate 4WD B 20 DTH | | GCI21030 | Inner Joint | | 27 | 26 | 35 | 78 | 112.5 | |
| | 2014.11-2017.05 | 6MT | R | L/R | Estate 4WD B 20 DTH | With differential lock | GCO81305 | Outer Joint | | 30 | 23 | 52.3 | 94 | 59.5 | M |
| | 2014.11-2017.05 | AT/MT | R | L | Estate 4WD B 20 DTH | Veh Equip:For vehicles with lectronic ltd slip differential | GDS82261 | Drive Shaft | | 30 | 34 | 52.3 | 94 | 791 | |
| | 2014.11-2017.05 | AT/MT | R | L | Estate 4WD B 20 DTH | Veh Equip:For vehicles with lectronic ltd slip differential | GCI81196 | Inner Joint | | 34 | 23 | 35 | 113.5 | 110 | |
| | 2014.11-2017.05 | MT | R | R | Estate 4WD B 20 DTH | | GDS81333 | Drive Shaft | | 30 | 34 | 52.3 | 94 | 842 | |
| | 2014.11-2017.05 | MT | R | R | Estate 4WD B 20 DTH | | GCI81197 | Inner Joint | | 34 | 23 | 35 | 82.5 | 109 | |
| | 2014.11-2017.05 | 6MT | F | R | Estate FWD B 20 DTH | For RPO/POC:GNB | GDS60027 | Drive Shaft | | 30 | 27 | 52.5 | 94.5 | 619 | |
| | 2014.11-2017.05 | 6MT | F | R | Estate FWD B 20 DTH | For RPO/POC:GNA,Chassis no. from:C1000001 | GDS84292 | Drive Shaft | | 30 | 27 | 52.5 | 94 | 618 | |
| | 2014.11-2017.05 | 6MT | F | L/R | Estate FWD B 20 DTH | | GCO17051 | Outer Joint | | 30 | 26 | 53.8 | 94.5 | 65.5 | M |
| | 2014.11-2017.05 | 6MT | F | L/R | Estate FWD B 20 DTH | | GCO21049 | Outer Joint | | 30 | 26 | 52.5 | 94 | 65.5 | M |

| | YEAR | TRANSM. | F/R | L/R | BODY STYLE & DRIVE TYPE & ENGINE | REMARKS | G-AP Ref. | PRODUCT | ABS | Technical Specifications A | B | C | H | L | P |
|---|---|---|---|---|---|---|---|---|---|---|---|---|---|---|---|
| **VAUXHALL** | | | | | | | | | | | | | | | |
| **Insignia Country Tourer** | | | | | | | | | | | | | | | |
| 2.0 (125 kw) | 2014.11-2017.05 | 6MT | F | L/R | Estate FWD B 20 DTH | | GCO88046 | Outer Joint | | 30 | 26 | 52.5 | 94.5 | 65.5 | M |
| | 2014.11-2017.05 | 6MT | F | L/R | Estate FWD B 20 DTH | | GCI21030 | Inner Joint | | 27 | 26 | 35 | 78 | 112.5 | |
| | 2017.03- | 6MT | F | L | Estate FWD D 20 DTH | | GDS83818 | Drive Shaft | | 30 | 27 | 60.5 | 94.5 | 615 | |
| | 2017.03- | 6MT | F | L | Estate FWD D 20 DTH | | GCI82377 | Inner Joint | | 27 | 35 | 35 | 101 | 100.5 | |
| | 2017.03- | 6MT/8AT | F | L/R | Estate FWD D 20 DTH | | GCO81945 | Outer Joint | | 30 | 35 | 60.5 | 94.5 | 60 | M |
| | 2017.03- | 6MT/8AT | F | R | Estate FWD D 20 DTH | | GCI82319 | Inner Joint | | 27 | 35 | 42 | | 139 | |
| | 2017.03- | 8AT | F | L | Estate FWD D 20 DTH | | GDS56988 | Drive Shaft | | 30 | 27 | 60.5 | 94.5 | 621 | |
| | 2017.03- | 8AT/6MT | F | R | Estate FWD D 20 DTH | | GDS83927 | Drive Shaft | | 30 | 27 | 60.5 | 94.5 | 595 | |
| | 2017.09- | 6MT | F | L | Estate 4WD B 20 DTH;D 20 DTH | | GDS83818 | Drive Shaft | | 30 | 27 | 60.5 | 94.5 | 615 | |
| | 2017.09- | 6MT | F | R | Estate 4WD B 20 DTH;D 20 DTH | | GDS83653 | Drive Shaft | | 30 | 27 | 60.5 | 94.5 | 559 | |
| | 2017.09- | 6MT | F | L | Estate 4WD B 20 DTH;D 20 DTH | | GCI82377 | Inner Joint | | 27 | 35 | 35 | 101 | 100.5 | |
| | 2017.09- | 6MT/8AT | F | L/R | Estate 4WD B 20 DTH;D 20 DTH | | GCO81945 | Outer Joint | | 30 | 35 | 60.5 | 94.5 | 60 | M |
| | 2017.09- | 6MT/8AT | F | R | Estate 4WD B 20 DTH;D 20 DTH | | GCI82319 | Inner Joint | | 27 | 35 | 42 | | 139 | |
| | 2017.09- | 8AT | F | L | Estate 4WD B 20 DTH;D 20 DTH | | GDS56988 | Drive Shaft | | 30 | 27 | 60.5 | 94.5 | 621 | |
| | 2017.09- | 8AT | F | R | Estate 4WD B 20 DTH;D 20 DTH | | GDS83927 | Drive Shaft | | 30 | 27 | 60.5 | 94.5 | 595 | |
| 2.0 (143 kw) | 2013.09-2017.05 | 6AT | F | R | Estate 4WD A 20 DTR | | GDS21045 | Drive Shaft | | 30 | 27 | 52.5 | 94.5 | 615 | |
| | 2013.09-2017.05 | 6AT | F | L/R | Estate 4WD A 20 DTR | | GCO17051 | Outer Joint | | 30 | 26 | 53.8 | 94.5 | 65.5 | M |
| | 2013.09-2017.05 | 6AT | F | L/R | Estate 4WD A 20 DTR | | GCO21049 | Outer Joint | | 30 | 26 | 52.5 | 94 | 65.5 | M |
| | 2013.09-2017.05 | 6AT | F | L/R | Estate 4WD A 20 DTR | | GCO88046 | Outer Joint | | 30 | 26 | 52.5 | 94.5 | 65.5 | M |
| | 2013.09-2017.05 | 6AT | F | L/R | Estate 4WD A 20 DTR | | GCI86015 | Inner Joint | | 27 | 26 | 35 | 78.5 | 109.5 | |
| | 2013.09-2017.05 | AT | F | L/R | Estate 4WD A 20 DTR | | GDS82085 | Drive Shaft | | 30 | 27 | 52.5 | 94 | 615 | |
| | 2013.09-2017.05 | 6AT | R | R | Estate 4WD A 20 DTR | | GDS81333 | Drive Shaft | | 30 | 34 | 52.3 | 94 | 842 | |
| | 2013.09-2017.05 | 6AT | R | L/R | Estate 4WD A 20 DTR | With differential lock | GCO81305 | Outer Joint | | 30 | 23 | 52.3 | 94 | 59.5 | M |
| | 2013.09-2017.05 | 6AT | R | R | Estate 4WD A 20 DTR | | GCI81197 | Inner Joint | | 34 | 23 | 35 | 82.5 | 109 | |
| | 2013.09-2017.05 | AT/MT | R | L | Estate 4WD A 20 DTR | Veh Equip:For vehicles with lectronic ltd slip differential | GDS82261 | Drive Shaft | | 30 | 34 | 52.3 | 94 | 791 | |
| | 2013.09-2017.05 | AT/MT | R | L | Estate 4WD A 20 DTR | Veh Equip:For vehicles with lectronic ltd slip differential | GCI81196 | Inner Joint | | 34 | 23 | 35 | 113.5 | 110 | |
| **Insignia Sports Tourer** | | | | | | | | | | | | | | | |
| 1.4 (103 kw) | 2011.04-2017.05 | 6MT | F | L/R | Estate FWD A 14 NET;B 14 NET | | GCO17051 | Outer Joint | | 30 | 26 | 53.8 | 94.5 | 65.5 | M |
| | 2011.04-2017.05 | 6MT | F | L/R | Estate FWD A 14 NET;B 14 NET | | GCO21049 | Outer Joint | | 30 | 26 | 52.5 | 94 | 65.5 | M |
| | 2011.04-2017.05 | 6MT | F | L/R | Estate FWD A 14 NET;B 14 NET | | GCO88046 | Outer Joint | | 30 | 26 | 52.5 | 94.5 | 65.5 | M |
| | 2011.04-2017.05 | 6MT | F | R | Estate FWD A 14 NET;B 14 NET | | GCI88026 | Inner Joint | | 34 | 26 | 37.5 | | 100 | |
| | 2011.04-2017.05 | MT | F | L | Estate FWD A 14 NET;B 14 NET | | GDS21043 | Drive Shaft | | 30 | 25 | 52.5 | 94.5 | 624.5 | |
| | 2012.07-2017.05 | 6AT/6MT | F | L/R | Estate FWD A 14 NET | | GCO88046 | Outer Joint | | 30 | 26 | 52.5 | 94.5 | 65.5 | M |
| | 2012.07-2017.05 | MT | F | L | Estate FWD A 14 NET | | GDS21043 | Drive Shaft | | 30 | 25 | 52.5 | 94.5 | 624.5 | |
| | 2012.07-2017.05 | MT | F | L/R | Estate FWD A 14 NET | | GCO17051 | Outer Joint | | 30 | 26 | 53.8 | 94.5 | 65.5 | M |
| | 2012.07-2017.05 | MT | F | L/R | Estate FWD A 14 NET | | GCO21049 | Outer Joint | | 30 | 26 | 52.5 | 94 | 65.5 | M |
| 1.5 (103 kw) | 2017.03- | 6MT | F | L | Estate FWD B 15 SFL;D 15 SFL | | GDS82470 | Drive Shaft | | 30 | 25 | 60.5 | 94.5 | 630 | |
| | 2017.03- | 6MT | F | R | Estate FWD B 15 SFL;D 15 SFL | | GDS82471 | Drive Shaft | | 30 | 25 | 60.5 | 94.5 | 990 | |
| | 2017.03- | 6MT | F | L/R | Estate FWD B 15 SFL;D 15 SFL | | GCO81945 | Outer Joint | | 30 | 35 | 60.5 | 94.5 | 60 | M |
| | 2017.03- | 6MT | F | L/R | Estate FWD B 15 SFL;D 15 SFL | | GCI81831 | Inner Joint | | 25 | 35 | 35 | 57.5 | 130 | |
| 1.5 (121 kw) | 2017.03- | 6AT | F | L | Estate FWD B 15 SFT;D 15 SFT;D 15 XHT | | GDS83622 | Drive Shaft | | 30 | 34 | 60.5 | 94.5 | 677 | |
| | 2017.03- | 6AT | F | L/R | Estate FWD B 15 SFT;D 15 SFT;D 15 XHT | | GCO81945 | Outer Joint | | 30 | 35 | 60.5 | 94.5 | 60 | M |
| | 2017.03- | 6AT | F | L | Estate FWD B 15 SFT;D 15 SFT;D 15 XHT | | GCI82318 | Inner Joint | | 34 | 35 | 35 | 137 | 100.5 | |
| | 2017.03- | 6MT | F | L | Estate FWD B 15 SFT;D 15 SFT;D 15 XHT | | GDS82470 | Drive Shaft | | 30 | 25 | 60.5 | 94.5 | 630 | |
| | 2017.03- | 6MT | F | R | Estate FWD B 15 SFT;D 15 SFT;D 15 XHT | | GDS82471 | Drive Shaft | | 30 | 25 | 60.5 | 94.5 | 990 | |
| | 2017.03- | 6MT | F | L/R | Estate FWD B 15 SFT;D 15 SFT;D 15 XHT | | GCI81831 | Inner Joint | | 25 | 35 | 35 | 57.5 | 130 | |
| 1.6 (81 kw) | 2017.03- | 6MT | F | L | Estate FWD B 16 DTE;D 16 DTE;D 16 DTN | | GDS82470 | Drive Shaft | | 30 | 25 | 60.5 | 94.5 | 630 | |
| | 2017.03- | 6MT | F | R | Estate FWD B 16 DTE;D 16 DTE;D 16 DTN | | GDS83817 | Drive Shaft | | 30 | 27 | 60.5 | 94.5 | 580 | |
| | 2017.03- | 6MT | F | L/R | Estate FWD B 16 DTE;D 16 DTE;D 16 DTN | | GCO81945 | Outer Joint | | 30 | 35 | 60.5 | 94.5 | 60 | M |
| | 2017.03- | 6MT | F | L | Estate FWD B 16 DTE;D 16 DTE;D 16 DTN | | GCI81831 | Inner Joint | | 25 | 35 | 35 | 57.5 | 130 | |
| | 2017.03- | 6MT | F | R | Estate FWD B 16 DTE;D 16 DTE;D 16 DTN | | GCI82319 | Inner Joint | | 27 | 35 | 42 | | 139 | |
| 1.6 (85 kw) | 2008.07-2012.07 | 6MT | F | L | Estate FWD A 16 XER | | GDS21050 | Drive Shaft | | 30 | 25 | 52 | 94 | 622 | |
| | 2008.07-2012.07 | 6MT | F | L/R | Estate FWD A 16 XER | | GCO21038 | Outer Joint | | 30 | 24 | 52 | 94 | 64 | M |
| | 2008.07-2012.07 | 6MT | F | L/R | Estate FWD A 16 XER | | GCI44008 | Inner Joint | | 25 | 25 | 34.9 | 57.5 | 113.2 | |
| | 2008.07-2012.07 | | F | R | Estate FWD A 16 XER | Date To:2011.12;Chassis no. to:B1999999 | GDS21054 | Drive Shaft | | 30 | 25 | 52 | 94 | 1008 | |
| 1.6 (100 kw) | 2015.07-2017.05 | 6AT | F | L | Estate FWD B 16 DTH | | GDS82258 | Drive Shaft | | 30 | 34 | 52.5 | 94 | 666 | |
| | 2015.07-2017.05 | 6AT | F | R | Estate FWD B 16 DTH | | GDS56650 | Drive Shaft | | 30 | 34 | 52.5 | 94 | 599 | |
| | 2015.07-2017.05 | 6AT | F | R | Estate FWD B 16 DTH | | GCI82194 | Inner Joint | | 34 | 26 | 37.5 | | 124 | |
| | 2015.07-2017.05 | 6AT/6MT | F | L/R | Estate FWD B 16 DTH | | GCO17051 | Outer Joint | | 30 | 26 | 53.8 | 94.5 | 65.5 | M |
| | 2015.07-2017.05 | 6AT/6MT | F | L/R | Estate FWD B 16 DTH | | GCO21049 | Outer Joint | | 30 | 26 | 52.5 | 94 | 65.5 | M |
| | 2015.07-2017.05 | 6AT/6MT | F | L/R | Estate FWD B 16 DTH | | GCO88046 | Outer Joint | | 30 | 26 | 52.5 | 94.5 | 65.5 | M |
| | 2015.07-2017.05 | 6MT | F | R | Estate FWD B 16 DTH | Chassis no. from:C1000001 | GDS84292 | Drive Shaft | | 30 | 27 | 52.5 | 94 | 618 | |
| | 2015.07-2017.05 | 6MT | F | R | Estate FWD B 16 DTH | | GCI21030 | Inner Joint | | 27 | 26 | 35 | 78 | 112.5 | |
| | 2015.07-2017.05 | AT | F | L | Estate FWD B 16 DTH | | GCI86021 | Inner Joint | | 34 | 26 | 35 | 136.5 | 87 | |
| | 2015.07-2017.05 | MT | F | L | Estate FWD B 16 DTH | | GDS21043 | Drive Shaft | | 30 | 25 | 52.5 | 94.5 | 624.5 | |

| | YEAR | TRANSM. | F/R | L/R | BODY STYLE & DRIVE TYPE & ENGINE | REMARKS | G-AP Ref. | PRODUCT | ABS | Technical Specifications A | B | C | H | L | P |
|---|---|---|---|---|---|---|---|---|---|---|---|---|---|---|---|
| **VAUXHALL** **Insignia Sports Tourer** | | | | | | | | | | | | | | | |
| 1.6 (100 kw) | 2015.07-2017.05 | MT | F | R | Estate FWD B 16 DTH | Chassis no. to:B1999999 | GDS60027 | Drive Shaft | | 30 | 27 | 52.5 | 94.5 | 619 | |
| | 2017.03- | 6AT | F | L | Estate FWD B 16 DTH;D 16 DTH | | GDS83622 | Drive Shaft | | 30 | 34 | 60.5 | 94.5 | 677 | |
| | 2017.03- | 6AT | F | L | Estate FWD B 16 DTH;D 16 DTH | | GCI82318 | Inner Joint | | 34 | 35 | 35 | 137 | 100.5 | |
| | 2017.03- | 6MT | F | L | Estate FWD B 16 DTH;D 16 DTH | | GDS82470 | Drive Shaft | | 30 | 25 | 60.5 | 94.5 | 630 | |
| | 2017.03- | 6MT | F | R | Estate FWD B 16 DTH;D 16 DTH | | GDS83817 | Drive Shaft | | 30 | 27 | 60.5 | 94.5 | 580 | |
| | 2017.03- | 6MT | F | L | Estate FWD B 16 DTH;D 16 DTH | | GCI81831 | Inner Joint | | 25 | 35 | 35 | 57.5 | 130 | |
| | 2017.03- | 6MT | F | R | Estate FWD B 16 DTH;D 16 DTH | | GCI82319 | Inner Joint | | 27 | 35 | 42 | | 139 | |
| | 2017.03- | 6MT/6AT | F | L/R | Estate FWD B 16 DTH;D 16 DTH | | GCO81945 | Outer Joint | | 30 | 35 | 60.5 | 94.5 | 60 | M |
| 1.6 (125 kw) | 2013.07-2017.05 | 6AT | F | L | Estate FWD A 16 XHT;B 16 SHL | | GDS82258 | Drive Shaft | | 30 | 34 | 52.5 | 94 | 666 | |
| | 2013.07-2017.05 | 6AT | F | L | Estate FWD A 16 XHT;B 16 SHL | Chassis no. to::B32752 | GDS82258 | Drive Shaft | | 30 | 34 | 52.5 | 94 | 666 | |
| | 2013.07-2017.05 | 6AT | F | R | Estate FWD A 16 XHT;B 16 SHL | | GDS21045 | Drive Shaft | | 30 | 27 | 52.5 | 94.5 | 615 | |
| | 2013.07-2017.05 | 6AT | F | R | Estate FWD A 16 XHT;B 16 SHL | | GDS82085 | Drive Shaft | | 30 | 27 | 52.5 | 94 | 615 | |
| | 2013.07-2017.05 | 6AT | F | R | Estate FWD A 16 XHT;B 16 SHL | | GCI86015 | Inner Joint | | 27 | 26 | 35 | 78.5 | 109.5 | |
| | 2013.07-2017.05 | 6AT/6MT | F | L/R | Estate FWD A 16 XHT;B 16 SHL | | GCO17051 | Outer Joint | | 30 | 26 | 53.8 | 94.5 | 65.5 | M |
| | 2013.07-2017.05 | 6AT/6MT | F | L/R | Estate FWD A 16 XHT;B 16 SHL | | GCO21049 | Outer Joint | | 30 | 26 | 52.5 | 94 | 65.5 | M |
| | 2013.07-2017.05 | 6AT/6MT | F | L/R | Estate FWD A 16 XHT;B 16 SHL | | GCO88046 | Outer Joint | | 30 | 26 | 52.5 | 94.5 | 65.5 | M |
| | 2013.07-2017.05 | 6MT | F | R | Estate FWD A 16 XHT;B 16 SHL | Chassis no. from:C1000001 | GDS84292 | Drive Shaft | | 30 | 27 | 52.5 | 94 | 618 | |
| | 2013.07-2017.05 | 6MT | F | R | Estate FWD A 16 XHT;B 16 SHL | | GDS84292 | Drive Shaft | | 30 | 27 | 52.5 | 94 | 618 | |
| | 2013.07-2017.05 | 6MT | F | R | Estate FWD A 16 XHT;B 16 SHL | | GCI21030 | Inner Joint | | 27 | 26 | 35 | 78 | 112.5 | |
| | 2013.07-2017.05 | AT | F | R | Estate FWD A 16 XHT;B 16 SHL | | GDS82085 | Drive Shaft | | 30 | 27 | 52.5 | 94 | 615 | |
| | 2013.07-2017.05 | AT | F | L | Estate FWD A 16 XHT;B 16 SHL | | GCI86021 | Inner Joint | | 34 | 26 | 35 | 136.5 | 87 | |
| | 2013.07-2017.05 | MT | F | L | Estate FWD A 16 XHT;B 16 SHL | | GDS21043 | Drive Shaft | | 30 | 25 | 52.5 | 94.5 | 624.5 | |
| | 2013.07-2017.05 | MT | F | R | Estate FWD A 16 XHT;B 16 SHL | Chassis no. to:B1999999 | GDS60027 | Drive Shaft | | 30 | 27 | 52.5 | 94.5 | 619 | |
| 1.6 (132 kw) | 2009.01-2017.05 | 6MT | F | L/R | Estate FWD A 16 LET | | GCO17051 | Outer Joint | | 30 | 26 | 53.8 | 94.5 | 65.5 | M |
| | 2009.01-2017.05 | 6MT | F | L/R | Estate FWD A 16 LET | | GCO21049 | Outer Joint | | 30 | 26 | 52.5 | 94 | 65.5 | M |
| | 2009.01-2017.05 | 6MT | F | L/R | Estate FWD A 16 LET | | GCO88046 | Outer Joint | | 30 | 26 | 52.5 | 94.5 | 65.5 | M |
| | 2009.01-2017.05 | 6MT | F | R | Estate FWD A 16 LET | | GCI88026 | Inner Joint | | 34 | 26 | 37.5 | | 100 | |
| | 2009.01-2017.05 | MT | F | L | Estate FWD A 16 LET | | GDS21043 | Drive Shaft | | 30 | 25 | 52.5 | 94.5 | 624.5 | |
| 1.6 (147 kw) | 2018.06- | 6AT | F | L | Estate FWD D 16 SHT | | GDS83622 | Drive Shaft | | 30 | 34 | 60.5 | 94.5 | 677 | |
| | 2018.06- | 6AT | F | L/R | Estate FWD D 16 SHT | | GCO81945 | Outer Joint | | 30 | 35 | 60.5 | 94.5 | 60 | M |
| | 2018.06- | 6AT | F | L | Estate FWD D 16 SHT | | GCI82318 | Inner Joint | | 34 | 35 | 35 | 137 | 100.5 | |
| | 2018.06- | 6MT | F | L | Estate FWD D 16 SHT | | GDS82470 | Drive Shaft | | 30 | 25 | 60.5 | 94.5 | 630 | |
| | 2018.06- | 6MT | F | L | Estate FWD D 16 SHT | | GCI81831 | Inner Joint | | 25 | 35 | 35 | 57.5 | 130 | |
| 1.8 (103 kw) | 2008.07-2017.05 | 6MT | F | L/R | Estate FWD A 18 XER | | GCO21038 | Outer Joint | | 30 | 24 | 52 | 94 | 64 | M |
| | 2008.07-2017.05 | 6MT | F | L/R | Estate FWD A 18 XER | | GCI44008 | Inner Joint | | 25 | 25 | 34.9 | 57.5 | 113.2 | |
| | 2008.07-2017.05 | MT | F | L | Estate FWD A 18 XER | | GDS21050 | Drive Shaft | | 30 | 25 | 52 | 94 | 622 | |
| | 2008.07-2017.05 | MT | F | R | Estate FWD A 18 XER | | GDS21054 | Drive Shaft | | 30 | 25 | 52 | 94 | 1008 | |
| 2.0 (81 kw) | 2008.07-2017.05 | 6MT | F | L | Estate FWD A 20 DTC | | GDS60026 | Drive Shaft | | 30 | 25 | 52.5 | 94.5 | 631 | |
| | 2008.07-2017.05 | 6MT | F | R | Estate FWD A 20 DTC | For car needless intermediate shaft | GDS57620 | Drive Shaft | | 30 | 25 | 52.5 | 94 | 1002 | |
| | 2008.07-2017.05 | 6MT | F | R | Estate FWD A 20 DTC | For car need intermediate shaft | GDS60027 | Drive Shaft | | 30 | 27 | 52.5 | 94.5 | 619 | |
| | 2008.07-2017.05 | 6MT | F | L/R | Estate FWD A 20 DTC | | GCO17051 | Outer Joint | | 30 | 26 | 53.8 | 94.5 | 65.5 | M |
| | 2008.07-2017.05 | 6MT | F | L/R | Estate FWD A 20 DTC | | GCO21049 | Outer Joint | | 30 | 26 | 52.5 | 94 | 65.5 | M |
| | 2008.07-2017.05 | 6MT | F | L/R | Estate FWD A 20 DTC | | GCO88046 | Outer Joint | | 30 | 26 | 52.5 | 94.5 | 65.5 | M |
| | 2008.07-2017.05 | 6MT | F | R | Estate FWD A 20 DTC | | GCI21030 | Inner Joint | | 27 | 26 | 35 | 78 | 112.5 | |
| 2.0 (88 kw) | 2012.03-2016.03 | 6MT | F | L/R | Estate FWD A 20 DTE | Chassis no. to:B1999999 | GDS60027 | Drive Shaft | | 30 | 27 | 52.5 | 94.5 | 619 | |
| | 2012.03-2016.03 | 6MT | F | L/R | Estate FWD A 20 DTE | Chassis no. from:C1000001 | GDS84292 | Drive Shaft | | 30 | 27 | 52.5 | 94 | 618 | |
| | 2012.03-2016.03 | 6MT | F | L/R | Estate FWD A 20 DTE | | GCO17051 | Outer Joint | | 30 | 26 | 53.8 | 94.5 | 65.5 | M |
| | 2012.03-2016.03 | 6MT | F | L/R | Estate FWD A 20 DTE | | GCO21049 | Outer Joint | | 30 | 26 | 52.5 | 94 | 65.5 | M |
| | 2012.03-2016.03 | 6MT | F | L/R | Estate FWD A 20 DTE | | GCO88046 | Outer Joint | | 30 | 26 | 52.5 | 94.5 | 65.5 | M |
| | 2012.03-2016.03 | 6MT | F | L/R | Estate FWD A 20 DTE | | GCI21030 | Inner Joint | | 27 | 26 | 35 | 78 | 112.5 | |
| 2.0 (96 kw) | 2008.07-2014.12 | 6AT | F | L | Estate FWD A 20 DTJ;A 20 DT | Date To:2011.12,Chassis no. to:B1999999 | GDS21045 | Drive Shaft | | 30 | 27 | 52.5 | 94.5 | 615 | |
| | 2008.07-2014.12 | 6AT | F | R | Estate FWD A 20 DTJ;A 20 DT | Date From:2012.01,Chassis no. from:C1000001,Date To:2011.12,Chassis no. to:B1999999 | GDS21045 | Drive Shaft | | 30 | 27 | 52.5 | 94.5 | 615 | |
| | 2008.07-2014.12 | 6AT | F | L/R | Estate FWD A 20 DTJ;A 20 DT | Date To:2011.12,Chassis no. to:B1999999 | GDS82085 | Drive Shaft | | 30 | 27 | 52.5 | 94 | 615 | |
| | 2008.07-2014.12 | 6AT | F | L/R | Estate FWD A 20 DTJ;A 20 DT | | GCO88046 | Outer Joint | | 30 | 26 | 52.5 | 94.5 | 65.5 | M |
| | 2008.07-2014.12 | 6AT | F | L/R | Estate FWD A 20 DTJ;A 20 DT | | GCI86015 | Inner Joint | | 27 | 26 | 35 | 78.5 | 109.5 | |
| | 2008.07-2014.12 | 6AT/6MT | F | L/R | Estate FWD A 20 DTJ;A 20 DT | Transmission:6MT,For Engine code:A20DTJ | GCO17051 | Outer Joint | | 30 | 26 | 53.8 | 94.5 | 65.5 | M |
| | 2008.07-2014.12 | 6MT | F | L | Estate FWD A 20 DTJ;A 20 DT | Chassis no. to:D1061030 | GDS60026 | Drive Shaft | | 30 | 25 | 52.5 | 94.5 | 631 | |
| | 2008.07-2014.12 | 6MT | F | R | Estate FWD A 20 DTJ;A 20 DT | For car needless intermediate shaft | GDS57620 | Drive Shaft | | 30 | 25 | 52.5 | 94 | 1002 | |
| | 2008.07-2014.12 | 6MT | F | R | Estate FWD A 20 DTJ;A 20 DT | For car need intermediate shaft | GDS60027 | Drive Shaft | | 30 | 27 | 52.5 | 94.5 | 619 | |
| | 2008.07-2014.12 | 6MT | F | L/R | Estate FWD A 20 DTJ;A 20 DT | For Engine code:A20DT | GCO21038 | Outer Joint | | 30 | 24 | 52 | 94 | 64 | M |
| | 2008.07-2014.12 | 6MT | F | L | Estate FWD A 20 DTJ;A 20 DT | For Engine code:A20DT | GCI44008 | Inner Joint | | 25 | 25 | 34.9 | 57.5 | 113.2 | |
| | 2008.07-2014.12 | 6MT | F | R | Estate FWD A 20 DTJ;A 20 DT | | GCI21030 | Inner Joint | | 27 | 26 | 35 | 78 | 112.5 | |
| | 2008.07-2014.12 | 6MT/6AT | F | L/R | Estate FWD A 20 DTJ;A 20 DT | Transmission:6MT,For Engine code:A20DTJ | GCO21049 | Outer Joint | | 30 | 26 | 52.5 | 94 | 65.5 | M |
| 2.0 (103 kw) | 2013.07-2017.05 | 6MT | F | L/R | Estate FWD A 20 DTE | Chassis no. to:B1999999 | GDS60027 | Drive Shaft | | 30 | 27 | 52.5 | 94.5 | 619 | |
| | 2013.07-2017.05 | 6MT | F | L/R | Estate FWD A 20 DTE | Chassis no. from:C1000001 | GDS84292 | Drive Shaft | | 30 | 27 | 52.5 | 94 | 618 | |

| | YEAR | TRANSM. | F/R | L/R | BODY STYLE & DRIVE TYPE & ENGINE | REMARKS | G-AP Ref. | PRODUCT | ABS | Technical Specifications A | B | C | H | L | P |
|---|---|---|---|---|---|---|---|---|---|---|---|---|---|---|---|
| **VAUXHALL** | | | | | | | | | | | | | | | |
| **Insignia Sports Tourer** | | | | | | | | | | | | | | | |
| 2.0 (103 kw) | 2013.07-2017.05 | 6MT | F | L/R | Estate FWD A 20 DTE | | GCO17051 | Outer Joint | | 30 | 26 | 53.8 | 94.5 | 65.5 | M |
| | 2013.07-2017.05 | 6MT | F | L/R | Estate FWD A 20 DTE | | GCO21049 | Outer Joint | | 30 | 26 | 52.5 | 94 | 65.5 | M |
| | 2013.07-2017.05 | 6MT | F | L/R | Estate FWD A 20 DTE | | GCO88046 | Outer Joint | | 30 | 26 | 52.5 | 94.5 | 65.5 | M |
| | 2013.07-2017.05 | 6MT | F | L/R | Estate FWD A 20 DTE | | GCI21030 | Inner Joint | | 27 | 26 | 35 | 78 | 112.5 | |
| 2.0 (118 kw) | 2008.07-2017.05 | 6AT | F | L/R | Estate 4WD A 20 DTH | Date To:2011.12,Chassis no. to:B1999999 | GDS21045 | Drive Shaft | | 30 | 27 | 52.5 | 94.5 | 615 | |
| | 2008.07-2017.05 | 6AT | F | L/R | Estate 4WD A 20 DTH | | GCI86015 | Inner Joint | | 27 | 26 | 35 | 78.5 | 109.5 | |
| | 2008.07-2017.05 | 6AT/6MT | F | L/R | Estate 4WD A 20 DTH | | GCO17051 | Outer Joint | | 30 | 26 | 53.8 | 94.5 | 65.5 | M |
| | 2008.07-2017.05 | 6AT/6MT | F | L/R | Estate 4WD A 20 DTH | | GCO21049 | Outer Joint | | 30 | 26 | 52.5 | 94 | 65.5 | M |
| | 2008.07-2017.05 | 6AT/6MT | F | L/R | Estate 4WD A 20 DTH | | GCO88046 | Outer Joint | | 30 | 26 | 52.5 | 94.5 | 65.5 | M |
| | 2008.07-2017.05 | 6MT | F | L/R | Estate 4WD A 20 DTH | Chassis no. from:C1000001 | GDS84292 | Drive Shaft | | 30 | 27 | 52.5 | 94 | 618 | |
| | 2008.07-2017.05 | 6MT | F | L | Estate 4WD A 20 DTH | | GCI21030 | Inner Joint | | 27 | 26 | 35 | 78 | 112.5 | |
| | 2008.07-2017.05 | AT | F | L/R | Estate 4WD A 20 DTH | | GDS82085 | Drive Shaft | | 30 | 27 | 52.5 | 94 | 615 | |
| | 2008.07-2017.05 | MT | F | L/R | Estate 4WD A 20 DTH | Chassis no. to:B1999999 | GDS60027 | Drive Shaft | | 30 | 27 | 52.5 | 94.5 | 619 | |
| | 2008.07-2017.05 | 6AT/6MT | R | L/R | Estate 4WD A 20 DTH | With differential lock | GCO81305 | Outer Joint | | 30 | 23 | 52.3 | 94 | 59.5 | M |
| | 2008.07-2017.05 | AT/MT | R | L | Estate 4WD A 20 DTH | Veh Equip:For vehicles with lectronic ltd slip differential | GDS82261 | Drive Shaft | | 30 | 34 | 52.3 | 94 | 791 | |
| | 2008.07-2017.05 | AT/MT | R | R | Estate 4WD A 20 DTH | | GDS81333 | Drive Shaft | | 30 | 34 | 52.3 | 94 | 842 | |
| | 2008.07-2017.05 | AT/MT | R | L | Estate 4WD A 20 DTH | Veh Equip:For vehicles with lectronic ltd slip differential | GCI81196 | Inner Joint | | 34 | 23 | 35 | 113.5 | 110 | |
| | 2008.07-2017.05 | AT/MT | R | R | Estate 4WD A 20 DTH | | GCI81197 | Inner Joint | | 34 | 23 | 35 | 82.5 | 109 | |
| | 2008.07-2017.05 | 6AT | F | L | Estate FWD A 20 DTH | Date To:2011.12,Chassis no. to:B1999999 | GDS21045 | Drive Shaft | | 30 | 27 | 52.5 | 94.5 | 615 | |
| | 2008.07-2017.05 | 6AT | F | R | Estate FWD A 20 DTH | Date From:2012.01,Chassis no. from:C1000001,Date To:2011.12,Chassis no. to:B1999999 | GDS21045 | Drive Shaft | | 30 | 27 | 52.5 | 94.5 | 615 | |
| | 2008.07-2017.05 | 6AT | F | L/R | Estate FWD A 20 DTH | Date To:2011.12,Chassis no. to:B1999999 | GDS82085 | Drive Shaft | | 30 | 27 | 52.5 | 94 | 615 | |
| | 2008.07-2017.05 | 6AT | F | L/R | Estate FWD A 20 DTH | | GCI86015 | Inner Joint | | 27 | 26 | 35 | 78.5 | 109.5 | |
| | 2008.07-2017.05 | 6AT/6MT | F | L | Estate FWD A 20 DTH | | GCO88046 | Outer Joint | | 30 | 26 | 52.5 | 94.5 | 65.5 | M |
| | 2008.07-2017.05 | 6AT/6MT | F | L/R | Estate FWD A 20 DTH | | GCO17051 | Outer Joint | | 30 | 26 | 53.8 | 94.5 | 65.5 | M |
| | 2008.07-2017.05 | 6AT/6MT | F | L/R | Estate FWD A 20 DTH | | GCO21049 | Outer Joint | | 30 | 26 | 52.5 | 94 | 65.5 | M |
| | 2008.07-2017.05 | 6MT | F | L/R | Estate FWD A 20 DTH | Chassis no. to:B1999999 | GDS60027 | Drive Shaft | | 30 | 27 | 52.5 | 94.5 | 619 | |
| | 2008.07-2017.05 | 6MT | F | L/R | Estate FWD A 20 DTH | Chassis no. from:C1000001 | GDS84292 | Drive Shaft | | 30 | 27 | 52.5 | 94 | 618 | |
| | 2008.07-2017.05 | 6MT | F | L/R | Estate FWD A 20 DTH | | GCI21030 | Inner Joint | | 27 | 26 | 35 | 78 | 112.5 | |
| 2.0 (120 kw) | 2013.07-2017.05 | 6AT | F | R | Estate FWD A 20 DTH | | GDS21045 | Drive Shaft | | 30 | 27 | 52.5 | 94.5 | 615 | |
| | 2013.07-2017.05 | 6AT | F | L/R | Estate FWD A 20 DTH | | GCI86015 | Inner Joint | | 27 | 26 | 35 | 78.5 | 109.5 | |
| | 2013.07-2017.05 | 6AT/6MT | F | L | Estate FWD A 20 DTH | | GCO88046 | Outer Joint | | 30 | 26 | 52.5 | 94.5 | 65.5 | M |
| | 2013.07-2017.05 | 6AT/6MT | F | L/R | Estate FWD A 20 DTH | | GCO17051 | Outer Joint | | 30 | 26 | 53.8 | 94.5 | 65.5 | M |
| | 2013.07-2017.05 | 6AT/6MT | F | L/R | Estate FWD A 20 DTH | | GCO21049 | Outer Joint | | 30 | 26 | 52.5 | 94 | 65.5 | M |
| | 2013.07-2017.05 | 6MT | F | L/R | Estate FWD A 20 DTH | Chassis no. from:C1000001 | GDS84292 | Drive Shaft | | 30 | 27 | 52.5 | 94 | 618 | |
| | 2013.07-2017.05 | 6MT | F | L/R | Estate FWD A 20 DTH | | GCI21030 | Inner Joint | | 27 | 26 | 35 | 78 | 112.5 | |
| | 2013.07-2017.05 | AT | F | L/R | Estate FWD A 20 DTH | | GDS82085 | Drive Shaft | | 30 | 27 | 52.5 | 94 | 615 | |
| | 2013.07-2017.05 | MT | F | L/R | Estate FWD A 20 DTH | Chassis no. to:B1999999 | GDS60027 | Drive Shaft | | 30 | 27 | 52.5 | 94.5 | 619 | |
| 2.0 (125 kw) | 2014.11-2017.05 | 6AT/6MT | F | L/R | Estate 4WD B 20 DTH | | GCO88046 | Outer Joint | | 30 | 26 | 52.5 | 94.5 | 65.5 | M |
| | 2014.11-2017.05 | 6MT/6AT | F | R | Estate 4WD B 20 DTH | | GDS60027 | Drive Shaft | | 30 | 27 | 52.5 | 94.5 | 619 | |
| | 2014.11-2017.05 | MT | F | L/R | Estate 4WD B 20 DTH | | GCO17051 | Outer Joint | | 30 | 26 | 53.8 | 94.5 | 65.5 | M |
| | 2014.11-2017.05 | MT | F | L/R | Estate 4WD B 20 DTH | | GCO21049 | Outer Joint | | 30 | 26 | 52.5 | 94 | 65.5 | M |
| | 2014.11-2017.05 | MT | F | L/R | Estate 4WD B 20 DTH | | GCI21030 | Inner Joint | | 27 | 26 | 35 | 78 | 112.5 | |
| | 2014.11-2017.05 | AT/MT | R | L | Estate 4WD B 20 DTH | Veh Equip:For vehicles with lectronic ltd slip differential | GDS82261 | Drive Shaft | | 30 | 34 | 52.3 | 94 | 791 | |
| | 2014.11-2017.05 | AT/MT | R | L/R | Estate 4WD B 20 DTH | With differential lock | GCO81305 | Outer Joint | | 30 | 23 | 52.3 | 94 | 59.5 | M |
| | 2014.11-2017.05 | AT/MT | R | L | Estate 4WD B 20 DTH | Veh Equip:For vehicles with lectronic ltd slip differential | GCI81196 | Inner Joint | | 34 | 23 | 35 | 113.5 | 110 | |
| | 2014.11-2017.05 | MT | R | R | Estate 4WD B 20 DTH | | GDS81333 | Drive Shaft | | 30 | 34 | 52.3 | 94 | 842 | |
| | 2014.11-2017.05 | MT | R | R | Estate 4WD B 20 DTH | | GCI81197 | Inner Joint | | 34 | 23 | 35 | 82.5 | 109 | |
| | 2014.11-2017.05 | 6AT | F | R | Estate FWD B 20 DTH | | GDS21045 | Drive Shaft | | 30 | 27 | 52.5 | 94.5 | 615 | |
| | 2014.11-2017.05 | 6AT | F | L/R | Estate FWD B 20 DTH | | GCI86015 | Inner Joint | | 27 | 26 | 35 | 78.5 | 109.5 | |
| | 2014.11-2017.05 | 6AT/6MT | F | L/R | Estate FWD B 20 DTH | | GCO17051 | Outer Joint | | 30 | 26 | 53.8 | 94.5 | 65.5 | M |
| | 2014.11-2017.05 | 6AT/6MT | F | L/R | Estate FWD B 20 DTH | | GCO21049 | Outer Joint | | 30 | 26 | 52.5 | 94 | 65.5 | M |
| | 2014.11-2017.05 | 6AT/6MT | F | L/R | Estate FWD B 20 DTH | | GCO88046 | Outer Joint | | 30 | 26 | 52.5 | 94.5 | 65.5 | M |
| | 2014.11-2017.05 | 6MT | F | R | Estate FWD B 20 DTH | Chassis no. to:B1999999,For RPO/POC:GNA | GDS60027 | Drive Shaft | | 30 | 27 | 52.5 | 94.5 | 619 | |
| | 2014.11-2017.05 | 6MT | F | R | Estate FWD B 20 DTH | For RPO/POC:GNA,Chassis no. from:C1000001 | GDS84292 | Drive Shaft | | 30 | 27 | 52.5 | 94 | 618 | |
| | 2014.11-2017.05 | 6MT | F | L/R | Estate FWD B 20 DTH | | GCI21030 | Inner Joint | | 27 | 26 | 35 | 78 | 112.5 | |
| | 2014.11-2017.05 | AT | F | L/R | Estate FWD B 20 DTH | | GDS82085 | Drive Shaft | | 30 | 27 | 52.5 | 94 | 615 | |
| | 2017.03- | 6MT | F | L | Estate FWD B 20 DTH;D 20 DTH | | GDS83818 | Drive Shaft | | 30 | 27 | 60.5 | 94.5 | 615 | |
| | 2017.03- | 6MT | F | L | Estate FWD B 20 DTH;D 20 DTH | | GCI82377 | Inner Joint | | 27 | 35 | 35 | 101 | 100.5 | |
| | 2017.03- | 6MT/8AT | F | L/R | Estate FWD B 20 DTH;D 20 DTH | | GCO81945 | Outer Joint | | 30 | 35 | 60.5 | 94.5 | 60 | M |
| | 2017.03- | 6MT/8AT | F | R | Estate FWD B 20 DTH;D 20 DTH | | GCI82319 | Inner Joint | | 27 | 35 | 42 | | 139 | |
| | 2017.03- | 8AT | F | L | Estate FWD B 20 DTH;D 20 DTH | | GDS56988 | Drive Shaft | | 30 | 27 | 60.5 | 94.5 | 621 | |
| | 2017.03- | 8AT/6MT | F | R | Estate FWD B 20 DTH;D 20 DTH | | GDS83927 | Drive Shaft | | 30 | 27 | 60.5 | 94.5 | 595 | |
| 2.0 (140 kw) | 2008.11-2017.05 | 6AT | F | L | Estate FWD A 20 DTR | Date To:2011.12,Chassis no. to:B1999999 | GDS21045 | Drive Shaft | | 30 | 27 | 52.5 | 94.5 | 615 | |
| | 2008.11-2017.05 | 6AT | F | R | Estate FWD A 20 DTR | Date From:2012.01,Chassis no. from:C1000001,Date To:2011.12,Chassis no. to:B1999999 | GDS21045 | Drive Shaft | | 30 | 27 | 52.5 | 94.5 | 615 | |
| | 2008.11-2017.05 | 6AT | F | L/R | Estate FWD A 20 DTR | Date To:2011.12,Chassis no. to:B1999999 | GDS82085 | Drive Shaft | | 30 | 27 | 52.5 | 94 | 615 | |

| | YEAR | TRANSM. | F/R | L/R | BODY STYLE & DRIVE TYPE & ENGINE | REMARKS | G-AP Ref. | PRODUCT | ABS | Technical Specifications A | B | C | H | L | P |
|---|---|---|---|---|---|---|---|---|---|---|---|---|---|---|---|
| **VAUXHALL** **Insignia Sports Tourer** | | | | | | | | | | | | | | | |
| 2.0 (140 kw) | 2008.11-2017.05 | 6AT | F | L/R | Estate FWD A 20 DTR | | GCO17051 | Outer Joint | | 30 | 26 | 53.8 | 94.5 | 65.5 | M |
| | 2008.11-2017.05 | 6AT | F | L/R | Estate FWD A 20 DTR | | GCO21049 | Outer Joint | | 30 | 26 | 52.5 | 94 | 65.5 | M |
| | 2008.11-2017.05 | 6AT | F | L/R | Estate FWD A 20 DTR | | GCO88046 | Outer Joint | | 30 | 26 | 52.5 | 94.5 | 65.5 | M |
| | 2008.11-2017.05 | 6AT | F | L/R | Estate FWD A 20 DTR | | GCI86015 | Inner Joint | | 27 | 26 | 35 | 78.5 | 109.5 | |
| | 2008.11-2017.05 | 6MT | F | L/R | Estate FWD A 20 DTR | | GCO21057 | Outer Joint | | 30 | 27 | 59.1 | 94 | 65 | M |
| | 2008.11-2017.05 | AT | F | L | Estate FWD A 20 DTR | Date from:2012.01,Chassis no. from:C1000001 | GDS82085 | Drive Shaft | | 30 | 27 | 52.5 | 94 | 615 | |
| | 2009.05-2017.05 | 6AT | F | L | Estate 4WD A 20 DTR | Date To:2011.12,Chassis no. to:B1999999 | GDS21045 | Drive Shaft | | 30 | 27 | 52.5 | 94.5 | 615 | |
| | 2009.05-2017.05 | 6AT | F | R | Estate 4WD A 20 DTR | Date From:2012.01,Chassis no. from:C1000001;Date To:2011.12,Chassis no. to:B1999999 | GDS21045 | Drive Shaft | | 30 | 27 | 52.5 | 94.5 | 615 | |
| | 2009.05-2017.05 | 6AT | F | L/R | Estate 4WD A 20 DTR | Date To:2011.12,Chassis no. to:B1999999 | GDS82085 | Drive Shaft | | 30 | 27 | 52.5 | 94 | 615 | |
| | 2009.05-2017.05 | 6AT/6MT | F | L/R | Estate 4WD A 20 DTR | | GCO88046 | Outer Joint | | 30 | 26 | 52.5 | 94.5 | 65.5 | M |
| | 2009.05-2017.05 | 6MT | F | L/R | Estate 4WD A 20 DTR | For RPO/POC:GNA | GCI21030 | Inner Joint | | 27 | 26 | 35 | 78 | 112.5 | |
| | 2009.05-2017.05 | 6MT/6AT | F | L/R | Estate 4WD A 20 DTR | Transmission:6MT,For RPO/POC:GNB | GCI86015 | Inner Joint | | 27 | 26 | 35 | 78.5 | 109.5 | |
| | 2009.05-2017.05 | AT | F | L | Estate 4WD A 20 DTR | Date from:2012.01,Chassis no. from:C1000001 | GDS82085 | Drive Shaft | | 30 | 27 | 52.5 | 94 | 615 | |
| | 2009.05-2017.05 | MT | F | L/R | Estate 4WD A 20 DTR | | GCO17051 | Outer Joint | | 30 | 26 | 53.8 | 94.5 | 65.5 | M |
| | 2009.05-2017.05 | MT | F | L/R | Estate 4WD A 20 DTR | | GCO21049 | Outer Joint | | 30 | 26 | 52.5 | 94 | 65.5 | M |
| | 2009.05-2017.05 | AT/MT | R | L | Estate 4WD A 20 DTR | Veh Equip:For vehicles with lectronic ltd slip differential | GDS82261 | Drive Shaft | | 30 | 34 | 52.3 | 94 | 791 | |
| | 2009.05-2017.05 | AT/MT | R | R | Estate 4WD A 20 DTR | | GDS81333 | Drive Shaft | | 30 | 34 | 52.3 | 94 | 842 | |
| | 2009.05-2017.05 | AT/MT | R | L/R | Estate 4WD A 20 DTR | With differential lock | GCO81305 | Outer Joint | | 30 | 23 | 52.3 | 94 | 59.5 | M |
| | 2009.05-2017.05 | AT/MT | R | L | Estate 4WD A 20 DTR | Veh Equip:For vehicles with lectronic ltd slip differential | GCI81196 | Inner Joint | | 34 | 23 | 35 | 113.5 | 110 | |
| | 2009.05-2017.05 | AT/MT | R | R | Estate 4WD A 20 DTR | | GCI81197 | Inner Joint | | 34 | 23 | 35 | 82.5 | 109 | |
| 2.0 (143 kw) | 2012.03-2017.05 | 6AT | F | R | Estate 4WD A 20 DTR | | GDS21045 | Drive Shaft | | 30 | 27 | 52.5 | 94.5 | 615 | |
| | 2012.03-2017.05 | 6AT/6MT | F | L/R | Estate 4WD A 20 DTR | | GCO17051 | Outer Joint | | 30 | 26 | 53.8 | 94.5 | 65.5 | M |
| | 2012.03-2017.05 | 6AT/6MT | F | L/R | Estate 4WD A 20 DTR | | GCO21049 | Outer Joint | | 30 | 26 | 52.5 | 94 | 65.5 | M |
| | 2012.03-2017.05 | 6AT/6MT | F | L/R | Estate 4WD A 20 DTR | | GCO88046 | Outer Joint | | 30 | 26 | 52.5 | 94.5 | 65.5 | M |
| | 2012.03-2017.05 | 6MT | F | L/R | Estate 4WD A 20 DTR | For RPO/POC:GNA | GCI21030 | Inner Joint | | 27 | 26 | 35 | 78 | 112.5 | |
| | 2012.03-2017.05 | 6MT/6AT | F | L/R | Estate 4WD A 20 DTR | Transmission:6MT,For RPO/POC:GNB | GCI86015 | Inner Joint | | 27 | 26 | 35 | 78.5 | 109.5 | |
| | 2012.03-2017.05 | AT | F | L/R | Estate 4WD A 20 DTR | | GDS82085 | Drive Shaft | | 30 | 27 | 52.5 | 94 | 615 | |
| | 2012.03-2017.05 | 6AT/6MT | R | L/R | Estate 4WD A 20 DTR | With differential lock | GCO81305 | Outer Joint | | 30 | 23 | 52.3 | 94 | 59.5 | M |
| | 2012.03-2017.05 | AT/MT | R | L | Estate 4WD A 20 DTR | Veh Equip:For vehicles with lectronic ltd slip differential | GDS82261 | Drive Shaft | | 30 | 34 | 52.3 | 94 | 791 | |
| | 2012.03-2017.05 | AT/MT | R | R | Estate 4WD A 20 DTR | | GDS81333 | Drive Shaft | | 30 | 34 | 52.3 | 94 | 842 | |
| | 2012.03-2017.05 | AT/MT | R | L | Estate 4WD A 20 DTR | Veh Equip:For vehicles with lectronic ltd slip differential | GCI81196 | Inner Joint | | 34 | 23 | 35 | 113.5 | 110 | |
| | 2012.03-2017.05 | AT/MT | R | R | Estate 4WD A 20 DTR | | GCI81197 | Inner Joint | | 34 | 23 | 35 | 82.5 | 109 | |
| | 2012.03-2017.05 | 6AT | F | R | Estate FWD A 20 DTR | | GDS21045 | Drive Shaft | | 30 | 27 | 52.5 | 94.5 | 615 | |
| | 2012.03-2017.05 | 6AT | F | L/R | Estate FWD A 20 DTR | | GCO17051 | Outer Joint | | 30 | 26 | 53.8 | 94.5 | 65.5 | M |
| | 2012.03-2017.05 | 6AT | F | L/R | Estate FWD A 20 DTR | | GCO21049 | Outer Joint | | 30 | 26 | 52.5 | 94 | 65.5 | M |
| | 2012.03-2017.05 | 6AT | F | L/R | Estate FWD A 20 DTR | | GCO88046 | Outer Joint | | 30 | 26 | 52.5 | 94.5 | 65.5 | M |
| | 2012.03-2017.05 | 6AT | F | L/R | Estate FWD A 20 DTR | | GCI86015 | Inner Joint | | 27 | 26 | 35 | 78.5 | 109.5 | |
| | 2012.03-2017.05 | 6MT | F | L/R | Estate FWD A 20 DTR | | GCO21057 | Outer Joint | | 30 | 27 | 59.1 | 94 | 65 | M |
| | 2012.03-2017.05 | AT | F | L/R | Estate FWD A 20 DTR | | GDS82085 | Drive Shaft | | 30 | 27 | 52.5 | 94 | 615 | |
| 2.0 (162 kw) | 2008.07-2017.05 | 6AT | F | L/R | Estate 4WD A 20 NHT | | GDS21045 | Drive Shaft | | 30 | 27 | 52.5 | 94.5 | 615 | |
| | 2008.07-2017.05 | 6AT | F | L/R | Estate 4WD A 20 NHT | | GCI86015 | Inner Joint | | 27 | 26 | 35 | 78.5 | 109.5 | |
| | 2008.07-2017.05 | 6AT/6MT | F | L/R | Estate 4WD A 20 NHT | | GCO17051 | Outer Joint | | 30 | 26 | 53.8 | 94.5 | 65.5 | M |
| | 2008.07-2017.05 | 6AT/6MT | F | L/R | Estate 4WD A 20 NHT | | GCO21049 | Outer Joint | | 30 | 26 | 52.5 | 94 | 65.5 | M |
| | 2008.07-2017.05 | 6AT/6MT | F | L/R | Estate 4WD A 20 NHT | | GCO88046 | Outer Joint | | 30 | 26 | 52.5 | 94.5 | 65.5 | M |
| | 2008.07-2017.05 | 6MT | F | L/R | Estate 4WD A 20 NHT | | GDS84292 | Drive Shaft | | 30 | 27 | 52.5 | 94 | 618 | |
| | 2008.07-2017.05 | 6MT | F | L/R | Estate 4WD A 20 NHT | | GCI21030 | Inner Joint | | 27 | 26 | 35 | 78 | 112.5 | |
| | 2008.07-2017.05 | AT | F | L/R | Estate 4WD A 20 NHT | | GDS82085 | Drive Shaft | | 30 | 27 | 52.5 | 94 | 615 | |
| | 2008.07-2017.05 | 6AT/6MT | R | L/R | Estate 4WD A 20 NHT | For vehicles with electronic ltd slip differential | GCO81305 | Outer Joint | | 30 | 23 | 52.3 | 94 | 59.5 | M |
| | 2008.07-2017.05 | AT/MT | R | L | Estate 4WD A 20 NHT | Veh Equip:For vehicles with lectronic ltd slip differential | GDS82261 | Drive Shaft | | 30 | 34 | 52.3 | 94 | 791 | |
| | 2008.07-2017.05 | AT/MT | R | R | Estate 4WD A 20 NHT | For vehicles with lectronic ltd slip differential | GDS81333 | Drive Shaft | | 30 | 34 | 52.3 | 94 | 842 | |
| | 2008.07-2017.05 | AT/MT | R | L | Estate 4WD A 20 NHT | Veh Equip:For vehicles with lectronic ltd slip differential | GCI81196 | Inner Joint | | 34 | 23 | 35 | 113.5 | 110 | |
| | 2008.07-2017.05 | AT/MT | R | R | Estate 4WD A 20 NHT | For vehicles with lectronic ltd slip differential | GCI81197 | Inner Joint | | 34 | 23 | 35 | 82.5 | 109 | |
| | 2008.07-2017.05 | 6AT | F | L/R | Estate FWD A 20 NHT;A 20 NFT | | GDS21045 | Drive Shaft | | 30 | 27 | 52.5 | 94.5 | 615 | |
| | 2008.07-2017.05 | 6AT | F | L/R | Estate FWD A 20 NHT;A 20 NFT | | GCI86015 | Inner Joint | | 27 | 26 | 35 | 78.5 | 109.5 | |
| | 2008.07-2017.05 | 6AT/6MT | F | L/R | Estate FWD A 20 NHT;A 20 NFT | | GCO17051 | Outer Joint | | 30 | 26 | 53.8 | 94.5 | 65.5 | M |
| | 2008.07-2017.05 | 6AT/6MT | F | L/R | Estate FWD A 20 NHT;A 20 NFT | | GCO21049 | Outer Joint | | 30 | 26 | 52.5 | 94 | 65.5 | M |
| | 2008.07-2017.05 | 6AT/6MT | F | L/R | Estate FWD A 20 NHT;A 20 NFT | | GCO88046 | Outer Joint | | 30 | 26 | 52.5 | 94.5 | 65.5 | M |
| | 2008.07-2017.05 | 6MT | F | L/R | Estate FWD A 20 NHT;A 20 NFT | Chassis no. from:C1000001 | GDS84292 | Drive Shaft | | 30 | 27 | 52.5 | 94 | 618 | |
| | 2008.07-2017.05 | 6MT | F | L/R | Estate FWD A 20 NHT;A 20 NFT | | GCI21030 | Inner Joint | | 27 | 26 | 35 | 78 | 112.5 | |
| | 2008.07-2017.05 | AT | F | L | Estate FWD A 20 NHT;A 20 NFT | Date from:2011.01;Chassis no. from:B1000001 | GDS82085 | Drive Shaft | | 30 | 27 | 52.5 | 94 | 615 | |
| | 2008.07-2017.05 | AT | F | R | Estate FWD A 20 NHT;A 20 NFT | | GDS82085 | Drive Shaft | | 30 | 27 | 52.5 | 94 | 615 | |
| | 2008.07-2017.05 | MT | F | L/R | Estate FWD A 20 NHT;A 20 NFT | Chassis no. to:B1999999 | GDS60027 | Drive Shaft | | 30 | 27 | 52.5 | 94.5 | 619 | |
| 2.0 (184 kw) | 2011.07-2017.05 | 6AT/6MT | F | L/R | Estate 4WD A 20 NHT;A 20 NFT;B 20 NHT | | GCO88046 | Outer Joint | | 30 | 26 | 52.5 | 94.5 | 65.5 | M |
| | 2011.07-2017.05 | 6MT | F | L/R | Estate 4WD A 20 NHT;A 20 NFT;B 20 NHT | For RPO/POC:MK6 | GDS60027 | Drive Shaft | | 30 | 27 | 52.5 | 94.5 | 619 | |
| | 2011.07-2017.05 | 6MT | F | L/R | Estate 4WD A 20 NHT;A 20 NFT;B 20 NHT | For RPO/POC:MR6,Chassis no. from:C1000001 | GDS84292 | Drive Shaft | | 30 | 27 | 52.5 | 94 | 618 | |

| | YEAR | TRANSM. | F/R | L/R | BODY STYLE & DRIVE TYPE & ENGINE | REMARKS | G-AP Ref. | PRODUCT | ABS | Technical Specifications A | B | C | H | L | P |
|---|---|---|---|---|---|---|---|---|---|---|---|---|---|---|---|
| **VAUXHALL** | | | | | | | | | | | | | | | |
| **Insignia Sports Tourer** | | | | | | | | | | | | | | | |
| 2.0 (184 kw) | 2011.07-2017.05 | 6MT | F | L/R | Estate 4WD A 20 NHT;A 20 NFT;B 20 NHT | | GCI21030 | Inner Joint | | 27 | 26 | 35 | 78 | 112.5 | |
| | 2011.07-2017.05 | MT | F | L/R | Estate 4WD A 20 NHT;A 20 NFT;B 20 NHT | | GCO17051 | Outer Joint | | 30 | 26 | 53.8 | 94.5 | 65.5 | M |
| | 2011.07-2017.05 | MT | F | L/R | Estate 4WD A 20 NHT;A 20 NFT;B 20 NHT | | GCO21049 | Outer Joint | | 30 | 26 | 52.5 | 94 | 65.5 | M |
| | 2011.07-2017.05 | 6MT/6AT | R | R | Estate 4WD A 20 NHT;A 20 NFT;B 20 NHT | | GDS81333 | Drive Shaft | | 30 | 34 | 52.3 | 94 | 842 | |
| | 2011.07-2017.05 | AT/MT | R | L/R | Estate 4WD A 20 NHT;A 20 NFT;B 20 NHT | For vehicles with electronic ltd slip differential | GCO81305 | Outer Joint | | 30 | 23 | 52.3 | 94 | 59.5 | M |
| | 2011.07-2017.05 | 6AT/6MT | F | L/R | Estate FWD A 20 NHT;B 20 NHT | | GCO17051 | Outer Joint | | 30 | 26 | 53.8 | 94.5 | 65.5 | M |
| | 2011.07-2017.05 | 6AT/6MT | F | L/R | Estate FWD A 20 NHT;B 20 NHT | | GCO21049 | Outer Joint | | 30 | 26 | 52.5 | 94 | 65.5 | M |
| | 2011.07-2017.05 | 6AT/6MT | F | L/R | Estate FWD A 20 NHT;B 20 NHT | | GCO88046 | Outer Joint | | 30 | 26 | 52.5 | 94.5 | 65.5 | M |
| | 2011.07-2017.05 | 6MT | F | L/R | Estate FWD A 20 NHT;B 20 NHT | For RPO/POC:MR6,Chassis no. from:C1000001 | GDS84292 | Drive Shaft | | 30 | 27 | 52.5 | 94 | 618 | |
| | 2011.07-2017.05 | 6MT | F | L/R | Estate FWD A 20 NHT;B 20 NHT | | GCI21030 | Inner Joint | | 27 | 26 | 35 | 78 | 112.5 | |
| | 2011.07-2017.05 | AT | F | L | Estate FWD A 20 NHT;B 20 NHT | Date from:2011.01;Chassis no. from:B1000001 | GDS82085 | Drive Shaft | | 30 | 27 | 52.5 | 94 | 615 | |
| | 2011.07-2017.05 | MT | F | L/R | Estate FWD A 20 NHT;B 20 NHT | Chassis no. to:B1999999,For RPO/POC:MR6 | GDS60027 | Drive Shaft | | 30 | 27 | 52.5 | 94.5 | 619 | |
| 2.0 (191 kw) | 2017.03- | 8AT | F | L | Estate 4WD B 20 NFT | | GDS56988 | Drive Shaft | | 30 | 27 | 60.5 | 94.5 | 621 | |
| | 2017.03- | 8AT | F | R | Estate 4WD B 20 NFT | | GDS83653 | Drive Shaft | | 30 | 27 | 60.5 | 94.5 | 559 | |
| | 2017.03- | 8AT | F | L/R | Estate 4WD B 20 NFT | | GCO81945 | Outer Joint | | 30 | 35 | 60.5 | 94.5 | 60 | M |
| | 2017.03- | 8AT | F | L | Estate 4WD B 20 NFT | | GCI82377 | Inner Joint | | 27 | 35 | 35 | 101 | 100.5 | |
| | 2017.03- | 8AT | F | R | Estate 4WD B 20 NFT | | GCI82319 | Inner Joint | | 27 | 35 | 42 | | 139 | |
| 2.8 (191 kw) | 2008.08-2017.05 | 6AT | F | L | Estate 4WD A 28 NET | Date To:2010.12,Chassis no. to:A1999999 | GDS21045 | Drive Shaft | | 30 | 27 | 52.5 | 94.5 | 615 | |
| | 2008.08-2017.05 | 6AT | F | R | Estate 4WD A 28 NET | | GDS21045 | Drive Shaft | | 30 | 27 | 52.5 | 94.5 | 615 | |
| | 2008.08-2017.05 | 6AT | F | L/R | Estate 4WD A 28 NET | Date from:2010.01,Chassis no. from:A1000001 | GCO17051 | Outer Joint | | 30 | 26 | 53.8 | 94.5 | 65.5 | M |
| | 2008.08-2017.05 | 6AT | F | L/R | Estate 4WD A 28 NET | Date from:2010.01,Chassis no. from:A1000001 | GCO21049 | Outer Joint | | 30 | 26 | 52.5 | 94 | 65.5 | M |
| | 2008.08-2017.05 | 6AT | F | L/R | Estate 4WD A 28 NET | Date from:2010.01,Chassis no. from:A1000001 | GCO88046 | Outer Joint | | 30 | 26 | 52.5 | 94.5 | 65.5 | M |
| | 2008.08-2017.05 | 6AT | F | L/R | Estate 4WD A 28 NET | Date from:2010.01,Chassis no. from:A1000001 | GCI86015 | Inner Joint | | 27 | 26 | 35 | 78.5 | 109.5 | |
| | 2008.08-2017.05 | 6AT/6MT | F | L/R | Estate 4WD A 28 NET | Transmission:6AT,Date to:2009.12,Chassis no. to:S1999999991999999 | GCO21057 | Outer Joint | | 30 | 27 | 59.1 | 94 | 65 | M |
| | 2008.08-2017.05 | AT | F | L/R | Estate 4WD A 28 NET | | GDS82085 | Drive Shaft | | 30 | 27 | 52.5 | 94 | 615 | |
| | 2008.08-2017.05 | 6AT/6MT | R | L/R | Estate 4WD A 28 NET | For vehicles with electronic ltd slip differential | GCO81305 | Outer Joint | | 30 | 23 | 52.3 | 94 | 59.5 | M |
| | 2008.08-2017.05 | AT/MT | R | L | Estate 4WD A 28 NET | Veh Equip:For vehicles with lectronic ltd slip differential | GDS82261 | Drive Shaft | | 30 | 34 | 52.3 | 94 | 791 | |
| | 2008.08-2017.05 | AT/MT | R | R | Estate 4WD A 28 NET | | GDS81333 | Drive Shaft | | 30 | 34 | 52.3 | 94 | 842 | |
| | 2008.08-2017.05 | AT/MT | R | L | Estate 4WD A 28 NET | Veh Equip:For vehicles with lectronic ltd slip differential | GCI81196 | Inner Joint | | 34 | 23 | 35 | 113.5 | 110 | |
| | 2008.08-2017.05 | AT/MT | R | R | Estate 4WD A 28 NET | | GCI81197 | Inner Joint | | 34 | 23 | 35 | 82.5 | 109 | |
| 2.8 (239 kw) | 2009.07-2017.05 | 6AT/6MT | F | L/R | Estate 4WD A 28 NER | | GCO21057 | Outer Joint | | 30 | 27 | 59.1 | 94 | 65 | M |
| | 2009.07-2017.05 | 6AT/6MT | R | L/R | Estate 4WD A 28 NER | For vehicles with electronic ltd slip differential | GCO81305 | Outer Joint | | 30 | 23 | 52.3 | 94 | 59.5 | M |
| | 2009.07-2017.05 | AT/MT | R | L | Estate 4WD A 28 NER | For vehicles with lectronic ltd slip differential | GDS82261 | Drive Shaft | | 30 | 34 | 52.3 | 94 | 791 | |
| | 2009.07-2017.05 | AT/MT | R | R | Estate 4WD A 28 NER | | GDS81333 | Drive Shaft | | 30 | 34 | 52.3 | 94 | 842 | |
| | 2009.07-2017.05 | AT/MT | R | L | Estate 4WD A 28 NER | For vehicles with lectronic ltd slip differential | GCI81196 | Inner Joint | | 34 | 23 | 35 | 113.5 | 110 | |
| | 2009.07-2017.05 | AT/MT | R | R | Estate 4WD A 28 NER | | GCI81197 | Inner Joint | | 34 | 23 | 35 | 82.5 | 109 | |
| **Meriva** | | | | | | | | | | | | | | | |
| 1.3 (51 kw) | 2005.04-2010.06 | 5MT | F | L | MPV FWD Z 13 DT;Y 13 DT | | GDS44002 | Drive Shaft | 29T | 22 | 22 | 52 | 95 | 585 | |
| | 2005.04-2010.06 | 5MT | F | L/R | MPV FWD Z 13 DT;Y 13 DT | | GCO44002 | Outer Joint | 29T | 22 | 23 | 52 | 97.5 | 61 | M |
| | 2005.04-2010.06 | MT | F | L | MPV FWD Z 13 DT;Y 13 DT | | GDS99069 | Drive Shaft | 29T | 22 | 22 | 52 | 97.5 | 584 | |
| | 2005.04-2010.06 | | F | R | MPV FWD Z 13 DT;Y 13 DT | | GDS99157 | Drive Shaft | 29T | 22 | 22 | 52 | 97.5 | 930 | |
| | 2005.04-2010.06 | | F | L/R | MPV FWD Z 13 DT;Y 13 DT | | GCI44009 | Inner Joint | | 22 | 23 | 35 | 57.5 | 96 | |
| 1.3 (55 kw) | 2003.01-2009.10 | 5MT | F | L | MPV FWD Z 13 DTJ | | GDS44002 | Drive Shaft | 29T | 22 | 22 | 52 | 95 | 585 | |
| | 2003.01-2009.10 | 5MT | F | L/R | MPV FWD Z 13 DTJ | | GCO44002 | Outer Joint | 29T | 22 | 23 | 52 | 97.5 | 61 | M |
| | 2003.01-2009.10 | MT | F | L | MPV FWD Z 13 DTJ | | GDS99069 | Drive Shaft | 29T | 22 | 22 | 52 | 97.5 | 584 | |
| | 2003.01-2009.10 | | F | R | MPV FWD Z 13 DTJ | | GDS99157 | Drive Shaft | 29T | 22 | 22 | 52 | 97.5 | 930 | |
| | 2003.01-2009.10 | | F | L/R | MPV FWD Z 13 DTJ | | GCI44009 | Inner Joint | | 22 | 23 | 35 | 57.5 | 96 | |
| | 2010.06-2013.10 | 5MT | F | L/R | MPV FWD A 13 DTC | | GCO44093 | Outer Joint | | 33 | 23 | 52 | 103.5 | 60 | M |
| | 2010.06-2013.10 | 5MT | F | R | MPV FWD A 13 DTC | | GCI44017 | Inner Joint | | 22 | 23 | 35 | 57.5 | 116 | |
| | 2010.06-2013.10 | MT | F | R | MPV FWD A 13 DTC | | GDS44088 | Drive Shaft | | 33 | 22 | 52 | 103.5 | 953 | |
| 1.3 (70 kw) | 2010.06-2014.11 | 5MT | F | L/R | MPV FWD A 13 DTE | | GCO44093 | Outer Joint | | 33 | 23 | 52 | 103.5 | 60 | M |
| | 2010.06-2014.11 | 5MT | F | R | MPV FWD A 13 DTE | | GCI44017 | Inner Joint | | 22 | 23 | 35 | 57.5 | 116 | |
| | 2010.06-2014.11 | MT | F | R | MPV FWD A 13 DTE | | GDS44088 | Drive Shaft | | 33 | 22 | 52 | 103.5 | 953 | |
| 1.4 (66 kw) | 2003.01-2010.06 | 5MT | F | L | MPV FWD Z 14 XEP | | GDS44100 | Drive Shaft | 29T | 22 | 22 | 52 | 97.5 | 590 | |
| | 2003.01-2010.06 | 5MT | F | R | MPV FWD Z 14 XEP | Inner teeth of wheel side:22 | GDS82365 | Drive Shaft | 29T | 22 | 22 | 52 | 97.5 | 941 | |
| | 2003.01-2010.06 | 5MT | F | R | MPV FWD Z 14 XEP | Inner teeth of wheel side:28 | GDS99157 | Drive Shaft | 29T | 22 | 22 | 52 | 97.5 | 930 | |
| | 2003.01-2010.06 | 5MT | F | L | MPV FWD Z 14 XEP | Manufacturer:GKN | GCI81778 | Inner Joint | | 22 | 22 | 34.95 | 57 | 95 | |
| | 2003.01-2010.06 | 5MT | F | R | MPV FWD Z 14 XEP | | GCI60001 | Inner Joint | | 22 | 28 | 34.9 | 57.5 | 96.5 | |
| | 2003.01-2010.06 | 5MT | F | R | MPV FWD Z 14 XEP | Manufacturer:GKN | GCI81778 | Inner Joint | | 22 | 22 | 34.95 | 57 | 95 | |
| | 2003.01-2010.06 | AT/MT | F | L | MPV FWD Z 14 XEP | VL | GDS44027 | Drive Shaft | 29T | 22 | 22 | 52 | 98 | 580 | |
| | 2003.01-2010.06 | AT/MT | F | R | MPV FWD Z 14 XEP | | GDS44075 | Drive Shaft | 29T | 22 | 22 | 52 | 97.5 | 926 | |
| | 2003.01-2010.06 | AT/MT | F | L/R | MPV FWD Z 14 XEP | | GCO44020 | Outer Joint | 29T | 22 | 28 | 52 | 97.5 | 57.5 | O |
| | 2003.01-2010.06 | MT | F | L | MPV FWD Z 14 XEP | TJ | GDS99069 | Drive Shaft | 29T | 22 | 22 | 52 | 97.5 | 584 | |
| | 2003.01-2010.06 | MT | F | R | MPV FWD Z 14 XEP | | GCO44018 | Outer Joint | | 22 | 28 | 52.2 | 97.5 | 55 | O |
| | 2003.01-2010.06 | MT | F | L/R | MPV FWD Z 14 XEP | Chassis no. from:44162553 | GCO44019 | Outer Joint | 29T | 22 | 28 | 52 | 97.5 | 57.5 | O |

| | YEAR | TRANSM. | F/R | L/R | BODY STYLE & DRIVE TYPE & ENGINE | REMARKS | G-AP Ref. | PRODUCT | ABS | Technical Specifications | | | | | |
|---|---|---|---|---|---|---|---|---|---|---|---|---|---|---|---|
| | | | | | | | | | | A | B | C | H | L | P |
| **VAUXHALL** | | | | | | | | | | | | | | | |
| **Meriva** | | | | | | | | | | | | | | | |
| 1.4 (74 kw) | 2010.06-2017.03 | 5MT | F | L/R | MPV FWD A 14 XER;B 14 XER | | GCI21014 | Inner Joint | | 22 | 22 | 35 | 57.5 | 105.5 | |
| 1.4 (88 kw) | 2010.06-2013.10 | 5MT | F | L | MPV FWD A 14 NEL;B 14 NEL | | GDS60013 | Drive Shaft | | 33 | 22 | 52 | 103 | 595 | |
| | 2010.06-2013.10 | 5MT | F | R | MPV FWD A 14 NEL;B 14 NEL | | GCI44017 | Inner Joint | | 22 | 23 | 35 | 57.5 | 116 | |
| | 2010.06-2013.10 | AT | F | L | MPV FWD A 14 NEL;B 14 NEL | | GDS82262 | Drive Shaft | | 33 | 27 | 52 | 103.5 | 575 | |
| | 2010.06-2013.10 | AT | F | R | MPV FWD A 14 NEL;B 14 NEL | | GDS82266 | Drive Shaft | | 33 | 34 | 52 | 103.5 | 560 | |
| | 2010.06-2013.10 | AT | F | L | MPV FWD A 14 NEL;B 14 NEL | | GCI81705 | Inner Joint | | 27 | 23 | 34.97 | 78.5 | 107 | |
| | 2010.06-2013.10 | AT | F | R | MPV FWD A 14 NEL;B 14 NEL | | GCI81706 | Inner Joint | | 34 | 23 | 37.5 | | 121.5 | |
| | 2010.06-2013.10 | AT/MT | F | L/R | MPV FWD A 14 NEL;B 14 NEL | | GCO44093 | Outer Joint | | 33 | 23 | 52 | 103.5 | 60 | M |
| | 2010.06-2013.10 | MT | F | R | MPV FWD A 14 NEL;B 14 NEL | | GDS83389 | Drive Shaft | | 33 | 22 | 52 | 103.5 | 962 | |
| | 2011.06-2017.03 | 5MT | F | R | MPV FWD A 14 NEL | | GCI44017 | Inner Joint | | 22 | 23 | 35 | 57.5 | 116 | |
| | 2011.06-2017.03 | MT | F | L | MPV FWD A 14 NEL | | GDS60013 | Drive Shaft | | 33 | 22 | 52 | 103 | 595 | |
| | 2011.06-2017.03 | MT | F | R | MPV FWD A 14 NEL | | GDS83389 | Drive Shaft | | 33 | 22 | 52 | 103.5 | 962 | |
| | 2011.06-2017.03 | MT | F | L/R | MPV FWD A 14 NEL | | GCO44093 | Outer Joint | | 33 | 23 | 52 | 103.5 | 60 | M |
| 1.4 (103 kw) | 2010.06-2013.10 | 6MT | F | L | MPV FWD A 14 NET;B 14 NET | | GDS56869 | Drive Shaft | | 33 | 25 | 52 | 103.5 | 587 | |
| | 2010.06-2013.10 | 6MT | F | R | MPV FWD A 14 NET;B 14 NET | | GDS56873 | Drive Shaft | | 33 | 34 | 52 | 103.5 | 561 | |
| | 2010.06-2013.10 | 6MT | F | L/R | MPV FWD A 14 NET;B 14 NET | | GCO21051 | Outer Joint | | 33 | 24 | 52 | 103.5 | 64 | M |
| | 2010.06-2013.10 | 6MT | F | L | MPV FWD A 14 NET;B 14 NET | | GCI44008 | Inner Joint | | 25 | 25 | 34.9 | 57.5 | 113.2 | |
| | 2010.06-2013.10 | 6MT | F | R | MPV FWD A 14 NET;B 14 NET | | GCI44005 | Inner Joint | | 34 | 25 | 35 | | 130.2 | |
| 1.6 (64 kw) | 2003.01-2010.06 | 5MT | F | L | MPV FWD Z 16 SE | TJ | GDS44100 | Drive Shaft | 29T | 22 | 22 | 52 | 97.5 | 590 | |
| | 2003.01-2010.06 | 5MT | F | R | MPV FWD Z 16 SE | | GDS82365 | Drive Shaft | 29T | 22 | 22 | 52 | 97.5 | 941 | |
| | 2003.01-2010.06 | 5MT | F | R | MPV FWD Z 16 SE | | GDS99157 | Drive Shaft | 29T | 22 | 22 | 52 | 97.5 | 930 | |
| | 2003.01-2010.06 | 5MT | F | L/R | MPV FWD Z 16 SE | Manufacturer:GKN | GCO44005 | Outer Joint | 29T | 22 | 22 | 52 | 97.5 | 58.5 | M |
| | 2003.01-2010.06 | 5MT | F | L/R | MPV FWD Z 16 SE | Manufacturer:Delphi | GCO44020 | Outer Joint | 29T | 22 | 28 | 52 | 97.5 | 57.5 | O |
| | 2003.01-2010.06 | 5MT | F | L | MPV FWD Z 16 SE | Manufacturer:GKN | GCI81778 | Inner Joint | | 22 | 22 | 34.95 | 57 | 95 | |
| | 2003.01-2010.06 | AT/MT | F | R | MPV FWD Z 16 SE | Manufacturer Restriction:GKN Make | GDS44075 | Drive Shaft | 29T | 22 | 22 | 52 | 97.5 | 926 | |
| | 2003.01-2010.06 | AT/MT | F | L/R | MPV FWD Z 16 SE | Manufacturer:Delphi | GCO44019 | Outer Joint | 29T | 22 | 28 | 52 | 97.5 | 57.5 | O |
| | 2003.01-2010.06 | MT | F | L | MPV FWD Z 16 SE | Manufacturer Restriction:GKN Make;VL | GDS44027 | Drive Shaft | 29T | 22 | 22 | 52 | 98 | 580 | |
| | 2003.01-2010.06 | MT | F | L | MPV FWD Z 16 SE | TJ | GDS99069 | Drive Shaft | 29T | 22 | 22 | 52 | 97.5 | 584 | |
| 1.6 (70 kw) | 2014.01-2017.01 | 6MT | F | L/R | MPV FWD B 16 DTC | | GDS82037 | Drive Shaft | | 33 | 25 | 56 | 103.5 | 583 | |
| | 2014.01-2017.01 | 6MT | F | R | MPV FWD B 16 DTC | | GCI21030 | Inner Joint | | 27 | 26 | 35 | 78 | 112.5 | |
| | 2014.01-2017.01 | MT | F | L/R | MPV FWD B 16 DTC | | GCO99024 | Outer Joint | | 33 | 26 | 52.5 | 94 | 65.5 | M |
| 1.6 (74 kw) | 2003.01-2005.09 | 5MT/SAT | F | R | MPV FWD Z 16 XE | | GDS82365 | Drive Shaft | 29T | 22 | 22 | 52 | 97.5 | 941 | |
| | 2003.01-2005.09 | AT/MT | F | L | MPV FWD Z 16 XE | VL | GDS44027 | Drive Shaft | 29T | 22 | 22 | 52 | 98 | 580 | |
| | 2003.01-2005.09 | AT/MT | F | L | MPV FWD Z 16 XE | TJ | GDS99069 | Drive Shaft | 29T | 22 | 22 | 52 | 97.5 | 584 | |
| | 2003.01-2005.09 | AT/MT | F | R | MPV FWD Z 16 XE | | GDS44075 | Drive Shaft | 29T | 22 | 22 | 52 | 97.5 | 926 | |
| | 2003.01-2005.09 | AT/MT | F | L/R | MPV FWD Z 16 XE | Manufacturer:Delphi | GCO44019 | Outer Joint | 29T | 22 | 28 | 52 | 97.5 | 57.5 | O |
| | 2003.01-2005.09 | SAT/5MT | F | L | MPV FWD Z 16 XE | TJ | GDS44100 | Drive Shaft | 29T | 22 | 22 | 52 | 97.5 | 590 | |
| | 2003.01-2005.09 | SAT/5MT | F | R | MPV FWD Z 16 XE | | GDS99157 | Drive Shaft | 29T | 22 | 22 | 52 | 97.5 | 930 | |
| | 2003.01-2005.09 | SAT/5MT | F | L/R | MPV FWD Z 16 XE | Manufacturer:GKN | GCO44005 | Outer Joint | 29T | 22 | 22 | 52 | 97.5 | 58.5 | M |
| | 2003.01-2005.09 | SAT/5MT | F | L/R | MPV FWD Z 16 XE | Manufacturer:Delphi | GCO44020 | Outer Joint | 29T | 22 | 28 | 52 | 97.5 | 57.5 | O |
| | 2003.01-2005.09 | SAT/5MT | F | L | MPV FWD Z 16 XE | Manufacturer:GKN | GCI81778 | Inner Joint | | 22 | 22 | 34.95 | 57 | 95 | |
| 1.6 (77 kw) | 2003.05-2010.06 | 5MT | F | L | MPV FWD Z 16 XEP | | GDS44100 | Drive Shaft | 29T | 22 | 22 | 52 | 97.5 | 590 | |
| | 2003.05-2010.06 | 5MT | F | R | MPV FWD Z 16 XEP | | GDS82365 | Drive Shaft | 29T | 22 | 22 | 52 | 97.5 | 941 | |
| | 2003.05-2010.06 | 5MT/SAT | F | R | MPV FWD Z 16 XEP | Manufacturer:GKN | GCI81778 | Inner Joint | | 22 | 22 | 34.95 | 57 | 95 | |
| | 2003.05-2010.06 | AT/MT | F | L/R | MPV FWD Z 16 XEP | Manufacturer:GKN | GCO44005 | Outer Joint | 29T | 22 | 22 | 52 | 97.5 | 58.5 | M |
| | 2003.05-2010.06 | AT/MT | F | L/R | MPV FWD Z 16 XEP | Manufacturer:Delphi | GCO44019 | Outer Joint | 29T | 22 | 28 | 52 | 97.5 | 57.5 | O |
| | 2003.05-2010.06 | AT/MT | F | L/R | MPV FWD Z 16 XEP | Manufacturer:Delphi | GCO44020 | Outer Joint | 29T | 22 | 28 | 52 | 97.5 | 57.5 | O |
| 1.6 (81 kw) | 2014.07-2017.03 | 6MT | F | L/R | MPV FWD B 16 DTL;B 16 DTE;B 16 DTN | | GDS82037 | Drive Shaft | | 33 | 25 | 56 | 103.5 | 583 | |
| | 2014.07-2017.03 | 6MT | F | R | MPV FWD B 16 DTL;B 16 DTE;B 16 DTN | | GCI21030 | Inner Joint | | 27 | 26 | 35 | 78 | 112.5 | |
| | 2014.07-2017.03 | MT | F | L/R | MPV FWD B 16 DTL;B 16 DTE;B 16 DTN | | GCO99024 | Outer Joint | | 33 | 26 | 52.5 | 94 | 65.5 | M |
| 1.6 (100 kw) | 2013.08-2017.01 | 6MT | F | L/R | MPV FWD B 16 DTH | | GDS82037 | Drive Shaft | | 33 | 25 | 56 | 103.5 | 583 | |
| | 2013.08-2017.01 | 6MT | F | R | MPV FWD B 16 DTH | | GCI21030 | Inner Joint | | 27 | 26 | 35 | 78 | 112.5 | |
| | 2013.08-2017.01 | MT | F | L/R | MPV FWD B 16 DTH | | GCO99024 | Outer Joint | | 33 | 26 | 52.5 | 94 | 65.5 | M |
| 1.6 (132 kw) | 2006.05-2010.06 | 6MT | F | R | MPV FWD Z 16 LET | | GDS60021 | Drive Shaft | 29T | 33 | 34 | 52 | 104 | 612 | |
| | 2006.05-2010.06 | 6MT | F | L/R | MPV FWD Z 16 LET | | GCO44004 | Outer Joint | 29T | 33 | 24 | 52 | 104 | 64 | M |
| | 2006.05-2010.06 | MT | F | R | MPV FWD Z 16 LET | | GCI60003 | Inner Joint | | 34 | 24 | 35.5 | | 117.5 | |
| 1.7 (55 kw) | 2003.06-2010.06 | 5MT | F | L | MPV FWD Y 17 DT | | GDS44002 | Drive Shaft | 29T | 22 | 22 | 52 | 95 | 585 | |
| | 2003.06-2010.06 | 5MT | F | L/R | MPV FWD Y 17 DT | | GCO44002 | Outer Joint | 29T | 22 | 23 | 52 | 97.5 | 61 | M |
| | 2003.06-2010.06 | MT | F | L | MPV FWD Y 17 DT | | GDS99069 | Drive Shaft | 29T | 22 | 22 | 52 | 97.5 | 584 | |
| | 2003.06-2010.06 | MT | F | R | MPV FWD Y 17 DT | | GCO44018 | Outer Joint | | 22 | 28 | 52.2 | 97.5 | 55 | O |
| | 2003.06-2010.06 | MT | F | R | MPV FWD Y 17 DT | Date to:2006.07 | GCI60003 | Inner Joint | | 34 | 24 | 35.5 | | 117.5 | |
| | 2003.06-2010.06 | | F | R | MPV FWD Y 17 DT | Date To:2006.07;For Engine Code:Z17DT | GDS60021 | Drive Shaft | 29T | 33 | 34 | 52 | 104 | 612 | |
| | 2003.06-2010.06 | | F | R | MPV FWD Y 17 DT | | GDS99157 | Drive Shaft | 29T | 22 | 22 | 52 | 97.5 | 930 | |
| | 2003.06-2010.06 | | F | L/R | MPV FWD Y 17 DT | | GCO44019 | Outer Joint | 29T | 22 | 28 | 52 | 97.5 | 57.5 | O |
| | 2003.06-2010.06 | | F | L/R | MPV FWD Y 17 DT | | GCI44009 | Inner Joint | | 22 | 23 | 35 | 57.5 | 96 | |

| | YEAR | TRANSM. | F/R | L/R | BODY STYLE & DRIVE TYPE & ENGINE | REMARKS | G-AP Ref. | PRODUCT | ABS | Technical Specifications A | B | C | H | L | P |
|---|---|---|---|---|---|---|---|---|---|---|---|---|---|---|---|
| **VAUXHALL** | | | | | | | | | | | | | | | |
| **Meriva** | | | | | | | | | | | | | | | |
| 1.7 (74 kw) | 2003.09-2008.06 | 5MT | F | L | MPV FWD Z 17 DTH | Date to:2005.08 | GDS44094 | Drive Shaft | 29T | 33 | 34 | 52 | 104 | 599 | |
| | 2003.09-2008.06 | 5MT | F | R | MPV FWD Z 17 DTH | Date to:2005.08 | GDS60021 | Drive Shaft | 29T | 33 | 34 | 52 | 104 | 612 | |
| | 2003.09-2008.06 | 5MT | F | L/R | MPV FWD Z 17 DTH | | GCO44004 | Outer Joint | 29T | 33 | 24 | 52 | 104 | 64 | M |
| | 2003.09-2008.06 | 5MT | F | L | MPV FWD Z 17 DTH | | GCI21034 | Inner Joint | | 34 | 24 | 35 | 56.5 | 102 | |
| | 2003.09-2008.06 | MT | F | L | MPV FWD Z 17 DTH | Date from:2004.01 | GDS44032 | Drive Shaft | 29T | 33 | 34 | 52 | 104 | 587.5 | |
| | 2003.09-2008.06 | MT | F | R | MPV FWD Z 17 DTH | Date to:2005.08 | GCI60003 | Inner Joint | | 34 | 24 | 35.5 | | 117.5 | |
| | 2010.06-2017.01 | 6AT | F | L | MPV FWD A 17 DT | | GDS82262 | Drive Shaft | | 33 | 27 | 52 | 103.5 | 575 | |
| | 2010.06-2017.01 | 6AT | F | L/R | MPV FWD A 17 DT | | GCO44093 | Outer Joint | | 33 | 23 | 52 | 103.5 | 60 | M |
| | 2010.06-2017.01 | 6AT | F | L | MPV FWD A 17 DT | | GCI81705 | Inner Joint | | 27 | 23 | 34.97 | 78.5 | 107 | |
| 1.7 (81 kw) | 2010.06-2015.06 | 6AT | F | L | MPV FWD A 17 DTC;A 17 DTI | | GDS82262 | Drive Shaft | | 33 | 27 | 52 | 103.5 | 575 | |
| | 2010.06-2015.06 | 6AT | F | L/R | MPV FWD A 17 DTC;A 17 DTI | | GCO44093 | Outer Joint | | 33 | 23 | 52 | 103.5 | 60 | M |
| | 2010.06-2015.06 | 6MT | F | L | MPV FWD A 17 DTC;A 17 DTI | | GDS82037 | Drive Shaft | | 33 | 25 | 56 | 103.5 | 583 | |
| | 2010.06-2015.06 | 6MT | F | R | MPV FWD A 17 DTC;A 17 DTI | | GDS82085 | Drive Shaft | | 30 | 27 | 52.5 | 94 | 615 | |
| | 2010.06-2015.06 | 6MT | F | L/R | MPV FWD A 17 DTC;A 17 DTI | | GCO99024 | Outer Joint | | 33 | 26 | 52.5 | 94 | 65.5 | M |
| | 2010.06-2015.06 | 6MT | F | R | MPV FWD A 17 DTC;A 17 DTI | | GCI88026 | Inner Joint | | 34 | 26 | 37.5 | | 100 | |
| 1.7 (96 kw) | 2010.06-2013.10 | 6MT | F | L | MPV FWD A 17 DTS | | GDS82037 | Drive Shaft | | 33 | 25 | 56 | 103.5 | 583 | |
| | 2010.06-2013.10 | 6MT | F | R | MPV FWD A 17 DTS | | GDS82085 | Drive Shaft | | 30 | 27 | 52.5 | 94 | 615 | |
| | 2010.06-2013.10 | 6MT | F | R | MPV FWD A 17 DTS | | GCI88026 | Inner Joint | | 34 | 26 | 37.5 | | 100 | |
| | 2010.06-2013.10 | AT/MT | F | L/R | MPV FWD A 17 DTS | | GCO88047 | Outer Joint | | 33 | 23 | 52.5 | 94 | 59.5 | M |
| | 2010.06-2013.10 | | F | | MPV FWD A 17 DTS | | GCO99024 | Outer Joint | | 33 | 26 | 52.5 | 94 | 65.5 | M |
| 1.8 (92 kw) | 2003.05-2010.06 | AT/MT | F | L | MPV FWD Z 18 XE | | GDS99069 | Drive Shaft | 29T | 22 | 22 | 52 | 97.5 | 584 | |
| | 2003.05-2010.06 | SAT/5MT | F | L | MPV FWD Z 18 XE | | GDS44002 | Drive Shaft | 29T | 22 | 22 | 52 | 95 | 585 | |
| | 2003.05-2010.06 | SAT/5MT | F | L/R | MPV FWD Z 18 XE | | GCO44002 | Outer Joint | 29T | 22 | 23 | 52 | 97.5 | 61 | M |
| | 2003.05-2010.06 | | F | R | MPV FWD Z 18 XE | | GDS99157 | Drive Shaft | 29T | 22 | 22 | 52 | 97.5 | 930 | |
| | 2003.05-2010.06 | | F | L/R | MPV FWD Z 18 XE | | GCI44009 | Inner Joint | | 22 | 23 | 35 | 57.5 | 96 | |
| **Mokka** | | | | | | | | | | | | | | | |
| 1.2 (74 kw) | 2020.10- | 6MT | F | L | SUV FWD F 12 XHL (EB2ADTD) | | GDS84174 | Drive Shaft | | 25 | 24 | 55.7 | 84 | 685 | |
| | 2020.10- | 6MT | F | R | SUV FWD F 12 XHL (EB2ADTD) | | GDS84335 | Drive Shaft | | 25 | 24 | 55.7 | 84 | 910 | |
| | 2020.10- | 6MT | F | L/R | SUV FWD F 12 XHL (EB2ADTD) | | GCO82279 | Outer Joint | | 25 | 34 | 55.7 | 84 | 55.5 | I |
| | 2020.10- | 6MT | F | L | SUV FWD F 12 XHL (EB2ADTD) | | GCI82131 | Inner Joint | | 24 | 34 | 40 | 62 | 89 | |
| | 2020.10- | 6MT | F | R | SUV FWD F 12 XHL (EB2ADTD) | | GCI82130 | Inner Joint | | 24 | 34 | 29.8 | 291 | 88 | |
| 1.2 (96 kw) | 2020.10- | 6MT | F | L | SUV FWD F 12 XHT (EB2ADTS) | | GDS84174 | Drive Shaft | | 25 | 24 | 55.7 | 84 | 685 | |
| | 2020.10- | 6MT | F | R | SUV FWD F 12 XHT (EB2ADTS) | | GDS84335 | Drive Shaft | | 25 | 24 | 55.7 | 84 | 910 | |
| | 2020.10- | 6MT | F | L/R | SUV FWD F 12 XHT (EB2ADTS) | | GCO82279 | Outer Joint | | 25 | 34 | 55.7 | 84 | 55.5 | I |
| | 2020.10- | 6MT | F | L | SUV FWD F 12 XHT (EB2ADTS) | | GCI82131 | Inner Joint | | 24 | 34 | 40 | 62 | 89 | |
| | 2020.10- | 6MT | F | R | SUV FWD F 12 XHT (EB2ADTS) | | GCI82130 | Inner Joint | | 24 | 34 | 29.8 | 291 | 88 | |
| | 2020.10- | 8AT | F | L | SUV FWD F 12 XHT (EB2ADTS) | | GDS84557 | Drive Shaft | | 25 | 37 | 56 | 83.5 | 641 | |
| | 2020.10- | 8AT | F | R | SUV FWD F 12 XHT (EB2ADTS) | | GDS84559 | Drive Shaft | | 25 | 37 | 56 | 83.5 | 903 | |
| | 2020.10- | 8AT | F | L/R | SUV FWD F 12 XHT (EB2ADTS) | | GCO82749 | Outer Joint | | 25 | 23 | 56 | 83.5 | 50 | I |
| | 2020.10- | 8AT | F | L | SUV FWD F 12 XHT (EB2ADTS) | | GCI82859 | Inner Joint | | 37 | 24 | 42 | 58.5 | 101.5 | |
| | 2020.10- | 8AT | F | R | SUV FWD F 12 XHT (EB2ADTS) | | GCI82860 | Inner Joint | | 37 | 24 | 29.85 | 285 | 101 | |
| 1.2 (100 kw) | 2022.12- | 6MT | F | L | SUV FWD HPW (EB2LTD) | | GDS84174 | Drive Shaft | | 25 | 24 | 55.7 | 84 | 685 | |
| | 2022.12- | 6MT | F | R | SUV FWD HPW (EB2LTD) | | GDS84335 | Drive Shaft | | 25 | 24 | 55.7 | 84 | 910 | |
| | 2022.12- | 6MT | F | R | SUV FWD HPW (EB2LTD) | | GCI82130 | Inner Joint | | 24 | 34 | 29.8 | 291 | 88 | |
| | 2024.12- | 6DCT | F | R | SUV FWD HPY (EB2LTDH2) | | GDS56753 | Drive Shaft | | 25 | 37 | 55.7 | 84 | 911 | |
| | 2024.12- | | F | R | SUV FWD HPY (EB2LTDH2) | | GCI83474 | Inner Joint | | 37 | 34 | 29.8 | 290 | 99 | |
| 1.2 (107 kw) | 2025.04- | 6DCT | F | R | SUV FWD HPY (EB2LTDH2) | | GDS56753 | Drive Shaft | | 25 | 37 | 55.7 | 84 | 911 | |
| 1.5 (81 kw) | 2020.10- | 6MT | F | L | SUV FWD F 15 DT (DV5RCE) | | GDS84174 | Drive Shaft | | 25 | 24 | 55.7 | 84 | 685 | |
| | 2020.10- | 6MT | F | R | SUV FWD F 15 DT (DV5RCE) | | GDS84335 | Drive Shaft | | 25 | 24 | 55.7 | 84 | 910 | |
| | 2020.10- | 6MT | F | L/R | SUV FWD F 15 DT (DV5RCE) | | GCO82279 | Outer Joint | | 25 | 34 | 55.7 | 84 | 55.5 | I |
| | 2020.10- | 6MT | F | L | SUV FWD F 15 DT (DV5RCE) | | GCI82131 | Inner Joint | | 24 | 34 | 40 | 62 | 89 | |
| | 2020.10- | 6MT | F | R | SUV FWD F 15 DT (DV5RCE) | | GCI82130 | Inner Joint | | 24 | 34 | 29.8 | 291 | 88 | |
| 1.7 (96 kw) | 2012.06-2019.12 | 6MT | F | L | SUV 4WD A 17 DTS | | GDS21114 | Drive Shaft | | 25 | 25 | 52.4 | 92 | 603 | |
| | 2012.06-2019.12 | 6MT | F | R | SUV 4WD A 17 DTS | | GDS86065 | Drive Shaft | | 25 | 34 | 52.4 | 92 | 585 | |
| | 2012.06-2019.12 | 6MT | F | L/R | SUV 4WD A 17 DTS | | GCO21059 | Outer Joint | | 25 | 23 | 52.4 | 92 | 61 | I |
| | 2012.06-2019.12 | 6MT | F | L | SUV 4WD A 17 DTS | | GCI86028 | Inner Joint | | 25 | 24 | 34.9 | 57 | 101 | |
| | 2012.06-2019.12 | 6MT | R | L/R | SUV 4WD A 17 DTS | | GDS82614 | Drive Shaft | | 25 | | 60 | 91.5 | 700 | |
| | 2012.06-2019.12 | 6MT | R | L/R | SUV 4WD A 17 DTS | | GCO83590 | Outer Joint | | 25 | 20 | 60 | 91.5 | 58 | M |
| | 2012.06-2019.12 | 6MT | R | L/R | SUV 4WD A 17 DTS | | GCI83731 | Inner Joint | | | 19 | | | 77 | |
| | 2012.06-2019.12 | 6AT | F | L | SUV FWD A 17 DTS | | GDS82044 | Drive Shaft | | 25 | 34 | 52.4 | 92 | 650 | |
| | 2012.06-2019.12 | 6AT | F | L | SUV FWD A 17 DTS | TJ | GCI81612 | Inner Joint | | 34 | 24 | 35 | 136.5 | 78 | |
| | 2012.06-2019.12 | 6AT/6MT | F | R | SUV FWD A 17 DTS | | GDS21094 | Drive Shaft | | 25 | 34 | 52.4 | 92 | 587 | |
| | 2012.06-2019.12 | 6AT/6MT | F | R | SUV FWD A 17 DTS | Transmission:6MT,Date from:2012.08;Transmission:6AT | GDS86065 | Drive Shaft | | 25 | 34 | 52.4 | 92 | 585 | |
| | 2012.06-2019.12 | 6AT/6MT | F | L/R | SUV FWD A 17 DTS | | GCO21059 | Outer Joint | | 25 | 23 | 52.4 | 92 | 61 | I |
| | 2012.06-2019.12 | 6MT | F | L | SUV FWD A 17 DTS | | GDS21114 | Drive Shaft | | 25 | 25 | 52.4 | 92 | 603 | |

| | YEAR | TRANSM. | F/R | L/R | BODY STYLE & DRIVE TYPE & ENGINE | REMARKS | G-AP Ref. | PRODUCT | ABS | Technical Specifications A | B | C | H | L | P |
|---|---|---|---|---|---|---|---|---|---|---|---|---|---|---|---|
| **VAUXHALL** | | | | | | | | | | | | | | | |
| **Mokka** | | | | | | | | | | | | | | | |
| 1.7 (96 kw) | 2012.06-2019.12 | 6MT | F | L | SUV FWD A 17 DTS | | GCI86028 | Inner Joint | | 25 | 24 | 34.9 | 57 | 101 | |
| EV (100 kw) | 2020.06- | ET | F | L | SUV FWD ZKX (ZK01) | | GDS56582 | Drive Shaft | | 25 | 24 | 56 | 83.5 | 675 | |
| | 2020.06- | ET | F | R | SUV FWD ZKX (ZK01) | | GDS56581 | Drive Shaft | | 25 | 24 | 56 | 83.5 | 902 | |
| | 2020.06- | ET | F | L/R | SUV FWD ZKX (ZK01) | | GCO82749 | Outer Joint | | 25 | 23 | 56 | 83.5 | 50 | I |
| | 2020.06- | ET | F | L | SUV FWD ZKX (ZK01) | | GCI83389 | Inner Joint | | 24 | 23 | 40 | 61.5 | 110.5 | |
| | 2020.06- | ET | F | R | SUV FWD ZKX (ZK01) | | GCI83388 | Inner Joint | | 24 | 23 | 29.8 | 290.5 | 110.5 | |
| EV (115 kw) | 2023.10- | ET | F | L | SUV FWD ZKW (ZK02) | | GDS56582 | Drive Shaft | | 25 | 24 | 56 | 83.5 | 675 | |
| | 2023.10- | ET | F | R | SUV FWD ZKW (ZK02) | | GDS56581 | Drive Shaft | | 25 | 24 | 56 | 83.5 | 902 | |
| EV (207 kw) | 2025.09- | ET | F | L | SUV FWD | | GDS56582 | Drive Shaft | | 25 | 24 | 56 | 83.5 | 675 | |
| | 2025.09- | ET | F | R | SUV FWD | | GDS56581 | Drive Shaft | | 25 | 24 | 56 | 83.5 | 902 | |
| **Mokka X** | | | | | | | | | | | | | | | |
| 1.4 (112 kw) | 2016.06-2019.12 | 6AT | F | L | SUV 4WD B 14 XFT | | GDS82044 | Drive Shaft | | 25 | 34 | 52.4 | 92 | 650 | |
| | 2016.06-2019.12 | 6AT | F | R | SUV 4WD B 14 XFT | | GDS86065 | Drive Shaft | | 25 | 34 | 52.4 | 92 | 585 | |
| | 2016.06-2019.12 | 6AT | F | L/R | SUV 4WD B 14 XFT | Vehicle Production Country:Spain | GCO21059 | Outer Joint | | 25 | 23 | 52.4 | 92 | 61 | I |
| | 2016.06-2019.12 | 6AT | F | L/R | SUV 4WD B 14 XFT | Vehicle Production Country:South Korea | GCO88077 | Outer Joint | | 25 | 23 | 52.5 | 92 | 59 | M |
| | 2016.06-2019.12 | 6AT | F | L | SUV 4WD B 14 XFT | | GCI81612 | Inner Joint | | 34 | 24 | 35 | 136.5 | 78 | |
| | 2016.06-2019.12 | 6AT | R | L/R | SUV 4WD B 14 XFT | | GDS82614 | Drive Shaft | | 25 | | 60 | 91.5 | 700 | |
| | 2016.06-2019.12 | 6AT | R | L/R | SUV 4WD B 14 XFT | | GCO83590 | Outer Joint | | 25 | 20 | 60 | 91.5 | 58 | M |
| | 2016.06-2019.12 | 6AT | R | L/R | SUV 4WD B 14 XFT | | GCI83731 | Inner Joint | | | 19 | | | 77 | |
| **Mokka/Mokka X** | | | | | | | | | | | | | | | |
| 1.4 (103 kw) | 2012.06-2019.12 | 6MT | F | L | SUV 4WD D 14 NET, B 14 NET, A 14 NET | | GDS21114 | Drive Shaft | | 25 | 25 | 52.4 | 92 | 603 | |
| | 2012.06-2019.12 | 6MT | F | R | SUV 4WD D 14 NET, B 14 NET, A 14 NET | For RPO/POC:MR5 | GDS21094 | Drive Shaft | | 25 | 34 | 52.4 | 92 | 587 | |
| | 2012.06-2019.12 | 6MT | F | R | SUV 4WD D 14 NET, B 14 NET, A 14 NET | For RPO/POC:M7Y | GDS86065 | Drive Shaft | | 25 | 34 | 52.4 | 92 | 585 | |
| | 2012.06-2019.12 | 6MT | F | L/R | SUV 4WD D 14 NET, B 14 NET, A 14 NET | Enginecode:A14NET/B14NET | GCO21059 | Outer Joint | | 25 | 23 | 52.4 | 92 | 61 | I |
| | 2012.06-2019.12 | 6MT | F | L | SUV 4WD D 14 NET, B 14 NET, A 14 NET | | GCI86028 | Inner Joint | | 25 | 24 | 34.9 | 57 | 101 | |
| | 2012.06-2019.12 | 6MT | R | L/R | SUV 4WD D 14 NET, B 14 NET, A 14 NET | | GDS82614 | Drive Shaft | | 25 | | 60 | 91.5 | 700 | |
| | 2012.06-2019.12 | 6MT | R | L/R | SUV 4WD D 14 NET, B 14 NET, A 14 NET | | GCO83590 | Outer Joint | | 25 | 20 | 60 | 91.5 | 58 | M |
| | 2012.06-2019.12 | 6MT | R | L/R | SUV 4WD D 14 NET, B 14 NET, A 14 NET | | GCI83731 | Inner Joint | | | 19 | | | 77 | |
| | 2013.04-2019.12 | 6AT | F | L | SUV FWD D 14 NET, B 14 NET, A 14 NET | | GDS82044 | Drive Shaft | | 25 | 34 | 52.4 | 92 | 650 | |
| | 2013.04-2019.12 | 6AT | F | R | SUV FWD D 14 NET, B 14 NET, A 14 NET | Neoprene;Inner Joint TJ | GDS21094 | Drive Shaft | | 25 | 34 | 52.4 | 92 | 587 | |
| | 2013.04-2019.12 | 6AT | F | R | SUV FWD D 14 NET, B 14 NET, A 14 NET | Chassis no. from:HB000001;Vehicle Production Country:Republic of Korea | GDS81761 | Drive Shaft | | 25 | 34 | 52.5 | 92 | 584 | |
| | 2013.04-2019.12 | 6AT | F | L | SUV FWD D 14 NET, B 14 NET, A 14 NET | TJ | GCI81612 | Inner Joint | | 34 | 24 | 35 | 136.5 | 78 | |
| | 2013.04-2019.12 | 6AT/6MT | F | R | SUV FWD D 14 NET, B 14 NET, A 14 NET | | GDS86065 | Drive Shaft | | 25 | 34 | 52.4 | 92 | 585 | |
| | 2013.04-2019.12 | 6AT/6MT | F | L/R | SUV FWD D 14 NET, B 14 NET, A 14 NET | Enginecode:A14NET/B14NET | GCO21059 | Outer Joint | | 25 | 23 | 52.4 | 92 | 61 | I |
| | 2013.04-2019.12 | 6MT | F | L | SUV FWD D 14 NET, B 14 NET, A 14 NET | | GDS21114 | Drive Shaft | | 25 | 25 | 52.4 | 92 | 603 | |
| | 2013.04-2019.12 | 6MT | F | L | SUV FWD D 14 NET, B 14 NET, A 14 NET | | GCI86028 | Inner Joint | | 25 | 24 | 34.9 | 57 | 101 | |
| 1.6 (81 kw) | 2015.06-2019.12 | 6MT | F | L | SUV FWD B 16 DTN, B 16 DTU | | GDS21114 | Drive Shaft | | 25 | 25 | 52.4 | 92 | 603 | |
| | 2015.06-2019.12 | 6MT | F | R | SUV FWD B 16 DTN, B 16 DTU | Neoprene;Inner Joint TJ | GDS21094 | Drive Shaft | | 25 | 34 | 52.4 | 92 | 587 | |
| | 2015.06-2019.12 | 6MT | F | R | SUV FWD B 16 DTN, B 16 DTU | | GDS86065 | Drive Shaft | | 25 | 34 | 52.4 | 92 | 585 | |
| | 2015.06-2019.12 | 6MT | F | L/R | SUV FWD B 16 DTN, B 16 DTU | Enginecode:B16DTN | GCO21059 | Outer Joint | | 25 | 23 | 52.4 | 92 | 61 | I |
| | 2015.06-2019.12 | 6MT | F | L | SUV FWD B 16 DTN, B 16 DTU | | GCI86028 | Inner Joint | | 25 | 24 | 34.9 | 57 | 101 | |
| 1.6 (85 kw) | 2012.06-2019.12 | 5MT | F | L | SUV FWD B 16 XER, D 16 XER, A 16 XER | | GDS81425 | Drive Shaft | | 25 | 34 | 52.5 | 92 | 625 | |
| | 2012.06-2019.12 | 5MT | F | R | SUV FWD B 16 XER, D 16 XER, A 16 XER | Date To:2012.07 | GDS81761 | Drive Shaft | | 25 | 34 | 52.5 | 92 | 584 | |
| | 2012.06-2019.12 | 5MT | F | L/R | SUV FWD B 16 XER, D 16 XER, A 16 XER | | GCO88077 | Outer Joint | | 25 | 23 | 52.5 | 92 | 59 | M |
| | 2012.06-2019.12 | 5MT | F | L | SUV FWD B 16 XER, D 16 XER, A 16 XER | | GCI88070 | Inner Joint | | 34 | 23 | 35 | 56 | 99.5 | |
| | 2012.06-2019.12 | 5MT | F | R | SUV FWD B 16 XER, D 16 XER, A 16 XER | | GCI88071 | Inner Joint | | 34 | 23 | 41 | | 120 | |
| 1.6 (100 kw) | 2015.01-2019.12 | 6MT | F | L | SUV 4WD A 16 DTH, B 16 DTH, D 16 DTH | | GDS21114 | Drive Shaft | | 25 | 25 | 52.4 | 92 | 603 | |
| | 2015.01-2019.12 | 6MT | F | R | SUV 4WD A 16 DTH, B 16 DTH, D 16 DTH | | GDS86065 | Drive Shaft | | 25 | 34 | 52.4 | 92 | 585 | |
| | 2015.01-2019.12 | 6MT | F | L/R | SUV 4WD A 16 DTH, B 16 DTH, D 16 DTH | Enginecode:A16DTH/B16DTH | GCO21059 | Outer Joint | | 25 | 23 | 52.4 | 92 | 61 | I |
| | 2015.01-2019.12 | 6MT | F | L | SUV 4WD A 16 DTH, B 16 DTH, D 16 DTH | | GCI86028 | Inner Joint | | 25 | 24 | 34.9 | 57 | 101 | |
| | 2015.01-2019.12 | 6MT | R | L/R | SUV 4WD A 16 DTH, B 16 DTH, D 16 DTH | | GDS82614 | Drive Shaft | | 25 | | 60 | 91.5 | 700 | |
| | 2015.01-2019.12 | 6MT | R | L/R | SUV 4WD A 16 DTH, B 16 DTH, D 16 DTH | | GCO83590 | Outer Joint | | 25 | 20 | 60 | 91.5 | 58 | M |
| | 2015.01-2019.12 | 6MT | R | L/R | SUV 4WD A 16 DTH, B 16 DTH, D 16 DTH | | GCI83731 | Inner Joint | | | 19 | | | 77 | |
| | 2015.01-2019.12 | 6AT | F | L | SUV FWD A 16 DTH, B 16 DTH, D 16 DTH | | GDS86064 | Drive Shaft | | 25 | 34 | 52.4 | 92 | 646 | |
| | 2015.01-2019.12 | 6AT/6MT | F | R | SUV FWD A 16 DTH, B 16 DTH, D 16 DTH | | GDS21094 | Drive Shaft | | 25 | 34 | 52.4 | 92 | 587 | |
| | 2015.01-2019.12 | 6AT/6MT | F | R | SUV FWD A 16 DTH, B 16 DTH, D 16 DTH | | GDS86065 | Drive Shaft | | 25 | 34 | 52.4 | 92 | 585 | |
| | 2015.01-2019.12 | 6AT/6MT | F | L/R | SUV FWD A 16 DTH, B 16 DTH, D 16 DTH | Enginecode:A16DTH/B16DTH | GCO21059 | Outer Joint | | 25 | 23 | 52.4 | 92 | 61 | I |
| | 2015.01-2019.12 | 6AT/6MT | F | L | SUV FWD A 16 DTH, B 16 DTH, D 16 DTH | | GCI81612 | Inner Joint | | 34 | 24 | 35 | 136.5 | 78 | |
| | 2015.01-2019.12 | 6MT | F | L | SUV FWD A 16 DTH, B 16 DTH, D 16 DTH | | GDS21114 | Drive Shaft | | 25 | 25 | 52.4 | 92 | 603 | |
| | 2015.01-2019.12 | 6MT | F | L | SUV FWD A 16 DTH, B 16 DTH, D 16 DTH | | GCI86028 | Inner Joint | | 25 | 24 | 34.9 | 57 | 101 | |
| **Movano** | | | | | | | | | | | | | | | |
| 1.9 (60 kw) | 2001.10-2010.05 | 5MT | F | L | Bus FWD F9Q 774 | | GDS50010 | Drive Shaft | | 28 | | 67.1 | 93.5 | 669 | |
| | 2001.10-2010.05 | 5MT | F | L | Bus FWD F9Q 774 | | GCO50014 | Outer Joint | | 28 | 27 | 67.1 | 93.5 | 64.5 | I |
| | 2001.10-2010.05 | MT | F | L | Bus FWD F9Q 774 | Date from:2003.11;Date to:2006.12 | GDS50246 | Drive Shaft | | 28 | 37 | 65 | 96 | 644 | |
| | 2001.10-2010.05 | 5MT | F | L | Van FWD F9Q 774 | | GDS50010 | Drive Shaft | | 28 | | 67.1 | 93.5 | 669 | |

| | YEAR | TRANSM. | F/R | L/R | BODY STYLE & DRIVE TYPE & ENGINE | REMARKS | G-AP Ref. | PRODUCT | ABS | Technical Specifications A | B | C | H | L | P |
|---|---|---|---|---|---|---|---|---|---|---|---|---|---|---|---|
| **VAUXHALL** **Movano** | | | | | | | | | | | | | | | |
| 1.9 (60 kw) | 2001.10-2010.05 | 5MT | F | L | Van FWD F9Q 774 | | GDS50246 | Drive Shaft | | 28 | 37 | 65 | 96 | 644 | |
| | 2001.10-2010.05 | MT | F | L | Van FWD F9Q 774 | Date from:2003.11;Date to:2006.12;Trans. code:PK5 | GDS44005 | Drive Shaft | 51T | 28 | 37 | 65 | 96 | 670 | |
| | 2001.10-2010.05 | MT | F | R | Van FWD F9Q 774 | Date from:2003.11;Date to:2006.12 | GDS50060 | Drive Shaft | 51T | 28 | 39 | 65 | 96 | 1126 | |
| | 2001.10-2010.05 | MT | F | L/R | Van FWD F9Q 774 | Trans. code:PF1/PK5 | GCO44026 | Outer Joint | 51T | 28 | 36 | 65 | 96 | 71 | I |
| 2.2 (66 kw) | 2000.09-2010.05 | 5MT | F | L | Bus FWD G9T 720, G9T 722, G9T 750 | | GDS50010 | Drive Shaft | | 28 | | 67.1 | 93.5 | 669 | |
| | 2000.09-2010.05 | 5MT | F | L | Bus FWD G9T 720, G9T 722, G9T 750 | For Engine code:G9T750 | GDS50166 | Drive Shaft | 51T | 28 | 37 | 65 | 96 | 663 | |
| | 2000.09-2010.05 | 5MT | F | L/R | Bus FWD G9T 720, G9T 722, G9T 750 | | GCO44026 | Outer Joint | 51T | 28 | 36 | 65 | 96 | 71 | I |
| | 2000.09-2010.05 | MT | F | L | Bus FWD G9T 720, G9T 722, G9T 750 | Date to:2006.09;Trans. code:PF1 | GDS44005 | Drive Shaft | 51T | 28 | 37 | 65 | 96 | 670 | |
| | 2000.09-2010.05 | MT | F | R | Bus FWD G9T 720, G9T 722, G9T 750 | Date to:2006.09;Trans. code:PF1 | GDS44016 | Drive Shaft | 51T | 28 | 39 | 65 | 96 | 1132 | |
| | 2000.09-2010.05 | MT | F | R | Bus FWD G9T 720, G9T 722, G9T 750 | Date to:2006.09;Trans. code:PF1 | GDS50214 | Drive Shaft | | 28 | 39 | 65 | 96 | 1132 | |
| | 2000.09-2010.05 | 5MT | F | L | Platform/Chassis FWD G9T 720, G9T 722, G9T 750 | | GDS50010 | Drive Shaft | | 28 | | 67.1 | 93.5 | 669 | |
| | 2000.09-2010.05 | 5MT | F | L/R | Platform/Chassis FWD G9T 720, G9T 722, G9T 750 | | GCO44026 | Outer Joint | 51T | 28 | 36 | 65 | 96 | 71 | I |
| | 2000.09-2010.05 | MT | F | L | Platform/Chassis FWD G9T 720, G9T 722, G9T 750 | Date to:2006.09;Trans. code:PF1 | GDS44005 | Drive Shaft | 51T | 28 | 37 | 65 | 96 | 670 | |
| | 2000.09-2010.05 | MT | F | R | Platform/Chassis FWD G9T 720, G9T 722, G9T 750 | Date to:2006.09;Trans. code:PF1 | GDS44016 | Drive Shaft | 51T | 28 | 39 | 65 | 96 | 1132 | |
| | 2000.09-2010.05 | MT | F | R | Platform/Chassis FWD G9T 720, G9T 722, G9T 750 | Date to:2006.09;Trans. code:PF1 | GDS50214 | Drive Shaft | | 28 | 39 | 65 | 96 | 1132 | |
| | 2000.09-2010.05 | 5MT | F | L | Van FWD G9T 720, G9T 722, G9T 750 | | GDS50010 | Drive Shaft | | 28 | | 67.1 | 93.5 | 669 | |
| | 2000.09-2010.05 | 5MT | F | L | Van FWD G9T 720, G9T 722, G9T 750 | For Engine code:G9T750 | GDS50166 | Drive Shaft | 51T | 28 | 37 | 65 | 96 | 663 | |
| | 2000.09-2010.05 | MT | F | L | Van FWD G9T 720, G9T 722, G9T 750 | Date to:2006.06;Trans. code:PF1 | GDS44005 | Drive Shaft | 51T | 28 | 37 | 65 | 96 | 670 | |
| | 2000.09-2010.05 | MT | F | R | Van FWD G9T 720, G9T 722, G9T 750 | Date to:2006.06;Trans. code:PF1 | GDS44016 | Drive Shaft | 51T | 28 | 39 | 65 | 96 | 1132 | |
| | 2000.09-2010.05 | MT | F | R | Van FWD G9T 720, G9T 722, G9T 750 | Date to:2006.06;Trans. code:PF1 | GDS50214 | Drive Shaft | | 28 | 39 | 65 | 96 | 1132 | |
| | 2000.09-2010.05 | MT | F | L/R | Van FWD G9T 720, G9T 722, G9T 750 | Trans. code:PF1 | GCO44026 | Outer Joint | 51T | 28 | 36 | 65 | 96 | 71 | I |
| 2.2 (88 kw) | 2022.12-2023.10 | 6MT | F | L | Van FWD 4HA (DW12RUE) | | GDS83907 | Drive Shaft | | 35 | 41 | 71.5 | 127 | 822 | |
| | 2022.12-2023.10 | 6MT | F | R | Van FWD 4HA (DW12RUE) | | GDS83906 | Drive Shaft | | 35 | 41 | 71.5 | 127 | 1125 | |
| | 2022.12-2023.10 | 6MT | F | R | Van FWD 4HA (DW12RUE) | | GCI82445 | Inner Joint | | 41 | 29 | 34.85 | 372 | 110 | |
| 2.2 (103 kw) | 2021.12-2023.10 | 6MT | F | L | Van FWD 4HB (DW12RUD) | | GDS56467 | Drive Shaft | | 35 | 41 | 71.5 | 127 | 824 | |
| | 2021.12-2023.10 | 6MT | F | R | Van FWD 4HB (DW12RUD) | | GDS57538 | Drive Shaft | | 35 | 41 | 71.5 | 127 | 1127 | |
| | 2021.12-2023.10 | 6MT | F | L | Van FWD 4HB (DW12RUD) | | GCI17028 | Inner Joint | | 41 | 29 | 43 | 69.5 | 109.5 | |
| | 2021.12-2025.04 | 6MT | F | L | Platform/Chassis FWD 4HB (DW12RUD) | | GDS56467 | Drive Shaft | | 35 | 41 | 71.5 | 127 | 824 | |
| | 2021.12-2025.04 | 6MT | F | R | Platform/Chassis FWD 4HB (DW12RUD) | | GDS57538 | Drive Shaft | | 35 | 41 | 71.5 | 127 | 1127 | |
| | 2021.12-2025.04 | 6MT | F | L | Platform/Chassis FWD 4HB (DW12RUD) | | GCI17028 | Inner Joint | | 41 | 29 | 43 | 69.5 | 109.5 | |
| 2.2 (121 kw) | 2021.12-2023.10 | 6MT | F | L | Van FWD 4HH (DW12RUC) | | GDS56467 | Drive Shaft | | 35 | 41 | 71.5 | 127 | 824 | |
| | 2021.12-2023.10 | 6MT | F | R | Van FWD 4HH (DW12RUC) | | GDS57538 | Drive Shaft | | 35 | 41 | 71.5 | 127 | 1127 | |
| | 2021.12-2023.10 | 6MT | F | L | Van FWD 4HH (DW12RUC) | | GCI17028 | Inner Joint | | 41 | 29 | 43 | 69.5 | 109.5 | |
| | 2022.12-2023.10 | 6MT | F | L | Platform/Chassis FWD 4HH (DW12RUC) | | GDS56467 | Drive Shaft | | 35 | 41 | 71.5 | 127 | 824 | |
| | 2022.12-2023.10 | 6MT | F | R | Platform/Chassis FWD 4HH (DW12RUC) | | GDS57538 | Drive Shaft | | 35 | 41 | 71.5 | 127 | 1127 | |
| | 2022.12-2023.10 | 6MT | F | L | Platform/Chassis FWD 4HH (DW12RUC) | | GCI17028 | Inner Joint | | 41 | 29 | 43 | 69.5 | 109.5 | |
| 2.3 (74 kw) | 2010.05-2015.05 | 6MT | F | L | Platform/Chassis FWD M9T 676;M9T 670;M9T 672;M9T 870 | | GDS18247 | Drive Shaft | | 31 | 39 | 70 | 100.5 | 743 | |
| | 2010.05-2015.05 | 6MT | F | R | Platform/Chassis FWD M9T 676;M9T 670;M9T 672;M9T 870 | Date to:2014.02 | GDS18248 | Drive Shaft | | 31 | 39 | 70 | 100.5 | 1075 | |
| | 2010.05-2015.05 | 6MT | F | R | Platform/Chassis FWD M9T 676;M9T 670;M9T 672;M9T 870 | Date from:2014.03,Date to:2019.07 | GDS18515 | Drive Shaft | | 31 | 39 | 70 | 101 | 1077 | |
| | 2010.05-2015.05 | 6MT | F | R | Platform/Chassis FWD M9T 676;M9T 670;M9T 672;M9T 870 | Date From:2014.03,Date To:2019.07 | GCO18289 | Outer Joint | | 31 | 36 | 70 | 101 | 69 | I |
| | 2010.05-2015.05 | 6MT | F | L/R | Platform/Chassis FWD M9T 676;M9T 670;M9T 672;M9T 870 | | GCO50132 | Outer Joint | | 31 | 27 | 70 | 100.5 | 63.5 | I |
| | 2010.05-2015.05 | 6MT | F | L | Platform/Chassis FWD M9T 676;M9T 670;M9T 672;M9T 870 | | GCI50045 | Inner Joint | | 39 | 27 | 39 | 74 | 109 | |
| | 2010.05-2015.05 | 6MT | F | R | Platform/Chassis FWD M9T 676;M9T 670;M9T 672;M9T 870 | Date to:2014.02 | GCI50046 | Inner Joint | | 39 | 27 | 30 | 364 | 87 | |
| | 2010.05-2015.05 | 6MT | F | L | Van FWD M9T 676;M9T 670;M9T 672;M9T 870 | | GDS18247 | Drive Shaft | | 31 | 39 | 70 | 100.5 | 743 | |
| | 2010.05-2015.05 | 6MT | F | R | Van FWD M9T 676;M9T 670;M9T 672;M9T 870 | Date to:2014.02 | GDS18248 | Drive Shaft | | 31 | 39 | 70 | 100.5 | 1075 | |
| | 2010.05-2015.05 | 6MT | F | R | Van FWD M9T 676;M9T 670;M9T 672;M9T 870 | Date from:2014.03 | GDS18515 | Drive Shaft | | 31 | 39 | 70 | 101 | 1077 | |
| | 2010.05-2015.05 | 6MT | F | R | Van FWD M9T 676;M9T 670;M9T 672;M9T 870 | Date From:2014.03 | GCO18289 | Outer Joint | | 31 | 36 | 70 | 101 | 69 | I |
| | 2010.05-2015.05 | 6MT | F | L/R | Van FWD M9T 676;M9T 670;M9T 672;M9T 870 | | GCO50132 | Outer Joint | | 31 | 27 | 70 | 100.5 | 63.5 | I |
| | 2010.05-2015.05 | 6MT | F | L | Van FWD M9T 676;M9T 670;M9T 672;M9T 870 | | GCI50045 | Inner Joint | | 39 | 27 | 39 | 74 | 109 | |
| | 2010.05-2015.05 | 6MT | F | R | Van FWD M9T 676;M9T 670;M9T 672;M9T 870 | Date to:2014.02 | GCI50046 | Inner Joint | | 39 | 27 | 30 | 364 | 87 | |
| | 2010.05-2015.12 | 6MT | F | L | Bus FWD M9T 676;M9T 670;M9T 672 | | GDS18247 | Drive Shaft | | 31 | 39 | 70 | 100.5 | 743 | |
| | 2010.05-2015.12 | 6MT | F | R | Bus FWD M9T 676;M9T 670;M9T 672 | Date to:2014.02 | GDS18248 | Drive Shaft | | 31 | 39 | 70 | 100.5 | 1075 | |
| | 2010.05-2015.12 | 6MT | F | R | Bus FWD M9T 676;M9T 670;M9T 672 | Date from:2014.03,Date to:2019.07 | GDS18515 | Drive Shaft | | 31 | 39 | 70 | 101 | 1077 | |
| | 2010.05-2015.12 | 6MT | F | R | Bus FWD M9T 676;M9T 670;M9T 672 | Date From:2014.03,Date To:2019.07 | GCO18289 | Outer Joint | | 31 | 36 | 70 | 101 | 69 | I |
| | 2010.05-2015.12 | 6MT | F | L/R | Bus FWD M9T 676;M9T 670;M9T 672 | | GCO50132 | Outer Joint | | 31 | 27 | 70 | 100.5 | 63.5 | I |
| | 2010.05-2015.12 | 6MT | F | L | Bus FWD M9T 676;M9T 670;M9T 672 | | GCI50045 | Inner Joint | | 39 | 27 | 39 | 74 | 109 | |
| | 2010.05-2015.12 | 6MT | F | R | Bus FWD M9T 676;M9T 670;M9T 672 | Date to:2014.02 | GCI50046 | Inner Joint | | 39 | 27 | 30 | 364 | 87 | |
| 2.3 (81 kw) | 2014.05-2019.07 | 6MT | F | L | Bus FWD M9T 870;M9T 704 | | GDS18247 | Drive Shaft | | 31 | 39 | 70 | 100.5 | 743 | |
| | 2014.05-2019.07 | 6MT | F | R | Bus FWD M9T 870;M9T 704 | Date To:2019.07 | GDS18515 | Drive Shaft | | 31 | 39 | 70 | 101 | 1077 | |
| | 2014.05-2019.07 | 6MT | F | L | Bus FWD M9T 870;M9T 704 | | GCO50132 | Outer Joint | | 31 | 27 | 70 | 100.5 | 63.5 | I |
| | 2014.05-2019.07 | 6MT | F | R | Bus FWD M9T 870;M9T 704 | Date To:2019.07 | GCO18289 | Outer Joint | | 31 | 36 | 70 | 101 | 69 | I |
| | 2014.05-2019.07 | 6MT | F | L | Bus FWD M9T 870;M9T 704 | | GCI50045 | Inner Joint | | 39 | 27 | 39 | 74 | 109 | |
| | 2014.05-2019.07 | 6MT | F | L | Platform/Chassis FWD M9T 870;M9T 704 | | GDS18247 | Drive Shaft | | 31 | 39 | 70 | 100.5 | 743 | |
| | 2014.05-2019.07 | 6MT | F | R | Platform/Chassis FWD M9T 870;M9T 704 | Date To:2019.07 | GDS18515 | Drive Shaft | | 31 | 39 | 70 | 101 | 1077 | |
| | 2014.05-2019.07 | 6MT | F | L | Platform/Chassis FWD M9T 870;M9T 704 | | GCO50132 | Outer Joint | | 31 | 27 | 70 | 100.5 | 63.5 | I |

| | YEAR | TRANSM. | F/R | L/R | BODY STYLE & DRIVE TYPE & ENGINE | REMARKS | G-AP Ref. | PRODUCT | ABS | Technical Specifications A | B | C | H | L | P |
|---|---|---|---|---|---|---|---|---|---|---|---|---|---|---|---|
| **VAUXHALL** **Movano** | | | | | | | | | | | | | | | |
| 2.3 (81 kw) | 2014.05-2019.07 | 6MT | F | R | Platform/Chassis FWD M9T 870;M9T 704 | Date To:2019.07 | GCO18289 | Outer Joint | | 31 | 36 | 70 | 101 | 69 | I |
| | 2014.05-2019.07 | 6MT | F | L | Platform/Chassis FWD M9T 870;M9T 704 | | GCI50045 | Inner Joint | | 39 | 27 | 39 | 74 | 109 | |
| | 2014.05-2019.07 | 6MT | F | L | Van FWD M9T 870;M9T 704 | | GDS18247 | Drive Shaft | | 31 | 39 | 70 | 100.5 | 743 | |
| | 2014.05-2019.07 | 6MT | F | R | Van FWD M9T 870;M9T 704 | Date To:2019.07 | GDS18515 | Drive Shaft | | 31 | 39 | 70 | 101 | 1077 | |
| | 2014.05-2019.07 | 6MT | F | L | Van FWD M9T 870;M9T 704 | | GCO50132 | Outer Joint | | 31 | 27 | 70 | 100.5 | 63.5 | I |
| | 2014.05-2019.07 | 6MT | F | R | Van FWD M9T 870;M9T 704 | Date To:2019.07 | GCO18289 | Outer Joint | | 31 | 36 | 70 | 101 | 69 | I |
| | 2014.05-2019.07 | 6MT | F | L | Van FWD M9T 870;M9T 704 | | GCI50045 | Inner Joint | | 39 | 27 | 39 | 74 | 109 | |
| 2.3 (92 kw) | 2010.05-2015.05 | 6AT/6MT | F | R | Platform/Chassis FWD M9T 676;M9T 670;M9T 680;M9T 696;M9T 672;M9T 876 | Date from:2014.03,Date to:2019.07 | GDS18515 | Drive Shaft | | 31 | 39 | 70 | 101 | 1077 | |
| | 2010.05-2015.05 | 6AT/6MT | F | R | Platform/Chassis FWD M9T 676;M9T 670;M9T 680;M9T 696;M9T 672;M9T 876 | Date From:2014.03,Date To:2019.07 | GCO18289 | Outer Joint | | 31 | 36 | 70 | 101 | 69 | I |
| | 2010.05-2015.05 | MT | F | L | Platform/Chassis FWD M9T 676;M9T 670;M9T 680;M9T 696;M9T 672;M9T 876 | | GDS18247 | Drive Shaft | | 31 | 39 | 70 | 100.5 | 743 | |
| | 2010.05-2015.05 | MT | F | R | Platform/Chassis FWD M9T 676;M9T 670;M9T 680;M9T 696;M9T 672;M9T 876 | Date to:2014.02 | GDS18248 | Drive Shaft | | 31 | 39 | 70 | 100.5 | 1075 | |
| | 2010.05-2015.05 | MT | F | L/R | Platform/Chassis FWD M9T 676;M9T 670;M9T 680;M9T 696;M9T 672;M9T 876 | | GCO50132 | Outer Joint | | 31 | 27 | 70 | 100.5 | 63.5 | I |
| | 2010.05-2015.05 | MT | F | L | Platform/Chassis FWD M9T 676;M9T 670;M9T 680;M9T 696;M9T 672;M9T 876 | | GCI50045 | Inner Joint | | 39 | 27 | 39 | 74 | 109 | |
| | 2010.05-2015.05 | MT | F | R | Platform/Chassis FWD M9T 676;M9T 670;M9T 680;M9T 696;M9T 672;M9T 876 | Date to:2014.02 | GCI50046 | Inner Joint | | 39 | 27 | 30 | 364 | 87 | |
| | 2010.05-2015.05 | 6AT/6MT | F | L | Van FWD M9T 676;M9T 670;M9T 680;M9T 672;M9T 876 | | GDS18247 | Drive Shaft | | 31 | 39 | 70 | 100.5 | 743 | |
| | 2010.05-2015.05 | 6AT/6MT | F | R | Van FWD M9T 676;M9T 670;M9T 680;M9T 672;M9T 876 | Date to:2014.02 | GDS18248 | Drive Shaft | | 31 | 39 | 70 | 100.5 | 1075 | |
| | 2010.05-2015.05 | 6AT/6MT | F | R | Van FWD M9T 676;M9T 670;M9T 680;M9T 672;M9T 876 | Date from:2014.03,Date to:2019.07 | GDS18515 | Drive Shaft | | 31 | 39 | 70 | 101 | 1077 | |
| | 2010.05-2015.05 | 6AT/6MT | F | R | Van FWD M9T 676;M9T 670;M9T 680;M9T 672;M9T 876 | Date From:2014.03,Date To:2019.07 | GCO18289 | Outer Joint | | 31 | 36 | 70 | 101 | 69 | I |
| | 2010.05-2015.05 | 6AT/6MT | F | L/R | Van FWD M9T 676;M9T 670;M9T 680;M9T 672;M9T 876 | | GCO50132 | Outer Joint | | 31 | 27 | 70 | 100.5 | 63.5 | I |
| | 2010.05-2015.05 | 6AT/6MT | F | L | Van FWD M9T 676;M9T 670;M9T 680;M9T 672;M9T 876 | | GCI50045 | Inner Joint | | 39 | 27 | 39 | 74 | 109 | |
| | 2010.05-2015.05 | 6AT/6MT | F | R | Van FWD M9T 676;M9T 670;M9T 680;M9T 672;M9T 876 | Date to:2014.02 | GCI50046 | Inner Joint | | 39 | 27 | 30 | 364 | 87 | |
| | 2010.05-2015.12 | 6AT/6MT | F | L | Bus FWD M9T 676;M9T 670;M9T 680;M9T 672;M9T 876 | | GDS18247 | Drive Shaft | | 31 | 39 | 70 | 100.5 | 743 | |
| | 2010.05-2015.12 | 6AT/6MT | F | R | Bus FWD M9T 676;M9T 670;M9T 680;M9T 672;M9T 876 | Date to:2014.02 | GDS18248 | Drive Shaft | | 31 | 39 | 70 | 100.5 | 1075 | |
| | 2010.05-2015.12 | 6AT/6MT | F | R | Bus FWD M9T 676;M9T 670;M9T 680;M9T 672;M9T 876 | Date from:2014.03,Date to:2019.07 | GDS18515 | Drive Shaft | | 31 | 39 | 70 | 101 | 1077 | |
| | 2010.05-2015.12 | 6AT/6MT | F | R | Bus FWD M9T 676;M9T 670;M9T 680;M9T 672;M9T 876 | Date From:2014.03,Date To:2019.07 | GCO18289 | Outer Joint | | 31 | 36 | 70 | 101 | 69 | I |
| | 2010.05-2015.12 | 6AT/6MT | F | L/R | Bus FWD M9T 676;M9T 670;M9T 680;M9T 672;M9T 876 | | GCO50132 | Outer Joint | | 31 | 27 | 70 | 100.5 | 63.5 | I |
| | 2010.05-2015.12 | 6AT/6MT | F | L | Bus FWD M9T 676;M9T 670;M9T 680;M9T 672;M9T 876 | | GCI50045 | Inner Joint | | 39 | 27 | 39 | 74 | 109 | |
| | 2010.05-2015.12 | 6AT/6MT | F | R | Bus FWD M9T 676;M9T 670;M9T 680;M9T 672;M9T 876 | Date to:2014.02 | GCI50046 | Inner Joint | | 39 | 27 | 30 | 364 | 87 | |
| 2.3 (96 kw) | 2016.10-2020.04 | 6MT | F | L | Platform/Chassis FWD M9T 704 | | GDS18247 | Drive Shaft | | 31 | 39 | 70 | 100.5 | 743 | |
| | 2016.10-2020.04 | 6MT | F | R | Platform/Chassis FWD M9T 704 | Date To:2019.07 | GDS18515 | Drive Shaft | | 31 | 39 | 70 | 101 | 1077 | |
| | 2016.10-2020.04 | 6MT | F | R | Platform/Chassis FWD M9T 704 | Date from:2019.08 | GDS57562 | Drive Shaft | | 31 | 39 | 70 | 101 | 1085 | |
| | 2016.10-2020.04 | 6MT | F | L | Platform/Chassis FWD M9T 704 | | GCO50132 | Outer Joint | | 31 | 27 | 70 | 100.5 | 63.5 | I |
| | 2016.10-2020.04 | 6MT | F | R | Platform/Chassis FWD M9T 704 | Date To:2019.07 | GCO18289 | Outer Joint | | 31 | 36 | 70 | 101 | 69 | I |
| | 2016.10-2020.04 | 6MT | F | L | Platform/Chassis FWD M9T 704 | | GCI50045 | Inner Joint | | 39 | 27 | 39 | 74 | 109 | |
| | 2016.10-2020.04 | 6MT | F | L | Van FWD M9T 704 | | GDS18247 | Drive Shaft | | 31 | 39 | 70 | 100.5 | 743 | |
| | 2016.10-2020.04 | 6MT | F | R | Van FWD M9T 704 | Date To:2019.07 | GDS18515 | Drive Shaft | | 31 | 39 | 70 | 101 | 1077 | |
| | 2016.10-2020.04 | 6MT | F | R | Van FWD M9T 704 | Date from:2019.08 | GDS57562 | Drive Shaft | | 31 | 39 | 70 | 101 | 1085 | |
| | 2016.10-2020.04 | 6MT | F | L | Van FWD M9T 704 | | GCO50132 | Outer Joint | | 31 | 27 | 70 | 100.5 | 63.5 | I |
| | 2016.10-2020.04 | 6MT | F | R | Van FWD M9T 704 | Date To:2019.07 | GCO18289 | Outer Joint | | 31 | 36 | 70 | 101 | 69 | I |
| | 2016.10-2020.04 | 6MT | F | L | Van FWD M9T 704 | | GCI50045 | Inner Joint | | 39 | 27 | 39 | 74 | 109 | |
| 2.3 (100 kw) | 2014.05-2019.07 | MT | F | L | Bus FWD M9T 702 | | GDS18247 | Drive Shaft | | 31 | 39 | 70 | 100.5 | 743 | |
| | 2014.05-2019.07 | MT | F | R | Bus FWD M9T 702 | Date to:2019.07 | GDS18515 | Drive Shaft | | 31 | 39 | 70 | 101 | 1077 | |
| | 2014.05-2019.07 | MT | F | L | Bus FWD M9T 702 | | GCO50132 | Outer Joint | | 31 | 27 | 70 | 100.5 | 63.5 | I |
| | 2014.05-2019.07 | MT | F | R | Bus FWD M9T 702 | Date To:2019.07 | GCO18289 | Outer Joint | | 31 | 36 | 70 | 101 | 69 | I |
| | 2014.05-2019.07 | MT | F | L | Bus FWD M9T 702 | | GCI50045 | Inner Joint | | 39 | 27 | 39 | 74 | 109 | |
| | 2014.05-2021.12 | 6MT | F | R | Platform/Chassis FWD M9T 702;M9T 716 | Date from:2019.08 | GDS57562 | Drive Shaft | | 31 | 39 | 70 | 101 | 1085 | |
| | 2014.05-2021.12 | MT | F | L | Platform/Chassis FWD M9T 702;M9T 716 | | GDS18247 | Drive Shaft | | 31 | 39 | 70 | 100.5 | 743 | |
| | 2014.05-2021.12 | MT | F | R | Platform/Chassis FWD M9T 702;M9T 716 | Date to:2019.07 | GDS18515 | Drive Shaft | | 31 | 39 | 70 | 101 | 1077 | |
| | 2014.05-2021.12 | MT | F | L | Platform/Chassis FWD M9T 702;M9T 716 | | GCO50132 | Outer Joint | | 31 | 27 | 70 | 100.5 | 63.5 | I |
| | 2014.05-2021.12 | MT | F | R | Platform/Chassis FWD M9T 702;M9T 716 | Date To:2019.07 | GCO18289 | Outer Joint | | 31 | 36 | 70 | 101 | 69 | I |
| | 2014.05-2021.12 | MT | F | L | Platform/Chassis FWD M9T 702;M9T 716 | | GCI50045 | Inner Joint | | 39 | 27 | 39 | 74 | 109 | |
| | 2014.05-2021.12 | 6MT | F | R | Van FWD M9T 702;M9T 716 | Date from:2019.08 | GDS57562 | Drive Shaft | | 31 | 39 | 70 | 101 | 1085 | |
| | 2014.05-2021.12 | MT | F | L | Van FWD M9T 702;M9T 716 | | GDS18247 | Drive Shaft | | 31 | 39 | 70 | 100.5 | 743 | |
| | 2014.05-2021.12 | MT | F | R | Van FWD M9T 702;M9T 716 | Date to:2019.07 | GDS18515 | Drive Shaft | | 31 | 39 | 70 | 101 | 1077 | |
| | 2014.05-2021.12 | MT | F | L | Van FWD M9T 702;M9T 716 | | GCO50132 | Outer Joint | | 31 | 27 | 70 | 100.5 | 63.5 | I |
| | 2014.05-2021.12 | MT | F | R | Van FWD M9T 702;M9T 716 | Date To:2019.07 | GCO18289 | Outer Joint | | 31 | 36 | 70 | 101 | 69 | I |
| | 2014.05-2021.12 | MT | F | L | Van FWD M9T 702;M9T 716 | | GCI50045 | Inner Joint | | 39 | 27 | 39 | 74 | 109 | |
| 2.3 (107 kw) | 2010.05-2020.04 | 6MT | F | L | Bus FWD M9T 680;M9T 678;M9T 706 | | GDS18247 | Drive Shaft | | 31 | 39 | 70 | 100.5 | 743 | |
| | 2010.05-2020.04 | 6MT | F | R | Bus FWD M9T 680;M9T 678;M9T 706 | Date to:2014.02 | GDS18248 | Drive Shaft | | 31 | 39 | 70 | 100.5 | 1075 | |
| | 2010.05-2020.04 | 6MT | F | R | Bus FWD M9T 680;M9T 678;M9T 706 | Date from:2014.03,Date to:2019.07 | GDS18515 | Drive Shaft | | 31 | 39 | 70 | 101 | 1077 | |
| | 2010.05-2020.04 | 6MT | F | R | Bus FWD M9T 680;M9T 678;M9T 706 | Date from:2019.08 | GDS57562 | Drive Shaft | | 31 | 39 | 70 | 101 | 1085 | |
| | 2010.05-2020.04 | 6MT | F | R | Bus FWD M9T 680;M9T 678;M9T 706 | Date From:2014.03,Date To:2019.07 | GCO18289 | Outer Joint | | 31 | 36 | 70 | 101 | 69 | I |
| | 2010.05-2020.04 | 6MT | F | L/R | Bus FWD M9T 680;M9T 678;M9T 706 | | GCO50132 | Outer Joint | | 31 | 27 | 70 | 100.5 | 63.5 | I |
| | 2010.05-2020.04 | 6MT | F | L | Bus FWD M9T 680;M9T 678;M9T 706 | | GCI50045 | Inner Joint | | 39 | 27 | 39 | 74 | 109 | |
| | 2010.05-2020.04 | 6MT | F | R | Bus FWD M9T 680;M9T 678;M9T 706 | Date to:2014.02 | GCI50046 | Inner Joint | | 39 | 27 | 30 | 364 | 87 | |

| | YEAR | TRANSM. | F/R | L/R | BODY STYLE & DRIVE TYPE & ENGINE | REMARKS | G-AP Ref. | PRODUCT | ABS | Technical Specifications A | B | C | H | L | P |
|---|---|---|---|---|---|---|---|---|---|---|---|---|---|---|---|
| **VAUXHALL** **Movano** | | | | | | | | | | | | | | | |
| 2.3 (107 kw) | 2010.05-2021.12 | 6AT/6MT | F | R | Platform/Chassis FWD M9T 680;M9T 678;M9T 706 | Date from:2014.03,Date to:2019.07 | GDS18515 | Drive Shaft | | 31 | 39 | 70 | 101 | 1077 | |
| | 2010.05-2021.12 | 6AT/6MT | F | R | Platform/Chassis FWD M9T 680;M9T 678;M9T 706 | Date from:2019.08 | GDS57562 | Drive Shaft | | 31 | 39 | 70 | 101 | 1085 | |
| | 2010.05-2021.12 | 6AT/6MT | F | R | Platform/Chassis FWD M9T 680;M9T 678;M9T 706 | Date From:2014.03,Date To:2019.07 | GCO18289 | Outer Joint | | 31 | 36 | 70 | 101 | 69 | I |
| | 2010.05-2021.12 | AT/MT | F | L | Platform/Chassis FWD M9T 680;M9T 678;M9T 706 | | GDS18247 | Drive Shaft | | 31 | 39 | 70 | 100.5 | 743 | |
| | 2010.05-2021.12 | AT/MT | F | R | Platform/Chassis FWD M9T 680;M9T 678;M9T 706 | Date to:2014.02 | GDS18248 | Drive Shaft | | 31 | 39 | 70 | 100.5 | 1075 | |
| | 2010.05-2021.12 | AT/MT | F | L/R | Platform/Chassis FWD M9T 680;M9T 678;M9T 706 | | GCO50132 | Outer Joint | | 31 | 27 | 70 | 100.5 | 63.5 | I |
| | 2010.05-2021.12 | AT/MT | F | L | Platform/Chassis FWD M9T 680;M9T 678;M9T 706 | | GCI50045 | Inner Joint | | 39 | 27 | 39 | 74 | 109 | |
| | 2010.05-2021.12 | AT/MT | F | R | Platform/Chassis FWD M9T 680;M9T 678;M9T 706 | Date to:2014.02 | GCI50046 | Inner Joint | | 39 | 27 | 30 | 364 | 87 | |
| | 2010.05-2021.12 | 6AT/6MT | F | R | Van FWD M9T 680;M9T 678;M9T 706 | Date from:2014.03,Date to:2019.07 | GDS18515 | Drive Shaft | | 31 | 39 | 70 | 101 | 1077 | |
| | 2010.05-2021.12 | 6AT/6MT | F | R | Van FWD M9T 680;M9T 678;M9T 706 | Date from:2019.08 | GDS57562 | Drive Shaft | | 31 | 39 | 70 | 101 | 1085 | |
| | 2010.05-2021.12 | 6AT/6MT | F | R | Van FWD M9T 680;M9T 678;M9T 706 | Date From:2014.03,Date To:2019.07 | GCO18289 | Outer Joint | | 31 | 36 | 70 | 101 | 69 | I |
| | 2010.05-2021.12 | AT/MT | F | L | Van FWD M9T 680;M9T 678;M9T 706 | | GDS18247 | Drive Shaft | | 31 | 39 | 70 | 100.5 | 743 | |
| | 2010.05-2021.12 | AT/MT | F | R | Van FWD M9T 680;M9T 678;M9T 706 | Date to:2014.02 | GDS18248 | Drive Shaft | | 31 | 39 | 70 | 100.5 | 1075 | |
| | 2010.05-2021.12 | AT/MT | F | L/R | Van FWD M9T 680;M9T 678;M9T 706 | | GCO50132 | Outer Joint | | 31 | 27 | 70 | 100.5 | 63.5 | I |
| | 2010.05-2021.12 | AT/MT | F | L | Van FWD M9T 680;M9T 678;M9T 706 | | GCI50045 | Inner Joint | | 39 | 27 | 39 | 74 | 109 | |
| | 2010.05-2021.12 | AT/MT | F | R | Van FWD M9T 680;M9T 678;M9T 706 | Date to:2014.02 | GCI50046 | Inner Joint | | 39 | 27 | 30 | 364 | 87 | |
| 2.3 (110 kw) | 2019.08-2021.12 | 6MT | F | L | Platform/Chassis FWD M9T 716 | | GDS18247 | Drive Shaft | | 31 | 39 | 70 | 100.5 | 743 | |
| | 2019.08-2021.12 | 6MT | F | R | Platform/Chassis FWD M9T 716 | | GDS57562 | Drive Shaft | | 31 | 39 | 70 | 101 | 1085 | |
| | 2019.08-2021.12 | 6MT | F | L/R | Platform/Chassis FWD M9T 716 | | GCO18289 | Outer Joint | | 31 | 36 | 70 | 101 | 69 | I |
| | 2019.08-2021.12 | 6MT | F | L | Van FWD M9T 716 | | GDS18247 | Drive Shaft | | 31 | 39 | 70 | 100.5 | 743 | |
| | 2019.08-2021.12 | 6MT | F | R | Van FWD M9T 716 | | GDS57562 | Drive Shaft | | 31 | 39 | 70 | 101 | 1085 | |
| | 2019.08-2021.12 | 6MT | F | L/R | Van FWD M9T 716 | | GCO18289 | Outer Joint | | 31 | 36 | 70 | 101 | 69 | I |
| 2.3 (120 kw) | 2014.05-2021.12 | 6MT | F | R | Bus FWD M9T 702;M9T 708 | Date from:2019.08 | GDS57562 | Drive Shaft | | 31 | 39 | 70 | 101 | 1085 | |
| | 2014.05-2021.12 | MT | F | L | Bus FWD M9T 702;M9T 708 | | GDS18247 | Drive Shaft | | 31 | 39 | 70 | 100.5 | 743 | |
| | 2014.05-2021.12 | MT | F | R | Bus FWD M9T 702;M9T 708 | Date to:2019.07 | GDS18515 | Drive Shaft | | 31 | 39 | 70 | 101 | 1077 | |
| | 2014.05-2021.12 | MT | F | L | Bus FWD M9T 702;M9T 708 | | GCO50132 | Outer Joint | | 31 | 27 | 70 | 100.5 | 63.5 | I |
| | 2014.05-2021.12 | MT | F | R | Bus FWD M9T 702;M9T 708 | Date To:2019.07 | GCO18289 | Outer Joint | | 31 | 36 | 70 | 101 | 69 | I |
| | 2014.05-2021.12 | MT | F | L | Bus FWD M9T 702;M9T 708 | | GCI50045 | Inner Joint | | 39 | 27 | 39 | 74 | 109 | |
| | 2014.05-2021.12 | 6MT | F | R | Van FWD M9T 702;M9T 708 | Date from:2019.08 | GDS57562 | Drive Shaft | | 31 | 39 | 70 | 101 | 1085 | |
| | 2014.05-2021.12 | MT | F | L | Van FWD M9T 702;M9T 708 | | GDS18247 | Drive Shaft | | 31 | 39 | 70 | 100.5 | 743 | |
| | 2014.05-2021.12 | MT | F | R | Van FWD M9T 702;M9T 708 | Date to:2019.07 | GDS18515 | Drive Shaft | | 31 | 39 | 70 | 101 | 1077 | |
| | 2014.05-2021.12 | MT | F | L | Van FWD M9T 702;M9T 708 | | GCO50132 | Outer Joint | | 31 | 27 | 70 | 100.5 | 63.5 | I |
| | 2014.05-2021.12 | MT | F | R | Van FWD M9T 702;M9T 708 | Date To:2019.07 | GCO18289 | Outer Joint | | 31 | 36 | 70 | 101 | 69 | I |
| | 2014.05-2021.12 | MT | F | L | Van FWD M9T 702;M9T 708 | | GCI50045 | Inner Joint | | 39 | 27 | 39 | 74 | 109 | |
| | 2016.10-2021.12 | 6AT/6MT | F | L | Platform/Chassis FWD M9T 702;M9T 708 | | GDS18247 | Drive Shaft | | 31 | 39 | 70 | 100.5 | 743 | |
| | 2016.10-2021.12 | 6MT | F | L/R | Platform/Chassis FWD M9T 702;M9T 708 | | GCO18289 | Outer Joint | | 31 | 36 | 70 | 101 | 69 | I |
| 2.3 (125 kw) | 2015.07-2020.04 | 6MT | F | R | Bus FWD M9T 706 | Date from:2019.08 | GDS57562 | Drive Shaft | | 31 | 39 | 70 | 101 | 1085 | |
| | 2015.07-2020.04 | MT | F | L | Bus FWD M9T 706 | | GDS18247 | Drive Shaft | | 31 | 39 | 70 | 100.5 | 743 | |
| | 2015.07-2020.04 | MT | F | R | Bus FWD M9T 706 | Date To:2019.07 | GDS18515 | Drive Shaft | | 31 | 39 | 70 | 101 | 1077 | |
| | 2015.07-2020.04 | MT | F | L | Bus FWD M9T 706 | | GCO50132 | Outer Joint | | 31 | 27 | 70 | 100.5 | 63.5 | I |
| | 2015.07-2020.04 | MT | F | R | Bus FWD M9T 706 | Date To:2019.07 | GCO18289 | Outer Joint | | 31 | 36 | 70 | 101 | 69 | I |
| | 2015.07-2020.04 | MT | F | L | Bus FWD M9T 706 | | GCI50045 | Inner Joint | | 39 | 27 | 39 | 74 | 109 | |
| | 2016.11-2021.12 | 6MT | F | L | Platform/Chassis FWD M9T 706 | | GDS18247 | Drive Shaft | | 31 | 39 | 70 | 100.5 | 743 | |
| | 2016.11-2021.12 | 6MT | F | R | Platform/Chassis FWD M9T 706 | Date To:2019.07 | GDS18515 | Drive Shaft | | 31 | 39 | 70 | 101 | 1077 | |
| | 2016.11-2021.12 | 6MT | F | R | Platform/Chassis FWD M9T 706 | Date from:2019.08 | GDS57562 | Drive Shaft | | 31 | 39 | 70 | 101 | 1085 | |
| | 2016.11-2021.12 | 6MT | F | L | Platform/Chassis FWD M9T 706 | | GCO50132 | Outer Joint | | 31 | 27 | 70 | 100.5 | 63.5 | I |
| | 2016.11-2021.12 | 6MT | F | R | Platform/Chassis FWD M9T 706 | Date To:2019.07 | GCO18289 | Outer Joint | | 31 | 36 | 70 | 101 | 69 | I |
| | 2016.11-2021.12 | 6MT | F | L | Platform/Chassis FWD M9T 706 | | GCI50045 | Inner Joint | | 39 | 27 | 39 | 74 | 109 | |
| | 2016.11-2021.12 | 6MT | F | L | Van FWD M9T 706 | | GDS18247 | Drive Shaft | | 31 | 39 | 70 | 100.5 | 743 | |
| | 2016.11-2021.12 | 6MT | F | R | Van FWD M9T 706 | Date To:2019.07 | GDS18515 | Drive Shaft | | 31 | 39 | 70 | 101 | 1077 | |
| | 2016.11-2021.12 | 6MT | F | R | Van FWD M9T 706 | Date from:2019.08 | GDS57562 | Drive Shaft | | 31 | 39 | 70 | 101 | 1085 | |
| | 2016.11-2021.12 | 6MT | F | L | Van FWD M9T 706 | | GCO50132 | Outer Joint | | 31 | 27 | 70 | 100.5 | 63.5 | I |
| | 2016.11-2021.12 | 6MT | F | R | Van FWD M9T 706 | Date To:2019.07 | GCO18289 | Outer Joint | | 31 | 36 | 70 | 101 | 69 | I |
| | 2016.11-2021.12 | 6MT | F | L | Van FWD M9T 706 | | GCI50045 | Inner Joint | | 39 | 27 | 39 | 74 | 109 | |
| 2.3 (132 kw) | 2019.08-2021.12 | 6AT/6MT | F | L | Platform/Chassis FWD M9T 716 | | GDS18247 | Drive Shaft | | 31 | 39 | 70 | 100.5 | 743 | |
| | 2019.08-2021.12 | 6MT | F | R | Platform/Chassis FWD M9T 716 | Date from:2019.08 | GDS57562 | Drive Shaft | | 31 | 39 | 70 | 101 | 1085 | |
| | 2019.08-2021.12 | 6MT | F | L/R | Platform/Chassis FWD M9T 716 | | GCO18289 | Outer Joint | | 31 | 36 | 70 | 101 | 69 | I |
| | 2019.08-2021.12 | 6AT/6MT | F | L | Van FWD M9T 716 | | GDS18247 | Drive Shaft | | 31 | 39 | 70 | 100.5 | 743 | |
| | 2019.08-2021.12 | 6AT/6MT | F | R | Van FWD M9T 716 | | GDS57562 | Drive Shaft | | 31 | 39 | 70 | 101 | 1085 | |
| | 2019.08-2021.12 | 6AT/6MT | F | L/R | Van FWD M9T 716 | | GCO18289 | Outer Joint | | 31 | 36 | 70 | 101 | 69 | I |
| 2.5 (59 kw) | 1998.10-2000.09 | 5MT | F | L | Bus FWD S8U 770 | | GDS50010 | Drive Shaft | | 28 | | 67.1 | 93.5 | 669 | |
| | 1998.10-2000.09 | 5MT | F | R | Bus FWD S8U 770 | | GDS50011 | Drive Shaft | | 28 | 39 | 67.1 | 93.5 | 1118 | |
| | 1998.10-2000.09 | 5MT | F | L/R | Bus FWD S8U 770 | | GCO50014 | Outer Joint | | 28 | 27 | 67.1 | 93.5 | 64.5 | I |
| | 1998.10-2000.09 | MT | F | L | Bus FWD S8U 770 | Trans. code:PF1 | GDS44005 | Drive Shaft | 51T | 28 | 37 | 65 | 96 | 670 | |
| | 1998.10-2000.09 | MT | F | R | Bus FWD S8U 770 | Trans. code:PF1 | GDS44004 | Drive Shaft | 51T | 28 | 39 | 67.1 | 93.5 | 1118 | |

| | YEAR | TRANSM. | F/R | L/R | BODY STYLE & DRIVE TYPE & ENGINE | REMARKS | G-AP Ref. | PRODUCT | ABS | Technical Specifications | | | | | |
|---|---|---|---|---|---|---|---|---|---|---|---|---|---|---|---|
| | | | | | | | | | | A | B | C | H | L | P |
| **VAUXHALL** | | | | | | | | | | | | | | | |
| **Movano** | | | | | | | | | | | | | | | |
| 2.5 (59 kw) | 1998.10-2000.09 | MT | F | R | Bus FWD S8U 770 | | GCI50006 | Inner Joint | | 39 | 27 | 30 | 437 | 98 | |
| | 1998.10-2000.09 | 5MT | F | L | Van FWD S8U 770 | | GDS50010 | Drive Shaft | | 28 | | 67.1 | 93.5 | 669 | |
| | 1998.10-2000.09 | 5MT | F | R | Van FWD S8U 770 | | GDS50011 | Drive Shaft | | 28 | 39 | 67.1 | 93.5 | 1118 | |
| | 1998.10-2000.09 | MT | F | L | Van FWD S8U 770 | Trans. code:PF1 | GDS44005 | Drive Shaft | 51T | 28 | 37 | 65 | 96 | 670 | |
| | 1998.10-2000.09 | MT | F | R | Van FWD S8U 770 | Trans. code:PF1 | GDS44004 | Drive Shaft | 51T | 28 | 39 | 67.1 | 93.5 | 1118 | |
| | 1998.10-2000.09 | MT | F | L/R | Van FWD S8U 770 | | GCO50014 | Outer Joint | | 28 | 27 | 67.1 | 93.5 | 64.5 | I |
| | 1998.10-2000.09 | MT | F | R | Van FWD S8U 770 | | GCI50006 | Inner Joint | | 39 | 27 | 30 | 437 | 98 | |
| | 1998.10-2000.09 | | F | | Van FWD S8U 770 | | GCO44008 | Outer Joint | 51T | 28 | 27 | 67.1 | 93.5 | 64.5 | I |
| | 1998.10-2002.08 | 5MT | F | L | Platform/Chassis FWD S8U 770, S8U 772 | | GDS50010 | Drive Shaft | | 28 | | 67.1 | 93.5 | 669 | |
| | 1998.10-2002.08 | 5MT | F | R | Platform/Chassis FWD S8U 770, S8U 772 | | GDS50011 | Drive Shaft | | 28 | 39 | 67.1 | 93.5 | 1118 | |
| | 1998.10-2002.08 | MT | F | L | Platform/Chassis FWD S8U 770, S8U 772 | Date to:2000.09;Trans. code:PF1 | GDS44005 | Drive Shaft | 51T | 28 | 37 | 65 | 96 | 670 | |
| | 1998.10-2002.08 | MT | F | R | Platform/Chassis FWD S8U 770, S8U 772 | Date to:2000.09;Trans. code:PF1 | GDS44004 | Drive Shaft | 51T | 28 | 39 | 67.1 | 93.5 | 1118 | |
| | 1998.10-2002.08 | MT | F | L/R | Platform/Chassis FWD S8U 770, S8U 772 | | GCO50014 | Outer Joint | | 28 | 27 | 67.1 | 93.5 | 64.5 | I |
| | 1998.10-2002.08 | MT | F | R | Platform/Chassis FWD S8U 770, S8U 772 | | GCI50006 | Inner Joint | | 39 | 27 | 30 | 437 | 98 | |
| | 1998.10-2002.08 | | F | | Platform/Chassis FWD S8U 770, S8U 772 | | GCO44008 | Outer Joint | 51T | 28 | 27 | 67.1 | 93.5 | 64.5 | I |
| 2.5 (73 kw) | 2003.11-2006.12 | 5MT | F | L | Platform/Chassis FWD G9U 754 | | GDS50166 | Drive Shaft | 51T | 28 | 37 | 65 | 96 | 663 | |
| | 2003.11-2006.12 | MT | F | L/R | Platform/Chassis FWD G9U 754 | Date from:2004.01 | GCO44026 | Outer Joint | 51T | 28 | 36 | 65 | 96 | 71 | I |
| | 2003.11-2006.12 | 5MT | F | L | Van FWD G9U 754 | | GDS50166 | Drive Shaft | 51T | 28 | 37 | 65 | 96 | 663 | |
| | 2003.11-2006.12 | MT | F | L/R | Van FWD G9U 754 | Date from:2004.01 | GCO44026 | Outer Joint | 51T | 28 | 36 | 65 | 96 | 71 | I |
| 2.5 (74 kw) | 2001.10-2009.08 | 6MT/SAT | F | R | Bus FWD G9U 650 | | GDS50366 | Drive Shaft | 51T | 28 | 39 | 65 | 96 | 1116 | |
| | 2001.10-2009.08 | MT | F | R | Bus FWD G9U 650 | | GCI50006 | Inner Joint | | 39 | 27 | 30 | 437 | 98 | |
| | 2001.10-2009.08 | SAT/6MT | F | L | Bus FWD G9U 650 | | GDS99286 | Drive Shaft | 51T | 28 | 39 | 65 | 96 | 700 | |
| | 2001.10-2009.08 | SAT/6MT | F | L | Bus FWD G9U 650 | | GCO44026 | Outer Joint | 51T | 28 | 36 | 65 | 96 | 71 | I |
| | 2006.10-2010.12 | 6MT | F | L | Platform/Chassis FWD G9U 650 | | GDS99286 | Drive Shaft | 51T | 28 | 39 | 65 | 96 | 700 | |
| | 2006.10-2010.12 | 6MT | F | R | Platform/Chassis FWD G9U 650 | | GDS50366 | Drive Shaft | 51T | 28 | 39 | 65 | 96 | 1116 | |
| | 2006.10-2010.12 | 6MT | F | L | Platform/Chassis FWD G9U 650 | | GCO44026 | Outer Joint | 51T | 28 | 36 | 65 | 96 | 71 | I |
| | 2006.10-2010.12 | MT | F | R | Platform/Chassis FWD G9U 650 | | GCI50006 | Inner Joint | | 39 | 27 | 30 | 437 | 98 | |
| | 2006.10-2010.12 | 5MT/6MT | F | L | Van FWD G9U 650 | | GDS99286 | Drive Shaft | 51T | 28 | 39 | 65 | 96 | 700 | |
| | 2006.10-2010.12 | 5MT/6MT | F | R | Van FWD G9U 650 | | GDS50366 | Drive Shaft | 51T | 28 | 39 | 65 | 96 | 1116 | |
| | 2006.10-2010.12 | MT | F | L/R | Van FWD G9U 650 | | GCO44026 | Outer Joint | 51T | 28 | 36 | 65 | 96 | 71 | I |
| | 2006.10-2010.12 | MT | F | R | Van FWD G9U 650 | | GCI50006 | Inner Joint | | 39 | 27 | 30 | 437 | 98 | |
| 2.5 (84 kw) | 2001.01-2006.12 | 5MT | F | L | Platform/Chassis FWD G9U 720, G9U 724, G9U 750, G9U 754 | | GDS50166 | Drive Shaft | 51T | 28 | 37 | 65 | 96 | 663 | |
| | 2001.01-2006.12 | 5MT | F | L/R | Platform/Chassis FWD G9U 720, G9U 724, G9U 750, G9U 754 | | GCO44026 | Outer Joint | 51T | 28 | 36 | 65 | 96 | 71 | I |
| | 2001.01-2006.12 | MT | F | L | Platform/Chassis FWD G9U 720, G9U 724, G9U 750, G9U 754 | | GDS44012 | Drive Shaft | | 28 | 37 | 65 | 96 | 663 | |
| | 2001.01-2006.12 | MT | F | R | Platform/Chassis FWD G9U 720, G9U 724, G9U 750, G9U 754 | | GDS50066 | Drive Shaft | | 28 | 39 | 65 | 96 | 1142 | |
| | 2001.01-2006.12 | MT | F | R | Platform/Chassis FWD G9U 720, G9U 724, G9U 750, G9U 754 | | GDS50249 | Drive Shaft | | 28 | 39 | 65 | 96 | 1144 | |
| | 2001.01-2006.12 | MT | F | R | Platform/Chassis FWD G9U 720, G9U 724, G9U 750, G9U 754 | Trans. code:PK5 | GDS99151 | Drive Shaft | 51T | 28 | 39 | 65 | 96 | 1144 | |
| | 2001.01-2006.12 | MT | F | R | Platform/Chassis FWD G9U 720, G9U 724, G9U 750, G9U 754 | | GCI50006 | Inner Joint | | 39 | 27 | 30 | 437 | 98 | |
| | 2001.10-2009.08 | 5MT | F | L | Bus FWD G9U 720, G9U 724, G9U 750, G9U 754 | | GDS50166 | Drive Shaft | 51T | 28 | 37 | 65 | 96 | 663 | |
| | 2001.10-2009.08 | 5MT | F | L/R | Bus FWD G9U 720, G9U 724, G9U 750, G9U 754 | | GCO44026 | Outer Joint | 51T | 28 | 36 | 65 | 96 | 71 | I |
| | 2001.10-2009.08 | MT | F | L | Bus FWD G9U 720, G9U 724, G9U 750, G9U 754 | Date from:2002.09;Date to:2006.09;Trans. code:PF1 | GDS44005 | Drive Shaft | 51T | 28 | 37 | 65 | 96 | 670 | |
| | 2001.10-2009.08 | MT | F | L | Bus FWD G9U 720, G9U 724, G9U 750, G9U 754 | Date from:2002.09;Date to:2006.09;Trans. code:PF1 | GDS50010 | Drive Shaft | | 28 | | 67.1 | 93.5 | 669 | |
| | 2001.10-2009.08 | MT | F | R | Bus FWD G9U 720, G9U 724, G9U 750, G9U 754 | Date from:2002.09;Date to:2006.09;Trans. code:PF1 | GDS44004 | Drive Shaft | 51T | 28 | 39 | 67.1 | 93.5 | 1118 | |
| | 2001.10-2009.08 | MT | F | R | Bus FWD G9U 720, G9U 724, G9U 750, G9U 754 | Date from:2002.09;Date to:2006.09;Trans. code:PF1 | GDS50011 | Drive Shaft | | 28 | 39 | 67.1 | 93.5 | 1118 | |
| | 2001.10-2009.08 | MT | F | R | Bus FWD G9U 720, G9U 724, G9U 750, G9U 754 | | GCI50006 | Inner Joint | | 39 | 27 | 30 | 437 | 98 | |
| | 2001.10-2009.08 | | F | R | Bus FWD G9U 720, G9U 724, G9U 750, G9U 754 | | GDS50066 | Drive Shaft | | 28 | 39 | 65 | 96 | 1142 | |
| | 2001.10-2010.05 | MT | F | L | Van FWD G9U 720, G9U 724, G9U 750, G9U 754 | | GDS44012 | Drive Shaft | | 28 | 37 | 65 | 96 | 663 | |
| | 2001.10-2010.05 | MT | F | L | Van FWD G9U 720, G9U 724, G9U 750, G9U 754 | Trans. code:PK5 | GDS50166 | Drive Shaft | 51T | 28 | 37 | 65 | 96 | 663 | |
| | 2001.10-2010.05 | MT | F | R | Van FWD G9U 720, G9U 724, G9U 750, G9U 754 | | GDS50066 | Drive Shaft | | 28 | 39 | 65 | 96 | 1142 | |
| | 2001.10-2010.05 | MT | F | R | Van FWD G9U 720, G9U 724, G9U 750, G9U 754 | | GDS50249 | Drive Shaft | | 28 | 39 | 65 | 96 | 1144 | |
| | 2001.10-2010.05 | MT | F | R | Van FWD G9U 720, G9U 724, G9U 750, G9U 754 | Trans. code:PK5 | GDS99151 | Drive Shaft | 51T | 28 | 39 | 65 | 96 | 1144 | |
| | 2001.10-2010.05 | MT | F | L/R | Van FWD G9U 720, G9U 724, G9U 750, G9U 754 | Trans. code:PK5 | GCO44026 | Outer Joint | 51T | 28 | 36 | 65 | 96 | 71 | I |
| 2.5 (88 kw) | 2003.02-2009.08 | MT | F | R | Bus FWD G9U 632, G9U 650 | | GCI50006 | Inner Joint | | 39 | 27 | 30 | 437 | 98 | |
| | 2003.02-2009.08 | SAT/6MT | F | L | Bus FWD G9U 632, G9U 650 | | GDS99286 | Drive Shaft | 51T | 28 | 39 | 65 | 96 | 700 | |
| | 2003.02-2009.08 | SAT/6MT | F | L | Bus FWD G9U 632, G9U 650 | | GCO44026 | Outer Joint | 51T | 28 | 36 | 65 | 96 | 71 | I |
| | 2003.02-2009.08 | | F | R | Bus FWD G9U 632, G9U 650 | | GDS50066 | Drive Shaft | | 28 | 39 | 65 | 96 | 1142 | |
| | 2006.08-2010.05 | 6MT/SAT | F | R | Platform/Chassis FWD G9U 632, G9U 650 | | GDS50366 | Drive Shaft | 51T | 28 | 39 | 65 | 96 | 1116 | |
| | 2006.08-2010.05 | MT | F | R | Platform/Chassis FWD G9U 632, G9U 650 | | GCI50006 | Inner Joint | | 39 | 27 | 30 | 437 | 98 | |
| | 2006.08-2010.05 | SAT/6MT | F | L | Platform/Chassis FWD G9U 632, G9U 650 | | GDS99286 | Drive Shaft | 51T | 28 | 39 | 65 | 96 | 700 | |
| | 2006.08-2010.05 | SAT/6MT | F | L | Platform/Chassis FWD G9U 632, G9U 650 | | GCO44026 | Outer Joint | 51T | 28 | 36 | 65 | 96 | 71 | I |
| | 2006.08-2010.05 | MT | F | R | Van FWD G9U 632, G9U 650 | | GDS50366 | Drive Shaft | 51T | 28 | 39 | 65 | 96 | 1116 | |
| | 2006.08-2010.05 | MT | F | L/R | Van FWD G9U 632, G9U 650 | | GCO44026 | Outer Joint | 51T | 28 | 36 | 65 | 96 | 71 | I |
| | 2006.08-2010.05 | MT | F | R | Van FWD G9U 632, G9U 650 | | GCI50006 | Inner Joint | | 39 | 27 | 30 | 437 | 98 | |
| | 2006.08-2010.05 | SAT/6MT | F | L | Van FWD G9U 632, G9U 650 | | GDS99286 | Drive Shaft | 51T | 28 | 39 | 65 | 96 | 700 | |
| | 2006.08-2010.05 | | F | R | Van FWD G9U 632, G9U 650 | | GDS50066 | Drive Shaft | | 28 | 39 | 65 | 96 | 1142 | |

| | YEAR | TRANSM. | F/R | L/R | BODY STYLE & DRIVE TYPE & ENGINE | REMARKS | G-AP Ref. | PRODUCT | ABS | Technical Specifications A | B | C | H | L | P |
|---|---|---|---|---|---|---|---|---|---|---|---|---|---|---|---|
| **VAUXHALL** | | | | | | | | | | | | | | | |
| **Movano** | | | | | | | | | | | | | | | |
| 2.5 (107 kw) | 2006.08-2010.05 | MT | F | R | Bus FWD G9U 632 | | GCI50006 | Inner Joint | | 39 | 27 | 30 | 437 | 98 | |
| | 2006.08-2010.05 | SAT/6MT | F | L | Bus FWD G9U 632 | | GDS99286 | Drive Shaft | 51T | 28 | 39 | 65 | 96 | 700 | |
| | 2006.08-2010.05 | SAT/6MT | F | L | Bus FWD G9U 632 | | GCO44026 | Outer Joint | 51T | 28 | 36 | 65 | 96 | 71 | I |
| | 2006.08-2010.05 | | F | R | Bus FWD G9U 632 | | GDS50066 | Drive Shaft | | 28 | 39 | 65 | 96 | 1142 | |
| | 2006.08-2010.05 | MT | F | R | Platform/Chassis FWD G9U 632, G9U 650 | | GCI50006 | Inner Joint | | 39 | 27 | 30 | 437 | 98 | |
| | 2006.08-2010.05 | SAT/6MT | F | L | Platform/Chassis FWD G9U 632, G9U 650 | | GDS99286 | Drive Shaft | 51T | 28 | 39 | 65 | 96 | 700 | |
| | 2006.08-2010.05 | SAT/6MT | F | L | Platform/Chassis FWD G9U 632, G9U 650 | | GCO44026 | Outer Joint | 51T | 28 | 36 | 65 | 96 | 71 | I |
| | 2006.08-2010.05 | | F | R | Platform/Chassis FWD G9U 632, G9U 650 | | GDS50066 | Drive Shaft | | 28 | 39 | 65 | 96 | 1142 | |
| | 2006.08-2010.05 | MT | F | R | Van FWD G9U 632 | | GDS50366 | Drive Shaft | 51T | 28 | 39 | 65 | 96 | 1116 | |
| | 2006.08-2010.05 | MT | F | L/R | Van FWD G9U 632 | | GCO44026 | Outer Joint | 51T | 28 | 36 | 65 | 96 | 71 | I |
| | 2006.08-2010.05 | MT | F | R | Van FWD G9U 632 | | GCI50006 | Inner Joint | | 39 | 27 | 30 | 437 | 98 | |
| | 2006.08-2010.05 | SAT/6MT | F | L | Van FWD G9U 632 | | GDS99286 | Drive Shaft | 51T | 28 | 39 | 65 | 96 | 700 | |
| | 2006.08-2010.05 | | F | R | Van FWD G9U 632 | | GDS50066 | Drive Shaft | | 28 | 39 | 65 | 96 | 1142 | |
| 2.8 (84 kw) | 1998.10-2001.10 | 5MT | F | L | Bus FWD S9W 702 | | GDS50010 | Drive Shaft | | 28 | | 67.1 | 93.5 | 669 | |
| | 1998.10-2001.10 | 5MT | F | R | Bus FWD S9W 702 | | GDS50011 | Drive Shaft | | 28 | 39 | 67.1 | 93.5 | 1118 | |
| | 1998.10-2001.10 | 5MT | F | L/R | Bus FWD S9W 702 | | GCO50014 | Outer Joint | | 28 | 27 | 67.1 | 93.5 | 64.5 | I |
| | 1998.10-2001.10 | MT | F | L | Bus FWD S9W 702 | Trans. code:PK5 | GDS44005 | Drive Shaft | 51T | 28 | 37 | 65 | 96 | 670 | |
| | 1998.10-2001.10 | MT | F | R | Bus FWD S9W 702 | Trans. code:PK5 | GDS44004 | Drive Shaft | 51T | 28 | 39 | 67.1 | 93.5 | 1118 | |
| | 1998.10-2001.10 | MT | F | R | Bus FWD S9W 702 | | GCI50006 | Inner Joint | | 39 | 27 | 30 | 437 | 98 | |
| | 1998.10-2001.10 | 5MT | F | L | Platform/Chassis FWD S9W 702 | | GDS50010 | Drive Shaft | | 28 | | 67.1 | 93.5 | 669 | |
| | 1998.10-2001.10 | 5MT | F | R | Platform/Chassis FWD S9W 702 | | GDS50011 | Drive Shaft | | 28 | 39 | 67.1 | 93.5 | 1118 | |
| | 1998.10-2001.10 | MT | F | L | Platform/Chassis FWD S9W 702 | Trans. code:PK5 | GDS44005 | Drive Shaft | 51T | 28 | 37 | 65 | 96 | 670 | |
| | 1998.10-2001.10 | MT | F | R | Platform/Chassis FWD S9W 702 | Trans. code:PK5 | GDS44004 | Drive Shaft | 51T | 28 | 39 | 67.1 | 93.5 | 1118 | |
| | 1998.10-2001.10 | MT | F | L/R | Platform/Chassis FWD S9W 702 | | GCO50014 | Outer Joint | | 28 | 27 | 67.1 | 93.5 | 64.5 | I |
| | 1998.10-2001.10 | MT | F | R | Platform/Chassis FWD S9W 702 | | GCI50006 | Inner Joint | | 39 | 27 | 30 | 437 | 98 | |
| | 1998.10-2001.10 | | F | | Platform/Chassis FWD S9W 702 | | GCO44008 | Outer Joint | 51T | 28 | 27 | 67.1 | 93.5 | 64.5 | I |
| | 1998.10-2001.10 | 5MT | F | L | Van FWD S9W 702 | | GDS50010 | Drive Shaft | | 28 | | 67.1 | 93.5 | 669 | |
| | 1998.10-2001.10 | 5MT | F | R | Van FWD S9W 702 | | GDS50011 | Drive Shaft | | 28 | 39 | 67.1 | 93.5 | 1118 | |
| | 1998.10-2001.10 | 5MT | F | L/R | Van FWD S9W 702 | | GCO50014 | Outer Joint | | 28 | 27 | 67.1 | 93.5 | 64.5 | I |
| | 1998.10-2001.10 | MT | F | L | Van FWD S9W 702 | Trans. code:PK5 | GDS44005 | Drive Shaft | 51T | 28 | 37 | 65 | 96 | 670 | |
| | 1998.10-2001.10 | MT | F | R | Van FWD S9W 702 | Trans. code:PK5 | GDS44004 | Drive Shaft | 51T | 28 | 39 | 67.1 | 93.5 | 1118 | |
| | 1998.10-2001.10 | MT | F | R | Van FWD S9W 702 | | GCI50006 | Inner Joint | | 39 | 27 | 30 | 437 | 98 | |
| 3.0 (100 kw) | 2003.10-2010.05 | 6MT | F | R | Bus FWD ZD3 200 | | GDS50059 | Drive Shaft | 51T | 28 | 39 | 65 | 96 | 1126 | |
| | 2003.10-2010.05 | 6MT | F | R | Platform/Chassis FWD ZD3 200, ZD3 202 | | GDS50059 | Drive Shaft | 51T | 28 | 39 | 65 | 96 | 1126 | |
| | 2003.10-2010.05 | MT | F | R | Van FWD ZD3 202 | | GDS50059 | Drive Shaft | 51T | 28 | 39 | 65 | 96 | 1126 | |
| | 2003.10-2010.05 | MT | F | L/R | Van FWD ZD3 202 | | GCO44026 | Outer Joint | 51T | 28 | 36 | 65 | 96 | 71 | I |
| **Movano-e** | | | | | | | | | | | | | | | |
| EV (100 kw) | 2021.12-2023.10 | 6MT | F | L | Van FWD A3H256B42G000 | | GDS56467 | Drive Shaft | | 35 | 41 | 71.5 | 127 | 824 | |
| | 2021.12-2023.10 | 6MT | F | R | Van FWD A3H256B42G000 | | GDS57538 | Drive Shaft | | 35 | 41 | 71.5 | 127 | 1127 | |
| | 2021.12-2023.10 | 6MT | F | L | Van FWD A3H256B42G000 | | GCI17028 | Inner Joint | | 41 | 29 | 43 | 69.5 | 109.5 | |
| **Signum** | | | | | | | | | | | | | | | |
| 1.8 (90 kw) | 2003.06-2005.07 | CVT/5MT | F | L | Hatchback FWD Z 18 XE | Chassis no. from:71009337 | GDS17223 | Drive Shaft | | 30 | 22 | 52 | 94 | 609 | |
| | 2003.06-2005.07 | CVT/5MT | F | L | Hatchback FWD Z 18 XE | Chassis no. to:71009336 | GDS44020 | Drive Shaft | | 30 | 22 | 52.5 | 105 | 617.5 | |
| | 2003.06-2005.07 | CVT/5MT | F | R | Hatchback FWD Z 18 XE | | GDS17040 | Drive Shaft | | 30 | 22 | 52.5 | 105 | 987 | |
| | 2003.06-2005.07 | CVT/5MT | F | L/R | Hatchback FWD Z 18 XE | Chassis no. to:71009336 | GCO17007 | Outer Joint | | 30 | 25 | 52.5 | 105 | 62 | O |
| | 2003.06-2005.07 | CVT/5MT | F | L/R | Hatchback FWD Z 18 XE | Chassis no. from:71009337 | GCO21038 | Outer Joint | | 30 | 24 | 52 | 94 | 64 | M |
| | 2003.06-2005.07 | | F | L/R | Hatchback FWD Z 18 XE | | GCI99026 | Inner Joint | | 22 | 25 | 35 | 57 | 111.7 | |
| 1.8 (103 kw) | 2005.08-2008.05 | SAT/5MT | F | L | Hatchback FWD Z 18 XER | Chassis no. from:71009337 | GDS17223 | Drive Shaft | | 30 | 22 | 52 | 94 | 609 | |
| | 2005.08-2008.05 | SAT/5MT | F | L | Hatchback FWD Z 18 XER | Chassis no. to:71009336 | GDS44020 | Drive Shaft | | 30 | 22 | 52.5 | 105 | 617.5 | |
| | 2005.08-2008.05 | SAT/5MT | F | R | Hatchback FWD Z 18 XER | Chassis no. to:71009336 | GDS17040 | Drive Shaft | | 30 | 22 | 52.5 | 105 | 987 | |
| | 2005.08-2008.05 | SAT/5MT | F | L/R | Hatchback FWD Z 18 XER | Chassis no. to:71009336 | GCO17007 | Outer Joint | | 30 | 25 | 52.5 | 105 | 62 | O |
| | 2005.08-2008.05 | SAT/5MT | F | L/R | Hatchback FWD Z 18 XER | Chassis no. from:71009337 | GCO21038 | Outer Joint | | 30 | 24 | 52 | 94 | 64 | M |
| | 2005.08-2008.05 | SAT/5MT | F | L | Hatchback FWD Z 18 XER | Chassis no. from:71009337 | GCI99026 | Inner Joint | | 22 | 25 | 35 | 57 | 111.7 | |
| 1.9 (88 kw) | 2004.04-2008.03 | 5MT | F | L | Hatchback FWD Z 19 DT | Trans. code:M32 | GDS21092 | Drive Shaft | | 30 | 25 | 53.8 | 94.5 | 604 | |
| | 2004.04-2008.03 | 5MT | F | R | Hatchback FWD Z 19 DT | Trans. code:M32 | GDS21053 | Drive Shaft | | 30 | 34 | 53.8 | 94.5 | 617 | |
| | 2004.04-2008.03 | 5MT | F | L/R | Hatchback FWD Z 19 DT | Trans. code:F40 | GDS21032 | Drive Shaft | | 30 | 27 | 53.8 | 94.5 | 605 | |
| | 2004.04-2008.03 | MT | F | L/R | Hatchback FWD Z 19 DT | | GDS21036 | Drive Shaft | | 30 | 27 | 55.4 | 100 | 602 | |
| | 2004.04-2008.03 | MT | F | L/R | Hatchback FWD Z 19 DT | | GCO17051 | Outer Joint | | 30 | 26 | 53.8 | 94.5 | 65.5 | M |
| | 2004.04-2008.03 | MT | F | L | Hatchback FWD Z 19 DT | | GCI99186 | Inner Joint | | 25 | 28 | 34.9 | 57.5 | 111 | |
| | 2004.04-2008.03 | MT | F | R | Hatchback FWD Z 19 DT | | GCI44016 | Inner Joint | | 34 | 28 | 37.5 | | 129.2 | |
| | 2004.04-2008.03 | | F | L/R | Hatchback FWD Z 19 DT | Trans. code:F40 | GCI99138 | Inner Joint | | 27 | 28 | 35 | 78 | 112 | |
| 1.9 (110 kw) | 2004.04-2008.03 | AT | F | L/R | Hatchback FWD Z 19 DTH | | GDS44080 | Drive Shaft | | 30 | 27 | 53.8 | 94.5 | 591 | |
| | 2004.04-2008.03 | AT | F | L/R | Hatchback FWD Z 19 DTH | | GCI21024 | Inner Joint | | 27 | 34 | 35 | 101 | 88 | |
| | 2004.04-2008.03 | AT/MT | F | L/R | Hatchback FWD Z 19 DTH | | GCO17051 | Outer Joint | | 30 | 26 | 53.8 | 94.5 | 65.5 | M |
| | 2004.04-2008.03 | MT | F | L | Hatchback FWD Z 19 DTH | Trans. code:M32 | GDS21092 | Drive Shaft | | 30 | 25 | 53.8 | 94.5 | 604 | |

| | YEAR | TRANSM. | F/R | L/R | BODY STYLE & DRIVE TYPE & ENGINE | REMARKS | G-AP Ref. | PRODUCT | ABS | Technical Specifications A | B | C | H | L | P |
|---|---|---|---|---|---|---|---|---|---|---|---|---|---|---|---|
| **VAUXHALL** | | | | | | | | | | | | | | | |
| **Signum** | | | | | | | | | | | | | | | |
| 1.9 (110 kw) | 2004.04-2008.03 | MT | F | R | Hatchback FWD Z 19 DTH | Trans. code:M32 | GDS21053 | Drive Shaft | | 30 | 34 | 53.8 | 94.5 | 617 | |
| | 2004.04-2008.03 | MT | F | L/R | Hatchback FWD Z 19 DTH | Trans. code:F40 | GDS21032 | Drive Shaft | | 30 | 27 | 53.8 | 94.5 | 605 | |
| | 2004.04-2008.03 | MT | F | L | Hatchback FWD Z 19 DTH | | GCI99186 | Inner Joint | | 25 | 28 | 34.9 | 57.5 | 111 | |
| | 2004.04-2008.03 | MT | F | R | Hatchback FWD Z 19 DTH | | GCI44016 | Inner Joint | | 34 | 28 | 37.5 | | 129.2 | |
| | 2004.04-2008.03 | | F | L/R | Hatchback FWD Z 19 DTH | | GDS21036 | Drive Shaft | | 30 | 27 | 55.4 | 100 | 602 | |
| | 2004.04-2008.03 | | F | L/R | Hatchback FWD Z 19 DTH | Trans. code:F40 | GCI99138 | Inner Joint | | 27 | 28 | 35 | 78 | 112 | |
| 2.0 (74 kw) | 2003.05-2004.04 | 5MT | F | L | Hatchback FWD Y 20 DTH | | GDS60015 | Drive Shaft | | 30 | 34 | 52.5 | 105 | 628 | |
| | 2003.05-2004.04 | 5MT | F | R | Hatchback FWD Y 20 DTH | Chassis no. from:41036716 | GDS21061 | Drive Shaft | | 30 | 34 | 52.5 | 105 | 968 | |
| | 2003.05-2004.04 | 5MT | F | R | Hatchback FWD Y 20 DTH | Chassis no. to:41036715 | GDS60016 | Drive Shaft | | 30 | 34 | 52.5 | 105 | 588 | |
| | 2003.05-2004.04 | 5MT | F | R | Hatchback FWD Y 20 DTH | | GCI44002 | Inner Joint | | 34 | 25 | 35 | 56.2 | 114.8 | |
| | 2003.05-2004.04 | 5MT | F | R | Hatchback FWD Y 20 DTH | | GCI44005 | Inner Joint | | 34 | 25 | 35 | | 130.2 | |
| | 2003.05-2004.04 | MT | F | L/R | Hatchback FWD Y 20 DTH | | GCO17007 | Outer Joint | | 30 | 25 | 52.5 | 105 | 62 | O |
| 2.0 (129 kw) | 2003.03-2008.10 | 6MT | F | L/R | Hatchback FWD Z 20 NET | Inner teeth of wheel side:26 | GDS21032 | Drive Shaft | | 30 | 27 | 53.8 | 94.5 | 605 | |
| | 2003.03-2008.10 | 6MT | F | L/R | Hatchback FWD Z 20 NET | | GCI99138 | Inner Joint | | 27 | 28 | 35 | 78 | 112 | |
| | 2003.03-2008.10 | MT | F | L/R | Hatchback FWD Z 20 NET | Date from:2003.09;Date to:2008.03 | GCO17051 | Outer Joint | | 30 | 26 | 53.8 | 94.5 | 65.5 | M |
| | 2003.03-2008.10 | | F | L/R | Hatchback FWD Z 20 NET | Inner teeth of wheel side:28 | GDS21036 | Drive Shaft | | 30 | 27 | 55.4 | 100 | 602 | |
| 2.2 (92 kw) | 2003.05-2008.05 | MT | F | L/R | Hatchback FWD Y 22 DTR | Date to:2004.04 | GCO17051 | Outer Joint | | 30 | 26 | 53.8 | 94.5 | 65.5 | M |
| | 2003.05-2008.05 | SAT/5MT | F | L/R | Hatchback FWD Y 22 DTR | Inner teeth of wheel side:26 | GDS21032 | Drive Shaft | | 30 | 27 | 53.8 | 94.5 | 605 | |
| | 2003.05-2008.05 | | F | L/R | Hatchback FWD Y 22 DTR | Inner teeth of wheel side:28 | GDS21036 | Drive Shaft | | 30 | 27 | 55.4 | 100 | 602 | |
| | 2003.05-2008.05 | | F | L/R | Hatchback FWD Y 22 DTR | | GCI99138 | Inner Joint | | 27 | 28 | 35 | 78 | 112 | |
| 2.2 (114 kw) | 2003.05-2008.05 | 5MT | F | R | Hatchback FWD Z 22 YH | | GCI44005 | Inner Joint | | 34 | 25 | 35 | | 130.2 | |
| | 2003.05-2008.05 | MT | F | L | Hatchback FWD Z 22 YH | Trans. code:M32 | GDS82090 | Drive Shaft | | 30 | 25 | 52 | 94 | 596 | |
| | 2003.05-2008.05 | MT | F | R | Hatchback FWD Z 22 YH | Trans. code:M32 | GDS82089 | Drive Shaft | | 30 | 34 | 52 | 94 | 577 | |
| | 2003.05-2008.05 | SAT/5MT | F | L | Hatchback FWD Z 22 YH | Chassis no. to:71009336 | GDS60015 | Drive Shaft | | 30 | 34 | 52.5 | 105 | 628 | |
| | 2003.05-2008.05 | SAT/5MT | F | R | Hatchback FWD Z 22 YH | Chassis no. to:71009336 | GDS60016 | Drive Shaft | | 30 | 34 | 52.5 | 105 | 588 | |
| | 2003.05-2008.05 | SAT/5MT | F | L/R | Hatchback FWD Z 22 YH | Chassis no. to:71009336 | GCO17007 | Outer Joint | | 30 | 25 | 52.5 | 105 | 62 | O |
| | 2003.05-2008.05 | SAT/5MT | F | L/R | Hatchback FWD Z 22 YH | Chassis no. from:71009337 | GCO21038 | Outer Joint | | 30 | 24 | 52 | 94 | 64 | M |
| | 2003.05-2008.05 | SAT/5MT | F | L | Hatchback FWD Z 22 YH | | GCI44002 | Inner Joint | | 34 | 25 | 35 | 56.2 | 114.8 | |
| | 2003.05-2008.05 | SAT/5MT | F | L | Hatchback FWD Z 22 YH | Trans. code:M32 | GCI44008 | Inner Joint | | 25 | 25 | 34.9 | 57.5 | 113.2 | |
| 2.8 (169 kw) | 2005.07-2008.05 | 6AT | F | L/R | Hatchback FWD Z 28 NEL | | GCO21057 | Outer Joint | | 30 | 27 | 59.1 | 94 | 65 | M |
| | 2005.07-2008.05 | 6MT | F | L/R | Hatchback FWD Z 28 NEL | | GDS21036 | Drive Shaft | | 30 | 27 | 55.4 | 100 | 602 | |
| | 2005.07-2008.05 | MT | F | L/R | Hatchback FWD Z 28 NEL | | GCO21030 | Outer Joint | | 30 | 28 | 55.4 | 96 | 65 | M |
| 2.8 (184 kw) | 2007.05-2008.10 | MT | F | L/R | Hatchback FWD Z 28 NET | | GDS21036 | Drive Shaft | | 30 | 27 | 55.4 | 100 | 602 | |
| | 2007.05-2008.10 | MT | F | L/R | Hatchback FWD Z 28 NET | | GCO21030 | Outer Joint | | 30 | 28 | 55.4 | 96 | 65 | M |
| 3.0 (130 kw) | 2003.05-2008.05 | MT | F | L/R | Hatchback FWD Y 30 DT | Date to:2005.12 | GCO17051 | Outer Joint | | 30 | 26 | 53.8 | 94.5 | 65.5 | M |
| | 2003.05-2008.05 | SAT/6MT | F | L/R | Hatchback FWD Y 30 DT | | GDS21032 | Drive Shaft | | 30 | 27 | 53.8 | 94.5 | 605 | |
| | 2003.05-2008.05 | | F | L/R | Hatchback FWD Y 30 DT | | GDS21036 | Drive Shaft | | 30 | 27 | 55.4 | 100 | 602 | |
| | 2003.05-2008.05 | | F | L/R | Hatchback FWD Y 30 DT | | GCI99138 | Inner Joint | | 27 | 28 | 35 | 78 | 112 | |
| 3.0 (135 kw) | 2005.07-2008.06 | 6AT | F | L/R | Hatchback FWD Z 30 DT | | GCO21057 | Outer Joint | | 30 | 27 | 59.1 | 94 | 65 | M |
| | 2005.07-2008.06 | 6MT | F | L/R | Hatchback FWD Z 30 DT | | GDS21036 | Drive Shaft | | 30 | 27 | 55.4 | 100 | 602 | |
| | 2005.07-2008.06 | MT | F | L/R | Hatchback FWD Z 30 DT | | GCO21030 | Outer Joint | | 30 | 28 | 55.4 | 96 | 65 | M |
| 3.2 (155 kw) | 2003.05-2008.05 | MT | F | L/R | Hatchback FWD Z 32 SE | Date to:2005.07 | GCO17051 | Outer Joint | | 30 | 26 | 53.8 | 94.5 | 65.5 | M |
| | 2003.05-2008.05 | SAT/5MT | F | L/R | Hatchback FWD Z 32 SE | | GDS21032 | Drive Shaft | | 30 | 27 | 53.8 | 94.5 | 605 | |
| | 2003.05-2008.05 | | F | L/R | Hatchback FWD Z 32 SE | | GDS21036 | Drive Shaft | | 30 | 27 | 55.4 | 100 | 602 | |
| | 2003.05-2008.05 | | F | L/R | Hatchback FWD Z 32 SE | | GCI99138 | Inner Joint | | 27 | 28 | 35 | 78 | 112 | |
| **Sintra** | | | | | | | | | | | | | | | |
| 2.2 (104 kw) | 1997.03-1999.08 | | F | | MPV FWD X22XE | | GCO99020 | Outer Joint | | 33 | 25 | 50 | 105 | 61 | O |
| | 1997.03-1999.08 | | F | L/R | MPV FWD X22XE | | GCI44002 | Inner Joint | | 34 | 25 | 35 | 56.2 | 114.8 | |
| **Tigra** | | | | | | | | | | | | | | | |
| 1.3 (51 kw) | 2004.06-2009.08 | 5MT | F | L | Convertible FWD Z 13 DT | | GDS44027 | Drive Shaft | 29T | 22 | 22 | 52 | 98 | 580 | |
| | 2004.06-2009.08 | 5MT | F | R | Convertible FWD Z 13 DT | | GDS44026 | Drive Shaft | 29T | 22 | 22 | 52 | 98 | 930 | |
| | 2004.06-2009.08 | 5MT | F | R | Convertible FWD Z 13 DT | | GDS99205 | Drive Shaft | | 22 | 22 | 52 | 97.5 | 930 | |
| | 2004.06-2009.08 | 5MT | F | L/R | Convertible FWD Z 13 DT | | GCI44003 | Inner Joint | | 22 | 28 | 34.95 | 57.5 | 83.5 | |
| | 2004.06-2009.08 | MT | F | L | Convertible FWD Z 13 DT | | GDS99069 | Drive Shaft | 29T | 22 | 22 | 52 | 97.5 | 584 | |
| | 2004.06-2009.08 | MT | F | R | Convertible FWD Z 13 DT | | GCO44018 | Outer Joint | | 22 | 28 | 52.2 | 97.5 | 55 | O |
| | 2004.06-2009.08 | MT | F | R | Convertible FWD Z 13 DT | | GCO44043 | Outer Joint | | 22 | 28 | 52 | 97.5 | 57.5 | O |
| | 2004.06-2009.08 | MT | F | L/R | Convertible FWD Z 13 DT | | GCO44019 | Outer Joint | 29T | 22 | 28 | 52 | 97.5 | 57.5 | O |
| | 2004.06-2009.08 | MT | F | L/R | Convertible FWD Z 13 DT | | GCO44020 | Outer Joint | 29T | 22 | 28 | 52 | 97.5 | 57.5 | O |
| | 2004.06-2009.08 | | F | R | Convertible FWD Z 13 DT | | GDS44075 | Drive Shaft | 29T | 22 | 22 | 52 | 97.5 | 926 | |
| 1.4 (66 kw) | 1994.07-2000.12 | 4AT/5MT | F | L | Coupe FWD X14XE | | GDS44001 | Drive Shaft | 29T | 22 | 22 | 52 | 95 | 573 | |
| | 1994.07-2000.12 | 4AT/5MT | F | R | Coupe FWD X14XE | | GDS60002 | Drive Shaft | 29T | 22 | 22 | 52 | 95 | 926 | |
| | 1994.07-2000.12 | 4AT/5MT | F | L/R | Coupe FWD X14XE | | GCI44003 | Inner Joint | | 22 | 28 | 34.95 | 57.5 | 83.5 | |
| | 1994.07-2000.12 | MT | F | L/R | Coupe FWD X14XE | | GCO44020 | Outer Joint | 29T | 22 | 28 | 52 | 97.5 | 57.5 | O |
| | 1994.07-2000.12 | | F | | Coupe FWD X14XE | | GCO44018 | Outer Joint | | 22 | 28 | 52.2 | 97.5 | 55 | O |
| | 1994.07-2000.12 | | F | | Coupe FWD X14XE | | GCO44019 | Outer Joint | 29T | 22 | 28 | 52 | 97.5 | 57.5 | O |

| | YEAR | TRANSM. | F/R | L/R | BODY STYLE & DRIVE TYPE & ENGINE | REMARKS | G-AP Ref. | PRODUCT | ABS | Technical Specifications A | B | C | H | L | P |
|---|---|---|---|---|---|---|---|---|---|---|---|---|---|---|---|
| **VAUXHALL** | | | | | | | | | | | | | | | |
| **Tigra** | | | | | | | | | | | | | | | |
| 1.4 (66 kw) | 2004.06-2009.08 | AT/MT | F | L | Convertible FWD Z 14 XEP | | GDS99069 | Drive Shaft | 29T | 22 | 22 | 52 | 97.5 | 584 | |
| | 2004.06-2009.08 | MT | F | R | Convertible FWD Z 14 XEP | | GCO44018 | Outer Joint | | 22 | 28 | 52.2 | 97.5 | 55 | O |
| | 2004.06-2009.08 | MT | F | R | Convertible FWD Z 14 XEP | | GCO44043 | Outer Joint | | 22 | 28 | 52 | 97.5 | 57.5 | O |
| | 2004.06-2009.08 | MT | F | L/R | Convertible FWD Z 14 XEP | | GCO44019 | Outer Joint | 29T | 22 | 28 | 52 | 97.5 | 57.5 | O |
| | 2004.06-2009.08 | MT | F | L/R | Convertible FWD Z 14 XEP | | GCO44020 | Outer Joint | 29T | 22 | 28 | 52 | 97.5 | 57.5 | O |
| | 2004.06-2009.08 | Semi-AT/5MT | F | L | Convertible FWD Z 14 XEP | | GDS44027 | Drive Shaft | 29T | 22 | 22 | 52 | 98 | 580 | |
| | 2004.06-2009.08 | Semi-AT/5MT | F | R | Convertible FWD Z 14 XEP | | GDS44026 | Drive Shaft | 29T | 22 | 22 | 52 | 98 | 930 | |
| | 2004.06-2009.08 | Semi-AT/5MT | F | R | Convertible FWD Z 14 XEP | | GDS99205 | Drive Shaft | | 22 | 22 | 52 | 97.5 | 930 | |
| | 2004.06-2009.08 | Semi-AT/5MT | F | L/R | Convertible FWD Z 14 XEP | | GCI44003 | Inner Joint | | 22 | 28 | 34.95 | 57.5 | 83.5 | |
| | 2004.06-2009.08 | | F | R | Convertible FWD Z 14 XEP | | GDS44075 | Drive Shaft | 29T | 22 | 22 | 52 | 97.5 | 926 | |
| 1.6 (78 kw) | 1994.11-2000.12 | AT/MT | F | L/R | Coupe FWD X16XE | | GCO44007 | Outer Joint | 29T | 22 | 22 | 52 | 94.5 | 50 | O |
| | 1994.11-2000.12 | MT | F | L/R | Coupe FWD X16XE | Date from:1994.11 | GCI44004 | Inner Joint | | 22 | 22 | 34.95 | 57.5 | 103 | |
| | 1994.11-2000.12 | | F | | Coupe FWD X16XE | | GCI44003 | Inner Joint | | 22 | 28 | 34.95 | 57.5 | 83.5 | |
| 1.8 (92 kw) | 2004.06-2009.08 | 5MT | F | L | Convertible FWD Z 18 XE | | GDS44027 | Drive Shaft | 29T | 22 | 22 | 52 | 98 | 580 | |
| | 2004.06-2009.08 | 5MT | F | L | Convertible FWD Z 18 XE | | GDS82091 | Drive Shaft | 29T | 22 | 22 | 52 | 97.5 | 580 | |
| | 2004.06-2009.08 | 5MT | F | R | Convertible FWD Z 18 XE | | GDS44026 | Drive Shaft | 29T | 22 | 22 | 52 | 98 | 930 | |
| | 2004.06-2009.08 | 5MT | F | R | Convertible FWD Z 18 XE | | GDS82092 | Drive Shaft | 29T | 22 | 22 | 52 | 97.5 | 930 | |
| | 2004.06-2009.08 | 5MT | F | L/R | Convertible FWD Z 18 XE | | GCO44002 | Outer Joint | 29T | 22 | 23 | 52 | 97.5 | 61 | M |
| | 2004.06-2009.08 | MT | F | L | Convertible FWD Z 18 XE | | GDS99069 | Drive Shaft | 29T | 22 | 22 | 52 | 97.5 | 584 | |
| | 2004.06-2009.08 | MT | F | R | Convertible FWD Z 18 XE | | GDS44075 | Drive Shaft | 29T | 22 | 22 | 52 | 97.5 | 926 | |
| | 2004.06-2009.08 | MT | F | L/R | Convertible FWD Z 18 XE | | GCI44009 | Inner Joint | | 22 | 23 | 35 | 57.5 | 96 | |
| **Vectra** | | | | | | | | | | | | | | | |
| 1.6 (55 kw) | 1995.10-2000.08 | 5MT | F | L | Hatchback FWD X16SZR | | GDS44076 | Drive Shaft | 29T | 22 | 22 | 52 | 95 | 592 | |
| | 1995.10-2000.08 | 5MT | F | R | Hatchback FWD X16SZR | | GDS44077 | Drive Shaft | 29T | 22 | 22 | 52 | 95 | 955 | |
| | 1995.10-2000.08 | 5MT | F | L/R | Hatchback FWD X16SZR | Chassis no. To:W1285446 | GCO44021 | Outer Joint | 29T | 22 | 22 | 52 | 95 | 50 | O |
| | 1995.10-2000.08 | AT/MT | F | L/R | Hatchback FWD X16SZR | Date to:2000.08;Chassis no. to:W1286446;Chassis no. to:W5276825;Chassis no. to:W7154258 | GCO44007 | Outer Joint | 29T | 22 | 22 | 52 | 94.5 | 50 | O |
| | 1995.10-2000.08 | AT/MT | F | L/R | Hatchback FWD X16SZR | Date to:2000.08;Chassis no. from:W1285447;Chassis no. from:W7154259 | GCO44011 | Outer Joint | 29T | 33 | 22 | 52 | 103 | 50.5 | O |
| | 1995.10-2000.08 | AT/MT | F | L/R | Hatchback FWD X16SZR | Chassis no. to:W7154258 | GCO44051 | Outer Joint | 29T | 22 | 22 | 52 | 95 | 50 | O |
| | 1995.10-2000.08 | AT/MT | F | L/R | Hatchback FWD X16SZR | Chassis no. to:W7154258 | GCI44004 | Inner Joint | | 22 | 22 | 34.95 | 57.5 | 103 | |
| | 1995.10-2000.08 | | F | | Hatchback FWD X16SZR | | GCO44010 | Outer Joint | 29T | 33 | 22 | 52 | 103 | 50.5 | O |
| | 1995.10-2000.12 | 5MT | F | L | Saloon FWD X16SZR | | GDS44076 | Drive Shaft | 29T | 22 | 22 | 52 | 95 | 592 | |
| | 1995.10-2000.12 | 5MT | F | R | Saloon FWD X16SZR | | GDS44077 | Drive Shaft | 29T | 22 | 22 | 52 | 95 | 955 | |
| | 1995.10-2000.12 | 5MT | F | L/R | Saloon FWD X16SZR | Chassis no. To:W1285446 | GCO44021 | Outer Joint | 29T | 22 | 22 | 52 | 95 | 50 | O |
| | 1995.10-2000.12 | AT/MT | F | L/R | Saloon FWD X16SZR | Date to:2000.12;Chassis no. to:W1286446;Chassis no. to:W5276825;Chassis no. to:W7154258 | GCO44007 | Outer Joint | 29T | 22 | 22 | 52 | 94.5 | 50 | O |
| | 1995.10-2000.12 | AT/MT | F | L/R | Saloon FWD X16SZR | Date to:2000.12;Chassis no. from:W1285447;Chassis no. from:W7154259 | GCO44011 | Outer Joint | 29T | 33 | 22 | 52 | 103 | 50.5 | O |
| | 1995.10-2000.12 | AT/MT | F | L/R | Saloon FWD X16SZR | Chassis no. to:W7154258 | GCO44051 | Outer Joint | 29T | 22 | 22 | 52 | 95 | 50 | O |
| | 1995.10-2000.12 | AT/MT | F | L/R | Saloon FWD X16SZR | Chassis no. to:W7154258 | GCI44004 | Inner Joint | | 22 | 22 | 34.95 | 57.5 | 103 | |
| | 1995.10-2000.12 | | F | | Saloon FWD X16SZR | | GCO44010 | Outer Joint | 29T | 33 | 22 | 52 | 103 | 50.5 | O |
| 1.6 (74 kw) | 1995.09-2002.03 | 4AT/5MT | F | L | Hatchback FWD X16XEL/Y16XE/Z16XE | | GDS44076 | Drive Shaft | 29T | 22 | 22 | 52 | 95 | 592 | |
| | 1995.09-2002.03 | 4AT/5MT | F | R | Hatchback FWD X16XEL/Y16XE/Z16XE | | GDS44077 | Drive Shaft | 29T | 22 | 22 | 52 | 95 | 955 | |
| | 1995.09-2002.03 | 4AT/5MT | F | L/R | Hatchback FWD X16XEL/Y16XE/Z16XE | Chassis no. To:W1285446 | GCO44021 | Outer Joint | 29T | 22 | 22 | 52 | 95 | 50 | O |
| | 1995.09-2002.03 | AT/MT | F | L/R | Hatchback FWD X16XEL/Y16XE/Z16XE | Chassis no. to:W1285446;Chassis no. to:W5276825;Chassis no. to:W7154258 | GCO44007 | Outer Joint | 29T | 22 | 22 | 52 | 94.5 | 50 | O |
| | 1995.09-2002.03 | AT/MT | F | L/R | Hatchback FWD X16XEL/Y16XE/Z16XE | Chassis no. from:W1285447;Chassis no. from:W7154259 | GCO44011 | Outer Joint | 29T | 33 | 22 | 52 | 103 | 50.5 | O |
| | 1995.09-2002.03 | AT/MT | F | L/R | Hatchback FWD X16XEL/Y16XE/Z16XE | Chassis no. to:W7154258 | GCO44051 | Outer Joint | 29T | 22 | 22 | 52 | 95 | 50 | O |
| | 1995.09-2002.03 | AT/MT | F | L/R | Hatchback FWD X16XEL/Y16XE/Z16XE | Chassis no. to:W7154258 | GCI44004 | Inner Joint | | 22 | 22 | 34.95 | 57.5 | 103 | |
| | 1995.09-2002.03 | | F | | Hatchback FWD X16XEL/Y16XE/Z16XE | | GCO44010 | Outer Joint | 29T | 33 | 22 | 52 | 103 | 50.5 | O |
| | 1995.09-2002.08 | 4AT/5MT | F | L | Saloon FWD X16XEL/Y16XE/Z16XE | | GDS44076 | Drive Shaft | 29T | 22 | 22 | 52 | 95 | 592 | |
| | 1995.09-2002.08 | 4AT/5MT | F | R | Saloon FWD X16XEL/Y16XE/Z16XE | | GDS44077 | Drive Shaft | 29T | 22 | 22 | 52 | 95 | 955 | |
| | 1995.09-2002.08 | 4AT/5MT | F | L/R | Saloon FWD X16XEL/Y16XE/Z16XE | Chassis no. To:W1285446 | GCO44021 | Outer Joint | 29T | 22 | 22 | 52 | 95 | 50 | O |
| | 1995.09-2002.08 | AT/MT | F | L/R | Saloon FWD X16XEL/Y16XE/Z16XE | Chassis no. to:W1285446;Chassis no. to:W5276825;Chassis no. to:W7154258 | GCO44007 | Outer Joint | 29T | 22 | 22 | 52 | 94.5 | 50 | O |
| | 1995.09-2002.08 | AT/MT | F | L/R | Saloon FWD X16XEL/Y16XE/Z16XE | Chassis no. from:W1285447;Chassis no. from:W7154259 | GCO44011 | Outer Joint | 29T | 33 | 22 | 52 | 103 | 50.5 | O |
| | 1995.09-2002.08 | AT/MT | F | L/R | Saloon FWD X16XEL/Y16XE/Z16XE | Date to:1999.12;Chassis no. to:W7154258 | GCO44051 | Outer Joint | 29T | 22 | 22 | 52 | 95 | 50 | O |
| | 1995.09-2002.08 | AT/MT | F | L/R | Saloon FWD X16XEL/Y16XE/Z16XE | | GCI44004 | Inner Joint | | 22 | 22 | 34.95 | 57.5 | 103 | |
| | 1995.09-2002.08 | | F | | Saloon FWD X16XEL/Y16XE/Z16XE | | GCO44010 | Outer Joint | 29T | 33 | 22 | 52 | 103 | 50.5 | O |
| 1.7 (60 kw) | 1995.10-1996.11 | 5MT | F | L | Hatchback FWD X17TD | | GDS44038 | Drive Shaft | 29T | 33 | 34 | 52 | 103.5 | 595 | |
| | 1995.10-1996.11 | 5MT | F | R | Hatchback FWD X17TD | | GDS44039 | Drive Shaft | 29T | 33 | 34 | 52 | 103.5 | 959 | |
| | 1995.10-1996.11 | AT/MT | F | L/R | Hatchback FWD X17TD | | GCO44006 | Outer Joint | 29T | 33 | 25 | 52 | 103.5 | 61 | O |
| | 1995.10-1996.11 | AT/MT | F | L/R | Hatchback FWD X17TD | | GCO44049 | Outer Joint | | 33 | 25 | 52 | 109 | 61 | O |
| | 1995.10-1996.11 | | F | L/R | Hatchback FWD X17TD | | GCI44002 | Inner Joint | | 34 | 25 | 35 | 56.2 | 114.8 | |
| | 1995.10-1996.11 | 5MT | F | L | Saloon FWD X17TD | | GDS44038 | Drive Shaft | 29T | 33 | 34 | 52 | 103.5 | 595 | |
| | 1995.10-1996.11 | 5MT | F | R | Saloon FWD X17TD | | GDS44039 | Drive Shaft | 29T | 33 | 34 | 52 | 103.5 | 959 | |
| | 1995.10-1996.11 | AT/MT | F | L/R | Saloon FWD X17TD | | GCO44006 | Outer Joint | 29T | 33 | 25 | 52 | 103.5 | 61 | O |
| | 1995.10-1996.11 | AT/MT | F | L/R | Saloon FWD X17TD | | GCO44049 | Outer Joint | | 33 | 25 | 52 | 109 | 61 | O |
| | 1995.10-1996.11 | | F | L/R | Saloon FWD X17TD | | GCI44002 | Inner Joint | | 34 | 25 | 35 | 56.2 | 114.8 | |
| 1.8 (85 kw) | 1995.09-2000.08 | 4AT/5MT | F | L | Hatchback FWD X18XE | | GDS44038 | Drive Shaft | 29T | 33 | 34 | 52 | 103.5 | 595 | |

| | YEAR | TRANSM. | F/R | L/R | BODY STYLE & DRIVE TYPE & ENGINE | REMARKS | G-AP Ref. | PRODUCT | ABS | Technical Specifications A | B | C | H | L | P |
|---|---|---|---|---|---|---|---|---|---|---|---|---|---|---|---|
| **VAUXHALL** | | | | | | | | | | | | | | | |
| **Vectra** | | | | | | | | | | | | | | | |
| 1.8 (85 kw) | 1995.09-2000.08 | 4AT/5MT | F | R | Hatchback FWD X18XE | | GDS44039 | Drive Shaft | 29T | 33 | 34 | 52 | 103.5 | 959 | |
| | 1995.09-2000.08 | AT/MT | F | L/R | Hatchback FWD X18XE | | GCO44006 | Outer Joint | 29T | 33 | 25 | 52 | 103.5 | 61 | O |
| | 1995.09-2000.08 | | F | L/R | Hatchback FWD X18XE | | GCO44049 | Outer Joint | | 33 | 25 | 52 | 109 | 61 | O |
| | 1995.09-2000.08 | | F | L/R | Hatchback FWD X18XE | | GCI44002 | Inner Joint | | 34 | 25 | 35 | 56.2 | 114.8 | |
| | 1995.09-2000.08 | 4AT/5MT | F | L | Saloon FWD X18XE | | GDS44038 | Drive Shaft | 29T | 33 | 34 | 52 | 103.5 | 595 | |
| | 1995.09-2000.08 | 4AT/5MT | F | R | Saloon FWD X18XE | | GDS44039 | Drive Shaft | 29T | 33 | 34 | 52 | 103.5 | 959 | |
| | 1995.09-2000.08 | AT/MT | F | L/R | Saloon FWD X18XE | | GCO44006 | Outer Joint | 29T | 33 | 25 | 52 | 103.5 | 61 | O |
| | 1995.09-2000.08 | | F | L/R | Saloon FWD X18XE | | GCO44049 | Outer Joint | | 33 | 25 | 52 | 109 | 61 | O |
| | 1995.09-2000.08 | | F | L/R | Saloon FWD X18XE | | GCI44002 | Inner Joint | | 34 | 25 | 35 | 56.2 | 114.8 | |
| | 1995.10-2000.09 | 4AT/5MT | F | L | Hatchback FWD X18XE1 | for OE number:90512983;for OE number:374261;For Engine code:X18XE | GDS44038 | Drive Shaft | 29T | 33 | 34 | 52 | 103.5 | 595 | |
| | 1995.10-2000.09 | 4AT/5MT | F | R | Hatchback FWD X18XE1 | for OE number:90512386;for OE number:374249;For Engine code:X18XE | GDS44039 | Drive Shaft | 29T | 33 | 34 | 52 | 103.5 | 959 | |
| | 1995.10-2000.09 | AT/MT | F | L/R | Hatchback FWD X18XE1 | | GCO44006 | Outer Joint | 29T | 33 | 25 | 52 | 103.5 | 61 | O |
| | 1995.10-2000.09 | AT/MT | F | L/R | Hatchback FWD X18XE1 | | GCO44049 | Outer Joint | | 33 | 25 | 52 | 109 | 61 | O |
| | 1995.10-2000.09 | | F | L/R | Hatchback FWD X18XE1 | | GCI44002 | Inner Joint | | 34 | 25 | 35 | 56.2 | 114.8 | |
| | 1995.10-2000.09 | 4AT/5MT | F | L | Saloon FWD X18XE1 | For Engine code:X18XE | GDS44038 | Drive Shaft | 29T | 33 | 34 | 52 | 103.5 | 595 | |
| | 1995.10-2000.09 | 4AT/5MT | F | R | Saloon FWD X18XE1 | For Engine code:X18XE | GDS44039 | Drive Shaft | 29T | 33 | 34 | 52 | 103.5 | 959 | |
| | 1995.10-2000.09 | AT/MT | F | L/R | Saloon FWD X18XE1 | | GCO44006 | Outer Joint | 29T | 33 | 25 | 52 | 103.5 | 61 | O |
| | 1995.10-2000.09 | | F | L/R | Saloon FWD X18XE1 | | GCO44049 | Outer Joint | | 33 | 25 | 52 | 109 | 61 | O |
| | 1995.10-2000.09 | | F | L/R | Saloon FWD X18XE1 | | GCI44002 | Inner Joint | | 34 | 25 | 35 | 56.2 | 114.8 | |
| | 1996.11-2000.08 | 4AT/5MT | F | L | Estate FWD X18XE | | GDS44038 | Drive Shaft | 29T | 33 | 34 | 52 | 103.5 | 595 | |
| | 1996.11-2000.08 | 4AT/5MT | F | R | Estate FWD X18XE | | GDS44039 | Drive Shaft | 29T | 33 | 34 | 52 | 103.5 | 959 | |
| | 1996.11-2000.08 | AT/MT | F | L/R | Estate FWD X18XE | | GCO44006 | Outer Joint | 29T | 33 | 25 | 52 | 103.5 | 61 | O |
| | 1996.11-2000.08 | | F | L/R | Estate FWD X18XE | | GCO44049 | Outer Joint | | 33 | 25 | 52 | 109 | 61 | O |
| | 1996.11-2000.08 | | F | L/R | Estate FWD X18XE | | GCI44002 | Inner Joint | | 34 | 25 | 35 | 56.2 | 114.8 | |
| | 1996.11-2000.09 | 4AT/5MT | F | L | Estate FWD X18XE1 | for OE number:90512983;for OE number:374261;For Engine code:X18XE | GDS44038 | Drive Shaft | 29T | 33 | 34 | 52 | 103.5 | 595 | |
| | 1996.11-2000.09 | 4AT/5MT | F | R | Estate FWD X18XE1 | for OE number:90512386;for OE number:374249;For Engine code:X18XE | GDS44039 | Drive Shaft | 29T | 33 | 34 | 52 | 103.5 | 959 | |
| | 1996.11-2000.09 | AT/MT | F | L/R | Estate FWD X18XE1 | | GCO44006 | Outer Joint | 29T | 33 | 25 | 52 | 103.5 | 61 | O |
| | 1996.11-2000.09 | AT/MT | F | L/R | Estate FWD X18XE1 | | GCO44049 | Outer Joint | | 33 | 25 | 52 | 109 | 61 | O |
| | 1996.11-2000.09 | | F | L/R | Estate FWD X18XE1 | | GCI44002 | Inner Joint | | 34 | 25 | 35 | 56.2 | 114.8 | |
| 1.8 (90 kw) | 2002.04-2008.07 | 5MT | F | L | Saloon FWD Z 18 XE | Chassis no. from:71009337 | GDS17223 | Drive Shaft | | 30 | 22 | 52 | 94 | 609 | |
| | 2002.04-2008.07 | 5MT | F | L | Saloon FWD Z 18 XE | Chassis no. to:71009336 | GDS44020 | Drive Shaft | | 30 | 22 | 52.5 | 105 | 617.5 | |
| | 2002.04-2008.07 | 5MT | F | R | Saloon FWD Z 18 XE | Chassis no. to:71009336 | GDS17040 | Drive Shaft | | 30 | 22 | 52.5 | 105 | 987 | |
| | 2002.04-2008.07 | 5MT | F | L/R | Saloon FWD Z 18 XE | Chassis no. to:71009336 | GCO17007 | Outer Joint | | 30 | 25 | 52.5 | 105 | 62 | O |
| | 2002.04-2008.07 | 5MT | F | L/R | Saloon FWD Z 18 XE | Chassis no. from:71009337 | GCO21038 | Outer Joint | | 30 | 24 | 52 | 94 | 64 | M |
| | 2002.04-2008.07 | 5MT | F | L | Saloon FWD Z 18 XE | Chassis no. from:71009337 | GCI99026 | Inner Joint | | 22 | 25 | 35 | 57 | 111.7 | |
| | 2002.04-2008.07 | CVT/5MT | F | L | Saloon FWD Z 18 XE | Chassis no. from:71009337 | GDS17223 | Drive Shaft | | 30 | 22 | 52 | 94 | 609 | |
| | 2002.04-2008.07 | CVT/5MT | F | L | Saloon FWD Z 18 XE | Chassis no. to:71009336 | GDS44020 | Drive Shaft | | 30 | 22 | 52.5 | 105 | 617.5 | |
| | 2002.04-2008.07 | CVT/5MT | F | R | Saloon FWD Z 18 XE | Chassis no. to:71009336 | GDS17040 | Drive Shaft | | 30 | 22 | 52.5 | 105 | 987 | |
| | 2002.04-2008.07 | CVT/5MT | F | L/R | Saloon FWD Z 18 XE | Chassis no. to:71009336 | GCO17007 | Outer Joint | | 30 | 25 | 52.5 | 105 | 62 | O |
| | 2002.04-2008.07 | CVT/5MT | F | L/R | Saloon FWD Z 18 XE | Chassis no. from:71009337 | GCO21038 | Outer Joint | | 30 | 24 | 52 | 94 | 64 | M |
| | 2002.04-2008.07 | CVT/5MT | F | L | Saloon FWD Z 18 XE | Chassis no. from:71009337 | GCI99026 | Inner Joint | | 22 | 25 | 35 | 57 | 111.7 | |
| | 2002.08-2008.07 | 5MT | F | L | Hatchback FWD Z 18 XE | Chassis no. from:71009337 | GDS17223 | Drive Shaft | | 30 | 22 | 52 | 94 | 609 | |
| | 2002.08-2008.07 | 5MT | F | L | Hatchback FWD Z 18 XE | Chassis no. to:71009336 | GDS44020 | Drive Shaft | | 30 | 22 | 52.5 | 105 | 617.5 | |
| | 2002.08-2008.07 | 5MT | F | R | Hatchback FWD Z 18 XE | Chassis no. to:71009336 | GDS17040 | Drive Shaft | | 30 | 22 | 52.5 | 105 | 987 | |
| | 2002.08-2008.07 | 5MT | F | L/R | Hatchback FWD Z 18 XE | Chassis no. to:71009336 | GCO17007 | Outer Joint | | 30 | 25 | 52.5 | 105 | 62 | O |
| | 2002.08-2008.07 | 5MT | F | L/R | Hatchback FWD Z 18 XE | Chassis no. from:71009337 | GCO21038 | Outer Joint | | 30 | 24 | 52 | 94 | 64 | M |
| | 2002.08-2008.07 | 5MT | F | L | Hatchback FWD Z 18 XE | Chassis no. from:71009337 | GCI99026 | Inner Joint | | 22 | 25 | 35 | 57 | 111.7 | |
| | 2002.08-2008.07 | CVT/5MT | F | L | Hatchback FWD Z 18 XE | Chassis no. from:71009337 | GDS17223 | Drive Shaft | | 30 | 22 | 52 | 94 | 609 | |
| | 2002.08-2008.07 | CVT/5MT | F | L | Hatchback FWD Z 18 XE | Chassis no. to:71009336 | GDS44020 | Drive Shaft | | 30 | 22 | 52.5 | 105 | 617.5 | |
| | 2002.08-2008.07 | CVT/5MT | F | R | Hatchback FWD Z 18 XE | Chassis no. to:71009336 | GDS17040 | Drive Shaft | | 30 | 22 | 52.5 | 105 | 987 | |
| | 2002.08-2008.07 | CVT/5MT | F | L/R | Hatchback FWD Z 18 XE | Chassis no. to:71009336 | GCO17007 | Outer Joint | | 30 | 25 | 52.5 | 105 | 62 | O |
| | 2002.08-2008.07 | CVT/5MT | F | L/R | Hatchback FWD Z 18 XE | Chassis no. from:71009337 | GCO21038 | Outer Joint | | 30 | 24 | 52 | 94 | 64 | M |
| | 2002.08-2008.07 | CVT/5MT | F | L | Hatchback FWD Z 18 XE | Chassis no. from:71009337 | GCI99026 | Inner Joint | | 22 | 25 | 35 | 57 | 111.7 | |
| | 2003.10-2005.08 | CVT/5MT | F | L | Estate FWD Z 18 XE | | GDS44020 | Drive Shaft | | 30 | 22 | 52.5 | 105 | 617.5 | |
| | 2003.10-2005.08 | CVT/5MT | F | R | Estate FWD Z 18 XE | | GDS17040 | Drive Shaft | | 30 | 22 | 52.5 | 105 | 987 | |
| | 2003.10-2005.08 | MT | F | L/R | Estate FWD Z 18 XE | | GCO17007 | Outer Joint | | 30 | 25 | 52.5 | 105 | 62 | O |
| | 2003.10-2005.08 | | F | | Estate FWD Z 18 XE | | GCO21038 | Outer Joint | | 30 | 24 | 52 | 94 | 64 | M |
| | 2003.10-2005.08 | | F | L/R | Estate FWD Z 18 XE | | GCI99026 | Inner Joint | | 22 | 25 | 35 | 57 | 111.7 | |
| 1.8 (92 kw) | 2000.09-2002.03 | | F | L/R | Estate FWD Z18XE | | GCO44006 | Outer Joint | 29T | 33 | 25 | 52 | 103.5 | 61 | O |
| | 2000.09-2002.03 | | F | L/R | Estate FWD Z18XE | | GCO44049 | Outer Joint | | 33 | 25 | 52 | 109 | 61 | O |
| | 2000.09-2002.03 | | F | L/R | Estate FWD Z18XE | | GCI99026 | Inner Joint | | 22 | 25 | 35 | 57 | 111.7 | |
| | 2000.09-2002.03 | | F | L/R | Saloon FWD Z18XE | | GCO44006 | Outer Joint | 29T | 33 | 25 | 52 | 103.5 | 61 | O |
| | 2000.09-2002.03 | | F | L/R | Saloon FWD Z18XE | | GCO44049 | Outer Joint | | 33 | 25 | 52 | 109 | 61 | O |
| | 2000.09-2002.03 | | F | L/R | Saloon FWD Z18XE | | GCI99026 | Inner Joint | | 22 | 25 | 35 | 57 | 111.7 | |
| | 2000.09-2002.08 | AT/MT | F | L/R | Estate FWD Z18XE | | GCO44006 | Outer Joint | 29T | 33 | 25 | 52 | 103.5 | 61 | O |

| | YEAR | TRANSM. | F/R | L/R | BODY STYLE & DRIVE TYPE & ENGINE | REMARKS | G-AP Ref. | PRODUCT | ABS | Technical Specifications A | B | C | H | L | P |
|---|---|---|---|---|---|---|---|---|---|---|---|---|---|---|---|
| **VAUXHALL** | | | | | | | | | | | | | | | |
| **Vectra** | | | | | | | | | | | | | | | |
| 1.8 (92 kw) | 2000.09-2002.08 | AT/MT | F | L/R | Estate FWD Z18XE | | GCO44049 | Outer Joint | | 33 | 25 | 52 | 109 | 61 | O |
| | 2000.09-2002.08 | | F | L/R | Estate FWD Z18XE | | GCI44002 | Inner Joint | | 34 | 25 | 35 | 56.2 | 114.8 | |
| | 2000.09-2002.08 | | F | L/R | Estate FWD Z18XE | | GCI99026 | Inner Joint | | 22 | 25 | 35 | 57 | 111.7 | |
| | 2000.09-2002.08 | AT/MT | F | L/R | Hatchback FWD Z18XE | Date to:2002.08 | GCO44006 | Outer Joint | 29T | 33 | 25 | 52 | 103.5 | 61 | O |
| | 2000.09-2002.08 | AT/MT | F | L/R | Hatchback FWD Z18XE | | GCO44049 | Outer Joint | | 33 | 25 | 52 | 109 | 61 | O |
| | 2000.09-2002.08 | | F | L/R | Hatchback FWD Z18XE | Date To:2002.08 | GCI44002 | Inner Joint | | 34 | 25 | 35 | 56.2 | 114.8 | |
| | 2000.09-2002.08 | | F | L/R | Hatchback FWD Z18XE | | GCI99026 | Inner Joint | | 22 | 25 | 35 | 57 | 111.7 | |
| | 2000.09-2002.08 | AT/MT | F | L/R | Saloon FWD Z18XE | | GCO44006 | Outer Joint | 29T | 33 | 25 | 52 | 103.5 | 61 | O |
| | 2000.09-2002.08 | AT/MT | F | L/R | Saloon FWD Z18XE | | GCO44049 | Outer Joint | | 33 | 25 | 52 | 109 | 61 | O |
| | 2000.09-2002.08 | | F | L/R | Saloon FWD Z18XE | | GCI44002 | Inner Joint | | 34 | 25 | 35 | 56.2 | 114.8 | |
| | 2000.09-2002.08 | | F | L/R | Saloon FWD Z18XE | | GCI99026 | Inner Joint | | 22 | 25 | 35 | 57 | 111.7 | |
| | 2000.09-2003.07 | | F | L/R | Hatchback FWD Z18XE | | GCO44006 | Outer Joint | 29T | 33 | 25 | 52 | 103.5 | 61 | O |
| | 2000.09-2003.07 | | F | L/R | Hatchback FWD Z18XE | | GCO44049 | Outer Joint | | 33 | 25 | 52 | 109 | 61 | O |
| | 2000.09-2003.07 | | F | L/R | Hatchback FWD Z18XE | | GCI99026 | Inner Joint | | 22 | 25 | 35 | 57 | 111.7 | |
| 1.8 (103 kw) | 2006.01-2008.07 | 5MT | F | L | Estate FWD Z 18 XER | Chassis no. from:71009337 | GDS17223 | Drive Shaft | | 30 | 22 | 52 | 94 | 609 | |
| | 2006.01-2008.07 | 5MT | F | L | Estate FWD Z 18 XER | Chassis no. to:71009336 | GDS44020 | Drive Shaft | | 30 | 22 | 52.5 | 105 | 617.5 | |
| | 2006.01-2008.07 | 5MT | F | R | Estate FWD Z 18 XER | Chassis no. to:71009336 | GDS17040 | Drive Shaft | | 30 | 22 | 52.5 | 105 | 987 | |
| | 2006.01-2008.07 | 5MT | F | L/R | Estate FWD Z 18 XER | Chassis no. to:71009336 | GCO17007 | Outer Joint | | 30 | 25 | 52.5 | 105 | 62 | O |
| | 2006.01-2008.07 | 5MT | F | L/R | Estate FWD Z 18 XER | Chassis no. from:71009337 | GCO21038 | Outer Joint | | 30 | 24 | 52 | 94 | 64 | M |
| | 2006.01-2008.07 | 5MT | F | L | Estate FWD Z 18 XER | Chassis no. from:71009337 | GCI99026 | Inner Joint | | 22 | 25 | 35 | 57 | 111.7 | |
| | 2006.01-2008.07 | 5MT | F | L | Hatchback FWD Z 18 XER | Chassis no. from:71009337 | GDS17223 | Drive Shaft | | 30 | 22 | 52 | 94 | 609 | |
| | 2006.01-2008.07 | 5MT | F | L | Hatchback FWD Z 18 XER | Chassis no. to:71009336 | GDS44020 | Drive Shaft | | 30 | 22 | 52.5 | 105 | 617.5 | |
| | 2006.01-2008.07 | 5MT | F | R | Hatchback FWD Z 18 XER | Chassis no. to:71009336 | GDS17040 | Drive Shaft | | 30 | 22 | 52.5 | 105 | 987 | |
| | 2006.01-2008.07 | 5MT | F | L/R | Hatchback FWD Z 18 XER | Chassis no. to:71009336 | GCO17007 | Outer Joint | | 30 | 25 | 52.5 | 105 | 62 | O |
| | 2006.01-2008.07 | 5MT | F | L/R | Hatchback FWD Z 18 XER | Chassis no. from:71009337 | GCO21038 | Outer Joint | | 30 | 24 | 52 | 94 | 64 | M |
| | 2006.01-2008.07 | 5MT | F | L | Hatchback FWD Z 18 XER | Chassis no. from:71009337 | GCI99026 | Inner Joint | | 22 | 25 | 35 | 57 | 111.7 | |
| | 2006.01-2008.07 | 5MT | F | L | Saloon FWD Z 18 XER | Chassis no. from:71009337 | GDS17223 | Drive Shaft | | 30 | 22 | 52 | 94 | 609 | |
| | 2006.01-2008.07 | 5MT | F | L | Saloon FWD Z 18 XER | Chassis no. to:71009336 | GDS44020 | Drive Shaft | | 30 | 22 | 52.5 | 105 | 617.5 | |
| | 2006.01-2008.07 | 5MT | F | R | Saloon FWD Z 18 XER | Chassis no. to:71009336 | GDS17040 | Drive Shaft | | 30 | 22 | 52.5 | 105 | 987 | |
| | 2006.01-2008.07 | 5MT | F | L/R | Saloon FWD Z 18 XER | Chassis no. to:71009336 | GCO17007 | Outer Joint | | 30 | 25 | 52.5 | 105 | 62 | O |
| | 2006.01-2008.07 | 5MT | F | L/R | Saloon FWD Z 18 XER | Chassis no. from:71009337 | GCO21038 | Outer Joint | | 30 | 24 | 52 | 94 | 64 | M |
| | 2006.01-2008.07 | 5MT | F | L | Saloon FWD Z 18 XER | Chassis no. from:71009337 | GCI99026 | Inner Joint | | 22 | 25 | 35 | 57 | 111.7 | |
| 1.9 (88 kw) | 2002.04-2008.09 | 6MT | F | L | Saloon FWD Z 19 DT | Trans. code:M32 | GDS21092 | Drive Shaft | | 30 | 25 | 53.8 | 94.5 | 604 | |
| | 2002.04-2008.09 | 6MT | F | R | Saloon FWD Z 19 DT | Trans. code:M32 | GDS21053 | Drive Shaft | | 30 | 34 | 53.8 | 94.5 | 617 | |
| | 2002.04-2008.09 | 6MT | F | L/R | Saloon FWD Z 19 DT | Trans. code:F40 | GDS21032 | Drive Shaft | | 30 | 27 | 53.8 | 94.5 | 605 | |
| | 2002.04-2008.09 | MT | F | L/R | Saloon FWD Z 19 DT | | GDS21036 | Drive Shaft | | 30 | 27 | 55.4 | 100 | 602 | |
| | 2002.04-2008.09 | MT | F | L/R | Saloon FWD Z 19 DT | Date from:2004.04 | GCO17051 | Outer Joint | | 30 | 26 | 53.8 | 94.5 | 65.5 | M |
| | 2002.04-2008.09 | MT | F | L | Saloon FWD Z 19 DT | Date from:2004.04 | GCI99186 | Inner Joint | | 25 | 28 | 34.9 | 57.5 | 111 | |
| | 2002.04-2008.09 | MT | F | R | Saloon FWD Z 19 DT | Date from:2004.04 | GCI44016 | Inner Joint | | 34 | 28 | 37.5 | | 129.2 | |
| | 2002.04-2008.09 | MT | F | L/R | Saloon FWD Z 19 DT | | GCI99138 | Inner Joint | | 27 | 28 | 35 | 78 | 112 | |
| | 2002.08-2008.07 | 6MT | F | L | Hatchback FWD Z 19 DT | Trans. code:M32 | GDS21092 | Drive Shaft | | 30 | 25 | 53.8 | 94.5 | 604 | |
| | 2002.08-2008.07 | 6MT | F | R | Hatchback FWD Z 19 DT | Trans. code:M32 | GDS21053 | Drive Shaft | | 30 | 34 | 53.8 | 94.5 | 617 | |
| | 2002.08-2008.07 | 6MT | F | L/R | Hatchback FWD Z 19 DT | Trans. code:F40 | GDS21032 | Drive Shaft | | 30 | 27 | 53.8 | 94.5 | 605 | |
| | 2002.08-2008.07 | MT | F | L/R | Hatchback FWD Z 19 DT | | GDS21036 | Drive Shaft | | 30 | 27 | 55.4 | 100 | 602 | |
| | 2002.08-2008.07 | MT | F | L/R | Hatchback FWD Z 19 DT | Date from:2004.04 | GCO17051 | Outer Joint | | 30 | 26 | 53.8 | 94.5 | 65.5 | M |
| | 2002.08-2008.07 | MT | F | L | Hatchback FWD Z 19 DT | Date from:2004.04 | GCI99186 | Inner Joint | | 25 | 28 | 34.9 | 57.5 | 111 | |
| | 2002.08-2008.07 | MT | F | R | Hatchback FWD Z 19 DT | Date from:2004.04 | GCI44016 | Inner Joint | | 34 | 28 | 37.5 | | 129.2 | |
| | 2002.08-2008.07 | MT | F | L/R | Hatchback FWD Z 19 DT | | GCI99138 | Inner Joint | | 27 | 28 | 35 | 78 | 112 | |
| | 2004.04-2008.07 | 6MT | F | L | Estate FWD Z 19 DT | Trans. code:M32 | GDS21092 | Drive Shaft | | 30 | 25 | 53.8 | 94.5 | 604 | |
| | 2004.04-2008.07 | 6MT | F | R | Estate FWD Z 19 DT | Trans. code:M32 | GDS21053 | Drive Shaft | | 30 | 34 | 53.8 | 94.5 | 617 | |
| | 2004.04-2008.07 | 6MT | F | L/R | Estate FWD Z 19 DT | Trans. code:F40 | GDS21032 | Drive Shaft | | 30 | 27 | 53.8 | 94.5 | 605 | |
| | 2004.04-2008.07 | MT | F | L/R | Estate FWD Z 19 DT | | GDS21036 | Drive Shaft | | 30 | 27 | 55.4 | 100 | 602 | |
| | 2004.04-2008.07 | MT | F | L/R | Estate FWD Z 19 DT | | GCO17051 | Outer Joint | | 30 | 26 | 53.8 | 94.5 | 65.5 | M |
| | 2004.04-2008.07 | MT | F | L | Estate FWD Z 19 DT | | GCI99186 | Inner Joint | | 25 | 28 | 34.9 | 57.5 | 111 | |
| | 2004.04-2008.07 | MT | F | R | Estate FWD Z 19 DT | | GCI44016 | Inner Joint | | 34 | 28 | 37.5 | | 129.2 | |
| | 2004.04-2008.07 | MT | F | L/R | Estate FWD Z 19 DT | | GCI99138 | Inner Joint | | 27 | 28 | 35 | 78 | 112 | |
| 1.9 (110 kw) | 2004.04-2008.07 | AT/MT | F | L/R | Hatchback FWD Z 19 DTH | | GDS21036 | Drive Shaft | | 30 | 27 | 55.4 | 100 | 602 | |
| | 2004.04-2008.07 | AT/MT | F | L/R | Hatchback FWD Z 19 DTH | | GCO17051 | Outer Joint | | 30 | 26 | 53.8 | 94.5 | 65.5 | M |
| | 2004.04-2008.07 | AT/MT | F | L/R | Hatchback FWD Z 19 DTH | | GCI21024 | Inner Joint | | 27 | 34 | 35 | 101 | 88 | |
| | 2004.04-2008.07 | AT/Semi-AT | F | L/R | Hatchback FWD Z 19 DTH | | GDS44080 | Drive Shaft | | 30 | 27 | 53.8 | 94.5 | 591 | |
| | 2004.04-2008.07 | MT | F | L | Hatchback FWD Z 19 DTH | Trans. code:M32 | GDS21092 | Drive Shaft | | 30 | 25 | 53.8 | 94.5 | 604 | |
| | 2004.04-2008.07 | MT | F | R | Hatchback FWD Z 19 DTH | Trans. code:M32 | GDS21053 | Drive Shaft | | 30 | 34 | 53.8 | 94.5 | 617 | |
| | 2004.04-2008.07 | MT | F | L/R | Hatchback FWD Z 19 DTH | | GDS21032 | Drive Shaft | | 30 | 27 | 53.8 | 94.5 | 605 | |
| | 2004.04-2008.07 | MT | F | L/R | Hatchback FWD Z 19 DTH | | GCI99138 | Inner Joint | | 27 | 28 | 35 | 78 | 112 | |
| | 2004.04-2008.08 | AT/MT | F | L/R | Saloon FWD Z 19 DTH | | GDS21036 | Drive Shaft | | 30 | 27 | 55.4 | 100 | 602 | |

| | YEAR | TRANSM. | F/R | L/R | BODY STYLE & DRIVE TYPE & ENGINE | REMARKS | G-AP Ref. | PRODUCT | ABS | Technical Specifications A | B | C | H | L | P |
|---|---|---|---|---|---|---|---|---|---|---|---|---|---|---|---|
| **VAUXHALL** | | | | | | | | | | | | | | | |
| **Vectra** | | | | | | | | | | | | | | | |
| 1.9 (110 kw) | 2004.04-2008.08 | AT/MT | F | L/R | Saloon FWD Z 19 DTH | | GCO17051 | Outer Joint | | 30 | 26 | 53.8 | 94.5 | 65.5 | M |
| | 2004.04-2008.08 | AT/MT | F | L/R | Saloon FWD Z 19 DTH | | GCI21024 | Inner Joint | | 27 | 34 | 35 | 101 | 88 | |
| | 2004.04-2008.08 | AT/Semi-AT | F | L/R | Saloon FWD Z 19 DTH | | GDS44080 | Drive Shaft | | 30 | 27 | 53.8 | 94.5 | 591 | |
| | 2004.04-2008.08 | MT | F | L | Saloon FWD Z 19 DTH | Trans. code:M32 | GDS21092 | Drive Shaft | | 30 | 25 | 53.8 | 94.5 | 604 | |
| | 2004.04-2008.08 | MT | F | R | Saloon FWD Z 19 DTH | Trans. code:M32 | GDS21053 | Drive Shaft | | 30 | 34 | 53.8 | 94.5 | 617 | |
| | 2004.04-2008.08 | MT | F | L/R | Saloon FWD Z 19 DTH | | GDS21032 | Drive Shaft | | 30 | 27 | 53.8 | 94.5 | 605 | |
| | 2004.04-2009.05 | AT/MT | F | L/R | Estate FWD Z 19 DTH | | GDS21036 | Drive Shaft | | 30 | 27 | 55.4 | 100 | 602 | |
| | 2004.04-2009.05 | AT/MT | F | L/R | Estate FWD Z 19 DTH | | GCO17051 | Outer Joint | | 30 | 26 | 53.8 | 94.5 | 65.5 | M |
| | 2004.04-2009.05 | AT/MT | F | L/R | Estate FWD Z 19 DTH | | GCI21024 | Inner Joint | | 27 | 34 | 35 | 101 | 88 | |
| | 2004.04-2009.05 | AT/Semi-AT | F | L/R | Estate FWD Z 19 DTH | | GDS44080 | Drive Shaft | | 30 | 27 | 53.8 | 94.5 | 591 | |
| | 2004.04-2009.05 | MT | F | L | Estate FWD Z 19 DTH | Trans. code:M32 | GDS21092 | Drive Shaft | | 30 | 25 | 53.8 | 94.5 | 604 | |
| | 2004.04-2009.05 | MT | F | R | Estate FWD Z 19 DTH | Trans. code:M32 | GDS21053 | Drive Shaft | | 30 | 34 | 53.8 | 94.5 | 617 | |
| | 2004.04-2009.05 | MT | F | L/R | Estate FWD Z 19 DTH | | GDS21032 | Drive Shaft | | 30 | 27 | 53.8 | 94.5 | 605 | |
| | 2004.04-2009.05 | MT | F | L/R | Estate FWD Z 19 DTH | | GCI99138 | Inner Joint | | 27 | 28 | 35 | 78 | 112 | |
| 2.0 (60 kw) | 1996.09-2000.08 | 5MT | F | L | Hatchback FWD X20DTL | | GDS44038 | Drive Shaft | 29T | 33 | 34 | 52 | 103.5 | 595 | |
| | 1996.09-2000.08 | 5MT | F | R | Hatchback FWD X20DTL | | GDS44039 | Drive Shaft | 29T | 33 | 34 | 52 | 103.5 | 959 | |
| | 1996.09-2000.08 | AT/MT | F | L/R | Hatchback FWD X20DTL | Date from:1996.09;Date to:2000.08 | GCO44006 | Outer Joint | 29T | 33 | 25 | 52 | 103.5 | 61 | O |
| | 1996.09-2000.08 | AT/MT | F | L/R | Hatchback FWD X20DTL | | GCO44049 | Outer Joint | | 33 | 25 | 52 | 109 | 61 | O |
| | 1996.09-2000.08 | | F | L/R | Hatchback FWD X20DTL | | GCI44002 | Inner Joint | | 34 | 25 | 35 | 56.2 | 114.8 | |
| | 1996.09-2000.08 | 5MT | F | L | Saloon FWD X20DTL | | GDS44038 | Drive Shaft | 29T | 33 | 34 | 52 | 103.5 | 595 | |
| | 1996.09-2000.08 | 5MT | F | R | Saloon FWD X20DTL | | GDS44039 | Drive Shaft | 29T | 33 | 34 | 52 | 103.5 | 959 | |
| | 1996.09-2000.08 | AT/MT | F | L/R | Saloon FWD X20DTL | Date from:1996.09;Date to:2000.08 | GCO44006 | Outer Joint | 29T | 33 | 25 | 52 | 103.5 | 61 | O |
| | 1996.09-2000.08 | AT/MT | F | L/R | Saloon FWD X20DTL | | GCO44049 | Outer Joint | | 33 | 25 | 52 | 109 | 61 | O |
| | 1996.09-2000.08 | | F | L/R | Saloon FWD X20DTL | | GCI44002 | Inner Joint | | 34 | 25 | 35 | 56.2 | 114.8 | |
| | 1996.11-2000.08 | 5MT | F | L | Estate FWD X20DTL | | GDS44038 | Drive Shaft | 29T | 33 | 34 | 52 | 103.5 | 595 | |
| | 1996.11-2000.08 | 5MT | F | R | Estate FWD X20DTL | | GDS44039 | Drive Shaft | 29T | 33 | 34 | 52 | 103.5 | 959 | |
| | 1996.11-2000.08 | AT/MT | F | L/R | Estate FWD X20DTL | Date from:1996.11;Date to:2000.08 | GCO44006 | Outer Joint | 29T | 33 | 25 | 52 | 103.5 | 61 | O |
| | 1996.11-2000.08 | AT/MT | F | L/R | Estate FWD X20DTL | | GCO44049 | Outer Joint | | 33 | 25 | 52 | 109 | 61 | O |
| | 1996.11-2000.08 | | F | L/R | Estate FWD X20DTL | | GCI44002 | Inner Joint | | 34 | 25 | 35 | 56.2 | 114.8 | |
| 2.0 (74 kw) | 1995.08-2001.10 | 5MT | F | L | Estate FWD X20DTH/Y20DTH | | GDS44038 | Drive Shaft | 29T | 33 | 34 | 52 | 103.5 | 595 | |
| | 1995.08-2001.10 | 5MT | F | R | Estate FWD X20DTH/Y20DTH | | GDS44039 | Drive Shaft | 29T | 33 | 34 | 52 | 103.5 | 959 | |
| | 1995.08-2001.10 | AT/MT | F | L/R | Estate FWD X20DTH/Y20DTH | | GCO44006 | Outer Joint | 29T | 33 | 25 | 52 | 103.5 | 61 | O |
| | 1995.08-2001.10 | AT/MT | F | L/R | Estate FWD X20DTH/Y20DTH | | GCO44049 | Outer Joint | | 33 | 25 | 52 | 109 | 61 | O |
| | 1995.08-2001.10 | | F | L/R | Estate FWD X20DTH/Y20DTH | | GCI44002 | Inner Joint | | 34 | 25 | 35 | 56.2 | 114.8 | |
| | 1995.08-2001.10 | 5MT | F | L | Saloon FWD X20DTH/Y20DTH | | GDS44038 | Drive Shaft | 29T | 33 | 34 | 52 | 103.5 | 595 | |
| | 1995.08-2001.10 | 5MT | F | R | Saloon FWD X20DTH/Y20DTH | | GDS44039 | Drive Shaft | 29T | 33 | 34 | 52 | 103.5 | 959 | |
| | 1995.08-2001.10 | AT/MT | F | L/R | Saloon FWD X20DTH/Y20DTH | | GCO44006 | Outer Joint | 29T | 33 | 25 | 52 | 103.5 | 61 | O |
| | 1995.08-2001.10 | AT/MT | F | L/R | Saloon FWD X20DTH/Y20DTH | | GCO44049 | Outer Joint | | 33 | 25 | 52 | 109 | 61 | O |
| | 1995.08-2001.10 | | F | L/R | Saloon FWD X20DTH/Y20DTH | | GCI44002 | Inner Joint | | 34 | 25 | 35 | 56.2 | 114.8 | |
| | 1997.06-2001.10 | 5MT | F | L | Hatchback FWD X20DTH/Y20DTH | | GDS44038 | Drive Shaft | 29T | 33 | 34 | 52 | 103.5 | 595 | |
| | 1997.06-2001.10 | 5MT | F | R | Hatchback FWD X20DTH/Y20DTH | | GDS44039 | Drive Shaft | 29T | 33 | 34 | 52 | 103.5 | 959 | |
| | 1997.06-2001.10 | AT/MT | F | L/R | Hatchback FWD X20DTH/Y20DTH | | GCO44006 | Outer Joint | 29T | 33 | 25 | 52 | 103.5 | 61 | O |
| | 1997.06-2001.10 | AT/MT | F | L/R | Hatchback FWD X20DTH/Y20DTH | Date from:1998.01 | GCO44049 | Outer Joint | | 33 | 25 | 52 | 109 | 61 | O |
| | 1997.06-2001.10 | | F | L/R | Hatchback FWD X20DTH/Y20DTH | | GCI44002 | Inner Joint | | 34 | 25 | 35 | 56.2 | 114.8 | |
| | 2002.04-2008.10 | 5MT | F | L | Saloon FWD Y 20 DTH | | GDS60015 | Drive Shaft | | 30 | 34 | 52.5 | 105 | 628 | |
| | 2002.04-2008.10 | 5MT | F | R | Saloon FWD Y 20 DTH | Chassis no. from:41036716 | GDS21061 | Drive Shaft | | 30 | 34 | 52.5 | 105 | 968 | |
| | 2002.04-2008.10 | 5MT | F | R | Saloon FWD Y 20 DTH | Chassis no. to:41036715 | GDS60016 | Drive Shaft | | 30 | 34 | 52.5 | 105 | 588 | |
| | 2002.04-2008.10 | 5MT | F | R | Saloon FWD Y 20 DTH | For Engine code:Y20DTH | GCI44005 | Inner Joint | | 34 | 25 | 35 | | 130.2 | |
| | 2002.04-2008.10 | MT | F | L/R | Saloon FWD Y 20 DTH | Date to:2005.08 | GCO17007 | Outer Joint | | 30 | 25 | 52.5 | 105 | 62 | O |
| | 2002.04-2008.10 | | F | L/R | Saloon FWD Y 20 DTH | | GCI44002 | Inner Joint | | 34 | 25 | 35 | 56.2 | 114.8 | |
| | 2002.08-2008.07 | 5MT | F | L | Hatchback FWD Y 20 DTH | | GDS60015 | Drive Shaft | | 30 | 34 | 52.5 | 105 | 628 | |
| | 2002.08-2008.07 | 5MT | F | R | Hatchback FWD Y 20 DTH | Chassis no. from:41036716 | GDS21061 | Drive Shaft | | 30 | 34 | 52.5 | 105 | 968 | |
| | 2002.08-2008.07 | 5MT | F | R | Hatchback FWD Y 20 DTH | Chassis no. to:41036715 | GDS60016 | Drive Shaft | | 30 | 34 | 52.5 | 105 | 588 | |
| | 2002.08-2008.07 | 5MT | F | R | Hatchback FWD Y 20 DTH | For Engine code:Y20DTH | GCI44005 | Inner Joint | | 34 | 25 | 35 | | 130.2 | |
| | 2002.08-2008.07 | MT | F | L/R | Hatchback FWD Y 20 DTH | Date to:2005.08 | GCO17007 | Outer Joint | | 30 | 25 | 52.5 | 105 | 62 | O |
| | 2002.08-2008.07 | | F | L/R | Hatchback FWD Y 20 DTH | | GCI44002 | Inner Joint | | 34 | 25 | 35 | 56.2 | 114.8 | |
| | 2003.10-2008.07 | 5MT | F | L | Estate FWD Y 20 DTH | | GDS60015 | Drive Shaft | | 30 | 34 | 52.5 | 105 | 628 | |
| | 2003.10-2008.07 | 5MT | F | R | Estate FWD Y 20 DTH | Chassis no. from:41036716 | GDS21061 | Drive Shaft | | 30 | 34 | 52.5 | 105 | 968 | |
| | 2003.10-2008.07 | 5MT | F | R | Estate FWD Y 20 DTH | Chassis no. to:41036715 | GDS60016 | Drive Shaft | | 30 | 34 | 52.5 | 105 | 588 | |
| | 2003.10-2008.07 | 5MT | F | R | Estate FWD Y 20 DTH | For Engine code:Y20DTH | GCI44005 | Inner Joint | | 34 | 25 | 35 | | 130.2 | |
| | 2003.10-2008.07 | MT | F | L/R | Estate FWD Y 20 DTH | Date to:2005.08 | GCO17007 | Outer Joint | | 30 | 25 | 52.5 | 105 | 62 | O |
| | 2003.10-2008.07 | | F | L/R | Estate FWD Y 20 DTH | | GCI44002 | Inner Joint | | 34 | 25 | 35 | 56.2 | 114.8 | |
| 2.0 (100 kw) | 1995.09-2000.08 | 4AT/5MT | F | L | Hatchback FWD X20XEV | | GDS44038 | Drive Shaft | 29T | 33 | 34 | 52 | 103.5 | 595 | |
| | 1995.09-2000.08 | 4AT/5MT | F | R | Hatchback FWD X20XEV | | GDS44039 | Drive Shaft | 29T | 33 | 34 | 52 | 103.5 | 959 | |
| | 1995.09-2000.08 | AT/MT | F | L/R | Hatchback FWD X20XEV | Date to:2000.08 | GCO44006 | Outer Joint | 29T | 33 | 25 | 52 | 103.5 | 61 | O |

| | YEAR | TRANSM. | F/R | L/R | BODY STYLE & DRIVE TYPE & ENGINE | REMARKS | G-AP Ref. | PRODUCT | ABS | Technical Specifications A | B | C | H | L | P |
|---|---|---|---|---|---|---|---|---|---|---|---|---|---|---|---|
| **VAUXHALL** | | | | | | | | | | | | | | | |
| **Vectra** | | | | | | | | | | | | | | | |
| 2.0 (100 kw) | 1995.09-2000.08 | AT/MT | F | L/R | Hatchback FWD X20XEV | | GCO44049 | Outer Joint | | 33 | 25 | 52 | 109 | 61 | O |
| | 1995.09-2000.08 | | F | L/R | Hatchback FWD X20XEV | | GCI44002 | Inner Joint | | 34 | 25 | 35 | 56.2 | 114.8 | |
| | 1995.09-2000.08 | 4AT/5MT | F | L | Saloon FWD X20XEV | | GDS44038 | Drive Shaft | 29T | 33 | 34 | 52 | 103.5 | 595 | |
| | 1995.09-2000.08 | 4AT/5MT | F | R | Saloon FWD X20XEV | | GDS44039 | Drive Shaft | 29T | 33 | 34 | 52 | 103.5 | 959 | |
| | 1995.09-2000.08 | AT/MT | F | L/R | Saloon FWD X20XEV | Date to:2000.08 | GCO44006 | Outer Joint | 29T | 33 | 25 | 52 | 103.5 | 61 | O |
| | 1995.09-2000.08 | AT/MT | F | L/R | Saloon FWD X20XEV | | GCO44049 | Outer Joint | | 33 | 25 | 52 | 109 | 61 | O |
| | 1995.09-2000.08 | | F | L/R | Saloon FWD X20XEV | | GCI44002 | Inner Joint | | 34 | 25 | 35 | 56.2 | 114.8 | |
| | 1996.11-2000.08 | 4AT/5MT | F | L | Estate FWD X20XEV | | GDS44038 | Drive Shaft | 29T | 33 | 34 | 52 | 103.5 | 595 | |
| | 1996.11-2000.08 | 4AT/5MT | F | R | Estate FWD X20XEV | | GDS44039 | Drive Shaft | 29T | 33 | 34 | 52 | 103.5 | 959 | |
| | 1996.11-2000.08 | AT/MT | F | L/R | Estate FWD X20XEV | Date from:1996.11;Date to:2000.08 | GCO44006 | Outer Joint | 29T | 33 | 25 | 52 | 103.5 | 61 | O |
| | 1996.11-2000.08 | AT/MT | F | L/R | Estate FWD X20XEV | | GCO44049 | Outer Joint | | 33 | 25 | 52 | 109 | 61 | O |
| | 1996.11-2000.08 | | F | L/R | Estate FWD X20XEV | | GCI44002 | Inner Joint | | 34 | 25 | 35 | 56.2 | 114.8 | |
| | 1998.05-2001.01 | 5MT | F | L | Hatchback FWD X20XEV | | GDS44038 | Drive Shaft | 29T | 33 | 34 | 52 | 103.5 | 595 | |
| | 1998.05-2001.01 | 5MT | F | R | Hatchback FWD X20XEV | | GDS44039 | Drive Shaft | 29T | 33 | 34 | 52 | 103.5 | 959 | |
| | 1998.05-2001.01 | | F | L/R | Hatchback FWD X20XEV | | GCO44006 | Outer Joint | 29T | 33 | 25 | 52 | 103.5 | 61 | O |
| | 1998.05-2001.01 | | F | L/R | Hatchback FWD X20XEV | | GCO44049 | Outer Joint | | 33 | 25 | 52 | 109 | 61 | O |
| | 1998.05-2001.01 | | F | L/R | Hatchback FWD X20XEV | | GCI44002 | Inner Joint | | 34 | 25 | 35 | 56.2 | 114.8 | |
| | 1998.05-2001.01 | 5MT | F | L | Saloon FWD X20XEV | | GDS44038 | Drive Shaft | 29T | 33 | 34 | 52 | 103.5 | 595 | |
| | 1998.05-2001.01 | 5MT | F | R | Saloon FWD X20XEV | | GDS44039 | Drive Shaft | 29T | 33 | 34 | 52 | 103.5 | 959 | |
| | 1998.05-2001.01 | | F | L/R | Saloon FWD X20XEV | | GCO44006 | Outer Joint | 29T | 33 | 25 | 52 | 103.5 | 61 | O |
| | 1998.05-2001.01 | | F | L/R | Saloon FWD X20XEV | | GCO44049 | Outer Joint | | 33 | 25 | 52 | 109 | 61 | O |
| | 1998.05-2001.01 | | F | L/R | Saloon FWD X20XEV | | GCI44002 | Inner Joint | | 34 | 25 | 35 | 56.2 | 114.8 | |
| | 1998.10-2001.01 | 5MT | F | L | Estate FWD X20XEV | | GDS44038 | Drive Shaft | 29T | 33 | 34 | 52 | 103.5 | 595 | |
| | 1998.10-2001.01 | 5MT | F | R | Estate FWD X20XEV | | GDS44039 | Drive Shaft | 29T | 33 | 34 | 52 | 103.5 | 959 | |
| | 1998.10-2001.01 | | F | L/R | Estate FWD X20XEV | | GCO44006 | Outer Joint | 29T | 33 | 25 | 52 | 103.5 | 61 | O |
| | 1998.10-2001.01 | | F | L/R | Estate FWD X20XEV | | GCO44049 | Outer Joint | | 33 | 25 | 52 | 109 | 61 | O |
| | 1998.10-2001.01 | | F | L/R | Estate FWD X20XEV | | GCI44002 | Inner Joint | | 34 | 25 | 35 | 56.2 | 114.8 | |
| 2.0 (129 kw) | 2000.01-2008.10 | 6MT | F | L/R | Saloon FWD Z 20 NET | Inner teeth of wheel side:26 | GDS21032 | Drive Shaft | | 30 | 27 | 53.8 | 94.5 | 605 | |
| | 2000.01-2008.10 | 6MT | F | L/R | Saloon FWD Z 20 NET | | GCI99138 | Inner Joint | | 27 | 28 | 35 | 78 | 112 | |
| | 2000.01-2008.10 | MT | F | L/R | Saloon FWD Z 20 NET | Date from:2003.04;Date to:2005.11 | GCO17051 | Outer Joint | | 30 | 26 | 53.8 | 94.5 | 65.5 | M |
| | 2000.01-2008.10 | | F | L/R | Saloon FWD Z 20 NET | Inner teeth of wheel side:28 | GDS21036 | Drive Shaft | | 30 | 27 | 55.4 | 100 | 602 | |
| | 2003.03-2008.07 | 6MT | F | L/R | Hatchback FWD Z 20 NET | Inner teeth of wheel side:26 | GDS21032 | Drive Shaft | | 30 | 27 | 53.8 | 94.5 | 605 | |
| | 2003.03-2008.07 | 6MT | F | L/R | Hatchback FWD Z 20 NET | | GCI99138 | Inner Joint | | 27 | 28 | 35 | 78 | 112 | |
| | 2003.03-2008.07 | MT | F | L/R | Hatchback FWD Z 20 NET | | GCO17051 | Outer Joint | | 30 | 26 | 53.8 | 94.5 | 65.5 | M |
| | 2003.03-2008.07 | | F | L/R | Hatchback FWD Z 20 NET | Inner teeth of wheel side:28 | GDS21036 | Drive Shaft | | 30 | 27 | 55.4 | 100 | 602 | |
| | 2003.10-2008.07 | 6MT | F | L/R | Estate FWD Z 20 NET | Inner teeth of wheel side:26 | GDS21032 | Drive Shaft | | 30 | 27 | 53.8 | 94.5 | 605 | |
| | 2003.10-2008.07 | 6MT | F | L/R | Estate FWD Z 20 NET | | GCI99138 | Inner Joint | | 27 | 28 | 35 | 78 | 112 | |
| | 2003.10-2008.07 | MT | F | L/R | Estate FWD Z 20 NET | | GCO17051 | Outer Joint | | 30 | 26 | 53.8 | 94.5 | 65.5 | M |
| | 2003.10-2008.07 | | F | L/R | Estate FWD Z 20 NET | Inner teeth of wheel side:28 | GDS21036 | Drive Shaft | | 30 | 27 | 55.4 | 100 | 602 | |
| 2.2 (92 kw) | 2000.09-2002.08 | 5MT | F | L | Estate FWD Y22DTR | | GDS44058 | Drive Shaft | 29T | 33 | 27 | 55 | 104 | 586 | |
| | 2000.09-2002.08 | 5MT | F | L/R | Estate FWD Y22DTR | | GCO44065 | Outer Joint | 29T | 33 | 35 | 55 | 104 | 67.5 | I |
| | 2000.09-2002.08 | 5MT | F | L/R | Estate FWD Y22DTR | | GCI99188 | Inner Joint | | 27 | 35 | 35 | 80.5 | 109 | |
| | 2000.09-2002.08 | MT | F | L/R | Estate FWD Y22DTR | Date from:2000.09 | GDS21032 | Drive Shaft | | 30 | 27 | 53.8 | 94.5 | 605 | |
| | 2000.09-2002.08 | MT | F | L/R | Estate FWD Y22DTR | Date from:2000.09 | GCO17051 | Outer Joint | | 30 | 26 | 53.8 | 94.5 | 65.5 | M |
| | 2000.09-2002.08 | 5MT | F | L | Hatchback FWD Y22DTR | | GDS44058 | Drive Shaft | 29T | 33 | 27 | 55 | 104 | 586 | |
| | 2000.09-2002.08 | 5MT | F | L/R | Hatchback FWD Y22DTR | | GCO44065 | Outer Joint | 29T | 33 | 35 | 55 | 104 | 67.5 | I |
| | 2000.09-2002.08 | 5MT | F | L/R | Hatchback FWD Y22DTR | | GCI99188 | Inner Joint | | 27 | 35 | 35 | 80.5 | 109 | |
| | 2000.09-2002.08 | MT | F | L/R | Hatchback FWD Y22DTR | Date from:2000.09 | GDS21032 | Drive Shaft | | 30 | 27 | 53.8 | 94.5 | 605 | |
| | 2000.09-2002.08 | MT | F | L/R | Hatchback FWD Y22DTR | Date from:2000.09 | GCO17051 | Outer Joint | | 30 | 26 | 53.8 | 94.5 | 65.5 | M |
| | 2000.09-2002.08 | 5MT | F | L | Saloon FWD Y22DTR | | GDS44058 | Drive Shaft | 29T | 33 | 27 | 55 | 104 | 586 | |
| | 2000.09-2002.08 | 5MT | F | L/R | Saloon FWD Y22DTR | | GCO44065 | Outer Joint | 29T | 33 | 35 | 55 | 104 | 67.5 | I |
| | 2000.09-2002.08 | 5MT | F | L/R | Saloon FWD Y22DTR | | GCI99188 | Inner Joint | | 27 | 35 | 35 | 80.5 | 109 | |
| | 2002.04-2008.10 | 5AT | F | L/R | Saloon FWD Y 22 DTR | Inner teeth of wheel side:28 | GDS21036 | Drive Shaft | | 30 | 27 | 55.4 | 100 | 602 | |
| | 2002.04-2008.10 | MT | F | L/R | Saloon FWD Y 22 DTR | Date to:2004.03 | GCO17051 | Outer Joint | | 30 | 26 | 53.8 | 94.5 | 65.5 | M |
| | 2002.04-2008.10 | SAT/5MT | F | L/R | Saloon FWD Y 22 DTR | Inner teeth of wheel side:26 | GDS21032 | Drive Shaft | | 30 | 27 | 53.8 | 94.5 | 605 | |
| | 2002.04-2008.10 | | F | L/R | Saloon FWD Y 22 DTR | | GCI99138 | Inner Joint | | 27 | 28 | 35 | 78 | 112 | |
| | 2002.08-2008.07 | 5AT | F | L/R | Hatchback FWD Y 22 DTR | Inner teeth of wheel side:28 | GDS21036 | Drive Shaft | | 30 | 27 | 55.4 | 100 | 602 | |
| | 2002.08-2008.07 | MT | F | L/R | Hatchback FWD Y 22 DTR | | GCO17051 | Outer Joint | | 30 | 26 | 53.8 | 94.5 | 65.5 | M |
| | 2002.08-2008.07 | SAT/5MT | F | L/R | Hatchback FWD Y 22 DTR | Inner teeth of wheel side:26 | GDS21032 | Drive Shaft | | 30 | 27 | 53.8 | 94.5 | 605 | |
| | 2002.08-2008.07 | | F | L/R | Hatchback FWD Y 22 DTR | | GCI99138 | Inner Joint | | 27 | 28 | 35 | 78 | 112 | |
| | 2003.10-2008.07 | MT | F | L/R | Estate FWD Y 22 DTR | | GCO17051 | Outer Joint | | 30 | 26 | 53.8 | 94.5 | 65.5 | M |
| | 2003.10-2008.07 | SAT/5MT/6MT | F | L/R | Estate FWD Y 22 DTR | Inner teeth of wheel side:26 | GDS21032 | Drive Shaft | | 30 | 27 | 53.8 | 94.5 | 605 | |
| | 2003.10-2008.07 | | F | L/R | Estate FWD Y 22 DTR | Inner teeth of wheel side:28 | GDS21036 | Drive Shaft | | 30 | 27 | 55.4 | 100 | 602 | |
| | 2003.10-2008.07 | | F | L/R | Estate FWD Y 22 DTR | | GCI99138 | Inner Joint | | 27 | 28 | 35 | 78 | 112 | |
| 2.2 (108 kw) | 1995.08-2001.10 | 4AT/5MT | F | L | Saloon FWD Z22SE | | GDS44038 | Drive Shaft | 29T | 33 | 34 | 52 | 103.5 | 595 | |

| | YEAR | TRANSM. | F/R | L/R | BODY STYLE & DRIVE TYPE & ENGINE | REMARKS | G-AP Ref. | PRODUCT | ABS | Technical Specifications | | | | | |
|---|---|---|---|---|---|---|---|---|---|---|---|---|---|---|---|
| | | | | | | | | | | A | B | C | H | L | P |
| **VAUXHALL** | | | | | | | | | | | | | | | |
| **Vectra** | | | | | | | | | | | | | | | |
| 2.2 (108 kw) | 1995.08-2001.10 | 4AT/5MT | F | R | Saloon FWD Z22SE | | GDS44039 | Drive Shaft | 29T | 33 | 34 | 52 | 103.5 | 959 | |
| | 1995.08-2001.10 | AT/MT | F | L/R | Saloon FWD Z22SE | | GCO44006 | Outer Joint | 29T | 33 | 25 | 52 | 103.5 | 61 | O |
| | 1995.08-2001.10 | | F | L/R | Saloon FWD Z22SE | | GCO44049 | Outer Joint | | 33 | 25 | 52 | 109 | 61 | O |
| | 1995.08-2001.10 | | F | L/R | Saloon FWD Z22SE | | GCI44002 | Inner Joint | | 34 | 25 | 35 | 56.2 | 114.8 | |
| | 2000.09-2002.03 | 4AT/5MT | F | L | Hatchback FWD Z22SE | | GDS44038 | Drive Shaft | 29T | 33 | 34 | 52 | 103.5 | 595 | |
| | 2000.09-2002.03 | 4AT/5MT | F | R | Hatchback FWD Z22SE | | GDS44039 | Drive Shaft | 29T | 33 | 34 | 52 | 103.5 | 959 | |
| | 2000.09-2002.03 | AT/MT | F | L/R | Hatchback FWD Z22SE | Date to:2002.03 | GCO44006 | Outer Joint | 29T | 33 | 25 | 52 | 103.5 | 61 | O |
| | 2000.09-2002.03 | | F | L/R | Hatchback FWD Z22SE | | GCO44049 | Outer Joint | | 33 | 25 | 52 | 109 | 61 | O |
| | 2000.09-2002.03 | | F | L/R | Hatchback FWD Z22SE | | GCI44002 | Inner Joint | | 34 | 25 | 35 | 56.2 | 114.8 | |
| | 2000.09-2002.08 | 4AT/5MT | F | L | Estate FWD Z22SE | | GDS44038 | Drive Shaft | 29T | 33 | 34 | 52 | 103.5 | 595 | |
| | 2000.09-2002.08 | 4AT/5MT | F | R | Estate FWD Z22SE | | GDS44039 | Drive Shaft | 29T | 33 | 34 | 52 | 103.5 | 959 | |
| | 2000.09-2002.08 | AT/MT | F | L/R | Estate FWD Z22SE | Date from:2000.09 | GCO44006 | Outer Joint | 29T | 33 | 25 | 52 | 103.5 | 61 | O |
| | 2000.09-2002.08 | | F | L/R | Estate FWD Z22SE | | GCO44049 | Outer Joint | | 33 | 25 | 52 | 109 | 61 | O |
| | 2000.09-2002.08 | | F | L/R | Estate FWD Z22SE | | GCI44002 | Inner Joint | | 34 | 25 | 35 | 56.2 | 114.8 | |
| | 2002.01-2008.10 | 5AT/5MT | F | L | Saloon FWD Z 22 SE | Chassis no. to:71009336 | GDS60015 | Drive Shaft | | 30 | 34 | 52.5 | 105 | 628 | |
| | 2002.01-2008.10 | 5AT/5MT | F | R | Saloon FWD Z 22 SE | Chassis no. to:71009336 | GDS60016 | Drive Shaft | | 30 | 34 | 52.5 | 105 | 588 | |
| | 2002.01-2008.10 | 5AT/5MT | F | L/R | Saloon FWD Z 22 SE | Chassis no. to:71009336 | GCO17007 | Outer Joint | | 30 | 25 | 52.5 | 105 | 62 | O |
| | 2002.01-2008.10 | 5AT/5MT | F | L/R | Saloon FWD Z 22 SE | Chassis no. from:71009337 | GCO21038 | Outer Joint | | 30 | 24 | 52 | 94 | 64 | M |
| | 2002.01-2008.10 | 5AT/5MT | F | L | Saloon FWD Z 22 SE | | GCI44002 | Inner Joint | | 34 | 25 | 35 | 56.2 | 114.8 | |
| | 2002.01-2008.10 | 5AT/5MT | F | L | Saloon FWD Z 22 SE | | GCI44008 | Inner Joint | | 25 | 25 | 34.9 | 57.5 | 113.2 | |
| | 2002.01-2008.10 | 5MT | F | R | Saloon FWD Z 22 SE | | GCI44005 | Inner Joint | | 34 | 25 | 35 | | 130.2 | |
| | 2002.01-2008.10 | | F | R | Saloon FWD Z 22 SE | Chassis no. from:71009337 | GDS82089 | Drive Shaft | | 30 | 34 | 52 | 94 | 577 | |
| | 2002.08-2008.07 | 5MT | F | R | Hatchback FWD Z 22 SE | | GCI44005 | Inner Joint | | 34 | 25 | 35 | | 130.2 | |
| | 2002.08-2008.07 | SAT/5MT | F | L | Hatchback FWD Z 22 SE | Chassis no. to:71009336 | GDS60015 | Drive Shaft | | 30 | 34 | 52.5 | 105 | 628 | |
| | 2002.08-2008.07 | SAT/5MT | F | R | Hatchback FWD Z 22 SE | Chassis no. to:71009336 | GDS60016 | Drive Shaft | | 30 | 34 | 52.5 | 105 | 588 | |
| | 2002.08-2008.07 | SAT/5MT | F | L/R | Hatchback FWD Z 22 SE | Chassis no. to:71009336 | GCO17007 | Outer Joint | | 30 | 25 | 52.5 | 105 | 62 | O |
| | 2002.08-2008.07 | SAT/5MT | F | L/R | Hatchback FWD Z 22 SE | Chassis no. from:71009337 | GCO21038 | Outer Joint | | 30 | 24 | 52 | 94 | 64 | M |
| | 2002.08-2008.07 | SAT/5MT | F | L | Hatchback FWD Z 22 SE | | GCI44002 | Inner Joint | | 34 | 25 | 35 | 56.2 | 114.8 | |
| | 2002.08-2008.07 | SAT/5MT | F | L | Hatchback FWD Z 22 SE | | GCI44008 | Inner Joint | | 25 | 25 | 34.9 | 57.5 | 113.2 | |
| | 2002.08-2008.07 | | F | R | Hatchback FWD Z 22 SE | Chassis no. from:71009337 | GDS82089 | Drive Shaft | | 30 | 34 | 52 | 94 | 577 | |
| 2.2 (114 kw) | 2002.01-2008.10 | 5MT | F | R | Saloon FWD Z 22 YH | | GCI44005 | Inner Joint | | 34 | 25 | 35 | | 130.2 | |
| | 2002.01-2008.10 | AT | F | L | Saloon FWD Z 22 YH | | GDS60015 | Drive Shaft | | 30 | 34 | 52.5 | 105 | 628 | |
| | 2002.01-2008.10 | AT/MT | F | L/R | Saloon FWD Z 22 YH | Transmission:AT,Chassis no. to:71009336,Transmission:MT,Chassis no. to:71009336,Trans. code:F23 | GCO17007 | Outer Joint | | 30 | 25 | 52.5 | 105 | 62 | O |
| | 2002.01-2008.10 | MT | F | L | Saloon FWD Z 22 YH | Trans. code:F23 | GDS60015 | Drive Shaft | | 30 | 34 | 52.5 | 105 | 628 | |
| | 2002.01-2008.10 | MT | F | R | Saloon FWD Z 22 YH | Trans. code:F23 | GDS60016 | Drive Shaft | | 30 | 34 | 52.5 | 105 | 588 | |
| | 2002.01-2008.10 | MT | F | R | Saloon FWD Z 22 YH | Trans. code:M32 | GDS82089 | Drive Shaft | | 30 | 34 | 52 | 94 | 577 | |
| | 2002.01-2008.10 | MT | F | L/R | Saloon FWD Z 22 YH | Trans. code:M32,Chassis no. from:71009337 | GCO21038 | Outer Joint | | 30 | 24 | 52 | 94 | 64 | M |
| | 2002.01-2008.10 | SAT/5MT | F | L | Saloon FWD Z 22 YH | | GCI44002 | Inner Joint | | 34 | 25 | 35 | 56.2 | 114.8 | |
| | 2002.01-2008.10 | SAT/5MT | F | L | Saloon FWD Z 22 YH | | GCI44008 | Inner Joint | | 25 | 25 | 34.9 | 57.5 | 113.2 | |
| | 2003.10-2005.08 | 5MT | F | R | Hatchback FWD Z 22 YH | | GCI44005 | Inner Joint | | 34 | 25 | 35 | | 130.2 | |
| | 2003.10-2005.08 | AT | F | L | Hatchback FWD Z 22 YH | | GDS60015 | Drive Shaft | | 30 | 34 | 52.5 | 105 | 628 | |
| | 2003.10-2005.08 | AT/MT | F | L/R | Hatchback FWD Z 22 YH | Transmission:AT,Chassis no. to:71009336,Transmission:MT,Chassis no. to:71009336,Trans. code:F23 | GCO17007 | Outer Joint | | 30 | 25 | 52.5 | 105 | 62 | O |
| | 2003.10-2005.08 | MT | F | L | Hatchback FWD Z 22 YH | Trans. code:F23 | GDS60015 | Drive Shaft | | 30 | 34 | 52.5 | 105 | 628 | |
| | 2003.10-2005.08 | MT | F | R | Hatchback FWD Z 22 YH | Trans. code:F23 | GDS60016 | Drive Shaft | | 30 | 34 | 52.5 | 105 | 588 | |
| | 2003.10-2005.08 | MT | F | R | Hatchback FWD Z 22 YH | Trans. code:M32 | GDS82089 | Drive Shaft | | 30 | 34 | 52 | 94 | 577 | |
| | 2003.10-2005.08 | MT | F | L/R | Hatchback FWD Z 22 YH | Trans. code:M32,Chassis no. from:71009337 | GCO21038 | Outer Joint | | 30 | 24 | 52 | 94 | 64 | M |
| | 2003.10-2005.08 | SAT/5MT | F | L | Hatchback FWD Z 22 YH | | GCI44002 | Inner Joint | | 34 | 25 | 35 | 56.2 | 114.8 | |
| | 2003.10-2005.08 | SAT/5MT | F | L | Hatchback FWD Z 22 YH | | GCI44008 | Inner Joint | | 25 | 25 | 34.9 | 57.5 | 113.2 | |
| | 2003.10-2008.07 | 5MT | F | R | Estate FWD Z 22 YH | | GCI44005 | Inner Joint | | 34 | 25 | 35 | | 130.2 | |
| | 2003.10-2008.07 | AT | F | L | Estate FWD Z 22 YH | | GDS60015 | Drive Shaft | | 30 | 34 | 52.5 | 105 | 628 | |
| | 2003.10-2008.07 | AT/MT | F | L/R | Estate FWD Z 22 YH | Transmission:AT,Chassis no. to:71009336,Transmission:MT,Chassis no. to:71009336,Trans. code:F23 | GCO17007 | Outer Joint | | 30 | 25 | 52.5 | 105 | 62 | O |
| | 2003.10-2008.07 | MT | F | L | Estate FWD Z 22 YH | Trans. code:F23 | GDS60015 | Drive Shaft | | 30 | 34 | 52.5 | 105 | 628 | |
| | 2003.10-2008.07 | MT | F | R | Estate FWD Z 22 YH | Trans. code:F23 | GDS60016 | Drive Shaft | | 30 | 34 | 52.5 | 105 | 588 | |
| | 2003.10-2008.07 | MT | F | R | Estate FWD Z 22 YH | Trans. code:M32 | GDS82089 | Drive Shaft | | 30 | 34 | 52 | 94 | 577 | |
| | 2003.10-2008.07 | MT | F | L/R | Estate FWD Z 22 YH | Trans. code:M32,Chassis no. from:71009337 | GCO21038 | Outer Joint | | 30 | 24 | 52 | 94 | 64 | M |
| | 2003.10-2008.07 | SAT/5MT | F | L | Estate FWD Z 22 YH | | GCI44002 | Inner Joint | | 34 | 25 | 35 | 56.2 | 114.8 | |
| | 2003.10-2008.07 | SAT/5MT | F | L | Estate FWD Z 22 YH | | GCI44008 | Inner Joint | | 25 | 25 | 34.9 | 57.5 | 113.2 | |
| 2.5 (125 kw) | 1995.09-2000.08 | 4AT/5MT | F | L | Hatchback FWD X25XE | | GDS44038 | Drive Shaft | 29T | 33 | 34 | 52 | 103.5 | 595 | |
| | 1995.09-2000.08 | 4AT/5MT | F | R | Hatchback FWD X25XE | | GDS44039 | Drive Shaft | 29T | 33 | 34 | 52 | 103.5 | 959 | |
| | 1995.09-2000.08 | 4AT/5MT | F | R | Hatchback FWD X25XE | | GDS44077 | Drive Shaft | 29T | 22 | 22 | 52 | 95 | 955 | |
| | 1995.09-2000.08 | AT/MT | F | L/R | Hatchback FWD X25XE | | GCO44006 | Outer Joint | 29T | 33 | 25 | 52 | 103.5 | 61 | O |
| | 1995.09-2000.08 | | F | L/R | Hatchback FWD X25XE | | GCO44049 | Outer Joint | | 33 | 25 | 52 | 109 | 61 | O |
| | 1995.09-2000.08 | | F | R | Hatchback FWD X25XE | | GCI44005 | Inner Joint | | 34 | 25 | 35 | | 130.2 | |
| | 1995.09-2000.08 | | F | L/R | Hatchback FWD X25XE | | GCI44002 | Inner Joint | | 34 | 25 | 35 | 56.2 | 114.8 | |
| | 1995.09-2000.08 | 4AT/5MT | F | L | Saloon FWD X25XE | | GDS44038 | Drive Shaft | 29T | 33 | 34 | 52 | 103.5 | 595 | |

| | YEAR | TRANSM. | F/R | L/R | BODY STYLE & DRIVE TYPE & ENGINE | REMARKS | G-AP Ref. | PRODUCT | ABS | Technical Specifications A | B | C | H | L | P |
|---|---|---|---|---|---|---|---|---|---|---|---|---|---|---|---|
| **VAUXHALL** | | | | | | | | | | | | | | | |
| **Vectra** | | | | | | | | | | | | | | | |
| 2.5 (125 kw) | 1995.09-2000.08 | 4AT/5MT | F | R | Saloon FWD X25XE | | GDS44039 | Drive Shaft | 29T | 33 | 34 | 52 | 103.5 | 959 | |
| | 1995.09-2000.08 | 4AT/5MT | F | R | Saloon FWD X25XE | | GDS44077 | Drive Shaft | 29T | 22 | 22 | 52 | 95 | 955 | |
| | 1995.09-2000.08 | AT/MT | F | L/R | Saloon FWD X25XE | | GCO44006 | Outer Joint | 29T | 33 | 25 | 52 | 103.5 | 61 | O |
| | 1995.09-2000.08 | | F | L/R | Saloon FWD X25XE | | GCO44049 | Outer Joint | | 33 | 25 | 52 | 109 | 61 | O |
| | 1995.09-2000.08 | | F | R | Saloon FWD X25XE | | GCI44005 | Inner Joint | | 34 | 25 | 35 | | 130.2 | |
| | 1995.09-2000.08 | | F | L/R | Saloon FWD X25XE | | GCI44002 | Inner Joint | | 34 | 25 | 35 | 56.2 | 114.8 | |
| | 1996.11-2000.08 | 4AT/5MT | F | L | Estate FWD X25XE | | GDS44038 | Drive Shaft | 29T | 33 | 34 | 52 | 103.5 | 595 | |
| | 1996.11-2000.08 | 4AT/5MT | F | R | Estate FWD X25XE | | GDS44039 | Drive Shaft | 29T | 33 | 34 | 52 | 103.5 | 959 | |
| | 1996.11-2000.08 | 4AT/5MT | F | R | Estate FWD X25XE | | GDS44077 | Drive Shaft | 29T | 22 | 22 | 52 | 95 | 955 | |
| | 1996.11-2000.08 | AT/MT | F | L/R | Estate FWD X25XE | | GCO44006 | Outer Joint | 29T | 33 | 25 | 52 | 103.5 | 61 | O |
| | 1996.11-2000.08 | | F | L/R | Estate FWD X25XE | | GCO44049 | Outer Joint | | 33 | 25 | 52 | 109 | 61 | O |
| | 1996.11-2000.08 | | F | R | Estate FWD X25XE | | GCI44005 | Inner Joint | | 34 | 25 | 35 | | 130.2 | |
| | 1996.11-2000.08 | | F | L/R | Estate FWD X25XE | | GCI44002 | Inner Joint | | 34 | 25 | 35 | 56.2 | 114.8 | |
| 2.5 (143 kw) | 1997.01-2000.07 | 5MT | F | L | Saloon FWD X25XE | | GDS44038 | Drive Shaft | 29T | 33 | 34 | 52 | 103.5 | 595 | |
| | 1997.01-2000.07 | 5MT | F | R | Saloon FWD X25XE | | GDS44077 | Drive Shaft | 29T | 22 | 22 | 52 | 95 | 955 | |
| | 1997.01-2000.07 | AT/MT | F | L/R | Saloon FWD X25XE | | GCO44006 | Outer Joint | 29T | 33 | 25 | 52 | 103.5 | 61 | O |
| | 1997.01-2000.07 | | F | L/R | Saloon FWD X25XE | | GCO44049 | Outer Joint | | 33 | 25 | 52 | 109 | 61 | O |
| | 1997.01-2000.07 | | F | L | Saloon FWD X25XE | | GCI44002 | Inner Joint | | 34 | 25 | 35 | 56.2 | 114.8 | |
| | 1997.01-2000.07 | | F | R | Saloon FWD X25XE | | GCI44005 | Inner Joint | | 34 | 25 | 35 | | 130.2 | |
| | 1998.03-2000.07 | 5MT | F | L | Estate FWD X25XE | | GDS44038 | Drive Shaft | 29T | 33 | 34 | 52 | 103.5 | 595 | |
| | 1998.03-2000.07 | 5MT | F | R | Estate FWD X25XE | | GDS44077 | Drive Shaft | 29T | 22 | 22 | 52 | 95 | 955 | |
| | 1998.03-2000.07 | AT/MT | F | L/R | Estate FWD X25XE | | GCO44006 | Outer Joint | 29T | 33 | 25 | 52 | 103.5 | 61 | O |
| | 1998.03-2000.07 | | F | L/R | Estate FWD X25XE | | GCO44049 | Outer Joint | | 33 | 25 | 52 | 109 | 61 | O |
| | 1998.03-2000.07 | | F | L | Estate FWD X25XE | | GCI44002 | Inner Joint | | 34 | 25 | 35 | 56.2 | 114.8 | |
| | 1998.03-2000.07 | | F | R | Estate FWD X25XE | | GCI44005 | Inner Joint | | 34 | 25 | 35 | | 130.2 | |
| | 1998.03-2000.07 | 5MT | F | L | Hatchback FWD X25XE | | GDS44038 | Drive Shaft | 29T | 33 | 34 | 52 | 103.5 | 595 | |
| | 1998.03-2000.07 | 5MT | F | R | Hatchback FWD X25XE | | GDS44077 | Drive Shaft | 29T | 22 | 22 | 52 | 95 | 955 | |
| | 1998.03-2000.07 | AT/MT | F | L/R | Hatchback FWD X25XE | | GCO44006 | Outer Joint | 29T | 33 | 25 | 52 | 103.5 | 61 | O |
| | 1998.03-2000.07 | | F | L/R | Hatchback FWD X25XE | | GCO44049 | Outer Joint | | 33 | 25 | 52 | 109 | 61 | O |
| | 1998.03-2000.07 | | F | L | Hatchback FWD X25XE | | GCI44002 | Inner Joint | | 34 | 25 | 35 | 56.2 | 114.8 | |
| | 1998.03-2000.07 | | F | R | Hatchback FWD X25XE | | GCI44005 | Inner Joint | | 34 | 25 | 35 | | 130.2 | |
| 2.6 (125 kw) | 2000.09-2002.03 | AT/MT | F | L/R | Estate FWD Y26SE | | GCO44065 | Outer Joint | 29T | 33 | 35 | 55 | 104 | 67.5 | I |
| | 2000.09-2002.03 | | F | R | Estate FWD Y26SE | | GCI44005 | Inner Joint | | 34 | 25 | 35 | | 130.2 | |
| | 2000.09-2002.03 | AT/MT | F | L/R | Hatchback FWD Y26SE | | GCO44065 | Outer Joint | 29T | 33 | 35 | 55 | 104 | 67.5 | I |
| | 2000.09-2002.03 | | F | R | Hatchback FWD Y26SE | | GCI44005 | Inner Joint | | 34 | 25 | 35 | | 130.2 | |
| | 2000.09-2002.03 | AT/MT | F | L/R | Saloon FWD Y26SE | | GCO44065 | Outer Joint | 29T | 33 | 35 | 55 | 104 | 67.5 | I |
| | 2000.09-2002.03 | | F | R | Saloon FWD Y26SE | | GCI44005 | Inner Joint | | 34 | 25 | 35 | | 130.2 | |
| 2.8 (169 kw) | 2005.08-2009.05 | 6AT | F | L/R | Estate FWD Z 28 NEL | | GCO21057 | Outer Joint | | 30 | 27 | 59.1 | 94 | 65 | M |
| | 2005.08-2009.05 | MT | F | L/R | Estate FWD Z 28 NEL | | GDS21036 | Drive Shaft | | 30 | 27 | 55.4 | 100 | 602 | |
| | 2005.08-2009.05 | MT | F | L/R | Estate FWD Z 28 NEL | | GCO21030 | Outer Joint | | 30 | 28 | 55.4 | 96 | 65 | M |
| | 2005.08-2009.05 | 6AT | F | L/R | Hatchback FWD Z 28 NEL | | GCO21057 | Outer Joint | | 30 | 27 | 59.1 | 94 | 65 | M |
| | 2005.08-2009.05 | 6MT | F | L/R | Hatchback FWD Z 28 NEL | | GDS21036 | Drive Shaft | | 30 | 27 | 55.4 | 100 | 602 | |
| | 2005.08-2009.05 | MT | F | L/R | Hatchback FWD Z 28 NEL | | GCO21030 | Outer Joint | | 30 | 28 | 55.4 | 96 | 65 | M |
| 2.8 (184 kw) | 2006.02-2009.05 | 6MT | F | L/R | Hatchback FWD Z 28 NET | | GDS21036 | Drive Shaft | | 30 | 27 | 55.4 | 100 | 602 | |
| | 2006.02-2009.05 | 6MT | F | L/R | Hatchback FWD Z 28 NET | | GCO21030 | Outer Joint | | 30 | 28 | 55.4 | 96 | 65 | M |
| 2.8 (188 kw) | 2005.08-2006.08 | 6MT | F | L/R | Hatchback FWD Z 28 NET | | GDS21036 | Drive Shaft | | 30 | 27 | 55.4 | 100 | 602 | |
| | 2005.08-2006.08 | 6MT | F | L/R | Hatchback FWD Z 28 NET | | GCO21030 | Outer Joint | | 30 | 28 | 55.4 | 96 | 65 | M |
| | 2006.08-2009.05 | 6MT | F | L/R | Estate FWD Z 28 NET | | GDS21036 | Drive Shaft | | 30 | 27 | 55.4 | 100 | 602 | |
| | 2006.08-2009.05 | 6MT | F | L/R | Estate FWD Z 28 NET | | GCO21030 | Outer Joint | | 30 | 28 | 55.4 | 96 | 65 | M |
| 2.8 (206 kw) | 2006.10-2009.05 | 6AT | F | L/R | Estate FWD Z 28 NET | | GCO21057 | Outer Joint | | 30 | 27 | 59.1 | 94 | 65 | M |
| | 2006.10-2009.05 | 6MT | F | L/R | Estate FWD Z 28 NET | | GDS21036 | Drive Shaft | | 30 | 27 | 55.4 | 100 | 602 | |
| | 2006.10-2009.05 | 6MT | F | L/R | Estate FWD Z 28 NET | | GCO21030 | Outer Joint | | 30 | 28 | 55.4 | 96 | 65 | M |
| | 2006.10-2009.05 | 6MT | F | L/R | Hatchback FWD Z 28 NET | | GDS21036 | Drive Shaft | | 30 | 27 | 55.4 | 100 | 602 | |
| | 2006.10-2009.05 | 6MT | F | L/R | Hatchback FWD Z 28 NET | | GCO21030 | Outer Joint | | 30 | 28 | 55.4 | 96 | 65 | M |
| 3.0 (130 kw) | 2003.06-2005.08 | MT | F | L/R | Hatchback FWD Y 30 DT | | GCO17051 | Outer Joint | | 30 | 26 | 53.8 | 94.5 | 65.5 | M |
| | 2003.06-2005.08 | SAT/6MT | F | L/R | Hatchback FWD Y 30 DT | Inner teeth of wheel side:26 | GDS21032 | Drive Shaft | | 30 | 27 | 53.8 | 94.5 | 605 | |
| | 2003.06-2005.08 | | F | L/R | Hatchback FWD Y 30 DT | Inner teeth of wheel side:28 | GDS21036 | Drive Shaft | | 30 | 27 | 55.4 | 100 | 602 | |
| | 2003.06-2005.08 | | F | L/R | Hatchback FWD Y 30 DT | | GCI99138 | Inner Joint | | 27 | 28 | 35 | 78 | 112 | |
| | 2003.06-2005.08 | MT | F | L/R | Saloon FWD Y 30 DT | | GCO17051 | Outer Joint | | 30 | 26 | 53.8 | 94.5 | 65.5 | M |
| | 2003.06-2005.08 | SAT/6MT | F | L/R | Saloon FWD Y 30 DT | Inner teeth of wheel side:26 | GDS21032 | Drive Shaft | | 30 | 27 | 53.8 | 94.5 | 605 | |
| | 2003.06-2005.08 | | F | L/R | Saloon FWD Y 30 DT | Inner teeth of wheel side:28 | GDS21036 | Drive Shaft | | 30 | 27 | 55.4 | 100 | 602 | |
| | 2003.06-2005.08 | | F | L/R | Saloon FWD Y 30 DT | | GCI99138 | Inner Joint | | 27 | 28 | 35 | 78 | 112 | |
| | 2003.10-2005.08 | MT | F | L/R | Estate FWD Y 30 DT | | GCO17051 | Outer Joint | | 30 | 26 | 53.8 | 94.5 | 65.5 | M |
| | 2003.10-2005.08 | SAT/6MT | F | L/R | Estate FWD Y 30 DT | Inner teeth of wheel side:26 | GDS21032 | Drive Shaft | | 30 | 27 | 53.8 | 94.5 | 605 | |
| | 2003.10-2005.08 | | F | L/R | Estate FWD Y 30 DT | Inner teeth of wheel side:28 | GDS21036 | Drive Shaft | | 30 | 27 | 55.4 | 100 | 602 | |

| | YEAR | TRANSM. | F/R | L/R | BODY STYLE & DRIVE TYPE & ENGINE | REMARKS | G-AP Ref. | PRODUCT | ABS | Technical Specifications A | B | C | H | L | P |
|---|---|---|---|---|---|---|---|---|---|---|---|---|---|---|---|
| **VAUXHALL** | | | | | | | | | | | | | | | |
| **Vectra** | | | | | | | | | | | | | | | |
| 3.0 (130 kw) | 2003.10-2005.08 | | F | L/R | Estate FWD Y 30 DT | | GCI99138 | Inner Joint | | 27 | 28 | 35 | 78 | 112 | |
| 3.0 (135 kw) | 2005.08-2008.07 | 6AT | F | L/R | Estate FWD Z 30 DT | | GCO21057 | Outer Joint | | 30 | 27 | 59.1 | 94 | 65 | M |
| | 2005.08-2008.07 | 6MT | F | L/R | Estate FWD Z 30 DT | | GDS21036 | Drive Shaft | | 30 | 27 | 55.4 | 100 | 602 | |
| | 2005.08-2008.07 | MT | F | L/R | Estate FWD Z 30 DT | | GCO21030 | Outer Joint | | 30 | 28 | 55.4 | 96 | 65 | M |
| | 2005.08-2008.07 | 6AT | F | L/R | Hatchback FWD Z 30 DT | | GCO21057 | Outer Joint | | 30 | 27 | 59.1 | 94 | 65 | M |
| | 2005.08-2008.07 | 6MT | F | L/R | Hatchback FWD Z 30 DT | | GDS21036 | Drive Shaft | | 30 | 27 | 55.4 | 100 | 602 | |
| | 2005.08-2008.07 | MT | F | L/R | Hatchback FWD Z 30 DT | | GCO21030 | Outer Joint | | 30 | 28 | 55.4 | 96 | 65 | M |
| | 2005.08-2008.07 | 6AT | F | L/R | Saloon FWD Z 30 DT | | GCO21057 | Outer Joint | | 30 | 27 | 59.1 | 94 | 65 | M |
| | 2005.08-2008.07 | 6MT | F | L/R | Saloon FWD Z 30 DT | | GDS21036 | Drive Shaft | | 30 | 27 | 55.4 | 100 | 602 | |
| | 2005.08-2008.07 | MT | F | L/R | Saloon FWD Z 30 DT | | GCO21030 | Outer Joint | | 30 | 28 | 55.4 | 96 | 65 | M |
| 3.2 (155 kw) | 2002.08-2008.07 | AT/MT | F | L/R | Hatchback FWD Z 32 SE | Inner teeth of wheel side:28 | GDS21036 | Drive Shaft | | 30 | 27 | 55.4 | 100 | 602 | |
| | 2002.08-2008.07 | MT | F | L/R | Hatchback FWD Z 32 SE | Date to:2005.07 | GCO17051 | Outer Joint | | 30 | 26 | 53.8 | 94.5 | 65.5 | M |
| | 2002.08-2008.07 | SAT/5MT | F | L/R | Hatchback FWD Z 32 SE | Inner teeth of wheel side:26 | GDS21032 | Drive Shaft | | 30 | 27 | 53.8 | 94.5 | 605 | |
| | 2002.08-2008.07 | | F | L/R | Hatchback FWD Z 32 SE | | GCI99138 | Inner Joint | | 27 | 28 | 35 | 78 | 112 | |
| | 2003.06-2008.07 | MT | F | L/R | Saloon FWD Z 32 SE | Date to:2005.08 | GCO17051 | Outer Joint | | 30 | 26 | 53.8 | 94.5 | 65.5 | M |
| | 2003.06-2008.07 | SAT/5MT | F | L/R | Saloon FWD Z 32 SE | Inner teeth of wheel side:26 | GDS21032 | Drive Shaft | | 30 | 27 | 53.8 | 94.5 | 605 | |
| | 2003.06-2008.07 | | F | L/R | Saloon FWD Z 32 SE | Inner teeth of wheel side:28 | GDS21036 | Drive Shaft | | 30 | 27 | 55.4 | 100 | 602 | |
| | 2003.06-2008.07 | | F | L/R | Saloon FWD Z 32 SE | | GCI99138 | Inner Joint | | 27 | 28 | 35 | 78 | 112 | |
| | 2003.10-2005.08 | MT | F | L/R | Estate FWD Z 32 SE | | GCO17051 | Outer Joint | | 30 | 26 | 53.8 | 94.5 | 65.5 | M |
| | 2003.10-2005.08 | SAT/5MT | F | L/R | Estate FWD Z 32 SE | Inner teeth of wheel side:26 | GDS21032 | Drive Shaft | | 30 | 27 | 53.8 | 94.5 | 605 | |
| | 2003.10-2005.08 | | F | L/R | Estate FWD Z 32 SE | Inner teeth of wheel side:28 | GDS21036 | Drive Shaft | | 30 | 27 | 55.4 | 100 | 602 | |
| | 2003.10-2005.08 | | F | L/R | Estate FWD Z 32 SE | | GCI99138 | Inner Joint | | 27 | 28 | 35 | 78 | 112 | |
| **Viva** | | | | | | | | | | | | | | | |
| 1.0 (54 kw) | 2015.06-2018.03 | 5MT | F | L | Hatchback FWD B 10 XL;D 10 XE | | GDS81616 | Drive Shaft | 48T | 25 | 22 | 52.5 | 92 | 625 | |
| | 2015.06-2018.03 | 5MT | F | R | Hatchback FWD B 10 XL;D 10 XE | | GDS81615 | Drive Shaft | 48T | 25 | 22 | 52.5 | 92 | 828 | |
| | 2015.06-2018.03 | 5MT | F | L/R | Hatchback FWD B 10 XL;D 10 XE | | GCO81420 | Outer Joint | 48T | 25 | 27 | 52.5 | 92 | 48 | M |
| | 2015.06-2018.03 | 5MT | F | L/R | Hatchback FWD B 10 XL;D 10 XE | | GCI81431 | Inner Joint | | 22 | 27 | 35 | 59 | 91.5 | |
| | 2018.01-2019.03 | 5MT | F | L | Hatchback FWD D 10 XE | | GDS81616 | Drive Shaft | 48T | 25 | 22 | 52.5 | 92 | 625 | |
| | 2018.01-2019.03 | 5MT | F | R | Hatchback FWD D 10 XE | | GDS81615 | Drive Shaft | 48T | 25 | 22 | 52.5 | 92 | 828 | |
| | 2018.01-2019.03 | 5MT | F | L/R | Hatchback FWD D 10 XE | | GCO81420 | Outer Joint | 48T | 25 | 27 | 52.5 | 92 | 48 | M |
| | 2018.01-2019.03 | 5MT | F | L/R | Hatchback FWD D 10 XE | | GCI81431 | Inner Joint | | 22 | 27 | 35 | 59 | 91.5 | |
| 1.0 (55 kw) | 2015.01-2018.03 | 5AT/5MT | F | L | Hatchback FWD B 10 XE | | GDS81616 | Drive Shaft | 48T | 25 | 22 | 52.5 | 92 | 625 | |
| | 2015.01-2018.03 | 5AT/5MT | F | R | Hatchback FWD B 10 XE | | GDS81615 | Drive Shaft | 48T | 25 | 22 | 52.5 | 92 | 828 | |
| | 2015.01-2018.03 | 5AT/5MT | F | L/R | Hatchback FWD B 10 XE | | GCO81420 | Outer Joint | 48T | 25 | 27 | 52.5 | 92 | 48 | M |
| | 2015.01-2018.03 | 5AT/5MT | F | R | Hatchback FWD B 10 XE | | GCI81431 | Inner Joint | | 22 | 27 | 35 | 59 | 91.5 | |
| **Vivaro** | | | | | | | | | | | | | | | |
| 1.5 (75 kw) | 2019.03-2025.05 | 6MT | F | L | Van FWD D 15 DT (DV5RUCD) | | GDS82315 | Drive Shaft | | 28 | 37 | 58.6 | 93 | 719 | |
| | 2019.03-2025.05 | 6MT | F | R | Van FWD D 15 DT (DV5RUCD) | | GDS82316 | Drive Shaft | | 28 | 37 | 58.6 | 93 | 974 | |
| | 2019.03-2025.05 | 6MT | F | L/R | Van FWD D 15 DT (DV5RUCD) | | GCO10098 | Outer Joint | | 28 | 39 | 58.6 | 93 | 63 | I |
| | 2019.03-2025.05 | 6MT | F | R | Van FWD D 15 DT (DV5RUCD) | | GCI81759 | Inner Joint | | 37 | 34 | 31.9 | 302 | 88 | |
| 1.5 (88 kw) | 2019.03- | 6MT | F | L | Van FWD D 15 DTH (DV5RUC) | | GDS82315 | Drive Shaft | | 28 | 37 | 58.6 | 93 | 719 | |
| | 2019.03- | 6MT | F | R | Van FWD D 15 DTH (DV5RUC) | | GDS82316 | Drive Shaft | | 28 | 37 | 58.6 | 93 | 974 | |
| | 2019.03- | 6MT | F | L/R | Van FWD D 15 DTH (DV5RUC) | | GCO10098 | Outer Joint | | 28 | 39 | 58.6 | 93 | 63 | I |
| | 2019.03- | 6MT | F | R | Van FWD D 15 DTH (DV5RUC) | | GCI81759 | Inner Joint | | 37 | 34 | 31.9 | 302 | 88 | |
| 1.6 (66 kw) | 2014.05- | 6MT | F | L | Bus FWD R9M 408 | | GDS82548 | Drive Shaft | | 29 | 39 | 60 | 95.5 | 694 | |
| | 2014.05- | 6MT | F | R | Bus FWD R9M 408 | | GDS18445 | Drive Shaft | | 29 | 39 | 60 | 96 | 1020 | |
| | 2014.05- | MT | F | L | Bus FWD R9M 408 | | GCO81973 | Outer Joint | | 29 | 28 | 60 | 95.5 | 68.5 | I |
| | 2014.05- | MT | F | R | Bus FWD R9M 408 | | GCO18327 | Outer Joint | | 29 | 28 | 60 | 96 | 69 | I |
| | 2014.05- | MT | F | L | Bus FWD R9M 408 | | GCI18247 | Inner Joint | | 39 | 27 | 39 | 74 | 108.5 | |
| | 2014.05- | MT | F | R | Bus FWD R9M 408 | | GCI81567 | Inner Joint | | 39 | 27 | 30 | 367.5 | 92 | |
| | 2014.05- | 6MT | F | L | Van FWD R9M 408 | | GDS82548 | Drive Shaft | | 29 | 39 | 60 | 95.5 | 694 | |
| | 2014.05- | 6MT | F | R | Van FWD R9M 408 | | GDS18445 | Drive Shaft | | 29 | 39 | 60 | 96 | 1020 | |
| | 2014.05- | MT | F | L | Van FWD R9M 408 | | GCO81973 | Outer Joint | | 29 | 28 | 60 | 95.5 | 68.5 | I |
| | 2014.05- | MT | F | R | Van FWD R9M 408 | | GCO18327 | Outer Joint | | 29 | 28 | 60 | 96 | 69 | I |
| | 2014.05- | MT | F | L | Van FWD R9M 408 | | GCI18247 | Inner Joint | | 39 | 27 | 39 | 74 | 108.5 | |
| | 2014.05- | MT | F | R | Van FWD R9M 408 | | GCI81567 | Inner Joint | | 39 | 27 | 30 | 367.5 | 92 | |
| 1.6 (70 kw) | 2016.08- | 6MT | F | L | Bus FWD R9M 413;R9M 415 | | GDS82548 | Drive Shaft | | 29 | 39 | 60 | 95.5 | 694 | |
| | 2016.08- | 6MT | F | R | Bus FWD R9M 413;R9M 415 | | GDS18445 | Drive Shaft | | 29 | 39 | 60 | 96 | 1020 | |
| | 2016.08- | MT | F | L | Bus FWD R9M 413;R9M 415 | | GCO81973 | Outer Joint | | 29 | 28 | 60 | 95.5 | 68.5 | I |
| | 2016.08- | MT | F | R | Bus FWD R9M 413;R9M 415 | | GCO18327 | Outer Joint | | 29 | 28 | 60 | 96 | 69 | I |
| | 2016.08- | MT | F | L | Bus FWD R9M 413;R9M 415 | | GCI18247 | Inner Joint | | 39 | 27 | 39 | 74 | 108.5 | |
| | 2016.08- | MT | F | R | Bus FWD R9M 413;R9M 415 | | GCI81567 | Inner Joint | | 39 | 27 | 30 | 367.5 | 92 | |
| | 2016.08- | 6MT | F | L | Van FWD R9M 413;R9M 415 | | GDS82548 | Drive Shaft | | 29 | 39 | 60 | 95.5 | 694 | |
| | 2016.08- | 6MT | F | R | Van FWD R9M 413;R9M 415 | | GDS18445 | Drive Shaft | | 29 | 39 | 60 | 96 | 1020 | |
| | 2016.08- | MT | F | L | Van FWD R9M 413;R9M 415 | | GCO81973 | Outer Joint | | 29 | 28 | 60 | 95.5 | 68.5 | I |

| | YEAR | TRANSM. | F/R | L/R | BODY STYLE & DRIVE TYPE & ENGINE | REMARKS | G-AP Ref. | PRODUCT | ABS | Technical Specifications | | | | | |
|---|---|---|---|---|---|---|---|---|---|---|---|---|---|---|---|
| | | | | | | | | | | A | B | C | H | L | P |
| **VAUXHALL** **Vivaro** | | | | | | | | | | | | | | | |
| 1.6 (70 kw) | 2016.08- | MT | F | R | Van FWD R9M 413;R9M 415 | | GCO18327 | Outer Joint | | 29 | 28 | 60 | 96 | 69 | I |
| | 2016.08- | MT | F | L | Van FWD R9M 413;R9M 415 | | GCI18247 | Inner Joint | | 39 | 27 | 39 | 74 | 108.5 | |
| | 2016.08- | MT | F | R | Van FWD R9M 413;R9M 415 | | GCI81567 | Inner Joint | | 39 | 27 | 30 | 367.5 | 92 | |
| 1.6 (85 kw) | 2014.05- | 6MT | F | L | Bus FWD R9M 408 | | GDS82548 | Drive Shaft | | 29 | 39 | 60 | 95.5 | 694 | |
| | 2014.05- | 6MT | F | R | Bus FWD R9M 408 | | GDS18445 | Drive Shaft | | 29 | 39 | 60 | 96 | 1020 | |
| | 2014.05- | MT | F | L | Bus FWD R9M 408 | | GCO81973 | Outer Joint | | 29 | 28 | 60 | 95.5 | 68.5 | I |
| | 2014.05- | MT | F | R | Bus FWD R9M 408 | | GCO18327 | Outer Joint | | 29 | 28 | 60 | 96 | 69 | I |
| | 2014.05- | MT | F | L | Bus FWD R9M 408 | | GCI18247 | Inner Joint | | 39 | 27 | 39 | 74 | 108.5 | |
| | 2014.05- | MT | F | R | Bus FWD R9M 408 | | GCI81567 | Inner Joint | | 39 | 27 | 30 | 367.5 | 92 | |
| | 2014.05- | 6MT | F | L | Platform/Chassis FWD R9M 408 | | GDS82548 | Drive Shaft | | 29 | 39 | 60 | 95.5 | 694 | |
| | 2014.05- | 6MT | F | R | Platform/Chassis FWD R9M 408 | | GDS18445 | Drive Shaft | | 29 | 39 | 60 | 96 | 1020 | |
| | 2014.05- | MT | F | L | Platform/Chassis FWD R9M 408 | | GCO81973 | Outer Joint | | 29 | 28 | 60 | 95.5 | 68.5 | I |
| | 2014.05- | MT | F | R | Platform/Chassis FWD R9M 408 | | GCO18327 | Outer Joint | | 29 | 28 | 60 | 96 | 69 | I |
| | 2014.05- | MT | F | L | Platform/Chassis FWD R9M 408 | | GCI18247 | Inner Joint | | 39 | 27 | 39 | 74 | 108.5 | |
| | 2014.05- | MT | F | R | Platform/Chassis FWD R9M 408 | | GCI81567 | Inner Joint | | 39 | 27 | 30 | 367.5 | 92 | |
| | 2014.05- | 6MT | F | L | Van FWD R9M 408 | | GDS82548 | Drive Shaft | | 29 | 39 | 60 | 95.5 | 694 | |
| | 2014.05- | 6MT | F | R | Van FWD R9M 408 | | GDS18445 | Drive Shaft | | 29 | 39 | 60 | 96 | 1020 | |
| | 2014.05- | MT | F | L | Van FWD R9M 408 | | GCO81973 | Outer Joint | | 29 | 28 | 60 | 95.5 | 68.5 | I |
| | 2014.05- | MT | F | R | Van FWD R9M 408 | | GCO18327 | Outer Joint | | 29 | 28 | 60 | 96 | 69 | I |
| | 2014.05- | MT | F | L | Van FWD R9M 408 | | GCI18247 | Inner Joint | | 39 | 27 | 39 | 74 | 108.5 | |
| | 2014.05- | MT | F | R | Van FWD R9M 408 | | GCI81567 | Inner Joint | | 39 | 27 | 30 | 367.5 | 92 | |
| 1.6 (88 kw) | 2014.05- | 6MT | F | L | Bus FWD R9M 450;R9M 413 | | GDS82548 | Drive Shaft | | 29 | 39 | 60 | 95.5 | 694 | |
| | 2014.05- | 6MT | F | R | Bus FWD R9M 450;R9M 413 | | GDS18445 | Drive Shaft | | 29 | 39 | 60 | 96 | 1020 | |
| | 2014.05- | MT | F | L | Bus FWD R9M 450;R9M 413 | | GCO81973 | Outer Joint | | 29 | 28 | 60 | 95.5 | 68.5 | I |
| | 2014.05- | MT | F | R | Bus FWD R9M 450;R9M 413 | | GCO18327 | Outer Joint | | 29 | 28 | 60 | 96 | 69 | I |
| | 2014.05- | MT | F | L | Bus FWD R9M 450;R9M 413 | | GCI18247 | Inner Joint | | 39 | 27 | 39 | 74 | 108.5 | |
| | 2014.05- | MT | F | R | Bus FWD R9M 450;R9M 413 | | GCI81567 | Inner Joint | | 39 | 27 | 30 | 367.5 | 92 | |
| | 2014.05- | 6MT | F | L | Platform/Chassis FWD R9M 450 | | GDS82548 | Drive Shaft | | 29 | 39 | 60 | 95.5 | 694 | |
| | 2014.05- | 6MT | F | R | Platform/Chassis FWD R9M 450 | | GDS18445 | Drive Shaft | | 29 | 39 | 60 | 96 | 1020 | |
| | 2014.05- | MT | F | L | Platform/Chassis FWD R9M 450 | | GCO81973 | Outer Joint | | 29 | 28 | 60 | 95.5 | 68.5 | I |
| | 2014.05- | MT | F | R | Platform/Chassis FWD R9M 450 | | GCO18327 | Outer Joint | | 29 | 28 | 60 | 96 | 69 | I |
| | 2014.05- | MT | F | L | Platform/Chassis FWD R9M 450 | | GCI18247 | Inner Joint | | 39 | 27 | 39 | 74 | 108.5 | |
| | 2014.05- | MT | F | R | Platform/Chassis FWD R9M 450 | | GCI81567 | Inner Joint | | 39 | 27 | 30 | 367.5 | 92 | |
| | 2014.05- | 6MT | F | L | Van FWD R9M 450;R9M 413 | | GDS82548 | Drive Shaft | | 29 | 39 | 60 | 95.5 | 694 | |
| | 2014.05- | 6MT | F | R | Van FWD R9M 450;R9M 413 | | GDS18445 | Drive Shaft | | 29 | 39 | 60 | 96 | 1020 | |
| | 2014.05- | MT | F | L | Van FWD R9M 450;R9M 413 | | GCO81973 | Outer Joint | | 29 | 28 | 60 | 95.5 | 68.5 | I |
| | 2014.05- | MT | F | R | Van FWD R9M 450;R9M 413 | | GCO18327 | Outer Joint | | 29 | 28 | 60 | 96 | 69 | I |
| | 2014.05- | MT | F | L | Van FWD R9M 450;R9M 413 | | GCI18247 | Inner Joint | | 39 | 27 | 39 | 74 | 108.5 | |
| | 2014.05- | MT | F | R | Van FWD R9M 450;R9M 413 | | GCI81567 | Inner Joint | | 39 | 27 | 30 | 367.5 | 92 | |
| 1.6 (89 kw) | 2016.08- | 6MT | F | L | Van FWD R9M 413;R9M 415 | | GDS82548 | Drive Shaft | | 29 | 39 | 60 | 95.5 | 694 | |
| | 2016.08- | 6MT | F | R | Van FWD R9M 413;R9M 415 | | GDS18445 | Drive Shaft | | 29 | 39 | 60 | 96 | 1020 | |
| | 2016.08- | 6MT | F | L | Van FWD R9M 413;R9M 415 | | GCO81973 | Outer Joint | | 29 | 28 | 60 | 95.5 | 68.5 | I |
| | 2016.08- | 6MT | F | R | Van FWD R9M 413;R9M 415 | | GCO18327 | Outer Joint | | 29 | 28 | 60 | 96 | 69 | I |
| | 2016.08- | 6MT | F | L | Van FWD R9M 413;R9M 415 | | GCI18247 | Inner Joint | | 39 | 27 | 39 | 74 | 108.5 | |
| | 2016.08- | 6MT | F | R | Van FWD R9M 413;R9M 415 | | GCI81567 | Inner Joint | | 39 | 27 | 30 | 367.5 | 92 | |
| | 2019.01- | 6MT | F | L | Bus FWD R9M 415 | | GDS82548 | Drive Shaft | | 29 | 39 | 60 | 95.5 | 694 | |
| | 2019.01- | 6MT | F | R | Bus FWD R9M 415 | | GDS18445 | Drive Shaft | | 29 | 39 | 60 | 96 | 1020 | |
| | 2019.01- | 6MT | F | L | Bus FWD R9M 415 | | GCO81973 | Outer Joint | | 29 | 28 | 60 | 95.5 | 68.5 | I |
| | 2019.01- | 6MT | F | R | Bus FWD R9M 415 | | GCO18327 | Outer Joint | | 29 | 28 | 60 | 96 | 69 | I |
| | 2019.01- | 6MT | F | L | Bus FWD R9M 415 | | GCI18247 | Inner Joint | | 39 | 27 | 39 | 74 | 108.5 | |
| | 2019.01- | 6MT | F | R | Bus FWD R9M 415 | | GCI81567 | Inner Joint | | 39 | 27 | 30 | 367.5 | 92 | |
| 1.6 (92 kw) | 2016.08- | 6MT | F | L | Bus FWD R9M 452 | | GDS82548 | Drive Shaft | | 29 | 39 | 60 | 95.5 | 694 | |
| | 2016.08- | 6MT | F | R | Bus FWD R9M 452 | | GDS18445 | Drive Shaft | | 29 | 39 | 60 | 96 | 1020 | |
| | 2016.08- | MT | F | L | Bus FWD R9M 452 | | GCO81973 | Outer Joint | | 29 | 28 | 60 | 95.5 | 68.5 | I |
| | 2016.08- | MT | F | R | Bus FWD R9M 452 | | GCO18327 | Outer Joint | | 29 | 28 | 60 | 96 | 69 | I |
| | 2016.08- | MT | F | L | Bus FWD R9M 452 | | GCI18247 | Inner Joint | | 39 | 27 | 39 | 74 | 108.5 | |
| | 2016.08- | MT | F | R | Bus FWD R9M 452 | | GCI81567 | Inner Joint | | 39 | 27 | 30 | 367.5 | 92 | |
| | 2016.08- | 6MT | F | L | Platform/Chassis FWD R9M 452 | | GDS82548 | Drive Shaft | | 29 | 39 | 60 | 95.5 | 694 | |
| | 2016.08- | 6MT | F | R | Platform/Chassis FWD R9M 452 | | GDS18445 | Drive Shaft | | 29 | 39 | 60 | 96 | 1020 | |
| | 2016.08- | MT | F | L | Platform/Chassis FWD R9M 452 | | GCO81973 | Outer Joint | | 29 | 28 | 60 | 95.5 | 68.5 | I |
| | 2016.08- | MT | F | R | Platform/Chassis FWD R9M 452 | | GCO18327 | Outer Joint | | 29 | 28 | 60 | 96 | 69 | I |
| | 2016.08- | MT | F | L | Platform/Chassis FWD R9M 452 | | GCI18247 | Inner Joint | | 39 | 27 | 39 | 74 | 108.5 | |
| | 2016.08- | MT | F | R | Platform/Chassis FWD R9M 452 | | GCI81567 | Inner Joint | | 39 | 27 | 30 | 367.5 | 92 | |
| | 2016.08- | 6MT | F | L | Van FWD R9M 452 | | GDS82548 | Drive Shaft | | 29 | 39 | 60 | 95.5 | 694 | |
| | 2016.08- | 6MT | F | R | Van FWD R9M 452 | | GDS18445 | Drive Shaft | | 29 | 39 | 60 | 96 | 1020 | |

| | YEAR | TRANSM. | F/R | L/R | BODY STYLE & DRIVE TYPE & ENGINE | REMARKS | G-AP Ref. | PRODUCT | ABS | Technical Specifications | | | | | |
|---|---|---|---|---|---|---|---|---|---|---|---|---|---|---|---|
| | | | | | | | | | | A | B | C | H | L | P |
| **VAUXHALL** | | | | | | | | | | | | | | | |
| **Vivaro** | | | | | | | | | | | | | | | |
| 1.6 (92 kw) | 2016.08- | MT | F | L | Van FWD R9M 452 | | GCO81973 | Outer Joint | | 29 | 28 | 60 | 95.5 | 68.5 | I |
| | 2016.08- | MT | F | R | Van FWD R9M 452 | | GCO18327 | Outer Joint | | 29 | 28 | 60 | 96 | 69 | I |
| | 2016.08- | MT | F | L | Van FWD R9M 452 | | GCI18247 | Inner Joint | | 39 | 27 | 39 | 74 | 108.5 | |
| | 2016.08- | MT | F | R | Van FWD R9M 452 | | GCI81567 | Inner Joint | | 39 | 27 | 30 | 367.5 | 92 | |
| 1.6 (103 kw) | 2014.05- | MT | F | L | Platform/Chassis FWD R9M 450 | | GDS82548 | Drive Shaft | | 29 | 39 | 60 | 95.5 | 694 | |
| | 2014.05- | MT | F | R | Platform/Chassis FWD R9M 450 | | GDS18445 | Drive Shaft | | 29 | 39 | 60 | 96 | 1020 | |
| | 2014.05- | MT | F | L | Platform/Chassis FWD R9M 450 | | GCO81973 | Outer Joint | | 29 | 28 | 60 | 95.5 | 68.5 | I |
| | 2014.05- | MT | F | R | Platform/Chassis FWD R9M 450 | | GCO18327 | Outer Joint | | 29 | 28 | 60 | 96 | 69 | I |
| | 2014.05- | MT | F | L | Platform/Chassis FWD R9M 450 | | GCI18247 | Inner Joint | | 39 | 27 | 39 | 74 | 108.5 | |
| | 2014.05- | MT | F | R | Platform/Chassis FWD R9M 450 | | GCI81567 | Inner Joint | | 39 | 27 | 30 | 367.5 | 92 | |
| | 2014.05- | 6MT | F | L | Van FWD R9M 450 | | GDS82548 | Drive Shaft | | 29 | 39 | 60 | 95.5 | 694 | |
| | 2014.05- | 6MT | F | R | Van FWD R9M 450 | | GDS18445 | Drive Shaft | | 29 | 39 | 60 | 96 | 1020 | |
| | 2014.05- | MT | F | L | Van FWD R9M 450 | | GCO81973 | Outer Joint | | 29 | 28 | 60 | 95.5 | 68.5 | I |
| | 2014.05- | MT | F | R | Van FWD R9M 450 | | GCO18327 | Outer Joint | | 29 | 28 | 60 | 96 | 69 | I |
| | 2014.05- | MT | F | L | Van FWD R9M 450 | | GCI18247 | Inner Joint | | 39 | 27 | 39 | 74 | 108.5 | |
| | 2014.05- | MT | F | R | Van FWD R9M 450 | | GCI81567 | Inner Joint | | 39 | 27 | 30 | 367.5 | 92 | |
| | 2014.06- | 6MT | F | L | Bus FWD R9M 450 | | GDS82548 | Drive Shaft | | 29 | 39 | 60 | 95.5 | 694 | |
| | 2014.06- | 6MT | F | R | Bus FWD R9M 450 | | GDS18445 | Drive Shaft | | 29 | 39 | 60 | 96 | 1020 | |
| | 2014.06- | MT | F | L | Bus FWD R9M 450 | | GCO81973 | Outer Joint | | 29 | 28 | 60 | 95.5 | 68.5 | I |
| | 2014.06- | MT | F | R | Bus FWD R9M 450 | | GCO18327 | Outer Joint | | 29 | 28 | 60 | 96 | 69 | I |
| | 2014.06- | MT | F | L | Bus FWD R9M 450 | | GCI18247 | Inner Joint | | 39 | 27 | 39 | 74 | 108.5 | |
| | 2014.06- | MT | F | R | Bus FWD R9M 450 | | GCI81567 | Inner Joint | | 39 | 27 | 30 | 367.5 | 92 | |
| 1.6 (107 kw) | 2016.08- | 6MT | F | L | Bus FWD R9M 452 | | GDS82548 | Drive Shaft | | 29 | 39 | 60 | 95.5 | 694 | |
| | 2016.08- | 6MT | F | R | Bus FWD R9M 452 | | GDS18445 | Drive Shaft | | 29 | 39 | 60 | 96 | 1020 | |
| | 2016.08- | 6MT | F | L | Bus FWD R9M 452 | | GCO81973 | Outer Joint | | 29 | 28 | 60 | 95.5 | 68.5 | I |
| | 2016.08- | 6MT | F | R | Bus FWD R9M 452 | | GCO18327 | Outer Joint | | 29 | 28 | 60 | 96 | 69 | I |
| | 2016.08- | 6MT | F | L | Bus FWD R9M 452 | | GCI18247 | Inner Joint | | 39 | 27 | 39 | 74 | 108.5 | |
| | 2016.08- | 6MT | F | R | Bus FWD R9M 452 | | GCI81567 | Inner Joint | | 39 | 27 | 30 | 367.5 | 92 | |
| | 2016.08- | MT | F | L | Platform/Chassis FWD R9M 452 | | GDS82548 | Drive Shaft | | 29 | 39 | 60 | 95.5 | 694 | |
| | 2016.08- | MT | F | R | Platform/Chassis FWD R9M 452 | | GDS18445 | Drive Shaft | | 29 | 39 | 60 | 96 | 1020 | |
| | 2016.08- | MT | F | L | Platform/Chassis FWD R9M 452 | | GCO81973 | Outer Joint | | 29 | 28 | 60 | 95.5 | 68.5 | I |
| | 2016.08- | MT | F | R | Platform/Chassis FWD R9M 452 | | GCO18327 | Outer Joint | | 29 | 28 | 60 | 96 | 69 | I |
| | 2016.08- | MT | F | L | Platform/Chassis FWD R9M 452 | | GCI18247 | Inner Joint | | 39 | 27 | 39 | 74 | 108.5 | |
| | 2016.08- | MT | F | R | Platform/Chassis FWD R9M 452 | | GCI81567 | Inner Joint | | 39 | 27 | 30 | 367.5 | 92 | |
| | 2016.08- | 6MT | F | L | Van FWD R9M 452 | | GDS82548 | Drive Shaft | | 29 | 39 | 60 | 95.5 | 694 | |
| | 2016.08- | 6MT | F | R | Van FWD R9M 452 | | GDS18445 | Drive Shaft | | 29 | 39 | 60 | 96 | 1020 | |
| | 2016.08- | MT | F | L | Van FWD R9M 452 | | GCO81973 | Outer Joint | | 29 | 28 | 60 | 95.5 | 68.5 | I |
| | 2016.08- | MT | F | R | Van FWD R9M 452 | | GCO18327 | Outer Joint | | 29 | 28 | 60 | 96 | 69 | I |
| | 2016.08- | MT | F | L | Van FWD R9M 452 | | GCI18247 | Inner Joint | | 39 | 27 | 39 | 74 | 108.5 | |
| | 2016.08- | MT | F | R | Van FWD R9M 452 | | GCI81567 | Inner Joint | | 39 | 27 | 30 | 367.5 | 92 | |
| 1.9 (59 kw) | 2001.08-2006.12 | 5MT | F | L | Bus FWD F9Q 762 | | GDS44003 | Drive Shaft | | 27 | 37 | 56.5 | 93.5 | 676 | |
| | 2001.08-2006.12 | 5MT | F | R | Bus FWD F9Q 762 | | GDS44013 | Drive Shaft | | 27 | 39 | 56.5 | 93.5 | 1020 | |
| | 2001.08-2006.12 | 5MT | F | L/R | Bus FWD F9Q 762 | | GCO44034 | Outer Joint | | 27 | 26 | 56.5 | 93.5 | 64 | M |
| | 2001.08-2006.12 | 5MT | F | L | Van FWD F9Q 762 | | GDS44003 | Drive Shaft | | 27 | 37 | 56.5 | 93.5 | 676 | |
| | 2001.08-2006.12 | 5MT | F | R | Van FWD F9Q 762 | | GDS44013 | Drive Shaft | | 27 | 39 | 56.5 | 93.5 | 1020 | |
| | 2001.08-2006.12 | 6MT | F | L/R | Van FWD F9Q 762 | | GCO44034 | Outer Joint | | 27 | 26 | 56.5 | 93.5 | 64 | M |
| 1.9 (74 kw) | 2001.08-2006.12 | 5MT/6MT | F | L | Bus FWD F9Q 760 | | GDS44003 | Drive Shaft | | 27 | 37 | 56.5 | 93.5 | 676 | |
| | 2001.08-2006.12 | 5MT/6MT | F | R | Bus FWD F9Q 760 | | GDS44013 | Drive Shaft | | 27 | 39 | 56.5 | 93.5 | 1020 | |
| | 2001.08-2006.12 | 5MT/6MT | F | L/R | Bus FWD F9Q 760 | | GCO44034 | Outer Joint | | 27 | 26 | 56.5 | 93.5 | 64 | M |
| | 2001.08-2006.12 | 6MT | F | L | Van FWD F9Q 760 | | GDS44003 | Drive Shaft | | 27 | 37 | 56.5 | 93.5 | 676 | |
| | 2001.08-2006.12 | 6MT | F | R | Van FWD F9Q 760 | | GDS44013 | Drive Shaft | | 27 | 39 | 56.5 | 93.5 | 1020 | |
| | 2001.08-2006.12 | 6MT | F | L/R | Van FWD F9Q 760 | | GCO44034 | Outer Joint | | 27 | 26 | 56.5 | 93.5 | 64 | M |
| 2.0 (66 kw) | 2006.01-2014.07 | 6MT | F | L | Bus FWD M9R 780;M9R 782;M9R 630;M9R 786;M9R 692 | | GDS60022 | Drive Shaft | | 27 | 39 | 56.6 | 94 | 694 | |
| | 2006.01-2014.07 | 6MT | F | R | Bus FWD M9R 780;M9R 782;M9R 630;M9R 786;M9R 692 | | GDS18271 | Drive Shaft | | 27 | 39 | 56.6 | 94 | 1013 | |
| | 2006.01-2014.07 | 6MT | F | L/R | Bus FWD M9R 780;M9R 782;M9R 630;M9R 786;M9R 692 | | GCO18281 | Outer Joint | | 27 | 28 | 56.5 | 93.5 | 66.5 | I |
| | 2006.01-2014.07 | 6MT | F | R | Bus FWD M9R 780;M9R 782;M9R 630;M9R 786;M9R 692 | | GCI50046 | Inner Joint | | 39 | 27 | 30 | 364 | 87 | |
| | 2006.01-2014.07 | 6MT | F | L | Platform/Chassis FWD M9R 780;M9R 782;M9R 630;M9R 786;M9R 692 | | GDS60022 | Drive Shaft | | 27 | 39 | 56.6 | 94 | 694 | |
| | 2006.01-2014.07 | 6MT | F | R | Platform/Chassis FWD M9R 780;M9R 782;M9R 630;M9R 786;M9R 692 | | GDS18271 | Drive Shaft | | 27 | 39 | 56.6 | 94 | 1013 | |
| | 2006.01-2014.07 | 6MT | F | L/R | Platform/Chassis FWD M9R 780;M9R 782;M9R 630;M9R 786;M9R 692 | | GCO18281 | Outer Joint | | 27 | 28 | 56.5 | 93.5 | 66.5 | I |
| | 2006.01-2014.07 | 6MT | F | R | Platform/Chassis FWD M9R 780;M9R 782;M9R 630;M9R 786;M9R 692 | | GCI50046 | Inner Joint | | 39 | 27 | 30 | 364 | 87 | |
| | 2006.01-2014.07 | 6MT | F | L | Van FWD M9R 780;M9R 782;M9R 630;M9R 786;M9R 692 | | GDS60022 | Drive Shaft | | 27 | 39 | 56.6 | 94 | 694 | |
| | 2006.01-2014.07 | 6MT | F | R | Van FWD M9R 780;M9R 782;M9R 630;M9R 786;M9R 692 | | GDS18271 | Drive Shaft | | 27 | 39 | 56.6 | 94 | 1013 | |
| | 2006.01-2014.07 | 6MT | F | L/R | Van FWD M9R 780;M9R 782;M9R 630;M9R 786;M9R 692 | | GCO18281 | Outer Joint | | 27 | 28 | 56.5 | 93.5 | 66.5 | I |
| | 2006.01-2014.07 | 6MT | F | L/R | Van FWD M9R 780;M9R 782;M9R 630;M9R 786;M9R 692 | | GCO60005 | Outer Joint | | 27 | 36 | 56.6 | 94 | 71 | I |
| | 2006.01-2014.07 | 6MT | F | R | Van FWD M9R 780;M9R 782;M9R 630;M9R 786;M9R 692 | | GCI50046 | Inner Joint | | 39 | 27 | 30 | 364 | 87 | |

| | YEAR | TRANSM. | F/R | L/R | BODY STYLE & DRIVE TYPE & ENGINE | REMARKS | G-AP Ref. | PRODUCT | ABS | Technical Specifications | | | | | |
|---|---|---|---|---|---|---|---|---|---|---|---|---|---|---|---|
| | | | | | | | | | | A | B | C | H | L | P |
| **VAUXHALL** | | | | | | | | | | | | | | | |
| **Vivaro** | | | | | | | | | | | | | | | |
| 2.0 (84 kw) | 2006.08-2014.07 | 6AT/5MT/6MT | F | L | Bus FWD M9R 780;M9R 782;M9R 784;M9R 788;M9R 630;M9R 786;M9R 692 | | GDS60022 | Drive Shaft | | 27 | 39 | 56.6 | 94 | 694 | |
| | 2006.08-2014.07 | 6AT/5MT/6MT | F | R | Bus FWD M9R 780;M9R 782;M9R 784;M9R 788;M9R 630;M9R 786;M9R 692 | | GDS18271 | Drive Shaft | | 27 | 39 | 56.6 | 94 | 1013 | |
| | 2006.08-2014.07 | 6AT/5MT/6MT | F | L/R | Bus FWD M9R 780;M9R 782;M9R 784;M9R 788;M9R 630;M9R 786;M9R 692 | | GCO18281 | Outer Joint | | 27 | 28 | 56.5 | 93.5 | 66.5 | I |
| | 2006.08-2014.07 | 6AT/5MT/6MT | F | R | Bus FWD M9R 780;M9R 782;M9R 784;M9R 788;M9R 630;M9R 786;M9R 692 | | GCI50046 | Inner Joint | | 39 | 27 | 30 | 364 | 87 | |
| | 2006.08-2014.07 | 6AT/6MT | F | L | Platform/Chassis FWD M9R 780;M9R 782;M9R 784;M9R 788;M9R 630;M9R 786;M9R 692 | | GDS60022 | Drive Shaft | | 27 | 39 | 56.6 | 94 | 694 | |
| | 2006.08-2014.07 | 6AT/6MT | F | R | Platform/Chassis FWD M9R 780;M9R 782;M9R 784;M9R 788;M9R 630;M9R 786;M9R 692 | | GDS18271 | Drive Shaft | | 27 | 39 | 56.6 | 94 | 1013 | |
| | 2006.08-2014.07 | 6AT/6MT | F | R | Platform/Chassis FWD M9R 780;M9R 782;M9R 784;M9R 788;M9R 630;M9R 786;M9R 692 | | GCI50046 | Inner Joint | | 39 | 27 | 30 | 364 | 87 | |
| | 2006.08-2014.07 | 6MT | F | L/R | Platform/Chassis FWD M9R 780;M9R 782;M9R 784;M9R 788;M9R 630;M9R 786;M9R 692 | | GCO18281 | Outer Joint | | 27 | 28 | 56.5 | 93.5 | 66.5 | I |
| | 2006.08-2014.07 | 6AT/6MT | F | L | Van FWD M9R 780;M9R 782;M9R 784;M9R 788;M9R 630;M9R 786;M9R 692 | | GDS60022 | Drive Shaft | | 27 | 39 | 56.6 | 94 | 694 | |
| | 2006.08-2014.07 | 6AT/6MT | F | R | Van FWD M9R 780;M9R 782;M9R 784;M9R 788;M9R 630;M9R 786;M9R 692 | | GDS18271 | Drive Shaft | | 27 | 39 | 56.6 | 94 | 1013 | |
| | 2006.08-2014.07 | 6AT/6MT | F | L/R | Van FWD M9R 780;M9R 782;M9R 784;M9R 788;M9R 630;M9R 786;M9R 692 | | GCO18281 | Outer Joint | | 27 | 28 | 56.5 | 93.5 | 66.5 | I |
| | 2006.08-2014.07 | 6AT/6MT | F | L/R | Van FWD M9R 780;M9R 782;M9R 784;M9R 788;M9R 630;M9R 786;M9R 692 | | GCO60005 | Outer Joint | | 27 | 36 | 56.6 | 94 | 71 | I |
| | 2006.08-2014.07 | 6AT/6MT | F | R | Van FWD M9R 780;M9R 782;M9R 784;M9R 788;M9R 630;M9R 786;M9R 692 | | GCI50046 | Inner Joint | | 39 | 27 | 30 | 364 | 87 | |
| 2.0 (86 kw) | 2006.08-2014.07 | 6MT | F | L | Bus FWD F4R 820 | | GDS44003 | Drive Shaft | | 27 | 37 | 56.5 | 93.5 | 676 | |
| | 2006.08-2014.07 | 6MT | F | R | Bus FWD F4R 820 | | GDS44013 | Drive Shaft | | 27 | 39 | 56.5 | 93.5 | 1020 | |
| | 2006.08-2014.07 | 6MT | F | L/R | Bus FWD F4R 820 | | GCO44034 | Outer Joint | | 27 | 26 | 56.5 | 93.5 | 64 | M |
| | 2006.08-2014.07 | 6MT | F | L | Platform/Chassis FWD F4R 820 | | GDS44003 | Drive Shaft | | 27 | 37 | 56.5 | 93.5 | 676 | |
| | 2006.08-2014.07 | 6MT | F | R | Platform/Chassis FWD F4R 820 | | GDS44013 | Drive Shaft | | 27 | 39 | 56.5 | 93.5 | 1020 | |
| | 2006.08-2014.07 | 6MT | F | L/R | Platform/Chassis FWD F4R 820 | | GCO44034 | Outer Joint | | 27 | 26 | 56.5 | 93.5 | 64 | M |
| | 2006.08-2014.07 | 6MT | F | L | Van FWD F4R 820 | | GDS44003 | Drive Shaft | | 27 | 37 | 56.5 | 93.5 | 676 | |
| | 2006.08-2014.07 | 6MT | F | R | Van FWD F4R 820 | | GDS44013 | Drive Shaft | | 27 | 39 | 56.5 | 93.5 | 1020 | |
| | 2006.08-2014.07 | 6MT | F | L/R | Van FWD F4R 820 | | GCO44034 | Outer Joint | | 27 | 26 | 56.5 | 93.5 | 64 | M |
| 2.0 (88 kw) | 2001.08-2006.12 | 6MT | F | L | Bus FWD F4R 720 | | GDS44003 | Drive Shaft | | 27 | 37 | 56.5 | 93.5 | 676 | |
| | 2001.08-2006.12 | 6MT | F | R | Bus FWD F4R 720 | | GDS44013 | Drive Shaft | | 27 | 39 | 56.5 | 93.5 | 1020 | |
| | 2001.08-2006.12 | 6MT | F | L/R | Bus FWD F4R 720 | | GCO44034 | Outer Joint | | 27 | 26 | 56.5 | 93.5 | 64 | M |
| | 2001.08-2006.12 | 6MT | F | L | Van FWD F4R 720 | | GDS44003 | Drive Shaft | | 27 | 37 | 56.5 | 93.5 | 676 | |
| | 2001.08-2006.12 | 6MT | F | R | Van FWD F4R 720 | | GDS44013 | Drive Shaft | | 27 | 39 | 56.5 | 93.5 | 1020 | |
| | 2001.08-2006.12 | 6MT | F | L/R | Van FWD F4R 720 | | GCO44034 | Outer Joint | | 27 | 26 | 56.5 | 93.5 | 64 | M |
| | 2003.04-2014.07 | 6MT | F | L | Platform/Chassis FWD F4R 720 | | GDS44003 | Drive Shaft | | 27 | 37 | 56.5 | 93.5 | 676 | |
| | 2003.04-2014.07 | 6MT | F | R | Platform/Chassis FWD F4R 720 | | GDS44013 | Drive Shaft | | 27 | 39 | 56.5 | 93.5 | 1020 | |
| | 2003.04-2014.07 | 6MT | F | L/R | Platform/Chassis FWD F4R 720 | | GCO44034 | Outer Joint | | 27 | 26 | 56.5 | 93.5 | 64 | M |
| 2.0 (90 kw) | 2019.03-2022.04 | 6MT | F | L | Van FWD D 20 DTL (DW10FE) | For vehicles without standard suspension | GDS83778 | Drive Shaft | | 28 | 37 | 58.5 | 92.5 | 699 | |
| | 2019.03-2022.04 | 6MT | F | L | Van FWD D 20 DTL (DW10FE) | For vehicles with standard suspension | GDS84397 | Drive Shaft | | 28 | 37 | 58.6 | 93 | 696 | |
| | 2019.03-2022.04 | 6MT | F | R | Van FWD D 20 DTL (DW10FE) | For vehicles with standard suspension | GDS82847 | Drive Shaft | | 28 | 37 | 58.6 | 93 | 1005 | |
| | 2019.03-2022.04 | 6MT | F | R | Van FWD D 20 DTL (DW10FE) | For vehicles without standard suspension | GDS83775 | Drive Shaft | | 28 | 37 | 58.5 | 92.5 | 1002 | |
| | 2019.03-2022.04 | 6MT | F | L/R | Van FWD D 20 DTL (DW10FE) | | GCO82483 | Outer Joint | | 28 | 36 | 58.5 | 92.5 | 60.5 | I |
| | 2019.03-2022.04 | 6MT | F | L | Van FWD D 20 DTL (DW10FE) | | GCI82363 | Inner Joint | | 37 | 36 | 40 | 68 | 108 | |
| | 2019.03-2022.04 | 6MT | F | R | Van FWD D 20 DTL (DW10FE) | For vehicles with standard suspension | GCI10041 | Inner Joint | | 37 | 39 | 32 | 399 | 95.5 | |
| | 2019.03-2022.04 | 6MT | F | R | Van FWD D 20 DTL (DW10FE) | For vehicles without standard suspension | GCI82364 | Inner Joint | | 37 | 36 | 32 | 400 | 108 | |
| | 2019.03-2022.04 | 8AT | F | L | Van FWD D 20 DTL (DW10FE) | For vehicles with standard suspension | GDS56191 | Drive Shaft | | 28 | 37 | 58.6 | 93 | 649 | |
| | 2019.03-2022.04 | 8AT | F | R | Van FWD D 20 DTL (DW10FE) | For vehicles with standard suspension | GDS56190 | Drive Shaft | | 28 | 37 | 58.6 | 93 | 989 | |
| | 2019.03-2022.04 | 8AT | F | L/R | Van FWD D 20 DTL (DW10FE) | For vehicles with standard suspension | GCO82805 | Outer Joint | | 28 | 39 | 58.6 | 93 | 63 | I |
| | 2019.03-2023.03 | 6MT | F | L | Platform/Chassis FWD D 20 DTL (DW10FE) | | GDS83778 | Drive Shaft | | 28 | 37 | 58.5 | 92.5 | 699 | |
| | 2019.03-2023.03 | 6MT | F | R | Platform/Chassis FWD D 20 DTL (DW10FE) | For vehicles with standard suspension | GDS82847 | Drive Shaft | | 28 | 37 | 58.6 | 93 | 1005 | |
| | 2019.03-2023.03 | 6MT | F | R | Platform/Chassis FWD D 20 DTL (DW10FE) | For vehicles without standard suspension | GDS83775 | Drive Shaft | | 28 | 37 | 58.5 | 92.5 | 1002 | |
| | 2019.03-2023.03 | 6MT | F | L/R | Platform/Chassis FWD D 20 DTL (DW10FE) | | GCO82483 | Outer Joint | | 28 | 36 | 58.5 | 92.5 | 60.5 | I |
| | 2019.03-2023.03 | 6MT | F | L | Platform/Chassis FWD D 20 DTL (DW10FE) | | GCI82363 | Inner Joint | | 37 | 36 | 40 | 68 | 108 | |
| | 2019.03-2023.03 | 6MT | F | R | Platform/Chassis FWD D 20 DTL (DW10FE) | For vehicles with standard suspension | GCI10041 | Inner Joint | | 37 | 39 | 32 | 399 | 95.5 | |
| | 2019.03-2023.03 | 6MT | F | R | Platform/Chassis FWD D 20 DTL (DW10FE) | For vehicles without standard suspension | GCI82364 | Inner Joint | | 37 | 36 | 32 | 400 | 108 | |
| 2.0 (106 kw) | 2021.08-2025.05 | 6MT | F | L | Van FWD DW10FDDU340;DW10FDDU370 | For vehicles without standard suspension | GDS83778 | Drive Shaft | | 28 | 37 | 58.5 | 92.5 | 699 | |
| | 2021.08-2025.05 | 6MT | F | L | Van FWD DW10FDDU340;DW10FDDU370 | For vehicles with standard suspension | GDS84397 | Drive Shaft | | 28 | 37 | 58.6 | 93 | 696 | |
| | 2021.08-2025.05 | 6MT | F | R | Van FWD DW10FDDU340;DW10FDDU370 | For vehicles with standard suspension | GDS82847 | Drive Shaft | | 28 | 37 | 58.6 | 93 | 1005 | |
| | 2021.08-2025.05 | 6MT | F | R | Van FWD DW10FDDU340;DW10FDDU370 | For vehicles without standard suspension | GDS83775 | Drive Shaft | | 28 | 37 | 58.5 | 92.5 | 1002 | |
| | 2021.08-2025.05 | 6MT | F | L | Van FWD DW10FDDU340;DW10FDDU370 | For vehicles with standard suspension | GCI10040 | Inner Joint | | 37 | 39 | 40 | 69 | 95.5 | |
| | 2021.08-2025.05 | 6MT | F | L | Van FWD DW10FDDU340;DW10FDDU370 | For vehicles without standard suspension | GCI82363 | Inner Joint | | 37 | 36 | 40 | 68 | 108 | |
| | 2021.08-2025.05 | 6MT | F | R | Van FWD DW10FDDU340;DW10FDDU370 | For vehicles with standard suspension | GCI10041 | Inner Joint | | 37 | 39 | 32 | 399 | 95.5 | |
| | 2021.08-2025.05 | 6MT | F | R | Van FWD DW10FDDU340;DW10FDDU370 | For vehicles without standard suspension | GCI82364 | Inner Joint | | 37 | 36 | 32 | 400 | 108 | |
| | 2021.08-2025.05 | 8AT | F | L | Van FWD DW10FDDU340;DW10FDDU370 | For vehicles with standard suspension | GDS56191 | Drive Shaft | | 28 | 37 | 58.6 | 93 | 649 | |
| | 2021.08-2025.05 | 8AT | F | R | Van FWD DW10FDDU340;DW10FDDU370 | For vehicles with standard suspension | GDS56190 | Drive Shaft | | 28 | 37 | 58.6 | 93 | 989 | |
| | 2021.08-2025.05 | 8AT | F | L/R | Van FWD DW10FDDU340;DW10FDDU370 | For vehicles with standard suspension | GCO82805 | Outer Joint | | 28 | 39 | 58.6 | 93 | 63 | I |
| | 2021.08-2025.05 | 8AT | F | L | Van FWD DW10FDDU340;DW10FDDU370 | For vehicles with standard suspension | GCI10120 | Inner Joint | | 37 | 39 | 42.2 | 60 | 95.5 | |
| | 2021.08-2025.05 | 8AT | F | R | Van FWD DW10FDDU340;DW10FDDU370 | For vehicles with standard suspension | GCI45033 | Inner Joint | | 37 | 39 | | 379 | 96 | |
| | 2023.04-2025.05 | 6MT | F | L | Platform/Chassis FWD DW10FDDU340 | | GDS83778 | Drive Shaft | | 28 | 37 | 58.5 | 92.5 | 699 | |
| | 2023.04-2025.05 | 6MT | F | R | Platform/Chassis FWD DW10FDDU340 | For vehicles with standard suspension | GDS82847 | Drive Shaft | | 28 | 37 | 58.6 | 93 | 1005 | |
| | 2023.04-2025.05 | 6MT | F | R | Platform/Chassis FWD DW10FDDU340 | | GDS83775 | Drive Shaft | | 28 | 37 | 58.5 | 92.5 | 1002 | |

| | YEAR | TRANSM. | F/R | L/R | BODY STYLE & DRIVE TYPE & ENGINE | REMARKS | G-AP Ref. | PRODUCT | ABS | Technical Specifications A | B | C | H | L | P |
|---|---|---|---|---|---|---|---|---|---|---|---|---|---|---|---|
| **VAUXHALL** | | | | | | | | | | | | | | | |
| **Vivaro** | | | | | | | | | | | | | | | |
| 2.0 (106 kw) | 2023.04-2025.05 | 6MT | F | R | Platform/Chassis FWD DW10FDDU340 | For vehicles with standard suspension | GCI10041 | Inner Joint | | 37 | 39 | 32 | 399 | 95.5 | |
| 2.0 (110 kw) | 2019.03-2021.09 | 6MT | F | L | Van FWD D 20 DTH (DW10FD) | For vehicles without standard suspension | GDS83778 | Drive Shaft | | 28 | 37 | 58.5 | 92.5 | 699 | |
| | 2019.03-2021.09 | 6MT | F | L | Van FWD D 20 DTH (DW10FD) | For vehicles with standard suspension | GDS84397 | Drive Shaft | | 28 | 37 | 58.6 | 93 | 696 | |
| | 2019.03-2021.09 | 6MT | F | R | Van FWD D 20 DTH (DW10FD) | For vehicles with standard suspension | GDS82847 | Drive Shaft | | 28 | 37 | 58.6 | 93 | 1005 | |
| | 2019.03-2021.09 | 6MT | F | R | Van FWD D 20 DTH (DW10FD) | For vehicles without standard suspension | GDS83775 | Drive Shaft | | 28 | 37 | 58.5 | 92.5 | 1002 | |
| | 2019.03-2021.09 | 6MT | F | L/R | Van FWD D 20 DTH (DW10FD) | | GCO82483 | Outer Joint | | 28 | 36 | 58.5 | 92.5 | 60.5 | I |
| | 2019.03-2021.09 | 6MT | F | L | Van FWD D 20 DTH (DW10FD) | | GCI82363 | Inner Joint | | 37 | 36 | 40 | 68 | 108 | |
| | 2019.03-2021.09 | 6MT | F | R | Van FWD D 20 DTH (DW10FD) | For vehicles with standard suspension | GCI10041 | Inner Joint | | 37 | 39 | 32 | 399 | 95.5 | |
| | 2019.03-2021.09 | 6MT | F | R | Van FWD D 20 DTH (DW10FD) | For vehicles without standard suspension | GCI82364 | Inner Joint | | 37 | 36 | 32 | 400 | 108 | |
| 2.0 (130 kw) | 2019.03-2025.05 | 8AT | F | L | Van FWD D 20 DTR (DW10FDCU) | | GDS56191 | Drive Shaft | | 28 | 37 | 58.6 | 93 | 649 | |
| | 2019.03-2025.05 | 8AT | F | R | Van FWD D 20 DTR (DW10FDCU) | | GDS56190 | Drive Shaft | | 28 | 37 | 58.6 | 93 | 989 | |
| | 2019.03-2025.05 | 8AT | F | L/R | Van FWD D 20 DTR (DW10FDCU) | | GCO82805 | Outer Joint | | 28 | 39 | 58.6 | 93 | 63 | I |
| | 2019.03-2025.05 | 8AT | F | L | Van FWD D 20 DTR (DW10FDCU) | | GCI10120 | Inner Joint | | 37 | 39 | 42.2 | 60 | 95.5 | |
| | 2019.03-2025.05 | 8AT | F | R | Van FWD D 20 DTR (DW10FDCU) | | GCI45033 | Inner Joint | | 37 | 39 | | 379 | 96 | |
| 2.5 (99 kw) | 2003.04-2006.07 | 6AT/6MT | F | L | Platform/Chassis FWD G9U 730 | | GDS50557 | Drive Shaft | | 27 | 37 | 56.5 | 92 | 634 | |
| | 2003.04-2006.07 | 6AT/6MT | F | R | Platform/Chassis FWD G9U 730 | | GDS50562 | Drive Shaft | | 27 | 39 | 56.5 | 92 | 1056 | |
| | 2003.04-2006.07 | 6AT/6MT | F | R | Platform/Chassis FWD G9U 730 | | GCO50080 | Outer Joint | | 27 | 37 | 56.5 | 92 | 73 | I |
| | 2003.04-2006.07 | 6AT/6MT | F | R | Platform/Chassis FWD G9U 730 | | GCI50097 | Inner Joint | | 39 | 35 | 30 | 409 | 90 | |
| | 2003.07-2014.07 | 6AT/6MT | F | L | Bus FWD G9U 730 | | GDS50557 | Drive Shaft | | 27 | 37 | 56.5 | 92 | 634 | |
| | 2003.07-2014.07 | 6AT/6MT | F | R | Bus FWD G9U 730 | | GDS50562 | Drive Shaft | | 27 | 39 | 56.5 | 92 | 1056 | |
| | 2003.07-2014.07 | 6AT/6MT | F | R | Bus FWD G9U 730 | | GCI50097 | Inner Joint | | 39 | 35 | 30 | 409 | 90 | |
| | 2003.07-2014.07 | AT/MT | F | L/R | Bus FWD G9U 730 | | GCO50080 | Outer Joint | | 27 | 37 | 56.5 | 92 | 73 | I |
| | 2003.07-2014.07 | 6AT/6MT | F | L | Van FWD G9U 730 | | GDS50557 | Drive Shaft | | 27 | 37 | 56.5 | 92 | 634 | |
| | 2003.07-2014.07 | 6AT/6MT | F | R | Van FWD G9U 730 | | GDS50562 | Drive Shaft | | 27 | 39 | 56.5 | 92 | 1056 | |
| | 2003.07-2014.07 | 6AT/6MT | F | R | Van FWD G9U 730 | | GCI50097 | Inner Joint | | 39 | 35 | 30 | 409 | 90 | |
| | 2003.07-2014.07 | AT/MT | F | L/R | Van FWD G9U 730 | | GCO50080 | Outer Joint | | 27 | 37 | 56.5 | 92 | 73 | I |
| 2.5 (107 kw) | 2006.01-2014.07 | 6AT/6MT | F | L | Bus FWD G9U 630 | Chassis no. from:7V600001 | GDS50497 | Drive Shaft | | 27 | 39 | 56.6 | 94 | 667 | |
| | 2006.01-2014.07 | 6AT/6MT | F | L | Bus FWD G9U 630 | Chassis no. to:6V699999 | GDS50557 | Drive Shaft | | 27 | 37 | 56.5 | 92 | 634 | |
| | 2006.01-2014.07 | 6AT/6MT | F | R | Bus FWD G9U 630 | Chassis no. from:7V600001 | GDS18301 | Drive Shaft | | 27 | 39 | 56.6 | 94 | 1045 | |
| | 2006.01-2014.07 | 6AT/6MT | F | R | Bus FWD G9U 630 | Chassis no. to:6V699999 | GDS50562 | Drive Shaft | | 27 | 39 | 56.5 | 92 | 1056 | |
| | 2006.01-2014.07 | 6AT/6MT | F | R | Bus FWD G9U 630 | Chassis no. to:6V699999 | GCO50080 | Outer Joint | | 27 | 37 | 56.5 | 92 | 73 | I |
| | 2006.01-2014.07 | 6AT/6MT | F | R | Bus FWD G9U 630 | Chassis no. to:6V699999 | GCI50097 | Inner Joint | | 39 | 35 | 30 | 409 | 90 | |
| | 2006.01-2014.07 | | F | L/R | Bus FWD G9U 630 | Chassis no. from:7V600001 | GCO60005 | Outer Joint | | 27 | 36 | 56.6 | 94 | 71 | I |
| | 2006.08-2014.07 | 6AT/6MT | F | L | Platform/Chassis FWD G9U 630 | Chassis no. from:7V600001 | GDS50497 | Drive Shaft | | 27 | 39 | 56.6 | 94 | 667 | |
| | 2006.08-2014.07 | 6AT/6MT | F | L | Platform/Chassis FWD G9U 630 | Chassis no. to:6V699999 | GDS50557 | Drive Shaft | | 27 | 37 | 56.5 | 92 | 634 | |
| | 2006.08-2014.07 | 6AT/6MT | F | R | Platform/Chassis FWD G9U 630 | Chassis no. from:7V600001 | GDS18301 | Drive Shaft | | 27 | 39 | 56.6 | 94 | 1045 | |
| | 2006.08-2014.07 | 6AT/6MT | F | R | Platform/Chassis FWD G9U 630 | Chassis no. to:6V699999 | GDS50562 | Drive Shaft | | 27 | 39 | 56.5 | 92 | 1056 | |
| | 2006.08-2014.07 | 6AT/6MT | F | R | Platform/Chassis FWD G9U 630 | Chassis no. to:6V699999 | GCO50080 | Outer Joint | | 27 | 37 | 56.5 | 92 | 73 | I |
| | 2006.08-2014.07 | 6AT/6MT | F | R | Platform/Chassis FWD G9U 630 | Chassis no. to:6V699999 | GCI50097 | Inner Joint | | 39 | 35 | 30 | 409 | 90 | |
| | 2006.08-2014.07 | | F | L/R | Platform/Chassis FWD G9U 630 | Chassis no. from:7V600001 | GCO60005 | Outer Joint | | 27 | 36 | 56.6 | 94 | 71 | I |
| | 2006.08-2014.07 | 6AT/6MT | F | L | Van FWD G9U 630 | Chassis no. from:7V600001 | GDS50497 | Drive Shaft | | 27 | 39 | 56.6 | 94 | 667 | |
| | 2006.08-2014.07 | 6AT/6MT | F | L | Van FWD G9U 630 | Chassis no. to:6V699999 | GDS50557 | Drive Shaft | | 27 | 37 | 56.5 | 92 | 634 | |
| | 2006.08-2014.07 | 6AT/6MT | F | R | Van FWD G9U 630 | Chassis no. from:7V600001 | GDS18301 | Drive Shaft | | 27 | 39 | 56.6 | 94 | 1045 | |
| | 2006.08-2014.07 | 6AT/6MT | F | R | Van FWD G9U 630 | Chassis no. to:6V699999 | GDS50562 | Drive Shaft | | 27 | 39 | 56.5 | 92 | 1056 | |
| | 2006.08-2014.07 | 6AT/6MT | F | R | Van FWD G9U 630 | Chassis no. to:6V699999 | GCO50080 | Outer Joint | | 27 | 37 | 56.5 | 92 | 73 | I |
| | 2006.08-2014.07 | 6AT/6MT | F | R | Van FWD G9U 630 | Chassis no. to:6V699999 | GCI50097 | Inner Joint | | 39 | 35 | 30 | 409 | 90 | |
| | 2006.08-2014.07 | | F | L/R | Van FWD G9U 630 | Chassis no. from:7V600001 | GCO60005 | Outer Joint | | 27 | 36 | 56.6 | 94 | 71 | I |
| EV (100 kw) | 2024.04- | ET | F | L | Platform/Chassis FWD ZKU (ZK02) | | GDS57725 | Drive Shaft | | 28 | 37 | 58.5 | 96 | 724 | |
| | 2024.04- | ET | F | R | Platform/Chassis FWD ZKU (ZK02) | | GDS82316 | Drive Shaft | | 28 | 37 | 58.6 | 93 | 974 | |
| | 2024.04- | ET | F | L/R | Platform/Chassis FWD ZKU (ZK02) | | GCO10098 | Outer Joint | | 28 | 39 | 58.6 | 93 | 63 | I |
| | 2024.04- | ET | F | L | Van FWD ZKU (ZK02) | | GDS57725 | Drive Shaft | | 28 | 37 | 58.5 | 96 | 724 | |
| | 2024.04- | ET | F | R | Van FWD ZKU (ZK02) | | GDS82316 | Drive Shaft | | 28 | 37 | 58.6 | 93 | 974 | |
| | 2024.04- | ET | F | L/R | Van FWD ZKU (ZK02) | | GCO10098 | Outer Joint | | 28 | 39 | 58.6 | 93 | 63 | I |
| **Vivaro Life** | | | | | | | | | | | | | | | |
| 1.5 (75 kw) | 2019.03-2022.09 | 6MT | F | L | Bus FWD D 15 DT (DV5RUCD) | | GDS82315 | Drive Shaft | | 28 | 37 | 58.6 | 93 | 719 | |
| | 2019.03-2022.09 | 6MT | F | R | Bus FWD D 15 DT (DV5RUCD) | | GDS82316 | Drive Shaft | | 28 | 37 | 58.6 | 93 | 974 | |
| | 2019.03-2022.09 | 6MT | F | L/R | Bus FWD D 15 DT (DV5RUCD) | | GCO10098 | Outer Joint | | 28 | 39 | 58.6 | 93 | 63 | I |
| | 2019.03-2022.09 | 6MT | F | R | Bus FWD D 15 DT (DV5RUCD) | | GCI81759 | Inner Joint | | 37 | 34 | 31.9 | 302 | 88 | |
| 1.5 (88 kw) | 2019.03-2022.09 | 6MT | F | L | Bus FWD D 15 DTH (DV5RUC) | | GDS82315 | Drive Shaft | | 28 | 37 | 58.6 | 93 | 719 | |
| | 2019.03-2022.09 | 6MT | F | R | Bus FWD D 15 DTH (DV5RUC) | | GDS82316 | Drive Shaft | | 28 | 37 | 58.6 | 93 | 974 | |
| | 2019.03-2022.09 | 6MT | F | L/R | Bus FWD D 15 DTH (DV5RUC) | | GCO10098 | Outer Joint | | 28 | 39 | 58.6 | 93 | 63 | I |
| | 2019.03-2022.09 | 6MT | F | R | Bus FWD D 15 DTH (DV5RUC) | | GCI81759 | Inner Joint | | 37 | 34 | 31.9 | 302 | 88 | |
| 2.0 (106 kw) | 2020.09-2022.09 | 6MT | F | L | Bus FWD DW10FDDU340;DW10FDDU370 | | GDS83778 | Drive Shaft | | 28 | 37 | 58.5 | 92.5 | 699 | |
| | 2020.09-2022.09 | 6MT | F | R | Bus FWD DW10FDDU340;DW10FDDU370 | | GDS83775 | Drive Shaft | | 28 | 37 | 58.5 | 92.5 | 1002 | |
| | 2020.09-2022.09 | 6MT | F | L/R | Bus FWD DW10FDDU340;DW10FDDU370 | | GCO82483 | Outer Joint | | 28 | 36 | 58.5 | 92.5 | 60.5 | I |

| | YEAR | TRANSM. | F/R | L/R | BODY STYLE & DRIVE TYPE & ENGINE | REMARKS | G-AP Ref. | PRODUCT | ABS | Technical Specifications A | B | C | H | L | P |
|---|---|---|---|---|---|---|---|---|---|---|---|---|---|---|---|
| **VAUXHALL** | | | | | | | | | | | | | | | |
| **Vivaro Life** | | | | | | | | | | | | | | | |
| 2.0 (106 kw) | 2020.09-2022.09 | 6MT | F | L | Bus FWD DW10FDDU340;DW10FDDU370 | | GCI82363 | Inner Joint | | 37 | 36 | 40 | 68 | 108 | |
| | 2020.09-2022.09 | 6MT | F | R | Bus FWD DW10FDDU340;DW10FDDU370 | | GCI82364 | Inner Joint | | 37 | 36 | 32 | 400 | 108 | |
| | 2020.09-2022.09 | 8AT | F | L | Bus FWD DW10FDDU340;DW10FDDU370 | For vehicles with standard suspension | GDS56191 | Drive Shaft | | 28 | 37 | 58.6 | 93 | 649 | |
| | 2020.09-2022.09 | 8AT | F | R | Bus FWD DW10FDDU340;DW10FDDU370 | For vehicles with standard suspension | GDS56190 | Drive Shaft | | 28 | 37 | 58.6 | 93 | 989 | |
| | 2020.09-2022.09 | 8AT | F | L/R | Bus FWD DW10FDDU340;DW10FDDU370 | For vehicles with standard suspension | GCO82805 | Outer Joint | | 28 | 39 | 58.6 | 93 | 63 | I |
| 2.0 (110 kw) | 2019.03-2021.09 | 6MT | F | L | Bus FWD D 20 DTH (DW10FD) | | GDS82315 | Drive Shaft | | 28 | 37 | 58.6 | 93 | 719 | |
| | 2019.03-2021.09 | 6MT | F | R | Bus FWD D 20 DTH (DW10FD) | | GDS82316 | Drive Shaft | | 28 | 37 | 58.6 | 93 | 974 | |
| 2.0 (130 kw) | 2019.03-2022.09 | 8AT | F | L | Bus FWD D 20 DTR (DW10FDCU) | For vehicles with standard suspension | GDS56191 | Drive Shaft | | 28 | 37 | 58.6 | 93 | 649 | |
| | 2019.03-2022.09 | 8AT | F | R | Bus FWD D 20 DTR (DW10FDCU) | For vehicles with standard suspension | GDS56190 | Drive Shaft | | 28 | 37 | 58.6 | 93 | 989 | |
| | 2019.03-2022.09 | 8AT | F | L/R | Bus FWD D 20 DTR (DW10FDCU) | For vehicles with standard suspension | GCO82805 | Outer Joint | | 28 | 39 | 58.6 | 93 | 63 | I |
| | 2019.03-2022.09 | 8AT | F | L | Bus FWD D 20 DTR (DW10FDCU) | For vehicles with standard suspension | GCI10120 | Inner Joint | | 37 | 39 | 42.2 | 60 | 95.5 | |
| | 2019.03-2022.09 | 8AT | F | R | Bus FWD D 20 DTR (DW10FDCU) | For vehicles with standard suspension | GCI45033 | Inner Joint | | 37 | 39 | | 379 | 96 | |
| EV (100 kw) | 2024.08- | ET | F | L | Bus FWD ZKW (ZK02) | | GDS57725 | Drive Shaft | | 28 | 37 | 58.5 | 96 | 724 | |
| | 2024.08- | ET | F | R | Bus FWD ZKW (ZK02) | | GDS82316 | Drive Shaft | | 28 | 37 | 58.6 | 93 | 974 | |
| | 2024.08- | ET | F | L/R | Bus FWD ZKW (ZK02) | | GCO10098 | Outer Joint | | 28 | 39 | 58.6 | 93 | 63 | I |
| **Vivaro-E** | | | | | | | | | | | | | | | |
| EV (100 kw) | 2020.09-2024.03 | ET | F | L | Van FWD ZKX (ZK01) | | GDS57725 | Drive Shaft | | 28 | 37 | 58.5 | 96 | 724 | |
| | 2020.09-2024.03 | ET | F | R | Van FWD ZKX (ZK01) | | GDS82316 | Drive Shaft | | 28 | 37 | 58.6 | 93 | 974 | |
| | 2020.09-2024.03 | ET | F | L/R | Van FWD ZKX (ZK01) | | GCO10098 | Outer Joint | | 28 | 39 | 58.6 | 93 | 63 | I |
| | 2020.09-2024.03 | ET | F | R | Van FWD ZKX (ZK01) | | GCI81759 | Inner Joint | | 37 | 34 | 31.9 | 302 | 88 | |
| | 2023.04-2024.03 | ET | F | L | Platform/Chassis FWD ZKX (ZK01) | | GDS57725 | Drive Shaft | | 28 | 37 | 58.5 | 96 | 724 | |
| | 2023.04-2024.03 | ET | F | R | Platform/Chassis FWD ZKX (ZK01) | | GDS82316 | Drive Shaft | | 28 | 37 | 58.6 | 93 | 974 | |
| | 2023.04-2024.03 | ET | F | L/R | Platform/Chassis FWD ZKX (ZK01) | | GCO10098 | Outer Joint | | 28 | 39 | 58.6 | 93 | 63 | I |
| **Vivaro-E life** | | | | | | | | | | | | | | | |
| EV (100 kw) | 2020.09-2024.07 | ET | F | L | Bus FWD ZKX (ZK01) | | GDS57725 | Drive Shaft | | 28 | 37 | 58.5 | 96 | 724 | |
| | 2020.09-2024.07 | ET | F | R | Bus FWD ZKX (ZK01) | | GDS82316 | Drive Shaft | | 28 | 37 | 58.6 | 93 | 974 | |
| | 2020.09-2024.07 | ET | F | L/R | Bus FWD ZKX (ZK01) | | GCO10098 | Outer Joint | | 28 | 39 | 58.6 | 93 | 63 | I |
| | 2020.09-2024.07 | ET | F | R | Bus FWD ZKX (ZK01) | | GCI81759 | Inner Joint | | 37 | 34 | 31.9 | 302 | 88 | |
| **Zafira** | | | | | | | | | | | | | | | |
| 1.6 (71 kw) | 2001.09-2005.06 | 5MT | F | L | MPV FWD Z16YNG | | GDS44028 | Drive Shaft | | 33 | 22 | 53 | 95 | 590 | |
| | 2001.09-2005.06 | 5MT | F | R | MPV FWD Z16YNG | | GDS44030 | Drive Shaft | | 33 | 22 | 53 | 95 | 952 | |
| | 2001.09-2005.06 | AT | F | | MPV FWD Z16YNG | | GCO44010 | Outer Joint | 29T | 33 | 22 | 52 | 103 | 50.5 | O |
| | 2001.09-2005.06 | | F | L/R | MPV FWD Z16YNG | | GCO44003 | Outer Joint | | 33 | 22 | 53 | 95 | 54.5 | M |
| | 2001.09-2005.06 | | F | L | MPV FWD Z16YNG | | GCI21014 | Inner Joint | | 22 | 22 | 35 | 57.5 | 105.5 | |
| 1.6 (74 kw) | 1998.11-2005.08 | 5MT | F | L/R | MPV FWD X16XEL | | GCI44004 | Inner Joint | | 22 | 22 | 34.95 | 57.5 | 103 | |
| | 1998.11-2005.08 | 5MT | F | L/R | MPV FWD X16XEL | | GCI99026 | Inner Joint | | 22 | 25 | 35 | 57 | 111.7 | |
| | 1998.11-2005.08 | MT | F | L | MPV FWD X16XEL | Chassis no. from:42000001 | GDS60013 | Drive Shaft | | 33 | 22 | 52 | 103 | 595 | |
| | 1998.11-2005.08 | MT | F | R | MPV FWD X16XEL | Chassis no. from:42000001 | GDS44033 | Drive Shaft | | 33 | 22 | 52 | 103 | 950.5 | |
| | 1998.11-2005.08 | MT | F | R | MPV FWD X16XEL | Chassis no. to:32999999 | GDS60035 | Drive Shaft | | 33 | 22 | 52 | 109 | 961 | |
| | 1998.11-2005.08 | MT | F | L/R | MPV FWD X16XEL | Date from:2004.08;Chassis no. from:42084194;Chassis no. from:42000001;Chassis no. from:8H | GCO44006 | Outer Joint | 29T | 33 | 25 | 52 | 103.5 | 61 | O |
| | 1998.11-2005.08 | MT | F | L/R | MPV FWD X16XEL | Date To:2004.07,Chassis no. to:42084193 | GCO44009 | Outer Joint | | 33 | 22 | 52 | 103 | 50.5 | O |
| | 1998.11-2005.08 | MT | F | L/R | MPV FWD X16XEL | Date to:2004.07;Chassis no. to:4208419 3;Chassis no. to:4H | GCO44030 | Outer Joint | | 33 | 22 | 52 | 103 | 50.5 | O |
| | 1998.11-2005.08 | MT | F | L/R | MPV FWD X16XEL | Date from:2004.08;Chassis no. from:42084194;Chassis no. from:42000001;Chassis no. from:8H | GCO44049 | Outer Joint | | 33 | 25 | 52 | 109 | 61 | O |
| | 1998.11-2005.08 | MT | F | L | MPV FWD X16XEL | Date from:2004.08 | GCI21014 | Inner Joint | | 22 | 22 | 35 | 57.5 | 105.5 | |
| | 1998.11-2005.08 | | F | | MPV FWD X16XEL | | GCO44010 | Outer Joint | 29T | 33 | 22 | 52 | 103 | 50.5 | O |
| | 1999.05-2005.06 | 5MT | F | L | MPV FWD X16XEL/Z16XE | Chassis no. from:42000001 | GDS60013 | Drive Shaft | | 33 | 22 | 52 | 103 | 595 | |
| | 1999.05-2005.06 | 5MT | F | R | MPV FWD X16XEL/Z16XE | Chassis no. from:42000001 | GDS44033 | Drive Shaft | | 33 | 22 | 52 | 103 | 950.5 | |
| | 1999.05-2005.06 | 5MT | F | R | MPV FWD X16XEL/Z16XE | Chassis no. to:32999999 | GDS60035 | Drive Shaft | | 33 | 22 | 52 | 109 | 961 | |
| | 1999.05-2005.06 | 5MT | F | L/R | MPV FWD X16XEL/Z16XE | Chassis no. from:42084194 | GCI44004 | Inner Joint | | 22 | 22 | 34.95 | 57.5 | 103 | |
| | 1999.05-2005.06 | 5MT | F | L/R | MPV FWD X16XEL/Z16XE | | GCI99026 | Inner Joint | | 22 | 25 | 35 | 57 | 111.7 | |
| | 1999.05-2005.06 | AT/MT | F | L/R | MPV FWD X16XEL/Z16XE | | GCO44006 | Outer Joint | 29T | 33 | 25 | 52 | 103.5 | 61 | O |
| | 1999.05-2005.06 | MT | F | R | MPV FWD X16XEL/Z16XE | | GCO44049 | Outer Joint | | 33 | 25 | 52 | 109 | 61 | O |
| | 1999.05-2005.06 | | F | L/R | MPV FWD X16XEL/Z16XE | Chassis no. to:42084193 | GCO44009 | Outer Joint | | 33 | 22 | 52 | 103 | 50.5 | O |
| | 1999.05-2005.06 | | F | L/R | MPV FWD X16XEL/Z16XE | Chassis no. to:42084193 | GCO44030 | Outer Joint | | 33 | 22 | 52 | 103 | 50.5 | O |
| | 1999.05-2005.06 | | F | | MPV FWD X16XEL/Z16XE | | GCO44010 | Outer Joint | 29T | 33 | 22 | 52 | 103 | 50.5 | O |
| | 1999.05-2005.06 | | F | L | MPV FWD X16XEL/Z16XE | | GCI21014 | Inner Joint | | 22 | 22 | 35 | 57.5 | 105.5 | |
| 1.6 (77 kw) | 2005.07-2014.11 | 5MT | F | L | MPV FWD Z 16 XEP;Z 16 XE1 | | GDS44028 | Drive Shaft | | 33 | 22 | 53 | 95 | 590 | |
| | 2005.07-2014.11 | 5MT | F | R | MPV FWD Z 16 XEP;Z 16 XE1 | | GDS44030 | Drive Shaft | | 33 | 22 | 53 | 95 | 952 | |
| | 2005.07-2014.11 | MT | F | L/R | MPV FWD Z 16 XEP;Z 16 XE1 | | GCO44003 | Outer Joint | | 33 | 22 | 53 | 95 | 54.5 | M |
| | 2005.07-2014.11 | MT | F | L | MPV FWD Z 16 XEP;Z 16 XE1 | | GCI21014 | Inner Joint | | 22 | 22 | 35 | 57.5 | 105.5 | |
| | 2005.07-2014.11 | MT | F | L/R | MPV FWD Z 16 XEP;Z 16 XE1 | | GCI44004 | Inner Joint | | 22 | 22 | 34.95 | 57.5 | 103 | |
| 1.6 (85 kw) | 2007.12-2014.11 | 4AT/5MT | F | L | MPV FWD Z 16 XER;A 16 XER | | GDS44028 | Drive Shaft | | 33 | 22 | 53 | 95 | 590 | |
| | 2007.12-2014.11 | 4AT/5MT | F | R | MPV FWD Z 16 XER;A 16 XER | | GDS44030 | Drive Shaft | | 33 | 22 | 53 | 95 | 952 | |
| | 2007.12-2014.11 | 4AT/5MT | F | L/R | MPV FWD Z 16 XER;A 16 XER | | GCO44003 | Outer Joint | | 33 | 22 | 53 | 95 | 54.5 | M |
| | 2007.12-2014.11 | 4AT/5MT | F | L/R | MPV FWD Z 16 XER;A 16 XER | | GCI21014 | Inner Joint | | 22 | 22 | 35 | 57.5 | 105.5 | |

| | YEAR | TRANSM. | F/R | L/R | BODY STYLE & DRIVE TYPE & ENGINE | REMARKS | G-AP Ref. | PRODUCT | ABS | Technical Specifications A | B | C | H | L | P |
|---|---|---|---|---|---|---|---|---|---|---|---|---|---|---|---|
| **VAUXHALL** **Zafira** | | | | | | | | | | | | | | | |
| 1.6 (85 kw) | 2007.12-2014.11 | 4AT/5MT | F | L/R | MPV FWD Z 16 XER;A 16 XER | | GCI44004 | Inner Joint | | 22 | 22 | 34.95 | 57.5 | 103 | |
| 1.7 (81 kw) | 2009.04-2014.11 | AT/MT | F | L/R | MPV FWD Z 17 DTJ;A 17 DTJ | | GCO44027 | Outer Joint | | 33 | 26 | 52.5 | 94 | 65.5 | M |
| | 2009.04-2014.11 | MT | F | L | MPV FWD Z 17 DTJ;A 17 DTJ | | GDS21051 | Drive Shaft | | 33 | 25 | 52.5 | 94 | 579 | |
| | 2009.04-2014.11 | MT | F | R | MPV FWD Z 17 DTJ;A 17 DTJ | | GDS44099 | Drive Shaft | | 33 | 34 | 52.5 | 94 | 563 | |
| | 2009.04-2014.11 | MT | F | | MPV FWD Z 17 DTJ;A 17 DTJ | | GCO99024 | Outer Joint | | 33 | 26 | 52.5 | 94 | 65.5 | M |
| | 2009.04-2014.11 | MT | F | L | MPV FWD Z 17 DTJ;A 17 DTJ | | GCI99186 | Inner Joint | | 25 | 28 | 34.9 | 57.5 | 111 | |
| | 2009.04-2014.11 | MT | F | R | MPV FWD Z 17 DTJ;A 17 DTJ | | GCI44016 | Inner Joint | | 34 | 28 | 37.5 | | 129.2 | |
| 1.7 (92 kw) | 2008.01-2014.11 | 6MT | F | L | MPV FWD A 17 DTR | | GDS21051 | Drive Shaft | | 33 | 25 | 52.5 | 94 | 579 | |
| | 2008.01-2014.11 | 6MT | F | R | MPV FWD A 17 DTR | | GDS44099 | Drive Shaft | | 33 | 34 | 52.5 | 94 | 563 | |
| | 2008.01-2014.11 | AT/MT | F | L/R | MPV FWD A 17 DTR | | GCO44027 | Outer Joint | | 33 | 26 | 52.5 | 94 | 65.5 | M |
| | 2008.01-2014.11 | MT | F | | MPV FWD A 17 DTR | | GCO99024 | Outer Joint | | 33 | 26 | 52.5 | 94 | 65.5 | M |
| | 2008.01-2014.11 | MT | F | L | MPV FWD A 17 DTR | | GCI99186 | Inner Joint | | 25 | 28 | 34.9 | 57.5 | 111 | |
| | 2008.01-2014.11 | MT | F | R | MPV FWD A 17 DTR | | GCI44016 | Inner Joint | | 34 | 28 | 37.5 | | 129.2 | |
| 1.8 (85 kw) | 1999.05-2000.08 | 4AT/5MT | F | R | MPV FWD X18XE1 | | GDS60035 | Drive Shaft | | 33 | 22 | 52 | 109 | 961 | |
| | 1999.05-2000.08 | AT/MT | F | L | MPV FWD X18XE1 | | GDS60013 | Drive Shaft | | 33 | 22 | 52 | 103 | 595 | |
| | 1999.05-2000.08 | AT/MT | F | L/R | MPV FWD X18XE1 | | GCO44006 | Outer Joint | 29T | 33 | 25 | 52 | 103.5 | 61 | O |
| | 1999.05-2000.08 | MT | F | R | MPV FWD X18XE1 | | GCO44049 | Outer Joint | | 33 | 25 | 52 | 109 | 61 | O |
| | 1999.05-2000.08 | MT | F | L/R | MPV FWD X18XE1 | | GCI99026 | Inner Joint | | 22 | 25 | 35 | 57 | 111.7 | |
| 1.8 (88 kw) | 2013.04-2014.11 | MT | F | L | MPV FWD A 18 XEL | | GDS21063 | Drive Shaft | | 33 | 22 | 53 | 93.5 | 586 | |
| | 2013.04-2014.11 | MT | F | R | MPV FWD A 18 XEL | | GDS21055 | Drive Shaft | | 33 | 22 | 53 | 93.5 | 950 | |
| | 2013.04-2014.11 | MT | F | L/R | MPV FWD A 18 XEL | | GCO44028 | Outer Joint | | 33 | 24 | 53 | 93.5 | 63.5 | M |
| | 2013.04-2014.11 | MT | F | L/R | MPV FWD A 18 XEL | | GCI99026 | Inner Joint | | 22 | 25 | 35 | 57 | 111.7 | |
| 1.8 (92 kw) | 2000.09-2005.06 | 4AT/5MT | F | R | MPV FWD Z18XE | | GDS60035 | Drive Shaft | | 33 | 22 | 52 | 109 | 961 | |
| | 2000.09-2005.06 | 5MT | F | R | MPV FWD Z18XE | | GDS60035 | Drive Shaft | | 33 | 22 | 52 | 109 | 961 | |
| | 2000.09-2005.06 | 5MT | F | L | MPV FWD Z18XE | | GCO44030 | Outer Joint | | 33 | 22 | 52 | 103 | 50.5 | O |
| | 2000.09-2005.06 | 5MT | F | R | MPV FWD Z18XE | | GCO44049 | Outer Joint | | 33 | 25 | 52 | 109 | 61 | O |
| | 2000.09-2005.06 | AT/MT | F | L | MPV FWD Z18XE | | GDS60013 | Drive Shaft | | 33 | 22 | 52 | 103 | 595 | |
| | 2000.09-2005.06 | AT/MT | F | L/R | MPV FWD Z18XE | | GCO44006 | Outer Joint | 29T | 33 | 25 | 52 | 103.5 | 61 | O |
| | 2000.09-2005.06 | MT | F | R | MPV FWD Z18XE | | GCO44049 | Outer Joint | | 33 | 25 | 52 | 109 | 61 | O |
| | 2000.09-2005.06 | MT | F | L/R | MPV FWD Z18XE | | GCI99026 | Inner Joint | | 22 | 25 | 35 | 57 | 111.7 | |
| | 2000.09-2005.06 | | F | L | MPV FWD Z18XE | | GDS60013 | Drive Shaft | | 33 | 22 | 52 | 103 | 595 | |
| | 2000.09-2005.06 | | F | L/R | MPV FWD Z18XE | | GCI99026 | Inner Joint | | 22 | 25 | 35 | 57 | 111.7 | |
| 1.8 (103 kw) | 2005.04-2014.11 | AT/MT | F | L/R | MPV FWD Z 18 XER;A 18 XER | | GCO44028 | Outer Joint | | 33 | 24 | 53 | 93.5 | 63.5 | M |
| | 2005.04-2014.11 | MT | F | L/R | MPV FWD Z 18 XER;A 18 XER | | GCI99026 | Inner Joint | | 22 | 25 | 35 | 57 | 111.7 | |
| | 2005.04-2014.11 | SAT/5MT | F | L | MPV FWD Z 18 XER;A 18 XER | | GDS21063 | Drive Shaft | | 33 | 22 | 53 | 93.5 | 586 | |
| | 2005.04-2014.11 | SAT/5MT | F | R | MPV FWD Z 18 XER;A 18 XER | | GDS21055 | Drive Shaft | | 33 | 22 | 53 | 93.5 | 950 | |
| 1.9 (88 kw) | 2005.07-2014.11 | 6AT | F | L | MPV FWD Z 19 DT | Chassis no. from:72024736/7G032261 | GDS21111 | Drive Shaft | | 33 | 27 | 52.5 | 94 | 562 | |
| | 2005.07-2014.11 | 6AT | F | L | MPV FWD Z 19 DT | Chassis no. to:72024735/7G032260 | GDS60034 | Drive Shaft | | 33 | 27 | 52.5 | 94 | 564 | |
| | 2005.07-2014.11 | 6AT | F | L | MPV FWD Z 19 DT | Chassis no. from:72024736/7G032260 | GCI86015 | Inner Joint | | 27 | 26 | 35 | 78.5 | 109.5 | |
| | 2005.07-2014.11 | 6MT | F | R | MPV FWD Z 19 DT | Chassis no. to:72025241/7G032293 | GCI99187 | Inner Joint | | 34 | 34 | 37.5 | | 124 | |
| | 2005.07-2014.11 | AT | F | R | MPV FWD Z 19 DT | | GDS21110 | Drive Shaft | | 33 | 27 | 52.5 | 94 | 576 | |
| | 2005.07-2014.11 | AT | F | L | MPV FWD Z 19 DT | | GCI21016 | Inner Joint | | 27 | 26 | 35 | 78.5 | 112 | |
| | 2005.07-2014.11 | MT | F | L | MPV FWD Z 19 DT | Date from:2007.08 | GDS21051 | Drive Shaft | | 33 | 25 | 52.5 | 94 | 579 | |
| | 2005.07-2014.11 | MT | F | L | MPV FWD Z 19 DT | Date to:2007.07 | GDS21073 | Drive Shaft | | 33 | 25 | 52.5 | 94 | 578 | |
| | 2005.07-2014.11 | MT | F | R | MPV FWD Z 19 DT | | GDS21056 | Drive Shaft | | 33 | 34 | 52.5 | 94 | 595 | |
| | 2005.07-2014.11 | MT | F | L/R | MPV FWD Z 19 DT | | GCO44027 | Outer Joint | | 33 | 26 | 52.5 | 94 | 65.5 | M |
| | 2005.07-2014.11 | MT | F | L | MPV FWD Z 19 DT | | GCI21018 | Inner Joint | | 25 | 34 | 35 | 58 | 116 | |
| | 2005.07-2014.11 | MT | F | L | MPV FWD Z 19 DT | | GCI99186 | Inner Joint | | 25 | 28 | 34.9 | 57.5 | 111 | |
| | 2005.07-2014.11 | | F | | MPV FWD Z 19 DT | | GCO99024 | Outer Joint | | 33 | 26 | 52.5 | 94 | 65.5 | M |
| 1.9 (110 kw) | 2005.07-2014.11 | 6AT | F | L | MPV FWD Z 19 DTH | Chassis no. from:72024736/7G031833 | GDS56693 | Drive Shaft | | 30 | 27 | 52.5 | 94.5 | 562 | |
| | 2005.07-2014.11 | 6AT | F | R | MPV FWD Z 19 DTH | Chassis no. from:72024736/7G031833 | GDS84029 | Drive Shaft | | 30 | 27 | 53.8 | 94.5 | 575 | |
| | 2005.07-2014.11 | 6AT | F | L/R | MPV FWD Z 19 DTH | Chassis no. from:72024736/7G031833 | GCI86015 | Inner Joint | | 27 | 26 | 35 | 78.5 | 109.5 | |
| | 2005.07-2014.11 | 6MT | F | R | MPV FWD Z 19 DTH | Chassis no. to:72024735/7G032584 | GDS21056 | Drive Shaft | | 33 | 34 | 52.5 | 94 | 595 | |
| | 2005.07-2014.11 | 6MT | F | R | MPV FWD Z 19 DTH | Chassis no. from:72024736/7G032585 | GDS82084 | Drive Shaft | | 30 | 34 | 53.8 | 94.5 | 598 | |
| | 2005.07-2014.11 | AT/MT/6AT | F | L/R | MPV FWD Z 19 DTH | | GCO17051 | Outer Joint | | 30 | 26 | 53.8 | 94.5 | 65.5 | M |
| | 2005.07-2014.11 | MT | F | L | MPV FWD Z 19 DTH | Chassis no. From:72024736 | GDS21035 | Drive Shaft | | 30 | 25 | 53.8 | 94.5 | 581 | |
| | 2005.07-2014.11 | MT | F | L | MPV FWD Z 19 DTH | Chassis no. To:72024735 | GDS21071 | Drive Shaft | | 30 | 25 | 53.8 | 94.5 | 576 | |
| | 2005.07-2014.11 | MT | F | R | MPV FWD Z 19 DTH | Chassis no. To:72024735 | GDS21062 | Drive Shaft | | 30 | 34 | 53.8 | 94.5 | 595 | |
| | 2005.07-2014.11 | MT | F | L | MPV FWD Z 19 DTH | Chassis no. To:72024735 | GCI21018 | Inner Joint | | 25 | 34 | 35 | 58 | 116 | |
| | 2005.07-2014.11 | MT | F | L | MPV FWD Z 19 DTH | Chassis no. From:72024736 | GCI99186 | Inner Joint | | 25 | 28 | 34.9 | 57.5 | 111 | |
| | 2005.07-2014.11 | MT | F | R | MPV FWD Z 19 DTH | Chassis no. From:72024736 | GCI44016 | Inner Joint | | 34 | 28 | 37.5 | | 129.2 | |
| | 2005.07-2014.11 | MT | F | R | MPV FWD Z 19 DTH | Chassis no. To:72024735 | GCI99187 | Inner Joint | | 34 | 34 | 37.5 | | 124 | |
| 2.0 (60 kw) | 1999.05-2000.08 | 5MT | F | L | MPV FWD X20DTL | | GDS44044 | Drive Shaft | | 33 | 34 | 52 | 103.5 | 595 | |
| | 1999.05-2000.08 | 5MT | F | R | MPV FWD X20DTL | | GDS88011 | Drive Shaft | | 33 | 34 | 52 | 104 | 959 | |
| | 1999.05-2000.08 | 5MT | F | L | MPV FWD X20DTL | | GCO44032 | Outer Joint | | 33 | 25 | 52 | 103.5 | 61 | O |

| | YEAR | TRANSM. | F/R | L/R | BODY STYLE & DRIVE TYPE & ENGINE | REMARKS | G-AP Ref. | PRODUCT | ABS | Technical Specifications A | B | C | H | L | P |
|---|---|---|---|---|---|---|---|---|---|---|---|---|---|---|---|
| **VAUXHALL** | | | | | | | | | | | | | | | |
| **Zafira** | | | | | | | | | | | | | | | |
| 2.0 (60 kw) | 1999.05-2000.08 | AT/MT | F | L/R | MPV FWD X20DTL | Date to:2000.08 | GCO44006 | Outer Joint | 29T | 33 | 25 | 52 | 103.5 | 61 | O |
| | 1999.05-2000.08 | MT | F | R | MPV FWD X20DTL | | GCO44049 | Outer Joint | | 33 | 25 | 52 | 109 | 61 | O |
| | 1999.05-2000.08 | | F | L/R | MPV FWD X20DTL | | GCI44002 | Inner Joint | | 34 | 25 | 35 | 56.2 | 114.8 | |
| 2.0 (74 kw) | 2000.09-2005.06 | 5MT | F | L | MPV FWD Y20DTH | | GDS44044 | Drive Shaft | | 33 | 34 | 52 | 103.5 | 595 | |
| | 2000.09-2005.06 | 5MT | F | R | MPV FWD Y20DTH | | GDS88011 | Drive Shaft | | 33 | 34 | 52 | 104 | 959 | |
| | 2000.09-2005.06 | 5MT | F | L/R | MPV FWD Y20DTH | | GCO44006 | Outer Joint | 29T | 33 | 25 | 52 | 103.5 | 61 | O |
| | 2000.09-2005.06 | 5MT | F | L/R | MPV FWD Y20DTH | | GCO44049 | Outer Joint | | 33 | 25 | 52 | 109 | 61 | O |
| | 2000.09-2005.06 | 5MT | F | L/R | MPV FWD Y20DTH | | GCI44002 | Inner Joint | | 34 | 25 | 35 | 56.2 | 114.8 | |
| 2.0 (141 kw) | 2001.08-2005.06 | 5MT | F | R | MPV FWD Z20LET | | GDS44082 | Drive Shaft | | 33 | 34 | 55 | 104 | 663 | |
| | 2001.08-2005.06 | MT | F | L | MPV FWD Z20LET | | GDS44025 | Drive Shaft | | 33 | 34 | 55 | 104 | 593 | |
| | 2001.08-2005.06 | MT | F | L/R | MPV FWD Z20LET | | GCO99061 | Outer Joint | | 33 | 35 | 55 | 104 | 67.5 | I |
| | 2001.08-2005.06 | MT | F | L | MPV FWD Z20LET | | GCI44018 | Inner Joint | | 34 | 35 | 35 | 56 | 119.5 | |
| | 2001.08-2005.06 | | F | L | MPV FWD Z20LET | | GCO44065 | Outer Joint | 29T | 33 | 35 | 55 | 104 | 67.5 | I |
| 2.0 (147 kw) | 2002.06-2005.06 | 5MT | F | R | MPV FWD Z20LET | | GDS44082 | Drive Shaft | | 33 | 34 | 55 | 104 | 663 | |
| | 2002.06-2005.06 | MT | F | L | MPV FWD Z20LET | | GDS44025 | Drive Shaft | | 33 | 34 | 55 | 104 | 593 | |
| | 2002.06-2005.06 | MT | F | L/R | MPV FWD Z20LET | | GCO99061 | Outer Joint | | 33 | 35 | 55 | 104 | 67.5 | I |
| | 2002.06-2005.06 | MT | F | L | MPV FWD Z20LET | | GCI44018 | Inner Joint | | 34 | 35 | 35 | 56 | 119.5 | |
| | 2002.06-2005.06 | | F | L | MPV FWD Z20LET | | GCO44065 | Outer Joint | 29T | 33 | 35 | 55 | 104 | 67.5 | I |
| | 2005.07-2014.11 | 6MT | F | R | MPV FWD Z 20 LER | | GDS21056 | Drive Shaft | | 33 | 34 | 52.5 | 94 | 595 | |
| | 2005.07-2014.11 | 6MT | F | R | MPV FWD Z 20 LER | | GCI99187 | Inner Joint | | 34 | 34 | 37.5 | | 124 | |
| | 2005.07-2014.11 | MT | F | L/R | MPV FWD Z 20 LER | | GCO44027 | Outer Joint | | 33 | 26 | 52.5 | 94 | 65.5 | M |
| | 2005.07-2014.11 | | F | | MPV FWD Z 20 LER | | GCO99024 | Outer Joint | | 33 | 26 | 52.5 | 94 | 65.5 | M |
| 2.0 (176 kw) | 2006.01-2014.11 | 6MT | F | R | MPV FWD Z 20 LEH | | GDS21062 | Drive Shaft | | 30 | 34 | 53.8 | 94.5 | 595 | |
| | 2006.01-2014.11 | 6MT | F | R | MPV FWD Z 20 LEH | Chassis no. from:72024736/7G031833 | GDS82084 | Drive Shaft | | 30 | 34 | 53.8 | 94.5 | 598 | |
| | 2006.01-2014.11 | 6MT | F | R | MPV FWD Z 20 LEH | Chassis no. from:72024736/7G031833 | GCI44016 | Inner Joint | | 34 | 28 | 37.5 | | 129.2 | |
| | 2006.01-2014.11 | 6MT | F | R | MPV FWD Z 20 LEH | Chassis no. to:72024735/7G031832 | GCI99187 | Inner Joint | | 34 | 34 | 37.5 | | 124 | |
| | 2006.01-2014.11 | | F | L/R | MPV FWD Z 20 LEH | | GCO17051 | Outer Joint | | 30 | 26 | 53.8 | 94.5 | 65.5 | M |
| 2.2 (108 kw) | 2000.08-2005.08 | 4AT/5MT | F | L | MPV FWD Z22SE | | GDS44044 | Drive Shaft | | 33 | 34 | 52 | 103.5 | 595 | |
| | 2000.08-2005.08 | 4AT/5MT | F | R | MPV FWD Z22SE | | GDS88011 | Drive Shaft | | 33 | 34 | 52 | 104 | 959 | |
| | 2000.08-2005.08 | 4AT/5MT | F | L | MPV FWD Z22SE | | GCO44032 | Outer Joint | | 33 | 25 | 52 | 103.5 | 61 | O |
| | 2000.08-2005.08 | AT/MT | F | L/R | MPV FWD Z22SE | Date from:2000.08 | GCO44006 | Outer Joint | 29T | 33 | 25 | 52 | 103.5 | 61 | O |
| | 2000.08-2005.08 | MT | F | R | MPV FWD Z22SE | | GCO44049 | Outer Joint | | 33 | 25 | 52 | 109 | 61 | O |
| | 2000.08-2005.08 | | F | L/R | MPV FWD Z22SE | | GCI44002 | Inner Joint | | 34 | 25 | 35 | 56.2 | 114.8 | |
| 2.2 (110 kw) | 2005.07-2014.11 | AT/MT | F | L/R | MPV FWD Z 22 YH | | GCO44028 | Outer Joint | | 33 | 24 | 53 | 93.5 | 63.5 | M |
| | 2005.07-2014.11 | MT | F | L | MPV FWD Z 22 YH | | GDS21107 | Drive Shaft | | 33 | 25 | 53 | 93.5 | 557 | |
| | 2005.07-2014.11 | MT | F | R | MPV FWD Z 22 YH | | GDS44051 | Drive Shaft | | 33 | 34 | 53 | 93.5 | 570 | |
| | 2005.07-2014.11 | MT | F | L | MPV FWD Z 22 YH | | GCI44008 | Inner Joint | | 25 | 25 | 34.9 | 57.5 | 113.2 | |
| | 2005.07-2014.11 | MT | F | R | MPV FWD Z 22 YH | | GCI44005 | Inner Joint | | 34 | 25 | 35 | | 130.2 | |
| | 2005.07-2014.11 | MT | F | R | MPV FWD Z 22 YH | | GCI44011 | Inner Joint | | 34 | 25 | 37.5 | | 130.2 | |
| **Zafira Tourer** | | | | | | | | | | | | | | | |
| 1.4 (88 kw) | 2011.10-2014.06 | 6MT | F | L | MPV FWD A 14 NEL | | GDS56465 | Drive Shaft | | 30 | 25 | 52.5 | 94 | 615 | |
| | 2011.10-2014.06 | 6MT | F | R | MPV FWD A 14 NEL | | GDS56464 | Drive Shaft | | 30 | 25 | 52.5 | 94 | 1014 | |
| | 2011.10-2014.06 | 6MT | F | L/R | MPV FWD A 14 NEL | | GCO83304 | Outer Joint | | 30 | 24 | 52.5 | 94 | 63.5 | M |
| 1.4 (103 kw) | 2011.10-2018.05 | 6AT | F | L | MPV FWD A 14 NET;B 14 NET | | GDS57772 | Drive Shaft | | 30 | 34 | 52.3 | 94 | 658 | |
| | 2011.10-2018.05 | 6AT | F | R | MPV FWD A 14 NET;B 14 NET | | GDS57771 | Drive Shaft | | 30 | 34 | 52.3 | 94 | 604 | |
| | 2011.10-2018.05 | 6AT | F | L/R | MPV FWD A 14 NET;B 14 NET | | GCO81305 | Outer Joint | | 30 | 23 | 52.3 | 94 | 59.5 | M |
| | 2011.10-2018.05 | 6AT | F | L | MPV FWD A 14 NET;B 14 NET | | GCI81774 | Inner Joint | | 34 | 23 | 35 | 136.5 | 84.5 | |
| | 2011.10-2018.05 | 6AT | F | R | MPV FWD A 14 NET;B 14 NET | | GCI81706 | Inner Joint | | 34 | 23 | 37.5 | | 121.5 | |
| | 2011.10-2018.05 | 6MT | F | L | MPV FWD A 14 NET;B 14 NET | | GDS56465 | Drive Shaft | | 30 | 25 | 52.5 | 94 | 615 | |
| | 2011.10-2018.05 | 6MT | F | R | MPV FWD A 14 NET;B 14 NET | | GDS56464 | Drive Shaft | | 30 | 25 | 52.5 | 94 | 1014 | |
| | 2011.10-2018.05 | 6MT | F | L/R | MPV FWD A 14 NET;B 14 NET | | GCO83304 | Outer Joint | | 30 | 24 | 52.5 | 94 | 63.5 | M |
| 1.6 (99 kw) | 2013.07-2016.05 | 6MT | F | L | MPV FWD B 16 DTH | Chassis no. to:B1999999 | GDS60027 | Drive Shaft | | 30 | 27 | 52.5 | 94.5 | 619 | |
| | 2013.07-2016.05 | 6MT | F | L | MPV FWD B 16 DTH | Chassis no. from:C1000001 | GDS84292 | Drive Shaft | | 30 | 27 | 52.5 | 94 | 618 | |
| | 2013.07-2016.05 | 6MT | F | L | MPV FWD B 16 DTH | Chassis no. from:C1000001 | GCO21049 | Outer Joint | | 30 | 26 | 52.5 | 94 | 65.5 | M |
| | 2013.07-2016.05 | 6MT | F | L | MPV FWD B 16 DTH | Chassis no. to:B1999999 | GCO88046 | Outer Joint | | 30 | 26 | 52.5 | 94.5 | 65.5 | M |
| | 2013.07-2016.05 | 6MT | F | L | MPV FWD B 16 DTH | | GCI21030 | Inner Joint | | 27 | 26 | 35 | 78 | 112.5 | |
| 1.6 (100 kw) | 2013.02-2016.05 | 6MT | F | L | MPV FWD B 16 DTH | Chassis no. from:C1000001 | GDS84292 | Drive Shaft | | 30 | 27 | 52.5 | 94 | 618 | |
| | 2013.02-2016.05 | 6MT | F | L/R | MPV FWD B 16 DTH | Chassis no. to:B1999999 | GDS60027 | Drive Shaft | | 30 | 27 | 52.5 | 94.5 | 619 | |
| | 2013.02-2016.05 | 6MT | F | L/R | MPV FWD B 16 DTH | | GCO88046 | Outer Joint | | 30 | 26 | 52.5 | 94.5 | 65.5 | M |
| | 2013.02-2016.05 | 6MT | F | L/R | MPV FWD B 16 DTH | | GCI21030 | Inner Joint | | 27 | 26 | 35 | 78 | 112.5 | |
| 1.6 (110 kw) | 2011.10-2016.04 | 6MT | F | L/R | MPV FWD A 16 XNT | | GCO88046 | Outer Joint | | 30 | 26 | 52.5 | 94.5 | 65.5 | M |
| | 2011.10-2016.04 | MT | F | L/R | MPV FWD A 16 XNT | | GCO17051 | Outer Joint | | 30 | 26 | 53.8 | 94.5 | 65.5 | M |
| | 2011.10-2016.04 | MT | F | L/R | MPV FWD A 16 XNT | | GCO21049 | Outer Joint | | 30 | 26 | 52.5 | 94 | 65.5 | M |
| 1.6 (125 kw) | 2012.12-2019.03 | 6MT | F | R | MPV FWD A 16 XHT;B 16 SHL;D 16 SHL | | GDS60027 | Drive Shaft | | 30 | 27 | 52.5 | 94.5 | 619 | |
| | 2012.12-2019.03 | 6MT | F | L/R | MPV FWD A 16 XHT;B 16 SHL;D 16 SHL | | GCO88046 | Outer Joint | | 30 | 26 | 52.5 | 94.5 | 65.5 | M |

| | YEAR | TRANSM. | F/R | L/R | BODY STYLE & DRIVE TYPE & ENGINE | REMARKS | G-AP Ref. | PRODUCT | ABS | Technical Specifications A | B | C | H | L | P |
|---|---|---|---|---|---|---|---|---|---|---|---|---|---|---|---|
| **VAUXHALL** | | | | | | | | | | | | | | | |
| **Zafira Tourer** | | | | | | | | | | | | | | | |
| 1.6 (147 kw) | 2013.07-2018.05 | 6MT | F | R | MPV FWD A 16 SHT;B 16 SHT;D 16 SHT | | GDS60027 | Drive Shaft | | 30 | 27 | 52.5 | 94.5 | 619 | |
| | 2013.07-2018.05 | 6MT | F | L/R | MPV FWD A 16 SHT;B 16 SHT;D 16 SHT | | GCO17051 | Outer Joint | | 30 | 26 | 53.8 | 94.5 | 65.5 | M |
| | 2013.07-2018.05 | 6MT | F | L/R | MPV FWD A 16 SHT;B 16 SHT;D 16 SHT | | GCO21049 | Outer Joint | | 30 | 26 | 52.5 | 94 | 65.5 | M |
| | 2013.07-2018.05 | 6MT | F | L/R | MPV FWD A 16 SHT;B 16 SHT;D 16 SHT | | GCO88046 | Outer Joint | | 30 | 26 | 52.5 | 94.5 | 65.5 | M |
| | 2013.07-2018.05 | 6MT | F | R | MPV FWD A 16 SHT;B 16 SHT;D 16 SHT | | GCI21030 | Inner Joint | | 27 | 26 | 35 | 78 | 112.5 | |
| 2.0 (81 kw) | 2011.09-2014.10 | 6MT | F | L | MPV FWD A 20 DTL | Chassis no. to:B1999999 | GDS60027 | Drive Shaft | | 30 | 27 | 52.5 | 94.5 | 619 | |
| | 2011.09-2014.10 | 6MT | F | L | MPV FWD A 20 DTL | Chassis no. from:C1000001 | GDS84292 | Drive Shaft | | 30 | 27 | 52.5 | 94 | 618 | |
| | 2011.09-2014.10 | 6MT | F | L/R | MPV FWD A 20 DTL | | GCO88046 | Outer Joint | | 30 | 26 | 52.5 | 94.5 | 65.5 | M |
| | 2011.09-2014.10 | 6MT | F | L | MPV FWD A 20 DTL | | GCI21030 | Inner Joint | | 27 | 26 | 35 | 78 | 112.5 | |
| 2.0 (96 kw) | 2011.10-2014.10 | 6MT | F | L | MPV FWD A 20 DT;Z 20 DTJ;Y 20 DTJ | Chassis no. to:B1999999 | GDS60027 | Drive Shaft | | 30 | 27 | 52.5 | 94.5 | 619 | |
| | 2011.10-2014.10 | 6MT | F | L | MPV FWD A 20 DT;Z 20 DTJ;Y 20 DTJ | Chassis no. from:C1000001 | GDS84292 | Drive Shaft | | 30 | 27 | 52.5 | 94 | 618 | |
| | 2011.10-2014.10 | 6MT | F | L | MPV FWD A 20 DT;Z 20 DTJ;Y 20 DTJ | | GCO88046 | Outer Joint | | 30 | 26 | 52.5 | 94.5 | 65.5 | M |
| | 2011.10-2014.10 | 6MT | F | L | MPV FWD A 20 DT;Z 20 DTJ;Y 20 DTJ | | GCI21030 | Inner Joint | | 27 | 26 | 35 | 78 | 112.5 | |
| 2.0 (121 kw) | 2011.10-2014.10 | 6AT | F | L/R | MPV FWD A 20 DTH | | GDS82388 | Drive Shaft | | 30 | 27 | 52.5 | 94 | 609 | |
| | 2011.10-2014.10 | 6AT | F | L/R | MPV FWD A 20 DTH | | GCO17051 | Outer Joint | | 30 | 26 | 53.8 | 94.5 | 65.5 | M |
| | 2011.10-2014.10 | 6AT | F | L/R | MPV FWD A 20 DTH | | GCO21049 | Outer Joint | | 30 | 26 | 52.5 | 94 | 65.5 | M |
| | 2011.10-2014.10 | 6AT | F | L/R | MPV FWD A 20 DTH | | GCI86015 | Inner Joint | | 27 | 26 | 35 | 78.5 | 109.5 | |
| | 2011.10-2014.10 | 6MT | F | L | MPV FWD A 20 DTH | Chassis no. from:C1000001 | GDS84292 | Drive Shaft | | 30 | 27 | 52.5 | 94 | 618 | |
| | 2011.10-2014.10 | 6MT | F | L/R | MPV FWD A 20 DTH | Chassis no. to:B1999999 | GDS60027 | Drive Shaft | | 30 | 27 | 52.5 | 94.5 | 619 | |
| | 2011.10-2014.10 | 6MT | F | L/R | MPV FWD A 20 DTH | | GCO88046 | Outer Joint | | 30 | 26 | 52.5 | 94.5 | 65.5 | M |
| 2.0 (125 kw) | 2014.11-2018.05 | 6AT | F | L | MPV FWD B 20 DTH | | GDS21093 | Drive Shaft | | 30 | 27 | 52.5 | 94 | 625 | |
| | 2014.11-2018.05 | 6AT | F | R | MPV FWD B 20 DTH | | GDS82388 | Drive Shaft | | 30 | 27 | 52.5 | 94 | 609 | |
| | 2014.11-2018.05 | 6AT | F | L/R | MPV FWD B 20 DTH | | GCO17051 | Outer Joint | | 30 | 26 | 53.8 | 94.5 | 65.5 | M |
| | 2014.11-2018.05 | 6AT | F | L/R | MPV FWD B 20 DTH | | GCO21049 | Outer Joint | | 30 | 26 | 52.5 | 94 | 65.5 | M |
| | 2014.11-2018.05 | 6AT | F | L | MPV FWD B 20 DTH | | GCI21016 | Inner Joint | | 27 | 26 | 35 | 78.5 | 112 | |
| | 2014.11-2018.05 | 6AT | F | R | MPV FWD B 20 DTH | | GCI86015 | Inner Joint | | 27 | 26 | 35 | 78.5 | 109.5 | |
| | 2014.11-2018.05 | 6MT | F | R | MPV FWD B 20 DTH | Chassis no. to:B1999999 | GDS60027 | Drive Shaft | | 30 | 27 | 52.5 | 94.5 | 619 | |
| | 2014.11-2018.05 | 6MT | F | R | MPV FWD B 20 DTH | Chassis no. from:C1000001 | GDS84292 | Drive Shaft | | 30 | 27 | 52.5 | 94 | 618 | |
| | 2014.11-2018.05 | 6MT | F | L/R | MPV FWD B 20 DTH | | GCO88046 | Outer Joint | | 30 | 26 | 52.5 | 94.5 | 65.5 | M |
| 2.0 (143 kw) | 2012.11-2018.08 | 6MT | F | L | MPV FWD A 20 DTR | Chassis no. to:B1999999 | GDS60027 | Drive Shaft | | 30 | 27 | 52.5 | 94.5 | 619 | |
| | 2012.11-2018.08 | 6MT | F | L | MPV FWD A 20 DTR | Chassis no. from:C1000001 | GDS84292 | Drive Shaft | | 30 | 27 | 52.5 | 94 | 618 | |
| | 2012.11-2018.08 | 6MT | F | L | MPV FWD A 20 DTR | Chassis no. from:C1000001 | GCO21049 | Outer Joint | | 30 | 26 | 52.5 | 94 | 65.5 | M |
| | 2012.11-2018.08 | 6MT | F | L | MPV FWD A 20 DTR | Chassis no. to:B1999999 | GCO88046 | Outer Joint | | 30 | 26 | 52.5 | 94.5 | 65.5 | M |
| | 2012.11-2018.08 | 6MT | F | L | MPV FWD A 20 DTR | | GCI21030 | Inner Joint | | 27 | 26 | 35 | 78 | 112.5 | |
| **VENUCIA** | | | | | | | | | | | | | | | |
| **D50** | | | | | | | | | | | | | | | |
| 1.6 (86 kw) | 2012.04- | 4AT | F | L | Saloon FWD HR16DE | Model year to:2017 | GDS41202 | Drive Shaft | | 25 | 25 | 49 | 94 | 660 | |
| | 2012.04- | 4AT | F | R | Saloon FWD HR16DE | Model year to:2017 | GDS41203 | Drive Shaft | | 25 | 25 | 49 | 94 | 903 | |
| **R50** | | | | | | | | | | | | | | | |
| 1.6 (86 kw) | 2012.04- | 4AT | F | L | Hatchback FWD HR16DE | Model year to:2017 | GDS41202 | Drive Shaft | | 25 | 25 | 49 | 94 | 660 | |
| | 2012.04- | 4AT | F | R | Hatchback FWD HR16DE | Model year to:2017 | GDS41203 | Drive Shaft | | 25 | 25 | 49 | 94 | 903 | |
| **R50X** | | | | | | | | | | | | | | | |
| 1.6 (86 kw) | 2013.10- | 4AT | F | L | Hatchback FWD HR16DE | Model year to:2016 | GDS41202 | Drive Shaft | | 25 | 25 | 49 | 94 | 660 | |
| | 2013.10- | 4AT | F | R | Hatchback FWD HR16DE | Model year to:2016 | GDS41203 | Drive Shaft | | 25 | 25 | 49 | 94 | 903 | |
| **T70** | | | | | | | | | | | | | | | |
| 2.0 (106 kw) | 2015.01- | CVT | F | L | SUV FWD MR20DE | Model year to:2018 | GCI41168 | Inner Joint | | 27 | 33 | 40 | 62.5 | 118 | |
| **VOLVO** | | | | | | | | | | | | | | | |
| **440** | | | | | | | | | | | | | | | |
| 1.6 (61 kw) | 1988.09-1996.09 | MT | F | L/R | Hatchback FWD B16F | | GCO62006 | Outer Joint | | 22 | 22 | 50 | 83 | 52 | O |
| | 1988.09-1996.09 | MT | F | L/R | Hatchback FWD B16F | | GCO62007 | Outer Joint | 44T | 22 | 22 | 50 | 83 | 52 | O |
| 1.7 (75 kw) | 1989.04-1996.12 | MT | F | L/R | Hatchback FWD B18EP/B18F/B18FP | | GCO62006 | Outer Joint | | 22 | 22 | 50 | 83 | 52 | O |
| | 1989.04-1996.12 | MT | F | L/R | Hatchback FWD B18EP/B18F/B18FP | | GCO62007 | Outer Joint | 44T | 22 | 22 | 50 | 83 | 52 | O |
| 1.7 (88 kw) | 1988.09-1996.04 | MT | F | L/R | Hatchback FWD B18FT | | GCO62004 | Outer Joint | | 22 | 25 | 50 | 83 | 61 | O |
| | 1988.09-1996.04 | MT | F | L/R | Hatchback FWD B18FT | | GCO62005 | Outer Joint | 44T | 22 | 25 | 50 | 83 | 61 | O |
| 1.7 (90 kw) | 1988.09-1996.12 | MT | F | L/R | Hatchback FWD B18FTM | | GCO62004 | Outer Joint | | 22 | 25 | 50 | 83 | 61 | O |
| | 1988.09-1996.12 | MT | F | L/R | Hatchback FWD B18FTM | | GCO62005 | Outer Joint | 44T | 22 | 25 | 50 | 83 | 61 | O |
| 1.8 (66 kw) | 1991.08-1996.07 | MT | F | L/R | Hatchback FWD B 18 U (01.92-07.96) | | GCO62006 | Outer Joint | | 22 | 22 | 50 | 83 | 52 | O |
| | 1991.08-1996.07 | MT | F | L/R | Hatchback FWD B 18 U (01.92-07.96) | | GCO62007 | Outer Joint | 44T | 22 | 22 | 50 | 83 | 52 | O |
| 1.9 (66 kw) | 1994.07-1996.12 | MT | F | | Hatchback FWD D19T | | GCO62005 | Outer Joint | 44T | 22 | 25 | 50 | 83 | 61 | O |
| 2.0 (80 kw) | 1993.08-1997.08 | MT | F | L/R | Hatchback FWD B20F | | GCO62006 | Outer Joint | | 22 | 22 | 50 | 83 | 52 | O |
| | 1993.08-1997.08 | MT | F | L/R | Hatchback FWD B20F | | GCO62007 | Outer Joint | 44T | 22 | 22 | 50 | 83 | 52 | O |
| **460** | | | | | | | | | | | | | | | |
| 1.6 (61 kw) | 1990.01-1996.07 | MT | F | L/R | Saloon FWD B16F | | GCO62006 | Outer Joint | | 22 | 22 | 50 | 83 | 52 | O |
| | 1990.01-1996.07 | MT | F | L/R | Saloon FWD B16F | | GCO62007 | Outer Joint | 44T | 22 | 22 | 50 | 83 | 52 | O |
| 1.7 (64 kw) | 1988.09-1996.07 | MT | F | L/R | Saloon FWD B18KPD | | GCO62006 | Outer Joint | | 22 | 22 | 50 | 83 | 52 | O |

| | YEAR | TRANSM. | F/R | L/R | BODY STYLE & DRIVE TYPE & ENGINE | REMARKS | G-AP Ref. | PRODUCT | ABS | Technical Specifications A | B | C | H | L | P |
|---|---|---|---|---|---|---|---|---|---|---|---|---|---|---|---|
| **VOLVO** | | | | | | | | | | | | | | | |
| **460** | | | | | | | | | | | | | | | |
| 1.7 (64 kw) | 1988.09-1996.07 | MT | F | L/R | Saloon FWD B18KPD | | GCO62007 | Outer Joint | 44T | 22 | 22 | 50 | 83 | 52 | O |
| 1.7 (88 kw) | 1989.09-1996.08 | MT | F | L/R | Saloon FWD B18FT | | GCO62004 | Outer Joint | | 22 | 25 | 50 | 83 | 61 | O |
| | 1989.09-1996.08 | MT | F | L/R | Saloon FWD B18FT | | GCO62005 | Outer Joint | 44T | 22 | 25 | 50 | 83 | 61 | O |
| 1.7 (90 kw) | 1989.09-1996.07 | MT | F | L/R | Saloon FWD B18FTM | | GCO62004 | Outer Joint | | 22 | 25 | 50 | 83 | 61 | O |
| | 1989.09-1996.07 | MT | F | L/R | Saloon FWD B18FTM | | GCO62005 | Outer Joint | 44T | 22 | 25 | 50 | 83 | 61 | O |
| 1.8 (66 kw) | 1991.08-1996.07 | MT | F | L/R | Saloon FWD B18U | | GCO62006 | Outer Joint | | 22 | 22 | 50 | 83 | 52 | O |
| | 1991.08-1996.07 | MT | F | L/R | Saloon FWD B18U | | GCO62007 | Outer Joint | 44T | 22 | 22 | 50 | 83 | 52 | O |
| 1.9 (66 kw) | 1994.07-1997.08 | MT | F | L/R | Saloon FWD D19T/D19TIC | | GCO62004 | Outer Joint | | 22 | 25 | 50 | 83 | 61 | O |
| | 1994.07-1997.08 | MT | F | L/R | Saloon FWD D19T/D19TIC | | GCO62005 | Outer Joint | 44T | 22 | 25 | 50 | 83 | 61 | O |
| 2.0 (80 kw) | 1993.08-1997.08 | MT | F | | Saloon FWD B20F | | GCO62005 | Outer Joint | 44T | 22 | 25 | 50 | 83 | 61 | O |
| **480** | | | | | | | | | | | | | | | |
| 1.7 (88 kw) | 1987.08-1996.08 | MT | F | L/R | Coupe FWD B18EAT/B18FT/B18FTM | | GCO62004 | Outer Joint | | 22 | 25 | 50 | 83 | 61 | O |
| | 1987.08-1996.08 | MT | F | L/R | Coupe FWD B18EAT/B18FT/B18FTM | | GCO62005 | Outer Joint | 44T | 22 | 25 | 50 | 83 | 61 | O |
| 1.7 (90 kw) | 1991.01-1996.07 | MT | F | L/R | Coupe FWD B18FT | | GCO62004 | Outer Joint | | 22 | 25 | 50 | 83 | 61 | O |
| | 1991.01-1996.07 | MT | F | L/R | Coupe FWD B18FT | | GCO62005 | Outer Joint | 44T | 22 | 25 | 50 | 83 | 61 | O |
| **850** | | | | | | | | | | | | | | | |
| 2.0 (93 kw) | 1994.08-1996.10 | AT/MT | F | L | Saloon FWD B5202FS | | GDS62001 | Drive Shaft | 48T | 26 | 26 | 56.5 | 98.5 | 574.5 | |
| | 1994.08-1996.10 | AT/MT | F | R | Saloon FWD B5202FS | | GDS62002 | Drive Shaft | 48T | 26 | 26 | 56.5 | 98.5 | 1028 | |
| | 1994.08-1996.10 | AT/MT | F | L/R | Saloon FWD B5202FS | | GCO62001 | Outer Joint | 48T | 26 | 25 | 56.5 | 98.5 | 56 | O |
| | 1994.08-1996.10 | MT | F | R | Saloon FWD B5202FS | | GCI62015 | Inner Joint | | 26 | 25 | 40 | 531.5 | 96 | |
| | 1994.08-1996.10 | | F | | Saloon FWD B5202FS | | GCO62014 | Outer Joint | | 26 | 25 | 56.5 | 98.5 | 56 | O |
| 2.0 (105 kw) | 1991.09-1996.10 | AT | F | R | Saloon FWD B5204FS | Date from:1991.09 | GDS62002 | Drive Shaft | 48T | 26 | 26 | 56.5 | 98.5 | 1028 | |
| | 1991.09-1996.10 | AT/MT | F | L | Saloon FWD B5204FS | | GDS62001 | Drive Shaft | 48T | 26 | 26 | 56.5 | 98.5 | 574.5 | |
| | 1991.09-1996.10 | AT/MT | F | L/R | Saloon FWD B5204FS | Date from:1991.09 | GCO62001 | Outer Joint | 48T | 26 | 25 | 56.5 | 98.5 | 56 | O |
| | 1991.09-1996.10 | MT | F | R | Saloon FWD B5204FS | Date from:1991.09 | GCI62015 | Inner Joint | | 26 | 25 | 40 | 531.5 | 96 | |
| | 1991.09-1996.10 | | F | | Saloon FWD B5204FS | | GCO62014 | Outer Joint | | 26 | 25 | 56.5 | 98.5 | 56 | O |
| 2.0 (155 kw) | 1993.09-1996.10 | AT/MT | F | L | Saloon FWD B5204FT | | GDS62001 | Drive Shaft | 48T | 26 | 26 | 56.5 | 98.5 | 574.5 | |
| | 1993.09-1996.10 | AT/MT | F | R | Saloon FWD B5204FT | | GDS62002 | Drive Shaft | 48T | 26 | 26 | 56.5 | 98.5 | 1028 | |
| | 1993.09-1996.10 | AT/MT | F | L/R | Saloon FWD B5204FT | | GCO62002 | Outer Joint | 48T | 26 | 28 | 56.5 | 97.5 | 66 | O |
| | 1993.09-1996.10 | AT/MT | F | L/R | Saloon FWD B5204FT | | GCO62016 | Outer Joint | | 26 | 28 | 56.5 | 97.5 | 66 | O |
| 2.3 (166 kw) | 1993.09-1996.10 | AT/MT | F | L | Saloon FWD B5234FT | | GDS62001 | Drive Shaft | 48T | 26 | 26 | 56.5 | 98.5 | 574.5 | |
| | 1993.09-1996.10 | AT/MT | F | R | Saloon FWD B5234FT | | GDS62002 | Drive Shaft | 48T | 26 | 26 | 56.5 | 98.5 | 1028 | |
| | 1993.09-1996.10 | AT/MT | F | L/R | Saloon FWD B5234FT | | GCO62002 | Outer Joint | 48T | 26 | 28 | 56.5 | 97.5 | 66 | O |
| | 1993.09-1996.10 | AT/MT | F | L/R | Saloon FWD B5234FT | | GCO62016 | Outer Joint | | 26 | 28 | 56.5 | 97.5 | 66 | O |
| 2.3 (179 kw) | 1994.09-1997.10 | MT | F | R | Saloon FWD B5234T5 | Date from:1995.01, Not For Trans. code:M59 | GDS62002 | Drive Shaft | 48T | 26 | 26 | 56.5 | 98.5 | 1028 | |
| 2.3 (184 kw) | 1995.06-1996.10 | MT | F | L | Saloon FWD B5234T4 | | GDS62001 | Drive Shaft | 48T | 26 | 26 | 56.5 | 98.5 | 574.5 | |
| | 1995.06-1996.10 | MT | F | R | Saloon FWD B5234T4 | Trans. code:Excluding M59 | GDS62002 | Drive Shaft | 48T | 26 | 26 | 56.5 | 98.5 | 1028 | |
| | 1995.06-1996.10 | MT | F | L/R | Saloon FWD B5234T4 | | GCO62002 | Outer Joint | 48T | 26 | 28 | 56.5 | 97.5 | 66 | O |
| | 1995.06-1996.10 | MT | F | L/R | Saloon FWD B5234T4 | | GCO62016 | Outer Joint | | 26 | 28 | 56.5 | 97.5 | 66 | O |
| 2.4 (103 kw) | 1991.06-1997.10 | AT/MT | F | L | Saloon FWD B5252FS | | GDS62001 | Drive Shaft | 48T | 26 | 26 | 56.5 | 98.5 | 574.5 | |
| | 1991.06-1997.10 | AT/MT | F | R | Saloon FWD B5252FS | | GDS62002 | Drive Shaft | 48T | 26 | 26 | 56.5 | 98.5 | 1028 | |
| | 1991.06-1997.10 | AT/MT | F | L/R | Saloon FWD B5252FS | | GCO62001 | Outer Joint | 48T | 26 | 25 | 56.5 | 98.5 | 56 | O |
| | 1991.06-1997.10 | MT | F | R | Saloon FWD B5252FS | | GCI62015 | Inner Joint | | 26 | 25 | 40 | 531.5 | 96 | |
| | 1991.06-1997.10 | | F | | Saloon FWD B5252FS | | GCO62014 | Outer Joint | | 26 | 25 | 56.5 | 98.5 | 56 | O |
| 2.4 (106 kw) | 1994.08-1996.12 | AT/MT | F | L | Saloon FWD B5252FS | | GDS62001 | Drive Shaft | 48T | 26 | 26 | 56.5 | 98.5 | 574.5 | |
| | 1994.08-1996.12 | AT/MT | F | R | Saloon FWD B5252FS | | GDS62002 | Drive Shaft | 48T | 26 | 26 | 56.5 | 98.5 | 1028 | |
| | 1994.08-1996.12 | AT/MT | F | L/R | Saloon FWD B5252FS | | GCO62001 | Outer Joint | 48T | 26 | 25 | 56.5 | 98.5 | 56 | O |
| | 1994.08-1996.12 | MT | F | R | Saloon FWD B5252FS | | GCI62015 | Inner Joint | | 26 | 25 | 40 | 531.5 | 96 | |
| | 1994.08-1996.12 | | F | | Saloon FWD B5252FS | | GCO62014 | Outer Joint | | 26 | 25 | 56.5 | 98.5 | 56 | O |
| 2.4 (125 kw) | 1991.08-1997.05 | AT/MT | F | L | Saloon FWD B5254FS | | GDS62001 | Drive Shaft | 48T | 26 | 26 | 56.5 | 98.5 | 574.5 | |
| | 1991.08-1997.05 | AT/MT | F | R | Saloon FWD B5254FS | | GDS62002 | Drive Shaft | 48T | 26 | 26 | 56.5 | 98.5 | 1028 | |
| | 1991.08-1997.05 | AT/MT | F | L/R | Saloon FWD B5254FS | | GCO62001 | Outer Joint | 48T | 26 | 25 | 56.5 | 98.5 | 56 | O |
| | 1991.08-1997.05 | MT | F | R | Saloon FWD B5254FS | | GCI62015 | Inner Joint | | 26 | 25 | 40 | 531.5 | 96 | |
| | 1991.08-1997.05 | | F | | Saloon FWD B5254FS | | GCO62014 | Outer Joint | | 26 | 25 | 56.5 | 98.5 | 56 | O |
| 2.4 (142 kw) | 1993.09-1997.10 | | F | | Saloon FWD B5254T | | GCO62014 | Outer Joint | | 26 | 25 | 56.5 | 98.5 | 56 | O |
| 2.5 (103 kw) | 1995.12-1996.10 | AT/MT | F | L | Saloon FWD D5252T | | GDS62001 | Drive Shaft | 48T | 26 | 26 | 56.5 | 98.5 | 574.5 | |
| | 1995.12-1996.10 | AT/MT | F | R | Saloon FWD D5252T | | GDS62002 | Drive Shaft | 48T | 26 | 26 | 56.5 | 98.5 | 1028 | |
| | 1995.12-1996.10 | AT/MT | F | L/R | Saloon FWD D5252T | | GCO62002 | Outer Joint | 48T | 26 | 28 | 56.5 | 97.5 | 66 | O |
| | 1995.12-1996.10 | AT/MT | F | L/R | Saloon FWD D5252T | | GCO62016 | Outer Joint | | 26 | 28 | 56.5 | 97.5 | 66 | O |
| **850 Estate/Combi** | | | | | | | | | | | | | | | |
| 2.0 (93 kw) | 1994.12-1997.10 | AT | F | R | Estate FWD B5202FS | Date from:1994.12 | GDS62002 | Drive Shaft | 48T | 26 | 26 | 56.5 | 98.5 | 1028 | |
| | 1994.12-1997.10 | AT/MT | F | L | Estate FWD B5202FS | | GDS62001 | Drive Shaft | 48T | 26 | 26 | 56.5 | 98.5 | 574.5 | |
| | 1994.12-1997.10 | AT/MT | F | L/R | Estate FWD B5202FS | Date from:1994.12 | GCO62001 | Outer Joint | 48T | 26 | 25 | 56.5 | 98.5 | 56 | O |
| | 1994.12-1997.10 | MT | F | R | Estate FWD B5202FS | Date from:1994.12 | GCI62015 | Inner Joint | | 26 | 25 | 40 | 531.5 | 96 | |
| | 1994.12-1997.10 | | F | | Estate FWD B5202FS | | GCO62014 | Outer Joint | | 26 | 25 | 56.5 | 98.5 | 56 | O |

| | YEAR | TRANSM. | F/R | L/R | BODY STYLE & DRIVE TYPE & ENGINE | REMARKS | G-AP Ref. | PRODUCT | ABS | Technical Specifications A | B | C | H | L | P |
|---|---|---|---|---|---|---|---|---|---|---|---|---|---|---|---|
| **VOLVO** | | | | | | | | | | | | | | | |
| **850 Estate/Combi** | | | | | | | | | | | | | | | |
| 2.0 (105 kw) | 1993.09-1997.10 | AT | F | R | Estate FWD B5204FS | Date from:1993.09 | GDS62002 | Drive Shaft | 48T | 26 | 26 | 56.5 | 98.5 | 1028 | |
| | 1993.09-1997.10 | AT/MT | F | L | Estate FWD B5204FS | | GDS62001 | Drive Shaft | 48T | 26 | 26 | 56.5 | 98.5 | 574.5 | |
| | 1993.09-1997.10 | AT/MT | F | L/R | Estate FWD B5204FS | | GCO62001 | Outer Joint | 48T | 26 | 25 | 56.5 | 98.5 | 56 | O |
| | 1993.09-1997.10 | AT/MT | F | L/R | Estate FWD B5204FS | | GCO62014 | Outer Joint | | 26 | 25 | 56.5 | 98.5 | 56 | O |
| | 1993.09-1997.10 | MT | F | R | Estate FWD B5204FS | Date from:1993.09 | GCI62015 | Inner Joint | | 26 | 25 | 40 | 531.5 | 96 | |
| 2.0 (132 kw) | 1993.09-1997.10 | AT/MT | F | L | Estate FWD B5204T2 | | GDS62001 | Drive Shaft | 48T | 26 | 26 | 56.5 | 98.5 | 574.5 | |
| | 1993.09-1997.10 | MT | F | L/R | Estate FWD B5204T2 | | GCO62001 | Outer Joint | 48T | 26 | 25 | 56.5 | 98.5 | 56 | O |
| 2.0 (155 kw) | 1993.09-1997.10 | AT/MT | F | L | Estate FWD B5204FT | | GDS62001 | Drive Shaft | 48T | 26 | 26 | 56.5 | 98.5 | 574.5 | |
| | 1993.09-1997.10 | AT/MT | F | R | Estate FWD B5204FT | | GDS62002 | Drive Shaft | 48T | 26 | 26 | 56.5 | 98.5 | 1028 | |
| | 1993.09-1997.10 | AT/MT | F | L/R | Estate FWD B5204FT | | GCO62002 | Outer Joint | 48T | 26 | 28 | 56.5 | 97.5 | 66 | O |
| | 1993.09-1997.10 | AT/MT | F | L/R | Estate FWD B5204FT | | GCO62016 | Outer Joint | | 26 | 28 | 56.5 | 97.5 | 66 | O |
| 2.3 (166 kw) | 1993.02-1996.12 | AT/MT | F | L | Estate FWD B5234FT | | GDS62001 | Drive Shaft | 48T | 26 | 26 | 56.5 | 98.5 | 574.5 | |
| | 1993.02-1996.12 | AT/MT | F | R | Estate FWD B5234FT | | GDS62002 | Drive Shaft | 48T | 26 | 26 | 56.5 | 98.5 | 1028 | |
| | 1993.02-1996.12 | AT/MT | F | L/R | Estate FWD B5234FT | | GCO62002 | Outer Joint | 48T | 26 | 28 | 56.5 | 97.5 | 66 | O |
| | 1993.02-1996.12 | AT/MT | F | L/R | Estate FWD B5234FT | | GCO62016 | Outer Joint | | 26 | 28 | 56.5 | 97.5 | 66 | O |
| 2.3 (179 kw) | 1995.06-1997.10 | MT | F | R | Estate FWD B5234T5 | Date from:1995.01, Not For Trans. code:M59 | GDS62002 | Drive Shaft | 48T | 26 | 26 | 56.5 | 98.5 | 1028 | |
| 2.3 (184 kw) | 1995.06-1997.10 | MT | F | L | Estate FWD B5234T4 | | GDS62001 | Drive Shaft | 48T | 26 | 26 | 56.5 | 98.5 | 574.5 | |
| | 1995.06-1997.10 | MT | F | R | Estate FWD B5234T4 | Trans. code:Excluding M59 | GDS62002 | Drive Shaft | 48T | 26 | 26 | 56.5 | 98.5 | 1028 | |
| | 1995.06-1997.10 | MT | F | L/R | Estate FWD B5234T4 | | GCO62002 | Outer Joint | 48T | 26 | 28 | 56.5 | 97.5 | 66 | O |
| | 1995.06-1997.10 | MT | F | L/R | Estate FWD B5234T4 | | GCO62016 | Outer Joint | | 26 | 28 | 56.5 | 97.5 | 66 | O |
| 2.4 (103 kw) | 1992.08-1997.10 | AT/MT | F | L | Estate FWD B5252FS | | GDS62001 | Drive Shaft | 48T | 26 | 26 | 56.5 | 98.5 | 574.5 | |
| | 1992.08-1997.10 | AT/MT | F | R | Estate FWD B5252FS | | GDS62002 | Drive Shaft | 48T | 26 | 26 | 56.5 | 98.5 | 1028 | |
| | 1992.08-1997.10 | AT/MT | F | L/R | Estate FWD B5252FS | | GCO62001 | Outer Joint | 48T | 26 | 25 | 56.5 | 98.5 | 56 | O |
| | 1992.08-1997.10 | MT | F | R | Estate FWD B5252FS | | GCI62015 | Inner Joint | | 26 | 25 | 40 | 531.5 | 96 | |
| | 1992.08-1997.10 | | F | L/R | Estate FWD B5252FS | | GCO62014 | Outer Joint | | 26 | 25 | 56.5 | 98.5 | 56 | O |
| 2.4 (106 kw) | 1994.08-1996.12 | AT/MT | F | L | Estate FWD B5252FS | | GDS62001 | Drive Shaft | 48T | 26 | 26 | 56.5 | 98.5 | 574.5 | |
| | 1994.08-1996.12 | AT/MT | F | R | Estate FWD B5252FS | | GDS62002 | Drive Shaft | 48T | 26 | 26 | 56.5 | 98.5 | 1028 | |
| | 1994.08-1996.12 | AT/MT | F | L/R | Estate FWD B5252FS | | GCO62001 | Outer Joint | 48T | 26 | 25 | 56.5 | 98.5 | 56 | O |
| | 1994.08-1996.12 | AT/MT | F | L/R | Estate FWD B5252FS | | GCO62014 | Outer Joint | | 26 | 25 | 56.5 | 98.5 | 56 | O |
| | 1994.08-1996.12 | MT | F | R | Estate FWD B5252FS | | GCI62015 | Inner Joint | | 26 | 25 | 40 | 531.5 | 96 | |
| 2.4 (125 kw) | 1992.09-1997.01 | AT/MT | F | L | Estate FWD B5254FS | | GDS62001 | Drive Shaft | 48T | 26 | 26 | 56.5 | 98.5 | 574.5 | |
| | 1992.09-1997.01 | AT/MT | F | R | Estate FWD B5254FS | | GDS62002 | Drive Shaft | 48T | 26 | 26 | 56.5 | 98.5 | 1028 | |
| | 1992.09-1997.01 | AT/MT | F | L/R | Estate FWD B5254FS | | GCO62001 | Outer Joint | 48T | 26 | 25 | 56.5 | 98.5 | 56 | O |
| | 1992.09-1997.01 | MT | F | R | Estate FWD B5254FS | | GCI62015 | Inner Joint | | 26 | 25 | 40 | 531.5 | 96 | |
| | 1992.09-1997.01 | | F | | Estate FWD B5254FS | | GCO62014 | Outer Joint | | 26 | 25 | 56.5 | 98.5 | 56 | O |
| 2.4 (142 kw) | 1996.02-1997.12 | AT/MT | F | L/R | Estate 4WD B5254T | | GCO62002 | Outer Joint | 48T | 26 | 28 | 56.5 | 97.5 | 66 | O |
| | 1996.02-1997.12 | AT/MT | F | L/R | Estate 4WD B5254T | | GCO62016 | Outer Joint | | 26 | 28 | 56.5 | 97.5 | 66 | O |
| | 1996.02-1997.12 | MT | F | L | Estate 4WD B5254T | | GDS62001 | Drive Shaft | 48T | 26 | 26 | 56.5 | 98.5 | 574.5 | |
| | 1996.02-1997.12 | | R | L/R | Estate 4WD B5254T | | GDS81128 | Drive Shaft | 48T | 26 | 26 | 60.5 | 81 | 751 | |
| 2.5 (103 kw) | 1995.12-1997.10 | AT/MT | F | L | Estate FWD D5252T | | GDS62001 | Drive Shaft | 48T | 26 | 26 | 56.5 | 98.5 | 574.5 | |
| | 1995.12-1997.10 | AT/MT | F | R | Estate FWD D5252T | | GDS62002 | Drive Shaft | 48T | 26 | 26 | 56.5 | 98.5 | 1028 | |
| | 1995.12-1997.10 | AT/MT | F | L/R | Estate FWD D5252T | | GCO62002 | Outer Joint | 48T | 26 | 28 | 56.5 | 97.5 | 66 | O |
| | 1995.12-1997.10 | AT/MT | F | L/R | Estate FWD D5252T | | GCO62016 | Outer Joint | | 26 | 28 | 56.5 | 97.5 | 66 | O |
| **960** | | | | | | | | | | | | | | | |
| 2.5 (125 kw) | 1993.09-1996.10 | AT/MT | R | L/R | Saloon RWD B6254S | | GDS81126 | Drive Shaft | | 26 | 26 | 60.5 | 81 | 745 | |
| | 1993.09-1996.10 | AT/MT | R | L/R | Saloon RWD B6254S | | GCI81050 | Inner Joint | 48T | 26 | 25 | 60.5 | 81 | 96.8 | |
| | 1993.09-1996.10 | AT/MT | R | L/R | Saloon RWD B6254S | | GCI81060 | Inner Joint | | 26 | 25 | 35 | 70 | 106.3 | |
| **960 Estate/Combi** | | | | | | | | | | | | | | | |
| 2.5 (125 kw) | 1993.09-1996.10 | AT/MT | R | L/R | Estate RWD B6254S | | GDS81126 | Drive Shaft | | 26 | 26 | 60.5 | 81 | 745 | |
| | 1993.09-1996.10 | AT/MT | R | L/R | Estate RWD B6254S | | GCI81050 | Inner Joint | 48T | 26 | 25 | 60.5 | 81 | 96.8 | |
| | 1993.09-1996.10 | AT/MT | R | L/R | Estate RWD B6254S | | GCI81060 | Inner Joint | | 26 | 25 | 35 | 70 | 106.3 | |
| **C30** | | | | | | | | | | | | | | | |
| 1.6 (74 kw) | 2006.10-2012.12 | 5MT | F | L | Hatchback FWD B 4164 S3 | | GDS18359 | Drive Shaft | | 36 | 23 | 56 | 48 | 594 | |
| | 2006.10-2012.12 | 5MT | F | L | Hatchback FWD B 4164 S3 | Model year from:2007,Model year to:2011 | GCI18044 | Inner Joint | | 26 | 23 | 40 | 68.5 | 99.5 | |
| | 2006.10-2012.12 | 5MT | F | L | Hatchback FWD B 4164 S3 | Model year from:2007,Model year to:2011 | GCO81424 | Inner Joint | | 31 | 27 | 36.2 | 70 | 62 | |
| | 2006.10-2012.12 | MT | F | R | Hatchback FWD B 4164 S3 | Inner teeth of wheel side:24 | GDS18206 | Drive Shaft | | 36 | 23 | 56 | 48 | 906 | |
| | 2006.10-2012.12 | MT | F | R | Hatchback FWD B 4164 S3 | Inner teeth of wheel side:25 | GDS18337 | Drive Shaft | | 36 | 23 | 51.6 | 48 | 908 | |
| | 2006.10-2012.12 | MT | F | L/R | Hatchback FWD B 4164 S3 | | GCO99129 | Outer Joint | | 36 | 24 | 56 | 48 | 57 | M |
| 1.6 (80 kw) | 2006.10-2012.12 | 5MT | F | L | Hatchback FWD D 4164 T | | GDS18218 | Drive Shaft | | 36 | 26 | 56 | 48 | 582 | |
| | 2006.10-2012.12 | 5MT | F | R | Hatchback FWD D 4164 T | | GDS18219 | Drive Shaft | | 36 | 26 | 56.3 | 48 | 921 | |
| | 2006.10-2012.12 | 5MT | F | R | Hatchback FWD D 4164 T | | GCO18230 | Outer Joint | | 36 | 26 | 56.3 | 48 | 61 | M |
| | 2006.10-2012.12 | 5MT | F | R | Hatchback FWD D 4164 T | | GCO99288 | Outer Joint | | 36 | 26 | 56.3 | 48 | 61 | M |
| | 2006.10-2012.12 | 5MT | F | L/R | Hatchback FWD D 4164 T | | GCO18203 | Outer Joint | | 36 | 23 | 56 | 48 | 57 | I |
| | 2006.10-2012.12 | 5MT | F | L | Hatchback FWD D 4164 T | | GCI18044 | Inner Joint | | 26 | 23 | 40 | 68.5 | 99.5 | |
| 1.6 (84 kw) | 2010.10-2012.12 | 6MT | F | L | Hatchback FWD D 4162 T | | GDS62078 | Drive Shaft | | 36 | 26 | 56.3 | 48 | 583 | |

| | YEAR | TRANSM. | F/R | L/R | BODY STYLE & DRIVE TYPE & ENGINE | REMARKS | G-AP Ref. | PRODUCT | ABS | Technical Specifications A | B | C | H | L | P |
|---|---|---|---|---|---|---|---|---|---|---|---|---|---|---|---|
| **VOLVO** **C30** | | | | | | | | | | | | | | | |
| 1.6 (84 kw) | 2010.10-2012.12 | 6MT | F | R | Hatchback FWD D 4162 T | | GDS62053 | Drive Shaft | | 36 | 26 | 56.3 | 48 | 917 | |
| | 2010.10-2012.12 | 6MT | F | L/R | Hatchback FWD D 4162 T | Model year to:2011 | GCO62031 | Outer Joint | 48T | 36 | 27 | 56.5 | 55 | 65 | M |
| | 2010.10-2012.12 | 6MT | F | L/R | Hatchback FWD D 4162 T | | GCO99288 | Outer Joint | | 36 | 26 | 56.3 | 48 | 61 | M |
| | 2010.10-2012.12 | 6MT | F | L | Hatchback FWD D 4162 T | Model year to:2011 | GCI18044 | Inner Joint | | 26 | 23 | 40 | 68.5 | 99.5 | |
| | 2010.10-2012.12 | 6MT | F | L | Hatchback FWD D 4162 T | | GCI62052 | Inner Joint | | 26 | 28 | 40 | 61 | 112.5 | |
| | 2010.10-2012.12 | 6MT | F | L | Hatchback FWD D 4162 T | Model year to:2011 | GCO81424 | Inner Joint | | 31 | 27 | 36.2 | 70 | 62 | |
| | 2010.10-2012.12 | 6MT | F | R | Hatchback FWD D 4162 T | | GCI62027 | Inner Joint | | 26 | 28 | 40 | 383 | 99 | |
| 1.8 (92 kw) | 2006.10-2012.12 | 5MT | F | L | Hatchback FWD B 4184 S11 | | GDS18218 | Drive Shaft | | 36 | 26 | 56 | 48 | 582 | |
| | 2006.10-2012.12 | MT | F | R | Hatchback FWD B 4184 S11 | | GDS18219 | Drive Shaft | | 36 | 26 | 56.3 | 48 | 921 | |
| | 2006.10-2012.12 | MT | F | R | Hatchback FWD B 4184 S11 | | GCO99130 | Outer Joint | | 36 | 26 | 56.3 | 48 | 61 | M |
| | 2006.10-2012.12 | | F | L/R | Hatchback FWD B 4184 S11 | Date To:2010.12 | GCO18203 | Outer Joint | | 36 | 23 | 56 | 48 | 57 | I |
| | 2006.10-2012.12 | | F | | Hatchback FWD B 4184 S11 | for model year:2011 | GCO62031 | Outer Joint | 48T | 36 | 27 | 56.5 | 55 | 65 | M |
| | 2006.10-2012.12 | | F | | Hatchback FWD B 4184 S11 | for model year:2011 | GCO62045 | Outer Joint | | 40 | 26 | 57.7 | 52 | 62.5 | M |
| | 2006.10-2012.12 | | F | L | Hatchback FWD B 4184 S11 | for model year:2011 | GCO81424 | Inner Joint | | 31 | 27 | 36.2 | 70 | 62 | |
| | 2006.10-2012.12 | | F | R | Hatchback FWD B 4184 S11 | | GCI18044 | Inner Joint | | 26 | 23 | 40 | 68.5 | 99.5 | |
| | 2007.01-2012.12 | 5MT | F | L | Hatchback FWD B 4184 S8 | | GDS18218 | Drive Shaft | | 36 | 26 | 56 | 48 | 582 | |
| | 2007.01-2012.12 | MT | F | R | Hatchback FWD B 4184 S8 | | GDS18219 | Drive Shaft | | 36 | 26 | 56.3 | 48 | 921 | |
| | 2007.01-2012.12 | MT | F | R | Hatchback FWD B 4184 S8 | | GCO99130 | Outer Joint | | 36 | 26 | 56.3 | 48 | 61 | M |
| | 2007.01-2012.12 | | F | L/R | Hatchback FWD B 4184 S8 | Chassis no. to:17913 | GCO18203 | Outer Joint | | 36 | 23 | 56 | 48 | 57 | I |
| | 2007.01-2012.12 | | F | L/R | Hatchback FWD B 4184 S8 | | GCO62031 | Outer Joint | 48T | 36 | 27 | 56.5 | 55 | 65 | M |
| | 2007.01-2012.12 | | F | | Hatchback FWD B 4184 S8 | for model year:2011 | GCO62045 | Outer Joint | | 40 | 26 | 57.7 | 52 | 62.5 | M |
| | 2007.01-2012.12 | | F | L | Hatchback FWD B 4184 S8 | for model year:2011 | GCO81424 | Inner Joint | | 31 | 27 | 36.2 | 70 | 62 | |
| | 2007.01-2012.12 | | F | R | Hatchback FWD B 4184 S8 | | GCI18044 | Inner Joint | | 26 | 23 | 40 | 68.5 | 99.5 | |
| 2.0 (100 kw) | 2006.10-2012.12 | AT | F | L | Hatchback FWD D 4204 T | | GDS18367 | Drive Shaft | | 36 | 28 | 56 | 48 | 570 | |
| | 2006.10-2012.12 | AT | F | R | Hatchback FWD D 4204 T | | GDS62024 | Drive Shaft | | 36 | 28 | 56 | 48 | 908 | |
| | 2006.10-2012.12 | AT | F | R | Hatchback FWD D 4204 T | | GCI62017 | Inner Joint | | 28 | 26 | 33.95 | 371.5 | 92 | |
| | 2006.10-2012.12 | MT | F | L | Hatchback FWD D 4204 T | | GDS18218 | Drive Shaft | | 36 | 26 | 56 | 48 | 582 | |
| | 2006.10-2012.12 | MT | F | R | Hatchback FWD D 4204 T | | GDS18219 | Drive Shaft | | 36 | 26 | 56.3 | 48 | 921 | |
| | 2006.10-2012.12 | MT | F | L/R | Hatchback FWD D 4204 T | Date to:2010.12 | GCO18203 | Outer Joint | | 36 | 23 | 56 | 48 | 57 | I |
| 2.0 (107 kw) | 2006.10-2012.12 | AT | F | L | Hatchback FWD B 4204 S3 | | GDS18367 | Drive Shaft | | 36 | 28 | 56 | 48 | 570 | |
| | 2006.10-2012.12 | AT | F | R | Hatchback FWD B 4204 S3 | | GDS62024 | Drive Shaft | | 36 | 28 | 56 | 48 | 908 | |
| | 2006.10-2012.12 | AT | F | R | Hatchback FWD B 4204 S3 | | GCI62017 | Inner Joint | | 28 | 26 | 33.95 | 371.5 | 92 | |
| | 2006.10-2012.12 | MT | F | L | Hatchback FWD B 4204 S3 | | GDS18218 | Drive Shaft | | 36 | 26 | 56 | 48 | 582 | |
| | 2006.10-2012.12 | MT | F | R | Hatchback FWD B 4204 S3 | | GDS18219 | Drive Shaft | | 36 | 26 | 56.3 | 48 | 921 | |
| | 2006.10-2012.12 | MT | F | L | Hatchback FWD B 4204 S3 | | GCO18203 | Outer Joint | | 36 | 23 | 56 | 48 | 57 | I |
| | 2006.10-2012.12 | MT | F | R | Hatchback FWD B 4204 S3 | | GCO99130 | Outer Joint | | 36 | 26 | 56.3 | 48 | 61 | M |
| | 2006.10-2012.12 | MT | F | R | Hatchback FWD B 4204 S3 | | GCI18044 | Inner Joint | | 26 | 23 | 40 | 68.5 | 99.5 | |
| | 2006.10-2012.12 | | F | L/R | Hatchback FWD B 4204 S3 | for model year:2011 | GCO62031 | Outer Joint | 48T | 36 | 27 | 56.5 | 55 | 65 | M |
| | 2006.10-2012.12 | | F | | Hatchback FWD B 4204 S3 | for model year:2011 | GCO62045 | Outer Joint | | 40 | 26 | 57.7 | 52 | 62.5 | M |
| | 2006.10-2012.12 | | F | L | Hatchback FWD B 4204 S3 | for model year:2011 | GCO81424 | Inner Joint | | 31 | 27 | 36.2 | 70 | 62 | |
| | 2010.01-2012.12 | 5MT | F | L | Hatchback FWD B 4204 S4 | | GDS18218 | Drive Shaft | | 36 | 26 | 56 | 48 | 582 | |
| | 2010.01-2012.12 | | F | R | Hatchback FWD B 4204 S4 | | GDS18219 | Drive Shaft | | 36 | 26 | 56.3 | 48 | 921 | |
| | 2010.01-2012.12 | | F | L | Hatchback FWD B 4204 S4 | | GCO18203 | Outer Joint | | 36 | 23 | 56 | 48 | 57 | I |
| | 2010.01-2012.12 | | F | | Hatchback FWD B 4204 S4 | for model year:2011 | GCO62031 | Outer Joint | 48T | 36 | 27 | 56.5 | 55 | 65 | M |
| | 2010.01-2012.12 | | F | | Hatchback FWD B 4204 S4 | for model year:2011 | GCO62045 | Outer Joint | | 40 | 26 | 57.7 | 52 | 62.5 | M |
| | 2010.01-2012.12 | | F | L | Hatchback FWD B 4204 S4 | for model year:2011 | GCO81424 | Inner Joint | | 31 | 27 | 36.2 | 70 | 62 | |
| | 2010.01-2012.12 | | F | R | Hatchback FWD B 4204 S4 | | GCI18044 | Inner Joint | | 26 | 23 | 40 | 68.5 | 99.5 | |
| 2.0 (110 kw) | 2010.10-2012.12 | AT | F | L | Hatchback FWD D 5204 T5 | | GDS62108 | Drive Shaft | | 36 | 31 | 56 | 48 | 506 | |
| | 2010.10-2012.12 | AT | F | R | Hatchback FWD D 5204 T5 | | GDS62103 | Drive Shaft | | 36 | 28 | 56 | 48 | 955 | |
| | 2010.10-2012.12 | AT | F | R | Hatchback FWD D 5204 T5 | | GCI62048 | Inner Joint | | 28 | 26 | 33 | 520 | 100.5 | |
| | 2010.10-2012.12 | MT | F | L | Hatchback FWD D 5204 T5 | | GDS18290 | Drive Shaft | | 36 | 26 | 56 | 48 | 530 | |
| | 2010.10-2012.12 | MT | F | R | Hatchback FWD D 5204 T5 | | GDS62062 | Drive Shaft | | 36 | 26 | 56 | 48 | 959 | |
| | 2010.10-2012.12 | MT | F | L | Hatchback FWD D 5204 T5 | | GCI18159 | Inner Joint | | 26 | 26 | 40 | 67 | 96.5 | |
| | 2010.10-2012.12 | | F | | Hatchback FWD D 5204 T5 | for model year:2011 | GCO62031 | Outer Joint | 48T | 36 | 27 | 56.5 | 55 | 65 | M |
| | 2010.10-2012.12 | | F | | Hatchback FWD D 5204 T5 | for model year:2011 | GCO62045 | Outer Joint | | 40 | 26 | 57.7 | 52 | 62.5 | M |
| | 2010.10-2012.12 | | F | L | Hatchback FWD D 5204 T5 | for model year:2011 | GCI18044 | Inner Joint | | 26 | 23 | 40 | 68.5 | 99.5 | |
| | 2010.10-2012.12 | | F | L | Hatchback FWD D 5204 T5 | for model year:2011 | GCO81424 | Inner Joint | | 31 | 27 | 36.2 | 70 | 62 | |
| 2.0 (130 kw) | 2010.10-2012.12 | AT | F | L | Hatchback FWD D 5204 T | | GDS62108 | Drive Shaft | | 36 | 31 | 56 | 48 | 506 | |
| | 2010.10-2012.12 | AT | F | R | Hatchback FWD D 5204 T | | GDS62103 | Drive Shaft | | 36 | 28 | 56 | 48 | 955 | |
| | 2010.10-2012.12 | AT | F | R | Hatchback FWD D 5204 T | | GCI62048 | Inner Joint | | 28 | 26 | 33 | 520 | 100.5 | |
| | 2010.10-2012.12 | MT | F | L | Hatchback FWD D 5204 T | | GDS18290 | Drive Shaft | | 36 | 26 | 56 | 48 | 530 | |
| | 2010.10-2012.12 | MT | F | R | Hatchback FWD D 5204 T | | GDS62062 | Drive Shaft | | 36 | 26 | 56 | 48 | 959 | |
| | 2010.10-2012.12 | MT | F | L | Hatchback FWD D 5204 T | | GCI18159 | Inner Joint | | 26 | 26 | 40 | 67 | 96.5 | |
| | 2010.10-2012.12 | | F | | Hatchback FWD D 5204 T | for model year:2011 | GCO62031 | Outer Joint | 48T | 36 | 27 | 56.5 | 55 | 65 | M |
| | 2010.10-2012.12 | | F | | Hatchback FWD D 5204 T | for model year:2011 | GCO62045 | Outer Joint | | 40 | 26 | 57.7 | 52 | 62.5 | M |

| | YEAR | TRANSM. | F/R | L/R | BODY STYLE & DRIVE TYPE & ENGINE | REMARKS | G-AP Ref. | PRODUCT | ABS | Technical Specifications A | B | C | H | L | P |
|---|---|---|---|---|---|---|---|---|---|---|---|---|---|---|---|
| **VOLVO** | | | | | | | | | | | | | | | |
| **C30** | | | | | | | | | | | | | | | |
| 2.0 (130 kw) | 2010.10-2012.12 | | F | L | Hatchback FWD D 5204 T | for model year:2011 | GCI18044 | Inner Joint | | 26 | 23 | 40 | 68.5 | 99.5 | |
| | 2010.10-2012.12 | | F | L | Hatchback FWD D 5204 T | for model year:2011 | GCO81424 | Inner Joint | | 31 | 27 | 36.2 | 70 | 62 | |
| 2.4 (120 kw) | 2006.10-2012.12 | AT | F | L | Hatchback FWD D 5244 T9 | Date to:2010.12 | GDS62060 | Drive Shaft | | 36 | 26 | 56 | 48 | 519 | |
| | 2006.10-2012.12 | AT | F | R | Hatchback FWD D 5244 T9 | | GDS62063 | Drive Shaft | | 36 | 26 | 56 | 48 | 947 | |
| | 2006.10-2012.12 | AT | F | R | Hatchback FWD D 5244 T9 | | GCO99132 | Outer Joint | | 36 | 24 | 56 | 48 | 57 | I |
| | 2006.10-2012.12 | AT | F | L/R | Hatchback FWD D 5244 T9 | | GCO62033 | Outer Joint | | 36 | 24 | 56 | 48 | 59 | I |
| | 2006.10-2012.12 | MT | F | L | Hatchback FWD D 5244 T9 | Date to:2010.12 | GDS18290 | Drive Shaft | | 36 | 26 | 56 | 48 | 530 | |
| | 2006.10-2012.12 | MT | F | L | Hatchback FWD D 5244 T9 | | GCI18159 | Inner Joint | | 26 | 26 | 40 | 67 | 96.5 | |
| | 2006.10-2012.12 | | F | | Hatchback FWD D 5244 T9 | for model year:2011 | GCO62031 | Outer Joint | 48T | 36 | 27 | 56.5 | 55 | 65 | M |
| | 2006.10-2012.12 | | F | | Hatchback FWD D 5244 T9 | for model year:2011 | GCO62045 | Outer Joint | | 40 | 26 | 57.7 | 52 | 62.5 | M |
| | 2006.10-2012.12 | | F | L | Hatchback FWD D 5244 T9 | for model year:2011 | GCI18044 | Inner Joint | | 26 | 23 | 40 | 68.5 | 99.5 | |
| | 2006.10-2012.12 | | F | L | Hatchback FWD D 5244 T9 | | GCI99109 | Inner Joint | | 26 | 26 | 31 | 68 | 87 | |
| | 2006.10-2012.12 | | F | L | Hatchback FWD D 5244 T9 | for model year:2011 | GCO81424 | Inner Joint | | 31 | 27 | 36.2 | 70 | 62 | |
| 2.4 (125 kw) | 2006.10-2012.12 | 5AT | F | R | Hatchback FWD B 5244 S4 | | GDS62063 | Drive Shaft | | 36 | 26 | 56 | 48 | 947 | |
| | 2006.10-2012.12 | 5AT | F | L | Hatchback FWD B 5244 S4 | | GCI99109 | Inner Joint | | 26 | 26 | 31 | 68 | 87 | |
| | 2006.10-2012.12 | 5MT | F | R | Hatchback FWD B 5244 S4 | | GDS62062 | Drive Shaft | | 36 | 26 | 56 | 48 | 959 | |
| | 2006.10-2012.12 | 5MT | F | L | Hatchback FWD B 5244 S4 | | GCI18159 | Inner Joint | | 26 | 26 | 40 | 67 | 96.5 | |
| | 2006.10-2012.12 | AT | F | R | Hatchback FWD B 5244 S4 | | GCO99132 | Outer Joint | | 36 | 24 | 56 | 48 | 57 | I |
| | 2006.10-2012.12 | AT/MT | F | L/R | Hatchback FWD B 5244 S4 | | GCO62033 | Outer Joint | | 36 | 24 | 56 | 48 | 59 | I |
| | 2006.10-2012.12 | MT/5MT | F | L | Hatchback FWD B 5244 S4 | | GDS18290 | Drive Shaft | | 36 | 26 | 56 | 48 | 530 | |
| | 2006.10-2012.12 | Semi-AT | F | L | Hatchback FWD B 5244 S4 | Date to:2010.12;Chassis no. from:17914 | GDS62060 | Drive Shaft | | 36 | 26 | 56 | 48 | 519 | |
| | 2006.10-2012.12 | | F | L/R | Hatchback FWD B 5244 S4 | for model year:2011 | GCO62031 | Outer Joint | 48T | 36 | 27 | 56.5 | 55 | 65 | M |
| | 2006.10-2012.12 | | F | | Hatchback FWD B 5244 S4 | for model year:2011 | GCO62045 | Outer Joint | | 40 | 26 | 57.7 | 52 | 62.5 | M |
| | 2006.10-2012.12 | | F | L | Hatchback FWD B 5244 S4 | for model year:2011 | GCI18044 | Inner Joint | | 26 | 23 | 40 | 68.5 | 99.5 | |
| | 2006.10-2012.12 | | F | L | Hatchback FWD B 5244 S4 | for model year:2011 | GCO81424 | Inner Joint | | 31 | 27 | 36.2 | 70 | 62 | |
| 2.4 (132 kw) | 2006.10-2012.12 | AT | F | L | Hatchback FWD D 5244 T8;D 5244 T13 | Date to:2010.12;Chassis no. from:17914;For Engine code:D 5244 T8 | GDS62060 | Drive Shaft | | 36 | 26 | 56 | 48 | 519 | |
| | 2006.10-2012.12 | AT | F | R | Hatchback FWD D 5244 T8;D 5244 T13 | | GDS62063 | Drive Shaft | | 36 | 26 | 56 | 48 | 947 | |
| | 2006.10-2012.12 | AT | F | R | Hatchback FWD D 5244 T8;D 5244 T13 | | GCO99132 | Outer Joint | | 36 | 24 | 56 | 48 | 57 | I |
| | 2006.10-2012.12 | AT | F | L/R | Hatchback FWD D 5244 T8;D 5244 T13 | | GCO62033 | Outer Joint | | 36 | 24 | 56 | 48 | 59 | I |
| | 2006.10-2012.12 | MT | F | L | Hatchback FWD D 5244 T8;D 5244 T13 | For Engine code:D5244T13 | GDS18290 | Drive Shaft | | 36 | 26 | 56 | 48 | 530 | |
| | 2006.10-2012.12 | MT | F | R | Hatchback FWD D 5244 T8;D 5244 T13 | For Engine code:D5244T13 | GDS62062 | Drive Shaft | | 36 | 26 | 56 | 48 | 959 | |
| | 2006.10-2012.12 | MT | F | L/R | Hatchback FWD D 5244 T8;D 5244 T13 | | GCO99129 | Outer Joint | | 36 | 24 | 56 | 48 | 57 | M |
| | 2006.10-2012.12 | MT | F | L | Hatchback FWD D 5244 T8;D 5244 T13 | For Engine code:D5244T13 | GCI18159 | Inner Joint | | 26 | 26 | 40 | 67 | 96.5 | |
| | 2006.10-2012.12 | | F | | Hatchback FWD D 5244 T8;D 5244 T13 | for model year:2011 | GCO62031 | Outer Joint | 48T | 36 | 27 | 56.5 | 55 | 65 | M |
| | 2006.10-2012.12 | | F | | Hatchback FWD D 5244 T8;D 5244 T13 | for model year:2011 | GCO62045 | Outer Joint | | 40 | 26 | 57.7 | 52 | 62.5 | M |
| | 2006.10-2012.12 | | F | L | Hatchback FWD D 5244 T8;D 5244 T13 | for model year:2011 | GCI18044 | Inner Joint | | 26 | 23 | 40 | 68.5 | 99.5 | |
| | 2006.10-2012.12 | | F | L | Hatchback FWD D 5244 T8;D 5244 T13 | | GCI99109 | Inner Joint | | 26 | 26 | 31 | 68 | 87 | |
| | 2006.10-2012.12 | | F | L | Hatchback FWD D 5244 T8;D 5244 T13 | for model year:2011 | GCO81424 | Inner Joint | | 31 | 27 | 36.2 | 70 | 62 | |
| 2.5 (162 kw) | 2006.10-2012.12 | AT | F | L | Hatchback FWD B 5254 T3 | | GDS62060 | Drive Shaft | | 36 | 26 | 56 | 48 | 519 | |
| | 2006.10-2012.12 | AT | F | R | Hatchback FWD B 5254 T3 | | GCO99132 | Outer Joint | | 36 | 24 | 56 | 48 | 57 | I |
| | 2006.10-2012.12 | AT | F | L | Hatchback FWD B 5254 T3 | | GCI99109 | Inner Joint | | 26 | 26 | 31 | 68 | 87 | |
| | 2006.10-2012.12 | MT | F | L | Hatchback FWD B 5254 T3 | | GDS18290 | Drive Shaft | | 36 | 26 | 56 | 48 | 530 | |
| | 2006.10-2012.12 | MT | F | R | Hatchback FWD B 5254 T3 | | GDS62062 | Drive Shaft | | 36 | 26 | 56 | 48 | 959 | |
| | 2006.10-2012.12 | MT | F | L | Hatchback FWD B 5254 T3 | | GCI18159 | Inner Joint | | 26 | 26 | 40 | 67 | 96.5 | |
| | 2006.10-2012.12 | Semi-AT | F | L | Hatchback FWD B 5254 T3 | Date to:2007.05 | GDS62060 | Drive Shaft | | 36 | 26 | 56 | 48 | 519 | |
| | 2006.10-2012.12 | Semi-AT | F | R | Hatchback FWD B 5254 T3 | | GDS62063 | Drive Shaft | | 36 | 26 | 56 | 48 | 947 | |
| | 2006.10-2012.12 | Semi-AT | F | L | Hatchback FWD B 5254 T3 | | GCO62033 | Outer Joint | | 36 | 24 | 56 | 48 | 59 | I |
| | 2006.10-2012.12 | | F | | Hatchback FWD B 5254 T3 | for model year:2011 | GCO62031 | Outer Joint | 48T | 36 | 27 | 56.5 | 55 | 65 | M |
| | 2006.10-2012.12 | | F | | Hatchback FWD B 5254 T3 | for model year:2011 | GCO62045 | Outer Joint | | 40 | 26 | 57.7 | 52 | 62.5 | M |
| | 2006.10-2012.12 | | F | L | Hatchback FWD B 5254 T3 | for model year:2011 | GCI18044 | Inner Joint | | 26 | 23 | 40 | 68.5 | 99.5 | |
| | 2006.10-2012.12 | | F | L | Hatchback FWD B 5254 T3 | for model year:2011 | GCO81424 | Inner Joint | | 31 | 27 | 36.2 | 70 | 62 | |
| 2.5 (169 kw) | 2007.03-2012.12 | AT | F | L | Hatchback FWD B 5254 T7 | | GDS62060 | Drive Shaft | | 36 | 26 | 56 | 48 | 519 | |
| | 2007.03-2012.12 | AT | F | R | Hatchback FWD B 5254 T7 | | GCO99132 | Outer Joint | | 36 | 24 | 56 | 48 | 57 | I |
| | 2007.03-2012.12 | AT | F | L | Hatchback FWD B 5254 T7 | | GCI99109 | Inner Joint | | 26 | 26 | 31 | 68 | 87 | |
| | 2007.03-2012.12 | MT | F | L | Hatchback FWD B 5254 T7 | | GDS18290 | Drive Shaft | | 36 | 26 | 56 | 48 | 530 | |
| | 2007.03-2012.12 | MT | F | R | Hatchback FWD B 5254 T7 | | GDS62062 | Drive Shaft | | 36 | 26 | 56 | 48 | 959 | |
| | 2007.03-2012.12 | MT | F | L | Hatchback FWD B 5254 T7 | | GCI18159 | Inner Joint | | 26 | 26 | 40 | 67 | 96.5 | |
| | 2007.03-2012.12 | Semi-AT | F | L | Hatchback FWD B 5254 T7 | Date from:2007.06 | GDS62060 | Drive Shaft | | 36 | 26 | 56 | 48 | 519 | |
| | 2007.03-2012.12 | Semi-AT | F | R | Hatchback FWD B 5254 T7 | | GDS62063 | Drive Shaft | | 36 | 26 | 56 | 48 | 947 | |
| | 2007.03-2012.12 | Semi-AT | F | L | Hatchback FWD B 5254 T7 | | GCO62033 | Outer Joint | | 36 | 24 | 56 | 48 | 59 | I |
| | 2007.03-2012.12 | | F | L/R | Hatchback FWD B 5254 T7 | for model year:2011 | GCO62031 | Outer Joint | 48T | 36 | 27 | 56.5 | 55 | 65 | M |
| | 2007.03-2012.12 | | F | | Hatchback FWD B 5254 T7 | for model year:2011 | GCO62045 | Outer Joint | | 40 | 26 | 57.7 | 52 | 62.5 | M |
| | 2007.03-2012.12 | | F | L | Hatchback FWD B 5254 T7 | for model year:2011 | GCI18044 | Inner Joint | | 26 | 23 | 40 | 68.5 | 99.5 | |
| | 2007.03-2012.12 | | F | L | Hatchback FWD B 5254 T7 | for model year:2011 | GCO81424 | Inner Joint | | 31 | 27 | 36.2 | 70 | 62 | |
| 2.5 (184 kw) | 2007.10-2013.12 | AT | F | L | Hatchback FWD B 5254 T7 | | GDS62060 | Drive Shaft | | 36 | 26 | 56 | 48 | 519 | |

| | YEAR | TRANSM. | F/R | L/R | BODY STYLE & DRIVE TYPE & ENGINE | REMARKS | G-AP Ref. | PRODUCT | ABS | Technical Specifications | | | | | |
|---|---|---|---|---|---|---|---|---|---|---|---|---|---|---|---|
| | | | | | | | | | | A | B | C | H | L | P |
| **VOLVO** | | | | | | | | | | | | | | | |
| **C30** | | | | | | | | | | | | | | | |
| 2.5 (184 kw) | 2007.10-2013.12 | AT | F | L/R | Hatchback FWD B 5254 T7 | | GCO62033 | Outer Joint | | 36 | 24 | 56 | 48 | 59 | I |
| | 2007.10-2013.12 | AT | F | L | Hatchback FWD B 5254 T7 | | GCI99109 | Inner Joint | | 26 | 26 | 31 | 68 | 87 | |
| | 2007.10-2013.12 | Semi-AT | F | R | Hatchback FWD B 5254 T7 | | GDS62063 | Drive Shaft | | 36 | 26 | 56 | 48 | 947 | |
| EV (82 kw) | 2010.12-2012.12 | | F | | Hatchback FWD E400V1 | for model year:2011 | GCO62031 | Outer Joint | 48T | 36 | 27 | 56.5 | 55 | 65 | M |
| | 2010.12-2012.12 | | F | | Hatchback FWD E400V1 | for model year:2011 | GCO62045 | Outer Joint | | 40 | 26 | 57.7 | 52 | 62.5 | M |
| | 2010.12-2012.12 | | F | L | Hatchback FWD E400V1 | for model year:2011 | GCI18044 | Inner Joint | | 26 | 23 | 40 | 68.5 | 99.5 | |
| | 2010.12-2012.12 | | F | L | Hatchback FWD E400V1 | for model year:2011 | GCO81424 | Inner Joint | | 31 | 27 | 36.2 | 70 | 62 | |
| EV (89 kw) | 2010.12-2012.12 | | F | L/R | Hatchback FWD E400V1 | | GCO62031 | Outer Joint | 48T | 36 | 27 | 56.5 | 55 | 65 | M |
| | 2010.12-2012.12 | | F | | Hatchback FWD E400V1 | for model year:2011 | GCO62045 | Outer Joint | | 40 | 26 | 57.7 | 52 | 62.5 | M |
| | 2010.12-2012.12 | | F | L | Hatchback FWD E400V1 | for model year:2011 | GCI18044 | Inner Joint | | 26 | 23 | 40 | 68.5 | 99.5 | |
| | 2010.12-2012.12 | | F | L | Hatchback FWD E400V1 | for model year:2011 | GCO81424 | Inner Joint | | 31 | 27 | 36.2 | 70 | 62 | |
| **C70** | | | | | | | | | | | | | | | |
| 2.0 (100 kw) | 2008.01-2009.10 | AT | F | R | Convertible FWD D 4204 T | | GCI62017 | Inner Joint | | 28 | 26 | 33.95 | 371.5 | 92 | |
| | 2008.01-2009.10 | MT | F | L | Convertible FWD D 4204 T | | GDS18218 | Drive Shaft | | 36 | 26 | 56 | 48 | 582 | |
| | 2008.01-2009.10 | MT | F | R | Convertible FWD D 4204 T | Chassis no. from:280408 | GDS56093 | Drive Shaft | | 36 | 26 | 56 | 48 | 916 | |
| | 2008.01-2009.10 | MT | F | L/R | Convertible FWD D 4204 T | Chassis no. from:280408 | GCO99155 | Outer Joint | | 36 | 26 | 56 | 48 | 64 | I |
| | 2008.01-2009.10 | MT | F | R | Convertible FWD D 4204 T | Chassis no. from:280408 | GCI83312 | Inner Joint | | 26 | 26 | 40 | 389 | 92 | |
| | 2008.01-2009.10 | Semi-AT | F | L | Convertible FWD D 4204 T | | GDS18367 | Drive Shaft | | 36 | 28 | 56 | 48 | 570 | |
| | 2008.01-2009.10 | Semi-AT | F | R | Convertible FWD D 4204 T | | GDS62024 | Drive Shaft | | 36 | 28 | 56 | 48 | 908 | |
| 2.0 (110 kw) | 2010.10-2013.06 | AT | F | L | Convertible FWD D 5204 T5 | | GDS62108 | Drive Shaft | | 36 | 31 | 56 | 48 | 506 | |
| | 2010.10-2013.06 | AT | F | R | Convertible FWD D 5204 T5 | | GDS62103 | Drive Shaft | | 36 | 28 | 56 | 48 | 955 | |
| | 2010.10-2013.06 | AT | F | R | Convertible FWD D 5204 T5 | | GCI62048 | Inner Joint | | 28 | 26 | 33 | 520 | 100.5 | |
| | 2010.10-2013.06 | AT/MT | F | L/R | Convertible FWD D 5204 T5 | | GCO99155 | Outer Joint | | 36 | 26 | 56 | 48 | 64 | I |
| | 2010.10-2013.06 | MT | F | L | Convertible FWD D 5204 T5 | | GDS18290 | Drive Shaft | | 36 | 26 | 56 | 48 | 530 | |
| | 2010.10-2013.06 | MT | F | R | Convertible FWD D 5204 T5 | | GDS62062 | Drive Shaft | | 36 | 26 | 56 | 48 | 959 | |
| | 2010.10-2013.06 | MT | F | L | Convertible FWD D 5204 T5 | | GCI18159 | Inner Joint | | 26 | 26 | 40 | 67 | 96.5 | |
| 2.0 (120 kw) | 1999.02-2002.08 | AT | F | L | Coupe FWD B5204T4 | Trans. code:AW55-50SN | GDS62143 | Drive Shaft | 48T | 36 | 26 | 56.5 | 48 | 506 | |
| | 1999.02-2002.08 | AT | F | R | Coupe FWD B5204T4 | Trans. code:AW55-50SN | GDS83502 | Drive Shaft | 48T | 36 | 26 | 56.5 | 48 | 959 | |
| | 1999.02-2002.08 | AT | F | L/R | Coupe FWD B5204T4 | Trans. code:AW55-50SN | GCO62009 | Outer Joint | 48T | 36 | 27 | 56.5 | 48 | 66 | M |
| | 1999.02-2002.08 | AT | F | L | Coupe FWD B5204T4 | Trans. code:AW55-50SN | GCI62038 | Inner Joint | | 26 | 26 | 31 | 68 | 87 | |
| | 1999.02-2002.08 | AT | F | R | Coupe FWD B5204T4 | Trans. code:AW55-50SN | GCI82266 | Inner Joint | | 26 | 26 | 31 | 513 | 93.5 | |
| | 1999.02-2002.08 | AT/MT | F | L/R | Coupe FWD B5204T4 | | GCO62010 | Outer Joint | 48T | 36 | 33 | 56.5 | 48 | 58 | M |
| | 1999.02-2002.08 | MT | F | L | Coupe FWD B5204T4 | | GDS62009 | Drive Shaft | 48T | 36 | 26 | 56.5 | 48 | 523 | |
| | 1999.02-2005.10 | AT/MT | F | L/R | Cabriolet FWD B5204T4 | | GCO62010 | Outer Joint | 48T | 36 | 33 | 56.5 | 48 | 58 | M |
| | 1999.02-2005.10 | MT | F | L | Cabriolet FWD B5204T4 | | GDS62009 | Drive Shaft | 48T | 36 | 26 | 56.5 | 48 | 523 | |
| | 1999.02-2005.10 | MT | F | L | Cabriolet FWD B5204T4 | | GCO62009 | Outer Joint | 48T | 36 | 27 | 56.5 | 48 | 66 | M |
| 2.0 (130 kw) | 2010.10-2013.06 | AT | F | L | Convertible FWD D 5204 T | | GDS62108 | Drive Shaft | | 36 | 31 | 56 | 48 | 506 | |
| | 2010.10-2013.06 | AT | F | R | Convertible FWD D 5204 T | | GDS62103 | Drive Shaft | | 36 | 28 | 56 | 48 | 955 | |
| | 2010.10-2013.06 | AT | F | R | Convertible FWD D 5204 T | | GCI62048 | Inner Joint | | 28 | 26 | 33 | 520 | 100.5 | |
| | 2010.10-2013.06 | AT/MT | F | L/R | Convertible FWD D 5204 T | | GCO99155 | Outer Joint | | 36 | 26 | 56 | 48 | 64 | I |
| | 2010.10-2013.06 | MT | F | L | Convertible FWD D 5204 T | | GDS18290 | Drive Shaft | | 36 | 26 | 56 | 48 | 530 | |
| | 2010.10-2013.06 | MT | F | R | Convertible FWD D 5204 T | | GDS62062 | Drive Shaft | | 36 | 26 | 56 | 48 | 959 | |
| | 2010.10-2013.06 | MT | F | L | Convertible FWD D 5204 T | | GCI18159 | Inner Joint | | 26 | 26 | 40 | 67 | 96.5 | |
| 2.0 (132 kw) | 1998.03-1998.12 | AT | F | R | Cabriolet FWD B5204T2 | | GDS62002 | Drive Shaft | 48T | 26 | 26 | 56.5 | 98.5 | 1028 | |
| | 1998.03-1998.12 | AT/MT | F | L | Cabriolet FWD B5204T2 | | GDS62001 | Drive Shaft | 48T | 26 | 26 | 56.5 | 98.5 | 574.5 | |
| | 1998.03-1998.12 | AT/MT | F | L/R | Cabriolet FWD B5204T2 | Date to:1998.12 | GCO62001 | Outer Joint | 48T | 26 | 25 | 56.5 | 98.5 | 56 | O |
| | 1998.03-1998.12 | AT/MT | F | L/R | Cabriolet FWD B5204T2 | | GCO62014 | Outer Joint | | 26 | 25 | 56.5 | 98.5 | 56 | O |
| | 1998.03-1998.12 | MT | F | L/R | Cabriolet FWD B5204T2 | | GCO62002 | Outer Joint | 48T | 26 | 28 | 56.5 | 97.5 | 66 | O |
| | 1998.03-1998.12 | AT | F | R | Coupe FWD B5204T2 | | GDS62002 | Drive Shaft | 48T | 26 | 26 | 56.5 | 98.5 | 1028 | |
| | 1998.03-1998.12 | AT/MT | F | L | Coupe FWD B5204T2 | | GDS62001 | Drive Shaft | 48T | 26 | 26 | 56.5 | 98.5 | 574.5 | |
| | 1998.03-1998.12 | AT/MT | F | L/R | Coupe FWD B5204T2 | | GCO62001 | Outer Joint | 48T | 26 | 25 | 56.5 | 98.5 | 56 | O |
| | 1998.03-1998.12 | AT/MT | F | L/R | Coupe FWD B5204T2 | | GCO62014 | Outer Joint | | 26 | 25 | 56.5 | 98.5 | 56 | O |
| | 1998.03-1998.12 | MT | F | L/R | Coupe FWD B5204T2 | | GCO62002 | Outer Joint | 48T | 26 | 28 | 56.5 | 97.5 | 66 | O |
| | 1998.03-1998.12 | MT | F | R | Coupe FWD B5204T2 | Date from:1998.03,Date to:1998.12 | GCI62015 | Inner Joint | | 26 | 25 | 40 | 531.5 | 96 | |
| 2.0 (166 kw) | 1997.06-2000.12 | AT | F | R | Coupe FWD B5204T3 | Year to:1998 | GDS62002 | Drive Shaft | 48T | 26 | 26 | 56.5 | 98.5 | 1028 | |
| | 1997.06-2000.12 | AT/MT | F | L | Coupe FWD B5204T3 | Year to:1998 | GDS62001 | Drive Shaft | 48T | 26 | 26 | 56.5 | 98.5 | 574.5 | |
| | 1997.06-2000.12 | AT/MT | F | L/R | Coupe FWD B5204T3 | Year to:1998,Inner teeth:25 | GCO62001 | Outer Joint | 48T | 26 | 25 | 56.5 | 98.5 | 56 | O |
| | 1997.06-2000.12 | AT/MT | F | L/R | Coupe FWD B5204T3 | Year to:1998,Inner teeth:28 | GCO62002 | Outer Joint | 48T | 26 | 28 | 56.5 | 97.5 | 66 | O |
| | 1997.06-2000.12 | AT/MT | F | L/R | Coupe FWD B5204T3 | Year to:1998,Inner teeth:28 | GCO62016 | Outer Joint | | 26 | 28 | 56.5 | 97.5 | 66 | O |
| | 1997.06-2000.12 | MT | F | L | Coupe FWD B5204T3 | | GDS62009 | Drive Shaft | 48T | 36 | 26 | 56.5 | 48 | 523 | |
| | 1998.03-2000.08 | AT | F | L | Cabriolet FWD B5204T3 | | GDS62143 | Drive Shaft | 48T | 36 | 26 | 56.5 | 48 | 506 | |
| | 1998.03-2000.08 | AT | F | L | Cabriolet FWD B5204T3 | | GCO62009 | Outer Joint | 48T | 36 | 27 | 56.5 | 48 | 66 | M |
| | 1998.03-2000.08 | AT | F | L | Cabriolet FWD B5204T3 | | GCI62038 | Inner Joint | | 26 | 26 | 31 | 68 | 87 | |
| | 1998.03-2000.08 | MT | F | L | Cabriolet FWD B5204T3 | | GDS62009 | Drive Shaft | 48T | 36 | 26 | 56.5 | 48 | 523 | |
| 2.3 (176 kw) | 1997.03-2002.08 | AT | F | L | Coupe FWD B5234T3 | Year from:2001 | GDS62143 | Drive Shaft | 48T | 36 | 26 | 56.5 | 48 | 506 | |

| | YEAR | TRANSM. | F/R | L/R | BODY STYLE & DRIVE TYPE & ENGINE | REMARKS | G-AP Ref. | PRODUCT | ABS | Technical Specifications | | | | | |
|---|---|---|---|---|---|---|---|---|---|---|---|---|---|---|---|
| | | | | | | | | | | A | B | C | H | L | P |
| **VOLVO** | | | | | | | | | | | | | | | |
| **C70** | | | | | | | | | | | | | | | |
| 2.3 (176 kw) | 1997.03-2002.08 | AT | F | R | Coupe FWD B5234T3 | Year to:1998 | GDS62002 | Drive Shaft | 48T | 26 | 26 | 56.5 | 98.5 | 1028 | |
| | 1997.03-2002.08 | AT | F | R | Coupe FWD B5234T3 | Year from:2001 | GDS83502 | Drive Shaft | 48T | 36 | 26 | 56.5 | 48 | 959 | |
| | 1997.03-2002.08 | AT | F | L/R | Coupe FWD B5234T3 | Year to:1998,Inner teeth:25 | GCO62001 | Outer Joint | 48T | 26 | 25 | 56.5 | 98.5 | 56 | O |
| | 1997.03-2002.08 | AT | F | L | Coupe FWD B5234T3 | Year from:2001 | GCI62038 | Inner Joint | | 26 | 26 | 31 | 68 | 87 | |
| | 1997.03-2002.08 | AT | F | R | Coupe FWD B5234T3 | Year from:2001 | GCI82266 | Inner Joint | | 26 | 26 | 31 | 513 | 93.5 | |
| | 1997.03-2002.08 | AT/MT | F | L | Coupe FWD B5234T3 | Year to:1998 | GDS62001 | Drive Shaft | 48T | 26 | 26 | 56.5 | 98.5 | 574.5 | |
| | 1997.03-2002.08 | AT/MT | F | L/R | Coupe FWD B5234T3 | Year to:1998,Inner teeth:28,with ABS | GCO62002 | Outer Joint | 48T | 26 | 28 | 56.5 | 97.5 | 66 | O |
| | 1997.03-2002.08 | AT/MT | F | L/R | Coupe FWD B5234T3 | Year to:1998,Inner teeth:28,without ABS | GCO62016 | Outer Joint | | 26 | 28 | 56.5 | 97.5 | 66 | O |
| | 1997.03-2002.08 | MT | F | L | Coupe FWD B5234T3 | | GDS62009 | Drive Shaft | 48T | 36 | 26 | 56.5 | 48 | 523 | |
| | 1997.03-2002.08 | MT | F | L | Coupe FWD B5234T3 | Year to:1998,Inner teeth:25 | GCO62001 | Outer Joint | 48T | 26 | 25 | 56.5 | 98.5 | 56 | O |
| | 1997.03-2002.08 | MT | F | L/R | Coupe FWD B5234T3 | Year from:2001 | GCO62009 | Outer Joint | 48T | 36 | 27 | 56.5 | 48 | 66 | M |
| | 1998.03-2005.10 | AT | F | L | Cabriolet FWD B5234T3 | Year from:1999 | GDS62143 | Drive Shaft | 48T | 36 | 26 | 56.5 | 48 | 506 | |
| | 1998.03-2005.10 | AT | F | R | Cabriolet FWD B5234T3 | Year to:1998 | GDS62002 | Drive Shaft | 48T | 26 | 26 | 56.5 | 98.5 | 1028 | |
| | 1998.03-2005.10 | AT | F | R | Cabriolet FWD B5234T3 | Year from:1999 | GDS83502 | Drive Shaft | 48T | 36 | 26 | 56.5 | 48 | 959 | |
| | 1998.03-2005.10 | AT | F | L | Cabriolet FWD B5234T3 | Year from:1999 | GCO62009 | Outer Joint | 48T | 36 | 27 | 56.5 | 48 | 66 | M |
| | 1998.03-2005.10 | AT | F | L | Cabriolet FWD B5234T3 | Year from:1999 | GCI62038 | Inner Joint | | 26 | 26 | 31 | 68 | 87 | |
| | 1998.03-2005.10 | AT | F | R | Cabriolet FWD B5234T3 | Year from:1999 | GCI82266 | Inner Joint | | 26 | 26 | 31 | 513 | 93.5 | |
| | 1998.03-2005.10 | AT/MT | F | L | Cabriolet FWD B5234T3 | Year to:1998 | GDS62001 | Drive Shaft | 48T | 26 | 26 | 56.5 | 98.5 | 574.5 | |
| | 1998.03-2005.10 | AT/MT | F | L/R | Cabriolet FWD B5234T3 | Year to:1998,Inner teeth:25 | GCO62001 | Outer Joint | 48T | 26 | 25 | 56.5 | 98.5 | 56 | O |
| | 1998.03-2005.10 | AT/MT | F | L/R | Cabriolet FWD B5234T3 | Year to:1998,Inner teeth:28 | GCO62002 | Outer Joint | 48T | 26 | 28 | 56.5 | 97.5 | 66 | O |
| | 1998.03-2005.10 | AT/MT | F | L/R | Cabriolet FWD B5234T3 | Year to:1998,Inner teeth:28 | GCO62016 | Outer Joint | | 26 | 28 | 56.5 | 97.5 | 66 | O |
| | 1998.03-2005.10 | MT | F | L | Cabriolet FWD B5234T3 | | GDS62009 | Drive Shaft | 48T | 36 | 26 | 56.5 | 48 | 523 | |
| 2.3 (180 kw) | 2002.09-2005.10 | AT | F | L | Cabriolet FWD B5234T9 | | GDS62143 | Drive Shaft | 48T | 36 | 26 | 56.5 | 48 | 506 | |
| | 2002.09-2005.10 | AT | F | R | Cabriolet FWD B5234T9 | | GDS83502 | Drive Shaft | 48T | 36 | 26 | 56.5 | 48 | 959 | |
| | 2002.09-2005.10 | AT | F | L/R | Cabriolet FWD B5234T9 | | GCO62009 | Outer Joint | 48T | 36 | 27 | 56.5 | 48 | 66 | M |
| | 2002.09-2005.10 | AT | F | L | Cabriolet FWD B5234T9 | | GCI62038 | Inner Joint | | 26 | 26 | 31 | 68 | 87 | |
| | 2002.09-2005.10 | AT | F | R | Cabriolet FWD B5234T9 | | GCI82266 | Inner Joint | | 26 | 26 | 31 | 513 | 93.5 | |
| | 2002.09-2005.10 | MT | F | L | Cabriolet FWD B5234T9 | Chassis no. from:26609 | GDS62001 | Drive Shaft | 48T | 26 | 26 | 56.5 | 98.5 | 574.5 | |
| | 2002.09-2005.10 | MT | F | L | Cabriolet FWD B5234T9 | | GDS62009 | Drive Shaft | 48T | 36 | 26 | 56.5 | 48 | 523 | |
| | 2002.09-2005.10 | MT | F | L | Cabriolet FWD B5234T9 | Chassis no. from:26609 | GCO62001 | Outer Joint | 48T | 26 | 25 | 56.5 | 98.5 | 56 | O |
| 2.4 (103 kw) | 2006.03-2009.10 | AT | F | R | Convertible FWD B 5244 S5 | | GCO99132 | Outer Joint | | 36 | 24 | 56 | 48 | 57 | I |
| | 2006.03-2009.10 | AT | F | L | Convertible FWD B 5244 S5 | | GCI99109 | Inner Joint | | 26 | 26 | 31 | 68 | 87 | |
| | 2006.03-2009.10 | AT/MT | F | L/R | Convertible FWD B 5244 S5 | | GCO62033 | Outer Joint | | 36 | 24 | 56 | 48 | 59 | I |
| | 2006.03-2009.10 | AT/Semi-AT | F | L | Convertible FWD B 5244 S5 | | GDS62060 | Drive Shaft | | 36 | 26 | 56 | 48 | 519 | |
| | 2006.03-2009.10 | MT | F | L | Convertible FWD B 5244 S5 | | GDS18290 | Drive Shaft | | 36 | 26 | 56 | 48 | 530 | |
| | 2006.03-2009.10 | MT | F | R | Convertible FWD B 5244 S5 | | GDS62062 | Drive Shaft | | 36 | 26 | 56 | 48 | 959 | |
| | 2006.03-2009.10 | MT | F | L | Convertible FWD B 5244 S5 | | GCI18159 | Inner Joint | | 26 | 26 | 40 | 67 | 96.5 | |
| | 2006.03-2009.10 | Semi-AT | F | R | Convertible FWD B 5244 S5 | | GDS62063 | Drive Shaft | | 36 | 26 | 56 | 48 | 947 | |
| 2.4 (120 kw) | 2007.03-2013.06 | AT | F | L | Convertible FWD D 5244 T9 | Date from:2009.01 | GDS62060 | Drive Shaft | | 36 | 26 | 56 | 48 | 519 | |
| | 2007.03-2013.06 | AT | F | R | Convertible FWD D 5244 T9 | | GDS62063 | Drive Shaft | | 36 | 26 | 56 | 48 | 947 | |
| | 2007.03-2013.06 | AT | F | R | Convertible FWD D 5244 T9 | | GCO99132 | Outer Joint | | 36 | 24 | 56 | 48 | 57 | I |
| | 2007.03-2013.06 | AT | F | L/R | Convertible FWD D 5244 T9 | | GCO62033 | Outer Joint | | 36 | 24 | 56 | 48 | 59 | I |
| | 2007.03-2013.06 | MT | F | L | Convertible FWD D 5244 T9 | Date from:2009.01 | GDS18290 | Drive Shaft | | 36 | 26 | 56 | 48 | 530 | |
| | 2007.03-2013.06 | MT | F | L | Convertible FWD D 5244 T9 | | GCI18159 | Inner Joint | | 26 | 26 | 40 | 67 | 96.5 | |
| | 2007.03-2013.06 | | F | L | Convertible FWD D 5244 T9 | | GCI99109 | Inner Joint | | 26 | 26 | 31 | 68 | 87 | |
| 2.4 (121 kw) | 1999.03-2000.08 | AT | F | L | Coupe FWD B5254SDENS | | GDS62001 | Drive Shaft | 48T | 26 | 26 | 56.5 | 98.5 | 574.5 | |
| | 1999.03-2000.08 | AT | F | L/R | Coupe FWD B5254SDENS | | GCO62001 | Outer Joint | 48T | 26 | 25 | 56.5 | 98.5 | 56 | O |
| | 1999.03-2000.08 | MT | F | L | Coupe FWD B5254SDENS | | GDS62009 | Drive Shaft | 48T | 36 | 26 | 56.5 | 48 | 523 | |
| | 1999.03-2000.08 | MT | F | L/R | Coupe FWD B5254SDENS | | GCO62010 | Outer Joint | 48T | 36 | 33 | 56.5 | 48 | 58 | M |
| 2.4 (125 kw) | 1998.06-1999.12 | 5AT | F | L | Cabriolet FWD B5244S | | GDS62143 | Drive Shaft | 48T | 36 | 26 | 56.5 | 48 | 506 | |
| | 1998.06-1999.12 | 5AT | F | R | Cabriolet FWD B5244S | | GDS83502 | Drive Shaft | 48T | 36 | 26 | 56.5 | 48 | 959 | |
| | 1998.06-1999.12 | 5AT | F | L/R | Cabriolet FWD B5244S | | GCO62009 | Outer Joint | 48T | 36 | 27 | 56.5 | 48 | 66 | M |
| | 1998.06-1999.12 | 5AT | F | L | Cabriolet FWD B5244S | | GCI62038 | Inner Joint | | 26 | 26 | 31 | 68 | 87 | |
| | 1998.06-1999.12 | 5AT | F | R | Cabriolet FWD B5244S | | GCI82266 | Inner Joint | | 26 | 26 | 31 | 513 | 93.5 | |
| | 1998.06-1999.12 | 5MT | F | L | Cabriolet FWD B5244S | | GDS62009 | Drive Shaft | 48T | 36 | 26 | 56.5 | 48 | 523 | |
| | 1998.06-1999.12 | AT/MT | F | L/R | Cabriolet FWD B5244S | Date from:1999.01,Date to:1999.12 | GCO62010 | Outer Joint | 48T | 36 | 33 | 56.5 | 48 | 58 | M |
| | 1999.10-2000.12 | 5AT | F | L | Coupe FWD B5244S | | GDS62143 | Drive Shaft | 48T | 36 | 26 | 56.5 | 48 | 506 | |
| | 1999.10-2000.12 | 5AT | F | R | Coupe FWD B5244S | | GDS83502 | Drive Shaft | 48T | 36 | 26 | 56.5 | 48 | 959 | |
| | 1999.10-2000.12 | 5AT | F | L | Coupe FWD B5244S | | GCI62038 | Inner Joint | | 26 | 26 | 31 | 68 | 87 | |
| | 1999.10-2000.12 | 5AT | F | R | Coupe FWD B5244S | | GCI82266 | Inner Joint | | 26 | 26 | 31 | 513 | 93.5 | |
| | 1999.10-2000.12 | 5MT | F | L | Coupe FWD B5244S | | GDS62009 | Drive Shaft | 48T | 36 | 26 | 56.5 | 48 | 523 | |
| | 1999.10-2000.12 | AT | F | L/R | Coupe FWD B5244S | | GCO62009 | Outer Joint | 48T | 36 | 27 | 56.5 | 48 | 66 | M |
| | 1999.10-2000.12 | AT/MT | F | L/R | Coupe FWD B5244S | Date from:1999.10,Date to:2000.12 | GCO62010 | Outer Joint | 48T | 36 | 33 | 56.5 | 48 | 58 | M |
| | 2006.03-2009.10 | AT/Semi-AT | F | L | Convertible FWD B 5244 S4 | | GDS62060 | Drive Shaft | | 36 | 26 | 56 | 48 | 519 | |
| | 2006.03-2009.10 | AT/Semi-AT | F | R | Convertible FWD B 5244 S4 | | GDS62063 | Drive Shaft | | 36 | 26 | 56 | 48 | 947 | |

| | YEAR | TRANSM. | F/R | L/R | BODY STYLE & DRIVE TYPE & ENGINE | REMARKS | G-AP Ref. | PRODUCT | ABS | Technical Specifications A | B | C | H | L | P |
|---|---|---|---|---|---|---|---|---|---|---|---|---|---|---|---|
| **VOLVO** | | | | | | | | | | | | | | | |
| **C70** | | | | | | | | | | | | | | | |
| 2.4 (125 kw) | 2006.03-2009.10 | AT/Semi-AT | F | L/R | Convertible FWD B 5244 S4 | | GCO62033 | Outer Joint | | 36 | 24 | 56 | 48 | 59 | I |
| | 2006.03-2009.10 | AT/Semi-AT | F | L | Convertible FWD B 5244 S4 | | GCI99109 | Inner Joint | | 26 | 26 | 31 | 68 | 87 | |
| | 2006.03-2009.10 | MT | F | L | Convertible FWD B 5244 S4 | | GDS18290 | Drive Shaft | | 36 | 26 | 56 | 48 | 530 | |
| | 2006.03-2009.10 | MT | F | R | Convertible FWD B 5244 S4 | | GDS62062 | Drive Shaft | | 36 | 26 | 56 | 48 | 959 | |
| | 2006.03-2009.10 | MT | F | L/R | Convertible FWD B 5244 S4 | | GCO99129 | Outer Joint | | 36 | 24 | 56 | 48 | 57 | M |
| | 2006.03-2009.10 | MT | F | L | Convertible FWD B 5244 S4 | | GCI18159 | Inner Joint | | 26 | 26 | 40 | 67 | 96.5 | |
| | 2006.03-2009.10 | MT | F | R | Convertible FWD B 5244 S4 | | GCI62046 | Inner Joint | | 26 | 26 | 28 | 513.5 | 93 | |
| 2.4 (132 kw) | 2006.03-2013.06 | 5AT | F | L/R | Convertible FWD D 5244 T8;D 5244 T13 | | GCO62033 | Outer Joint | | 36 | 24 | 56 | 48 | 59 | I |
| | 2006.03-2013.06 | AT | F | L | Convertible FWD D 5244 T8;D 5244 T13 | | GDS62060 | Drive Shaft | | 36 | 26 | 56 | 48 | 519 | |
| | 2006.03-2013.06 | AT | F | R | Convertible FWD D 5244 T8;D 5244 T13 | | GDS62063 | Drive Shaft | | 36 | 26 | 56 | 48 | 947 | |
| | 2006.03-2013.06 | AT | F | R | Convertible FWD D 5244 T8;D 5244 T13 | | GCO99132 | Outer Joint | | 36 | 24 | 56 | 48 | 57 | I |
| | 2006.03-2013.06 | MT | F | L | Convertible FWD D 5244 T8;D 5244 T13 | | GDS18290 | Drive Shaft | | 36 | 26 | 56 | 48 | 530 | |
| | 2006.03-2013.06 | MT | F | L/R | Convertible FWD D 5244 T8;D 5244 T13 | | GCO99129 | Outer Joint | | 36 | 24 | 56 | 48 | 57 | M |
| | 2006.03-2013.06 | MT | F | L | Convertible FWD D 5244 T8;D 5244 T13 | | GCI18159 | Inner Joint | | 26 | 26 | 40 | 67 | 96.5 | |
| | 2006.03-2013.06 | | F | L | Convertible FWD D 5244 T8;D 5244 T13 | | GCI99109 | Inner Joint | | 26 | 26 | 31 | 68 | 87 | |
| 2.4 (142 kw) | 1997.06-2002.12 | AT | F | L | Coupe FWD B5244T/B5254T | | GDS62143 | Drive Shaft | 48T | 36 | 26 | 56.5 | 48 | 506 | |
| | 1997.06-2002.12 | AT | F | R | Coupe FWD B5244T/B5254T | | GDS83502 | Drive Shaft | 48T | 36 | 26 | 56.5 | 48 | 959 | |
| | 1997.06-2002.12 | AT | F | L | Coupe FWD B5244T/B5254T | | GCO62009 | Outer Joint | 48T | 36 | 27 | 56.5 | 48 | 66 | M |
| | 1997.06-2002.12 | AT | F | L | Coupe FWD B5244T/B5254T | | GCI62038 | Inner Joint | | 26 | 26 | 31 | 68 | 87 | |
| | 1997.06-2002.12 | AT | F | R | Coupe FWD B5244T/B5254T | | GCI82266 | Inner Joint | | 26 | 26 | 31 | 513 | 93.5 | |
| | 1997.06-2002.12 | MT | F | L | Coupe FWD B5244T/B5254T | | GDS62009 | Drive Shaft | 48T | 36 | 26 | 56.5 | 48 | 523 | |
| | 1997.06-2002.12 | MT | F | L | Coupe FWD B5244T/B5254T | | GCO62010 | Outer Joint | 48T | 36 | 33 | 56.5 | 48 | 58 | M |
| | 1998.03-2005.10 | AT | F | L | Cabriolet FWD B5244T | Trans. code:AW55-50SN | GDS62143 | Drive Shaft | 48T | 36 | 26 | 56.5 | 48 | 506 | |
| | 1998.03-2005.10 | AT | F | R | Cabriolet FWD B5244T | Trans. code:AW55-50SN | GDS83502 | Drive Shaft | 48T | 36 | 26 | 56.5 | 48 | 959 | |
| | 1998.03-2005.10 | AT | F | L/R | Cabriolet FWD B5244T | Trans. code:AW55-50SN | GCO62009 | Outer Joint | 48T | 36 | 27 | 56.5 | 48 | 66 | M |
| | 1998.03-2005.10 | AT | F | L | Cabriolet FWD B5244T | Trans. code:AW55-50SN | GCI62038 | Inner Joint | | 26 | 26 | 31 | 68 | 87 | |
| | 1998.03-2005.10 | AT | F | R | Cabriolet FWD B5244T | Trans. code:AW55-50SN | GCI82266 | Inner Joint | | 26 | 26 | 31 | 513 | 93.5 | |
| | 1998.03-2005.10 | MT | F | L | Cabriolet FWD B5244T | | GDS62009 | Drive Shaft | 48T | 36 | 26 | 56.5 | 48 | 523 | |
| 2.4 (147 kw) | 1999.04-2005.10 | AT | F | L | Cabriolet FWD B5244T7 | | GDS62143 | Drive Shaft | 48T | 36 | 26 | 56.5 | 48 | 506 | |
| | 1999.04-2005.10 | AT | F | R | Cabriolet FWD B5244T7 | | GDS83502 | Drive Shaft | 48T | 36 | 26 | 56.5 | 48 | 959 | |
| | 1999.04-2005.10 | AT | F | L/R | Cabriolet FWD B5244T7 | | GCO62009 | Outer Joint | 48T | 36 | 27 | 56.5 | 48 | 66 | M |
| | 1999.04-2005.10 | AT | F | L | Cabriolet FWD B5244T7 | | GCI62038 | Inner Joint | | 26 | 26 | 31 | 68 | 87 | |
| | 1999.04-2005.10 | AT | F | R | Cabriolet FWD B5244T7 | | GCI82266 | Inner Joint | | 26 | 26 | 31 | 513 | 93.5 | |
| | 1999.04-2005.10 | MT | F | L | Cabriolet FWD B5244T7 | | GDS62009 | Drive Shaft | 48T | 36 | 26 | 56.5 | 48 | 523 | |
| 2.5 (162 kw) | 2006.03-2007.02 | AT | F | R | Convertible FWD B 5254 T3 | | GCO99132 | Outer Joint | | 36 | 24 | 56 | 48 | 57 | I |
| | 2006.03-2007.02 | AT | F | L | Convertible FWD B 5254 T3 | | GCI99109 | Inner Joint | | 26 | 26 | 31 | 68 | 87 | |
| | 2006.03-2007.02 | AT/Semi-AT | F | L | Convertible FWD B 5254 T3 | | GDS62060 | Drive Shaft | | 36 | 26 | 56 | 48 | 519 | |
| | 2006.03-2007.02 | MT | F | L | Convertible FWD B 5254 T3 | | GDS18290 | Drive Shaft | | 36 | 26 | 56 | 48 | 530 | |
| | 2006.03-2007.02 | MT | F | R | Convertible FWD B 5254 T3 | | GDS62062 | Drive Shaft | | 36 | 26 | 56 | 48 | 959 | |
| | 2006.03-2007.02 | MT | F | L/R | Convertible FWD B 5254 T3 | | GCO62033 | Outer Joint | | 36 | 24 | 56 | 48 | 59 | I |
| | 2006.03-2007.02 | MT | F | L | Convertible FWD B 5254 T3 | | GCI18159 | Inner Joint | | 26 | 26 | 40 | 67 | 96.5 | |
| | 2006.03-2007.02 | Semi-AT | F | R | Convertible FWD B 5254 T3 | | GDS62063 | Drive Shaft | | 36 | 26 | 56 | 48 | 947 | |
| 2.5 (169 kw) | 2007.03-2013.06 | AT | F | R | Convertible FWD B 5254 T7 | | GCO99132 | Outer Joint | | 36 | 24 | 56 | 48 | 57 | I |
| | 2007.03-2013.06 | AT | F | L | Convertible FWD B 5254 T7 | | GCI99109 | Inner Joint | | 26 | 26 | 31 | 68 | 87 | |
| | 2007.03-2013.06 | AT/MT | F | L/R | Convertible FWD B 5254 T7 | | GCO62033 | Outer Joint | | 36 | 24 | 56 | 48 | 59 | I |
| | 2007.03-2013.06 | AT/Semi-AT | F | L | Convertible FWD B 5254 T7 | | GDS62060 | Drive Shaft | | 36 | 26 | 56 | 48 | 519 | |
| | 2007.03-2013.06 | MT | F | L | Convertible FWD B 5254 T7 | | GDS18290 | Drive Shaft | | 36 | 26 | 56 | 48 | 530 | |
| | 2007.03-2013.06 | MT | F | R | Convertible FWD B 5254 T7 | | GDS62062 | Drive Shaft | | 36 | 26 | 56 | 48 | 959 | |
| | 2007.03-2013.06 | MT | F | L | Convertible FWD B 5254 T7 | | GCI18159 | Inner Joint | | 26 | 26 | 40 | 67 | 96.5 | |
| | 2007.03-2013.06 | Semi-AT | F | R | Convertible FWD B 5254 T7 | | GDS62063 | Drive Shaft | | 36 | 26 | 56 | 48 | 947 | |
| **EX30** | | | | | | | | | | | | | | | |
| EV (200 kw) | 2023.06- | ET | R | L | SUV RWD E400V10;E400V18 | | GDS58194 | Drive Shaft | | 40 | 27 | 58 | 52 | 587 | |
| | 2023.06- | ET | R | R | SUV RWD E400V10;E400V18 | | GDS58191 | Drive Shaft | | 40 | 30 | 58 | 52 | 637 | |
| | 2023.06- | ET | R | L/R | SUV RWD E400V10;E400V18 | | GCO83858 | Outer Joint | | 40 | 36 | 58 | 52 | 64 | M |
| | 2023.06- | ET | R | L | SUV RWD E400V10;E400V18 | | GCI84033 | Inner Joint | | 27 | 26 | 45 | | 145 | |
| | 2023.06- | ET | R | R | SUV RWD E400V10;E400V18 | | GCI84030 | Inner Joint | | 30 | 26 | 40 | 64 | 131 | |
| EV (315 kw) | 2023.06- | ET | F | L | SUV 4WD E400V14 | | GDS58193 | Drive Shaft | | 40 | 27 | 58 | 52 | 596 | |
| | 2023.06- | ET | F | R | SUV 4WD E400V14 | | GDS58192 | Drive Shaft | | 40 | 26 | 58 | 52 | 644 | |
| | 2023.06- | ET | F | L/R | SUV 4WD E400V14 | | GCO83859 | Outer Joint | | 40 | 24 | 58 | 52 | 61.5 | I |
| | 2023.06- | ET | F | L | SUV 4WD E400V14 | | GCI84032 | Inner Joint | | 27 | 24 | 45 | | 141.5 | |
| | 2023.06- | ET | F | R | SUV 4WD E400V14 | | GCI84031 | Inner Joint | | 26 | 24 | 35 | 59.5 | 125 | |
| | 2023.06- | ET | R | L | SUV 4WD E400V14 | | GDS58194 | Drive Shaft | | 40 | 27 | 58 | 52 | 587 | |
| | 2023.06- | ET | R | R | SUV 4WD E400V14 | | GDS58191 | Drive Shaft | | 40 | 30 | 58 | 52 | 637 | |
| | 2023.06- | ET | R | L/R | SUV 4WD E400V14 | | GCO83858 | Outer Joint | | 40 | 36 | 58 | 52 | 64 | M |
| | 2023.06- | ET | R | L | SUV 4WD E400V14 | | GCI84033 | Inner Joint | | 27 | 26 | 45 | | 145 | |

| | YEAR | TRANSM. | F/R | L/R | BODY STYLE & DRIVE TYPE & ENGINE | REMARKS | G-AP Ref. | PRODUCT | ABS | Technical Specifications A | B | C | H | L | P |
|---|---|---|---|---|---|---|---|---|---|---|---|---|---|---|---|
| **VOLVO** | | | | | | | | | | | | | | | |
| **EX30** | | | | | | | | | | | | | | | |
| EV (315 kw) | 2023.06- | ET | R | R | SUV 4WD E400V14 | | GCI84030 | Inner Joint | | 30 | 26 | 40 | 64 | 131 | |
| **EX30 Cross Country** | | | | | | | | | | | | | | | |
| EV (315 kw) | 2025.02- | ET | F | L | SUV 4WD | | GDS58193 | Drive Shaft | | 40 | 27 | 58 | 52 | 596 | |
| | 2025.02- | ET | F | R | SUV 4WD | | GDS58192 | Drive Shaft | | 40 | 26 | 58 | 52 | 644 | |
| | 2025.02- | ET | F | L/R | SUV 4WD | | GCO83859 | Outer Joint | | 40 | 24 | 58 | 52 | 61.5 | I |
| | 2025.02- | ET | F | L | SUV 4WD | | GCI84032 | Inner Joint | | 27 | 24 | 45 | | 141.5 | |
| | 2025.02- | ET | F | R | SUV 4WD | | GCI84031 | Inner Joint | | 26 | 24 | 35 | 59.5 | 125 | |
| | 2025.02- | ET | R | L | SUV 4WD | | GDS58194 | Drive Shaft | | 40 | 27 | 58 | 52 | 587 | |
| | 2025.02- | ET | R | R | SUV 4WD | | GDS58191 | Drive Shaft | | 40 | 30 | 58 | 52 | 637 | |
| | 2025.02- | ET | R | L/R | SUV 4WD | | GCO83858 | Outer Joint | | 40 | 36 | 58 | 52 | 64 | M |
| | 2025.02- | ET | R | L | SUV 4WD | | GCI84033 | Inner Joint | | 27 | 26 | 45 | | 145 | |
| | 2025.02- | ET | R | R | SUV 4WD | | GCI84030 | Inner Joint | | 30 | 26 | 40 | 64 | 131 | |
| **S40** | | | | | | | | | | | | | | | |
| 1.6 (74 kw) | 2005.01-2012.12 | 5MT | F | L | Saloon FWD B 4164 S3 | Inner teeth of wheel side:24 | GDS18189 | Drive Shaft | | 36 | 23 | 56 | 48 | 601 | |
| | 2005.01-2012.12 | 5MT | F | L | Saloon FWD B 4164 S3 | Inner teeth of wheel side:25 | GDS18336 | Drive Shaft | | 36 | 23 | 51.6 | 48 | 600 | |
| | 2005.01-2012.12 | 5MT | F | L | Saloon FWD B 4164 S3 | Inner teeth of wheel side:23 | GDS18359 | Drive Shaft | | 36 | 23 | 56 | 48 | 594 | |
| | 2005.01-2012.12 | 5MT | F | R | Saloon FWD B 4164 S3 | Inner teeth of wheel side:24 | GDS18206 | Drive Shaft | | 36 | 23 | 56 | 48 | 906 | |
| | 2005.01-2012.12 | 5MT | F | R | Saloon FWD B 4164 S3 | Inner teeth of wheel side:25 | GDS18337 | Drive Shaft | | 36 | 23 | 51.6 | 48 | 908 | |
| | 2005.01-2012.12 | MT | F | L/R | Saloon FWD B 4164 S3 | | GCO99129 | Outer Joint | | 36 | 24 | 56 | 48 | 57 | M |
| 1.6 (77 kw) | 1995.09-1999.08 | 5MT | F | L/R | Saloon FWD B4164S | | GCO39021 | Outer Joint | | 25 | 29 | 54 | 94.5 | 64.5 | O |
| | 1995.09-1999.08 | MT | F | L | Saloon FWD B4164S | | GDS62004 | Drive Shaft | 43T | 25 | 30 | 54 | 95 | 628.7 | |
| 1.6 (80 kw) | 1999.03-2003.12 | 5MT | F | R | Saloon FWD B4164S2 | | GDS50421 | Drive Shaft | 43T | 25 | 23 | 54 | 94.5 | 813 | |
| | 1999.03-2003.12 | AT/MT | F | L/R | Saloon FWD B4164S2 | | GCO62008 | Outer Joint | 43T | 25 | 33 | 54 | 95 | 61 | M |
| | 1999.03-2003.12 | MT | F | L | Saloon FWD B4164S2 | ABS Ring Ø [mm]:82 | GDS62023 | Drive Shaft | 43T | 25 | 30 | 54 | 95 | 628.7 | |
| | 1999.03-2003.12 | MT | F | R | Saloon FWD B4164S2 | | GDS39096 | Drive Shaft | 43T | 25 | 25 | 54 | 95.5 | 937 | |
| | 1999.03-2003.12 | | F | | Saloon FWD B4164S2 | | GCO39100 | Outer Joint | 43T | 25 | 23 | 54 | 95.5 | 64 | M |
| 1.6 (81 kw) | 2005.01-2012.12 | 5MT | F | L | Saloon FWD D 4164 T | | GDS18218 | Drive Shaft | | 36 | 26 | 56 | 48 | 582 | |
| | 2005.01-2012.12 | 5MT | F | R | Saloon FWD D 4164 T | | GDS18219 | Drive Shaft | | 36 | 26 | 56.3 | 48 | 921 | |
| | 2005.01-2012.12 | 5MT | F | L | Saloon FWD D 4164 T | | GCI18044 | Inner Joint | | 26 | 23 | 40 | 68.5 | 99.5 | |
| | 2005.01-2012.12 | MT | F | R | Saloon FWD D 4164 T | | GCO99130 | Outer Joint | | 36 | 26 | 56.3 | 48 | 61 | M |
| | 2005.01-2012.12 | | F | R | Saloon FWD D 4164 T | | GCO99288 | Outer Joint | | 36 | 26 | 56.3 | 48 | 61 | M |
| 1.6 (84 kw) | 2010.10-2012.12 | 6MT | F | L | Saloon FWD D 4162 T | | GDS62078 | Drive Shaft | | 36 | 26 | 56.3 | 48 | 583 | |
| | 2010.10-2012.12 | 6MT | F | R | Saloon FWD D 4162 T | | GDS62053 | Drive Shaft | | 36 | 26 | 56.3 | 48 | 917 | |
| | 2010.10-2012.12 | 6MT | F | L | Saloon FWD D 4162 T | | GCO99288 | Outer Joint | | 36 | 26 | 56.3 | 48 | 61 | M |
| | 2010.10-2012.12 | 6MT | F | L | Saloon FWD D 4162 T | | GCI62052 | Inner Joint | | 26 | 28 | 40 | 61 | 112.5 | |
| | 2010.10-2012.12 | 6MT | F | R | Saloon FWD D 4162 T | | GCI62027 | Inner Joint | | 26 | 28 | 40 | 383 | 99 | |
| 1.8 (85 kw) | 1995.07-1999.08 | AT | F | L/R | Saloon FWD B4184S/B4184S3 | | GCO62003 | Outer Joint | 43T | 25 | 25 | 54 | 95 | 61 | O |
| | 1995.07-1999.08 | MT | F | L | Saloon FWD B4184S/B4184S3 | | GDS62004 | Drive Shaft | 43T | 25 | 30 | 54 | 95 | 628.7 | |
| | 1995.07-1999.08 | MT | F | L/R | Saloon FWD B4184S/B4184S3 | | GCO39021 | Outer Joint | | 25 | 29 | 54 | 94.5 | 64.5 | O |
| | 1998.09-2003.08 | AT | F | L/R | Saloon FWD B4184S2 | Groove type:Middle | GCO62008 | Outer Joint | 43T | 25 | 33 | 54 | 95 | 61 | M |
| | 1998.09-2003.08 | AT | F | L/R | Saloon FWD B4184S2 | Groove type:Outer | GCO99262 | Outer Joint | 43T | 25 | 25 | 54 | 95 | 61 | O |
| | 1998.09-2003.08 | AT | F | L | Saloon FWD B4184S2 | | GCI62032 | Inner Joint | | 26 | 34 | 40 | 67.5 | 98.5 | |
| | 1998.09-2003.08 | MT | F | R | Saloon FWD B4184S2 | | GDS39096 | Drive Shaft | 43T | 25 | 25 | 54 | 95.5 | 937 | |
| | 1998.09-2003.08 | MT | F | R | Saloon FWD B4184S2 | Chassis no. to:834210 | GDS50421 | Drive Shaft | 43T | 25 | 23 | 54 | 94.5 | 813 | |
| | 1998.09-2003.08 | MT | F | R | Saloon FWD B4184S2 | | GDS62021 | Drive Shaft | 43T | 25 | 26 | 54 | 95 | 945 | |
| | 1998.09-2003.08 | MT | F | L/R | Saloon FWD B4184S2 | ABS Ring Ø [mm]:82 | GCO39021 | Outer Joint | | 25 | 29 | 54 | 94.5 | 64.5 | O |
| | 1998.09-2003.08 | MT | F | | Saloon FWD B4184S2 | | GCO39100 | Outer Joint | 43T | 25 | 23 | 54 | 95.5 | 64 | M |
| 1.8 (90 kw) | 1999.03-2003.12 | AT | F | L/R | Saloon FWD B4184S2 | | GCO99262 | Outer Joint | 43T | 25 | 25 | 54 | 95 | 61 | O |
| | 1999.03-2003.12 | AT | F | L | Saloon FWD B4184S2 | Model year from:2002 | GCI62032 | Inner Joint | | 26 | 34 | 40 | 67.5 | 98.5 | |
| | 1999.03-2003.12 | AT/MT | F | L/R | Saloon FWD B4184S2 | | GCO62008 | Outer Joint | 43T | 25 | 33 | 54 | 95 | 61 | M |
| | 1999.03-2003.12 | MT | F | L | Saloon FWD B4184S2 | Chassis no. to:834210 | GDS62023 | Drive Shaft | 43T | 25 | 30 | 54 | 95 | 628.7 | |
| | 1999.03-2003.12 | MT | F | L | Saloon FWD B4184S2 | Model year from:2003 | GDS62072 | Drive Shaft | 43T | 25 | 26 | 54 | 95 | 599 | |
| | 1999.03-2003.12 | MT | F | R | Saloon FWD B4184S2 | Model year to:2001 | GDS50421 | Drive Shaft | 43T | 25 | 23 | 54 | 94.5 | 813 | |
| | 1999.03-2003.12 | MT | F | R | Saloon FWD B4184S2 | Model year from:2003 | GDS62021 | Drive Shaft | 43T | 25 | 26 | 54 | 95 | 945 | |
| | 1999.03-2003.12 | MT | F | L/R | Saloon FWD B4184S2 | | GCO39021 | Outer Joint | | 25 | 29 | 54 | 94.5 | 64.5 | O |
| | 1999.03-2003.12 | MT | F | L/R | Saloon FWD B4184S2 | | GCO39100 | Outer Joint | 43T | 25 | 23 | 54 | 95.5 | 64 | M |
| | 1999.03-2003.12 | MT | F | R | Saloon FWD B4184S2 | Model year from:2003 | GCI18171 | Inner Joint | | 26 | 26 | 40 | 429.5 | 93 | |
| | 2000.10-2004.08 | AT | F | | Saloon FWD B4184SJ | | GCO99262 | Outer Joint | 43T | 25 | 25 | 54 | 95 | 61 | O |
| | 2000.10-2004.08 | AT | F | L | Saloon FWD B4184SJ | Trans. code:AW55 | GCI62032 | Inner Joint | | 26 | 34 | 40 | 67.5 | 98.5 | |
| | 2000.10-2004.08 | AT/MT | F | L/R | Saloon FWD B4184SJ | | GCO62011 | Outer Joint | 43T | 25 | 33 | 56.3 | 99 | 61.5 | M |
| | 2000.10-2004.08 | MT | F | L | Saloon FWD B4184SJ | ABS Ring Ø [mm]:82 | GDS62023 | Drive Shaft | 43T | 25 | 30 | 54 | 95 | 628.7 | |
| | 2000.10-2004.08 | MT | F | R | Saloon FWD B4184SJ | | GDS39096 | Drive Shaft | 43T | 25 | 25 | 54 | 95.5 | 937 | |
| | 2000.10-2004.08 | MT | F | R | Saloon FWD B4184SJ | ABS Ring Ø [mm]:82 | GDS50421 | Drive Shaft | 43T | 25 | 23 | 54 | 94.5 | 813 | |
| | 2000.10-2004.08 | MT | F | R | Saloon FWD B4184SJ | | GDS62021 | Drive Shaft | 43T | 25 | 26 | 54 | 95 | 945 | |
| | 2000.10-2004.08 | MT | F | L/R | Saloon FWD B4184SJ | ABS Ring Ø [mm]:82 | GCO39021 | Outer Joint | | 25 | 29 | 54 | 94.5 | 64.5 | O |

| | YEAR | TRANSM. | F/R | L/R | BODY STYLE & DRIVE TYPE & ENGINE | REMARKS | G-AP Ref. | PRODUCT | ABS | Technical Specifications A | B | C | H | L | P |
|---|---|---|---|---|---|---|---|---|---|---|---|---|---|---|---|
| **VOLVO S40** | | | | | | | | | | | | | | | |
| 1.8 (90 kw) | 2000.10-2004.08 | MT | F | L/R | Saloon FWD B4184SJ | | GCO39100 | Outer Joint | 43T | 25 | 23 | 54 | 95.5 | 64 | M |
| | 2000.10-2004.08 | MT | F | | Saloon FWD B4184SJ | | GCO99230 | Outer Joint | 43T | 25 | 29 | 54 | 95 | 60 | O |
| | 2000.11-2004.12 | 5MT | F | R | Saloon FWD B4184S9 | | GDS50421 | Drive Shaft | 43T | 25 | 23 | 54 | 94.5 | 813 | |
| 1.8 (92 kw) | 1997.10-2001.10 | AT | F | | Saloon FWD B4184SM | | GCO99262 | Outer Joint | 43T | 25 | 25 | 54 | 95 | 61 | O |
| | 1997.10-2001.10 | AT | F | L | Saloon FWD B4184SM | Date from:2000.01;Trans. code:AW55 | GCI62032 | Inner Joint | | 26 | 34 | 40 | 67.5 | 98.5 | |
| | 1997.10-2001.10 | AT/MT | F | L/R | Saloon FWD B4184SM | Date to:2001.10 | GCO62008 | Outer Joint | 43T | 25 | 33 | 54 | 95 | 61 | M |
| | 1997.10-2001.10 | MT | F | L | Saloon FWD B4184SM | ABS Ring Ø [mm]:82 | GDS62023 | Drive Shaft | 43T | 25 | 30 | 54 | 95 | 628.7 | |
| | 1997.10-2001.10 | MT | F | R | Saloon FWD B4184SM | | GDS39096 | Drive Shaft | 43T | 25 | 25 | 54 | 95.5 | 937 | |
| | 1997.10-2001.10 | MT | F | R | Saloon FWD B4184SM | ABS Ring Ø [mm]:78 | GDS39255 | Drive Shaft | 43T | 25 | 23 | 54 | 95 | 816 | |
| | 1997.10-2001.10 | MT | F | R | Saloon FWD B4184SM | ABS Ring Ø [mm]:82 | GDS50421 | Drive Shaft | 43T | 25 | 23 | 54 | 94.5 | 813 | |
| | 1997.10-2001.10 | MT | F | R | Saloon FWD B4184SM | | GDS62021 | Drive Shaft | 43T | 25 | 26 | 54 | 95 | 945 | |
| | 1997.10-2001.10 | MT | F | L/R | Saloon FWD B4184SM | | GCO39100 | Outer Joint | 43T | 25 | 23 | 54 | 95.5 | 64 | M |
| | 1997.10-2001.10 | MT | F | | Saloon FWD B4184SM | | GCO99230 | Outer Joint | 43T | 25 | 29 | 54 | 95 | 60 | O |
| | 2004.04-2010.12 | 5MT | F | L | Saloon FWD B 4184 S11 | Chassis no. from:265341,Chassis no. to:265340 | GDS18218 | Drive Shaft | | 36 | 26 | 56 | 48 | 582 | |
| | 2004.04-2010.12 | AT | F | L | Saloon FWD B 4184 S11 | Date to:2007.12 | GDS62060 | Drive Shaft | | 36 | 26 | 56 | 48 | 519 | |
| | 2004.04-2010.12 | AT | F | R | Saloon FWD B 4184 S11 | Date to:2007.12 | GDS62063 | Drive Shaft | | 36 | 26 | 56 | 48 | 947 | |
| | 2004.04-2010.12 | MT | F | R | Saloon FWD B 4184 S11 | | GDS18219 | Drive Shaft | | 36 | 26 | 56.3 | 48 | 921 | |
| | 2004.04-2010.12 | MT | F | R | Saloon FWD B 4184 S11 | | GCO99130 | Outer Joint | | 36 | 26 | 56.3 | 48 | 61 | M |
| | 2004.04-2010.12 | | F | L/R | Saloon FWD B 4184 S11 | Date To:2010.09 | GCO18203 | Outer Joint | | 36 | 23 | 56 | 48 | 57 | I |
| | 2004.04-2010.12 | | F | R | Saloon FWD B 4184 S11 | | GCI18044 | Inner Joint | | 26 | 23 | 40 | 68.5 | 99.5 | |
| | 2006.01-2010.12 | 5MT | F | L | Saloon FWD B 4184 S8 | Chassis no. from:265341,Chassis no. to:265340 | GDS18218 | Drive Shaft | | 36 | 26 | 56 | 48 | 582 | |
| | 2006.01-2010.12 | AT | F | L | Saloon FWD B 4184 S8 | | GDS62060 | Drive Shaft | | 36 | 26 | 56 | 48 | 519 | |
| | 2006.01-2010.12 | AT | F | R | Saloon FWD B 4184 S8 | | GDS62063 | Drive Shaft | | 36 | 26 | 56 | 48 | 947 | |
| | 2006.01-2010.12 | MT | F | R | Saloon FWD B 4184 S8 | | GDS18219 | Drive Shaft | | 36 | 26 | 56.3 | 48 | 921 | |
| | 2006.01-2010.12 | MT | F | R | Saloon FWD B 4184 S8 | | GCO99130 | Outer Joint | | 36 | 26 | 56.3 | 48 | 61 | M |
| | 2006.01-2010.12 | | F | L/R | Saloon FWD B 4184 S8 | Date From:2006.04;Date To:2010.09 | GCO18203 | Outer Joint | | 36 | 23 | 56 | 48 | 57 | I |
| | 2006.01-2010.12 | | F | R | Saloon FWD B 4184 S8 | | GCI18044 | Inner Joint | | 26 | 23 | 40 | 68.5 | 99.5 | |
| 1.9 (66 kw) | 1996.01-1999.09 | 5MT | F | L/R | Saloon FWD D4192T | | GCO39021 | Outer Joint | | 25 | 29 | 54 | 94.5 | 64.5 | O |
| | 1996.01-1999.09 | MT | F | L | Saloon FWD D4192T | | GDS62004 | Drive Shaft | 43T | 25 | 30 | 54 | 95 | 628.7 | |
| | 1996.01-1999.09 | MT | F | L | Saloon FWD D4192T | | GCO62010 | Outer Joint | 48T | 36 | 33 | 56.5 | 48 | 58 | M |
| 1.9 (70 kw) | 1996.12-2000.07 | 5MT | F | R | Saloon FWD D4192T2 | | GDS50421 | Drive Shaft | 43T | 25 | 23 | 54 | 94.5 | 813 | |
| | 1996.12-2000.07 | AT/MT | F | L/R | Saloon FWD D4192T2 | | GCO62012 | Outer Joint | 43T | 26 | 27 | 56.5 | 98 | 66.5 | M |
| | 1996.12-2000.07 | MT | F | L | Saloon FWD D4192T2 | | GDS62023 | Drive Shaft | 43T | 25 | 30 | 54 | 95 | 628.7 | |
| | 1996.12-2000.07 | MT | F | L/R | Saloon FWD D4192T2 | ABS Ring Ø [mm]:82 | GCO39021 | Outer Joint | | 25 | 29 | 54 | 94.5 | 64.5 | O |
| 1.9 (75 kw) | 2000.05-2004.06 | 5MT | F | L | Saloon FWD D4192T4 | | GDS62064 | Drive Shaft | 43T | 26 | 26 | 56.5 | 98 | 607 | |
| | 2000.05-2004.06 | 5MT | F | L/R | Saloon FWD D4192T4 | | GCO62012 | Outer Joint | 43T | 26 | 27 | 56.5 | 98 | 66.5 | M |
| | 2000.05-2004.06 | MT | F | L | Saloon FWD D4192T4 | | GDS62023 | Drive Shaft | 43T | 25 | 30 | 54 | 95 | 628.7 | |
| | 2000.05-2004.06 | MT | F | R | Saloon FWD D4192T4 | | GDS50421 | Drive Shaft | 43T | 25 | 23 | 54 | 94.5 | 813 | |
| 1.9 (85 kw) | 2000.07-2004.06 | 5MT | F | L | Saloon FWD D4192T3 | | GDS62064 | Drive Shaft | 43T | 26 | 26 | 56.5 | 98 | 607 | |
| | 2000.07-2004.06 | 5MT | F | L/R | Saloon FWD D4192T3 | | GCO62012 | Outer Joint | 43T | 26 | 27 | 56.5 | 98 | 66.5 | M |
| 1.9 (147 kw) | 1997.10-2000.12 | AT | F | L | Saloon FWD B4194T/B4194T2 | For Enginecode:B4194T2,Chassis no. from:600000 | GDS62089 | Drive Shaft | 43T | 26 | 26 | 56.5 | 98 | 593 | |
| | 1997.10-2000.12 | AT | F | L | Saloon FWD B4194T/B4194T2 | For Enginecode:B4194T2,Chassis no. from:327171,Chassis no. to:599999 | GDS62118 | Drive Shaft | 43T | 26 | 26 | 56.5 | 98 | 600 | |
| | 1997.10-2000.12 | AT | F | R | Saloon FWD B4194T/B4194T2 | For Enginecode:B4194T2,Chassis no. to:600204 | GDS62044 | Drive Shaft | 43T | 26 | 26 | 56.5 | 98 | 955 | |
| | 1997.10-2000.12 | AT | F | R | Saloon FWD B4194T/B4194T2 | For Engine code:B4194T2;Chassis no. to:600204 | GCI18171 | Inner Joint | | 26 | 26 | 40 | 429.5 | 93 | |
| | 1997.10-2000.12 | AT/MT | F | L/R | Saloon FWD B4194T/B4194T2 | Date from:1997.10 | GCO62012 | Outer Joint | 43T | 26 | 27 | 56.5 | 98 | 66.5 | M |
| | 1997.10-2000.12 | MT | F | L | Saloon FWD B4194T/B4194T2 | | GDS62144 | Drive Shaft | 43T | 26 | 26 | 56.5 | 98 | 599 | |
| | 1997.10-2000.12 | | F | L/R | Saloon FWD B4194T/B4194T2 | For Engine code:B4194T2 | GCO62003 | Outer Joint | 43T | 25 | 25 | 54 | 95 | 61 | O |
| 2.0 (96 kw) | 2005.07-2006.12 | 6MT | F | L | Saloon FWD D 4204 T2 | | GDS18218 | Drive Shaft | | 36 | 26 | 56 | 48 | 582 | |
| | 2005.07-2006.12 | 6MT | F | R | Saloon FWD D 4204 T2 | | GDS56093 | Drive Shaft | | 36 | 26 | 56 | 48 | 916 | |
| | 2005.07-2006.12 | 6MT | F | L/R | Saloon FWD D 4204 T2 | | GCO99155 | Outer Joint | | 36 | 26 | 56 | 48 | 64 | I |
| | 2005.07-2006.12 | 6MT | F | R | Saloon FWD D 4204 T2 | | GCI83312 | Inner Joint | | 26 | 26 | 40 | 389 | 92 | |
| | 2005.07-2006.12 | AT | F | R | Saloon FWD D 4204 T2 | | GCI62017 | Inner Joint | | 28 | 26 | 33.95 | 371.5 | 92 | |
| 2.0 (98 kw) | 2005.07-2006.12 | 6MT | F | L | Saloon FWD D 4204 T2 | | GDS18218 | Drive Shaft | | 36 | 26 | 56 | 48 | 582 | |
| | 2005.07-2006.12 | 6MT | F | R | Saloon FWD D 4204 T2 | | GDS56093 | Drive Shaft | | 36 | 26 | 56 | 48 | 916 | |
| | 2005.07-2006.12 | 6MT | F | L/R | Saloon FWD D 4204 T2 | | GCO99155 | Outer Joint | | 36 | 26 | 56 | 48 | 64 | I |
| | 2005.07-2006.12 | 6MT | F | R | Saloon FWD D 4204 T2 | | GCI83312 | Inner Joint | | 26 | 26 | 40 | 389 | 92 | |
| 2.0 (100 kw) | 1995.07-2003.12 | AT | F | L | Saloon FWD B4204S/B4204S2 | | GCI62032 | Inner Joint | | 26 | 34 | 40 | 67.5 | 98.5 | |
| | 1995.07-2003.12 | AT/MT | F | L/R | Saloon FWD B4204S/B4204S2 | | GCO62003 | Outer Joint | 43T | 25 | 25 | 54 | 95 | 61 | O |
| | 1995.07-2003.12 | MT | F | L | Saloon FWD B4204S/B4204S2 | Date to:2000.12;ABS Ring Ø [mm]:82;For Engine code:B4204S | GDS62023 | Drive Shaft | 43T | 25 | 30 | 54 | 95 | 628.7 | |
| | 1995.07-2003.12 | MT | F | L | Saloon FWD B4204S/B4204S2 | | GDS62072 | Drive Shaft | 43T | 25 | 26 | 54 | 95 | 599 | |
| | 1995.07-2003.12 | MT | F | R | Saloon FWD B4204S/B4204S2 | Date To:1998.12;ABS Ring Ø [mm]:78;For Engine Code:B4204S | GDS39255 | Drive Shaft | 43T | 25 | 23 | 54 | 95 | 816 | |
| | 1995.07-2003.12 | MT | F | R | Saloon FWD B4204S/B4204S2 | Date to:2000.12;ABS Ring Ø [mm]:82;For Engine code:B4204S | GDS50421 | Drive Shaft | 43T | 25 | 23 | 54 | 94.5 | 813 | |
| | 1995.07-2003.12 | MT | F | R | Saloon FWD B4204S/B4204S2 | Model year from:2001 | GDS62021 | Drive Shaft | 43T | 25 | 26 | 54 | 95 | 945 | |
| | 1995.07-2003.12 | MT | F | R | Saloon FWD B4204S/B4204S2 | Model year to:2000 | GDS62035 | Drive Shaft | 43T | 25 | 26 | 54 | 95 | 948 | |
| | 1995.07-2003.12 | | F | | Saloon FWD B4204S/B4204S2 | | GCO99262 | Outer Joint | 43T | 25 | 25 | 54 | 95 | 61 | O |

| | YEAR | TRANSM. | F/R | L/R | BODY STYLE & DRIVE TYPE & ENGINE | REMARKS | G-AP Ref. | PRODUCT | ABS | Technical Specifications A | B | C | H | L | P |
|---|---|---|---|---|---|---|---|---|---|---|---|---|---|---|---|
| **VOLVO** **S40** | | | | | | | | | | | | | | | |
| 2.0 (100 kw) | 2004.01-2010.12 | 5MT | F | R | Saloon FWD D 4204 T | | GDS62105 | Drive Shaft | | 36 | 26 | 56 | 48 | 911 | |
| | 2004.01-2010.12 | 5MT | F | L | Saloon FWD D 4204 T | | GCI18159 | Inner Joint | | 26 | 26 | 40 | 67 | 96.5 | |
| | 2004.01-2010.12 | 6AT | F | L | Saloon FWD D 4204 T | | GDS18367 | Drive Shaft | | 36 | 28 | 56 | 48 | 570 | |
| | 2004.01-2010.12 | 6AT | F | R | Saloon FWD D 4204 T | | GDS62024 | Drive Shaft | | 36 | 28 | 56 | 48 | 908 | |
| | 2004.01-2010.12 | 6AT | F | R | Saloon FWD D 4204 T | | GCI62017 | Inner Joint | | 28 | 26 | 33.95 | 371.5 | 92 | |
| | 2004.01-2010.12 | 6MT | F | L | Saloon FWD D 4204 T | | GDS18218 | Drive Shaft | | 36 | 26 | 56 | 48 | 582 | |
| | 2004.01-2010.12 | 6MT | F | R | Saloon FWD D 4204 T | | GDS56093 | Drive Shaft | | 36 | 26 | 56 | 48 | 916 | |
| | 2004.01-2010.12 | 6MT | F | L/R | Saloon FWD D 4204 T | | GCO99155 | Outer Joint | | 36 | 26 | 56 | 48 | 64 | I |
| | 2004.01-2010.12 | 6MT | F | R | Saloon FWD D 4204 T | | GCI83312 | Inner Joint | | 26 | 26 | 40 | 389 | 92 | |
| 2.0 (103 kw) | 1995.07-1999.08 | AT | F | L/R | Saloon FWD B4204S | | GCO62003 | Outer Joint | 43T | 25 | 25 | 54 | 95 | 61 | O |
| | 1995.07-1999.08 | MT | F | L | Saloon FWD B4204S | | GDS62004 | Drive Shaft | 43T | 25 | 30 | 54 | 95 | 628.7 | |
| | 1995.07-1999.08 | MT | F | L/R | Saloon FWD B4204S | | GCO39021 | Outer Joint | | 25 | 29 | 54 | 94.5 | 64.5 | O |
| 2.0 (107 kw) | 2006.10-2012.12 | 5MT | F | L | Saloon FWD B 4204 S3 | Chassis no. from:265341,Chassis no. to:265340 | GDS18218 | Drive Shaft | | 36 | 26 | 56 | 48 | 582 | |
| | 2006.10-2012.12 | 5MT | F | L | Saloon FWD B 4204 S3 | Chassis no. from:265341 | GCO18203 | Outer Joint | | 36 | 23 | 56 | 48 | 57 | I |
| | 2006.10-2012.12 | 5MT | F | R | Saloon FWD B 4204 S3 | | GCI18044 | Inner Joint | | 26 | 23 | 40 | 68.5 | 99.5 | |
| | 2006.10-2012.12 | 6AT | F | R | Saloon FWD B 4204 S3 | | GCI62017 | Inner Joint | | 28 | 26 | 33.95 | 371.5 | 92 | |
| | 2006.10-2012.12 | AT | F | L | Saloon FWD B 4204 S3 | | GDS18367 | Drive Shaft | | 36 | 28 | 56 | 48 | 570 | |
| | 2006.10-2012.12 | AT | F | L | Saloon FWD B 4204 S3 | | GDS62060 | Drive Shaft | | 36 | 26 | 56 | 48 | 519 | |
| | 2006.10-2012.12 | AT | F | R | Saloon FWD B 4204 S3 | | GDS62024 | Drive Shaft | | 36 | 28 | 56 | 48 | 908 | |
| | 2006.10-2012.12 | AT | F | R | Saloon FWD B 4204 S3 | | GDS62063 | Drive Shaft | | 36 | 26 | 56 | 48 | 947 | |
| | 2006.10-2012.12 | MT | F | R | Saloon FWD B 4204 S3 | | GDS18219 | Drive Shaft | | 36 | 26 | 56.3 | 48 | 921 | |
| | 2006.10-2012.12 | MT | F | R | Saloon FWD B 4204 S3 | | GCO99130 | Outer Joint | | 36 | 26 | 56.3 | 48 | 61 | M |
| | 2009.10-2012.12 | 5MT | F | L | Saloon FWD B 4204 S4 | | GDS18218 | Drive Shaft | | 36 | 26 | 56 | 48 | 582 | |
| | 2009.10-2012.12 | 5MT | F | R | Saloon FWD B 4204 S4 | | GDS18219 | Drive Shaft | | 36 | 26 | 56.3 | 48 | 921 | |
| | 2009.10-2012.12 | AT | F | L | Saloon FWD B 4204 S4 | | GDS62060 | Drive Shaft | | 36 | 26 | 56 | 48 | 519 | |
| | 2009.10-2012.12 | AT | F | R | Saloon FWD B 4204 S4 | | GDS62063 | Drive Shaft | | 36 | 26 | 56 | 48 | 947 | |
| | 2009.10-2012.12 | MT | F | R | Saloon FWD B 4204 S4 | | GCO99130 | Outer Joint | | 36 | 26 | 56.3 | 48 | 61 | M |
| | 2009.10-2012.12 | | F | L | Saloon FWD B 4204 S4 | | GCO18203 | Outer Joint | | 36 | 23 | 56 | 48 | 57 | I |
| | 2009.10-2012.12 | | F | R | Saloon FWD B 4204 S4 | | GCI18044 | Inner Joint | | 26 | 23 | 40 | 68.5 | 99.5 | |
| 2.0 (110 kw) | 2010.10-2012.12 | 6AT | F | L | Saloon FWD D 5204 T5 | | GDS62108 | Drive Shaft | | 36 | 31 | 56 | 48 | 506 | |
| | 2010.10-2012.12 | 6AT | F | R | Saloon FWD D 5204 T5 | | GDS62103 | Drive Shaft | | 36 | 28 | 56 | 48 | 955 | |
| | 2010.10-2012.12 | 6AT | F | L/R | Saloon FWD D 5204 T5 | | GCO99155 | Outer Joint | | 36 | 26 | 56 | 48 | 64 | I |
| | 2010.10-2012.12 | 6AT | F | R | Saloon FWD D 5204 T5 | | GCI62048 | Inner Joint | | 28 | 26 | 33 | 520 | 100.5 | |
| | 2010.10-2012.12 | 6MT | F | R | Saloon FWD D 5204 T5 | | GDS62062 | Drive Shaft | | 36 | 26 | 56 | 48 | 959 | |
| | 2010.10-2012.12 | 6MT | F | R | Saloon FWD D 5204 T5 | | GCO99155 | Outer Joint | | 36 | 26 | 56 | 48 | 64 | I |
| | 2010.10-2012.12 | 6MT | F | L | Saloon FWD D 5204 T5 | | GCI18159 | Inner Joint | | 26 | 26 | 40 | 67 | 96.5 | |
| | 2010.10-2012.12 | MT/6MT | F | L | Saloon FWD D 5204 T5 | | GDS18290 | Drive Shaft | | 36 | 26 | 56 | 48 | 530 | |
| 2.0 (118 kw) | 1997.10-2003.12 | AT | F | L | Saloon FWD B4204T | Chassis no. from:946024 | GDS62089 | Drive Shaft | 43T | 26 | 26 | 56.5 | 98 | 593 | |
| | 1997.10-2003.12 | AT | F | L | Saloon FWD B4204T | Chassis no. from:327171,Chassis no. to:946023 | GDS62118 | Drive Shaft | 43T | 26 | 26 | 56.5 | 98 | 600 | |
| | 1997.10-2003.12 | AT | F | R | Saloon FWD B4204T | Chassis no. to:600204 | GDS62044 | Drive Shaft | 43T | 26 | 26 | 56.5 | 98 | 955 | |
| | 1997.10-2003.12 | AT | F | L/R | Saloon FWD B4204T | | GCO62003 | Outer Joint | 43T | 25 | 25 | 54 | 95 | 61 | O |
| | 1997.10-2003.12 | AT | F | R | Saloon FWD B4204T | Chassis no. to:600204 | GCI18171 | Inner Joint | | 26 | 26 | 40 | 429.5 | 93 | |
| | 1997.10-2003.12 | AT/MT | F | L/R | Saloon FWD B4204T | | GCO62012 | Outer Joint | 43T | 26 | 27 | 56.5 | 98 | 66.5 | M |
| | 1997.10-2003.12 | MT | F | L | Saloon FWD B4204T | | GDS62144 | Drive Shaft | 43T | 26 | 26 | 56.5 | 98 | 599 | |
| 2.0 (120 kw) | 2001.06-2004.06 | AT | F | L | Saloon FWD B4204T3 | Chassis no. from:946024 | GDS62089 | Drive Shaft | 43T | 26 | 26 | 56.5 | 98 | 593 | |
| | 2001.06-2004.06 | AT | F | L | Saloon FWD B4204T3 | | GDS62118 | Drive Shaft | 43T | 26 | 26 | 56.5 | 98 | 600 | |
| | 2001.06-2004.06 | AT | F | R | Saloon FWD B4204T3 | | GDS62044 | Drive Shaft | 43T | 26 | 26 | 56.5 | 98 | 955 | |
| | 2001.06-2004.06 | AT | F | R | Saloon FWD B4204T3 | Chassis no. to:600204 | GCI18171 | Inner Joint | | 26 | 26 | 40 | 429.5 | 93 | |
| | 2001.06-2004.06 | MT | F | L | Saloon FWD B4204T3 | | GDS62064 | Drive Shaft | 43T | 26 | 26 | 56.5 | 98 | 607 | |
| | 2001.06-2004.06 | MT | F | R | Saloon FWD B4204T3 | | GDS62035 | Drive Shaft | 43T | 25 | 26 | 54 | 95 | 948 | |
| | 2001.06-2004.06 | MT | F | L | Saloon FWD B4204T3 | | GCO62012 | Outer Joint | 43T | 26 | 27 | 56.5 | 98 | 66.5 | M |
| 2.0 (121 kw) | 1999.10-2001.06 | AT | F | L | Saloon FWD B4204T2/B4204T3 | Chassis no. from:600000 | GDS62089 | Drive Shaft | 43T | 26 | 26 | 56.5 | 98 | 593 | |
| | 1999.10-2001.06 | AT | F | L | Saloon FWD B4204T2/B4204T3 | Chassis no. from:327171,Chassis no. to:599999 | GDS62118 | Drive Shaft | 43T | 26 | 26 | 56.5 | 98 | 600 | |
| | 1999.10-2001.06 | AT | F | R | Saloon FWD B4204T2/B4204T3 | Chassis no. to:600204 | GDS62044 | Drive Shaft | 43T | 26 | 26 | 56.5 | 98 | 955 | |
| | 1999.10-2001.06 | AT | F | R | Saloon FWD B4204T2/B4204T3 | Chassis no. to:600204 | GCI18171 | Inner Joint | | 26 | 26 | 40 | 429.5 | 93 | |
| | 1999.10-2001.06 | AT/MT | F | L/R | Saloon FWD B4204T2/B4204T3 | | GCO62012 | Outer Joint | 43T | 26 | 27 | 56.5 | 98 | 66.5 | M |
| | 1999.10-2001.06 | MT | F | L | Saloon FWD B4204T2/B4204T3 | | GDS62144 | Drive Shaft | 43T | 26 | 26 | 56.5 | 98 | 599 | |
| 2.0 (130 kw) | 2010.10-2012.12 | 6AT | F | L | Saloon FWD D 5204 T | | GDS62108 | Drive Shaft | | 36 | 31 | 56 | 48 | 506 | |
| | 2010.10-2012.12 | 6AT | F | R | Saloon FWD D 5204 T | | GDS62103 | Drive Shaft | | 36 | 28 | 56 | 48 | 955 | |
| | 2010.10-2012.12 | 6AT | F | L/R | Saloon FWD D 5204 T | | GCO99155 | Outer Joint | | 36 | 26 | 56 | 48 | 64 | I |
| | 2010.10-2012.12 | 6AT | F | R | Saloon FWD D 5204 T | | GCI62048 | Inner Joint | | 28 | 26 | 33 | 520 | 100.5 | |
| | 2010.10-2012.12 | 6MT | F | R | Saloon FWD D 5204 T | | GDS62062 | Drive Shaft | | 36 | 26 | 56 | 48 | 959 | |
| | 2010.10-2012.12 | 6MT | F | R | Saloon FWD D 5204 T | | GCO99155 | Outer Joint | | 36 | 26 | 56 | 48 | 64 | I |
| | 2010.10-2012.12 | 6MT | F | L | Saloon FWD D 5204 T | | GCI18159 | Inner Joint | | 26 | 26 | 40 | 67 | 96.5 | |
| | 2010.10-2012.12 | MT/6MT | F | L | Saloon FWD D 5204 T | | GDS18290 | Drive Shaft | | 36 | 26 | 56 | 48 | 530 | |

| | YEAR | TRANSM. | F/R | L/R | BODY STYLE & DRIVE TYPE & ENGINE | REMARKS | G-AP Ref. | PRODUCT | ABS | Technical Specifications A | B | C | H | L | P |
|---|---|---|---|---|---|---|---|---|---|---|---|---|---|---|---|
| **VOLVO** **S40** | | | | | | | | | | | | | | | |
| 2.0 (147 kw) | 2000.12-2003.12 | AT | F | L | Saloon FWD B4204T5 | Chassis no. from:946024 | GDS62089 | Drive Shaft | 43T | 26 | 26 | 56.5 | 98 | 593 | |
| | 2000.12-2003.12 | AT | F | L | Saloon FWD B4204T5 | | GDS62118 | Drive Shaft | 43T | 26 | 26 | 56.5 | 98 | 600 | |
| | 2000.12-2003.12 | AT | F | R | Saloon FWD B4204T5 | | GDS62044 | Drive Shaft | 43T | 26 | 26 | 56.5 | 98 | 955 | |
| | 2000.12-2003.12 | AT | F | R | Saloon FWD B4204T5 | Chassis no. to:600204 | GCI18171 | Inner Joint | | 26 | 26 | 40 | 429.5 | 93 | |
| | 2000.12-2003.12 | AT/MT | F | L/R | Saloon FWD B4204T5 | Date from:2000.12 | GCO62012 | Outer Joint | 43T | 26 | 27 | 56.5 | 98 | 66.5 | M |
| | 2000.12-2003.12 | MT | F | L | Saloon FWD B4204T5 | | GDS62064 | Drive Shaft | 43T | 26 | 26 | 56.5 | 98 | 607 | |
| | 2000.12-2003.12 | MT | F | R | Saloon FWD B4204T5 | | GDS62035 | Drive Shaft | 43T | 25 | 26 | 54 | 95 | 948 | |
| 2.4 (103 kw) | 2004.01-2010.12 | 5AT | F | L | Saloon FWD B 5244 S5 | | GDS62060 | Drive Shaft | | 36 | 26 | 56 | 48 | 519 | |
| | 2004.01-2010.12 | 5AT | F | R | Saloon FWD B 5244 S5 | | GDS62063 | Drive Shaft | | 36 | 26 | 56 | 48 | 947 | |
| | 2004.01-2010.12 | 5AT | F | L | Saloon FWD B 5244 S5 | | GCI99109 | Inner Joint | | 26 | 26 | 31 | 68 | 87 | |
| | 2004.01-2010.12 | 5AT/Semi-AT | F | L/R | Saloon FWD B 5244 S5 | | GCO62033 | Outer Joint | | 36 | 24 | 56 | 48 | 59 | I |
| | 2004.01-2010.12 | 5MT | F | L | Saloon FWD B 5244 S5 | | GDS18290 | Drive Shaft | | 36 | 26 | 56 | 48 | 530 | |
| | 2004.01-2010.12 | 5MT | F | R | Saloon FWD B 5244 S5 | TJ | GDS62062 | Drive Shaft | | 36 | 26 | 56 | 48 | 959 | |
| | 2004.01-2010.12 | 5MT | F | L | Saloon FWD B 5244 S5 | Chassis no. from:178129 | GCI18159 | Inner Joint | | 26 | 26 | 40 | 67 | 96.5 | |
| 2.4 (120 kw) | 2007.03-2010.12 | 5AT | F | R | Saloon FWD D 5244 T9 | | GDS62063 | Drive Shaft | | 36 | 26 | 56 | 48 | 947 | |
| | 2007.03-2010.12 | | F | L | Saloon FWD D 5244 T9 | | GDS62060 | Drive Shaft | | 36 | 26 | 56 | 48 | 519 | |
| | 2007.03-2010.12 | | F | R | Saloon FWD D 5244 T9 | | GCO62033 | Outer Joint | | 36 | 24 | 56 | 48 | 59 | I |
| | 2007.03-2010.12 | | F | L | Saloon FWD D 5244 T9 | | GCI99109 | Inner Joint | | 26 | 26 | 31 | 68 | 87 | |
| 2.4 (125 kw) | 2004.01-2012.12 | 5AT | F | R | Saloon FWD B 5244 S4 | | GDS62063 | Drive Shaft | | 36 | 26 | 56 | 48 | 947 | |
| | 2004.01-2012.12 | 5AT | F | L | Saloon FWD B 5244 S4 | | GCI99109 | Inner Joint | | 26 | 26 | 31 | 68 | 87 | |
| | 2004.01-2012.12 | 5MT | F | L | Saloon FWD B 5244 S4 | | GDS18290 | Drive Shaft | | 36 | 26 | 56 | 48 | 530 | |
| | 2004.01-2012.12 | 5MT | F | R | Saloon FWD B 5244 S4 | | GDS62062 | Drive Shaft | | 36 | 26 | 56 | 48 | 959 | |
| | 2004.01-2012.12 | 5MT | F | L | Saloon FWD B 5244 S4 | Chassis no. from:178129 | GCI18159 | Inner Joint | | 26 | 26 | 40 | 67 | 96.5 | |
| | 2004.01-2012.12 | AT | F | R | Saloon FWD B 5244 S4 | | GCO99132 | Outer Joint | | 36 | 24 | 56 | 48 | 57 | I |
| | 2004.01-2012.12 | AT/MT | F | L/R | Saloon FWD B 5244 S4 | | GCO62033 | Outer Joint | | 36 | 24 | 56 | 48 | 59 | I |
| | 2004.01-2012.12 | Semi-AT | F | L | Saloon FWD B 5244 S4 | | GDS62060 | Drive Shaft | | 36 | 26 | 56 | 48 | 519 | |
| 2.4 (132 kw) | 2006.03-2010.12 | 5AT | F | L | Saloon FWD D 5244 T8;D 5244 T13 | | GDS62060 | Drive Shaft | | 36 | 26 | 56 | 48 | 519 | |
| | 2006.03-2010.12 | 5AT | F | R | Saloon FWD D 5244 T8;D 5244 T13 | | GDS62063 | Drive Shaft | | 36 | 26 | 56 | 48 | 947 | |
| | 2006.03-2010.12 | 5AT | F | L/R | Saloon FWD D 5244 T8;D 5244 T13 | | GCO62033 | Outer Joint | | 36 | 24 | 56 | 48 | 59 | I |
| | 2006.03-2010.12 | 5AT | F | L | Saloon FWD D 5244 T8;D 5244 T13 | | GCI99109 | Inner Joint | | 26 | 26 | 31 | 68 | 87 | |
| | 2006.03-2010.12 | 6MT | F | L | Saloon FWD D 5244 T8;D 5244 T13 | | GDS18290 | Drive Shaft | | 36 | 26 | 56 | 48 | 530 | |
| | 2006.03-2010.12 | 6MT | F | R | Saloon FWD D 5244 T8;D 5244 T13 | | GDS62062 | Drive Shaft | | 36 | 26 | 56 | 48 | 959 | |
| | 2006.03-2010.12 | 6MT | F | L | Saloon FWD D 5244 T8;D 5244 T13 | | GCI18159 | Inner Joint | | 26 | 26 | 40 | 67 | 96.5 | |
| | 2006.03-2010.12 | AT | F | R | Saloon FWD D 5244 T8;D 5244 T13 | | GCO99132 | Outer Joint | | 36 | 24 | 56 | 48 | 57 | I |
| 2.5 (162 kw) | 2004.01-2007.12 | 5AT | F | R | Saloon FWD B 5254 T3 | | GDS62063 | Drive Shaft | | 36 | 26 | 56 | 48 | 947 | |
| | 2004.01-2007.12 | 6MT | F | L | Saloon FWD B 5254 T3 | | GDS18290 | Drive Shaft | | 36 | 26 | 56 | 48 | 530 | |
| | 2004.01-2007.12 | 6MT | F | R | Saloon FWD B 5254 T3 | | GDS62062 | Drive Shaft | | 36 | 26 | 56 | 48 | 959 | |
| | 2004.01-2007.12 | 6MT | F | L | Saloon FWD B 5254 T3 | Drive Type:Front Wheel Drive;Chassis no. from:178129 | GCI18159 | Inner Joint | | 26 | 26 | 40 | 67 | 96.5 | |
| | 2004.01-2007.12 | AT | F | R | Saloon FWD B 5254 T3 | | GCO99132 | Outer Joint | | 36 | 24 | 56 | 48 | 57 | I |
| | 2004.01-2007.12 | AT | F | L | Saloon FWD B 5254 T3 | | GCI99109 | Inner Joint | | 26 | 26 | 31 | 68 | 87 | |
| | 2004.01-2007.12 | AT/MT | F | L/R | Saloon FWD B 5254 T3 | | GCO62033 | Outer Joint | | 36 | 24 | 56 | 48 | 59 | I |
| | 2004.01-2007.12 | AT/Semi-AT | F | L | Saloon FWD B 5254 T3 | | GDS62060 | Drive Shaft | | 36 | 26 | 56 | 48 | 519 | |
| | 2004.01-2007.12 | MT | F | R | Saloon FWD B 5254 T3 | | GCI62046 | Inner Joint | | 26 | 26 | 28 | 513.5 | 93 | |
| | 2004.04-2007.12 | 5AT | F | R | Saloon 4WD B 5254 T3 | Chassis no. to:452736 | GDS62100 | Drive Shaft | | 36 | 26 | 56 | 48 | 954 | |
| | 2004.04-2007.12 | 5AT | F | R | Saloon 4WD B 5254 T3 | Chassis no. from:452737 | GDS62102 | Drive Shaft | | 36 | 26 | 56 | 48 | 954 | |
| | 2004.04-2007.12 | 5AT | F | L/R | Saloon 4WD B 5254 T3 | Chassis no. to:452736 | GCO99155 | Outer Joint | | 36 | 26 | 56 | 48 | 64 | I |
| | 2004.04-2007.12 | 5AT | F | R | Saloon 4WD B 5254 T3 | | GCI62046 | Inner Joint | | 26 | 26 | 28 | 513.5 | 93 | |
| | 2004.04-2007.12 | 6MT | F | L | Saloon 4WD B 5254 T3 | | GDS62106 | Drive Shaft | | 36 | 26 | 56 | 48 | 539 | |
| | 2004.04-2007.12 | 6MT | F | R | Saloon 4WD B 5254 T3 | Chassis no. to:452736 | GDS62098 | Drive Shaft | | 36 | 26 | 56 | 48 | 968 | |
| | 2004.04-2007.12 | 6MT | F | R | Saloon 4WD B 5254 T3 | Chassis no. from:452737 | GDS62101 | Drive Shaft | | 36 | 26 | 56 | 48 | 969 | |
| | 2004.04-2007.12 | AT/5AT | F | L | Saloon 4WD B 5254 T3 | | GDS62060 | Drive Shaft | | 36 | 26 | 56 | 48 | 519 | |
| | 2004.04-2007.12 | MT | F | L | Saloon 4WD B 5254 T3 | | GDS18290 | Drive Shaft | | 36 | 26 | 56 | 48 | 530 | |
| | 2004.04-2007.12 | | F | R | Saloon 4WD B 5254 T3 | | GDS62063 | Drive Shaft | | 36 | 26 | 56 | 48 | 947 | |
| | 2004.04-2007.12 | 5AT/6MT | R | L/R | Saloon 4WD B 5254 T3 | | GCI44031 | Inner Joint | | 26 | 20 | 35 | 69.5 | 81 | |
| | 2004.04-2007.12 | SAT/6MT | R | L/R | Saloon 4WD B 5254 T3 | | GDS81131 | Drive Shaft | 44NS | 36 | 26 | 56.5 | 50 | 727 | |
| 2.5 (169 kw) | 2007.03-2010.12 | 5AT | F | R | Saloon 4WD B 5254 T7 | | GDS62102 | Drive Shaft | | 36 | 26 | 56 | 48 | 954 | |
| | 2007.03-2010.12 | 5AT | F | R | Saloon 4WD B 5254 T7 | Chassis no. from:452737 | GCI62047 | Inner Joint | | 26 | 26 | 29.97 | 513.5 | 93 | |
| | 2007.03-2010.12 | 6MT | F | L | Saloon 4WD B 5254 T7 | | GDS62106 | Drive Shaft | | 36 | 26 | 56 | 48 | 539 | |
| | 2007.03-2010.12 | 6MT | F | R | Saloon 4WD B 5254 T7 | Chassis no. to:472491 | GDS62098 | Drive Shaft | | 36 | 26 | 56 | 48 | 968 | |
| | 2007.03-2010.12 | 6MT | F | R | Saloon 4WD B 5254 T7 | Chassis no. from:472492 | GDS62101 | Drive Shaft | | 36 | 26 | 56 | 48 | 969 | |
| | 2007.03-2010.12 | 6MT | F | L/R | Saloon 4WD B 5254 T7 | | GCO99155 | Outer Joint | | 36 | 26 | 56 | 48 | 64 | I |
| | 2007.03-2010.12 | 6MT | F | R | Saloon 4WD B 5254 T7 | Chassis no. from:452737 | GCI62045 | Inner Joint | | 26 | 26 | 28 | 528 | 93 | |
| | 2007.03-2010.12 | AT/5AT | F | L | Saloon 4WD B 5254 T7 | | GDS62060 | Drive Shaft | | 36 | 26 | 56 | 48 | 519 | |
| | 2007.03-2010.12 | MT | F | L | Saloon 4WD B 5254 T7 | | GDS18290 | Drive Shaft | | 36 | 26 | 56 | 48 | 530 | |
| | 2007.03-2010.12 | 5AT/6MT | R | L/R | Saloon 4WD B 5254 T7 | | GDS81131 | Drive Shaft | 44NS | 36 | 26 | 56.5 | 50 | 727 | |

| | YEAR | TRANSM. | F/R | L/R | BODY STYLE & DRIVE TYPE & ENGINE | REMARKS | G-AP Ref. | PRODUCT | ABS | Technical Specifications A | B | C | H | L | P |
|---|---|---|---|---|---|---|---|---|---|---|---|---|---|---|---|
| **VOLVO** | | | | | | | | | | | | | | | |
| **S40** | | | | | | | | | | | | | | | |
| 2.5 (169 kw) | 2007.03-2010.12 | 5AT/6MT | R | L/R | Saloon 4WD B 5254 T7 | | GCI44031 | Inner Joint | | 26 | 20 | 35 | 69.5 | 81 | |
| | 2007.03-2010.12 | 5AT/6MT | R | L/R | Saloon 4WD B 5254 T7 | | GCI44032 | Inner Joint | 44NS | 36 | 20 | 56.6 | 50 | 81.5 | |
| | 2007.03-2012.12 | 5AT | F | R | Saloon FWD B 5254 T7 | | GDS62063 | Drive Shaft | | 36 | 26 | 56 | 48 | 947 | |
| | 2007.03-2012.12 | 6MT | F | L | Saloon FWD B 5254 T7 | | GDS18290 | Drive Shaft | | 36 | 26 | 56 | 48 | 530 | |
| | 2007.03-2012.12 | 6MT | F | R | Saloon FWD B 5254 T7 | | GDS62062 | Drive Shaft | | 36 | 26 | 56 | 48 | 959 | |
| | 2007.03-2012.12 | 6MT | F | L | Saloon FWD B 5254 T7 | Drive Type:Front Wheel Drive;Chassis no. from:178129 | GCI18159 | Inner Joint | | 26 | 26 | 40 | 67 | 96.5 | |
| | 2007.03-2012.12 | AT | F | L | Saloon FWD B 5254 T7 | | GDS62060 | Drive Shaft | | 36 | 26 | 56 | 48 | 519 | |
| | 2007.03-2012.12 | AT | F | R | Saloon FWD B 5254 T7 | | GCO99132 | Outer Joint | | 36 | 24 | 56 | 48 | 57 | I |
| | 2007.03-2012.12 | AT | F | L/R | Saloon FWD B 5254 T7 | | GCO62033 | Outer Joint | | 36 | 24 | 56 | 48 | 59 | I |
| | 2007.03-2012.12 | AT | F | L | Saloon FWD B 5254 T7 | | GCI99109 | Inner Joint | | 26 | 26 | 31 | 68 | 87 | |
| **S60** | | | | | | | | | | | | | | | |
| 1.5 (90 kw) | 2015.10-2018.05 | 6AT | F | L | Saloon FWD B 4154 T5 | | GDS83640 | Drive Shaft | | 40 | 26 | 57.7 | 52 | 576 | |
| | 2015.10-2018.05 | 6AT | F | R | Saloon FWD B 4154 T5 | | GDS83661 | Drive Shaft | | 40 | 26 | 57.7 | 52 | 953 | |
| | 2015.10-2018.05 | 6AT | F | L | Saloon FWD B 4154 T5 | | GCO62052 | Outer Joint | | 40 | 25 | 57.7 | 52 | 59.5 | I |
| | 2015.10-2018.05 | 6AT | F | L | Saloon FWD B 4154 T5 | | GCI82187 | Inner Joint | | 26 | 24 | 31 | 72 | 94 | |
| | 2015.10-2018.05 | 6AT | F | R | Saloon FWD B 4154 T5 | | GCI82304 | Inner Joint | | 26 | 24 | 31 | 454 | 98 | |
| 1.5 (112 kw) | 2015.03-2018.05 | 6AT | F | L | Saloon FWD B 4154 T4 | | GDS83640 | Drive Shaft | | 40 | 26 | 57.7 | 52 | 576 | |
| | 2015.03-2018.05 | 6AT | F | R | Saloon FWD B 4154 T4 | | GDS83661 | Drive Shaft | | 40 | 26 | 57.7 | 52 | 953 | |
| | 2015.03-2018.05 | 6AT | F | L | Saloon FWD B 4154 T4 | | GCO62052 | Outer Joint | | 40 | 25 | 57.7 | 52 | 59.5 | I |
| | 2015.03-2018.05 | 6AT | F | L | Saloon FWD B 4154 T4 | | GCI82187 | Inner Joint | | 26 | 24 | 31 | 72 | 94 | |
| | 2015.03-2018.05 | 6AT | F | R | Saloon FWD B 4154 T4 | | GCI82304 | Inner Joint | | 26 | 24 | 31 | 454 | 98 | |
| 1.6 (84 kw) | 2011.01-2015.12 | 6DCT | F | L | Saloon FWD D 4162 T | | GDS62127 | Drive Shaft | | 40 | 28 | 57.7 | 52 | 602 | |
| | 2011.01-2015.12 | 6DCT | F | R | Saloon FWD D 4162 T | | GDS62133 | Drive Shaft | | 40 | 28 | 57.7 | 52 | 934 | |
| | 2011.01-2015.12 | 6DCT | F | L | Saloon FWD D 4162 T | | GCI62056 | Inner Joint | | 28 | 24 | 33.8 | 80 | 95.5 | |
| | 2011.01-2015.12 | 6DCT | F | R | Saloon FWD D 4162 T | | GCI62067 | Inner Joint | | 28 | 24 | 33.8 | 374.5 | 98.5 | |
| | 2011.01-2015.12 | 6MT | F | L | Saloon FWD D 4162 T | | GDS62093 | Drive Shaft | | 40 | 26 | 57.7 | 52 | 610 | |
| | 2011.01-2015.12 | 6MT | F | R | Saloon FWD D 4162 T | | GDS62094 | Drive Shaft | | 40 | 26 | 57.7 | 52 | 946 | |
| | 2011.01-2015.12 | 6MT | F | L | Saloon FWD D 4162 T | | GCI18128 | Inner Joint | | 26 | 28 | 40 | 68.5 | 111 | |
| | 2011.01-2015.12 | 6MT | F | R | Saloon FWD D 4162 T | | GCI18129 | Inner Joint | | 26 | 28 | 40 | 389 | 96.5 | |
| | 2011.01-2015.12 | MT/6MT | F | L/R | Saloon FWD D 4162 T | | GCO99271 | Outer Joint | | 40 | 28 | 57.7 | 51 | 63 | M |
| 1.6 (110 kw) | 2010.04-2015.12 | 6DCT | F | L | Saloon FWD B 4164 T3 | | GDS62081 | Drive Shaft | | 40 | 28 | 57.7 | 51 | 591 | |
| | 2010.04-2015.12 | 6DCT | F | L | Saloon FWD B 4164 T3 | | GDS62095 | Drive Shaft | | 40 | 28 | 57.7 | 52 | 592 | |
| | 2010.04-2015.12 | 6DCT | F | R | Saloon FWD B 4164 T3 | | GDS62082 | Drive Shaft | | 40 | 28 | 57.7 | 51 | 950 | |
| | 2010.04-2015.12 | 6DCT | F | R | Saloon FWD B 4164 T3 | | GDS62096 | Drive Shaft | | 40 | 28 | 57.7 | 52 | 952 | |
| | 2010.04-2015.12 | 6DCT | F | L | Saloon FWD B 4164 T3 | | GCI81077 | Inner Joint | | 28 | 28 | 34 | 80 | 95.5 | |
| | 2010.04-2015.12 | 6DCT | F | R | Saloon FWD B 4164 T3 | | GCI81078 | Inner Joint | | 28 | 28 | 34 | 446.5 | 95.5 | |
| | 2010.04-2015.12 | 6MT | F | L | Saloon FWD B 4164 T3 | | GDS99211 | Drive Shaft | | 40 | 26 | 57.7 | 51 | 603 | |
| | 2010.04-2015.12 | 6MT | F | R | Saloon FWD B 4164 T3 | | GDS62084 | Drive Shaft | | 40 | 26 | 57.7 | 51 | 963 | |
| | 2010.04-2015.12 | 6MT | F | L/R | Saloon FWD B 4164 T3 | | GCO99271 | Outer Joint | | 40 | 28 | 57.7 | 51 | 63 | M |
| | 2010.04-2015.12 | 6MT | F | R | Saloon FWD B 4164 T3 | | GCI62041 | Inner Joint | | 26 | 28 | 40 | 447 | 95.5 | |
| 1.6 (132 kw) | 2010.04-2015.12 | 6DCT | F | L | Saloon FWD B 4164 T | | GDS62081 | Drive Shaft | | 40 | 28 | 57.7 | 51 | 591 | |
| | 2010.04-2015.12 | 6DCT | F | L | Saloon FWD B 4164 T | | GDS62095 | Drive Shaft | | 40 | 28 | 57.7 | 52 | 592 | |
| | 2010.04-2015.12 | 6DCT | F | R | Saloon FWD B 4164 T | | GDS62082 | Drive Shaft | | 40 | 28 | 57.7 | 51 | 950 | |
| | 2010.04-2015.12 | 6DCT | F | R | Saloon FWD B 4164 T | | GDS62096 | Drive Shaft | | 40 | 28 | 57.7 | 52 | 952 | |
| | 2010.04-2015.12 | 6DCT | F | L | Saloon FWD B 4164 T | | GCI81077 | Inner Joint | | 28 | 28 | 34 | 80 | 95.5 | |
| | 2010.04-2015.12 | 6DCT | F | R | Saloon FWD B 4164 T | | GCI81078 | Inner Joint | | 28 | 28 | 34 | 446.5 | 95.5 | |
| | 2010.04-2015.12 | 6MT | F | L | Saloon FWD B 4164 T | | GDS99211 | Drive Shaft | | 40 | 26 | 57.7 | 51 | 603 | |
| | 2010.04-2015.12 | 6MT | F | R | Saloon FWD B 4164 T | | GDS62084 | Drive Shaft | | 40 | 26 | 57.7 | 51 | 963 | |
| | 2010.04-2015.12 | 6MT | F | L/R | Saloon FWD B 4164 T | | GCO99271 | Outer Joint | | 40 | 28 | 57.7 | 51 | 63 | M |
| | 2010.04-2015.12 | 6MT | F | R | Saloon FWD B 4164 T | | GCI62041 | Inner Joint | | 26 | 28 | 40 | 447 | 95.5 | |
| | 2011.04-2015.12 | 6DCT | F | L | Saloon FWD B 4164 T2 | | GDS62081 | Drive Shaft | | 40 | 28 | 57.7 | 51 | 591 | |
| | 2011.04-2015.12 | 6DCT | F | L | Saloon FWD B 4164 T2 | | GDS62095 | Drive Shaft | | 40 | 28 | 57.7 | 52 | 592 | |
| | 2011.04-2015.12 | 6DCT | F | R | Saloon FWD B 4164 T2 | | GDS62082 | Drive Shaft | | 40 | 28 | 57.7 | 51 | 950 | |
| | 2011.04-2015.12 | 6DCT | F | R | Saloon FWD B 4164 T2 | | GDS62096 | Drive Shaft | | 40 | 28 | 57.7 | 52 | 952 | |
| | 2011.04-2015.12 | 6DCT | F | L | Saloon FWD B 4164 T2 | | GCI81077 | Inner Joint | | 28 | 28 | 34 | 80 | 95.5 | |
| | 2011.04-2015.12 | 6DCT | F | R | Saloon FWD B 4164 T2 | | GCI81078 | Inner Joint | | 28 | 28 | 34 | 446.5 | 95.5 | |
| | 2011.04-2015.12 | 6MT | F | L | Saloon FWD B 4164 T2 | | GDS99211 | Drive Shaft | | 40 | 26 | 57.7 | 51 | 603 | |
| | 2011.04-2015.12 | 6MT | F | R | Saloon FWD B 4164 T2 | | GDS62084 | Drive Shaft | | 40 | 26 | 57.7 | 51 | 963 | |
| | 2011.04-2015.12 | 6MT | F | L/R | Saloon FWD B 4164 T2 | | GCO99271 | Outer Joint | | 40 | 28 | 57.7 | 51 | 63 | M |
| | 2011.04-2015.12 | 6MT | F | R | Saloon FWD B 4164 T2 | | GCI62041 | Inner Joint | | 26 | 28 | 40 | 447 | 95.5 | |
| 2.0 (88 kw) | 2015.03-2018.05 | 6AT | F | L | Saloon FWD D 4204 T8;D 4204 T20 | | GDS83640 | Drive Shaft | | 40 | 26 | 57.7 | 52 | 576 | |
| | 2015.03-2018.05 | 6AT | F | R | Saloon FWD D 4204 T8;D 4204 T20 | | GDS83661 | Drive Shaft | | 40 | 26 | 57.7 | 52 | 953 | |
| | 2015.03-2018.05 | 6AT | F | L | Saloon FWD D 4204 T8;D 4204 T20 | | GCI82187 | Inner Joint | | 26 | 24 | 31 | 72 | 94 | |
| | 2015.03-2018.05 | 6MT | F | L | Saloon FWD D 4204 T8;D 4204 T20 | | GDS62119 | Drive Shaft | | 40 | 31 | 57.7 | 52 | 599 | |
| | 2015.03-2018.05 | 6MT | F | R | Saloon FWD D 4204 T8;D 4204 T20 | | GDS62117 | Drive Shaft | | 40 | 28 | 57.7 | 52 | 949 | |

| | YEAR | TRANSM. | F/R | L/R | BODY STYLE & DRIVE TYPE & ENGINE | REMARKS | G-AP Ref. | PRODUCT | ABS | Technical Specifications | | | | | |
|---|---|---|---|---|---|---|---|---|---|---|---|---|---|---|---|
| | | | | | | | | | | A | B | C | H | L | P |
| **VOLVO** **S60** | | | | | | | | | | | | | | | |
| 2.0 (88 kw) | 2015.03-2018.05 | 8AT | F | R | Saloon FWD D 4204 T8;D 4204 T20 | | GCI82304 | Inner Joint | | 26 | 24 | 31 | 454 | 98 | |
| | 2015.03-2018.05 | MT | F | L | Saloon FWD D 4204 T8;D 4204 T20 | | GCI62060 | Inner Joint | | 31 | 26 | 44 | 79 | 105 | |
| | 2015.03-2018.05 | MT | F | R | Saloon FWD D 4204 T8;D 4204 T20 | | GCI62062 | Inner Joint | | 28 | 26 | 40 | 454 | 92 | |
| | 2015.03-2018.05 | MT/6AT | F | L/R | Saloon FWD D 4204 T8;D 4204 T20 | | GCO62052 | Outer Joint | | 40 | 25 | 57.7 | 52 | 59.5 | I |
| 2.0 (100 kw) | 2012.05-2015.12 | 6AT | F | L | Saloon FWD D 5204 T7 | | GDS62109 | Drive Shaft | | 40 | 31 | 57.7 | 52 | 524 | |
| | 2012.05-2015.12 | 6AT | F | R | Saloon FWD D 5204 T7 | Chassis no. from:218431 | GDS62091 | Drive Shaft | | 40 | 28 | 57.7 | 52 | 992 | |
| | 2012.05-2015.12 | 6AT | F | L/R | Saloon FWD D 5204 T7 | Different retainers | GCO59344 | Outer Joint | | 40 | 26 | 57.7 | 52 | 63.5 | M |
| | 2012.05-2015.12 | 6AT | F | L/R | Saloon FWD D 5204 T7 | Different retainers | GCO62045 | Outer Joint | | 40 | 26 | 57.7 | 52 | 62.5 | M |
| | 2012.05-2015.12 | 6AT | F | R | Saloon FWD D 5204 T7 | Chassis no. from:218431 | GCI62043 | Inner Joint | | 28 | 26 | 33 | 521 | 100 | |
| | 2012.05-2015.12 | 6MT | F | L | Saloon FWD D 5204 T7 | | GDS21070 | Drive Shaft | | 40 | 26 | 57.7 | 52 | 556 | |
| | 2012.05-2015.12 | 6MT | F | R | Saloon FWD D 5204 T7 | | GDS62086 | Drive Shaft | | 40 | 26 | 57.7 | 52 | 1002 | |
| | 2012.05-2015.12 | 6MT | F | L/R | Saloon FWD D 5204 T7 | | GCO59285 | Outer Joint | | 40 | 27 | 57.7 | 52 | 63.5 | M |
| | 2012.05-2015.12 | | F | R | Saloon FWD D 5204 T7 | | GCI81076 | Inner Joint | | 26 | 28 | 40 | 522.5 | 123.7 | |
| 2.0 (110 kw) | 2015.03-2018.05 | 6AT | F | L | Saloon FWD D 4204 T9;D 4204 T4 | | GDS83640 | Drive Shaft | | 40 | 26 | 57.7 | 52 | 576 | |
| | 2015.03-2018.05 | 6AT | F | R | Saloon FWD D 4204 T9;D 4204 T4 | | GDS83661 | Drive Shaft | | 40 | 26 | 57.7 | 52 | 953 | |
| | 2015.03-2018.05 | 6AT | F | L | Saloon FWD D 4204 T9;D 4204 T4 | | GCI82187 | Inner Joint | | 26 | 24 | 31 | 72 | 94 | |
| | 2015.03-2018.05 | 6AT | F | R | Saloon FWD D 4204 T9;D 4204 T4 | | GCI82304 | Inner Joint | | 26 | 24 | 31 | 454 | 98 | |
| | 2015.03-2018.05 | 6MT | F | L | Saloon FWD D 4204 T9;D 4204 T4 | | GDS62119 | Drive Shaft | | 40 | 31 | 57.7 | 52 | 599 | |
| | 2015.03-2018.05 | 6MT | F | R | Saloon FWD D 4204 T9;D 4204 T4 | | GDS62117 | Drive Shaft | | 40 | 28 | 57.7 | 52 | 949 | |
| | 2015.03-2018.05 | 8AT | F | L | Saloon FWD D 4204 T9;D 4204 T4 | | GDS81373 | Drive Shaft | | 40 | 31 | 57.5 | 52 | 581 | |
| | 2015.03-2018.05 | 8AT | F | R | Saloon FWD D 4204 T9;D 4204 T4 | Model:S60 Cross Country | GDS81374 | Drive Shaft | | 40 | 28 | 57.5 | 52 | 961 | |
| | 2015.03-2018.05 | 8AT | F | L | Saloon FWD D 4204 T9;D 4204 T4 | | GCO81181 | Outer Joint | | 40 | 28 | 57.5 | 52 | 60.5 | I |
| | 2015.03-2018.05 | 8AT | F | L | Saloon FWD D 4204 T9;D 4204 T4 | Transmission side | GCO81424 | Inner Joint | | 31 | 27 | 36.2 | 70 | 62 | |
| | 2015.03-2018.05 | 8AT | F | R | Saloon FWD D 4204 T9;D 4204 T4 | Model:S60 Cross Country | GCO81427 | Inner Joint | | 28 | 27 | 33 | 453 | 57 | |
| | 2015.03-2018.05 | MT | F | L | Saloon FWD D 4204 T9;D 4204 T4 | | GCI62060 | Inner Joint | | 31 | 26 | 44 | 79 | 105 | |
| | 2015.03-2018.05 | MT | F | R | Saloon FWD D 4204 T9;D 4204 T4 | | GCI62062 | Inner Joint | | 28 | 26 | 40 | 454 | 92 | |
| | 2015.03-2018.05 | MT/6AT | F | L/R | Saloon FWD D 4204 T9;D 4204 T4 | | GCO62052 | Outer Joint | | 40 | 25 | 57.7 | 52 | 59.5 | I |
| 2.0 (112 kw) | 2015.03-2018.05 | 6MT | F | L | Saloon FWD B 4204 T37 | | GDS62119 | Drive Shaft | | 40 | 31 | 57.7 | 52 | 599 | |
| | 2015.03-2018.05 | 6MT | F | R | Saloon FWD B 4204 T37 | | GDS62117 | Drive Shaft | | 40 | 28 | 57.7 | 52 | 949 | |
| | 2015.03-2018.05 | 6MT | F | L/R | Saloon FWD B 4204 T37 | | GCO62052 | Outer Joint | | 40 | 25 | 57.7 | 52 | 59.5 | I |
| | 2015.03-2018.05 | 6MT | F | L | Saloon FWD B 4204 T37 | | GCI62060 | Inner Joint | | 31 | 26 | 44 | 79 | 105 | |
| | 2015.03-2018.05 | 6MT | F | R | Saloon FWD B 4204 T37 | | GCI62062 | Inner Joint | | 28 | 26 | 40 | 454 | 92 | |
| 2.0 (120 kw) | 2010.04-2014.12 | 6AT | F | L | Saloon FWD D 5204 T2;D 5204 T3 | Chassis no. to:218430 | GDS62076 | Drive Shaft | | 40 | 31 | 57.7 | 52 | 529 | |
| | 2010.04-2014.12 | 6AT | F | L | Saloon FWD D 5204 T2;D 5204 T3 | Chassis no. from:218431 | GDS62109 | Drive Shaft | | 40 | 31 | 57.7 | 52 | 524 | |
| | 2010.04-2014.12 | 6AT | F | R | Saloon FWD D 5204 T2;D 5204 T3 | Chassis no. to:218430 | GDS59444 | Drive Shaft | | 40 | 28 | 57.7 | 52 | 994 | |
| | 2010.04-2014.12 | 6AT | F | R | Saloon FWD D 5204 T2;D 5204 T3 | Chassis no. from:218431 | GDS62091 | Drive Shaft | | 40 | 28 | 57.7 | 52 | 992 | |
| | 2010.04-2014.12 | 6AT | F | L/R | Saloon FWD D 5204 T2;D 5204 T3 | Chassis no. from:218431;Different retainers | GCO59344 | Outer Joint | | 40 | 26 | 57.7 | 52 | 63.5 | M |
| | 2010.04-2014.12 | 6AT | F | L/R | Saloon FWD D 5204 T2;D 5204 T3 | Chassis no. to:218430 | GCO62042 | Outer Joint | | 40 | 27 | 57.7 | 52 | 63.5 | M |
| | 2010.04-2014.12 | 6AT | F | L/R | Saloon FWD D 5204 T2;D 5204 T3 | Chassis no. from:218431;Different retainers | GCO62045 | Outer Joint | | 40 | 26 | 57.7 | 52 | 62.5 | M |
| | 2010.04-2014.12 | 6AT | F | L | Saloon FWD D 5204 T2;D 5204 T3 | Chassis no. to:218430 | GCI62034 | Inner Joint | | 31 | 27 | 36.2 | 68 | 90 | |
| | 2010.04-2014.12 | 6AT | F | R | Saloon FWD D 5204 T2;D 5204 T3 | Chassis no. from:218431 | GCI62043 | Inner Joint | | 28 | 26 | 33 | 521 | 100 | |
| | 2010.04-2014.12 | 6MT | F | L | Saloon FWD D 5204 T2;D 5204 T3 | | GDS21070 | Drive Shaft | | 40 | 26 | 57.7 | 52 | 556 | |
| | 2010.04-2014.12 | 6MT | F | R | Saloon FWD D 5204 T2;D 5204 T3 | | GDS62086 | Drive Shaft | | 40 | 26 | 57.7 | 52 | 1002 | |
| | 2010.04-2014.12 | 6MT | F | L/R | Saloon FWD D 5204 T2;D 5204 T3 | | GCO59285 | Outer Joint | | 40 | 27 | 57.7 | 52 | 63.5 | M |
| | 2010.04-2014.12 | 6MT | F | R | Saloon FWD D 5204 T2;D 5204 T3 | | GCI81076 | Inner Joint | | 26 | 28 | 40 | 522.5 | 123.7 | |
| | 2010.04-2014.12 | 6AT | F | L | Saloon FWD D 5204 T3 | Chassis no. to:218430 | GDS62076 | Drive Shaft | | 40 | 31 | 57.7 | 52 | 529 | |
| | 2010.04-2014.12 | 6AT | F | L | Saloon FWD D 5204 T3 | Chassis no. from:218431 | GDS62109 | Drive Shaft | | 40 | 31 | 57.7 | 52 | 524 | |
| | 2010.04-2014.12 | 6AT | F | R | Saloon FWD D 5204 T3 | Chassis no. to:218430 | GDS59444 | Drive Shaft | | 40 | 28 | 57.7 | 52 | 994 | |
| | 2010.04-2014.12 | 6AT | F | R | Saloon FWD D 5204 T3 | Chassis no. from:218431 | GDS62091 | Drive Shaft | | 40 | 28 | 57.7 | 52 | 992 | |
| | 2010.04-2014.12 | 6MT | F | L | Saloon FWD D 5204 T3 | | GDS21070 | Drive Shaft | | 40 | 26 | 57.7 | 52 | 556 | |
| | 2010.04-2014.12 | 6MT | F | R | Saloon FWD D 5204 T3 | | GDS62086 | Drive Shaft | | 40 | 26 | 57.7 | 52 | 1002 | |
| 2.0 (132 kw) | 2000.07-2010.04 | AT | F | L | Saloon FWD B 5204 T5 | | GDS62022 | Drive Shaft | 48T | 36 | 26 | 56.5 | 48 | 527 | |
| | 2000.07-2010.04 | AT | F | R | Saloon FWD B 5204 T5 | | GDS62017 | Drive Shaft | 48T | 36 | 26 | 56.5 | 48 | 978.5 | |
| | 2000.07-2010.04 | AT | F | L | Saloon FWD B 5204 T5 | | GCI99109 | Inner Joint | | 26 | 26 | 31 | 68 | 87 | |
| | 2000.07-2010.04 | AT | F | R | Saloon FWD B 5204 T5 | | GCI62029 | Inner Joint | | 26 | 26 | 31 | 513 | 93.5 | |
| | 2000.07-2010.04 | AT/MT | F | L/R | Saloon FWD B 5204 T5 | | GCO62009 | Outer Joint | 48T | 36 | 27 | 56.5 | 48 | 66 | M |
| | 2000.07-2010.04 | MT | F | L | Saloon FWD B 5204 T5 | | GDS62057 | Drive Shaft | 48T | 36 | 26 | 56.5 | 48 | 546 | |
| | 2000.07-2010.04 | MT | F | R | Saloon FWD B 5204 T5 | | GDS62031 | Drive Shaft | 48T | 36 | 26 | 56.5 | 48 | 992 | |
| | 2012.05-2015.12 | 6AT | F | L | Saloon FWD B 5204 T8 | Chassis no. to:273341,For Salescode:FC21/FC22 | GDS62076 | Drive Shaft | | 40 | 31 | 57.7 | 52 | 529 | |
| | 2012.05-2015.12 | 6AT | F | L | Saloon FWD B 5204 T8 | Chassis no. from:273342,For Salescode:FC21/FC22 | GDS62109 | Drive Shaft | | 40 | 31 | 57.7 | 52 | 524 | |
| | 2012.05-2015.12 | 6AT | F | R | Saloon FWD B 5204 T8 | Chassis no. to:273341/271937,For Salescode:FC21/FC22 | GDS59444 | Drive Shaft | | 40 | 28 | 57.7 | 52 | 994 | |
| | 2012.05-2015.12 | 6AT | F | R | Saloon FWD B 5204 T8 | Chassis no. from:273342/271938,For Salescode:FC21/FC22 | GDS62091 | Drive Shaft | | 40 | 28 | 57.7 | 52 | 992 | |
| | 2012.05-2015.12 | | F | L | Saloon FWD B 5204 T8 | For Salescode:FC21:For Salescode:FC22:Chassis no. from:271938;Chassis no. from:273342 | GCO62045 | Outer Joint | | 40 | 26 | 57.7 | 52 | 62.5 | M |
| | 2012.05-2015.12 | | F | R | Saloon FWD B 5204 T8 | For Salescode:FC21:For Salescode:FC22:Chassis no. from:271938;Chassis no. from:273342 | GCI62043 | Inner Joint | | 28 | 26 | 33 | 521 | 100 | |
| 2.0 (133 kw) | 2013.09-2015.12 | 6MT | F | L | Saloon FWD D 4204 T5 | | GDS62119 | Drive Shaft | | 40 | 31 | 57.7 | 52 | 599 | |

| | YEAR | TRANSM. | F/R | L/R | BODY STYLE & DRIVE TYPE & ENGINE | REMARKS | G-AP Ref. | PRODUCT | ABS | Technical Specifications | | | | | |
|---|---|---|---|---|---|---|---|---|---|---|---|---|---|---|---|
| | | | | | | | | | | A | B | C | H | L | P |
| **VOLVO** **S60** | | | | | | | | | | | | | | | |
| 2.0 (133 kw) | 2013.09-2015.12 | 6MT | F | R | Saloon FWD D 4204 T5 | | GDS62117 | Drive Shaft | | 40 | 28 | 57.7 | 52 | 949 | |
| | 2013.09-2015.12 | AT | F | L | Saloon FWD D 4204 T5 | | GDS62126 | Drive Shaft | | 40 | 31 | 57.5 | 52 | 576 | |
| | 2013.09-2015.12 | AT | F | R | Saloon FWD D 4204 T5 | | GDS62124 | Drive Shaft | | 40 | 28 | 57.5 | 52 | 954 | |
| | 2013.09-2015.12 | AT | F | L/R | Saloon FWD D 4204 T5 | | GCO62053 | Outer Joint | | 40 | 27 | 57.5 | 52 | 60.5 | I |
| | 2013.09-2015.12 | AT | F | L | Saloon FWD D 4204 T5 | | GCI62034 | Inner Joint | | 31 | 27 | 36.2 | 68 | 90 | |
| | 2013.09-2015.12 | AT | F | R | Saloon FWD D 4204 T5 | | GCI62065 | Inner Joint | | 28 | 27 | 33 | 454 | 94 | |
| | 2013.09-2015.12 | MT | F | L/R | Saloon FWD D 4204 T5 | | GCO62052 | Outer Joint | | 40 | 25 | 57.7 | 52 | 59.5 | I |
| | 2013.09-2015.12 | MT | F | L | Saloon FWD D 4204 T5 | | GCI62060 | Inner Joint | | 31 | 26 | 44 | 79 | 105 | |
| | 2013.09-2015.12 | MT | F | R | Saloon FWD D 4204 T5 | | GCI62062 | Inner Joint | | 28 | 26 | 40 | 454 | 92 | |
| 2.0 (140 kw) | 2015.03-2018.05 | 6AT | F | L | Saloon FWD B 4204 T19 | | GDS83640 | Drive Shaft | | 40 | 26 | 57.7 | 52 | 576 | |
| | 2015.03-2018.05 | 6AT | F | R | Saloon FWD B 4204 T19 | | GDS83661 | Drive Shaft | | 40 | 26 | 57.7 | 52 | 953 | |
| | 2015.03-2018.05 | 6AT | F | L | Saloon FWD B 4204 T19 | | GCI82187 | Inner Joint | | 26 | 24 | 31 | 72 | 94 | |
| | 2015.03-2018.05 | 6AT | F | R | Saloon FWD B 4204 T19 | | GCI82304 | Inner Joint | | 26 | 24 | 31 | 454 | 98 | |
| | 2015.03-2018.05 | 6AT/6MT | F | L/R | Saloon FWD B 4204 T19 | | GCO62052 | Outer Joint | | 40 | 25 | 57.7 | 52 | 59.5 | I |
| | 2015.03-2018.05 | 6MT | F | L | Saloon FWD B 4204 T19 | | GDS62119 | Drive Shaft | | 40 | 31 | 57.7 | 52 | 599 | |
| | 2015.03-2018.05 | 6MT | F | R | Saloon FWD B 4204 T19 | | GDS62117 | Drive Shaft | | 40 | 28 | 57.7 | 52 | 949 | |
| | 2015.03-2018.05 | 6MT | F | L | Saloon FWD B 4204 T19 | | GCI62060 | Inner Joint | | 31 | 26 | 44 | 79 | 105 | |
| | 2015.03-2018.05 | 6MT | F | R | Saloon FWD B 4204 T19 | | GCI62062 | Inner Joint | | 28 | 26 | 40 | 454 | 92 | |
| | 2015.03-2018.05 | 6MT | F | L | Saloon FWD D 4204 T14 | | GDS62119 | Drive Shaft | | 40 | 31 | 57.7 | 52 | 599 | |
| | 2015.03-2018.05 | 6MT | F | R | Saloon FWD D 4204 T14 | | GDS62117 | Drive Shaft | | 40 | 28 | 57.7 | 52 | 949 | |
| | 2015.03-2018.05 | 8AT | F | L | Saloon FWD D 4204 T14 | | GDS62126 | Drive Shaft | | 40 | 31 | 57.5 | 52 | 576 | |
| | 2015.03-2018.05 | 8AT | F | R | Saloon FWD D 4204 T14 | Model:S60 Cross Country | GDS81374 | Drive Shaft | | 40 | 28 | 57.5 | 52 | 961 | |
| | 2015.03-2018.05 | 8AT | F | L | Saloon FWD D 4204 T14 | | GCO81181 | Outer Joint | | 40 | 28 | 57.5 | 52 | 60.5 | I |
| | 2015.03-2018.05 | 8AT | F | L | Saloon FWD D 4204 T14 | Transmission side | GCO81424 | Inner Joint | | 31 | 27 | 36.2 | 70 | 62 | |
| | 2015.03-2018.05 | 8AT | F | R | Saloon FWD D 4204 T14 | Model:S60 Cross Country | GCO81427 | Inner Joint | | 28 | 27 | 33 | 453 | 57 | |
| | 2015.03-2018.05 | AT | F | L/R | Saloon FWD D 4204 T14 | | GCO62053 | Outer Joint | | 40 | 27 | 57.5 | 52 | 60.5 | I |
| | 2015.03-2018.05 | AT | F | L | Saloon FWD D 4204 T14 | | GCI62034 | Inner Joint | | 31 | 27 | 36.2 | 68 | 90 | |
| | 2015.03-2018.05 | MT | F | L/R | Saloon FWD D 4204 T14 | | GCO62052 | Outer Joint | | 40 | 25 | 57.7 | 52 | 59.5 | I |
| | 2015.03-2018.05 | MT | F | L | Saloon FWD D 4204 T14 | | GCI62060 | Inner Joint | | 31 | 26 | 44 | 79 | 105 | |
| | 2015.03-2018.05 | MT | F | R | Saloon FWD D 4204 T14 | | GCI62062 | Inner Joint | | 28 | 26 | 40 | 454 | 92 | |
| 2.0 (147 kw) | 2015.03-2018.05 | 6MT | F | L | Saloon FWD D 4204 T14 | | GDS62119 | Drive Shaft | | 40 | 31 | 57.7 | 52 | 599 | |
| | 2015.03-2018.05 | 6MT | F | R | Saloon FWD D 4204 T14 | | GDS62117 | Drive Shaft | | 40 | 28 | 57.7 | 52 | 949 | |
| | 2015.03-2018.05 | 6MT | F | L/R | Saloon FWD D 4204 T14 | | GCO62052 | Outer Joint | | 40 | 25 | 57.7 | 52 | 59.5 | I |
| | 2015.03-2018.05 | 6MT | F | L | Saloon FWD D 4204 T14 | | GCI62060 | Inner Joint | | 31 | 26 | 44 | 79 | 105 | |
| | 2015.03-2018.05 | 6MT | F | R | Saloon FWD D 4204 T14 | | GCI62062 | Inner Joint | | 28 | 26 | 40 | 454 | 92 | |
| | 2015.03-2018.05 | 8AT | F | L | Saloon FWD D 4204 T14 | | GDS62126 | Drive Shaft | | 40 | 31 | 57.5 | 52 | 576 | |
| | 2015.03-2018.05 | 8AT | F | L | Saloon FWD D 4204 T14 | | GDS81373 | Drive Shaft | | 40 | 31 | 57.5 | 52 | 581 | |
| | 2015.03-2018.05 | 8AT | F | R | Saloon FWD D 4204 T14 | Model:S60 | GDS62124 | Drive Shaft | | 40 | 28 | 57.5 | 52 | 954 | |
| | 2015.03-2018.05 | 8AT | F | R | Saloon FWD D 4204 T14 | Model:S60 Cross Country | GDS81374 | Drive Shaft | | 40 | 28 | 57.5 | 52 | 961 | |
| | 2015.03-2018.05 | 8AT | F | L | Saloon FWD D 4204 T14 | | GCO81181 | Outer Joint | | 40 | 28 | 57.5 | 52 | 60.5 | I |
| | 2015.03-2018.05 | 8AT | F | R | Saloon FWD D 4204 T14 | | GCO62053 | Outer Joint | | 40 | 27 | 57.5 | 52 | 60.5 | I |
| | 2015.03-2018.05 | 8AT | F | L | Saloon FWD D 4204 T14 | Transmission side | GCO81424 | Inner Joint | | 31 | 27 | 36.2 | 70 | 62 | |
| | 2015.03-2018.05 | 8AT | F | R | Saloon FWD D 4204 T14 | Model:S60 | GCI62065 | Inner Joint | | 28 | 27 | 33 | 454 | 94 | |
| | 2015.03-2018.05 | 8AT | F | R | Saloon FWD D 4204 T14 | Model:S60 Cross Country | GCO81427 | Inner Joint | | 28 | 27 | 33 | 453 | 57 | |
| 2.0 (149 kw) | 2010.04-2011.12 | 6DCT | F | L | Saloon FWD B 4204 T6 | | GDS62113 | Drive Shaft | | 40 | 28 | 57.7 | 52 | 590 | |
| | 2010.04-2011.12 | 6DCT | F | R | Saloon FWD B 4204 T6 | | GDS62114 | Drive Shaft | | 40 | 28 | 57.7 | 52 | 952 | |
| | 2010.04-2011.12 | 6DCT | F | L/R | Saloon FWD B 4204 T6 | | GCO18269 | Outer Joint | | 40 | 26 | 57.7 | 52 | 63.5 | I |
| | 2010.04-2011.12 | 6MT | F | L | Saloon FWD B 4204 T6 | | GDS62134 | Drive Shaft | | 40 | 26 | 57.7 | 52 | 599 | |
| | 2010.04-2011.12 | 6MT | F | R | Saloon FWD B 4204 T6 | | GDS62112 | Drive Shaft | | 40 | 26 | 57.7 | 52 | 962 | |
| | 2010.04-2011.12 | 6MT | F | L | Saloon FWD B 4204 T6 | | GCI62072 | Inner Joint | | 26 | 26 | 40 | 69 | 112 | |
| | 2010.04-2011.12 | 6MT | F | R | Saloon FWD B 4204 T6 | | GCI62057 | Inner Joint | | 26 | 26 | 40 | 448 | 103 | |
| | 2010.04-2011.12 | AT/MT | F | L/R | Saloon FWD B 4204 T6 | | GCO59344 | Outer Joint | | 40 | 26 | 57.7 | 52 | 63.5 | M |
| | 2010.04-2011.12 | AT/MT | F | L/R | Saloon FWD B 4204 T6 | | GCO99271 | Outer Joint | | 40 | 28 | 57.7 | 51 | 63 | M |
| 2.0 (165 kw) | 2015.03-2018.05 | AT | F | L | Saloon FWD D 4204 T11 | | GDS62126 | Drive Shaft | | 40 | 31 | 57.5 | 52 | 576 | |
| | 2015.03-2018.05 | AT | F | R | Saloon FWD D 4204 T11 | | GDS62124 | Drive Shaft | | 40 | 28 | 57.5 | 52 | 954 | |
| | 2015.03-2018.05 | AT | F | L/R | Saloon FWD D 4204 T11 | | GCO62053 | Outer Joint | | 40 | 27 | 57.5 | 52 | 60.5 | I |
| | 2015.03-2018.05 | AT | F | L | Saloon FWD D 4204 T11 | | GCI62034 | Inner Joint | | 31 | 27 | 36.2 | 68 | 90 | |
| | 2015.03-2018.05 | AT | F | R | Saloon FWD D 4204 T11 | | GCI62065 | Inner Joint | | 28 | 27 | 33 | 454 | 94 | |
| 2.0 (171 kw) | 2015.03-2018.05 | 8AT | F | R | Saloon FWD D 4204 T11 | | GDS62124 | Drive Shaft | | 40 | 28 | 57.5 | 52 | 954 | |
| | 2015.03-2018.05 | 8AT | F | R | Saloon FWD D 4204 T11 | | GCO62053 | Outer Joint | | 40 | 27 | 57.5 | 52 | 60.5 | I |
| | 2015.03-2018.05 | 8AT | F | R | Saloon FWD D 4204 T11 | | GCI62065 | Inner Joint | | 28 | 27 | 33 | 454 | 94 | |
| | 2015.03-2018.05 | | F | L | Saloon FWD D 4204 T11 | | GDS62126 | Drive Shaft | | 40 | 31 | 57.5 | 52 | 576 | |
| 2.0 (177 kw) | 2010.04-2014.12 | 6AT | F | R | Saloon FWD B 4204 T7 | | GDS62114 | Drive Shaft | | 40 | 28 | 57.7 | 52 | 952 | |
| | 2010.04-2014.12 | 6AT | F | R | Saloon FWD B 4204 T7 | | GCI62058 | Inner Joint | | 28 | 26 | 33.95 | 430 | 103 | |
| | 2010.04-2014.12 | 6DCT | F | L | Saloon FWD B 4204 T7 | | GDS62113 | Drive Shaft | | 40 | 28 | 57.7 | 52 | 590 | |

| | YEAR | TRANSM. | F/R | L/R | BODY STYLE & DRIVE TYPE & ENGINE | REMARKS | G-AP Ref. | PRODUCT | ABS | Technical Specifications | | | | | |
|---|---|---|---|---|---|---|---|---|---|---|---|---|---|---|---|
| | | | | | | | | | | A | B | C | H | L | P |
| **VOLVO** **S60** | | | | | | | | | | | | | | | |
| 2.0 (177 kw) | 2010.04-2014.12 | 6DCT | F | L/R | Saloon FWD B 4204 T7 | | GCO18269 | Outer Joint | | 40 | 26 | 57.7 | 52 | 63.5 | I |
| | 2010.04-2014.12 | 6MT | F | L | Saloon FWD B 4204 T7 | | GDS62134 | Drive Shaft | | 40 | 26 | 57.7 | 52 | 599 | |
| | 2010.04-2014.12 | 6MT | F | R | Saloon FWD B 4204 T7 | | GDS62112 | Drive Shaft | | 40 | 26 | 57.7 | 52 | 962 | |
| | 2010.04-2014.12 | 6MT | F | L | Saloon FWD B 4204 T7 | | GCI62072 | Inner Joint | | 26 | 26 | 40 | 69 | 112 | |
| | 2010.04-2014.12 | 6MT | F | R | Saloon FWD B 4204 T7 | | GCI62057 | Inner Joint | | 26 | 26 | 40 | 448 | 103 | |
| | 2010.04-2014.12 | AT/MT | F | L/R | Saloon FWD B 4204 T7 | Date from:2012.01 | GCO99271 | Outer Joint | | 40 | 28 | 57.7 | 51 | 63 | M |
| 2.0 (180 kw) | 2013.09-2018.12 | 8AT | F | L | Saloon FWD B 4204 T11 | | GDS62126 | Drive Shaft | | 40 | 31 | 57.5 | 52 | 576 | |
| | 2013.09-2018.12 | 8AT | F | R | Saloon FWD B 4204 T11 | | GDS62124 | Drive Shaft | | 40 | 28 | 57.5 | 52 | 954 | |
| | 2013.09-2018.12 | 8AT | F | L/R | Saloon FWD B 4204 T11 | | GCO62053 | Outer Joint | | 40 | 27 | 57.5 | 52 | 60.5 | I |
| | 2013.09-2018.12 | 8AT | F | L | Saloon FWD B 4204 T11 | | GCI62034 | Inner Joint | | 31 | 27 | 36.2 | 68 | 90 | |
| | 2013.09-2018.12 | 8AT | F | R | Saloon FWD B 4204 T11 | | GCI62065 | Inner Joint | | 28 | 27 | 33 | 454 | 94 | |
| | 2014.09-2015.12 | 6AT | F | L | Saloon FWD B 4204 T7 | | GDS62113 | Drive Shaft | | 40 | 28 | 57.7 | 52 | 590 | |
| | 2014.09-2015.12 | AT | F | R | Saloon FWD B 4204 T7 | | GDS62114 | Drive Shaft | | 40 | 28 | 57.7 | 52 | 952 | |
| | 2014.09-2015.12 | AT | F | R | Saloon FWD B 4204 T7 | | GCO18269 | Outer Joint | | 40 | 26 | 57.7 | 52 | 63.5 | I |
| | 2014.09-2015.12 | AT | F | R | Saloon FWD B 4204 T7 | | GCI62058 | Inner Joint | | 28 | 26 | 33.95 | 430 | 103 | |
| 2.0 (225 kw) | 2013.09-2018.12 | AT | F | L | Saloon FWD B 4204 T9 | | GDS62126 | Drive Shaft | | 40 | 31 | 57.5 | 52 | 576 | |
| | 2013.09-2018.12 | AT | F | R | Saloon FWD B 4204 T9 | | GDS62124 | Drive Shaft | | 40 | 28 | 57.5 | 52 | 954 | |
| | 2013.09-2018.12 | AT | F | L/R | Saloon FWD B 4204 T9 | | GCO62053 | Outer Joint | | 40 | 27 | 57.5 | 52 | 60.5 | I |
| | 2013.09-2018.12 | AT | F | L | Saloon FWD B 4204 T9 | | GCI62034 | Inner Joint | | 31 | 27 | 36.2 | 68 | 90 | |
| | 2013.09-2018.12 | AT | F | R | Saloon FWD B 4204 T9 | | GCI62065 | Inner Joint | | 28 | 27 | 33 | 454 | 94 | |
| | 2015.09-2018.12 | 8AT | F | L | Saloon 4WD B 4204 T9 | | GCI62034 | Inner Joint | | 31 | 27 | 36.2 | 68 | 90 | |
| | 2015.09-2018.12 | | F | L | Saloon 4WD B 4204 T9 | | GDS62126 | Drive Shaft | | 40 | 31 | 57.5 | 52 | 576 | |
| | 2015.09-2018.12 | | F | L | Saloon 4WD B 4204 T9 | | GCO62053 | Outer Joint | | 40 | 27 | 57.5 | 52 | 60.5 | I |
| | 2015.09-2018.12 | 8AT | R | L/R | Saloon 4WD B 4204 T9 | | GDS62077 | Drive Shaft | 44NS | 36 | 23 | 56.5 | 49.5 | 762 | |
| | 2015.09-2018.12 | 8AT | R | L/R | Saloon 4WD B 4204 T9 | | GCI62035 | Inner Joint | | 23 | 29 | 28 | 64 | 110 | |
| | 2015.09-2018.12 | | R | L/R | Saloon 4WD B 4204 T9 | | GCO83248 | Outer Joint | 44NS | 36 | 29 | 56.5 | 49.5 | 64 | I |
| 2.0 (270 kw) | 2015.06-2018.05 | 8AT | F | L | Saloon 4WD B 4204 T43 | | GCI62034 | Inner Joint | | 31 | 27 | 36.2 | 68 | 90 | |
| | 2015.06-2018.05 | | F | L | Saloon 4WD B 4204 T43 | | GDS62126 | Drive Shaft | | 40 | 31 | 57.5 | 52 | 576 | |
| | 2015.06-2018.05 | | F | L | Saloon 4WD B 4204 T43 | | GCO62053 | Outer Joint | | 40 | 27 | 57.5 | 52 | 60.5 | I |
| | 2015.06-2018.05 | 8AT | R | L/R | Saloon 4WD B 4204 T43 | | GDS62077 | Drive Shaft | 44NS | 36 | 23 | 56.5 | 49.5 | 762 | |
| | 2015.06-2018.05 | 8AT | R | L/R | Saloon 4WD B 4204 T43 | | GCI62035 | Inner Joint | | 23 | 29 | 28 | 64 | 110 | |
| | 2015.06-2018.05 | | R | L/R | Saloon 4WD B 4204 T43 | | GCO83248 | Outer Joint | 44NS | 36 | 29 | 56.5 | 49.5 | 64 | I |
| 2.3 (184 kw) | 2000.07-2010.04 | AT | F | L | Saloon FWD B 5234 T3 | | GDS62022 | Drive Shaft | 48T | 36 | 26 | 56.5 | 48 | 527 | |
| | 2000.07-2010.04 | AT | F | R | Saloon FWD B 5234 T3 | | GDS62017 | Drive Shaft | 48T | 36 | 26 | 56.5 | 48 | 978.5 | |
| | 2000.07-2010.04 | AT | F | L | Saloon FWD B 5234 T3 | | GCI99109 | Inner Joint | | 26 | 26 | 31 | 68 | 87 | |
| | 2000.07-2010.04 | AT | F | R | Saloon FWD B 5234 T3 | | GCI62029 | Inner Joint | | 26 | 26 | 31 | 513 | 93.5 | |
| | 2000.07-2010.04 | AT/MT | F | L/R | Saloon FWD B 5234 T3 | | GCO62009 | Outer Joint | 48T | 36 | 27 | 56.5 | 48 | 66 | M |
| | 2000.07-2010.04 | MT | F | L | Saloon FWD B 5234 T3 | | GDS62057 | Drive Shaft | 48T | 36 | 26 | 56.5 | 48 | 546 | |
| | 2000.07-2010.04 | MT | F | R | Saloon FWD B 5234 T3 | | GDS62031 | Drive Shaft | 48T | 36 | 26 | 56.5 | 48 | 992 | |
| 2.3 (195 kw) | 2000.07-2002.09 | 5AT | F | L | Saloon FWD B 5234 T7 | | GDS62022 | Drive Shaft | 48T | 36 | 26 | 56.5 | 48 | 527 | |
| | 2000.07-2002.09 | 5AT | F | R | Saloon FWD B 5234 T7 | | GDS62017 | Drive Shaft | 48T | 36 | 26 | 56.5 | 48 | 978.5 | |
| | 2000.07-2002.09 | 5AT | F | L/R | Saloon FWD B 5234 T7 | | GCO62009 | Outer Joint | 48T | 36 | 27 | 56.5 | 48 | 66 | M |
| | 2000.07-2002.09 | 5AT | F | L | Saloon FWD B 5234 T7 | | GCI99109 | Inner Joint | | 26 | 26 | 31 | 68 | 87 | |
| | 2000.07-2002.09 | 5AT | F | R | Saloon FWD B 5234 T7 | | GCI62029 | Inner Joint | | 26 | 26 | 31 | 513 | 93.5 | |
| 2.4 (85 kw) | 2003.10-2005.12 | MT | F | L | Saloon FWD D 5244 T3 | | GDS62057 | Drive Shaft | 48T | 36 | 26 | 56.5 | 48 | 546 | |
| | 2003.10-2005.12 | MT | F | R | Saloon FWD D 5244 T3 | | GDS62031 | Drive Shaft | 48T | 36 | 26 | 56.5 | 48 | 992 | |
| | 2003.10-2005.12 | MT | F | R | Saloon FWD D 5244 T3 | | GCO62009 | Outer Joint | 48T | 36 | 27 | 56.5 | 48 | 66 | M |
| 2.4 (90 kw) | 2005.05-2006.12 | MT | F | L | Saloon FWD D 5244 T6 | | GDS62057 | Drive Shaft | 48T | 36 | 26 | 56.5 | 48 | 546 | |
| | 2005.05-2006.12 | MT | F | R | Saloon FWD D 5244 T6 | | GDS62031 | Drive Shaft | 48T | 36 | 26 | 56.5 | 48 | 992 | |
| | 2005.05-2006.12 | MT | F | R | Saloon FWD D 5244 T6 | | GCO62009 | Outer Joint | 48T | 36 | 27 | 56.5 | 48 | 66 | M |
| 2.4 (93 kw) | 2005.03-2010.04 | 5MT | F | L | Saloon FWD D 5244 T7 | | GDS62057 | Drive Shaft | 48T | 36 | 26 | 56.5 | 48 | 546 | |
| | 2005.03-2010.04 | 5MT | F | R | Saloon FWD D 5244 T7 | | GDS62031 | Drive Shaft | 48T | 36 | 26 | 56.5 | 48 | 992 | |
| | 2005.03-2010.04 | 5MT | F | R | Saloon FWD D 5244 T7 | | GCO62009 | Outer Joint | 48T | 36 | 27 | 56.5 | 48 | 66 | M |
| 2.4 (96 kw) | 2001.05-2010.04 | AT | F | L | Saloon FWD D 5244 T2 | | GDS62022 | Drive Shaft | 48T | 36 | 26 | 56.5 | 48 | 527 | |
| | 2001.05-2010.04 | AT | F | R | Saloon FWD D 5244 T2 | | GDS62017 | Drive Shaft | 48T | 36 | 26 | 56.5 | 48 | 978.5 | |
| | 2001.05-2010.04 | AT | F | L | Saloon FWD D 5244 T2 | | GCI99109 | Inner Joint | | 26 | 26 | 31 | 68 | 87 | |
| | 2001.05-2010.04 | AT | F | R | Saloon FWD D 5244 T2 | | GCI62029 | Inner Joint | | 26 | 26 | 31 | 513 | 93.5 | |
| | 2001.05-2010.04 | AT/MT | F | L/R | Saloon FWD D 5244 T2 | | GCO62009 | Outer Joint | 48T | 36 | 27 | 56.5 | 48 | 66 | M |
| | 2001.05-2010.04 | MT | F | L | Saloon FWD D 5244 T2 | | GDS62057 | Drive Shaft | 48T | 36 | 26 | 56.5 | 48 | 546 | |
| | 2001.05-2010.04 | MT | F | R | Saloon FWD D 5244 T2 | | GDS62031 | Drive Shaft | 48T | 36 | 26 | 56.5 | 48 | 992 | |
| 2.4 (103 kw) | 2000.07-2010.04 | AT | F | L | Saloon FWD B 5244 S2 | | GDS62022 | Drive Shaft | 48T | 36 | 26 | 56.5 | 48 | 527 | |
| | 2000.07-2010.04 | AT | F | R | Saloon FWD B 5244 S2 | | GDS62017 | Drive Shaft | 48T | 36 | 26 | 56.5 | 48 | 978.5 | |
| | 2000.07-2010.04 | AT | F | L/R | Saloon FWD B 5244 S2 | | GCO62009 | Outer Joint | 48T | 36 | 27 | 56.5 | 48 | 66 | M |
| | 2000.07-2010.04 | AT | F | L | Saloon FWD B 5244 S2 | | GCI99109 | Inner Joint | | 26 | 26 | 31 | 68 | 87 | |
| | 2000.07-2010.04 | AT | F | R | Saloon FWD B 5244 S2 | | GCI62029 | Inner Joint | | 26 | 26 | 31 | 513 | 93.5 | |

| | YEAR | TRANSM. | F/R | L/R | BODY STYLE & DRIVE TYPE & ENGINE | REMARKS | G-AP Ref. | PRODUCT | ABS | Technical Specifications A | B | C | H | L | P |
|---|---|---|---|---|---|---|---|---|---|---|---|---|---|---|---|
| **VOLVO** **S60** | | | | | | | | | | | | | | | |
| 2.4 (103 kw) | 2000.07-2010.04 | AT/MT | F | L/R | Saloon FWD B 5244 S2 | Date from:2000.11 | GCO62010 | Outer Joint | 48T | 36 | 33 | 56.5 | 48 | 58 | M |
| | 2000.07-2010.04 | MT | F | L | Saloon FWD B 5244 S2 | | GDS62029 | Drive Shaft | 48T | 36 | 26 | 56.5 | 48 | 540 | |
| | 2000.07-2010.04 | MT | F | R | Saloon FWD B 5244 S2 | | GDS62028 | Drive Shaft | 48T | 36 | 26 | 56.5 | 48 | 990 | |
| | 2000.07-2010.04 | MT | F | L/R | Saloon FWD B 5244 S2 | | GCO62040 | Outer Joint | 48T | 36 | 25 | 56.5 | 48 | 58 | M |
| | 2000.07-2010.04 | MT | F | L | Saloon FWD B 5244 S2 | | GCI62028 | Inner Joint | | 26 | 25 | 40 | 67.5 | 94 | |
| | 2000.07-2010.04 | MT | F | R | Saloon FWD B 5244 S2 | | GCI62030 | Inner Joint | | 26 | 25 | 40 | 526 | 92.5 | |
| | 2001.07-2010.04 | AT | F | L | Saloon FWD B 5244 SG;B 5244 SG2 | | GDS62029 | Drive Shaft | 48T | 36 | 26 | 56.5 | 48 | 540 | |
| | 2001.07-2010.04 | AT | F | R | Saloon FWD B 5244 SG;B 5244 SG2 | | GDS62028 | Drive Shaft | 48T | 36 | 26 | 56.5 | 48 | 990 | |
| | 2001.07-2010.04 | AT | F | L/R | Saloon FWD B 5244 SG;B 5244 SG2 | | GCO62040 | Outer Joint | 48T | 36 | 25 | 56.5 | 48 | 58 | M |
| | 2001.07-2010.04 | AT | F | L | Saloon FWD B 5244 SG;B 5244 SG2 | | GCI62028 | Inner Joint | | 26 | 25 | 40 | 67.5 | 94 | |
| | 2001.07-2010.04 | AT | F | R | Saloon FWD B 5244 SG;B 5244 SG2 | | GCI62030 | Inner Joint | | 26 | 25 | 40 | 526 | 92.5 | |
| | 2001.07-2010.04 | AT/MT | F | L/R | Saloon FWD B 5244 SG;B 5244 SG2 | | GCO62010 | Outer Joint | 48T | 36 | 33 | 56.5 | 48 | 58 | M |
| | 2001.07-2010.04 | MT | F | L | Saloon FWD B 5244 SG;B 5244 SG2 | | GDS62022 | Drive Shaft | 48T | 36 | 26 | 56.5 | 48 | 527 | |
| | 2001.07-2010.04 | MT | F | R | Saloon FWD B 5244 SG;B 5244 SG2 | | GDS62017 | Drive Shaft | 48T | 36 | 26 | 56.5 | 48 | 978.5 | |
| | 2001.07-2010.04 | MT | F | L/R | Saloon FWD B 5244 SG;B 5244 SG2 | | GCO62009 | Outer Joint | 48T | 36 | 27 | 56.5 | 48 | 66 | M |
| | 2001.07-2010.04 | MT | F | L | Saloon FWD B 5244 SG;B 5244 SG2 | | GCI99109 | Inner Joint | | 26 | 26 | 31 | 68 | 87 | |
| | 2001.07-2010.04 | MT | F | R | Saloon FWD B 5244 SG;B 5244 SG2 | | GCI62029 | Inner Joint | | 26 | 26 | 31 | 513 | 93.5 | |
| | 2001.07-2010.04 | AT | F | L | Saloon FWD B 5244 SG2 | | GDS62022 | Drive Shaft | 48T | 36 | 26 | 56.5 | 48 | 527 | |
| | 2001.07-2010.04 | AT | F | R | Saloon FWD B 5244 SG2 | | GDS62017 | Drive Shaft | 48T | 36 | 26 | 56.5 | 48 | 978.5 | |
| | 2001.07-2010.04 | AT | F | L/R | Saloon FWD B 5244 SG2 | | GCO62009 | Outer Joint | 48T | 36 | 27 | 56.5 | 48 | 66 | M |
| | 2001.07-2010.04 | AT | F | L | Saloon FWD B 5244 SG2 | | GCI99109 | Inner Joint | | 26 | 26 | 31 | 68 | 87 | |
| | 2001.07-2010.04 | AT | F | R | Saloon FWD B 5244 SG2 | | GCI62029 | Inner Joint | | 26 | 26 | 31 | 513 | 93.5 | |
| | 2001.07-2010.04 | AT/MT | F | L/R | Saloon FWD B 5244 SG2 | | GCO62010 | Outer Joint | 48T | 36 | 33 | 56.5 | 48 | 58 | M |
| | 2001.07-2010.04 | MT | F | L | Saloon FWD B 5244 SG2 | | GDS62029 | Drive Shaft | 48T | 36 | 26 | 56.5 | 48 | 540 | |
| | 2001.07-2010.04 | MT | F | R | Saloon FWD B 5244 SG2 | | GDS62028 | Drive Shaft | 48T | 36 | 26 | 56.5 | 48 | 990 | |
| | 2001.07-2010.04 | MT | F | L/R | Saloon FWD B 5244 SG2 | | GCO62040 | Outer Joint | 48T | 36 | 25 | 56.5 | 48 | 58 | M |
| | 2001.07-2010.04 | MT | F | L | Saloon FWD B 5244 SG2 | | GCI62028 | Inner Joint | | 26 | 25 | 40 | 67.5 | 94 | |
| | 2001.07-2010.04 | MT | F | R | Saloon FWD B 5244 SG2 | | GCI62030 | Inner Joint | | 26 | 25 | 40 | 526 | 92.5 | |
| 2.4 (120 kw) | 2001.01-2010.04 | 5MT | F | L | Saloon FWD D 5244 T;D 5244 T5 | For Engine code:D5244T/D5244T5 | GDS62057 | Drive Shaft | 48T | 36 | 26 | 56.5 | 48 | 546 | |
| | 2001.01-2010.04 | 5MT | F | R | Saloon FWD D 5244 T;D 5244 T5 | | GDS62031 | Drive Shaft | 48T | 36 | 26 | 56.5 | 48 | 992 | |
| | 2001.01-2010.04 | 5MT | F | R | Saloon FWD D 5244 T;D 5244 T5 | | GCO62009 | Outer Joint | 48T | 36 | 27 | 56.5 | 48 | 66 | M |
| | 2005.07-2009.12 | AT | F | L/R | Saloon FWD D 5244 T5 | | GCO62009 | Outer Joint | 48T | 36 | 27 | 56.5 | 48 | 66 | M |
| | 2005.07-2009.12 | AT | F | L | Saloon FWD D 5244 T5 | | GCI99109 | Inner Joint | | 26 | 26 | 31 | 68 | 87 | |
| | 2005.07-2009.12 | AT | F | R | Saloon FWD D 5244 T5 | | GCI62029 | Inner Joint | | 26 | 26 | 31 | 513 | 93.5 | |
| | 2005.07-2009.12 | MT | F | L/R | Saloon FWD D 5244 T5 | | GCO62038 | Outer Joint | | 36 | 25 | 56.5 | 48 | 58 | M |
| | 2005.07-2009.12 | MT | F | L/R | Saloon FWD D 5244 T5 | | GCO62040 | Outer Joint | 48T | 36 | 25 | 56.5 | 48 | 58 | M |
| | 2005.07-2009.12 | MT | F | L | Saloon FWD D 5244 T5 | | GCI62028 | Inner Joint | | 26 | 25 | 40 | 67.5 | 94 | |
| | 2005.07-2009.12 | MT | F | R | Saloon FWD D 5244 T5 | | GCI62030 | Inner Joint | | 26 | 25 | 40 | 526 | 92.5 | |
| 2.4 (125 kw) | 2000.11-2010.04 | AT | F | L | Saloon FWD B 5244 S | | GDS62022 | Drive Shaft | 48T | 36 | 26 | 56.5 | 48 | 527 | |
| | 2000.11-2010.04 | AT | F | R | Saloon FWD B 5244 S | | GDS62017 | Drive Shaft | 48T | 36 | 26 | 56.5 | 48 | 978.5 | |
| | 2000.11-2010.04 | AT | F | L/R | Saloon FWD B 5244 S | | GCO62009 | Outer Joint | 48T | 36 | 27 | 56.5 | 48 | 66 | M |
| | 2000.11-2010.04 | AT | F | L | Saloon FWD B 5244 S | | GCI99109 | Inner Joint | | 26 | 26 | 31 | 68 | 87 | |
| | 2000.11-2010.04 | AT | F | R | Saloon FWD B 5244 S | | GCI62029 | Inner Joint | | 26 | 26 | 31 | 513 | 93.5 | |
| | 2000.11-2010.04 | AT/MT | F | L/R | Saloon FWD B 5244 S | | GCO62010 | Outer Joint | 48T | 36 | 33 | 56.5 | 48 | 58 | M |
| | 2000.11-2010.04 | MT | F | L | Saloon FWD B 5244 S | | GDS62029 | Drive Shaft | 48T | 36 | 26 | 56.5 | 48 | 540 | |
| | 2000.11-2010.04 | MT | F | R | Saloon FWD B 5244 S | | GDS62028 | Drive Shaft | 48T | 36 | 26 | 56.5 | 48 | 990 | |
| | 2000.11-2010.04 | MT | F | L/R | Saloon FWD B 5244 S | | GCO62040 | Outer Joint | 48T | 36 | 25 | 56.5 | 48 | 58 | M |
| | 2000.11-2010.04 | MT | F | L | Saloon FWD B 5244 S | | GCI62028 | Inner Joint | | 26 | 25 | 40 | 67.5 | 94 | |
| | 2000.11-2010.04 | MT | F | R | Saloon FWD B 5244 S | | GCI62030 | Inner Joint | | 26 | 25 | 40 | 526 | 92.5 | |
| 2.4 (132 kw) | 2005.01-2006.10 | 5AT | F | L | Saloon FWD B 5244 T4 | | GDS62022 | Drive Shaft | 48T | 36 | 26 | 56.5 | 48 | 527 | |
| | 2005.01-2006.10 | 5AT | F | R | Saloon FWD B 5244 T4 | | GDS62017 | Drive Shaft | 48T | 36 | 26 | 56.5 | 48 | 978.5 | |
| | 2005.01-2006.10 | 5AT | F | R | Saloon FWD B 5244 T4 | | GCO62009 | Outer Joint | 48T | 36 | 27 | 56.5 | 48 | 66 | M |
| | 2005.01-2006.10 | 5AT | F | L | Saloon FWD B 5244 T4 | | GCI99109 | Inner Joint | | 26 | 26 | 31 | 68 | 87 | |
| | 2005.01-2006.10 | 5AT | F | R | Saloon FWD B 5244 T4 | | GCI62029 | Inner Joint | | 26 | 26 | 31 | 513 | 93.5 | |
| | 2005.01-2006.10 | 6AT | F | L | Saloon FWD B 5244 T4 | | GDS62141 | Drive Shaft | 48T | 36 | 28 | 56.5 | 48 | 521 | |
| | 2005.01-2006.10 | 6AT | F | R | Saloon FWD B 5244 T4 | | GDS82776 | Drive Shaft | 48T | 36 | 28 | 56.5 | 48 | 993 | |
| | 2005.01-2006.10 | 6AT | F | L | Saloon FWD B 5244 T4 | | GCO62037 | Outer Joint | 48T | 36 | 27 | 56.5 | 48 | 66 | M |
| | 2005.01-2006.10 | 6AT | F | L | Saloon FWD B 5244 T4 | | GCI62075 | Inner Joint | | 28 | 27 | 33 | 68.5 | 90 | |
| 2.4 (136 kw) | 2005.03-2010.04 | AT | F | L | Saloon FWD D 5244 T4 | | GDS62141 | Drive Shaft | 48T | 36 | 28 | 56.5 | 48 | 521 | |
| | 2005.03-2010.04 | AT | F | L | Saloon FWD D 5244 T4 | | GCO62037 | Outer Joint | 48T | 36 | 27 | 56.5 | 48 | 66 | M |
| | 2005.03-2010.04 | AT | F | L | Saloon FWD D 5244 T4 | | GCI62075 | Inner Joint | | 28 | 27 | 33 | 68.5 | 90 | |
| | 2005.03-2010.04 | MT | F | R | Saloon FWD D 5244 T4 | | GDS62028 | Drive Shaft | 48T | 36 | 26 | 56.5 | 48 | 990 | |
| | 2005.03-2010.04 | MT | F | R | Saloon FWD D 5244 T4 | | GCO62040 | Outer Joint | 48T | 36 | 25 | 56.5 | 48 | 58 | M |
| | 2005.03-2010.04 | MT | F | R | Saloon FWD D 5244 T4 | | GCI62030 | Inner Joint | | 26 | 25 | 40 | 526 | 92.5 | |
| 2.4 (140 kw) | 2015.03-2018.05 | | F | L | Saloon 4WD D 5244 T21 | | GDS62076 | Drive Shaft | | 40 | 31 | 57.7 | 52 | 529 | |

| | YEAR | TRANSM. | F/R | L/R | BODY STYLE & DRIVE TYPE & ENGINE | REMARKS | G-AP Ref. | PRODUCT | ABS | Technical Specifications A | B | C | H | L | P |
|---|---|---|---|---|---|---|---|---|---|---|---|---|---|---|---|
| **VOLVO** **S60** | | | | | | | | | | | | | | | |
| 2.4 (140 kw) | 2015.03-2018.05 | | F | R | Saloon 4WD D 5244 T21 | | GCI62033 | Inner Joint | | 28 | 27 | 29.95 | 521 | 102.5 | |
| | 2015.03-2018.05 | 6AT | R | L/R | Saloon 4WD D 5244 T21 | Chassis no. to:169999;8 balls | GDS83926 | Drive Shaft | 44NS | 36 | 26 | 56.5 | 49.5 | 751 | |
| | 2015.03-2018.05 | 6AT | R | L/R | Saloon 4WD D 5244 T21 | Chassis no. to:169999;8 balls | GCO83248 | Outer Joint | 44NS | 36 | 29 | 56.5 | 49.5 | 64 | I |
| | 2015.03-2018.05 | 6AT | R | L/R | Saloon 4WD D 5244 T21 | Chassis no. to:169999 | GCI18187 | Inner Joint | | 26 | 29 | 35 | 69.5 | 107.5 | |
| | 2015.03-2018.05 | 6AT | R | L/R | Saloon 4WD D 5244 T21 | Chassis no. from:170000 | GCI62035 | Inner Joint | | 23 | 29 | 28 | 64 | 110 | |
| | 2015.03-2018.05 | AT | R | L/R | Saloon 4WD D 5244 T21 | Chassis no. from:170000 | GDS62077 | Drive Shaft | 44NS | 36 | 23 | 56.5 | 49.5 | 762 | |
| 2.4 (147 kw) | 2000.07-2010.04 | AT | F | L | Saloon FWD B 5244 T3 | | GDS62022 | Drive Shaft | 48T | 36 | 26 | 56.5 | 48 | 527 | |
| | 2000.07-2010.04 | AT | F | R | Saloon FWD B 5244 T3 | | GDS62017 | Drive Shaft | 48T | 36 | 26 | 56.5 | 48 | 978.5 | |
| | 2000.07-2010.04 | AT | F | L | Saloon FWD B 5244 T3 | | GCI99109 | Inner Joint | | 26 | 26 | 31 | 68 | 87 | |
| | 2000.07-2010.04 | AT | F | R | Saloon FWD B 5244 T3 | | GCI62029 | Inner Joint | | 26 | 26 | 31 | 513 | 93.5 | |
| | 2000.07-2010.04 | AT/MT | F | L/R | Saloon FWD B 5244 T3 | | GCO62009 | Outer Joint | 48T | 36 | 27 | 56.5 | 48 | 66 | M |
| | 2000.07-2010.04 | MT | F | L | Saloon FWD B 5244 T3 | | GDS62057 | Drive Shaft | 48T | 36 | 26 | 56.5 | 48 | 546 | |
| | 2000.07-2010.04 | MT | F | R | Saloon FWD B 5244 T3 | | GDS62031 | Drive Shaft | 48T | 36 | 26 | 56.5 | 48 | 992 | |
| | 2001.06-2010.04 | AT | F | L | Saloon 4WD B 5244 T3 | | GDS62022 | Drive Shaft | 48T | 36 | 26 | 56.5 | 48 | 527 | |
| | 2001.06-2010.04 | AT | F | R | Saloon 4WD B 5244 T3 | | GDS62017 | Drive Shaft | 48T | 36 | 26 | 56.5 | 48 | 978.5 | |
| | 2001.06-2010.04 | AT | F | L | Saloon 4WD B 5244 T3 | | GCI99109 | Inner Joint | | 26 | 26 | 31 | 68 | 87 | |
| | 2001.06-2010.04 | AT | F | R | Saloon 4WD B 5244 T3 | | GCI62029 | Inner Joint | | 26 | 26 | 31 | 513 | 93.5 | |
| | 2001.06-2010.04 | AT/MT | F | L/R | Saloon 4WD B 5244 T3 | | GCO62009 | Outer Joint | 48T | 36 | 27 | 56.5 | 48 | 66 | M |
| | 2001.06-2010.04 | MT | F | L | Saloon 4WD B 5244 T3 | | GDS62057 | Drive Shaft | 48T | 36 | 26 | 56.5 | 48 | 546 | |
| | 2001.06-2010.04 | MT | F | R | Saloon 4WD B 5244 T3 | | GDS62031 | Drive Shaft | 48T | 36 | 26 | 56.5 | 48 | 992 | |
| | 2001.06-2010.04 | AT/MT | R | L/R | Saloon 4WD B 5244 T3 | | GDS81130 | Drive Shaft | | 36 | 26 | 56.5 | 50 | 764 | |
| | 2001.06-2010.04 | AT/MT | R | L/R | Saloon 4WD B 5244 T3 | | GCI44031 | Inner Joint | | 26 | 20 | 35 | 69.5 | 81 | |
| 2.4 (151 kw) | 2010.04-2011.12 | AT | F | L | Saloon 4WD D 5244 T10 | | GCO59344 | Outer Joint | | 40 | 26 | 57.7 | 52 | 63.5 | M |
| | 2010.04-2011.12 | AT | F | L | Saloon 4WD D 5244 T10 | | GCI62061 | Inner Joint | | 31 | 26 | 36.2 | 68 | 87 | |
| | 2010.04-2011.12 | | F | L | Saloon 4WD D 5244 T10 | | GDS62076 | Drive Shaft | | 40 | 31 | 57.7 | 52 | 529 | |
| | 2010.04-2011.12 | | F | R | Saloon 4WD D 5244 T10 | | GCI62033 | Inner Joint | | 28 | 27 | 29.95 | 521 | 102.5 | |
| | 2010.04-2011.12 | 6AT | R | L/R | Saloon 4WD D 5244 T10 | Chassis no. from:170000 | GDS62077 | Drive Shaft | 44NS | 36 | 23 | 56.5 | 49.5 | 762 | |
| | 2010.04-2011.12 | 6AT | R | L/R | Saloon 4WD D 5244 T10 | Chassis no. to:169999;8 balls | GDS83926 | Drive Shaft | 44NS | 36 | 26 | 56.5 | 49.5 | 751 | |
| | 2010.04-2011.12 | 6AT | R | L/R | Saloon 4WD D 5244 T10 | Chassis no. to:169999;8 balls | GCO83248 | Outer Joint | 44NS | 36 | 29 | 56.5 | 49.5 | 64 | I |
| | 2010.04-2011.12 | 6AT | R | L/R | Saloon 4WD D 5244 T10 | Chassis no. to:169999 | GCI18187 | Inner Joint | | 26 | 29 | 35 | 69.5 | 107.5 | |
| | 2010.04-2011.12 | 6AT | F | L | Saloon FWD D 5244 T10 | | GDS62076 | Drive Shaft | | 40 | 31 | 57.7 | 52 | 529 | |
| | 2010.04-2011.12 | 6AT | F | R | Saloon FWD D 5244 T10 | | GDS59444 | Drive Shaft | | 40 | 28 | 57.7 | 52 | 994 | |
| | 2010.04-2011.12 | 6MT | F | L | Saloon FWD D 5244 T10 | | GDS21070 | Drive Shaft | | 40 | 26 | 57.7 | 52 | 556 | |
| | 2010.04-2011.12 | 6MT | F | R | Saloon FWD D 5244 T10 | | GDS62086 | Drive Shaft | | 40 | 26 | 57.7 | 52 | 1002 | |
| | 2010.04-2011.12 | 6MT | F | L/R | Saloon FWD D 5244 T10 | | GCO59285 | Outer Joint | | 40 | 27 | 57.7 | 52 | 63.5 | M |
| | 2010.04-2011.12 | 6MT | F | R | Saloon FWD D 5244 T10 | | GCI81076 | Inner Joint | | 26 | 28 | 40 | 522.5 | 123.7 | |
| | 2010.04-2011.12 | AT | F | L | Saloon FWD D 5244 T10 | | GDS62109 | Drive Shaft | | 40 | 31 | 57.7 | 52 | 524 | |
| 2.4 (158 kw) | 2011.04-2015.12 | AT | F | L | Saloon 4WD D 5244 T15 | | GCI62061 | Inner Joint | | 31 | 26 | 36.2 | 68 | 87 | |
| | 2011.04-2015.12 | | F | L | Saloon 4WD D 5244 T15 | | GDS62076 | Drive Shaft | | 40 | 31 | 57.7 | 52 | 529 | |
| | 2011.04-2015.12 | | F | R | Saloon 4WD D 5244 T15 | | GCI62033 | Inner Joint | | 28 | 27 | 29.95 | 521 | 102.5 | |
| | 2011.04-2015.12 | 6AT | R | L/R | Saloon 4WD D 5244 T15 | Chassis no. from:170000 | GDS62077 | Drive Shaft | 44NS | 36 | 23 | 56.5 | 49.5 | 762 | |
| | 2011.04-2015.12 | 6AT | R | L/R | Saloon 4WD D 5244 T15 | Chassis no. to:169999;8 balls | GDS83926 | Drive Shaft | 44NS | 36 | 26 | 56.5 | 49.5 | 751 | |
| | 2011.04-2015.12 | 6AT | R | L/R | Saloon 4WD D 5244 T15 | Chassis no. to:169999;8 balls | GCO83248 | Outer Joint | 44NS | 36 | 29 | 56.5 | 49.5 | 64 | I |
| | 2011.04-2015.12 | 6AT | R | L/R | Saloon 4WD D 5244 T15 | Chassis no. to:169999 | GCI18187 | Inner Joint | | 26 | 29 | 35 | 69.5 | 107.5 | |
| | 2011.04-2015.12 | 6AT | F | L | Saloon FWD D 5244 T11;D 5244 T15 | | GDS62076 | Drive Shaft | | 40 | 31 | 57.7 | 52 | 529 | |
| | 2011.04-2015.12 | 6AT | F | R | Saloon FWD D 5244 T11;D 5244 T15 | | GDS59444 | Drive Shaft | | 40 | 28 | 57.7 | 52 | 994 | |
| | 2011.04-2015.12 | 6MT | F | L | Saloon FWD D 5244 T11;D 5244 T15 | | GDS21070 | Drive Shaft | | 40 | 26 | 57.7 | 52 | 556 | |
| | 2011.04-2015.12 | 6MT | F | R | Saloon FWD D 5244 T11;D 5244 T15 | | GDS62086 | Drive Shaft | | 40 | 26 | 57.7 | 52 | 1002 | |
| | 2011.04-2015.12 | 6MT | F | L/R | Saloon FWD D 5244 T11;D 5244 T15 | | GCO59285 | Outer Joint | | 40 | 27 | 57.7 | 52 | 63.5 | M |
| | 2011.04-2015.12 | 6MT | F | R | Saloon FWD D 5244 T11;D 5244 T15 | | GCI81076 | Inner Joint | | 26 | 28 | 40 | 522.5 | 123.7 | |
| | 2011.04-2015.12 | AT | F | L | Saloon FWD D 5244 T11;D 5244 T15 | | GDS62109 | Drive Shaft | | 40 | 31 | 57.7 | 52 | 524 | |
| 2.4 (169 kw) | 2014.04-2015.12 | | F | L | Saloon 4WD D 5244 T15 | | GDS62076 | Drive Shaft | | 40 | 31 | 57.7 | 52 | 529 | |
| | 2014.04-2015.12 | | F | R | Saloon 4WD D 5244 T15 | | GCI62033 | Inner Joint | | 28 | 27 | 29.95 | 521 | 102.5 | |
| | 2014.04-2015.12 | 6AT | R | L/R | Saloon 4WD D 5244 T15 | Chassis no. from:170000 | GDS62077 | Drive Shaft | 44NS | 36 | 23 | 56.5 | 49.5 | 762 | |
| | 2014.04-2015.12 | 6AT | R | L/R | Saloon 4WD D 5244 T15 | Chassis no. to:169999;8 balls | GDS83926 | Drive Shaft | 44NS | 36 | 26 | 56.5 | 49.5 | 751 | |
| | 2014.04-2015.12 | 6AT | R | L/R | Saloon 4WD D 5244 T15 | Chassis no. to:169999;8 balls | GCO83248 | Outer Joint | 44NS | 36 | 29 | 56.5 | 49.5 | 64 | I |
| | 2014.04-2015.12 | 6AT | R | L/R | Saloon 4WD D 5244 T15 | Chassis no. to:169999 | GCI18187 | Inner Joint | | 26 | 29 | 35 | 69.5 | 107.5 | |
| | 2014.04-2015.12 | 6AT | F | L | Saloon FWD D 5244 T15 | | GDS62076 | Drive Shaft | | 40 | 31 | 57.7 | 52 | 529 | |
| | 2014.04-2015.12 | 6AT | F | R | Saloon FWD D 5244 T15 | | GDS59444 | Drive Shaft | | 40 | 28 | 57.7 | 52 | 994 | |
| | 2014.04-2015.12 | 6MT | F | L | Saloon FWD D 5244 T15 | | GDS21070 | Drive Shaft | | 40 | 26 | 57.7 | 52 | 556 | |
| | 2014.04-2015.12 | 6MT | F | R | Saloon FWD D 5244 T15 | | GDS62086 | Drive Shaft | | 40 | 26 | 57.7 | 52 | 1002 | |
| | 2014.04-2015.12 | 6MT | F | L/R | Saloon FWD D 5244 T15 | | GCO59285 | Outer Joint | | 40 | 27 | 57.7 | 52 | 63.5 | M |
| | 2014.04-2015.12 | 6MT | F | R | Saloon FWD D 5244 T15 | | GCI81076 | Inner Joint | | 26 | 28 | 40 | 522.5 | 123.7 | |
| 2.4 (191 kw) | 2004.04-2010.04 | AT | F | L | Saloon FWD B 5244 T5 | | GDS62022 | Drive Shaft | 48T | 36 | 26 | 56.5 | 48 | 527 | |
| | 2004.04-2010.04 | AT | F | R | Saloon FWD B 5244 T5 | | GDS62017 | Drive Shaft | 48T | 36 | 26 | 56.5 | 48 | 978.5 | |

| | YEAR | TRANSM. | F/R | L/R | BODY STYLE & DRIVE TYPE & ENGINE | REMARKS | G-AP Ref. | PRODUCT | ABS | Technical Specifications A | B | C | H | L | P |
|---|---|---|---|---|---|---|---|---|---|---|---|---|---|---|---|
| **VOLVO** | | | | | | | | | | | | | | | |
| **S60** | | | | | | | | | | | | | | | |
| 2.4 (191 kw) | 2004.04-2010.04 | AT | F | L | Saloon FWD B 5244 T5 | | GCI99109 | Inner Joint | | 26 | 26 | 31 | 68 | 87 | |
| | 2004.04-2010.04 | AT | F | R | Saloon FWD B 5244 T5 | | GCI62029 | Inner Joint | | 26 | 26 | 31 | 513 | 93.5 | |
| | 2004.04-2010.04 | AT/MT | F | L/R | Saloon FWD B 5244 T5 | | GCO62009 | Outer Joint | 48T | 36 | 27 | 56.5 | 48 | 66 | M |
| | 2004.04-2010.04 | MT | F | L | Saloon FWD B 5244 T5 | | GDS62057 | Drive Shaft | 48T | 36 | 26 | 56.5 | 48 | 546 | |
| | 2004.04-2010.04 | MT | F | R | Saloon FWD B 5244 T5 | | GDS62031 | Drive Shaft | 48T | 36 | 26 | 56.5 | 48 | 992 | |
| 2.5 (154 kw) | 2002.07-2010.04 | AT | F | R | Saloon 4WD B 5254 T2 | | GDS62140 | Drive Shaft | 48T | 36 | 26 | 56.5 | 48 | 977 | |
| | 2002.07-2010.04 | AT | F | R | Saloon 4WD B 5254 T2 | | GCI62031 | Inner Joint | | 26 | 26 | 28 | 513 | 93.5 | |
| | 2002.07-2010.04 | AT/MT | F | L | Saloon 4WD B 5254 T2 | | GDS62022 | Drive Shaft | 48T | 36 | 26 | 56.5 | 48 | 527 | |
| | 2002.07-2010.04 | AT/MT | F | L/R | Saloon 4WD B 5254 T2 | | GCO62009 | Outer Joint | 48T | 36 | 27 | 56.5 | 48 | 66 | M |
| | 2002.07-2010.04 | AT/MT | F | L | Saloon 4WD B 5254 T2 | | GCI99109 | Inner Joint | | 26 | 26 | 31 | 68 | 87 | |
| | 2002.07-2010.04 | AT/MT | R | L/R | Saloon 4WD B 5254 T2 | year from:2006 | GDS81130 | Drive Shaft | | 36 | 26 | 56.5 | 50 | 764 | |
| | 2002.07-2010.04 | AT/MT | R | L/R | Saloon 4WD B 5254 T2 | year from:2006 | GCI44031 | Inner Joint | | 26 | 20 | 35 | 69.5 | 81 | |
| | 2003.01-2010.04 | AT | F | L | Saloon FWD B 5254 T2 | | GDS62022 | Drive Shaft | 48T | 36 | 26 | 56.5 | 48 | 527 | |
| | 2003.01-2010.04 | AT | F | R | Saloon FWD B 5254 T2 | | GDS62017 | Drive Shaft | 48T | 36 | 26 | 56.5 | 48 | 978.5 | |
| | 2003.01-2010.04 | AT | F | L/R | Saloon FWD B 5254 T2 | | GCO62009 | Outer Joint | 48T | 36 | 27 | 56.5 | 48 | 66 | M |
| | 2003.01-2010.04 | AT | F | L | Saloon FWD B 5254 T2 | | GCI99109 | Inner Joint | | 26 | 26 | 31 | 68 | 87 | |
| | 2003.01-2010.04 | AT | F | R | Saloon FWD B 5254 T2 | | GCI62029 | Inner Joint | | 26 | 26 | 31 | 513 | 93.5 | |
| | 2003.01-2010.04 | MT | F | R | Saloon FWD B 5254 T2 | Trans. code:M56 | GDS62031 | Drive Shaft | 48T | 36 | 26 | 56.5 | 48 | 992 | |
| | 2003.01-2010.04 | MT | F | L/R | Saloon FWD B 5254 T2 | Model year to:2003,Trans. code:M58;Trans. code:M56 | GDS62057 | Drive Shaft | 48T | 36 | 26 | 56.5 | 48 | 546 | |
| | 2003.01-2010.04 | MT | F | R | Saloon FWD B 5254 T2 | Trans. code:M56 | GCO62009 | Outer Joint | 48T | 36 | 27 | 56.5 | 48 | 66 | M |
| 2.5 (183 kw) | 2013.01-2016.01 | 6AT | F | L | Saloon FWD B 5254 T14 | Chassis no. to:207357/207119 | GDS62076 | Drive Shaft | | 40 | 31 | 57.7 | 52 | 529 | |
| | 2013.01-2016.01 | 6AT | F | L | Saloon FWD B 5254 T14 | Chassis no. from:207358/207120 | GDS62109 | Drive Shaft | | 40 | 31 | 57.7 | 52 | 524 | |
| | 2013.01-2016.01 | 6AT | F | R | Saloon FWD B 5254 T14 | Chassis no. to:207357/207119 | GDS59444 | Drive Shaft | | 40 | 28 | 57.7 | 52 | 994 | |
| | 2013.01-2016.01 | 6AT | F | R | Saloon FWD B 5254 T14 | Chassis no. from:207358/207120 | GDS62091 | Drive Shaft | | 40 | 28 | 57.7 | 52 | 992 | |
| 2.5 (186 kw) | 2011.09-2015.12 | 6AT | F | L | Saloon FWD B 5254 T5 | For Salescode:FC21;For Salescode:FC22;Chassis no. to:207357/207119;Chassis no. to:207357 | GDS62076 | Drive Shaft | | 40 | 31 | 57.7 | 52 | 529 | |
| | 2011.09-2015.12 | 6AT | F | L | Saloon FWD B 5254 T5 | For Salescode:FC21;For Salescode:FC22;Chassis no. from:207358/207120;Chassis no. from:207358 | GDS62109 | Drive Shaft | | 40 | 31 | 57.7 | 52 | 524 | |
| | 2011.09-2015.12 | 6AT | F | R | Saloon FWD B 5254 T5 | Chassis no. to:207357/207119,For Salescode:FC21/FC22 | GDS59444 | Drive Shaft | | 40 | 28 | 57.7 | 52 | 994 | |
| | 2011.09-2015.12 | 6AT | F | R | Saloon FWD B 5254 T5 | Chassis no. from:207358/207120,For Salescode:FC21/FC22 | GDS62091 | Drive Shaft | | 40 | 28 | 57.7 | 52 | 992 | |
| | 2011.09-2015.12 | | F | L | Saloon FWD B 5254 T5 | For Salescode:FC21;For Salescode:FC22;Chassis no. from:207120;Chassis no. from:207358 | GCO62045 | Outer Joint | | 40 | 26 | 57.7 | 52 | 62.5 | M |
| | 2011.09-2015.12 | | F | R | Saloon FWD B 5254 T5 | For Salescode:FC21;For Salescode:FC22;Chassis no. from:207120;Chassis no. from:207358 | GCI62043 | Inner Joint | | 28 | 26 | 33 | 521 | 100 | |
| 2.5 (221 kw) | 2003.01-2010.04 | 5AT | F | L | Saloon 4WD B 5254 T4 | | GDS62022 | Drive Shaft | 48T | 36 | 26 | 56.5 | 48 | 527 | |
| | 2003.01-2010.04 | 5AT | F | R | Saloon 4WD B 5254 T4 | | GDS62140 | Drive Shaft | 48T | 36 | 26 | 56.5 | 48 | 977 | |
| | 2003.01-2010.04 | 5AT | F | L/R | Saloon 4WD B 5254 T4 | | GCO62009 | Outer Joint | 48T | 36 | 27 | 56.5 | 48 | 66 | M |
| | 2003.01-2010.04 | 5AT | F | L | Saloon 4WD B 5254 T4 | | GCI99109 | Inner Joint | | 26 | 26 | 31 | 68 | 87 | |
| | 2003.01-2010.04 | 5AT | F | R | Saloon 4WD B 5254 T4 | | GCI62031 | Inner Joint | | 26 | 26 | 28 | 513 | 93.5 | |
| | 2003.01-2010.04 | 6AT | F | L | Saloon 4WD B 5254 T4 | | GDS62141 | Drive Shaft | 48T | 36 | 28 | 56.5 | 48 | 521 | |
| | 2003.01-2010.04 | 6AT | F | L | Saloon 4WD B 5254 T4 | | GCO62037 | Outer Joint | 48T | 36 | 27 | 56.5 | 48 | 66 | M |
| | 2003.01-2010.04 | 6AT | F | L | Saloon 4WD B 5254 T4 | | GCI62075 | Inner Joint | | 28 | 27 | 33 | 68.5 | 90 | |
| | 2003.01-2010.04 | 6MT | F | L | Saloon 4WD B 5254 T4 | | GDS62057 | Drive Shaft | 48T | 36 | 26 | 56.5 | 48 | 546 | |
| | 2003.01-2010.04 | 4AT/5MT | R | L/R | Saloon 4WD B 5254 T4 | | GDS81130 | Drive Shaft | | 36 | 26 | 56.5 | 50 | 764 | |
| | 2003.01-2010.04 | 4AT/5MT | R | L/R | Saloon 4WD B 5254 T4 | | GCI44031 | Inner Joint | | 26 | 20 | 35 | 69.5 | 81 | |
| | 2003.01-2010.04 | 6AT | R | L/R | Saloon 4WD B 5254 T4 | | GDS81129 | Drive Shaft | | 36 | 26 | 56.5 | 49.5 | 756 | |
| | 2003.01-2010.04 | 6AT | R | L/R | Saloon 4WD B 5254 T4 | | GCI81051 | Inner Joint | | 36 | 22 | 56.5 | 49.5 | 97 | |
| | 2003.01-2010.04 | 6AT | R | L/R | Saloon 4WD B 5254 T4 | | GCI81062 | Inner Joint | | 26 | 22 | 35 | 69.5 | 94 | |
| 3.0 (224 kw) | 2010.04-2015.12 | | F | L | Saloon 4WD B 6304 T4 | | GDS62076 | Drive Shaft | | 40 | 31 | 57.7 | 52 | 529 | |
| | 2010.04-2015.12 | 6AT | R | L/R | Saloon 4WD B 6304 T4 | Chassis no. from:170000 | GDS62077 | Drive Shaft | 44NS | 36 | 23 | 56.5 | 49.5 | 762 | |
| | 2010.04-2015.12 | 6AT | R | L/R | Saloon 4WD B 6304 T4 | Chassis no. to:169999;8 balls | GDS83926 | Drive Shaft | 44NS | 36 | 26 | 56.5 | 49.5 | 751 | |
| | 2010.04-2015.12 | 6AT | R | L/R | Saloon 4WD B 6304 T4 | Chassis no. to:169999;8 balls | GCO83248 | Outer Joint | 44NS | 36 | 29 | 56.5 | 49.5 | 64 | I |
| | 2010.04-2015.12 | 6AT | R | L/R | Saloon 4WD B 6304 T4 | Chassis no. to:169999 | GCI18187 | Inner Joint | | 26 | 29 | 35 | 69.5 | 107.5 | |
| 3.0 (242 kw) | 2014.04-2015.12 | | F | L | Saloon 4WD B 6304 T4;B 6304 T3 | | GDS62076 | Drive Shaft | | 40 | 31 | 57.7 | 52 | 529 | |
| | 2014.04-2015.12 | 6AT | R | L/R | Saloon 4WD B 6304 T4;B 6304 T3 | Chassis no. from:170000 | GDS62077 | Drive Shaft | 44NS | 36 | 23 | 56.5 | 49.5 | 762 | |
| | 2014.04-2015.12 | 6AT | R | L/R | Saloon 4WD B 6304 T4;B 6304 T3 | Chassis no. to:169999;8 balls | GDS83926 | Drive Shaft | 44NS | 36 | 26 | 56.5 | 49.5 | 751 | |
| | 2014.04-2015.12 | 6AT | R | L/R | Saloon 4WD B 6304 T4;B 6304 T3 | Chassis no. to:169999;8 balls | GCO83248 | Outer Joint | 44NS | 36 | 29 | 56.5 | 49.5 | 64 | I |
| | 2014.04-2015.12 | 6AT | R | L/R | Saloon 4WD B 6304 T4;B 6304 T3 | Chassis no. to:169999 | GCI18187 | Inner Joint | | 26 | 29 | 35 | 69.5 | 107.5 | |
| 3.0 (258 kw) | 2014.04-2018.12 | | F | L | Saloon 4WD B 6304 T5 | | GDS62076 | Drive Shaft | | 40 | 31 | 57.7 | 52 | 529 | |
| | 2014.04-2018.12 | 6AT | R | L/R | Saloon 4WD B 6304 T5 | Chassis no. from:170000 | GDS62077 | Drive Shaft | 44NS | 36 | 23 | 56.5 | 49.5 | 762 | |
| | 2014.04-2018.12 | 6AT | R | L/R | Saloon 4WD B 6304 T5 | Chassis no. to:169999;8 balls | GDS83926 | Drive Shaft | 44NS | 36 | 26 | 56.5 | 49.5 | 751 | |
| | 2014.04-2018.12 | 6AT | R | L/R | Saloon 4WD B 6304 T5 | Chassis no. to:169999;8 balls | GCO83248 | Outer Joint | 44NS | 36 | 29 | 56.5 | 49.5 | 64 | I |
| | 2014.04-2018.12 | 6AT | R | L/R | Saloon 4WD B 6304 T5 | Chassis no. to:169999 | GCI18187 | Inner Joint | | 26 | 29 | 35 | 69.5 | 107.5 | |
| **S60 Cross Country** | | | | | | | | | | | | | | | |
| 2.0 (110 kw) | 2015.03-2018.05 | 6AT | F | L | Saloon FWD D 4204 T9, D 4204 T4 | | GDS83640 | Drive Shaft | | 40 | 26 | 57.7 | 52 | 576 | |
| | 2015.03-2018.05 | 6AT | F | R | Saloon FWD D 4204 T9, D 4204 T4 | | GDS83661 | Drive Shaft | | 40 | 26 | 57.7 | 52 | 953 | |
| | 2015.03-2018.05 | 6AT | F | L | Saloon FWD D 4204 T9, D 4204 T4 | | GCI82187 | Inner Joint | | 26 | 24 | 31 | 72 | 94 | |
| | 2015.03-2018.05 | 6AT | F | R | Saloon FWD D 4204 T9, D 4204 T4 | | GCI82304 | Inner Joint | | 26 | 24 | 31 | 454 | 98 | |
| | 2015.03-2018.05 | 6MT | F | L | Saloon FWD D 4204 T9, D 4204 T4 | | GDS62119 | Drive Shaft | | 40 | 31 | 57.7 | 52 | 599 | |

| | YEAR | TRANSM. | F/R | L/R | BODY STYLE & DRIVE TYPE & ENGINE | REMARKS | G-AP Ref. | PRODUCT | ABS | Technical Specifications A | B | C | H | L | P |
|---|---|---|---|---|---|---|---|---|---|---|---|---|---|---|---|
| **VOLVO** | | | | | | | | | | | | | | | |
| **S60 Cross Country** | | | | | | | | | | | | | | | |
| 2.0 (110 kw) | 2015.03-2018.05 | 6MT | F | R | Saloon FWD D 4204 T9, D 4204 T4 | | GDS62117 | Drive Shaft | | 40 | 28 | 57.7 | 52 | 949 | |
| | 2015.03-2018.05 | 6MT | F | L | Saloon FWD D 4204 T9, D 4204 T4 | | GCI62060 | Inner Joint | | 31 | 26 | 44 | 79 | 105 | |
| | 2015.03-2018.05 | 8AT | F | L | Saloon FWD D 4204 T9, D 4204 T4 | | GDS81373 | Drive Shaft | | 40 | 31 | 57.5 | 52 | 581 | |
| | 2015.03-2018.05 | 8AT | F | R | Saloon FWD D 4204 T9, D 4204 T4 | | GDS81374 | Drive Shaft | | 40 | 28 | 57.5 | 52 | 961 | |
| 2.0 (140 kw) | 2015.03-2018.05 | 6MT | F | L | Saloon FWD D 4204 T14 | | GDS62119 | Drive Shaft | | 40 | 31 | 57.7 | 52 | 599 | |
| | 2015.03-2018.05 | 8AT | F | L | Saloon FWD D 4204 T14 | | GDS81373 | Drive Shaft | | 40 | 31 | 57.5 | 52 | 581 | |
| | 2015.03-2018.05 | 8AT | F | R | Saloon FWD D 4204 T14 | | GDS81374 | Drive Shaft | | 40 | 28 | 57.5 | 52 | 961 | |
| | 2015.03-2018.05 | 8AT | F | L | Saloon FWD D 4204 T14 | | GCO81181 | Outer Joint | | 40 | 28 | 57.5 | 52 | 60.5 | I |
| | 2015.03-2018.05 | 8AT | F | L | Saloon FWD D 4204 T14 | Transmission side | GCO81424 | Inner Joint | | 31 | 27 | 36.2 | 70 | 62 | |
| | 2015.03-2018.05 | AT | F | L/R | Saloon FWD D 4204 T14 | | GCO62053 | Outer Joint | | 40 | 27 | 57.5 | 52 | 60.5 | I |
| | 2015.03-2018.05 | AT | F | L | Saloon FWD D 4204 T14 | | GCI62034 | Inner Joint | | 31 | 27 | 36.2 | 68 | 90 | |
| | 2015.03-2018.05 | AT | F | R | Saloon FWD D 4204 T14 | | GCI62065 | Inner Joint | | 28 | 27 | 33 | 454 | 94 | |
| | 2015.03-2018.05 | MT | F | L/R | Saloon FWD D 4204 T14 | | GCO62052 | Outer Joint | | 40 | 25 | 57.7 | 52 | 59.5 | I |
| | 2015.03-2018.05 | MT | F | L | Saloon FWD D 4204 T14 | | GCI62060 | Inner Joint | | 31 | 26 | 44 | 79 | 105 | |
| | 2015.03-2018.05 | MT | F | R | Saloon FWD D 4204 T14 | | GCI62062 | Inner Joint | | 28 | 26 | 40 | 454 | 92 | |
| 2.0 (147 kw) | 2015.03-2018.05 | 6MT | F | L | Saloon FWD D 4204 T14 | | GDS62119 | Drive Shaft | | 40 | 31 | 57.7 | 52 | 599 | |
| | 2015.03-2018.05 | 6MT | F | R | Saloon FWD D 4204 T14 | | GDS62117 | Drive Shaft | | 40 | 28 | 57.7 | 52 | 949 | |
| | 2015.03-2018.05 | 6MT | F | L | Saloon FWD D 4204 T14 | | GCI62060 | Inner Joint | | 31 | 26 | 44 | 79 | 105 | |
| | 2015.03-2018.05 | 8AT | F | L | Saloon FWD D 4204 T14 | | GDS81373 | Drive Shaft | | 40 | 31 | 57.5 | 52 | 581 | |
| | 2015.03-2018.05 | 8AT | F | R | Saloon FWD D 4204 T14 | | GDS81374 | Drive Shaft | | 40 | 28 | 57.5 | 52 | 961 | |
| 2.4 (140 kw) | 2015.03-2018.05 | 6AT | F | L | Saloon 4WD D 5244 T21 | Model year to:2016 | GDS81369 | Drive Shaft | | 40 | 31 | 57.7 | 52 | 537 | |
| | 2015.03-2018.05 | 6AT | F | R | Saloon 4WD D 5244 T21 | | GDS81370 | Drive Shaft | | 40 | 28 | 57.7 | 52 | 1008 | |
| | 2015.03-2018.05 | | F | L | Saloon 4WD D 5244 T21 | | GCO81424 | Inner Joint | | 31 | 27 | 36.2 | 70 | 62 | |
| | 2015.03-2018.05 | | F | R | Saloon 4WD D 5244 T21 | | GCI62033 | Inner Joint | | 28 | 27 | 29.95 | 521 | 102.5 | |
| | 2015.03-2018.05 | 6AT | R | L/R | Saloon 4WD D 5244 T21 | | GDS62077 | Drive Shaft | 44NS | 36 | 23 | 56.5 | 49.5 | 762 | |
| | 2015.03-2018.05 | AT | R | L/R | Saloon 4WD D 5244 T21 | | GCO83248 | Outer Joint | 44NS | 36 | 29 | 56.5 | 49.5 | 64 | I |
| | 2015.03-2018.05 | AT | R | L/R | Saloon 4WD D 5244 T21 | | GCI62035 | Inner Joint | | 23 | 29 | 28 | 64 | 110 | |
| **S60 Cross Country** | | | | | | | | | | | | | | | |
| 2.0 (180 kw) | 2016.06-2018.12 | 8AT | F | L | Saloon 4WD B 4204 T11 | | GDS81373 | Drive Shaft | | 40 | 31 | 57.5 | 52 | 581 | |
| | 2016.06-2018.12 | | F | L | Saloon 4WD B 4204 T11 | | GCO81181 | Outer Joint | | 40 | 28 | 57.5 | 52 | 60.5 | I |
| | 2016.06-2018.12 | | F | L | Saloon 4WD B 4204 T11 | | GCO81424 | Inner Joint | | 31 | 27 | 36.2 | 70 | 62 | |
| | 2016.06-2018.12 | 8AT | R | L/R | Saloon 4WD B 4204 T11 | | GDS62077 | Drive Shaft | 44NS | 36 | 23 | 56.5 | 49.5 | 762 | |
| | 2016.06-2018.12 | | R | L/R | Saloon 4WD B 4204 T11 | | GCO83248 | Outer Joint | 44NS | 36 | 29 | 56.5 | 49.5 | 64 | I |
| | 2016.06-2018.12 | | R | L/R | Saloon 4WD B 4204 T11 | | GCI62035 | Inner Joint | | 23 | 29 | 28 | 64 | 110 | |
| 2.0 (186 kw) | 2016.06-2018.05 | 8AT | F | L | Saloon 4WD B 4204 T11 | | GDS81373 | Drive Shaft | | 40 | 31 | 57.5 | 52 | 581 | |
| | 2016.06-2018.05 | 8AT | F | L | Saloon 4WD B 4204 T11 | | GCO81424 | Inner Joint | | 31 | 27 | 36.2 | 70 | 62 | |
| | 2016.06-2018.05 | | F | L | Saloon 4WD B 4204 T11 | | GCO81181 | Outer Joint | | 40 | 28 | 57.5 | 52 | 60.5 | I |
| | 2016.06-2018.05 | 8AT | R | L/R | Saloon 4WD B 4204 T11 | | GDS62077 | Drive Shaft | 44NS | 36 | 23 | 56.5 | 49.5 | 762 | |
| | 2016.06-2018.05 | 8AT | R | L/R | Saloon 4WD B 4204 T11 | | GCI62035 | Inner Joint | | 23 | 29 | 28 | 64 | 110 | |
| | 2016.06-2018.05 | | R | L/R | Saloon 4WD B 4204 T11 | | GCO83248 | Outer Joint | 44NS | 36 | 29 | 56.5 | 49.5 | 64 | I |
| 2.4 (162 kw) | 2015.03-2018.07 | 6AT | F | L | Saloon 4WD D 5244 T21 | Model year to:2016 | GDS81369 | Drive Shaft | | 40 | 31 | 57.7 | 52 | 537 | |
| | 2015.03-2018.07 | 6AT | F | R | Saloon 4WD D 5244 T21 | | GDS81370 | Drive Shaft | | 40 | 28 | 57.7 | 52 | 1008 | |
| | 2015.03-2018.07 | 6AT | F | L/R | Saloon 4WD D 5244 T21 | | GCO62042 | Outer Joint | | 40 | 27 | 57.7 | 52 | 63.5 | M |
| | 2015.03-2018.07 | 6AT | F | L | Saloon 4WD D 5244 T21 | | GCO81424 | Inner Joint | | 31 | 27 | 36.2 | 70 | 62 | |
| | 2015.03-2018.07 | 6AT | R | L/R | Saloon 4WD D 5244 T21 | | GDS62077 | Drive Shaft | 44NS | 36 | 23 | 56.5 | 49.5 | 762 | |
| | 2015.03-2018.07 | 6AT | R | L/R | Saloon 4WD D 5244 T21 | | GCO83248 | Outer Joint | 44NS | 36 | 29 | 56.5 | 49.5 | 64 | I |
| 2.5 (183 kw) | 2015.03-2018.12 | 6AT | F | L | Saloon 4WD B 5254 T14 | Model year to:2016 | GDS81369 | Drive Shaft | | 40 | 31 | 57.7 | 52 | 537 | |
| | 2015.03-2018.12 | 6AT | F | R | Saloon 4WD B 5254 T14 | | GDS81370 | Drive Shaft | | 40 | 28 | 57.7 | 52 | 1008 | |
| | 2015.03-2018.12 | 6AT | F | L/R | Saloon 4WD B 5254 T14 | | GCO62042 | Outer Joint | | 40 | 27 | 57.7 | 52 | 63.5 | M |
| | 2015.03-2018.12 | 6AT | F | L | Saloon 4WD B 5254 T14 | | GCO81424 | Inner Joint | | 31 | 27 | 36.2 | 70 | 62 | |
| | 2015.03-2018.12 | 6AT | R | L/R | Saloon 4WD B 5254 T14 | | GDS62077 | Drive Shaft | 44NS | 36 | 23 | 56.5 | 49.5 | 762 | |
| | 2015.03-2018.12 | 6AT | R | L/R | Saloon 4WD B 5254 T14 | | GCO83248 | Outer Joint | 44NS | 36 | 29 | 56.5 | 49.5 | 64 | I |
| 2.5 (187 kw) | 2015.03-2018.12 | 6AT | F | L | Saloon 4WD B 5254 T12 | | GDS81369 | Drive Shaft | | 40 | 31 | 57.7 | 52 | 537 | |
| | 2015.03-2018.12 | 6AT | F | L | Saloon 4WD B 5254 T12 | | GDS81381 | Drive Shaft | | 40 | 31 | 57.7 | 52 | 537 | |
| | 2015.03-2018.12 | 6AT | F | R | Saloon 4WD B 5254 T12 | | GDS81370 | Drive Shaft | | 40 | 28 | 57.7 | 52 | 1008 | |
| | 2015.03-2018.12 | 6AT | F | L/R | Saloon 4WD B 5254 T12 | | GCO62042 | Outer Joint | | 40 | 27 | 57.7 | 52 | 63.5 | M |
| | 2015.03-2018.12 | 6AT | F | L | Saloon 4WD B 5254 T12 | Model year to:2016 | GCO81424 | Inner Joint | | 31 | 27 | 36.2 | 70 | 62 | |
| | 2015.03-2018.12 | 6AT | R | L/R | Saloon 4WD B 5254 T12 | | GDS62077 | Drive Shaft | 44NS | 36 | 23 | 56.5 | 49.5 | 762 | |
| | 2015.03-2018.12 | 6AT | R | L/R | Saloon 4WD B 5254 T12 | | GCO83248 | Outer Joint | 44NS | 36 | 29 | 56.5 | 49.5 | 64 | I |
| | 2015.03-2018.12 | 6AT | R | L/R | Saloon 4WD B 5254 T12 | | GCI62035 | Inner Joint | | 23 | 29 | 28 | 64 | 110 | |
| **S70** | | | | | | | | | | | | | | | |
| 2.0 (93 kw) | 1996.11-2000.09 | AT | F | L | Saloon FWD B5202FS | Model year from:1999 | GDS62143 | Drive Shaft | 48T | 36 | 26 | 56.5 | 48 | 506 | |
| | 1996.11-2000.09 | AT | F | R | Saloon FWD B5202FS | Model year from:1999 | GDS83502 | Drive Shaft | 48T | 36 | 26 | 56.5 | 48 | 959 | |
| | 1996.11-2000.09 | AT | F | L | Saloon FWD B5202FS | Model year to:1998 | GCO62002 | Outer Joint | 48T | 26 | 28 | 56.5 | 97.5 | 66 | O |
| | 1996.11-2000.09 | AT | F | L/R | Saloon FWD B5202FS | Model year from:1999 | GCO62009 | Outer Joint | 48T | 36 | 27 | 56.5 | 48 | 66 | M |

| | YEAR | TRANSM. | F/R | L/R | BODY STYLE & DRIVE TYPE & ENGINE | REMARKS | G-AP Ref. | PRODUCT | ABS | Technical Specifications | | | | | |
|---|---|---|---|---|---|---|---|---|---|---|---|---|---|---|---|
| | | | | | | | | | | A | B | C | H | L | P |
| **VOLVO** **S70** | | | | | | | | | | | | | | | |
| 2.0 (93 kw) | 1996.11-2000.09 | AT | F | L | Saloon FWD B5202FS | Model year from:1999 | GCI62038 | Inner Joint | | 26 | 26 | 31 | 68 | 87 | |
| | 1996.11-2000.09 | AT | F | R | Saloon FWD B5202FS | Model year from:1999 | GCI82266 | Inner Joint | | 26 | 26 | 31 | 513 | 93.5 | |
| | 1996.11-2000.09 | AT/MT | F | L | Saloon FWD B5202FS | Model year to:1998 | GDS62001 | Drive Shaft | 48T | 26 | 26 | 56.5 | 98.5 | 574.5 | |
| | 1996.11-2000.09 | AT/MT | F | R | Saloon FWD B5202FS | Model year to:1998 | GDS62002 | Drive Shaft | 48T | 26 | 26 | 56.5 | 98.5 | 1028 | |
| | 1996.11-2000.09 | AT/MT | F | L/R | Saloon FWD B5202FS | Model year to:1998 | GCO62001 | Outer Joint | 48T | 26 | 25 | 56.5 | 98.5 | 56 | O |
| | 1996.11-2000.09 | AT/MT | F | L/R | Saloon FWD B5202FS | Model year to:1998 | GCO62014 | Outer Joint | | 26 | 25 | 56.5 | 98.5 | 56 | O |
| | 1996.11-2000.09 | MT | F | L | Saloon FWD B5202FS | Model year from:1999 | GDS62009 | Drive Shaft | 48T | 36 | 26 | 56.5 | 48 | 523 | |
| | 1996.11-2000.09 | MT | F | L | Saloon FWD B5202FS | Model year from:1999 | GCO62010 | Outer Joint | 48T | 36 | 33 | 56.5 | 48 | 58 | M |
| | 1996.11-2000.09 | MT | F | R | Saloon FWD B5202FS | Date to:1998.12 | GCI62015 | Inner Joint | | 26 | 25 | 40 | 531.5 | 96 | |
| 2.0 (105 kw) | 1996.11-1998.09 | AT | F | R | Saloon FWD B5204T2 | | GDS62002 | Drive Shaft | 48T | 26 | 26 | 56.5 | 98.5 | 1028 | |
| | 1996.11-1998.09 | AT/MT | F | L/R | Saloon FWD B5204T2 | | GCO62001 | Outer Joint | 48T | 26 | 25 | 56.5 | 98.5 | 56 | O |
| | 1996.11-1998.09 | AT/MT | F | L/R | Saloon FWD B5204T2 | | GCO62014 | Outer Joint | | 26 | 25 | 56.5 | 98.5 | 56 | O |
| | 1996.11-1998.09 | MT | F | L | Saloon FWD B5204T2 | | GDS62001 | Drive Shaft | 48T | 26 | 26 | 56.5 | 98.5 | 574.5 | |
| | 1996.11-1998.09 | MT | F | L | Saloon FWD B5204T2 | | GCO62002 | Outer Joint | 48T | 26 | 28 | 56.5 | 97.5 | 66 | O |
| | 1996.11-1998.09 | MT | F | R | Saloon FWD B5204T2 | Date to:1998.09 | GCI62015 | Inner Joint | | 26 | 25 | 40 | 531.5 | 96 | |
| 2.0 (120 kw) | 1998.12-2000.08 | MT | F | L | Saloon FWD B5204T4 | | GDS62009 | Drive Shaft | 48T | 36 | 26 | 56.5 | 48 | 523 | |
| | 1998.12-2000.08 | MT | F | L | Saloon FWD B5204T4 | | GCO62010 | Outer Joint | 48T | 36 | 33 | 56.5 | 48 | 58 | M |
| 2.0 (132 kw) | 1997.01-2000.11 | AT | F | R | Saloon FWD B5204T2 | | GDS62002 | Drive Shaft | 48T | 26 | 26 | 56.5 | 98.5 | 1028 | |
| | 1997.01-2000.11 | AT/MT | F | L | Saloon FWD B5204T2 | | GDS62001 | Drive Shaft | 48T | 26 | 26 | 56.5 | 98.5 | 574.5 | |
| | 1997.01-2000.11 | AT/MT | F | L/R | Saloon FWD B5204T2 | | GCO62001 | Outer Joint | 48T | 26 | 25 | 56.5 | 98.5 | 56 | O |
| | 1997.01-2000.11 | AT/MT | F | L/R | Saloon FWD B5204T2 | | GCO62014 | Outer Joint | | 26 | 25 | 56.5 | 98.5 | 56 | O |
| | 1997.01-2000.11 | MT | F | L/R | Saloon FWD B5204T2 | | GCO62002 | Outer Joint | 48T | 26 | 28 | 56.5 | 97.5 | 66 | O |
| | 1997.01-2000.11 | MT | F | R | Saloon FWD B5204T2 | | GCI62015 | Inner Joint | | 26 | 25 | 40 | 531.5 | 96 | |
| 2.0 (155 kw) | 1996.11-1998.09 | AT/MT | F | L | Saloon FWD B5204T2 | Date to:1999.12 | GDS62001 | Drive Shaft | 48T | 26 | 26 | 56.5 | 98.5 | 574.5 | |
| | 1996.11-1998.09 | AT/MT | F | R | Saloon FWD B5204T2 | Date to:1999.12 | GDS62002 | Drive Shaft | 48T | 26 | 26 | 56.5 | 98.5 | 1028 | |
| | 1996.11-1998.09 | AT/MT | F | L/R | Saloon FWD B5204T2 | Date to:1999.12 | GCO62001 | Outer Joint | 48T | 26 | 25 | 56.5 | 98.5 | 56 | O |
| | 1996.11-1998.09 | AT/MT | F | L/R | Saloon FWD B5204T2 | Date from:1999.01 | GCO62009 | Outer Joint | 48T | 36 | 27 | 56.5 | 48 | 66 | M |
| 2.0 (166 kw) | 1996.11-2000.09 | AT | F | L | Saloon FWD B5204T3 | Year from:1999 | GDS62143 | Drive Shaft | 48T | 36 | 26 | 56.5 | 48 | 506 | |
| | 1996.11-2000.09 | AT | F | R | Saloon FWD B5204T3 | Year to:1998 | GDS62002 | Drive Shaft | 48T | 26 | 26 | 56.5 | 98.5 | 1028 | |
| | 1996.11-2000.09 | AT | F | L | Saloon FWD B5204T3 | Year from:1999 | GCI62038 | Inner Joint | | 26 | 26 | 31 | 68 | 87 | |
| | 1996.11-2000.09 | AT/MT | F | L | Saloon FWD B5204T3 | Year to:1998 | GDS62001 | Drive Shaft | 48T | 26 | 26 | 56.5 | 98.5 | 574.5 | |
| | 1996.11-2000.09 | AT/MT | F | L/R | Saloon FWD B5204T3 | Year to:1998,Inner teeth:25 | GCO62001 | Outer Joint | 48T | 26 | 25 | 56.5 | 98.5 | 56 | O |
| | 1996.11-2000.09 | AT/MT | F | L/R | Saloon FWD B5204T3 | Year to:1998,Inner teeth:28,with ABS | GCO62002 | Outer Joint | 48T | 26 | 28 | 56.5 | 97.5 | 66 | O |
| | 1996.11-2000.09 | AT/MT | F | L/R | Saloon FWD B5204T3 | Year to:1998,Inner teeth:28,without ABS | GCO62016 | Outer Joint | | 26 | 28 | 56.5 | 97.5 | 66 | O |
| | 1996.11-2000.09 | MT | F | L | Saloon FWD B5204T3 | | GDS62009 | Drive Shaft | 48T | 36 | 26 | 56.5 | 48 | 523 | |
| | 1996.11-2000.09 | MT | F | L | Saloon FWD B5204T3 | Year from:1999 | GCO62009 | Outer Joint | 48T | 36 | 27 | 56.5 | 48 | 66 | M |
| 2.3 (176 kw) | 1997.01-2000.11 | 4AT/5AT/5MT | F | L | Saloon FWD B5234T3 | | GDS62001 | Drive Shaft | 48T | 26 | 26 | 56.5 | 98.5 | 574.5 | |
| | 1997.01-2000.11 | 4AT/5AT/5MT | F | R | Saloon FWD B5234T3 | | GDS62002 | Drive Shaft | 48T | 26 | 26 | 56.5 | 98.5 | 1028 | |
| | 1997.01-2000.11 | 4AT/5AT/5MT | F | L/R | Saloon FWD B5234T3 | | GCO62001 | Outer Joint | 48T | 26 | 25 | 56.5 | 98.5 | 56 | O |
| | 1997.01-2000.11 | AT/MT | F | L/R | Saloon FWD B5234T3 | Date to:1998.12 | GCO62002 | Outer Joint | 48T | 26 | 28 | 56.5 | 97.5 | 66 | O |
| | 1997.01-2000.11 | AT/MT | F | L/R | Saloon FWD B5234T3 | Date from:1999.01 | GCO62009 | Outer Joint | 48T | 36 | 27 | 56.5 | 48 | 66 | M |
| 2.3 (177 kw) | 1996.11-1998.09 | 5MT | F | L | Saloon 4WD B5234T3 | | GDS62001 | Drive Shaft | 48T | 26 | 26 | 56.5 | 98.5 | 574.5 | |
| | 1996.11-1998.09 | 5MT | F | R | Saloon 4WD B5234T3 | | GDS62002 | Drive Shaft | 48T | 26 | 26 | 56.5 | 98.5 | 1028 | |
| | 1996.11-1998.09 | 5MT | F | L/R | Saloon 4WD B5234T3 | | GCO62002 | Outer Joint | 48T | 26 | 28 | 56.5 | 97.5 | 66 | O |
| | 1996.11-1998.09 | 5MT | R | L/R | Saloon 4WD B5234T3 | | GDS81128 | Drive Shaft | 48T | 26 | 26 | 60.5 | 81 | 751 | |
| | 1996.11-1998.09 | 5MT | R | L/R | Saloon 4WD B5234T3 | | GCI81050 | Inner Joint | 48T | 26 | 25 | 60.5 | 81 | 96.8 | |
| | 1996.11-1998.09 | 5MT | R | L/R | Saloon 4WD B5234T3 | | GCI81060 | Inner Joint | | 26 | 25 | 35 | 70 | 106.3 | |
| | 1996.11-2000.12 | AT | F | R | Saloon FWD B5234T3 | | GDS62002 | Drive Shaft | 48T | 26 | 26 | 56.5 | 98.5 | 1028 | |
| | 1996.11-2000.12 | MT | F | L | Saloon FWD B5234T3 | | GDS62001 | Drive Shaft | 48T | 26 | 26 | 56.5 | 98.5 | 574.5 | |
| | 1996.11-2000.12 | MT | F | L/R | Saloon FWD B5234T3 | | GCO62002 | Outer Joint | 48T | 26 | 28 | 56.5 | 97.5 | 66 | O |
| | 1996.11-2000.12 | | F | | Saloon FWD B5234T3 | Model year from:1997 | GCO62031 | Outer Joint | 48T | 36 | 27 | 56.5 | 55 | 65 | M |
| | 1996.11-2000.12 | | F | | Saloon FWD B5234T3 | Model year from:1997 | GCO62045 | Outer Joint | | 40 | 26 | 57.7 | 52 | 62.5 | M |
| | 1996.11-2000.12 | | F | L | Saloon FWD B5234T3 | Model year from:1997 | GCI18044 | Inner Joint | | 26 | 23 | 40 | 68.5 | 99.5 | |
| | 1996.11-2000.12 | | F | L | Saloon FWD B5234T3 | Model year from:1997 | GCO81424 | Inner Joint | | 31 | 27 | 36.2 | 70 | 62 | |
| 2.3 (184 kw) | 1997.01-2000.11 | AT/MT | F | L | Saloon FWD B5234T4 | Date to:1999.12 | GDS62001 | Drive Shaft | 48T | 26 | 26 | 56.5 | 98.5 | 574.5 | |
| | 1997.01-2000.11 | AT/MT | F | R | Saloon FWD B5234T4 | Date to:1999.12 | GDS62002 | Drive Shaft | 48T | 26 | 26 | 56.5 | 98.5 | 1028 | |
| | 1997.01-2000.11 | AT/MT | F | L/R | Saloon FWD B5234T4 | Date to:1999.12 | GCO62001 | Outer Joint | 48T | 26 | 25 | 56.5 | 98.5 | 56 | O |
| | 1997.01-2000.11 | AT/MT | F | L/R | Saloon FWD B5234T4 | Date from:1999.01 | GCO62009 | Outer Joint | 48T | 36 | 27 | 56.5 | 48 | 66 | M |
| 2.3 (195 kw) | 1998.01-2000.09 | 4AT | F | L | Saloon FWD B5234T7 | | GDS62009 | Drive Shaft | 48T | 36 | 26 | 56.5 | 48 | 523 | |
| 2.4 (103 kw) | 1999.04-2000.09 | AT | F | L | Saloon 4WD B5244S2 | Trans. code:AW50/51 | GDS62143 | Drive Shaft | 48T | 36 | 26 | 56.5 | 48 | 506 | |
| | 1999.04-2000.09 | AT | F | L | Saloon 4WD B5244S2 | Trans. code:AW50/51 | GCO62009 | Outer Joint | 48T | 36 | 27 | 56.5 | 48 | 66 | M |
| | 1999.04-2000.09 | AT | F | L | Saloon 4WD B5244S2 | Trans. code:AW50/51 | GCI62038 | Inner Joint | | 26 | 26 | 31 | 68 | 87 | |
| | 1999.04-2000.09 | MT | F | L | Saloon 4WD B5244S2 | | GDS62009 | Drive Shaft | 48T | 36 | 26 | 56.5 | 48 | 523 | |
| | 1999.04-2000.09 | MT | F | L | Saloon 4WD B5244S2 | | GCO62010 | Outer Joint | 48T | 36 | 33 | 56.5 | 48 | 58 | M |
| | 1999.04-2000.09 | AT/MT | R | L/R | Saloon 4WD B5244S2 | | GDS81128 | Drive Shaft | 48T | 26 | 26 | 60.5 | 81 | 751 | |

| | YEAR | TRANSM. | F/R | L/R | BODY STYLE & DRIVE TYPE & ENGINE | REMARKS | G-AP Ref. | PRODUCT | ABS | Technical Specifications A | B | C | H | L | P |
|---|---|---|---|---|---|---|---|---|---|---|---|---|---|---|---|
| **VOLVO** **S70** | | | | | | | | | | | | | | | |
| 2.4 (103 kw) | 1999.04-2000.09 | AT/MT | R | L/R | Saloon 4WD B5244S2 | | GCI81050 | Inner Joint | 48T | 26 | 25 | 60.5 | 81 | 96.8 | |
| | 1999.04-2000.09 | AT/MT | R | L/R | Saloon 4WD B5244S2 | | GCI81060 | Inner Joint | | 26 | 25 | 35 | 70 | 106.3 | |
| | 1999.04-2000.11 | AT | F | L | Saloon FWD B5244S2 | | GDS62143 | Drive Shaft | 48T | 36 | 26 | 56.5 | 48 | 506 | |
| | 1999.04-2000.11 | AT | F | R | Saloon FWD B5244S2 | | GDS83502 | Drive Shaft | 48T | 36 | 26 | 56.5 | 48 | 959 | |
| | 1999.04-2000.11 | AT | F | L/R | Saloon FWD B5244S2 | | GCO62009 | Outer Joint | 48T | 36 | 27 | 56.5 | 48 | 66 | M |
| | 1999.04-2000.11 | AT | F | L | Saloon FWD B5244S2 | | GCI62038 | Inner Joint | | 26 | 26 | 31 | 68 | 87 | |
| | 1999.04-2000.11 | AT | F | R | Saloon FWD B5244S2 | | GCI82266 | Inner Joint | | 26 | 26 | 31 | 513 | 93.5 | |
| | 1999.04-2000.11 | AT/MT | F | L/R | Saloon FWD B5244S2 | | GCO62010 | Outer Joint | 48T | 36 | 33 | 56.5 | 48 | 58 | M |
| | 1999.04-2000.11 | MT | F | L | Saloon FWD B5244S2 | | GDS62009 | Drive Shaft | 48T | 36 | 26 | 56.5 | 48 | 523 | |
| | 1999.07-2000.09 | 4AT | F | L | Saloon FWD B5244SG | | GDS62009 | Drive Shaft | 48T | 36 | 26 | 56.5 | 48 | 523 | |
| | 1999.07-2000.11 | AT | F | L | Saloon FWD B5244SG2 | | GDS62143 | Drive Shaft | 48T | 36 | 26 | 56.5 | 48 | 506 | |
| | 1999.07-2000.11 | AT | F | R | Saloon FWD B5244SG2 | | GDS83502 | Drive Shaft | 48T | 36 | 26 | 56.5 | 48 | 959 | |
| | 1999.07-2000.11 | AT | F | L/R | Saloon FWD B5244SG2 | | GCO62009 | Outer Joint | 48T | 36 | 27 | 56.5 | 48 | 66 | M |
| | 1999.07-2000.11 | AT | F | L | Saloon FWD B5244SG2 | | GCI62038 | Inner Joint | | 26 | 26 | 31 | 68 | 87 | |
| | 1999.07-2000.11 | AT | F | R | Saloon FWD B5244SG2 | | GCI82266 | Inner Joint | | 26 | 26 | 31 | 513 | 93.5 | |
| | 1999.07-2000.11 | AT/MT | F | L/R | Saloon FWD B5244SG2 | | GCO62010 | Outer Joint | 48T | 36 | 33 | 56.5 | 48 | 58 | M |
| 2.4 (106 kw) | 1996.11-1999.05 | 4AT | F | L | Saloon 4WD B5252FS | | GDS62001 | Drive Shaft | 48T | 26 | 26 | 56.5 | 98.5 | 574.5 | |
| | 1996.11-1999.05 | 4AT | F | R | Saloon 4WD B5252FS | | GDS62002 | Drive Shaft | 48T | 26 | 26 | 56.5 | 98.5 | 1028 | |
| | 1996.11-1999.05 | MT | F | L/R | Saloon 4WD B5252FS | | GCO62001 | Outer Joint | 48T | 26 | 25 | 56.5 | 98.5 | 56 | O |
| | 1996.11-1999.05 | 4AT | R | L/R | Saloon 4WD B5252FS | | GDS81128 | Drive Shaft | 48T | 26 | 26 | 60.5 | 81 | 751 | |
| | 1996.11-1999.05 | 4AT | R | L/R | Saloon 4WD B5252FS | | GCI81050 | Inner Joint | 48T | 26 | 25 | 60.5 | 81 | 96.8 | |
| | 1996.11-1999.05 | 4AT | R | L/R | Saloon 4WD B5252FS | | GCI81060 | Inner Joint | | 26 | 25 | 35 | 70 | 106.3 | |
| | 1997.01-2000.11 | 4AT/5MT | F | L | Saloon FWD B5252FS | Model year to:1998 | GDS62001 | Drive Shaft | 48T | 26 | 26 | 56.5 | 98.5 | 574.5 | |
| | 1997.01-2000.11 | 4AT/5MT | F | L | Saloon FWD B5252FS | Model year from:1999 | GDS62009 | Drive Shaft | 48T | 36 | 26 | 56.5 | 48 | 523 | |
| | 1997.01-2000.11 | 4AT/5MT | F | R | Saloon FWD B5252FS | Model year to:1998 | GDS62002 | Drive Shaft | 48T | 26 | 26 | 56.5 | 98.5 | 1028 | |
| | 1997.01-2000.11 | 4AT/5MT | F | L/R | Saloon FWD B5252FS | Model year to:1998 | GCO62001 | Outer Joint | 48T | 26 | 25 | 56.5 | 98.5 | 56 | O |
| | 1997.01-2000.11 | 4AT/5MT | F | L/R | Saloon FWD B5252FS | Model year to:1998 | GCO62014 | Outer Joint | | 26 | 25 | 56.5 | 98.5 | 56 | O |
| | 1997.01-2000.11 | 5MT | F | L/R | Saloon FWD B5252FS | Model year from:1999 | GCO62010 | Outer Joint | 48T | 36 | 33 | 56.5 | 48 | 58 | M |
| | 1997.01-2000.11 | MT | F | R | Saloon FWD B5252FS | Date to:1998.12 | GCI62015 | Inner Joint | | 26 | 25 | 40 | 531.5 | 96 | |
| | 1998.10-2000.01 | 4AT | F | L | Saloon FWD GB5252S | | GDS62009 | Drive Shaft | 48T | 36 | 26 | 56.5 | 48 | 523 | |
| | 1998.10-2000.01 | AT/MT | F | L/R | Saloon FWD GB5252S | Date to:1998.12 | GCO62001 | Outer Joint | 48T | 26 | 25 | 56.5 | 98.5 | 56 | O |
| | 1998.10-2000.01 | AT/MT | F | L/R | Saloon FWD GB5252S | Date to:1999.12 | GCO62002 | Outer Joint | 48T | 26 | 28 | 56.5 | 97.5 | 66 | O |
| | 1998.10-2000.01 | AT/MT | F | L/R | Saloon FWD GB5252S | Date from:1999.01,Date to:2000.01 | GCO62010 | Outer Joint | 48T | 36 | 33 | 56.5 | 48 | 58 | M |
| | 1998.10-2000.01 | AT/MT | F | L/R | Saloon FWD GB5252S | Date to:1999.12 | GCO62016 | Outer Joint | | 26 | 28 | 56.5 | 97.5 | 66 | O |
| 2.4 (121 kw) | 1996.12-2000.11 | AT | F | R | Saloon FWD B5254SDENS | | GDS62002 | Drive Shaft | 48T | 26 | 26 | 56.5 | 98.5 | 1028 | |
| | 1996.12-2000.11 | AT | F | L/R | Saloon FWD B5254SDENS | | GCO62001 | Outer Joint | 48T | 26 | 25 | 56.5 | 98.5 | 56 | O |
| | 1996.12-2000.11 | AT/MT | F | L | Saloon FWD B5254SDENS | | GDS62009 | Drive Shaft | 48T | 36 | 26 | 56.5 | 48 | 523 | |
| | 1996.12-2000.11 | AT/MT | F | L/R | Saloon FWD B5254SDENS | | GCO62014 | Outer Joint | | 26 | 25 | 56.5 | 98.5 | 56 | O |
| | 1996.12-2000.11 | MT | F | L/R | Saloon FWD B5254SDENS | | GCO62010 | Outer Joint | 48T | 36 | 33 | 56.5 | 48 | 58 | M |
| | 1998.10-1999.05 | MT | F | L | Saloon 4WD B5254SDENS | | GDS62009 | Drive Shaft | 48T | 36 | 26 | 56.5 | 48 | 523 | |
| | 1998.10-1999.05 | MT | F | L | Saloon 4WD B5254SDENS | | GCO62010 | Outer Joint | 48T | 36 | 33 | 56.5 | 48 | 58 | M |
| | 1998.10-1999.05 | MT | R | L/R | Saloon 4WD B5254SDENS | | GDS81128 | Drive Shaft | 48T | 26 | 26 | 60.5 | 81 | 751 | |
| | 1998.10-1999.05 | MT | R | L/R | Saloon 4WD B5254SDENS | | GCI81050 | Inner Joint | 48T | 26 | 25 | 60.5 | 81 | 96.8 | |
| | 1998.10-1999.05 | MT | R | L/R | Saloon 4WD B5254SDENS | | GCI81060 | Inner Joint | | 26 | 25 | 35 | 70 | 106.3 | |
| 2.4 (125 kw) | 1996.11-2000.09 | AT | F | L | Saloon FWD B5244S/B5254FS | For Engine Code:B5244S | GDS62143 | Drive Shaft | 48T | 36 | 26 | 56.5 | 48 | 506 | |
| | 1996.11-2000.09 | AT | F | R | Saloon FWD B5244S/B5254FS | For Engine Code:B5244S | GDS83502 | Drive Shaft | 48T | 36 | 26 | 56.5 | 48 | 959 | |
| | 1996.11-2000.09 | AT | F | L | Saloon FWD B5244S/B5254FS | For Engine Code:B5254FS | GCO62002 | Outer Joint | 48T | 26 | 28 | 56.5 | 97.5 | 66 | O |
| | 1996.11-2000.09 | AT | F | L/R | Saloon FWD B5244S/B5254FS | For Engine Code:B5244S | GCO62009 | Outer Joint | 48T | 36 | 27 | 56.5 | 48 | 66 | M |
| | 1996.11-2000.09 | AT | F | L | Saloon FWD B5244S/B5254FS | For Engine Code:B5244S | GCI62038 | Inner Joint | | 26 | 26 | 31 | 68 | 87 | |
| | 1996.11-2000.09 | AT | F | R | Saloon FWD B5244S/B5254FS | For Engine Code:B5244S | GCI82266 | Inner Joint | | 26 | 26 | 31 | 513 | 93.5 | |
| | 1996.11-2000.09 | AT/MT | F | L | Saloon FWD B5244S/B5254FS | For Engine Code:B5254FS | GDS62001 | Drive Shaft | 48T | 26 | 26 | 56.5 | 98.5 | 574.5 | |
| | 1996.11-2000.09 | AT/MT | F | R | Saloon FWD B5244S/B5254FS | For Engine Code:B5254FS | GDS62002 | Drive Shaft | 48T | 26 | 26 | 56.5 | 98.5 | 1028 | |
| | 1996.11-2000.09 | AT/MT | F | L/R | Saloon FWD B5244S/B5254FS | For Engine Code:B5254FS | GCO62001 | Outer Joint | 48T | 26 | 25 | 56.5 | 98.5 | 56 | O |
| | 1996.11-2000.09 | AT/MT | F | L/R | Saloon FWD B5244S/B5254FS | For Engine Code:B5254FS | GCO62014 | Outer Joint | | 26 | 25 | 56.5 | 98.5 | 56 | O |
| | 1996.11-2000.09 | MT | F | L | Saloon FWD B5244S/B5254FS | For Engine code:B5244S | GDS62009 | Drive Shaft | 48T | 36 | 26 | 56.5 | 48 | 523 | |
| | 1996.11-2000.09 | MT | F | L | Saloon FWD B5244S/B5254FS | For Engine Code:B5244S | GCO62010 | Outer Joint | 48T | 36 | 33 | 56.5 | 48 | 58 | M |
| | 1996.11-2000.09 | MT | F | R | Saloon FWD B5244S/B5254FS | Date to:1998.12 | GCI62015 | Inner Joint | | 26 | 25 | 40 | 531.5 | 96 | |
| | 1999.04-2000.09 | AT | F | L | Saloon 4WD B5244S | | GDS62143 | Drive Shaft | 48T | 36 | 26 | 56.5 | 48 | 506 | |
| | 1999.04-2000.09 | AT | F | L | Saloon 4WD B5244S | | GCO62009 | Outer Joint | 48T | 36 | 27 | 56.5 | 48 | 66 | M |
| | 1999.04-2000.09 | AT | F | L | Saloon 4WD B5244S | | GCI62038 | Inner Joint | | 26 | 26 | 31 | 68 | 87 | |
| | 1999.04-2000.09 | MT | F | L | Saloon 4WD B5244S | | GDS62009 | Drive Shaft | 48T | 36 | 26 | 56.5 | 48 | 523 | |
| | 1999.04-2000.09 | MT | F | L | Saloon 4WD B5244S | | GCO62010 | Outer Joint | 48T | 36 | 33 | 56.5 | 48 | 58 | M |
| | 1999.04-2000.09 | AT | R | L/R | Saloon 4WD B5244S | | GDS81128 | Drive Shaft | 48T | 26 | 26 | 60.5 | 81 | 751 | |
| | 1999.04-2000.09 | AT | R | L/R | Saloon 4WD B5244S | | GCI81050 | Inner Joint | 48T | 26 | 25 | 60.5 | 81 | 96.8 | |
| | 1999.04-2000.09 | AT | R | L/R | Saloon 4WD B5244S | | GCI81060 | Inner Joint | | 26 | 25 | 35 | 70 | 106.3 | |

| | YEAR | TRANSM. | F/R | L/R | BODY STYLE & DRIVE TYPE & ENGINE | REMARKS | G-AP Ref. | PRODUCT | ABS | Technical Specifications A | B | C | H | L | P |
|---|---|---|---|---|---|---|---|---|---|---|---|---|---|---|---|
| **VOLVO** | | | | | | | | | | | | | | | |
| **S70** | | | | | | | | | | | | | | | |
| 2.4 (142 kw) | 1996.11-1999.04 | 4AT/5MT | F | L | Saloon 4WD B5254T | | GDS62009 | Drive Shaft | 48T | 36 | 26 | 56.5 | 48 | 523 | |
| | 1996.11-1999.04 | 4AT/5MT | R | L/R | Saloon 4WD B5254T | | GDS81128 | Drive Shaft | 48T | 26 | 26 | 60.5 | 81 | 751 | |
| | 1996.11-1999.04 | 4AT/5MT | R | L/R | Saloon 4WD B5254T | | GCI81050 | Inner Joint | 48T | 26 | 25 | 60.5 | 81 | 96.8 | |
| | 1996.11-1999.04 | 4AT/5MT | R | L/R | Saloon 4WD B5254T | | GCI81060 | Inner Joint | | 26 | 25 | 35 | 70 | 106.3 | |
| | 1996.11-2000.09 | AT | F | L | Saloon FWD B5244T/B5254T | Year from:1999 | GDS62143 | Drive Shaft | 48T | 36 | 26 | 56.5 | 48 | 506 | |
| | 1996.11-2000.09 | AT | F | R | Saloon FWD B5244T/B5254T | Year from:1999 | GDS83502 | Drive Shaft | 48T | 36 | 26 | 56.5 | 48 | 959 | |
| | 1996.11-2000.09 | AT | F | L | Saloon FWD B5244T/B5254T | Year from:1999 | GCO62009 | Outer Joint | 48T | 36 | 27 | 56.5 | 48 | 66 | M |
| | 1996.11-2000.09 | AT | F | L | Saloon FWD B5244T/B5254T | Year from:1999 | GCI62038 | Inner Joint | | 26 | 26 | 31 | 68 | 87 | |
| | 1996.11-2000.09 | AT | F | R | Saloon FWD B5244T/B5254T | Year from:1999 | GCI82266 | Inner Joint | | 26 | 26 | 31 | 513 | 93.5 | |
| | 1996.11-2000.09 | AT/MT | F | L | Saloon FWD B5244T/B5254T | Year to:1998 | GDS62001 | Drive Shaft | 48T | 26 | 26 | 56.5 | 98.5 | 574.5 | |
| | 1996.11-2000.09 | AT/MT | F | R | Saloon FWD B5244T/B5254T | Date to:1999.01 | GDS62002 | Drive Shaft | 48T | 26 | 26 | 56.5 | 98.5 | 1028 | |
| | 1996.11-2000.09 | AT/MT | F | L/R | Saloon FWD B5244T/B5254T | Year to:1998,Inner teeth:25 | GCO62001 | Outer Joint | 48T | 26 | 25 | 56.5 | 98.5 | 56 | O |
| | 1996.11-2000.09 | AT/MT | F | L/R | Saloon FWD B5244T/B5254T | Year to:1998,Inner teeth:28 | GCO62002 | Outer Joint | 48T | 26 | 28 | 56.5 | 97.5 | 66 | O |
| | 1996.11-2000.09 | AT/MT | F | L/R | Saloon FWD B5244T/B5254T | Year to:1998,Inner teeth:28 | GCO62016 | Outer Joint | | 26 | 28 | 56.5 | 97.5 | 66 | O |
| | 1996.11-2000.09 | MT | F | L | Saloon FWD B5244T/B5254T | | GDS62009 | Drive Shaft | 48T | 36 | 26 | 56.5 | 48 | 523 | |
| 2.5 (103 kw) | 1996.11-2000.09 | MT | F | L | Saloon FWD D5252T | | GDS62001 | Drive Shaft | 48T | 26 | 26 | 56.5 | 98.5 | 574.5 | |
| | 1996.11-2000.09 | MT | F | L | Saloon FWD D5252T | | GDS62009 | Drive Shaft | 48T | 36 | 26 | 56.5 | 48 | 523 | |
| | 1996.11-2000.09 | MT | F | L | Saloon FWD D5252T | | GCO62001 | Outer Joint | 48T | 26 | 25 | 56.5 | 98.5 | 56 | O |
| | 1996.11-2000.09 | MT | F | L/R | Saloon FWD D5252T | Model Year to:1998 | GCO62002 | Outer Joint | 48T | 26 | 28 | 56.5 | 97.5 | 66 | O |
| | 1999.10-2000.09 | AT | F | L | Saloon 4WD D5252T | Trans. code:AW50/51 | GDS62143 | Drive Shaft | 48T | 36 | 26 | 56.5 | 48 | 506 | |
| | 1999.10-2000.09 | AT | F | L | Saloon 4WD D5252T | Trans. code:AW50/51 | GCO62009 | Outer Joint | 48T | 36 | 27 | 56.5 | 48 | 66 | M |
| | 1999.10-2000.09 | AT | F | L | Saloon 4WD D5252T | Trans. code:AW50/51 | GCI62038 | Inner Joint | | 26 | 26 | 31 | 68 | 87 | |
| | 1999.10-2000.09 | MT | F | L | Saloon 4WD D5252T | | GDS62009 | Drive Shaft | 48T | 36 | 26 | 56.5 | 48 | 523 | |
| | 1999.10-2000.09 | MT | F | L | Saloon 4WD D5252T | | GCO62010 | Outer Joint | 48T | 36 | 33 | 56.5 | 48 | 58 | M |
| | 1999.10-2000.09 | AT/MT | R | L/R | Saloon 4WD D5252T | | GDS81128 | Drive Shaft | 48T | 26 | 26 | 60.5 | 81 | 751 | |
| | 1999.10-2000.09 | AT/MT | R | L/R | Saloon 4WD D5252T | | GCI81050 | Inner Joint | 48T | 26 | 25 | 60.5 | 81 | 96.8 | |
| | 1999.10-2000.09 | AT/MT | R | L/R | Saloon 4WD D5252T | | GCI81060 | Inner Joint | | 26 | 25 | 35 | 70 | 106.3 | |
| **S80** | | | | | | | | | | | | | | | |
| 1.6 (80 kw) | 2010.01-2011.12 | 5MT | F | L | Saloon FWD D 4164 T | | GDS62093 | Drive Shaft | | 40 | 26 | 57.7 | 52 | 610 | |
| | 2010.01-2011.12 | 5MT | F | R | Saloon FWD D 4164 T | | GDS62094 | Drive Shaft | | 40 | 26 | 57.7 | 52 | 946 | |
| | 2010.01-2011.12 | 5MT | F | L | Saloon FWD D 4164 T | | GCI18128 | Inner Joint | | 26 | 28 | 40 | 68.5 | 111 | |
| | 2010.01-2011.12 | MT | F | L/R | Saloon FWD D 4164 T | | GCO99271 | Outer Joint | | 40 | 28 | 57.7 | 51 | 63 | M |
| 1.6 (84 kw) | 2011.06-2014.01 | 6DCT | F | L | Saloon FWD D 4162 T | | GCI62056 | Inner Joint | | 28 | 24 | 33.8 | 80 | 95.5 | |
| | 2011.06-2014.01 | 6DCT | F | R | Saloon FWD D 4162 T | | GCI62067 | Inner Joint | | 28 | 24 | 33.8 | 374.5 | 98.5 | |
| | 2011.06-2014.01 | AT | F | L | Saloon FWD D 4162 T | | GDS62127 | Drive Shaft | | 40 | 28 | 57.7 | 52 | 602 | |
| | 2011.06-2014.01 | AT | F | R | Saloon FWD D 4162 T | | GDS62133 | Drive Shaft | | 40 | 28 | 57.7 | 52 | 934 | |
| | 2011.06-2014.01 | MT | F | L | Saloon FWD D 4162 T | | GDS62093 | Drive Shaft | | 40 | 26 | 57.7 | 52 | 610 | |
| | 2011.06-2014.01 | MT | F | R | Saloon FWD D 4162 T | | GDS62094 | Drive Shaft | | 40 | 26 | 57.7 | 52 | 946 | |
| | 2011.06-2014.01 | MT | F | L/R | Saloon FWD D 4162 T | | GCO99271 | Outer Joint | | 40 | 28 | 57.7 | 51 | 63 | M |
| | 2011.06-2014.01 | MT | F | L | Saloon FWD D 4162 T | | GCI18128 | Inner Joint | | 26 | 28 | 40 | 68.5 | 111 | |
| | 2011.06-2014.01 | MT | F | R | Saloon FWD D 4162 T | | GCI18129 | Inner Joint | | 26 | 28 | 40 | 389 | 96.5 | |
| 1.6 (85 kw) | 2014.01-2016.12 | AT | F | L | Saloon FWD D 4162 T | | GDS62127 | Drive Shaft | | 40 | 28 | 57.7 | 52 | 602 | |
| | 2014.01-2016.12 | AT | F | R | Saloon FWD D 4162 T | | GDS62133 | Drive Shaft | | 40 | 28 | 57.7 | 52 | 934 | |
| | 2014.01-2016.12 | AT | F | L | Saloon FWD D 4162 T | | GCI62056 | Inner Joint | | 28 | 24 | 33.8 | 80 | 95.5 | |
| | 2014.01-2016.12 | AT | F | R | Saloon FWD D 4162 T | | GCI62067 | Inner Joint | | 28 | 24 | 33.8 | 374.5 | 98.5 | |
| 1.6 (132 kw) | 2010.10-2014.04 | 6DCT | F | L | Saloon FWD B 4164 T | | GDS62081 | Drive Shaft | | 40 | 28 | 57.7 | 51 | 591 | |
| | 2010.10-2014.04 | 6DCT | F | L | Saloon FWD B 4164 T | | GDS62095 | Drive Shaft | | 40 | 28 | 57.7 | 52 | 592 | |
| | 2010.10-2014.04 | 6DCT | F | R | Saloon FWD B 4164 T | | GDS62096 | Drive Shaft | | 40 | 28 | 57.7 | 52 | 952 | |
| | 2010.10-2014.04 | 6MT | F | L | Saloon FWD B 4164 T | | GDS99211 | Drive Shaft | | 40 | 26 | 57.7 | 51 | 603 | |
| | 2010.10-2014.04 | 6MT | F | R | Saloon FWD B 4164 T | | GDS62084 | Drive Shaft | | 40 | 26 | 57.7 | 51 | 963 | |
| | 2010.10-2014.04 | 6MT | F | L/R | Saloon FWD B 4164 T | | GCO99271 | Outer Joint | | 40 | 28 | 57.7 | 51 | 63 | M |
| | 2010.10-2014.04 | MT | F | R | Saloon FWD B 4164 T | | GCI62041 | Inner Joint | | 26 | 28 | 40 | 447 | 95.5 | |
| | 2011.05-2014.01 | 6DCT | F | L | Saloon FWD B 4164 T2 | | GDS62081 | Drive Shaft | | 40 | 28 | 57.7 | 51 | 591 | |
| | 2011.05-2014.01 | 6DCT | F | L | Saloon FWD B 4164 T2 | | GDS62095 | Drive Shaft | | 40 | 28 | 57.7 | 52 | 592 | |
| | 2011.05-2014.01 | 6DCT | F | R | Saloon FWD B 4164 T2 | | GDS62096 | Drive Shaft | | 40 | 28 | 57.7 | 52 | 952 | |
| | 2011.05-2014.01 | 6MT | F | L | Saloon FWD B 4164 T2 | | GDS99211 | Drive Shaft | | 40 | 26 | 57.7 | 51 | 603 | |
| | 2011.05-2014.01 | 6MT | F | R | Saloon FWD B 4164 T2 | | GDS62084 | Drive Shaft | | 40 | 26 | 57.7 | 51 | 963 | |
| | 2011.05-2014.01 | 6MT | F | L/R | Saloon FWD B 4164 T2 | | GCO99271 | Outer Joint | | 40 | 28 | 57.7 | 51 | 63 | M |
| | 2011.05-2014.01 | MT | F | R | Saloon FWD B 4164 T2 | | GCI62041 | Inner Joint | | 26 | 28 | 40 | 447 | 95.5 | |
| 2.0 (100 kw) | 2008.02-2011.03 | 6MT | F | L | Saloon FWD D 4204 T | | GCI18128 | Inner Joint | | 26 | 28 | 40 | 68.5 | 111 | |
| | 2008.02-2011.03 | AT | F | L/R | Saloon FWD D 4204 T | | GCO59344 | Outer Joint | | 40 | 26 | 57.7 | 52 | 63.5 | M |
| | 2008.02-2011.03 | MT | F | L/R | Saloon FWD D 4204 T | | GCO99271 | Outer Joint | | 40 | 28 | 57.7 | 51 | 63 | M |
| | 2008.02-2011.03 | | F | L | Saloon FWD D 4204 T | | GDS62093 | Drive Shaft | | 40 | 26 | 57.7 | 52 | 610 | |
| | 2008.02-2011.03 | | F | R | Saloon FWD D 4204 T | | GDS62094 | Drive Shaft | | 40 | 26 | 57.7 | 52 | 946 | |
| | 2008.02-2011.03 | | F | R | Saloon FWD D 4204 T | | GCI18129 | Inner Joint | | 26 | 28 | 40 | 389 | 96.5 | |

| | YEAR | TRANSM. | F/R | L/R | BODY STYLE & DRIVE TYPE & ENGINE | REMARKS | G-AP Ref. | PRODUCT | ABS | Technical Specifications A | B | C | H | L | P |
|---|---|---|---|---|---|---|---|---|---|---|---|---|---|---|---|
| **VOLVO** **S80** | | | | | | | | | | | | | | | |
| 2.0 (100 kw) | 2012.05-2014.05 | 6AT | F | L/R | Saloon FWD D 5204 T7 | Chassis no. from:171776 | GCO59344 | Outer Joint | | 40 | 26 | 57.7 | 52 | 63.5 | M |
| | 2012.05-2014.05 | 6AT | F | L/R | Saloon FWD D 5204 T7 | Chassis no. from:171776 | GCO62045 | Outer Joint | | 40 | 26 | 57.7 | 52 | 62.5 | M |
| | 2012.05-2014.05 | 6MT | F | L | Saloon FWD D 5204 T7 | | GDS21070 | Drive Shaft | | 40 | 26 | 57.7 | 52 | 556 | |
| | 2012.05-2014.05 | 6MT | F | R | Saloon FWD D 5204 T7 | | GDS62086 | Drive Shaft | | 40 | 26 | 57.7 | 52 | 1002 | |
| | 2012.05-2014.05 | 6MT | F | L/R | Saloon FWD D 5204 T7 | | GCO59285 | Outer Joint | | 40 | 27 | 57.7 | 52 | 63.5 | M |
| | 2012.05-2014.05 | AT | F | L | Saloon FWD D 5204 T7 | Chassis no. to:171775 | GDS62076 | Drive Shaft | | 40 | 31 | 57.7 | 52 | 529 | |
| | 2012.05-2014.05 | AT | F | L | Saloon FWD D 5204 T7 | Chassis no. from:171776 | GDS62109 | Drive Shaft | | 40 | 31 | 57.7 | 52 | 524 | |
| | 2012.05-2014.05 | AT | F | R | Saloon FWD D 5204 T7 | Chassis no. to:171775 | GDS59444 | Drive Shaft | | 40 | 28 | 57.7 | 52 | 994 | |
| | 2012.05-2014.05 | AT | F | R | Saloon FWD D 5204 T7 | Chassis no. from:171776 | GDS62091 | Drive Shaft | | 40 | 28 | 57.7 | 52 | 992 | |
| | 2012.05-2014.05 | AT | F | R | Saloon FWD D 5204 T7 | Chassis no. from:171776 | GCI62043 | Inner Joint | | 28 | 26 | 33 | 521 | 100 | |
| | 2012.05-2014.05 | MT | F | R | Saloon FWD D 5204 T7 | | GCI81076 | Inner Joint | | 26 | 28 | 40 | 522.5 | 123.7 | |
| 2.0 (107 kw) | 2008.01-2011.12 | 5MT | F | L | Saloon FWD B 4204 S4 | | GDS62093 | Drive Shaft | | 40 | 26 | 57.7 | 52 | 610 | |
| | 2008.01-2011.12 | 5MT | F | R | Saloon FWD B 4204 S4 | | GDS62094 | Drive Shaft | | 40 | 26 | 57.7 | 52 | 946 | |
| | 2008.01-2011.12 | 5MT | F | L | Saloon FWD B 4204 S4 | | GCI18128 | Inner Joint | | 26 | 28 | 40 | 68.5 | 111 | |
| | 2008.01-2011.12 | 6DCT | F | L | Saloon FWD B 4204 S4 | | GDS62115 | Drive Shaft | | 40 | 28 | 57.7 | 52 | 602 | |
| | 2008.01-2011.12 | 6DCT | F | R | Saloon FWD B 4204 S4 | | GDS57739 | Drive Shaft | | 40 | 28 | 57.7 | 52 | 939 | |
| | 2008.01-2011.12 | 6DCT | F | L/R | Saloon FWD B 4204 S4 | | GCO18269 | Outer Joint | | 40 | 26 | 57.7 | 52 | 63.5 | I |
| | 2008.01-2011.12 | 6DCT | F | L | Saloon FWD B 4204 S4 | | GCI62059 | Inner Joint | | 28 | 26 | 34 | 80 | 101.5 | |
| | 2008.01-2011.12 | 6DCT | F | R | Saloon FWD B 4204 S4 | | GCI83868 | Inner Joint | | 28 | 26 | 33.8 | 371 | 103 | |
| | 2008.01-2011.12 | AT | F | L/R | Saloon FWD B 4204 S4 | | GCO59344 | Outer Joint | | 40 | 26 | 57.7 | 52 | 63.5 | M |
| | 2008.01-2011.12 | MT | F | L/R | Saloon FWD B 4204 S4 | | GCO99271 | Outer Joint | | 40 | 28 | 57.7 | 51 | 63 | M |
| | 2008.01-2012.09 | 5MT | F | L | Saloon FWD B 4204 S3 | | GDS62093 | Drive Shaft | | 40 | 26 | 57.7 | 52 | 610 | |
| | 2008.01-2012.09 | 5MT | F | R | Saloon FWD B 4204 S3 | | GDS62094 | Drive Shaft | | 40 | 26 | 57.7 | 52 | 946 | |
| | 2008.01-2012.09 | 5MT | F | L | Saloon FWD B 4204 S3 | | GCI18128 | Inner Joint | | 26 | 28 | 40 | 68.5 | 111 | |
| | 2008.01-2012.09 | AT | F | L/R | Saloon FWD B 4204 S3 | | GCO59344 | Outer Joint | | 40 | 26 | 57.7 | 52 | 63.5 | M |
| | 2008.01-2012.09 | MT | F | L/R | Saloon FWD B 4204 S3 | | GCO99271 | Outer Joint | | 40 | 28 | 57.7 | 51 | 63 | M |
| 2.0 (120 kw) | 1998.11-2001.03 | AT | F | L | Saloon FWD B5204T4 | | GDS62137 | Drive Shaft | 48T | 36 | 26 | 56.5 | 48 | 551 | |
| | 1998.11-2001.03 | AT | F | L/R | Saloon FWD B5204T4 | | GCO62009 | Outer Joint | 48T | 36 | 27 | 56.5 | 48 | 66 | M |
| | 1998.11-2001.03 | AT | F | L | Saloon FWD B5204T4 | | GCI62050 | Inner Joint | | 26 | 26 | 40 | 67 | 104 | |
| | 1998.11-2001.03 | MT | F | L | Saloon FWD B5204T4 | Date from:1998.11,Date to:2001.03 | GDS56216 | Drive Shaft | 48T | 36 | 26 | 57 | 48 | 556 | |
| | 1998.11-2001.03 | MT | F | R | Saloon FWD B5204T4 | | GDS56586 | Drive Shaft | 48T | 36 | 26 | 57 | 48 | 1006 | |
| | 1998.11-2001.03 | MT | F | L/R | Saloon FWD B5204T4 | Date from:1998.11,Date to:2001.03 | GCO62010 | Outer Joint | 48T | 36 | 33 | 56.5 | 48 | 58 | M |
| | 1998.11-2001.03 | MT | F | L/R | Saloon FWD B5204T4 | Date from:1998.11,Date to:2001.03 | GCO83208 | Outer Joint | 48T | 36 | 27 | 57 | 48 | 66 | M |
| | 2010.01-2016.12 | 6AT | F | L | Saloon FWD D 5204 T2;D 5204 T3 | Chassis no. to:171775 | GDS62076 | Drive Shaft | | 40 | 31 | 57.7 | 52 | 529 | |
| | 2010.01-2016.12 | 6AT | F | L | Saloon FWD D 5204 T2;D 5204 T3 | Chassis no. from:171776 | GDS62109 | Drive Shaft | | 40 | 31 | 57.7 | 52 | 524 | |
| | 2010.01-2016.12 | 6AT | F | R | Saloon FWD D 5204 T2;D 5204 T3 | Chassis no. from:171776 | GCO62045 | Outer Joint | | 40 | 26 | 57.7 | 52 | 62.5 | M |
| | 2010.01-2016.12 | 6AT | F | L/R | Saloon FWD D 5204 T2;D 5204 T3 | Chassis no. from:171776 | GCO59344 | Outer Joint | | 40 | 26 | 57.7 | 52 | 63.5 | M |
| | 2010.01-2016.12 | 6MT | F | L | Saloon FWD D 5204 T2;D 5204 T3 | | GDS21070 | Drive Shaft | | 40 | 26 | 57.7 | 52 | 556 | |
| | 2010.01-2016.12 | 6MT | F | R | Saloon FWD D 5204 T2;D 5204 T3 | | GDS62086 | Drive Shaft | | 40 | 26 | 57.7 | 52 | 1002 | |
| | 2010.01-2016.12 | 6MT | F | L/R | Saloon FWD D 5204 T2;D 5204 T3 | | GCO59285 | Outer Joint | | 40 | 27 | 57.7 | 52 | 63.5 | M |
| | 2010.01-2016.12 | AT | F | R | Saloon FWD D 5204 T2;D 5204 T3 | Chassis no. to:171775 | GDS59444 | Drive Shaft | | 40 | 28 | 57.7 | 52 | 994 | |
| | 2010.01-2016.12 | AT | F | R | Saloon FWD D 5204 T2;D 5204 T3 | Chassis no. from:171776 | GDS62091 | Drive Shaft | | 40 | 28 | 57.7 | 52 | 992 | |
| | 2010.01-2016.12 | AT | F | R | Saloon FWD D 5204 T2;D 5204 T3 | Chassis no. from:171776 | GCI62043 | Inner Joint | | 28 | 26 | 33 | 521 | 100 | |
| | 2010.01-2016.12 | MT | F | R | Saloon FWD D 5204 T2;D 5204 T3 | | GCI81076 | Inner Joint | | 26 | 28 | 40 | 522.5 | 123.7 | |
| 2.0 (132 kw) | 1999.09-2005.08 | AT | F | L | Saloon FWD B5204T5 | | GDS62138 | Drive Shaft | 48T | 36 | 26 | 56.5 | 48 | 488 | |
| | 1999.09-2005.08 | AT | F | L/R | Saloon FWD B5204T5 | | GCO62009 | Outer Joint | 48T | 36 | 27 | 56.5 | 48 | 66 | M |
| | 1999.09-2005.08 | AT | F | L | Saloon FWD B5204T5 | | GCI62050 | Inner Joint | | 26 | 26 | 40 | 67 | 104 | |
| | 1999.09-2005.08 | AT/MT | F | L/R | Saloon FWD B5204T5 | | GCO62010 | Outer Joint | 48T | 36 | 33 | 56.5 | 48 | 58 | M |
| 2.0 (133 kw) | 2013.09-2016.12 | 6MT | F | L | Saloon FWD D 4204 T5 | | GDS62119 | Drive Shaft | | 40 | 31 | 57.7 | 52 | 599 | |
| | 2013.09-2016.12 | 6MT | F | R | Saloon FWD D 4204 T5 | | GDS62117 | Drive Shaft | | 40 | 28 | 57.7 | 52 | 949 | |
| | 2013.09-2016.12 | AT | F | L | Saloon FWD D 4204 T5 | | GDS62126 | Drive Shaft | | 40 | 31 | 57.5 | 52 | 576 | |
| | 2013.09-2016.12 | AT | F | R | Saloon FWD D 4204 T5 | | GDS62124 | Drive Shaft | | 40 | 28 | 57.5 | 52 | 954 | |
| | 2013.09-2016.12 | AT | F | L/R | Saloon FWD D 4204 T5 | | GCO62053 | Outer Joint | | 40 | 27 | 57.5 | 52 | 60.5 | I |
| | 2013.09-2016.12 | AT | F | L | Saloon FWD D 4204 T5 | | GCI62034 | Inner Joint | | 31 | 27 | 36.2 | 68 | 90 | |
| | 2013.09-2016.12 | AT | F | R | Saloon FWD D 4204 T5 | | GCI62065 | Inner Joint | | 28 | 27 | 33 | 454 | 94 | |
| | 2013.09-2016.12 | MT | F | L/R | Saloon FWD D 4204 T5 | | GCO62052 | Outer Joint | | 40 | 25 | 57.7 | 52 | 59.5 | I |
| | 2013.09-2016.12 | MT | F | L | Saloon FWD D 4204 T5 | | GCI62060 | Inner Joint | | 31 | 26 | 44 | 79 | 105 | |
| | 2013.09-2016.12 | MT | F | R | Saloon FWD D 4204 T5 | | GCI62062 | Inner Joint | | 28 | 26 | 40 | 454 | 92 | |
| 2.0 (149 kw) | 2010.01-2011.05 | 6DCT | F | L | Saloon FWD B 4204 T6 | | GDS62113 | Drive Shaft | | 40 | 28 | 57.7 | 52 | 590 | |
| | 2010.01-2011.05 | 6DCT | F | R | Saloon FWD B 4204 T6 | | GDS62114 | Drive Shaft | | 40 | 28 | 57.7 | 52 | 952 | |
| | 2010.01-2011.05 | 6DCT | F | L/R | Saloon FWD B 4204 T6 | | GCO18269 | Outer Joint | | 40 | 26 | 57.7 | 52 | 63.5 | I |
| | 2010.01-2011.05 | 6DCT | F | L | Saloon FWD B 4204 T6 | | GCI62059 | Inner Joint | | 28 | 26 | 34 | 80 | 101.5 | |
| | 2010.01-2011.05 | 6MT | F | R | Saloon FWD B 4204 T6 | | GDS62112 | Drive Shaft | | 40 | 26 | 57.7 | 52 | 962 | |
| | 2010.01-2011.05 | 6MT | F | L | Saloon FWD B 4204 T6 | | GCI62072 | Inner Joint | | 26 | 26 | 40 | 69 | 112 | |
| | 2010.01-2011.05 | 6MT | F | R | Saloon FWD B 4204 T6 | | GCI62057 | Inner Joint | | 26 | 26 | 40 | 448 | 103 | |

| | YEAR | TRANSM. | F/R | L/R | BODY STYLE & DRIVE TYPE & ENGINE | REMARKS | G-AP Ref. | PRODUCT | ABS | Technical Specifications A | B | C | H | L | P |
|---|---|---|---|---|---|---|---|---|---|---|---|---|---|---|---|
| **VOLVO** | | | | | | | | | | | | | | | |
| **S80** | | | | | | | | | | | | | | | |
| 2.0 (149 kw) | 2010.01-2011.05 | AT/MT | F | L/R | Saloon FWD B 4204 T6 | | GCO59344 | Outer Joint | | 40 | 26 | 57.7 | 52 | 63.5 | M |
| | 2010.01-2011.05 | AT/MT | F | L/R | Saloon FWD B 4204 T6 | | GCO99271 | Outer Joint | | 40 | 28 | 57.7 | 51 | 63 | M |
| | 2010.01-2011.05 | MT | F | L | Saloon FWD B 4204 T6 | | GDS62134 | Drive Shaft | | 40 | 26 | 57.7 | 52 | 599 | |
| 2.0 (162 kw) | 2014.01-2016.12 | | F | L | Saloon FWD B 4204 T15 | | GDS62126 | Drive Shaft | | 40 | 31 | 57.5 | 52 | 576 | |
| | 2014.01-2016.12 | | F | R | Saloon FWD B 4204 T15 | | GDS62124 | Drive Shaft | | 40 | 28 | 57.5 | 52 | 954 | |
| | 2014.01-2016.12 | | F | L | Saloon FWD B 4204 T15 | | GCI62034 | Inner Joint | | 31 | 27 | 36.2 | 68 | 90 | |
| | 2014.01-2016.12 | | F | R | Saloon FWD B 4204 T15 | | GCI62065 | Inner Joint | | 28 | 27 | 33 | 454 | 94 | |
| 2.0 (166 kw) | 1998.11-2000.10 | AT | F | L | Saloon FWD B5204T3 | | GDS62137 | Drive Shaft | 48T | 36 | 26 | 56.5 | 48 | 551 | |
| | 1998.11-2000.10 | AT | F | L | Saloon FWD B5204T3 | | GCI62050 | Inner Joint | | 26 | 26 | 40 | 67 | 104 | |
| | 1998.11-2000.10 | AT/MT | F | L/R | Saloon FWD B5204T3 | Date from:1998.11,Date to:2000.10 | GCO62009 | Outer Joint | 48T | 36 | 27 | 56.5 | 48 | 66 | M |
| | 1998.11-2000.10 | MT | F | L | Saloon FWD B5204T3 | Date from:1998.11,Date to:2000.10 | GDS56216 | Drive Shaft | 48T | 36 | 26 | 57 | 48 | 556 | |
| | 1998.11-2000.10 | MT | F | R | Saloon FWD B5204T3 | | GDS56586 | Drive Shaft | 48T | 36 | 26 | 57 | 48 | 1006 | |
| | 1998.11-2000.10 | MT | F | L/R | Saloon FWD B5204T3 | Date from:1998.11,Date to:2000.10 | GCO83208 | Outer Joint | 48T | 36 | 27 | 57 | 48 | 66 | M |
| 2.0 (177 kw) | 2010.10-2016.12 | 6DCT | F | R | Saloon FWD B 4204 T7 | | GDS62114 | Drive Shaft | | 40 | 28 | 57.7 | 52 | 952 | |
| | 2010.10-2016.12 | 6DCT | F | L/R | Saloon FWD B 4204 T7 | | GCO18269 | Outer Joint | | 40 | 26 | 57.7 | 52 | 63.5 | I |
| | 2010.10-2016.12 | 6MT | F | L | Saloon FWD B 4204 T7 | | GCI62072 | Inner Joint | | 26 | 26 | 40 | 69 | 112 | |
| | 2010.10-2016.12 | 6MT | F | R | Saloon FWD B 4204 T7 | | GCI62057 | Inner Joint | | 26 | 26 | 40 | 448 | 103 | |
| | 2010.10-2016.12 | AT | F | L | Saloon FWD B 4204 T7 | | GDS62113 | Drive Shaft | | 40 | 28 | 57.7 | 52 | 590 | |
| | 2010.10-2016.12 | AT | F | L | Saloon FWD B 4204 T7 | | GCI62059 | Inner Joint | | 28 | 26 | 34 | 80 | 101.5 | |
| | 2010.10-2016.12 | AT/MT | F | L/R | Saloon FWD B 4204 T7 | | GCO99271 | Outer Joint | | 40 | 28 | 57.7 | 51 | 63 | M |
| | 2010.10-2016.12 | MT | F | L | Saloon FWD B 4204 T7 | | GDS62134 | Drive Shaft | | 40 | 26 | 57.7 | 52 | 599 | |
| | 2010.10-2016.12 | MT | F | R | Saloon FWD B 4204 T7 | | GDS62112 | Drive Shaft | | 40 | 26 | 57.7 | 52 | 962 | |
| 2.0 (180 kw) | 2013.09-2014.05 | AT | F | L | Saloon FWD B 4204 T11 | | GDS62126 | Drive Shaft | | 40 | 31 | 57.5 | 52 | 576 | |
| | 2013.09-2014.05 | AT | F | R | Saloon FWD B 4204 T11 | | GDS62124 | Drive Shaft | | 40 | 28 | 57.5 | 52 | 954 | |
| | 2013.09-2014.05 | AT | F | L/R | Saloon FWD B 4204 T11 | | GCO62053 | Outer Joint | | 40 | 27 | 57.5 | 52 | 60.5 | I |
| | 2013.09-2014.05 | AT | F | L | Saloon FWD B 4204 T11 | | GCI62034 | Inner Joint | | 31 | 27 | 36.2 | 68 | 90 | |
| | 2013.09-2014.05 | AT | F | R | Saloon FWD B 4204 T11 | | GCI62065 | Inner Joint | | 28 | 27 | 33 | 454 | 94 | |
| | 2014.12-2016.12 | 8AT | F | L | Saloon FWD B 4204 T11 | | GDS62126 | Drive Shaft | | 40 | 31 | 57.5 | 52 | 576 | |
| | 2014.12-2016.12 | 8AT | F | R | Saloon FWD B 4204 T11 | | GDS62124 | Drive Shaft | | 40 | 28 | 57.5 | 52 | 954 | |
| 2.3 (195 kw) | 2000.04-2005.03 | | F | L | Saloon FWD B5234T7 | | GDS62033 | Drive Shaft | 48T | 36 | 26 | 56.5 | 48 | 535 | |
| 2.4 (96 kw) | 2001.10-2006.07 | AT | F | L | Saloon FWD D5244T2 | | GDS62033 | Drive Shaft | 48T | 36 | 26 | 56.5 | 48 | 535 | |
| | 2001.10-2006.07 | AT/MT | F | L/R | Saloon FWD D5244T2 | | GCO62009 | Outer Joint | 48T | 36 | 27 | 56.5 | 48 | 66 | M |
| | 2001.10-2006.07 | MT | F | L | Saloon FWD D5244T2 | | GDS56216 | Drive Shaft | 48T | 36 | 26 | 57 | 48 | 556 | |
| | 2001.10-2006.07 | MT | F | R | Saloon FWD D5244T2 | | GDS56586 | Drive Shaft | 48T | 36 | 26 | 57 | 48 | 1006 | |
| | 2001.10-2006.07 | MT | F | L/R | Saloon FWD D5244T2 | | GCO83208 | Outer Joint | 48T | 36 | 27 | 57 | 48 | 66 | M |
| 2.4 (103 kw) | 1998.10-2006.07 | AT | F | L | Saloon FWD B5244S2 | | GDS62033 | Drive Shaft | 48T | 36 | 26 | 56.5 | 48 | 535 | |
| | 1998.10-2006.07 | AT | F | R | Saloon FWD B5244S2 | | GDS62034 | Drive Shaft | 48T | 36 | 26 | 56.5 | 48 | 987 | |
| | 1998.10-2006.07 | AT | F | L/R | Saloon FWD B5244S2 | | GCO62010 | Outer Joint | 48T | 36 | 33 | 56.5 | 48 | 58 | M |
| | 1998.10-2006.07 | AT | F | R | Saloon FWD B5244S2 | | GCI62012 | Inner Joint | | 26 | 24 | 31 | 513 | 85 | |
| | 1998.10-2006.07 | MT | F | L | Saloon FWD B5244S2 | | GDS83472 | Drive Shaft | 48T | 36 | 26 | 56.5 | 48 | 552 | |
| | 1998.10-2006.07 | MT | F | R | Saloon FWD B5244S2 | | GDS83781 | Drive Shaft | 48T | 36 | 26 | 55.5 | 48 | 1003 | |
| | 1998.10-2006.07 | MT | F | L | Saloon FWD B5244S2 | | GCO62010 | Outer Joint | 48T | 36 | 33 | 56.5 | 48 | 58 | M |
| | 1998.10-2006.07 | MT | F | R | Saloon FWD B5244S2 | | GCO82538 | Outer Joint | 48T | 36 | 33 | 55.5 | 48 | 55 | M |
| | 1998.10-2006.07 | MT | F | R | Saloon FWD B5244S2 | | GCI82422 | Inner Joint | | 26 | 25 | 40 | 527.5 | 67 | |
| | 2001.09-2006.07 | AT | F | L | Saloon FWD B5244SG2 | | GDS62033 | Drive Shaft | 48T | 36 | 26 | 56.5 | 48 | 535 | |
| | 2001.09-2006.07 | AT | F | R | Saloon FWD B5244SG2 | | GDS62034 | Drive Shaft | 48T | 36 | 26 | 56.5 | 48 | 987 | |
| | 2001.09-2006.07 | AT | F | L/R | Saloon FWD B5244SG2 | | GCO62010 | Outer Joint | 48T | 36 | 33 | 56.5 | 48 | 58 | M |
| | 2001.09-2006.07 | AT | F | R | Saloon FWD B5244SG2 | | GCI62012 | Inner Joint | | 26 | 24 | 31 | 513 | 85 | |
| | 2001.09-2006.07 | MT | F | L | Saloon FWD B5244SG2 | | GDS83472 | Drive Shaft | 48T | 36 | 26 | 56.5 | 48 | 552 | |
| | 2001.09-2006.07 | MT | F | R | Saloon FWD B5244SG2 | | GDS83781 | Drive Shaft | 48T | 36 | 26 | 55.5 | 48 | 1003 | |
| | 2001.09-2006.07 | MT | F | L | Saloon FWD B5244SG2 | | GCO62010 | Outer Joint | 48T | 36 | 33 | 56.5 | 48 | 58 | M |
| | 2001.09-2006.07 | MT | F | R | Saloon FWD B5244SG2 | | GCO82538 | Outer Joint | 48T | 36 | 33 | 55.5 | 48 | 55 | M |
| | 2001.09-2006.07 | MT | F | R | Saloon FWD B5244SG2 | | GCI82422 | Inner Joint | | 26 | 25 | 40 | 527.5 | 67 | |
| | 2001.10-2006.07 | AT | F | L | Saloon FWD B5244SG | | GDS62033 | Drive Shaft | 48T | 36 | 26 | 56.5 | 48 | 535 | |
| | 2001.10-2006.07 | AT | F | R | Saloon FWD B5244SG | | GDS62034 | Drive Shaft | 48T | 36 | 26 | 56.5 | 48 | 987 | |
| | 2001.10-2006.07 | AT | F | L/R | Saloon FWD B5244SG | | GCO62010 | Outer Joint | 48T | 36 | 33 | 56.5 | 48 | 58 | M |
| | 2001.10-2006.07 | AT | F | R | Saloon FWD B5244SG | | GCI62012 | Inner Joint | | 26 | 24 | 31 | 513 | 85 | |
| | 2001.10-2006.07 | MT | F | L | Saloon FWD B5244SG | | GDS83472 | Drive Shaft | 48T | 36 | 26 | 56.5 | 48 | 552 | |
| | 2001.10-2006.07 | MT | F | R | Saloon FWD B5244SG | | GDS83781 | Drive Shaft | 48T | 36 | 26 | 55.5 | 48 | 1003 | |
| | 2001.10-2006.07 | MT | F | L | Saloon FWD B5244SG | | GCO62010 | Outer Joint | 48T | 36 | 33 | 56.5 | 48 | 58 | M |
| | 2001.10-2006.07 | MT | F | R | Saloon FWD B5244SG | | GCO82538 | Outer Joint | 48T | 36 | 33 | 55.5 | 48 | 55 | M |
| | 2001.10-2006.07 | MT | F | R | Saloon FWD B5244SG | | GCI82422 | Inner Joint | | 26 | 25 | 40 | 527.5 | 67 | |
| 2.4 (120 kw) | 2001.06-2006.07 | AT | F | L | Saloon FWD D5244T | | GDS62033 | Drive Shaft | 48T | 36 | 26 | 56.5 | 48 | 535 | |
| | 2001.06-2006.07 | MT | F | L | Saloon FWD D5244T | | GDS56216 | Drive Shaft | 48T | 36 | 26 | 57 | 48 | 556 | |
| | 2001.06-2006.07 | MT | F | R | Saloon FWD D5244T | | GDS56586 | Drive Shaft | 48T | 36 | 26 | 57 | 48 | 1006 | |

| | YEAR | TRANSM. | F/R | L/R | BODY STYLE & DRIVE TYPE & ENGINE | REMARKS | G-AP Ref. | PRODUCT | ABS | Technical Specifications A | B | C | H | L | P |
|---|---|---|---|---|---|---|---|---|---|---|---|---|---|---|---|
| **VOLVO** **S80** | | | | | | | | | | | | | | | |
| 2.4 (120 kw) | 2001.06-2006.07 | MT | F | L/R | Saloon FWD D5244T | | GCO83208 | Outer Joint | 48T | 36 | 27 | 57 | 48 | 66 | M |
| | 2006.03-2011.03 | 6AT | F | L | Saloon FWD D 5244 T5;D 5244 T19 | | GDS62109 | Drive Shaft | | 40 | 31 | 57.7 | 52 | 524 | |
| | 2006.03-2011.03 | 6AT | F | R | Saloon FWD D 5244 T5;D 5244 T19 | | GDS62091 | Drive Shaft | | 40 | 28 | 57.7 | 52 | 992 | |
| | 2006.03-2011.03 | 6MT | F | L | Saloon FWD D 5244 T5;D 5244 T19 | | GDS21070 | Drive Shaft | | 40 | 26 | 57.7 | 52 | 556 | |
| | 2006.03-2011.03 | 6MT | F | R | Saloon FWD D 5244 T5;D 5244 T19 | | GDS62086 | Drive Shaft | | 40 | 26 | 57.7 | 52 | 1002 | |
| | 2006.03-2011.03 | AT | F | L/R | Saloon FWD D 5244 T5;D 5244 T19 | Date to:2011.12 | GCO59344 | Outer Joint | | 40 | 26 | 57.7 | 52 | 63.5 | M |
| 2.4 (125 kw) | 1998.07-2006.07 | AT | F | L | Saloon FWD B5244S | | GDS62033 | Drive Shaft | 48T | 36 | 26 | 56.5 | 48 | 535 | |
| | 1998.07-2006.07 | AT | F | R | Saloon FWD B5244S | | GDS62034 | Drive Shaft | 48T | 36 | 26 | 56.5 | 48 | 987 | |
| | 1998.07-2006.07 | AT | F | L/R | Saloon FWD B5244S | | GCO62010 | Outer Joint | 48T | 36 | 33 | 56.5 | 48 | 58 | M |
| | 1998.07-2006.07 | AT | F | R | Saloon FWD B5244S | | GCI62012 | Inner Joint | | 26 | 24 | 31 | 513 | 85 | |
| | 1998.07-2006.07 | MT | F | L | Saloon FWD B5244S | | GDS83472 | Drive Shaft | 48T | 36 | 26 | 56.5 | 48 | 552 | |
| | 1998.07-2006.07 | MT | F | R | Saloon FWD B5244S | | GDS83781 | Drive Shaft | 48T | 36 | 26 | 55.5 | 48 | 1003 | |
| | 1998.07-2006.07 | MT | F | L | Saloon FWD B5244S | | GCO62010 | Outer Joint | 48T | 36 | 33 | 56.5 | 48 | 58 | M |
| | 1998.07-2006.07 | MT | F | R | Saloon FWD B5244S | | GCO82538 | Outer Joint | 48T | 36 | 33 | 55.5 | 48 | 55 | M |
| | 1998.07-2006.07 | MT | F | R | Saloon FWD B5244S | | GCI82422 | Inner Joint | | 26 | 25 | 40 | 527.5 | 67 | |
| 2.4 (129 kw) | 2010.01-2011.03 | 6AT | F | L | Saloon FWD D 5244 T14 | | GDS62076 | Drive Shaft | | 40 | 31 | 57.7 | 52 | 529 | |
| | 2010.01-2011.03 | 6MT | F | L | Saloon FWD D 5244 T14 | | GDS21070 | Drive Shaft | | 40 | 26 | 57.7 | 52 | 556 | |
| | 2010.01-2011.03 | 6MT | F | R | Saloon FWD D 5244 T14 | | GDS62086 | Drive Shaft | | 40 | 26 | 57.7 | 52 | 1002 | |
| | 2010.01-2011.03 | 6MT | F | L/R | Saloon FWD D 5244 T14 | | GCO59285 | Outer Joint | | 40 | 27 | 57.7 | 52 | 63.5 | M |
| | 2010.01-2011.03 | AT | F | L | Saloon FWD D 5244 T14 | | GDS62109 | Drive Shaft | | 40 | 31 | 57.7 | 52 | 524 | |
| | 2010.01-2011.03 | AT | F | R | Saloon FWD D 5244 T14 | | GDS59444 | Drive Shaft | | 40 | 28 | 57.7 | 52 | 994 | |
| | 2010.01-2011.03 | MT | F | R | Saloon FWD D 5244 T14 | | GCI81076 | Inner Joint | | 26 | 28 | 40 | 522.5 | 123.7 | |
| 2.4 (136 kw) | 2006.03-2009.08 | 6AT | F | L | Saloon FWD D 5244 T4 | | GDS62076 | Drive Shaft | | 40 | 31 | 57.7 | 52 | 529 | |
| | 2006.03-2009.08 | 6MT | F | L | Saloon FWD D 5244 T4 | | GDS21070 | Drive Shaft | | 40 | 26 | 57.7 | 52 | 556 | |
| | 2006.03-2009.08 | 6MT | F | R | Saloon FWD D 5244 T4 | | GDS62086 | Drive Shaft | | 40 | 26 | 57.7 | 52 | 1002 | |
| | 2006.03-2009.08 | 6MT | F | L/R | Saloon FWD D 5244 T4 | | GCO59285 | Outer Joint | | 40 | 27 | 57.7 | 52 | 63.5 | M |
| | 2006.03-2009.08 | AT | F | L | Saloon FWD D 5244 T4 | Date to:2009.12 | GDS62109 | Drive Shaft | | 40 | 31 | 57.7 | 52 | 524 | |
| | 2006.03-2009.08 | AT | F | R | Saloon FWD D 5244 T4 | | GDS59444 | Drive Shaft | | 40 | 28 | 57.7 | 52 | 994 | |
| | 2006.03-2009.08 | MT | F | R | Saloon FWD D 5244 T4 | | GCI81076 | Inner Joint | | 26 | 28 | 40 | 522.5 | 123.7 | |
| | 2007.01-2009.05 | 6AT | F | R | Saloon 4WD D 5244 T4 | | GCI62033 | Inner Joint | | 28 | 27 | 29.95 | 521 | 102.5 | |
| | 2007.01-2009.05 | 6MT | F | L/R | Saloon 4WD D 5244 T4 | | GCO59285 | Outer Joint | | 40 | 27 | 57.7 | 52 | 63.5 | M |
| | 2007.01-2009.05 | AT | F | L | Saloon 4WD D 5244 T4 | | GDS62076 | Drive Shaft | | 40 | 31 | 57.7 | 52 | 529 | |
| | 2007.01-2009.05 | MT | F | L | Saloon 4WD D 5244 T4 | | GCI62040 | Inner Joint | | 31 | 28 | 44 | 65 | 111.2 | |
| | 2007.01-2009.05 | 6AT | R | L/R | Saloon 4WD D 5244 T4 | Chassis no. from:165000 | GDS62077 | Drive Shaft | 44NS | 36 | 23 | 56.5 | 49.5 | 762 | |
| | 2007.01-2009.05 | 6AT | R | L/R | Saloon 4WD D 5244 T4 | Chassis no. to:164999;8 balls | GDS83926 | Drive Shaft | 44NS | 36 | 26 | 56.5 | 49.5 | 751 | |
| | 2007.01-2009.05 | 6AT | R | L/R | Saloon 4WD D 5244 T4 | Chassis no. to:164999 | GCO83248 | Outer Joint | 44NS | 36 | 29 | 56.5 | 49.5 | 64 | I |
| | 2007.01-2009.05 | 6AT | R | L/R | Saloon 4WD D 5244 T4 | Chassis no. to:164999 | GCI18187 | Inner Joint | | 26 | 29 | 35 | 69.5 | 107.5 | |
| 2.4 (147 kw) | 1999.10-2003.09 | AT | F | L | Saloon FWD B5244T3 | | GDS62033 | Drive Shaft | 48T | 36 | 26 | 56.5 | 48 | 535 | |
| | 1999.10-2003.09 | AT/MT | F | L/R | Saloon FWD B5244T3 | Date to:2003.09 | GCO62009 | Outer Joint | 48T | 36 | 27 | 56.5 | 48 | 66 | M |
| | 1999.10-2003.09 | MT | F | L | Saloon FWD B5244T3 | Date to:2003.09 | GDS56216 | Drive Shaft | 48T | 36 | 26 | 57 | 48 | 556 | |
| | 1999.10-2003.09 | MT | F | R | Saloon FWD B5244T3 | | GDS56586 | Drive Shaft | 48T | 36 | 26 | 57 | 48 | 1006 | |
| | 1999.10-2003.09 | MT | F | L/R | Saloon FWD B5244T3 | Date to:2003.09 | GCO83208 | Outer Joint | 48T | 36 | 27 | 57 | 48 | 66 | M |
| | 2000.08-2003.09 | 5AT | F | L | Saloon 4WD B5244T3 | | GDS62033 | Drive Shaft | 48T | 36 | 26 | 56.5 | 48 | 535 | |
| | 2000.08-2003.09 | 5AT | F | R | Saloon 4WD B5244T3 | | GDS62140 | Drive Shaft | 48T | 36 | 26 | 56.5 | 48 | 977 | |
| | 2000.08-2003.09 | 5AT | F | R | Saloon 4WD B5244T3 | | GCI62031 | Inner Joint | | 26 | 26 | 28 | 513 | 93.5 | |
| | 2000.08-2003.09 | AT/MT | F | L/R | Saloon 4WD B5244T3 | | GCO62009 | Outer Joint | 48T | 36 | 27 | 56.5 | 48 | 66 | M |
| | 2000.08-2003.09 | 5AT | R | L/R | Saloon 4WD B5244T3 | | GDS81130 | Drive Shaft | | 36 | 26 | 56.5 | 50 | 764 | |
| | 2000.08-2003.09 | 5AT | R | L/R | Saloon 4WD B5244T3 | | GCI44031 | Inner Joint | | 26 | 20 | 35 | 69.5 | 81 | |
| 2.4 (151 kw) | 2010.01-2011.12 | 6AT | F | R | Saloon 4WD D 5244 T10 | | GCI62033 | Inner Joint | | 28 | 27 | 29.95 | 521 | 102.5 | |
| | 2010.01-2011.12 | 6AT/6MT | F | L | Saloon 4WD D 5244 T10 | | GDS62076 | Drive Shaft | | 40 | 31 | 57.7 | 52 | 529 | |
| | 2010.01-2011.12 | AT | F | L | Saloon 4WD D 5244 T10 | | GDS59443 | Drive Shaft | | 40 | 31 | 57.7 | 52 | 528 | |
| | 2010.01-2011.12 | AT | F | L/R | Saloon 4WD D 5244 T10 | | GCO59285 | Outer Joint | | 40 | 27 | 57.7 | 52 | 63.5 | M |
| | 2010.01-2011.12 | 6AT | R | L/R | Saloon 4WD D 5244 T10 | Chassis no. to:164999;8 balls | GDS83926 | Drive Shaft | 44NS | 36 | 26 | 56.5 | 49.5 | 751 | |
| | 2010.01-2011.12 | 6AT | R | L/R | Saloon 4WD D 5244 T10 | Chassis no. to:164999 | GCO83248 | Outer Joint | 44NS | 36 | 29 | 56.5 | 49.5 | 64 | I |
| | 2010.01-2011.12 | 6AT | R | L/R | Saloon 4WD D 5244 T10 | CHAssis no. to:164999 | GCI18187 | Inner Joint | | 26 | 29 | 35 | 69.5 | 107.5 | |
| | 2010.01-2011.12 | 6AT/6MT | R | L/R | Saloon 4WD D 5244 T10 | Chassis no. from:165000 | GDS62077 | Drive Shaft | 44NS | 36 | 23 | 56.5 | 49.5 | 762 | |
| | 2010.01-2011.12 | 6AT | F | L | Saloon FWD D 5244 T10 | | GDS62076 | Drive Shaft | | 40 | 31 | 57.7 | 52 | 529 | |
| | 2010.01-2011.12 | 6MT | F | L | Saloon FWD D 5244 T10 | | GDS21070 | Drive Shaft | | 40 | 26 | 57.7 | 52 | 556 | |
| | 2010.01-2011.12 | 6MT | F | R | Saloon FWD D 5244 T10 | | GDS62086 | Drive Shaft | | 40 | 26 | 57.7 | 52 | 1002 | |
| | 2010.01-2011.12 | 6MT | F | L/R | Saloon FWD D 5244 T10 | | GCO59285 | Outer Joint | | 40 | 27 | 57.7 | 52 | 63.5 | M |
| | 2010.01-2011.12 | AT | F | L | Saloon FWD D 5244 T10 | Date to:2011.12 | GDS62109 | Drive Shaft | | 40 | 31 | 57.7 | 52 | 524 | |
| | 2010.01-2011.12 | AT | F | R | Saloon FWD D 5244 T10 | | GDS59444 | Drive Shaft | | 40 | 28 | 57.7 | 52 | 994 | |
| | 2010.01-2011.12 | MT | F | R | Saloon FWD D 5244 T10 | | GCI81076 | Inner Joint | | 26 | 28 | 40 | 522.5 | 123.7 | |
| 2.4 (158 kw) | 2011.06-2015.04 | 6AT | F | L | Saloon 4WD D 5244 T15 | | GDS62076 | Drive Shaft | | 40 | 31 | 57.7 | 52 | 529 | |
| | 2011.06-2015.04 | 6AT | F | R | Saloon 4WD D 5244 T15 | | GCI62033 | Inner Joint | | 28 | 27 | 29.95 | 521 | 102.5 | |

| | YEAR | TRANSM. | F/R | L/R | BODY STYLE & DRIVE TYPE & ENGINE | REMARKS | G-AP Ref. | PRODUCT | ABS | Technical Specifications A | B | C | H | L | P |
|---|---|---|---|---|---|---|---|---|---|---|---|---|---|---|---|
| **VOLVO S80** | | | | | | | | | | | | | | | |
| 2.4 (158 kw) | 2011.06-2015.04 | 6AT | R | L/R | Saloon 4WD D 5244 T15 | Chassis no. from:165000 | GDS62077 | Drive Shaft | 44NS | 36 | 23 | 56.5 | 49.5 | 762 | |
| | 2011.06-2015.04 | 6AT | R | L/R | Saloon 4WD D 5244 T15 | Chassis no. to:164999;8 balls | GDS83926 | Drive Shaft | 44NS | 36 | 26 | 56.5 | 49.5 | 751 | |
| | 2011.06-2015.04 | 6AT | R | L/R | Saloon 4WD D 5244 T15 | Chassis no. to:164999;8 balls | GCO83248 | Outer Joint | 44NS | 36 | 29 | 56.5 | 49.5 | 64 | I |
| | 2011.06-2015.04 | 6AT | R | L/R | Saloon 4WD D 5244 T15 | Chassis no. to:164999 | GCI18187 | Inner Joint | | 26 | 29 | 35 | 69.5 | 107.5 | |
| | 2011.06-2015.04 | 6AT | F | L | Saloon FWD D 5244 T11;D 5244 T15 | | GDS62076 | Drive Shaft | | 40 | 31 | 57.7 | 52 | 529 | |
| | 2011.06-2015.04 | 6MT | F | L | Saloon FWD D 5244 T11;D 5244 T15 | | GDS21070 | Drive Shaft | | 40 | 26 | 57.7 | 52 | 556 | |
| | 2011.06-2015.04 | 6MT | F | R | Saloon FWD D 5244 T11;D 5244 T15 | | GDS62086 | Drive Shaft | | 40 | 26 | 57.7 | 52 | 1002 | |
| | 2011.06-2015.04 | 6MT | F | L/R | Saloon FWD D 5244 T11;D 5244 T15 | | GCO59285 | Outer Joint | | 40 | 27 | 57.7 | 52 | 63.5 | M |
| | 2011.06-2015.04 | AT | F | L | Saloon FWD D 5244 T11;D 5244 T15 | | GDS62109 | Drive Shaft | | 40 | 31 | 57.7 | 52 | 524 | |
| | 2011.06-2015.04 | AT | F | R | Saloon FWD D 5244 T11;D 5244 T15 | | GDS59444 | Drive Shaft | | 40 | 28 | 57.7 | 52 | 994 | |
| | 2011.06-2015.04 | MT | F | R | Saloon FWD D 5244 T11;D 5244 T15 | | GCI81076 | Inner Joint | | 26 | 28 | 40 | 522.5 | 123.7 | |
| 2.5 (103 kw) | 1998.07-2001.10 | AT | F | L | Saloon FWD D5252T | | GDS62033 | Drive Shaft | 48T | 36 | 26 | 56.5 | 48 | 535 | |
| | 1998.07-2001.10 | AT/MT | F | L/R | Saloon FWD D5252T | Date to:2001.10 | GCO62009 | Outer Joint | 48T | 36 | 27 | 56.5 | 48 | 66 | M |
| | 1998.07-2001.10 | MT | F | L | Saloon FWD D5252T | | GDS62138 | Drive Shaft | 48T | 36 | 26 | 56.5 | 48 | 488 | |
| | 1998.07-2001.10 | MT | F | L | Saloon FWD D5252T | | GCI62050 | Inner Joint | | 26 | 26 | 40 | 67 | 104 | |
| 2.5 (147 kw) | 2006.03-2011.12 | 6AT | F | L | Saloon FWD B 5254 T6 | | GDS62109 | Drive Shaft | | 40 | 31 | 57.7 | 52 | 524 | |
| | 2006.03-2011.12 | 6AT | F | R | Saloon FWD B 5254 T6 | Chassis no. to:134000 | GDS62091 | Drive Shaft | | 40 | 28 | 57.7 | 52 | 992 | |
| | 2006.03-2011.12 | 6AT | F | L/R | Saloon FWD B 5254 T6 | | GCO59344 | Outer Joint | | 40 | 26 | 57.7 | 52 | 63.5 | M |
| | 2006.03-2011.12 | 6AT/6MT | F | R | Saloon FWD B 5254 T6 | Chassis no. from:134001,Chassis no. to:151339 | GDS59444 | Drive Shaft | | 40 | 28 | 57.7 | 52 | 994 | |
| | 2006.03-2011.12 | 6MT | F | L | Saloon FWD B 5254 T6 | | GDS21070 | Drive Shaft | | 40 | 26 | 57.7 | 52 | 556 | |
| | 2006.03-2011.12 | 6MT | F | R | Saloon FWD B 5254 T6 | | GDS62086 | Drive Shaft | | 40 | 26 | 57.7 | 52 | 1002 | |
| | 2006.03-2011.12 | 6MT | F | L/R | Saloon FWD B 5254 T6 | | GCO59285 | Outer Joint | | 40 | 27 | 57.7 | 52 | 63.5 | M |
| | 2006.03-2011.12 | 6MT | F | R | Saloon FWD B 5254 T6 | | GCI81076 | Inner Joint | | 26 | 28 | 40 | 522.5 | 123.7 | |
| | 2008.05-2011.12 | 6AT | F | L | Saloon FWD B 5254 T8 | | GDS62109 | Drive Shaft | | 40 | 31 | 57.7 | 52 | 524 | |
| | 2008.05-2011.12 | 6AT | F | R | Saloon FWD B 5254 T8 | | GDS62091 | Drive Shaft | | 40 | 28 | 57.7 | 52 | 992 | |
| | 2008.05-2011.12 | 6MT | F | L | Saloon FWD B 5254 T8 | | GDS21070 | Drive Shaft | | 40 | 26 | 57.7 | 52 | 556 | |
| | 2008.05-2011.12 | 6MT | F | R | Saloon FWD B 5254 T8 | | GDS62086 | Drive Shaft | | 40 | 26 | 57.7 | 52 | 1002 | |
| | 2008.05-2011.12 | 6MT | F | L/R | Saloon FWD B 5254 T8 | | GCO59285 | Outer Joint | | 40 | 27 | 57.7 | 52 | 63.5 | M |
| | 2008.05-2011.12 | AT | F | L/R | Saloon FWD B 5254 T8 | Different retainers | GCO59344 | Outer Joint | | 40 | 26 | 57.7 | 52 | 63.5 | M |
| | 2008.05-2011.12 | AT | F | L/R | Saloon FWD B 5254 T8 | Different retainers | GCO62045 | Outer Joint | | 40 | 26 | 57.7 | 52 | 62.5 | M |
| | 2008.05-2011.12 | AT | F | R | Saloon FWD B 5254 T8 | Chassis no. from:134001 | GCI62043 | Inner Joint | | 28 | 26 | 33 | 521 | 100 | |
| | 2008.05-2011.12 | MT | F | R | Saloon FWD B 5254 T8 | | GCI81076 | Inner Joint | | 26 | 28 | 40 | 522.5 | 123.7 | |
| 2.5 (154 kw) | 2002.10-2006.07 | AT | F | L | Saloon 4WD B5254T2 | | GDS62033 | Drive Shaft | 48T | 36 | 26 | 56.5 | 48 | 535 | |
| | 2002.10-2006.07 | AT/MT | F | L/R | Saloon 4WD B5254T2 | | GCO62009 | Outer Joint | 48T | 36 | 27 | 56.5 | 48 | 66 | M |
| | 2002.10-2006.07 | SAT/5AT | F | R | Saloon 4WD B5254T2 | | GDS62140 | Drive Shaft | 48T | 36 | 26 | 56.5 | 48 | 977 | |
| | 2002.10-2006.07 | SAT/5AT | F | R | Saloon 4WD B5254T2 | | GCI62031 | Inner Joint | | 26 | 26 | 28 | 513 | 93.5 | |
| | 2002.10-2006.07 | SAT/5AT | R | L/R | Saloon 4WD B5254T2 | | GDS81130 | Drive Shaft | | 36 | 26 | 56.5 | 50 | 764 | |
| | 2002.10-2006.07 | SAT/5AT | R | L/R | Saloon 4WD B5254T2 | | GCI44031 | Inner Joint | | 26 | 20 | 35 | 69.5 | 81 | |
| | 2003.03-2006.12 | AT | F | L | Saloon FWD B5254T2 | | GDS62033 | Drive Shaft | 48T | 36 | 26 | 56.5 | 48 | 535 | |
| | 2003.03-2006.12 | AT/MT | F | L/R | Saloon FWD B5254T2 | | GCO62009 | Outer Joint | 48T | 36 | 27 | 56.5 | 48 | 66 | M |
| | 2003.03-2006.12 | MT | F | L | Saloon FWD B5254T2 | | GDS56216 | Drive Shaft | 48T | 36 | 26 | 57 | 48 | 556 | |
| | 2003.03-2006.12 | MT | F | R | Saloon FWD B5254T2 | | GDS56586 | Drive Shaft | 48T | 36 | 26 | 57 | 48 | 1006 | |
| | 2003.03-2006.12 | MT | F | L/R | Saloon FWD B5254T2 | | GCO83208 | Outer Joint | 48T | 36 | 27 | 57 | 48 | 66 | M |
| 2.5 (170 kw) | 2010.01-2011.12 | 6AT | F | L | Saloon FWD B 5254 T11 | | GDS62109 | Drive Shaft | | 40 | 31 | 57.7 | 52 | 524 | |
| | 2010.01-2011.12 | 6AT | F | R | Saloon FWD B 5254 T11 | Chassis no. from:134001,Chassis no. to:151339 | GDS59444 | Drive Shaft | | 40 | 28 | 57.7 | 52 | 994 | |
| | 2010.01-2011.12 | 6AT | F | R | Saloon FWD B 5254 T11 | Chassis no. to:134000;Chassis no. from:151340 | GDS62091 | Drive Shaft | | 40 | 28 | 57.7 | 52 | 992 | |
| | 2010.01-2011.12 | 6AT | F | L/R | Saloon FWD B 5254 T11 | Different retainers | GCO59344 | Outer Joint | | 40 | 26 | 57.7 | 52 | 63.5 | M |
| | 2010.01-2011.12 | 6AT | F | L/R | Saloon FWD B 5254 T11 | Different retainers | GCO62045 | Outer Joint | | 40 | 26 | 57.7 | 52 | 62.5 | M |
| | 2010.01-2011.12 | 6MT | F | L | Saloon FWD B 5254 T11 | | GDS21070 | Drive Shaft | | 40 | 26 | 57.7 | 52 | 556 | |
| | 2010.01-2011.12 | 6MT | F | R | Saloon FWD B 5254 T11 | | GDS62086 | Drive Shaft | | 40 | 26 | 57.7 | 52 | 1002 | |
| | 2010.01-2011.12 | 6MT | F | L/R | Saloon FWD B 5254 T11 | | GCO59285 | Outer Joint | | 40 | 27 | 57.7 | 52 | 63.5 | M |
| | 2010.01-2011.12 | AT | F | R | Saloon FWD B 5254 T11 | Chassis no. from:134001 | GCI62043 | Inner Joint | | 28 | 26 | 33 | 521 | 100 | |
| | 2010.01-2011.12 | MT | F | R | Saloon FWD B 5254 T11 | | GCI81076 | Inner Joint | | 26 | 28 | 40 | 522.5 | 123.7 | |
| | 2010.01-2012.12 | 6AT | F | L | Saloon FWD B 5254 T10 | | GDS62109 | Drive Shaft | | 40 | 31 | 57.7 | 52 | 524 | |
| | 2010.01-2012.12 | 6AT | F | R | Saloon FWD B 5254 T10 | Chassis no. from:134001,Chassis no. to:151339 | GDS59444 | Drive Shaft | | 40 | 28 | 57.7 | 52 | 994 | |
| | 2010.01-2012.12 | 6AT | F | R | Saloon FWD B 5254 T10 | Chassis no. to:134000;Chassis no. from:151340 | GDS62091 | Drive Shaft | | 40 | 28 | 57.7 | 52 | 992 | |
| | 2010.01-2012.12 | 6AT | F | R | Saloon FWD B 5254 T10 | Different retainers | GCO62045 | Outer Joint | | 40 | 26 | 57.7 | 52 | 62.5 | M |
| | 2010.01-2012.12 | 6MT | F | L | Saloon FWD B 5254 T10 | | GDS21070 | Drive Shaft | | 40 | 26 | 57.7 | 52 | 556 | |
| | 2010.01-2012.12 | 6MT | F | R | Saloon FWD B 5254 T10 | | GDS62086 | Drive Shaft | | 40 | 26 | 57.7 | 52 | 1002 | |
| | 2010.01-2012.12 | 6MT | F | L/R | Saloon FWD B 5254 T10 | | GCO59285 | Outer Joint | | 40 | 27 | 57.7 | 52 | 63.5 | M |
| | 2010.01-2012.12 | AT | F | L/R | Saloon FWD B 5254 T10 | Different retainers | GCO59344 | Outer Joint | | 40 | 26 | 57.7 | 52 | 63.5 | M |
| | 2010.01-2012.12 | AT | F | R | Saloon FWD B 5254 T10 | | GCI62043 | Inner Joint | | 28 | 26 | 33 | 521 | 100 | |
| | 2010.01-2012.12 | MT | F | R | Saloon FWD B 5254 T10 | | GCI81076 | Inner Joint | | 26 | 28 | 40 | 522.5 | 123.7 | |
| 2.5 (183 kw) | 2012.09-2016.12 | AT | F | L | Saloon FWD B 5254 T14 | | GDS62109 | Drive Shaft | | 40 | 31 | 57.7 | 52 | 524 | |
| | 2012.09-2016.12 | AT | F | R | Saloon FWD B 5254 T14 | | GDS62091 | Drive Shaft | | 40 | 28 | 57.7 | 52 | 992 | |

| | YEAR | TRANSM. | F/R | L/R | BODY STYLE & DRIVE TYPE & ENGINE | REMARKS | G-AP Ref. | PRODUCT | ABS | Technical Specifications A | B | C | H | L | P |
|---|---|---|---|---|---|---|---|---|---|---|---|---|---|---|---|
| **VOLVO** **S80** | | | | | | | | | | | | | | | |
| 2.5 (183 kw) | 2012.09-2016.12 | AT | F | L/R | Saloon FWD B 5254 T14 | | GCO62045 | Outer Joint | | 40 | 26 | 57.7 | 52 | 62.5 | M |
| | 2012.09-2016.12 | AT | F | R | Saloon FWD B 5254 T14 | | GCI62043 | Inner Joint | | 28 | 26 | 33 | 521 | 100 | |
| 2.5 (187 kw) | 2012.01-2016.04 | AT | F | L | Saloon FWD B 5254 T12 | | GDS62109 | Drive Shaft | | 40 | 31 | 57.7 | 52 | 524 | |
| | 2012.01-2016.04 | AT | F | R | Saloon FWD B 5254 T12 | | GDS62091 | Drive Shaft | | 40 | 28 | 57.7 | 52 | 992 | |
| | 2012.01-2016.04 | AT | F | L/R | Saloon FWD B 5254 T12 | | GCO62045 | Outer Joint | | 40 | 26 | 57.7 | 52 | 62.5 | M |
| | 2012.01-2016.04 | AT | F | R | Saloon FWD B 5254 T12 | | GCI62043 | Inner Joint | | 28 | 26 | 33 | 521 | 100 | |
| 2.8 (200 kw) | 1998.07-2001.10 | SAT | F | L | Saloon FWD B6284T | | GDS62025 | Drive Shaft | 48T | 36 | 35 | 56.5 | 48 | 430 | |
| | 1998.07-2001.10 | SAT/4AT | F | R | Saloon FWD B6284T | With viscous clutch | GDS62026 | Drive Shaft | 48T | 36 | 39 | 56.5 | 48 | 662 | |
| | 1998.07-2001.10 | SAT/4AT | F | R | Saloon FWD B6284T | Without viscous clutch | GDS83415 | Drive Shaft | 48T | 36 | 39 | 56.5 | 48 | 669 | |
| | 1998.07-2001.10 | SAT/4AT | F | L/R | Saloon FWD B6284T | | GCO62009 | Outer Joint | 48T | 36 | 27 | 56.5 | 48 | 66 | M |
| | 1998.07-2001.10 | SAT/4AT | F | R | Saloon FWD B6284T | Without viscous clutch | GCI82205 | Inner Joint | | 39 | 26 | 45 | 229 | 129 | |
| 2.9 (144 kw) | 2000.01-2006.07 | 4AT | F | L | Saloon FWD B6294S2 | | GDS62025 | Drive Shaft | 48T | 36 | 35 | 56.5 | 48 | 430 | |
| | 2000.01-2006.07 | 4AT | F | R | Saloon FWD B6294S2 | With viscous clutch | GDS62026 | Drive Shaft | 48T | 36 | 39 | 56.5 | 48 | 662 | |
| | 2000.01-2006.07 | 4AT | F | R | Saloon FWD B6294S2 | Without viscous clutch | GDS83415 | Drive Shaft | 48T | 36 | 39 | 56.5 | 48 | 669 | |
| | 2000.01-2006.07 | 4AT | F | L/R | Saloon FWD B6294S2 | | GCO62009 | Outer Joint | 48T | 36 | 27 | 56.5 | 48 | 66 | M |
| | 2000.01-2006.07 | 4AT | F | R | Saloon FWD B6294S2 | Without viscous clutch | GCI82205 | Inner Joint | | 39 | 26 | 45 | 229 | 129 | |
| 2.9 (147 kw) | 1999.10-2001.10 | 4AT/5MT | F | L | Saloon FWD B6294S | | GDS62138 | Drive Shaft | 48T | 36 | 26 | 56.5 | 48 | 488 | |
| | 1999.10-2001.10 | 4AT/5MT | F | L | Saloon FWD B6294S | | GCO62009 | Outer Joint | 48T | 36 | 27 | 56.5 | 48 | 66 | M |
| | 1999.10-2001.10 | 4AT/5MT | F | L | Saloon FWD B6294S | | GCI62050 | Inner Joint | | 26 | 26 | 40 | 67 | 104 | |
| 2.9 (150 kw) | 1998.07-2000.10 | AT | F | L | Saloon FWD B6304S3 | | GDS62025 | Drive Shaft | 48T | 36 | 35 | 56.5 | 48 | 430 | |
| | 1998.07-2000.10 | AT | F | R | Saloon FWD B6304S3 | With viscous clutch | GDS62026 | Drive Shaft | 48T | 36 | 39 | 56.5 | 48 | 662 | |
| | 1998.07-2000.10 | AT | F | R | Saloon FWD B6304S3 | Without viscous clutch | GDS83415 | Drive Shaft | 48T | 36 | 39 | 56.5 | 48 | 669 | |
| | 1998.07-2000.10 | AT | F | R | Saloon FWD B6304S3 | Without viscous clutch | GCI82205 | Inner Joint | | 39 | 26 | 45 | 229 | 129 | |
| | 1998.07-2000.10 | AT/MT | F | L/R | Saloon FWD B6304S3 | | GCO62009 | Outer Joint | 48T | 36 | 27 | 56.5 | 48 | 66 | M |
| | 1998.07-2000.10 | MT | F | L | Saloon FWD B6304S3 | | GDS62138 | Drive Shaft | 48T | 36 | 26 | 56.5 | 48 | 488 | |
| | 1998.07-2000.10 | MT | F | L | Saloon FWD B6304S3 | | GCI62050 | Inner Joint | | 26 | 26 | 40 | 67 | 104 | |
| 2.9 (200 kw) | 2001.10-2006.07 | AT | F | R | Saloon FWD B6294T | With viscous clutch | GDS62026 | Drive Shaft | 48T | 36 | 39 | 56.5 | 48 | 662 | |
| | 2001.10-2006.07 | AT | F | R | Saloon FWD B6294T | Without viscous clutch | GDS83415 | Drive Shaft | 48T | 36 | 39 | 56.5 | 48 | 669 | |
| | 2001.10-2006.07 | AT | F | L/R | Saloon FWD B6294T | | GCO62009 | Outer Joint | 48T | 36 | 27 | 56.5 | 48 | 66 | M |
| | 2001.10-2006.07 | AT/SAT | F | R | Saloon FWD B6294T | Without viscous clutch | GCI82205 | Inner Joint | | 39 | 26 | 45 | 229 | 129 | |
| | 2001.10-2006.07 | SAT | F | L | Saloon FWD B6294T | | GDS62025 | Drive Shaft | 48T | 36 | 35 | 56.5 | 48 | 430 | |
| 3.0 (210 kw) | 2007.01-2010.12 | | F | L | Saloon 4WD B 6304 T2 | | GDS62076 | Drive Shaft | | 40 | 31 | 57.7 | 52 | 529 | |
| | 2007.01-2010.12 | 6AT | R | L/R | Saloon 4WD B 6304 T2 | Chassis no. from:165000 | GDS62077 | Drive Shaft | 44NS | 36 | 23 | 56.5 | 49.5 | 762 | |
| | 2007.01-2010.12 | 6AT | R | L/R | Saloon 4WD B 6304 T2 | Chassis no. to:164999;8 balls | GDS83926 | Drive Shaft | 44NS | 36 | 26 | 56.5 | 49.5 | 751 | |
| | 2007.01-2010.12 | 6AT | R | L/R | Saloon 4WD B 6304 T2 | Chassis no. to:164999;8 balls | GCO83248 | Outer Joint | 44NS | 36 | 29 | 56.5 | 49.5 | 64 | I |
| | 2007.01-2010.12 | 6AT | R | L/R | Saloon 4WD B 6304 T2 | Chassis no. to:164999 | GCI18187 | Inner Joint | | 26 | 29 | 35 | 69.5 | 107.5 | |
| 3.0 (224 kw) | 2010.10-2015.12 | 6AT | F | L | Saloon 4WD B 6304 T4 | | GDS62076 | Drive Shaft | | 40 | 31 | 57.7 | 52 | 529 | |
| | 2010.10-2015.12 | 6AT | R | L/R | Saloon 4WD B 6304 T4 | Chassis no. from:165000 | GDS62077 | Drive Shaft | 44NS | 36 | 23 | 56.5 | 49.5 | 762 | |
| | 2010.10-2015.12 | 6AT | R | L/R | Saloon 4WD B 6304 T4 | Chassis no. to:164999;8 balls | GDS83926 | Drive Shaft | 44NS | 36 | 26 | 56.5 | 49.5 | 751 | |
| | 2010.10-2015.12 | 6AT | R | L/R | Saloon 4WD B 6304 T4 | Chassis no. to:164999;8 balls | GCO83248 | Outer Joint | 44NS | 36 | 29 | 56.5 | 49.5 | 64 | I |
| | 2010.10-2015.12 | 6AT | R | L/R | Saloon 4WD B 6304 T4 | Chassis no. to:164999;DOJ | GCI18187 | Inner Joint | | 26 | 29 | 35 | 69.5 | 107.5 | |
| 3.2 (175 kw) | 2006.03-2010.12 | 6AT | F | L | Saloon FWD B 6324 S | | GDS62022 | Drive Shaft | 48T | 36 | 26 | 56.5 | 48 | 527 | |
| | 2006.03-2010.12 | AT | F | R | Saloon FWD B 6324 S | | GCO62045 | Outer Joint | | 40 | 26 | 57.7 | 52 | 62.5 | M |
| | 2007.01-2010.12 | 6AT | F | L | Saloon 4WD B 6324 S | | GDS62022 | Drive Shaft | 48T | 36 | 26 | 56.5 | 48 | 527 | |
| | 2007.01-2010.12 | 6AT | F | R | Saloon 4WD B 6324 S | | GDS62092 | Drive Shaft | | 40 | 28 | 57.7 | 52 | 995 | |
| | 2007.01-2010.12 | | F | R | Saloon 4WD B 6324 S | | GCI62044 | Inner Joint | | 28 | 26 | 30 | 526 | 105 | |
| | 2007.01-2010.12 | 6AT | R | L/R | Saloon 4WD B 6324 S | 8 balls | GDS83926 | Drive Shaft | 44NS | 36 | 26 | 56.5 | 49.5 | 751 | |
| | 2007.01-2010.12 | 6AT | R | L/R | Saloon 4WD B 6324 S | 8 balls | GCO83248 | Outer Joint | 44NS | 36 | 29 | 56.5 | 49.5 | 64 | I |
| | 2007.01-2010.12 | 6AT | R | L/R | Saloon 4WD B 6324 S | DOJ | GCI18187 | Inner Joint | | 26 | 29 | 35 | 69.5 | 107.5 | |
| 3.2 (177 kw) | 2009.01-2010.03 | 6AT | F | L | Saloon 4WD B 6324 S | | GDS62022 | Drive Shaft | 48T | 36 | 26 | 56.5 | 48 | 527 | |
| | 2009.01-2010.03 | 6AT | R | L/R | Saloon 4WD B 6324 S | | GDS83926 | Drive Shaft | 44NS | 36 | 26 | 56.5 | 49.5 | 751 | |
| | 2009.01-2010.03 | 6AT | R | L/R | Saloon 4WD B 6324 S | | GCI18187 | Inner Joint | | 26 | 29 | 35 | 69.5 | 107.5 | |
| | 2009.01-2010.03 | AT | R | L/R | Saloon 4WD B 6324 S | | GCO83248 | Outer Joint | 44NS | 36 | 29 | 56.5 | 49.5 | 64 | I |
| 3.2 (179 kw) | 2010.01-2014.12 | 6AT | F | L | Saloon 4WD B 6324 S5 | | GDS62022 | Drive Shaft | 48T | 36 | 26 | 56.5 | 48 | 527 | |
| | 2010.01-2014.12 | AT | F | R | Saloon 4WD B 6324 S5 | | GDS62092 | Drive Shaft | | 40 | 28 | 57.7 | 52 | 995 | |
| | 2010.01-2014.12 | AT | F | R | Saloon 4WD B 6324 S5 | | GCI62044 | Inner Joint | | 28 | 26 | 30 | 526 | 105 | |
| | 2010.01-2014.12 | 6AT | R | L/R | Saloon 4WD B 6324 S5 | 8 balls | GDS83926 | Drive Shaft | 44NS | 36 | 26 | 56.5 | 49.5 | 751 | |
| | 2010.01-2014.12 | 6AT | R | L/R | Saloon 4WD B 6324 S5 | 8 balls | GCO83248 | Outer Joint | 44NS | 36 | 29 | 56.5 | 49.5 | 64 | I |
| | 2010.01-2014.12 | 6AT | R | L/R | Saloon 4WD B 6324 S5 | | GCI18187 | Inner Joint | | 26 | 29 | 35 | 69.5 | 107.5 | |
| | 2010.01-2014.12 | 6AT | F | L | Saloon FWD B 6324 S5 | | GDS62022 | Drive Shaft | 48T | 36 | 26 | 56.5 | 48 | 527 | |
| | 2010.01-2014.12 | AT | F | R | Saloon FWD B 6324 S5 | | GCO62045 | Outer Joint | | 40 | 26 | 57.7 | 52 | 62.5 | M |
| 4.4 (232 kw) | 2006.03-2012.03 | 6AT | F | L | Saloon 4WD B 8444 S | | GDS62076 | Drive Shaft | | 40 | 31 | 57.7 | 52 | 529 | |
| | 2006.03-2012.03 | AT | F | L/R | Saloon 4WD B 8444 S | | GCO59344 | Outer Joint | | 40 | 26 | 57.7 | 52 | 63.5 | M |
| | 2006.03-2012.03 | 6AT | R | L/R | Saloon 4WD B 8444 S | 8 balls | GDS83926 | Drive Shaft | 44NS | 36 | 26 | 56.5 | 49.5 | 751 | |
| | 2006.03-2012.03 | 6AT | R | L/R | Saloon 4WD B 8444 S | 8 balls | GCO83248 | Outer Joint | 44NS | 36 | 29 | 56.5 | 49.5 | 64 | I |

| | YEAR | TRANSM. | F/R | L/R | BODY STYLE & DRIVE TYPE & ENGINE | REMARKS | G-AP Ref. | PRODUCT | ABS | Technical Specifications A | B | C | H | L | P |
|---|---|---|---|---|---|---|---|---|---|---|---|---|---|---|---|
| **VOLVO** | | | | | | | | | | | | | | | |
| **S80** | | | | | | | | | | | | | | | |
| 4.4 (232 kw) | 2006.03-2012.03 | 6AT | R | L/R | Saloon 4WD B 8444 S | | GCI18187 | Inner Joint | | 26 | 29 | 35 | 69.5 | 107.5 | |
| **S90** | | | | | | | | | | | | | | | |
| 2.0 (110 kw) | 2016.03-2021.12 | 6AT | F | L | Saloon FWD D 4204 T9;D 4204 T16 | For Engine code:D4204T9 | GDS83640 | Drive Shaft | | 40 | 26 | 57.7 | 52 | 576 | |
| | 2016.03-2021.12 | 8AT | F | L | Saloon FWD D 4204 T9;D 4204 T16 | Equipment code:FC25/FC35 | GDS84536 | Drive Shaft | | 40 | 31 | 54 | 53 | 597 | |
| | 2016.03-2021.12 | 8AT | F | R | Saloon FWD D 4204 T9;D 4204 T16 | Equipment code:FC25/FC35 | GDS84535 | Drive Shaft | | 40 | 28 | 54 | 53 | 972 | |
| | 2016.03-2021.12 | 8AT | F | L/R | Saloon FWD D 4204 T9;D 4204 T16 | Chassis no. to:98576,Equipment code:FC25/FC35 | GCO82859 | Outer Joint | | 40 | 26 | 54 | 53 | 63 | M |
| 2.0 (120 kw) | 2018.09-2021.12 | 8AT | F | L | Saloon FWD D 4204 T7 | | GDS84536 | Drive Shaft | | 40 | 31 | 54 | 53 | 597 | |
| | 2018.09-2021.12 | 8AT | F | R | Saloon FWD D 4204 T7 | | GDS84535 | Drive Shaft | | 40 | 28 | 54 | 53 | 972 | |
| | 2018.09-2021.12 | 8AT | F | L/R | Saloon FWD D 4204 T7 | | GCO82859 | Outer Joint | | 40 | 26 | 54 | 53 | 63 | M |
| 2.0 (140 kw) | 2016.03-2021.12 | 8AT | F | L | Saloon 4WD D 4204 T14 | | GDS84536 | Drive Shaft | | 40 | 31 | 54 | 53 | 597 | |
| | 2016.03-2021.12 | 8AT | F | L/R | Saloon 4WD D 4204 T14 | | GCO82859 | Outer Joint | | 40 | 26 | 54 | 53 | 63 | M |
| | 2016.03-2021.12 | 8AT | F | L | Saloon FWD D 4204 T14 | | GDS84536 | Drive Shaft | | 40 | 31 | 54 | 53 | 597 | |
| | 2016.03-2021.12 | 8AT | F | R | Saloon FWD D 4204 T14 | | GDS84535 | Drive Shaft | | 40 | 28 | 54 | 53 | 972 | |
| | 2016.03-2021.12 | 8AT | F | L/R | Saloon FWD D 4204 T14 | | GCO82859 | Outer Joint | | 40 | 26 | 54 | 53 | 63 | M |
| | 2017.10-2021.12 | 8AT | F | L | Saloon FWD B 4204 T31;B 4204 T44 | | GDS84536 | Drive Shaft | | 40 | 31 | 54 | 53 | 597 | |
| | 2017.10-2021.12 | 8AT | F | R | Saloon FWD B 4204 T31;B 4204 T44 | | GDS84535 | Drive Shaft | | 40 | 28 | 54 | 53 | 972 | |
| | 2017.10-2021.12 | 8AT | F | L/R | Saloon FWD B 4204 T31;B 4204 T44 | | GCO82859 | Outer Joint | | 40 | 26 | 54 | 53 | 63 | M |
| 2.0 (145 kw) | 2020.03- | 8AT | F | L | Saloon FWD B 420 T6 | | GDS84536 | Drive Shaft | | 40 | 31 | 54 | 53 | 597 | |
| | 2020.03- | 8AT | F | R | Saloon FWD B 420 T6 | | GDS84535 | Drive Shaft | | 40 | 28 | 54 | 53 | 972 | |
| | 2020.03- | 8AT | F | L/R | Saloon FWD B 420 T6 | | GCO82859 | Outer Joint | | 40 | 26 | 54 | 53 | 63 | M |
| 2.0 (147 kw) | 2016.03-2021.12 | 8AT | F | L | Saloon 4WD D 4204 T14 | | GDS84536 | Drive Shaft | | 40 | 31 | 54 | 53 | 597 | |
| | 2016.03-2021.12 | 8AT | F | L/R | Saloon 4WD D 4204 T14 | | GCO82859 | Outer Joint | | 40 | 26 | 54 | 53 | 63 | M |
| | 2016.03-2021.12 | 8AT | F | L | Saloon FWD D 4204 T14 | | GDS84536 | Drive Shaft | | 40 | 31 | 54 | 53 | 597 | |
| | 2016.03-2021.12 | 8AT | F | R | Saloon FWD D 4204 T14 | | GDS84535 | Drive Shaft | | 40 | 28 | 54 | 53 | 972 | |
| | 2016.03-2021.12 | 8AT | F | L/R | Saloon FWD D 4204 T14 | | GCO82859 | Outer Joint | | 40 | 26 | 54 | 53 | 63 | M |
| 2.0 (155 kw) | 2019.06-2021.12 | 8AT | F | L | Saloon FWD B 4204 T31 | | GDS84536 | Drive Shaft | | 40 | 31 | 54 | 53 | 597 | |
| | 2019.06-2021.12 | 8AT | F | R | Saloon FWD B 4204 T31 | | GDS84535 | Drive Shaft | | 40 | 28 | 54 | 53 | 972 | |
| | 2019.06-2021.12 | 8AT | F | L/R | Saloon FWD B 4204 T31 | | GCO82859 | Outer Joint | | 40 | 26 | 54 | 53 | 63 | M |
| 2.0 (173 kw) | 2016.03-2021.12 | 8AT | F | L | Saloon 4WD D 4204 T23 | | GDS84536 | Drive Shaft | | 40 | 31 | 54 | 53 | 597 | |
| | 2016.03-2021.12 | 8AT | F | L/R | Saloon 4WD D 4204 T23 | | GCO82859 | Outer Joint | | 40 | 26 | 54 | 53 | 63 | M |
| 2.0 (177 kw) | 2016.03-2021.11 | 8AT | F | L | Saloon 4WD D 4204 T23 | | GDS84536 | Drive Shaft | | 40 | 31 | 54 | 53 | 597 | |
| | 2016.03-2021.11 | 8AT | F | L/R | Saloon 4WD D 4204 T23 | | GCO82859 | Outer Joint | | 40 | 26 | 54 | 53 | 63 | M |
| 2.0 (183 kw) | 2016.03-2021.12 | 8AT | F | L | Saloon FWD B 4204 T20 | | GDS84536 | Drive Shaft | | 40 | 31 | 54 | 53 | 597 | |
| | 2016.03-2021.12 | 8AT | F | R | Saloon FWD B 4204 T20 | | GDS84535 | Drive Shaft | | 40 | 28 | 54 | 53 | 972 | |
| | 2016.03-2021.12 | 8AT | F | L/R | Saloon FWD B 4204 T20 | | GCO82859 | Outer Joint | | 40 | 26 | 54 | 53 | 63 | M |
| | 2022.03- | 8AT | F | L | Saloon FWD B 420 T10 | Equipment code:FC25/FC35 | GDS84536 | Drive Shaft | | 40 | 31 | 54 | 53 | 597 | |
| | 2022.03- | 8AT | F | R | Saloon FWD B 420 T10 | Equipment code:FC25/FC35 | GDS84535 | Drive Shaft | | 40 | 28 | 54 | 53 | 972 | |
| | 2022.03- | 8AT | F | L/R | Saloon FWD B 420 T10 | Chassis no. to:98576,Equipment code:FC25/FC35 | GCO82859 | Outer Joint | | 40 | 26 | 54 | 53 | 63 | M |
| 2.0 (184 kw) | 2017.10-2021.12 | 8AT | F | L | Saloon FWD B 4204 T26 | | GDS84536 | Drive Shaft | | 40 | 31 | 54 | 53 | 597 | |
| | 2017.10-2021.12 | 8AT | F | R | Saloon FWD B 4204 T26 | | GDS84535 | Drive Shaft | | 40 | 28 | 54 | 53 | 972 | |
| | 2017.10-2021.12 | 8AT | F | L/R | Saloon FWD B 4204 T26 | | GCO82859 | Outer Joint | | 40 | 26 | 54 | 53 | 63 | M |
| | 2020.03- | 8AT | F | L | Saloon FWD B 4204 T26;B 420 T2 | | GDS84536 | Drive Shaft | | 40 | 31 | 54 | 53 | 597 | |
| | 2020.03- | 8AT | F | R | Saloon FWD B 4204 T26;B 420 T2 | | GDS84535 | Drive Shaft | | 40 | 28 | 54 | 53 | 972 | |
| | 2020.03- | 8AT | F | L/R | Saloon FWD B 4204 T26;B 420 T2 | | GCO82859 | Outer Joint | | 40 | 26 | 54 | 53 | 63 | M |
| 2.0 (186 kw) | 2017.10-2021.12 | 8AT | F | L | Saloon FWD B 4204 T26 | | GDS84536 | Drive Shaft | | 40 | 31 | 54 | 53 | 597 | |
| | 2017.10-2021.12 | 8AT | F | R | Saloon FWD B 4204 T26 | | GDS84535 | Drive Shaft | | 40 | 28 | 54 | 53 | 972 | |
| | 2017.10-2021.12 | 8AT | F | L/R | Saloon FWD B 4204 T26 | | GCO82859 | Outer Joint | | 40 | 26 | 54 | 53 | 63 | M |
| 2.0 (187 kw) | 2016.03-2021.12 | 8AT | F | L | Saloon FWD B 4204 T23 | | GDS84536 | Drive Shaft | | 40 | 31 | 54 | 53 | 597 | |
| | 2016.03-2021.12 | 8AT | F | R | Saloon FWD B 4204 T23 | | GDS84535 | Drive Shaft | | 40 | 28 | 54 | 53 | 972 | |
| | 2016.03-2021.12 | 8AT | F | L/R | Saloon FWD B 4204 T23 | | GCO82859 | Outer Joint | | 40 | 26 | 54 | 53 | 63 | M |
| 2.0 (192 kw) | 2016.03-2021.12 | 8AT | F | L | Saloon FWD B 4204 T23 | | GDS84536 | Drive Shaft | | 40 | 31 | 54 | 53 | 597 | |
| | 2016.03-2021.12 | 8AT | F | R | Saloon FWD B 4204 T23 | | GDS84535 | Drive Shaft | | 40 | 28 | 54 | 53 | 972 | |
| | 2016.03-2021.12 | 8AT | F | L/R | Saloon FWD B 4204 T23 | | GCO82859 | Outer Joint | | 40 | 26 | 54 | 53 | 63 | M |
| 2.0 (228 kw) | 2017.10-2021.12 | 8AT | F | L | Saloon 4WD B 4204 T29 | | GDS84536 | Drive Shaft | | 40 | 31 | 54 | 53 | 597 | |
| | 2017.10-2021.12 | 8AT | F | L/R | Saloon 4WD B 4204 T29 | | GCO82859 | Outer Joint | | 40 | 26 | 54 | 53 | 63 | M |
| 2.0 (233 kw) | 2019.01- | 8AT | F | L | Saloon 4WD B 4204 T34;B 4204 T53 | | GDS58139 | Drive Shaft | | 40 | 31 | 54 | 53 | 573 | |
| | 2019.01- | 8AT | F | R | Saloon 4WD B 4204 T34;B 4204 T53 | Equipment code:FC25/FC35 | GDS58140 | Drive Shaft | | 40 | 28 | 54 | 53 | 996 | |
| | 2019.01- | 8AT | F | L/R | Saloon 4WD B 4204 T34;B 4204 T53 | Equipment code:FC25/FC35 | GCO83257 | Outer Joint | | 40 | 26 | 54 | 53 | 63 | M |
| | 2019.01- | 8AT | F | L | Saloon 4WD B 4204 T34;B 4204 T53 | | GCI84021 | Inner Joint | | 31 | 24 | 36.2 | 67.5 | 82.5 | |
| | 2019.01- | 8AT | F | R | Saloon 4WD B 4204 T34;B 4204 T53 | Equipment code:FC25/FC35 | GCI84022 | Inner Joint | | 28 | 24 | 33 | 494 | 79 | |
| | 2019.01- | 8AT | R | L | Saloon 4WD B 4204 T34;B 4204 T53 | For Engine code:B4204T53 | GDS58190 | Drive Shaft | | 40 | 25 | 54 | 53 | 615 | |
| | 2019.01- | 8AT | R | R | Saloon 4WD B 4204 T34;B 4204 T53 | For Engine code:B4204T53 | GDS58259 | Drive Shaft | | 40 | 37 | 54 | 53 | 645 | |
| | 2019.01- | 8AT | R | L/R | Saloon 4WD B 4204 T34;B 4204 T53 | For Engine code:B4204T53 | GCO83356 | Outer Joint | | 40 | 26 | 54 | 53 | 68.5 | M |
| | 2019.01- | 8AT | R | L | Saloon 4WD B 4204 T34;B 4204 T53 | For Engine code:B4204T53 | GCI84029 | Inner Joint | | 25 | 26 | | 49.5 | 63 | |
| | 2019.01- | 8AT | R | R | Saloon 4WD B 4204 T34;B 4204 T53 | For Engine code:B4204T53 | GCI84047 | Inner Joint | | 37 | 26 | | 91.5 | 63 | |

| | YEAR | TRANSM. | F/R | L/R | BODY STYLE & DRIVE TYPE & ENGINE | REMARKS | G-AP Ref. | PRODUCT | ABS | Technical Specifications | | | | | |
|---|---|---|---|---|---|---|---|---|---|---|---|---|---|---|---|
| | | | | | | | | | | A | B | C | H | L | P |
| **VOLVO** **S90** | | | | | | | | | | | | | | | |
| 2.0 (235 kw) | 2016.03-2021.12 | 8AT | F | L | Saloon 4WD B 4204 T27 | | GDS84536 | Drive Shaft | | 40 | 31 | 54 | 53 | 597 | |
| | 2016.03-2021.12 | 8AT | F | L/R | Saloon 4WD B 4204 T27 | | GCO82859 | Outer Joint | | 40 | 26 | 54 | 53 | 63 | M |
| 2.0 (240 kw) | 2017.10-2021.12 | 8AT | F | L | Saloon 4WD B 4204 T29 | | GDS84536 | Drive Shaft | | 40 | 31 | 54 | 53 | 597 | |
| | 2017.10-2021.12 | 8AT | F | L/R | Saloon 4WD B 4204 T29 | | GCO82859 | Outer Joint | | 40 | 26 | 54 | 53 | 63 | M |
| 2.0 (246 kw) | 2016.03-2021.12 | 8AT | F | L | Saloon 4WD B 4204 T27 | | GDS84536 | Drive Shaft | | 40 | 31 | 54 | 53 | 597 | |
| | 2016.03-2021.12 | 8AT | F | L/R | Saloon 4WD B 4204 T27 | | GCO82859 | Outer Joint | | 40 | 26 | 54 | 53 | 63 | M |
| | 2017.10-2022.12 | 8AT | F | L | Saloon 4WD B 4204 T35 | | GDS58139 | Drive Shaft | | 40 | 31 | 54 | 53 | 573 | |
| | 2017.10-2022.12 | 8AT | F | R | Saloon 4WD B 4204 T35 | Equipment code:FC25/FC35 | GDS58140 | Drive Shaft | | 40 | 28 | 54 | 53 | 996 | |
| | 2017.10-2022.12 | 8AT | F | L/R | Saloon 4WD B 4204 T35 | Equipment code:FC25/FC35 | GCO83257 | Outer Joint | | 40 | 26 | 54 | 53 | 63 | M |
| | 2017.10-2022.12 | 8AT | F | L | Saloon 4WD B 4204 T35 | | GCI84021 | Inner Joint | | 31 | 24 | 36.2 | 67.5 | 82.5 | |
| | 2017.10-2022.12 | 8AT | F | R | Saloon 4WD B 4204 T35 | Equipment code:FC25/FC35 | GCI84022 | Inner Joint | | 28 | 24 | 33 | 494 | 79 | |
| 2.0 (287 kw) | 2018.04-2022.12 | 8AT | F | L | Saloon 4WD B 4204 T34 | | GDS58139 | Drive Shaft | | 40 | 31 | 54 | 53 | 573 | |
| | 2018.04-2022.12 | 8AT | F | R | Saloon 4WD B 4204 T34 | Equipment code:FC25/FC35 | GDS58140 | Drive Shaft | | 40 | 28 | 54 | 53 | 996 | |
| | 2018.04-2022.12 | 8AT | F | L/R | Saloon 4WD B 4204 T34 | Equipment code:FC25/FC35 | GCO83257 | Outer Joint | | 40 | 26 | 54 | 53 | 63 | M |
| | 2018.04-2022.12 | 8AT | F | L | Saloon 4WD B 4204 T34 | | GCI84021 | Inner Joint | | 31 | 24 | 36.2 | 67.5 | 82.5 | |
| | 2018.04-2022.12 | 8AT | F | R | Saloon 4WD B 4204 T34 | Equipment code:FC25/FC35 | GCI84022 | Inner Joint | | 28 | 24 | 33 | 494 | 79 | |
| 2.0 (299 kw) | 2017.10-2022.12 | | F | L | Saloon 4WD B 4204 T35 | | GDS58139 | Drive Shaft | | 40 | 31 | 54 | 53 | 573 | |
| | 2017.10-2022.12 | | F | R | Saloon 4WD B 4204 T35 | Equipment code:FC25/FC35 | GDS58140 | Drive Shaft | | 40 | 28 | 54 | 53 | 996 | |
| | 2017.10-2022.12 | | F | L/R | Saloon 4WD B 4204 T35 | Equipment code:FC25/FC35 | GCO83257 | Outer Joint | | 40 | 26 | 54 | 53 | 63 | M |
| | 2017.10-2022.12 | | F | L | Saloon 4WD B 4204 T35 | | GCI84021 | Inner Joint | | 31 | 24 | 36.2 | 67.5 | 82.5 | |
| | 2017.10-2022.12 | | F | R | Saloon 4WD B 4204 T35 | Equipment code:FC25/FC35 | GCI84022 | Inner Joint | | 28 | 24 | 33 | 494 | 79 | |
| 2.0 (335 kw) | 2022.01- | 8AT | F | L | Saloon 4WD B 4204 T56 | | GDS58139 | Drive Shaft | | 40 | 31 | 54 | 53 | 573 | |
| | 2022.01- | 8AT | F | R | Saloon 4WD B 4204 T56 | | GDS58140 | Drive Shaft | | 40 | 28 | 54 | 53 | 996 | |
| | 2022.01- | 8AT | F | L/R | Saloon 4WD B 4204 T56 | | GCO83257 | Outer Joint | | 40 | 26 | 54 | 53 | 63 | M |
| | 2022.01- | 8AT | F | L | Saloon 4WD B 4204 T56 | | GCI84021 | Inner Joint | | 31 | 24 | 36.2 | 67.5 | 82.5 | |
| | 2022.01- | 8AT | F | R | Saloon 4WD B 4204 T56 | | GCI84022 | Inner Joint | | 28 | 24 | 33 | 494 | 79 | |
| | 2022.01- | 8AT | R | L | Saloon 4WD B 4204 T56 | | GDS58190 | Drive Shaft | | 40 | 25 | 54 | 53 | 615 | |
| | 2022.01- | 8AT | R | R | Saloon 4WD B 4204 T56 | | GDS58259 | Drive Shaft | | 40 | 37 | 54 | 53 | 645 | |
| | 2022.01- | 8AT | R | L/R | Saloon 4WD B 4204 T56 | | GCO83356 | Outer Joint | | 40 | 26 | 54 | 53 | 68.5 | M |
| | 2022.01- | 8AT | R | L | Saloon 4WD B 4204 T56 | | GCI84029 | Inner Joint | | 25 | 26 | | 49.5 | 63 | |
| | 2022.01- | 8AT | R | R | Saloon 4WD B 4204 T56 | | GCI84047 | Inner Joint | | 37 | 26 | | 91.5 | 63 | |
| 2.0 (340 kw) | 2022.04- | 8AT | F | L | Saloon 4WD B 4204 T34;B 4204 T57;B 4204 T53 | | GDS58139 | Drive Shaft | | 40 | 31 | 54 | 53 | 573 | |
| | 2022.04- | 8AT | F | R | Saloon 4WD B 4204 T34;B 4204 T57;B 4204 T53 | | GDS58140 | Drive Shaft | | 40 | 28 | 54 | 53 | 996 | |
| | 2022.04- | 8AT | F | L/R | Saloon 4WD B 4204 T34;B 4204 T57;B 4204 T53 | | GCO83257 | Outer Joint | | 40 | 26 | 54 | 53 | 63 | M |
| | 2022.04- | 8AT | F | L | Saloon 4WD B 4204 T34;B 4204 T57;B 4204 T53 | | GCI84021 | Inner Joint | | 31 | 24 | 36.2 | 67.5 | 82.5 | |
| | 2022.04- | 8AT | F | R | Saloon 4WD B 4204 T34;B 4204 T57;B 4204 T53 | | GCI84022 | Inner Joint | | 28 | 24 | 33 | 494 | 79 | |
| | 2022.04- | 8AT | R | L | Saloon 4WD B 4204 T34;B 4204 T57;B 4204 T53 | | GDS58190 | Drive Shaft | | 40 | 25 | 54 | 53 | 615 | |
| | 2022.04- | 8AT | R | R | Saloon 4WD B 4204 T34;B 4204 T57;B 4204 T53 | | GDS58259 | Drive Shaft | | 40 | 37 | 54 | 53 | 645 | |
| | 2022.04- | 8AT | R | L/R | Saloon 4WD B 4204 T34;B 4204 T57;B 4204 T53 | | GCO83356 | Outer Joint | | 40 | 26 | 54 | 53 | 68.5 | M |
| | 2022.04- | 8AT | R | L | Saloon 4WD B 4204 T34;B 4204 T57;B 4204 T53 | | GCI84029 | Inner Joint | | 25 | 26 | | 49.5 | 63 | |
| | 2022.04- | 8AT | R | R | Saloon 4WD B 4204 T34;B 4204 T57;B 4204 T53 | | GCI84047 | Inner Joint | | 37 | 26 | | 91.5 | 63 | |
| 2.5 (125 kw) | 1996.11-1998.10 | 4AT | R | L/R | Saloon RWD B6254FS | Type:DIFF.RATIO 3.54/3.73 | GDS81125 | Drive Shaft | | 26 | 26 | 61 | 81 | 743 | |
| | 1996.11-1998.10 | 4AT | R | L/R | Saloon RWD B6254FS | Type:DIFF.RATIO 3.91/4.10 | GDS81126 | Drive Shaft | | 26 | 26 | 60.5 | 81 | 745 | |
| | 1996.11-1998.10 | 4AT | R | L/R | Saloon RWD B6254FS | Type:DIFF.RATIO 3.54/3.73 | GCI81049 | Inner Joint | | 26 | 28 | 61 | 81 | 110.2 | |
| | 1996.11-1998.10 | 4AT | R | L/R | Saloon RWD B6254FS | Type:DIFF.RATIO 3.91/4.10 | GCI81050 | Inner Joint | 48T | 26 | 25 | 60.5 | 81 | 96.8 | |
| | 1996.11-1998.10 | 4AT | R | L/R | Saloon RWD B6254FS | Type:DIFF.RATIO 3.54/3.73 | GCI81059 | Inner Joint | | 26 | 28 | 35 | 69.5 | 119.7 | |
| | 1996.11-1998.10 | 4AT | R | L/R | Saloon RWD B6254FS | Type:DIFF.RATIO 3.91/4.10 | GCI81060 | Inner Joint | | 26 | 25 | 35 | 70 | 106.3 | |
| 2.5 (132 kw) | 1996.11-1997.10 | 5AT | R | L/R | Saloon RWD B6244FS | Type:DIFF.RATIO 3.54/3.73 | GDS81125 | Drive Shaft | | 26 | 26 | 61 | 81 | 743 | |
| | 1996.11-1997.10 | 5AT | R | L/R | Saloon RWD B6244FS | Type:DIFF.RATIO 3.91/4.10 | GDS81126 | Drive Shaft | | 26 | 26 | 60.5 | 81 | 745 | |
| | 1996.11-1997.10 | 5AT | R | L/R | Saloon RWD B6244FS | Type:DIFF.RATIO 3.54/3.73 | GCI81049 | Inner Joint | | 26 | 28 | 61 | 81 | 110.2 | |
| | 1996.11-1997.10 | 5AT | R | L/R | Saloon RWD B6244FS | Type:DIFF.RATIO 3.91/4.10 | GCI81050 | Inner Joint | 48T | 26 | 25 | 60.5 | 81 | 96.8 | |
| | 1996.11-1997.10 | 5AT | R | L/R | Saloon RWD B6244FS | Type:DIFF.RATIO 3.54/3.73 | GCI81059 | Inner Joint | | 26 | 28 | 35 | 69.5 | 119.7 | |
| | 1996.11-1997.10 | 5AT | R | L/R | Saloon RWD B6244FS | Type:DIFF.RATIO 3.91/4.10 | GCI81060 | Inner Joint | | 26 | 25 | 35 | 70 | 106.3 | |
| 2.9 (132 kw) | 1996.11-1998.10 | 4AT/5MT | R | L/R | Saloon RWD B6304FS2 | Type:DIFF.RATIO 3.54/3.73 | GDS81125 | Drive Shaft | | 26 | 26 | 61 | 81 | 743 | |
| | 1996.11-1998.10 | 4AT/5MT | R | L/R | Saloon RWD B6304FS2 | Type:DIFF.RATIO 3.91/4.10 | GDS81126 | Drive Shaft | | 26 | 26 | 60.5 | 81 | 745 | |
| | 1996.11-1998.10 | 4AT/5MT | R | L/R | Saloon RWD B6304FS2 | Type:DIFF.RATIO 3.54/3.73 | GCI81049 | Inner Joint | | 26 | 28 | 61 | 81 | 110.2 | |
| | 1996.11-1998.10 | 4AT/5MT | R | L/R | Saloon RWD B6304FS2 | Type:DIFF.RATIO 3.91/4.10 | GCI81050 | Inner Joint | 48T | 26 | 25 | 60.5 | 81 | 96.8 | |
| | 1996.11-1998.10 | 4AT/5MT | R | L/R | Saloon RWD B6304FS2 | Type:DIFF.RATIO 3.54/3.73 | GCI81059 | Inner Joint | | 26 | 28 | 35 | 69.5 | 119.7 | |
| | 1996.11-1998.10 | 4AT/5MT | R | L/R | Saloon RWD B6304FS2 | Type:DIFF.RATIO 3.91/4.10 | GCI81060 | Inner Joint | | 26 | 25 | 35 | 70 | 106.3 | |
| 2.9 (150 kw) | 1997.01-1998.12 | 4AT | R | L/R | Saloon RWD B6304FS/B6304FS2 | Type:DIFF.RATIO 3.91/4.10 | GDS81126 | Drive Shaft | | 26 | 26 | 60.5 | 81 | 745 | |
| | 1997.01-1998.12 | 4AT | R | L/R | Saloon RWD B6304FS/B6304FS2 | Type:DIFF.RATIO 3.91/4.10 | GCI81060 | Inner Joint | | 26 | 25 | 35 | 70 | 106.3 | |
| | 1997.01-1998.12 | AT | R | L/R | Saloon RWD B6304FS/B6304FS2 | Type:DIFF.RATIO 3.54/3.73 | GDS81125 | Drive Shaft | | 26 | 26 | 61 | 81 | 743 | |
| | 1997.01-1998.12 | AT | R | L/R | Saloon RWD B6304FS/B6304FS2 | Type:DIFF.RATIO 3.54/3.73 | GCI81049 | Inner Joint | | 26 | 28 | 61 | 81 | 110.2 | |
| | 1997.01-1998.12 | AT | R | L/R | Saloon RWD B6304FS/B6304FS2 | Type:DIFF.RATIO 3.54/3.73 | GCI81059 | Inner Joint | | 26 | 28 | 35 | 69.5 | 119.7 | |

| | YEAR | TRANSM. | F/R | L/R | BODY STYLE & DRIVE TYPE & ENGINE | REMARKS | G-AP Ref. | PRODUCT | ABS | Technical Specifications A | B | C | H | L | P |
|---|---|---|---|---|---|---|---|---|---|---|---|---|---|---|---|
| **VOLVO** **V40** | | | | | | | | | | | | | | | |
| 1.5 (90 kw) | 2015.02-2019.08 | 6AT | F | R | Hatchback FWD B 4154 T5;B 4154 T3 | | GDS83220 | Drive Shaft | | 36 | 26 | 56.1 | 48 | 935 | |
| | 2015.02-2019.08 | 6AT | F | L/R | Hatchback FWD B 4154 T5;B 4154 T3 | | GCO62049 | Outer Joint | | 36 | 26 | 56.1 | 48 | 64 | M |
| | 2015.02-2019.08 | 6AT | F | R | Hatchback FWD B 4154 T5;B 4154 T3 | | GCI82186 | Inner Joint | | 26 | 24 | 31 | 469 | 98 | |
| | 2015.02-2019.08 | AT | F | L | Hatchback FWD B 4154 T5;B 4154 T3 | | GDS83219 | Drive Shaft | | 36 | 26 | 56.1 | 48 | 558 | |
| | 2015.02-2019.08 | AT | F | L | Hatchback FWD B 4154 T5;B 4154 T3 | | GCI82187 | Inner Joint | | 26 | 24 | 31 | 72 | 94 | |
| 1.5 (112 kw) | 2015.02-2019.08 | 6AT | F | L | Hatchback FWD B 4154 T4;B 4154 T2 | | GDS83219 | Drive Shaft | | 36 | 26 | 56.1 | 48 | 558 | |
| | 2015.02-2019.08 | 6AT | F | R | Hatchback FWD B 4154 T4;B 4154 T2 | | GDS83220 | Drive Shaft | | 36 | 26 | 56.1 | 48 | 935 | |
| | 2015.02-2019.08 | 6AT | F | L/R | Hatchback FWD B 4154 T4;B 4154 T2 | | GCO62049 | Outer Joint | | 36 | 26 | 56.1 | 48 | 64 | M |
| | 2015.02-2019.08 | 6AT | F | R | Hatchback FWD B 4154 T4;B 4154 T2 | | GCI82186 | Inner Joint | | 26 | 24 | 31 | 469 | 98 | |
| | 2015.02-2019.08 | AT | F | L | Hatchback FWD B 4154 T4;B 4154 T2 | | GCI82187 | Inner Joint | | 26 | 24 | 31 | 72 | 94 | |
| 1.6 (77 kw) | 1995.12-1999.09 | 5MT | F | L/R | Estate FWD B4164S | | GCO39021 | Outer Joint | | 25 | 29 | 54 | 94.5 | 64.5 | O |
| | 1995.12-1999.09 | MT | F | L | Estate FWD B4164S | | GDS62004 | Drive Shaft | 43T | 25 | 30 | 54 | 95 | 628.7 | |
| 1.6 (80 kw) | 1999.03-2004.06 | 5MT | F | R | Estate FWD B4164S2 | | GDS50421 | Drive Shaft | 43T | 25 | 23 | 54 | 94.5 | 813 | |
| | 1999.03-2004.06 | AT/MT | F | L/R | Estate FWD B4164S2 | | GCO62008 | Outer Joint | 43T | 25 | 33 | 54 | 95 | 61 | M |
| | 1999.03-2004.06 | MT | F | L | Estate FWD B4164S2 | ABS Ring Ø [mm]:82 | GDS62023 | Drive Shaft | 43T | 25 | 30 | 54 | 95 | 628.7 | |
| | 1999.03-2004.06 | MT | F | R | Estate FWD B4164S2 | | GDS39096 | Drive Shaft | 43T | 25 | 25 | 54 | 95.5 | 937 | |
| | 1999.03-2004.06 | MT | F | L/R | Estate FWD B4164S2 | ABS Ring Ø [mm]:82 | GCO39021 | Outer Joint | | 25 | 29 | 54 | 94.5 | 64.5 | O |
| | 1999.03-2004.06 | | F | | Estate FWD B4164S2 | | GCO39100 | Outer Joint | 43T | 25 | 23 | 54 | 95.5 | 64 | M |
| 1.6 (84 kw) | 2012.03-2016.12 | 6DCT | F | L | Hatchback FWD D 4162 T | | GDS62111 | Drive Shaft | | 36 | 28 | 56.1 | 48 | 578 | |
| | 2012.03-2016.12 | 6DCT | F | R | Hatchback FWD D 4162 T | | GDS62128 | Drive Shaft | | 36 | 28 | 56.1 | 48 | 913 | |
| | 2012.03-2016.12 | 6DCT | F | L | Hatchback FWD D 4162 T | | GCI62056 | Inner Joint | | 28 | 24 | 33.8 | 80 | 95.5 | |
| | 2012.03-2016.12 | 6DCT | F | R | Hatchback FWD D 4162 T | | GCI62067 | Inner Joint | | 28 | 24 | 33.8 | 374.5 | 98.5 | |
| | 2012.03-2016.12 | 6MT | F | L | Hatchback FWD D 4162 T | | GDS34224 | Drive Shaft | | 36 | 26 | 56.1 | 48 | 581 | |
| | 2012.03-2016.12 | 6MT | F | R | Hatchback FWD D 4162 T | Model:V40 | GDS34270 | Drive Shaft | | 36 | 26 | 56.1 | 48 | 918 | |
| | 2012.03-2016.12 | 6MT | F | L/R | Hatchback FWD D 4162 T | | GCO34194 | Outer Joint | | 36 | 24 | 56.1 | 48 | 59 | M |
| | 2012.03-2016.12 | 6MT | F | L | Hatchback FWD D 4162 T | | GCI34111 | Inner Joint | | 26 | 24 | 40 | 61 | 112.5 | |
| | 2012.03-2016.12 | 6MT | F | R | Hatchback FWD D 4162 T | Model:V40 | GCI34150 | Inner Joint | | 26 | 24 | 40 | 381 | 98 | |
| | 2013.09-2015.12 | 6DCT | F | L | Hatchback Van FWD D 4162 T | | GCI62056 | Inner Joint | | 28 | 24 | 33.8 | 80 | 95.5 | |
| | 2013.09-2015.12 | 6DCT | F | R | Hatchback Van FWD D 4162 T | | GCI62067 | Inner Joint | | 28 | 24 | 33.8 | 374.5 | 98.5 | |
| | 2013.09-2015.12 | 6MT | F | L | Hatchback Van FWD D 4162 T | | GDS34224 | Drive Shaft | | 36 | 26 | 56.1 | 48 | 581 | |
| | 2013.09-2015.12 | 6MT | F | L/R | Hatchback Van FWD D 4162 T | | GCO34194 | Outer Joint | | 36 | 24 | 56.1 | 48 | 59 | M |
| | 2013.09-2015.12 | 6MT | F | L | Hatchback Van FWD D 4162 T | | GCI34111 | Inner Joint | | 26 | 24 | 40 | 61 | 112.5 | |
| | 2013.09-2015.12 | AT | F | L | Hatchback Van FWD D 4162 T | | GDS62111 | Drive Shaft | | 36 | 28 | 56.1 | 48 | 578 | |
| | 2013.09-2015.12 | AT | F | R | Hatchback Van FWD D 4162 T | | GDS62128 | Drive Shaft | | 36 | 28 | 56.1 | 48 | 913 | |
| | 2013.09-2015.12 | MT | F | R | Hatchback Van FWD D 4162 T | | GDS34270 | Drive Shaft | | 36 | 26 | 56.1 | 48 | 918 | |
| | 2013.09-2015.12 | MT | F | R | Hatchback Van FWD D 4162 T | | GCI34150 | Inner Joint | | 26 | 24 | 40 | 381 | 98 | |
| 1.6 (88 kw) | 2013.04-2016.12 | 6MT | F | L | Hatchback FWD B 4164 T4 | | GDS34224 | Drive Shaft | | 36 | 26 | 56.1 | 48 | 581 | |
| | 2013.04-2016.12 | 6MT | F | R | Hatchback FWD B 4164 T4 | | GDS62110 | Drive Shaft | | 36 | 26 | 56.1 | 48 | 921 | |
| | 2013.04-2016.12 | 6MT | F | L/R | Hatchback FWD B 4164 T4 | | GCO34194 | Outer Joint | | 36 | 24 | 56.1 | 48 | 59 | M |
| | 2013.04-2016.12 | 6MT | F | L | Hatchback FWD B 4164 T4 | | GCI34111 | Inner Joint | | 26 | 24 | 40 | 61 | 112.5 | |
| | 2013.04-2016.12 | 6MT | F | R | Hatchback FWD B 4164 T4 | | GCI62055 | Inner Joint | | 26 | 24 | 40 | 447.5 | 98.5 | |
| 1.6 (110 kw) | 2012.03-2016.12 | 6MT | F | L | Hatchback FWD B 4164 T3 | | GDS34224 | Drive Shaft | | 36 | 26 | 56.1 | 48 | 581 | |
| | 2012.03-2016.12 | 6MT | F | L/R | Hatchback FWD B 4164 T3 | | GCO34194 | Outer Joint | | 36 | 24 | 56.1 | 48 | 59 | M |
| | 2012.03-2016.12 | 6MT | F | L | Hatchback FWD B 4164 T3 | | GCI34111 | Inner Joint | | 26 | 24 | 40 | 61 | 112.5 | |
| | 2012.03-2016.12 | MT | F | R | Hatchback FWD B 4164 T3 | | GDS62110 | Drive Shaft | | 36 | 26 | 56.1 | 48 | 921 | |
| | 2012.03-2016.12 | MT | F | R | Hatchback FWD B 4164 T3 | | GCI62055 | Inner Joint | | 26 | 24 | 40 | 447.5 | 98.5 | |
| 1.6 (132 kw) | 2012.03-2016.12 | 6AT/6MT | F | R | Hatchback FWD B 4164 T | | GDS62110 | Drive Shaft | | 36 | 26 | 56.1 | 48 | 921 | |
| | 2012.03-2016.12 | 6AT/6MT | F | R | Hatchback FWD B 4164 T | | GCI62055 | Inner Joint | | 26 | 24 | 40 | 447.5 | 98.5 | |
| | 2012.03-2016.12 | 6DCT | F | L | Hatchback FWD B 4164 T | | GDS62111 | Drive Shaft | | 36 | 28 | 56.1 | 48 | 578 | |
| | 2012.03-2016.12 | 6DCT | F | R | Hatchback FWD B 4164 T | | GDS62129 | Drive Shaft | | 36 | 28 | 56.1 | 48 | 920 | |
| | 2012.03-2016.12 | 6DCT | F | L | Hatchback FWD B 4164 T | | GCI62056 | Inner Joint | | 28 | 24 | 33.8 | 80 | 95.5 | |
| | 2012.03-2016.12 | 6MT | F | L | Hatchback FWD B 4164 T | | GDS34224 | Drive Shaft | | 36 | 26 | 56.1 | 48 | 581 | |
| | 2012.03-2016.12 | 6MT | F | L/R | Hatchback FWD B 4164 T | | GCO34194 | Outer Joint | | 36 | 24 | 56.1 | 48 | 59 | M |
| | 2012.03-2016.12 | 6MT | F | L | Hatchback FWD B 4164 T | | GCI34111 | Inner Joint | | 26 | 24 | 40 | 61 | 112.5 | |
| 1.6 (147 kw) | 2014.04-2015.12 | 6MT | F | L | Hatchback FWD B 4164 T | | GDS34224 | Drive Shaft | | 36 | 26 | 56.1 | 48 | 581 | |
| | 2014.04-2015.12 | 6MT | F | L/R | Hatchback FWD B 4164 T | | GCO34194 | Outer Joint | | 36 | 24 | 56.1 | 48 | 59 | M |
| | 2014.04-2015.12 | 6MT | F | L | Hatchback FWD B 4164 T | | GCI34111 | Inner Joint | | 26 | 24 | 40 | 61 | 112.5 | |
| | 2014.04-2015.12 | AT | F | L | Hatchback FWD B 4164 T | | GDS62111 | Drive Shaft | | 36 | 28 | 56.1 | 48 | 578 | |
| | 2014.04-2015.12 | AT | F | R | Hatchback FWD B 4164 T | | GDS62129 | Drive Shaft | | 36 | 28 | 56.1 | 48 | 920 | |
| | 2014.04-2015.12 | AT | F | L | Hatchback FWD B 4164 T | | GCI62056 | Inner Joint | | 28 | 24 | 33.8 | 80 | 95.5 | |
| | 2014.04-2015.12 | AT | F | R | Hatchback FWD B 4164 T | | GCI62068 | Inner Joint | | 28 | 24 | 33.8 | 447 | 98.5 | |
| | 2014.04-2015.12 | MT | F | R | Hatchback FWD B 4164 T | | GDS62110 | Drive Shaft | | 36 | 26 | 56.1 | 48 | 921 | |
| | 2014.04-2015.12 | MT | F | R | Hatchback FWD B 4164 T | | GCI62055 | Inner Joint | | 26 | 24 | 40 | 447.5 | 98.5 | |
| 1.8 (85 kw) | 1995.07-1999.08 | AT | F | L/R | Estate FWD B4184S/B4184S3 | | GCO62003 | Outer Joint | 43T | 25 | 25 | 54 | 95 | 61 | O |
| | 1995.07-1999.08 | MT | F | L | Estate FWD B4184S/B4184S3 | | GDS62004 | Drive Shaft | 43T | 25 | 30 | 54 | 95 | 628.7 | |

| | YEAR | TRANSM. | F/R | L/R | BODY STYLE & DRIVE TYPE & ENGINE | REMARKS | G-AP Ref. | PRODUCT | ABS | Technical Specifications A | B | C | H | L | P |
|---|---|---|---|---|---|---|---|---|---|---|---|---|---|---|---|
| **VOLVO** **V40** | | | | | | | | | | | | | | | |
| 1.8 (85 kw) | 1995.07-1999.08 | MT | F | L/R | Estate FWD B4184S/B4184S3 | | GCO39021 | Outer Joint | | 25 | 29 | 54 | 94.5 | 64.5 | O |
| | 2001.06-2003.08 | 5MT | F | R | Estate FWD B4184S10 | | GDS50421 | Drive Shaft | 43T | 25 | 23 | 54 | 94.5 | 813 | |
| | 2001.06-2003.08 | | F | L/R | Estate FWD B4184S10 | | GCO39021 | Outer Joint | | 25 | 29 | 54 | 94.5 | 64.5 | O |
| 1.8 (88 kw) | 2000.11-2004.08 | 5MT | F | L | Estate FWD B4184S9 | | GDS62023 | Drive Shaft | 43T | 25 | 30 | 54 | 95 | 628.7 | |
| | 2000.11-2004.08 | 5MT | F | R | Estate FWD B4184S9 | | GDS50421 | Drive Shaft | 43T | 25 | 23 | 54 | 94.5 | 813 | |
| 1.8 (90 kw) | 1998.04-2004.06 | AT | F | L | Estate FWD B4184SJ | Trans. code:AW55 | GCI62032 | Inner Joint | | 26 | 34 | 40 | 67.5 | 98.5 | |
| | 1998.04-2004.06 | AT/MT | F | L/R | Estate FWD B4184SJ | | GCO62011 | Outer Joint | 43T | 25 | 33 | 56.3 | 99 | 61.5 | M |
| | 1998.04-2004.06 | MT | F | L | Estate FWD B4184SJ | ABS Ring Ø [mm]:82 | GDS62023 | Drive Shaft | 43T | 25 | 30 | 54 | 95 | 628.7 | |
| | 1998.04-2004.06 | MT | F | R | Estate FWD B4184SJ | | GDS39096 | Drive Shaft | 43T | 25 | 25 | 54 | 95.5 | 937 | |
| | 1998.04-2004.06 | MT | F | R | Estate FWD B4184SJ | ABS Ring Ø [mm]:82 | GDS50421 | Drive Shaft | 43T | 25 | 23 | 54 | 94.5 | 813 | |
| | 1998.04-2004.06 | MT | F | R | Estate FWD B4184SJ | | GDS62021 | Drive Shaft | 43T | 25 | 26 | 54 | 95 | 945 | |
| | 1998.04-2004.06 | MT | F | L/R | Estate FWD B4184SJ | ABS Ring Ø [mm]:82 | GCO39021 | Outer Joint | | 25 | 29 | 54 | 94.5 | 64.5 | O |
| | 1998.04-2004.06 | MT | F | L/R | Estate FWD B4184SJ | ABS Ring Ø [mm]:82 | GCO39100 | Outer Joint | 43T | 25 | 23 | 54 | 95.5 | 64 | M |
| | 1998.04-2004.06 | MT | F | | Estate FWD B4184SJ | | GCO99230 | Outer Joint | 43T | 25 | 29 | 54 | 95 | 60 | O |
| | 1999.03-2004.06 | AT | F | L | Estate FWD B4184S2 | | GCI62032 | Inner Joint | | 26 | 34 | 40 | 67.5 | 98.5 | |
| | 1999.03-2004.06 | AT/MT | F | L/R | Estate FWD B4184S2 | | GCO62008 | Outer Joint | 43T | 25 | 33 | 54 | 95 | 61 | M |
| | 1999.03-2004.06 | MT | F | L | Estate FWD B4184S2 | Chassis no. to:834210;Trans. side without housing | GDS62023 | Drive Shaft | 43T | 25 | 30 | 54 | 95 | 628.7 | |
| | 1999.03-2004.06 | MT | F | L | Estate FWD B4184S2 | Model year from:2003 | GDS62072 | Drive Shaft | 43T | 25 | 26 | 54 | 95 | 599 | |
| | 1999.03-2004.06 | MT | F | R | Estate FWD B4184S2 | Trans. ID:M5M42 | GDS39096 | Drive Shaft | 43T | 25 | 25 | 54 | 95.5 | 937 | |
| | 1999.03-2004.06 | MT | F | R | Estate FWD B4184S2 | Model year to:2000 | GDS50421 | Drive Shaft | 43T | 25 | 23 | 54 | 94.5 | 813 | |
| | 1999.03-2004.06 | MT | F | R | Estate FWD B4184S2 | Model year from:2003 | GDS62021 | Drive Shaft | 43T | 25 | 26 | 54 | 95 | 945 | |
| | 1999.03-2004.06 | MT | F | L/R | Estate FWD B4184S2 | | GCO39021 | Outer Joint | | 25 | 29 | 54 | 94.5 | 64.5 | O |
| | 1999.03-2004.06 | MT | F | L/R | Estate FWD B4184S2 | Date to:2003.12 | GCO39100 | Outer Joint | 43T | 25 | 23 | 54 | 95.5 | 64 | M |
| | 1999.03-2004.06 | 5MT | F | L | Estate FWD B4184S9 | | GDS62023 | Drive Shaft | 43T | 25 | 30 | 54 | 95 | 628.7 | |
| | 1999.03-2004.06 | 5MT | F | R | Estate FWD B4184S9 | | GDS50421 | Drive Shaft | 43T | 25 | 23 | 54 | 94.5 | 813 | |
| 1.8 (92 kw) | 1997.10-2001.10 | AT | F | L | Estate FWD B4184SM | Date from:2000.01;Trans. code:AW55 | GCI62032 | Inner Joint | | 26 | 34 | 40 | 67.5 | 98.5 | |
| | 1997.10-2001.10 | AT/MT | F | L/R | Estate FWD B4184SM | Date to:2001.10 | GCO62008 | Outer Joint | 43T | 25 | 33 | 54 | 95 | 61 | M |
| | 1997.10-2001.10 | MT | F | L | Estate FWD B4184SM | ABS Ring Ø [mm]:82 | GDS62023 | Drive Shaft | 43T | 25 | 30 | 54 | 95 | 628.7 | |
| | 1997.10-2001.10 | MT | F | R | Estate FWD B4184SM | | GDS39096 | Drive Shaft | 43T | 25 | 25 | 54 | 95.5 | 937 | |
| | 1997.10-2001.10 | MT | F | R | Estate FWD B4184SM | ABS Ring Ø [mm]:78 | GDS39255 | Drive Shaft | 43T | 25 | 23 | 54 | 95 | 816 | |
| | 1997.10-2001.10 | MT | F | R | Estate FWD B4184SM | ABS Ring Ø [mm]:82 | GDS50421 | Drive Shaft | 43T | 25 | 23 | 54 | 94.5 | 813 | |
| | 1997.10-2001.10 | MT | F | R | Estate FWD B4184SM | | GDS62021 | Drive Shaft | 43T | 25 | 26 | 54 | 95 | 945 | |
| | 1997.10-2001.10 | MT | F | L/R | Estate FWD B4184SM | | GCO39100 | Outer Joint | 43T | 25 | 23 | 54 | 95.5 | 64 | M |
| | 1997.10-2001.10 | MT | F | | Estate FWD B4184SM | | GCO99230 | Outer Joint | 43T | 25 | 29 | 54 | 95 | 60 | O |
| 1.9 (66 kw) | 1996.01-1999.09 | 5MT | F | L/R | Estate FWD D4192T | | GCO39021 | Outer Joint | | 25 | 29 | 54 | 94.5 | 64.5 | O |
| | 1996.01-1999.09 | MT | F | L | Estate FWD D4192T | | GDS62009 | Drive Shaft | 48T | 36 | 26 | 56.5 | 48 | 523 | |
| | 1996.01-1999.09 | MT | F | L | Estate FWD D4192T | | GCO62010 | Outer Joint | 48T | 36 | 33 | 56.5 | 48 | 58 | M |
| 1.9 (70 kw) | 1999.01-2000.07 | 5MT | F | R | Estate FWD D4192T2 | | GDS50421 | Drive Shaft | 43T | 25 | 23 | 54 | 94.5 | 813 | |
| | 1999.01-2000.07 | AT/MT | F | L/R | Estate FWD D4192T2 | | GCO62012 | Outer Joint | 43T | 26 | 27 | 56.5 | 98 | 66.5 | M |
| | 1999.01-2000.07 | MT | F | L | Estate FWD D4192T2 | | GDS62004 | Drive Shaft | 43T | 25 | 30 | 54 | 95 | 628.7 | |
| | 1999.01-2000.07 | MT | F | L | Estate FWD D4192T2 | | GDS62023 | Drive Shaft | 43T | 25 | 30 | 54 | 95 | 628.7 | |
| | 1999.01-2000.07 | MT | F | L/R | Estate FWD D4192T2 | ABS Ring Ø [mm]:82 | GCO39021 | Outer Joint | | 25 | 29 | 54 | 94.5 | 64.5 | O |
| 1.9 (75 kw) | 2000.05-2004.06 | 5MT | F | L | Estate FWD D4192T4 | | GDS62064 | Drive Shaft | 43T | 26 | 26 | 56.5 | 98 | 607 | |
| | 2000.05-2004.06 | 5MT | F | L/R | Estate FWD D4192T4 | | GCO62012 | Outer Joint | 43T | 26 | 27 | 56.5 | 98 | 66.5 | M |
| 1.9 (85 kw) | 2000.07-2004.06 | 5MT | F | L | Estate FWD D4192T3 | | GDS62064 | Drive Shaft | 43T | 26 | 26 | 56.5 | 98 | 607 | |
| | 2000.07-2004.06 | 5MT | F | L/R | Estate FWD D4192T3 | | GCO62012 | Outer Joint | 43T | 26 | 27 | 56.5 | 98 | 66.5 | M |
| 1.9 (147 kw) | 1997.10-2000.12 | AT | F | L | Estate FWD B4194T/B4194T2 | For Enginecode:B4194T2,Chassis no. from:600000 | GDS62089 | Drive Shaft | 43T | 26 | 26 | 56.5 | 98 | 593 | |
| | 1997.10-2000.12 | AT | F | L | Estate FWD B4194T/B4194T2 | For Enginecode:B4194T2,Chassis no. from:327171,Chassis no. to:599999 | GDS62118 | Drive Shaft | 43T | 26 | 26 | 56.5 | 98 | 600 | |
| | 1997.10-2000.12 | AT | F | R | Estate FWD B4194T/B4194T2 | For Enginecode:B4194T2,Chassis no. to:600204 | GDS62044 | Drive Shaft | 43T | 26 | 26 | 56.5 | 98 | 955 | |
| | 1997.10-2000.12 | AT | F | R | Estate FWD B4194T/B4194T2 | For Engine code:B4194T2;Chassis no. to:600204 | GCI18171 | Inner Joint | | 26 | 26 | 40 | 429.5 | 93 | |
| | 1997.10-2000.12 | AT/MT | F | L/R | Estate FWD B4194T/B4194T2 | Date from:1997.10 | GCO62012 | Outer Joint | 43T | 26 | 27 | 56.5 | 98 | 66.5 | M |
| | 1997.10-2000.12 | MT | F | L | Estate FWD B4194T/B4194T2 | | GDS62144 | Drive Shaft | 43T | 26 | 26 | 56.5 | 98 | 599 | |
| | 1997.10-2000.12 | | F | L/R | Estate FWD B4194T/B4194T2 | For Engine code:B4194T | GCO62003 | Outer Joint | 43T | 25 | 25 | 54 | 95 | 61 | O |
| 2.0 (88 kw) | 2015.02-2019.08 | 6AT | F | L | Hatchback FWD D 4204 T8;D 4204 T13 | | GDS83219 | Drive Shaft | | 36 | 26 | 56.1 | 48 | 558 | |
| | 2015.02-2019.08 | 6AT | F | R | Hatchback FWD D 4204 T8;D 4204 T13 | | GDS83220 | Drive Shaft | | 36 | 26 | 56.1 | 48 | 935 | |
| | 2015.02-2019.08 | 6AT | F | L/R | Hatchback FWD D 4204 T8;D 4204 T13 | | GCO62049 | Outer Joint | | 36 | 26 | 56.1 | 48 | 64 | M |
| | 2015.02-2019.08 | 6AT | F | L | Hatchback FWD D 4204 T8;D 4204 T13 | | GCI82187 | Inner Joint | | 26 | 24 | 31 | 72 | 94 | |
| | 2015.02-2019.08 | 6AT | F | R | Hatchback FWD D 4204 T8;D 4204 T13 | | GCI82186 | Inner Joint | | 26 | 24 | 31 | 469 | 98 | |
| | 2015.02-2019.08 | 6MT | F | L | Hatchback FWD D 4204 T8;D 4204 T13 | Chassis no. from:276643,Trans. code:M66 | GDS56169 | Drive Shaft | | 36 | 31 | 56.1 | 48 | 577 | |
| | 2015.02-2019.08 | 6MT | F | L | Hatchback FWD D 4204 T8;D 4204 T13 | Trans. code:M76 | GDS56785 | Drive Shaft | | 36 | 28 | 56.1 | 48 | 571 | |
| | 2015.02-2019.08 | 6MT | F | L | Hatchback FWD D 4204 T8;D 4204 T13 | Chassis no. to:276642,Trans. code:M66 | GDS62122 | Drive Shaft | | 36 | 31 | 56.1 | 48 | 586 | |
| | 2015.02-2019.08 | 6MT | F | R | Hatchback FWD D 4204 T8;D 4204 T13 | Trans. code:M76 | GDS57906 | Drive Shaft | | 36 | 28 | 56.1 | 48 | 949 | |
| | 2015.02-2019.08 | 6MT | F | R | Hatchback FWD D 4204 T8;D 4204 T13 | Chassis no. to:276642,Trans. code:M66 | GDS62131 | Drive Shaft | | 36 | 28 | 56.1 | 48 | 936 | |
| | 2015.02-2019.08 | 6MT | F | R | Hatchback FWD D 4204 T8;D 4204 T13 | Chassis no. from:276643,Trans. code:M66 | GDS62135 | Drive Shaft | | 36 | 28 | 56.1 | 48 | 930 | |
| | 2015.02-2019.08 | 6MT | F | L/R | Hatchback FWD D 4204 T8;D 4204 T13 | Chassis no. from:276643,Trans. code:M66;Trans. code:M76 | GCO34194 | Outer Joint | | 36 | 24 | 56.1 | 48 | 59 | M |

| | YEAR | TRANSM. | F/R | L/R | BODY STYLE & DRIVE TYPE & ENGINE | REMARKS | G-AP Ref. | PRODUCT | ABS | Technical Specifications | | | | | |
|---|---|---|---|---|---|---|---|---|---|---|---|---|---|---|---|
| | | | | | | | | | | A | B | C | H | L | P |
| **VOLVO** **V40** | | | | | | | | | | | | | | | |
| 2.0 (88 kw) | 2015.02-2019.08 | 6MT | F | L/R | Hatchback FWD D 4204 T8;D 4204 T13 | Chassis no. to:276642,Trans. code:M66 | GCO62049 | Outer Joint | | 36 | 26 | 56.1 | 48 | 64 | M |
| | 2015.02-2019.08 | 6MT | F | L | Hatchback FWD D 4204 T8;D 4204 T13 | Chassis no. to:276642,Trans. code:M66 | GCI62073 | Inner Joint | | 31 | 26 | 44 | 79 | 105.5 | |
| | 2015.02-2019.08 | 6MT | F | L | Hatchback FWD D 4204 T8;D 4204 T13 | Chassis no. from:276643,Trans. code:M66 | GCI83116 | Inner Joint | | 31 | 24 | 44 | 79 | 101.5 | |
| | 2015.02-2019.08 | 6MT | F | L | Hatchback FWD D 4204 T8;D 4204 T13 | Trans. code:M76 | GCI83489 | Inner Joint | | 28 | 24 | 40 | 65.5 | 110 | |
| | 2015.02-2019.08 | 6MT | F | R | Hatchback FWD D 4204 T8;D 4204 T13 | Chassis no. to:276642,Trans. code:M66 | GCI62070 | Inner Joint | | 28 | 26 | 40 | 469 | 95 | |
| | 2015.02-2019.08 | 6MT | F | R | Hatchback FWD D 4204 T8;D 4204 T13 | Chassis no. from:276643,Trans. code:M66 | GCI62074 | Inner Joint | | 28 | 24 | 40 | 470 | 98 | |
| | 2015.02-2019.08 | 6MT | F | R | Hatchback FWD D 4204 T8;D 4204 T13 | Trans. code:M76 | GCI83914 | Inner Joint | | 28 | 24 | 40 | 484 | 98 | |
| 2.0 (90 kw) | 2015.02-2019.08 | 6MT | F | L | Hatchback FWD B 4204 T38;B 4204 T17 | Trans. code:M76 | GDS56785 | Drive Shaft | | 36 | 28 | 56.1 | 48 | 571 | |
| | 2015.02-2019.08 | 6MT | F | L | Hatchback FWD B 4204 T38;B 4204 T17 | Trans. code:M66 | GDS62122 | Drive Shaft | | 36 | 31 | 56.1 | 48 | 586 | |
| | 2015.02-2019.08 | 6MT | F | R | Hatchback FWD B 4204 T38;B 4204 T17 | Trans. code:M76 | GDS57906 | Drive Shaft | | 36 | 28 | 56.1 | 48 | 949 | |
| | 2015.02-2019.08 | 6MT | F | R | Hatchback FWD B 4204 T38;B 4204 T17 | Trans. code:M66 | GDS62131 | Drive Shaft | | 36 | 28 | 56.1 | 48 | 936 | |
| | 2015.02-2019.08 | 6MT | F | L/R | Hatchback FWD B 4204 T38;B 4204 T17 | Trans. code:M76 | GCO34194 | Outer Joint | | 36 | 24 | 56.1 | 48 | 59 | M |
| | 2015.02-2019.08 | 6MT | F | L/R | Hatchback FWD B 4204 T38;B 4204 T17 | Trans. code:M66 | GCO62049 | Outer Joint | | 36 | 26 | 56.1 | 48 | 64 | M |
| | 2015.02-2019.08 | 6MT | F | L | Hatchback FWD B 4204 T38;B 4204 T17 | Trans. code:M66 | GCI62073 | Inner Joint | | 31 | 26 | 44 | 79 | 105.5 | |
| | 2015.02-2019.08 | 6MT | F | L | Hatchback FWD B 4204 T38;B 4204 T17 | Trans. code:M76 | GCI83489 | Inner Joint | | 28 | 24 | 40 | 65.5 | 110 | |
| | 2015.02-2019.08 | 6MT | F | R | Hatchback FWD B 4204 T38;B 4204 T17 | Trans. code:M66 | GCI62070 | Inner Joint | | 28 | 26 | 40 | 469 | 95 | |
| | 2015.02-2019.08 | 6MT | F | R | Hatchback FWD B 4204 T38;B 4204 T17 | Trans. code:M76 | GCI83914 | Inner Joint | | 28 | 24 | 40 | 484 | 98 | |
| 2.0 (100 kw) | 1996.11-2004.06 | AT | F | L/R | Estate FWD B4204S/B4204S2 | Model year from:2001 | GCO62003 | Outer Joint | 43T | 25 | 25 | 54 | 95 | 61 | O |
| | 1996.11-2004.06 | AT | F | L | Estate FWD B4204S/B4204S2 | Model year from:2001 | GCI62032 | Inner Joint | | 26 | 34 | 40 | 67.5 | 98.5 | |
| | 1996.11-2004.06 | AT/MT | F | L/R | Estate FWD B4204S/B4204S2 | Transmission:AT,Model year from:2001 | GCO62008 | Outer Joint | 43T | 25 | 33 | 54 | 95 | 61 | M |
| | 1996.11-2004.06 | MT | F | L | Estate FWD B4204S/B4204S2 | | GDS62072 | Drive Shaft | 43T | 25 | 26 | 54 | 95 | 599 | |
| | 1996.11-2004.06 | MT | F | R | Estate FWD B4204S/B4204S2 | Model year from:2001 | GDS62021 | Drive Shaft | 43T | 25 | 26 | 54 | 95 | 945 | |
| | 1996.11-2004.06 | MT/AT | F | R | Estate FWD B4204S/B4204S2 | Transmission:MT,Model year to:2000;Transmission:AT,Model year from:2001 | GDS62035 | Drive Shaft | 43T | 25 | 26 | 54 | 95 | 948 | |
| 2.0 (103 kw) | 1996.11-1999.12 | AT | F | | Estate FWD B4204S | | GCO99262 | Outer Joint | 43T | 25 | 25 | 54 | 95 | 61 | O |
| | 1996.11-1999.12 | AT | F | L | Estate FWD B4204S | Trans. code:AW55 | GCI62032 | Inner Joint | | 26 | 34 | 40 | 67.5 | 98.5 | |
| | 1996.11-1999.12 | AT/MT | F | L/R | Estate FWD B4204S | Date from:1996.11 | GCO62003 | Outer Joint | 43T | 25 | 25 | 54 | 95 | 61 | O |
| | 1996.11-1999.12 | MT | F | L | Estate FWD B4204S | | GDS62004 | Drive Shaft | 43T | 25 | 30 | 54 | 95 | 628.7 | |
| | 1996.11-1999.12 | MT | F | L | Estate FWD B4204S | ABS Ring Ø [mm]:82 | GDS62023 | Drive Shaft | 43T | 25 | 30 | 54 | 95 | 628.7 | |
| | 1996.11-1999.12 | MT | F | L | Estate FWD B4204S | | GDS62072 | Drive Shaft | 43T | 25 | 26 | 54 | 95 | 599 | |
| | 1996.11-1999.12 | MT | F | R | Estate FWD B4204S | ABS Ring Ø [mm]:82 | GDS50421 | Drive Shaft | 43T | 25 | 23 | 54 | 94.5 | 813 | |
| | 1996.11-1999.12 | MT | F | R | Estate FWD B4204S | | GDS62021 | Drive Shaft | 43T | 25 | 26 | 54 | 95 | 945 | |
| | 1996.11-1999.12 | MT | F | R | Estate FWD B4204S | | GDS62035 | Drive Shaft | 43T | 25 | 26 | 54 | 95 | 948 | |
| | 1996.11-1999.12 | MT | F | | Estate FWD B4204S | | GCO99230 | Outer Joint | 43T | 25 | 29 | 54 | 95 | 60 | O |
| 2.0 (110 kw) | 2012.03-2015.03 | 6AT | F | L | Hatchback FWD D 5204 T6 | | GDS62116 | Drive Shaft | | 36 | 31 | 56.1 | 48 | 517 | |
| | 2012.03-2015.03 | 6AT | F | R | Hatchback FWD D 5204 T6 | | GDS62132 | Drive Shaft | | 36 | 28 | 56.1 | 48 | 968 | |
| | 2012.03-2015.03 | 6AT | F | L | Hatchback FWD D 5204 T6 | | GCI62061 | Inner Joint | | 31 | 26 | 36.2 | 68 | 87 | |
| | 2012.03-2015.03 | 6AT | F | R | Hatchback FWD D 5204 T6 | | GCI62071 | Inner Joint | | 28 | 26 | 33 | 525 | 100 | |
| | 2012.03-2015.03 | 6MT | F | L | Hatchback FWD D 5204 T6 | | GDS62087 | Drive Shaft | | 36 | 26 | 56.1 | 48 | 544 | |
| | 2012.03-2015.03 | 6MT | F | R | Hatchback FWD D 5204 T6 | | GDS62120 | Drive Shaft | | 36 | 26 | 56.1 | 48 | 966 | |
| | 2012.03-2015.03 | 6MT | F | L/R | Hatchback FWD D 5204 T6 | | GCO62049 | Outer Joint | | 36 | 26 | 56.1 | 48 | 64 | M |
| | 2012.03-2015.03 | 6MT | F | L | Hatchback FWD D 5204 T6 | | GCI62050 | Inner Joint | | 26 | 26 | 40 | 67 | 104 | |
| | 2013.09-2015.12 | AT | F | L | Hatchback Van FWD D 5204 T6 | | GDS62116 | Drive Shaft | | 36 | 31 | 56.1 | 48 | 517 | |
| | 2013.09-2015.12 | AT | F | R | Hatchback Van FWD D 5204 T6 | | GDS62132 | Drive Shaft | | 36 | 28 | 56.1 | 48 | 968 | |
| | 2013.09-2015.12 | MT | F | L | Hatchback Van FWD D 5204 T6 | | GDS62087 | Drive Shaft | | 36 | 26 | 56.1 | 48 | 544 | |
| | 2013.09-2015.12 | MT | F | R | Hatchback Van FWD D 5204 T6 | | GDS62120 | Drive Shaft | | 36 | 26 | 56.1 | 48 | 966 | |
| | 2013.09-2015.12 | MT | F | L | Hatchback Van FWD D 5204 T6 | | GCO62049 | Outer Joint | | 36 | 26 | 56.1 | 48 | 64 | M |
| | 2013.09-2015.12 | MT | F | L | Hatchback Van FWD D 5204 T6 | | GCI62050 | Inner Joint | | 26 | 26 | 40 | 67 | 104 | |
| | 2015.04-2019.08 | 6AT | F | L | Hatchback FWD D 4204 T9;D 4204 T16 | | GDS83219 | Drive Shaft | | 36 | 26 | 56.1 | 48 | 558 | |
| | 2015.04-2019.08 | 6AT | F | R | Hatchback FWD D 4204 T9;D 4204 T16 | | GDS83220 | Drive Shaft | | 36 | 26 | 56.1 | 48 | 935 | |
| | 2015.04-2019.08 | 6AT | F | L | Hatchback FWD D 4204 T9;D 4204 T16 | | GCI82187 | Inner Joint | | 26 | 24 | 31 | 72 | 94 | |
| | 2015.04-2019.08 | 6AT | F | R | Hatchback FWD D 4204 T9;D 4204 T16 | | GCI82186 | Inner Joint | | 26 | 24 | 31 | 469 | 98 | |
| | 2015.04-2019.08 | 6MT | F | L | Hatchback FWD D 4204 T9;D 4204 T16 | Trans. code:M76 | GDS56785 | Drive Shaft | | 36 | 28 | 56.1 | 48 | 571 | |
| | 2015.04-2019.08 | 6MT | F | L | Hatchback FWD D 4204 T9;D 4204 T16 | Trans. code:M66 | GDS62122 | Drive Shaft | | 36 | 31 | 56.1 | 48 | 586 | |
| | 2015.04-2019.08 | 6MT | F | R | Hatchback FWD D 4204 T9;D 4204 T16 | Trans. code:M76 | GDS57906 | Drive Shaft | | 36 | 28 | 56.1 | 48 | 949 | |
| | 2015.04-2019.08 | 6MT | F | R | Hatchback FWD D 4204 T9;D 4204 T16 | Trans. code:M66 | GDS62131 | Drive Shaft | | 36 | 28 | 56.1 | 48 | 936 | |
| | 2015.04-2019.08 | 6MT | F | L/R | Hatchback FWD D 4204 T9;D 4204 T16 | Trans. code:M76 | GCO34194 | Outer Joint | | 36 | 24 | 56.1 | 48 | 59 | M |
| | 2015.04-2019.08 | 6MT | F | L | Hatchback FWD D 4204 T9;D 4204 T16 | Trans. code:M66 | GCI62073 | Inner Joint | | 31 | 26 | 44 | 79 | 105.5 | |
| | 2015.04-2019.08 | 6MT | F | L | Hatchback FWD D 4204 T9;D 4204 T16 | Trans. code:M76 | GCI83489 | Inner Joint | | 28 | 24 | 40 | 65.5 | 110 | |
| | 2015.04-2019.08 | 6MT | F | R | Hatchback FWD D 4204 T9;D 4204 T16 | Trans. code:M66 | GCI62070 | Inner Joint | | 28 | 26 | 40 | 469 | 95 | |
| | 2015.04-2019.08 | 6MT | F | R | Hatchback FWD D 4204 T9;D 4204 T16 | Trans. code:M76 | GCI83914 | Inner Joint | | 28 | 24 | 40 | 484 | 98 | |
| | 2015.04-2019.08 | 6MT/6AT | F | L/R | Hatchback FWD D 4204 T9;D 4204 T16 | Transmission:6MT,Trans. code:M66 | GCO62049 | Outer Joint | | 36 | 26 | 56.1 | 48 | 64 | M |
| 2.0 (112 kw) | 2015.02-2019.08 | 6MT | F | L | Hatchback FWD B 4204 T37;B 4204 T33 | | GDS56785 | Drive Shaft | | 36 | 28 | 56.1 | 48 | 571 | |
| | 2015.02-2019.08 | 6MT | F | R | Hatchback FWD B 4204 T37;B 4204 T33 | | GDS57906 | Drive Shaft | | 36 | 28 | 56.1 | 48 | 949 | |
| | 2015.02-2019.08 | 6MT | F | L/R | Hatchback FWD B 4204 T37;B 4204 T33 | | GCO34194 | Outer Joint | | 36 | 24 | 56.1 | 48 | 59 | M |
| | 2015.02-2019.08 | 6MT | F | L | Hatchback FWD B 4204 T37;B 4204 T33 | | GCI83489 | Inner Joint | | 28 | 24 | 40 | 65.5 | 110 | |

| | YEAR | TRANSM. | F/R | L/R | BODY STYLE & DRIVE TYPE & ENGINE | REMARKS | G-AP Ref. | PRODUCT | ABS | Technical Specifications A | B | C | H | L | P |
|---|---|---|---|---|---|---|---|---|---|---|---|---|---|---|---|
| **VOLVO** **V40** | | | | | | | | | | | | | | | |
| 2.0 (112 kw) | 2015.02-2019.08 | 6MT | F | R | Hatchback FWD B 4204 T37;B 4204 T33 | | GCI83914 | Inner Joint | | 28 | 24 | 40 | 484 | 98 | |
| 2.0 (118 kw) | 1997.10-2004.01 | AT | F | L | Estate FWD B4204T | Chassis no. from:946024 | GDS62089 | Drive Shaft | 43T | 26 | 26 | 56.5 | 98 | 593 | |
| | 1997.10-2004.01 | AT | F | L | Estate FWD B4204T | Chassis no. from:327171,Chassis no. to:946023 | GDS62118 | Drive Shaft | 43T | 26 | 26 | 56.5 | 98 | 600 | |
| | 1997.10-2004.01 | AT | F | R | Estate FWD B4204T | Chassis no. to:600204 | GDS62044 | Drive Shaft | 43T | 26 | 26 | 56.5 | 98 | 955 | |
| | 1997.10-2004.01 | AT | F | R | Estate FWD B4204T | Chassis no. to:600204 | GCI18171 | Inner Joint | | 26 | 26 | 40 | 429.5 | 93 | |
| | 1997.10-2004.01 | AT/MT | F | L/R | Estate FWD B4204T | | GCO62012 | Outer Joint | 43T | 26 | 27 | 56.5 | 98 | 66.5 | M |
| | 1997.10-2004.01 | MT | F | L | Estate FWD B4204T | | GDS62144 | Drive Shaft | 43T | 26 | 26 | 56.5 | 98 | 599 | |
| | 1997.10-2004.01 | | F | L/R | Estate FWD B4204T | | GCO62003 | Outer Joint | 43T | 25 | 25 | 54 | 95 | 61 | O |
| 2.0 (120 kw) | 2001.06-2004.06 | AT | F | L | Estate FWD B4204T3 | Chassis no. from:946024 | GDS62089 | Drive Shaft | 43T | 26 | 26 | 56.5 | 98 | 593 | |
| | 2001.06-2004.06 | AT | F | L | Estate FWD B4204T3 | | GDS62118 | Drive Shaft | 43T | 26 | 26 | 56.5 | 98 | 600 | |
| | 2001.06-2004.06 | AT | F | R | Estate FWD B4204T3 | | GDS62044 | Drive Shaft | 43T | 26 | 26 | 56.5 | 98 | 955 | |
| | 2001.06-2004.06 | AT | F | R | Estate FWD B4204T3 | Chassis no. to:600204 | GCI18171 | Inner Joint | | 26 | 26 | 40 | 429.5 | 93 | |
| | 2001.06-2004.06 | MT | F | L | Estate FWD B4204T3 | | GDS62064 | Drive Shaft | 43T | 26 | 26 | 56.5 | 98 | 607 | |
| | 2001.06-2004.06 | MT | F | R | Estate FWD B4204T3 | | GDS62035 | Drive Shaft | 43T | 25 | 26 | 54 | 95 | 948 | |
| | 2001.06-2004.06 | MT | F | L | Estate FWD B4204T3 | | GCO62012 | Outer Joint | 43T | 26 | 27 | 56.5 | 98 | 66.5 | M |
| 2.0 (121 kw) | 1999.10-2001.06 | AT | F | L | Estate FWD B4204T2 | Chassis no. from:600000 | GDS62089 | Drive Shaft | 43T | 26 | 26 | 56.5 | 98 | 593 | |
| | 1999.10-2001.06 | AT | F | L | Estate FWD B4204T2 | Chassis no. from:327171,Chassis no. to:599999 | GDS62118 | Drive Shaft | 43T | 26 | 26 | 56.5 | 98 | 600 | |
| | 1999.10-2001.06 | AT | F | R | Estate FWD B4204T2 | Chassis no. to:600204 | GDS62044 | Drive Shaft | 43T | 26 | 26 | 56.5 | 98 | 955 | |
| | 1999.10-2001.06 | AT | F | R | Estate FWD B4204T2 | Chassis no. to:600204 | GCI18171 | Inner Joint | | 26 | 26 | 40 | 429.5 | 93 | |
| | 1999.10-2001.06 | AT/MT | F | L/R | Estate FWD B4204T2 | Date from:1999.10;Date to:2001.06 | GCO62012 | Outer Joint | 43T | 26 | 27 | 56.5 | 98 | 66.5 | M |
| | 1999.10-2001.06 | MT | F | L | Estate FWD B4204T2 | | GDS62144 | Drive Shaft | 43T | 26 | 26 | 56.5 | 98 | 599 | |
| 2.0 (130 kw) | 2012.03-2014.12 | 6AT | F | L | Hatchback FWD D 5204 T4 | | GDS62116 | Drive Shaft | | 36 | 31 | 56.1 | 48 | 517 | |
| | 2012.03-2014.12 | 6AT | F | R | Hatchback FWD D 5204 T4 | | GDS62132 | Drive Shaft | | 36 | 28 | 56.1 | 48 | 968 | |
| | 2012.03-2014.12 | MT | F | L | Hatchback FWD D 5204 T4 | | GDS62087 | Drive Shaft | | 36 | 26 | 56.1 | 48 | 544 | |
| | 2012.03-2014.12 | MT | F | R | Hatchback FWD D 5204 T4 | | GDS62120 | Drive Shaft | | 36 | 26 | 56.1 | 48 | 966 | |
| | 2012.03-2014.12 | MT | F | L | Hatchback FWD D 5204 T4 | | GCO62049 | Outer Joint | | 36 | 26 | 56.1 | 48 | 64 | M |
| | 2012.03-2014.12 | MT | F | L | Hatchback FWD D 5204 T4 | | GCI62050 | Inner Joint | | 26 | 26 | 40 | 67 | 104 | |
| | 2013.09-2014.12 | AT | F | L | Hatchback Van FWD D 5204 T4 | | GDS62116 | Drive Shaft | | 36 | 31 | 56.1 | 48 | 517 | |
| | 2013.09-2014.12 | AT | F | R | Hatchback Van FWD D 5204 T4 | | GDS62132 | Drive Shaft | | 36 | 28 | 56.1 | 48 | 968 | |
| | 2013.09-2014.12 | MT | F | L | Hatchback Van FWD D 5204 T4 | | GDS62087 | Drive Shaft | | 36 | 26 | 56.1 | 48 | 544 | |
| | 2013.09-2014.12 | MT | F | R | Hatchback Van FWD D 5204 T4 | | GDS62120 | Drive Shaft | | 36 | 26 | 56.1 | 48 | 966 | |
| | 2013.09-2014.12 | MT | F | L | Hatchback Van FWD D 5204 T4 | | GCO62049 | Outer Joint | | 36 | 26 | 56.1 | 48 | 64 | M |
| | 2013.09-2014.12 | MT | F | L | Hatchback Van FWD D 5204 T4 | | GCI62050 | Inner Joint | | 26 | 26 | 40 | 67 | 104 | |
| 2.0 (132 kw) | 2013.07-2015.12 | AT | F | L | Hatchback FWD B 5204 T8 | | GDS62116 | Drive Shaft | | 36 | 31 | 56.1 | 48 | 517 | |
| | 2013.07-2015.12 | AT | F | R | Hatchback FWD B 5204 T8 | | GDS62132 | Drive Shaft | | 36 | 28 | 56.1 | 48 | 968 | |
| | 2013.07-2015.12 | AT | F | L/R | Hatchback FWD B 5204 T8 | | GCO62049 | Outer Joint | | 36 | 26 | 56.1 | 48 | 64 | M |
| | 2013.07-2015.12 | AT | F | L | Hatchback FWD B 5204 T8 | | GCI62061 | Inner Joint | | 31 | 26 | 36.2 | 68 | 87 | |
| | 2013.07-2015.12 | AT | F | R | Hatchback FWD B 5204 T8 | | GCI62071 | Inner Joint | | 28 | 26 | 33 | 525 | 100 | |
| 2.0 (140 kw) | 2014.05-2019.08 | 6MT | F | L | Hatchback FWD D 4204 T14 | Trans. code:M66 | GDS62122 | Drive Shaft | | 36 | 31 | 56.1 | 48 | 586 | |
| | 2014.05-2019.08 | 6MT | F | R | Hatchback FWD D 4204 T14 | Chassis no. to:92099;Trans. code:M66;Chassis no. to:276642;Trans. code:M66 | GDS62131 | Drive Shaft | | 36 | 28 | 56.1 | 48 | 936 | |
| | 2014.05-2019.08 | 6MT | F | L | Hatchback FWD D 4204 T14 | Trans. code:M66 | GCO62049 | Outer Joint | | 36 | 26 | 56.1 | 48 | 64 | M |
| | 2014.05-2019.08 | 6MT | F | R | Hatchback FWD D 4204 T14 | Chassis no. to:92099;Trans. code:M66;Chassis no. to:276642;Trans. code:M66 | GCO62049 | Outer Joint | | 36 | 26 | 56.1 | 48 | 64 | M |
| | 2014.05-2019.08 | 6MT | F | L | Hatchback FWD D 4204 T14 | Trans. code:M66 | GCI62073 | Inner Joint | | 31 | 26 | 44 | 79 | 105.5 | |
| | 2014.05-2019.08 | 6MT | F | R | Hatchback FWD D 4204 T14 | Chassis no. to:92099;Trans. code:M66;Chassis no. to:276642;Trans. code:M66 | GCI62070 | Inner Joint | | 28 | 26 | 40 | 469 | 95 | |
| | 2014.05-2019.08 | 8AT | F | R | Hatchback FWD D 4204 T14 | | GDS62130 | Drive Shaft | | 36 | 28 | 56.1 | 48 | 936 | |
| | 2014.05-2019.08 | 8AT | F | L | Hatchback FWD D 4204 T14 | | GCI62063 | Inner Joint | | 31 | 26 | 36.2 | 68 | 93 | |
| | 2014.05-2019.08 | AT | F | L | Hatchback FWD D 4204 T14 | Model:V40/V40 Cross Country | GDS62121 | Drive Shaft | | 36 | 31 | 56.1 | 48 | 562 | |
| | 2014.05-2019.08 | AT | F | L/R | Hatchback FWD D 4204 T14 | | GCO62049 | Outer Joint | | 36 | 26 | 56.1 | 48 | 64 | M |
| | 2014.05-2019.08 | AT | F | R | Hatchback FWD D 4204 T14 | Model:V40/V40 Cross Country | GCI62069 | Inner Joint | | 28 | 26 | 33 | 469 | 95 | |
| | 2015.08-2019.08 | 6AT | F | L | Hatchback FWD B 4204 T19 | | GDS83219 | Drive Shaft | | 36 | 26 | 56.1 | 48 | 558 | |
| | 2015.08-2019.08 | 6AT | F | R | Hatchback FWD B 4204 T19 | | GDS83220 | Drive Shaft | | 36 | 26 | 56.1 | 48 | 935 | |
| | 2015.08-2019.08 | 6AT | F | L/R | Hatchback FWD B 4204 T19 | | GCO62049 | Outer Joint | | 36 | 26 | 56.1 | 48 | 64 | M |
| | 2015.08-2019.08 | 6AT | F | L | Hatchback FWD B 4204 T19 | | GCI82187 | Inner Joint | | 26 | 24 | 31 | 72 | 94 | |
| | 2015.08-2019.08 | 6AT | F | R | Hatchback FWD B 4204 T19 | | GCI82186 | Inner Joint | | 26 | 24 | 31 | 469 | 98 | |
| | 2015.08-2019.08 | 6MT | F | L | Hatchback FWD B 4204 T19 | | GDS56785 | Drive Shaft | | 36 | 28 | 56.1 | 48 | 571 | |
| | 2015.08-2019.08 | 6MT | F | R | Hatchback FWD B 4204 T19 | | GDS57906 | Drive Shaft | | 36 | 28 | 56.1 | 48 | 949 | |
| | 2015.08-2019.08 | 6MT | F | L/R | Hatchback FWD B 4204 T19 | | GCO34194 | Outer Joint | | 36 | 24 | 56.1 | 48 | 59 | M |
| | 2015.08-2019.08 | 6MT | F | L | Hatchback FWD B 4204 T19 | | GCI83489 | Inner Joint | | 28 | 24 | 40 | 65.5 | 110 | |
| | 2015.08-2019.08 | 6MT | F | R | Hatchback FWD B 4204 T19 | | GCI83914 | Inner Joint | | 28 | 24 | 40 | 484 | 98 | |
| 2.0 (147 kw) | 2000.07-2004.06 | AT | F | L | Estate FWD B4204T5 | Chassis no. from:946024 | GDS62089 | Drive Shaft | 43T | 26 | 26 | 56.5 | 98 | 593 | |
| | 2000.07-2004.06 | AT | F | L | Estate FWD B4204T5 | | GDS62118 | Drive Shaft | 43T | 26 | 26 | 56.5 | 98 | 600 | |
| | 2000.07-2004.06 | AT | F | R | Estate FWD B4204T5 | | GDS62044 | Drive Shaft | 43T | 26 | 26 | 56.5 | 98 | 955 | |
| | 2000.07-2004.06 | AT | F | R | Estate FWD B4204T5 | Chassis no. to:600204 | GCI18171 | Inner Joint | | 26 | 26 | 40 | 429.5 | 93 | |
| | 2000.07-2004.06 | AT/MT | F | L/R | Estate FWD B4204T5 | | GCO62012 | Outer Joint | 43T | 26 | 27 | 56.5 | 98 | 66.5 | M |
| | 2000.07-2004.06 | MT | F | L | Estate FWD B4204T5 | | GDS62064 | Drive Shaft | 43T | 26 | 26 | 56.5 | 98 | 607 | |

| | YEAR | TRANSM. | F/R | L/R | BODY STYLE & DRIVE TYPE & ENGINE | REMARKS | G-AP Ref. | PRODUCT | ABS | Technical Specifications A | B | C | H | L | P |
|---|---|---|---|---|---|---|---|---|---|---|---|---|---|---|---|
| **VOLVO** | | | | | | | | | | | | | | | |
| **V40** | | | | | | | | | | | | | | | |
| 2.0 (147 kw) | 2000.07-2004.06 | MT | F | R | Estate FWD B4204T5 | | GDS62035 | Drive Shaft | 43T | 25 | 26 | 54 | 95 | 948 | |
| | 2014.05-2019.08 | 6MT | F | L | Hatchback FWD D 4204 T14 | Trans. code:M66 | GDS62122 | Drive Shaft | | 36 | 31 | 56.1 | 48 | 586 | |
| | 2014.05-2019.08 | 6MT | F | R | Hatchback FWD D 4204 T14 | Trans. code:M66 | GDS62131 | Drive Shaft | | 36 | 28 | 56.1 | 48 | 936 | |
| | 2014.05-2019.08 | 6MT | F | L/R | Hatchback FWD D 4204 T14 | Trans. code:M66 | GCO62049 | Outer Joint | | 36 | 26 | 56.1 | 48 | 64 | M |
| | 2014.05-2019.08 | 6MT | F | L | Hatchback FWD D 4204 T14 | Trans. code:M66 | GCI62073 | Inner Joint | | 31 | 26 | 44 | 79 | 105.5 | |
| | 2014.05-2019.08 | 6MT | F | R | Hatchback FWD D 4204 T14 | Trans. code:M66 | GCI62070 | Inner Joint | | 28 | 26 | 40 | 469 | 95 | |
| | 2014.05-2019.08 | 8AT | F | L | Hatchback FWD D 4204 T14 | | GDS62121 | Drive Shaft | | 36 | 31 | 56.1 | 48 | 562 | |
| | 2014.05-2019.08 | 8AT | F | R | Hatchback FWD D 4204 T14 | | GDS62130 | Drive Shaft | | 36 | 28 | 56.1 | 48 | 936 | |
| | 2014.05-2019.08 | 8AT | F | L/R | Hatchback FWD D 4204 T14 | | GCO62049 | Outer Joint | | 36 | 26 | 56.1 | 48 | 64 | M |
| | 2014.05-2019.08 | 8AT | F | L | Hatchback FWD D 4204 T14 | | GCI62063 | Inner Joint | | 31 | 26 | 36.2 | 68 | 93 | |
| | 2014.05-2019.08 | 8AT | F | R | Hatchback FWD D 4204 T14 | | GCI62069 | Inner Joint | | 28 | 26 | 33 | 469 | 95 | |
| 2.0 (157 kw) | 2013.03-2015.12 | 6AT | F | L | Hatchback FWD B 5204 T9 | | GCI62061 | Inner Joint | | 31 | 26 | 36.2 | 68 | 87 | |
| | 2013.03-2015.12 | 6AT | F | R | Hatchback FWD B 5204 T9 | | GCI62071 | Inner Joint | | 28 | 26 | 33 | 525 | 100 | |
| | 2013.03-2015.12 | | F | L | Hatchback FWD B 5204 T9 | | GDS62116 | Drive Shaft | | 36 | 31 | 56.1 | 48 | 517 | |
| | 2013.03-2015.12 | | F | R | Hatchback FWD B 5204 T9 | | GDS62132 | Drive Shaft | | 36 | 28 | 56.1 | 48 | 968 | |
| | 2013.03-2015.12 | | F | L/R | Hatchback FWD B 5204 T9 | | GCO62049 | Outer Joint | | 36 | 26 | 56.1 | 48 | 64 | M |
| 2.0 (180 kw) | 2014.05-2019.08 | 8AT | F | L | Hatchback FWD B 4204 T11;B 4204 T41 | | GCI62063 | Inner Joint | | 31 | 26 | 36.2 | 68 | 93 | |
| | 2014.05-2019.08 | AT | F | L | Hatchback FWD B 4204 T11;B 4204 T41 | | GDS62121 | Drive Shaft | | 36 | 31 | 56.1 | 48 | 562 | |
| | 2014.05-2019.08 | AT | F | R | Hatchback FWD B 4204 T11;B 4204 T41 | | GDS62130 | Drive Shaft | | 36 | 28 | 56.1 | 48 | 936 | |
| | 2014.05-2019.08 | AT | F | L/R | Hatchback FWD B 4204 T11;B 4204 T41 | | GCO62049 | Outer Joint | | 36 | 26 | 56.1 | 48 | 64 | M |
| | 2014.05-2019.08 | AT | F | R | Hatchback FWD B 4204 T11;B 4204 T41 | | GCI62069 | Inner Joint | | 28 | 26 | 33 | 469 | 95 | |
| 2.0 (186 kw) | 2014.05-2019.08 | 8AT | F | L | Hatchback FWD B 4204 T11 | | GDS62121 | Drive Shaft | | 36 | 31 | 56.1 | 48 | 562 | |
| | 2014.05-2019.08 | 8AT | F | R | Hatchback FWD B 4204 T11 | | GDS62130 | Drive Shaft | | 36 | 28 | 56.1 | 48 | 936 | |
| | 2014.05-2019.08 | 8AT | F | L/R | Hatchback FWD B 4204 T11 | | GCO62049 | Outer Joint | | 36 | 26 | 56.1 | 48 | 64 | M |
| | 2014.05-2019.08 | 8AT | F | L | Hatchback FWD B 4204 T11 | | GCI62063 | Inner Joint | | 31 | 26 | 36.2 | 68 | 93 | |
| 2.5 (183 kw) | 2014.01-2014.12 | AT | F | L | Hatchback FWD B 5254 T14 | | GDS62116 | Drive Shaft | | 36 | 31 | 56.1 | 48 | 517 | |
| | 2014.01-2014.12 | AT | F | R | Hatchback FWD B 5254 T14 | | GDS62132 | Drive Shaft | | 36 | 28 | 56.1 | 48 | 968 | |
| | 2014.01-2014.12 | AT | F | L/R | Hatchback FWD B 5254 T14 | | GCO62049 | Outer Joint | | 36 | 26 | 56.1 | 48 | 64 | M |
| | 2014.01-2014.12 | AT | F | L | Hatchback FWD B 5254 T14 | | GCI62061 | Inner Joint | | 31 | 26 | 36.2 | 68 | 87 | |
| | 2014.01-2014.12 | AT | F | R | Hatchback FWD B 5254 T14 | | GCI62071 | Inner Joint | | 28 | 26 | 33 | 525 | 100 | |
| 2.5 (187 kw) | 2012.12-2014.12 | 6AT | F | L | Hatchback FWD B 5254 T12 | | GDS62116 | Drive Shaft | | 36 | 31 | 56.1 | 48 | 517 | |
| | 2012.12-2014.12 | 6AT | F | R | Hatchback FWD B 5254 T12 | | GDS62132 | Drive Shaft | | 36 | 28 | 56.1 | 48 | 968 | |
| | 2012.12-2014.12 | 6AT | F | L/R | Hatchback FWD B 5254 T12 | | GCO62049 | Outer Joint | | 36 | 26 | 56.1 | 48 | 64 | M |
| | 2012.12-2014.12 | 6AT | F | L | Hatchback FWD B 5254 T12 | | GCI62061 | Inner Joint | | 31 | 26 | 36.2 | 68 | 87 | |
| | 2012.12-2014.12 | 6AT | F | R | Hatchback FWD B 5254 T12 | | GCI62071 | Inner Joint | | 28 | 26 | 33 | 525 | 100 | |
| **V40 Cross Country** | | | | | | | | | | | | | | | |
| 1.5 (112 kw) | 2015.04-2019.08 | 6AT | F | L | Hatchback FWD B 4154 T4;B 4154 T2 | | GDS83219 | Drive Shaft | | 36 | 26 | 56.1 | 48 | 558 | |
| | 2015.04-2019.08 | 6AT | F | R | Hatchback FWD B 4154 T4;B 4154 T2 | | GDS83220 | Drive Shaft | | 36 | 26 | 56.1 | 48 | 935 | |
| | 2015.04-2019.08 | 6AT | F | L/R | Hatchback FWD B 4154 T4;B 4154 T2 | | GCO62049 | Outer Joint | | 36 | 26 | 56.1 | 48 | 64 | M |
| | 2015.04-2019.08 | 6AT | F | L | Hatchback FWD B 4154 T4;B 4154 T2 | | GCI82187 | Inner Joint | | 26 | 24 | 31 | 72 | 94 | |
| | 2015.04-2019.08 | 6AT | F | R | Hatchback FWD B 4154 T4;B 4154 T2 | | GCI82186 | Inner Joint | | 26 | 24 | 31 | 469 | 98 | |
| 1.6 (84 kw) | 2012.10-2016.12 | 6DCT | F | L | Hatchback FWD D 4162 T | | GDS62111 | Drive Shaft | | 36 | 28 | 56.1 | 48 | 578 | |
| | 2012.10-2016.12 | 6DCT | F | R | Hatchback FWD D 4162 T | | GDS62128 | Drive Shaft | | 36 | 28 | 56.1 | 48 | 913 | |
| | 2012.10-2016.12 | 6DCT | F | L | Hatchback FWD D 4162 T | | GCI62056 | Inner Joint | | 28 | 24 | 33.8 | 80 | 95.5 | |
| | 2012.10-2016.12 | 6DCT | F | R | Hatchback FWD D 4162 T | | GCI62067 | Inner Joint | | 28 | 24 | 33.8 | 374.5 | 98.5 | |
| | 2012.10-2016.12 | 6MT | F | L | Hatchback FWD D 4162 T | | GDS34224 | Drive Shaft | | 36 | 26 | 56.1 | 48 | 581 | |
| | 2012.10-2016.12 | 6MT | F | R | Hatchback FWD D 4162 T | | GDS34270 | Drive Shaft | | 36 | 26 | 56.1 | 48 | 918 | |
| | 2012.10-2016.12 | 6MT | F | L/R | Hatchback FWD D 4162 T | | GCO34194 | Outer Joint | | 36 | 24 | 56.1 | 48 | 59 | M |
| | 2012.10-2016.12 | 6MT | F | L | Hatchback FWD D 4162 T | | GCI34111 | Inner Joint | | 26 | 24 | 40 | 61 | 112.5 | |
| | 2012.10-2016.12 | 6MT | F | R | Hatchback FWD D 4162 T | | GCI34150 | Inner Joint | | 26 | 24 | 40 | 381 | 98 | |
| | 2013.09-2015.12 | 6DCT | F | L | Hatchback Van FWD D 4162 T | | GDS62111 | Drive Shaft | | 36 | 28 | 56.1 | 48 | 578 | |
| | 2013.09-2015.12 | 6DCT | F | R | Hatchback Van FWD D 4162 T | | GDS62128 | Drive Shaft | | 36 | 28 | 56.1 | 48 | 913 | |
| | 2013.09-2015.12 | 6DCT | F | L | Hatchback Van FWD D 4162 T | | GCI62056 | Inner Joint | | 28 | 24 | 33.8 | 80 | 95.5 | |
| | 2013.09-2015.12 | 6DCT | F | R | Hatchback Van FWD D 4162 T | | GCI62067 | Inner Joint | | 28 | 24 | 33.8 | 374.5 | 98.5 | |
| | 2013.09-2015.12 | 6MT | F | L | Hatchback Van FWD D 4162 T | | GDS34224 | Drive Shaft | | 36 | 26 | 56.1 | 48 | 581 | |
| | 2013.09-2015.12 | 6MT | F | R | Hatchback Van FWD D 4162 T | | GDS34270 | Drive Shaft | | 36 | 26 | 56.1 | 48 | 918 | |
| | 2013.09-2015.12 | 6MT | F | L/R | Hatchback Van FWD D 4162 T | | GCO34194 | Outer Joint | | 36 | 24 | 56.1 | 48 | 59 | M |
| | 2013.09-2015.12 | 6MT | F | L | Hatchback Van FWD D 4162 T | | GCI34111 | Inner Joint | | 26 | 24 | 40 | 61 | 112.5 | |
| | 2013.09-2015.12 | 6MT | F | R | Hatchback Van FWD D 4162 T | | GCI34150 | Inner Joint | | 26 | 24 | 40 | 381 | 98 | |
| 1.6 (132 kw) | 2012.10-2016.12 | 6DCT | F | L | Hatchback FWD B 4164 T | | GDS62111 | Drive Shaft | | 36 | 28 | 56.1 | 48 | 578 | |
| | 2012.10-2016.12 | 6DCT | F | R | Hatchback FWD B 4164 T | | GDS62129 | Drive Shaft | | 36 | 28 | 56.1 | 48 | 920 | |
| | 2012.10-2016.12 | 6DCT | F | L | Hatchback FWD B 4164 T | | GCI62056 | Inner Joint | | 28 | 24 | 33.8 | 80 | 95.5 | |
| | 2012.10-2016.12 | 6DCT | F | R | Hatchback FWD B 4164 T | | GCI62068 | Inner Joint | | 28 | 24 | 33.8 | 447 | 98.5 | |
| | 2012.10-2016.12 | 6MT | F | L | Hatchback FWD B 4164 T | | GDS34224 | Drive Shaft | | 36 | 26 | 56.1 | 48 | 581 | |
| | 2012.10-2016.12 | 6MT | F | R | Hatchback FWD B 4164 T | | GDS62110 | Drive Shaft | | 36 | 26 | 56.1 | 48 | 921 | |

| | YEAR | TRANSM. | F/R | L/R | BODY STYLE & DRIVE TYPE & ENGINE | REMARKS | G-AP Ref. | PRODUCT | ABS | Technical Specifications | | | | | |
|---|---|---|---|---|---|---|---|---|---|---|---|---|---|---|---|
| | | | | | | | | | | A | B | C | H | L | P |
| **VOLVO**<br>**V40 Cross Country** | | | | | | | | | | | | | | | |
| 1.6 (132 kw) | 2012.10-2016.12 | 6MT | F | L/R | Hatchback FWD B 4164 T | | GCO34194 | Outer Joint | | 36 | 24 | 56.1 | 48 | 59 | M |
| | 2012.10-2016.12 | 6MT | F | L | Hatchback FWD B 4164 T | | GCI34111 | Inner Joint | | 26 | 24 | 40 | 61 | 112.5 | |
| | 2012.10-2016.12 | 6MT | F | R | Hatchback FWD B 4164 T | | GCI62055 | Inner Joint | | 26 | 24 | 40 | 447.5 | 98.5 | |
| 2.0 (88 kw) | 2015.02-2019.08 | 6AT | F | L | Hatchback FWD D 4204 T8;D 4204 T13 | | GDS83219 | Drive Shaft | | 36 | 26 | 56.1 | 48 | 558 | |
| | 2015.02-2019.08 | 6AT | F | R | Hatchback FWD D 4204 T8;D 4204 T13 | | GDS83220 | Drive Shaft | | 36 | 26 | 56.1 | 48 | 935 | |
| | 2015.02-2019.08 | 6AT | F | L | Hatchback FWD D 4204 T8;D 4204 T13 | | GCI82187 | Inner Joint | | 26 | 24 | 31 | 72 | 94 | |
| | 2015.02-2019.08 | 6MT | F | L | Hatchback FWD D 4204 T8;D 4204 T13 | Chassis no. from:92100,Trans. code:M66 | GDS56169 | Drive Shaft | | 36 | 31 | 56.1 | 48 | 577 | |
| | 2015.02-2019.08 | 6MT | F | L | Hatchback FWD D 4204 T8;D 4204 T13 | Trans. code:M76 | GDS56785 | Drive Shaft | | 36 | 28 | 56.1 | 48 | 571 | |
| | 2015.02-2019.08 | 6MT | F | L | Hatchback FWD D 4204 T8;D 4204 T13 | Chassis no. to:92099,Trans. code:M66 | GDS62122 | Drive Shaft | | 36 | 31 | 56.1 | 48 | 586 | |
| | 2015.02-2019.08 | 6MT | F | R | Hatchback FWD D 4204 T8;D 4204 T13 | Trans. code:M76 | GDS57906 | Drive Shaft | | 36 | 28 | 56.1 | 48 | 949 | |
| | 2015.02-2019.08 | 6MT | F | R | Hatchback FWD D 4204 T8;D 4204 T13 | Chassis no. to:92099,Trans. code:M66 | GDS62131 | Drive Shaft | | 36 | 28 | 56.1 | 48 | 936 | |
| | 2015.02-2019.08 | 6MT | F | R | Hatchback FWD D 4204 T8;D 4204 T13 | Chassis no. from:92100,Trans. code:M66 | GDS62135 | Drive Shaft | | 36 | 28 | 56.1 | 48 | 930 | |
| | 2015.02-2019.08 | 6MT | F | L/R | Hatchback FWD D 4204 T8;D 4204 T13 | Chassis no. from:92100,Trans. code:M66;Trans. code:M76 | GCO34194 | Outer Joint | | 36 | 24 | 56.1 | 48 | 59 | M |
| | 2015.02-2019.08 | 6MT | F | L/R | Hatchback FWD D 4204 T8;D 4204 T13 | Chassis no. to:92099,Trans. code:M66 | GCO62049 | Outer Joint | | 36 | 26 | 56.1 | 48 | 64 | M |
| | 2015.02-2019.08 | 6MT | F | L | Hatchback FWD D 4204 T8;D 4204 T13 | Chassis no. to:92099,Trans. code:M66 | GCI62073 | Inner Joint | | 31 | 26 | 44 | 79 | 105.5 | |
| | 2015.02-2019.08 | 6MT | F | L | Hatchback FWD D 4204 T8;D 4204 T13 | Chassis no. from:92100,Trans. code:M66 | GCI83116 | Inner Joint | | 31 | 24 | 44 | 79 | 101.5 | |
| | 2015.02-2019.08 | 6MT | F | L | Hatchback FWD D 4204 T8;D 4204 T13 | Trans. code:M76 | GCI83489 | Inner Joint | | 28 | 24 | 40 | 65.5 | 110 | |
| | 2015.02-2019.08 | 6MT | F | R | Hatchback FWD D 4204 T8;D 4204 T13 | Chassis no. to:92099,Trans. code:M66 | GCI62070 | Inner Joint | | 28 | 26 | 40 | 469 | 95 | |
| | 2015.02-2019.08 | 6MT | F | R | Hatchback FWD D 4204 T8;D 4204 T13 | Chassis no. from:92100,Trans. code:M66 | GCI62074 | Inner Joint | | 28 | 24 | 40 | 470 | 98 | |
| | 2015.02-2019.08 | 6MT | F | R | Hatchback FWD D 4204 T8;D 4204 T13 | Trans. code:M76 | GCI83914 | Inner Joint | | 28 | 24 | 40 | 484 | 98 | |
| 2.0 (110 kw) | 2012.10-2015.03 | 6AT | F | L | Hatchback FWD D 5204 T6 | | GDS62116 | Drive Shaft | | 36 | 31 | 56.1 | 48 | 517 | |
| | 2012.10-2015.03 | 6AT | F | R | Hatchback FWD D 5204 T6 | | GDS62132 | Drive Shaft | | 36 | 28 | 56.1 | 48 | 968 | |
| | 2012.10-2015.03 | 6AT | F | L | Hatchback FWD D 5204 T6 | | GCI62061 | Inner Joint | | 31 | 26 | 36.2 | 68 | 87 | |
| | 2012.10-2015.03 | 6AT | F | R | Hatchback FWD D 5204 T6 | | GCI62071 | Inner Joint | | 28 | 26 | 33 | 525 | 100 | |
| | 2012.10-2015.03 | 6AT/6MT | F | L/R | Hatchback FWD D 5204 T6 | | GCO62049 | Outer Joint | | 36 | 26 | 56.1 | 48 | 64 | M |
| | 2012.10-2015.03 | 6MT | F | L | Hatchback FWD D 5204 T6 | | GDS62087 | Drive Shaft | | 36 | 26 | 56.1 | 48 | 544 | |
| | 2012.10-2015.03 | 6MT | F | R | Hatchback FWD D 5204 T6 | | GDS62120 | Drive Shaft | | 36 | 26 | 56.1 | 48 | 966 | |
| | 2012.10-2015.03 | 6MT | F | L | Hatchback FWD D 5204 T6 | | GCI62050 | Inner Joint | | 26 | 26 | 40 | 67 | 104 | |
| | 2013.09-2015.12 | 6AT | F | L | Hatchback Van FWD D 5204 T6 | | GDS62116 | Drive Shaft | | 36 | 31 | 56.1 | 48 | 517 | |
| | 2013.09-2015.12 | 6AT | F | R | Hatchback Van FWD D 5204 T6 | | GDS62132 | Drive Shaft | | 36 | 28 | 56.1 | 48 | 968 | |
| | 2013.09-2015.12 | 6AT | F | L | Hatchback Van FWD D 5204 T6 | | GCI62061 | Inner Joint | | 31 | 26 | 36.2 | 68 | 87 | |
| | 2013.09-2015.12 | 6AT | F | R | Hatchback Van FWD D 5204 T6 | | GCI62071 | Inner Joint | | 28 | 26 | 33 | 525 | 100 | |
| | 2013.09-2015.12 | 6AT/6MT | F | L/R | Hatchback Van FWD D 5204 T6 | | GCO62049 | Outer Joint | | 36 | 26 | 56.1 | 48 | 64 | M |
| | 2013.09-2015.12 | 6MT | F | L | Hatchback Van FWD D 5204 T6 | | GDS62087 | Drive Shaft | | 36 | 26 | 56.1 | 48 | 544 | |
| | 2013.09-2015.12 | 6MT | F | R | Hatchback Van FWD D 5204 T6 | | GDS62120 | Drive Shaft | | 36 | 26 | 56.1 | 48 | 966 | |
| | 2013.09-2015.12 | 6MT | F | L | Hatchback Van FWD D 5204 T6 | | GCI62050 | Inner Joint | | 26 | 26 | 40 | 67 | 104 | |
| | 2015.04-2019.08 | 6AT | F | L | Hatchback FWD D 4204 T9;D 4204 T16 | | GDS83219 | Drive Shaft | | 36 | 26 | 56.1 | 48 | 558 | |
| | 2015.04-2019.08 | 6AT | F | R | Hatchback FWD D 4204 T9;D 4204 T16 | | GDS83220 | Drive Shaft | | 36 | 26 | 56.1 | 48 | 935 | |
| | 2015.04-2019.08 | 6AT | F | L | Hatchback FWD D 4204 T9;D 4204 T16 | | GCI82187 | Inner Joint | | 26 | 24 | 31 | 72 | 94 | |
| | 2015.04-2019.08 | 6AT | F | R | Hatchback FWD D 4204 T9;D 4204 T16 | | GCI82186 | Inner Joint | | 26 | 24 | 31 | 469 | 98 | |
| | 2015.04-2019.08 | 6AT/6MT | F | L/R | Hatchback FWD D 4204 T9;D 4204 T16 | Transmission:6AT;Transmission:6MT;Trans. code:M66 | GCO62049 | Outer Joint | | 36 | 26 | 56.1 | 48 | 64 | M |
| | 2015.04-2019.08 | 6MT | F | L | Hatchback FWD D 4204 T9;D 4204 T16 | Trans. code:M76 | GDS56785 | Drive Shaft | | 36 | 28 | 56.1 | 48 | 571 | |
| | 2015.04-2019.08 | 6MT | F | L | Hatchback FWD D 4204 T9;D 4204 T16 | Trans. code:M66 | GDS62122 | Drive Shaft | | 36 | 31 | 56.1 | 48 | 586 | |
| | 2015.04-2019.08 | 6MT | F | R | Hatchback FWD D 4204 T9;D 4204 T16 | Trans. code:M76 | GDS57906 | Drive Shaft | | 36 | 28 | 56.1 | 48 | 949 | |
| | 2015.04-2019.08 | 6MT | F | R | Hatchback FWD D 4204 T9;D 4204 T16 | Trans. code:M66 | GDS62131 | Drive Shaft | | 36 | 28 | 56.1 | 48 | 936 | |
| | 2015.04-2019.08 | 6MT | F | L/R | Hatchback FWD D 4204 T9;D 4204 T16 | Trans. code:M76 | GCO34194 | Outer Joint | | 36 | 24 | 56.1 | 48 | 59 | M |
| | 2015.04-2019.08 | 6MT | F | L | Hatchback FWD D 4204 T9;D 4204 T16 | Trans. code:M66 | GCI62073 | Inner Joint | | 31 | 26 | 44 | 79 | 105.5 | |
| | 2015.04-2019.08 | 6MT | F | L | Hatchback FWD D 4204 T9;D 4204 T16 | Trans. code:M76 | GCI83489 | Inner Joint | | 28 | 24 | 40 | 65.5 | 110 | |
| | 2015.04-2019.08 | 6MT | F | R | Hatchback FWD D 4204 T9;D 4204 T16 | Trans. code:M66 | GCI62070 | Inner Joint | | 28 | 26 | 40 | 469 | 95 | |
| | 2015.04-2019.08 | 6MT | F | R | Hatchback FWD D 4204 T9;D 4204 T16 | Trans. code:M76 | GCI83914 | Inner Joint | | 28 | 24 | 40 | 484 | 98 | |
| 2.0 (112 kw) | 2015.02-2019.08 | 6MT | F | L | Hatchback FWD B 4204 T37 | Trans. code:M76 | GDS56785 | Drive Shaft | | 36 | 28 | 56.1 | 48 | 571 | |
| | 2015.02-2019.08 | 6MT | F | L | Hatchback FWD B 4204 T37 | Trans. code:M66 | GDS62122 | Drive Shaft | | 36 | 31 | 56.1 | 48 | 586 | |
| | 2015.02-2019.08 | 6MT | F | R | Hatchback FWD B 4204 T37 | Trans. code:M76 | GDS57906 | Drive Shaft | | 36 | 28 | 56.1 | 48 | 949 | |
| | 2015.02-2019.08 | 6MT | F | R | Hatchback FWD B 4204 T37 | Trans. code:M66 | GDS62131 | Drive Shaft | | 36 | 28 | 56.1 | 48 | 936 | |
| | 2015.02-2019.08 | 6MT | F | L/R | Hatchback FWD B 4204 T37 | Trans. code:M76 | GCO34194 | Outer Joint | | 36 | 24 | 56.1 | 48 | 59 | M |
| | 2015.02-2019.08 | 6MT | F | L/R | Hatchback FWD B 4204 T37 | Trans. code:M66 | GCO62049 | Outer Joint | | 36 | 26 | 56.1 | 48 | 64 | M |
| | 2015.02-2019.08 | 6MT | F | L | Hatchback FWD B 4204 T37 | Trans. code:M66 | GCI62073 | Inner Joint | | 31 | 26 | 44 | 79 | 105.5 | |
| | 2015.02-2019.08 | 6MT | F | L | Hatchback FWD B 4204 T37 | Trans. code:M76 | GCI83489 | Inner Joint | | 28 | 24 | 40 | 65.5 | 110 | |
| | 2015.02-2019.08 | 6MT | F | R | Hatchback FWD B 4204 T37 | Trans. code:M66 | GCI62070 | Inner Joint | | 28 | 26 | 40 | 469 | 95 | |
| | 2015.02-2019.08 | 6MT | F | R | Hatchback FWD B 4204 T37 | Trans. code:M76 | GCI83914 | Inner Joint | | 28 | 24 | 40 | 484 | 98 | |
| 2.0 (130 kw) | 2012.10-2014.12 | 6AT | F | L | Hatchback FWD D 5204 T4 | | GDS62116 | Drive Shaft | | 36 | 31 | 56.1 | 48 | 517 | |
| | 2012.10-2014.12 | 6AT | F | R | Hatchback FWD D 5204 T4 | | GDS62132 | Drive Shaft | | 36 | 28 | 56.1 | 48 | 968 | |
| | 2012.10-2014.12 | 6AT | F | L | Hatchback FWD D 5204 T4 | | GCI62061 | Inner Joint | | 31 | 26 | 36.2 | 68 | 87 | |
| | 2012.10-2014.12 | 6AT | F | R | Hatchback FWD D 5204 T4 | | GCI62071 | Inner Joint | | 28 | 26 | 33 | 525 | 100 | |
| | 2012.10-2014.12 | 6AT/6MT | F | L/R | Hatchback FWD D 5204 T4 | | GCO62049 | Outer Joint | | 36 | 26 | 56.1 | 48 | 64 | M |

| | YEAR | TRANSM. | F/R | L/R | BODY STYLE & DRIVE TYPE & ENGINE | REMARKS | G-AP Ref. | PRODUCT | ABS | Technical Specifications A | B | C | H | L | P |
|---|---|---|---|---|---|---|---|---|---|---|---|---|---|---|---|
| **VOLVO**<br>**V40 Cross Country** | | | | | | | | | | | | | | | |
| 2.0 (130 kw) | 2012.10-2014.12 | 6MT | F | L | Hatchback FWD D 5204 T4 | | GDS62087 | Drive Shaft | | 36 | 26 | 56.1 | 48 | 544 | |
| | 2012.10-2014.12 | 6MT | F | R | Hatchback FWD D 5204 T4 | | GDS62120 | Drive Shaft | | 36 | 26 | 56.1 | 48 | 966 | |
| | 2012.10-2014.12 | 6MT | F | L | Hatchback FWD D 5204 T4 | | GCI62050 | Inner Joint | | 26 | 26 | 40 | 67 | 104 | |
| | 2013.09-2014.12 | 6AT | F | L | Hatchback Van FWD D 5204 T4 | | GDS62116 | Drive Shaft | | 36 | 31 | 56.1 | 48 | 517 | |
| | 2013.09-2014.12 | 6AT | F | R | Hatchback Van FWD D 5204 T4 | | GDS62132 | Drive Shaft | | 36 | 28 | 56.1 | 48 | 968 | |
| | 2013.09-2014.12 | 6AT | F | L | Hatchback Van FWD D 5204 T4 | | GCI62061 | Inner Joint | | 31 | 26 | 36.2 | 68 | 87 | |
| | 2013.09-2014.12 | 6AT | F | R | Hatchback Van FWD D 5204 T4 | | GCI62071 | Inner Joint | | 28 | 26 | 33 | 525 | 100 | |
| | 2013.09-2014.12 | 6AT/6MT | F | L/R | Hatchback Van FWD D 5204 T4 | | GCO62049 | Outer Joint | | 36 | 26 | 56.1 | 48 | 64 | M |
| | 2013.09-2014.12 | 6MT | F | L | Hatchback Van FWD D 5204 T4 | | GDS62087 | Drive Shaft | | 36 | 26 | 56.1 | 48 | 544 | |
| | 2013.09-2014.12 | 6MT | F | R | Hatchback Van FWD D 5204 T4 | | GDS62120 | Drive Shaft | | 36 | 26 | 56.1 | 48 | 966 | |
| | 2013.09-2014.12 | 6MT | F | L | Hatchback Van FWD D 5204 T4 | | GCI62050 | Inner Joint | | 26 | 26 | 40 | 67 | 104 | |
| 2.0 (132 kw) | 2013.07-2015.12 | AT | F | L | Hatchback 4WD B 5204 T8 | | GDS62116 | Drive Shaft | | 36 | 31 | 56.1 | 48 | 517 | |
| | 2013.07-2015.12 | AT | F | L/R | Hatchback 4WD B 5204 T8 | | GCO62049 | Outer Joint | | 36 | 26 | 56.1 | 48 | 64 | M |
| | 2013.07-2015.12 | AT | F | L | Hatchback 4WD B 5204 T8 | | GCI62061 | Inner Joint | | 31 | 26 | 36.2 | 68 | 87 | |
| | 2013.10-2015.12 | | F | L | Hatchback FWD B 5204 T8 | | GDS62116 | Drive Shaft | | 36 | 31 | 56.1 | 48 | 517 | |
| | 2013.10-2015.12 | | F | R | Hatchback FWD B 5204 T8 | | GDS62132 | Drive Shaft | | 36 | 28 | 56.1 | 48 | 968 | |
| | 2013.10-2015.12 | | F | L/R | Hatchback FWD B 5204 T8 | | GCO62049 | Outer Joint | | 36 | 26 | 56.1 | 48 | 64 | M |
| | 2013.10-2015.12 | | F | L | Hatchback FWD B 5204 T8 | | GCI62061 | Inner Joint | | 31 | 26 | 36.2 | 68 | 87 | |
| | 2013.10-2015.12 | | F | R | Hatchback FWD B 5204 T8 | | GCI62071 | Inner Joint | | 28 | 26 | 33 | 525 | 100 | |
| 2.0 (140 kw) | 2014.05-2019.08 | 8AT | F | L | Hatchback 4WD B 4204 T21 | | GCI62063 | Inner Joint | | 31 | 26 | 36.2 | 68 | 93 | |
| | 2014.05-2019.08 | AT | F | L/R | Hatchback 4WD B 4204 T21 | | GDS62121 | Drive Shaft | | 36 | 31 | 56.1 | 48 | 562 | |
| | 2014.05-2019.08 | AT | F | L/R | Hatchback 4WD B 4204 T21 | | GCO62049 | Outer Joint | | 36 | 26 | 56.1 | 48 | 64 | M |
| | 2014.05-2019.08 | AT | R | L/R | Hatchback 4WD B 4204 T21 | | GDS62107 | Drive Shaft | 44NS | 36 | 23 | 56.5 | 50 | 742 | |
| | 2014.05-2019.08 | AT | R | L/R | Hatchback 4WD B 4204 T21 | | GCI44032 | Inner Joint | 44NS | 36 | 20 | 56.6 | 50 | 81.5 | |
| | 2014.05-2019.08 | 6MT | F | L | Hatchback FWD D 4204 T14 | | GDS62122 | Drive Shaft | | 36 | 31 | 56.1 | 48 | 586 | |
| | 2014.05-2019.08 | 6MT | F | R | Hatchback FWD D 4204 T14 | | GDS62131 | Drive Shaft | | 36 | 28 | 56.1 | 48 | 936 | |
| | 2014.05-2019.08 | 6MT | F | L | Hatchback FWD D 4204 T14 | | GCI62073 | Inner Joint | | 31 | 26 | 44 | 79 | 105.5 | |
| | 2014.05-2019.08 | 8AT | F | L | Hatchback FWD D 4204 T14 | | GDS62121 | Drive Shaft | | 36 | 31 | 56.1 | 48 | 562 | |
| | 2014.05-2019.08 | 8AT | F | R | Hatchback FWD D 4204 T14 | | GDS62130 | Drive Shaft | | 36 | 28 | 56.1 | 48 | 936 | |
| | 2014.05-2019.08 | 8AT | F | L | Hatchback FWD D 4204 T14 | | GCI62063 | Inner Joint | | 31 | 26 | 36.2 | 68 | 93 | |
| | 2014.05-2019.08 | 8AT/6MT | F | L/R | Hatchback FWD D 4204 T14 | | GCO62049 | Outer Joint | | 36 | 26 | 56.1 | 48 | 64 | M |
| | 2015.08-2019.08 | 6AT | F | L | Hatchback FWD B 4204 T19 | | GDS83219 | Drive Shaft | | 36 | 26 | 56.1 | 48 | 558 | |
| | 2015.08-2019.08 | 6AT | F | R | Hatchback FWD B 4204 T19 | | GDS83220 | Drive Shaft | | 36 | 26 | 56.1 | 48 | 935 | |
| | 2015.08-2019.08 | 6AT | F | L | Hatchback FWD B 4204 T19 | | GCI82187 | Inner Joint | | 26 | 24 | 31 | 72 | 94 | |
| | 2015.08-2019.08 | 6AT | F | R | Hatchback FWD B 4204 T19 | | GCI82186 | Inner Joint | | 26 | 24 | 31 | 469 | 98 | |
| | 2015.08-2019.08 | 6AT/6MT | F | L/R | Hatchback FWD B 4204 T19 | | GCO62049 | Outer Joint | | 36 | 26 | 56.1 | 48 | 64 | M |
| | 2015.08-2019.08 | 6MT | F | L | Hatchback FWD B 4204 T19 | | GDS62122 | Drive Shaft | | 36 | 31 | 56.1 | 48 | 586 | |
| | 2015.08-2019.08 | 6MT | F | R | Hatchback FWD B 4204 T19 | | GDS62131 | Drive Shaft | | 36 | 28 | 56.1 | 48 | 936 | |
| | 2015.08-2019.08 | 6MT | F | L | Hatchback FWD B 4204 T19 | | GCI62073 | Inner Joint | | 31 | 26 | 44 | 79 | 105.5 | |
| | 2015.08-2019.08 | 6MT | F | R | Hatchback FWD B 4204 T19 | | GCI62070 | Inner Joint | | 28 | 26 | 40 | 469 | 95 | |
| 2.0 (147 kw) | 2014.05-2019.08 | 6MT | F | L | Hatchback FWD D 4204 T14 | | GDS62122 | Drive Shaft | | 36 | 31 | 56.1 | 48 | 586 | |
| | 2014.05-2019.08 | 6MT | F | R | Hatchback FWD D 4204 T14 | | GDS62131 | Drive Shaft | | 36 | 28 | 56.1 | 48 | 936 | |
| | 2014.05-2019.08 | 6MT | F | L | Hatchback FWD D 4204 T14 | | GCI62073 | Inner Joint | | 31 | 26 | 44 | 79 | 105.5 | |
| | 2014.05-2019.08 | 8AT | F | L | Hatchback FWD D 4204 T14 | | GDS62121 | Drive Shaft | | 36 | 31 | 56.1 | 48 | 562 | |
| | 2014.05-2019.08 | 8AT | F | R | Hatchback FWD D 4204 T14 | | GDS62130 | Drive Shaft | | 36 | 28 | 56.1 | 48 | 936 | |
| | 2014.05-2019.08 | 8AT | F | L | Hatchback FWD D 4204 T14 | | GCI62063 | Inner Joint | | 31 | 26 | 36.2 | 68 | 93 | |
| 2.0 (157 kw) | 2013.02-2015.12 | | F | L | Hatchback FWD B 5204 T9 | | GDS62116 | Drive Shaft | | 36 | 31 | 56.1 | 48 | 517 | |
| | 2013.02-2015.12 | | F | R | Hatchback FWD B 5204 T9 | | GDS62132 | Drive Shaft | | 36 | 28 | 56.1 | 48 | 968 | |
| | 2013.02-2015.12 | | F | L/R | Hatchback FWD B 5204 T9 | | GCO62049 | Outer Joint | | 36 | 26 | 56.1 | 48 | 64 | M |
| | 2013.02-2015.12 | | F | L | Hatchback FWD B 5204 T9 | | GCI62061 | Inner Joint | | 31 | 26 | 36.2 | 68 | 87 | |
| | 2013.02-2015.12 | | F | R | Hatchback FWD B 5204 T9 | | GCI62071 | Inner Joint | | 28 | 26 | 33 | 525 | 100 | |
| | 2013.03-2015.12 | | F | L | Hatchback 4WD B 5204 T9 | | GDS62116 | Drive Shaft | | 36 | 31 | 56.1 | 48 | 517 | |
| | 2013.03-2015.12 | | F | L | Hatchback 4WD B 5204 T9 | | GCO62049 | Outer Joint | | 36 | 26 | 56.1 | 48 | 64 | M |
| | 2013.03-2015.12 | 6AT | R | L/R | Hatchback 4WD B 5204 T9 | | GDS62107 | Drive Shaft | 44NS | 36 | 23 | 56.5 | 50 | 742 | |
| | 2013.03-2015.12 | 6AT | R | L/R | Hatchback 4WD B 5204 T9 | | GCI44032 | Inner Joint | 44NS | 36 | 20 | 56.6 | 50 | 81.5 | |
| 2.0 (180 kw) | 2014.05-2019.08 | 8AT | F | L/R | Hatchback 4WD B 4204 T11;B 4204 T41 | | GDS62121 | Drive Shaft | | 36 | 31 | 56.1 | 48 | 562 | |
| | 2014.05-2019.08 | 8AT | F | L/R | Hatchback 4WD B 4204 T11;B 4204 T41 | | GCO62049 | Outer Joint | | 36 | 26 | 56.1 | 48 | 64 | M |
| | 2014.05-2019.08 | 8AT | F | L | Hatchback 4WD B 4204 T11;B 4204 T41 | | GCI62063 | Inner Joint | | 31 | 26 | 36.2 | 68 | 93 | |
| | 2014.05-2019.08 | 8AT | R | L/R | Hatchback 4WD B 4204 T11;B 4204 T41 | | GDS62107 | Drive Shaft | 44NS | 36 | 23 | 56.5 | 50 | 742 | |
| | 2014.05-2019.08 | 8AT | R | L/R | Hatchback 4WD B 4204 T11;B 4204 T41 | | GCI44032 | Inner Joint | 44NS | 36 | 20 | 56.6 | 50 | 81.5 | |
| 2.0 (186 kw) | 2015.01-2019.08 | 8AT | F | L | Hatchback 4WD B 4204 T11 | | GCI62063 | Inner Joint | | 31 | 26 | 36.2 | 68 | 93 | |
| | 2015.01-2019.08 | | F | L | Hatchback 4WD B 4204 T11 | | GDS62121 | Drive Shaft | | 36 | 31 | 56.1 | 48 | 562 | |
| | 2015.01-2019.08 | | F | L | Hatchback 4WD B 4204 T11 | | GCO62049 | Outer Joint | | 36 | 26 | 56.1 | 48 | 64 | M |
| | 2015.01-2019.08 | | R | L/R | Hatchback 4WD B 4204 T11 | | GDS62107 | Drive Shaft | 44NS | 36 | 23 | 56.5 | 50 | 742 | |
| 2.5 (183 kw) | 2014.01-2015.12 | AT | F | L | Hatchback 4WD B 5254 T14 | | GDS62116 | Drive Shaft | | 36 | 31 | 56.1 | 48 | 517 | |

| | YEAR | TRANSM. | F/R | L/R | BODY STYLE & DRIVE TYPE & ENGINE | REMARKS | G-AP Ref. | PRODUCT | ABS | Technical Specifications A | B | C | H | L | P |
|---|---|---|---|---|---|---|---|---|---|---|---|---|---|---|---|
| **VOLVO** | | | | | | | | | | | | | | | |
| **V40 Cross Country** | | | | | | | | | | | | | | | |
| 2.5 (183 kw) | 2014.01-2015.12 | AT | F | L | Hatchback 4WD B 5254 T14 | | GCO62049 | Outer Joint | | 36 | 26 | 56.1 | 48 | 64 | M |
| | 2014.01-2015.12 | AT | R | L/R | Hatchback 4WD B 5254 T14 | | GDS62107 | Drive Shaft | 44NS | 36 | 23 | 56.5 | 50 | 742 | |
| | 2014.01-2015.12 | AT | R | L/R | Hatchback 4WD B 5254 T14 | | GCI44032 | Inner Joint | 44NS | 36 | 20 | 56.6 | 50 | 81.5 | |
| | 2014.01-2015.12 | 6AT | F | L | Hatchback FWD B 5254 T14 | | GDS62116 | Drive Shaft | | 36 | 31 | 56.1 | 48 | 517 | |
| | 2014.01-2015.12 | 6AT | F | R | Hatchback FWD B 5254 T14 | | GDS62132 | Drive Shaft | | 36 | 28 | 56.1 | 48 | 968 | |
| 2.5 (187 kw) | 2012.10-2016.12 | 6AT | F | L | Hatchback 4WD B 5254 T12 | | GDS62116 | Drive Shaft | | 36 | 31 | 56.1 | 48 | 517 | |
| | 2012.10-2016.12 | 6AT | F | L | Hatchback 4WD B 5254 T12 | | GCO62049 | Outer Joint | | 36 | 26 | 56.1 | 48 | 64 | M |
| | 2012.10-2016.12 | 6AT | R | L/R | Hatchback 4WD B 5254 T12 | | GDS62107 | Drive Shaft | 44NS | 36 | 23 | 56.5 | 50 | 742 | |
| | 2012.10-2016.12 | 6AT | R | L/R | Hatchback 4WD B 5254 T12 | | GCI44032 | Inner Joint | 44NS | 36 | 20 | 56.6 | 50 | 81.5 | |
| | 2012.10-2016.12 | 6AT | F | L | Hatchback FWD B 5254 T12 | | GDS62116 | Drive Shaft | | 36 | 31 | 56.1 | 48 | 517 | |
| | 2012.10-2016.12 | 6AT | F | R | Hatchback FWD B 5254 T12 | | GDS62132 | Drive Shaft | | 36 | 28 | 56.1 | 48 | 968 | |
| | 2012.10-2016.12 | | F | L | Hatchback FWD B 5254 T12 | | GCO62049 | Outer Joint | | 36 | 26 | 56.1 | 48 | 64 | M |
| | 2012.10-2016.12 | | F | L | Hatchback FWD B 5254 T12 | | GCI62061 | Inner Joint | | 31 | 26 | 36.2 | 68 | 87 | |
| **V50** | | | | | | | | | | | | | | | |
| 1.6 (74 kw) | 2005.01-2012.12 | MT | F | L | Estate FWD B 4164 S3 | | GDS18189 | Drive Shaft | | 36 | 23 | 56 | 48 | 601 | |
| | 2005.01-2012.12 | MT | F | L | Estate FWD B 4164 S3 | | GDS18336 | Drive Shaft | | 36 | 23 | 51.6 | 48 | 600 | |
| | 2005.01-2012.12 | MT | F | R | Estate FWD B 4164 S3 | | GDS18206 | Drive Shaft | | 36 | 23 | 56 | 48 | 906 | |
| | 2005.01-2012.12 | MT | F | R | Estate FWD B 4164 S3 | | GDS18337 | Drive Shaft | | 36 | 23 | 51.6 | 48 | 908 | |
| | 2005.01-2012.12 | MT | F | L | Estate FWD B 4164 S3 | | GCO18264 | Outer Joint | | 36 | 25 | 51.6 | 48 | 58 | O |
| | 2005.01-2012.12 | MT | F | L/R | Estate FWD B 4164 S3 | | GCO99129 | Outer Joint | | 36 | 24 | 56 | 48 | 57 | M |
| | 2005.01-2012.12 | MT | F | L | Estate FWD B 4164 S3 | | GCI18168 | Inner Joint | | 23 | 22 | 40 | 61 | 90 | |
| | 2005.01-2012.12 | | F | L | Estate FWD B 4164 S3 | | GDS18359 | Drive Shaft | | 36 | 23 | 56 | 48 | 594 | |
| 1.6 (80 kw) | 2005.03-2012.12 | 5MT | F | L | Estate FWD D 4164 T | | GDS18218 | Drive Shaft | | 36 | 26 | 56 | 48 | 582 | |
| | 2005.03-2012.12 | 5MT | F | R | Estate FWD D 4164 T | | GDS18219 | Drive Shaft | | 36 | 26 | 56.3 | 48 | 921 | |
| | 2005.03-2012.12 | 5MT | F | L | Estate FWD D 4164 T | | GCO18203 | Outer Joint | | 36 | 23 | 56 | 48 | 57 | I |
| | 2005.03-2012.12 | 5MT | F | R | Estate FWD D 4164 T | | GCO18230 | Outer Joint | | 36 | 26 | 56.3 | 48 | 61 | M |
| | 2005.03-2012.12 | 5MT | F | L | Estate FWD D 4164 T | | GCI18044 | Inner Joint | | 26 | 23 | 40 | 68.5 | 99.5 | |
| 1.6 (81 kw) | 2005.01-2011.12 | 5MT | F | L | Estate FWD D 4164 T | | GDS18218 | Drive Shaft | | 36 | 26 | 56 | 48 | 582 | |
| | 2005.01-2011.12 | 5MT | F | L | Estate FWD D 4164 T | | GCI18044 | Inner Joint | | 26 | 23 | 40 | 68.5 | 99.5 | |
| | 2005.01-2011.12 | MT | F | R | Estate FWD D 4164 T | | GDS18219 | Drive Shaft | | 36 | 26 | 56.3 | 48 | 921 | |
| | 2005.01-2011.12 | MT | F | R | Estate FWD D 4164 T | | GCO99130 | Outer Joint | | 36 | 26 | 56.3 | 48 | 61 | M |
| | 2005.01-2011.12 | | F | R | Estate FWD D 4164 T | | GCO99288 | Outer Joint | | 36 | 26 | 56.3 | 48 | 61 | M |
| 1.6 (84 kw) | 2010.01-2012.12 | 6MT | F | L | Estate FWD D 4162 T | | GDS62078 | Drive Shaft | | 36 | 26 | 56.3 | 48 | 583 | |
| | 2010.01-2012.12 | 6MT | F | R | Estate FWD D 4162 T | | GDS62053 | Drive Shaft | | 36 | 26 | 56.3 | 48 | 917 | |
| | 2010.01-2012.12 | 6MT | F | L | Estate FWD D 4162 T | | GCO99288 | Outer Joint | | 36 | 26 | 56.3 | 48 | 61 | M |
| | 2010.01-2012.12 | 6MT | F | L | Estate FWD D 4162 T | | GCI62052 | Inner Joint | | 26 | 28 | 40 | 61 | 112.5 | |
| | 2010.01-2012.12 | 6MT | F | R | Estate FWD D 4162 T | | GCI62027 | Inner Joint | | 26 | 28 | 40 | 383 | 99 | |
| 1.8 (92 kw) | 2004.04-2010.12 | 5MT | F | L | Estate FWD B 4184 S11 | Chassis no. from:279945,Chassis no. to:279944 | GDS18218 | Drive Shaft | | 36 | 26 | 56 | 48 | 582 | |
| | 2004.04-2010.12 | AT | F | L | Estate FWD B 4184 S11 | | GDS62060 | Drive Shaft | | 36 | 26 | 56 | 48 | 519 | |
| | 2004.04-2010.12 | AT | F | R | Estate FWD B 4184 S11 | | GDS62063 | Drive Shaft | | 36 | 26 | 56 | 48 | 947 | |
| | 2004.04-2010.12 | MT | F | R | Estate FWD B 4184 S11 | | GDS18219 | Drive Shaft | | 36 | 26 | 56.3 | 48 | 921 | |
| | 2004.04-2010.12 | MT | F | R | Estate FWD B 4184 S11 | | GCO99130 | Outer Joint | | 36 | 26 | 56.3 | 48 | 61 | M |
| | 2004.04-2010.12 | | F | L/R | Estate FWD B 4184 S11 | Date To:2010.09 | GCO18203 | Outer Joint | | 36 | 23 | 56 | 48 | 57 | I |
| | 2004.04-2010.12 | | F | R | Estate FWD B 4184 S11 | | GCI18044 | Inner Joint | | 26 | 23 | 40 | 68.5 | 99.5 | |
| | 2005.01-2010.12 | 5MT | F | L | Estate FWD B 4184 S8 | Chassis no. from:279945,Chassis no. to:279944 | GDS18218 | Drive Shaft | | 36 | 26 | 56 | 48 | 582 | |
| | 2005.01-2010.12 | AT | F | L | Estate FWD B 4184 S8 | | GDS62060 | Drive Shaft | | 36 | 26 | 56 | 48 | 519 | |
| | 2005.01-2010.12 | AT | F | R | Estate FWD B 4184 S8 | | GDS62063 | Drive Shaft | | 36 | 26 | 56 | 48 | 947 | |
| | 2005.01-2010.12 | MT | F | R | Estate FWD B 4184 S8 | | GDS18219 | Drive Shaft | | 36 | 26 | 56.3 | 48 | 921 | |
| | 2005.01-2010.12 | MT | F | R | Estate FWD B 4184 S8 | | GCO99130 | Outer Joint | | 36 | 26 | 56.3 | 48 | 61 | M |
| | 2005.01-2010.12 | | F | L/R | Estate FWD B 4184 S8 | Date From:2005.04;Date To:2010.09 | GCO18203 | Outer Joint | | 36 | 23 | 56 | 48 | 57 | I |
| | 2005.01-2010.12 | | F | R | Estate FWD B 4184 S8 | | GCI18044 | Inner Joint | | 26 | 23 | 40 | 68.5 | 99.5 | |
| 1.8 (93 kw) | 2009.01-2010.09 | 5MT | F | L | Estate FWD B 4184 S8 | | GDS18218 | Drive Shaft | | 36 | 26 | 56 | 48 | 582 | |
| | 2009.01-2010.09 | | F | R | Estate FWD B 4184 S8 | | GDS18219 | Drive Shaft | | 36 | 26 | 56.3 | 48 | 921 | |
| | 2009.01-2010.09 | | F | L | Estate FWD B 4184 S8 | | GCO18203 | Outer Joint | | 36 | 23 | 56 | 48 | 57 | I |
| | 2009.01-2010.09 | | F | R | Estate FWD B 4184 S8 | | GCI18044 | Inner Joint | | 26 | 23 | 40 | 68.5 | 99.5 | |
| 2.0 (96 kw) | 2005.07-2006.12 | 6MT | F | L | Estate FWD D 4204 T2 | | GDS18218 | Drive Shaft | | 36 | 26 | 56 | 48 | 582 | |
| | 2005.07-2006.12 | 6MT | F | R | Estate FWD D 4204 T2 | Chassis no. from:280408 | GDS56093 | Drive Shaft | | 36 | 26 | 56 | 48 | 916 | |
| | 2005.07-2006.12 | 6MT | F | L/R | Estate FWD D 4204 T2 | Chassis no. from:280408 | GCO99155 | Outer Joint | | 36 | 26 | 56 | 48 | 64 | I |
| | 2005.07-2006.12 | 6MT | F | R | Estate FWD D 4204 T2 | Chassis no. from:280408 | GCI83312 | Inner Joint | | 26 | 26 | 40 | 389 | 92 | |
| 2.0 (98 kw) | 2003.12-2006.12 | 6MT | F | L | Estate FWD D 4204 T2 | | GDS18218 | Drive Shaft | | 36 | 26 | 56 | 48 | 582 | |
| | 2003.12-2006.12 | 6MT | F | R | Estate FWD D 4204 T2 | | GDS56093 | Drive Shaft | | 36 | 26 | 56 | 48 | 916 | |
| | 2003.12-2006.12 | 6MT | F | L/R | Estate FWD D 4204 T2 | | GCO99155 | Outer Joint | | 36 | 26 | 56 | 48 | 64 | I |
| | 2003.12-2006.12 | 6MT | F | R | Estate FWD D 4204 T2 | | GCI83312 | Inner Joint | | 26 | 26 | 40 | 389 | 92 | |
| | 2003.12-2006.12 | Semi-AT | F | L | Estate FWD D 4204 T2 | | GDS18367 | Drive Shaft | | 36 | 28 | 56 | 48 | 570 | |
| 2.0 (100 kw) | 2004.04-2010.12 | 6DCT | F | L | Estate FWD D 4204 T | | GDS18367 | Drive Shaft | | 36 | 28 | 56 | 48 | 570 | |

| | YEAR | TRANSM. | F/R | L/R | BODY STYLE & DRIVE TYPE & ENGINE | REMARKS | G-AP Ref. | PRODUCT | ABS | Technical Specifications A | B | C | H | L | P |
|---|---|---|---|---|---|---|---|---|---|---|---|---|---|---|---|
| **VOLVO** **V50** | | | | | | | | | | | | | | | |
| 2.0 (100 kw) | 2004.04-2010.12 | 6DCT | F | R | Estate FWD D 4204 T | | GDS62024 | Drive Shaft | | 36 | 28 | 56 | 48 | 908 | |
| | 2004.04-2010.12 | 6DCT | F | R | Estate FWD D 4204 T | | GCI62017 | Inner Joint | | 28 | 26 | 33.95 | 371.5 | 92 | |
| | 2004.04-2010.12 | 6MT | F | L | Estate FWD D 4204 T | Trans. code:MMT6 | GDS18218 | Drive Shaft | | 36 | 26 | 56 | 48 | 582 | |
| | 2004.04-2010.12 | 6MT | F | R | Estate FWD D 4204 T | Chassis no. from:280408,Trans. code:MMT6 | GDS56093 | Drive Shaft | | 36 | 26 | 56 | 48 | 916 | |
| | 2004.04-2010.12 | 6MT | F | L/R | Estate FWD D 4204 T | Chassis no. from:280408,Trans. code:MMT6 | GCO99155 | Outer Joint | | 36 | 26 | 56 | 48 | 64 | I |
| | 2004.04-2010.12 | 6MT | F | R | Estate FWD D 4204 T | Chassis no. from:280408,Trans. code:MMT6 | GCI83312 | Inner Joint | | 26 | 26 | 40 | 389 | 92 | |
| 2.0 (107 kw) | 2006.10-2012.12 | AT | F | L | Estate FWD B 4204 S3 | | GDS18367 | Drive Shaft | | 36 | 28 | 56 | 48 | 570 | |
| | 2006.10-2012.12 | AT | F | L | Estate FWD B 4204 S3 | | GDS62060 | Drive Shaft | | 36 | 26 | 56 | 48 | 519 | |
| | 2006.10-2012.12 | AT | F | R | Estate FWD B 4204 S3 | | GDS62024 | Drive Shaft | | 36 | 28 | 56 | 48 | 908 | |
| | 2006.10-2012.12 | AT | F | R | Estate FWD B 4204 S3 | | GDS62063 | Drive Shaft | | 36 | 26 | 56 | 48 | 947 | |
| | 2006.10-2012.12 | AT | F | R | Estate FWD B 4204 S3 | | GCI62017 | Inner Joint | | 28 | 26 | 33.95 | 371.5 | 92 | |
| | 2006.10-2012.12 | MT | F | L | Estate FWD B 4204 S3 | Chassis no. from:279945,Chassis no. to:279944 | GDS18218 | Drive Shaft | | 36 | 26 | 56 | 48 | 582 | |
| | 2006.10-2012.12 | MT | F | R | Estate FWD B 4204 S3 | | GDS18219 | Drive Shaft | | 36 | 26 | 56.3 | 48 | 921 | |
| | 2006.10-2012.12 | MT | F | L | Estate FWD B 4204 S3 | Chassis no. from:279945 | GCO18203 | Outer Joint | | 36 | 23 | 56 | 48 | 57 | I |
| | 2006.10-2012.12 | MT | F | R | Estate FWD B 4204 S3 | | GCO99130 | Outer Joint | | 36 | 26 | 56.3 | 48 | 61 | M |
| | 2006.10-2012.12 | MT | F | R | Estate FWD B 4204 S3 | | GCI18044 | Inner Joint | | 26 | 23 | 40 | 68.5 | 99.5 | |
| | 2010.01-2012.12 | 5MT | F | L | Estate FWD B 4204 S4 | | GDS18218 | Drive Shaft | | 36 | 26 | 56 | 48 | 582 | |
| | 2010.01-2012.12 | AT | F | L | Estate FWD B 4204 S4 | | GDS62060 | Drive Shaft | | 36 | 26 | 56 | 48 | 519 | |
| | 2010.01-2012.12 | AT | F | R | Estate FWD B 4204 S4 | | GDS62063 | Drive Shaft | | 36 | 26 | 56 | 48 | 947 | |
| | 2010.01-2012.12 | MT | F | R | Estate FWD B 4204 S4 | | GDS18219 | Drive Shaft | | 36 | 26 | 56.3 | 48 | 921 | |
| | 2010.01-2012.12 | MT | F | R | Estate FWD B 4204 S4 | | GCO99130 | Outer Joint | | 36 | 26 | 56.3 | 48 | 61 | M |
| | 2010.01-2012.12 | | F | L | Estate FWD B 4204 S4 | | GCO18203 | Outer Joint | | 36 | 23 | 56 | 48 | 57 | I |
| | 2010.01-2012.12 | | F | R | Estate FWD B 4204 S4 | | GCI18044 | Inner Joint | | 26 | 23 | 40 | 68.5 | 99.5 | |
| 2.0 (110 kw) | 2010.10-2012.12 | AT | F | L | Estate FWD D 5204 T5 | | GDS62108 | Drive Shaft | | 36 | 31 | 56 | 48 | 506 | |
| | 2010.10-2012.12 | AT | F | R | Estate FWD D 5204 T5 | | GDS62103 | Drive Shaft | | 36 | 28 | 56 | 48 | 955 | |
| | 2010.10-2012.12 | AT | F | R | Estate FWD D 5204 T5 | | GCI62048 | Inner Joint | | 28 | 26 | 33 | 520 | 100.5 | |
| | 2010.10-2012.12 | AT/MT | F | L/R | Estate FWD D 5204 T5 | | GCO99155 | Outer Joint | | 36 | 26 | 56 | 48 | 64 | I |
| | 2010.10-2012.12 | MT | F | L | Estate FWD D 5204 T5 | | GDS18290 | Drive Shaft | | 36 | 26 | 56 | 48 | 530 | |
| | 2010.10-2012.12 | MT | F | R | Estate FWD D 5204 T5 | | GDS62062 | Drive Shaft | | 36 | 26 | 56 | 48 | 959 | |
| | 2010.10-2012.12 | MT | F | L | Estate FWD D 5204 T5 | | GCI18159 | Inner Joint | | 26 | 26 | 40 | 67 | 96.5 | |
| 2.0 (130 kw) | 2010.10-2012.12 | AT | F | L | Estate FWD D 5204 T | | GDS62108 | Drive Shaft | | 36 | 31 | 56 | 48 | 506 | |
| | 2010.10-2012.12 | AT | F | R | Estate FWD D 5204 T | | GDS62103 | Drive Shaft | | 36 | 28 | 56 | 48 | 955 | |
| | 2010.10-2012.12 | AT | F | R | Estate FWD D 5204 T | | GCI62048 | Inner Joint | | 28 | 26 | 33 | 520 | 100.5 | |
| | 2010.10-2012.12 | AT/MT | F | L/R | Estate FWD D 5204 T | | GCO99155 | Outer Joint | | 36 | 26 | 56 | 48 | 64 | I |
| | 2010.10-2012.12 | MT | F | L | Estate FWD D 5204 T | | GDS18290 | Drive Shaft | | 36 | 26 | 56 | 48 | 530 | |
| | 2010.10-2012.12 | MT | F | R | Estate FWD D 5204 T | | GDS62062 | Drive Shaft | | 36 | 26 | 56 | 48 | 959 | |
| | 2010.10-2012.12 | MT | F | L | Estate FWD D 5204 T | | GCI18159 | Inner Joint | | 26 | 26 | 40 | 67 | 96.5 | |
| 2.4 (103 kw) | 2004.04-2010.12 | 5AT | F | R | Estate FWD B 5244 S5 | | GDS62063 | Drive Shaft | | 36 | 26 | 56 | 48 | 947 | |
| | 2004.04-2010.12 | AT | F | L | Estate FWD B 5244 S5 | | GDS62060 | Drive Shaft | | 36 | 26 | 56 | 48 | 519 | |
| | 2004.04-2010.12 | AT | F | R | Estate FWD B 5244 S5 | | GCO99132 | Outer Joint | | 36 | 24 | 56 | 48 | 57 | I |
| | 2004.04-2010.12 | AT | F | L | Estate FWD B 5244 S5 | | GCI99109 | Inner Joint | | 26 | 26 | 31 | 68 | 87 | |
| | 2004.04-2010.12 | AT/MT | F | L/R | Estate FWD B 5244 S5 | | GCO62033 | Outer Joint | | 36 | 24 | 56 | 48 | 59 | I |
| | 2004.04-2010.12 | MT | F | L | Estate FWD B 5244 S5 | Chassis no. from:180376;Chassis no. to:180375 | GDS18290 | Drive Shaft | | 36 | 26 | 56 | 48 | 530 | |
| | 2004.04-2010.12 | MT | F | R | Estate FWD B 5244 S5 | | GDS62062 | Drive Shaft | | 36 | 26 | 56 | 48 | 959 | |
| | 2004.04-2010.12 | MT | F | L | Estate FWD B 5244 S5 | Chassis no. from:180376 | GCI18159 | Inner Joint | | 26 | 26 | 40 | 67 | 96.5 | |
| 2.4 (120 kw) | 2007.05-2010.12 | 5AT | F | R | Estate FWD D 5244 T9 | | GDS62063 | Drive Shaft | | 36 | 26 | 56 | 48 | 947 | |
| | 2007.05-2010.12 | AT | F | L | Estate FWD D 5244 T9 | | GDS62060 | Drive Shaft | | 36 | 26 | 56 | 48 | 519 | |
| | 2007.05-2010.12 | AT | F | L/R | Estate FWD D 5244 T9 | | GCO62033 | Outer Joint | | 36 | 24 | 56 | 48 | 59 | I |
| | 2007.05-2010.12 | MT | F | L | Estate FWD D 5244 T9 | | GDS18290 | Drive Shaft | | 36 | 26 | 56 | 48 | 530 | |
| | 2007.05-2010.12 | MT | F | L | Estate FWD D 5244 T9 | | GCI18159 | Inner Joint | | 26 | 26 | 40 | 67 | 96.5 | |
| | 2007.05-2010.12 | | F | L | Estate FWD D 5244 T9 | | GCI99109 | Inner Joint | | 26 | 26 | 31 | 68 | 87 | |
| 2.4 (125 kw) | 2004.04-2010.12 | 5AT | F | R | Estate FWD B 5244 S4 | | GDS62063 | Drive Shaft | | 36 | 26 | 56 | 48 | 947 | |
| | 2004.04-2010.12 | AT | F | L | Estate FWD B 5244 S4 | | GDS62060 | Drive Shaft | | 36 | 26 | 56 | 48 | 519 | |
| | 2004.04-2010.12 | AT | F | R | Estate FWD B 5244 S4 | | GCO99132 | Outer Joint | | 36 | 24 | 56 | 48 | 57 | I |
| | 2004.04-2010.12 | AT | F | L | Estate FWD B 5244 S4 | | GCI99109 | Inner Joint | | 26 | 26 | 31 | 68 | 87 | |
| | 2004.04-2010.12 | AT/MT | F | L/R | Estate FWD B 5244 S4 | | GCO62033 | Outer Joint | | 36 | 24 | 56 | 48 | 59 | I |
| | 2004.04-2010.12 | MT | F | L | Estate FWD B 5244 S4 | Chassis no. from:180376;Chassis no. to:180375 | GDS18290 | Drive Shaft | | 36 | 26 | 56 | 48 | 530 | |
| | 2004.04-2010.12 | MT | F | R | Estate FWD B 5244 S4 | | GDS62062 | Drive Shaft | | 36 | 26 | 56 | 48 | 959 | |
| | 2004.04-2010.12 | MT | F | L | Estate FWD B 5244 S4 | Chassis no. from:180376 | GCI18159 | Inner Joint | | 26 | 26 | 40 | 67 | 96.5 | |
| | 2006.08-2009.12 | MT | F | L | Estate 4WD B 5244 S4 | | GCI18159 | Inner Joint | | 26 | 26 | 40 | 67 | 96.5 | |
| 2.4 (132 kw) | 2006.03-2010.12 | 5AT | F | R | Estate FWD D 5244 T8;D 5244 T13 | | GDS62063 | Drive Shaft | | 36 | 26 | 56 | 48 | 947 | |
| | 2006.03-2010.12 | AT | F | L | Estate FWD D 5244 T8;D 5244 T13 | | GDS62060 | Drive Shaft | | 36 | 26 | 56 | 48 | 519 | |
| | 2006.03-2010.12 | AT | F | R | Estate FWD D 5244 T8;D 5244 T13 | | GCO99132 | Outer Joint | | 36 | 24 | 56 | 48 | 57 | I |
| | 2006.03-2010.12 | AT | F | L/R | Estate FWD D 5244 T8;D 5244 T13 | | GCO62033 | Outer Joint | | 36 | 24 | 56 | 48 | 59 | I |
| | 2006.03-2010.12 | MT | F | L | Estate FWD D 5244 T8;D 5244 T13 | | GDS18290 | Drive Shaft | | 36 | 26 | 56 | 48 | 530 | |

| | YEAR | TRANSM. | F/R | L/R | BODY STYLE & DRIVE TYPE & ENGINE | REMARKS | G-AP Ref. | PRODUCT | ABS | Technical Specifications A | B | C | H | L | P |
|---|---|---|---|---|---|---|---|---|---|---|---|---|---|---|---|
| **VOLVO** | | | | | | | | | | | | | | | |
| **V50** | | | | | | | | | | | | | | | |
| 2.4 (132 kw) | 2006.03-2010.12 | MT | F | R | Estate FWD D 5244 T8;D 5244 T13 | | GDS62062 | Drive Shaft | | 36 | 26 | 56 | 48 | 959 | |
| | 2006.03-2010.12 | MT | F | L | Estate FWD D 5244 T8;D 5244 T13 | | GCI18159 | Inner Joint | | 26 | 26 | 40 | 67 | 96.5 | |
| | 2006.03-2010.12 | | F | L | Estate FWD D 5244 T8;D 5244 T13 | | GCI99109 | Inner Joint | | 26 | 26 | 31 | 68 | 87 | |
| 2.5 (162 kw) | 2004.04-2007.12 | 5AT | F | R | Estate 4WD B 5254 T3 | Chassis no. to:3884634 | GDS62100 | Drive Shaft | | 36 | 26 | 56 | 48 | 954 | |
| | 2004.04-2007.12 | 5AT | F | R | Estate 4WD B 5254 T3 | Chassis no. from:3884635 | GDS62102 | Drive Shaft | | 36 | 26 | 56 | 48 | 954 | |
| | 2004.04-2007.12 | 6MT | F | R | Estate 4WD B 5254 T3 | Chassis no. from:472492 | GCI62045 | Inner Joint | | 26 | 26 | 28 | 528 | 93 | |
| | 2004.04-2007.12 | AT | F | L | Estate 4WD B 5254 T3 | | GDS62060 | Drive Shaft | | 36 | 26 | 56 | 48 | 519 | |
| | 2004.04-2007.12 | MT | F | L | Estate 4WD B 5254 T3 | | GDS62106 | Drive Shaft | | 36 | 26 | 56 | 48 | 539 | |
| | 2004.04-2007.12 | MT | F | R | Estate 4WD B 5254 T3 | Chassis no. to:472491 | GDS62098 | Drive Shaft | | 36 | 26 | 56 | 48 | 968 | |
| | 2004.04-2007.12 | MT | F | R | Estate 4WD B 5254 T3 | Chassis no. from:472492 | GDS62101 | Drive Shaft | | 36 | 26 | 56 | 48 | 969 | |
| | 2004.04-2007.12 | MT | F | L/R | Estate 4WD B 5254 T3 | | GCO99155 | Outer Joint | | 36 | 26 | 56 | 48 | 64 | I |
| | 2004.04-2007.12 | 5AT/6MT | R | L/R | Estate 4WD B 5254 T3 | | GCI44031 | Inner Joint | | 26 | 20 | 35 | 69.5 | 81 | |
| | 2004.04-2007.12 | 6MT | R | L/R | Estate 4WD B 5254 T3 | | GDS81131 | Drive Shaft | 44NS | 36 | 26 | 56.5 | 50 | 727 | |
| | 2004.04-2007.12 | 5AT | F | R | Estate FWD B 5254 T3 | | GDS62063 | Drive Shaft | | 36 | 26 | 56 | 48 | 947 | |
| | 2004.04-2007.12 | AT | F | L | Estate FWD B 5254 T3 | | GDS62060 | Drive Shaft | | 36 | 26 | 56 | 48 | 519 | |
| | 2004.04-2007.12 | AT | F | R | Estate FWD B 5254 T3 | | GCO99132 | Outer Joint | | 36 | 24 | 56 | 48 | 57 | I |
| | 2004.04-2007.12 | AT | F | L | Estate FWD B 5254 T3 | | GCI99109 | Inner Joint | | 26 | 26 | 31 | 68 | 87 | |
| | 2004.04-2007.12 | AT/MT | F | L/R | Estate FWD B 5254 T3 | | GCO62033 | Outer Joint | | 36 | 24 | 56 | 48 | 59 | I |
| | 2004.04-2007.12 | MT | F | L | Estate FWD B 5254 T3 | Chassis no. from:180376;Chassis no. to:180375 | GDS18290 | Drive Shaft | | 36 | 26 | 56 | 48 | 530 | |
| | 2004.04-2007.12 | MT | F | R | Estate FWD B 5254 T3 | | GDS62062 | Drive Shaft | | 36 | 26 | 56 | 48 | 959 | |
| | 2004.04-2007.12 | MT | F | L | Estate FWD B 5254 T3 | Chassis no. from:180376 | GCI18159 | Inner Joint | | 26 | 26 | 40 | 67 | 96.5 | |
| 2.5 (169 kw) | 2007.03-2010.12 | AT | F | L | Estate 4WD B 5254 T7 | | GDS62060 | Drive Shaft | | 36 | 26 | 56 | 48 | 519 | |
| | 2007.03-2010.12 | AT | F | R | Estate 4WD B 5254 T7 | Chassis no. from:472492 | GDS62102 | Drive Shaft | | 36 | 26 | 56 | 48 | 954 | |
| | 2007.03-2010.12 | AT | F | R | Estate 4WD B 5254 T7 | | GCI62047 | Inner Joint | | 26 | 26 | 29.97 | 513.5 | 93 | |
| | 2007.03-2010.12 | MT | F | L | Estate 4WD B 5254 T7 | | GDS18290 | Drive Shaft | | 36 | 26 | 56 | 48 | 530 | |
| | 2007.03-2010.12 | MT | F | L | Estate 4WD B 5254 T7 | | GDS62106 | Drive Shaft | | 36 | 26 | 56 | 48 | 539 | |
| | 2007.03-2010.12 | MT | F | R | Estate 4WD B 5254 T7 | Chassis no. to:472491 | GDS62098 | Drive Shaft | | 36 | 26 | 56 | 48 | 968 | |
| | 2007.03-2010.12 | MT | F | R | Estate 4WD B 5254 T7 | Chassis no. from:472492 | GDS62101 | Drive Shaft | | 36 | 26 | 56 | 48 | 969 | |
| | 2007.03-2010.12 | MT | F | L | Estate 4WD B 5254 T7 | | GCI18159 | Inner Joint | | 26 | 26 | 40 | 67 | 96.5 | |
| | 2007.03-2010.12 | MT | F | R | Estate 4WD B 5254 T7 | Chassis no. from:472492 | GCI62045 | Inner Joint | | 26 | 26 | 28 | 528 | 93 | |
| | 2007.03-2010.12 | 5AT/6MT | R | L/R | Estate 4WD B 5254 T7 | | GCI44031 | Inner Joint | | 26 | 20 | 35 | 69.5 | 81 | |
| | 2007.03-2010.12 | | R | L/R | Estate 4WD B 5254 T7 | | GDS81131 | Drive Shaft | 44NS | 36 | 26 | 56.5 | 50 | 727 | |
| | 2007.03-2012.12 | 5AT | F | R | Estate FWD B 5254 T7 | | GDS62063 | Drive Shaft | | 36 | 26 | 56 | 48 | 947 | |
| | 2007.03-2012.12 | AT | F | L | Estate FWD B 5254 T7 | | GDS62060 | Drive Shaft | | 36 | 26 | 56 | 48 | 519 | |
| | 2007.03-2012.12 | AT | F | L | Estate FWD B 5254 T7 | | GCI99109 | Inner Joint | | 26 | 26 | 31 | 68 | 87 | |
| | 2007.03-2012.12 | AT/MT | F | L/R | Estate FWD B 5254 T7 | | GCO62033 | Outer Joint | | 36 | 24 | 56 | 48 | 59 | I |
| | 2007.03-2012.12 | MT | F | L | Estate FWD B 5254 T7 | | GDS18290 | Drive Shaft | | 36 | 26 | 56 | 48 | 530 | |
| | 2007.03-2012.12 | MT | F | R | Estate FWD B 5254 T7 | | GDS62062 | Drive Shaft | | 36 | 26 | 56 | 48 | 959 | |
| | 2007.03-2012.12 | MT | F | L | Estate FWD B 5254 T7 | Chassis no. from:180376 | GCI18159 | Inner Joint | | 26 | 26 | 40 | 67 | 96.5 | |
| **V60** | | | | | | | | | | | | | | | |
| 1.5 (90 kw) | 2015.10-2017.03 | 6AT | F | L | Estate FWD B 4154 T5 | | GDS83640 | Drive Shaft | | 40 | 26 | 57.7 | 52 | 576 | |
| | 2015.10-2017.03 | 6AT | F | R | Estate FWD B 4154 T5 | | GDS83661 | Drive Shaft | | 40 | 26 | 57.7 | 52 | 953 | |
| | 2015.10-2017.03 | 6AT | F | L/R | Estate FWD B 4154 T5 | | GCO62052 | Outer Joint | | 40 | 25 | 57.7 | 52 | 59.5 | I |
| | 2015.10-2017.03 | 6AT | F | L | Estate FWD B 4154 T5 | | GCI82187 | Inner Joint | | 26 | 24 | 31 | 72 | 94 | |
| | 2015.10-2017.03 | 6AT | F | R | Estate FWD B 4154 T5 | | GCI82304 | Inner Joint | | 26 | 24 | 31 | 454 | 98 | |
| 1.5 (112 kw) | 2015.03-2018.05 | 6AT | F | L | Estate FWD B 4154 T4 | | GDS83640 | Drive Shaft | | 40 | 26 | 57.7 | 52 | 576 | |
| | 2015.03-2018.05 | 6AT | F | R | Estate FWD B 4154 T4 | | GDS83661 | Drive Shaft | | 40 | 26 | 57.7 | 52 | 953 | |
| | 2015.03-2018.05 | 6AT | F | L/R | Estate FWD B 4154 T4 | | GCO62052 | Outer Joint | | 40 | 25 | 57.7 | 52 | 59.5 | I |
| | 2015.03-2018.05 | 6AT | F | L | Estate FWD B 4154 T4 | | GCI82187 | Inner Joint | | 26 | 24 | 31 | 72 | 94 | |
| | 2015.03-2018.05 | 6AT | F | R | Estate FWD B 4154 T4 | | GCI82304 | Inner Joint | | 26 | 24 | 31 | 454 | 98 | |
| 1.6 (84 kw) | 2011.02-2015.12 | 6DCT | F | L | Estate FWD D 4162 T | | GDS62127 | Drive Shaft | | 40 | 28 | 57.7 | 52 | 602 | |
| | 2011.02-2015.12 | 6DCT | F | R | Estate FWD D 4162 T | | GDS62133 | Drive Shaft | | 40 | 28 | 57.7 | 52 | 934 | |
| | 2011.02-2015.12 | 6DCT | F | L | Estate FWD D 4162 T | | GCI62056 | Inner Joint | | 28 | 24 | 33.8 | 80 | 95.5 | |
| | 2011.02-2015.12 | 6DCT | F | R | Estate FWD D 4162 T | | GCI62067 | Inner Joint | | 28 | 24 | 33.8 | 374.5 | 98.5 | |
| | 2011.02-2015.12 | 6MT | F | L | Estate FWD D 4162 T | | GDS62093 | Drive Shaft | | 40 | 26 | 57.7 | 52 | 610 | |
| | 2011.02-2015.12 | 6MT | F | R | Estate FWD D 4162 T | | GDS62094 | Drive Shaft | | 40 | 26 | 57.7 | 52 | 946 | |
| | 2011.02-2015.12 | 6MT | F | L | Estate FWD D 4162 T | | GCI18128 | Inner Joint | | 26 | 28 | 40 | 68.5 | 111 | |
| | 2011.02-2015.12 | 6MT | F | R | Estate FWD D 4162 T | | GCI18129 | Inner Joint | | 26 | 28 | 40 | 389 | 96.5 | |
| | 2013.09-2015.12 | 6DCT | F | L | Estate Van FWD D 4162 T | | GCI62056 | Inner Joint | | 28 | 24 | 33.8 | 80 | 95.5 | |
| | 2013.09-2015.12 | 6DCT | F | R | Estate Van FWD D 4162 T | | GCI62067 | Inner Joint | | 28 | 24 | 33.8 | 374.5 | 98.5 | |
| | 2013.09-2015.12 | 6MT | F | L | Estate Van FWD D 4162 T | | GDS62093 | Drive Shaft | | 40 | 26 | 57.7 | 52 | 610 | |
| | 2013.09-2015.12 | 6MT | F | R | Estate Van FWD D 4162 T | | GDS62094 | Drive Shaft | | 40 | 26 | 57.7 | 52 | 946 | |
| | 2013.09-2015.12 | 6MT | F | L/R | Estate Van FWD D 4162 T | | GCO99271 | Outer Joint | | 40 | 28 | 57.7 | 51 | 63 | M |
| | 2013.09-2015.12 | 6MT | F | L | Estate Van FWD D 4162 T | | GCI18128 | Inner Joint | | 26 | 28 | 40 | 68.5 | 111 | |
| | 2013.09-2015.12 | 6MT | F | R | Estate Van FWD D 4162 T | | GCI18129 | Inner Joint | | 26 | 28 | 40 | 389 | 96.5 | |

| | YEAR | TRANSM. | F/R | L/R | BODY STYLE & DRIVE TYPE & ENGINE | REMARKS | G-AP Ref. | PRODUCT | ABS | Technical Specifications A | B | C | H | L | P |
|---|---|---|---|---|---|---|---|---|---|---|---|---|---|---|---|
| **VOLVO** **V60** | | | | | | | | | | | | | | | |
| 1.6 (84 kw) | 2013.09-2015.12 | | F | | Estate Van FWD D 4162 T | | GDS62127 | Drive Shaft | | 40 | 28 | 57.7 | 52 | 602 | |
| | 2013.09-2015.12 | | F | | Estate Van FWD D 4162 T | | GDS62133 | Drive Shaft | | 40 | 28 | 57.7 | 52 | 934 | |
| 1.6 (110 kw) | 2010.09-2015.12 | 6DCT | F | L | Estate FWD B 4164 T3 | | GDS62081 | Drive Shaft | | 40 | 28 | 57.7 | 51 | 591 | |
| | 2010.09-2015.12 | 6DCT | F | L | Estate FWD B 4164 T3 | | GDS62095 | Drive Shaft | | 40 | 28 | 57.7 | 52 | 592 | |
| | 2010.09-2015.12 | 6DCT | F | R | Estate FWD B 4164 T3 | | GDS62082 | Drive Shaft | | 40 | 28 | 57.7 | 51 | 950 | |
| | 2010.09-2015.12 | 6DCT | F | R | Estate FWD B 4164 T3 | | GDS62096 | Drive Shaft | | 40 | 28 | 57.7 | 52 | 952 | |
| | 2010.09-2015.12 | 6DCT | F | L | Estate FWD B 4164 T3 | | GCI81077 | Inner Joint | | 28 | 28 | 34 | 80 | 95.5 | |
| | 2010.09-2015.12 | 6DCT | F | R | Estate FWD B 4164 T3 | | GCI81078 | Inner Joint | | 28 | 28 | 34 | 446.5 | 95.5 | |
| | 2010.09-2015.12 | 6MT | F | L | Estate FWD B 4164 T3 | | GDS99211 | Drive Shaft | | 40 | 26 | 57.7 | 51 | 603 | |
| | 2010.09-2015.12 | 6MT | F | R | Estate FWD B 4164 T3 | | GDS62084 | Drive Shaft | | 40 | 26 | 57.7 | 51 | 963 | |
| | 2010.09-2015.12 | 6MT | F | L/R | Estate FWD B 4164 T3 | | GCO99271 | Outer Joint | | 40 | 28 | 57.7 | 51 | 63 | M |
| | 2010.09-2015.12 | 6MT | F | R | Estate FWD B 4164 T3 | | GCI62041 | Inner Joint | | 26 | 28 | 40 | 447 | 95.5 | |
| | 2010.09-2015.12 | | F | L/R | Estate FWD B 4164 T3 | Model year from:2011 | GCO62031 | Outer Joint | 48T | 36 | 27 | 56.5 | 55 | 65 | M |
| | 2010.09-2015.12 | | F | L/R | Estate FWD B 4164 T3 | Model year from:2011 | GCO62045 | Outer Joint | | 40 | 26 | 57.7 | 52 | 62.5 | M |
| | 2010.09-2015.12 | | F | L | Estate FWD B 4164 T3 | Model year from:2011 | GCI18044 | Inner Joint | | 26 | 23 | 40 | 68.5 | 99.5 | |
| | 2010.09-2015.12 | | F | L | Estate FWD B 4164 T3 | Model year from:2011 | GCO81424 | Inner Joint | | 31 | 27 | 36.2 | 70 | 62 | |
| 1.6 (132 kw) | 2010.09-2015.12 | 6DCT | F | L | Estate FWD B 4164 T | | GDS62081 | Drive Shaft | | 40 | 28 | 57.7 | 51 | 591 | |
| | 2010.09-2015.12 | 6DCT | F | L | Estate FWD B 4164 T | | GDS62095 | Drive Shaft | | 40 | 28 | 57.7 | 52 | 592 | |
| | 2010.09-2015.12 | 6DCT | F | R | Estate FWD B 4164 T | | GDS62082 | Drive Shaft | | 40 | 28 | 57.7 | 51 | 950 | |
| | 2010.09-2015.12 | 6DCT | F | R | Estate FWD B 4164 T | | GDS62096 | Drive Shaft | | 40 | 28 | 57.7 | 52 | 952 | |
| | 2010.09-2015.12 | 6DCT | F | L | Estate FWD B 4164 T | | GCI81077 | Inner Joint | | 28 | 28 | 34 | 80 | 95.5 | |
| | 2010.09-2015.12 | 6DCT | F | R | Estate FWD B 4164 T | | GCI81078 | Inner Joint | | 28 | 28 | 34 | 446.5 | 95.5 | |
| | 2010.09-2015.12 | 6MT | F | L | Estate FWD B 4164 T | | GDS99211 | Drive Shaft | | 40 | 26 | 57.7 | 51 | 603 | |
| | 2010.09-2015.12 | 6MT | F | R | Estate FWD B 4164 T | | GDS62084 | Drive Shaft | | 40 | 26 | 57.7 | 51 | 963 | |
| | 2010.09-2015.12 | 6MT | F | L/R | Estate FWD B 4164 T | | GCO99271 | Outer Joint | | 40 | 28 | 57.7 | 51 | 63 | M |
| | 2010.09-2015.12 | 6MT | F | R | Estate FWD B 4164 T | | GCI62041 | Inner Joint | | 26 | 28 | 40 | 447 | 95.5 | |
| | 2010.09-2015.12 | | F | L/R | Estate FWD B 4164 T | Model year from:2011 | GCO62031 | Outer Joint | 48T | 36 | 27 | 56.5 | 55 | 65 | M |
| | 2010.09-2015.12 | | F | L/R | Estate FWD B 4164 T | Model year from:2011 | GCO62045 | Outer Joint | | 40 | 26 | 57.7 | 52 | 62.5 | M |
| | 2010.09-2015.12 | | F | L | Estate FWD B 4164 T | Model year from:2011 | GCI18044 | Inner Joint | | 26 | 23 | 40 | 68.5 | 99.5 | |
| | 2010.09-2015.12 | | F | L | Estate FWD B 4164 T | Model year from:2011 | GCO81424 | Inner Joint | | 31 | 27 | 36.2 | 70 | 62 | |
| | 2011.04-2015.12 | 6DCT | F | L | Estate FWD B 4164 T2 | | GDS62081 | Drive Shaft | | 40 | 28 | 57.7 | 51 | 591 | |
| | 2011.04-2015.12 | 6DCT | F | L | Estate FWD B 4164 T2 | | GDS62095 | Drive Shaft | | 40 | 28 | 57.7 | 52 | 592 | |
| | 2011.04-2015.12 | 6DCT | F | R | Estate FWD B 4164 T2 | | GDS62082 | Drive Shaft | | 40 | 28 | 57.7 | 51 | 950 | |
| | 2011.04-2015.12 | 6DCT | F | R | Estate FWD B 4164 T2 | | GDS62096 | Drive Shaft | | 40 | 28 | 57.7 | 52 | 952 | |
| | 2011.04-2015.12 | 6DCT | F | L | Estate FWD B 4164 T2 | | GCI81077 | Inner Joint | | 28 | 28 | 34 | 80 | 95.5 | |
| | 2011.04-2015.12 | 6DCT | F | R | Estate FWD B 4164 T2 | | GCI81078 | Inner Joint | | 28 | 28 | 34 | 446.5 | 95.5 | |
| | 2011.04-2015.12 | 6MT | F | L | Estate FWD B 4164 T2 | | GDS99211 | Drive Shaft | | 40 | 26 | 57.7 | 51 | 603 | |
| | 2011.04-2015.12 | 6MT | F | R | Estate FWD B 4164 T2 | | GDS62084 | Drive Shaft | | 40 | 26 | 57.7 | 51 | 963 | |
| | 2011.04-2015.12 | 6MT | F | L/R | Estate FWD B 4164 T2 | | GCO99271 | Outer Joint | | 40 | 28 | 57.7 | 51 | 63 | M |
| | 2011.04-2015.12 | 6MT | F | R | Estate FWD B 4164 T2 | | GCI62041 | Inner Joint | | 26 | 28 | 40 | 447 | 95.5 | |
| 2.0 (88 kw) | 2015.03-2018.05 | 6AT | F | L | Estate FWD D 4204 T8;D 4204 T20 | | GDS83640 | Drive Shaft | | 40 | 26 | 57.7 | 52 | 576 | |
| | 2015.03-2018.05 | 6AT | F | R | Estate FWD D 4204 T8;D 4204 T20 | | GDS83661 | Drive Shaft | | 40 | 26 | 57.7 | 52 | 953 | |
| | 2015.03-2018.05 | 6AT | F | L | Estate FWD D 4204 T8;D 4204 T20 | | GCI82187 | Inner Joint | | 26 | 24 | 31 | 72 | 94 | |
| | 2015.03-2018.05 | 6AT | F | R | Estate FWD D 4204 T8;D 4204 T20 | | GCI82304 | Inner Joint | | 26 | 24 | 31 | 454 | 98 | |
| | 2015.03-2018.05 | 6MT | F | L | Estate FWD D 4204 T8;D 4204 T20 | | GDS62119 | Drive Shaft | | 40 | 31 | 57.7 | 52 | 599 | |
| | 2015.03-2018.05 | 6MT | F | R | Estate FWD D 4204 T8;D 4204 T20 | | GDS62117 | Drive Shaft | | 40 | 28 | 57.7 | 52 | 949 | |
| | 2015.03-2018.05 | MT | F | L | Estate FWD D 4204 T8;D 4204 T20 | | GCI62060 | Inner Joint | | 31 | 26 | 44 | 79 | 105 | |
| | 2015.03-2018.05 | MT | F | R | Estate FWD D 4204 T8;D 4204 T20 | | GCI62062 | Inner Joint | | 28 | 26 | 40 | 454 | 92 | |
| | 2015.03-2018.05 | MT/6AT | F | L/R | Estate FWD D 4204 T8;D 4204 T20 | | GCO62052 | Outer Joint | | 40 | 25 | 57.7 | 52 | 59.5 | I |
| 2.0 (100 kw) | 2012.05-2015.12 | 6AT | F | L | Estate FWD D 5204 T7 | | GDS62109 | Drive Shaft | | 40 | 31 | 57.7 | 52 | 524 | |
| | 2012.05-2015.12 | 6AT | F | R | Estate FWD D 5204 T7 | | GDS62091 | Drive Shaft | | 40 | 28 | 57.7 | 52 | 992 | |
| | 2012.05-2015.12 | 6AT | F | L/R | Estate FWD D 5204 T7 | Different retainers | GCO59344 | Outer Joint | | 40 | 26 | 57.7 | 52 | 63.5 | M |
| | 2012.05-2015.12 | 6AT | F | L/R | Estate FWD D 5204 T7 | Different retainers | GCO62045 | Outer Joint | | 40 | 26 | 57.7 | 52 | 62.5 | M |
| | 2012.05-2015.12 | 6AT | F | R | Estate FWD D 5204 T7 | | GCI62043 | Inner Joint | | 28 | 26 | 33 | 521 | 100 | |
| | 2012.05-2015.12 | 6AT/6MT | F | L | Estate FWD D 5204 T7 | TJ | GCI18044 | Inner Joint | | 26 | 23 | 40 | 68.5 | 99.5 | |
| | 2012.05-2015.12 | 6AT/6MT | F | L | Estate FWD D 5204 T7 | DOJ | GCO81424 | Inner Joint | | 31 | 27 | 36.2 | 70 | 62 | |
| | 2012.05-2015.12 | 6AT/6MT | F | R | Estate FWD D 5204 T7 | | GCI81076 | Inner Joint | | 26 | 28 | 40 | 522.5 | 123.7 | |
| | 2012.05-2015.12 | 6MT | F | L | Estate FWD D 5204 T7 | | GDS21070 | Drive Shaft | | 40 | 26 | 57.7 | 52 | 556 | |
| | 2012.05-2015.12 | 6MT | F | R | Estate FWD D 5204 T7 | | GDS62086 | Drive Shaft | | 40 | 26 | 57.7 | 52 | 1002 | |
| | 2012.05-2015.12 | 6MT | F | L/R | Estate FWD D 5204 T7 | | GCO59285 | Outer Joint | | 40 | 27 | 57.7 | 52 | 63.5 | M |
| | 2013.09-2015.12 | 6AT | F | L | Estate Van FWD D 5204 T7 | | GDS62109 | Drive Shaft | | 40 | 31 | 57.7 | 52 | 524 | |
| | 2013.09-2015.12 | 6AT | F | R | Estate Van FWD D 5204 T7 | | GDS62091 | Drive Shaft | | 40 | 28 | 57.7 | 52 | 992 | |
| | 2013.09-2015.12 | 6AT | F | L/R | Estate Van FWD D 5204 T7 | | GCO62045 | Outer Joint | | 40 | 26 | 57.7 | 52 | 62.5 | M |
| | 2013.09-2015.12 | 6AT | F | R | Estate Van FWD D 5204 T7 | | GCI62043 | Inner Joint | | 28 | 26 | 33 | 521 | 100 | |
| | 2013.09-2015.12 | 6MT | F | L | Estate Van FWD D 5204 T7 | | GDS21070 | Drive Shaft | | 40 | 26 | 57.7 | 52 | 556 | |

| | YEAR | TRANSM. | F/R | L/R | BODY STYLE & DRIVE TYPE & ENGINE | REMARKS | G-AP Ref. | PRODUCT | ABS | Technical Specifications A | B | C | H | L | P |
|---|---|---|---|---|---|---|---|---|---|---|---|---|---|---|---|
| **VOLVO** **V60** | | | | | | | | | | | | | | | |
| 2.0 (100 kw) | 2013.09-2015.12 | 6MT | F | R | Estate Van FWD D 5204 T7 | | GDS62086 | Drive Shaft | | 40 | 26 | 57.7 | 52 | 1002 | |
| | 2013.09-2015.12 | 6MT | F | L/R | Estate Van FWD D 5204 T7 | | GCO59285 | Outer Joint | | 40 | 27 | 57.7 | 52 | 63.5 | M |
| | 2013.09-2015.12 | | F | | Estate Van FWD D 5204 T7 | | GCI81076 | Inner Joint | | 26 | 28 | 40 | 522.5 | 123.7 | |
| 2.0 (110 kw) | 2015.03-2018.05 | 6AT | F | L | Estate FWD D 4204 T9;D 4204 T4 | | GDS83640 | Drive Shaft | | 40 | 26 | 57.7 | 52 | 576 | |
| | 2015.03-2018.05 | 6AT | F | R | Estate FWD D 4204 T9;D 4204 T4 | | GDS83661 | Drive Shaft | | 40 | 26 | 57.7 | 52 | 953 | |
| | 2015.03-2018.05 | 6MT | F | L | Estate FWD D 4204 T9;D 4204 T4 | | GDS62119 | Drive Shaft | | 40 | 31 | 57.7 | 52 | 599 | |
| | 2015.03-2018.05 | 6MT | F | R | Estate FWD D 4204 T9;D 4204 T4 | | GDS62117 | Drive Shaft | | 40 | 28 | 57.7 | 52 | 949 | |
| | 2015.03-2018.05 | 8AT | F | L | Estate FWD D 4204 T9;D 4204 T4 | | GCO81181 | Outer Joint | | 40 | 28 | 57.5 | 52 | 60.5 | I |
| | 2015.03-2018.05 | 8AT | F | L | Estate FWD D 4204 T9;D 4204 T4 | | GCI82187 | Inner Joint | | 26 | 24 | 31 | 72 | 94 | |
| | 2015.03-2018.05 | 8AT | F | L | Estate FWD D 4204 T9;D 4204 T4 | Transmission side | GCO81424 | Inner Joint | | 31 | 27 | 36.2 | 70 | 62 | |
| | 2015.03-2018.05 | 8AT | F | R | Estate FWD D 4204 T9;D 4204 T4 | | GCI82304 | Inner Joint | | 26 | 24 | 31 | 454 | 98 | |
| | 2015.03-2018.05 | MT | F | L | Estate FWD D 4204 T9;D 4204 T4 | | GCI62060 | Inner Joint | | 31 | 26 | 44 | 79 | 105 | |
| | 2015.03-2018.05 | MT | F | R | Estate FWD D 4204 T9;D 4204 T4 | | GCI62062 | Inner Joint | | 28 | 26 | 40 | 454 | 92 | |
| | 2015.03-2018.05 | MT/8AT | F | L/R | Estate FWD D 4204 T9;D 4204 T4 | | GCO62052 | Outer Joint | | 40 | 25 | 57.7 | 52 | 59.5 | I |
| | 2018.09-2021.12 | 8AT | F | L | Estate 4WD D 4204 T4 | | GCO82347 | Outer Joint | | 40 | 28 | 54.1 | 53 | 62.5 | I |
| | 2018.09-2021.12 | 8AT | F | L | Estate 4WD D 4204 T4 | | GCI62034 | Inner Joint | | 31 | 27 | 36.2 | 68 | 90 | |
| 2.0 (112 kw) | 2015.03-2018.05 | 6MT | F | L | Estate FWD B 4204 T37 | | GDS62119 | Drive Shaft | | 40 | 31 | 57.7 | 52 | 599 | |
| | 2015.03-2018.05 | 6MT | F | R | Estate FWD B 4204 T37 | | GDS62117 | Drive Shaft | | 40 | 28 | 57.7 | 52 | 949 | |
| | 2015.03-2018.05 | 6MT | F | L/R | Estate FWD B 4204 T37 | | GCO62052 | Outer Joint | | 40 | 25 | 57.7 | 52 | 59.5 | I |
| | 2015.03-2018.05 | 6MT | F | L | Estate FWD B 4204 T37 | | GCI62060 | Inner Joint | | 31 | 26 | 44 | 79 | 105 | |
| | 2015.03-2018.05 | 6MT | F | R | Estate FWD B 4204 T37 | | GCI62062 | Inner Joint | | 28 | 26 | 40 | 454 | 92 | |
| 2.0 (120 kw) | 2010.07-2014.12 | 6AT | F | L | Estate FWD D 5204 T2;D 5204 T3 | Chassis no. to:128939 | GDS62076 | Drive Shaft | | 40 | 31 | 57.7 | 52 | 529 | |
| | 2010.07-2014.12 | 6AT | F | L | Estate FWD D 5204 T2;D 5204 T3 | Chassis no. from:128940 | GDS62109 | Drive Shaft | | 40 | 31 | 57.7 | 52 | 524 | |
| | 2010.07-2014.12 | 6AT | F | R | Estate FWD D 5204 T2;D 5204 T3 | Chassis no. to:128939 | GDS59444 | Drive Shaft | | 40 | 28 | 57.7 | 52 | 994 | |
| | 2010.07-2014.12 | 6AT | F | R | Estate FWD D 5204 T2;D 5204 T3 | Chassis no. from:128940 | GDS62091 | Drive Shaft | | 40 | 28 | 57.7 | 52 | 992 | |
| | 2010.07-2014.12 | 6AT | F | L/R | Estate FWD D 5204 T2;D 5204 T3 | Chassis no. from:128940;Different retainers | GCO59344 | Outer Joint | | 40 | 26 | 57.7 | 52 | 63.5 | M |
| | 2010.07-2014.12 | 6AT | F | L/R | Estate FWD D 5204 T2;D 5204 T3 | Chassis no. from:128940;Different retainers | GCO62045 | Outer Joint | | 40 | 26 | 57.7 | 52 | 62.5 | M |
| | 2010.07-2014.12 | 6AT | F | L | Estate FWD D 5204 T2;D 5204 T3 | Chassis no. to:128939 | GCI62034 | Inner Joint | | 31 | 27 | 36.2 | 68 | 90 | |
| | 2010.07-2014.12 | 6AT | F | L | Estate FWD D 5204 T2;D 5204 T3 | Chassis no. from:128940 | GCI62061 | Inner Joint | | 31 | 26 | 36.2 | 68 | 87 | |
| | 2010.07-2014.12 | 6AT | F | R | Estate FWD D 5204 T2;D 5204 T3 | Chassis no. from:128940 | GCI62043 | Inner Joint | | 28 | 26 | 33 | 521 | 100 | |
| | 2010.07-2014.12 | 6MT | F | L | Estate FWD D 5204 T2;D 5204 T3 | | GDS21070 | Drive Shaft | | 40 | 26 | 57.7 | 52 | 556 | |
| | 2010.07-2014.12 | 6MT | F | R | Estate FWD D 5204 T2;D 5204 T3 | | GDS62086 | Drive Shaft | | 40 | 26 | 57.7 | 52 | 1002 | |
| | 2010.07-2014.12 | 6MT | F | L/R | Estate FWD D 5204 T2;D 5204 T3 | | GCO59285 | Outer Joint | | 40 | 27 | 57.7 | 52 | 63.5 | M |
| | 2010.07-2014.12 | 6MT | F | R | Estate FWD D 5204 T2;D 5204 T3 | | GCI81076 | Inner Joint | | 26 | 28 | 40 | 522.5 | 123.7 | |
| | 2013.09-2015.12 | 6AT | F | L | Estate Van FWD D 5204 T3 | | GDS62109 | Drive Shaft | | 40 | 31 | 57.7 | 52 | 524 | |
| | 2013.09-2015.12 | 6AT | F | R | Estate Van FWD D 5204 T3 | | GDS62091 | Drive Shaft | | 40 | 28 | 57.7 | 52 | 992 | |
| | 2013.09-2015.12 | 6AT | F | L/R | Estate Van FWD D 5204 T3 | | GCO62045 | Outer Joint | | 40 | 26 | 57.7 | 52 | 62.5 | M |
| | 2013.09-2015.12 | 6AT | F | R | Estate Van FWD D 5204 T3 | | GCI62043 | Inner Joint | | 28 | 26 | 33 | 521 | 100 | |
| | 2013.09-2015.12 | 6MT | F | L | Estate Van FWD D 5204 T3 | | GDS21070 | Drive Shaft | | 40 | 26 | 57.7 | 52 | 556 | |
| | 2013.09-2015.12 | 6MT | F | R | Estate Van FWD D 5204 T3 | | GDS62086 | Drive Shaft | | 40 | 26 | 57.7 | 52 | 1002 | |
| | 2013.09-2015.12 | 6MT | F | L/R | Estate Van FWD D 5204 T3 | | GCO59285 | Outer Joint | | 40 | 27 | 57.7 | 52 | 63.5 | M |
| | 2013.09-2015.12 | | F | | Estate Van FWD D 5204 T3 | | GCI81076 | Inner Joint | | 26 | 28 | 40 | 522.5 | 123.7 | |
| 2.0 (132 kw) | 2014.01-2018.07 | 6AT | F | L | Estate FWD B 5204 T8 | Chassis no. to:199772 | GDS62076 | Drive Shaft | | 40 | 31 | 57.7 | 52 | 529 | |
| | 2014.01-2018.07 | 6AT | F | L | Estate FWD B 5204 T8 | Chassis no. from:199773 | GDS62109 | Drive Shaft | | 40 | 31 | 57.7 | 52 | 524 | |
| | 2014.01-2018.07 | 6AT | F | R | Estate FWD B 5204 T8 | Chassis no. to:199772 | GDS59444 | Drive Shaft | | 40 | 28 | 57.7 | 52 | 994 | |
| | 2014.01-2018.07 | 6AT | F | R | Estate FWD B 5204 T8 | Chassis no. from:199773 | GDS62091 | Drive Shaft | | 40 | 28 | 57.7 | 52 | 992 | |
| | 2014.01-2018.07 | | F | L | Estate FWD B 5204 T8 | Chassis no. from:199773 | GCO62045 | Outer Joint | | 40 | 26 | 57.7 | 52 | 62.5 | M |
| | 2014.01-2018.07 | | F | | Estate FWD B 5204 T8 | for model year:2015 | GCO62031 | Outer Joint | 48T | 36 | 27 | 56.5 | 55 | 65 | M |
| | 2014.01-2018.07 | | F | L | Estate FWD B 5204 T8 | for model year:2015 | GCI18044 | Inner Joint | | 26 | 23 | 40 | 68.5 | 99.5 | |
| | 2014.01-2018.07 | | F | L | Estate FWD B 5204 T8 | for model year:2015 | GCO81424 | Inner Joint | | 31 | 27 | 36.2 | 70 | 62 | |
| | 2014.01-2018.07 | | F | R | Estate FWD B 5204 T8 | Chassis no. from:199773 | GCI62043 | Inner Joint | | 28 | 26 | 33 | 521 | 100 | |
| 2.0 (133 kw) | 2013.10-2015.12 | 6MT | F | L | Estate FWD D 4204 T5 | | GDS62119 | Drive Shaft | | 40 | 31 | 57.7 | 52 | 599 | |
| | 2013.10-2015.12 | 6MT | F | R | Estate FWD D 4204 T5 | | GDS62117 | Drive Shaft | | 40 | 28 | 57.7 | 52 | 949 | |
| | 2013.10-2015.12 | 6MT | F | L/R | Estate FWD D 4204 T5 | | GCO62052 | Outer Joint | | 40 | 25 | 57.7 | 52 | 59.5 | I |
| | 2013.10-2015.12 | 6MT | F | L | Estate FWD D 4204 T5 | | GCI62060 | Inner Joint | | 31 | 26 | 44 | 79 | 105 | |
| | 2013.10-2015.12 | 6MT | F | R | Estate FWD D 4204 T5 | | GCI62062 | Inner Joint | | 28 | 26 | 40 | 454 | 92 | |
| | 2013.10-2015.12 | 8AT | F | L | Estate FWD D 4204 T5 | | GDS62126 | Drive Shaft | | 40 | 31 | 57.5 | 52 | 576 | |
| | 2013.10-2015.12 | 8AT | F | R | Estate FWD D 4204 T5 | | GDS62124 | Drive Shaft | | 40 | 28 | 57.5 | 52 | 954 | |
| | 2013.10-2015.12 | 8AT | F | L/R | Estate FWD D 4204 T5 | | GCO62053 | Outer Joint | | 40 | 27 | 57.5 | 52 | 60.5 | I |
| | 2013.10-2015.12 | 8AT | F | L | Estate FWD D 4204 T5 | | GCI62034 | Inner Joint | | 31 | 27 | 36.2 | 68 | 90 | |
| | 2013.10-2015.12 | 8AT | F | R | Estate FWD D 4204 T5 | | GCI62065 | Inner Joint | | 28 | 27 | 33 | 454 | 94 | |
| 2.0 (140 kw) | 2015.03-2018.05 | 6AT | F | L | Estate FWD B 4204 T19 | | GDS83640 | Drive Shaft | | 40 | 26 | 57.7 | 52 | 576 | |
| | 2015.03-2018.05 | 6AT | F | R | Estate FWD B 4204 T19 | | GDS83661 | Drive Shaft | | 40 | 26 | 57.7 | 52 | 953 | |
| | 2015.03-2018.05 | 6AT | F | L | Estate FWD B 4204 T19 | | GCI82187 | Inner Joint | | 26 | 24 | 31 | 72 | 94 | |
| | 2015.03-2018.05 | 6AT | F | R | Estate FWD B 4204 T19 | | GCI82304 | Inner Joint | | 26 | 24 | 31 | 454 | 98 | |

| | YEAR | TRANSM. | F/R | L/R | BODY STYLE & DRIVE TYPE & ENGINE | REMARKS | G-AP Ref. | PRODUCT | ABS | Technical Specifications A | B | C | H | L | P |
|---|---|---|---|---|---|---|---|---|---|---|---|---|---|---|---|
| **VOLVO** **V60** | | | | | | | | | | | | | | | |
| 2.0 (140 kw) | 2015.03-2018.05 | 6AT/6MT | F | L/R | Estate FWD B 4204 T19 | | GCO62052 | Outer Joint | | 40 | 25 | 57.7 | 52 | 59.5 | I |
| | 2015.03-2018.05 | 6MT | F | L | Estate FWD B 4204 T19 | | GDS62119 | Drive Shaft | | 40 | 31 | 57.7 | 52 | 599 | |
| | 2015.03-2018.05 | 6MT | F | R | Estate FWD B 4204 T19 | | GDS62117 | Drive Shaft | | 40 | 28 | 57.7 | 52 | 949 | |
| | 2015.03-2018.05 | 6MT | F | L | Estate FWD B 4204 T19 | | GCI62060 | Inner Joint | | 31 | 26 | 44 | 79 | 105 | |
| | 2015.03-2018.05 | 6MT | F | R | Estate FWD B 4204 T19 | | GCI62062 | Inner Joint | | 28 | 26 | 40 | 454 | 92 | |
| | 2015.03-2018.05 | 6MT | F | L | Estate FWD D 4204 T14 | | GDS62119 | Drive Shaft | | 40 | 31 | 57.7 | 52 | 599 | |
| | 2015.03-2018.05 | 6MT | F | R | Estate FWD D 4204 T14 | | GDS62117 | Drive Shaft | | 40 | 28 | 57.7 | 52 | 949 | |
| | 2015.03-2018.05 | 8AT | F | L | Estate FWD D 4204 T14 | | GDS62126 | Drive Shaft | | 40 | 31 | 57.5 | 52 | 576 | |
| | 2015.03-2018.05 | 8AT | F | L | Estate FWD D 4204 T14 | | GCO81181 | Outer Joint | | 40 | 28 | 57.5 | 52 | 60.5 | I |
| | 2015.03-2018.05 | 8AT | F | L | Estate FWD D 4204 T14 | Transmission side | GCO81424 | Inner Joint | | 31 | 27 | 36.2 | 70 | 62 | |
| | 2015.03-2018.05 | AT | F | R | Estate FWD D 4204 T14 | | GDS62124 | Drive Shaft | | 40 | 28 | 57.5 | 52 | 954 | |
| | 2015.03-2018.05 | AT | F | L/R | Estate FWD D 4204 T14 | | GCO62053 | Outer Joint | | 40 | 27 | 57.5 | 52 | 60.5 | I |
| | 2015.03-2018.05 | AT | F | L | Estate FWD D 4204 T14 | | GCI62034 | Inner Joint | | 31 | 27 | 36.2 | 68 | 90 | |
| | 2015.03-2018.05 | AT | F | R | Estate FWD D 4204 T14 | | GCI62065 | Inner Joint | | 28 | 27 | 33 | 454 | 94 | |
| | 2015.03-2018.05 | MT | F | L/R | Estate FWD D 4204 T14 | | GCO62052 | Outer Joint | | 40 | 25 | 57.7 | 52 | 59.5 | I |
| | 2015.03-2018.05 | MT | F | L | Estate FWD D 4204 T14 | | GCI62060 | Inner Joint | | 31 | 26 | 44 | 79 | 105 | |
| | 2015.03-2018.05 | MT | F | R | Estate FWD D 4204 T14 | | GCI62062 | Inner Joint | | 28 | 26 | 40 | 454 | 92 | |
| | 2018.09-2021.12 | 8AT | F | L | Estate 4WD D 4204 T14 | | GCO82347 | Outer Joint | | 40 | 28 | 54.1 | 53 | 62.5 | I |
| | 2018.09-2021.12 | 8AT | F | L | Estate 4WD D 4204 T14 | | GCI62034 | Inner Joint | | 31 | 27 | 36.2 | 68 | 90 | |
| 2.0 (147 kw) | 2018.02-2021.12 | 8AT | F | L | Estate FWD D 4204 T14 | | GDS62126 | Drive Shaft | | 40 | 31 | 57.5 | 52 | 576 | |
| | 2018.02-2021.12 | 8AT | F | R | Estate FWD D 4204 T14 | | GDS62124 | Drive Shaft | | 40 | 28 | 57.5 | 52 | 954 | |
| | 2018.02-2021.12 | 8AT | F | L/R | Estate FWD D 4204 T14 | | GCO62053 | Outer Joint | | 40 | 27 | 57.5 | 52 | 60.5 | I |
| | 2018.02-2021.12 | 8AT | F | L | Estate FWD D 4204 T14 | | GCI62034 | Inner Joint | | 31 | 27 | 36.2 | 68 | 90 | |
| | 2018.02-2021.12 | 8AT | F | R | Estate FWD D 4204 T14 | | GCI62065 | Inner Joint | | 28 | 27 | 33 | 454 | 94 | |
| 2.0 (149 kw) | 2010.07-2012.12 | 6AT | F | R | Estate FWD B 4204 T6 | | GCI62058 | Inner Joint | | 28 | 26 | 33.95 | 430 | 103 | |
| | 2010.07-2012.12 | 6DCT | F | L | Estate FWD B 4204 T6 | | GDS62113 | Drive Shaft | | 40 | 28 | 57.7 | 52 | 590 | |
| | 2010.07-2012.12 | 6DCT | F | R | Estate FWD B 4204 T6 | | GDS62114 | Drive Shaft | | 40 | 28 | 57.7 | 52 | 952 | |
| | 2010.07-2012.12 | 6DCT | F | L/R | Estate FWD B 4204 T6 | | GCO18269 | Outer Joint | | 40 | 26 | 57.7 | 52 | 63.5 | I |
| | 2010.07-2012.12 | 6DCT | F | L | Estate FWD B 4204 T6 | | GCI62059 | Inner Joint | | 28 | 26 | 34 | 80 | 101.5 | |
| | 2010.07-2012.12 | 6MT | F | L | Estate FWD B 4204 T6 | | GDS62134 | Drive Shaft | | 40 | 26 | 57.7 | 52 | 599 | |
| | 2010.07-2012.12 | 6MT | F | R | Estate FWD B 4204 T6 | | GDS62112 | Drive Shaft | | 40 | 26 | 57.7 | 52 | 962 | |
| | 2010.07-2012.12 | 6MT | F | L | Estate FWD B 4204 T6 | | GCI62072 | Inner Joint | | 26 | 26 | 40 | 69 | 112 | |
| | 2010.07-2012.12 | 6MT | F | R | Estate FWD B 4204 T6 | | GCI62057 | Inner Joint | | 26 | 26 | 40 | 448 | 103 | |
| 2.0 (157 kw) | 2013.10-2018.05 | 6AT | F | L | Estate FWD B 5204 T9 | Chassis no. to:199772 | GDS62076 | Drive Shaft | | 40 | 31 | 57.7 | 52 | 529 | |
| | 2013.10-2018.05 | 6AT | F | L | Estate FWD B 5204 T9 | Chassis no. from:199773 | GDS62109 | Drive Shaft | | 40 | 31 | 57.7 | 52 | 524 | |
| | 2013.10-2018.05 | 6AT | F | R | Estate FWD B 5204 T9 | Chassis no. to:199772 | GDS59444 | Drive Shaft | | 40 | 28 | 57.7 | 52 | 994 | |
| | 2013.10-2018.05 | 6AT | F | R | Estate FWD B 5204 T9 | Chassis no. from:199773 | GDS62091 | Drive Shaft | | 40 | 28 | 57.7 | 52 | 992 | |
| | 2013.10-2018.05 | 6AT | F | L | Estate FWD B 5204 T9 | Chassis no. from:199773 | GCO59344 | Outer Joint | | 40 | 26 | 57.7 | 52 | 63.5 | M |
| | 2013.10-2018.05 | 6AT | F | L | Estate FWD B 5204 T9 | Chassis no. to:199772 | GCO62042 | Outer Joint | | 40 | 27 | 57.7 | 52 | 63.5 | M |
| | 2013.10-2018.05 | 6AT | F | R | Estate FWD B 5204 T9 | Chassis no. from:199773 | GCO62045 | Outer Joint | | 40 | 26 | 57.7 | 52 | 62.5 | M |
| | 2013.10-2018.05 | 6AT | F | L | Estate FWD B 5204 T9 | Chassis no. to:199772 | GCI62034 | Inner Joint | | 31 | 27 | 36.2 | 68 | 90 | |
| | 2013.10-2018.05 | 6AT | F | L | Estate FWD B 5204 T9 | Chassis no. from:199773 | GCI62061 | Inner Joint | | 31 | 26 | 36.2 | 68 | 87 | |
| | 2013.10-2018.05 | 6AT | F | R | Estate FWD B 5204 T9 | Chassis no. from:199773 | GCI62043 | Inner Joint | | 28 | 26 | 33 | 521 | 100 | |
| | 2013.10-2018.05 | | F | | Estate FWD B 5204 T9 | for model year:2015 | GCO62031 | Outer Joint | 48T | 36 | 27 | 56.5 | 55 | 65 | M |
| | 2013.10-2018.05 | | F | L | Estate FWD B 5204 T9 | for model year:2015 | GCI18044 | Inner Joint | | 26 | 23 | 40 | 68.5 | 99.5 | |
| | 2013.10-2018.05 | | F | L | Estate FWD B 5204 T9 | for model year:2015 | GCO81424 | Inner Joint | | 31 | 27 | 36.2 | 70 | 62 | |
| | 2014.03-2015.12 | 6AT | F | L | Estate FWD B 5204 T9 | Chassis no. to:199772 | GDS62076 | Drive Shaft | | 40 | 31 | 57.7 | 52 | 529 | |
| | 2014.03-2015.12 | 6AT | F | L | Estate FWD B 5204 T9 | Chassis no. from:199773 | GDS62109 | Drive Shaft | | 40 | 31 | 57.7 | 52 | 524 | |
| | 2014.03-2015.12 | 6AT | F | R | Estate FWD B 5204 T9 | Chassis no. to:199772 | GDS59444 | Drive Shaft | | 40 | 28 | 57.7 | 52 | 994 | |
| | 2014.03-2015.12 | 6AT | F | R | Estate FWD B 5204 T9 | Chassis no. from:199773 | GDS62091 | Drive Shaft | | 40 | 28 | 57.7 | 52 | 992 | |
| | 2014.03-2015.12 | | F | | Estate FWD B 5204 T9 | | GCO62045 | Outer Joint | | 40 | 26 | 57.7 | 52 | 62.5 | M |
| | 2014.03-2015.12 | | F | | Estate FWD B 5204 T9 | | GCI62043 | Inner Joint | | 28 | 26 | 33 | 521 | 100 | |
| 2.0 (162 kw) | 2014.01-2017.12 | 6AT | F | L | Estate FWD B 4204 T15 | | GDS62126 | Drive Shaft | | 40 | 31 | 57.5 | 52 | 576 | |
| | 2014.01-2017.12 | 6AT | F | R | Estate FWD B 4204 T15 | | GDS62124 | Drive Shaft | | 40 | 28 | 57.5 | 52 | 954 | |
| | 2014.01-2017.12 | 6AT | F | L/R | Estate FWD B 4204 T15 | | GCO62053 | Outer Joint | | 40 | 27 | 57.5 | 52 | 60.5 | I |
| | 2014.01-2017.12 | 6AT | F | L | Estate FWD B 4204 T15 | | GCI62034 | Inner Joint | | 31 | 27 | 36.2 | 68 | 90 | |
| | 2014.01-2017.12 | 6AT | F | R | Estate FWD B 4204 T15 | | GCI62065 | Inner Joint | | 28 | 27 | 33 | 454 | 94 | |
| | 2014.01-2017.12 | | F | | Estate FWD B 4204 T15 | for model year:2015 | GCO62031 | Outer Joint | 48T | 36 | 27 | 56.5 | 55 | 65 | M |
| | 2014.01-2017.12 | | F | | Estate FWD B 4204 T15 | for model year:2015 | GCO62045 | Outer Joint | | 40 | 26 | 57.7 | 52 | 62.5 | M |
| | 2014.01-2017.12 | | F | L | Estate FWD B 4204 T15 | for model year:2015 | GCI18044 | Inner Joint | | 26 | 23 | 40 | 68.5 | 99.5 | |
| | 2014.01-2017.12 | | F | L | Estate FWD B 4204 T15 | for model year:2015 | GCO81424 | Inner Joint | | 31 | 27 | 36.2 | 70 | 62 | |
| 2.0 (165 kw) | 2015.03-2018.05 | AT | F | L | Estate FWD D 4204 T11 | | GDS62126 | Drive Shaft | | 40 | 31 | 57.5 | 52 | 576 | |
| | 2015.03-2018.05 | AT | F | R | Estate FWD D 4204 T11 | | GDS62124 | Drive Shaft | | 40 | 28 | 57.5 | 52 | 954 | |
| | 2015.03-2018.05 | AT | F | L/R | Estate FWD D 4204 T11 | | GCO62053 | Outer Joint | | 40 | 27 | 57.5 | 52 | 60.5 | I |
| | 2015.03-2018.05 | AT | F | L | Estate FWD D 4204 T11 | | GCI62034 | Inner Joint | | 31 | 27 | 36.2 | 68 | 90 | |

| | YEAR | TRANSM. | F/R | L/R | BODY STYLE & DRIVE TYPE & ENGINE | REMARKS | G-AP Ref. | PRODUCT | ABS | Technical Specifications A | B | C | H | L | P |
|---|---|---|---|---|---|---|---|---|---|---|---|---|---|---|---|
| **VOLVO** **V60** | | | | | | | | | | | | | | | |
| 2.0 (165 kw) | 2015.03-2018.05 | AT | F | R | Estate FWD D 4204 T11 | | GCI62065 | Inner Joint | | 28 | 27 | 33 | 454 | 94 | |
| 2.0 (176 kw) | 2012.08-2014.07 | 6AT | F | L | Estate FWD B 4204 T7 | | GDS62113 | Drive Shaft | | 40 | 28 | 57.7 | 52 | 590 | |
| | 2012.08-2014.07 | 6AT | F | R | Estate FWD B 4204 T7 | | GDS62114 | Drive Shaft | | 40 | 28 | 57.7 | 52 | 952 | |
| | 2012.08-2014.07 | | F | L/R | Estate FWD B 4204 T7 | | GCO62031 | Outer Joint | 48T | 36 | 27 | 56.5 | 55 | 65 | M |
| | 2012.08-2014.07 | | F | | Estate FWD B 4204 T7 | for model year:2015 | GCO62045 | Outer Joint | | 40 | 26 | 57.7 | 52 | 62.5 | M |
| | 2012.08-2014.07 | | F | L | Estate FWD B 4204 T7 | for model year:2015 | GCI18044 | Inner Joint | | 26 | 23 | 40 | 68.5 | 99.5 | |
| | 2012.08-2014.07 | | F | L | Estate FWD B 4204 T7 | for model year:2015 | GCO81424 | Inner Joint | | 31 | 27 | 36.2 | 70 | 62 | |
| 2.0 (177 kw) | 2010.09-2014.12 | 6AT | F | R | Estate FWD B 4204 T7 | | GDS62114 | Drive Shaft | | 40 | 28 | 57.7 | 52 | 952 | |
| | 2010.09-2014.12 | 6AT | F | R | Estate FWD B 4204 T7 | | GCI62058 | Inner Joint | | 28 | 26 | 33.95 | 430 | 103 | |
| | 2010.09-2014.12 | 6DCT | F | L | Estate FWD B 4204 T7 | | GDS62113 | Drive Shaft | | 40 | 28 | 57.7 | 52 | 590 | |
| | 2010.09-2014.12 | 6DCT | F | L/R | Estate FWD B 4204 T7 | | GCO18269 | Outer Joint | | 40 | 26 | 57.7 | 52 | 63.5 | I |
| | 2010.09-2014.12 | 6DCT | F | L | Estate FWD B 4204 T7 | | GCI62059 | Inner Joint | | 28 | 26 | 34 | 80 | 101.5 | |
| | 2010.09-2014.12 | 6MT | F | L | Estate FWD B 4204 T7 | | GDS62134 | Drive Shaft | | 40 | 26 | 57.7 | 52 | 599 | |
| | 2010.09-2014.12 | 6MT | F | R | Estate FWD B 4204 T7 | | GDS62112 | Drive Shaft | | 40 | 26 | 57.7 | 52 | 962 | |
| | 2010.09-2014.12 | 6MT | F | L | Estate FWD B 4204 T7 | | GCI62072 | Inner Joint | | 26 | 26 | 40 | 69 | 112 | |
| | 2010.09-2014.12 | 6MT | F | R | Estate FWD B 4204 T7 | | GCI62057 | Inner Joint | | 26 | 26 | 40 | 448 | 103 | |
| 2.0 (180 kw) | 2013.10-2018.12 | 8AT | F | L | Estate FWD B 4204 T11;B 4204 T41 | | GDS62126 | Drive Shaft | | 40 | 31 | 57.5 | 52 | 576 | |
| | 2013.10-2018.12 | 8AT | F | L | Estate FWD B 4204 T11;B 4204 T41 | | GCI62034 | Inner Joint | | 31 | 27 | 36.2 | 68 | 90 | |
| | 2013.10-2018.12 | AT | F | R | Estate FWD B 4204 T11;B 4204 T41 | | GDS62124 | Drive Shaft | | 40 | 28 | 57.5 | 52 | 954 | |
| | 2013.10-2018.12 | AT | F | L/R | Estate FWD B 4204 T11;B 4204 T41 | | GCO62053 | Outer Joint | | 40 | 27 | 57.5 | 52 | 60.5 | I |
| | 2013.10-2018.12 | AT | F | R | Estate FWD B 4204 T11;B 4204 T41 | | GCI62065 | Inner Joint | | 28 | 27 | 33 | 454 | 94 | |
| | 2013.10-2018.12 | | F | L/R | Estate FWD B 4204 T11;B 4204 T41 | for model year:2015 | GCO62031 | Outer Joint | 48T | 36 | 27 | 56.5 | 55 | 65 | M |
| | 2013.10-2018.12 | | F | | Estate FWD B 4204 T11;B 4204 T41 | for model year:2015 | GCO62045 | Outer Joint | | 40 | 26 | 57.7 | 52 | 62.5 | M |
| | 2013.10-2018.12 | | F | L | Estate FWD B 4204 T11;B 4204 T41 | for model year:2015 | GCI18044 | Inner Joint | | 26 | 23 | 40 | 68.5 | 99.5 | |
| | 2013.10-2018.12 | | F | L | Estate FWD B 4204 T11;B 4204 T41 | for model year:2015 | GCO81424 | Inner Joint | | 31 | 27 | 36.2 | 70 | 62 | |
| | 2014.07-2018.05 | | F | L/R | Estate 4WD B4204T11 | | GCO62031 | Outer Joint | 48T | 36 | 27 | 56.5 | 55 | 65 | M |
| | 2014.07-2018.05 | | F | | Estate 4WD B4204T11 | for model year:2015 | GCO62045 | Outer Joint | | 40 | 26 | 57.7 | 52 | 62.5 | M |
| | 2014.07-2018.05 | | F | L | Estate 4WD B4204T11 | for model year:2015 | GCI18044 | Inner Joint | | 26 | 23 | 40 | 68.5 | 99.5 | |
| | 2014.07-2018.05 | | F | L | Estate 4WD B4204T11 | for model year:2015 | GCO81424 | Inner Joint | | 31 | 27 | 36.2 | 70 | 62 | |
| 2.0 (184 kw) | 2018.09-2021.12 | 8AT | F | L | Estate 4WD B 4204 T26 | | GCO82347 | Outer Joint | | 40 | 28 | 54.1 | 53 | 62.5 | I |
| | 2018.09-2021.12 | 8AT | F | L | Estate 4WD B 4204 T26 | | GCI62034 | Inner Joint | | 31 | 27 | 36.2 | 68 | 90 | |
| 2.0 (225 kw) | 2013.10-2018.12 | | F | L | Estate 4WD B 4204 T9 | | GDS62126 | Drive Shaft | | 40 | 31 | 57.5 | 52 | 576 | |
| | 2013.10-2018.12 | | F | L/R | Estate 4WD B 4204 T9 | | GCO62031 | Outer Joint | 48T | 36 | 27 | 56.5 | 55 | 65 | M |
| | 2013.10-2018.12 | | F | | Estate 4WD B 4204 T9 | for model year:2015 | GCO62045 | Outer Joint | | 40 | 26 | 57.7 | 52 | 62.5 | M |
| | 2013.10-2018.12 | | F | L | Estate 4WD B 4204 T9 | for model year:2015 | GCI18044 | Inner Joint | | 26 | 23 | 40 | 68.5 | 99.5 | |
| | 2013.10-2018.12 | | F | L | Estate 4WD B 4204 T9 | for model year:2015 | GCO81424 | Inner Joint | | 31 | 27 | 36.2 | 70 | 62 | |
| | 2013.10-2018.12 | 8AT | R | L/R | Estate 4WD B 4204 T9 | | GDS62077 | Drive Shaft | 44NS | 36 | 23 | 56.5 | 49.5 | 762 | |
| | 2013.10-2018.12 | 8AT | F | L | Estate FWD B 4204 T9 | | GDS62126 | Drive Shaft | | 40 | 31 | 57.5 | 52 | 576 | |
| | 2013.10-2018.12 | 8AT | F | R | Estate FWD B 4204 T9 | | GDS62124 | Drive Shaft | | 40 | 28 | 57.5 | 52 | 954 | |
| | 2013.10-2018.12 | 8AT | F | L/R | Estate FWD B 4204 T9 | | GCO62053 | Outer Joint | | 40 | 27 | 57.5 | 52 | 60.5 | I |
| | 2013.10-2018.12 | 8AT | F | L | Estate FWD B 4204 T9 | | GCI62034 | Inner Joint | | 31 | 27 | 36.2 | 68 | 90 | |
| | 2013.10-2018.12 | 8AT | F | R | Estate FWD B 4204 T9 | | GCI62065 | Inner Joint | | 28 | 27 | 33 | 454 | 94 | |
| | 2013.10-2018.12 | | F | L/R | Estate FWD B 4204 T9 | for model year:2015 | GCO62031 | Outer Joint | 48T | 36 | 27 | 56.5 | 55 | 65 | M |
| | 2013.10-2018.12 | | F | | Estate FWD B 4204 T9 | for model year:2015 | GCO62045 | Outer Joint | | 40 | 26 | 57.7 | 52 | 62.5 | M |
| | 2013.10-2018.12 | | F | L | Estate FWD B 4204 T9 | for model year:2015 | GCI18044 | Inner Joint | | 26 | 23 | 40 | 68.5 | 99.5 | |
| | 2013.10-2018.12 | | F | L | Estate FWD B 4204 T9 | for model year:2015 | GCO81424 | Inner Joint | | 31 | 27 | 36.2 | 70 | 62 | |
| 2.0 (270 kw) | 2015.06-2018.05 | 8AT | F | L | Estate 4WD B 4204 T43 | | GCI62034 | Inner Joint | | 31 | 27 | 36.2 | 68 | 90 | |
| | 2015.06-2018.05 | | F | L | Estate 4WD B 4204 T43 | | GDS62126 | Drive Shaft | | 40 | 31 | 57.5 | 52 | 576 | |
| | 2015.06-2018.05 | | F | L | Estate 4WD B 4204 T43 | | GCO62053 | Outer Joint | | 40 | 27 | 57.5 | 52 | 60.5 | I |
| | 2015.06-2018.05 | 8AT | R | L/R | Estate 4WD B 4204 T43 | | GDS62077 | Drive Shaft | 44NS | 36 | 23 | 56.5 | 49.5 | 762 | |
| | 2015.06-2018.05 | 8AT | R | L/R | Estate 4WD B 4204 T43 | | GCI62035 | Inner Joint | | 23 | 29 | 28 | 64 | 110 | |
| | 2015.06-2018.05 | | R | L/R | Estate 4WD B 4204 T43 | | GCO83248 | Outer Joint | 44NS | 36 | 29 | 56.5 | 49.5 | 64 | I |
| 2.4 (120 kw) | 2012.05-2015.12 | 6AT | F | L | Estate 4WD D 5244 T17 | | GDS62076 | Drive Shaft | | 40 | 31 | 57.7 | 52 | 529 | |
| | 2012.05-2015.12 | | F | | Estate 4WD D 5244 T17 | for model year:2015 | GCO62031 | Outer Joint | 48T | 36 | 27 | 56.5 | 55 | 65 | M |
| | 2012.05-2015.12 | | F | | Estate 4WD D 5244 T17 | for model year:2015 | GCO62045 | Outer Joint | | 40 | 26 | 57.7 | 52 | 62.5 | M |
| | 2012.05-2015.12 | | F | L | Estate 4WD D 5244 T17 | for model year:2015 | GCI18044 | Inner Joint | | 26 | 23 | 40 | 68.5 | 99.5 | |
| | 2012.05-2015.12 | | F | L | Estate 4WD D 5244 T17 | for model year:2015 | GCO81424 | Inner Joint | | 31 | 27 | 36.2 | 70 | 62 | |
| | 2012.05-2015.12 | 6AT | R | L/R | Estate 4WD D 5244 T17 | Chassis no. from:90001 | GDS62077 | Drive Shaft | 44NS | 36 | 23 | 56.5 | 49.5 | 762 | |
| | 2012.05-2015.12 | 6AT | R | L/R | Estate 4WD D 5244 T17 | Chassis no. to:90000;8 balls | GDS83926 | Drive Shaft | 44NS | 36 | 26 | 56.5 | 49.5 | 751 | |
| | 2012.05-2015.12 | 6AT | R | L/R | Estate 4WD D 5244 T17 | Chassis no. to:90000;8 balls | GCO83248 | Outer Joint | 44NS | 36 | 29 | 56.5 | 49.5 | 64 | I |
| | 2012.05-2015.12 | 6AT | R | L/R | Estate 4WD D 5244 T17 | Chassis no. to:90000 | GCI18187 | Inner Joint | | 26 | 29 | 35 | 69.5 | 107.5 | |
| 2.4 (133 kw) | 2013.09-2015.12 | | F | L | Estate Van 4WD D 5244 T12 | | GDS62076 | Drive Shaft | | 40 | 31 | 57.7 | 52 | 529 | |
| | 2013.09-2015.12 | | F | R | Estate Van 4WD D 5244 T12 | | GCI62033 | Inner Joint | | 28 | 27 | 29.95 | 521 | 102.5 | |
| | 2013.09-2015.12 | 6AT | R | L/R | Estate Van 4WD D 5244 T12 | Chassis no. from:90001 | GDS62077 | Drive Shaft | 44NS | 36 | 23 | 56.5 | 49.5 | 762 | |
| | 2013.09-2015.12 | 6AT | R | L/R | Estate Van 4WD D 5244 T12 | Chassis no. to:90000;8 balls | GDS83926 | Drive Shaft | 44NS | 36 | 26 | 56.5 | 49.5 | 751 | |

| | YEAR | TRANSM. | F/R | L/R | BODY STYLE & DRIVE TYPE & ENGINE | REMARKS | G-AP Ref. | PRODUCT | ABS | Technical Specifications A | B | C | H | L | P |
|---|---|---|---|---|---|---|---|---|---|---|---|---|---|---|---|
| **VOLVO** **V60** | | | | | | | | | | | | | | | |
| 2.4 (133 kw) | 2013.09-2015.12 | 6AT | R | L/R | Estate Van 4WD D 5244 T12 | Chassis no. to:90000;8 balls | GCO83248 | Outer Joint | 44NS | 36 | 29 | 56.5 | 49.5 | 64 | I |
| | 2013.09-2015.12 | 6AT | R | L/R | Estate Van 4WD D 5244 T12 | Chassis no. to:90000 | GCI18187 | Inner Joint | | 26 | 29 | 35 | 69.5 | 107.5 | |
| | 2013.10-2015.12 | 6AT | F | L | Estate 4WD D 5244 T12 | | GDS62076 | Drive Shaft | | 40 | 31 | 57.7 | 52 | 529 | |
| | 2013.10-2015.12 | 6AT | F | L/R | Estate 4WD D 5244 T12 | | GCO59285 | Outer Joint | | 40 | 27 | 57.7 | 52 | 63.5 | M |
| | 2013.10-2015.12 | 6AT | F | R | Estate 4WD D 5244 T12 | | GCI62033 | Inner Joint | | 28 | 27 | 29.95 | 521 | 102.5 | |
| | 2013.10-2015.12 | 6AT | R | L/R | Estate 4WD D 5244 T12 | Chassis no. from:90001 | GDS62077 | Drive Shaft | 44NS | 36 | 23 | 56.5 | 49.5 | 762 | |
| | 2013.10-2015.12 | 6AT | R | L/R | Estate 4WD D 5244 T12 | Chassis no. to:90000;8 balls | GDS83926 | Drive Shaft | 44NS | 36 | 26 | 56.5 | 49.5 | 751 | |
| | 2013.10-2015.12 | 6AT | R | L/R | Estate 4WD D 5244 T12 | Chassis no. to:90000 | GCO83248 | Outer Joint | 44NS | 36 | 29 | 56.5 | 49.5 | 64 | I |
| | 2013.10-2015.12 | 6AT | R | L/R | Estate 4WD D 5244 T12 | Chassis no. to:90000 | GCI18187 | Inner Joint | | 26 | 29 | 35 | 69.5 | 107.5 | |
| 2.4 (140 kw) | 2015.03-2018.05 | 6AT | F | L | Estate 4WD D 5244 T21 | | GDS62076 | Drive Shaft | | 40 | 31 | 57.7 | 52 | 529 | |
| | 2015.03-2018.05 | 6AT | F | R | Estate 4WD D 5244 T21 | | GCI62033 | Inner Joint | | 28 | 27 | 29.95 | 521 | 102.5 | |
| | 2015.03-2018.05 | 6AT | R | L/R | Estate 4WD D 5244 T21 | Chassis no. from:90001 | GDS62077 | Drive Shaft | 44NS | 36 | 23 | 56.5 | 49.5 | 762 | |
| | 2015.03-2018.05 | 6AT | R | L/R | Estate 4WD D 5244 T21 | Chassis no. to:90000;8 balls | GDS83926 | Drive Shaft | 44NS | 36 | 26 | 56.5 | 49.5 | 751 | |
| | 2015.03-2018.05 | 6AT | R | L/R | Estate 4WD D 5244 T21 | CHAssis no. to:90000 | GCO83248 | Outer Joint | 44NS | 36 | 29 | 56.5 | 49.5 | 64 | I |
| | 2015.03-2018.05 | 6AT | R | L/R | Estate 4WD D 5244 T21 | Chassis no. to:90000 | GCI18187 | Inner Joint | | 26 | 29 | 35 | 69.5 | 107.5 | |
| 2.4 (151 kw) | 2010.07-2011.12 | 6AT | F | L | Estate 4WD D 5244 T10 | | GDS62076 | Drive Shaft | | 40 | 31 | 57.7 | 52 | 529 | |
| | 2010.07-2011.12 | AT | F | L | Estate 4WD D 5244 T10 | | GCO59344 | Outer Joint | | 40 | 26 | 57.7 | 52 | 63.5 | M |
| | 2010.07-2011.12 | AT | F | L | Estate 4WD D 5244 T10 | | GCI62061 | Inner Joint | | 31 | 26 | 36.2 | 68 | 87 | |
| | 2010.07-2011.12 | 6AT | R | L/R | Estate 4WD D 5244 T10 | Chassis no. from:90001 | GDS62077 | Drive Shaft | 44NS | 36 | 23 | 56.5 | 49.5 | 762 | |
| | 2010.07-2011.12 | 6AT | R | L/R | Estate 4WD D 5244 T10 | Chassis no. to:90000;8 balls | GDS83926 | Drive Shaft | 44NS | 36 | 26 | 56.5 | 49.5 | 751 | |
| | 2010.07-2011.12 | 6AT | R | L/R | Estate 4WD D 5244 T10 | Chassis no. to:90000;8 balls | GCO83248 | Outer Joint | 44NS | 36 | 29 | 56.5 | 49.5 | 64 | I |
| | 2010.07-2011.12 | 6AT | R | L/R | Estate 4WD D 5244 T10 | Chassis no. to:90000 | GCI18187 | Inner Joint | | 26 | 29 | 35 | 69.5 | 107.5 | |
| | 2010.07-2011.12 | 6AT | F | L | Estate FWD D 5244 T10 | | GDS62076 | Drive Shaft | | 40 | 31 | 57.7 | 52 | 529 | |
| | 2010.07-2011.12 | 6MT | F | L | Estate FWD D 5244 T10 | | GDS21070 | Drive Shaft | | 40 | 26 | 57.7 | 52 | 556 | |
| | 2010.07-2011.12 | 6MT | F | R | Estate FWD D 5244 T10 | | GDS62086 | Drive Shaft | | 40 | 26 | 57.7 | 52 | 1002 | |
| | 2010.07-2011.12 | 6MT | F | L/R | Estate FWD D 5244 T10 | | GCO59285 | Outer Joint | | 40 | 27 | 57.7 | 52 | 63.5 | M |
| | 2010.07-2011.12 | 6MT | F | R | Estate FWD D 5244 T10 | | GCI81076 | Inner Joint | | 26 | 28 | 40 | 522.5 | 123.7 | |
| | 2010.07-2011.12 | AT | F | L | Estate FWD D 5244 T10 | | GDS62109 | Drive Shaft | | 40 | 31 | 57.7 | 52 | 524 | |
| | 2010.07-2011.12 | AT | F | R | Estate FWD D 5244 T10 | | GDS59444 | Drive Shaft | | 40 | 28 | 57.7 | 52 | 994 | |
| 2.4 (158 kw) | 2011.04-2015.12 | 6AT | F | L | Estate 4WD D 5244 T15 | | GDS62076 | Drive Shaft | | 40 | 31 | 57.7 | 52 | 529 | |
| | 2011.04-2015.12 | 6AT | F | R | Estate 4WD D 5244 T15 | | GCO59285 | Outer Joint | | 40 | 27 | 57.7 | 52 | 63.5 | M |
| | 2011.04-2015.12 | 6AT | F | R | Estate 4WD D 5244 T15 | Model year from:2014 | GCI62033 | Inner Joint | | 28 | 27 | 29.95 | 521 | 102.5 | |
| | 2011.04-2015.12 | 6AT | R | L/R | Estate 4WD D 5244 T15 | Chassis no. from:90001 | GDS62077 | Drive Shaft | 44NS | 36 | 23 | 56.5 | 49.5 | 762 | |
| | 2011.04-2015.12 | 6AT | R | L/R | Estate 4WD D 5244 T15 | Chassis no. to:90000;8 balls | GDS83926 | Drive Shaft | 44NS | 36 | 26 | 56.5 | 49.5 | 751 | |
| | 2011.04-2015.12 | 6AT | R | L/R | Estate 4WD D 5244 T15 | Chassis no. to:90000 | GCO83248 | Outer Joint | 44NS | 36 | 29 | 56.5 | 49.5 | 64 | I |
| | 2011.04-2015.12 | 6AT | R | L/R | Estate 4WD D 5244 T15 | Chassis no. to:90000 | GCI18187 | Inner Joint | | 26 | 29 | 35 | 69.5 | 107.5 | |
| | 2011.04-2015.12 | 6AT | F | L | Estate FWD D 5244 T11;D 5244 T15 | | GDS62076 | Drive Shaft | | 40 | 31 | 57.7 | 52 | 529 | |
| | 2011.04-2015.12 | 6AT | F | R | Estate FWD D 5244 T11;D 5244 T15 | | GDS59444 | Drive Shaft | | 40 | 28 | 57.7 | 52 | 994 | |
| | 2011.04-2015.12 | 6MT | F | L | Estate FWD D 5244 T11;D 5244 T15 | | GDS21070 | Drive Shaft | | 40 | 26 | 57.7 | 52 | 556 | |
| | 2011.04-2015.12 | 6MT | F | R | Estate FWD D 5244 T11;D 5244 T15 | | GDS62086 | Drive Shaft | | 40 | 26 | 57.7 | 52 | 1002 | |
| | 2011.04-2015.12 | 6MT | F | L/R | Estate FWD D 5244 T11;D 5244 T15 | | GCO59285 | Outer Joint | | 40 | 27 | 57.7 | 52 | 63.5 | M |
| | 2011.04-2015.12 | AT | F | L | Estate FWD D 5244 T11;D 5244 T15 | | GDS62109 | Drive Shaft | | 40 | 31 | 57.7 | 52 | 524 | |
| | 2011.04-2015.12 | AT | F | L | Estate FWD D 5244 T11;D 5244 T15 | | GCI62061 | Inner Joint | | 31 | 26 | 36.2 | 68 | 87 | |
| | 2011.04-2015.12 | | F | | Estate FWD D 5244 T11;D 5244 T15 | | GCI81076 | Inner Joint | | 26 | 28 | 40 | 522.5 | 123.7 | |
| | 2013.09-2015.12 | 6AT | F | L | Estate Van FWD D 5244 T15 | | GDS62076 | Drive Shaft | | 40 | 31 | 57.7 | 52 | 529 | |
| | 2013.09-2015.12 | 6AT | F | R | Estate Van FWD D 5244 T15 | | GDS59444 | Drive Shaft | | 40 | 28 | 57.7 | 52 | 994 | |
| | 2013.09-2015.12 | 6MT | F | L | Estate Van FWD D 5244 T15 | | GDS21070 | Drive Shaft | | 40 | 26 | 57.7 | 52 | 556 | |
| | 2013.09-2015.12 | 6MT | F | R | Estate Van FWD D 5244 T15 | | GDS62086 | Drive Shaft | | 40 | 26 | 57.7 | 52 | 1002 | |
| | 2013.09-2015.12 | 6MT | F | L/R | Estate Van FWD D 5244 T15 | | GCO59285 | Outer Joint | | 40 | 27 | 57.7 | 52 | 63.5 | M |
| | 2013.09-2015.12 | | F | | Estate Van FWD D 5244 T15 | | GCI81076 | Inner Joint | | 26 | 28 | 40 | 522.5 | 123.7 | |
| 2.4 (169 kw) | 2014.04-2015.12 | 6AT | F | L | Estate 4WD D 5244 T15 | | GDS62076 | Drive Shaft | | 40 | 31 | 57.7 | 52 | 529 | |
| | 2014.04-2015.12 | 6AT | F | R | Estate 4WD D 5244 T15 | | GCO59285 | Outer Joint | | 40 | 27 | 57.7 | 52 | 63.5 | M |
| | 2014.04-2015.12 | 6AT | F | R | Estate 4WD D 5244 T15 | Model year from:2014 | GCI62033 | Inner Joint | | 28 | 27 | 29.95 | 521 | 102.5 | |
| | 2014.04-2015.12 | 6AT | R | L/R | Estate 4WD D 5244 T15 | Chassis no. from:90001 | GDS62077 | Drive Shaft | 44NS | 36 | 23 | 56.5 | 49.5 | 762 | |
| | 2014.04-2015.12 | 6AT | R | L/R | Estate 4WD D 5244 T15 | Chassis no. to:90000;8 balls | GDS83926 | Drive Shaft | 44NS | 36 | 26 | 56.5 | 49.5 | 751 | |
| | 2014.04-2015.12 | 6AT | R | L/R | Estate 4WD D 5244 T15 | Chassis no. to:90000 | GCO83248 | Outer Joint | 44NS | 36 | 29 | 56.5 | 49.5 | 64 | I |
| | 2014.04-2015.12 | 6AT | R | L/R | Estate 4WD D 5244 T15 | Chassis no. to:90000 | GCI18187 | Inner Joint | | 26 | 29 | 35 | 69.5 | 107.5 | |
| | 2014.04-2015.12 | 6AT | F | L | Estate FWD D 5244 T23 | | GDS62076 | Drive Shaft | | 40 | 31 | 57.7 | 52 | 529 | |
| | 2014.04-2015.12 | 6AT | F | R | Estate FWD D 5244 T23 | | GDS59444 | Drive Shaft | | 40 | 28 | 57.7 | 52 | 994 | |
| | 2014.04-2015.12 | 6MT | F | L | Estate FWD D 5244 T23 | | GDS21070 | Drive Shaft | | 40 | 26 | 57.7 | 52 | 556 | |
| | 2014.04-2015.12 | 6MT | F | R | Estate FWD D 5244 T23 | | GDS62086 | Drive Shaft | | 40 | 26 | 57.7 | 52 | 1002 | |
| | 2014.04-2015.12 | 6MT | F | L/R | Estate FWD D 5244 T23 | | GCO59285 | Outer Joint | | 40 | 27 | 57.7 | 52 | 63.5 | M |
| | 2014.04-2015.12 | | F | L | Estate FWD D 5244 T23 | Date from:2015 | GCI18044 | Inner Joint | | 26 | 23 | 40 | 68.5 | 99.5 | |
| | 2014.04-2015.12 | | F | L | Estate FWD D 5244 T23 | Date from:2015 | GCO81424 | Inner Joint | | 31 | 27 | 36.2 | 70 | 62 | |
| | 2014.04-2015.12 | | F | | Estate FWD D 5244 T23 | | GCI81076 | Inner Joint | | 26 | 28 | 40 | 522.5 | 123.7 | |

| | YEAR | TRANSM. | F/R | L/R | BODY STYLE & DRIVE TYPE & ENGINE | REMARKS | G-AP Ref. | PRODUCT | ABS | Technical Specifications A | B | C | H | L | P |
|---|---|---|---|---|---|---|---|---|---|---|---|---|---|---|---|
| **VOLVO** | | | | | | | | | | | | | | | |
| **V60** | | | | | | | | | | | | | | | |
| 2.4 (169 kw) | 2015.03-2018.05 | AT | F | L | Estate 4WD D87PHEV | | GDS62109 | Drive Shaft | | 40 | 31 | 57.7 | 52 | 524 | |
| | 2015.03-2018.05 | AT | F | L | Estate 4WD D87PHEV | | GDS62125 | Drive Shaft | | 40 | 31 | 57.5 | 52 | 529 | |
| | 2015.03-2018.05 | AT | F | R | Estate 4WD D87PHEV | | GDS62123 | Drive Shaft | | 40 | 28 | 57.5 | 52 | 994 | |
| | 2015.03-2018.05 | AT | F | L | Estate 4WD D87PHEV | | GCO59344 | Outer Joint | | 40 | 26 | 57.7 | 52 | 63.5 | M |
| | 2015.03-2018.05 | AT | F | L/R | Estate 4WD D87PHEV | | GCO62053 | Outer Joint | | 40 | 27 | 57.5 | 52 | 60.5 | I |
| | 2015.03-2018.05 | AT | F | L | Estate 4WD D87PHEV | | GCI62034 | Inner Joint | | 31 | 27 | 36.2 | 68 | 90 | |
| | 2015.03-2018.05 | AT | F | L | Estate 4WD D87PHEV | | GCI62061 | Inner Joint | | 31 | 26 | 36.2 | 68 | 87 | |
| | 2015.03-2018.05 | AT | F | R | Estate 4WD D87PHEV | | GCI62066 | Inner Joint | | 28 | 27 | 33 | 520 | 103 | |
| | 2015.03-2018.05 | AT | R | L/R | Estate 4WD D87PHEV | | GDS81122 | Drive Shaft | 44NS | 36 | 32 | 56.2 | 49.5 | 592 | |
| | 2015.03-2018.05 | AT | R | L/R | Estate 4WD D87PHEV | | GCO81347 | Outer Joint | 44NS | 36 | 30 | 56.2 | 49.5 | 62.5 | I |
| | 2015.03-2018.05 | AT | R | L/R | Estate 4WD D87PHEV | | GCI81057 | Inner Joint | | 32 | 30 | 36 | 56 | 100 | |
| 2.4 (206 kw) | 2012.06-2015.12 | 6AT | F | L | Estate 4WD D82PHEV | | GCI62034 | Inner Joint | | 31 | 27 | 36.2 | 68 | 90 | |
| | 2012.06-2015.12 | 6AT | F | R | Estate 4WD D82PHEV | | GCI62066 | Inner Joint | | 28 | 27 | 33 | 520 | 103 | |
| | 2012.06-2015.12 | AT | F | L | Estate 4WD D82PHEV | | GDS62109 | Drive Shaft | | 40 | 31 | 57.7 | 52 | 524 | |
| | 2012.06-2015.12 | AT | F | L | Estate 4WD D82PHEV | | GCO59344 | Outer Joint | | 40 | 26 | 57.7 | 52 | 63.5 | M |
| | 2012.06-2015.12 | | F | L | Estate 4WD D82PHEV | | GDS62125 | Drive Shaft | | 40 | 31 | 57.5 | 52 | 529 | |
| | 2012.06-2015.12 | | F | R | Estate 4WD D82PHEV | | GDS62123 | Drive Shaft | | 40 | 28 | 57.5 | 52 | 994 | |
| | 2012.06-2015.12 | | F | | Estate 4WD D82PHEV | Model year from:2015 | GCO62031 | Outer Joint | 48T | 36 | 27 | 56.5 | 55 | 65 | M |
| | 2012.06-2015.12 | | F | | Estate 4WD D82PHEV | Model year from:2015 | GCO62045 | Outer Joint | | 40 | 26 | 57.7 | 52 | 62.5 | M |
| | 2012.06-2015.12 | 6AT | R | L/R | Estate 4WD D82PHEV | | GCI81057 | Inner Joint | | 32 | 30 | 36 | 56 | 100 | |
| | 2012.06-2015.12 | | R | L/R | Estate 4WD D82PHEV | | GDS81122 | Drive Shaft | 44NS | 36 | 32 | 56.2 | 49.5 | 592 | |
| | 2015.03-2018.05 | AT | F | L | Estate 4WD D97PHEV | | GDS62109 | Drive Shaft | | 40 | 31 | 57.7 | 52 | 524 | |
| | 2015.03-2018.05 | AT | F | L | Estate 4WD D97PHEV | | GDS62125 | Drive Shaft | | 40 | 31 | 57.5 | 52 | 529 | |
| | 2015.03-2018.05 | AT | F | R | Estate 4WD D97PHEV | | GDS62123 | Drive Shaft | | 40 | 28 | 57.5 | 52 | 994 | |
| | 2015.03-2018.05 | AT | F | L | Estate 4WD D97PHEV | | GCO59344 | Outer Joint | | 40 | 26 | 57.7 | 52 | 63.5 | M |
| | 2015.03-2018.05 | AT | F | L/R | Estate 4WD D97PHEV | | GCO62053 | Outer Joint | | 40 | 27 | 57.5 | 52 | 60.5 | I |
| | 2015.03-2018.05 | AT | F | L | Estate 4WD D97PHEV | | GCI62034 | Inner Joint | | 31 | 27 | 36.2 | 68 | 90 | |
| | 2015.03-2018.05 | AT | F | L | Estate 4WD D97PHEV | | GCI62061 | Inner Joint | | 31 | 26 | 36.2 | 68 | 87 | |
| | 2015.03-2018.05 | AT | F | R | Estate 4WD D97PHEV | | GCI62066 | Inner Joint | | 28 | 27 | 33 | 520 | 103 | |
| | 2015.03-2018.05 | AT | R | L/R | Estate 4WD D97PHEV | | GDS81122 | Drive Shaft | 44NS | 36 | 32 | 56.2 | 49.5 | 592 | |
| | 2015.03-2018.05 | AT | R | L/R | Estate 4WD D97PHEV | | GCO81347 | Outer Joint | 44NS | 36 | 30 | 56.2 | 49.5 | 62.5 | I |
| | 2015.03-2018.05 | AT | R | L/R | Estate 4WD D97PHEV | | GCI81057 | Inner Joint | | 32 | 30 | 36 | 56 | 100 | |
| 3.0 (224 kw) | 2010.07-2015.12 | 6AT | F | R | Estate 4WD B 6304 T4 | | GDS62076 | Drive Shaft | | 40 | 31 | 57.7 | 52 | 529 | |
| | 2010.07-2015.12 | 6AT | F | L/R | Estate 4WD B 6304 T4 | | GCO62042 | Outer Joint | | 40 | 27 | 57.7 | 52 | 63.5 | M |
| | 2010.07-2015.12 | 6AT | R | L/R | Estate 4WD B 6304 T4 | Chassis no. from:90001 | GDS62077 | Drive Shaft | 44NS | 36 | 23 | 56.5 | 49.5 | 762 | |
| | 2010.07-2015.12 | 6AT | R | L/R | Estate 4WD B 6304 T4 | Chassis no. to:90000;8 balls | GDS83926 | Drive Shaft | 44NS | 36 | 26 | 56.5 | 49.5 | 751 | |
| | 2010.07-2015.12 | 6AT | R | L/R | Estate 4WD B 6304 T4 | Chassis no. to:90000;8 balls | GCO83248 | Outer Joint | 44NS | 36 | 29 | 56.5 | 49.5 | 64 | I |
| | 2010.07-2015.12 | 6AT | R | L/R | Estate 4WD B 6304 T4 | Chassis no. to:90000 | GCI18187 | Inner Joint | | 26 | 29 | 35 | 69.5 | 107.5 | |
| 3.0 (242 kw) | 2014.04-2015.12 | 6AT | F | L/R | Estate 4WD B 6304 T4;B 6304 T3 | | GCO62042 | Outer Joint | | 40 | 27 | 57.7 | 52 | 63.5 | M |
| | 2014.04-2015.12 | 6AT | F | L | Estate 4WD B 6304 T4;B 6304 T3 | | GCI62034 | Inner Joint | | 31 | 27 | 36.2 | 68 | 90 | |
| | 2014.04-2015.12 | AT | F | L | Estate 4WD B 6304 T4;B 6304 T3 | | GDS62076 | Drive Shaft | | 40 | 31 | 57.7 | 52 | 529 | |
| | 2014.04-2015.12 | 6AT | R | L/R | Estate 4WD B 6304 T4;B 6304 T3 | Chassis no. from:90001 | GDS62077 | Drive Shaft | 44NS | 36 | 23 | 56.5 | 49.5 | 762 | |
| | 2014.04-2015.12 | 6AT | R | L/R | Estate 4WD B 6304 T4;B 6304 T3 | Chassis no. to:90000;8 balls | GDS83926 | Drive Shaft | 44NS | 36 | 26 | 56.5 | 49.5 | 751 | |
| | 2014.04-2015.12 | 6AT | R | L/R | Estate 4WD B 6304 T4;B 6304 T3 | Chassis no. to:90000;8 balls | GCO83248 | Outer Joint | 44NS | 36 | 29 | 56.5 | 49.5 | 64 | I |
| | 2014.04-2015.12 | 6AT | R | L/R | Estate 4WD B 6304 T4;B 6304 T3 | Chassis no. to:90000 | GCI18187 | Inner Joint | | 26 | 29 | 35 | 69.5 | 107.5 | |
| 3.0 (258 kw) | 2014.04-2018.05 | 6AT | F | L | Estate 4WD B 6304 T5 | | GDS62076 | Drive Shaft | | 40 | 31 | 57.7 | 52 | 529 | |
| | 2014.04-2018.05 | 6AT | R | L/R | Estate 4WD B 6304 T5 | Chassis no. from:90001 | GDS62077 | Drive Shaft | 44NS | 36 | 23 | 56.5 | 49.5 | 762 | |
| | 2014.04-2018.05 | 6AT | R | L/R | Estate 4WD B 6304 T5 | Chassis no. to:90000,8 balls | GDS83926 | Drive Shaft | 44NS | 36 | 26 | 56.5 | 49.5 | 751 | |
| | 2014.04-2018.05 | 6AT | R | L/R | Estate 4WD B 6304 T5 | Chassis no. to:90000;8 balls | GCO83248 | Outer Joint | 44NS | 36 | 29 | 56.5 | 49.5 | 64 | I |
| | 2014.04-2018.05 | 6AT | R | L/R | Estate 4WD B 6304 T5 | Chassis no. to:90000 | GCI18187 | Inner Joint | | 26 | 29 | 35 | 69.5 | 107.5 | |
| **V60 Cross Country** | | | | | | | | | | | | | | | |
| 2.0 (110 kw) | 2015.03-2018.05 | 6AT/8AT | F | L | Estate FWD D 4204 T9;D 4204 T4 | | GDS81373 | Drive Shaft | | 40 | 31 | 57.5 | 52 | 581 | |
| | 2015.03-2018.05 | 6AT/8AT | F | R | Estate FWD D 4204 T9;D 4204 T4 | | GDS81374 | Drive Shaft | | 40 | 28 | 57.5 | 52 | 961 | |
| | 2015.03-2018.05 | 6AT/8AT | F | L | Estate FWD D 4204 T9;D 4204 T4 | | GCO81181 | Outer Joint | | 40 | 28 | 57.5 | 52 | 60.5 | I |
| | 2015.03-2018.05 | 6AT/8AT | F | L | Estate FWD D 4204 T9;D 4204 T4 | | GCO81424 | Inner Joint | | 31 | 27 | 36.2 | 70 | 62 | |
| | 2015.03-2018.05 | 6AT/8AT | F | R | Estate FWD D 4204 T9;D 4204 T4 | | GCO81427 | Inner Joint | | 28 | 27 | 33 | 453 | 57 | |
| | 2018.12-2021.12 | 8AT | F | L | Estate 4WD D 4204 T4 | | GDS83208 | Drive Shaft | | 40 | 31 | 54.1 | 53 | 617 | |
| | 2018.12-2021.12 | 8AT | F | R | Estate 4WD D 4204 T4 | | GDS83207 | Drive Shaft | | 40 | 28 | 54.1 | 53 | 995 | |
| | 2018.12-2021.12 | 8AT | F | L/R | Estate 4WD D 4204 T4 | | GCO82347 | Outer Joint | | 40 | 28 | 54.1 | 53 | 62.5 | I |
| | 2018.12-2021.12 | 8AT | F | L | Estate 4WD D 4204 T4 | | GCI62034 | Inner Joint | | 31 | 27 | 36.2 | 68 | 90 | |
| | 2018.12-2021.12 | 8AT | F | R | Estate 4WD D 4204 T4 | | GCI82176 | Inner Joint | | 28 | 27 | 29.97 | 470 | 94 | |
| 2.0 (140 kw) | 2015.03-2018.05 | 8AT | F | L | Estate FWD D 4204 T14 | | GDS81373 | Drive Shaft | | 40 | 31 | 57.5 | 52 | 581 | |
| | 2015.03-2018.05 | 8AT | F | R | Estate FWD D 4204 T14 | | GDS81374 | Drive Shaft | | 40 | 28 | 57.5 | 52 | 961 | |
| | 2015.03-2018.05 | 8AT | F | L | Estate FWD D 4204 T14 | | GCO81181 | Outer Joint | | 40 | 28 | 57.5 | 52 | 60.5 | I |
| | 2015.03-2018.05 | 8AT | F | L | Estate FWD D 4204 T14 | | GCO81424 | Inner Joint | | 31 | 27 | 36.2 | 70 | 62 | |

| | YEAR | TRANSM. | F/R | L/R | BODY STYLE & DRIVE TYPE & ENGINE | REMARKS | G-AP Ref. | PRODUCT | ABS | Technical Specifications A | B | C | H | L | P |
|---|---|---|---|---|---|---|---|---|---|---|---|---|---|---|---|
| **VOLVO** **V60 Cross Country** | | | | | | | | | | | | | | | |
| 2.0 (140 kw) | 2015.03-2018.05 | 8AT | F | R | Estate FWD D 4204 T14 | | GCO81427 | Inner Joint | | 28 | 27 | 33 | 453 | 57 | |
| | 2018.12-2021.12 | 8AT | F | L | Estate 4WD D 4204 T14 | | GDS83208 | Drive Shaft | | 40 | 31 | 54.1 | 53 | 617 | |
| | 2018.12-2021.12 | 8AT | F | R | Estate 4WD D 4204 T14 | To Chassis:69547;From Chassis:69548 | GDS83207 | Drive Shaft | | 40 | 28 | 54.1 | 53 | 995 | |
| | 2018.12-2021.12 | 8AT | F | L/R | Estate 4WD D 4204 T14 | | GCO82347 | Outer Joint | | 40 | 28 | 54.1 | 53 | 62.5 | I |
| | 2018.12-2021.12 | 8AT | F | L | Estate 4WD D 4204 T14 | | GCI62034 | Inner Joint | | 31 | 27 | 36.2 | 68 | 90 | |
| | 2018.12-2021.12 | 8AT | F | R | Estate 4WD D 4204 T14 | To Chassis:69547;From Chassis:69548 | GCI82176 | Inner Joint | | 28 | 27 | 29.97 | 470 | 94 | |
| 2.0 (147 kw) | 2015.03-2018.05 | 8AT | F | L | Estate FWD D 4204 T14 | | GDS81373 | Drive Shaft | | 40 | 31 | 57.5 | 52 | 581 | |
| | 2015.03-2018.05 | 8AT | F | R | Estate FWD D 4204 T14 | | GDS81374 | Drive Shaft | | 40 | 28 | 57.5 | 52 | 961 | |
| | 2015.03-2018.05 | 8AT | F | L | Estate FWD D 4204 T14 | | GCO81181 | Outer Joint | | 40 | 28 | 57.5 | 52 | 60.5 | I |
| | 2015.03-2018.05 | 8AT | F | L | Estate FWD D 4204 T14 | Transmission side | GCO81424 | Inner Joint | | 31 | 27 | 36.2 | 70 | 62 | |
| | 2015.03-2018.05 | 8AT | F | R | Estate FWD D 4204 T14 | | GCO81427 | Inner Joint | | 28 | 27 | 33 | 453 | 57 | |
| | 2018.02-2020.12 | 8AT | F | L | Estate 4WD D 4204 T14 | | GDS83208 | Drive Shaft | | 40 | 31 | 54.1 | 53 | 617 | |
| | 2018.02-2020.12 | 8AT | F | R | Estate 4WD D 4204 T14 | To Chassis:69547;From Chassis:69548 | GDS83207 | Drive Shaft | | 40 | 28 | 54.1 | 53 | 995 | |
| | 2018.02-2020.12 | 8AT | F | L/R | Estate 4WD D 4204 T14 | | GCO82347 | Outer Joint | | 40 | 28 | 54.1 | 53 | 62.5 | I |
| | 2018.02-2020.12 | 8AT | F | L | Estate 4WD D 4204 T14 | | GCI62034 | Inner Joint | | 31 | 27 | 36.2 | 68 | 90 | |
| | 2018.02-2020.12 | 8AT | F | R | Estate 4WD D 4204 T14 | To Chassis:69547;From Chassis:69548 | GCI82176 | Inner Joint | | 28 | 27 | 29.97 | 470 | 94 | |
| 2.0 (180 kw) | 2015.03-2018.05 | 8AT | F | L | Estate FWD B 4204 T11 | | GDS81373 | Drive Shaft | | 40 | 31 | 57.5 | 52 | 581 | |
| | 2015.03-2018.05 | 8AT | F | R | Estate FWD B 4204 T11 | | GDS81374 | Drive Shaft | | 40 | 28 | 57.5 | 52 | 961 | |
| | 2015.03-2018.05 | 8AT | F | L | Estate FWD B 4204 T11 | | GCO81424 | Inner Joint | | 31 | 27 | 36.2 | 70 | 62 | |
| | 2015.03-2018.05 | 8AT | F | R | Estate FWD B 4204 T11 | | GCO81427 | Inner Joint | | 28 | 27 | 33 | 453 | 57 | |
| | 2015.03-2018.05 | | F | L | Estate FWD B 4204 T11 | | GCO81181 | Outer Joint | | 40 | 28 | 57.5 | 52 | 60.5 | I |
| | 2016.06-2018.05 | 8AT | F | L | Estate 4WD B 4204 T11 | | GDS81373 | Drive Shaft | | 40 | 31 | 57.5 | 52 | 581 | |
| | 2016.06-2018.05 | | F | L | Estate 4WD B 4204 T11 | | GCO81181 | Outer Joint | | 40 | 28 | 57.5 | 52 | 60.5 | I |
| | 2016.06-2018.05 | | F | L | Estate 4WD B 4204 T11 | | GCO81424 | Inner Joint | | 31 | 27 | 36.2 | 70 | 62 | |
| | 2016.06-2018.05 | 8AT | R | L/R | Estate 4WD B 4204 T11 | | GDS62077 | Drive Shaft | 44NS | 36 | 23 | 56.5 | 49.5 | 762 | |
| | 2016.06-2018.05 | | R | L/R | Estate 4WD B 4204 T11 | | GCO83248 | Outer Joint | 44NS | 36 | 29 | 56.5 | 49.5 | 64 | I |
| | 2016.06-2018.05 | | R | L/R | Estate 4WD B 4204 T11 | | GCI62035 | Inner Joint | | 23 | 29 | 28 | 64 | 110 | |
| 2.0 (184 kw) | 2018.12-2021.12 | 8AT | F | L | Estate 4WD B 4204 T26 | | GDS83208 | Drive Shaft | | 40 | 31 | 54.1 | 53 | 617 | |
| | 2018.12-2021.12 | 8AT | F | R | Estate 4WD B 4204 T26 | | GDS83207 | Drive Shaft | | 40 | 28 | 54.1 | 53 | 995 | |
| | 2018.12-2021.12 | 8AT | F | L/R | Estate 4WD B 4204 T26 | | GCO82347 | Outer Joint | | 40 | 28 | 54.1 | 53 | 62.5 | I |
| | 2018.12-2021.12 | 8AT | F | L | Estate 4WD B 4204 T26 | | GCI62034 | Inner Joint | | 31 | 27 | 36.2 | 68 | 90 | |
| | 2018.12-2021.12 | 8AT | F | R | Estate 4WD B 4204 T26 | | GCI82176 | Inner Joint | | 28 | 27 | 29.97 | 470 | 94 | |
| 2.0 (186 kw) | 2015.03-2018.07 | 8AT | F | L | Estate 4WD B 4204 T11 | | GDS81373 | Drive Shaft | | 40 | 31 | 57.5 | 52 | 581 | |
| | 2015.03-2018.07 | 8AT | F | L | Estate 4WD B 4204 T11 | | GCO81424 | Inner Joint | | 31 | 27 | 36.2 | 70 | 62 | |
| | 2015.03-2018.07 | | F | L | Estate 4WD B 4204 T11 | | GCO81181 | Outer Joint | | 40 | 28 | 57.5 | 52 | 60.5 | I |
| | 2015.03-2018.07 | 8AT | R | L/R | Estate 4WD B 4204 T11 | | GDS62077 | Drive Shaft | 44NS | 36 | 23 | 56.5 | 49.5 | 762 | |
| | 2015.03-2018.07 | 8AT | R | L/R | Estate 4WD B 4204 T11 | | GCI62035 | Inner Joint | | 23 | 29 | 28 | 64 | 110 | |
| | 2015.03-2018.07 | | R | L/R | Estate 4WD B 4204 T11 | | GCO83248 | Outer Joint | 44NS | 36 | 29 | 56.5 | 49.5 | 64 | I |
| | 2015.03-2018.07 | 8AT | F | L | Estate FWD B 4204 T11 | | GDS81373 | Drive Shaft | | 40 | 31 | 57.5 | 52 | 581 | |
| | 2015.03-2018.07 | 8AT | F | R | Estate FWD B 4204 T11 | | GDS81374 | Drive Shaft | | 40 | 28 | 57.5 | 52 | 961 | |
| | 2015.03-2018.07 | 8AT | F | L | Estate FWD B 4204 T11 | | GCO81424 | Inner Joint | | 31 | 27 | 36.2 | 70 | 62 | |
| | 2015.03-2018.07 | 8AT | F | R | Estate FWD B 4204 T11 | | GCO81427 | Inner Joint | | 28 | 27 | 33 | 453 | 57 | |
| | 2015.03-2018.07 | | F | L | Estate FWD B 4204 T11 | | GCO81181 | Outer Joint | | 40 | 28 | 57.5 | 52 | 60.5 | I |
| 2.4 (140 kw) | 2015.03-2018.05 | 6AT | F | L | Estate 4WD D 5244 T21 | | GDS81369 | Drive Shaft | | 40 | 31 | 57.7 | 52 | 537 | |
| | 2015.03-2018.05 | 6AT | F | L | Estate 4WD D 5244 T21 | | GDS81381 | Drive Shaft | | 40 | 31 | 57.7 | 52 | 537 | |
| | 2015.03-2018.05 | 6AT | F | R | Estate 4WD D 5244 T21 | | GDS81370 | Drive Shaft | | 40 | 28 | 57.7 | 52 | 1008 | |
| | 2015.03-2018.05 | 6AT | F | L/R | Estate 4WD D 5244 T21 | | GCO62042 | Outer Joint | | 40 | 27 | 57.7 | 52 | 63.5 | M |
| | 2015.03-2018.05 | 6AT | F | L | Estate 4WD D 5244 T21 | Model year to:2016 | GCO81424 | Inner Joint | | 31 | 27 | 36.2 | 70 | 62 | |
| | 2015.03-2018.05 | 6AT | R | L/R | Estate 4WD D 5244 T21 | | GDS62077 | Drive Shaft | 44NS | 36 | 23 | 56.5 | 49.5 | 762 | |
| | 2015.03-2018.05 | 6AT | R | L/R | Estate 4WD D 5244 T21 | | GCO83248 | Outer Joint | 44NS | 36 | 29 | 56.5 | 49.5 | 64 | I |
| | 2015.03-2018.05 | 6AT | R | L/R | Estate 4WD D 5244 T21 | | GCI62035 | Inner Joint | | 23 | 29 | 28 | 64 | 110 | |
| 2.4 (147 kw) | 2015.03-2018.05 | 6AT | F | L | Estate 4WD D 5244 T21 | Model year to:2016 | GDS81369 | Drive Shaft | | 40 | 31 | 57.7 | 52 | 537 | |
| | 2015.03-2018.05 | 6AT | F | R | Estate 4WD D 5244 T21 | | GDS81370 | Drive Shaft | | 40 | 28 | 57.7 | 52 | 1008 | |
| | 2015.03-2018.05 | 6AT | F | L/R | Estate 4WD D 5244 T21 | | GCO62042 | Outer Joint | | 40 | 27 | 57.7 | 52 | 63.5 | M |
| | 2015.03-2018.05 | 6AT | F | L | Estate 4WD D 5244 T21 | | GCO81424 | Inner Joint | | 31 | 27 | 36.2 | 70 | 62 | |
| | 2015.03-2018.05 | 6AT | R | L/R | Estate 4WD D 5244 T21 | | GDS62077 | Drive Shaft | 44NS | 36 | 23 | 56.5 | 49.5 | 762 | |
| | 2015.03-2018.05 | 6AT | R | L/R | Estate 4WD D 5244 T21 | | GCO83248 | Outer Joint | 44NS | 36 | 29 | 56.5 | 49.5 | 64 | I |
| 2.4 (162 kw) | 2015.03-2018.05 | 6AT | F | L | Estate 4WD D 5244 T21 | | GDS81369 | Drive Shaft | | 40 | 31 | 57.7 | 52 | 537 | |
| | 2015.03-2018.05 | 6AT | F | L | Estate 4WD D 5244 T21 | | GDS81381 | Drive Shaft | | 40 | 31 | 57.7 | 52 | 537 | |
| | 2015.03-2018.05 | 6AT | F | R | Estate 4WD D 5244 T21 | | GDS81370 | Drive Shaft | | 40 | 28 | 57.7 | 52 | 1008 | |
| | 2015.03-2018.05 | 6AT | F | L/R | Estate 4WD D 5244 T21 | | GCO62042 | Outer Joint | | 40 | 27 | 57.7 | 52 | 63.5 | M |
| | 2015.03-2018.05 | 6AT | R | L/R | Estate 4WD D 5244 T21 | | GDS62077 | Drive Shaft | 44NS | 36 | 23 | 56.5 | 49.5 | 762 | |
| | 2015.03-2018.05 | 6AT | R | L/R | Estate 4WD D 5244 T21 | | GCO83248 | Outer Joint | 44NS | 36 | 29 | 56.5 | 49.5 | 64 | I |
| 2.5 (187 kw) | 2015.03-2018.05 | 6AT | F | L | Estate 4WD B 5254 T12 | | GDS81369 | Drive Shaft | | 40 | 31 | 57.7 | 52 | 537 | |
| | 2015.03-2018.05 | 6AT | F | L | Estate 4WD B 5254 T12 | | GDS81381 | Drive Shaft | | 40 | 31 | 57.7 | 52 | 537 | |

| | YEAR | TRANSM. | F/R | L/R | BODY STYLE & DRIVE TYPE & ENGINE | REMARKS | G-AP Ref. | PRODUCT | ABS | Technical Specifications A | B | C | H | L | P |
|---|---|---|---|---|---|---|---|---|---|---|---|---|---|---|---|
| **VOLVO** | | | | | | | | | | | | | | | |
| **V60 Cross Country** | | | | | | | | | | | | | | | |
| 2.5 (187 kw) | 2015.03-2018.05 | 6AT | F | R | Estate 4WD B 5254 T12 | | GDS81370 | Drive Shaft | | 40 | 28 | 57.7 | 52 | 1008 | |
| | 2015.03-2018.05 | 6AT | F | L/R | Estate 4WD B 5254 T12 | | GCO62042 | Outer Joint | | 40 | 27 | 57.7 | 52 | 63.5 | M |
| | 2015.03-2018.05 | 6AT | F | L | Estate 4WD B 5254 T12 | Model year to:2016 | GCO81424 | Inner Joint | | 31 | 27 | 36.2 | 70 | 62 | |
| | 2015.03-2018.05 | 6AT | R | L/R | Estate 4WD B 5254 T12 | | GDS62077 | Drive Shaft | 44NS | 36 | 23 | 56.5 | 49.5 | 762 | |
| | 2015.03-2018.05 | 6AT | R | L/R | Estate 4WD B 5254 T12 | | GCO83248 | Outer Joint | 44NS | 36 | 29 | 56.5 | 49.5 | 64 | I |
| | 2015.03-2018.05 | 6AT | R | L/R | Estate 4WD B 5254 T12 | | GCI62035 | Inner Joint | | 23 | 29 | 28 | 64 | 110 | |
| **V70** | | | | | | | | | | | | | | | |
| 1.6 (80 kw) | 2009.07-2011.12 | 5MT | F | L | Estate FWD D 4164 T | | GDS62093 | Drive Shaft | | 40 | 26 | 57.7 | 52 | 610 | |
| | 2009.07-2011.12 | 5MT | F | R | Estate FWD D 4164 T | | GDS62094 | Drive Shaft | | 40 | 26 | 57.7 | 52 | 946 | |
| | 2009.07-2011.12 | 5MT | F | L | Estate FWD D 4164 T | | GCI18128 | Inner Joint | | 26 | 28 | 40 | 68.5 | 111 | |
| | 2009.07-2011.12 | MT | F | L/R | Estate FWD D 4164 T | | GCO99271 | Outer Joint | | 40 | 28 | 57.7 | 51 | 63 | M |
| 1.6 (84 kw) | 2011.04-2015.12 | 6DCT | F | L | Estate FWD D 4162 T | | GCI62056 | Inner Joint | | 28 | 24 | 33.8 | 80 | 95.5 | |
| | 2011.04-2015.12 | 6DCT | F | R | Estate FWD D 4162 T | | GCI62067 | Inner Joint | | 28 | 24 | 33.8 | 374.5 | 98.5 | |
| | 2011.04-2015.12 | AT | F | L | Estate FWD D 4162 T | | GDS62127 | Drive Shaft | | 40 | 28 | 57.7 | 52 | 602 | |
| | 2011.04-2015.12 | AT | F | R | Estate FWD D 4162 T | | GDS62133 | Drive Shaft | | 40 | 28 | 57.7 | 52 | 934 | |
| | 2011.04-2015.12 | MT | F | R | Estate FWD D 4162 T | | GDS62094 | Drive Shaft | | 40 | 26 | 57.7 | 52 | 946 | |
| | 2011.04-2015.12 | MT | F | L/R | Estate FWD D 4162 T | | GCO99271 | Outer Joint | | 40 | 28 | 57.7 | 51 | 63 | M |
| | 2011.04-2015.12 | MT | F | L | Estate FWD D 4162 T | | GCI18128 | Inner Joint | | 26 | 28 | 40 | 68.5 | 111 | |
| | 2011.04-2015.12 | MT | F | R | Estate FWD D 4162 T | | GCI18129 | Inner Joint | | 26 | 28 | 40 | 389 | 96.5 | |
| | 2011.04-2015.12 | | F | L | Estate FWD D 4162 T | | GDS62093 | Drive Shaft | | 40 | 26 | 57.7 | 52 | 610 | |
| 1.6 (132 kw) | 2010.10-2015.12 | 6DCT | F | L | Estate FWD B 4164 T | | GDS62081 | Drive Shaft | | 40 | 28 | 57.7 | 51 | 591 | |
| | 2010.10-2015.12 | 6DCT | F | L | Estate FWD B 4164 T | | GDS62095 | Drive Shaft | | 40 | 28 | 57.7 | 52 | 592 | |
| | 2010.10-2015.12 | 6DCT | F | R | Estate FWD B 4164 T | | GDS62096 | Drive Shaft | | 40 | 28 | 57.7 | 52 | 952 | |
| | 2010.10-2015.12 | 6MT | F | L | Estate FWD B 4164 T | | GDS99211 | Drive Shaft | | 40 | 26 | 57.7 | 51 | 603 | |
| | 2010.10-2015.12 | 6MT | F | R | Estate FWD B 4164 T | | GDS62084 | Drive Shaft | | 40 | 26 | 57.7 | 51 | 963 | |
| | 2010.10-2015.12 | 6MT | F | L/R | Estate FWD B 4164 T | | GCO99271 | Outer Joint | | 40 | 28 | 57.7 | 51 | 63 | M |
| | 2010.10-2015.12 | MT | F | R | Estate FWD B 4164 T | | GCI62041 | Inner Joint | | 26 | 28 | 40 | 447 | 95.5 | |
| | 2011.01-2015.12 | 6DCT | F | L | Estate FWD B 4164 T2 | | GDS62081 | Drive Shaft | | 40 | 28 | 57.7 | 51 | 591 | |
| | 2011.01-2015.12 | 6DCT | F | L | Estate FWD B 4164 T2 | | GDS62095 | Drive Shaft | | 40 | 28 | 57.7 | 52 | 592 | |
| | 2011.01-2015.12 | 6DCT | F | R | Estate FWD B 4164 T2 | | GDS62082 | Drive Shaft | | 40 | 28 | 57.7 | 51 | 950 | |
| | 2011.01-2015.12 | 6DCT | F | R | Estate FWD B 4164 T2 | | GDS62096 | Drive Shaft | | 40 | 28 | 57.7 | 52 | 952 | |
| | 2011.01-2015.12 | 6MT | F | L | Estate FWD B 4164 T2 | | GDS99211 | Drive Shaft | | 40 | 26 | 57.7 | 51 | 603 | |
| | 2011.01-2015.12 | 6MT | F | R | Estate FWD B 4164 T2 | | GDS62084 | Drive Shaft | | 40 | 26 | 57.7 | 51 | 963 | |
| | 2011.01-2015.12 | 6MT | F | L/R | Estate FWD B 4164 T2 | | GCO99271 | Outer Joint | | 40 | 28 | 57.7 | 51 | 63 | M |
| | 2011.01-2015.12 | AT | F | L | Estate FWD B 4164 T2 | | GCI81077 | Inner Joint | | 28 | 28 | 34 | 80 | 95.5 | |
| | 2011.01-2015.12 | AT | F | R | Estate FWD B 4164 T2 | | GCI81078 | Inner Joint | | 28 | 28 | 34 | 446.5 | 95.5 | |
| | 2011.01-2015.12 | MT | F | R | Estate FWD B 4164 T2 | | GCI62041 | Inner Joint | | 26 | 28 | 40 | 447 | 95.5 | |
| 2.0 (88 kw) | 2015.03-2016.04 | 6AT | F | L | Estate FWD D 4204 T20 | | GDS83640 | Drive Shaft | | 40 | 26 | 57.7 | 52 | 576 | |
| | 2015.03-2016.04 | 6AT | F | R | Estate FWD D 4204 T20 | | GDS83661 | Drive Shaft | | 40 | 26 | 57.7 | 52 | 953 | |
| | 2015.03-2016.04 | 6MT | F | L | Estate FWD D 4204 T20 | | GDS62119 | Drive Shaft | | 40 | 31 | 57.7 | 52 | 599 | |
| | 2015.03-2016.04 | 6MT | F | R | Estate FWD D 4204 T20 | | GDS62117 | Drive Shaft | | 40 | 28 | 57.7 | 52 | 949 | |
| | 2015.03-2016.04 | AT | F | L | Estate FWD D 4204 T20 | | GCI82187 | Inner Joint | | 26 | 24 | 31 | 72 | 94 | |
| | 2015.03-2016.04 | AT | F | R | Estate FWD D 4204 T20 | | GCI82304 | Inner Joint | | 26 | 24 | 31 | 454 | 98 | |
| | 2015.03-2016.04 | AT/MT | F | L/R | Estate FWD D 4204 T20 | | GCO62052 | Outer Joint | | 40 | 25 | 57.7 | 52 | 59.5 | I |
| | 2015.03-2016.04 | MT | F | L | Estate FWD D 4204 T20 | | GCI62060 | Inner Joint | | 31 | 26 | 44 | 79 | 105 | |
| | 2015.03-2016.04 | MT | F | R | Estate FWD D 4204 T20 | | GCI62062 | Inner Joint | | 28 | 26 | 40 | 454 | 92 | |
| 2.0 (93 kw) | 1996.11-2000.02 | AT | F | L | Estate FWD B5202FS | Model year to:1998 | GCO62002 | Outer Joint | 48T | 26 | 28 | 56.5 | 97.5 | 66 | O |
| | 1996.11-2000.02 | AT/MT | F | L | Estate FWD B5202FS | Model year to:1998 | GDS62001 | Drive Shaft | 48T | 26 | 26 | 56.5 | 98.5 | 574.5 | |
| | 1996.11-2000.02 | AT/MT | F | L | Estate FWD B5202FS | Model year from:1999 | GDS62009 | Drive Shaft | 48T | 36 | 26 | 56.5 | 48 | 523 | |
| | 1996.11-2000.02 | AT/MT | F | R | Estate FWD B5202FS | Model year to:1998 | GDS62002 | Drive Shaft | 48T | 26 | 26 | 56.5 | 98.5 | 1028 | |
| | 1996.11-2000.02 | AT/MT | F | L/R | Estate FWD B5202FS | Model year to:1998 | GCO62001 | Outer Joint | 48T | 26 | 25 | 56.5 | 98.5 | 56 | O |
| | 1996.11-2000.02 | AT/MT | F | L/R | Estate FWD B5202FS | Model year to:1998 | GCO62014 | Outer Joint | | 26 | 25 | 56.5 | 98.5 | 56 | O |
| | 1996.11-2000.02 | MT | F | L | Estate FWD B5202FS | Model year from:1999 | GCO62010 | Outer Joint | 48T | 36 | 33 | 56.5 | 48 | 58 | M |
| | 1996.11-2000.02 | MT | F | R | Estate FWD B5202FS | Date from:1996.11,Date to:1998.12 | GCI62015 | Inner Joint | | 26 | 25 | 40 | 531.5 | 96 | |
| 2.0 (100 kw) | 2007.10-2015.12 | AT | F | L/R | Estate FWD D 4204 T | | GCO59344 | Outer Joint | | 40 | 26 | 57.7 | 52 | 63.5 | M |
| | 2007.10-2015.12 | MT | F | L | Estate FWD D 4204 T | | GDS62093 | Drive Shaft | | 40 | 26 | 57.7 | 52 | 610 | |
| | 2007.10-2015.12 | MT | F | R | Estate FWD D 4204 T | | GDS62094 | Drive Shaft | | 40 | 26 | 57.7 | 52 | 946 | |
| | 2007.10-2015.12 | MT | F | L/R | Estate FWD D 4204 T | | GCO99271 | Outer Joint | | 40 | 28 | 57.7 | 51 | 63 | M |
| | 2007.10-2015.12 | MT | F | L | Estate FWD D 4204 T | | GCI18128 | Inner Joint | | 26 | 28 | 40 | 68.5 | 111 | |
| | 2007.10-2015.12 | MT | F | R | Estate FWD D 4204 T | | GCI18129 | Inner Joint | | 26 | 28 | 40 | 389 | 96.5 | |
| | 2007.10-2015.12 | 6AT | F | L | Estate FWD D 5204 T7 | Chassis no. to:270487 | GDS62076 | Drive Shaft | | 40 | 31 | 57.7 | 52 | 529 | |
| | 2007.10-2015.12 | 6AT | F | R | Estate FWD D 5204 T7 | Chassis no. to:270487 | GDS59444 | Drive Shaft | | 40 | 28 | 57.7 | 52 | 994 | |
| | 2007.10-2015.12 | 6AT | F | R | Estate FWD D 5204 T7 | Chassis no. from:270488 | GDS62091 | Drive Shaft | | 40 | 28 | 57.7 | 52 | 992 | |
| | 2007.10-2015.12 | 6MT | F | L | Estate FWD D 5204 T7 | | GDS21070 | Drive Shaft | | 40 | 26 | 57.7 | 52 | 556 | |
| | 2007.10-2015.12 | 6MT | F | R | Estate FWD D 5204 T7 | | GDS62086 | Drive Shaft | | 40 | 26 | 57.7 | 52 | 1002 | |

| | YEAR | TRANSM. | F/R | L/R | BODY STYLE & DRIVE TYPE & ENGINE | REMARKS | G-AP Ref. | PRODUCT | ABS | Technical Specifications | | | | | |
|---|---|---|---|---|---|---|---|---|---|---|---|---|---|---|---|
| | | | | | | | | | | A | B | C | H | L | P |
| **VOLVO** | | | | | | | | | | | | | | | |
| **V70** | | | | | | | | | | | | | | | |
| 2.0 (100 kw) | 2007.10-2015.12 | 6MT | F | L/R | Estate FWD D 5204 T7 | | GCO59285 | Outer Joint | | 40 | 27 | 57.7 | 52 | 63.5 | M |
| | 2007.10-2015.12 | AT | F | L | Estate FWD D 5204 T7 | Chassis no. from:270488 | GDS62109 | Drive Shaft | | 40 | 31 | 57.7 | 52 | 524 | |
| | 2007.10-2015.12 | AT | F | L/R | Estate FWD D 5204 T7 | Chassis no. from:270488;Different retainers | GCO59344 | Outer Joint | | 40 | 26 | 57.7 | 52 | 63.5 | M |
| | 2007.10-2015.12 | AT | F | L/R | Estate FWD D 5204 T7 | Chassis no. from:270488;Different retainers | GCO62045 | Outer Joint | | 40 | 26 | 57.7 | 52 | 62.5 | M |
| | 2007.10-2015.12 | AT | F | R | Estate FWD D 5204 T7 | | GCI62043 | Inner Joint | | 28 | 26 | 33 | 521 | 100 | |
| | 2007.10-2015.12 | MT | F | R | Estate FWD D 5204 T7 | | GCI81076 | Inner Joint | | 26 | 28 | 40 | 522.5 | 123.7 | |
| | 2013.09-2015.12 | 6AT | F | L | Estate Van FWD D 5204 T7 | Chassis no. to:270487 | GDS62076 | Drive Shaft | | 40 | 31 | 57.7 | 52 | 529 | |
| | 2013.09-2015.12 | 6AT | F | R | Estate Van FWD D 5204 T7 | Chassis no. to:270487 | GDS59444 | Drive Shaft | | 40 | 28 | 57.7 | 52 | 994 | |
| | 2013.09-2015.12 | 6AT | F | R | Estate Van FWD D 5204 T7 | Chassis no. from:270488 | GDS62091 | Drive Shaft | | 40 | 28 | 57.7 | 52 | 992 | |
| | 2013.09-2015.12 | 6MT | F | L | Estate Van FWD D 5204 T7 | | GDS21070 | Drive Shaft | | 40 | 26 | 57.7 | 52 | 556 | |
| | 2013.09-2015.12 | 6MT | F | R | Estate Van FWD D 5204 T7 | | GDS62086 | Drive Shaft | | 40 | 26 | 57.7 | 52 | 1002 | |
| | 2013.09-2015.12 | 6MT | F | L/R | Estate Van FWD D 5204 T7 | | GCO59285 | Outer Joint | | 40 | 27 | 57.7 | 52 | 63.5 | M |
| | 2013.09-2015.12 | AT | F | L | Estate Van FWD D 5204 T7 | Chassis no. from:270488 | GDS62109 | Drive Shaft | | 40 | 31 | 57.7 | 52 | 524 | |
| | 2013.09-2015.12 | AT | F | L/R | Estate Van FWD D 5204 T7 | Chassis no. from:270488;Different retainers | GCO62045 | Outer Joint | | 40 | 26 | 57.7 | 52 | 62.5 | M |
| | 2013.09-2015.12 | AT | F | R | Estate Van FWD D 5204 T7 | | GCI62043 | Inner Joint | | 28 | 26 | 33 | 521 | 100 | |
| | 2013.09-2015.12 | MT | F | R | Estate Van FWD D 5204 T7 | | GCI81076 | Inner Joint | | 26 | 28 | 40 | 522.5 | 123.7 | |
| 2.0 (105 kw) | 1996.11-1998.09 | 5MT | F | L/R | Estate FWD B5204T2 | Date from:1996.11,Date to:1998.09 | GCO62002 | Outer Joint | 48T | 26 | 28 | 56.5 | 97.5 | 66 | O |
| | 1996.11-1998.09 | AT/MT | F | L | Estate FWD B5204T2 | Date to:1999.12 | GDS62001 | Drive Shaft | 48T | 26 | 26 | 56.5 | 98.5 | 574.5 | |
| | 1996.11-1998.09 | AT/MT | F | R | Estate FWD B5204T2 | Date to:1999.12 | GDS62002 | Drive Shaft | 48T | 26 | 26 | 56.5 | 98.5 | 1028 | |
| | 1996.11-1998.09 | AT/MT | F | L/R | Estate FWD B5204T2 | Date to:1999.12 | GCO62001 | Outer Joint | 48T | 26 | 25 | 56.5 | 98.5 | 56 | O |
| | 1996.11-1998.09 | AT/MT | F | L/R | Estate FWD B5204T2 | Date from:1999.01 | GCO62010 | Outer Joint | 48T | 36 | 33 | 56.5 | 48 | 58 | M |
| | 1996.11-1998.09 | AT/MT | F | L/R | Estate FWD B5204T2 | Date to:1999.12 | GCO62014 | Outer Joint | | 26 | 25 | 56.5 | 98.5 | 56 | O |
| | 1996.11-1998.09 | MT | F | R | Estate FWD B5204T2 | Date from:1996.11,Date to:1998.09 | GCI62015 | Inner Joint | | 26 | 25 | 40 | 531.5 | 96 | |
| 2.0 (107 kw) | 2007.10-2011.12 | 5MT | F | L | Estate FWD B 4204 S3 | | GDS62093 | Drive Shaft | | 40 | 26 | 57.7 | 52 | 610 | |
| | 2007.10-2011.12 | 5MT | F | R | Estate FWD B 4204 S3 | | GDS62094 | Drive Shaft | | 40 | 26 | 57.7 | 52 | 946 | |
| | 2007.10-2011.12 | 5MT | F | L | Estate FWD B 4204 S3 | | GCI18128 | Inner Joint | | 26 | 28 | 40 | 68.5 | 111 | |
| | 2007.10-2011.12 | AT | F | L/R | Estate FWD B 4204 S3 | | GCO59344 | Outer Joint | | 40 | 26 | 57.7 | 52 | 63.5 | M |
| | 2007.10-2011.12 | MT | F | L/R | Estate FWD B 4204 S3 | | GCO99271 | Outer Joint | | 40 | 28 | 57.7 | 51 | 63 | M |
| | 2008.01-2011.12 | 5MT | F | L | Estate FWD B 4204 S4 | | GDS62093 | Drive Shaft | | 40 | 26 | 57.7 | 52 | 610 | |
| | 2008.01-2011.12 | 5MT | F | R | Estate FWD B 4204 S4 | | GDS62094 | Drive Shaft | | 40 | 26 | 57.7 | 52 | 946 | |
| | 2008.01-2011.12 | 5MT | F | L | Estate FWD B 4204 S4 | | GCI18128 | Inner Joint | | 26 | 28 | 40 | 68.5 | 111 | |
| | 2008.01-2011.12 | 6DCT | F | L | Estate FWD B 4204 S4 | | GDS62115 | Drive Shaft | | 40 | 28 | 57.7 | 52 | 602 | |
| | 2008.01-2011.12 | 6DCT | F | R | Estate FWD B 4204 S4 | | GDS57739 | Drive Shaft | | 40 | 28 | 57.7 | 52 | 939 | |
| | 2008.01-2011.12 | 6DCT | F | L/R | Estate FWD B 4204 S4 | | GCO18269 | Outer Joint | | 40 | 26 | 57.7 | 52 | 63.5 | I |
| | 2008.01-2011.12 | 6DCT | F | L | Estate FWD B 4204 S4 | | GCI62059 | Inner Joint | | 28 | 26 | 34 | 80 | 101.5 | |
| | 2008.01-2011.12 | 6DCT | F | R | Estate FWD B 4204 S4 | | GCI83868 | Inner Joint | | 28 | 26 | 33.8 | 371 | 103 | |
| | 2008.01-2011.12 | AT | F | L/R | Estate FWD B 4204 S4 | | GCO59344 | Outer Joint | | 40 | 26 | 57.7 | 52 | 63.5 | M |
| | 2008.01-2011.12 | MT | F | L/R | Estate FWD B 4204 S4 | | GCO99271 | Outer Joint | | 40 | 28 | 57.7 | 51 | 63 | M |
| 2.0 (110 kw) | 2015.03-2016.04 | 6AT | F | L | Estate FWD D 4204 T9 | | GDS83640 | Drive Shaft | | 40 | 26 | 57.7 | 52 | 576 | |
| | 2015.03-2016.04 | 6AT | F | R | Estate FWD D 4204 T9 | | GDS83661 | Drive Shaft | | 40 | 26 | 57.7 | 52 | 953 | |
| | 2015.03-2016.04 | 6MT | F | L | Estate FWD D 4204 T9 | | GDS62119 | Drive Shaft | | 40 | 31 | 57.7 | 52 | 599 | |
| | 2015.03-2016.04 | 6MT | F | R | Estate FWD D 4204 T9 | | GDS62117 | Drive Shaft | | 40 | 28 | 57.7 | 52 | 949 | |
| | 2015.03-2016.04 | AT | F | L | Estate FWD D 4204 T9 | | GCI82187 | Inner Joint | | 26 | 24 | 31 | 72 | 94 | |
| | 2015.03-2016.04 | AT | F | R | Estate FWD D 4204 T9 | | GCI82304 | Inner Joint | | 26 | 24 | 31 | 454 | 98 | |
| | 2015.03-2016.04 | AT/MT | F | L/R | Estate FWD D 4204 T9 | | GCO62052 | Outer Joint | | 40 | 25 | 57.7 | 52 | 59.5 | I |
| | 2015.03-2016.04 | MT | F | L | Estate FWD D 4204 T9 | | GCI62060 | Inner Joint | | 31 | 26 | 44 | 79 | 105 | |
| | 2015.03-2016.04 | MT | F | R | Estate FWD D 4204 T9 | | GCI62062 | Inner Joint | | 28 | 26 | 40 | 454 | 92 | |
| 2.0 (120 kw) | 1997.01-2000.08 | MT | F | L | Estate FWD B5204T4 | | GDS62009 | Drive Shaft | 48T | 36 | 26 | 56.5 | 48 | 523 | |
| | 1997.01-2000.08 | MT | F | L | Estate FWD B5204T4 | | GCO62010 | Outer Joint | 48T | 36 | 33 | 56.5 | 48 | 58 | M |
| | 2010.03-2015.12 | 6AT | F | L | Estate FWD D 5204 T2;D 5204 T3 | | GDS62076 | Drive Shaft | | 40 | 31 | 57.7 | 52 | 529 | |
| | 2010.03-2015.12 | 6AT | F | L | Estate FWD D 5204 T2;D 5204 T3 | Chassis no. from:270488 | GDS62109 | Drive Shaft | | 40 | 31 | 57.7 | 52 | 524 | |
| | 2010.03-2015.12 | 6AT | F | R | Estate FWD D 5204 T2;D 5204 T3 | Chassis no. to:270487 | GDS59444 | Drive Shaft | | 40 | 28 | 57.7 | 52 | 994 | |
| | 2010.03-2015.12 | 6AT | F | R | Estate FWD D 5204 T2;D 5204 T3 | Chassis no. from:270488 | GDS62091 | Drive Shaft | | 40 | 28 | 57.7 | 52 | 992 | |
| | 2010.03-2015.12 | 6AT | F | L/R | Estate FWD D 5204 T2;D 5204 T3 | Chassis no. from:270488;Different retainers | GCO59344 | Outer Joint | | 40 | 26 | 57.7 | 52 | 63.5 | M |
| | 2010.03-2015.12 | 6AT | F | L/R | Estate FWD D 5204 T2;D 5204 T3 | Chassis no. from:270488;Different retainers | GCO62045 | Outer Joint | | 40 | 26 | 57.7 | 52 | 62.5 | M |
| | 2010.03-2015.12 | 6AT | F | R | Estate FWD D 5204 T2;D 5204 T3 | Chassis no. from:270488 | GCI62043 | Inner Joint | | 28 | 26 | 33 | 521 | 100 | |
| | 2010.03-2015.12 | 6MT | F | L | Estate FWD D 5204 T2;D 5204 T3 | | GDS21070 | Drive Shaft | | 40 | 26 | 57.7 | 52 | 556 | |
| | 2010.03-2015.12 | 6MT | F | R | Estate FWD D 5204 T2;D 5204 T3 | | GDS62086 | Drive Shaft | | 40 | 26 | 57.7 | 52 | 1002 | |
| | 2010.03-2015.12 | 6MT | F | L/R | Estate FWD D 5204 T2;D 5204 T3 | | GCO59285 | Outer Joint | | 40 | 27 | 57.7 | 52 | 63.5 | M |
| | 2010.03-2015.12 | 6MT | F | R | Estate FWD D 5204 T2;D 5204 T3 | | GCI81076 | Inner Joint | | 26 | 28 | 40 | 522.5 | 123.7 | |
| 2.0 (132 kw) | 1997.01-2000.03 | AT | F | R | Estate FWD B5204T2 | | GDS62002 | Drive Shaft | 48T | 26 | 26 | 56.5 | 98.5 | 1028 | |
| | 1997.01-2000.03 | AT/MT | F | L | Estate FWD B5204T2 | | GDS62001 | Drive Shaft | 48T | 26 | 26 | 56.5 | 98.5 | 574.5 | |
| | 1997.01-2000.03 | AT/MT | F | L/R | Estate FWD B5204T2 | | GCO62001 | Outer Joint | 48T | 26 | 25 | 56.5 | 98.5 | 56 | O |
| | 1997.01-2000.03 | AT/MT | F | L/R | Estate FWD B5204T2 | | GCO62014 | Outer Joint | | 26 | 25 | 56.5 | 98.5 | 56 | O |
| | 1997.01-2000.03 | MT | F | L/R | Estate FWD B5204T2 | | GCO62002 | Outer Joint | 48T | 26 | 28 | 56.5 | 97.5 | 66 | O |

| | YEAR | TRANSM. | F/R | L/R | BODY STYLE & DRIVE TYPE & ENGINE | REMARKS | G-AP Ref. | PRODUCT | ABS | Technical Specifications A | B | C | H | L | P |
|---|---|---|---|---|---|---|---|---|---|---|---|---|---|---|---|
| **VOLVO** **V70** | | | | | | | | | | | | | | | |
| 2.0 (132 kw) | 1997.01-2000.03 | MT | F | R | Estate FWD B5204T2 | | GCI62015 | Inner Joint | | 26 | 25 | 40 | 531.5 | 96 | |
| | 1999.11-2007.08 | AT | F | L | Estate FWD B 5204 T5 | | GDS62022 | Drive Shaft | 48T | 36 | 26 | 56.5 | 48 | 527 | |
| | 1999.11-2007.08 | AT | F | R | Estate FWD B 5204 T5 | | GDS62017 | Drive Shaft | 48T | 36 | 26 | 56.5 | 48 | 978.5 | |
| | 1999.11-2007.08 | AT | F | L | Estate FWD B 5204 T5 | | GCI99109 | Inner Joint | | 26 | 26 | 31 | 68 | 87 | |
| | 1999.11-2007.08 | AT | F | R | Estate FWD B 5204 T5 | | GCI62029 | Inner Joint | | 26 | 26 | 31 | 513 | 93.5 | |
| | 1999.11-2007.08 | AT/MT | F | L/R | Estate FWD B 5204 T5 | | GCO62009 | Outer Joint | 48T | 36 | 27 | 56.5 | 48 | 66 | M |
| | 1999.11-2007.08 | MT | F | L | Estate FWD B 5204 T5 | | GDS62057 | Drive Shaft | 48T | 36 | 26 | 56.5 | 48 | 546 | |
| | 1999.11-2007.08 | MT | F | R | Estate FWD B 5204 T5 | | GDS62031 | Drive Shaft | 48T | 36 | 26 | 56.5 | 48 | 992 | |
| 2.0 (133 kw) | 2013.10-2016.04 | 6MT | F | L | Estate FWD D 4204 T5 | | GDS62119 | Drive Shaft | | 40 | 31 | 57.7 | 52 | 599 | |
| | 2013.10-2016.04 | 6MT | F | R | Estate FWD D 4204 T5 | | GDS62117 | Drive Shaft | | 40 | 28 | 57.7 | 52 | 949 | |
| | 2013.10-2016.04 | AT | F | L | Estate FWD D 4204 T5 | | GDS62126 | Drive Shaft | | 40 | 31 | 57.5 | 52 | 576 | |
| | 2013.10-2016.04 | AT | F | R | Estate FWD D 4204 T5 | | GDS62124 | Drive Shaft | | 40 | 28 | 57.5 | 52 | 954 | |
| | 2013.10-2016.04 | AT | F | L/R | Estate FWD D 4204 T5 | | GCO62053 | Outer Joint | | 40 | 27 | 57.5 | 52 | 60.5 | I |
| | 2013.10-2016.04 | AT | F | L | Estate FWD D 4204 T5 | | GCI62034 | Inner Joint | | 31 | 27 | 36.2 | 68 | 90 | |
| | 2013.10-2016.04 | AT | F | R | Estate FWD D 4204 T5 | | GCI62065 | Inner Joint | | 28 | 27 | 33 | 454 | 94 | |
| | 2013.10-2016.04 | MT | F | L/R | Estate FWD D 4204 T5 | | GCO62052 | Outer Joint | | 40 | 25 | 57.7 | 52 | 59.5 | I |
| | 2013.10-2016.04 | MT | F | L | Estate FWD D 4204 T5 | | GCI62060 | Inner Joint | | 31 | 26 | 44 | 79 | 105 | |
| | 2013.10-2016.04 | MT | F | R | Estate FWD D 4204 T5 | | GCI62062 | Inner Joint | | 28 | 26 | 40 | 454 | 92 | |
| 2.0 (140 kw) | 2015.03-2016.04 | 6AT | F | L | Estate FWD B 4204 T19 | | GDS83640 | Drive Shaft | | 40 | 26 | 57.7 | 52 | 576 | |
| | 2015.03-2016.04 | 6AT | F | R | Estate FWD B 4204 T19 | | GDS83661 | Drive Shaft | | 40 | 26 | 57.7 | 52 | 953 | |
| | 2015.03-2016.04 | 6AT | F | L | Estate FWD B 4204 T19 | | GCI82187 | Inner Joint | | 26 | 24 | 31 | 72 | 94 | |
| | 2015.03-2016.04 | 6AT | F | R | Estate FWD B 4204 T19 | | GCI82304 | Inner Joint | | 26 | 24 | 31 | 454 | 98 | |
| | 2015.03-2016.04 | 6AT/6MT | F | L/R | Estate FWD B 4204 T19 | | GCO62052 | Outer Joint | | 40 | 25 | 57.7 | 52 | 59.5 | I |
| | 2015.03-2016.04 | 6MT | F | L | Estate FWD B 4204 T19 | | GDS62119 | Drive Shaft | | 40 | 31 | 57.7 | 52 | 599 | |
| | 2015.03-2016.04 | 6MT | F | R | Estate FWD B 4204 T19 | | GDS62117 | Drive Shaft | | 40 | 28 | 57.7 | 52 | 949 | |
| | 2015.03-2016.04 | 6MT | F | L | Estate FWD B 4204 T19 | | GCI62060 | Inner Joint | | 31 | 26 | 44 | 79 | 105 | |
| | 2015.03-2016.04 | 6MT | F | R | Estate FWD B 4204 T19 | | GCI62062 | Inner Joint | | 28 | 26 | 40 | 454 | 92 | |
| 2.0 (149 kw) | 2009.09-2011.12 | 6DCT | F | L | Estate FWD B 4204 T6 | | GDS62113 | Drive Shaft | | 40 | 28 | 57.7 | 52 | 590 | |
| | 2009.09-2011.12 | 6DCT | F | R | Estate FWD B 4204 T6 | | GDS62114 | Drive Shaft | | 40 | 28 | 57.7 | 52 | 952 | |
| | 2009.09-2011.12 | 6DCT | F | L | Estate FWD B 4204 T6 | | GCO18269 | Outer Joint | | 40 | 26 | 57.7 | 52 | 63.5 | I |
| | 2009.09-2011.12 | 6DCT | F | L | Estate FWD B 4204 T6 | | GCI62059 | Inner Joint | | 28 | 26 | 34 | 80 | 101.5 | |
| | 2009.09-2011.12 | 6DCT | F | R | Estate FWD B 4204 T6 | | GCI62058 | Inner Joint | | 28 | 26 | 33.95 | 430 | 103 | |
| | 2009.09-2011.12 | 6MT | F | L | Estate FWD B 4204 T6 | | GCI62072 | Inner Joint | | 26 | 26 | 40 | 69 | 112 | |
| | 2009.09-2011.12 | 6MT | F | R | Estate FWD B 4204 T6 | | GCI62057 | Inner Joint | | 26 | 26 | 40 | 448 | 103 | |
| | 2009.09-2011.12 | AT/MT | F | L/R | Estate FWD B 4204 T6 | | GCO59344 | Outer Joint | | 40 | 26 | 57.7 | 52 | 63.5 | M |
| | 2009.09-2011.12 | AT/MT | F | L/R | Estate FWD B 4204 T6 | | GCO99271 | Outer Joint | | 40 | 28 | 57.7 | 51 | 63 | M |
| | 2009.09-2011.12 | MT | F | L | Estate FWD B 4204 T6 | | GDS62134 | Drive Shaft | | 40 | 26 | 57.7 | 52 | 599 | |
| | 2009.09-2011.12 | MT | F | R | Estate FWD B 4204 T6 | | GDS62112 | Drive Shaft | | 40 | 26 | 57.7 | 52 | 962 | |
| 2.0 (155 kw) | 1996.11-1998.09 | AT/MT | F | L | Estate FWD B5204T2 | Date to:1999.12 | GDS62001 | Drive Shaft | 48T | 26 | 26 | 56.5 | 98.5 | 574.5 | |
| | 1996.11-1998.09 | AT/MT | F | R | Estate FWD B5204T2 | Date to:1999.12 | GDS62002 | Drive Shaft | 48T | 26 | 26 | 56.5 | 98.5 | 1028 | |
| | 1996.11-1998.09 | AT/MT | F | L/R | Estate FWD B5204T2 | Date to:1999.12 | GCO62001 | Outer Joint | 48T | 26 | 25 | 56.5 | 98.5 | 56 | O |
| | 1996.11-1998.09 | AT/MT | F | L/R | Estate FWD B5204T2 | Date from:1999.01 | GCO62009 | Outer Joint | 48T | 36 | 27 | 56.5 | 48 | 66 | M |
| 2.0 (157 kw) | 2012.04-2015.12 | 6AT | F | L | Estate FWD B 5204 T9 | Chassis no. from:303825 | GDS62109 | Drive Shaft | | 40 | 31 | 57.7 | 52 | 524 | |
| | 2012.04-2015.12 | 6AT | F | R | Estate FWD B 5204 T9 | Chassis no. from:303825 | GDS62091 | Drive Shaft | | 40 | 28 | 57.7 | 52 | 992 | |
| | 2012.04-2015.12 | 6AT | F | R | Estate FWD B 5204 T9 | Chassis no. from:303825 | GCI62043 | Inner Joint | | 28 | 26 | 33 | 521 | 100 | |
| | 2012.04-2015.12 | 6MT | F | L | Estate FWD B 5204 T9 | | GDS21070 | Drive Shaft | | 40 | 26 | 57.7 | 52 | 556 | |
| | 2012.04-2015.12 | 6MT | F | R | Estate FWD B 5204 T9 | | GDS62086 | Drive Shaft | | 40 | 26 | 57.7 | 52 | 1002 | |
| | 2012.04-2015.12 | 6MT | F | L/R | Estate FWD B 5204 T9 | | GCO59285 | Outer Joint | | 40 | 27 | 57.7 | 52 | 63.5 | M |
| | 2012.04-2015.12 | 6MT | F | R | Estate FWD B 5204 T9 | | GCI81076 | Inner Joint | | 26 | 28 | 40 | 522.5 | 123.7 | |
| | 2013.03-2015.12 | 6MT | F | L | Estate FWD B 5204 T9 | | GDS21070 | Drive Shaft | | 40 | 26 | 57.7 | 52 | 556 | |
| | 2013.03-2015.12 | 6MT | F | R | Estate FWD B 5204 T9 | | GDS62086 | Drive Shaft | | 40 | 26 | 57.7 | 52 | 1002 | |
| | 2013.03-2015.12 | 6MT | F | L/R | Estate FWD B 5204 T9 | | GCO59285 | Outer Joint | | 40 | 27 | 57.7 | 52 | 63.5 | M |
| | 2013.03-2015.12 | AT | F | L | Estate FWD B 5204 T9 | | GDS62109 | Drive Shaft | | 40 | 31 | 57.7 | 52 | 524 | |
| | 2013.03-2015.12 | AT | F | R | Estate FWD B 5204 T9 | | GDS62091 | Drive Shaft | | 40 | 28 | 57.7 | 52 | 992 | |
| | 2013.03-2015.12 | AT | F | R | Estate FWD B 5204 T9 | | GCI62043 | Inner Joint | | 28 | 26 | 33 | 521 | 100 | |
| | 2013.03-2015.12 | MT | F | R | Estate FWD B 5204 T9 | | GCI81076 | Inner Joint | | 26 | 28 | 40 | 522.5 | 123.7 | |
| 2.0 (166 kw) | 1996.11-2000.02 | 5MT | F | L | Estate 4WD B5204T3 | Year to:1998 | GDS62001 | Drive Shaft | 48T | 26 | 26 | 56.5 | 98.5 | 574.5 | |
| | 1996.11-2000.02 | 5MT | F | L | Estate 4WD B5204T3 | Year to:1998 | GCO62001 | Outer Joint | 48T | 26 | 25 | 56.5 | 98.5 | 56 | O |
| | 1996.11-2000.02 | MT | F | L | Estate 4WD B5204T3 | | GDS62009 | Drive Shaft | 48T | 36 | 26 | 56.5 | 48 | 523 | |
| | 1996.11-2000.02 | 5MT | R | L/R | Estate 4WD B5204T3 | | GDS81128 | Drive Shaft | 48T | 26 | 26 | 60.5 | 81 | 751 | |
| | 1996.11-2000.02 | 5MT | R | L/R | Estate 4WD B5204T3 | | GCI81050 | Inner Joint | 48T | 26 | 25 | 60.5 | 81 | 96.8 | |
| | 1996.11-2000.02 | 5MT | R | L/R | Estate 4WD B5204T3 | | GCI81060 | Inner Joint | | 26 | 25 | 35 | 70 | 106.3 | |
| | 1996.11-2000.02 | AT | F | L | Estate FWD B5204T3 | Year from:1999 | GDS62143 | Drive Shaft | 48T | 36 | 26 | 56.5 | 48 | 506 | |
| | 1996.11-2000.02 | AT | F | R | Estate FWD B5204T3 | Year to:1998 | GDS62002 | Drive Shaft | 48T | 26 | 26 | 56.5 | 98.5 | 1028 | |
| | 1996.11-2000.02 | AT | F | L | Estate FWD B5204T3 | Year from:1999 | GCO62009 | Outer Joint | 48T | 36 | 27 | 56.5 | 48 | 66 | M |

| | YEAR | TRANSM. | F/R | L/R | BODY STYLE & DRIVE TYPE & ENGINE | REMARKS | G-AP Ref. | PRODUCT | ABS | Technical Specifications A | B | C | H | L | P |
|---|---|---|---|---|---|---|---|---|---|---|---|---|---|---|---|
| **VOLVO** **V70** | | | | | | | | | | | | | | | |
| 2.0 (166 kw) | 1996.11-2000.02 | AT | F | L | Estate FWD B5204T3 | Year from:1999 | GCI62038 | Inner Joint | | 26 | 26 | 31 | 68 | 87 | |
| | 1996.11-2000.02 | AT/MT | F | L | Estate FWD B5204T3 | Year to:1998 | GDS62001 | Drive Shaft | 48T | 26 | 26 | 56.5 | 98.5 | 574.5 | |
| | 1996.11-2000.02 | AT/MT | F | L/R | Estate FWD B5204T3 | Year to:1998,Inner teeth:25 | GCO62001 | Outer Joint | 48T | 26 | 25 | 56.5 | 98.5 | 56 | O |
| | 1996.11-2000.02 | AT/MT | F | L/R | Estate FWD B5204T3 | Year to:1998,Inner teeth:28 | GCO62002 | Outer Joint | 48T | 26 | 28 | 56.5 | 97.5 | 66 | O |
| | 1996.11-2000.02 | AT/MT | F | L/R | Estate FWD B5204T3 | Year to:1998,Inner teeth:28 | GCO62016 | Outer Joint | | 26 | 28 | 56.5 | 97.5 | 66 | O |
| | 1996.11-2000.02 | MT | F | L | Estate FWD B5204T3 | | GDS62009 | Drive Shaft | 48T | 36 | 26 | 56.5 | 48 | 523 | |
| 2.0 (177 kw) | 2010.01-2014.12 | 6AT | F | R | Estate FWD B 4204 T7 | | GDS62114 | Drive Shaft | | 40 | 28 | 57.7 | 52 | 952 | |
| | 2010.01-2014.12 | 6AT | F | R | Estate FWD B 4204 T7 | | GCI62058 | Inner Joint | | 28 | 26 | 33.95 | 430 | 103 | |
| | 2010.01-2014.12 | 6DCT | F | L | Estate FWD B 4204 T7 | | GCO18269 | Outer Joint | | 40 | 26 | 57.7 | 52 | 63.5 | I |
| | 2010.01-2014.12 | 6MT | F | L | Estate FWD B 4204 T7 | | GCI62072 | Inner Joint | | 26 | 26 | 40 | 69 | 112 | |
| | 2010.01-2014.12 | 6MT | F | R | Estate FWD B 4204 T7 | Chassis no. from:229604 | GCI62057 | Inner Joint | | 26 | 26 | 40 | 448 | 103 | |
| | 2010.01-2014.12 | AT | F | L | Estate FWD B 4204 T7 | | GDS62113 | Drive Shaft | | 40 | 28 | 57.7 | 52 | 590 | |
| | 2010.01-2014.12 | AT | F | L | Estate FWD B 4204 T7 | | GCI62059 | Inner Joint | | 28 | 26 | 34 | 80 | 101.5 | |
| | 2010.01-2014.12 | AT/MT | F | L/R | Estate FWD B 4204 T7 | | GCO99271 | Outer Joint | | 40 | 28 | 57.7 | 51 | 63 | M |
| | 2010.01-2014.12 | MT | F | L | Estate FWD B 4204 T7 | | GDS62134 | Drive Shaft | | 40 | 26 | 57.7 | 52 | 599 | |
| | 2010.01-2014.12 | MT | F | R | Estate FWD B 4204 T7 | Chassis no. from:229604;Chassis no. to:229603 | GDS62112 | Drive Shaft | | 40 | 26 | 57.7 | 52 | 962 | |
| 2.0 (180 kw) | 2013.10-2016.04 | AT | F | L | Estate FWD B 4204 T11 | | GDS62126 | Drive Shaft | | 40 | 31 | 57.5 | 52 | 576 | |
| | 2013.10-2016.04 | AT | F | R | Estate FWD B 4204 T11 | | GDS62124 | Drive Shaft | | 40 | 28 | 57.5 | 52 | 954 | |
| | 2013.10-2016.04 | AT | F | L/R | Estate FWD B 4204 T11 | | GCO62053 | Outer Joint | | 40 | 27 | 57.5 | 52 | 60.5 | I |
| | 2013.10-2016.04 | AT | F | L | Estate FWD B 4204 T11 | | GCI62034 | Inner Joint | | 31 | 27 | 36.2 | 68 | 90 | |
| | 2013.10-2016.04 | AT | F | R | Estate FWD B 4204 T11 | | GCI62065 | Inner Joint | | 28 | 27 | 33 | 454 | 94 | |
| 2.3 (176 kw) | 1997.01-1999.03 | AT/MT | F | L/R | Estate 4WD B5234T3 | Date to:1998.12 | GCO62002 | Outer Joint | 48T | 26 | 28 | 56.5 | 97.5 | 66 | O |
| | 1997.01-1999.03 | AT/MT | F | L/R | Estate 4WD B5234T3 | Date to:1998.12 | GCO62016 | Outer Joint | | 26 | 28 | 56.5 | 97.5 | 66 | O |
| | 1997.01-1999.03 | MT | F | L | Estate 4WD B5234T3 | Date to:1999.12 | GDS62001 | Drive Shaft | 48T | 26 | 26 | 56.5 | 98.5 | 574.5 | |
| | 1997.01-2000.03 | 4AT | F | L | Estate FWD B5234T3 | | GDS62001 | Drive Shaft | 48T | 26 | 26 | 56.5 | 98.5 | 574.5 | |
| | 1997.01-2000.03 | 4AT | F | R | Estate FWD B5234T3 | | GDS62002 | Drive Shaft | 48T | 26 | 26 | 56.5 | 98.5 | 1028 | |
| | 1997.01-2000.03 | 4AT | F | L/R | Estate FWD B5234T3 | | GCO62001 | Outer Joint | 48T | 26 | 25 | 56.5 | 98.5 | 56 | O |
| | 1997.01-2000.03 | AT/MT | F | L/R | Estate FWD B5234T3 | Date to:1998.12 | GCO62002 | Outer Joint | 48T | 26 | 28 | 56.5 | 97.5 | 66 | O |
| | 1997.01-2000.03 | AT/MT | F | L/R | Estate FWD B5234T3 | Date from:1999.01 | GCO62009 | Outer Joint | 48T | 36 | 27 | 56.5 | 48 | 66 | M |
| 2.3 (177 kw) | 1996.11-2000.11 | MT | F | L | Estate 4WD B5234T3 | | GDS62001 | Drive Shaft | 48T | 26 | 26 | 56.5 | 98.5 | 574.5 | |
| | 1996.11-2000.11 | MT | F | L | Estate 4WD B5234T3 | | GCO62002 | Outer Joint | 48T | 26 | 28 | 56.5 | 97.5 | 66 | O |
| | 1996.11-2000.11 | 4AT/5MT | R | L/R | Estate 4WD B5234T3 | | GDS81128 | Drive Shaft | 48T | 26 | 26 | 60.5 | 81 | 751 | |
| | 1996.11-2000.11 | 4AT/5MT | R | L/R | Estate 4WD B5234T3 | | GCI81050 | Inner Joint | 48T | 26 | 25 | 60.5 | 81 | 96.8 | |
| | 1996.11-2000.11 | 4AT/5MT | R | L/R | Estate 4WD B5234T3 | | GCI81060 | Inner Joint | | 26 | 25 | 35 | 70 | 106.3 | |
| | 1996.11-2000.11 | AT | F | L | Estate FWD B5234T3 | Chassis no. to:496004 | GDS62001 | Drive Shaft | 48T | 26 | 26 | 56.5 | 98.5 | 574.5 | |
| | 1996.11-2000.11 | AT | F | R | Estate FWD B5234T3 | | GDS62002 | Drive Shaft | 48T | 26 | 26 | 56.5 | 98.5 | 1028 | |
| | 1996.11-2000.11 | MT | F | L | Estate FWD B5234T3 | | GDS62001 | Drive Shaft | 48T | 26 | 26 | 56.5 | 98.5 | 574.5 | |
| | 1996.11-2000.11 | MT | F | L/R | Estate FWD B5234T3 | | GCO62002 | Outer Joint | 48T | 26 | 28 | 56.5 | 97.5 | 66 | O |
| 2.3 (184 kw) | 1997.04-2000.02 | AT/MT | F | L | Estate FWD B5234T4 | Date to:1999.12 | GDS62001 | Drive Shaft | 48T | 26 | 26 | 56.5 | 98.5 | 574.5 | |
| | 1997.04-2000.02 | AT/MT | F | R | Estate FWD B5234T4 | Date to:1999.12 | GDS62002 | Drive Shaft | 48T | 26 | 26 | 56.5 | 98.5 | 1028 | |
| | 1997.04-2000.02 | AT/MT | F | L/R | Estate FWD B5234T4 | Date to:1999.12 | GCO62001 | Outer Joint | 48T | 26 | 25 | 56.5 | 98.5 | 56 | O |
| | 1997.04-2000.02 | AT/MT | F | L/R | Estate FWD B5234T4 | Date from:1999.01 | GCO62009 | Outer Joint | 48T | 36 | 27 | 56.5 | 48 | 66 | M |
| | 1997.04-2000.03 | SAT/4AT/5MT | F | L | Estate 4WD B5234T4/B5234T6 | | GDS62001 | Drive Shaft | 48T | 26 | 26 | 56.5 | 98.5 | 574.5 | |
| | 1997.04-2000.03 | SAT/4AT/5MT | F | L | Estate 4WD B5234T4/B5234T6 | | GCO62001 | Outer Joint | 48T | 26 | 25 | 56.5 | 98.5 | 56 | O |
| | 1997.04-2000.03 | SAT/4AT/5MT | R | L/R | Estate 4WD B5234T4/B5234T6 | | GDS81128 | Drive Shaft | 48T | 26 | 26 | 60.5 | 81 | 751 | |
| | 1997.04-2000.03 | SAT/4AT/5MT | R | L/R | Estate 4WD B5234T4/B5234T6 | | GCI81050 | Inner Joint | 48T | 26 | 25 | 60.5 | 81 | 96.8 | |
| | 1997.04-2000.03 | SAT/4AT/5MT | R | L/R | Estate 4WD B5234T4/B5234T6 | | GCI81060 | Inner Joint | | 26 | 25 | 35 | 70 | 106.3 | |
| | 1999.11-2004.12 | AT | F | L | Estate FWD B 5234 T3 | | GDS62022 | Drive Shaft | 48T | 36 | 26 | 56.5 | 48 | 527 | |
| | 1999.11-2004.12 | AT | F | R | Estate FWD B 5234 T3 | | GDS62017 | Drive Shaft | 48T | 36 | 26 | 56.5 | 48 | 978.5 | |
| | 1999.11-2004.12 | AT | F | L | Estate FWD B 5234 T3 | | GCI99109 | Inner Joint | | 26 | 26 | 31 | 68 | 87 | |
| | 1999.11-2004.12 | AT | F | R | Estate FWD B 5234 T3 | | GCI62029 | Inner Joint | | 26 | 26 | 31 | 513 | 93.5 | |
| | 1999.11-2004.12 | AT/MT | F | L/R | Estate FWD B 5234 T3 | | GCO62009 | Outer Joint | 48T | 36 | 27 | 56.5 | 48 | 66 | M |
| | 1999.11-2004.12 | MT | F | L | Estate FWD B 5234 T3 | | GDS62057 | Drive Shaft | 48T | 36 | 26 | 56.5 | 48 | 546 | |
| | 1999.11-2004.12 | MT | F | R | Estate FWD B 5234 T3 | | GDS62031 | Drive Shaft | 48T | 36 | 26 | 56.5 | 48 | 992 | |
| 2.3 (195 kw) | 1998.12-2000.02 | AT | F | L | Estate 4WD B5234T8 | | GDS62009 | Drive Shaft | 48T | 36 | 26 | 56.5 | 48 | 523 | |
| | 1998.12-2000.02 | AT/MT | F | L/R | Estate 4WD B5234T8 | | GCO62009 | Outer Joint | 48T | 36 | 27 | 56.5 | 48 | 66 | M |
| | 1998.12-2000.02 | AT | R | L/R | Estate 4WD B5234T8 | | GDS81128 | Drive Shaft | 48T | 26 | 26 | 60.5 | 81 | 751 | |
| | 1998.12-2000.02 | AT | R | L/R | Estate 4WD B5234T8 | | GCI81050 | Inner Joint | 48T | 26 | 25 | 60.5 | 81 | 96.8 | |
| | 1998.12-2000.02 | AT | R | L/R | Estate 4WD B5234T8 | | GCI81060 | Inner Joint | | 26 | 25 | 35 | 70 | 106.3 | |
| | 2000.10-2004.09 | 5AT | F | L | Estate FWD B 5234 T7 | | GDS62022 | Drive Shaft | 48T | 36 | 26 | 56.5 | 48 | 527 | |
| | 2000.10-2004.09 | 5AT | F | R | Estate FWD B 5234 T7 | | GDS62017 | Drive Shaft | 48T | 36 | 26 | 56.5 | 48 | 978.5 | |
| | 2000.10-2004.09 | 5AT | F | L/R | Estate FWD B 5234 T7 | | GCO62009 | Outer Joint | 48T | 36 | 27 | 56.5 | 48 | 66 | M |
| | 2000.10-2004.09 | 5AT | F | L | Estate FWD B 5234 T7 | | GCI99109 | Inner Joint | | 26 | 26 | 31 | 68 | 87 | |
| | 2000.10-2004.09 | 5AT | F | R | Estate FWD B 5234 T7 | | GCI62029 | Inner Joint | | 26 | 26 | 31 | 513 | 93.5 | |
| 2.4 (90 kw) | 2005.07-2008.12 | 5MT | F | L | Estate FWD D 5244 T6 | | GDS62057 | Drive Shaft | 48T | 36 | 26 | 56.5 | 48 | 546 | |

| | YEAR | TRANSM. | F/R | L/R | BODY STYLE & DRIVE TYPE & ENGINE | REMARKS | G-AP Ref. | PRODUCT | ABS | Technical Specifications A | B | C | H | L | P |
|---|---|---|---|---|---|---|---|---|---|---|---|---|---|---|---|
| **VOLVO** **V70** | | | | | | | | | | | | | | | |
| 2.4 (90 kw) | 2005.07-2008.12 | 5MT | F | R | Estate FWD D 5244 T6 | | GDS62031 | Drive Shaft | 48T | 36 | 26 | 56.5 | 48 | 992 | |
| | 2005.07-2008.12 | 5MT | F | R | Estate FWD D 5244 T6 | | GCO62009 | Outer Joint | 48T | 36 | 27 | 56.5 | 48 | 66 | M |
| 2.4 (93 kw) | 2005.04-2008.12 | 5MT | F | L | Estate FWD D 5244 T7 | | GDS62057 | Drive Shaft | 48T | 36 | 26 | 56.5 | 48 | 546 | |
| | 2005.04-2008.12 | 5MT | F | R | Estate FWD D 5244 T7 | | GDS62031 | Drive Shaft | 48T | 36 | 26 | 56.5 | 48 | 992 | |
| | 2005.04-2008.12 | 5MT | F | R | Estate FWD D 5244 T7 | | GCO62009 | Outer Joint | 48T | 36 | 27 | 56.5 | 48 | 66 | M |
| 2.4 (96 kw) | 2001.07-2007.08 | AT | F | L | Estate FWD D 5244 T2 | | GDS62022 | Drive Shaft | 48T | 36 | 26 | 56.5 | 48 | 527 | |
| | 2001.07-2007.08 | AT | F | R | Estate FWD D 5244 T2 | | GDS62017 | Drive Shaft | 48T | 36 | 26 | 56.5 | 48 | 978.5 | |
| | 2001.07-2007.08 | AT | F | L | Estate FWD D 5244 T2 | | GCI99109 | Inner Joint | | 26 | 26 | 31 | 68 | 87 | |
| | 2001.07-2007.08 | AT | F | R | Estate FWD D 5244 T2 | | GCI62029 | Inner Joint | | 26 | 26 | 31 | 513 | 93.5 | |
| | 2001.07-2007.08 | AT/MT | F | L/R | Estate FWD D 5244 T2 | | GCO62009 | Outer Joint | 48T | 36 | 27 | 56.5 | 48 | 66 | M |
| | 2001.07-2007.08 | MT | F | L | Estate FWD D 5244 T2 | | GDS62057 | Drive Shaft | 48T | 36 | 26 | 56.5 | 48 | 546 | |
| | 2001.07-2007.08 | MT | F | R | Estate FWD D 5244 T2 | | GDS62031 | Drive Shaft | 48T | 36 | 26 | 56.5 | 48 | 992 | |
| 2.4 (103 kw) | 1999.04-2000.05 | AT | F | L | Estate FWD B5244S2 | | GDS62143 | Drive Shaft | 48T | 36 | 26 | 56.5 | 48 | 506 | |
| | 1999.04-2000.05 | AT | F | R | Estate FWD B5244S2 | | GDS83502 | Drive Shaft | 48T | 36 | 26 | 56.5 | 48 | 959 | |
| | 1999.04-2000.05 | AT | F | L/R | Estate FWD B5244S2 | | GCO62009 | Outer Joint | 48T | 36 | 27 | 56.5 | 48 | 66 | M |
| | 1999.04-2000.05 | AT | F | L | Estate FWD B5244S2 | | GCI62038 | Inner Joint | | 26 | 26 | 31 | 68 | 87 | |
| | 1999.04-2000.05 | AT | F | R | Estate FWD B5244S2 | | GCI82266 | Inner Joint | | 26 | 26 | 31 | 513 | 93.5 | |
| | 1999.04-2000.05 | AT/MT | F | L/R | Estate FWD B5244S2 | | GCO62010 | Outer Joint | 48T | 36 | 33 | 56.5 | 48 | 58 | M |
| | 1999.04-2000.05 | MT | F | L | Estate FWD B5244S2 | | GDS62009 | Drive Shaft | 48T | 36 | 26 | 56.5 | 48 | 523 | |
| | 1999.08-2000.12 | 5AT | F | L | Estate FWD B5244SG | | GDS62143 | Drive Shaft | 48T | 36 | 26 | 56.5 | 48 | 506 | |
| | 1999.08-2000.12 | 5AT | F | R | Estate FWD B5244SG | | GDS83502 | Drive Shaft | 48T | 36 | 26 | 56.5 | 48 | 959 | |
| | 1999.08-2000.12 | 5AT | F | L/R | Estate FWD B5244SG | | GCO62009 | Outer Joint | 48T | 36 | 27 | 56.5 | 48 | 66 | M |
| | 1999.08-2000.12 | 5AT | F | L | Estate FWD B5244SG | | GCI62038 | Inner Joint | | 26 | 26 | 31 | 68 | 87 | |
| | 1999.08-2000.12 | 5AT | F | R | Estate FWD B5244SG | | GCI82266 | Inner Joint | | 26 | 26 | 31 | 513 | 93.5 | |
| | 1999.08-2000.12 | AT/MT | F | L/R | Estate FWD B5244SG | Date to:2000.03 | GCO62010 | Outer Joint | 48T | 36 | 33 | 56.5 | 48 | 58 | M |
| | 2000.03-2007.08 | AT | F | L | Estate FWD B 5244 S2 | | GDS62022 | Drive Shaft | 48T | 36 | 26 | 56.5 | 48 | 527 | |
| | 2000.03-2007.08 | AT | F | R | Estate FWD B 5244 S2 | | GDS62017 | Drive Shaft | 48T | 36 | 26 | 56.5 | 48 | 978.5 | |
| | 2000.03-2007.08 | AT | F | L/R | Estate FWD B 5244 S2 | | GCO62009 | Outer Joint | 48T | 36 | 27 | 56.5 | 48 | 66 | M |
| | 2000.03-2007.08 | AT | F | L | Estate FWD B 5244 S2 | | GCI99109 | Inner Joint | | 26 | 26 | 31 | 68 | 87 | |
| | 2000.03-2007.08 | AT | F | R | Estate FWD B 5244 S2 | | GCI62029 | Inner Joint | | 26 | 26 | 31 | 513 | 93.5 | |
| | 2000.03-2007.08 | AT/MT | F | L/R | Estate FWD B 5244 S2 | | GCO62010 | Outer Joint | 48T | 36 | 33 | 56.5 | 48 | 58 | M |
| | 2000.03-2007.08 | MT | F | L | Estate FWD B 5244 S2 | | GDS62029 | Drive Shaft | 48T | 36 | 26 | 56.5 | 48 | 540 | |
| | 2000.03-2007.08 | MT | F | R | Estate FWD B 5244 S2 | | GDS62028 | Drive Shaft | 48T | 36 | 26 | 56.5 | 48 | 990 | |
| | 2000.03-2007.08 | MT | F | L/R | Estate FWD B 5244 S2 | | GCO62040 | Outer Joint | 48T | 36 | 25 | 56.5 | 48 | 58 | M |
| | 2000.03-2007.08 | MT | F | L | Estate FWD B 5244 S2 | | GCI62028 | Inner Joint | | 26 | 25 | 40 | 67.5 | 94 | |
| | 2000.03-2007.08 | MT | F | R | Estate FWD B 5244 S2 | | GCI62030 | Inner Joint | | 26 | 25 | 40 | 526 | 92.5 | |
| | 2001.09-2007.08 | AT | F | L | Estate FWD B 5244 SG;B 5244 SG2 | | GDS62022 | Drive Shaft | 48T | 36 | 26 | 56.5 | 48 | 527 | |
| | 2001.09-2007.08 | AT | F | R | Estate FWD B 5244 SG;B 5244 SG2 | | GDS62017 | Drive Shaft | 48T | 36 | 26 | 56.5 | 48 | 978.5 | |
| | 2001.09-2007.08 | AT | F | L/R | Estate FWD B 5244 SG;B 5244 SG2 | | GCO62009 | Outer Joint | 48T | 36 | 27 | 56.5 | 48 | 66 | M |
| | 2001.09-2007.08 | AT | F | L | Estate FWD B 5244 SG;B 5244 SG2 | | GCI99109 | Inner Joint | | 26 | 26 | 31 | 68 | 87 | |
| | 2001.09-2007.08 | AT | F | R | Estate FWD B 5244 SG;B 5244 SG2 | | GCI62029 | Inner Joint | | 26 | 26 | 31 | 513 | 93.5 | |
| | 2001.09-2007.08 | AT/MT | F | L/R | Estate FWD B 5244 SG;B 5244 SG2 | | GCO62010 | Outer Joint | 48T | 36 | 33 | 56.5 | 48 | 58 | M |
| | 2001.09-2007.08 | MT | F | L | Estate FWD B 5244 SG;B 5244 SG2 | | GDS62029 | Drive Shaft | 48T | 36 | 26 | 56.5 | 48 | 540 | |
| | 2001.09-2007.08 | MT | F | R | Estate FWD B 5244 SG;B 5244 SG2 | | GDS62028 | Drive Shaft | 48T | 36 | 26 | 56.5 | 48 | 990 | |
| | 2001.09-2007.08 | MT | F | L/R | Estate FWD B 5244 SG;B 5244 SG2 | | GCO62040 | Outer Joint | 48T | 36 | 25 | 56.5 | 48 | 58 | M |
| | 2001.09-2007.08 | MT | F | L | Estate FWD B 5244 SG;B 5244 SG2 | | GCI62028 | Inner Joint | | 26 | 25 | 40 | 67.5 | 94 | |
| | 2001.09-2007.08 | MT | F | R | Estate FWD B 5244 SG;B 5244 SG2 | | GCI62030 | Inner Joint | | 26 | 25 | 40 | 526 | 92.5 | |
| | 2001.09-2007.08 | AT | F | L | Estate FWD B 5244 SG2 | | GDS62022 | Drive Shaft | 48T | 36 | 26 | 56.5 | 48 | 527 | |
| | 2001.09-2007.08 | AT | F | R | Estate FWD B 5244 SG2 | | GDS62017 | Drive Shaft | 48T | 36 | 26 | 56.5 | 48 | 978.5 | |
| | 2001.09-2007.08 | AT | F | L/R | Estate FWD B 5244 SG2 | | GCO62009 | Outer Joint | 48T | 36 | 27 | 56.5 | 48 | 66 | M |
| | 2001.09-2007.08 | AT | F | L | Estate FWD B 5244 SG2 | | GCI99109 | Inner Joint | | 26 | 26 | 31 | 68 | 87 | |
| | 2001.09-2007.08 | AT | F | R | Estate FWD B 5244 SG2 | | GCI62029 | Inner Joint | | 26 | 26 | 31 | 513 | 93.5 | |
| | 2001.09-2007.08 | AT/MT | F | L/R | Estate FWD B 5244 SG2 | | GCO62010 | Outer Joint | 48T | 36 | 33 | 56.5 | 48 | 58 | M |
| | 2001.09-2007.08 | MT | F | L | Estate FWD B 5244 SG2 | | GDS62029 | Drive Shaft | 48T | 36 | 26 | 56.5 | 48 | 540 | |
| | 2001.09-2007.08 | MT | F | R | Estate FWD B 5244 SG2 | | GDS62028 | Drive Shaft | 48T | 36 | 26 | 56.5 | 48 | 990 | |
| | 2001.09-2007.08 | MT | F | L/R | Estate FWD B 5244 SG2 | | GCO62040 | Outer Joint | 48T | 36 | 25 | 56.5 | 48 | 58 | M |
| | 2001.09-2007.08 | MT | F | L | Estate FWD B 5244 SG2 | | GCI62028 | Inner Joint | | 26 | 25 | 40 | 67.5 | 94 | |
| | 2001.09-2007.08 | MT | F | R | Estate FWD B 5244 SG2 | | GCI62030 | Inner Joint | | 26 | 25 | 40 | 526 | 92.5 | |
| 2.4 (106 kw) | 1996.11-1999.06 | AT | F | L | Estate FWD B5252FS | Model year from:1999 | GDS62143 | Drive Shaft | 48T | 36 | 26 | 56.5 | 48 | 506 | |
| | 1996.11-1999.06 | AT | F | R | Estate FWD B5252FS | Model year from:1999 | GDS83502 | Drive Shaft | 48T | 36 | 26 | 56.5 | 48 | 959 | |
| | 1996.11-1999.06 | AT | F | L | Estate FWD B5252FS | Model year to:1998 | GCO62002 | Outer Joint | 48T | 26 | 28 | 56.5 | 97.5 | 66 | O |
| | 1996.11-1999.06 | AT | F | L/R | Estate FWD B5252FS | Model year from:1999 | GCO62009 | Outer Joint | 48T | 36 | 27 | 56.5 | 48 | 66 | M |
| | 1996.11-1999.06 | AT | F | L | Estate FWD B5252FS | Model year from:1999 | GCI62038 | Inner Joint | | 26 | 26 | 31 | 68 | 87 | |
| | 1996.11-1999.06 | AT | F | R | Estate FWD B5252FS | Model year from:1999 | GCI82266 | Inner Joint | | 26 | 26 | 31 | 513 | 93.5 | |
| | 1996.11-1999.06 | AT/MT | F | L | Estate FWD B5252FS | Model year to:1998 | GDS62001 | Drive Shaft | 48T | 26 | 26 | 56.5 | 98.5 | 574.5 | |

| | YEAR | TRANSM. | F/R | L/R | BODY STYLE & DRIVE TYPE & ENGINE | REMARKS | G-AP Ref. | PRODUCT | ABS | Technical Specifications A | B | C | H | L | P |
|---|---|---|---|---|---|---|---|---|---|---|---|---|---|---|---|
| **VOLVO** **V70** | | | | | | | | | | | | | | | |
| 2.4 (106 kw) | 1996.11-1999.06 | AT/MT | F | R | Estate FWD B5252FS | Model year to:1998 | GDS62002 | Drive Shaft | 48T | 26 | 26 | 56.5 | 98.5 | 1028 | |
| | 1996.11-1999.06 | AT/MT | F | L/R | Estate FWD B5252FS | Model year to:1998 | GCO62001 | Outer Joint | 48T | 26 | 25 | 56.5 | 98.5 | 56 | O |
| | 1996.11-1999.06 | AT/MT | F | L/R | Estate FWD B5252FS | Model year to:1998 | GCO62014 | Outer Joint | | 26 | 25 | 56.5 | 98.5 | 56 | O |
| | 1996.11-1999.06 | MT | F | L | Estate FWD B5252FS | Model year from:1999 | GDS62009 | Drive Shaft | 48T | 36 | 26 | 56.5 | 48 | 523 | |
| | 1996.11-1999.06 | MT | F | L | Estate FWD B5252FS | Model year from:1999 | GCO62010 | Outer Joint | 48T | 36 | 33 | 56.5 | 48 | 58 | M |
| | 1996.11-1999.06 | MT | F | R | Estate FWD B5252FS | Date to:1998.12 | GCI62015 | Inner Joint | | 26 | 25 | 40 | 531.5 | 96 | |
| | 1997.01-1999.08 | AT/MT | F | L/R | Estate FWD GB5252S | Date to:1998.12 | GCO62001 | Outer Joint | 48T | 26 | 25 | 56.5 | 98.5 | 56 | O |
| | 1997.01-1999.08 | AT/MT | F | L/R | Estate FWD GB5252S | Date to:1998.12 | GCO62002 | Outer Joint | 48T | 26 | 28 | 56.5 | 97.5 | 66 | O |
| | 1997.01-1999.08 | AT/MT | F | L/R | Estate FWD GB5252S | Date from:1999.01 | GCO62009 | Outer Joint | 48T | 36 | 27 | 56.5 | 48 | 66 | M |
| | 1997.01-1999.08 | AT/MT | F | L/R | Estate FWD GB5252S | Date from:1999.01,Date to:1999.08 | GCO62010 | Outer Joint | 48T | 36 | 33 | 56.5 | 48 | 58 | M |
| | 1997.01-1999.08 | AT/MT | F | L/R | Estate FWD GB5252S | Date to:1998.12 | GCO62016 | Outer Joint | | 26 | 28 | 56.5 | 97.5 | 66 | O |
| 2.4 (120 kw) | 2001.01-2008.12 | 5AT | F | L | Estate FWD D 5244 T;D 5244 T2;D 5244 T5 | | GDS62022 | Drive Shaft | 48T | 36 | 26 | 56.5 | 48 | 527 | |
| | 2001.01-2008.12 | 5AT | F | R | Estate FWD D 5244 T;D 5244 T2;D 5244 T5 | | GDS62017 | Drive Shaft | 48T | 36 | 26 | 56.5 | 48 | 978.5 | |
| | 2001.01-2008.12 | 5AT | F | L | Estate FWD D 5244 T;D 5244 T2;D 5244 T5 | | GCI99109 | Inner Joint | | 26 | 26 | 31 | 68 | 87 | |
| | 2001.01-2008.12 | 5AT | F | R | Estate FWD D 5244 T;D 5244 T2;D 5244 T5 | | GCI62029 | Inner Joint | | 26 | 26 | 31 | 513 | 93.5 | |
| | 2001.01-2008.12 | 5AT/5MT/6MT | F | L/R | Estate FWD D 5244 T;D 5244 T2;D 5244 T5 | | GCO62009 | Outer Joint | 48T | 36 | 27 | 56.5 | 48 | 66 | M |
| | 2001.01-2008.12 | 5MT/6MT | F | L | Estate FWD D 5244 T;D 5244 T2;D 5244 T5 | | GDS62057 | Drive Shaft | 48T | 36 | 26 | 56.5 | 48 | 546 | |
| | 2001.01-2008.12 | 5MT/6MT | F | R | Estate FWD D 5244 T;D 5244 T2;D 5244 T5 | | GDS62031 | Drive Shaft | 48T | 36 | 26 | 56.5 | 48 | 992 | |
| | 2001.01-2008.12 | Semi-AT | F | L | Estate FWD D 5244 T;D 5244 T2;D 5244 T5 | | GDS62141 | Drive Shaft | 48T | 36 | 28 | 56.5 | 48 | 521 | |
| | 2001.01-2008.12 | Semi-AT | F | R | Estate FWD D 5244 T;D 5244 T2;D 5244 T5 | | GDS82776 | Drive Shaft | 48T | 36 | 28 | 56.5 | 48 | 993 | |
| | 2001.01-2008.12 | Semi-AT | F | L/R | Estate FWD D 5244 T;D 5244 T2;D 5244 T5 | | GCO62037 | Outer Joint | 48T | 36 | 27 | 56.5 | 48 | 66 | M |
| | 2001.01-2008.12 | Semi-AT | F | L | Estate FWD D 5244 T;D 5244 T2;D 5244 T5 | | GCI62075 | Inner Joint | | 28 | 27 | 33 | 68.5 | 90 | |
| | 2002.07-2007.08 | 5AT | F | L | Estate 4WD D 5244 T;D 5244 T2;D 5244 T5 | | GDS62022 | Drive Shaft | 48T | 36 | 26 | 56.5 | 48 | 527 | |
| | 2002.07-2007.08 | 5AT | F | R | Estate 4WD D 5244 T;D 5244 T2;D 5244 T5 | | GDS62140 | Drive Shaft | 48T | 36 | 26 | 56.5 | 48 | 977 | |
| | 2002.07-2007.08 | 5AT | F | L/R | Estate 4WD D 5244 T;D 5244 T2;D 5244 T5 | | GCO62009 | Outer Joint | 48T | 36 | 27 | 56.5 | 48 | 66 | M |
| | 2002.07-2007.08 | 6MT | R | L/R | Estate 4WD D 5244 T;D 5244 T2;D 5244 T5 | | GDS81130 | Drive Shaft | | 36 | 26 | 56.5 | 50 | 764 | |
| | 2002.07-2007.08 | 6MT | R | L/R | Estate 4WD D 5244 T;D 5244 T2;D 5244 T5 | | GCI44031 | Inner Joint | | 26 | 20 | 35 | 69.5 | 81 | |
| | 2007.04-2010.12 | 6AT | F | L | Estate FWD D 5244 T5;D 5244 T19 | For Engine code:D5244T19 | GDS62076 | Drive Shaft | | 40 | 31 | 57.7 | 52 | 529 | |
| | 2007.04-2010.12 | 6AT | F | L | Estate FWD D 5244 T5;D 5244 T19 | For Engine code:D5244T5 | GDS62109 | Drive Shaft | | 40 | 31 | 57.7 | 52 | 524 | |
| | 2007.04-2010.12 | 6AT | F | R | Estate FWD D 5244 T5;D 5244 T19 | For Engine code:D5244T5,Chassis no. from:167101;Chassis no. to:213772;For Engine code:D5244T19 | GDS59444 | Drive Shaft | | 40 | 28 | 57.7 | 52 | 994 | |
| | 2007.04-2010.12 | 6AT | F | R | Estate FWD D 5244 T5;D 5244 T19 | For Engine code:D5244T5,Chassis no. to:167100;Chassis no. from:213773 | GDS62091 | Drive Shaft | | 40 | 28 | 57.7 | 52 | 992 | |
| | 2007.04-2010.12 | 6MT | F | L | Estate FWD D 5244 T5;D 5244 T19 | For Engine code:D5244T5 | GDS21070 | Drive Shaft | | 40 | 26 | 57.7 | 52 | 556 | |
| | 2007.04-2010.12 | 6MT | F | R | Estate FWD D 5244 T5;D 5244 T19 | For Engine code:D5244T5 | GDS62086 | Drive Shaft | | 40 | 26 | 57.7 | 52 | 1002 | |
| | 2007.04-2010.12 | AT | F | L/R | Estate FWD D 5244 T5;D 5244 T19 | Chassis no. to:167100;Chassis no. from:213773 | GCO59344 | Outer Joint | | 40 | 26 | 57.7 | 52 | 63.5 | M |
| | 2007.10-2015.12 | AT | F | L | Estate 4WD D 5244 T17 | | GDS62076 | Drive Shaft | | 40 | 31 | 57.7 | 52 | 529 | |
| | 2007.10-2015.12 | AT | F | R | Estate 4WD D 5244 T17 | | GCI62033 | Inner Joint | | 28 | 27 | 29.95 | 521 | 102.5 | |
| | 2007.10-2015.12 | 6AT | R | L/R | Estate 4WD D 5244 T17 | Chassis no. from:249101 | GDS62077 | Drive Shaft | 44NS | 36 | 23 | 56.5 | 49.5 | 762 | |
| | 2007.10-2015.12 | 6AT | R | L/R | Estate 4WD D 5244 T17 | Chassis no. to:249100;8 balls | GDS83926 | Drive Shaft | 44NS | 36 | 26 | 56.5 | 49.5 | 751 | |
| | 2007.10-2015.12 | 6AT | R | L/R | Estate 4WD D 5244 T17 | Chassis no. to:249100;8 balls | GCO83248 | Outer Joint | 44NS | 36 | 29 | 56.5 | 49.5 | 64 | I |
| | 2007.10-2015.12 | AT | R | L/R | Estate 4WD D 5244 T17 | Chassis no. to:249100 | GCI18187 | Inner Joint | | 26 | 29 | 35 | 69.5 | 107.5 | |
| | 2013.09-2015.12 | AT | F | L | Estate Van 4WD D 5244 T17 | | GDS62076 | Drive Shaft | | 40 | 31 | 57.7 | 52 | 529 | |
| | 2013.09-2015.12 | AT | F | R | Estate Van 4WD D 5244 T17 | | GCI62033 | Inner Joint | | 28 | 27 | 29.95 | 521 | 102.5 | |
| | 2013.09-2015.12 | 6AT | R | L/R | Estate Van 4WD D 5244 T17 | Chassis no. from:249101 | GDS62077 | Drive Shaft | 44NS | 36 | 23 | 56.5 | 49.5 | 762 | |
| | 2013.09-2015.12 | 6AT | R | L/R | Estate Van 4WD D 5244 T17 | Chassis no. to:249100;8 balls | GDS83926 | Drive Shaft | 44NS | 36 | 26 | 56.5 | 49.5 | 751 | |
| | 2013.09-2015.12 | 6AT | R | L/R | Estate Van 4WD D 5244 T17 | Chassis no. to:249100;8 balls | GCO83248 | Outer Joint | 44NS | 36 | 29 | 56.5 | 49.5 | 64 | I |
| | 2013.09-2015.12 | AT | R | L/R | Estate Van 4WD D 5244 T17 | Chassis no. to:249100 | GCI18187 | Inner Joint | | 26 | 29 | 35 | 69.5 | 107.5 | |
| 2.4 (121 kw) | 1998.10-1999.05 | 4AT/5MT | F | L | Estate 4WD B5254SDENS | | GDS62009 | Drive Shaft | 48T | 36 | 26 | 56.5 | 48 | 523 | |
| | 1998.10-1999.05 | 4AT/5MT | F | L/R | Estate 4WD B5254SDENS | Date to:1998.12 | GCO62001 | Outer Joint | 48T | 26 | 25 | 56.5 | 98.5 | 56 | O |
| | 1998.10-1999.05 | 4AT/5MT | F | L/R | Estate 4WD B5254SDENS | | GCO62010 | Outer Joint | 48T | 36 | 33 | 56.5 | 48 | 58 | M |
| | 1998.10-1999.05 | 4AT/5MT | R | L/R | Estate 4WD B5254SDENS | | GDS81128 | Drive Shaft | 48T | 26 | 26 | 60.5 | 81 | 751 | |
| | 1998.10-1999.05 | 4AT/5MT | R | L/R | Estate 4WD B5254SDENS | | GCI81050 | Inner Joint | 48T | 26 | 25 | 60.5 | 81 | 96.8 | |
| | 1998.10-1999.05 | 4AT/5MT | R | L/R | Estate 4WD B5254SDENS | | GCI81060 | Inner Joint | | 26 | 25 | 35 | 70 | 106.3 | |
| | 1998.10-1999.05 | AT | F | L | Estate FWD B5254SDENS | | GDS62001 | Drive Shaft | 48T | 26 | 26 | 56.5 | 98.5 | 574.5 | |
| | 1998.10-1999.05 | AT | F | L | Estate FWD B5254SDENS | | GCO62014 | Outer Joint | | 26 | 25 | 56.5 | 98.5 | 56 | O |
| | 1998.10-1999.05 | AT | F | L/R | Estate FWD B5254SDENS | | GCO62001 | Outer Joint | 48T | 26 | 25 | 56.5 | 98.5 | 56 | O |
| | 1998.10-1999.05 | MT | F | L | Estate FWD B5254SDENS | | GDS62009 | Drive Shaft | 48T | 36 | 26 | 56.5 | 48 | 523 | |
| | 1998.10-1999.05 | MT | F | L/R | Estate FWD B5254SDENS | | GCO62010 | Outer Joint | 48T | 36 | 33 | 56.5 | 48 | 58 | M |
| 2.4 (125 kw) | 1997.01-2000.05 | AT | F | L | Estate FWD B5244S/B5254FS/B5254S | For Engine Code:B5244S | GDS62143 | Drive Shaft | 48T | 36 | 26 | 56.5 | 48 | 506 | |
| | 1997.01-2000.05 | AT | F | R | Estate FWD B5244S/B5254FS/B5254S | For Engine Code:B5244S | GDS83502 | Drive Shaft | 48T | 36 | 26 | 56.5 | 48 | 959 | |
| | 1997.01-2000.05 | AT | F | L | Estate FWD B5244S/B5254FS/B5254S | For Engine Code:B5254FS | GCO62002 | Outer Joint | 48T | 26 | 28 | 56.5 | 97.5 | 66 | O |
| | 1997.01-2000.05 | AT | F | L/R | Estate FWD B5244S/B5254FS/B5254S | For Engine Code:B5244S | GCO62009 | Outer Joint | 48T | 36 | 27 | 56.5 | 48 | 66 | M |
| | 1997.01-2000.05 | AT | F | L | Estate FWD B5244S/B5254FS/B5254S | For Engine Code:B5244S | GCI62038 | Inner Joint | | 26 | 26 | 31 | 68 | 87 | |
| | 1997.01-2000.05 | AT | F | R | Estate FWD B5244S/B5254FS/B5254S | For Engine Code:B5244S | GCI82266 | Inner Joint | | 26 | 26 | 31 | 513 | 93.5 | |
| | 1997.01-2000.05 | AT/MT | F | L | Estate FWD B5244S/B5254FS/B5254S | For Engine Code:B5254FS | GDS62001 | Drive Shaft | 48T | 26 | 26 | 56.5 | 98.5 | 574.5 | |
| | 1997.01-2000.05 | AT/MT | F | R | Estate FWD B5244S/B5254FS/B5254S | For Engine Code:B5254FS | GDS62002 | Drive Shaft | 48T | 26 | 26 | 56.5 | 98.5 | 1028 | |

| | YEAR | TRANSM. | F/R | L/R | BODY STYLE & DRIVE TYPE & ENGINE | REMARKS | G-AP Ref. | PRODUCT | ABS | Technical Specifications A | B | C | H | L | P |
|---|---|---|---|---|---|---|---|---|---|---|---|---|---|---|---|
| **VOLVO** **V70** | | | | | | | | | | | | | | | |
| 2.4 (125 kw) | 1997.01-2000.05 | AT/MT | F | L/R | Estate FWD B5244S/B5254FS/B5254S | For Engine Code:B5254FS | GCO62001 | Outer Joint | 48T | 26 | 25 | 56.5 | 98.5 | 56 | O |
| | 1997.01-2000.05 | MT | F | L | Estate FWD B5244S/B5254FS/B5254S | For Engine code:B5244S | GDS62009 | Drive Shaft | 48T | 36 | 26 | 56.5 | 48 | 523 | |
| | 1997.01-2000.05 | MT | F | L | Estate FWD B5244S/B5254FS/B5254S | For Engine Code:B5244S | GCO62010 | Outer Joint | 48T | 36 | 33 | 56.5 | 48 | 58 | M |
| | 1997.01-2000.05 | MT | F | R | Estate FWD B5244S/B5254FS/B5254S | Date to:1998.12 | GCI62015 | Inner Joint | | 26 | 25 | 40 | 531.5 | 96 | |
| | 2000.03-2007.08 | AT | F | L | Estate FWD B 5244 S | | GDS62022 | Drive Shaft | 48T | 36 | 26 | 56.5 | 48 | 527 | |
| | 2000.03-2007.08 | AT | F | R | Estate FWD B 5244 S | | GDS62017 | Drive Shaft | 48T | 36 | 26 | 56.5 | 48 | 978.5 | |
| | 2000.03-2007.08 | AT | F | L/R | Estate FWD B 5244 S | | GCO62009 | Outer Joint | 48T | 36 | 27 | 56.5 | 48 | 66 | M |
| | 2000.03-2007.08 | AT | F | L | Estate FWD B 5244 S | | GCI99109 | Inner Joint | | 26 | 26 | 31 | 68 | 87 | |
| | 2000.03-2007.08 | AT | F | R | Estate FWD B 5244 S | | GCI62029 | Inner Joint | | 26 | 26 | 31 | 513 | 93.5 | |
| | 2000.03-2007.08 | AT/MT | F | L/R | Estate FWD B 5244 S | | GCO62010 | Outer Joint | 48T | 36 | 33 | 56.5 | 48 | 58 | M |
| | 2000.03-2007.08 | MT | F | L | Estate FWD B 5244 S | | GDS62029 | Drive Shaft | 48T | 36 | 26 | 56.5 | 48 | 540 | |
| | 2000.03-2007.08 | MT | F | R | Estate FWD B 5244 S | | GDS62028 | Drive Shaft | 48T | 36 | 26 | 56.5 | 48 | 990 | |
| | 2000.03-2007.08 | MT | F | L/R | Estate FWD B 5244 S | | GCO62040 | Outer Joint | 48T | 36 | 25 | 56.5 | 48 | 58 | M |
| | 2000.03-2007.08 | MT | F | L | Estate FWD B 5244 S | | GCI62028 | Inner Joint | | 26 | 25 | 40 | 67.5 | 94 | |
| | 2000.03-2007.08 | MT | F | R | Estate FWD B 5244 S | | GCI62030 | Inner Joint | | 26 | 25 | 40 | 526 | 92.5 | |
| 2.4 (129 kw) | 2009.04-2010.12 | 6AT | F | L | Estate FWD D 5244 T14 | | GDS62076 | Drive Shaft | | 40 | 31 | 57.7 | 52 | 529 | |
| | 2009.04-2010.12 | 6MT | F | L | Estate FWD D 5244 T14 | | GDS21070 | Drive Shaft | | 40 | 26 | 57.7 | 52 | 556 | |
| | 2009.04-2010.12 | 6MT | F | R | Estate FWD D 5244 T14 | | GDS62086 | Drive Shaft | | 40 | 26 | 57.7 | 52 | 1002 | |
| | 2009.04-2010.12 | 6MT | F | L/R | Estate FWD D 5244 T14 | | GCO59285 | Outer Joint | | 40 | 27 | 57.7 | 52 | 63.5 | M |
| | 2009.04-2010.12 | AT | F | L | Estate FWD D 5244 T14 | | GDS62109 | Drive Shaft | | 40 | 31 | 57.7 | 52 | 524 | |
| | 2009.04-2010.12 | AT | F | R | Estate FWD D 5244 T14 | | GDS59444 | Drive Shaft | | 40 | 28 | 57.7 | 52 | 994 | |
| | 2009.04-2010.12 | MT | F | R | Estate FWD D 5244 T14 | | GCI81076 | Inner Joint | | 26 | 28 | 40 | 522.5 | 123.7 | |
| 2.4 (133 kw) | 2013.10-2016.04 | AT | F | L | Estate 4WD D 5244 T12 | | GDS62076 | Drive Shaft | | 40 | 31 | 57.7 | 52 | 529 | |
| | 2013.10-2016.04 | AT | F | R | Estate 4WD D 5244 T12 | | GCI62033 | Inner Joint | | 28 | 27 | 29.95 | 521 | 102.5 | |
| | 2013.10-2016.04 | 6AT | R | L/R | Estate 4WD D 5244 T12 | Chassis no. from:249101 | GDS62077 | Drive Shaft | 44NS | 36 | 23 | 56.5 | 49.5 | 762 | |
| | 2013.10-2016.04 | 6AT | R | L/R | Estate 4WD D 5244 T12 | Chassis no. to:249100;8 balls | GDS83926 | Drive Shaft | 44NS | 36 | 26 | 56.5 | 49.5 | 751 | |
| | 2013.10-2016.04 | 6AT | R | L/R | Estate 4WD D 5244 T12 | Chassis no. to:249100;8 balls | GCO83248 | Outer Joint | 44NS | 36 | 29 | 56.5 | 49.5 | 64 | I |
| | 2013.10-2016.04 | 6AT | R | L/R | Estate 4WD D 5244 T12 | Chassis no. to:249100 | GCI18187 | Inner Joint | | 26 | 29 | 35 | 69.5 | 107.5 | |
| 2.4 (136 kw) | 2005.04-2008.12 | AT | F | L | Estate FWD D 5244 T4 | | GDS62141 | Drive Shaft | 48T | 36 | 28 | 56.5 | 48 | 521 | |
| | 2005.04-2008.12 | AT | F | R | Estate FWD D 5244 T4 | | GDS82776 | Drive Shaft | 48T | 36 | 28 | 56.5 | 48 | 993 | |
| | 2005.04-2008.12 | AT | F | L/R | Estate FWD D 5244 T4 | | GCO62037 | Outer Joint | 48T | 36 | 27 | 56.5 | 48 | 66 | M |
| | 2005.04-2008.12 | AT | F | L | Estate FWD D 5244 T4 | | GCI62075 | Inner Joint | | 28 | 27 | 33 | 68.5 | 90 | |
| | 2005.04-2008.12 | MT | F | R | Estate FWD D 5244 T4 | | GDS62028 | Drive Shaft | 48T | 36 | 26 | 56.5 | 48 | 990 | |
| | 2005.04-2008.12 | MT | F | R | Estate FWD D 5244 T4 | | GCO62040 | Outer Joint | 48T | 36 | 25 | 56.5 | 48 | 58 | M |
| | 2005.04-2008.12 | MT | F | R | Estate FWD D 5244 T4 | | GCI62030 | Inner Joint | | 26 | 25 | 40 | 526 | 92.5 | |
| | 2005.05-2007.08 | AT | F | L | Estate 4WD D 5244 T4 | | GDS62141 | Drive Shaft | 48T | 36 | 28 | 56.5 | 48 | 521 | |
| | 2005.05-2007.08 | AT | F | L | Estate 4WD D 5244 T4 | | GCO62037 | Outer Joint | 48T | 36 | 27 | 56.5 | 48 | 66 | M |
| | 2005.05-2007.08 | AT | F | L | Estate 4WD D 5244 T4 | | GCI62075 | Inner Joint | | 28 | 27 | 33 | 68.5 | 90 | |
| | 2005.05-2007.08 | MT | F | L | Estate 4WD D 5244 T4 | | GCO62038 | Outer Joint | | 36 | 25 | 56.5 | 48 | 58 | M |
| | 2005.05-2007.08 | 6AT/6MT | R | L/R | Estate 4WD D 5244 T4 | | GDS81129 | Drive Shaft | | 36 | 26 | 56.5 | 49.5 | 756 | |
| | 2005.05-2007.08 | 6AT/6MT | R | L/R | Estate 4WD D 5244 T4 | | GCI81051 | Inner Joint | | 36 | 22 | 56.5 | 49.5 | 97 | |
| | 2005.05-2007.08 | 6AT/6MT | R | L/R | Estate 4WD D 5244 T4 | | GCI81062 | Inner Joint | | 26 | 22 | 35 | 69.5 | 94 | |
| | 2007.04-2009.12 | 6AT | F | L | Estate 4WD D 5244 T4 | | GDS62076 | Drive Shaft | | 40 | 31 | 57.7 | 52 | 529 | |
| | 2007.04-2009.12 | 6AT | F | R | Estate 4WD D 5244 T4 | | GCI62033 | Inner Joint | | 28 | 27 | 29.95 | 521 | 102.5 | |
| | 2007.04-2009.12 | 6MT | F | L/R | Estate 4WD D 5244 T4 | | GCO59285 | Outer Joint | | 40 | 27 | 57.7 | 52 | 63.5 | M |
| | 2007.04-2009.12 | 6MT | F | L | Estate 4WD D 5244 T4 | | GCI62040 | Inner Joint | | 31 | 28 | 44 | 65 | 111.2 | |
| | 2007.04-2009.12 | 6AT | R | L/R | Estate 4WD D 5244 T4 | Chassis no. from::249101 | GDS62077 | Drive Shaft | 44NS | 36 | 23 | 56.5 | 49.5 | 762 | |
| | 2007.04-2009.12 | 6AT/6MT | R | L/R | Estate 4WD D 5244 T4 | Transmission:6AT,CHAssis no. to:249100;Transmission:6MT,8 balls | GDS83926 | Drive Shaft | 44NS | 36 | 26 | 56.5 | 49.5 | 751 | |
| | 2007.04-2009.12 | 6AT/6MT | R | L/R | Estate 4WD D 5244 T4 | Transmission:6AT,CHAssis no. to:249100;Transmission:6MT | GCI18187 | Inner Joint | | 26 | 29 | 35 | 69.5 | 107.5 | |
| | 2007.04-2009.12 | 6MT/6AT | R | L/R | Estate 4WD D 5244 T4 | Transmission:6AT,CHAssis no. to:249100;Transmission:6MT | GCO83248 | Outer Joint | 44NS | 36 | 29 | 56.5 | 49.5 | 64 | I |
| | 2007.04-2009.12 | 6AT | F | L | Estate FWD D 5244 T4 | | GDS62076 | Drive Shaft | | 40 | 31 | 57.7 | 52 | 529 | |
| | 2007.04-2009.12 | 6AT | F | R | Estate FWD D 5244 T4 | | GDS59444 | Drive Shaft | | 40 | 28 | 57.7 | 52 | 994 | |
| | 2007.04-2009.12 | 6MT | F | L | Estate FWD D 5244 T4 | | GDS21070 | Drive Shaft | | 40 | 26 | 57.7 | 52 | 556 | |
| | 2007.04-2009.12 | 6MT | F | R | Estate FWD D 5244 T4 | | GDS62086 | Drive Shaft | | 40 | 26 | 57.7 | 52 | 1002 | |
| | 2007.04-2009.12 | 6MT | F | L/R | Estate FWD D 5244 T4 | | GCO59285 | Outer Joint | | 40 | 27 | 57.7 | 52 | 63.5 | M |
| | 2007.04-2009.12 | AT | F | L | Estate FWD D 5244 T4 | | GDS62109 | Drive Shaft | | 40 | 31 | 57.7 | 52 | 524 | |
| | 2007.04-2009.12 | MT | F | R | Estate FWD D 5244 T4 | | GCI81076 | Inner Joint | | 26 | 28 | 40 | 522.5 | 123.7 | |
| 2.4 (142 kw) | 1996.04-2000.12 | AT | F | L | Estate 4WD B 5254 T, B 5244 T | Year from:1999 | GDS62143 | Drive Shaft | 48T | 36 | 26 | 56.5 | 48 | 506 | |
| | 1996.04-2000.12 | AT | F | R | Estate 4WD B 5254 T, B 5244 T | Year to:1998 | GDS62002 | Drive Shaft | 48T | 26 | 26 | 56.5 | 98.5 | 1028 | |
| | 1996.04-2000.12 | AT | F | R | Estate 4WD B 5254 T, B 5244 T | Year from:1999 | GDS83502 | Drive Shaft | 48T | 36 | 26 | 56.5 | 48 | 959 | |
| | 1996.04-2000.12 | AT | F | L | Estate 4WD B 5254 T, B 5244 T | Year from:1999 | GCO62009 | Outer Joint | 48T | 36 | 27 | 56.5 | 48 | 66 | M |
| | 1996.04-2000.12 | AT | F | L | Estate 4WD B 5254 T, B 5244 T | Year from:1999 | GCI62038 | Inner Joint | | 26 | 26 | 31 | 68 | 87 | |
| | 1996.04-2000.12 | AT | F | R | Estate 4WD B 5254 T, B 5244 T | Year from:1999 | GCI82266 | Inner Joint | | 26 | 26 | 31 | 513 | 93.5 | |
| | 1996.04-2000.12 | AT/MT | F | L | Estate 4WD B 5254 T, B 5244 T | Year to:1998 | GDS62001 | Drive Shaft | 48T | 26 | 26 | 56.5 | 98.5 | 574.5 | |
| | 1996.04-2000.12 | AT/MT | F | L/R | Estate 4WD B 5254 T, B 5244 T | Year to:1998,Inner teeth:25 | GCO62001 | Outer Joint | 48T | 26 | 25 | 56.5 | 98.5 | 56 | O |

| | YEAR | TRANSM. | F/R | L/R | BODY STYLE & DRIVE TYPE & ENGINE | REMARKS | G-AP Ref. | PRODUCT | ABS | Technical Specifications A | B | C | H | L | P |
|---|---|---|---|---|---|---|---|---|---|---|---|---|---|---|---|
| **VOLVO** | | | | | | | | | | | | | | | |
| **V70** | | | | | | | | | | | | | | | |
| 2.4 (142 kw) | 1996.04-2000.12 | AT/MT | F | L/R | Estate 4WD B 5254 T, B 5244 T | Year to:1998,Inner teeth:28 | GCO62002 | Outer Joint | 48T | 26 | 28 | 56.5 | 97.5 | 66 | O |
| | 1996.04-2000.12 | MT | F | L | Estate 4WD B 5254 T, B 5244 T | | GDS62009 | Drive Shaft | 48T | 36 | 26 | 56.5 | 48 | 523 | |
| | 1996.04-2000.12 | AT/MT | R | L/R | Estate 4WD B 5254 T, B 5244 T | | GDS81128 | Drive Shaft | 48T | 26 | 26 | 60.5 | 81 | 751 | |
| | 1996.04-2000.12 | AT/MT | R | L/R | Estate 4WD B 5254 T, B 5244 T | | GCI81050 | Inner Joint | 48T | 26 | 25 | 60.5 | 81 | 96.8 | |
| | 1996.04-2000.12 | AT/MT | R | L/R | Estate 4WD B 5254 T, B 5244 T | | GCI81060 | Inner Joint | | 26 | 25 | 35 | 70 | 106.3 | |
| | 1997.01-2000.03 | AT | F | L | Estate FWD B5244T/B5254T | Year from:1999 | GDS62143 | Drive Shaft | 48T | 36 | 26 | 56.5 | 48 | 506 | |
| | 1997.01-2000.03 | AT | F | R | Estate FWD B5244T/B5254T | Year to:1998 | GDS62002 | Drive Shaft | 48T | 26 | 26 | 56.5 | 98.5 | 1028 | |
| | 1997.01-2000.03 | AT | F | R | Estate FWD B5244T/B5254T | Year from:1999 | GDS83502 | Drive Shaft | 48T | 36 | 26 | 56.5 | 48 | 959 | |
| | 1997.01-2000.03 | AT | F | L | Estate FWD B5244T/B5254T | Year from:1999 | GCO62009 | Outer Joint | 48T | 36 | 27 | 56.5 | 48 | 66 | M |
| | 1997.01-2000.03 | AT | F | L | Estate FWD B5244T/B5254T | Year from:1999 | GCI62038 | Inner Joint | | 26 | 26 | 31 | 68 | 87 | |
| | 1997.01-2000.03 | AT | F | R | Estate FWD B5244T/B5254T | Year from:1999 | GCI82266 | Inner Joint | | 26 | 26 | 31 | 513 | 93.5 | |
| | 1997.01-2000.03 | AT/MT | F | L | Estate FWD B5244T/B5254T | Year to:1998 | GDS62001 | Drive Shaft | 48T | 26 | 26 | 56.5 | 98.5 | 574.5 | |
| | 1997.01-2000.03 | AT/MT | F | L/R | Estate FWD B5244T/B5254T | Year to:1998 | GCO62001 | Outer Joint | 48T | 26 | 25 | 56.5 | 98.5 | 56 | O |
| | 1997.01-2000.03 | MT | F | L | Estate FWD B5244T/B5254T | | GDS62009 | Drive Shaft | 48T | 36 | 26 | 56.5 | 48 | 523 | |
| | 1997.01-2000.03 | MT | F | L/R | Estate FWD B5244T/B5254T | Year to:1998 | GCO62002 | Outer Joint | 48T | 26 | 28 | 56.5 | 97.5 | 66 | O |
| 2.4 (147 kw) | 1999.11-2003.08 | AT | F | L | Estate FWD B 5244 T3 | | GDS62022 | Drive Shaft | 48T | 36 | 26 | 56.5 | 48 | 527 | |
| | 1999.11-2003.08 | AT | F | R | Estate FWD B 5244 T3 | | GDS62017 | Drive Shaft | 48T | 36 | 26 | 56.5 | 48 | 978.5 | |
| | 1999.11-2003.08 | AT | F | L | Estate FWD B 5244 T3 | | GCI99109 | Inner Joint | | 26 | 26 | 31 | 68 | 87 | |
| | 1999.11-2003.08 | AT | F | R | Estate FWD B 5244 T3 | | GCI62029 | Inner Joint | | 26 | 26 | 31 | 513 | 93.5 | |
| | 1999.11-2003.08 | AT/MT | F | L/R | Estate FWD B 5244 T3 | | GCO62009 | Outer Joint | 48T | 36 | 27 | 56.5 | 48 | 66 | M |
| | 1999.11-2003.08 | MT | F | L | Estate FWD B 5244 T3 | | GDS62057 | Drive Shaft | 48T | 36 | 26 | 56.5 | 48 | 546 | |
| | 1999.11-2003.08 | MT | F | R | Estate FWD B 5244 T3 | | GDS62031 | Drive Shaft | 48T | 36 | 26 | 56.5 | 48 | 992 | |
| | 2001.09-2002.08 | 5AT | F | L | Estate 4WD B 5244 T3 | | GDS62039 | Drive Shaft | 48T | 36 | 26 | 56.5 | 48 | 558.5 | |
| | 2001.09-2002.08 | 5AT | F | R | Estate 4WD B 5244 T3 | | GDS62140 | Drive Shaft | 48T | 36 | 26 | 56.5 | 48 | 977 | |
| | 2001.09-2002.08 | 5AT | F | L | Estate 4WD B 5244 T3 | | GCI99109 | Inner Joint | | 26 | 26 | 31 | 68 | 87 | |
| | 2001.09-2002.08 | 5AT/5MT | F | L/R | Estate 4WD B 5244 T3 | | GCO62009 | Outer Joint | 48T | 36 | 27 | 56.5 | 48 | 66 | M |
| | 2001.09-2002.08 | 5MT | F | L | Estate 4WD B 5244 T3 | | GDS84500 | Drive Shaft | 48T | 36 | 26 | 56.5 | 48 | 576 | |
| | 2001.09-2002.08 | 5MT | F | R | Estate 4WD B 5244 T3 | | GDS83882 | Drive Shaft | 48T | 36 | 26 | 56.5 | 48 | 1028 | |
| | 2001.09-2002.08 | 5AT/5MT | R | L/R | Estate 4WD B 5244 T3 | | GDS81130 | Drive Shaft | | 36 | 26 | 56.5 | 50 | 764 | |
| | 2001.09-2002.08 | 5AT/5MT | R | L/R | Estate 4WD B 5244 T3 | | GCI44031 | Inner Joint | | 26 | 20 | 35 | 69.5 | 81 | |
| 2.4 (151 kw) | 2008.10-2011.12 | 6AT | F | L | Estate FWD D 5244 T10 | | GDS62076 | Drive Shaft | | 40 | 31 | 57.7 | 52 | 529 | |
| | 2008.10-2011.12 | 6MT | F | L | Estate FWD D 5244 T10 | | GDS21070 | Drive Shaft | | 40 | 26 | 57.7 | 52 | 556 | |
| | 2008.10-2011.12 | 6MT | F | R | Estate FWD D 5244 T10 | | GDS62086 | Drive Shaft | | 40 | 26 | 57.7 | 52 | 1002 | |
| | 2008.10-2011.12 | 6MT | F | L/R | Estate FWD D 5244 T10 | | GCO59285 | Outer Joint | | 40 | 27 | 57.7 | 52 | 63.5 | M |
| | 2008.10-2011.12 | AT | F | L | Estate FWD D 5244 T10 | | GDS62109 | Drive Shaft | | 40 | 31 | 57.7 | 52 | 524 | |
| | 2008.10-2011.12 | AT | F | R | Estate FWD D 5244 T10 | | GDS59444 | Drive Shaft | | 40 | 28 | 57.7 | 52 | 994 | |
| | 2008.10-2011.12 | MT | F | R | Estate FWD D 5244 T10 | | GCI81076 | Inner Joint | | 26 | 28 | 40 | 522.5 | 123.7 | |
| | 2009.12-2011.12 | 6AT | F | L | Estate 4WD D 5244 T10 | | GDS62076 | Drive Shaft | | 40 | 31 | 57.7 | 52 | 529 | |
| | 2009.12-2011.12 | 6AT | F | R | Estate 4WD D 5244 T10 | | GCI62033 | Inner Joint | | 28 | 27 | 29.95 | 521 | 102.5 | |
| | 2009.12-2011.12 | 6AT | R | L/R | Estate 4WD D 5244 T10 | Chassis no. from:249101 | GDS62077 | Drive Shaft | 44NS | 36 | 23 | 56.5 | 49.5 | 762 | |
| | 2009.12-2011.12 | 6AT | R | L/R | Estate 4WD D 5244 T10 | Chassis no. to:249100;8 balls | GDS83926 | Drive Shaft | 44NS | 36 | 26 | 56.5 | 49.5 | 751 | |
| | 2009.12-2011.12 | 6AT | R | L/R | Estate 4WD D 5244 T10 | Chassis no. to:249100;8 balls | GCO83248 | Outer Joint | 44NS | 36 | 29 | 56.5 | 49.5 | 64 | I |
| | 2009.12-2011.12 | 6AT | R | L/R | Estate 4WD D 5244 T10 | | GCI18187 | Inner Joint | | 26 | 29 | 35 | 69.5 | 107.5 | |
| 2.4 (158 kw) | 2011.04-2015.12 | 6AT | F | L | Estate 4WD D 5244 T15 | | GDS62076 | Drive Shaft | | 40 | 31 | 57.7 | 52 | 529 | |
| | 2011.04-2015.12 | 6AT | F | L | Estate 4WD D 5244 T15 | | GCI62061 | Inner Joint | | 31 | 26 | 36.2 | 68 | 87 | |
| | 2011.04-2015.12 | 6AT | F | R | Estate 4WD D 5244 T15 | | GCI62033 | Inner Joint | | 28 | 27 | 29.95 | 521 | 102.5 | |
| | 2011.04-2015.12 | 6AT | R | L/R | Estate 4WD D 5244 T15 | Chassis no. from:249101 | GDS62077 | Drive Shaft | 44NS | 36 | 23 | 56.5 | 49.5 | 762 | |
| | 2011.04-2015.12 | 6AT | R | L/R | Estate 4WD D 5244 T15 | Chassis no. to:249100;8 balls | GDS83926 | Drive Shaft | 44NS | 36 | 26 | 56.5 | 49.5 | 751 | |
| | 2011.04-2015.12 | 6AT | R | L/R | Estate 4WD D 5244 T15 | Chassis no. to:249100;8 balls | GCO83248 | Outer Joint | 44NS | 36 | 29 | 56.5 | 49.5 | 64 | I |
| | 2011.04-2015.12 | 6AT | R | L/R | Estate 4WD D 5244 T15 | Chassis no. to:249100 | GCI18187 | Inner Joint | | 26 | 29 | 35 | 69.5 | 107.5 | |
| | 2011.04-2015.12 | 6AT | R | L/R | Estate 4WD D 5244 T15 | Chassis no. from:249101 | GCI62035 | Inner Joint | | 23 | 29 | 28 | 64 | 110 | |
| | 2011.04-2015.12 | 6AT | F | L | Estate FWD D 5244 T11;D 5244 T15 | | GDS62076 | Drive Shaft | | 40 | 31 | 57.7 | 52 | 529 | |
| | 2011.04-2015.12 | 6MT | F | L | Estate FWD D 5244 T11;D 5244 T15 | | GDS21070 | Drive Shaft | | 40 | 26 | 57.7 | 52 | 556 | |
| | 2011.04-2015.12 | 6MT | F | R | Estate FWD D 5244 T11;D 5244 T15 | | GDS62086 | Drive Shaft | | 40 | 26 | 57.7 | 52 | 1002 | |
| | 2011.04-2015.12 | 6MT | F | L/R | Estate FWD D 5244 T11;D 5244 T15 | | GCO59285 | Outer Joint | | 40 | 27 | 57.7 | 52 | 63.5 | M |
| | 2011.04-2015.12 | AT | F | L | Estate FWD D 5244 T11;D 5244 T15 | | GDS62109 | Drive Shaft | | 40 | 31 | 57.7 | 52 | 524 | |
| | 2011.04-2015.12 | AT | F | R | Estate FWD D 5244 T11;D 5244 T15 | | GDS59444 | Drive Shaft | | 40 | 28 | 57.7 | 52 | 994 | |
| | 2011.04-2015.12 | AT | F | L | Estate FWD D 5244 T11;D 5244 T15 | | GCI62061 | Inner Joint | | 31 | 26 | 36.2 | 68 | 87 | |
| | 2011.04-2015.12 | MT | F | R | Estate FWD D 5244 T11;D 5244 T15 | | GCI81076 | Inner Joint | | 26 | 28 | 40 | 522.5 | 123.7 | |
| | 2013.09-2015.12 | 6AT | F | L | Estate Van FWD D 5244 T11;D 5244 T15 | | GDS62076 | Drive Shaft | | 40 | 31 | 57.7 | 52 | 529 | |
| | 2013.09-2015.12 | 6MT | F | L | Estate Van FWD D 5244 T11;D 5244 T15 | | GDS21070 | Drive Shaft | | 40 | 26 | 57.7 | 52 | 556 | |
| | 2013.09-2015.12 | 6MT | F | R | Estate Van FWD D 5244 T11;D 5244 T15 | | GDS62086 | Drive Shaft | | 40 | 26 | 57.7 | 52 | 1002 | |
| | 2013.09-2015.12 | 6MT | F | L/R | Estate Van FWD D 5244 T11;D 5244 T15 | | GCO59285 | Outer Joint | | 40 | 27 | 57.7 | 52 | 63.5 | M |
| | 2013.09-2015.12 | AT | F | R | Estate Van FWD D 5244 T11;D 5244 T15 | | GDS59444 | Drive Shaft | | 40 | 28 | 57.7 | 52 | 994 | |
| | 2013.09-2015.12 | AT/MT | F | L | Estate Van FWD D 5244 T11;D 5244 T15 | | GCI62034 | Inner Joint | | 31 | 27 | 36.2 | 68 | 90 | |

| | YEAR | TRANSM. | F/R | L/R | BODY STYLE & DRIVE TYPE & ENGINE | REMARKS | G-AP Ref. | PRODUCT | ABS | Technical Specifications A | B | C | H | L | P |
|---|---|---|---|---|---|---|---|---|---|---|---|---|---|---|---|
| **VOLVO** **V70** | | | | | | | | | | | | | | | |
| 2.4 (158 kw) | 2013.09-2015.12 | MT | F | R | Estate Van FWD D 5244 T11;D 5244 T15 | | GCI62065 | Inner Joint | | 28 | 27 | 33 | 454 | 94 | |
| 2.4 (169 kw) | 2011.03-2016.04 | AT | F | L | Estate 4WD D 5244 T15 | | GDS62076 | Drive Shaft | | 40 | 31 | 57.7 | 52 | 529 | |
| | 2011.03-2016.04 | AT | F | R | Estate 4WD D 5244 T15 | | GCI62033 | Inner Joint | | 28 | 27 | 29.95 | 521 | 102.5 | |
| | 2011.03-2016.04 | 6AT | R | L/R | Estate 4WD D 5244 T15 | Chassis no. from:249101 | GDS62077 | Drive Shaft | 44NS | 36 | 23 | 56.5 | 49.5 | 762 | |
| | 2011.03-2016.04 | 6AT | R | L/R | Estate 4WD D 5244 T15 | Chassis no. to:249100;8 balls | GDS83926 | Drive Shaft | 44NS | 36 | 26 | 56.5 | 49.5 | 751 | |
| | 2011.03-2016.04 | 6AT | R | L/R | Estate 4WD D 5244 T15 | Chassis no. to:249100;8 balls | GCO83248 | Outer Joint | 44NS | 36 | 29 | 56.5 | 49.5 | 64 | I |
| | 2011.03-2016.04 | 6AT | R | L/R | Estate 4WD D 5244 T15 | Chassis no. to:249100 | GCI18187 | Inner Joint | | 26 | 29 | 35 | 69.5 | 107.5 | |
| | 2011.03-2016.04 | 6MT | F | L | Estate FWD | | GDS21070 | Drive Shaft | | 40 | 26 | 57.7 | 52 | 556 | |
| | 2011.03-2016.04 | 6MT | F | R | Estate FWD | | GDS62086 | Drive Shaft | | 40 | 26 | 57.7 | 52 | 1002 | |
| | 2011.03-2016.04 | 6MT | F | L/R | Estate FWD | | GCO59285 | Outer Joint | | 40 | 27 | 57.7 | 52 | 63.5 | M |
| | 2011.03-2016.04 | AT | F | L | Estate FWD | | GDS62076 | Drive Shaft | | 40 | 31 | 57.7 | 52 | 529 | |
| | 2011.03-2016.04 | AT | F | R | Estate FWD | | GDS59444 | Drive Shaft | | 40 | 28 | 57.7 | 52 | 994 | |
| | 2011.03-2016.04 | MT | F | R | Estate FWD | | GCI81076 | Inner Joint | | 26 | 28 | 40 | 522.5 | 123.7 | |
| 2.4 (191 kw) | 2004.04-2007.08 | 5AT | F | L | Estate FWD B 5244 T5 | | GDS62141 | Drive Shaft | 48T | 36 | 28 | 56.5 | 48 | 521 | |
| | 2004.04-2007.08 | 5AT | F | R | Estate FWD B 5244 T5 | | GDS82776 | Drive Shaft | 48T | 36 | 28 | 56.5 | 48 | 993 | |
| | 2004.04-2007.08 | 5AT | F | L | Estate FWD B 5244 T5 | | GCI62075 | Inner Joint | | 28 | 27 | 33 | 68.5 | 90 | |
| | 2004.04-2007.08 | 6MT | F | L | Estate FWD B 5244 T5 | | GDS62057 | Drive Shaft | 48T | 36 | 26 | 56.5 | 48 | 546 | |
| | 2004.04-2007.08 | AT/MT | F | L/R | Estate FWD B 5244 T5 | | GCO62009 | Outer Joint | 48T | 36 | 27 | 56.5 | 48 | 66 | M |
| | 2004.04-2007.08 | MT | F | R | Estate FWD B 5244 T5 | | GDS62031 | Drive Shaft | 48T | 36 | 26 | 56.5 | 48 | 992 | |
| 2.4 (195 kw) | 1999.03-2000.03 | 5AT | F | L | Estate 4WD B5244T2 | | GDS62143 | Drive Shaft | 48T | 36 | 26 | 56.5 | 48 | 506 | |
| | 1999.03-2000.03 | 5AT | F | L | Estate 4WD B5244T2 | | GCO62009 | Outer Joint | 48T | 36 | 27 | 56.5 | 48 | 66 | M |
| | 1999.03-2000.03 | 5AT | F | L | Estate 4WD B5244T2 | | GCI62038 | Inner Joint | | 26 | 26 | 31 | 68 | 87 | |
| | 1999.03-2000.03 | 5AT | R | L/R | Estate 4WD B5244T2 | | GDS81128 | Drive Shaft | 48T | 26 | 26 | 60.5 | 81 | 751 | |
| | 1999.03-2000.03 | 5AT | R | L/R | Estate 4WD B5244T2 | | GCI81050 | Inner Joint | 48T | 26 | 25 | 60.5 | 81 | 96.8 | |
| | 1999.03-2000.03 | 5AT | R | L/R | Estate 4WD B5244T2 | | GCI81060 | Inner Joint | | 26 | 25 | 35 | 70 | 106.3 | |
| 2.5 (103 kw) | 1996.11-2000.02 | 4AT/5MT | F | L | Estate 4WD D5252T | Model year from:1999 | GDS62009 | Drive Shaft | 48T | 36 | 26 | 56.5 | 48 | 523 | |
| | 1996.11-2000.02 | AT/MT | F | R | Estate 4WD D5252T | Model year to:1998 | GDS62001 | Drive Shaft | 48T | 26 | 26 | 56.5 | 98.5 | 574.5 | |
| | 1996.11-2000.02 | MT | F | R | Estate 4WD D5252T | Date to:1998 | GCO62002 | Outer Joint | 48T | 26 | 28 | 56.5 | 97.5 | 66 | O |
| | 1996.11-2000.02 | 4AT/5MT | R | L/R | Estate 4WD D5252T | | GDS81128 | Drive Shaft | 48T | 26 | 26 | 60.5 | 81 | 751 | |
| | 1996.11-2000.02 | 4AT/5MT | R | L/R | Estate 4WD D5252T | | GCI81050 | Inner Joint | 48T | 26 | 25 | 60.5 | 81 | 96.8 | |
| | 1996.11-2000.02 | 4AT/5MT | R | L/R | Estate 4WD D5252T | | GCI81060 | Inner Joint | | 26 | 25 | 35 | 70 | 106.3 | |
| | 1997.01-2000.05 | MT | F | L | Estate FWD D5252T | Year to:1998 | GDS62001 | Drive Shaft | 48T | 26 | 26 | 56.5 | 98.5 | 574.5 | |
| | 1997.01-2000.05 | MT | F | L | Estate FWD D5252T | | GDS62009 | Drive Shaft | 48T | 36 | 26 | 56.5 | 48 | 523 | |
| | 1997.01-2000.05 | MT | F | L | Estate FWD D5252T | Year to:1998 | GCO62001 | Outer Joint | 48T | 26 | 25 | 56.5 | 98.5 | 56 | O |
| | 1999.11-2007.08 | 5MT | F | L | Estate FWD D 5252 T | | GDS62057 | Drive Shaft | 48T | 36 | 26 | 56.5 | 48 | 546 | |
| | 1999.11-2007.08 | 5MT | F | R | Estate FWD D 5252 T | | GDS62031 | Drive Shaft | 48T | 36 | 26 | 56.5 | 48 | 992 | |
| | 1999.11-2007.08 | 5MT | F | R | Estate FWD D 5252 T | | GCO62009 | Outer Joint | 48T | 36 | 27 | 56.5 | 48 | 66 | M |
| 2.5 (147 kw) | 2007.08-2009.12 | 6AT | F | L | Estate FWD B 5254 T6 | | GDS62109 | Drive Shaft | | 40 | 31 | 57.7 | 52 | 524 | |
| | 2007.08-2009.12 | 6AT | F | L/R | Estate FWD B 5254 T6 | | GCO59344 | Outer Joint | | 40 | 26 | 57.7 | 52 | 63.5 | M |
| | 2007.08-2009.12 | 6MT | F | L | Estate FWD B 5254 T6 | | GDS21070 | Drive Shaft | | 40 | 26 | 57.7 | 52 | 556 | |
| | 2007.08-2009.12 | 6MT | F | R | Estate FWD B 5254 T6 | | GDS62086 | Drive Shaft | | 40 | 26 | 57.7 | 52 | 1002 | |
| | 2007.08-2009.12 | 6MT | F | L/R | Estate FWD B 5254 T6 | | GCO59285 | Outer Joint | | 40 | 27 | 57.7 | 52 | 63.5 | M |
| | 2007.08-2009.12 | AT | F | R | Estate FWD B 5254 T6 | | GDS59444 | Drive Shaft | | 40 | 28 | 57.7 | 52 | 994 | |
| | 2007.08-2009.12 | AT/Semi-AT | F | R | Estate FWD B 5254 T6 | | GDS62091 | Drive Shaft | | 40 | 28 | 57.7 | 52 | 992 | |
| | 2007.08-2009.12 | MT | F | R | Estate FWD B 5254 T6 | | GCI81076 | Inner Joint | | 26 | 28 | 40 | 522.5 | 123.7 | |
| | 2008.05-2009.12 | 6AT | F | L | Estate FWD B 5254 T8 | | GDS62109 | Drive Shaft | | 40 | 31 | 57.7 | 52 | 524 | |
| | 2008.05-2009.12 | 6AT | F | R | Estate FWD B 5254 T8 | | GDS62091 | Drive Shaft | | 40 | 28 | 57.7 | 52 | 992 | |
| | 2008.05-2009.12 | 6AT | F | L/R | Estate FWD B 5254 T8 | | GCO59344 | Outer Joint | | 40 | 26 | 57.7 | 52 | 63.5 | M |
| | 2008.05-2009.12 | 6MT | F | L | Estate FWD B 5254 T8 | | GDS21070 | Drive Shaft | | 40 | 26 | 57.7 | 52 | 556 | |
| | 2008.05-2009.12 | 6MT | F | R | Estate FWD B 5254 T8 | | GDS62086 | Drive Shaft | | 40 | 26 | 57.7 | 52 | 1002 | |
| | 2008.05-2009.12 | 6MT | F | L/R | Estate FWD B 5254 T8 | | GCO59285 | Outer Joint | | 40 | 27 | 57.7 | 52 | 63.5 | M |
| | 2008.05-2009.12 | AT | F | R | Estate FWD B 5254 T8 | | GDS59444 | Drive Shaft | | 40 | 28 | 57.7 | 52 | 994 | |
| | 2008.05-2009.12 | MT | F | R | Estate FWD B 5254 T8 | | GCI81076 | Inner Joint | | 26 | 28 | 40 | 522.5 | 123.7 | |
| 2.5 (154 kw) | 2001.07-2007.08 | AT | F | L | Estate FWD B 5254 T2 | | GDS62022 | Drive Shaft | 48T | 36 | 26 | 56.5 | 48 | 527 | |
| | 2001.07-2007.08 | AT | F | R | Estate FWD B 5254 T2 | | GDS62017 | Drive Shaft | 48T | 36 | 26 | 56.5 | 48 | 978.5 | |
| | 2001.07-2007.08 | AT | F | L | Estate FWD B 5254 T2 | | GCI99109 | Inner Joint | | 26 | 26 | 31 | 68 | 87 | |
| | 2001.07-2007.08 | AT | F | R | Estate FWD B 5254 T2 | | GCI62029 | Inner Joint | | 26 | 26 | 31 | 513 | 93.5 | |
| | 2001.07-2007.08 | AT/MT | F | L/R | Estate FWD B 5254 T2 | | GCO62009 | Outer Joint | 48T | 36 | 27 | 56.5 | 48 | 66 | M |
| | 2001.07-2007.08 | MT | F | L | Estate FWD B 5254 T2 | | GDS62057 | Drive Shaft | 48T | 36 | 26 | 56.5 | 48 | 546 | |
| | 2001.07-2007.08 | MT | F | R | Estate FWD B 5254 T2 | | GDS62031 | Drive Shaft | 48T | 36 | 26 | 56.5 | 48 | 992 | |
| | 2002.07-2007.08 | AT | F | L | Estate 4WD B 5254 T2 | | GDS62022 | Drive Shaft | 48T | 36 | 26 | 56.5 | 48 | 527 | |
| | 2002.07-2007.08 | AT | F | R | Estate 4WD B 5254 T2 | | GDS62140 | Drive Shaft | 48T | 36 | 26 | 56.5 | 48 | 977 | |
| | 2002.07-2007.08 | AT | F | L/R | Estate 4WD B 5254 T2 | | GCO62009 | Outer Joint | 48T | 36 | 27 | 56.5 | 48 | 66 | M |
| | 2002.07-2007.08 | AT | F | L | Estate 4WD B 5254 T2 | | GCI99109 | Inner Joint | | 26 | 26 | 31 | 68 | 87 | |
| | 2002.07-2007.08 | AT | F | R | Estate 4WD B 5254 T2 | | GCI62031 | Inner Joint | | 26 | 26 | 28 | 513 | 93.5 | |

| | YEAR | TRANSM. | F/R | L/R | BODY STYLE & DRIVE TYPE & ENGINE | REMARKS | G-AP Ref. | PRODUCT | ABS | Technical Specifications A | B | C | H | L | P |
|---|---|---|---|---|---|---|---|---|---|---|---|---|---|---|---|
| **VOLVO** **V70** | | | | | | | | | | | | | | | |
| 2.5 (154 kw) | 2002.07-2007.08 | MT | F | L | Estate 4WD B 5254 T2 | | GDS62057 | Drive Shaft | 48T | 36 | 26 | 56.5 | 48 | 546 | |
| | 2002.07-2007.08 | AT/MT | R | L/R | Estate 4WD B 5254 T2 | | GDS81130 | Drive Shaft | | 36 | 26 | 56.5 | 50 | 764 | |
| | 2002.07-2007.08 | AT/MT | R | L/R | Estate 4WD B 5254 T2 | | GCI44031 | Inner Joint | | 26 | 20 | 35 | 69.5 | 81 | |
| 2.5 (170 kw) | 2009.04-2011.12 | 6AT | F | L | Estate FWD B 5254 T11 | | GDS62109 | Drive Shaft | | 40 | 31 | 57.7 | 52 | 524 | |
| | 2009.04-2011.12 | 6AT | F | R | Estate FWD B 5254 T11 | Chassis no. from:167101,Chassis no. to:213772 | GDS59444 | Drive Shaft | | 40 | 28 | 57.7 | 52 | 994 | |
| | 2009.04-2011.12 | 6AT | F | R | Estate FWD B 5254 T11 | Chassis no. to:167100;Chassis no. from:213773 | GDS62091 | Drive Shaft | | 40 | 28 | 57.7 | 52 | 992 | |
| | 2009.04-2011.12 | 6AT | F | L/R | Estate FWD B 5254 T11 | | GCO59344 | Outer Joint | | 40 | 26 | 57.7 | 52 | 63.5 | M |
| | 2009.04-2011.12 | 6MT | F | L | Estate FWD B 5254 T11 | | GDS21070 | Drive Shaft | | 40 | 26 | 57.7 | 52 | 556 | |
| | 2009.04-2011.12 | 6MT | F | R | Estate FWD B 5254 T11 | | GDS62086 | Drive Shaft | | 40 | 26 | 57.7 | 52 | 1002 | |
| | 2009.04-2011.12 | 6MT | F | L/R | Estate FWD B 5254 T11 | | GCO59285 | Outer Joint | | 40 | 27 | 57.7 | 52 | 63.5 | M |
| | 2009.04-2011.12 | MT | F | R | Estate FWD B 5254 T11 | | GCI81076 | Inner Joint | | 26 | 28 | 40 | 522.5 | 123.7 | |
| | 2009.04-2012.12 | 6AT | F | L | Estate FWD B 5254 T10 | | GDS62109 | Drive Shaft | | 40 | 31 | 57.7 | 52 | 524 | |
| | 2009.04-2012.12 | 6MT | F | L | Estate FWD B 5254 T10 | | GDS21070 | Drive Shaft | | 40 | 26 | 57.7 | 52 | 556 | |
| | 2009.04-2012.12 | 6MT | F | R | Estate FWD B 5254 T10 | | GDS62086 | Drive Shaft | | 40 | 26 | 57.7 | 52 | 1002 | |
| | 2009.04-2012.12 | 6MT | F | L/R | Estate FWD B 5254 T10 | | GCO59285 | Outer Joint | | 40 | 27 | 57.7 | 52 | 63.5 | M |
| | 2009.04-2012.12 | AT | F | R | Estate FWD B 5254 T10 | | GDS59444 | Drive Shaft | | 40 | 28 | 57.7 | 52 | 994 | |
| | 2009.04-2012.12 | AT | F | R | Estate FWD B 5254 T10 | Chassis no. from:167001;Chassis no. to:167000 | GDS62091 | Drive Shaft | | 40 | 28 | 57.7 | 52 | 992 | |
| | 2009.04-2012.12 | AT | F | L/R | Estate FWD B 5254 T10 | Different retainers | GCO59344 | Outer Joint | | 40 | 26 | 57.7 | 52 | 63.5 | M |
| | 2009.04-2012.12 | AT | F | L/R | Estate FWD B 5254 T10 | Different retainers | GCO62045 | Outer Joint | | 40 | 26 | 57.7 | 52 | 62.5 | M |
| | 2009.04-2012.12 | AT | F | R | Estate FWD B 5254 T10 | Chassis no. from:167001 | GCI62043 | Inner Joint | | 28 | 26 | 33 | 521 | 100 | |
| | 2009.04-2012.12 | MT | F | R | Estate FWD B 5254 T10 | | GCI81076 | Inner Joint | | 26 | 28 | 40 | 522.5 | 123.7 | |
| 2.5 (221 kw) | 2003.03-2007.08 | AT | F | L | Estate 4WD B 5254 T4 | year to:2005 | GDS62022 | Drive Shaft | 48T | 36 | 26 | 56.5 | 48 | 527 | |
| | 2003.03-2007.08 | AT | F | L | Estate 4WD B 5254 T4 | year from:2006 | GDS62141 | Drive Shaft | 48T | 36 | 28 | 56.5 | 48 | 521 | |
| | 2003.03-2007.08 | AT | F | R | Estate 4WD B 5254 T4 | year to:2005 | GDS62140 | Drive Shaft | 48T | 36 | 26 | 56.5 | 48 | 977 | |
| | 2003.03-2007.08 | AT | F | L | Estate 4WD B 5254 T4 | year from:2006 | GCO62037 | Outer Joint | 48T | 36 | 27 | 56.5 | 48 | 66 | M |
| | 2003.03-2007.08 | AT | F | L/R | Estate 4WD B 5254 T4 | Model year to:2005 | GCO62009 | Outer Joint | 48T | 36 | 27 | 56.5 | 48 | 66 | M |
| | 2003.03-2007.08 | AT | F | L | Estate 4WD B 5254 T4 | year from:2006 | GCI62075 | Inner Joint | | 28 | 27 | 33 | 68.5 | 90 | |
| | 2003.03-2007.08 | AT | F | L | Estate 4WD B 5254 T4 | year to:2005 | GCI99109 | Inner Joint | | 26 | 26 | 31 | 68 | 87 | |
| | 2003.03-2007.08 | AT | F | R | Estate 4WD B 5254 T4 | year to:2005 | GCI62031 | Inner Joint | | 26 | 26 | 28 | 513 | 93.5 | |
| | 2003.03-2007.08 | MT | F | L | Estate 4WD B 5254 T4 | | GDS62057 | Drive Shaft | 48T | 36 | 26 | 56.5 | 48 | 546 | |
| | 2003.03-2007.08 | 6AT | R | L/R | Estate 4WD B 5254 T4 | year from:2007 | GDS81129 | Drive Shaft | | 36 | 26 | 56.5 | 49.5 | 756 | |
| | 2003.03-2007.08 | 6AT | R | L/R | Estate 4WD B 5254 T4 | year from:2007 | GCI81051 | Inner Joint | | 36 | 22 | 56.5 | 49.5 | 97 | |
| | 2003.03-2007.08 | 6AT | R | L/R | Estate 4WD B 5254 T4 | year from:2007 | GCI81062 | Inner Joint | | 26 | 22 | 35 | 69.5 | 94 | |
| | 2003.03-2007.08 | AT | R | L/R | Estate 4WD B 5254 T4 | Model year from:2005,Model year to:2006 | GDS81130 | Drive Shaft | | 36 | 26 | 56.5 | 50 | 764 | |
| | 2003.03-2007.08 | AT | R | L/R | Estate 4WD B 5254 T4 | year from:2005,year to:2006 | GCI44031 | Inner Joint | | 26 | 20 | 35 | 69.5 | 81 | |
| 3.0 (210 kw) | 2007.08-2010.12 | 6AT | F | L | Estate 4WD B 6304 T2 | | GDS62076 | Drive Shaft | | 40 | 31 | 57.7 | 52 | 529 | |
| | 2007.08-2010.12 | 6AT | R | L/R | Estate 4WD B 6304 T2 | Chassis no. to:249100;8 balls | GCO83248 | Outer Joint | 44NS | 36 | 29 | 56.5 | 49.5 | 64 | I |
| | 2007.08-2010.12 | 6AT/SAT | R | L/R | Estate 4WD B 6304 T2 | Chassis no. from:249101 | GDS62077 | Drive Shaft | 44NS | 36 | 23 | 56.5 | 49.5 | 762 | |
| | 2007.08-2010.12 | SAT/6AT | R | L/R | Estate 4WD B 6304 T2 | Chassis no. to:249100;8 balls | GDS83926 | Drive Shaft | 44NS | 36 | 26 | 56.5 | 49.5 | 751 | |
| | 2007.08-2010.12 | SAT/6AT | R | L/R | Estate 4WD B 6304 T2 | Chassis no. to:249100 | GCI18187 | Inner Joint | | 26 | 29 | 35 | 69.5 | 107.5 | |
| 3.0 (224 kw) | 2010.01-2015.12 | | F | L | Estate 4WD B 6304 T4 | | GDS62076 | Drive Shaft | | 40 | 31 | 57.7 | 52 | 529 | |
| | 2010.01-2015.12 | 6AT | R | L/R | Estate 4WD B 6304 T4 | Chassis no. from:249101 | GDS62077 | Drive Shaft | 44NS | 36 | 23 | 56.5 | 49.5 | 762 | |
| | 2010.01-2015.12 | 6AT | R | L/R | Estate 4WD B 6304 T4 | Chassis no. to:249100;8 balls | GDS83926 | Drive Shaft | 44NS | 36 | 26 | 56.5 | 49.5 | 751 | |
| | 2010.01-2015.12 | 6AT | R | L/R | Estate 4WD B 6304 T4 | Chassis no. to:249100;8 balls | GCO83248 | Outer Joint | 44NS | 36 | 29 | 56.5 | 49.5 | 64 | I |
| | 2010.01-2015.12 | 6AT | R | L/R | Estate 4WD B 6304 T4 | Chassis no. to:249100 | GCI18187 | Inner Joint | | 26 | 29 | 35 | 69.5 | 107.5 | |
| | 2010.01-2015.12 | 6AT | R | L/R | Estate 4WD B 6304 T4 | Chassis no. from:249101 | GCI62035 | Inner Joint | | 23 | 29 | 28 | 64 | 110 | |
| 3.0 (242 kw) | 2013.11-2016.04 | AT | F | L | Estate 4WD B 6304 T4 | | GDS62076 | Drive Shaft | | 40 | 31 | 57.7 | 52 | 529 | |
| | 2013.11-2016.04 | AT | R | L/R | Estate 4WD B 6304 T4 | Chassis no. from:249101 | GDS62077 | Drive Shaft | 44NS | 36 | 23 | 56.5 | 49.5 | 762 | |
| | 2013.11-2016.04 | AT | R | L/R | Estate 4WD B 6304 T4 | Chassis no. to:249100;8 balls | GDS83926 | Drive Shaft | 44NS | 36 | 26 | 56.5 | 49.5 | 751 | |
| | 2013.11-2016.04 | AT | R | L/R | Estate 4WD B 6304 T4 | Chassis no. to:249100;8 balls | GCO83248 | Outer Joint | 44NS | 36 | 29 | 56.5 | 49.5 | 64 | I |
| | 2013.11-2016.04 | AT | R | L/R | Estate 4WD B 6304 T4 | Chassis no. to:249100 | GCI18187 | Inner Joint | | 26 | 29 | 35 | 69.5 | 107.5 | |
| 3.2 (175 kw) | 2007.04-2010.12 | 6AT | F | L | Estate 4WD B 6324 S | | GDS62022 | Drive Shaft | 48T | 36 | 26 | 56.5 | 48 | 527 | |
| | 2007.04-2010.12 | AT | F | R | Estate 4WD B 6324 S | | GDS62092 | Drive Shaft | | 40 | 28 | 57.7 | 52 | 995 | |
| | 2007.04-2010.12 | AT | F | R | Estate 4WD B 6324 S | | GCI62044 | Inner Joint | | 28 | 26 | 30 | 526 | 105 | |
| | 2007.04-2010.12 | 6AT | R | L/R | Estate 4WD B 6324 S | 8 balls | GDS83926 | Drive Shaft | 44NS | 36 | 26 | 56.5 | 49.5 | 751 | |
| | 2007.04-2010.12 | 6AT | R | L/R | Estate 4WD B 6324 S | 8 balls | GCO83248 | Outer Joint | 44NS | 36 | 29 | 56.5 | 49.5 | 64 | I |
| | 2007.04-2010.12 | 6AT | R | L/R | Estate 4WD B 6324 S | | GCI18187 | Inner Joint | | 26 | 29 | 35 | 69.5 | 107.5 | |
| | 2007.08-2010.12 | 6AT | F | L | Estate FWD B 6324 S | | GDS62022 | Drive Shaft | 48T | 36 | 26 | 56.5 | 48 | 527 | |
| | 2007.08-2010.12 | 6AT | F | R | Estate FWD B 6324 S | | GCO62045 | Outer Joint | | 40 | 26 | 57.7 | 52 | 62.5 | M |
| 3.2 (179 kw) | 2010.04-2014.12 | 6AT | F | L | Estate FWD B 6324 S5 | | GDS62022 | Drive Shaft | 48T | 36 | 26 | 56.5 | 48 | 527 | |
| | 2010.04-2014.12 | 6AT | F | R | Estate FWD B 6324 S5 | | GCO62045 | Outer Joint | | 40 | 26 | 57.7 | 52 | 62.5 | M |
| | 2010.04-2015.12 | 6AT | F | L | Estate 4WD B 6324 S5 | | GDS62022 | Drive Shaft | 48T | 36 | 26 | 56.5 | 48 | 527 | |
| | 2010.04-2015.12 | AT | F | R | Estate 4WD B 6324 S5 | Date from:2011.01 | GDS62092 | Drive Shaft | | 40 | 28 | 57.7 | 52 | 995 | |
| | 2010.04-2015.12 | AT | F | R | Estate 4WD B 6324 S5 | Date from:2011.01 | GCI62044 | Inner Joint | | 28 | 26 | 30 | 526 | 105 | |
| | 2010.04-2015.12 | 6AT | R | L/R | Estate 4WD B 6324 S5 | | GDS62077 | Drive Shaft | 44NS | 36 | 23 | 56.5 | 49.5 | 762 | |

| | YEAR | TRANSM. | F/R | L/R | BODY STYLE & DRIVE TYPE & ENGINE | REMARKS | G-AP Ref. | PRODUCT | ABS | Technical Specifications A | B | C | H | L | P |
|---|---|---|---|---|---|---|---|---|---|---|---|---|---|---|---|
| **VOLVO** | | | | | | | | | | | | | | | |
| **V70 XC** | | | | | | | | | | | | | | | |
| 2.0 (166 kw) | 1997.10-1999.03 | | F | L | Estate 4WD B5204T3 | | GDS62001 | Drive Shaft | 48T | 26 | 26 | 56.5 | 98.5 | 574.5 | |
| | 1997.10-1999.03 | | F | L | Estate 4WD B5204T3 | | GCO62002 | Outer Joint | 48T | 26 | 28 | 56.5 | 97.5 | 66 | O |
| | 1997.10-1999.03 | 5MT | R | L/R | Estate 4WD B5204T3 | | GDS81128 | Drive Shaft | 48T | 26 | 26 | 60.5 | 81 | 751 | |
| | 1997.10-1999.03 | 5MT | R | L/R | Estate 4WD B5204T3 | | GCI81050 | Inner Joint | 48T | 26 | 25 | 60.5 | 81 | 96.8 | |
| | 1997.10-1999.03 | 5MT | R | L/R | Estate 4WD B5204T3 | | GCI81060 | Inner Joint | | 26 | 25 | 35 | 70 | 106.3 | |
| 2.4 (142 kw) | 1997.11-2002.09 | MT | F | L | Estate 4WD B5244T/B5254T | | GDS62009 | Drive Shaft | 48T | 36 | 26 | 56.5 | 48 | 523 | |
| | 1997.11-2002.09 | MT | F | L | Estate 4WD B5244T/B5254T | | GCO62010 | Outer Joint | 48T | 36 | 33 | 56.5 | 48 | 58 | M |
| | 1997.11-2002.09 | AT/MT | R | L/R | Estate 4WD B5244T/B5254T | | GDS81128 | Drive Shaft | 48T | 26 | 26 | 60.5 | 81 | 751 | |
| | 1997.11-2002.09 | AT/MT | R | L/R | Estate 4WD B5244T/B5254T | | GCI81050 | Inner Joint | 48T | 26 | 25 | 60.5 | 81 | 96.8 | |
| | 1997.11-2002.09 | AT/MT | R | L/R | Estate 4WD B5244T/B5254T | | GCI81060 | Inner Joint | | 26 | 25 | 35 | 70 | 106.3 | |
| **V90** | | | | | | | | | | | | | | | |
| 2.0 (110 kw) | 2016.03-2021.12 | 8AT | F | L | Estate 4WD D 4204 T4 | | GDS84536 | Drive Shaft | | 40 | 31 | 54 | 53 | 597 | |
| | 2016.03-2021.12 | 8AT | F | L/R | Estate 4WD D 4204 T4 | | GCO82859 | Outer Joint | | 40 | 26 | 54 | 53 | 63 | M |
| | 2016.03-2021.12 | 6AT | F | L | Estate FWD D 4204 T9;D 4204 T16 | | GDS83640 | Drive Shaft | | 40 | 26 | 57.7 | 52 | 576 | |
| | 2016.03-2021.12 | 8AT | F | L | Estate FWD D 4204 T9;D 4204 T16 | | GDS84536 | Drive Shaft | | 40 | 31 | 54 | 53 | 597 | |
| | 2016.03-2021.12 | 8AT | F | R | Estate FWD D 4204 T9;D 4204 T16 | | GDS84535 | Drive Shaft | | 40 | 28 | 54 | 53 | 972 | |
| | 2016.03-2021.12 | 8AT | F | L/R | Estate FWD D 4204 T9;D 4204 T16 | | GCO82859 | Outer Joint | | 40 | 26 | 54 | 53 | 63 | M |
| 2.0 (120 kw) | 2018.09-2021.12 | 8AT | F | L | Estate FWD D 4204 T7 | | GDS84536 | Drive Shaft | | 40 | 31 | 54 | 53 | 597 | |
| | 2018.09-2021.12 | 8AT | F | R | Estate FWD D 4204 T7 | | GDS84535 | Drive Shaft | | 40 | 28 | 54 | 53 | 972 | |
| | 2018.09-2021.12 | 8AT | F | L/R | Estate FWD D 4204 T7 | | GCO82859 | Outer Joint | | 40 | 26 | 54 | 53 | 63 | M |
| 2.0 (140 kw) | 2016.03-2021.12 | 8AT | F | L | Estate 4WD D 4204 T14 | | GDS84536 | Drive Shaft | | 40 | 31 | 54 | 53 | 597 | |
| | 2016.03-2021.12 | 8AT | F | L/R | Estate 4WD D 4204 T14 | | GCO82859 | Outer Joint | | 40 | 26 | 54 | 53 | 63 | M |
| | 2016.03-2021.12 | 8AT | F | L | Estate FWD D 4204 T14 | | GDS84536 | Drive Shaft | | 40 | 31 | 54 | 53 | 597 | |
| | 2016.03-2021.12 | 8AT | F | R | Estate FWD D 4204 T14 | | GDS84535 | Drive Shaft | | 40 | 28 | 54 | 53 | 972 | |
| | 2016.03-2021.12 | 8AT | F | L/R | Estate FWD D 4204 T14 | | GCO82859 | Outer Joint | | 40 | 26 | 54 | 53 | 63 | M |
| | 2017.10-2021.12 | 8AT | F | L | Estate FWD B 4204 T31 | | GDS84536 | Drive Shaft | | 40 | 31 | 54 | 53 | 597 | |
| | 2017.10-2021.12 | 8AT | F | R | Estate FWD B 4204 T31 | | GDS84535 | Drive Shaft | | 40 | 28 | 54 | 53 | 972 | |
| | 2017.10-2021.12 | 8AT | F | L/R | Estate FWD B 4204 T31 | | GCO82859 | Outer Joint | | 40 | 26 | 54 | 53 | 63 | M |
| 2.0 (145 kw) | 2020.03- | 8AT | F | L | Estate FWD B 420 T6 | | GDS84536 | Drive Shaft | | 40 | 31 | 54 | 53 | 597 | |
| | 2020.03- | 8AT | F | R | Estate FWD B 420 T6 | | GDS84535 | Drive Shaft | | 40 | 28 | 54 | 53 | 972 | |
| | 2020.03- | 8AT | F | L/R | Estate FWD B 420 T6 | | GCO82859 | Outer Joint | | 40 | 26 | 54 | 53 | 63 | M |
| | 2020.10- | 8AT | F | R | Estate FWD D 420 T8 | Chassis no. to:162987 | GDS84535 | Drive Shaft | | 40 | 28 | 54 | 53 | 972 | |
| | 2020.10- | 8AT | F | L/R | Estate FWD D 420 T8 | Chassis no. to:162987 | GCO82859 | Outer Joint | | 40 | 26 | 54 | 53 | 63 | M |
| 2.0 (147 kw) | 2016.10-2021.12 | 8AT | F | L | Estate 4WD D 4204 T14 | | GDS84536 | Drive Shaft | | 40 | 31 | 54 | 53 | 597 | |
| | 2016.10-2021.12 | 8AT | F | L/R | Estate 4WD D 4204 T14 | | GCO82859 | Outer Joint | | 40 | 26 | 54 | 53 | 63 | M |
| | 2016.10-2021.12 | 8AT | F | L | Estate FWD D 4204 T14 | | GDS84536 | Drive Shaft | | 40 | 31 | 54 | 53 | 597 | |
| | 2016.10-2021.12 | 8AT | F | R | Estate FWD D 4204 T14 | | GDS84535 | Drive Shaft | | 40 | 28 | 54 | 53 | 972 | |
| | 2016.10-2021.12 | 8AT | F | L/R | Estate FWD D 4204 T14 | | GCO82859 | Outer Joint | | 40 | 26 | 54 | 53 | 63 | M |
| 2.0 (155 kw) | 2019.06-2021.12 | 8AT | F | L | Estate FWD B 4204 T31 | | GDS84536 | Drive Shaft | | 40 | 31 | 54 | 53 | 597 | |
| | 2019.06-2021.12 | 8AT | F | R | Estate FWD B 4204 T31 | | GDS84535 | Drive Shaft | | 40 | 28 | 54 | 53 | 972 | |
| | 2019.06-2021.12 | 8AT | F | L/R | Estate FWD B 4204 T31 | | GCO82859 | Outer Joint | | 40 | 26 | 54 | 53 | 63 | M |
| 2.0 (173 kw) | 2016.03-2021.12 | 8AT | F | L | Estate 4WD D 4204 T23 | | GDS84536 | Drive Shaft | | 40 | 31 | 54 | 53 | 597 | |
| | 2016.03-2021.12 | 8AT | F | L/R | Estate 4WD D 4204 T23 | | GCO82859 | Outer Joint | | 40 | 26 | 54 | 53 | 63 | M |
| 2.0 (176 kw) | 2016.10-2021.12 | 8AT | F | L | Estate 4WD D 4204 T23 | | GDS84536 | Drive Shaft | | 40 | 31 | 54 | 53 | 597 | |
| | 2016.10-2021.12 | 8AT | F | L/R | Estate 4WD D 4204 T23 | | GCO82859 | Outer Joint | | 40 | 26 | 54 | 53 | 63 | M |
| 2.0 (184 kw) | 2017.10-2021.12 | 8AT | F | L | Estate FWD B 4204 T23;B 4204 T26 | | GDS84536 | Drive Shaft | | 40 | 31 | 54 | 53 | 597 | |
| | 2017.10-2021.12 | 8AT | F | R | Estate FWD B 4204 T23;B 4204 T26 | | GDS84535 | Drive Shaft | | 40 | 28 | 54 | 53 | 972 | |
| | 2017.10-2021.12 | 8AT | F | L/R | Estate FWD B 4204 T23;B 4204 T26 | | GCO82859 | Outer Joint | | 40 | 26 | 54 | 53 | 63 | M |
| | 2020.03- | 8AT | F | L | Estate FWD B 420 T2 | | GDS84536 | Drive Shaft | | 40 | 31 | 54 | 53 | 597 | |
| | 2020.03- | 8AT | F | R | Estate FWD B 420 T2 | | GDS84535 | Drive Shaft | | 40 | 28 | 54 | 53 | 972 | |
| | 2020.03- | 8AT | F | L/R | Estate FWD B 420 T2 | | GCO82859 | Outer Joint | | 40 | 26 | 54 | 53 | 63 | M |
| 2.0 (186 kw) | 2017.10-2020.03 | 8AT | F | L | Estate FWD B 4204 T26 | | GDS84536 | Drive Shaft | | 40 | 31 | 54 | 53 | 597 | |
| | 2017.10-2020.03 | 8AT | F | R | Estate FWD B 4204 T26 | | GDS84535 | Drive Shaft | | 40 | 28 | 54 | 53 | 972 | |
| | 2017.10-2020.03 | 8AT | F | L/R | Estate FWD B 4204 T26 | | GCO82859 | Outer Joint | | 40 | 26 | 54 | 53 | 63 | M |
| 2.0 (187 kw) | 2016.03-2018.12 | 8AT | F | L | Estate FWD B 4204 T23 | | GDS84536 | Drive Shaft | | 40 | 31 | 54 | 53 | 597 | |
| | 2016.03-2018.12 | 8AT | F | R | Estate FWD B 4204 T23 | | GDS84535 | Drive Shaft | | 40 | 28 | 54 | 53 | 972 | |
| | 2016.03-2018.12 | 8AT | F | L/R | Estate FWD B 4204 T23 | | GCO82859 | Outer Joint | | 40 | 26 | 54 | 53 | 63 | M |
| 2.0 (228 kw) | 2017.10-2021.12 | 8AT | F | L | Estate 4WD B 4204 T29 | | GDS84536 | Drive Shaft | | 40 | 31 | 54 | 53 | 597 | |
| | 2017.10-2021.12 | 8AT | F | L/R | Estate 4WD B 4204 T29 | | GCO82859 | Outer Joint | | 40 | 26 | 54 | 53 | 63 | M |
| 2.0 (233 kw) | 2018.05-2022.12 | 8AT | F | L | Estate 4WD B 4204 T34 | | GDS58139 | Drive Shaft | | 40 | 31 | 54 | 53 | 573 | |
| | 2018.05-2022.12 | 8AT | F | R | Estate 4WD B 4204 T34 | | GDS58140 | Drive Shaft | | 40 | 28 | 54 | 53 | 996 | |
| | 2018.05-2022.12 | 8AT | F | L/R | Estate 4WD B 4204 T34 | | GCO83257 | Outer Joint | | 40 | 26 | 54 | 53 | 63 | M |
| | 2018.05-2022.12 | 8AT | F | L | Estate 4WD B 4204 T34 | | GCI84021 | Inner Joint | | 31 | 24 | 36.2 | 67.5 | 82.5 | |
| | 2018.05-2022.12 | 8AT | F | R | Estate 4WD B 4204 T34 | | GCI84022 | Inner Joint | | 28 | 24 | 33 | 494 | 79 | |
| 2.0 (235 kw) | 2016.03-2018.12 | 8AT | F | L | Estate 4WD B 4204 T27 | | GDS84536 | Drive Shaft | | 40 | 31 | 54 | 53 | 597 | |

| | YEAR | TRANSM. | F/R | L/R | BODY STYLE & DRIVE TYPE & ENGINE | REMARKS | G-AP Ref. | PRODUCT | ABS | Technical Specifications A | B | C | H | L | P |
|---|---|---|---|---|---|---|---|---|---|---|---|---|---|---|---|
| **VOLVO** **V90** | | | | | | | | | | | | | | | |
| 2.0 (235 kw) | 2016.03-2018.12 | 8AT | F | L/R | Estate 4WD B 4204 T27 | | GCO82859 | Outer Joint | | 40 | 26 | 54 | 53 | 63 | M |
| 2.0 (240 kw) | 2017.10-2021.12 | 8AT | F | L | Estate 4WD B 4204 T29 | | GDS84536 | Drive Shaft | | 40 | 31 | 54 | 53 | 597 | |
| | 2017.10-2021.12 | 8AT | F | L/R | Estate 4WD B 4204 T29 | | GCO82859 | Outer Joint | | 40 | 26 | 54 | 53 | 63 | M |
| 2.0 (246 kw) | 2016.03-2018.12 | | F | L | Estate 4WD B 4204 T35 | | GDS58139 | Drive Shaft | | 40 | 31 | 54 | 53 | 573 | |
| | 2016.03-2018.12 | | F | R | Estate 4WD B 4204 T35 | | GDS58140 | Drive Shaft | | 40 | 28 | 54 | 53 | 996 | |
| | 2016.03-2018.12 | | F | L/R | Estate 4WD B 4204 T35 | | GCO83257 | Outer Joint | | 40 | 26 | 54 | 53 | 63 | M |
| | 2016.03-2018.12 | | F | L | Estate 4WD B 4204 T35 | | GCI84021 | Inner Joint | | 31 | 24 | 36.2 | 67.5 | 82.5 | |
| | 2016.03-2018.12 | | F | R | Estate 4WD B 4204 T35 | | GCI84022 | Inner Joint | | 28 | 24 | 33 | 494 | 79 | |
| 2.0 (250 kw) | 2020.06-2022.12 | 5MT | F | L | Estate 4WD B 4204 T46 | | GDS58139 | Drive Shaft | | 40 | 31 | 54 | 53 | 573 | |
| | 2020.06-2022.12 | 5MT | F | R | Estate 4WD B 4204 T46 | | GDS58140 | Drive Shaft | | 40 | 28 | 54 | 53 | 996 | |
| | 2020.06-2022.12 | 5MT | F | L/R | Estate 4WD B 4204 T46 | | GCO83257 | Outer Joint | | 40 | 26 | 54 | 53 | 63 | M |
| | 2020.06-2022.12 | 5MT | F | L | Estate 4WD B 4204 T46 | | GCI84021 | Inner Joint | | 31 | 24 | 36.2 | 67.5 | 82.5 | |
| | 2020.06-2022.12 | 5MT | F | R | Estate 4WD B 4204 T46 | | GCI84022 | Inner Joint | | 28 | 24 | 33 | 494 | 79 | |
| 2.0 (257 kw) | 2022.01- | 8AT | F | L | Estate 4WD B 4204 T52 | | GDS58139 | Drive Shaft | | 40 | 31 | 54 | 53 | 573 | |
| | 2022.01- | 8AT | F | R | Estate 4WD B 4204 T52 | | GDS58140 | Drive Shaft | | 40 | 28 | 54 | 53 | 996 | |
| | 2022.01- | 8AT | F | L/R | Estate 4WD B 4204 T52 | | GCO83257 | Outer Joint | | 40 | 26 | 54 | 53 | 63 | M |
| | 2022.01- | 8AT | F | L | Estate 4WD B 4204 T52 | | GCI84021 | Inner Joint | | 31 | 24 | 36.2 | 67.5 | 82.5 | |
| | 2022.01- | 8AT | F | R | Estate 4WD B 4204 T52 | | GCI84022 | Inner Joint | | 28 | 24 | 33 | 494 | 79 | |
| | 2022.01- | 8AT | R | L | Estate 4WD B 4204 T52 | | GDS58190 | Drive Shaft | | 40 | 25 | 54 | 53 | 615 | |
| | 2022.01- | 8AT | R | R | Estate 4WD B 4204 T52 | | GDS58259 | Drive Shaft | | 40 | 37 | 54 | 53 | 645 | |
| | 2022.01- | 8AT | R | L/R | Estate 4WD B 4204 T52 | | GCO83356 | Outer Joint | | 40 | 26 | 54 | 53 | 68.5 | M |
| | 2022.01- | 8AT | R | L | Estate 4WD B 4204 T52 | | GCI84029 | Inner Joint | | 25 | 26 | | 49.5 | 63 | |
| | 2022.01- | 8AT | R | R | Estate 4WD B 4204 T52 | | GCI84047 | Inner Joint | | 37 | 26 | | 91.5 | 63 | |
| 2.0 (287 kw) | 2018.04-2022.12 | 8AT | F | L | Estate 4WD B 4204 T34 | | GDS58139 | Drive Shaft | | 40 | 31 | 54 | 53 | 573 | |
| | 2018.04-2022.12 | 8AT | F | R | Estate 4WD B 4204 T34 | | GDS58140 | Drive Shaft | | 40 | 28 | 54 | 53 | 996 | |
| | 2018.04-2022.12 | 8AT | F | L/R | Estate 4WD B 4204 T34 | | GCO83257 | Outer Joint | | 40 | 26 | 54 | 53 | 63 | M |
| | 2018.04-2022.12 | 8AT | F | L | Estate 4WD B 4204 T34 | | GCI84021 | Inner Joint | | 31 | 24 | 36.2 | 67.5 | 82.5 | |
| | 2018.04-2022.12 | 8AT | F | R | Estate 4WD B 4204 T34 | | GCI84022 | Inner Joint | | 28 | 24 | 33 | 494 | 79 | |
| 2.0 (299 kw) | 2016.03-2018.12 | 8AT | F | L | Estate 4WD B 4204 T35 | | GDS58139 | Drive Shaft | | 40 | 31 | 54 | 53 | 573 | |
| | 2016.03-2018.12 | 8AT | F | R | Estate 4WD B 4204 T35 | | GDS58140 | Drive Shaft | | 40 | 28 | 54 | 53 | 996 | |
| | 2016.03-2018.12 | 8AT | F | L/R | Estate 4WD B 4204 T35 | | GCO83257 | Outer Joint | | 40 | 26 | 54 | 53 | 63 | M |
| | 2016.03-2018.12 | 8AT | F | L | Estate 4WD B 4204 T35 | | GCI84021 | Inner Joint | | 31 | 24 | 36.2 | 67.5 | 82.5 | |
| | 2016.03-2018.12 | 8AT | F | R | Estate 4WD B 4204 T35 | | GCI84022 | Inner Joint | | 28 | 24 | 33 | 494 | 79 | |
| 2.0 (317 kw) | 2023.01- | 8AT | F | L | Estate 4WD B 4204 T56;B 4204 T57 | | GDS58139 | Drive Shaft | | 40 | 31 | 54 | 53 | 573 | |
| | 2023.01- | 8AT | F | R | Estate 4WD B 4204 T56;B 4204 T57 | | GDS58140 | Drive Shaft | | 40 | 28 | 54 | 53 | 996 | |
| | 2023.01- | 8AT | F | L/R | Estate 4WD B 4204 T56;B 4204 T57 | | GCO83257 | Outer Joint | | 40 | 26 | 54 | 53 | 63 | M |
| | 2023.01- | 8AT | F | L | Estate 4WD B 4204 T56;B 4204 T57 | | GCI84021 | Inner Joint | | 31 | 24 | 36.2 | 67.5 | 82.5 | |
| | 2023.01- | 8AT | F | R | Estate 4WD B 4204 T56;B 4204 T57 | | GCI84022 | Inner Joint | | 28 | 24 | 33 | 494 | 79 | |
| | 2023.01- | 8AT | R | L | Estate 4WD B 4204 T56;B 4204 T57 | | GDS58190 | Drive Shaft | | 40 | 25 | 54 | 53 | 615 | |
| | 2023.01- | 8AT | R | R | Estate 4WD B 4204 T56;B 4204 T57 | | GDS58259 | Drive Shaft | | 40 | 37 | 54 | 53 | 645 | |
| | 2023.01- | 8AT | R | L/R | Estate 4WD B 4204 T56;B 4204 T57 | | GCO83356 | Outer Joint | | 40 | 26 | 54 | 53 | 68.5 | M |
| | 2023.01- | 8AT | R | L | Estate 4WD B 4204 T56;B 4204 T57 | | GCI84029 | Inner Joint | | 25 | 26 | | 49.5 | 63 | |
| | 2023.01- | 8AT | R | R | Estate 4WD B 4204 T56;B 4204 T57 | | GCI84047 | Inner Joint | | 37 | 26 | | 91.5 | 63 | |
| 2.0 (335 kw) | 2022.05- | 8AT | F | L | Estate 4WD B 4204 T56 | | GDS58139 | Drive Shaft | | 40 | 31 | 54 | 53 | 573 | |
| | 2022.05- | 8AT | F | R | Estate 4WD B 4204 T56 | | GDS58140 | Drive Shaft | | 40 | 28 | 54 | 53 | 996 | |
| | 2022.05- | 8AT | F | L/R | Estate 4WD B 4204 T56 | | GCO83257 | Outer Joint | | 40 | 26 | 54 | 53 | 63 | M |
| | 2022.05- | 8AT | F | L | Estate 4WD B 4204 T56 | | GCI84021 | Inner Joint | | 31 | 24 | 36.2 | 67.5 | 82.5 | |
| | 2022.05- | 8AT | F | R | Estate 4WD B 4204 T56 | | GCI84022 | Inner Joint | | 28 | 24 | 33 | 494 | 79 | |
| | 2022.05- | 8AT | R | L | Estate 4WD B 4204 T56 | | GDS58190 | Drive Shaft | | 40 | 25 | 54 | 53 | 615 | |
| | 2022.05- | 8AT | R | R | Estate 4WD B 4204 T56 | | GDS58259 | Drive Shaft | | 40 | 37 | 54 | 53 | 645 | |
| | 2022.05- | 8AT | R | L/R | Estate 4WD B 4204 T56 | | GCO83356 | Outer Joint | | 40 | 26 | 54 | 53 | 68.5 | M |
| | 2022.05- | 8AT | R | L | Estate 4WD B 4204 T56 | | GCI84029 | Inner Joint | | 25 | 26 | | 49.5 | 63 | |
| | 2022.05- | 8AT | R | R | Estate 4WD B 4204 T56 | | GCI84047 | Inner Joint | | 37 | 26 | | 91.5 | 63 | |
| 2.5 (125 kw) | 1996.11-1998.10 | 4AT/5MT | R | L/R | Estate RWD B6254FS/B6254GS | Type:DIFF.RATIO 3.54/3.73 | GDS81125 | Drive Shaft | | 26 | 26 | 61 | 81 | 743 | |
| | 1996.11-1998.10 | 4AT/5MT | R | L/R | Estate RWD B6254FS/B6254GS | Type:DIFF.RATIO 3.91/4.10 | GDS81126 | Drive Shaft | | 26 | 26 | 60.5 | 81 | 745 | |
| | 1996.11-1998.10 | 4AT/5MT | R | L/R | Estate RWD B6254FS/B6254GS | Type:DIFF.RATIO 3.54/3.73 | GCI81049 | Inner Joint | | 26 | 28 | 61 | 81 | 110.2 | |
| | 1996.11-1998.10 | 4AT/5MT | R | L/R | Estate RWD B6254FS/B6254GS | Type:DIFF.RATIO 3.91/4.10 | GCI81050 | Inner Joint | 48T | 26 | 25 | 60.5 | 81 | 96.8 | |
| | 1996.11-1998.10 | 4AT/5MT | R | L/R | Estate RWD B6254FS/B6254GS | Type:DIFF.RATIO 3.54/3.73 | GCI81059 | Inner Joint | | 26 | 28 | 35 | 69.5 | 119.7 | |
| | 1996.11-1998.10 | 4AT/5MT | R | L/R | Estate RWD B6254FS/B6254GS | Type:DIFF.RATIO 3.91/4.10 | GCI81060 | Inner Joint | | 26 | 25 | 35 | 70 | 106.3 | |
| 2.9 (132 kw) | 1996.11-1999.04 | 4AT/5MT | R | L/R | Estate RWD B6304FS2 | Type:DIFF.RATIO 3.54/3.73 | GDS81125 | Drive Shaft | | 26 | 26 | 61 | 81 | 743 | |
| | 1996.11-1999.04 | 4AT/5MT | R | L/R | Estate RWD B6304FS2 | Type:DIFF.RATIO 3.91/4.10 | GDS81126 | Drive Shaft | | 26 | 26 | 60.5 | 81 | 745 | |
| | 1996.11-1999.04 | 4AT/5MT | R | L/R | Estate RWD B6304FS2 | Type:DIFF.RATIO 3.54/3.73 | GCI81049 | Inner Joint | | 26 | 28 | 61 | 81 | 110.2 | |
| | 1996.11-1999.04 | 4AT/5MT | R | L/R | Estate RWD B6304FS2 | Type:DIFF.RATIO 3.91/4.10 | GCI81050 | Inner Joint | 48T | 26 | 25 | 60.5 | 81 | 96.8 | |
| | 1996.11-1999.04 | 4AT/5MT | R | L/R | Estate RWD B6304FS2 | Type:DIFF.RATIO 3.54/3.73 | GCI81059 | Inner Joint | | 26 | 28 | 35 | 69.5 | 119.7 | |
| | 1996.11-1999.04 | 4AT/5MT | R | L/R | Estate RWD B6304FS2 | Type:DIFF.RATIO 3.91/4.10 | GCI81060 | Inner Joint | | 26 | 25 | 35 | 70 | 106.3 | |

| | YEAR | TRANSM. | F/R | L/R | BODY STYLE & DRIVE TYPE & ENGINE | REMARKS | G-AP Ref. | PRODUCT | ABS | Technical Specifications A | B | C | H | L | P |
|---|---|---|---|---|---|---|---|---|---|---|---|---|---|---|---|
| **VOLVO** | | | | | | | | | | | | | | | |
| **V90** | | | | | | | | | | | | | | | |
| 2.9 (150 kw) | 1997.01-1998.12 | 4AT | R | L/R | Estate RWD B6304FS/B6304GS | Type:DIFF.RATIO 3.54/3.73 | GDS81125 | Drive Shaft | | 26 | 26 | 61 | 81 | 743 | |
| | 1997.01-1998.12 | 4AT | R | L/R | Estate RWD B6304FS/B6304GS | Type:DIFF.RATIO 3.91/4.10 | GDS81126 | Drive Shaft | | 26 | 26 | 60.5 | 81 | 745 | |
| | 1997.01-1998.12 | 4AT | R | L/R | Estate RWD B6304FS/B6304GS | Type:DIFF.RATIO 3.54/3.73 | GCI81049 | Inner Joint | | 26 | 28 | 61 | 81 | 110.2 | |
| | 1997.01-1998.12 | 4AT | R | L/R | Estate RWD B6304FS/B6304GS | Type:DIFF.RATIO 3.91/4.10 | GCI81050 | Inner Joint | 48T | 26 | 25 | 60.5 | 81 | 96.8 | |
| | 1997.01-1998.12 | 4AT | R | L/R | Estate RWD B6304FS/B6304GS | Type:DIFF.RATIO 3.54/3.73 | GCI81059 | Inner Joint | | 26 | 28 | 35 | 69.5 | 119.7 | |
| | 1997.01-1998.12 | 4AT | R | L/R | Estate RWD B6304FS/B6304GS | Type:DIFF.RATIO 3.91/4.10 | GCI81060 | Inner Joint | | 26 | 25 | 35 | 70 | 106.3 | |
| **V90 Cross Country** | | | | | | | | | | | | | | | |
| 2.0 (120 kw) | 2018.09- | 8AT | F | L | Estate 4WD D 4204 T7 | | GDS83208 | Drive Shaft | | 40 | 31 | 54.1 | 53 | 617 | |
| | 2018.09- | 8AT | F | R | Estate 4WD D 4204 T7 | | GDS83207 | Drive Shaft | | 40 | 28 | 54.1 | 53 | 995 | |
| | 2018.09- | 8AT | F | L/R | Estate 4WD D 4204 T7 | | GCO82347 | Outer Joint | | 40 | 28 | 54.1 | 53 | 62.5 | I |
| | 2018.09- | 8AT | F | L | Estate 4WD D 4204 T7 | | GCI62034 | Inner Joint | | 31 | 27 | 36.2 | 68 | 90 | |
| | 2018.09- | 8AT | F | R | Estate 4WD D 4204 T7 | | GCI82176 | Inner Joint | | 28 | 27 | 29.97 | 470 | 94 | |
| 2.0 (140 kw) | 2016.10- | 8AT | F | L | Estate 4WD D 4204 T14 | | GDS83208 | Drive Shaft | | 40 | 31 | 54.1 | 53 | 617 | |
| | 2016.10- | 8AT | F | R | Estate 4WD D 4204 T14 | | GDS83207 | Drive Shaft | | 40 | 28 | 54.1 | 53 | 995 | |
| | 2016.10- | 8AT | F | L/R | Estate 4WD D 4204 T14 | | GCO82347 | Outer Joint | | 40 | 28 | 54.1 | 53 | 62.5 | I |
| | 2016.10- | 8AT | F | L | Estate 4WD D 4204 T14 | | GCI62034 | Inner Joint | | 31 | 27 | 36.2 | 68 | 90 | |
| | 2016.10- | 8AT | F | R | Estate 4WD D 4204 T14 | | GCI82176 | Inner Joint | | 28 | 27 | 29.97 | 470 | 94 | |
| 2.0 (147 kw) | 2016.10- | 8AT | F | L | Estate 4WD D 4204 T14 | | GDS83208 | Drive Shaft | | 40 | 31 | 54.1 | 53 | 617 | |
| | 2016.10- | 8AT | F | R | Estate 4WD D 4204 T14 | | GDS83207 | Drive Shaft | | 40 | 28 | 54.1 | 53 | 995 | |
| | 2016.10- | 8AT | F | L/R | Estate 4WD D 4204 T14 | | GCO82347 | Outer Joint | | 40 | 28 | 54.1 | 53 | 62.5 | I |
| | 2016.10- | 8AT | F | L | Estate 4WD D 4204 T14 | | GCI62034 | Inner Joint | | 31 | 27 | 36.2 | 68 | 90 | |
| | 2016.10- | 8AT | F | R | Estate 4WD D 4204 T14 | | GCI82176 | Inner Joint | | 28 | 27 | 29.97 | 470 | 94 | |
| 2.0 (173 kw) | 2016.10- | 8AT | F | L | Estate 4WD D 4204 T23 | | GDS83208 | Drive Shaft | | 40 | 31 | 54.1 | 53 | 617 | |
| | 2016.10- | 8AT | F | R | Estate 4WD D 4204 T23 | | GDS83207 | Drive Shaft | | 40 | 28 | 54.1 | 53 | 995 | |
| | 2016.10- | 8AT | F | L/R | Estate 4WD D 4204 T23 | | GCO82347 | Outer Joint | | 40 | 28 | 54.1 | 53 | 62.5 | I |
| | 2016.10- | 8AT | F | L | Estate 4WD D 4204 T23 | | GCI62034 | Inner Joint | | 31 | 27 | 36.2 | 68 | 90 | |
| | 2016.10- | 8AT | F | R | Estate 4WD D 4204 T23 | | GCI82176 | Inner Joint | | 28 | 27 | 29.97 | 470 | 94 | |
| 2.0 (176 kw) | 2016.10- | 8AT | F | L | Estate 4WD D 4204 T23 | | GDS83208 | Drive Shaft | | 40 | 31 | 54.1 | 53 | 617 | |
| | 2016.10- | 8AT | F | R | Estate 4WD D 4204 T23 | | GDS83207 | Drive Shaft | | 40 | 28 | 54.1 | 53 | 995 | |
| | 2016.10- | 8AT | F | L/R | Estate 4WD D 4204 T23 | | GCO82347 | Outer Joint | | 40 | 28 | 54.1 | 53 | 62.5 | I |
| | 2016.10- | 8AT | F | L | Estate 4WD D 4204 T23 | | GCI62034 | Inner Joint | | 31 | 27 | 36.2 | 68 | 90 | |
| | 2016.10- | 8AT | F | R | Estate 4WD D 4204 T23 | | GCI82176 | Inner Joint | | 28 | 27 | 29.97 | 470 | 94 | |
| 2.0 (183 kw) | 2016.03-2021.12 | 8AT | F | L | Estate 4WD B 4204 T23 | | GDS83208 | Drive Shaft | | 40 | 31 | 54.1 | 53 | 617 | |
| | 2016.03-2021.12 | 8AT | F | R | Estate 4WD B 4204 T23 | | GDS83207 | Drive Shaft | | 40 | 28 | 54.1 | 53 | 995 | |
| | 2016.03-2021.12 | 8AT | F | L/R | Estate 4WD B 4204 T23 | | GCO82347 | Outer Joint | | 40 | 28 | 54.1 | 53 | 62.5 | I |
| | 2016.03-2021.12 | 8AT | F | L | Estate 4WD B 4204 T23 | | GCI62034 | Inner Joint | | 31 | 27 | 36.2 | 68 | 90 | |
| | 2016.03-2021.12 | 8AT | F | R | Estate 4WD B 4204 T23 | | GCI82176 | Inner Joint | | 28 | 27 | 29.97 | 470 | 94 | |
| 2.0 (184 kw) | 2017.10- | 8AT | F | L | Estate 4WD B 4204 T26 | | GDS83208 | Drive Shaft | | 40 | 31 | 54.1 | 53 | 617 | |
| | 2017.10- | 8AT | F | R | Estate 4WD B 4204 T26 | | GDS83207 | Drive Shaft | | 40 | 28 | 54.1 | 53 | 995 | |
| | 2017.10- | 8AT | F | L/R | Estate 4WD B 4204 T26 | | GCO82347 | Outer Joint | | 40 | 28 | 54.1 | 53 | 62.5 | I |
| | 2017.10- | 8AT | F | L | Estate 4WD B 4204 T26 | | GCI62034 | Inner Joint | | 31 | 27 | 36.2 | 68 | 90 | |
| | 2017.10- | 8AT | F | R | Estate 4WD B 4204 T26 | | GCI82176 | Inner Joint | | 28 | 27 | 29.97 | 470 | 94 | |
| 2.0 (186 kw) | 2017.10- | 8AT | F | L | Estate 4WD B 4204 T26 | | GDS83208 | Drive Shaft | | 40 | 31 | 54.1 | 53 | 617 | |
| | 2017.10- | 8AT | F | R | Estate 4WD B 4204 T26 | | GDS83207 | Drive Shaft | | 40 | 28 | 54.1 | 53 | 995 | |
| | 2017.10- | 8AT | F | L/R | Estate 4WD B 4204 T26 | | GCO82347 | Outer Joint | | 40 | 28 | 54.1 | 53 | 62.5 | I |
| | 2017.10- | 8AT | F | L | Estate 4WD B 4204 T26 | | GCI62034 | Inner Joint | | 31 | 27 | 36.2 | 68 | 90 | |
| | 2017.10- | 8AT | F | R | Estate 4WD B 4204 T26 | | GCI82176 | Inner Joint | | 28 | 27 | 29.97 | 470 | 94 | |
| 2.0 (187 kw) | 2016.10-2018.12 | 8AT | F | L | Estate 4WD B 4204 T23 | | GDS83208 | Drive Shaft | | 40 | 31 | 54.1 | 53 | 617 | |
| | 2016.10-2018.12 | 8AT | F | R | Estate 4WD B 4204 T23 | | GDS83207 | Drive Shaft | | 40 | 28 | 54.1 | 53 | 995 | |
| | 2016.10-2018.12 | 8AT | F | L/R | Estate 4WD B 4204 T23 | | GCO82347 | Outer Joint | | 40 | 28 | 54.1 | 53 | 62.5 | I |
| | 2016.10-2018.12 | 8AT | F | L | Estate 4WD B 4204 T23 | | GCI62034 | Inner Joint | | 31 | 27 | 36.2 | 68 | 90 | |
| | 2016.10-2018.12 | 8AT | F | R | Estate 4WD B 4204 T23 | | GCI82176 | Inner Joint | | 28 | 27 | 29.97 | 470 | 94 | |
| 2.0 (192 kw) | 2016.10-2018.12 | 8AT | F | L | Estate 4WD B 4204 T23 | | GDS83208 | Drive Shaft | | 40 | 31 | 54.1 | 53 | 617 | |
| | 2016.10-2018.12 | 8AT | F | R | Estate 4WD B 4204 T23 | | GDS83207 | Drive Shaft | | 40 | 28 | 54.1 | 53 | 995 | |
| | 2016.10-2018.12 | 8AT | F | L/R | Estate 4WD B 4204 T23 | | GCO82347 | Outer Joint | | 40 | 28 | 54.1 | 53 | 62.5 | I |
| | 2016.10-2018.12 | 8AT | F | L | Estate 4WD B 4204 T23 | | GCI62034 | Inner Joint | | 31 | 27 | 36.2 | 68 | 90 | |
| | 2016.10-2018.12 | 8AT | F | R | Estate 4WD B 4204 T23 | | GCI82176 | Inner Joint | | 28 | 27 | 29.97 | 470 | 94 | |
| 2.0 (228 kw) | 2017.10- | 8AT | F | L | Estate 4WD B 4204 T29 | | GDS83208 | Drive Shaft | | 40 | 31 | 54.1 | 53 | 617 | |
| | 2017.10- | 8AT | F | R | Estate 4WD B 4204 T29 | | GDS83207 | Drive Shaft | | 40 | 28 | 54.1 | 53 | 995 | |
| | 2017.10- | 8AT | F | L/R | Estate 4WD B 4204 T29 | | GCO82347 | Outer Joint | | 40 | 28 | 54.1 | 53 | 62.5 | I |
| | 2017.10- | 8AT | F | L | Estate 4WD B 4204 T29 | | GCI62034 | Inner Joint | | 31 | 27 | 36.2 | 68 | 90 | |
| | 2017.10- | 8AT | F | R | Estate 4WD B 4204 T29 | | GCI82176 | Inner Joint | | 28 | 27 | 29.97 | 470 | 94 | |
| 2.0 (235 kw) | 2016.10- | 8AT | F | L | Estate 4WD B 4204 T27 | | GDS83208 | Drive Shaft | | 40 | 31 | 54.1 | 53 | 617 | |
| | 2016.10- | 8AT | F | R | Estate 4WD B 4204 T27 | | GDS83207 | Drive Shaft | | 40 | 28 | 54.1 | 53 | 995 | |
| | 2016.10- | 8AT | F | L/R | Estate 4WD B 4204 T27 | | GCO82347 | Outer Joint | | 40 | 28 | 54.1 | 53 | 62.5 | I |

| | YEAR | TRANSM. | F/R | L/R | BODY STYLE & DRIVE TYPE & ENGINE | REMARKS | G-AP Ref. | PRODUCT | ABS | Technical Specifications A | B | C | H | L | P |
|---|---|---|---|---|---|---|---|---|---|---|---|---|---|---|---|
| **VOLVO** | | | | | | | | | | | | | | | |
| **V90 Cross Country** | | | | | | | | | | | | | | | |
| 2.0 (235 kw) | 2016.10- | 8AT | F | L | Estate 4WD B 4204 T27 | | GCI62034 | Inner Joint | | 31 | 27 | 36.2 | 68 | 90 | |
| | 2016.10- | 8AT | F | R | Estate 4WD B 4204 T27 | | GCI82176 | Inner Joint | | 28 | 27 | 29.97 | 470 | 94 | |
| 2.0 (240 kw) | 2017.10- | 8AT | F | L | Estate 4WD B 4204 T29 | | GDS83208 | Drive Shaft | | 40 | 31 | 54.1 | 53 | 617 | |
| | 2017.10- | 8AT | F | R | Estate 4WD B 4204 T29 | | GDS83207 | Drive Shaft | | 40 | 28 | 54.1 | 53 | 995 | |
| | 2017.10- | 8AT | F | L/R | Estate 4WD B 4204 T29 | | GCO82347 | Outer Joint | | 40 | 28 | 54.1 | 53 | 62.5 | I |
| | 2017.10- | 8AT | F | L | Estate 4WD B 4204 T29 | | GCI62034 | Inner Joint | | 31 | 27 | 36.2 | 68 | 90 | |
| | 2017.10- | 8AT | F | R | Estate 4WD B 4204 T29 | | GCI82176 | Inner Joint | | 28 | 27 | 29.97 | 470 | 94 | |
| 2.0 (246 kw) | 2016.10-2017.12 | 8AT | F | L | Estate 4WD B 4204 T27 | | GDS83208 | Drive Shaft | | 40 | 31 | 54.1 | 53 | 617 | |
| | 2016.10-2017.12 | 8AT | F | R | Estate 4WD B 4204 T27 | | GDS83207 | Drive Shaft | | 40 | 28 | 54.1 | 53 | 995 | |
| | 2016.10-2017.12 | 8AT | F | L/R | Estate 4WD B 4204 T27 | | GCO82347 | Outer Joint | | 40 | 28 | 54.1 | 53 | 62.5 | I |
| | 2016.10-2017.12 | 8AT | F | L | Estate 4WD B 4204 T27 | | GCI62034 | Inner Joint | | 31 | 27 | 36.2 | 68 | 90 | |
| | 2016.10-2017.12 | 8AT | F | R | Estate 4WD B 4204 T27 | | GCI82176 | Inner Joint | | 28 | 27 | 29.97 | 470 | 94 | |
| **XC40** | | | | | | | | | | | | | | | |
| 1.5 (95 kw) | 2019.06- | 6MT | F | L | SUV FWD B 3154 T9 | Chassis no. to:086966;Equipment code:FC19;Chassis no. to:086961;Equipment code:FC22/FC25 | GCI83489 | Inner Joint | | 28 | 24 | 40 | 65.5 | 110 | |
| | 2019.06- | 8AT | F | L/R | SUV FWD B 3154 T9 | | GCO83463 | Outer Joint | | 36 | 26 | 54 | 43 | 63.5 | M |
| | 2019.06- | 8AT | F | L | SUV FWD B 3154 T9 | | GCI83382 | Inner Joint | | 28 | 26 | 33 | 71.5 | 93 | |
| 1.5 (110 kw) | 2020.12-2022.12 | 8AT | F | L/R | SUV FWD B3154T4 | | GCO83463 | Outer Joint | | 36 | 26 | 54 | 43 | 63.5 | M |
| | 2020.12-2022.12 | 8AT | F | L | SUV FWD B3154T4 | | GCI83382 | Inner Joint | | 28 | 26 | 33 | 71.5 | 93 | |
| 1.5 (115 kw) | 2018.03-2019.03 | 6MT | F | L | SUV FWD B 3154 T | Chassis no. to:086966;Equipment code:FC19;Chassis no. to:086961;Equipment code:FC22/FC25 | GCI83489 | Inner Joint | | 28 | 24 | 40 | 65.5 | 110 | |
| 1.5 (120 kw) | 2019.03-2022.12 | 6MT | F | L | SUV FWD B 3154 T2;B 3154 T7 | Chassis no. to:086966;Equipment code:FC19;Chassis no. to:086961;Equipment code:FC22/FC25 | GCI83489 | Inner Joint | | 28 | 24 | 40 | 65.5 | 110 | |
| | 2019.03-2022.12 | 8AT | F | L/R | SUV FWD B 3154 T2;B 3154 T7 | | GCO83463 | Outer Joint | | 36 | 26 | 54 | 43 | 63.5 | M |
| | 2019.03-2022.12 | 8AT | F | L | SUV FWD B 3154 T2;B 3154 T7 | | GCI83382 | Inner Joint | | 28 | 26 | 33 | 71.5 | 93 | |
| 2.0 (110 kw) | 2018.09-2021.09 | 8AT | F | L | SUV 4WD D 4204 T16 | Equipment code:FC19/FC22/FC25 | GDS56875 | Drive Shaft | | 36 | 31 | 54 | 43 | 581 | |
| | 2018.09-2021.09 | 8AT | F | R | SUV 4WD D 4204 T16 | Equipment code:FC19/FC22/FC25 | GDS56874 | Drive Shaft | | 36 | 28 | 54 | 43 | 960 | |
| | 2018.09-2021.09 | 8AT | F | L/R | SUV 4WD D 4204 T16 | Equipment code:FC19/FC22/FC25 | GCO83463 | Outer Joint | | 36 | 26 | 54 | 43 | 63.5 | M |
| | 2018.09-2021.09 | 8AT | F | L | SUV 4WD D 4204 T16 | Equipment code:FC19/FC22/FC25 | GCI62063 | Inner Joint | | 31 | 26 | 36.2 | 68 | 93 | |
| | 2018.09-2021.09 | 8AT | F | R | SUV 4WD D 4204 T16 | Equipment code:FC19/FC22/FC25 | GCI83536 | Inner Joint | | 28 | 26 | 30 | 470 | 94.5 | |
| | 2018.09-2021.09 | 8AT | F | L | SUV FWD D 4204 T16 | Equipment code:FC19/FC22/FC25 | GDS56875 | Drive Shaft | | 36 | 31 | 54 | 43 | 581 | |
| | 2018.09-2021.09 | 8AT | F | L/R | SUV FWD D 4204 T16 | Equipment code:FC19/FC22/FC25 | GCO83463 | Outer Joint | | 36 | 26 | 54 | 43 | 63.5 | M |
| | 2018.09-2021.09 | 8AT | F | L | SUV FWD D 4204 T16 | Equipment code:FC19/FC22/FC25 | GCI62063 | Inner Joint | | 31 | 26 | 36.2 | 68 | 93 | |
| 2.0 (118 kw) | 2019.12-2021.12 | 8AT | F | L | SUV 4WD D 4204 T16 | | GDS56875 | Drive Shaft | | 36 | 31 | 54 | 43 | 581 | |
| | 2019.12-2021.12 | 8AT | F | R | SUV 4WD D 4204 T16 | Equipment code:FC19/FC22/FC25 | GDS56874 | Drive Shaft | | 36 | 28 | 54 | 43 | 960 | |
| | 2019.12-2021.12 | 8AT | F | L/R | SUV 4WD D 4204 T16 | Equipment code:FC19/FC22/FC25 | GCO83463 | Outer Joint | | 36 | 26 | 54 | 43 | 63.5 | M |
| | 2019.12-2021.12 | 8AT | F | R | SUV 4WD D 4204 T16 | Equipment code:FC19/FC22/FC25 | GCI83536 | Inner Joint | | 28 | 26 | 30 | 470 | 94.5 | |
| | 2019.12-2021.12 | 8AT | F | L | SUV FWD D 4204 T16 | Vol/Pol code:FC19/FC22/FC25 | GDS56875 | Drive Shaft | | 36 | 31 | 54 | 43 | 581 | |
| | 2019.12-2021.12 | 8AT | F | L/R | SUV FWD D 4204 T16 | Equipment code:FC19/FC22/FC25 | GCO83463 | Outer Joint | | 36 | 26 | 54 | 43 | 63.5 | M |
| | 2019.12-2021.12 | 8AT | F | L | SUV FWD D 4204 T16 | Equipment code:FC19/FC22/FC25 | GCI62063 | Inner Joint | | 31 | 26 | 36.2 | 68 | 93 | |
| 2.0 (140 kw) | 2017.10-2021.09 | 8AT | F | L | SUV 4WD D 4204 T12 | Equipment code:FC19/FC22/FC25 | GDS56875 | Drive Shaft | | 36 | 31 | 54 | 43 | 581 | |
| | 2017.10-2021.09 | 8AT | F | R | SUV 4WD D 4204 T12 | Equipment code:FC19/FC22/FC25 | GDS56874 | Drive Shaft | | 36 | 28 | 54 | 43 | 960 | |
| | 2017.10-2021.09 | 8AT | F | L/R | SUV 4WD D 4204 T12 | Equipment code:FC19/FC22/FC25 | GCO83463 | Outer Joint | | 36 | 26 | 54 | 43 | 63.5 | M |
| | 2017.10-2021.09 | 8AT | F | L | SUV 4WD D 4204 T12 | Equipment code:FC19/FC22/FC25 | GCI62063 | Inner Joint | | 31 | 26 | 36.2 | 68 | 93 | |
| | 2017.10-2021.09 | 8AT | F | R | SUV 4WD D 4204 T12 | Equipment code:FC19/FC22/FC25 | GCI83536 | Inner Joint | | 28 | 26 | 30 | 470 | 94.5 | |
| | 2018.09- | 8AT | F | L | SUV 4WD B 4204 T31;B 4204 T47 | Equipment code:FC19/FC22/FC25 | GDS56875 | Drive Shaft | | 36 | 31 | 54 | 43 | 581 | |
| | 2018.09- | 8AT | F | R | SUV 4WD B 4204 T31;B 4204 T47 | Equipment code:FC19/FC22/FC25 | GDS56874 | Drive Shaft | | 36 | 28 | 54 | 43 | 960 | |
| | 2018.09- | 8AT | F | L/R | SUV 4WD B 4204 T31;B 4204 T47 | Equipment code:FC19/FC22/FC25 | GCO83463 | Outer Joint | | 36 | 26 | 54 | 43 | 63.5 | M |
| | 2018.09- | 8AT | F | L | SUV 4WD B 4204 T31;B 4204 T47 | Equipment code:FC19/FC22/FC25 | GCI62063 | Inner Joint | | 31 | 26 | 36.2 | 68 | 93 | |
| | 2018.09- | 8AT | F | R | SUV 4WD B 4204 T31;B 4204 T47 | Equipment code:FC19/FC22/FC25 | GCI83536 | Inner Joint | | 28 | 26 | 30 | 470 | 94.5 | |
| | 2018.09-2021.12 | 8AT | F | L | SUV FWD B 4204 T31;B 4204 T47 | Equipment code:FC19/FC22/FC25 | GDS56875 | Drive Shaft | | 36 | 31 | 54 | 43 | 581 | |
| | 2018.09-2021.12 | 8AT | F | L/R | SUV FWD B 4204 T31;B 4204 T47 | Equipment code:FC19/FC22/FC25 | GCO83463 | Outer Joint | | 36 | 26 | 54 | 43 | 63.5 | M |
| | 2018.09-2021.12 | 8AT | F | L | SUV FWD B 4204 T31;B 4204 T47 | Equipment code:FC19/FC22/FC25 | GCI62063 | Inner Joint | | 31 | 26 | 36.2 | 68 | 93 | |
| 2.0 (145 kw) | 2019.09- | 7AT/8AT | F | L | SUV 4WD B 420 T6;B 420 T5 | Equipment code:FC19/FC22/FC25 | GDS56875 | Drive Shaft | | 36 | 31 | 54 | 43 | 581 | |
| | 2019.09- | 7AT/8AT | F | L/R | SUV 4WD B 420 T6;B 420 T5 | Equipment code:FC19/FC22/FC25 | GCO83463 | Outer Joint | | 36 | 26 | 54 | 43 | 63.5 | M |
| | 2019.09- | 7AT/8AT | F | L | SUV 4WD B 420 T6;B 420 T5 | Equipment code:FC19/FC22/FC25 | GCI62063 | Inner Joint | | 31 | 26 | 36.2 | 68 | 93 | |
| | 2019.09- | 8AT | F | R | SUV 4WD B 420 T6;B 420 T5 | Equipment code:FC19/FC22/FC25 | GDS56874 | Drive Shaft | | 36 | 28 | 54 | 43 | 960 | |
| | 2019.09- | 8AT | F | R | SUV 4WD B 420 T6;B 420 T5 | Equipment code:FC19/FC22/FC25 | GCI83536 | Inner Joint | | 28 | 26 | 30 | 470 | 94.5 | |
| | 2019.09- | 8AT | F | L | SUV FWD B 420 T6;B 420 T5 | Equipment code:FC19/FC22/FC25 | GDS56875 | Drive Shaft | | 36 | 31 | 54 | 43 | 581 | |
| | 2019.09- | 8AT | F | L/R | SUV FWD B 420 T6;B 420 T5 | Equipment code:FC19/FC22/FC25 | GCO83463 | Outer Joint | | 36 | 26 | 54 | 43 | 63.5 | M |
| | 2019.09- | 8AT | F | L | SUV FWD B 420 T6;B 420 T5 | Equipment code:FC19/FC22/FC25 | GCI62063 | Inner Joint | | 31 | 26 | 36.2 | 68 | 93 | |
| 2.0 (147 kw) | 2019.01-2021.09 | 8AT | F | L | SUV 4WD D 4204 T12 | Equipment code:FC19/FC22/FC25 | GDS56875 | Drive Shaft | | 36 | 31 | 54 | 43 | 581 | |
| | 2019.01-2021.09 | 8AT | F | R | SUV 4WD D 4204 T12 | Equipment code:FC19/FC22/FC25 | GDS56874 | Drive Shaft | | 36 | 28 | 54 | 43 | 960 | |
| | 2019.01-2021.09 | 8AT | F | L/R | SUV 4WD D 4204 T12 | Equipment code:FC19/FC22/FC25 | GCO83463 | Outer Joint | | 36 | 26 | 54 | 43 | 63.5 | M |
| | 2019.01-2021.09 | 8AT | F | L | SUV 4WD D 4204 T12 | Equipment code:FC19/FC22/FC25 | GCI62063 | Inner Joint | | 31 | 26 | 36.2 | 68 | 93 | |
| | 2019.01-2021.09 | 8AT | F | R | SUV 4WD D 4204 T12 | Equipment code:FC19/FC22/FC25 | GCI83536 | Inner Joint | | 28 | 26 | 30 | 470 | 94.5 | |
| 2.0 (182 kw) | 2017.10-2021.09 | 8AT | F | L | SUV 4WD B 4204 T14 | Equipment code:FC19/FC22/FC25 | GDS56875 | Drive Shaft | | 36 | 31 | 54 | 43 | 581 | |
| | 2017.10-2021.09 | 8AT | F | R | SUV 4WD B 4204 T14 | Equipment code:FC19/FC22/FC25 | GDS56874 | Drive Shaft | | 36 | 28 | 54 | 43 | 960 | |

| | YEAR | TRANSM. | F/R | L/R | BODY STYLE & DRIVE TYPE & ENGINE | REMARKS | G-AP Ref. | PRODUCT | ABS | Technical Specifications A | B | C | H | L | P |
|---|---|---|---|---|---|---|---|---|---|---|---|---|---|---|---|
| **VOLVO** | | | | | | | | | | | | | | | |
| **XC40** | | | | | | | | | | | | | | | |
| 2.0 (182 kw) | 2017.10-2021.09 | 8AT | F | L/R | SUV 4WD B 4204 T14 | Equipment code:FC19/FC22/FC25 | GCO83463 | Outer Joint | | 36 | 26 | 54 | 43 | 63.5 | M |
| | 2017.10-2021.09 | 8AT | F | L | SUV 4WD B 4204 T14 | Equipment code:FC19/FC22/FC25 | GCI62063 | Inner Joint | | 31 | 26 | 36.2 | 68 | 93 | |
| | 2017.10-2021.09 | 8AT | F | R | SUV 4WD B 4204 T14 | Equipment code:FC19/FC22/FC25 | GCI83536 | Inner Joint | | 28 | 26 | 30 | 470 | 94.5 | |
| 2.0 (183 kw) | 2017.10-2019.09 | 8AT | F | L | SUV 4WD B 4204 T20 | Equipment code:FC19/FC22/FC25 | GDS56875 | Drive Shaft | | 36 | 31 | 54 | 43 | 581 | |
| | 2017.10-2019.09 | 8AT | F | R | SUV 4WD B 4204 T20 | Equipment code:FC19/FC22/FC25 | GDS56874 | Drive Shaft | | 36 | 28 | 54 | 43 | 960 | |
| | 2017.10-2019.09 | 8AT | F | L/R | SUV 4WD B 4204 T20 | Equipment code:FC19/FC22/FC25 | GCO83463 | Outer Joint | | 36 | 26 | 54 | 43 | 63.5 | M |
| | 2017.10-2019.09 | 8AT | F | L | SUV 4WD B 4204 T20 | Equipment code:FC19/FC22/FC25 | GCI62063 | Inner Joint | | 31 | 26 | 36.2 | 68 | 93 | |
| | 2017.10-2019.09 | 8AT | F | R | SUV 4WD B 4204 T20 | Equipment code:FC19/FC22/FC25 | GCI83536 | Inner Joint | | 28 | 26 | 30 | 470 | 94.5 | |
| | 2017.10-2022.12 | 8AT | F | L | SUV 4WD B 4204 T36 | Equipment code:FC19/FC22/FC25 | GDS56875 | Drive Shaft | | 36 | 31 | 54 | 43 | 581 | |
| | 2017.10-2022.12 | 8AT | F | R | SUV 4WD B 4204 T36 | Equipment code:FC19/FC22/FC25 | GDS56874 | Drive Shaft | | 36 | 28 | 54 | 43 | 960 | |
| | 2017.10-2022.12 | 8AT | F | L/R | SUV 4WD B 4204 T36 | Equipment code:FC19/FC22/FC25 | GCO83463 | Outer Joint | | 36 | 26 | 54 | 43 | 63.5 | M |
| | 2017.10-2022.12 | 8AT | F | L | SUV 4WD B 4204 T36 | Equipment code:FC19/FC22/FC25 | GCI62063 | Inner Joint | | 31 | 26 | 36.2 | 68 | 93 | |
| | 2017.10-2022.12 | 8AT | F | R | SUV 4WD B 4204 T36 | Equipment code:FC19/FC22/FC25 | GCI83536 | Inner Joint | | 28 | 26 | 30 | 470 | 94.5 | |
| | 2022.03-2023.12 | 8AT | F | L | SUV 4WD B 420 T10 | Equipment code:FC19/FC22/FC25 | GDS56875 | Drive Shaft | | 36 | 31 | 54 | 43 | 581 | |
| | 2022.03-2023.12 | 8AT | F | R | SUV 4WD B 420 T10 | Equipment code:FC19/FC22/FC25 | GDS56874 | Drive Shaft | | 36 | 28 | 54 | 43 | 960 | |
| | 2022.03-2023.12 | 8AT | F | L/R | SUV 4WD B 420 T10 | Equipment code:FC19/FC22/FC25 | GCO83463 | Outer Joint | | 36 | 26 | 54 | 43 | 63.5 | M |
| | 2022.03-2023.12 | 8AT | F | L | SUV 4WD B 420 T10 | Equipment code:FC19/FC22/FC25 | GCI62063 | Inner Joint | | 31 | 26 | 36.2 | 68 | 93 | |
| | 2022.03-2023.12 | 8AT | F | R | SUV 4WD B 420 T10 | Equipment code:FC19/FC22/FC25 | GCI83536 | Inner Joint | | 28 | 26 | 30 | 470 | 94.5 | |
| 2.0 (184 kw) | 2019.09-2023.12 | 8AT | F | L | SUV 4WD B 420 T2 | Equipment code:FC19/FC22/FC25 | GDS56875 | Drive Shaft | | 36 | 31 | 54 | 43 | 581 | |
| | 2019.09-2023.12 | 8AT | F | R | SUV 4WD B 420 T2 | Equipment code:FC19/FC22/FC25 | GDS56874 | Drive Shaft | | 36 | 28 | 54 | 43 | 960 | |
| | 2019.09-2023.12 | 8AT | F | L/R | SUV 4WD B 420 T2 | Equipment code:FC19/FC22/FC25 | GCO83463 | Outer Joint | | 36 | 26 | 54 | 43 | 63.5 | M |
| | 2019.09-2023.12 | 8AT | F | L | SUV 4WD B 420 T2 | Equipment code:FC19/FC22/FC25 | GCI62063 | Inner Joint | | 31 | 26 | 36.2 | 68 | 93 | |
| | 2019.09-2023.12 | 8AT | F | R | SUV 4WD B 420 T2 | Equipment code:FC19/FC22/FC25 | GCI83536 | Inner Joint | | 28 | 26 | 30 | 470 | 94.5 | |
| **XC60** | | | | | | | | | | | | | | | |
| 2.0 (100 kw) | 2012.04-2015.12 | AT | F | L | SUV FWD D 5204 T7 | | GDS81385 | Drive Shaft | | 40 | 31 | 57.5 | 52 | 547 | |
| | 2012.04-2015.12 | AT | F | R | SUV FWD D 5204 T7 | | GDS84519 | Drive Shaft | | 40 | 28 | 57.7 | 52 | 1023 | |
| | 2012.04-2015.12 | AT | F | R | SUV FWD D 5204 T7 | | GCO59441 | Outer Joint | | 40 | 27 | 57.7 | 52 | 63.5 | M |
| | 2012.04-2015.12 | AT | F | L | SUV FWD D 5204 T7 | Transmission side | GCO81424 | Inner Joint | | 31 | 27 | 36.2 | 70 | 62 | |
| | 2012.04-2015.12 | AT | F | R | SUV FWD D 5204 T7 | | GCI82831 | Inner Joint | | 28 | 27 | 33 | 519.5 | 82.5 | |
| | 2013.09-2015.12 | 6AT | F | L | SUV Van FWD D 5204 T7 | | GDS81385 | Drive Shaft | | 40 | 31 | 57.5 | 52 | 547 | |
| | 2013.09-2015.12 | AT | F | R | SUV Van FWD D 5204 T7 | | GDS84519 | Drive Shaft | | 40 | 28 | 57.7 | 52 | 1023 | |
| | 2013.09-2015.12 | AT | F | R | SUV Van FWD D 5204 T7 | | GCO59441 | Outer Joint | | 40 | 27 | 57.7 | 52 | 63.5 | M |
| | 2013.09-2015.12 | AT | F | R | SUV Van FWD D 5204 T7 | | GCI82831 | Inner Joint | | 28 | 27 | 33 | 519.5 | 82.5 | |
| 2.0 (110 kw) | 2015.03-2017.04 | 6MT | F | L | SUV FWD D 4204 T4 | | GDS81377 | Drive Shaft | | 40 | 31 | 57.5 | 52 | 623 | |
| | 2015.03-2017.04 | 6MT | F | R | SUV FWD D 4204 T4 | | GDS81379 | Drive Shaft | | 40 | 28 | 57.5 | 52 | 977 | |
| | 2015.03-2017.04 | 6MT | F | L | SUV FWD D 4204 T4 | | GCO81429 | Inner Joint | | 31 | 27 | 44 | 79 | 80 | |
| | 2015.03-2017.04 | 6MT | F | R | SUV FWD D 4204 T4 | | GCO81428 | Inner Joint | | 28 | 27 | 40 | 454 | 57 | |
| | 2015.03-2017.04 | 8AT | F | L | SUV FWD D 4204 T4 | | GDS81375 | Drive Shaft | | 40 | 31 | 57.5 | 52 | 596 | |
| | 2015.03-2017.04 | 8AT | F | R | SUV FWD D 4204 T4 | | GDS81378 | Drive Shaft | | 40 | 28 | 57.5 | 52 | 976 | |
| | 2015.03-2017.04 | 8AT | F | L | SUV FWD D 4204 T4 | Transmission side | GCO81424 | Inner Joint | | 31 | 27 | 36.2 | 70 | 62 | |
| | 2015.03-2017.04 | 8AT | F | R | SUV FWD D 4204 T4 | | GCO81427 | Inner Joint | | 28 | 27 | 33 | 453 | 57 | |
| | 2015.03-2017.04 | 8AT/6MT | F | L/R | SUV FWD D 4204 T4 | | GCO81181 | Outer Joint | | 40 | 28 | 57.5 | 52 | 60.5 | I |
| 2.0 (120 kw) | 2010.03-2014.12 | 6AT | F | L | SUV FWD D 5204 T2;D 5204 T3 | | GDS81385 | Drive Shaft | | 40 | 31 | 57.5 | 52 | 547 | |
| | 2010.03-2014.12 | 6AT | F | R | SUV FWD D 5204 T2;D 5204 T3 | | GDS84519 | Drive Shaft | | 40 | 28 | 57.7 | 52 | 1023 | |
| | 2010.03-2014.12 | 6AT | F | L/R | SUV FWD D 5204 T2;D 5204 T3 | | GCO59441 | Outer Joint | | 40 | 27 | 57.7 | 52 | 63.5 | M |
| | 2010.03-2014.12 | 6AT | F | L | SUV FWD D 5204 T2;D 5204 T3 | | GCO81424 | Inner Joint | | 31 | 27 | 36.2 | 70 | 62 | |
| | 2010.03-2014.12 | 6AT | F | R | SUV FWD D 5204 T2;D 5204 T3 | | GCI82831 | Inner Joint | | 28 | 27 | 33 | 519.5 | 82.5 | |
| | 2010.03-2014.12 | 6MT | F | L | SUV FWD D 5204 T2;D 5204 T3 | | GDS83405 | Drive Shaft | | 40 | 31 | 57.7 | 52 | 585 | |
| | 2010.03-2014.12 | 6MT | F | R | SUV FWD D 5204 T2;D 5204 T3 | | GDS56501 | Drive Shaft | | 40 | 28 | 57.7 | 52 | 1023 | |
| | 2010.03-2014.12 | 6MT | F | L/R | SUV FWD D 5204 T2;D 5204 T3 | | GCO62042 | Outer Joint | | 40 | 27 | 57.7 | 52 | 63.5 | M |
| | 2010.03-2014.12 | 6MT | F | L | SUV FWD D 5204 T2;D 5204 T3 | | GCO81430 | Inner Joint | | 31 | 27 | 44 | 65 | 78.5 | |
| | 2010.03-2014.12 | 6MT | F | R | SUV FWD D 5204 T2;D 5204 T3 | | GCI83335 | Inner Joint | | 28 | 27 | 40 | 521 | 80 | |
| | 2010.03-2014.12 | AT/MT | F | L/R | SUV FWD D 5204 T2;D 5204 T3 | Model year to:2010 | GCO62031 | Outer Joint | 48T | 36 | 27 | 56.5 | 55 | 65 | M |
| | 2010.03-2014.12 | AT/MT | F | L/R | SUV FWD D 5204 T2;D 5204 T3 | Model year to:2010 | GCO62045 | Outer Joint | | 40 | 26 | 57.7 | 52 | 62.5 | M |
| | 2010.03-2014.12 | AT/MT | F | L | SUV FWD D 5204 T2;D 5204 T3 | Model year to:2010;out teeth:26 | GCI18044 | Inner Joint | | 26 | 23 | 40 | 68.5 | 99.5 | |
| | 2013.09-2017.02 | 6AT | F | L | SUV Van FWD D 5204 T3 | | GDS81385 | Drive Shaft | | 40 | 31 | 57.5 | 52 | 547 | |
| | 2013.09-2017.02 | 6AT | F | R | SUV Van FWD D 5204 T3 | | GDS84519 | Drive Shaft | | 40 | 28 | 57.7 | 52 | 1023 | |
| | 2013.09-2017.02 | 6AT | F | R | SUV Van FWD D 5204 T3 | | GCO59441 | Outer Joint | | 40 | 27 | 57.7 | 52 | 63.5 | M |
| | 2013.09-2017.02 | 6AT | F | R | SUV Van FWD D 5204 T3 | | GCI82831 | Inner Joint | | 28 | 27 | 33 | 519.5 | 82.5 | |
| | 2013.09-2017.02 | 6MT | F | L | SUV Van FWD D 5204 T3 | | GDS83405 | Drive Shaft | | 40 | 31 | 57.7 | 52 | 585 | |
| | 2013.09-2017.02 | 6MT | F | R | SUV Van FWD D 5204 T3 | | GDS56501 | Drive Shaft | | 40 | 28 | 57.7 | 52 | 1023 | |
| | 2013.09-2017.02 | 6MT | F | R | SUV Van FWD D 5204 T3 | | GCO62042 | Outer Joint | | 40 | 27 | 57.7 | 52 | 63.5 | M |
| | 2013.09-2017.02 | 6MT | F | L | SUV Van FWD D 5204 T3 | | GCO81430 | Inner Joint | | 31 | 27 | 44 | 65 | 78.5 | |
| | 2013.09-2017.02 | 6MT | F | R | SUV Van FWD D 5204 T3 | | GCI83335 | Inner Joint | | 28 | 27 | 40 | 521 | 80 | |
| | 2018.12-2021.12 | 8AT | F | L | SUV FWD D 4204 T7 | | GDS83208 | Drive Shaft | | 40 | 31 | 54.1 | 53 | 617 | |

| | YEAR | TRANSM. | F/R | L/R | BODY STYLE & DRIVE TYPE & ENGINE | REMARKS | G-AP Ref. | PRODUCT | ABS | Technical Specifications A | B | C | H | L | P |
|---|---|---|---|---|---|---|---|---|---|---|---|---|---|---|---|
| **VOLVO** **XC60** | | | | | | | | | | | | | | | |
| 2.0 (120 kw) | 2018.12-2021.12 | 8AT | F | R | SUV FWD D 4204 T7 | | GDS83207 | Drive Shaft | | 40 | 28 | 54.1 | 53 | 995 | |
| | 2018.12-2021.12 | 8AT | F | L/R | SUV FWD D 4204 T7 | | GCO82347 | Outer Joint | | 40 | 28 | 54.1 | 53 | 62.5 | I |
| | 2018.12-2021.12 | 8AT | F | L | SUV FWD D 4204 T7 | | GCI62034 | Inner Joint | | 31 | 27 | 36.2 | 68 | 90 | |
| | 2018.12-2021.12 | 8AT | F | R | SUV FWD D 4204 T7 | For Salescode:FC21;Chassis no. to:195778 | GCI82176 | Inner Joint | | 28 | 27 | 29.97 | 470 | 94 | |
| 2.0 (133 kw) | 2013.10-2015.12 | AT | F | L | SUV FWD D 4204 T5 | | GDS81375 | Drive Shaft | | 40 | 31 | 57.5 | 52 | 596 | |
| | 2013.10-2015.12 | AT | F | R | SUV FWD D 4204 T5 | | GDS81378 | Drive Shaft | | 40 | 28 | 57.5 | 52 | 976 | |
| | 2013.10-2015.12 | AT | F | L | SUV FWD D 4204 T5 | Transmission side | GCO81424 | Inner Joint | | 31 | 27 | 36.2 | 70 | 62 | |
| | 2013.10-2015.12 | AT | F | R | SUV FWD D 4204 T5 | | GCO81427 | Inner Joint | | 28 | 27 | 33 | 453 | 57 | |
| | 2013.10-2015.12 | AT/MT | F | L/R | SUV FWD D 4204 T5 | | GCO81181 | Outer Joint | | 40 | 28 | 57.5 | 52 | 60.5 | I |
| | 2013.10-2015.12 | MT | F | L | SUV FWD D 4204 T5 | | GDS81377 | Drive Shaft | | 40 | 31 | 57.5 | 52 | 623 | |
| | 2013.10-2015.12 | MT | F | R | SUV FWD D 4204 T5 | | GDS81379 | Drive Shaft | | 40 | 28 | 57.5 | 52 | 977 | |
| | 2013.10-2015.12 | MT | F | L | SUV FWD D 4204 T5 | | GCO81429 | Inner Joint | | 31 | 27 | 44 | 79 | 80 | |
| | 2013.10-2015.12 | MT | F | R | SUV FWD D 4204 T5 | | GCO81428 | Inner Joint | | 28 | 27 | 40 | 454 | 57 | |
| 2.0 (140 kw) | 2015.03-2017.02 | AT | F | L | SUV FWD D 4204 T14 | | GDS81375 | Drive Shaft | | 40 | 31 | 57.5 | 52 | 596 | |
| | 2015.03-2017.02 | AT | F | R | SUV FWD D 4204 T14 | | GDS81378 | Drive Shaft | | 40 | 28 | 57.5 | 52 | 976 | |
| | 2015.03-2017.02 | AT | F | L | SUV FWD D 4204 T14 | | GCO81424 | Inner Joint | | 31 | 27 | 36.2 | 70 | 62 | |
| | 2015.03-2017.02 | AT/MT | F | L/R | SUV FWD D 4204 T14 | | GCO81181 | Outer Joint | | 40 | 28 | 57.5 | 52 | 60.5 | I |
| | 2015.03-2017.02 | MT | F | L | SUV FWD D 4204 T14 | | GDS81377 | Drive Shaft | | 40 | 31 | 57.5 | 52 | 623 | |
| | 2015.03-2017.02 | MT | F | R | SUV FWD D 4204 T14 | | GDS81379 | Drive Shaft | | 40 | 28 | 57.5 | 52 | 977 | |
| | 2017.03-2021.12 | 8AT | F | L | SUV 4WD D 4204 T14 | | GDS83208 | Drive Shaft | | 40 | 31 | 54.1 | 53 | 617 | |
| | 2017.03-2021.12 | 8AT | F | R | SUV 4WD D 4204 T14 | | GDS83207 | Drive Shaft | | 40 | 28 | 54.1 | 53 | 995 | |
| | 2017.03-2021.12 | 8AT | F | L/R | SUV 4WD D 4204 T14 | | GCO82347 | Outer Joint | | 40 | 28 | 54.1 | 53 | 62.5 | I |
| | 2017.03-2021.12 | 8AT | F | L | SUV 4WD D 4204 T14 | | GCI62034 | Inner Joint | | 31 | 27 | 36.2 | 68 | 90 | |
| | 2017.03-2021.12 | 8AT | F | R | SUV 4WD D 4204 T14 | For Salescode:FC21;Chassis no. to:195778 | GCI82176 | Inner Joint | | 28 | 27 | 29.97 | 470 | 94 | |
| | 2017.03-2021.12 | 8AT | R | L/R | SUV 4WD D 4204 T14 | | GDS56701 | Drive Shaft | | 40 | 23 | 56.5 | 52 | 820 | |
| | 2017.03-2021.12 | 8AT | F | L | SUV FWD D 4204 T14 | | GDS83208 | Drive Shaft | | 40 | 31 | 54.1 | 53 | 617 | |
| | 2017.03-2021.12 | 8AT | F | R | SUV FWD D 4204 T14 | | GDS83207 | Drive Shaft | | 40 | 28 | 54.1 | 53 | 995 | |
| | 2017.03-2021.12 | 8AT | F | L/R | SUV FWD D 4204 T14 | | GCO82347 | Outer Joint | | 40 | 28 | 54.1 | 53 | 62.5 | I |
| | 2017.03-2021.12 | 8AT | F | L | SUV FWD D 4204 T14 | | GCI62034 | Inner Joint | | 31 | 27 | 36.2 | 68 | 90 | |
| | 2017.03-2021.12 | 8AT | F | R | SUV FWD D 4204 T14 | For Salescode:FC21;Chassis no. to:195778 | GCI82176 | Inner Joint | | 28 | 27 | 29.97 | 470 | 94 | |
| | 2018.09-2021.12 | 8AT | F | L | SUV FWD B 4204 T31 | | GDS83208 | Drive Shaft | | 40 | 31 | 54.1 | 53 | 617 | |
| | 2018.09-2021.12 | 8AT | F | L | SUV FWD B 4204 T31 | | GCO82347 | Outer Joint | | 40 | 28 | 54.1 | 53 | 62.5 | I |
| | 2018.09-2021.12 | 8AT | F | L | SUV FWD B 4204 T31 | | GCI62034 | Inner Joint | | 31 | 27 | 36.2 | 68 | 90 | |
| 2.0 (145 kw) | 2019.04- | 8AT | F | L/R | SUV 4WD D 420 T8 | | GCO82347 | Outer Joint | | 40 | 28 | 54.1 | 53 | 62.5 | I |
| | 2019.04- | 8AT | F | L | SUV 4WD D 420 T8 | | GCI62034 | Inner Joint | | 31 | 27 | 36.2 | 68 | 90 | |
| | 2019.04- | 8AT | F | R | SUV 4WD D 420 T8 | | GCI82176 | Inner Joint | | 28 | 27 | 29.97 | 470 | 94 | |
| | 2019.04- | 8AT | R | L/R | SUV 4WD D 420 T8 | Trans. code:AWF8G45 | GDS56701 | Drive Shaft | | 40 | 23 | 56.5 | 52 | 820 | |
| | 2019.04- | 8AT | R | L/R | SUV 4WD D 420 T8 | Trans. code:AWF8G55 | GDS58208 | Drive Shaft | | 40 | 34 | 56.5 | 52 | 817 | |
| 2.0 (147 kw) | 2018.12-2020.06 | 8AT | F | L | SUV FWD D 4204 T14 | | GDS83208 | Drive Shaft | | 40 | 31 | 54.1 | 53 | 617 | |
| | 2018.12-2020.06 | 8AT | F | R | SUV FWD D 4204 T14 | | GDS83207 | Drive Shaft | | 40 | 28 | 54.1 | 53 | 995 | |
| | 2018.12-2020.06 | 8AT | F | L/R | SUV FWD D 4204 T14 | | GCO82347 | Outer Joint | | 40 | 28 | 54.1 | 53 | 62.5 | I |
| | 2018.12-2020.06 | 8AT | F | L | SUV FWD D 4204 T14 | | GCI62034 | Inner Joint | | 31 | 27 | 36.2 | 68 | 90 | |
| | 2018.12-2020.06 | 8AT | F | R | SUV FWD D 4204 T14 | For Salescode:FC21;Chassis no. to:195778 | GCI82176 | Inner Joint | | 28 | 27 | 29.97 | 470 | 94 | |
| | 2019.01-2021.12 | 8AT | F | L | SUV 4WD D 4204 T14 | | GDS83208 | Drive Shaft | | 40 | 31 | 54.1 | 53 | 617 | |
| | 2019.01-2021.12 | 8AT | F | R | SUV 4WD D 4204 T14 | | GDS83207 | Drive Shaft | | 40 | 28 | 54.1 | 53 | 995 | |
| | 2019.01-2021.12 | 8AT | F | L/R | SUV 4WD D 4204 T14 | | GCO82347 | Outer Joint | | 40 | 28 | 54.1 | 53 | 62.5 | I |
| | 2019.01-2021.12 | 8AT | F | L | SUV 4WD D 4204 T14 | | GCI62034 | Inner Joint | | 31 | 27 | 36.2 | 68 | 90 | |
| | 2019.01-2021.12 | 8AT | F | R | SUV 4WD D 4204 T14 | For Salescode:FC21;Chassis no. to:195778 | GCI82176 | Inner Joint | | 28 | 27 | 29.97 | 470 | 94 | |
| | 2019.01-2021.12 | 8AT | R | L/R | SUV 4WD D 4204 T14 | | GDS56701 | Drive Shaft | | 40 | 23 | 56.5 | 52 | 820 | |
| 2.0 (149 kw) | 2009.12-2012.12 | AT | F | L | SUV FWD B 4204 T6 | Date to:2011.12;Trans. code:MPS6 Powershift | GDS81386 | Drive Shaft | | 40 | 31 | 57.7 | 52 | 624 | |
| | 2009.12-2012.12 | AT | F | R | SUV FWD B 4204 T6 | | GDS81387 | Drive Shaft | | 40 | 28 | 57.7 | 52 | 1030 | |
| | 2009.12-2012.12 | AT | F | R | SUV FWD B 4204 T6 | Date to:2011.12;Trans. code:MPS6 Powershift | GDS81390 | Drive Shaft | | 40 | 28 | 57.7 | 52 | 978 | |
| | 2009.12-2012.12 | AT | F | L | SUV FWD B 4204 T6 | Transmission side | GCO81424 | Inner Joint | | 31 | 27 | 36.2 | 70 | 62 | |
| | 2009.12-2012.12 | AT | F | L | SUV FWD B 4204 T6 | Date to:2011.12;Trans. code:MPS6 Powershift | GCO81434 | Inner Joint | | 31 | 27 | 45 | 78.5 | 69.5 | |
| | 2009.12-2012.12 | AT | F | R | SUV FWD B 4204 T6 | | GCO81435 | Inner Joint | | 28 | 27 | 30 | 526 | 82.5 | |
| | 2009.12-2012.12 | AT | F | R | SUV FWD B 4204 T6 | Date to:2011.12;Trans. code:MPS6 Powershift | GCO81436 | Inner Joint | | 28 | 27 | 34 | 430.5 | 82.5 | |
| | 2009.12-2012.12 | | F | | SUV FWD B 4204 T6 | for model year:2010 | GCO62031 | Outer Joint | 48T | 36 | 27 | 56.5 | 55 | 65 | M |
| | 2009.12-2012.12 | | F | | SUV FWD B 4204 T6 | for model year:2010 | GCO62045 | Outer Joint | | 40 | 26 | 57.7 | 52 | 62.5 | M |
| | 2009.12-2012.12 | | F | L | SUV FWD B 4204 T6 | for model year:2010 | GCI18044 | Inner Joint | | 26 | 23 | 40 | 68.5 | 99.5 | |
| 2.0 (155 kw) | 2019.07-2021.12 | 8AT | F | L | SUV FWD B 4204 T31P | | GDS83208 | Drive Shaft | | 40 | 31 | 54.1 | 53 | 617 | |
| | 2019.07-2021.12 | 8AT | F | L | SUV FWD B 4204 T31P | | GCO82347 | Outer Joint | | 40 | 28 | 54.1 | 53 | 62.5 | I |
| | 2019.07-2021.12 | 8AT | F | L | SUV FWD B 4204 T31P | | GCI62034 | Inner Joint | | 31 | 27 | 36.2 | 68 | 90 | |
| 2.0 (173 kw) | 2017.03-2022.12 | 8AT | F | L | SUV 4WD D 4204 T23 | | GDS83208 | Drive Shaft | | 40 | 31 | 54.1 | 53 | 617 | |
| | 2017.03-2022.12 | 8AT | F | R | SUV 4WD D 4204 T23 | | GDS83207 | Drive Shaft | | 40 | 28 | 54.1 | 53 | 995 | |
| | 2017.03-2022.12 | 8AT | F | L/R | SUV 4WD D 4204 T23 | | GCO82347 | Outer Joint | | 40 | 28 | 54.1 | 53 | 62.5 | I |

| | YEAR | TRANSM. | F/R | L/R | BODY STYLE & DRIVE TYPE & ENGINE | REMARKS | G-AP Ref. | PRODUCT | ABS | Technical Specifications A | B | C | H | L | P |
|---|---|---|---|---|---|---|---|---|---|---|---|---|---|---|---|
| **VOLVO** | | | | | | | | | | | | | | | |
| **XC60** | | | | | | | | | | | | | | | |
| 2.0 (173 kw) | 2017.03-2022.12 | 8AT | F | L | SUV 4WD D 4204 T23 | | GCI62034 | Inner Joint | | 31 | 27 | 36.2 | 68 | 90 | |
| | 2017.03-2022.12 | 8AT | F | R | SUV 4WD D 4204 T23 | For Salescode:FC21;Chassis no. to:195778 | GCI82176 | Inner Joint | | 28 | 27 | 29.97 | 470 | 94 | |
| | 2017.03-2022.12 | 8AT | R | L/R | SUV 4WD D 4204 T23 | | GDS56701 | Drive Shaft | | 40 | 23 | 56.5 | 52 | 820 | |
| | 2019.04- | 8AT | R | L/R | SUV 4WD D 420 T2 | | GDS58208 | Drive Shaft | | 40 | 34 | 56.5 | 52 | 817 | |
| 2.0 (177 kw) | 2010.09-2017.02 | AT | F | L | SUV FWD B 4204 T7 | Trans. code:MPS6 | GDS81386 | Drive Shaft | | 40 | 31 | 57.7 | 52 | 624 | |
| | 2010.09-2017.02 | AT | F | R | SUV FWD B 4204 T7 | Trans. code:MPS6 | GDS81390 | Drive Shaft | | 40 | 28 | 57.7 | 52 | 978 | |
| | 2010.09-2017.02 | AT | F | L | SUV FWD B 4204 T7 | Trans. code:MPS6 | GCO81434 | Inner Joint | | 31 | 27 | 45 | 78.5 | 69.5 | |
| | 2010.09-2017.02 | AT | F | R | SUV FWD B 4204 T7 | Trans. code:MPS6 | GCO81436 | Inner Joint | | 28 | 27 | 34 | 430.5 | 82.5 | |
| | 2010.09-2017.02 | | F | L/R | SUV FWD B 4204 T7 | Model year to:2010 | GCO62031 | Outer Joint | 48T | 36 | 27 | 56.5 | 55 | 65 | M |
| | 2010.09-2017.02 | | F | | SUV FWD B 4204 T7 | Model year to:2010 | GCO62045 | Outer Joint | | 40 | 26 | 57.7 | 52 | 62.5 | M |
| | 2010.09-2017.02 | | F | L | SUV FWD B 4204 T7 | Model year to:2010 | GCI18044 | Inner Joint | | 26 | 23 | 40 | 68.5 | 99.5 | |
| | 2010.09-2017.02 | | F | L | SUV FWD B 4204 T7 | Model year to:2010 | GCO81424 | Inner Joint | | 31 | 27 | 36.2 | 70 | 62 | |
| | 2018.10-2020.03 | 8AT | F | L | SUV 4WD D 4204 T23 | | GDS83208 | Drive Shaft | | 40 | 31 | 54.1 | 53 | 617 | |
| | 2018.10-2020.03 | 8AT | F | R | SUV 4WD D 4204 T23 | | GDS83207 | Drive Shaft | | 40 | 28 | 54.1 | 53 | 995 | |
| | 2018.10-2020.03 | 8AT | F | L/R | SUV 4WD D 4204 T23 | | GCO82347 | Outer Joint | | 40 | 28 | 54.1 | 53 | 62.5 | I |
| | 2018.10-2020.03 | 8AT | F | L | SUV 4WD D 4204 T23 | | GCI62034 | Inner Joint | | 31 | 27 | 36.2 | 68 | 90 | |
| | 2018.10-2020.03 | 8AT | F | R | SUV 4WD D 4204 T23 | For Salescode:FC21;Chassis no. to:195778 | GCI82176 | Inner Joint | | 28 | 27 | 29.97 | 470 | 94 | |
| | 2018.10-2020.03 | 8AT | R | L/R | SUV 4WD D 4204 T23 | | GDS56701 | Drive Shaft | | 40 | 23 | 56.5 | 52 | 820 | |
| 2.0 (180 kw) | 2013.10-2017.02 | AT | F | L | SUV FWD B 4204 T11;B 4204 T41 | | GDS81375 | Drive Shaft | | 40 | 31 | 57.5 | 52 | 596 | |
| | 2013.10-2017.02 | AT | F | R | SUV FWD B 4204 T11;B 4204 T41 | | GDS81378 | Drive Shaft | | 40 | 28 | 57.5 | 52 | 976 | |
| | 2013.10-2017.02 | AT | F | L/R | SUV FWD B 4204 T11;B 4204 T41 | | GCO81181 | Outer Joint | | 40 | 28 | 57.5 | 52 | 60.5 | I |
| | 2013.10-2017.02 | AT | F | L | SUV FWD B 4204 T11;B 4204 T41 | Transmission side | GCO81424 | Inner Joint | | 31 | 27 | 36.2 | 70 | 62 | |
| | 2013.10-2017.02 | AT | F | R | SUV FWD B 4204 T11;B 4204 T41 | | GCO81427 | Inner Joint | | 28 | 27 | 33 | 453 | 57 | |
| | 2015.10-2017.02 | 8AT | F | L | SUV 4WD B 4204 T11 | | GDS81375 | Drive Shaft | | 40 | 31 | 57.5 | 52 | 596 | |
| | 2015.10-2017.02 | 8AT | F | L | SUV 4WD B 4204 T11 | | GCO81181 | Outer Joint | | 40 | 28 | 57.5 | 52 | 60.5 | I |
| | 2015.10-2017.02 | 8AT | F | L | SUV 4WD B 4204 T11 | Transmission side | GCO81424 | Inner Joint | | 31 | 27 | 36.2 | 70 | 62 | |
| | 2015.10-2017.02 | AT | R | L/R | SUV 4WD B 4204 T11 | | GDS62077 | Drive Shaft | 44NS | 36 | 23 | 56.5 | 49.5 | 762 | |
| | 2015.10-2017.02 | AT | R | L/R | SUV 4WD B 4204 T11 | | GCO83248 | Outer Joint | 44NS | 36 | 29 | 56.5 | 49.5 | 64 | I |
| | 2015.10-2017.02 | AT | R | L/R | SUV 4WD B 4204 T11 | | GCI62035 | Inner Joint | | 23 | 29 | 28 | 64 | 110 | |
| | 2021.01- | 8AT | R | L/R | SUV 4WD D 420 T2 | | GDS58208 | Drive Shaft | | 40 | 34 | 56.5 | 52 | 817 | |
| 2.0 (183 kw) | 2017.10-2021.12 | 8AT | F | L | SUV 4WD B 4204 T20 | | GDS83208 | Drive Shaft | | 40 | 31 | 54.1 | 53 | 617 | |
| | 2017.10-2021.12 | 8AT | F | R | SUV 4WD B 4204 T20 | | GDS83207 | Drive Shaft | | 40 | 28 | 54.1 | 53 | 995 | |
| | 2017.10-2021.12 | 8AT | F | L/R | SUV 4WD B 4204 T20 | | GCO82347 | Outer Joint | | 40 | 28 | 54.1 | 53 | 62.5 | I |
| | 2017.10-2021.12 | 8AT | F | L | SUV 4WD B 4204 T20 | | GCI62034 | Inner Joint | | 31 | 27 | 36.2 | 68 | 90 | |
| | 2017.10-2021.12 | 8AT | F | R | SUV 4WD B 4204 T20 | | GCI82176 | Inner Joint | | 28 | 27 | 29.97 | 470 | 94 | |
| | 2017.10-2021.12 | 8AT | R | L/R | SUV 4WD B 4204 T20 | | GDS56701 | Drive Shaft | | 40 | 23 | 56.5 | 52 | 820 | |
| | 2022.03- | 8AT | R | L/R | SUV 4WD B 420 T10 | | GDS56701 | Drive Shaft | | 40 | 23 | 56.5 | 52 | 820 | |
| 2.0 (184 kw) | 2017.10-2020.12 | 8AT | F | L | SUV 4WD B 4204 T26 | | GDS83208 | Drive Shaft | | 40 | 31 | 54.1 | 53 | 617 | |
| | 2017.10-2020.12 | 8AT | F | R | SUV 4WD B 4204 T26 | | GDS83207 | Drive Shaft | | 40 | 28 | 54.1 | 53 | 995 | |
| | 2017.10-2020.12 | 8AT | F | L/R | SUV 4WD B 4204 T26 | | GCO82347 | Outer Joint | | 40 | 28 | 54.1 | 53 | 62.5 | I |
| | 2017.10-2020.12 | 8AT | F | L | SUV 4WD B 4204 T26 | | GCI62034 | Inner Joint | | 31 | 27 | 36.2 | 68 | 90 | |
| | 2017.10-2020.12 | 8AT | F | R | SUV 4WD B 4204 T26 | | GCI82176 | Inner Joint | | 28 | 27 | 29.97 | 470 | 94 | |
| | 2017.10-2020.12 | 8AT | R | L/R | SUV 4WD B 4204 T26 | | GDS56701 | Drive Shaft | | 40 | 23 | 56.5 | 52 | 820 | |
| | 2017.10-2020.12 | 8AT | F | L | SUV FWD B 4204 T26 | | GDS83208 | Drive Shaft | | 40 | 31 | 54.1 | 53 | 617 | |
| | 2017.10-2020.12 | 8AT | F | L | SUV FWD B 4204 T26 | | GCO82347 | Outer Joint | | 40 | 28 | 54.1 | 53 | 62.5 | I |
| | 2017.10-2020.12 | 8AT | F | L | SUV FWD B 4204 T26 | | GCI62034 | Inner Joint | | 31 | 27 | 36.2 | 68 | 90 | |
| | 2020.01- | 8AT | R | L/R | SUV 4WD B 420 T2;B420T11 | | GDS56701 | Drive Shaft | | 40 | 23 | 56.5 | 52 | 820 | |
| 2.0 (186 kw) | 2019.05-2020.12 | 8AT | F | L | SUV 4WD B 4204 T26P | | GDS83208 | Drive Shaft | | 40 | 31 | 54.1 | 53 | 617 | |
| | 2019.05-2020.12 | 8AT | F | R | SUV 4WD B 4204 T26P | | GDS83207 | Drive Shaft | | 40 | 28 | 54.1 | 53 | 995 | |
| | 2019.05-2020.12 | 8AT | F | L/R | SUV 4WD B 4204 T26P | | GCO82347 | Outer Joint | | 40 | 28 | 54.1 | 53 | 62.5 | I |
| | 2019.05-2020.12 | 8AT | F | L | SUV 4WD B 4204 T26P | | GCI62034 | Inner Joint | | 31 | 27 | 36.2 | 68 | 90 | |
| | 2019.05-2020.12 | 8AT | F | R | SUV 4WD B 4204 T26P | | GCI82176 | Inner Joint | | 28 | 27 | 29.97 | 470 | 94 | |
| | 2019.05-2020.12 | 8AT | R | L/R | SUV 4WD B 4204 T26P | | GDS56701 | Drive Shaft | | 40 | 23 | 56.5 | 52 | 820 | |
| | 2019.05-2020.12 | 8AT | F | L | SUV FWD B 4204 T26P | | GDS83208 | Drive Shaft | | 40 | 31 | 54.1 | 53 | 617 | |
| | 2019.05-2020.12 | 8AT | F | L | SUV FWD B 4204 T26P | | GCO82347 | Outer Joint | | 40 | 28 | 54.1 | 53 | 62.5 | I |
| | 2019.05-2020.12 | 8AT | F | L | SUV FWD B 4204 T26P | | GCI62034 | Inner Joint | | 31 | 27 | 36.2 | 68 | 90 | |
| 2.0 (187 kw) | 2017.03- | 8AT | F | L | SUV FWD B 4204 T23 | | GDS83208 | Drive Shaft | | 40 | 31 | 54.1 | 53 | 617 | |
| | 2017.03- | 8AT | F | L | SUV FWD B 4204 T23 | | GCO82347 | Outer Joint | | 40 | 28 | 54.1 | 53 | 62.5 | I |
| | 2017.03- | 8AT | F | L | SUV FWD B 4204 T23 | | GCI62034 | Inner Joint | | 31 | 27 | 36.2 | 68 | 90 | |
| | 2017.03-2021.12 | 8AT | F | L | SUV 4WD B 4204 T23 | | GDS83208 | Drive Shaft | | 40 | 31 | 54.1 | 53 | 617 | |
| | 2017.03-2021.12 | 8AT | F | R | SUV 4WD B 4204 T23 | | GDS83207 | Drive Shaft | | 40 | 28 | 54.1 | 53 | 995 | |
| | 2017.03-2021.12 | 8AT | F | L/R | SUV 4WD B 4204 T23 | | GCO82347 | Outer Joint | | 40 | 28 | 54.1 | 53 | 62.5 | I |
| | 2017.03-2021.12 | 8AT | F | L | SUV 4WD B 4204 T23 | | GCI62034 | Inner Joint | | 31 | 27 | 36.2 | 68 | 90 | |
| | 2017.03-2021.12 | 8AT | F | R | SUV 4WD B 4204 T23 | | GCI82176 | Inner Joint | | 28 | 27 | 29.97 | 470 | 94 | |
| | 2017.03-2021.12 | 8AT | R | L/R | SUV 4WD B 4204 T23 | | GDS56701 | Drive Shaft | | 40 | 23 | 56.5 | 52 | 820 | |

| | YEAR | TRANSM. | F/R | L/R | BODY STYLE & DRIVE TYPE & ENGINE | REMARKS | G-AP Ref. | PRODUCT | ABS | Technical Specifications A | B | C | H | L | P |
|---|---|---|---|---|---|---|---|---|---|---|---|---|---|---|---|
| **VOLVO** | | | | | | | | | | | | | | | |
| **XC60** | | | | | | | | | | | | | | | |
| 2.0 (192 kw) | 2017.03-2018.12 | 8AT | F | L | SUV 4WD B 4204 T23 | | GDS83208 | Drive Shaft | | 40 | 31 | 54.1 | 53 | 617 | |
| | 2017.03-2018.12 | 8AT | F | R | SUV 4WD B 4204 T23 | | GDS83207 | Drive Shaft | | 40 | 28 | 54.1 | 53 | 995 | |
| | 2017.03-2018.12 | 8AT | F | L/R | SUV 4WD B 4204 T23 | | GCO82347 | Outer Joint | | 40 | 28 | 54.1 | 53 | 62.5 | I |
| | 2017.03-2018.12 | 8AT | F | L | SUV 4WD B 4204 T23 | | GCI62034 | Inner Joint | | 31 | 27 | 36.2 | 68 | 90 | |
| | 2017.03-2018.12 | 8AT | F | R | SUV 4WD B 4204 T23 | | GCI82176 | Inner Joint | | 28 | 27 | 29.97 | 470 | 94 | |
| | 2017.03-2018.12 | 8AT | R | L/R | SUV 4WD B 4204 T23 | | GDS56701 | Drive Shaft | | 40 | 23 | 56.5 | 52 | 820 | |
| 2.0 (220 kw) | 2020.03- | 8AT | R | L/R | SUV 4WD B 420 T | | GDS58208 | Drive Shaft | | 40 | 34 | 56.5 | 52 | 817 | |
| 2.0 (225 kw) | 2013.10-2017.02 | AT | F | L | SUV FWD B 4204 T9 | | GDS81375 | Drive Shaft | | 40 | 31 | 57.5 | 52 | 596 | |
| | 2013.10-2017.02 | AT | F | R | SUV FWD B 4204 T9 | | GDS81378 | Drive Shaft | | 40 | 28 | 57.5 | 52 | 976 | |
| | 2013.10-2017.02 | AT | F | L/R | SUV FWD B 4204 T9 | | GCO81181 | Outer Joint | | 40 | 28 | 57.5 | 52 | 60.5 | I |
| | 2013.10-2017.02 | AT | F | L | SUV FWD B 4204 T9 | Transmission side | GCO81424 | Inner Joint | | 31 | 27 | 36.2 | 70 | 62 | |
| | 2013.10-2017.02 | AT | F | R | SUV FWD B 4204 T9 | | GCO81427 | Inner Joint | | 28 | 27 | 33 | 453 | 57 | |
| | 2013.10-2017.12 | 8AT | F | L | SUV 4WD B 4204 T9 | | GDS81375 | Drive Shaft | | 40 | 31 | 57.5 | 52 | 596 | |
| | 2013.10-2017.12 | 8AT | F | L | SUV 4WD B 4204 T9 | | GCO81181 | Outer Joint | | 40 | 28 | 57.5 | 52 | 60.5 | I |
| | 2013.10-2017.12 | 8AT | F | L | SUV 4WD B 4204 T9 | Transmission side | GCO81424 | Inner Joint | | 31 | 27 | 36.2 | 70 | 62 | |
| | 2013.10-2017.12 | AT | R | L/R | SUV 4WD B 4204 T9 | | GDS62077 | Drive Shaft | 44NS | 36 | 23 | 56.5 | 49.5 | 762 | |
| | 2013.10-2017.12 | AT | R | L/R | SUV 4WD B 4204 T9 | | GCO83248 | Outer Joint | 44NS | 36 | 29 | 56.5 | 49.5 | 64 | I |
| | 2013.10-2017.12 | AT | R | L/R | SUV 4WD B 4204 T9 | | GCI62035 | Inner Joint | | 23 | 29 | 28 | 64 | 110 | |
| 2.0 (228 kw) | 2017.10-2021.12 | 8AT | F | L | SUV 4WD B 4204 T29 | | GDS83208 | Drive Shaft | | 40 | 31 | 54.1 | 53 | 617 | |
| | 2017.10-2021.12 | 8AT | F | R | SUV 4WD B 4204 T29 | | GDS83207 | Drive Shaft | | 40 | 28 | 54.1 | 53 | 995 | |
| | 2017.10-2021.12 | 8AT | F | L/R | SUV 4WD B 4204 T29 | | GCO82347 | Outer Joint | | 40 | 28 | 54.1 | 53 | 62.5 | I |
| | 2017.10-2021.12 | 8AT | F | L | SUV 4WD B 4204 T29 | | GCI62034 | Inner Joint | | 31 | 27 | 36.2 | 68 | 90 | |
| | 2017.10-2021.12 | 8AT | F | R | SUV 4WD B 4204 T29 | | GCI82176 | Inner Joint | | 28 | 27 | 29.97 | 470 | 94 | |
| | 2017.10-2021.12 | 8AT | R | L/R | SUV 4WD B 4204 T29 | | GDS56701 | Drive Shaft | | 40 | 23 | 56.5 | 52 | 820 | |
| 2.0 (235 kw) | 2017.03-2021.12 | 8AT | F | L | SUV 4WD B 4204 T27 | | GDS83208 | Drive Shaft | | 40 | 31 | 54.1 | 53 | 617 | |
| | 2017.03-2021.12 | 8AT | F | R | SUV 4WD B 4204 T27 | | GDS83207 | Drive Shaft | | 40 | 28 | 54.1 | 53 | 995 | |
| | 2017.03-2021.12 | 8AT | F | L/R | SUV 4WD B 4204 T27 | | GCO82347 | Outer Joint | | 40 | 28 | 54.1 | 53 | 62.5 | I |
| | 2017.03-2021.12 | 8AT | F | L | SUV 4WD B 4204 T27 | | GCI62034 | Inner Joint | | 31 | 27 | 36.2 | 68 | 90 | |
| | 2017.03-2021.12 | 8AT | F | R | SUV 4WD B 4204 T27 | | GCI82176 | Inner Joint | | 28 | 27 | 29.97 | 470 | 94 | |
| | 2017.03-2021.12 | 8AT | R | L/R | SUV 4WD B 4204 T27 | | GDS56701 | Drive Shaft | | 40 | 23 | 56.5 | 52 | 820 | |
| 2.0 (240 kw) | 2018.12-2019.08 | 8AT | F | L | SUV 4WD B 4204 T29P | | GDS83208 | Drive Shaft | | 40 | 31 | 54.1 | 53 | 617 | |
| | 2018.12-2019.08 | 8AT | F | R | SUV 4WD B 4204 T29P | | GDS83207 | Drive Shaft | | 40 | 28 | 54.1 | 53 | 995 | |
| | 2018.12-2019.08 | 8AT | F | L/R | SUV 4WD B 4204 T29P | | GCO82347 | Outer Joint | | 40 | 28 | 54.1 | 53 | 62.5 | I |
| | 2018.12-2019.08 | 8AT | F | L | SUV 4WD B 4204 T29P | | GCI62034 | Inner Joint | | 31 | 27 | 36.2 | 68 | 90 | |
| | 2018.12-2019.08 | 8AT | F | R | SUV 4WD B 4204 T29P | | GCI82176 | Inner Joint | | 28 | 27 | 29.97 | 470 | 94 | |
| | 2018.12-2019.08 | 8AT | R | L/R | SUV 4WD B 4204 T29P | | GDS56701 | Drive Shaft | | 40 | 23 | 56.5 | 52 | 820 | |
| 2.0 (246 kw) | 2017.03-2021.12 | 8AT | F | L | SUV 4WD B 4204 T27 | | GDS83208 | Drive Shaft | | 40 | 31 | 54.1 | 53 | 617 | |
| | 2017.03-2021.12 | 8AT | F | R | SUV 4WD B 4204 T27 | | GDS83207 | Drive Shaft | | 40 | 28 | 54.1 | 53 | 995 | |
| | 2017.03-2021.12 | 8AT | F | L/R | SUV 4WD B 4204 T27 | | GCO82347 | Outer Joint | | 40 | 28 | 54.1 | 53 | 62.5 | I |
| | 2017.03-2021.12 | 8AT | F | L | SUV 4WD B 4204 T27 | | GCI62034 | Inner Joint | | 31 | 27 | 36.2 | 68 | 90 | |
| | 2017.03-2021.12 | 8AT | F | R | SUV 4WD B 4204 T27 | | GCI82176 | Inner Joint | | 28 | 27 | 29.97 | 470 | 94 | |
| | 2017.03-2021.12 | 8AT | R | L/R | SUV 4WD B 4204 T27 | | GDS56701 | Drive Shaft | | 40 | 23 | 56.5 | 52 | 820 | |
| 2.4 (120 kw) | 2008.05-2017.02 | 6AT | F | R | SUV 4WD D 5244 T5;D 5244 T16;D 5244 T17 | | GDS81388 | Drive Shaft | | 40 | 28 | 57.7 | 52 | 1024 | |
| | 2008.05-2017.02 | 6AT/6MT | F | L | SUV 4WD D 5244 T5;D 5244 T16;D 5244 T17 | | GDS83405 | Drive Shaft | | 40 | 31 | 57.7 | 52 | 585 | |
| | 2008.05-2017.02 | 6AT/6MT | F | L/R | SUV 4WD D 5244 T5;D 5244 T16;D 5244 T17 | Model year from:2009,Model year to:2015 | GCO62031 | Outer Joint | 48T | 36 | 27 | 56.5 | 55 | 65 | M |
| | 2008.05-2017.02 | 6AT/6MT | F | L/R | SUV 4WD D 5244 T5;D 5244 T16;D 5244 T17 | | GCO62042 | Outer Joint | | 40 | 27 | 57.7 | 52 | 63.5 | M |
| | 2008.05-2017.02 | 6AT/6MT | F | L/R | SUV 4WD D 5244 T5;D 5244 T16;D 5244 T17 | Model year from:2009,Model year to:2015 | GCO62045 | Outer Joint | | 40 | 26 | 57.7 | 52 | 62.5 | M |
| | 2008.05-2017.02 | 6AT/6MT | F | L | SUV 4WD D 5244 T5;D 5244 T16;D 5244 T17 | Model year from:2009,Model year to:2015;out teeth 26 | GCI18044 | Inner Joint | | 26 | 23 | 40 | 68.5 | 99.5 | |
| | 2008.05-2017.02 | 6AT/6MT | F | L | SUV 4WD D 5244 T5;D 5244 T16;D 5244 T17 | Model year from:2009,Model year to:2015;For Engine code:D 5244 T5,D 5244 T16,D 5244 T17,out teeth 31 | GCO81424 | Inner Joint | | 31 | 27 | 36.2 | 70 | 62 | |
| | 2008.05-2017.02 | 6AT/6MT | F | R | SUV 4WD D 5244 T5;D 5244 T16;D 5244 T17 | | GCO81431 | Inner Joint | | 28 | 27 | 30 | 523.5 | 82.5 | |
| | 2008.05-2017.02 | 6MT | F | R | SUV 4WD D 5244 T5;D 5244 T16;D 5244 T17 | | GDS83406 | Drive Shaft | | 40 | 28 | 57.7 | 52 | 1027 | |
| | 2008.05-2017.02 | 6AT/6MT | R | L/R | SUV 4WD D 5244 T5;D 5244 T16;D 5244 T17 | Chassis no. from:365000 | GDS62077 | Drive Shaft | 44NS | 36 | 23 | 56.5 | 49.5 | 762 | |
| | 2008.05-2017.02 | 6AT/6MT | R | L/R | SUV 4WD D 5244 T5;D 5244 T16;D 5244 T17 | Chassis no. to:364999;8 balls | GDS83926 | Drive Shaft | 44NS | 36 | 26 | 56.5 | 49.5 | 751 | |
| | 2008.05-2017.02 | 6AT/6MT | R | L/R | SUV 4WD D 5244 T5;D 5244 T16;D 5244 T17 | | GCO83248 | Outer Joint | 44NS | 36 | 29 | 56.5 | 49.5 | 64 | I |
| | 2013.09-2017.02 | 6AT/6MT | F | L | SUV Van 4WD D 5244 T17 | | GDS83405 | Drive Shaft | | 40 | 31 | 57.7 | 52 | 585 | |
| | 2013.09-2017.02 | 6AT/6MT | F | R | SUV Van 4WD D 5244 T17 | | GDS83406 | Drive Shaft | | 40 | 28 | 57.7 | 52 | 1027 | |
| | 2013.09-2017.02 | 6AT | R | L/R | SUV Van 4WD D 5244 T17 | | GDS83926 | Drive Shaft | 44NS | 36 | 26 | 56.5 | 49.5 | 751 | |
| | 2013.09-2017.02 | 6AT | R | L/R | SUV Van 4WD D 5244 T17 | | GCO83248 | Outer Joint | 44NS | 36 | 29 | 56.5 | 49.5 | 64 | I |
| | 2013.09-2017.02 | | R | L/R | SUV Van 4WD D 5244 T17 | | GCI18187 | Inner Joint | | 26 | 29 | 35 | 69.5 | 107.5 | |
| 2.4 (129 kw) | 2009.04-2010.12 | 6AT | F | L | SUV FWD D 5244 T14 | | GDS81385 | Drive Shaft | | 40 | 31 | 57.5 | 52 | 547 | |
| | 2009.04-2010.12 | 6AT | F | R | SUV FWD D 5244 T14 | | GDS84519 | Drive Shaft | | 40 | 28 | 57.7 | 52 | 1023 | |
| | 2009.04-2010.12 | 6AT | F | L/R | SUV FWD D 5244 T14 | | GCO59441 | Outer Joint | | 40 | 27 | 57.7 | 52 | 63.5 | M |
| | 2009.04-2010.12 | 6AT | F | L | SUV FWD D 5244 T14 | | GCO81424 | Inner Joint | | 31 | 27 | 36.2 | 70 | 62 | |
| | 2009.04-2010.12 | 6AT | F | R | SUV FWD D 5244 T14 | | GCI82831 | Inner Joint | | 28 | 27 | 33 | 519.5 | 82.5 | |
| | 2009.04-2010.12 | 6MT | F | L | SUV FWD D 5244 T14 | | GDS83405 | Drive Shaft | | 40 | 31 | 57.7 | 52 | 585 | |

| | YEAR | TRANSM. | F/R | L/R | BODY STYLE & DRIVE TYPE & ENGINE | REMARKS | G-AP Ref. | PRODUCT | ABS | Technical Specifications A | B | C | H | L | P |
|---|---|---|---|---|---|---|---|---|---|---|---|---|---|---|---|
| **VOLVO** | | | | | | | | | | | | | | | |
| **XC60** | | | | | | | | | | | | | | | |
| 2.4 (129 kw) | 2009.04-2010.12 | 6MT | F | L/R | SUV FWD D 5244 T14 | | GCO62042 | Outer Joint | | 40 | 27 | 57.7 | 52 | 63.5 | M |
| | 2009.04-2010.12 | 6MT | F | L | SUV FWD D 5244 T14 | | GCO81430 | Inner Joint | | 31 | 27 | 44 | 65 | 78.5 | |
| | 2009.04-2010.12 | AT/MT | F | L/R | SUV FWD D 5244 T14 | | GCO62031 | Outer Joint | 48T | 36 | 27 | 56.5 | 55 | 65 | M |
| | 2009.04-2010.12 | AT/MT | F | L/R | SUV FWD D 5244 T14 | | GCO62045 | Outer Joint | | 40 | 26 | 57.7 | 52 | 62.5 | M |
| | 2009.04-2010.12 | MT | F | R | SUV FWD D 5244 T14 | | GDS56501 | Drive Shaft | | 40 | 28 | 57.7 | 52 | 1023 | |
| | 2009.04-2010.12 | MT | F | R | SUV FWD D 5244 T14 | | GCI83335 | Inner Joint | | 28 | 27 | 40 | 521 | 80 | |
| 2.4 (133 kw) | 2013.10-2015.12 | 6AT | F | L | SUV 4WD D 5244 T12 | For Engine code:D5244T12 | GCO81424 | Inner Joint | | 31 | 27 | 36.2 | 70 | 62 | |
| | 2013.10-2015.12 | AT | F | L | SUV 4WD D 5244 T12 | | GDS81385 | Drive Shaft | | 40 | 31 | 57.5 | 52 | 547 | |
| | 2013.10-2015.12 | AT | F | R | SUV 4WD D 5244 T12 | | GDS81388 | Drive Shaft | | 40 | 28 | 57.7 | 52 | 1024 | |
| | 2013.10-2015.12 | AT | F | R | SUV 4WD D 5244 T12 | | GCO81433 | Inner Joint | | 28 | 27 | 30 | 520.5 | 82.5 | |
| | 2013.10-2015.12 | MT | F | L | SUV 4WD D 5244 T12 | | GDS83405 | Drive Shaft | | 40 | 31 | 57.7 | 52 | 585 | |
| | 2013.10-2015.12 | MT | F | R | SUV 4WD D 5244 T12 | | GDS83406 | Drive Shaft | | 40 | 28 | 57.7 | 52 | 1027 | |
| | 2013.10-2015.12 | MT | F | L/R | SUV 4WD D 5244 T12 | | GCO62042 | Outer Joint | | 40 | 27 | 57.7 | 52 | 63.5 | M |
| | 2013.10-2015.12 | MT | F | L | SUV 4WD D 5244 T12 | | GCO81430 | Inner Joint | | 31 | 27 | 44 | 65 | 78.5 | |
| | 2013.10-2015.12 | MT | F | R | SUV 4WD D 5244 T12 | | GCO81431 | Inner Joint | | 28 | 27 | 30 | 523.5 | 82.5 | |
| | 2013.10-2015.12 | AT | R | L/R | SUV 4WD D 5244 T12 | Chassis no. to:364999;8 balls | GDS83926 | Drive Shaft | 44NS | 36 | 26 | 56.5 | 49.5 | 751 | |
| | 2013.10-2015.12 | AT | R | L/R | SUV 4WD D 5244 T12 | Chassis no. to:364999;8 balls | GCO83248 | Outer Joint | 44NS | 36 | 29 | 56.5 | 49.5 | 64 | I |
| | 2013.10-2015.12 | AT | R | L/R | SUV 4WD D 5244 T12 | Chassis no. to:364999 | GCI18187 | Inner Joint | | 26 | 29 | 35 | 69.5 | 107.5 | |
| | 2013.10-2015.12 | MT/AT | R | L/R | SUV 4WD D 5244 T12 | Transmission:AT,Chassis no. from:365000 | GDS62077 | Drive Shaft | 44NS | 36 | 23 | 56.5 | 49.5 | 762 | |
| | 2013.10-2015.12 | MT/AT | R | L/R | SUV 4WD D 5244 T12 | Transmission:AT,Chassis no. from:365000 | GCI62035 | Inner Joint | | 23 | 29 | 28 | 64 | 110 | |
| 2.4 (136 kw) | 2008.05-2009.12 | 6AT/6MT | F | L | SUV 4WD D 5244 T4 | | GDS83405 | Drive Shaft | | 40 | 31 | 57.7 | 52 | 585 | |
| | 2008.05-2009.12 | 6AT/6MT | F | R | SUV 4WD D 5244 T4 | | GCO62042 | Outer Joint | | 40 | 27 | 57.7 | 52 | 63.5 | M |
| | 2008.05-2009.12 | 6AT/6MT | F | R | SUV 4WD D 5244 T4 | | GCO81431 | Inner Joint | | 28 | 27 | 30 | 523.5 | 82.5 | |
| | 2008.05-2009.12 | 6MT | F | R | SUV 4WD D 5244 T4 | | GDS83406 | Drive Shaft | | 40 | 28 | 57.7 | 52 | 1027 | |
| | 2008.05-2009.12 | | F | L | SUV 4WD D 5244 T4 | Model year from:2009 | GCO81424 | Inner Joint | | 31 | 27 | 36.2 | 70 | 62 | |
| | 2008.05-2009.12 | AT | R | L/R | SUV 4WD D 5244 T4 | 8 balls | GDS83926 | Drive Shaft | 44NS | 36 | 26 | 56.5 | 49.5 | 751 | |
| | 2008.05-2009.12 | AT | R | L/R | SUV 4WD D 5244 T4 | 8 balls | GCO83248 | Outer Joint | 44NS | 36 | 29 | 56.5 | 49.5 | 64 | I |
| | 2008.05-2009.12 | AT | R | L/R | SUV 4WD D 5244 T4 | | GCI18187 | Inner Joint | | 26 | 29 | 35 | 69.5 | 107.5 | |
| 2.4 (140 kw) | 2015.03-2017.02 | 6MT | F | L | SUV 4WD D 5244 T21 | | GDS83405 | Drive Shaft | | 40 | 31 | 57.7 | 52 | 585 | |
| | 2015.03-2017.02 | 6MT | F | R | SUV 4WD D 5244 T21 | | GDS83406 | Drive Shaft | | 40 | 28 | 57.7 | 52 | 1027 | |
| | 2015.03-2017.02 | AT | F | L | SUV 4WD D 5244 T21 | | GDS81385 | Drive Shaft | | 40 | 31 | 57.5 | 52 | 547 | |
| | 2015.03-2017.02 | AT | F | R | SUV 4WD D 5244 T21 | | GDS81388 | Drive Shaft | | 40 | 28 | 57.7 | 52 | 1024 | |
| | 2015.03-2017.02 | AT | F | L | SUV 4WD D 5244 T21 | | GCO81424 | Inner Joint | | 31 | 27 | 36.2 | 70 | 62 | |
| | 2015.03-2017.02 | AT | F | R | SUV 4WD D 5244 T21 | | GCO81433 | Inner Joint | | 28 | 27 | 30 | 520.5 | 82.5 | |
| | 2015.03-2017.02 | AT/MT | F | L/R | SUV 4WD D 5244 T21 | | GCO62042 | Outer Joint | | 40 | 27 | 57.7 | 52 | 63.5 | M |
| | 2015.03-2017.02 | MT | F | L | SUV 4WD D 5244 T21 | | GCO81430 | Inner Joint | | 31 | 27 | 44 | 65 | 78.5 | |
| | 2015.03-2017.02 | MT | F | R | SUV 4WD D 5244 T21 | | GCO81431 | Inner Joint | | 28 | 27 | 30 | 523.5 | 82.5 | |
| | 2015.03-2017.02 | AT/MT | R | L/R | SUV 4WD D 5244 T21 | Vehicle Production Country:Belgium | GDS62077 | Drive Shaft | 44NS | 36 | 23 | 56.5 | 49.5 | 762 | |
| | 2015.03-2017.02 | AT/MT | R | L/R | SUV 4WD D 5244 T21 | Vehicle Production Country:Belgium | GCO83248 | Outer Joint | 44NS | 36 | 29 | 56.5 | 49.5 | 64 | I |
| | 2015.03-2017.02 | AT/MT | R | L/R | SUV 4WD D 5244 T21 | Vehicle Production Country:Belgium | GCI62035 | Inner Joint | | 23 | 29 | 28 | 64 | 110 | |
| 2.4 (151 kw) | 2009.07-2011.06 | 6AT/6MT | F | L | SUV 4WD D 5244 T10 | | GDS59443 | Drive Shaft | | 40 | 31 | 57.7 | 52 | 528 | |
| | 2009.07-2011.06 | 6AT/6MT | F | L | SUV 4WD D 5244 T10 | Model year to:2010;TJ | GCI18044 | Inner Joint | | 26 | 23 | 40 | 68.5 | 99.5 | |
| | 2009.07-2011.06 | 6AT/6MT | F | L | SUV 4WD D 5244 T10 | Model year to:2010;For Engine code:D 5244 T10;DOJ | GCO81424 | Inner Joint | | 31 | 27 | 36.2 | 70 | 62 | |
| | 2009.07-2011.06 | AT | F | L/R | SUV 4WD D 5244 T10 | | GCO59285 | Outer Joint | | 40 | 27 | 57.7 | 52 | 63.5 | M |
| | 2009.07-2011.06 | 6AT | R | L/R | SUV 4WD D 5244 T10 | 8 balls | GDS83926 | Drive Shaft | 44NS | 36 | 26 | 56.5 | 49.5 | 751 | |
| 2.4 (158 kw) | 2011.04-2015.12 | 6AT/6MT | F | L/R | SUV 4WD D 5244 T11;D 5244 T15 | | GCO62042 | Outer Joint | | 40 | 27 | 57.7 | 52 | 63.5 | M |
| | 2011.04-2015.12 | 6AT/6MT | F | L | SUV 4WD D 5244 T11;D 5244 T15 | | GCO81430 | Inner Joint | | 31 | 27 | 44 | 65 | 78.5 | |
| | 2011.04-2015.12 | 6AT/6MT | F | R | SUV 4WD D 5244 T11;D 5244 T15 | | GCO81431 | Inner Joint | | 28 | 27 | 30 | 523.5 | 82.5 | |
| | 2011.04-2015.12 | 6MT | F | L | SUV 4WD D 5244 T11;D 5244 T15 | | GDS83405 | Drive Shaft | | 40 | 31 | 57.7 | 52 | 585 | |
| | 2011.04-2015.12 | 6MT | F | R | SUV 4WD D 5244 T11;D 5244 T15 | | GDS83406 | Drive Shaft | | 40 | 28 | 57.7 | 52 | 1027 | |
| | 2011.04-2015.12 | AT | R | L/R | SUV 4WD D 5244 T11;D 5244 T15 | Chassis no. from:365000 | GDS62077 | Drive Shaft | 44NS | 36 | 23 | 56.5 | 49.5 | 762 | |
| | 2011.04-2015.12 | AT | R | L/R | SUV 4WD D 5244 T11;D 5244 T15 | Chassis no. to:364999;8 balls | GDS83926 | Drive Shaft | 44NS | 36 | 26 | 56.5 | 49.5 | 751 | |
| | 2011.04-2015.12 | AT | R | L/R | SUV 4WD D 5244 T11;D 5244 T15 | CHAssis no. to:364999 | GCO83248 | Outer Joint | 44NS | 36 | 29 | 56.5 | 49.5 | 64 | I |
| | 2011.04-2015.12 | AT | R | L/R | SUV 4WD D 5244 T11;D 5244 T15 | Chassis no. to:364999 | GCI18187 | Inner Joint | | 26 | 29 | 35 | 69.5 | 107.5 | |
| | 2011.04-2015.12 | AT | R | L/R | SUV 4WD D 5244 T11;D 5244 T15 | Chassis no. from:365000 | GCI62035 | Inner Joint | | 23 | 29 | 28 | 64 | 110 | |
| | 2011.06-2017.02 | | F | L | SUV FWD D5244T11 | Model year from:2012,Model year to:2015 | GCO81424 | Inner Joint | | 31 | 27 | 36.2 | 70 | 62 | |
| | 2013.09-2017.02 | 6AT/6MT | F | L | SUV Van 4WD D 5244 T11;D 5244 T15 | | GDS83405 | Drive Shaft | | 40 | 31 | 57.7 | 52 | 585 | |
| | 2013.09-2017.02 | 6AT/6MT | F | R | SUV Van 4WD D 5244 T11;D 5244 T15 | | GDS83406 | Drive Shaft | | 40 | 28 | 57.7 | 52 | 1027 | |
| | 2013.09-2017.02 | 6MT | F | L | SUV Van 4WD D 5244 T11;D 5244 T15 | | GCO81430 | Inner Joint | | 31 | 27 | 44 | 65 | 78.5 | |
| | 2013.09-2017.02 | 6AT | R | L/R | SUV Van 4WD D 5244 T11;D 5244 T15 | Chassis no. to:364999 | GDS83926 | Drive Shaft | 44NS | 36 | 26 | 56.5 | 49.5 | 751 | |
| | 2013.09-2017.02 | 6AT/6MT | R | L/R | SUV Van 4WD D 5244 T11;D 5244 T15 | Chassis no. from:365000 | GDS62077 | Drive Shaft | 44NS | 36 | 23 | 56.5 | 49.5 | 762 | |
| | 2013.09-2017.02 | 6AT/6MT | R | L/R | SUV Van 4WD D 5244 T11;D 5244 T15 | CHAssis no. to:364999 | GCO83248 | Outer Joint | 44NS | 36 | 29 | 56.5 | 49.5 | 64 | I |
| | 2013.09-2017.02 | 6MT | R | L/R | SUV Van 4WD D 5244 T11;D 5244 T15 | Chassis no. to:364999 | GCI18187 | Inner Joint | | 26 | 29 | 35 | 69.5 | 107.5 | |
| 2.4 (162 kw) | 2015.03-2017.02 | 6MT | F | L | SUV 4WD D 5244 T22;D 5244 T20 | | GDS83405 | Drive Shaft | | 40 | 31 | 57.7 | 52 | 585 | |
| | 2015.03-2017.02 | 6MT | F | R | SUV 4WD D 5244 T22;D 5244 T20 | | GDS83406 | Drive Shaft | | 40 | 28 | 57.7 | 52 | 1027 | |

| | YEAR | TRANSM. | F/R | L/R | BODY STYLE & DRIVE TYPE & ENGINE | REMARKS | G-AP Ref. | PRODUCT | ABS | Technical Specifications A | B | C | H | L | P |
|---|---|---|---|---|---|---|---|---|---|---|---|---|---|---|---|
| **VOLVO** | | | | | | | | | | | | | | | |
| **XC60** | | | | | | | | | | | | | | | |
| 2.4 (162 kw) | 2015.03-2017.02 | AT | F | L | SUV 4WD D 5244 T22;D 5244 T20 | | GDS81385 | Drive Shaft | | 40 | 31 | 57.5 | 52 | 547 | |
| | 2015.03-2017.02 | AT | F | R | SUV 4WD D 5244 T22;D 5244 T20 | | GDS81388 | Drive Shaft | | 40 | 28 | 57.7 | 52 | 1024 | |
| | 2015.03-2017.02 | AT | F | L | SUV 4WD D 5244 T22;D 5244 T20 | | GCO81424 | Inner Joint | | 31 | 27 | 36.2 | 70 | 62 | |
| | 2015.03-2017.02 | AT | F | R | SUV 4WD D 5244 T22;D 5244 T20 | | GCO81433 | Inner Joint | | 28 | 27 | 30 | 520.5 | 82.5 | |
| | 2015.03-2017.02 | AT/MT | F | L/R | SUV 4WD D 5244 T22;D 5244 T20 | | GCO62042 | Outer Joint | | 40 | 27 | 57.7 | 52 | 63.5 | M |
| | 2015.03-2017.02 | MT | F | L | SUV 4WD D 5244 T22;D 5244 T20 | | GCO81430 | Inner Joint | | 31 | 27 | 44 | 65 | 78.5 | |
| | 2015.03-2017.02 | MT | F | R | SUV 4WD D 5244 T22;D 5244 T20 | | GCO81431 | Inner Joint | | 28 | 27 | 30 | 523.5 | 82.5 | |
| | 2015.03-2017.02 | AT/MT | R | L/R | SUV 4WD D 5244 T22;D 5244 T20 | Vehicle Production Country:Belgium | GDS62077 | Drive Shaft | 44NS | 36 | 23 | 56.5 | 49.5 | 762 | |
| | 2015.03-2017.02 | AT/MT | R | L/R | SUV 4WD D 5244 T22;D 5244 T20 | Vehicle Production Country:Belgium | GCO83248 | Outer Joint | 44NS | 36 | 29 | 56.5 | 49.5 | 64 | I |
| | 2015.03-2017.02 | AT/MT | R | L/R | SUV 4WD D 5244 T22;D 5244 T20 | Vehicle Production Country:Belgium | GCI62035 | Inner Joint | | 23 | 29 | 28 | 64 | 110 | |
| 2.4 (169 kw) | 2014.04-2015.12 | 6MT | F | L | SUV 4WD D 5244 T23 | | GDS83405 | Drive Shaft | | 40 | 31 | 57.7 | 52 | 585 | |
| | 2014.04-2015.12 | 6MT | F | R | SUV 4WD D 5244 T23 | | GDS83406 | Drive Shaft | | 40 | 28 | 57.7 | 52 | 1027 | |
| | 2014.04-2015.12 | AT | F | L | SUV 4WD D 5244 T23 | | GDS81385 | Drive Shaft | | 40 | 31 | 57.5 | 52 | 547 | |
| | 2014.04-2015.12 | AT | F | R | SUV 4WD D 5244 T23 | | GDS81388 | Drive Shaft | | 40 | 28 | 57.7 | 52 | 1024 | |
| | 2014.04-2015.12 | AT | F | L | SUV 4WD D 5244 T23 | Transmission side | GCO81424 | Inner Joint | | 31 | 27 | 36.2 | 70 | 62 | |
| | 2014.04-2015.12 | AT | F | R | SUV 4WD D 5244 T23 | | GCO81433 | Inner Joint | | 28 | 27 | 30 | 520.5 | 82.5 | |
| | 2014.04-2015.12 | MT | F | L/R | SUV 4WD D 5244 T23 | | GCO62042 | Outer Joint | | 40 | 27 | 57.7 | 52 | 63.5 | M |
| | 2014.04-2015.12 | MT | F | L | SUV 4WD D 5244 T23 | | GCO81430 | Inner Joint | | 31 | 27 | 44 | 65 | 78.5 | |
| | 2014.04-2015.12 | MT | F | R | SUV 4WD D 5244 T23 | | GCO81431 | Inner Joint | | 28 | 27 | 30 | 523.5 | 82.5 | |
| | 2014.04-2015.12 | AT/MT | R | L/R | SUV 4WD D 5244 T23 | Chassis no. from:365000 | GDS62077 | Drive Shaft | 44NS | 36 | 23 | 56.5 | 49.5 | 762 | |
| | 2014.04-2015.12 | AT/MT | R | L/R | SUV 4WD D 5244 T23 | Chassis no. to:364999;8 balls | GDS83926 | Drive Shaft | 44NS | 36 | 26 | 56.5 | 49.5 | 751 | |
| | 2014.04-2015.12 | AT/MT | R | L/R | SUV 4WD D 5244 T23 | Chassis no. to:364999;8 balls | GCO83248 | Outer Joint | 44NS | 36 | 29 | 56.5 | 49.5 | 64 | I |
| | 2014.04-2015.12 | AT/MT | R | L/R | SUV 4WD D 5244 T23 | Chassis no. to:364999 | GCI18187 | Inner Joint | | 26 | 29 | 35 | 69.5 | 107.5 | |
| | 2014.04-2015.12 | AT/MT | R | L/R | SUV 4WD D 5244 T23 | Chassis no. from:365000 | GCI62035 | Inner Joint | | 23 | 29 | 28 | 64 | 110 | |
| 2.5 (183 kw) | 2014.04-2017.02 | AT | F | L | SUV 4WD B 5254 T12 | | GDS81385 | Drive Shaft | | 40 | 31 | 57.5 | 52 | 547 | |
| | 2014.04-2017.02 | AT | F | R | SUV 4WD B 5254 T12 | | GDS81388 | Drive Shaft | | 40 | 28 | 57.7 | 52 | 1024 | |
| | 2014.04-2017.02 | AT | F | L | SUV 4WD B 5254 T12 | Transmission side | GCO81424 | Inner Joint | | 31 | 27 | 36.2 | 70 | 62 | |
| | 2014.04-2017.02 | AT | F | R | SUV 4WD B 5254 T12 | | GCO81433 | Inner Joint | | 28 | 27 | 30 | 520.5 | 82.5 | |
| 2.5 (187 kw) | 2014.04-2017.02 | AT | F | L | SUV 4WD B 5254 T12 | | GDS81385 | Drive Shaft | | 40 | 31 | 57.5 | 52 | 547 | |
| | 2014.04-2017.02 | AT | F | R | SUV 4WD B 5254 T12 | | GDS81388 | Drive Shaft | | 40 | 28 | 57.7 | 52 | 1024 | |
| | 2014.04-2017.02 | AT | F | L | SUV 4WD B 5254 T12 | Transmission side | GCO81424 | Inner Joint | | 31 | 27 | 36.2 | 70 | 62 | |
| | 2014.04-2017.02 | AT | F | R | SUV 4WD B 5254 T12 | | GCO81433 | Inner Joint | | 28 | 27 | 30 | 520.5 | 82.5 | |
| 3.0 (210 kw) | 2008.05-2010.12 | AT | F | L | SUV 4WD B 6304 T2 | | GDS81385 | Drive Shaft | | 40 | 31 | 57.5 | 52 | 547 | |
| | 2008.05-2010.12 | AT | F | R | SUV 4WD B 6304 T2 | | GDS81387 | Drive Shaft | | 40 | 28 | 57.7 | 52 | 1030 | |
| | 2008.05-2010.12 | AT | F | L | SUV 4WD B 6304 T2 | Transmission side | GCO81424 | Inner Joint | | 31 | 27 | 36.2 | 70 | 62 | |
| | 2008.05-2010.12 | AT | F | R | SUV 4WD B 6304 T2 | | GCO81435 | Inner Joint | | 28 | 27 | 30 | 526 | 82.5 | |
| | 2008.05-2010.12 | | F | L/R | SUV 4WD B 6304 T2 | Model year from:2009 | GCO62031 | Outer Joint | 48T | 36 | 27 | 56.5 | 55 | 65 | M |
| | 2008.05-2010.12 | | F | L/R | SUV 4WD B 6304 T2 | Model year from:2009 | GCO62045 | Outer Joint | | 40 | 26 | 57.7 | 52 | 62.5 | M |
| | 2008.05-2010.12 | | F | L | SUV 4WD B 6304 T2 | Model year from:2010 | GCI18044 | Inner Joint | | 26 | 23 | 40 | 68.5 | 99.5 | |
| | 2008.05-2010.12 | 6AT | R | L/R | SUV 4WD B 6304 T2 | | GDS83926 | Drive Shaft | 44NS | 36 | 26 | 56.5 | 49.5 | 751 | |
| | 2008.05-2010.12 | 6AT | R | L/R | SUV 4WD B 6304 T2 | 8 balls | GCO83248 | Outer Joint | 44NS | 36 | 29 | 56.5 | 49.5 | 64 | I |
| | 2008.05-2010.12 | 6AT | R | L/R | SUV 4WD B 6304 T2 | | GCI18187 | Inner Joint | | 26 | 29 | 35 | 69.5 | 107.5 | |
| 3.0 (224 kw) | 2010.03-2017.02 | AT | F | L | SUV 4WD B 6304 T4 | | GDS81385 | Drive Shaft | | 40 | 31 | 57.5 | 52 | 547 | |
| | 2010.03-2017.02 | AT | F | R | SUV 4WD B 6304 T4 | | GDS81387 | Drive Shaft | | 40 | 28 | 57.7 | 52 | 1030 | |
| | 2010.03-2017.02 | AT | F | L | SUV 4WD B 6304 T4 | Transmission side | GCO81424 | Inner Joint | | 31 | 27 | 36.2 | 70 | 62 | |
| | 2010.03-2017.02 | AT | F | R | SUV 4WD B 6304 T4 | | GCO81435 | Inner Joint | | 28 | 27 | 30 | 526 | 82.5 | |
| | 2010.03-2017.02 | | F | L/R | SUV 4WD B 6304 T4 | Model year to:2010 | GCO62031 | Outer Joint | 48T | 36 | 27 | 56.5 | 55 | 65 | M |
| | 2010.03-2017.02 | | F | L/R | SUV 4WD B 6304 T4 | Model year to:2010 | GCO62045 | Outer Joint | | 40 | 26 | 57.7 | 52 | 62.5 | M |
| | 2010.03-2017.02 | | F | L | SUV 4WD B 6304 T4 | Model year to:2010 | GCI18044 | Inner Joint | | 26 | 23 | 40 | 68.5 | 99.5 | |
| | 2010.03-2017.02 | 6AT | R | L/R | SUV 4WD B 6304 T4 | 8 balls | GDS83926 | Drive Shaft | 44NS | 36 | 26 | 56.5 | 49.5 | 751 | |
| | 2010.03-2017.02 | 6AT | R | L/R | SUV 4WD B 6304 T4 | 8 balls | GCO83248 | Outer Joint | 44NS | 36 | 29 | 56.5 | 49.5 | 64 | I |
| | 2010.03-2017.02 | 6AT | R | L/R | SUV 4WD B 6304 T4 | | GCI18187 | Inner Joint | | 26 | 29 | 35 | 69.5 | 107.5 | |
| 3.0 (242 kw) | 2014.04-2015.12 | AT | F | L | SUV 4WD B 6304 T4;B 6304 T3 | | GDS81385 | Drive Shaft | | 40 | 31 | 57.5 | 52 | 547 | |
| | 2014.04-2015.12 | AT | F | R | SUV 4WD B 6304 T4;B 6304 T3 | | GDS81387 | Drive Shaft | | 40 | 28 | 57.7 | 52 | 1030 | |
| | 2014.04-2015.12 | AT | F | L | SUV 4WD B 6304 T4;B 6304 T3 | Transmission side | GCO81424 | Inner Joint | | 31 | 27 | 36.2 | 70 | 62 | |
| | 2014.04-2015.12 | AT | F | R | SUV 4WD B 6304 T4;B 6304 T3 | | GCO81435 | Inner Joint | | 28 | 27 | 30 | 526 | 82.5 | |
| | 2014.04-2015.12 | AT | R | L/R | SUV 4WD B 6304 T4;B 6304 T3 | | GDS62077 | Drive Shaft | 44NS | 36 | 23 | 56.5 | 49.5 | 762 | |
| | 2014.04-2015.12 | AT | R | L/R | SUV 4WD B 6304 T4;B 6304 T3 | | GCI62035 | Inner Joint | | 23 | 29 | 28 | 64 | 110 | |
| 3.2 (171 kw) | 2011.09-2014.12 | AT | F | R | SUV FWD B 6324 S4 | | GDS81389 | Drive Shaft | | 40 | 28 | 57.7 | 52 | 1030 | |
| 3.2 (175 kw) | 2009.07-2010.12 | AT | F | L | SUV 4WD B 6324 S | | GDS81385 | Drive Shaft | | 40 | 31 | 57.5 | 52 | 547 | |
| | 2009.07-2010.12 | AT | F | R | SUV 4WD B 6324 S | | GDS81387 | Drive Shaft | | 40 | 28 | 57.7 | 52 | 1030 | |
| | 2009.07-2010.12 | AT | F | L | SUV 4WD B 6324 S | Transmission side | GCO81424 | Inner Joint | | 31 | 27 | 36.2 | 70 | 62 | |
| | 2009.07-2010.12 | AT | F | R | SUV 4WD B 6324 S | | GCO81435 | Inner Joint | | 28 | 27 | 30 | 526 | 82.5 | |
| | 2009.07-2010.12 | | F | L/R | SUV 4WD B 6324 S | | GCO62031 | Outer Joint | 48T | 36 | 27 | 56.5 | 55 | 65 | M |
| | 2009.07-2010.12 | | F | L/R | SUV 4WD B 6324 S | | GCO62045 | Outer Joint | | 40 | 26 | 57.7 | 52 | 62.5 | M |

| | YEAR | TRANSM. | F/R | L/R | BODY STYLE & DRIVE TYPE & ENGINE | REMARKS | G-AP Ref. | PRODUCT | ABS | Technical Specifications A | B | C | H | L | P |
|---|---|---|---|---|---|---|---|---|---|---|---|---|---|---|---|
| **VOLVO** | | | | | | | | | | | | | | | |
| **XC60** | | | | | | | | | | | | | | | |
| 3.2 (175 kw) | 2009.07-2010.12 | | F | L | SUV 4WD B 6324 S | Model year from:2010 | GCI18044 | Inner Joint | | 26 | 23 | 40 | 68.5 | 99.5 | |
| | 2009.07-2010.12 | 6AT | R | L/R | SUV 4WD B 6324 S | Chassis no. to:49999;8 balls | GDS83926 | Drive Shaft | 44NS | 36 | 26 | 56.5 | 49.5 | 751 | |
| | 2009.07-2010.12 | 6AT | R | L/R | SUV 4WD B 6324 S | Chassis no. to:49999;8 balls | GCO83248 | Outer Joint | 44NS | 36 | 29 | 56.5 | 49.5 | 64 | I |
| | 2009.07-2010.12 | 6AT | R | L/R | SUV 4WD B 6324 S | Chassis no. to:49999 | GCI18187 | Inner Joint | | 26 | 29 | 35 | 69.5 | 107.5 | |
| 3.2 (179 kw) | 2010.03-2015.12 | AT | F | L | SUV 4WD B 6324 S5 | | GDS81385 | Drive Shaft | | 40 | 31 | 57.5 | 52 | 547 | |
| | 2010.03-2015.12 | AT | F | R | SUV 4WD B 6324 S5 | | GDS81387 | Drive Shaft | | 40 | 28 | 57.7 | 52 | 1030 | |
| | 2010.03-2015.12 | AT | F | L | SUV 4WD B 6324 S5 | Transmission side | GCO81424 | Inner Joint | | 31 | 27 | 36.2 | 70 | 62 | |
| | 2010.03-2015.12 | AT | F | R | SUV 4WD B 6324 S5 | | GCO81435 | Inner Joint | | 28 | 27 | 30 | 526 | 82.5 | |
| | 2010.03-2015.12 | | F | L/R | SUV 4WD B 6324 S5 | Model year to:2010 | GCO62031 | Outer Joint | 48T | 36 | 27 | 56.5 | 55 | 65 | M |
| | 2010.03-2015.12 | | F | L/R | SUV 4WD B 6324 S5 | Model year to:2010 | GCO62045 | Outer Joint | | 40 | 26 | 57.7 | 52 | 62.5 | M |
| | 2010.03-2015.12 | | F | L | SUV 4WD B 6324 S5 | Model year to:2010 | GCI18044 | Inner Joint | | 26 | 23 | 40 | 68.5 | 99.5 | |
| | 2010.03-2015.12 | 6AT | R | L/R | SUV 4WD B 6324 S5 | 8 balls | GDS83926 | Drive Shaft | 44NS | 36 | 26 | 56.5 | 49.5 | 751 | |
| | 2010.03-2015.12 | 6AT | R | L/R | SUV 4WD B 6324 S5 | 8 balls | GCO83248 | Outer Joint | 44NS | 36 | 29 | 56.5 | 49.5 | 64 | I |
| | 2010.03-2015.12 | 6AT | R | L/R | SUV 4WD B 6324 S5 | | GCI18187 | Inner Joint | | 26 | 29 | 35 | 69.5 | 107.5 | |
| **XC70** | | | | | | | | | | | | | | | |
| 2.0 (120 kw) | 2010.04-2015.12 | 6AT | F | L | Estate FWD D 5204 T2;D 5204 T3 | Model year from:2014 | GDS81369 | Drive Shaft | | 40 | 31 | 57.7 | 52 | 537 | |
| | 2010.04-2015.12 | 6AT | F | L | Estate FWD D 5204 T2;D 5204 T3 | Model year to:2013 | GDS81381 | Drive Shaft | | 40 | 31 | 57.7 | 52 | 537 | |
| | 2010.04-2015.12 | 6AT | F | L | Estate FWD D 5204 T2;D 5204 T3 | Model year to:2013 | GCO59285 | Outer Joint | | 40 | 27 | 57.7 | 52 | 63.5 | M |
| | 2010.04-2015.12 | 6MT | F | L | Estate FWD D 5204 T2;D 5204 T3 | | GDS81380 | Drive Shaft | | 40 | 31 | 57.7 | 52 | 566 | |
| | 2010.04-2015.12 | AT | F | L | Estate FWD D 5204 T2;D 5204 T3 | Model year from:2014 | GCO62042 | Outer Joint | | 40 | 27 | 57.7 | 52 | 63.5 | M |
| | 2010.04-2015.12 | AT | F | L | Estate FWD D 5204 T2;D 5204 T3 | Transmission side | GCO81424 | Inner Joint | | 31 | 27 | 36.2 | 70 | 62 | |
| | 2013.09-2016.12 | 6AT | F | L | Estate Van FWD D 5204 T3 | Model year from:2014 | GDS81369 | Drive Shaft | | 40 | 31 | 57.7 | 52 | 537 | |
| | 2013.09-2016.12 | 6AT | F | L | Estate Van FWD D 5204 T3 | Model year from:2014 | GCO62042 | Outer Joint | | 40 | 27 | 57.7 | 52 | 63.5 | M |
| | 2013.09-2016.12 | 6AT | F | L | Estate Van FWD D 5204 T3 | Model year from:2014 | GCO81424 | Inner Joint | | 31 | 27 | 36.2 | 70 | 62 | |
| | 2013.09-2016.12 | 6MT | F | L | Estate Van FWD D 5204 T3 | | GDS81380 | Drive Shaft | | 40 | 31 | 57.7 | 52 | 566 | |
| | 2013.09-2016.12 | 6MT | F | L | Estate Van FWD D 5204 T3 | | GCO59285 | Outer Joint | | 40 | 27 | 57.7 | 52 | 63.5 | M |
| | 2013.09-2016.12 | 6MT | F | L | Estate Van FWD D 5204 T3 | | GCO81430 | Inner Joint | | 31 | 27 | 44 | 65 | 78.5 | |
| 2.0 (133 kw) | 2013.10-2016.04 | AT | F | L | Estate FWD D 4204 T5 | | GDS81373 | Drive Shaft | | 40 | 31 | 57.5 | 52 | 581 | |
| | 2013.10-2016.04 | AT | F | R | Estate FWD D 4204 T5 | | GDS81374 | Drive Shaft | | 40 | 28 | 57.5 | 52 | 961 | |
| | 2013.10-2016.04 | AT | F | L/R | Estate FWD D 4204 T5 | | GCO81181 | Outer Joint | | 40 | 28 | 57.5 | 52 | 60.5 | I |
| | 2013.10-2016.04 | AT | F | L | Estate FWD D 4204 T5 | | GCO81424 | Inner Joint | | 31 | 27 | 36.2 | 70 | 62 | |
| | 2013.10-2016.04 | AT | F | R | Estate FWD D 4204 T5 | | GCO81427 | Inner Joint | | 28 | 27 | 33 | 453 | 57 | |
| | 2013.10-2016.04 | MT | F | R | Estate FWD D 4204 T5 | | GDS81376 | Drive Shaft | | 40 | 28 | 57.5 | 52 | 962 | |
| | 2013.10-2016.04 | MT | F | R | Estate FWD D 4204 T5 | | GCO81181 | Outer Joint | | 40 | 28 | 57.5 | 52 | 60.5 | I |
| | 2013.10-2016.04 | MT | F | R | Estate FWD D 4204 T5 | | GCO81428 | Inner Joint | | 28 | 27 | 40 | 454 | 57 | |
| 2.0 (180 kw) | 2013.10-2016.12 | AT | F | L | Estate FWD B 4204 T11 | | GDS81373 | Drive Shaft | | 40 | 31 | 57.5 | 52 | 581 | |
| | 2013.10-2016.12 | AT | F | R | Estate FWD B 4204 T11 | | GDS81374 | Drive Shaft | | 40 | 28 | 57.5 | 52 | 961 | |
| | 2013.10-2016.12 | AT | F | L/R | Estate FWD B 4204 T11 | | GCO81181 | Outer Joint | | 40 | 28 | 57.5 | 52 | 60.5 | I |
| | 2013.10-2016.12 | AT | F | L | Estate FWD B 4204 T11 | | GCO81424 | Inner Joint | | 31 | 27 | 36.2 | 70 | 62 | |
| | 2013.10-2016.12 | AT | F | R | Estate FWD B 4204 T11 | | GCO81427 | Inner Joint | | 28 | 27 | 33 | 453 | 57 | |
| 2.4 (120 kw) | 2002.09-2007.08 | 5AT | F | L | Estate 4WD D 5244 T | | GDS62039 | Drive Shaft | 48T | 36 | 26 | 56.5 | 48 | 558.5 | |
| | 2002.09-2007.08 | 5AT | F | R | Estate 4WD D 5244 T | | GDS62065 | Drive Shaft | 48T | 36 | 26 | 56.5 | 48 | 1006 | |
| | 2002.09-2007.08 | 5AT | F | L | Estate 4WD D 5244 T | | GCI99109 | Inner Joint | | 26 | 26 | 31 | 68 | 87 | |
| | 2002.09-2007.08 | 5AT | F | R | Estate 4WD D 5244 T | | GCI62014 | Inner Joint | | 26 | 26 | 28 | 513 | 93.5 | |
| | 2002.09-2007.08 | 5AT/6MT | F | L/R | Estate 4WD D 5244 T | | GCO62009 | Outer Joint | 48T | 36 | 27 | 56.5 | 48 | 66 | M |
| | 2002.09-2007.08 | 6MT | F | L | Estate 4WD D 5244 T | | GDS84500 | Drive Shaft | 48T | 36 | 26 | 56.5 | 48 | 576 | |
| | 2002.09-2007.08 | 6MT | F | R | Estate 4WD D 5244 T | | GDS83882 | Drive Shaft | 48T | 36 | 26 | 56.5 | 48 | 1028 | |
| | 2002.09-2007.08 | 6MT | F | R | Estate 4WD D 5244 T | | GCI82414 | Inner Joint | | 26 | 28 | 27.97 | 527 | 88 | |
| | 2002.09-2007.08 | AT/MT | R | L/R | Estate 4WD D 5244 T | | GDS81130 | Drive Shaft | | 36 | 26 | 56.5 | 50 | 764 | |
| | 2002.09-2007.08 | AT/MT | R | L/R | Estate 4WD D 5244 T | | GCI44031 | Inner Joint | | 26 | 20 | 35 | 69.5 | 81 | |
| | 2007.08-2016.04 | 6AT | F | L | Estate 4WD D 5244 T5;D 5244 T16;D 5244 T17 | Model year from:2014 | GDS81369 | Drive Shaft | | 40 | 31 | 57.7 | 52 | 537 | |
| | 2007.08-2016.04 | 6AT | F | L | Estate 4WD D 5244 T5;D 5244 T16;D 5244 T17 | Model year to:2013 | GDS81381 | Drive Shaft | | 40 | 31 | 57.7 | 52 | 537 | |
| | 2007.08-2016.04 | 6AT | F | R | Estate 4WD D 5244 T5;D 5244 T16;D 5244 T17 | Model year from:2014 | GDS81370 | Drive Shaft | | 40 | 28 | 57.7 | 52 | 1008 | |
| | 2007.08-2016.04 | 6AT | F | R | Estate 4WD D 5244 T5;D 5244 T16;D 5244 T17 | Model year to:2013 | GDS81384 | Drive Shaft | | 40 | 28 | 57.7 | 52 | 1008 | |
| | 2007.08-2016.04 | 6AT | F | L | Estate 4WD D 5244 T5;D 5244 T16;D 5244 T17 | | GCO81424 | Inner Joint | | 31 | 27 | 36.2 | 70 | 62 | |
| | 2007.08-2016.04 | 6MT | F | L | Estate 4WD D 5244 T5;D 5244 T16;D 5244 T17 | | GDS81380 | Drive Shaft | | 40 | 31 | 57.7 | 52 | 566 | |
| | 2007.08-2016.04 | 6MT | F | R | Estate 4WD D 5244 T5;D 5244 T16;D 5244 T17 | | GDS81382 | Drive Shaft | | 40 | 28 | 57.7 | 52 | 1011 | |
| | 2007.08-2016.04 | 6MT | F | L | Estate 4WD D 5244 T5;D 5244 T16;D 5244 T17 | | GCO81430 | Inner Joint | | 31 | 27 | 44 | 65 | 78.5 | |
| | 2007.08-2016.04 | AT/MT | F | L/R | Estate 4WD D 5244 T5;D 5244 T16;D 5244 T17 | | GCO59285 | Outer Joint | | 40 | 27 | 57.7 | 52 | 63.5 | M |
| | 2007.08-2016.04 | MT | F | R | Estate 4WD D 5244 T5;D 5244 T16;D 5244 T17 | | GCO81431 | Inner Joint | | 28 | 27 | 30 | 523.5 | 82.5 | |
| | 2007.08-2016.04 | AT | R | L/R | Estate 4WD D 5244 T5;D 5244 T16;D 5244 T17 | Chassis no. from:146101 | GDS62077 | Drive Shaft | 44NS | 36 | 23 | 56.5 | 49.5 | 762 | |
| | 2007.08-2016.04 | AT | R | L/R | Estate 4WD D 5244 T5;D 5244 T16;D 5244 T17 | Chassis no. to:146100;8 balls | GDS83926 | Drive Shaft | 44NS | 36 | 26 | 56.5 | 49.5 | 751 | |
| | 2007.08-2016.04 | AT | R | L/R | Estate 4WD D 5244 T5;D 5244 T16;D 5244 T17 | Chassis no. to:146100 | GCO83248 | Outer Joint | 44NS | 36 | 29 | 56.5 | 49.5 | 64 | I |
| | 2007.08-2016.04 | AT | R | L/R | Estate 4WD D 5244 T5;D 5244 T16;D 5244 T17 | Chassis no. to:146100 | GCI18187 | Inner Joint | | 26 | 29 | 35 | 69.5 | 107.5 | |
| | 2013.09-2016.04 | 6AT | F | L | Estate Van 4WD D 5244 T17 | | GDS81369 | Drive Shaft | | 40 | 31 | 57.7 | 52 | 537 | |

| | YEAR | TRANSM. | F/R | L/R | BODY STYLE & DRIVE TYPE & ENGINE | REMARKS | G-AP Ref. | PRODUCT | ABS | Technical Specifications A | B | C | H | L | P |
|---|---|---|---|---|---|---|---|---|---|---|---|---|---|---|---|
| **VOLVO** **XC70** | | | | | | | | | | | | | | | |
| 2.4 (120 kw) | 2013.09-2016.04 | 6AT | F | L | Estate Van 4WD D 5244 T17 | | GDS81381 | Drive Shaft | | 40 | 31 | 57.7 | 52 | 537 | |
| | 2013.09-2016.04 | 6AT | F | R | Estate Van 4WD D 5244 T17 | | GDS81370 | Drive Shaft | | 40 | 28 | 57.7 | 52 | 1008 | |
| | 2013.09-2016.04 | 6MT | F | L | Estate Van 4WD D 5244 T17 | | GDS81380 | Drive Shaft | | 40 | 31 | 57.7 | 52 | 566 | |
| | 2013.09-2016.04 | 6MT | F | R | Estate Van 4WD D 5244 T17 | | GDS81382 | Drive Shaft | | 40 | 28 | 57.7 | 52 | 1011 | |
| | 2013.09-2016.04 | 6AT | R | L/R | Estate Van 4WD D 5244 T17 | Chassis no. from:146101 | GDS62077 | Drive Shaft | 44NS | 36 | 23 | 56.5 | 49.5 | 762 | |
| | 2013.09-2016.04 | AT | R | L/R | Estate Van 4WD D 5244 T17 | CHAssis no. to:146100 | GDS83926 | Drive Shaft | 44NS | 36 | 26 | 56.5 | 49.5 | 751 | |
| | 2013.09-2016.04 | AT | R | L/R | Estate Van 4WD D 5244 T17 | Chassis no. to:146100 | GCO83248 | Outer Joint | 44NS | 36 | 29 | 56.5 | 49.5 | 64 | I |
| | 2013.09-2016.04 | AT | R | L/R | Estate Van 4WD D 5244 T17 | Chassis no. to:146100 | GCI18187 | Inner Joint | | 26 | 29 | 35 | 69.5 | 107.5 | |
| 2.4 (129 kw) | 2009.06-2010.12 | 6AT | F | L | Estate FWD D 5244 T14 | Model year to:2013 | GDS81381 | Drive Shaft | | 40 | 31 | 57.7 | 52 | 537 | |
| | 2009.06-2010.12 | AT | F | L | Estate FWD D 5244 T14 | Transmission side,Date from:2010.01 | GCO81424 | Inner Joint | | 31 | 27 | 36.2 | 70 | 62 | |
| | 2009.06-2010.12 | MT | F | L | Estate FWD D 5244 T14 | | GDS81380 | Drive Shaft | | 40 | 31 | 57.7 | 52 | 566 | |
| | 2009.06-2010.12 | MT | F | L | Estate FWD D 5244 T14 | | GCO81430 | Inner Joint | | 31 | 27 | 44 | 65 | 78.5 | |
| | 2009.06-2010.12 | MT/6AT | F | L | Estate FWD D 5244 T14 | Transmission:6AT,Model year to:2013;Transmission:MT | GCO59285 | Outer Joint | | 40 | 27 | 57.7 | 52 | 63.5 | M |
| 2.4 (133 kw) | 2013.10-2016.04 | 6AT | F | L | Estate 4WD D 5244 T12 | | GDS81369 | Drive Shaft | | 40 | 31 | 57.7 | 52 | 537 | |
| | 2013.10-2016.04 | 6AT | F | L | Estate 4WD D 5244 T12 | | GDS81381 | Drive Shaft | | 40 | 31 | 57.7 | 52 | 537 | |
| | 2013.10-2016.04 | 6AT | F | R | Estate 4WD D 5244 T12 | | GDS81370 | Drive Shaft | | 40 | 28 | 57.7 | 52 | 1008 | |
| | 2013.10-2016.04 | 6MT | F | L | Estate 4WD D 5244 T12 | | GDS81380 | Drive Shaft | | 40 | 31 | 57.7 | 52 | 566 | |
| | 2013.10-2016.04 | 6MT | F | R | Estate 4WD D 5244 T12 | | GDS81382 | Drive Shaft | | 40 | 28 | 57.7 | 52 | 1011 | |
| | 2013.10-2016.04 | AT/MT | F | L/R | Estate 4WD D 5244 T12 | | GCO59285 | Outer Joint | | 40 | 27 | 57.7 | 52 | 63.5 | M |
| | 2013.10-2016.04 | MT | F | L | Estate 4WD D 5244 T12 | | GCO81430 | Inner Joint | | 31 | 27 | 44 | 65 | 78.5 | |
| | 2013.10-2016.04 | MT | F | R | Estate 4WD D 5244 T12 | | GCO81431 | Inner Joint | | 28 | 27 | 30 | 523.5 | 82.5 | |
| | 2013.10-2016.04 | 6AT | R | L/R | Estate 4WD D 5244 T12 | Chassis no. from:146101 | GDS62077 | Drive Shaft | 44NS | 36 | 23 | 56.5 | 49.5 | 762 | |
| | 2013.10-2016.04 | 6AT | R | L/R | Estate 4WD D 5244 T12 | Chassis no. to:146100;8 balls | GDS83926 | Drive Shaft | 44NS | 36 | 26 | 56.5 | 49.5 | 751 | |
| | 2013.10-2016.04 | 6AT | R | L/R | Estate 4WD D 5244 T12 | Chassis no. to:146100 | GCO83248 | Outer Joint | 44NS | 36 | 29 | 56.5 | 49.5 | 64 | I |
| | 2013.10-2016.04 | 6AT | R | L/R | Estate 4WD D 5244 T12 | Chassis no. to:146100 | GCI18187 | Inner Joint | | 26 | 29 | 35 | 69.5 | 107.5 | |
| | 2013.10-2016.04 | 6AT | R | L/R | Estate 4WD D 5244 T12 | Chassis no. from:146101 | GCI62035 | Inner Joint | | 23 | 29 | 28 | 64 | 110 | |
| 2.4 (136 kw) | 2005.12-2007.08 | 6AT/6MT | R | L/R | Estate 4WD D 5244 T4 | | GDS81129 | Drive Shaft | | 36 | 26 | 56.5 | 49.5 | 756 | |
| | 2005.12-2007.08 | 6AT/6MT | R | L/R | Estate 4WD D 5244 T4 | | GCI81051 | Inner Joint | | 36 | 22 | 56.5 | 49.5 | 97 | |
| | 2005.12-2007.08 | 6AT/6MT | R | L/R | Estate 4WD D 5244 T4 | | GCI81062 | Inner Joint | | 26 | 22 | 35 | 69.5 | 94 | |
| | 2007.04-2009.12 | 6AT | F | L | Estate 4WD D 5244 T4 | Model year from:2008 | GDS81381 | Drive Shaft | | 40 | 31 | 57.7 | 52 | 537 | |
| | 2007.04-2009.12 | 6AT | F | R | Estate 4WD D 5244 T4 | | GDS81384 | Drive Shaft | | 40 | 28 | 57.7 | 52 | 1008 | |
| | 2007.04-2009.12 | 6AT | F | L | Estate 4WD D 5244 T4 | | GCO81424 | Inner Joint | | 31 | 27 | 36.2 | 70 | 62 | |
| | 2007.04-2009.12 | 6MT | F | L | Estate 4WD D 5244 T4 | | GDS81380 | Drive Shaft | | 40 | 31 | 57.7 | 52 | 566 | |
| | 2007.04-2009.12 | 6MT | F | R | Estate 4WD D 5244 T4 | | GDS81382 | Drive Shaft | | 40 | 28 | 57.7 | 52 | 1011 | |
| | 2007.04-2009.12 | AT | F | L/R | Estate 4WD D 5244 T4 | | GCO59285 | Outer Joint | | 40 | 27 | 57.7 | 52 | 63.5 | M |
| | 2007.04-2009.12 | 6AT/6MT | R | L/R | Estate 4WD D 5244 T4 | Chassis no. from:146101 | GDS62077 | Drive Shaft | 44NS | 36 | 23 | 56.5 | 49.5 | 762 | |
| | 2007.04-2009.12 | AT | R | L/R | Estate 4WD D 5244 T4 | Chassis no. to:146100;8 balls | GDS83926 | Drive Shaft | 44NS | 36 | 26 | 56.5 | 49.5 | 751 | |
| | 2007.04-2009.12 | AT | R | L/R | Estate 4WD D 5244 T4 | CHAssis no. to:146100 | GCO83248 | Outer Joint | 44NS | 36 | 29 | 56.5 | 49.5 | 64 | I |
| | 2007.04-2009.12 | AT | R | L/R | Estate 4WD D 5244 T4 | Chassis no. to:146100 | GCI18187 | Inner Joint | | 26 | 29 | 35 | 69.5 | 107.5 | |
| 2.4 (151 kw) | 2009.04-2011.12 | 6AT | F | L | Estate 4WD D 5244 T10 | Model year to:2013 | GDS81381 | Drive Shaft | | 40 | 31 | 57.7 | 52 | 537 | |
| | 2009.04-2011.12 | 6AT | F | R | Estate 4WD D 5244 T10 | | GDS81384 | Drive Shaft | | 40 | 28 | 57.7 | 52 | 1008 | |
| | 2009.04-2011.12 | 6MT | F | L | Estate 4WD D 5244 T10 | | GDS81380 | Drive Shaft | | 40 | 31 | 57.7 | 52 | 566 | |
| | 2009.04-2011.12 | AT | F | L | Estate 4WD D 5244 T10 | | GCI81210 | Inner Joint | | 22 | 23 | 35 | 131.5 | 84.5 | |
| | 2009.04-2011.12 | MT | F | R | Estate 4WD D 5244 T10 | | GDS81382 | Drive Shaft | | 40 | 28 | 57.7 | 52 | 1011 | |
| | 2009.04-2011.12 | 6AT/6MT | R | L/R | Estate 4WD D 5244 T10 | Chassis no. from:146101 | GDS62077 | Drive Shaft | 44NS | 36 | 23 | 56.5 | 49.5 | 762 | |
| | 2009.04-2011.12 | AT | R | L/R | Estate 4WD D 5244 T10 | Chassis no. to:146100;8 balls | GDS83926 | Drive Shaft | 44NS | 36 | 26 | 56.5 | 49.5 | 751 | |
| | 2009.04-2011.12 | AT | R | L/R | Estate 4WD D 5244 T10 | Chassis no. to:146100;8 balls | GCO83248 | Outer Joint | 44NS | 36 | 29 | 56.5 | 49.5 | 64 | I |
| | 2009.04-2011.12 | AT | R | L/R | Estate 4WD D 5244 T10 | Chassis no. to:146100 | GCI18187 | Inner Joint | | 26 | 29 | 35 | 69.5 | 107.5 | |
| 2.4 (158 kw) | 2011.04-2015.12 | 6AT | F | L | Estate 4WD D 5244 T11;D 5244 T15 | Model year from:2014 | GDS81369 | Drive Shaft | | 40 | 31 | 57.7 | 52 | 537 | |
| | 2011.04-2015.12 | 6AT | F | L | Estate 4WD D 5244 T11;D 5244 T15 | Model year to:2013 | GDS81381 | Drive Shaft | | 40 | 31 | 57.7 | 52 | 537 | |
| | 2011.04-2015.12 | 6AT | F | R | Estate 4WD D 5244 T11;D 5244 T15 | Model year from:2014 | GDS81370 | Drive Shaft | | 40 | 28 | 57.7 | 52 | 1008 | |
| | 2011.04-2015.12 | 6AT | F | R | Estate 4WD D 5244 T11;D 5244 T15 | Model year to:2013 | GDS81384 | Drive Shaft | | 40 | 28 | 57.7 | 52 | 1008 | |
| | 2011.04-2015.12 | 6AT | F | L | Estate 4WD D 5244 T11;D 5244 T15 | | GCO81424 | Inner Joint | | 31 | 27 | 36.2 | 70 | 62 | |
| | 2011.04-2015.12 | 6MT | F | L | Estate 4WD D 5244 T11;D 5244 T15 | | GDS81380 | Drive Shaft | | 40 | 31 | 57.7 | 52 | 566 | |
| | 2011.04-2015.12 | 6MT | F | R | Estate 4WD D 5244 T11;D 5244 T15 | | GDS81382 | Drive Shaft | | 40 | 28 | 57.7 | 52 | 1011 | |
| | 2011.04-2015.12 | AT/MT | F | L/R | Estate 4WD D 5244 T11;D 5244 T15 | | GCO59285 | Outer Joint | | 40 | 27 | 57.7 | 52 | 63.5 | M |
| | 2011.04-2015.12 | MT | F | L | Estate 4WD D 5244 T11;D 5244 T15 | | GCO81430 | Inner Joint | | 31 | 27 | 44 | 65 | 78.5 | |
| | 2011.04-2015.12 | MT | F | R | Estate 4WD D 5244 T11;D 5244 T15 | | GCO81431 | Inner Joint | | 28 | 27 | 30 | 523.5 | 82.5 | |
| | 2011.04-2015.12 | AT | R | L/R | Estate 4WD D 5244 T11;D 5244 T15 | Chassis no. from:146101 | GDS62077 | Drive Shaft | 44NS | 36 | 23 | 56.5 | 49.5 | 762 | |
| | 2011.04-2015.12 | AT | R | L/R | Estate 4WD D 5244 T11;D 5244 T15 | Chassis no. to:146100;8 balls | GDS83926 | Drive Shaft | 44NS | 36 | 26 | 56.5 | 49.5 | 751 | |
| | 2011.04-2015.12 | AT | R | L/R | Estate 4WD D 5244 T11;D 5244 T15 | Chassis no. to:146100 | GCO83248 | Outer Joint | 44NS | 36 | 29 | 56.5 | 49.5 | 64 | I |
| | 2011.04-2015.12 | AT | R | L/R | Estate 4WD D 5244 T11;D 5244 T15 | Chassis no. to:146100 | GCI18187 | Inner Joint | | 26 | 29 | 35 | 69.5 | 107.5 | |
| | 2011.04-2015.12 | AT | R | L/R | Estate 4WD D 5244 T11;D 5244 T15 | Chassis no. from:146101 | GCI62035 | Inner Joint | | 23 | 29 | 28 | 64 | 110 | |
| | 2013.09-2016.12 | 6AT | F | L | Estate Van 4WD D 5244 T15 | | GDS81369 | Drive Shaft | | 40 | 31 | 57.7 | 52 | 537 | |
| | 2013.09-2016.12 | 6AT | F | L | Estate Van 4WD D 5244 T15 | | GDS81381 | Drive Shaft | | 40 | 31 | 57.7 | 52 | 537 | |

| | YEAR | TRANSM. | F/R | L/R | BODY STYLE & DRIVE TYPE & ENGINE | REMARKS | G-AP Ref. | PRODUCT | ABS | Technical Specifications A | B | C | H | L | P |
|---|---|---|---|---|---|---|---|---|---|---|---|---|---|---|---|
| **VOLVO** **XC70** | | | | | | | | | | | | | | | |
| 2.4 (158 kw) | 2013.09-2016.12 | 6AT | F | R | Estate Van 4WD D 5244 T15 | | GDS81370 | Drive Shaft | | 40 | 28 | 57.7 | 52 | 1008 | |
| | 2013.09-2016.12 | 6AT | R | L/R | Estate Van 4WD D 5244 T15 | Chassis no. from:146101 | GDS62077 | Drive Shaft | 44NS | 36 | 23 | 56.5 | 49.5 | 762 | |
| | 2013.09-2016.12 | 6AT | R | L/R | Estate Van 4WD D 5244 T15 | Chassis no. to:146100;8 balls | GDS83926 | Drive Shaft | 44NS | 36 | 26 | 56.5 | 49.5 | 751 | |
| | 2013.09-2016.12 | 6AT | R | L/R | Estate Van 4WD D 5244 T15 | Chassis no. to:146100;8 balls | GCO83248 | Outer Joint | 44NS | 36 | 29 | 56.5 | 49.5 | 64 | I |
| | 2013.09-2016.12 | 6AT | R | L/R | Estate Van 4WD D 5244 T15 | Chassis no. to:146100 | GCI18187 | Inner Joint | | 26 | 29 | 35 | 69.5 | 107.5 | |
| 2.4 (162 kw) | 2015.03-2016.04 | 6AT | F | L | Estate 4WD D 5244 T20 | | GDS81369 | Drive Shaft | | 40 | 31 | 57.7 | 52 | 537 | |
| | 2015.03-2016.04 | AT | F | R | Estate 4WD D 5244 T20 | | GDS81370 | Drive Shaft | | 40 | 28 | 57.7 | 52 | 1008 | |
| | 2015.03-2016.04 | AT | F | L | Estate 4WD D 5244 T20 | | GCO81424 | Inner Joint | | 31 | 27 | 36.2 | 70 | 62 | |
| | 2015.03-2016.04 | 6AT | R | L/R | Estate 4WD D 5244 T20 | Chassis no. from:146101 | GDS62077 | Drive Shaft | 44NS | 36 | 23 | 56.5 | 49.5 | 762 | |
| | 2015.03-2016.04 | 6AT | R | L/R | Estate 4WD D 5244 T20 | Chassis no. to:146100;8 balls | GDS83926 | Drive Shaft | 44NS | 36 | 26 | 56.5 | 49.5 | 751 | |
| | 2015.03-2016.04 | 6AT | R | L/R | Estate 4WD D 5244 T20 | Chassis no. to:146100;8 balls | GCO83248 | Outer Joint | 44NS | 36 | 29 | 56.5 | 49.5 | 64 | I |
| | 2015.03-2016.04 | 6AT | R | L/R | Estate 4WD D 5244 T20 | Chassis no. to:146100 | GCI18187 | Inner Joint | | 26 | 29 | 35 | 69.5 | 107.5 | |
| 2.4 (169 kw) | 2013.11-2016.04 | 6AT | F | L | Estate 4WD D 5244 T15 | Model year from:2014 | GDS81369 | Drive Shaft | | 40 | 31 | 57.7 | 52 | 537 | |
| | 2013.11-2016.04 | AT | F | R | Estate 4WD D 5244 T15 | | GDS81370 | Drive Shaft | | 40 | 28 | 57.7 | 52 | 1008 | |
| | 2013.11-2016.04 | AT | F | L | Estate 4WD D 5244 T15 | | GCO81424 | Inner Joint | | 31 | 27 | 36.2 | 70 | 62 | |
| | 2013.11-2016.04 | MT | F | L | Estate 4WD D 5244 T15 | | GDS81380 | Drive Shaft | | 40 | 31 | 57.7 | 52 | 566 | |
| | 2013.11-2016.04 | MT | F | R | Estate 4WD D 5244 T15 | | GDS81382 | Drive Shaft | | 40 | 28 | 57.7 | 52 | 1011 | |
| | 2013.11-2016.04 | AT | R | L/R | Estate 4WD D 5244 T15 | Chassis no. from:146101 | GDS62077 | Drive Shaft | 44NS | 36 | 23 | 56.5 | 49.5 | 762 | |
| | 2013.11-2016.04 | AT | R | L/R | Estate 4WD D 5244 T15 | Chassis no. to:146100;8 balls | GDS83926 | Drive Shaft | 44NS | 36 | 26 | 56.5 | 49.5 | 751 | |
| | 2013.11-2016.04 | AT | R | L/R | Estate 4WD D 5244 T15 | Chassis no. to:146100;8 balls | GCO83248 | Outer Joint | 44NS | 36 | 29 | 56.5 | 49.5 | 64 | I |
| | 2013.11-2016.04 | AT/MT | R | L/R | Estate 4WD D 5244 T15 | Chassis no. to:146100 | GCI18187 | Inner Joint | | 26 | 29 | 35 | 69.5 | 107.5 | |
| 2.5 (154 kw) | 2002.09-2007.08 | 5AT | F | L | Estate 4WD B 5254 T2 | | GDS62039 | Drive Shaft | 48T | 36 | 26 | 56.5 | 48 | 558.5 | |
| | 2002.09-2007.08 | 5AT | F | L | Estate 4WD B 5254 T2 | | GCI99109 | Inner Joint | | 26 | 26 | 31 | 68 | 87 | |
| | 2002.09-2007.08 | 5MT | F | L | Estate 4WD B 5254 T2 | | GDS84500 | Drive Shaft | 48T | 36 | 26 | 56.5 | 48 | 576 | |
| | 2002.09-2007.08 | 5MT | F | R | Estate 4WD B 5254 T2 | | GCI82414 | Inner Joint | | 26 | 28 | 27.97 | 527 | 88 | |
| | 2002.09-2007.08 | 5AT/5MT | R | L/R | Estate 4WD B 5254 T2 | | GDS81130 | Drive Shaft | | 36 | 26 | 56.5 | 50 | 764 | |
| | 2002.09-2007.08 | 5AT/5MT | R | L/R | Estate 4WD B 5254 T2 | | GCI44031 | Inner Joint | | 26 | 20 | 35 | 69.5 | 81 | |
| 2.5 (183 kw) | 2015.03-2016.12 | 6AT | F | L | Estate 4WD B 5254 T14 | | GDS81369 | Drive Shaft | | 40 | 31 | 57.7 | 52 | 537 | |
| | 2015.03-2016.12 | AT | F | R | Estate 4WD B 5254 T14 | | GDS81370 | Drive Shaft | | 40 | 28 | 57.7 | 52 | 1008 | |
| | 2015.03-2016.12 | AT | F | L | Estate 4WD B 5254 T14 | | GCO81424 | Inner Joint | | 31 | 27 | 36.2 | 70 | 62 | |
| | 2015.03-2016.12 | 6AT | R | L/R | Estate 4WD B 5254 T14 | Chassis no. to:146100;8 balls | GCO83248 | Outer Joint | 44NS | 36 | 29 | 56.5 | 49.5 | 64 | I |
| | 2015.03-2016.12 | 6AT | R | L/R | Estate 4WD B 5254 T14 | Chassis no. to:146100 | GCI18187 | Inner Joint | | 26 | 29 | 35 | 69.5 | 107.5 | |
| | 2015.03-2016.12 | AT | R | L/R | Estate 4WD B 5254 T14 | Chassis no. from:146101 | GDS62077 | Drive Shaft | 44NS | 36 | 23 | 56.5 | 49.5 | 762 | |
| | 2015.03-2016.12 | AT | R | L/R | Estate 4WD B 5254 T14 | Chassis no. to:146100;8 balls | GDS83926 | Drive Shaft | 44NS | 36 | 26 | 56.5 | 49.5 | 751 | |
| 2.5 (187 kw) | 2015.08-2016.12 | 6AT | F | L | Estate 4WD B 5254 T12 | | GDS81369 | Drive Shaft | | 40 | 31 | 57.7 | 52 | 537 | |
| | 2015.08-2016.12 | 6AT | F | R | Estate 4WD B 5254 T12 | | GDS81370 | Drive Shaft | | 40 | 28 | 57.7 | 52 | 1008 | |
| | 2015.08-2016.12 | 6AT | F | L | Estate 4WD B 5254 T12 | | GCO81424 | Inner Joint | | 31 | 27 | 36.2 | 70 | 62 | |
| | 2015.08-2016.12 | 6AT | R | L/R | Estate 4WD B 5254 T12 | Chassis no. from:146101 | GDS62077 | Drive Shaft | 44NS | 36 | 23 | 56.5 | 49.5 | 762 | |
| | 2015.08-2016.12 | 6AT | R | L/R | Estate 4WD B 5254 T12 | Chassis no. to:146100 | GDS83926 | Drive Shaft | 44NS | 36 | 26 | 56.5 | 49.5 | 751 | |
| | 2015.08-2016.12 | 6AT | R | L/R | Estate 4WD B 5254 T12 | Chassis no. to:146100;8 balls | GCO83248 | Outer Joint | 44NS | 36 | 29 | 56.5 | 49.5 | 64 | I |
| | 2015.08-2016.12 | 6AT | R | L/R | Estate 4WD B 5254 T12 | Chassis no. to:146100;DOJ | GCI18187 | Inner Joint | | 26 | 29 | 35 | 69.5 | 107.5 | |
| 3.0 (210 kw) | 2008.01-2016.12 | 6AT | F | L | Estate 4WD B 6304 T2 | | GDS81381 | Drive Shaft | | 40 | 31 | 57.7 | 52 | 537 | |
| | 2008.01-2016.12 | 6AT | F | R | Estate 4WD B 6304 T2 | | GDS81383 | Drive Shaft | | 40 | 28 | 57.7 | 52 | 1014 | |
| | 2008.01-2016.12 | 6AT | F | L/R | Estate 4WD B 6304 T2 | | GCO81432 | Inner Joint | | 28 | 27 | 30 | 526 | 82.5 | |
| | 2008.01-2016.12 | AT | F | L | Estate 4WD B 6304 T2 | | GCI81210 | Inner Joint | | 22 | 23 | 35 | 131.5 | 84.5 | |
| | 2008.01-2016.12 | 6AT | R | L/R | Estate 4WD B 6304 T2 | Chassis no. from:146101 | GDS62077 | Drive Shaft | 44NS | 36 | 23 | 56.5 | 49.5 | 762 | |
| | 2008.01-2016.12 | 6AT | R | L/R | Estate 4WD B 6304 T2 | Chassis no. to:146100 | GDS83926 | Drive Shaft | 44NS | 36 | 26 | 56.5 | 49.5 | 751 | |
| | 2008.01-2016.12 | 6AT | R | L/R | Estate 4WD B 6304 T2 | Chassis no. to:146100;8 balls | GCO83248 | Outer Joint | 44NS | 36 | 29 | 56.5 | 49.5 | 64 | I |
| | 2008.01-2016.12 | 6AT | R | L/R | Estate 4WD B 6304 T2 | CHAssis no. to:146100 | GCI18187 | Inner Joint | | 26 | 29 | 35 | 69.5 | 107.5 | |
| 3.0 (224 kw) | 2010.01-2015.04 | 6AT | F | L | Estate 4WD B 6304 T4 | Model year from:2014 | GDS81369 | Drive Shaft | | 40 | 31 | 57.7 | 52 | 537 | |
| | 2010.01-2015.04 | 6AT | F | L | Estate 4WD B 6304 T4 | Model year to:2013 | GDS81381 | Drive Shaft | | 40 | 31 | 57.7 | 52 | 537 | |
| | 2010.01-2015.04 | AT | F | R | Estate 4WD B 6304 T4 | | GDS81383 | Drive Shaft | | 40 | 28 | 57.7 | 52 | 1014 | |
| | 2010.01-2015.04 | AT | F | L | Estate 4WD B 6304 T4 | Transmission side | GCO81424 | Inner Joint | | 31 | 27 | 36.2 | 70 | 62 | |
| | 2010.01-2015.04 | AT | F | R | Estate 4WD B 6304 T4 | | GCO81432 | Inner Joint | | 28 | 27 | 30 | 526 | 82.5 | |
| | 2010.01-2015.04 | 6AT | R | L/R | Estate 4WD B 6304 T4 | Chassis no. from:146101 | GDS62077 | Drive Shaft | 44NS | 36 | 23 | 56.5 | 49.5 | 762 | |
| | 2010.01-2015.04 | 6AT | R | L/R | Estate 4WD B 6304 T4 | Chassis no. to:146100;8 balls | GDS83926 | Drive Shaft | 44NS | 36 | 26 | 56.5 | 49.5 | 751 | |
| | 2010.01-2015.04 | 6AT | R | L/R | Estate 4WD B 6304 T4 | Chassis no. to:146100;8 balls | GCO83248 | Outer Joint | 44NS | 36 | 29 | 56.5 | 49.5 | 64 | I |
| | 2010.01-2015.04 | 6AT | R | L/R | Estate 4WD B 6304 T4 | Chassis no. to:146100 | GCI18187 | Inner Joint | | 26 | 29 | 35 | 69.5 | 107.5 | |
| | 2010.01-2015.04 | AT | R | L/R | Estate 4WD B 6304 T4 | Chassis no. from:146101 | GCI62035 | Inner Joint | | 23 | 29 | 28 | 64 | 110 | |
| 3.0 (242 kw) | 2013.11-2016.12 | 6AT | F | L/R | Estate 4WD B 6304 T4 | | GCO59285 | Outer Joint | | 40 | 27 | 57.7 | 52 | 63.5 | M |
| | 2013.11-2016.12 | AT | F | L | Estate 4WD B 6304 T4 | Model year from:2014 | GDS81369 | Drive Shaft | | 40 | 31 | 57.7 | 52 | 537 | |
| | 2013.11-2016.12 | AT | F | R | Estate 4WD B 6304 T4 | | GDS81383 | Drive Shaft | | 40 | 28 | 57.7 | 52 | 1014 | |
| | 2013.11-2016.12 | AT | F | L | Estate 4WD B 6304 T4 | | GCO81424 | Inner Joint | | 31 | 27 | 36.2 | 70 | 62 | |
| | 2013.11-2016.12 | AT | F | R | Estate 4WD B 6304 T4 | | GCO81432 | Inner Joint | | 28 | 27 | 30 | 526 | 82.5 | |
| | 2013.11-2016.12 | 6AT | R | L/R | Estate 4WD B 6304 T4 | Chassis no. from:146101 | GDS62077 | Drive Shaft | 44NS | 36 | 23 | 56.5 | 49.5 | 762 | |

| | YEAR | TRANSM. | F/R | L/R | BODY STYLE & DRIVE TYPE & ENGINE | REMARKS | G-AP Ref. | PRODUCT | ABS | Technical Specifications A | B | C | H | L | P |
|---|---|---|---|---|---|---|---|---|---|---|---|---|---|---|---|
| **VOLVO** | | | | | | | | | | | | | | | |
| **XC70** | | | | | | | | | | | | | | | |
| 3.0 (242 kw) | 2013.11-2016.12 | 6AT | R | L/R | Estate 4WD B 6304 T4 | Chassis no. to:146100;8 balls | GDS83926 | Drive Shaft | 44NS | 36 | 26 | 56.5 | 49.5 | 751 | |
| | 2013.11-2016.12 | 6AT | R | L/R | Estate 4WD B 6304 T4 | Chassis no. to:146100 | GCO83248 | Outer Joint | 44NS | 36 | 29 | 56.5 | 49.5 | 64 | I |
| | 2013.11-2016.12 | 6AT | R | L/R | Estate 4WD B 6304 T4 | Chassis no. to:146100 | GCI18187 | Inner Joint | | 26 | 29 | 35 | 69.5 | 107.5 | |
| | 2013.11-2016.12 | 6AT | R | L/R | Estate 4WD B 6304 T4 | Chassis no. from:146101 | GCI62035 | Inner Joint | | 23 | 29 | 28 | 64 | 110 | |
| 3.2 (175 kw) | 2007.08-2011.12 | 6AT | F | R | Estate 4WD B 6324 S | | GDS81383 | Drive Shaft | | 40 | 28 | 57.7 | 52 | 1014 | |
| | 2007.08-2011.12 | 6AT | F | L/R | Estate 4WD B 6324 S | | GCO81432 | Inner Joint | | 28 | 27 | 30 | 526 | 82.5 | |
| | 2007.08-2011.12 | AT | F | L | Estate 4WD B 6324 S | Model year to:2013 | GDS81381 | Drive Shaft | | 40 | 31 | 57.7 | 52 | 537 | |
| | 2007.08-2011.12 | AT | F | L | Estate 4WD B 6324 S | | GCI81210 | Inner Joint | | 22 | 23 | 35 | 131.5 | 84.5 | |
| | 2007.08-2011.12 | 6AT | R | L/R | Estate 4WD B 6324 S | Chassis no. from:146101 | GDS62077 | Drive Shaft | 44NS | 36 | 23 | 56.5 | 49.5 | 762 | |
| | 2007.08-2011.12 | 6AT | R | L/R | Estate 4WD B 6324 S | Chassis no. to:146100;8 balls | GDS83926 | Drive Shaft | 44NS | 36 | 26 | 56.5 | 49.5 | 751 | |
| | 2007.08-2011.12 | 6AT | R | L/R | Estate 4WD B 6324 S | Chassis no. to:146100;8 balls | GCO83248 | Outer Joint | 44NS | 36 | 29 | 56.5 | 49.5 | 64 | I |
| | 2007.08-2011.12 | 6AT | R | L/R | Estate 4WD B 6324 S | CHAssis no. to:146100 | GCI18187 | Inner Joint | | 26 | 29 | 35 | 69.5 | 107.5 | |
| 3.2 (179 kw) | 2010.05-2014.12 | 6AT | F | R | Estate 4WD B 6324 S5 | | GDS81383 | Drive Shaft | | 40 | 28 | 57.7 | 52 | 1014 | |
| | 2010.05-2014.12 | 6AT | F | L/R | Estate 4WD B 6324 S5 | | GCO81432 | Inner Joint | | 28 | 27 | 30 | 526 | 82.5 | |
| | 2010.05-2014.12 | AT | F | L | Estate 4WD B 6324 S5 | Model year from:2014 | GDS81369 | Drive Shaft | | 40 | 31 | 57.7 | 52 | 537 | |
| | 2010.05-2014.12 | AT | F | L | Estate 4WD B 6324 S5 | Model year to:2013 | GDS81381 | Drive Shaft | | 40 | 31 | 57.7 | 52 | 537 | |
| | 2010.05-2014.12 | AT | F | L | Estate 4WD B 6324 S5 | | GCI81210 | Inner Joint | | 22 | 23 | 35 | 131.5 | 84.5 | |
| | 2010.05-2014.12 | 6AT | R | L/R | Estate 4WD B 6324 S5 | Chassis no. from:146101 | GDS62077 | Drive Shaft | 44NS | 36 | 23 | 56.5 | 49.5 | 762 | |
| | 2010.05-2014.12 | 6AT | R | L/R | Estate 4WD B 6324 S5 | Chassis no. to:146100;8 balls | GDS83926 | Drive Shaft | 44NS | 36 | 26 | 56.5 | 49.5 | 751 | |
| | 2010.05-2014.12 | 6AT | R | L/R | Estate 4WD B 6324 S5 | Chassis no. to:146100;8 balls | GCO83248 | Outer Joint | 44NS | 36 | 29 | 56.5 | 49.5 | 64 | I |
| | 2010.05-2014.12 | 6AT | R | L/R | Estate 4WD B 6324 S5 | Chassis no. to:146100 | GCI18187 | Inner Joint | | 26 | 29 | 35 | 69.5 | 107.5 | |
| **XC70 Cross Country** | | | | | | | | | | | | | | | |
| 2.4 (147 kw) | 2000.03-2002.09 | 5AT | F | L | Estate 4WD B 5244 T3 | | GDS62039 | Drive Shaft | 48T | 36 | 26 | 56.5 | 48 | 558.5 | |
| | 2000.03-2002.09 | 5AT | F | R | Estate 4WD B 5244 T3 | | GDS62065 | Drive Shaft | 48T | 36 | 26 | 56.5 | 48 | 1006 | |
| | 2000.03-2002.09 | 5AT | F | L | Estate 4WD B 5244 T3 | | GCI99109 | Inner Joint | | 26 | 26 | 31 | 68 | 87 | |
| | 2000.03-2002.09 | 5AT | F | R | Estate 4WD B 5244 T3 | | GCI62014 | Inner Joint | | 26 | 26 | 28 | 513 | 93.5 | |
| | 2000.03-2002.09 | 5AT/5MT | F | L/R | Estate 4WD B 5244 T3 | | GCO62009 | Outer Joint | 48T | 36 | 27 | 56.5 | 48 | 66 | M |
| | 2000.03-2002.09 | 5MT | F | L | Estate 4WD B 5244 T3 | | GDS84500 | Drive Shaft | 48T | 36 | 26 | 56.5 | 48 | 576 | |
| | 2000.03-2002.09 | 5MT | F | R | Estate 4WD B 5244 T3 | | GDS83882 | Drive Shaft | 48T | 36 | 26 | 56.5 | 48 | 1028 | |
| | 2000.03-2002.09 | 5MT | F | R | Estate 4WD B 5244 T3 | | GCI82414 | Inner Joint | | 26 | 28 | 27.97 | 527 | 88 | |
| | 2000.03-2002.09 | AT/MT | R | L/R | Estate 4WD B 5244 T3 | | GDS81130 | Drive Shaft | | 36 | 26 | 56.5 | 50 | 764 | |
| | 2000.03-2002.09 | AT/MT | R | L/R | Estate 4WD B 5244 T3 | | GCI44031 | Inner Joint | | 26 | 20 | 35 | 69.5 | 81 | |
| **XC90** | | | | | | | | | | | | | | | |
| 2.0 (140 kw) | 2015.06-2018.12 | 8AT | F | L | SUV FWD D 4204 T14 | | GDS83208 | Drive Shaft | | 40 | 31 | 54.1 | 53 | 617 | |
| | 2015.06-2018.12 | 8AT | F | L | SUV FWD D 4204 T14 | | GCO82347 | Outer Joint | | 40 | 28 | 54.1 | 53 | 62.5 | I |
| | 2015.06-2018.12 | 8AT | F | L | SUV FWD D 4204 T14 | | GCI62034 | Inner Joint | | 31 | 27 | 36.2 | 68 | 90 | |
| | 2015.10-2018.12 | 8AT | F | L | SUV 4WD D 4204 T6 | | GDS83208 | Drive Shaft | | 40 | 31 | 54.1 | 53 | 617 | |
| | 2015.10-2018.12 | 8AT | F | R | SUV 4WD D 4204 T6 | | GDS83207 | Drive Shaft | | 40 | 28 | 54.1 | 53 | 995 | |
| | 2015.10-2018.12 | 8AT | F | L/R | SUV 4WD D 4204 T6 | | GCO82347 | Outer Joint | | 40 | 28 | 54.1 | 53 | 62.5 | I |
| | 2015.10-2018.12 | 8AT | F | L | SUV 4WD D 4204 T6 | | GCI62034 | Inner Joint | | 31 | 27 | 36.2 | 68 | 90 | |
| | 2015.10-2018.12 | 8AT | F | R | SUV 4WD D 4204 T6 | Chassis no. from:78219;Chassis no. to:424111 | GCI82176 | Inner Joint | | 28 | 27 | 29.97 | 470 | 94 | |
| | 2015.10-2018.12 | 8AT | R | L/R | SUV 4WD D 4204 T6 | | GDS56701 | Drive Shaft | | 40 | 23 | 56.5 | 52 | 820 | |
| 2.0 (165 kw) | 2014.09-2016.12 | 8AT | F | L | SUV 4WD D 4204 T11 | | GDS83208 | Drive Shaft | | 40 | 31 | 54.1 | 53 | 617 | |
| | 2014.09-2016.12 | 8AT | F | R | SUV 4WD D 4204 T11 | | GDS83207 | Drive Shaft | | 40 | 28 | 54.1 | 53 | 995 | |
| | 2014.09-2016.12 | 8AT | F | L/R | SUV 4WD D 4204 T11 | | GCO82347 | Outer Joint | | 40 | 28 | 54.1 | 53 | 62.5 | I |
| | 2014.09-2016.12 | 8AT | F | L | SUV 4WD D 4204 T11 | | GCI62034 | Inner Joint | | 31 | 27 | 36.2 | 68 | 90 | |
| | 2014.09-2016.12 | 8AT | F | R | SUV 4WD D 4204 T11 | Chassis no. from:78219;Chassis no. to:424111 | GCI82176 | Inner Joint | | 28 | 27 | 29.97 | 470 | 94 | |
| | 2014.09-2016.12 | 8AT | R | L/R | SUV 4WD D 4204 T11 | | GDS56701 | Drive Shaft | | 40 | 23 | 56.5 | 52 | 820 | |
| 2.0 (173 kw) | 2016.03-2019.12 | 8AT | F | L | SUV 4WD D 4204 T23 | | GDS83208 | Drive Shaft | | 40 | 31 | 54.1 | 53 | 617 | |
| | 2016.03-2019.12 | 8AT | F | R | SUV 4WD D 4204 T23 | | GDS83207 | Drive Shaft | | 40 | 28 | 54.1 | 53 | 995 | |
| | 2016.03-2019.12 | 8AT | F | L/R | SUV 4WD D 4204 T23 | | GCO82347 | Outer Joint | | 40 | 28 | 54.1 | 53 | 62.5 | I |
| | 2016.03-2019.12 | 8AT | F | L | SUV 4WD D 4204 T23 | | GCI62034 | Inner Joint | | 31 | 27 | 36.2 | 68 | 90 | |
| | 2016.03-2019.12 | 8AT | F | R | SUV 4WD D 4204 T23 | Chassis no. from:78219;Chassis no. to:424111 | GCI82176 | Inner Joint | | 28 | 27 | 29.97 | 470 | 94 | |
| | 2016.03-2019.12 | 8AT | R | L/R | SUV 4WD D 4204 T23 | | GDS56701 | Drive Shaft | | 40 | 23 | 56.5 | 52 | 820 | |
| | 2019.04- | 8AT | R | L/R | SUV 4WD D 420 T2 | | GDS58208 | Drive Shaft | | 40 | 34 | 56.5 | 52 | 817 | |
| 2.0 (176 kw) | 2016.03-2021.12 | 8AT | F | L | SUV 4WD D 4204 T23 | | GDS83208 | Drive Shaft | | 40 | 31 | 54.1 | 53 | 617 | |
| | 2016.03-2021.12 | 8AT | F | R | SUV 4WD D 4204 T23 | | GDS83207 | Drive Shaft | | 40 | 28 | 54.1 | 53 | 995 | |
| | 2016.03-2021.12 | 8AT | F | L/R | SUV 4WD D 4204 T23 | | GCO82347 | Outer Joint | | 40 | 28 | 54.1 | 53 | 62.5 | I |
| | 2016.03-2021.12 | 8AT | F | L | SUV 4WD D 4204 T23 | | GCI62034 | Inner Joint | | 31 | 27 | 36.2 | 68 | 90 | |
| | 2016.03-2021.12 | 8AT | F | R | SUV 4WD D 4204 T23 | Chassis no. from:78219;Chassis no. to:424111 | GCI82176 | Inner Joint | | 28 | 27 | 29.97 | 470 | 94 | |
| | 2016.03-2021.12 | 8AT | R | L/R | SUV 4WD D 4204 T23 | | GDS56701 | Drive Shaft | | 40 | 23 | 56.5 | 52 | 820 | |
| | 2017.10-2020.12 | 8AT | F | L | SUV 4WD B 4204 T26 | | GDS83208 | Drive Shaft | | 40 | 31 | 54.1 | 53 | 617 | |
| | 2017.10-2020.12 | 8AT | F | R | SUV 4WD B 4204 T26 | | GDS83207 | Drive Shaft | | 40 | 28 | 54.1 | 53 | 995 | |
| | 2017.10-2020.12 | 8AT | F | L/R | SUV 4WD B 4204 T26 | | GCO82347 | Outer Joint | | 40 | 28 | 54.1 | 53 | 62.5 | I |
| | 2017.10-2020.12 | 8AT | F | L | SUV 4WD B 4204 T26 | | GCI62034 | Inner Joint | | 31 | 27 | 36.2 | 68 | 90 | |

| | YEAR | TRANSM. | F/R | L/R | BODY STYLE & DRIVE TYPE & ENGINE | REMARKS | G-AP Ref. | PRODUCT | ABS | Technical Specifications | | | | | |
|---|---|---|---|---|---|---|---|---|---|---|---|---|---|---|---|
| | | | | | | | | | | A | B | C | H | L | P |
| **VOLVO** | | | | | | | | | | | | | | | |
| **XC90** | | | | | | | | | | | | | | | |
| 2.0 (176 kw) | 2017.10-2020.12 | 8AT | F | R | SUV 4WD B 4204 T26 | Chassis no. from:78219;Chassis no. to:424111 | GCI82176 | Inner Joint | | 28 | 27 | 29.97 | 470 | 94 | |
| | 2017.10-2020.12 | 8AT | R | L/R | SUV 4WD B 4204 T26 | | GDS56701 | Drive Shaft | | 40 | 23 | 56.5 | 52 | 820 | |
| 2.0 (177 kw) | 2018.10-2021.12 | 8AT | F | L | SUV 4WD D 4204 T23 | | GDS83208 | Drive Shaft | | 40 | 31 | 54.1 | 53 | 617 | |
| | 2018.10-2021.12 | 8AT | F | R | SUV 4WD D 4204 T23 | | GDS83207 | Drive Shaft | | 40 | 28 | 54.1 | 53 | 995 | |
| | 2018.10-2021.12 | 8AT | F | L/R | SUV 4WD D 4204 T23 | | GCO82347 | Outer Joint | | 40 | 28 | 54.1 | 53 | 62.5 | I |
| | 2018.10-2021.12 | 8AT | F | L | SUV 4WD D 4204 T23 | | GCI62034 | Inner Joint | | 31 | 27 | 36.2 | 68 | 90 | |
| | 2018.10-2021.12 | 8AT | F | R | SUV 4WD D 4204 T23 | Chassis no. from:78219;Chassis no. to:424111 | GCI82176 | Inner Joint | | 28 | 27 | 29.97 | 470 | 94 | |
| | 2018.10-2021.12 | 8AT | R | L/R | SUV 4WD D 4204 T23 | | GDS56701 | Drive Shaft | | 40 | 23 | 56.5 | 52 | 820 | |
| 2.0 (180 kw) | 2021.01- | 8AT | R | L/R | SUV 4WD D 420 T2 | | GDS58208 | Drive Shaft | | 40 | 34 | 56.5 | 52 | 817 | |
| 2.0 (183 kw) | 2016.02-2018.12 | 8AT | F | L | SUV 4WD B 4204 T23 | | GDS83208 | Drive Shaft | | 40 | 31 | 54.1 | 53 | 617 | |
| | 2016.02-2018.12 | 8AT | F | R | SUV 4WD B 4204 T23 | | GDS83207 | Drive Shaft | | 40 | 28 | 54.1 | 53 | 995 | |
| | 2016.02-2018.12 | 8AT | F | L/R | SUV 4WD B 4204 T23 | | GCO82347 | Outer Joint | | 40 | 28 | 54.1 | 53 | 62.5 | I |
| | 2016.02-2018.12 | 8AT | F | L | SUV 4WD B 4204 T23 | | GCI62034 | Inner Joint | | 31 | 27 | 36.2 | 68 | 90 | |
| | 2016.02-2018.12 | 8AT | F | R | SUV 4WD B 4204 T23 | Chassis no. from:78219;Chassis no. to:424111 | GCI82176 | Inner Joint | | 28 | 27 | 29.97 | 470 | 94 | |
| | 2016.02-2018.12 | 8AT | R | L/R | SUV 4WD B 4204 T23 | | GDS56701 | Drive Shaft | | 40 | 23 | 56.5 | 52 | 820 | |
| | 2022.03- | 8AT | R | L/R | SUV 4WD B 420 T10 | | GDS56701 | Drive Shaft | | 40 | 23 | 56.5 | 52 | 820 | |
| 2.0 (184 kw) | 2017.10-2020.12 | 8AT | F | L | SUV 4WD B 4204 T26 | | GDS83208 | Drive Shaft | | 40 | 31 | 54.1 | 53 | 617 | |
| | 2017.10-2020.12 | 8AT | F | R | SUV 4WD B 4204 T26 | | GDS83207 | Drive Shaft | | 40 | 28 | 54.1 | 53 | 995 | |
| | 2017.10-2020.12 | 8AT | F | L/R | SUV 4WD B 4204 T26 | | GCO82347 | Outer Joint | | 40 | 28 | 54.1 | 53 | 62.5 | I |
| | 2017.10-2020.12 | 8AT | F | L | SUV 4WD B 4204 T26 | | GCI62034 | Inner Joint | | 31 | 27 | 36.2 | 68 | 90 | |
| | 2017.10-2020.12 | 8AT | F | R | SUV 4WD B 4204 T26 | Chassis no. from:78219;Chassis no. to:424111 | GCI82176 | Inner Joint | | 28 | 27 | 29.97 | 470 | 94 | |
| | 2017.10-2020.12 | 8AT | R | L/R | SUV 4WD B 4204 T26 | | GDS56701 | Drive Shaft | | 40 | 23 | 56.5 | 52 | 820 | |
| | 2020.01- | 8AT | R | L/R | SUV 4WD B 420 T2;B420T11 | | GDS56701 | Drive Shaft | | 40 | 23 | 56.5 | 52 | 820 | |
| 2.0 (186 kw) | 2019.07-2020.12 | 8AT | F | L | SUV 4WD B 4204 T26P | | GDS83208 | Drive Shaft | | 40 | 31 | 54.1 | 53 | 617 | |
| | 2019.07-2020.12 | 8AT | F | R | SUV 4WD B 4204 T26P | | GDS83207 | Drive Shaft | | 40 | 28 | 54.1 | 53 | 995 | |
| | 2019.07-2020.12 | 8AT | F | L/R | SUV 4WD B 4204 T26P | | GCO82347 | Outer Joint | | 40 | 28 | 54.1 | 53 | 62.5 | I |
| | 2019.07-2020.12 | 8AT | F | L | SUV 4WD B 4204 T26P | | GCI62034 | Inner Joint | | 31 | 27 | 36.2 | 68 | 90 | |
| | 2019.07-2020.12 | 8AT | F | R | SUV 4WD B 4204 T26P | Chassis no. from:78219;Chassis no. to:424111 | GCI82176 | Inner Joint | | 28 | 27 | 29.97 | 470 | 94 | |
| | 2019.07-2020.12 | 8AT | R | L/R | SUV 4WD B 4204 T26P | | GDS56701 | Drive Shaft | | 40 | 23 | 56.5 | 52 | 820 | |
| 2.0 (187 kw) | 2015.06-2021.12 | 8AT | F | L | SUV 4WD B 4204 T23 | | GDS83208 | Drive Shaft | | 40 | 31 | 54.1 | 53 | 617 | |
| | 2015.06-2021.12 | 8AT | F | R | SUV 4WD B 4204 T23 | | GDS83207 | Drive Shaft | | 40 | 28 | 54.1 | 53 | 995 | |
| | 2015.06-2021.12 | 8AT | F | L/R | SUV 4WD B 4204 T23 | | GCO82347 | Outer Joint | | 40 | 28 | 54.1 | 53 | 62.5 | I |
| | 2015.06-2021.12 | 8AT | F | L | SUV 4WD B 4204 T23 | | GCI62034 | Inner Joint | | 31 | 27 | 36.2 | 68 | 90 | |
| | 2015.06-2021.12 | 8AT | F | R | SUV 4WD B 4204 T23 | Chassis no. from:78219;Chassis no. to:424111 | GCI82176 | Inner Joint | | 28 | 27 | 29.97 | 470 | 94 | |
| | 2015.06-2021.12 | 8AT | R | L/R | SUV 4WD B 4204 T23 | | GDS56701 | Drive Shaft | | 40 | 23 | 56.5 | 52 | 820 | |
| 2.0 (192 kw) | 2017.01-2021.12 | 8AT | F | L | SUV 4WD B 4204 T23 | | GDS83208 | Drive Shaft | | 40 | 31 | 54.1 | 53 | 617 | |
| | 2017.01-2021.12 | 8AT | F | R | SUV 4WD B 4204 T23 | | GDS83207 | Drive Shaft | | 40 | 28 | 54.1 | 53 | 995 | |
| | 2017.01-2021.12 | 8AT | F | L/R | SUV 4WD B 4204 T23 | | GCO82347 | Outer Joint | | 40 | 28 | 54.1 | 53 | 62.5 | I |
| | 2017.01-2021.12 | 8AT | F | L | SUV 4WD B 4204 T23 | | GCI62034 | Inner Joint | | 31 | 27 | 36.2 | 68 | 90 | |
| | 2017.01-2021.12 | 8AT | F | R | SUV 4WD B 4204 T23 | Chassis no. from:78219;Chassis no. to:424111 | GCI82176 | Inner Joint | | 28 | 27 | 29.97 | 470 | 94 | |
| | 2017.01-2021.12 | 8AT | R | L/R | SUV 4WD B 4204 T23 | | GDS56701 | Drive Shaft | | 40 | 23 | 56.5 | 52 | 820 | |
| 2.0 (220 kw) | 2020.03- | 8AT | R | L/R | SUV 4WD B 420 T | | GDS58208 | Drive Shaft | | 40 | 34 | 56.5 | 52 | 817 | |
| 2.0 (228 kw) | 2017.10-2021.12 | 8AT | F | L | SUV 4WD B 4204 T29 | | GDS83208 | Drive Shaft | | 40 | 31 | 54.1 | 53 | 617 | |
| | 2017.10-2021.12 | 8AT | F | R | SUV 4WD B 4204 T29 | | GDS83207 | Drive Shaft | | 40 | 28 | 54.1 | 53 | 995 | |
| | 2017.10-2021.12 | 8AT | F | L/R | SUV 4WD B 4204 T29 | | GCO82347 | Outer Joint | | 40 | 28 | 54.1 | 53 | 62.5 | I |
| | 2017.10-2021.12 | 8AT | F | L | SUV 4WD B 4204 T29 | | GCI62034 | Inner Joint | | 31 | 27 | 36.2 | 68 | 90 | |
| | 2017.10-2021.12 | 8AT | F | R | SUV 4WD B 4204 T29 | Chassis no. from:78219;Chassis no. to:424111 | GCI82176 | Inner Joint | | 28 | 27 | 29.97 | 470 | 94 | |
| | 2017.10-2021.12 | 8AT | R | L/R | SUV 4WD B 4204 T29 | | GDS56701 | Drive Shaft | | 40 | 23 | 56.5 | 52 | 820 | |
| 2.0 (235 kw) | 2014.09-2018.12 | 8AT | F | L | SUV 4WD B 4204 T27 | | GDS83208 | Drive Shaft | | 40 | 31 | 54.1 | 53 | 617 | |
| | 2014.09-2018.12 | 8AT | F | R | SUV 4WD B 4204 T27 | | GDS83207 | Drive Shaft | | 40 | 28 | 54.1 | 53 | 995 | |
| | 2014.09-2018.12 | 8AT | F | L/R | SUV 4WD B 4204 T27 | | GCO82347 | Outer Joint | | 40 | 28 | 54.1 | 53 | 62.5 | I |
| | 2014.09-2018.12 | 8AT | F | L | SUV 4WD B 4204 T27 | | GCI62034 | Inner Joint | | 31 | 27 | 36.2 | 68 | 90 | |
| | 2014.09-2018.12 | 8AT | F | R | SUV 4WD B 4204 T27 | Chassis no. from:78219;Chassis no. to:424111 | GCI82176 | Inner Joint | | 28 | 27 | 29.97 | 470 | 94 | |
| | 2014.09-2018.12 | 8AT | R | L/R | SUV 4WD B 4204 T27 | | GDS56701 | Drive Shaft | | 40 | 23 | 56.5 | 52 | 820 | |
| 2.0 (240 kw) | 2017.10-2021.12 | 8AT | F | L | SUV 4WD B 4204 T29P | | GDS83208 | Drive Shaft | | 40 | 31 | 54.1 | 53 | 617 | |
| | 2017.10-2021.12 | 8AT | F | R | SUV 4WD B 4204 T29P | | GDS83207 | Drive Shaft | | 40 | 28 | 54.1 | 53 | 995 | |
| | 2017.10-2021.12 | 8AT | F | L/R | SUV 4WD B 4204 T29P | | GCO82347 | Outer Joint | | 40 | 28 | 54.1 | 53 | 62.5 | I |
| | 2017.10-2021.12 | 8AT | F | L | SUV 4WD B 4204 T29P | | GCI62034 | Inner Joint | | 31 | 27 | 36.2 | 68 | 90 | |
| | 2017.10-2021.12 | 8AT | F | R | SUV 4WD B 4204 T29P | Chassis no. from:78219;Chassis no. to:424111 | GCI82176 | Inner Joint | | 28 | 27 | 29.97 | 470 | 94 | |
| | 2017.10-2021.12 | 8AT | R | L/R | SUV 4WD B 4204 T29P | | GDS56701 | Drive Shaft | | 40 | 23 | 56.5 | 52 | 820 | |
| 2.0 (246 kw) | 2017.01-2021.12 | 8AT | F | L | SUV 4WD B 4204 T27 | | GDS83208 | Drive Shaft | | 40 | 31 | 54.1 | 53 | 617 | |
| | 2017.01-2021.12 | 8AT | F | R | SUV 4WD B 4204 T27 | | GDS83207 | Drive Shaft | | 40 | 28 | 54.1 | 53 | 995 | |
| | 2017.01-2021.12 | 8AT | F | L/R | SUV 4WD B 4204 T27 | | GCO82347 | Outer Joint | | 40 | 28 | 54.1 | 53 | 62.5 | I |
| | 2017.01-2021.12 | 8AT | F | L | SUV 4WD B 4204 T27 | | GCI62034 | Inner Joint | | 31 | 27 | 36.2 | 68 | 90 | |
| | 2017.01-2021.12 | 8AT | F | R | SUV 4WD B 4204 T27 | Chassis no. from:78219;Chassis no. to:424111 | GCI82176 | Inner Joint | | 28 | 27 | 29.97 | 470 | 94 | |

| | YEAR | TRANSM. | F/R | L/R | BODY STYLE & DRIVE TYPE & ENGINE | REMARKS | G-AP Ref. | PRODUCT | ABS | Technical Specifications A | B | C | H | L | P |
|---|---|---|---|---|---|---|---|---|---|---|---|---|---|---|---|
| **VOLVO** | | | | | | | | | | | | | | | |
| **XC90** | | | | | | | | | | | | | | | |
| 2.0 (246 kw) | 2017.01-2021.12 | 8AT | R | L/R | SUV 4WD B 4204 T27 | | GDS56701 | Drive Shaft | | 40 | 23 | 56.5 | 52 | 820 | |
| 2.4 (120 kw) | 2002.10-2006.12 | 6MT | F | L | SUV 4WD D 5244 T | For Engine code:D5244T5,Chassis no. to:354115 | GDS62142 | Drive Shaft | 48T | 36 | 26 | 56.5 | 55 | 588 | |
| | 2002.10-2006.12 | 6MT | F | L | SUV 4WD D 5244 T | Chassis no. from:354128 | GDS83564 | Drive Shaft | 48T | 40 | 26 | 56.5 | 52 | 592 | |
| | 2002.10-2006.12 | 6MT | F | R | SUV 4WD D 5244 T | For Engine code:D5244T5,Chassis no. to:354115 | GDS81392 | Drive Shaft | 48T | 36 | 28 | 56.5 | 55 | 1050 | |
| | 2002.10-2006.12 | 6MT | F | R | SUV 4WD D 5244 T | Chassis no. from:354128 | GDS83637 | Drive Shaft | 48T | 40 | 26 | 56.5 | 52 | 1041 | |
| | 2002.10-2006.12 | 6MT | F | R | SUV 4WD D 5244 T | For Engine code:D5244T5,Chassis no. from:354116 | GDS84012 | Drive Shaft | 48T | 40 | 28 | 56.5 | 52 | 1044 | |
| | 2002.10-2006.12 | 6MT | F | L/R | SUV 4WD D 5244 T | For Engine code:D5244T5,Chassis no. to:354115 | GCO62031 | Outer Joint | 48T | 36 | 27 | 56.5 | 55 | 65 | M |
| | 2002.10-2006.12 | 6MT | F | L/R | SUV 4WD D 5244 T | Chassis no. from:354128;For Engine code:D5244T5,Chassis no. from:354116 | GCO62035 | Outer Joint | 48T | 40 | 27 | 56.5 | 52 | 63.5 | M |
| | 2002.10-2006.12 | 6MT | F | L | SUV 4WD D 5244 T | For Engine code:D5244T5,Chassis no. to:354115 | GCI62050 | Inner Joint | | 26 | 26 | 40 | 67 | 104 | |
| | 2002.10-2006.12 | 6MT | F | L | SUV 4WD D 5244 T | Chassis no. from:354128 | GCI82346 | Inner Joint | | 26 | 29 | 40 | 67 | 87 | |
| | 2002.10-2006.12 | 6MT | F | R | SUV 4WD D 5244 T | Chassis no. from:354128 | GCI82303 | Inner Joint | | 26 | 29 | 28 | 526 | 78 | |
| | 2002.10-2006.12 | 6MT | F | R | SUV 4WD D 5244 T | For Engine code:D5244T5,Chassis no. from:354116 | GCI82451 | Inner Joint | | 28 | 29 | 29.97 | 529 | 77 | |
| | 2002.10-2006.12 | 6MT | F | R | SUV 4WD D 5244 T | For Engine code:D5244T5,Chassis no. to:354115 | GCO81438 | Inner Joint | | 28 | 29 | 30 | 529 | 77 | |
| | 2002.10-2006.12 | AT | F | L | SUV 4WD D 5244 T | For Engine code:D5244T,Chassis no. from:354118 | GDS62083 | Drive Shaft | 48T | 40 | 26 | 56.5 | 52 | 580 | |
| | 2002.10-2006.12 | AT | F | L | SUV 4WD D 5244 T | For Engine code:D5244T5,Chassis no. from:354476 | GDS81371 | Drive Shaft | 48T | 40 | 31 | 56.5 | 52 | 552 | |
| | 2002.10-2006.12 | AT | F | L | SUV 4WD D 5244 T | For Engine code:D5244T,Chassis no. to:354117 | GDS81402 | Drive Shaft | 48T | 36 | 26 | 56.5 | 55 | 580 | |
| | 2002.10-2006.12 | AT | F | L | SUV 4WD D 5244 T | For Engine code:D5244T5,Chassis no. to:354475 | GDS83191 | Drive Shaft | 48T | 36 | 28 | 56.5 | 54.5 | 555 | |
| | 2002.10-2006.12 | AT | F | R | SUV 4WD D 5244 T | For Engine code:D5244T,Chassis no. to:354117 | GDS62136 | Drive Shaft | 48T | 36 | 26 | 56.5 | 55 | 1031 | |
| | 2002.10-2006.12 | AT | F | R | SUV 4WD D 5244 T | For Engine code:D5244T5,Chassis no. to:354475 | GDS81403 | Drive Shaft | 48T | 36 | 28 | 56.5 | 55 | 1033 | |
| | 2002.10-2006.12 | AT | F | R | SUV 4WD D 5244 T | For Engine code:D5244T5,Chassis no. from:354476 | GDS82185 | Drive Shaft | 48T | 40 | 28 | 57 | 52 | 1020 | |
| | 2002.10-2006.12 | AT | F | R | SUV 4WD D 5244 T | For Engine code:D5244T,Chassis no. from:354118 | GDS84080 | Drive Shaft | 48T | 40 | 26 | 57 | 52 | 1027 | |
| | 2002.10-2006.12 | AT | F | L/R | SUV 4WD D 5244 T | For Engine code:D5244T,Chassis no. to:356117;For Engine code:D5244T5,Chassis no. to:354475 | GCO62031 | Outer Joint | 48T | 36 | 27 | 56.5 | 55 | 65 | M |
| | 2002.10-2006.12 | AT | F | L/R | SUV 4WD D 5244 T | For Engine code:D5244T,Chassis no. from:354118;For Engine code:D5244T5,Chassis no. from:354476 | GCO81514 | Outer Joint | 48T | 40 | 28 | 57 | 52 | 61.5 | I |
| | 2002.10-2006.12 | AT | F | L | SUV 4WD D 5244 T | Engine code:D5244T | GCO62055 | Inner Joint | | 26 | 29 | 31 | 68.5 | 72 | |
| | 2002.10-2006.12 | AT | F | L | SUV 4WD D 5244 T | For Engine code:D5244T5,Chassis no. from:354476 | GCO81424 | Inner Joint | | 31 | 27 | 36.2 | 70 | 62 | |
| | 2002.10-2006.12 | AT | F | L | SUV 4WD D 5244 T | For Engine code:D5244T5,Chassis no. to:354475 | GCO81437 | Inner Joint | | 28 | 27 | 33 | 71.5 | 62 | |
| | 2002.10-2006.12 | AT | F | R | SUV 4WD D 5244 T | For Engine code:D5244T,Chassis no. to:354117 | GCI62031 | Inner Joint | | 26 | 26 | 28 | 513 | 93.5 | |
| | 2002.10-2006.12 | AT | F | R | SUV 4WD D 5244 T | For Engine code:D5244T,Chassis no. from:354118 | GCI82497 | Inner Joint | | 26 | 29 | 28 | 513 | 77 | |
| | 2002.10-2006.12 | AT/MT | R | L/R | SUV 4WD D 5244 T | Date from:2006.07 | GDS44068 | Drive Shaft | | 36 | 26 | 56.5 | 50 | 795 | |
| | 2002.10-2006.12 | AT/MT | R | L/R | SUV 4WD D 5244 T | Date from:2006.07 | GCO18290 | Outer Joint | | 36 | 29 | 56.5 | 49.5 | 64 | I |
| | 2002.10-2006.12 | | R | L/R | SUV 4WD D 5244 T | Date from:2006.07 | GCI18187 | Inner Joint | | 26 | 29 | 35 | 69.5 | 107.5 | |
| | 2007.10-2010.12 | 6MT | F | R | SUV 4WD D 5244 T5 | For Engine code:D5244T5,Chassis no. from:354116 | GCI82451 | Inner Joint | | 28 | 29 | 29.97 | 529 | 77 | |
| | 2007.10-2010.12 | AT | F | R | SUV 4WD D 5244 T5 | For Engine code:D5244T5,Chassis no. from:354476 | GDS82185 | Drive Shaft | 48T | 40 | 28 | 57 | 52 | 1020 | |
| | 2007.10-2010.12 | AT | F | L/R | SUV 4WD D 5244 T5 | For Engine code:D5244T,Chassis no. from:354118 | GCO81514 | Outer Joint | 48T | 40 | 28 | 57 | 52 | 61.5 | I |
| | 2009.04-2014.12 | AT | F | L | SUV FWD D 5244 T5 | Date to:2013.12;Chassis no. from:354476 | GDS81371 | Drive Shaft | 48T | 40 | 31 | 56.5 | 52 | 552 | |
| | 2009.04-2014.12 | AT | F | L | SUV FWD D 5244 T5 | Date to:2013.12,Chassis no. to:354475 | GDS83191 | Drive Shaft | 48T | 36 | 28 | 56.5 | 54.5 | 555 | |
| | 2009.04-2014.12 | AT | F | R | SUV FWD D 5244 T5 | | GDS81372 | Drive Shaft | 48T | 40 | 28 | 56.5 | 52 | 1028 | |
| | 2009.04-2014.12 | AT | F | L | SUV FWD D 5244 T5 | Chassis no. from:355741 | GCO81514 | Outer Joint | 48T | 40 | 28 | 57 | 52 | 61.5 | I |
| | 2009.04-2014.12 | AT | F | L | SUV FWD D 5244 T5 | Transmission side,Date to:2013.12;Chassis no. from:354476 | GCO81424 | Inner Joint | | 31 | 27 | 36.2 | 70 | 62 | |
| | 2009.04-2014.12 | AT | F | R | SUV FWD D 5244 T5 | | GCO81426 | Inner Joint | | 28 | 27 | 33 | 525.5 | 82.5 | |
| | 2009.04-2014.12 | AT/MT | F | L/R | SUV FWD D 5244 T5 | Date to:2013.12;Chassis no. to:354475 | GCO62031 | Outer Joint | 48T | 36 | 27 | 56.5 | 55 | 65 | M |
| | 2009.04-2014.12 | AT/MT | F | L/R | SUV FWD D 5244 T5 | Date to:2013.12;Chassis Number:367134-597532 | GCO62035 | Outer Joint | 48T | 40 | 27 | 56.5 | 52 | 63.5 | M |
| | 2009.04-2014.12 | MT | F | R | SUV FWD D 5244 T5 | Date to:2013.12;Chassis no. to:354115 | GDS81392 | Drive Shaft | 48T | 36 | 28 | 56.5 | 55 | 1050 | |
| | 2009.04-2014.12 | MT | F | L | SUV FWD D 5244 T5 | | GCI62050 | Inner Joint | | 26 | 26 | 40 | 67 | 104 | |
| | 2009.04-2014.12 | MT | F | R | SUV FWD D 5244 T5 | Date to:2013.12;Chassis no. to:354115 | GCO81438 | Inner Joint | | 28 | 29 | 30 | 529 | 77 | |
| | 2009.04-2014.12 | | F | | SUV FWD D 5244 T5 | for model year:2013 | GCO62045 | Outer Joint | | 40 | 26 | 57.7 | 52 | 62.5 | M |
| | 2009.04-2014.12 | | F | L | SUV FWD D 5244 T5 | for model year:2013 | GCI18044 | Inner Joint | | 26 | 23 | 40 | 68.5 | 99.5 | |
| | 2013.09-2014.12 | 6AT | F | L | SUV Van FWD D 5244 T5 | Chassis no. from:355741 | GDS81371 | Drive Shaft | 48T | 40 | 31 | 56.5 | 52 | 552 | |
| | 2013.09-2014.12 | 6AT | F | L | SUV Van FWD D 5244 T5 | Chassis no. to:355740 | GDS83191 | Drive Shaft | 48T | 36 | 28 | 56.5 | 54.5 | 555 | |
| | 2013.09-2014.12 | 6AT | F | R | SUV Van FWD D 5244 T5 | Chassis no. from:355741 | GDS81372 | Drive Shaft | 48T | 40 | 28 | 56.5 | 52 | 1028 | |
| | 2013.09-2014.12 | AT | F | L | SUV Van FWD D 5244 T5 | Chassis no. from:355741 | GCO81514 | Outer Joint | 48T | 40 | 28 | 57 | 52 | 61.5 | I |
| 2.4 (136 kw) | 2005.04-2012.12 | 6AT | F | R | SUV 4WD D 5244 T4 | Chassis no. to:354475 | GDS81404 | Drive Shaft | 48T | 36 | 28 | 56.5 | 55 | 1033 | |
| | 2005.04-2012.12 | 6MT | F | R | SUV 4WD D 5244 T4 | Chassis no. from:354116 | GDS84012 | Drive Shaft | 48T | 40 | 28 | 56.5 | 52 | 1044 | |
| | 2005.04-2012.12 | 6MT | F | R | SUV 4WD D 5244 T4 | Chassis no. from:354116 | GCI82451 | Inner Joint | | 28 | 29 | 29.97 | 529 | 77 | |
| | 2005.04-2012.12 | AT | F | L | SUV 4WD D 5244 T4 | Chassis no. from:354476 | GDS81371 | Drive Shaft | 48T | 40 | 31 | 56.5 | 52 | 552 | |
| | 2005.04-2012.12 | AT | F | R | SUV 4WD D 5244 T4 | Chassis no. from:354476 | GDS82185 | Drive Shaft | 48T | 40 | 28 | 57 | 52 | 1020 | |
| | 2005.04-2012.12 | AT | F | L/R | SUV 4WD D 5244 T4 | Chassis no. to:354475 | GCO62031 | Outer Joint | 48T | 36 | 27 | 56.5 | 55 | 65 | M |
| | 2005.04-2012.12 | AT | F | L/R | SUV 4WD D 5244 T4 | Chassis no. from:354476 | GCO62035 | Outer Joint | 48T | 40 | 27 | 56.5 | 52 | 63.5 | M |
| | 2005.04-2012.12 | AT | F | L/R | SUV 4WD D 5244 T4 | Chassis no. from:354476 | GCO81514 | Outer Joint | 48T | 40 | 28 | 57 | 52 | 61.5 | I |
| | 2005.04-2012.12 | AT | F | L | SUV 4WD D 5244 T4 | Chassis no. from:354476 | GCO81424 | Inner Joint | | 31 | 27 | 36.2 | 70 | 62 | |
| | 2005.04-2012.12 | MT | F | L | SUV 4WD D 5244 T4 | Chassis no. to:354115 | GDS62142 | Drive Shaft | 48T | 36 | 26 | 56.5 | 55 | 588 | |
| | 2005.04-2012.12 | MT | F | R | SUV 4WD D 5244 T4 | Chassis no. to:354115 | GDS81392 | Drive Shaft | 48T | 36 | 28 | 56.5 | 55 | 1050 | |
| | 2005.04-2012.12 | MT | F | L/R | SUV 4WD D 5244 T4 | Chassis no. to:354115 | GCO62031 | Outer Joint | 48T | 36 | 27 | 56.5 | 55 | 65 | M |
| | 2005.04-2012.12 | MT | F | L | SUV 4WD D 5244 T4 | Chassis no. to:354115 | GCI62050 | Inner Joint | | 26 | 26 | 40 | 67 | 104 | |
| | 2005.04-2012.12 | MT | F | R | SUV 4WD D 5244 T4 | Chassis no. to:354115 | GCO81438 | Inner Joint | | 28 | 29 | 30 | 529 | 77 | |

| | YEAR | TRANSM. | F/R | L/R | BODY STYLE & DRIVE TYPE & ENGINE | REMARKS | G-AP Ref. | PRODUCT | ABS | Technical Specifications A | B | C | H | L | P |
|---|---|---|---|---|---|---|---|---|---|---|---|---|---|---|---|
| **VOLVO** **XC90** | | | | | | | | | | | | | | | |
| 2.4 (136 kw) | 2005.04-2012.12 | AT/MT | R | L/R | SUV 4WD D 5244 T4 | | GDS44068 | Drive Shaft | | 36 | 26 | 56.5 | 50 | 795 | |
| | 2005.04-2012.12 | AT/MT | R | L/R | SUV 4WD D 5244 T4 | | GCO18290 | Outer Joint | | 36 | 29 | 56.5 | 49.5 | 64 | I |
| | 2005.04-2012.12 | MT/AT | R | L/R | SUV 4WD D 5244 T4 | | GCI18187 | Inner Joint | | 26 | 29 | 35 | 69.5 | 107.5 | |
| 2.4 (147 kw) | 2011.01-2014.12 | 6AT | F | L | SUV 4WD D 5244 T18 | Chassis no. from:354476 | GDS81371 | Drive Shaft | 48T | 40 | 31 | 56.5 | 52 | 552 | |
| | 2011.01-2014.12 | 6AT | F | R | SUV 4WD D 5244 T18 | Chassis no. to:354475 | GDS81404 | Drive Shaft | 48T | 36 | 28 | 56.5 | 55 | 1033 | |
| | 2011.01-2014.12 | 6AT | F | R | SUV 4WD D 5244 T18 | Chassis no. from:354476,Chassis no. to:597532 | GDS82185 | Drive Shaft | 48T | 40 | 28 | 57 | 52 | 1020 | |
| | 2011.01-2014.12 | 6AT | F | L/R | SUV 4WD D 5244 T18 | Chassis no. to:354475 | GCO62031 | Outer Joint | 48T | 36 | 27 | 56.5 | 55 | 65 | M |
| | 2011.01-2014.12 | 6AT | F | L/R | SUV 4WD D 5244 T18 | Chassis no. from:354476;6 balls | GCO62035 | Outer Joint | 48T | 40 | 27 | 56.5 | 52 | 63.5 | M |
| | 2011.01-2014.12 | 6AT | F | L/R | SUV 4WD D 5244 T18 | Chassis no. from:354476;8 balls | GCO81514 | Outer Joint | 48T | 40 | 28 | 57 | 52 | 61.5 | I |
| | 2011.01-2014.12 | 6AT | F | L | SUV 4WD D 5244 T18 | Chassis no. from:354476 | GCO81424 | Inner Joint | | 31 | 27 | 36.2 | 70 | 62 | |
| | 2011.01-2014.12 | 6AT | R | L/R | SUV 4WD D 5244 T18 | | GDS44068 | Drive Shaft | | 36 | 26 | 56.5 | 50 | 795 | |
| | 2011.01-2014.12 | 6AT | R | L/R | SUV 4WD D 5244 T18 | | GCO18290 | Outer Joint | | 36 | 29 | 56.5 | 49.5 | 64 | I |
| | 2011.01-2014.12 | 6AT | R | L/R | SUV 4WD D 5244 T18 | | GCI18187 | Inner Joint | | 26 | 29 | 35 | 69.5 | 107.5 | |
| | 2013.09-2014.12 | 6AT | F | L | SUV Van 4WD D 5244 T18 | Chassis no. from:354476 | GDS81371 | Drive Shaft | 48T | 40 | 31 | 56.5 | 52 | 552 | |
| | 2013.09-2014.12 | 6AT | F | R | SUV Van 4WD D 5244 T18 | Chassis no. to:354475 | GDS81404 | Drive Shaft | 48T | 36 | 28 | 56.5 | 55 | 1033 | |
| | 2013.09-2014.12 | 6AT | F | R | SUV Van 4WD D 5244 T18 | Chassis no. from:354476,Chassis no. to:597532 | GDS82185 | Drive Shaft | 48T | 40 | 28 | 57 | 52 | 1020 | |
| | 2013.09-2014.12 | 6AT | F | L/R | SUV Van 4WD D 5244 T18 | Chassis no. to:354475 | GCO62031 | Outer Joint | 48T | 36 | 27 | 56.5 | 55 | 65 | M |
| | 2013.09-2014.12 | 6AT | F | L/R | SUV Van 4WD D 5244 T18 | Chassis no. From:354476 | GCO81514 | Outer Joint | 48T | 40 | 28 | 57 | 52 | 61.5 | I |
| | 2013.09-2014.12 | 6AT | R | L/R | SUV Van 4WD D 5244 T18 | | GDS44068 | Drive Shaft | | 36 | 26 | 56.5 | 50 | 795 | |
| | 2013.09-2014.12 | 6AT | R | L/R | SUV Van 4WD D 5244 T18 | | GCO18290 | Outer Joint | | 36 | 29 | 56.5 | 49.5 | 64 | I |
| | 2013.09-2014.12 | 6AT | R | L/R | SUV Van 4WD D 5244 T18 | | GCI18187 | Inner Joint | | 26 | 29 | 35 | 69.5 | 107.5 | |
| 2.4 (155 kw) | 2013.11-2014.09 | 6AT | F | R | SUV 4WD D 5244 T18 | Chassis no. to:354475 | GDS81404 | Drive Shaft | 48T | 36 | 28 | 56.5 | 55 | 1033 | |
| | 2013.11-2014.09 | AT | F | L | SUV 4WD D 5244 T18 | Chassis no. from:354476 | GDS81371 | Drive Shaft | 48T | 40 | 31 | 56.5 | 52 | 552 | |
| | 2013.11-2014.09 | AT | F | L | SUV 4WD D 5244 T18 | Chassis no. to:354475 | GDS83191 | Drive Shaft | 48T | 36 | 28 | 56.5 | 54.5 | 555 | |
| | 2013.11-2014.09 | AT | F | R | SUV 4WD D 5244 T18 | Chassis no. from:354476 | GDS82185 | Drive Shaft | 48T | 40 | 28 | 57 | 52 | 1020 | |
| | 2013.11-2014.09 | AT | F | L/R | SUV 4WD D 5244 T18 | Chassis no. From:354476 | GCO81514 | Outer Joint | 48T | 40 | 28 | 57 | 52 | 61.5 | I |
| | 2013.11-2014.09 | AT | F | L | SUV 4WD D 5244 T18 | Transmission side,Chassis no. from:354476 | GCO81424 | Inner Joint | | 31 | 27 | 36.2 | 70 | 62 | |
| | 2013.11-2014.09 | AT/MT | F | L/R | SUV 4WD D 5244 T18 | Chassis no. to:354475 | GCO62031 | Outer Joint | 48T | 36 | 27 | 56.5 | 55 | 65 | M |
| | 2013.11-2014.09 | AT/MT | F | L/R | SUV 4WD D 5244 T18 | Chassis Number:367134-597532 | GCO62035 | Outer Joint | 48T | 40 | 27 | 56.5 | 52 | 63.5 | M |
| | 2013.11-2014.09 | | F | | SUV 4WD D 5244 T18 | Model year to:2013 | GCO62045 | Outer Joint | | 40 | 26 | 57.7 | 52 | 62.5 | M |
| | 2013.11-2014.09 | | F | L | SUV 4WD D 5244 T18 | Model year to:2013 | GCI18044 | Inner Joint | | 26 | 23 | 40 | 68.5 | 99.5 | |
| | 2013.11-2014.09 | 6AT | R | L/R | SUV 4WD D 5244 T18 | | GCO18290 | Outer Joint | | 36 | 29 | 56.5 | 49.5 | 64 | I |
| | 2013.11-2014.09 | AT | R | L/R | SUV 4WD D 5244 T18 | | GDS44068 | Drive Shaft | | 36 | 26 | 56.5 | 50 | 795 | |
| | 2013.11-2014.09 | AT | R | L/R | SUV 4WD D 5244 T18 | | GCI18187 | Inner Joint | | 26 | 29 | 35 | 69.5 | 107.5 | |
| 2.5 (154 kw) | 2002.10-2014.09 | AT | F | L | SUV 4WD B 5254 T2 | Chassis no. to:354117;Inner teeth of tranm.side:28 | GDS62046 | Drive Shaft | 48T | 36 | 26 | 56.5 | 55 | 584 | |
| | 2002.10-2014.09 | AT | F | L | SUV 4WD B 5254 T2 | Chassis no. from:354118 | GDS62083 | Drive Shaft | 48T | 40 | 26 | 56.5 | 52 | 580 | |
| | 2002.10-2014.09 | AT | F | L | SUV 4WD B 5254 T2 | Chassis no. to:354117;Inner teeth of tranm.side:29 | GDS81402 | Drive Shaft | 48T | 36 | 26 | 56.5 | 55 | 580 | |
| | 2002.10-2014.09 | AT | F | R | SUV 4WD B 5254 T2 | Chassis no. to:354117 | GDS62136 | Drive Shaft | 48T | 36 | 26 | 56.5 | 55 | 1031 | |
| | 2002.10-2014.09 | AT | F | R | SUV 4WD B 5254 T2 | Chassis no. from:354118 | GDS84080 | Drive Shaft | 48T | 40 | 26 | 57 | 52 | 1027 | |
| | 2002.10-2014.09 | AT | F | L/R | SUV 4WD B 5254 T2 | Chassis no. to:354117 | GCO62031 | Outer Joint | 48T | 36 | 27 | 56.5 | 55 | 65 | M |
| | 2002.10-2014.09 | AT | F | L/R | SUV 4WD B 5254 T2 | Chassis no. from:354118 | GCO62035 | Outer Joint | 48T | 40 | 27 | 56.5 | 52 | 63.5 | M |
| | 2002.10-2014.09 | AT | F | L/R | SUV 4WD B 5254 T2 | Chassis no. from:354118 | GCO81514 | Outer Joint | 48T | 40 | 28 | 57 | 52 | 61.5 | I |
| | 2002.10-2014.09 | AT | F | R | SUV 4WD B 5254 T2 | Chassis no. to:354117 | GCI62031 | Inner Joint | | 26 | 26 | 28 | 513 | 93.5 | |
| | 2002.10-2014.09 | AT | F | R | SUV 4WD B 5254 T2 | Chassis no. from:354118 | GCI82497 | Inner Joint | | 26 | 29 | 28 | 513 | 77 | |
| | 2002.10-2014.09 | AT | F | L/R | SUV 4WD B 5254 T2 | Chassis no. to:354117 | GCO62055 | Inner Joint | | 26 | 29 | 31 | 68.5 | 72 | |
| | 2002.10-2014.09 | MT | F | L | SUV 4WD B 5254 T2 | Chassis no. to:196987 | GDS62142 | Drive Shaft | 48T | 36 | 26 | 56.5 | 55 | 588 | |
| | 2002.10-2014.09 | MT | F | L | SUV 4WD B 5254 T2 | Chassis no. from:354128 | GDS83564 | Drive Shaft | 48T | 40 | 26 | 56.5 | 52 | 592 | |
| | 2002.10-2014.09 | MT | F | R | SUV 4WD B 5254 T2 | Chassis no. to:196987,Date to:2007.12 | GDS81392 | Drive Shaft | 48T | 36 | 28 | 56.5 | 55 | 1050 | |
| | 2002.10-2014.09 | MT | F | R | SUV 4WD B 5254 T2 | Chassis no. from:354128 | GDS83637 | Drive Shaft | 48T | 40 | 26 | 56.5 | 52 | 1041 | |
| | 2002.10-2014.09 | MT | F | L/R | SUV 4WD B 5254 T2 | Chassis no. to:196987 | GCO62031 | Outer Joint | 48T | 36 | 27 | 56.5 | 55 | 65 | M |
| | 2002.10-2014.09 | MT | F | L/R | SUV 4WD B 5254 T2 | Chassis no. from:354128 | GCO62035 | Outer Joint | 48T | 40 | 27 | 56.5 | 52 | 63.5 | M |
| | 2002.10-2014.09 | MT | F | L | SUV 4WD B 5254 T2 | Chassis no. to:196987 | GCI62050 | Inner Joint | | 26 | 26 | 40 | 67 | 104 | |
| | 2002.10-2014.09 | MT | F | L | SUV 4WD B 5254 T2 | Chassis no. from:354128 | GCI82346 | Inner Joint | | 26 | 29 | 40 | 67 | 87 | |
| | 2002.10-2014.09 | MT | F | R | SUV 4WD B 5254 T2 | Chassis no. from:354128 | GCI82303 | Inner Joint | | 26 | 29 | 28 | 526 | 78 | |
| | 2002.10-2014.09 | AT/MT | R | L/R | SUV 4WD B 5254 T2 | | GDS44068 | Drive Shaft | | 36 | 26 | 56.5 | 50 | 795 | |
| | 2002.10-2014.09 | AT/MT | R | L/R | SUV 4WD B 5254 T2 | Date from:2006.07 | GCO18290 | Outer Joint | | 36 | 29 | 56.5 | 49.5 | 64 | I |
| | 2002.10-2014.09 | MT/AT | R | L/R | SUV 4WD B 5254 T2 | Date from:2006.07 | GCI18187 | Inner Joint | | 26 | 29 | 35 | 69.5 | 107.5 | |
| | 2012.10-2014.09 | AT | F | L | SUV 4WD B 5254 T9 | Date from:2013.01 | GDS62083 | Drive Shaft | 48T | 40 | 26 | 56.5 | 52 | 580 | |
| | 2012.10-2014.09 | AT | F | L/R | SUV 4WD B 5254 T9 | Date from:2013.01 | GCO62035 | Outer Joint | 48T | 40 | 27 | 56.5 | 52 | 63.5 | M |
| | 2012.10-2014.09 | AT | F | L | SUV 4WD B 5254 T9 | Date from:2013.01 | GCO62055 | Inner Joint | | 26 | 29 | 31 | 68.5 | 72 | |
| | 2012.10-2014.09 | | F | L/R | SUV 4WD B 5254 T9 | | GCO62031 | Outer Joint | 48T | 36 | 27 | 56.5 | 55 | 65 | M |
| | 2012.10-2014.09 | | F | | SUV 4WD B 5254 T9 | for model year:2013 | GCO62045 | Outer Joint | | 40 | 26 | 57.7 | 52 | 62.5 | M |
| | 2012.10-2014.09 | | F | L | SUV 4WD B 5254 T9 | for model year:2013 | GCI18044 | Inner Joint | | 26 | 23 | 40 | 68.5 | 99.5 | |
| | 2012.10-2014.09 | | F | L | SUV 4WD B 5254 T9 | for model year:2013 | GCO81424 | Inner Joint | | 31 | 27 | 36.2 | 70 | 62 | |
| | 2012.10-2014.09 | | R | | SUV 4WD B 5254 T9 | for model year:2013 | GCI18187 | Inner Joint | | 26 | 29 | 35 | 69.5 | 107.5 | |

| | YEAR | TRANSM. | F/R | L/R | BODY STYLE & DRIVE TYPE & ENGINE | REMARKS | G-AP Ref. | PRODUCT | ABS | Technical Specifications A | B | C | H | L | P |
|---|---|---|---|---|---|---|---|---|---|---|---|---|---|---|---|
| **VOLVO** | | | | | | | | | | | | | | | |
| **XC90** | | | | | | | | | | | | | | | |
| 2.9 (200 kw) | 2002.10-2006.12 | AT | F | L | SUV 4WD B 6294 T | | GDS56412 | Drive Shaft | 48T | 36 | 35 | 56.5 | 54.5 | 473 | |
| | 2002.10-2006.12 | AT | F | R | SUV 4WD B 6294 T | For left-hand drive vehicles | GDS83582 | Drive Shaft | 48T | 36 | 39 | 56.5 | 55 | 705 | |
| | 2002.10-2006.12 | AT | F | R | SUV 4WD B 6294 T | For right-hand drive vehicles | GDS84286 | Drive Shaft | 48T | 36 | 39 | 56.5 | 54.5 | 706 | |
| | 2002.10-2006.12 | AT | F | L/R | SUV 4WD B 6294 T | | GCO62031 | Outer Joint | 48T | 36 | 27 | 56.5 | 55 | 65 | M |
| | 2002.10-2006.12 | AT | F | L | SUV 4WD B 6294 T | | GCI83295 | Inner Joint | | 35 | 29 | 52 | 39.5 | 70 | |
| | 2002.10-2006.12 | AT | F | R | SUV 4WD B 6294 T | For left-hand drive vehicles | GCI82286 | Inner Joint | | 39 | 29 | 40 | 272.5 | 71 | |
| | 2002.10-2006.12 | AT | F | R | SUV 4WD B 6294 T | For right-hand drive vehicles | GCI82676 | Inner Joint | | 39 | 29 | 40 | 273 | 72 | |
| | 2002.10-2006.12 | 4AT | R | L/R | SUV 4WD B 6294 T | Date from:2004.07 | GCO18290 | Outer Joint | | 36 | 29 | 56.5 | 49.5 | 64 | I |
| | 2002.10-2006.12 | AT | R | L/R | SUV 4WD B 6294 T | | GDS44068 | Drive Shaft | | 36 | 26 | 56.5 | 50 | 795 | |
| | 2002.10-2006.12 | AT | R | L/R | SUV 4WD B 6294 T | Date from:2004.07 | GCI18187 | Inner Joint | | 26 | 29 | 35 | 69.5 | 107.5 | |
| 3.2 (175 kw) | 2006.03-2010.12 | AT | F | L | SUV 4WD B 6324 S | Chassis no. from:354799 | GDS81371 | Drive Shaft | 48T | 40 | 31 | 56.5 | 52 | 552 | |
| | 2006.03-2010.12 | AT | F | L | SUV 4WD B 6324 S | Chassis no. to:354798 | GDS83191 | Drive Shaft | 48T | 36 | 28 | 56.5 | 54.5 | 555 | |
| | 2006.03-2010.12 | AT | F | R | SUV 4WD B 6324 S | Chassis no. to:354798 | GDS81403 | Drive Shaft | 48T | 36 | 28 | 56.5 | 55 | 1033 | |
| | 2006.03-2010.12 | AT | F | L | SUV 4WD B 6324 S | Chassis no. from:355741 | GCO81514 | Outer Joint | 48T | 40 | 28 | 57 | 52 | 61.5 | I |
| | 2006.03-2010.12 | AT/MT | F | L/R | SUV 4WD B 6324 S | Chassis no. to:354798 | GCO62031 | Outer Joint | 48T | 36 | 27 | 56.5 | 55 | 65 | M |
| | 2006.03-2010.12 | AT/MT | F | L/R | SUV 4WD B 6324 S | Chassis Number:367134-597532 | GCO62035 | Outer Joint | 48T | 40 | 27 | 56.5 | 52 | 63.5 | M |
| | 2006.03-2010.12 | | F | L | SUV 4WD B 6324 S | Model year from:2007 | GCO81424 | Inner Joint | | 31 | 27 | 36.2 | 70 | 62 | |
| | 2006.03-2010.12 | 6AT | R | L/R | SUV 4WD B 6324 S | | GCO18290 | Outer Joint | | 36 | 29 | 56.5 | 49.5 | 64 | I |
| | 2006.03-2010.12 | AT | R | L/R | SUV 4WD B 6324 S | | GDS44068 | Drive Shaft | | 36 | 26 | 56.5 | 50 | 795 | |
| | 2006.03-2010.12 | AT | R | L/R | SUV 4WD B 6324 S | | GCI18187 | Inner Joint | | 26 | 29 | 35 | 69.5 | 107.5 | |
| | 2011.09-2014.09 | 6AT | F | L | SUV FWD B 6324 S | Chassis no. from:355741 | GDS81371 | Drive Shaft | 48T | 40 | 31 | 56.5 | 52 | 552 | |
| | 2011.09-2014.09 | 6AT | F | L | SUV FWD B 6324 S | Chassis no. to:355740 | GDS83191 | Drive Shaft | 48T | 36 | 28 | 56.5 | 54.5 | 555 | |
| | 2011.09-2014.09 | 6AT | F | R | SUV FWD B 6324 S | Chassis no. from:355741 | GDS81372 | Drive Shaft | 48T | 40 | 28 | 56.5 | 52 | 1028 | |
| | 2011.09-2014.09 | 6AT | F | L | SUV FWD B 6324 S | Chassis no. from:355741 | GCO62035 | Outer Joint | 48T | 40 | 27 | 56.5 | 52 | 63.5 | M |
| | 2011.09-2014.09 | 6AT | F | L | SUV FWD B 6324 S | Transmission side,Chassis no. from:355741 | GCO81424 | Inner Joint | | 31 | 27 | 36.2 | 70 | 62 | |
| | 2011.09-2014.09 | AT | F | L | SUV FWD B 6324 S | Chassis no. from:355741 | GCO81514 | Outer Joint | 48T | 40 | 28 | 57 | 52 | 61.5 | I |
| 3.2 (179 kw) | 2010.04-2014.09 | AT | F | L | SUV 4WD B 6324 S5 | Chassis no. from:354799 | GDS81371 | Drive Shaft | 48T | 40 | 31 | 56.5 | 52 | 552 | |
| | 2010.04-2014.09 | AT | F | L | SUV 4WD B 6324 S5 | Chassis no. to:354798 | GDS83191 | Drive Shaft | 48T | 36 | 28 | 56.5 | 54.5 | 555 | |
| | 2010.04-2014.09 | AT | F | R | SUV 4WD B 6324 S5 | | GDS81403 | Drive Shaft | 48T | 36 | 28 | 56.5 | 55 | 1033 | |
| | 2010.04-2014.09 | AT | F | L | SUV 4WD B 6324 S5 | Chassis no. from:355741 | GCO81514 | Outer Joint | 48T | 40 | 28 | 57 | 52 | 61.5 | I |
| | 2010.04-2014.09 | AT/MT | F | L/R | SUV 4WD B 6324 S5 | Chassis no. to:354798 | GCO62031 | Outer Joint | 48T | 36 | 27 | 56.5 | 55 | 65 | M |
| | 2010.04-2014.09 | AT/MT | F | L/R | SUV 4WD B 6324 S5 | Chassis Number:367134-597532 | GCO62035 | Outer Joint | 48T | 40 | 27 | 56.5 | 52 | 63.5 | M |
| | 2010.04-2014.09 | 6AT | R | L/R | SUV 4WD B 6324 S5 | | GCO18290 | Outer Joint | | 36 | 29 | 56.5 | 49.5 | 64 | I |
| | 2010.04-2014.09 | AT | R | L/R | SUV 4WD B 6324 S5 | | GDS44068 | Drive Shaft | | 36 | 26 | 56.5 | 50 | 795 | |
| | 2010.04-2014.09 | AT | R | L/R | SUV 4WD B 6324 S5 | | GCI18187 | Inner Joint | | 26 | 29 | 35 | 69.5 | 107.5 | |
| | 2011.09-2014.09 | 6AT | F | L | SUV FWD B 6324 S5 | Chassis no. from:355741 | GDS81371 | Drive Shaft | 48T | 40 | 31 | 56.5 | 52 | 552 | |
| | 2011.09-2014.09 | 6AT | F | L | SUV FWD B 6324 S5 | Chassis no. to:355740 | GDS83191 | Drive Shaft | 48T | 36 | 28 | 56.5 | 54.5 | 555 | |
| | 2011.09-2014.09 | 6AT | F | R | SUV FWD B 6324 S5 | Chassis no. from:355741 | GDS81372 | Drive Shaft | 48T | 40 | 28 | 56.5 | 52 | 1028 | |
| | 2011.09-2014.09 | AT | F | L | SUV FWD B 6324 S5 | Chassis no. from:355741 | GCO81514 | Outer Joint | 48T | 40 | 28 | 57 | 52 | 61.5 | I |
| 4.4 (232 kw) | 2005.01-2010.12 | 6AT | F | L | SUV 4WD B 8444 S | Chassis no. from:367134 | GDS81371 | Drive Shaft | 48T | 40 | 31 | 56.5 | 52 | 552 | |
| | 2005.01-2010.12 | 6AT | F | L | SUV 4WD B 8444 S | Chassis no. from:354476,Chassis no. to:367133 | GDS83191 | Drive Shaft | 48T | 36 | 28 | 56.5 | 54.5 | 555 | |
| | 2005.01-2010.12 | 6AT | F | R | SUV 4WD B 8444 S | Chassis no. from:367134 | GDS82185 | Drive Shaft | 48T | 40 | 28 | 57 | 52 | 1020 | |
| | 2005.01-2010.12 | 6AT | F | L/R | SUV 4WD B 8444 S | Chassis no. From:367134 | GCO81514 | Outer Joint | 48T | 40 | 28 | 57 | 52 | 61.5 | I |
| | 2005.01-2010.12 | AT | F | R | SUV 4WD B 8444 S | Chassis no.to:367133;Date to:2007.12 | GDS81404 | Drive Shaft | 48T | 36 | 28 | 56.5 | 55 | 1033 | |
| | 2005.01-2010.12 | AT/MT | F | L/R | SUV 4WD B 8444 S | Date to:2007.12;Chassis no. to:367133 | GCO62031 | Outer Joint | 48T | 36 | 27 | 56.5 | 55 | 65 | M |
| | 2005.01-2010.12 | AT/MT | F | L/R | SUV 4WD B 8444 S | Date to:2007.12;Chassis Number:367134-597532 | GCO62035 | Outer Joint | 48T | 40 | 27 | 56.5 | 52 | 63.5 | M |
| | 2005.01-2010.12 | 6AT | R | L/R | SUV 4WD B 8444 S | | GCO18290 | Outer Joint | | 36 | 29 | 56.5 | 49.5 | 64 | I |
| | 2005.01-2010.12 | 6AT | R | L/R | SUV 4WD B 8444 S | | GCI18187 | Inner Joint | | 26 | 29 | 35 | 69.5 | 107.5 | |
| | 2005.01-2010.12 | AT | R | L/R | SUV 4WD B 8444 S | | GDS44068 | Drive Shaft | | 36 | 26 | 56.5 | 50 | 795 | |
| 4.4 (235 kw) | 2004.09-2005.12 | 6AT | F | L | SUV 4WD B 8444 S | Chassis no. from:367134 | GDS81371 | Drive Shaft | 48T | 40 | 31 | 56.5 | 52 | 552 | |
| | 2004.09-2005.12 | 6AT | F | L | SUV 4WD B 8444 S | Chassis no. from:354476,Chassis no. to:367133 | GDS83191 | Drive Shaft | 48T | 36 | 28 | 56.5 | 54.5 | 555 | |
| | 2004.09-2005.12 | 6AT | F | R | SUV 4WD B 8444 S | Chassis no. to:367133 | GDS81404 | Drive Shaft | 48T | 36 | 28 | 56.5 | 55 | 1033 | |
| | 2004.09-2005.12 | 6AT | F | R | SUV 4WD B 8444 S | Chassis no. from:367134 | GDS82185 | Drive Shaft | 48T | 40 | 28 | 57 | 52 | 1020 | |
| | 2004.09-2005.12 | 6AT | F | L/R | SUV 4WD B 8444 S | Chassis no. to:367133 | GCO62031 | Outer Joint | 48T | 36 | 27 | 56.5 | 55 | 65 | M |
| | 2004.09-2005.12 | 6AT | F | L/R | SUV 4WD B 8444 S | Chassis no. from:367134 | GCO81514 | Outer Joint | 48T | 40 | 28 | 57 | 52 | 61.5 | I |
| | 2004.09-2005.12 | 6AT | R | L/R | SUV 4WD B 8444 S | | GDS44068 | Drive Shaft | | 36 | 26 | 56.5 | 50 | 795 | |
| | 2004.09-2005.12 | 6AT | R | L/R | SUV 4WD B 8444 S | | GCO18290 | Outer Joint | | 36 | 29 | 56.5 | 49.5 | 64 | I |
| | 2004.09-2005.12 | 6AT | R | L/R | SUV 4WD B 8444 S | | GCI18187 | Inner Joint | | 26 | 29 | 35 | 69.5 | 107.5 | |
| **VOLVO ASIA** | | | | | | | | | | | | | | | |
| **XC60** | | | | | | | | | | | | | | | |
| 2.0 (184 kw) | 2021.06- | AT | R | L/R | SUV 4WD B 420 T2, B420T11 | | GDS56701 | Drive Shaft | | 40 | 23 | 56.5 | 52 | 820 | |

| | YEAR | TRANSM. | F/R | L/R | BODY STYLE & DRIVE TYPE & ENGINE | REMARKS | G-AP Ref. | PRODUCT | ABS | Technical Specifications A | B | C | H | L | P |
|---|---|---|---|---|---|---|---|---|---|---|---|---|---|---|---|
| **VW** | | | | | | | | | | | | | | | |
| **Amarok** | | | | | | | | | | | | | | | |
| 2.0 (90 kw) | 2010.09-2013.10 | 6MT | F | L/R | Pickup 4WD CDBA;CNFA | | GDS61173 | Drive Shaft | | 28 | | 64.8 | 44.5 | 466 | |
| | 2010.09-2013.10 | 6MT | F | L/R | Pickup 4WD CDBA;CNFA | | GCO61062 | Outer Joint | | 28 | 27 | 64.8 | 44.5 | 66.5 | M |
| | 2010.09-2013.10 | 6MT | F | L/R | Pickup 4WD CDBA;CNFA | | GCI99148 | Inner Joint | | | 28 | | | 34 | |
| 2.0 (103 kw) | 2011.09-2016.10 | 6MT | F | L/R | Platform/Chassis 4WD CNFB | | GDS61173 | Drive Shaft | | 28 | | 64.8 | 44.5 | 466 | |
| | 2011.09-2016.10 | 6MT | F | L/R | Platform/Chassis 4WD CNFB | | GCO61062 | Outer Joint | | 28 | 27 | 64.8 | 44.5 | 66.5 | M |
| | 2011.09-2016.10 | 6MT | F | L/R | Platform/Chassis 4WD CNFB | | GCI99148 | Inner Joint | | | 28 | | | 34 | |
| | 2012.06-2022.05 | 6MT | F | L/R | Pickup 4WD CNFB | | GDS61173 | Drive Shaft | | 28 | | 64.8 | 44.5 | 466 | |
| | 2012.06-2022.05 | 6MT | F | L/R | Pickup 4WD CNFB | | GCO61062 | Outer Joint | | 28 | 27 | 64.8 | 44.5 | 66.5 | M |
| | 2012.06-2022.05 | MT | F | L/R | Pickup 4WD CNFB | For PR code:0FX;For PR code:0FA | GCI99148 | Inner Joint | | | 28 | | | 34 | |
| 2.0 (120 kw) | 2010.09-2012.08 | 6AT/6MT | F | L/R | Pickup 4WD CDCA | | GDS61173 | Drive Shaft | | 28 | | 64.8 | 44.5 | 466 | |
| | 2010.09-2012.08 | 6AT/6MT | F | L/R | Pickup 4WD CDCA | | GCO61062 | Outer Joint | | 28 | 27 | 64.8 | 44.5 | 66.5 | M |
| | 2010.09-2012.08 | 6AT/6MT | F | L/R | Pickup 4WD CDCA | | GCI99148 | Inner Joint | | | 28 | | | 34 | |
| 2.0 (125 kw) | 2022.09- | 6MT | F | L | Pickup 4WD DXKB(P02X) | | GDS56722 | Drive Shaft | | 28 | 29 | 60 | 114.5 | 652 | |
| | 2022.09- | 6MT | F | R | Pickup 4WD DXKB(P02X) | | GDS56723 | Drive Shaft | | 28 | 29 | 60 | 114.5 | 691 | |
| | 2022.09- | 6MT | F | L/R | Pickup 4WD DXKB(P02X) | Date from:2023.02 | GCO83408 | Outer Joint | | 28 | 37 | 60 | 114.5 | 72.5 | I |
| | 2022.09- | 6MT | F | L | Pickup 4WD DXKB(P02X) | Date from:2023.02 | GCI83453 | Inner Joint | | 29 | 37 | 35.6 | 110 | 78.5 | |
| | 2022.09- | 6MT | F | R | Pickup 4WD DXKB(P02X) | Date from:2023.02 | GCI83454 | Inner Joint | | 29 | 37 | 35.6 | 149 | 78.5 | |
| 2.0 (132 kw) | 2011.09-2022.05 | 8AT/6MT | F | L/R | Platform/Chassis 4WD CNEA;CSHA | | GDS61173 | Drive Shaft | | 28 | | 64.8 | 44.5 | 466 | |
| | 2011.09-2022.05 | 8AT/6MT | F | L/R | Platform/Chassis 4WD CNEA;CSHA | | GCO61062 | Outer Joint | | 28 | 27 | 64.8 | 44.5 | 66.5 | M |
| | 2011.09-2022.05 | | F | L/R | Platform/Chassis 4WD CNEA;CSHA | | GCI99148 | Inner Joint | | | 28 | | | 34 | |
| | 2011.11- | 8AT/6MT | F | L/R | Pickup 4WD CNEA;CSHA | | GDS61173 | Drive Shaft | | 28 | | 64.8 | 44.5 | 466 | |
| | 2011.11- | 8AT/6MT | F | L/R | Pickup 4WD CNEA;CSHA | | GCO61062 | Outer Joint | | 28 | 27 | 64.8 | 44.5 | 66.5 | M |
| | 2011.11- | 8AT/6MT | F | L/R | Pickup 4WD CNEA;CSHA | | GCI99148 | Inner Joint | | | 28 | | | 34 | |
| 2.0 (151 kw) | 2022.09- | 6MT/10AT | F | L | Pickup 4WD DXKD(YN2X) | | GDS56722 | Drive Shaft | | 28 | 29 | 60 | 114.5 | 652 | |
| | 2022.09- | 6MT/10AT | F | R | Pickup 4WD DXKD(YN2X) | | GDS56723 | Drive Shaft | | 28 | 29 | 60 | 114.5 | 691 | |
| | 2022.09- | 6MT/10AT | F | L/R | Pickup 4WD DXKD(YN2X) | Date from:2023.02 | GCO83408 | Outer Joint | | 28 | 37 | 60 | 114.5 | 72.5 | I |
| | 2022.09- | 6MT/10AT | F | L | Pickup 4WD DXKD(YN2X) | Date from:2023.02 | GCI83453 | Inner Joint | | 29 | 37 | 35.6 | 110 | 78.5 | |
| | 2022.09- | 6MT/10AT | F | R | Pickup 4WD DXKD(YN2X) | Date from:2023.02 | GCI83454 | Inner Joint | | 29 | 37 | 35.6 | 149 | 78.5 | |
| 3.0 (120 kw) | 2016.06-2020.06 | 6MT | F | L/R | Pickup 4WD DDXA | | GDS61173 | Drive Shaft | | 28 | | 64.8 | 44.5 | 466 | |
| | 2016.06-2020.06 | 6MT | F | L/R | Pickup 4WD DDXA | | GCO61062 | Outer Joint | | 28 | 27 | 64.8 | 44.5 | 66.5 | M |
| | 2016.06-2020.06 | 6MT | F | L/R | Pickup 4WD DDXA | | GCI99148 | Inner Joint | | | 28 | | | 34 | |
| 3.0 (150 kw) | 2016.06-2020.08 | 8AT | F | L/R | Pickup 4WD DDXB | For PR code:0FA | GCI99148 | Inner Joint | | | 28 | | | 34 | |
| | 2016.06-2020.08 | 8AT/6MT | F | L/R | Pickup 4WD DDXB | | GDS61173 | Drive Shaft | | 28 | | 64.8 | 44.5 | 466 | |
| | 2016.06-2020.08 | 8AT/6MT | F | L/R | Pickup 4WD DDXB | | GCO61062 | Outer Joint | | 28 | 27 | 64.8 | 44.5 | 66.5 | M |
| | 2016.06-2020.08 | 8AT | F | L/R | Platform/Chassis 4WD DDXB | Date to:2017.07,For PR code:0FX;For PR code:0FA/0FU | GDS61173 | Drive Shaft | | 28 | | 64.8 | 44.5 | 466 | |
| | 2016.06-2020.08 | 8AT | F | L/R | Platform/Chassis 4WD DDXB | For PR code:0FA/0FU | GCI99148 | Inner Joint | | | 28 | | | 34 | |
| | 2016.06-2020.08 | | F | L/R | Platform/Chassis 4WD DDXB | For PR code:0FA | GCO61062 | Outer Joint | | 28 | 27 | 64.8 | 44.5 | 66.5 | M |
| 3.0 (165 kw) | 2016.06-2022.05 | 8AT | F | L/R | Pickup 4WD DDXC;DDXD | For PR code:0FA;For PR code:0FX,Date to:2017.07 | GDS61173 | Drive Shaft | | 28 | | 64.8 | 44.5 | 466 | |
| | 2016.06-2022.05 | 8AT | F | L/R | Pickup 4WD DDXC;DDXD | For PR code:0FA/0FX | GCO61062 | Outer Joint | | 28 | 27 | 64.8 | 44.5 | 66.5 | M |
| | 2016.06-2022.05 | 8AT | F | L/R | Pickup 4WD DDXC;DDXD | For PR code:0FA | GCI99148 | Inner Joint | | | 28 | | | 34 | |
| 3.0 (177 kw) | 2022.09- | 10AT | F | L | Pickup 4WD DXWB(BF2X) | | GDS56722 | Drive Shaft | | 28 | 29 | 60 | 114.5 | 652 | |
| | 2022.09- | 10AT | F | R | Pickup 4WD DXWB(BF2X) | | GDS56723 | Drive Shaft | | 28 | 29 | 60 | 114.5 | 691 | |
| | 2022.09- | 10AT | F | L/R | Pickup 4WD DXWB(BF2X) | Date from:2023.02 | GCO83408 | Outer Joint | | 28 | 37 | 60 | 114.5 | 72.5 | I |
| | 2022.09- | 10AT | F | L | Pickup 4WD DXWB(BF2X) | Date from:2023.02 | GCI83453 | Inner Joint | | 29 | 37 | 35.6 | 110 | 78.5 | |
| | 2022.09- | 10AT | F | R | Pickup 4WD DXWB(BF2X) | Date from:2023.02 | GCI83454 | Inner Joint | | 29 | 37 | 35.6 | 149 | 78.5 | |
| 3.0 (190 kw) | 2018.05- | 8AT | F | L/R | Pickup 4WD DDXE | | GDS61173 | Drive Shaft | | 28 | | 64.8 | 44.5 | 466 | |
| | 2018.05- | 8AT | F | L/R | Pickup 4WD DDXE | | GCO61062 | Outer Joint | | 28 | 27 | 64.8 | 44.5 | 66.5 | M |
| | 2018.05- | 8AT | F | L/R | Pickup 4WD DDXE | | GCI99148 | Inner Joint | | | 28 | | | 34 | |
| | 2018.05-2022.05 | 8AT | F | L/R | Platform/Chassis 4WD DDXE | | GDS61173 | Drive Shaft | | 28 | | 64.8 | 44.5 | 466 | |
| | 2018.05-2022.05 | 8AT | F | L/R | Platform/Chassis 4WD DDXE | | GCO61062 | Outer Joint | | 28 | 27 | 64.8 | 44.5 | 66.5 | M |
| | 2018.05-2022.05 | 8AT | F | L/R | Platform/Chassis 4WD DDXE | | GCI99148 | Inner Joint | | | 28 | | | 34 | |
| **Arteon** | | | | | | | | | | | | | | | |
| 1.4 (160 kw) | 2020.11-2024.12 | 6AT | F | L/R | Hatchback FWD DGEB;EAJA;EBYA | | GCO83101 | Outer Joint | | 36 | 27 | 59.5 | 40 | 65 | M |
| | 2020.11-2024.12 | 6AT | F | L | Hatchback FWD DGEB;EAJA;EBYA | | GCI81158 | Inner Joint | | 37 | 34 | 34.5 | 65.5 | 83 | |
| | 2020.11-2024.12 | 6AT | F | R | Hatchback FWD DGEB;EAJA;EBYA | | GCI82108 | Inner Joint | | 37 | 34 | 40 | 77.5 | 103.5 | |
| | 2020.11-2024.12 | 6DCT | F | L | Hatchback FWD DGEB;EAJA;EBYA | | GDS81265 | Drive Shaft | | 36 | 37 | 59.5 | 40 | 557 | |
| | 2020.11-2024.12 | 6DCT | F | R | Hatchback FWD DGEB;EAJA;EBYA | | GDS83613 | Drive Shaft | | 36 | 37 | 59.5 | 40 | 921 | |
| 1.5 (110 kw) | 2017.11-2023.11 | 6MT | F | L | Hatchback FWD DADA;DPCA | For PR code:0ED | GDS61282 | Drive Shaft | | 36 | | 59.5 | 40 | 523 | |
| | 2017.11-2023.11 | 6MT | F | L | Hatchback FWD DADA;DPCA | For PR code:0EJ | GDS82387 | Drive Shaft | | 36 | | 59.5 | 40 | 523 | |
| | 2017.11-2023.11 | 6MT | F | R | Hatchback FWD DADA;DPCA | For PR code:0ED | GDS58110 | Drive Shaft | | 36 | | 59.5 | 40 | 793 | |
| | 2017.11-2023.11 | 6MT | F | R | Hatchback FWD DADA;DPCA | For PR code:0EJ | GDS82386 | Drive Shaft | | 36 | | 59.5 | 40 | 806 | |
| | 2017.11-2023.11 | 6MT | F | L/R | Hatchback FWD DADA;DPCA | For PR code:0ED | GCO61059 | Outer Joint | | 36 | 33 | 59.5 | 40 | 59.5 | I |
| | 2017.11-2023.11 | 6MT | F | R | Hatchback FWD DADA;DPCA | For PR code:0ED | GCI82447 | Inner Joint | | | 33 | | | 34 | |
| | 2017.11-2023.11 | 6MT | F | L/R | Hatchback FWD DADA;DPCA | For PR code:0EJ | GCI82456 | Inner Joint | | | 28 | | | 32 | |
| | 2017.11-2023.11 | 7DCT | F | L | Hatchback FWD DADA;DPCA | | GDS83323 | Drive Shaft | | 36 | 37 | 59.5 | 40 | 570 | |

| | YEAR | TRANSM. | F/R | L/R | BODY STYLE & DRIVE TYPE & ENGINE | REMARKS | G-AP Ref. | PRODUCT | ABS | Technical Specifications | | | | | |
|---|---|---|---|---|---|---|---|---|---|---|---|---|---|---|---|
| | | | | | | | | | | A | B | C | H | L | P |
| **VW** | | | | | | | | | | | | | | | |
| **Arteon** | | | | | | | | | | | | | | | |
| 1.5 (110 kw) | 2017.11-2023.11 | 7DCT | F | R | Hatchback FWD DADA;DPCA | | GDS84510 | Drive Shaft | | 36 | 37 | 59.5 | 40 | 925 | |
| | 2017.11-2023.11 | 7DCT | F | L/R | Hatchback FWD DADA;DPCA | | GCO83101 | Outer Joint | | 36 | 27 | 59.5 | 40 | 65 | M |
| | 2017.11-2023.11 | 7DCT | F | L | Hatchback FWD DADA;DPCA | | GCI83028 | Inner Joint | | 37 | 28 | | 65.5 | 90.2 | |
| 2.0 (110 kw) | 2017.03-2024.12 | 6DCT | F | L | Hatchback FWD DFGA;DBGA;DSRA;DSRB;DTSA;DTSB;DXPA | | GDS83381 | Drive Shaft | | 36 | | 59.5 | 40 | 483 | |
| | 2017.03-2024.12 | 6DCT | F | R | Hatchback FWD DFGA;DBGA;DSRA;DSRB;DTSA;DTSB;DXPA | | GDS61345 | Drive Shaft | | 36 | | 59.5 | 40 | 774 | |
| | 2017.03-2024.12 | 6DCT | F | L/R | Hatchback FWD DFGA;DBGA;DSRA;DSRB;DTSA;DTSB;DXPA | | GCI61057 | Inner Joint | | | 34 | | | 89 | |
| | 2017.03-2024.12 | 6MT | F | L | Hatchback FWD DFGA;DBGA;DSRA;DSRB;DTSA;DTSB;DXPA | | GDS81896 | Drive Shaft | | 36 | | 59.5 | 40 | 500 | |
| | 2017.03-2024.12 | 6MT | F | R | Hatchback FWD DFGA;DBGA;DSRA;DSRB;DTSA;DTSB;DXPA | | GDS61101 | Drive Shaft | | 36 | | 59.5 | 40 | 803 | |
| | 2017.03-2024.12 | 6MT | F | L/R | Hatchback FWD DFGA;DBGA;DSRA;DSRB;DTSA;DTSB;DXPA | | GCI83016 | Inner Joint | | | 28 | | | 32 | |
| | 2017.03-2024.12 | 6MT/6DCT/7DCT | F | L/R | Hatchback FWD DFGA;DBGA;DSRA;DSRB;DTSA;DTSB;DXPA | | GCO83101 | Outer Joint | | 36 | 27 | 59.5 | 40 | 65 | M |
| | 2017.03-2024.12 | 7DCT | F | L | Hatchback FWD DFGA;DBGA;DSRA;DSRB;DTSA;DTSB;DXPA | | GDS82351 | Drive Shaft | | 36 | 37 | 59.5 | 40 | 568 | |
| | 2017.03-2024.12 | 7DCT | F | R | Hatchback FWD DFGA;DBGA;DSRA;DSRB;DTSA;DTSB;DXPA | | GDS83613 | Drive Shaft | | 36 | 37 | 59.5 | 40 | 921 | |
| | 2017.03-2024.12 | 7DCT | F | L | Hatchback FWD DFGA;DBGA;DSRA;DSRB;DTSA;DTSB;DXPA | | GCI81158 | Inner Joint | | 37 | 34 | 34.5 | 65.5 | 83 | |
| | 2017.03-2024.12 | 7DCT | F | R | Hatchback FWD DFGA;DBGA;DSRA;DSRB;DTSA;DTSB;DXPA | | GCI82108 | Inner Joint | | 37 | 34 | 40 | 77.5 | 103.5 | |
| 2.0 (140 kw) | 2017.05-2020.08 | 7AT | F | L | Hatchback 4WD DFHA | | GDS82351 | Drive Shaft | | 36 | 37 | 59.5 | 40 | 568 | |
| | 2017.05-2020.08 | 7AT | F | R | Hatchback 4WD DFHA | | GDS61346 | Drive Shaft | | 36 | | 59.5 | 40 | 589 | |
| | 2017.05-2020.08 | 7AT | F | L/R | Hatchback 4WD DFHA | | GCO83101 | Outer Joint | | 36 | 27 | 59.5 | 40 | 65 | M |
| | 2017.05-2020.08 | 7AT | F | L | Hatchback 4WD DFHA | | GCI81158 | Inner Joint | | 37 | 34 | 34.5 | 65.5 | 83 | |
| | 2017.05-2020.08 | 7AT | F | R | Hatchback 4WD DFHA | | GCI61057 | Inner Joint | | | 34 | | | 89 | |
| | 2017.05-2020.08 | 7AT | R | L | Hatchback 4WD DFHA | | GDS61331 | Drive Shaft | | 36 | | 59.5 | 40 | 606 | |
| | 2017.05-2020.08 | 7AT | R | R | Hatchback 4WD DFHA | | GDS61332 | Drive Shaft | | 36 | | 59.5 | 40 | 650 | |
| | 2017.05-2020.08 | 7AT | R | L/R | Hatchback 4WD DFHA | | GCI35026 | Outer Joint | | 36 | 33 | 59.5 | 40 | 61 | |
| | 2017.05-2020.08 | 7AT | R | L/R | Hatchback 4WD DFHA | | GCI61103 | Inner Joint | | | 33 | | | 32 | |
| | 2017.05-2020.08 | 6MT | F | L | Hatchback FWD DFHA | | GDS81896 | Drive Shaft | | 36 | | 59.5 | 40 | 500 | |
| | 2017.05-2020.08 | 6MT | F | R | Hatchback FWD DFHA | | GDS61101 | Drive Shaft | | 36 | | 59.5 | 40 | 803 | |
| | 2017.05-2020.08 | 6MT | F | L/R | Hatchback FWD DFHA | | GCI83016 | Inner Joint | | | 28 | | | 32 | |
| | 2017.05-2020.08 | 6MT/7DCT | F | L/R | Hatchback FWD DFHA | | GCO83101 | Outer Joint | | 36 | 27 | 59.5 | 40 | 65 | M |
| | 2017.05-2020.08 | 7DCT | F | L | Hatchback FWD DFHA | | GDS82351 | Drive Shaft | | 36 | 37 | 59.5 | 40 | 568 | |
| | 2017.05-2020.08 | 7DCT | F | R | Hatchback FWD DFHA | | GDS83613 | Drive Shaft | | 36 | 37 | 59.5 | 40 | 921 | |
| | 2017.05-2020.08 | 7DCT | F | L | Hatchback FWD DFHA | | GCI81158 | Inner Joint | | 37 | 34 | 34.5 | 65.5 | 83 | |
| | 2017.05-2020.08 | 7DCT | F | R | Hatchback FWD DFHA | | GCI82108 | Inner Joint | | 37 | 34 | 40 | 77.5 | 103.5 | |
| 2.0 (147 kw) | 2020.09-2024.12 | 7AT | F | L | Hatchback 4WD DTUA | | GDS82351 | Drive Shaft | | 36 | 37 | 59.5 | 40 | 568 | |
| | 2020.09-2024.12 | 7AT | F | R | Hatchback 4WD DTUA | | GDS61346 | Drive Shaft | | 36 | | 59.5 | 40 | 589 | |
| | 2020.09-2024.12 | 7AT | F | L/R | Hatchback 4WD DTUA | | GCO83101 | Outer Joint | | 36 | 27 | 59.5 | 40 | 65 | M |
| | 2020.09-2024.12 | 7AT | F | R | Hatchback 4WD DTUA | | GCI61057 | Inner Joint | | | 34 | | | 89 | |
| | 2020.09-2024.12 | 7DCT | F | L | Hatchback 4WD DTUA | | GCI81158 | Inner Joint | | 37 | 34 | 34.5 | 65.5 | 83 | |
| | 2020.09-2024.12 | 7AT | R | L | Hatchback 4WD DTUA | | GDS61331 | Drive Shaft | | 36 | | 59.5 | 40 | 606 | |
| | 2020.09-2024.12 | 7AT | R | R | Hatchback 4WD DTUA | | GDS61332 | Drive Shaft | | 36 | | 59.5 | 40 | 650 | |
| | 2020.09-2024.12 | 7AT | R | L/R | Hatchback 4WD DTUA | | GCI35026 | Outer Joint | | 36 | 33 | 59.5 | 40 | 61 | |
| | 2020.09-2024.12 | 7AT | R | L/R | Hatchback 4WD DTUA | | GCI61103 | Inner Joint | | | 33 | | | 32 | |
| | 2020.09-2024.12 | 7AT | R | L/R | Hatchback 4WD DTUA | | GCI83008 | Inner Joint | | | 33 | | | 32 | |
| | 2020.09-2024.12 | 7DCT | F | L | Hatchback FWD DTUA | | GDS82351 | Drive Shaft | | 36 | 37 | 59.5 | 40 | 568 | |
| | 2020.09-2024.12 | 7DCT | F | R | Hatchback FWD DTUA | | GDS83613 | Drive Shaft | | 36 | 37 | 59.5 | 40 | 921 | |
| | 2020.09-2024.12 | 7DCT | F | R | Hatchback FWD DTUA | | GCO83101 | Outer Joint | | 36 | 27 | 59.5 | 40 | 65 | M |
| | 2020.09-2024.12 | 7DCT | F | L | Hatchback FWD DTUA | | GCI81158 | Inner Joint | | 37 | 34 | 34.5 | 65.5 | 83 | |
| | 2020.09-2024.12 | 7DCT | F | R | Hatchback FWD DTUA | | GCI82108 | Inner Joint | | 37 | 34 | 40 | 77.5 | 103.5 | |
| 2.0 (176 kw) | 2017.03-2020.07 | 7AT | F | L | Hatchback 4WD CUAA | | GDS82351 | Drive Shaft | | 36 | 37 | 59.5 | 40 | 568 | |
| | 2017.03-2020.07 | 7AT | F | R | Hatchback 4WD CUAA | | GDS61166 | Drive Shaft | | 36 | 40 | 59.5 | 40 | 611 | |
| | 2017.03-2020.07 | 7AT | F | L | Hatchback 4WD CUAA | | GCI81158 | Inner Joint | | 37 | 34 | 34.5 | 65.5 | 83 | |
| | 2017.03-2020.07 | 7AT | F | R | Hatchback 4WD CUAA | | GCI61048 | Inner Joint | | 40 | 34 | 46.9 | | 127.5 | |
| | 2017.03-2020.07 | 7DCT | F | L/R | Hatchback 4WD CUAA | | GCO83101 | Outer Joint | | 36 | 27 | 59.5 | 40 | 65 | M |
| | 2017.03-2020.07 | 7AT | R | L | Hatchback 4WD CUAA | | GDS61334 | Drive Shaft | | 36 | | 59.5 | 40 | 598 | |
| | 2017.03-2020.07 | 7AT | R | R | Hatchback 4WD CUAA | | GDS61335 | Drive Shaft | | 36 | | 59.5 | 40 | 638 | |
| | 2017.03-2020.07 | 7AT | R | L/R | Hatchback 4WD CUAA | | GCI53002 | Inner Joint | | | 33 | | | 34 | |
| | 2017.03-2020.07 | 7DCT | R | L/R | Hatchback 4WD CUAA | | GCI82447 | Inner Joint | | | 33 | | | 34 | |
| | 2017.03-2020.07 | | R | L/R | Hatchback 4WD CUAA | | GCI83011 | Inner Joint | | | 33 | | | 34 | |
| 2.0 (200 kw) | 2018.04-2024.12 | 7AT | F | R | Hatchback 4WD DLRB;DNUA | | GDS81889 | Drive Shaft | | 36 | | 59.5 | 40 | 614 | |
| | 2018.04-2024.12 | 7AT | F | R | Hatchback 4WD DLRB;DNUA | | GCO83101 | Outer Joint | | 36 | 27 | 59.5 | 40 | 65 | M |
| | 2018.04-2024.12 | 7AT | F | R | Hatchback 4WD DLRB;DNUA | | GCI61069 | Inner Joint | | | 28 | | | 32 | |
| | 2018.04-2024.12 | 8AT | F | L/R | Hatchback 4WD DLRB;DNUA | | GCO83104 | Outer Joint | | 36 | 28 | 59.4 | 40 | 65 | I |
| | 2018.04-2024.12 | 7AT | R | L | Hatchback 4WD DLRB;DNUA | | GDS61331 | Drive Shaft | | 36 | | 59.5 | 40 | 606 | |
| | 2018.04-2024.12 | 7AT | R | R | Hatchback 4WD DLRB;DNUA | | GDS61332 | Drive Shaft | | 36 | | 59.5 | 40 | 650 | |
| | 2018.04-2024.12 | 7AT | R | L/R | Hatchback 4WD DLRB;DNUA | | GCI35026 | Outer Joint | | 36 | 33 | 59.5 | 40 | 61 | |
| | 2018.04-2024.12 | 7AT | R | L/R | Hatchback 4WD DLRB;DNUA | | GCI61103 | Inner Joint | | | 33 | | | 32 | |
| 2.0 (206 kw) | 2017.04-2024.12 | 7AT | F | R | Hatchback 4WD DJHC;DNFE | | GDS81889 | Drive Shaft | | 36 | | 59.5 | 40 | 614 | |

| | YEAR | TRANSM. | F/R | L/R | BODY STYLE & DRIVE TYPE & ENGINE | REMARKS | G-AP Ref. | PRODUCT | ABS | Technical Specifications A | B | C | H | L | P |
|---|---|---|---|---|---|---|---|---|---|---|---|---|---|---|---|
| **VW** | | | | | | | | | | | | | | | |
| **Arteon** | | | | | | | | | | | | | | | |
| 2.0 (206 kw) | 2017.04-2024.12 | 7AT | F | R | Hatchback 4WD DJHC;DNFE | | GCO83101 | Outer Joint | | 36 | 27 | 59.5 | 40 | 65 | M |
| | 2017.04-2024.12 | 7AT | F | R | Hatchback 4WD DJHC;DNFE | | GCI61069 | Inner Joint | | | 28 | | | 32 | |
| | 2017.04-2024.12 | 7AT | R | L | Hatchback 4WD DJHC;DNFE | | GDS61331 | Drive Shaft | | 36 | | 59.5 | 40 | 606 | |
| | 2017.04-2024.12 | 7AT | R | R | Hatchback 4WD DJHC;DNFE | | GDS61332 | Drive Shaft | | 36 | | 59.5 | 40 | 650 | |
| | 2017.04-2024.12 | 7AT | R | L/R | Hatchback 4WD DJHC;DNFE | | GCI35026 | Outer Joint | | 36 | 33 | 59.5 | 40 | 61 | |
| | 2017.04-2024.12 | 7AT | R | L/R | Hatchback 4WD DJHC;DNFE | | GCI61103 | Inner Joint | | | 33 | | | 32 | |
| 2.0 (235 kw) | 2020.11-2024.12 | 7DCT | F | L | Hatchback 4WD DNFG | Trans. code:DQ500 | GDS82351 | Drive Shaft | | 36 | 37 | 59.5 | 40 | 568 | |
| | 2020.11-2024.12 | 7DCT | F | R | Hatchback 4WD DNFG | Date to:2023.11,For PR code:0EX | GDS61166 | Drive Shaft | | 36 | 40 | 59.5 | 40 | 611 | |
| | 2020.11-2024.12 | 7DCT | F | R | Hatchback 4WD DNFG | For PR code:0IJ | GDS81889 | Drive Shaft | | 36 | | 59.5 | 40 | 614 | |
| | 2020.11-2024.12 | 7DCT | F | L | Hatchback 4WD DNFG | | GCI81158 | Inner Joint | | 37 | 34 | 34.5 | 65.5 | 83 | |
| **Arteon Shooting Brake** | | | | | | | | | | | | | | | |
| 1.4 (160 kw) | 2020.11-2024.12 | 6AT | F | L/R | Estate FWD DGEB;EAJA;EBYA | | GCO83101 | Outer Joint | | 36 | 27 | 59.5 | 40 | 65 | M |
| | 2020.11-2024.12 | 6AT | F | L | Estate FWD DGEB;EAJA;EBYA | | GCI81158 | Inner Joint | | 37 | 34 | 34.5 | 65.5 | 83 | |
| | 2020.11-2024.12 | 6AT | F | R | Estate FWD DGEB;EAJA;EBYA | | GCI82108 | Inner Joint | | 37 | 34 | 40 | 77.5 | 103.5 | |
| | 2020.11-2024.12 | 6DCT | F | L | Estate FWD DGEB;EAJA;EBYA | | GDS81265 | Drive Shaft | | 36 | 37 | 59.5 | 40 | 557 | |
| | 2020.11-2024.12 | 6DCT | F | R | Estate FWD DGEB;EAJA;EBYA | | GDS83613 | Drive Shaft | | 36 | 37 | 59.5 | 40 | 921 | |
| 1.5 (110 kw) | 2020.08-2023.12 | 7AT | F | L | Estate FWD DPCA | | GDS83323 | Drive Shaft | | 36 | 37 | 59.5 | 40 | 570 | |
| | 2020.08-2023.12 | 7AT | F | L/R | Estate FWD DPCA | | GCO83101 | Outer Joint | | 36 | 27 | 59.5 | 40 | 65 | M |
| | 2020.08-2023.12 | 7AT | F | L | Estate FWD DPCA | | GCI83028 | Inner Joint | | 37 | 28 | | 65.5 | 90.2 | |
| | 2020.08-2023.12 | 7DCT | F | R | Estate FWD DPCA | | GDS84510 | Drive Shaft | | 36 | 37 | 59.5 | 40 | 925 | |
| 2.0 (110 kw) | 2020.09-2024.12 | 6MT | F | L | Estate FWD DSRA;DSRB;DTSA;DTSB;DXPA | | GDS81896 | Drive Shaft | | 36 | | 59.5 | 40 | 500 | |
| | 2020.09-2024.12 | 6MT | F | R | Estate FWD DSRA;DSRB;DTSA;DTSB;DXPA | | GDS61101 | Drive Shaft | | 36 | | 59.5 | 40 | 803 | |
| | 2020.09-2024.12 | 6MT | F | L/R | Estate FWD DSRA;DSRB;DTSA;DTSB;DXPA | | GCI83016 | Inner Joint | | | 28 | | | 32 | |
| | 2020.09-2024.12 | 7DCT | F | L | Estate FWD DSRA;DSRB;DTSA;DTSB;DXPA | Date to:2023.11 | GDS82351 | Drive Shaft | | 36 | 37 | 59.5 | 40 | 568 | |
| | 2020.09-2024.12 | 7DCT | F | R | Estate FWD DSRA;DSRB;DTSA;DTSB;DXPA | | GDS83613 | Drive Shaft | | 36 | 37 | 59.5 | 40 | 921 | |
| | 2020.09-2024.12 | 7DCT | F | R | Estate FWD DSRA;DSRB;DTSA;DTSB;DXPA | | GCO83101 | Outer Joint | | 36 | 27 | 59.5 | 40 | 65 | M |
| | 2020.09-2024.12 | 7DCT | F | L | Estate FWD DSRA;DSRB;DTSA;DTSB;DXPA | | GCI81158 | Inner Joint | | 37 | 34 | 34.5 | 65.5 | 83 | |
| | 2020.09-2024.12 | 7DCT | F | R | Estate FWD DSRA;DSRB;DTSA;DTSB;DXPA | | GCI82108 | Inner Joint | | 37 | 34 | 40 | 77.5 | 103.5 | |
| 2.0 (140 kw) | 2020.06-2020.08 | 7DCT | F | L | Estate 4WD DFHA | Date to:2023.11 | GDS82351 | Drive Shaft | | 36 | 37 | 59.5 | 40 | 568 | |
| | 2020.06-2020.08 | 7DCT | F | R | Estate 4WD DFHA | | GDS61346 | Drive Shaft | | 36 | | 59.5 | 40 | 589 | |
| | 2020.06-2020.08 | 7DCT | F | L | Estate 4WD DFHA | | GCI81158 | Inner Joint | | 37 | 34 | 34.5 | 65.5 | 83 | |
| | 2020.06-2020.08 | 7AT | R | L/R | Estate 4WD DFHA | | GCI35026 | Outer Joint | | 36 | 33 | 59.5 | 40 | 61 | |
| | 2020.06-2020.08 | 7DCT | R | L | Estate 4WD DFHA | | GDS61331 | Drive Shaft | | 36 | | 59.5 | 40 | 606 | |
| | 2020.06-2020.08 | 7DCT | R | R | Estate 4WD DFHA | | GDS61332 | Drive Shaft | | 36 | | 59.5 | 40 | 650 | |
| | 2020.06-2020.08 | 7DCT | R | L/R | Estate 4WD DFHA | | GCI61103 | Inner Joint | | | 33 | | | 32 | |
| | 2020.06-2020.08 | 7DCT | F | L | Estate FWD DFHA | Date to:2023.11 | GDS82351 | Drive Shaft | | 36 | 37 | 59.5 | 40 | 568 | |
| | 2020.06-2020.08 | 7DCT | F | R | Estate FWD DFHA | | GDS83613 | Drive Shaft | | 36 | 37 | 59.5 | 40 | 921 | |
| | 2020.06-2020.08 | 7DCT | F | R | Estate FWD DFHA | | GCO83101 | Outer Joint | | 36 | 27 | 59.5 | 40 | 65 | M |
| | 2020.06-2020.08 | 7DCT | F | L | Estate FWD DFHA | | GCI81158 | Inner Joint | | 37 | 34 | 34.5 | 65.5 | 83 | |
| | 2020.06-2020.08 | 7DCT | F | R | Estate FWD DFHA | | GCI82108 | Inner Joint | | 37 | 34 | 40 | 77.5 | 103.5 | |
| | 2020.09-2021.06 | 7AT | F | L/R | Estate FWD CZPB;DKZA | | GCO83101 | Outer Joint | | 36 | 27 | 59.5 | 40 | 65 | M |
| 2.0 (142 kw) | 2024.02- | 7DCT | F | L | Estate 4WD DXNB | | GDS82351 | Drive Shaft | | 36 | 37 | 59.5 | 40 | 568 | |
| | 2024.02- | 7DCT | F | R | Estate 4WD DXNB | With flange | GDS61346 | Drive Shaft | | 36 | | 59.5 | 40 | 589 | |
| | 2024.02- | 7DCT | F | L | Estate 4WD DXNB | | GCI81158 | Inner Joint | | 37 | 34 | 34.5 | 65.5 | 83 | |
| | 2024.02- | 7DCT | R | L/R | Estate 4WD DXNB | | GCI61103 | Inner Joint | | | 33 | | | 32 | |
| 2.0 (147 kw) | 2020.09-2024.12 | 7DCT | F | L | Estate 4WD DTUA | Date to:2023.11 | GDS82351 | Drive Shaft | | 36 | 37 | 59.5 | 40 | 568 | |
| | 2020.09-2024.12 | 7DCT | F | R | Estate 4WD DTUA | | GDS61346 | Drive Shaft | | 36 | | 59.5 | 40 | 589 | |
| | 2020.09-2024.12 | 7DCT | F | L | Estate 4WD DTUA | | GCI81158 | Inner Joint | | 37 | 34 | 34.5 | 65.5 | 83 | |
| | 2020.09-2024.12 | 7AT | R | L/R | Estate 4WD DTUA | | GCI35026 | Outer Joint | | 36 | 33 | 59.5 | 40 | 61 | |
| | 2020.09-2024.12 | 7DCT | R | L | Estate 4WD DTUA | | GDS61331 | Drive Shaft | | 36 | | 59.5 | 40 | 606 | |
| | 2020.09-2024.12 | 7DCT | R | R | Estate 4WD DTUA | | GDS61332 | Drive Shaft | | 36 | | 59.5 | 40 | 650 | |
| | 2020.09-2024.12 | 7DCT | R | L/R | Estate 4WD DTUA | | GCI61103 | Inner Joint | | | 33 | | | 32 | |
| | 2020.09-2024.12 | 7DCT | R | L/R | Estate 4WD DTUA | | GCI83008 | Inner Joint | | | 33 | | | 32 | |
| | 2020.09-2024.12 | 7DCT | F | L | Estate FWD DTUA | | GDS82351 | Drive Shaft | | 36 | 37 | 59.5 | 40 | 568 | |
| | 2020.09-2024.12 | 7DCT | F | R | Estate FWD DTUA | | GDS83613 | Drive Shaft | | 36 | 37 | 59.5 | 40 | 921 | |
| | 2020.09-2024.12 | 7DCT | F | R | Estate FWD DTUA | | GCO83101 | Outer Joint | | 36 | 27 | 59.5 | 40 | 65 | M |
| | 2020.09-2024.12 | 7DCT | F | L | Estate FWD DTUA | | GCI81158 | Inner Joint | | 37 | 34 | 34.5 | 65.5 | 83 | |
| | 2020.09-2024.12 | 7DCT | F | R | Estate FWD DTUA | | GCI82108 | Inner Joint | | 37 | 34 | 40 | 77.5 | 103.5 | |
| 2.0 (200 kw) | 2020.06-2024.12 | 7DCT | F | R | Estate 4WD DNUA | | GDS81889 | Drive Shaft | | 36 | | 59.5 | 40 | 614 | |
| | 2020.06-2024.12 | 7DCT | F | R | Estate 4WD DNUA | | GCI61069 | Inner Joint | | | 28 | | | 32 | |
| | 2020.06-2024.12 | 7AT | R | L/R | Estate 4WD DNUA | | GCI35026 | Outer Joint | | 36 | 33 | 59.5 | 40 | 61 | |
| | 2020.06-2024.12 | 7DCT | R | L | Estate 4WD DNUA | | GDS61331 | Drive Shaft | | 36 | | 59.5 | 40 | 606 | |
| | 2020.06-2024.12 | 7DCT | R | R | Estate 4WD DNUA | | GDS61332 | Drive Shaft | | 36 | | 59.5 | 40 | 650 | |
| | 2020.06-2024.12 | 7DCT | R | L/R | Estate 4WD DNUA | | GCI61103 | Inner Joint | | | 33 | | | 32 | |
| | 2020.06-2024.12 | 7DCT | R | L/R | Estate 4WD DNUA | | GCI83008 | Inner Joint | | | 33 | | | 32 | |

| | YEAR | TRANSM. | F/R | L/R | BODY STYLE & DRIVE TYPE & ENGINE | REMARKS | G-AP Ref. | PRODUCT | ABS | Technical Specifications A | B | C | H | L | P |
|---|---|---|---|---|---|---|---|---|---|---|---|---|---|---|---|
| **VW** | | | | | | | | | | | | | | | |
| **Arteon Shooting Brake** | | | | | | | | | | | | | | | |
| 2.0 (206 kw) | 2020.06-2024.12 | 7DCT | F | R | Estate 4WD DJHC;DNFE | | GDS81889 | Drive Shaft | | 36 | | 59.5 | 40 | 614 | |
| | 2020.06-2024.12 | 7DCT | F | R | Estate 4WD DJHC;DNFE | | GCI61069 | Inner Joint | | | 28 | | | 32 | |
| | 2020.06-2024.12 | 7AT | R | L/R | Estate 4WD DJHC;DNFE | | GCI35026 | Outer Joint | | 36 | 33 | 59.5 | 40 | 61 | |
| | 2020.06-2024.12 | 7DCT | R | L | Estate 4WD DJHC;DNFE | | GDS61331 | Drive Shaft | | 36 | | 59.5 | 40 | 606 | |
| | 2020.06-2024.12 | 7DCT | R | R | Estate 4WD DJHC;DNFE | | GDS61332 | Drive Shaft | | 36 | | 59.5 | 40 | 650 | |
| | 2020.06-2024.12 | 7DCT | R | L/R | Estate 4WD DJHC;DNFE | | GCI61103 | Inner Joint | | | 33 | | | 32 | |
| | 2020.06-2024.12 | 7DCT | R | L/R | Estate 4WD DJHC;DNFE | | GCI83008 | Inner Joint | | | 33 | | | 32 | |
| 2.0 (235 kw) | 2020.11-2024.12 | 7DCT | F | L | Estate 4WD DNFG | Trans. code:DQ500 | GDS82351 | Drive Shaft | | 36 | 37 | 59.5 | 40 | 568 | |
| | 2020.11-2024.12 | 7DCT | F | R | Estate 4WD DNFG | Date to:2023.11,For PR code:0EX | GDS61166 | Drive Shaft | | 36 | 40 | 59.5 | 40 | 611 | |
| | 2020.11-2024.12 | 7DCT | F | R | Estate 4WD DNFG | For PR code:0IJ | GDS81889 | Drive Shaft | | 36 | | 59.5 | 40 | 614 | |
| | 2020.11-2024.12 | 7DCT | F | L | Estate 4WD DNFG | For PR code:0EX | GCI81158 | Inner Joint | | 37 | 34 | 34.5 | 65.5 | 83 | |
| **Beetle** | | | | | | | | | | | | | | | |
| 1.2 (77 kw) | 2011.07-2019.07 | 6MT | F | L | Hatchback FWD CBZB | | GDS84330 | Drive Shaft | | 36 | | 59.5 | 40 | 537 | |
| | 2011.07-2019.07 | 6MT | F | R | Hatchback FWD CBZB | | GDS81986 | Drive Shaft | | 36 | | 59.5 | 40 | 812 | |
| | 2011.07-2019.07 | 6MT | F | L/R | Hatchback FWD CBZB | | GCO83037 | Outer Joint | | 36 | 30 | 59.5 | 40.5 | 56 | I |
| | 2011.07-2019.07 | 6MT | F | L/R | Hatchback FWD CBZB | | GCI81250 | Inner Joint | | | 26 | | | 34 | |
| | 2011.12-2019.07 | 6MT | F | L | Convertible FWD CBZB | | GDS84330 | Drive Shaft | | 36 | | 59.5 | 40 | 537 | |
| | 2011.12-2019.07 | 6MT | F | R | Convertible FWD CBZB | | GDS81986 | Drive Shaft | | 36 | | 59.5 | 40 | 812 | |
| | 2011.12-2019.07 | 6MT | F | L | Convertible FWD CBZB | | GCI81250 | Inner Joint | | | 26 | | | 34 | |
| | 2011.12-2019.07 | AT | F | L/R | Convertible FWD CBZB | | GCO83037 | Outer Joint | | 36 | 30 | 59.5 | 40.5 | 56 | I |
| | 2014.12-2019.07 | 6MT | F | L | Convertible FWD CYVD | | GDS82355 | Drive Shaft | | 36 | | 59.5 | 40 | 526 | |
| | 2014.12-2019.07 | 6MT | F | L/R | Convertible FWD CYVD | | GCO83037 | Outer Joint | | 36 | 30 | 59.5 | 40.5 | 56 | I |
| | 2014.12-2019.07 | 7DCT/6MT | F | L/R | Convertible FWD CYVD | | GCI81250 | Inner Joint | | | 26 | | | 34 | |
| | 2014.12-2019.07 | 6MT | F | L | Hatchback FWD CYVD | | GDS82355 | Drive Shaft | | 36 | | 59.5 | 40 | 526 | |
| | 2014.12-2019.07 | 6MT | F | L/R | Hatchback FWD CYVD | | GCO83037 | Outer Joint | | 36 | 30 | 59.5 | 40.5 | 56 | I |
| | 2014.12-2019.07 | 7DCT/6MT | F | L/R | Hatchback FWD CYVD | | GCI81250 | Inner Joint | | | 26 | | | 34 | |
| 1.4 (110 kw) | 2014.12-2018.09 | 7AT/6MT | F | L | Convertible FWD CZDA | | GDS61281 | Drive Shaft | | 36 | | 59.5 | 40 | 528 | |
| | 2014.12-2018.09 | 7AT/6MT | F | L | Convertible FWD CZDA | | GCO83002 | Outer Joint | | 36 | 27 | 59.5 | 40 | 66 | I |
| | 2014.12-2018.09 | 7AT/6MT | F | L | Convertible FWD CZDA | | GCI61069 | Inner Joint | | | 28 | | | 32 | |
| | 2014.12-2019.07 | 7AT/6MT | F | L | Hatchback FWD CZDA | | GDS61281 | Drive Shaft | | 36 | | 59.5 | 40 | 528 | |
| | 2014.12-2019.07 | 7AT/6MT | F | L | Hatchback FWD CZDA | | GCO83002 | Outer Joint | | 36 | 27 | 59.5 | 40 | 66 | I |
| | 2014.12-2019.07 | 7AT/6MT | F | L | Hatchback FWD CZDA | | GCI61069 | Inner Joint | | | 28 | | | 32 | |
| 1.4 (118 kw) | 2011.10-2016.07 | 6MT | F | R | Hatchback FWD CNWA, CTKA, CAVD, CTHD | | GDS81986 | Drive Shaft | | 36 | | 59.5 | 40 | 812 | |
| | 2011.10-2016.07 | 6MT | F | L/R | Hatchback FWD CNWA, CTKA, CAVD, CTHD | | GCO83037 | Outer Joint | | 36 | 30 | 59.5 | 40.5 | 56 | I |
| | 2011.10-2016.07 | 6MT | F | L/R | Hatchback FWD CNWA, CTKA, CAVD, CTHD | | GCI81250 | Inner Joint | | | 26 | | | 34 | |
| | 2011.10-2016.07 | 7AT/7DCT | F | L | Hatchback FWD CNWA, CTKA, CAVD, CTHD | | GCI61069 | Inner Joint | | | 28 | | | 32 | |
| | 2011.10-2016.07 | 7DCT | F | L | Hatchback FWD CNWA, CTKA, CAVD, CTHD | | GDS82356 | Drive Shaft | | 36 | | 59.5 | 40 | 534 | |
| | 2011.10-2016.07 | 7DCT | F | R | Hatchback FWD CNWA, CTKA, CAVD, CTHD | | GDS61339 | Drive Shaft | | 36 | | 59.5 | 40 | 794 | |
| | 2011.10-2016.07 | 7DCT | F | L/R | Hatchback FWD CNWA, CTKA, CAVD, CTHD | | GCO83002 | Outer Joint | | 36 | 27 | 59.5 | 40 | 66 | I |
| | 2011.12-2016.07 | 6MT | F | R | Convertible FWD CAVD;CNWA;CTHD;CTKA | | GDS81986 | Drive Shaft | | 36 | | 59.5 | 40 | 812 | |
| | 2011.12-2016.07 | 6MT | F | L/R | Convertible FWD CAVD;CNWA;CTHD;CTKA | | GCO83037 | Outer Joint | | 36 | 30 | 59.5 | 40.5 | 56 | I |
| | 2011.12-2016.07 | 6MT | F | L/R | Convertible FWD CAVD;CNWA;CTHD;CTKA | | GCI81250 | Inner Joint | | | 26 | | | 34 | |
| | 2011.12-2016.07 | 7DCT | F | L | Convertible FWD CAVD;CNWA;CTHD;CTKA | | GDS82356 | Drive Shaft | | 36 | | 59.5 | 40 | 534 | |
| | 2011.12-2016.07 | 7DCT | F | R | Convertible FWD CAVD;CNWA;CTHD;CTKA | | GDS61339 | Drive Shaft | | 36 | | 59.5 | 40 | 794 | |
| | 2011.12-2016.07 | 7DCT | F | L/R | Convertible FWD CAVD;CNWA;CTHD;CTKA | | GCO83002 | Outer Joint | | 36 | 27 | 59.5 | 40 | 66 | I |
| | 2011.12-2016.07 | 7DCT | F | L | Convertible FWD CAVD;CNWA;CTHD;CTKA | | GCI61069 | Inner Joint | | | 28 | | | 32 | |
| 1.6 (77 kw) | 2011.10-2016.07 | 5MT | F | L/R | Hatchback FWD CAYC | | GCO83037 | Outer Joint | | 36 | 30 | 59.5 | 40.5 | 56 | I |
| | 2011.10-2016.07 | 5MT | F | L/R | Hatchback FWD CAYC | | GCI81250 | Inner Joint | | | 26 | | | 34 | |
| | 2011.10-2016.07 | 7DCT | F | L | Hatchback FWD CAYC | | GDS61281 | Drive Shaft | | 36 | | 59.5 | 40 | 528 | |
| | 2011.10-2016.07 | 7DCT | F | R | Hatchback FWD CAYC | | GDS61341 | Drive Shaft | | 36 | | 59.5 | 40 | 806 | |
| | 2011.10-2016.07 | 7DCT | F | L/R | Hatchback FWD CAYC | | GCO83002 | Outer Joint | | 36 | 27 | 59.5 | 40 | 66 | I |
| | 2011.10-2016.07 | 7DCT | F | L/R | Hatchback FWD CAYC | | GCI61069 | Inner Joint | | | 28 | | | 32 | |
| | 2011.12-2016.07 | 5MT | F | L/R | Convertible FWD CAYC | | GCO83037 | Outer Joint | | 36 | 30 | 59.5 | 40.5 | 56 | I |
| | 2011.12-2016.07 | 5MT | F | L/R | Convertible FWD CAYC | | GCI81250 | Inner Joint | | | 26 | | | 34 | |
| | 2011.12-2016.07 | 7DCT | F | L | Convertible FWD CAYC | | GDS61281 | Drive Shaft | | 36 | | 59.5 | 40 | 528 | |
| | 2011.12-2016.07 | 7DCT | F | R | Convertible FWD CAYC | | GDS61341 | Drive Shaft | | 36 | | 59.5 | 40 | 806 | |
| | 2011.12-2016.07 | 7DCT | F | L/R | Convertible FWD CAYC | | GCO83002 | Outer Joint | | 36 | 27 | 59.5 | 40 | 66 | I |
| | 2011.12-2016.07 | 7DCT | F | L/R | Convertible FWD CAYC | | GCI61069 | Inner Joint | | | 28 | | | 32 | |
| 2.0 (81 kw) | 2014.06-2018.09 | 5MT | F | L/R | Convertible FWD CUUA | For Modelcode:5C1 | GCO83037 | Outer Joint | | 36 | 30 | 59.5 | 40.5 | 56 | I |
| | 2014.06-2018.09 | 5MT | F | L/R | Convertible FWD CUUA | | GCI81250 | Inner Joint | | | 26 | | | 34 | |
| | 2014.06-2018.09 | 7DCT | F | L | Convertible FWD CUUA | | GDS61281 | Drive Shaft | | 36 | | 59.5 | 40 | 528 | |
| | 2014.06-2018.09 | 7DCT | F | R | Convertible FWD CUUA | | GDS61341 | Drive Shaft | | 36 | | 59.5 | 40 | 806 | |
| | 2014.06-2018.09 | 7DCT | F | L/R | Convertible FWD CUUA | | GCO83002 | Outer Joint | | 36 | 27 | 59.5 | 40 | 66 | I |
| | 2014.06-2018.09 | 7DCT | F | L/R | Convertible FWD CUUA | | GCI61069 | Inner Joint | | | 28 | | | 32 | |
| | 2014.06-2018.09 | 5MT | F | L/R | Hatchback FWD CUUA | For Modelcode:5C1 | GCO83037 | Outer Joint | | 36 | 30 | 59.5 | 40.5 | 56 | I |

| | YEAR | TRANSM. | F/R | L/R | BODY STYLE & DRIVE TYPE & ENGINE | REMARKS | G-AP Ref. | PRODUCT | ABS | Technical Specifications A | B | C | H | L | P |
|---|---|---|---|---|---|---|---|---|---|---|---|---|---|---|---|
| **VW** | | | | | | | | | | | | | | | |
| **Beetle** | | | | | | | | | | | | | | | |
| 2.0 (81 kw) | 2014.06-2018.09 | 5MT | F | L/R | Hatchback FWD CUUA | | GCI81250 | Inner Joint | | | 26 | | | 34 | |
| | 2014.06-2018.09 | 7DCT | F | L | Hatchback FWD CUUA | | GDS61281 | Drive Shaft | | 36 | | 59.5 | 40 | 528 | |
| | 2014.06-2018.09 | 7DCT | F | R | Hatchback FWD CUUA | | GDS61341 | Drive Shaft | | 36 | | 59.5 | 40 | 806 | |
| | 2014.06-2018.09 | 7DCT | F | L/R | Hatchback FWD CUUA | | GCO83002 | Outer Joint | | 36 | 27 | 59.5 | 40 | 66 | I |
| | 2014.06-2018.09 | 7DCT | F | L/R | Hatchback FWD CUUA | | GCI61069 | Inner Joint | | | 28 | | | 32 | |
| 2.0 (103 kw) | 2011.04-2016.07 | 6MT | F | L | Hatchback FWD CFFB;CJAA | | GDS81896 | Drive Shaft | | 36 | | 59.5 | 40 | 500 | |
| | 2011.04-2016.07 | 6MT | F | R | Hatchback FWD CFFB;CJAA | | GDS61341 | Drive Shaft | | 36 | | 59.5 | 40 | 806 | |
| | 2011.04-2016.07 | 6MT | F | R | Hatchback FWD CFFB;CJAA | | GCO83002 | Outer Joint | | 36 | 27 | 59.5 | 40 | 66 | I |
| | 2011.04-2016.07 | 6MT | F | R | Hatchback FWD CFFB;CJAA | | GCI61069 | Inner Joint | | | 28 | | | 32 | |
| | 2012.04-2016.07 | 6MT | F | L | Convertible FWD CFFB;CJAA | | GDS81896 | Drive Shaft | | 36 | | 59.5 | 40 | 500 | |
| | 2012.04-2016.07 | 6MT | F | R | Convertible FWD CFFB;CJAA | | GDS61341 | Drive Shaft | | 36 | | 59.5 | 40 | 806 | |
| | 2012.04-2016.07 | 6MT | F | R | Convertible FWD CFFB;CJAA | | GCO83002 | Outer Joint | | 36 | 27 | 59.5 | 40 | 66 | I |
| | 2012.04-2016.07 | 6MT | F | R | Convertible FWD CFFB;CJAA | | GCI61069 | Inner Joint | | | 28 | | | 32 | |
| 2.0 (110 kw) | 2014.07-2018.09 | 6MT | F | L | Hatchback FWD CUUB;CVCA;DELA | | GDS81896 | Drive Shaft | | 36 | | 59.5 | 40 | 500 | |
| | 2014.07-2018.09 | 6MT | F | R | Hatchback FWD CUUB;CVCA;DELA | | GDS61341 | Drive Shaft | | 36 | | 59.5 | 40 | 806 | |
| | 2014.07-2018.09 | 6MT | F | R | Hatchback FWD CUUB;CVCA;DELA | | GCO83002 | Outer Joint | | 36 | 27 | 59.5 | 40 | 66 | I |
| | 2014.07-2018.09 | 6MT | F | R | Hatchback FWD CUUB;CVCA;DELA | | GCI61069 | Inner Joint | | | 28 | | | 32 | |
| | 2014.09-2018.09 | 6MT | F | L | Convertible FWD CUUB;CVCA;DELA | | GDS81896 | Drive Shaft | | 36 | | 59.5 | 40 | 500 | |
| | 2014.09-2018.09 | 6MT | F | R | Convertible FWD CUUB;CVCA;DELA | | GDS61341 | Drive Shaft | | 36 | | 59.5 | 40 | 806 | |
| | 2014.09-2018.09 | 6MT | F | R | Convertible FWD CUUB;CVCA;DELA | | GCO83002 | Outer Joint | | 36 | 27 | 59.5 | 40 | 66 | I |
| | 2014.09-2018.09 | 6MT | F | R | Convertible FWD CUUB;CVCA;DELA | | GCI61069 | Inner Joint | | | 28 | | | 32 | |
| 2.0 (147 kw) | 2011.04-2016.07 | 6DCT | F | L | Hatchback FWD CCTA, CCZA, CBFA | | GDS81896 | Drive Shaft | | 36 | | 59.5 | 40 | 500 | |
| | 2011.04-2016.07 | 6DCT | F | R | Hatchback FWD CCTA, CCZA, CBFA | | GDS83313 | Drive Shaft | | 36 | | 59.5 | 40 | 792 | |
| | 2011.04-2016.07 | 6DCT | F | L | Hatchback FWD CCTA, CCZA, CBFA | | GCI61069 | Inner Joint | | | 28 | | | 32 | |
| | 2011.04-2016.07 | 6DCT | F | L | Hatchback FWD CCTA, CCZA, CBFA | | GDS98006 | Stub Axle-Flange | | 37 | | | 67 | 123.5 | |
| | 2011.04-2016.07 | 6MT | F | L/R | Hatchback FWD CCTA, CCZA, CBFA | | GCO83002 | Outer Joint | | 36 | 27 | 59.5 | 40 | 66 | I |
| | 2011.04-2016.07 | MT | F | L/R | Hatchback FWD CCTA, CCZA, CBFA | Type:Beetle/Bjalla | GCO83037 | Outer Joint | | 36 | 30 | 59.5 | 40.5 | 56 | I |
| | 2011.12-2016.07 | 6DCT | F | L | Convertible FWD CCTA;CBFA;CCZA | | GDS81896 | Drive Shaft | | 36 | | 59.5 | 40 | 500 | |
| | 2011.12-2016.07 | 6DCT | F | R | Convertible FWD CCTA;CBFA;CCZA | | GDS83313 | Drive Shaft | | 36 | | 59.5 | 40 | 792 | |
| | 2011.12-2016.07 | 6DCT | F | L | Convertible FWD CCTA;CBFA;CCZA | | GCI61069 | Inner Joint | | | 28 | | | 32 | |
| | 2011.12-2016.07 | 6MT | F | L/R | Convertible FWD CCTA;CBFA;CCZA | | GCO83002 | Outer Joint | | 36 | 27 | 59.5 | 40 | 66 | I |
| | 2011.12-2016.07 | MT | F | L/R | Convertible FWD CCTA;CBFA;CCZA | | GCO83037 | Outer Joint | | 36 | 30 | 59.5 | 40.5 | 56 | I |
| 2.0 (155 kw) | 2012.12-2019.07 | 6DCT | F | R | Convertible FWD CPLA;CPPA | | GDS83313 | Drive Shaft | | 36 | | 59.5 | 40 | 792 | |
| | 2012.12-2019.07 | 6MT | F | L/R | Convertible FWD CPLA;CPPA | | GCO83037 | Outer Joint | | 36 | 30 | 59.5 | 40.5 | 56 | I |
| | 2012.12-2019.07 | 6MT | F | L/R | Convertible FWD CPLA;CPPA | For Enginecode:CPLA | GCI81250 | Inner Joint | | | 26 | | | 34 | |
| | 2012.12-2019.07 | 6MT/6DCT | F | L | Convertible FWD CPLA;CPPA | Transmission:6DCT;Transmission:6MT,For Engine code:CPLA,For PR code:A8T | GDS81896 | Drive Shaft | | 36 | | 59.5 | 40 | 500 | |
| | 2012.12-2019.07 | 6MT/6DCT | F | L | Convertible FWD CPLA;CPPA | | GCI61069 | Inner Joint | | | 28 | | | 32 | |
| | 2012.12-2019.07 | 6DCT | F | R | Hatchback FWD CPLA;CPPA | | GDS83313 | Drive Shaft | | 36 | | 59.5 | 40 | 792 | |
| | 2012.12-2019.07 | 6DCT | F | L | Hatchback FWD CPLA;CPPA | | GCI61069 | Inner Joint | | | 28 | | | 32 | |
| | 2012.12-2019.07 | 6DCT | F | L | Hatchback FWD CPLA;CPPA | | GDS98006 | Stub Axle-Flange | | 37 | | | 67 | 123.5 | |
| | 2012.12-2019.07 | 6MT | F | L/R | Hatchback FWD CPLA;CPPA | | GCO83037 | Outer Joint | | 36 | 30 | 59.5 | 40.5 | 56 | I |
| | 2012.12-2019.07 | 6MT | F | L/R | Hatchback FWD CPLA;CPPA | For Enginecode:CPLA | GCI81250 | Inner Joint | | | 26 | | | 34 | |
| | 2012.12-2019.07 | 6MT/6DCT | F | L | Hatchback FWD CPLA;CPPA | Transmission:6DCT;Transmission:6MT,For Engine code:CPLA,For PR code:A8T | GDS81896 | Drive Shaft | | 36 | | 59.5 | 40 | 500 | |
| 2.0 (162 kw) | 2014.12-2018.09 | 6MT | F | L/R | Convertible FWD CULC | For Engine code:CPLA | GCO83037 | Outer Joint | | 36 | 30 | 59.5 | 40.5 | 56 | I |
| | 2014.12-2018.09 | 6MT | F | L/R | Convertible FWD CULC | For Modelcode:5C7 | GCI81250 | Inner Joint | | | 26 | | | 34 | |
| | 2014.12-2018.09 | 6MT/6DCT | F | L | Convertible FWD CULC | Transmission:6DCT;Transmission:6MT,For PR code:A8T | GDS81896 | Drive Shaft | | 36 | | 59.5 | 40 | 500 | |
| | 2014.12-2018.09 | 6MT/6DCT | F | L | Convertible FWD CULC | | GCI61069 | Inner Joint | | | 28 | | | 32 | |
| | 2014.12-2018.09 | 6MT | F | L/R | Hatchback FWD CULC | For Engine code:CPLA | GCO83037 | Outer Joint | | 36 | 30 | 59.5 | 40.5 | 56 | I |
| | 2014.12-2018.09 | 6MT | F | L/R | Hatchback FWD CULC | For Modelcode:5C1 | GCI81250 | Inner Joint | | | 26 | | | 34 | |
| | 2014.12-2018.09 | 6MT/6DCT | F | L | Hatchback FWD CULC | Transmission:6DCT;Transmission:6MT,For PR code:A8T | GDS81896 | Drive Shaft | | 36 | | 59.5 | 40 | 500 | |
| | 2014.12-2018.09 | 6MT/6DCT | F | L | Hatchback FWD CULC | | GCI61069 | Inner Joint | | | 28 | | | 32 | |
| 2.5 (125 kw) | 2011.04-2019.07 | 6AT | F | L | Hatchback FWD CBTA;CBUA;CCCA | | GDS81582 | Drive Shaft | | 36 | 26 | 59.5 | 40 | 597 | |
| | 2011.04-2019.07 | MT | F | L/R | Hatchback FWD CBTA;CBUA;CCCA | | GCO83037 | Outer Joint | | 36 | 30 | 59.5 | 40.5 | 56 | I |
| | 2011.04-2019.07 | MT | F | L/R | Hatchback FWD CBTA;CBUA;CCCA | | GCI81250 | Inner Joint | | | 26 | | | 34 | |
| | 2011.12-2016.07 | 5MT | F | L/R | Convertible FWD CBTA;CBUA;CCCA | | GCO83037 | Outer Joint | | 36 | 30 | 59.5 | 40.5 | 56 | I |
| | 2011.12-2016.07 | 5MT | F | L/R | Convertible FWD CBTA;CBUA;CCCA | | GCI81250 | Inner Joint | | | 26 | | | 34 | |
| | 2011.12-2016.07 | 6AT | F | L | Convertible FWD CBTA;CBUA;CCCA | | GDS81582 | Drive Shaft | | 36 | 26 | 59.5 | 40 | 597 | |
| **Bora** | | | | | | | | | | | | | | | |
| 1.4 (55 kw) | 1998.10-2005.05 | 5MT | F | L | Saloon FWD AHW/AKQ/APE/AXP/BCA | | GDS61045 | Drive Shaft | | 36 | | 53 | 78.5 | 555 | |
| | 1998.10-2005.05 | 5MT | F | R | Saloon FWD AHW/AKQ/APE/AXP/BCA | | GDS83046 | Drive Shaft | | 36 | | 53 | 78.5 | 822 | |
| | 1998.10-2005.05 | 5MT | F | L/R | Saloon FWD AHW/AKQ/APE/AXP/BCA | | GCO83033 | Outer Joint | | 36 | 30 | 53 | 78.5 | 51 | I |
| | 1998.10-2005.05 | 5MT | F | L/R | Saloon FWD AHW/AKQ/APE/AXP/BCA | | GCI83008 | Inner Joint | | | 33 | | | 32 | |
| | 1998.10-2005.05 | AT | F | L/R | Saloon FWD AHW/AKQ/APE/AXP/BCA | | GCO83070 | Outer Joint | | 36 | 30 | 53 | 78 | 60 | I |
| 1.6 (74 kw) | 1998.08-2005.05 | AT | F | L | Saloon FWD AEH/AKL/APF | | GDS61020 | Drive Shaft | | 36 | | 53.2 | 77.5 | 547 | |
| | 1998.08-2005.05 | AT | F | R | Saloon FWD AEH/AKL/APF | | GDS83011 | Drive Shaft | | 36 | | 53.2 | 77.5 | 810.5 | |

| | YEAR | TRANSM. | F/R | L/R | BODY STYLE & DRIVE TYPE & ENGINE | REMARKS | G-AP Ref. | PRODUCT | ABS | Technical Specifications A | B | C | H | L | P |
|---|---|---|---|---|---|---|---|---|---|---|---|---|---|---|---|
| **VW** **Bora** | | | | | | | | | | | | | | | |
| 1.6 (74 kw) | 1998.08-2005.05 | AT | F | L/R | Saloon FWD AEH/AKL/APF | | GCO83070 | Outer Joint | | 36 | 30 | 53 | 78 | 60 | I |
| | 1998.08-2005.05 | AT | F | L/R | Saloon FWD AEH/AKL/APF | | GCI61006 | Inner Joint | | | 30 | | | 57.6 | |
| | 1998.08-2005.05 | MT | F | L | Saloon FWD AEH/AKL/APF | | GDS61045 | Drive Shaft | | 36 | | 53 | 78.5 | 555 | |
| | 1998.08-2005.05 | MT | F | R | Saloon FWD AEH/AKL/APF | | GDS83046 | Drive Shaft | | 36 | | 53 | 78.5 | 822 | |
| | 1998.08-2005.05 | MT | F | L/R | Saloon FWD AEH/AKL/APF | | GCO83033 | Outer Joint | | 36 | 30 | 53 | 78.5 | 51 | I |
| | 1998.08-2005.05 | MT | F | L/R | Saloon FWD AEH/AKL/APF | | GCI83008 | Inner Joint | | | 33 | | | 32 | |
| 1.6 (75 kw) | 2000.09-2005.05 | 4AT/5MT | F | L/R | Saloon FWD AVU/BFQ | | GCI61006 | Inner Joint | | | 30 | | | 57.6 | |
| | 2000.09-2005.05 | 4AT/5MT | F | L/R | Saloon FWD AVU/BFQ | | GCI83008 | Inner Joint | | | 33 | | | 32 | |
| | 2000.09-2005.05 | AT | F | L | Saloon FWD AVU/BFQ | | GDS61020 | Drive Shaft | | 36 | | 53.2 | 77.5 | 547 | |
| | 2000.09-2005.05 | AT | F | R | Saloon FWD AVU/BFQ | | GDS83011 | Drive Shaft | | 36 | | 53.2 | 77.5 | 810.5 | |
| | 2000.09-2005.05 | AT | F | L/R | Saloon FWD AVU/BFQ | | GCO83070 | Outer Joint | | 36 | 30 | 53 | 78 | 60 | I |
| | 2000.09-2005.05 | MT | F | L | Saloon FWD AVU/BFQ | | GDS61045 | Drive Shaft | | 36 | | 53 | 78.5 | 555 | |
| | 2000.09-2005.05 | MT | F | R | Saloon FWD AVU/BFQ | | GDS83046 | Drive Shaft | | 36 | | 53 | 78.5 | 822 | |
| | 2000.09-2005.05 | MT | F | L/R | Saloon FWD AVU/BFQ | | GCO83033 | Outer Joint | | 36 | 30 | 53 | 78.5 | 51 | I |
| 1.6 (77 kw) | 1998.10-2005.05 | 5MT | F | L | Saloon FWD ATN/AUS/AZD/BCB | | GDS61312 | Drive Shaft | | 36 | | 53 | 78 | 546 | |
| | 1998.10-2005.05 | 5MT | F | R | Saloon FWD ATN/AUS/AZD/BCB | | GDS61203 | Drive Shaft | | 36 | | 53.2 | 77.5 | 810 | |
| | 1998.10-2005.05 | 5MT | F | L/R | Saloon FWD ATN/AUS/AZD/BCB | | GCO83070 | Outer Joint | | 36 | 30 | 53 | 78 | 60 | I |
| | 1998.10-2005.05 | 5MT | F | L/R | Saloon FWD ATN/AUS/AZD/BCB | | GCI61005 | Inner Joint | | | 30 | | | 57.6 | |
| 1.6 (81 kw) | 2001.08-2005.05 | AT/MT | F | L/R | Saloon FWD BAD | | GCO83070 | Outer Joint | | 36 | 30 | 53 | 78 | 60 | I |
| | 2001.08-2005.05 | | F | L/R | Saloon FWD BAD | | GCI61005 | Inner Joint | | | 30 | | | 57.6 | |
| 1.8 (92 kw) | 1999.02-2000.10 | 5MT | F | L | Saloon 4WD AGN | | GDS61314 | Drive Shaft | | 36 | | 53 | 78 | 558 | |
| | 1999.02-2000.10 | MT | F | L | Saloon 4WD AGN | | GDS83006 | Drive Shaft | | 36 | | 53.2 | 77.5 | 557 | |
| | 1999.02-2000.10 | MT | F | R | Saloon 4WD AGN | | GDS83004 | Drive Shaft | | 36 | | 53.2 | 77.5 | 822 | |
| | 1999.02-2000.10 | MT | F | L/R | Saloon 4WD AGN | | GCO83070 | Outer Joint | | 36 | 30 | 53 | 78 | 60 | I |
| | 1999.02-2000.10 | MT | F | R | Saloon 4WD AGN | | GCI83009 | Inner Joint | | | 33 | | | 34 | |
| | 1999.02-2000.10 | MT | F | L/R | Saloon 4WD AGN | | GCI82447 | Inner Joint | | | 33 | | | 34 | |
| | 1999.02-2000.10 | MT | F | L/R | Saloon 4WD AGN | | GCI83006 | Inner Joint | | | 33 | | | 34 | |
| | 1999.02-2000.10 | 5MT | R | L | Saloon 4WD AGN | | GDS82364 | Drive Shaft | | 36 | | 53 | 78.5 | 651 | |
| | 1999.02-2000.10 | 5MT | R | R | Saloon 4WD AGN | | GDS81587 | Drive Shaft | | 36 | | 53 | 78.5 | 522 | |
| | 1999.02-2000.10 | 5MT | R | L/R | Saloon 4WD AGN | | GCO83033 | Outer Joint | | 36 | 30 | 53 | 78.5 | 51 | I |
| | 1999.02-2000.10 | 5MT | R | L/R | Saloon 4WD AGN | | GCI53002 | Inner Joint | | | 33 | | | 34 | |
| | 1999.02-2000.10 | MT | F | L | Saloon FWD AGN | Date from:1999.02,Date to:2000.10 | GDS61314 | Drive Shaft | | 36 | | 53 | 78 | 558 | |
| | 1999.02-2000.10 | MT | F | L | Saloon FWD AGN | | GDS83006 | Drive Shaft | | 36 | | 53.2 | 77.5 | 557 | |
| | 1999.02-2000.10 | MT | F | R | Saloon FWD AGN | | GDS83004 | Drive Shaft | | 36 | | 53.2 | 77.5 | 822 | |
| | 1999.02-2000.10 | MT | F | L/R | Saloon FWD AGN | Date from:1999.02,Date to:2000.10;for OE No.:1J0498099A | GCO83033 | Outer Joint | | 36 | 30 | 53 | 78.5 | 51 | I |
| | 1999.02-2000.10 | MT | F | L/R | Saloon FWD AGN | for OE No.:1J0498099B | GCO83070 | Outer Joint | | 36 | 30 | 53 | 78 | 60 | I |
| | 1999.02-2000.10 | MT | F | L/R | Saloon FWD AGN | | GCI83006 | Inner Joint | | | 33 | | | 34 | |
| | 1999.02-2000.10 | MT | F | L/R | Saloon FWD AGN | Date from:1999.02,Date to:2000.10 | GCI83009 | Inner Joint | | | 33 | | | 34 | |
| | 1999.02-2000.10 | MT | F | L/R | Saloon FWD AGN | | GCI83011 | Inner Joint | | | 33 | | | 34 | |
| 1.8 (110 kw) | 1999.02-2005.05 | 4AT/5AT/5MT | F | L | Saloon FWD AGU/ARX/AUM | | GDS61020 | Drive Shaft | | 36 | | 53.2 | 77.5 | 547 | |
| | 1999.02-2005.05 | 4AT/5AT/5MT | F | L/R | Saloon FWD AGU/ARX/AUM | | GCI61006 | Inner Joint | | | 30 | | | 57.6 | |
| | 1999.02-2005.05 | 4AT/5AT/5MT | F | L/R | Saloon FWD AGU/ARX/AUM | | GCI83007 | Inner Joint | | | 34 | | | 85 | |
| | 1999.02-2005.05 | 5AT | F | L | Saloon FWD AGU/ARX/AUM | | GDS61244 | Drive Shaft | | 36 | | 53 | 77.5 | 523 | |
| | 1999.02-2005.05 | 5AT | F | R | Saloon FWD AGU/ARX/AUM | Date from:2002.05 | GDS82405 | Drive Shaft | | 36 | | 53 | 77.5 | 815 | |
| | 1999.02-2005.05 | 5AT | F | L/R | Saloon FWD AGU/ARX/AUM | | GCO83035 | Outer Joint | | 36 | 27 | 53 | 77.5 | 65 | I |
| | 1999.02-2005.05 | 5AT | F | L/R | Saloon FWD AGU/ARX/AUM | Date from:2002.05 | GCI61057 | Inner Joint | | | 34 | | | 89 | |
| | 1999.02-2005.05 | AT | F | R | Saloon FWD AGU/ARX/AUM | | GDS61243 | Drive Shaft | | 36 | | 53 | 77.5 | 813 | |
| | 1999.02-2005.05 | MT | F | R | Saloon FWD AGU/ARX/AUM | | GDS83011 | Drive Shaft | | 36 | | 53.2 | 77.5 | 810.5 | |
| | 1999.02-2005.05 | MT | F | L/R | Saloon FWD AGU/ARX/AUM | | GCO83070 | Outer Joint | | 36 | 30 | 53 | 78 | 60 | I |
| 1.8 (132 kw) | 2001.10-2005.05 | 6MT | F | L | Saloon FWD AUQ | Date to:2003.01,Chassis no. to:1J_3W468500 | GDS56276 | Drive Shaft | | 36 | | 53 | 77.5 | 520 | |
| | 2001.10-2005.05 | 6MT | F | L | Saloon FWD AUQ | Date Fron:2003.02 | GDS61123 | Drive Shaft | | 36 | | 53 | 77.5 | 520 | |
| | 2001.10-2005.05 | 6MT | F | R | Saloon FWD AUQ | | GDS61121 | Drive Shaft | | 36 | | 53 | 77.5 | 806 | |
| | 2001.10-2005.05 | 6MT | F | L/R | Saloon FWD AUQ | | GCO83035 | Outer Joint | | 36 | 27 | 53 | 77.5 | 65 | I |
| | 2001.10-2005.05 | 6MT | F | L/R | Saloon FWD AUQ | Date to:2003.01,Chassis no. to:1J_3W468500 | GCI83001 | Inner Joint | | | 28 | | | 32 | |
| | 2001.10-2005.05 | 6MT | F | L/R | Saloon FWD AUQ | Date from:2003.02;Chassis no. from:1J_3W468501 | GCI83016 | Inner Joint | | | 28 | | | 32 | |
| 1.9 (50 kw) | 1998.11-2005.05 | 5MT | F | L | Saloon FWD AGP/AQM | | GDS61045 | Drive Shaft | | 36 | | 53 | 78.5 | 555 | |
| | 1998.11-2005.05 | 5MT | F | R | Saloon FWD AGP/AQM | | GDS83046 | Drive Shaft | | 36 | | 53 | 78.5 | 822 | |
| | 1998.11-2005.05 | 5MT | F | L/R | Saloon FWD AGP/AQM | | GCO83033 | Outer Joint | | 36 | 30 | 53 | 78.5 | 51 | I |
| | 1998.11-2005.05 | 5MT | F | L/R | Saloon FWD AGP/AQM | | GCI83008 | Inner Joint | | | 33 | | | 32 | |
| | 1998.11-2005.05 | AT | F | L | Saloon FWD AGP/AQM | | GDS61020 | Drive Shaft | | 36 | | 53.2 | 77.5 | 547 | |
| | 1998.11-2005.05 | AT | F | R | Saloon FWD AGP/AQM | | GDS83011 | Drive Shaft | | 36 | | 53.2 | 77.5 | 810.5 | |
| | 1998.11-2005.05 | AT | F | L/R | Saloon FWD AGP/AQM | | GCO83070 | Outer Joint | | 36 | 30 | 53 | 78 | 60 | I |
| 1.9 (66 kw) | 1998.10-2005.05 | AT | F | L | Saloon FWD AGR/ALH | | GDS61020 | Drive Shaft | | 36 | | 53.2 | 77.5 | 547 | |
| | 1998.10-2005.05 | AT | F | R | Saloon FWD AGR/ALH | | GDS83011 | Drive Shaft | | 36 | | 53.2 | 77.5 | 810.5 | |
| | 1998.10-2005.05 | AT | F | L/R | Saloon FWD AGR/ALH | | GCI61006 | Inner Joint | | | 30 | | | 57.6 | |

| | YEAR | TRANSM. | F/R | L/R | BODY STYLE & DRIVE TYPE & ENGINE | REMARKS | G-AP Ref. | PRODUCT | ABS | Technical Specifications A | B | C | H | L | P |
|---|---|---|---|---|---|---|---|---|---|---|---|---|---|---|---|
| **VW** **Bora** | | | | | | | | | | | | | | | |
| 1.9 (66 kw) | 1998.10-2005.05 | AT/MT | F | L/R | Saloon FWD AGR/ALH | | GCO83070 | Outer Joint | | 36 | 30 | 53 | 78 | 60 | I |
| | 1998.10-2005.05 | MT | F | L | Saloon FWD AGR/ALH | | GDS83006 | Drive Shaft | | 36 | | 53.2 | 77.5 | 557 | |
| | 1998.10-2005.05 | MT | F | R | Saloon FWD AGR/ALH | | GDS83004 | Drive Shaft | | 36 | | 53.2 | 77.5 | 822 | |
| | 1998.10-2005.05 | MT | F | L | Saloon FWD AGR/ALH | | GCI83011 | Inner Joint | | | 33 | | | 34 | |
| | 1998.10-2005.05 | MT | F | R | Saloon FWD AGR/ALH | | GCI83009 | Inner Joint | | | 33 | | | 34 | |
| | 1998.10-2005.05 | MT | F | L/R | Saloon FWD AGR/ALH | | GCI83006 | Inner Joint | | | 33 | | | 34 | |
| | 1998.11-2002.04 | 5MT | F | L | Saloon 4WD AGR | | GDS61314 | Drive Shaft | | 36 | | 53 | 78 | 558 | |
| | 1998.11-2002.04 | 5MT | F | L/R | Saloon 4WD AGR | | GCO83070 | Outer Joint | | 36 | 30 | 53 | 78 | 60 | I |
| | 1998.11-2002.04 | 5MT | F | L | Saloon 4WD AGR | | GCI82447 | Inner Joint | | | 33 | | | 34 | |
| | 1998.11-2002.04 | 5MT | F | R | Saloon 4WD AGR | | GCI83009 | Inner Joint | | | 33 | | | 34 | |
| | 1998.11-2002.04 | 5MT | F | L/R | Saloon 4WD AGR | | GCI83006 | Inner Joint | | | 33 | | | 34 | |
| | 1998.11-2002.04 | MT | F | L | Saloon 4WD AGR | | GDS83006 | Drive Shaft | | 36 | | 53.2 | 77.5 | 557 | |
| | 1998.11-2002.04 | MT | F | R | Saloon 4WD AGR | Date to:2001.12 | GDS83004 | Drive Shaft | | 36 | | 53.2 | 77.5 | 822 | |
| | 1998.11-2002.04 | 5MT | R | L | Saloon 4WD AGR | | GDS82364 | Drive Shaft | | 36 | | 53 | 78.5 | 651 | |
| | 1998.11-2002.04 | 5MT | R | R | Saloon 4WD AGR | | GDS81587 | Drive Shaft | | 36 | | 53 | 78.5 | 522 | |
| | 1998.11-2002.04 | 5MT | R | L/R | Saloon 4WD AGR | | GCO83033 | Outer Joint | | 36 | 30 | 53 | 78.5 | 51 | I |
| | 1998.11-2002.04 | 5MT | R | L/R | Saloon 4WD AGR | | GCI53002 | Inner Joint | | | 33 | | | 34 | |
| | 1998.11-2002.04 | 5MT | R | L/R | Saloon 4WD AGR | | GCI82447 | Inner Joint | | | 33 | | | 34 | |
| 1.9 (74 kw) | 2000.01-2003.05 | 6MT | F | L | Saloon 4WD ATD | | GDS61123 | Drive Shaft | | 36 | | 53 | 77.5 | 520 | |
| | 2000.01-2003.05 | 6MT | F | R | Saloon 4WD ATD | | GDS61186 | Drive Shaft | | 36 | | 53 | 77.5 | 653 | |
| | 2000.01-2003.05 | 6MT | F | L/R | Saloon 4WD ATD | | GCO83035 | Outer Joint | | 36 | 27 | 53 | 77.5 | 65 | I |
| | 2000.01-2003.05 | AT | F | L | Saloon 4WD ATD | | GDS61244 | Drive Shaft | | 36 | | 53 | 77.5 | 523 | |
| | 2000.01-2003.05 | AT | F | R | Saloon 4WD ATD | | GDS61243 | Drive Shaft | | 36 | | 53 | 77.5 | 813 | |
| | 2000.01-2003.05 | AT | F | L/R | Saloon 4WD ATD | | GCI61044 | Inner Joint | | | 34 | | | 85 | |
| | 2000.01-2003.05 | | F | L/R | Saloon 4WD ATD | Date To:2003.01;Chassis no. to:1J3W468500 | GCI83001 | Inner Joint | | | 28 | | | 32 | |
| | 2000.01-2003.05 | | F | L/R | Saloon 4WD ATD | Date From:2003.02;Chassis no. from:1J3W468501 | GCI83016 | Inner Joint | | | 28 | | | 32 | |
| | 2000.01-2003.05 | 6MT | R | L | Saloon 4WD ATD | | GDS82364 | Drive Shaft | | 36 | | 53 | 78.5 | 651 | |
| | 2000.01-2003.05 | 6MT | R | R | Saloon 4WD ATD | | GDS81587 | Drive Shaft | | 36 | | 53 | 78.5 | 522 | |
| | 2000.01-2003.05 | 6MT | R | L/R | Saloon 4WD ATD | | GCI82447 | Inner Joint | | | 33 | | | 34 | |
| | 2000.01-2003.05 | | R | L/R | Saloon 4WD ATD | | GCO83033 | Outer Joint | | 36 | 30 | 53 | 78.5 | 51 | I |
| | 2000.01-2003.05 | | R | L/R | Saloon 4WD ATD | Date To:2003.05 | GCI83011 | Inner Joint | | | 33 | | | 34 | |
| | 2000.09-2005.05 | AT | F | L | Saloon FWD ATD/AXR | | GDS61244 | Drive Shaft | | 36 | | 53 | 77.5 | 523 | |
| | 2000.09-2005.05 | AT | F | R | Saloon FWD ATD/AXR | | GDS61243 | Drive Shaft | | 36 | | 53 | 77.5 | 813 | |
| | 2000.09-2005.05 | AT | F | L/R | Saloon FWD ATD/AXR | | GCO83035 | Outer Joint | | 36 | 27 | 53 | 77.5 | 65 | I |
| | 2000.09-2005.05 | AT | F | L/R | Saloon FWD ATD/AXR | | GCI83007 | Inner Joint | | | 34 | | | 85 | |
| | 2000.09-2005.05 | MT | F | L | Saloon FWD ATD/AXR | | GDS83006 | Drive Shaft | | 36 | | 53.2 | 77.5 | 557 | |
| | 2000.09-2005.05 | MT | F | R | Saloon FWD ATD/AXR | | GDS83004 | Drive Shaft | | 36 | | 53.2 | 77.5 | 822 | |
| | 2000.09-2005.05 | MT | F | L/R | Saloon FWD ATD/AXR | | GCO83070 | Outer Joint | | 36 | 30 | 53 | 78 | 60 | I |
| | 2000.09-2005.05 | MT | F | L | Saloon FWD ATD/AXR | | GCI83011 | Inner Joint | | | 33 | | | 34 | |
| | 2000.09-2005.05 | MT | F | R | Saloon FWD ATD/AXR | | GCI83009 | Inner Joint | | | 33 | | | 34 | |
| | 2000.09-2005.05 | MT | F | L/R | Saloon FWD ATD/AXR | | GCI83006 | Inner Joint | | | 33 | | | 34 | |
| 1.9 (81 kw) | 1998.09-2005.05 | AT | F | L | Saloon FWD AHF/ASV | | GDS61020 | Drive Shaft | | 36 | | 53.2 | 77.5 | 547 | |
| | 1998.09-2005.05 | AT | F | R | Saloon FWD AHF/ASV | | GDS83011 | Drive Shaft | | 36 | | 53.2 | 77.5 | 810.5 | |
| | 1998.09-2005.05 | AT | F | L/R | Saloon FWD AHF/ASV | | GCI61006 | Inner Joint | | | 30 | | | 57.6 | |
| | 1998.09-2005.05 | AT/MT | F | L/R | Saloon FWD AHF/ASV | | GCO83070 | Outer Joint | | 36 | 30 | 53 | 78 | 60 | I |
| | 1998.09-2005.05 | MT | F | L | Saloon FWD AHF/ASV | | GDS83006 | Drive Shaft | | 36 | | 53.2 | 77.5 | 557 | |
| | 1998.09-2005.05 | MT | F | R | Saloon FWD AHF/ASV | | GDS83004 | Drive Shaft | | 36 | | 53.2 | 77.5 | 822 | |
| | 1998.09-2005.05 | MT | F | L | Saloon FWD AHF/ASV | | GCI83011 | Inner Joint | | | 33 | | | 34 | |
| | 1998.09-2005.05 | MT | F | R | Saloon FWD AHF/ASV | | GCI83009 | Inner Joint | | | 33 | | | 34 | |
| 1.9 (85 kw) | 1998.11-2001.07 | 5MT | F | L/R | Saloon FWD AJM/AUY | | GCO83035 | Outer Joint | | 36 | 27 | 53 | 77.5 | 65 | I |
| | 1998.11-2001.07 | AT | F | L | Saloon FWD AJM/AUY | | GDS61244 | Drive Shaft | | 36 | | 53 | 77.5 | 523 | |
| | 1998.11-2001.07 | AT | F | R | Saloon FWD AJM/AUY | | GDS61243 | Drive Shaft | | 36 | | 53 | 77.5 | 813 | |
| | 1998.11-2001.07 | AT | F | L/R | Saloon FWD AJM/AUY | | GCI61044 | Inner Joint | | | 34 | | | 85 | |
| | 1998.11-2001.07 | AT | F | L/R | Saloon FWD AJM/AUY | | GCI83007 | Inner Joint | | | 34 | | | 85 | |
| | 1998.11-2001.07 | MT | F | L | Saloon FWD AJM/AUY | For PR code:8Q0/8Q1 | GDS56276 | Drive Shaft | | 36 | | 53 | 77.5 | 520 | |
| | 1998.11-2001.07 | MT | F | R | Saloon FWD AJM/AUY | | GDS61121 | Drive Shaft | | 36 | | 53 | 77.5 | 806 | |
| | 1998.11-2001.07 | MT | F | L/R | Saloon FWD AJM/AUY | Date To:2003.01,Chassis no. to:1J3W468500 | GCI83001 | Inner Joint | | | 28 | | | 32 | |
| | 1999.02-2001.07 | 6MT | F | L | Saloon 4WD AJM/AUY | | GDS61123 | Drive Shaft | | 36 | | 53 | 77.5 | 520 | |
| | 1999.02-2001.07 | 6MT | F | R | Saloon 4WD AJM/AUY | | GDS61186 | Drive Shaft | | 36 | | 53 | 77.5 | 653 | |
| | 1999.02-2001.07 | 6MT | F | L/R | Saloon 4WD AJM/AUY | | GCO83035 | Outer Joint | | 36 | 27 | 53 | 77.5 | 65 | I |
| | 1999.02-2001.07 | AT | F | L/R | Saloon 4WD AJM/AUY | | GCI61044 | Inner Joint | | | 34 | | | 85 | |
| | 1999.02-2001.07 | | F | L/R | Saloon 4WD AJM/AUY | Date To:2003.01;Chassis no. to:1J3W468500 | GCI83001 | Inner Joint | | | 28 | | | 32 | |
| | 1999.02-2001.07 | 6MT | R | L | Saloon 4WD AJM/AUY | | GDS82364 | Drive Shaft | | 36 | | 53 | 78.5 | 651 | |
| | 1999.02-2001.07 | 6MT | R | R | Saloon 4WD AJM/AUY | | GDS81587 | Drive Shaft | | 36 | | 53 | 78.5 | 522 | |
| | 1999.02-2001.07 | | R | L/R | Saloon 4WD AJM/AUY | | GCO83033 | Outer Joint | | 36 | 30 | 53 | 78.5 | 51 | I |

| | YEAR | TRANSM. | F/R | L/R | BODY STYLE & DRIVE TYPE & ENGINE | REMARKS | G-AP Ref. | PRODUCT | ABS | Technical Specifications A | B | C | H | L | P |
|---|---|---|---|---|---|---|---|---|---|---|---|---|---|---|---|
| **VW Bora** | | | | | | | | | | | | | | | |
| 1.9 (85 kw) | 1999.02-2001.07 | | R | L/R | Saloon 4WD AJM/AUY | | GCI83011 | Inner Joint | | | 33 | | | 34 | |
| 1.9 (96 kw) | 1998.11-2005.05 | 5AT/6MT | F | L/R | Saloon FWD ASZ | | GCO83035 | Outer Joint | | 36 | 27 | 53 | 77.5 | 65 | I |
| | 1998.11-2005.05 | AT | F | L | Saloon FWD ASZ | | GDS61244 | Drive Shaft | | 36 | | 53 | 77.5 | 523 | |
| | 1998.11-2005.05 | AT | F | R | Saloon FWD ASZ | | GDS61243 | Drive Shaft | | 36 | | 53 | 77.5 | 813 | |
| | 1998.11-2005.05 | AT | F | L/R | Saloon FWD ASZ | | GCI61044 | Inner Joint | | | 34 | | | 85 | |
| | 1998.11-2005.05 | AT | F | L/R | Saloon FWD ASZ | | GCI83007 | Inner Joint | | | 34 | | | 85 | |
| | 1998.11-2005.05 | MT | F | L | Saloon FWD ASZ | For PR code:8Q0/8Q1 | GDS56276 | Drive Shaft | | 36 | | 53 | 77.5 | 520 | |
| | 1998.11-2005.05 | MT | F | R | Saloon FWD ASZ | | GDS61121 | Drive Shaft | | 36 | | 53 | 77.5 | 806 | |
| | 1998.11-2005.05 | MT | F | L/R | Saloon FWD ASZ | Date To:2003.01,Chassis no. to:1J3W468500 | GCI83001 | Inner Joint | | | 28 | | | 32 | |
| | 1998.11-2005.05 | | F | | Saloon FWD ASZ | Date From:2003.01 | GCI83016 | Inner Joint | | | 28 | | | 32 | |
| | 2001.04-2003.05 | 6MT | F | L | Saloon 4WD ASZ | | GDS61123 | Drive Shaft | | 36 | | 53 | 77.5 | 520 | |
| | 2001.04-2003.05 | 6MT | F | R | Saloon 4WD ASZ | | GDS61186 | Drive Shaft | | 36 | | 53 | 77.5 | 653 | |
| | 2001.04-2003.05 | 6MT | F | L/R | Saloon 4WD ASZ | | GCO83035 | Outer Joint | | 36 | 27 | 53 | 77.5 | 65 | I |
| | 2001.04-2003.05 | AT | F | L | Saloon 4WD ASZ | | GDS61244 | Drive Shaft | | 36 | | 53 | 77.5 | 523 | |
| | 2001.04-2003.05 | AT | F | R | Saloon 4WD ASZ | | GDS61243 | Drive Shaft | | 36 | | 53 | 77.5 | 813 | |
| | 2001.04-2003.05 | AT | F | L/R | Saloon 4WD ASZ | | GCI61044 | Inner Joint | | | 34 | | | 85 | |
| | 2001.04-2003.05 | MT | F | R | Saloon 4WD ASZ | | GDS61121 | Drive Shaft | | 36 | | 53 | 77.5 | 806 | |
| | 2001.04-2003.05 | | F | L/R | Saloon 4WD ASZ | Date To:2003.01;Chassis no. to:1J3W468500 | GCI83001 | Inner Joint | | | 28 | | | 32 | |
| | 2001.04-2003.05 | | F | | Saloon 4WD ASZ | Date From:2003.01 | GCI83016 | Inner Joint | | | 28 | | | 32 | |
| | 2001.04-2003.05 | 6MT | R | L | Saloon 4WD ASZ | | GDS82364 | Drive Shaft | | 36 | | 53 | 78.5 | 651 | |
| | 2001.04-2003.05 | 6MT | R | R | Saloon 4WD ASZ | | GDS81587 | Drive Shaft | | 36 | | 53 | 78.5 | 522 | |
| | 2001.04-2003.05 | 6MT | R | L/R | Saloon 4WD ASZ | | GCI82447 | Inner Joint | | | 33 | | | 34 | |
| | 2001.04-2003.05 | | R | L/R | Saloon 4WD ASZ | | GCO83033 | Outer Joint | | 36 | 30 | 53 | 78.5 | 51 | I |
| | 2001.04-2003.05 | | R | L/R | Saloon 4WD ASZ | Date From:2001.04;Date To:2003.05 | GCI83011 | Inner Joint | | | 33 | | | 34 | |
| 1.9 (110 kw) | 2000.09-2005.05 | 6MT | F | L | Saloon 4WD ARL | | GDS61123 | Drive Shaft | | 36 | | 53 | 77.5 | 520 | |
| | 2000.09-2005.05 | 6MT | F | R | Saloon 4WD ARL | | GDS61186 | Drive Shaft | | 36 | | 53 | 77.5 | 653 | |
| | 2000.09-2005.05 | 6MT | F | L/R | Saloon 4WD ARL | | GCO83035 | Outer Joint | | 36 | 27 | 53 | 77.5 | 65 | I |
| | 2000.09-2005.05 | MT | F | L/R | Saloon 4WD ARL | | GCI83006 | Inner Joint | | | 33 | | | 34 | |
| | 2000.09-2005.05 | | F | R | Saloon 4WD ARL | Date From:2000.09 | GDS61121 | Drive Shaft | | 36 | | 53 | 77.5 | 806 | |
| | 2000.09-2005.05 | | F | L/R | Saloon 4WD ARL | Date To:2003.01;Chassis no. to:1J3W468500 | GCI83001 | Inner Joint | | | 28 | | | 32 | |
| | 2000.09-2005.05 | | F | L/R | Saloon 4WD ARL | Date From:2003.02;Chassis no. from:1J3W468501 | GCI83016 | Inner Joint | | | 28 | | | 32 | |
| | 2000.09-2005.05 | 6MT | R | L | Saloon 4WD ARL | | GDS82364 | Drive Shaft | | 36 | | 53 | 78.5 | 651 | |
| | 2000.09-2005.05 | 6MT | R | R | Saloon 4WD ARL | | GDS81587 | Drive Shaft | | 36 | | 53 | 78.5 | 522 | |
| | 2000.09-2005.05 | 6MT | R | L/R | Saloon 4WD ARL | | GCI53002 | Inner Joint | | | 33 | | | 34 | |
| | 2000.09-2005.05 | 6MT | R | L/R | Saloon 4WD ARL | | GCI82447 | Inner Joint | | | 33 | | | 34 | |
| | 2000.09-2005.05 | | R | L/R | Saloon 4WD ARL | | GCO83033 | Outer Joint | | 36 | 30 | 53 | 78.5 | 51 | I |
| | 2000.09-2005.05 | | R | L/R | Saloon 4WD ARL | Date From:2000.09 | GCI83011 | Inner Joint | | | 33 | | | 34 | |
| | 2000.09-2005.05 | 6MT | F | L | Saloon FWD ARL | Date to:2003.01,For PR code:8Q0/8Q1,Chassis no. to:1J_3W468500 | GDS56276 | Drive Shaft | | 36 | | 53 | 77.5 | 520 | |
| | 2000.09-2005.05 | 6MT | F | R | Saloon FWD ARL | | GDS61121 | Drive Shaft | | 36 | | 53 | 77.5 | 806 | |
| | 2000.09-2005.05 | 6MT | F | L/R | Saloon FWD ARL | | GCO83035 | Outer Joint | | 36 | 27 | 53 | 77.5 | 65 | I |
| | 2000.09-2005.05 | 6MT | F | L/R | Saloon FWD ARL | Date To:2003.01;Chassis no. to:1J3W468500 | GCI83001 | Inner Joint | | | 28 | | | 32 | |
| | 2000.09-2005.05 | 6MT | F | L/R | Saloon FWD ARL | Date From:2003.02,Chassis no. from:1J3W468501 | GCI83016 | Inner Joint | | | 28 | | | 32 | |
| 2.0 (85 kw) | 1998.09-2005.05 | AT | F | L | Saloon FWD APK/AQY/AZG/AZJ | | GDS61020 | Drive Shaft | | 36 | | 53.2 | 77.5 | 547 | |
| | 1998.09-2005.05 | AT | F | R | Saloon FWD APK/AQY/AZG/AZJ | | GDS83011 | Drive Shaft | | 36 | | 53.2 | 77.5 | 810.5 | |
| | 1998.09-2005.05 | AT | F | L/R | Saloon FWD APK/AQY/AZG/AZJ | | GCI61006 | Inner Joint | | | 30 | | | 57.6 | |
| | 1998.09-2005.05 | AT/MT | F | L/R | Saloon FWD APK/AQY/AZG/AZJ | | GCO83070 | Outer Joint | | 36 | 30 | 53 | 78 | 60 | I |
| | 1998.09-2005.05 | MT | F | L | Saloon FWD APK/AQY/AZG/AZJ | | GDS61314 | Drive Shaft | | 36 | | 53 | 78 | 558 | |
| | 1998.09-2005.05 | MT | F | L | Saloon FWD APK/AQY/AZG/AZJ | | GDS83006 | Drive Shaft | | 36 | | 53.2 | 77.5 | 557 | |
| | 1998.09-2005.05 | MT | F | R | Saloon FWD APK/AQY/AZG/AZJ | | GDS83004 | Drive Shaft | | 36 | | 53.2 | 77.5 | 822 | |
| | 1998.09-2005.05 | MT | F | L | Saloon FWD APK/AQY/AZG/AZJ | | GCI82447 | Inner Joint | | | 33 | | | 34 | |
| | 1998.09-2005.05 | MT | F | R | Saloon FWD APK/AQY/AZG/AZJ | | GCI83009 | Inner Joint | | | 33 | | | 34 | |
| | 2000.04-2003.05 | 5MT | F | L | Saloon 4WD AZH/AZJ | | GDS61314 | Drive Shaft | | 36 | | 53 | 78 | 558 | |
| | 2000.04-2003.05 | 5MT | F | R | Saloon 4WD AZH/AZJ | | GDS83004 | Drive Shaft | | 36 | | 53.2 | 77.5 | 822 | |
| | 2000.04-2003.05 | 5MT | F | L | Saloon 4WD AZH/AZJ | | GCI82447 | Inner Joint | | | 33 | | | 34 | |
| | 2000.04-2003.05 | 5MT | F | L | Saloon 4WD AZH/AZJ | Date to:2003.05 | GCI83011 | Inner Joint | | | 33 | | | 34 | |
| | 2000.04-2003.05 | 5MT | F | R | Saloon 4WD AZH/AZJ | | GCI83009 | Inner Joint | | | 33 | | | 34 | |
| | 2000.04-2003.05 | MT | F | L/R | Saloon 4WD AZH/AZJ | Date to:2003.05 | GCO83070 | Outer Joint | | 36 | 30 | 53 | 78 | 60 | I |
| | 2000.04-2003.05 | 5MT | R | L | Saloon 4WD AZH/AZJ | | GDS82364 | Drive Shaft | | 36 | | 53 | 78.5 | 651 | |
| | 2000.04-2003.05 | 5MT | R | R | Saloon 4WD AZH/AZJ | | GDS81587 | Drive Shaft | | 36 | | 53 | 78.5 | 522 | |
| | 2000.04-2003.05 | 5MT | R | L/R | Saloon 4WD AZH/AZJ | | GCI53002 | Inner Joint | | | 33 | | | 34 | |
| | 2000.04-2003.05 | | R | L/R | Saloon 4WD AZH/AZJ | | GCO83033 | Outer Joint | | 36 | 30 | 53 | 78.5 | 51 | I |
| | 2000.04-2003.05 | | R | L/R | Saloon 4WD AZH/AZJ | Date to:2003.05 | GCI83011 | Inner Joint | | | 33 | | | 34 | |
| | 2005.01-2014.12 | 4AT | F | L | Saloon FWD 80PS (01.05-05.07), 85PS (01.05.12-14), 8HP (01.06-05.07), CBPN (06.07-12-14), CFBA (12.08-12-14) | | GDS61020 | Drive Shaft | | 36 | | 53.2 | 77.5 | 547 | |
| | 2005.01-2014.12 | 4AT | F | R | Saloon FWD 80PS (01.05-05.07), 85PS (01.05.12-14), 8HP (01.06-05.07), CBPN (06.07-12-14), CFBA (12.08-12-14) | | GDS83011 | Drive Shaft | | 36 | | 53.2 | 77.5 | 810.5 | |
| | 2005.01-2014.12 | 5MT | F | L | Saloon FWD 80PS (01.05-05.07), 85PS (01.05.12-14), 8HP (01.06-05.07), CBPN (06.07-12-14), CFBA (12.08-12-14) | | GDS61314 | Drive Shaft | | 36 | | 53 | 78 | 558 | |

| | YEAR | TRANSM. | F/R | L/R | BODY STYLE & DRIVE TYPE & ENGINE | REMARKS | G-AP Ref. | PRODUCT | ABS | Technical Specifications A | B | C | H | L | P |
|---|---|---|---|---|---|---|---|---|---|---|---|---|---|---|---|
| **VW** | | | | | | | | | | | | | | | |
| **Bora** | | | | | | | | | | | | | | | |
| 2.0 (85 kw) | 2005.01-2014.12 | 5MT | F | R | Saloon FWD BBW (01.05-09.07), BBV (01.05-12.14), BHP (01.05-09.07), CBPA (06.07-12.14), CFBA (12.08-12.14) | | GDS83004 | Drive Shaft | | 36 | | 53.2 | 77.5 | 822 | |
| | 2005.01-2014.12 | AT | F | L/R | Saloon FWD BBW (01.05-09.07), BBV (01.05-12.14), BHP (01.05-09.07), CBPA (06.07-12.14), CFBA (12.08-12.14) | | GCI61006 | Inner Joint | | | 30 | | | 57.6 | |
| 2.3 (110 kw) | 1998.09-2001.02 | 6MT | F | L | Saloon 4WD AGZ | | GDS61123 | Drive Shaft | | 36 | | 53 | 77.5 | 520 | |
| | 1998.09-2001.02 | 6MT | F | R | Saloon 4WD AGZ | | GDS61186 | Drive Shaft | | 36 | | 53 | 77.5 | 653 | |
| | 1998.09-2001.02 | 6MT | F | L/R | Saloon 4WD AGZ | | GCO83035 | Outer Joint | | 36 | 27 | 53 | 77.5 | 65 | I |
| | 1998.09-2001.02 | | F | L/R | Saloon 4WD AGZ | | GCI83001 | Inner Joint | | | 28 | | | 32 | |
| | 1998.09-2001.02 | 6MT | R | L | Saloon 4WD AGZ | | GDS82364 | Drive Shaft | | 36 | | 53 | 78.5 | 651 | |
| | 1998.09-2001.02 | 6MT | R | R | Saloon 4WD AGZ | | GDS81587 | Drive Shaft | | 36 | | 53 | 78.5 | 522 | |
| | 1998.09-2001.02 | 6MT | R | L/R | Saloon 4WD AGZ | | GCI53002 | Inner Joint | | | 33 | | | 34 | |
| | 1998.09-2001.02 | | R | L/R | Saloon 4WD AGZ | | GCO83033 | Outer Joint | | 36 | 30 | 53 | 78.5 | 51 | I |
| | 1998.09-2001.02 | | R | L/R | Saloon 4WD AGZ | | GCI83011 | Inner Joint | | | 33 | | | 34 | |
| | 1998.09-2001.02 | 4AT/5MT | F | R | Saloon FWD AGZ | Chassis no. to:1J_XW166084 | GDS61203 | Drive Shaft | | 36 | | 53.2 | 77.5 | 810 | |
| | 1998.09-2001.02 | 4AT/5MT | F | R | Saloon FWD AGZ | Chassis no. from:1J_XW166085 | GDS83011 | Drive Shaft | | 36 | | 53.2 | 77.5 | 810.5 | |
| | 1998.09-2001.02 | AT/MT | F | L/R | Saloon FWD AGZ | | GCO83070 | Outer Joint | | 36 | 30 | 53 | 78 | 60 | I |
| | 1998.09-2001.02 | | F | L | Saloon FWD AGZ | Chassis no. from:1J0W166085;Chassis no. to:1J1W000000;Chassis no. from:1J1W000001;Par PR:ceatc4JZ | GDS61020 | Drive Shaft | | 36 | | 53.2 | 77.5 | 547 | |
| | 1998.09-2001.02 | | F | L | Saloon FWD AGZ | Chassis no. to:1JXW166084 | GDS61312 | Drive Shaft | | 36 | | 53 | 78 | 546 | |
| | 1998.09-2001.02 | | F | L/R | Saloon FWD AGZ | | GCI61006 | Inner Joint | | | 30 | | | 57.6 | |
| 2.3 (125 kw) | 2000.09-2005.05 | 6MT | F | L | Saloon 4WD AQN | | GDS61123 | Drive Shaft | | 36 | | 53 | 77.5 | 520 | |
| | 2000.09-2005.05 | 6MT | F | R | Saloon 4WD AQN | | GDS61186 | Drive Shaft | | 36 | | 53 | 77.5 | 653 | |
| | 2000.09-2005.05 | 6MT | F | L/R | Saloon 4WD AQN | | GCO83035 | Outer Joint | | 36 | 27 | 53 | 77.5 | 65 | I |
| | 2000.09-2005.05 | AT | F | L | Saloon 4WD AQN | | GDS61244 | Drive Shaft | | 36 | | 53 | 77.5 | 523 | |
| | 2000.09-2005.05 | AT | F | R | Saloon 4WD AQN | | GDS61243 | Drive Shaft | | 36 | | 53 | 77.5 | 813 | |
| | 2000.09-2005.05 | AT | F | L/R | Saloon 4WD AQN | | GCI61044 | Inner Joint | | | 34 | | | 85 | |
| | 2000.09-2005.05 | | F | L/R | Saloon 4WD AQN | | GCI83001 | Inner Joint | | | 28 | | | 32 | |
| | 2000.09-2005.05 | | F | L/R | Saloon 4WD AQN | Date From:2003.02;Chassis no. from:1J3W468501 | GCI83016 | Inner Joint | | | 28 | | | 32 | |
| | 2000.09-2005.05 | 6MT | R | L | Saloon 4WD AQN | | GDS82364 | Drive Shaft | | 36 | | 53 | 78.5 | 651 | |
| | 2000.09-2005.05 | 6MT | R | R | Saloon 4WD AQN | | GDS81587 | Drive Shaft | | 36 | | 53 | 78.5 | 522 | |
| | 2000.09-2005.05 | | R | L/R | Saloon 4WD AQN | | GCO83033 | Outer Joint | | 36 | 30 | 53 | 78.5 | 51 | I |
| | 2000.09-2005.05 | | R | L/R | Saloon 4WD AQN | | GCI83011 | Inner Joint | | | 33 | | | 34 | |
| | 2000.09-2005.05 | AT | F | L | Saloon FWD AQN | | GDS61244 | Drive Shaft | | 36 | | 53 | 77.5 | 523 | |
| | 2000.09-2005.05 | AT | F | R | Saloon FWD AQN | | GDS61243 | Drive Shaft | | 36 | | 53 | 77.5 | 813 | |
| | 2000.09-2005.05 | AT | F | R | Saloon FWD AQN | Date from:2003.02,Chassis no. from:1J3W468502 | GDS82405 | Drive Shaft | | 36 | | 53 | 77.5 | 815 | |
| | 2000.09-2005.05 | AT | F | L/R | Saloon FWD AQN | | GCO83035 | Outer Joint | | 36 | 27 | 53 | 77.5 | 65 | I |
| | 2000.09-2005.05 | AT | F | L/R | Saloon FWD AQN | Date from:2003.02,Chassis no. from:1J_3W468502 | GCI61057 | Inner Joint | | | 34 | | | 89 | |
| | 2000.09-2005.05 | AT | F | L/R | Saloon FWD AQN | Date to:2003.01,Chassis no. to:1J_3W468501 | GCI83007 | Inner Joint | | | 34 | | | 85 | |
| | 2000.09-2005.05 | MT | F | L | Saloon FWD AQN | | GDS61020 | Drive Shaft | | 36 | | 53.2 | 77.5 | 547 | |
| | 2000.09-2005.05 | MT | F | R | Saloon FWD AQN | | GDS83011 | Drive Shaft | | 36 | | 53.2 | 77.5 | 810.5 | |
| | 2000.09-2005.05 | MT | F | L/R | Saloon FWD AQN | | GCO83070 | Outer Joint | | 36 | 30 | 53 | 78 | 60 | I |
| | 2000.09-2005.05 | MT | F | L/R | Saloon FWD AQN | | GCI61006 | Inner Joint | | | 30 | | | 57.6 | |
| 2.8 (150 kw) | 1999.05-2003.05 | 6MT | F | L | Saloon 4WD AQP/AUE/BDE | | GDS61123 | Drive Shaft | | 36 | | 53 | 77.5 | 520 | |
| | 1999.05-2003.05 | 6MT | F | R | Saloon 4WD AQP/AUE/BDE | | GDS61186 | Drive Shaft | | 36 | | 53 | 77.5 | 653 | |
| | 1999.05-2003.05 | 6MT | F | L/R | Saloon 4WD AQP/AUE/BDE | | GCO83035 | Outer Joint | | 36 | 27 | 53 | 77.5 | 65 | I |
| | 1999.05-2003.05 | | F | L/R | Saloon 4WD AQP/AUE/BDE | Date To:2003.01;Chassis no. to:1J3W468500 | GCI83001 | Inner Joint | | | 28 | | | 32 | |
| | 1999.05-2003.05 | | F | L/R | Saloon 4WD AQP/AUE/BDE | Date From:2003.02;Chassis no. from:1J3W468501 | GCI83016 | Inner Joint | | | 28 | | | 32 | |
| | 1999.05-2003.05 | 6MT | R | L | Saloon 4WD AQP/AUE/BDE | | GDS82364 | Drive Shaft | | 36 | | 53 | 78.5 | 651 | |
| | 1999.05-2003.05 | 6MT | R | R | Saloon 4WD AQP/AUE/BDE | | GDS81587 | Drive Shaft | | 36 | | 53 | 78.5 | 522 | |
| | 1999.05-2003.05 | 6MT | R | L/R | Saloon 4WD AQP/AUE/BDE | | GCI53002 | Inner Joint | | | 33 | | | 34 | |
| | 1999.05-2003.05 | 6MT | R | L/R | Saloon 4WD AQP/AUE/BDE | | GCI82447 | Inner Joint | | | 33 | | | 34 | |
| | 1999.05-2003.05 | | R | L/R | Saloon 4WD AQP/AUE/BDE | | GCO83033 | Outer Joint | | 36 | 30 | 53 | 78.5 | 51 | I |
| | 1999.05-2003.05 | | R | L/R | Saloon 4WD AQP/AUE/BDE | Date To:2003.05 | GCI83011 | Inner Joint | | | 33 | | | 34 | |
| **Bora Estate/Variant** | | | | | | | | | | | | | | | |
| 1.4 (55 kw) | 2000.05-2005.05 | 5MT | F | L | Estate FWD AHW/AKQ/APE/AXP/BCA | | GDS61045 | Drive Shaft | | 36 | | 53 | 78.5 | 555 | |
| | 2000.05-2005.05 | 5MT | F | R | Estate FWD AHW/AKQ/APE/AXP/BCA | | GDS83046 | Drive Shaft | | 36 | | 53 | 78.5 | 822 | |
| | 2000.05-2005.05 | AT | F | L/R | Estate FWD AHW/AKQ/APE/AXP/BCA | | GCO83070 | Outer Joint | | 36 | 30 | 53 | 78 | 60 | I |
| | 2000.05-2005.05 | MT | F | L/R | Estate FWD AHW/AKQ/APE/AXP/BCA | | GCO83033 | Outer Joint | | 36 | 30 | 53 | 78.5 | 51 | I |
| | 2000.05-2005.05 | MT | F | L/R | Estate FWD AHW/AKQ/APE/AXP/BCA | | GCI83008 | Inner Joint | | | 33 | | | 32 | |
| 1.6 (74 kw) | 1999.05-2002.04 | 4AT/5MT | F | L/R | Estate FWD AEH/AKL/APF | | GCI61006 | Inner Joint | | | 30 | | | 57.6 | |
| | 1999.05-2002.04 | 4AT/5MT | F | L/R | Estate FWD AEH/AKL/APF | | GCI83008 | Inner Joint | | | 33 | | | 32 | |
| | 1999.05-2002.04 | AT | F | L | Estate FWD AEH/AKL/APF | | GDS61020 | Drive Shaft | | 36 | | 53.2 | 77.5 | 547 | |
| | 1999.05-2002.04 | AT | F | R | Estate FWD AEH/AKL/APF | | GDS83011 | Drive Shaft | | 36 | | 53.2 | 77.5 | 810.5 | |
| | 1999.05-2002.04 | AT | F | L/R | Estate FWD AEH/AKL/APF | | GCO83070 | Outer Joint | | 36 | 30 | 53 | 78 | 60 | I |
| | 1999.05-2002.04 | MT | F | L | Estate FWD AEH/AKL/APF | | GDS61045 | Drive Shaft | | 36 | | 53 | 78.5 | 555 | |
| | 1999.05-2002.04 | MT | F | R | Estate FWD AEH/AKL/APF | | GDS83046 | Drive Shaft | | 36 | | 53 | 78.5 | 822 | |
| | 1999.05-2002.04 | MT | F | L/R | Estate FWD AEH/AKL/APF | | GCO83033 | Outer Joint | | 36 | 30 | 53 | 78.5 | 51 | I |
| 1.6 (75 kw) | 2000.09-2005.05 | 4AT/5MT | F | L/R | Estate FWD AVU/BFQ | | GCI61006 | Inner Joint | | | 30 | | | 57.6 | |

| | YEAR | TRANSM. | F/R | L/R | BODY STYLE & DRIVE TYPE & ENGINE | REMARKS | G-AP Ref. | PRODUCT | ABS | Technical Specifications A | B | C | H | L | P |
|---|---|---|---|---|---|---|---|---|---|---|---|---|---|---|---|
| **VW** **Bora Estate/Variant** | | | | | | | | | | | | | | | |
| 1.6 (75 kw) | 2000.09-2005.05 | 4AT/5MT | F | L/R | Estate FWD AVU/BFQ | | GCI83008 | Inner Joint | | | 33 | | | 32 | |
| | 2000.09-2005.05 | AT | F | L | Estate FWD AVU/BFQ | | GDS61020 | Drive Shaft | | 36 | | 53.2 | 77.5 | 547 | |
| | 2000.09-2005.05 | AT | F | R | Estate FWD AVU/BFQ | | GDS83011 | Drive Shaft | | 36 | | 53.2 | 77.5 | 810.5 | |
| | 2000.09-2005.05 | AT | F | L/R | Estate FWD AVU/BFQ | | GCO83070 | Outer Joint | | 36 | 30 | 53 | 78 | 60 | I |
| | 2000.09-2005.05 | MT | F | L | Estate FWD AVU/BFQ | | GDS61045 | Drive Shaft | | 36 | | 53 | 78.5 | 555 | |
| | 2000.09-2005.05 | MT | F | R | Estate FWD AVU/BFQ | | GDS83046 | Drive Shaft | | 36 | | 53 | 78.5 | 822 | |
| | 2000.09-2005.05 | MT | F | L/R | Estate FWD AVU/BFQ | | GCO83033 | Outer Joint | | 36 | 30 | 53 | 78.5 | 51 | I |
| 1.6 (77 kw) | 1999.11-2005.05 | 5MT | F | L | Estate FWD ATN/AUS/AZD/BCB | | GDS61312 | Drive Shaft | | 36 | | 53 | 78 | 546 | |
| | 1999.11-2005.05 | 5MT | F | R | Estate FWD ATN/AUS/AZD/BCB | | GDS61203 | Drive Shaft | | 36 | | 53.2 | 77.5 | 810 | |
| | 1999.11-2005.05 | AT | F | L/R | Estate FWD ATN/AUS/AZD/BCB | For vehicles with heavy duty suspension | GCO83070 | Outer Joint | | 36 | 30 | 53 | 78 | 60 | I |
| | 1999.11-2005.05 | | F | L/R | Estate FWD ATN/AUS/AZD/BCB | | GCI61005 | Inner Joint | | | 30 | | | 57.6 | |
| 1.6 (81 kw) | 2001.08-2005.05 | AT | F | L/R | Estate FWD BAD | | GCO83070 | Outer Joint | | 36 | 30 | 53 | 78 | 60 | I |
| | 2001.08-2005.05 | | F | L/R | Estate FWD BAD | | GCI61005 | Inner Joint | | | 30 | | | 57.6 | |
| 1.8 (92 kw) | 1999.05-2000.10 | 4AT/5MT | F | L | Estate 4WD AGN | | GDS61314 | Drive Shaft | | 36 | | 53 | 78 | 558 | |
| | 1999.05-2000.10 | 4AT/5MT | F | L/R | Estate 4WD AGN | | GCO83070 | Outer Joint | | 36 | 30 | 53 | 78 | 60 | I |
| | 1999.05-2000.10 | 4AT/5MT | F | L | Estate 4WD AGN | | GCI82447 | Inner Joint | | | 33 | | | 34 | |
| | 1999.05-2000.10 | 4AT/5MT | F | L | Estate 4WD AGN | Date to:2000.10 | GCI83011 | Inner Joint | | | 33 | | | 34 | |
| | 1999.05-2000.10 | 4AT/5MT | F | R | Estate 4WD AGN | | GCI83009 | Inner Joint | | | 33 | | | 34 | |
| | 1999.05-2000.10 | 5MT | F | R | Estate 4WD AGN | | GDS83004 | Drive Shaft | | 36 | | 53.2 | 77.5 | 822 | |
| | 1999.05-2000.10 | 4AT/5MT | R | L | Estate 4WD AGN | | GDS82364 | Drive Shaft | | 36 | | 53 | 78.5 | 651 | |
| | 1999.05-2000.10 | 4AT/5MT | R | R | Estate 4WD AGN | | GDS81587 | Drive Shaft | | 36 | | 53 | 78.5 | 522 | |
| | 1999.05-2000.10 | 4AT/5MT | R | L/R | Estate 4WD AGN | | GCO83033 | Outer Joint | | 36 | 30 | 53 | 78.5 | 51 | I |
| | 1999.05-2000.10 | 4AT/5MT | R | L/R | Estate 4WD AGN | | GCI53002 | Inner Joint | | | 33 | | | 34 | |
| | 1999.05-2000.10 | | R | L/R | Estate 4WD AGN | Date to:2000.10 | GCI83011 | Inner Joint | | | 33 | | | 34 | |
| 1.8 (110 kw) | 2000.05-2005.05 | 4AT/5AT/5MT | F | L/R | Estate FWD AGU/ARX/AUM | | GCI61006 | Inner Joint | | | 30 | | | 57.6 | |
| | 2000.05-2005.05 | 4AT/5AT/5MT | F | L/R | Estate FWD AGU/ARX/AUM | | GCI83007 | Inner Joint | | | 34 | | | 85 | |
| | 2000.05-2005.05 | 5AT | F | L | Estate FWD AGU/ARX/AUM | | GDS61244 | Drive Shaft | | 36 | | 53 | 77.5 | 523 | |
| | 2000.05-2005.05 | 5AT | F | R | Estate FWD AGU/ARX/AUM | | GDS61243 | Drive Shaft | | 36 | | 53 | 77.5 | 813 | |
| | 2000.05-2005.05 | 5AT | F | R | Estate FWD AGU/ARX/AUM | Date from:2002.05 | GDS82405 | Drive Shaft | | 36 | | 53 | 77.5 | 815 | |
| | 2000.05-2005.05 | 5AT | F | L/R | Estate FWD AGU/ARX/AUM | | GCO83035 | Outer Joint | | 36 | 27 | 53 | 77.5 | 65 | I |
| | 2000.05-2005.05 | 5AT | F | L/R | Estate FWD AGU/ARX/AUM | Date from:2002.05 | GCI61057 | Inner Joint | | | 34 | | | 89 | |
| | 2000.05-2005.05 | MT/4AT | F | L | Estate FWD AGU/ARX/AUM | | GDS61020 | Drive Shaft | | 36 | | 53.2 | 77.5 | 547 | |
| | 2000.05-2005.05 | MT/4AT | F | R | Estate FWD AGU/ARX/AUM | | GDS83011 | Drive Shaft | | 36 | | 53.2 | 77.5 | 810.5 | |
| | 2000.05-2005.05 | MT/4AT | F | L/R | Estate FWD AGU/ARX/AUM | | GCO83070 | Outer Joint | | 36 | 30 | 53 | 78 | 60 | I |
| 1.8 (132 kw) | 2001.05-2005.05 | 6MT | F | L | Estate FWD AUQ | | GDS56276 | Drive Shaft | | 36 | | 53 | 77.5 | 520 | |
| | 2001.05-2005.05 | 6MT | F | R | Estate FWD AUQ | | GDS61121 | Drive Shaft | | 36 | | 53 | 77.5 | 806 | |
| | 2001.05-2005.05 | 6MT | F | L/R | Estate FWD AUQ | | GCO83035 | Outer Joint | | 36 | 27 | 53 | 77.5 | 65 | I |
| | 2001.05-2005.05 | 6MT | F | L/R | Estate FWD AUQ | Date To:2003.01,Chassis no. to:1J3W468500 | GCI83001 | Inner Joint | | | 28 | | | 32 | |
| | 2001.05-2005.05 | 6MT | F | L/R | Estate FWD AUQ | Date From:2003.02,Chassis no. from:1J3W468501 | GCI83016 | Inner Joint | | | 28 | | | 32 | |
| 1.9 (66 kw) | 2004.07-2005.05 | 4AT/5MT | F | L | Estate FWD AGR/ALH | | GDS61314 | Drive Shaft | | 36 | | 53 | 78 | 558 | |
| | 2004.07-2005.05 | 4AT/5MT | F | L/R | Estate FWD AGR/ALH | | GCO83070 | Outer Joint | | 36 | 30 | 53 | 78 | 60 | I |
| | 2004.07-2005.05 | 4AT/5MT | F | L | Estate FWD AGR/ALH | | GCI82447 | Inner Joint | | | 33 | | | 34 | |
| | 2004.07-2005.05 | 4AT/5MT | F | R | Estate FWD AGR/ALH | | GCI83009 | Inner Joint | | | 33 | | | 34 | |
| 1.9 (74 kw) | 2000.05-2003.05 | 6MT | F | L | Estate 4WD ATD | | GDS61123 | Drive Shaft | | 36 | | 53 | 77.5 | 520 | |
| | 2000.05-2003.05 | 6MT | F | R | Estate 4WD ATD | | GDS61186 | Drive Shaft | | 36 | | 53 | 77.5 | 653 | |
| | 2000.05-2003.05 | 6MT | F | L/R | Estate 4WD ATD | | GCO83035 | Outer Joint | | 36 | 27 | 53 | 77.5 | 65 | I |
| | 2000.05-2003.05 | AT | F | L | Estate 4WD ATD | | GDS61244 | Drive Shaft | | 36 | | 53 | 77.5 | 523 | |
| | 2000.05-2003.05 | AT | F | R | Estate 4WD ATD | | GDS61243 | Drive Shaft | | 36 | | 53 | 77.5 | 813 | |
| | 2000.05-2003.05 | AT | F | L/R | Estate 4WD ATD | | GCI61044 | Inner Joint | | | 34 | | | 85 | |
| | 2000.05-2003.05 | | F | L/R | Estate 4WD ATD | Date To:2003.01;Chassis no. to:1J3W468500 | GCI83001 | Inner Joint | | | 28 | | | 32 | |
| | 2000.05-2003.05 | | F | L/R | Estate 4WD ATD | Date From:2003.02;Chassis no. from:1J3W468501 | GCI83016 | Inner Joint | | | 28 | | | 32 | |
| | 2000.05-2003.05 | 6MT | R | L | Estate 4WD ATD | | GDS82364 | Drive Shaft | | 36 | | 53 | 78.5 | 651 | |
| | 2000.05-2003.05 | 6MT | R | R | Estate 4WD ATD | | GDS81587 | Drive Shaft | | 36 | | 53 | 78.5 | 522 | |
| | 2000.05-2003.05 | 6MT | R | L/R | Estate 4WD ATD | | GCI82447 | Inner Joint | | | 33 | | | 34 | |
| | 2000.05-2003.05 | | R | L/R | Estate 4WD ATD | | GCO83033 | Outer Joint | | 36 | 30 | 53 | 78.5 | 51 | I |
| | 2000.05-2003.05 | | R | L/R | Estate 4WD ATD | Date To:2003.05 | GCI83011 | Inner Joint | | | 33 | | | 34 | |
| | 2000.05-2005.05 | AT | F | L | Estate FWD ATD/AXR | | GDS61244 | Drive Shaft | | 36 | | 53 | 77.5 | 523 | |
| | 2000.05-2005.05 | AT | F | R | Estate FWD ATD/AXR | | GDS61243 | Drive Shaft | | 36 | | 53 | 77.5 | 813 | |
| | 2000.05-2005.05 | AT | F | L/R | Estate FWD ATD/AXR | | GCO83035 | Outer Joint | | 36 | 27 | 53 | 77.5 | 65 | I |
| | 2000.05-2005.05 | AT | F | L/R | Estate FWD ATD/AXR | | GCI83007 | Inner Joint | | | 34 | | | 85 | |
| | 2000.05-2005.05 | MT | F | L | Estate FWD ATD/AXR | | GDS83006 | Drive Shaft | | 36 | | 53.2 | 77.5 | 557 | |
| | 2000.05-2005.05 | MT | F | R | Estate FWD ATD/AXR | | GDS83004 | Drive Shaft | | 36 | | 53.2 | 77.5 | 822 | |
| | 2000.05-2005.05 | MT | F | L/R | Estate FWD ATD/AXR | | GCO83070 | Outer Joint | | 36 | 30 | 53 | 78 | 60 | I |
| | 2000.05-2005.05 | MT | F | L | Estate FWD ATD/AXR | | GCI83011 | Inner Joint | | | 33 | | | 34 | |
| | 2000.05-2005.05 | MT | F | R | Estate FWD ATD/AXR | | GCI83009 | Inner Joint | | | 33 | | | 34 | |

| | YEAR | TRANSM. | F/R | L/R | BODY STYLE & DRIVE TYPE & ENGINE | REMARKS | G-AP Ref. | PRODUCT | ABS | Technical Specifications A | B | C | H | L | P |
|---|---|---|---|---|---|---|---|---|---|---|---|---|---|---|---|
| **VW**<br>**Bora Estate/Variant** | | | | | | | | | | | | | | | |
| 1.9 (74 kw) | 2000.05-2005.05 | MT | F | L/R | Estate FWD ATD/AXR | | GCI83006 | Inner Joint | | | 33 | | | 34 | |
| 1.9 (81 kw) | 1999.05-2005.05 | AT | F | L | Estate FWD AHF/ASV | | GDS61020 | Drive Shaft | | 36 | | 53.2 | 77.5 | 547 | |
| | 1999.05-2005.05 | AT | F | R | Estate FWD AHF/ASV | | GDS83011 | Drive Shaft | | 36 | | 53.2 | 77.5 | 810.5 | |
| | 1999.05-2005.05 | AT | F | L/R | Estate FWD AHF/ASV | | GCI61006 | Inner Joint | | | 30 | | | 57.6 | |
| | 1999.05-2005.05 | AT/MT | F | L/R | Estate FWD AHF/ASV | | GCO83070 | Outer Joint | | 36 | 30 | 53 | 78 | 60 | I |
| | 1999.05-2005.05 | MT | F | L | Estate FWD AHF/ASV | | GDS83006 | Drive Shaft | | 36 | | 53.2 | 77.5 | 557 | |
| | 1999.05-2005.05 | MT | F | R | Estate FWD AHF/ASV | | GDS83004 | Drive Shaft | | 36 | | 53.2 | 77.5 | 822 | |
| | 1999.05-2005.05 | MT | F | L | Estate FWD AHF/ASV | | GCI83011 | Inner Joint | | | 33 | | | 34 | |
| | 1999.05-2005.05 | MT | F | R | Estate FWD AHF/ASV | | GCI83009 | Inner Joint | | | 33 | | | 34 | |
| | 1999.05-2005.05 | MT | F | L/R | Estate FWD AHF/ASV | | GCI83006 | Inner Joint | | | 33 | | | 34 | |
| 1.9 (85 kw) | 1999.05-2001.07 | 6MT | F | L | Estate 4WD AJM/AUY | | GDS61123 | Drive Shaft | | 36 | | 53 | 77.5 | 520 | |
| | 1999.05-2001.07 | 6MT | F | R | Estate 4WD AJM/AUY | | GDS61186 | Drive Shaft | | 36 | | 53 | 77.5 | 653 | |
| | 1999.05-2001.07 | 6MT | F | L/R | Estate 4WD AJM/AUY | | GCO83035 | Outer Joint | | 36 | 27 | 53 | 77.5 | 65 | I |
| | 1999.05-2001.07 | AT | F | L/R | Estate 4WD AJM/AUY | | GCI61044 | Inner Joint | | | 34 | | | 85 | |
| | 1999.05-2001.07 | | F | R | Estate 4WD AJM/AUY | | GDS61121 | Drive Shaft | | 36 | | 53 | 77.5 | 806 | |
| | 1999.05-2001.07 | | F | L/R | Estate 4WD AJM/AUY | Date To:2003.01;Chassis no. to:1J3W468500 | GCI83001 | Inner Joint | | | 28 | | | 32 | |
| | 1999.05-2001.07 | 6MT | R | L | Estate 4WD AJM/AUY | | GDS82364 | Drive Shaft | | 36 | | 53 | 78.5 | 651 | |
| | 1999.05-2001.07 | 6MT | R | R | Estate 4WD AJM/AUY | | GDS81587 | Drive Shaft | | 36 | | 53 | 78.5 | 522 | |
| | 1999.05-2001.07 | | R | L/R | Estate 4WD AJM/AUY | | GCO83033 | Outer Joint | | 36 | 30 | 53 | 78.5 | 51 | I |
| | 1999.05-2001.07 | | R | L/R | Estate 4WD AJM/AUY | | GCI83011 | Inner Joint | | | 33 | | | 34 | |
| | 1999.05-2001.07 | 5AT/5MT | F | L/R | Estate FWD AJM/AUY | | GCO83035 | Outer Joint | | 36 | 27 | 53 | 77.5 | 65 | I |
| | 1999.05-2001.07 | AT | F | L | Estate FWD AJM/AUY | | GDS61244 | Drive Shaft | | 36 | | 53 | 77.5 | 523 | |
| | 1999.05-2001.07 | AT | F | R | Estate FWD AJM/AUY | | GDS61243 | Drive Shaft | | 36 | | 53 | 77.5 | 813 | |
| | 1999.05-2001.07 | AT | F | L/R | Estate FWD AJM/AUY | | GCI61044 | Inner Joint | | | 34 | | | 85 | |
| | 1999.05-2001.07 | AT | F | L/R | Estate FWD AJM/AUY | | GCI83007 | Inner Joint | | | 34 | | | 85 | |
| | 1999.05-2001.07 | MT | F | L | Estate FWD AJM/AUY | For PR code:8Q0/8Q1 | GDS56276 | Drive Shaft | | 36 | | 53 | 77.5 | 520 | |
| | 1999.05-2001.07 | MT | F | R | Estate FWD AJM/AUY | | GDS61121 | Drive Shaft | | 36 | | 53 | 77.5 | 806 | |
| | 1999.05-2001.07 | MT | F | L/R | Estate FWD AJM/AUY | Date To:2003.01,Chassis no. to:1J3W468500 | GCI83001 | Inner Joint | | | 28 | | | 32 | |
| 1.9 (96 kw) | 2001.04-2003.05 | 6MT | F | L | Estate 4WD ASZ | | GDS61123 | Drive Shaft | | 36 | | 53 | 77.5 | 520 | |
| | 2001.04-2003.05 | 6MT | F | R | Estate 4WD ASZ | | GDS61186 | Drive Shaft | | 36 | | 53 | 77.5 | 653 | |
| | 2001.04-2003.05 | 6MT | F | L/R | Estate 4WD ASZ | | GCO83035 | Outer Joint | | 36 | 27 | 53 | 77.5 | 65 | I |
| | 2001.04-2003.05 | AT | F | L | Estate 4WD ASZ | | GDS61244 | Drive Shaft | | 36 | | 53 | 77.5 | 523 | |
| | 2001.04-2003.05 | AT | F | R | Estate 4WD ASZ | | GDS61243 | Drive Shaft | | 36 | | 53 | 77.5 | 813 | |
| | 2001.04-2003.05 | AT | F | L/R | Estate 4WD ASZ | | GCI61044 | Inner Joint | | | 34 | | | 85 | |
| | 2001.04-2003.05 | | F | R | Estate 4WD ASZ | Date From:2001.04;Date To:2003.05 | GDS61121 | Drive Shaft | | 36 | | 53 | 77.5 | 806 | |
| | 2001.04-2003.05 | | F | L/R | Estate 4WD ASZ | Date To:2003.01;Chassis no. to:1J3W468500 | GCI83001 | Inner Joint | | | 28 | | | 32 | |
| | 2001.04-2003.05 | | F | L/R | Estate 4WD ASZ | Date From:2003.02;Chassis no. from:1J3W468501 | GCI83016 | Inner Joint | | | 28 | | | 32 | |
| | 2001.04-2003.05 | 6MT | R | L | Estate 4WD ASZ | | GDS82364 | Drive Shaft | | 36 | | 53 | 78.5 | 651 | |
| | 2001.04-2003.05 | 6MT | R | R | Estate 4WD ASZ | | GDS81587 | Drive Shaft | | 36 | | 53 | 78.5 | 522 | |
| | 2001.04-2003.05 | 6MT | R | L/R | Estate 4WD ASZ | | GCI82447 | Inner Joint | | | 33 | | | 34 | |
| | 2001.04-2003.05 | | R | L/R | Estate 4WD ASZ | | GCO83033 | Outer Joint | | 36 | 30 | 53 | 78.5 | 51 | I |
| | 2001.04-2003.05 | | R | L/R | Estate 4WD ASZ | Date From:2001.04;Date To:2003.05 | GCI83011 | Inner Joint | | | 33 | | | 34 | |
| | 2001.04-2005.05 | 5AT | F | L/R | Estate FWD ASZ | | GCO83035 | Outer Joint | | 36 | 27 | 53 | 77.5 | 65 | I |
| | 2001.04-2005.05 | AT | F | L | Estate FWD ASZ | | GDS61244 | Drive Shaft | | 36 | | 53 | 77.5 | 523 | |
| | 2001.04-2005.05 | AT | F | R | Estate FWD ASZ | | GDS61243 | Drive Shaft | | 36 | | 53 | 77.5 | 813 | |
| | 2001.04-2005.05 | AT | F | L/R | Estate FWD ASZ | | GCI61044 | Inner Joint | | | 34 | | | 85 | |
| | 2001.04-2005.05 | AT | F | L/R | Estate FWD ASZ | | GCI83007 | Inner Joint | | | 34 | | | 85 | |
| | 2001.04-2005.05 | MT | F | L | Estate FWD ASZ | For PR code:8Q0/8Q1 | GDS56276 | Drive Shaft | | 36 | | 53 | 77.5 | 520 | |
| | 2001.04-2005.05 | MT | F | R | Estate FWD ASZ | | GDS61121 | Drive Shaft | | 36 | | 53 | 77.5 | 806 | |
| | 2001.04-2005.05 | MT | F | L/R | Estate FWD ASZ | Date To:2003.01,Chassis no. to:1J3W468500 | GCI83001 | Inner Joint | | | 28 | | | 32 | |
| | 2001.04-2005.05 | MT | F | L/R | Estate FWD ASZ | Date From:2003.01 | GCI83016 | Inner Joint | | | 28 | | | 32 | |
| 1.9 (110 kw) | 2001.05-2005.05 | 6MT | F | L | Estate 4WD ARL | | GDS61123 | Drive Shaft | | 36 | | 53 | 77.5 | 520 | |
| | 2001.05-2005.05 | 6MT | F | R | Estate 4WD ARL | | GDS61186 | Drive Shaft | | 36 | | 53 | 77.5 | 653 | |
| | 2001.05-2005.05 | 6MT | F | L/R | Estate 4WD ARL | | GCO83035 | Outer Joint | | 36 | 27 | 53 | 77.5 | 65 | I |
| | 2001.05-2005.05 | MT | F | L/R | Estate 4WD ARL | | GCI83006 | Inner Joint | | | 33 | | | 34 | |
| | 2001.05-2005.05 | | F | R | Estate 4WD ARL | | GDS61121 | Drive Shaft | | 36 | | 53 | 77.5 | 806 | |
| | 2001.05-2005.05 | | F | L/R | Estate 4WD ARL | Date To:2003.01;Chassis no. to:1J3W468500 | GCI83001 | Inner Joint | | | 28 | | | 32 | |
| | 2001.05-2005.05 | | F | L/R | Estate 4WD ARL | Date From:2003.02;Chassis no. from:1J3W468501 | GCI83016 | Inner Joint | | | 28 | | | 32 | |
| | 2001.05-2005.05 | 6MT | R | L | Estate 4WD ARL | | GDS82364 | Drive Shaft | | 36 | | 53 | 78.5 | 651 | |
| | 2001.05-2005.05 | 6MT | R | R | Estate 4WD ARL | | GDS81587 | Drive Shaft | | 36 | | 53 | 78.5 | 522 | |
| | 2001.05-2005.05 | 6MT | R | L/R | Estate 4WD ARL | | GCI53002 | Inner Joint | | | 33 | | | 34 | |
| | 2001.05-2005.05 | | R | L/R | Estate 4WD ARL | | GCO83033 | Outer Joint | | 36 | 30 | 53 | 78.5 | 51 | I |
| | 2001.05-2005.05 | | R | L/R | Estate 4WD ARL | | GCI83011 | Inner Joint | | | 33 | | | 34 | |
| | 2001.05-2005.05 | 6MT | F | L | Estate FWD ARL | Date to:2003.01,For PR code:8Q0/8Q1,Chassis no. to:1J_3W468500 | GDS56276 | Drive Shaft | | 36 | | 53 | 77.5 | 520 | |
| | 2001.05-2005.05 | 6MT | F | R | Estate FWD ARL | | GDS61121 | Drive Shaft | | 36 | | 53 | 77.5 | 806 | |

| | YEAR | TRANSM. | F/R | L/R | BODY STYLE & DRIVE TYPE & ENGINE | REMARKS | G-AP Ref. | PRODUCT | ABS | Technical Specifications A | B | C | H | L | P |
|---|---|---|---|---|---|---|---|---|---|---|---|---|---|---|---|
| **VW** **Bora Estate/Variant** | | | | | | | | | | | | | | | |
| 1.9 (110 kw) | 2001.05-2005.05 | 6MT | F | L/R | Estate FWD ARL | | GCO83035 | Outer Joint | | 36 | 27 | 53 | 77.5 | 65 | I |
| | 2001.05-2005.05 | 6MT | F | L/R | Estate FWD ARL | Date To:2003.01,Chassis no. to:1J3W468500 | GCI83001 | Inner Joint | | | 28 | | | 32 | |
| | 2001.05-2005.05 | 6MT | F | L/R | Estate FWD ARL | Date From:2003.02,Chassis no. from:1J3W468501 | GCI83016 | Inner Joint | | | 28 | | | 32 | |
| 2.0 (85 kw) | 1999.05-2005.05 | AT | F | L | Estate FWD APK/AQY/AZJ | | GDS61020 | Drive Shaft | | 36 | | 53.2 | 77.5 | 547 | |
| | 1999.05-2005.05 | AT | F | R | Estate FWD APK/AQY/AZJ | | GDS83011 | Drive Shaft | | 36 | | 53.2 | 77.5 | 810.5 | |
| | 1999.05-2005.05 | AT | F | L/R | Estate FWD APK/AQY/AZJ | | GCI61006 | Inner Joint | | | 30 | | | 57.6 | |
| | 1999.05-2005.05 | AT/MT | F | L/R | Estate FWD APK/AQY/AZJ | | GCO83070 | Outer Joint | | 36 | 30 | 53 | 78 | 60 | I |
| | 1999.05-2005.05 | MT | F | L | Estate FWD APK/AQY/AZJ | | GDS61314 | Drive Shaft | | 36 | | 53 | 78 | 558 | |
| | 1999.05-2005.05 | MT | F | L | Estate FWD APK/AQY/AZJ | | GDS83006 | Drive Shaft | | 36 | | 53.2 | 77.5 | 557 | |
| | 1999.05-2005.05 | MT | F | R | Estate FWD APK/AQY/AZJ | | GDS83004 | Drive Shaft | | 36 | | 53.2 | 77.5 | 822 | |
| | 1999.05-2005.05 | MT | F | L | Estate FWD APK/AQY/AZJ | | GCI82447 | Inner Joint | | | 33 | | | 34 | |
| | 1999.05-2005.05 | MT | F | R | Estate FWD APK/AQY/AZJ | | GCI83009 | Inner Joint | | | 33 | | | 34 | |
| | 1999.05-2005.05 | MT | F | L/R | Estate FWD APK/AQY/AZJ | | GCI83006 | Inner Joint | | | 33 | | | 34 | |
| | 2000.04-2005.03 | 4AT/5MT | F | L | Estate 4WD AZH/AZJ | | GDS61314 | Drive Shaft | | 36 | | 53 | 78 | 558 | |
| | 2000.04-2005.03 | 4AT/5MT | F | L/R | Estate 4WD AZH/AZJ | | GCO83070 | Outer Joint | | 36 | 30 | 53 | 78 | 60 | I |
| | 2000.04-2005.03 | 4AT/5MT | F | L | Estate 4WD AZH/AZJ | | GCI82447 | Inner Joint | | | 33 | | | 34 | |
| | 2000.04-2005.03 | 4AT/5MT | F | R | Estate 4WD AZH/AZJ | | GCI83009 | Inner Joint | | | 33 | | | 34 | |
| | 2000.04-2005.03 | MT | F | L | Estate 4WD AZH/AZJ | | GDS83006 | Drive Shaft | | 36 | | 53.2 | 77.5 | 557 | |
| | 2000.04-2005.03 | MT | F | R | Estate 4WD AZH/AZJ | | GDS83004 | Drive Shaft | | 36 | | 53.2 | 77.5 | 822 | |
| | 2000.04-2005.03 | MT | F | L/R | Estate 4WD AZH/AZJ | | GCI83006 | Inner Joint | | | 33 | | | 34 | |
| | 2000.04-2005.03 | 4AT/5MT | R | L | Estate 4WD AZH/AZJ | | GDS82364 | Drive Shaft | | 36 | | 53 | 78.5 | 651 | |
| | 2000.04-2005.03 | 4AT/5MT | R | R | Estate 4WD AZH/AZJ | | GDS81587 | Drive Shaft | | 36 | | 53 | 78.5 | 522 | |
| | 2000.04-2005.03 | 4AT/5MT | R | L/R | Estate 4WD AZH/AZJ | | GCO83033 | Outer Joint | | 36 | 30 | 53 | 78.5 | 51 | I |
| | 2000.04-2005.03 | 4AT/5MT | R | L/R | Estate 4WD AZH/AZJ | | GCI53002 | Inner Joint | | | 33 | | | 34 | |
| | 2000.04-2005.03 | 4AT/5MT | R | L/R | Estate 4WD AZH/AZJ | | GCI82447 | Inner Joint | | | 33 | | | 34 | |
| 2.3 (110 kw) | 1999.05-2001.02 | 6MT | F | L | Estate 4WD AGZ | | GDS61123 | Drive Shaft | | 36 | | 53 | 77.5 | 520 | |
| | 1999.05-2001.02 | 6MT | F | R | Estate 4WD AGZ | | GDS61186 | Drive Shaft | | 36 | | 53 | 77.5 | 653 | |
| | 1999.05-2001.02 | 6MT | F | L/R | Estate 4WD AGZ | | GCO83035 | Outer Joint | | 36 | 27 | 53 | 77.5 | 65 | I |
| | 1999.05-2001.02 | AT/MT | F | L | Estate 4WD AGZ | | GDS61020 | Drive Shaft | | 36 | | 53.2 | 77.5 | 547 | |
| | 1999.05-2001.02 | | F | L/R | Estate 4WD AGZ | | GCI83001 | Inner Joint | | | 28 | | | 32 | |
| | 1999.05-2001.02 | 6MT | R | L | Estate 4WD AGZ | | GDS82364 | Drive Shaft | | 36 | | 53 | 78.5 | 651 | |
| | 1999.05-2001.02 | 6MT | R | R | Estate 4WD AGZ | | GDS81587 | Drive Shaft | | 36 | | 53 | 78.5 | 522 | |
| | 1999.05-2001.02 | 6MT | R | L/R | Estate 4WD AGZ | | GCI53002 | Inner Joint | | | 33 | | | 34 | |
| | 1999.05-2001.02 | | R | L/R | Estate 4WD AGZ | | GCO83033 | Outer Joint | | 36 | 30 | 53 | 78.5 | 51 | I |
| | 1999.05-2001.02 | | R | L/R | Estate 4WD AGZ | | GCI83011 | Inner Joint | | | 33 | | | 34 | |
| | 1999.05-2001.02 | 4AT/5MT | F | L | Estate FWD AGZ | | GDS61020 | Drive Shaft | | 36 | | 53.2 | 77.5 | 547 | |
| | 1999.05-2001.02 | 4AT/5MT | F | R | Estate FWD AGZ | Chassis no. to:1J_XW166084 | GDS61203 | Drive Shaft | | 36 | | 53.2 | 77.5 | 810 | |
| | 1999.05-2001.02 | 4AT/5MT | F | R | Estate FWD AGZ | Chassis no. from:1J_XW166085 | GDS83011 | Drive Shaft | | 36 | | 53.2 | 77.5 | 810.5 | |
| | 1999.05-2001.02 | AT/MT | F | L/R | Estate FWD AGZ | | GCO83070 | Outer Joint | | 36 | 30 | 53 | 78 | 60 | I |
| | 1999.05-2001.02 | MT | F | L | Estate FWD AGZ | Chassis no. to:1JXW166084 | GDS61312 | Drive Shaft | | 36 | | 53 | 78 | 546 | |
| | 1999.05-2001.02 | | F | L/R | Estate FWD AGZ | | GCI61006 | Inner Joint | | | 30 | | | 57.6 | |
| 2.3 (125 kw) | 2000.09-2003.06 | 6MT | F | L | Estate 4WD AQN | | GDS61123 | Drive Shaft | | 36 | | 53 | 77.5 | 520 | |
| | 2000.09-2003.06 | 6MT | F | R | Estate 4WD AQN | | GDS61186 | Drive Shaft | | 36 | | 53 | 77.5 | 653 | |
| | 2000.09-2003.06 | 6MT | F | L/R | Estate 4WD AQN | | GCO83035 | Outer Joint | | 36 | 27 | 53 | 77.5 | 65 | I |
| | 2000.09-2003.06 | AT | F | L | Estate 4WD AQN | | GDS61244 | Drive Shaft | | 36 | | 53 | 77.5 | 523 | |
| | 2000.09-2003.06 | AT | F | R | Estate 4WD AQN | | GDS61243 | Drive Shaft | | 36 | | 53 | 77.5 | 813 | |
| | 2000.09-2003.06 | AT | F | L/R | Estate 4WD AQN | | GCI61044 | Inner Joint | | | 34 | | | 85 | |
| | 2000.09-2003.06 | | F | L/R | Estate 4WD AQN | | GCI83001 | Inner Joint | | | 28 | | | 32 | |
| | 2000.09-2003.06 | | F | L/R | Estate 4WD AQN | Date From:2003.02:Chassis no. from:1J3W468501 | GCI83016 | Inner Joint | | | 28 | | | 32 | |
| | 2000.09-2003.06 | 6MT | R | L | Estate 4WD AQN | | GDS82364 | Drive Shaft | | 36 | | 53 | 78.5 | 651 | |
| | 2000.09-2003.06 | 6MT | R | R | Estate 4WD AQN | | GDS81587 | Drive Shaft | | 36 | | 53 | 78.5 | 522 | |
| | 2000.09-2003.06 | 6MT | R | L/R | Estate 4WD AQN | | GCI82447 | Inner Joint | | | 33 | | | 34 | |
| | 2000.09-2003.06 | | R | L/R | Estate 4WD AQN | | GCO83033 | Outer Joint | | 36 | 30 | 53 | 78.5 | 51 | I |
| | 2000.09-2003.06 | | R | L/R | Estate 4WD AQN | Date To:2003.06 | GCI83011 | Inner Joint | | | 33 | | | 34 | |
| | 2000.09-2005.05 | AT | F | L | Estate FWD AQN | | GDS61244 | Drive Shaft | | 36 | | 53 | 77.5 | 523 | |
| | 2000.09-2005.05 | AT | F | R | Estate FWD AQN | | GDS61243 | Drive Shaft | | 36 | | 53 | 77.5 | 813 | |
| | 2000.09-2005.05 | AT | F | R | Estate FWD AQN | Date from:2003.02,Chassis no. from:1J3W468502 | GDS82405 | Drive Shaft | | 36 | | 53 | 77.5 | 815 | |
| | 2000.09-2005.05 | AT | F | L/R | Estate FWD AQN | | GCO83035 | Outer Joint | | 36 | 27 | 53 | 77.5 | 65 | I |
| | 2000.09-2005.05 | AT | F | L/R | Estate FWD AQN | Date from:2003.02,Chassis no. from:1J_3W468502 | GCI61057 | Inner Joint | | | 34 | | | 89 | |
| | 2000.09-2005.05 | AT | F | L/R | Estate FWD AQN | Date to:2003.01,Chassis no. to:1J_3W468501 | GCI83007 | Inner Joint | | | 34 | | | 85 | |
| | 2000.09-2005.05 | MT | F | L | Estate FWD AQN | | GDS61020 | Drive Shaft | | 36 | | 53.2 | 77.5 | 547 | |
| | 2000.09-2005.05 | MT | F | R | Estate FWD AQN | | GDS83011 | Drive Shaft | | 36 | | 53.2 | 77.5 | 810.5 | |
| | 2000.09-2005.05 | MT | F | L/R | Estate FWD AQN | | GCO83070 | Outer Joint | | 36 | 30 | 53 | 78 | 60 | I |
| | 2000.09-2005.05 | MT | F | L/R | Estate FWD AQN | | GCI61006 | Inner Joint | | | 30 | | | 57.6 | |
| 2.8 (150 kw) | 1999.05-2003.05 | 6MT | F | L | Estate 4WD AQP/AUE/BDE | | GDS61123 | Drive Shaft | | 36 | | 53 | 77.5 | 520 | |

| | YEAR | TRANSM. | F/R | L/R | BODY STYLE & DRIVE TYPE & ENGINE | REMARKS | G-AP Ref. | PRODUCT | ABS | Technical Specifications A | B | C | H | L | P |
|---|---|---|---|---|---|---|---|---|---|---|---|---|---|---|---|
| **VW** | | | | | | | | | | | | | | | |
| **Bora Estate/Variant** | | | | | | | | | | | | | | | |
| 2.8 (150 kw) | 1999.05-2003.05 | 6MT | F | R | Estate 4WD AQP/AUE/BDE | | GDS61186 | Drive Shaft | | 36 | | 53 | 77.5 | 653 | |
| | 1999.05-2003.05 | 6MT | F | L/R | Estate 4WD AQP/AUE/BDE | | GCO83035 | Outer Joint | | 36 | 27 | 53 | 77.5 | 65 | I |
| | 1999.05-2003.05 | | F | L/R | Estate 4WD AQP/AUE/BDE | Date To:2003.01;Chassis no. to:1J3W468500 | GCI83001 | Inner Joint | | | 28 | | | 32 | |
| | 1999.05-2003.05 | | F | L/R | Estate 4WD AQP/AUE/BDE | Date From:2003.02;Chassis no. from:1J3W468501 | GCI83016 | Inner Joint | | | 28 | | | 32 | |
| | 1999.05-2003.05 | 6MT | R | L | Estate 4WD AQP/AUE/BDE | | GDS82364 | Drive Shaft | | 36 | | 53 | 78.5 | 651 | |
| | 1999.05-2003.05 | 6MT | R | R | Estate 4WD AQP/AUE/BDE | | GDS81587 | Drive Shaft | | 36 | | 53 | 78.5 | 522 | |
| | 1999.05-2003.05 | 6MT | R | L/R | Estate 4WD AQP/AUE/BDE | | GCI53002 | Inner Joint | | | 33 | | | 34 | |
| | 1999.05-2003.05 | 6MT | R | L/R | Estate 4WD AQP/AUE/BDE | | GCI82447 | Inner Joint | | | 33 | | | 34 | |
| | 1999.05-2003.05 | | R | L/R | Estate 4WD AQP/AUE/BDE | | GCO83033 | Outer Joint | | 36 | 30 | 53 | 78.5 | 51 | I |
| | 1999.05-2003.05 | | R | L/R | Estate 4WD AQP/AUE/BDE | Date To:2003.05 | GCI83011 | Inner Joint | | | 33 | | | 34 | |
| **Caddy** | | | | | | | | | | | | | | | |
| 1.0 (62 kw) | 2018.11-2019.07 | 5MT | F | L | MPV FWD DKRD | | GDS57830 | Drive Shaft | | 36 | | 59.5 | 40 | 492 | |
| | 2018.11-2019.07 | 5MT | F | R | MPV FWD DKRD | | GDS82230 | Drive Shaft | | 36 | | 59.5 | 40 | 789 | |
| | 2018.11-2019.07 | 5MT | F | L/R | MPV FWD DKRD | | GCO61059 | Outer Joint | | 36 | 33 | 59.5 | 40 | 59.5 | I |
| | 2018.11-2019.07 | 5MT | F | L/R | MPV FWD DKRD | | GCI81689 | Inner Joint | | | 32 | | | 89 | |
| 1.0 (75 kw) | 2015.11-2020.09 | 5MT | F | L | Box Body/MPV FWD CHZG, DKRE | | GDS57830 | Drive Shaft | | 36 | | 59.5 | 40 | 492 | |
| | 2015.11-2020.09 | 5MT | F | R | Box Body/MPV FWD CHZG, DKRE | | GDS82230 | Drive Shaft | | 36 | | 59.5 | 40 | 789 | |
| | 2015.11-2020.09 | 5MT | F | R | Box Body/MPV FWD CHZG, DKRE | | GCO61059 | Outer Joint | | 36 | 33 | 59.5 | 40 | 59.5 | I |
| | 2015.11-2020.09 | 5MT | F | L/R | Box Body/MPV FWD CHZG, DKRE | | GCI81689 | Inner Joint | | | 32 | | | 89 | |
| | 2015.11-2020.09 | 5MT | F | L | MPV FWD CHZG, DKRE | | GDS57830 | Drive Shaft | | 36 | | 59.5 | 40 | 492 | |
| | 2015.11-2020.09 | 5MT | F | R | MPV FWD CHZG, DKRE | | GDS82230 | Drive Shaft | | 36 | | 59.5 | 40 | 789 | |
| | 2015.11-2020.09 | 5MT | F | R | MPV FWD CHZG, DKRE | | GCO61059 | Outer Joint | | 36 | 33 | 59.5 | 40 | 59.5 | I |
| | 2015.11-2020.09 | 5MT | F | L/R | MPV FWD CHZG, DKRE | | GCI81689 | Inner Joint | | | 32 | | | 89 | |
| 1.2 (62 kw) | 2015.06-2020.09 | 5MT | F | L | Box Body/MPV FWD CYVC | | GDS61282 | Drive Shaft | | 36 | | 59.5 | 40 | 523 | |
| | 2015.06-2020.09 | 5MT | F | R | Box Body/MPV FWD CYVC | | GDS61307 | Drive Shaft | | 36 | | 59.5 | 40 | 819 | |
| | 2015.06-2020.09 | 5MT | F | L | Box Body/MPV FWD CYVC | | GCO61059 | Outer Joint | | 36 | 33 | 59.5 | 40 | 59.5 | I |
| | 2015.06-2020.09 | 5MT | F | R | Box Body/MPV FWD CYVC | | GCO83037 | Outer Joint | | 36 | 30 | 59.5 | 40.5 | 56 | I |
| | 2015.06-2020.09 | 5MT | F | L/R | Box Body/MPV FWD CYVC | | GCI53002 | Inner Joint | | | 33 | | | 34 | |
| | 2015.06-2020.09 | 5MT | F | L/R | Box Body/MPV FWD CYVC | | GCI82447 | Inner Joint | | | 33 | | | 34 | |
| | 2015.06-2020.09 | | F | L/R | Box Body/MPV FWD CYVC | | GCI83011 | Inner Joint | | | 33 | | | 34 | |
| | 2015.06-2020.09 | 5MT | F | L | MPV FWD CYVC | | GDS61282 | Drive Shaft | | 36 | | 59.5 | 40 | 523 | |
| | 2015.06-2020.09 | 5MT | F | R | MPV FWD CYVC | | GDS61307 | Drive Shaft | | 36 | | 59.5 | 40 | 819 | |
| | 2015.06-2020.09 | 5MT | F | L | MPV FWD CYVC | | GCO61059 | Outer Joint | | 36 | 33 | 59.5 | 40 | 59.5 | I |
| | 2015.06-2020.09 | 5MT | F | R | MPV FWD CYVC | | GCO83037 | Outer Joint | | 36 | 30 | 59.5 | 40.5 | 56 | I |
| | 2015.06-2020.09 | 5MT | F | L/R | MPV FWD CYVC | | GCI53002 | Inner Joint | | | 33 | | | 34 | |
| | 2015.06-2020.09 | 5MT | F | L/R | MPV FWD CYVC | | GCI82447 | Inner Joint | | | 33 | | | 34 | |
| | 2015.06-2020.09 | | F | L/R | MPV FWD CYVC | | GCI83011 | Inner Joint | | | 33 | | | 34 | |
| 1.2 (63 kw) | 2010.09-2015.05 | 5MT | F | L | Box Body/MPV FWD CBZA | | GDS61100 | Drive Shaft | | 36 | | 59.5 | 40 | 513 | |
| | 2010.09-2015.05 | 5MT | F | R | Box Body/MPV FWD CBZA | | GDS61096 | Drive Shaft | | 36 | | 59.5 | 40.5 | 799 | |
| | 2010.09-2015.05 | 5MT | F | R | Box Body/MPV FWD CBZA | | GCI82447 | Inner Joint | | | 33 | | | 34 | |
| | 2010.09-2015.05 | MT | F | L/R | Box Body/MPV FWD CBZA | | GCI83006 | Inner Joint | | | 33 | | | 34 | |
| | 2010.09-2015.05 | | F | L | Box Body/MPV FWD CBZA | | GCO61059 | Outer Joint | | 36 | 33 | 59.5 | 40 | 59.5 | I |
| | 2010.09-2015.05 | | F | L | Box Body/MPV FWD CBZA | | GCO83002 | Outer Joint | | 36 | 27 | 59.5 | 40 | 66 | I |
| | 2010.09-2015.05 | | F | L | Box Body/MPV FWD CBZA | Date To:2013.01;For special-purpose vehicles | GCO83101 | Outer Joint | | 36 | 27 | 59.5 | 40 | 65 | M |
| | 2010.09-2015.05 | | F | L | Box Body/MPV FWD CBZA | | GCI83016 | Inner Joint | | | 28 | | | 32 | |
| | 2010.09-2015.05 | | F | R | Box Body/MPV FWD CBZA | | GCI83011 | Inner Joint | | | 33 | | | 34 | |
| | 2010.09-2015.05 | 5MT | F | L | MPV FWD CBZA | | GDS61100 | Drive Shaft | | 36 | | 59.5 | 40 | 513 | |
| | 2010.09-2015.05 | 5MT | F | R | MPV FWD CBZA | | GDS61096 | Drive Shaft | | 36 | | 59.5 | 40.5 | 799 | |
| | 2010.09-2015.05 | 5MT | F | L/R | MPV FWD CBZA | Inner Teeth:33 | GCO61059 | Outer Joint | | 36 | 33 | 59.5 | 40 | 59.5 | I |
| | 2010.09-2015.05 | 5MT | F | L/R | MPV FWD CBZA | Inner Teeth:27 | GCO83002 | Outer Joint | | 36 | 27 | 59.5 | 40 | 66 | I |
| | 2010.09-2015.05 | 5MT | F | L/R | MPV FWD CBZA | Inner Teeth:30 | GCO83037 | Outer Joint | | 36 | 30 | 59.5 | 40.5 | 56 | I |
| | 2010.09-2015.05 | 5MT | F | L/R | MPV FWD CBZA | For special-purpose vehicles | GCO83101 | Outer Joint | | 36 | 27 | 59.5 | 40 | 65 | M |
| | 2010.09-2015.05 | 5MT | F | L | MPV FWD CBZA | | GCI83016 | Inner Joint | | | 28 | | | 32 | |
| | 2010.09-2015.05 | 5MT | F | R | MPV FWD CBZA | | GCI82447 | Inner Joint | | | 33 | | | 34 | |
| 1.2 (77 kw) | 2010.09-2015.05 | 5MT | F | L | Box Body/MPV FWD CBZB | | GDS61100 | Drive Shaft | | 36 | | 59.5 | 40 | 513 | |
| | 2010.09-2015.05 | 5MT | F | R | Box Body/MPV FWD CBZB | | GDS61096 | Drive Shaft | | 36 | | 59.5 | 40.5 | 799 | |
| | 2010.09-2015.05 | 5MT | F | R | Box Body/MPV FWD CBZB | | GCI82447 | Inner Joint | | | 33 | | | 34 | |
| | 2010.09-2015.05 | MT | F | L/R | Box Body/MPV FWD CBZB | | GCI83006 | Inner Joint | | | 33 | | | 34 | |
| | 2010.09-2015.05 | | F | L | Box Body/MPV FWD CBZB | | GCO83002 | Outer Joint | | 36 | 27 | 59.5 | 40 | 66 | I |
| | 2010.09-2015.05 | | F | L | Box Body/MPV FWD CBZB | Date To:2013.01;For special-purpose vehicles | GCO83101 | Outer Joint | | 36 | 27 | 59.5 | 40 | 65 | M |
| | 2010.09-2015.05 | | F | L/R | Box Body/MPV FWD CBZB | | GCO61059 | Outer Joint | | 36 | 33 | 59.5 | 40 | 59.5 | I |
| | 2010.09-2015.05 | | F | L | Box Body/MPV FWD CBZB | | GCI83016 | Inner Joint | | | 28 | | | 32 | |
| | 2010.09-2015.05 | | F | R | Box Body/MPV FWD CBZB | | GCI83011 | Inner Joint | | | 33 | | | 34 | |
| | 2010.09-2015.05 | 5MT | F | L | MPV FWD CBZB | | GDS61100 | Drive Shaft | | 36 | | 59.5 | 40 | 513 | |
| | 2010.09-2015.05 | 5MT | F | R | MPV FWD CBZB | | GDS61096 | Drive Shaft | | 36 | | 59.5 | 40.5 | 799 | |

| | YEAR | TRANSM. | F/R | L/R | BODY STYLE & DRIVE TYPE & ENGINE | REMARKS | G-AP Ref. | PRODUCT | ABS | Technical Specifications A | B | C | H | L | P |
|---|---|---|---|---|---|---|---|---|---|---|---|---|---|---|---|
| **VW Caddy** | | | | | | | | | | | | | | | |
| 1.2 (77 kw) | 2010.09-2015.05 | 5MT | F | L/R | MPV FWD CBZB | | GCO61059 | Outer Joint | | 36 | 33 | 59.5 | 40 | 59.5 | I |
| | 2010.09-2015.05 | 5MT | F | L/R | MPV FWD CBZB | | GCO83002 | Outer Joint | | 36 | 27 | 59.5 | 40 | 66 | I |
| | 2010.09-2015.05 | 5MT | F | L/R | MPV FWD CBZB | | GCO83037 | Outer Joint | | 36 | 30 | 59.5 | 40.5 | 56 | I |
| | 2010.09-2015.05 | 5MT | F | L/R | MPV FWD CBZB | | GCO83101 | Outer Joint | | 36 | 27 | 59.5 | 40 | 65 | M |
| | 2010.09-2015.05 | 5MT | F | L | MPV FWD CBZB | | GCI83016 | Inner Joint | | | 28 | | | 32 | |
| | 2010.09-2015.05 | 5MT | F | R | MPV FWD CBZB | | GCI82447 | Inner Joint | | | 33 | | | 34 | |
| 1.4 (44 kw) | 1995.11-2003.06 | 5MT | F | L | MPV FWD AEX/AKV/APQ/AUD | | GDS53004 | Drive Shaft | | 22 | | 50 | 78.5 | 562 | |
| | 1995.11-2003.06 | 5MT | F | L/R | MPV FWD AEX/AKV/APQ/AUD | | GCO53008 | Outer Joint | | 22 | 30 | 53 | 78.5 | 51 | I |
| | 1995.11-2003.06 | MT | F | L/R | MPV FWD AEX/AKV/APQ/AUD | | GCI53001 | Inner Joint | | | 33 | | | 32 | |
| | 1995.11-2003.06 | 5MT | F | L | MPV Van FWD AEX/APQ/AUD | | GDS53004 | Drive Shaft | | 22 | | 50 | 78.5 | 562 | |
| | 1995.11-2003.06 | 5MT | F | L/R | MPV Van FWD AEX/APQ/AUD | | GCO53008 | Outer Joint | | 22 | 30 | 53 | 78.5 | 51 | I |
| | 1995.11-2003.06 | MT | F | L/R | MPV Van FWD AEX/APQ/AUD | Date to:2003.06 | GCI53001 | Inner Joint | | | 33 | | | 32 | |
| 1.4 (55 kw) | 2000.09-2003.06 | 5MT | F | L | MPV FWD AUA | | GDS53004 | Drive Shaft | | 22 | | 50 | 78.5 | 562 | |
| | 2000.09-2003.06 | 5MT | F | L/R | MPV FWD AUA | | GCO53008 | Outer Joint | | 22 | 30 | 53 | 78.5 | 51 | I |
| | 2000.09-2003.06 | MT | F | L/R | MPV FWD AUA | | GCI53001 | Inner Joint | | | 33 | | | 32 | |
| | 2000.09-2003.06 | 5MT | F | L | MPV Van FWD AUA | | GDS53004 | Drive Shaft | | 22 | | 50 | 78.5 | 562 | |
| | 2000.09-2003.06 | 5MT | F | L/R | MPV Van FWD AUA | | GCO53008 | Outer Joint | | 22 | 30 | 53 | 78.5 | 51 | I |
| | 2000.09-2003.06 | MT | F | L/R | MPV Van FWD AUA | | GCI53001 | Inner Joint | | | 33 | | | 32 | |
| | 2004.03-2006.05 | 5MT | F | L | Box Body/MPV FWD BCA | | GDS61201 | Drive Shaft | | 36 | | 59.5 | 40.5 | 535 | |
| | 2004.03-2006.05 | 5MT | F | R | Box Body/MPV FWD BCA | | GDS81343 | Drive Shaft | | 36 | | 59.5 | 40 | 805 | |
| | 2004.03-2006.05 | 5MT | F | L/R | Box Body/MPV FWD BCA | | GCO83037 | Outer Joint | | 36 | 30 | 59.5 | 40.5 | 56 | I |
| | 2004.03-2006.05 | 5MT | F | L/R | Box Body/MPV FWD BCA | | GCI82447 | Inner Joint | | | 33 | | | 34 | |
| | 2004.03-2006.05 | MT | F | L/R | Box Body/MPV FWD BCA | | GCI83006 | Inner Joint | | | 33 | | | 34 | |
| | 2004.03-2006.05 | MT | F | L/R | Box Body/MPV FWD BCA | | GCI83008 | Inner Joint | | | 33 | | | 32 | |
| | 2004.03-2006.05 | | F | L/R | Box Body/MPV FWD BCA | | GCI83011 | Inner Joint | | | 33 | | | 34 | |
| | 2004.03-2006.05 | 5MT | F | L | MPV FWD BCA | | GDS61201 | Drive Shaft | | 36 | | 59.5 | 40.5 | 535 | |
| | 2004.03-2006.05 | 5MT | F | R | MPV FWD BCA | | GDS81343 | Drive Shaft | | 36 | | 59.5 | 40 | 805 | |
| | 2004.03-2006.05 | 5MT | F | L/R | MPV FWD BCA | | GCO83037 | Outer Joint | | 36 | 30 | 59.5 | 40.5 | 56 | I |
| | 2004.03-2006.05 | 5MT | F | L/R | MPV FWD BCA | | GCI82447 | Inner Joint | | | 33 | | | 34 | |
| | 2004.03-2006.05 | MT | F | L/R | MPV FWD BCA | | GCI83006 | Inner Joint | | | 33 | | | 34 | |
| | 2004.03-2006.05 | MT | F | L/R | MPV FWD BCA | | GCI83008 | Inner Joint | | | 33 | | | 32 | |
| | 2004.03-2006.05 | | F | L/R | MPV FWD BCA | | GCI83011 | Inner Joint | | | 33 | | | 34 | |
| 1.4 (59 kw) | 2006.05-2010.08 | 5MT | F | L | Box Body/MPV FWD BUD | | GDS61201 | Drive Shaft | | 36 | | 59.5 | 40.5 | 535 | |
| | 2006.05-2010.08 | 5MT | F | R | Box Body/MPV FWD BUD | | GDS81343 | Drive Shaft | | 36 | | 59.5 | 40 | 805 | |
| | 2006.05-2010.08 | 5MT | F | L/R | Box Body/MPV FWD BUD | | GCO83037 | Outer Joint | | 36 | 30 | 59.5 | 40.5 | 56 | I |
| | 2006.05-2010.08 | 5MT | F | L/R | Box Body/MPV FWD BUD | | GCI82447 | Inner Joint | | | 33 | | | 34 | |
| | 2006.05-2010.08 | MT | F | L | Box Body/MPV FWD BUD | | GDS83294 | Drive Shaft | | 36 | | 59.5 | 38 | 519 | |
| | 2006.05-2010.08 | MT | F | R | Box Body/MPV FWD BUD | | GDS61042 | Drive Shaft | | 36 | | 59.5 | 40.5 | 814 | |
| | 2006.05-2010.08 | MT | F | L/R | Box Body/MPV FWD BUD | | GCI83006 | Inner Joint | | | 33 | | | 34 | |
| | 2006.05-2010.08 | MT | F | L/R | Box Body/MPV FWD BUD | | GCI83011 | Inner Joint | | | 33 | | | 34 | |
| | 2006.05-2010.08 | 5MT | F | L | MPV FWD BUD | | GDS61201 | Drive Shaft | | 36 | | 59.5 | 40.5 | 535 | |
| | 2006.05-2010.08 | 5MT | F | R | MPV FWD BUD | | GDS81343 | Drive Shaft | | 36 | | 59.5 | 40 | 805 | |
| | 2006.05-2010.08 | 5MT | F | L/R | MPV FWD BUD | | GCO83037 | Outer Joint | | 36 | 30 | 59.5 | 40.5 | 56 | I |
| | 2006.05-2010.08 | 5MT | F | L/R | MPV FWD BUD | | GCI82447 | Inner Joint | | | 33 | | | 34 | |
| | 2006.05-2010.08 | MT | F | L | MPV FWD BUD | | GDS83294 | Drive Shaft | | 36 | | 59.5 | 38 | 519 | |
| | 2006.05-2010.08 | MT | F | R | MPV FWD BUD | | GDS61042 | Drive Shaft | | 36 | | 59.5 | 40.5 | 814 | |
| | 2006.05-2010.08 | MT | F | L/R | MPV FWD BUD | | GCI83006 | Inner Joint | | | 33 | | | 34 | |
| | 2006.05-2010.08 | MT | F | L/R | MPV FWD BUD | | GCI83011 | Inner Joint | | | 33 | | | 34 | |
| 1.4 (81 kw) | 2015.06-2020.09 | 6DCT | F | L | Box Body/MPV FWD CPWA | | GDS83295 | Drive Shaft | | 36 | | 59.5 | 40 | 491 | |
| | 2015.06-2020.09 | 6DCT | F | R | Box Body/MPV FWD CPWA | | GDS81891 | Drive Shaft | | 36 | | 59.5 | 40 | 781 | |
| | 2015.06-2020.09 | 6DCT | F | L/R | Box Body/MPV FWD CPWA | | GCI61069 | Inner Joint | | | 28 | | | 32 | |
| | 2015.06-2020.09 | 6MT | F | L | Box Body/MPV FWD CPWA | | GDS61100 | Drive Shaft | | 36 | | 59.5 | 40 | 513 | |
| | 2015.06-2020.09 | 6MT | F | R | Box Body/MPV FWD CPWA | | GDS61101 | Drive Shaft | | 36 | | 59.5 | 40 | 803 | |
| | 2015.06-2020.09 | 6MT | F | L/R | Box Body/MPV FWD CPWA | | GCO83101 | Outer Joint | | 36 | 27 | 59.5 | 40 | 65 | M |
| | 2015.06-2020.09 | 6MT | F | L/R | Box Body/MPV FWD CPWA | | GCI83016 | Inner Joint | | | 28 | | | 32 | |
| | 2015.06-2020.09 | 6DCT | F | L | MPV FWD CPWA | | GDS83295 | Drive Shaft | | 36 | | 59.5 | 40 | 491 | |
| | 2015.06-2020.09 | 6DCT | F | R | MPV FWD CPWA | | GDS81891 | Drive Shaft | | 36 | | 59.5 | 40 | 781 | |
| | 2015.06-2020.09 | 6DCT | F | L/R | MPV FWD CPWA | | GCI61069 | Inner Joint | | | 28 | | | 32 | |
| | 2015.06-2020.09 | 6MT | F | L | MPV FWD CPWA | | GDS61100 | Drive Shaft | | 36 | | 59.5 | 40 | 513 | |
| | 2015.06-2020.09 | 6MT | F | R | MPV FWD CPWA | | GDS61101 | Drive Shaft | | 36 | | 59.5 | 40 | 803 | |
| | 2015.06-2020.09 | 6MT | F | L | MPV FWD CPWA | | GCO83101 | Outer Joint | | 36 | 27 | 59.5 | 40 | 65 | M |
| | 2015.06-2020.09 | 6MT | F | L/R | MPV FWD CPWA | | GCI83016 | Inner Joint | | | 28 | | | 32 | |
| 1.4 (92 kw) | 2015.05-2020.09 | 6MT | F | L | Box Body/MPV FWD CZCB | | GDS61100 | Drive Shaft | | 36 | | 59.5 | 40 | 513 | |
| | 2015.05-2020.09 | 6MT | F | R | Box Body/MPV FWD CZCB | | GDS61101 | Drive Shaft | | 36 | | 59.5 | 40 | 803 | |
| | 2015.05-2020.09 | 6MT | F | L/R | Box Body/MPV FWD CZCB | | GCO83101 | Outer Joint | | 36 | 27 | 59.5 | 40 | 65 | M |

| | YEAR | TRANSM. | F/R | L/R | BODY STYLE & DRIVE TYPE & ENGINE | REMARKS | G-AP Ref. | PRODUCT | ABS | Technical Specifications | | | | | |
|---|---|---|---|---|---|---|---|---|---|---|---|---|---|---|---|
| | | | | | | | | | | A | B | C | H | L | P |
| **VW Caddy** | | | | | | | | | | | | | | | |
| 1.4 (92 kw) | 2015.05-2020.09 | 7DCT | F | R | Box Body/MPV FWD CZCB | | GDS61126 | Drive Shaft | | 36 | | 59.5 | 40 | 793 | |
| | 2015.05-2020.09 | | F | L/R | Box Body/MPV FWD CZCB | | GCI83016 | Inner Joint | | | 28 | | | 32 | |
| | 2015.05-2020.09 | 6MT | F | R | MPV FWD CZCB | | GDS61101 | Drive Shaft | | 36 | | 59.5 | 40 | 803 | |
| | 2015.05-2020.09 | 6MT/7DCT | F | L | MPV FWD CZCB | | GDS61100 | Drive Shaft | | 36 | | 59.5 | 40 | 513 | |
| | 2015.05-2020.09 | 6MT/7DCT | F | L/R | MPV FWD CZCB | | GCO83101 | Outer Joint | | 36 | 27 | 59.5 | 40 | 65 | M |
| | 2015.05-2020.09 | 6MT/7DCT | F | L/R | MPV FWD CZCB | | GCI83016 | Inner Joint | | | 28 | | | 32 | |
| | 2015.05-2020.09 | 7DCT | F | R | MPV FWD CZCB | Date from:2016.03 | GDS61126 | Drive Shaft | | 36 | | 59.5 | 40 | 793 | |
| | 2015.05-2020.09 | 7DCT | F | R | MPV FWD CZCB | Date to:2016.02 | GDS61147 | Drive Shaft | | 36 | | 59.5 | 40 | 795 | |
| | 2015.05-2020.09 | 7DCT | F | R | MPV FWD CZCB | Date from:2016.03 | GDS83313 | Drive Shaft | | 36 | | 59.5 | 40 | 792 | |
| 1.4 (96 kw) | 2018.07-2020.09 | 6MT | F | R | MPV FWD DJKD | | GDS61101 | Drive Shaft | | 36 | | 59.5 | 40 | 803 | |
| | 2018.07-2020.09 | 6MT | F | L/R | MPV FWD DJKD | | GCO83101 | Outer Joint | | 36 | 27 | 59.5 | 40 | 65 | M |
| | 2018.07-2020.09 | 7AT/6MT | F | L | MPV FWD DJKD | | GDS61100 | Drive Shaft | | 36 | | 59.5 | 40 | 513 | |
| | 2018.07-2020.09 | 7DCT | F | R | MPV FWD DJKD | | GDS61126 | Drive Shaft | | 36 | | 59.5 | 40 | 793 | |
| | 2018.07-2020.09 | | F | L/R | MPV FWD DJKD | | GCI83016 | Inner Joint | | | 28 | | | 32 | |
| | 2019.06-2020.09 | 6MT | F | R | Box Body/MPV FWD DJKD | | GDS61101 | Drive Shaft | | 36 | | 59.5 | 40 | 803 | |
| | 2019.06-2020.09 | 7AT | F | L | Box Body/MPV FWD DJKD | | GDS61100 | Drive Shaft | | 36 | | 59.5 | 40 | 513 | |
| | 2019.06-2020.09 | 7DCT | F | R | Box Body/MPV FWD DJKD | | GDS61126 | Drive Shaft | | 36 | | 59.5 | 40 | 793 | |
| 1.5 (84 kw) | 2021.01-2024.11 | 6MT | F | L | Box Body/MPV FWD DPBC | | GDS81896 | Drive Shaft | | 36 | | 59.5 | 40 | 500 | |
| | 2021.01-2024.11 | 6MT | F | R | Box Body/MPV FWD DPBC | | GDS83313 | Drive Shaft | | 36 | | 59.5 | 40 | 792 | |
| | 2021.01-2024.11 | 6MT | F | L | Box Body/MPV FWD DPBC | | GCI61069 | Inner Joint | | | 28 | | | 32 | |
| | 2021.01-2024.11 | 6MT | F | R | Box Body/MPV FWD DPBC | | GCI61002 | Inner Joint | | | 28 | | | 31.8 | |
| | 2021.01-2024.11 | 7DCT | F | L | Box Body/MPV FWD DPBC | | GDS83323 | Drive Shaft | | 36 | 37 | 59.5 | 40 | 570 | |
| | 2021.01-2024.11 | 7DCT | F | R | Box Body/MPV FWD DPBC | | GDS84510 | Drive Shaft | | 36 | 37 | 59.5 | 40 | 925 | |
| | 2021.01-2024.11 | 7DCT | F | L/R | Box Body/MPV FWD DPBC | | GCO83101 | Outer Joint | | 36 | 27 | 59.5 | 40 | 65 | M |
| | 2021.01-2024.11 | 7DCT | F | L | Box Body/MPV FWD DPBC | | GCI83028 | Inner Joint | | 37 | 28 | | 65.5 | 90.2 | |
| | 2021.01-2024.11 | 6MT | F | L | MPV FWD DPBC | | GDS81896 | Drive Shaft | | 36 | | 59.5 | 40 | 500 | |
| | 2021.01-2024.11 | 6MT | F | R | MPV FWD DPBC | | GDS83313 | Drive Shaft | | 36 | | 59.5 | 40 | 792 | |
| | 2021.01-2024.11 | 6MT | F | L | MPV FWD DPBC | | GCI61069 | Inner Joint | | | 28 | | | 32 | |
| | 2021.01-2024.11 | 6MT | F | R | MPV FWD DPBC | | GCI61002 | Inner Joint | | | 28 | | | 31.8 | |
| | 2021.01-2024.11 | 7DCT | F | L | MPV FWD DPBC | | GDS83323 | Drive Shaft | | 36 | 37 | 59.5 | 40 | 570 | |
| | 2021.01-2024.11 | 7DCT | F | R | MPV FWD DPBC | | GDS84510 | Drive Shaft | | 36 | 37 | 59.5 | 40 | 925 | |
| | 2021.01-2024.11 | 7DCT | F | L/R | MPV FWD DPBC | | GCO83101 | Outer Joint | | 36 | 27 | 59.5 | 40 | 65 | M |
| | 2021.01-2024.11 | 7DCT | F | L | MPV FWD DPBC | | GCI83028 | Inner Joint | | 37 | 28 | | 65.5 | 90.2 | |
| 1.5 (85 kw) | 2024.03- | 6MT | F | L | Box Body/MPV FWD DXDE | | GDS81896 | Drive Shaft | | 36 | | 59.5 | 40 | 500 | |
| | 2024.03- | 6MT | F | R | Box Body/MPV FWD DXDE | | GDS83313 | Drive Shaft | | 36 | | 59.5 | 40 | 792 | |
| | 2024.03- | 7DCT | F | L | Box Body/MPV FWD DXDE | | GDS83323 | Drive Shaft | | 36 | 37 | 59.5 | 40 | 570 | |
| | 2024.03- | 6MT | F | L | MPV FWD DXDE | | GDS81896 | Drive Shaft | | 36 | | 59.5 | 40 | 500 | |
| | 2024.03- | 6MT | F | R | MPV FWD DXDE | | GDS83313 | Drive Shaft | | 36 | | 59.5 | 40 | 792 | |
| | 2024.03- | 7DCT | F | L | MPV FWD DXDE | | GDS83323 | Drive Shaft | | 36 | 37 | 59.5 | 40 | 570 | |
| 1.5 (110 kw) | 2024.08- | 6DCT | F | L | Box Body/MPV FWD DUCC | | GDS81265 | Drive Shaft | | 36 | 37 | 59.5 | 40 | 557 | |
| | 2024.08- | 6DCT | F | R | Box Body/MPV FWD DUCC | | GDS57844 | Drive Shaft | | 36 | 37 | 59.5 | 40 | 929 | |
| | 2024.08- | AT | F | L | Box Body/MPV FWD DUCC | | GCI81158 | Inner Joint | | 37 | 34 | 34.5 | 65.5 | 83 | |
| | 2024.08- | 6DCT | F | L | MPV FWD DUCC | | GDS81265 | Drive Shaft | | 36 | 37 | 59.5 | 40 | 557 | |
| | 2024.08- | 6DCT | F | R | MPV FWD DUCC | | GDS57844 | Drive Shaft | | 36 | 37 | 59.5 | 40 | 929 | |
| | 2024.08- | AT | F | L | MPV FWD DUCC | | GCI81158 | Inner Joint | | 37 | 34 | 34.5 | 65.5 | 83 | |
| 1.6 (55 kw) | 1995.11-1997.05 | 5MT | F | L | MPV FWD 1F | | GDS53003 | Drive Shaft | | 22 | | 53 | 78.5 | 539.5 | |
| | 1995.11-1997.05 | 5MT | F | L/R | MPV FWD 1F | | GCO53008 | Outer Joint | | 22 | 30 | 53 | 78.5 | 51 | I |
| | 1995.11-1997.05 | MT | F | R | MPV FWD 1F | | GDS53005 | Drive Shaft | | 22 | | 53 | 78.5 | 774 | |
| | 1995.11-1997.05 | MT | F | L/R | MPV FWD 1F | | GCI83005 | Inner Joint | | | 33 | | | 32 | |
| | 1995.11-1997.05 | MT | F | L/R | MPV FWD 1F | | GCI83006 | Inner Joint | | | 33 | | | 34 | |
| | 1995.11-1997.05 | 5MT | F | L | MPV Van FWD 1F | | GDS53003 | Drive Shaft | | 22 | | 53 | 78.5 | 539.5 | |
| | 1995.11-1997.05 | 5MT | F | L/R | MPV Van FWD 1F | | GCO53008 | Outer Joint | | 22 | 30 | 53 | 78.5 | 51 | I |
| | 1995.11-1997.05 | 5MT | F | L | MPV Van FWD 1F | Vehicle Production Country:France | GCI83011 | Inner Joint | | | 33 | | | 34 | |
| | 1995.11-1997.05 | 5MT | F | R | MPV Van FWD 1F | Vehicle Production Country:France | GCI83009 | Inner Joint | | | 33 | | | 34 | |
| | 1995.11-1997.05 | 5MT | F | L/R | MPV Van FWD 1F | | GCI83005 | Inner Joint | | | 33 | | | 32 | |
| | 1995.11-1997.05 | MT | F | L/R | MPV Van FWD 1F | | GCI83006 | Inner Joint | | | 33 | | | 34 | |
| | 1995.11-1997.05 | | F | L | MPV Van FWD 1F | Country Version:France | GDS53001 | Drive Shaft | | 22 | | 53 | 78.5 | 535 | |
| | 1997.06-2000.09 | 5MT | F | L | MPV FWD AEE | | GDS53004 | Drive Shaft | | 22 | | 50 | 78.5 | 562 | |
| | 1997.06-2000.09 | 5MT | F | L/R | MPV FWD AEE | | GCO53008 | Outer Joint | | 22 | 30 | 53 | 78.5 | 51 | I |
| | 1997.06-2000.09 | MT | F | L/R | MPV FWD AEE | | GCI53001 | Inner Joint | | | 33 | | | 32 | |
| | 1997.06-2000.09 | 5MT | F | L | MPV Van FWD AEE | | GDS53004 | Drive Shaft | | 22 | | 50 | 78.5 | 562 | |
| | 1997.06-2000.09 | 5MT | F | L/R | MPV Van FWD AEE | | GCO53008 | Outer Joint | | 22 | 30 | 53 | 78.5 | 51 | I |
| | 1997.06-2000.09 | MT | F | L/R | MPV Van FWD AEE | Date from:1997.06;For Engine Code:AEE | GCI53001 | Inner Joint | | | 33 | | | 32 | |
| | 2010.08-2015.05 | 5MT | F | L | Box Body/MPV FWD CAYE | for special-purpose vehicles | GDS61100 | Drive Shaft | | 36 | | 59.5 | 40 | 513 | |
| | 2010.08-2015.05 | 5MT | F | L | Box Body/MPV FWD CAYE | Date from:2014.04 | GDS61282 | Drive Shaft | | 36 | | 59.5 | 40 | 523 | |

| | YEAR | TRANSM. | F/R | L/R | BODY STYLE & DRIVE TYPE & ENGINE | REMARKS | G-AP Ref. | PRODUCT | ABS | Technical Specifications A | B | C | H | L | P |
|---|---|---|---|---|---|---|---|---|---|---|---|---|---|---|---|
| **VW Caddy** | | | | | | | | | | | | | | | |
| 1.6 (55 kw) | 2010.08-2015.05 | 5MT | F | R | Box Body/MPV FWD CAYE | for special-purpose vehicles,Date to:2014.03 | GDS61101 | Drive Shaft | | 36 | | 59.5 | 40 | 803 | |
| | 2010.08-2015.05 | 5MT | F | R | Box Body/MPV FWD CAYE | Date from:2014.04 | GDS61283 | Drive Shaft | | 36 | | 59.5 | 40 | 815 | |
| | 2010.08-2015.05 | 5MT | F | L | Box Body/MPV FWD CAYE | Date From:2014.04;For special-purpose vehicles | GCO83101 | Outer Joint | | 36 | 27 | 59.5 | 40 | 65 | M |
| | 2010.08-2015.05 | 5MT | F | R | Box Body/MPV FWD CAYE | For special-purpose vehicles | GCO83002 | Outer Joint | | 36 | 27 | 59.5 | 40 | 66 | I |
| | 2010.08-2015.05 | 5MT | F | L/R | Box Body/MPV FWD CAYE | Date from:2014.04 | GCO61059 | Outer Joint | | 36 | 33 | 59.5 | 40 | 59.5 | I |
| | 2010.08-2015.05 | 5MT | F | L/R | Box Body/MPV FWD CAYE | Date To:2014.03 | GCO83002 | Outer Joint | | 36 | 27 | 59.5 | 40 | 66 | I |
| | 2010.08-2015.05 | 5MT | F | L/R | Box Body/MPV FWD CAYE | | GCI61069 | Inner Joint | | | 28 | | | 32 | |
| | 2010.08-2015.05 | 5MT | F | L/R | Box Body/MPV FWD CAYE | Date from:2014.04 | GCI82447 | Inner Joint | | | 33 | | | 34 | |
| | 2010.08-2015.05 | 5MT | F | L/R | Box Body/MPV FWD CAYE | | GCI83016 | Inner Joint | | | 28 | | | 32 | |
| | 2010.08-2015.05 | MT | F | L/R | Box Body/MPV FWD CAYE | Date From:2014.03 | GCI83006 | Inner Joint | | | 33 | | | 34 | |
| | 2010.08-2015.05 | | F | R | Box Body/MPV FWD CAYE | | GDS61042 | Drive Shaft | | 36 | | 59.5 | 40.5 | 814 | |
| | 2010.08-2015.05 | 5MT | F | L | MPV FWD CAYE | for special-purpose vehicles | GDS61100 | Drive Shaft | | 36 | | 59.5 | 40 | 513 | |
| | 2010.08-2015.05 | 5MT | F | L | MPV FWD CAYE | Date from:2014.04 | GDS61282 | Drive Shaft | | 36 | | 59.5 | 40 | 523 | |
| | 2010.08-2015.05 | 5MT | F | R | MPV FWD CAYE | for special-purpose vehicles,Date to:2014.03 | GDS61101 | Drive Shaft | | 36 | | 59.5 | 40 | 803 | |
| | 2010.08-2015.05 | 5MT | F | R | MPV FWD CAYE | Date from:2014.04 | GDS61283 | Drive Shaft | | 36 | | 59.5 | 40 | 815 | |
| | 2010.08-2015.05 | 5MT | F | L | MPV FWD CAYE | For special-purpose vehicles | GCO83101 | Outer Joint | | 36 | 27 | 59.5 | 40 | 65 | M |
| | 2010.08-2015.05 | 5MT | F | R | MPV FWD CAYE | For special-purpose vehicles | GCO83002 | Outer Joint | | 36 | 27 | 59.5 | 40 | 66 | I |
| | 2010.08-2015.05 | 5MT | F | L/R | MPV FWD CAYE | Date from:2014.04 | GCO61059 | Outer Joint | | 36 | 33 | 59.5 | 40 | 59.5 | I |
| | 2010.08-2015.05 | 5MT | F | L/R | MPV FWD CAYE | Date To:2014.03 | GCO83002 | Outer Joint | | 36 | 27 | 59.5 | 40 | 66 | I |
| | 2010.08-2015.05 | 5MT | F | L/R | MPV FWD CAYE | Date from:2014.04 | GCI82447 | Inner Joint | | | 33 | | | 34 | |
| | 2010.08-2015.05 | 5MT | F | L/R | MPV FWD CAYE | | GCI83016 | Inner Joint | | | 28 | | | 32 | |
| | 2010.08-2015.05 | MT | F | L/R | MPV FWD CAYE | Date From:2014.03 | GCI83006 | Inner Joint | | | 33 | | | 34 | |
| | 2010.08-2015.05 | | F | R | MPV FWD CAYE | | GDS61042 | Drive Shaft | | 36 | | 59.5 | 40.5 | 814 | |
| | 2015.05-2017.11 | 5MT | F | L | Box Body/MPV FWD CAYE | for special-purpose vehicles | GDS61100 | Drive Shaft | | 36 | | 59.5 | 40 | 513 | |
| | 2015.05-2017.11 | 5MT | F | L | Box Body/MPV FWD CAYE | | GDS61282 | Drive Shaft | | 36 | | 59.5 | 40 | 523 | |
| | 2015.05-2017.11 | 5MT | F | R | Box Body/MPV FWD CAYE | for special-purpose vehicles | GDS61101 | Drive Shaft | | 36 | | 59.5 | 40 | 803 | |
| | 2015.05-2017.11 | 5MT | F | R | Box Body/MPV FWD CAYE | | GDS61283 | Drive Shaft | | 36 | | 59.5 | 40 | 815 | |
| | 2015.05-2017.11 | 5MT | F | R | Box Body/MPV FWD CAYE | for special-purpose vehicles | GCO83101 | Outer Joint | | 36 | 27 | 59.5 | 40 | 65 | M |
| | 2015.05-2017.11 | 5MT | F | L/R | Box Body/MPV FWD CAYE | | GCO61059 | Outer Joint | | 36 | 33 | 59.5 | 40 | 59.5 | I |
| | 2015.05-2017.11 | 5MT | F | L/R | Box Body/MPV FWD CAYE | | GCI82447 | Inner Joint | | | 33 | | | 34 | |
| | 2015.05-2017.11 | 5MT | F | L/R | Box Body/MPV FWD CAYE | | GCI83016 | Inner Joint | | | 28 | | | 32 | |
| | 2015.05-2017.11 | MT | F | L | Box Body/MPV FWD CAYE | | GDS83294 | Drive Shaft | | 36 | | 59.5 | 38 | 519 | |
| | 2015.05-2017.11 | MT | F | L | Box Body/MPV FWD CAYE | | GCO83037 | Outer Joint | | 36 | 30 | 59.5 | 40.5 | 56 | I |
| | 2015.05-2017.11 | MT | F | L/R | Box Body/MPV FWD CAYE | | GCI83006 | Inner Joint | | | 33 | | | 34 | |
| | 2015.05-2017.11 | | F | R | Box Body/MPV FWD CAYE | | GDS61042 | Drive Shaft | | 36 | | 59.5 | 40.5 | 814 | |
| | 2015.05-2017.11 | 5MT | F | L | MPV FWD CAYE | for special-purpose vehicles | GDS61100 | Drive Shaft | | 36 | | 59.5 | 40 | 513 | |
| | 2015.05-2017.11 | 5MT | F | L | MPV FWD CAYE | | GDS61282 | Drive Shaft | | 36 | | 59.5 | 40 | 523 | |
| | 2015.05-2017.11 | 5MT | F | R | MPV FWD CAYE | for special-purpose vehicles | GDS61101 | Drive Shaft | | 36 | | 59.5 | 40 | 803 | |
| | 2015.05-2017.11 | 5MT | F | R | MPV FWD CAYE | | GDS61283 | Drive Shaft | | 36 | | 59.5 | 40 | 815 | |
| | 2015.05-2017.11 | 5MT | F | R | MPV FWD CAYE | for special-purpose vehicles | GCO83101 | Outer Joint | | 36 | 27 | 59.5 | 40 | 65 | M |
| | 2015.05-2017.11 | 5MT | F | L/R | MPV FWD CAYE | | GCO61059 | Outer Joint | | 36 | 33 | 59.5 | 40 | 59.5 | I |
| | 2015.05-2017.11 | 5MT | F | L/R | MPV FWD CAYE | | GCI82447 | Inner Joint | | | 33 | | | 34 | |
| | 2015.05-2017.11 | 5MT | F | L/R | MPV FWD CAYE | | GCI83016 | Inner Joint | | | 28 | | | 32 | |
| | 2015.05-2017.11 | MT | F | L | MPV FWD CAYE | | GDS83294 | Drive Shaft | | 36 | | 59.5 | 38 | 519 | |
| | 2015.05-2017.11 | MT | F | L | MPV FWD CAYE | | GCO83037 | Outer Joint | | 36 | 30 | 59.5 | 40.5 | 56 | I |
| | 2015.05-2017.11 | MT | F | L/R | MPV FWD CAYE | | GCI83006 | Inner Joint | | | 33 | | | 34 | |
| | 2015.05-2017.11 | | F | R | MPV FWD CAYE | | GDS61042 | Drive Shaft | | 36 | | 59.5 | 40.5 | 814 | |
| 1.6 (75 kw) | 2004.04-2015.05 | 5MT | F | L | Box Body/MPV FWD BGU, BSE, BSF | Model code:2KH | GDS61282 | Drive Shaft | | 36 | | 59.5 | 40 | 523 | |
| | 2004.04-2015.05 | 5MT | F | L | Box Body/MPV FWD BGU, BSE, BSF | Model code:2CA/2KA | GDS83373 | Drive Shaft | | 36 | | 59.5 | 38 | 511 | |
| | 2004.04-2015.05 | 5MT | F | R | Box Body/MPV FWD BGU, BSE, BSF | | GDS61042 | Drive Shaft | | 36 | | 59.5 | 40.5 | 814 | |
| | 2004.04-2015.05 | 5MT | F | L | Box Body/MPV FWD BGU, BSE, BSF | Date From:2007.11;Date To:2010.08;type:caddy maxi | GCO83002 | Outer Joint | | 36 | 27 | 59.5 | 40 | 66 | I |
| | 2004.04-2015.05 | 5MT | F | R | Box Body/MPV FWD BGU, BSE, BSF | Date from:2007.11;Date to:2010.08;type:caddy maxi | GCO83037 | Outer Joint | | 36 | 30 | 59.5 | 40.5 | 56 | I |
| | 2004.04-2015.05 | 5MT | F | L/R | Box Body/MPV FWD BGU, BSE, BSF | | GCI82447 | Inner Joint | | | 33 | | | 34 | |
| | 2004.04-2015.05 | AT | F | L | Box Body/MPV FWD BGU, BSE, BSF | | GDS61093 | Drive Shaft | | 36 | 26 | 59.5 | 40.5 | 587.5 | |
| | 2004.04-2015.05 | AT | F | R | Box Body/MPV FWD BGU, BSE, BSF | | GDS61094 | Drive Shaft | | 36 | 26 | 59.5 | 40.5 | 884 | |
| | 2004.04-2015.05 | MT | F | L | Box Body/MPV FWD BGU, BSE, BSF | | GDS83294 | Drive Shaft | | 36 | | 59.5 | 38 | 519 | |
| | 2004.04-2015.05 | MT | F | | Box Body/MPV FWD BGU, BSE, BSF | Date From:2011.08 | GCO61059 | Outer Joint | | 36 | 33 | 59.5 | 40 | 59.5 | I |
| | 2004.04-2015.05 | MT | F | L/R | Box Body/MPV FWD BGU, BSE, BSF | | GCI83006 | Inner Joint | | | 33 | | | 34 | |
| | 2004.04-2015.05 | MT | F | L/R | Box Body/MPV FWD BGU, BSE, BSF | | GCI83011 | Inner Joint | | | 33 | | | 34 | |
| | 2004.04-2015.05 | 5MT | F | L | MPV FWD BGU, BSE, BSF | | GDS61282 | Drive Shaft | | 36 | | 59.5 | 40 | 523 | |
| | 2004.04-2015.05 | 5MT | F | L | MPV FWD BGU, BSE, BSF | | GDS83373 | Drive Shaft | | 36 | | 59.5 | 38 | 511 | |
| | 2004.04-2015.05 | 5MT | F | R | MPV FWD BGU, BSE, BSF | | GDS61042 | Drive Shaft | | 36 | | 59.5 | 40.5 | 814 | |
| | 2004.04-2015.05 | 5MT | F | L | MPV FWD BGU, BSE, BSF | For special-purpose vehicles | GCO83002 | Outer Joint | | 36 | 27 | 59.5 | 40 | 66 | I |
| | 2004.04-2015.05 | 5MT | F | L/R | MPV FWD BGU, BSE, BSF | | GCO61059 | Outer Joint | | 36 | 33 | 59.5 | 40 | 59.5 | I |
| | 2004.04-2015.05 | 5MT | F | L/R | MPV FWD BGU, BSE, BSF | | GCO83037 | Outer Joint | | 36 | 30 | 59.5 | 40.5 | 56 | I |

| | YEAR | TRANSM. | F/R | L/R | BODY STYLE & DRIVE TYPE & ENGINE | REMARKS | G-AP Ref. | PRODUCT | ABS | Technical Specifications A | B | C | H | L | P |
|---|---|---|---|---|---|---|---|---|---|---|---|---|---|---|---|
| **VW Caddy** | | | | | | | | | | | | | | | |
| 1.6 (75 kw) | 2004.04-2015.05 | 5MT | F | L/R | MPV FWD BGU, BSE, BSF | | GCI53002 | Inner Joint | | | 33 | | | 34 | |
| | 2004.04-2015.05 | 5MT | F | L/R | MPV FWD BGU, BSE, BSF | | GCI82447 | Inner Joint | | | 33 | | | 34 | |
| | 2010.08-2015.05 | 5MT | F | R | Box Body/MPV FWD CAYD | | GDS61101 | Drive Shaft | | 36 | | 59.5 | 40 | 803 | |
| | 2010.08-2015.05 | 5MT/7DCT | F | L | Box Body/MPV FWD CAYD | | GDS61100 | Drive Shaft | | 36 | | 59.5 | 40 | 513 | |
| | 2010.08-2015.05 | 5MT/7DCT | F | L/R | Box Body/MPV FWD CAYD | | GCO83002 | Outer Joint | | 36 | 27 | 59.5 | 40 | 66 | I |
| | 2010.08-2015.05 | 5MT/7DCT | F | L/R | Box Body/MPV FWD CAYD | | GCO83101 | Outer Joint | | 36 | 27 | 59.5 | 40 | 65 | M |
| | 2010.08-2015.05 | 5MT/7DCT | F | L/R | Box Body/MPV FWD CAYD | | GCI83016 | Inner Joint | | | 28 | | | 32 | |
| | 2010.08-2015.05 | 7DCT | F | R | Box Body/MPV FWD CAYD | | GDS61339 | Drive Shaft | | 36 | | 59.5 | 40 | 794 | |
| | 2010.08-2015.05 | 5MT | F | R | MPV FWD CAYD | | GDS61101 | Drive Shaft | | 36 | | 59.5 | 40 | 803 | |
| | 2010.08-2015.05 | 5MT/7DCT | F | L | MPV FWD CAYD | | GDS61100 | Drive Shaft | | 36 | | 59.5 | 40 | 513 | |
| | 2010.08-2015.05 | 5MT/7DCT | F | L/R | MPV FWD CAYD | | GCO83002 | Outer Joint | | 36 | 27 | 59.5 | 40 | 66 | I |
| | 2010.08-2015.05 | 5MT/7DCT | F | L/R | MPV FWD CAYD | | GCO83101 | Outer Joint | | 36 | 27 | 59.5 | 40 | 65 | M |
| | 2010.08-2015.05 | 5MT/7DCT | F | L/R | MPV FWD CAYD | | GCI83016 | Inner Joint | | | 28 | | | 32 | |
| | 2010.08-2015.05 | 7DCT | F | R | MPV FWD CAYD | | GDS61339 | Drive Shaft | | 36 | | 59.5 | 40 | 794 | |
| | 2011.05-2015.05 | 5MT | F | L | Box Body/MPV FWD CHGA | Date from:2011.08 | GDS61282 | Drive Shaft | | 36 | | 59.5 | 40 | 523 | |
| | 2011.05-2015.05 | 5MT | F | R | Box Body/MPV FWD CHGA | | GDS61042 | Drive Shaft | | 36 | | 59.5 | 40.5 | 814 | |
| | 2011.05-2015.05 | 5MT | F | R | Box Body/MPV FWD CHGA | Date from:2011.08;type:caddy maxi | GCO83037 | Outer Joint | | 36 | 30 | 59.5 | 40.5 | 56 | I |
| | 2011.05-2015.05 | 5MT | F | L/R | Box Body/MPV FWD CHGA | Date From:2011.08 | GCO61059 | Outer Joint | | 36 | 33 | 59.5 | 40 | 59.5 | I |
| | 2011.05-2015.05 | 5MT | F | L/R | Box Body/MPV FWD CHGA | Date To:2011.07;type:caddy maxi | GCO83002 | Outer Joint | | 36 | 27 | 59.5 | 40 | 66 | I |
| | 2011.05-2015.05 | 5MT | F | L | Box Body/MPV FWD CHGA | Date from:2011.08 | GCI53002 | Inner Joint | | | 33 | | | 34 | |
| | 2011.05-2015.05 | 5MT | F | L/R | Box Body/MPV FWD CHGA | | GCI82447 | Inner Joint | | | 33 | | | 34 | |
| | 2011.05-2015.05 | MT | F | L/R | Box Body/MPV FWD CHGA | | GCI83006 | Inner Joint | | | 33 | | | 34 | |
| | 2011.05-2015.05 | | F | L/R | Box Body/MPV FWD CHGA | | GCI83011 | Inner Joint | | | 33 | | | 34 | |
| | 2011.05-2015.05 | 5MT | F | R | MPV FWD CHGA | | GDS61042 | Drive Shaft | | 36 | | 59.5 | 40.5 | 814 | |
| | 2011.05-2015.05 | 5MT | F | L | MPV FWD CHGA | Date from:2011.08 | GCO61059 | Outer Joint | | 36 | 33 | 59.5 | 40 | 59.5 | I |
| | 2011.05-2015.05 | 5MT | F | R | MPV FWD CHGA | Date from:2011.08 | GCO83037 | Outer Joint | | 36 | 30 | 59.5 | 40.5 | 56 | I |
| | 2011.05-2015.05 | 5MT | F | L/R | MPV FWD CHGA | Date to:2011.07 | GCO83002 | Outer Joint | | 36 | 27 | 59.5 | 40 | 66 | I |
| | 2011.05-2015.05 | 5MT | F | L/R | MPV FWD CHGA | | GCI82447 | Inner Joint | | | 33 | | | 34 | |
| | 2011.05-2015.05 | 6MT | F | L | MPV FWD CHGA | Date from:2011.09 | GDS61282 | Drive Shaft | | 36 | | 59.5 | 40 | 523 | |
| | 2011.05-2015.05 | MT | F | L/R | MPV FWD CHGA | | GCI83006 | Inner Joint | | | 33 | | | 34 | |
| | 2011.05-2015.05 | | F | L/R | MPV FWD CHGA | | GCI83011 | Inner Joint | | | 33 | | | 34 | |
| | 2015.05-2020.09 | 5MT | F | L | Box Body/MPV FWD CAYD | | GDS61100 | Drive Shaft | | 36 | | 59.5 | 40 | 513 | |
| | 2015.05-2020.09 | 5MT | F | R | Box Body/MPV FWD CAYD | | GDS61101 | Drive Shaft | | 36 | | 59.5 | 40 | 803 | |
| | 2015.05-2020.09 | 5MT/7DCT | F | L/R | Box Body/MPV FWD CAYD | | GCO83101 | Outer Joint | | 36 | 27 | 59.5 | 40 | 65 | M |
| | 2015.05-2020.09 | 7DCT | F | R | Box Body/MPV FWD CAYD | | GDS61126 | Drive Shaft | | 36 | | 59.5 | 40 | 793 | |
| | 2015.05-2020.09 | AT/MT | F | L/R | Box Body/MPV FWD CAYD | | GCI83016 | Inner Joint | | | 28 | | | 32 | |
| | 2015.05-2020.09 | 5MT | F | L | MPV FWD CAYD | | GDS61100 | Drive Shaft | | 36 | | 59.5 | 40 | 513 | |
| | 2015.05-2020.09 | 5MT | F | R | MPV FWD CAYD | | GDS61101 | Drive Shaft | | 36 | | 59.5 | 40 | 803 | |
| | 2015.05-2020.09 | 5MT/7DCT | F | L/R | MPV FWD CAYD | | GCO83101 | Outer Joint | | 36 | 27 | 59.5 | 40 | 65 | M |
| | 2015.05-2020.09 | 7DCT | F | R | MPV FWD CAYD | | GDS61126 | Drive Shaft | | 36 | | 59.5 | 40 | 793 | |
| | 2015.05-2020.09 | AT/MT | F | L/R | MPV FWD CAYD | | GCI83016 | Inner Joint | | | 28 | | | 32 | |
| 1.6 (81 kw) | 2015.11-2020.09 | 5MT | F | L | Box Body/MPV FWD CWVA | | GDS61282 | Drive Shaft | | 36 | | 59.5 | 40 | 523 | |
| | 2015.11-2020.09 | 5MT | F | R | Box Body/MPV FWD CWVA | | GDS61307 | Drive Shaft | | 36 | | 59.5 | 40 | 819 | |
| | 2015.11-2020.09 | 5MT | F | L | Box Body/MPV FWD CWVA | | GCO61059 | Outer Joint | | 36 | 33 | 59.5 | 40 | 59.5 | I |
| | 2015.11-2020.09 | 5MT | F | R | Box Body/MPV FWD CWVA | | GCO83037 | Outer Joint | | 36 | 30 | 59.5 | 40.5 | 56 | I |
| | 2015.11-2020.09 | 5MT | F | L/R | Box Body/MPV FWD CWVA | | GCI53002 | Inner Joint | | | 33 | | | 34 | |
| | 2015.11-2020.09 | 5MT | F | L/R | Box Body/MPV FWD CWVA | | GCI82447 | Inner Joint | | | 33 | | | 34 | |
| | 2015.11-2020.09 | | R | L/R | Box Body/MPV FWD CWVA | Type:Caddy Maxi | GCI83011 | Inner Joint | | | 33 | | | 34 | |
| | 2015.11-2020.09 | 5MT | F | L | MPV FWD CWVA | | GDS61282 | Drive Shaft | | 36 | | 59.5 | 40 | 523 | |
| | 2015.11-2020.09 | 5MT | F | R | MPV FWD CWVA | | GDS61307 | Drive Shaft | | 36 | | 59.5 | 40 | 819 | |
| | 2015.11-2020.09 | 5MT | F | L | MPV FWD CWVA | | GCO61059 | Outer Joint | | 36 | 33 | 59.5 | 40 | 59.5 | I |
| | 2015.11-2020.09 | 5MT | F | R | MPV FWD CWVA | | GCO83037 | Outer Joint | | 36 | 30 | 59.5 | 40.5 | 56 | I |
| | 2015.11-2020.09 | 5MT | F | L/R | MPV FWD CWVA | | GCI53002 | Inner Joint | | | 33 | | | 34 | |
| | 2015.11-2020.09 | 5MT | F | L/R | MPV FWD CWVA | | GCI82447 | Inner Joint | | | 33 | | | 34 | |
| | 2015.11-2020.09 | | F | L/R | MPV FWD CWVA | | GCI83011 | Inner Joint | | | 33 | | | 34 | |
| | 2021.02- | 6MT | F | L/R | Box Body/MPV FWD DWYA | | GCO61059 | Outer Joint | | 36 | 33 | 59.5 | 40 | 59.5 | I |
| | 2021.02- | 6MT | F | L | Box Body/MPV FWD DWYA | | GCI53002 | Inner Joint | | | 33 | | | 34 | |
| | 2021.02- | 6MT | F | L/R | MPV FWD DWYA | | GCO61059 | Outer Joint | | 36 | 33 | 59.5 | 40 | 59.5 | I |
| | 2021.02- | 6MT | F | L | MPV FWD DWYA | | GCI53002 | Inner Joint | | | 33 | | | 34 | |
| 1.7 (42 kw) | 1996.07-2000.09 | 5MT | F | L | MPV FWD AHB | | GDS53003 | Drive Shaft | | 22 | | 53 | 78.5 | 539.5 | |
| | 1996.07-2000.09 | 5MT | F | R | MPV FWD AHB | | GDS53005 | Drive Shaft | | 22 | | 53 | 78.5 | 774 | |
| | 1996.07-2000.09 | 5MT | F | L/R | MPV FWD AHB | | GCO53008 | Outer Joint | | 22 | 30 | 53 | 78.5 | 51 | I |
| | 1996.07-2000.09 | 5MT | F | L/R | MPV FWD AHB | Date to:1997.03,Chassis no. to:9KV526500 | GCI83005 | Inner Joint | | | 33 | | | 32 | |
| | 1996.07-2000.09 | | F | R | MPV FWD AHB | | GDS53002 | Drive Shaft | | 22 | | 53.2 | 78 | 769 | |
| | 1996.10-2000.09 | 5MT | F | L | MPV Van FWD AHB | | GDS53003 | Drive Shaft | | 22 | | 53 | 78.5 | 539.5 | |

| | YEAR | TRANSM. | F/R | L/R | BODY STYLE & DRIVE TYPE & ENGINE | REMARKS | G-AP Ref. | PRODUCT | ABS | Technical Specifications A | B | C | H | L | P |
|---|---|---|---|---|---|---|---|---|---|---|---|---|---|---|---|
| **VW Caddy** | | | | | | | | | | | | | | | |
| 1.7 (42 kw) | 1996.10-2000.09 | 5MT | F | R | MPV Van FWD AHB | | GDS53005 | Drive Shaft | | 22 | | 53 | 78.5 | 774 | |
| | 1996.10-2000.09 | 5MT | F | L/R | MPV Van FWD AHB | | GCO53008 | Outer Joint | | 22 | 30 | 53 | 78.5 | 51 | I |
| | 1996.10-2000.09 | MT | F | L/R | MPV Van FWD AHB | Date from:1996.10;Chassis no. to:9K-V-526500 | GCI83005 | Inner Joint | | | 33 | | | 32 | |
| 1.9 (47 kw) | 1995.11-2004.01 | 5MT | F | L | MPV FWD 1Y/AEY/AYQ | | GDS53003 | Drive Shaft | | 22 | | 53 | 78.5 | 539.5 | |
| | 1995.11-2004.01 | 5MT | F | R | MPV FWD 1Y/AEY/AYQ | | GDS53005 | Drive Shaft | | 22 | | 53 | 78.5 | 774 | |
| | 1995.11-2004.01 | 5MT | F | R | MPV FWD 1Y/AEY/AYQ | For Engine code:1Y/AEY/AYQ | GDS53005 | Drive Shaft | | 22 | | 53 | 78.5 | 774 | |
| | 1995.11-2004.01 | 5MT | F | L/R | MPV FWD 1Y/AEY/AYQ | | GCO53008 | Outer Joint | | 22 | 30 | 53 | 78.5 | 51 | I |
| | 1995.11-2004.01 | 5MT | F | L/R | MPV FWD 1Y/AEY/AYQ | | GCI83005 | Inner Joint | | | 33 | | | 32 | |
| | 1995.11-2004.01 | 5MT | F | L | MPV Van FWD 1Y/AEY/AYQ | | GDS53003 | Drive Shaft | | 22 | | 53 | 78.5 | 539.5 | |
| | 1995.11-2004.01 | 5MT | F | R | MPV Van FWD 1Y/AEY/AYQ | | GDS53005 | Drive Shaft | | 22 | | 53 | 78.5 | 774 | |
| | 1995.11-2004.01 | 5MT | F | L/R | MPV Van FWD 1Y/AEY/AYQ | | GCO53008 | Outer Joint | | 22 | 30 | 53 | 78.5 | 51 | I |
| | 1995.11-2004.01 | 5MT | F | L/R | MPV Van FWD 1Y/AEY/AYQ | | GCI83005 | Inner Joint | | | 33 | | | 32 | |
| | 1998.02-2009.06 | 5MT | F | L | MPV Van FWD 1Y | | GDS53003 | Drive Shaft | | 22 | | 53 | 78.5 | 539.5 | |
| | 1998.02-2009.06 | 5MT | F | R | MPV Van FWD 1Y | For Engine code:1Y/AEY/AYQ | GDS53005 | Drive Shaft | | 22 | | 53 | 78.5 | 774 | |
| | 1998.02-2009.06 | MT | F | L/R | MPV Van FWD 1Y | | GCI83005 | Inner Joint | | | 33 | | | 32 | |
| | 2005.10-2009.06 | 5MT | F | L | MPV FWD 1Y | | GDS53003 | Drive Shaft | | 22 | | 53 | 78.5 | 539.5 | |
| | 2005.10-2009.06 | 5MT | F | R | MPV FWD 1Y | For Engine code:1Y/AEY/AYQ | GDS53005 | Drive Shaft | | 22 | | 53 | 78.5 | 774 | |
| | 2005.10-2009.06 | MT | F | L/R | MPV FWD 1Y | | GCI83005 | Inner Joint | | | 33 | | | 32 | |
| 1.9 (48 kw) | 2005.10-2009.06 | 5MT | F | L | MPV FWD 1Y | | GDS53003 | Drive Shaft | | 22 | | 53 | 78.5 | 539.5 | |
| | 2005.10-2009.06 | 5MT | F | R | MPV FWD 1Y | For Engine code:1Y/AEY/AYQ | GDS53005 | Drive Shaft | | 22 | | 53 | 78.5 | 774 | |
| | 2005.10-2009.06 | MT | F | L/R | MPV FWD 1Y | | GCI83005 | Inner Joint | | | 33 | | | 32 | |
| 1.9 (55 kw) | 2005.09-2010.08 | 5MT | F | L | Box Body/MPV FWD BSU | | GDS61100 | Drive Shaft | | 36 | | 59.5 | 40 | 513 | |
| | 2005.09-2010.08 | 5MT | F | R | Box Body/MPV FWD BSU | | GDS61101 | Drive Shaft | | 36 | | 59.5 | 40 | 803 | |
| | 2005.09-2010.08 | 5MT | F | L/R | Box Body/MPV FWD BSU | Date to:2009.05,Date from:2009.06 | GCO83002 | Outer Joint | | 36 | 27 | 59.5 | 40 | 66 | I |
| | 2005.09-2010.08 | 5MT | F | L/R | Box Body/MPV FWD BSU | Date from:2009.06 | GCO83101 | Outer Joint | | 36 | 27 | 59.5 | 40 | 65 | M |
| | 2005.09-2010.08 | AT | F | L | Box Body/MPV FWD BSU | | GDS83241 | Drive Shaft | | 36 | | 59.5 | 40 | 475 | |
| | 2005.09-2010.08 | AT | F | L | Box Body/MPV FWD BSU | | GCI54004 | Inner Joint | | | 34 | | | 81 | |
| | 2005.09-2010.08 | | F | L/R | Box Body/MPV FWD BSU | | GCI83016 | Inner Joint | | | 28 | | | 32 | |
| | 2005.09-2010.08 | 5MT | F | L | MPV FWD BSU | | GDS61100 | Drive Shaft | | 36 | | 59.5 | 40 | 513 | |
| | 2005.09-2010.08 | 5MT | F | R | MPV FWD BSU | | GDS61101 | Drive Shaft | | 36 | | 59.5 | 40 | 803 | |
| | 2005.09-2010.08 | 5MT | F | L/R | MPV FWD BSU | | GCO83002 | Outer Joint | | 36 | 27 | 59.5 | 40 | 66 | I |
| | 2005.09-2010.08 | 5MT | F | L/R | MPV FWD BSU | | GCO83101 | Outer Joint | | 36 | 27 | 59.5 | 40 | 65 | M |
| | 2005.09-2010.08 | 5MT | F | L/R | MPV FWD BSU | | GCI83016 | Inner Joint | | | 28 | | | 32 | |
| 1.9 (66 kw) | 1996.10-2003.06 | 5MT | F | R | MPV FWD 1Z/AHU/ALE/ALH | | GDS53002 | Drive Shaft | | 22 | | 53.2 | 78 | 769 | |
| | 1996.10-2003.06 | 5MT | F | L/R | MPV FWD 1Z/AHU/ALE/ALH | | GCO53007 | Outer Joint | | 22 | 30 | 53.2 | 78 | 61 | I |
| | 1996.10-2003.06 | 5MT | F | L | MPV FWD 1Z/AHU/ALE/ALH | | GCI82447 | Inner Joint | | | 33 | | | 34 | |
| | 1996.10-2003.06 | MT | F | L | MPV FWD 1Z/AHU/ALE/ALH | | GDS53001 | Drive Shaft | | 22 | | 53 | 78.5 | 535 | |
| | 1996.10-2003.06 | MT | F | L/R | MPV FWD 1Z/AHU/ALE/ALH | | GCO53004 | Outer Joint | | 22 | 30 | 51 | 78 | 61 | I |
| | 1996.10-2003.06 | MT | F | L/R | MPV FWD 1Z/AHU/ALE/ALH | | GCI83006 | Inner Joint | | | 33 | | | 34 | |
| | 1996.10-2003.06 | MT | F | L/R | MPV FWD 1Z/AHU/ALE/ALH | | GCI83011 | Inner Joint | | | 33 | | | 34 | |
| | 1996.10-2003.06 | 5MT | F | R | MPV Van FWD 1Z/AHU/ALE/ALH | | GDS53002 | Drive Shaft | | 22 | | 53.2 | 78 | 769 | |
| | 1996.10-2003.06 | 5MT | F | L/R | MPV Van FWD 1Z/AHU/ALE/ALH | | GCO53007 | Outer Joint | | 22 | 30 | 53.2 | 78 | 61 | I |
| | 1996.10-2003.06 | 5MT | F | L | MPV Van FWD 1Z/AHU/ALE/ALH | | GCI82447 | Inner Joint | | | 33 | | | 34 | |
| | 1996.10-2003.06 | MT | F | L | MPV Van FWD 1Z/AHU/ALE/ALH | | GDS53001 | Drive Shaft | | 22 | | 53 | 78.5 | 535 | |
| | 1996.10-2003.06 | MT | F | L/R | MPV Van FWD 1Z/AHU/ALE/ALH | | GCO53004 | Outer Joint | | 22 | 30 | 51 | 78 | 61 | I |
| | 1996.10-2003.06 | MT | F | R | MPV Van FWD 1Z/AHU/ALE/ALH | Date to:2003.06 | GCI83009 | Inner Joint | | | 33 | | | 34 | |
| | 1996.10-2003.06 | MT | F | L/R | MPV Van FWD 1Z/AHU/ALE/ALH | | GCI83006 | Inner Joint | | | 33 | | | 34 | |
| | 1996.10-2003.06 | MT | F | L/R | MPV Van FWD 1Z/AHU/ALE/ALH | | GCI83011 | Inner Joint | | | 33 | | | 34 | |
| 1.9 (77 kw) | 2004.04-2010.08 | 5MT | F | L | Box Body/MPV FWD BLS, BJB | | GDS61100 | Drive Shaft | | 36 | | 59.5 | 40 | 513 | |
| | 2004.04-2010.08 | 5MT | F | R | Box Body/MPV FWD BLS, BJB | | GDS61101 | Drive Shaft | | 36 | | 59.5 | 40 | 803 | |
| | 2004.04-2010.08 | 5MT | F | L/R | Box Body/MPV FWD BLS, BJB | | GCI83016 | Inner Joint | | | 28 | | | 32 | |
| | 2004.04-2010.08 | 5MT/6DCT | F | L/R | Box Body/MPV FWD BLS, BJB | | GCO83002 | Outer Joint | | 36 | 27 | 59.5 | 40 | 66 | I |
| | 2004.04-2010.08 | 5MT/6DCT | F | L/R | Box Body/MPV FWD BLS, BJB | | GCO83101 | Outer Joint | | 36 | 27 | 59.5 | 40 | 65 | M |
| | 2004.04-2010.08 | 6DCT | F | L | Box Body/MPV FWD BLS, BJB | Chassis no. from:2K_9_000001;Chassis no. to:2K_8_200000 | GDS83381 | Drive Shaft | | 36 | | 59.5 | 40 | 483 | |
| | 2004.04-2010.08 | 6DCT | F | R | Box Body/MPV FWD BLS, BJB | TJ | GDS54011 | Drive Shaft | | 36 | | 59.5 | 40 | 755 | |
| | 2004.04-2010.08 | 6DCT | F | L/R | Box Body/MPV FWD BLS, BJB | TJ | GCI54004 | Inner Joint | | | 34 | | | 81 | |
| | 2004.04-2010.08 | 6DCT | F | L/R | Box Body/MPV FWD BLS, BJB | AAR | GCI61057 | Inner Joint | | | 34 | | | 89 | |
| | 2004.04-2010.08 | AT | F | L | Box Body/MPV FWD BLS, BJB | Model: Caddy;Date to:2008.05;Model:Caddy Maxi;Date from:2007.11;Date to:2008.05 | GDS54013 | Drive Shaft | | 36 | | 59.5 | 40 | 479.5 | |
| | 2004.04-2010.08 | 5MT | F | L | MPV FWD BLS, BJB | | GDS61100 | Drive Shaft | | 36 | | 59.5 | 40 | 513 | |
| | 2004.04-2010.08 | 5MT | F | R | MPV FWD BLS, BJB | | GDS61101 | Drive Shaft | | 36 | | 59.5 | 40 | 803 | |
| | 2004.04-2010.08 | 5MT | F | L/R | MPV FWD BLS, BJB | | GCI83016 | Inner Joint | | | 28 | | | 32 | |
| | 2004.04-2010.08 | 5MT/6DCT | F | L/R | MPV FWD BLS, BJB | | GCO83002 | Outer Joint | | 36 | 27 | 59.5 | 40 | 66 | I |
| | 2004.04-2010.08 | 5MT/6DCT | F | L/R | MPV FWD BLS, BJB | | GCO83101 | Outer Joint | | 36 | 27 | 59.5 | 40 | 65 | M |
| | 2004.04-2010.08 | 6DCT | F | L | MPV FWD BLS, BJB | Chassis no. from:2K_9_000001;Chassis no. to:2K_8_200000 | GDS83381 | Drive Shaft | | 36 | | 59.5 | 40 | 483 | |
| | 2004.04-2010.08 | 6DCT | F | R | MPV FWD BLS, BJB | TJ | GDS54011 | Drive Shaft | | 36 | | 59.5 | 40 | 755 | |

| | YEAR | TRANSM. | F/R | L/R | BODY STYLE & DRIVE TYPE & ENGINE | REMARKS | G-AP Ref. | PRODUCT | ABS | Technical Specifications A | B | C | H | L | P |
|---|---|---|---|---|---|---|---|---|---|---|---|---|---|---|---|
| **VW Caddy** | | | | | | | | | | | | | | | |
| 1.9 (77 kw) | 2004.04-2010.08 | 6DCT | F | L/R | MPV FWD BLS, BJB | TJ | GCI54004 | Inner Joint | | | 34 | | | 81 | |
| | 2004.04-2010.08 | 6DCT | F | L/R | MPV FWD BLS, BJB | AAR | GCI61057 | Inner Joint | | | 34 | | | 89 | |
| | 2004.04-2010.08 | AT | F | L | MPV FWD BLS, BJB | Model: Caddy;Date to:2008.05;Model:Caddy Maxi;Date from:2007.11;Date to:2008.05 | GDS54013 | Drive Shaft | | 36 | | 59.5 | 40 | 479.5 | |
| | 2008.05-2010.08 | 5MT | F | L/R | MPV 4WD BLS | Date to:2009.05 | GCO83002 | Outer Joint | | 36 | 27 | 59.5 | 40 | 66 | I |
| | 2008.05-2010.08 | 5MT | F | L/R | MPV 4WD BLS | | GCI83016 | Inner Joint | | | 28 | | | 32 | |
| | 2008.05-2010.08 | 6MT | F | L | MPV 4WD BLS | | GDS83295 | Drive Shaft | | 36 | | 59.5 | 40 | 491 | |
| | 2008.05-2010.08 | 6MT | F | R | MPV 4WD BLS | | GDS83266 | Drive Shaft | | 36 | | 59.5 | 40 | 601 | |
| | 2008.05-2010.08 | | F | L | MPV 4WD BLS | | GDS83236 | Drive Shaft | | 36 | | 59.5 | 40 | 484 | |
| | 2008.11-2010.08 | 5MT | F | L/R | Box Body/MPV 4WD BLS | | GCO83002 | Outer Joint | | 36 | 27 | 59.5 | 40 | 66 | I |
| | 2008.11-2010.08 | 5MT | F | L/R | Box Body/MPV 4WD BLS | | GCI83016 | Inner Joint | | | 28 | | | 32 | |
| | 2008.11-2010.08 | 6MT | F | L | Box Body/MPV 4WD BLS | | GDS83295 | Drive Shaft | | 36 | | 59.5 | 40 | 491 | |
| | 2008.11-2010.08 | 6MT | F | R | Box Body/MPV 4WD BLS | | GDS83266 | Drive Shaft | | 36 | | 59.5 | 40 | 601 | |
| | 2008.11-2010.08 | MT | F | L | Box Body/MPV 4WD BLS | | GDS83236 | Drive Shaft | | 36 | | 59.5 | 40 | 484 | |
| 2.0 (51 kw) | 2004.03-2010.08 | 5MT | F | L | Box Body/MPV FWD BDJ;BST | | GDS83373 | Drive Shaft | | 36 | | 59.5 | 38 | 511 | |
| | 2004.03-2010.08 | 5MT | F | R | Box Body/MPV FWD BDJ;BST | | GDS61042 | Drive Shaft | | 36 | | 59.5 | 40.5 | 814 | |
| | 2004.03-2010.08 | 5MT | F | L/R | Box Body/MPV FWD BDJ;BST | | GCO83002 | Outer Joint | | 36 | 27 | 59.5 | 40 | 66 | I |
| | 2004.03-2010.08 | 5MT | F | L/R | Box Body/MPV FWD BDJ;BST | | GCO83037 | Outer Joint | | 36 | 30 | 59.5 | 40.5 | 56 | I |
| | 2004.03-2010.08 | 5MT | F | L/R | Box Body/MPV FWD BDJ;BST | | GCI82447 | Inner Joint | | | 33 | | | 34 | |
| | 2004.03-2010.08 | 5MT | F | L | MPV FWD BDJ;BST | | GDS83373 | Drive Shaft | | 36 | | 59.5 | 38 | 511 | |
| | 2004.03-2010.08 | 5MT | F | R | MPV FWD BDJ;BST | | GDS61042 | Drive Shaft | | 36 | | 59.5 | 40.5 | 814 | |
| | 2004.03-2010.08 | 5MT | F | L/R | MPV FWD BDJ;BST | | GCO83002 | Outer Joint | | 36 | 27 | 59.5 | 40 | 66 | I |
| | 2004.03-2010.08 | 5MT | F | L/R | MPV FWD BDJ;BST | | GCO83037 | Outer Joint | | 36 | 30 | 59.5 | 40.5 | 56 | I |
| | 2004.03-2010.08 | 5MT | F | L/R | MPV FWD BDJ;BST | | GCI82447 | Inner Joint | | | 33 | | | 34 | |
| 2.0 (55 kw) | 2015.05-2020.09 | 5MT | F | L | Box Body/MPV FWD DFSC, DFSF, CUUF | for special-purpose vehicles | GDS61100 | Drive Shaft | | 36 | | 59.5 | 40 | 513 | |
| | 2015.05-2020.09 | 5MT | F | L | Box Body/MPV FWD DFSC, DFSF, CUUF | | GDS61282 | Drive Shaft | | 36 | | 59.5 | 40 | 523 | |
| | 2015.05-2020.09 | 5MT | F | R | Box Body/MPV FWD DFSC, DFSF, CUUF | Economy;not for special-purpose vehicles | GDS61042 | Drive Shaft | | 36 | | 59.5 | 40.5 | 814 | |
| | 2015.05-2020.09 | 5MT | F | R | Box Body/MPV FWD DFSC, DFSF, CUUF | for special-purpose vehicles | GDS61101 | Drive Shaft | | 36 | | 59.5 | 40 | 803 | |
| | 2015.05-2020.09 | 5MT | F | R | Box Body/MPV FWD DFSC, DFSF, CUUF | No Economy;not for special-purpose vehicles | GDS61283 | Drive Shaft | | 36 | | 59.5 | 40 | 815 | |
| | 2015.05-2020.09 | 5MT | F | L/R | Box Body/MPV FWD DFSC, DFSF, CUUF | | GCI82447 | Inner Joint | | | 33 | | | 34 | |
| | 2015.05-2020.09 | 5MT/6MT | F | L/R | Box Body/MPV FWD DFSC, DFSF, CUUF | | GCO61059 | Outer Joint | | 36 | 33 | 59.5 | 40 | 59.5 | I |
| | 2015.05-2020.09 | 5MT/6MT | F | L/R | Box Body/MPV FWD DFSC, DFSF, CUUF | for special-purpose vehicles | GCO83101 | Outer Joint | | 36 | 27 | 59.5 | 40 | 65 | M |
| | 2015.05-2020.09 | 5MT/6MT | F | L/R | Box Body/MPV FWD DFSC, DFSF, CUUF | | GCI83016 | Inner Joint | | | 28 | | | 32 | |
| | 2015.05-2020.09 | 6MT | F | L | Box Body/MPV FWD DFSC, DFSF, CUUF | | GDS83295 | Drive Shaft | | 36 | | 59.5 | 40 | 491 | |
| | 2015.05-2020.09 | 6MT | F | R | Box Body/MPV FWD DFSC, DFSF, CUUF | Date to:2016.02 | GDS61147 | Drive Shaft | | 36 | | 59.5 | 40 | 795 | |
| | 2015.05-2020.09 | 6MT | F | R | Box Body/MPV FWD DFSC, DFSF, CUUF | Date from:2016.03 | GDS83313 | Drive Shaft | | 36 | | 59.5 | 40 | 792 | |
| | 2015.05-2020.09 | 6MT | F | L/R | Box Body/MPV FWD DFSC, DFSF, CUUF | | GCI61069 | Inner Joint | | | 28 | | | 32 | |
| | 2015.05-2020.09 | MT | F | L | Box Body/MPV FWD DFSC, DFSF, CUUF | | GDS83294 | Drive Shaft | | 36 | | 59.5 | 38 | 519 | |
| | 2015.05-2020.09 | MT | F | L | Box Body/MPV FWD DFSC, DFSF, CUUF | | GCO83037 | Outer Joint | | 36 | 30 | 59.5 | 40.5 | 56 | I |
| | 2015.05-2020.09 | MT | F | L/R | Box Body/MPV FWD DFSC, DFSF, CUUF | | GCI83006 | Inner Joint | | | 33 | | | 34 | |
| | 2015.05-2020.09 | 5MT | F | L | MPV FWD DFSF, CUUF | for special-purpose vehicles | GDS61100 | Drive Shaft | | 36 | | 59.5 | 40 | 513 | |
| | 2015.05-2020.09 | 5MT | F | L | MPV FWD DFSF, CUUF | | GDS61282 | Drive Shaft | | 36 | | 59.5 | 40 | 523 | |
| | 2015.05-2020.09 | 5MT | F | R | MPV FWD DFSF, CUUF | for special-purpose vehicles | GDS61101 | Drive Shaft | | 36 | | 59.5 | 40 | 803 | |
| | 2015.05-2020.09 | 5MT | F | R | MPV FWD DFSF, CUUF | | GDS61283 | Drive Shaft | | 36 | | 59.5 | 40 | 815 | |
| | 2015.05-2020.09 | 5MT | F | R | MPV FWD DFSF, CUUF | for special-purpose vehicles | GCO83101 | Outer Joint | | 36 | 27 | 59.5 | 40 | 65 | M |
| | 2015.05-2020.09 | 5MT | F | L/R | MPV FWD DFSF, CUUF | | GCO61059 | Outer Joint | | 36 | 33 | 59.5 | 40 | 59.5 | I |
| | 2015.05-2020.09 | 5MT | F | L/R | MPV FWD DFSF, CUUF | | GCI82447 | Inner Joint | | | 33 | | | 34 | |
| | 2015.05-2020.09 | 5MT | F | L/R | MPV FWD DFSF, CUUF | | GCI83016 | Inner Joint | | | 28 | | | 32 | |
| | 2015.05-2020.09 | MT | F | L | MPV FWD DFSF, CUUF | | GDS83294 | Drive Shaft | | 36 | | 59.5 | 38 | 519 | |
| | 2015.05-2020.09 | MT | F | L | MPV FWD DFSF, CUUF | | GCO83037 | Outer Joint | | 36 | 30 | 59.5 | 40.5 | 56 | I |
| | 2015.05-2020.09 | MT | F | L/R | MPV FWD DFSF, CUUF | | GCI83006 | Inner Joint | | | 33 | | | 34 | |
| | 2015.05-2020.09 | | F | R | MPV FWD DFSF, CUUF | | GDS61042 | Drive Shaft | | 36 | | 59.5 | 40.5 | 814 | |
| | 2015.11-2019.07 | 6MT | F | L | Box Body/MPV 4WD DFSC | | GDS83236 | Drive Shaft | | 36 | | 59.5 | 40 | 484 | |
| | 2015.11-2019.07 | 6MT | F | R | Box Body/MPV 4WD DFSC | Wheel Hub Diam [mm]:42;Date to:2017.08;Wheel Hub Diam [mm]:37;Date from:2017.08 | GDS81892 | Drive Shaft | | 36 | | 59.5 | 40 | 602 | |
| | 2015.11-2019.07 | 6MT | F | L | Box Body/MPV 4WD DFSC | | GCI61002 | Inner Joint | | | 28 | | | 31.8 | |
| | 2015.11-2019.07 | MT | F | L/R | Box Body/MPV 4WD DFSC | | GCO83101 | Outer Joint | | 36 | 27 | 59.5 | 40 | 65 | M |
| | 2015.11-2019.07 | | F | L | Box Body/MPV 4WD DFSC | | GCO81352 | Outer Joint | | 36 | 28 | 59.5 | 40 | 65 | I |
| | 2015.11-2019.07 | | F | L | Box Body/MPV 4WD DFSC | | GCO83104 | Outer Joint | | 36 | 28 | 59.4 | 40 | 65 | I |
| | 2020.09- | 6MT | F | L | Box Body/MPV FWD DTRF | | GDS81896 | Drive Shaft | | 36 | | 59.5 | 40 | 500 | |
| | 2020.09- | 6MT | F | R | Box Body/MPV FWD DTRF | | GDS83313 | Drive Shaft | | 36 | | 59.5 | 40 | 792 | |
| | 2020.09- | 6MT | F | L/R | Box Body/MPV FWD DTRF | | GCO83101 | Outer Joint | | 36 | 27 | 59.5 | 40 | 65 | M |
| | 2020.09- | 6MT | F | L | MPV FWD DTRF;DXRE | | GDS81896 | Drive Shaft | | 36 | | 59.5 | 40 | 500 | |
| | 2020.09- | 6MT | F | R | MPV FWD DTRF;DXRE | | GDS83313 | Drive Shaft | | 36 | | 59.5 | 40 | 792 | |
| 2.0 (62 kw) | 2010.11-2015.05 | 6MT | F | L | Box Body/MPV FWD CFHE | | GDS83295 | Drive Shaft | | 36 | | 59.5 | 40 | 491 | |
| | 2010.11-2015.05 | 6MT | F | R | Box Body/MPV FWD CFHE | | GDS61147 | Drive Shaft | | 36 | | 59.5 | 40 | 795 | |
| | 2010.11-2015.05 | 6MT | F | L/R | Box Body/MPV FWD CFHE | | GCI61069 | Inner Joint | | | 28 | | | 32 | |

| | YEAR | TRANSM. | F/R | L/R | BODY STYLE & DRIVE TYPE & ENGINE | REMARKS | G-AP Ref. | PRODUCT | ABS | Technical Specifications A | B | C | H | L | P |
|---|---|---|---|---|---|---|---|---|---|---|---|---|---|---|---|
| **VW Caddy** | | | | | | | | | | | | | | | |
| 2.0 (62 kw) | 2010.11-2015.05 | | F | L/R | Box Body/MPV FWD CFHE | Date To:2013.09;For special-purpose vehicles | GCO83101 | Outer Joint | | 36 | 27 | 59.5 | 40 | 65 | M |
| | 2010.12-2015.05 | 6MT | F | L | Box Body/MPV 4WD CFHE | | GDS83295 | Drive Shaft | | 36 | | 59.5 | 40 | 491 | |
| | 2010.12-2015.05 | 6MT | F | R | Box Body/MPV 4WD CFHE | | GDS81892 | Drive Shaft | | 36 | | 59.5 | 40 | 602 | |
| | 2010.12-2015.05 | 6MT | F | L/R | Box Body/MPV 4WD CFHE | | GCI83016 | Inner Joint | | | 28 | | | 32 | |
| | 2010.12-2015.05 | | F | L/R | Box Body/MPV 4WD CFHE | | GCO83101 | Outer Joint | | 36 | 27 | 59.5 | 40 | 65 | M |
| 2.0 (75 kw) | 2015.05-2020.09 | 5MT | F | L | Box Body/MPV FWD CUUD, DFSD | | GDS61100 | Drive Shaft | | 36 | | 59.5 | 40 | 513 | |
| | 2015.05-2020.09 | 5MT | F | R | Box Body/MPV FWD CUUD, DFSD | | GDS61101 | Drive Shaft | | 36 | | 59.5 | 40 | 803 | |
| | 2015.05-2020.09 | 5MT | F | L/R | Box Body/MPV FWD CUUD, DFSD | | GCI83016 | Inner Joint | | | 28 | | | 32 | |
| | 2015.05-2020.09 | 5MT/6DCT | F | L/R | Box Body/MPV FWD CUUD, DFSD | | GCO83101 | Outer Joint | | 36 | 27 | 59.5 | 40 | 65 | M |
| | 2015.05-2020.09 | 6DCT | F | L | Box Body/MPV FWD CUUD, DFSD | AAR | GDS83381 | Drive Shaft | | 36 | | 59.5 | 40 | 483 | |
| | 2015.05-2020.09 | 6DCT | F | R | Box Body/MPV FWD CUUD, DFSD | | GDS83354 | Drive Shaft | | 36 | | 59.5 | 40 | 763 | |
| | 2015.05-2020.09 | 6DCT | F | L/R | Box Body/MPV FWD CUUD, DFSD | | GCI61057 | Inner Joint | | | 34 | | | 89 | |
| | 2015.05-2020.09 | 5MT | F | L | MPV FWD CUUD, DFSD | | GDS61100 | Drive Shaft | | 36 | | 59.5 | 40 | 513 | |
| | 2015.05-2020.09 | 5MT | F | R | MPV FWD CUUD, DFSD | | GDS61101 | Drive Shaft | | 36 | | 59.5 | 40 | 803 | |
| | 2015.05-2020.09 | 5MT | F | L/R | MPV FWD CUUD, DFSD | | GCI83016 | Inner Joint | | | 28 | | | 32 | |
| | 2015.05-2020.09 | 5MT/6DCT | F | L/R | MPV FWD CUUD, DFSD | | GCO83101 | Outer Joint | | 36 | 27 | 59.5 | 40 | 65 | M |
| | 2015.05-2020.09 | 6DCT | F | L | MPV FWD CUUD, DFSD | AAR | GDS83381 | Drive Shaft | | 36 | | 59.5 | 40 | 483 | |
| | 2015.05-2020.09 | 6DCT | F | R | MPV FWD CUUD, DFSD | AAR | GDS83354 | Drive Shaft | | 36 | | 59.5 | 40 | 763 | |
| | 2015.05-2020.09 | 6DCT | F | L/R | MPV FWD CUUD, DFSD | TJ | GCI54004 | Inner Joint | | | 34 | | | 81 | |
| | 2015.05-2020.09 | 6DCT | F | L/R | MPV FWD CUUD, DFSD | AAR | GCI61057 | Inner Joint | | | 34 | | | 89 | |
| | 2020.09- | 6MT | F | L | Box Body/MPV FWD DTRE, DXRD | | GDS81896 | Drive Shaft | | 36 | | 59.5 | 40 | 500 | |
| | 2020.09- | 6MT | F | R | Box Body/MPV FWD DTRE, DXRD | | GDS83313 | Drive Shaft | | 36 | | 59.5 | 40 | 792 | |
| | 2020.09- | 6MT | F | L | MPV FWD DTRE, DXRD | | GDS81896 | Drive Shaft | | 36 | | 59.5 | 40 | 500 | |
| | 2020.09- | 6MT | F | R | MPV FWD DTRE, DXRD | | GDS83313 | Drive Shaft | | 36 | | 59.5 | 40 | 792 | |
| | 2020.09- | 6MT | F | L/R | MPV FWD DTRE, DXRD | | GCO83101 | Outer Joint | | 36 | 27 | 59.5 | 40 | 65 | M |
| 2.0 (80 kw) | 2006.04-2015.05 | 5MT | F | L | Box Body/MPV FWD BSX | Date from:2011.08 | GDS61282 | Drive Shaft | | 36 | | 59.5 | 40 | 523 | |
| | 2006.04-2015.05 | 5MT | F | L | Box Body/MPV FWD BSX | Chassis no. to:2KB005000 | GDS83373 | Drive Shaft | | 36 | | 59.5 | 38 | 511 | |
| | 2006.04-2015.05 | 5MT | F | R | Box Body/MPV FWD BSX | Chassis no. to:2KB005000,Chassis no. from:2KB200001,Date from:2011.08 | GDS61042 | Drive Shaft | | 36 | | 59.5 | 40.5 | 814 | |
| | 2006.04-2015.05 | 5MT | F | L | Box Body/MPV FWD BSX | Date from:2011.08 | GCO61059 | Outer Joint | | 36 | 33 | 59.5 | 40 | 59.5 | I |
| | 2006.04-2015.05 | 5MT | F | L | Box Body/MPV FWD BSX | Date To:2011.07 | GCO83002 | Outer Joint | | 36 | 27 | 59.5 | 40 | 66 | I |
| | 2006.04-2015.05 | 5MT | F | L/R | Box Body/MPV FWD BSX | | GCO83037 | Outer Joint | | 36 | 30 | 59.5 | 40.5 | 56 | I |
| | 2006.04-2015.05 | 5MT | F | L | Box Body/MPV FWD BSX | Chassis no. from:2KB200001 | GCI53002 | Inner Joint | | | 33 | | | 34 | |
| | 2006.04-2015.05 | 5MT | F | L/R | Box Body/MPV FWD BSX | | GCI82447 | Inner Joint | | | 33 | | | 34 | |
| | 2006.04-2015.05 | MT | F | L/R | Box Body/MPV FWD BSX | | GCI83006 | Inner Joint | | | 33 | | | 34 | |
| | 2006.04-2015.05 | | F | L/R | Box Body/MPV FWD BSX | | GCI83011 | Inner Joint | | | 33 | | | 34 | |
| | 2006.04-2015.05 | 5MT | F | L | MPV FWD BSX | Date from:2011.08 | GDS61282 | Drive Shaft | | 36 | | 59.5 | 40 | 523 | |
| | 2006.04-2015.05 | 5MT | F | L | MPV FWD BSX | Chassis no. to:2KB005000 | GDS83373 | Drive Shaft | | 36 | | 59.5 | 38 | 511 | |
| | 2006.04-2015.05 | 5MT | F | R | MPV FWD BSX | Chassis no. to:2KB005000,Chassis no. from:2KB200001,Date from:2011.08 | GDS61042 | Drive Shaft | | 36 | | 59.5 | 40.5 | 814 | |
| | 2006.04-2015.05 | 5MT | F | L | MPV FWD BSX | Date from:2011.08 | GCO61059 | Outer Joint | | 36 | 33 | 59.5 | 40 | 59.5 | I |
| | 2006.04-2015.05 | 5MT | F | L | MPV FWD BSX | Date To:2011.07 | GCO83002 | Outer Joint | | 36 | 27 | 59.5 | 40 | 66 | I |
| | 2006.04-2015.05 | 5MT | F | L/R | MPV FWD BSX | | GCO83037 | Outer Joint | | 36 | 30 | 59.5 | 40.5 | 56 | I |
| | 2006.04-2015.05 | 5MT | F | L/R | MPV FWD BSX | Chassis no. from:2KB200001 | GCI53002 | Inner Joint | | | 33 | | | 34 | |
| | 2006.04-2015.05 | 5MT | F | L/R | MPV FWD BSX | | GCI82447 | Inner Joint | | | 33 | | | 34 | |
| | 2006.04-2015.05 | MT | F | L/R | MPV FWD BSX | | GCI83006 | Inner Joint | | | 33 | | | 34 | |
| | 2006.04-2015.05 | | F | L/R | MPV FWD BSX | | GCI83011 | Inner Joint | | | 33 | | | 34 | |
| 2.0 (81 kw) | 2010.08-2015.05 | 6MT | F | L | Box Body/MPV 4WD CFHF | | GDS83295 | Drive Shaft | | 36 | | 59.5 | 40 | 491 | |
| | 2010.08-2015.05 | 6MT | F | R | Box Body/MPV 4WD CFHF | Date to:2013.02,For special-purpose vehicles | GDS81892 | Drive Shaft | | 36 | | 59.5 | 40 | 602 | |
| | 2010.08-2015.05 | 6MT | F | R | Box Body/MPV 4WD CFHF | | GDS83266 | Drive Shaft | | 36 | | 59.5 | 40 | 601 | |
| | 2010.08-2015.05 | 6MT | F | L | Box Body/MPV 4WD CFHF | Date from:2013.11 | GCI61002 | Inner Joint | | | 28 | | | 31.8 | |
| | 2010.08-2015.05 | 6MT | F | L/R | Box Body/MPV 4WD CFHF | Date to:2013.10,Position:Front axle left and right;Date from:2013.11,Position:Front axle right | GCI83016 | Inner Joint | | | 28 | | | 32 | |
| | 2010.08-2015.05 | MT | F | L | Box Body/MPV 4WD CFHF | | GDS83236 | Drive Shaft | | 36 | | 59.5 | 40 | 484 | |
| | 2010.08-2015.05 | | F | L | Box Body/MPV 4WD CFHF | Date from:2013.11;Date from:2013.10,for special-purpose vehicles | GCO81352 | Outer Joint | | 36 | 28 | 59.5 | 40 | 65 | I |
| | 2010.08-2015.05 | | F | L | Box Body/MPV 4WD CFHF | | GCO83104 | Outer Joint | | 36 | 28 | 59.4 | 40 | 65 | I |
| | 2010.08-2015.05 | | F | R | Box Body/MPV 4WD CFHF | Date from:2013.11 | GCO83002 | Outer Joint | | 36 | 27 | 59.5 | 40 | 66 | I |
| | 2010.08-2015.05 | | F | L/R | Box Body/MPV 4WD CFHF | Date To:2013.10 | GCO83002 | Outer Joint | | 36 | 27 | 59.5 | 40 | 66 | I |
| | 2010.08-2015.05 | | F | L/R | Box Body/MPV 4WD CFHF | Date To:2013.09;For special-purpose vehicles | GCO83101 | Outer Joint | | 36 | 27 | 59.5 | 40 | 65 | M |
| | 2010.08-2015.05 | 5MT | F | L | Box Body/MPV FWD CLCA | | GDS61100 | Drive Shaft | | 36 | | 59.5 | 40 | 513 | |
| | 2010.08-2015.05 | 5MT | F | R | Box Body/MPV FWD CLCA | | GDS61101 | Drive Shaft | | 36 | | 59.5 | 40 | 803 | |
| | 2010.08-2015.05 | 5MT | F | L/R | Box Body/MPV FWD CLCA | | GCI83016 | Inner Joint | | | 28 | | | 32 | |
| | 2010.08-2015.05 | | F | L | Box Body/MPV FWD CLCA | | GDS83236 | Drive Shaft | | 36 | | 59.5 | 40 | 484 | |
| | 2010.08-2015.05 | | F | L/R | Box Body/MPV FWD CLCA | Date To:2013.10 | GCO83002 | Outer Joint | | 36 | 27 | 59.5 | 40 | 66 | I |
| | 2010.08-2015.05 | | F | L/R | Box Body/MPV FWD CLCA | Date To:2013.09;For special-purpose vehicles | GCO83101 | Outer Joint | | 36 | 27 | 59.5 | 40 | 65 | M |
| | 2010.08-2015.05 | 6MT | F | L | MPV 4WD CFHF | | GDS83295 | Drive Shaft | | 36 | | 59.5 | 40 | 491 | |
| | 2010.08-2015.05 | 6MT | F | R | MPV 4WD CFHF | Date to:2013.02,For special-purpose vehicles | GDS81892 | Drive Shaft | | 36 | | 59.5 | 40 | 602 | |
| | 2010.08-2015.05 | 6MT | F | R | MPV 4WD CFHF | | GDS83266 | Drive Shaft | | 36 | | 59.5 | 40 | 601 | |

| | YEAR | TRANSM. | F/R | L/R | BODY STYLE & DRIVE TYPE & ENGINE | REMARKS | G-AP Ref. | PRODUCT | ABS | Technical Specifications A | B | C | H | L | P |
|---|---|---|---|---|---|---|---|---|---|---|---|---|---|---|---|
| **VW Caddy** | | | | | | | | | | | | | | | |
| 2.0 (81 kw) | 2010.08-2015.05 | 6MT | F | L | MPV 4WD CFHF | Date from:2013.11 | GCI61002 | Inner Joint | | | 28 | | | 31.8 | |
| | 2010.08-2015.05 | 6MT | F | L/R | MPV 4WD CFHF | Date to:2013.10;Position:Front axle left and right;Date from:2013.11;Position:Front axle right | GCI83016 | Inner Joint | | | 28 | | | 32 | |
| | 2010.08-2015.05 | | F | L | MPV 4WD CFHF | | GDS83236 | Drive Shaft | | 36 | | 59.5 | 40 | 484 | |
| | 2010.08-2015.05 | | F | L | MPV 4WD CFHF | Date from:2013.11;Date from:2013.10;for special-purpose vehicles | GCO81352 | Outer Joint | | 36 | 28 | 59.5 | 40 | 65 | I |
| | 2010.08-2015.05 | | F | L | MPV 4WD CFHF | | GCO83104 | Outer Joint | | 36 | 28 | 59.4 | 40 | 65 | I |
| | 2010.08-2015.05 | | F | R | MPV 4WD CFHF | | GCO83002 | Outer Joint | | 36 | 27 | 59.5 | 40 | 66 | I |
| | 2010.08-2015.05 | | F | L/R | MPV 4WD CFHF | Date To:2013.10 | GCO83002 | Outer Joint | | 36 | 27 | 59.5 | 40 | 66 | I |
| | 2010.08-2015.05 | | F | L/R | MPV 4WD CFHF | Date To:2013.09;For special-purpose vehicles | GCO83101 | Outer Joint | | 36 | 27 | 59.5 | 40 | 65 | M |
| | 2010.08-2015.05 | 5MT | F | L | MPV FWD CLCA | | GDS61100 | Drive Shaft | | 36 | | 59.5 | 40 | 513 | |
| | 2010.08-2015.05 | 5MT | F | R | MPV FWD CLCA | | GDS61101 | Drive Shaft | | 36 | | 59.5 | 40 | 803 | |
| | 2010.08-2015.05 | 5MT | F | L/R | MPV FWD CLCA | | GCI83016 | Inner Joint | | | 28 | | | 32 | |
| | 2010.08-2015.05 | MT | F | L | MPV FWD CLCA | | GDS83236 | Drive Shaft | | 36 | | 59.5 | 40 | 484 | |
| | 2010.08-2015.05 | | F | L/R | MPV FWD CLCA | Date To:2013.10 | GCO83002 | Outer Joint | | 36 | 27 | 59.5 | 40 | 66 | I |
| | 2010.08-2015.05 | | F | L/R | MPV FWD CLCA | Date To:2013.09;For special-purpose vehicles | GCO83101 | Outer Joint | | 36 | 27 | 59.5 | 40 | 65 | M |
| | 2015.05-2020.09 | 6MT | F | L | Box Body/MPV 4WD CLCA, CFHF | | GDS83236 | Drive Shaft | | 36 | | 59.5 | 40 | 484 | |
| | 2015.05-2020.09 | 6MT | F | R | Box Body/MPV 4WD CLCA, CFHF | Wheel Hub Diam [mm]:42 | GDS81892 | Drive Shaft | | 36 | | 59.5 | 40 | 602 | |
| | 2015.05-2020.09 | 6MT | F | L | Box Body/MPV 4WD CLCA, CFHF | | GCI61002 | Inner Joint | | | 28 | | | 31.8 | |
| | 2015.05-2020.09 | | F | L | Box Body/MPV 4WD CLCA, CFHF | Type:Caddy Maxi | GCO81352 | Outer Joint | | 36 | 28 | 59.5 | 40 | 65 | I |
| | 2015.05-2020.09 | | F | L | Box Body/MPV 4WD CLCA, CFHF | | GCO83104 | Outer Joint | | 36 | 28 | 59.4 | 40 | 65 | I |
| | 2015.05-2020.09 | | F | R | Box Body/MPV 4WD CLCA, CFHF | | GCO83101 | Outer Joint | | 36 | 27 | 59.5 | 40 | 65 | M |
| | 2015.05-2020.09 | 6MT | F | L | MPV 4WD CLCA, CFHF | | GDS83236 | Drive Shaft | | 36 | | 59.5 | 40 | 484 | |
| | 2015.05-2020.09 | 6MT | F | R | MPV 4WD CLCA, CFHF | Wheel Hub Diam [mm]:42 | GDS81892 | Drive Shaft | | 36 | | 59.5 | 40 | 602 | |
| | 2015.05-2020.09 | 6MT | F | L | MPV 4WD CLCA, CFHF | | GCI61002 | Inner Joint | | | 28 | | | 31.8 | |
| | 2015.05-2020.09 | | F | L | MPV 4WD CLCA, CFHF | | GCO81352 | Outer Joint | | 36 | 28 | 59.5 | 40 | 65 | I |
| | 2015.05-2020.09 | | F | L | MPV 4WD CLCA, CFHF | | GCO83104 | Outer Joint | | 36 | 28 | 59.4 | 40 | 65 | I |
| | 2015.05-2020.09 | | F | R | MPV 4WD CLCA, CFHF | | GCO83101 | Outer Joint | | 36 | 27 | 59.5 | 40 | 65 | M |
| | 2021.04- | 6MT | F | L | Box Body/MPV FWD CRVD | | GDS83295 | Drive Shaft | | 36 | | 59.5 | 40 | 491 | |
| | 2021.04- | 6MT | F | R | Box Body/MPV FWD CRVD | | GDS61101 | Drive Shaft | | 36 | | 59.5 | 40 | 803 | |
| | 2021.04- | 6MT | F | L | MPV FWD CRVD | | GDS83295 | Drive Shaft | | 36 | | 59.5 | 40 | 491 | |
| | 2021.04- | 6MT | F | R | MPV FWD CRVD | | GDS61101 | Drive Shaft | | 36 | | 59.5 | 40 | 803 | |
| 2.0 (90 kw) | 2015.05-2020.09 | 6MT | F | L | Box Body/MPV 4WD CUUE, DFSE | | GDS83236 | Drive Shaft | | 36 | | 59.5 | 40 | 484 | |
| | 2015.05-2020.09 | 6MT | F | R | Box Body/MPV 4WD CUUE, DFSE | Wheel Hub Diam [mm]:42;Date to:2017.08;Wheel Hub Diam [mm]:37;Date from:2017.10 | GDS81892 | Drive Shaft | | 36 | | 59.5 | 40 | 602 | |
| | 2015.05-2020.09 | 6MT | F | L | Box Body/MPV 4WD CUUE, DFSE | | GCI61002 | Inner Joint | | | 28 | | | 31.8 | |
| | 2015.05-2020.09 | | F | L | Box Body/MPV 4WD CUUE, DFSE | Type:Caddy Maxi | GCO81352 | Outer Joint | | 36 | 28 | 59.5 | 40 | 65 | I |
| | 2015.05-2020.09 | | F | L | Box Body/MPV 4WD CUUE, DFSE | | GCO83104 | Outer Joint | | 36 | 28 | 59.4 | 40 | 65 | I |
| | 2015.05-2020.09 | | F | L/R | Box Body/MPV 4WD CUUE, DFSE | Date To:2013.09;For special-purpose vehicles | GCO83101 | Outer Joint | | 36 | 27 | 59.5 | 40 | 65 | M |
| | 2015.05-2020.09 | 6MT | F | L | MPV 4WD CUUE, DFSE | | GDS83236 | Drive Shaft | | 36 | | 59.5 | 40 | 484 | |
| | 2015.05-2020.09 | 6MT | F | R | MPV 4WD CUUE, DFSE | Wheel Hub Diam [mm]:42;Date to:2017.08;Wheel Hub Diam [mm]:37;Date from:2017.10 | GDS81892 | Drive Shaft | | 36 | | 59.5 | 40 | 602 | |
| | 2015.05-2020.09 | 6MT | F | L | MPV 4WD CUUE, DFSE | | GCI61002 | Inner Joint | | | 28 | | | 31.8 | |
| | 2015.05-2020.09 | MT | F | R | MPV 4WD CUUE, DFSE | | GCO83101 | Outer Joint | | 36 | 27 | 59.5 | 40 | 65 | M |
| | 2015.05-2020.09 | | F | L | MPV 4WD CUUE, DFSE | | GCO81352 | Outer Joint | | 36 | 28 | 59.5 | 40 | 65 | I |
| | 2015.05-2020.09 | | F | L | MPV 4WD CUUE, DFSE | | GCO83104 | Outer Joint | | 36 | 28 | 59.4 | 40 | 65 | I |
| | 2020.09- | 7DCT | F | L | Box Body/MPV FWD DTRC, DXRA | | GDS82351 | Drive Shaft | | 36 | 37 | 59.5 | 40 | 568 | |
| | 2020.09- | 7DCT | F | R | Box Body/MPV FWD DTRC, DXRA | | GDS83613 | Drive Shaft | | 36 | 37 | 59.5 | 40 | 921 | |
| | 2020.09- | 7DCT | F | L/R | Box Body/MPV FWD DTRC, DXRA | | GCO83101 | Outer Joint | | 36 | 27 | 59.5 | 40 | 65 | M |
| | 2020.09- | 7DCT | F | L | Box Body/MPV FWD DTRC, DXRA | | GCI81158 | Inner Joint | | 37 | 34 | 34.5 | 65.5 | 83 | |
| | 2020.09- | 7DCT | F | R | Box Body/MPV FWD DTRC, DXRA | | GCI82108 | Inner Joint | | 37 | 34 | 40 | 77.5 | 103.5 | |
| | 2020.09- | 7DCT | F | L | MPV FWD DTRC, DXRA | | GDS82351 | Drive Shaft | | 36 | 37 | 59.5 | 40 | 568 | |
| | 2020.09- | 7DCT | F | R | MPV FWD DTRC, DXRA | | GDS83613 | Drive Shaft | | 36 | 37 | 59.5 | 40 | 921 | |
| | 2020.09- | 7DCT | F | L/R | MPV FWD DTRC, DXRA | | GCO83101 | Outer Joint | | 36 | 27 | 59.5 | 40 | 65 | M |
| | 2020.09- | 7DCT | F | L | MPV FWD DTRC, DXRA | | GCI81158 | Inner Joint | | 37 | 34 | 34.5 | 65.5 | 83 | |
| | 2020.09- | 7DCT | F | R | MPV FWD DTRC, DXRA | | GCI82108 | Inner Joint | | 37 | 34 | 40 | 77.5 | 103.5 | |
| | 2021.03- | 6MT | F | L | Box Body/MPV 4WD DTRC, DXRA | | GDS81896 | Drive Shaft | | 36 | | 59.5 | 40 | 500 | |
| | 2021.03- | 6MT | F | R | Box Body/MPV 4WD DTRC, DXRA | | GDS84020 | Drive Shaft | | 36 | | 59.5 | 40 | 615 | |
| | 2021.03- | 6MT | F | R | Box Body/MPV 4WD DTRC, DXRA | | GCO83101 | Outer Joint | | 36 | 27 | 59.5 | 40 | 65 | M |
| | 2021.03- | 6MT | F | R | Box Body/MPV 4WD DTRC, DXRA | | GCI82456 | Inner Joint | | | 28 | | | 32 | |
| | 2021.03- | 6MT | F | L | MPV 4WD DTRC, DXRA | | GDS81896 | Drive Shaft | | 36 | | 59.5 | 40 | 500 | |
| | 2021.03- | 6MT | F | R | MPV 4WD DTRC, DXRA | | GDS84020 | Drive Shaft | | 36 | | 59.5 | 40 | 615 | |
| | 2021.03- | 6MT | F | R | MPV 4WD DTRC, DXRA | | GCO83101 | Outer Joint | | 36 | 27 | 59.5 | 40 | 65 | M |
| | 2021.03- | 6MT | F | R | MPV 4WD DTRC, DXRA | | GCI82456 | Inner Joint | | | 28 | | | 32 | |
| 2.0 (103 kw) | 2007.09-2010.08 | 6MT | F | L | Box Body/MPV FWD BMM | | GDS83295 | Drive Shaft | | 36 | | 59.5 | 40 | 491 | |
| | 2007.09-2010.08 | 6MT | F | R | Box Body/MPV FWD BMM | | GDS61147 | Drive Shaft | | 36 | | 59.5 | 40 | 795 | |
| | 2007.09-2010.08 | MT | F | L/R | Box Body/MPV FWD BMM | | GCI83016 | Inner Joint | | | 28 | | | 32 | |
| | 2007.09-2010.08 | | F | L/R | Box Body/MPV FWD BMM | Date To:2013.09;For special-purpose vehicles | GCO83101 | Outer Joint | | 36 | 27 | 59.5 | 40 | 65 | M |
| | 2007.09-2010.08 | 6MT | F | L | MPV FWD BMM | | GDS83295 | Drive Shaft | | 36 | | 59.5 | 40 | 491 | |

| | YEAR | TRANSM. | F/R | L/R | BODY STYLE & DRIVE TYPE & ENGINE | REMARKS | G-AP Ref. | PRODUCT | ABS | Technical Specifications A | B | C | H | L | P |
|---|---|---|---|---|---|---|---|---|---|---|---|---|---|---|---|
| **VW Caddy** | | | | | | | | | | | | | | | |
| 2.0 (103 kw) | 2007.09-2010.08 | 6MT | F | R | MPV FWD BMM | | GDS61126 | Drive Shaft | | 36 | | 59.5 | 40 | 793 | |
| | 2007.09-2010.08 | 6MT | F | R | MPV FWD BMM | | GDS61147 | Drive Shaft | | 36 | | 59.5 | 40 | 795 | |
| | 2007.09-2010.08 | 6MT | F | R | MPV FWD BMM | | GDS83313 | Drive Shaft | | 36 | | 59.5 | 40 | 792 | |
| | 2007.09-2010.08 | 6MT | F | L/R | MPV FWD BMM | GrooveType:Inner | GCO83002 | Outer Joint | | 36 | 27 | 59.5 | 40 | 66 | I |
| | 2007.09-2010.08 | 6MT | F | L/R | MPV FWD BMM | | GCO83101 | Outer Joint | | 36 | 27 | 59.5 | 40 | 65 | M |
| | 2007.09-2010.08 | 6MT | F | R | MPV FWD BMM | | GCI61002 | Inner Joint | | | 28 | | | 31.8 | |
| | 2007.09-2010.08 | 6MT | F | R | MPV FWD BMM | | GCI83016 | Inner Joint | | | 28 | | | 32 | |
| | 2010.11-2015.05 | 6AT | F | L/R | Box Body/MPV 4WD CFHC | | GCO83101 | Outer Joint | | 36 | 27 | 59.5 | 40 | 65 | M |
| | 2010.11-2015.05 | 6AT | F | L/R | Box Body/MPV 4WD CFHC | Date from:2013.10 | GCO83104 | Outer Joint | | 36 | 28 | 59.4 | 40 | 65 | I |
| | 2010.11-2015.05 | 6AT | F | L/R | Box Body/MPV 4WD CFHC | | GCI83016 | Inner Joint | | | 28 | | | 32 | |
| | 2010.11-2015.05 | 6DCT | F | L | Box Body/MPV 4WD CFHC | Date from:2013.10 | GDS83236 | Drive Shaft | | 36 | | 59.5 | 40 | 484 | |
| | 2010.11-2015.05 | 6DCT | F | L | Box Body/MPV 4WD CFHC | Date to:2013.09 | GDS83295 | Drive Shaft | | 36 | | 59.5 | 40 | 491 | |
| | 2010.11-2015.05 | 6DCT | F | R | Box Body/MPV 4WD CFHC | Wheel Hub Diam:42,Date from:2012.10;Date to:2013.09 | GDS81892 | Drive Shaft | | 36 | | 59.5 | 40 | 602 | |
| | 2010.11-2015.05 | AT | F | L/R | Box Body/MPV 4WD CFHC | | GCI61057 | Inner Joint | | | 34 | | | 89 | |
| | 2010.11-2015.05 | DCT | F | L | Box Body/MPV 4WD CFHC | | GCI54004 | Inner Joint | | | 34 | | | 81 | |
| | 2010.11-2015.05 | | F | L | Box Body/MPV 4WD CFHC | Date From:2013.10 | GCO81352 | Outer Joint | | 36 | 28 | 59.5 | 40 | 65 | I |
| | 2010.11-2015.05 | 6AT | F | R | Box Body/MPV FWD CLCB, CFHC | | GCI54004 | Inner Joint | | | 34 | | | 81 | |
| | 2010.11-2015.05 | 6AT/6MT | F | L/R | Box Body/MPV FWD CLCB, CFHC | | GCO83101 | Outer Joint | | 36 | 27 | 59.5 | 40 | 65 | M |
| | 2010.11-2015.05 | 6DCT | F | L | Box Body/MPV FWD CLCB, CFHC | | GDS83381 | Drive Shaft | | 36 | | 59.5 | 40 | 483 | |
| | 2010.11-2015.05 | 6DCT | F | R | Box Body/MPV FWD CLCB, CFHC | | GDS83354 | Drive Shaft | | 36 | | 59.5 | 40 | 763 | |
| | 2010.11-2015.05 | 6MT | F | L | Box Body/MPV FWD CLCB, CFHC | | GDS83295 | Drive Shaft | | 36 | | 59.5 | 40 | 491 | |
| | 2010.11-2015.05 | 6MT | F | R | Box Body/MPV FWD CLCB, CFHC | | GDS61147 | Drive Shaft | | 36 | | 59.5 | 40 | 795 | |
| | 2010.11-2015.05 | 6MT | F | R | Box Body/MPV FWD CLCB, CFHC | | GDS83313 | Drive Shaft | | 36 | | 59.5 | 40 | 792 | |
| | 2010.11-2015.05 | 6MT | F | L/R | Box Body/MPV FWD CLCB, CFHC | Tripod Joint | GCI61057 | Inner Joint | | | 34 | | | 89 | |
| | 2010.11-2015.05 | 6MT | F | L/R | Box Body/MPV FWD CLCB, CFHC | CV Joint | GCI61069 | Inner Joint | | | 28 | | | 32 | |
| | 2010.11-2015.05 | AT | F | L | Box Body/MPV FWD CLCB, CFHC | | GDS83241 | Drive Shaft | | 36 | | 59.5 | 40 | 475 | |
| | 2010.11-2015.05 | MT | F | L | Box Body/MPV FWD CLCB, CFHC | | GDS83236 | Drive Shaft | | 36 | | 59.5 | 40 | 484 | |
| | 2010.11-2015.05 | 6AT | F | L/R | MPV 4WD CFHC | | GCO83101 | Outer Joint | | 36 | 27 | 59.5 | 40 | 65 | M |
| | 2010.11-2015.05 | 6AT | F | L/R | MPV 4WD CFHC | Date from:2013.10 | GCO83104 | Outer Joint | | 36 | 28 | 59.4 | 40 | 65 | I |
| | 2010.11-2015.05 | 6AT | F | L/R | MPV 4WD CFHC | | GCI83016 | Inner Joint | | | 28 | | | 32 | |
| | 2010.11-2015.05 | 6DCT | F | L | MPV 4WD CFHC | Date from:2013.10 | GDS83236 | Drive Shaft | | 36 | | 59.5 | 40 | 484 | |
| | 2010.11-2015.05 | 6DCT | F | L | MPV 4WD CFHC | Date to:2013.09 | GDS83295 | Drive Shaft | | 36 | | 59.5 | 40 | 491 | |
| | 2010.11-2015.05 | 6DCT | F | R | MPV 4WD CFHC | Wheel Hub Diam:42,Date from:2012.10;Date to:2013.09 | GDS81892 | Drive Shaft | | 36 | | 59.5 | 40 | 602 | |
| | 2010.11-2015.05 | AT | F | L/R | MPV 4WD CFHC | | GCI61057 | Inner Joint | | | 34 | | | 89 | |
| | 2010.11-2015.05 | DCT | F | L | MPV 4WD CFHC | | GCI54004 | Inner Joint | | | 34 | | | 81 | |
| | 2010.11-2015.05 | | F | L | MPV 4WD CFHC | Date From:2013.10 | GCO81352 | Outer Joint | | 36 | 28 | 59.5 | 40 | 65 | I |
| | 2010.11-2015.05 | 6AT | F | R | MPV FWD CLCB, CFHC | | GCI54004 | Inner Joint | | | 34 | | | 81 | |
| | 2010.11-2015.05 | 6AT | F | L/R | MPV FWD CLCB, CFHC | | GCI61057 | Inner Joint | | | 34 | | | 89 | |
| | 2010.11-2015.05 | 6AT/6MT | F | L/R | MPV FWD CLCB, CFHC | | GCO83101 | Outer Joint | | 36 | 27 | 59.5 | 40 | 65 | M |
| | 2010.11-2015.05 | 6DCT | F | L | MPV FWD CLCB, CFHC | | GDS83381 | Drive Shaft | | 36 | | 59.5 | 40 | 483 | |
| | 2010.11-2015.05 | 6DCT | F | R | MPV FWD CLCB, CFHC | | GDS83354 | Drive Shaft | | 36 | | 59.5 | 40 | 763 | |
| | 2010.11-2015.05 | 6MT | F | L | MPV FWD CLCB, CFHC | | GDS83295 | Drive Shaft | | 36 | | 59.5 | 40 | 491 | |
| | 2010.11-2015.05 | 6MT | F | R | MPV FWD CLCB, CFHC | | GDS61147 | Drive Shaft | | 36 | | 59.5 | 40 | 795 | |
| | 2010.11-2015.05 | 6MT | F | R | MPV FWD CLCB, CFHC | | GDS83313 | Drive Shaft | | 36 | | 59.5 | 40 | 792 | |
| | 2010.11-2015.05 | 6MT | F | L/R | MPV FWD CLCB, CFHC | | GCI61069 | Inner Joint | | | 28 | | | 32 | |
| | 2010.11-2015.05 | AT | F | L | MPV FWD CLCB, CFHC | | GDS83241 | Drive Shaft | | 36 | | 59.5 | 40 | 475 | |
| | 2010.11-2015.05 | MT | F | L | MPV FWD CLCB, CFHC | | GDS83236 | Drive Shaft | | 36 | | 59.5 | 40 | 484 | |
| | 2015.05-2020.09 | 6AT | F | L | Box Body/MPV 4WD CFHC | | GDS83236 | Drive Shaft | | 36 | | 59.5 | 40 | 484 | |
| | 2015.05-2020.09 | 6AT | F | R | Box Body/MPV 4WD CFHC | Wheel Hub Diam [mm]:42,Date to:2017.08;Wheel Hub Diam [mm]:27,Date from:2017.10 | GDS81892 | Drive Shaft | | 36 | | 59.5 | 40 | 602 | |
| | 2015.05-2020.09 | 6AT | F | R | Box Body/MPV 4WD CFHC | | GCI61069 | Inner Joint | | | 28 | | | 32 | |
| | 2015.05-2020.09 | DCT | F | L | Box Body/MPV 4WD CFHC | | GCI54004 | Inner Joint | | | 34 | | | 81 | |
| | 2015.05-2020.09 | | F | L | Box Body/MPV 4WD CFHC | | GCO81352 | Outer Joint | | 36 | 28 | 59.5 | 40 | 65 | I |
| | 2015.05-2020.09 | | F | L | Box Body/MPV 4WD CFHC | | GCO83104 | Outer Joint | | 36 | 28 | 59.4 | 40 | 65 | I |
| | 2015.05-2020.09 | | F | L/R | Box Body/MPV 4WD CFHC | Date To:2013.09;For special-purpose vehicles | GCO83101 | Outer Joint | | 36 | 27 | 59.5 | 40 | 65 | M |
| | 2015.05-2020.09 | 6DCT | F | L | Box Body/MPV FWD CLCB, CFHC | | GDS83381 | Drive Shaft | | 36 | | 59.5 | 40 | 483 | |
| | 2015.05-2020.09 | 6DCT | F | R | Box Body/MPV FWD CLCB, CFHC | | GDS83354 | Drive Shaft | | 36 | | 59.5 | 40 | 763 | |
| | 2015.05-2020.09 | 6DCT | F | L/R | Box Body/MPV FWD CLCB, CFHC | | GCI61057 | Inner Joint | | | 34 | | | 89 | |
| | 2015.05-2020.09 | 6MT | F | L | Box Body/MPV FWD CLCB, CFHC | | GDS83295 | Drive Shaft | | 36 | | 59.5 | 40 | 491 | |
| | 2015.05-2020.09 | 6MT | F | R | Box Body/MPV FWD CLCB, CFHC | Date to:2016.02 | GDS61147 | Drive Shaft | | 36 | | 59.5 | 40 | 795 | |
| | 2015.05-2020.09 | 6MT | F | R | Box Body/MPV FWD CLCB, CFHC | Date from:2016.03 | GDS83313 | Drive Shaft | | 36 | | 59.5 | 40 | 792 | |
| | 2015.05-2020.09 | 6MT | F | L/R | Box Body/MPV FWD CLCB, CFHC | | GCI61069 | Inner Joint | | | 28 | | | 32 | |
| | 2015.05-2020.09 | AT | F | L | Box Body/MPV FWD CLCB, CFHC | | GDS83241 | Drive Shaft | | 36 | | 59.5 | 40 | 475 | |
| | 2015.05-2020.09 | DCT | F | L | Box Body/MPV FWD CLCB, CFHC | | GCI54004 | Inner Joint | | | 34 | | | 81 | |
| | 2015.05-2020.09 | MT/DCT | F | L/R | Box Body/MPV FWD CLCB, CFHC | | GCO83101 | Outer Joint | | 36 | 27 | 59.5 | 40 | 65 | M |
| | 2015.05-2020.09 | 6AT | F | L | MPV 4WD CFHC | | GDS83236 | Drive Shaft | | 36 | | 59.5 | 40 | 484 | |

| | YEAR | TRANSM. | F/R | L/R | BODY STYLE & DRIVE TYPE & ENGINE | REMARKS | G-AP Ref. | PRODUCT | ABS | Technical Specifications A | B | C | H | L | P |
|---|---|---|---|---|---|---|---|---|---|---|---|---|---|---|---|
| **VW** | | | | | | | | | | | | | | | |
| **Caddy** | | | | | | | | | | | | | | | |
| 2.0 (103 kw) | 2015.05-2020.09 | 6AT | F | R | MPV 4WD CFHC | Wheel Hub Diam [mm]:42,Date to:2017.08;Wheel Hub Diam [mm]:37,Date from:2017.10 | GDS81892 | Drive Shaft | | 36 | | 59.5 | 40 | 602 | |
| | 2015.05-2020.09 | 6AT | F | R | MPV 4WD CFHC | | GCI61069 | Inner Joint | | | 28 | | | 32 | |
| | 2015.05-2020.09 | DCT | F | L | MPV 4WD CFHC | | GCI54004 | Inner Joint | | | 34 | | | 81 | |
| | 2015.05-2020.09 | | F | L | MPV 4WD CFHC | | GCO81352 | Outer Joint | | 36 | 28 | 59.5 | 40 | 65 | I |
| | 2015.05-2020.09 | | F | L | MPV 4WD CFHC | | GCO83104 | Outer Joint | | 36 | 28 | 59.4 | 40 | 65 | I |
| | 2015.05-2020.09 | | F | L/R | MPV 4WD CFHC | Date To:2013.09;For special-purpose vehicles | GCO83101 | Outer Joint | | 36 | 27 | 59.5 | 40 | 65 | M |
| | 2015.05-2020.09 | 6DCT | F | L | MPV FWD CLCB, CFHC | | GDS83381 | Drive Shaft | | 36 | | 59.5 | 40 | 483 | |
| | 2015.05-2020.09 | 6DCT | F | R | MPV FWD CLCB, CFHC | | GDS83354 | Drive Shaft | | 36 | | 59.5 | 40 | 763 | |
| | 2015.05-2020.09 | 6DCT | F | L/R | MPV FWD CLCB, CFHC | | GCI61057 | Inner Joint | | | 34 | | | 89 | |
| | 2015.05-2020.09 | 6MT | F | L | MPV FWD CLCB, CFHC | | GDS83295 | Drive Shaft | | 36 | | 59.5 | 40 | 491 | |
| | 2015.05-2020.09 | 6MT | F | R | MPV FWD CLCB, CFHC | Date to:2016.02 | GDS61147 | Drive Shaft | | 36 | | 59.5 | 40 | 795 | |
| | 2015.05-2020.09 | 6MT | F | R | MPV FWD CLCB, CFHC | Date from:2016.03 | GDS83313 | Drive Shaft | | 36 | | 59.5 | 40 | 792 | |
| | 2015.05-2020.09 | 6MT | F | L/R | MPV FWD CLCB, CFHC | | GCI61069 | Inner Joint | | | 28 | | | 32 | |
| | 2015.05-2020.09 | AT | F | L | MPV FWD CLCB, CFHC | | GDS83241 | Drive Shaft | | 36 | | 59.5 | 40 | 475 | |
| | 2015.05-2020.09 | DCT | F | L | MPV FWD CLCB, CFHC | | GCI54004 | Inner Joint | | | 34 | | | 81 | |
| | 2015.05-2020.09 | MT/DCT | F | L/R | MPV FWD CLCB, CFHC | | GCO83101 | Outer Joint | | 36 | 27 | 59.5 | 40 | 65 | M |
| 2.0 (110 kw) | 2015.05-2020.09 | 6DCT | F | L | Box Body/MPV FWD CUUB, DFSB | | GDS83381 | Drive Shaft | | 36 | | 59.5 | 40 | 483 | |
| | 2015.05-2020.09 | 6DCT | F | R | Box Body/MPV FWD CUUB, DFSB | | GDS83354 | Drive Shaft | | 36 | | 59.5 | 40 | 763 | |
| | 2015.05-2020.09 | 6DCT | F | R | Box Body/MPV FWD CUUB, DFSB | | GCO83101 | Outer Joint | | 36 | 27 | 59.5 | 40 | 65 | M |
| | 2015.05-2020.09 | 6DCT | F | L | Box Body/MPV FWD CUUB, DFSB | Date to:2015.11 | GCI54004 | Inner Joint | | | 34 | | | 81 | |
| | 2015.05-2020.09 | 6DCT | F | L/R | Box Body/MPV FWD CUUB, DFSB | | GCI61057 | Inner Joint | | | 34 | | | 89 | |
| | 2015.05-2020.09 | 6MT | F | L | Box Body/MPV FWD CUUB, DFSB | | GDS83295 | Drive Shaft | | 36 | | 59.5 | 40 | 491 | |
| | 2015.05-2020.09 | 6MT | F | R | Box Body/MPV FWD CUUB, DFSB | Date to:2016.02 | GDS61147 | Drive Shaft | | 36 | | 59.5 | 40 | 795 | |
| | 2015.05-2020.09 | 6MT | F | R | Box Body/MPV FWD CUUB, DFSB | Date from:2016.03 | GDS83313 | Drive Shaft | | 36 | | 59.5 | 40 | 792 | |
| | 2015.05-2020.09 | 6MT | F | L/R | Box Body/MPV FWD CUUB, DFSB | | GCI61069 | Inner Joint | | | 28 | | | 32 | |
| | 2015.05-2020.09 | AT | F | L | Box Body/MPV FWD CUUB, DFSB | | GDS83241 | Drive Shaft | | 36 | | 59.5 | 40 | 475 | |
| | 2015.05-2020.09 | 6DCT | F | L | MPV FWD CUUB, DFSB | AAR | GDS83381 | Drive Shaft | | 36 | | 59.5 | 40 | 483 | |
| | 2015.05-2020.09 | 6DCT | F | R | MPV FWD CUUB, DFSB | AAR | GDS83354 | Drive Shaft | | 36 | | 59.5 | 40 | 763 | |
| | 2015.05-2020.09 | 6DCT | F | L/R | MPV FWD CUUB, DFSB | | GCI61057 | Inner Joint | | | 34 | | | 89 | |
| | 2015.05-2020.09 | 6MT | F | L | MPV FWD CUUB, DFSB | | GDS83295 | Drive Shaft | | 36 | | 59.5 | 40 | 491 | |
| | 2015.05-2020.09 | 6MT | F | R | MPV FWD CUUB, DFSB | Date From:2016.03 | GDS61126 | Drive Shaft | | 36 | | 59.5 | 40 | 793 | |
| | 2015.05-2020.09 | 6MT | F | R | MPV FWD CUUB, DFSB | Date to:2016.02 | GDS61147 | Drive Shaft | | 36 | | 59.5 | 40 | 795 | |
| | 2015.05-2020.09 | 6MT | F | R | MPV FWD CUUB, DFSB | Date From:2016.03 | GDS83313 | Drive Shaft | | 36 | | 59.5 | 40 | 792 | |
| | 2015.05-2020.09 | 6MT | F | L/R | MPV FWD CUUB, DFSB | | GCI61069 | Inner Joint | | | 28 | | | 32 | |
| | 2015.05-2020.09 | 6MT/6DCT | F | L/R | MPV FWD CUUB, DFSB | | GCO83101 | Outer Joint | | 36 | 27 | 59.5 | 40 | 65 | M |
| | 2015.11-2020.09 | 6AT | F | L | Box Body/MPV 4WD DFSB | | GDS83236 | Drive Shaft | | 36 | | 59.5 | 40 | 484 | |
| | 2015.11-2020.09 | 6AT | F | R | Box Body/MPV 4WD DFSB | | GDS81892 | Drive Shaft | | 36 | | 59.5 | 40 | 602 | |
| | 2015.11-2020.09 | 6AT | F | L | Box Body/MPV 4WD DFSB | | GCI61002 | Inner Joint | | | 28 | | | 31.8 | |
| | 2015.11-2020.09 | 6AT | F | R | Box Body/MPV 4WD DFSB | | GCI61069 | Inner Joint | | | 28 | | | 32 | |
| | 2015.11-2020.09 | DCT | F | R | Box Body/MPV 4WD DFSB | | GCO83101 | Outer Joint | | 36 | 27 | 59.5 | 40 | 65 | M |
| | 2015.11-2020.09 | | F | L | Box Body/MPV 4WD DFSB | | GCO81352 | Outer Joint | | 36 | 28 | 59.5 | 40 | 65 | I |
| | 2015.11-2020.09 | | F | L | Box Body/MPV 4WD DFSB | | GCO83104 | Outer Joint | | 36 | 28 | 59.4 | 40 | 65 | I |
| | 2015.11-2020.09 | 6AT | F | L | MPV 4WD DFSB | | GDS83236 | Drive Shaft | | 36 | | 59.5 | 40 | 484 | |
| | 2015.11-2020.09 | 6AT | F | R | MPV 4WD DFSB | Wheel Hub Diam [mm]:42,Date to:2017.08;Wheel Hub Diam [mm]:37,Date from:2017.10 | GDS81892 | Drive Shaft | | 36 | | 59.5 | 40 | 602 | |
| | 2015.11-2020.09 | 6AT | F | L | MPV 4WD DFSB | | GCI61002 | Inner Joint | | | 28 | | | 31.8 | |
| | 2015.11-2020.09 | 6AT | F | R | MPV 4WD DFSB | | GCI61069 | Inner Joint | | | 28 | | | 32 | |
| | 2015.11-2020.09 | DCT | F | R | MPV 4WD DFSB | | GCO83101 | Outer Joint | | 36 | 27 | 59.5 | 40 | 65 | M |
| | 2015.11-2020.09 | | F | L | MPV 4WD DFSB | | GCO81352 | Outer Joint | | 36 | 28 | 59.5 | 40 | 65 | I |
| | 2015.11-2020.09 | | F | L | MPV 4WD DFSB | | GCO83104 | Outer Joint | | 36 | 28 | 59.4 | 40 | 65 | I |
| 2.0 (125 kw) | 2012.05-2015.05 | 6DCT | F | L | Box Body/MPV FWD CFJA | | GDS83381 | Drive Shaft | | 36 | | 59.5 | 40 | 483 | |
| | 2012.05-2015.05 | 6DCT | F | R | Box Body/MPV FWD CFJA | | GDS83354 | Drive Shaft | | 36 | | 59.5 | 40 | 763 | |
| | 2012.05-2015.05 | 6DCT | F | L | Box Body/MPV FWD CFJA | | GCO83101 | Outer Joint | | 36 | 27 | 59.5 | 40 | 65 | M |
| | 2012.05-2015.05 | AT | F | L | Box Body/MPV FWD CFJA | | GDS83241 | Drive Shaft | | 36 | | 59.5 | 40 | 475 | |
| | 2012.05-2015.05 | AT | F | L/R | Box Body/MPV FWD CFJA | | GCI61057 | Inner Joint | | | 34 | | | 89 | |
| | 2012.05-2015.05 | | F | L | Box Body/MPV FWD CFJA | | GCI54004 | Inner Joint | | | 34 | | | 81 | |
| | 2012.05-2015.05 | 6DCT | F | L | MPV FWD CFJA | | GDS83381 | Drive Shaft | | 36 | | 59.5 | 40 | 483 | |
| | 2012.05-2015.05 | 6DCT | F | R | MPV FWD CFJA | | GDS83354 | Drive Shaft | | 36 | | 59.5 | 40 | 763 | |
| | 2012.05-2015.05 | 6DCT | F | L | MPV FWD CFJA | | GCO83101 | Outer Joint | | 36 | 27 | 59.5 | 40 | 65 | M |
| | 2012.05-2015.05 | AT | F | L | MPV FWD CFJA | | GDS83241 | Drive Shaft | | 36 | | 59.5 | 40 | 475 | |
| | 2012.05-2015.05 | AT | F | L/R | MPV FWD CFJA | | GCI61057 | Inner Joint | | | 34 | | | 89 | |
| | 2012.05-2015.05 | | F | L | MPV FWD CFJA | | GCI54004 | Inner Joint | | | 34 | | | 81 | |
| **Caddy Alltrack** | | | | | | | | | | | | | | | |
| 1.0 (62 kw) | 2018.11-2019.07 | 5MT | F | L | MPV FWD DKRD | | GDS57830 | Drive Shaft | | 36 | | 59.5 | 40 | 492 | |
| | 2018.11-2019.07 | 5MT | F | R | MPV FWD DKRD | | GDS82230 | Drive Shaft | | 36 | | 59.5 | 40 | 789 | |
| | 2018.11-2019.07 | 5MT | F | L/R | MPV FWD DKRD | | GCO61059 | Outer Joint | | 36 | 33 | 59.5 | 40 | 59.5 | I |

| | YEAR | TRANSM. | F/R | L/R | BODY STYLE & DRIVE TYPE & ENGINE | REMARKS | G-AP Ref. | PRODUCT | ABS | Technical Specifications A | B | C | H | L | P |
|---|---|---|---|---|---|---|---|---|---|---|---|---|---|---|---|
| **VW** **Caddy Alltrack** | | | | | | | | | | | | | | | |
| 1.0 (62 kw) | 2018.11-2019.07 | 5MT | F | L/R | MPV FWD DKRD | | GCI81689 | Inner Joint | | | 32 | | | 89 | |
| 1.0 (75 kw) | 2015.11-2020.09 | 5MT | F | L | Box Body/MPV FWD CHZG | | GDS57830 | Drive Shaft | | 36 | | 59.5 | 40 | 492 | |
| | 2015.11-2020.09 | 5MT | F | R | Box Body/MPV FWD CHZG | | GDS82230 | Drive Shaft | | 36 | | 59.5 | 40 | 789 | |
| | 2015.11-2020.09 | 5MT | F | L/R | Box Body/MPV FWD CHZG | | GCO61059 | Outer Joint | | 36 | 33 | 59.5 | 40 | 59.5 | I |
| | 2015.11-2020.09 | 5MT | F | L/R | Box Body/MPV FWD CHZG | | GCI81689 | Inner Joint | | | 32 | | | 89 | |
| | 2015.11-2020.09 | 5MT | F | L | MPV FWD CHZG | | GDS57830 | Drive Shaft | | 36 | | 59.5 | 40 | 492 | |
| | 2015.11-2020.09 | 5MT | F | R | MPV FWD CHZG | | GDS82230 | Drive Shaft | | 36 | | 59.5 | 40 | 789 | |
| | 2015.11-2020.09 | 5MT | F | L/R | MPV FWD CHZG | | GCO61059 | Outer Joint | | 36 | 33 | 59.5 | 40 | 59.5 | I |
| | 2015.11-2020.09 | 5MT | F | L/R | MPV FWD CHZG | | GCI81689 | Inner Joint | | | 32 | | | 89 | |
| 1.2 (62 kw) | 2015.06-2020.09 | 5MT | F | L | Box Body/MPV FWD CYVC | | GDS61282 | Drive Shaft | | 36 | | 59.5 | 40 | 523 | |
| | 2015.06-2020.09 | 5MT | F | R | Box Body/MPV FWD CYVC | | GDS61307 | Drive Shaft | | 36 | | 59.5 | 40 | 819 | |
| | 2015.06-2020.09 | 5MT | F | L | Box Body/MPV FWD CYVC | | GCO61059 | Outer Joint | | 36 | 33 | 59.5 | 40 | 59.5 | I |
| | 2015.06-2020.09 | 5MT | F | R | Box Body/MPV FWD CYVC | | GCO83037 | Outer Joint | | 36 | 30 | 59.5 | 40.5 | 56 | I |
| | 2015.06-2020.09 | 5MT | F | L/R | Box Body/MPV FWD CYVC | | GCI53002 | Inner Joint | | | 33 | | | 34 | |
| | 2015.06-2020.09 | 5MT | F | L/R | Box Body/MPV FWD CYVC | | GCI82447 | Inner Joint | | | 33 | | | 34 | |
| | 2015.06-2020.09 | | F | L/R | Box Body/MPV FWD CYVC | Date to:2020.09,Type: Caddy Alltrack | GCI83011 | Inner Joint | | | 33 | | | 34 | |
| | 2015.06-2020.09 | 5MT | F | L | MPV FWD CYVC | | GDS61282 | Drive Shaft | | 36 | | 59.5 | 40 | 523 | |
| | 2015.06-2020.09 | 5MT | F | R | MPV FWD CYVC | | GDS61307 | Drive Shaft | | 36 | | 59.5 | 40 | 819 | |
| | 2015.06-2020.09 | 5MT | F | L | MPV FWD CYVC | | GCO61059 | Outer Joint | | 36 | 33 | 59.5 | 40 | 59.5 | I |
| | 2015.06-2020.09 | 5MT | F | R | MPV FWD CYVC | | GCO83037 | Outer Joint | | 36 | 30 | 59.5 | 40.5 | 56 | I |
| | 2015.06-2020.09 | 5MT | F | L/R | MPV FWD CYVC | | GCI53002 | Inner Joint | | | 33 | | | 34 | |
| | 2015.06-2020.09 | 5MT | F | L/R | MPV FWD CYVC | | GCI82447 | Inner Joint | | | 33 | | | 34 | |
| | 2015.06-2020.09 | | F | L/R | MPV FWD CYVC | Date to:2020.09,Type: Caddy Alltrack | GCI83011 | Inner Joint | | | 33 | | | 34 | |
| 1.4 (81 kw) | 2015.06-2020.09 | 6MT | F | L | Box Body/MPV FWD CPWA | | GDS61100 | Drive Shaft | | 36 | | 59.5 | 40 | 513 | |
| | 2015.06-2020.09 | 6MT | F | R | Box Body/MPV FWD CPWA | | GDS61101 | Drive Shaft | | 36 | | 59.5 | 40 | 803 | |
| | 2015.06-2020.09 | 6MT | F | L/R | Box Body/MPV FWD CPWA | | GCO83101 | Outer Joint | | 36 | 27 | 59.5 | 40 | 65 | M |
| | 2015.06-2020.09 | 6MT | F | L/R | Box Body/MPV FWD CPWA | | GCI83016 | Inner Joint | | | 28 | | | 32 | |
| | 2015.06-2020.09 | 6DCT | F | L | MPV FWD CPWA | | GDS83295 | Drive Shaft | | 36 | | 59.5 | 40 | 491 | |
| | 2015.06-2020.09 | 6DCT | F | R | MPV FWD CPWA | | GDS81891 | Drive Shaft | | 36 | | 59.5 | 40 | 781 | |
| | 2015.06-2020.09 | 6DCT | F | L/R | MPV FWD CPWA | | GCI61069 | Inner Joint | | | 28 | | | 32 | |
| | 2015.06-2020.09 | 6MT | F | L | MPV FWD CPWA | | GDS61100 | Drive Shaft | | 36 | | 59.5 | 40 | 513 | |
| | 2015.06-2020.09 | 6MT | F | R | MPV FWD CPWA | | GDS61101 | Drive Shaft | | 36 | | 59.5 | 40 | 803 | |
| | 2015.06-2020.09 | 6MT | F | L/R | MPV FWD CPWA | | GCO83101 | Outer Joint | | 36 | 27 | 59.5 | 40 | 65 | M |
| | 2015.06-2020.09 | 6MT | F | L/R | MPV FWD CPWA | | GCI83016 | Inner Joint | | | 28 | | | 32 | |
| 1.4 (92 kw) | 2015.05-2020.09 | 6MT | F | L | Box Body/MPV FWD CZCB | | GDS61100 | Drive Shaft | | 36 | | 59.5 | 40 | 513 | |
| | 2015.05-2020.09 | 6MT | F | R | Box Body/MPV FWD CZCB | | GDS61101 | Drive Shaft | | 36 | | 59.5 | 40 | 803 | |
| | 2015.05-2020.09 | 6MT/7DCT | F | L/R | Box Body/MPV FWD CZCB | | GCO83101 | Outer Joint | | 36 | 27 | 59.5 | 40 | 65 | M |
| | 2015.05-2020.09 | 7DCT | F | R | Box Body/MPV FWD CZCB | Date to:2016.02 | GDS61147 | Drive Shaft | | 36 | | 59.5 | 40 | 795 | |
| | 2015.05-2020.09 | 7DCT | F | R | Box Body/MPV FWD CZCB | Date from:2016.03 | GDS83313 | Drive Shaft | | 36 | | 59.5 | 40 | 792 | |
| | 2015.05-2020.09 | | F | L/R | Box Body/MPV FWD CZCB | | GCI83016 | Inner Joint | | | 28 | | | 32 | |
| | 2015.05-2020.09 | 6MT | F | R | MPV FWD CZCB | | GDS61101 | Drive Shaft | | 36 | | 59.5 | 40 | 803 | |
| | 2015.05-2020.09 | 6MT/7DCT | F | L | MPV FWD CZCB | | GDS61100 | Drive Shaft | | 36 | | 59.5 | 40 | 513 | |
| | 2015.05-2020.09 | 6MT/7DCT | F | L/R | MPV FWD CZCB | | GCO83101 | Outer Joint | | 36 | 27 | 59.5 | 40 | 65 | M |
| | 2015.05-2020.09 | 6MT/7DCT | F | L/R | MPV FWD CZCB | | GCI83016 | Inner Joint | | | 28 | | | 32 | |
| | 2015.05-2020.09 | 7DCT | F | R | MPV FWD CZCB | hollow shaft | GDS61147 | Drive Shaft | | 36 | | 59.5 | 40 | 795 | |
| | 2015.05-2020.09 | 7DCT | F | R | MPV FWD CZCB | solid shaft | GDS83313 | Drive Shaft | | 36 | | 59.5 | 40 | 792 | |
| 1.4 (96 kw) | 2018.07-2020.09 | 6MT | F | R | MPV FWD DJKD | | GDS61101 | Drive Shaft | | 36 | | 59.5 | 40 | 803 | |
| | 2018.07-2020.09 | 6MT | F | R | MPV FWD DJKD | | GCO83101 | Outer Joint | | 36 | 27 | 59.5 | 40 | 65 | M |
| | 2018.07-2020.09 | 7AT/6MT | F | L | MPV FWD DJKD | | GDS61100 | Drive Shaft | | 36 | | 59.5 | 40 | 513 | |
| | 2018.07-2020.09 | 7DCT | F | R | MPV FWD DJKD | | GDS83313 | Drive Shaft | | 36 | | 59.5 | 40 | 792 | |
| | 2018.07-2020.09 | | F | L/R | MPV FWD DJKD | | GCI83016 | Inner Joint | | | 28 | | | 32 | |
| | 2019.06-2020.09 | 7AT | F | L | Box Body/MPV FWD DJKD | | GDS61100 | Drive Shaft | | 36 | | 59.5 | 40 | 513 | |
| | 2019.06-2020.09 | 7DCT | F | R | Box Body/MPV FWD DJKD | | GDS83313 | Drive Shaft | | 36 | | 59.5 | 40 | 792 | |
| 1.6 (55 kw) | 2015.05-2017.11 | 5MT | F | L | Box Body/MPV FWD CAYE | For special-purpose vehicles | GDS61100 | Drive Shaft | | 36 | | 59.5 | 40 | 513 | |
| | 2015.05-2017.11 | 5MT | F | L | Box Body/MPV FWD CAYE | Not For special-purpose vehicles | GDS61282 | Drive Shaft | | 36 | | 59.5 | 40 | 523 | |
| | 2015.05-2017.11 | 5MT | F | R | Box Body/MPV FWD CAYE | Economy,not for special-purpose vehicles | GDS61042 | Drive Shaft | | 36 | | 59.5 | 40.5 | 814 | |
| | 2015.05-2017.11 | 5MT | F | R | Box Body/MPV FWD CAYE | For special-purpose vehicles | GDS61101 | Drive Shaft | | 36 | | 59.5 | 40 | 803 | |
| | 2015.05-2017.11 | 5MT | F | R | Box Body/MPV FWD CAYE | No Economy,not for special-purpose vehicles | GDS61283 | Drive Shaft | | 36 | | 59.5 | 40 | 815 | |
| | 2015.05-2017.11 | 5MT | F | L/R | Box Body/MPV FWD CAYE | | GCO61059 | Outer Joint | | 36 | 33 | 59.5 | 40 | 59.5 | I |
| | 2015.05-2017.11 | 5MT | F | L/R | Box Body/MPV FWD CAYE | | GCO83101 | Outer Joint | | 36 | 27 | 59.5 | 40 | 65 | M |
| | 2015.05-2017.11 | 5MT | F | L/R | Box Body/MPV FWD CAYE | | GCI82447 | Inner Joint | | | 33 | | | 34 | |
| | 2015.05-2017.11 | 5MT | F | L/R | Box Body/MPV FWD CAYE | | GCI83016 | Inner Joint | | | 28 | | | 32 | |
| | 2015.05-2017.11 | 5MT | F | L | MPV FWD CAYE | For special-purpose vehicles | GDS61100 | Drive Shaft | | 36 | | 59.5 | 40 | 513 | |
| | 2015.05-2017.11 | 5MT | F | L | MPV FWD CAYE | Not For special-purpose vehicles | GDS61282 | Drive Shaft | | 36 | | 59.5 | 40 | 523 | |
| | 2015.05-2017.11 | 5MT | F | R | MPV FWD CAYE | Economy,not for special-purpose vehicles | GDS61042 | Drive Shaft | | 36 | | 59.5 | 40.5 | 814 | |

| | YEAR | TRANSM. | F/R | L/R | BODY STYLE & DRIVE TYPE & ENGINE | REMARKS | G-AP Ref. | PRODUCT | ABS | Technical Specifications A | B | C | H | L | P |
|---|---|---|---|---|---|---|---|---|---|---|---|---|---|---|---|
| **VW** **Caddy Alltrack** | | | | | | | | | | | | | | | |
| 1.6 (55 kw) | 2015.05-2017.11 | 5MT | F | R | MPV FWD CAYE | For special-purpose vehicles | GDS61101 | Drive Shaft | | 36 | | 59.5 | 40 | 803 | |
| | 2015.05-2017.11 | 5MT | F | R | MPV FWD CAYE | No Economy,not for special-purpose vehicles | GDS61283 | Drive Shaft | | 36 | | 59.5 | 40 | 815 | |
| | 2015.05-2017.11 | 5MT | F | L/R | MPV FWD CAYE | | GCO61059 | Outer Joint | | 36 | 33 | 59.5 | 40 | 59.5 | I |
| | 2015.05-2017.11 | 5MT | F | L/R | MPV FWD CAYE | | GCO83101 | Outer Joint | | 36 | 27 | 59.5 | 40 | 65 | M |
| | 2015.05-2017.11 | 5MT | F | L/R | MPV FWD CAYE | | GCI82447 | Inner Joint | | | 33 | | | 34 | |
| | 2015.05-2017.11 | 5MT | F | L/R | MPV FWD CAYE | | GCI83016 | Inner Joint | | | 28 | | | 32 | |
| 1.6 (75 kw) | 2015.05-2020.09 | 5MT | F | R | Box Body/MPV FWD CAYD | | GDS61101 | Drive Shaft | | 36 | | 59.5 | 40 | 803 | |
| | 2015.05-2020.09 | 7DCT | F | R | Box Body/MPV FWD CAYD | Date to:2016.02 | GDS61147 | Drive Shaft | | 36 | | 59.5 | 40 | 795 | |
| | 2015.05-2020.09 | 7DCT | F | R | Box Body/MPV FWD CAYD | Date from:2016.03 | GDS83313 | Drive Shaft | | 36 | | 59.5 | 40 | 792 | |
| | 2015.05-2020.09 | 7DCT/5MT | F | L | Box Body/MPV FWD CAYD | | GDS61100 | Drive Shaft | | 36 | | 59.5 | 40 | 513 | |
| | 2015.05-2020.09 | 5MT | F | R | MPV FWD CAYD | | GDS61101 | Drive Shaft | | 36 | | 59.5 | 40 | 803 | |
| | 2015.05-2020.09 | 7DCT | F | R | MPV FWD CAYD | Date to:2016.02 | GDS61147 | Drive Shaft | | 36 | | 59.5 | 40 | 795 | |
| | 2015.05-2020.09 | 7DCT | F | R | MPV FWD CAYD | Date from:2016.03 | GDS83313 | Drive Shaft | | 36 | | 59.5 | 40 | 792 | |
| | 2015.05-2020.09 | 7DCT/5MT | F | L | MPV FWD CAYD | | GDS61100 | Drive Shaft | | 36 | | 59.5 | 40 | 513 | |
| 1.6 (81 kw) | 2015.11-2020.09 | 5MT | F | L | Box Body/MPV FWD CWVA | | GDS61282 | Drive Shaft | | 36 | | 59.5 | 40 | 523 | |
| | 2015.11-2020.09 | 5MT | F | R | Box Body/MPV FWD CWVA | | GDS61307 | Drive Shaft | | 36 | | 59.5 | 40 | 819 | |
| | 2015.11-2020.09 | 5MT | F | L | Box Body/MPV FWD CWVA | | GCO61059 | Outer Joint | | 36 | 33 | 59.5 | 40 | 59.5 | I |
| | 2015.11-2020.09 | 5MT | F | R | Box Body/MPV FWD CWVA | | GCO83037 | Outer Joint | | 36 | 30 | 59.5 | 40.5 | 56 | I |
| | 2015.11-2020.09 | 5MT | F | L/R | Box Body/MPV FWD CWVA | | GCI82447 | Inner Joint | | | 33 | | | 34 | |
| | 2015.11-2020.09 | 5MT | F | L | MPV FWD CWVA | | GDS61282 | Drive Shaft | | 36 | | 59.5 | 40 | 523 | |
| | 2015.11-2020.09 | 5MT | F | R | MPV FWD CWVA | | GDS61307 | Drive Shaft | | 36 | | 59.5 | 40 | 819 | |
| | 2015.11-2020.09 | 5MT | F | L | MPV FWD CWVA | | GCO61059 | Outer Joint | | 36 | 33 | 59.5 | 40 | 59.5 | I |
| | 2015.11-2020.09 | 5MT | F | R | MPV FWD CWVA | | GCO83037 | Outer Joint | | 36 | 30 | 59.5 | 40.5 | 56 | I |
| | 2015.11-2020.09 | 5MT | F | L/R | MPV FWD CWVA | | GCI82447 | Inner Joint | | | 33 | | | 34 | |
| 2.0 (55 kw) | 2015.05-2020.09 | 5MT | F | L | Box Body/MPV FWD CUUF;DFSC;DFSF | for special-purpose vehicles | GDS61100 | Drive Shaft | | 36 | | 59.5 | 40 | 513 | |
| | 2015.05-2020.09 | 5MT | F | L | Box Body/MPV FWD CUUF;DFSC;DFSF | | GDS61282 | Drive Shaft | | 36 | | 59.5 | 40 | 523 | |
| | 2015.05-2020.09 | 5MT | F | R | Box Body/MPV FWD CUUF;DFSC;DFSF | for special-purpose vehicles | GDS61101 | Drive Shaft | | 36 | | 59.5 | 40 | 803 | |
| | 2015.05-2020.09 | 5MT | F | R | Box Body/MPV FWD CUUF;DFSC;DFSF | | GDS61283 | Drive Shaft | | 36 | | 59.5 | 40 | 815 | |
| | 2015.05-2020.09 | 5MT | F | R | Box Body/MPV FWD CUUF;DFSC;DFSF | for special-purpose vehicles | GCO83101 | Outer Joint | | 36 | 27 | 59.5 | 40 | 65 | M |
| | 2015.05-2020.09 | 5MT | F | L/R | Box Body/MPV FWD CUUF;DFSC;DFSF | | GCO61059 | Outer Joint | | 36 | 33 | 59.5 | 40 | 59.5 | I |
| | 2015.05-2020.09 | 5MT | F | L/R | Box Body/MPV FWD CUUF;DFSC;DFSF | | GCI82447 | Inner Joint | | | 33 | | | 34 | |
| | 2015.05-2020.09 | 5MT | F | L/R | Box Body/MPV FWD CUUF;DFSC;DFSF | | GCI83016 | Inner Joint | | | 28 | | | 32 | |
| | 2015.05-2020.09 | MT | F | L | Box Body/MPV FWD CUUF;DFSC;DFSF | | GDS83294 | Drive Shaft | | 36 | | 59.5 | 38 | 519 | |
| | 2015.05-2020.09 | MT | F | L | Box Body/MPV FWD CUUF;DFSC;DFSF | | GCO83037 | Outer Joint | | 36 | 30 | 59.5 | 40.5 | 56 | I |
| | 2015.05-2020.09 | MT | F | L/R | Box Body/MPV FWD CUUF;DFSC;DFSF | | GCI83006 | Inner Joint | | | 33 | | | 34 | |
| | 2015.05-2020.09 | | F | R | Box Body/MPV FWD CUUF;DFSC;DFSF | | GDS61042 | Drive Shaft | | 36 | | 59.5 | 40.5 | 814 | |
| | 2015.05-2020.09 | 5MT | F | L | MPV FWD CUUF;DFSF | for special-purpose vehicles | GDS61100 | Drive Shaft | | 36 | | 59.5 | 40 | 513 | |
| | 2015.05-2020.09 | 5MT | F | L | MPV FWD CUUF;DFSF | | GDS61282 | Drive Shaft | | 36 | | 59.5 | 40 | 523 | |
| | 2015.05-2020.09 | 5MT | F | R | MPV FWD CUUF;DFSF | for special-purpose vehicles | GDS61101 | Drive Shaft | | 36 | | 59.5 | 40 | 803 | |
| | 2015.05-2020.09 | 5MT | F | R | MPV FWD CUUF;DFSF | | GDS61283 | Drive Shaft | | 36 | | 59.5 | 40 | 815 | |
| | 2015.05-2020.09 | 5MT | F | R | MPV FWD CUUF;DFSF | for special-purpose vehicles | GCO83101 | Outer Joint | | 36 | 27 | 59.5 | 40 | 65 | M |
| | 2015.05-2020.09 | 5MT | F | L/R | MPV FWD CUUF;DFSF | | GCO61059 | Outer Joint | | 36 | 33 | 59.5 | 40 | 59.5 | I |
| | 2015.05-2020.09 | 5MT | F | L/R | MPV FWD CUUF;DFSF | | GCI82447 | Inner Joint | | | 33 | | | 34 | |
| | 2015.05-2020.09 | 5MT | F | L/R | MPV FWD CUUF;DFSF | | GCI83016 | Inner Joint | | | 28 | | | 32 | |
| | 2015.05-2020.09 | MT | F | L | MPV FWD CUUF;DFSF | | GDS83294 | Drive Shaft | | 36 | | 59.5 | 38 | 519 | |
| | 2015.05-2020.09 | MT | F | L | MPV FWD CUUF;DFSF | | GCO83037 | Outer Joint | | 36 | 30 | 59.5 | 40.5 | 56 | I |
| | 2015.05-2020.09 | MT | F | L/R | MPV FWD CUUF;DFSF | | GCI83006 | Inner Joint | | | 33 | | | 34 | |
| | 2015.05-2020.09 | | F | R | MPV FWD CUUF;DFSF | | GDS61042 | Drive Shaft | | 36 | | 59.5 | 40.5 | 814 | |
| 2.0 (75 kw) | 2015.05-2020.09 | 5MT | F | L | Box Body/MPV FWD CUUD;DFSD | | GDS61100 | Drive Shaft | | 36 | | 59.5 | 40 | 513 | |
| | 2015.05-2020.09 | 5MT | F | R | Box Body/MPV FWD CUUD;DFSD | | GDS61101 | Drive Shaft | | 36 | | 59.5 | 40 | 803 | |
| | 2015.05-2020.09 | 5MT | F | L/R | Box Body/MPV FWD CUUD;DFSD | | GCO83002 | Outer Joint | | 36 | 27 | 59.5 | 40 | 66 | I |
| | 2015.05-2020.09 | 5MT | F | L/R | Box Body/MPV FWD CUUD;DFSD | | GCI83016 | Inner Joint | | | 28 | | | 32 | |
| | 2015.05-2020.09 | 5MT/6DCT | F | L/R | Box Body/MPV FWD CUUD;DFSD | | GCO83101 | Outer Joint | | 36 | 27 | 59.5 | 40 | 65 | M |
| | 2015.05-2020.09 | 6DCT | F | L | Box Body/MPV FWD CUUD;DFSD | AAR | GDS83381 | Drive Shaft | | 36 | | 59.5 | 40 | 483 | |
| | 2015.05-2020.09 | 6DCT | F | R | Box Body/MPV FWD CUUD;DFSD | AAR | GDS83354 | Drive Shaft | | 36 | | 59.5 | 40 | 763 | |
| | 2015.05-2020.09 | 6DCT | F | L/R | Box Body/MPV FWD CUUD;DFSD | TJ | GCI54004 | Inner Joint | | | 34 | | | 81 | |
| | 2015.05-2020.09 | 6DCT | F | L/R | Box Body/MPV FWD CUUD;DFSD | AAR | GCI61057 | Inner Joint | | | 34 | | | 89 | |
| | 2015.05-2020.09 | 5MT | F | L | MPV FWD CUUD;DFSD | | GDS61100 | Drive Shaft | | 36 | | 59.5 | 40 | 513 | |
| | 2015.05-2020.09 | 5MT | F | R | MPV FWD CUUD;DFSD | | GDS61101 | Drive Shaft | | 36 | | 59.5 | 40 | 803 | |
| | 2015.05-2020.09 | 5MT | F | L/R | MPV FWD CUUD;DFSD | | GCO83002 | Outer Joint | | 36 | 27 | 59.5 | 40 | 66 | I |
| | 2015.05-2020.09 | 5MT | F | L/R | MPV FWD CUUD;DFSD | | GCI83016 | Inner Joint | | | 28 | | | 32 | |
| | 2015.05-2020.09 | 5MT/6DCT | F | L/R | MPV FWD CUUD;DFSD | | GCO83101 | Outer Joint | | 36 | 27 | 59.5 | 40 | 65 | M |
| | 2015.05-2020.09 | 6DCT | F | L | MPV FWD CUUD;DFSD | AAR | GDS83381 | Drive Shaft | | 36 | | 59.5 | 40 | 483 | |
| | 2015.05-2020.09 | 6DCT | F | R | MPV FWD CUUD;DFSD | AAR | GDS83354 | Drive Shaft | | 36 | | 59.5 | 40 | 763 | |
| | 2015.05-2020.09 | 6DCT | F | L/R | MPV FWD CUUD;DFSD | TJ | GCI54004 | Inner Joint | | | 34 | | | 81 | |

| | YEAR | TRANSM. | F/R | L/R | BODY STYLE & DRIVE TYPE & ENGINE | REMARKS | G-AP Ref. | PRODUCT | ABS | Technical Specifications A | B | C | H | L | P |
|---|---|---|---|---|---|---|---|---|---|---|---|---|---|---|---|
| **VW Caddy Alltrack** | | | | | | | | | | | | | | | |
| 2.0 (75 kw) | 2015.05-2020.09 | 6DCT | F | L/R | MPV FWD CUUD;DFSD | AAR | GCI61057 | Inner Joint | | | 34 | | | 89 | |
| 2.0 (81 kw) | 2015.05-2020.09 | 6MT | F | L | Box Body/MPV 4WD CFHF | | GDS83236 | Drive Shaft | | 36 | | 59.5 | 40 | 484 | |
| | 2015.05-2020.09 | 6MT | F | R | Box Body/MPV 4WD CFHF | Wheel Hub Diam [mm]:42 | GDS81892 | Drive Shaft | | 36 | | 59.5 | 40 | 602 | |
| | 2015.05-2020.09 | 6MT | F | L | Box Body/MPV 4WD CFHF | | GCO83104 | Outer Joint | | 36 | 28 | 59.4 | 40 | 65 | I |
| | 2015.05-2020.09 | 6MT | F | R | Box Body/MPV 4WD CFHF | Wheel Hub Diam [mm]:42 | GCO83101 | Outer Joint | | 36 | 27 | 59.5 | 40 | 65 | M |
| | 2015.05-2020.09 | 6MT | F | L | Box Body/MPV 4WD CFHF | | GCI61002 | Inner Joint | | | 28 | | | 31.8 | |
| | 2015.05-2020.09 | 6MT | F | R | Box Body/MPV 4WD CFHF | | GCI61069 | Inner Joint | | | 28 | | | 32 | |
| | 2015.05-2020.09 | 6MT | F | L | MPV 4WD CFHF;CLCA | | GDS83236 | Drive Shaft | | 36 | | 59.5 | 40 | 484 | |
| | 2015.05-2020.09 | 6MT | F | R | MPV 4WD CFHF;CLCA | Wheel Hub Diam [mm]:42 | GDS81892 | Drive Shaft | | 36 | | 59.5 | 40 | 602 | |
| | 2015.05-2020.09 | 6MT | F | L | MPV 4WD CFHF;CLCA | | GCO83104 | Outer Joint | | 36 | 28 | 59.4 | 40 | 65 | I |
| | 2015.05-2020.09 | 6MT | F | L | MPV 4WD CFHF;CLCA | | GCI61002 | Inner Joint | | | 28 | | | 31.8 | |
| | 2015.09-2020.09 | 5MT | F | L | Box Body/MPV FWD CLCA | | GDS61100 | Drive Shaft | | 36 | | 59.5 | 40 | 513 | |
| | 2015.09-2020.09 | 5MT | F | R | Box Body/MPV FWD CLCA | | GDS61101 | Drive Shaft | | 36 | | 59.5 | 40 | 803 | |
| | 2015.09-2020.09 | 5MT | F | L/R | Box Body/MPV FWD CLCA | | GCO83101 | Outer Joint | | 36 | 27 | 59.5 | 40 | 65 | M |
| | 2015.09-2020.09 | 5MT | F | L/R | Box Body/MPV FWD CLCA | | GCI82456 | Inner Joint | | | 28 | | | 32 | |
| 2.0 (90 kw) | 2015.05-2020.09 | 6MT | F | L | Box Body/MPV 4WD CUUE;DFSE | | GDS83236 | Drive Shaft | | 36 | | 59.5 | 40 | 484 | |
| | 2015.05-2020.09 | 6MT | F | R | Box Body/MPV 4WD CUUE;DFSE | Wheel Hub Diam [mm]:42,Date to:2017.08;Wheel Hub Diam [mm]:27,Date from:2017.10 | GDS81892 | Drive Shaft | | 36 | | 59.5 | 40 | 602 | |
| | 2015.05-2020.09 | 6MT | F | L | Box Body/MPV 4WD CUUE;DFSE | | GCI61002 | Inner Joint | | | 28 | | | 31.8 | |
| | 2015.05-2020.09 | | F | L | Box Body/MPV 4WD CUUE;DFSE | | GCO81352 | Outer Joint | | 36 | 28 | 59.5 | 40 | 65 | I |
| | 2015.05-2020.09 | | F | L | Box Body/MPV 4WD CUUE;DFSE | | GCO83104 | Outer Joint | | 36 | 28 | 59.4 | 40 | 65 | I |
| | 2015.05-2020.09 | | F | R | Box Body/MPV 4WD CUUE;DFSE | | GCO83101 | Outer Joint | | 36 | 27 | 59.5 | 40 | 65 | M |
| | 2015.05-2020.09 | 6MT | F | L | MPV 4WD CUUE;DFSE | | GDS83236 | Drive Shaft | | 36 | | 59.5 | 40 | 484 | |
| | 2015.05-2020.09 | 6MT | F | R | MPV 4WD CUUE;DFSE | Wheel Hub Diam [mm]:42,Date to:2017.08;Wheel Hub Diam [mm]:27,Date from:2017.10 | GDS81892 | Drive Shaft | | 36 | | 59.5 | 40 | 602 | |
| | 2015.05-2020.09 | 6MT | F | L | MPV 4WD CUUE;DFSE | | GCI61002 | Inner Joint | | | 28 | | | 31.8 | |
| | 2015.05-2020.09 | | F | L | MPV 4WD CUUE;DFSE | | GCO81352 | Outer Joint | | 36 | 28 | 59.5 | 40 | 65 | I |
| | 2015.05-2020.09 | | F | L | MPV 4WD CUUE;DFSE | | GCO83104 | Outer Joint | | 36 | 28 | 59.4 | 40 | 65 | I |
| | 2015.05-2020.09 | | F | R | MPV 4WD CUUE;DFSE | | GCO83101 | Outer Joint | | 36 | 27 | 59.5 | 40 | 65 | M |
| 2.0 (103 kw) | 2015.05-2020.09 | 6AT | F | L | Box Body/MPV 4WD CFHC | | GDS83236 | Drive Shaft | | 36 | | 59.5 | 40 | 484 | |
| | 2015.05-2020.09 | 6AT | F | L | Box Body/MPV 4WD CFHC | | GCO83104 | Outer Joint | | 36 | 28 | 59.4 | 40 | 65 | I |
| | 2015.05-2020.09 | 6AT | F | L | Box Body/MPV 4WD CFHC | | GCI61002 | Inner Joint | | | 28 | | | 31.8 | |
| | 2015.05-2020.09 | 6DCT | F | R | Box Body/MPV 4WD CFHC | Wheel Hub Diam [mm]:42,Date to:2017.08;Wheel Hub Diam [mm]:27,Date from:2017.10 | GDS81892 | Drive Shaft | | 36 | | 59.5 | 40 | 602 | |
| | 2015.05-2020.09 | 6DCT | F | L | Box Body/MPV FWD CFHC;CLCB | | GDS83381 | Drive Shaft | | 36 | | 59.5 | 40 | 483 | |
| | 2015.05-2020.09 | 6DCT | F | R | Box Body/MPV FWD CFHC;CLCB | | GDS83354 | Drive Shaft | | 36 | | 59.5 | 40 | 763 | |
| | 2015.05-2020.09 | 6MT | F | L | Box Body/MPV FWD CFHC;CLCB | | GDS83295 | Drive Shaft | | 36 | | 59.5 | 40 | 491 | |
| | 2015.05-2020.09 | 6MT | F | R | Box Body/MPV FWD CFHC;CLCB | Date to:2016.02 | GDS61147 | Drive Shaft | | 36 | | 59.5 | 40 | 795 | |
| | 2015.05-2020.09 | 6MT | F | R | Box Body/MPV FWD CFHC;CLCB | Date from:2016.03 | GDS83313 | Drive Shaft | | 36 | | 59.5 | 40 | 792 | |
| | 2015.05-2020.09 | 6AT | F | L | MPV 4WD CFHC | | GDS83236 | Drive Shaft | | 36 | | 59.5 | 40 | 484 | |
| | 2015.05-2020.09 | 6AT | F | L | MPV 4WD CFHC | | GCO83104 | Outer Joint | | 36 | 28 | 59.4 | 40 | 65 | I |
| | 2015.05-2020.09 | 6AT | F | L | MPV 4WD CFHC | | GCI61002 | Inner Joint | | | 28 | | | 31.8 | |
| | 2015.05-2020.09 | 6DCT/6MT | F | R | MPV 4WD CFHC | Wheel Hub Diam [mm]:42,Date to:2017.08;Wheel Hub Diam [mm]:27,Date from:2017.10 | GDS81892 | Drive Shaft | | 36 | | 59.5 | 40 | 602 | |
| | 2015.05-2020.09 | 6DCT | F | L | MPV FWD CFHC;CLCB | | GDS83381 | Drive Shaft | | 36 | | 59.5 | 40 | 483 | |
| | 2015.05-2020.09 | 6DCT | F | R | MPV FWD CFHC;CLCB | | GDS83354 | Drive Shaft | | 36 | | 59.5 | 40 | 763 | |
| | 2015.05-2020.09 | 6DCT | F | L/R | MPV FWD CFHC;CLCB | | GCO83101 | Outer Joint | | 36 | 27 | 59.5 | 40 | 65 | M |
| | 2015.05-2020.09 | 6DCT | F | L/R | MPV FWD CFHC;CLCB | | GCI61057 | Inner Joint | | | 34 | | | 89 | |
| | 2015.05-2020.09 | 6MT | F | L | MPV FWD CFHC;CLCB | | GDS83295 | Drive Shaft | | 36 | | 59.5 | 40 | 491 | |
| | 2015.05-2020.09 | 6MT | F | R | MPV FWD CFHC;CLCB | Date to:2016.02 | GDS61147 | Drive Shaft | | 36 | | 59.5 | 40 | 795 | |
| | 2015.05-2020.09 | 6MT | F | R | MPV FWD CFHC;CLCB | Date from:2016.03 | GDS83313 | Drive Shaft | | 36 | | 59.5 | 40 | 792 | |
| | 2015.05-2020.09 | 6MT | F | L/R | MPV FWD CFHC;CLCB | | GCI61069 | Inner Joint | | | 28 | | | 32 | |
| 2.0 (110 kw) | 2015.05-2020.09 | 6DCT | F | L | Box Body/MPV FWD CUUB;DFSB | | GDS83381 | Drive Shaft | | 36 | | 59.5 | 40 | 483 | |
| | 2015.05-2020.09 | 6DCT | F | R | Box Body/MPV FWD CUUB;DFSB | | GDS83354 | Drive Shaft | | 36 | | 59.5 | 40 | 763 | |
| | 2015.05-2020.09 | 6DCT | F | L | Box Body/MPV FWD CUUB;DFSB | Date to:2015.11 | GCI54004 | Inner Joint | | | 34 | | | 81 | |
| | 2015.05-2020.09 | 6DCT | F | L/R | Box Body/MPV FWD CUUB;DFSB | | GCI61057 | Inner Joint | | | 34 | | | 89 | |
| | 2015.05-2020.09 | 6MT | F | L | Box Body/MPV FWD CUUB;DFSB | | GDS83295 | Drive Shaft | | 36 | | 59.5 | 40 | 491 | |
| | 2015.05-2020.09 | 6MT | F | R | Box Body/MPV FWD CUUB;DFSB | | GDS61147 | Drive Shaft | | 36 | | 59.5 | 40 | 795 | |
| | 2015.05-2020.09 | 6MT | F | L/R | Box Body/MPV FWD CUUB;DFSB | | GCI61069 | Inner Joint | | | 28 | | | 32 | |
| | 2015.05-2020.09 | AT | F | L | Box Body/MPV FWD CUUB;DFSB | | GDS83241 | Drive Shaft | | 36 | | 59.5 | 40 | 475 | |
| | 2015.05-2020.09 | MT | F | L/R | Box Body/MPV FWD CUUB;DFSB | Date to:2015.11 | GCO83101 | Outer Joint | | 36 | 27 | 59.5 | 40 | 65 | M |
| | 2015.05-2020.09 | 6DCT | F | L | MPV FWD CUUB;DFSB | | GDS83381 | Drive Shaft | | 36 | | 59.5 | 40 | 483 | |
| | 2015.05-2020.09 | 6DCT | F | R | MPV FWD CUUB;DFSB | | GDS83354 | Drive Shaft | | 36 | | 59.5 | 40 | 763 | |
| | 2015.05-2020.09 | 6DCT | F | L/R | MPV FWD CUUB;DFSB | TJ | GCI54004 | Inner Joint | | | 34 | | | 81 | |
| | 2015.05-2020.09 | 6DCT | F | L/R | MPV FWD CUUB;DFSB | AAR | GCI61057 | Inner Joint | | | 34 | | | 89 | |
| | 2015.05-2020.09 | 6MT | F | L | MPV FWD CUUB;DFSB | | GDS83295 | Drive Shaft | | 36 | | 59.5 | 40 | 491 | |
| | 2015.05-2020.09 | 6MT | F | R | MPV FWD CUUB;DFSB | Date to:2016.02 | GDS61147 | Drive Shaft | | 36 | | 59.5 | 40 | 795 | |
| | 2015.05-2020.09 | 6MT | F | R | MPV FWD CUUB;DFSB | Date from:2016.03 | GDS83313 | Drive Shaft | | 36 | | 59.5 | 40 | 792 | |
| | 2015.05-2020.09 | 6MT | F | L/R | MPV FWD CUUB;DFSB | | GCI61069 | Inner Joint | | | 28 | | | 32 | |

| | YEAR | TRANSM. | F/R | L/R | BODY STYLE & DRIVE TYPE & ENGINE | REMARKS | G-AP Ref. | PRODUCT | ABS | Technical Specifications A | B | C | H | L | P |
|---|---|---|---|---|---|---|---|---|---|---|---|---|---|---|---|
| **VW** | | | | | | | | | | | | | | | |
| **Caddy Alltrack** | | | | | | | | | | | | | | | |
| 2.0 (110 kw) | 2015.05-2020.09 | 6MT/6DCT | F | L/R | MPV FWD CUUB;DFSB | | GCO83101 | Outer Joint | | 36 | 27 | 59.5 | 40 | 65 | M |
| | 2015.11-2020.09 | 6AT | F | L | Box Body/MPV 4WD DFSB | | GDS83236 | Drive Shaft | | 36 | | 59.5 | 40 | 484 | |
| | 2015.11-2020.09 | 6AT | F | R | Box Body/MPV 4WD DFSB | Wheel Hub Diam [mm]:42,Date to:2017.08;Wheel Hub Diam [mm]:27,Date from:2017.10 | GDS81892 | Drive Shaft | | 36 | | 59.5 | 40 | 602 | |
| | 2015.11-2020.09 | 6AT | F | L | Box Body/MPV 4WD DFSB | | GCI61002 | Inner Joint | | | 28 | | | 31.8 | |
| | 2015.11-2020.09 | 6AT | F | R | Box Body/MPV 4WD DFSB | | GCI61069 | Inner Joint | | | 28 | | | 32 | |
| | 2015.11-2020.09 | | F | L | Box Body/MPV 4WD DFSB | | GCO81352 | Outer Joint | | 36 | 28 | 59.5 | 40 | 65 | I |
| | 2015.11-2020.09 | | F | L | Box Body/MPV 4WD DFSB | | GCO83104 | Outer Joint | | 36 | 28 | 59.4 | 40 | 65 | I |
| | 2015.11-2020.09 | | F | R | Box Body/MPV 4WD DFSB | | GCO83101 | Outer Joint | | 36 | 27 | 59.5 | 40 | 65 | M |
| | 2015.11-2020.09 | 6AT | F | L | MPV 4WD DFSB | | GDS83236 | Drive Shaft | | 36 | | 59.5 | 40 | 484 | |
| | 2015.11-2020.09 | 6AT | F | R | MPV 4WD DFSB | Wheel Hub Diam [mm]:42,Date to:2017.08;Wheel Hub Diam [mm]:27,Date from:2017.10 | GDS81892 | Drive Shaft | | 36 | | 59.5 | 40 | 602 | |
| | 2015.11-2020.09 | 6AT | F | L | MPV 4WD DFSB | | GCI61002 | Inner Joint | | | 28 | | | 31.8 | |
| | 2015.11-2020.09 | 6AT | F | R | MPV 4WD DFSB | | GCI61069 | Inner Joint | | | 28 | | | 32 | |
| | 2015.11-2020.09 | | F | L | MPV 4WD DFSB | | GCO81352 | Outer Joint | | 36 | 28 | 59.5 | 40 | 65 | I |
| | 2015.11-2020.09 | | F | L | MPV 4WD DFSB | | GCO83104 | Outer Joint | | 36 | 28 | 59.4 | 40 | 65 | I |
| | 2015.11-2020.09 | | F | R | MPV 4WD DFSB | | GCO83101 | Outer Joint | | 36 | 27 | 59.5 | 40 | 65 | M |
| **Caddy California** | | | | | | | | | | | | | | | |
| 2.0 (55 kw) | 2020.09- | 6MT | F | L | MPV FWD DTRF | | GDS81896 | Drive Shaft | | 36 | | 59.5 | 40 | 500 | |
| | 2020.09- | 6MT | F | R | MPV FWD DTRF | | GDS83313 | Drive Shaft | | 36 | | 59.5 | 40 | 792 | |
| | 2020.09- | AT | F | L/R | MPV FWD DTRF | | GCO83101 | Outer Joint | | 36 | 27 | 59.5 | 40 | 65 | M |
| **Caddy California Camper** | | | | | | | | | | | | | | | |
| 1.5 (84 kw) | 2021.01-2024.11 | 6MT | F | L | MPV FWD DPBC | | GDS81896 | Drive Shaft | | 36 | | 59.5 | 40 | 500 | |
| | 2021.01-2024.11 | 6MT | F | R | MPV FWD DPBC | | GDS83313 | Drive Shaft | | 36 | | 59.5 | 40 | 792 | |
| | 2021.01-2024.11 | 6MT | F | L | MPV FWD DPBC | | GCI61069 | Inner Joint | | | 28 | | | 32 | |
| | 2021.01-2024.11 | 6MT | F | R | MPV FWD DPBC | | GCI61002 | Inner Joint | | | 28 | | | 31.8 | |
| | 2021.01-2024.11 | 7DCT | F | L | MPV FWD DPBC | | GDS83323 | Drive Shaft | | 36 | 37 | 59.5 | 40 | 570 | |
| | 2021.01-2024.11 | 7DCT | F | R | MPV FWD DPBC | | GDS84510 | Drive Shaft | | 36 | 37 | 59.5 | 40 | 925 | |
| | 2021.01-2024.11 | 7DCT | F | L/R | MPV FWD DPBC | | GCO83101 | Outer Joint | | 36 | 27 | 59.5 | 40 | 65 | M |
| | 2021.01-2024.11 | 7DCT | F | L | MPV FWD DPBC | | GCI83028 | Inner Joint | | 37 | 28 | | 65.5 | 90.2 | |
| 1.5 (85 kw) | 2024.03- | 6MT | F | L | MPV FWD DXDE | | GDS81896 | Drive Shaft | | 36 | | 59.5 | 40 | 500 | |
| | 2024.03- | 6MT | F | R | MPV FWD DXDE | | GDS83313 | Drive Shaft | | 36 | | 59.5 | 40 | 792 | |
| | 2024.03- | 7DCT | F | L | MPV FWD DXDE | | GDS83323 | Drive Shaft | | 36 | 37 | 59.5 | 40 | 570 | |
| 1.6 (81 kw) | 2021.02- | 6MT | F | L | MPV FWD DWYA | | GCI53002 | Inner Joint | | | 33 | | | 34 | |
| | 2021.02- | 6MT/7DCT | F | L/R | MPV FWD DWYA | | GCO61059 | Outer Joint | | 36 | 33 | 59.5 | 40 | 59.5 | I |
| 2.0 (75 kw) | 2020.09- | 6MT | F | L | MPV FWD DTRE, DXRD | | GDS81896 | Drive Shaft | | 36 | | 59.5 | 40 | 500 | |
| | 2020.09- | 6MT | F | R | MPV FWD DTRE, DXRD | | GDS83313 | Drive Shaft | | 36 | | 59.5 | 40 | 792 | |
| | 2020.09- | AT | F | L/R | MPV FWD DTRE, DXRD | | GCO83101 | Outer Joint | | 36 | 27 | 59.5 | 40 | 65 | M |
| 2.0 (90 kw) | 2020.09- | 7DCT | F | L | MPV FWD DTRC, DXRA | | GDS82351 | Drive Shaft | | 36 | 37 | 59.5 | 40 | 568 | |
| | 2020.09- | 7DCT | F | R | MPV FWD DTRC, DXRA | | GDS83613 | Drive Shaft | | 36 | 37 | 59.5 | 40 | 921 | |
| | 2020.09- | 7DCT | F | L/R | MPV FWD DTRC, DXRA | | GCO83101 | Outer Joint | | 36 | 27 | 59.5 | 40 | 65 | M |
| | 2020.09- | 7DCT | F | L | MPV FWD DTRC, DXRA | | GCI81158 | Inner Joint | | 37 | 34 | 34.5 | 65.5 | 83 | |
| | 2020.09- | 7DCT | F | R | MPV FWD DTRC, DXRA | | GCI82108 | Inner Joint | | 37 | 34 | 40 | 77.5 | 103.5 | |
| | 2021.03- | 6MT | F | L | MPV 4WD DTRC, DXRA | | GDS81896 | Drive Shaft | | 36 | | 59.5 | 40 | 500 | |
| | 2021.03- | MT | F | R | MPV 4WD DTRC, DXRA | | GDS84020 | Drive Shaft | | 36 | | 59.5 | 40 | 615 | |
| | 2021.03- | MT | F | L/R | MPV 4WD DTRC, DXRA | | GCO83101 | Outer Joint | | 36 | 27 | 59.5 | 40 | 65 | M |
| | 2021.03- | MT | F | L | MPV 4WD DTRC, DXRA | | GCI61069 | Inner Joint | | | 28 | | | 32 | |
| | 2021.03- | MT | F | R | MPV 4WD DTRC, DXRA | | GCI82456 | Inner Joint | | | 28 | | | 32 | |
| **Caddy Maxi** | | | | | | | | | | | | | | | |
| 1.5 (96 kw) | 2022.06-2024.04 | 6MT | F | L | Box Body/MPV FWD DHFA | | GDS81896 | Drive Shaft | | 36 | | 59.5 | 40 | 500 | |
| | 2022.06-2024.04 | 6MT | F | R | Box Body/MPV FWD DHFA | | GDS83313 | Drive Shaft | | 36 | | 59.5 | 40 | 792 | |
| | 2022.06-2024.04 | 6MT | F | L | MPV FWD DHFA | | GDS81896 | Drive Shaft | | 36 | | 59.5 | 40 | 500 | |
| | 2022.06-2024.04 | 6MT | F | R | MPV FWD DHFA | | GDS83313 | Drive Shaft | | 36 | | 59.5 | 40 | 792 | |
| **Caddy Pick-Up** | | | | | | | | | | | | | | | |
| 1.6 (55 kw) | 1996.06-2000.12 | 5MT | F | L | Pickup FWD AEE | | GDS54001 | Drive Shaft | | 22 | 22 | 45 | 82 | 599 | |
| | 1996.06-2000.12 | 5MT | F | R | Pickup FWD AEE | | GDS54002 | Drive Shaft | | 22 | 22 | 45 | 82 | 861 | |
| | 1996.06-2000.12 | 5MT | F | L/R | Pickup FWD AEE | | GCO54001 | Outer Joint | | 22 | 22 | 45 | 82 | 53.5 | I |
| | 1996.06-2000.12 | 5MT | F | L/R | Pickup FWD AEE | | GCI54003 | Inner Joint | | 22 | 30 | 40 | 60.2 | 94.5 | |
| | 1996.06-2000.12 | MT | F | L | Pickup FWD AEE | | GCI54002 | Inner Joint | | 22 | 22 | 40 | 60.2 | 94.5 | |
| 1.9 (47 kw) | 1996.06-2000.12 | 5MT | F | L | Pickup FWD AEF | | GDS54001 | Drive Shaft | | 22 | 22 | 45 | 82 | 599 | |
| | 1996.06-2000.12 | 5MT | F | R | Pickup FWD AEF | | GDS54002 | Drive Shaft | | 22 | 22 | 45 | 82 | 861 | |
| | 1996.06-2000.12 | 5MT | F | L/R | Pickup FWD AEF | | GCO54001 | Outer Joint | | 22 | 22 | 45 | 82 | 53.5 | I |
| | 1996.06-2000.12 | 5MT | F | L/R | Pickup FWD AEF | | GCI54003 | Inner Joint | | 22 | 30 | 40 | 60.2 | 94.5 | |
| | 1996.06-2000.12 | MT | F | L | Pickup FWD AEF | | GCI54002 | Inner Joint | | 22 | 22 | 40 | 60.2 | 94.5 | |
| **California** | | | | | | | | | | | | | | | |
| 1.9 (62 kw) | 2007.05-2009.12 | 5MT | F | L | Bus FWD BRR | 6 balls | GDS61105 | Drive Shaft | | 38 | | 63 | 102.5 | 645 | |
| | 2007.05-2009.12 | 5MT | F | L | Bus FWD BRR | 8 balls | GDS81508 | Drive Shaft | | 38 | | 63 | 102.5 | 645 | |

| | YEAR | TRANSM. | F/R | L/R | BODY STYLE & DRIVE TYPE & ENGINE | REMARKS | G-AP Ref. | PRODUCT | ABS | Technical Specifications A | B | C | H | L | P |
|---|---|---|---|---|---|---|---|---|---|---|---|---|---|---|---|
| **VW California** | | | | | | | | | | | | | | | |
| 1.9 (62 kw) | 2007.05-2009.12 | 5MT | F | R | Bus FWD BRR | 8 balls | GDS81533 | Drive Shaft | | 38 | 26 | 63 | 102.5 | 858 | |
| | 2007.05-2009.12 | 5MT | F | R | Bus FWD BRR | 6 balls | GDS83246 | Drive Shaft | | 38 | 26 | 63 | 102.5 | 858 | |
| | 2007.05-2009.12 | 5MT | F | L/R | Bus FWD BRR | | GCO61009 | Outer Joint | | 38 | 27 | 63 | 102 | 66 | M |
| | 2007.05-2009.12 | 5MT | F | L | Bus FWD BRR | | GCI61041 | Inner Joint | | | 28 | | | 32 | |
| | 2007.05-2009.12 | MT | F | L | Bus FWD BRR | | GCI61010 | Inner Joint | | | 28 | | | 32 | |
| 1.9 (63 kw) | 2007.05-2009.11 | 5MT | F | L | Bus FWD AXC | 6 balls | GDS61105 | Drive Shaft | | 38 | | 63 | 102.5 | 645 | |
| | 2007.05-2009.11 | 5MT | F | L | Bus FWD AXC | 8 balls | GDS81508 | Drive Shaft | | 38 | | 63 | 102.5 | 645 | |
| | 2007.05-2009.11 | 5MT | F | R | Bus FWD AXC | 8 balls | GDS81533 | Drive Shaft | | 38 | 26 | 63 | 102.5 | 858 | |
| | 2007.05-2009.11 | 5MT | F | R | Bus FWD AXC | 6 balls | GDS83246 | Drive Shaft | | 38 | 26 | 63 | 102.5 | 858 | |
| | 2007.05-2009.11 | 5MT | F | L/R | Bus FWD AXC | 6 balls | GCO61009 | Outer Joint | | 38 | 27 | 63 | 102 | 66 | M |
| | 2007.05-2009.11 | 5MT | F | L/R | Bus FWD AXC | 8 balls | GCO81348 | Outer Joint | | 38 | 28 | 63 | 102.5 | 64.5 | I |
| | 2007.05-2009.11 | 5MT | F | L | Bus FWD AXC | | GCI61010 | Inner Joint | | | 28 | | | 32 | |
| | 2007.05-2009.11 | 5MT | F | L | Bus FWD AXC | | GCI61069 | Inner Joint | | | 28 | | | 32 | |
| | 2007.05-2009.11 | 5MT | F | R | Bus FWD AXC | | GCI61020 | Inner Joint | | 26 | 28 | | 205.5 | 100.2 | |
| | 2007.05-2009.11 | 5MT | F | R | Bus FWD AXC | for OE number:02Z409345B | GDS61190 | Stub Axle,differential | | 26 | 37 | | | 136.5 | |
| 1.9 (75 kw) | 2007.05-2009.11 | 5MT | F | L | Bus FWD BRS | 6 balls | GDS61105 | Drive Shaft | | 38 | | 63 | 102.5 | 645 | |
| | 2007.05-2009.11 | 5MT | F | L | Bus FWD BRS | 8 balls | GDS81508 | Drive Shaft | | 38 | | 63 | 102.5 | 645 | |
| | 2007.05-2009.11 | 5MT | F | R | Bus FWD BRS | 8 balls | GDS81533 | Drive Shaft | | 38 | 26 | 63 | 102.5 | 858 | |
| | 2007.05-2009.11 | 5MT | F | R | Bus FWD BRS | 6 balls | GDS83246 | Drive Shaft | | 38 | 26 | 63 | 102.5 | 858 | |
| | 2007.05-2009.11 | 5MT | F | L/R | Bus FWD BRS | 6 balls | GCO61009 | Outer Joint | | 38 | 27 | 63 | 102 | 66 | M |
| | 2007.05-2009.11 | 5MT | F | L/R | Bus FWD BRS | 8 balls | GCO81348 | Outer Joint | | 38 | 28 | 63 | 102.5 | 64.5 | I |
| | 2007.05-2009.11 | 5MT | F | L | Bus FWD BRS | | GCI61010 | Inner Joint | | | 28 | | | 32 | |
| | 2007.05-2009.11 | 5MT | F | L | Bus FWD BRS | | GCI61069 | Inner Joint | | | 28 | | | 32 | |
| | 2007.05-2009.11 | 5MT | F | R | Bus FWD BRS | | GCI61020 | Inner Joint | | 26 | 28 | | 205.5 | 100.2 | |
| 1.9 (77 kw) | 2007.05-2009.11 | 5MT | F | L | Bus FWD AXB | 6 balls | GDS61105 | Drive Shaft | | 38 | | 63 | 102.5 | 645 | |
| | 2007.05-2009.11 | 5MT | F | L | Bus FWD AXB | 8 balls | GDS81508 | Drive Shaft | | 38 | | 63 | 102.5 | 645 | |
| | 2007.05-2009.11 | 5MT | F | R | Bus FWD AXB | 8 balls | GDS81533 | Drive Shaft | | 38 | 26 | 63 | 102.5 | 858 | |
| | 2007.05-2009.11 | 5MT | F | R | Bus FWD AXB | 6 balls | GDS83246 | Drive Shaft | | 38 | 26 | 63 | 102.5 | 858 | |
| | 2007.05-2009.11 | 5MT | F | L/R | Bus FWD AXB | 6 balls | GCO61009 | Outer Joint | | 38 | 27 | 63 | 102 | 66 | M |
| | 2007.05-2009.11 | 5MT | F | L/R | Bus FWD AXB | 8 balls | GCO81348 | Outer Joint | | 38 | 28 | 63 | 102.5 | 64.5 | I |
| | 2007.05-2009.11 | 5MT | F | L | Bus FWD AXB | | GCI61010 | Inner Joint | | | 28 | | | 32 | |
| | 2007.05-2009.11 | 5MT | F | L | Bus FWD AXB | | GCI61069 | Inner Joint | | | 28 | | | 32 | |
| | 2007.05-2009.11 | 5MT | F | R | Bus FWD AXB | | GCI61020 | Inner Joint | | 26 | 28 | | 205.5 | 100.2 | |
| | 2007.05-2009.11 | 5MT | F | R | Bus FWD AXB | for OE number:02Z409345B | GDS61190 | Stub Axle,differential | | 26 | 37 | | | 136.5 | |
| 2.0 (62 kw) | 2009.09-2015.08 | 5MT | F | L | Bus FWD CAAA | 6 balls | GDS61105 | Drive Shaft | | 38 | | 63 | 102.5 | 645 | |
| | 2009.09-2015.08 | 5MT | F | L | Bus FWD CAAA | 8 balls | GDS81508 | Drive Shaft | | 38 | | 63 | 102.5 | 645 | |
| | 2009.09-2015.08 | 5MT | F | R | Bus FWD CAAA | Date from:2015.05 | GDS82724 | Drive Shaft | | 38 | 26 | 63 | 102.5 | 867 | |
| | 2009.09-2015.08 | 5MT | F | R | Bus FWD CAAA | Date to:2015.04;Chassis no. from:7H_CG000001?H_CH000001?H_CK000001 | GDS83261 | Drive Shaft | | 38 | 26 | 63 | 102 | 857 | |
| | 2009.09-2015.08 | 5MT | F | L/R | Bus FWD CAAA | 6 balls | GCO61009 | Outer Joint | | 38 | 27 | 63 | 102 | 66 | M |
| | 2009.09-2015.08 | 5MT | F | L/R | Bus FWD CAAA | 8 balls | GCO81348 | Outer Joint | | 38 | 28 | 63 | 102.5 | 64.5 | I |
| | 2009.09-2015.08 | 5MT | F | L | Bus FWD CAAA | | GCI61069 | Inner Joint | | | 28 | | | 32 | |
| | 2009.09-2015.08 | 5MT | F | R | Bus FWD CAAA | Date to:2015.04 | GCI61053 | Inner Joint | | 26 | 28 | | 261 | 63 | |
| | 2009.09-2015.08 | 5MT | F | R | Bus FWD CAAA | Date from:2015.05 | GCI81969 | Inner Joint | | 26 | 28 | | 261 | 63 | |
| | 2009.09-2015.08 | 5MT | F | R | Bus FWD CAAA | for OE number:02Z409345B | GDS61190 | Stub Axle,differential | | 26 | 37 | | | 136.5 | |
| | 2009.09-2015.08 | 5MT | F | R | Bus FWD CAAA | | GDS61216 | Stub Axle,differential | | 26 | 37 | | | 145 | |
| | 2009.09-2015.08 | 5MT | F | L/R | Bus FWD CAAA | for OE number:0A5409355F | GDS61215 | Stub Axle,differential | | 26 | 42 | | | 143.5 | |
| | 2015.04-2019.07 | 5MT | F | L | Bus FWD CXGA | | GDS56700 | Drive Shaft | | 38 | | 63 | 102.5 | 657 | |
| | 2015.04-2019.07 | 5MT | F | R | Bus FWD CXGA | | GDS56734 | Drive Shaft | | 38 | 26 | 63 | 102.5 | 854 | |
| | 2015.04-2019.07 | 5MT | F | L/R | Bus FWD CXGA | | GCO81348 | Outer Joint | | 38 | 28 | 63 | 102.5 | 64.5 | I |
| | 2015.04-2019.07 | 5MT | F | L | Bus FWD CXGA | | GCI61069 | Inner Joint | | | 28 | | | 32 | |
| 2.0 (66 kw) | 2019.10-2024.08 | 5MT | F | L | Bus FWD CXGD;DNAC | | GDS56700 | Drive Shaft | | 38 | | 63 | 102.5 | 657 | |
| | 2019.10-2024.08 | 5MT | F | R | Bus FWD CXGD;DNAC | Date to:2020.09 | GDS56734 | Drive Shaft | | 38 | 26 | 63 | 102.5 | 854 | |
| | 2019.10-2024.08 | 5MT | F | L/R | Bus FWD CXGD;DNAC | | GCO81348 | Outer Joint | | 38 | 28 | 63 | 102.5 | 64.5 | I |
| | 2019.10-2024.08 | 5MT | F | L | Bus FWD CXGD;DNAC | Date from:2020.12 | GCI82456 | Inner Joint | | | 28 | | | 32 | |
| | 2019.10-2024.08 | 5MT | F | R | Bus FWD CXGD;DNAC | Date to:2020.09 | GCI83461 | Inner Joint | | 26 | 28 | 44 | 250 | 63 | |
| 2.0 (75 kw) | 2009.09-2015.08 | 5MT | F | L | Bus FWD CAAB | 6 balls | GDS61105 | Drive Shaft | | 38 | | 63 | 102.5 | 645 | |
| | 2009.09-2015.08 | 5MT | F | L | Bus FWD CAAB | 8 balls | GDS81508 | Drive Shaft | | 38 | | 63 | 102.5 | 645 | |
| | 2009.09-2015.08 | 5MT | F | R | Bus FWD CAAB | Date from:2015.05 | GDS82724 | Drive Shaft | | 38 | 26 | 63 | 102.5 | 867 | |
| | 2009.09-2015.08 | 5MT | F | R | Bus FWD CAAB | Date to:2015.04;Chassis no. from:7H_CG000001?H_CH000001?H_CK000001 | GDS83261 | Drive Shaft | | 38 | 26 | 63 | 102 | 857 | |
| | 2009.09-2015.08 | 5MT | F | L/R | Bus FWD CAAB | 6 balls | GCO61009 | Outer Joint | | 38 | 27 | 63 | 102 | 66 | M |
| | 2009.09-2015.08 | 5MT | F | L/R | Bus FWD CAAB | 8 balls | GCO81348 | Outer Joint | | 38 | 28 | 63 | 102.5 | 64.5 | I |
| | 2009.09-2015.08 | 5MT | F | L | Bus FWD CAAB | | GCI61069 | Inner Joint | | | 28 | | | 32 | |
| | 2009.09-2015.08 | 5MT | F | R | Bus FWD CAAB | Date to:2015.04 | GCI61053 | Inner Joint | | 26 | 28 | | 261 | 63 | |
| | 2009.09-2015.08 | 5MT | F | R | Bus FWD CAAB | Date from:2015.05 | GCI81969 | Inner Joint | | 26 | 28 | | 261 | 63 | |
| | 2009.09-2015.08 | 5MT | F | R | Bus FWD CAAB | for OE number:02Z409345B | GDS61190 | Stub Axle,differential | | 26 | 37 | | | 136.5 | |

| | YEAR | TRANSM. | F/R | L/R | BODY STYLE & DRIVE TYPE & ENGINE | REMARKS | G-AP Ref. | PRODUCT | ABS | Technical Specifications | | | | | |
|---|---|---|---|---|---|---|---|---|---|---|---|---|---|---|---|
| | | | | | | | | | | A | B | C | H | L | P |
| **VW California** | | | | | | | | | | | | | | | |
| 2.0 (75 kw) | 2009.09-2015.08 | 5MT | F | R | Bus FWD CAAB | | GDS61216 | Stub Axle,differential | | 26 | 37 | | | 145 | |
| | 2009.09-2015.08 | 5MT | F | L/R | Bus FWD CAAB | for OE number:0A5409355F | GDS61215 | Stub Axle,differential | | 26 | 42 | | | 143.5 | |
| | 2015.04-2019.12 | 5MT | F | L | Bus FWD CAAB;CXGB | For Enginecode:CXGB,For PR code:DM6/M0H | GDS56700 | Drive Shaft | | 38 | | 63 | 102.5 | 657 | |
| | 2015.04-2019.12 | 5MT | F | L | Bus FWD CAAB;CXGB | Date to:2017.03,For PR code:D55 | GDS81508 | Drive Shaft | | 38 | | 63 | 102.5 | 645 | |
| | 2015.04-2019.12 | 5MT | F | R | Bus FWD CAAB;CXGB | For Enginecode:CXGB | GDS56734 | Drive Shaft | | 38 | 26 | 63 | 102.5 | 854 | |
| | 2015.04-2019.12 | 5MT | F | L/R | Bus FWD CAAB;CXGB | | GCO81348 | Outer Joint | | 38 | 28 | 63 | 102.5 | 64.5 | I |
| | 2015.04-2019.12 | 5MT | F | L | Bus FWD CAAB;CXGB | | GCI61069 | Inner Joint | | | 28 | | | 32 | |
| | 2015.04-2019.12 | 5MT | F | R | Bus FWD CAAB;CXGB | For Engine code:CAAB | GCI81969 | Inner Joint | | 26 | 28 | | 261 | 63 | |
| 2.0 (81 kw) | 2019.07-2024.08 | 5MT | F | L | Bus FWD CXHC;DNAB | | GDS56700 | Drive Shaft | | 38 | | 63 | 102.5 | 657 | |
| | 2019.07-2024.08 | 5MT | F | R | Bus FWD CXHC;DNAB | Date to:2020.09 | GDS56734 | Drive Shaft | | 38 | 26 | 63 | 102.5 | 854 | |
| | 2019.07-2024.08 | 5MT | F | L/R | Bus FWD CXHC;DNAB | | GCO81348 | Outer Joint | | 38 | 28 | 63 | 102.5 | 64.5 | I |
| | 2019.07-2024.08 | 5MT | F | L | Bus FWD CXHC;DNAB | Date from:2020.12 | GCI82456 | Inner Joint | | | 28 | | | 32 | |
| | 2019.07-2024.08 | 5MT | F | R | Bus FWD CXHC;DNAB | Date to:2020.09 | GCI83461 | Inner Joint | | 26 | 28 | 44 | 250 | 63 | |
| 2.0 (84 kw) | 2011.05-2015.08 | 5MT | F | L | Bus FWD CAAD | 6 balls | GDS61105 | Drive Shaft | | 38 | | 63 | 102.5 | 645 | |
| | 2011.05-2015.08 | 5MT | F | L | Bus FWD CAAD | 8 balls | GDS81508 | Drive Shaft | | 38 | | 63 | 102.5 | 645 | |
| | 2011.05-2015.08 | 5MT | F | R | Bus FWD CAAD | Date from:2015.05 | GDS82724 | Drive Shaft | | 38 | 26 | 63 | 102.5 | 867 | |
| | 2011.05-2015.08 | 5MT | F | R | Bus FWD CAAD | Date to:2015.04 | GDS83261 | Drive Shaft | | 38 | 26 | 63 | 102 | 857 | |
| | 2011.05-2015.08 | 5MT | F | L/R | Bus FWD CAAD | 6 balls | GCO61009 | Outer Joint | | 38 | 27 | 63 | 102 | 66 | M |
| | 2011.05-2015.08 | 5MT | F | L/R | Bus FWD CAAD | 8 balls | GCO81348 | Outer Joint | | 38 | 28 | 63 | 102.5 | 64.5 | I |
| | 2011.05-2015.08 | 5MT | F | L | Bus FWD CAAD | | GCI61069 | Inner Joint | | | 28 | | | 32 | |
| | 2011.05-2015.08 | 5MT | F | R | Bus FWD CAAD | Date to:2015.04 | GCI61053 | Inner Joint | | 26 | 28 | | 261 | 63 | |
| | 2011.05-2015.08 | 5MT | F | R | Bus FWD CAAD | Date from:2015.05 | GCI81969 | Inner Joint | | 26 | 28 | | 261 | 63 | |
| | 2011.05-2015.08 | 5MT | F | R | Bus FWD CAAD | for OE number:02Z409345B | GDS61190 | Stub Axle,differential | | 26 | 37 | | | 136.5 | |
| | 2011.05-2015.08 | 5MT | F | R | Bus FWD CAAD | | GDS61216 | Stub Axle,differential | | 26 | 37 | | | 145 | |
| | 2011.05-2015.08 | 5MT | F | L/R | Bus FWD CAAD | for OE number:0A5409355F | GDS61215 | Stub Axle,differential | | 26 | 42 | | | 143.5 | |
| | 2016.05-2019.08 | 5MT | F | L | Bus FWD CXHB | | GDS56700 | Drive Shaft | | 38 | | 63 | 102.5 | 657 | |
| | 2016.05-2019.08 | 5MT | F | R | Bus FWD CXHB | | GDS56734 | Drive Shaft | | 38 | 26 | 63 | 102.5 | 854 | |
| | 2016.05-2019.08 | 5MT | F | L/R | Bus FWD CXHB | | GCO81348 | Outer Joint | | 38 | 28 | 63 | 102.5 | 64.5 | I |
| | 2016.05-2019.08 | 5MT | F | L | Bus FWD CXHB | | GCI61069 | Inner Joint | | | 28 | | | 32 | |
| 2.0 (100 kw) | 2010.05-2015.08 | 6MT | F | L | Bus 4WD CAAE;CCHB | [illegible] | GDS61084 | Drive Shaft | | 38 | 26 | 63 | 102.5 | 613 | |
| | 2010.05-2015.08 | 6MT | F | L | Bus 4WD CAAE;CCHB | Date From:2013.07 | GDS83360 | Drive Shaft | | 38 | 42 | 63 | 102.5 | 617 | |
| | 2010.05-2015.08 | 6MT | F | R | Bus 4WD CAAE;CCHB | Date to:2013.06 | GDS61084 | Drive Shaft | | 38 | 26 | 63 | 102.5 | 613 | |
| | 2010.05-2015.08 | 6MT | F | R | Bus 4WD CAAE;CCHB | Date from:2013.07 | GDS81666 | Drive Shaft | | 38 | 26 | 63 | 102.5 | 616 | |
| | 2010.05-2015.08 | 6MT | F | L/R | Bus 4WD CAAE;CCHB | Date to:2013.06 | GCO61011 | Outer Joint | | 38 | 29 | 63 | 102.5 | 70 | M |
| | 2010.05-2015.08 | 6MT | F | L/R | Bus 4WD CAAE;CCHB | Date From:2013.07;6 balls | GCO61060 | Outer Joint | | 38 | 30 | 63 | 102.5 | 68 | I |
| | 2010.05-2015.08 | 6MT | F | L/R | Bus 4WD CAAE;CCHB | Date From:2013.07;8 balls | GCO81467 | Outer Joint | | 38 | 30 | 63 | 102.5 | 67.5 | I |
| | 2010.05-2015.08 | 6MT | F | L | Bus 4WD CAAE;CCHB | Date to:2012.05;For PR code:F4D/F0K/F0Y;For special-purpose vehicles | GCI61029 | Inner Joint | | 26 | 30 | 46.8 | | 137 | |
| | 2010.05-2015.08 | 6MT | F | L | Bus 4WD CAAE;CCHB | Date From:2013.07 | GCI61104 | Inner Joint | | 42 | 30 | 35.6 | | 136 | |
| | 2010.05-2015.08 | 6MT | F | R | Bus 4WD CAAE;CCHB | Date to:2013.06 | GCI61029 | Inner Joint | | 26 | 30 | 46.8 | | 137 | |
| | 2010.05-2015.08 | 6MT | F | L | Bus 4WD CAAE;CCHB | Model:Transporter,for OE number:0A5409343B | GDS61213 | Stub Axle,differential | | 42 | 42 | | | 135.5 | |
| | 2010.05-2015.08 | 6MT | F | R | Bus 4WD CAAE;CCHB | Model:Transporter,for OE number:0A5409343A | GDS61215 | Stub Axle,differential | | 26 | 42 | | | 143.5 | |
| | 2010.05-2015.08 | 6MT | F | R | Bus 4WD CAAE;CCHB | | GDS61216 | Stub Axle,differential | | 26 | 37 | | | 145 | |
| | 2010.05-2015.08 | 6MT | F | L/R | Bus 4WD CAAE;CCHB | Model:Transporter,for OE number:0A5409343 | GDS61191 | Stub Axle,differential | | 26 | 42 | | | 135.5 | |
| | 2010.05-2015.08 | 6MT | R | L | Bus 4WD CAAE;CCHB | | GDS61257 | Drive Shaft | | 38 | | 59 | 100 | 683 | |
| | 2010.05-2015.08 | 6MT | R | R | Bus 4WD CAAE;CCHB | | GDS61258 | Drive Shaft | | 38 | | 59 | 100 | 743 | |
| | 2010.05-2015.08 | 6MT | R | L/R | Bus 4WD CAAE;CCHB | | GCI82474 | Outer Joint | | 38 | 28 | 59 | 100 | 59 | |
| | 2010.05-2015.08 | 6MT | R | L/R | Bus 4WD CAAE;CCHB | | GCI61075 | Inner Joint | | | 28 | | | 26 | |
| | 2010.05-2015.08 | 6MT | F | L | Bus FWD CAAE;CCHB | Date to:2013.06 | GDS61084 | Drive Shaft | | 38 | 26 | 63 | 102.5 | 613 | |
| | 2010.05-2015.08 | 6MT | F | L | Bus FWD CAAE;CCHB | Date From:2013.07 | GDS83360 | Drive Shaft | | 38 | 42 | 63 | 102.5 | 617 | |
| | 2010.05-2015.08 | 6MT | F | R | Bus FWD CAAE;CCHB | Date From:2013.07,Date To:2015.04 | GDS82361 | Drive Shaft | | 38 | 26 | 63 | 102.5 | 879 | |
| | 2010.05-2015.08 | 6MT | F | R | Bus FWD CAAE;CCHB | | GDS83296 | Drive Shaft | | 38 | 26 | 63 | 102.5 | 880 | |
| | 2010.05-2015.08 | 6MT | F | R | Bus FWD CAAE;CCHB | Date From:2015.05 | GDS83361 | Drive Shaft | | 38 | 26 | 63 | 102.5 | 883 | |
| | 2010.05-2015.08 | 6MT | F | L | Bus FWD CAAE;CCHB | Date To:2013.06 | GCI61029 | Inner Joint | | 26 | 30 | 46.8 | | 137 | |
| | 2010.05-2015.08 | 6MT | F | L | Bus FWD CAAE;CCHB | Date From:2013.07 | GCI61104 | Inner Joint | | 42 | 30 | 35.6 | | 136 | |
| | 2010.05-2015.08 | 6MT | F | R | Bus FWD CAAE;CCHB | Date to:2015.04 | GCI61080 | Inner Joint | | 26 | 30 | | 281.5 | 106 | |
| | 2010.05-2015.08 | 6MT | F | R | Bus FWD CAAE;CCHB | Date from:2015.05 | GCI81381 | Inner Joint | | 26 | 30 | | 281.5 | 105 | |
| | 2010.05-2015.08 | 6MT | F | L | Bus FWD CAAE;CCHB | Model:Transporter,for OE number:0A5409343B | GDS61213 | Stub Axle,differential | | 42 | 42 | | | 135.5 | |
| | 2010.05-2015.08 | 6MT | F | R | Bus FWD CAAE;CCHB | Model:Transporter,for OE number:0A5409343A | GDS61215 | Stub Axle,differential | | 26 | 42 | | | 143.5 | |
| | 2010.05-2015.08 | 6MT | F | L/R | Bus FWD CAAE;CCHB | Model:Transporter,for OE number:0A5409343 | GDS61191 | Stub Axle,differential | | 26 | 42 | | | 135.5 | |
| | 2010.05-2015.08 | 6MT/7DCT | F | L/R | Bus FWD CAAE;CCHB | Date to:2013.06 | GCO61011 | Outer Joint | | 38 | 29 | 63 | 102.5 | 70 | M |
| | 2010.05-2015.08 | 6MT/7DCT | F | L/R | Bus FWD CAAE;CCHB | Date From:2013.07;6 balls | GCO61060 | Outer Joint | | 38 | 30 | 63 | 102.5 | 68 | I |
| | 2010.05-2015.08 | 6MT/7DCT | F | L/R | Bus FWD CAAE;CCHB | Date From:2013.07;8 balls | GCO81467 | Outer Joint | | 38 | 30 | 63 | 102.5 | 67.5 | I |
| | 2010.05-2015.08 | 6MT/7DCT | F | R | Bus FWD CAAE;CCHB | Model:Transporter | GDS61216 | Stub Axle,differential | | 26 | 37 | | | 145 | |
| | 2010.05-2015.08 | 7DCT | F | L | Bus FWD CAAE;CCHB | | GDS83293 | Drive Shaft | | 38 | 37 | 63 | 102.5 | 645 | |
| | 2010.05-2015.08 | 7DCT | F | R | Bus FWD CAAE;CCHB | Chassis no. from:7HCG000001/7HCH000001/7HCX000001 | GDS82392 | Drive Shaft | | 38 | 37 | 63 | 102.5 | 1025 | |

| | YEAR | TRANSM. | F/R | L/R | BODY STYLE & DRIVE TYPE & ENGINE | REMARKS | G-AP Ref. | PRODUCT | ABS | Technical Specifications | | | | | |
|---|---|---|---|---|---|---|---|---|---|---|---|---|---|---|---|
| | | | | | | | | | | A | B | C | H | L | P |
| **VW California** | | | | | | | | | | | | | | | |
| 2.0 (100 kw) | 2010.05-2015.08 | 7DCT | F | R | Bus FWD CAAE;CCHB | Chassis no. to:7HBG500000/7HBH500000/7HBX500000 | GDS83353 | Drive Shaft | | 38 | 37 | 63 | 102.5 | 1027 | |
| | 2010.05-2015.08 | 7DCT | F | R | Bus FWD CAAE;CCHB | Chassis no. from:7HCG000001/7HCH000001/7HCX000001 | GCI81754 | Inner Joint | | 37 | 27 | 34.5 | 430.5 | 96 | |
| | 2010.05-2015.08 | 7DCT | F | R | Bus FWD CAAE;CCHB | Chassis no. to:7HBG500000/7HBH500000/7HBX500000 | GCI83037 | Inner Joint | | 37 | 27 | 34.5 | 430.5 | 96 | |
| 2.0 (103 kw) | 2009.09-2015.08 | 6MT | F | L | Bus FWD CAAC;CCHA | Date to:2013.05 | GDS61084 | Drive Shaft | | 38 | 26 | 63 | 102.5 | 613 | |
| | 2009.09-2015.08 | 6MT | F | L | Bus FWD CAAC;CCHA | Date from:2015.05 | GDS83360 | Drive Shaft | | 38 | 42 | 63 | 102.5 | 617 | |
| | 2009.09-2015.08 | 6MT | F | R | Bus FWD CAAC;CCHA | Date from:2013.06,Date to:2015.04 | GDS82361 | Drive Shaft | | 38 | 26 | 63 | 102.5 | 879 | |
| | 2009.09-2015.08 | 6MT | F | R | Bus FWD CAAC;CCHA | Date to:2013.05 | GDS83296 | Drive Shaft | | 38 | 26 | 63 | 102.5 | 880 | |
| | 2009.09-2015.08 | 6MT | F | R | Bus FWD CAAC;CCHA | Date from:2015.05 | GDS83361 | Drive Shaft | | 38 | 26 | 63 | 102.5 | 883 | |
| | 2009.09-2015.08 | 6MT | F | L | Bus FWD CAAC;CCHA | Date to:2013.05 | GCI61029 | Inner Joint | | 26 | 30 | 46.8 | | 137 | |
| | 2009.09-2015.08 | 6MT | F | L | Bus FWD CAAC;CCHA | Date from:2015.05 | GCI61104 | Inner Joint | | 42 | 30 | 35.6 | | 136 | |
| | 2009.09-2015.08 | 6MT | F | R | Bus FWD CAAC;CCHA | Date to:2015.04 | GCI61080 | Inner Joint | | 26 | 30 | | 281.5 | 106 | |
| | 2009.09-2015.08 | 6MT | F | R | Bus FWD CAAC;CCHA | Date from:2015.05 | GCI81381 | Inner Joint | | 26 | 30 | | 281.5 | 105 | |
| | 2009.09-2015.08 | 6MT | F | L | Bus FWD CAAC;CCHA | for OE number:0A5409343B | GDS61213 | Stub Axle,differential | | 42 | 42 | | | 135.5 | |
| | 2009.09-2015.08 | 6MT | F | R | Bus FWD CAAC;CCHA | for OE number:0A5409343A | GDS61215 | Stub Axle,differential | | 26 | 42 | | | 143.5 | |
| | 2009.09-2015.08 | 6MT | F | L/R | Bus FWD CAAC;CCHA | for OE number:0A5409343 | GDS61191 | Stub Axle,differential | | 26 | 42 | | | 135.5 | |
| | 2009.09-2015.08 | 6MT/7DCT | F | L/R | Bus FWD CAAC;CCHA | 6 balls | GCO61011 | Outer Joint | | 38 | 29 | 63 | 102.5 | 70 | M |
| | 2009.09-2015.08 | 6MT/7DCT | F | L/R | Bus FWD CAAC;CCHA | 6 balls | GCO61060 | Outer Joint | | 38 | 30 | 63 | 102.5 | 68 | I |
| | 2009.09-2015.08 | 6MT/7DCT | F | L/R | Bus FWD CAAC;CCHA | 8 balls | GCO81467 | Outer Joint | | 38 | 30 | 63 | 102.5 | 67.5 | I |
| | 2009.09-2015.08 | 7AT | F | R | Bus FWD CAAC;CCHA | | GDS61216 | Stub Axle,differential | | 26 | 37 | | | 145 | |
| | 2009.09-2015.08 | 7DCT | F | L | Bus FWD CAAC;CCHA | 6 balls,TJ | GDS83293 | Drive Shaft | | 38 | 37 | 63 | 102.5 | 645 | |
| | 2009.09-2015.08 | 7DCT | F | R | Bus FWD CAAC;CCHA | 8 balls,AAR | GDS82392 | Drive Shaft | | 38 | 37 | 63 | 102.5 | 1025 | |
| | 2009.09-2015.08 | 7DCT | F | R | Bus FWD CAAC;CCHA | 6 balls,AAR | GDS83353 | Drive Shaft | | 38 | 37 | 63 | 102.5 | 1027 | |
| | 2009.09-2015.08 | 7DCT | F | R | Bus FWD CAAC;CCHA | Chassis no. From:7HCG000001/7HCH000001/7HCX000001 | GCI81754 | Inner Joint | | 37 | 27 | 34.5 | 430.5 | 96 | |
| | 2009.09-2015.08 | 7DCT | F | R | Bus FWD CAAC;CCHA | Chassis no. to:7HBG500000/7HBH500000/7HBX500000 | GCI83037 | Inner Joint | | 37 | 27 | 34.5 | 430.5 | 96 | |
| | 2009.10-2015.08 | 6MT | F | L | Bus 4WD CAAC;CCHA | [illegible] | GDS61084 | Drive Shaft | | 38 | 26 | 63 | 102.5 | 613 | |
| | 2009.10-2015.08 | 6MT | F | L | Bus 4WD CAAC;CCHA | Date From:2013.07 | GDS83360 | Drive Shaft | | 38 | 42 | 63 | 102.5 | 617 | |
| | 2009.10-2015.08 | 6MT | F | R | Bus 4WD CAAC;CCHA | Date to:2013.06 | GDS61084 | Drive Shaft | | 38 | 26 | 63 | 102.5 | 613 | |
| | 2009.10-2015.08 | 6MT | F | R | Bus 4WD CAAC;CCHA | Date from:2013.07 | GDS81666 | Drive Shaft | | 38 | 26 | 63 | 102.5 | 616 | |
| | 2009.10-2015.08 | 6MT | F | L/R | Bus 4WD CAAC;CCHA | Date to:2013.06 | GCO61011 | Outer Joint | | 38 | 29 | 63 | 102.5 | 70 | M |
| | 2009.10-2015.08 | 6MT | F | L/R | Bus 4WD CAAC;CCHA | Date From:2013.07;6 balls | GCO61060 | Outer Joint | | 38 | 30 | 63 | 102.5 | 68 | I |
| | 2009.10-2015.08 | 6MT | F | L/R | Bus 4WD CAAC;CCHA | Date From:2013.07;8 balls | GCO81467 | Outer Joint | | 38 | 30 | 63 | 102.5 | 67.5 | I |
| | 2009.10-2015.08 | 6MT | F | L | Bus 4WD CAAC;CCHA | [illegible] | GCI61029 | Inner Joint | | 26 | 30 | 46.8 | | 137 | |
| | 2009.10-2015.08 | 6MT | F | L | Bus 4WD CAAC;CCHA | Date From:2013.07 | GCI61104 | Inner Joint | | 42 | 30 | 35.6 | | 136 | |
| | 2009.10-2015.08 | 6MT | F | R | Bus 4WD CAAC;CCHA | Date To:2013.06 | GCI61029 | Inner Joint | | 26 | 30 | 46.8 | | 137 | |
| | 2009.10-2015.08 | 6MT | F | L | Bus 4WD CAAC;CCHA | Model:Transporter,for OE number:0A5409343B | GDS61213 | Stub Axle,differential | | 42 | 42 | | | 135.5 | |
| | 2009.10-2015.08 | 6MT | F | R | Bus 4WD CAAC;CCHA | Model:Transporter,for OE number:0A5409343A | GDS61215 | Stub Axle,differential | | 26 | 42 | | | 143.5 | |
| | 2009.10-2015.08 | 6MT | F | L/R | Bus 4WD CAAC;CCHA | Model:Transporter,for OE number:0A5409343 | GDS61191 | Stub Axle,differential | | 26 | 42 | | | 135.5 | |
| | 2009.10-2015.08 | 6MT | R | L | Bus 4WD CAAC;CCHA | | GDS61257 | Drive Shaft | | 38 | | 59 | 100 | 683 | |
| | 2009.10-2015.08 | 6MT | R | R | Bus 4WD CAAC;CCHA | | GDS61258 | Drive Shaft | | 38 | | 59 | 100 | 743 | |
| | 2009.10-2015.08 | 6MT | R | L/R | Bus 4WD CAAC;CCHA | | GCI82474 | Outer Joint | | 38 | 28 | 59 | 100 | 59 | |
| | 2009.10-2015.08 | 6MT | R | L/R | Bus 4WD CAAC;CCHA | | GCI61075 | Inner Joint | | | 28 | | | 26 | |
| | 2015.04-2019.12 | 6MT | F | L | Bus FWD CAAC | | GDS83360 | Drive Shaft | | 38 | 42 | 63 | 102.5 | 617 | |
| | 2015.04-2019.12 | 6MT | F | R | Bus FWD CAAC | | GDS83361 | Drive Shaft | | 38 | 26 | 63 | 102.5 | 883 | |
| | 2015.04-2019.12 | 6MT | F | L | Bus FWD CAAC | | GCI61029 | Inner Joint | | 26 | 30 | 46.8 | | 137 | |
| | 2015.04-2019.12 | 6MT | F | L | Bus FWD CAAC | | GCI61104 | Inner Joint | | 42 | 30 | 35.6 | | 136 | |
| | 2015.04-2019.12 | 6MT | F | R | Bus FWD CAAC | | GCI81381 | Inner Joint | | 26 | 30 | | 281.5 | 105 | |
| | 2015.04-2019.12 | 7AT/6MT | F | L/R | Bus FWD CAAC | | GCO81467 | Outer Joint | | 38 | 30 | 63 | 102.5 | 67.5 | I |
| | 2015.04-2019.12 | 7DCT | F | L | Bus FWD CAAC | | GDS83293 | Drive Shaft | | 38 | 37 | 63 | 102.5 | 645 | |
| | 2015.04-2019.12 | 7DCT | F | R | Bus FWD CAAC | | GDS82392 | Drive Shaft | | 38 | 37 | 63 | 102.5 | 1025 | |
| | 2015.04-2019.12 | 7DCT | F | R | Bus FWD CAAC | Date to:2017.01 | GCO61060 | Outer Joint | | 38 | 30 | 63 | 102.5 | 68 | I |
| | 2015.04-2019.12 | 7DCT | F | R | Bus FWD CAAC | Date to:2017.01 | GCI83037 | Inner Joint | | 37 | 27 | 34.5 | 430.5 | 96 | |
| | 2015.06-2019.12 | 6MT | F | L | Bus 4WD CAAC | | GDS83360 | Drive Shaft | | 38 | 42 | 63 | 102.5 | 617 | |
| | 2015.06-2019.12 | 6MT | F | R | Bus 4WD CAAC | Date to:2017.01 | GDS81666 | Drive Shaft | | 38 | 26 | 63 | 102.5 | 616 | |
| | 2015.06-2019.12 | 6MT | F | L/R | Bus 4WD CAAC | | GCO81467 | Outer Joint | | 38 | 30 | 63 | 102.5 | 67.5 | I |
| | 2015.06-2019.12 | 6MT | F | L/R | Bus 4WD CAAC | For PR code:F0X/F0Y | GCO82386 | Outer Joint | | 38 | 31 | 63 | 103 | 69 | I |
| | 2015.06-2019.12 | 6MT | F | R | Bus 4WD CAAC | Date to:2017.01 | GCI61029 | Inner Joint | | 26 | 30 | 46.8 | | 137 | |
| | 2015.06-2019.12 | 6MT | R | L | Bus 4WD CAAC | | GDS61257 | Drive Shaft | | 38 | | 59 | 100 | 683 | |
| | 2015.06-2019.12 | 6MT | R | R | Bus 4WD CAAC | | GDS61258 | Drive Shaft | | 38 | | 59 | 100 | 743 | |
| | 2015.06-2019.12 | 6MT | R | L/R | Bus 4WD CAAC | | GCI61075 | Inner Joint | | | 28 | | | 26 | |
| 2.0 (110 kw) | 2012.07-2015.08 | 6MT | F | L | Bus FWD CJKB | Date From:2013.07 | GDS83360 | Drive Shaft | | 38 | 42 | 63 | 102.5 | 617 | |
| | 2012.07-2015.08 | 6MT | F | R | Bus FWD CJKB | Date From:2013.07,Date To:2015.04 | GDS82361 | Drive Shaft | | 38 | 26 | 63 | 102.5 | 879 | |
| | 2012.07-2015.08 | 6MT | F | R | Bus FWD CJKB | Date To:2013.06 | GDS83296 | Drive Shaft | | 38 | 26 | 63 | 102.5 | 880 | |
| | 2012.07-2015.08 | 6MT | F | R | Bus FWD CJKB | Date From:2015.05 | GDS83361 | Drive Shaft | | 38 | 26 | 63 | 102.5 | 883 | |
| | 2012.07-2015.08 | 6MT | F | L/R | Bus FWD CJKB | Date To:2013.06 | GCO61011 | Outer Joint | | 38 | 29 | 63 | 102.5 | 70 | M |
| | 2012.07-2015.08 | 6MT | F | L/R | Bus FWD CJKB | Date From:2013.07;6 balls | GCO61060 | Outer Joint | | 38 | 30 | 63 | 102.5 | 68 | I |

| | YEAR | TRANSM. | F/R | L/R | BODY STYLE & DRIVE TYPE & ENGINE | REMARKS | G-AP Ref. | PRODUCT | ABS | Technical Specifications A | B | C | H | L | P |
|---|---|---|---|---|---|---|---|---|---|---|---|---|---|---|---|
| **VW California** | | | | | | | | | | | | | | | |
| 2.0 (110 kw) | 2012.07-2015.08 | 6MT | F | L/R | Bus FWD CJKB | Date From:2013.07;8 balls | GCO81467 | Outer Joint | | 38 | 30 | 63 | 102.5 | 67.5 | I |
| | 2012.07-2015.08 | 6MT | F | L | Bus FWD CJKB | Date to:2013.06 | GCI61029 | Inner Joint | | 26 | 30 | 46.8 | | 137 | |
| | 2012.07-2015.08 | 6MT | F | L | Bus FWD CJKB | Date from:2013.07 | GCI61104 | Inner Joint | | 42 | 30 | 35.6 | | 136 | |
| | 2012.07-2015.08 | 6MT | F | R | Bus FWD CJKB | Date to:2015.04 | GCI61080 | Inner Joint | | 26 | 30 | | 281.5 | 106 | |
| | 2012.07-2015.08 | 6MT | F | R | Bus FWD CJKB | Date from:2015.05 | GCI81381 | Inner Joint | | 26 | 30 | | 281.5 | 105 | |
| | 2012.07-2015.08 | 6MT | F | L | Bus FWD CJKB | Model:Transporter,for OE number:0A5409343B | GDS61213 | Stub Axle,differential | | 42 | 42 | | | 135.5 | |
| | 2012.07-2015.08 | 6MT | F | R | Bus FWD CJKB | Model:Transporter,for OE number:0A5409343A | GDS61215 | Stub Axle,differential | | 26 | 42 | | | 143.5 | |
| | 2012.07-2015.08 | 6MT | F | R | Bus FWD CJKB | | GDS61216 | Stub Axle,differential | | 26 | 37 | | | 145 | |
| | 2012.07-2015.08 | 6MT | F | L/R | Bus FWD CJKB | Model:Transporter,for OE number:0A5409343 | GDS61191 | Stub Axle,differential | | 26 | 42 | | | 135.5 | |
| | 2015.04-2019.07 | 6MT | F | L | Bus FWD CJKB | | GDS83360 | Drive Shaft | | 38 | 42 | 63 | 102.5 | 617 | |
| | 2015.04-2019.07 | 6MT | F | R | Bus FWD CJKB | | GDS83361 | Drive Shaft | | 38 | 26 | 63 | 102.5 | 883 | |
| | 2015.04-2019.07 | 6MT | F | L/R | Bus FWD CJKB | | GCO81467 | Outer Joint | | 38 | 30 | 63 | 102.5 | 67.5 | I |
| | 2015.04-2019.07 | 6MT | F | L | Bus FWD CJKB | | GCI61029 | Inner Joint | | 26 | 30 | 46.8 | | 137 | |
| | 2015.04-2019.07 | 6MT | F | L | Bus FWD CJKB | | GCI61104 | Inner Joint | | 42 | 30 | 35.6 | | 136 | |
| | 2015.04-2019.07 | 6MT | F | R | Bus FWD CJKB | | GCI81381 | Inner Joint | | 26 | 30 | | 281.5 | 105 | |
| | 2015.04-2024.08 | 6MT | F | L | Bus FWD CXFA;CXHA;DNAA | date to:2017.01 | GDS83360 | Drive Shaft | | 38 | 42 | 63 | 102.5 | 617 | |
| | 2015.04-2024.08 | 6MT | F | R | Bus FWD CXFA;CXHA;DNAA | date to:2017.01 | GDS83361 | Drive Shaft | | 38 | 26 | 63 | 102.5 | 883 | |
| | 2015.04-2024.08 | 6MT | F | L | Bus FWD CXFA;CXHA;DNAA | For Modelcode:SGC/SGG | GCI61029 | Inner Joint | | 26 | 30 | 46.8 | | 137 | |
| | 2015.04-2024.08 | 6MT | F | L | Bus FWD CXFA;CXHA;DNAA | Date to:2017.01 | GCI61104 | Inner Joint | | 42 | 30 | 35.6 | | 136 | |
| | 2015.04-2024.08 | 6MT | F | R | Bus FWD CXFA;CXHA;DNAA | For Modelcode:SGC/SGG | GCI81381 | Inner Joint | | 26 | 30 | | 281.5 | 105 | |
| | 2015.04-2024.08 | 6MT | F | L | Bus FWD CXFA;CXHA;DNAA | Type:Transporter;for OE number:0A5409343B | GDS61213 | Stub Axle,differential | | 42 | 42 | | | 135.5 | |
| | 2015.04-2024.08 | 6MT | F | R | Bus FWD CXFA;CXHA;DNAA | Type:Transporter;for OE number:0A5409343A | GDS61215 | Stub Axle,differential | | 26 | 42 | | | 143.5 | |
| | 2015.04-2024.08 | 7AT/6MT | F | L/R | Bus FWD CXFA;CXHA;DNAA | | GDS61216 | Stub Axle,differential | | 26 | 37 | | | 145 | |
| | 2015.04-2024.08 | 7DCT | F | L | Bus FWD CXFA;CXHA;DNAA | | GDS83293 | Drive Shaft | | 38 | 37 | 63 | 102.5 | 645 | |
| | 2015.04-2024.08 | 7DCT | F | R | Bus FWD CXFA;CXHA;DNAA | Date to:2019.12 | GDS82392 | Drive Shaft | | 38 | 37 | 63 | 102.5 | 1025 | |
| | 2015.04-2024.08 | 7DCT | F | R | Bus FWD CXFA;CXHA;DNAA | Date to:2017.01;For Model code:SGC/SGG | GCO61060 | Outer Joint | | 38 | 30 | 63 | 102.5 | 68 | I |
| | 2015.04-2024.08 | 7DCT | F | L | Bus FWD CXFA;CXHA;DNAA | For Modelcode:SHC | GCI81261 | Inner Joint | | 37 | 27 | 34.5 | 65.5 | 88.5 | |
| | 2015.04-2024.08 | 7DCT | F | R | Bus FWD CXFA;CXHA;DNAA | Date to:2017.01;For Model code:SGC/SGG | GCI83037 | Inner Joint | | 37 | 27 | 34.5 | 430.5 | 96 | |
| | 2015.04-2024.08 | MT | F | L/R | Bus FWD CXFA;CXHA;DNAA | | GCO61060 | Outer Joint | | 38 | 30 | 63 | 102.5 | 68 | I |
| | 2015.04-2024.08 | MT/6MT | F | L/R | Bus FWD CXFA;CXHA;DNAA | Date from:2013.07 | GCO81467 | Outer Joint | | 38 | 30 | 63 | 102.5 | 67.5 | I |
| | 2015.08-2024.08 | 6MT | F | L | Bus 4WD CXFA;CXHA;DNAA | Date to:2017.01;Outer teeth of tranm.side:42 | GDS83360 | Drive Shaft | | 38 | 42 | 63 | 102.5 | 617 | |
| | 2015.08-2024.08 | 6MT | F | R | Bus 4WD CXFA;CXHA;DNAA | Date to:2017.01,Model code:SGB/SGJ;Date to:2017.01,Model code:SGC/SGG | GDS81666 | Drive Shaft | | 38 | 26 | 63 | 102.5 | 616 | |
| | 2015.08-2024.08 | 6MT | F | L | Bus 4WD CXFA;CXHA;DNAA | | GCI61029 | Inner Joint | | 26 | 30 | 46.8 | | 137 | |
| | 2015.08-2024.08 | 6MT | F | L | Bus 4WD CXFA;CXHA;DNAA | Type:Transporter;for OE number:0A5409343B | GDS61213 | Stub Axle,differential | | 42 | 42 | | | 135.5 | |
| | 2015.08-2024.08 | 6MT | F | R | Bus 4WD CXFA;CXHA;DNAA | Type:Transporter;for OE number:0A5409343A | GDS61215 | Stub Axle,differential | | 26 | 42 | | | 143.5 | |
| | 2015.08-2024.08 | 6MT/7DCT | F | L/R | Bus 4WD CXFA;CXHA;DNAA | | GCO81467 | Outer Joint | | 38 | 30 | 63 | 102.5 | 67.5 | I |
| | 2015.08-2024.08 | 6MT/7DCT | F | R | Bus 4WD CXFA;CXHA;DNAA | | GCI81453 | Inner Joint | | 26 | 27 | 47 | | 128 | |
| | 2015.08-2024.08 | 7DCT | F | L | Bus 4WD CXFA;CXHA;DNAA | | GDS83293 | Drive Shaft | | 38 | 37 | 63 | 102.5 | 645 | |
| | 2015.08-2024.08 | 7DCT | F | R | Bus 4WD CXFA;CXHA;DNAA | | GDS81665 | Drive Shaft | | 38 | 26 | 63 | 102.5 | 614 | |
| | 2015.08-2024.08 | 7DCT | F | L | Bus 4WD CXFA;CXHA;DNAA | For Model code:SHB/SHJ | GCI81261 | Inner Joint | | 37 | 27 | 34.5 | 65.5 | 88.5 | |
| | 2015.08-2024.08 | 6MT/7DCT | R | L | Bus 4WD CXFA;CXHA;DNAA | | GDS61257 | Drive Shaft | | 38 | | 59 | 100 | 683 | |
| | 2015.08-2024.08 | 6MT/7DCT | R | R | Bus 4WD CXFA;CXHA;DNAA | | GDS61258 | Drive Shaft | | 38 | | 59 | 100 | 743 | |
| | 2015.08-2024.08 | 6MT/7DCT | R | L/R | Bus 4WD CXFA;CXHA;DNAA | Date to:2016.04 | GCI82474 | Outer Joint | | 38 | 28 | 59 | 100 | 59 | |
| | 2015.08-2024.08 | 6MT/7DCT | R | L/R | Bus 4WD CXFA;CXHA;DNAA | Date to:2016.04 | GCI61075 | Inner Joint | | | 28 | | | 26 | |
| 2.0 (132 kw) | 2009.09-2015.08 | 6MT | F | L | Bus FWD CFCA | Date to:2013.05 | GDS61084 | Drive Shaft | | 38 | 26 | 63 | 102.5 | 613 | |
| | 2009.09-2015.08 | 6MT | F | L | Bus FWD CFCA | Date from:2015.05 | GDS83360 | Drive Shaft | | 38 | 42 | 63 | 102.5 | 617 | |
| | 2009.09-2015.08 | 6MT | F | R | Bus FWD CFCA | Date from:2013.06,Date to:2015.04 | GDS82361 | Drive Shaft | | 38 | 26 | 63 | 102.5 | 879 | |
| | 2009.09-2015.08 | 6MT | F | R | Bus FWD CFCA | Date to:2013.05 | GDS83296 | Drive Shaft | | 38 | 26 | 63 | 102.5 | 880 | |
| | 2009.09-2015.08 | 6MT | F | R | Bus FWD CFCA | Date from:2015.05 | GDS83361 | Drive Shaft | | 38 | 26 | 63 | 102.5 | 883 | |
| | 2009.09-2015.08 | 6MT | F | L | Bus FWD CFCA | Date to:2013.05 | GCI61029 | Inner Joint | | 26 | 30 | 46.8 | | 137 | |
| | 2009.09-2015.08 | 6MT | F | L | Bus FWD CFCA | Date from:2015.05 | GCI61104 | Inner Joint | | 42 | 30 | 35.6 | | 136 | |
| | 2009.09-2015.08 | 6MT | F | R | Bus FWD CFCA | Date to:2015.04 | GCI61080 | Inner Joint | | 26 | 30 | | 281.5 | 106 | |
| | 2009.09-2015.08 | 6MT | F | R | Bus FWD CFCA | Date from:2015.05 | GCI81381 | Inner Joint | | 26 | 30 | | 281.5 | 105 | |
| | 2009.09-2015.08 | 6MT | F | L | Bus FWD CFCA | for OE number:0A5409343B | GDS61213 | Stub Axle,differential | | 42 | 42 | | | 135.5 | |
| | 2009.09-2015.08 | 6MT | F | R | Bus FWD CFCA | for OE number:0A5409343A | GDS61215 | Stub Axle,differential | | 26 | 42 | | | 143.5 | |
| | 2009.09-2015.08 | 6MT | F | L/R | Bus FWD CFCA | for OE number:0A5409343 | GDS61191 | Stub Axle,differential | | 26 | 42 | | | 135.5 | |
| | 2009.09-2015.08 | 6MT/7DCT | F | L/R | Bus FWD CFCA | 6 balls | GCO61011 | Outer Joint | | 38 | 29 | 63 | 102.5 | 70 | M |
| | 2009.09-2015.08 | 6MT/7DCT | F | L/R | Bus FWD CFCA | 6 balls | GCO61060 | Outer Joint | | 38 | 30 | 63 | 102.5 | 68 | I |
| | 2009.09-2015.08 | 6MT/7DCT | F | L/R | Bus FWD CFCA | 8 balls | GCO81467 | Outer Joint | | 38 | 30 | 63 | 102.5 | 67.5 | I |
| | 2009.09-2015.08 | 7AT | F | R | Bus FWD CFCA | | GDS61216 | Stub Axle,differential | | 26 | 37 | | | 145 | |
| | 2009.09-2015.08 | 7DCT | F | L | Bus FWD CFCA | 6 balls,TJ | GDS83293 | Drive Shaft | | 38 | 37 | 63 | 102.5 | 645 | |
| | 2009.09-2015.08 | 7DCT | F | R | Bus FWD CFCA | 8 balls,AAR | GDS82392 | Drive Shaft | | 38 | 37 | 63 | 102.5 | 1025 | |
| | 2009.09-2015.08 | 7DCT | F | R | Bus FWD CFCA | 6 balls,AAR | GDS83353 | Drive Shaft | | 38 | 37 | 63 | 102.5 | 1027 | |
| | 2009.09-2015.08 | 7DCT | F | R | Bus FWD CFCA | Chassis no. From:7HCG000001/7HCH000001/7HCX000001 | GCI81754 | Inner Joint | | 37 | 27 | 34.5 | 430.5 | 96 | |
| | 2009.09-2015.08 | 7DCT | F | R | Bus FWD CFCA | Chassis no. to:7HBG500000/7HBH500000/7HBX500000 | GCI83037 | Inner Joint | | 37 | 27 | 34.5 | 430.5 | 96 | |

| | YEAR | TRANSM. | F/R | L/R | BODY STYLE & DRIVE TYPE & ENGINE | REMARKS | G-AP Ref. | PRODUCT | ABS | Technical Specifications A | B | C | H | L | P |
|---|---|---|---|---|---|---|---|---|---|---|---|---|---|---|---|
| **VW California** | | | | | | | | | | | | | | | |
| 2.0 (132 kw) | 2010.01-2015.08 | 6MT | F | L | Bus 4WD CFCA | Date:2010.01,Model:Transporter,for OE number:0A5409343B | GDS61084 | Drive Shaft | | 38 | 26 | 63 | 102.5 | 613 | |
| | 2010.01-2015.08 | 6MT | F | L | Bus 4WD CFCA | Date From:2013.07 | GDS83360 | Drive Shaft | | 38 | 42 | 63 | 102.5 | 617 | |
| | 2010.01-2015.08 | 6MT | F | R | Bus 4WD CFCA | Date to:2013.06 | GDS61084 | Drive Shaft | | 38 | 26 | 63 | 102.5 | 613 | |
| | 2010.01-2015.08 | 6MT | F | R | Bus 4WD CFCA | Date from:2013.07 | GDS81666 | Drive Shaft | | 38 | 26 | 63 | 102.5 | 616 | |
| | 2010.01-2015.08 | 6MT | F | L | Bus 4WD CFCA | Date:2010.01,Model:Transporter,for OE number:0A5409343B | GCI61029 | Inner Joint | | 26 | 30 | 46.8 | | 137 | |
| | 2010.01-2015.08 | 6MT | F | L | Bus 4WD CFCA | Date From:2013.07 | GCI61104 | Inner Joint | | 42 | 30 | 35.6 | | 136 | |
| | 2010.01-2015.08 | 6MT | F | R | Bus 4WD CFCA | Date to:2013.06 | GCI61029 | Inner Joint | | 26 | 30 | 46.8 | | 137 | |
| | 2010.01-2015.08 | 6MT | F | L | Bus 4WD CFCA | Date From:2010.01,Model:Transporter,for OE number:0A5409343B | GDS61213 | Stub Axle,differential | | 42 | 42 | | | 135.5 | |
| | 2010.01-2015.08 | 6MT | F | R | Bus 4WD CFCA | Date From:2010.01,Model:Transporter,for OE number:0A5409343A | GDS61215 | Stub Axle,differential | | 26 | 42 | | | 143.5 | |
| | 2010.01-2015.08 | 6MT/7DCT | F | L/R | Bus 4WD CFCA | Date to:2013.06 | GCO61011 | Outer Joint | | 38 | 29 | 63 | 102.5 | 70 | M |
| | 2010.01-2015.08 | 6MT/7DCT | F | L/R | Bus 4WD CFCA | Date from:2013.07 | GCO61060 | Outer Joint | | 38 | 30 | 63 | 102.5 | 68 | I |
| | 2010.01-2015.08 | 6MT/7DCT | F | L/R | Bus 4WD CFCA | Date from:2013.07 | GCO81467 | Outer Joint | | 38 | 30 | 63 | 102.5 | 67.5 | I |
| | 2010.01-2015.08 | 7DCT | F | L | Bus 4WD CFCA | | GDS83293 | Drive Shaft | | 38 | 37 | 63 | 102.5 | 645 | |
| | 2010.01-2015.08 | 7DCT | F | R | Bus 4WD CFCA | Chassis no. from:7HCG000001/7HCH000001/7HCX000001;Date From:2013.07 | GDS81665 | Drive Shaft | | 38 | 26 | 63 | 102.5 | 614 | |
| | 2010.01-2015.08 | 7DCT | F | R | Bus 4WD CFCA | Chassis no. to:7HBG500000/7HBH500000/7HBX500000 | GDS81920 | Drive Shaft | | 38 | 26 | 63 | 102.5 | 614 | |
| | 2010.01-2015.08 | 7DCT | F | R | Bus 4WD CFCA | | GCI81453 | Inner Joint | | 26 | 27 | 47 | | 128 | |
| | 2010.01-2015.08 | 7DCT | F | R | Bus 4WD CFCA | | GDS61216 | Stub Axle,differential | | 26 | 37 | | | 145 | |
| | 2010.01-2015.08 | 6MT/7DCT | R | L | Bus 4WD CFCA | | GDS61257 | Drive Shaft | | 38 | | 59 | 100 | 683 | |
| | 2010.01-2015.08 | 6MT/7DCT | R | R | Bus 4WD CFCA | | GDS61258 | Drive Shaft | | 38 | | 59 | 100 | 743 | |
| | 2010.01-2015.08 | 6MT/7DCT | R | L/R | Bus 4WD CFCA | | GCI82474 | Outer Joint | | 38 | 28 | 59 | 100 | 59 | |
| | 2010.01-2015.08 | 6MT/7DCT | R | L/R | Bus 4WD CFCA | | GCI61075 | Inner Joint | | | 28 | | | 26 | |
| | 2015.04-2019.12 | 7AT | F | L/R | Bus FWD CFCA | | GCO81467 | Outer Joint | | 38 | 30 | 63 | 102.5 | 67.5 | I |
| | 2015.04-2019.12 | 7DCT | F | L | Bus FWD CFCA | | GDS83293 | Drive Shaft | | 38 | 37 | 63 | 102.5 | 645 | |
| | 2015.04-2019.12 | 7DCT | F | R | Bus FWD CFCA | | GDS82392 | Drive Shaft | | 38 | 37 | 63 | 102.5 | 1025 | |
| | 2015.04-2019.12 | 7DCT | F | R | Bus FWD CFCA | Model year to:2015 | GCO61060 | Outer Joint | | 38 | 30 | 63 | 102.5 | 68 | I |
| | 2015.04-2019.12 | 7DCT | F | R | Bus FWD CFCA | Model year to:2015 | GCI83037 | Inner Joint | | 37 | 27 | 34.5 | 430.5 | 96 | |
| | 2015.06-2019.12 | 7AT | F | L/R | Bus 4WD CFCA | | GCO81467 | Outer Joint | | 38 | 30 | 63 | 102.5 | 67.5 | I |
| | 2015.06-2019.12 | 7AT | F | R | Bus 4WD CFCA | | GCI81453 | Inner Joint | | 26 | 27 | 47 | | 128 | |
| | 2015.06-2019.12 | 7DCT | F | L | Bus 4WD CFCA | | GDS83293 | Drive Shaft | | 38 | 37 | 63 | 102.5 | 645 | |
| | 2015.06-2019.12 | 7DCT | F | R | Bus 4WD CFCA | | GDS81665 | Drive Shaft | | 38 | 26 | 63 | 102.5 | 614 | |
| | 2015.06-2019.12 | 7AT | R | L/R | Bus 4WD CFCA | | GCI61075 | Inner Joint | | | 28 | | | 26 | |
| | 2015.06-2019.12 | 7DCT | R | L | Bus 4WD CFCA | | GDS61257 | Drive Shaft | | 38 | | 59 | 100 | 683 | |
| | 2015.06-2019.12 | 7DCT | R | R | Bus 4WD CFCA | | GDS61258 | Drive Shaft | | 38 | | 59 | 100 | 743 | |
| 2.0 (146 kw) | 2018.08-2024.08 | 7AT | F | L | Bus 4WD CXEC | | GCO82386 | Outer Joint | | 38 | 31 | 63 | 103 | 69 | I |
| | 2018.08-2024.08 | 7AT | F | L | Bus 4WD CXEC | | GCI81261 | Inner Joint | | 37 | 27 | 34.5 | 65.5 | 88.5 | |
| | 2018.08-2024.08 | 7DCT | F | L | Bus 4WD CXEC | Date To:2020.11 | GDS83497 | Drive Shaft | | 38 | 37 | 63 | 103 | 646 | |
| | 2018.08-2024.08 | 7DCT | F | R | Bus 4WD CXEC | For Modelcode:SGC/SGG | GCI81453 | Inner Joint | | 26 | 27 | 47 | | 128 | |
| | 2018.08-2024.08 | 7AT | R | R | Bus 4WD CXEC | | GDS61258 | Drive Shaft | | 38 | | 59 | 100 | 743 | |
| | 2018.08-2024.08 | 7DCT | R | L | Bus 4WD CXEC | | GDS61257 | Drive Shaft | | 38 | | 59 | 100 | 683 | |
| | 2018.08-2024.08 | 7AT | F | L/R | Bus FWD CXEC | | GCO82386 | Outer Joint | | 38 | 31 | 63 | 103 | 69 | I |
| | 2018.08-2024.08 | 7AT | F | L | Bus FWD CXEC | | GCI81261 | Inner Joint | | 37 | 27 | 34.5 | 65.5 | 88.5 | |
| | 2018.08-2024.08 | 7AT | F | R | Bus FWD CXEC | | GCI81754 | Inner Joint | | 37 | 27 | 34.5 | 430.5 | 96 | |
| | 2018.08-2024.08 | 7DCT | F | L | Bus FWD CXEC | Date To:2020.11 | GDS83497 | Drive Shaft | | 38 | 37 | 63 | 103 | 646 | |
| | 2018.08-2024.08 | 7DCT | F | R | Bus FWD CXEC | For Modelcode:SGC/SGG | GDS83496 | Drive Shaft | | 38 | 37 | 63 | 103 | 1025 | |
| 2.0 (150 kw) | 2011.05-2015.08 | 6MT | F | L | Bus FWD CJKA | Date to:2013.06 | GDS61084 | Drive Shaft | | 38 | 26 | 63 | 102.5 | 613 | |
| | 2011.05-2015.08 | 6MT | F | L | Bus FWD CJKA | Date From:2013.07 | GDS83360 | Drive Shaft | | 38 | 42 | 63 | 102.5 | 617 | |
| | 2011.05-2015.08 | 6MT | F | R | Bus FWD CJKA | Date From:2013.07,Date To:2015.04 | GDS82361 | Drive Shaft | | 38 | 26 | 63 | 102.5 | 879 | |
| | 2011.05-2015.08 | 6MT | F | R | Bus FWD CJKA | Date To:2013.06 | GDS83296 | Drive Shaft | | 38 | 26 | 63 | 102.5 | 880 | |
| | 2011.05-2015.08 | 6MT | F | R | Bus FWD CJKA | Date From:2015.05 | GDS83361 | Drive Shaft | | 38 | 26 | 63 | 102.5 | 883 | |
| | 2011.05-2015.08 | 6MT | F | L | Bus FWD CJKA | Date To:2013.06 | GCI61029 | Inner Joint | | 26 | 30 | 46.8 | | 137 | |
| | 2011.05-2015.08 | 6MT | F | L | Bus FWD CJKA | Date From:2013.07 | GCI61104 | Inner Joint | | 42 | 30 | 35.6 | | 136 | |
| | 2011.05-2015.08 | 6MT | F | R | Bus FWD CJKA | Date to:2015.04 | GCI61080 | Inner Joint | | 26 | 30 | | 281.5 | 106 | |
| | 2011.05-2015.08 | 6MT | F | R | Bus FWD CJKA | Date from:2015.05 | GCI81381 | Inner Joint | | 26 | 30 | | 281.5 | 105 | |
| | 2011.05-2015.08 | 6MT | F | L | Bus FWD CJKA | Model:Transporter,for OE number:0A5409343B | GDS61213 | Stub Axle,differential | | 42 | 42 | | | 135.5 | |
| | 2011.05-2015.08 | 6MT | F | R | Bus FWD CJKA | Model:Transporter,for OE number:0A5409343A | GDS61215 | Stub Axle,differential | | 26 | 42 | | | 143.5 | |
| | 2011.05-2015.08 | 6MT | F | L/R | Bus FWD CJKA | Model:Transporter,for OE number:0A5409343 | GDS61191 | Stub Axle,differential | | 26 | 42 | | | 135.5 | |
| | 2011.05-2015.08 | 6MT/7DCT | F | L/R | Bus FWD CJKA | Date to:2013.06 | GCO61011 | Outer Joint | | 38 | 29 | 63 | 102.5 | 70 | M |
| | 2011.05-2015.08 | 6MT/7DCT | F | L/R | Bus FWD CJKA | Date From:2013.07;6 balls | GCO61060 | Outer Joint | | 38 | 30 | 63 | 102.5 | 68 | I |
| | 2011.05-2015.08 | 6MT/7DCT | F | L/R | Bus FWD CJKA | Date From:2013.07;8 balls | GCO81467 | Outer Joint | | 38 | 30 | 63 | 102.5 | 67.5 | I |
| | 2011.05-2015.08 | 6MT/7DCT | F | R | Bus FWD CJKA | | GDS61216 | Stub Axle,differential | | 26 | 37 | | | 145 | |
| | 2011.05-2015.08 | 7DCT | F | L | Bus FWD CJKA | | GDS83293 | Drive Shaft | | 38 | 37 | 63 | 102.5 | 645 | |
| | 2011.05-2015.08 | 7DCT | F | R | Bus FWD CJKA | Chassis no. from:7HCG000001/7HCH000001/7HCX000001 | GDS82392 | Drive Shaft | | 38 | 37 | 63 | 102.5 | 1025 | |
| | 2011.05-2015.08 | 7DCT | F | R | Bus FWD CJKA | Chassis no. to:7HBG500000/7HBH500000/7HBX500000 | GDS83353 | Drive Shaft | | 38 | 37 | 63 | 102.5 | 1027 | |
| | 2011.05-2015.08 | 7DCT | F | R | Bus FWD CJKA | Chassis no. from:7HCG000001/7HCH000001/7HCX000001 | GCI81754 | Inner Joint | | 37 | 27 | 34.5 | 430.5 | 96 | |
| | 2011.05-2015.08 | 7DCT | F | R | Bus FWD CJKA | Chassis no. to:7HBG500000/7HBH500000/7HBX500000 | GCI83037 | Inner Joint | | 37 | 27 | 34.5 | 430.5 | 96 | |

| | YEAR | TRANSM. | F/R | L/R | BODY STYLE & DRIVE TYPE & ENGINE | REMARKS | G-AP Ref. | PRODUCT | ABS | Technical Specifications A | B | C | H | L | P |
|---|---|---|---|---|---|---|---|---|---|---|---|---|---|---|---|
| **VW California** | | | | | | | | | | | | | | | |
| 2.0 (150 kw) | 2011.07-2015.08 | 7DCT | F | L | Bus 4WD CJKA | | GDS83293 | Drive Shaft | | 38 | 37 | 63 | 102.5 | 645 | |
| | 2011.07-2015.08 | 7DCT | F | R | Bus 4WD CJKA | | GDS81665 | Drive Shaft | | 38 | 26 | 63 | 102.5 | 614 | |
| | 2011.07-2015.08 | 7DCT | F | L/R | Bus 4WD CJKA | Date to:2013.06 | GCO61011 | Outer Joint | | 38 | 29 | 63 | 102.5 | 70 | M |
| | 2011.07-2015.08 | 7DCT | F | L/R | Bus 4WD CJKA | Date from:2013.07 | GCO81467 | Outer Joint | | 38 | 30 | 63 | 102.5 | 67.5 | I |
| | 2011.07-2015.08 | 7DCT | F | R | Bus 4WD CJKA | | GCI81453 | Inner Joint | | 26 | 27 | 47 | | 128 | |
| | 2011.07-2015.08 | 7DCT | F | R | Bus 4WD CJKA | | GDS61216 | Stub Axle,differential | | 26 | 37 | | | 145 | |
| | 2011.07-2015.08 | 7DCT | R | L | Bus 4WD CJKA | | GDS61257 | Drive Shaft | | 38 | | 59 | 100 | 683 | |
| | 2011.07-2015.08 | 7DCT | R | R | Bus 4WD CJKA | | GDS61258 | Drive Shaft | | 38 | | 59 | 100 | 743 | |
| | 2011.07-2015.08 | 7DCT | R | L/R | Bus 4WD CJKA | | GCI82474 | Outer Joint | | 38 | 28 | 59 | 100 | 59 | |
| | 2011.07-2015.08 | 7DCT | R | L/R | Bus 4WD CJKA | | GCI61075 | Inner Joint | | | 28 | | | 26 | |
| | 2015.04-2019.07 | 7AT | F | L/R | Bus FWD CJKA | | GCO81467 | Outer Joint | | 38 | 30 | 63 | 102.5 | 67.5 | I |
| | 2015.04-2019.07 | 7DCT | F | L | Bus FWD CJKA | Date to:2007.01 | GDS83293 | Drive Shaft | | 38 | 37 | 63 | 102.5 | 645 | |
| | 2015.04-2019.07 | 7DCT | F | R | Bus FWD CJKA | | GDS82392 | Drive Shaft | | 38 | 37 | 63 | 102.5 | 1025 | |
| | 2015.04-2019.07 | 7DCT | F | R | Bus FWD CJKA | Model year to:2015 | GCO61060 | Outer Joint | | 38 | 30 | 63 | 102.5 | 68 | I |
| | 2015.04-2019.07 | 7DCT | F | R | Bus FWD CJKA | Model year to:2015 | GCI83037 | Inner Joint | | 37 | 27 | 34.5 | 430.5 | 96 | |
| | 2015.06-2019.07 | 7AT | F | L/R | Bus 4WD CJKA | | GCO81467 | Outer Joint | | 38 | 30 | 63 | 102.5 | 67.5 | I |
| | 2015.06-2019.07 | 7AT | F | R | Bus 4WD CJKA | | GCI81453 | Inner Joint | | 26 | 27 | 47 | | 128 | |
| | 2015.06-2019.07 | 7DCT | F | L | Bus 4WD CJKA | | GDS83293 | Drive Shaft | | 38 | 37 | 63 | 102.5 | 645 | |
| | 2015.06-2019.07 | 7DCT | F | R | Bus 4WD CJKA | | GDS81665 | Drive Shaft | | 38 | 26 | 63 | 102.5 | 614 | |
| | 2015.06-2019.07 | 7AT | R | L/R | Bus 4WD CJKA | | GCI61075 | Inner Joint | | | 28 | | | 26 | |
| | 2015.06-2019.07 | 7DCT | R | L | Bus 4WD CJKA | | GDS61257 | Drive Shaft | | 38 | | 59 | 100 | 683 | |
| | 2015.06-2019.07 | 7DCT | R | R | Bus 4WD CJKA | | GDS61258 | Drive Shaft | | 38 | | 59 | 100 | 743 | |
| | 2015.06-2024.08 | 6MT | F | R | Bus 4WD CXEB;DMZA | For model code:SHC | GDS81665 | Drive Shaft | | 38 | 26 | 63 | 102.5 | 614 | |
| | 2015.06-2024.08 | 6MT | F | L | Bus 4WD CXEB;DMZA | Type:Transporter;for OE number:0A5409343B | GDS61213 | Stub Axle,differential | | 42 | 42 | | | 135.5 | |
| | 2015.06-2024.08 | 6MT | F | R | Bus 4WD CXEB;DMZA | Type:Transporter;for OE number:0A5409343A | GDS61215 | Stub Axle,differential | | 26 | 42 | | | 143.5 | |
| | 2015.06-2024.08 | 7AT/6MT | F | L/R | Bus 4WD CXEB;DMZA | For Modelcode:SHC | GCO81467 | Outer Joint | | 38 | 30 | 63 | 102.5 | 67.5 | I |
| | 2015.06-2024.08 | 7AT/6MT | F | L/R | Bus 4WD CXEB;DMZA | | GDS61216 | Stub Axle,differential | | 26 | 37 | | | 145 | |
| | 2015.06-2024.08 | 7DCT | F | L | Bus 4WD CXEB;DMZA | Date From:2017.01,Date To:2020.11 | GDS83497 | Drive Shaft | | 38 | 37 | 63 | 103 | 646 | |
| | 2015.06-2024.08 | 7DCT | F | L | Bus 4WD CXEB;DMZA | | GCO82386 | Outer Joint | | 38 | 31 | 63 | 103 | 69 | I |
| | 2015.06-2024.08 | 7DCT | F | L | Bus 4WD CXEB;DMZA | | GCI81261 | Inner Joint | | 37 | 27 | 34.5 | 65.5 | 88.5 | |
| | 2015.06-2024.08 | 7DCT/6MT | F | R | Bus 4WD CXEB;DMZA | Transmission:6MT;Transmission:7DCT;Modelcode:SGC/SGG | GCI81453 | Inner Joint | | 26 | 27 | 47 | | 128 | |
| | 2015.06-2024.08 | 6MT/7DCT | R | L | Bus 4WD CXEB;DMZA | | GDS61257 | Drive Shaft | | 38 | | 59 | 100 | 683 | |
| | 2015.06-2024.08 | 6MT/7DCT | R | R | Bus 4WD CXEB;DMZA | | GDS61258 | Drive Shaft | | 38 | | 59 | 100 | 743 | |
| | 2015.06-2024.08 | | R | L | Bus 4WD CXEB;DMZA | Date To:2016.04 | GCI61075 | Inner Joint | | | 28 | | | 26 | |
| | 2015.06-2024.08 | 6MT | F | L/R | Bus FWD CXEB;DMZA | For Modelcode:SHC | GCO81467 | Outer Joint | | 38 | 30 | 63 | 102.5 | 67.5 | I |
| | 2015.06-2024.08 | 6MT | F | L | Bus FWD CXEB;DMZA | Type:Transporter;for OE number:0A5409343B | GDS61213 | Stub Axle,differential | | 42 | 42 | | | 135.5 | |
| | 2015.06-2024.08 | 6MT | F | R | Bus FWD CXEB;DMZA | Type:Transporter;for OE number:0A5409343A | GDS61215 | Stub Axle,differential | | 26 | 42 | | | 143.5 | |
| | 2015.06-2024.08 | 7DCT | F | L | Bus FWD CXEB;DMZA | Date from:2017.02;For Modelcode:SGB/SGJ;6 balls | GDS61105 | Drive Shaft | | 38 | | 63 | 102.5 | 645 | |
| | 2015.06-2024.08 | 7DCT | F | L | Bus FWD CXEB;DMZA | Date from:2017.02;For Modelcode:SGC/SGG;8 balls | GDS81508 | Drive Shaft | | 38 | | 63 | 102.5 | 645 | |
| | 2015.06-2024.08 | 7DCT | F | L | Bus FWD CXEB;DMZA | Date to:2020.11,For Modelcode:SHC | GDS83497 | Drive Shaft | | 38 | 37 | 63 | 103 | 646 | |
| | 2015.06-2024.08 | 7DCT | F | R | Bus FWD CXEB;DMZA | For Modelcode:SGC/SGG | GDS83496 | Drive Shaft | | 38 | 37 | 63 | 103 | 1025 | |
| | 2015.06-2024.08 | 7DCT | F | L/R | Bus FWD CXEB;DMZA | | GCO82386 | Outer Joint | | 38 | 31 | 63 | 103 | 69 | I |
| | 2015.06-2024.08 | 7DCT | F | L | Bus FWD CXEB;DMZA | | GCI81261 | Inner Joint | | 37 | 27 | 34.5 | 65.5 | 88.5 | |
| | 2015.06-2024.08 | 7DCT | F | R | Bus FWD CXEB;DMZA | | GCI81754 | Inner Joint | | 37 | 27 | 34.5 | 430.5 | 96 | |
| | 2015.06-2024.08 | | F | L/R | Bus FWD CXEB;DMZA | | GDS61216 | Stub Axle,differential | | 26 | 37 | | | 145 | |
| 2.5 (85 kw) | 1998.05-2003.04 | 4AT | F | R | Bus FWD AET (.-04.01), APL (.-12.99), AVT (12.99-.) | | GDS61003 | Drive Shaft | | 38 | | 60.2 | 34.5 | 540.8 | |
| | 1998.05-2003.04 | 4AT | F | R | Bus FWD AET (.-04.01), APL (.-12.99), AVT (12.99-.) | | GDS61004 | Drive Shaft | 48T | 38 | | 60.2 | 34.5 | 540.8 | |
| | 1998.05-2003.04 | 4AT/5MT | F | L/R | Bus FWD AET (.-04.01), APL (.-12.99), AVT (12.99-.) | | GCI61002 | Inner Joint | | | 28 | | | 31.8 | |
| | 1998.05-2003.04 | 5MT | F | L/R | Bus FWD AET (.-04.01), APL (.-12.99), AVT (12.99-.) | | GDS61003 | Drive Shaft | | 38 | | 60.2 | 34.5 | 540.8 | |
| | 1998.05-2003.04 | 5MT | F | L/R | Bus FWD AET (.-04.01), APL (.-12.99), AVT (12.99-.) | | GDS61004 | Drive Shaft | 48T | 38 | | 60.2 | 34.5 | 540.8 | |
| 2.5 (96 kw) | 2007.05-2009.11 | 6AT | F | L/R | Bus 4WD AXD;BNZ | Model:Transporter Shuttle,for OE number:09K409352 | GDS61238 | Stub Axle,differential | | 26 | 30 | | | 114.5 | |
| | 2007.05-2009.11 | 6MT | F | L | Bus 4WD AXD;BNZ | | GDS61084 | Drive Shaft | | 38 | 26 | 63 | 102.5 | 613 | |
| | 2007.05-2009.11 | 6MT | F | R | Bus 4WD AXD;BNZ | | GDS57411 | Drive Shaft | | 38 | 26 | 63 | 102.5 | 616 | |
| | 2007.05-2009.11 | 6MT | F | L/R | Bus 4WD AXD;BNZ | | GCO61011 | Outer Joint | | 38 | 29 | 63 | 102.5 | 70 | M |
| | 2007.05-2009.11 | 6MT | F | L | Bus 4WD AXD;BNZ | | GCI61029 | Inner Joint | | 26 | 30 | 46.8 | | 137 | |
| | 2007.05-2009.11 | 6MT | F | L | Bus 4WD AXD;BNZ | Outer teeth:42 | GCI61104 | Inner Joint | | 42 | 30 | 35.6 | | 136 | |
| | 2007.05-2009.11 | 6MT | F | R | Bus 4WD AXD;BNZ | | GCI83652 | Inner Joint | | 26 | 30 | 46.8 | | 137 | |
| | 2007.05-2009.11 | 6MT | F | L | Bus 4WD AXD;BNZ | Model:Transporter Shuttle,for OE number:0A5409343B | GDS61213 | Stub Axle,differential | | 42 | 42 | | | 135.5 | |
| | 2007.05-2009.11 | 6MT | F | R | Bus 4WD AXD;BNZ | Model:Transporter Shuttle,for OE number:0A5409343A | GDS61215 | Stub Axle,differential | | 26 | 42 | | | 143.5 | |
| | 2007.05-2009.11 | 6MT | F | L/R | Bus 4WD AXD;BNZ | Model:Transporter Shuttle,for OE number:0A5409343 | GDS61191 | Stub Axle,differential | | 26 | 42 | | | 135.5 | |
| | 2007.05-2009.11 | 6MT | R | L | Bus 4WD AXD;BNZ | | GDS61257 | Drive Shaft | | 38 | | 59 | 100 | 683 | |
| | 2007.05-2009.11 | 6MT | R | R | Bus 4WD AXD;BNZ | | GDS61258 | Drive Shaft | | 38 | | 59 | 100 | 743 | |
| | 2007.05-2009.11 | 6MT | R | L/R | Bus 4WD AXD;BNZ | | GCI82474 | Outer Joint | | 38 | 28 | 59 | 100 | 59 | |
| | 2007.05-2009.11 | 6MT | R | L/R | Bus 4WD AXD;BNZ | | GCI61075 | Inner Joint | | | 28 | | | 26 | |
| | 2007.05-2009.11 | 6AT | F | L | Bus FWD AXD;BNZ | | GDS83973 | Drive Shaft | | 38 | 26 | 63 | 102.5 | 615 | |

| | YEAR | TRANSM. | F/R | L/R | BODY STYLE & DRIVE TYPE & ENGINE | REMARKS | G-AP Ref. | PRODUCT | ABS | Technical Specifications A | B | C | H | L | P |
|---|---|---|---|---|---|---|---|---|---|---|---|---|---|---|---|
| **VW** | | | | | | | | | | | | | | | |
| **California** | | | | | | | | | | | | | | | |
| 2.5 (96 kw) | 2007.05-2009.11 | 6AT | F | R | Bus FWD AXD;BNZ | Inner teeth of tranm.side:27 | GDS61210 | Drive Shaft | | 38 | 26 | 63 | 102.5 | 925 | |
| | 2007.05-2009.11 | 6AT | F | L | Bus FWD AXD;BNZ | | GCI82441 | Inner Joint | | 26 | 27 | 47 | | 128 | |
| | 2007.05-2009.11 | 6AT/6MT | F | L/R | Bus FWD AXD;BNZ | | GCO61011 | Outer Joint | | 38 | 29 | 63 | 102.5 | 70 | M |
| | 2007.05-2009.11 | 6MT | F | L | Bus FWD AXD;BNZ | | GDS83360 | Drive Shaft | | 38 | 42 | 63 | 102.5 | 617 | |
| | 2007.05-2009.11 | 6MT | F | R | Bus FWD AXD;BNZ | | GDS61140 | Drive Shaft | | 38 | 26 | 63 | 102.5 | 873 | |
| | 2007.05-2009.11 | 6MT | F | L | Bus FWD AXD;BNZ | | GCI61029 | Inner Joint | | 26 | 30 | 46.8 | | 137 | |
| | 2007.05-2009.11 | 6MT | F | L | Bus FWD AXD;BNZ | | GCI61104 | Inner Joint | | 42 | 30 | 35.6 | | 136 | |
| | 2007.05-2009.11 | 6MT | F | R | Bus FWD AXD;BNZ | | GCI61021 | Inner Joint | | 26 | 30 | | 288 | 106 | |
| 2.5 (120 kw) | 2007.05-2009.11 | 6MT | F | L | Bus FWD BLJ | | GDS61084 | Drive Shaft | | 38 | 26 | 63 | 102.5 | 613 | |
| | 2007.05-2009.11 | 6MT | F | L | Bus FWD BLJ | | GDS83360 | Drive Shaft | | 38 | 42 | 63 | 102.5 | 617 | |
| | 2007.05-2009.11 | 6MT | F | R | Bus FWD BLJ | | GDS61140 | Drive Shaft | | 38 | 26 | 63 | 102.5 | 873 | |
| | 2007.05-2009.11 | 6MT | F | L/R | Bus FWD BLJ | | GCO61011 | Outer Joint | | 38 | 29 | 63 | 102.5 | 70 | M |
| | 2007.05-2009.11 | 6MT | F | L | Bus FWD BLJ | | GCI61029 | Inner Joint | | 26 | 30 | 46.8 | | 137 | |
| | 2007.05-2009.11 | 6MT | F | R | Bus FWD BLJ | | GCI61021 | Inner Joint | | 26 | 30 | | 288 | 106 | |
| | 2007.05-2009.11 | 6MT | F | L | Bus FWD BLJ | for OE number:0A5409343B | GDS61213 | Stub Axle,differential | | 42 | 42 | | | 135.5 | |
| | 2007.05-2009.11 | 6MT | F | R | Bus FWD BLJ | for OE number:0A5409343A | GDS61215 | Stub Axle,differential | | 26 | 42 | | | 143.5 | |
| | 2007.05-2009.11 | 6MT | F | L/R | Bus FWD BLJ | for OE number:0A5409343 | GDS61191 | Stub Axle,differential | | 26 | 42 | | | 135.5 | |
| 2.5 (128 kw) | 2007.05-2009.11 | 6MT | F | L | Bus 4WD AXE;BPC | | GDS61084 | Drive Shaft | | 38 | 26 | 63 | 102.5 | 613 | |
| | 2007.05-2009.11 | 6MT | F | R | Bus 4WD AXE;BPC | | GDS57411 | Drive Shaft | | 38 | 26 | 63 | 102.5 | 616 | |
| | 2007.05-2009.11 | 6MT | F | L/R | Bus 4WD AXE;BPC | | GCO61011 | Outer Joint | | 38 | 29 | 63 | 102.5 | 70 | M |
| | 2007.05-2009.11 | 6MT | F | L | Bus 4WD AXE;BPC | | GCI61029 | Inner Joint | | 26 | 30 | 46.8 | | 137 | |
| | 2007.05-2009.11 | 6MT | F | L | Bus 4WD AXE;BPC | Outer teeth:42 | GCI61104 | Inner Joint | | 42 | 30 | 35.6 | | 136 | |
| | 2007.05-2009.11 | 6MT | F | R | Bus 4WD AXE;BPC | | GCI83652 | Inner Joint | | 26 | 30 | 46.8 | | 137 | |
| | 2007.05-2009.11 | 6MT | F | L | Bus 4WD AXE;BPC | Model:Transporter Shuttle,for OE number:0A5409343B | GDS61213 | Stub Axle,differential | | 42 | 42 | | | 135.5 | |
| | 2007.05-2009.11 | 6MT | F | R | Bus 4WD AXE;BPC | Model:Transporter Shuttle,for OE number:0A5409343A | GDS61215 | Stub Axle,differential | | 26 | 42 | | | 143.5 | |
| | 2007.05-2009.11 | 6MT | F | L/R | Bus 4WD AXE;BPC | Model:Transporter Shuttle,for OE number:0A5409343 | GDS61191 | Stub Axle,differential | | 26 | 42 | | | 135.5 | |
| | 2007.05-2009.11 | 6MT | R | L | Bus 4WD AXE;BPC | | GDS61257 | Drive Shaft | | 38 | | 59 | 100 | 683 | |
| | 2007.05-2009.11 | 6MT | R | R | Bus 4WD AXE;BPC | | GDS61258 | Drive Shaft | | 38 | | 59 | 100 | 743 | |
| | 2007.05-2009.11 | 6MT | R | L/R | Bus 4WD AXE;BPC | | GCI82474 | Outer Joint | | 38 | 28 | 59 | 100 | 59 | |
| | 2007.05-2009.11 | 6MT | R | L/R | Bus 4WD AXE;BPC | | GCI61075 | Inner Joint | | | 28 | | | 26 | |
| | 2007.05-2009.11 | 6AT | F | L | Bus FWD AXE;BPC | | GDS83973 | Drive Shaft | | 38 | 26 | 63 | 102.5 | 615 | |
| | 2007.05-2009.11 | 6AT | F | R | Bus FWD AXE;BPC | Inner teeth of tranm.side:27 | GDS61210 | Drive Shaft | | 38 | 26 | 63 | 102.5 | 925 | |
| | 2007.05-2009.11 | 6AT | F | L | Bus FWD AXE;BPC | | GCI82441 | Inner Joint | | 26 | 27 | 47 | | 128 | |
| | 2007.05-2009.11 | 6AT/6MT | F | L/R | Bus FWD AXE;BPC | | GCO61011 | Outer Joint | | 38 | 29 | 63 | 102.5 | 70 | M |
| | 2007.05-2009.11 | 6MT | F | L | Bus FWD AXE;BPC | | GDS83360 | Drive Shaft | | 38 | 42 | 63 | 102.5 | 617 | |
| | 2007.05-2009.11 | 6MT | F | R | Bus FWD AXE;BPC | | GDS61140 | Drive Shaft | | 38 | 26 | 63 | 102.5 | 873 | |
| | 2007.05-2009.11 | 6MT | F | L | Bus FWD AXE;BPC | | GCI61029 | Inner Joint | | 26 | 30 | 46.8 | | 137 | |
| | 2007.05-2009.11 | 6MT | F | L | Bus FWD AXE;BPC | | GCI61104 | Inner Joint | | 42 | 30 | 35.6 | | 136 | |
| | 2007.05-2009.11 | 6MT | F | R | Bus FWD AXE;BPC | | GCI61021 | Inner Joint | | 26 | 30 | | 288 | 106 | |
| 2.8 (103 kw) | 1996.07-2000.05 | 4AT | F | R | Bus FWD AES | | GDS61004 | Drive Shaft | 48T | 38 | | 60.2 | 34.5 | 540.8 | |
| | 1996.07-2000.05 | 4AT/5MT | F | L/R | Bus FWD AES | | GCO61006 | Outer Joint | 48T | 38 | 27 | 60.2 | 34.5 | 65 | I |
| | 1996.07-2000.05 | 5MT | F | L/R | Bus FWD AES | | GDS61004 | Drive Shaft | 48T | 38 | | 60.2 | 34.5 | 540.8 | |
| **Campmobile** | | | | | | | | | | | | | | | |
| 1.9 (50 kw) | 1992.10-2003.04 | 5MT | F | L/R | Bus FWD ABL | Chassis no. from:70_T_200001,Date From:1996.01 | GDS61003 | Drive Shaft | | 38 | | 60.2 | 34.5 | 540.8 | |
| | 1992.10-2003.04 | 5MT | F | L/R | Bus FWD ABL | Chassis no. from:70_T_200001,Date From:1996.01 | GDS61004 | Drive Shaft | 48T | 38 | | 60.2 | 34.5 | 540.8 | |
| | 1992.10-2003.04 | 5MT | F | L/R | Bus FWD ABL | Chassis no. to:70_R_200000;Chassis no. from:70_0H000001;Chassis no. to:70_T_199999;Date To:1995.12 | GDS61052 | Drive Shaft | 48T | 38 | | 60.2 | 34.5 | 529 | |
| | 1992.10-2003.04 | 5MT | F | L/R | Bus FWD ABL | Chassis no. to:70_R_200000;Chassis no. from:70_0H000001;Chassis no. to:70_T_199999;Date To:1995.12 | GDS61119 | Drive Shaft | | 38 | | 60.2 | 34.5 | 527 | |
| | 1992.10-2003.04 | 5MT | F | L/R | Bus FWD ABL | | GCO61003 | Outer Joint | | 38 | 33 | 60.2 | 34.5 | 65 | I |
| | 1992.10-2003.04 | 5MT | F | L/R | Bus FWD ABL | | GCO61004 | Outer Joint | 48T | 38 | 33 | 60.2 | 34.5 | 65 | I |
| | 1992.10-2003.04 | 5MT | F | L/R | Bus FWD ABL | without ABS | GCO61005 | Outer Joint | | 38 | 27 | 60.2 | 34.5 | 65 | I |
| | 1992.10-2003.04 | 5MT | F | L/R | Bus FWD ABL | | GCO61006 | Outer Joint | 48T | 38 | 27 | 60.2 | 34.5 | 65 | I |
| | 1992.10-2003.04 | 5MT | F | L/R | Bus FWD ABL | | GCI61001 | Inner Joint | | | 33 | | | 31.8 | |
| | 1992.10-2003.04 | 5MT | F | L/R | Bus FWD ABL | | GCI61002 | Inner Joint | | | 28 | | | 31.8 | |
| | 1992.10-2003.04 | AT/MT | F | R | Bus FWD ABL | | GDS61225 | Stub Axle-Flange | | 37 | | | 338 | 394 | |
| 2.0 (62 kw) | 1990.09-2003.04 | 4AT | F | L | Bus FWD AAC | Date from:1996.01,Chassis no. from:70T200001 | GDS61052 | Drive Shaft | 48T | 38 | | 60.2 | 34.5 | 529 | |
| | 1990.09-2003.04 | 4AT | F | L | Bus FWD AAC | Date to:1995.12,Chassis no. to:70T199999 | GDS61107 | Drive Shaft | 48T | 38 | | 60.2 | 34.5 | 520 | |
| | 1990.09-2003.04 | 4AT | F | R | Bus FWD AAC | Date From:1996.01,Chassis no. from:70T200001 | GDS61003 | Drive Shaft | | 38 | | 60.2 | 34.5 | 540.8 | |
| | 1990.09-2003.04 | 4AT | F | R | Bus FWD AAC | Date From:1996.01,Chassis no. from:70T200001 | GDS61004 | Drive Shaft | 48T | 38 | | 60.2 | 34.5 | 540.8 | |
| | 1990.09-2003.04 | 4AT | F | R | Bus FWD AAC | Date to:1995.12,Chassis no. to:70T199999 | GDS61034 | Drive Shaft | | 38 | | 60.2 | 34.5 | 529 | |
| | 1990.09-2003.04 | 4AT | F | R | Bus FWD AAC | Date to:1995.12,Chassis no. to:70T199999 | GDS61052 | Drive Shaft | 48T | 38 | | 60.2 | 34.5 | 529 | |
| | 1990.09-2003.04 | 4AT | F | R | Bus FWD AAC | Date to:1995.12,Chassis no. from:70SH000001;Chassis no. to:70T199999;Chassis no. to:70R200000 | GDS61119 | Drive Shaft | | 38 | | 60.2 | 34.5 | 527 | |
| | 1990.09-2003.04 | 4AT/5MT | F | L/R | Bus FWD AAC | | GCO61003 | Outer Joint | | 38 | 33 | 60.2 | 34.5 | 65 | I |
| | 1990.09-2003.04 | 4AT/5MT | F | L/R | Bus FWD AAC | | GCO61004 | Outer Joint | 48T | 38 | 33 | 60.2 | 34.5 | 65 | I |
| | 1990.09-2003.04 | 4AT/5MT | F | L/R | Bus FWD AAC | | GCO61005 | Outer Joint | | 38 | 27 | 60.2 | 34.5 | 65 | I |
| | 1990.09-2003.04 | 4AT/5MT | F | L/R | Bus FWD AAC | | GCO61006 | Outer Joint | 48T | 38 | 27 | 60.2 | 34.5 | 65 | I |

| | YEAR | TRANSM. | F/R | L/R | BODY STYLE & DRIVE TYPE & ENGINE | REMARKS | G-AP Ref. | PRODUCT | ABS | Technical Specifications A | B | C | H | L | P |
|---|---|---|---|---|---|---|---|---|---|---|---|---|---|---|---|
| **VW Campmobile** | | | | | | | | | | | | | | | |
| 2.0 (62 kw) | 1990.09-2003.04 | 4AT/5MT | F | L/R | Bus FWD AAC | | GCI61001 | Inner Joint | | | 33 | | | 31.8 | |
| | 1990.09-2003.04 | 4AT/5MT | F | L/R | Bus FWD AAC | | GCI61002 | Inner Joint | | | 28 | | | 31.8 | |
| | 1990.09-2003.04 | 5MT | F | L/R | Bus FWD AAC | Date From:1996.01,Chassis no. from:70T200001 | GDS61003 | Drive Shaft | | 38 | | 60.2 | 34.5 | 540.8 | |
| | 1990.09-2003.04 | 5MT | F | L/R | Bus FWD AAC | Date From:1996.01,Chassis no. from:70T200001 | GDS61004 | Drive Shaft | 48T | 38 | | 60.2 | 34.5 | 540.8 | |
| | 1990.09-2003.04 | 5MT | F | L/R | Bus FWD AAC | Date to:1995.12,Chassis no. from:70SH000001,Chassis no. to:70T199999 | GDS61034 | Drive Shaft | | 38 | | 60.2 | 34.5 | 529 | |
| | 1990.09-2003.04 | 5MT | F | L/R | Bus FWD AAC | Date To:1995.12,Chassis no. from:70SH000001,Chassis no. to:70T199999,Chassis no. to:70R200000 | GDS61052 | Drive Shaft | 48T | 38 | | 60.2 | 34.5 | 529 | |
| | 1990.09-2003.04 | 5MT | F | L/R | Bus FWD AAC | Date to:1995.12,Chassis no. from:70SH000001,Chassis no. to:70T199999,Chassis no. to:70R200000 | GDS61119 | Drive Shaft | | 38 | | 60.2 | 34.5 | 527 | |
| | 1990.09-2003.04 | AT/MT | F | R | Bus FWD AAC | | GDS61225 | Stub Axle-Flange | | 37 | | | 338 | 394 | |
| 2.4 (55 kw) | 1997.08-2003.04 | 4AT | F | L | Bus FWD AJA | | GDS61052 | Drive Shaft | 48T | 38 | | 60.2 | 34.5 | 529 | |
| | 1997.08-2003.04 | 4AT | F | R | Bus FWD AJA | | GDS61003 | Drive Shaft | | 38 | | 60.2 | 34.5 | 540.8 | |
| | 1997.08-2003.04 | 4AT | F | R | Bus FWD AJA | | GDS61004 | Drive Shaft | 48T | 38 | | 60.2 | 34.5 | 540.8 | |
| | 1997.08-2003.04 | 4AT/5MT | F | L/R | Bus FWD AJA | | GCO61005 | Outer Joint | | 38 | 27 | 60.2 | 34.5 | 65 | I |
| | 1997.08-2003.04 | 4AT/5MT | F | L/R | Bus FWD AJA | | GCO61006 | Outer Joint | 48T | 38 | 27 | 60.2 | 34.5 | 65 | I |
| | 1997.08-2003.04 | 4AT/5MT | F | L/R | Bus FWD AJA | | GCI61002 | Inner Joint | | | 28 | | | 31.8 | |
| | 1997.08-2003.04 | 5MT | F | L/R | Bus FWD AJA | | GDS61003 | Drive Shaft | | 38 | | 60.2 | 34.5 | 540.8 | |
| | 1997.08-2003.04 | 5MT | F | L/R | Bus FWD AJA | | GDS61004 | Drive Shaft | 48T | 38 | | 60.2 | 34.5 | 540.8 | |
| | 1997.08-2003.04 | MT | F | R | Bus FWD AJA | | GDS61225 | Stub Axle-Flange | | 37 | | | 338 | 394 | |
| 2.4 (57 kw) | 1990.09-1998.04 | 4AT | F | L | Bus FWD AAB | Date from:1996.01,Chassis no. from:70T200001 | GDS61052 | Drive Shaft | 48T | 38 | | 60.2 | 34.5 | 529 | |
| | 1990.09-1998.04 | 4AT | F | L | Bus FWD AAB | Date to:1995.12,Chassis no. to:70_T_199999 | GDS61107 | Drive Shaft | 48T | 38 | | 60.2 | 34.5 | 520 | |
| | 1990.09-1998.04 | 4AT | F | R | Bus FWD AAB | Date from:1996.01,Chassis no. from:70_T_200001 | GDS61003 | Drive Shaft | | 38 | | 60.2 | 34.5 | 540.8 | |
| | 1990.09-1998.04 | 4AT | F | R | Bus FWD AAB | Date from:1996.01,Chassis no. from:70T200001 | GDS61004 | Drive Shaft | 48T | 38 | | 60.2 | 34.5 | 540.8 | |
| | 1990.09-1998.04 | 4AT | F | R | Bus FWD AAB | Date to:1995.12,Chassis no. to:70T199999 | GDS61034 | Drive Shaft | | 38 | | 60.2 | 34.5 | 529 | |
| | 1990.09-1998.04 | 4AT | F | R | Bus FWD AAB | Date to:1995.12,Chassis no. to:70T199999 | GDS61052 | Drive Shaft | 48T | 38 | | 60.2 | 34.5 | 529 | |
| | 1990.09-1998.04 | 4AT | F | R | Bus FWD AAB | Date to:1995.12,Chassis no. from:70SH000001,Chassis no. to:70T199999,Chassis no. to:70R200000 | GDS61119 | Drive Shaft | | 38 | | 60.2 | 34.5 | 527 | |
| | 1990.09-1998.04 | 4AT/5MT | F | L/R | Bus FWD AAB | | GCO61003 | Outer Joint | | 38 | 33 | 60.2 | 34.5 | 65 | I |
| | 1990.09-1998.04 | 4AT/5MT | F | L/R | Bus FWD AAB | | GCO61004 | Outer Joint | 48T | 38 | 33 | 60.2 | 34.5 | 65 | I |
| | 1990.09-1998.04 | 4AT/5MT | F | L/R | Bus FWD AAB | Inner teeth:27,without ABS | GCO61005 | Outer Joint | | 38 | 27 | 60.2 | 34.5 | 65 | I |
| | 1990.09-1998.04 | 4AT/5MT | F | L/R | Bus FWD AAB | | GCO61006 | Outer Joint | 48T | 38 | 27 | 60.2 | 34.5 | 65 | I |
| | 1990.09-1998.04 | 4AT/5MT | F | L/R | Bus FWD AAB | Inner teeth:33 | GCI61001 | Inner Joint | | | 33 | | | 31.8 | |
| | 1990.09-1998.04 | 4AT/5MT | F | L/R | Bus FWD AAB | | GCI61002 | Inner Joint | | | 28 | | | 31.8 | |
| | 1990.09-1998.04 | 5MT | F | L/R | Bus FWD AAB | Date from:1996.01,Chassis no. from:70_T_200001 | GDS61003 | Drive Shaft | | 38 | | 60.2 | 34.5 | 540.8 | |
| | 1990.09-1998.04 | 5MT | F | L/R | Bus FWD AAB | Date from:1996.01,Chassis no. from:70T200001 | GDS61004 | Drive Shaft | 48T | 38 | | 60.2 | 34.5 | 540.8 | |
| | 1990.09-1998.04 | 5MT | F | L/R | Bus FWD AAB | Date to:1995.12,Chassis no. from:70SH000001,Chassis no. to:70T199999 | GDS61034 | Drive Shaft | | 38 | | 60.2 | 34.5 | 529 | |
| | 1990.09-1998.04 | 5MT | F | L/R | Bus FWD AAB | Date to:1995.12,Chassis no. from:70SH000001,Chassis no. to:70T199999 | GDS61052 | Drive Shaft | 48T | 38 | | 60.2 | 34.5 | 529 | |
| | 1990.09-1998.04 | 5MT | F | L/R | Bus FWD AAB | Date to:1995.12,Chassis no. from:70SH000001,Chassis no. to:70T199999,Chassis no. to:70R200000 | GDS61119 | Drive Shaft | | 38 | | 60.2 | 34.5 | 527 | |
| | 1990.09-1998.04 | AT/MT | F | R | Bus FWD AAB | | GDS61225 | Stub Axle-Flange | | 37 | | | 338 | 394 | |
| 2.5 (75 kw) | 1996.01-2003.04 | 5MT | F | L/R | Bus 4WD ACV, AXL | | GDS61003 | Drive Shaft | | 38 | | 60.2 | 34.5 | 540.8 | |
| | 1996.01-2003.04 | 5MT | F | L/R | Bus 4WD ACV, AXL | | GDS61004 | Drive Shaft | 48T | 38 | | 60.2 | 34.5 | 540.8 | |
| | 1996.01-2003.04 | 5MT | F | L/R | Bus 4WD ACV, AXL | | GCO61005 | Outer Joint | | 38 | 27 | 60.2 | 34.5 | 65 | I |
| | 1996.01-2003.04 | 5MT | F | L/R | Bus 4WD ACV, AXL | | GCO61006 | Outer Joint | 48T | 38 | 27 | 60.2 | 34.5 | 65 | I |
| | 1996.01-2003.04 | 5MT | F | L/R | Bus 4WD ACV, AXL | | GCI61002 | Inner Joint | | | 28 | | | 31.8 | |
| 2.5 (81 kw) | 1990.09-2003.06 | 4AT | F | L | Bus FWD AAF (11.90-12.93), ACU, AEN, AEU | Date to:1995.12,Chassis no. to:70T199999 | GDS61107 | Drive Shaft | 48T | 38 | | 60.2 | 34.5 | 520 | |
| | 1990.09-2003.06 | 4AT | F | R | Bus FWD AAF (11.90-12.93), ACU, AEN, AEU | Date From:1996.01,Chassis no. from:70T200001 | GDS61003 | Drive Shaft | | 38 | | 60.2 | 34.5 | 540.8 | |
| | 1990.09-2003.06 | 4AT | F | R | Bus FWD AAF (11.90-12.93), ACU, AEN, AEU | Date From:1996.01,Chassis no. from:70T200001 | GDS61004 | Drive Shaft | 48T | 38 | | 60.2 | 34.5 | 540.8 | |
| | 1990.09-2003.06 | 4AT | F | R | Bus FWD AAF (11.90-12.93), ACU, AEN, AEU | Date to:1995.12,Chassis no. to:70T199999;Chassis no. to:70R200000 | GDS61034 | Drive Shaft | | 38 | | 60.2 | 34.5 | 529 | |
| | 1990.09-2003.06 | 4AT | F | R | Bus FWD AAF (11.90-12.93), ACU, AEN, AEU | Date to:1995.12,Chassis no. to:70T199999;Chassis no. to:70R200000 | GDS61052 | Drive Shaft | 48T | 38 | | 60.2 | 34.5 | 529 | |
| | 1990.09-2003.06 | 4AT | F | R | Bus FWD AAF (11.90-12.93), ACU, AEN, AEU | Date to:1995.12,Chassis no. to:70T199999;Chassis no. to:70R200000 | GDS61119 | Drive Shaft | | 38 | | 60.2 | 34.5 | 527 | |
| | 1990.09-2003.06 | 4AT/5MT | F | L/R | Bus FWD AAF (11.90-12.93), ACU, AEN, AEU | | GCO61003 | Outer Joint | | 38 | 33 | 60.2 | 34.5 | 65 | I |
| | 1990.09-2003.06 | 4AT/5MT | F | L/R | Bus FWD AAF (11.90-12.93), ACU, AEN, AEU | | GCO61004 | Outer Joint | 48T | 38 | 33 | 60.2 | 34.5 | 65 | I |
| | 1990.09-2003.06 | 4AT/5MT | F | L/R | Bus FWD AAF (11.90-12.93), ACU, AEN, AEU | | GCO61005 | Outer Joint | | 38 | 27 | 60.2 | 34.5 | 65 | I |
| | 1990.09-2003.06 | 4AT/5MT | F | L/R | Bus FWD AAF (11.90-12.93), ACU, AEN, AEU | | GCO61006 | Outer Joint | 48T | 38 | 27 | 60.2 | 34.5 | 65 | I |
| | 1990.09-2003.06 | 4AT/5MT | F | L/R | Bus FWD AAF (11.90-12.93), ACU, AEN, AEU | | GCI61001 | Inner Joint | | | 33 | | | 31.8 | |
| | 1990.09-2003.06 | 4AT/5MT | F | L/R | Bus FWD AAF (11.90-12.93), ACU, AEN, AEU | | GCI61002 | Inner Joint | | | 28 | | | 31.8 | |
| | 1990.09-2003.06 | 5MT | F | L/R | Bus FWD AAF (11.90-12.93), ACU, AEN, AEU | Date From:1996.01,Chassis no. from:70T200001 | GDS61003 | Drive Shaft | | 38 | | 60.2 | 34.5 | 540.8 | |
| | 1990.09-2003.06 | 5MT | F | L/R | Bus FWD AAF (11.90-12.93), ACU, AEN, AEU | Date From:1996.01,Chassis no. from:70T200001 | GDS61004 | Drive Shaft | 48T | 38 | | 60.2 | 34.5 | 540.8 | |
| | 1990.09-2003.06 | 5MT | F | L/R | Bus FWD AAF (11.90-12.93), ACU, AEN, AEU | Date to:1995.12,Chassis no. from:70SH000001,Chassis no. to:70T199999 | GDS61034 | Drive Shaft | | 38 | | 60.2 | 34.5 | 529 | |
| | 1990.09-2003.06 | 5MT | F | L/R | Bus FWD AAF (11.90-12.93), ACU, AEN, AEU | Date to:1995.12,Chassis no. from:70SH000001,Chassis no. to:70T199999,Chassis no. to:70R200000 | GDS61052 | Drive Shaft | 48T | 38 | | 60.2 | 34.5 | 529 | |
| | 1990.09-2003.06 | 5MT | F | L/R | Bus FWD AAF (11.90-12.93), ACU, AEN, AEU | Date to:1995.12,Chassis no. from:70SH000001,Chassis no. to:70T199999,Chassis no. to:70R200000 | GDS61119 | Drive Shaft | | 38 | | 60.2 | 34.5 | 527 | |
| | 1990.09-2003.06 | AT/MT | F | R | Bus FWD AAF (11.90-12.93), ACU, AEN, AEU | | GDS61225 | Stub Axle-Flange | | 37 | | | 338 | 394 | |
| | 1992.08-2003.04 | 5MT | F | L/R | Bus 4WD AAF (11.92-12.93), ACU (01.94-.), AEU | Model:Transporter;Model:Multivan;Caravelle,Chassis no. from:70T200000,Date From:1996.01 | GDS61003 | Drive Shaft | | 38 | | 60.2 | 34.5 | 540.8 | |
| | 1992.08-2003.04 | 5MT | F | L/R | Bus 4WD AAF (11.92-12.93), ACU (01.94-.), AEU | Model:Transporter;Model:Multivan;Caravelle,Chassis no. from:70T200000,Date From:1996.01 | GDS61004 | Drive Shaft | 48T | 38 | | 60.2 | 34.5 | 540.8 | |
| | 1992.08-2003.04 | 5MT | F | L/R | Bus 4WD AAF (11.92-12.93), ACU (01.94-.), AEU | Chassis no. to:70T199999,Date To:1995.12 | GDS61034 | Drive Shaft | | 38 | | 60.2 | 34.5 | 529 | |
| | 1992.08-2003.04 | 5MT | F | L/R | Bus 4WD AAF (11.92-12.93), ACU (01.94-.), AEU | Chassis no. to:70T199999,Date To:1995.12 | GDS61052 | Drive Shaft | 48T | 38 | | 60.2 | 34.5 | 529 | |
| | 1992.08-2003.04 | 5MT | F | L/R | Bus 4WD AAF (11.92-12.93), ACU (01.94-.), AEU | Chassis no. to:70T199999,Date To:1995.12 | GDS61119 | Drive Shaft | | 38 | | 60.2 | 34.5 | 527 | |
| | 1992.08-2003.04 | 5MT | F | L/R | Bus 4WD AAF (11.92-12.93), ACU (01.94-.), AEU | | GCO61003 | Outer Joint | | 38 | 33 | 60.2 | 34.5 | 65 | I |

| | YEAR | TRANSM. | F/R | L/R | BODY STYLE & DRIVE TYPE & ENGINE | REMARKS | G-AP Ref. | PRODUCT | ABS | Technical Specifications A | B | C | H | L | P |
|---|---|---|---|---|---|---|---|---|---|---|---|---|---|---|---|
| **VW** | | | | | | | | | | | | | | | |
| **Campmobile** | | | | | | | | | | | | | | | |
| 2.5 (81 kw) | 1992.08-2003.04 | 5MT | F | L/R | Bus 4WD AAF (11.92-12.93), ACU (01.94-.), AEU | | GCO61004 | Outer Joint | 48T | 38 | 33 | 60.2 | 34.5 | 65 | I |
| | 1992.08-2003.04 | 5MT | F | L/R | Bus 4WD AAF (11.92-12.93), ACU (01.94-.), AEU | | GCO61005 | Outer Joint | | 38 | 27 | 60.2 | 34.5 | 65 | I |
| | 1992.08-2003.04 | 5MT | F | L/R | Bus 4WD AAF (11.92-12.93), ACU (01.94-.), AEU | | GCO61006 | Outer Joint | 48T | 38 | 27 | 60.2 | 34.5 | 65 | I |
| | 1992.08-2003.04 | 5MT | F | L/R | Bus 4WD AAF (11.92-12.93), ACU (01.94-.), AEU | | GCI61002 | Inner Joint | | | 28 | | | 31.8 | |
| 2.5 (85 kw) | 1996.07-2003.04 | 5MT | F | L/R | Bus 4WD AET (08.96-.), APL (05.99-.), AVT | | GDS61003 | Drive Shaft | | 38 | | 60.2 | 34.5 | 540.8 | |
| | 1996.07-2003.04 | 5MT | F | L/R | Bus 4WD AET (08.96-.), APL (05.99-.), AVT | | GDS61004 | Drive Shaft | 48T | 38 | | 60.2 | 34.5 | 540.8 | |
| | 1996.07-2003.04 | 5MT | F | L/R | Bus 4WD AET (08.96-.), APL (05.99-.), AVT | | GCO61005 | Outer Joint | | 38 | 27 | 60.2 | 34.5 | 65 | I |
| | 1996.07-2003.04 | 5MT | F | L/R | Bus 4WD AET (08.96-.), APL (05.99-.), AVT | | GCO61006 | Outer Joint | 48T | 38 | 27 | 60.2 | 34.5 | 65 | I |
| | 1996.07-2003.04 | 5MT | F | L/R | Bus 4WD AET (08.96-.), APL (05.99-.), AVT | | GCI61002 | Inner Joint | | | 28 | | | 31.8 | |
| | 1996.08-2003.04 | 4AT | F | L | Bus FWD AET (08.96-.), APL (05.99-.), AVT | | GDS61052 | Drive Shaft | 48T | 38 | | 60.2 | 34.5 | 529 | |
| | 1996.08-2003.04 | 4AT | F | R | Bus FWD AET (08.96-.), APL (05.99-.), AVT | | GDS61003 | Drive Shaft | | 38 | | 60.2 | 34.5 | 540.8 | |
| | 1996.08-2003.04 | 4AT | F | R | Bus FWD AET (08.96-.), APL (05.99-.), AVT | | GDS61004 | Drive Shaft | 48T | 38 | | 60.2 | 34.5 | 540.8 | |
| | 1996.08-2003.04 | 4AT/5MT | F | L/R | Bus FWD AET (08.96-.), APL (05.99-.), AVT | | GCO61005 | Outer Joint | | 38 | 27 | 60.2 | 34.5 | 65 | I |
| | 1996.08-2003.04 | 4AT/5MT | F | L/R | Bus FWD AET (08.96-.), APL (05.99-.), AVT | | GCO61006 | Outer Joint | 48T | 38 | 27 | 60.2 | 34.5 | 65 | I |
| | 1996.08-2003.04 | 4AT/5MT | F | L/R | Bus FWD AET (08.96-.), APL (05.99-.), AVT | | GCI61002 | Inner Joint | | | 28 | | | 31.8 | |
| | 1996.08-2003.04 | 5MT | F | L/R | Bus FWD AET (08.96-.), APL (05.99-.), AVT | | GDS61003 | Drive Shaft | | 38 | | 60.2 | 34.5 | 540.8 | |
| | 1996.08-2003.04 | 5MT | F | L/R | Bus FWD AET (08.96-.), APL (05.99-.), AVT | | GDS61004 | Drive Shaft | 48T | 38 | | 60.2 | 34.5 | 540.8 | |
| | 1996.08-2003.04 | MT | F | R | Bus FWD AET (08.96-.), APL (05.99-.), AVT | | GDS61225 | Stub Axle-Flange | | 37 | | | 338 | 394 | |
| 2.5 (111 kw) | 1998.05-2003.04 | 4AT/5MT | F | L/R | Bus FWD AHY, AXG | | GDS61033 | Drive Shaft | 48T | 38 | | 60.2 | 34.5 | 545 | |
| | 1998.05-2003.04 | 4AT/5MT | F | L/R | Bus FWD AHY, AXG | | GCO61005 | Outer Joint | | 38 | 27 | 60.2 | 34.5 | 65 | I |
| | 1998.05-2003.04 | 4AT/5MT | F | L/R | Bus FWD AHY, AXG | | GCO61006 | Outer Joint | 48T | 38 | 27 | 60.2 | 34.5 | 65 | I |
| | 1998.05-2003.04 | 4AT/5MT | F | L/R | Bus FWD AHY, AXG | | GCI61030 | Inner Joint | | | 30 | | | 32 | |
| 2.8 (103 kw) | 1995.11-2000.04 | 4AT | F | R | Bus FWD AES (11.95-.) | | GDS61003 | Drive Shaft | | 38 | | 60.2 | 34.5 | 540.8 | |
| | 1995.11-2000.04 | 4AT | F | R | Bus FWD AES (11.95-.) | | GDS61004 | Drive Shaft | 48T | 38 | | 60.2 | 34.5 | 540.8 | |
| | 1995.11-2000.04 | 4AT/5MT | F | L/R | Bus FWD AES (11.95-.) | | GCO61005 | Outer Joint | | 38 | 27 | 60.2 | 34.5 | 65 | I |
| | 1995.11-2000.04 | 4AT/5MT | F | L/R | Bus FWD AES (11.95-.) | | GCO61006 | Outer Joint | 48T | 38 | 27 | 60.2 | 34.5 | 65 | I |
| | 1995.11-2000.04 | 4AT/5MT | F | L/R | Bus FWD AES (11.95-.) | | GCI61002 | Inner Joint | | | 28 | | | 31.8 | |
| | 1995.11-2000.04 | 5MT | F | L/R | Bus FWD AES (11.95-.) | | GDS61003 | Drive Shaft | | 38 | | 60.2 | 34.5 | 540.8 | |
| | 1995.11-2000.04 | 5MT | F | L/R | Bus FWD AES (11.95-.) | | GDS61004 | Drive Shaft | 48T | 38 | | 60.2 | 34.5 | 540.8 | |
| | 1995.11-2000.04 | AT/MT | F | R | Bus FWD AES (11.95-.) | | GDS61225 | Stub Axle-Flange | | 37 | | | 338 | 394 | |
| 2.8 (150 kw) | 2000.04-2003.04 | 4AT | F | R | Bus FWD AMV, AXK | | GDS61033 | Drive Shaft | 48T | 38 | | 60.2 | 34.5 | 545 | |
| | 2000.04-2003.04 | 4AT | F | L/R | Bus FWD AMV, AXK | | GCO61005 | Outer Joint | | 38 | 27 | 60.2 | 34.5 | 65 | I |
| | 2000.04-2003.04 | 4AT | F | L/R | Bus FWD AMV, AXK | | GCO61006 | Outer Joint | 48T | 38 | 27 | 60.2 | 34.5 | 65 | I |
| | 2000.04-2003.04 | 4AT | F | L/R | Bus FWD AMV, AXK | | GCI61030 | Inner Joint | | | 30 | | | 32 | |
| **Caravelle** | | | | | | | | | | | | | | | |
| 2.0 (85 kw) | 2011.05-2015.08 | MT | F | L | Bus FWD CSDA | Date To:2013.05;6 balls | GDS61105 | Drive Shaft | | 38 | | 63 | 102.5 | 645 | |
| | 2011.05-2015.08 | MT | F | L | Bus FWD CSDA | Date To:2013.05;8 balls | GDS81508 | Drive Shaft | | 38 | | 63 | 102.5 | 645 | |
| | 2011.05-2015.08 | MT | F | R | Bus FWD CSDA | Date To:2012.08 | GDS83261 | Drive Shaft | | 38 | 26 | 63 | 102 | 857 | |
| | 2011.05-2015.08 | MT | F | L/R | Bus FWD CSDA | Date To:2013.05;6 balls | GCO61009 | Outer Joint | | 38 | 27 | 63 | 102 | 66 | M |
| | 2011.05-2015.08 | MT | F | L/R | Bus FWD CSDA | Date To:2013.05;8 balls | GCO81348 | Outer Joint | | 38 | 28 | 63 | 102.5 | 64.5 | I |
| | 2011.05-2015.08 | MT | F | L | Bus FWD CSDA | Date To:2013.05 | GCI61069 | Inner Joint | | | 28 | | | 32 | |
| | 2011.05-2015.08 | MT | F | R | Bus FWD CSDA | Date To:2012.08 | GCI61053 | Inner Joint | | 26 | 28 | | 261 | 63 | |
| | 2011.05-2015.08 | MT | F | R | Bus FWD CSDA | for OE number:02Z409345B | GDS61190 | Stub Axle,differential | | 26 | 37 | | | 136.5 | |
| | 2011.05-2015.08 | MT | F | L/R | Bus FWD CSDA | for OE number:0A5409355F | GDS61215 | Stub Axle,differential | | 26 | 42 | | | 143.5 | |
| 2.4 (57 kw) | 1992.10-1998.09 | 5MT | F | L/R | Bus 4WD AAB | Chassis no. from:70T200000 | GDS61003 | Drive Shaft | | 38 | | 60.2 | 34.5 | 540.8 | |
| | 1992.10-1998.09 | 5MT | F | L/R | Bus 4WD AAB | Chassis no. from:70T200000 | GDS61004 | Drive Shaft | 48T | 38 | | 60.2 | 34.5 | 540.8 | |
| | 1992.10-1998.09 | 5MT | F | L/R | Bus 4WD AAB | Chassis no. to:70T199999 | GDS61034 | Drive Shaft | | 38 | | 60.2 | 34.5 | 529 | |
| | 1992.10-1998.09 | 5MT | F | L/R | Bus 4WD AAB | Chassis no. to:70T199999 | GDS61052 | Drive Shaft | 48T | 38 | | 60.2 | 34.5 | 529 | |
| | 1992.10-1998.09 | 5MT | F | L/R | Bus 4WD AAB | Chassis no. to:70T199999 | GDS61119 | Drive Shaft | | 38 | | 60.2 | 34.5 | 527 | |
| | 1992.10-1998.09 | 5MT | F | L/R | Bus 4WD AAB | | GCO61005 | Outer Joint | | 38 | 27 | 60.2 | 34.5 | 65 | I |
| | 1992.10-1998.09 | 5MT | F | L/R | Bus 4WD AAB | | GCO61006 | Outer Joint | 48T | 38 | 27 | 60.2 | 34.5 | 65 | I |
| | 1992.10-1998.09 | 5MT | F | L/R | Bus 4WD AAB | | GCI61002 | Inner Joint | | | 28 | | | 31.8 | |
| 3.2 (170 kw) | 2004.02-2004.06 | 6AT | F | L/R | Bus FWD BDL | | GCO61011 | Outer Joint | | 38 | 29 | 63 | 102.5 | 70 | M |
| | 2004.02-2004.06 | 6AT | F | L | Bus FWD BDL | | GCI61029 | Inner Joint | | 26 | 30 | 46.8 | | 137 | |
| **CC** | | | | | | | | | | | | | | | |
| 1.4 (110 kw) | 2015.05-2016.12 | 6MT | F | L | Coupe FWD CZDA | | GDS61282 | Drive Shaft | | 36 | | 59.5 | 40 | 523 | |
| | 2015.05-2016.12 | 6MT | F | L/R | Coupe FWD CZDA | | GCO61059 | Outer Joint | | 36 | 33 | 59.5 | 40 | 59.5 | I |
| | 2015.05-2016.12 | 6MT | F | L/R | Coupe FWD CZDA | | GCI82447 | Inner Joint | | | 33 | | | 34 | |
| | 2015.05-2016.12 | 7AT/6MT | F | L/R | Coupe FWD CZDA | | GCI83016 | Inner Joint | | | 28 | | | 32 | |
| | 2015.05-2016.12 | 7DCT | F | L | Coupe FWD CZDA | | GDS61100 | Drive Shaft | | 36 | | 59.5 | 40 | 513 | |
| | 2015.05-2016.12 | 7DCT | F | R | Coupe FWD CZDA | | GDS83313 | Drive Shaft | | 36 | | 59.5 | 40 | 792 | |
| | 2015.05-2016.12 | 7DCT | F | L/R | Coupe FWD CZDA | | GCO83101 | Outer Joint | | 36 | 27 | 59.5 | 40 | 65 | M |
| 1.4 (118 kw) | 2011.11-2016.12 | 6MT | F | L | Coupe FWD CKMA | | GDS61201 | Drive Shaft | | 36 | | 59.5 | 40.5 | 535 | |
| | 2011.11-2016.12 | 6MT | F | R | Coupe FWD CKMA | | GDS61096 | Drive Shaft | | 36 | | 59.5 | 40.5 | 799 | |
| | 2011.11-2016.12 | 6MT | F | L/R | Coupe FWD CKMA | | GCO83037 | Outer Joint | | 36 | 30 | 59.5 | 40.5 | 56 | I |

| | YEAR | TRANSM. | F/R | L/R | BODY STYLE & DRIVE TYPE & ENGINE | REMARKS | G-AP Ref. | PRODUCT | ABS | Technical Specifications A | B | C | H | L | P |
|---|---|---|---|---|---|---|---|---|---|---|---|---|---|---|---|
| **VW** | | | | | | | | | | | | | | | |
| **CC** | | | | | | | | | | | | | | | |
| 1.4 (118 kw) | 2011.11-2016.12 | 6MT | F | L/R | Coupe FWD CKMA | | GCI82447 | Inner Joint | | | 33 | | | 34 | |
| | 2011.11-2016.12 | 7AT/6MT | F | L/R | Coupe FWD CKMA | | GCI83016 | Inner Joint | | | 28 | | | 32 | |
| | 2011.11-2016.12 | 7DCT | F | L | Coupe FWD CKMA | | GDS61281 | Drive Shaft | | 36 | | 59.5 | 40 | 528 | |
| | 2011.11-2016.12 | 7DCT | F | R | Coupe FWD CKMA | | GDS81653 | Drive Shaft | | 36 | | 59.5 | 40 | 785 | |
| | 2011.11-2016.12 | 7DCT | F | L/R | Coupe FWD CKMA | | GCO83002 | Outer Joint | | 36 | 27 | 59.5 | 40 | 66 | I |
| | 2011.11-2016.12 | AT | F | L | Coupe FWD CKMA | Date from:2012.01 | GDS83302 | Drive Shaft | | 36 | | 59.5 | 40 | 528 | |
| | 2011.11-2016.12 | 6MT | F | L | Coupe FWD CTHD | | GDS61201 | Drive Shaft | | 36 | | 59.5 | 40.5 | 535 | |
| | 2011.11-2016.12 | 6MT | F | R | Coupe FWD CTHD | | GDS61096 | Drive Shaft | | 36 | | 59.5 | 40.5 | 799 | |
| | 2011.11-2016.12 | 6MT | F | L/R | Coupe FWD CTHD | | GCI82447 | Inner Joint | | | 33 | | | 34 | |
| | 2011.11-2016.12 | 6MT/7AT | F | L/R | Coupe FWD CTHD | | GCO83037 | Outer Joint | | 36 | 30 | 59.5 | 40.5 | 56 | I |
| | 2011.11-2016.12 | 7AT/6MT | F | L/R | Coupe FWD CTHD | | GCO83002 | Outer Joint | | 36 | 27 | 59.5 | 40 | 66 | I |
| | 2011.11-2016.12 | 7AT/6MT | F | L/R | Coupe FWD CTHD | | GCI83016 | Inner Joint | | | 28 | | | 32 | |
| | 2011.11-2016.12 | 7DCT | F | L | Coupe FWD CTHD | | GDS61281 | Drive Shaft | | 36 | | 59.5 | 40 | 528 | |
| | 2011.11-2016.12 | 7DCT | F | R | Coupe FWD CTHD | | GDS81653 | Drive Shaft | | 36 | | 59.5 | 40 | 785 | |
| | 2011.11-2016.12 | AT | F | L | Coupe FWD CTHD | | GDS83302 | Drive Shaft | | 36 | | 59.5 | 40 | 528 | |
| 1.8 (112 kw) | 2011.11-2016.12 | 6MT | F | R | Coupe FWD CDAB | | GDS61341 | Drive Shaft | | 36 | | 59.5 | 40 | 806 | |
| | 2011.11-2016.12 | 6MT | F | R | Coupe FWD CDAB | | GCI61069 | Inner Joint | | | 28 | | | 32 | |
| | 2011.11-2016.12 | 6MT/7DCT | F | L | Coupe FWD CDAB | | GDS61100 | Drive Shaft | | 36 | | 59.5 | 40 | 513 | |
| | 2011.11-2016.12 | 7DCT | F | R | Coupe FWD CDAB | Date from:2013.04;Date to:2013.05 | GDS61126 | Drive Shaft | | 36 | | 59.5 | 40 | 793 | |
| | 2011.11-2016.12 | 7DCT | F | R | Coupe FWD CDAB | | GDS83313 | Drive Shaft | | 36 | | 59.5 | 40 | 792 | |
| | 2011.11-2016.12 | 7DCT | F | L/R | Coupe FWD CDAB | Date to:2013.03 | GCO83101 | Outer Joint | | 36 | 27 | 59.5 | 40 | 65 | M |
| | 2011.11-2016.12 | 7DCT/6MT | F | L/R | Coupe FWD CDAB | Transmission:7DCTDate from:2013.04;Date to:2013.05;Transmission:6MT | GCO83002 | Outer Joint | | 36 | 27 | 59.5 | 40 | 66 | I |
| | 2011.11-2016.12 | AT | F | L | Coupe FWD CDAB | | GDS61093 | Drive Shaft | | 36 | 26 | 59.5 | 40.5 | 587.5 | |
| | 2011.11-2016.12 | AT | F | R | Coupe FWD CDAB | | GDS61094 | Drive Shaft | | 36 | 26 | 59.5 | 40.5 | 884 | |
| | 2011.11-2016.12 | MT | F | R | Coupe FWD CDAB | | GDS61101 | Drive Shaft | | 36 | | 59.5 | 40 | 803 | |
| | 2011.11-2016.12 | | F | L/R | Coupe FWD CDAB | | GCI83016 | Inner Joint | | | 28 | | | 32 | |
| 1.8 (118 kw) | 2011.11-2016.12 | 6AT | F | L/R | Coupe FWD CDAA | | GCI61011 | Inner Joint | | 26 | 32 | 31 | 68.5 | 85 | |
| | 2011.11-2016.12 | 6MT | F | R | Coupe FWD CDAA | | GDS61341 | Drive Shaft | | 36 | | 59.5 | 40 | 806 | |
| | 2011.11-2016.12 | 6MT/7DCT | F | L/R | Coupe FWD CDAA | Date from:2013.04,Date to:2013.05 | GCO83002 | Outer Joint | | 36 | 27 | 59.5 | 40 | 66 | I |
| | 2011.11-2016.12 | 7AT | F | L | Coupe FWD CDAA | | GDS83236 | Drive Shaft | | 36 | | 59.5 | 40 | 484 | |
| | 2011.11-2016.12 | 7DCT | F | L | Coupe FWD CDAA | | GDS61100 | Drive Shaft | | 36 | | 59.5 | 40 | 513 | |
| | 2011.11-2016.12 | 7DCT | F | R | Coupe FWD CDAA | Date from:2013.04;Date to:2013.05 | GDS61126 | Drive Shaft | | 36 | | 59.5 | 40 | 793 | |
| | 2011.11-2016.12 | 7DCT | F | R | Coupe FWD CDAA | | GDS83313 | Drive Shaft | | 36 | | 59.5 | 40 | 792 | |
| | 2011.11-2016.12 | 7DCT | F | L/R | Coupe FWD CDAA | Date to:2013.03,Date from:2013.06 | GCO83101 | Outer Joint | | 36 | 27 | 59.5 | 40 | 65 | M |
| | 2011.11-2016.12 | AT | F | L | Coupe FWD CDAA | | GDS61093 | Drive Shaft | | 36 | 26 | 59.5 | 40.5 | 587.5 | |
| | 2011.11-2016.12 | AT | F | R | Coupe FWD CDAA | | GDS61094 | Drive Shaft | | 36 | 26 | 59.5 | 40.5 | 884 | |
| | 2011.11-2016.12 | | F | L/R | Coupe FWD CDAA | | GCI83016 | Inner Joint | | | 28 | | | 32 | |
| 2.0 (100 kw) | 2011.11-2016.12 | 6AT/6MT | F | L/R | Coupe FWD CFFA | Original Tripod Design | GCI61057 | Inner Joint | | | 34 | | | 89 | |
| | 2011.11-2016.12 | 6AT/6MT | F | L/R | Coupe FWD CFFA | | GCI83016 | Inner Joint | | | 28 | | | 32 | |
| | 2011.11-2016.12 | 6DCT | F | L | Coupe FWD CFFA | | GDS54013 | Drive Shaft | | 36 | | 59.5 | 40 | 479.5 | |
| | 2011.11-2016.12 | 6DCT | F | R | Coupe FWD CFFA | | GDS54011 | Drive Shaft | | 36 | | 59.5 | 40 | 755 | |
| | 2011.11-2016.12 | 6MT | F | L | Coupe FWD CFFA | | GDS83295 | Drive Shaft | | 36 | | 59.5 | 40 | 491 | |
| | 2011.11-2016.12 | 6MT | F | R | Coupe FWD CFFA | | GDS61126 | Drive Shaft | | 36 | | 59.5 | 40 | 793 | |
| | 2011.11-2016.12 | AT | F | L | Coupe FWD CFFA | | GDS83241 | Drive Shaft | | 36 | | 59.5 | 40 | 475 | |
| | 2011.11-2016.12 | MT/6MT | F | R | Coupe FWD CFFA | | GDS83313 | Drive Shaft | | 36 | | 59.5 | 40 | 792 | |
| | 2011.11-2016.12 | | F | L/R | Coupe FWD CFFA | | GCO83002 | Outer Joint | | 36 | 27 | 59.5 | 40 | 66 | I |
| 2.0 (103 kw) | 2011.11-2016.12 | 6MT | F | L | Coupe 4WD CFFB | | GDS83295 | Drive Shaft | | 36 | | 59.5 | 40 | 491 | |
| | 2011.11-2016.12 | 6MT | F | R | Coupe 4WD CFFB | | GDS83266 | Drive Shaft | | 36 | | 59.5 | 40 | 601 | |
| | 2011.11-2016.12 | AT | F | R | Coupe 4WD CFFB | | GDS83241 | Drive Shaft | | 36 | | 59.5 | 40 | 475 | |
| | 2011.11-2016.12 | AT | F | R | Coupe 4WD CFFB | | GCI54004 | Inner Joint | | | 34 | | | 81 | |
| | 2011.11-2016.12 | AT | F | L/R | Coupe 4WD CFFB | | GCI83006 | Inner Joint | | | 33 | | | 34 | |
| | 2011.11-2016.12 | MT | F | L | Coupe 4WD CFFB | | GDS83236 | Drive Shaft | | 36 | | 59.5 | 40 | 484 | |
| | 2011.11-2016.12 | | F | L/R | Coupe 4WD CFFB | | GCO83002 | Outer Joint | | 36 | 27 | 59.5 | 40 | 66 | I |
| | 2011.11-2016.12 | | F | L/R | Coupe 4WD CFFB | | GCI83016 | Inner Joint | | | 28 | | | 32 | |
| | 2011.11-2016.12 | 6MT | R | L | Coupe 4WD CFFB | | GDS61284 | Drive Shaft | | 36 | | 59.5 | 40 | 594 | |
| | 2011.11-2016.12 | 6MT | R | R | Coupe 4WD CFFB | | GDS61293 | Drive Shaft | | 36 | | 59.5 | 40 | 631 | |
| | 2011.11-2016.12 | 6MT | R | L/R | Coupe 4WD CFFB | | GCI35026 | Outer Joint | | 36 | 33 | 59.5 | 40 | 61 | |
| | 2011.11-2016.12 | 6MT | R | L/R | Coupe 4WD CFFB | | GCI82447 | Inner Joint | | | 33 | | | 34 | |
| | 2011.11-2016.12 | | R | L/R | Coupe 4WD CFFB | | GCI83011 | Inner Joint | | | 33 | | | 34 | |
| | 2011.11-2016.12 | 6DCT | F | L | Coupe FWD CFFB | | GDS54013 | Drive Shaft | | 36 | | 59.5 | 40 | 479.5 | |
| | 2011.11-2016.12 | 6DCT | F | L | Coupe FWD CFFB | | GDS83241 | Drive Shaft | | 36 | | 59.5 | 40 | 475 | |
| | 2011.11-2016.12 | 6DCT | F | R | Coupe FWD CFFB | | GDS54011 | Drive Shaft | | 36 | | 59.5 | 40 | 755 | |
| | 2011.11-2016.12 | 6DCT | F | L/R | Coupe FWD CFFB | AAR | GCI61057 | Inner Joint | | | 34 | | | 89 | |
| | 2011.11-2016.12 | 6MT | F | L | Coupe FWD CFFB | Inner teeth of tranm.side:28 | GDS83295 | Drive Shaft | | 36 | | 59.5 | 40 | 491 | |
| | 2011.11-2016.12 | 6MT | F | R | Coupe FWD CFFB | | GDS61126 | Drive Shaft | | 36 | | 59.5 | 40 | 793 | |

| | YEAR | TRANSM. | F/R | L/R | BODY STYLE & DRIVE TYPE & ENGINE | REMARKS | G-AP Ref. | PRODUCT | ABS | Technical Specifications A | B | C | H | L | P |
|---|---|---|---|---|---|---|---|---|---|---|---|---|---|---|---|
| **VW** | | | | | | | | | | | | | | | |
| **CC** | | | | | | | | | | | | | | | |
| 2.0 (103 kw) | 2011.11-2016.12 | 6MT | F | R | Coupe FWD CFFB | | GDS83313 | Drive Shaft | | 36 | | 59.5 | 40 | 792 | |
| | 2011.11-2016.12 | 6MT | F | L/R | Coupe FWD CFFB | | GCI61002 | Inner Joint | | | 28 | | | 31.8 | |
| | 2011.11-2016.12 | 6MT | F | L/R | Coupe FWD CFFB | | GCI61041 | Inner Joint | | | 28 | | | 32 | |
| | 2011.11-2016.12 | 6MT | F | L/R | Coupe FWD CFFB | | GCI61069 | Inner Joint | | | 28 | | | 32 | |
| | 2011.11-2016.12 | 6MT | F | L/R | Coupe FWD CFFB | | GCI83016 | Inner Joint | | | 28 | | | 32 | |
| | 2011.11-2016.12 | 6MT/6DCT | F | L/R | Coupe FWD CFFB | | GCO83002 | Outer Joint | | 36 | 27 | 59.5 | 40 | 66 | I |
| | 2011.11-2016.12 | MT | F | L | Coupe FWD CFFB | Inner teeth of tranm.side:33 | GDS83236 | Drive Shaft | | 36 | | 59.5 | 40 | 484 | |
| 2.0 (110 kw) | 2015.05-2016.12 | 6DCT | F | L | Coupe FWD CUVC | | GDS61310 | Drive Shaft | | 36 | | 59.4 | 40 | 477 | |
| | 2015.05-2016.12 | 6DCT | F | R | Coupe FWD CUVC | | GDS83354 | Drive Shaft | | 36 | | 59.5 | 40 | 763 | |
| | 2015.05-2016.12 | 6MT | F | L | Coupe FWD CUVC | | GDS83236 | Drive Shaft | | 36 | | 59.5 | 40 | 484 | |
| | 2015.05-2016.12 | 6MT | F | R | Coupe FWD CUVC | | GDS83313 | Drive Shaft | | 36 | | 59.5 | 40 | 792 | |
| | 2015.05-2016.12 | 6MT | F | L/R | Coupe FWD CUVC | | GCI61002 | Inner Joint | | | 28 | | | 31.8 | |
| | 2015.05-2016.12 | AT | F | L | Coupe FWD CUVC | | GDS83241 | Drive Shaft | | 36 | | 59.5 | 40 | 475 | |
| | 2015.05-2016.12 | AT | F | R | Coupe FWD CUVC | | GDS54011 | Drive Shaft | | 36 | | 59.5 | 40 | 755 | |
| | 2015.05-2016.12 | AT | F | L/R | Coupe FWD CUVC | | GCI61057 | Inner Joint | | | 34 | | | 89 | |
| | 2015.05-2016.12 | AT/MT | F | L/R | Coupe FWD CUVC | 6 balls | GCO83104 | Outer Joint | | 36 | 28 | 59.4 | 40 | 65 | I |
| | 2015.05-2016.12 | MT | F | R | Coupe FWD CUVC | | GDS61126 | Drive Shaft | | 36 | | 59.5 | 40 | 793 | |
| | 2015.05-2016.12 | | F | L/R | Coupe FWD CUVC | 8 balls | GCO81352 | Outer Joint | | 36 | 28 | 59.5 | 40 | 65 | I |
| 2.0 (125 kw) | 2011.11-2013.01 | 6AT | F | L | Coupe 4WD CFGB | | GDS54013 | Drive Shaft | | 36 | | 59.5 | 40 | 479.5 | |
| | 2011.11-2013.01 | 6AT | F | R | Coupe 4WD CFGB | | GDS61295 | Drive Shaft | | 36 | | 59.5 | 40 | 555 | |
| | 2011.11-2013.01 | AT | F | L/R | Coupe 4WD CFGB | | GCI61057 | Inner Joint | | | 34 | | | 89 | |
| | 2011.11-2013.01 | AT | F | L/R | Coupe 4WD CFGB | | GCI83006 | Inner Joint | | | 33 | | | 34 | |
| | 2011.11-2013.01 | | F | L/R | Coupe 4WD CFGB | | GCO83002 | Outer Joint | | 36 | 27 | 59.5 | 40 | 66 | I |
| | 2011.11-2013.01 | 6AT | R | L | Coupe 4WD CFGB | | GDS61284 | Drive Shaft | | 36 | | 59.5 | 40 | 594 | |
| | 2011.11-2013.01 | 6AT | R | R | Coupe 4WD CFGB | | GDS61293 | Drive Shaft | | 36 | | 59.5 | 40 | 631 | |
| | 2011.11-2013.01 | 6AT | R | L/R | Coupe 4WD CFGB | | GCI35026 | Outer Joint | | 36 | 33 | 59.5 | 40 | 61 | |
| | 2011.11-2013.01 | 6AT | R | L/R | Coupe 4WD CFGB | | GCI82447 | Inner Joint | | | 33 | | | 34 | |
| | 2011.11-2013.01 | | R | L/R | Coupe 4WD CFGB | | GCI83011 | Inner Joint | | | 33 | | | 34 | |
| | 2011.11-2016.12 | 6AT/6MT | F | L/R | Coupe FWD CFGB;CLLA | Date to:2013.05 | GCO83101 | Outer Joint | | 36 | 27 | 59.5 | 40 | 65 | M |
| | 2011.11-2016.12 | 6DCT | F | L | Coupe FWD CFGB;CLLA | Date to:2013.05 | GDS54013 | Drive Shaft | | 36 | | 59.5 | 40 | 479.5 | |
| | 2011.11-2016.12 | 6DCT | F | L | Coupe FWD CFGB;CLLA | Date from:2013.06 | GDS61310 | Drive Shaft | | 36 | | 59.4 | 40 | 477 | |
| | 2011.11-2016.12 | 6DCT | F | L | Coupe FWD CFGB;CLLA | Date to:2013.05 | GDS83241 | Drive Shaft | | 36 | | 59.5 | 40 | 475 | |
| | 2011.11-2016.12 | 6DCT | F | R | Coupe FWD CFGB;CLLA | Date to:2013.05 | GDS54011 | Drive Shaft | | 36 | | 59.5 | 40 | 755 | |
| | 2011.11-2016.12 | 6DCT | F | R | Coupe FWD CFGB;CLLA | Date from:2013.06 | GDS83354 | Drive Shaft | | 36 | | 59.5 | 40 | 763 | |
| | 2011.11-2016.12 | 6MT | F | L | Coupe FWD CFGB;CLLA | Date to:2013.05 | GDS83236 | Drive Shaft | | 36 | | 59.5 | 40 | 484 | |
| | 2011.11-2016.12 | 6MT | F | R | Coupe FWD CFGB;CLLA | Date to:2013.05 | GDS61126 | Drive Shaft | | 36 | | 59.5 | 40 | 793 | |
| | 2011.11-2016.12 | 6MT | F | R | Coupe FWD CFGB;CLLA | Date from:2013.06 | GDS83313 | Drive Shaft | | 36 | | 59.5 | 40 | 792 | |
| | 2011.11-2016.12 | AT | F | L | Coupe FWD CFGB;CLLA | Date to:2013.05 | GCI54004 | Inner Joint | | | 34 | | | 81 | |
| | 2011.11-2016.12 | AT | F | L/R | Coupe FWD CFGB;CLLA | | GCI61057 | Inner Joint | | | 34 | | | 89 | |
| | 2011.11-2016.12 | AT/MT | F | L/R | Coupe FWD CFGB;CLLA | Date from:2013.05 | GCO83104 | Outer Joint | | 36 | 28 | 59.4 | 40 | 65 | I |
| | 2011.11-2016.12 | | F | L/R | Coupe FWD CFGB;CLLA | Date From:2013.06 | GCO81352 | Outer Joint | | 36 | 28 | 59.5 | 40 | 65 | I |
| 2.0 (130 kw) | 2012.12-2016.12 | 6AT | F | L | Coupe 4WD CFGC | | GDS54013 | Drive Shaft | | 36 | | 59.5 | 40 | 479.5 | |
| | 2012.12-2016.12 | 6AT | F | R | Coupe 4WD CFGC | | GDS61295 | Drive Shaft | | 36 | | 59.5 | 40 | 555 | |
| | 2012.12-2016.12 | AT | F | L/R | Coupe 4WD CFGC | Date from:2013.01 | GCI61057 | Inner Joint | | | 34 | | | 89 | |
| | 2012.12-2016.12 | AT | F | L/R | Coupe 4WD CFGC | | GCI83006 | Inner Joint | | | 33 | | | 34 | |
| | 2012.12-2016.12 | | F | L/R | Coupe 4WD CFGC | | GCO83002 | Outer Joint | | 36 | 27 | 59.5 | 40 | 66 | I |
| | 2012.12-2016.12 | 6AT | R | L | Coupe 4WD CFGC | | GDS61284 | Drive Shaft | | 36 | | 59.5 | 40 | 594 | |
| | 2012.12-2016.12 | 6AT | R | R | Coupe 4WD CFGC | | GDS61293 | Drive Shaft | | 36 | | 59.5 | 40 | 631 | |
| | 2012.12-2016.12 | 6AT | R | L/R | Coupe 4WD CFGC | | GCI35026 | Outer Joint | | 36 | 33 | 59.5 | 40 | 61 | |
| | 2012.12-2016.12 | 6AT | R | L/R | Coupe 4WD CFGC | | GCI82447 | Inner Joint | | | 33 | | | 34 | |
| | 2012.12-2016.12 | | F/R | L/R | Coupe 4WD CFGC | | GCI83011 | Inner Joint | | | 33 | | | 34 | |
| | 2012.12-2016.12 | 6DCT | F | L | Coupe FWD CFGC | Date to:2013.05 | GDS54013 | Drive Shaft | | 36 | | 59.5 | 40 | 479.5 | |
| | 2012.12-2016.12 | 6DCT | F | L | Coupe FWD CFGC | Date from:2013.06 | GDS61310 | Drive Shaft | | 36 | | 59.4 | 40 | 477 | |
| | 2012.12-2016.12 | 6DCT | F | R | Coupe FWD CFGC | Date from:2013.06 | GDS83354 | Drive Shaft | | 36 | | 59.5 | 40 | 763 | |
| | 2012.12-2016.12 | 6DCT | F | L | Coupe FWD CFGC | Date to:2013.05 | GCI54004 | Inner Joint | | | 34 | | | 81 | |
| | 2012.12-2016.12 | 6MT | F | L | Coupe FWD CFGC | Date to:2013.05 | GDS83236 | Drive Shaft | | 36 | | 59.5 | 40 | 484 | |
| | 2012.12-2016.12 | 6MT | F | R | Coupe FWD CFGC | | GDS61126 | Drive Shaft | | 36 | | 59.5 | 40 | 793 | |
| | 2012.12-2016.12 | 6MT | F | R | Coupe FWD CFGC | Date from:2013.06 | GDS83313 | Drive Shaft | | 36 | | 59.5 | 40 | 792 | |
| | 2012.12-2016.12 | AT | F | L/R | Coupe FWD CFGC | Date from:2013.01 | GCI61057 | Inner Joint | | | 34 | | | 89 | |
| | 2012.12-2016.12 | AT/MT | F | L/R | Coupe FWD CFGC | Date from:2013.01;Date from:2013.05 | GCO83104 | Outer Joint | | 36 | 28 | 59.4 | 40 | 65 | I |
| | 2012.12-2016.12 | MT | F | L/R | Coupe FWD CFGC | Date to:2013.05 | GCO83101 | Outer Joint | | 36 | 27 | 59.5 | 40 | 65 | M |
| | 2012.12-2016.12 | | F | L/R | Coupe FWD CFGC | Date From:2013.06 | GCO81352 | Outer Joint | | 36 | 28 | 59.5 | 40 | 65 | I |
| 2.0 (135 kw) | 2015.05-2016.12 | 6DCT | F | L | Coupe FWD CUWA | | GDS61310 | Drive Shaft | | 36 | | 59.4 | 40 | 477 | |
| | 2015.05-2016.12 | 6DCT | F | R | Coupe FWD CUWA | | GDS83354 | Drive Shaft | | 36 | | 59.5 | 40 | 763 | |
| | 2015.05-2016.12 | 6MT | F | L | Coupe FWD CUWA | | GDS83236 | Drive Shaft | | 36 | | 59.5 | 40 | 484 | |

| | YEAR | TRANSM. | F/R | L/R | BODY STYLE & DRIVE TYPE & ENGINE | REMARKS | G-AP Ref. | PRODUCT | ABS | Technical Specifications A | B | C | H | L | P |
|---|---|---|---|---|---|---|---|---|---|---|---|---|---|---|---|
| **VW** | | | | | | | | | | | | | | | |
| **CC** | | | | | | | | | | | | | | | |
| 2.0 (135 kw) | 2015.05-2016.12 | 6MT | F | R | Coupe FWD CUWA | | GDS83313 | Drive Shaft | | 36 | | 59.5 | 40 | 792 | |
| | 2015.05-2016.12 | 6MT | F | L/R | Coupe FWD CUWA | | GCI61002 | Inner Joint | | | 28 | | | 31.8 | |
| | 2015.05-2016.12 | AT | F | L | Coupe FWD CUWA | | GDS83241 | Drive Shaft | | 36 | | 59.5 | 40 | 475 | |
| | 2015.05-2016.12 | AT | F | R | Coupe FWD CUWA | | GDS54011 | Drive Shaft | | 36 | | 59.5 | 40 | 755 | |
| | 2015.05-2016.12 | AT | F | L/R | Coupe FWD CUWA | | GCI61057 | Inner Joint | | | 34 | | | 89 | |
| | 2015.05-2016.12 | AT/MT | F | L/R | Coupe FWD CUWA | 6 balls | GCO83104 | Outer Joint | | 36 | 28 | 59.4 | 40 | 65 | I |
| | 2015.05-2016.12 | MT | F | R | Coupe FWD CUWA | | GDS61126 | Drive Shaft | | 36 | | 59.5 | 40 | 793 | |
| | 2015.05-2016.12 | | F | L/R | Coupe FWD CUWA | 8 balls | GCO81352 | Outer Joint | | 36 | 28 | 59.5 | 40 | 65 | I |
| 2.0 (147 kw) | 2011.11-2016.12 | 6AT/6MT | F | L | Coupe FWD CCTA;CBFA | | GDS83295 | Drive Shaft | | 36 | | 59.5 | 40 | 491 | |
| | 2011.11-2016.12 | 6DCT | F | R | Coupe FWD CCTA;CBFA | | GDS81653 | Drive Shaft | | 36 | | 59.5 | 40 | 785 | |
| | 2011.11-2016.12 | 6DCT/6MT | F | L/R | Coupe FWD CCTA;CBFA | | GCO83101 | Outer Joint | | 36 | 27 | 59.5 | 40 | 65 | M |
| | 2011.11-2016.12 | 6DCT/6MT | F | L/R | Coupe FWD CCTA;CBFA | | GCI83016 | Inner Joint | | | 28 | | | 32 | |
| | 2011.11-2016.12 | 6MT | F | R | Coupe FWD CCTA;CBFA | | GDS61147 | Drive Shaft | | 36 | | 59.5 | 40 | 795 | |
| 2.0 (155 kw) | 2011.11-2016.12 | 6AT/6MT | F | L | Coupe FWD CCZB | | GDS83295 | Drive Shaft | | 36 | | 59.5 | 40 | 491 | |
| | 2011.11-2016.12 | 6DCT | F | R | Coupe FWD CCZB | | GDS81653 | Drive Shaft | | 36 | | 59.5 | 40 | 785 | |
| | 2011.11-2016.12 | 6MT | F | R | Coupe FWD CCZB | | GDS61147 | Drive Shaft | | 36 | | 59.5 | 40 | 795 | |
| | 2011.11-2016.12 | | F | L/R | Coupe FWD CCZB | | GCO83101 | Outer Joint | | 36 | 27 | 59.5 | 40 | 65 | M |
| | 2011.11-2016.12 | | F | L/R | Coupe FWD CCZB | | GCI83016 | Inner Joint | | | 28 | | | 32 | |
| 3.6 (220 kw) | 2011.11-2016.12 | 6AT | F | L | Coupe 4WD BWS | | GDS83295 | Drive Shaft | | 36 | | 59.5 | 40 | 491 | |
| | 2011.11-2016.12 | 6AT | F | R | Coupe 4WD BWS | | GDS83266 | Drive Shaft | | 36 | | 59.5 | 40 | 601 | |
| | 2011.11-2016.12 | 6AT | F | L | Coupe 4WD BWS | | GCO83002 | Outer Joint | | 36 | 27 | 59.5 | 40 | 66 | I |
| | 2011.11-2016.12 | 6AT | F | L/R | Coupe 4WD BWS | | GCO83101 | Outer Joint | | 36 | 27 | 59.5 | 40 | 65 | M |
| | 2011.11-2016.12 | 6AT | F | L/R | Coupe 4WD BWS | | GCI61069 | Inner Joint | | | 28 | | | 32 | |
| | 2011.11-2016.12 | 6AT | R | L | Coupe 4WD BWS | | GDS61284 | Drive Shaft | | 36 | | 59.5 | 40 | 594 | |
| | 2011.11-2016.12 | 6AT | R | R | Coupe 4WD BWS | | GDS61293 | Drive Shaft | | 36 | | 59.5 | 40 | 631 | |
| | 2011.11-2016.12 | 6AT | R | L/R | Coupe 4WD BWS | | GCI35026 | Outer Joint | | 36 | 33 | 59.5 | 40 | 61 | |
| | 2011.11-2016.12 | 6AT | R | L/R | Coupe 4WD BWS | | GCI53002 | Inner Joint | | | 33 | | | 34 | |
| | 2011.11-2016.12 | 6AT | R | L/R | Coupe 4WD BWS | | GCI82447 | Inner Joint | | | 33 | | | 34 | |
| **Crafter** | | | | | | | | | | | | | | | |
| 2.0 (75 kw) | 2016.09-2024.06 | 6MT | F | R | Van FWD DAUB, DNAD | Date To:2022.06 | GDS83935 | Drive Shaft | | 44 | 42 | 72.4 | 109.5 | 1089 | |
| 2.0 (103 kw) | 2016.09- | 6MT | F | L | Van FWD DMZE, DAUA, DNAE | Date from:2017.04 | GDS83938 | Drive Shaft | | 44 | 42 | 72.4 | 109.5 | 722 | |
| | 2016.09- | 8AT | F | L | Van FWD DMZE, DAUA, DNAE | | GDS83937 | Drive Shaft | | 44 | 42 | 72.4 | 109.5 | 707 | |
| | 2016.09- | 8AT/6MT | F | R | Van FWD DMZE, DAUA, DNAE | Date from:2017.04,For PR code:0GG/7MM,Trans.code:RJJ,Date from:2022.11,For PR code:0GG/7MM,Trans.code:RJJ | GDS83935 | Drive Shaft | | 44 | 42 | 72.4 | 109.5 | 1089 | |
| | 2016.09- | 8AT/6MT | F | L/R | Van FWD DMZE, DAUA, DNAE | | GCO82542 | Outer Joint | | 44 | 31 | 72.4 | 109.5 | 65.5 | I |
| | 2016.09- | 8AT/6MT | F | L | Van FWD DMZE, DAUA, DNAE | | GCI82429 | Inner Joint | | 42 | 29 | | 67.5 | 100 | |
| | 2016.09- | 8AT/6MT | F | R | Van FWD DMZE, DAUA, DNAE | Date from:2017.04,For PR code:0GG/7MM,Trans.code:RJJ,Date from:2022.11,For PR code:0GG/7MM,Trans.code:RJJ | GCI82446 | Inner Joint | | 42 | 29 | 36.5 | 421.5 | 106.5 | |
| | 2017.04- | 6MT | F | L | Van 4WD DMZE, DAUA, DNAE | | GDS83938 | Drive Shaft | | 44 | 42 | 72.4 | 109.5 | 722 | |
| | 2017.04- | 6MT | F | R | Van 4WD DMZE, DAUA, DNAE | | GDS83936 | Drive Shaft | | 44 | 26 | 72.4 | 109.5 | 687 | |
| | 2017.04- | 6MT | F | L/R | Van 4WD DMZE, DAUA, DNAE | | GCO82542 | Outer Joint | | 44 | 31 | 72.4 | 109.5 | 65.5 | I |
| | 2017.04- | 6MT | F | L | Van 4WD DMZE, DAUA, DNAE | | GCI82429 | Inner Joint | | 42 | 29 | | 67.5 | 100 | |
| | 2017.04- | 6MT | F | R | Van 4WD DMZE, DAUA, DNAE | | GCI82428 | Inner Joint | | 26 | 29 | 47 | 39.5 | 100 | |
| 2.0 (120 kw) | 2022.11- | 6MT | F | L | Platform/Chassis 4WD DMZD | | GDS83938 | Drive Shaft | | 44 | 42 | 72.4 | 109.5 | 722 | |
| | 2022.11- | 8AT | F | L | Platform/Chassis 4WD DMZD | | GDS83937 | Drive Shaft | | 44 | 42 | 72.4 | 109.5 | 707 | |
| | 2022.11- | 8AT/6MT | F | L/R | Platform/Chassis 4WD DMZD | | GCO82542 | Outer Joint | | 44 | 31 | 72.4 | 109.5 | 65.5 | I |
| | 2022.11- | 8AT/6MT | F | L | Platform/Chassis 4WD DMZD | | GCI82429 | Inner Joint | | 42 | 29 | | 67.5 | 100 | |
| | 2022.11- | 8AT/6MT | F | R | Platform/Chassis 4WD DMZD | | GCI82428 | Inner Joint | | 26 | 29 | 47 | 39.5 | 100 | |
| | 2022.11- | 6MT | F | L | Platform/Chassis FWD DMZD | | GDS83938 | Drive Shaft | | 44 | 42 | 72.4 | 109.5 | 722 | |
| | 2022.11- | 8AT | F | L | Platform/Chassis FWD DMZD | | GDS83937 | Drive Shaft | | 44 | 42 | 72.4 | 109.5 | 707 | |
| | 2022.11- | 8AT | F | R | Platform/Chassis FWD DMZD | Date to:2022.11,For PR code:0GG/7MM,Trans. code:RJJ | GDS83935 | Drive Shaft | | 44 | 42 | 72.4 | 109.5 | 1089 | |
| | 2022.11- | 8AT | F | R | Platform/Chassis FWD DMZD | Date to:2022.11,For PR code:0GG/7MM,Trans. code:RJJ | GCI82446 | Inner Joint | | 42 | 29 | 36.5 | 421.5 | 106.5 | |
| | 2022.11- | 8AT/6MT | F | L/R | Platform/Chassis FWD DMZD | | GCO82542 | Outer Joint | | 44 | 31 | 72.4 | 109.5 | 65.5 | I |
| | 2022.11- | 8AT/6MT | F | L | Platform/Chassis FWD DMZD | | GCI82429 | Inner Joint | | 42 | 29 | | 67.5 | 100 | |
| 2.0 (130 kw) | 2016.09- | 6MT | F | L | Van FWD DAVA, DMZB | Date from:2017.04 | GDS83938 | Drive Shaft | | 44 | 42 | 72.4 | 109.5 | 722 | |
| | 2016.09- | 8AT | F | L | Van FWD DAVA, DMZB | | GDS83937 | Drive Shaft | | 44 | 42 | 72.4 | 109.5 | 707 | |
| | 2016.09- | 8AT/6MT | F | R | Van FWD DAVA, DMZB | Date from:2017.04,For PR code:0GG/7MM,Trans.code:RJJ,Date from:2022.11,For PR code:0GG/7MM,Trans.code:RJJ | GDS83935 | Drive Shaft | | 44 | 42 | 72.4 | 109.5 | 1089 | |
| | 2016.09- | 8AT/6MT | F | L/R | Van FWD DAVA, DMZB | | GCO82542 | Outer Joint | | 44 | 31 | 72.4 | 109.5 | 65.5 | I |
| | 2016.09- | 8AT/6MT | F | L | Van FWD DAVA, DMZB | | GCI82429 | Inner Joint | | 42 | 29 | | 67.5 | 100 | |
| | 2016.09- | 8AT/6MT | F | R | Van FWD DAVA, DMZB | Date from:2017.04,For PR code:0GG/7MM,Trans.code:RJJ,Date from:2022.11,For PR code:0GG/7MM,Trans.code:RJJ | GCI82446 | Inner Joint | | 42 | 29 | 36.5 | 421.5 | 106.5 | |
| | 2017.03- | 6MT | F | L | Van 4WD DAVA, DMZB | Date From:2017.04 | GDS83938 | Drive Shaft | | 44 | 42 | 72.4 | 109.5 | 722 | |
| | 2017.03- | 6MT/8AT | F | R | Van 4WD DAVA, DMZB | Date From:2017.04 | GDS83936 | Drive Shaft | | 44 | 26 | 72.4 | 109.5 | 687 | |
| | 2017.03- | 8AT | F | L | Van 4WD DAVA, DMZB | | GDS83937 | Drive Shaft | | 44 | 42 | 72.4 | 109.5 | 707 | |
| | 2017.03- | 8AT/6MT | F | L/R | Van 4WD DAVA, DMZB | | GCO82542 | Outer Joint | | 44 | 31 | 72.4 | 109.5 | 65.5 | I |
| | 2017.03- | 8AT/6MT | F | L | Van 4WD DAVA, DMZB | | GCI82429 | Inner Joint | | 42 | 29 | | 67.5 | 100 | |
| | 2017.03- | 8AT/6MT | F | R | Van 4WD DAVA, DMZB | | GCI82428 | Inner Joint | | 26 | 29 | 47 | 39.5 | 100 | |

| | YEAR | TRANSM. | F/R | L/R | BODY STYLE & DRIVE TYPE & ENGINE | REMARKS | G-AP Ref. | PRODUCT | ABS | Technical Specifications A | B | C | H | L | P |
|---|---|---|---|---|---|---|---|---|---|---|---|---|---|---|---|
| **VW** | | | | | | | | | | | | | | | |
| **Crafter 30-50** | | | | | | | | | | | | | | | |
| 2.0 (80 kw) | 2011.05-2016.12 | 6MT | R | L | Van RWD CKTB, CSLA | Model:CRAFTER 50,For PR code:HR3 | GDS82926 | Drive Shaft | | | 30 | | | 874.5 | |
| | 2011.05-2016.12 | 6MT | R | R | Van RWD CKTB, CSLA | Model:CRAFTER 50,For PR code:HR3 | GDS82925 | Drive Shaft | | | 30 | | | 913.5 | |
| 2.0 (100 kw) | 2011.05-2016.12 | 6MT | R | L | Van RWD CKTC | Model:CRAFTER 50,For PR code:HR3 | GDS82926 | Drive Shaft | | | 30 | | | 874.5 | |
| | 2011.05-2016.12 | 6MT | R | R | Van RWD CKTC | Model:CRAFTER 50,For PR code:HR3 | GDS82925 | Drive Shaft | | | 30 | | | 913.5 | |
| 2.0 (105 kw) | 2011.10-2016.12 | 6MT | R | L | Van RWD CKUC | Model:CRAFTER 50,For PR code:HR3 | GDS82926 | Drive Shaft | | | 30 | | | 874.5 | |
| | 2011.10-2016.12 | 6MT | R | R | Van RWD CKUC | Model:CRAFTER 50,For PR code:HR3 | GDS82925 | Drive Shaft | | | 30 | | | 913.5 | |
| 2.0 (120 kw) | 2011.07-2016.12 | 6MT | R | L | Van RWD CSNA, CKUB | Model:CRAFTER 50,For PR code:HR3 | GDS82926 | Drive Shaft | | | 30 | | | 874.5 | |
| | 2011.07-2016.12 | 6MT | R | R | Van RWD CSNA, CKUB | Model:CRAFTER 50,For PR code:HR3 | GDS82925 | Drive Shaft | | | 30 | | | 913.5 | |
| 2.5 (80 kw) | 2006.04-2013.05 | 6MT | R | L | Van RWD CEBB, BJK | Model:CRAFTER 50,For PR code:HR3 | GDS82926 | Drive Shaft | | | 30 | | | 874.5 | |
| | 2006.04-2013.05 | 6MT | R | R | Van RWD CEBB, BJK | Model:CRAFTER 50,For PR code:HR3 | GDS82925 | Drive Shaft | | | 30 | | | 913.5 | |
| 2.5 (100 kw) | 2006.04-2013.05 | 6MT | R | L | Van RWD CECA, BJL | Model:CRAFTER 50,For PR code:HR3 | GDS82926 | Drive Shaft | | | 30 | | | 874.5 | |
| | 2006.04-2013.05 | 6MT | R | R | Van RWD CECA, BJL | Model:CRAFTER 50,For PR code:HR3 | GDS82925 | Drive Shaft | | | 30 | | | 913.5 | |
| 2.5 (120 kw) | 2006.04-2011.07 | 6MT | R | L | Van RWD CECB, BJM | Model:CRAFTER 50,For PR code:HR3 | GDS82926 | Drive Shaft | | | 30 | | | 874.5 | |
| | 2006.04-2011.07 | 6MT | R | R | Van RWD CECB, BJM | Model:CRAFTER 50,For PR code:HR3 | GDS82925 | Drive Shaft | | | 30 | | | 913.5 | |
| **Crafter 35** | | | | | | | | | | | | | | | |
| 2.0 (75 kw) | 2016.10-2024.06 | 6MT | F | R | Bus FWD DAUB;DNAD | Date To:2022.06 | GDS83935 | Drive Shaft | | 44 | 42 | 72.4 | 109.5 | 1089 | |
| | 2016.11-2024.06 | 6MT | F | R | Platform/Chassis FWD DAUB;DNAD | Date To:2022.06 | GDS83935 | Drive Shaft | | 44 | 42 | 72.4 | 109.5 | 1089 | |
| 2.0 (103 kw) | 2016.09- | 6MT | F | L | Bus FWD DAUA;DNAE | Date From:2017.04 | GDS83938 | Drive Shaft | | 44 | 42 | 72.4 | 109.5 | 722 | |
| | 2016.09- | 8AT | F | L | Bus FWD DAUA;DNAE | | GDS83937 | Drive Shaft | | 44 | 42 | 72.4 | 109.5 | 707 | |
| | 2016.09- | 8AT/6MT | F | R | Bus FWD DAUA;DNAE | Transmission:6AT/6MT,Trans.code:0B1,Trans.from:2002-07,Date to:2002-12,Trans. PR code:0GG/7MM,Trans. code:RJJ | GDS83935 | Drive Shaft | | 44 | 42 | 72.4 | 109.5 | 1089 | |
| | 2016.09- | 8AT/6MT | F | L/R | Bus FWD DAUA;DNAE | | GCO82542 | Outer Joint | | 44 | 31 | 72.4 | 109.5 | 65.5 | I |
| | 2016.09- | 8AT/6MT | F | L | Bus FWD DAUA;DNAE | | GCI82429 | Inner Joint | | 42 | 29 | | 67.5 | 100 | |
| | 2016.09- | 8AT/6MT | F | R | Bus FWD DAUA;DNAE | Transmission:6AT/6MT,Trans.code:0B1,Trans.from:2002-07,Date to:2002-12,Trans. PR code:0GG/7MM,Trans. code:RJJ | GCI82446 | Inner Joint | | 42 | 29 | 36.5 | 421.5 | 106.5 | |
| | 2016.11- | 6MT | F | L | Platform/Chassis FWD DAUA;DNAE;DMZE | Date from:2017.04 | GDS83938 | Drive Shaft | | 44 | 42 | 72.4 | 109.5 | 722 | |
| | 2016.11- | 8AT | F | L | Platform/Chassis FWD DAUA;DNAE;DMZE | | GDS83937 | Drive Shaft | | 44 | 42 | 72.4 | 109.5 | 707 | |
| | 2016.11- | 8AT/6MT | F | R | Platform/Chassis FWD DAUA;DNAE;DMZE | Transmission:6AT/6MT,Trans.code:0B1,Trans.from:2002-07,Date to:2002-12,Trans. PR code:0GG/7MM,Trans. code:RJJ | GDS83935 | Drive Shaft | | 44 | 42 | 72.4 | 109.5 | 1089 | |
| | 2016.11- | 8AT/6MT | F | L/R | Platform/Chassis FWD DAUA;DNAE;DMZE | | GCO82542 | Outer Joint | | 44 | 31 | 72.4 | 109.5 | 65.5 | I |
| | 2016.11- | 8AT/6MT | F | L | Platform/Chassis FWD DAUA;DNAE;DMZE | | GCI82429 | Inner Joint | | 42 | 29 | | 67.5 | 100 | |
| | 2016.11- | 8AT/6MT | F | R | Platform/Chassis FWD DAUA;DNAE;DMZE | Transmission:6AT/6MT,Trans.code:0B1,Trans.from:2002-07,Date to:2002-12,Trans. PR code:0GG/7MM,Trans. code:RJJ | GCI82446 | Inner Joint | | 42 | 29 | 36.5 | 421.5 | 106.5 | |
| | 2017.04- | 6MT | F | L | Bus 4WD DAUA;DNAE | | GDS83938 | Drive Shaft | | 44 | 42 | 72.4 | 109.5 | 722 | |
| | 2017.04- | 6MT | F | R | Bus 4WD DAUA;DNAE | | GDS83936 | Drive Shaft | | 44 | 26 | 72.4 | 109.5 | 687 | |
| | 2017.04- | 6MT | F | L/R | Bus 4WD DAUA;DNAE | | GCO82542 | Outer Joint | | 44 | 31 | 72.4 | 109.5 | 65.5 | I |
| | 2017.04- | 6MT | F | L | Bus 4WD DAUA;DNAE | | GCI82429 | Inner Joint | | 42 | 29 | | 67.5 | 100 | |
| | 2017.04- | 6MT | F | R | Bus 4WD DAUA;DNAE | | GCI82428 | Inner Joint | | 26 | 29 | 47 | 39.5 | 100 | |
| | 2017.11- | 6MT | F | L | Platform/Chassis 4WD DAUA;DNAE;DMZE | | GDS83938 | Drive Shaft | | 44 | 42 | 72.4 | 109.5 | 722 | |
| | 2017.11- | 6MT | F | R | Platform/Chassis 4WD DAUA;DNAE;DMZE | | GDS83936 | Drive Shaft | | 44 | 26 | 72.4 | 109.5 | 687 | |
| | 2017.11- | 6MT | F | L/R | Platform/Chassis 4WD DAUA;DNAE;DMZE | | GCO82542 | Outer Joint | | 44 | 31 | 72.4 | 109.5 | 65.5 | I |
| | 2017.11- | 6MT | F | L | Platform/Chassis 4WD DAUA;DNAE;DMZE | | GCI82429 | Inner Joint | | 42 | 29 | | 67.5 | 100 | |
| | 2017.11- | 6MT | F | R | Platform/Chassis 4WD DAUA;DNAE;DMZE | | GCI82428 | Inner Joint | | 26 | 29 | 47 | 39.5 | 100 | |
| 2.0 (120 kw) | 2022.11- | 6MT | F | L | Van 4WD DMZD | | GDS83938 | Drive Shaft | | 44 | 42 | 72.4 | 109.5 | 722 | |
| | 2022.11- | 6MT | F | R | Van 4WD DMZD | | GCI82428 | Inner Joint | | 26 | 29 | 47 | 39.5 | 100 | |
| | 2022.11- | 8AT | F | L | Van 4WD DMZD | | GDS83937 | Drive Shaft | | 44 | 42 | 72.4 | 109.5 | 707 | |
| | 2022.11- | 8AT/6MT | F | L/R | Van 4WD DMZD | | GCO82542 | Outer Joint | | 44 | 31 | 72.4 | 109.5 | 65.5 | I |
| | 2022.11- | 8AT/6MT | F | L | Van 4WD DMZD | | GCI82429 | Inner Joint | | 42 | 29 | | 67.5 | 100 | |
| | 2022.11- | 6MT | F | L | Van FWD DMZD | | GDS83938 | Drive Shaft | | 44 | 42 | 72.4 | 109.5 | 722 | |
| | 2022.11- | 8AT | F | L | Van FWD DMZD | | GDS83937 | Drive Shaft | | 44 | 42 | 72.4 | 109.5 | 707 | |
| | 2022.11- | 8AT | F | R | Van FWD DMZD | Date to:2022.11,For PR code:0GG/7MM,Trans. code:RJJ | GDS83935 | Drive Shaft | | 44 | 42 | 72.4 | 109.5 | 1089 | |
| | 2022.11- | 8AT | F | R | Van FWD DMZD | Date to:2022.11,For PR code:0GG/7MM,Trans. code:RJJ | GCI82446 | Inner Joint | | 42 | 29 | 36.5 | 421.5 | 106.5 | |
| | 2022.11- | 8AT/6MT | F | L/R | Van FWD DMZD | | GCO82542 | Outer Joint | | 44 | 31 | 72.4 | 109.5 | 65.5 | I |
| | 2022.11- | 8AT/6MT | F | L | Van FWD DMZD | | GCI82429 | Inner Joint | | 42 | 29 | | 67.5 | 100 | |
| 2.0 (130 kw) | 2016.09- | 6MT | F | L | Bus FWD DAVA;DMZB | Date From:2017.04 | GDS83938 | Drive Shaft | | 44 | 42 | 72.4 | 109.5 | 722 | |
| | 2016.09- | 8AT | F | L | Bus FWD DAVA;DMZB | | GDS83937 | Drive Shaft | | 44 | 42 | 72.4 | 109.5 | 707 | |
| | 2016.09- | 8AT/6MT | F | R | Bus FWD DAVA;DMZB | Transmission:6AT/6MT,Trans.code:0B1,Trans.from:2002-07,Date to:2002-12,Trans. PR code:0GG/7MM,Trans. code:RJJ | GDS83935 | Drive Shaft | | 44 | 42 | 72.4 | 109.5 | 1089 | |
| | 2016.09- | 8AT/6MT | F | L/R | Bus FWD DAVA;DMZB | | GCO82542 | Outer Joint | | 44 | 31 | 72.4 | 109.5 | 65.5 | I |
| | 2016.09- | 8AT/6MT | F | L | Bus FWD DAVA;DMZB | | GCI82429 | Inner Joint | | 42 | 29 | | 67.5 | 100 | |
| | 2016.09- | 8AT/6MT | F | R | Bus FWD DAVA;DMZB | Transmission:6AT/6MT,Trans.code:0B1,Trans.from:2002-07,Date to:2002-12,Trans. PR code:0GG/7MM,Trans. code:RJJ | GCI82446 | Inner Joint | | 42 | 29 | 36.5 | 421.5 | 106.5 | |
| | 2016.11- | 6MT | F | L | Platform/Chassis FWD DAVA;DMZB | Date from:2017.04 | GDS83938 | Drive Shaft | | 44 | 42 | 72.4 | 109.5 | 722 | |
| | 2016.11- | 8AT | F | L | Platform/Chassis FWD DAVA;DMZB | | GDS83937 | Drive Shaft | | 44 | 42 | 72.4 | 109.5 | 707 | |
| | 2016.11- | 8AT/6MT | F | R | Platform/Chassis FWD DAVA;DMZB | Transmission:6AT/6MT,Trans.code:0B1,Trans.from:2002-07,Date to:2002-12,Trans. PR code:0GG/7MM,Trans. code:RJJ | GDS83935 | Drive Shaft | | 44 | 42 | 72.4 | 109.5 | 1089 | |
| | 2016.11- | 8AT/6MT | F | L/R | Platform/Chassis FWD DAVA;DMZB | | GCO82542 | Outer Joint | | 44 | 31 | 72.4 | 109.5 | 65.5 | I |
| | 2016.11- | 8AT/6MT | F | L | Platform/Chassis FWD DAVA;DMZB | | GCI82429 | Inner Joint | | 42 | 29 | | 67.5 | 100 | |
| | 2016.11- | 8AT/6MT | F | R | Platform/Chassis FWD DAVA;DMZB | Transmission:6AT/6MT,Trans.code:0B1,Trans.from:2002-07,Date to:2002-12,Trans. PR code:0GG/7MM,Trans. code:RJJ | GCI82446 | Inner Joint | | 42 | 29 | 36.5 | 421.5 | 106.5 | |
| | 2017.03- | 6MT | F | L | Bus 4WD DAVA;DMZB | | GDS83938 | Drive Shaft | | 44 | 42 | 72.4 | 109.5 | 722 | |
| | 2017.03- | 6MT | F | R | Bus 4WD DAVA;DMZB | | GCI82428 | Inner Joint | | 26 | 29 | 47 | 39.5 | 100 | |
| | 2017.03- | 6MT/8AT | F | R | Bus 4WD DAVA;DMZB | | GDS83936 | Drive Shaft | | 44 | 26 | 72.4 | 109.5 | 687 | |

| | YEAR | TRANSM. | F/R | L/R | BODY STYLE & DRIVE TYPE & ENGINE | REMARKS | G-AP Ref. | PRODUCT | ABS | Technical Specifications A | B | C | H | L | P |
|---|---|---|---|---|---|---|---|---|---|---|---|---|---|---|---|
| **VW** | | | | | | | | | | | | | | | |
| **Crafter 35** | | | | | | | | | | | | | | | |
| 2.0 (130 kw) | 2017.03- | 8AT | F | L | Bus 4WD DAVA;DMZB | | GDS83937 | Drive Shaft | | 44 | 42 | 72.4 | 109.5 | 707 | |
| | 2017.03- | 8AT/6MT | F | L/R | Bus 4WD DAVA;DMZB | | GCO82542 | Outer Joint | | 44 | 31 | 72.4 | 109.5 | 65.5 | I |
| | 2017.03- | 8AT/6MT | F | L | Bus 4WD DAVA;DMZB | | GCI82429 | Inner Joint | | 42 | 29 | | 67.5 | 100 | |
| | 2017.11- | 6MT | F | L | Platform/Chassis 4WD DAVA;DMZB | | GDS83938 | Drive Shaft | | 44 | 42 | 72.4 | 109.5 | 722 | |
| | 2017.11- | 6MT/8AT | F | R | Platform/Chassis 4WD DAVA;DMZB | | GDS83936 | Drive Shaft | | 44 | 26 | 72.4 | 109.5 | 687 | |
| | 2017.11- | 8AT | F | L | Platform/Chassis 4WD DAVA;DMZB | | GDS83937 | Drive Shaft | | 44 | 42 | 72.4 | 109.5 | 707 | |
| | 2017.11- | 8AT/6MT | F | L/R | Platform/Chassis 4WD DAVA;DMZB | | GCO82542 | Outer Joint | | 44 | 31 | 72.4 | 109.5 | 65.5 | I |
| | 2017.11- | 8AT/6MT | F | L | Platform/Chassis 4WD DAVA;DMZB | | GCI82429 | Inner Joint | | 42 | 29 | | 67.5 | 100 | |
| | 2017.11- | 8AT/6MT | F | R | Platform/Chassis 4WD DAVA;DMZB | | GCI82428 | Inner Joint | | 26 | 29 | 47 | 39.5 | 100 | |
| **e-Crafter 35** | | | | | | | | | | | | | | | |
| EV (100 kw) | 2018.07- | ET | F | L | Van FWD EBHA | | GDS58367 | Drive Shaft | | 44 | 37 | 72.4 | 109.5 | 746 | |
| | 2018.07- | ET | F | R | Van FWD EBHA | | GDS58372 | Drive Shaft | | 44 | 37 | 72.4 | 109.5 | 1067 | |
| | 2018.07- | ET | F | L/R | Van FWD EBHA | | GCO83893 | Outer Joint | | 44 | 30 | 72.4 | 109.5 | 65.5 | I |
| | 2018.07- | ET | F | R | Van FWD EBHA | | GCI84088 | Inner Joint | | 37 | 27 | 34.5 | 401 | 96 | |
| **E-Golf** | | | | | | | | | | | | | | | |
| EV (85 kw) | 2014.03-2017.02 | ET | F | L | Hatchback FWD EAGA | Date from:2016.12 | GDS56697 | Drive Shaft | | 36 | | 59.5 | 40 | 593 | |
| | 2014.03-2017.02 | ET | F | R | Hatchback FWD EAGA | | GDS56977 | Drive Shaft | | 36 | | 59.5 | 40 | 665 | |
| | 2014.03-2017.02 | ET | F | R | Hatchback FWD EAGA | | GCO83101 | Outer Joint | | 36 | 27 | 59.5 | 40 | 65 | M |
| | 2014.03-2017.02 | ET | F | R | Hatchback FWD EAGA | | GCI61069 | Inner Joint | | | 28 | | | 32 | |
| | 2014.03-2017.02 | | F | L/R | Hatchback FWD EAGA | | GCI83016 | Inner Joint | | | 28 | | | 32 | |
| EV (100 kw) | 2016.12-2021.01 | ET | F | L | Hatchback FWD EAZA;EBSA | | GDS56697 | Drive Shaft | | 36 | | 59.5 | 40 | 593 | |
| | 2016.12-2021.01 | ET | F | R | Hatchback FWD EAZA;EBSA | | GDS56977 | Drive Shaft | | 36 | | 59.5 | 40 | 665 | |
| | 2016.12-2021.01 | ET | F | L/R | Hatchback FWD EAZA;EBSA | | GCO83101 | Outer Joint | | 36 | 27 | 59.5 | 40 | 65 | M |
| | 2016.12-2021.01 | ET | F | L/R | Hatchback FWD EAZA;EBSA | | GCI83016 | Inner Joint | | | 28 | | | 32 | |
| | 2016.12-2021.01 | ET | F | L | Hatchback FWD EAZA;EBSA | | GDS98006 | Stub Axle-Flange | | 37 | | | 67 | 123.5 | |
| **E-Load Up** | | | | | | | | | | | | | | | |
| EV (60 kw) | 2014.12-2019.08 | ET | F | L | Hatchback Van FWD EABA | | GDS56201 | Drive Shaft | | 22 | 33 | 46 | 78 | 702 | |
| | 2014.12-2019.08 | ET | F | R | Hatchback Van FWD EABA | | GDS56200 | Drive Shaft | | 22 | 33 | 46 | 78 | 743 | |
| | 2014.12-2019.08 | ET | F | L/R | Hatchback Van FWD EABA | Date from:2014.04 | GCO83202 | Outer Joint | | 22 | 30 | 46 | 78 | 61 | I |
| | 2014.12-2019.08 | ET | F | L/R | Hatchback Van FWD EABA | Date from:2014.04 | GCI81546 | Inner Joint | | 33 | 32 | 39.9 | 58.5 | 105 | |
| **E-Up** | | | | | | | | | | | | | | | |
| EV (60 kw) | 2013.07-2019.08 | ET | F | L | Hatchback FWD EABA | | GDS56201 | Drive Shaft | | 22 | 33 | 46 | 78 | 702 | |
| | 2013.07-2019.08 | ET | F | R | Hatchback FWD EABA | | GDS56200 | Drive Shaft | | 22 | 33 | 46 | 78 | 743 | |
| | 2013.07-2019.08 | ET | F | L/R | Hatchback FWD EABA | Date from:2014.04 | GCO83202 | Outer Joint | | 22 | 30 | 46 | 78 | 61 | I |
| | 2013.07-2019.08 | ET | F | L/R | Hatchback FWD EABA | Date from:2014.04 | GCI81546 | Inner Joint | | 33 | 32 | 39.9 | 58.5 | 105 | |
| EV (61 kw) | 2019.08- | ET | F | L | Hatchback FWD EBMA | | GDS56201 | Drive Shaft | | 22 | 33 | 46 | 78 | 702 | |
| | 2019.08- | ET | F | R | Hatchback FWD EBMA | | GDS56200 | Drive Shaft | | 22 | 33 | 46 | 78 | 743 | |
| | 2019.08- | ET | F | L/R | Hatchback FWD EBMA | | GCO83202 | Outer Joint | | 22 | 30 | 46 | 78 | 61 | I |
| | 2019.08- | ET | F | L/R | Hatchback FWD EBMA | | GCI81546 | Inner Joint | | 33 | 32 | 39.9 | 58.5 | 105 | |
| **Eos** | | | | | | | | | | | | | | | |
| 1.4 (90 kw) | 2007.11-2015.08 | 6MT | F | L | Convertible FWD CAXA | | GDS61201 | Drive Shaft | | 36 | | 59.5 | 40.5 | 535 | |
| | 2007.11-2015.08 | 6MT | F | R | Convertible FWD CAXA | | GDS61096 | Drive Shaft | | 36 | | 59.5 | 40.5 | 799 | |
| | 2007.11-2015.08 | 6MT | F | L/R | Convertible FWD CAXA | | GCO61059 | Outer Joint | | 36 | 33 | 59.5 | 40 | 59.5 | I |
| | 2007.11-2015.08 | 6MT | F | L/R | Convertible FWD CAXA | | GCO83037 | Outer Joint | | 36 | 30 | 59.5 | 40.5 | 56 | I |
| | 2007.11-2015.08 | 6MT | F | L/R | Convertible FWD CAXA | | GCI82447 | Inner Joint | | | 33 | | | 34 | |
| 1.4 (118 kw) | 2008.05-2015.08 | 6MT | F | L | Convertible FWD CAVD;CTHD | | GDS61201 | Drive Shaft | | 36 | | 59.5 | 40.5 | 535 | |
| | 2008.05-2015.08 | 6MT | F | R | Convertible FWD CAVD;CTHD | | GDS61096 | Drive Shaft | | 36 | | 59.5 | 40.5 | 799 | |
| | 2008.05-2015.08 | 6MT | F | L/R | Convertible FWD CAVD;CTHD | | GCO83037 | Outer Joint | | 36 | 30 | 59.5 | 40.5 | 56 | I |
| | 2008.05-2015.08 | 6MT | F | L/R | Convertible FWD CAVD;CTHD | | GCI82447 | Inner Joint | | | 33 | | | 34 | |
| | 2008.05-2015.08 | MT | F | L/R | Convertible FWD CAVD;CTHD | | GCI83006 | Inner Joint | | | 33 | | | 34 | |
| | 2008.05-2015.08 | | F | L/R | Convertible FWD CAVD;CTHD | | GCI83011 | Inner Joint | | | 33 | | | 34 | |
| 1.6 (85 kw) | 2006.06-2008.05 | 6MT | F | L | Convertible FWD BLF | | GDS61201 | Drive Shaft | | 36 | | 59.5 | 40.5 | 535 | |
| | 2006.06-2008.05 | 6MT | F | R | Convertible FWD BLF | | GDS61096 | Drive Shaft | | 36 | | 59.5 | 40.5 | 799 | |
| | 2006.06-2008.05 | 6MT | F | L/R | Convertible FWD BLF | | GCO83037 | Outer Joint | | 36 | 30 | 59.5 | 40.5 | 56 | I |
| | 2006.06-2008.05 | 6MT | F | L/R | Convertible FWD BLF | | GCI82447 | Inner Joint | | | 33 | | | 34 | |
| | 2006.06-2008.05 | MT | F | L | Convertible FWD BLF | | GDS83319 | Drive Shaft | | 36 | | 59.5 | 38 | 557 | |
| | 2006.06-2008.05 | MT | F | R | Convertible FWD BLF | | GDS61211 | Drive Shaft | | 36 | | 59.5 | 40.5 | 784 | |
| | 2006.06-2008.05 | MT | F | L/R | Convertible FWD BLF | | GCI83006 | Inner Joint | | | 33 | | | 34 | |
| | 2006.06-2008.05 | MT | F | L/R | Convertible FWD BLF | | GCI83011 | Inner Joint | | | 33 | | | 34 | |
| 2.0 (100 kw) | 2010.11-2015.08 | 6DCT | F | L | Convertible FWD CFFA | | GDS54013 | Drive Shaft | | 36 | | 59.5 | 40 | 479.5 | |
| | 2010.11-2015.08 | 6DCT | F | R | Convertible FWD CFFA | | GDS54011 | Drive Shaft | | 36 | | 59.5 | 40 | 755 | |
| | 2010.11-2015.08 | 6DCT | F | L/R | Convertible FWD CFFA | | GCI54004 | Inner Joint | | | 34 | | | 81 | |
| | 2010.11-2015.08 | 6DCT | F | L/R | Convertible FWD CFFA | | GCI61057 | Inner Joint | | | 34 | | | 89 | |
| | 2010.11-2015.08 | 6MT | F | L | Convertible FWD CFFA | | GDS83295 | Drive Shaft | | 36 | | 59.5 | 40 | 491 | |
| | 2010.11-2015.08 | 6MT | F | R | Convertible FWD CFFA | | GDS83313 | Drive Shaft | | 36 | | 59.5 | 40 | 792 | |

| | YEAR | TRANSM. | F/R | L/R | BODY STYLE & DRIVE TYPE & ENGINE | REMARKS | G-AP Ref. | PRODUCT | ABS | Technical Specifications A | B | C | H | L | P |
|---|---|---|---|---|---|---|---|---|---|---|---|---|---|---|---|
| **VW** | | | | | | | | | | | | | | | |
| **Eos** | | | | | | | | | | | | | | | |
| 2.0 (100 kw) | 2010.11-2015.08 | 6MT | F | L/R | Convertible FWD CFFA | Date from:2013.03 | GCI61069 | Inner Joint | | | 28 | | | 32 | |
| | 2010.11-2015.08 | 6MT | F | L/R | Convertible FWD CFFA | Date to:2013.02 | GCI83016 | Inner Joint | | | 28 | | | 32 | |
| | 2010.11-2015.08 | 6MT/6DCT | F | L/R | Convertible FWD CFFA | | GCO83002 | Outer Joint | | 36 | 27 | 59.5 | 40 | 66 | I |
| | 2010.11-2015.08 | AT | F | L/R | Convertible FWD CFFA | | GCO83101 | Outer Joint | | 36 | 27 | 59.5 | 40 | 65 | M |
| | 2010.11-2015.08 | MT | F | L | Convertible FWD CFFA | | GDS83236 | Drive Shaft | | 36 | | 59.5 | 40 | 484 | |
| 2.0 (103 kw) | 2006.06-2008.05 | 6AT/6MT | F | L/R | Convertible FWD BMM | | GCI54004 | Inner Joint | | | 34 | | | 81 | |
| | 2006.06-2008.05 | 6AT/6MT | F | L/R | Convertible FWD BMM | Original Tripod Design | GCI61057 | Inner Joint | | | 34 | | | 89 | |
| | 2006.06-2008.05 | 6AT/6MT | F | L/R | Convertible FWD BMM | | GCI83016 | Inner Joint | | | 28 | | | 32 | |
| | 2006.06-2008.05 | 6DCT | F | L | Convertible FWD BMM | | GDS54013 | Drive Shaft | | 36 | | 59.5 | 40 | 479.5 | |
| | 2006.06-2008.05 | 6DCT | F | R | Convertible FWD BMM | | GDS54011 | Drive Shaft | | 36 | | 59.5 | 40 | 755 | |
| | 2006.06-2008.05 | 6MT | F | L | Convertible FWD BMM | | GDS83295 | Drive Shaft | | 36 | | 59.5 | 40 | 491 | |
| | 2006.06-2008.05 | 6MT | F | R | Convertible FWD BMM | | GDS61126 | Drive Shaft | | 36 | | 59.5 | 40 | 793 | |
| | 2006.06-2008.05 | 6MT | F | R | Convertible FWD BMM | | GDS83313 | Drive Shaft | | 36 | | 59.5 | 40 | 792 | |
| | 2006.06-2008.05 | 6MT/6DCT | F | L/R | Convertible FWD BMM | | GCO83002 | Outer Joint | | 36 | 27 | 59.5 | 40 | 66 | I |
| | 2006.06-2008.05 | AT | F | L | Convertible FWD BMM | | GDS83241 | Drive Shaft | | 36 | | 59.5 | 40 | 475 | |
| | 2006.06-2008.05 | MT | F | L | Convertible FWD BMM | | GDS83236 | Drive Shaft | | 36 | | 59.5 | 40 | 484 | |
| | 2008.05-2015.08 | 6AT/6MT | F | L/R | Convertible FWD CBAB;CFFB | TJ | GCI54004 | Inner Joint | | | 34 | | | 81 | |
| | 2008.05-2015.08 | 6AT/6MT | F | L/R | Convertible FWD CBAB;CFFB | AAR | GCI61057 | Inner Joint | | | 34 | | | 89 | |
| | 2008.05-2015.08 | 6AT/6MT | F | L/R | Convertible FWD CBAB;CFFB | | GCI83016 | Inner Joint | | | 28 | | | 32 | |
| | 2008.05-2015.08 | 6DCT | F | L | Convertible FWD CBAB;CFFB | | GDS54013 | Drive Shaft | | 36 | | 59.5 | 40 | 479.5 | |
| | 2008.05-2015.08 | 6DCT | F | R | Convertible FWD CBAB;CFFB | | GDS54011 | Drive Shaft | | 36 | | 59.5 | 40 | 755 | |
| | 2008.05-2015.08 | 6MT | F | L | Convertible FWD CBAB;CFFB | Inner teeth of tranm.side:28 | GDS83295 | Drive Shaft | | 36 | | 59.5 | 40 | 491 | |
| | 2008.05-2015.08 | 6MT | F | R | Convertible FWD CBAB;CFFB | Date from:2013.03 | GDS61147 | Drive Shaft | | 36 | | 59.5 | 40 | 795 | |
| | 2008.05-2015.08 | 6MT | F | R | Convertible FWD CBAB;CFFB | Date to:2013.02 | GDS83313 | Drive Shaft | | 36 | | 59.5 | 40 | 792 | |
| | 2008.05-2015.08 | 6MT | F | L/R | Convertible FWD CBAB;CFFB | Date from:2013.03 | GCI61069 | Inner Joint | | | 28 | | | 32 | |
| | 2008.05-2015.08 | 6MT/6DCT | F | L/R | Convertible FWD CBAB;CFFB | | GCO83002 | Outer Joint | | 36 | 27 | 59.5 | 40 | 66 | I |
| | 2008.05-2015.08 | AT | F | L | Convertible FWD CBAB;CFFB | | GDS83241 | Drive Shaft | | 36 | | 59.5 | 40 | 475 | |
| | 2008.05-2015.08 | MT | F | L | Convertible FWD CBAB;CFFB | Inner teeth of tranm.side:33 | GDS83236 | Drive Shaft | | 36 | | 59.5 | 40 | 484 | |
| 2.0 (110 kw) | 2006.03-2008.05 | 6MT | F | L | Convertible FWD BVY;BVZ | | GDS83294 | Drive Shaft | | 36 | | 59.5 | 38 | 519 | |
| | 2006.03-2008.05 | 6MT | F | R | Convertible FWD BVY;BVZ | | GDS61042 | Drive Shaft | | 36 | | 59.5 | 40.5 | 814 | |
| | 2006.03-2008.05 | 6MT | F | L/R | Convertible FWD BVY;BVZ | | GCO83037 | Outer Joint | | 36 | 30 | 59.5 | 40.5 | 56 | I |
| | 2006.03-2008.05 | 6MT | F | L/R | Convertible FWD BVY;BVZ | | GCI82447 | Inner Joint | | | 33 | | | 34 | |
| | 2006.03-2008.05 | AT | F | L | Convertible FWD BVY;BVZ | | GDS61093 | Drive Shaft | | 36 | 26 | 59.5 | 40.5 | 587.5 | |
| | 2006.03-2008.05 | AT | F | R | Convertible FWD BVY;BVZ | | GDS61094 | Drive Shaft | | 36 | 26 | 59.5 | 40.5 | 884 | |
| | 2006.03-2008.05 | MT | F | L/R | Convertible FWD BVY;BVZ | | GCI83006 | Inner Joint | | | 33 | | | 34 | |
| | 2006.03-2008.05 | MT | F | L/R | Convertible FWD BVY;BVZ | | GCI83011 | Inner Joint | | | 33 | | | 34 | |
| 2.0 (147 kw) | 2006.03-2015.08 | 6DCT | F | R | Convertible FWD BWA;BPY;CAWB;CCTA;CBFA;CCZA | Date to:2009.11;Date from:2009.12;For Enginecode:BPY/BWA/CCZA | GDS81653 | Drive Shaft | | 36 | | 59.5 | 40 | 785 | |
| | 2006.03-2015.08 | 6DCT | F | R | Convertible FWD BWA;BPY;CAWB;CCTA;CBFA;CCZA | Date to:2009.11 | GDS83349 | Drive Shaft | | 36 | | 59.5 | 40 | 784 | |
| | 2006.03-2015.08 | 6DCT | F | L | Convertible FWD BWA;BPY;CAWB;CCTA;CBFA;CCZA | | GDS98006 | Stub Axle-Flange | | 37 | | | 67 | 123.5 | |
| | 2006.03-2015.08 | 6DCT/6MT | F | L/R | Convertible FWD BWA;BPY;CAWB;CCTA;CBFA;CCZA | Date to:2009.11 | GCO83002 | Outer Joint | | 36 | 27 | 59.5 | 40 | 66 | I |
| | 2006.03-2015.08 | 6DCT/6MT | F | L/R | Convertible FWD BWA;BPY;CAWB;CCTA;CBFA;CCZA | Date from:2009.12 | GCO83101 | Outer Joint | | 36 | 27 | 59.5 | 40 | 65 | M |
| | 2006.03-2015.08 | 6DCT/6MT | F | L/R | Convertible FWD BWA;BPY;CAWB;CCTA;CBFA;CCZA | Non-Original design | GCI83016 | Inner Joint | | | 28 | | | 32 | |
| | 2006.03-2015.08 | 6MT | F | R | Convertible FWD BWA;BPY;CAWB;CCTA;CBFA;CCZA | Date to:2009.11,solid shaft | GDS61126 | Drive Shaft | | 36 | | 59.5 | 40 | 793 | |
| | 2006.03-2015.08 | 6MT | F | R | Convertible FWD BWA;BPY;CAWB;CCTA;CBFA;CCZA | hollow shaft | GDS61147 | Drive Shaft | | 36 | | 59.5 | 40 | 795 | |
| | 2006.03-2015.08 | 6MT | F | R | Convertible FWD BWA;BPY;CAWB;CCTA;CBFA;CCZA | Date from:2009.12,solid shaft | GDS83313 | Drive Shaft | | 36 | | 59.5 | 40 | 792 | |
| | 2006.03-2015.08 | 6MT/6DCT | F | L | Convertible FWD BWA;BPY;CAWB;CCTA;CBFA;CCZA | | GDS83295 | Drive Shaft | | 36 | | 59.5 | 40 | 491 | |
| | 2006.03-2015.08 | 6MT/6DCT | F | L/R | Convertible FWD BWA;BPY;CAWB;CCTA;CBFA;CCZA | Original design | GCI61069 | Inner Joint | | | 28 | | | 32 | |
| 2.0 (155 kw) | 2009.11-2015.08 | 6DCT | F | R | Convertible FWD CCZB | | GDS81653 | Drive Shaft | | 36 | | 59.5 | 40 | 785 | |
| | 2009.11-2015.08 | 6DCT | F | L | Convertible FWD CCZB | | GDS98006 | Stub Axle-Flange | | 37 | | | 67 | 123.5 | |
| | 2009.11-2015.08 | 6MT | F | R | Convertible FWD CCZB | Date to:2009.11 | GDS61126 | Drive Shaft | | 36 | | 59.5 | 40 | 793 | |
| | 2009.11-2015.08 | 6MT | F | R | Convertible FWD CCZB | Date from:2009.12 | GDS61147 | Drive Shaft | | 36 | | 59.5 | 40 | 795 | |
| | 2009.11-2015.08 | 6MT | F | R | Convertible FWD CCZB | Date to:2009.11 | GDS61339 | Drive Shaft | | 36 | | 59.5 | 40 | 794 | |
| | 2009.11-2015.08 | 6MT | F | L/R | Convertible FWD CCZB | Date from:2013.06 | GCO83101 | Outer Joint | | 36 | 27 | 59.5 | 40 | 65 | M |
| | 2009.11-2015.08 | 6MT | F | L/R | Convertible FWD CCZB | For Modelcode:1F7 | GCI83016 | Inner Joint | | | 28 | | | 32 | |
| | 2009.11-2015.08 | 6MT/6DCT | F | L | Convertible FWD CCZB | | GDS83295 | Drive Shaft | | 36 | | 59.5 | 40 | 491 | |
| | 2009.11-2015.08 | | F | L | Convertible FWD CCZB | | GDS83236 | Drive Shaft | | 36 | | 59.5 | 40 | 484 | |
| | 2009.11-2015.08 | | F | L/R | Convertible FWD CCZB | Date To:2009.11 | GCO83002 | Outer Joint | | 36 | 27 | 59.5 | 40 | 66 | I |
| 3.2 (184 kw) | 2006.06-2009.05 | 6AT | F | L | Convertible FWD BUB;CBRA | | GDS61285 | Drive Shaft | | 36 | | 59.5 | 40 | 472 | |
| | 2006.06-2009.05 | 6AT | F | R | Convertible FWD BUB;CBRA | | GDS83354 | Drive Shaft | | 36 | | 59.5 | 40 | 763 | |
| | 2006.06-2009.05 | 6AT | F | R | Convertible FWD BUB;CBRA | | GCO83101 | Outer Joint | | 36 | 27 | 59.5 | 40 | 65 | M |
| | 2006.06-2009.05 | 6AT | F | R | Convertible FWD BUB;CBRA | | GCI61057 | Inner Joint | | | 34 | | | 89 | |
| | 2006.06-2009.05 | MT | F | R | Convertible FWD BUB;CBRA | | GDS61126 | Drive Shaft | | 36 | | 59.5 | 40 | 793 | |
| | 2006.06-2009.05 | | F | L/R | Convertible FWD BUB;CBRA | | GCI54004 | Inner Joint | | | 34 | | | 81 | |
| 3.6 (191 kw) | 2009.05-2010.11 | 6AT | F | R | Convertible FWD CDVA | Date from:2009.10 | GCO83002 | Outer Joint | | 36 | 27 | 59.5 | 40 | 66 | I |
| | 2009.05-2010.11 | 6AT | F | R | Convertible FWD CDVA | Date from:2009.10 | GCI61069 | Inner Joint | | | 28 | | | 32 | |

| | YEAR | TRANSM. | F/R | L/R | BODY STYLE & DRIVE TYPE & ENGINE | REMARKS | G-AP Ref. | PRODUCT | ABS | Technical Specifications A | B | C | H | L | P |
|---|---|---|---|---|---|---|---|---|---|---|---|---|---|---|---|
| **VW** | | | | | | | | | | | | | | | |
| **Eos** | | | | | | | | | | | | | | | |
| 3.6 (191 kw) | 2009.05-2010.11 | 6DCT | F | L | Convertible FWD CDVA | Date to:2009.09 | GDS61285 | Drive Shaft | | 36 | | 59.5 | 40 | 472 | |
| | 2009.05-2010.11 | 6DCT | F | L | Convertible FWD CDVA | Date from:2009.10 | GDS83295 | Drive Shaft | | 36 | | 59.5 | 40 | 491 | |
| | 2009.05-2010.11 | 6DCT | F | R | Convertible FWD CDVA | Date from:2009.10 | GDS81653 | Drive Shaft | | 36 | | 59.5 | 40 | 785 | |
| | 2009.05-2010.11 | 6DCT | F | R | Convertible FWD CDVA | Date to:2009.09 | GDS83354 | Drive Shaft | | 36 | | 59.5 | 40 | 763 | |
| | 2009.05-2010.11 | | F | L/R | Convertible FWD CDVA | | GCO83101 | Outer Joint | | 36 | 27 | 59.5 | 40 | 65 | M |
| | 2009.05-2010.11 | | F | L/R | Convertible FWD CDVA | Date To:2009.09 | GCI54004 | Inner Joint | | | 34 | | | 81 | |
| | 2009.05-2010.11 | | F | L/R | Convertible FWD CDVA | Date To:2009.09 | GCI61057 | Inner Joint | | | 34 | | | 89 | |
| | 2009.05-2010.11 | | F | L/R | Convertible FWD CDVA | Date From:2009.10 | GCI83016 | Inner Joint | | | 28 | | | 32 | |
| **Fox** | | | | | | | | | | | | | | | |
| 1.2 (40 kw) | 2005.04-2011.07 | 5MT | F | L | Hatchback FWD BMD;CHFB | For PR code:1AC/1AT/1N2;PS/MS:For vehicles with power steering | GDS61262 | Drive Shaft | | 36 | | 52 | 75.5 | 525 | |
| | 2005.04-2011.07 | 5MT | F | L | Hatchback FWD BMD;CHFB | For PR code:1AC/1AT/1N0;PS/MS:For vehicles without power steering | GDS83063 | Drive Shaft | | 36 | | 50.7 | 58.5 | 501 | |
| | 2005.04-2011.07 | 5MT | F | R | Hatchback FWD BMD;CHFB | For PR code:1AL;For PR code:1AC/1AT/1N2;PS/MS:For vehicles with power steering | GDS61040 | Drive Shaft | | 36 | | 52 | 75.5 | 770 | |
| | 2005.04-2011.07 | 5MT | F | L/R | Hatchback FWD BMD;CHFB | For PR code:1N0;For vehicles without power steering;For vehicles with ABS | GCO54002 | Outer Joint | | 20 | 30 | 52 | 59.5 | 49.5 | I |
| | 2005.04-2011.07 | 5MT | F | L/R | Hatchback FWD BMD;CHFB | For PR code:1AC/1AT/1N2;PS/MS:For vehicles with power steering | GCO54004 | Outer Joint | | 36 | 30 | 52 | 75.5 | 47.5 | I |
| | 2005.04-2011.07 | 5MT | F | L/R | Hatchback FWD BMD;CHFB | For PR code:1AL | GCO83007 | Outer Joint | | 22 | 30 | 51 | 78.7 | 51.1 | I |
| | 2005.04-2011.07 | 5MT | F | L/R | Hatchback FWD BMD;CHFB | For PR code:1N0;PS/MS:For vehicles without power steering;Non-Original design | GCI83008 | Inner Joint | | | 33 | | | 32 | |
| | 2005.04-2011.07 | MT | F | L/R | Hatchback FWD BMD;CHFB | Non-Original design | GCI83005 | Inner Joint | | | 33 | | | 32 | |
| 1.2 (44 kw) | 2010.09-2011.12 | 5MT | F | L | Hatchback FWD CHFA | for vehicles with power steering | GDS61262 | Drive Shaft | | 36 | | 52 | 75.5 | 525 | |
| | 2010.09-2011.12 | 5MT | F | L | Hatchback FWD CHFA | for vehicles without power steering | GDS83063 | Drive Shaft | | 36 | | 50.7 | 58.5 | 501 | |
| | 2010.09-2011.12 | 5MT | F | R | Hatchback FWD CHFA | | GDS61040 | Drive Shaft | | 36 | | 52 | 75.5 | 770 | |
| | 2010.09-2011.12 | 5MT | F | L/R | Hatchback FWD CHFA | For PR code:1N0;For vehicles without power steering;For vehicles with ABS | GCO54002 | Outer Joint | | 20 | 30 | 52 | 59.5 | 49.5 | I |
| | 2010.09-2011.12 | AT/MT | F | L/R | Hatchback FWD CHFA | | GCI83005 | Inner Joint | | | 33 | | | 32 | |
| | 2010.09-2011.12 | | F | L/R | Hatchback FWD CHFA | For PR code:1AC/1AT/1N2;PS/MS:Powersteer | GCO54004 | Outer Joint | | 36 | 30 | 52 | 75.5 | 47.5 | I |
| | 2010.09-2011.12 | | F | L/R | Hatchback FWD CHFA | For PR code:1AL | GCO83007 | Outer Joint | | 22 | 30 | 51 | 78.7 | 51.1 | I |
| | 2010.09-2011.12 | | F | L/R | Hatchback FWD CHFA | For PR code:1N0;PS/MS:Not for Powersteering | GCI83008 | Inner Joint | | | 33 | | | 32 | |
| | 2010.09-2011.12 | 5MT | F | L | Hatchback Van FWD CHFA | | GDS83063 | Drive Shaft | | 36 | | 50.7 | 58.5 | 501 | |
| | 2010.09-2011.12 | 5MT | F | R | Hatchback Van FWD CHFA | | GDS61040 | Drive Shaft | | 36 | | 52 | 75.5 | 770 | |
| | 2010.09-2011.12 | 5MT | F | L/R | Hatchback Van FWD CHFA | For PR code:1N0;For vehicles without power steering;For vehicles with ABS | GCO54002 | Outer Joint | | 20 | 30 | 52 | 59.5 | 49.5 | I |
| | 2010.09-2011.12 | 5MT | F | L/R | Hatchback Van FWD CHFA | For PR code:1AC/1AT/1N2,Powersteer | GCO54004 | Outer Joint | | 36 | 30 | 52 | 75.5 | 47.5 | I |
| | 2010.09-2011.12 | 5MT | F | L/R | Hatchback Van FWD CHFA | For PR code:1AL | GCO83007 | Outer Joint | | 22 | 30 | 51 | 78.7 | 51.1 | I |
| | 2010.09-2011.12 | | F | L | Hatchback Van FWD CHFA | For PR code:1AC/1AT/1N2;PS/MS:Powersteer | GDS61262 | Drive Shaft | | 36 | | 52 | 75.5 | 525 | |
| | 2010.09-2011.12 | | F | L/R | Hatchback Van FWD CHFA | For PR code:1N0;PS/MS:Not for Powersteering | GCI83008 | Inner Joint | | | 33 | | | 32 | |
| 1.4 (51 kw) | 2005.04-2009.12 | 5MT | F | L | Hatchback FWD BNM | | GDS61078 | Drive Shaft | | 36 | | 50.7 | 58.5 | 501 | |
| | 2005.04-2009.12 | 5MT | F | R | Hatchback FWD BNM | | GCO83024 | Outer Joint | | 36 | 30 | 50.75 | 59 | 55.5 | I |
| | 2005.04-2009.12 | 5MT | F | L/R | Hatchback FWD BNM | without Rim protector | GCO61010 | Outer Joint | | 36 | 30 | 52 | 75 | 55.5 | I |
| 1.4 (55 kw) | 2005.04-2009.12 | 5MT | F | L | Hatchback FWD BKR | | GDS61262 | Drive Shaft | | 36 | | 52 | 75.5 | 525 | |
| | 2005.04-2009.12 | 5MT | F | R | Hatchback FWD BKR | | GDS61040 | Drive Shaft | | 36 | | 52 | 75.5 | 770 | |
| | 2005.04-2009.12 | 5MT | F | L/R | Hatchback FWD BKR | | GCO54004 | Outer Joint | | 36 | 30 | 52 | 75.5 | 47.5 | I |
| | 2005.04-2009.12 | 5MT | F | L/R | Hatchback FWD BKR | For PR code:1AL | GCO83007 | Outer Joint | | 22 | 30 | 51 | 78.7 | 51.1 | I |
| | 2005.04-2009.12 | 5MT | F | L | Hatchback FWD BKR | | GCI83008 | Inner Joint | | | 33 | | | 32 | |
| **Golf** | | | | | | | | | | | | | | | |
| 1.0 (63 kw) | 2017.01-2019.07 | 5MT | F | L | Hatchback FWD CHZK;DKLB | | GDS82231 | Drive Shaft | | 36 | | 59.5 | 40 | 486 | |
| | 2017.01-2019.07 | 5MT | F | R | Hatchback FWD CHZK;DKLB | | GDS82230 | Drive Shaft | | 36 | | 59.5 | 40 | 789 | |
| | 2017.01-2019.07 | 5MT | F | L/R | Hatchback FWD CHZK;DKLB | | GCO61059 | Outer Joint | | 36 | 33 | 59.5 | 40 | 59.5 | I |
| | 2017.01-2019.07 | 5MT/6MT/7DCT | F | L/R | Hatchback FWD CHZK;DKLB | | GCI81689 | Inner Joint | | | 32 | | | 89 | |
| 1.0 (66 kw) | 2020.02- | 5MT | F | L | Hatchback FWD DLAB | | GDS82231 | Drive Shaft | | 36 | | 59.5 | 40 | 486 | |
| | 2020.02- | 5MT | F | R | Hatchback FWD DLAB | | GDS82229 | Drive Shaft | | 36 | | 59.5 | 40 | 767 | |
| | 2020.02- | 5MT | F | L/R | Hatchback FWD DLAB | | GCO61059 | Outer Joint | | 36 | 33 | 59.5 | 40 | 59.5 | I |
| | 2020.02- | 5MT | F | L | Hatchback FWD DLAB | | GCI81689 | Inner Joint | | | 32 | | | 89 | |
| 1.0 (81 kw) | 2016.11-2020.08 | 6MT | F | L | Hatchback FWD CHZC | | GDS82231 | Drive Shaft | | 36 | | 59.5 | 40 | 486 | |
| | 2016.11-2020.08 | 6MT | F | R | Hatchback FWD CHZC | | GDS82230 | Drive Shaft | | 36 | | 59.5 | 40 | 789 | |
| | 2016.11-2020.08 | 6MT | F | L/R | Hatchback FWD CHZC | | GCO61059 | Outer Joint | | 36 | 33 | 59.5 | 40 | 59.5 | I |
| | 2016.11-2020.08 | 6MT/7DCT | F | L/R | Hatchback FWD CHZC | | GCI81689 | Inner Joint | | | 32 | | | 89 | |
| | 2016.11-2020.08 | 7DCT | F | R | Hatchback FWD CHZC | | GDS82229 | Drive Shaft | | 36 | | 59.5 | 40 | 767 | |
| | 2016.11-2020.08 | 7DCT | F | R | Hatchback FWD CHZC | | GCO61059 | Outer Joint | | 36 | 33 | 59.5 | 40 | 59.5 | I |
| | 2020.02- | 6MT | F | L | Hatchback FWD DLAA | | GDS82231 | Drive Shaft | | 36 | | 59.5 | 40 | 486 | |
| | 2020.02- | 6MT | F | R | Hatchback FWD DLAA | | GDS82229 | Drive Shaft | | 36 | | 59.5 | 40 | 767 | |
| | 2020.02- | 6MT | F | L | Hatchback FWD DLAA | | GCI81689 | Inner Joint | | | 32 | | | 89 | |
| | 2020.02- | 7AT/6MT | F | L/R | Hatchback FWD DLAA | | GCO61059 | Outer Joint | | 36 | 33 | 59.5 | 40 | 59.5 | I |
| | 2020.02- | 7DCT | F | L | Hatchback FWD DLAA | | GDS57830 | Drive Shaft | | 36 | | 59.5 | 40 | 492 | |
| | 2020.02- | 7DCT | F | R | Hatchback FWD DLAA | | GDS57831 | Drive Shaft | | 36 | | 59.5 | 40 | 758 | |
| | 2020.06- | 6MT | F | L | Hatchback FWD DLAA | | GDS82231 | Drive Shaft | | 36 | | 59.5 | 40 | 486 | |
| | 2020.06- | 6MT | F | R | Hatchback FWD DLAA | | GDS82229 | Drive Shaft | | 36 | | 59.5 | 40 | 767 | |
| | 2020.06- | 6MT | F | L | Hatchback FWD DLAA | | GCI81689 | Inner Joint | | | 32 | | | 89 | |
| | 2020.06- | 7AT/6MT | F | L/R | Hatchback FWD DLAA | | GCO61059 | Outer Joint | | 36 | 33 | 59.5 | 40 | 59.5 | I |

| | YEAR | TRANSM. | F/R | L/R | BODY STYLE & DRIVE TYPE & ENGINE | REMARKS | G-AP Ref. | PRODUCT | ABS | Technical Specifications A | B | C | H | L | P |
|---|---|---|---|---|---|---|---|---|---|---|---|---|---|---|---|
| **VW** **Golf** | | | | | | | | | | | | | | | |
| 1.0 (81 kw) | 2020.06- | 7DCT | F | L | Hatchback FWD DLAA | | GDS57830 | Drive Shaft | | 36 | | 59.5 | 40 | 492 | |
| | 2020.06- | 7DCT | F | R | Hatchback FWD DLAA | | GDS57831 | Drive Shaft | | 36 | | 59.5 | 40 | 758 | |
| 1.0 (85 kw) | 2015.05-2020.08 | 6MT | F | L | Hatchback FWD CHZD;DKRF | | GDS82231 | Drive Shaft | | 36 | | 59.5 | 40 | 486 | |
| | 2015.05-2020.08 | 6MT | F | R | Hatchback FWD CHZD;DKRF | | GDS82230 | Drive Shaft | | 36 | | 59.5 | 40 | 789 | |
| | 2015.05-2020.08 | 6MT/7DCT | F | L/R | Hatchback FWD CHZD;DKRF | | GCO61059 | Outer Joint | | 36 | 33 | 59.5 | 40 | 59.5 | I |
| | 2015.05-2020.08 | 6MT/7DCT | F | L/R | Hatchback FWD CHZD;DKRF | | GCI81689 | Inner Joint | | | 32 | | | 89 | |
| | 2015.05-2020.08 | 7DCT | F | R | Hatchback FWD CHZD;DKRF | | GDS82229 | Drive Shaft | | 36 | | 59.5 | 40 | 767 | |
| 1.2 (63 kw) | 2010.05-2012.11 | 5MT | F | L/R | Hatchback FWD CBZA | | GCO83037 | Outer Joint | | 36 | 30 | 59.5 | 40.5 | 56 | I |
| | 2010.05-2012.11 | 5MT/7DCT | F | L | Hatchback FWD CBZA | | GDS61201 | Drive Shaft | | 36 | | 59.5 | 40.5 | 535 | |
| | 2010.05-2012.11 | 5MT/7DCT | F | R | Hatchback FWD CBZA | | GDS61096 | Drive Shaft | | 36 | | 59.5 | 40.5 | 799 | |
| | 2010.05-2012.11 | 7DCT | F | L/R | Hatchback FWD CBZA | | GCO61059 | Outer Joint | | 36 | 33 | 59.5 | 40 | 59.5 | I |
| | 2010.05-2012.11 | 7DCT/5MT | F | L/R | Hatchback FWD CBZA | | GCI82447 | Inner Joint | | | 33 | | | 34 | |
| | 2010.05-2012.11 | 5MT | F | L/R | Hatchback Van FWD CBZA | | GCI82447 | Inner Joint | | | 33 | | | 34 | |
| | 2010.05-2012.11 | MT | F | L | Hatchback Van FWD CBZA | | GDS61201 | Drive Shaft | | 36 | | 59.5 | 40.5 | 535 | |
| | 2010.05-2012.11 | MT | F | R | Hatchback Van FWD CBZA | | GDS61096 | Drive Shaft | | 36 | | 59.5 | 40.5 | 799 | |
| | 2010.05-2012.11 | MT | F | L/R | Hatchback Van FWD CBZA | | GCO83037 | Outer Joint | | 36 | 30 | 59.5 | 40.5 | 56 | I |
| | 2010.05-2012.11 | | F | L/R | Hatchback Van FWD CBZA | | GCI83011 | Inner Joint | | | 33 | | | 34 | |
| | 2012.08-2017.03 | 5MT | F | L | Hatchback FWD CJZB;CYVA | For PR code:1PE/1PF/1PA/2H4/1PA/2H0/2H5/0EM | GDS61097 | Drive Shaft | | 36 | | 59.5 | 40.5 | 543 | |
| | 2012.08-2017.03 | 5MT | F | L | Hatchback FWD CJZB;CYVA | | GDS83294 | Drive Shaft | | 36 | | 59.5 | 38 | 519 | |
| | 2012.08-2017.03 | 5MT | F | L | Hatchback FWD CJZB;CYVA | For PR code:0EC | GDS83373 | Drive Shaft | | 36 | | 59.5 | 38 | 511 | |
| | 2012.08-2017.03 | 5MT | F | R | Hatchback FWD CJZB;CYVA | | GDS61042 | Drive Shaft | | 36 | | 59.5 | 40.5 | 814 | |
| | 2012.08-2017.03 | 5MT | F | R | Hatchback FWD CJZB;CYVA | For PR code:0EM | GDS61096 | Drive Shaft | | 36 | | 59.5 | 40.5 | 799 | |
| | 2012.08-2017.03 | 5MT | F | R | Hatchback FWD CJZB;CYVA | For PR code:0EC | GDS61307 | Drive Shaft | | 36 | | 59.5 | 40 | 819 | |
| | 2012.08-2017.03 | 5MT | F | L/R | Hatchback FWD CJZB;CYVA | | GCO83037 | Outer Joint | | 36 | 30 | 59.5 | 40.5 | 56 | I |
| | 2012.08-2017.03 | 5MT | F | L/R | Hatchback FWD CJZB;CYVA | | GCI82447 | Inner Joint | | | 33 | | | 34 | |
| | 2012.08-2017.03 | AT/MT | F | L/R | Hatchback FWD CJZB;CYVA | | GCI83011 | Inner Joint | | | 33 | | | 34 | |
| | 2012.08-2017.03 | MT | F | R | Hatchback FWD CJZB;CYVA | | GCI53002 | Inner Joint | | | 33 | | | 34 | |
| | 2012.08-2017.03 | MT | F | L/R | Hatchback FWD CJZB;CYVA | | GCI83006 | Inner Joint | | | 33 | | | 34 | |
| | 2012.08-2017.03 | 5MT | F | L | Hatchback Van FWD CJZB | For PR code:0EC | GDS83373 | Drive Shaft | | 36 | | 59.5 | 38 | 511 | |
| | 2012.08-2017.03 | 5MT | F | R | Hatchback Van FWD CJZB | | GDS61096 | Drive Shaft | | 36 | | 59.5 | 40.5 | 799 | |
| | 2012.08-2017.03 | 5MT | F | L/R | Hatchback Van FWD CJZB | | GCI82447 | Inner Joint | | | 33 | | | 34 | |
| | 2012.08-2017.03 | AT/MT | F | L/R | Hatchback Van FWD CJZB | Date from:2013.01 | GCI83011 | Inner Joint | | | 33 | | | 34 | |
| | 2012.08-2017.03 | MT | F | L | Hatchback Van FWD CJZB | Date from:2013.01 | GDS83294 | Drive Shaft | | 36 | | 59.5 | 38 | 519 | |
| | 2012.08-2017.03 | MT | F | R | Hatchback Van FWD CJZB | Date from:2013.01 | GDS61042 | Drive Shaft | | 36 | | 59.5 | 40.5 | 814 | |
| | 2012.08-2017.03 | MT | F | L/R | Hatchback Van FWD CJZB | | GCO83037 | Outer Joint | | 36 | 30 | 59.5 | 40.5 | 56 | I |
| | 2012.08-2017.03 | | F | L | Hatchback Van FWD CJZB | For PR code:1PE/1PF/1PA/2H4 | GDS61097 | Drive Shaft | | 36 | | 59.5 | 40.5 | 543 | |
| 1.2 (77 kw) | 2008.11-2012.11 | 6MT/7DCT | F | L | Hatchback FWD CBZB | | GDS61201 | Drive Shaft | | 36 | | 59.5 | 40.5 | 535 | |
| | 2008.11-2012.11 | 6MT/7DCT | F | R | Hatchback FWD CBZB | | GDS61096 | Drive Shaft | | 36 | | 59.5 | 40.5 | 799 | |
| | 2008.11-2012.11 | 6MT/7DCT | F | L/R | Hatchback FWD CBZB | | GCO83037 | Outer Joint | | 36 | 30 | 59.5 | 40.5 | 56 | I |
| | 2008.11-2012.11 | 6MT/7DCT | F | L/R | Hatchback FWD CBZB | | GCI82447 | Inner Joint | | | 33 | | | 34 | |
| | 2008.11-2012.11 | 7DCT | F | L/R | Hatchback FWD CBZB | | GCO61059 | Outer Joint | | 36 | 33 | 59.5 | 40 | 59.5 | I |
| | 2009.05-2012.11 | 7DCT/5MT/6MT | F | L/R | Hatchback Van FWD CBZB | | GCI82447 | Inner Joint | | | 33 | | | 34 | |
| | 2009.05-2012.11 | AT/MT | F | L | Hatchback Van FWD CBZB | | GDS61201 | Drive Shaft | | 36 | | 59.5 | 40.5 | 535 | |
| | 2009.05-2012.11 | AT/MT | F | R | Hatchback Van FWD CBZB | | GDS61096 | Drive Shaft | | 36 | | 59.5 | 40.5 | 799 | |
| | 2009.05-2012.11 | AT/MT | F | L | Hatchback Van FWD CBZB | | GCO83037 | Outer Joint | | 36 | 30 | 59.5 | 40.5 | 56 | I |
| | 2009.05-2012.11 | AT/MT | F | R | Hatchback Van FWD CBZB | | GCO61059 | Outer Joint | | 36 | 33 | 59.5 | 40 | 59.5 | I |
| | 2009.05-2012.11 | | F | L/R | Hatchback Van FWD CBZB | | GCI83011 | Inner Joint | | | 33 | | | 34 | |
| | 2012.11-2017.03 | 6MT | F | L | Hatchback Van FWD CJZA | | GDS83373 | Drive Shaft | | 36 | | 59.5 | 38 | 511 | |
| | 2012.11-2017.03 | 6MT | F | R | Hatchback Van FWD CJZA | | GDS61307 | Drive Shaft | | 36 | | 59.5 | 40 | 819 | |
| | 2012.11-2017.03 | 6MT | F | L/R | Hatchback Van FWD CJZA | | GCO83037 | Outer Joint | | 36 | 30 | 59.5 | 40.5 | 56 | I |
| | 2012.11-2017.03 | 7DCT | F | L | Hatchback Van FWD CJZA | | GDS61282 | Drive Shaft | | 36 | | 59.5 | 40 | 523 | |
| | 2012.11-2017.03 | 7DCT | F | R | Hatchback Van FWD CJZA | | GDS61096 | Drive Shaft | | 36 | | 59.5 | 40.5 | 799 | |
| | 2012.11-2017.03 | 7DCT | F | L/R | Hatchback Van FWD CJZA | | GCO61059 | Outer Joint | | 36 | 33 | 59.5 | 40 | 59.5 | I |
| | 2012.11-2017.03 | 7DCT/5MT/6MT | F | L/R | Hatchback Van FWD CJZA | | GCI82447 | Inner Joint | | | 33 | | | 34 | |
| | 2012.11-2017.03 | AT/MT | F | L/R | Hatchback Van FWD CJZA | Date from:2013.01 | GCI83011 | Inner Joint | | | 33 | | | 34 | |
| | 2012.11-2017.03 | MT | F | L | Hatchback Van FWD CJZA | Date from:2013.01 | GDS83294 | Drive Shaft | | 36 | | 59.5 | 38 | 519 | |
| | 2012.11-2017.03 | MT | F | R | Hatchback Van FWD CJZA | Date from:2013.01 | GDS61042 | Drive Shaft | | 36 | | 59.5 | 40.5 | 814 | |
| | 2012.11-2020.08 | 5MT/6MT | F | L | Hatchback FWD CJZA | | GDS83373 | Drive Shaft | | 36 | | 59.5 | 38 | 511 | |
| | 2012.11-2020.08 | 5MT/6MT | F | R | Hatchback FWD CJZA | | GDS61307 | Drive Shaft | | 36 | | 59.5 | 40 | 819 | |
| | 2012.11-2020.08 | 5MT/6MT | F | L/R | Hatchback FWD CJZA | | GCO83037 | Outer Joint | | 36 | 30 | 59.5 | 40.5 | 56 | I |
| | 2012.11-2020.08 | 5MT/6MT | F | R | Hatchback FWD CJZA | | GCI53002 | Inner Joint | | | 33 | | | 34 | |
| | 2012.11-2020.08 | 7DCT | F | L | Hatchback FWD CJZA | For PR code:1PE/1PF/1PA/2H4,no Economy | GDS61282 | Drive Shaft | | 36 | | 59.5 | 40 | 523 | |
| | 2012.11-2020.08 | 7DCT | F | L | Hatchback FWD CJZA | For PR code:1PE/1PF/1PA/2H4,Economy;For PR code:1PA/2H0/2H5 | GDS83294 | Drive Shaft | | 36 | | 59.5 | 38 | 519 | |
| | 2012.11-2020.08 | 7DCT | F | R | Hatchback FWD CJZA | | GDS61096 | Drive Shaft | | 36 | | 59.5 | 40.5 | 799 | |
| | 2012.11-2020.08 | 7DCT | F | L/R | Hatchback FWD CJZA | | GCO61059 | Outer Joint | | 36 | 33 | 59.5 | 40 | 59.5 | I |

| | YEAR | TRANSM. | F/R | L/R | BODY STYLE & DRIVE TYPE & ENGINE | REMARKS | G-AP Ref. | PRODUCT | ABS | Technical Specifications A | B | C | H | L | P |
|---|---|---|---|---|---|---|---|---|---|---|---|---|---|---|---|
| **VW Golf** | | | | | | | | | | | | | | | |
| 1.2 (77 kw) | 2012.11-2020.08 | 7DCT | F | L | Hatchback FWD CJZA | For PR code:1PE/1PF/1PA/2H4 | GCI53002 | Inner Joint | | | 33 | | | 34 | |
| | 2012.11-2020.08 | 7DCT/5MT/6MT | F | L/R | Hatchback FWD CJZA | | GCI82447 | Inner Joint | | | 33 | | | 34 | |
| | 2012.11-2020.08 | AT/MT | F | L/R | Hatchback FWD CJZA | | GCI83011 | Inner Joint | | | 33 | | | 34 | |
| | 2012.11-2020.08 | MT | F | R | Hatchback FWD CJZA | | GDS61042 | Drive Shaft | | 36 | | 59.5 | 40.5 | 814 | |
| 1.2 (81 kw) | 2014.04-2017.03 | 6MT | F | L | Hatchback FWD CYVB | | GDS83373 | Drive Shaft | | 36 | | 59.5 | 38 | 511 | |
| | 2014.04-2017.03 | 6MT | F | R | Hatchback FWD CYVB | | GDS61307 | Drive Shaft | | 36 | | 59.5 | 40 | 819 | |
| | 2014.04-2017.03 | 6MT | F | L/R | Hatchback FWD CYVB | | GCO83037 | Outer Joint | | 36 | 30 | 59.5 | 40.5 | 56 | I |
| | 2014.04-2017.03 | 6MT | F | R | Hatchback FWD CYVB | | GCI53002 | Inner Joint | | | 33 | | | 34 | |
| | 2014.04-2017.03 | 7DCT | F | L | Hatchback FWD CYVB | For PR code:1PE/1PF/1PA/2H4,no Economy | GDS61282 | Drive Shaft | | 36 | | 59.5 | 40 | 523 | |
| | 2014.04-2017.03 | 7DCT | F | L | Hatchback FWD CYVB | For PR code: 1PE/1PF/1PA/2H4,Economy;For PR code:1PA/2H6/2H5|Normal | GDS83294 | Drive Shaft | | 36 | | 59.5 | 38 | 519 | |
| | 2014.04-2017.03 | 7DCT | F | R | Hatchback FWD CYVB | | GDS61096 | Drive Shaft | | 36 | | 59.5 | 40.5 | 799 | |
| | 2014.04-2017.03 | 7DCT | F | L/R | Hatchback FWD CYVB | | GCO61059 | Outer Joint | | 36 | 33 | 59.5 | 40 | 59.5 | I |
| | 2014.04-2017.03 | 7DCT | F | L | Hatchback FWD CYVB | | GCI53002 | Inner Joint | | | 33 | | | 34 | |
| | 2014.04-2017.03 | 7DCT/6MT | F | L/R | Hatchback FWD CYVB | | GCI82447 | Inner Joint | | | 33 | | | 34 | |
| | 2014.04-2017.03 | | F | L/R | Hatchback FWD CYVB | | GCI83011 | Inner Joint | | | 33 | | | 34 | |
| 1.4 (44 kw) | 1991.11-1997.12 | MT | F | L | Hatchback FWD ABD/AEX | Chassis no. from:1H-T-000001 | GDS53004 | Drive Shaft | | 22 | | 50 | 78.5 | 562 | |
| | 1991.11-1997.12 | MT | F | L | Hatchback FWD ABD/AEX | Chassis no. to:1H-S-700000 | GDS61172 | Drive Shaft | | 22 | | 53 | 78 | 584.5 | |
| | 1991.11-1997.12 | MT | F | R | Hatchback FWD ABD/AEX | Chassis no. to:1H-N-990000 | GDS61055 | Drive Shaft | | 22 | | 53 | 78.5 | 796 | |
| | 1991.11-1997.12 | MT | F | R | Hatchback FWD ABD/AEX | Chassis no. from:1H-P-000001;Chassis no. to:1H-S-700000 | GDS61067 | Drive Shaft | | 22 | | 51 | 78.7 | 781 | |
| | 1991.11-1997.12 | MT | F | L/R | Hatchback FWD ABD/AEX | | GCO53008 | Outer Joint | | 22 | 30 | 53 | 78.5 | 51 | I |
| | 1991.11-1997.12 | MT | F | L/R | Hatchback FWD ABD/AEX | Chassis no. to:1H-S-700000 | GCI53001 | Inner Joint | | | 33 | | | 32 | |
| | 1991.11-1997.12 | MT | F | L/R | Hatchback FWD ABD/AEX | Chassis no. from:1H-T-000001 | GCI83005 | Inner Joint | | | 33 | | | 32 | |
| 1.4 (55 kw) | 1997.10-2004.05 | 5MT | F | L | Hatchback FWD AHW/AKQ/APE/AXP/BCA | | GDS61045 | Drive Shaft | | 36 | | 53 | 78.5 | 555 | |
| | 1997.10-2004.05 | 5MT | F | R | Hatchback FWD AHW/AKQ/APE/AXP/BCA | | GDS83046 | Drive Shaft | | 36 | | 53 | 78.5 | 822 | |
| | 1997.10-2004.05 | 5MT | F | L/R | Hatchback FWD AHW/AKQ/APE/AXP/BCA | | GCO83033 | Outer Joint | | 36 | 30 | 53 | 78.5 | 51 | I |
| | 1997.10-2004.05 | 5MT | F | L/R | Hatchback FWD AHW/AKQ/APE/AXP/BCA | | GCI83008 | Inner Joint | | | 33 | | | 32 | |
| | 2003.10-2006.05 | 5MT | F | L | Hatchback FWD BCA | | GDS53007 | Drive Shaft | | 36 | | 59.5 | 40 | 559 | |
| | 2003.10-2006.05 | 5MT | F | R | Hatchback FWD BCA | | GDS53008 | Drive Shaft | | 36 | | 59.5 | 40 | 782 | |
| | 2003.10-2006.05 | 5MT | F | L/R | Hatchback FWD BCA | | GCO53001 | Outer Joint | | 36 | 30 | 59.5 | 40 | 49 | I |
| | 2003.10-2006.05 | 5MT | F | L/R | Hatchback FWD BCA | | GCI83008 | Inner Joint | | | 33 | | | 32 | |
| | 2003.10-2006.05 | MT | F | R | Hatchback FWD BCA | | GDS61237 | Stub Axle,differential | | 23 | 37 | | | 142.5 | |
| 1.4 (59 kw) | 2006.05-2008.11 | 5MT | F | L | Hatchback FWD BUD | | GDS53007 | Drive Shaft | | 36 | | 59.5 | 40 | 559 | |
| | 2006.05-2008.11 | 5MT | F | R | Hatchback FWD BUD | | GDS53008 | Drive Shaft | | 36 | | 59.5 | 40 | 782 | |
| | 2006.05-2008.11 | 5MT | F | L/R | Hatchback FWD BUD | | GCO53001 | Outer Joint | | 36 | 30 | 59.5 | 40 | 49 | I |
| | 2006.05-2008.11 | 5MT | F | L/R | Hatchback FWD BUD | | GCI83008 | Inner Joint | | | 33 | | | 32 | |
| | 2008.10-2012.11 | 5MT | F | L | Hatchback FWD CGGA | | GDS53007 | Drive Shaft | | 36 | | 59.5 | 40 | 559 | |
| | 2008.10-2012.11 | 5MT | F | R | Hatchback FWD CGGA | | GDS53008 | Drive Shaft | | 36 | | 59.5 | 40 | 782 | |
| | 2008.10-2012.11 | 5MT | F | L/R | Hatchback FWD CGGA | | GCO53001 | Outer Joint | | 36 | 30 | 59.5 | 40 | 49 | I |
| | 2008.10-2012.11 | 5MT | F | L/R | Hatchback FWD CGGA | | GCI83008 | Inner Joint | | | 33 | | | 32 | |
| 1.4 (66 kw) | 2003.10-2006.07 | 5MT | F | L | Hatchback FWD BKG;BLN | | GDS53007 | Drive Shaft | | 36 | | 59.5 | 40 | 559 | |
| | 2003.10-2006.07 | 5MT | F | R | Hatchback FWD BKG;BLN | | GDS53008 | Drive Shaft | | 36 | | 59.5 | 40 | 782 | |
| | 2003.10-2006.07 | 5MT | F | L/R | Hatchback FWD BKG;BLN | | GCO53001 | Outer Joint | | 36 | 30 | 59.5 | 40 | 49 | I |
| | 2003.10-2006.07 | 5MT | F | L/R | Hatchback FWD BKG;BLN | | GCI83008 | Inner Joint | | | 33 | | | 32 | |
| | 2003.10-2006.07 | MT | F | R | Hatchback FWD BKG;BLN | | GDS61237 | Stub Axle,differential | | 23 | 37 | | | 142.5 | |
| 1.4 (81 kw) | 2013.06-2018.07 | 6MT | F | R | Hatchback FWD CPWA;CZBA | | GDS61307 | Drive Shaft | | 36 | | 59.5 | 40 | 819 | |
| | 2013.06-2018.07 | 6MT | F | R | Hatchback FWD CPWA;CZBA | For Engine code:CPWA | GCO83037 | Outer Joint | | 36 | 30 | 59.5 | 40.5 | 56 | I |
| | 2013.06-2018.07 | 6MT | F | L/R | Hatchback FWD CPWA;CZBA | For Engine code:CPWA | GCI53002 | Inner Joint | | | 33 | | | 34 | |
| | 2013.06-2018.07 | 6MT/7DCT | F | L | Hatchback FWD CPWA;CZBA | For Engine code:CPWA,For PR code:1PE/1PF/1PA/2H4 | GDS61282 | Drive Shaft | | 36 | | 59.5 | 40 | 523 | |
| | 2013.06-2018.07 | 6MT/7DCT | F | L | Hatchback FWD CPWA;CZBA | | GDS83294 | Drive Shaft | | 36 | | 59.5 | 38 | 519 | |
| | 2013.06-2018.07 | 7DCT | F | R | Hatchback FWD CPWA;CZBA | | GDS61096 | Drive Shaft | | 36 | | 59.5 | 40.5 | 799 | |
| | 2013.06-2018.07 | 7DCT | F | L | Hatchback FWD CPWA;CZBA | For Engine code:CPWA | GCI53002 | Inner Joint | | | 33 | | | 34 | |
| | 2013.06-2018.07 | 7DCT/6MT | F | L/R | Hatchback FWD CPWA;CZBA | For Engine code:CPWA | GCI82447 | Inner Joint | | | 33 | | | 34 | |
| | 2013.06-2018.07 | | F | L/R | Hatchback FWD CPWA;CZBA | For Engine code:CPWA | GCO61059 | Outer Joint | | 36 | 33 | 59.5 | 40 | 59.5 | I |
| | 2013.06-2018.07 | | F | L/R | Hatchback FWD CPWA;CZBA | For Engine Code:CPWA | GCI83011 | Inner Joint | | | 33 | | | 34 | |
| 1.4 (90 kw) | 2007.05-2008.11 | 6MT | F | L/R | Hatchback FWD CAXA | | GCI82447 | Inner Joint | | | 33 | | | 34 | |
| | 2007.05-2008.11 | AT | F | L | Hatchback FWD CAXA | | GDS81783 | Drive Shaft | | 36 | 40 | 59.5 | 40 | 531 | |
| | 2007.05-2008.11 | AT | F | R | Hatchback FWD CAXA | | GDS81784 | Drive Shaft | | 36 | 40 | 59.5 | 40 | 801 | |
| | 2007.05-2008.11 | AT | F | L/R | Hatchback FWD CAXA | | GCO83002 | Outer Joint | | 36 | 27 | 59.5 | 40 | 66 | I |
| | 2007.05-2008.11 | AT | F | L/R | Hatchback FWD CAXA | | GCI61054 | Inner Joint | | 40 | 28 | 46.9 | 41 | 101.7 | |
| | 2007.05-2008.11 | MT | F | L | Hatchback FWD CAXA | | GDS61201 | Drive Shaft | | 36 | | 59.5 | 40.5 | 535 | |
| | 2007.05-2008.11 | MT | F | R | Hatchback FWD CAXA | | GDS61096 | Drive Shaft | | 36 | | 59.5 | 40.5 | 799 | |
| | 2007.05-2008.11 | MT | F | L/R | Hatchback FWD CAXA | | GCO83037 | Outer Joint | | 36 | 30 | 59.5 | 40.5 | 56 | I |
| | 2008.10-2012.11 | 6MT | F | L | Hatchback FWD CAXA | | GDS61201 | Drive Shaft | | 36 | | 59.5 | 40.5 | 535 | |
| | 2008.10-2012.11 | 6MT | F | R | Hatchback FWD CAXA | | GDS61096 | Drive Shaft | | 36 | | 59.5 | 40.5 | 799 | |
| | 2008.10-2012.11 | 6MT | F | L/R | Hatchback FWD CAXA | | GCO83037 | Outer Joint | | 36 | 30 | 59.5 | 40.5 | 56 | I |

| | YEAR | TRANSM. | F/R | L/R | BODY STYLE & DRIVE TYPE & ENGINE | REMARKS | G-AP Ref. | PRODUCT | ABS | Technical Specifications A | B | C | H | L | P |
|---|---|---|---|---|---|---|---|---|---|---|---|---|---|---|---|
| **VW** **Golf** | | | | | | | | | | | | | | | |
| 1.4 (90 kw) | 2008.10-2012.11 | 6MT | F | L/R | Hatchback FWD CAXA | | GCI53002 | Inner Joint | | | 33 | | | 34 | |
| | 2008.10-2012.11 | 6MT | F | L/R | Hatchback FWD CAXA | | GCI82447 | Inner Joint | | | 33 | | | 34 | |
| | 2008.10-2012.11 | 7DCT | F | L | Hatchback FWD CAXA | Date from:2011.06 | GDS61201 | Drive Shaft | | 36 | | 59.5 | 40.5 | 535 | |
| | 2008.10-2012.11 | 7DCT | F | L | Hatchback FWD CAXA | Date from:2008.11,Date to:2011.05 | GDS61281 | Drive Shaft | | 36 | | 59.5 | 40 | 528 | |
| | 2008.10-2012.11 | 7DCT | F | L | Hatchback FWD CAXA | Date to:2008.10 | GDS81783 | Drive Shaft | | 36 | 40 | 59.5 | 40 | 531 | |
| | 2008.10-2012.11 | 7DCT | F | R | Hatchback FWD CAXA | Date from:2011.06 | GDS61096 | Drive Shaft | | 36 | | 59.5 | 40.5 | 799 | |
| | 2008.10-2012.11 | 7DCT | F | R | Hatchback FWD CAXA | Date from:2008.11,Date to:2011.05 | GDS81653 | Drive Shaft | | 36 | | 59.5 | 40 | 785 | |
| | 2008.10-2012.11 | 7DCT | F | R | Hatchback FWD CAXA | Date to:2008.10 | GDS81784 | Drive Shaft | | 36 | 40 | 59.5 | 40 | 801 | |
| | 2008.10-2012.11 | 7DCT | F | L/R | Hatchback FWD CAXA | Date from:2011.06 | GCO61059 | Outer Joint | | 36 | 33 | 59.5 | 40 | 59.5 | I |
| | 2008.10-2012.11 | 7DCT | F | L/R | Hatchback FWD CAXA | Date to:2011.05 | GCO83002 | Outer Joint | | 36 | 27 | 59.5 | 40 | 66 | I |
| | 2008.10-2012.11 | 7DCT | F | L/R | Hatchback FWD CAXA | Date to:2008.10 | GCI61054 | Inner Joint | | 40 | 28 | 46.9 | 41 | 101.7 | |
| | 2008.10-2012.11 | 7DCT | F | L/R | Hatchback FWD CAXA | Date from:2008.11,Date to:2011.05 | GCI61069 | Inner Joint | | | 28 | | | 32 | |
| | 2008.10-2012.11 | 7DCT | F | L/R | Hatchback FWD CAXA | Date from:2011.06 | GCI82447 | Inner Joint | | | 33 | | | 34 | |
| | 2008.10-2012.11 | 7DCT | F | L/R | Hatchback FWD CAXA | Date from:2008.11,Date to:2011.05 | GCI83016 | Inner Joint | | | 28 | | | 32 | |
| | 2008.10-2012.11 | 6MT | F | L/R | Hatchback Van FWD CAXA | | GCI82447 | Inner Joint | | | 33 | | | 34 | |
| | 2008.10-2012.11 | 6MT/7DCT | F | L | Hatchback Van FWD CAXA | Transmission:6MT,For PR code:0EM/0EJ,Transmission:7DCT,Date from:2011.06 | GDS61201 | Drive Shaft | | 36 | | 59.5 | 40.5 | 535 | |
| | 2008.10-2012.11 | 6MT/7DCT | F | R | Hatchback Van FWD CAXA | Transmission:6MT,For PR code:0EM/0EJ,Transmission:7DCT,Date from:2011.06 | GDS61096 | Drive Shaft | | 36 | | 59.5 | 40.5 | 799 | |
| | 2008.10-2012.11 | 7AT/6MT | F | L/R | Hatchback Van FWD CAXA | | GCI83016 | Inner Joint | | | 28 | | | 32 | |
| | 2008.10-2012.11 | 7DCT | F | L | Hatchback Van FWD CAXA | Date from:2008.11,Date to:2011.05 | GDS61281 | Drive Shaft | | 36 | | 59.5 | 40 | 528 | |
| | 2008.10-2012.11 | 7DCT | F | L | Hatchback Van FWD CAXA | Date to:2008.10 | GDS81783 | Drive Shaft | | 36 | 40 | 59.5 | 40 | 531 | |
| | 2008.10-2012.11 | 7DCT | F | R | Hatchback Van FWD CAXA | Date from:2008.11,Date to:2011.05 | GDS81653 | Drive Shaft | | 36 | | 59.5 | 40 | 785 | |
| | 2008.10-2012.11 | 7DCT | F | R | Hatchback Van FWD CAXA | Date to:2008.10 | GDS81784 | Drive Shaft | | 36 | 40 | 59.5 | 40 | 801 | |
| | 2008.10-2012.11 | 7DCT | F | L/R | Hatchback Van FWD CAXA | Date to:2008.10 | GCI61054 | Inner Joint | | 40 | 28 | 46.9 | 41 | 101.7 | |
| | 2008.10-2012.11 | AT | F | L/R | Hatchback Van FWD CAXA | Date to:2011.05 | GCO83002 | Outer Joint | | 36 | 27 | 59.5 | 40 | 66 | I |
| | 2008.10-2012.11 | AT/MT | F | L | Hatchback Van FWD CAXA | Date from:2011.06 | GCO83037 | Outer Joint | | 36 | 30 | 59.5 | 40.5 | 56 | I |
| | 2008.10-2012.11 | AT/MT | F | R | Hatchback Van FWD CAXA | Date from:2011.06 | GCO61059 | Outer Joint | | 36 | 33 | 59.5 | 40 | 59.5 | I |
| | 2008.10-2012.11 | MT | F | L | Hatchback Van FWD CAXA | PR code:OEM/OEJ | GDS61201 | Drive Shaft | | 36 | | 59.5 | 40.5 | 535 | |
| | 2008.10-2012.11 | MT | F | R | Hatchback Van FWD CAXA | PR code:OEM/OEJ | GDS61096 | Drive Shaft | | 36 | | 59.5 | 40.5 | 799 | |
| | 2012.11-2017.03 | 6MT | F | R | Hatchback FWD CMBA;CXSA | | GDS61307 | Drive Shaft | | 36 | | 59.5 | 40 | 819 | |
| | 2012.11-2017.03 | 6MT/7DCT | F | L | Hatchback FWD CMBA;CXSA | For PR code:1PE/1PF/1PA/2H4 | GDS61282 | Drive Shaft | | 36 | | 59.5 | 40 | 523 | |
| | 2012.11-2017.03 | 6MT/7DCT | F | L/R | Hatchback FWD CMBA;CXSA | | GCO61059 | Outer Joint | | 36 | 33 | 59.5 | 40 | 59.5 | I |
| | 2012.11-2017.03 | 6MT/7DCT | F | L/R | Hatchback FWD CMBA;CXSA | | GCI53002 | Inner Joint | | | 33 | | | 34 | |
| | 2012.11-2017.03 | 6MT/7DCT | F | L/R | Hatchback FWD CMBA;CXSA | | GCI82447 | Inner Joint | | | 33 | | | 34 | |
| | 2012.11-2017.03 | 7DCT | F | R | Hatchback FWD CMBA;CXSA | | GDS61096 | Drive Shaft | | 36 | | 59.5 | 40.5 | 799 | |
| | 2012.11-2017.03 | 7DCT/6MT | F | L | Hatchback FWD CMBA;CXSA | For PR code:1PA/2H0/2H5 | GDS83294 | Drive Shaft | | 36 | | 59.5 | 38 | 519 | |
| | 2012.11-2017.03 | 6MT | F | L | Hatchback FWD CPVA | For PR code:1PE/1PF/1PA/2H4 | GDS61282 | Drive Shaft | | 36 | | 59.5 | 40 | 523 | |
| | 2012.11-2017.03 | 6MT | F | L | Hatchback FWD CPVA | For PR code:1PA/2H0/2H5 | GDS83294 | Drive Shaft | | 36 | | 59.5 | 38 | 519 | |
| | 2012.11-2017.03 | 6MT | F | R | Hatchback FWD CPVA | | GDS61307 | Drive Shaft | | 36 | | 59.5 | 40 | 819 | |
| | 2012.11-2017.03 | 6MT | F | L | Hatchback FWD CPVA | | GCO61059 | Outer Joint | | 36 | 33 | 59.5 | 40 | 59.5 | I |
| | 2012.11-2017.03 | 6MT | F | R | Hatchback FWD CPVA | | GCO83037 | Outer Joint | | 36 | 30 | 59.5 | 40.5 | 56 | I |
| | 2012.11-2017.03 | 6MT | F | L/R | Hatchback FWD CPVA | | GCI53002 | Inner Joint | | | 33 | | | 34 | |
| | 2012.11-2017.03 | 6MT | F | L/R | Hatchback FWD CPVA | | GCI82447 | Inner Joint | | | 33 | | | 34 | |
| | 2012.11-2017.03 | MT | F | L/R | Hatchback FWD CPVA | | GCI83006 | Inner Joint | | | 33 | | | 34 | |
| | 2012.11-2017.03 | | F | L/R | Hatchback FWD CPVA | | GCI83011 | Inner Joint | | | 33 | | | 34 | |
| | 2013.05-2017.03 | 6MT | F | R | Hatchback Van FWD CXSA | | GDS61307 | Drive Shaft | | 36 | | 59.5 | 40 | 819 | |
| | 2013.05-2017.03 | 6MT/7DCT | F | L | Hatchback Van FWD CXSA | Transmission:6MT,For PR code:1PE/1PF/1PA/2H4,Transmission:7DCT,For PR code:1PE/1PF/1PA/2H4,No Economy | GDS61282 | Drive Shaft | | 36 | | 59.5 | 40 | 523 | |
| | 2013.05-2017.03 | 6MT/7DCT | F | L | Hatchback Van FWD CXSA | Transmission:7DCT,For PR code:1PE/1PF/1PA/2H4,Economy,Transmission:6MT,For PR code:1PA/2H0/2H5 | GDS83294 | Drive Shaft | | 36 | | 59.5 | 38 | 519 | |
| | 2013.05-2017.03 | 7DCT | F | R | Hatchback Van FWD CXSA | | GDS61096 | Drive Shaft | | 36 | | 59.5 | 40.5 | 799 | |
| | 2013.05-2017.03 | 7DCT/5MT/6MT | F | L/R | Hatchback Van FWD CXSA | | GCI82447 | Inner Joint | | | 33 | | | 34 | |
| | 2013.05-2017.03 | AT | F | L/R | Hatchback Van FWD CXSA | Date from:2011.06 | GCO61059 | Outer Joint | | 36 | 33 | 59.5 | 40 | 59.5 | I |
| 1.4 (92 kw) | 2013.12-2018.07 | 6MT | F | L | Hatchback FWD CPVB | | GDS61282 | Drive Shaft | | 36 | | 59.5 | 40 | 523 | |
| | 2013.12-2018.07 | 6MT | F | R | Hatchback FWD CPVB | | GDS61307 | Drive Shaft | | 36 | | 59.5 | 40 | 819 | |
| | 2013.12-2018.07 | 6MT | F | L | Hatchback FWD CPVB | | GCO61059 | Outer Joint | | 36 | 33 | 59.5 | 40 | 59.5 | I |
| | 2013.12-2018.07 | 6MT | F | R | Hatchback FWD CPVB | | GCO83037 | Outer Joint | | 36 | 30 | 59.5 | 40.5 | 56 | I |
| | 2013.12-2018.07 | 6MT | F | L/R | Hatchback FWD CPVB | | GCI53002 | Inner Joint | | | 33 | | | 34 | |
| | 2013.12-2018.07 | 6MT | F | L/R | Hatchback FWD CPVB | | GCI82447 | Inner Joint | | | 33 | | | 34 | |
| | 2013.12-2018.07 | 7AT | F | L | Hatchback FWD CPVB | | GDS83294 | Drive Shaft | | 36 | | 59.5 | 38 | 519 | |
| | 2013.12-2018.07 | MT | F | L/R | Hatchback FWD CPVB | | GCI83006 | Inner Joint | | | 33 | | | 34 | |
| | 2013.12-2018.07 | | F | L/R | Hatchback FWD CPVB | Date From:2014.05 | GCI83011 | Inner Joint | | | 33 | | | 34 | |
| | 2014.05-2020.08 | 6MT | F | R | Hatchback FWD CZCA | | GDS61307 | Drive Shaft | | 36 | | 59.5 | 40 | 819 | |
| | 2014.05-2020.08 | 6MT/7DCT | F | L | Hatchback FWD CZCA | For PR code:1PA/1PE/1PF/2H4,No Economy | GDS61282 | Drive Shaft | | 36 | | 59.5 | 40 | 523 | |
| | 2014.05-2020.08 | 6MT/7DCT | F | L | Hatchback FWD CZCA | Transmission:6MT,For PR code:1PA/1PE/1PF/2H4,Transmission:7DCT,For PR code:1PA/1PE/1PF/2H4,Economy | GDS83294 | Drive Shaft | | 36 | | 59.5 | 38 | 519 | |
| | 2014.05-2020.08 | 6MT/7DCT | F | L/R | Hatchback FWD CZCA | | GCO61059 | Outer Joint | | 36 | 33 | 59.5 | 40 | 59.5 | I |
| | 2014.05-2020.08 | 6MT/7DCT | F | L/R | Hatchback FWD CZCA | Fitting Position:Front axle left,For PR code:1PA/1PE/1PF/2H4,No Economy,Fitting Position:Front axle right | GCI53002 | Inner Joint | | | 33 | | | 34 | |
| | 2014.05-2020.08 | 7DCT | F | R | Hatchback FWD CZCA | | GDS61096 | Drive Shaft | | 36 | | 59.5 | 40.5 | 799 | |

| | YEAR | TRANSM. | F/R | L/R | BODY STYLE & DRIVE TYPE & ENGINE | REMARKS | G-AP Ref. | PRODUCT | ABS | Technical Specifications A | B | C | H | L | P |
|---|---|---|---|---|---|---|---|---|---|---|---|---|---|---|---|
| **VW** **Golf** | | | | | | | | | | | | | | | |
| 1.4 (92 kw) | 2014.05-2020.08 | 7DCT | F | L/R | Hatchback FWD CZCA | Exhaust Emis Nm:Euro 5;For PR code:7GR | GCO83101 | Outer Joint | | 36 | 27 | 59.5 | 40 | 65 | M |
| | 2014.05-2020.08 | 7DCT/6MT | F | L/R | Hatchback FWD CZCA | | GCI82447 | Inner Joint | | | 33 | | | 34 | |
| 1.4 (103 kw) | 2006.05-2008.11 | 6AT/6MT | F | L/R | Hatchback FWD BMY | | GCI83016 | Inner Joint | | | 28 | | | 32 | |
| | 2006.05-2008.11 | 6DCT | F | L | Hatchback FWD BMY | | GDS81896 | Drive Shaft | | 36 | | 59.5 | 40 | 500 | |
| | 2006.05-2008.11 | 6DCT | F | R | Hatchback FWD BMY | | GDS61342 | Drive Shaft | | 36 | | 59.5 | 40 | 764 | |
| | 2006.05-2008.11 | 6MT | F | L | Hatchback FWD BMY | | GDS61201 | Drive Shaft | | 36 | | 59.5 | 40.5 | 535 | |
| | 2006.05-2008.11 | 6MT | F | R | Hatchback FWD BMY | | GDS61096 | Drive Shaft | | 36 | | 59.5 | 40.5 | 799 | |
| | 2006.05-2008.11 | 6MT | F | L/R | Hatchback FWD BMY | | GCI82447 | Inner Joint | | | 33 | | | 34 | |
| | 2006.05-2008.11 | AT | F | L | Hatchback FWD BMY | | GDS83236 | Drive Shaft | | 36 | | 59.5 | 40 | 484 | |
| | 2006.05-2008.11 | AT | F | L/R | Hatchback FWD BMY | | GCO83002 | Outer Joint | | 36 | 27 | 59.5 | 40 | 66 | I |
| | 2006.05-2008.11 | MT | F | L/R | Hatchback FWD BMY | | GCO83037 | Outer Joint | | 36 | 30 | 59.5 | 40.5 | 56 | I |
| | 2012.08-2017.03 | 6MT | F | L | Hatchback Van FWD CHPA | For PR code:1PE/1PF/1PA/2H4 | GDS61282 | Drive Shaft | | 36 | | 59.5 | 40 | 523 | |
| | 2012.08-2017.03 | 6MT | F | L | Hatchback Van FWD CHPA | For PR code:1PA/2H0/2H5 | GDS83294 | Drive Shaft | | 36 | | 59.5 | 38 | 519 | |
| | 2012.08-2017.03 | 6MT | F | R | Hatchback Van FWD CHPA | | GDS61283 | Drive Shaft | | 36 | | 59.5 | 40 | 815 | |
| | 2012.08-2017.03 | 6MT | F | L/R | Hatchback Van FWD CHPA | | GCO61059 | Outer Joint | | 36 | 33 | 59.5 | 40 | 59.5 | I |
| | 2012.08-2017.03 | 6MT | F | L/R | Hatchback Van FWD CHPA | | GCI82447 | Inner Joint | | | 33 | | | 34 | |
| | 2012.08-2017.03 | 7AT/6MT | F | L/R | Hatchback Van FWD CHPA | | GCI83016 | Inner Joint | | | 28 | | | 32 | |
| | 2012.08-2017.03 | 7DCT | F | L | Hatchback Van FWD CHPA | | GDS61100 | Drive Shaft | | 36 | | 59.5 | 40 | 513 | |
| | 2012.08-2017.03 | 7DCT | F | R | Hatchback Van FWD CHPA | | GDS83313 | Drive Shaft | | 36 | | 59.5 | 40 | 792 | |
| | 2012.08-2017.03 | 7DCT | F | L/R | Hatchback Van FWD CHPA | | GCO83101 | Outer Joint | | 36 | 27 | 59.5 | 40 | 65 | M |
| | 2012.08-2020.08 | 6MT | F | L | Hatchback FWD CPTA;CHPA | No Economy | GDS61282 | Drive Shaft | | 36 | | 59.5 | 40 | 523 | |
| | 2012.08-2020.08 | 6MT | F | R | Hatchback FWD CPTA;CHPA | | GDS61283 | Drive Shaft | | 36 | | 59.5 | 40 | 815 | |
| | 2012.08-2020.08 | 6MT | F | L | Hatchback FWD CPTA;CHPA | For Engine code:CZEA/CHPA | GCI53002 | Inner Joint | | | 33 | | | 34 | |
| | 2012.08-2020.08 | 6MT | F | L/R | Hatchback FWD CPTA;CHPA | | GCI82447 | Inner Joint | | | 33 | | | 34 | |
| | 2012.08-2020.08 | 7AT/6MT | F | L/R | Hatchback FWD CPTA;CHPA | | GCO61059 | Outer Joint | | 36 | 33 | 59.5 | 40 | 59.5 | I |
| | 2012.08-2020.08 | 7AT/6MT | F | L/R | Hatchback FWD CPTA;CHPA | | GCO83101 | Outer Joint | | 36 | 27 | 59.5 | 40 | 65 | M |
| | 2012.08-2020.08 | 7DCT | F | L | Hatchback FWD CPTA;CHPA | | GDS61100 | Drive Shaft | | 36 | | 59.5 | 40 | 513 | |
| | 2012.08-2020.08 | 7DCT | F | R | Hatchback FWD CPTA;CHPA | | GDS83313 | Drive Shaft | | 36 | | 59.5 | 40 | 792 | |
| | 2012.08-2020.08 | 7DCT | F | L | Hatchback FWD CPTA;CHPA | For PR code:1PE/1PF/1PA/2H4 | GCI53002 | Inner Joint | | | 33 | | | 34 | |
| | 2012.08-2020.08 | 7DCT | F | L/R | Hatchback FWD CPTA;CHPA | | GCI83016 | Inner Joint | | | 28 | | | 32 | |
| | 2012.08-2020.08 | MT | F | L | Hatchback FWD CPTA;CHPA | Economy | GDS83294 | Drive Shaft | | 36 | | 59.5 | 38 | 519 | |
| | 2012.08-2020.08 | MT | F | L | Hatchback FWD CPTA;CHPA | | GCO83037 | Outer Joint | | 36 | 30 | 59.5 | 40.5 | 56 | I |
| 1.4 (110 kw) | 2014.05-2021.03 | 6MT | F | L | Hatchback FWD CZEA;CZDA;DGXA | No Economy | GDS61282 | Drive Shaft | | 36 | | 59.5 | 40 | 523 | |
| | 2014.05-2021.03 | 6MT | F | R | Hatchback FWD CZEA;CZDA;DGXA | | GDS61283 | Drive Shaft | | 36 | | 59.5 | 40 | 815 | |
| | 2014.05-2021.03 | 6MT | F | L/R | Hatchback FWD CZEA;CZDA;DGXA | | GCO61059 | Outer Joint | | 36 | 33 | 59.5 | 40 | 59.5 | I |
| | 2014.05-2021.03 | 6MT | F | L/R | Hatchback FWD CZEA;CZDA;DGXA | | GCI53002 | Inner Joint | | | 33 | | | 34 | |
| | 2014.05-2021.03 | 6MT | F | L/R | Hatchback FWD CZEA;CZDA;DGXA | | GCI82447 | Inner Joint | | | 33 | | | 34 | |
| | 2014.05-2021.03 | 7AT/6MT | F | L/R | Hatchback FWD CZEA;CZDA;DGXA | | GCI83016 | Inner Joint | | | 28 | | | 32 | |
| | 2014.05-2021.03 | 7DCT | F | L | Hatchback FWD CZEA;CZDA;DGXA | | GDS61100 | Drive Shaft | | 36 | | 59.5 | 40 | 513 | |
| | 2014.05-2021.03 | 7DCT | F | R | Hatchback FWD CZEA;CZDA;DGXA | | GDS83313 | Drive Shaft | | 36 | | 59.5 | 40 | 792 | |
| | 2014.05-2021.03 | 7DCT | F | L/R | Hatchback FWD CZEA;CZDA;DGXA | | GCO83101 | Outer Joint | | 36 | 27 | 59.5 | 40 | 65 | M |
| | 2014.05-2021.03 | MT | F | L | Hatchback FWD CZEA;CZDA;DGXA | For Engine code:CZDA,Economy | GDS83294 | Drive Shaft | | 36 | | 59.5 | 38 | 519 | |
| | 2014.05-2021.03 | MT | F | L | Hatchback FWD CZEA;CZDA;DGXA | | GCO83037 | Outer Joint | | 36 | 30 | 59.5 | 40.5 | 56 | I |
| 1.4 (118 kw) | 2008.10-2012.11 | 6MT | F | L/R | Hatchback FWD CAVD;CNWA;CTHD | | GCI82447 | Inner Joint | | | 33 | | | 34 | |
| | 2008.10-2012.11 | 7AT | F | L/R | Hatchback FWD CAVD;CNWA;CTHD | Date from:2008.11 | GCI83016 | Inner Joint | | | 28 | | | 32 | |
| | 2008.10-2012.11 | 7DCT | F | L | Hatchback FWD CAVD;CNWA;CTHD | Date to:2008.10 | GDS81783 | Drive Shaft | | 36 | 40 | 59.5 | 40 | 531 | |
| | 2008.10-2012.11 | 7DCT | F | R | Hatchback FWD CAVD;CNWA;CTHD | Date to:2008.10 | GDS81784 | Drive Shaft | | 36 | 40 | 59.5 | 40 | 801 | |
| | 2008.10-2012.11 | 7DCT | F | L/R | Hatchback FWD CAVD;CNWA;CTHD | Date to:2008.10 | GCI61054 | Inner Joint | | 40 | 28 | 46.9 | 41 | 101.7 | |
| | 2008.10-2012.11 | AT | F | L | Hatchback FWD CAVD;CNWA;CTHD | | GDS61281 | Drive Shaft | | 36 | | 59.5 | 40 | 528 | |
| | 2008.10-2012.11 | AT | F | R | Hatchback FWD CAVD;CNWA;CTHD | Date from:2008.11 | GDS81653 | Drive Shaft | | 36 | | 59.5 | 40 | 785 | |
| | 2008.10-2012.11 | AT | F | L/R | Hatchback FWD CAVD;CNWA;CTHD | | GCO83002 | Outer Joint | | 36 | 27 | 59.5 | 40 | 66 | I |
| | 2008.10-2012.11 | MT | F | L | Hatchback FWD CAVD;CNWA;CTHD | | GDS61201 | Drive Shaft | | 36 | | 59.5 | 40.5 | 535 | |
| | 2008.10-2012.11 | MT | F | R | Hatchback FWD CAVD;CNWA;CTHD | | GDS61096 | Drive Shaft | | 36 | | 59.5 | 40.5 | 799 | |
| | 2008.10-2012.11 | MT | F | L/R | Hatchback FWD CAVD;CNWA;CTHD | | GCO83037 | Outer Joint | | 36 | 30 | 59.5 | 40.5 | 56 | I |
| | 2008.10-2012.11 | 6MT | F | L/R | Hatchback Van FWD CAVD | | GCI82447 | Inner Joint | | | 33 | | | 34 | |
| | 2008.10-2012.11 | 7AT/6MT | F | L/R | Hatchback Van FWD CAVD | | GCI83016 | Inner Joint | | | 28 | | | 32 | |
| | 2008.10-2012.11 | 7DCT | F | L | Hatchback Van FWD CAVD | Date from:2008.11 | GDS61281 | Drive Shaft | | 36 | | 59.5 | 40 | 528 | |
| | 2008.10-2012.11 | 7DCT | F | L | Hatchback Van FWD CAVD | Date to:2008.10 | GDS81783 | Drive Shaft | | 36 | 40 | 59.5 | 40 | 531 | |
| | 2008.10-2012.11 | 7DCT | F | R | Hatchback Van FWD CAVD | Date from:2008.11 | GDS81653 | Drive Shaft | | 36 | | 59.5 | 40 | 785 | |
| | 2008.10-2012.11 | 7DCT | F | R | Hatchback Van FWD CAVD | Date to:2008.10 | GDS81784 | Drive Shaft | | 36 | 40 | 59.5 | 40 | 801 | |
| | 2008.10-2012.11 | 7DCT | F | L/R | Hatchback Van FWD CAVD | Date to:2008.10 | GCI61054 | Inner Joint | | 40 | 28 | 46.9 | 41 | 101.7 | |
| | 2008.10-2012.11 | AT | F | L/R | Hatchback Van FWD CAVD | | GCO83002 | Outer Joint | | 36 | 27 | 59.5 | 40 | 66 | I |
| | 2008.10-2012.11 | MT | F | L | Hatchback Van FWD CAVD | | GDS61201 | Drive Shaft | | 36 | | 59.5 | 40.5 | 535 | |
| | 2008.10-2012.11 | MT | F | R | Hatchback Van FWD CAVD | | GDS61096 | Drive Shaft | | 36 | | 59.5 | 40.5 | 799 | |
| | 2008.10-2012.11 | MT | F | L/R | Hatchback Van FWD CAVD | | GCO83037 | Outer Joint | | 36 | 30 | 59.5 | 40.5 | 56 | I |

| | YEAR | TRANSM. | F/R | L/R | BODY STYLE & DRIVE TYPE & ENGINE | REMARKS | G-AP Ref. | PRODUCT | ABS | Technical Specifications A | B | C | H | L | P |
|---|---|---|---|---|---|---|---|---|---|---|---|---|---|---|---|
| **VW Golf** | | | | | | | | | | | | | | | |
| 1.4 (125 kw) | 2005.11-2008.11 | 6DCT | F | L | Hatchback FWD BLG | | GDS81896 | Drive Shaft | | 36 | | 59.5 | 40 | 500 | |
| | 2005.11-2008.11 | 6MT | F | R | Hatchback FWD BLG | | GDS81653 | Drive Shaft | | 36 | | 59.5 | 40 | 785 | |
| | 2005.11-2008.11 | 6MT/6DCT | F | L/R | Hatchback FWD BLG | Transmission:6MT,Chassis no. to:1K7000000;Transmission:6MT,Chassis no. from:1K8000001;Transmission:6DCT | GCO83002 | Outer Joint | | 36 | 27 | 59.5 | 40 | 66 | I |
| | 2005.11-2008.11 | AT | F | L | Hatchback FWD BLG | | GDS83236 | Drive Shaft | | 36 | | 59.5 | 40 | 484 | |
| | 2005.11-2008.11 | AT | F | R | Hatchback FWD BLG | | GDS61342 | Drive Shaft | | 36 | | 59.5 | 40 | 764 | |
| | 2005.11-2008.11 | AT | F | L/R | Hatchback FWD BLG | | GCI83016 | Inner Joint | | | 28 | | | 32 | |
| | 2005.11-2008.11 | MT | F | L | Hatchback FWD BLG | | GDS83302 | Drive Shaft | | 36 | | 59.5 | 40 | 528 | |
| 1.4 (150 kw) | 2014.05-2020.08 | 6DCT | F | L | Hatchback FWD CUKB;DGEA | | GDS81985 | Drive Shaft | | 36 | 37 | 59.5 | 40 | 546 | |
| | 2014.05-2020.08 | 6DCT | F | R | Hatchback FWD CUKB;DGEA | | GDS83612 | Drive Shaft | | 36 | 37 | 59.5 | 40 | 907 | |
| | 2014.05-2020.08 | 6DCT | F | L/R | Hatchback FWD CUKB;DGEA | | GCO83101 | Outer Joint | | 36 | 27 | 59.5 | 40 | 65 | M |
| | 2014.05-2020.08 | 6DCT | F | L | Hatchback FWD CUKB;DGEA | | GCI81158 | Inner Joint | | 37 | 34 | 34.5 | 65.5 | 83 | |
| | 2014.05-2020.08 | 6DCT | F | R | Hatchback FWD CUKB;DGEA | | GCI82108 | Inner Joint | | 37 | 34 | 40 | 77.5 | 103.5 | |
| | 2020.07- | 6DCT | F | L | Hatchback FWD DGEA | | GDS81985 | Drive Shaft | | 36 | 37 | 59.5 | 40 | 546 | |
| | 2020.07- | 6DCT | F | R | Hatchback FWD DGEA | Date To:2023.10 | GDS83612 | Drive Shaft | | 36 | 37 | 59.5 | 40 | 907 | |
| | 2020.07- | 6DCT | F | L/R | Hatchback FWD DGEA | | GCO83101 | Outer Joint | | 36 | 27 | 59.5 | 40 | 65 | M |
| | 2020.07- | 6DCT | F | L | Hatchback FWD DGEA | | GCI81158 | Inner Joint | | 37 | 34 | 34.5 | 65.5 | 83 | |
| | 2020.07- | 6DCT | F | R | Hatchback FWD DGEA | | GCI82108 | Inner Joint | | 37 | 34 | 40 | 77.5 | 103.5 | |
| 1.4 (180 kw) | 2020.07- | 6AT | F | L | Hatchback FWD DGEA | Date To:2020.11 | GDS81985 | Drive Shaft | | 36 | 37 | 59.5 | 40 | 546 | |
| | 2020.07- | 6AT | F | R | Hatchback FWD DGEA | | GDS83612 | Drive Shaft | | 36 | 37 | 59.5 | 40 | 907 | |
| | 2020.07- | 6AT | F | R | Hatchback FWD DGEA | | GCO83101 | Outer Joint | | 36 | 27 | 59.5 | 40 | 65 | M |
| | 2020.07- | 6AT | F | R | Hatchback FWD DGEA | | GCI82108 | Inner Joint | | 37 | 34 | 40 | 77.5 | 103.5 | |
| | 2020.07- | 6DCT | F | L | Hatchback FWD DGEA | | GCI81158 | Inner Joint | | 37 | 34 | 34.5 | 65.5 | 83 | |
| 1.5 (85 kw) | 2024.03- | 6MT | F | L | Hatchback FWD DXDE | | GDS84408 | Drive Shaft | | 36 | | 59.5 | 40 | 499 | |
| | 2024.03- | 6MT | F | R | Hatchback FWD DXDE | | GDS84417 | Drive Shaft | | 36 | | 59.5 | 40 | 783 | |
| | 2024.03- | 6MT | F | L/R | Hatchback FWD DXDE | | GCO61059 | Outer Joint | | 36 | 33 | 59.5 | 40 | 59.5 | I |
| | 2024.03- | 6MT | F | L/R | Hatchback FWD DXDE | | GCI82447 | Inner Joint | | | 33 | | | 34 | |
| | 2024.03- | 7DCT | F | L | Hatchback FWD DXDE | | GDS61282 | Drive Shaft | | 36 | | 59.5 | 40 | 523 | |
| | 2024.03- | 7DCT | F | R | Hatchback FWD DXDE | | GDS84417 | Drive Shaft | | 36 | | 59.5 | 40 | 783 | |
| | 2024.03- | 7DCT | F | L/R | Hatchback FWD DXDE | | GCO61059 | Outer Joint | | 36 | 33 | 59.5 | 40 | 59.5 | I |
| | 2024.03- | 7DCT | F | L | Hatchback FWD DXDE | | GCI53002 | Inner Joint | | | 33 | | | 34 | |
| | 2024.03- | 7DCT | F | R | Hatchback FWD DXDE | | GCI82447 | Inner Joint | | | 33 | | | 34 | |
| 1.5 (96 kw) | 2017.05-2020.08 | 6MT | F | R | Hatchback FWD DACA;DPBA | | GDS84416 | Drive Shaft | | 36 | | 59.5 | 40 | 800 | |
| | 2017.05-2020.08 | 6MT/7DCT | F | L/R | Hatchback FWD DACA;DPBA | | GCO61059 | Outer Joint | | 36 | 33 | 59.5 | 40 | 59.5 | I |
| | 2017.05-2020.08 | 6MT/7DCT | F | L/R | Hatchback FWD DACA;DPBA | | GCI53002 | Inner Joint | | | 33 | | | 34 | |
| | 2017.05-2020.08 | 6MT/7DCT | F | L/R | Hatchback FWD DACA;DPBA | | GCI82447 | Inner Joint | | | 33 | | | 34 | |
| | 2017.05-2020.08 | 7DCT | F | L | Hatchback FWD DACA;DPBA | | GDS61282 | Drive Shaft | | 36 | | 59.5 | 40 | 523 | |
| | 2017.05-2020.08 | 7DCT | F | R | Hatchback FWD DACA;DPBA | | GDS84417 | Drive Shaft | | 36 | | 59.5 | 40 | 783 | |
| | 2018.11-2020.08 | 6MT | F | R | Hatchback FWD DHFA | | GDS61096 | Drive Shaft | | 36 | | 59.5 | 40.5 | 799 | |
| | 2018.11-2020.08 | 6MT | F | L/R | Hatchback FWD DHFA | | GCI82447 | Inner Joint | | | 33 | | | 34 | |
| | 2018.11-2020.08 | 6MT/7DCT | F | L | Hatchback FWD DHFA | | GDS61282 | Drive Shaft | | 36 | | 59.5 | 40 | 523 | |
| | 2018.11-2020.08 | 6MT/7DCT | F | L/R | Hatchback FWD DHFA | | GCO61059 | Outer Joint | | 36 | 33 | 59.5 | 40 | 59.5 | I |
| | 2018.11-2020.08 | 7DCT | F | R | Hatchback FWD DHFA | | GDS84417 | Drive Shaft | | 36 | | 59.5 | 40 | 783 | |
| | 2018.11-2020.08 | 7DCT | F | L/R | Hatchback FWD DHFA | | GCI53002 | Inner Joint | | | 33 | | | 34 | |
| | 2019.07- | 6MT | F | R | Hatchback FWD DPBA | | GDS84416 | Drive Shaft | | 36 | | 59.5 | 40 | 800 | |
| | 2019.07- | 6MT/7DCT | F | L/R | Hatchback FWD DPBA | | GCO61059 | Outer Joint | | 36 | 33 | 59.5 | 40 | 59.5 | I |
| | 2019.07- | 6MT/7DCT | F | L/R | Hatchback FWD DPBA | | GCI53002 | Inner Joint | | | 33 | | | 34 | |
| | 2019.07- | 7DCT | F | L | Hatchback FWD DPBA | | GDS61282 | Drive Shaft | | 36 | | 59.5 | 40 | 523 | |
| | 2019.07- | 7DCT | F | R | Hatchback FWD DPBA | | GDS84417 | Drive Shaft | | 36 | | 59.5 | 40 | 783 | |
| | 2020.09- | 7AT | F | L | Hatchback FWD DHFA | | GDS61282 | Drive Shaft | | 36 | | 59.5 | 40 | 523 | |
| | 2020.09- | 7AT | F | R | Hatchback FWD DHFA | | GDS84417 | Drive Shaft | | 36 | | 59.5 | 40 | 783 | |
| | 2020.09- | 7AT | F | L/R | Hatchback FWD DHFA | | GCO61059 | Outer Joint | | 36 | 33 | 59.5 | 40 | 59.5 | I |
| | 2020.09- | 7DCT | F | L/R | Hatchback FWD DHFA | | GCI53002 | Inner Joint | | | 33 | | | 34 | |
| | 2020.09- | 7DCT | F | L/R | Hatchback FWD DHFA | | GCI82447 | Inner Joint | | | 33 | | | 34 | |
| | 2020.11- | 5MT/6MT/7DCT | F | L/R | Hatchback FWD DPBA | | GCO61059 | Outer Joint | | 36 | 33 | 59.5 | 40 | 59.5 | I |
| | 2020.11- | 7DCT | F | L | Hatchback FWD DPBA | | GDS61282 | Drive Shaft | | 36 | | 59.5 | 40 | 523 | |
| | 2020.11- | 7DCT | F | R | Hatchback FWD DPBA | | GDS84417 | Drive Shaft | | 36 | | 59.5 | 40 | 783 | |
| | 2020.11- | 7DCT | F | L/R | Hatchback FWD DPBA | | GCI82447 | Inner Joint | | | 33 | | | 34 | |
| 1.5 (110 kw) | 2017.04-2020.08 | 6MT | F | L | Hatchback FWD DADA;DPCA | | GDS61282 | Drive Shaft | | 36 | | 59.5 | 40 | 523 | |
| | 2017.04-2020.08 | 6MT | F | R | Hatchback FWD DADA;DPCA | | GDS58110 | Drive Shaft | | 36 | | 59.5 | 40 | 793 | |
| | 2017.04-2020.08 | 6MT | F | L/R | Hatchback FWD DADA;DPCA | | GCI82447 | Inner Joint | | | 33 | | | 34 | |
| | 2017.04-2020.08 | 6MT/7DCT | F | L/R | Hatchback FWD DADA;DPCA | | GCO61059 | Outer Joint | | 36 | 33 | 59.5 | 40 | 59.5 | I |
| | 2017.04-2020.08 | 7DCT | F | L | Hatchback FWD DADA;DPCA | | GDS61100 | Drive Shaft | | 36 | | 59.5 | 40 | 513 | |
| | 2017.04-2020.08 | 7DCT | F | R | Hatchback FWD DADA;DPCA | | GDS84503 | Drive Shaft | | 36 | 40 | 59.5 | 40 | 817 | |
| | 2017.04-2020.08 | 7DCT | F | L/R | Hatchback FWD DADA;DPCA | | GCO83101 | Outer Joint | | 36 | 27 | 59.5 | 40 | 65 | M |
| | 2019.07- | 6MT | F | L | Hatchback FWD DPCA;DXDB | | GDS84408 | Drive Shaft | | 36 | | 59.5 | 40 | 499 | |

| | YEAR | TRANSM. | F/R | L/R | BODY STYLE & DRIVE TYPE & ENGINE | REMARKS | G-AP Ref. | PRODUCT | ABS | Technical Specifications A | B | C | H | L | P |
|---|---|---|---|---|---|---|---|---|---|---|---|---|---|---|---|
| **VW** **Golf** | | | | | | | | | | | | | | | |
| 1.5 (110 kw) | 2019.07- | 6MT | F | R | Hatchback FWD DPCA;DXDB | | GDS84417 | Drive Shaft | | 36 | | 59.5 | 40 | 783 | |
| | 2019.07- | 6MT | F | L/R | Hatchback FWD DPCA;DXDB | | GCO61059 | Outer Joint | | 36 | 33 | 59.5 | 40 | 59.5 | I |
| | 2019.07- | 6MT | F | L/R | Hatchback FWD DPCA;DXDB | | GCI53002 | Inner Joint | | | 33 | | | 34 | |
| | 2019.12- | 7AT | F | L | Hatchback FWD DFYA;DXDB | | GDS61100 | Drive Shaft | | 36 | | 59.5 | 40 | 513 | |
| | 2019.12- | 7AT | F | L | Hatchback FWD DFYA;DXDB | | GCO83101 | Outer Joint | | 36 | 27 | 59.5 | 40 | 65 | M |
| | 2019.12- | 7AT | F | R | Hatchback FWD DFYA;DXDB | | GCO61059 | Outer Joint | | 36 | 33 | 59.5 | 40 | 59.5 | I |
| | 2019.12- | 7DCT | F | R | Hatchback FWD DFYA;DXDB | | GDS84503 | Drive Shaft | | 36 | 40 | 59.5 | 40 | 817 | |
| 1.5 (150 kw) | 2024.06- | 6DCT | F | L | Hatchback FWD DUCB, EANB | | GCI81158 | Inner Joint | | 37 | 34 | 34.5 | 65.5 | 83 | |
| 1.5 (200 kw) | 2024.06- | 6DCT | F | L | Hatchback FWD DUCA | | GCI81158 | Inner Joint | | 37 | 34 | 34.5 | 65.5 | 83 | |
| 1.6 (55 kw) | 1992.08-1997.12 | MT | F | L | Hatchback FWD ABU/AEA/AEE | For Engine code:ABU | GDS61172 | Drive Shaft | | 22 | | 53 | 78 | 584.5 | |
| | 1992.08-1997.12 | MT | F | R | Hatchback FWD ABU/AEA/AEE | For Engine code:ABU,Chassis no. to:1H_N_990000 | GDS61055 | Drive Shaft | | 22 | | 53 | 78.5 | 796 | |
| | 1992.08-1997.12 | MT | F | R | Hatchback FWD ABU/AEA/AEE | For Engine code:ABU,Chassis no. from:1H_P_000001 | GDS61067 | Drive Shaft | | 22 | | 51 | 78.7 | 781 | |
| | 1992.08-1997.12 | MT | F | L/R | Hatchback FWD ABU/AEA/AEE | | GCO53008 | Outer Joint | | 22 | 30 | 53 | 78.5 | 51 | I |
| | 1992.08-1997.12 | MT | F | L/R | Hatchback FWD ABU/AEA/AEE | For Engine code:ABU | GCI53001 | Inner Joint | | | 33 | | | 32 | |
| | 1992.08-1997.12 | MT | F | L/R | Hatchback FWD ABU/AEA/AEE | For Engine code:AEA/AEE | GCI83005 | Inner Joint | | | 33 | | | 32 | |
| 1.6 (66 kw) | 2009.02-2012.11 | 5MT | F | L | Hatchback FWD CAYB | Chassis no. from:1K_C_000001 | GDS61282 | Drive Shaft | | 36 | | 59.5 | 40 | 523 | |
| | 2009.02-2012.11 | 5MT | F | L | Hatchback FWD CAYB | Chassis no. to:1K_B_400000 | GDS83294 | Drive Shaft | | 36 | | 59.5 | 38 | 519 | |
| | 2009.02-2012.11 | 5MT | F | R | Hatchback FWD CAYB | Chassis no. to:1K_B_400000 | GDS61042 | Drive Shaft | | 36 | | 59.5 | 40.5 | 814 | |
| | 2009.02-2012.11 | 5MT | F | R | Hatchback FWD CAYB | Chassis no. from:1K_C_000001 | GDS61283 | Drive Shaft | | 36 | | 59.5 | 40 | 815 | |
| | 2009.02-2012.11 | 5MT | F | L/R | Hatchback FWD CAYB | | GCO83037 | Outer Joint | | 36 | 30 | 59.5 | 40.5 | 56 | I |
| | 2009.02-2012.11 | 5MT | F | L/R | Hatchback FWD CAYB | | GCI82447 | Inner Joint | | | 33 | | | 34 | |
| | 2009.02-2012.11 | MT | F | L/R | Hatchback FWD CAYB | | GCI83006 | Inner Joint | | | 33 | | | 34 | |
| | 2009.02-2012.11 | MT | F | L/R | Hatchback FWD CAYB | | GCI83011 | Inner Joint | | | 33 | | | 34 | |
| | 2009.02-2012.11 | | F | | Hatchback FWD CAYB | | GCO83100 | Outer Joint | | 36 | 33 | 59.5 | 38 | 56 | I |
| | 2009.02-2012.11 | 5MT | F | L | Hatchback Van FWD CAYB | Chassis no. from:1K_C_000001 | GDS61282 | Drive Shaft | | 36 | | 59.5 | 40 | 523 | |
| | 2009.02-2012.11 | 5MT | F | L | Hatchback Van FWD CAYB | Chassis no. to:1K_B_400000 | GDS83294 | Drive Shaft | | 36 | | 59.5 | 38 | 519 | |
| | 2009.02-2012.11 | 5MT | F | R | Hatchback Van FWD CAYB | Chassis no. to:1K_B_400000 | GDS61042 | Drive Shaft | | 36 | | 59.5 | 40.5 | 814 | |
| | 2009.02-2012.11 | 5MT | F | R | Hatchback Van FWD CAYB | Chassis no. from:1K_C_000001 | GDS61283 | Drive Shaft | | 36 | | 59.5 | 40 | 815 | |
| | 2009.02-2012.11 | 5MT | F | L/R | Hatchback Van FWD CAYB | | GCO83037 | Outer Joint | | 36 | 30 | 59.5 | 40.5 | 56 | I |
| | 2009.02-2012.11 | 5MT | F | L/R | Hatchback Van FWD CAYB | | GCI82447 | Inner Joint | | | 33 | | | 34 | |
| | 2009.02-2012.11 | | F | L/R | Hatchback Van FWD CAYB | | GCI83011 | Inner Joint | | | 33 | | | 34 | |
| | 2013.04-2017.03 | 5MT | F | L | Hatchback Van FWD CLHB;CRKA;CXXA;DDYB | For PR code:1PE/1PF/1PA/2H4 | GDS61282 | Drive Shaft | | 36 | | 59.5 | 40 | 523 | |
| | 2013.04-2017.03 | 5MT | F | L | Hatchback Van FWD CLHB;CRKA;CXXA;DDYB | For PR code:1PA/2H0/2H5 | GDS83294 | Drive Shaft | | 36 | | 59.5 | 38 | 519 | |
| | 2013.04-2017.03 | 5MT | F | R | Hatchback Van FWD CLHB;CRKA;CXXA;DDYB | | GDS61042 | Drive Shaft | | 36 | | 59.5 | 40.5 | 814 | |
| | 2013.04-2017.03 | 5MT | F | L/R | Hatchback Van FWD CLHB;CRKA;CXXA;DDYB | | GCI82447 | Inner Joint | | | 33 | | | 34 | |
| | 2013.04-2017.03 | MT | F | L/R | Hatchback Van FWD CLHB;CRKA;CXXA;DDYB | | GCO83037 | Outer Joint | | 36 | 30 | 59.5 | 40.5 | 56 | I |
| | 2013.04-2017.03 | | F | L/R | Hatchback Van FWD CLHB;CRKA;CXXA;DDYB | | GCI83011 | Inner Joint | | | 33 | | | 34 | |
| | 2013.04-2018.07 | 5MT | F | L | Hatchback FWD CLHB;CRKA;CXXA;DDYB | Model code:BQ1 | GDS61282 | Drive Shaft | | 36 | | 59.5 | 40 | 523 | |
| | 2013.04-2018.07 | 5MT | F | L | Hatchback FWD CLHB;CRKA;CXXA;DDYB | Model code:5G1 | GDS83294 | Drive Shaft | | 36 | | 59.5 | 38 | 519 | |
| | 2013.04-2018.07 | 5MT | F | R | Hatchback FWD CLHB;CRKA;CXXA;DDYB | Model code:5G1 | GDS61042 | Drive Shaft | | 36 | | 59.5 | 40.5 | 814 | |
| | 2013.04-2018.07 | 5MT | F | R | Hatchback FWD CLHB;CRKA;CXXA;DDYB | Model code:BQ1 | GDS61283 | Drive Shaft | | 36 | | 59.5 | 40 | 815 | |
| | 2013.04-2018.07 | 5MT | F | L/R | Hatchback FWD CLHB;CRKA;CXXA;DDYB | | GCO83037 | Outer Joint | | 36 | 30 | 59.5 | 40.5 | 56 | I |
| | 2013.04-2018.07 | 5MT | F | L/R | Hatchback FWD CLHB;CRKA;CXXA;DDYB | Model code:BQ1 | GCI53002 | Inner Joint | | | 33 | | | 34 | |
| | 2013.04-2018.07 | 5MT | F | L/R | Hatchback FWD CLHB;CRKA;CXXA;DDYB | | GCI82447 | Inner Joint | | | 33 | | | 34 | |
| | 2013.04-2018.07 | MT | F | L/R | Hatchback FWD CLHB;CRKA;CXXA;DDYB | | GCI83006 | Inner Joint | | | 33 | | | 34 | |
| | 2013.04-2018.07 | | F | L/R | Hatchback FWD CLHB;CRKA;CXXA;DDYB | | GCO61059 | Outer Joint | | 36 | 33 | 59.5 | 40 | 59.5 | I |
| | 2013.04-2018.07 | | F | L/R | Hatchback FWD CLHB;CRKA;CXXA;DDYB | | GCI83011 | Inner Joint | | | 33 | | | 34 | |
| 1.6 (74 kw) | 1994.10-1997.12 | AT | F | L | Hatchback FWD AEK/AFT/AKS | | GDS61011 | Drive Shaft | | 22 | | 53.2 | 78 | 547 | |
| | 1994.10-1997.12 | AT | F | R | Hatchback FWD AEK/AFT/AKS | | GDS61028 | Drive Shaft | | 22 | | 53.2 | 78 | 767 | |
| | 1994.10-1997.12 | AT | F | L/R | Hatchback FWD AEK/AFT/AKS | Date from:1996.01 | GCO53007 | Outer Joint | | 22 | 30 | 53.2 | 78 | 61 | I |
| | 1994.10-1997.12 | AT | F | | Hatchback FWD AEK/AFT/AKS | | GCO53004 | Outer Joint | | 22 | 30 | 51 | 78 | 61 | I |
| | 1994.10-1997.12 | AT | F | L | Hatchback FWD AEK/AFT/AKS | | GCI61004 | Inner Joint | | | 34 | | | 59.2 | |
| | 1994.10-1997.12 | MT | F | L | Hatchback FWD AEK/AFT/AKS | | GDS53004 | Drive Shaft | | 22 | | 50 | 78.5 | 562 | |
| | 1994.10-1997.12 | MT | F | R | Hatchback FWD AEK/AFT/AKS | Chassis no. to:1H-S-700000 | GDS61055 | Drive Shaft | | 22 | | 53 | 78.5 | 796 | |
| | 1994.10-1997.12 | MT | F | L/R | Hatchback FWD AEK/AFT/AKS | Date from:1996.01;Chassis no. from:1H-S-180001 | GCO53008 | Outer Joint | | 22 | 30 | 53 | 78.5 | 51 | I |
| | 1994.10-1997.12 | MT | F | | Hatchback FWD AEK/AFT/AKS | | GCO53006 | Outer Joint | | 22 | 30 | 50 | 78.5 | 52 | I |
| | 1994.10-1997.12 | MT | F | L/R | Hatchback FWD AEK/AFT/AKS | | GCI83005 | Inner Joint | | | 33 | | | 32 | |
| | 1997.10-2004.05 | AT | F | L | Hatchback FWD AEH/AKL/APF | | GDS61020 | Drive Shaft | | 36 | | 53.2 | 77.5 | 547 | |
| | 1997.10-2004.05 | AT | F | R | Hatchback FWD AEH/AKL/APF | | GDS83011 | Drive Shaft | | 36 | | 53.2 | 77.5 | 810.5 | |
| | 1997.10-2004.05 | AT | F | L/R | Hatchback FWD AEH/AKL/APF | | GCO83070 | Outer Joint | | 36 | 30 | 53 | 78 | 60 | I |
| | 1997.10-2004.05 | AT | F | L/R | Hatchback FWD AEH/AKL/APF | | GCI61006 | Inner Joint | | | 30 | | | 57.6 | |
| | 1997.10-2004.05 | MT | F | L | Hatchback FWD AEH/AKL/APF | | GDS61045 | Drive Shaft | | 36 | | 53 | 78.5 | 555 | |
| | 1997.10-2004.05 | MT | F | R | Hatchback FWD AEH/AKL/APF | | GDS83046 | Drive Shaft | | 36 | | 53 | 78.5 | 822 | |
| | 1997.10-2004.05 | MT | F | L/R | Hatchback FWD AEH/AKL/APF | | GCO83033 | Outer Joint | | 36 | 30 | 53 | 78.5 | 51 | I |
| | 1997.10-2004.05 | MT | F | L/R | Hatchback FWD AEH/AKL/APF | | GCI83008 | Inner Joint | | | 33 | | | 32 | |

| | YEAR | TRANSM. | F/R | L/R | BODY STYLE & DRIVE TYPE & ENGINE | REMARKS | G-AP Ref. | PRODUCT | ABS | Technical Specifications A | B | C | H | L | P |
|---|---|---|---|---|---|---|---|---|---|---|---|---|---|---|---|
| **VW** **Golf** | | | | | | | | | | | | | | | |
| 1.6 (75 kw) | 2000.09-2004.05 | AT | F | L | Hatchback FWD AVU/BFQ | | GDS61020 | Drive Shaft | | 36 | | 53.2 | 77.5 | 547 | |
| | 2000.09-2004.05 | AT | F | R | Hatchback FWD AVU/BFQ | | GDS83011 | Drive Shaft | | 36 | | 53.2 | 77.5 | 810.5 | |
| | 2000.09-2004.05 | AT | F | L/R | Hatchback FWD AVU/BFQ | | GCO83070 | Outer Joint | | 36 | 30 | 53 | 78 | 60 | I |
| | 2000.09-2004.05 | AT | F | L/R | Hatchback FWD AVU/BFQ | | GCI61006 | Inner Joint | | | 30 | | | 57.6 | |
| | 2000.09-2004.05 | MT | F | L | Hatchback FWD AVU/BFQ | | GDS61045 | Drive Shaft | | 36 | | 53 | 78.5 | 555 | |
| | 2000.09-2004.05 | MT | F | R | Hatchback FWD AVU/BFQ | | GDS83046 | Drive Shaft | | 36 | | 53 | 78.5 | 822 | |
| | 2000.09-2004.05 | MT | F | L/R | Hatchback FWD AVU/BFQ | | GCO83033 | Outer Joint | | 36 | 30 | 53 | 78.5 | 51 | I |
| | 2000.09-2004.05 | MT | F | L/R | Hatchback FWD AVU/BFQ | | GCI83008 | Inner Joint | | | 33 | | | 32 | |
| | 2004.01-2008.11 | 5MT | F | L | Hatchback FWD BGU;BSE;BSF;CCSA | | GDS61097 | Drive Shaft | | 36 | | 59.5 | 40.5 | 543 | |
| | 2004.01-2008.11 | 5MT | F | R | Hatchback FWD BGU;BSE;BSF;CCSA | | GDS61096 | Drive Shaft | | 36 | | 59.5 | 40.5 | 799 | |
| | 2004.01-2008.11 | 5MT | F | L/R | Hatchback FWD BGU;BSE;BSF;CCSA | | GCI82447 | Inner Joint | | | 33 | | | 34 | |
| | 2004.01-2008.11 | 6AT | F | L | Hatchback FWD BGU;BSE;BSF;CCSA | | GDS83318 | Drive Shaft | | 36 | 26 | 59.5 | 38 | 581 | |
| | 2004.01-2008.11 | 6AT | F | R | Hatchback FWD BGU;BSE;BSF;CCSA | Chassis no. to:1K_5_600000 | GDS61094 | Drive Shaft | | 36 | 26 | 59.5 | 40.5 | 884 | |
| | 2004.01-2008.11 | 6AT | F | R | Hatchback FWD BGU;BSE;BSF;CCSA | Chassis no. from:1K_6_000001 | GDS83346 | Drive Shaft | | 36 | 26 | 59.5 | 38 | 879 | |
| | 2004.01-2008.11 | 6AT | F | L/R | Hatchback FWD BGU;BSE;BSF;CCSA | Chassis no. from:1K_8_500001 | GCI61011 | Inner Joint | | 26 | 32 | 31 | 68.5 | 85 | |
| | 2004.01-2008.11 | 6AT | F | L/R | Hatchback FWD BGU;BSE;BSF;CCSA | Chassis no. from:1K_8_500001 | GCI61050 | Inner Joint | | 26 | 32 | 31 | 68.5 | 89 | |
| | 2004.01-2008.11 | 6AT/5MT | F | L/R | Hatchback FWD BGU;BSE;BSF;CCSA | | GCO83037 | Outer Joint | | 36 | 30 | 59.5 | 40.5 | 56 | I |
| | 2004.01-2008.11 | MT | F | R | Hatchback FWD BGU;BSE;BSF;CCSA | | GDS61237 | Stub Axle,differential | | 23 | 37 | | | 142.5 | |
| | 2007.10-2008.11 | 5MT | F | L | Hatchback FWD CCSA | | GDS61097 | Drive Shaft | | 36 | | 59.5 | 40.5 | 543 | |
| | 2007.10-2008.11 | 5MT | F | R | Hatchback FWD CCSA | | GDS61096 | Drive Shaft | | 36 | | 59.5 | 40.5 | 799 | |
| | 2007.10-2008.11 | 5MT | F | L/R | Hatchback FWD CCSA | | GCO83037 | Outer Joint | | 36 | 30 | 59.5 | 40.5 | 56 | I |
| | 2007.10-2008.11 | 5MT | F | L/R | Hatchback FWD CCSA | | GCI82447 | Inner Joint | | | 33 | | | 34 | |
| | 2007.10-2008.11 | | F | L/R | Hatchback FWD CCSA | | GCI83011 | Inner Joint | | | 33 | | | 34 | |
| | 2008.10-2012.11 | 5MT | F | L | Hatchback FWD BSE;BSF;CCSA;CMXA | | GDS61097 | Drive Shaft | | 36 | | 59.5 | 40.5 | 543 | |
| | 2008.10-2012.11 | 5MT | F | R | Hatchback FWD BSE;BSF;CCSA;CMXA | | GDS61096 | Drive Shaft | | 36 | | 59.5 | 40.5 | 799 | |
| | 2008.10-2012.11 | 7DCT | F | L | Hatchback FWD BSE;BSF;CCSA;CMXA | | GDS83294 | Drive Shaft | | 36 | | 59.5 | 38 | 519 | |
| | 2008.10-2012.11 | 7DCT | F | R | Hatchback FWD BSE;BSF;CCSA;CMXA | | GDS61042 | Drive Shaft | | 36 | | 59.5 | 40.5 | 814 | |
| | 2008.10-2012.11 | 7DCT/5MT | F | L/R | Hatchback FWD BSE;BSF;CCSA;CMXA | | GCO83037 | Outer Joint | | 36 | 30 | 59.5 | 40.5 | 56 | I |
| | 2008.10-2012.11 | 7DCT/5MT | F | L/R | Hatchback FWD BSE;BSF;CCSA;CMXA | | GCI82447 | Inner Joint | | | 33 | | | 34 | |
| | 2008.10-2012.11 | 5MT | F | L | Hatchback FWD CCSA;CMXA | | GDS61097 | Drive Shaft | | 36 | | 59.5 | 40.5 | 543 | |
| | 2008.10-2012.11 | 5MT | F | R | Hatchback FWD CCSA;CMXA | | GDS61096 | Drive Shaft | | 36 | | 59.5 | 40.5 | 799 | |
| | 2008.10-2012.11 | 5MT | F | L/R | Hatchback FWD CCSA;CMXA | | GCO83037 | Outer Joint | | 36 | 30 | 59.5 | 40.5 | 56 | I |
| | 2008.10-2012.11 | 5MT | F | L/R | Hatchback FWD CCSA;CMXA | | GCI82447 | Inner Joint | | | 33 | | | 34 | |
| | 2008.10-2012.11 | 7AT | F | L | Hatchback FWD CCSA;CMXA | | GDS83294 | Drive Shaft | | 36 | | 59.5 | 38 | 519 | |
| | 2008.10-2012.11 | MT | F | L/R | Hatchback FWD CCSA;CMXA | | GCI83006 | Inner Joint | | | 33 | | | 34 | |
| | 2008.10-2012.11 | MT | F | L/R | Hatchback FWD CCSA;CMXA | | GCI83011 | Inner Joint | | | 33 | | | 34 | |
| | 2009.03-2012.11 | 5MT | F | R | Hatchback FWD CHGA | | GDS61096 | Drive Shaft | | 36 | | 59.5 | 40.5 | 799 | |
| | 2009.03-2012.11 | 5MT | F | L/R | Hatchback FWD CHGA | | GCO83037 | Outer Joint | | 36 | 30 | 59.5 | 40.5 | 56 | I |
| | 2009.03-2012.11 | 5MT | F | L/R | Hatchback FWD CHGA | | GCI82447 | Inner Joint | | | 33 | | | 34 | |
| | 2009.03-2012.11 | MT | F | L | Hatchback FWD CHGA | | GDS61097 | Drive Shaft | | 36 | | 59.5 | 40.5 | 543 | |
| | 2009.03-2012.11 | MT | F | L/R | Hatchback FWD CHGA | | GCI83006 | Inner Joint | | | 33 | | | 34 | |
| | 2009.03-2012.11 | MT | F | L/R | Hatchback FWD CHGA | | GCI83011 | Inner Joint | | | 33 | | | 34 | |
| 1.6 (77 kw) | 1999.05-2004.05 | 5MT | F | L | Hatchback FWD ATN/AUS/AZD/BCB | | GDS61312 | Drive Shaft | | 36 | | 53 | 78 | 546 | |
| | 1999.05-2004.05 | 5MT | F | R | Hatchback FWD ATN/AUS/AZD/BCB | | GDS61203 | Drive Shaft | | 36 | | 53.2 | 77.5 | 810 | |
| | 1999.05-2004.05 | 5MT | F | L/R | Hatchback FWD ATN/AUS/AZD/BCB | | GCO83070 | Outer Joint | | 36 | 30 | 53 | 78 | 60 | I |
| | 1999.05-2004.05 | 5MT | F | L/R | Hatchback FWD ATN/AUS/AZD/BCB | | GCI61005 | Inner Joint | | | 30 | | | 57.6 | |
| | 2009.02-2012.11 | 5MT | F | L | Hatchback FWD CAYC | different spread of gear ratio with 203294 | GDS61282 | Drive Shaft | | 36 | | 59.5 | 40 | 523 | |
| | 2009.02-2012.11 | 5MT | F | L | Hatchback FWD CAYC | different spread of gear ratio with 261282 | GDS83294 | Drive Shaft | | 36 | | 59.5 | 38 | 519 | |
| | 2009.02-2012.11 | 5MT | F | R | Hatchback FWD CAYC | different spread of gear ratio with 261283 | GDS61042 | Drive Shaft | | 36 | | 59.5 | 40.5 | 814 | |
| | 2009.02-2012.11 | 5MT | F | R | Hatchback FWD CAYC | different spread of gear ratio with 261042 | GDS61283 | Drive Shaft | | 36 | | 59.5 | 40 | 815 | |
| | 2009.02-2012.11 | 5MT | F | L/R | Hatchback FWD CAYC | For PR code:G0C/G0J | GCO83037 | Outer Joint | | 36 | 30 | 59.5 | 40.5 | 56 | I |
| | 2009.02-2012.11 | 5MT | F | L/R | Hatchback FWD CAYC | For PR code:G0J | GCI53002 | Inner Joint | | | 33 | | | 34 | |
| | 2009.02-2012.11 | 5MT | F | L/R | Hatchback FWD CAYC | | GCI82447 | Inner Joint | | | 33 | | | 34 | |
| | 2009.02-2012.11 | 7DCT | F | L | Hatchback FWD CAYC | Date to:2011.05 | GDS61100 | Drive Shaft | | 36 | | 59.5 | 40 | 513 | |
| | 2009.02-2012.11 | 7DCT | F | L | Hatchback FWD CAYC | Date from:2011.06 | GDS61282 | Drive Shaft | | 36 | | 59.5 | 40 | 523 | |
| | 2009.02-2012.11 | 7DCT | F | R | Hatchback FWD CAYC | Date from:2011.06 | GDS61096 | Drive Shaft | | 36 | | 59.5 | 40.5 | 799 | |
| | 2009.02-2012.11 | 7DCT | F | R | Hatchback FWD CAYC | Date to:2011.05 | GDS61339 | Drive Shaft | | 36 | | 59.5 | 40 | 794 | |
| | 2009.02-2012.11 | 7DCT | F | L/R | Hatchback FWD CAYC | Date to:2011.05 | GCO83002 | Outer Joint | | 36 | 27 | 59.5 | 40 | 66 | I |
| | 2009.02-2012.11 | 7DCT | F | L/R | Hatchback FWD CAYC | Date from:2011.06 | GCI53002 | Inner Joint | | | 33 | | | 34 | |
| | 2009.02-2012.11 | 7DCT | F | L/R | Hatchback FWD CAYC | Date to:2011.05,Original design | GCI61069 | Inner Joint | | | 28 | | | 32 | |
| | 2009.02-2012.11 | 7DCT | F | L/R | Hatchback FWD CAYC | Date from:2011.06 | GCI82447 | Inner Joint | | | 33 | | | 34 | |
| | 2009.02-2012.11 | 7DCT | F | L/R | Hatchback FWD CAYC | Date to:2011.05,Non-Original design | GCI83016 | Inner Joint | | | 28 | | | 32 | |
| | 2009.02-2012.11 | 7DCT/5MT | F | L/R | Hatchback FWD CAYC | Transmission:7DCTDate from:2011.06[Transmission:5MT;For PR code:G0J;Inner teeth:31 | GCO61059 | Outer Joint | | 36 | 33 | 59.5 | 40 | 59.5 | I |
| | 2009.05-2012.11 | 5MT | F | R | Hatchback Van FWD CAYC | | GDS61042 | Drive Shaft | | 36 | | 59.5 | 40.5 | 814 | |
| | 2009.05-2012.11 | 5MT | F | L/R | Hatchback Van FWD CAYC | | GCI82447 | Inner Joint | | | 33 | | | 34 | |

| | YEAR | TRANSM. | F/R | L/R | BODY STYLE & DRIVE TYPE & ENGINE | REMARKS | G-AP Ref. | PRODUCT | ABS | Technical Specifications A | B | C | H | L | P |
|---|---|---|---|---|---|---|---|---|---|---|---|---|---|---|---|
| **VW** **Golf** | | | | | | | | | | | | | | | |
| 1.6 (77 kw) | 2009.05-2012.11 | 7AT/5MT | F | L/R | Hatchback Van FWD CAYC | | GCI83016 | Inner Joint | | | 28 | | | 32 | |
| | 2009.05-2012.11 | 7DCT | F | R | Hatchback Van FWD CAYC | Date to:2011.05 | GDS61339 | Drive Shaft | | 36 | | 59.5 | 40 | 794 | |
| | 2009.05-2012.11 | AT | F | L | Hatchback Van FWD CAYC | Date to:2009.10 | GDS61100 | Drive Shaft | | 36 | | 59.5 | 40 | 513 | |
| | 2009.05-2012.11 | AT | F | L | Hatchback Van FWD CAYC | Date from:2011.06 | GDS61282 | Drive Shaft | | 36 | | 59.5 | 40 | 523 | |
| | 2009.05-2012.11 | AT | F | R | Hatchback Van FWD CAYC | Date from:2011.06 | GDS61096 | Drive Shaft | | 36 | | 59.5 | 40.5 | 799 | |
| | 2009.05-2012.11 | AT | F | L/R | Hatchback Van FWD CAYC | Date from:2011.06 | GCO61059 | Outer Joint | | 36 | 33 | 59.5 | 40 | 59.5 | I |
| | 2009.05-2012.11 | AT | F | L/R | Hatchback Van FWD CAYC | Date to:2009.10 | GCO83002 | Outer Joint | | 36 | 27 | 59.5 | 40 | 66 | I |
| | 2009.05-2012.11 | MT | F | L | Hatchback Van FWD CAYC | Date from:2011.06,For PR code:G0J | GDS61282 | Drive Shaft | | 36 | | 59.5 | 40 | 523 | |
| | 2009.05-2012.11 | MT | F | L | Hatchback Van FWD CAYC | Date to:2011.05;date from:2011.06,For PR code:G0C | GDS83294 | Drive Shaft | | 36 | | 59.5 | 38 | 519 | |
| | 2009.05-2012.11 | MT | F | R | Hatchback Van FWD CAYC | Date from:2011.06,For PR code:G0J | GDS61283 | Drive Shaft | | 36 | | 59.5 | 40 | 815 | |
| | 2009.05-2012.11 | MT | F | L/R | Hatchback Van FWD CAYC | Date to:2011.05;Date from:2011.06 | GCO83037 | Outer Joint | | 36 | 30 | 59.5 | 40.5 | 56 | I |
| | 2012.08-2017.03 | 5MT | F | R | Hatchback FWD CLHA | Inner teeth of wheel side:30 | GDS61042 | Drive Shaft | | 36 | | 59.5 | 40.5 | 814 | |
| | 2012.08-2017.03 | 5MT | F | R | Hatchback FWD CLHA | Inner teeth of wheel side:33 | GDS61283 | Drive Shaft | | 36 | | 59.5 | 40 | 815 | |
| | 2012.08-2017.03 | 5MT | F | R | Hatchback FWD CLHA | Date from:2013.03,Date to:2013.04 | GCO83037 | Outer Joint | | 36 | 30 | 59.5 | 40.5 | 56 | I |
| | 2012.08-2017.03 | 7DCT | F | R | Hatchback FWD CLHA | Inner teeth of wheel side:30 | GDS61096 | Drive Shaft | | 36 | | 59.5 | 40.5 | 799 | |
| | 2012.08-2017.03 | 7DCT/5MT | F | L | Hatchback FWD CLHA | No Economy | GDS61282 | Drive Shaft | | 36 | | 59.5 | 40 | 523 | |
| | 2012.08-2017.03 | 7DCT/5MT | F | L | Hatchback FWD CLHA | Economy | GDS83294 | Drive Shaft | | 36 | | 59.5 | 38 | 519 | |
| | 2012.08-2017.03 | 7DCT/5MT | F | L/R | Hatchback FWD CLHA | Transmission:7DCT;Transmission:5MT,Date to:2013.02,Date from:2013.05 | GCO61059 | Outer Joint | | 36 | 33 | 59.5 | 40 | 59.5 | I |
| | 2012.08-2017.03 | 7DCT/5MT | F | L/R | Hatchback FWD CLHA | | GCI82447 | Inner Joint | | | 33 | | | 34 | |
| | 2012.08-2017.03 | 5MT | F | R | Hatchback Van FWD CLHA | | GDS61042 | Drive Shaft | | 36 | | 59.5 | 40.5 | 814 | |
| | 2012.08-2017.03 | 5MT | F | R | Hatchback Van FWD CLHA | | GDS61283 | Drive Shaft | | 36 | | 59.5 | 40 | 815 | |
| | 2012.08-2017.03 | 5MT | F | R | Hatchback Van FWD CLHA | Date from:2013.03;Date to:2013.04 | GCO83037 | Outer Joint | | 36 | 30 | 59.5 | 40.5 | 56 | I |
| | 2012.08-2017.03 | 5MT | F | L/R | Hatchback Van FWD CLHA | | GCI53002 | Inner Joint | | | 33 | | | 34 | |
| | 2012.08-2017.03 | 5MT/7DCT | F | L | Hatchback Van FWD CLHA | No Economy | GDS61282 | Drive Shaft | | 36 | | 59.5 | 40 | 523 | |
| | 2012.08-2017.03 | 7AT/5MT | F | L | Hatchback Van FWD CLHA | Economy | GDS83294 | Drive Shaft | | 36 | | 59.5 | 38 | 519 | |
| | 2012.08-2017.03 | 7DCT | F | R | Hatchback Van FWD CLHA | | GDS61096 | Drive Shaft | | 36 | | 59.5 | 40.5 | 799 | |
| | 2012.08-2017.03 | 7DCT | F | L | Hatchback Van FWD CLHA | | GCI53002 | Inner Joint | | | 33 | | | 34 | |
| | 2012.08-2017.03 | 7DCT/5MT | F | L/R | Hatchback Van FWD CLHA | | GCI82447 | Inner Joint | | | 33 | | | 34 | |
| | 2012.08-2017.03 | MT | F | L/R | Hatchback Van FWD CLHA | Date from:2011.06;For PR code:G0J | GCO61059 | Outer Joint | | 36 | 33 | 59.5 | 40 | 59.5 | I |
| | 2012.08-2017.03 | | F | L/R | Hatchback Van FWD CLHA | | GCI83011 | Inner Joint | | | 33 | | | 34 | |
| | 2012.11-2017.03 | 6MT | F | L | Hatchback 4WD CLHA | | GDS83295 | Drive Shaft | | 36 | | 59.5 | 40 | 491 | |
| | 2012.11-2017.03 | 6MT | F | R | Hatchback 4WD CLHA | | GDS81892 | Drive Shaft | | 36 | | 59.5 | 40 | 602 | |
| | 2012.11-2017.03 | 6MT | F | L/R | Hatchback 4WD CLHA | | GCO83101 | Outer Joint | | 36 | 27 | 59.5 | 40 | 65 | M |
| | 2012.11-2017.03 | 6MT | F | L/R | Hatchback 4WD CLHA | | GCI61069 | Inner Joint | | | 28 | | | 32 | |
| | 2012.11-2017.03 | 6MT | F | L/R | Hatchback 4WD CLHA | | GCI83016 | Inner Joint | | | 28 | | | 32 | |
| | 2012.11-2017.03 | 6MT | R | L | Hatchback 4WD CLHA | | GDS61286 | Drive Shaft | | 36 | | 59.5 | 40 | 587 | |
| | 2012.11-2017.03 | 6MT | R | R | Hatchback 4WD CLHA | | GDS61287 | Drive Shaft | | 36 | | 59.5 | 40 | 632 | |
| | 2012.11-2017.03 | 6MT | R | L/R | Hatchback 4WD CLHA | | GCI35026 | Outer Joint | | 36 | 33 | 59.5 | 40 | 61 | |
| | 2012.11-2017.03 | 6MT | R | L/R | Hatchback 4WD CLHA | | GCI61103 | Inner Joint | | | 33 | | | 32 | |
| 1.6 (81 kw) | 2001.08-2004.05 | AT/MT | F | L/R | Hatchback FWD BAD | | GCO83070 | Outer Joint | | 36 | 30 | 53 | 78 | 60 | I |
| | 2001.08-2004.05 | | F | L/R | Hatchback FWD BAD | | GCI61005 | Inner Joint | | | 30 | | | 57.6 | |
| | 2013.01-2017.03 | 6MT | F | L | Hatchback 4WD CRKB;CXXB | | GDS83295 | Drive Shaft | | 36 | | 59.5 | 40 | 491 | |
| | 2013.01-2017.03 | 6MT | F | R | Hatchback 4WD CRKB;CXXB | | GDS81892 | Drive Shaft | | 36 | | 59.5 | 40 | 602 | |
| | 2013.01-2017.03 | 6MT | F | L/R | Hatchback 4WD CRKB;CXXB | | GCO83101 | Outer Joint | | 36 | 27 | 59.5 | 40 | 65 | M |
| | 2013.01-2017.03 | 6MT | F | L/R | Hatchback 4WD CRKB;CXXB | | GCI61069 | Inner Joint | | | 28 | | | 32 | |
| | 2013.01-2017.03 | 6MT | F | L/R | Hatchback 4WD CRKB;CXXB | | GCI83016 | Inner Joint | | | 28 | | | 32 | |
| | 2013.01-2017.03 | 6MT | R | L | Hatchback 4WD CRKB;CXXB | | GDS61286 | Drive Shaft | | 36 | | 59.5 | 40 | 587 | |
| | 2013.01-2017.03 | 6MT | R | R | Hatchback 4WD CRKB;CXXB | | GDS61287 | Drive Shaft | | 36 | | 59.5 | 40 | 632 | |
| | 2013.01-2017.03 | 6MT | R | L/R | Hatchback 4WD CRKB;CXXB | | GCI35026 | Outer Joint | | 36 | 33 | 59.5 | 40 | 61 | |
| | 2013.01-2017.03 | 6MT | R | L/R | Hatchback 4WD CRKB;CXXB | | GCI61103 | Inner Joint | | | 33 | | | 32 | |
| | 2013.01-2017.03 | 5MT | F | R | Hatchback FWD CRKB;CXXB;DBKA | Economy | GDS61042 | Drive Shaft | | 36 | | 59.5 | 40.5 | 814 | |
| | 2013.01-2017.03 | 5MT/6MT | F | R | Hatchback FWD CRKB;CXXB;DBKA | No Economy | GDS61283 | Drive Shaft | | 36 | | 59.5 | 40 | 815 | |
| | 2013.01-2017.03 | 5MT/6MT/7DCT | F | L | Hatchback FWD CRKB;CXXB;DBKA | | GDS61282 | Drive Shaft | | 36 | | 59.5 | 40 | 523 | |
| | 2013.01-2017.03 | 5MT/6MT/7DCT | F | L | Hatchback FWD CRKB;CXXB;DBKA | Economy,Trtamission:7DCT,For PR code:1PE/1PF/1PA/2H4/2H0/2H5 | GDS83294 | Drive Shaft | | 36 | | 59.5 | 38 | 519 | |
| | 2013.01-2017.03 | 5MT/6MT/7DCT | F | L | Hatchback FWD CRKB;CXXB;DBKA | | GCI53002 | Inner Joint | | | 33 | | | 34 | |
| | 2013.01-2017.03 | 5MT/6MT/7DCT | F | L/R | Hatchback FWD CRKB;CXXB;DBKA | | GCI82447 | Inner Joint | | | 33 | | | 34 | |
| | 2013.01-2017.03 | 7DCT | F | R | Hatchback FWD CRKB;CXXB;DBKA | | GDS61096 | Drive Shaft | | 36 | | 59.5 | 40.5 | 799 | |
| | 2013.01-2017.03 | AT | F | L | Hatchback FWD CRKB;CXXB;DBKA | | GCO83037 | Outer Joint | | 36 | 30 | 59.5 | 40.5 | 56 | I |
| | 2013.01-2017.03 | MT | F | L/R | Hatchback FWD CRKB;CXXB;DBKA | Date from:2011.06;For PR code:G0J | GCO61059 | Outer Joint | | 36 | 33 | 59.5 | 40 | 59.5 | I |
| | 2013.01-2017.03 | MT | F | R | Hatchback FWD CRKB;CXXB;DBKA | | GCI53002 | Inner Joint | | | 33 | | | 34 | |
| | 2013.01-2017.03 | | F | L/R | Hatchback FWD CRKB;CXXB;DBKA | | GCI83011 | Inner Joint | | | 33 | | | 34 | |
| | 2013.11-2017.03 | 5MT | F | R | Hatchback Van FWD CRKB;CXXB | | GDS61042 | Drive Shaft | | 36 | | 59.5 | 40.5 | 814 | |
| | 2013.11-2017.03 | 6MT | F | R | Hatchback Van FWD CRKB;CXXB | | GDS61283 | Drive Shaft | | 36 | | 59.5 | 40 | 815 | |
| | 2013.11-2017.03 | 6MT | F | L/R | Hatchback Van FWD CRKB;CXXB | | GCI53002 | Inner Joint | | | 33 | | | 34 | |
| | 2013.11-2017.03 | 6MT/7DCT | F | L | Hatchback Van FWD CRKB;CXXB | Transmission:6MT,No Economy;Transmission:7DCT,For PR code:1PE/1PF/1PA/2H4,No Economy | GDS61282 | Drive Shaft | | 36 | | 59.5 | 40 | 523 | |

| | YEAR | TRANSM. | F/R | L/R | BODY STYLE & DRIVE TYPE & ENGINE | REMARKS | G-AP Ref. | PRODUCT | ABS | Technical Specifications A | B | C | H | L | P |
|---|---|---|---|---|---|---|---|---|---|---|---|---|---|---|---|
| **VW** **Golf** | | | | | | | | | | | | | | | |
| 1.6 (81 kw) | 2013.11-2017.03 | 6MT/7DCT | F | L | Hatchback Van FWD CRKB;CXXB | | GDS83294 | Drive Shaft | | 36 | | 59.5 | 38 | 519 | |
| | 2013.11-2017.03 | 7DCT | F | R | Hatchback Van FWD CRKB;CXXB | | GDS61096 | Drive Shaft | | 36 | | 59.5 | 40.5 | 799 | |
| | 2013.11-2017.03 | 7DCT | F | L | Hatchback Van FWD CRKB;CXXB | | GCI53002 | Inner Joint | | | 33 | | | 34 | |
| | 2013.11-2017.03 | 7DCT/5MT/6MT | F | L/R | Hatchback Van FWD CRKB;CXXB | | GCI82447 | Inner Joint | | | 33 | | | 34 | |
| | 2013.11-2017.03 | MT | F | L/R | Hatchback Van FWD CRKB;CXXB | Date from:2011.06;For PR code:G0J | GCO61059 | Outer Joint | | 36 | 33 | 59.5 | 40 | 59.5 | I |
| | 2013.11-2017.03 | | F | L/R | Hatchback Van FWD CRKB;CXXB | | GCI83011 | Inner Joint | | | 33 | | | 34 | |
| | 2014.05-2017.07 | 5MT | F | L | Hatchback FWD CWVA | For PR code:1PE/1PF/1PA/2H4 | GDS61097 | Drive Shaft | | 36 | | 59.5 | 40.5 | 543 | |
| | 2014.05-2017.07 | 5MT | F | R | Hatchback FWD CWVA | | GDS61096 | Drive Shaft | | 36 | | 59.5 | 40.5 | 799 | |
| | 2014.05-2017.07 | 5MT | F | L/R | Hatchback FWD CWVA | | GCO83037 | Outer Joint | | 36 | 30 | 59.5 | 40.5 | 56 | I |
| | 2014.05-2017.07 | 5MT | F | L/R | Hatchback FWD CWVA | | GCI82447 | Inner Joint | | | 33 | | | 34 | |
| | 2014.05-2017.07 | 6AT | F | L | Hatchback FWD CWVA | For PR code:1PE/1PF/1PA/2H4,For facelift | GDS83318 | Drive Shaft | | 36 | 26 | 59.5 | 38 | 581 | |
| | 2014.05-2017.07 | 6AT | F | R | Hatchback FWD CWVA | | GDS83346 | Drive Shaft | | 36 | 26 | 59.5 | 38 | 879 | |
| | 2014.05-2017.07 | 6AT | F | L/R | Hatchback FWD CWVA | | GCI61011 | Inner Joint | | 26 | 32 | 31 | 68.5 | 85 | |
| | 2014.05-2017.07 | 6AT | F | L/R | Hatchback FWD CWVA | | GCI61050 | Inner Joint | | 26 | 32 | 31 | 68.5 | 89 | |
| | 2014.05-2017.07 | MT | F | L | Hatchback FWD CWVA | | GDS83373 | Drive Shaft | | 36 | | 59.5 | 38 | 511 | |
| 1.6 (85 kw) | 2003.10-2008.07 | 5MT | F | L/R | Hatchback FWD BAG;BLF;BLP | | GCO83037 | Outer Joint | | 36 | 30 | 59.5 | 40.5 | 56 | I |
| | 2003.10-2008.07 | 6AT | F | L | Hatchback FWD BAG;BLF;BLP | AAR | GDS81582 | Drive Shaft | | 36 | 26 | 59.5 | 40 | 597 | |
| | 2003.10-2008.07 | 6AT | F | L/R | Hatchback FWD BAG;BLF;BLP | Chassis no. from:1K_6_000001 | GCI61011 | Inner Joint | | 26 | 32 | 31 | 68.5 | 85 | |
| | 2003.10-2008.07 | 6AT | F | L/R | Hatchback FWD BAG;BLF;BLP | Chassis no. from:1K_6_000001 | GCI61050 | Inner Joint | | 26 | 32 | 31 | 68.5 | 89 | |
| | 2003.10-2008.07 | 6MT | F | L/R | Hatchback FWD BAG;BLF;BLP | | GCI82447 | Inner Joint | | | 33 | | | 34 | |
| | 2003.10-2008.07 | AT | F | R | Hatchback FWD BAG;BLF;BLP | AAR | GDS81583 | Drive Shaft | | 36 | 26 | 59.5 | 40 | 873 | |
| | 2003.10-2008.07 | MT | F | L | Hatchback FWD BAG;BLF;BLP | | GDS83319 | Drive Shaft | | 36 | | 59.5 | 38 | 557 | |
| | 2003.10-2008.07 | MT | F | R | Hatchback FWD BAG;BLF;BLP | | GDS61211 | Drive Shaft | | 36 | | 59.5 | 40.5 | 784 | |
| | 2003.10-2008.07 | MT | F | R | Hatchback FWD BAG;BLF;BLP | | GDS61237 | Stub Axle,differential | | 23 | 37 | | | 142.5 | |
| | 2016.11-2020.08 | 5MT | F | R | Hatchback FWD DDYA;DGTE | Inner teeth of wheel side:30 | GDS61042 | Drive Shaft | | 36 | | 59.5 | 40.5 | 814 | |
| | 2016.11-2020.08 | 5MT | F | R | Hatchback FWD DDYA;DGTE | Inner teeth of wheel side:33 | GDS61283 | Drive Shaft | | 36 | | 59.5 | 40 | 815 | |
| | 2016.11-2020.08 | 5MT/7DCT | F | L | Hatchback FWD DDYA;DGTE | | GDS61282 | Drive Shaft | | 36 | | 59.5 | 40 | 523 | |
| | 2016.11-2020.08 | 5MT/7DCT | F | L | Hatchback FWD DDYA;DGTE | | GCI53002 | Inner Joint | | | 33 | | | 34 | |
| | 2016.11-2020.08 | 7AT/5MT | F | L/R | Hatchback FWD DDYA;DGTE | | GCO61059 | Outer Joint | | 36 | 33 | 59.5 | 40 | 59.5 | I |
| | 2016.11-2020.08 | 7DCT | F | R | Hatchback FWD DDYA;DGTE | | GDS61096 | Drive Shaft | | 36 | | 59.5 | 40.5 | 799 | |
| | 2016.11-2020.08 | 7DCT/5MT | F | L/R | Hatchback FWD DDYA;DGTE | | GCI82447 | Inner Joint | | | 33 | | | 34 | |
| | 2016.11-2020.08 | MT | F | R | Hatchback FWD DDYA;DGTE | | GCI53002 | Inner Joint | | | 33 | | | 34 | |
| | 2016.11-2020.08 | | F | L/R | Hatchback FWD DDYA;DGTE | | GCI83011 | Inner Joint | | | 33 | | | 34 | |
| 1.8 (55 kw) | 1991.08-1997.12 | AT | F | L | Hatchback FWD AAM | | GDS61011 | Drive Shaft | | 22 | | 53.2 | 78 | 547 | |
| | 1991.08-1997.12 | AT | F | R | Hatchback FWD AAM | | GDS61028 | Drive Shaft | | 22 | | 53.2 | 78 | 767 | |
| | 1991.08-1997.12 | AT | F | L | Hatchback FWD AAM | | GCI61004 | Inner Joint | | | 34 | | | 59.2 | |
| | 1991.08-1997.12 | AT | F | R | Hatchback FWD AAM | Chassis no. to:1H-R-990000 | GCI83009 | Inner Joint | | | 33 | | | 34 | |
| | 1991.08-1997.12 | AT/MT | F | L/R | Hatchback FWD AAM | | GCO53007 | Outer Joint | | 22 | 30 | 53.2 | 78 | 61 | I |
| | 1991.08-1997.12 | MT | F | L | Hatchback FWD AAM | | GDS61001 | Drive Shaft | | 22 | | 53.2 | 78 | 557 | |
| | 1991.08-1997.12 | MT | F | R | Hatchback FWD AAM | hollow shaft | GDS61002 | Drive Shaft | | 22 | | 53 | 78.5 | 793 | |
| | 1991.08-1997.12 | MT | F | R | Hatchback FWD AAM | solid shaft | GDS61009 | Drive Shaft | | 22 | | 53.2 | 78 | 789 | |
| | 1991.08-1997.12 | MT | F | R | Hatchback FWD AAM | | GCI83009 | Inner Joint | | | 33 | | | 34 | |
| | 1991.08-1997.12 | MT | F | L/R | Hatchback FWD AAM | | GCI83011 | Inner Joint | | | 33 | | | 34 | |
| | 1991.08-1997.12 | | F | | Hatchback FWD AAM | | GCO53004 | Outer Joint | | 22 | 30 | 51 | 78 | 61 | I |
| 1.8 (66 kw) | 1991.08-1997.12 | AT | F | L | Hatchback FWD ABS/ACC/ADZ | Chassis no. to:1H-R-990000 | GDS61001 | Drive Shaft | | 22 | | 53.2 | 78 | 557 | |
| | 1991.08-1997.12 | AT | F | L | Hatchback FWD ABS/ACC/ADZ | Chassis no. from:1H-S-000001 | GDS61011 | Drive Shaft | | 22 | | 53.2 | 78 | 547 | |
| | 1991.08-1997.12 | AT | F | R | Hatchback FWD ABS/ACC/ADZ | Chassis no. from:1H-S-000001 | GDS61028 | Drive Shaft | | 22 | | 53.2 | 78 | 767 | |
| | 1991.08-1997.12 | AT | F | L/R | Hatchback FWD ABS/ACC/ADZ | Chassis no. from:1H-S-000001 | GCI61004 | Inner Joint | | | 34 | | | 59.2 | |
| | 1991.08-1997.12 | AT | F | L/R | Hatchback FWD ABS/ACC/ADZ | Chassis no. to:1H-R-990000 | GCI83009 | Inner Joint | | | 33 | | | 34 | |
| | 1991.08-1997.12 | AT/MT | F | L/R | Hatchback FWD ABS/ACC/ADZ | | GCO53007 | Outer Joint | | 22 | 30 | 53.2 | 78 | 61 | I |
| | 1991.08-1997.12 | MT | F | L | Hatchback FWD ABS/ACC/ADZ | | GDS61001 | Drive Shaft | | 22 | | 53.2 | 78 | 557 | |
| | 1991.08-1997.12 | MT | F | R | Hatchback FWD ABS/ACC/ADZ | | GDS61009 | Drive Shaft | | 22 | | 53.2 | 78 | 789 | |
| | 1993.01-1997.12 | MT | F | R | Hatchback 4WD ABS/ADZ | hollow shaft | GDS61002 | Drive Shaft | | 22 | | 53 | 78.5 | 793 | |
| | 1993.01-1997.12 | MT | F | R | Hatchback 4WD ABS/ADZ | solid shaft | GDS61009 | Drive Shaft | | 22 | | 53.2 | 78 | 789 | |
| | 1993.01-1997.12 | MT | F | L/R | Hatchback 4WD ABS/ADZ | | GCO53007 | Outer Joint | | 22 | 30 | 53.2 | 78 | 61 | I |
| | 1993.01-1997.12 | MT | F | R | Hatchback 4WD ABS/ADZ | | GCI83009 | Inner Joint | | | 33 | | | 34 | |
| | 1993.01-1997.12 | MT | F | L/R | Hatchback 4WD ABS/ADZ | | GCI83011 | Inner Joint | | | 33 | | | 34 | |
| | 1993.01-1997.12 | | F | | Hatchback 4WD ABS/ADZ | | GCO53004 | Outer Joint | | 22 | 30 | 51 | 78 | 61 | I |
| | 1993.01-1997.12 | MT | R | L/R | Hatchback 4WD ABS/ADZ | | GCI83005 | Inner Joint | | | 33 | | | 32 | |
| 1.8 (92 kw) | 1997.10-2000.10 | AT | F | L | Hatchback FWD AGN | | GDS61020 | Drive Shaft | | 36 | | 53.2 | 77.5 | 547 | |
| | 1997.10-2000.10 | AT | F | R | Hatchback FWD AGN | | GDS83011 | Drive Shaft | | 36 | | 53.2 | 77.5 | 810.5 | |
| | 1997.10-2000.10 | AT | F | L/R | Hatchback FWD AGN | | GCI61006 | Inner Joint | | | 30 | | | 57.6 | |
| | 1997.10-2000.10 | AT/MT | F | L/R | Hatchback FWD AGN | | GCO83070 | Outer Joint | | 36 | 30 | 53 | 78 | 60 | I |
| | 1997.10-2000.10 | MT | F | L | Hatchback FWD AGN | | GDS61314 | Drive Shaft | | 36 | | 53 | 78 | 558 | |
| | 1997.10-2000.10 | MT | F | R | Hatchback FWD AGN | | GDS83004 | Drive Shaft | | 36 | | 53.2 | 77.5 | 822 | |

| | YEAR | TRANSM. | F/R | L/R | BODY STYLE & DRIVE TYPE & ENGINE | REMARKS | G-AP Ref. | PRODUCT | ABS | Technical Specifications A | B | C | H | L | P |
|---|---|---|---|---|---|---|---|---|---|---|---|---|---|---|---|
| **VW Golf** | | | | | | | | | | | | | | | |
| 1.8 (92 kw) | 1997.10-2000.10 | MT | F | L | Hatchback FWD AGN | | GCI82447 | Inner Joint | | | 33 | | | 34 | |
| | 1997.10-2000.10 | MT | F | L/R | Hatchback FWD AGN | | GCI83011 | Inner Joint | | | 33 | | | 34 | |
| | 1998.05-2000.10 | 5MT | F | L | Hatchback 4WD AGN | | GDS61314 | Drive Shaft | | 36 | | 53 | 78 | 558 | |
| | 1998.05-2000.10 | 5MT | F | L/R | Hatchback 4WD AGN | | GCO83070 | Outer Joint | | 36 | 30 | 53 | 78 | 60 | I |
| | 1998.05-2000.10 | 5MT | F | L | Hatchback 4WD AGN | | GCI82447 | Inner Joint | | | 33 | | | 34 | |
| | 1998.05-2000.10 | 5MT | F | R | Hatchback 4WD AGN | | GCI83009 | Inner Joint | | | 33 | | | 34 | |
| | 1998.05-2000.10 | 5MT | F | L/R | Hatchback 4WD AGN | | GCI83006 | Inner Joint | | | 33 | | | 34 | |
| | 1998.05-2000.10 | MT | F | L | Hatchback 4WD AGN | | GDS83006 | Drive Shaft | | 36 | | 53.2 | 77.5 | 557 | |
| | 1998.05-2000.10 | MT | F | R | Hatchback 4WD AGN | | GDS83004 | Drive Shaft | | 36 | | 53.2 | 77.5 | 822 | |
| | 1998.05-2000.10 | 5MT | R | L | Hatchback 4WD AGN | | GDS82364 | Drive Shaft | | 36 | | 53 | 78.5 | 651 | |
| | 1998.05-2000.10 | 5MT | R | R | Hatchback 4WD AGN | | GDS81587 | Drive Shaft | | 36 | | 53 | 78.5 | 522 | |
| | 1998.05-2000.10 | 5MT | R | L/R | Hatchback 4WD AGN | | GCO83033 | Outer Joint | | 36 | 30 | 53 | 78.5 | 51 | I |
| | 1998.05-2000.10 | 5MT | R | L/R | Hatchback 4WD AGN | | GCI53002 | Inner Joint | | | 33 | | | 34 | |
| | 1998.05-2000.10 | 5MT | R | L/R | Hatchback 4WD AGN | | GCI82447 | Inner Joint | | | 33 | | | 34 | |
| 1.8 (110 kw) | 1997.08-2005.06 | 4AT | F | L | Hatchback FWD AGU/AQA/ARZ/AUM/AWD | | GDS61020 | Drive Shaft | | 36 | | 53.2 | 77.5 | 547 | |
| | 1997.08-2005.06 | 4AT | F | R | Hatchback FWD AGU/AQA/ARZ/AUM/AWD | | GDS83011 | Drive Shaft | | 36 | | 53.2 | 77.5 | 810.5 | |
| | 1997.08-2005.06 | 5AT | F | L | Hatchback FWD AGU/AQA/ARZ/AUM/AWD | AAR | GDS61244 | Drive Shaft | | 36 | | 53 | 77.5 | 523 | |
| | 1997.08-2005.06 | 5AT | F | R | Hatchback FWD AGU/AQA/ARZ/AUM/AWD | TJ | GDS61243 | Drive Shaft | | 36 | | 53 | 77.5 | 813 | |
| | 1997.08-2005.06 | 5AT | F | R | Hatchback FWD AGU/AQA/ARZ/AUM/AWD | AAR | GDS82405 | Drive Shaft | | 36 | | 53 | 77.5 | 815 | |
| | 1997.08-2005.06 | 5AT | F | L/R | Hatchback FWD AGU/AQA/ARZ/AUM/AWD | | GCO83035 | Outer Joint | | 36 | 27 | 53 | 77.5 | 65 | I |
| | 1997.08-2005.06 | 5AT | F | L/R | Hatchback FWD AGU/AQA/ARZ/AUM/AWD | Date from:2003.04;AAR | GCI61057 | Inner Joint | | | 34 | | | 89 | |
| | 1997.08-2005.06 | 5AT | F | L/R | Hatchback FWD AGU/AQA/ARZ/AUM/AWD | TJ | GCI83007 | Inner Joint | | | 34 | | | 85 | |
| | 1997.08-2005.06 | 5MT | F | L | Hatchback FWD AGU/AQA/ARZ/AUM/AWD | Date from:1998.08 | GDS61020 | Drive Shaft | | 36 | | 53.2 | 77.5 | 547 | |
| | 1997.08-2005.06 | 5MT | F | L | Hatchback FWD AGU/AQA/ARZ/AUM/AWD | Date to:1998.07 | GDS61312 | Drive Shaft | | 36 | | 53 | 78 | 546 | |
| | 1997.08-2005.06 | 5MT | F | R | Hatchback FWD AGU/AQA/ARZ/AUM/AWD | Date to:1998.07 | GDS61203 | Drive Shaft | | 36 | | 53.2 | 77.5 | 810 | |
| | 1997.08-2005.06 | 5MT | F | R | Hatchback FWD AGU/AQA/ARZ/AUM/AWD | Date from:1998.08 | GDS83011 | Drive Shaft | | 36 | | 53.2 | 77.5 | 810.5 | |
| | 1997.08-2005.06 | 5MT | F | L/R | Hatchback FWD AGU/AQA/ARZ/AUM/AWD | | GCO83070 | Outer Joint | | 36 | 30 | 53 | 78 | 60 | I |
| | 1997.08-2005.06 | 5MT | F | L/R | Hatchback FWD AGU/AQA/ARZ/AUM/AWD | | GCI61006 | Inner Joint | | | 30 | | | 57.6 | |
| 1.8 (118 kw) | 2009.06-2011.01 | 6MT | F | R | Hatchback FWD CDAA | | GDS61101 | Drive Shaft | | 36 | | 59.5 | 40 | 803 | |
| | 2009.06-2011.01 | 7AT | F | L | Hatchback FWD CDAA | | GDS83236 | Drive Shaft | | 36 | | 59.5 | 40 | 484 | |
| | 2009.06-2011.01 | AT | F | L | Hatchback FWD CDAA | | GDS61093 | Drive Shaft | | 36 | 26 | 59.5 | 40.5 | 587.5 | |
| | 2009.06-2011.01 | AT | F | R | Hatchback FWD CDAA | | GDS61094 | Drive Shaft | | 36 | 26 | 59.5 | 40.5 | 884 | |
| | 2009.06-2011.01 | AT | F | R | Hatchback FWD CDAA | | GDS83313 | Drive Shaft | | 36 | | 59.5 | 40 | 792 | |
| | 2009.06-2011.01 | AT | F | L/R | Hatchback FWD CDAA | | GCO83101 | Outer Joint | | 36 | 27 | 59.5 | 40 | 65 | M |
| | 2009.06-2011.01 | AT/MT | F | L | Hatchback FWD CDAA | | GDS61100 | Drive Shaft | | 36 | | 59.5 | 40 | 513 | |
| | 2009.06-2011.01 | MT | F | R | Hatchback FWD CDAA | | GDS61341 | Drive Shaft | | 36 | | 59.5 | 40 | 806 | |
| | 2009.06-2011.01 | MT | F | L/R | Hatchback FWD CDAA | | GCO83002 | Outer Joint | | 36 | 27 | 59.5 | 40 | 66 | I |
| | 2009.06-2011.01 | MT | F | L/R | Hatchback FWD CDAA | | GCI83016 | Inner Joint | | | 28 | | | 32 | |
| 1.8 (132 kw) | 2001.06-2007.03 | 6MT | F | L | Hatchback FWD AUQ | | GDS61123 | Drive Shaft | | 36 | | 53 | 77.5 | 520 | |
| | 2001.06-2007.03 | 6MT | F | L | Hatchback FWD AUQ | Type:GTI 25 JAHRE | GDS81913 | Drive Shaft | | 36 | | 53 | 40 | 480 | |
| | 2001.06-2007.03 | 6MT | F | L | Hatchback FWD AUQ | | GDS99115 | Drive Shaft | | 36 | | 53 | 77.5 | 518 | |
| | 2001.06-2007.03 | 6MT | F | R | Hatchback FWD AUQ | Type:GTI 25 JAHRE | GDS61088 | Drive Shaft | | 36 | | 53 | 40 | 769 | |
| | 2001.06-2007.03 | 6MT | F | R | Hatchback FWD AUQ | | GDS61121 | Drive Shaft | | 36 | | 53 | 77.5 | 806 | |
| | 2001.06-2007.03 | 6MT | F | L/R | Hatchback FWD AUQ | For 25th Anniversary grade | GCO61021 | Outer Joint | | 36 | 27 | 53 | 40 | 65 | I |
| | 2001.06-2007.03 | 6MT | F | L/R | Hatchback FWD AUQ | | GCO83035 | Outer Joint | | 36 | 27 | 53 | 77.5 | 65 | I |
| | 2001.06-2007.03 | 6MT | F | L/R | Hatchback FWD AUQ | Date To:2003.01 | GCI83001 | Inner Joint | | | 28 | | | 32 | |
| | 2001.06-2007.03 | MT | F | L/R | Hatchback FWD AUQ | | GCI83016 | Inner Joint | | | 28 | | | 32 | |
| 1.9 (47 kw) | 1991.11-1997.08 | MT | F | L | Hatchback FWD 1Y | | GDS53004 | Drive Shaft | | 22 | | 50 | 78.5 | 562 | |
| | 1991.11-1997.08 | MT | F | R | Hatchback FWD 1Y | | GDS61055 | Drive Shaft | | 22 | | 53 | 78.5 | 796 | |
| | 1991.11-1997.08 | MT | F | L/R | Hatchback FWD 1Y | | GCO53008 | Outer Joint | | 22 | 30 | 53 | 78.5 | 51 | I |
| | 1991.11-1997.08 | MT | F | L/R | Hatchback FWD 1Y | | GCI83005 | Inner Joint | | | 33 | | | 32 | |
| 1.9 (50 kw) | 1997.10-2004.05 | 5MT | F | L | Hatchback FWD AGP/AQM | | GDS61045 | Drive Shaft | | 36 | | 53 | 78.5 | 555 | |
| | 1997.10-2004.05 | 5MT | F | R | Hatchback FWD AGP/AQM | | GDS83046 | Drive Shaft | | 36 | | 53 | 78.5 | 822 | |
| | 1997.10-2004.05 | 5MT | F | L/R | Hatchback FWD AGP/AQM | | GCO83033 | Outer Joint | | 36 | 30 | 53 | 78.5 | 51 | I |
| | 1997.10-2004.05 | 5MT | F | L/R | Hatchback FWD AGP/AQM | | GCI83008 | Inner Joint | | | 33 | | | 32 | |
| 1.9 (55 kw) | 1991.11-1997.12 | AT | F | L | Hatchback FWD AAZ | Chassis no. to:1H-R-990000 | GDS61001 | Drive Shaft | | 22 | | 53.2 | 78 | 557 | |
| | 1991.11-1997.12 | AT | F | L | Hatchback FWD AAZ | Chassis no. from:1H-S-000001 | GDS61011 | Drive Shaft | | 22 | | 53.2 | 78 | 547 | |
| | 1991.11-1997.12 | AT | F | R | Hatchback FWD AAZ | Chassis no. from:1H-S-000001 | GDS61028 | Drive Shaft | | 22 | | 53.2 | 78 | 767 | |
| | 1991.11-1997.12 | AT | F | L/R | Hatchback FWD AAZ | Chassis no. from:1H-S-000001 | GCI61004 | Inner Joint | | | 34 | | | 59.2 | |
| | 1991.11-1997.12 | AT | F | L/R | Hatchback FWD AAZ | Chassis no. to:1H-R-990000 | GCI83009 | Inner Joint | | | 33 | | | 34 | |
| | 1991.11-1997.12 | AT/MT | F | L/R | Hatchback FWD AAZ | | GCO53007 | Outer Joint | | 22 | 30 | 53.2 | 78 | 61 | I |
| | 1991.11-1997.12 | MT | F | L | Hatchback FWD AAZ | | GDS61001 | Drive Shaft | | 22 | | 53.2 | 78 | 557 | |
| | 1991.11-1997.12 | MT | F | R | Hatchback FWD AAZ | | GDS61009 | Drive Shaft | | 22 | | 53.2 | 78 | 789 | |
| | 1991.11-1997.12 | MT | F | L/R | Hatchback FWD AAZ | | GCI83006 | Inner Joint | | | 33 | | | 34 | |
| 1.9 (66 kw) | 1993.08-1997.12 | MT | F | L | Hatchback FWD 1Z/AHU/ALE | | GDS61001 | Drive Shaft | | 22 | | 53.2 | 78 | 557 | |

| | YEAR | TRANSM. | F/R | L/R | BODY STYLE & DRIVE TYPE & ENGINE | REMARKS | G-AP Ref. | PRODUCT | ABS | Technical Specifications A | B | C | H | L | P |
|---|---|---|---|---|---|---|---|---|---|---|---|---|---|---|---|
| **VW** **Golf** | | | | | | | | | | | | | | | |
| 1.9 (66 kw) | 1993.08-1997.12 | MT | F | R | Hatchback FWD 1Z/AHU/ALE | | GDS61002 | Drive Shaft | | 22 | | 53 | 78.5 | 793 | |
| | 1993.08-1997.12 | MT | F | L/R | Hatchback FWD 1Z/AHU/ALE | | GCO53007 | Outer Joint | | 22 | 30 | 53.2 | 78 | 61 | I |
| | 1994.10-1997.09 | 5MT | F | L/R | Hatchback 4WD 1Z/AHU/ALE | | GCI83011 | Inner Joint | | | 33 | | | 34 | |
| | 1997.10-2004.05 | AT | F | L | Hatchback FWD AGR/ALH | | GDS61020 | Drive Shaft | | 36 | | 53.2 | 77.5 | 547 | |
| | 1997.10-2004.05 | AT | F | R | Hatchback FWD AGR/ALH | | GDS83011 | Drive Shaft | | 36 | | 53.2 | 77.5 | 810.5 | |
| | 1997.10-2004.05 | AT | F | L/R | Hatchback FWD AGR/ALH | | GCI61006 | Inner Joint | | | 30 | | | 57.6 | |
| | 1997.10-2004.05 | AT/MT | F | L/R | Hatchback FWD AGR/ALH | | GCO83070 | Outer Joint | | 36 | 30 | 53 | 78 | 60 | I |
| | 1997.10-2004.05 | MT | F | L | Hatchback FWD AGR/ALH | | GDS83006 | Drive Shaft | | 36 | | 53.2 | 77.5 | 557 | |
| | 1997.10-2004.05 | MT | F | R | Hatchback FWD AGR/ALH | | GDS83004 | Drive Shaft | | 36 | | 53.2 | 77.5 | 822 | |
| | 1997.10-2004.05 | MT | F | L | Hatchback FWD AGR/ALH | | GCI83011 | Inner Joint | | | 33 | | | 34 | |
| | 1997.10-2004.05 | MT | F | R | Hatchback FWD AGR/ALH | | GCI83009 | Inner Joint | | | 33 | | | 34 | |
| | 1997.10-2004.05 | MT | F | L/R | Hatchback FWD AGR/ALH | | GCI83006 | Inner Joint | | | 33 | | | 34 | |
| | 1998.07-2002.04 | 5MT | F | L | Hatchback 4WD AGR | | GDS61314 | Drive Shaft | | 36 | | 53 | 78 | 558 | |
| | 1998.07-2002.04 | 5MT | F | L/R | Hatchback 4WD AGR | | GCO83070 | Outer Joint | | 36 | 30 | 53 | 78 | 60 | I |
| | 1998.07-2002.04 | 5MT | F | L | Hatchback 4WD AGR | | GCI82447 | Inner Joint | | | 33 | | | 34 | |
| | 1998.07-2002.04 | 5MT | F | R | Hatchback 4WD AGR | | GCI83009 | Inner Joint | | | 33 | | | 34 | |
| | 1998.07-2002.04 | 5MT | F | L/R | Hatchback 4WD AGR | | GCI83006 | Inner Joint | | | 33 | | | 34 | |
| | 1998.07-2002.04 | MT | F | L | Hatchback 4WD AGR | | GDS83006 | Drive Shaft | | 36 | | 53.2 | 77.5 | 557 | |
| | 1998.07-2002.04 | MT | F | R | Hatchback 4WD AGR | | GDS83004 | Drive Shaft | | 36 | | 53.2 | 77.5 | 822 | |
| | 1998.07-2002.04 | 5MT | R | L | Hatchback 4WD AGR | | GDS82364 | Drive Shaft | | 36 | | 53 | 78.5 | 651 | |
| | 1998.07-2002.04 | 5MT | R | R | Hatchback 4WD AGR | | GDS81587 | Drive Shaft | | 36 | | 53 | 78.5 | 522 | |
| | 1998.07-2002.04 | 5MT | R | L/R | Hatchback 4WD AGR | | GCO83033 | Outer Joint | | 36 | 30 | 53 | 78.5 | 51 | I |
| | 1998.07-2002.04 | 5MT | R | L/R | Hatchback 4WD AGR | | GCI53002 | Inner Joint | | | 33 | | | 34 | |
| | 1998.07-2002.04 | 5MT | R | L/R | Hatchback 4WD AGR | | GCI82447 | Inner Joint | | | 33 | | | 34 | |
| | 2004.05-2008.11 | 5MT | F | L | Hatchback FWD BRU;BXF;BXJ | | GDS83294 | Drive Shaft | | 36 | | 59.5 | 38 | 519 | |
| | 2004.05-2008.11 | 5MT | F | R | Hatchback FWD BRU;BXF;BXJ | | GDS61042 | Drive Shaft | | 36 | | 59.5 | 40.5 | 814 | |
| | 2004.05-2008.11 | 5MT | F | L/R | Hatchback FWD BRU;BXF;BXJ | | GCO83037 | Outer Joint | | 36 | 30 | 59.5 | 40.5 | 56 | I |
| | 2004.05-2008.11 | 5MT | F | L/R | Hatchback FWD BRU;BXF;BXJ | | GCI82447 | Inner Joint | | | 33 | | | 34 | |
| | 2004.05-2008.11 | MT | F | R | Hatchback FWD BRU;BXF;BXJ | | GDS61237 | Stub Axle,differential | | 23 | 37 | | | 142.5 | |
| 1.9 (74 kw) | 1997.10-2005.12 | 5AT/5MT | F | L | Hatchback FWD ATD/AXR | | GCI82447 | Inner Joint | | | 33 | | | 34 | |
| | 1997.10-2005.12 | 5MT | F | L | Hatchback FWD ATD/AXR | | GDS83006 | Drive Shaft | | 36 | | 53.2 | 77.5 | 557 | |
| | 1997.10-2005.12 | 5MT | F | R | Hatchback FWD ATD/AXR | | GDS83004 | Drive Shaft | | 36 | | 53.2 | 77.5 | 822 | |
| | 1997.10-2005.12 | 5MT | F | L/R | Hatchback FWD ATD/AXR | | GCO83070 | Outer Joint | | 36 | 30 | 53 | 78 | 60 | I |
| | 1997.10-2005.12 | 5MT | F | L | Hatchback FWD ATD/AXR | for OE number:1J0498103A | GCI83011 | Inner Joint | | | 33 | | | 34 | |
| | 1997.10-2005.12 | 5MT | F | R | Hatchback FWD ATD/AXR | for OE number:357498104 | GCI83009 | Inner Joint | | | 33 | | | 34 | |
| | 1997.10-2005.12 | 5MT | F | L/R | Hatchback FWD ATD/AXR | for OE number:1J0407331H | GCI83006 | Inner Joint | | | 33 | | | 34 | |
| | 2000.02-2005.06 | 6MT | F | L | Hatchback 4WD ATD | | GDS61123 | Drive Shaft | | 36 | | 53 | 77.5 | 520 | |
| | 2000.02-2005.06 | 6MT | F | R | Hatchback 4WD ATD | | GDS61186 | Drive Shaft | | 36 | | 53 | 77.5 | 653 | |
| | 2000.02-2005.06 | 6MT | F | L/R | Hatchback 4WD ATD | | GCO83035 | Outer Joint | | 36 | 27 | 53 | 77.5 | 65 | I |
| | 2000.02-2005.06 | 6MT | F | L/R | Hatchback 4WD ATD | Date to:2003.01 | GCI83001 | Inner Joint | | | 28 | | | 32 | |
| | 2000.02-2005.06 | 6MT | F | L/R | Hatchback 4WD ATD | Date from:2003.02 | GCI83016 | Inner Joint | | | 28 | | | 32 | |
| | 2000.02-2005.06 | AT | F | L | Hatchback 4WD ATD | | GDS61244 | Drive Shaft | | 36 | | 53 | 77.5 | 523 | |
| | 2000.02-2005.06 | AT | F | R | Hatchback 4WD ATD | | GDS61243 | Drive Shaft | | 36 | | 53 | 77.5 | 813 | |
| | 2000.02-2005.06 | AT | F | L/R | Hatchback 4WD ATD | | GCI61044 | Inner Joint | | | 34 | | | 85 | |
| | 2000.02-2005.06 | 6MT | R | L | Hatchback 4WD ATD | | GDS82364 | Drive Shaft | | 36 | | 53 | 78.5 | 651 | |
| | 2000.02-2005.06 | 6MT | R | R | Hatchback 4WD ATD | | GDS81587 | Drive Shaft | | 36 | | 53 | 78.5 | 522 | |
| | 2000.02-2005.06 | 6MT | R | L/R | Hatchback 4WD ATD | | GCO83033 | Outer Joint | | 36 | 30 | 53 | 78.5 | 51 | I |
| | 2000.02-2005.06 | 6MT | R | L/R | Hatchback 4WD ATD | | GCI82447 | Inner Joint | | | 33 | | | 34 | |
| | 2000.02-2005.06 | 6MT | R | L/R | Hatchback 4WD ATD | | GCI83011 | Inner Joint | | | 33 | | | 34 | |
| 1.9 (77 kw) | 2003.10-2008.11 | 5MT/6MT | F | L | Hatchback FWD BKC;BLS;BXE | | GDS83294 | Drive Shaft | | 36 | | 59.5 | 38 | 519 | |
| | 2003.10-2008.11 | 5MT/6MT | F | R | Hatchback FWD BKC;BLS;BXE | Inner teeth of wheel side:30 | GDS61042 | Drive Shaft | | 36 | | 59.5 | 40.5 | 814 | |
| | 2003.10-2008.11 | 5MT/6MT | F | L/R | Hatchback FWD BKC;BLS;BXE | | GCO83037 | Outer Joint | | 36 | 30 | 59.5 | 40.5 | 56 | I |
| | 2003.10-2008.11 | 5MT/6MT | F | L/R | Hatchback FWD BKC;BLS;BXE | | GCI82447 | Inner Joint | | | 33 | | | 34 | |
| | 2003.10-2008.11 | 6DCT | F | L | Hatchback FWD BKC;BLS;BXE | Not For driving school cars | GDS54013 | Drive Shaft | | 36 | | 59.5 | 40 | 479.5 | |
| | 2003.10-2008.11 | 6DCT | F | L | Hatchback FWD BKC;BLS;BXE | For driving school cars | GDS83381 | Drive Shaft | | 36 | | 59.5 | 40 | 483 | |
| | 2003.10-2008.11 | 6DCT | F | R | Hatchback FWD BKC;BLS;BXE | TJ | GDS54011 | Drive Shaft | | 36 | | 59.5 | 40 | 755 | |
| | 2003.10-2008.11 | 6DCT | F | R | Hatchback FWD BKC;BLS;BXE | AAR | GDS83354 | Drive Shaft | | 36 | | 59.5 | 40 | 763 | |
| | 2003.10-2008.11 | 6DCT | F | L/R | Hatchback FWD BKC;BLS;BXE | | GCO83101 | Outer Joint | | 36 | 27 | 59.5 | 40 | 65 | M |
| | 2003.10-2008.11 | 6DCT | F | L/R | Hatchback FWD BKC;BLS;BXE | TJ | GCI54004 | Inner Joint | | | 34 | | | 81 | |
| | 2003.10-2008.11 | 6DCT | F | L/R | Hatchback FWD BKC;BLS;BXE | AAR | GCI61057 | Inner Joint | | | 34 | | | 89 | |
| | 2003.10-2008.11 | 6DCT/7DCT | F | L/R | Hatchback FWD BKC;BLS;BXE | | GCO83002 | Outer Joint | | 36 | 27 | 59.5 | 40 | 66 | I |
| | 2003.10-2008.11 | 6MT | F | R | Hatchback FWD BKC;BLS;BXE | Inner teeth of wheel side:33 | GDS61283 | Drive Shaft | | 36 | | 59.5 | 40 | 815 | |
| | 2003.10-2008.11 | 7DCT | F | L | Hatchback FWD BKC;BLS;BXE | | GDS82260 | Drive Shaft | | 36 | 40 | 59.5 | 40 | 519 | |
| | 2003.10-2008.11 | 7DCT | F | R | Hatchback FWD BKC;BLS;BXE | | GDS81916 | Drive Shaft | | 36 | 40 | 59.5 | 40 | 816 | |
| | 2003.10-2008.11 | 7DCT | F | L/R | Hatchback FWD BKC;BLS;BXE | | GCI61054 | Inner Joint | | 40 | 28 | 46.9 | 41 | 101.7 | |

| | YEAR | TRANSM. | F/R | L/R | BODY STYLE & DRIVE TYPE & ENGINE | REMARKS | G-AP Ref. | PRODUCT | ABS | Technical Specifications A | B | C | H | L | P |
|---|---|---|---|---|---|---|---|---|---|---|---|---|---|---|---|
| **VW Golf** | | | | | | | | | | | | | | | |
| 1.9 (77 kw) | 2003.10-2008.11 | MT | F | R | Hatchback FWD BKC;BLS;BXE | | GDS61237 | Stub Axle,differential | | 23 | 37 | | | 142.5 | |
| | 2003.11-2006.02 | 6DCT | F | L | Hatchback Van FWD BKC | Not For driving school cars | GDS54013 | Drive Shaft | | 36 | | 59.5 | 40 | 479.5 | |
| | 2003.11-2006.02 | 6DCT | F | L | Hatchback Van FWD BKC | For driving school cars | GDS83381 | Drive Shaft | | 36 | | 59.5 | 40 | 483 | |
| | 2003.11-2006.02 | 6DCT | F | R | Hatchback Van FWD BKC | Not For driving school cars | GDS54011 | Drive Shaft | | 36 | | 59.5 | 40 | 755 | |
| | 2003.11-2006.02 | 6DCT | F | R | Hatchback Van FWD BKC | For driving school cars | GDS83354 | Drive Shaft | | 36 | | 59.5 | 40 | 763 | |
| | 2003.11-2006.02 | 6DCT | F | L/R | Hatchback Van FWD BKC | Not For driving school cars | GCO83002 | Outer Joint | | 36 | 27 | 59.5 | 40 | 66 | I |
| | 2003.11-2006.02 | 6DCT | F | L/R | Hatchback Van FWD BKC | For driving school cars | GCO83101 | Outer Joint | | 36 | 27 | 59.5 | 40 | 65 | M |
| | 2003.11-2006.02 | 6DCT | F | L/R | Hatchback Van FWD BKC | | GCI54004 | Inner Joint | | | 34 | | | 81 | |
| | 2003.11-2006.02 | 6DCT | F | L/R | Hatchback Van FWD BKC | | GCI61057 | Inner Joint | | | 34 | | | 89 | |
| | 2004.08-2008.11 | 6MT | F | L | Hatchback 4WD BKC;BLS;BXE | | GDS83295 | Drive Shaft | | 36 | | 59.5 | 40 | 491 | |
| | 2004.08-2008.11 | 6MT | F | R | Hatchback 4WD BKC;BLS;BXE | | GDS83266 | Drive Shaft | | 36 | | 59.5 | 40 | 601 | |
| | 2004.08-2008.11 | 6MT | F | L/R | Hatchback 4WD BKC;BLS;BXE | | GCO83002 | Outer Joint | | 36 | 27 | 59.5 | 40 | 66 | I |
| | 2004.08-2008.11 | 6MT | F | L/R | Hatchback 4WD BKC;BLS;BXE | | GCI83016 | Inner Joint | | | 28 | | | 32 | |
| | 2004.08-2008.11 | MT | F | R | Hatchback 4WD BKC;BLS;BXE | | GDS61237 | Stub Axle,differential | | 23 | 37 | | | 142.5 | |
| | 2004.08-2008.11 | 6MT | R | L | Hatchback 4WD BKC;BLS;BXE | | GDS61284 | Drive Shaft | | 36 | | 59.5 | 40 | 594 | |
| | 2004.08-2008.11 | 6MT | R | R | Hatchback 4WD BKC;BLS;BXE | | GDS61293 | Drive Shaft | | 36 | | 59.5 | 40 | 631 | |
| | 2004.08-2008.11 | 6MT | R | L/R | Hatchback 4WD BKC;BLS;BXE | | GCI35026 | Outer Joint | | 36 | 33 | 59.5 | 40 | 61 | |
| | 2004.08-2008.11 | 6MT | R | L/R | Hatchback 4WD BKC;BLS;BXE | | GCO83037 | Outer Joint | | 36 | 30 | 59.5 | 40.5 | 56 | I |
| | 2004.08-2008.11 | 6MT | R | L/R | Hatchback 4WD BKC;BLS;BXE | | GCI53002 | Inner Joint | | | 33 | | | 34 | |
| | 2004.08-2008.11 | 6MT | R | L/R | Hatchback 4WD BKC;BLS;BXE | | GCI82447 | Inner Joint | | | 33 | | | 34 | |
| 1.9 (81 kw) | 1996.02-1997.12 | AT/MT | F | L/R | Hatchback FWD AFN | not for PR code:E2U | GCO53007 | Outer Joint | | 22 | 30 | 53.2 | 78 | 61 | I |
| | 1996.02-1997.12 | AT/MT | F | L/R | Hatchback FWD AFN | For PR code:E2U,Chassis no. from:1H-V-000001 | GCO83070 | Outer Joint | | 36 | 30 | 53 | 78 | 60 | I |
| | 1996.02-1997.12 | MT | F | L | Hatchback FWD AFN | not for PR code:E2U | GDS61001 | Drive Shaft | | 22 | | 53.2 | 78 | 557 | |
| | 1996.02-1997.12 | MT | F | R | Hatchback FWD AFN | not for PR code:E2U | GDS61002 | Drive Shaft | | 22 | | 53 | 78.5 | 793 | |
| | 1997.10-2004.05 | AT | F | L | Hatchback FWD AHF/ASV | | GDS61020 | Drive Shaft | | 36 | | 53.2 | 77.5 | 547 | |
| | 1997.10-2004.05 | AT | F | R | Hatchback FWD AHF/ASV | | GDS83011 | Drive Shaft | | 36 | | 53.2 | 77.5 | 810.5 | |
| | 1997.10-2004.05 | AT | F | L/R | Hatchback FWD AHF/ASV | | GCI61006 | Inner Joint | | | 30 | | | 57.6 | |
| | 1997.10-2004.05 | AT/MT | F | L/R | Hatchback FWD AHF/ASV | | GCO83070 | Outer Joint | | 36 | 30 | 53 | 78 | 60 | I |
| | 1997.10-2004.05 | MT | F | L | Hatchback FWD AHF/ASV | | GDS83006 | Drive Shaft | | 36 | | 53.2 | 77.5 | 557 | |
| | 1997.10-2004.05 | MT | F | R | Hatchback FWD AHF/ASV | | GDS83004 | Drive Shaft | | 36 | | 53.2 | 77.5 | 822 | |
| | 1997.10-2004.05 | MT | F | L | Hatchback FWD AHF/ASV | | GCI83011 | Inner Joint | | | 33 | | | 34 | |
| | 1997.10-2004.05 | MT | F | R | Hatchback FWD AHF/ASV | | GCI83009 | Inner Joint | | | 33 | | | 34 | |
| | 1997.10-2004.05 | MT | F | L/R | Hatchback FWD AHF/ASV | | GCI83006 | Inner Joint | | | 33 | | | 34 | |
| 1.9 (85 kw) | 1999.05-2001.07 | 5MT/6MT | F | L/R | Hatchback FWD AJM/AUY | | GCO83035 | Outer Joint | | 36 | 27 | 53 | 77.5 | 65 | I |
| | 1999.05-2001.07 | 6MT | F | L/R | Hatchback FWD AJM/AUY | Date to:2003.01 | GCI83001 | Inner Joint | | | 28 | | | 32 | |
| | 1999.05-2001.07 | AT | F | L | Hatchback FWD AJM/AUY | | GDS61244 | Drive Shaft | | 36 | | 53 | 77.5 | 523 | |
| | 1999.05-2001.07 | AT | F | R | Hatchback FWD AJM/AUY | | GDS61243 | Drive Shaft | | 36 | | 53 | 77.5 | 813 | |
| | 1999.05-2001.07 | AT | F | L/R | Hatchback FWD AJM/AUY | | GCI61044 | Inner Joint | | | 34 | | | 85 | |
| | 1999.05-2001.07 | AT | F | L/R | Hatchback FWD AJM/AUY | | GCI83007 | Inner Joint | | | 34 | | | 85 | |
| | 1999.05-2001.07 | MT | F | L | Hatchback FWD AJM/AUY | For PR code:8Q0/8Q1,with headlamp levelling (mechanical) | GDS56276 | Drive Shaft | | 36 | | 53 | 77.5 | 520 | |
| | 1999.05-2001.07 | MT | F | R | Hatchback FWD AJM/AUY | Solid shaft | GDS61121 | Drive Shaft | | 36 | | 53 | 77.5 | 806 | |
| | 2000.01-2001.07 | 6MT | F | L | Hatchback 4WD AJM/AUY | | GDS61123 | Drive Shaft | | 36 | | 53 | 77.5 | 520 | |
| | 2000.01-2001.07 | 6MT | F | R | Hatchback 4WD AJM/AUY | Date to:2002.04 | GDS61186 | Drive Shaft | | 36 | | 53 | 77.5 | 653 | |
| | 2000.01-2001.07 | 6MT | F | L/R | Hatchback 4WD AJM/AUY | | GCO83035 | Outer Joint | | 36 | 27 | 53 | 77.5 | 65 | I |
| | 2000.01-2001.07 | 6MT | F | L/R | Hatchback 4WD AJM/AUY | Date to:2003.01 | GCI83001 | Inner Joint | | | 28 | | | 32 | |
| | 2000.01-2001.07 | 6MT | R | L | Hatchback 4WD AJM/AUY | | GDS82364 | Drive Shaft | | 36 | | 53 | 78.5 | 651 | |
| | 2000.01-2001.07 | 6MT | R | R | Hatchback 4WD AJM/AUY | | GDS81587 | Drive Shaft | | 36 | | 53 | 78.5 | 522 | |
| | 2000.01-2001.07 | 6MT | R | L/R | Hatchback 4WD AJM/AUY | | GCO83033 | Outer Joint | | 36 | 30 | 53 | 78.5 | 51 | I |
| | 2000.01-2001.07 | 6MT | R | L/R | Hatchback 4WD AJM/AUY | | GCI82447 | Inner Joint | | | 33 | | | 34 | |
| | 2000.01-2001.07 | 6MT | R | L/R | Hatchback 4WD AJM/AUY | Date from:2000.01 | GCI83011 | Inner Joint | | | 33 | | | 34 | |
| 1.9 (96 kw) | 2001.04-2004.05 | 5AT/6MT | F | L/R | Hatchback FWD ASZ | | GCO83035 | Outer Joint | | 36 | 27 | 53 | 77.5 | 65 | I |
| | 2001.04-2004.05 | AT | F | L | Hatchback FWD ASZ | AAR | GDS61244 | Drive Shaft | | 36 | | 53 | 77.5 | 523 | |
| | 2001.04-2004.05 | AT | F | R | Hatchback FWD ASZ | TJ | GDS61243 | Drive Shaft | | 36 | | 53 | 77.5 | 813 | |
| | 2001.04-2004.05 | AT | F | R | Hatchback FWD ASZ | AAR | GDS82405 | Drive Shaft | | 36 | | 53 | 77.5 | 815 | |
| | 2001.04-2004.05 | AT | F | L/R | Hatchback FWD ASZ | Date from:2003.02;AAR | GCI61057 | Inner Joint | | | 34 | | | 89 | |
| | 2001.04-2004.05 | AT | F | L/R | Hatchback FWD ASZ | TJ | GCI83007 | Inner Joint | | | 34 | | | 85 | |
| | 2001.04-2004.05 | MT | F | L | Hatchback FWD ASZ | Date to:2001.07;For PR code:8Q0/8Q1,with headlamp levelling (mechanical);Date from:2001.08;Date to:2003.01 | GDS56276 | Drive Shaft | | 36 | | 53 | 77.5 | 520 | |
| | 2001.04-2004.05 | MT | F | R | Hatchback FWD ASZ | | GDS61121 | Drive Shaft | | 36 | | 53 | 77.5 | 806 | |
| | 2001.04-2004.05 | MT | F | L/R | Hatchback FWD ASZ | Date to:2003.01 | GCI83001 | Inner Joint | | | 28 | | | 32 | |
| | 2001.04-2004.05 | MT | F | L/R | Hatchback FWD ASZ | Date from:2003.02 | GCI83016 | Inner Joint | | | 28 | | | 32 | |
| | 2001.04-2005.06 | 6MT | F | L | Hatchback 4WD ASZ | | GDS61123 | Drive Shaft | | 36 | | 53 | 77.5 | 520 | |
| | 2001.04-2005.06 | 6MT | F | R | Hatchback 4WD ASZ | | GDS61186 | Drive Shaft | | 36 | | 53 | 77.5 | 653 | |
| | 2001.04-2005.06 | 6MT | F | L/R | Hatchback 4WD ASZ | | GCO83035 | Outer Joint | | 36 | 27 | 53 | 77.5 | 65 | I |
| | 2001.04-2005.06 | 6MT | F | L/R | Hatchback 4WD ASZ | Date to:2003.01 | GCI83001 | Inner Joint | | | 28 | | | 32 | |
| | 2001.04-2005.06 | 6MT | F | L/R | Hatchback 4WD ASZ | Date from:2003.02 | GCI83016 | Inner Joint | | | 28 | | | 32 | |

| | YEAR | TRANSM. | F/R | L/R | BODY STYLE & DRIVE TYPE & ENGINE | REMARKS | G-AP Ref. | PRODUCT | ABS | Technical Specifications A | B | C | H | L | P |
|---|---|---|---|---|---|---|---|---|---|---|---|---|---|---|---|
| **VW Golf** | | | | | | | | | | | | | | | |
| 1.9 (96 kw) | 2001.04-2005.06 | AT | F | L | Hatchback 4WD ASZ | | GDS61244 | Drive Shaft | | 36 | | 53 | 77.5 | 523 | |
| | 2001.04-2005.06 | AT | F | R | Hatchback 4WD ASZ | | GDS61243 | Drive Shaft | | 36 | | 53 | 77.5 | 813 | |
| | 2001.04-2005.06 | AT | F | L/R | Hatchback 4WD ASZ | | GCI61044 | Inner Joint | | | 34 | | | 85 | |
| | 2001.04-2005.06 | 6MT | R | L | Hatchback 4WD ASZ | | GDS82364 | Drive Shaft | | 36 | | 53 | 78.5 | 651 | |
| | 2001.04-2005.06 | 6MT | R | R | Hatchback 4WD ASZ | | GDS81587 | Drive Shaft | | 36 | | 53 | 78.5 | 522 | |
| | 2001.04-2005.06 | 6MT | R | L/R | Hatchback 4WD ASZ | | GCO83033 | Outer Joint | | 36 | 30 | 53 | 78.5 | 51 | I |
| | 2001.04-2005.06 | 6MT | R | L/R | Hatchback 4WD ASZ | | GCI82447 | Inner Joint | | | 33 | | | 34 | |
| | 2001.04-2005.06 | 6MT | R | L/R | Hatchback 4WD ASZ | Date from:2001.04 | GCI83011 | Inner Joint | | | 33 | | | 34 | |
| 1.9 (110 kw) | 2000.09-2004.05 | 6MT | F | L | Hatchback FWD ARL | Date to:2001.06,with headlamp levelling (mechanical) | GDS56276 | Drive Shaft | | 36 | | 53 | 77.5 | 520 | |
| | 2000.09-2004.05 | 6MT | F | L | Hatchback FWD ARL | | GDS99115 | Drive Shaft | | 36 | | 53 | 77.5 | 518 | |
| | 2000.09-2004.05 | 6MT | F | R | Hatchback FWD ARL | | GDS61121 | Drive Shaft | | 36 | | 53 | 77.5 | 806 | |
| | 2000.09-2004.05 | 6MT | F | R | Hatchback FWD ARL | Date From:2000.09;Date To:2004.05;Chassis no. from:1J1B07301 | GDS61186 | Drive Shaft | | 36 | | 53 | 77.5 | 653 | |
| | 2000.09-2004.05 | 6MT | F | L/R | Hatchback FWD ARL | | GCO83035 | Outer Joint | | 36 | 27 | 53 | 77.5 | 65 | I |
| | 2000.09-2004.05 | 6MT | F | L | Hatchback FWD ARL | Date to:2001.06,with headlamp levelling (mechanical) | GCI61010 | Inner Joint | | | 28 | | | 32 | |
| | 2000.09-2004.05 | 6MT | F | L/R | Hatchback FWD ARL | Date to:2003.01,without headlamp levelling (mechanical) | GCI83001 | Inner Joint | | | 28 | | | 32 | |
| | 2000.09-2004.05 | 6MT | F | L/R | Hatchback FWD ARL | Date from:2003.02 | GCI83016 | Inner Joint | | | 28 | | | 32 | |
| | 2000.09-2004.05 | MT | F | R | Hatchback FWD ARL | Date to:2004.12,For PR code:E54 | GDS61088 | Drive Shaft | | 36 | | 53 | 40 | 769 | |
| | 2001.05-2005.06 | 6MT | F | L | Hatchback 4WD ARL | | GDS61123 | Drive Shaft | | 36 | | 53 | 77.5 | 520 | |
| | 2001.05-2005.06 | 6MT | F | R | Hatchback 4WD ARL | | GDS61186 | Drive Shaft | | 36 | | 53 | 77.5 | 653 | |
| | 2001.05-2005.06 | 6MT | F | L/R | Hatchback 4WD ARL | | GCO83035 | Outer Joint | | 36 | 27 | 53 | 77.5 | 65 | I |
| | 2001.05-2005.06 | 6MT | F | L/R | Hatchback 4WD ARL | Date to:2003.01 | GCI83001 | Inner Joint | | | 28 | | | 32 | |
| | 2001.05-2005.06 | 6MT | F | L/R | Hatchback 4WD ARL | Date from:2003.02 | GCI83016 | Inner Joint | | | 28 | | | 32 | |
| | 2001.05-2005.06 | MT | F | L/R | Hatchback 4WD ARL | | GCI83006 | Inner Joint | | | 33 | | | 34 | |
| | 2001.05-2005.06 | 6MT | R | L | Hatchback 4WD ARL | | GDS82364 | Drive Shaft | | 36 | | 53 | 78.5 | 651 | |
| | 2001.05-2005.06 | 6MT | R | R | Hatchback 4WD ARL | | GDS81587 | Drive Shaft | | 36 | | 53 | 78.5 | 522 | |
| | 2001.05-2005.06 | 6MT | R | L/R | Hatchback 4WD ARL | | GCO83033 | Outer Joint | | 36 | 30 | 53 | 78.5 | 51 | I |
| | 2001.05-2005.06 | 6MT | R | L/R | Hatchback 4WD ARL | | GCI82447 | Inner Joint | | | 33 | | | 34 | |
| | 2001.05-2005.06 | 6MT | R | L/R | Hatchback 4WD ARL | Date from:2001.05 | GCI83011 | Inner Joint | | | 33 | | | 34 | |
| 2.0 (55 kw) | 2004.01-2008.11 | 5MT | F | L | Hatchback FWD BDK | | GDS61097 | Drive Shaft | | 36 | | 59.5 | 40.5 | 543 | |
| | 2004.01-2008.11 | 5MT | F | R | Hatchback FWD BDK | | GDS61096 | Drive Shaft | | 36 | | 59.5 | 40.5 | 799 | |
| | 2004.01-2008.11 | 5MT | F | L/R | Hatchback FWD BDK | | GCO83037 | Outer Joint | | 36 | 30 | 59.5 | 40.5 | 56 | I |
| | 2004.01-2008.11 | 5MT | F | L/R | Hatchback FWD BDK | | GCI82447 | Inner Joint | | | 33 | | | 34 | |
| | 2004.01-2008.11 | MT | F | R | Hatchback FWD BDK | | GDS61237 | Stub Axle,differential | | 23 | 37 | | | 142.5 | |
| 2.0 (79 kw) | 1995.01-1997.12 | MT | F | R | Hatchback FWD AEP | | GDS61002 | Drive Shaft | | 22 | | 53 | 78.5 | 793 | |
| | 1995.01-1997.12 | | F | | Hatchback FWD AEP | | GCO53004 | Outer Joint | | 22 | 30 | 51 | 78 | 61 | I |
| 2.0 (81 kw) | 2008.10-2012.11 | 5MT | F | L/R | Hatchback FWD CBDC;CLCA | | GCI82447 | Inner Joint | | | 33 | | | 34 | |
| | 2008.10-2012.11 | 6AT/5MT | F | L/R | Hatchback FWD CBDC;CLCA | TJ | GCI54004 | Inner Joint | | | 34 | | | 81 | |
| | 2008.10-2012.11 | 6AT/5MT | F | L/R | Hatchback FWD CBDC;CLCA | AAR | GCI61057 | Inner Joint | | | 34 | | | 89 | |
| | 2008.10-2012.11 | AT | F | L | Hatchback FWD CBDC;CLCA | | GDS54013 | Drive Shaft | | 36 | | 59.5 | 40 | 479.5 | |
| | 2008.10-2012.11 | AT | F | L | Hatchback FWD CBDC;CLCA | | GDS83241 | Drive Shaft | | 36 | | 59.5 | 40 | 475 | |
| | 2008.10-2012.11 | AT | F | R | Hatchback FWD CBDC;CLCA | | GDS54011 | Drive Shaft | | 36 | | 59.5 | 40 | 755 | |
| | 2008.10-2012.11 | AT | F | L/R | Hatchback FWD CBDC;CLCA | Date to:2011.05 | GCO83002 | Outer Joint | | 36 | 27 | 59.5 | 40 | 66 | I |
| | 2008.10-2012.11 | MT | F | L | Hatchback FWD CBDC;CLCA | | GDS83294 | Drive Shaft | | 36 | | 59.5 | 38 | 519 | |
| | 2008.10-2012.11 | MT | F | R | Hatchback FWD CBDC;CLCA | | GDS61042 | Drive Shaft | | 36 | | 59.5 | 40.5 | 814 | |
| | 2008.10-2012.11 | MT | F | L/R | Hatchback FWD CBDC;CLCA | Date to:2011.05 | GCO83037 | Outer Joint | | 36 | 30 | 59.5 | 40.5 | 56 | I |
| | 2008.10-2012.11 | MT | F | R | Hatchback FWD CBDC;CLCA | Date to:2011.05 | GCI53002 | Inner Joint | | | 33 | | | 34 | |
| | 2012.11-2020.08 | 5MT | F | L | Hatchback FWD CRVA;CYKB;DFGB;DCYB;DEJB | No Economy | GDS61282 | Drive Shaft | | 36 | | 59.5 | 40 | 523 | |
| | 2012.11-2020.08 | 5MT | F | R | Hatchback FWD CRVA;CYKB;DFGB;DCYB;DEJB | | GDS61042 | Drive Shaft | | 36 | | 59.5 | 40.5 | 814 | |
| | 2012.11-2020.08 | 5MT | F | R | Hatchback FWD CRVA;CYKB;DFGB;DCYB;DEJB | | GDS61283 | Drive Shaft | | 36 | | 59.5 | 40 | 815 | |
| | 2012.11-2020.08 | 5MT | F | L/R | Hatchback FWD CRVA;CYKB;DFGB;DCYB;DEJB | | GCI82447 | Inner Joint | | | 33 | | | 34 | |
| | 2012.11-2020.08 | 6AT/7AT/5MT | F | L/R | Hatchback FWD CRVA;CYKB;DFGB;DCYB;DEJB | | GCO61059 | Outer Joint | | 36 | 33 | 59.5 | 40 | 59.5 | I |
| | 2012.11-2020.08 | 6AT/7AT/5MT | F | L/R | Hatchback FWD CRVA;CYKB;DFGB;DCYB;DEJB | | GCO83101 | Outer Joint | | 36 | 27 | 59.5 | 40 | 65 | M |
| | 2012.11-2020.08 | 6DCT | F | L | Hatchback FWD CRVA;CYKB;DFGB;DCYB;DEJB | | GDS61285 | Drive Shaft | | 36 | | 59.5 | 40 | 472 | |
| | 2012.11-2020.08 | 6DCT | F | R | Hatchback FWD CRVA;CYKB;DFGB;DCYB;DEJB | | GDS83354 | Drive Shaft | | 36 | | 59.5 | 40 | 763 | |
| | 2012.11-2020.08 | 6DCT | F | L/R | Hatchback FWD CRVA;CYKB;DFGB;DCYB;DEJB | For Engine code:CRLB/CRBC/DEJA | GCI61057 | Inner Joint | | | 34 | | | 89 | |
| | 2012.11-2020.08 | 7DCT | F | L | Hatchback FWD CRVA;CYKB;DFGB;DCYB;DEJB | | GDS81265 | Drive Shaft | | 36 | 37 | 59.5 | 40 | 557 | |
| | 2012.11-2020.08 | 7DCT | F | R | Hatchback FWD CRVA;CYKB;DFGB;DCYB;DEJB | | GDS83612 | Drive Shaft | | 36 | 37 | 59.5 | 40 | 907 | |
| | 2012.11-2020.08 | 7DCT | F | L | Hatchback FWD CRVA;CYKB;DFGB;DCYB;DEJB | | GCI81158 | Inner Joint | | 37 | 34 | 34.5 | 65.5 | 83 | |
| | 2012.11-2020.08 | 7DCT | F | R | Hatchback FWD CRVA;CYKB;DFGB;DCYB;DEJB | | GCI82108 | Inner Joint | | 37 | 34 | 40 | 77.5 | 103.5 | |
| | 2012.11-2020.08 | MT/7AT | F | L | Hatchback FWD CRVA;CYKB;DFGB;DCYB;DEJB | | GCO83037 | Outer Joint | | 36 | 30 | 59.5 | 40.5 | 56 | I |
| 2.0 (85 kw) | 1991.11-1997.08 | AT | F | L | Hatchback FWD 2E/ABA/ADY/AGG/AKR | Chassis no. to:1H-R-990000 | GDS61001 | Drive Shaft | | 22 | | 53.2 | 78 | 557 | |
| | 1991.11-1997.08 | AT | F | L | Hatchback FWD 2E/ABA/ADY/AGG/AKR | | GDS61011 | Drive Shaft | | 22 | | 53.2 | 78 | 547 | |
| | 1991.11-1997.08 | AT | F | R | Hatchback FWD 2E/ABA/ADY/AGG/AKR | Date from:1994.01 | GDS61009 | Drive Shaft | | 22 | | 53.2 | 78 | 789 | |
| | 1991.11-1997.08 | AT | F | R | Hatchback FWD 2E/ABA/ADY/AGG/AKR | Chassis no. from:1H-S-000001 | GDS61028 | Drive Shaft | | 22 | | 53.2 | 78 | 767 | |
| | 1991.11-1997.08 | AT | F | L/R | Hatchback FWD 2E/ABA/ADY/AGG/AKR | | GCO53007 | Outer Joint | | 22 | 30 | 53.2 | 78 | 61 | I |

| | YEAR | TRANSM. | F/R | L/R | BODY STYLE & DRIVE TYPE & ENGINE | REMARKS | G-AP Ref. | PRODUCT | ABS | Technical Specifications A | B | C | H | L | P |
|---|---|---|---|---|---|---|---|---|---|---|---|---|---|---|---|
| **VW** **Golf** | | | | | | | | | | | | | | | |
| 2.0 (85 kw) | 1991.11-1997.08 | AT | F | L | Hatchback FWD 2E/ABA/ADY/AGG/AKR | | GCI61004 | Inner Joint | | | 34 | | | 59.2 | |
| | 1991.11-1997.08 | AT | F | R | Hatchback FWD 2E/ABA/ADY/AGG/AKR | Chassis no. to:1H-R-990000 | GCI83009 | Inner Joint | | | 33 | | | 34 | |
| | 1991.11-1997.08 | AT/MT | F | L/R | Hatchback FWD 2E/ABA/ADY/AGG/AKR | Date from:1994.01 | GCI83011 | Inner Joint | | | 33 | | | 34 | |
| | 1991.11-1997.08 | MT | F | L | Hatchback FWD 2E/ABA/ADY/AGG/AKR | Date from:1994.01 | GDS99116 | Drive Shaft | | 36 | | 53.2 | 77.5 | 548.5 | |
| | 1991.11-1997.08 | MT | F | R | Hatchback FWD 2E/ABA/ADY/AGG/AKR | | GDS61002 | Drive Shaft | | 22 | | 53 | 78.5 | 793 | |
| | 1991.11-1997.08 | MT | F | R | Hatchback FWD 2E/ABA/ADY/AGG/AKR | | GDS99112 | Drive Shaft | | 36 | | 53.2 | 77.5 | 783 | |
| | 1991.11-1997.08 | MT | F | L/R | Hatchback FWD 2E/ABA/ADY/AGG/AKR | | GCO53004 | Outer Joint | | 22 | 30 | 51 | 78 | 61 | I |
| | 1991.11-1997.08 | MT | F | L/R | Hatchback FWD 2E/ABA/ADY/AGG/AKR | | GCO83070 | Outer Joint | | 36 | 30 | 53 | 78 | 60 | I |
| | 1991.11-1997.08 | MT | F | R | Hatchback FWD 2E/ABA/ADY/AGG/AKR | | GCI83009 | Inner Joint | | | 33 | | | 34 | |
| | 1996.05-1997.12 | 5MT | F | L/R | Hatchback 4WD AGG | | GCI83011 | Inner Joint | | | 33 | | | 34 | |
| | 1996.05-1997.12 | MT | F | R | Hatchback 4WD AGG | | GDS61002 | Drive Shaft | | 22 | | 53 | 78.5 | 793 | |
| | 1996.05-1997.12 | | F | | Hatchback 4WD AGG | | GCO53004 | Outer Joint | | 22 | 30 | 51 | 78 | 61 | I |
| | 1998.08-2004.07 | AT | F | L | Hatchback FWD AEG/APK/AQY/AZG/AZJ | | GDS61020 | Drive Shaft | | 36 | | 53.2 | 77.5 | 547 | |
| | 1998.08-2004.07 | AT | F | R | Hatchback FWD AEG/APK/AQY/AZG/AZJ | | GDS83011 | Drive Shaft | | 36 | | 53.2 | 77.5 | 810.5 | |
| | 1998.08-2004.07 | AT | F | L/R | Hatchback FWD AEG/APK/AQY/AZG/AZJ | | GCI61006 | Inner Joint | | | 30 | | | 57.6 | |
| | 1998.08-2004.07 | AT/MT | F | L/R | Hatchback FWD AEG/APK/AQY/AZG/AZJ | | GCO83070 | Outer Joint | | 36 | 30 | 53 | 78 | 60 | I |
| | 1998.08-2004.07 | MT | F | L | Hatchback FWD AEG/APK/AQY/AZG/AZJ | | GDS61314 | Drive Shaft | | 36 | | 53 | 78 | 558 | |
| | 1998.08-2004.07 | MT | F | L | Hatchback FWD AEG/APK/AQY/AZG/AZJ | | GDS83006 | Drive Shaft | | 36 | | 53.2 | 77.5 | 557 | |
| | 1998.08-2004.07 | MT | F | R | Hatchback FWD AEG/APK/AQY/AZG/AZJ | | GDS83004 | Drive Shaft | | 36 | | 53.2 | 77.5 | 822 | |
| | 1998.08-2004.07 | MT | F | R | Hatchback FWD AEG/APK/AQY/AZG/AZJ | | GCI83009 | Inner Joint | | | 33 | | | 34 | |
| | 1998.08-2004.07 | MT | F | L/R | Hatchback FWD AEG/APK/AQY/AZG/AZJ | | GCI82447 | Inner Joint | | | 33 | | | 34 | |
| | 1998.08-2004.07 | MT | F | L/R | Hatchback FWD AEG/APK/AQY/AZG/AZJ | | GCI83006 | Inner Joint | | | 33 | | | 34 | |
| | 2000.04-2005.06 | 5MT | F | L | Hatchback 4WD AZH/AZJ | | GDS61314 | Drive Shaft | | 36 | | 53 | 78 | 558 | |
| | 2000.04-2005.06 | 5MT | F | L/R | Hatchback 4WD AZH/AZJ | | GCO83070 | Outer Joint | | 36 | 30 | 53 | 78 | 60 | I |
| | 2000.04-2005.06 | 5MT | F | L | Hatchback 4WD AZH/AZJ | | GCI82447 | Inner Joint | | | 33 | | | 34 | |
| | 2000.04-2005.06 | 5MT | F | R | Hatchback 4WD AZH/AZJ | | GCI83009 | Inner Joint | | | 33 | | | 34 | |
| | 2000.04-2005.06 | MT | F | L | Hatchback 4WD AZH/AZJ | | GDS83006 | Drive Shaft | | 36 | | 53.2 | 77.5 | 557 | |
| | 2000.04-2005.06 | MT | F | R | Hatchback 4WD AZH/AZJ | | GDS83004 | Drive Shaft | | 36 | | 53.2 | 77.5 | 822 | |
| | 2000.04-2005.06 | MT | F | L/R | Hatchback 4WD AZH/AZJ | | GCI83006 | Inner Joint | | | 33 | | | 34 | |
| | 2000.04-2005.06 | 5MT | R | L | Hatchback 4WD AZH/AZJ | | GDS82364 | Drive Shaft | | 36 | | 53 | 78.5 | 651 | |
| | 2000.04-2005.06 | 5MT | R | R | Hatchback 4WD AZH/AZJ | | GDS81587 | Drive Shaft | | 36 | | 53 | 78.5 | 522 | |
| | 2000.04-2005.06 | 5MT | R | L/R | Hatchback 4WD AZH/AZJ | | GCO83033 | Outer Joint | | 36 | 30 | 53 | 78.5 | 51 | I |
| | 2000.04-2005.06 | 5MT | R | L/R | Hatchback 4WD AZH/AZJ | | GCI53002 | Inner Joint | | | 33 | | | 34 | |
| | 2000.04-2005.06 | 5MT | R | L/R | Hatchback 4WD AZH/AZJ | | GCI82447 | Inner Joint | | | 33 | | | 34 | |
| | 2002.05-2003.05 | 5MT | F | L | Hatchback FWD BEH | | GCI82447 | Inner Joint | | | 33 | | | 34 | |
| | 2002.05-2003.05 | | F | L | Hatchback FWD BEH | | GDS61314 | Drive Shaft | | 36 | | 53 | 78 | 558 | |
| | 2002.05-2003.05 | | F | R | Hatchback FWD BEH | | GDS83004 | Drive Shaft | | 36 | | 53.2 | 77.5 | 822 | |
| | 2002.05-2003.05 | | F | L/R | Hatchback FWD BEH | For vehicles with heavy duty suspension | GCO83070 | Outer Joint | | 36 | 30 | 53 | 78 | 60 | I |
| | 2002.05-2003.05 | | F | R | Hatchback FWD BEH | | GCI83009 | Inner Joint | | | 33 | | | 34 | |
| | 2005.01-2008.11 | 5MT | F | L | Hatchback FWD BEV;BHY | | GDS83294 | Drive Shaft | | 36 | | 59.5 | 38 | 519 | |
| | 2005.01-2008.11 | 5MT | F | R | Hatchback FWD BEV;BHY | | GDS61042 | Drive Shaft | | 36 | | 59.5 | 40.5 | 814 | |
| | 2005.01-2008.11 | 5MT | F | L/R | Hatchback FWD BEV;BHY | | GCO83037 | Outer Joint | | 36 | 30 | 59.5 | 40.5 | 56 | I |
| | 2005.01-2008.11 | 5MT | F | L/R | Hatchback FWD BEV;BHY | | GCI82447 | Inner Joint | | | 33 | | | 34 | |
| | 2019.08- | 6MT | F | L | Hatchback FWD DSUD;DTRD;DTRB;DXRC | | GDS83295 | Drive Shaft | | 36 | | 59.5 | 40 | 491 | |
| | 2019.08- | 6MT | F | R | Hatchback FWD DSUD;DTRD;DTRB;DXRC | | GDS81891 | Drive Shaft | | 36 | | 59.5 | 40 | 781 | |
| | 2019.08- | 6MT | F | L | Hatchback FWD DSUD;DTRD;DTRB;DXRC | | GCO83002 | Outer Joint | | 36 | 27 | 59.5 | 40 | 66 | I |
| | 2019.08- | 6MT | F | L | Hatchback FWD DSUD;DTRD;DTRB;DXRC | | GCI61041 | Inner Joint | | | 28 | | | 32 | |
| | 2019.08- | 6MT | F | R | Hatchback FWD DSUD;DTRD;DTRB;DXRC | | GCI61069 | Inner Joint | | | 28 | | | 32 | |
| | 2019.08- | 6MT | F | R | Hatchback FWD DSUD;DTRD;DTRB;DXRC | | GDS98007 | Stub Axle-Flange | | 37 | | | 88 | 148 | |
| | 2019.08- | 7DCT | F | L | Hatchback FWD DSUD;DTRD;DTRB;DXRC | For PR code:0EG | GDS61282 | Drive Shaft | | 36 | | 59.5 | 40 | 523 | |
| | 2019.08- | 7DCT | F | L | Hatchback FWD DSUD;DTRD;DTRB;DXRC | For PR code:0IJ | GDS81265 | Drive Shaft | | 36 | 37 | 59.5 | 40 | 557 | |
| | 2019.08- | 7DCT | F | R | Hatchback FWD DSUD;DTRD;DTRB;DXRC | For PR code:0IJ | GDS83612 | Drive Shaft | | 36 | 37 | 59.5 | 40 | 907 | |
| | 2019.08- | 7DCT | F | R | Hatchback FWD DSUD;DTRD;DTRB;DXRC | For PR code:0EG | GDS84417 | Drive Shaft | | 36 | | 59.5 | 40 | 783 | |
| | 2019.08- | 7DCT | F | R | Hatchback FWD DSUD;DTRD;DTRB;DXRC | For PR code:0IJ | GCO83101 | Outer Joint | | 36 | 27 | 59.5 | 40 | 65 | M |
| | 2019.08- | 7DCT | F | L/R | Hatchback FWD DSUD;DTRD;DTRB;DXRC | For PR code:0EG | GCO61059 | Outer Joint | | 36 | 33 | 59.5 | 40 | 59.5 | I |
| | 2019.08- | 7DCT | F | L | Hatchback FWD DSUD;DTRD;DTRB;DXRC | For PR code:0IJ | GCI81158 | Inner Joint | | 37 | 34 | 34.5 | 65.5 | 83 | |
| | 2019.08- | 7DCT | F | R | Hatchback FWD DSUD;DTRD;DTRB;DXRC | For PR code:0IJ | GCI82108 | Inner Joint | | 37 | 34 | 40 | 77.5 | 103.5 | |
| | 2019.08- | 7DCT | F | L/R | Hatchback FWD DSUD;DTRD;DTRB;DXRC | For PR code:0EG | GCI53002 | Inner Joint | | | 33 | | | 34 | |
| 2.0 (100 kw) | 2003.10-2008.11 | 6AT/6MT | F | L/R | Hatchback FWD AZV | For driving school cars | GCO83101 | Outer Joint | | 36 | 27 | 59.5 | 40 | 65 | M |
| | 2003.10-2008.11 | 6DCT | F | L | Hatchback FWD AZV | Not For driving school cars | GDS54013 | Drive Shaft | | 36 | | 59.5 | 40 | 479.5 | |
| | 2003.10-2008.11 | 6DCT | F | L | Hatchback FWD AZV | For driving school cars | GDS83381 | Drive Shaft | | 36 | | 59.5 | 40 | 483 | |
| | 2003.10-2008.11 | 6DCT | F | R | Hatchback FWD AZV | For driving school cars | GDS54011 | Drive Shaft | | 36 | | 59.5 | 40 | 755 | |
| | 2003.10-2008.11 | 6DCT | F | R | Hatchback FWD AZV | Date to:2004.10,not For driving school cars | GDS83355 | Drive Shaft | | 36 | 23 | 59.5 | 40 | 799 | |
| | 2003.10-2008.11 | 6DCT | F | R | Hatchback FWD AZV | Date to:2004.10,Posision:Right | GCI83041 | Inner Joint | | 23 | 34 | | 319 | 88 | |
| | 2003.10-2008.11 | 6DCT | F | L/R | Hatchback FWD AZV | Date to:2004.10,Posision:Left;Date from:2004.11,Posision:Left/Right | GCI54004 | Inner Joint | | | 34 | | | 81 | |

| | YEAR | TRANSM. | F/R | L/R | BODY STYLE & DRIVE TYPE & ENGINE | REMARKS | G-AP Ref. | PRODUCT | ABS | Technical Specifications A | B | C | H | L | P |
|---|---|---|---|---|---|---|---|---|---|---|---|---|---|---|---|
| **VW** **Golf** | | | | | | | | | | | | | | | |
| 2.0 (100 kw) | 2003.10-2008.11 | 6DCT | F | L/R | Hatchback FWD AZV | Date to:2004.10,Posision:Left;Date from:2004.11,Posision:Left/Right | GCI61057 | Inner Joint | | | 34 | | | 89 | |
| | 2003.10-2008.11 | 6MT | F | L | Hatchback FWD AZV | Date From:2004.11,For driving school cars | GDS83295 | Drive Shaft | | 36 | | 59.5 | 40 | 491 | |
| | 2003.10-2008.11 | 6MT | F | R | Hatchback FWD AZV | Date to:2007.12;For driving school cars | GDS61126 | Drive Shaft | | 36 | | 59.5 | 40 | 793 | |
| | 2003.10-2008.11 | 6MT | F | R | Hatchback FWD AZV | For driving school cars | GDS61147 | Drive Shaft | | 36 | | 59.5 | 40 | 795 | |
| | 2003.10-2008.11 | 6MT | F | R | Hatchback FWD AZV | Date From:2004.11,For driving school cars | GDS83313 | Drive Shaft | | 36 | | 59.5 | 40 | 792 | |
| | 2003.10-2008.11 | 6MT | F | L/R | Hatchback FWD AZV | | GCI83016 | Inner Joint | | | 28 | | | 32 | |
| | 2003.10-2008.11 | AT | F | L | Hatchback FWD AZV | | GDS83241 | Drive Shaft | | 36 | | 59.5 | 40 | 475 | |
| | 2003.10-2008.11 | AT/MT | F | L/R | Hatchback FWD AZV | | GCO83002 | Outer Joint | | 36 | 27 | 59.5 | 40 | 66 | I |
| | 2003.10-2008.11 | MT | F | R | Hatchback FWD AZV | | GDS83236 | Drive Shaft | | 36 | | 59.5 | 40 | 484 | |
| | 2003.10-2008.11 | MT | F | R | Hatchback FWD AZV | | GDS61237 | Stub Axle,differential | | 23 | 37 | | | 142.5 | |
| | 2008.10-2012.11 | 6MT | F | L | Hatchback FWD CBAA;CFFA | | GDS83295 | Drive Shaft | | 36 | | 59.5 | 40 | 491 | |
| | 2008.10-2012.11 | 6MT | F | R | Hatchback FWD CBAA;CFFA | Chassis no. from:1K_C_000001 | GDS61126 | Drive Shaft | | 36 | | 59.5 | 40 | 793 | |
| | 2008.10-2012.11 | 6MT | F | R | Hatchback FWD CBAA;CFFA | Chassis no. to:1K_B_400000 | GDS83313 | Drive Shaft | | 36 | | 59.5 | 40 | 792 | |
| | 2008.10-2012.11 | 6MT | F | L | Hatchback FWD CBAA;CFFA | Rims:With steel rim | GCO83101 | Outer Joint | | 36 | 27 | 59.5 | 40 | 65 | M |
| | 2008.10-2012.11 | AT | F | L | Hatchback FWD CBAA;CFFA | | GDS83241 | Drive Shaft | | 36 | | 59.5 | 40 | 475 | |
| | 2008.10-2012.11 | AT | F | L | Hatchback FWD CBAA;CFFA | | GCI54004 | Inner Joint | | | 34 | | | 81 | |
| | 2008.10-2012.11 | MT | F | L | Hatchback FWD CBAA;CFFA | | GDS83236 | Drive Shaft | | 36 | | 59.5 | 40 | 484 | |
| | 2008.10-2012.11 | MT | F | L/R | Hatchback FWD CBAA;CFFA | | GCO83002 | Outer Joint | | 36 | 27 | 59.5 | 40 | 66 | I |
| | 2008.10-2012.11 | MT/6MT | F | L/R | Hatchback FWD CBAA;CFFA | | GCI83016 | Inner Joint | | | 28 | | | 32 | |
| 2.0 (103 kw) | 2003.10-2008.11 | 6AT/6MT | F | L/R | Hatchback FWD BKD | For driving school cars | GCO83101 | Outer Joint | | 36 | 27 | 59.5 | 40 | 65 | M |
| | 2003.10-2008.11 | 6DCT | F | L | Hatchback FWD BKD | Not For driving school cars | GDS54013 | Drive Shaft | | 36 | | 59.5 | 40 | 479.5 | |
| | 2003.10-2008.11 | 6DCT | F | L | Hatchback FWD BKD | For driving school cars | GDS83381 | Drive Shaft | | 36 | | 59.5 | 40 | 483 | |
| | 2003.10-2008.11 | 6DCT | F | R | Hatchback FWD BKD | For driving school cars | GDS54011 | Drive Shaft | | 36 | | 59.5 | 40 | 755 | |
| | 2003.10-2008.11 | 6DCT | F | R | Hatchback FWD BKD | Date to:2004.10,not For driving school cars | GDS83355 | Drive Shaft | | 36 | 23 | 59.5 | 40 | 799 | |
| | 2003.10-2008.11 | 6DCT | F | R | Hatchback FWD BKD | Date to:2004.10,Posision:Right | GCI83041 | Inner Joint | | 23 | 34 | | 319 | 88 | |
| | 2003.10-2008.11 | 6DCT | F | L/R | Hatchback FWD BKD | Date to:2004.10,Posision:Left;Date from:2004.11,Posision:Left/Right | GCI54004 | Inner Joint | | | 34 | | | 81 | |
| | 2003.10-2008.11 | 6DCT | F | L/R | Hatchback FWD BKD | Date to:2004.10,Posision:Left;Date from:2004.11,Posision:Left/Right | GCI61057 | Inner Joint | | | 34 | | | 89 | |
| | 2003.10-2008.11 | 6MT | F | R | Hatchback FWD BKD | For driving school cars | GDS61126 | Drive Shaft | | 36 | | 59.5 | 40 | 793 | |
| | 2003.10-2008.11 | 6MT | F | R | Hatchback FWD BKD | For driving school cars | GDS61147 | Drive Shaft | | 36 | | 59.5 | 40 | 795 | |
| | 2003.10-2008.11 | 6MT | F | R | Hatchback FWD BKD | Date from:2004.11 | GDS83313 | Drive Shaft | | 36 | | 59.5 | 40 | 792 | |
| | 2003.10-2008.11 | 6MT | F | L/R | Hatchback FWD BKD | Posision:Right,Date to:2004.10 | GDS83295 | Drive Shaft | | 36 | | 59.5 | 40 | 491 | |
| | 2003.10-2008.11 | 6MT | F | L/R | Hatchback FWD BKD | | GCI83016 | Inner Joint | | | 28 | | | 32 | |
| | 2003.10-2008.11 | AT | F | L | Hatchback FWD BKD | | GDS83241 | Drive Shaft | | 36 | | 59.5 | 40 | 475 | |
| | 2003.10-2008.11 | AT/MT | F | L/R | Hatchback FWD BKD | | GCO83002 | Outer Joint | | 36 | 27 | 59.5 | 40 | 66 | I |
| | 2003.10-2008.11 | MT | F | R | Hatchback FWD BKD | Date to:2004.11 | GDS83236 | Drive Shaft | | 36 | | 59.5 | 40 | 484 | |
| | 2003.10-2008.11 | MT | F | R | Hatchback FWD BKD | | GDS61237 | Stub Axle,differential | | 23 | 37 | | | 142.5 | |
| | 2004.08-2008.11 | 6MT | F | L | Hatchback 4WD BKD | | GDS83295 | Drive Shaft | | 36 | | 59.5 | 40 | 491 | |
| | 2004.08-2008.11 | 6MT | F | R | Hatchback 4WD BKD | | GDS83266 | Drive Shaft | | 36 | | 59.5 | 40 | 601 | |
| | 2004.08-2008.11 | 6MT | F | L/R | Hatchback 4WD BKD | | GCO83002 | Outer Joint | | 36 | 27 | 59.5 | 40 | 66 | I |
| | 2004.08-2008.11 | 6MT | F | L/R | Hatchback 4WD BKD | | GCI83016 | Inner Joint | | | 28 | | | 32 | |
| | 2004.08-2008.11 | MT | F | R | Hatchback 4WD BKD | | GDS61237 | Stub Axle,differential | | 23 | 37 | | | 142.5 | |
| | 2004.08-2008.11 | 6MT | R | L | Hatchback 4WD BKD | | GDS61284 | Drive Shaft | | 36 | | 59.5 | 40 | 594 | |
| | 2004.08-2008.11 | 6MT | R | R | Hatchback 4WD BKD | | GDS61293 | Drive Shaft | | 36 | | 59.5 | 40 | 631 | |
| | 2004.08-2008.11 | 6MT | R | L/R | Hatchback 4WD BKD | | GCI35026 | Outer Joint | | 36 | 33 | 59.5 | 40 | 61 | |
| | 2004.08-2008.11 | 6MT | R | L/R | Hatchback 4WD BKD | | GCO83037 | Outer Joint | | 36 | 30 | 59.5 | 40.5 | 56 | I |
| | 2004.08-2008.11 | 6MT | R | L/R | Hatchback 4WD BKD | | GCI53002 | Inner Joint | | | 33 | | | 34 | |
| | 2004.08-2008.11 | 6MT | R | L/R | Hatchback 4WD BKD | | GCI82447 | Inner Joint | | | 33 | | | 34 | |
| | 2004.12-2008.11 | 6DCT | F | L | Hatchback FWD BMM | Not For driving school cars | GDS54013 | Drive Shaft | | 36 | | 59.5 | 40 | 479.5 | |
| | 2004.12-2008.11 | 6DCT | F | L | Hatchback FWD BMM | For driving school cars | GDS83381 | Drive Shaft | | 36 | | 59.5 | 40 | 483 | |
| | 2004.12-2008.11 | 6DCT | F | R | Hatchback FWD BMM | For driving school cars | GDS54011 | Drive Shaft | | 36 | | 59.5 | 40 | 755 | |
| | 2004.12-2008.11 | 6DCT | F | L/R | Hatchback FWD BMM | TJ | GCI54004 | Inner Joint | | | 34 | | | 81 | |
| | 2004.12-2008.11 | 6DCT | F | L/R | Hatchback FWD BMM | AAR | GCI61057 | Inner Joint | | | 34 | | | 89 | |
| | 2004.12-2008.11 | 6MT | F | L | Hatchback FWD BMM | Inner teeth of tranm.side:28 | GDS83295 | Drive Shaft | | 36 | | 59.5 | 40 | 491 | |
| | 2004.12-2008.11 | 6MT | F | R | Hatchback FWD BMM | For driving school cars;Solid shaft | GDS61126 | Drive Shaft | | 36 | | 59.5 | 40 | 793 | |
| | 2004.12-2008.11 | 6MT | F | R | Hatchback FWD BMM | For driving school cars;Hollow shaft | GDS61147 | Drive Shaft | | 36 | | 59.5 | 40 | 795 | |
| | 2004.12-2008.11 | 6MT | F | R | Hatchback FWD BMM | Not for driving school cars | GDS83313 | Drive Shaft | | 36 | | 59.5 | 40 | 792 | |
| | 2004.12-2008.11 | 6MT | F | L/R | Hatchback FWD BMM | Not for driving school cars | GCO83002 | Outer Joint | | 36 | 27 | 59.5 | 40 | 66 | I |
| | 2004.12-2008.11 | 6MT | F | L/R | Hatchback FWD BMM | | GCI83016 | Inner Joint | | | 28 | | | 32 | |
| | 2004.12-2008.11 | AT | F | L | Hatchback FWD BMM | | GDS83241 | Drive Shaft | | 36 | | 59.5 | 40 | 475 | |
| | 2004.12-2008.11 | AT/MT | F | L/R | Hatchback FWD BMM | For driving school cars | GCO83101 | Outer Joint | | 36 | 27 | 59.5 | 40 | 65 | M |
| | 2004.12-2008.11 | MT | F | L | Hatchback FWD BMM | Inner teeth of tranm.side:33 | GDS83236 | Drive Shaft | | 36 | | 59.5 | 40 | 484 | |
| | 2004.12-2008.11 | MT | F | R | Hatchback FWD BMM | | GDS61237 | Stub Axle,differential | | 23 | 37 | | | 142.5 | |
| | 2007.01-2008.11 | 6MT | F | L | Hatchback 4WD BMM | | GDS83295 | Drive Shaft | | 36 | | 59.5 | 40 | 491 | |
| | 2007.01-2008.11 | 6MT | F | R | Hatchback 4WD BMM | | GDS83266 | Drive Shaft | | 36 | | 59.5 | 40 | 601 | |
| | 2007.01-2008.11 | 6MT | F | L/R | Hatchback 4WD BMM | Date from:2007.05 | GCO83002 | Outer Joint | | 36 | 27 | 59.5 | 40 | 66 | I |

| | YEAR | TRANSM. | F/R | L/R | BODY STYLE & DRIVE TYPE & ENGINE | REMARKS | G-AP Ref. | PRODUCT | ABS | Technical Specifications A | B | C | H | L | P |
|---|---|---|---|---|---|---|---|---|---|---|---|---|---|---|---|
| **VW** **Golf** | | | | | | | | | | | | | | | |
| 2.0 (103 kw) | 2007.01-2008.11 | MT | F | L | Hatchback 4WD BMM | | GDS83236 | Drive Shaft | | 36 | | 59.5 | 40 | 484 | |
| | 2007.01-2008.11 | MT | F | R | Hatchback 4WD BMM | | GDS61237 | Stub Axle,differential | | 23 | 37 | | | 142.5 | |
| | 2007.01-2008.11 | MT/6MT | F | L/R | Hatchback 4WD BMM | | GCI83016 | Inner Joint | | | 28 | | | 32 | |
| | 2007.01-2008.11 | 6MT | R | L | Hatchback 4WD BMM | | GDS61284 | Drive Shaft | | 36 | | 59.5 | 40 | 594 | |
| | 2007.01-2008.11 | 6MT | R | R | Hatchback 4WD BMM | | GDS61293 | Drive Shaft | | 36 | | 59.5 | 40 | 631 | |
| | 2007.01-2008.11 | 6MT | R | L/R | Hatchback 4WD BMM | | GCI35026 | Outer Joint | | 36 | 33 | 59.5 | 40 | 61 | |
| | 2007.01-2008.11 | 6MT | R | L/R | Hatchback 4WD BMM | Date To:2007.06 | GCO83037 | Outer Joint | | 36 | 30 | 59.5 | 40.5 | 56 | I |
| | 2007.01-2008.11 | 6MT | R | L/R | Hatchback 4WD BMM | | GCI82447 | Inner Joint | | | 33 | | | 34 | |
| | 2008.10-2013.05 | 6AT/6MT | F | L/R | Hatchback FWD CBAB;CFFB;CJAA | TJ | GCI54004 | Inner Joint | | | 34 | | | 81 | |
| | 2008.10-2013.05 | 6AT/6MT | F | L/R | Hatchback FWD CBAB;CFFB;CJAA | AAR | GCI61057 | Inner Joint | | | 34 | | | 89 | |
| | 2008.10-2013.05 | 6AT/6MT | F | L/R | Hatchback FWD CBAB;CFFB;CJAA | VL | GCI83016 | Inner Joint | | | 28 | | | 32 | |
| | 2008.10-2013.05 | AT | F | L | Hatchback FWD CBAB;CFFB;CJAA | | GDS54013 | Drive Shaft | | 36 | | 59.5 | 40 | 479.5 | |
| | 2008.10-2013.05 | AT | F | L | Hatchback FWD CBAB;CFFB;CJAA | | GDS83241 | Drive Shaft | | 36 | | 59.5 | 40 | 475 | |
| | 2008.10-2013.05 | AT | F | R | Hatchback FWD CBAB;CFFB;CJAA | | GDS54011 | Drive Shaft | | 36 | | 59.5 | 40 | 755 | |
| | 2008.10-2013.05 | MT | F | L | Hatchback FWD CBAB;CFFB;CJAA | Inner teeth of tranm.side:33 | GDS83236 | Drive Shaft | | 36 | | 59.5 | 40 | 484 | |
| | 2008.10-2013.05 | MT | F | L | Hatchback FWD CBAB;CFFB;CJAA | Inner teeth of tranm.side:28 | GDS83295 | Drive Shaft | | 36 | | 59.5 | 40 | 491 | |
| | 2008.10-2013.05 | MT | F | R | Hatchback FWD CBAB;CFFB;CJAA | | GDS61126 | Drive Shaft | | 36 | | 59.5 | 40 | 793 | |
| | 2008.10-2013.05 | MT | F | R | Hatchback FWD CBAB;CFFB;CJAA | | GDS83313 | Drive Shaft | | 36 | | 59.5 | 40 | 792 | |
| | 2008.10-2013.05 | MT | F | L | Hatchback FWD CBAB;CFFB;CJAA | Rims:With steel rim | GCO83101 | Outer Joint | | 36 | 27 | 59.5 | 40 | 65 | M |
| | 2008.10-2013.05 | MT | F | L | Hatchback FWD CBAB;CFFB;CJAA | Rims:With steel rim;VL | GCI61069 | Inner Joint | | | 28 | | | 32 | |
| | 2008.10-2013.05 | | F | L/R | Hatchback FWD CBAB;CFFB;CJAA | | GCO83002 | Outer Joint | | 36 | 27 | 59.5 | 40 | 66 | I |
| | 2009.05-2012.11 | AT | F | L | Hatchback 4WD CBAB;CFFB | | GDS83241 | Drive Shaft | | 36 | | 59.5 | 40 | 475 | |
| | 2009.05-2012.11 | AT | F | L | Hatchback 4WD CBAB;CFFB | | GCI54004 | Inner Joint | | | 34 | | | 81 | |
| | 2009.05-2012.11 | MT | F | L | Hatchback 4WD CBAB;CFFB | Inner teeth of tranm.side:33 | GDS83236 | Drive Shaft | | 36 | | 59.5 | 40 | 484 | |
| | 2009.05-2012.11 | MT | F | L | Hatchback 4WD CBAB;CFFB | Inner teeth of tranm.side:28 | GDS83295 | Drive Shaft | | 36 | | 59.5 | 40 | 491 | |
| | 2009.05-2012.11 | MT | F | R | Hatchback 4WD CBAB;CFFB | | GDS83266 | Drive Shaft | | 36 | | 59.5 | 40 | 601 | |
| | 2009.05-2012.11 | MT | F | L/R | Hatchback 4WD CBAB;CFFB | | GCO83002 | Outer Joint | | 36 | 27 | 59.5 | 40 | 66 | I |
| | 2009.05-2012.11 | MT/6MT | F | L/R | Hatchback 4WD CBAB;CFFB | | GCI83016 | Inner Joint | | | 28 | | | 32 | |
| | 2009.05-2012.11 | 6MT | R | L | Hatchback 4WD CBAB;CFFB | | GDS61284 | Drive Shaft | | 36 | | 59.5 | 40 | 594 | |
| | 2009.05-2012.11 | 6MT | R | R | Hatchback 4WD CBAB;CFFB | | GDS61293 | Drive Shaft | | 36 | | 59.5 | 40 | 631 | |
| | 2009.05-2012.11 | 6MT | R | L/R | Hatchback 4WD CBAB;CFFB | | GCI35026 | Outer Joint | | 36 | 33 | 59.5 | 40 | 61 | |
| | 2009.05-2012.11 | 6MT | R | L/R | Hatchback 4WD CBAB;CFFB | | GCI82447 | Inner Joint | | | 33 | | | 34 | |
| | 2009.09-2012.11 | 6AT/6MT | F | L/R | Hatchback Van FWD CFFB;CJAA | | GCI54004 | Inner Joint | | | 34 | | | 81 | |
| | 2009.09-2012.11 | 6AT/6MT | F | L/R | Hatchback Van FWD CFFB;CJAA | Original Tripod Design | GCI61057 | Inner Joint | | | 34 | | | 89 | |
| | 2009.09-2012.11 | 6AT/6MT | F | L/R | Hatchback Van FWD CFFB;CJAA | | GCI83016 | Inner Joint | | | 28 | | | 32 | |
| | 2009.09-2012.11 | 6DCT | F | R | Hatchback Van FWD CFFB;CJAA | | GDS54011 | Drive Shaft | | 36 | | 59.5 | 40 | 755 | |
| | 2009.09-2012.11 | 6MT | F | R | Hatchback Van FWD CFFB;CJAA | | GDS83313 | Drive Shaft | | 36 | | 59.5 | 40 | 792 | |
| | 2009.09-2012.11 | AT | F | L | Hatchback Van FWD CFFB;CJAA | | GDS54013 | Drive Shaft | | 36 | | 59.5 | 40 | 479.5 | |
| | 2009.09-2012.11 | MT | F | L | Hatchback Van FWD CFFB;CJAA | | GDS83295 | Drive Shaft | | 36 | | 59.5 | 40 | 491 | |
| | 2009.09-2012.11 | MT | F | L | Hatchback Van FWD CFFB;CJAA | Rims:With steel rim | GCO83101 | Outer Joint | | 36 | 27 | 59.5 | 40 | 65 | M |
| | 2009.09-2012.11 | | F | L/R | Hatchback Van FWD CFFB;CJAA | | GCO83002 | Outer Joint | | 36 | 27 | 59.5 | 40 | 66 | I |
| 2.0 (105 kw) | 2012.08-2020.08 | 6DCT | F | L | Hatchback FWD CRBB;CRVC | | GDS61285 | Drive Shaft | | 36 | | 59.5 | 40 | 472 | |
| | 2012.08-2020.08 | 6DCT | F | R | Hatchback FWD CRBB;CRVC | | GDS83354 | Drive Shaft | | 36 | | 59.5 | 40 | 763 | |
| | 2012.08-2020.08 | 6DCT | F | L/R | Hatchback FWD CRBB;CRVC | For Engine code:CRLB/CRBC/DEJA | GCI61057 | Inner Joint | | | 34 | | | 89 | |
| | 2012.08-2020.08 | 6MT | F | L | Hatchback FWD CRBB;CRVC | | GDS83295 | Drive Shaft | | 36 | | 59.5 | 40 | 491 | |
| | 2012.08-2020.08 | 6MT | F | R | Hatchback FWD CRBB;CRVC | | GDS83313 | Drive Shaft | | 36 | | 59.5 | 40 | 792 | |
| | 2012.08-2020.08 | 6MT | F | L/R | Hatchback FWD CRBB;CRVC | For Modelcode:5G1 | GCO83101 | Outer Joint | | 36 | 27 | 59.5 | 40 | 65 | M |
| | 2012.08-2020.08 | 6MT | F | L | Hatchback FWD CRBB;CRVC | For PR code:1PE/1PF/1PA/2H4 | GCI61069 | Inner Joint | | | 28 | | | 32 | |
| | 2012.08-2020.08 | MT/6MT | F | L/R | Hatchback FWD CRBB;CRVC | | GCI83016 | Inner Joint | | | 28 | | | 32 | |
| 2.0 (110 kw) | 1992.08-1997.12 | AT | F | L/R | Hatchback FWD ABF | Chassis no. from:1H-S-000001;Chassis no. to:1H-S-700000 | GCO83070 | Outer Joint | | 36 | 30 | 53 | 78 | 60 | I |
| | 1992.08-1997.12 | AT | F | R | Hatchback FWD ABF | Chassis no. from:1H-S-000001;Chassis no. to:1H-S-700000 | GCI83009 | Inner Joint | | | 33 | | | 34 | |
| | 1992.08-1997.12 | AT/MT | F | L/R | Hatchback FWD ABF | Chassis Number:1HS000001-1HS700000 | GCI83011 | Inner Joint | | | 33 | | | 34 | |
| | 1992.08-1997.12 | MT | F | L | Hatchback FWD ABF | | GDS99116 | Drive Shaft | | 36 | | 53.2 | 77.5 | 548.5 | |
| | 1992.08-1997.12 | MT | F | R | Hatchback FWD ABF | | GDS99112 | Drive Shaft | | 36 | | 53.2 | 77.5 | 783 | |
| | 1992.08-1997.12 | MT | F | L/R | Hatchback FWD ABF | | GCO83070 | Outer Joint | | 36 | 30 | 53 | 78 | 60 | I |
| | 1992.08-1997.12 | MT | F | R | Hatchback FWD ABF | | GCI83009 | Inner Joint | | | 33 | | | 34 | |
| | 1992.08-1997.12 | MT | F | L/R | Hatchback FWD ABF | | GCI83006 | Inner Joint | | | 33 | | | 34 | |
| | 2004.01-2008.11 | 6AT | F | L/R | Hatchback FWD AXW;BLX;BLY;BLR;BVY;BVZ;BVX | Chassis no. to:1K_5_600000;Chassis no. from:1K_6_000001 | GCI61011 | Inner Joint | | 26 | 32 | 31 | 68.5 | 85 | |
| | 2004.01-2008.11 | 6AT | F | L/R | Hatchback FWD AXW;BLX;BLY;BLR;BVY;BVZ;BVX | Chassis no. to:1K_5_600000;Chassis no. from:1K_6_000001 | GCI61050 | Inner Joint | | 26 | 32 | 31 | 68.5 | 89 | |
| | 2004.01-2008.11 | 6AT/6MT | F | L/R | Hatchback FWD AXW;BLX;BLY;BLR;BVY;BVZ;BVX | | GCO83037 | Outer Joint | | 36 | 30 | 59.5 | 40.5 | 56 | I |
| | 2004.01-2008.11 | 6MT | F | L/R | Hatchback FWD AXW;BLX;BLY;BLR;BVY;BVZ;BVX | | GCI82447 | Inner Joint | | | 33 | | | 34 | |
| | 2004.01-2008.11 | AT | F | L | Hatchback FWD AXW;BLX;BLY;BLR;BVY;BVZ;BVX | | GDS61093 | Drive Shaft | | 36 | 26 | 59.5 | 40.5 | 587.5 | |
| | 2004.01-2008.11 | AT | F | R | Hatchback FWD AXW;BLX;BLY;BLR;BVY;BVZ;BVX | | GDS61094 | Drive Shaft | | 36 | 26 | 59.5 | 40.5 | 884 | |
| | 2004.01-2008.11 | MT | F | L | Hatchback FWD AXW;BLX;BLY;BLR;BVY;BVZ;BVX | | GDS83294 | Drive Shaft | | 36 | | 59.5 | 38 | 519 | |
| | 2004.01-2008.11 | MT | F | R | Hatchback FWD AXW;BLX;BLY;BLR;BVY;BVZ;BVX | | GDS61042 | Drive Shaft | | 36 | | 59.5 | 40.5 | 814 | |

| | YEAR | TRANSM. | F/R | L/R | BODY STYLE & DRIVE TYPE & ENGINE | REMARKS | G-AP Ref. | PRODUCT | ABS | Technical Specifications A | B | C | H | L | P |
|---|---|---|---|---|---|---|---|---|---|---|---|---|---|---|---|
| **VW** **Golf** | | | | | | | | | | | | | | | |
| 2.0 (110 kw) | 2004.01-2008.11 | MT | F | R | Hatchback FWD AXW;BLX;BLY;BLR;BVY;BVZ;BVX | | GDS61237 | Stub Axle,differential | | 23 | 37 | | | 142.5 | |
| | 2004.08-2008.11 | 6MT | F | L | Hatchback 4WD BLX;BVX | | GDS83294 | Drive Shaft | | 36 | | 59.5 | 38 | 519 | |
| | 2004.08-2008.11 | 6MT | F | R | Hatchback 4WD BLX;BVX | | GDS61096 | Drive Shaft | | 36 | | 59.5 | 40.5 | 799 | |
| | 2004.08-2008.11 | 6MT | F | L/R | Hatchback 4WD BLX;BVX | | GCO83037 | Outer Joint | | 36 | 30 | 59.5 | 40.5 | 56 | I |
| | 2004.08-2008.11 | AT | F | L | Hatchback 4WD BLX;BVX | | GDS61093 | Drive Shaft | | 36 | 26 | 59.5 | 40.5 | 587.5 | |
| | 2004.08-2008.11 | AT | F | R | Hatchback 4WD BLX;BVX | | GDS61094 | Drive Shaft | | 36 | 26 | 59.5 | 40.5 | 884 | |
| | 2004.08-2008.11 | MT | F | R | Hatchback 4WD BLX;BVX | | GDS61237 | Stub Axle,differential | | 23 | 37 | | | 142.5 | |
| | 2004.08-2008.11 | 6MT | R | L | Hatchback 4WD BLX;BVX | | GDS61284 | Drive Shaft | | 36 | | 59.5 | 40 | 594 | |
| | 2004.08-2008.11 | 6MT | R | R | Hatchback 4WD BLX;BVX | | GDS61293 | Drive Shaft | | 36 | | 59.5 | 40 | 631 | |
| | 2004.08-2008.11 | 6MT | R | L/R | Hatchback 4WD BLX;BVX | | GCI35026 | Outer Joint | | 36 | 33 | 59.5 | 40 | 61 | |
| | 2004.08-2008.11 | 6MT | F/R | L/R | Hatchback 4WD BLX;BVX | | GCI82447 | Inner Joint | | | 33 | | | 34 | |
| | 2012.08-2020.08 | 6DCT | F | L | Hatchback FWD CRLB;CRMB;CRBC;CRUA;DFGA;DCYA;DEJA | | GDS61285 | Drive Shaft | | 36 | | 59.5 | 40 | 472 | |
| | 2012.08-2020.08 | 6DCT | F | R | Hatchback FWD CRLB;CRMB;CRBC;CRUA;DFGA;DCYA;DEJA | | GDS83354 | Drive Shaft | | 36 | | 59.5 | 40 | 763 | |
| | 2012.08-2020.08 | 6DCT | F | L/R | Hatchback FWD CRLB;CRMB;CRBC;CRUA;DFGA;DCYA;DEJA | | GCI61057 | Inner Joint | | | 34 | | | 89 | |
| | 2012.08-2020.08 | 6MT | F | L | Hatchback FWD CRLB;CRMB;CRBC;CRUA;DFGA;DCYA;DEJA | For PR code:F4E/F4F/F5Z/F6U,For taxis | GDS83295 | Drive Shaft | | 36 | | 59.5 | 40 | 491 | |
| | 2012.08-2020.08 | 6MT | F | R | Hatchback FWD CRLB;CRMB;CRBC;CRUA;DFGA;DCYA;DEJA | For PR code:1PE/1PF/1PA/2H4/2H5/1PE/1PF/2H4/F5Z/F6U,For taxis,For Model code:5G1 | GDS83313 | Drive Shaft | | 36 | | 59.5 | 40 | 792 | |
| | 2012.08-2020.08 | 6MT | F | L/R | Hatchback FWD CRLB;CRMB;CRBC;CRUA;DFGA;DCYA;DEJA | | GCI83016 | Inner Joint | | | 28 | | | 32 | |
| | 2012.08-2020.08 | 6MT/6DCT/7DCT | F | L/R | Hatchback FWD CRLB;CRMB;CRBC;CRUA;DFGA;DCYA;DEJA | | GCO83101 | Outer Joint | | 36 | 27 | 59.5 | 40 | 65 | M |
| | 2012.08-2020.08 | 7DCT | F | L | Hatchback FWD CRLB;CRMB;CRBC;CRUA;DFGA;DCYA;DEJA | | GDS81265 | Drive Shaft | | 36 | 37 | 59.5 | 40 | 557 | |
| | 2012.08-2020.08 | 7DCT | F | R | Hatchback FWD CRLB;CRMB;CRBC;CRUA;DFGA;DCYA;DEJA | | GDS83612 | Drive Shaft | | 36 | 37 | 59.5 | 40 | 907 | |
| | 2012.08-2020.08 | 7DCT | F | L | Hatchback FWD CRLB;CRMB;CRBC;CRUA;DFGA;DCYA;DEJA | | GCI81158 | Inner Joint | | 37 | 34 | 34.5 | 65.5 | 83 | |
| | 2012.08-2020.08 | 7DCT | F | R | Hatchback FWD CRLB;CRMB;CRBC;CRUA;DFGA;DCYA;DEJA | | GCI82108 | Inner Joint | | 37 | 34 | 40 | 77.5 | 103.5 | |
| | 2012.11-2020.08 | 6MT | F | L | Hatchback 4WD CRLB;CKFC;CRMB;CRBC;DFGA;DCYA | | GDS83295 | Drive Shaft | | 36 | | 59.5 | 40 | 491 | |
| | 2012.11-2020.08 | 6MT | F | R | Hatchback 4WD CRLB;CKFC;CRMB;CRBC;DFGA;DCYA | | GDS81892 | Drive Shaft | | 36 | | 59.5 | 40 | 602 | |
| | 2012.11-2020.08 | 6MT | F | L/R | Hatchback 4WD CRLB;CKFC;CRMB;CRBC;DFGA;DCYA | | GCI61069 | Inner Joint | | | 28 | | | 32 | |
| | 2012.11-2020.08 | 6MT | F | L/R | Hatchback 4WD CRLB;CKFC;CRMB;CRBC;DFGA;DCYA | | GCI83016 | Inner Joint | | | 28 | | | 32 | |
| | 2012.11-2020.08 | 6MT/7DCT | F | L/R | Hatchback 4WD CRLB;CKFC;CRMB;CRBC;DFGA;DCYA | | GCO83101 | Outer Joint | | 36 | 27 | 59.5 | 40 | 65 | M |
| | 2012.11-2020.08 | 7DCT | F | L | Hatchback 4WD CRLB;CKFC;CRMB;CRBC;DFGA;DCYA | | GDS81265 | Drive Shaft | | 36 | 37 | 59.5 | 40 | 557 | |
| | 2012.11-2020.08 | 7DCT | F | R | Hatchback 4WD CRLB;CKFC;CRMB;CRBC;DFGA;DCYA | | GDS81893 | Drive Shaft | | 36 | | 59.5 | 40 | 575 | |
| | 2012.11-2020.08 | 7DCT | F | L | Hatchback 4WD CRLB;CKFC;CRMB;CRBC;DFGA;DCYA | | GCI81158 | Inner Joint | | 37 | 34 | 34.5 | 65.5 | 83 | |
| | 2012.11-2020.08 | 7DCT | F | R | Hatchback 4WD CRLB;CKFC;CRMB;CRBC;DFGA;DCYA | | GCI61057 | Inner Joint | | | 34 | | | 89 | |
| | 2012.11-2020.08 | 6MT/7DCT | R | L | Hatchback 4WD CRLB;CKFC;CRMB;CRBC;DFGA;DCYA | | GDS61286 | Drive Shaft | | 36 | | 59.5 | 40 | 587 | |
| | 2012.11-2020.08 | 6MT/7DCT | R | R | Hatchback 4WD CRLB;CKFC;CRMB;CRBC;DFGA;DCYA | | GDS61287 | Drive Shaft | | 36 | | 59.5 | 40 | 632 | |
| | 2012.11-2020.08 | 6MT/7DCT | R | L/R | Hatchback 4WD CRLB;CKFC;CRMB;CRBC;DFGA;DCYA | | GCI35026 | Outer Joint | | 36 | 33 | 59.5 | 40 | 61 | |
| | 2012.11-2020.08 | 6MT/7DCT | R | L/R | Hatchback 4WD CRLB;CKFC;CRMB;CRBC;DFGA;DCYA | | GCI61103 | Inner Joint | | | 33 | | | 32 | |
| | 2013.05-2014.05 | 6MT | F | L | Hatchback Van 4WD CRBC | | GDS83295 | Drive Shaft | | 36 | | 59.5 | 40 | 491 | |
| | 2013.05-2014.05 | 6MT | F | R | Hatchback Van 4WD CRBC | | GDS81892 | Drive Shaft | | 36 | | 59.5 | 40 | 602 | |
| | 2013.05-2014.05 | 6MT | F | L/R | Hatchback Van 4WD CRBC | For Modelcode:5G1 | GCO83101 | Outer Joint | | 36 | 27 | 59.5 | 40 | 65 | M |
| | 2013.05-2014.05 | 6MT | F | L | Hatchback Van 4WD CRBC | For PR code:1PE/1PF/1PA/2H4 | GCI61069 | Inner Joint | | | 28 | | | 32 | |
| | 2013.05-2014.05 | MT/6MT | F | L/R | Hatchback Van 4WD CRBC | | GCI83016 | Inner Joint | | | 28 | | | 32 | |
| | 2013.05-2014.05 | 6MT | R | L | Hatchback Van 4WD CRBC | | GDS61286 | Drive Shaft | | 36 | | 59.5 | 40 | 587 | |
| | 2013.05-2014.05 | 6MT | R | R | Hatchback Van 4WD CRBC | | GDS61287 | Drive Shaft | | 36 | | 59.5 | 40 | 632 | |
| | 2013.05-2014.05 | 6MT | R | L/R | Hatchback Van 4WD CRBC | | GCI35026 | Outer Joint | | 36 | 33 | 59.5 | 40 | 61 | |
| | 2013.05-2014.05 | | R | L/R | Hatchback Van 4WD CRBC | | GCI61103 | Inner Joint | | | 33 | | | 32 | |
| | 2013.05-2014.05 | 6DCT | F | L | Hatchback Van FWD CRLB;CKFC;CRBC;DCYA | For Engine code:CRLB;For Engine code:CRBC;For PR code:1PE/1PF/1PA/2H4/2H5/2H6 | GDS61285 | Drive Shaft | | 36 | | 59.5 | 40 | 472 | |
| | 2013.05-2014.05 | 6DCT | F | R | Hatchback Van FWD CRLB;CKFC;CRBC;DCYA | For Engine code:CRBC/CRLB | GDS83354 | Drive Shaft | | 36 | | 59.5 | 40 | 763 | |
| | 2013.05-2014.05 | 6DCT | F | L/R | Hatchback Van FWD CRLB;CKFC;CRBC;DCYA | For Engine code:CRBC/CRLB | GCO83101 | Outer Joint | | 36 | 27 | 59.5 | 40 | 65 | M |
| | 2013.05-2014.05 | 6DCT | F | L/R | Hatchback Van FWD CRLB;CKFC;CRBC;DCYA | For Engine code:CRBC/CRLB | GCI61057 | Inner Joint | | | 34 | | | 89 | |
| | 2013.05-2014.05 | 6MT | F | L | Hatchback Van FWD CRLB;CKFC;CRBC;DCYA | For PR code:F4E/F4F/F5E/F5R/F5Z/F6U/1PA/2H2/2H5/1PE/1PF/2H4 | GDS83295 | Drive Shaft | | 36 | | 59.5 | 40 | 491 | |
| | 2013.05-2014.05 | 6MT | F | R | Hatchback Van FWD CRLB;CKFC;CRBC;DCYA | | GDS83313 | Drive Shaft | | 36 | | 59.5 | 40 | 792 | |
| | 2013.05-2014.05 | 6MT | F | L/R | Hatchback Van FWD CRLB;CKFC;CRBC;DCYA | | GCO83101 | Outer Joint | | 36 | 27 | 59.5 | 40 | 65 | M |
| | 2013.05-2014.05 | 6MT | F | L/R | Hatchback Van FWD CRLB;CKFC;CRBC;DCYA | | GCI83016 | Inner Joint | | | 28 | | | 32 | |
| | 2019.08- | 6MT | F | L | Hatchback FWD DSRB;DTSA;DTSB;DTTA;DTTC;DXRB | For Engine code:DTSA;Date from:2021.05;For Engine code:DTTA | GDS83295 | Drive Shaft | | 36 | | 59.5 | 40 | 491 | |
| | 2019.08- | 6MT | F | R | Hatchback FWD DSRB;DTSA;DTSB;DTTA;DTTC;DXRB | | GDS81891 | Drive Shaft | | 36 | | 59.5 | 40 | 781 | |
| | 2019.08- | 6MT | F | L | Hatchback FWD DSRB;DTSA;DTSB;DTTA;DTTC;DXRB | Groove Type:Inner | GCO83002 | Outer Joint | | 36 | 27 | 59.5 | 40 | 66 | I |
| | 2019.08- | 6MT | F | L | Hatchback FWD DSRB;DTSA;DTSB;DTTA;DTTC;DXRB | | GCI61041 | Inner Joint | | | 28 | | | 32 | |
| | 2019.08- | 6MT | F | L | Hatchback FWD DSRB;DTSA;DTSB;DTTA;DTTC;DXRB | Date from:2021.05 | GCI61069 | Inner Joint | | | 28 | | | 32 | |
| | 2019.08- | 6MT | F | R | Hatchback FWD DSRB;DTSA;DTSB;DTTA;DTTC;DXRB | For Enginecode:DTTA | GDS98007 | Stub Axle-Flange | | 37 | | | 88 | 148 | |
| | 2019.08- | 7DCT | F | L | Hatchback FWD DSRB;DTSA;DTSB;DTTA;DTTC;DXRB | For PR code:0EG | GDS61282 | Drive Shaft | | 36 | | 59.5 | 40 | 523 | |
| | 2019.08- | 7DCT | F | L | Hatchback FWD DSRB;DTSA;DTSB;DTTA;DTTC;DXRB | For PR code:0IJ | GDS81265 | Drive Shaft | | 36 | 37 | 59.5 | 40 | 557 | |
| | 2019.08- | 7DCT | F | R | Hatchback FWD DSRB;DTSA;DTSB;DTTA;DTTC;DXRB | For PR code:0IJ | GDS83612 | Drive Shaft | | 36 | 37 | 59.5 | 40 | 907 | |
| | 2019.08- | 7DCT | F | R | Hatchback FWD DSRB;DTSA;DTSB;DTTA;DTTC;DXRB | For PR code:0EG | GDS84417 | Drive Shaft | | 36 | | 59.5 | 40 | 783 | |
| | 2019.08- | 7DCT | F | L/R | Hatchback FWD DSRB;DTSA;DTSB;DTTA;DTTC;DXRB | For PR code:0EG | GCO61059 | Outer Joint | | 36 | 33 | 59.5 | 40 | 59.5 | I |
| | 2019.08- | 7DCT | F | L | Hatchback FWD DSRB;DTSA;DTSB;DTTA;DTTC;DXRB | For PR code:0IJ | GCI81158 | Inner Joint | | 37 | 34 | 34.5 | 65.5 | 83 | |
| | 2019.08- | 7DCT | F | R | Hatchback FWD DSRB;DTSA;DTSB;DTTA;DTTC;DXRB | For PR code:0IJ | GCI82108 | Inner Joint | | 37 | 34 | 40 | 77.5 | 103.5 | |

| | YEAR | TRANSM. | F/R | L/R | BODY STYLE & DRIVE TYPE & ENGINE | REMARKS | G-AP Ref. | PRODUCT | ABS | Technical Specifications A | B | C | H | L | P |
|---|---|---|---|---|---|---|---|---|---|---|---|---|---|---|---|
| **VW** **Golf** | | | | | | | | | | | | | | | |
| 2.0 (110 kw) | 2019.08- | 7DCT | F | L/R | Hatchback FWD DSRB;DTSA;DTSB;DTTA;DTTC;DXRB | For PR code:0EG | GCI53002 | Inner Joint | | | 33 | | | 34 | |
| | 2019.08- | 7DCT/6MT | F | L/R | Hatchback FWD DSRB;DTSA;DTSB;DTTA;DTTC;DXRB | Transmission:7DCT,For PR code:0IJ;Transmission:6MT | GCO83101 | Outer Joint | | 36 | 27 | 59.5 | 40 | 65 | M |
| | 2021.06- | 7DCT | F | L | Hatchback 4WD DTTC | | GDS81265 | Drive Shaft | | 36 | 37 | 59.5 | 40 | 557 | |
| | 2021.06- | 7DCT | F | R | Hatchback 4WD DTTC | | GDS81893 | Drive Shaft | | 36 | | 59.5 | 40 | 575 | |
| | 2021.06- | 7DCT | F | L/R | Hatchback 4WD DTTC | | GCO83101 | Outer Joint | | 36 | 27 | 59.5 | 40 | 65 | M |
| | 2021.06- | 7DCT | F | L | Hatchback 4WD DTTC | | GCI81158 | Inner Joint | | 37 | 34 | 34.5 | 65.5 | 83 | |
| | 2021.06- | 7DCT | F | R | Hatchback 4WD DTTC | | GCI61057 | Inner Joint | | | 34 | | | 89 | |
| | 2021.06- | 7DCT | R | L | Hatchback 4WD DTTC | | GDS61286 | Drive Shaft | | 36 | | 59.5 | 40 | 587 | |
| | 2021.06- | 7DCT | R | R | Hatchback 4WD DTTC | | GDS61287 | Drive Shaft | | 36 | | 59.5 | 40 | 632 | |
| | 2021.06- | 7DCT | R | L/R | Hatchback 4WD DTTC | | GCI35026 | Outer Joint | | 36 | 33 | 59.5 | 40 | 61 | |
| | 2021.06- | 7DCT | R | L/R | Hatchback 4WD DTTC | | GCI61103 | Inner Joint | | | 33 | | | 32 | |
| 2.0 (125 kw) | 2005.11-2008.11 | 6DCT | F | L | Hatchback FWD BMN | | GDS83381 | Drive Shaft | | 36 | | 59.5 | 40 | 483 | |
| | 2005.11-2008.11 | 6DCT | F | R | Hatchback FWD BMN | For driving school cars | GDS54011 | Drive Shaft | | 36 | | 59.5 | 40 | 755 | |
| | 2005.11-2008.11 | 6DCT | F | L/R | Hatchback FWD BMN | | GCI54004 | Inner Joint | | | 34 | | | 81 | |
| | 2005.11-2008.11 | 6DCT | F | L/R | Hatchback FWD BMN | | GCI61057 | Inner Joint | | | 34 | | | 89 | |
| | 2005.11-2008.11 | 6MT | F | L | Hatchback FWD BMN | Inner teeth of tranm.side:28 | GDS83295 | Drive Shaft | | 36 | | 59.5 | 40 | 491 | |
| | 2005.11-2008.11 | 6MT | F | R | Hatchback FWD BMN | For driving school cars;Hollow shaft\|Normal | GDS61147 | Drive Shaft | | 36 | | 59.5 | 40 | 795 | |
| | 2005.11-2008.11 | 6MT | F | R | Hatchback FWD BMN | For driving school cars;Solid shaft | GDS83313 | Drive Shaft | | 36 | | 59.5 | 40 | 792 | |
| | 2005.11-2008.11 | 6MT | F | L/R | Hatchback FWD BMN | Date to:2007.12,For driving school cars;For Modelcode:5G1;For PR code:PJE\|PJF\|PJZ\|PNU;For tank | GCO83101 | Outer Joint | | 36 | 27 | 59.5 | 40 | 65 | M |
| | 2005.11-2008.11 | 6MT | F | L/R | Hatchback FWD BMN | | GCI83016 | Inner Joint | | | 28 | | | 32 | |
| | 2005.11-2008.11 | MT | F | L | Hatchback FWD BMN | Inner teeth of tranm.side:33 | GDS83236 | Drive Shaft | | 36 | | 59.5 | 40 | 484 | |
| | 2005.11-2008.11 | MT | F | R | Hatchback FWD BMN | Solid shaft | GDS61126 | Drive Shaft | | 36 | | 59.5 | 40 | 793 | |
| | 2009.04-2012.11 | 6DCT | F | L | Hatchback FWD CBBB;CFGB | For light alloy rims | GDS83381 | Drive Shaft | | 36 | | 59.5 | 40 | 483 | |
| | 2009.04-2012.11 | 6DCT | F | R | Hatchback FWD CBBB;CFGB | | GDS83354 | Drive Shaft | | 36 | | 59.5 | 40 | 763 | |
| | 2009.04-2012.11 | 6DCT | F | L/R | Hatchback FWD CBBB;CFGB | TJ | GCI54004 | Inner Joint | | | 34 | | | 81 | |
| | 2009.04-2012.11 | 6DCT | F | L/R | Hatchback FWD CBBB;CFGB | AAR | GCI61057 | Inner Joint | | | 34 | | | 89 | |
| | 2009.04-2012.11 | 6MT | F | L | Hatchback FWD CBBB;CFGB | Inner teeth of tranm.side:28 | GDS83295 | Drive Shaft | | 36 | | 59.5 | 40 | 491 | |
| | 2009.04-2012.11 | 6MT | F | R | Hatchback FWD CBBB;CFGB | For driving school cars;Solid shaft | GDS61126 | Drive Shaft | | 36 | | 59.5 | 40 | 793 | |
| | 2009.04-2012.11 | 6MT | F | R | Hatchback FWD CBBB;CFGB | For driving school cars;Hollow shaft | GDS61147 | Drive Shaft | | 36 | | 59.5 | 40 | 795 | |
| | 2009.04-2012.11 | 6MT | F | R | Hatchback FWD CBBB;CFGB | Solid shaft | GDS83313 | Drive Shaft | | 36 | | 59.5 | 40 | 792 | |
| | 2009.04-2012.11 | 6MT | F | L/R | Hatchback FWD CBBB;CFGB | | GCI83016 | Inner Joint | | | 28 | | | 32 | |
| | 2009.04-2012.11 | AT | F | L | Hatchback FWD CBBB;CFGB | | GDS54013 | Drive Shaft | | 36 | | 59.5 | 40 | 479.5 | |
| | 2009.04-2012.11 | AT | F | R | Hatchback FWD CBBB;CFGB | TJ | GDS54011 | Drive Shaft | | 36 | | 59.5 | 40 | 755 | |
| | 2009.04-2012.11 | AT | F | L | Hatchback FWD CBBB;CFGB | | GCO83101 | Outer Joint | | 36 | 27 | 59.5 | 40 | 65 | M |
| | 2009.04-2012.11 | MT | F | L | Hatchback FWD CBBB;CFGB | Inner teeth of tranm.side:33 | GDS83236 | Drive Shaft | | 36 | | 59.5 | 40 | 484 | |
| | 2010.05-2012.11 | 6AT/6MT | F | L/R | Hatchback Van FWD CFGB | | GCI54004 | Inner Joint | | | 34 | | | 81 | |
| | 2010.05-2012.11 | 6AT/6MT | F | L/R | Hatchback Van FWD CFGB | Original Tripod Design | GCI61057 | Inner Joint | | | 34 | | | 89 | |
| | 2010.05-2012.11 | 6AT/6MT | F | L/R | Hatchback Van FWD CFGB | | GCI83016 | Inner Joint | | | 28 | | | 32 | |
| | 2010.05-2012.11 | 6DCT | F | L | Hatchback Van FWD CFGB | For light alloy rims | GDS83381 | Drive Shaft | | 36 | | 59.5 | 40 | 483 | |
| | 2010.05-2012.11 | 6DCT | F | R | Hatchback Van FWD CFGB | | GDS83354 | Drive Shaft | | 36 | | 59.5 | 40 | 763 | |
| | 2010.05-2012.11 | 6DCT | F | L | Hatchback Van FWD CFGB | Rims:With alloy rim | GCO83101 | Outer Joint | | 36 | 27 | 59.5 | 40 | 65 | M |
| | 2010.05-2012.11 | 6MT | F | R | Hatchback Van FWD CFGB | For driving school cars | GDS61147 | Drive Shaft | | 36 | | 59.5 | 40 | 795 | |
| | 2010.05-2012.11 | 6MT | F | R | Hatchback Van FWD CFGB | For driving school cars | GDS83313 | Drive Shaft | | 36 | | 59.5 | 40 | 792 | |
| | 2010.05-2012.11 | AT | F | L | Hatchback Van FWD CFGB | For steel rims | GDS54013 | Drive Shaft | | 36 | | 59.5 | 40 | 479.5 | |
| | 2010.05-2012.11 | MT | F | L | Hatchback Van FWD CFGB | With steel rim;With alloy rim | GDS83295 | Drive Shaft | | 36 | | 59.5 | 40 | 491 | |
| | 2010.05-2012.11 | MT | F | R | Hatchback Van FWD CFGB | | GDS61126 | Drive Shaft | | 36 | | 59.5 | 40 | 793 | |
| 2.0 (135 kw) | 2013.04-2017.03 | 6AT/6MT | F | L/R | Hatchback Van FWD CUNA | | GCI83016 | Inner Joint | | | 28 | | | 32 | |
| | 2013.04-2017.03 | 6DCT | F | L | Hatchback Van FWD CUNA | | GDS61285 | Drive Shaft | | 36 | | 59.5 | 40 | 472 | |
| | 2013.04-2017.03 | 6DCT | F | R | Hatchback Van FWD CUNA | | GDS83354 | Drive Shaft | | 36 | | 59.5 | 40 | 763 | |
| | 2013.04-2017.03 | 6DCT | F | L/R | Hatchback Van FWD CUNA | For Engine code:CRLB/CRBC/DEJA | GCI61057 | Inner Joint | | | 34 | | | 89 | |
| | 2013.04-2017.03 | 6MT | F | L | Hatchback Van FWD CUNA | | GDS83295 | Drive Shaft | | 36 | | 59.5 | 40 | 491 | |
| | 2013.04-2017.03 | 6MT | F | R | Hatchback Van FWD CUNA | | GDS83313 | Drive Shaft | | 36 | | 59.5 | 40 | 792 | |
| | 2013.04-2017.03 | 6MT | F | L/R | Hatchback Van FWD CUNA | | GCO83101 | Outer Joint | | 36 | 27 | 59.5 | 40 | 65 | M |
| | 2013.04-2020.08 | 6DCT | F | L | Hatchback FWD CUNA;DGCA;DJGA | | GDS61285 | Drive Shaft | | 36 | | 59.5 | 40 | 472 | |
| | 2013.04-2020.08 | 6DCT | F | R | Hatchback FWD CUNA;DGCA;DJGA | | GDS83354 | Drive Shaft | | 36 | | 59.5 | 40 | 763 | |
| | 2013.04-2020.08 | 6DCT | F | L/R | Hatchback FWD CUNA;DGCA;DJGA | | GCI61057 | Inner Joint | | | 34 | | | 89 | |
| | 2013.04-2020.08 | 6MT | F | L | Hatchback FWD CUNA;DGCA;DJGA | | GDS83295 | Drive Shaft | | 36 | | 59.5 | 40 | 491 | |
| | 2013.04-2020.08 | 6MT | F | R | Hatchback FWD CUNA;DGCA;DJGA | | GDS83313 | Drive Shaft | | 36 | | 59.5 | 40 | 792 | |
| | 2013.04-2020.08 | 6MT | F | L/R | Hatchback FWD CUNA;DGCA;DJGA | | GCI83016 | Inner Joint | | | 28 | | | 32 | |
| | 2013.04-2020.08 | 6MT/6DCT | F | L/R | Hatchback FWD CUNA;DGCA;DJGA | | GCO83101 | Outer Joint | | 36 | 27 | 59.5 | 40 | 65 | M |
| | 2013.04-2020.08 | 7DCT | F | L | Hatchback FWD CUNA;DGCA;DJGA | | GDS81265 | Drive Shaft | | 36 | 37 | 59.5 | 40 | 557 | |
| | 2013.04-2020.08 | 7DCT | F | R | Hatchback FWD CUNA;DGCA;DJGA | | GDS83612 | Drive Shaft | | 36 | 37 | 59.5 | 40 | 907 | |
| | 2013.04-2020.08 | 7DCT | F | L | Hatchback FWD CUNA;DGCA;DJGA | | GCI81158 | Inner Joint | | 37 | 34 | 34.5 | 65.5 | 83 | |
| | 2013.04-2020.08 | 7DCT | F | R | Hatchback FWD CUNA;DGCA;DJGA | | GCI82108 | Inner Joint | | 37 | 34 | 40 | 77.5 | 103.5 | |
| 2.0 (140 kw) | 2021.06-2024.11 | 7DCT | F | L | Hatchback 4WD DNNA | | GDS84237 | Drive Shaft | | 36 | 37 | 59.5 | 40 | 560 | |

| | YEAR | TRANSM. | F/R | L/R | BODY STYLE & DRIVE TYPE & ENGINE | REMARKS | G-AP Ref. | PRODUCT | ABS | Technical Specifications A | B | C | H | L | P |
|---|---|---|---|---|---|---|---|---|---|---|---|---|---|---|---|
| **VW** **Golf** | | | | | | | | | | | | | | | |
| 2.0 (140 kw) | 2021.06-2024.11 | 7DCT | F | R | Hatchback 4WD DNNA | Wheel Hub Diam:27 | GDS81892 | Drive Shaft | | 36 | | 59.5 | 40 | 602 | |
| | 2021.06-2024.11 | 7DCT | F | L/R | Hatchback 4WD DNNA | | GCO83101 | Outer Joint | | 36 | 27 | 59.5 | 40 | 65 | M |
| | 2021.06-2024.11 | 7DCT | F | L | Hatchback 4WD DNNA | | GCI83028 | Inner Joint | | 37 | 28 | | 65.5 | 90.2 | |
| | 2021.06-2024.11 | 7DCT | F | R | Hatchback 4WD DNNA | | GCI61069 | Inner Joint | | | 28 | | | 32 | |
| | 2021.06-2024.11 | 7DCT | R | L | Hatchback 4WD DNNA | | GDS61286 | Drive Shaft | | 36 | | 59.5 | 40 | 587 | |
| | 2021.06-2024.11 | 7DCT | R | R | Hatchback 4WD DNNA | | GDS61287 | Drive Shaft | | 36 | | 59.5 | 40 | 632 | |
| | 2021.06-2024.11 | 7DCT | R | L/R | Hatchback 4WD DNNA | | GCI35026 | Outer Joint | | 36 | 33 | 59.5 | 40 | 61 | |
| | 2021.06-2024.11 | 7DCT | R | L/R | Hatchback 4WD DNNA | | GCI61103 | Inner Joint | | | 33 | | | 32 | |
| | 2021.06-2024.11 | 7DCT | F | L | Hatchback FWD DNNA | | GDS84237 | Drive Shaft | | 36 | 37 | 59.5 | 40 | 560 | |
| | 2021.06-2024.11 | 7DCT | F | L | Hatchback FWD DNNA | | GCI83028 | Inner Joint | | 37 | 28 | | 65.5 | 90.2 | |
| | 2021.06-2024.11 | AT | F | L/R | Hatchback FWD DNNA | | GCO83101 | Outer Joint | | 36 | 27 | 59.5 | 40 | 65 | M |
| 2.0 (147 kw) | 2004.10-2009.02 | 6AT/6MT | F | L/R | Hatchback FWD AXX;BWA;BPY;CAWB;CCTA;CBFA | TJ | GCI54004 | Inner Joint | | | 34 | | | 81 | |
| | 2004.10-2009.02 | 6AT/6MT | F | L/R | Hatchback FWD AXX;BWA;BPY;CAWB;CCTA;CBFA | AAR | GCI61057 | Inner Joint | | | 34 | | | 89 | |
| | 2004.10-2009.02 | 6AT/6MT | F | L/R | Hatchback FWD AXX;BWA;BPY;CAWB;CCTA;CBFA | VL | GCI83016 | Inner Joint | | | 28 | | | 32 | |
| | 2004.10-2009.02 | 6DCT | F | L | Hatchback FWD AXX;BWA;BPY;CAWB;CCTA;CBFA | Chassis no. to:1K_5_600000 | GDS54013 | Drive Shaft | | 36 | | 59.5 | 40 | 479.5 | |
| | 2004.10-2009.02 | 6DCT | F | R | Hatchback FWD AXX;BWA;BPY;CAWB;CCTA;CBFA | Chassis no. to:1K_5_600000,Trans. code:HRW | GDS81653 | Drive Shaft | | 36 | | 59.5 | 40 | 785 | |
| | 2004.10-2009.02 | 6DCT | F | R | Hatchback FWD AXX;BWA;BPY;CAWB;CCTA;CBFA | Chassis no. from:1K_6_000001 | GDS81891 | Drive Shaft | | 36 | | 59.5 | 40 | 781 | |
| | 2004.10-2009.02 | 6DCT | F | R | Hatchback FWD AXX;BWA;BPY;CAWB;CCTA;CBFA | Chassis no. to:1K5600000;Trans. code:HRW;VL | GCI61069 | Inner Joint | | | 28 | | | 32 | |
| | 2004.10-2009.02 | 6DCT | F | L | Hatchback FWD AXX;BWA;BPY;CAWB;CCTA;CBFA | | GDS98006 | Stub Axle-Flange | | 37 | | | 67 | 123.5 | |
| | 2004.10-2009.02 | 6MT | F | R | Hatchback FWD AXX;BWA;BPY;CAWB;CCTA;CBFA | | GDS61126 | Drive Shaft | | 36 | | 59.5 | 40 | 793 | |
| | 2004.10-2009.02 | 6MT/6DCT | F | L | Hatchback FWD AXX;BWA;BPY;CAWB;CCTA;CBFA | tranmission:6DCT;Chassis no. to:1K_5_600000;Chassis no. from:1K_6_000001;Trans. code:HRW | GDS83295 | Drive Shaft | | 36 | | 59.5 | 40 | 491 | |
| | 2004.10-2009.02 | AT | F | L/R | Hatchback FWD AXX;BWA;BPY;CAWB;CCTA;CBFA | | GCI61038 | Inner Joint | | 26 | 34 | 31 | 68.5 | 88.5 | |
| | 2004.10-2009.02 | AT/MT | F | L | Hatchback FWD AXX;BWA;BPY;CAWB;CCTA;CBFA | | GDS83236 | Drive Shaft | | 36 | | 59.5 | 40 | 484 | |
| | 2004.10-2009.02 | MT | F | R | Hatchback FWD AXX;BWA;BPY;CAWB;CCTA;CBFA | | GDS61237 | Stub Axle,differential | | 23 | 37 | | | 142.5 | |
| | 2004.10-2009.02 | | F | L/R | Hatchback FWD AXX;BWA;BPY;CAWB;CCTA;CBFA | Date to:2009.12 | GCO83002 | Outer Joint | | 36 | 27 | 59.5 | 40 | 66 | I |
| | 2009.06-2013.11 | 6AT/6MT | F | L/R | Hatchback FWD CCTA;CBFA | | GCO83002 | Outer Joint | | 36 | 27 | 59.5 | 40 | 66 | I |
| | 2009.06-2013.11 | 6DCT | F | R | Hatchback FWD CCTA;CBFA | Date to:2009.12 | GDS81653 | Drive Shaft | | 36 | | 59.5 | 40 | 785 | |
| | 2009.06-2013.11 | 6DCT | F | R | Hatchback FWD CCTA;CBFA | Date from:2010.01 | GDS81891 | Drive Shaft | | 36 | | 59.5 | 40 | 781 | |
| | 2009.06-2013.11 | 6MT | F | R | Hatchback FWD CCTA;CBFA | Date to:2009.12 | GDS61126 | Drive Shaft | | 36 | | 59.5 | 40 | 793 | |
| | 2009.06-2013.11 | 6MT | F | R | Hatchback FWD CCTA;CBFA | Date to:2009.12 | GDS61339 | Drive Shaft | | 36 | | 59.5 | 40 | 794 | |
| | 2009.06-2013.11 | AT | F | R | Hatchback FWD CCTA;CBFA | | GCI61069 | Inner Joint | | | 28 | | | 32 | |
| | 2009.06-2013.11 | AT/MT | F | L | Hatchback FWD CCTA;CBFA | | GDS83295 | Drive Shaft | | 36 | | 59.5 | 40 | 491 | |
| | 2009.06-2013.11 | MT | F | R | Hatchback FWD CCTA;CBFA | Date from:2010.01 | GDS61147 | Drive Shaft | | 36 | | 59.5 | 40 | 795 | |
| | 2009.06-2013.11 | MT | F | L/R | Hatchback FWD CCTA;CBFA | | GCO83101 | Outer Joint | | 36 | 27 | 59.5 | 40 | 65 | M |
| | 2009.06-2013.11 | | F | L/R | Hatchback FWD CCTA;CBFA | | GCI83016 | Inner Joint | | | 28 | | | 32 | |
| | 2020.09- | 7DCT | F | L | Hatchback 4WD DTUA | | GCI81158 | Inner Joint | | 37 | 34 | 34.5 | 65.5 | 83 | |
| | 2020.09- | 7DCT | F | R | Hatchback 4WD DTUA | | GCI61057 | Inner Joint | | | 34 | | | 89 | |
| | 2020.09- | 7DCT | R | L/R | Hatchback 4WD DTUA | | GCI35026 | Outer Joint | | 36 | 33 | 59.5 | 40 | 61 | |
| | 2020.09- | 7DCT | R | L/R | Hatchback 4WD DTUA | | GCI61103 | Inner Joint | | | 33 | | | 32 | |
| | 2020.09- | 7AT | F | R | Hatchback FWD DTUA | | GDS83612 | Drive Shaft | | 36 | 37 | 59.5 | 40 | 907 | |
| | 2020.09- | 7AT | F | R | Hatchback FWD DTUA | | GCO83101 | Outer Joint | | 36 | 27 | 59.5 | 40 | 65 | M |
| | 2020.09- | 7AT | F | R | Hatchback FWD DTUA | | GCI82108 | Inner Joint | | 37 | 34 | 40 | 77.5 | 103.5 | |
| | 2020.09- | 7DCT | F | L | Hatchback FWD DTUA | | GDS81265 | Drive Shaft | | 36 | 37 | 59.5 | 40 | 557 | |
| | 2020.09- | 7DCT | F | L | Hatchback FWD DTUA | | GCI81158 | Inner Joint | | 37 | 34 | 34.5 | 65.5 | 83 | |
| 2.0 (150 kw) | 2024.12- | 7DCT | F | L | Hatchback 4WD DNNE | | GDS84237 | Drive Shaft | | 36 | 37 | 59.5 | 40 | 560 | |
| | 2024.12- | 7DCT | F | R | Hatchback 4WD DNNE | | GDS81892 | Drive Shaft | | 36 | | 59.5 | 40 | 602 | |
| | 2024.12- | 7DCT | R | L | Hatchback 4WD DNNE | | GDS61286 | Drive Shaft | | 36 | | 59.5 | 40 | 587 | |
| | 2024.12- | 7DCT | R | R | Hatchback 4WD DNNE | | GDS61287 | Drive Shaft | | 36 | | 59.5 | 40 | 632 | |
| 2.0 (155 kw) | 2009.02-2012.11 | 6AT/6MT | F | L/R | Hatchback Van FWD CCZB | Date to:2009.12 | GCO83002 | Outer Joint | | 36 | 27 | 59.5 | 40 | 66 | I |
| | 2009.02-2012.11 | 6AT/6MT | F | L/R | Hatchback Van FWD CCZB | Date from:2010.01 | GCO83101 | Outer Joint | | 36 | 27 | 59.5 | 40 | 65 | M |
| | 2009.02-2012.11 | 6DCT | F | R | Hatchback Van FWD CCZB | | GDS81891 | Drive Shaft | | 36 | | 59.5 | 40 | 781 | |
| | 2009.02-2012.11 | 6MT | F | R | Hatchback Van FWD CCZB | Date to:2009.12 | GDS61126 | Drive Shaft | | 36 | | 59.5 | 40 | 793 | |
| | 2009.02-2012.11 | 6MT | F | R | Hatchback Van FWD CCZB | Date from:2010.01 | GDS61147 | Drive Shaft | | 36 | | 59.5 | 40 | 795 | |
| | 2009.02-2012.11 | 6MT | F | R | Hatchback Van FWD CCZB | Date to:2009.12 | GDS61339 | Drive Shaft | | 36 | | 59.5 | 40 | 794 | |
| | 2009.02-2012.11 | 6MT | F | L | Hatchback Van FWD CCZB | | GCI53002 | Inner Joint | | | 33 | | | 34 | |
| | 2009.02-2012.11 | 6MT/6DCT | F | L | Hatchback Van FWD CCZB | | GDS83295 | Drive Shaft | | 36 | | 59.5 | 40 | 491 | |
| | 2009.02-2012.11 | AT | F | R | Hatchback Van FWD CCZB | | GDS81653 | Drive Shaft | | 36 | | 59.5 | 40 | 785 | |
| | 2009.02-2012.11 | AT | F | R | Hatchback Van FWD CCZB | | GCI61069 | Inner Joint | | | 28 | | | 32 | |
| | 2009.02-2012.11 | | F | L/R | Hatchback Van FWD CCZB | | GCI83016 | Inner Joint | | | 28 | | | 32 | |
| | 2009.04-2012.11 | 6DCT | F | L | Hatchback FWD CCZB | Inner teeth of tranm.side:28 | GDS83295 | Drive Shaft | | 36 | | 59.5 | 40 | 491 | |
| | 2009.04-2012.11 | 6DCT | F | R | Hatchback FWD CCZB | Date to:2009.12 | GDS81653 | Drive Shaft | | 36 | | 59.5 | 40 | 785 | |
| | 2009.04-2012.11 | 6DCT | F | R | Hatchback FWD CCZB | Date from:2010.01 | GDS81891 | Drive Shaft | | 36 | | 59.5 | 40 | 781 | |
| | 2009.04-2012.11 | 6DCT | F | L | Hatchback FWD CCZB | | GDS98006 | Stub Axle-Flange | | 37 | | | 67 | 123.5 | |
| | 2009.04-2012.11 | 6MT | F | R | Hatchback FWD CCZB | solid shaft | GDS61339 | Drive Shaft | | 36 | | 59.5 | 40 | 794 | |
| | 2009.04-2012.11 | 6MT | F | R | Hatchback FWD CCZB | solid shaft | GDS83313 | Drive Shaft | | 36 | | 59.5 | 40 | 792 | |

| | YEAR | TRANSM. | F/R | L/R | BODY STYLE & DRIVE TYPE & ENGINE | REMARKS | G-AP Ref. | PRODUCT | ABS | Technical Specifications | | | | | |
|---|---|---|---|---|---|---|---|---|---|---|---|---|---|---|---|
| | | | | | | | | | | A | B | C | H | L | P |
| **VW** **Golf** | | | | | | | | | | | | | | | |
| 2.0 (155 kw) | 2009.04-2012.11 | 6MT | F | L/R | Hatchback FWD CCZB | | GCI83016 | Inner Joint | | | 28 | | | 32 | |
| | 2009.04-2012.11 | AT | F | L/R | Hatchback FWD CCZB | Date from:2010.02 | GCO83101 | Outer Joint | | 36 | 27 | 59.5 | 40 | 65 | M |
| | 2009.04-2012.11 | AT | F | R | Hatchback FWD CCZB | | GCI61069 | Inner Joint | | | 28 | | | 32 | |
| | 2009.04-2012.11 | MT | F | R | Hatchback FWD CCZB | Date to:2009.12 | GDS61126 | Drive Shaft | | 36 | | 59.5 | 40 | 793 | |
| | 2009.04-2012.11 | MT | F | R | Hatchback FWD CCZB | Date from:2010.01 | GDS61147 | Drive Shaft | | 36 | | 59.5 | 40 | 795 | |
| | 2009.04-2012.11 | | F | L/R | Hatchback FWD CCZB | Date To:2009.12 | GCO83002 | Outer Joint | | 36 | 27 | 59.5 | 40 | 66 | I |
| | 2013.11-2017.07 | 6AT | F | L | Hatchback FWD CNTA;CXCA | | GDS83295 | Drive Shaft | | 36 | | 59.5 | 40 | 491 | |
| | 2013.11-2017.07 | 6AT | F | R | Hatchback FWD CNTA;CXCA | | GDS81891 | Drive Shaft | | 36 | | 59.5 | 40 | 781 | |
| | 2013.11-2017.07 | 6AT | F | L/R | Hatchback FWD CNTA;CXCA | | GCI61069 | Inner Joint | | | 28 | | | 32 | |
| | 2013.11-2017.07 | AT | F | L/R | Hatchback FWD CNTA;CXCA | | GCO83101 | Outer Joint | | 36 | 27 | 59.5 | 40 | 65 | M |
| | 2013.11-2017.07 | AT/6DCT | F | R | Hatchback FWD CNTA;CXCA | Date from:2014.01 | GDS61126 | Drive Shaft | | 36 | | 59.5 | 40 | 793 | |
| 2.0 (162 kw) | 2013.04-2017.03 | 6DCT | F | R | Hatchback Van FWD CHHB | | GDS81891 | Drive Shaft | | 36 | | 59.5 | 40 | 781 | |
| | 2013.04-2017.03 | 6DCT | F | L/R | Hatchback Van FWD CHHB | | GCI61069 | Inner Joint | | | 28 | | | 32 | |
| | 2013.04-2017.03 | 6DCT/6MT | F | L | Hatchback Van FWD CHHB | | GDS83295 | Drive Shaft | | 36 | | 59.5 | 40 | 491 | |
| | 2013.04-2017.03 | 6MT | F | R | Hatchback Van FWD CHHB | | GDS61147 | Drive Shaft | | 36 | | 59.5 | 40 | 795 | |
| | 2013.04-2017.03 | 6MT | F | L/R | Hatchback Van FWD CHHB | | GCI83016 | Inner Joint | | | 28 | | | 32 | |
| | 2013.04-2017.03 | AT/MT | F | L/R | Hatchback Van FWD CHHB | | GCO83101 | Outer Joint | | 36 | 27 | 59.5 | 40 | 65 | M |
| | 2013.04-2020.08 | 6DCT | F | R | Hatchback FWD CHHB;CXDA;CXCB;CNTC | | GDS81891 | Drive Shaft | | 36 | | 59.5 | 40 | 781 | |
| | 2013.04-2020.08 | 6DCT | F | L/R | Hatchback FWD CHHB;CXDA;CXCB;CNTC | | GCI61069 | Inner Joint | | | 28 | | | 32 | |
| | 2013.04-2020.08 | 6DCT/6MT | F | L | Hatchback FWD CHHB;CXDA;CXCB;CNTC | | GDS83295 | Drive Shaft | | 36 | | 59.5 | 40 | 491 | |
| | 2013.04-2020.08 | 6DCT/6MT | F | L/R | Hatchback FWD CHHB;CXDA;CXCB;CNTC | | GCO83101 | Outer Joint | | 36 | 27 | 59.5 | 40 | 65 | M |
| | 2013.04-2020.08 | 6MT | F | R | Hatchback FWD CHHB;CXDA;CXCB;CNTC | | GDS61147 | Drive Shaft | | 36 | | 59.5 | 40 | 795 | |
| | 2013.04-2020.08 | 6MT | F | L/R | Hatchback FWD CHHB;CXDA;CXCB;CNTC | | GCI83016 | Inner Joint | | | 28 | | | 32 | |
| 2.0 (169 kw) | 2006.09-2008.12 | 6DCT | F | R | Hatchback FWD BYD | | GDS81653 | Drive Shaft | | 36 | | 59.5 | 40 | 785 | |
| | 2006.09-2008.12 | 6DCT | F | R | Hatchback FWD BYD | | GDS81891 | Drive Shaft | | 36 | | 59.5 | 40 | 781 | |
| | 2006.09-2008.12 | 6DCT | F | R | Hatchback FWD BYD | | GCO83002 | Outer Joint | | 36 | 27 | 59.5 | 40 | 66 | I |
| | 2006.09-2008.12 | 6DCT | F | R | Hatchback FWD BYD | | GCI61069 | Inner Joint | | | 28 | | | 32 | |
| | 2006.09-2008.12 | 6MT | F | R | Hatchback FWD BYD | | GDS61126 | Drive Shaft | | 36 | | 59.5 | 40 | 793 | |
| | 2006.09-2008.12 | 6MT | F | R | Hatchback FWD BYD | | GDS61339 | Drive Shaft | | 36 | | 59.5 | 40 | 794 | |
| | 2006.09-2008.12 | 6MT | F | L | Hatchback FWD BYD | | GCO61059 | Outer Joint | | 36 | 33 | 59.5 | 40 | 59.5 | I |
| | 2006.09-2008.12 | 6MT | F | L | Hatchback FWD BYD | | GCI53002 | Inner Joint | | | 33 | | | 34 | |
| | 2006.09-2008.12 | 6MT | F | L/R | Hatchback FWD BYD | | GCI83016 | Inner Joint | | | 28 | | | 32 | |
| | 2006.09-2008.12 | 6MT/6DCT | F | L | Hatchback FWD BYD | | GDS83295 | Drive Shaft | | 36 | | 59.5 | 40 | 491 | |
| | 2006.09-2008.12 | | F | L | Hatchback FWD BYD | | GDS83236 | Drive Shaft | | 36 | | 59.5 | 40 | 484 | |
| | 2013.04-2020.08 | 6AT/6MT | F | L | Hatchback FWD CHHA;CXDB | | GDS83295 | Drive Shaft | | 36 | | 59.5 | 40 | 491 | |
| | 2013.04-2020.08 | 6DCT | F | R | Hatchback FWD CHHA;CXDB | For vehicles with electronic LTD slip differential | GDS81891 | Drive Shaft | | 36 | | 59.5 | 40 | 781 | |
| | 2013.04-2020.08 | 6MT | F | R | Hatchback FWD CHHA;CXDB | Date to:2016.02,For vehicles with electronic limited slip diff. | GDS61147 | Drive Shaft | | 36 | | 59.5 | 40 | 795 | |
| | 2013.04-2020.08 | 6MT | F | R | Hatchback FWD CHHA;CXDB | Date from:2016.03,For vehicles with electronic limited slip diff. | GDS83313 | Drive Shaft | | 36 | | 59.5 | 40 | 792 | |
| | 2013.04-2020.08 | 6MT | F | L/R | Hatchback FWD CHHA;CXDB | For Modelcode:5G1 | GCI83016 | Inner Joint | | | 28 | | | 32 | |
| | 2013.04-2020.08 | 6MT/6DCT | F | R | Hatchback FWD CHHA;CXDB | Wheel Hub Diam[mm]:Date to:2017.06:With differential lock;Wheel Hub Diam[mm]:Date from:2017.0[illegible] | GDS81892 | Drive Shaft | | 36 | | 59.5 | 40 | 602 | |
| | 2013.04-2020.08 | 6MT/6DCT | F | L/R | Hatchback FWD CHHA;CXDB | | GCO83101 | Outer Joint | | 36 | 27 | 59.5 | 40 | 65 | M |
| | 2013.04-2020.08 | 6MT/6DCT | F | L/R | Hatchback FWD CHHA;CXDB | Transmission:6MT,For Modelcode:BQ1;Transmission:6DCT | GCI61069 | Inner Joint | | | 28 | | | 32 | |
| | 2015.04-2017.03 | 6AT/6MT | F | L | Hatchback Van FWD CHHA | | GCI61069 | Inner Joint | | | 28 | | | 32 | |
| | 2015.04-2017.03 | 6MT | F | R | Hatchback Van FWD CHHA | Date to:2016.02,For vehicles with electronic limited slip diff. | GDS61147 | Drive Shaft | | 36 | | 59.5 | 40 | 795 | |
| | 2015.04-2017.03 | 6MT | F | R | Hatchback Van FWD CHHA | Date from:2016.03,For vehicles with electronic limited slip diff. | GDS83313 | Drive Shaft | | 36 | | 59.5 | 40 | 792 | |
| | 2015.04-2017.03 | 6MT | F | L/R | Hatchback Van FWD CHHA | | GCI83016 | Inner Joint | | | 28 | | | 32 | |
| | 2015.04-2017.03 | 6MT/6DCT | F | L | Hatchback Van FWD CHHA | | GDS83295 | Drive Shaft | | 36 | | 59.5 | 40 | 491 | |
| | 2015.04-2017.03 | 6MT/6DCT | F | R | Hatchback Van FWD CHHA | Transmission:6MT,With differential lock | GDS81892 | Drive Shaft | | 36 | | 59.5 | 40 | 602 | |
| | 2015.04-2017.03 | AT/MT | F | L/R | Hatchback Van FWD CHHA | | GCO83101 | Outer Joint | | 36 | 27 | 59.5 | 40 | 65 | M |
| 2.0 (173 kw) | 2011.05-2012.11 | 6AT/6MT | F | L | Hatchback FWD CDLG | | GDS83295 | Drive Shaft | | 36 | | 59.5 | 40 | 491 | |
| | 2011.05-2012.11 | 6DCT | F | R | Hatchback FWD CDLG | | GDS81891 | Drive Shaft | | 36 | | 59.5 | 40 | 781 | |
| | 2011.05-2012.11 | 6MT | F | R | Hatchback FWD CDLG | | GDS61147 | Drive Shaft | | 36 | | 59.5 | 40 | 795 | |
| | 2011.05-2012.11 | 6MT | F | R | Hatchback FWD CDLG | | GDS83313 | Drive Shaft | | 36 | | 59.5 | 40 | 792 | |
| | 2011.05-2012.11 | MT | F | R | Hatchback FWD CDLG | | GCO83002 | Outer Joint | | 36 | 27 | 59.5 | 40 | 66 | I |
| | 2011.05-2012.11 | | F | L/R | Hatchback FWD CDLG | | GCO83101 | Outer Joint | | 36 | 27 | 59.5 | 40 | 65 | M |
| | 2011.05-2012.11 | | F | L/R | Hatchback FWD CDLG | | GCI83016 | Inner Joint | | | 28 | | | 32 | |
| 2.0 (180 kw) | 2017.03-2020.08 | 6MT | F | L | Hatchback FWD DLBA;DKTB | | GDS83295 | Drive Shaft | | 36 | | 59.5 | 40 | 491 | |
| | 2017.03-2020.08 | 6MT | F | L/R | Hatchback FWD DLBA;DKTB | | GCO83101 | Outer Joint | | 36 | 27 | 59.5 | 40 | 65 | M |
| | 2017.03-2020.08 | 6MT | F | L | Hatchback FWD DLBA;DKTB | | GCI61069 | Inner Joint | | | 28 | | | 32 | |
| | 2017.03-2020.08 | 7AT/6MT | F | R | Hatchback FWD DLBA;DKTB | Wheel Hub Diam [mm]:42,Date to:2017.06;Wheel Hub Diam [mm]:27,Date from:2017.[illegible] | GDS81892 | Drive Shaft | | 36 | | 59.5 | 40 | 602 | |
| | 2017.03-2020.08 | 7DCT | F | L | Hatchback FWD DLBA;DKTB | | GDS84237 | Drive Shaft | | 36 | 37 | 59.5 | 40 | 560 | |
| | 2017.03-2020.08 | 7DCT | F | L | Hatchback FWD DLBA;DKTB | | GCI83028 | Inner Joint | | 37 | 28 | | 65.5 | 90.2 | |
| | 2020.08- | 6MT | F | L | Hatchback FWD DLBA;DNPA;DRNA | | GDS83295 | Drive Shaft | | 36 | | 59.5 | 40 | 491 | |
| | 2020.08- | 6MT/7DCT | F | L/R | Hatchback FWD DLBA;DNPA;DRNA | Transmission:6MT,Position:Front axle left and right;Transmission:7DCT,Position:Front Axle Right | GCI82456 | Inner Joint | | | 28 | | | 32 | |
| | 2020.08- | 7DCT | F | L | Hatchback FWD DLBA;DNPA;DRNA | | GDS84237 | Drive Shaft | | 36 | 37 | 59.5 | 40 | 560 | |

| | YEAR | TRANSM. | F/R | L/R | BODY STYLE & DRIVE TYPE & ENGINE | REMARKS | G-AP Ref. | PRODUCT | ABS | Technical Specifications A | B | C | H | L | P |
|---|---|---|---|---|---|---|---|---|---|---|---|---|---|---|---|
| **VW** **Golf** | | | | | | | | | | | | | | | |
| 2.0 (180 kw) | 2020.08- | 7DCT | F | L | Hatchback FWD DLBA;DNPA;DRNA | | GCI83028 | Inner Joint | | 37 | 28 | | 65.5 | 90.2 | |
| | 2020.08- | 7DCT/6MT | F | R | Hatchback FWD DLBA;DNPA;DRNA | Wheel Hub Diam:27 | GDS81892 | Drive Shaft | | 36 | | 59.5 | 40 | 602 | |
| 2.0 (188 kw) | 2009.11-2013.11 | 6AT/6MT | F | L | Hatchback 4WD CDLC;CRZA | | GDS83295 | Drive Shaft | | 36 | | 59.5 | 40 | 491 | |
| | 2009.11-2013.11 | 6AT/6MT | F | R | Hatchback 4WD CDLC;CRZA | | GDS83266 | Drive Shaft | | 36 | | 59.5 | 40 | 601 | |
| | 2009.11-2013.11 | 6DCT | F | L/R | Hatchback 4WD CDLC;CRZA | From Chassis:1K_C_000001 | GCI61069 | Inner Joint | | | 28 | | | 32 | |
| | 2009.11-2013.11 | 6DCT | F | L | Hatchback 4WD CDLC;CRZA | | GDS98006 | Stub Axle-Flange | | 37 | | | 67 | 123.5 | |
| | 2009.11-2013.11 | | F | L/R | Hatchback 4WD CDLC;CRZA | Date To:2012.11 | GCO83101 | Outer Joint | | 36 | 27 | 59.5 | 40 | 65 | M |
| | 2009.11-2013.11 | | F | L/R | Hatchback 4WD CDLC;CRZA | | GCI83016 | Inner Joint | | | 28 | | | 32 | |
| | 2009.11-2013.11 | 6AT/6MT | R | L | Hatchback 4WD CDLC;CRZA | | GDS61284 | Drive Shaft | | 36 | | 59.5 | 40 | 594 | |
| | 2009.11-2013.11 | 6AT/6MT | R | R | Hatchback 4WD CDLC;CRZA | | GDS61293 | Drive Shaft | | 36 | | 59.5 | 40 | 631 | |
| | 2009.11-2013.11 | 6AT/6MT | R | L/R | Hatchback 4WD CDLC;CRZA | | GCI35026 | Outer Joint | | 36 | 33 | 59.5 | 40 | 61 | |
| | 2009.11-2013.11 | 6AT/6MT | R | L/R | Hatchback 4WD CDLC;CRZA | | GCI53002 | Inner Joint | | | 33 | | | 34 | |
| | 2009.11-2013.11 | 6AT/6MT | R | L/R | Hatchback 4WD CDLC;CRZA | | GCI82447 | Inner Joint | | | 33 | | | 34 | |
| 2.0 (195 kw) | 2009.11-2011.05 | 6MT | F | L/R | Hatchback 4WD CDLA | | GCO83101 | Outer Joint | | 36 | 27 | 59.5 | 40 | 65 | M |
| | 2009.11-2011.05 | 6AT/6MT | R | L | Hatchback 4WD CDLA | | GDS61284 | Drive Shaft | | 36 | | 59.5 | 40 | 594 | |
| | 2009.11-2011.05 | 6AT/6MT | R | R | Hatchback 4WD CDLA | | GDS61293 | Drive Shaft | | 36 | | 59.5 | 40 | 631 | |
| | 2009.11-2011.05 | 6AT/6MT | R | L/R | Hatchback 4WD CDLA | | GCI53002 | Inner Joint | | | 33 | | | 34 | |
| | 2016.02-2017.03 | 6AT/6MT | F | L | Hatchback FWD CJXE | | GDS83295 | Drive Shaft | | 36 | | 59.5 | 40 | 491 | |
| | 2016.02-2017.03 | 6AT/6MT | F | L | Hatchback FWD CJXE | | GCI61069 | Inner Joint | | | 28 | | | 32 | |
| | 2016.02-2017.03 | 6DCT | F | R | Hatchback FWD CJXE | | GDS81891 | Drive Shaft | | 36 | | 59.5 | 40 | 781 | |
| | 2016.02-2017.03 | 6DCT | F | R | Hatchback FWD CJXE | | GCI61069 | Inner Joint | | | 28 | | | 32 | |
| | 2016.02-2017.03 | 6MT | F | R | Hatchback FWD CJXE | Date to:2016.02,For vehicles with electronic limited slip diff. | GDS61147 | Drive Shaft | | 36 | | 59.5 | 40 | 795 | |
| | 2016.02-2017.03 | 6MT | F | R | Hatchback FWD CJXE | With differential lock | GDS81892 | Drive Shaft | | 36 | | 59.5 | 40 | 602 | |
| | 2016.02-2017.03 | 6MT | F | R | Hatchback FWD CJXE | Date from:2016.03,For vehicles with electronic limited slip diff. | GDS83313 | Drive Shaft | | 36 | | 59.5 | 40 | 792 | |
| | 2016.02-2017.03 | 6MT | F | L/R | Hatchback FWD CJXE | | GCI83016 | Inner Joint | | | 28 | | | 32 | |
| | 2016.02-2017.03 | MT/DCT | F | L/R | Hatchback FWD CJXE | Date to:2017.03 | GCO83101 | Outer Joint | | 36 | 27 | 59.5 | 40 | 65 | M |
| | 2024.06- | 7DCT | F | L | Hatchback FWD DNPD | | GDS84237 | Drive Shaft | | 36 | 37 | 59.5 | 40 | 560 | |
| | 2024.06- | 7DCT | F | R | Hatchback FWD DNPD | | GDS81892 | Drive Shaft | | 36 | | 59.5 | 40 | 602 | |
| | 2024.06- | 7DCT | F | L/R | Hatchback FWD DNPD | | GCO83101 | Outer Joint | | 36 | 27 | 59.5 | 40 | 65 | M |
| | 2024.06- | 7DCT | F | L | Hatchback FWD DNPD | | GCI83028 | Inner Joint | | 37 | 28 | | 65.5 | 90.2 | |
| | 2024.06- | 7DCT | F | R | Hatchback FWD DNPD | | GCI61069 | Inner Joint | | | 28 | | | 32 | |
| 2.0 (199 kw) | 2009.11-2012.11 | 6AT/6MT | F | L | Hatchback 4WD CDLF | | GDS83295 | Drive Shaft | | 36 | | 59.5 | 40 | 491 | |
| | 2009.11-2012.11 | 6AT/6MT | F | R | Hatchback 4WD CDLF | | GDS83266 | Drive Shaft | | 36 | | 59.5 | 40 | 601 | |
| | 2009.11-2012.11 | 6DCT | F | L/R | Hatchback 4WD CDLF | From Chassis:1K_C_000001 | GCI61069 | Inner Joint | | | 28 | | | 32 | |
| | 2009.11-2012.11 | | F | L/R | Hatchback 4WD CDLF | | GCO83101 | Outer Joint | | 36 | 27 | 59.5 | 40 | 65 | M |
| | 2009.11-2012.11 | | F | L/R | Hatchback 4WD CDLF | | GCI83016 | Inner Joint | | | 28 | | | 32 | |
| | 2009.11-2012.11 | 6AT/6MT | R | L | Hatchback 4WD CDLF | | GDS61284 | Drive Shaft | | 36 | | 59.5 | 40 | 594 | |
| | 2009.11-2012.11 | 6AT/6MT | R | R | Hatchback 4WD CDLF | | GDS61293 | Drive Shaft | | 36 | | 59.5 | 40 | 631 | |
| | 2009.11-2012.11 | 6AT/6MT | R | L/R | Hatchback 4WD CDLF | | GCI35026 | Outer Joint | | 36 | 33 | 59.5 | 40 | 61 | |
| | 2009.11-2012.11 | 6AT/6MT | R | L/R | Hatchback 4WD CDLF | | GCI53002 | Inner Joint | | | 33 | | | 34 | |
| | 2009.11-2012.11 | 6AT/6MT | R | L/R | Hatchback 4WD CDLF | | GCI82447 | Inner Joint | | | 33 | | | 34 | |
| | 2009.11-2012.11 | 6AT/6MT | F | R | Hatchback Van 4WD CDLF | | GDS83266 | Drive Shaft | | 36 | | 59.5 | 40 | 601 | |
| | 2009.11-2012.11 | 6DCT | F | L/R | Hatchback Van 4WD CDLF | From Chassis:1K_C_000001 | GCI61069 | Inner Joint | | | 28 | | | 32 | |
| | 2009.11-2012.11 | 6MT | F | L | Hatchback Van 4WD CDLF | | GDS83295 | Drive Shaft | | 36 | | 59.5 | 40 | 491 | |
| | 2009.11-2012.11 | | F | L/R | Hatchback Van 4WD CDLF | | GCO83101 | Outer Joint | | 36 | 27 | 59.5 | 40 | 65 | M |
| | 2009.11-2012.11 | | F | L/R | Hatchback Van 4WD CDLF | | GCI83016 | Inner Joint | | | 28 | | | 32 | |
| | 2009.11-2012.11 | 5MT | R | L/R | Hatchback Van 4WD CDLF | | GCI82447 | Inner Joint | | | 33 | | | 34 | |
| | 2009.11-2012.11 | 6AT/6MT | R | L | Hatchback Van 4WD CDLF | | GDS61284 | Drive Shaft | | 36 | | 59.5 | 40 | 594 | |
| | 2009.11-2012.11 | 6AT/6MT | R | R | Hatchback Van 4WD CDLF | | GDS61293 | Drive Shaft | | 36 | | 59.5 | 40 | 631 | |
| | 2009.11-2012.11 | 6AT/6MT | R | L/R | Hatchback Van 4WD CDLF | | GCI35026 | Outer Joint | | 36 | 33 | 59.5 | 40 | 61 | |
| | 2009.11-2012.11 | 6AT/6MT | R | L/R | Hatchback Van 4WD CDLF | | GCI53002 | Inner Joint | | | 33 | | | 34 | |
| 2.0 (206 kw) | 2013.11-2017.03 | 6AT | F | L | Hatchback 4WD CJXB | | GDS83295 | Drive Shaft | | 36 | | 59.5 | 40 | 491 | |
| | 2013.11-2017.03 | 6AT | F | R | Hatchback 4WD CJXB | Wheel Hub Diam [mm]:42 | GDS81892 | Drive Shaft | | 36 | | 59.5 | 40 | 602 | |
| | 2013.11-2017.03 | 6DCT | F | L | Hatchback 4WD CJXB | | GDS98006 | Stub Axle-Flange | | 37 | | | 67 | 123.5 | |
| | 2013.11-2017.03 | MT/6AT | F | L/R | Hatchback 4WD CJXB | | GCO83101 | Outer Joint | | 36 | 27 | 59.5 | 40 | 65 | M |
| | 2013.11-2017.03 | 6AT | R | L | Hatchback 4WD CJXB | | GDS61286 | Drive Shaft | | 36 | | 59.5 | 40 | 587 | |
| | 2013.11-2017.03 | 6AT | R | R | Hatchback 4WD CJXB | | GDS61287 | Drive Shaft | | 36 | | 59.5 | 40 | 632 | |
| | 2013.11-2017.03 | 6AT | R | L/R | Hatchback 4WD CJXB | | GCI61103 | Inner Joint | | | 33 | | | 32 | |
| 2.0 (213 kw) | 2016.12-2020.08 | 6AT/6MT | F | R | Hatchback 4WD CJXD;DJHB;DNUC | Wheel Hub Diam [mm]:27 | GDS81892 | Drive Shaft | | 36 | | 59.5 | 40 | 602 | |
| | 2016.12-2020.08 | 6AT/7AT/6MT | F | L | Hatchback 4WD CJXD;DJHB;DNUC | | GCI61069 | Inner Joint | | | 28 | | | 32 | |
| | 2016.12-2020.08 | 6MT | F | L | Hatchback 4WD CJXD;DJHB;DNUC | | GDS83295 | Drive Shaft | | 36 | | 59.5 | 40 | 491 | |
| | 2016.12-2020.08 | 7AT | F | R | Hatchback 4WD CJXD;DJHB;DNUC | Wheel Hub Diam [mm]:42/27 | GDS81892 | Drive Shaft | | 36 | | 59.5 | 40 | 602 | |
| | 2016.12-2020.08 | 7DCT | F | L | Hatchback 4WD CJXD;DJHB;DNUC | | GDS84237 | Drive Shaft | | 36 | 37 | 59.5 | 40 | 560 | |
| | 2016.12-2020.08 | 7DCT | F | L | Hatchback 4WD CJXD;DJHB;DNUC | | GCI83028 | Inner Joint | | 37 | 28 | | 65.5 | 90.2 | |
| | 2016.12-2020.08 | AT/MT | F | L/R | Hatchback 4WD CJXD;DJHB;DNUC | | GCO83101 | Outer Joint | | 36 | 27 | 59.5 | 40 | 65 | M |

| | YEAR | TRANSM. | F/R | L/R | BODY STYLE & DRIVE TYPE & ENGINE | REMARKS | G-AP Ref. | PRODUCT | ABS | Technical Specifications A | B | C | H | L | P |
|---|---|---|---|---|---|---|---|---|---|---|---|---|---|---|---|
| **VW** **Golf** | | | | | | | | | | | | | | | |
| 2.0 (213 kw) | 2016.12-2020.08 | 6AT/7AT/6MT | R | L | Hatchback 4WD CJXD;DJHB;DNUC | | GDS61286 | Drive Shaft | | 36 | | 59.5 | 40 | 587 | |
| | 2016.12-2020.08 | 6AT/7AT/6MT | R | R | Hatchback 4WD CJXD;DJHB;DNUC | | GDS61287 | Drive Shaft | | 36 | | 59.5 | 40 | 632 | |
| | 2016.12-2020.08 | 6AT/7AT/6MT | R | L/R | Hatchback 4WD CJXD;DJHB;DNUC | | GCI61103 | Inner Joint | | | 33 | | | 32 | |
| | 2018.11-2020.08 | 6AT/7AT | F | L | Hatchback FWD DNUC;CJXH | | GCI83028 | Inner Joint | | 37 | 28 | | 65.5 | 90.2 | |
| | 2018.11-2020.08 | 6DCT | F | L | Hatchback FWD DNUC;CJXH | | GDS83295 | Drive Shaft | | 36 | | 59.5 | 40 | 491 | |
| | 2018.11-2020.08 | 6DCT | F | R | Hatchback FWD DNUC;CJXH | For vehicles with electronic limited slip diff. | GDS81891 | Drive Shaft | | 36 | | 59.5 | 40 | 781 | |
| | 2018.11-2020.08 | 6DCT/7DCT | F | R | Hatchback FWD DNUC;CJXH | With differential lock | GDS81892 | Drive Shaft | | 36 | | 59.5 | 40 | 602 | |
| | 2018.11-2020.08 | 7DCT | F | L | Hatchback FWD DNUC;CJXH | | GDS84237 | Drive Shaft | | 36 | 37 | 59.5 | 40 | 560 | |
| 2.0 (221 kw) | 2013.11-2020.08 | 6MT | F | L | Hatchback 4WD CJXC;DNUE | | GDS83295 | Drive Shaft | | 36 | | 59.5 | 40 | 491 | |
| | 2013.11-2020.08 | 6MT | F | R | Hatchback 4WD CJXC;DNUE | | GDS81892 | Drive Shaft | | 36 | | 59.5 | 40 | 602 | |
| | 2013.11-2020.08 | 6MT | F | L/R | Hatchback 4WD CJXC;DNUE | | GCO83101 | Outer Joint | | 36 | 27 | 59.5 | 40 | 65 | M |
| | 2013.11-2020.08 | 6MT | F | L/R | Hatchback 4WD CJXC;DNUE | | GCI61069 | Inner Joint | | | 28 | | | 32 | |
| | 2013.11-2020.08 | 7DCT | F | L | Hatchback 4WD CJXC;DNUE | | GDS84237 | Drive Shaft | | 36 | 37 | 59.5 | 40 | 560 | |
| | 2013.11-2020.08 | 7DCT | F | L | Hatchback 4WD CJXC;DNUE | | GCI83028 | Inner Joint | | 37 | 28 | | 65.5 | 90.2 | |
| | 2013.11-2020.08 | 6MT | R | L | Hatchback 4WD CJXC;DNUE | | GDS61286 | Drive Shaft | | 36 | | 59.5 | 40 | 587 | |
| | 2013.11-2020.08 | 6MT | R | R | Hatchback 4WD CJXC;DNUE | | GDS61287 | Drive Shaft | | 36 | | 59.5 | 40 | 632 | |
| | 2013.11-2020.08 | 6MT | R | L/R | Hatchback 4WD CJXC;DNUE | | GCI35026 | Outer Joint | | 36 | 33 | 59.5 | 40 | 61 | |
| | 2013.11-2020.08 | 6MT | R | L/R | Hatchback 4WD CJXC;DNUE | | GCI61103 | Inner Joint | | | 33 | | | 32 | |
| | 2020.10- | 7DCT | F | L | Hatchback FWD DNFC | | GDS84237 | Drive Shaft | | 36 | 37 | 59.5 | 40 | 560 | |
| | 2020.10- | 7DCT | F | R | Hatchback FWD DNFC | Wheel Hub Diam:27 | GDS81892 | Drive Shaft | | 36 | | 59.5 | 40 | 602 | |
| | 2020.10- | 7DCT | F | L | Hatchback FWD DNFC | | GCI83028 | Inner Joint | | 37 | 28 | | 65.5 | 90.2 | |
| | 2020.10- | 7DCT | F | R | Hatchback FWD DNFC | | GCI61069 | Inner Joint | | | 28 | | | 32 | |
| 2.0 (228 kw) | 2016.09-2017.03 | 6MT | F | L | Hatchback FWD CJXG | | GDS83295 | Drive Shaft | | 36 | | 59.5 | 40 | 491 | |
| | 2016.09-2017.03 | 6MT | F | R | Hatchback FWD CJXG | Without differential lock | GDS81892 | Drive Shaft | | 36 | | 59.5 | 40 | 602 | |
| | 2016.09-2017.03 | 6MT | F | R | Hatchback FWD CJXG | For vehicles with electronic limited slip diff. | GDS83313 | Drive Shaft | | 36 | | 59.5 | 40 | 792 | |
| | 2016.09-2017.03 | 6MT | F | L/R | Hatchback FWD CJXG | | GCO83101 | Outer Joint | | 36 | 27 | 59.5 | 40 | 65 | M |
| | 2016.09-2017.03 | 6MT | F | L | Hatchback FWD CJXG | | GCI61069 | Inner Joint | | | 28 | | | 32 | |
| | 2016.09-2017.03 | | F | L/R | Hatchback FWD CJXG | | GCI83016 | Inner Joint | | | 28 | | | 32 | |
| | 2016.12-2020.08 | 6MT | F | L | Hatchback 4WD CJXG;DJHA | | GDS83295 | Drive Shaft | | 36 | | 59.5 | 40 | 491 | |
| | 2016.12-2020.08 | 6MT | F | L/R | Hatchback 4WD CJXG;DJHA | | GCI61069 | Inner Joint | | | 28 | | | 32 | |
| | 2016.12-2020.08 | 6MT/7DCT | F | R | Hatchback 4WD CJXG;DJHA | | GDS81892 | Drive Shaft | | 36 | | 59.5 | 40 | 602 | |
| | 2016.12-2020.08 | 6MT/7DCT | F | L/R | Hatchback 4WD CJXG;DJHA | | GCO83101 | Outer Joint | | 36 | 27 | 59.5 | 40 | 65 | M |
| | 2016.12-2020.08 | 7DCT | F | L | Hatchback 4WD CJXG;DJHA | | GDS84237 | Drive Shaft | | 36 | 37 | 59.5 | 40 | 560 | |
| | 2016.12-2020.08 | 7DCT | F | L | Hatchback 4WD CJXG;DJHA | | GCI83028 | Inner Joint | | 37 | 28 | | 65.5 | 90.2 | |
| | 2016.12-2020.08 | 7DCT | F | R | Hatchback 4WD CJXG;DJHA | | GCI61069 | Inner Joint | | | 28 | | | 32 | |
| | 2016.12-2020.08 | 6MT/7DCT | R | L | Hatchback 4WD CJXG;DJHA | | GDS61286 | Drive Shaft | | 36 | | 59.5 | 40 | 587 | |
| | 2016.12-2020.08 | 6MT/7DCT | R | R | Hatchback 4WD CJXG;DJHA | | GDS61287 | Drive Shaft | | 36 | | 59.5 | 40 | 632 | |
| | 2016.12-2020.08 | 6MT/7DCT | R | L/R | Hatchback 4WD CJXG;DJHA | | GCI35026 | Outer Joint | | 36 | 33 | 59.5 | 40 | 61 | |
| | 2016.12-2020.08 | 6MT/7DCT | R | L/R | Hatchback 4WD CJXG;DJHA | | GCI61103 | Inner Joint | | | 33 | | | 32 | |
| 2.0 (235 kw) | 2020.09- | 7DCT | F | L | Hatchback 4WD DNFG;DSFF;DSFE | | GDS84237 | Drive Shaft | | 36 | 37 | 59.5 | 40 | 560 | |
| | 2020.09- | 7DCT | F | R | Hatchback 4WD DNFG;DSFF;DSFE | Wheel Hub Diam:27 | GDS81892 | Drive Shaft | | 36 | | 59.5 | 40 | 602 | |
| | 2020.09- | 7DCT | F | L | Hatchback 4WD DNFG;DSFF;DSFE | | GCI83028 | Inner Joint | | 37 | 28 | | 65.5 | 90.2 | |
| | 2020.09- | 7DCT | F | R | Hatchback 4WD DNFG;DSFF;DSFE | | GCI61069 | Inner Joint | | | 28 | | | 32 | |
| 2.0 (239 kw) | 2025.10- | 7DCT | F | L | Hatchback FWD DNFH | | GDS84237 | Drive Shaft | | 36 | 37 | 59.5 | 40 | 560 | |
| | 2025.10- | 7DCT | F | R | Hatchback FWD DNFH | | GDS81892 | Drive Shaft | | 36 | | 59.5 | 40 | 602 | |
| 2.0 (245 kw) | 2022.07- | 7DCT | F | L | Hatchback 4WD DNFF;DSFD | | GDS84237 | Drive Shaft | | 36 | 37 | 59.5 | 40 | 560 | |
| | 2022.07- | 7DCT | F | L | Hatchback 4WD DNFF;DSFD | | GCO83101 | Outer Joint | | 36 | 27 | 59.5 | 40 | 65 | M |
| | 2022.07- | 7DCT | F | L | Hatchback 4WD DNFF;DSFD | | GCI83028 | Inner Joint | | 37 | 28 | | 65.5 | 90.2 | |
| | 2022.07- | 7DCT/6MT | F | R | Hatchback 4WD DNFF;DSFD | Wheel Hub Diam [mm]:27 | GDS81892 | Drive Shaft | | 36 | | 59.5 | 40 | 602 | |
| | 2022.07- | 7DCT/6MT | F | R | Hatchback 4WD DNFF;DSFD | Wheel Hub Diam [mm]:27 | GCO83101 | Outer Joint | | 36 | 27 | 59.5 | 40 | 65 | M |
| | 2022.07- | 7DCT/6MT | F | R | Hatchback 4WD DNFF;DSFD | | GCI61069 | Inner Joint | | | 28 | | | 32 | |
| 2.0 (265 kw) | 2016.09- | 6MT/6DCT | F | L/R | Hatchback 4WD CJXC | For Engine Code:CJXC | GCO83101 | Outer Joint | | 36 | 27 | 59.5 | 40 | 65 | M |
| 2.3 (110 kw) | 1997.10-2001.02 | 4AT/5MT | F | L | Hatchback FWD AGZ | | GDS61020 | Drive Shaft | | 36 | | 53.2 | 77.5 | 547 | |
| | 1997.10-2001.02 | 5MT | F | R | Hatchback FWD AGZ | | GDS83011 | Drive Shaft | | 36 | | 53.2 | 77.5 | 810.5 | |
| | 1997.10-2001.02 | AT/MT | F | L/R | Hatchback FWD AGZ | | GCO83070 | Outer Joint | | 36 | 30 | 53 | 78 | 60 | I |
| | 1997.10-2001.02 | AT/MT | F | L/R | Hatchback FWD AGZ | Date to:1998.07 | GCI61005 | Inner Joint | | | 30 | | | 57.6 | |
| | 1997.10-2001.02 | AT/MT | F | L/R | Hatchback FWD AGZ | | GCI61006 | Inner Joint | | | 30 | | | 57.6 | |
| | 1997.10-2001.02 | MT | F | R | Hatchback FWD AGZ | | GDS61203 | Drive Shaft | | 36 | | 53.2 | 77.5 | 810 | |
| | 1997.10-2001.02 | MT/5MT | F | L | Hatchback FWD AGZ | Date to:1998.07 | GDS61312 | Drive Shaft | | 36 | | 53 | 78 | 546 | |
| | 1998.11-2000.05 | 6MT | F | L | Hatchback 4WD AGZ | | GDS61123 | Drive Shaft | | 36 | | 53 | 77.5 | 520 | |
| | 1998.11-2000.05 | 6MT | F | R | Hatchback 4WD AGZ | | GDS61186 | Drive Shaft | | 36 | | 53 | 77.5 | 653 | |
| | 1998.11-2000.05 | 6MT | F | L/R | Hatchback 4WD AGZ | | GCO83035 | Outer Joint | | 36 | 27 | 53 | 77.5 | 65 | I |
| | 1998.11-2000.05 | 6MT | F | L/R | Hatchback 4WD AGZ | | GCI83001 | Inner Joint | | | 28 | | | 32 | |
| | 1998.11-2000.05 | AT/MT | F | L | Hatchback 4WD AGZ | | GDS61020 | Drive Shaft | | 36 | | 53.2 | 77.5 | 547 | |
| | 1998.11-2000.05 | 6MT | R | L | Hatchback 4WD AGZ | | GDS82364 | Drive Shaft | | 36 | | 53 | 78.5 | 651 | |

| | YEAR | TRANSM. | F/R | L/R | BODY STYLE & DRIVE TYPE & ENGINE | REMARKS | G-AP Ref. | PRODUCT | ABS | Technical Specifications A | B | C | H | L | P |
|---|---|---|---|---|---|---|---|---|---|---|---|---|---|---|---|
| **VW** **Golf** | | | | | | | | | | | | | | | |
| 2.3 (110 kw) | 1998.11-2000.05 | 6MT | R | R | Hatchback 4WD AGZ | | GDS81587 | Drive Shaft | | 36 | | 53 | 78.5 | 522 | |
| | 1998.11-2000.05 | 6MT | R | L/R | Hatchback 4WD AGZ | | GCO83033 | Outer Joint | | 36 | 30 | 53 | 78.5 | 51 | I |
| | 1998.11-2000.05 | 6MT | R | L/R | Hatchback 4WD AGZ | | GCI82447 | Inner Joint | | | 33 | | | 34 | |
| 2.3 (125 kw) | 2000.09-2004.05 | 5AT | F | L | Hatchback FWD AQN | | GDS61244 | Drive Shaft | | 36 | | 53 | 77.5 | 523 | |
| | 2000.09-2004.05 | 5AT | F | R | Hatchback FWD AQN | | GDS61243 | Drive Shaft | | 36 | | 53 | 77.5 | 813 | |
| | 2000.09-2004.05 | 5AT | F | R | Hatchback FWD AQN | | GDS82405 | Drive Shaft | | 36 | | 53 | 77.5 | 815 | |
| | 2000.09-2004.05 | 5AT | F | L/R | Hatchback FWD AQN | | GCO83035 | Outer Joint | | 36 | 27 | 53 | 77.5 | 65 | I |
| | 2000.09-2004.05 | 5AT | F | L/R | Hatchback FWD AQN | Date from:2003.03 | GCI61057 | Inner Joint | | | 34 | | | 89 | |
| | 2000.09-2004.05 | 5AT/5MT | F | L/R | Hatchback FWD AQN | | GCI61006 | Inner Joint | | | 30 | | | 57.6 | |
| | 2000.09-2004.05 | 5AT/5MT | F | L/R | Hatchback FWD AQN | | GCI83007 | Inner Joint | | | 34 | | | 85 | |
| | 2000.09-2004.05 | 5MT | F | L | Hatchback FWD AQN | [illegible] | GDS61020 | Drive Shaft | | 36 | | 53.2 | 77.5 | 547 | |
| | 2000.09-2004.05 | 5MT | F | R | Hatchback FWD AQN | Date from:1998.08 | GDS83011 | Drive Shaft | | 36 | | 53.2 | 77.5 | 810.5 | |
| | 2000.09-2004.05 | MT | F | L/R | Hatchback FWD AQN | Date to:2004.05 | GCO83070 | Outer Joint | | 36 | 30 | 53 | 78 | 60 | I |
| | 2000.09-2005.06 | 6MT | F | L | Hatchback 4WD AQN | | GDS61123 | Drive Shaft | | 36 | | 53 | 77.5 | 520 | |
| | 2000.09-2005.06 | 6MT | F | R | Hatchback 4WD AQN | | GDS61186 | Drive Shaft | | 36 | | 53 | 77.5 | 653 | |
| | 2000.09-2005.06 | 6MT | F | L/R | Hatchback 4WD AQN | | GCO83035 | Outer Joint | | 36 | 27 | 53 | 77.5 | 65 | I |
| | 2000.09-2005.06 | 6MT | F | L/R | Hatchback 4WD AQN | | GCI83001 | Inner Joint | | | 28 | | | 32 | |
| | 2000.09-2005.06 | 6MT | F | L/R | Hatchback 4WD AQN | Date from:2003.02 | GCI83016 | Inner Joint | | | 28 | | | 32 | |
| | 2000.09-2005.06 | AT | F | L | Hatchback 4WD AQN | | GDS61244 | Drive Shaft | | 36 | | 53 | 77.5 | 523 | |
| | 2000.09-2005.06 | AT | F | R | Hatchback 4WD AQN | | GDS61243 | Drive Shaft | | 36 | | 53 | 77.5 | 813 | |
| | 2000.09-2005.06 | AT | F | L/R | Hatchback 4WD AQN | | GCI61044 | Inner Joint | | | 34 | | | 85 | |
| | 2000.09-2005.06 | 6MT | R | L | Hatchback 4WD AQN | | GDS82364 | Drive Shaft | | 36 | | 53 | 78.5 | 651 | |
| | 2000.09-2005.06 | 6MT | R | R | Hatchback 4WD AQN | | GDS81587 | Drive Shaft | | 36 | | 53 | 78.5 | 522 | |
| | 2000.09-2005.06 | 6MT | R | L/R | Hatchback 4WD AQN | | GCO83033 | Outer Joint | | 36 | 30 | 53 | 78.5 | 51 | I |
| | 2000.09-2005.06 | 6MT | R | L/R | Hatchback 4WD AQN | | GCI82447 | Inner Joint | | | 33 | | | 34 | |
| 2.5 (125 kw) | 2009.07-2013.05 | 5MT | F | L | Hatchback FWD CBTA;CBUA | | GDS83294 | Drive Shaft | | 36 | | 59.5 | 38 | 519 | |
| | 2009.07-2013.05 | 5MT | F | R | Hatchback FWD CBTA;CBUA | | GDS61283 | Drive Shaft | | 36 | | 59.5 | 40 | 815 | |
| | 2009.07-2013.05 | 5MT | F | L/R | Hatchback FWD CBTA;CBUA | | GCI82447 | Inner Joint | | | 33 | | | 34 | |
| | 2009.07-2013.05 | 5MT/6AT | F | L/R | Hatchback FWD CBTA;CBUA | | GCO83037 | Outer Joint | | 36 | 30 | 59.5 | 40.5 | 56 | I |
| | 2009.07-2013.05 | 6AT | F | L | Hatchback FWD CBTA;CBUA | | GDS61111 | Drive Shaft | | 36 | 26 | 59.5 | 40 | 584 | |
| | 2009.07-2013.05 | 6AT | F | R | Hatchback FWD CBTA;CBUA | | GDS61094 | Drive Shaft | | 36 | 26 | 59.5 | 40.5 | 884 | |
| | 2009.07-2013.05 | 6AT | F | R | Hatchback FWD CBTA;CBUA | | GDS61112 | Drive Shaft | | 36 | 26 | 59.5 | 40 | 883 | |
| | 2009.07-2013.05 | 6AT | F | L/R | Hatchback FWD CBTA;CBUA | | GCI61011 | Inner Joint | | 26 | 32 | 31 | 68.5 | 85 | |
| | 2009.07-2013.05 | 6AT | F | L/R | Hatchback FWD CBTA;CBUA | | GCI61050 | Inner Joint | | 26 | 32 | 31 | 68.5 | 89 | |
| | 2009.07-2013.05 | 6AT/5MT | F | L/R | Hatchback FWD CBTA;CBUA | | GCO83002 | Outer Joint | | 36 | 27 | 59.5 | 40 | 66 | I |
| 2.8 (120 kw) | 1995.07-1997.12 | MT | F | L | Hatchback FWD AAA | | GDS99116 | Drive Shaft | | 36 | | 53.2 | 77.5 | 548.5 | |
| | 1995.07-1997.12 | MT | F | R | Hatchback FWD AAA | | GDS99112 | Drive Shaft | | 36 | | 53.2 | 77.5 | 783 | |
| | 1995.07-1997.12 | MT | F | L/R | Hatchback FWD AAA | | GCO83070 | Outer Joint | | 36 | 30 | 53 | 78 | 60 | I |
| | 1995.07-1997.12 | MT | F | L/R | Hatchback FWD AAA | | GCI83003 | Inner Joint | | | 33 | | | 32 | |
| 2.8 (128 kw) | 1992.01-1997.12 | AT | F | L/R | Hatchback FWD AAA | Chassis no. from:1H-S-000001;Chassis no. to:1H-S-700000 | GCO83070 | Outer Joint | | 36 | 30 | 53 | 78 | 60 | I |
| | 1992.01-1997.12 | AT | F | R | Hatchback FWD AAA | Chassis no. from:1H-S-000001;Chassis no. to:1H-S-700000 | GCI83009 | Inner Joint | | | 33 | | | 34 | |
| | 1992.01-1997.12 | AT/MT | F | L/R | Hatchback FWD AAA | Chassis Number:1HS000001-1HS700000 | GCI83011 | Inner Joint | | | 33 | | | 34 | |
| | 1992.01-1997.12 | MT | F | L | Hatchback FWD AAA | | GDS99116 | Drive Shaft | | 36 | | 53.2 | 77.5 | 548.5 | |
| | 1992.01-1997.12 | MT | F | R | Hatchback FWD AAA | | GDS99112 | Drive Shaft | | 36 | | 53.2 | 77.5 | 783 | |
| | 1992.01-1997.12 | MT | F | L/R | Hatchback FWD AAA | | GCO83070 | Outer Joint | | 36 | 30 | 53 | 78 | 60 | I |
| | 1992.01-1997.12 | MT | F | R | Hatchback FWD AAA | | GCI83009 | Inner Joint | | | 33 | | | 34 | |
| 2.8 (150 kw) | 1999.05-2005.06 | 6MT | F | L | Hatchback 4WD AQP/AUE/BDE | | GDS61123 | Drive Shaft | | 36 | | 53 | 77.5 | 520 | |
| | 1999.05-2005.06 | 6MT | F | R | Hatchback 4WD AQP/AUE/BDE | | GDS61186 | Drive Shaft | | 36 | | 53 | 77.5 | 653 | |
| | 1999.05-2005.06 | 6MT | F | L/R | Hatchback 4WD AQP/AUE/BDE | | GCO83035 | Outer Joint | | 36 | 27 | 53 | 77.5 | 65 | I |
| | 1999.05-2005.06 | 6MT | F | L/R | Hatchback 4WD AQP/AUE/BDE | Date to:2003.01 | GCI83001 | Inner Joint | | | 28 | | | 32 | |
| | 1999.05-2005.06 | 6MT | F | L/R | Hatchback 4WD AQP/AUE/BDE | Date from:2003.02 | GCI83016 | Inner Joint | | | 28 | | | 32 | |
| | 1999.05-2005.06 | 6MT | R | L | Hatchback 4WD AQP/AUE/BDE | | GDS82364 | Drive Shaft | | 36 | | 53 | 78.5 | 651 | |
| | 1999.05-2005.06 | 6MT | R | R | Hatchback 4WD AQP/AUE/BDE | | GDS81587 | Drive Shaft | | 36 | | 53 | 78.5 | 522 | |
| | 1999.05-2005.06 | 6MT | R | L/R | Hatchback 4WD AQP/AUE/BDE | | GCO83033 | Outer Joint | | 36 | 30 | 53 | 78.5 | 51 | I |
| | 1999.05-2005.06 | 6MT | R | L/R | Hatchback 4WD AQP/AUE/BDE | | GCI82447 | Inner Joint | | | 33 | | | 34 | |
| 2.9 (140 kw) | 1994.10-1997.12 | MT | F | L | Hatchback 4WD ABV | | GDS99116 | Drive Shaft | | 36 | | 53.2 | 77.5 | 548.5 | |
| | 1994.10-1997.12 | MT | F | R | Hatchback 4WD ABV | | GDS99112 | Drive Shaft | | 36 | | 53.2 | 77.5 | 783 | |
| | 1994.10-1997.12 | MT | F | L/R | Hatchback 4WD ABV | | GCO83070 | Outer Joint | | 36 | 30 | 53 | 78 | 60 | I |
| | 1994.10-1997.12 | MT | F | L/R | Hatchback 4WD ABV | | GCI83003 | Inner Joint | | | 33 | | | 32 | |
| 3.2 (177 kw) | 2002.06-2005.06 | 6AT | F | L | Hatchback 4WD BFH/BML | | GDS81912 | Drive Shaft | | 36 | | 53 | 40 | 472 | |
| | 2002.06-2005.06 | 6AT | F | R | Hatchback 4WD BFH/BML | | GDS81138 | Drive Shaft | | 36 | | 53 | 40 | 571 | |
| | 2002.06-2005.06 | 6AT | F | L/R | Hatchback 4WD BFH/BML | | GCO61021 | Outer Joint | | 36 | 27 | 53 | 40 | 65 | I |
| | 2002.06-2005.06 | 6AT | F | L | Hatchback 4WD BFH/BML | | GCI61057 | Inner Joint | | | 34 | | | 89 | |
| | 2002.06-2005.06 | 6MT | F | L | Hatchback 4WD BFH/BML | Date from:2003.07 | GDS81913 | Drive Shaft | | 36 | | 53 | 40 | 480 | |
| | 2002.06-2005.06 | 6MT | F | L | Hatchback 4WD BFH/BML | Date to:2003.06 | GDS83304 | Drive Shaft | | 36 | | 59.5 | 40 | 481 | |

| | YEAR | TRANSM. | F/R | L/R | BODY STYLE & DRIVE TYPE & ENGINE | REMARKS | G-AP Ref. | PRODUCT | ABS | Technical Specifications A | B | C | H | L | P |
|---|---|---|---|---|---|---|---|---|---|---|---|---|---|---|---|
| **VW** | | | | | | | | | | | | | | | |
| **Golf** | | | | | | | | | | | | | | | |
| 3.2 (177 kw) | 2002.06-2005.06 | 6MT | F | R | Hatchback 4WD BFH/BML | | GDS83322 | Drive Shaft | | 36 | | 59.5 | 40 | 613 | |
| | 2002.06-2005.06 | AT/MT | R | L | Hatchback 4WD BFH/BML | | GDS82364 | Drive Shaft | | 36 | | 53 | 78.5 | 651 | |
| | 2002.06-2005.06 | AT/MT | R | R | Hatchback 4WD BFH/BML | | GDS81587 | Drive Shaft | | 36 | | 53 | 78.5 | 522 | |
| | 2002.06-2005.06 | AT/MT | R | L/R | Hatchback 4WD BFH/BML | | GCO83033 | Outer Joint | | 36 | 30 | 53 | 78.5 | 51 | I |
| | 2002.06-2005.06 | AT/MT | R | L/R | Hatchback 4WD BFH/BML | | GCI53002 | Inner Joint | | | 33 | | | 34 | |
| | 2002.06-2005.06 | AT/MT | R | L/R | Hatchback 4WD BFH/BML | | GCI82447 | Inner Joint | | | 33 | | | 34 | |
| 3.2 (184 kw) | 2005.11-2008.11 | 6AT/6MT | F | R | Hatchback 4WD BUB;CBRA | | GCI53002 | Inner Joint | | | 33 | | | 34 | |
| | 2005.11-2008.11 | 6AT/6MT | F | L/R | Hatchback 4WD BUB;CBRA | | GCI83016 | Inner Joint | | | 28 | | | 32 | |
| | 2005.11-2008.11 | 6DCT | F | L | Hatchback 4WD BUB;CBRA | Date to:2006.10 | GDS83241 | Drive Shaft | | 36 | | 59.5 | 40 | 475 | |
| | 2005.11-2008.11 | 6DCT | F | L | Hatchback 4WD BUB;CBRA | | GDS98006 | Stub Axle-Flange | | 37 | | | 67 | 123.5 | |
| | 2005.11-2008.11 | 6MT | F | L | Hatchback 4WD BUB;CBRA | | GCO61059 | Outer Joint | | 36 | 33 | 59.5 | 40 | 59.5 | I |
| | 2005.11-2008.11 | 6MT/6DCT | F | L | Hatchback 4WD BUB;CBRA | Trismission:6DCT,Date from:2006.11 | GDS83295 | Drive Shaft | | 36 | | 59.5 | 40 | 491 | |
| | 2005.11-2008.11 | AT/MT | F | R | Hatchback 4WD BUB;CBRA | | GDS83266 | Drive Shaft | | 36 | | 59.5 | 40 | 601 | |
| | 2005.11-2008.11 | MT | F | L | Hatchback 4WD BUB;CBRA | | GDS83236 | Drive Shaft | | 36 | | 59.5 | 40 | 484 | |
| | 2005.11-2008.11 | | F | L/R | Hatchback 4WD BUB;CBRA | | GCO83002 | Outer Joint | | 36 | 27 | 59.5 | 40 | 66 | I |
| | 2005.11-2008.11 | 6AT/6MT | R | L | Hatchback 4WD BUB;CBRA | | GDS61284 | Drive Shaft | | 36 | | 59.5 | 40 | 594 | |
| | 2005.11-2008.11 | 6AT/6MT | R | R | Hatchback 4WD BUB;CBRA | | GDS61293 | Drive Shaft | | 36 | | 59.5 | 40 | 631 | |
| | 2005.11-2008.11 | 6AT/6MT | R | L/R | Hatchback 4WD BUB;CBRA | | GCI35026 | Outer Joint | | 36 | 33 | 59.5 | 40 | 61 | |
| | 2005.11-2008.11 | 6AT/6MT | R | L/R | Hatchback 4WD BUB;CBRA | Date to:2007.06 | GCO83037 | Outer Joint | | 36 | 30 | 59.5 | 40.5 | 56 | I |
| | 2005.11-2008.11 | 6AT/6MT | R | L | Hatchback 4WD BUB;CBRA | | GCI53002 | Inner Joint | | | 33 | | | 34 | |
| | 2005.11-2008.11 | 6AT/6MT | R | L/R | Hatchback 4WD BUB;CBRA | | GCI82447 | Inner Joint | | | 33 | | | 34 | |
| **Golf Variant** | | | | | | | | | | | | | | | |
| 2.0 (140 kw) | 2021.06-2024.11 | 7DCT | F | L | Estate 4WD DNNA | | GDS84237 | Drive Shaft | | 36 | 37 | 59.5 | 40 | 560 | |
| | 2021.06-2024.11 | 7DCT | F | R | Estate 4WD DNNA | Wheel Hub Diam:27 | GDS81892 | Drive Shaft | | 36 | | 59.5 | 40 | 602 | |
| | 2021.06-2024.11 | 7DCT | F | L/R | Estate 4WD DNNA | | GCO83101 | Outer Joint | | 36 | 27 | 59.5 | 40 | 65 | M |
| | 2021.06-2024.11 | 7DCT | F | L | Estate 4WD DNNA | | GCI83028 | Inner Joint | | 37 | 28 | | 65.5 | 90.2 | |
| | 2021.06-2024.11 | 7DCT | F | R | Estate 4WD DNNA | | GCI61069 | Inner Joint | | | 28 | | | 32 | |
| | 2021.06-2024.11 | 7DCT | R | L | Estate 4WD DNNA | | GDS61286 | Drive Shaft | | 36 | | 59.5 | 40 | 587 | |
| | 2021.06-2024.11 | 7DCT | R | R | Estate 4WD DNNA | | GDS61287 | Drive Shaft | | 36 | | 59.5 | 40 | 632 | |
| | 2021.06-2024.11 | 7DCT | R | L/R | Estate 4WD DNNA | | GCI35026 | Outer Joint | | 36 | 33 | 59.5 | 40 | 61 | |
| | 2021.06-2024.11 | 7DCT | R | L/R | Estate 4WD DNNA | | GCI61103 | Inner Joint | | | 33 | | | 32 | |
| **Golf Alltrack** | | | | | | | | | | | | | | | |
| 1.6 (81 kw) | 2014.12-2017.03 | 6MT | F | L | Estate 4WD CRKB;CXXB | For PR code:1PA/2H0/2H5;For PR code:1PE/1PF/1PA/2H4 | GDS83295 | Drive Shaft | | 36 | | 59.5 | 40 | 491 | |
| | 2014.12-2017.03 | 6MT | F | R | Estate 4WD CRKB;CXXB | | GDS81892 | Drive Shaft | | 36 | | 59.5 | 40 | 602 | |
| | 2014.12-2017.03 | 6MT | F | L | Estate 4WD CRKB;CXXB | For PR code:1PA/2H0/2H5;For PR code:1PE/1PF/1PA/2H4 | GCI61069 | Inner Joint | | | 28 | | | 32 | |
| | 2014.12-2017.03 | MT | F | L | Estate 4WD CRKB;CXXB | | GDS83294 | Drive Shaft | | 36 | | 59.5 | 38 | 519 | |
| | 2014.12-2017.03 | MT | F | L | Estate 4WD CRKB;CXXB | | GCO83037 | Outer Joint | | 36 | 30 | 59.5 | 40.5 | 56 | I |
| | 2014.12-2017.03 | MT | F | L/R | Estate 4WD CRKB;CXXB | | GCO83100 | Outer Joint | | 36 | 33 | 59.5 | 38 | 56 | I |
| | 2014.12-2017.03 | | F | L/R | Estate 4WD CRKB;CXXB | | GCO83101 | Outer Joint | | 36 | 27 | 59.5 | 40 | 65 | M |
| | 2014.12-2017.03 | | F | L/R | Estate 4WD CRKB;CXXB | | GCI83016 | Inner Joint | | | 28 | | | 32 | |
| | 2014.12-2017.03 | 6MT | R | L | Estate 4WD CRKB;CXXB | | GDS61286 | Drive Shaft | | 36 | | 59.5 | 40 | 587 | |
| | 2014.12-2017.03 | 6MT | R | R | Estate 4WD CRKB;CXXB | | GDS61287 | Drive Shaft | | 36 | | 59.5 | 40 | 632 | |
| | 2014.12-2017.03 | | R | L/R | Estate 4WD CRKB;CXXB | | GCI61103 | Inner Joint | | | 33 | | | 32 | |
| 1.8 (132 kw) | 2014.12-2020.08 | 6AT | F | L | Estate 4WD CJSB | | GDS83295 | Drive Shaft | | 36 | | 59.5 | 40 | 491 | |
| | 2014.12-2020.08 | 6AT | F | R | Estate 4WD CJSB | | GDS81892 | Drive Shaft | | 36 | | 59.5 | 40 | 602 | |
| | 2014.12-2020.08 | 6AT | F | L | Estate 4WD CJSB | | GCI61069 | Inner Joint | | | 28 | | | 32 | |
| | 2014.12-2020.08 | AT | F | L/R | Estate 4WD CJSB | | GCO83101 | Outer Joint | | 36 | 27 | 59.5 | 40 | 65 | M |
| | 2014.12-2020.08 | | F | L/R | Estate 4WD CJSB | | GCI83016 | Inner Joint | | | 28 | | | 32 | |
| | 2014.12-2020.08 | 6AT | R | L | Estate 4WD CJSB | | GDS61286 | Drive Shaft | | 36 | | 59.5 | 40 | 587 | |
| | 2014.12-2020.08 | 6AT | R | R | Estate 4WD CJSB | | GDS61287 | Drive Shaft | | 36 | | 59.5 | 40 | 632 | |
| | 2014.12-2020.08 | 6AT | R | L/R | Estate 4WD CJSB | | GCI61103 | Inner Joint | | | 33 | | | 32 | |
| | 2019.02-2020.08 | 6DCT | F | L | Estate FWD CJSB | | GDS98006 | Stub Axle-Flange | | 37 | | | 67 | 123.5 | |
| 2.0 (110 kw) | 2014.12-2020.08 | 6MT | F | L | Estate 4WD CRLB;CRBC;DFGA;DCYA | For PR code:1PA/2H0/2H5;For PR code:1PE/1PF/1PA/2H4 | GDS83295 | Drive Shaft | | 36 | | 59.5 | 40 | 491 | |
| | 2014.12-2020.08 | 6MT | F | R | Estate 4WD CRLB;CRBC;DFGA;DCYA | | GDS81892 | Drive Shaft | | 36 | | 59.5 | 40 | 602 | |
| | 2014.12-2020.08 | 6MT | F | L | Estate 4WD CRLB;CRBC;DFGA;DCYA | For PR code:1PA/2H0/2H5;For PR code:1PE/1PF/1PA/2H4 | GCI61069 | Inner Joint | | | 28 | | | 32 | |
| | 2014.12-2020.08 | 6MT | F | L/R | Estate 4WD CRLB;CRBC;DFGA;DCYA | | GCI83016 | Inner Joint | | | 28 | | | 32 | |
| | 2014.12-2020.08 | 7DCT | F | L | Estate 4WD CRLB;CRBC;DFGA;DCYA | | GDS81265 | Drive Shaft | | 36 | 37 | 59.5 | 40 | 557 | |
| | 2014.12-2020.08 | 7DCT | F | R | Estate 4WD CRLB;CRBC;DFGA;DCYA | | GDS81893 | Drive Shaft | | 36 | | 59.5 | 40 | 575 | |
| | 2014.12-2020.08 | 7DCT | F | L | Estate 4WD CRLB;CRBC;DFGA;DCYA | | GCI81158 | Inner Joint | | 37 | 34 | 34.5 | 65.5 | 83 | |
| | 2014.12-2020.08 | 7DCT | F | R | Estate 4WD CRLB;CRBC;DFGA;DCYA | | GCI61057 | Inner Joint | | | 34 | | | 89 | |
| | 2014.12-2020.08 | MT | F | L | Estate 4WD CRLB;CRBC;DFGA;DCYA | | GDS83294 | Drive Shaft | | 36 | | 59.5 | 38 | 519 | |
| | 2014.12-2020.08 | MT | F | L | Estate 4WD CRLB;CRBC;DFGA;DCYA | | GCO83037 | Outer Joint | | 36 | 30 | 59.5 | 40.5 | 56 | I |
| | 2014.12-2020.08 | MT | F | L/R | Estate 4WD CRLB;CRBC;DFGA;DCYA | | GCO83100 | Outer Joint | | 36 | 33 | 59.5 | 38 | 56 | I |
| | 2014.12-2020.08 | | F | L | Estate 4WD CRLB;CRBC;DFGA;DCYA | For PR code:1PE/1PF/1PA/2H4 | GCO83101 | Outer Joint | | 36 | 27 | 59.5 | 40 | 65 | M |
| | 2014.12-2020.08 | 6MT | R | L | Estate 4WD CRLB;CRBC;DFGA;DCYA | | GDS61286 | Drive Shaft | | 36 | | 59.5 | 40 | 587 | |

| | YEAR | TRANSM. | F/R | L/R | BODY STYLE & DRIVE TYPE & ENGINE | REMARKS | G-AP Ref. | PRODUCT | ABS | Technical Specifications A | B | C | H | L | P |
|---|---|---|---|---|---|---|---|---|---|---|---|---|---|---|---|
| **VW** | | | | | | | | | | | | | | | |
| **Golf Alltrack** | | | | | | | | | | | | | | | |
| 2.0 (110 kw) | 2014.12-2020.08 | 6MT | R | R | Estate 4WD CRLB;CRBC;DFGA;DCYA | | GDS61287 | Drive Shaft | | 36 | | 59.5 | 40 | 632 | |
| | 2014.12-2020.08 | 6MT | R | L/R | Estate 4WD CRLB;CRBC;DFGA;DCYA | | GCI61103 | Inner Joint | | | 33 | | | 32 | |
| 2.0 (135 kw) | 2014.12-2020.08 | 6DCT | F | L | Estate 4WD CUNA;DGCA;DJGA | | GDS61285 | Drive Shaft | | 36 | | 59.5 | 40 | 472 | |
| | 2014.12-2020.08 | 6DCT | F | L/R | Estate 4WD CUNA;DGCA;DJGA | | GCI61057 | Inner Joint | | | 34 | | | 89 | |
| | 2014.12-2020.08 | 6DCT/7DCT | F | R | Estate 4WD CUNA;DGCA;DJGA | | GDS81893 | Drive Shaft | | 36 | | 59.5 | 40 | 575 | |
| | 2014.12-2020.08 | 7DCT | F | L | Estate 4WD CUNA;DGCA;DJGA | | GDS81265 | Drive Shaft | | 36 | 37 | 59.5 | 40 | 557 | |
| | 2014.12-2020.08 | 7DCT | F | L | Estate 4WD CUNA;DGCA;DJGA | | GCI81158 | Inner Joint | | 37 | 34 | 34.5 | 65.5 | 83 | |
| | 2014.12-2020.08 | AT/6DCT | F | L/R | Estate 4WD CUNA;DGCA;DJGA | | GCO83101 | Outer Joint | | 36 | 27 | 59.5 | 40 | 65 | M |
| | 2014.12-2020.08 | 6AT/7AT | R | L | Estate 4WD CUNA;DGCA;DJGA | | GDS61286 | Drive Shaft | | 36 | | 59.5 | 40 | 587 | |
| | 2014.12-2020.08 | 6AT/7AT | R | R | Estate 4WD CUNA;DGCA;DJGA | | GDS61287 | Drive Shaft | | 36 | | 59.5 | 40 | 632 | |
| | 2014.12-2020.08 | | R | L/R | Estate 4WD CUNA;DGCA;DJGA | For Modelcode:BA5 | GCI61103 | Inner Joint | | | 33 | | | 32 | |
| 2.0 (140 kw) | 2021.03-2024.11 | 7DCT | F | L | Estate 4WD DNNA | | GDS84237 | Drive Shaft | | 36 | 37 | 59.5 | 40 | 560 | |
| | 2021.03-2024.11 | 7DCT | F | R | Estate 4WD DNNA | | GDS81892 | Drive Shaft | | 36 | | 59.5 | 40 | 602 | |
| | 2021.03-2024.11 | 7DCT | R | L | Estate 4WD DNNA | | GDS61286 | Drive Shaft | | 36 | | 59.5 | 40 | 587 | |
| | 2021.03-2024.11 | 7DCT | R | R | Estate 4WD DNNA | | GDS61287 | Drive Shaft | | 36 | | 59.5 | 40 | 632 | |
| 2.0 (147 kw) | 2020.11- | 7DCT | F | L | Estate 4WD DTUA | | GDS81265 | Drive Shaft | | 36 | 37 | 59.5 | 40 | 557 | |
| | 2020.11- | 7DCT | F | R | Estate 4WD DTUA | | GDS81893 | Drive Shaft | | 36 | | 59.5 | 40 | 575 | |
| | 2020.11- | 7DCT | F | L/R | Estate 4WD DTUA | | GCO83101 | Outer Joint | | 36 | 27 | 59.5 | 40 | 65 | M |
| | 2020.11- | 7DCT | F | L | Estate 4WD DTUA | | GCI81158 | Inner Joint | | 37 | 34 | 34.5 | 65.5 | 83 | |
| | 2020.11- | 7DCT | F | R | Estate 4WD DTUA | | GCI61057 | Inner Joint | | | 34 | | | 89 | |
| | 2020.11- | 7DCT | R | L | Estate 4WD DTUA | | GDS61286 | Drive Shaft | | 36 | | 59.5 | 40 | 587 | |
| | 2020.11- | 7DCT | R | R | Estate 4WD DTUA | | GDS61287 | Drive Shaft | | 36 | | 59.5 | 40 | 632 | |
| | 2020.11- | 7DCT | R | L/R | Estate 4WD DTUA | | GCI35026 | Outer Joint | | 36 | 33 | 59.5 | 40 | 61 | |
| | 2020.11- | 7DCT | R | L/R | Estate 4WD DTUA | | GCI61103 | Inner Joint | | | 33 | | | 32 | |
| **Golf Cabrio** | | | | | | | | | | | | | | | |
| 1.2 (77 kw) | 2011.03-2016.05 | 6MT | F | L | Convertible FWD CBZB | | GDS61201 | Drive Shaft | | 36 | | 59.5 | 40.5 | 535 | |
| | 2011.03-2016.05 | 6MT | F | R | Convertible FWD CBZB | | GDS61096 | Drive Shaft | | 36 | | 59.5 | 40.5 | 799 | |
| | 2011.03-2016.05 | 6MT | F | L/R | Convertible FWD CBZB | | GCO83037 | Outer Joint | | 36 | 30 | 59.5 | 40.5 | 56 | I |
| | 2011.03-2016.05 | 6MT | F | L/R | Convertible FWD CBZB | | GCI82447 | Inner Joint | | | 33 | | | 34 | |
| | 2013.11-2016.05 | AT | F | R | Convertible FWD CJZA;CYVD | Date from:2014.01 | GDS61096 | Drive Shaft | | 36 | | 59.5 | 40.5 | 799 | |
| | 2013.11-2016.05 | MT | F | L | Convertible FWD CJZA;CYVD | Date from:2014.01 | GDS83294 | Drive Shaft | | 36 | | 59.5 | 38 | 519 | |
| | 2013.11-2016.05 | MT | F | L | Convertible FWD CJZA;CYVD | | GDS83373 | Drive Shaft | | 36 | | 59.5 | 38 | 511 | |
| | 2013.11-2016.05 | MT | F | R | Convertible FWD CJZA;CYVD | Date from:2014.01 | GDS61042 | Drive Shaft | | 36 | | 59.5 | 40.5 | 814 | |
| | 2013.11-2016.05 | MT | F | R | Convertible FWD CJZA;CYVD | | GDS61307 | Drive Shaft | | 36 | | 59.5 | 40 | 819 | |
| | 2013.11-2016.05 | MT | F | L/R | Convertible FWD CJZA;CYVD | | GCO83037 | Outer Joint | | 36 | 30 | 59.5 | 40.5 | 56 | I |
| | 2013.11-2016.05 | MT | F | L/R | Convertible FWD CJZA;CYVD | | GCI82447 | Inner Joint | | | 33 | | | 34 | |
| | 2013.11-2016.05 | MT | F | L/R | Convertible FWD CJZA;CYVD | | GCI83006 | Inner Joint | | | 33 | | | 34 | |
| | 2013.11-2016.05 | MT | F | L/R | Convertible FWD CJZA;CYVD | | GCI83011 | Inner Joint | | | 33 | | | 34 | |
| 1.4 (90 kw) | 2011.11-2016.05 | 6MT/7AT | F | L/R | Convertible FWD CAXA | | GCO83037 | Outer Joint | | 36 | 30 | 59.5 | 40.5 | 56 | I |
| | 2011.11-2016.05 | 7AT/6MT | F | L/R | Convertible FWD CAXA | | GCO61059 | Outer Joint | | 36 | 33 | 59.5 | 40 | 59.5 | I |
| | 2011.11-2016.05 | 7DCT/6MT | F | L/R | Convertible FWD CAXA | | GCI82447 | Inner Joint | | | 33 | | | 34 | |
| | 2011.11-2016.05 | AT/MT | F | L | Convertible FWD CAXA | | GDS61201 | Drive Shaft | | 36 | | 59.5 | 40.5 | 535 | |
| | 2011.11-2016.05 | AT/MT | F | R | Convertible FWD CAXA | | GDS61096 | Drive Shaft | | 36 | | 59.5 | 40.5 | 799 | |
| 1.4 (92 kw) | 2013.11-2016.05 | 6MT | F | R | Convertible FWD CXSB;CZCA | | GDS61307 | Drive Shaft | | 36 | | 59.5 | 40 | 819 | |
| | 2013.11-2016.05 | 7AT/6MT | F | L/R | Convertible FWD CXSB;CZCA | | GCI82447 | Inner Joint | | | 33 | | | 34 | |
| | 2013.11-2016.05 | 7DCT | F | R | Convertible FWD CXSB;CZCA | | GDS61096 | Drive Shaft | | 36 | | 59.5 | 40.5 | 799 | |
| | 2013.11-2016.05 | 7DCT/6MT | F | L | Convertible FWD CXSB;CZCA | | GDS61282 | Drive Shaft | | 36 | | 59.5 | 40 | 523 | |
| 1.4 (110 kw) | 2013.11-2016.05 | 6MT | F | R | Convertible FWD CHPB;CZDA | | GDS61283 | Drive Shaft | | 36 | | 59.5 | 40 | 815 | |
| | 2013.11-2016.05 | 6MT | F | L/R | Convertible FWD CHPB;CZDA | | GCI82447 | Inner Joint | | | 33 | | | 34 | |
| | 2013.11-2016.05 | 7AT/6MT | F | L/R | Convertible FWD CHPB;CZDA | | GCI83016 | Inner Joint | | | 28 | | | 32 | |
| | 2013.11-2016.05 | 7DCT | F | R | Convertible FWD CHPB;CZDA | | GDS83313 | Drive Shaft | | 36 | | 59.5 | 40 | 792 | |
| | 2013.11-2016.05 | DCT | F | L | Convertible FWD CHPB;CZDA | | GDS61100 | Drive Shaft | | 36 | | 59.5 | 40 | 513 | |
| | 2013.11-2016.05 | DCT | F | L/R | Convertible FWD CHPB;CZDA | | GCO83101 | Outer Joint | | 36 | 27 | 59.5 | 40 | 65 | M |
| | 2013.11-2016.05 | MT | F | L | Convertible FWD CHPB;CZDA | | GDS61282 | Drive Shaft | | 36 | | 59.5 | 40 | 523 | |
| | 2013.11-2016.05 | MT | F | L/R | Convertible FWD CHPB;CZDA | | GCO61059 | Outer Joint | | 36 | 33 | 59.5 | 40 | 59.5 | I |
| 1.4 (118 kw) | 2011.03-2016.05 | 6MT | F | L/R | Convertible FWD CAVD;CNWA;CTHD;CTKA | | GCI82447 | Inner Joint | | | 33 | | | 34 | |
| | 2011.03-2016.05 | 6MT/7AT | F | L/R | Convertible FWD CAVD;CNWA;CTHD;CTKA | | GCO83037 | Outer Joint | | 36 | 30 | 59.5 | 40.5 | 56 | I |
| | 2011.03-2016.05 | 7AT/6MT | F | L/R | Convertible FWD CAVD;CNWA;CTHD;CTKA | | GCO83002 | Outer Joint | | 36 | 27 | 59.5 | 40 | 66 | I |
| | 2011.03-2016.05 | 7AT/6MT | F | L/R | Convertible FWD CAVD;CNWA;CTHD;CTKA | | GCI83016 | Inner Joint | | | 28 | | | 32 | |
| | 2011.03-2016.05 | AT | F | L | Convertible FWD CAVD;CNWA;CTHD;CTKA | | GDS61281 | Drive Shaft | | 36 | | 59.5 | 40 | 528 | |
| | 2011.03-2016.05 | AT | F | R | Convertible FWD CAVD;CNWA;CTHD;CTKA | | GDS81653 | Drive Shaft | | 36 | | 59.5 | 40 | 785 | |
| | 2011.03-2016.05 | MT | F | L | Convertible FWD CAVD;CNWA;CTHD;CTKA | | GDS61201 | Drive Shaft | | 36 | | 59.5 | 40.5 | 535 | |
| | 2011.03-2016.05 | MT | F | R | Convertible FWD CAVD;CNWA;CTHD;CTKA | | GDS61096 | Drive Shaft | | 36 | | 59.5 | 40.5 | 799 | |
| 1.6 (74 kw) | 1994.10-1998.02 | AT | F | L | Cabriolet FWD AEK/AFT/AKS | | GDS61011 | Drive Shaft | | 22 | | 53.2 | 78 | 547 | |
| | 1994.10-1998.02 | AT | F | | Cabriolet FWD AEK/AFT/AKS | | GCO53004 | Outer Joint | | 22 | 30 | 51 | 78 | 61 | I |

| | YEAR | TRANSM. | F/R | L/R | BODY STYLE & DRIVE TYPE & ENGINE | REMARKS | G-AP Ref. | PRODUCT | ABS | Technical Specifications A | B | C | H | L | P |
|---|---|---|---|---|---|---|---|---|---|---|---|---|---|---|---|
| **VW** **Golf Cabrio** | | | | | | | | | | | | | | | |
| 1.6 (74 kw) | 1994.10-1998.02 | AT | F | L | Cabriolet FWD AEK/AFT/AKS | | GCI61004 | Inner Joint | | | 34 | | | 59.2 | |
| | 1994.10-1998.02 | AT/MT | F | L/R | Cabriolet FWD AEK/AFT/AKS | | GCO53008 | Outer Joint | | 22 | 30 | 53 | 78.5 | 51 | I |
| | 1994.10-1998.02 | MT | F | L/R | Cabriolet FWD AEK/AFT/AKS | For Engine Code:AEK/AFT/AKS | GCO53005 | Outer Joint | | 22 | 30 | 53 | 78.5 | 51 | I |
| | 1994.10-1998.02 | MT | F | | Cabriolet FWD AEK/AFT/AKS | | GCO53006 | Outer Joint | | 22 | 30 | 50 | 78.5 | 52 | I |
| | 1998.06-2002.06 | 5MT | F | R | Cabriolet FWD AFT/AKS | | GDS61055 | Drive Shaft | | 22 | | 53 | 78.5 | 796 | |
| | 1998.06-2002.06 | 5MT | F | L/R | Cabriolet FWD AFT/AKS | | GCO53008 | Outer Joint | | 22 | 30 | 53 | 78.5 | 51 | I |
| | 1998.06-2002.06 | 5MT | F | L/R | Cabriolet FWD AFT/AKS | | GCI83005 | Inner Joint | | | 33 | | | 32 | |
| 1.6 (77 kw) | 2011.03-2016.05 | 5MT | F | L | Convertible FWD CAYC | | GDS83294 | Drive Shaft | | 36 | | 59.5 | 38 | 519 | |
| | 2011.03-2016.05 | 5MT | F | R | Convertible FWD CAYC | | GDS61042 | Drive Shaft | | 36 | | 59.5 | 40.5 | 814 | |
| | 2011.03-2016.05 | 5MT | F | L/R | Convertible FWD CAYC | | GCO83037 | Outer Joint | | 36 | 30 | 59.5 | 40.5 | 56 | I |
| | 2011.03-2016.05 | 5MT | F | L/R | Convertible FWD CAYC | | GCI82447 | Inner Joint | | | 33 | | | 34 | |
| 1.8 (55 kw) | 1993.07-1997.12 | MT | F | L | Cabriolet FWD AAM | Date to:1997.12 | GDS61001 | Drive Shaft | | 22 | | 53.2 | 78 | 557 | |
| | 1993.07-1997.12 | MT | F | R | Cabriolet FWD AAM | | GDS61009 | Drive Shaft | | 22 | | 53.2 | 78 | 789 | |
| | 1993.07-1997.12 | MT | F | L/R | Cabriolet FWD AAM | Date to:1997.12 | GCO53007 | Outer Joint | | 22 | 30 | 53.2 | 78 | 61 | I |
| | 1993.07-1997.12 | MT | F | R | Cabriolet FWD AAM | Date to:1997.12 | GCI83009 | Inner Joint | | | 33 | | | 34 | |
| | 1998.01-2000.10 | 5MT | F | L | Cabriolet FWD AAM/ANN | | GDS61001 | Drive Shaft | | 22 | | 53.2 | 78 | 557 | |
| | 1998.01-2000.10 | 5MT | F | R | Cabriolet FWD AAM/ANN | | GDS61009 | Drive Shaft | | 22 | | 53.2 | 78 | 789 | |
| | 1998.01-2000.10 | 5MT | F | L/R | Cabriolet FWD AAM/ANN | | GCO53007 | Outer Joint | | 22 | 30 | 53.2 | 78 | 61 | I |
| | 1998.01-2000.10 | 5MT | F | L | Cabriolet FWD AAM/ANN | | GCI82447 | Inner Joint | | | 33 | | | 34 | |
| | 1998.01-2000.10 | AT/MT | F | L/R | Cabriolet FWD AAM/ANN | | GCO53004 | Outer Joint | | 22 | 30 | 51 | 78 | 61 | I |
| | 1998.01-2000.10 | MT | F | R | Cabriolet FWD AAM/ANN | Date to:2000.10 | GCI83009 | Inner Joint | | | 33 | | | 34 | |
| | 1998.01-2000.10 | MT | F | L/R | Cabriolet FWD AAM/ANN | | GCI83006 | Inner Joint | | | 33 | | | 34 | |
| | 1998.01-2000.10 | | F | R | Cabriolet FWD AAM/ANN | | GDS61002 | Drive Shaft | | 22 | | 53 | 78.5 | 793 | |
| | 1998.01-2000.10 | | F | L | Cabriolet FWD AAM/ANN | Date To:2000.10 | GCI83011 | Inner Joint | | | 33 | | | 34 | |
| 1.8 (66 kw) | 1993.09-2000.10 | AT | F | L | Cabriolet FWD ABS/ADZ/ANP | Chassis no. from:1H-S-000001 | GDS61011 | Drive Shaft | | 22 | | 53.2 | 78 | 547 | |
| | 1993.09-2000.10 | AT | F | R | Cabriolet FWD ABS/ADZ/ANP | Chassis no. from:1H-S-000001 | GDS61028 | Drive Shaft | | 22 | | 53.2 | 78 | 767 | |
| | 1993.09-2000.10 | AT | F | L/R | Cabriolet FWD ABS/ADZ/ANP | Chassis no. from:1H-S-000001 | GCI61004 | Inner Joint | | | 34 | | | 59.2 | |
| | 1993.09-2000.10 | AT | F | L/R | Cabriolet FWD ABS/ADZ/ANP | Chassis no. to:1H-R-990000 | GCI83009 | Inner Joint | | | 33 | | | 34 | |
| | 1993.09-2000.10 | AT/MT | F | L/R | Cabriolet FWD ABS/ADZ/ANP | | GCO53007 | Outer Joint | | 22 | 30 | 53.2 | 78 | 61 | I |
| | 1993.09-2000.10 | MT | F | L | Cabriolet FWD ABS/ADZ/ANP | | GDS61001 | Drive Shaft | | 22 | | 53.2 | 78 | 557 | |
| | 1993.09-2000.10 | MT | F | R | Cabriolet FWD ABS/ADZ/ANP | | GDS61009 | Drive Shaft | | 22 | | 53.2 | 78 | 789 | |
| | 1998.06-2000.09 | 5MT | F | L | Cabriolet FWD ANP | | GDS61001 | Drive Shaft | | 22 | | 53.2 | 78 | 557 | |
| | 1998.06-2000.09 | 5MT | F | R | Cabriolet FWD ANP | | GDS61009 | Drive Shaft | | 22 | | 53.2 | 78 | 789 | |
| | 1998.06-2000.09 | 5MT | F | L/R | Cabriolet FWD ANP | | GCO53007 | Outer Joint | | 22 | 30 | 53.2 | 78 | 61 | I |
| | 1998.06-2000.09 | 5MT | F | L | Cabriolet FWD ANP | | GCI82447 | Inner Joint | | | 33 | | | 34 | |
| | 1998.06-2000.09 | AT | F | L | Cabriolet FWD ANP | | GDS61011 | Drive Shaft | | 22 | | 53.2 | 78 | 547 | |
| | 1998.06-2000.09 | AT | F | L | Cabriolet FWD ANP | | GCI61004 | Inner Joint | | | 34 | | | 59.2 | |
| | 1998.06-2000.09 | AT/MT | F | L/R | Cabriolet FWD ANP | | GCO53004 | Outer Joint | | 22 | 30 | 51 | 78 | 61 | I |
| | 1998.06-2000.09 | MT | F | R | Cabriolet FWD ANP | Date to:2000.09 | GCI83009 | Inner Joint | | | 33 | | | 34 | |
| | 1998.06-2000.09 | | F | R | Cabriolet FWD ANP | | GDS61002 | Drive Shaft | | 22 | | 53 | 78.5 | 793 | |
| | 1998.06-2000.09 | | F | L | Cabriolet FWD ANP | Date To:2000.09 | GCI83011 | Inner Joint | | | 33 | | | 34 | |
| 1.9 (66 kw) | 1995.08-1998.05 | MT | F | L | Cabriolet FWD 1Z/AHU | | GDS61001 | Drive Shaft | | 22 | | 53.2 | 78 | 557 | |
| | 1995.08-1998.05 | MT | F | R | Cabriolet FWD 1Z/AHU | | GDS61002 | Drive Shaft | | 22 | | 53 | 78.5 | 793 | |
| | 1995.08-1998.05 | MT | F | L/R | Cabriolet FWD 1Z/AHU | | GCO53007 | Outer Joint | | 22 | 30 | 53.2 | 78 | 61 | I |
| | 1995.08-1998.05 | MT | F | R | Cabriolet FWD 1Z/AHU | | GCI83009 | Inner Joint | | | 33 | | | 34 | |
| | 1995.08-1998.05 | MT | F | L/R | Cabriolet FWD 1Z/AHU | | GCI83011 | Inner Joint | | | 33 | | | 34 | |
| | 1995.08-1998.05 | | F | | Cabriolet FWD 1Z/AHU | | GCO53004 | Outer Joint | | 22 | 30 | 51 | 78 | 61 | I |
| | 1998.06-2002.06 | 5MT | F | L | Cabriolet FWD AHU/ALE | | GDS61001 | Drive Shaft | | 22 | | 53.2 | 78 | 557 | |
| | 1998.06-2002.06 | 5MT | F | R | Cabriolet FWD AHU/ALE | hollow shaft | GDS61002 | Drive Shaft | | 22 | | 53 | 78.5 | 793 | |
| | 1998.06-2002.06 | 5MT | F | R | Cabriolet FWD AHU/ALE | solid shaft | GDS61009 | Drive Shaft | | 22 | | 53.2 | 78 | 789 | |
| | 1998.06-2002.06 | MT | F | L/R | Cabriolet FWD AHU/ALE | | GCO53007 | Outer Joint | | 22 | 30 | 53.2 | 78 | 61 | I |
| | 1998.06-2002.06 | | F | L | Cabriolet FWD AHU/ALE | | GCI83011 | Inner Joint | | | 33 | | | 34 | |
| | 1998.06-2002.06 | | F | R | Cabriolet FWD AHU/ALE | | GCI83009 | Inner Joint | | | 33 | | | 34 | |
| 1.9 (81 kw) | 1996.10-1998.05 | MT | F | L | Cabriolet FWD AFN | Date from:1996.10 | GDS61001 | Drive Shaft | | 22 | | 53.2 | 78 | 557 | |
| | 1996.10-1998.05 | MT | F | R | Cabriolet FWD AFN | Date from:1996.10 | GDS61002 | Drive Shaft | | 22 | | 53 | 78.5 | 793 | |
| | 1996.10-1998.05 | MT | F | L/R | Cabriolet FWD AFN | | GCO53007 | Outer Joint | | 22 | 30 | 53.2 | 78 | 61 | I |
| | 1996.10-1998.05 | MT | F | R | Cabriolet FWD AFN | Date from:1996.10 | GCI83009 | Inner Joint | | | 33 | | | 34 | |
| | 1996.10-1998.05 | MT | F | L/R | Cabriolet FWD AFN | | GCI83011 | Inner Joint | | | 33 | | | 34 | |
| | 1996.10-1998.05 | | F | | Cabriolet FWD AFN | | GCO53004 | Outer Joint | | 22 | 30 | 51 | 78 | 61 | I |
| | 1998.06-2002.06 | 5MT | F | L | Cabriolet FWD AFN/AVG | | GDS61001 | Drive Shaft | | 22 | | 53.2 | 78 | 557 | |
| | 1998.06-2002.06 | 5MT | F | R | Cabriolet FWD AFN/AVG | hollow shaft | GDS61002 | Drive Shaft | | 22 | | 53 | 78.5 | 793 | |
| | 1998.06-2002.06 | 5MT | F | R | Cabriolet FWD AFN/AVG | solid shaft | GDS61009 | Drive Shaft | | 22 | | 53.2 | 78 | 789 | |
| | 1998.06-2002.06 | 5MT | F | L/R | Cabriolet FWD AFN/AVG | | GCO53007 | Outer Joint | | 22 | 30 | 53.2 | 78 | 61 | I |
| | 1998.06-2002.06 | | F | L | Cabriolet FWD AFN/AVG | | GCI83011 | Inner Joint | | | 33 | | | 34 | |
| | 1998.06-2002.06 | | F | R | Cabriolet FWD AFN/AVG | | GCI83009 | Inner Joint | | | 33 | | | 34 | |

| | YEAR | TRANSM. | F/R | L/R | BODY STYLE & DRIVE TYPE & ENGINE | REMARKS | G-AP Ref. | PRODUCT | ABS | Technical Specifications A | B | C | H | L | P |
|---|---|---|---|---|---|---|---|---|---|---|---|---|---|---|---|
| **VW** | | | | | | | | | | | | | | | |
| **Golf Cabrio** | | | | | | | | | | | | | | | |
| 2.0 (81 kw) | 2013.11-2016.05 | MT | F | L | Convertible FWD CUUA | | GDS83294 | Drive Shaft | | 36 | | 59.5 | 38 | 519 | |
| | 2013.11-2016.05 | MT | F | R | Convertible FWD CUUA | | GDS61042 | Drive Shaft | | 36 | | 59.5 | 40.5 | 814 | |
| | 2013.11-2016.05 | MT | F | L/R | Convertible FWD CUUA | | GCO83037 | Outer Joint | | 36 | 30 | 59.5 | 40.5 | 56 | I |
| | 2013.11-2016.05 | MT | F | L/R | Convertible FWD CUUA | | GCI82447 | Inner Joint | | | 33 | | | 34 | |
| | 2013.11-2016.05 | MT | F | L/R | Convertible FWD CUUA | | GCI83006 | Inner Joint | | | 33 | | | 34 | |
| 2.0 (85 kw) | 1994.05-1998.05 | AT | F | L | Cabriolet FWD 2E/ADY/AGG/AKR | | GDS61011 | Drive Shaft | | 22 | | 53.2 | 78 | 547 | |
| | 1994.05-1998.05 | AT | F | L | Cabriolet FWD 2E/ADY/AGG/AKR | | GCI61004 | Inner Joint | | | 34 | | | 59.2 | |
| | 1994.05-1998.05 | AT/MT | F | L | Cabriolet FWD 2E/ADY/AGG/AKR | Date from:1994.10 | GDS61001 | Drive Shaft | | 22 | | 53.2 | 78 | 557 | |
| | 1994.05-1998.05 | AT/MT | F | L/R | Cabriolet FWD 2E/ADY/AGG/AKR | Date from:1994.10 | GCO53007 | Outer Joint | | 22 | 30 | 53.2 | 78 | 61 | I |
| | 1994.05-1998.05 | AT/MT | F | | Cabriolet FWD 2E/ADY/AGG/AKR | | GCO53004 | Outer Joint | | 22 | 30 | 51 | 78 | 61 | I |
| | 1994.05-1998.05 | AT/MT | F | R | Cabriolet FWD 2E/ADY/AGG/AKR | Date from:1994.10 | GCI83009 | Inner Joint | | | 33 | | | 34 | |
| | 1994.05-1998.05 | MT | F | R | Cabriolet FWD 2E/ADY/AGG/AKR | hollow shaft | GDS61002 | Drive Shaft | | 22 | | 53 | 78.5 | 793 | |
| | 1994.05-1998.05 | MT | F | R | Cabriolet FWD 2E/ADY/AGG/AKR | solid shaft | GDS61009 | Drive Shaft | | 22 | | 53.2 | 78 | 789 | |
| | 1994.05-1998.05 | MT | F | L/R | Cabriolet FWD 2E/ADY/AGG/AKR | | GCI83011 | Inner Joint | | | 33 | | | 34 | |
| | 1998.06-2002.06 | 4AT | F | L | Cabriolet FWD AGG/AKR/ATU/AWF/AWG | | GDS61011 | Drive Shaft | | 22 | | 53.2 | 78 | 547 | |
| | 1998.06-2002.06 | 4AT | F | R | Cabriolet FWD AGG/AKR/ATU/AWF/AWG | | GDS61028 | Drive Shaft | | 22 | | 53.2 | 78 | 767 | |
| | 1998.06-2002.06 | 4AT | F | L | Cabriolet FWD AGG/AKR/ATU/AWF/AWG | | GCI61004 | Inner Joint | | | 34 | | | 59.2 | |
| | 1998.06-2002.06 | 4AT/5MT | F | L/R | Cabriolet FWD AGG/AKR/ATU/AWF/AWG | | GCO53007 | Outer Joint | | 22 | 30 | 53.2 | 78 | 61 | I |
| | 1998.06-2002.06 | 5MT | F | L | Cabriolet FWD AGG/AKR/ATU/AWF/AWG | | GDS61001 | Drive Shaft | | 22 | | 53.2 | 78 | 557 | |
| | 1998.06-2002.06 | 5MT | F | R | Cabriolet FWD AGG/AKR/ATU/AWF/AWG | | GDS61002 | Drive Shaft | | 22 | | 53 | 78.5 | 793 | |
| | 1998.06-2002.06 | 5MT | F | R | Cabriolet FWD AGG/AKR/ATU/AWF/AWG | | GDS61009 | Drive Shaft | | 22 | | 53.2 | 78 | 789 | |
| | 1998.06-2002.06 | 5MT | F | L | Cabriolet FWD AGG/AKR/ATU/AWF/AWG | | GCI82447 | Inner Joint | | | 33 | | | 34 | |
| | 1998.06-2002.06 | 5MT | F | R | Cabriolet FWD AGG/AKR/ATU/AWF/AWG | | GCI83009 | Inner Joint | | | 33 | | | 34 | |
| | 1998.06-2002.06 | AT | F | L/R | Cabriolet FWD AGG/AKR/ATU/AWF/AWG | | GCO53004 | Outer Joint | | 22 | 30 | 51 | 78 | 61 | I |
| 2.0 (103 kw) | 2011.11-2016.05 | 6AT/6MT | F | L/R | Convertible FWD CFHC | Original Tripod Design | GCI61057 | Inner Joint | | | 34 | | | 89 | |
| | 2011.11-2016.05 | 6AT/6MT | F | L/R | Convertible FWD CFHC | | GCI83016 | Inner Joint | | | 28 | | | 32 | |
| | 2011.11-2016.05 | AT | F | L | Convertible FWD CFHC | For PR code:1PA/1PE/1PF | GDS54013 | Drive Shaft | | 36 | | 59.5 | 40 | 479.5 | |
| | 2011.11-2016.05 | AT | F | L | Convertible FWD CFHC | Rims:With alloy rim | GDS83241 | Drive Shaft | | 36 | | 59.5 | 40 | 475 | |
| | 2011.11-2016.05 | AT | F | R | Convertible FWD CFHC | | GDS54011 | Drive Shaft | | 36 | | 59.5 | 40 | 755 | |
| | 2011.11-2016.05 | MT | F | L | Convertible FWD CFHC | | GDS83236 | Drive Shaft | | 36 | | 59.5 | 40 | 484 | |
| | 2011.11-2016.05 | MT | F | L | Convertible FWD CFHC | | GDS83295 | Drive Shaft | | 36 | | 59.5 | 40 | 491 | |
| | 2011.11-2016.05 | MT | F | R | Convertible FWD CFHC | | GDS61126 | Drive Shaft | | 36 | | 59.5 | 40 | 793 | |
| | 2011.11-2016.05 | MT | F | R | Convertible FWD CFHC | | GDS83313 | Drive Shaft | | 36 | | 59.5 | 40 | 792 | |
| | 2011.11-2016.05 | MT | F | L | Convertible FWD CFHC | Rims:With alloy rim | GCO61059 | Outer Joint | | 36 | 33 | 59.5 | 40 | 59.5 | I |
| | 2011.11-2016.05 | MT | F | L | Convertible FWD CFHC | Rims:With steel rim | GCO83101 | Outer Joint | | 36 | 27 | 59.5 | 40 | 65 | M |
| | 2011.11-2016.05 | | F | L/R | Convertible FWD CFHC | | GCO83002 | Outer Joint | | 36 | 27 | 59.5 | 40 | 66 | I |
| 2.0 (110 kw) | 2013.11-2016.05 | 6DCT | F | L | Convertible FWD CUUB | | GDS83381 | Drive Shaft | | 36 | | 59.5 | 40 | 483 | |
| | 2013.11-2016.05 | 6DCT | F | R | Convertible FWD CUUB | | GDS83354 | Drive Shaft | | 36 | | 59.5 | 40 | 763 | |
| | 2013.11-2016.05 | AT | F | L/R | Convertible FWD CUUB | Date to:2016.05 | GCI83011 | Inner Joint | | | 33 | | | 34 | |
| | 2013.11-2016.05 | DCT | F | L/R | Convertible FWD CUUB | | GCO83101 | Outer Joint | | 36 | 27 | 59.5 | 40 | 65 | M |
| | 2013.11-2016.05 | DCT | F | R | Convertible FWD CUUB | Date to:2016.05 | GCI54004 | Inner Joint | | | 34 | | | 81 | |
| | 2013.11-2016.05 | DCT | F | L/R | Convertible FWD CUUB | | GCI61057 | Inner Joint | | | 34 | | | 89 | |
| | 2013.11-2016.05 | MT | F | L | Convertible FWD CUUB | | GDS83295 | Drive Shaft | | 36 | | 59.5 | 40 | 491 | |
| | 2013.11-2016.05 | MT | F | R | Convertible FWD CUUB | | GDS61126 | Drive Shaft | | 36 | | 59.5 | 40 | 793 | |
| | 2013.11-2016.05 | MT | F | R | Convertible FWD CUUB | | GDS61147 | Drive Shaft | | 36 | | 59.5 | 40 | 795 | |
| | 2013.11-2016.05 | MT | F | R | Convertible FWD CUUB | | GDS83313 | Drive Shaft | | 36 | | 59.5 | 40 | 792 | |
| | 2013.11-2016.05 | MT | F | L/R | Convertible FWD CUUB | Date to:2016.05 | GCO83002 | Outer Joint | | 36 | 27 | 59.5 | 40 | 66 | I |
| | 2013.11-2016.05 | MT | F | L/R | Convertible FWD CUUB | | GCI83016 | Inner Joint | | | 28 | | | 32 | |
| 2.0 (155 kw) | 2012.05-2016.05 | 6DCT | F | R | Convertible FWD CCZB | | GDS81891 | Drive Shaft | | 36 | | 59.5 | 40 | 781 | |
| | 2012.05-2016.05 | 6DCT | F | L/R | Convertible FWD CCZB | | GCI61069 | Inner Joint | | | 28 | | | 32 | |
| | 2012.05-2016.05 | 6MT | F | R | Convertible FWD CCZB | | GDS61147 | Drive Shaft | | 36 | | 59.5 | 40 | 795 | |
| | 2012.05-2016.05 | AT | F | L | Convertible FWD CCZB | | GDS83295 | Drive Shaft | | 36 | | 59.5 | 40 | 491 | |
| | 2012.05-2016.05 | AT | F | L/R | Convertible FWD CCZB | | GCI83016 | Inner Joint | | | 28 | | | 32 | |
| | 2012.05-2016.05 | MT | F | R | Convertible FWD CCZB | | GCO83002 | Outer Joint | | 36 | 27 | 59.5 | 40 | 66 | I |
| | 2012.05-2016.05 | | F | L/R | Convertible FWD CCZB | | GCO83101 | Outer Joint | | 36 | 27 | 59.5 | 40 | 65 | M |
| 2.0 (162 kw) | 2013.11-2016.05 | 6AT | F | L | Convertible FWD CULC | | GDS83295 | Drive Shaft | | 36 | | 59.5 | 40 | 491 | |
| | 2013.11-2016.05 | 6AT | F | R | Convertible FWD CULC | | GDS81891 | Drive Shaft | | 36 | | 59.5 | 40 | 781 | |
| 2.0 (195 kw) | 2013.01-2016.05 | 6AT | F | L | Convertible FWD CDLA | | GDS83295 | Drive Shaft | | 36 | | 59.5 | 40 | 491 | |
| | 2013.01-2016.05 | 6AT | F | R | Convertible FWD CDLA | | GDS81891 | Drive Shaft | | 36 | | 59.5 | 40 | 781 | |
| | 2013.01-2016.05 | 6AT | F | L/R | Convertible FWD CDLA | | GCI61069 | Inner Joint | | | 28 | | | 32 | |
| | 2013.01-2016.05 | | F | L/R | Convertible FWD CDLA | | GCO83101 | Outer Joint | | 36 | 27 | 59.5 | 40 | 65 | M |
| **Golf Estate/Variant** | | | | | | | | | | | | | | | |
| 1.0 (63 kw) | 2017.01-2019.07 | 5MT | F | L | Estate FWD CHZK;DKLB | | GDS82231 | Drive Shaft | | 36 | | 59.5 | 40 | 486 | |
| | 2017.01-2019.07 | 5MT | F | R | Estate FWD CHZK;DKLB | | GDS82230 | Drive Shaft | | 36 | | 59.5 | 40 | 789 | |
| | 2017.01-2019.07 | 5MT | F | L/R | Estate FWD CHZK;DKLB | | GCO61059 | Outer Joint | | 36 | 33 | 59.5 | 40 | 59.5 | I |

| | YEAR | TRANSM. | F/R | L/R | BODY STYLE & DRIVE TYPE & ENGINE | REMARKS | G-AP Ref. | PRODUCT | ABS | Technical Specifications A | B | C | H | L | P |
|---|---|---|---|---|---|---|---|---|---|---|---|---|---|---|---|
| **VW** **Golf Estate/Variant** | | | | | | | | | | | | | | | |
| 1.0 (63 kw) | 2017.01-2019.07 | 5MT/6MT/7DCT | F | L/R | Estate FWD CHZK;DKLB | | GCI81689 | Inner Joint | | | 32 | | | 89 | |
| 1.0 (66 kw) | 2020.08- | 5MT | F | R | Estate FWD DLAB | | GDS82229 | Drive Shaft | | 36 | | 59.5 | 40 | 767 | |
| | 2020.08- | 6MT | F | L | Estate FWD DLAB | | GDS82231 | Drive Shaft | | 36 | | 59.5 | 40 | 486 | |
| | 2020.08- | 6MT | F | L/R | Estate FWD DLAB | | GCO61059 | Outer Joint | | 36 | 33 | 59.5 | 40 | 59.5 | I |
| | 2020.08- | 6MT | F | L | Estate FWD DLAB | | GCI81689 | Inner Joint | | | 32 | | | 89 | |
| 1.0 (81 kw) | 2016.11-2020.08 | 6MT | F | L | Estate FWD CHZC | | GDS82231 | Drive Shaft | | 36 | | 59.5 | 40 | 486 | |
| | 2016.11-2020.08 | 6MT | F | R | Estate FWD CHZC | | GDS82230 | Drive Shaft | | 36 | | 59.5 | 40 | 789 | |
| | 2016.11-2020.08 | 6MT | F | L/R | Estate FWD CHZC | | GCO61059 | Outer Joint | | 36 | 33 | 59.5 | 40 | 59.5 | I |
| | 2016.11-2020.08 | 6MT/7DCT | F | L/R | Estate FWD CHZC | | GCI81689 | Inner Joint | | | 32 | | | 89 | |
| | 2016.11-2020.08 | 7DCT | F | R | Estate FWD CHZC | | GDS82229 | Drive Shaft | | 36 | | 59.5 | 40 | 767 | |
| | 2016.11-2020.08 | 7DCT | F | R | Estate FWD CHZC | | GCO61059 | Outer Joint | | 36 | 33 | 59.5 | 40 | 59.5 | I |
| | 2020.08- | 6MT | F | L | Estate FWD DLAA | | GDS82231 | Drive Shaft | | 36 | | 59.5 | 40 | 486 | |
| | 2020.08- | 6MT | F | R | Estate FWD DLAA | | GDS82229 | Drive Shaft | | 36 | | 59.5 | 40 | 767 | |
| | 2020.08- | 6MT | F | L/R | Estate FWD DLAA | | GCO61059 | Outer Joint | | 36 | 33 | 59.5 | 40 | 59.5 | I |
| | 2020.08- | 6MT | F | L | Estate FWD DLAA | | GCI81689 | Inner Joint | | | 32 | | | 89 | |
| | 2020.09- | 6MT | F | L | Estate FWD DLAA | | GDS82231 | Drive Shaft | | 36 | | 59.5 | 40 | 486 | |
| | 2020.09- | 6MT | F | R | Estate FWD DLAA | | GDS82229 | Drive Shaft | | 36 | | 59.5 | 40 | 767 | |
| | 2020.09- | 6MT | F | L | Estate FWD DLAA | | GCI81689 | Inner Joint | | | 32 | | | 89 | |
| | 2020.09- | 7AT/6MT | F | L/R | Estate FWD DLAA | | GCO61059 | Outer Joint | | 36 | 33 | 59.5 | 40 | 59.5 | I |
| | 2020.09- | 7DCT | F | L | Estate FWD DLAA | | GDS57830 | Drive Shaft | | 36 | | 59.5 | 40 | 492 | |
| | 2020.09- | 7DCT | F | R | Estate FWD DLAA | | GDS57831 | Drive Shaft | | 36 | | 59.5 | 40 | 758 | |
| 1.0 (85 kw) | 2015.05-2020.08 | 6MT | F | L | Estate FWD CHZD;DKRF | | GDS82231 | Drive Shaft | | 36 | | 59.5 | 40 | 486 | |
| | 2015.05-2020.08 | 6MT | F | R | Estate FWD CHZD;DKRF | | GDS82230 | Drive Shaft | | 36 | | 59.5 | 40 | 789 | |
| | 2015.05-2020.08 | 6MT | F | L/R | Estate FWD CHZD;DKRF | | GCO61059 | Outer Joint | | 36 | 33 | 59.5 | 40 | 59.5 | I |
| | 2015.05-2020.08 | 6MT/7DCT | F | L/R | Estate FWD CHZD;DKRF | | GCI81689 | Inner Joint | | | 32 | | | 89 | |
| | 2015.05-2020.08 | 7DCT | F | R | Estate FWD CHZD;DKRF | | GDS82229 | Drive Shaft | | 36 | | 59.5 | 40 | 767 | |
| | 2015.05-2020.08 | 7DCT | F | R | Estate FWD CHZD;DKRF | | GCO61059 | Outer Joint | | 36 | 33 | 59.5 | 40 | 59.5 | I |
| 1.2 (63 kw) | 2010.07-2013.07 | 5MT | F | L | Estate FWD CBZA | | GDS81584 | Drive Shaft | | 36 | | 59.5 | 40 | 530 | |
| | 2010.07-2013.07 | 5MT | F | L/R | Estate FWD CBZA | | GCO83037 | Outer Joint | | 36 | 30 | 59.5 | 40.5 | 56 | I |
| | 2010.07-2013.07 | AT | F | | Estate FWD CBZA | | GCO83100 | Outer Joint | | 36 | 33 | 59.5 | 38 | 56 | I |
| | 2010.07-2013.07 | MT | F | R | Estate FWD CBZA | | GDS61096 | Drive Shaft | | 36 | | 59.5 | 40.5 | 799 | |
| | 2010.07-2013.07 | MT | F | L/R | Estate FWD CBZA | | GCI83006 | Inner Joint | | | 33 | | | 34 | |
| | 2010.07-2013.07 | MT | F | L/R | Estate FWD CBZA | | GCI83011 | Inner Joint | | | 33 | | | 34 | |
| | 2013.05-2017.03 | 5MT | F | R | Estate FWD CJZB;CYVA | | GDS61096 | Drive Shaft | | 36 | | 59.5 | 40.5 | 799 | |
| | 2013.05-2017.03 | 5MT | F | L/R | Estate FWD CJZB;CYVA | | GCI82447 | Inner Joint | | | 33 | | | 34 | |
| | 2013.05-2017.03 | AT/MT | F | L/R | Estate FWD CJZB;CYVA | | GCI83011 | Inner Joint | | | 33 | | | 34 | |
| | 2013.05-2017.03 | MT | F | L | Estate FWD CJZB;CYVA | | GDS83294 | Drive Shaft | | 36 | | 59.5 | 38 | 519 | |
| | 2013.05-2017.03 | MT | F | L | Estate FWD CJZB;CYVA | Date to:2017.03;For PR code:1PE/1PF;For PR code:0EC | GDS83373 | Drive Shaft | | 36 | | 59.5 | 38 | 511 | |
| | 2013.05-2017.03 | MT | F | R | Estate FWD CJZB;CYVA | | GDS61042 | Drive Shaft | | 36 | | 59.5 | 40.5 | 814 | |
| | 2013.05-2017.03 | MT | F | L/R | Estate FWD CJZB;CYVA | Date to:2017.03 | GCO83037 | Outer Joint | | 36 | 30 | 59.5 | 40.5 | 56 | I |
| | 2013.05-2017.03 | | F | L | Estate FWD CJZB;CYVA | For PR code:1PE/1PF/1PA/2H4 | GDS61097 | Drive Shaft | | 36 | | 59.5 | 40.5 | 543 | |
| 1.2 (77 kw) | 2009.07-2013.07 | 5MT/6MT | F | L/R | Estate FWD CBZB | | GCI82447 | Inner Joint | | | 33 | | | 34 | |
| | 2009.07-2013.07 | 6MT | F | L | Estate FWD CBZB | | GDS81584 | Drive Shaft | | 36 | | 59.5 | 40 | 530 | |
| | 2009.07-2013.07 | 6MT | F | R | Estate FWD CBZB | | GDS61096 | Drive Shaft | | 36 | | 59.5 | 40.5 | 799 | |
| | 2009.07-2013.07 | 6MT | F | L/R | Estate FWD CBZB | | GCO83037 | Outer Joint | | 36 | 30 | 59.5 | 40.5 | 56 | I |
| | 2009.07-2013.07 | 7AT/5MT/6MT | F | L/R | Estate FWD CBZB | | GCI83016 | Inner Joint | | | 28 | | | 32 | |
| | 2009.07-2013.07 | 7DCT | F | L | Estate FWD CBZB | Date to:2012.06 | GDS83302 | Drive Shaft | | 36 | | 59.5 | 40 | 528 | |
| | 2009.07-2013.07 | AT | F | R | Estate FWD CBZB | | GDS81653 | Drive Shaft | | 36 | | 59.5 | 40 | 785 | |
| | 2009.07-2013.07 | AT | F | L/R | Estate FWD CBZB | | GCO83002 | Outer Joint | | 36 | 27 | 59.5 | 40 | 66 | I |
| | 2009.07-2013.07 | AT | F | | Estate FWD CBZB | | GCO83100 | Outer Joint | | 36 | 33 | 59.5 | 38 | 56 | I |
| | 2013.04-2020.08 | 6MT | F | L | Estate FWD CJZA | | GDS83373 | Drive Shaft | | 36 | | 59.5 | 38 | 511 | |
| | 2013.04-2020.08 | 6MT | F | R | Estate FWD CJZA | | GDS61307 | Drive Shaft | | 36 | | 59.5 | 40 | 819 | |
| | 2013.04-2020.08 | 6MT/7AT | F | L/R | Estate FWD CJZA | | GCO83037 | Outer Joint | | 36 | 30 | 59.5 | 40.5 | 56 | I |
| | 2013.04-2020.08 | 7AT/6MT | F | L/R | Estate FWD CJZA | | GCO61059 | Outer Joint | | 36 | 33 | 59.5 | 40 | 59.5 | I |
| | 2013.04-2020.08 | 7DCT | F | L | Estate FWD CJZA | | GDS61282 | Drive Shaft | | 36 | | 59.5 | 40 | 523 | |
| | 2013.04-2020.08 | 7DCT | F | R | Estate FWD CJZA | | GDS61096 | Drive Shaft | | 36 | | 59.5 | 40.5 | 799 | |
| | 2013.04-2020.08 | 7DCT/6MT | F | L/R | Estate FWD CJZA | | GCI82447 | Inner Joint | | | 33 | | | 34 | |
| | 2013.04-2020.08 | AT/MT | F | L/R | Estate FWD CJZA | | GCI83011 | Inner Joint | | | 33 | | | 34 | |
| | 2013.04-2020.08 | MT | F | L | Estate FWD CJZA | | GDS83294 | Drive Shaft | | 36 | | 59.5 | 38 | 519 | |
| | 2013.04-2020.08 | MT | F | R | Estate FWD CJZA | | GDS61042 | Drive Shaft | | 36 | | 59.5 | 40.5 | 814 | |
| 1.2 (81 kw) | 2014.04-2017.03 | 6MT | F | L | Estate FWD CYVB | | GDS83373 | Drive Shaft | | 36 | | 59.5 | 38 | 511 | |
| | 2014.04-2017.03 | 6MT | F | R | Estate FWD CYVB | | GDS61307 | Drive Shaft | | 36 | | 59.5 | 40 | 819 | |
| | 2014.04-2017.03 | 6MT | F | L/R | Estate FWD CYVB | | GCO83037 | Outer Joint | | 36 | 30 | 59.5 | 40.5 | 56 | I |
| | 2014.04-2017.03 | 7DCT | F | L | Estate FWD CYVB | For PR code:1PE/1PF/1PA/2H4,No Economy | GDS61282 | Drive Shaft | | 36 | | 59.5 | 40 | 523 | |
| | 2014.04-2017.03 | 7DCT | F | L | Estate FWD CYVB | For PR code:1PE/1PF/1PA/2H4,Economy;For PR code:1PA/2H0/2H5 | GDS83294 | Drive Shaft | | 36 | | 59.5 | 38 | 519 | |

| | YEAR | TRANSM. | F/R | L/R | BODY STYLE & DRIVE TYPE & ENGINE | REMARKS | G-AP Ref. | PRODUCT | ABS | Technical Specifications A | B | C | H | L | P |
|---|---|---|---|---|---|---|---|---|---|---|---|---|---|---|---|
| **VW** **Golf Estate/Variant** | | | | | | | | | | | | | | | |
| 1.2 (81 kw) | 2014.04-2017.03 | 7DCT | F | R | Estate FWD CYVB | | GDS61096 | Drive Shaft | | 36 | | 59.5 | 40.5 | 799 | |
| | 2014.04-2017.03 | 7DCT | F | L/R | Estate FWD CYVB | | GCO61059 | Outer Joint | | 36 | 33 | 59.5 | 40 | 59.5 | I |
| | 2014.04-2017.03 | 7DCT/6MT | F | L/R | Estate FWD CYVB | | GCI82447 | Inner Joint | | | 33 | | | 34 | |
| 1.4 (40 kw) | 1993.07-1997.12 | AT/MT | F | L/R | Estate FWD ABD/AEX | | GCO53006 | Outer Joint | | 22 | 30 | 50 | 78.5 | 52 | I |
| | 1993.07-1997.12 | MT | F | L | Estate FWD ABD/AEX | Date to:1995.07 | GDS61172 | Drive Shaft | | 22 | | 53 | 78 | 584.5 | |
| | 1993.07-1997.12 | MT | F | R | Estate FWD ABD/AEX | Date to:1995.07 | GDS61067 | Drive Shaft | | 22 | | 51 | 78.7 | 781 | |
| | 1993.07-1997.12 | MT | F | L/R | Estate FWD ABD/AEX | Date to:1995.07 | GCO53008 | Outer Joint | | 22 | 30 | 53 | 78.5 | 51 | I |
| | 1993.07-1997.12 | MT | F | L/R | Estate FWD ABD/AEX | Date to:1995.07 | GCI53001 | Inner Joint | | | 33 | | | 32 | |
| 1.4 (44 kw) | 1993.07-1998.05 | MT | F | L | Estate FWD ABD/AEX/APQ | Date to:1998.05;Chassis no. from:1H-T-000001 | GDS53004 | Drive Shaft | | 22 | | 50 | 78.5 | 562 | |
| | 1993.07-1998.05 | MT | F | L | Estate FWD ABD/AEX/APQ | Date to:1998.05;Chassis no. to:1H-S-700000 | GDS61172 | Drive Shaft | | 22 | | 53 | 78 | 584.5 | |
| | 1993.07-1998.05 | MT | F | R | Estate FWD ABD/AEX/APQ | Date to:1998.05;Chassis no. to:1H-S-700000 | GDS61067 | Drive Shaft | | 22 | | 51 | 78.7 | 781 | |
| | 1993.07-1998.05 | MT | F | L/R | Estate FWD ABD/AEX/APQ | Date to:1998.05 | GCO53008 | Outer Joint | | 22 | 30 | 53 | 78.5 | 51 | I |
| | 1993.07-1998.05 | MT | F | L/R | Estate FWD ABD/AEX/APQ | Date to:1998.05;Chassis no. to:1H-S-700000 | GCI53001 | Inner Joint | | | 33 | | | 32 | |
| | 1993.07-1998.05 | MT | F | L/R | Estate FWD ABD/AEX/APQ | Date to:1998.05;Chassis no. from:1H-T-000001 | GCI83005 | Inner Joint | | | 33 | | | 32 | |
| | 1993.07-1998.05 | | F | | Estate FWD ABD/AEX/APQ | | GCO53006 | Outer Joint | | 22 | 30 | 50 | 78.5 | 52 | I |
| 1.4 (55 kw) | 1999.05-2006.06 | 5MT | F | L | Estate FWD AHW/AKQ/APE/AXP/BCA | | GDS61045 | Drive Shaft | | 36 | | 53 | 78.5 | 555 | |
| | 1999.05-2006.06 | 5MT | F | R | Estate FWD AHW/AKQ/APE/AXP/BCA | | GDS83046 | Drive Shaft | | 36 | | 53 | 78.5 | 822 | |
| | 1999.05-2006.06 | 5MT | F | L/R | Estate FWD AHW/AKQ/APE/AXP/BCA | | GCO83033 | Outer Joint | | 36 | 30 | 53 | 78.5 | 51 | I |
| | 1999.05-2006.06 | 5MT | F | L/R | Estate FWD AHW/AKQ/APE/AXP/BCA | | GCI83008 | Inner Joint | | | 33 | | | 32 | |
| 1.4 (59 kw) | 2007.06-2009.07 | 5MT | F | L | Estate FWD BUD | | GDS53007 | Drive Shaft | | 36 | | 59.5 | 40 | 559 | |
| | 2007.06-2009.07 | 5MT | F | R | Estate FWD BUD | | GDS53008 | Drive Shaft | | 36 | | 59.5 | 40 | 782 | |
| | 2007.06-2009.07 | 5MT | F | L/R | Estate FWD BUD | | GCO53001 | Outer Joint | | 36 | 30 | 59.5 | 40 | 49 | I |
| | 2007.06-2009.07 | 5MT | F | L/R | Estate FWD BUD | | GCI83008 | Inner Joint | | | 33 | | | 32 | |
| | 2009.07-2013.07 | 5MT | F | L | Estate FWD CGGA | | GDS53007 | Drive Shaft | | 36 | | 59.5 | 40 | 559 | |
| | 2009.07-2013.07 | 5MT | F | R | Estate FWD CGGA | | GDS53008 | Drive Shaft | | 36 | | 59.5 | 40 | 782 | |
| | 2009.07-2013.07 | 5MT | F | L/R | Estate FWD CGGA | | GCO53001 | Outer Joint | | 36 | 30 | 59.5 | 40 | 49 | I |
| | 2009.07-2013.07 | MT | F | L/R | Estate FWD CGGA | | GCI83008 | Inner Joint | | | 33 | | | 32 | |
| 1.4 (81 kw) | 2013.09-2018.07 | 6MT | F | R | Estate FWD CPWA | | GDS61307 | Drive Shaft | | 36 | | 59.5 | 40 | 819 | |
| | 2013.09-2018.07 | 6MT | F | R | Estate FWD CPWA | | GCO83037 | Outer Joint | | 36 | 30 | 59.5 | 40.5 | 56 | I |
| | 2013.09-2018.07 | 6MT | F | L/R | Estate FWD CPWA | | GCI53002 | Inner Joint | | | 33 | | | 34 | |
| | 2013.09-2018.07 | 6MT/7DCT | F | L | Estate FWD CPWA | | GDS61282 | Drive Shaft | | 36 | | 59.5 | 40 | 523 | |
| | 2013.09-2018.07 | 6MT/7DCT | F | L | Estate FWD CPWA | | GCO61059 | Outer Joint | | 36 | 33 | 59.5 | 40 | 59.5 | I |
| | 2013.09-2018.07 | 7DCT | F | R | Estate FWD CPWA | | GDS61096 | Drive Shaft | | 36 | | 59.5 | 40.5 | 799 | |
| | 2013.09-2018.07 | 7DCT | F | L | Estate FWD CPWA | | GCI53002 | Inner Joint | | | 33 | | | 34 | |
| | 2013.09-2018.07 | 7DCT/6MT | F | L/R | Estate FWD CPWA | | GCI82447 | Inner Joint | | | 33 | | | 34 | |
| | 2013.09-2018.07 | MT/7AT | F | L | Estate FWD CPWA | | GDS83294 | Drive Shaft | | 36 | | 59.5 | 38 | 519 | |
| | 2013.09-2018.07 | | F | L/R | Estate FWD CPWA | | GCI83011 | Inner Joint | | | 33 | | | 34 | |
| 1.4 (90 kw) | 2007.06-2009.07 | 6MT | F | R | Estate FWD CAXA | | GDS61096 | Drive Shaft | | 36 | | 59.5 | 40.5 | 799 | |
| | 2007.06-2009.07 | 6MT | F | L/R | Estate FWD CAXA | | GCI82447 | Inner Joint | | | 33 | | | 34 | |
| | 2007.06-2009.07 | 7DCT | F | R | Estate FWD CAXA | Date from:2008.12,Chassis no. from:1K9295791 | GDS81653 | Drive Shaft | | 36 | | 59.5 | 40 | 785 | |
| | 2007.06-2009.07 | AT | F | L | Estate FWD CAXA | Date to:2008.11 | GDS81783 | Drive Shaft | | 36 | 40 | 59.5 | 40 | 531 | |
| | 2007.06-2009.07 | AT | F | L | Estate FWD CAXA | Date From:2008.12;Date To:2010.04 | GDS83302 | Drive Shaft | | 36 | | 59.5 | 40 | 528 | |
| | 2007.06-2009.07 | AT | F | R | Estate FWD CAXA | Date to:2008.11 | GDS81784 | Drive Shaft | | 36 | 40 | 59.5 | 40 | 801 | |
| | 2007.06-2009.07 | AT | F | L/R | Estate FWD CAXA | | GCO83002 | Outer Joint | | 36 | 27 | 59.5 | 40 | 66 | I |
| | 2007.06-2009.07 | AT | F | L/R | Estate FWD CAXA | Date to:2008.11,Chassis no. to:1K9295790 | GCI61054 | Inner Joint | | 40 | 28 | 46.9 | 41 | 101.7 | |
| | 2007.06-2009.07 | AT | F | L/R | Estate FWD CAXA | Date from:2008.12,Chassis no. from:1K9295791 | GCI83016 | Inner Joint | | | 28 | | | 32 | |
| | 2007.06-2009.07 | MT | F | L | Estate FWD CAXA | | GDS61201 | Drive Shaft | | 36 | | 59.5 | 40.5 | 535 | |
| | 2007.06-2009.07 | MT | F | L | Estate FWD CAXA | | GDS81584 | Drive Shaft | | 36 | | 59.5 | 40 | 530 | |
| | 2007.06-2009.07 | MT | F | L/R | Estate FWD CAXA | | GCO83037 | Outer Joint | | 36 | 30 | 59.5 | 40.5 | 56 | I |
| | 2009.07-2013.07 | 6MT | F | L | Estate FWD CAXA | | GDS81584 | Drive Shaft | | 36 | | 59.5 | 40 | 530 | |
| | 2009.07-2013.07 | 6MT | F | L/R | Estate FWD CAXA | | GCO83037 | Outer Joint | | 36 | 30 | 59.5 | 40.5 | 56 | I |
| | 2009.07-2013.07 | 6MT | F | L/R | Estate FWD CAXA | | GCI82447 | Inner Joint | | | 33 | | | 34 | |
| | 2009.07-2013.07 | 7AT/6MT | F | L/R | Estate FWD CAXA | | GCI83016 | Inner Joint | | | 28 | | | 32 | |
| | 2009.07-2013.07 | 7DCT | F | L | Estate FWD CAXA | | GDS83302 | Drive Shaft | | 36 | | 59.5 | 40 | 528 | |
| | 2009.07-2013.07 | AT | F | R | Estate FWD CAXA | | GDS81653 | Drive Shaft | | 36 | | 59.5 | 40 | 785 | |
| | 2009.07-2013.07 | AT | F | L/R | Estate FWD CAXA | | GCO83002 | Outer Joint | | 36 | 27 | 59.5 | 40 | 66 | I |
| | 2009.07-2013.07 | MT | F | R | Estate FWD CAXA | | GDS61096 | Drive Shaft | | 36 | | 59.5 | 40.5 | 799 | |
| | 2013.04-2017.03 | 6MT | F | L | Estate FWD CPVA | | GDS61282 | Drive Shaft | | 36 | | 59.5 | 40 | 523 | |
| | 2013.04-2017.03 | 6MT | F | R | Estate FWD CPVA | | GDS61307 | Drive Shaft | | 36 | | 59.5 | 40 | 819 | |
| | 2013.04-2017.03 | 6MT | F | L | Estate FWD CPVA | | GCO61059 | Outer Joint | | 36 | 33 | 59.5 | 40 | 59.5 | I |
| | 2013.04-2017.03 | 6MT | F | R | Estate FWD CPVA | | GCO83037 | Outer Joint | | 36 | 30 | 59.5 | 40.5 | 56 | I |
| | 2013.04-2017.03 | 6MT | F | L/R | Estate FWD CPVA | | GCI53002 | Inner Joint | | | 33 | | | 34 | |
| | 2013.04-2017.03 | 6MT | F | L/R | Estate FWD CPVA | | GCI82447 | Inner Joint | | | 33 | | | 34 | |
| | 2013.04-2017.03 | 7AT | F | L | Estate FWD CPVA | | GDS83294 | Drive Shaft | | 36 | | 59.5 | 38 | 519 | |
| | 2013.04-2017.03 | MT | F | L/R | Estate FWD CPVA | | GCI83006 | Inner Joint | | | 33 | | | 34 | |

| | YEAR | TRANSM. | F/R | L/R | BODY STYLE & DRIVE TYPE & ENGINE | REMARKS | G-AP Ref. | PRODUCT | ABS | Technical Specifications A | B | C | H | L | P |
|---|---|---|---|---|---|---|---|---|---|---|---|---|---|---|---|
| **VW** **Golf Estate/Variant** | | | | | | | | | | | | | | | |
| 1.4 (90 kw) | 2013.04-2017.03 | | F | L/R | Estate FWD CPVA | Date To:2017.03 | GCI83011 | Inner Joint | | | 33 | | | 34 | |
| | 2013.05-2017.03 | 6MT | F | R | Estate FWD CXSA | | GDS61307 | Drive Shaft | | 36 | | 59.5 | 40 | 819 | |
| | 2013.05-2017.03 | 6MT/7DCT | F | L | Estate FWD CXSA | For PR code:1PE/1PF/1PA/2H4;Inner teeth of wheel side:33 | GDS61282 | Drive Shaft | | 36 | | 59.5 | 40 | 523 | |
| | 2013.05-2017.03 | 7DCT | F | L | Estate FWD CXSA | For PR code:1PE/1PF/1PA/2H4;Inner teeth of wheel side:30 | GDS83294 | Drive Shaft | | 36 | | 59.5 | 38 | 519 | |
| | 2013.05-2017.03 | 7DCT | F | R | Estate FWD CXSA | | GDS61096 | Drive Shaft | | 36 | | 59.5 | 40.5 | 799 | |
| | 2013.05-2017.03 | 7DCT/6MT | F | L/R | Estate FWD CXSA | | GCI82447 | Inner Joint | | | 33 | | | 34 | |
| | 2013.05-2017.03 | | F | L/R | Estate FWD CXSA | | GCO61059 | Outer Joint | | 36 | 33 | 59.5 | 40 | 59.5 | I |
| 1.4 (92 kw) | 2014.05-2017.03 | 6MT | F | L | Estate FWD CPVB | | GDS61282 | Drive Shaft | | 36 | | 59.5 | 40 | 523 | |
| | 2014.05-2017.03 | 6MT | F | R | Estate FWD CPVB | | GDS61307 | Drive Shaft | | 36 | | 59.5 | 40 | 819 | |
| | 2014.05-2017.03 | 6MT | F | L | Estate FWD CPVB | | GCO61059 | Outer Joint | | 36 | 33 | 59.5 | 40 | 59.5 | I |
| | 2014.05-2017.03 | 6MT | F | R | Estate FWD CPVB | | GCO83037 | Outer Joint | | 36 | 30 | 59.5 | 40.5 | 56 | I |
| | 2014.05-2017.03 | 6MT | F | L/R | Estate FWD CPVB | | GCI53002 | Inner Joint | | | 33 | | | 34 | |
| | 2014.05-2017.03 | 6MT | F | L/R | Estate FWD CPVB | | GCI82447 | Inner Joint | | | 33 | | | 34 | |
| | 2014.05-2017.03 | 7AT | F | L | Estate FWD CPVB | | GDS83294 | Drive Shaft | | 36 | | 59.5 | 38 | 519 | |
| | 2014.05-2017.03 | MT | F | L/R | Estate FWD CPVB | | GCI83006 | Inner Joint | | | 33 | | | 34 | |
| | 2014.05-2017.03 | | F | L/R | Estate FWD CPVB | Date To:2017.03 | GCI83011 | Inner Joint | | | 33 | | | 34 | |
| | 2014.05-2020.08 | 6MT | F | L | Estate FWD CZCA;CZDD | | GDS61282 | Drive Shaft | | 36 | | 59.5 | 40 | 523 | |
| | 2014.05-2020.08 | 6MT | F | R | Estate FWD CZCA;CZDD | | GDS61307 | Drive Shaft | | 36 | | 59.5 | 40 | 819 | |
| | 2014.05-2020.08 | 6MT | F | R | Estate FWD CZCA;CZDD | | GCO83037 | Outer Joint | | 36 | 30 | 59.5 | 40.5 | 56 | I |
| | 2014.05-2020.08 | 6MT | F | L/R | Estate FWD CZCA;CZDD | For Modelcode:BV5 | GCO61059 | Outer Joint | | 36 | 33 | 59.5 | 40 | 59.5 | I |
| | 2014.05-2020.08 | 6MT | F | L/R | Estate FWD CZCA;CZDD | | GCI53002 | Inner Joint | | | 33 | | | 34 | |
| | 2014.05-2020.08 | 6MT | F | L/R | Estate FWD CZCA;CZDD | | GCI82447 | Inner Joint | | | 33 | | | 34 | |
| | 2014.05-2020.08 | 6MT/7DCT | F | L | Estate FWD CZCA;CZDD | Transmission:0AF;For PR code:1PA/2H4/2H0;Vibration damper:Transmission:7DCT;For PR code:1PE/1PF/1PA/2H4/2H0 | GDS83294 | Drive Shaft | | 36 | | 59.5 | 38 | 519 | |
| | 2014.05-2020.08 | 7DCT | F | R | Estate FWD CZCA;CZDD | | GDS61096 | Drive Shaft | | 36 | | 59.5 | 40.5 | 799 | |
| | 2014.05-2020.08 | 7DCT | F | L/R | Estate FWD CZCA;CZDD | Exhaust Emis Nm:Euro 5;For PR code:7GR | GCO83101 | Outer Joint | | 36 | 27 | 59.5 | 40 | 65 | M |
| | 2014.05-2020.08 | 7DCT | F | L | Estate FWD CZCA;CZDD | | GCI53002 | Inner Joint | | | 33 | | | 34 | |
| 1.4 (103 kw) | 2007.06-2009.07 | 6AT/6MT | F | L/R | Estate FWD BMY | | GCI83016 | Inner Joint | | | 28 | | | 32 | |
| | 2007.06-2009.07 | 6DCT | F | L | Estate FWD BMY | | GDS81896 | Drive Shaft | | 36 | | 59.5 | 40 | 500 | |
| | 2007.06-2009.07 | 6MT | F | L/R | Estate FWD BMY | | GCI82447 | Inner Joint | | | 33 | | | 34 | |
| | 2007.06-2009.07 | AT | F | L | Estate FWD BMY | | GDS83236 | Drive Shaft | | 36 | | 59.5 | 40 | 484 | |
| | 2007.06-2009.07 | AT | F | R | Estate FWD BMY | | GDS61342 | Drive Shaft | | 36 | | 59.5 | 40 | 764 | |
| | 2007.06-2009.07 | AT | F | L/R | Estate FWD BMY | Date to:2008.06 | GCO83002 | Outer Joint | | 36 | 27 | 59.5 | 40 | 66 | I |
| | 2007.06-2009.07 | MT | F | L | Estate FWD BMY | | GDS61201 | Drive Shaft | | 36 | | 59.5 | 40.5 | 535 | |
| | 2007.06-2009.07 | MT | F | L | Estate FWD BMY | | GDS83302 | Drive Shaft | | 36 | | 59.5 | 40 | 528 | |
| | 2007.06-2009.07 | MT | F | R | Estate FWD BMY | | GDS61096 | Drive Shaft | | 36 | | 59.5 | 40.5 | 799 | |
| | 2007.06-2009.07 | MT | F | L/R | Estate FWD BMY | Date to:2008.06 | GCO83037 | Outer Joint | | 36 | 30 | 59.5 | 40.5 | 56 | I |
| | 2013.05-2020.08 | 6MT | F | L | Estate FWD CHPA | | GDS61282 | Drive Shaft | | 36 | | 59.5 | 40 | 523 | |
| | 2013.05-2020.08 | 6MT | F | R | Estate FWD CHPA | | GDS61283 | Drive Shaft | | 36 | | 59.5 | 40 | 815 | |
| | 2013.05-2020.08 | 6MT | F | L/R | Estate FWD CHPA | | GCO61059 | Outer Joint | | 36 | 33 | 59.5 | 40 | 59.5 | I |
| | 2013.05-2020.08 | 6MT | F | L/R | Estate FWD CHPA | | GCI82447 | Inner Joint | | | 33 | | | 34 | |
| | 2013.05-2020.08 | 7AT/6MT | F | L/R | Estate FWD CHPA | | GCI83016 | Inner Joint | | | 28 | | | 32 | |
| | 2013.05-2020.08 | 7DCT | F | L | Estate FWD CHPA | | GDS61100 | Drive Shaft | | 36 | | 59.5 | 40 | 513 | |
| | 2013.05-2020.08 | 7DCT | F | R | Estate FWD CHPA | | GDS83313 | Drive Shaft | | 36 | | 59.5 | 40 | 792 | |
| | 2013.05-2020.08 | 7DCT | F | L/R | Estate FWD CHPA | | GCO83101 | Outer Joint | | 36 | 27 | 59.5 | 40 | 65 | M |
| | 2013.05-2020.08 | MT | F | L | Estate FWD CHPA | | GDS83294 | Drive Shaft | | 36 | | 59.5 | 38 | 519 | |
| | 2013.05-2020.08 | MT | F | L | Estate FWD CHPA | | GCO83037 | Outer Joint | | 36 | 30 | 59.5 | 40.5 | 56 | I |
| 1.4 (110 kw) | 2014.05-2021.03 | 6MT | F | L | Estate FWD CHPB;CZDA;DGXA | | GDS61282 | Drive Shaft | | 36 | | 59.5 | 40 | 523 | |
| | 2014.05-2021.03 | 6MT | F | R | Estate FWD CHPB;CZDA;DGXA | | GDS61283 | Drive Shaft | | 36 | | 59.5 | 40 | 815 | |
| | 2014.05-2021.03 | 6MT | F | L/R | Estate FWD CHPB;CZDA;DGXA | | GCO61059 | Outer Joint | | 36 | 33 | 59.5 | 40 | 59.5 | I |
| | 2014.05-2021.03 | 6MT | F | L/R | Estate FWD CHPB;CZDA;DGXA | | GCI82447 | Inner Joint | | | 33 | | | 34 | |
| | 2014.05-2021.03 | 7AT/6MT | F | L/R | Estate FWD CHPB;CZDA;DGXA | | GCI83016 | Inner Joint | | | 28 | | | 32 | |
| | 2014.05-2021.03 | 7DCT | F | L | Estate FWD CHPB;CZDA;DGXA | | GDS61100 | Drive Shaft | | 36 | | 59.5 | 40 | 513 | |
| | 2014.05-2021.03 | 7DCT | F | R | Estate FWD CHPB;CZDA;DGXA | | GDS83313 | Drive Shaft | | 36 | | 59.5 | 40 | 792 | |
| | 2014.05-2021.03 | 7DCT | F | L/R | Estate FWD CHPB;CZDA;DGXA | | GCO83101 | Outer Joint | | 36 | 27 | 59.5 | 40 | 65 | M |
| | 2014.05-2021.03 | MT | F | L | Estate FWD CHPB;CZDA;DGXA | | GDS83294 | Drive Shaft | | 36 | | 59.5 | 38 | 519 | |
| | 2014.05-2021.03 | MT | F | L | Estate FWD CHPB;CZDA;DGXA | | GCO83037 | Outer Joint | | 36 | 30 | 59.5 | 40.5 | 56 | I |
| 1.4 (118 kw) | 2008.07-2009.07 | 6MT | F | L/R | Estate FWD CAVD | | GCI82447 | Inner Joint | | | 33 | | | 34 | |
| | 2008.07-2009.07 | 7DCT | F | R | Estate FWD CAVD | Date from:2008.12;Chassis no. from:1K9295791 | GDS81653 | Drive Shaft | | 36 | | 59.5 | 40 | 785 | |
| | 2008.07-2009.07 | AT | F | L | Estate FWD CAVD | Date to:2008.11 | GDS81783 | Drive Shaft | | 36 | 40 | 59.5 | 40 | 531 | |
| | 2008.07-2009.07 | AT | F | L | Estate FWD CAVD | Date From:2008.12;Date To:2010.04 | GDS83302 | Drive Shaft | | 36 | | 59.5 | 40 | 528 | |
| | 2008.07-2009.07 | AT | F | R | Estate FWD CAVD | Date to:2008.11 | GDS81784 | Drive Shaft | | 36 | 40 | 59.5 | 40 | 801 | |
| | 2008.07-2009.07 | AT | F | L/R | Estate FWD CAVD | | GCO83002 | Outer Joint | | 36 | 27 | 59.5 | 40 | 66 | I |
| | 2008.07-2009.07 | AT | F | L/R | Estate FWD CAVD | Date to:2008.11;Chassis no. to:1K9295790 | GCI61054 | Inner Joint | | 40 | 28 | 46.9 | 41 | 101.7 | |
| | 2008.07-2009.07 | AT | F | L/R | Estate FWD CAVD | Date from:2008.12;Chassis no. from:1K9295791 | GCI83016 | Inner Joint | | | 28 | | | 32 | |
| | 2008.07-2009.07 | MT | F | L | Estate FWD CAVD | | GDS61201 | Drive Shaft | | 36 | | 59.5 | 40.5 | 535 | |

| | YEAR | TRANSM. | F/R | L/R | BODY STYLE & DRIVE TYPE & ENGINE | REMARKS | G-AP Ref. | PRODUCT | ABS | Technical Specifications A | B | C | H | L | P |
|---|---|---|---|---|---|---|---|---|---|---|---|---|---|---|---|
| **VW** **Golf Estate/Variant** | | | | | | | | | | | | | | | |
| 1.4 (118 kw) | 2008.07-2009.07 | MT | F | R | Estate FWD CAVD | | GDS61096 | Drive Shaft | | 36 | | 59.5 | 40.5 | 799 | |
| | 2008.07-2009.07 | MT | F | L/R | Estate FWD CAVD | | GCO83037 | Outer Joint | | 36 | 30 | 59.5 | 40.5 | 56 | I |
| | 2009.07-2013.07 | 6MT | F | L/R | Estate FWD CAVD;CNWA;CTHD;CTKA | | GCO83037 | Outer Joint | | 36 | 30 | 59.5 | 40.5 | 56 | I |
| | 2009.07-2013.07 | 6MT | F | L/R | Estate FWD CAVD;CNWA;CTHD;CTKA | | GCI82447 | Inner Joint | | | 33 | | | 34 | |
| | 2009.07-2013.07 | 7AT | F | L | Estate FWD CAVD;CNWA;CTHD;CTKA | | GDS61281 | Drive Shaft | | 36 | | 59.5 | 40 | 528 | |
| | 2009.07-2013.07 | 7AT/6MT | F | L/R | Estate FWD CAVD;CNWA;CTHD;CTKA | | GCI83016 | Inner Joint | | | 28 | | | 32 | |
| | 2009.07-2013.07 | AT | F | L | Estate FWD CAVD;CNWA;CTHD;CTKA | | GDS83302 | Drive Shaft | | 36 | | 59.5 | 40 | 528 | |
| | 2009.07-2013.07 | AT | F | R | Estate FWD CAVD;CNWA;CTHD;CTKA | | GDS81653 | Drive Shaft | | 36 | | 59.5 | 40 | 785 | |
| | 2009.07-2013.07 | AT | F | L/R | Estate FWD CAVD;CNWA;CTHD;CTKA | | GCO83002 | Outer Joint | | 36 | 27 | 59.5 | 40 | 66 | I |
| | 2009.07-2013.07 | MT | F | L | Estate FWD CAVD;CNWA;CTHD;CTKA | For Engine code:CTHD | GDS61201 | Drive Shaft | | 36 | | 59.5 | 40.5 | 535 | |
| | 2009.07-2013.07 | MT | F | R | Estate FWD CAVD;CNWA;CTHD;CTKA | For Engine code:CAVD/CTHD | GDS61096 | Drive Shaft | | 36 | | 59.5 | 40.5 | 799 | |
| 1.4 (125 kw) | 2007.06-2009.07 | 6DCT | F | L | Estate FWD BLG | | GDS81896 | Drive Shaft | | 36 | | 59.5 | 40 | 500 | |
| | 2007.06-2009.07 | 6DCT/7DCT | F | L/R | Estate FWD BLG | | GCI83016 | Inner Joint | | | 28 | | | 32 | |
| | 2007.06-2009.07 | 6MT | F | R | Estate FWD BLG | | GDS81653 | Drive Shaft | | 36 | | 59.5 | 40 | 785 | |
| | 2007.06-2009.07 | AT | F | L | Estate FWD BLG | | GDS83236 | Drive Shaft | | 36 | | 59.5 | 40 | 484 | |
| | 2007.06-2009.07 | AT | F | R | Estate FWD BLG | | GDS61342 | Drive Shaft | | 36 | | 59.5 | 40 | 764 | |
| | 2007.06-2009.07 | AT | F | L/R | Estate FWD BLG | | GCO83002 | Outer Joint | | 36 | 27 | 59.5 | 40 | 66 | I |
| | 2007.06-2009.07 | MT | F | L | Estate FWD BLG | | GDS83302 | Drive Shaft | | 36 | | 59.5 | 40 | 528 | |
| 1.5 (96 kw) | 2017.07-2020.08 | 6MT | F | R | Estate FWD DACA;DPBA | | GDS84416 | Drive Shaft | | 36 | | 59.5 | 40 | 800 | |
| | 2017.07-2020.08 | 6MT/7DCT | F | L/R | Estate FWD DACA;DPBA | | GCO61059 | Outer Joint | | 36 | 33 | 59.5 | 40 | 59.5 | I |
| | 2017.07-2020.08 | 6MT/7DCT | F | L/R | Estate FWD DACA;DPBA | | GCI53002 | Inner Joint | | | 33 | | | 34 | |
| | 2017.07-2020.08 | 6MT/7DCT | F | L/R | Estate FWD DACA;DPBA | | GCI82447 | Inner Joint | | | 33 | | | 34 | |
| | 2017.07-2020.08 | 7DCT | F | L | Estate FWD DACA;DPBA | | GDS61282 | Drive Shaft | | 36 | | 59.5 | 40 | 523 | |
| | 2017.07-2020.08 | 7DCT | F | R | Estate FWD DACA;DPBA | | GDS84417 | Drive Shaft | | 36 | | 59.5 | 40 | 783 | |
| | 2018.12-2020.08 | 7AT | F | L | Estate FWD DHFA | | GDS61282 | Drive Shaft | | 36 | | 59.5 | 40 | 523 | |
| | 2018.12-2020.08 | 7AT | F | R | Estate FWD DHFA | | GDS84417 | Drive Shaft | | 36 | | 59.5 | 40 | 783 | |
| | 2018.12-2020.08 | 7AT | F | L/R | Estate FWD DHFA | | GCO61059 | Outer Joint | | 36 | 33 | 59.5 | 40 | 59.5 | I |
| | 2018.12-2020.08 | 7AT | F | L | Estate FWD DHFA | | GCI53002 | Inner Joint | | | 33 | | | 34 | |
| | 2018.12-2020.08 | 7AT | F | L/R | Estate FWD DHFA | | GCI83011 | Inner Joint | | | 33 | | | 34 | |
| | 2018.12-2020.08 | 7DCT | F | L/R | Estate FWD DHFA | | GCI82447 | Inner Joint | | | 33 | | | 34 | |
| | 2020.08- | 6MT | F | R | Estate FWD DPBA | | GDS84416 | Drive Shaft | | 36 | | 59.5 | 40 | 800 | |
| | 2020.08- | 6MT/7DCT | F | L | Estate FWD DPBA | | GDS61282 | Drive Shaft | | 36 | | 59.5 | 40 | 523 | |
| | 2020.08- | 6MT/7DCT | F | L/R | Estate FWD DPBA | | GCO61059 | Outer Joint | | 36 | 33 | 59.5 | 40 | 59.5 | I |
| | 2020.08- | 6MT/7DCT | F | L/R | Estate FWD DPBA | | GCI53002 | Inner Joint | | | 33 | | | 34 | |
| | 2020.08- | 7DCT | F | R | Estate FWD DPBA | | GDS84417 | Drive Shaft | | 36 | | 59.5 | 40 | 783 | |
| | 2020.09- | 7AT | F | L | Estate FWD DHFA | | GDS61282 | Drive Shaft | | 36 | | 59.5 | 40 | 523 | |
| | 2020.09- | 7AT | F | R | Estate FWD DHFA | | GDS84417 | Drive Shaft | | 36 | | 59.5 | 40 | 783 | |
| | 2020.09- | 7AT | F | L/R | Estate FWD DHFA | | GCO61059 | Outer Joint | | 36 | 33 | 59.5 | 40 | 59.5 | I |
| | 2020.09- | 7DCT | F | L/R | Estate FWD DHFA | | GCI53002 | Inner Joint | | | 33 | | | 34 | |
| | 2020.09- | 7DCT | F | L/R | Estate FWD DHFA | | GCI82447 | Inner Joint | | | 33 | | | 34 | |
| | 2020.12- | 7AT | F | L/R | Estate FWD DPBA | | GCO61059 | Outer Joint | | 36 | 33 | 59.5 | 40 | 59.5 | I |
| | 2020.12- | 7DCT | F | L | Estate FWD DPBA | | GDS61282 | Drive Shaft | | 36 | | 59.5 | 40 | 523 | |
| | 2020.12- | 7DCT | F | R | Estate FWD DPBA | | GDS84417 | Drive Shaft | | 36 | | 59.5 | 40 | 783 | |
| | 2020.12- | 7DCT | F | L/R | Estate FWD DPBA | | GCI53002 | Inner Joint | | | 33 | | | 34 | |
| 1.5 (110 kw) | 2017.04-2020.08 | 6MT | F | L | Estate FWD DADA;DPCA | | GDS61282 | Drive Shaft | | 36 | | 59.5 | 40 | 523 | |
| | 2017.04-2020.08 | 6MT | F | R | Estate FWD DADA;DPCA | | GDS58110 | Drive Shaft | | 36 | | 59.5 | 40 | 793 | |
| | 2017.04-2020.08 | 6MT | F | L/R | Estate FWD DADA;DPCA | | GCI82447 | Inner Joint | | | 33 | | | 34 | |
| | 2017.04-2020.08 | 6MT/7DCT | F | L/R | Estate FWD DADA;DPCA | | GCO61059 | Outer Joint | | 36 | 33 | 59.5 | 40 | 59.5 | I |
| | 2017.04-2020.08 | 7DCT | F | L | Estate FWD DADA;DPCA | | GDS61100 | Drive Shaft | | 36 | | 59.5 | 40 | 513 | |
| | 2017.04-2020.08 | 7DCT | F | R | Estate FWD DADA;DPCA | | GDS84503 | Drive Shaft | | 36 | 40 | 59.5 | 40 | 817 | |
| | 2017.04-2020.08 | 7DCT | F | L/R | Estate FWD DADA;DPCA | | GCO83101 | Outer Joint | | 36 | 27 | 59.5 | 40 | 65 | M |
| | 2020.08- | 6MT | F | L | Estate FWD DPCA;DXDB | | GDS84408 | Drive Shaft | | 36 | | 59.5 | 40 | 499 | |
| | 2020.08- | 6MT | F | R | Estate FWD DPCA;DXDB | | GDS84417 | Drive Shaft | | 36 | | 59.5 | 40 | 783 | |
| | 2020.08- | 6MT | F | L/R | Estate FWD DPCA;DXDB | | GCO61059 | Outer Joint | | 36 | 33 | 59.5 | 40 | 59.5 | I |
| | 2020.08- | 6MT | F | L/R | Estate FWD DPCA;DXDB | | GCI53002 | Inner Joint | | | 33 | | | 34 | |
| | 2020.08- | 7DCT | F | L | Estate FWD DPCA;DXDB | | GDS61100 | Drive Shaft | | 36 | | 59.5 | 40 | 513 | |
| | 2020.08- | 7DCT | F | R | Estate FWD DPCA;DXDB | | GDS84503 | Drive Shaft | | 36 | 40 | 59.5 | 40 | 817 | |
| | 2020.12- | 7AT | F | L | Estate FWD DFYA;DXDB | | GDS61100 | Drive Shaft | | 36 | | 59.5 | 40 | 513 | |
| | 2020.12- | 7AT | F | L | Estate FWD DFYA;DXDB | | GCO83101 | Outer Joint | | 36 | 27 | 59.5 | 40 | 65 | M |
| | 2020.12- | 7AT | F | R | Estate FWD DFYA;DXDB | | GCO61059 | Outer Joint | | 36 | 33 | 59.5 | 40 | 59.5 | I |
| | 2020.12- | 7DCT | F | R | Estate FWD DFYA;DXDB | | GDS84503 | Drive Shaft | | 36 | 40 | 59.5 | 40 | 817 | |
| 1.6 (66 kw) | 2009.12-2013.07 | 5MT | F | L | Estate FWD CAYB | | GDS83294 | Drive Shaft | | 36 | | 59.5 | 38 | 519 | |
| | 2009.12-2013.07 | 5MT | F | R | Estate FWD CAYB | | GDS61042 | Drive Shaft | | 36 | | 59.5 | 40.5 | 814 | |
| | 2009.12-2013.07 | 5MT | F | L/R | Estate FWD CAYB | | GCI82447 | Inner Joint | | | 33 | | | 34 | |
| | 2009.12-2013.07 | MT | F | L/R | Estate FWD CAYB | | GCO83037 | Outer Joint | | 36 | 30 | 59.5 | 40.5 | 56 | I |

| | YEAR | TRANSM. | F/R | L/R | BODY STYLE & DRIVE TYPE & ENGINE | REMARKS | G-AP Ref. | PRODUCT | ABS | Technical Specifications A | B | C | H | L | P |
|---|---|---|---|---|---|---|---|---|---|---|---|---|---|---|---|
| **VW** **Golf Estate/Variant** | | | | | | | | | | | | | | | |
| 1.6 (66 kw) | 2009.12-2013.07 | MT | F | L/R | Estate FWD CAYB | | GCI83006 | Inner Joint | | | 33 | | | 34 | |
| | 2009.12-2013.07 | MT | F | | Estate FWD CAYB | | GCI83016 | Inner Joint | | | 28 | | | 32 | |
| | 2009.12-2013.07 | | F | | Estate FWD CAYB | | GCO83100 | Outer Joint | | 36 | 33 | 59.5 | 38 | 56 | I |
| | 2009.12-2013.07 | | F | L/R | Estate FWD CAYB | | GCI83011 | Inner Joint | | | 33 | | | 34 | |
| | 2013.05-2018.07 | 5MT | F | L | Estate FWD CLHB;CRKA;CXXA;DDYB | for model cod BV5 | GDS61282 | Drive Shaft | | 36 | | 59.5 | 40 | 523 | |
| | 2013.05-2018.07 | 5MT | F | L | Estate FWD CLHB;CRKA;CXXA;DDYB | for model cod BA5 | GDS83294 | Drive Shaft | | 36 | | 59.5 | 38 | 519 | |
| | 2013.05-2018.07 | 5MT | F | R | Estate FWD CLHB;CRKA;CXXA;DDYB | for model cod BA5 | GDS61042 | Drive Shaft | | 36 | | 59.5 | 40.5 | 814 | |
| | 2013.05-2018.07 | 5MT | F | R | Estate FWD CLHB;CRKA;CXXA;DDYB | for model cod BV5 | GDS61283 | Drive Shaft | | 36 | | 59.5 | 40 | 815 | |
| | 2013.05-2018.07 | 5MT | F | L/R | Estate FWD CLHB;CRKA;CXXA;DDYB | for model cod BV5 | GCI53002 | Inner Joint | | | 33 | | | 34 | |
| | 2013.05-2018.07 | 5MT | F | L/R | Estate FWD CLHB;CRKA;CXXA;DDYB | | GCI82447 | Inner Joint | | | 33 | | | 34 | |
| | 2013.05-2018.07 | MT | F | L/R | Estate FWD CLHB;CRKA;CXXA;DDYB | For Engine code:CLHB | GCO83037 | Outer Joint | | 36 | 30 | 59.5 | 40.5 | 56 | I |
| | 2013.05-2018.07 | MT | F | L/R | Estate FWD CLHB;CRKA;CXXA;DDYB | | GCI83006 | Inner Joint | | | 33 | | | 34 | |
| | 2013.05-2018.07 | | F | L/R | Estate FWD CLHB;CRKA;CXXA;DDYB | For Modelcode:BV5 | GCO61059 | Outer Joint | | 36 | 33 | 59.5 | 40 | 59.5 | I |
| | 2013.05-2018.07 | | F | L/R | Estate FWD CLHB;CRKA;CXXA;DDYB | | GCI83011 | Inner Joint | | | 33 | | | 34 | |
| 1.6 (74 kw) | 1994.10-1999.04 | AT | F | L | Estate FWD AEK/AFT/AKS | | GDS61011 | Drive Shaft | | 22 | | 53.2 | 78 | 547 | |
| | 1994.10-1999.04 | AT | F | R | Estate FWD AEK/AFT/AKS | Date from:1994.10 | GDS61028 | Drive Shaft | | 22 | | 53.2 | 78 | 767 | |
| | 1994.10-1999.04 | AT | F | L/R | Estate FWD AEK/AFT/AKS | Date from:1994.10 | GCO53007 | Outer Joint | | 22 | 30 | 53.2 | 78 | 61 | I |
| | 1994.10-1999.04 | AT | F | | Estate FWD AEK/AFT/AKS | | GCO53004 | Outer Joint | | 22 | 30 | 51 | 78 | 61 | I |
| | 1994.10-1999.04 | AT | F | L | Estate FWD AEK/AFT/AKS | | GCI61004 | Inner Joint | | | 34 | | | 59.2 | |
| | 1994.10-1999.04 | MT | F | L | Estate FWD AEK/AFT/AKS | Date from:1994.10 | GDS53004 | Drive Shaft | | 22 | | 50 | 78.5 | 562 | |
| | 1994.10-1999.04 | MT | F | R | Estate FWD AEK/AFT/AKS | Date from:1994.10 | GDS61055 | Drive Shaft | | 22 | | 53 | 78.5 | 796 | |
| | 1994.10-1999.04 | MT | F | L/R | Estate FWD AEK/AFT/AKS | Date from:1994.10 | GCO53008 | Outer Joint | | 22 | 30 | 53 | 78.5 | 51 | I |
| | 1994.10-1999.04 | MT | F | R | Estate FWD AEK/AFT/AKS | Date from:1994.10 | GCI83009 | Inner Joint | | | 33 | | | 34 | |
| | 1994.10-1999.04 | MT | F | L/R | Estate FWD AEK/AFT/AKS | Date from:1994.10 | GCI83005 | Inner Joint | | | 33 | | | 32 | |
| | 1994.10-1999.04 | | F | | Estate FWD AEK/AFT/AKS | | GCO53006 | Outer Joint | | 22 | 30 | 50 | 78.5 | 52 | I |
| | 1999.05-2002.04 | 4AT/5MT | F | L/R | Estate FWD AEH/AKL/APF | | GCI61006 | Inner Joint | | | 30 | | | 57.6 | |
| | 1999.05-2002.04 | 4AT/5MT | F | L/R | Estate FWD AEH/AKL/APF | | GCI83008 | Inner Joint | | | 33 | | | 32 | |
| | 1999.05-2002.04 | AT | F | L | Estate FWD AEH/AKL/APF | | GDS61020 | Drive Shaft | | 36 | | 53.2 | 77.5 | 547 | |
| | 1999.05-2002.04 | AT | F | R | Estate FWD AEH/AKL/APF | | GDS83011 | Drive Shaft | | 36 | | 53.2 | 77.5 | 810.5 | |
| | 1999.05-2002.04 | AT | F | L/R | Estate FWD AEH/AKL/APF | | GCO83070 | Outer Joint | | 36 | 30 | 53 | 78 | 60 | I |
| | 1999.05-2002.04 | MT | F | L | Estate FWD AEH/AKL/APF | | GDS61045 | Drive Shaft | | 36 | | 53 | 78.5 | 555 | |
| | 1999.05-2002.04 | MT | F | R | Estate FWD AEH/AKL/APF | | GDS83046 | Drive Shaft | | 36 | | 53 | 78.5 | 822 | |
| | 1999.05-2002.04 | MT | F | L/R | Estate FWD AEH/AKL/APF | | GCO83033 | Outer Joint | | 36 | 30 | 53 | 78.5 | 51 | I |
| 1.6 (75 kw) | 2000.09-2006.06 | AT | F | L | Estate FWD AVU/BFQ | | GDS61020 | Drive Shaft | | 36 | | 53.2 | 77.5 | 547 | |
| | 2000.09-2006.06 | AT | F | L/R | Estate FWD AVU/BFQ | | GCO83070 | Outer Joint | | 36 | 30 | 53 | 78 | 60 | I |
| | 2000.09-2006.06 | AT | F | L/R | Estate FWD AVU/BFQ | | GCI61006 | Inner Joint | | | 30 | | | 57.6 | |
| | 2000.09-2006.06 | MT | F | L | Estate FWD AVU/BFQ | | GDS61045 | Drive Shaft | | 36 | | 53 | 78.5 | 555 | |
| | 2000.09-2006.06 | MT | F | R | Estate FWD AVU/BFQ | | GDS83046 | Drive Shaft | | 36 | | 53 | 78.5 | 822 | |
| | 2000.09-2006.06 | MT | F | L/R | Estate FWD AVU/BFQ | | GCO83033 | Outer Joint | | 36 | 30 | 53 | 78.5 | 51 | I |
| | 2000.09-2006.06 | MT | F | L/R | Estate FWD AVU/BFQ | | GCI83008 | Inner Joint | | | 33 | | | 32 | |
| | 2007.06-2009.07 | 5MT | F | L | Estate FWD BSE;BSF;CCSA | | GDS61097 | Drive Shaft | | 36 | | 59.5 | 40.5 | 543 | |
| | 2007.06-2009.07 | 5MT | F | R | Estate FWD BSE;BSF;CCSA | | GDS61096 | Drive Shaft | | 36 | | 59.5 | 40.5 | 799 | |
| | 2007.06-2009.07 | 5MT | F | L/R | Estate FWD BSE;BSF;CCSA | | GCI82447 | Inner Joint | | | 33 | | | 34 | |
| | 2007.06-2009.07 | 6AT | F | L | Estate FWD BSE;BSF;CCSA | | GDS61093 | Drive Shaft | | 36 | 26 | 59.5 | 40.5 | 587.5 | |
| | 2007.06-2009.07 | 6AT | F | R | Estate FWD BSE;BSF;CCSA | | GDS61094 | Drive Shaft | | 36 | 26 | 59.5 | 40.5 | 884 | |
| | 2007.06-2009.07 | 6AT | F | L/R | Estate FWD BSE;BSF;CCSA | | GCI61011 | Inner Joint | | 26 | 32 | 31 | 68.5 | 85 | |
| | 2007.06-2009.07 | 6AT | F | L/R | Estate FWD BSE;BSF;CCSA | | GCI61050 | Inner Joint | | 26 | 32 | 31 | 68.5 | 89 | |
| | 2007.06-2009.07 | 6AT/5MT | F | L/R | Estate FWD BSE;BSF;CCSA | | GCO83037 | Outer Joint | | 36 | 30 | 59.5 | 40.5 | 56 | I |
| | 2007.11-2009.07 | 5MT | F | L | Estate FWD CCSA | | GDS61097 | Drive Shaft | | 36 | | 59.5 | 40.5 | 543 | |
| | 2007.11-2009.07 | 5MT | F | R | Estate FWD CCSA | | GDS61096 | Drive Shaft | | 36 | | 59.5 | 40.5 | 799 | |
| | 2007.11-2009.07 | 5MT | F | L/R | Estate FWD CCSA | | GCO83037 | Outer Joint | | 36 | 30 | 59.5 | 40.5 | 56 | I |
| | 2007.11-2009.07 | 5MT | F | L/R | Estate FWD CCSA | | GCI82447 | Inner Joint | | | 33 | | | 34 | |
| | 2007.11-2009.07 | MT | F | L/R | Estate FWD CCSA | | GCI83006 | Inner Joint | | | 33 | | | 34 | |
| | 2007.11-2009.07 | | F | L/R | Estate FWD CCSA | | GCI83011 | Inner Joint | | | 33 | | | 34 | |
| | 2009.07-2010.12 | 5MT | F | L | Estate FWD BSF;CHGA | | GDS61097 | Drive Shaft | | 36 | | 59.5 | 40.5 | 543 | |
| | 2009.07-2010.12 | 5MT | F | R | Estate FWD BSF;CHGA | | GDS61096 | Drive Shaft | | 36 | | 59.5 | 40.5 | 799 | |
| | 2009.07-2010.12 | 5MT | F | L/R | Estate FWD BSF;CHGA | | GCO83037 | Outer Joint | | 36 | 30 | 59.5 | 40.5 | 56 | I |
| | 2009.07-2010.12 | 5MT | F | L/R | Estate FWD BSF;CHGA | | GCI82447 | Inner Joint | | | 33 | | | 34 | |
| | 2009.07-2010.12 | | F | L/R | Estate FWD BSF;CHGA | | GCI83011 | Inner Joint | | | 33 | | | 34 | |
| | 2009.07-2013.07 | 5MT | F | L | Estate FWD BSE;BSF;CCSA | | GDS61097 | Drive Shaft | | 36 | | 59.5 | 40.5 | 543 | |
| | 2009.07-2013.07 | 5MT | F | R | Estate FWD BSE;BSF;CCSA | | GDS61096 | Drive Shaft | | 36 | | 59.5 | 40.5 | 799 | |
| | 2009.07-2013.07 | 5MT | F | L/R | Estate FWD BSE;BSF;CCSA | | GCO83037 | Outer Joint | | 36 | 30 | 59.5 | 40.5 | 56 | I |
| | 2009.07-2013.07 | 5MT | F | L/R | Estate FWD BSE;BSF;CCSA | | GCI82447 | Inner Joint | | | 33 | | | 34 | |
| | 2010.07-2013.07 | 5MT | F | L | Estate FWD CCSA;CMXA | | GDS61097 | Drive Shaft | | 36 | | 59.5 | 40.5 | 543 | |
| | 2010.07-2013.07 | 5MT | F | R | Estate FWD CCSA;CMXA | | GDS61096 | Drive Shaft | | 36 | | 59.5 | 40.5 | 799 | |

| | YEAR | TRANSM. | F/R | L/R | BODY STYLE & DRIVE TYPE & ENGINE | REMARKS | G-AP Ref. | PRODUCT | ABS | Technical Specifications A | B | C | H | L | P |
|---|---|---|---|---|---|---|---|---|---|---|---|---|---|---|---|
| **VW** **Golf Estate/Variant** | | | | | | | | | | | | | | | |
| 1.6 (75 kw) | 2010.07-2013.07 | 5MT | F | L/R | Estate FWD CCSA;CMXA | | GCO83037 | Outer Joint | | 36 | 30 | 59.5 | 40.5 | 56 | I |
| | 2010.07-2013.07 | 5MT | F | L/R | Estate FWD CCSA;CMXA | | GCI82447 | Inner Joint | | | 33 | | | 34 | |
| | 2010.07-2013.07 | MT | F | L/R | Estate FWD CCSA;CMXA | | GCI83006 | Inner Joint | | | 33 | | | 34 | |
| | 2010.07-2013.07 | | F | L/R | Estate FWD CCSA;CMXA | | GCI83011 | Inner Joint | | | 33 | | | 34 | |
| 1.6 (77 kw) | 1999.05-2006.06 | 5MT | F | L | Estate FWD ATN/AUS/AZD/BCB | | GDS61312 | Drive Shaft | | 36 | | 53 | 78 | 546 | |
| | 1999.05-2006.06 | 5MT | F | R | Estate FWD ATN/AUS/AZD/BCB | | GDS61203 | Drive Shaft | | 36 | | 53.2 | 77.5 | 810 | |
| | 1999.05-2006.06 | 5MT | F | L/R | Estate FWD ATN/AUS/AZD/BCB | | GCO83070 | Outer Joint | | 36 | 30 | 53 | 78 | 60 | I |
| | 1999.05-2006.06 | 5MT | F | L/R | Estate FWD ATN/AUS/AZD/BCB | | GCI61005 | Inner Joint | | | 30 | | | 57.6 | |
| | 2009.07-2013.07 | 6MT | F | L | Estate 4WD CAYC | | GDS83236 | Drive Shaft | | 36 | | 59.5 | 40 | 484 | |
| | 2009.07-2013.07 | 6MT | F | L | Estate 4WD CAYC | | GDS83295 | Drive Shaft | | 36 | | 59.5 | 40 | 491 | |
| | 2009.07-2013.07 | 6MT | F | R | Estate 4WD CAYC | | GDS83266 | Drive Shaft | | 36 | | 59.5 | 40 | 601 | |
| | 2009.07-2013.07 | 6MT | F | L/R | Estate 4WD CAYC | | GCI83016 | Inner Joint | | | 28 | | | 32 | |
| | 2009.07-2013.07 | AT | F | L/R | Estate 4WD CAYC | | GCO83002 | Outer Joint | | 36 | 27 | 59.5 | 40 | 66 | I |
| | 2009.07-2013.07 | MT | F | L | Estate 4WD CAYC | | GDS83294 | Drive Shaft | | 36 | | 59.5 | 38 | 519 | |
| | 2009.07-2013.07 | MT | F | R | Estate 4WD CAYC | | GDS61042 | Drive Shaft | | 36 | | 59.5 | 40.5 | 814 | |
| | 2009.07-2013.07 | MT | F | L | Estate 4WD CAYC | | GCO83037 | Outer Joint | | 36 | 30 | 59.5 | 40.5 | 56 | I |
| | 2009.07-2013.07 | 6MT | R | L | Estate 4WD CAYC | | GDS61284 | Drive Shaft | | 36 | | 59.5 | 40 | 594 | |
| | 2009.07-2013.07 | 6MT | R | R | Estate 4WD CAYC | | GDS61293 | Drive Shaft | | 36 | | 59.5 | 40 | 631 | |
| | 2009.07-2013.07 | 6MT | R | L/R | Estate 4WD CAYC | | GCI35026 | Outer Joint | | 36 | 33 | 59.5 | 40 | 61 | |
| | 2009.07-2013.07 | 6MT | R | L/R | Estate 4WD CAYC | | GCI82447 | Inner Joint | | | 33 | | | 34 | |
| | 2009.07-2013.07 | 5MT | F | L | Estate FWD CAYC | | GDS83294 | Drive Shaft | | 36 | | 59.5 | 38 | 519 | |
| | 2009.07-2013.07 | 5MT | F | R | Estate FWD CAYC | | GDS61042 | Drive Shaft | | 36 | | 59.5 | 40.5 | 814 | |
| | 2009.07-2013.07 | 5MT | F | L/R | Estate FWD CAYC | | GCO83037 | Outer Joint | | 36 | 30 | 59.5 | 40.5 | 56 | I |
| | 2009.07-2013.07 | 5MT | F | L/R | Estate FWD CAYC | | GCI82447 | Inner Joint | | | 33 | | | 34 | |
| | 2009.07-2013.07 | 7DCT | F | L | Estate FWD CAYC | | GDS61100 | Drive Shaft | | 36 | | 59.5 | 40 | 513 | |
| | 2009.07-2013.07 | 7DCT | F | R | Estate FWD CAYC | hollow shaft | GDS61339 | Drive Shaft | | 36 | | 59.5 | 40 | 794 | |
| | 2009.07-2013.07 | 7DCT | F | R | Estate FWD CAYC | solid shaft | GDS83313 | Drive Shaft | | 36 | | 59.5 | 40 | 792 | |
| | 2009.07-2013.07 | 7DCT | F | L/R | Estate FWD CAYC | | GCO83002 | Outer Joint | | 36 | 27 | 59.5 | 40 | 66 | I |
| | 2009.07-2013.07 | 7DCT | F | R | Estate FWD CAYC | | GCI61069 | Inner Joint | | | 28 | | | 32 | |
| | 2009.07-2013.07 | 7DCT | F | L/R | Estate FWD CAYC | | GCI83016 | Inner Joint | | | 28 | | | 32 | |
| | 2009.07-2013.07 | DCT | F | L/R | Estate FWD CAYC | Date From:2011.06 | GCO83100 | Outer Joint | | 36 | 33 | 59.5 | 38 | 56 | I |
| | 2009.07-2013.07 | Semi-AT | F | L | Estate FWD CAYC | Date to:2011.06 | GDS83236 | Drive Shaft | | 36 | | 59.5 | 40 | 484 | |
| | 2013.05-2017.03 | 6MT | F | L | Estate 4WD CLHA | | GDS83295 | Drive Shaft | | 36 | | 59.5 | 40 | 491 | |
| | 2013.05-2017.03 | 6MT | F | R | Estate 4WD CLHA | | GDS81892 | Drive Shaft | | 36 | | 59.5 | 40 | 602 | |
| | 2013.05-2017.03 | 6MT | F | L | Estate 4WD CLHA | | GCO83101 | Outer Joint | | 36 | 27 | 59.5 | 40 | 65 | M |
| | 2013.05-2017.03 | 6MT | F | L | Estate 4WD CLHA | | GCI61069 | Inner Joint | | | 28 | | | 32 | |
| | 2013.05-2017.03 | | F | L/R | Estate 4WD CLHA | Date To:2017.03 | GCI83011 | Inner Joint | | | 33 | | | 34 | |
| | 2013.05-2017.03 | | F | L/R | Estate 4WD CLHA | | GCI83016 | Inner Joint | | | 28 | | | 32 | |
| | 2013.05-2017.03 | 6MT | R | L | Estate 4WD CLHA | | GDS61286 | Drive Shaft | | 36 | | 59.5 | 40 | 587 | |
| | 2013.05-2017.03 | 6MT | R | R | Estate 4WD CLHA | | GDS61287 | Drive Shaft | | 36 | | 59.5 | 40 | 632 | |
| | 2013.05-2017.03 | 6MT | R | L/R | Estate 4WD CLHA | | GCI35026 | Outer Joint | | 36 | 33 | 59.5 | 40 | 61 | |
| | 2013.05-2017.03 | 6MT | R | L/R | Estate 4WD CLHA | | GCI61103 | Inner Joint | | | 33 | | | 32 | |
| | 2013.05-2017.03 | 5MT | F | R | Estate FWD CLHA | Economy | GDS61042 | Drive Shaft | | 36 | | 59.5 | 40.5 | 814 | |
| | 2013.05-2017.03 | 5MT | F | R | Estate FWD CLHA | | GDS61283 | Drive Shaft | | 36 | | 59.5 | 40 | 815 | |
| | 2013.05-2017.03 | 5MT | F | L/R | Estate FWD CLHA | | GCO61059 | Outer Joint | | 36 | 33 | 59.5 | 40 | 59.5 | I |
| | 2013.05-2017.03 | 5MT | F | L/R | Estate FWD CLHA | | GCI53002 | Inner Joint | | | 33 | | | 34 | |
| | 2013.05-2017.03 | 7AT | F | L | Estate FWD CLHA | | GCO61059 | Outer Joint | | 36 | 33 | 59.5 | 40 | 59.5 | I |
| | 2013.05-2017.03 | 7AT | F | L | Estate FWD CLHA | | GCI53002 | Inner Joint | | | 33 | | | 34 | |
| | 2013.05-2017.03 | 7AT/5MT | F | L | Estate FWD CLHA | No Economy | GDS61282 | Drive Shaft | | 36 | | 59.5 | 40 | 523 | |
| | 2013.05-2017.03 | 7DCT | F | R | Estate FWD CLHA | | GDS61096 | Drive Shaft | | 36 | | 59.5 | 40.5 | 799 | |
| | 2013.05-2017.03 | 7DCT/5MT | F | L/R | Estate FWD CLHA | | GCI82447 | Inner Joint | | | 33 | | | 34 | |
| | 2013.05-2017.03 | AT/MT | F | L | Estate FWD CLHA | Economy | GDS83294 | Drive Shaft | | 36 | | 59.5 | 38 | 519 | |
| | 2013.05-2017.03 | AT/MT | F | L | Estate FWD CLHA | | GCO83037 | Outer Joint | | 36 | 30 | 59.5 | 40.5 | 56 | I |
| | 2013.05-2017.03 | | F | L/R | Estate FWD CLHA | Date To:2017.03 | GCI83011 | Inner Joint | | | 33 | | | 34 | |
| 1.6 (81 kw) | 2001.08-2006.06 | AT/MT | F | L/R | Estate FWD BAD | | GCO83070 | Outer Joint | | 36 | 30 | 53 | 78 | 60 | I |
| | 2001.08-2006.06 | | F | L/R | Estate FWD BAD | | GCI61005 | Inner Joint | | | 30 | | | 57.6 | |
| | 2013.05-2017.03 | 6MT | F | L | Estate 4WD CRKB;CXXB | | GDS83295 | Drive Shaft | | 36 | | 59.5 | 40 | 491 | |
| | 2013.05-2017.03 | 6MT | F | R | Estate 4WD CRKB;CXXB | | GDS81892 | Drive Shaft | | 36 | | 59.5 | 40 | 602 | |
| | 2013.05-2017.03 | 6MT | F | L/R | Estate 4WD CRKB;CXXB | | GCO83101 | Outer Joint | | 36 | 27 | 59.5 | 40 | 65 | M |
| | 2013.05-2017.03 | 6MT | F | L/R | Estate 4WD CRKB;CXXB | | GCI83016 | Inner Joint | | | 28 | | | 32 | |
| | 2013.05-2017.03 | | F | L | Estate 4WD CRKB;CXXB | For PR code:1PE/1PF/1PA/2H4 | GCI61069 | Inner Joint | | | 28 | | | 32 | |
| | 2013.05-2017.03 | 6MT | R | L | Estate 4WD CRKB;CXXB | | GDS61286 | Drive Shaft | | 36 | | 59.5 | 40 | 587 | |
| | 2013.05-2017.03 | 6MT | R | R | Estate 4WD CRKB;CXXB | | GDS61287 | Drive Shaft | | 36 | | 59.5 | 40 | 632 | |
| | 2013.05-2017.03 | 6MT | R | L/R | Estate 4WD CRKB;CXXB | | GCI61103 | Inner Joint | | | 33 | | | 32 | |
| | 2013.05-2017.03 | 5MT/6MT | F | R | Estate FWD CRKB;CXXB;DBKA | No Economy | GDS61283 | Drive Shaft | | 36 | | 59.5 | 40 | 815 | |

| | YEAR | TRANSM. | F/R | L/R | BODY STYLE & DRIVE TYPE & ENGINE | REMARKS | G-AP Ref. | PRODUCT | ABS | Technical Specifications A | B | C | H | L | P |
|---|---|---|---|---|---|---|---|---|---|---|---|---|---|---|---|
| **VW** **Golf Estate/Variant** | | | | | | | | | | | | | | | |
| 1.6 (81 kw) | 2013.05-2017.03 | 5MT/6MT | F | L/R | Estate FWD CRKB;CXXB;DBKA | | GCO61059 | Outer Joint | | 36 | 33 | 59.5 | 40 | 59.5 | I |
| | 2013.05-2017.03 | 5MT/6MT/7DCT | F | L | Estate FWD CRKB;CXXB;DBKA | No Economy | GDS61282 | Drive Shaft | | 36 | | 59.5 | 40 | 523 | |
| | 2013.05-2017.03 | 5MT/6MT/7DCT | F | L/R | Estate FWD CRKB;CXXB;DBKA | | GCI82447 | Inner Joint | | | 33 | | | 34 | |
| | 2013.05-2017.03 | 7DCT | F | R | Estate FWD CRKB;CXXB;DBKA | Economy | GDS61096 | Drive Shaft | | 36 | | 59.5 | 40.5 | 799 | |
| | 2013.05-2017.03 | 7DCT | F | L | Estate FWD CRKB;CXXB;DBKA | | GCO61059 | Outer Joint | | 36 | 33 | 59.5 | 40 | 59.5 | I |
| | 2013.05-2017.03 | 7DCT | F | L | Estate FWD CRKB;CXXB;DBKA | | GCI53002 | Inner Joint | | | 33 | | | 34 | |
| | 2013.05-2017.03 | AT/MT | F | L | Estate FWD CRKB;CXXB;DBKA | | GDS83294 | Drive Shaft | | 36 | | 59.5 | 38 | 519 | |
| | 2013.05-2017.03 | AT/MT | F | L | Estate FWD CRKB;CXXB;DBKA | | GCO83037 | Outer Joint | | 36 | 30 | 59.5 | 40.5 | 56 | I |
| | 2013.05-2017.03 | | F | R | Estate FWD CRKB;CXXB;DBKA | Economy | GDS61042 | Drive Shaft | | 36 | | 59.5 | 40.5 | 814 | |
| | 2013.05-2017.03 | | F | L/R | Estate FWD CRKB;CXXB;DBKA | Date To:2017.03 | GCI83011 | Inner Joint | | | 33 | | | 34 | |
| | 2014.05-2017.07 | 5MT | F | L | Estate FWD CWVA | For PR code:1PE/1PF/1PA/2H4 | GDS61097 | Drive Shaft | | 36 | | 59.5 | 40.5 | 543 | |
| | 2014.05-2017.07 | 5MT | F | R | Estate FWD CWVA | | GDS61096 | Drive Shaft | | 36 | | 59.5 | 40.5 | 799 | |
| | 2014.05-2017.07 | 5MT | F | L/R | Estate FWD CWVA | | GCI82447 | Inner Joint | | | 33 | | | 34 | |
| | 2014.05-2017.07 | 5MT/6MT | F | L | Estate FWD CWVA | | GDS83294 | Drive Shaft | | 36 | | 59.5 | 38 | 519 | |
| | 2014.05-2017.07 | 5MT/6MT | F | R | Estate FWD CWVA | | GDS61042 | Drive Shaft | | 36 | | 59.5 | 40.5 | 814 | |
| | 2014.05-2017.07 | 6AT | F | L | Estate FWD CWVA | For PR code:1PA/2H0/2H5 | GDS61093 | Drive Shaft | | 36 | 26 | 59.5 | 40.5 | 587.5 | |
| | 2014.05-2017.07 | 6AT | F | L | Estate FWD CWVA | For PR code:1PE/1PF/1PA/2H4 | GDS83318 | Drive Shaft | | 36 | 26 | 59.5 | 38 | 581 | |
| | 2014.05-2017.07 | 6AT | F | R | Estate FWD CWVA | | GDS61094 | Drive Shaft | | 36 | 26 | 59.5 | 40.5 | 884 | |
| | 2014.05-2017.07 | 6AT | F | R | Estate FWD CWVA | | GDS83346 | Drive Shaft | | 36 | 26 | 59.5 | 38 | 879 | |
| | 2014.05-2017.07 | 6AT | F | L/R | Estate FWD CWVA | | GCI61011 | Inner Joint | | 26 | 32 | 31 | 68.5 | 85 | |
| | 2014.05-2017.07 | 6AT | F | L/R | Estate FWD CWVA | | GCI61050 | Inner Joint | | 26 | 32 | 31 | 68.5 | 89 | |
| | 2014.05-2017.07 | 6AT/5MT | F | L/R | Estate FWD CWVA | | GCO83037 | Outer Joint | | 36 | 30 | 59.5 | 40.5 | 56 | I |
| 1.6 (85 kw) | 2016.11-2020.08 | 5MT | F | R | Estate FWD DDYA;DGTE | For Modelcode:BV5;Inner teeth of wheel side:30 | GDS61042 | Drive Shaft | | 36 | | 59.5 | 40.5 | 814 | |
| | 2016.11-2020.08 | 5MT | F | R | Estate FWD DDYA;DGTE | Inner teeth of wheel side:33 | GDS61283 | Drive Shaft | | 36 | | 59.5 | 40 | 815 | |
| | 2016.11-2020.08 | 5MT | F | L/R | Estate FWD DDYA;DGTE | | GCO61059 | Outer Joint | | 36 | 33 | 59.5 | 40 | 59.5 | I |
| | 2016.11-2020.08 | 5MT | F | L/R | Estate FWD DDYA;DGTE | | GCI53002 | Inner Joint | | | 33 | | | 34 | |
| | 2016.11-2020.08 | 7AT | F | L | Estate FWD DDYA;DGTE | | GCO61059 | Outer Joint | | 36 | 33 | 59.5 | 40 | 59.5 | I |
| | 2016.11-2020.08 | 7AT | F | L | Estate FWD DDYA;DGTE | | GCI53002 | Inner Joint | | | 33 | | | 34 | |
| | 2016.11-2020.08 | 7AT/5MT | F | L | Estate FWD DDYA;DGTE | | GDS61282 | Drive Shaft | | 36 | | 59.5 | 40 | 523 | |
| | 2016.11-2020.08 | 7DCT | F | R | Estate FWD DDYA;DGTE | | GDS61096 | Drive Shaft | | 36 | | 59.5 | 40.5 | 799 | |
| | 2016.11-2020.08 | 7DCT/5MT | F | L/R | Estate FWD DDYA;DGTE | | GCI82447 | Inner Joint | | | 33 | | | 34 | |
| | 2016.11-2020.08 | | F | L/R | Estate FWD DDYA;DGTE | | GCI83011 | Inner Joint | | | 33 | | | 34 | |
| 1.8 (55 kw) | 1993.07-1999.02 | AT | F | L | Estate FWD AAM/ANN | Chassis no. from:1H-S-000001 | GDS61011 | Drive Shaft | | 22 | | 53.2 | 78 | 547 | |
| | 1993.07-1999.02 | AT | F | R | Estate FWD AAM/ANN | Chassis no. from:1H-S-000001 | GDS61028 | Drive Shaft | | 22 | | 53.2 | 78 | 767 | |
| | 1993.07-1999.02 | AT | F | L/R | Estate FWD AAM/ANN | Chassis no. from:1H-S-000001 | GCI61004 | Inner Joint | | | 34 | | | 59.2 | |
| | 1993.07-1999.02 | AT | F | L/R | Estate FWD AAM/ANN | Chassis no. to:1H-R-990000 | GCI83009 | Inner Joint | | | 33 | | | 34 | |
| | 1993.07-1999.02 | AT/MT | F | L/R | Estate FWD AAM/ANN | | GCO53007 | Outer Joint | | 22 | 30 | 53.2 | 78 | 61 | I |
| | 1993.07-1999.02 | MT | F | L | Estate FWD AAM/ANN | | GDS61001 | Drive Shaft | | 22 | | 53.2 | 78 | 557 | |
| | 1993.07-1999.02 | MT | F | R | Estate FWD AAM/ANN | | GDS61009 | Drive Shaft | | 22 | | 53.2 | 78 | 789 | |
| 1.8 (66 kw) | 1993.07-1999.04 | AT | F | L | Estate FWD ABS/ADZ/ANP | Chassis no. to:1H-R-990000 | GDS61001 | Drive Shaft | | 22 | | 53.2 | 78 | 557 | |
| | 1993.07-1999.04 | AT | F | L | Estate FWD ABS/ADZ/ANP | | GDS61011 | Drive Shaft | | 22 | | 53.2 | 78 | 547 | |
| | 1993.07-1999.04 | AT | F | R | Estate FWD ABS/ADZ/ANP | Chassis no. from:1H-S-000001 | GDS61028 | Drive Shaft | | 22 | | 53.2 | 78 | 767 | |
| | 1993.07-1999.04 | AT | F | L | Estate FWD ABS/ADZ/ANP | | GCI61004 | Inner Joint | | | 34 | | | 59.2 | |
| | 1993.07-1999.04 | AT | F | R | Estate FWD ABS/ADZ/ANP | Chassis no. to:1H-R-990000 | GCI83009 | Inner Joint | | | 33 | | | 34 | |
| | 1993.07-1999.04 | AT/MT | F | L/R | Estate FWD ABS/ADZ/ANP | | GCO53007 | Outer Joint | | 22 | 30 | 53.2 | 78 | 61 | I |
| | 1993.07-1999.04 | MT | F | L | Estate FWD ABS/ADZ/ANP | | GDS61001 | Drive Shaft | | 22 | | 53.2 | 78 | 557 | |
| | 1993.07-1999.04 | MT | F | R | Estate FWD ABS/ADZ/ANP | hollow shaft | GDS61002 | Drive Shaft | | 22 | | 53 | 78.5 | 793 | |
| | 1993.07-1999.04 | MT | F | R | Estate FWD ABS/ADZ/ANP | solid shaft | GDS61009 | Drive Shaft | | 22 | | 53.2 | 78 | 789 | |
| | 1993.07-1999.04 | MT | F | R | Estate FWD ABS/ADZ/ANP | | GCI83009 | Inner Joint | | | 33 | | | 34 | |
| | 1993.07-1999.04 | MT | F | L/R | Estate FWD ABS/ADZ/ANP | | GCI83011 | Inner Joint | | | 33 | | | 34 | |
| | 1993.07-1999.04 | | F | | Estate FWD ABS/ADZ/ANP | | GCO53004 | Outer Joint | | 22 | 30 | 51 | 78 | 61 | I |
| | 1994.10-1999.02 | AT/MT | F | L/R | Estate 4WD ADZ | | GCO53007 | Outer Joint | | 22 | 30 | 53.2 | 78 | 61 | I |
| | 1994.10-1999.02 | MT | F | L | Estate 4WD ADZ | | GDS61001 | Drive Shaft | | 22 | | 53.2 | 78 | 557 | |
| | 1994.10-1999.02 | MT | F | R | Estate 4WD ADZ | hollow shaft | GDS61002 | Drive Shaft | | 22 | | 53 | 78.5 | 793 | |
| | 1994.10-1999.02 | MT | F | R | Estate 4WD ADZ | solid shaft | GDS61009 | Drive Shaft | | 22 | | 53.2 | 78 | 789 | |
| | 1994.10-1999.02 | MT | F | R | Estate 4WD ADZ | | GCI83009 | Inner Joint | | | 33 | | | 34 | |
| | 1994.10-1999.02 | MT | F | L/R | Estate 4WD ADZ | | GCI83011 | Inner Joint | | | 33 | | | 34 | |
| | 1994.10-1999.02 | | F | | Estate 4WD ADZ | | GCO53004 | Outer Joint | | 22 | 30 | 51 | 78 | 61 | I |
| 1.8 (92 kw) | 1999.05-2000.10 | 5MT | F | L | Estate 4WD AGN | | GDS61314 | Drive Shaft | | 36 | | 53 | 78 | 558 | |
| | 1999.05-2000.10 | 5MT | F | L/R | Estate 4WD AGN | | GCO83070 | Outer Joint | | 36 | 30 | 53 | 78 | 60 | I |
| | 1999.05-2000.10 | 5MT | F | L | Estate 4WD AGN | | GCI82447 | Inner Joint | | | 33 | | | 34 | |
| | 1999.05-2000.10 | 5MT | F | R | Estate 4WD AGN | | GCI83009 | Inner Joint | | | 33 | | | 34 | |
| | 1999.05-2000.10 | 5MT | F | L/R | Estate 4WD AGN | | GCI83006 | Inner Joint | | | 33 | | | 34 | |
| | 1999.05-2000.10 | MT | F | L | Estate 4WD AGN | | GDS83006 | Drive Shaft | | 36 | | 53.2 | 77.5 | 557 | |
| | 1999.05-2000.10 | MT | F | R | Estate 4WD AGN | | GDS83004 | Drive Shaft | | 36 | | 53.2 | 77.5 | 822 | |

| | YEAR | TRANSM. | F/R | L/R | BODY STYLE & DRIVE TYPE & ENGINE | REMARKS | G-AP Ref. | PRODUCT | ABS | Technical Specifications A | B | C | H | L | P |
|---|---|---|---|---|---|---|---|---|---|---|---|---|---|---|---|
| **VW** **Golf Estate/Variant** | | | | | | | | | | | | | | | |
| 1.8 (92 kw) | 1999.05-2000.10 | 5MT | R | L | Estate 4WD AGN | | GDS82364 | Drive Shaft | | 36 | | 53 | 78.5 | 651 | |
| | 1999.05-2000.10 | 5MT | R | R | Estate 4WD AGN | | GDS81587 | Drive Shaft | | 36 | | 53 | 78.5 | 522 | |
| | 1999.05-2000.10 | 5MT | R | L/R | Estate 4WD AGN | | GCO83033 | Outer Joint | | 36 | 30 | 53 | 78.5 | 51 | I |
| | 1999.05-2000.10 | 5MT | R | L/R | Estate 4WD AGN | | GCI53002 | Inner Joint | | | 33 | | | 34 | |
| | 1999.05-2000.10 | 5MT | R | L/R | Estate 4WD AGN | | GCI82447 | Inner Joint | | | 33 | | | 34 | |
| 1.8 (110 kw) | 1999.05-2006.05 | 5AT | F | L/R | Estate FWD AGU/ARZ/AUM | Date from:2001.05 | GCI61006 | Inner Joint | | | 30 | | | 57.6 | |
| | 1999.05-2006.05 | AT | F | L | Estate FWD AGU/ARZ/AUM | For Engine code:AUM | GDS61244 | Drive Shaft | | 36 | | 53 | 77.5 | 523 | |
| | 1999.05-2006.05 | AT | F | R | Estate FWD AGU/ARZ/AUM | For Engine code:AUM | GDS61243 | Drive Shaft | | 36 | | 53 | 77.5 | 813 | |
| | 1999.05-2006.05 | AT | F | L/R | Estate FWD AGU/ARZ/AUM | Date to:2001.04 | GCO83070 | Outer Joint | | 36 | 30 | 53 | 78 | 60 | I |
| | 1999.05-2006.05 | AT | F | L/R | Estate FWD AGU/ARZ/AUM | Date to:2004.12;For Engine code:AUM | GCI61044 | Inner Joint | | | 34 | | | 85 | |
| | 1999.05-2006.05 | AT/MT | F | L | Estate FWD AGU/ARZ/AUM | | GDS61020 | Drive Shaft | | 36 | | 53.2 | 77.5 | 547 | |
| | 1999.05-2006.05 | AT/MT | F | L/R | Estate FWD AGU/ARZ/AUM | Date to:2001.04 | GCI61006 | Inner Joint | | | 30 | | | 57.6 | |
| | 1999.05-2006.05 | MT | F | R | Estate FWD AGU/ARZ/AUM | Date to:2004.12 | GDS83011 | Drive Shaft | | 36 | | 53.2 | 77.5 | 810.5 | |
| | 1999.05-2006.05 | MT | F | L/R | Estate FWD AGU/ARZ/AUM | | GCO83070 | Outer Joint | | 36 | 30 | 53 | 78 | 60 | I |
| 1.8 (132 kw) | 2016.11- | 6AT | F | L | Estate 4WD CJSB | | GCO83101 | Outer Joint | | 36 | 27 | 59.5 | 40 | 65 | M |
| | 2016.11- | 6AT | F | L | Estate 4WD CJSB | | GCI61069 | Inner Joint | | | 28 | | | 32 | |
| | 2016.11- | 6AT | R | L/R | Estate 4WD CJSB | | GCI35026 | Outer Joint | | 36 | 33 | 59.5 | 40 | 61 | |
| | 2016.11- | 6AT | R | L/R | Estate 4WD CJSB | | GCI61103 | Inner Joint | | | 33 | | | 32 | |
| 1.9 (50 kw) | 1997.10-2006.05 | 5MT | F | L | Estate FWD AGP/AQM | | GDS61045 | Drive Shaft | | 36 | | 53 | 78.5 | 555 | |
| | 1997.10-2006.05 | 5MT | F | R | Estate FWD AGP/AQM | | GDS83046 | Drive Shaft | | 36 | | 53 | 78.5 | 822 | |
| | 1997.10-2006.05 | AT | F | L/R | Estate FWD AGP/AQM | | GCO83070 | Outer Joint | | 36 | 30 | 53 | 78 | 60 | I |
| | 1997.10-2006.05 | AT | F | L/R | Estate FWD AGP/AQM | Date from:2000.01 | GCI83005 | Inner Joint | | | 33 | | | 32 | |
| | 1997.10-2006.05 | MT | F | L/R | Estate FWD AGP/AQM | | GCO83033 | Outer Joint | | 36 | 30 | 53 | 78.5 | 51 | I |
| | 1997.10-2006.05 | MT | F | L/R | Estate FWD AGP/AQM | | GCI83005 | Inner Joint | | | 33 | | | 32 | |
| | 1997.10-2006.05 | MT | F | L/R | Estate FWD AGP/AQM | Date from:2000.01 | GCI83008 | Inner Joint | | | 33 | | | 32 | |
| 1.9 (55 kw) | 1993.07-1999.02 | AT | F | L | Estate FWD AAZ | Chassis no. to:1H-R-990000 | GDS61001 | Drive Shaft | | 22 | | 53.2 | 78 | 557 | |
| | 1993.07-1999.02 | AT | F | L | Estate FWD AAZ | | GDS61011 | Drive Shaft | | 22 | | 53.2 | 78 | 547 | |
| | 1993.07-1999.02 | AT | F | R | Estate FWD AAZ | Chassis no. from:1H-S-000001 | GDS61028 | Drive Shaft | | 22 | | 53.2 | 78 | 767 | |
| | 1993.07-1999.02 | AT | F | L | Estate FWD AAZ | | GCI61004 | Inner Joint | | | 34 | | | 59.2 | |
| | 1993.07-1999.02 | AT | F | R | Estate FWD AAZ | Chassis no. to:1H-R-990000 | GCI83009 | Inner Joint | | | 33 | | | 34 | |
| | 1993.07-1999.02 | AT/MT | F | L/R | Estate FWD AAZ | | GCO53007 | Outer Joint | | 22 | 30 | 53.2 | 78 | 61 | I |
| | 1993.07-1999.02 | AT/MT | F | L/R | Estate FWD AAZ | Chassis no. to:1H-R-990000 | GCI83011 | Inner Joint | | | 33 | | | 34 | |
| | 1993.07-1999.02 | MT | F | L | Estate FWD AAZ | | GDS61001 | Drive Shaft | | 22 | | 53.2 | 78 | 557 | |
| | 1993.07-1999.02 | MT | F | R | Estate FWD AAZ | hollow shaft | GDS61002 | Drive Shaft | | 22 | | 53 | 78.5 | 793 | |
| | 1993.07-1999.02 | MT | F | R | Estate FWD AAZ | Chassis no. to:1H-R-990000;solid shaft | GDS61009 | Drive Shaft | | 22 | | 53.2 | 78 | 789 | |
| | 1993.07-1999.02 | MT | F | R | Estate FWD AAZ | | GCI83009 | Inner Joint | | | 33 | | | 34 | |
| | 1993.07-1999.02 | MT | F | L/R | Estate FWD AAZ | | GCI83006 | Inner Joint | | | 33 | | | 34 | |
| | 1993.07-1999.02 | | F | | Estate FWD AAZ | | GCO53004 | Outer Joint | | 22 | 30 | 51 | 78 | 61 | I |
| 1.9 (66 kw) | 1993.08-1999.04 | MT | F | L | Estate FWD 1Z/AHU/ALE | | GDS61001 | Drive Shaft | | 22 | | 53.2 | 78 | 557 | |
| | 1993.08-1999.04 | MT | F | L | Estate FWD 1Z/AHU/ALE | | GDS61011 | Drive Shaft | | 22 | | 53.2 | 78 | 547 | |
| | 1993.08-1999.04 | MT | F | R | Estate FWD 1Z/AHU/ALE | | GDS61002 | Drive Shaft | | 22 | | 53 | 78.5 | 793 | |
| | 1993.08-1999.04 | MT | F | L/R | Estate FWD 1Z/AHU/ALE | | GCO53007 | Outer Joint | | 22 | 30 | 53.2 | 78 | 61 | I |
| | 1993.08-1999.04 | MT | F | L | Estate FWD 1Z/AHU/ALE | | GCI61004 | Inner Joint | | | 34 | | | 59.2 | |
| | 1993.08-1999.04 | MT | F | R | Estate FWD 1Z/AHU/ALE | | GCI83009 | Inner Joint | | | 33 | | | 34 | |
| | 1993.08-1999.04 | MT | F | L/R | Estate FWD 1Z/AHU/ALE | | GCI83011 | Inner Joint | | | 33 | | | 34 | |
| | 1993.08-1999.04 | | F | | Estate FWD 1Z/AHU/ALE | | GCO53004 | Outer Joint | | 22 | 30 | 51 | 78 | 61 | I |
| | 1994.03-1999.04 | | F | R | Estate 4WD 1Z/AHU/ALE | | GCI83009 | Inner Joint | | | 33 | | | 34 | |
| | 1994.03-1999.04 | | R | L/R | Estate 4WD 1Z/AHU/ALE | | GCI83005 | Inner Joint | | | 33 | | | 32 | |
| | 1999.05-2002.04 | 5MT | F | L | Estate 4WD AGR | | GDS61314 | Drive Shaft | | 36 | | 53 | 78 | 558 | |
| | 1999.05-2002.04 | 5MT | F | L/R | Estate 4WD AGR | | GCO83070 | Outer Joint | | 36 | 30 | 53 | 78 | 60 | I |
| | 1999.05-2002.04 | 5MT | F | L | Estate 4WD AGR | | GCI82447 | Inner Joint | | | 33 | | | 34 | |
| | 1999.05-2002.04 | 5MT | F | R | Estate 4WD AGR | | GCI83009 | Inner Joint | | | 33 | | | 34 | |
| | 1999.05-2002.04 | 5MT | F | L/R | Estate 4WD AGR | | GCI83006 | Inner Joint | | | 33 | | | 34 | |
| | 1999.05-2002.04 | MT | F | L | Estate 4WD AGR | | GDS83006 | Drive Shaft | | 36 | | 53.2 | 77.5 | 557 | |
| | 1999.05-2002.04 | MT | F | R | Estate 4WD AGR | | GDS83004 | Drive Shaft | | 36 | | 53.2 | 77.5 | 822 | |
| | 1999.05-2002.04 | 5MT | R | L | Estate 4WD AGR | | GDS82364 | Drive Shaft | | 36 | | 53 | 78.5 | 651 | |
| | 1999.05-2002.04 | 5MT | R | R | Estate 4WD AGR | | GDS81587 | Drive Shaft | | 36 | | 53 | 78.5 | 522 | |
| | 1999.05-2002.04 | 5MT | R | L/R | Estate 4WD AGR | | GCO83033 | Outer Joint | | 36 | 30 | 53 | 78.5 | 51 | I |
| | 1999.05-2002.04 | 5MT | R | L/R | Estate 4WD AGR | | GCI53002 | Inner Joint | | | 33 | | | 34 | |
| | 1999.05-2002.04 | 5MT | R | L/R | Estate 4WD AGR | | GCI82447 | Inner Joint | | | 33 | | | 34 | |
| | 1999.05-2006.05 | AT | F | L | Estate FWD AGR/ALH | | GDS61020 | Drive Shaft | | 36 | | 53.2 | 77.5 | 547 | |
| | 1999.05-2006.05 | AT | F | R | Estate FWD AGR/ALH | | GDS83011 | Drive Shaft | | 36 | | 53.2 | 77.5 | 810.5 | |
| | 1999.05-2006.05 | AT | F | L/R | Estate FWD AGR/ALH | | GCI61006 | Inner Joint | | | 30 | | | 57.6 | |
| | 1999.05-2006.05 | AT/MT | F | L/R | Estate FWD AGR/ALH | | GCO83070 | Outer Joint | | 36 | 30 | 53 | 78 | 60 | I |
| | 1999.05-2006.05 | MT | F | L | Estate FWD AGR/ALH | | GDS83006 | Drive Shaft | | 36 | | 53.2 | 77.5 | 557 | |

| | YEAR | TRANSM. | F/R | L/R | BODY STYLE & DRIVE TYPE & ENGINE | REMARKS | G-AP Ref. | PRODUCT | ABS | Technical Specifications A | B | C | H | L | P |
|---|---|---|---|---|---|---|---|---|---|---|---|---|---|---|---|
| **VW** **Golf Estate/Variant** | | | | | | | | | | | | | | | |
| 1.9 (66 kw) | 1999.05-2006.05 | MT | F | R | Estate FWD AGR/ALH | | GDS83004 | Drive Shaft | | 36 | | 53.2 | 77.5 | 822 | |
| | 1999.05-2006.05 | MT | F | L | Estate FWD AGR/ALH | | GCI83011 | Inner Joint | | | 33 | | | 34 | |
| | 1999.05-2006.05 | MT | F | R | Estate FWD AGR/ALH | | GCI83009 | Inner Joint | | | 33 | | | 34 | |
| | 1999.05-2006.05 | MT | F | L/R | Estate FWD AGR/ALH | | GCI83006 | Inner Joint | | | 33 | | | 34 | |
| 1.9 (74 kw) | 1999.05-2006.06 | MT | F | L | Estate FWD ATD/AXR | | GDS83006 | Drive Shaft | | 36 | | 53.2 | 77.5 | 557 | |
| | 1999.05-2006.06 | MT | F | R | Estate FWD ATD/AXR | | GDS83004 | Drive Shaft | | 36 | | 53.2 | 77.5 | 822 | |
| | 1999.05-2006.06 | MT | F | L/R | Estate FWD ATD/AXR | | GCO83070 | Outer Joint | | 36 | 30 | 53 | 78 | 60 | I |
| | 1999.05-2006.06 | MT | F | L/R | Estate FWD ATD/AXR | | GCI83006 | Inner Joint | | | 33 | | | 34 | |
| | 2000.02-2005.06 | 6MT | F | L | Estate 4WD ATD | | GDS61123 | Drive Shaft | | 36 | | 53 | 77.5 | 520 | |
| | 2000.02-2005.06 | 6MT | F | R | Estate 4WD ATD | | GDS61186 | Drive Shaft | | 36 | | 53 | 77.5 | 653 | |
| | 2000.02-2005.06 | 6MT | F | L/R | Estate 4WD ATD | | GCO83035 | Outer Joint | | 36 | 27 | 53 | 77.5 | 65 | I |
| | 2000.02-2005.06 | AT | F | L | Estate 4WD ATD | | GDS61244 | Drive Shaft | | 36 | | 53 | 77.5 | 523 | |
| | 2000.02-2005.06 | AT | F | R | Estate 4WD ATD | | GDS61243 | Drive Shaft | | 36 | | 53 | 77.5 | 813 | |
| | 2000.02-2005.06 | AT | F | L/R | Estate 4WD ATD | | GCI61044 | Inner Joint | | | 34 | | | 85 | |
| | 2000.02-2005.06 | MT | F | L/R | Estate 4WD ATD | Date from:2003.02 | GCI83016 | Inner Joint | | | 28 | | | 32 | |
| | 2000.02-2005.06 | | F | L/R | Estate 4WD ATD | Date To:2003.01 | GCI83001 | Inner Joint | | | 28 | | | 32 | |
| | 2000.02-2005.06 | 6MT | R | L | Estate 4WD ATD | | GDS82364 | Drive Shaft | | 36 | | 53 | 78.5 | 651 | |
| | 2000.02-2005.06 | 6MT | R | R | Estate 4WD ATD | | GDS81587 | Drive Shaft | | 36 | | 53 | 78.5 | 522 | |
| | 2000.02-2005.06 | 6MT | R | L/R | Estate 4WD ATD | | GCI82447 | Inner Joint | | | 33 | | | 34 | |
| | 2000.02-2005.06 | MT | R | L/R | Estate 4WD ATD | | GCO83033 | Outer Joint | | 36 | 30 | 53 | 78.5 | 51 | I |
| | 2000.02-2005.06 | | R | L/R | Estate 4WD ATD | Date To:2005.06 | GCI83011 | Inner Joint | | | 33 | | | 34 | |
| 1.9 (77 kw) | 2007.06-2009.07 | 5MT | F | L | Estate FWD BLS;BXE | | GDS83294 | Drive Shaft | | 36 | | 59.5 | 38 | 519 | |
| | 2007.06-2009.07 | 5MT | F | R | Estate FWD BLS;BXE | | GDS61042 | Drive Shaft | | 36 | | 59.5 | 40.5 | 814 | |
| | 2007.06-2009.07 | 5MT | F | L/R | Estate FWD BLS;BXE | | GCO83037 | Outer Joint | | 36 | 30 | 59.5 | 40.5 | 56 | I |
| | 2007.06-2009.07 | 5MT | F | L/R | Estate FWD BLS;BXE | | GCI82447 | Inner Joint | | | 33 | | | 34 | |
| | 2007.06-2009.07 | 6DCT | F | L | Estate FWD BLS;BXE | | GDS54013 | Drive Shaft | | 36 | | 59.5 | 40 | 479.5 | |
| | 2007.06-2009.07 | 6DCT | F | R | Estate FWD BLS;BXE | | GDS54011 | Drive Shaft | | 36 | | 59.5 | 40 | 755 | |
| | 2007.06-2009.07 | 6DCT | F | L/R | Estate FWD BLS;BXE | | GCI61057 | Inner Joint | | | 34 | | | 89 | |
| | 2007.06-2009.07 | 6DCT/7DCT | F | L/R | Estate FWD BLS;BXE | | GCO83002 | Outer Joint | | 36 | 27 | 59.5 | 40 | 66 | I |
| | 2007.06-2009.07 | 7DCT | F | L | Estate FWD BLS;BXE | Date from:2008.12,Chassis no. from:1K_9_295791 | GDS61100 | Drive Shaft | | 36 | | 59.5 | 40 | 513 | |
| | 2007.06-2009.07 | 7DCT | F | L | Estate FWD BLS;BXE | Date to:2008.11,Chassis no. to:1K_9_295790 | GDS82260 | Drive Shaft | | 36 | 40 | 59.5 | 40 | 519 | |
| | 2007.06-2009.07 | 7DCT | F | R | Estate FWD BLS;BXE | Date from:2008.12,Chassis no. from:1K_9_295791 | GDS61339 | Drive Shaft | | 36 | | 59.5 | 40 | 794 | |
| | 2007.06-2009.07 | 7DCT | F | R | Estate FWD BLS;BXE | Date to:2008.11,Chassis no. to:1K_9_295790 | GDS81916 | Drive Shaft | | 36 | 40 | 59.5 | 40 | 816 | |
| | 2007.06-2009.07 | 7DCT | F | L/R | Estate FWD BLS;BXE | Date to:2008.11,Chassis no. to:1K_9_295790 | GCI61054 | Inner Joint | | 40 | 28 | 46.9 | 41 | 101.7 | |
| | 2007.06-2009.07 | 7DCT | F | L/R | Estate FWD BLS;BXE | Date from:2008.12 | GCI83016 | Inner Joint | | | 28 | | | 32 | |
| | 2008.01-2009.07 | 6AT | F | L | Estate 4WD BLS | | GDS83241 | Drive Shaft | | 36 | | 59.5 | 40 | 475 | |
| | 2008.01-2009.07 | 6AT/6MT | F | L/R | Estate 4WD BLS | | GCI83016 | Inner Joint | | | 28 | | | 32 | |
| | 2008.01-2009.07 | AT | F | L/R | Estate 4WD BLS | | GCI61057 | Inner Joint | | | 34 | | | 89 | |
| | 2008.01-2009.07 | MT | F | L | Estate 4WD BLS | | GDS83236 | Drive Shaft | | 36 | | 59.5 | 40 | 484 | |
| | 2008.01-2009.07 | MT | F | L | Estate 4WD BLS | | GDS83295 | Drive Shaft | | 36 | | 59.5 | 40 | 491 | |
| | 2008.01-2009.07 | MT | F | R | Estate 4WD BLS | | GDS83266 | Drive Shaft | | 36 | | 59.5 | 40 | 601 | |
| | 2008.01-2009.07 | | F | L/R | Estate 4WD BLS | | GCO83002 | Outer Joint | | 36 | 27 | 59.5 | 40 | 66 | I |
| | 2008.01-2009.07 | 6AT/6MT | R | L | Estate 4WD BLS | | GDS61284 | Drive Shaft | | 36 | | 59.5 | 40 | 594 | |
| | 2008.01-2009.07 | 6AT/6MT | R | R | Estate 4WD BLS | | GDS61293 | Drive Shaft | | 36 | | 59.5 | 40 | 631 | |
| | 2008.01-2009.07 | 6AT/6MT | R | L/R | Estate 4WD BLS | | GCI35026 | Outer Joint | | 36 | 33 | 59.5 | 40 | 61 | |
| | 2008.01-2009.07 | 6AT/6MT | R | L/R | Estate 4WD BLS | | GCI53002 | Inner Joint | | | 33 | | | 34 | |
| | 2008.01-2009.07 | 6AT/6MT | R | L/R | Estate 4WD BLS | | GCI82447 | Inner Joint | | | 33 | | | 34 | |
| 1.9 (81 kw) | 1996.02-1999.02 | MT | F | L | Estate FWD AFN | | GDS61001 | Drive Shaft | | 22 | | 53.2 | 78 | 557 | |
| | 1996.02-1999.02 | MT | F | R | Estate FWD AFN | | GDS61002 | Drive Shaft | | 22 | | 53 | 78.5 | 793 | |
| | 1996.02-1999.02 | MT | F | L/R | Estate FWD AFN | | GCO53007 | Outer Joint | | 22 | 30 | 53.2 | 78 | 61 | I |
| | 1996.02-1999.02 | MT | F | R | Estate FWD AFN | | GCI83009 | Inner Joint | | | 33 | | | 34 | |
| | 1996.02-1999.02 | MT | F | L/R | Estate FWD AFN | | GCI83011 | Inner Joint | | | 33 | | | 34 | |
| | 1996.02-1999.02 | | F | | Estate FWD AFN | | GCO53004 | Outer Joint | | 22 | 30 | 51 | 78 | 61 | I |
| | 1999.05-2006.05 | AT | F | L | Estate FWD AHF/ASV | | GDS61020 | Drive Shaft | | 36 | | 53.2 | 77.5 | 547 | |
| | 1999.05-2006.05 | AT | F | R | Estate FWD AHF/ASV | | GDS83011 | Drive Shaft | | 36 | | 53.2 | 77.5 | 810.5 | |
| | 1999.05-2006.05 | AT | F | L/R | Estate FWD AHF/ASV | | GCI61006 | Inner Joint | | | 30 | | | 57.6 | |
| | 1999.05-2006.05 | AT/MT | F | L/R | Estate FWD AHF/ASV | | GCO83070 | Outer Joint | | 36 | 30 | 53 | 78 | 60 | I |
| | 1999.05-2006.05 | MT | F | L | Estate FWD AHF/ASV | | GDS83006 | Drive Shaft | | 36 | | 53.2 | 77.5 | 557 | |
| | 1999.05-2006.05 | MT | F | R | Estate FWD AHF/ASV | | GDS83004 | Drive Shaft | | 36 | | 53.2 | 77.5 | 822 | |
| | 1999.05-2006.05 | MT | F | L | Estate FWD AHF/ASV | | GCI83011 | Inner Joint | | | 33 | | | 34 | |
| | 1999.05-2006.05 | MT | F | R | Estate FWD AHF/ASV | | GCI83009 | Inner Joint | | | 33 | | | 34 | |
| | 1999.05-2006.05 | MT | F | L/R | Estate FWD AHF/ASV | | GCI83006 | Inner Joint | | | 33 | | | 34 | |
| 1.9 (85 kw) | 1999.05-2002.04 | 6MT | F | L/R | Estate FWD AJM/AUY | | GCO83035 | Outer Joint | | 36 | 27 | 53 | 77.5 | 65 | I |
| | 1999.05-2002.04 | AT | F | L | Estate FWD AJM/AUY | | GDS61244 | Drive Shaft | | 36 | | 53 | 77.5 | 523 | |
| | 1999.05-2002.04 | AT | F | R | Estate FWD AJM/AUY | | GDS61243 | Drive Shaft | | 36 | | 53 | 77.5 | 813 | |

| | YEAR | TRANSM. | F/R | L/R | BODY STYLE & DRIVE TYPE & ENGINE | REMARKS | G-AP Ref. | PRODUCT | ABS | Technical Specifications A | B | C | H | L | P |
|---|---|---|---|---|---|---|---|---|---|---|---|---|---|---|---|
| **VW** **Golf Estate/Variant** | | | | | | | | | | | | | | | |
| 1.9 (85 kw) | 1999.05-2002.04 | AT | F | L/R | Estate FWD AJM/AUY | | GCI83007 | Inner Joint | | | 34 | | | 85 | |
| | 1999.05-2002.04 | MT | F | L | Estate FWD AJM/AUY | For PR code:8Q0/8Q1,with headlamp levelling (mechanical) | GDS56276 | Drive Shaft | | 36 | | 53 | 77.5 | 520 | |
| | 1999.05-2002.04 | MT | F | R | Estate FWD AJM/AUY | | GDS61121 | Drive Shaft | | 36 | | 53 | 77.5 | 806 | |
| | 1999.05-2002.04 | MT | F | L/R | Estate FWD AJM/AUY | Date To:2003.01 | GCI83001 | Inner Joint | | | 28 | | | 32 | |
| | 1999.12-2001.07 | 6MT | F | L | Estate 4WD AJM/AUY | | GDS61123 | Drive Shaft | | 36 | | 53 | 77.5 | 520 | |
| | 1999.12-2001.07 | 6MT | F | R | Estate 4WD AJM/AUY | | GDS61186 | Drive Shaft | | 36 | | 53 | 77.5 | 653 | |
| | 1999.12-2001.07 | 6MT | F | L/R | Estate 4WD AJM/AUY | | GCO83035 | Outer Joint | | 36 | 27 | 53 | 77.5 | 65 | I |
| | 1999.12-2001.07 | MT | F | L/R | Estate 4WD AJM/AUY | | GCI83006 | Inner Joint | | | 33 | | | 34 | |
| | 1999.12-2001.07 | | F | L/R | Estate 4WD AJM/AUY | Date To:2003.01 | GCI83001 | Inner Joint | | | 28 | | | 32 | |
| | 1999.12-2001.07 | 6MT | R | L | Estate 4WD AJM/AUY | | GDS82364 | Drive Shaft | | 36 | | 53 | 78.5 | 651 | |
| | 1999.12-2001.07 | 6MT | R | R | Estate 4WD AJM/AUY | | GDS81587 | Drive Shaft | | 36 | | 53 | 78.5 | 522 | |
| | 1999.12-2001.07 | 6MT | R | L/R | Estate 4WD AJM/AUY | | GCI82447 | Inner Joint | | | 33 | | | 34 | |
| | 1999.12-2001.07 | MT | R | L/R | Estate 4WD AJM/AUY | | GCO83033 | Outer Joint | | 36 | 30 | 53 | 78.5 | 51 | I |
| | 1999.12-2001.07 | | R | L/R | Estate 4WD AJM/AUY | Date From:1999.12 | GCI83011 | Inner Joint | | | 33 | | | 34 | |
| 1.9 (96 kw) | 2001.04-2005.06 | 6MT | F | L | Estate 4WD ASZ | | GDS61123 | Drive Shaft | | 36 | | 53 | 77.5 | 520 | |
| | 2001.04-2005.06 | 6MT | F | R | Estate 4WD ASZ | | GDS61186 | Drive Shaft | | 36 | | 53 | 77.5 | 653 | |
| | 2001.04-2005.06 | 6MT | F | L/R | Estate 4WD ASZ | | GCO83035 | Outer Joint | | 36 | 27 | 53 | 77.5 | 65 | I |
| | 2001.04-2005.06 | AT | F | L | Estate 4WD ASZ | Date from:2001.04;Date to:2005.06 | GDS61244 | Drive Shaft | | 36 | | 53 | 77.5 | 523 | |
| | 2001.04-2005.06 | AT | F | R | Estate 4WD ASZ | Date from:2001.04;Date to:2005.06 | GDS61243 | Drive Shaft | | 36 | | 53 | 77.5 | 813 | |
| | 2001.04-2005.06 | AT | F | L/R | Estate 4WD ASZ | | GCI61044 | Inner Joint | | | 34 | | | 85 | |
| | 2001.04-2005.06 | MT | F | L/R | Estate 4WD ASZ | Date from:2003.02 | GCI83016 | Inner Joint | | | 28 | | | 32 | |
| | 2001.04-2005.06 | | F | R | Estate 4WD ASZ | Date From:2001.04;Date To:2005.06 | GDS61121 | Drive Shaft | | 36 | | 53 | 77.5 | 806 | |
| | 2001.04-2005.06 | | F | L/R | Estate 4WD ASZ | Date To:2003.01 | GCI83001 | Inner Joint | | | 28 | | | 32 | |
| | 2001.04-2005.06 | 6MT | R | L | Estate 4WD ASZ | | GDS82364 | Drive Shaft | | 36 | | 53 | 78.5 | 651 | |
| | 2001.04-2005.06 | 6MT | R | R | Estate 4WD ASZ | | GDS81587 | Drive Shaft | | 36 | | 53 | 78.5 | 522 | |
| | 2001.04-2005.06 | 6MT | R | L/R | Estate 4WD ASZ | | GCI82447 | Inner Joint | | | 33 | | | 34 | |
| | 2001.04-2005.06 | MT | R | L/R | Estate 4WD ASZ | | GCO83033 | Outer Joint | | 36 | 30 | 53 | 78.5 | 51 | I |
| | 2001.04-2005.06 | | R | L/R | Estate 4WD ASZ | Date From:2001.04;Date To:2005.06 | GCI83011 | Inner Joint | | | 33 | | | 34 | |
| | 2001.04-2006.05 | AT | F | L | Estate FWD ASZ | Date from:2001.04 | GDS61244 | Drive Shaft | | 36 | | 53 | 77.5 | 523 | |
| | 2001.04-2006.05 | AT | F | R | Estate FWD ASZ | Date from:2001.04 | GDS61243 | Drive Shaft | | 36 | | 53 | 77.5 | 813 | |
| | 2001.04-2006.05 | AT | F | L/R | Estate FWD ASZ | | GCO83070 | Outer Joint | | 36 | 30 | 53 | 78 | 60 | I |
| | 2001.04-2006.05 | AT | F | L/R | Estate FWD ASZ | | GCI61044 | Inner Joint | | | 34 | | | 85 | |
| | 2001.04-2006.05 | AT | F | | Estate FWD ASZ | | GCI83007 | Inner Joint | | | 34 | | | 85 | |
| | 2001.04-2006.05 | MT | F | R | Estate FWD ASZ | Date from:2001.04 | GDS61121 | Drive Shaft | | 36 | | 53 | 77.5 | 806 | |
| | 2001.04-2006.05 | | F | | Estate FWD ASZ | Date From:2003.02 | GCI83016 | Inner Joint | | | 28 | | | 32 | |
| 1.9 (110 kw) | 2002.05-2005.06 | MT | F | L | Estate 4WD ARL | | GDS61123 | Drive Shaft | | 36 | | 53 | 77.5 | 520 | |
| | 2002.05-2005.06 | MT | F | R | Estate 4WD ARL | | GDS61186 | Drive Shaft | | 36 | | 53 | 77.5 | 653 | |
| | 2002.05-2005.06 | MT | F | L/R | Estate 4WD ARL | | GCO83035 | Outer Joint | | 36 | 27 | 53 | 77.5 | 65 | I |
| | 2002.05-2005.06 | MT | F | L/R | Estate 4WD ARL | | GCI83006 | Inner Joint | | | 33 | | | 34 | |
| | 2002.05-2005.06 | MT | F | L/R | Estate 4WD ARL | Date from:2003.02 | GCI83016 | Inner Joint | | | 28 | | | 32 | |
| | 2002.05-2005.06 | | F | R | Estate 4WD ARL | | GDS61121 | Drive Shaft | | 36 | | 53 | 77.5 | 806 | |
| | 2002.05-2005.06 | | F | L/R | Estate 4WD ARL | Date To:2003.01 | GCI83001 | Inner Joint | | | 28 | | | 32 | |
| | 2002.05-2005.06 | MT | R | L | Estate 4WD ARL | | GDS82364 | Drive Shaft | | 36 | | 53 | 78.5 | 651 | |
| | 2002.05-2005.06 | MT | R | R | Estate 4WD ARL | | GDS81587 | Drive Shaft | | 36 | | 53 | 78.5 | 522 | |
| | 2002.05-2005.06 | MT | R | L/R | Estate 4WD ARL | | GCO83033 | Outer Joint | | 36 | 30 | 53 | 78.5 | 51 | I |
| | 2002.05-2005.06 | MT | R | L/R | Estate 4WD ARL | | GCI82447 | Inner Joint | | | 33 | | | 34 | |
| | 2002.05-2005.06 | MT | R | L/R | Estate 4WD ARL | | GCI83011 | Inner Joint | | | 33 | | | 34 | |
| | 2002.05-2006.06 | 6MT | F | L | Estate FWD ARL | | GDS56276 | Drive Shaft | | 36 | | 53 | 77.5 | 520 | |
| | 2002.05-2006.06 | 6MT | F | L | Estate FWD ARL | For PR code:E54 | GDS81913 | Drive Shaft | | 36 | | 53 | 40 | 480 | |
| | 2002.05-2006.06 | 6MT | F | R | Estate FWD ARL | for PR nunmber E54 | GDS61088 | Drive Shaft | | 36 | | 53 | 40 | 769 | |
| | 2002.05-2006.06 | 6MT | F | R | Estate FWD ARL | | GDS61121 | Drive Shaft | | 36 | | 53 | 77.5 | 806 | |
| | 2002.05-2006.06 | 6MT | F | L/R | Estate FWD ARL | For PR code:E54 | GCO61021 | Outer Joint | | 36 | 27 | 53 | 40 | 65 | I |
| | 2002.05-2006.06 | 6MT | F | L/R | Estate FWD ARL | | GCO83035 | Outer Joint | | 36 | 27 | 53 | 77.5 | 65 | I |
| | 2002.05-2006.06 | MT | F | L/R | Estate FWD ARL | Date from:2003.02 | GCI83016 | Inner Joint | | | 28 | | | 32 | |
| 2.0 (79 kw) | 1995.08-1996.04 | MT | F | R | Estate FWD AEP | | GDS61002 | Drive Shaft | | 22 | | 53 | 78.5 | 793 | |
| | 1995.08-1996.04 | | F | | Estate FWD AEP | | GCO53004 | Outer Joint | | 22 | 30 | 51 | 78 | 61 | I |
| 2.0 (81 kw) | 2010.01-2013.07 | 5MT | F | L | Estate FWD CLCA | | GDS83294 | Drive Shaft | | 36 | | 59.5 | 38 | 519 | |
| | 2010.01-2013.07 | 5MT | F | R | Estate FWD CLCA | | GDS61042 | Drive Shaft | | 36 | | 59.5 | 40.5 | 814 | |
| | 2010.01-2013.07 | 5MT | F | L/R | Estate FWD CLCA | | GCO83037 | Outer Joint | | 36 | 30 | 59.5 | 40.5 | 56 | I |
| | 2010.01-2013.07 | 5MT | F | L/R | Estate FWD CLCA | | GCI82447 | Inner Joint | | | 33 | | | 34 | |
| | 2010.01-2013.07 | MT | F | L/R | Estate FWD CLCA | | GCI83006 | Inner Joint | | | 33 | | | 34 | |
| | 2010.01-2013.07 | | F | L/R | Estate FWD CLCA | | GCI83011 | Inner Joint | | | 33 | | | 34 | |
| | 2013.05-2020.08 | 5MT | F | L | Estate FWD CRVA;CYKB;CRLD;DFGB;DCYB;DEJB | | GDS61282 | Drive Shaft | | 36 | | 59.5 | 40 | 523 | |
| | 2013.05-2020.08 | 5MT | F | R | Estate FWD CRVA;CYKB;CRLD;DFGB;DCYB;DEJB | | GDS61283 | Drive Shaft | | 36 | | 59.5 | 40 | 815 | |
| | 2013.05-2020.08 | 5MT | F | L/R | Estate FWD CRVA;CYKB;CRLD;DFGB;DCYB;DEJB | | GCO61059 | Outer Joint | | 36 | 33 | 59.5 | 40 | 59.5 | I |

| | YEAR | TRANSM. | F/R | L/R | BODY STYLE & DRIVE TYPE & ENGINE | REMARKS | G-AP Ref. | PRODUCT | ABS | Technical Specifications A | B | C | H | L | P |
|---|---|---|---|---|---|---|---|---|---|---|---|---|---|---|---|
| **VW** **Golf Estate/Variant** | | | | | | | | | | | | | | | |
| 2.0 (81 kw) | 2013.05-2020.08 | 5MT | F | L/R | Estate FWD CRVA;CYKB;CRLD;DFGB;DCYB;DEJB | Date to:2017.03 | GCI83011 | Inner Joint | | | 33 | | | 34 | |
| | 2013.05-2020.08 | 6DCT | F | L | Estate FWD CRVA;CYKB;CRLD;DFGB;DCYB;DEJB | | GDS61285 | Drive Shaft | | 36 | | 59.5 | 40 | 472 | |
| | 2013.05-2020.08 | 6DCT | F | R | Estate FWD CRVA;CYKB;CRLD;DFGB;DCYB;DEJB | | GDS83354 | Drive Shaft | | 36 | | 59.5 | 40 | 763 | |
| | 2013.05-2020.08 | 6DCT | F | L/R | Estate FWD CRVA;CYKB;CRLD;DFGB;DCYB;DEJB | | GCI61057 | Inner Joint | | | 34 | | | 89 | |
| | 2013.05-2020.08 | 6MT | F | L | Estate FWD CRVA;CYKB;CRLD;DFGB;DCYB;DEJB | For taxis | GDS83295 | Drive Shaft | | 36 | | 59.5 | 40 | 491 | |
| | 2013.05-2020.08 | 6MT | F | R | Estate FWD CRVA;CYKB;CRLD;DFGB;DCYB;DEJB | | GDS83313 | Drive Shaft | | 36 | | 59.5 | 40 | 792 | |
| | 2013.05-2020.08 | 6MT | F | L/R | Estate FWD CRVA;CYKB;CRLD;DFGB;DCYB;DEJB | | GCI83016 | Inner Joint | | | 28 | | | 32 | |
| | 2013.05-2020.08 | 7DCT | F | L | Estate FWD CRVA;CYKB;CRLD;DFGB;DCYB;DEJB | | GDS81265 | Drive Shaft | | 36 | 37 | 59.5 | 40 | 557 | |
| | 2013.05-2020.08 | 7DCT | F | R | Estate FWD CRVA;CYKB;CRLD;DFGB;DCYB;DEJB | | GDS83612 | Drive Shaft | | 36 | 37 | 59.5 | 40 | 907 | |
| | 2013.05-2020.08 | 7DCT | F | L/R | Estate FWD CRVA;CYKB;CRLD;DFGB;DCYB;DEJB | | GCO83101 | Outer Joint | | 36 | 27 | 59.5 | 40 | 65 | M |
| | 2013.05-2020.08 | 7DCT | F | L | Estate FWD CRVA;CYKB;CRLD;DFGB;DCYB;DEJB | | GCI81158 | Inner Joint | | 37 | 34 | 34.5 | 65.5 | 83 | |
| | 2013.05-2020.08 | 7DCT | F | R | Estate FWD CRVA;CYKB;CRLD;DFGB;DCYB;DEJB | | GCI82108 | Inner Joint | | 37 | 34 | 40 | 77.5 | 103.5 | |
| 2.0 (85 kw) | 1993.07-1999.04 | AT | F | L | Estate FWD 2E/ADY/AGG/AKR | Chassis no. to:1H-R-990000 | GDS61001 | Drive Shaft | | 22 | | 53.2 | 78 | 557 | |
| | 1993.07-1999.04 | AT | F | L | Estate FWD 2E/ADY/AGG/AKR | | GDS61011 | Drive Shaft | | 22 | | 53.2 | 78 | 547 | |
| | 1993.07-1999.04 | AT | F | R | Estate FWD 2E/ADY/AGG/AKR | Chassis no. from:1H-S-000001 | GDS61028 | Drive Shaft | | 22 | | 53.2 | 78 | 767 | |
| | 1993.07-1999.04 | AT | F | L/R | Estate FWD 2E/ADY/AGG/AKR | | GCO53007 | Outer Joint | | 22 | 30 | 53.2 | 78 | 61 | I |
| | 1993.07-1999.04 | AT | F | L | Estate FWD 2E/ADY/AGG/AKR | | GCI61004 | Inner Joint | | | 34 | | | 59.2 | |
| | 1993.07-1999.04 | AT | F | R | Estate FWD 2E/ADY/AGG/AKR | Chassis no. to:1H-R-990000 | GCI83009 | Inner Joint | | | 33 | | | 34 | |
| | 1993.07-1999.04 | AT/MT | F | L | Estate FWD 2E/ADY/AGG/AKR | | GDS99116 | Drive Shaft | | 36 | | 53.2 | 77.5 | 548.5 | |
| | 1993.07-1999.04 | AT/MT | F | R | Estate FWD 2E/ADY/AGG/AKR | | GDS99112 | Drive Shaft | | 36 | | 53.2 | 77.5 | 783 | |
| | 1993.07-1999.04 | AT/MT | F | L/R | Estate FWD 2E/ADY/AGG/AKR | | GCI83011 | Inner Joint | | | 33 | | | 34 | |
| | 1993.07-1999.04 | MT | F | L | Estate FWD 2E/ADY/AGG/AKR | Chassis no. from:1H-S-000001 | GDS61001 | Drive Shaft | | 22 | | 53.2 | 78 | 557 | |
| | 1993.07-1999.04 | MT | F | R | Estate FWD 2E/ADY/AGG/AKR | | GDS61002 | Drive Shaft | | 22 | | 53 | 78.5 | 793 | |
| | 1993.07-1999.04 | MT | F | L/R | Estate FWD 2E/ADY/AGG/AKR | Chassis no. from:1H-S-000001 | GCO53007 | Outer Joint | | 22 | 30 | 53.2 | 78 | 61 | I |
| | 1993.07-1999.04 | MT | F | L/R | Estate FWD 2E/ADY/AGG/AKR | Chassis no. to:1H-R-990000 | GCO83070 | Outer Joint | | 36 | 30 | 53 | 78 | 60 | I |
| | 1993.07-1999.04 | MT | F | R | Estate FWD 2E/ADY/AGG/AKR | | GCI83009 | Inner Joint | | | 33 | | | 34 | |
| | 1993.07-1999.04 | | F | | Estate FWD 2E/ADY/AGG/AKR | | GCO53004 | Outer Joint | | 22 | 30 | 51 | 78 | 61 | I |
| | 1996.05-1997.12 | MT | F | L | Estate 4WD AGG | | GDS83006 | Drive Shaft | | 36 | | 53.2 | 77.5 | 557 | |
| | 1996.05-1997.12 | MT | F | R | Estate 4WD AGG | | GDS99112 | Drive Shaft | | 36 | | 53.2 | 77.5 | 783 | |
| | 1996.05-1997.12 | MT | F | L/R | Estate 4WD AGG | | GCO83070 | Outer Joint | | 36 | 30 | 53 | 78 | 60 | I |
| | 1996.05-1997.12 | MT | F | L/R | Estate 4WD AGG | | GCI83011 | Inner Joint | | | 33 | | | 34 | |
| | 1999.05-2006.06 | AT | F | L | Estate FWD APK/AQY/AZJ | | GDS61020 | Drive Shaft | | 36 | | 53.2 | 77.5 | 547 | |
| | 1999.05-2006.06 | AT | F | R | Estate FWD APK/AQY/AZJ | | GDS83011 | Drive Shaft | | 36 | | 53.2 | 77.5 | 810.5 | |
| | 1999.05-2006.06 | AT | F | L/R | Estate FWD APK/AQY/AZJ | | GCI61006 | Inner Joint | | | 30 | | | 57.6 | |
| | 1999.05-2006.06 | AT/MT | F | L/R | Estate FWD APK/AQY/AZJ | | GCO83070 | Outer Joint | | 36 | 30 | 53 | 78 | 60 | I |
| | 1999.05-2006.06 | MT | F | L | Estate FWD APK/AQY/AZJ | | GDS61314 | Drive Shaft | | 36 | | 53 | 78 | 558 | |
| | 1999.05-2006.06 | MT | F | L | Estate FWD APK/AQY/AZJ | | GDS83006 | Drive Shaft | | 36 | | 53.2 | 77.5 | 557 | |
| | 1999.05-2006.06 | MT | F | R | Estate FWD APK/AQY/AZJ | | GDS83004 | Drive Shaft | | 36 | | 53.2 | 77.5 | 822 | |
| | 1999.05-2006.06 | MT | F | L/R | Estate FWD APK/AQY/AZJ | | GCI83006 | Inner Joint | | | 33 | | | 34 | |
| | 1999.05-2006.06 | MT | F | L/R | Estate FWD APK/AQY/AZJ | | GCI83009 | Inner Joint | | | 33 | | | 34 | |
| | 1999.05-2006.06 | MT | F | L/R | Estate FWD APK/AQY/AZJ | | GCI83011 | Inner Joint | | | 33 | | | 34 | |
| | 2000.04-2005.06 | 5MT | F | L | Estate 4WD AZH/AZJ | | GDS61314 | Drive Shaft | | 36 | | 53 | 78 | 558 | |
| | 2000.04-2005.06 | 5MT | F | L/R | Estate 4WD AZH/AZJ | | GCO83070 | Outer Joint | | 36 | 30 | 53 | 78 | 60 | I |
| | 2000.04-2005.06 | 5MT | F | L | Estate 4WD AZH/AZJ | | GCI82447 | Inner Joint | | | 33 | | | 34 | |
| | 2000.04-2005.06 | 5MT | F | R | Estate 4WD AZH/AZJ | | GCI83009 | Inner Joint | | | 33 | | | 34 | |
| | 2000.04-2005.06 | 5MT | F | L/R | Estate 4WD AZH/AZJ | | GCI83006 | Inner Joint | | | 33 | | | 34 | |
| | 2000.04-2005.06 | MT | F | L | Estate 4WD AZH/AZJ | | GDS83006 | Drive Shaft | | 36 | | 53.2 | 77.5 | 557 | |
| | 2000.04-2005.06 | MT | F | R | Estate 4WD AZH/AZJ | | GDS83004 | Drive Shaft | | 36 | | 53.2 | 77.5 | 822 | |
| | 2000.04-2005.06 | 5MT | R | L | Estate 4WD AZH/AZJ | | GDS82364 | Drive Shaft | | 36 | | 53 | 78.5 | 651 | |
| | 2000.04-2005.06 | 5MT | R | R | Estate 4WD AZH/AZJ | | GDS81587 | Drive Shaft | | 36 | | 53 | 78.5 | 522 | |
| | 2000.04-2005.06 | 5MT | R | L/R | Estate 4WD AZH/AZJ | | GCO83033 | Outer Joint | | 36 | 30 | 53 | 78.5 | 51 | I |
| | 2000.04-2005.06 | 5MT | R | L/R | Estate 4WD AZH/AZJ | | GCI53002 | Inner Joint | | | 33 | | | 34 | |
| | 2000.04-2005.06 | 5MT | R | L/R | Estate 4WD AZH/AZJ | | GCI82447 | Inner Joint | | | 33 | | | 34 | |
| | 2002.05-2006.06 | 5MT | F | L | Estate FWD BEH | | GDS61314 | Drive Shaft | | 36 | | 53 | 78 | 558 | |
| | 2002.05-2006.06 | 5MT | F | R | Estate FWD BEH | | GDS83004 | Drive Shaft | | 36 | | 53.2 | 77.5 | 822 | |
| | 2002.05-2006.06 | 5MT | F | L | Estate FWD BEH | | GCI82447 | Inner Joint | | | 33 | | | 34 | |
| | 2002.05-2006.06 | 5MT | F | R | Estate FWD BEH | | GCI83009 | Inner Joint | | | 33 | | | 34 | |
| | 2002.05-2006.06 | MT | F | L/R | Estate FWD BEH | | GCO83070 | Outer Joint | | 36 | 30 | 53 | 78 | 60 | I |
| | 2002.05-2006.06 | MT | F | L/R | Estate FWD BEH | | GCI83006 | Inner Joint | | | 33 | | | 34 | |
| | 2002.05-2006.06 | | F | L | Estate FWD BEH | Date From:2002.05 | GCI83011 | Inner Joint | | | 33 | | | 34 | |
| | 2020.08- | 6MT | F | L | Estate FWD DSUD;DTRD;DTRB;DXRC | | GDS83295 | Drive Shaft | | 36 | | 59.5 | 40 | 491 | |
| | 2020.08- | 6MT | F | R | Estate FWD DSUD;DTRD;DTRB;DXRC | | GDS81891 | Drive Shaft | | 36 | | 59.5 | 40 | 781 | |
| | 2020.08- | 6MT | F | L | Estate FWD DSUD;DTRD;DTRB;DXRC | | GCO83002 | Outer Joint | | 36 | 27 | 59.5 | 40 | 66 | I |
| | 2020.08- | 6MT | F | L | Estate FWD DSUD;DTRD;DTRB;DXRC | | GCI61041 | Inner Joint | | | 28 | | | 32 | |
| | 2020.08- | 6MT | F | R | Estate FWD DSUD;DTRD;DTRB;DXRC | | GCI61069 | Inner Joint | | | 28 | | | 32 | |

| | YEAR | TRANSM. | F/R | L/R | BODY STYLE & DRIVE TYPE & ENGINE | REMARKS | G-AP Ref. | PRODUCT | ABS | Technical Specifications A | B | C | H | L | P |
|---|---|---|---|---|---|---|---|---|---|---|---|---|---|---|---|
| **VW** **Golf Estate/Variant** | | | | | | | | | | | | | | | |
| 2.0 (85 kw) | 2020.08- | 6MT | F | R | Estate FWD DSUD;DTRD;DTRB;DXRC | | GDS98007 | Stub Axle-Flange | | 37 | | | 88 | 148 | |
| | 2020.08- | 7DCT | F | L | Estate FWD DSUD;DTRD;DTRB;DXRC | For PR code:0EG | GDS61282 | Drive Shaft | | 36 | | 59.5 | 40 | 523 | |
| | 2020.08- | 7DCT | F | L | Estate FWD DSUD;DTRD;DTRB;DXRC | For PR code:0IJ | GDS81265 | Drive Shaft | | 36 | 37 | 59.5 | 40 | 557 | |
| | 2020.08- | 7DCT | F | R | Estate FWD DSUD;DTRD;DTRB;DXRC | For PR code:0IJ | GDS83612 | Drive Shaft | | 36 | 37 | 59.5 | 40 | 907 | |
| | 2020.08- | 7DCT | F | R | Estate FWD DSUD;DTRD;DTRB;DXRC | For PR code:0EG | GDS84417 | Drive Shaft | | 36 | | 59.5 | 40 | 783 | |
| | 2020.08- | 7DCT | F | R | Estate FWD DSUD;DTRD;DTRB;DXRC | For PR code:0IJ | GCO83101 | Outer Joint | | 36 | 27 | 59.5 | 40 | 65 | M |
| | 2020.08- | 7DCT | F | L/R | Estate FWD DSUD;DTRD;DTRB;DXRC | For PR code:0EG | GCO61059 | Outer Joint | | 36 | 33 | 59.5 | 40 | 59.5 | I |
| | 2020.08- | 7DCT | F | L | Estate FWD DSUD;DTRD;DTRB;DXRC | For PR code:0IJ | GCI81158 | Inner Joint | | 37 | 34 | 34.5 | 65.5 | 83 | |
| | 2020.08- | 7DCT | F | R | Estate FWD DSUD;DTRD;DTRB;DXRC | For PR code:0IJ | GCI82108 | Inner Joint | | 37 | 34 | 40 | 77.5 | 103.5 | |
| | 2020.08- | 7DCT | F | L/R | Estate FWD DSUD;DTRD;DTRB;DXRC | For PR code:0EG | GCI53002 | Inner Joint | | | 33 | | | 34 | |
| 2.0 (88 kw) | 2000.04-2006.06 | MT | R | L/R | Estate 4WD ATF | Date From:2000.04 | GCO83033 | Outer Joint | | 36 | 30 | 53 | 78.5 | 51 | I |
| 2.0 (100 kw) | 2007.06-2009.07 | 6MT | F | L | Estate FWD AZV;CBDA | | GDS83295 | Drive Shaft | | 36 | | 59.5 | 40 | 491 | |
| | 2007.06-2009.07 | 6MT | F | R | Estate FWD AZV;CBDA | | GDS83313 | Drive Shaft | | 36 | | 59.5 | 40 | 792 | |
| | 2007.06-2009.07 | 6MT | F | L/R | Estate FWD AZV;CBDA | | GCO83002 | Outer Joint | | 36 | 27 | 59.5 | 40 | 66 | I |
| | 2007.06-2009.07 | 6MT | F | L/R | Estate FWD AZV;CBDA | | GCI83016 | Inner Joint | | | 28 | | | 32 | |
| | 2007.06-2009.07 | AT | F | L | Estate FWD AZV;CBDA | | GDS83241 | Drive Shaft | | 36 | | 59.5 | 40 | 475 | |
| | 2007.06-2009.07 | AT | F | R | Estate FWD AZV;CBDA | | GDS54011 | Drive Shaft | | 36 | | 59.5 | 40 | 755 | |
| | 2007.06-2009.07 | AT | F | L | Estate FWD AZV;CBDA | | GCI54004 | Inner Joint | | | 34 | | | 81 | |
| | 2007.06-2009.07 | AT | F | L/R | Estate FWD AZV;CBDA | | GCI61057 | Inner Joint | | | 34 | | | 89 | |
| | 2007.06-2009.07 | MT | F | L | Estate FWD AZV;CBDA | | GDS83236 | Drive Shaft | | 36 | | 59.5 | 40 | 484 | |
| | 2007.06-2009.07 | MT | F | R | Estate FWD AZV;CBDA | | GDS61126 | Drive Shaft | | 36 | | 59.5 | 40 | 793 | |
| | 2007.06-2009.07 | MT | F | R | Estate FWD AZV;CBDA | | GDS61339 | Drive Shaft | | 36 | | 59.5 | 40 | 794 | |
| | 2009.07-2013.07 | 6MT | F | L | Estate FWD CBDA;CFHB | | GDS83295 | Drive Shaft | | 36 | | 59.5 | 40 | 491 | |
| | 2009.07-2013.07 | 6MT | F | L/R | Estate FWD CBDA;CFHB | | GCI83016 | Inner Joint | | | 28 | | | 32 | |
| | 2009.07-2013.07 | MT | F | R | Estate FWD CBDA;CFHB | | GDS61339 | Drive Shaft | | 36 | | 59.5 | 40 | 794 | |
| | 2009.07-2013.07 | | F | L/R | Estate FWD CBDA;CFHB | | GCO83002 | Outer Joint | | 36 | 27 | 59.5 | 40 | 66 | I |
| 2.0 (103 kw) | 2007.06-2009.07 | 6DCT | F | L | Estate FWD BKD;CBDB | | GDS54013 | Drive Shaft | | 36 | | 59.5 | 40 | 479.5 | |
| | 2007.06-2009.07 | 6DCT | F | L | Estate FWD BKD;CBDB | | GDS83241 | Drive Shaft | | 36 | | 59.5 | 40 | 475 | |
| | 2007.06-2009.07 | 6DCT | F | R | Estate FWD BKD;CBDB | | GDS54011 | Drive Shaft | | 36 | | 59.5 | 40 | 755 | |
| | 2007.06-2009.07 | 6DCT | F | L/R | Estate FWD BKD;CBDB | | GCI54004 | Inner Joint | | | 34 | | | 81 | |
| | 2007.06-2009.07 | 6DCT | F | L/R | Estate FWD BKD;CBDB | Original Tripod Design | GCI61057 | Inner Joint | | | 34 | | | 89 | |
| | 2007.06-2009.07 | 6MT | F | L | Estate FWD BKD;CBDB | | GDS83295 | Drive Shaft | | 36 | | 59.5 | 40 | 491 | |
| | 2007.06-2009.07 | 6MT | F | R | Estate FWD BKD;CBDB | | GDS61126 | Drive Shaft | | 36 | | 59.5 | 40 | 793 | |
| | 2007.06-2009.07 | 6MT | F | R | Estate FWD BKD;CBDB | | GDS61339 | Drive Shaft | | 36 | | 59.5 | 40 | 794 | |
| | 2007.06-2009.07 | 6MT | F | R | Estate FWD BKD;CBDB | | GDS83313 | Drive Shaft | | 36 | | 59.5 | 40 | 792 | |
| | 2007.06-2009.07 | 6MT | F | L | Estate FWD BKD;CBDB | | GCI61041 | Inner Joint | | | 28 | | | 32 | |
| | 2007.06-2009.07 | 6MT | F | R | Estate FWD BKD;CBDB | | GCI61002 | Inner Joint | | | 28 | | | 31.8 | |
| | 2007.06-2009.07 | 6MT | F | R | Estate FWD BKD;CBDB | | GCI61069 | Inner Joint | | | 28 | | | 32 | |
| | 2007.06-2009.07 | 6MT | F | L/R | Estate FWD BKD;CBDB | | GCI83016 | Inner Joint | | | 28 | | | 32 | |
| | 2007.06-2009.07 | 6MT/6DCT | F | L/R | Estate FWD BKD;CBDB | | GCO83002 | Outer Joint | | 36 | 27 | 59.5 | 40 | 66 | I |
| | 2007.06-2009.07 | MT | F | L | Estate FWD BKD;CBDB | | GDS83236 | Drive Shaft | | 36 | | 59.5 | 40 | 484 | |
| | 2007.06-2009.07 | 6DCT | F | L | Estate FWD BMM | | GDS54013 | Drive Shaft | | 36 | | 59.5 | 40 | 479.5 | |
| | 2007.06-2009.07 | 6DCT | F | L | Estate FWD BMM | | GDS83241 | Drive Shaft | | 36 | | 59.5 | 40 | 475 | |
| | 2007.06-2009.07 | 6DCT | F | R | Estate FWD BMM | | GDS54011 | Drive Shaft | | 36 | | 59.5 | 40 | 755 | |
| | 2007.06-2009.07 | 6DCT | F | L/R | Estate FWD BMM | | GCI54004 | Inner Joint | | | 34 | | | 81 | |
| | 2007.06-2009.07 | 6DCT | F | L/R | Estate FWD BMM | Original Tripod Design | GCI61057 | Inner Joint | | | 34 | | | 89 | |
| | 2007.06-2009.07 | 6MT | F | L | Estate FWD BMM | | GDS83295 | Drive Shaft | | 36 | | 59.5 | 40 | 491 | |
| | 2007.06-2009.07 | 6MT | F | R | Estate FWD BMM | | GDS61339 | Drive Shaft | | 36 | | 59.5 | 40 | 794 | |
| | 2007.06-2009.07 | 6MT | F | R | Estate FWD BMM | | GDS83313 | Drive Shaft | | 36 | | 59.5 | 40 | 792 | |
| | 2007.06-2009.07 | 6MT | F | L/R | Estate FWD BMM | | GCI61002 | Inner Joint | | | 28 | | | 31.8 | |
| | 2007.06-2009.07 | 6MT | F | L/R | Estate FWD BMM | | GCI61041 | Inner Joint | | | 28 | | | 32 | |
| | 2007.06-2009.07 | 6MT | F | L/R | Estate FWD BMM | | GCI61069 | Inner Joint | | | 28 | | | 32 | |
| | 2007.06-2009.07 | 6MT | F | L/R | Estate FWD BMM | | GCI83016 | Inner Joint | | | 28 | | | 32 | |
| | 2007.06-2009.07 | 6MT/6DCT | F | L/R | Estate FWD BMM | | GCO83002 | Outer Joint | | 36 | 27 | 59.5 | 40 | 66 | I |
| | 2009.07-2013.07 | AT | F | L | Estate FWD CBDB;CJAA;CFHC | | GDS54013 | Drive Shaft | | 36 | | 59.5 | 40 | 479.5 | |
| | 2009.07-2013.07 | AT | F | L | Estate FWD CBDB;CJAA;CFHC | | GDS83241 | Drive Shaft | | 36 | | 59.5 | 40 | 475 | |
| | 2009.07-2013.07 | AT | F | R | Estate FWD CBDB;CJAA;CFHC | | GDS54011 | Drive Shaft | | 36 | | 59.5 | 40 | 755 | |
| | 2009.07-2013.07 | AT | F | L/R | Estate FWD CBDB;CJAA;CFHC | TJ | GCI54004 | Inner Joint | | | 34 | | | 81 | |
| | 2009.07-2013.07 | AT | F | L/R | Estate FWD CBDB;CJAA;CFHC | AAR | GCI61057 | Inner Joint | | | 34 | | | 89 | |
| | 2009.07-2013.07 | AT/MT | F | L/R | Estate FWD CBDB;CJAA;CFHC | | GCO83002 | Outer Joint | | 36 | 27 | 59.5 | 40 | 66 | I |
| | 2009.07-2013.07 | MT | F | L | Estate FWD CBDB;CJAA;CFHC | Inner teeth of tranm.side:33 | GDS83236 | Drive Shaft | | 36 | | 59.5 | 40 | 484 | |
| | 2009.07-2013.07 | MT | F | L | Estate FWD CBDB;CJAA;CFHC | Inner teeth of tranm.side:28 | GDS83295 | Drive Shaft | | 36 | | 59.5 | 40 | 491 | |
| | 2009.07-2013.07 | MT | F | R | Estate FWD CBDB;CJAA;CFHC | Solid shaft | GDS61126 | Drive Shaft | | 36 | | 59.5 | 40 | 793 | |
| | 2009.07-2013.07 | MT | F | R | Estate FWD CBDB;CJAA;CFHC | Hollow shaft | GDS61339 | Drive Shaft | | 36 | | 59.5 | 40 | 794 | |
| | 2009.07-2013.07 | MT | F | R | Estate FWD CBDB;CJAA;CFHC | Solid shaft | GDS83313 | Drive Shaft | | 36 | | 59.5 | 40 | 792 | |

| | YEAR | TRANSM. | F/R | L/R | BODY STYLE & DRIVE TYPE & ENGINE | REMARKS | G-AP Ref. | PRODUCT | ABS | Technical Specifications A | B | C | H | L | P |
|---|---|---|---|---|---|---|---|---|---|---|---|---|---|---|---|
| **VW** **Golf Estate/Variant** | | | | | | | | | | | | | | | |
| 2.0 (103 kw) | 2009.07-2013.07 | MT | F | L | Estate FWD CBDB;CJAA;CFHC | | GCI61041 | Inner Joint | | | 28 | | | 32 | |
| | 2009.07-2013.07 | MT | F | R | Estate FWD CBDB;CJAA;CFHC | | GCI61002 | Inner Joint | | | 28 | | | 31.8 | |
| | 2009.07-2013.07 | MT | F | R | Estate FWD CBDB;CJAA;CFHC | | GCI61069 | Inner Joint | | | 28 | | | 32 | |
| | 2009.07-2013.07 | MT | F | L/R | Estate FWD CBDB;CJAA;CFHC | | GCI83016 | Inner Joint | | | 28 | | | 32 | |
| 2.0 (110 kw) | 2013.04-2020.08 | 6MT | F | L | Estate 4WD CRLB;CRBC;DFGA;DCYA | | GDS83295 | Drive Shaft | | 36 | | 59.5 | 40 | 491 | |
| | 2013.04-2020.08 | 6MT | F | R | Estate 4WD CRLB;CRBC;DFGA;DCYA | | GDS81892 | Drive Shaft | | 36 | | 59.5 | 40 | 602 | |
| | 2013.04-2020.08 | 6MT | F | L/R | Estate 4WD CRLB;CRBC;DFGA;DCYA | | GCO83101 | Outer Joint | | 36 | 27 | 59.5 | 40 | 65 | M |
| | 2013.04-2020.08 | 6MT | F | L/R | Estate 4WD CRLB;CRBC;DFGA;DCYA | | GCI61069 | Inner Joint | | | 28 | | | 32 | |
| | 2013.04-2020.08 | 6MT | F | L/R | Estate 4WD CRLB;CRBC;DFGA;DCYA | | GCI83016 | Inner Joint | | | 28 | | | 32 | |
| | 2013.04-2020.08 | 6MT | R | L | Estate 4WD CRLB;CRBC;DFGA;DCYA | | GDS61286 | Drive Shaft | | 36 | | 59.5 | 40 | 587 | |
| | 2013.04-2020.08 | 6MT | R | R | Estate 4WD CRLB;CRBC;DFGA;DCYA | | GDS61287 | Drive Shaft | | 36 | | 59.5 | 40 | 632 | |
| | 2013.04-2020.08 | 6MT | R | L/R | Estate 4WD CRLB;CRBC;DFGA;DCYA | | GCI35026 | Outer Joint | | 36 | 33 | 59.5 | 40 | 61 | |
| | 2013.04-2020.08 | 6MT | R | L/R | Estate 4WD CRLB;CRBC;DFGA;DCYA | | GCI61103 | Inner Joint | | | 33 | | | 32 | |
| | 2013.04-2020.08 | 6DCT | F | L | Estate FWD CRLB;CRBC;CRUA;DFGA;DCYA;DEJA | | GDS61285 | Drive Shaft | | 36 | | 59.5 | 40 | 472 | |
| | 2013.04-2020.08 | 6DCT | F | R | Estate FWD CRLB;CRBC;CRUA;DFGA;DCYA;DEJA | | GDS83354 | Drive Shaft | | 36 | | 59.5 | 40 | 763 | |
| | 2013.04-2020.08 | 6DCT | F | L/R | Estate FWD CRLB;CRBC;CRUA;DFGA;DCYA;DEJA | | GCI61057 | Inner Joint | | | 34 | | | 89 | |
| | 2013.04-2020.08 | 6MT | F | R | Estate FWD CRLB;CRBC;CRUA;DFGA;DCYA;DEJA | For PR code:1PE/1PF/1PG2/4G1/1PA/2H4G2/H3;For PR code:F4EF/F5EF/F6LF;For basic;For Model code:8N3 | GDS83313 | Drive Shaft | | 36 | | 59.5 | 40 | 792 | |
| | 2013.04-2020.08 | 6MT | F | L/R | Estate FWD CRLB;CRBC;CRUA;DFGA;DCYA;DEJA | | GCI83016 | Inner Joint | | | 28 | | | 32 | |
| | 2013.04-2020.08 | 6MT/6DCT/7DCT | F | L/R | Estate FWD CRLB;CRBC;CRUA;DFGA;DCYA;DEJA | | GCO83101 | Outer Joint | | 36 | 27 | 59.5 | 40 | 65 | M |
| | 2013.04-2020.08 | 6MT/7DCT | F | L | Estate FWD CRLB;CRBC;CRUA;DFGA;DCYA;DEJA | | GDS83295 | Drive Shaft | | 36 | | 59.5 | 40 | 491 | |
| | 2013.04-2020.08 | 7DCT | F | L | Estate FWD CRLB;CRBC;CRUA;DFGA;DCYA;DEJA | | GDS81265 | Drive Shaft | | 36 | 37 | 59.5 | 40 | 557 | |
| | 2013.04-2020.08 | 7DCT | F | R | Estate FWD CRLB;CRBC;CRUA;DFGA;DCYA;DEJA | | GDS83612 | Drive Shaft | | 36 | 37 | 59.5 | 40 | 907 | |
| | 2013.04-2020.08 | 7DCT | F | L | Estate FWD CRLB;CRBC;CRUA;DFGA;DCYA;DEJA | | GCI81158 | Inner Joint | | 37 | 34 | 34.5 | 65.5 | 83 | |
| | 2013.04-2020.08 | 7DCT | F | R | Estate FWD CRLB;CRBC;CRUA;DFGA;DCYA;DEJA | | GCI82108 | Inner Joint | | 37 | 34 | 40 | 77.5 | 103.5 | |
| | 2020.08- | 6MT | F | L | Estate FWD DTSA;DTSB;DTTC;DXPA | | GDS83295 | Drive Shaft | | 36 | | 59.5 | 40 | 491 | |
| | 2020.08- | 6MT | F | R | Estate FWD DTSA;DTSB;DTTC;DXPA | | GDS81891 | Drive Shaft | | 36 | | 59.5 | 40 | 781 | |
| | 2020.08- | 7DCT | F | L | Estate FWD DTSA;DTSB;DTTC;DXPA | For PR code:0IJ | GDS81265 | Drive Shaft | | 36 | 37 | 59.5 | 40 | 557 | |
| | 2020.08- | 7DCT | F | R | Estate FWD DTSA;DTSB;DTTC;DXPA | For PR code:0IJ | GDS83612 | Drive Shaft | | 36 | 37 | 59.5 | 40 | 907 | |
| | 2020.08- | 7DCT | F | R | Estate FWD DTSA;DTSB;DTTC;DXPA | For PR code:0IJ | GCO83101 | Outer Joint | | 36 | 27 | 59.5 | 40 | 65 | M |
| | 2020.08- | 7DCT | F | L | Estate FWD DTSA;DTSB;DTTC;DXPA | | GCI81158 | Inner Joint | | 37 | 34 | 34.5 | 65.5 | 83 | |
| | 2020.08- | 7DCT | F | R | Estate FWD DTSA;DTSB;DTTC;DXPA | For PR code:0IJ | GCI82108 | Inner Joint | | 37 | 34 | 40 | 77.5 | 103.5 | |
| | 2021.06- | 7DCT | F | L | Estate 4WD DTTC | | GDS81265 | Drive Shaft | | 36 | 37 | 59.5 | 40 | 557 | |
| | 2021.06- | 7DCT | F | R | Estate 4WD DTTC | | GDS81893 | Drive Shaft | | 36 | | 59.5 | 40 | 575 | |
| | 2021.06- | 7DCT | F | L/R | Estate 4WD DTTC | | GCO83101 | Outer Joint | | 36 | 27 | 59.5 | 40 | 65 | M |
| | 2021.06- | 7DCT | F | L | Estate 4WD DTTC | | GCI81158 | Inner Joint | | 37 | 34 | 34.5 | 65.5 | 83 | |
| | 2021.06- | 7DCT | F | R | Estate 4WD DTTC | | GCI61057 | Inner Joint | | | 34 | | | 89 | |
| | 2021.06- | 7DCT | R | L | Estate 4WD DTTC | | GDS61286 | Drive Shaft | | 36 | | 59.5 | 40 | 587 | |
| | 2021.06- | 7DCT | R | R | Estate 4WD DTTC | | GDS61287 | Drive Shaft | | 36 | | 59.5 | 40 | 632 | |
| | 2021.06- | 7DCT | R | L/R | Estate 4WD DTTC | | GCI35026 | Outer Joint | | 36 | 33 | 59.5 | 40 | 61 | |
| | 2021.06- | 7DCT | R | L/R | Estate 4WD DTTC | | GCI61103 | Inner Joint | | | 33 | | | 32 | |
| 2.0 (135 kw) | 2015.01-2019.07 | 6DCT | F | L | Estate FWD CUNA;DGCA;DJGA | | GDS61285 | Drive Shaft | | 36 | | 59.5 | 40 | 472 | |
| | 2015.01-2019.07 | 6DCT | F | R | Estate FWD CUNA;DGCA;DJGA | | GDS83354 | Drive Shaft | | 36 | | 59.5 | 40 | 763 | |
| | 2015.01-2019.07 | 6DCT | F | L/R | Estate FWD CUNA;DGCA;DJGA | | GCI61057 | Inner Joint | | | 34 | | | 89 | |
| | 2015.01-2019.07 | 6MT | F | L | Estate FWD CUNA;DGCA;DJGA | For PR code:1PE/1PF/1PA/2H4 | GDS83295 | Drive Shaft | | 36 | | 59.5 | 40 | 491 | |
| | 2015.01-2019.07 | 6MT | F | R | Estate FWD CUNA;DGCA;DJGA | | GDS83313 | Drive Shaft | | 36 | | 59.5 | 40 | 792 | |
| | 2015.01-2019.07 | 6MT | F | L/R | Estate FWD CUNA;DGCA;DJGA | | GCI83016 | Inner Joint | | | 28 | | | 32 | |
| | 2015.01-2019.07 | 6MT/6DCT/7DCT | F | L/R | Estate FWD CUNA;DGCA;DJGA | | GCO83101 | Outer Joint | | 36 | 27 | 59.5 | 40 | 65 | M |
| | 2015.01-2019.07 | 7DCT | F | L | Estate FWD CUNA;DGCA;DJGA | | GDS81265 | Drive Shaft | | 36 | 37 | 59.5 | 40 | 557 | |
| | 2015.01-2019.07 | 7DCT | F | R | Estate FWD CUNA;DGCA;DJGA | | GDS83612 | Drive Shaft | | 36 | 37 | 59.5 | 40 | 907 | |
| | 2015.01-2019.07 | 7DCT | F | L | Estate FWD CUNA;DGCA;DJGA | | GCI81158 | Inner Joint | | 37 | 34 | 34.5 | 65.5 | 83 | |
| | 2015.01-2019.07 | 7DCT | F | R | Estate FWD CUNA;DGCA;DJGA | | GCI82108 | Inner Joint | | 37 | 34 | 40 | 77.5 | 103.5 | |
| 2.0 (140 kw) | 2021.06-2024.11 | 7DCT | F | L | Estate FWD DNNA | | GDS84237 | Drive Shaft | | 36 | 37 | 59.5 | 40 | 560 | |
| | 2021.06-2024.11 | 7DCT | F | L/R | Estate FWD DNNA | | GCO83101 | Outer Joint | | 36 | 27 | 59.5 | 40 | 65 | M |
| | 2021.06-2024.11 | 7DCT | F | L | Estate FWD DNNA | | GCI83028 | Inner Joint | | 37 | 28 | | 65.5 | 90.2 | |
| 2.0 (147 kw) | 2007.06-2009.07 | 6DCT | F | L | Estate FWD BWA;CAWB;CCTA;CBFA | For Engine code:CAWB | GDS83295 | Drive Shaft | | 36 | | 59.5 | 40 | 491 | |
| | 2007.06-2009.07 | 6DCT | F | R | Estate FWD BWA;CAWB;CCTA;CBFA | For Engine code:BWA | GDS81653 | Drive Shaft | | 36 | | 59.5 | 40 | 785 | |
| | 2007.06-2009.07 | 6DCT | F | R | Estate FWD BWA;CAWB;CCTA;CBFA | For Engine code:CAWB | GDS83266 | Drive Shaft | | 36 | | 59.5 | 40 | 601 | |
| | 2007.06-2009.07 | 6DCT | F | L | Estate FWD BWA;CAWB;CCTA;CBFA | For Engine code:CAWB | GCO61059 | Outer Joint | | 36 | 33 | 59.5 | 40 | 59.5 | I |
| | 2007.06-2009.07 | 6MT | F | R | Estate FWD BWA;CAWB;CCTA;CBFA | | GDS61126 | Drive Shaft | | 36 | | 59.5 | 40 | 793 | |
| | 2007.06-2009.07 | 6MT | F | R | Estate FWD BWA;CAWB;CCTA;CBFA | | GDS61147 | Drive Shaft | | 36 | | 59.5 | 40 | 795 | |
| | 2007.06-2009.07 | AT | F | L/R | Estate FWD BWA;CAWB;CCTA;CBFA | | GCI61038 | Inner Joint | | 26 | 34 | 31 | 68.5 | 88.5 | |
| | 2007.06-2009.07 | AT/MT | F | L | Estate FWD BWA;CAWB;CCTA;CBFA | | GDS83236 | Drive Shaft | | 36 | | 59.5 | 40 | 484 | |
| | 2007.06-2009.07 | | F | L/R | Estate FWD BWA;CAWB;CCTA;CBFA | For Engine code:CAWB | GCO83002 | Outer Joint | | 36 | 27 | 59.5 | 40 | 66 | I |
| | 2007.06-2009.07 | | F | L/R | Estate FWD BWA;CAWB;CCTA;CBFA | | GCI83016 | Inner Joint | | | 28 | | | 32 | |
| | 2009.07-2013.07 | 6DCT | F | R | Estate FWD CCZA | | GDS81653 | Drive Shaft | | 36 | | 59.5 | 40 | 785 | |

| | YEAR | TRANSM. | F/R | L/R | BODY STYLE & DRIVE TYPE & ENGINE | REMARKS | G-AP Ref. | PRODUCT | ABS | Technical Specifications A | B | C | H | L | P |
|---|---|---|---|---|---|---|---|---|---|---|---|---|---|---|---|
| **VW** **Golf Estate/Variant** | | | | | | | | | | | | | | | |
| 2.0 (147 kw) | 2009.07-2013.07 | 6MT | F | R | Estate FWD CCZA | | GDS61126 | Drive Shaft | | 36 | | 59.5 | 40 | 793 | |
| | 2009.07-2013.07 | AT | F | L | Estate FWD CCZA | | GDS83295 | Drive Shaft | | 36 | | 59.5 | 40 | 491 | |
| | 2009.07-2013.07 | | F | L/R | Estate FWD CCZA | | GCO83002 | Outer Joint | | 36 | 27 | 59.5 | 40 | 66 | I |
| | 2009.07-2013.07 | | F | L/R | Estate FWD CCZA | | GCI83016 | Inner Joint | | | 28 | | | 32 | |
| 2.0 (206 kw) | 2015.03-2017.03 | 6AT/6MT | F | R | Estate 4WD CJXB | Wheel Hub Diam [mm]:42 | GDS81892 | Drive Shaft | | 36 | | 59.5 | 40 | 602 | |
| | 2015.03-2017.03 | 6AT/6MT | F | L | Estate 4WD CJXB | | GCI61069 | Inner Joint | | | 28 | | | 32 | |
| | 2015.03-2017.03 | 6DCT | F | L | Estate 4WD CJXB | | GDS98006 | Stub Axle-Flange | | 37 | | | 67 | 123.5 | |
| | 2015.03-2017.03 | 6MT/6DCT | F | L | Estate 4WD CJXB | | GDS83295 | Drive Shaft | | 36 | | 59.5 | 40 | 491 | |
| | 2015.03-2017.03 | 6MT/AT | F | L/R | Estate 4WD CJXB | | GCO83101 | Outer Joint | | 36 | 27 | 59.5 | 40 | 65 | M |
| | 2015.03-2017.03 | 6AT/6MT | R | L | Estate 4WD CJXB | | GDS61286 | Drive Shaft | | 36 | | 59.5 | 40 | 587 | |
| | 2015.03-2017.03 | 6AT/6MT | R | R | Estate 4WD CJXB | | GDS61287 | Drive Shaft | | 36 | | 59.5 | 40 | 632 | |
| | 2015.03-2017.03 | 6AT/6MT | R | L/R | Estate 4WD CJXB | | GCI61103 | Inner Joint | | | 33 | | | 32 | |
| 2.0 (213 kw) | 2016.12-2020.08 | 7AT | F | R | Estate 4WD CJXD;DJHB;DNUC | Wheel Hub Diam [mm]:42,Date to:2017.08;Wheel Hub Diam [mm]:27,Date from:2017.10 | GDS81892 | Drive Shaft | | 36 | | 59.5 | 40 | 602 | |
| | 2016.12-2020.08 | 7AT | F | L | Estate 4WD CJXD;DJHB;DNUC | | GCI83028 | Inner Joint | | 37 | 28 | | 65.5 | 90.2 | |
| | 2016.12-2020.08 | 7AT | F | R | Estate 4WD CJXD;DJHB;DNUC | | GCI61069 | Inner Joint | | | 28 | | | 32 | |
| | 2016.12-2020.08 | 7DCT | F | L | Estate 4WD CJXD;DJHB;DNUC | | GDS84237 | Drive Shaft | | 36 | 37 | 59.5 | 40 | 560 | |
| | 2016.12-2020.08 | 7AT | R | L | Estate 4WD CJXD;DJHB;DNUC | | GDS61286 | Drive Shaft | | 36 | | 59.5 | 40 | 587 | |
| | 2016.12-2020.08 | 7AT | R | R | Estate 4WD CJXD;DJHB;DNUC | | GDS61287 | Drive Shaft | | 36 | | 59.5 | 40 | 632 | |
| | 2016.12-2020.08 | 7AT | R | L/R | Estate 4WD CJXD;DJHB;DNUC | | GCI35026 | Outer Joint | | 36 | 33 | 59.5 | 40 | 61 | |
| | 2016.12-2020.08 | 7AT | R | L/R | Estate 4WD CJXD;DJHB;DNUC | | GCI61103 | Inner Joint | | | 33 | | | 32 | |
| 2.0 (221 kw) | 2015.03-2020.08 | 6DCT | F | L | Estate 4WD CJXC;DNUE | | GDS83295 | Drive Shaft | | 36 | | 59.5 | 40 | 491 | |
| | 2015.03-2020.08 | 6DCT | F | L/R | Estate 4WD CJXC;DNUE | | GCI61069 | Inner Joint | | | 28 | | | 32 | |
| | 2015.03-2020.08 | 6DCT/7DCT | F | R | Estate 4WD CJXC;DNUE | | GDS81892 | Drive Shaft | | 36 | | 59.5 | 40 | 602 | |
| | 2015.03-2020.08 | 6DCT/7DCT | F | L/R | Estate 4WD CJXC;DNUE | | GCO83101 | Outer Joint | | 36 | 27 | 59.5 | 40 | 65 | M |
| | 2015.03-2020.08 | 7DCT | F | L | Estate 4WD CJXC;DNUE | | GDS84237 | Drive Shaft | | 36 | 37 | 59.5 | 40 | 560 | |
| | 2015.03-2020.08 | 7DCT | F | L | Estate 4WD CJXC;DNUE | | GCI83028 | Inner Joint | | 37 | 28 | | 65.5 | 90.2 | |
| | 2015.03-2020.08 | 7DCT | F | R | Estate 4WD CJXC;DNUE | | GCI61069 | Inner Joint | | | 28 | | | 32 | |
| | 2015.03-2020.08 | 6DCT/7DCT | R | L | Estate 4WD CJXC;DNUE | | GDS61286 | Drive Shaft | | 36 | | 59.5 | 40 | 587 | |
| | 2015.03-2020.08 | 6DCT/7DCT | R | R | Estate 4WD CJXC;DNUE | | GDS61287 | Drive Shaft | | 36 | | 59.5 | 40 | 632 | |
| | 2015.03-2020.08 | 6DCT/7DCT | R | L/R | Estate 4WD CJXC;DNUE | | GCI35026 | Outer Joint | | 36 | 33 | 59.5 | 40 | 61 | |
| | 2015.03-2020.08 | 6DCT/7DCT | R | L/R | Estate 4WD CJXC;DNUE | | GCI61103 | Inner Joint | | | 33 | | | 32 | |
| 2.0 (228 kw) | 2016.12-2020.08 | 7AT | F | L | Estate 4WD CJXG;DJHA | | GCI83028 | Inner Joint | | 37 | 28 | | 65.5 | 90.2 | |
| | 2016.12-2020.08 | 7AT/6MT | F | R | Estate 4WD CJXG;DJHA | Wheel Hub Diam [mm]:42,Date to:2017.08;Wheel Hub Diam [mm]:27,Date from:2017.10 | GDS81892 | Drive Shaft | | 36 | | 59.5 | 40 | 602 | |
| | 2016.12-2020.08 | 7DCT | F | L | Estate 4WD CJXG;DJHA | | GDS84237 | Drive Shaft | | 36 | 37 | 59.5 | 40 | 560 | |
| | 2016.12-2020.08 | 7DCT | F | R | Estate 4WD CJXG;DJHA | | GCI61069 | Inner Joint | | | 28 | | | 32 | |
| | 2016.12-2020.08 | 7AT | R | L | Estate 4WD CJXG;DJHA | | GDS61286 | Drive Shaft | | 36 | | 59.5 | 40 | 587 | |
| | 2016.12-2020.08 | 7AT | R | R | Estate 4WD CJXG;DJHA | | GDS61287 | Drive Shaft | | 36 | | 59.5 | 40 | 632 | |
| | 2016.12-2020.08 | 7AT | R | L/R | Estate 4WD CJXG;DJHA | | GCI35026 | Outer Joint | | 36 | 33 | 59.5 | 40 | 61 | |
| | 2016.12-2020.08 | 7AT | R | L/R | Estate 4WD CJXG;DJHA | | GCI61103 | Inner Joint | | | 33 | | | 32 | |
| 2.0 (235 kw) | 2021.06- | 7DCT | F | L | Estate 4WD DNFG | | GDS84237 | Drive Shaft | | 36 | 37 | 59.5 | 40 | 560 | |
| | 2021.06- | 7DCT | F | L | Estate 4WD DNFG | | GCI83028 | Inner Joint | | 37 | 28 | | 65.5 | 90.2 | |
| | 2021.06- | 7DCT/6MT | F | R | Estate 4WD DNFG | Wheel Hub Diam [mm]:27 | GDS81892 | Drive Shaft | | 36 | | 59.5 | 40 | 602 | |
| | 2021.06- | 7DCT/6MT | F | R | Estate 4WD DNFG | | GCI61069 | Inner Joint | | | 28 | | | 32 | |
| | 2021.06- | AT | F | L/R | Estate 4WD DNFG | | GCO83101 | Outer Joint | | 36 | 27 | 59.5 | 40 | 65 | M |
| 2.0 (245 kw) | 2024.06- | 7DCT | F | L | Estate 4WD DNFF | | GDS84237 | Drive Shaft | | 36 | 37 | 59.5 | 40 | 560 | |
| | 2024.06- | 7DCT | F | R | Estate 4WD DNFF | | GDS81892 | Drive Shaft | | 36 | | 59.5 | 40 | 602 | |
| | 2024.06- | 7DCT | F | L/R | Estate 4WD DNFF | | GCO83101 | Outer Joint | | 36 | 27 | 59.5 | 40 | 65 | M |
| | 2024.06- | 7DCT | F | L | Estate 4WD DNFF | | GCI83028 | Inner Joint | | 37 | 28 | | 65.5 | 90.2 | |
| | 2024.06- | 7DCT | F | R | Estate 4WD DNFF | | GCI61069 | Inner Joint | | | 28 | | | 32 | |
| 2.0 (265 kw) | 2016.09- | 6MT | F | L/R | Estate 4WD CJXC | For Engine Code:CJXC | GCO83101 | Outer Joint | | 36 | 27 | 59.5 | 40 | 65 | M |
| 2.3 (110 kw) | 1999.05-2001.02 | 6MT | F | L | Estate 4WD AGZ | | GDS61123 | Drive Shaft | | 36 | | 53 | 77.5 | 520 | |
| | 1999.05-2001.02 | 6MT | F | R | Estate 4WD AGZ | | GDS61186 | Drive Shaft | | 36 | | 53 | 77.5 | 653 | |
| | 1999.05-2001.02 | 6MT | F | L/R | Estate 4WD AGZ | | GCO83035 | Outer Joint | | 36 | 27 | 53 | 77.5 | 65 | I |
| | 1999.05-2001.02 | | F | L/R | Estate 4WD AGZ | | GCI83001 | Inner Joint | | | 28 | | | 32 | |
| | 1999.05-2001.02 | 6MT | R | L | Estate 4WD AGZ | | GDS82364 | Drive Shaft | | 36 | | 53 | 78.5 | 651 | |
| | 1999.05-2001.02 | 6MT | R | R | Estate 4WD AGZ | | GDS81587 | Drive Shaft | | 36 | | 53 | 78.5 | 522 | |
| | 1999.05-2001.02 | 6MT | R | L/R | Estate 4WD AGZ | | GCI53002 | Inner Joint | | | 33 | | | 34 | |
| | 1999.05-2001.02 | 6MT | R | L/R | Estate 4WD AGZ | | GCI82447 | Inner Joint | | | 33 | | | 34 | |
| | 1999.05-2001.02 | | R | L/R | Estate 4WD AGZ | | GCO83033 | Outer Joint | | 36 | 30 | 53 | 78.5 | 51 | I |
| | 1999.05-2001.02 | | R | L/R | Estate 4WD AGZ | Date To:2001.02 | GCI83011 | Inner Joint | | | 33 | | | 34 | |
| | 1999.05-2001.02 | AT | F | L | Estate FWD AGZ | Date to:1999.09;Date from:1999.10;Date to:2001.02;For vehicles with headlamp leveling (automatic);For PR code:802 | GDS61020 | Drive Shaft | | 36 | | 53.2 | 77.5 | 547 | |
| | 1999.05-2001.02 | AT/MT | F | L/R | Estate FWD AGZ | Date to:2001.02 | GCO83070 | Outer Joint | | 36 | 30 | 53 | 78 | 60 | I |
| | 1999.05-2001.02 | AT/MT | F | L/R | Estate FWD AGZ | Date to:2001.02 | GCI61006 | Inner Joint | | | 30 | | | 57.6 | |
| | 1999.05-2001.02 | MT | F | L | Estate FWD AGZ | Date to:1999.11;Date from:1999.12;Date to:2001.02;For vehicles with headlamp leveling (automatic);For PR code:802 | GDS61020 | Drive Shaft | | 36 | | 53.2 | 77.5 | 547 | |
| 2.3 (125 kw) | 2000.09-2005.06 | 6MT | F | L | Estate 4WD AQN | | GDS61123 | Drive Shaft | | 36 | | 53 | 77.5 | 520 | |

| | YEAR | TRANSM. | F/R | L/R | BODY STYLE & DRIVE TYPE & ENGINE | REMARKS | G-AP Ref. | PRODUCT | ABS | Technical Specifications A | B | C | H | L | P |
|---|---|---|---|---|---|---|---|---|---|---|---|---|---|---|---|
| **VW** | | | | | | | | | | | | | | | |
| **Golf Estate/Variant** | | | | | | | | | | | | | | | |
| 2.3 (125 kw) | 2000.09-2005.06 | 6MT | F | R | Estate 4WD AQN | | GDS61186 | Drive Shaft | | 36 | | 53 | 77.5 | 653 | |
| | 2000.09-2005.06 | 6MT | F | L/R | Estate 4WD AQN | | GCO83035 | Outer Joint | | 36 | 27 | 53 | 77.5 | 65 | I |
| | 2000.09-2005.06 | AT | F | L | Estate 4WD AQN | | GDS61244 | Drive Shaft | | 36 | | 53 | 77.5 | 523 | |
| | 2000.09-2005.06 | AT | F | R | Estate 4WD AQN | | GDS61243 | Drive Shaft | | 36 | | 53 | 77.5 | 813 | |
| | 2000.09-2005.06 | AT | F | L/R | Estate 4WD AQN | | GCI61044 | Inner Joint | | | 34 | | | 85 | |
| | 2000.09-2005.06 | MT | F | L | Estate 4WD AQN | | GDS61020 | Drive Shaft | | 36 | | 53.2 | 77.5 | 547 | |
| | 2000.09-2005.06 | | F | L/R | Estate 4WD AQN | | GCI83001 | Inner Joint | | | 28 | | | 32 | |
| | 2000.09-2005.06 | | F | L/R | Estate 4WD AQN | Date From:2003.02 | GCI83016 | Inner Joint | | | 28 | | | 32 | |
| | 2000.09-2005.06 | 6MT | R | L | Estate 4WD AQN | | GDS82364 | Drive Shaft | | 36 | | 53 | 78.5 | 651 | |
| | 2000.09-2005.06 | 6MT | R | R | Estate 4WD AQN | | GDS81587 | Drive Shaft | | 36 | | 53 | 78.5 | 522 | |
| | 2000.09-2005.06 | 6MT | R | L/R | Estate 4WD AQN | | GCI82447 | Inner Joint | | | 33 | | | 34 | |
| | 2000.09-2005.06 | | R | L/R | Estate 4WD AQN | | GCO83033 | Outer Joint | | 36 | 30 | 53 | 78.5 | 51 | I |
| | 2000.09-2005.06 | | R | L/R | Estate 4WD AQN | Date To:2005.06 | GCI83011 | Inner Joint | | | 33 | | | 34 | |
| | 2000.09-2006.05 | AT | F | L | Estate FWD AQN | | GDS61244 | Drive Shaft | | 36 | | 53 | 77.5 | 523 | |
| | 2000.09-2006.05 | AT | F | R | Estate FWD AQN | | GDS61243 | Drive Shaft | | 36 | | 53 | 77.5 | 813 | |
| | 2000.09-2006.05 | AT | F | L/R | Estate FWD AQN | | GCO83035 | Outer Joint | | 36 | 27 | 53 | 77.5 | 65 | I |
| | 2000.09-2006.05 | AT | F | L/R | Estate FWD AQN | Date from:2003.04 | GCI61057 | Inner Joint | | | 34 | | | 89 | |
| | 2000.09-2006.05 | AT | F | L/R | Estate FWD AQN | Date to:2003.01,Chassis no. to:1J_3W468501 | GCI83007 | Inner Joint | | | 34 | | | 85 | |
| | 2000.09-2006.05 | MT | F | L | Estate FWD AQN | | GDS61020 | Drive Shaft | | 36 | | 53.2 | 77.5 | 547 | |
| | 2000.09-2006.05 | MT | F | R | Estate FWD AQN | | GDS83011 | Drive Shaft | | 36 | | 53.2 | 77.5 | 810.5 | |
| | 2000.09-2006.05 | MT | F | L/R | Estate FWD AQN | | GCO83070 | Outer Joint | | 36 | 30 | 53 | 78 | 60 | I |
| | 2000.09-2006.05 | MT | F | L/R | Estate FWD AQN | | GCI61006 | Inner Joint | | | 30 | | | 57.6 | |
| 2.8 (150 kw) | 1999.05-2005.06 | 6MT | F | L | Estate 4WD AQP/AUE/BDE | | GDS61123 | Drive Shaft | | 36 | | 53 | 77.5 | 520 | |
| | 1999.05-2005.06 | 6MT | F | R | Estate 4WD AQP/AUE/BDE | | GDS61186 | Drive Shaft | | 36 | | 53 | 77.5 | 653 | |
| | 1999.05-2005.06 | 6MT | F | L/R | Estate 4WD AQP/AUE/BDE | | GCO83035 | Outer Joint | | 36 | 27 | 53 | 77.5 | 65 | I |
| | 1999.05-2005.06 | | F | L/R | Estate 4WD AQP/AUE/BDE | Date To:2003.01 | GCI83001 | Inner Joint | | | 28 | | | 32 | |
| | 1999.05-2005.06 | | F | L/R | Estate 4WD AQP/AUE/BDE | Date From:2003.02 | GCI83016 | Inner Joint | | | 28 | | | 32 | |
| | 1999.05-2005.06 | 6MT | R | L | Estate 4WD AQP/AUE/BDE | | GDS82364 | Drive Shaft | | 36 | | 53 | 78.5 | 651 | |
| | 1999.05-2005.06 | 6MT | R | R | Estate 4WD AQP/AUE/BDE | | GDS81587 | Drive Shaft | | 36 | | 53 | 78.5 | 522 | |
| | 1999.05-2005.06 | 6MT | R | L/R | Estate 4WD AQP/AUE/BDE | | GCI53002 | Inner Joint | | | 33 | | | 34 | |
| | 1999.05-2005.06 | 6MT | R | L/R | Estate 4WD AQP/AUE/BDE | | GCI82447 | Inner Joint | | | 33 | | | 34 | |
| | 1999.05-2005.06 | | R | L/R | Estate 4WD AQP/AUE/BDE | | GCO83033 | Outer Joint | | 36 | 30 | 53 | 78.5 | 51 | I |
| | 1999.05-2005.06 | | R | L/R | Estate 4WD AQP/AUE/BDE | Date To:2005.06 | GCI83011 | Inner Joint | | | 33 | | | 34 | |
| 2.9 (140 kw) | 1995.07-1997.12 | MT | F | L | Estate 4WD ABV | For Engine Code:ABV | GDS83006 | Drive Shaft | | 36 | | 53.2 | 77.5 | 557 | |
| | 1995.07-1997.12 | MT | F | R | Estate 4WD ABV | For Engine Code:ABV | GDS99112 | Drive Shaft | | 36 | | 53.2 | 77.5 | 783 | |
| | 1995.07-1997.12 | MT | F | L/R | Estate 4WD ABV | | GCO83070 | Outer Joint | | 36 | 30 | 53 | 78 | 60 | I |
| | 1995.07-1997.12 | MT | F | L/R | Estate 4WD ABV | | GCI83006 | Inner Joint | | | 33 | | | 34 | |
| **Golf Plus** | | | | | | | | | | | | | | | |
| 1.2 (63 kw) | 2010.05-2013.12 | 5MT | F | L/R | Hatchback FWD CBZA | | GCO83037 | Outer Joint | | 36 | 30 | 59.5 | 40.5 | 56 | I |
| | 2010.05-2013.12 | 5MT/7DCT | F | L | Hatchback FWD CBZA | | GDS61201 | Drive Shaft | | 36 | | 59.5 | 40.5 | 535 | |
| | 2010.05-2013.12 | 5MT/7DCT | F | R | Hatchback FWD CBZA | | GDS61096 | Drive Shaft | | 36 | | 59.5 | 40.5 | 799 | |
| | 2010.05-2013.12 | 5MT/7DCT | F | L/R | Hatchback FWD CBZA | | GCI82447 | Inner Joint | | | 33 | | | 34 | |
| | 2010.05-2013.12 | 7DCT | F | L/R | Hatchback FWD CBZA | | GCO61059 | Outer Joint | | 36 | 33 | 59.5 | 40 | 59.5 | I |
| 1.2 (77 kw) | 2009.11-2013.12 | 6MT | F | L/R | Hatchback FWD CBZB | | GCO83037 | Outer Joint | | 36 | 30 | 59.5 | 40.5 | 56 | I |
| | 2009.11-2013.12 | 6MT/7DCT | F | L | Hatchback FWD CBZB | | GDS61201 | Drive Shaft | | 36 | | 59.5 | 40.5 | 535 | |
| | 2009.11-2013.12 | 6MT/7DCT | F | R | Hatchback FWD CBZB | | GDS61096 | Drive Shaft | | 36 | | 59.5 | 40.5 | 799 | |
| | 2009.11-2013.12 | 6MT/7DCT | F | L/R | Hatchback FWD CBZB | | GCI82447 | Inner Joint | | | 33 | | | 34 | |
| | 2009.11-2013.12 | 7DCT | F | L/R | Hatchback FWD CBZB | | GCO61059 | Outer Joint | | 36 | 33 | 59.5 | 40 | 59.5 | I |
| | 2009.11-2014.08 | 7DCT/6MT | F | L/R | Hatchback Van FWD CBZB | | GCI82447 | Inner Joint | | | 33 | | | 34 | |
| | 2009.11-2014.08 | AT/MT | F | L | Hatchback Van FWD CBZB | | GDS61201 | Drive Shaft | | 36 | | 59.5 | 40.5 | 535 | |
| | 2009.11-2014.08 | AT/MT | F | R | Hatchback Van FWD CBZB | | GDS61096 | Drive Shaft | | 36 | | 59.5 | 40.5 | 799 | |
| | 2009.11-2014.08 | AT/MT | F | L | Hatchback Van FWD CBZB | | GCO83037 | Outer Joint | | 36 | 30 | 59.5 | 40.5 | 56 | I |
| | 2009.11-2014.08 | AT/MT | F | R | Hatchback Van FWD CBZB | | GCO61059 | Outer Joint | | 36 | 33 | 59.5 | 40 | 59.5 | I |
| | 2009.11-2014.08 | | F | L/R | Hatchback Van FWD CBZB | | GCI83011 | Inner Joint | | | 33 | | | 34 | |
| 1.4 (55 kw) | 2005.01-2006.11 | 5MT | F | L | Hatchback FWD BCA | | GDS53007 | Drive Shaft | | 36 | | 59.5 | 40 | 559 | |
| | 2005.01-2006.11 | 5MT | F | R | Hatchback FWD BCA | | GDS53008 | Drive Shaft | | 36 | | 59.5 | 40 | 782 | |
| | 2005.01-2006.11 | 5MT | F | L/R | Hatchback FWD BCA | | GCO53001 | Outer Joint | | 36 | 30 | 59.5 | 40 | 49 | I |
| | 2005.01-2006.11 | MT | F | L/R | Hatchback FWD BCA | | GCI83008 | Inner Joint | | | 33 | | | 32 | |
| 1.4 (59 kw) | 2006.05-2013.12 | MT | F | L | Hatchback FWD BUD;CGGA | | GDS53007 | Drive Shaft | | 36 | | 59.5 | 40 | 559 | |
| | 2006.05-2013.12 | MT | F | R | Hatchback FWD BUD;CGGA | | GDS53008 | Drive Shaft | | 36 | | 59.5 | 40 | 782 | |
| | 2006.05-2013.12 | MT | F | L/R | Hatchback FWD BUD;CGGA | | GCO53001 | Outer Joint | | 36 | 30 | 59.5 | 40 | 49 | I |
| | 2006.05-2013.12 | MT | F | L/R | Hatchback FWD BUD;CGGA | | GCI83008 | Inner Joint | | | 33 | | | 32 | |
| 1.4 (66 kw) | 2005.07-2006.11 | 5MT | F | L | Hatchback FWD BLN | | GDS53007 | Drive Shaft | | 36 | | 59.5 | 40 | 559 | |
| | 2005.07-2006.11 | 5MT | F | R | Hatchback FWD BLN | | GDS53008 | Drive Shaft | | 36 | | 59.5 | 40 | 782 | |
| | 2005.07-2006.11 | 5MT | F | L/R | Hatchback FWD BLN | | GCO53001 | Outer Joint | | 36 | 30 | 59.5 | 40 | 49 | I |

| | YEAR | TRANSM. | F/R | L/R | BODY STYLE & DRIVE TYPE & ENGINE | REMARKS | G-AP Ref. | PRODUCT | ABS | Technical Specifications A | B | C | H | L | P |
|---|---|---|---|---|---|---|---|---|---|---|---|---|---|---|---|
| **VW** **Golf Plus** | | | | | | | | | | | | | | | |
| 1.4 (66 kw) | 2005.07-2006.11 | 5MT | F | L/R | Hatchback FWD BLN | | GCI83008 | Inner Joint | | | 33 | | | 32 | |
| 1.4 (90 kw) | 2007.06-2013.12 | 6MT | F | L | Hatchback FWD CAXA | | GDS61201 | Drive Shaft | | 36 | | 59.5 | 40.5 | 535 | |
| | 2007.06-2013.12 | 6MT | F | R | Hatchback FWD CAXA | | GDS61096 | Drive Shaft | | 36 | | 59.5 | 40.5 | 799 | |
| | 2007.06-2013.12 | 6MT | F | L/R | Hatchback FWD CAXA | | GCO83037 | Outer Joint | | 36 | 30 | 59.5 | 40.5 | 56 | I |
| | 2007.06-2013.12 | 6MT | F | L/R | Hatchback FWD CAXA | | GCI82447 | Inner Joint | | | 33 | | | 34 | |
| | 2007.06-2013.12 | 7DCT | F | L | Hatchback FWD CAXA | Date from:2011.06 | GDS61201 | Drive Shaft | | 36 | | 59.5 | 40.5 | 535 | |
| | 2007.06-2013.12 | 7DCT | F | L | Hatchback FWD CAXA | Date from:2008.11,Date to:2011.05 | GDS61281 | Drive Shaft | | 36 | | 59.5 | 40 | 528 | |
| | 2007.06-2013.12 | 7DCT | F | L | Hatchback FWD CAXA | Date to:2008.10 | GDS81783 | Drive Shaft | | 36 | 40 | 59.5 | 40 | 531 | |
| | 2007.06-2013.12 | 7DCT | F | R | Hatchback FWD CAXA | Date from:2011.06 | GDS61096 | Drive Shaft | | 36 | | 59.5 | 40.5 | 799 | |
| | 2007.06-2013.12 | 7DCT | F | R | Hatchback FWD CAXA | Date from:2008.11,Date to:2011.05 | GDS81653 | Drive Shaft | | 36 | | 59.5 | 40 | 785 | |
| | 2007.06-2013.12 | 7DCT | F | R | Hatchback FWD CAXA | Date to:2008.10 | GDS81784 | Drive Shaft | | 36 | 40 | 59.5 | 40 | 801 | |
| | 2007.06-2013.12 | 7DCT | F | L/R | Hatchback FWD CAXA | Date from:2011.06 | GCO61059 | Outer Joint | | 36 | 33 | 59.5 | 40 | 59.5 | I |
| | 2007.06-2013.12 | 7DCT | F | L/R | Hatchback FWD CAXA | Date to:2011.05 | GCO83002 | Outer Joint | | 36 | 27 | 59.5 | 40 | 66 | I |
| | 2007.06-2013.12 | 7DCT | F | L/R | Hatchback FWD CAXA | Date from:2011.06 | GCI53002 | Inner Joint | | | 33 | | | 34 | |
| | 2007.06-2013.12 | 7DCT | F | L/R | Hatchback FWD CAXA | Date to:2008.10 | GCI61054 | Inner Joint | | 40 | 28 | 46.9 | 41 | 101.7 | |
| | 2007.06-2013.12 | 7DCT | F | L/R | Hatchback FWD CAXA | Date from:2008.11,Date to:2011.05,Original design | GCI61069 | Inner Joint | | | 28 | | | 32 | |
| | 2007.06-2013.12 | 7DCT | F | L/R | Hatchback FWD CAXA | Date from:2011.06 | GCI82447 | Inner Joint | | | 33 | | | 34 | |
| | 2007.06-2013.12 | 7DCT | F | L/R | Hatchback FWD CAXA | Date from:2008.11,Date to:2011.05,Non-Original design | GCI83016 | Inner Joint | | | 28 | | | 32 | |
| | 2009.01-2014.08 | 6MT | F | L/R | Hatchback Van FWD CAXA | Date from:2010.06;For PR code:A8T | GCO61059 | Outer Joint | | 36 | 33 | 59.5 | 40 | 59.5 | I |
| | 2009.01-2014.08 | 6MT | F | L/R | Hatchback Van FWD CAXA | | GCI82447 | Inner Joint | | | 33 | | | 34 | |
| | 2009.01-2014.08 | 7AT/6MT | F | L/R | Hatchback Van FWD CAXA | | GCI83016 | Inner Joint | | | 28 | | | 32 | |
| | 2009.01-2014.08 | AT | F | L | Hatchback Van FWD CAXA | | GDS61281 | Drive Shaft | | 36 | | 59.5 | 40 | 528 | |
| | 2009.01-2014.08 | AT | F | R | Hatchback Van FWD CAXA | | GDS81653 | Drive Shaft | | 36 | | 59.5 | 40 | 785 | |
| | 2009.01-2014.08 | AT | F | L/R | Hatchback Van FWD CAXA | | GCO83002 | Outer Joint | | 36 | 27 | 59.5 | 40 | 66 | I |
| | 2009.01-2014.08 | MT | F | L | Hatchback Van FWD CAXA | | GDS61201 | Drive Shaft | | 36 | | 59.5 | 40.5 | 535 | |
| | 2009.01-2014.08 | MT | F | R | Hatchback Van FWD CAXA | | GDS61096 | Drive Shaft | | 36 | | 59.5 | 40.5 | 799 | |
| | 2009.01-2014.08 | MT | F | L | Hatchback Van FWD CAXA | | GCO83037 | Outer Joint | | 36 | 30 | 59.5 | 40.5 | 56 | I |
| 1.4 (103 kw) | 2006.05-2008.06 | 6AT/6MT | F | L/R | Hatchback FWD BMY | | GCI83016 | Inner Joint | | | 28 | | | 32 | |
| | 2006.05-2008.06 | 6DCT | F | L | Hatchback FWD BMY | | GDS81896 | Drive Shaft | | 36 | | 59.5 | 40 | 500 | |
| | 2006.05-2008.06 | 6MT | F | L | Hatchback FWD BMY | Chassis no. to:1K7650000;Chassis no. from:1K8500001 | GDS61201 | Drive Shaft | | 36 | | 59.5 | 40.5 | 535 | |
| | 2006.05-2008.06 | 6MT | F | R | Hatchback FWD BMY | Chassis no. to:1K7650000;Chassis no. from:1K8500001 | GDS61096 | Drive Shaft | | 36 | | 59.5 | 40.5 | 799 | |
| | 2006.05-2008.06 | 6MT | F | L/R | Hatchback FWD BMY | | GCI82447 | Inner Joint | | | 33 | | | 34 | |
| | 2006.05-2008.06 | AT | F | L | Hatchback FWD BMY | | GDS83236 | Drive Shaft | | 36 | | 59.5 | 40 | 484 | |
| | 2006.05-2008.06 | AT | F | R | Hatchback FWD BMY | | GDS61342 | Drive Shaft | | 36 | | 59.5 | 40 | 764 | |
| | 2006.05-2008.06 | AT | F | L/R | Hatchback FWD BMY | | GCO83002 | Outer Joint | | 36 | 27 | 59.5 | 40 | 66 | I |
| | 2006.05-2008.06 | MT | F | L | Hatchback FWD BMY | | GDS83302 | Drive Shaft | | 36 | | 59.5 | 40 | 528 | |
| | 2006.05-2008.06 | MT | F | L/R | Hatchback FWD BMY | | GCO83037 | Outer Joint | | 36 | 30 | 59.5 | 40.5 | 56 | I |
| 1.4 (118 kw) | 2008.06-2013.12 | 6MT | F | L/R | Hatchback FWD CAVD;CNWA;CTHD | Date from:2010.06;For PR code:A8T | GCO61059 | Outer Joint | | 36 | 33 | 59.5 | 40 | 59.5 | I |
| | 2008.06-2013.12 | 6MT | F | L/R | Hatchback FWD CAVD;CNWA;CTHD | | GCI82447 | Inner Joint | | | 33 | | | 34 | |
| | 2008.06-2013.12 | AT | F | L | Hatchback FWD CAVD;CNWA;CTHD | Date from:2008.11 | GDS61281 | Drive Shaft | | 36 | | 59.5 | 40 | 528 | |
| | 2008.06-2013.12 | AT | F | L | Hatchback FWD CAVD;CNWA;CTHD | Date to:2008.10 | GDS81783 | Drive Shaft | | 36 | 40 | 59.5 | 40 | 531 | |
| | 2008.06-2013.12 | AT | F | R | Hatchback FWD CAVD;CNWA;CTHD | Date from:2008.11 | GDS81653 | Drive Shaft | | 36 | | 59.5 | 40 | 785 | |
| | 2008.06-2013.12 | AT | F | R | Hatchback FWD CAVD;CNWA;CTHD | Date to:2008.10 | GDS81784 | Drive Shaft | | 36 | 40 | 59.5 | 40 | 801 | |
| | 2008.06-2013.12 | AT | F | L/R | Hatchback FWD CAVD;CNWA;CTHD | | GCO83002 | Outer Joint | | 36 | 27 | 59.5 | 40 | 66 | I |
| | 2008.06-2013.12 | AT | F | L/R | Hatchback FWD CAVD;CNWA;CTHD | Date to:2008.10 | GCI61054 | Inner Joint | | 40 | 28 | 46.9 | 41 | 101.7 | |
| | 2008.06-2013.12 | AT | F | L/R | Hatchback FWD CAVD;CNWA;CTHD | Date from:2008.11 | GCI83016 | Inner Joint | | | 28 | | | 32 | |
| | 2008.06-2013.12 | MT | F | L | Hatchback FWD CAVD;CNWA;CTHD | | GDS61201 | Drive Shaft | | 36 | | 59.5 | 40.5 | 535 | |
| | 2008.06-2013.12 | MT | F | R | Hatchback FWD CAVD;CNWA;CTHD | | GDS61096 | Drive Shaft | | 36 | | 59.5 | 40.5 | 799 | |
| | 2008.06-2013.12 | MT | F | L/R | Hatchback FWD CAVD;CNWA;CTHD | | GCO83037 | Outer Joint | | 36 | 30 | 59.5 | 40.5 | 56 | I |
| | 2009.01-2012.09 | 6MT | F | L/R | Hatchback Van FWD CAVD | | GCI82447 | Inner Joint | | | 33 | | | 34 | |
| | 2009.01-2012.09 | 7AT/6MT | F | L/R | Hatchback Van FWD CAVD | | GCI83016 | Inner Joint | | | 28 | | | 32 | |
| | 2009.01-2012.09 | AT | F | L | Hatchback Van FWD CAVD | | GDS61281 | Drive Shaft | | 36 | | 59.5 | 40 | 528 | |
| | 2009.01-2012.09 | AT | F | R | Hatchback Van FWD CAVD | | GDS81653 | Drive Shaft | | 36 | | 59.5 | 40 | 785 | |
| | 2009.01-2012.09 | AT | F | L/R | Hatchback Van FWD CAVD | | GCO83002 | Outer Joint | | 36 | 27 | 59.5 | 40 | 66 | I |
| | 2009.01-2012.09 | MT | F | L | Hatchback Van FWD CAVD | | GDS61201 | Drive Shaft | | 36 | | 59.5 | 40.5 | 535 | |
| | 2009.01-2012.09 | MT | F | R | Hatchback Van FWD CAVD | | GDS61096 | Drive Shaft | | 36 | | 59.5 | 40.5 | 799 | |
| | 2009.01-2012.09 | MT | F | R | Hatchback Van FWD CAVD | Date from:2010.06 | GCO61059 | Outer Joint | | 36 | 33 | 59.5 | 40 | 59.5 | I |
| | 2009.01-2012.09 | MT | F | L/R | Hatchback Van FWD CAVD | | GCO83037 | Outer Joint | | 36 | 30 | 59.5 | 40.5 | 56 | I |
| 1.4 (125 kw) | 2006.05-2008.06 | 6DCT | F | L | Hatchback FWD BLG | | GDS81896 | Drive Shaft | | 36 | | 59.5 | 40 | 500 | |
| | 2006.05-2008.06 | 6DCT | F | L/R | Hatchback FWD BLG | | GCI83016 | Inner Joint | | | 28 | | | 32 | |
| | 2006.05-2008.06 | 6MT | F | L/R | Hatchback FWD BLG | | GCO83002 | Outer Joint | | 36 | 27 | 59.5 | 40 | 66 | I |
| | 2006.05-2008.06 | AT | F | L | Hatchback FWD BLG | | GDS83236 | Drive Shaft | | 36 | | 59.5 | 40 | 484 | |
| | 2006.05-2008.06 | AT | F | R | Hatchback FWD BLG | | GDS61342 | Drive Shaft | | 36 | | 59.5 | 40 | 764 | |
| | 2006.05-2008.06 | MT | F | L | Hatchback FWD BLG | | GDS83302 | Drive Shaft | | 36 | | 59.5 | 40 | 528 | |
| | 2006.05-2008.06 | MT | F | R | Hatchback FWD BLG | | GDS81653 | Drive Shaft | | 36 | | 59.5 | 40 | 785 | |

| | YEAR | TRANSM. | F/R | L/R | BODY STYLE & DRIVE TYPE & ENGINE | REMARKS | G-AP Ref. | PRODUCT | ABS | Technical Specifications A | B | C | H | L | P |
|---|---|---|---|---|---|---|---|---|---|---|---|---|---|---|---|
| **VW** **Golf Plus** | | | | | | | | | | | | | | | |
| 1.6 (66 kw) | 2009.02-2013.12 | 5MT | F | L | Hatchback FWD CAYB | | GDS83294 | Drive Shaft | | 36 | | 59.5 | 38 | 519 | |
| | 2009.02-2013.12 | 5MT | F | R | Hatchback FWD CAYB | | GDS61042 | Drive Shaft | | 36 | | 59.5 | 40.5 | 814 | |
| | 2009.02-2013.12 | 5MT | F | L/R | Hatchback FWD CAYB | | GCO83037 | Outer Joint | | 36 | 30 | 59.5 | 40.5 | 56 | I |
| | 2009.02-2013.12 | 5MT | F | L/R | Hatchback FWD CAYB | | GCI82447 | Inner Joint | | | 33 | | | 34 | |
| | 2009.02-2014.08 | 5MT | F | L | Hatchback Van FWD CAYB | | GDS83294 | Drive Shaft | | 36 | | 59.5 | 38 | 519 | |
| | 2009.02-2014.08 | 5MT | F | R | Hatchback Van FWD CAYB | | GDS61042 | Drive Shaft | | 36 | | 59.5 | 40.5 | 814 | |
| | 2009.02-2014.08 | 5MT | F | L/R | Hatchback Van FWD CAYB | Chassis no. to:1KB650000 | GCO83037 | Outer Joint | | 36 | 30 | 59.5 | 40.5 | 56 | I |
| | 2009.02-2014.08 | 5MT | F | L/R | Hatchback Van FWD CAYB | | GCI82447 | Inner Joint | | | 33 | | | 34 | |
| | 2009.02-2014.08 | | F | L/R | Hatchback Van FWD CAYB | | GCI83011 | Inner Joint | | | 33 | | | 34 | |
| 1.6 (75 kw) | 2005.05-2013.12 | 5MT | F | L | Hatchback FWD BSE;BSF;CCSA;CMXA | | GDS61097 | Drive Shaft | | 36 | | 59.5 | 40.5 | 543 | |
| | 2005.05-2013.12 | 5MT | F | R | Hatchback FWD BSE;BSF;CCSA;CMXA | | GDS61096 | Drive Shaft | | 36 | | 59.5 | 40.5 | 799 | |
| | 2005.05-2013.12 | 5MT/6AT/7DCT | F | L/R | Hatchback FWD BSE;BSF;CCSA;CMXA | | GCO83037 | Outer Joint | | 36 | 30 | 59.5 | 40.5 | 56 | I |
| | 2005.05-2013.12 | 5MT/7DCT | F | L/R | Hatchback FWD BSE;BSF;CCSA;CMXA | | GCI82447 | Inner Joint | | | 33 | | | 34 | |
| | 2005.05-2013.12 | 6AT | F | L | Hatchback FWD BSE;BSF;CCSA;CMXA | | GDS83318 | Drive Shaft | | 36 | 26 | 59.5 | 38 | 581 | |
| | 2005.05-2013.12 | 6AT | F | R | Hatchback FWD BSE;BSF;CCSA;CMXA | | GDS83346 | Drive Shaft | | 36 | 26 | 59.5 | 38 | 879 | |
| | 2005.05-2013.12 | 6AT | F | L/R | Hatchback FWD BSE;BSF;CCSA;CMXA | Chassis no. to:1K_7_650000;Chassis no. from:1K_8_500001 | GCI61011 | Inner Joint | | 26 | 32 | 31 | 68.5 | 85 | |
| | 2005.05-2013.12 | 6AT | F | L/R | Hatchback FWD BSE;BSF;CCSA;CMXA | Chassis no. to:1K_7_650000;Chassis no. from:1K_8_500001 | GCI61050 | Inner Joint | | 26 | 32 | 31 | 68.5 | 89 | |
| | 2005.05-2013.12 | 7DCT | F | L | Hatchback FWD BSE;BSF;CCSA;CMXA | | GDS83294 | Drive Shaft | | 36 | | 59.5 | 38 | 519 | |
| | 2005.05-2013.12 | 7DCT | F | R | Hatchback FWD BSE;BSF;CCSA;CMXA | | GDS61042 | Drive Shaft | | 36 | | 59.5 | 40.5 | 814 | |
| | 2007.11-2013.12 | 5MT | F | L/R | Hatchback FWD CCSA;CMXA | | GCO83037 | Outer Joint | | 36 | 30 | 59.5 | 40.5 | 56 | I |
| | 2007.11-2013.12 | 5MT | F | L/R | Hatchback FWD CCSA;CMXA | | GCI82447 | Inner Joint | | | 33 | | | 34 | |
| | 2007.11-2013.12 | MT | F | L | Hatchback FWD CCSA;CMXA | | GDS61097 | Drive Shaft | | 36 | | 59.5 | 40.5 | 543 | |
| | 2007.11-2013.12 | MT | F | R | Hatchback FWD CCSA;CMXA | | GDS61096 | Drive Shaft | | 36 | | 59.5 | 40.5 | 799 | |
| | 2007.11-2013.12 | MT | F | L/R | Hatchback FWD CCSA;CMXA | | GCI83006 | Inner Joint | | | 33 | | | 34 | |
| | 2007.11-2013.12 | MT | F | L/R | Hatchback FWD CCSA;CMXA | | GCI83011 | Inner Joint | | | 33 | | | 34 | |
| | 2009.05-2013.12 | 5MT | F | L | Hatchback FWD CHGA | | GDS61097 | Drive Shaft | | 36 | | 59.5 | 40.5 | 543 | |
| | 2009.05-2013.12 | 5MT | F | R | Hatchback FWD CHGA | | GDS61096 | Drive Shaft | | 36 | | 59.5 | 40.5 | 799 | |
| | 2009.05-2013.12 | 5MT | F | L/R | Hatchback FWD CHGA | | GCO83037 | Outer Joint | | 36 | 30 | 59.5 | 40.5 | 56 | I |
| | 2009.05-2013.12 | 5MT | F | L/R | Hatchback FWD CHGA | | GCI82447 | Inner Joint | | | 33 | | | 34 | |
| 1.6 (77 kw) | 2009.02-2014.08 | 5MT | F | L/R | Hatchback Van FWD CAYC | | GCI82447 | Inner Joint | | | 33 | | | 34 | |
| | 2009.02-2014.08 | 7AT/5MT | F | L/R | Hatchback Van FWD CAYC | | GCI83016 | Inner Joint | | | 28 | | | 32 | |
| | 2009.02-2014.08 | 7DCT | F | L | Hatchback Van FWD CAYC | Date from:2011.06 | GDS61282 | Drive Shaft | | 36 | | 59.5 | 40 | 523 | |
| | 2009.02-2014.08 | 7DCT | F | R | Hatchback Van FWD CAYC | Date from:2011.06 | GDS61096 | Drive Shaft | | 36 | | 59.5 | 40.5 | 799 | |
| | 2009.02-2014.08 | 7DCT | F | R | Hatchback Van FWD CAYC | Date to:2011.05 | GDS61339 | Drive Shaft | | 36 | | 59.5 | 40 | 794 | |
| | 2009.02-2014.08 | 7DCT | F | L/R | Hatchback Van FWD CAYC | Date from:2011.06 | GCO61059 | Outer Joint | | 36 | 33 | 59.5 | 40 | 59.5 | I |
| | 2009.02-2014.08 | AT | F | L | Hatchback Van FWD CAYC | | GDS61100 | Drive Shaft | | 36 | | 59.5 | 40 | 513 | |
| | 2009.02-2014.08 | AT | F | L/R | Hatchback Van FWD CAYC | | GCO83002 | Outer Joint | | 36 | 27 | 59.5 | 40 | 66 | I |
| | 2009.02-2014.08 | MT | F | L | Hatchback Van FWD CAYC | | GDS83294 | Drive Shaft | | 36 | | 59.5 | 38 | 519 | |
| | 2009.02-2014.08 | MT | F | R | Hatchback Van FWD CAYC | | GDS61042 | Drive Shaft | | 36 | | 59.5 | 40.5 | 814 | |
| | 2009.02-2014.08 | MT | F | L/R | Hatchback Van FWD CAYC | | GCO83037 | Outer Joint | | 36 | 30 | 59.5 | 40.5 | 56 | I |
| | 2009.03-2013.12 | 5MT | F | L | Hatchback FWD CAYC | | GDS83294 | Drive Shaft | | 36 | | 59.5 | 38 | 519 | |
| | 2009.03-2013.12 | 5MT | F | R | Hatchback FWD CAYC | | GDS61042 | Drive Shaft | | 36 | | 59.5 | 40.5 | 814 | |
| | 2009.03-2013.12 | 5MT | F | L/R | Hatchback FWD CAYC | | GCO83037 | Outer Joint | | 36 | 30 | 59.5 | 40.5 | 56 | I |
| | 2009.03-2013.12 | 5MT | F | L/R | Hatchback FWD CAYC | | GCI82447 | Inner Joint | | | 33 | | | 34 | |
| | 2009.03-2013.12 | 7DCT | F | L | Hatchback FWD CAYC | Date to:2011.05 | GDS61100 | Drive Shaft | | 36 | | 59.5 | 40 | 513 | |
| | 2009.03-2013.12 | 7DCT | F | L | Hatchback FWD CAYC | Date from:2011.06 | GDS61282 | Drive Shaft | | 36 | | 59.5 | 40 | 523 | |
| | 2009.03-2013.12 | 7DCT | F | R | Hatchback FWD CAYC | Date from:2011.06 | GDS61096 | Drive Shaft | | 36 | | 59.5 | 40.5 | 799 | |
| | 2009.03-2013.12 | 7DCT | F | R | Hatchback FWD CAYC | Date to:2011.05 | GDS61339 | Drive Shaft | | 36 | | 59.5 | 40 | 794 | |
| | 2009.03-2013.12 | 7DCT | F | L/R | Hatchback FWD CAYC | Date from:2011.06 | GCO61059 | Outer Joint | | 36 | 33 | 59.5 | 40 | 59.5 | I |
| | 2009.03-2013.12 | 7DCT | F | L/R | Hatchback FWD CAYC | Date to:2011.05 | GCO83002 | Outer Joint | | 36 | 27 | 59.5 | 40 | 66 | I |
| | 2009.03-2013.12 | 7DCT | F | L/R | Hatchback FWD CAYC | Date from:2011.06 | GCI82447 | Inner Joint | | | 33 | | | 34 | |
| | 2009.03-2013.12 | 7DCT | F | L/R | Hatchback FWD CAYC | Date to:2011.05 | GCI83016 | Inner Joint | | | 28 | | | 32 | |
| 1.6 (85 kw) | 2004.12-2008.05 | 6AT | F | L | Hatchback FWD BLF | AAR | GDS81582 | Drive Shaft | | 36 | 26 | 59.5 | 40 | 597 | |
| | 2004.12-2008.05 | 6AT | F | L/R | Hatchback FWD BLF | Chassis no. to:1K_7_650000;Chassis no. from:1K_8_500001 | GCI61011 | Inner Joint | | 26 | 32 | 31 | 68.5 | 85 | |
| | 2004.12-2008.05 | 6AT | F | L/R | Hatchback FWD BLF | Chassis no. to:1K_7_650000;Chassis no. from:1K_8_500001 | GCI61050 | Inner Joint | | 26 | 32 | 31 | 68.5 | 89 | |
| | 2004.12-2008.05 | 6AT/6MT | F | L/R | Hatchback FWD BLF | | GCO83037 | Outer Joint | | 36 | 30 | 59.5 | 40.5 | 56 | I |
| | 2004.12-2008.05 | 6MT | F | L/R | Hatchback FWD BLF | | GCI82447 | Inner Joint | | | 33 | | | 34 | |
| | 2004.12-2008.05 | AT | F | R | Hatchback FWD BLF | AAR | GDS81583 | Drive Shaft | | 36 | 26 | 59.5 | 40 | 873 | |
| | 2004.12-2008.05 | MT | F | L | Hatchback FWD BLF | | GDS83319 | Drive Shaft | | 36 | | 59.5 | 38 | 557 | |
| | 2004.12-2008.05 | MT | F | R | Hatchback FWD BLF | | GDS61211 | Drive Shaft | | 36 | | 59.5 | 40.5 | 784 | |
| 1.9 (66 kw) | 2005.05-2008.12 | 5MT | F | L | Hatchback FWD BRU;BXF;BXJ | | GDS83294 | Drive Shaft | | 36 | | 59.5 | 38 | 519 | |
| | 2005.05-2008.12 | 5MT | F | R | Hatchback FWD BRU;BXF;BXJ | | GDS61042 | Drive Shaft | | 36 | | 59.5 | 40.5 | 814 | |
| | 2005.05-2008.12 | 5MT | F | L/R | Hatchback FWD BRU;BXF;BXJ | | GCO83037 | Outer Joint | | 36 | 30 | 59.5 | 40.5 | 56 | I |
| | 2005.05-2008.12 | 5MT | F | L/R | Hatchback FWD BRU;BXF;BXJ | | GCI82447 | Inner Joint | | | 33 | | | 34 | |
| 1.9 (77 kw) | 2005.01-2009.01 | 5MT/6MT | F | L | Hatchback FWD BKC;BLS;BXE | | GDS83294 | Drive Shaft | | 36 | | 59.5 | 38 | 519 | |

| | YEAR | TRANSM. | F/R | L/R | BODY STYLE & DRIVE TYPE & ENGINE | REMARKS | G-AP Ref. | PRODUCT | ABS | Technical Specifications | | | | | |
|---|---|---|---|---|---|---|---|---|---|---|---|---|---|---|---|
| | | | | | | | | | | A | B | C | H | L | P |
| **VW**<br>**Golf Plus** | | | | | | | | | | | | | | | |
| 1.9 (77 kw) | 2005.01-2009.01 | 5MT/6MT | F | R | Hatchback FWD BKC;BLS;BXE | Inner teeth of wheel side:30 | GDS61042 | Drive Shaft | | 36 | | 59.5 | 40.5 | 814 | |
| | 2005.01-2009.01 | 5MT/6MT | F | L/R | Hatchback FWD BKC;BLS;BXE | | GCO83037 | Outer Joint | | 36 | 30 | 59.5 | 40.5 | 56 | I |
| | 2005.01-2009.01 | 5MT/6MT | F | R | Hatchback FWD BKC;BLS;BXE | | GCI53002 | Inner Joint | | | 33 | | | 34 | |
| | 2005.01-2009.01 | 5MT/6MT | F | L/R | Hatchback FWD BKC;BLS;BXE | | GCI82447 | Inner Joint | | | 33 | | | 34 | |
| | 2005.01-2009.01 | 6DCT | F | L | Hatchback FWD BKC;BLS;BXE | Date to:2007.02;Date from:2007.03;For PR code:F0A/F4J/F9K/F9M/A8B/A8C/A8F | GDS54013 | Drive Shaft | | 36 | | 59.5 | 40 | 479.5 | |
| | 2005.01-2009.01 | 6DCT | F | L | Hatchback FWD BKC;BLS;BXE | Date from:2007.03;For PR code:A8T;Date from:2007.02;For PR code:F5F/F6L;For driving school cars | GDS83381 | Drive Shaft | | 36 | | 59.5 | 40 | 483 | |
| | 2005.01-2009.01 | 6DCT | F | R | Hatchback FWD BKC;BLS;BXE | TJ | GDS54011 | Drive Shaft | | 36 | | 59.5 | 40 | 755 | |
| | 2005.01-2009.01 | 6DCT | F | R | Hatchback FWD BKC;BLS;BXE | AAR | GDS83354 | Drive Shaft | | 36 | | 59.5 | 40 | 763 | |
| | 2005.01-2009.01 | 6DCT | F | L/R | Hatchback FWD BKC;BLS;BXE | | GCO83101 | Outer Joint | | 36 | 27 | 59.5 | 40 | 65 | M |
| | 2005.01-2009.01 | 6DCT | F | L/R | Hatchback FWD BKC;BLS;BXE | TJ | GCI54004 | Inner Joint | | | 34 | | | 81 | |
| | 2005.01-2009.01 | 6DCT | F | L/R | Hatchback FWD BKC;BLS;BXE | AAR | GCI61057 | Inner Joint | | | 34 | | | 89 | |
| | 2005.01-2009.01 | 6DCT/7DCT | F | L/R | Hatchback FWD BKC;BLS;BXE | | GCO83002 | Outer Joint | | 36 | 27 | 59.5 | 40 | 66 | I |
| | 2005.01-2009.01 | 6MT | F | R | Hatchback FWD BKC;BLS;BXE | Inner teeth of wheel side:33 | GDS61283 | Drive Shaft | | 36 | | 59.5 | 40 | 815 | |
| | 2005.01-2009.01 | 7DCT | F | L | Hatchback FWD BKC;BLS;BXE | Date from:2008.11 | GDS61100 | Drive Shaft | | 36 | | 59.5 | 40 | 513 | |
| | 2005.01-2009.01 | 7DCT | F | L | Hatchback FWD BKC;BLS;BXE | Date to:2008.10 | GDS82260 | Drive Shaft | | 36 | 40 | 59.5 | 40 | 519 | |
| | 2005.01-2009.01 | 7DCT | F | R | Hatchback FWD BKC;BLS;BXE | Date from:2008.11 | GDS61339 | Drive Shaft | | 36 | | 59.5 | 40 | 794 | |
| | 2005.01-2009.01 | 7DCT | F | R | Hatchback FWD BKC;BLS;BXE | Date to:2008.10 | GDS81916 | Drive Shaft | | 36 | 40 | 59.5 | 40 | 816 | |
| | 2005.01-2009.01 | 7DCT | F | L/R | Hatchback FWD BKC;BLS;BXE | Date to:2008.10 | GCI61054 | Inner Joint | | 40 | 28 | 46.9 | 41 | 101.7 | |
| | 2005.01-2009.01 | 7DCT | F | L/R | Hatchback FWD BKC;BLS;BXE | Date from:2008.11,Original design | GCI61069 | Inner Joint | | | 28 | | | 32 | |
| | 2005.01-2009.01 | 7DCT | F | L/R | Hatchback FWD BKC;BLS;BXE | Date from:2008.11,Non-Original design | GCI83016 | Inner Joint | | | 28 | | | 32 | |
| 2.0 (81 kw) | 2009.01-2013.12 | 5MT | F | L | Hatchback FWD CBDC;CLCA | | GDS83294 | Drive Shaft | | 36 | | 59.5 | 38 | 519 | |
| | 2009.01-2013.12 | 5MT | F | R | Hatchback FWD CBDC;CLCA | | GDS61042 | Drive Shaft | | 36 | | 59.5 | 40.5 | 814 | |
| | 2009.01-2013.12 | 5MT | F | L/R | Hatchback FWD CBDC;CLCA | | GCO83037 | Outer Joint | | 36 | 30 | 59.5 | 40.5 | 56 | I |
| | 2009.01-2013.12 | 5MT | F | L/R | Hatchback FWD CBDC;CLCA | | GCI82447 | Inner Joint | | | 33 | | | 34 | |
| | 2009.01-2013.12 | 6AT/5MT | F | L/R | Hatchback FWD CBDC;CLCA | TJ | GCI54004 | Inner Joint | | | 34 | | | 81 | |
| | 2009.01-2013.12 | 6AT/5MT | F | L/R | Hatchback FWD CBDC;CLCA | AAR | GCI61057 | Inner Joint | | | 34 | | | 89 | |
| | 2009.01-2013.12 | 6DCT | F | L | Hatchback FWD CBDC;CLCA | | GDS54013 | Drive Shaft | | 36 | | 59.5 | 40 | 479.5 | |
| | 2009.01-2013.12 | 6DCT | F | R | Hatchback FWD CBDC;CLCA | | GDS54011 | Drive Shaft | | 36 | | 59.5 | 40 | 755 | |
| | 2009.01-2013.12 | AT | F | L | Hatchback FWD CBDC;CLCA | | GDS83241 | Drive Shaft | | 36 | | 59.5 | 40 | 475 | |
| | 2009.01-2013.12 | AT | F | L/R | Hatchback FWD CBDC;CLCA | For Engine code:CBDC | GCO83002 | Outer Joint | | 36 | 27 | 59.5 | 40 | 66 | I |
| 2.0 (96 kw) | 2005.05-2007.05 | 6MT | F | L | Hatchback FWD BEE | [illegible] | GDS83295 | Drive Shaft | | 36 | | 59.5 | 40 | 491 | |
| | 2005.05-2007.05 | 6MT | F | R | Hatchback FWD BEE | For PR code:F5F/F6L;For driving school cars | GDS61126 | Drive Shaft | | 36 | | 59.5 | 40 | 793 | |
| | 2005.05-2007.05 | 6MT | F | R | Hatchback FWD BEE | Date from:2007.03;For Modelcode:5M1;For PR code:A8T | GDS61147 | Drive Shaft | | 36 | | 59.5 | 40 | 795 | |
| | 2005.05-2007.05 | 6MT | F | R | Hatchback FWD BEE | [illegible] | GDS83313 | Drive Shaft | | 36 | | 59.5 | 40 | 792 | |
| | 2005.05-2007.05 | 6MT | F | L/R | Hatchback FWD BEE | Date to:2007.02,Date from:2007.03 | GCO83002 | Outer Joint | | 36 | 27 | 59.5 | 40 | 66 | I |
| | 2005.05-2007.05 | 6MT | F | L/R | Hatchback FWD BEE | For PR code:F5F/F6L/A8B,Date from:2007.03,For driving school cars | GCO83101 | Outer Joint | | 36 | 27 | 59.5 | 40 | 65 | M |
| | 2005.05-2007.05 | 6MT | F | L/R | Hatchback FWD BEE | | GCI83016 | Inner Joint | | | 28 | | | 32 | |
| 2.0 (100 kw) | 2005.05-2013.12 | 6AT/6MT | F | L/R | Hatchback FWD AZV;CBDA;CFHB | | GCI54004 | Inner Joint | | | 34 | | | 81 | |
| | 2005.05-2013.12 | 6AT/6MT | F | L/R | Hatchback FWD AZV;CBDA;CFHB | Original Tripod Design | GCI61057 | Inner Joint | | | 34 | | | 89 | |
| | 2005.05-2013.12 | 6AT/6MT | F | L/R | Hatchback FWD AZV;CBDA;CFHB | | GCI83016 | Inner Joint | | | 28 | | | 32 | |
| | 2005.05-2013.12 | 6DCT | F | L | Hatchback FWD AZV;CBDA;CFHB | Date to:2007.02;Date from:2007.03;For PR code:F0A/F4J/F9K/F9M/A8B/A8C/A8F | GDS54013 | Drive Shaft | | 36 | | 59.5 | 40 | 479.5 | |
| | 2005.05-2013.12 | 6DCT | F | L | Hatchback FWD AZV;CBDA;CFHB | Date from:2007.03;For PR code:A8T;Date from:2007.02;For PR code:F5F/F6L;For driving school cars | GDS83381 | Drive Shaft | | 36 | | 59.5 | 40 | 483 | |
| | 2005.05-2013.12 | 6DCT | F | R | Hatchback FWD AZV;CBDA;CFHB | Date to:2007.02;Date from:2007.03;For PR code:F0A/F4J/F9K/F9M | GDS54011 | Drive Shaft | | 36 | | 59.5 | 40 | 755 | |
| | 2005.05-2013.12 | 6DCT | F | R | Hatchback FWD AZV;CBDA;CFHB | Date from:2007.03;For PR code:A8T;Date from:2007.02;For PR code:F5F/F6L;For driving school cars | GDS83354 | Drive Shaft | | 36 | | 59.5 | 40 | 763 | |
| | 2005.05-2013.12 | 6MT | F | L | Hatchback FWD AZV;CBDA;CFHB | For driving school cars;Date from:2007.03;For Modelcode:5M1;For PR code:F5F/F6L/F9K/F9M/A8T/A8B/A8C/A8F | GDS83295 | Drive Shaft | | 36 | | 59.5 | 40 | 491 | |
| | 2005.05-2013.12 | 6MT | F | R | Hatchback FWD AZV;CBDA;CFHB | Date from:2007.03;For Modelcode:5M1;For PR code:A8T | GDS61147 | Drive Shaft | | 36 | | 59.5 | 40 | 795 | |
| | 2005.05-2013.12 | 6MT | F | R | Hatchback FWD AZV;CBDA;CFHB | [illegible] | GDS83313 | Drive Shaft | | 36 | | 59.5 | 40 | 792 | |
| | 2005.05-2013.12 | AT/MT | F | L/R | Hatchback FWD AZV;CBDA;CFHB | [illegible] | GCO83101 | Outer Joint | | 36 | 27 | 59.5 | 40 | 65 | M |
| | 2005.05-2013.12 | MT | F | R | Hatchback FWD AZV;CBDA;CFHB | Date from:2007.03;For PR code:F5F/F6L;For driving school cars | GDS61126 | Drive Shaft | | 36 | | 59.5 | 40 | 793 | |
| | 2005.05-2013.12 | MT | F | R | Hatchback FWD AZV;CBDA;CFHB | | GDS83236 | Drive Shaft | | 36 | | 59.5 | 40 | 484 | |
| | 2005.05-2013.12 | MT | F | L/R | Hatchback FWD AZV;CBDA;CFHB | | GCO83002 | Outer Joint | | 36 | 27 | 59.5 | 40 | 66 | I |
| 2.0 (103 kw) | 2005.01-2013.12 | 6AT/6MT | F | L/R | Hatchback FWD BKD;CBDB;CFHC | TJ | GCI54004 | Inner Joint | | | 34 | | | 81 | |
| | 2005.01-2013.12 | 6AT/6MT | F | L/R | Hatchback FWD BKD;CBDB;CFHC | AAR | GCI61057 | Inner Joint | | | 34 | | | 89 | |
| | 2005.01-2013.12 | 6AT/6MT | F | L/R | Hatchback FWD BKD;CBDB;CFHC | | GCI83016 | Inner Joint | | | 28 | | | 32 | |
| | 2005.01-2013.12 | 6DCT | F | L | Hatchback FWD BKD;CBDB;CFHC | [illegible] | GDS54013 | Drive Shaft | | 36 | | 59.5 | 40 | 479.5 | |
| | 2005.01-2013.12 | 6DCT | F | L | Hatchback FWD BKD;CBDB;CFHC | [illegible] | GDS83381 | Drive Shaft | | 36 | | 59.5 | 40 | 483 | |
| | 2005.01-2013.12 | 6DCT | F | R | Hatchback FWD BKD;CBDB;CFHC | [illegible] | GDS54011 | Drive Shaft | | 36 | | 59.5 | 40 | 755 | |
| | 2005.01-2013.12 | 6DCT | F | R | Hatchback FWD BKD;CBDB;CFHC | [illegible] | GDS83354 | Drive Shaft | | 36 | | 59.5 | 40 | 763 | |
| | 2005.01-2013.12 | 6MT | F | L | Hatchback FWD BKD;CBDB;CFHC | For driving school cars;Date from:2007.03;For Modelcode:5M1;For PR code:F5F/F6L/F9K/F9M/A8T/A8B/A8C/A8F | GDS83295 | Drive Shaft | | 36 | | 59.5 | 40 | 491 | |
| | 2005.01-2013.12 | 6MT | F | R | Hatchback FWD BKD;CBDB;CFHC | Date from:2007.03;For Modelcode:5M1;For PR code:A8T | GDS61147 | Drive Shaft | | 36 | | 59.5 | 40 | 795 | |
| | 2005.01-2013.12 | 6MT | F | R | Hatchback FWD BKD;CBDB;CFHC | [illegible] | GDS83313 | Drive Shaft | | 36 | | 59.5 | 40 | 792 | |
| | 2005.01-2013.12 | 6MT | F | L | Hatchback FWD BKD;CBDB;CFHC | Rims:With steel rim;Chassis no. to:1KB650000 | GCI61069 | Inner Joint | | | 28 | | | 32 | |
| | 2005.01-2013.12 | AT/MT | F | L/R | Hatchback FWD BKD;CBDB;CFHC | [illegible] | GCO83101 | Outer Joint | | 36 | 27 | 59.5 | 40 | 65 | M |
| | 2005.01-2013.12 | MT | F | L | Hatchback FWD BKD;CBDB;CFHC | | GDS83236 | Drive Shaft | | 36 | | 59.5 | 40 | 484 | |
| | 2005.01-2013.12 | MT | F | R | Hatchback FWD BKD;CBDB;CFHC | Date from:2007.03;For PR code:A8T;For driving school cars | GDS61126 | Drive Shaft | | 36 | | 59.5 | 40 | 793 | |

| | YEAR | TRANSM. | F/R | L/R | BODY STYLE & DRIVE TYPE & ENGINE | REMARKS | G-AP Ref. | PRODUCT | ABS | Technical Specifications A | B | C | H | L | P |
|---|---|---|---|---|---|---|---|---|---|---|---|---|---|---|---|
| **VW** | | | | | | | | | | | | | | | |
| **Golf Plus** | | | | | | | | | | | | | | | |
| 2.0 (103 kw) | 2005.01-2013.12 | MT | F | L/R | Hatchback FWD BKD;CBDB;CFHC | | GCO83002 | Outer Joint | | 36 | 27 | 59.5 | 40 | 66 | I |
| | 2005.12-2011.05 | 6DCT | F | L | Hatchback FWD BMM | Date to:2007.02;Date from:2007.03;For PR code:F5A/F4L/FB6/FB8/AB8/A8C/A8F | GDS54013 | Drive Shaft | | 36 | | 59.5 | 40 | 479.5 | |
| | 2005.12-2011.05 | 6DCT | F | L | Hatchback FWD BMM | Date from:2007.03;For PR code:M7D;Date from:2007.03;For PR code:F5P/F9L;For driving school cars | GDS83381 | Drive Shaft | | 36 | | 59.5 | 40 | 483 | |
| | 2005.12-2011.05 | 6DCT | F | R | Hatchback FWD BMM | Date to:2007.02;Date from:2007.03;For PR code:F5A/F4L/FB6/FB8/AB8/A8C/A8F | GDS54011 | Drive Shaft | | 36 | | 59.5 | 40 | 755 | |
| | 2005.12-2011.05 | 6DCT | F | R | Hatchback FWD BMM | Date from:2007.03;For PR code:M7D;Date from:2007.03;For PR code:F5P/F9L;For driving school cars | GDS83354 | Drive Shaft | | 36 | | 59.5 | 40 | 763 | |
| | 2005.12-2011.05 | 6DCT | F | L/R | Hatchback FWD BMM | TJ | GCI54004 | Inner Joint | | | 34 | | | 81 | |
| | 2005.12-2011.05 | 6DCT | F | L/R | Hatchback FWD BMM | AAR | GCI61057 | Inner Joint | | | 34 | | | 89 | |
| | 2005.12-2011.05 | 6MT | F | L | Hatchback FWD BMM | | GDS83295 | Drive Shaft | | 36 | | 59.5 | 40 | 491 | |
| | 2005.12-2011.05 | 6MT | F | R | Hatchback FWD BMM | solid shaft | GDS61126 | Drive Shaft | | 36 | | 59.5 | 40 | 793 | |
| | 2005.12-2011.05 | 6MT | F | R | Hatchback FWD BMM | hollow shaft | GDS61147 | Drive Shaft | | 36 | | 59.5 | 40 | 795 | |
| | 2005.12-2011.05 | 6MT | F | R | Hatchback FWD BMM | solid shaft | GDS83313 | Drive Shaft | | 36 | | 59.5 | 40 | 792 | |
| | 2005.12-2011.05 | 6MT | F | L/R | Hatchback FWD BMM | | GCI83016 | Inner Joint | | | 28 | | | 32 | |
| | 2005.12-2011.05 | 6MT/6DCT | F | L/R | Hatchback FWD BMM | | GCO83002 | Outer Joint | | 36 | 27 | 59.5 | 40 | 66 | I |
| | 2005.12-2011.05 | 6MT/6DCT | F | L/R | Hatchback FWD BMM | | GCO83101 | Outer Joint | | 36 | 27 | 59.5 | 40 | 65 | M |
| | 2009.11-2014.08 | 6AT/6MT | F | L/R | Hatchback Van FWD CFHC | | GCI54004 | Inner Joint | | | 34 | | | 81 | |
| | 2009.11-2014.08 | 6AT/6MT | F | L/R | Hatchback Van FWD CFHC | Original Tripod Design | GCI61057 | Inner Joint | | | 34 | | | 89 | |
| | 2009.11-2014.08 | 6AT/6MT | F | L/R | Hatchback Van FWD CFHC | | GCI83016 | Inner Joint | | | 28 | | | 32 | |
| | 2009.11-2014.08 | 6DCT | F | L | Hatchback Van FWD CFHC | Chassis no. to:1K_B_650000;For PR code:A8B/A8C/A8F;Chassis no. from:1K_C_500001 | GDS54013 | Drive Shaft | | 36 | | 59.5 | 40 | 479.5 | |
| | 2009.11-2014.08 | 6DCT | F | L | Hatchback Van FWD CFHC | For PR code:A8T;Chassis no. from:1K_C_500001 | GDS83381 | Drive Shaft | | 36 | | 59.5 | 40 | 483 | |
| | 2009.11-2014.08 | 6DCT | F | R | Hatchback Van FWD CFHC | For PR code:A8B/A8C/A8F/A8T;Chassis no. from:1KC500001;Rims With alloy rim/With steel rim;For Bluetooth=01 | GDS54011 | Drive Shaft | | 36 | | 59.5 | 40 | 755 | |
| | 2009.11-2014.08 | 6MT | F | L | Hatchback Van FWD CFHC | For driving school cars;Date From:2007.03;For Bluetooth=5M1;For PR code:F5A/F4L/FB6/FB8/AB8/A8C/A8F | GDS83295 | Drive Shaft | | 36 | | 59.5 | 40 | 491 | |
| | 2009.11-2014.08 | 6MT | F | R | Hatchback Van FWD CFHC | Chassis no. to:1KB650000 | GDS61126 | Drive Shaft | | 36 | | 59.5 | 40 | 793 | |
| | 2009.11-2014.08 | 6MT | F | R | Hatchback Van FWD CFHC | Chassis no. to:1KB650000;For PR code:A8B/A8C/A8F/A8T;Chassis no. from:1KC500001 | GDS83313 | Drive Shaft | | 36 | | 59.5 | 40 | 792 | |
| | 2009.11-2014.08 | 6MT | F | L/R | Hatchback Van FWD CFHC | Chassis no. to:1KB650000 | GCO83002 | Outer Joint | | 36 | 27 | 59.5 | 40 | 66 | I |
| | 2009.11-2014.08 | 6MT | F | L/R | Hatchback Van FWD CFHC | For PR code:A8T;Chassis no. from:1KC500001 | GCO83101 | Outer Joint | | 36 | 27 | 59.5 | 40 | 65 | M |
| 2.0 (110 kw) | 2005.05-2008.06 | 6AT | F | L/R | Hatchback FWD BLY;BLR;BVY;BVZ | Chassis no. to:1K_7_650000;Chassis no. from:1K_8_500001 | GCI61011 | Inner Joint | | 26 | 32 | 31 | 68.5 | 85 | |
| | 2005.05-2008.06 | 6AT | F | L/R | Hatchback FWD BLY;BLR;BVY;BVZ | Chassis no. to:1K_7_650000;Chassis no. from:1K_8_500001 | GCI61050 | Inner Joint | | 26 | 32 | 31 | 68.5 | 89 | |
| | 2005.05-2008.06 | 6MT | F | L/R | Hatchback FWD BLY;BLR;BVY;BVZ | Chassis no. from:1K8500001;Chassis no. to:1K7650000 | GCO83037 | Outer Joint | | 36 | 30 | 59.5 | 40.5 | 56 | I |
| | 2005.05-2008.06 | 6MT | F | L/R | Hatchback FWD BLY;BLR;BVY;BVZ | | GCI82447 | Inner Joint | | | 33 | | | 34 | |
| | 2005.05-2008.06 | AT | F | L | Hatchback FWD BLY;BLR;BVY;BVZ | | GDS61093 | Drive Shaft | | 36 | 26 | 59.5 | 40.5 | 587.5 | |
| | 2005.05-2008.06 | AT | F | R | Hatchback FWD BLY;BLR;BVY;BVZ | | GDS61094 | Drive Shaft | | 36 | 26 | 59.5 | 40.5 | 884 | |
| | 2005.05-2008.06 | MT | F | L | Hatchback FWD BLY;BLR;BVY;BVZ | | GDS83294 | Drive Shaft | | 36 | | 59.5 | 38 | 519 | |
| | 2005.05-2008.06 | MT | F | R | Hatchback FWD BLY;BLR;BVY;BVZ | | GDS61042 | Drive Shaft | | 36 | | 59.5 | 40.5 | 814 | |
| **Golf Sportsvan** | | | | | | | | | | | | | | | |
| 1.0 (63 kw) | 2017.05-2019.07 | 5MT | F | L | Hatchback FWD CHZK;DKLB | | GDS82231 | Drive Shaft | | 36 | | 59.5 | 40 | 486 | |
| | 2017.05-2019.07 | 5MT | F | R | Hatchback FWD CHZK;DKLB | | GDS82230 | Drive Shaft | | 36 | | 59.5 | 40 | 789 | |
| | 2017.05-2019.07 | 5MT | F | L/R | Hatchback FWD CHZK;DKLB | | GCO61059 | Outer Joint | | 36 | 33 | 59.5 | 40 | 59.5 | I |
| | 2017.05-2019.07 | 5MT | F | L/R | Hatchback FWD CHZK;DKLB | | GCI81689 | Inner Joint | | | 32 | | | 89 | |
| 1.0 (81 kw) | 2017.05-2018.07 | 6MT | F | L | Hatchback FWD CHZC | | GDS82231 | Drive Shaft | | 36 | | 59.5 | 40 | 486 | |
| | 2017.05-2018.07 | 6MT | F | R | Hatchback FWD CHZC | | GDS82230 | Drive Shaft | | 36 | | 59.5 | 40 | 789 | |
| | 2017.05-2018.07 | 6MT | F | L/R | Hatchback FWD CHZC | | GCO61059 | Outer Joint | | 36 | 33 | 59.5 | 40 | 59.5 | I |
| | 2017.05-2018.07 | 6MT/7DCT | F | L/R | Hatchback FWD CHZC | | GCI81689 | Inner Joint | | | 32 | | | 89 | |
| | 2017.05-2018.07 | 7DCT | F | R | Hatchback FWD CHZC | | GDS82229 | Drive Shaft | | 36 | | 59.5 | 40 | 767 | |
| | 2017.05-2018.07 | 7DCT | F | R | Hatchback FWD CHZC | | GCO61059 | Outer Joint | | 36 | 33 | 59.5 | 40 | 59.5 | I |
| 1.0 (85 kw) | 2015.05-2020.08 | 6MT | F | L | Hatchback FWD CHZD;DKRF | | GDS82231 | Drive Shaft | | 36 | | 59.5 | 40 | 486 | |
| | 2015.05-2020.08 | 6MT | F | R | Hatchback FWD CHZD;DKRF | | GDS82230 | Drive Shaft | | 36 | | 59.5 | 40 | 789 | |
| | 2015.05-2020.08 | 6MT | F | L/R | Hatchback FWD CHZD;DKRF | | GCO61059 | Outer Joint | | 36 | 33 | 59.5 | 40 | 59.5 | I |
| | 2015.05-2020.08 | 6MT/7DCT | F | L/R | Hatchback FWD CHZD;DKRF | | GCI81689 | Inner Joint | | | 32 | | | 89 | |
| | 2015.05-2020.08 | 7DCT | F | R | Hatchback FWD CHZD;DKRF | | GDS82229 | Drive Shaft | | 36 | | 59.5 | 40 | 767 | |
| | 2015.05-2020.08 | 7DCT | F | R | Hatchback FWD CHZD;DKRF | | GCO61059 | Outer Joint | | 36 | 33 | 59.5 | 40 | 59.5 | I |
| 1.2 (63 kw) | 2014.05-2017.11 | 5MT | F | L | Hatchback FWD CYVA | | GDS61097 | Drive Shaft | | 36 | | 59.5 | 40.5 | 543 | |
| | 2014.05-2017.11 | 5MT | F | R | Hatchback FWD CYVA | | GDS61096 | Drive Shaft | | 36 | | 59.5 | 40.5 | 799 | |
| | 2014.05-2017.11 | 5MT | F | L/R | Hatchback FWD CYVA | | GCO83037 | Outer Joint | | 36 | 30 | 59.5 | 40.5 | 56 | I |
| | 2014.05-2017.11 | 5MT | F | L/R | Hatchback FWD CYVA | | GCI82447 | Inner Joint | | | 33 | | | 34 | |
| 1.2 (81 kw) | 2014.04-2017.11 | 6MT | F | L | Hatchback FWD CYVB | | GDS83373 | Drive Shaft | | 36 | | 59.5 | 38 | 511 | |
| | 2014.04-2017.11 | 6MT | F | R | Hatchback FWD CYVB | | GDS61307 | Drive Shaft | | 36 | | 59.5 | 40 | 819 | |
| | 2014.04-2017.11 | 6MT | F | L/R | Hatchback FWD CYVB | | GCO83037 | Outer Joint | | 36 | 30 | 59.5 | 40.5 | 56 | I |
| | 2014.04-2017.11 | 7DCT | F | L | Hatchback FWD CYVB | | GDS61282 | Drive Shaft | | 36 | | 59.5 | 40 | 523 | |
| | 2014.04-2017.11 | 7DCT | F | R | Hatchback FWD CYVB | | GDS61096 | Drive Shaft | | 36 | | 59.5 | 40.5 | 799 | |
| | 2014.04-2017.11 | 7DCT | F | L/R | Hatchback FWD CYVB | | GCO61059 | Outer Joint | | 36 | 33 | 59.5 | 40 | 59.5 | I |
| | 2014.04-2017.11 | 7DCT/6MT | F | L/R | Hatchback FWD CYVB | | GCI82447 | Inner Joint | | | 33 | | | 34 | |
| 1.4 (92 kw) | 2014.04-2017.11 | 6MT | F | L | Hatchback FWD CPVB | | GDS61282 | Drive Shaft | | 36 | | 59.5 | 40 | 523 | |
| | 2014.04-2017.11 | 6MT | F | R | Hatchback FWD CPVB | | GDS61307 | Drive Shaft | | 36 | | 59.5 | 40 | 819 | |
| | 2014.04-2017.11 | 6MT | F | L | Hatchback FWD CPVB | | GCO61059 | Outer Joint | | 36 | 33 | 59.5 | 40 | 59.5 | I |
| | 2014.04-2017.11 | 6MT | F | R | Hatchback FWD CPVB | | GCO83037 | Outer Joint | | 36 | 30 | 59.5 | 40.5 | 56 | I |

| | YEAR | TRANSM. | F/R | L/R | BODY STYLE & DRIVE TYPE & ENGINE | REMARKS | G-AP Ref. | PRODUCT | ABS | Technical Specifications A | B | C | H | L | P |
|---|---|---|---|---|---|---|---|---|---|---|---|---|---|---|---|
| **VW** **Golf Sportsvan** | | | | | | | | | | | | | | | |
| 1.4 (92 kw) | 2014.04-2017.11 | 6MT | F | L/R | Hatchback FWD CPVB | | GCI53002 | Inner Joint | | | 33 | | | 34 | |
| | 2014.04-2017.11 | 6MT | F | L/R | Hatchback FWD CPVB | | GCI82447 | Inner Joint | | | 33 | | | 34 | |
| | 2014.04-2017.11 | 7AT | F | L | Hatchback FWD CPVB | | GDS83294 | Drive Shaft | | 36 | | 59.5 | 38 | 519 | |
| | 2014.04-2017.11 | AT/MT | F | | Hatchback FWD CPVB | | GCO83100 | Outer Joint | | 36 | 33 | 59.5 | 38 | 56 | I |
| | 2014.04-2017.11 | MT | F | L/R | Hatchback FWD CPVB | | GCI83006 | Inner Joint | | | 33 | | | 34 | |
| | 2014.04-2017.11 | | F | L/R | Hatchback FWD CPVB | | GCI83011 | Inner Joint | | | 33 | | | 34 | |
| | 2014.04-2020.08 | 6MT | F | R | Hatchback FWD CZCA | | GDS61307 | Drive Shaft | | 36 | | 59.5 | 40 | 819 | |
| | 2014.04-2020.08 | 6MT/7DCT | F | L | Hatchback FWD CZCA | | GDS61282 | Drive Shaft | | 36 | | 59.5 | 40 | 523 | |
| | 2014.04-2020.08 | 6MT/7DCT | F | L/R | Hatchback FWD CZCA | | GCO61059 | Outer Joint | | 36 | 33 | 59.5 | 40 | 59.5 | I |
| | 2014.04-2020.08 | 6MT/7DCT | F | L/R | Hatchback FWD CZCA | | GCI53002 | Inner Joint | | | 33 | | | 34 | |
| | 2014.04-2020.08 | 6MT/7DCT | F | L/R | Hatchback FWD CZCA | | GCI82447 | Inner Joint | | | 33 | | | 34 | |
| | 2014.04-2020.08 | 7DCT | F | R | Hatchback FWD CZCA | | GDS61096 | Drive Shaft | | 36 | | 59.5 | 40.5 | 799 | |
| 1.4 (110 kw) | 2014.02-2018.07 | 6MT | F | L | Hatchback FWD CZDA | | GDS61282 | Drive Shaft | | 36 | | 59.5 | 40 | 523 | |
| | 2014.02-2018.07 | 6MT | F | R | Hatchback FWD CZDA | | GDS61283 | Drive Shaft | | 36 | | 59.5 | 40 | 815 | |
| | 2014.02-2018.07 | 6MT | F | L/R | Hatchback FWD CZDA | | GCO61059 | Outer Joint | | 36 | 33 | 59.5 | 40 | 59.5 | I |
| | 2014.02-2018.07 | 6MT | F | L/R | Hatchback FWD CZDA | | GCI82447 | Inner Joint | | | 33 | | | 34 | |
| | 2014.02-2018.07 | 7DCT | F | L | Hatchback FWD CZDA | | GDS61100 | Drive Shaft | | 36 | | 59.5 | 40 | 513 | |
| | 2014.02-2018.07 | 7DCT | F | R | Hatchback FWD CZDA | | GDS83313 | Drive Shaft | | 36 | | 59.5 | 40 | 792 | |
| | 2014.02-2018.07 | 7DCT | F | L/R | Hatchback FWD CZDA | | GCO83101 | Outer Joint | | 36 | 27 | 59.5 | 40 | 65 | M |
| | 2014.02-2018.07 | 7DCT | F | L/R | Hatchback FWD CZDA | | GCI83016 | Inner Joint | | | 28 | | | 32 | |
| 1.5 (96 kw) | 2017.05-2020.08 | 6MT | F | R | Hatchback FWD DACA;DPBA | | GDS84416 | Drive Shaft | | 36 | | 59.5 | 40 | 800 | |
| | 2017.05-2020.08 | 6MT | F | L/R | Hatchback FWD DACA;DPBA | | GCI82447 | Inner Joint | | | 33 | | | 34 | |
| | 2017.05-2020.08 | 6MT/7DCT | F | L/R | Hatchback FWD DACA;DPBA | | GCO61059 | Outer Joint | | 36 | 33 | 59.5 | 40 | 59.5 | I |
| | 2017.05-2020.08 | 7DCT | F | L | Hatchback FWD DACA;DPBA | | GDS61282 | Drive Shaft | | 36 | | 59.5 | 40 | 523 | |
| | 2017.05-2020.08 | 7DCT | F | R | Hatchback FWD DACA;DPBA | | GDS84417 | Drive Shaft | | 36 | | 59.5 | 40 | 783 | |
| | 2017.05-2020.08 | 7DCT | F | L/R | Hatchback FWD DACA;DPBA | | GCI53002 | Inner Joint | | | 33 | | | 34 | |
| 1.5 (110 kw) | 2017.05-2020.08 | 7AT | F | L | Hatchback FWD DADA;DPCA | | GDS61100 | Drive Shaft | | 36 | | 59.5 | 40 | 513 | |
| | 2017.05-2020.08 | 7AT | F | R | Hatchback FWD DADA;DPCA | | GDS84503 | Drive Shaft | | 36 | 40 | 59.5 | 40 | 817 | |
| | 2017.05-2020.08 | 7AT | F | L/R | Hatchback FWD DADA;DPCA | | GCO61059 | Outer Joint | | 36 | 33 | 59.5 | 40 | 59.5 | I |
| | 2017.05-2020.08 | 7AT | F | L/R | Hatchback FWD DADA;DPCA | | GCO83101 | Outer Joint | | 36 | 27 | 59.5 | 40 | 65 | M |
| | 2017.05-2020.08 | 7AT | F | R | Hatchback FWD DADA;DPCA | | GCI61090 | Inner Joint | | 40 | 28 | 46.9 | | 133.2 | |
| 1.6 (66 kw) | 2014.02-2018.07 | 5MT | F | L | Hatchback FWD CRKA;CXXA;DDYB | Date from:2016.11 | GDS61282 | Drive Shaft | | 36 | | 59.5 | 40 | 523 | |
| | 2014.02-2018.07 | 5MT | F | L | Hatchback FWD CRKA;CXXA;DDYB | Date to:2016.10 | GDS83294 | Drive Shaft | | 36 | | 59.5 | 38 | 519 | |
| | 2014.02-2018.07 | 5MT | F | R | Hatchback FWD CRKA;CXXA;DDYB | Date to:2016.10 | GDS61042 | Drive Shaft | | 36 | | 59.5 | 40.5 | 814 | |
| | 2014.02-2018.07 | 5MT | F | R | Hatchback FWD CRKA;CXXA;DDYB | Date from:2016.11 | GDS61283 | Drive Shaft | | 36 | | 59.5 | 40 | 815 | |
| | 2014.02-2018.07 | 5MT | F | L/R | Hatchback FWD CRKA;CXXA;DDYB | Date from:2016.11 | GCO61059 | Outer Joint | | 36 | 33 | 59.5 | 40 | 59.5 | I |
| | 2014.02-2018.07 | 5MT | F | L/R | Hatchback FWD CRKA;CXXA;DDYB | Date to:2016.10 | GCO83037 | Outer Joint | | 36 | 30 | 59.5 | 40.5 | 56 | I |
| | 2014.02-2018.07 | 5MT | F | L/R | Hatchback FWD CRKA;CXXA;DDYB | Date from:2016.11 | GCI53002 | Inner Joint | | | 33 | | | 34 | |
| | 2014.02-2018.07 | 5MT | F | L/R | Hatchback FWD CRKA;CXXA;DDYB | | GCI82447 | Inner Joint | | | 33 | | | 34 | |
| | 2014.02-2018.07 | MT | F | L/R | Hatchback FWD CRKA;CXXA;DDYB | | GCI83006 | Inner Joint | | | 33 | | | 34 | |
| | 2014.02-2018.07 | | F | L/R | Hatchback FWD CRKA;CXXA;DDYB | | GCI83011 | Inner Joint | | | 33 | | | 34 | |
| 1.6 (81 kw) | 2014.02-2016.11 | 5MT/6MT | F | R | Hatchback FWD CRKB;CXXB;DBKA | Date from:2016.11;Inner teeth of wheel side:30 | GDS61042 | Drive Shaft | | 36 | | 59.5 | 40.5 | 814 | |
| | 2014.02-2016.11 | 5MT/6MT | F | R | Hatchback FWD CRKB;CXXB;DBKA | Inner teeth of wheel side:33 | GDS61283 | Drive Shaft | | 36 | | 59.5 | 40 | 815 | |
| | 2014.02-2016.11 | 5MT/6MT | F | L/R | Hatchback FWD CRKB;CXXB;DBKA | | GCO61059 | Outer Joint | | 36 | 33 | 59.5 | 40 | 59.5 | I |
| | 2014.02-2016.11 | 5MT/6MT | F | L/R | Hatchback FWD CRKB;CXXB;DBKA | | GCI53002 | Inner Joint | | | 33 | | | 34 | |
| | 2014.02-2016.11 | 5MT/6MT/7DCT | F | L | Hatchback FWD CRKB;CXXB;DBKA | | GDS61282 | Drive Shaft | | 36 | | 59.5 | 40 | 523 | |
| | 2014.02-2016.11 | 5MT/6MT/7DCT | F | L/R | Hatchback FWD CRKB;CXXB;DBKA | | GCI82447 | Inner Joint | | | 33 | | | 34 | |
| | 2014.02-2016.11 | 7DCT | F | R | Hatchback FWD CRKB;CXXB;DBKA | | GDS61096 | Drive Shaft | | 36 | | 59.5 | 40.5 | 799 | |
| | 2014.02-2016.11 | 7DCT | F | L | Hatchback FWD CRKB;CXXB;DBKA | | GCO61059 | Outer Joint | | 36 | 33 | 59.5 | 40 | 59.5 | I |
| | 2014.02-2016.11 | 7DCT | F | L | Hatchback FWD CRKB;CXXB;DBKA | | GCI53002 | Inner Joint | | | 33 | | | 34 | |
| | 2014.02-2016.11 | AT | F | L | Hatchback FWD CRKB;CXXB;DBKA | | GDS83294 | Drive Shaft | | 36 | | 59.5 | 38 | 519 | |
| | 2014.02-2016.11 | AT | F | L | Hatchback FWD CRKB;CXXB;DBKA | | GCO83037 | Outer Joint | | 36 | 30 | 59.5 | 40.5 | 56 | I |
| | 2014.02-2016.11 | | F | L/R | Hatchback FWD CRKB;CXXB;DBKA | | GCI83011 | Inner Joint | | | 33 | | | 34 | |
| | 2014.05-2016.11 | 5MT | F | L | Hatchback FWD CWVA | For PR code:1PE/1PF/1PA/2H4 | GDS61097 | Drive Shaft | | 36 | | 59.5 | 40.5 | 543 | |
| | 2014.05-2016.11 | 5MT | F | R | Hatchback FWD CWVA | | GDS61096 | Drive Shaft | | 36 | | 59.5 | 40.5 | 799 | |
| | 2014.05-2016.11 | 5MT | F | L/R | Hatchback FWD CWVA | | GCO83037 | Outer Joint | | 36 | 30 | 59.5 | 40.5 | 56 | I |
| | 2014.05-2016.11 | 5MT | F | L/R | Hatchback FWD CWVA | | GCI82447 | Inner Joint | | | 33 | | | 34 | |
| | 2014.05-2016.11 | 6AT | F | L | Hatchback FWD CWVA | For PR code:1PE/1PF/1PA/2H4 | GDS83318 | Drive Shaft | | 36 | 26 | 59.5 | 38 | 581 | |
| | 2014.05-2016.11 | 6AT | F | R | Hatchback FWD CWVA | | GDS83346 | Drive Shaft | | 36 | 26 | 59.5 | 38 | 879 | |
| | 2014.05-2016.11 | 6AT | F | L/R | Hatchback FWD CWVA | | GCI61011 | Inner Joint | | 26 | 32 | 31 | 68.5 | 85 | |
| | 2014.05-2016.11 | 6AT | F | L/R | Hatchback FWD CWVA | | GCI61050 | Inner Joint | | 26 | 32 | 31 | 68.5 | 89 | |
| | 2014.05-2016.11 | MT | F | L | Hatchback FWD CWVA | | GDS83373 | Drive Shaft | | 36 | | 59.5 | 38 | 511 | |
| 1.6 (85 kw) | 2016.11-2020.08 | 5MT | F | R | Hatchback FWD DDYA;DGTE | | GDS61283 | Drive Shaft | | 36 | | 59.5 | 40 | 815 | |
| | 2016.11-2020.08 | 5MT | F | L/R | Hatchback FWD DDYA;DGTE | | GCO61059 | Outer Joint | | 36 | 33 | 59.5 | 40 | 59.5 | I |
| | 2016.11-2020.08 | 5MT | F | L/R | Hatchback FWD DDYA;DGTE | | GCI53002 | Inner Joint | | | 33 | | | 34 | |

| | YEAR | TRANSM. | F/R | L/R | BODY STYLE & DRIVE TYPE & ENGINE | REMARKS | G-AP Ref. | PRODUCT | ABS | Technical Specifications A | B | C | H | L | P |
|---|---|---|---|---|---|---|---|---|---|---|---|---|---|---|---|
| **VW** | | | | | | | | | | | | | | | |
| **Golf Sportsvan** | | | | | | | | | | | | | | | |
| 1.6 (85 kw) | 2016.11-2020.08 | 5MT/7DCT | F | L | Hatchback FWD DDYA;DGTE | | GDS61282 | Drive Shaft | | 36 | | 59.5 | 40 | 523 | |
| | 2016.11-2020.08 | 7DCT | F | R | Hatchback FWD DDYA;DGTE | | GDS61096 | Drive Shaft | | 36 | | 59.5 | 40.5 | 799 | |
| | 2016.11-2020.08 | 7DCT | F | L | Hatchback FWD DDYA;DGTE | | GCO61059 | Outer Joint | | 36 | 33 | 59.5 | 40 | 59.5 | I |
| | 2016.11-2020.08 | 7DCT | F | L | Hatchback FWD DDYA;DGTE | | GCI53002 | Inner Joint | | | 33 | | | 34 | |
| | 2016.11-2020.08 | 7DCT/5MT | F | L/R | Hatchback FWD DDYA;DGTE | | GCI82447 | Inner Joint | | | 33 | | | 34 | |
| | 2016.11-2020.08 | MT | F | R | Hatchback FWD DDYA;DGTE | Date From:2016.11 | GDS61042 | Drive Shaft | | 36 | | 59.5 | 40.5 | 814 | |
| 2.0 (81 kw) | 2014.05-2017.11 | 5MT | F | L | Hatchback FWD CRVA;CRLD;DCYB | Inner teeth of wheel side:33 | GDS61282 | Drive Shaft | | 36 | | 59.5 | 40 | 523 | |
| | 2014.05-2017.11 | 5MT | F | R | Hatchback FWD CRVA;CRLD;DCYB | Inner teeth of wheel side:30 | GDS61042 | Drive Shaft | | 36 | | 59.5 | 40.5 | 814 | |
| | 2014.05-2017.11 | 5MT | F | R | Hatchback FWD CRVA;CRLD;DCYB | Inner teeth of wheel side:33 | GDS61283 | Drive Shaft | | 36 | | 59.5 | 40 | 815 | |
| | 2014.05-2017.11 | 5MT | F | L/R | Hatchback FWD CRVA;CRLD;DCYB | | GCI82447 | Inner Joint | | | 33 | | | 34 | |
| | 2014.05-2017.11 | 6DCT | F | L | Hatchback FWD CRVA;CRLD;DCYB | | GDS61285 | Drive Shaft | | 36 | | 59.5 | 40 | 472 | |
| | 2014.05-2017.11 | 6DCT | F | R | Hatchback FWD CRVA;CRLD;DCYB | | GDS83354 | Drive Shaft | | 36 | | 59.5 | 40 | 763 | |
| | 2014.05-2017.11 | 6DCT | F | L/R | Hatchback FWD CRVA;CRLD;DCYB | | GCI61057 | Inner Joint | | | 34 | | | 89 | |
| | 2014.05-2017.11 | 6MT | F | L/R | Hatchback FWD CRVA;CRLD;DCYB | | GCO61059 | Outer Joint | | 36 | 33 | 59.5 | 40 | 59.5 | I |
| | 2014.05-2017.11 | 7DCT | F | L/R | Hatchback FWD CRVA;CRLD;DCYB | | GCO83101 | Outer Joint | | 36 | 27 | 59.5 | 40 | 65 | M |
| | 2014.05-2017.11 | AT/MT | F | L | Hatchback FWD CRVA;CRLD;DCYB | Inner teeth of wheel side:30 | GDS83294 | Drive Shaft | | 36 | | 59.5 | 38 | 519 | |
| | 2014.05-2017.11 | AT/MT | F | L | Hatchback FWD CRVA;CRLD;DCYB | | GCO83037 | Outer Joint | | 36 | 30 | 59.5 | 40.5 | 56 | I |
| 2.0 (110 kw) | 2014.02-2020.08 | 6DCT | F | L | Hatchback FWD CRLB;DFGA;DCYA | For PR code:1PE/1PF/1PA/2H4/2H0/2H5 | GDS61285 | Drive Shaft | | 36 | | 59.5 | 40 | 472 | |
| | 2014.02-2020.08 | 6DCT | F | R | Hatchback FWD CRLB;DFGA;DCYA | | GDS83354 | Drive Shaft | | 36 | | 59.5 | 40 | 763 | |
| | 2014.02-2020.08 | 6DCT | F | L/R | Hatchback FWD CRLB;DFGA;DCYA | | GCI61057 | Inner Joint | | | 34 | | | 89 | |
| | 2014.02-2020.08 | 6MT | F | L | Hatchback FWD CRLB;DFGA;DCYA | For PR code:F4E/F4F/F5Z,For taxis | GDS83295 | Drive Shaft | | 36 | | 59.5 | 40 | 491 | |
| | 2014.02-2020.08 | 6MT | F | R | Hatchback FWD CRLB;DFGA;DCYA | For PR code:1PE/1PF/2H4/1PA/2H0/2H5/F5F/F6M;For PR code:F4E/F4F/F5Z,For taxis | GDS83313 | Drive Shaft | | 36 | | 59.5 | 40 | 792 | |
| | 2014.02-2020.08 | 6MT | F | R | Hatchback FWD CRLB;DFGA;DCYA | For PR code:1PE/1PF/2H4/1PA/2H0/2H5/F5F/F6M | GDS83373 | Drive Shaft | | 36 | | 59.5 | 38 | 511 | |
| | 2014.02-2020.08 | 6MT | F | R | Hatchback FWD CRLB;DFGA;DCYA | For PR code:1PE/1PF/2H4/1PA/2H0/2H5/F5F/F6M | GCO83037 | Outer Joint | | 36 | 30 | 59.5 | 40.5 | 56 | I |
| | 2014.02-2020.08 | 6MT | F | L | Hatchback FWD CRLB;DFGA;DCYA | For PR code:1PE/1PF/1PA/2H4/F5F/F6M | GCI61069 | Inner Joint | | | 28 | | | 32 | |
| | 2014.02-2020.08 | 6MT | F | L/R | Hatchback FWD CRLB;DFGA;DCYA | | GCI83016 | Inner Joint | | | 28 | | | 32 | |
| | 2014.02-2020.08 | 6MT/6DCT/7DCT | F | L/R | Hatchback FWD CRLB;DFGA;DCYA | | GCO83101 | Outer Joint | | 36 | 27 | 59.5 | 40 | 65 | M |
| | 2014.02-2020.08 | 7DCT | F | L | Hatchback FWD CRLB;DFGA;DCYA | | GDS81265 | Drive Shaft | | 36 | 37 | 59.5 | 40 | 557 | |
| | 2014.02-2020.08 | 7DCT | F | R | Hatchback FWD CRLB;DFGA;DCYA | | GDS83612 | Drive Shaft | | 36 | 37 | 59.5 | 40 | 907 | |
| | 2014.02-2020.08 | 7DCT | F | L | Hatchback FWD CRLB;DFGA;DCYA | | GCI81158 | Inner Joint | | 37 | 34 | 34.5 | 65.5 | 83 | |
| | 2014.02-2020.08 | 7DCT | F | R | Hatchback FWD CRLB;DFGA;DCYA | | GCI82108 | Inner Joint | | 37 | 34 | 40 | 77.5 | 103.5 | |
| | 2014.02-2020.08 | AT | F | L/R | Hatchback FWD CRLB;DFGA;DCYA | | GCO83100 | Outer Joint | | 36 | 33 | 59.5 | 38 | 56 | I |
| **Golf Van (Hatchback)** | | | | | | | | | | | | | | | |
| 1.9 (50 kw) | 1998.11-2004.05 | | F | L | Hatchback Van FWD AQM | | GDS61045 | Drive Shaft | | 36 | | 53 | 78.5 | 555 | |
| | 1998.11-2004.05 | | F | R | Hatchback Van FWD AQM | | GDS83046 | Drive Shaft | | 36 | | 53 | 78.5 | 822 | |
| | 1998.11-2004.05 | | F | L/R | Hatchback Van FWD AQM | | GCO83033 | Outer Joint | | 36 | 30 | 53 | 78.5 | 51 | I |
| | 1998.11-2004.05 | | F | L/R | Hatchback Van FWD AQM | | GCI83008 | Inner Joint | | | 33 | | | 32 | |
| 1.9 (66 kw) | 2000.05-2002.09 | 5MT | F | L | Hatchback Van FWD AGR | | GDS83006 | Drive Shaft | | 36 | | 53.2 | 77.5 | 557 | |
| | 2000.05-2002.09 | 5MT | F | R | Hatchback Van FWD AGR | | GDS83004 | Drive Shaft | | 36 | | 53.2 | 77.5 | 822 | |
| | 2000.05-2002.09 | 5MT | F | L/R | Hatchback Van FWD AGR | | GCO83070 | Outer Joint | | 36 | 30 | 53 | 78 | 60 | I |
| | 2000.05-2002.09 | 5MT | F | L | Hatchback Van FWD AGR | | GCI83011 | Inner Joint | | | 33 | | | 34 | |
| | 2000.05-2002.09 | 5MT | F | R | Hatchback Van FWD AGR | | GCI83009 | Inner Joint | | | 33 | | | 34 | |
| | 2000.05-2002.09 | 5MT | F | L/R | Hatchback Van FWD AGR | | GCI83006 | Inner Joint | | | 33 | | | 34 | |
| | 2000.05-2002.09 | AT | F | L/R | Hatchback Van FWD AGR | | GCI61006 | Inner Joint | | | 30 | | | 57.6 | |
| 1.9 (81 kw) | 1997.10-2004.05 | 5MT | F | L | Hatchback Van FWD AHF | | GDS83006 | Drive Shaft | | 36 | | 53.2 | 77.5 | 557 | |
| | 1997.10-2004.05 | 5MT | F | R | Hatchback Van FWD AHF | | GDS83004 | Drive Shaft | | 36 | | 53.2 | 77.5 | 822 | |
| | 1997.10-2004.05 | 5MT | F | L | Hatchback Van FWD AHF | | GCI83011 | Inner Joint | | | 33 | | | 34 | |
| | 1997.10-2004.05 | 5MT | F | R | Hatchback Van FWD AHF | | GCI83009 | Inner Joint | | | 33 | | | 34 | |
| | 1997.10-2004.05 | 5MT | F | L/R | Hatchback Van FWD AHF | | GCI83006 | Inner Joint | | | 33 | | | 34 | |
| | 1997.10-2004.05 | AT | F | L/R | Hatchback Van FWD AHF | | GCI61006 | Inner Joint | | | 30 | | | 57.6 | |
| 1.9 (85 kw) | 2000.01-2001.04 | 5MT | F | L | Hatchback Van 4WD AUY | | GDS61123 | Drive Shaft | | 36 | | 53 | 77.5 | 520 | |
| | 2000.01-2001.04 | 5MT | F | L/R | Hatchback Van 4WD AUY | | GCO83035 | Outer Joint | | 36 | 27 | 53 | 77.5 | 65 | I |
| | 2000.01-2001.04 | | F | R | Hatchback Van 4WD AUY | | GDS61186 | Drive Shaft | | 36 | | 53 | 77.5 | 653 | |
| | 2000.01-2001.04 | | F | L/R | Hatchback Van 4WD AUY | | GCI83001 | Inner Joint | | | 28 | | | 32 | |
| | 2000.01-2001.04 | 5MT | R | L/R | Hatchback Van 4WD AUY | | GCI82447 | Inner Joint | | | 33 | | | 34 | |
| | 2000.01-2001.04 | | R | L | Hatchback Van 4WD AUY | | GDS82364 | Drive Shaft | | 36 | | 53 | 78.5 | 651 | |
| | 2000.01-2001.04 | | R | R | Hatchback Van 4WD AUY | | GDS81587 | Drive Shaft | | 36 | | 53 | 78.5 | 522 | |
| | 2000.01-2001.04 | | R | L/R | Hatchback Van 4WD AUY | | GCO83033 | Outer Joint | | 36 | 30 | 53 | 78.5 | 51 | I |
| 1.9 (96 kw) | 2001.04-2004.05 | 6MT | F | L | Hatchback Van FWD ASZ | | GDS56276 | Drive Shaft | | 36 | | 53 | 77.5 | 520 | |
| | 2001.04-2004.05 | 6MT | F | R | Hatchback Van FWD ASZ | | GDS61121 | Drive Shaft | | 36 | | 53 | 77.5 | 806 | |
| | 2001.04-2004.05 | 6MT | F | L/R | Hatchback Van FWD ASZ | | GCO83035 | Outer Joint | | 36 | 27 | 53 | 77.5 | 65 | I |
| | 2001.04-2004.05 | AT | F | L | Hatchback Van FWD ASZ | Date to:2002.06;Vehicle Equipment:for vehicles with headlamp levelling (automatic);For PR code:8G2 | GDS61244 | Drive Shaft | | 36 | | 53 | 77.5 | 523 | |
| | 2001.04-2004.05 | | F | L/R | Hatchback Van FWD ASZ | Date to:2003.01 | GCI83001 | Inner Joint | | | 28 | | | 32 | |
| | 2001.04-2004.05 | | F | L/R | Hatchback Van FWD ASZ | Date from:2003.02 | GCI83016 | Inner Joint | | | 28 | | | 32 | |

| | YEAR | TRANSM. | F/R | L/R | BODY STYLE & DRIVE TYPE & ENGINE | REMARKS | G-AP Ref. | PRODUCT | ABS | Technical Specifications A | B | C | H | L | P |
|---|---|---|---|---|---|---|---|---|---|---|---|---|---|---|---|
| **VW** **Golf Van (Variant)** | | | | | | | | | | | | | | | |
| 1.2 (63 kw) | 2013.05-2017.03 | 5MT | F | L | Estate Van FWD CJZB;CYVA | Code:CJZB;For PR code:1PE/1PF/1PA/2HA;For PR code:0EC | GDS83373 | Drive Shaft | | 36 | | 59.5 | 38 | 511 | |
| | 2013.05-2017.03 | 5MT | F | R | Estate Van FWD CJZB;CYVA | | GDS61096 | Drive Shaft | | 36 | | 59.5 | 40.5 | 799 | |
| | 2013.05-2017.03 | 5MT | F | L/R | Estate Van FWD CJZB;CYVA | | GCI82447 | Inner Joint | | | 33 | | | 34 | |
| | 2013.05-2017.03 | AT/MT | F | L/R | Estate Van FWD CJZB;CYVA | | GCI83011 | Inner Joint | | | 33 | | | 34 | |
| | 2013.05-2017.03 | MT | F | L | Estate Van FWD CJZB;CYVA | | GDS83294 | Drive Shaft | | 36 | | 59.5 | 38 | 519 | |
| | 2013.05-2017.03 | MT | F | R | Estate Van FWD CJZB;CYVA | | GDS61042 | Drive Shaft | | 36 | | 59.5 | 40.5 | 814 | |
| | 2013.05-2017.03 | MT | F | L/R | Estate Van FWD CJZB;CYVA | | GCO83037 | Outer Joint | | 36 | 30 | 59.5 | 40.5 | 56 | I |
| | 2013.05-2017.03 | | F | L | Estate Van FWD CJZB;CYVA | For PR code:1PE/1PF/1PA/2H4 | GDS61097 | Drive Shaft | | 36 | | 59.5 | 40.5 | 543 | |
| 1.2 (77 kw) | 2009.09-2014.05 | 5MT/6MT | F | L/R | Estate Van FWD CBZB | | GCI82447 | Inner Joint | | | 33 | | | 34 | |
| | 2009.09-2014.05 | 6MT | F | L | Estate Van FWD CBZB | | GDS81584 | Drive Shaft | | 36 | | 59.5 | 40 | 530 | |
| | 2009.09-2014.05 | 6MT | F | R | Estate Van FWD CBZB | | GDS61096 | Drive Shaft | | 36 | | 59.5 | 40.5 | 799 | |
| | 2009.09-2014.05 | 6MT | F | L/R | Estate Van FWD CBZB | | GCO83037 | Outer Joint | | 36 | 30 | 59.5 | 40.5 | 56 | I |
| | 2009.09-2014.05 | 7AT/5MT/6MT | F | L/R | Estate Van FWD CBZB | | GCI83016 | Inner Joint | | | 28 | | | 32 | |
| | 2009.09-2014.05 | 7DCT | F | L | Estate Van FWD CBZB | Date to:2012.06 | GDS83302 | Drive Shaft | | 36 | | 59.5 | 40 | 528 | |
| | 2009.09-2014.05 | AT | F | R | Estate Van FWD CBZB | | GDS81653 | Drive Shaft | | 36 | | 59.5 | 40 | 785 | |
| | 2009.09-2014.05 | AT | F | L/R | Estate Van FWD CBZB | | GCO83002 | Outer Joint | | 36 | 27 | 59.5 | 40 | 66 | I |
| | 2013.04-2017.03 | 6MT | F | L | Estate Van FWD CJZA | | GDS83373 | Drive Shaft | | 36 | | 59.5 | 38 | 511 | |
| | 2013.04-2017.03 | 6MT | F | R | Estate Van FWD CJZA | | GDS61307 | Drive Shaft | | 36 | | 59.5 | 40 | 819 | |
| | 2013.04-2017.03 | 6MT | F | L/R | Estate Van FWD CJZA | | GCO83037 | Outer Joint | | 36 | 30 | 59.5 | 40.5 | 56 | I |
| | 2013.04-2017.03 | 7DCT | F | L | Estate Van FWD CJZA | | GDS61282 | Drive Shaft | | 36 | | 59.5 | 40 | 523 | |
| | 2013.04-2017.03 | 7DCT | F | R | Estate Van FWD CJZA | | GDS61096 | Drive Shaft | | 36 | | 59.5 | 40.5 | 799 | |
| | 2013.04-2017.03 | 7DCT | F | L/R | Estate Van FWD CJZA | | GCO61059 | Outer Joint | | 36 | 33 | 59.5 | 40 | 59.5 | I |
| | 2013.04-2017.03 | 7DCT/5MT/6MT | F | L/R | Estate Van FWD CJZA | | GCI82447 | Inner Joint | | | 33 | | | 34 | |
| | 2013.04-2017.03 | AT/MT | F | L/R | Estate Van FWD CJZA | | GCI83011 | Inner Joint | | | 33 | | | 34 | |
| | 2013.04-2017.03 | MT | F | L | Estate Van FWD CJZA | | GDS83294 | Drive Shaft | | 36 | | 59.5 | 38 | 519 | |
| | 2013.04-2017.03 | MT | F | R | Estate Van FWD CJZA | | GDS61042 | Drive Shaft | | 36 | | 59.5 | 40.5 | 814 | |
| 1.4 (55 kw) | 2000.05-2006.06 | 5MT | F | L | Estate Van FWD AXP/BCA | | GDS61045 | Drive Shaft | | 36 | | 53 | 78.5 | 555 | |
| | 2000.05-2006.06 | 5MT | F | R | Estate Van FWD AXP/BCA | | GDS83046 | Drive Shaft | | 36 | | 53 | 78.5 | 822 | |
| | 2000.05-2006.06 | 5MT | F | L/R | Estate Van FWD AXP/BCA | | GCO83033 | Outer Joint | | 36 | 30 | 53 | 78.5 | 51 | I |
| | 2000.05-2006.06 | 5MT | F | L/R | Estate Van FWD AXP/BCA | | GCI83008 | Inner Joint | | | 33 | | | 32 | |
| 1.4 (90 kw) | 2009.07-2014.05 | 6MT | F | L/R | Estate Van FWD CAXA | | GCI82447 | Inner Joint | | | 33 | | | 34 | |
| | 2009.07-2014.05 | 7AT/6MT | F | L/R | Estate Van FWD CAXA | | GCI83016 | Inner Joint | | | 28 | | | 32 | |
| | 2009.07-2014.05 | 7DCT | F | L | Estate Van FWD CAXA | | GDS83302 | Drive Shaft | | 36 | | 59.5 | 40 | 528 | |
| | 2009.07-2014.05 | AT | F | R | Estate Van FWD CAXA | | GDS81653 | Drive Shaft | | 36 | | 59.5 | 40 | 785 | |
| | 2009.07-2014.05 | AT | F | L/R | Estate Van FWD CAXA | | GCO83002 | Outer Joint | | 36 | 27 | 59.5 | 40 | 66 | I |
| | 2009.07-2014.05 | MT | F | L | Estate Van FWD CAXA | | GDS81584 | Drive Shaft | | 36 | | 59.5 | 40 | 530 | |
| | 2009.07-2014.05 | MT | F | R | Estate Van FWD CAXA | | GDS61096 | Drive Shaft | | 36 | | 59.5 | 40.5 | 799 | |
| | 2009.07-2014.05 | MT | F | L/R | Estate Van FWD CAXA | | GCO83037 | Outer Joint | | 36 | 30 | 59.5 | 40.5 | 56 | I |
| | 2013.05-2017.03 | 6MT | F | R | Estate Van FWD CXSA | | GDS61307 | Drive Shaft | | 36 | | 59.5 | 40 | 819 | |
| | 2013.05-2017.03 | 6MT | F | L/R | Estate Van FWD CXSA | | GCO61059 | Outer Joint | | 36 | 33 | 59.5 | 40 | 59.5 | I |
| | 2013.05-2017.03 | 6MT/7DCT | F | L | Estate Van FWD CXSA | Transmission:6MT;For PR code:1PE/1PF/1PA/2H4;Transmission:7DCT;For PR code:1PE/1PF/1PA/2H4;No Economy | GDS61282 | Drive Shaft | | 36 | | 59.5 | 40 | 523 | |
| | 2013.05-2017.03 | 6MT/7DCT | F | L | Estate Van FWD CXSA | Transmission:7DCT;For PR code:1PE/1PF/1PA/2H4;Economy;Transmission:6MT;For PR code:1PA/2H0/2H5 | GDS83294 | Drive Shaft | | 36 | | 59.5 | 38 | 519 | |
| | 2013.05-2017.03 | 7DCT | F | R | Estate Van FWD CXSA | | GDS61096 | Drive Shaft | | 36 | | 59.5 | 40.5 | 799 | |
| | 2013.05-2017.03 | 7DCT/5MT/6MT | F | L/R | Estate Van FWD CXSA | | GCI82447 | Inner Joint | | | 33 | | | 34 | |
| 1.4 (103 kw) | 2013.05-2017.03 | 6MT | F | L | Estate Van FWD CHPA | No Economy;For PR code:1PE/1PF/1PA/2H4 | GDS61282 | Drive Shaft | | 36 | | 59.5 | 40 | 523 | |
| | 2013.05-2017.03 | 6MT | F | L | Estate Van FWD CHPA | Economy;For PR code:1PA/2H0/2H5 | GDS83294 | Drive Shaft | | 36 | | 59.5 | 38 | 519 | |
| | 2013.05-2017.03 | 6MT | F | R | Estate Van FWD CHPA | | GDS61283 | Drive Shaft | | 36 | | 59.5 | 40 | 815 | |
| | 2013.05-2017.03 | 6MT | F | L/R | Estate Van FWD CHPA | | GCO61059 | Outer Joint | | 36 | 33 | 59.5 | 40 | 59.5 | I |
| | 2013.05-2017.03 | 6MT | F | L/R | Estate Van FWD CHPA | | GCI82447 | Inner Joint | | | 33 | | | 34 | |
| | 2013.05-2017.03 | 7AT/6MT | F | L/R | Estate Van FWD CHPA | | GCI83016 | Inner Joint | | | 28 | | | 32 | |
| | 2013.05-2017.03 | 7DCT | F | L | Estate Van FWD CHPA | | GDS61100 | Drive Shaft | | 36 | | 59.5 | 40 | 513 | |
| | 2013.05-2017.03 | 7DCT | F | R | Estate Van FWD CHPA | | GDS83313 | Drive Shaft | | 36 | | 59.5 | 40 | 792 | |
| | 2013.05-2017.03 | 7DCT | F | L/R | Estate Van FWD CHPA | | GCO83101 | Outer Joint | | 36 | 27 | 59.5 | 40 | 65 | M |
| 1.4 (118 kw) | 2009.07-2012.10 | 6MT | F | L/R | Estate Van FWD CAVD | | GCI82447 | Inner Joint | | | 33 | | | 34 | |
| | 2009.07-2012.10 | 7AT/6MT | F | L/R | Estate Van FWD CAVD | | GCI83016 | Inner Joint | | | 28 | | | 32 | |
| | 2009.07-2012.10 | 7DCT | F | L | Estate Van FWD CAVD | | GDS83302 | Drive Shaft | | 36 | | 59.5 | 40 | 528 | |
| | 2009.07-2012.10 | AT | F | R | Estate Van FWD CAVD | | GDS81653 | Drive Shaft | | 36 | | 59.5 | 40 | 785 | |
| | 2009.07-2012.10 | AT | F | L/R | Estate Van FWD CAVD | | GCO83002 | Outer Joint | | 36 | 27 | 59.5 | 40 | 66 | I |
| | 2009.07-2012.10 | MT | F | L | Estate Van FWD CAVD | | GDS61201 | Drive Shaft | | 36 | | 59.5 | 40.5 | 535 | |
| | 2009.07-2012.10 | MT | F | R | Estate Van FWD CAVD | | GDS61096 | Drive Shaft | | 36 | | 59.5 | 40.5 | 799 | |
| | 2009.07-2012.10 | MT | F | L/R | Estate Van FWD CAVD | | GCO83037 | Outer Joint | | 36 | 30 | 59.5 | 40.5 | 56 | I |
| 1.6 (66 kw) | 2009.12-2012.10 | 5MT | F | L | Estate Van FWD CAYB | | GDS83294 | Drive Shaft | | 36 | | 59.5 | 38 | 519 | |
| | 2009.12-2012.10 | 5MT | F | R | Estate Van FWD CAYB | | GDS61042 | Drive Shaft | | 36 | | 59.5 | 40.5 | 814 | |
| | 2009.12-2012.10 | 5MT | F | L/R | Estate Van FWD CAYB | | GCO83037 | Outer Joint | | 36 | 30 | 59.5 | 40.5 | 56 | I |
| | 2009.12-2012.10 | 5MT | F | L/R | Estate Van FWD CAYB | | GCI82447 | Inner Joint | | | 33 | | | 34 | |

| | YEAR | TRANSM. | F/R | L/R | BODY STYLE & DRIVE TYPE & ENGINE | REMARKS | G-AP Ref. | PRODUCT | ABS | Technical Specifications A | B | C | H | L | P |
|---|---|---|---|---|---|---|---|---|---|---|---|---|---|---|---|
| **VW** **Golf Van (Variant)** | | | | | | | | | | | | | | | |
| 1.6 (66 kw) | 2009.12-2012.10 | | F | L/R | Estate Van FWD CAYB | | GCI83011 | Inner Joint | | | 33 | | | 34 | |
| | 2013.05-2017.03 | 5MT | F | L | Estate Van FWD CLHB;CRKA;CXXA;DDYB | For PR code:1PE/1PF/1PA/2H4 | GDS61282 | Drive Shaft | | 36 | | 59.5 | 40 | 523 | |
| | 2013.05-2017.03 | 5MT | F | L | Estate Van FWD CLHB;CRKA;CXXA;DDYB | For PR code:1PA/2H0/2H5 | GDS83294 | Drive Shaft | | 36 | | 59.5 | 38 | 519 | |
| | 2013.05-2017.03 | 5MT | F | R | Estate Van FWD CLHB;CRKA;CXXA;DDYB | | GDS61042 | Drive Shaft | | 36 | | 59.5 | 40.5 | 814 | |
| | 2013.05-2017.03 | 5MT | F | L/R | Estate Van FWD CLHB;CRKA;CXXA;DDYB | | GCI82447 | Inner Joint | | | 33 | | | 34 | |
| | 2013.05-2017.03 | MT | F | L/R | Estate Van FWD CLHB;CRKA;CXXA;DDYB | For Engine code:CLHB | GCO83037 | Outer Joint | | 36 | 30 | 59.5 | 40.5 | 56 | I |
| | 2013.05-2017.03 | | F | L/R | Estate Van FWD CLHB;CRKA;CXXA;DDYB | | GCI83011 | Inner Joint | | | 33 | | | 34 | |
| 1.6 (77 kw) | 2000.05-2006.06 | 5MT | F | L | Estate Van FWD AUS/AZD/BCB | | GDS61312 | Drive Shaft | | 36 | | 53 | 78 | 546 | |
| | 2000.05-2006.06 | 5MT | F | R | Estate Van FWD AUS/AZD/BCB | | GDS61203 | Drive Shaft | | 36 | | 53.2 | 77.5 | 810 | |
| | 2000.05-2006.06 | 5MT | F | L/R | Estate Van FWD AUS/AZD/BCB | | GCO83070 | Outer Joint | | 36 | 30 | 53 | 78 | 60 | I |
| | 2000.05-2006.06 | 5MT | F | L/R | Estate Van FWD AUS/AZD/BCB | | GCI61005 | Inner Joint | | | 30 | | | 57.6 | |
| | 2009.07-2014.05 | 5MT | F | L | Estate Van FWD CAYC | Date to:2011.06 | GDS83294 | Drive Shaft | | 36 | | 59.5 | 38 | 519 | |
| | 2009.07-2014.05 | 5MT | F | R | Estate Van FWD CAYC | | GDS61042 | Drive Shaft | | 36 | | 59.5 | 40.5 | 814 | |
| | 2009.07-2014.05 | 5MT | F | L/R | Estate Van FWD CAYC | | GCI82447 | Inner Joint | | | 33 | | | 34 | |
| | 2009.07-2014.05 | 7DCT | F | L | Estate Van FWD CAYC | | GDS61100 | Drive Shaft | | 36 | | 59.5 | 40 | 513 | |
| | 2009.07-2014.05 | 7DCT | F | R | Estate Van FWD CAYC | | GDS61339 | Drive Shaft | | 36 | | 59.5 | 40 | 794 | |
| | 2009.07-2014.05 | 7DCT | F | L/R | Estate Van FWD CAYC | | GCI83016 | Inner Joint | | | 28 | | | 32 | |
| | 2009.07-2014.05 | MT | F | L/R | Estate Van FWD CAYC | | GCO83037 | Outer Joint | | 36 | 30 | 59.5 | 40.5 | 56 | I |
| | 2009.07-2014.05 | | F | L/R | Estate Van FWD CAYC | | GCO83002 | Outer Joint | | 36 | 27 | 59.5 | 40 | 66 | I |
| | 2013.05-2017.03 | 6MT | F | L | Estate Van 4WD CLHA | | GDS83295 | Drive Shaft | | 36 | | 59.5 | 40 | 491 | |
| | 2013.05-2017.03 | 6MT | F | R | Estate Van 4WD CLHA | | GDS81892 | Drive Shaft | | 36 | | 59.5 | 40 | 602 | |
| | 2013.05-2017.03 | 6MT | F | L | Estate Van 4WD CLHA | | GCO83101 | Outer Joint | | 36 | 27 | 59.5 | 40 | 65 | M |
| | 2013.05-2017.03 | 6MT | F | L | Estate Van 4WD CLHA | | GCI61069 | Inner Joint | | | 28 | | | 32 | |
| | 2013.05-2017.03 | | F | L/R | Estate Van 4WD CLHA | | GCI83016 | Inner Joint | | | 28 | | | 32 | |
| | 2013.05-2017.03 | 6MT | R | L | Estate Van 4WD CLHA | | GDS61286 | Drive Shaft | | 36 | | 59.5 | 40 | 587 | |
| | 2013.05-2017.03 | 6MT | R | R | Estate Van 4WD CLHA | | GDS61287 | Drive Shaft | | 36 | | 59.5 | 40 | 632 | |
| | 2013.05-2017.03 | 6MT | R | L/R | Estate Van 4WD CLHA | | GCI35026 | Outer Joint | | 36 | 33 | 59.5 | 40 | 61 | |
| | 2013.05-2017.03 | 6MT | R | L/R | Estate Van 4WD CLHA | | GCI61103 | Inner Joint | | | 33 | | | 32 | |
| | 2013.05-2017.03 | 5MT | F | R | Estate Van FWD CLHA | | GDS61042 | Drive Shaft | | 36 | | 59.5 | 40.5 | 814 | |
| | 2013.05-2017.03 | 5MT | F | R | Estate Van FWD CLHA | | GDS61283 | Drive Shaft | | 36 | | 59.5 | 40 | 815 | |
| | 2013.05-2017.03 | 5MT | F | L/R | Estate Van FWD CLHA | | GCO61059 | Outer Joint | | 36 | 33 | 59.5 | 40 | 59.5 | I |
| | 2013.05-2017.03 | 5MT | F | L/R | Estate Van FWD CLHA | | GCI53002 | Inner Joint | | | 33 | | | 34 | |
| | 2013.05-2017.03 | 5MT/7DCT | F | L | Estate Van FWD CLHA | No Economy | GDS61282 | Drive Shaft | | 36 | | 59.5 | 40 | 523 | |
| | 2013.05-2017.03 | 5MT/7DCT | F | L | Estate Van FWD CLHA | Economy | GDS83294 | Drive Shaft | | 36 | | 59.5 | 38 | 519 | |
| | 2013.05-2017.03 | 7DCT | F | R | Estate Van FWD CLHA | | GDS61096 | Drive Shaft | | 36 | | 59.5 | 40.5 | 799 | |
| | 2013.05-2017.03 | 7DCT | F | L | Estate Van FWD CLHA | | GCO61059 | Outer Joint | | 36 | 33 | 59.5 | 40 | 59.5 | I |
| | 2013.05-2017.03 | 7DCT | F | L | Estate Van FWD CLHA | | GCI53002 | Inner Joint | | | 33 | | | 34 | |
| | 2013.05-2017.03 | 7DCT/5MT | F | L/R | Estate Van FWD CLHA | | GCI82447 | Inner Joint | | | 33 | | | 34 | |
| | 2013.05-2017.03 | | F | L/R | Estate Van FWD CLHA | | GCI83011 | Inner Joint | | | 33 | | | 34 | |
| 1.6 (81 kw) | 2013.05-2017.03 | 5MT | F | R | Estate Van FWD CRKB;CXXB | | GDS61042 | Drive Shaft | | 36 | | 59.5 | 40.5 | 814 | |
| | 2013.05-2017.03 | 6MT | F | L | Estate Van FWD CRKB;CXXB | No Economy | GDS61282 | Drive Shaft | | 36 | | 59.5 | 40 | 523 | |
| | 2013.05-2017.03 | 6MT | F | L | Estate Van FWD CRKB;CXXB | Economy | GDS83294 | Drive Shaft | | 36 | | 59.5 | 38 | 519 | |
| | 2013.05-2017.03 | 6MT | F | R | Estate Van FWD CRKB;CXXB | | GDS61283 | Drive Shaft | | 36 | | 59.5 | 40 | 815 | |
| | 2013.05-2017.03 | 6MT | F | L/R | Estate Van FWD CRKB;CXXB | | GCO61059 | Outer Joint | | 36 | 33 | 59.5 | 40 | 59.5 | I |
| | 2013.05-2017.03 | 6MT | F | L/R | Estate Van FWD CRKB;CXXB | | GCI53002 | Inner Joint | | | 33 | | | 34 | |
| | 2013.05-2017.03 | 6MT | F | L/R | Estate Van FWD CRKB;CXXB | | GCI82447 | Inner Joint | | | 33 | | | 34 | |
| | 2013.05-2017.03 | | F | L/R | Estate Van FWD CRKB;CXXB | | GCI83011 | Inner Joint | | | 33 | | | 34 | |
| 1.9 (50 kw) | 1999.05-2006.05 | 5MT | F | L | Estate Van FWD AQM | | GDS61045 | Drive Shaft | | 36 | | 53 | 78.5 | 555 | |
| | 1999.05-2006.05 | 5MT | F | R | Estate Van FWD AQM | | GDS83046 | Drive Shaft | | 36 | | 53 | 78.5 | 822 | |
| | 1999.05-2006.05 | | F | L/R | Estate Van FWD AQM | | GCO83033 | Outer Joint | | 36 | 30 | 53 | 78.5 | 51 | I |
| | 1999.05-2006.05 | | F | L/R | Estate Van FWD AQM | | GCI83008 | Inner Joint | | | 33 | | | 32 | |
| 1.9 (66 kw) | 1999.05-2006.05 | 5MT | F | L | Estate Van FWD AGR/ALH | | GDS83006 | Drive Shaft | | 36 | | 53.2 | 77.5 | 557 | |
| | 1999.05-2006.05 | 5MT | F | R | Estate Van FWD AGR/ALH | | GDS83004 | Drive Shaft | | 36 | | 53.2 | 77.5 | 822 | |
| | 1999.05-2006.05 | 5MT | F | L/R | Estate Van FWD AGR/ALH | | GCO83070 | Outer Joint | | 36 | 30 | 53 | 78 | 60 | I |
| | 1999.05-2006.05 | 5MT | F | L | Estate Van FWD AGR/ALH | | GCI83011 | Inner Joint | | | 33 | | | 34 | |
| | 1999.05-2006.05 | 5MT | F | R | Estate Van FWD AGR/ALH | | GCI83009 | Inner Joint | | | 33 | | | 34 | |
| | 1999.05-2006.05 | 5MT | F | L/R | Estate Van FWD AGR/ALH | | GCI83006 | Inner Joint | | | 33 | | | 34 | |
| | 1999.05-2006.05 | AT | F | L/R | Estate Van FWD AGR/ALH | | GCI61006 | Inner Joint | | | 30 | | | 57.6 | |
| 1.9 (74 kw) | 2000.02-2006.06 | 5MT | F | L | Estate Van FWD ATD/AXR | | GDS83006 | Drive Shaft | | 36 | | 53.2 | 77.5 | 557 | |
| | 2000.02-2006.06 | 5MT | F | R | Estate Van FWD ATD/AXR | | GDS83004 | Drive Shaft | | 36 | | 53.2 | 77.5 | 822 | |
| | 2000.02-2006.06 | 5MT | F | L/R | Estate Van FWD ATD/AXR | | GCO83070 | Outer Joint | | 36 | 30 | 53 | 78 | 60 | I |
| | 2000.02-2006.06 | 5MT | F | L | Estate Van FWD ATD/AXR | | GCI83011 | Inner Joint | | | 33 | | | 34 | |
| | 2000.02-2006.06 | 5MT | F | R | Estate Van FWD ATD/AXR | | GCI83009 | Inner Joint | | | 33 | | | 34 | |
| 1.9 (81 kw) | 1999.05-2006.05 | AT | F | L/R | Estate Van FWD AHF/ASV | | GCO83070 | Outer Joint | | 36 | 30 | 53 | 78 | 60 | I |
| | 1999.05-2006.05 | AT | F | L/R | Estate Van FWD AHF/ASV | | GCI61006 | Inner Joint | | | 30 | | | 57.6 | |

| | YEAR | TRANSM. | F/R | L/R | BODY STYLE & DRIVE TYPE & ENGINE | REMARKS | G-AP Ref. | PRODUCT | ABS | Technical Specifications A | B | C | H | L | P |
|---|---|---|---|---|---|---|---|---|---|---|---|---|---|---|---|
| **VW** | | | | | | | | | | | | | | | |
| **Golf Van (Variant)** | | | | | | | | | | | | | | | |
| 1.9 (81 kw) | 1999.05-2006.05 | MT | F | L/R | Estate Van FWD AHF/ASV | Date to:2001.04,For Engine code:ASV;Date from:2001.05 | GCO83070 | Outer Joint | | 36 | 30 | 53 | 78 | 60 | I |
| | 1999.05-2006.05 | MT | F | R | Estate Van FWD AHF/ASV | | GCI83009 | Inner Joint | | | 33 | | | 34 | |
| 1.9 (85 kw) | 1999.05-2002.04 | 5MT | F | L | Estate Van FWD AJM | For PR code:8Q0/8Q1,with headlamp levelling (mechanical) | GDS56276 | Drive Shaft | | 36 | | 53 | 77.5 | 520 | |
| | 1999.05-2002.04 | 5MT | F | R | Estate Van FWD AJM | | GDS61121 | Drive Shaft | | 36 | | 53 | 77.5 | 806 | |
| | 1999.05-2002.04 | 5MT | F | L/R | Estate Van FWD AJM | | GCO83035 | Outer Joint | | 36 | 27 | 53 | 77.5 | 65 | I |
| | 1999.05-2002.04 | 5MT | F | L/R | Estate Van FWD AJM | | GCI83001 | Inner Joint | | | 28 | | | 32 | |
| | 1999.05-2002.04 | 6MT | F | L | Estate Van FWD AJM | For PR code:8Q0/8Q1,with headlamp levelling (mechanical) | GCI61010 | Inner Joint | | | 28 | | | 32 | |
| | 1999.05-2002.04 | AT | F | L | Estate Van FWD AJM | Vehicle Equipment:for vehicles with headlamp levelling (automatic);For PR code:8G2 | GDS61244 | Drive Shaft | | 36 | | 53 | 77.5 | 523 | |
| 2.0 (103 kw) | 2009.07-2014.05 | 6AT/6MT | F | L/R | Estate Van FWD CBDB;CFHC | | GCI54004 | Inner Joint | | | 34 | | | 81 | |
| | 2009.07-2014.05 | 6AT/6MT | F | L/R | Estate Van FWD CBDB;CFHC | Original Tripod Design | GCI61057 | Inner Joint | | | 34 | | | 89 | |
| | 2009.07-2014.05 | 6AT/6MT | F | L/R | Estate Van FWD CBDB;CFHC | | GCI83016 | Inner Joint | | | 28 | | | 32 | |
| | 2009.07-2014.05 | AT | F | L | Estate Van FWD CBDB;CFHC | | GDS54013 | Drive Shaft | | 36 | | 59.5 | 40 | 479.5 | |
| | 2009.07-2014.05 | AT | F | R | Estate Van FWD CBDB;CFHC | | GDS54011 | Drive Shaft | | 36 | | 59.5 | 40 | 755 | |
| | 2009.07-2014.05 | MT | F | L | Estate Van FWD CBDB;CFHC | | GDS83295 | Drive Shaft | | 36 | | 59.5 | 40 | 491 | |
| | 2009.07-2014.05 | MT | F | R | Estate Van FWD CBDB;CFHC | | GDS61339 | Drive Shaft | | 36 | | 59.5 | 40 | 794 | |
| | 2009.07-2014.05 | MT | F | R | Estate Van FWD CBDB;CFHC | | GDS83313 | Drive Shaft | | 36 | | 59.5 | 40 | 792 | |
| | 2009.07-2014.05 | MT | F | L | Estate Van FWD CBDB;CFHC | Date to:2010.04 | GCO61059 | Outer Joint | | 36 | 33 | 59.5 | 40 | 59.5 | I |
| | 2009.07-2014.05 | | F | L/R | Estate Van FWD CBDB;CFHC | | GCO83002 | Outer Joint | | 36 | 27 | 59.5 | 40 | 66 | I |
| 2.0 (110 kw) | 2013.04-2017.03 | 6MT | F | L | Estate Van 4WD CRLB;CRBC;DCYA | | GDS83295 | Drive Shaft | | 36 | | 59.5 | 40 | 491 | |
| | 2013.04-2017.03 | 6MT | F | R | Estate Van 4WD CRLB;CRBC;DCYA | | GDS81892 | Drive Shaft | | 36 | | 59.5 | 40 | 602 | |
| | 2013.04-2017.03 | 6MT | F | L | Estate Van 4WD CRLB;CRBC;DCYA | | GCO83101 | Outer Joint | | 36 | 27 | 59.5 | 40 | 65 | M |
| | 2013.04-2017.03 | 6MT | F | L | Estate Van 4WD CRLB;CRBC;DCYA | | GCI61069 | Inner Joint | | | 28 | | | 32 | |
| | 2013.04-2017.03 | | F | L/R | Estate Van 4WD CRLB;CRBC;DCYA | | GCI83016 | Inner Joint | | | 28 | | | 32 | |
| | 2013.04-2017.03 | 6MT | R | L | Estate Van 4WD CRLB;CRBC;DCYA | | GDS61286 | Drive Shaft | | 36 | | 59.5 | 40 | 587 | |
| | 2013.04-2017.03 | 6MT | R | R | Estate Van 4WD CRLB;CRBC;DCYA | | GDS61287 | Drive Shaft | | 36 | | 59.5 | 40 | 632 | |
| | 2013.04-2017.03 | 6MT | R | L/R | Estate Van 4WD CRLB;CRBC;DCYA | | GCI35026 | Outer Joint | | 36 | 33 | 59.5 | 40 | 61 | |
| | 2013.04-2017.03 | 6MT | R | L/R | Estate Van 4WD CRLB;CRBC;DCYA | | GCI61103 | Inner Joint | | | 33 | | | 32 | |
| | 2013.04-2017.03 | 6DCT | F | L | Estate Van FWD CRLB;CRBC;DCYA | | GDS61285 | Drive Shaft | | 36 | | 59.5 | 40 | 472 | |
| | 2013.04-2017.03 | 6DCT | F | R | Estate Van FWD CRLB;CRBC;DCYA | | GDS83354 | Drive Shaft | | 36 | | 59.5 | 40 | 763 | |
| | 2013.04-2017.03 | 6DCT | F | L/R | Estate Van FWD CRLB;CRBC;DCYA | For Engine code:CRLB | GCO83101 | Outer Joint | | 36 | 27 | 59.5 | 40 | 65 | M |
| | 2013.04-2017.03 | 6DCT | F | L/R | Estate Van FWD CRLB;CRBC;DCYA | | GCI61057 | Inner Joint | | | 34 | | | 89 | |
| | 2013.04-2017.03 | 6MT | F | L | Estate Van FWD CRLB;CRBC;DCYA | | GDS83295 | Drive Shaft | | 36 | | 59.5 | 40 | 491 | |
| | 2013.04-2017.03 | 6MT | F | R | Estate Van FWD CRLB;CRBC;DCYA | | GDS83313 | Drive Shaft | | 36 | | 59.5 | 40 | 792 | |
| | 2013.04-2017.03 | 6MT | F | L/R | Estate Van FWD CRLB;CRBC;DCYA | | GCI83016 | Inner Joint | | | 28 | | | 32 | |
| | 2013.04-2017.03 | | F | L | Estate Van FWD CRLB;CRBC;DCYA | For PR code:1PE/1PF/1PA/2H4 | GCI61069 | Inner Joint | | | 28 | | | 32 | |
| **Golf Variant** | | | | | | | | | | | | | | | |
| 1.5 (85 kw) | 2024.03- | 6MT | F | L | Estate FWD DXDE | | GDS84408 | Drive Shaft | | 36 | | 59.5 | 40 | 499 | |
| | 2024.03- | 6MT | F | R | Estate FWD DXDE | | GDS84417 | Drive Shaft | | 36 | | 59.5 | 40 | 783 | |
| | 2024.03- | 6MT | F | L/R | Estate FWD DXDE | | GCO61059 | Outer Joint | | 36 | 33 | 59.5 | 40 | 59.5 | I |
| | 2024.03- | 6MT | F | L/R | Estate FWD DXDE | | GCI82447 | Inner Joint | | | 33 | | | 34 | |
| | 2024.03- | 7DCT | F | L | Estate FWD DXDE | | GDS61282 | Drive Shaft | | 36 | | 59.5 | 40 | 523 | |
| | 2024.03- | 7DCT | F | R | Estate FWD DXDE | | GDS84417 | Drive Shaft | | 36 | | 59.5 | 40 | 783 | |
| | 2024.03- | 7DCT | F | L/R | Estate FWD DXDE | | GCO61059 | Outer Joint | | 36 | 33 | 59.5 | 40 | 59.5 | I |
| | 2024.03- | 7DCT | F | L | Estate FWD DXDE | | GCI53002 | Inner Joint | | | 33 | | | 34 | |
| | 2024.03- | 7DCT | F | R | Estate FWD DXDE | | GCI82447 | Inner Joint | | | 33 | | | 34 | |
| 1.9 (47 kw) | 1993.07-1999.04 | MT | F | L | Estate FWD 1Y | | GDS53004 | Drive Shaft | | 22 | | 50 | 78.5 | 562 | |
| | 1993.07-1999.04 | MT | F | R | Estate FWD 1Y | | GDS61055 | Drive Shaft | | 22 | | 53 | 78.5 | 796 | |
| | 1993.07-1999.04 | MT | F | L/R | Estate FWD 1Y | | GCO53008 | Outer Joint | | 22 | 30 | 53 | 78.5 | 51 | I |
| | 1993.07-1999.04 | MT | F | L/R | Estate FWD 1Y | | GCI83005 | Inner Joint | | | 33 | | | 32 | |
| | 1993.07-1999.04 | | F | | Estate FWD 1Y | | GCO53006 | Outer Joint | | 22 | 30 | 50 | 78.5 | 52 | I |
| 2.0 (150 kw) | 2024.12- | 7DCT | F | L | Estate 4WD DNNE | | GDS84237 | Drive Shaft | | 36 | 37 | 59.5 | 40 | 560 | |
| | 2024.12- | 7DCT | F | R | Estate 4WD DNNE | | GDS81892 | Drive Shaft | | 36 | | 59.5 | 40 | 602 | |
| | 2024.12- | 7DCT | R | L | Estate 4WD DNNE | | GDS61286 | Drive Shaft | | 36 | | 59.5 | 40 | 587 | |
| | 2024.12- | 7DCT | R | R | Estate 4WD DNNE | | GDS61287 | Drive Shaft | | 36 | | 59.5 | 40 | 632 | |
| **Grand California** | | | | | | | | | | | | | | | |
| 2.0 (103 kw) | 2019.04- | 6MT | F | R | Bus 4WD DAUA;DNAE | Date to:2021.02 | GDS83936 | Drive Shaft | | 44 | 26 | 72.4 | 109.5 | 687 | |
| | 2019.04- | | F | L/R | Bus 4WD DAUA;DNAE | | GCO82542 | Outer Joint | | 44 | 31 | 72.4 | 109.5 | 65.5 | I |
| | 2019.04- | | F | L | Bus 4WD DAUA;DNAE | Date to:2021.02 | GCI82429 | Inner Joint | | 42 | 29 | | 67.5 | 100 | |
| | 2019.04- | 8AT | F | L | Bus FWD DAUA;DNAE | | GDS83937 | Drive Shaft | | 44 | 42 | 72.4 | 109.5 | 707 | |
| | 2019.04- | 8AT/6MT | F | R | Bus FWD DAUA;DNAE | Transmission:8AT/6MT;Drive:4;Wheel:4R;Transmission:8AT;Drive from:2020.07;Date to:2022.12;Vin:TPR-code:A002/1960;Trans. code:NLU | GDS83935 | Drive Shaft | | 44 | 42 | 72.4 | 109.5 | 1089 | |
| | 2019.04- | 8AT/6MT | F | L/R | Bus FWD DAUA;DNAE | | GCO82542 | Outer Joint | | 44 | 31 | 72.4 | 109.5 | 65.5 | I |
| | 2019.04- | 8AT/6MT | F | L | Bus FWD DAUA;DNAE | | GCI82429 | Inner Joint | | 42 | 29 | | 67.5 | 100 | |
| | 2019.04- | 8AT/6MT | F | R | Bus FWD DAUA;DNAE | Transmission:8AT/6MT;Drive:4;Wheel:4R;Transmission:8AT;Drive from:2020.07;Date to:2022.12;Vin:TPR-code:A002/1960;Trans. code:NLU | GCI82446 | Inner Joint | | 42 | 29 | 36.5 | 421.5 | 106.5 | |
| 2.0 (120 kw) | 2024.10- | 8AT | F | L | Bus 4WD DMZD | | GDS83937 | Drive Shaft | | 44 | 42 | 72.4 | 109.5 | 707 | |
| | 2024.10- | | F | L | Bus 4WD DMZD | | GCI82429 | Inner Joint | | 42 | 29 | | 67.5 | 100 | |

| | YEAR | TRANSM. | F/R | L/R | BODY STYLE & DRIVE TYPE & ENGINE | REMARKS | G-AP Ref. | PRODUCT | ABS | Technical Specifications A | B | C | H | L | P |
|---|---|---|---|---|---|---|---|---|---|---|---|---|---|---|---|
| **VW** | | | | | | | | | | | | | | | |
| **Grand California** | | | | | | | | | | | | | | | |
| 2.0 (120 kw) | 2024.10- | 8AT | F | L | Bus FWD DMZD | | GDS83937 | Drive Shaft | | 44 | 42 | 72.4 | 109.5 | 707 | |
| | 2024.10- | | F | L | Bus FWD DMZD | | GCI82429 | Inner Joint | | 42 | 29 | | 67.5 | 100 | |
| 2.0 (130 kw) | 2019.04- | 6MT | F | L | Bus 4WD DAVA;DMZB | | GDS83938 | Drive Shaft | | 44 | 42 | 72.4 | 109.5 | 722 | |
| | 2019.04- | 6MT | F | R | Bus 4WD DAVA;DMZB | | GCI82428 | Inner Joint | | 26 | 29 | 47 | 39.5 | 100 | |
| | 2019.04- | 6MT/8AT | F | R | Bus 4WD DAVA;DMZB | | GDS83936 | Drive Shaft | | 44 | 26 | 72.4 | 109.5 | 687 | |
| | 2019.04- | 8AT | F | L | Bus 4WD DAVA;DMZB | | GDS83937 | Drive Shaft | | 44 | 42 | 72.4 | 109.5 | 707 | |
| | 2019.04- | 8AT/6MT | F | L/R | Bus 4WD DAVA;DMZB | | GCO82542 | Outer Joint | | 44 | 31 | 72.4 | 109.5 | 65.5 | I |
| | 2019.04- | 8AT/6MT | F | L | Bus 4WD DAVA;DMZB | | GCI82429 | Inner Joint | | 42 | 29 | | 67.5 | 100 | |
| | 2019.04- | 6MT | F | L | Bus FWD DAVA;DMZB | | GDS83938 | Drive Shaft | | 44 | 42 | 72.4 | 109.5 | 722 | |
| | 2019.04- | 8AT | F | L | Bus FWD DAVA;DMZB | | GDS83937 | Drive Shaft | | 44 | 42 | 72.4 | 109.5 | 707 | |
| | 2019.04- | 8AT/6MT | F | R | Bus FWD DAVA;DMZB | [illegible] | GDS83935 | Drive Shaft | | 44 | 42 | 72.4 | 109.5 | 1089 | |
| | 2019.04- | 8AT/6MT | F | L/R | Bus FWD DAVA;DMZB | | GCO82542 | Outer Joint | | 44 | 31 | 72.4 | 109.5 | 65.5 | I |
| | 2019.04- | 8AT/6MT | F | L | Bus FWD DAVA;DMZB | | GCI82429 | Inner Joint | | 42 | 29 | | 67.5 | 100 | |
| | 2019.04- | 8AT/6MT | F | R | Bus FWD DAVA;DMZB | [illegible] | GCI82446 | Inner Joint | | 42 | 29 | 36.5 | 421.5 | 106.5 | |
| **ID.3** | | | | | | | | | | | | | | | |
| EV (93 kw) | 2021.11-2023.05 | ET | R | L | Hatchback RWD EBJD | For PR code:N22 | GDS58306 | Drive Shaft | | 38 | 42 | 59.5 | 34 | 618 | |
| | 2021.11-2023.05 | ET | R | R | Hatchback RWD EBJD | For PR code:N22 | GDS58305 | Drive Shaft | | 38 | 42 | 59.5 | 34 | 834 | |
| | 2021.11-2023.05 | ET | R | L/R | Hatchback RWD EBJD | For PR code:N22 | GCO83846 | Outer Joint | | 38 | 27 | 59.5 | 34 | 65 | M |
| | 2021.11-2023.05 | ET | R | L/R | Hatchback RWD EBJD | For PR code:N22 | GCI84059 | Inner Joint | | 42 | 28 | 45 | 80.5 | 129.5 | |
| EV (107 kw) | 2020.11- | ET | R | L | Hatchback RWD EBJC | For PR code:N22 | GDS58306 | Drive Shaft | | 38 | 42 | 59.5 | 34 | 618 | |
| | 2020.11- | ET | R | L | Hatchback RWD EBJC | Date to:2023.11;For PR code:N06 | GDS84093 | Drive Shaft | | 36 | 37 | 59.5 | 34 | 611 | |
| | 2020.11- | ET | R | R | Hatchback RWD EBJC | For PR code:N22 | GDS58305 | Drive Shaft | | 38 | 42 | 59.5 | 34 | 834 | |
| | 2020.11- | ET | R | R | Hatchback RWD EBJC | Date to:2023.11;For PR code:N06 | GDS84092 | Drive Shaft | | 36 | 37 | 59.5 | 34 | 840 | |
| | 2020.11- | ET | R | L/R | Hatchback RWD EBJC | For PR code:N22 | GCO83846 | Outer Joint | | 38 | 27 | 59.5 | 34 | 65 | M |
| | 2020.11- | ET | R | L/R | Hatchback RWD EBJC | Date to:2023.11;For PR code:N06 | GCI82504 | Inner Joint | | 37 | 33 | 40 | 69 | 83.5 | |
| | 2020.11- | ET | R | L/R | Hatchback RWD EBJC | For PR code:N22 | GCI84059 | Inner Joint | | 42 | 28 | 45 | 80.5 | 129.5 | |
| EV (110 kw) | 2020.03-2023.05 | ET | R | L | Hatchback RWD EBJD | For PR code:N22 | GDS58306 | Drive Shaft | | 38 | 42 | 59.5 | 34 | 618 | |
| | 2020.03-2023.05 | ET | R | L | Hatchback RWD EBJD | Date from:2020.10;For PR code:N06 | GDS84093 | Drive Shaft | | 36 | 37 | 59.5 | 34 | 611 | |
| | 2020.03-2023.05 | ET | R | R | Hatchback RWD EBJD | For PR code:N22 | GDS58305 | Drive Shaft | | 38 | 42 | 59.5 | 34 | 834 | |
| | 2020.03-2023.05 | ET | R | R | Hatchback RWD EBJD | Date from:2020.10;For PR code:N06 | GDS84092 | Drive Shaft | | 36 | 37 | 59.5 | 34 | 840 | |
| | 2020.03-2023.05 | ET | R | L/R | Hatchback RWD EBJD | For PR code:N22 | GCO83846 | Outer Joint | | 38 | 27 | 59.5 | 34 | 65 | M |
| | 2020.03-2023.05 | ET | R | L/R | Hatchback RWD EBJD | Date from:2020.10;For PR code:N06 | GCI82504 | Inner Joint | | 37 | 33 | 40 | 69 | 83.5 | |
| | 2020.03-2023.05 | ET | R | L/R | Hatchback RWD EBJD | For PR code:N22 | GCI84059 | Inner Joint | | 42 | 28 | 45 | 80.5 | 129.5 | |
| EV (125 kw) | 2024.06- | ET | R | L | Hatchback RWD EDCA | For PR code:N22 | GDS58306 | Drive Shaft | | 38 | 42 | 59.5 | 34 | 618 | |
| | 2024.06- | ET | R | R | Hatchback RWD EDCA | For PR code:N22 | GDS58305 | Drive Shaft | | 38 | 42 | 59.5 | 34 | 834 | |
| | 2024.06- | ET | R | L/R | Hatchback RWD EDCA | For PR code:N22 | GCO83846 | Outer Joint | | 38 | 27 | 59.5 | 34 | 65 | M |
| | 2024.06- | ET | R | L/R | Hatchback RWD EDCA | For PR code:N22 | GCI84059 | Inner Joint | | 42 | 28 | 45 | 80.5 | 129.5 | |
| EV (150 kw) | 2019.11- | ET | R | L | Hatchback RWD EBJC | For PR code:N22 | GDS58306 | Drive Shaft | | 38 | 42 | 59.5 | 34 | 618 | |
| | 2019.11- | ET | R | L | Hatchback RWD EBJC | Date from:2020.10;Date to:2023.11;For PR code:N06 | GDS84093 | Drive Shaft | | 36 | 37 | 59.5 | 34 | 611 | |
| | 2019.11- | ET | R | R | Hatchback RWD EBJC | For PR code:N22 | GDS58305 | Drive Shaft | | 38 | 42 | 59.5 | 34 | 834 | |
| | 2019.11- | ET | R | R | Hatchback RWD EBJC | Date from:2020.10;Date to:2023.11;For PR code:N06 | GDS84092 | Drive Shaft | | 36 | 37 | 59.5 | 34 | 840 | |
| | 2019.11- | ET | R | L/R | Hatchback RWD EBJC | For PR code:N22 | GCO83846 | Outer Joint | | 38 | 27 | 59.5 | 34 | 65 | M |
| | 2019.11- | ET | R | L/R | Hatchback RWD EBJC | Date from:2020.10;Date to:2023.11;For PR code:N06 | GCI82504 | Inner Joint | | 37 | 33 | 40 | 69 | 83.5 | |
| | 2019.11- | ET | R | L/R | Hatchback RWD EBJC | For PR code:N22 | GCI84059 | Inner Joint | | 42 | 28 | 45 | 80.5 | 129.5 | |
| | 2021.11- | ET | R | L | Hatchback RWD EBJA;EBJC | For PR code:N22 | GDS58306 | Drive Shaft | | 38 | 42 | 59.5 | 34 | 618 | |
| | 2021.11- | ET | R | L | Hatchback RWD EBJA;EBJC | Date from:2020.10;Date to:2023.11;For PR code:N06 | GDS84093 | Drive Shaft | | 36 | 37 | 59.5 | 34 | 611 | |
| | 2021.11- | ET | R | R | Hatchback RWD EBJA;EBJC | For PR code:N22 | GDS58305 | Drive Shaft | | 38 | 42 | 59.5 | 34 | 834 | |
| | 2021.11- | ET | R | R | Hatchback RWD EBJA;EBJC | Date from:2020.10;Date to:2023.11;For PR code:N06 | GDS84092 | Drive Shaft | | 36 | 37 | 59.5 | 34 | 840 | |
| | 2021.11- | ET | R | L/R | Hatchback RWD EBJA;EBJC | For PR code:N22 | GCO83846 | Outer Joint | | 38 | 27 | 59.5 | 34 | 65 | M |
| | 2021.11- | ET | R | L/R | Hatchback RWD EBJA;EBJC | Date from:2020.10;Date to:2023.11;For PR code:N06 | GCI82504 | Inner Joint | | 37 | 33 | 40 | 69 | 83.5 | |
| | 2021.11- | ET | R | L/R | Hatchback RWD EBJA;EBJC | For PR code:N22 | GCI84059 | Inner Joint | | 42 | 28 | 45 | 80.5 | 129.5 | |
| EV (170 kw) | 2024.06- | ET | R | L | Hatchback RWD EDCA | For PR code:N22 | GDS58306 | Drive Shaft | | 38 | 42 | 59.5 | 34 | 618 | |
| | 2024.06- | ET | R | R | Hatchback RWD EDCA | For PR code:N22 | GDS58305 | Drive Shaft | | 38 | 42 | 59.5 | 34 | 834 | |
| | 2024.06- | ET | R | L/R | Hatchback RWD EDCA | For PR code:N22 | GCO83846 | Outer Joint | | 38 | 27 | 59.5 | 34 | 65 | M |
| | 2024.06- | ET | R | L/R | Hatchback RWD EDCA | For PR code:N22 | GCI84059 | Inner Joint | | 42 | 28 | 45 | 80.5 | 129.5 | |
| | 2024.06- | ET | R | L | Hatchback RWD EDCA, EDCC | For PR code:N22 | GDS58306 | Drive Shaft | | 38 | 42 | 59.5 | 34 | 618 | |
| | 2024.06- | ET | R | R | Hatchback RWD EDCA, EDCC | For PR code:N22 | GDS58305 | Drive Shaft | | 38 | 42 | 59.5 | 34 | 834 | |
| | 2024.06- | ET | R | L/R | Hatchback RWD EDCA, EDCC | For PR code:N22 | GCO83846 | Outer Joint | | 38 | 27 | 59.5 | 34 | 65 | M |
| | 2024.06- | ET | R | L/R | Hatchback RWD EDCA, EDCC | For PR code:N22 | GCI84059 | Inner Joint | | 42 | 28 | 45 | 80.5 | 129.5 | |
| EV (210 kw) | 2024.06- | ET | R | L | Hatchback RWD EDFA | For PR code:N22 | GDS58306 | Drive Shaft | | 38 | 42 | 59.5 | 34 | 618 | |
| | 2024.06- | ET | R | R | Hatchback RWD EDFA | For PR code:N22 | GDS58305 | Drive Shaft | | 38 | 42 | 59.5 | 34 | 834 | |
| | 2024.06- | ET | R | L/R | Hatchback RWD EDFA | For PR code:N22 | GCO83846 | Outer Joint | | 38 | 27 | 59.5 | 34 | 65 | M |
| | 2024.06- | ET | R | L/R | Hatchback RWD EDFA | For PR code:N22 | GCI84059 | Inner Joint | | 42 | 28 | 45 | 80.5 | 129.5 | |
| EV (240 kw) | 2024.08- | ET | R | L | Hatchback RWD EEWA | For PR code:N22 | GDS58306 | Drive Shaft | | 38 | 42 | 59.5 | 34 | 618 | |
| | 2024.08- | ET | R | R | Hatchback RWD EEWA | For PR code:N22 | GDS58305 | Drive Shaft | | 38 | 42 | 59.5 | 34 | 834 | |

| | YEAR | TRANSM. | F/R | L/R | BODY STYLE & DRIVE TYPE & ENGINE | REMARKS | G-AP Ref. | PRODUCT | ABS | Technical Specifications | | | | | |
|---|---|---|---|---|---|---|---|---|---|---|---|---|---|---|---|
| | | | | | | | | | | A | B | C | H | L | P |
| **VW** | | | | | | | | | | | | | | | |
| **ID.3** | | | | | | | | | | | | | | | |
| EV (240 kw) | 2024.08- | ET | R | L/R | Hatchback RWD EEWA | For PR code:N22 | GCO83846 | Outer Joint | | 38 | 27 | 59.5 | 34 | 65 | M |
| | 2024.08- | ET | R | L/R | Hatchback RWD EEWA | For PR code:N22 | GCI84059 | Inner Joint | | 42 | 28 | 45 | 80.5 | 129.5 | |
| **ID.4** | | | | | | | | | | | | | | | |
| EV (109 kw) | 2021.01- | ET | R | L | SUV RWD EBJA | Date to:2023.10;Date from:2023.11,Date to:2024.04,For PR code:N35 | GDS56955 | Drive Shaft | | 38 | 37 | 59.5 | 34 | 634 | |
| | 2021.01- | ET | R | L | SUV RWD EBJA | For PR code:N22/T65 | GDS58102 | Drive Shaft | | 38 | 42 | 59.5 | 34 | 639 | |
| | 2021.01- | ET | R | R | SUV RWD EBJA | Date to:2023.10;Date from:2023.11,Date to:2024.04,For PR code:N35 | GDS56956 | Drive Shaft | | 38 | 37 | 59.5 | 34 | 859 | |
| | 2021.01- | ET | R | R | SUV RWD EBJA | For PR code:N22/T65 | GDS58101 | Drive Shaft | | 38 | 42 | 59.5 | 34 | 853 | |
| | 2021.01- | ET | R | L/R | SUV RWD EBJA | Date to:2023.10;Date from:2023.11,Date to:2024.04,For PR code:N35 | GCO83488 | Outer Joint | | 38 | 28 | 59.5 | 34 | 81 | |
| | 2021.01- | ET | R | L/R | SUV RWD EBJA | For PR code:N22/T65 | GCO83846 | Outer Joint | | 38 | 27 | 59.5 | 34 | 65 | M |
| | 2021.01- | ET | R | L/R | SUV RWD EBJA | Date to:2023.10;Date from:2023.11,Date to:2024.04,For PR code:N35 | GCI83571 | Inner Joint | | 37 | 28 | 39.95 | 69 | 85.5 | |
| EV (125 kw) | 2021.01- | ET | R | L | SUV RWD EBJA;EDCA | Date to:2023.10;Date from:2023.11,Date to:2024.04,For PR code:N35 | GDS56955 | Drive Shaft | | 38 | 37 | 59.5 | 34 | 634 | |
| | 2021.01- | ET | R | L | SUV RWD EBJA;EDCA | For PR code:N22/T65 | GDS58102 | Drive Shaft | | 38 | 42 | 59.5 | 34 | 639 | |
| | 2021.01- | ET | R | R | SUV RWD EBJA;EDCA | Date to:2023.10;Date from:2023.11,Date to:2024.04,For PR code:N35 | GDS56956 | Drive Shaft | | 38 | 37 | 59.5 | 34 | 859 | |
| | 2021.01- | ET | R | R | SUV RWD EBJA;EDCA | For PR code:N22/T65 | GDS58101 | Drive Shaft | | 38 | 42 | 59.5 | 34 | 853 | |
| | 2021.01- | ET | R | L/R | SUV RWD EBJA;EDCA | Date to:2023.10;Date from:2023.11,Date to:2024.04,For PR code:N35 | GCO83488 | Outer Joint | | 38 | 28 | 59.5 | 34 | 81 | |
| | 2021.01- | ET | R | L/R | SUV RWD EBJA;EDCA | For PR code:N22/T65 | GCO83846 | Outer Joint | | 38 | 27 | 59.5 | 34 | 65 | M |
| | 2021.01- | ET | R | L/R | SUV RWD EBJA;EDCA | Date to:2023.10;Date from:2023.11,Date to:2024.04,For PR code:N35 | GCI83571 | Inner Joint | | 37 | 28 | 39.95 | 69 | 85.5 | |
| EV (128 kw) | 2021.11- | ET | R | L | SUV RWD EBJA | Date to:2023.10;Date from:2023.11,Date to:2024.04,For PR code:N35 | GDS56955 | Drive Shaft | | 38 | 37 | 59.5 | 34 | 634 | |
| | 2021.11- | ET | R | L | SUV RWD EBJA | For PR code:N22/T65 | GDS58102 | Drive Shaft | | 38 | 42 | 59.5 | 34 | 639 | |
| | 2021.11- | ET | R | R | SUV RWD EBJA | Date to:2023.10;Date from:2023.11,Date to:2024.04,For PR code:N35 | GDS56956 | Drive Shaft | | 38 | 37 | 59.5 | 34 | 859 | |
| | 2021.11- | ET | R | R | SUV RWD EBJA | For PR code:N22/T65 | GDS58101 | Drive Shaft | | 38 | 42 | 59.5 | 34 | 853 | |
| | 2021.11- | ET | R | L/R | SUV RWD EBJA | Date to:2023.10;Date from:2023.11,Date to:2024.04,For PR code:N35 | GCO83488 | Outer Joint | | 38 | 28 | 59.5 | 34 | 81 | |
| | 2021.11- | ET | R | L/R | SUV RWD EBJA | For PR code:N22/T65 | GCO83846 | Outer Joint | | 38 | 27 | 59.5 | 34 | 65 | M |
| | 2021.11- | ET | R | L/R | SUV RWD EBJA | Date to:2023.10;Date from:2023.11,Date to:2024.04,For PR code:N35 | GCI83571 | Inner Joint | | 37 | 28 | 39.95 | 69 | 85.5 | |
| EV (150 kw) | 2020.05- | ET | R | L | SUV RWD EBJA;EBJC | Date to:2023.10;Date from:2023.11,Date to:2024.04,For PR code:N35 | GDS56955 | Drive Shaft | | 38 | 37 | 59.5 | 34 | 634 | |
| | 2020.05- | ET | R | L | SUV RWD EBJA;EBJC | For PR code:N22/T65 | GDS58102 | Drive Shaft | | 38 | 42 | 59.5 | 34 | 639 | |
| | 2020.05- | ET | R | R | SUV RWD EBJA;EBJC | Date to:2023.10;Date from:2023.11,Date to:2024.04,For PR code:N35 | GDS56956 | Drive Shaft | | 38 | 37 | 59.5 | 34 | 859 | |
| | 2020.05- | ET | R | R | SUV RWD EBJA;EBJC | For PR code:N22/T65 | GDS58101 | Drive Shaft | | 38 | 42 | 59.5 | 34 | 853 | |
| | 2020.05- | ET | R | L/R | SUV RWD EBJA;EBJC | Date to:2023.10;Date from:2023.11,Date to:2024.04,For PR code:N35 | GCO83488 | Outer Joint | | 38 | 28 | 59.5 | 34 | 81 | |
| | 2020.05- | ET | R | L/R | SUV RWD EBJA;EBJC | For PR code:N22/T65 | GCO83846 | Outer Joint | | 38 | 27 | 59.5 | 34 | 65 | M |
| | 2020.05- | ET | R | L/R | SUV RWD EBJA;EBJC | Date to:2023.10;Date from:2023.11,Date to:2024.04,For PR code:N35 | GCI83571 | Inner Joint | | 37 | 28 | 39.95 | 69 | 85.5 | |
| EV (195 kw) | 2022.07- | ET | F | L | SUV 4WD EBJA | For left-hand drive vehicles | GDS56405 | Drive Shaft | | 38 | 33 | 59.5 | 40.5 | 663 | |
| | 2022.07- | ET | F | L | SUV 4WD EBJA | For right-hand drive vehicles | GDS57677 | Drive Shaft | | 38 | 33 | 59.5 | 40.5 | 565 | |
| | 2022.07- | ET | F | R | SUV 4WD EBJA | For left-hand drive vehicles | GDS56971 | Drive Shaft | | 38 | 33 | 59.5 | 40.5 | 622 | |
| | 2022.07- | ET | F | R | SUV 4WD EBJA | For right-hand drive vehicles | GDS57678 | Drive Shaft | | 38 | 33 | 59.5 | 40.5 | 721 | |
| | 2022.07- | ET | F | L/R | SUV 4WD EBJA | | GCO83674 | Outer Joint | | 38 | 33 | 59.5 | 40.5 | 59 | I |
| | 2022.07- | ET | F | L/R | SUV 4WD EBJA | | GCI81546 | Inner Joint | | 33 | 32 | 39.9 | 58.5 | 105 | |
| | 2022.07- | ET | R | L | SUV 4WD EBJA | Date to:2023.10;Date from:2023.11,Date to:2024.04,For PR code:N35 | GDS56955 | Drive Shaft | | 38 | 37 | 59.5 | 34 | 634 | |
| | 2022.07- | ET | R | L | SUV 4WD EBJA | For PR code:N22/T65 | GDS58102 | Drive Shaft | | 38 | 42 | 59.5 | 34 | 639 | |
| | 2022.07- | ET | R | R | SUV 4WD EBJA | Date to:2023.10;Date from:2023.11,Date to:2024.04,For PR code:N35 | GDS56956 | Drive Shaft | | 38 | 37 | 59.5 | 34 | 859 | |
| | 2022.07- | ET | R | R | SUV 4WD EBJA | For PR code:N22/T65 | GDS58101 | Drive Shaft | | 38 | 42 | 59.5 | 34 | 853 | |
| | 2022.07- | ET | R | L/R | SUV 4WD EBJA | Date to:2023.10;Date from:2023.11,Date to:2024.04,For PR code:N35 | GCO83488 | Outer Joint | | 38 | 28 | 59.5 | 34 | 81 | |
| | 2022.07- | ET | R | L/R | SUV 4WD EBJA | For PR code:N22/T65 | GCO83846 | Outer Joint | | 38 | 27 | 59.5 | 34 | 65 | M |
| | 2022.07- | ET | R | L/R | SUV 4WD EBJA | Date to:2023.10;Date from:2023.11,Date to:2024.04,For PR code:N35 | GCI83571 | Inner Joint | | 37 | 28 | 39.95 | 69 | 85.5 | |
| EV (210 kw) | 2023.09- | ET | F | L | SUV 4WD EDFA;EDDA | For left-hand drive vehicles | GDS56405 | Drive Shaft | | 38 | 33 | 59.5 | 40.5 | 663 | |
| | 2023.09- | ET | F | L | SUV 4WD EDFA;EDDA | For right-hand drive vehicles | GDS57677 | Drive Shaft | | 38 | 33 | 59.5 | 40.5 | 565 | |
| | 2023.09- | ET | F | R | SUV 4WD EDFA;EDDA | For left-hand drive vehicles | GDS56971 | Drive Shaft | | 38 | 33 | 59.5 | 40.5 | 622 | |
| | 2023.09- | ET | F | R | SUV 4WD EDFA;EDDA | For right-hand drive vehicles | GDS57678 | Drive Shaft | | 38 | 33 | 59.5 | 40.5 | 721 | |
| | 2023.09- | ET | F | L/R | SUV 4WD EDFA;EDDA | | GCO83674 | Outer Joint | | 38 | 33 | 59.5 | 40.5 | 59 | I |
| | 2023.09- | ET | F | L/R | SUV 4WD EDFA;EDDA | | GCI81546 | Inner Joint | | 33 | 32 | 39.9 | 58.5 | 105 | |
| | 2023.09- | ET | R | L | SUV 4WD EDFA;EDDA | Date to:2023.10;Date from:2023.11,Date to:2024.04,For PR code:N35 | GDS56955 | Drive Shaft | | 38 | 37 | 59.5 | 34 | 634 | |
| | 2023.09- | ET | R | L | SUV 4WD EDFA;EDDA | For PR code:N22/T65 | GDS58102 | Drive Shaft | | 38 | 42 | 59.5 | 34 | 639 | |
| | 2023.09- | ET | R | R | SUV 4WD EDFA;EDDA | Date to:2023.10;Date from:2023.11,Date to:2024.04,For PR code:N35 | GDS56956 | Drive Shaft | | 38 | 37 | 59.5 | 34 | 859 | |
| | 2023.09- | ET | R | R | SUV 4WD EDFA;EDDA | For PR code:N22/T65 | GDS58101 | Drive Shaft | | 38 | 42 | 59.5 | 34 | 853 | |
| | 2023.09- | ET | R | L/R | SUV 4WD EDFA;EDDA | Date to:2023.10;Date from:2023.11,Date to:2024.04,For PR code:N35 | GCO83488 | Outer Joint | | 38 | 28 | 59.5 | 34 | 81 | |
| | 2023.09- | ET | R | L/R | SUV 4WD EDFA;EDDA | For PR code:N22/T65 | GCO83846 | Outer Joint | | 38 | 27 | 59.5 | 34 | 65 | M |
| | 2023.09- | ET | R | L/R | SUV 4WD EDFA;EDDA | Date to:2023.10;Date from:2023.11,Date to:2024.04,For PR code:N35 | GCI83571 | Inner Joint | | 37 | 28 | 39.95 | 69 | 85.5 | |
| | 2023.10- | ET | R | L | SUV RWD EDFA | Date to:2023.10;Date from:2023.11,Date to:2024.04,For PR code:N35 | GDS56955 | Drive Shaft | | 38 | 37 | 59.5 | 34 | 634 | |
| | 2023.10- | ET | R | L | SUV RWD EDFA | For PR code:N22/T65 | GDS58102 | Drive Shaft | | 38 | 42 | 59.5 | 34 | 639 | |
| | 2023.10- | ET | R | R | SUV RWD EDFA | Date to:2023.10;Date from:2023.11,Date to:2024.04,For PR code:N35 | GDS56956 | Drive Shaft | | 38 | 37 | 59.5 | 34 | 859 | |
| | 2023.10- | ET | R | R | SUV RWD EDFA | For PR code:N22/T65 | GDS58101 | Drive Shaft | | 38 | 42 | 59.5 | 34 | 853 | |
| | 2023.10- | ET | R | L/R | SUV RWD EDFA | Date to:2023.10;Date from:2023.11,Date to:2024.04,For PR code:N35 | GCO83488 | Outer Joint | | 38 | 28 | 59.5 | 34 | 81 | |
| | 2023.10- | ET | R | L/R | SUV RWD EDFA | For PR code:N22/T65 | GCO83846 | Outer Joint | | 38 | 27 | 59.5 | 34 | 65 | M |
| | 2023.10- | ET | R | L/R | SUV RWD EDFA | Date to:2023.10;Date from:2023.11,Date to:2024.04,For PR code:N35 | GCI83571 | Inner Joint | | 37 | 28 | 39.95 | 69 | 85.5 | |
| EV (220 kw) | 2021.05- | ET | F | L | SUV 4WD EBJA;EBRA | For left-hand drive vehicles | GDS56405 | Drive Shaft | | 38 | 33 | 59.5 | 40.5 | 663 | |

| | YEAR | TRANSM. | F/R | L/R | BODY STYLE & DRIVE TYPE & ENGINE | REMARKS | G-AP Ref. | PRODUCT | ABS | Technical Specifications A | B | C | H | L | P |
|---|---|---|---|---|---|---|---|---|---|---|---|---|---|---|---|
| **VW** | | | | | | | | | | | | | | | |
| **ID.4** | | | | | | | | | | | | | | | |
| EV (220 kw) | 2021.05- | ET | F | L | SUV 4WD EBJA;EBRA | For right-hand drive vehicles | GDS57677 | Drive Shaft | | 38 | 33 | 59.5 | 40.5 | 565 | |
| | 2021.05- | ET | F | R | SUV 4WD EBJA;EBRA | For left-hand drive vehicles | GDS56971 | Drive Shaft | | 38 | 33 | 59.5 | 40.5 | 622 | |
| | 2021.05- | ET | F | R | SUV 4WD EBJA;EBRA | For right-hand drive vehicles | GDS57678 | Drive Shaft | | 38 | 33 | 59.5 | 40.5 | 721 | |
| | 2021.05- | ET | F | L/R | SUV 4WD EBJA;EBRA | | GCO83674 | Outer Joint | | 38 | 33 | 59.5 | 40.5 | 59 | I |
| | 2021.05- | ET | F | L/R | SUV 4WD EBJA;EBRA | | GCI81546 | Inner Joint | | 33 | 32 | 39.9 | 58.5 | 105 | |
| | 2021.05- | ET | R | L | SUV 4WD EBJA;EBRA | Date to:2023.10;Date from:2023.11,Date to:2024.04,For PR code:N06 | GDS56955 | Drive Shaft | | 38 | 37 | 59.5 | 34 | 634 | |
| | 2021.05- | ET | R | L | SUV 4WD EBJA;EBRA | For PR code:N22/T65 | GDS58102 | Drive Shaft | | 38 | 42 | 59.5 | 34 | 639 | |
| | 2021.05- | ET | R | R | SUV 4WD EBJA;EBRA | Date to:2023.10;Date from:2023.11,Date to:2024.04,For PR code:N06 | GDS56956 | Drive Shaft | | 38 | 37 | 59.5 | 34 | 859 | |
| | 2021.05- | ET | R | R | SUV 4WD EBJA;EBRA | For PR code:N22/T65 | GDS58101 | Drive Shaft | | 38 | 42 | 59.5 | 34 | 853 | |
| | 2021.05- | ET | R | L/R | SUV 4WD EBJA;EBRA | Date to:2023.10;Date from:2023.11,Date to:2024.04,For PR code:N06 | GCO83488 | Outer Joint | | 38 | 28 | 59.5 | 34 | 81 | |
| | 2021.05- | ET | R | L/R | SUV 4WD EBJA;EBRA | For PR code:N22/T65 | GCO83846 | Outer Joint | | 38 | 27 | 59.5 | 34 | 65 | M |
| | 2021.05- | ET | R | L/R | SUV 4WD EBJA;EBRA | Date to:2023.10;Date from:2023.11,Date to:2024.04,For PR code:N06 | GCI83571 | Inner Joint | | 37 | 28 | 39.95 | 69 | 85.5 | |
| EV (250 kw) | 2023.10- | ET | F | L | SUV 4WD EDFA;EDDA | For left-hand drive vehicles | GDS56405 | Drive Shaft | | 38 | 33 | 59.5 | 40.5 | 663 | |
| | 2023.10- | ET | F | L | SUV 4WD EDFA;EDDA | For right-hand drive vehicles | GDS57677 | Drive Shaft | | 38 | 33 | 59.5 | 40.5 | 565 | |
| | 2023.10- | ET | F | R | SUV 4WD EDFA;EDDA | For left-hand drive vehicles | GDS56971 | Drive Shaft | | 38 | 33 | 59.5 | 40.5 | 622 | |
| | 2023.10- | ET | F | R | SUV 4WD EDFA;EDDA | For right-hand drive vehicles | GDS57678 | Drive Shaft | | 38 | 33 | 59.5 | 40.5 | 721 | |
| | 2023.10- | ET | F | L/R | SUV 4WD EDFA;EDDA | | GCO83674 | Outer Joint | | 38 | 33 | 59.5 | 40.5 | 59 | I |
| | 2023.10- | ET | F | L/R | SUV 4WD EDFA;EDDA | | GCI81546 | Inner Joint | | 33 | 32 | 39.9 | 58.5 | 105 | |
| | 2023.10- | ET | R | L | SUV 4WD EDFA;EDDA | Date to:2023.10;Date from:2023.11,Date to:2024.04,For PR code:N06 | GDS56955 | Drive Shaft | | 38 | 37 | 59.5 | 34 | 634 | |
| | 2023.10- | ET | R | L | SUV 4WD EDFA;EDDA | For PR code:N22/T65 | GDS58102 | Drive Shaft | | 38 | 42 | 59.5 | 34 | 639 | |
| | 2023.10- | ET | R | R | SUV 4WD EDFA;EDDA | Date to:2023.10;Date from:2023.11,Date to:2024.04,For PR code:N06 | GDS56956 | Drive Shaft | | 38 | 37 | 59.5 | 34 | 859 | |
| | 2023.10- | ET | R | R | SUV 4WD EDFA;EDDA | For PR code:N22/T65 | GDS58101 | Drive Shaft | | 38 | 42 | 59.5 | 34 | 853 | |
| | 2023.10- | ET | R | L/R | SUV 4WD EDFA;EDDA | Date to:2023.10;Date from:2023.11,Date to:2024.04,For PR code:N06 | GCO83488 | Outer Joint | | 38 | 28 | 59.5 | 34 | 81 | |
| | 2023.10- | ET | R | L/R | SUV 4WD EDFA;EDDA | For PR code:N22/T65 | GCO83846 | Outer Joint | | 38 | 27 | 59.5 | 34 | 65 | M |
| | 2023.10- | ET | R | L/R | SUV 4WD EDFA;EDDA | Date to:2023.10;Date from:2023.11,Date to:2024.04,For PR code:N06 | GCI83571 | Inner Joint | | 37 | 28 | 39.95 | 69 | 85.5 | |
| **ID.5** | | | | | | | | | | | | | | | |
| EV (125 kw) | 2024.06- | ET | R | L | SUV RWD | For PR code:N06 | GDS56955 | Drive Shaft | | 38 | 37 | 59.5 | 34 | 634 | |
| | 2024.06- | ET | R | L | SUV RWD | For PR code:N22/T65 | GDS58102 | Drive Shaft | | 38 | 42 | 59.5 | 34 | 639 | |
| | 2024.06- | ET | R | R | SUV RWD | For PR code:N06 | GDS56956 | Drive Shaft | | 38 | 37 | 59.5 | 34 | 859 | |
| | 2024.06- | ET | R | R | SUV RWD | For PR code:N22/T65 | GDS58101 | Drive Shaft | | 38 | 42 | 59.5 | 34 | 853 | |
| | 2024.06- | ET | R | L/R | SUV RWD | For PR code:N22/T65 | GCO83846 | Outer Joint | | 38 | 27 | 59.5 | 34 | 65 | M |
| EV (128 kw) | 2021.07- | ET | R | L | SUV RWD EBJA | Date to:2023.10;Date from:2023.11,Date to:2024.04,For PR code:N06 | GDS56955 | Drive Shaft | | 38 | 37 | 59.5 | 34 | 634 | |
| | 2021.07- | ET | R | L | SUV RWD EBJA | For PR code:N22/T65 | GDS58102 | Drive Shaft | | 38 | 42 | 59.5 | 34 | 639 | |
| | 2021.07- | ET | R | R | SUV RWD EBJA | Date to:2023.10;Date from:2023.11,Date to:2024.04,For PR code:N06 | GDS56956 | Drive Shaft | | 38 | 37 | 59.5 | 34 | 859 | |
| | 2021.07- | ET | R | R | SUV RWD EBJA | For PR code:N22/T65 | GDS58101 | Drive Shaft | | 38 | 42 | 59.5 | 34 | 853 | |
| | 2021.07- | ET | R | L/R | SUV RWD EBJA | Date to:2023.10;Date from:2023.11,Date to:2024.04,For PR code:N06 | GCO83488 | Outer Joint | | 38 | 28 | 59.5 | 34 | 81 | |
| | 2021.07- | ET | R | L/R | SUV RWD EBJA | For PR code:N22/T65 | GCO83846 | Outer Joint | | 38 | 27 | 59.5 | 34 | 65 | M |
| | 2021.07- | ET | R | L/R | SUV RWD EBJA | Date to:2023.10;Date from:2023.11,Date to:2024.04,For PR code:N06 | GCI83571 | Inner Joint | | 37 | 28 | 39.95 | 69 | 85.5 | |
| EV (150 kw) | 2021.08- | ET | R | L | SUV RWD EBJA | Date to:2023.10;Date from:2023.11,Date to:2024.04,For PR code:N06 | GDS56955 | Drive Shaft | | 38 | 37 | 59.5 | 34 | 634 | |
| | 2021.08- | ET | R | L | SUV RWD EBJA | For PR code:N22/T65 | GDS58102 | Drive Shaft | | 38 | 42 | 59.5 | 34 | 639 | |
| | 2021.08- | ET | R | R | SUV RWD EBJA | Date to:2023.10;Date from:2023.11,Date to:2024.04,For PR code:N06 | GDS56956 | Drive Shaft | | 38 | 37 | 59.5 | 34 | 859 | |
| | 2021.08- | ET | R | R | SUV RWD EBJA | For PR code:N22/T65 | GDS58101 | Drive Shaft | | 38 | 42 | 59.5 | 34 | 853 | |
| | 2021.08- | ET | R | L/R | SUV RWD EBJA | Date to:2023.10;Date from:2023.11,Date to:2024.04,For PR code:N06 | GCO83488 | Outer Joint | | 38 | 28 | 59.5 | 34 | 81 | |
| | 2021.08- | ET | R | L/R | SUV RWD EBJA | For PR code:N22/T65 | GCO83846 | Outer Joint | | 38 | 27 | 59.5 | 34 | 65 | M |
| | 2021.08- | ET | R | L/R | SUV RWD EBJA | Date to:2023.10;Date from:2023.11,Date to:2024.04,For PR code:N06 | GCI83571 | Inner Joint | | 37 | 28 | 39.95 | 69 | 85.5 | |
| EV (210 kw) | 2023.10- | ET | R | L | SUV RWD EDFA | Date to:2023.10;Date from:2023.11,Date to:2024.04,For PR code:N06 | GDS56955 | Drive Shaft | | 38 | 37 | 59.5 | 34 | 634 | |
| | 2023.10- | ET | R | L | SUV RWD EDFA | For PR code:N22/T65 | GDS58102 | Drive Shaft | | 38 | 42 | 59.5 | 34 | 639 | |
| | 2023.10- | ET | R | R | SUV RWD EDFA | Date to:2023.10;Date from:2023.11,Date to:2024.04,For PR code:N06 | GDS56956 | Drive Shaft | | 38 | 37 | 59.5 | 34 | 859 | |
| | 2023.10- | ET | R | R | SUV RWD EDFA | For PR code:N22/T65 | GDS58101 | Drive Shaft | | 38 | 42 | 59.5 | 34 | 853 | |
| | 2023.10- | ET | R | L/R | SUV RWD EDFA | Date to:2023.10;Date from:2023.11,Date to:2024.04,For PR code:N06 | GCO83488 | Outer Joint | | 38 | 28 | 59.5 | 34 | 81 | |
| | 2023.10- | ET | R | L/R | SUV RWD EDFA | For PR code:N22/T65 | GCO83846 | Outer Joint | | 38 | 27 | 59.5 | 34 | 65 | M |
| | 2023.10- | ET | R | L/R | SUV RWD EDFA | Date to:2023.10;Date from:2023.11,Date to:2024.04,For PR code:N06 | GCI83571 | Inner Joint | | 37 | 28 | 39.95 | 69 | 85.5 | |
| EV (220 kw) | 2021.08- | ET | F | L | SUV 4WD EBJA;EBRA | For left-hand drive vehicles | GDS56405 | Drive Shaft | | 38 | 33 | 59.5 | 40.5 | 663 | |
| | 2021.08- | ET | F | L | SUV 4WD EBJA;EBRA | For right-hand drive vehicles | GDS57677 | Drive Shaft | | 38 | 33 | 59.5 | 40.5 | 565 | |
| | 2021.08- | ET | F | R | SUV 4WD EBJA;EBRA | For left-hand drive vehicles | GDS56971 | Drive Shaft | | 38 | 33 | 59.5 | 40.5 | 622 | |
| | 2021.08- | ET | F | R | SUV 4WD EBJA;EBRA | For right-hand drive vehicles | GDS57678 | Drive Shaft | | 38 | 33 | 59.5 | 40.5 | 721 | |
| | 2021.08- | ET | F | L/R | SUV 4WD EBJA;EBRA | | GCO83674 | Outer Joint | | 38 | 33 | 59.5 | 40.5 | 59 | I |
| | 2021.08- | ET | F | L/R | SUV 4WD EBJA;EBRA | | GCI81546 | Inner Joint | | 33 | 32 | 39.9 | 58.5 | 105 | |
| | 2021.08- | ET | R | L | SUV 4WD EBJA;EBRA | Date to:2023.10;Date from:2023.11,Date to:2024.04,For PR code:N06 | GDS56955 | Drive Shaft | | 38 | 37 | 59.5 | 34 | 634 | |
| | 2021.08- | ET | R | L | SUV 4WD EBJA;EBRA | For PR code:N22/T65 | GDS58102 | Drive Shaft | | 38 | 42 | 59.5 | 34 | 639 | |
| | 2021.08- | ET | R | R | SUV 4WD EBJA;EBRA | Date to:2023.10;Date from:2023.11,Date to:2024.04,For PR code:N06 | GDS56956 | Drive Shaft | | 38 | 37 | 59.5 | 34 | 859 | |
| | 2021.08- | ET | R | R | SUV 4WD EBJA;EBRA | For PR code:N22/T65 | GDS58101 | Drive Shaft | | 38 | 42 | 59.5 | 34 | 853 | |
| | 2021.08- | ET | R | L/R | SUV 4WD EBJA;EBRA | Date to:2023.10;Date from:2023.11,Date to:2024.04,For PR code:N06 | GCO83488 | Outer Joint | | 38 | 28 | 59.5 | 34 | 81 | |
| | 2021.08- | ET | R | L/R | SUV 4WD EBJA;EBRA | For PR code:N22/T65 | GCO83846 | Outer Joint | | 38 | 27 | 59.5 | 34 | 65 | M |
| | 2021.08- | ET | R | L/R | SUV 4WD EBJA;EBRA | Date to:2023.10;Date from:2023.11,Date to:2024.04,For PR code:N06 | GCI83571 | Inner Joint | | 37 | 28 | 39.95 | 69 | 85.5 | |

| | YEAR | TRANSM. | F/R | L/R | BODY STYLE & DRIVE TYPE & ENGINE | REMARKS | G-AP Ref. | PRODUCT | ABS | Technical Specifications A | B | C | H | L | P |
|---|---|---|---|---|---|---|---|---|---|---|---|---|---|---|---|
| **VW** | | | | | | | | | | | | | | | |
| **ID.5** | | | | | | | | | | | | | | | |
| EV (250 kw) | 2023.10- | ET | F | L | SUV 4WD EDFA;EDDA | For left-hand drive vehicles | GDS56405 | Drive Shaft | | 38 | 33 | 59.5 | 40.5 | 663 | |
| | 2023.10- | ET | F | L | SUV 4WD EDFA;EDDA | For right-hand drive vehicles | GDS57677 | Drive Shaft | | 38 | 33 | 59.5 | 40.5 | 565 | |
| | 2023.10- | ET | F | R | SUV 4WD EDFA;EDDA | For left-hand drive vehicles | GDS56971 | Drive Shaft | | 38 | 33 | 59.5 | 40.5 | 622 | |
| | 2023.10- | ET | F | R | SUV 4WD EDFA;EDDA | For right-hand drive vehicles | GDS57678 | Drive Shaft | | 38 | 33 | 59.5 | 40.5 | 721 | |
| | 2023.10- | ET | F | L/R | SUV 4WD EDFA;EDDA | | GCO83674 | Outer Joint | | 38 | 33 | 59.5 | 40.5 | 59 | I |
| | 2023.10- | ET | F | L/R | SUV 4WD EDFA;EDDA | | GCI81546 | Inner Joint | | 33 | 32 | 39.9 | 58.5 | 105 | |
| | 2023.10- | ET | R | L | SUV 4WD EDFA;EDDA | Date to:2023.10;Date from:2023.11,Date to:2024.04,For PR code:N36 | GDS56955 | Drive Shaft | | 38 | 37 | 59.5 | 34 | 634 | |
| | 2023.10- | ET | R | L | SUV 4WD EDFA;EDDA | For PR code:N22/T65 | GDS58102 | Drive Shaft | | 38 | 42 | 59.5 | 34 | 639 | |
| | 2023.10- | ET | R | R | SUV 4WD EDFA;EDDA | Date to:2023.10;Date from:2023.11,Date to:2024.04,For PR code:N36 | GDS56956 | Drive Shaft | | 38 | 37 | 59.5 | 34 | 859 | |
| | 2023.10- | ET | R | R | SUV 4WD EDFA;EDDA | For PR code:N22/T65 | GDS58101 | Drive Shaft | | 38 | 42 | 59.5 | 34 | 853 | |
| | 2023.10- | ET | R | L/R | SUV 4WD EDFA;EDDA | Date to:2023.10;Date from:2023.11,Date to:2024.04,For PR code:N36 | GCO83488 | Outer Joint | | 38 | 28 | 59.5 | 34 | 81 | |
| | 2023.10- | ET | R | L/R | SUV 4WD EDFA;EDDA | For PR code:N22/T65 | GCO83846 | Outer Joint | | 38 | 27 | 59.5 | 34 | 65 | M |
| | 2023.10- | ET | R | L/R | SUV 4WD EDFA;EDDA | Date to:2023.10;Date from:2023.11,Date to:2024.04,For PR code:N36 | GCI83571 | Inner Joint | | 37 | 28 | 39.95 | 69 | 85.5 | |
| **ID.7** | | | | | | | | | | | | | | | |
| EV (210 kw) | 2023.06- | ET | R | L | Hatchback RWD EDFA | | GDS58102 | Drive Shaft | | 38 | 42 | 59.5 | 34 | 639 | |
| | 2023.06- | ET | R | R | Hatchback RWD EDFA | | GDS58101 | Drive Shaft | | 38 | 42 | 59.5 | 34 | 853 | |
| | 2023.06- | ET | R | L/R | Hatchback RWD EDFA | | GCO83846 | Outer Joint | | 38 | 27 | 59.5 | 34 | 65 | M |
| | 2024.02- | ET | R | L | Hatchback RWD EDFB | | GDS58102 | Drive Shaft | | 38 | 42 | 59.5 | 34 | 639 | |
| | 2024.02- | ET | R | R | Hatchback RWD EDFB | | GDS58101 | Drive Shaft | | 38 | 42 | 59.5 | 34 | 853 | |
| | 2024.02- | ET | R | L/R | Hatchback RWD EDFB | | GCO83846 | Outer Joint | | 38 | 27 | 59.5 | 34 | 65 | M |
| EV (250 kw) | 2024.06- | ET | F | L | Hatchback 4WD EDFB;EDDB | For left-hand drive vehicles | GDS56405 | Drive Shaft | | 38 | 33 | 59.5 | 40.5 | 663 | |
| | 2024.06- | ET | F | L | Hatchback 4WD EDFB;EDDB | For right-hand drive vehicles | GDS57677 | Drive Shaft | | 38 | 33 | 59.5 | 40.5 | 565 | |
| | 2024.06- | ET | F | R | Hatchback 4WD EDFB;EDDB | For left-hand drive vehicles | GDS56971 | Drive Shaft | | 38 | 33 | 59.5 | 40.5 | 622 | |
| | 2024.06- | ET | F | R | Hatchback 4WD EDFB;EDDB | For right-hand drive vehicles | GDS57678 | Drive Shaft | | 38 | 33 | 59.5 | 40.5 | 721 | |
| | 2024.06- | ET | F | L/R | Hatchback 4WD EDFB;EDDB | | GCI81546 | Inner Joint | | 33 | 32 | 39.9 | 58.5 | 105 | |
| | 2024.06- | ET | R | L | Hatchback 4WD EDFB;EDDB | | GDS58102 | Drive Shaft | | 38 | 42 | 59.5 | 34 | 639 | |
| | 2024.06- | ET | R | R | Hatchback 4WD EDFB;EDDB | | GDS58101 | Drive Shaft | | 38 | 42 | 59.5 | 34 | 853 | |
| | 2024.06- | ET | R | L/R | Hatchback 4WD EDFB;EDDB | | GCO83846 | Outer Joint | | 38 | 27 | 59.5 | 34 | 65 | M |
| **ID.7 Tourer** | | | | | | | | | | | | | | | |
| EV (210 kw) | 2024.02- | ET | R | L | Estate RWD EDFA | | GDS58102 | Drive Shaft | | 38 | 42 | 59.5 | 34 | 639 | |
| | 2024.02- | ET | R | R | Estate RWD EDFA | | GDS58101 | Drive Shaft | | 38 | 42 | 59.5 | 34 | 853 | |
| | 2024.02- | ET | R | L/R | Estate RWD EDFA | | GCO83846 | Outer Joint | | 38 | 27 | 59.5 | 34 | 65 | M |
| | 2024.02- | ET | R | L | Estate RWD EDFB | | GDS58102 | Drive Shaft | | 38 | 42 | 59.5 | 34 | 639 | |
| | 2024.02- | ET | R | R | Estate RWD EDFB | | GDS58101 | Drive Shaft | | 38 | 42 | 59.5 | 34 | 853 | |
| | 2024.02- | ET | R | L/R | Estate RWD EDFB | | GCO83846 | Outer Joint | | 38 | 27 | 59.5 | 34 | 65 | M |
| EV (250 kw) | 2024.06- | ET | F | L | Estate 4WD EDFB;EDDB | For left-hand drive vehicles | GDS56405 | Drive Shaft | | 38 | 33 | 59.5 | 40.5 | 663 | |
| | 2024.06- | ET | F | L | Estate 4WD EDFB;EDDB | For right-hand drive vehicles | GDS57677 | Drive Shaft | | 38 | 33 | 59.5 | 40.5 | 565 | |
| | 2024.06- | ET | F | R | Estate 4WD EDFB;EDDB | For left-hand drive vehicles | GDS56971 | Drive Shaft | | 38 | 33 | 59.5 | 40.5 | 622 | |
| | 2024.06- | ET | F | R | Estate 4WD EDFB;EDDB | For right-hand drive vehicles | GDS57678 | Drive Shaft | | 38 | 33 | 59.5 | 40.5 | 721 | |
| | 2024.06- | ET | F | L/R | Estate 4WD EDFB;EDDB | | GCI81546 | Inner Joint | | 33 | 32 | 39.9 | 58.5 | 105 | |
| | 2024.06- | ET | R | L | Estate 4WD EDFB;EDDB | | GDS58102 | Drive Shaft | | 38 | 42 | 59.5 | 34 | 639 | |
| | 2024.06- | ET | R | R | Estate 4WD EDFB;EDDB | | GDS58101 | Drive Shaft | | 38 | 42 | 59.5 | 34 | 853 | |
| | 2024.06- | ET | R | L/R | Estate 4WD EDFB;EDDB | | GCO83846 | Outer Joint | | 38 | 27 | 59.5 | 34 | 65 | M |
| **Jetta** | | | | | | | | | | | | | | | |
| 1.2 (77 kw) | 2010.10-2017.12 | 6MT | F | L | Saloon FWD CBZB | | GDS81584 | Drive Shaft | | 36 | | 59.5 | 40 | 530 | |
| | 2010.10-2017.12 | 7DCT | F | L | Saloon FWD CBZB | Date to:2012.06 | GDS83302 | Drive Shaft | | 36 | | 59.5 | 40 | 528 | |
| | 2010.10-2017.12 | 7DCT | F | L/R | Saloon FWD CBZB | Date To:2012.07;Date From:2014.10 | GCI61069 | Inner Joint | | | 28 | | | 32 | |
| | 2010.10-2017.12 | DCT | F | R | Saloon FWD CBZB | Date To:2012.07 | GDS81653 | Drive Shaft | | 36 | | 59.5 | 40 | 785 | |
| | 2010.10-2017.12 | DCT | F | L/R | Saloon FWD CBZB | Date To:2012.07;Date From:2014.10 | GCO83002 | Outer Joint | | 36 | 27 | 59.5 | 40 | 66 | I |
| | 2010.10-2017.12 | DCT | F | L/R | Saloon FWD CBZB | Date From:2012.08 | GCI81250 | Inner Joint | | | 26 | | | 34 | |
| | 2010.10-2017.12 | DCT | F | L/R | Saloon FWD CBZB | Date To:2012.07 | GCI82456 | Inner Joint | | | 28 | | | 32 | |
| | 2010.10-2017.12 | MT | F | R | Saloon FWD CBZB | | GDS61096 | Drive Shaft | | 36 | | 59.5 | 40.5 | 799 | |
| | 2010.10-2017.12 | MT | F | L/R | Saloon FWD CBZB | | GCO83037 | Outer Joint | | 36 | 30 | 59.5 | 40.5 | 56 | I |
| | 2010.10-2017.12 | MT | F | L/R | Saloon FWD CBZB | Date From:2014.10 | GCI81250 | Inner Joint | | | 26 | | | 34 | |
| | 2010.10-2017.12 | MT | F | L/R | Saloon FWD CBZB | | GCI82447 | Inner Joint | | | 33 | | | 34 | |
| | 2014.08-2017.12 | DCT/MT | F | L/R | Saloon FWD CYVD | | GCI81250 | Inner Joint | | | 26 | | | 34 | |
| | 2014.08-2017.12 | MT | F | R | Saloon FWD CYVD | | GDS81986 | Drive Shaft | | 36 | | 59.5 | 40 | 812 | |
| | 2014.08-2017.12 | MT | F | L/R | Saloon FWD CYVD | | GCO83037 | Outer Joint | | 36 | 30 | 59.5 | 40.5 | 56 | I |
| 1.4 (90 kw) | 2007.05-2010.10 | 6MT | F | L | Saloon FWD CAXA | | GDS81584 | Drive Shaft | | 36 | | 59.5 | 40 | 530 | |
| | 2007.05-2010.10 | 6MT | F | R | Saloon FWD CAXA | For Modelcode:162/163 | GDS61096 | Drive Shaft | | 36 | | 59.5 | 40.5 | 799 | |
| | 2007.05-2010.10 | 6MT | F | L/R | Saloon FWD CAXA | | GCI82447 | Inner Joint | | | 33 | | | 34 | |
| | 2007.05-2010.10 | 7AT/6MT | F | L/R | Saloon FWD CAXA | | GCI83016 | Inner Joint | | | 28 | | | 32 | |
| | 2007.05-2010.10 | 7DCT | F | L | Saloon FWD CAXA | Date to:2008.11 | GDS81783 | Drive Shaft | | 36 | 40 | 59.5 | 40 | 531 | |
| | 2007.05-2010.10 | 7DCT | F | L | Saloon FWD CAXA | Date from:2008.12 | GDS83302 | Drive Shaft | | 36 | | 59.5 | 40 | 528 | |
| | 2007.05-2010.10 | 7DCT | F | R | Saloon FWD CAXA | Date from:2010.05 | GDS81653 | Drive Shaft | | 36 | | 59.5 | 40 | 785 | |

| | YEAR | TRANSM. | F/R | L/R | BODY STYLE & DRIVE TYPE & ENGINE | REMARKS | G-AP Ref. | PRODUCT | ABS | Technical Specifications A | B | C | H | L | P |
|---|---|---|---|---|---|---|---|---|---|---|---|---|---|---|---|
| **VW Jetta** | | | | | | | | | | | | | | | |
| 1.4 (90 kw) | 2007.05-2010.10 | 7DCT | F | R | Saloon FWD CAXA | Date to:2010.04 | GDS81784 | Drive Shaft | | 36 | 40 | 59.5 | 40 | 801 | |
| | 2007.05-2010.10 | 7DCT | F | L/R | Saloon FWD CAXA | | GCI61054 | Inner Joint | | 40 | 28 | 46.9 | 41 | 101.7 | |
| | 2007.05-2010.10 | AT | F | L/R | Saloon FWD CAXA | | GCO83002 | Outer Joint | | 36 | 27 | 59.5 | 40 | 66 | I |
| | 2007.05-2010.10 | MT | F | L | Saloon FWD CAXA | | GDS61201 | Drive Shaft | | 36 | | 59.5 | 40.5 | 535 | |
| | 2007.05-2010.10 | MT | F | L/R | Saloon FWD CAXA | | GCO83037 | Outer Joint | | 36 | 30 | 59.5 | 40.5 | 56 | I |
| | 2011.05-2017.12 | 6MT | F | L | Saloon FWD CAXA;CMSB | Date from:2017.12,Modelcode:AV3 | GDS61282 | Drive Shaft | | 36 | | 59.5 | 40 | 523 | |
| | 2011.05-2017.12 | 6MT | F | L | Saloon FWD CAXA;CMSB | Modelcode:162/163;Date to:2015.08,Modelcode:AV2/AV3 | GDS81584 | Drive Shaft | | 36 | | 59.5 | 40 | 530 | |
| | 2011.05-2017.12 | 6MT | F | R | Saloon FWD CAXA;CMSB | For Modelcode:162/163 | GDS61096 | Drive Shaft | | 36 | | 59.5 | 40.5 | 799 | |
| | 2011.05-2017.12 | 6MT | F | R | Saloon FWD CAXA;CMSB | With vibration damper;Date from:2017.12;Model code:AV3 | GDS61307 | Drive Shaft | | 36 | | 59.5 | 40 | 819 | |
| | 2011.05-2017.12 | 6MT | F | L/R | Saloon FWD CAXA;CMSB | | GCO83037 | Outer Joint | | 36 | 30 | 59.5 | 40.5 | 56 | I |
| | 2011.05-2017.12 | 6MT | F | L/R | Saloon FWD CAXA;CMSB | | GCI82447 | Inner Joint | | | 33 | | | 34 | |
| | 2011.05-2017.12 | 7AT/6MT | F | L/R | Saloon FWD CAXA;CMSB | | GCI83016 | Inner Joint | | | 28 | | | 32 | |
| | 2011.05-2017.12 | 7DCT | F | L | Saloon FWD CAXA;CMSB | Modelcode:162/163;Date to:2015.08,Modelcode:AV2/AV3 | GDS83302 | Drive Shaft | | 36 | | 59.5 | 40 | 528 | |
| | 2011.05-2017.12 | 7DCT | F | R | Saloon FWD CAXA;CMSB | Modelcode:162/163;Date to:2018.08,Modelcode:AV2/AV3 | GDS81653 | Drive Shaft | | 36 | | 59.5 | 40 | 785 | |
| | 2011.05-2017.12 | 7DCT | F | L/R | Saloon FWD CAXA;CMSB | | GCO83002 | Outer Joint | | 36 | 27 | 59.5 | 40 | 66 | I |
| 1.4 (92 kw) | 2014.08-2017.12 | 6MT | F | R | Saloon FWD CZCA | For PR code:0EJ | GDS61096 | Drive Shaft | | 36 | | 59.5 | 40.5 | 799 | |
| | 2014.08-2017.12 | 7DCT | F | R | Saloon FWD CZCA | | GDS61339 | Drive Shaft | | 36 | | 59.5 | 40 | 794 | |
| | 2014.08-2017.12 | 7DCT | F | L/R | Saloon FWD CZCA | | GCI61069 | Inner Joint | | | 28 | | | 32 | |
| | 2014.08-2017.12 | DCT | F | R | Saloon FWD CZCA | | GCO83002 | Outer Joint | | 36 | 27 | 59.5 | 40 | 66 | I |
| | 2014.08-2017.12 | MT | F | L/R | Saloon FWD CZCA | | GCI81250 | Inner Joint | | | 26 | | | 34 | |
| 1.4 (103 kw) | 2006.07-2010.10 | 6AT/6MT | F | L/R | Saloon FWD BMY | | GCI83016 | Inner Joint | | | 28 | | | 32 | |
| | 2006.07-2010.10 | 6DCT | F | L | Saloon FWD BMY | | GDS81896 | Drive Shaft | | 36 | | 59.5 | 40 | 500 | |
| | 2006.07-2010.10 | 6DCT | F | R | Saloon FWD BMY | | GDS61342 | Drive Shaft | | 36 | | 59.5 | 40 | 764 | |
| | 2006.07-2010.10 | 6MT | F | L | Saloon FWD BMY | | GDS61201 | Drive Shaft | | 36 | | 59.5 | 40.5 | 535 | |
| | 2006.07-2010.10 | 6MT | F | R | Saloon FWD BMY | | GDS61096 | Drive Shaft | | 36 | | 59.5 | 40.5 | 799 | |
| | 2006.07-2010.10 | 6MT | F | L/R | Saloon FWD BMY | Date to:2008.06 | GCO83037 | Outer Joint | | 36 | 30 | 59.5 | 40.5 | 56 | I |
| | 2006.07-2010.10 | 6MT | F | L/R | Saloon FWD BMY | | GCI82447 | Inner Joint | | | 33 | | | 34 | |
| | 2006.07-2010.10 | AT | F | L | Saloon FWD BMY | | GDS83236 | Drive Shaft | | 36 | | 59.5 | 40 | 484 | |
| | 2006.07-2010.10 | AT | F | L/R | Saloon FWD BMY | Date to:2008.06 | GCO83002 | Outer Joint | | 36 | 27 | 59.5 | 40 | 66 | I |
| 1.4 (110 kw) | 2011.04-2017.12 | 6DCT/7DCT | F | L/R | Saloon FWD CAVA;CTHA | | GCO83002 | Outer Joint | | 36 | 27 | 59.5 | 40 | 66 | I |
| | 2011.04-2017.12 | 6MT | F | L/R | Saloon FWD CAVA;CTHA | | GCO83037 | Outer Joint | | 36 | 30 | 59.5 | 40.5 | 56 | I |
| | 2011.04-2017.12 | 6MT | F | L/R | Saloon FWD CAVA;CTHA | | GCI81250 | Inner Joint | | | 26 | | | 34 | |
| | 2011.04-2017.12 | 6MT/7DCT | F | R | Saloon FWD CAVA;CTHA | | GDS81653 | Drive Shaft | | 36 | | 59.5 | 40 | 785 | |
| | 2011.04-2017.12 | 7DCT | F | L | Saloon FWD CAVA;CTHA | Date from:2008.12;Chassis no. from:1K-9-091376 | GDS83302 | Drive Shaft | | 36 | | 59.5 | 40 | 528 | |
| | 2011.04-2017.12 | 7DCT | F | L/R | Saloon FWD CAVA;CTHA | | GCI83016 | Inner Joint | | | 28 | | | 32 | |
| | 2014.08-2017.12 | 6MT | F | R | Saloon FWD CZDA;CZTA | For PR code:0EJ | GDS61096 | Drive Shaft | | 36 | | 59.5 | 40.5 | 799 | |
| | 2014.08-2017.12 | 7DCT | F | R | Saloon FWD CZDA;CZTA | | GDS61339 | Drive Shaft | | 36 | | 59.5 | 40 | 794 | |
| | 2014.08-2017.12 | 7DCT | F | L/R | Saloon FWD CZDA;CZTA | | GCI61069 | Inner Joint | | | 28 | | | 32 | |
| | 2014.08-2017.12 | DCT | F | R | Saloon FWD CZDA;CZTA | | GCO83002 | Outer Joint | | 36 | 27 | 59.5 | 40 | 66 | I |
| | 2014.08-2017.12 | MT | F | L/R | Saloon FWD CZDA;CZTA | | GCI81250 | Inner Joint | | | 26 | | | 34 | |
| 1.4 (118 kw) | 2008.07-2010.10 | 6DCT | F | L/R | Saloon FWD CAVD | | GCO83002 | Outer Joint | | 36 | 27 | 59.5 | 40 | 66 | I |
| | 2008.07-2010.10 | 6MT | F | L | Saloon FWD CAVD | | GDS61201 | Drive Shaft | | 36 | | 59.5 | 40.5 | 535 | |
| | 2008.07-2010.10 | 6MT | F | R | Saloon FWD CAVD | | GDS61096 | Drive Shaft | | 36 | | 59.5 | 40.5 | 799 | |
| | 2008.07-2010.10 | 6MT | F | L/R | Saloon FWD CAVD | | GCO83037 | Outer Joint | | 36 | 30 | 59.5 | 40.5 | 56 | I |
| | 2008.07-2010.10 | 6MT | F | L/R | Saloon FWD CAVD | | GCI82447 | Inner Joint | | | 33 | | | 34 | |
| | 2008.07-2010.10 | 7AT/6MT | F | L/R | Saloon FWD CAVD | | GCI83016 | Inner Joint | | | 28 | | | 32 | |
| | 2008.07-2010.10 | 7DCT | F | L | Saloon FWD CAVD | Date from:2008.12;Chassis no. from:1K-9-091376 | GDS83302 | Drive Shaft | | 36 | | 59.5 | 40 | 528 | |
| | 2008.07-2010.10 | 7DCT | F | R | Saloon FWD CAVD | | GDS81653 | Drive Shaft | | 36 | | 59.5 | 40 | 785 | |
| | 2008.07-2010.10 | 7DCT | F | L/R | Saloon FWD CAVD | | GCI61054 | Inner Joint | | 40 | 28 | 46.9 | 41 | 101.7 | |
| | 2008.07-2010.10 | AT | F | L | Saloon FWD CAVD | Date from:2009.01 | GDS81783 | Drive Shaft | | 36 | 40 | 59.5 | 40 | 531 | |
| | 2008.07-2010.10 | AT | F | R | Saloon FWD CAVD | Date from:2009.01 | GDS81784 | Drive Shaft | | 36 | 40 | 59.5 | 40 | 801 | |
| | 2011.04-2017.12 | 6MT | F | L/R | Saloon FWD CAVD;CTHD | | GCI81250 | Inner Joint | | | 26 | | | 34 | |
| | 2011.04-2017.12 | 6MT/7AT | F | L/R | Saloon FWD CAVD;CTHD | | GCO83037 | Outer Joint | | 36 | 30 | 59.5 | 40.5 | 56 | I |
| | 2011.04-2017.12 | 7AT/6MT | F | L/R | Saloon FWD CAVD;CTHD | | GCO83002 | Outer Joint | | 36 | 27 | 59.5 | 40 | 66 | I |
| | 2011.04-2017.12 | 7DCT | F | L | Saloon FWD CAVD;CTHD | Date from:2008.12;Chassis no. from:1K-9-091376 | GDS83302 | Drive Shaft | | 36 | | 59.5 | 40 | 528 | |
| | 2011.04-2017.12 | 7DCT | F | R | Saloon FWD CAVD;CTHD | | GDS81653 | Drive Shaft | | 36 | | 59.5 | 40 | 785 | |
| | 2011.04-2017.12 | 7DCT | F | L/R | Saloon FWD CAVD;CTHD | | GCI83016 | Inner Joint | | | 28 | | | 32 | |
| | 2011.04-2017.12 | MT | F | L/R | Saloon FWD CAVD;CTHD | | GCI83011 | Inner Joint | | | 33 | | | 34 | |
| 1.4 (125 kw) | 2006.07-2010.10 | 6DCT | F | L | Saloon FWD BLG | | GDS81896 | Drive Shaft | | 36 | | 59.5 | 40 | 500 | |
| | 2006.07-2010.10 | 6DCT | F | R | Saloon FWD BLG | | GDS61342 | Drive Shaft | | 36 | | 59.5 | 40 | 764 | |
| | 2006.07-2010.10 | 6DCT | F | L/R | Saloon FWD BLG | | GCO83002 | Outer Joint | | 36 | 27 | 59.5 | 40 | 66 | I |
| | 2006.07-2010.10 | 6DCT/7DCT | F | L/R | Saloon FWD BLG | | GCI83016 | Inner Joint | | | 28 | | | 32 | |
| | 2006.07-2010.10 | 6MT | F | L | Saloon FWD BLG | | GDS83302 | Drive Shaft | | 36 | | 59.5 | 40 | 528 | |
| | 2006.07-2010.10 | 6MT | F | R | Saloon FWD BLG | | GDS81653 | Drive Shaft | | 36 | | 59.5 | 40 | 785 | |
| | 2006.07-2010.10 | AT | F | L | Saloon FWD BLG | | GDS83236 | Drive Shaft | | 36 | | 59.5 | 40 | 484 | |

| | YEAR | TRANSM. | F/R | L/R | BODY STYLE & DRIVE TYPE & ENGINE | REMARKS | G-AP Ref. | PRODUCT | ABS | Technical Specifications A | B | C | H | L | P |
|---|---|---|---|---|---|---|---|---|---|---|---|---|---|---|---|
| **VW** **Jetta** | | | | | | | | | | | | | | | |
| 1.4 (125 kw) | 2011.04-2017.12 | 7AT | F | L | Saloon FWD CNLA;CRJA | | GDS83295 | Drive Shaft | | 36 | | 59.5 | 40 | 491 | |
| | 2011.04-2017.12 | 7DCT | F | L | Saloon FWD CNLA;CRJA | | GCI61069 | Inner Joint | | | 28 | | | 32 | |
| | 2011.04-2017.12 | DCT | F | L/R | Saloon FWD CNLA;CRJA | | GCO83002 | Outer Joint | | 36 | 27 | 59.5 | 40 | 66 | I |
| 1.6 (63 kw) | 2013.03-2016.03 | 5MT | F | L | Saloon FWD CFNB | | GDS61097 | Drive Shaft | | 36 | | 59.5 | 40.5 | 543 | |
| | 2013.03-2016.03 | 5MT | F | L/R | Saloon FWD CFNB | | GCO83037 | Outer Joint | | 36 | 30 | 59.5 | 40.5 | 56 | I |
| | 2013.03-2016.03 | MT | F | L | Saloon FWD CFNB | | GDS83319 | Drive Shaft | | 36 | | 59.5 | 38 | 557 | |
| | 2013.03-2016.03 | MT | F | R | Saloon FWD CFNB | Date from:2015.10 | GDS61096 | Drive Shaft | | 36 | | 59.5 | 40.5 | 799 | |
| | 2013.03-2016.03 | MT | F | R | Saloon FWD CFNB | Date to:2015.09 | GDS61211 | Drive Shaft | | 36 | | 59.5 | 40.5 | 784 | |
| | 2013.03-2016.03 | MT | F | L/R | Saloon FWD CFNB | | GCI82447 | Inner Joint | | | 33 | | | 34 | |
| 1.6 (66 kw) | 2009.12-2010.10 | 5MT | F | L | Saloon FWD CAYB | | GDS83294 | Drive Shaft | | 36 | | 59.5 | 38 | 519 | |
| | 2009.12-2010.10 | 5MT | F | R | Saloon FWD CAYB | | GDS61042 | Drive Shaft | | 36 | | 59.5 | 40.5 | 814 | |
| | 2009.12-2010.10 | 5MT | F | L/R | Saloon FWD CAYB | | GCO83037 | Outer Joint | | 36 | 30 | 59.5 | 40.5 | 56 | I |
| | 2009.12-2010.10 | 5MT | F | L/R | Saloon FWD CAYB | | GCI82447 | Inner Joint | | | 33 | | | 34 | |
| | 2009.12-2010.10 | MT | F | | Saloon FWD CAYB | | GCI83016 | Inner Joint | | | 28 | | | 32 | |
| | 2015.09-2018.04 | 5MT | F | L | Saloon FWD CWVB | | GDS61097 | Drive Shaft | | 36 | | 59.5 | 40.5 | 543 | |
| | 2015.09-2018.04 | 5MT | F | R | Saloon FWD CWVB | | GDS61096 | Drive Shaft | | 36 | | 59.5 | 40.5 | 799 | |
| | 2015.09-2018.04 | 5MT | F | L/R | Saloon FWD CWVB | | GCO83037 | Outer Joint | | 36 | 30 | 59.5 | 40.5 | 56 | I |
| | 2015.09-2018.04 | 5MT | F | L/R | Saloon FWD CWVB | | GCI82447 | Inner Joint | | | 33 | | | 34 | |
| 1.6 (75 kw) | 2004.09-2010.10 | 5MT | F | L | Saloon FWD BGU;BSE;BSF;CCSA | | GDS61097 | Drive Shaft | | 36 | | 59.5 | 40.5 | 543 | |
| | 2004.09-2010.10 | 5MT | F | R | Saloon FWD BGU;BSE;BSF;CCSA | | GDS61096 | Drive Shaft | | 36 | | 59.5 | 40.5 | 799 | |
| | 2004.09-2010.10 | 5MT | F | L/R | Saloon FWD BGU;BSE;BSF;CCSA | | GCO83037 | Outer Joint | | 36 | 30 | 59.5 | 40.5 | 56 | I |
| | 2004.09-2010.10 | 5MT | F | L/R | Saloon FWD BGU;BSE;BSF;CCSA | For Engine code:BSE/BSF/CCSA | GCI82447 | Inner Joint | | | 33 | | | 34 | |
| | 2004.09-2010.10 | 6AT | F | L | Saloon FWD BGU;BSE;BSF;CCSA | | GDS61093 | Drive Shaft | | 36 | 26 | 59.5 | 40.5 | 587.5 | |
| | 2004.09-2010.10 | 6AT | F | R | Saloon FWD BGU;BSE;BSF;CCSA | For Engine code:BSE/BSF/CCSA | GDS61094 | Drive Shaft | | 36 | 26 | 59.5 | 40.5 | 884 | |
| | 2004.09-2010.10 | 6AT | F | R | Saloon FWD BGU;BSE;BSF;CCSA | For Engine code:BSE/BSF/CCSA | GDS83346 | Drive Shaft | | 36 | 26 | 59.5 | 38 | 879 | |
| | 2004.09-2010.10 | 6AT | F | L/R | Saloon FWD BGU;BSE;BSF;CCSA | TJ | GCI61011 | Inner Joint | | 26 | 32 | 31 | 68.5 | 85 | |
| | 2004.09-2010.10 | 6AT | F | L/R | Saloon FWD BGU;BSE;BSF;CCSA | AAR | GCI61050 | Inner Joint | | 26 | 32 | 31 | 68.5 | 89 | |
| | 2004.09-2010.10 | 7DCT | F | L | Saloon FWD BGU;BSE;BSF;CCSA | | GDS83294 | Drive Shaft | | 36 | | 59.5 | 38 | 519 | |
| | 2004.09-2010.10 | 7DCT | F | R | Saloon FWD BGU;BSE;BSF;CCSA | | GDS61042 | Drive Shaft | | 36 | | 59.5 | 40.5 | 814 | |
| | 2008.01-2010.10 | 5MT | F | L | Saloon FWD CCSA | | GDS61097 | Drive Shaft | | 36 | | 59.5 | 40.5 | 543 | |
| | 2008.01-2010.10 | 5MT | F | R | Saloon FWD CCSA | | GDS61096 | Drive Shaft | | 36 | | 59.5 | 40.5 | 799 | |
| | 2008.01-2010.10 | 5MT | F | L/R | Saloon FWD CCSA | | GCO83037 | Outer Joint | | 36 | 30 | 59.5 | 40.5 | 56 | I |
| | 2008.01-2010.10 | 5MT | F | L/R | Saloon FWD CCSA | Model year from:2009 | GCI61050 | Inner Joint | | 26 | 32 | 31 | 68.5 | 89 | |
| | 2008.01-2010.10 | 5MT | F | L/R | Saloon FWD CCSA | | GCI82447 | Inner Joint | | | 33 | | | 34 | |
| | 2008.01-2010.10 | 5MT | F | L/R | Saloon FWD CCSA | Model year from:2009 | GCI83006 | Inner Joint | | | 33 | | | 34 | |
| | 2008.01-2010.10 | 5MT | F | L/R | Saloon FWD CCSA | | GCI83011 | Inner Joint | | | 33 | | | 34 | |
| 1.6 (77 kw) | 2009.06-2010.10 | 5MT | F | L | Saloon FWD CAYC | | GDS83294 | Drive Shaft | | 36 | | 59.5 | 38 | 519 | |
| | 2009.06-2010.10 | 5MT | F | R | Saloon FWD CAYC | | GDS61042 | Drive Shaft | | 36 | | 59.5 | 40.5 | 814 | |
| | 2009.06-2010.10 | 5MT | F | L/R | Saloon FWD CAYC | | GCO83037 | Outer Joint | | 36 | 30 | 59.5 | 40.5 | 56 | I |
| | 2009.06-2010.10 | 5MT | F | L/R | Saloon FWD CAYC | | GCI82447 | Inner Joint | | | 33 | | | 34 | |
| | 2009.06-2010.10 | 7AT/5MT | F | L/R | Saloon FWD CAYC | | GCI83016 | Inner Joint | | | 28 | | | 32 | |
| | 2009.06-2010.10 | 7DCT | F | L | Saloon FWD CAYC | | GDS61100 | Drive Shaft | | 36 | | 59.5 | 40 | 513 | |
| | 2009.06-2010.10 | 7DCT | F | R | Saloon FWD CAYC | Date To:2010.04 | GDS61339 | Drive Shaft | | 36 | | 59.5 | 40 | 794 | |
| | 2009.06-2010.10 | 7DCT | F | R | Saloon FWD CAYC | | GDS83313 | Drive Shaft | | 36 | | 59.5 | 40 | 792 | |
| | 2009.06-2010.10 | 7DCT | F | L/R | Saloon FWD CAYC | | GCO83002 | Outer Joint | | 36 | 27 | 59.5 | 40 | 66 | I |
| | 2010.04-2015.07 | 5MT | F | L | Saloon FWD CAYC | Date to:2014.09 | GDS83294 | Drive Shaft | | 36 | | 59.5 | 38 | 519 | |
| | 2010.04-2015.07 | 5MT | F | R | Saloon FWD CAYC | | GDS61042 | Drive Shaft | | 36 | | 59.5 | 40.5 | 814 | |
| | 2010.04-2015.07 | 5MT | F | L/R | Saloon FWD CAYC | | GCO83037 | Outer Joint | | 36 | 30 | 59.5 | 40.5 | 56 | I |
| | 2010.04-2015.07 | 5MT | F | L/R | Saloon FWD CAYC | | GCI82447 | Inner Joint | | | 33 | | | 34 | |
| | 2010.04-2015.07 | 7DCT | F | L | Saloon FWD CAYC | | GDS61100 | Drive Shaft | | 36 | | 59.5 | 40 | 513 | |
| | 2010.04-2015.07 | 7DCT | F | R | Saloon FWD CAYC | | GDS61339 | Drive Shaft | | 36 | | 59.5 | 40 | 794 | |
| | 2010.04-2015.07 | 7DCT | F | L/R | Saloon FWD CAYC | | GCO83002 | Outer Joint | | 36 | 27 | 59.5 | 40 | 66 | I |
| | 2010.04-2015.07 | 7DCT | F | L/R | Saloon FWD CAYC | | GCI83016 | Inner Joint | | | 28 | | | 32 | |
| | 2011.12-2018.04 | 5MT/6AT | F | L/R | Saloon FWD CFNA;CLRA | Transmission:5MT;Transmission:6AT,Date to:2016.12 | GCO83037 | Outer Joint | | 36 | 30 | 59.5 | 40.5 | 56 | I |
| | 2011.12-2018.04 | MT | F | L | Saloon FWD CFNA;CLRA | | GDS83319 | Drive Shaft | | 36 | | 59.5 | 38 | 557 | |
| | 2011.12-2018.04 | MT | F | R | Saloon FWD CFNA;CLRA | | GDS61211 | Drive Shaft | | 36 | | 59.5 | 40.5 | 784 | |
| | 2011.12-2018.04 | MT | F | L/R | Saloon FWD CFNA;CLRA | | GCI82447 | Inner Joint | | | 33 | | | 34 | |
| 1.6 (81 kw) | 2015.09-2018.04 | 5MT | F | L | Saloon FWD CWVA | | GDS61097 | Drive Shaft | | 36 | | 59.5 | 40.5 | 543 | |
| | 2015.09-2018.04 | 5MT | F | R | Saloon FWD CWVA | | GDS61096 | Drive Shaft | | 36 | | 59.5 | 40.5 | 799 | |
| | 2015.09-2018.04 | 5MT | F | L/R | Saloon FWD CWVA | | GCI82447 | Inner Joint | | | 33 | | | 34 | |
| | 2015.09-2018.04 | 5MT/6AT | F | L/R | Saloon FWD CWVA | Transmission:5MT;Transmission:6AT,Date to:2016.12 | GCO83037 | Outer Joint | | 36 | 30 | 59.5 | 40.5 | 56 | I |
| | 2015.09-2018.04 | 6AT | F | R | Saloon FWD CWVA | Date to:2016.03 | GDS61094 | Drive Shaft | | 36 | 26 | 59.5 | 40.5 | 884 | |
| | 2015.09-2018.04 | 6AT | F | R | Saloon FWD CWVA | Date from:2016.04 | GDS61112 | Drive Shaft | | 36 | 26 | 59.5 | 40 | 883 | |
| 1.6 (85 kw) | 2005.09-2010.10 | 5MT | F | L/R | Saloon FWD BLF | | GCO83037 | Outer Joint | | 36 | 30 | 59.5 | 40.5 | 56 | I |
| | 2005.09-2010.10 | 6MT | F | L | Saloon FWD BLF | | GDS83319 | Drive Shaft | | 36 | | 59.5 | 38 | 557 | |

| | YEAR | TRANSM. | F/R | L/R | BODY STYLE & DRIVE TYPE & ENGINE | REMARKS | G-AP Ref. | PRODUCT | ABS | Technical Specifications A | B | C | H | L | P |
|---|---|---|---|---|---|---|---|---|---|---|---|---|---|---|---|
| **VW** **Jetta** | | | | | | | | | | | | | | | |
| 1.6 (85 kw) | 2005.09-2010.10 | 6MT | F | R | Saloon FWD BLF | | GDS61211 | Drive Shaft | | 36 | | 59.5 | 40.5 | 784 | |
| | 2005.09-2010.10 | 6MT | F | L/R | Saloon FWD BLF | | GCI82447 | Inner Joint | | | 33 | | | 34 | |
| | 2005.09-2010.10 | MT | F | L/R | Saloon FWD BLF | | GCI83011 | Inner Joint | | | 33 | | | 34 | |
| 1.8 (125 kw) | 2014.07-2017.12 | AT | F | L | Saloon FWD CPKA;CPRA | | GDS61153 | Drive Shaft | | 36 | 26 | 59.5 | 40 | 583 | |
| | 2014.07-2017.12 | AT | F | L/R | Saloon FWD CPKA;CPRA | | GCO83002 | Outer Joint | | 36 | 27 | 59.5 | 40 | 66 | I |
| | 2014.07-2017.12 | MT | F | L/R | Saloon FWD CPKA;CPRA | | GCI81250 | Inner Joint | | | 26 | | | 34 | |
| 1.9 (77 kw) | 2005.08-2010.10 | 5MT | F | L | Saloon FWD BKC;BLS;BXE | | GDS83294 | Drive Shaft | | 36 | | 59.5 | 38 | 519 | |
| | 2005.08-2010.10 | 5MT | F | R | Saloon FWD BKC;BLS;BXE | | GDS61042 | Drive Shaft | | 36 | | 59.5 | 40.5 | 814 | |
| | 2005.08-2010.10 | 5MT | F | L/R | Saloon FWD BKC;BLS;BXE | | GCO83037 | Outer Joint | | 36 | 30 | 59.5 | 40.5 | 56 | I |
| | 2005.08-2010.10 | 5MT | F | L/R | Saloon FWD BKC;BLS;BXE | | GCI82447 | Inner Joint | | | 33 | | | 34 | |
| | 2005.08-2010.10 | 6DCT | F | L | Saloon FWD BKC;BLS;BXE | | GDS54013 | Drive Shaft | | 36 | | 59.5 | 40 | 479.5 | |
| | 2005.08-2010.10 | 6DCT | F | R | Saloon FWD BKC;BLS;BXE | | GDS54011 | Drive Shaft | | 36 | | 59.5 | 40 | 755 | |
| | 2005.08-2010.10 | 6DCT | F | L/R | Saloon FWD BKC;BLS;BXE | | GCI61057 | Inner Joint | | | 34 | | | 89 | |
| | 2005.08-2010.10 | 6DCT/7DCT | F | L/R | Saloon FWD BKC;BLS;BXE | | GCO83002 | Outer Joint | | 36 | 27 | 59.5 | 40 | 66 | I |
| | 2005.08-2010.10 | 7DCT | F | L | Saloon FWD BKC;BLS;BXE | Date from:2008.12,Chassis no. from:1K_9_091376 | GDS61100 | Drive Shaft | | 36 | | 59.5 | 40 | 513 | |
| | 2005.08-2010.10 | 7DCT | F | L | Saloon FWD BKC;BLS;BXE | Date to:2008.11,Chassis no. to:1K_9_091375 | GDS82260 | Drive Shaft | | 36 | 40 | 59.5 | 40 | 519 | |
| | 2005.08-2010.10 | 7DCT | F | R | Saloon FWD BKC;BLS;BXE | Date from:2008.12,Chassis no. from:1K_9_091376 | GDS61339 | Drive Shaft | | 36 | | 59.5 | 40 | 794 | |
| | 2005.08-2010.10 | 7DCT | F | R | Saloon FWD BKC;BLS;BXE | Date to:2008.11,Chassis no. to:1K_9_091375 | GDS81916 | Drive Shaft | | 36 | 40 | 59.5 | 40 | 816 | |
| | 2005.08-2010.10 | 7DCT | F | L/R | Saloon FWD BKC;BLS;BXE | Date to:2008.11,Chassis no. to:1K_9_091375 | GCI61054 | Inner Joint | | 40 | 28 | 46.9 | 41 | 101.7 | |
| | 2005.08-2010.10 | 7DCT | F | L/R | Saloon FWD BKC;BLS;BXE | Date from:2008.12,Chassis no. from:1K_9_091376 | GCI83016 | Inner Joint | | | 28 | | | 32 | |
| 2.0 (81 kw) | 2010.10-2017.12 | 5MT | F | L | Saloon FWD CLCA;CUUA | | GDS83294 | Drive Shaft | | 36 | | 59.5 | 38 | 519 | |
| | 2010.10-2017.12 | 5MT/7AT | F | L/R | Saloon FWD CLCA;CUUA | | GCO83037 | Outer Joint | | 36 | 30 | 59.5 | 40.5 | 56 | I |
| | 2010.10-2017.12 | 6MT | F | R | Saloon FWD CLCA;CUUA | Date From:2010.05 | GDS61339 | Drive Shaft | | 36 | | 59.5 | 40 | 794 | |
| | 2010.10-2017.12 | 7AT/5MT | F | L/R | Saloon FWD CLCA;CUUA | | GCO83002 | Outer Joint | | 36 | 27 | 59.5 | 40 | 66 | I |
| | 2010.10-2017.12 | 7AT/5MT | F | L/R | Saloon FWD CLCA;CUUA | | GCI83016 | Inner Joint | | | 28 | | | 32 | |
| | 2010.10-2017.12 | 7DCT | F | L | Saloon FWD CLCA;CUUA | | GDS61100 | Drive Shaft | | 36 | | 59.5 | 40 | 513 | |
| | 2010.10-2017.12 | MT | F | R | Saloon FWD CLCA;CUUA | | GDS61042 | Drive Shaft | | 36 | | 59.5 | 40.5 | 814 | |
| | 2010.10-2017.12 | MT | F | L/R | Saloon FWD CLCA;CUUA | | GCI82447 | Inner Joint | | | 33 | | | 34 | |
| | 2010.10-2017.12 | MT | F | L/R | Saloon FWD CLCA;CUUA | Model year from:2011,Model year to:2018 | GCI83006 | Inner Joint | | | 33 | | | 34 | |
| 2.0 (85 kw) | 2010.06-2017.12 | 5MT | F | L | Saloon FWD CBPA;CKJA | Date from:2016.06 | GDS61097 | Drive Shaft | | 36 | | 59.5 | 40.5 | 543 | |
| | 2010.06-2017.12 | 5MT | F | R | Saloon FWD CBPA;CKJA | For PR code:0EM | GDS61096 | Drive Shaft | | 36 | | 59.5 | 40.5 | 799 | |
| | 2010.06-2017.12 | 5MT | F | R | Saloon FWD CBPA;CKJA | For Modelcode:162 | GDS61283 | Drive Shaft | | 36 | | 59.5 | 40 | 815 | |
| | 2010.06-2017.12 | 5MT | F | L/R | Saloon FWD CBPA;CKJA | | GCI82447 | Inner Joint | | | 33 | | | 34 | |
| | 2010.06-2017.12 | 6AT | F | L | Saloon FWD CBPA;CKJA | | GDS61093 | Drive Shaft | | 36 | 26 | 59.5 | 40.5 | 587.5 | |
| | 2010.06-2017.12 | 6AT | F | L | Saloon FWD CBPA;CKJA | For Modelcode:163 | GDS83318 | Drive Shaft | | 36 | 26 | 59.5 | 38 | 581 | |
| | 2010.06-2017.12 | 6AT | F | R | Saloon FWD CBPA;CKJA | | GDS61094 | Drive Shaft | | 36 | 26 | 59.5 | 40.5 | 884 | |
| | 2010.06-2017.12 | 6AT | F | R | Saloon FWD CBPA;CKJA | Date from:2015.09 | GDS61112 | Drive Shaft | | 36 | 26 | 59.5 | 40 | 883 | |
| | 2010.06-2017.12 | 6AT | F | L/R | Saloon FWD CBPA;CKJA | | GCI61011 | Inner Joint | | 26 | 32 | 31 | 68.5 | 85 | |
| | 2010.06-2017.12 | 6AT | F | L/R | Saloon FWD CBPA;CKJA | | GCI61050 | Inner Joint | | 26 | 32 | 31 | 68.5 | 89 | |
| | 2010.06-2017.12 | DCT | F | L/R | Saloon FWD CBPA;CKJA | | GCO83037 | Outer Joint | | 36 | 30 | 59.5 | 40.5 | 56 | I |
| 2.0 (100 kw) | 2005.09-2010.10 | 6AT/6MT | F | L/R | Saloon FWD AZV;CBDA | | GCI54004 | Inner Joint | | | 34 | | | 81 | |
| | 2005.09-2010.10 | 6AT/6MT | F | L/R | Saloon FWD AZV;CBDA | Original Tripod Design | GCI61057 | Inner Joint | | | 34 | | | 89 | |
| | 2005.09-2010.10 | 6AT/6MT | F | L/R | Saloon FWD AZV;CBDA | | GCI83016 | Inner Joint | | | 28 | | | 32 | |
| | 2005.09-2010.10 | 6DCT | F | L | Saloon FWD AZV;CBDA | | GDS54013 | Drive Shaft | | 36 | | 59.5 | 40 | 479.5 | |
| | 2005.09-2010.10 | 6DCT | F | R | Saloon FWD AZV;CBDA | | GDS54011 | Drive Shaft | | 36 | | 59.5 | 40 | 755 | |
| | 2005.09-2010.10 | 6MT | F | L | Saloon FWD AZV;CBDA | | GDS83295 | Drive Shaft | | 36 | | 59.5 | 40 | 491 | |
| | 2005.09-2010.10 | 6MT | F | R | Saloon FWD AZV;CBDA | Date from:2010.05 | GDS61339 | Drive Shaft | | 36 | | 59.5 | 40 | 794 | |
| | 2005.09-2010.10 | 6MT | F | R | Saloon FWD AZV;CBDA | | GDS83313 | Drive Shaft | | 36 | | 59.5 | 40 | 792 | |
| | 2005.09-2010.10 | 6MT | F | L | Saloon FWD AZV;CBDA | Date from:2009.12;Date to:2010.04 | GCO61059 | Outer Joint | | 36 | 33 | 59.5 | 40 | 59.5 | I |
| | 2005.09-2010.10 | AT | F | L | Saloon FWD AZV;CBDA | | GDS83241 | Drive Shaft | | 36 | | 59.5 | 40 | 475 | |
| | 2005.09-2010.10 | MT | F | L | Saloon FWD AZV;CBDA | | GDS83236 | Drive Shaft | | 36 | | 59.5 | 40 | 484 | |
| | 2005.09-2010.10 | MT | F | R | Saloon FWD AZV;CBDA | | GDS61126 | Drive Shaft | | 36 | | 59.5 | 40 | 793 | |
| | 2005.09-2010.10 | MT | F | R | Saloon FWD AZV;CBDA | | GDS61339 | Drive Shaft | | 36 | | 59.5 | 40 | 794 | |
| | 2005.09-2010.10 | | F | L/R | Saloon FWD AZV;CBDA | | GCO83002 | Outer Joint | | 36 | 27 | 59.5 | 40 | 66 | I |
| 2.0 (103 kw) | 2005.08-2010.10 | 6AT/6MT | F | L/R | Saloon FWD BKD;CBDB;CBEA;CJAA | | GCI54004 | Inner Joint | | | 34 | | | 81 | |
| | 2005.08-2010.10 | 6AT/6MT | F | L/R | Saloon FWD BKD;CBDB;CBEA;CJAA | Original Tripod Design | GCI61057 | Inner Joint | | | 34 | | | 89 | |
| | 2005.08-2010.10 | 6AT/6MT | F | L/R | Saloon FWD BKD;CBDB;CBEA;CJAA | | GCI83016 | Inner Joint | | | 28 | | | 32 | |
| | 2005.08-2010.10 | 6DCT | F | L | Saloon FWD BKD;CBDB;CBEA;CJAA | For Engine code:BKD/CBDB | GDS54013 | Drive Shaft | | 36 | | 59.5 | 40 | 479.5 | |
| | 2005.08-2010.10 | 6DCT | F | R | Saloon FWD BKD;CBDB;CBEA;CJAA | | GDS54011 | Drive Shaft | | 36 | | 59.5 | 40 | 755 | |
| | 2005.08-2010.10 | 6MT | F | L | Saloon FWD BKD;CBDB;CBEA;CJAA | | GDS83295 | Drive Shaft | | 36 | | 59.5 | 40 | 491 | |
| | 2005.08-2010.10 | 6MT | F | R | Saloon FWD BKD;CBDB;CBEA;CJAA | Date from:2010.05 | GDS61339 | Drive Shaft | | 36 | | 59.5 | 40 | 794 | |
| | 2005.08-2010.10 | 6MT | F | R | Saloon FWD BKD;CBDB;CBEA;CJAA | | GDS83313 | Drive Shaft | | 36 | | 59.5 | 40 | 792 | |
| | 2005.08-2010.10 | 6MT | F | L | Saloon FWD BKD;CBDB;CBEA;CJAA | Date from:2009.12;Date to:2010.04 | GCO61059 | Outer Joint | | 36 | 33 | 59.5 | 40 | 59.5 | I |
| | 2005.08-2010.10 | AT | F | L | Saloon FWD BKD;CBDB;CBEA;CJAA | | GDS83241 | Drive Shaft | | 36 | | 59.5 | 40 | 475 | |
| | 2005.08-2010.10 | MT | F | L | Saloon FWD BKD;CBDB;CBEA;CJAA | | GDS83236 | Drive Shaft | | 36 | | 59.5 | 40 | 484 | |

| | YEAR | TRANSM. | F/R | L/R | BODY STYLE & DRIVE TYPE & ENGINE | REMARKS | G-AP Ref. | PRODUCT | ABS | Technical Specifications A | B | C | H | L | P |
|---|---|---|---|---|---|---|---|---|---|---|---|---|---|---|---|
| **VW** **Jetta** | | | | | | | | | | | | | | | |
| 2.0 (103 kw) | 2005.08-2010.10 | MT | F | R | Saloon FWD BKD;CBDB;CBEA;CJAA | | GDS61126 | Drive Shaft | | 36 | | 59.5 | 40 | 793 | |
| | 2005.08-2010.10 | MT | F | R | Saloon FWD BKD;CBDB;CBEA;CJAA | | GDS61339 | Drive Shaft | | 36 | | 59.5 | 40 | 794 | |
| | 2005.08-2010.10 | | F | L/R | Saloon FWD BKD;CBDB;CBEA;CJAA | | GCO83002 | Outer Joint | | 36 | 27 | 59.5 | 40 | 66 | I |
| | 2005.10-2010.10 | 6AT/6MT | F | L/R | Saloon FWD BMM | | GCI54004 | Inner Joint | | | 34 | | | 81 | |
| | 2005.10-2010.10 | 6AT/6MT | F | L/R | Saloon FWD BMM | Original Tripod Design | GCI61057 | Inner Joint | | | 34 | | | 89 | |
| | 2005.10-2010.10 | 6AT/6MT | F | L/R | Saloon FWD BMM | | GCI83016 | Inner Joint | | | 28 | | | 32 | |
| | 2005.10-2010.10 | 6DCT | F | L | Saloon FWD BMM | | GDS54013 | Drive Shaft | | 36 | | 59.5 | 40 | 479.5 | |
| | 2005.10-2010.10 | 6DCT | F | R | Saloon FWD BMM | | GDS54011 | Drive Shaft | | 36 | | 59.5 | 40 | 755 | |
| | 2005.10-2010.10 | 6MT | F | L | Saloon FWD BMM | | GDS83295 | Drive Shaft | | 36 | | 59.5 | 40 | 491 | |
| | 2005.10-2010.10 | 6MT | F | R | Saloon FWD BMM | | GDS83313 | Drive Shaft | | 36 | | 59.5 | 40 | 792 | |
| | 2005.10-2010.10 | AT | F | L | Saloon FWD BMM | | GDS83241 | Drive Shaft | | 36 | | 59.5 | 40 | 475 | |
| | 2005.10-2010.10 | MT | F | L | Saloon FWD BMM | | GDS83236 | Drive Shaft | | 36 | | 59.5 | 40 | 484 | |
| | 2005.10-2010.10 | MT | F | R | Saloon FWD BMM | | GDS61126 | Drive Shaft | | 36 | | 59.5 | 40 | 793 | |
| | 2005.10-2010.10 | MT | F | R | Saloon FWD BMM | | GDS61339 | Drive Shaft | | 36 | | 59.5 | 40 | 794 | |
| | 2005.10-2010.10 | | F | L/R | Saloon FWD BMM | | GCO83002 | Outer Joint | | 36 | 27 | 59.5 | 40 | 66 | I |
| | 2010.07-2017.12 | 5MT | F | L | Saloon FWD CFFB;CJAA;CFHC;CLCB | Inner teeth of wheel side:33 | GDS61282 | Drive Shaft | | 36 | | 59.5 | 40 | 523 | |
| | 2010.07-2017.12 | 5MT | F | L | Saloon FWD CFFB;CJAA;CFHC;CLCB | Inner teeth of wheel side:30 | GDS83294 | Drive Shaft | | 36 | | 59.5 | 38 | 519 | |
| | 2010.07-2017.12 | 5MT | F | R | Saloon FWD CFFB;CJAA;CFHC;CLCB | Inner teeth of wheel side:30 | GDS61042 | Drive Shaft | | 36 | | 59.5 | 40.5 | 814 | |
| | 2010.07-2017.12 | 5MT | F | R | Saloon FWD CFFB;CJAA;CFHC;CLCB | Inner teeth of wheel side:33 | GDS61283 | Drive Shaft | | 36 | | 59.5 | 40 | 815 | |
| | 2010.07-2017.12 | 6AT/6MT | F | L/R | Saloon FWD CFFB;CJAA;CFHC;CLCB | | GCI54004 | Inner Joint | | | 34 | | | 81 | |
| | 2010.07-2017.12 | 6AT/6MT | F | L/R | Saloon FWD CFFB;CJAA;CFHC;CLCB | Original Tripod Design | GCI61057 | Inner Joint | | | 34 | | | 89 | |
| | 2010.07-2017.12 | 6AT/6MT | F | L/R | Saloon FWD CFFB;CJAA;CFHC;CLCB | | GCI83016 | Inner Joint | | | 28 | | | 32 | |
| | 2010.07-2017.12 | AT | F | L | Saloon FWD CFFB;CJAA;CFHC;CLCB | | GDS54013 | Drive Shaft | | 36 | | 59.5 | 40 | 479.5 | |
| | 2010.07-2017.12 | AT | F | L | Saloon FWD CFFB;CJAA;CFHC;CLCB | | GDS83241 | Drive Shaft | | 36 | | 59.5 | 40 | 475 | |
| | 2010.07-2017.12 | AT | F | R | Saloon FWD CFFB;CJAA;CFHC;CLCB | | GDS54011 | Drive Shaft | | 36 | | 59.5 | 40 | 755 | |
| | 2010.07-2017.12 | AT/MT | F | L/R | Saloon FWD CFFB;CJAA;CFHC;CLCB | | GCO83002 | Outer Joint | | 36 | 27 | 59.5 | 40 | 66 | I |
| | 2010.07-2017.12 | MT | F | L | Saloon FWD CFFB;CJAA;CFHC;CLCB | | GDS83295 | Drive Shaft | | 36 | | 59.5 | 40 | 491 | |
| | 2010.07-2017.12 | MT | F | R | Saloon FWD CFFB;CJAA;CFHC;CLCB | | GDS61126 | Drive Shaft | | 36 | | 59.5 | 40 | 793 | |
| | 2010.07-2017.12 | MT | F | R | Saloon FWD CFFB;CJAA;CFHC;CLCB | | GDS61339 | Drive Shaft | | 36 | | 59.5 | 40 | 794 | |
| 2.0 (110 kw) | 2005.08-2010.10 | 6AT | F | L | Saloon FWD BLX;BLY;BLR;BVY;BVZ | | GDS61093 | Drive Shaft | | 36 | 26 | 59.5 | 40.5 | 587.5 | |
| | 2005.08-2010.10 | 6AT | F | R | Saloon FWD BLX;BLY;BLR;BVY;BVZ | | GDS61094 | Drive Shaft | | 36 | 26 | 59.5 | 40.5 | 884 | |
| | 2005.08-2010.10 | 6AT | F | L/R | Saloon FWD BLX;BLY;BLR;BVY;BVZ | | GCI61011 | Inner Joint | | 26 | 32 | 31 | 68.5 | 85 | |
| | 2005.08-2010.10 | 6AT | F | L/R | Saloon FWD BLX;BLY;BLR;BVY;BVZ | | GCI61050 | Inner Joint | | 26 | 32 | 31 | 68.5 | 89 | |
| | 2005.08-2010.10 | 6AT/6MT | F | L/R | Saloon FWD BLX;BLY;BLR;BVY;BVZ | Date to:2008.06 | GCO83037 | Outer Joint | | 36 | 30 | 59.5 | 40.5 | 56 | I |
| | 2005.08-2010.10 | 6MT | F | L | Saloon FWD BLX;BLY;BLR;BVY;BVZ | | GDS83294 | Drive Shaft | | 36 | | 59.5 | 38 | 519 | |
| | 2005.08-2010.10 | 6MT | F | R | Saloon FWD BLX;BLY;BLR;BVY;BVZ | | GDS61042 | Drive Shaft | | 36 | | 59.5 | 40.5 | 814 | |
| | 2005.08-2010.10 | 6MT | F | L/R | Saloon FWD BLX;BLY;BLR;BVY;BVZ | | GCI82447 | Inner Joint | | | 33 | | | 34 | |
| | 2014.07-2017.12 | 6AT/6MT | F | L/R | Saloon FWD CUUB;CVCA;DELA;DGMA | | GCI54004 | Inner Joint | | | 34 | | | 81 | |
| | 2014.07-2017.12 | 6AT/6MT | F | L/R | Saloon FWD CUUB;CVCA;DELA;DGMA | Original Tripod Design | GCI61057 | Inner Joint | | | 34 | | | 89 | |
| | 2014.07-2017.12 | 6AT/6MT | F | L/R | Saloon FWD CUUB;CVCA;DELA;DGMA | | GCI83016 | Inner Joint | | | 28 | | | 32 | |
| | 2014.07-2017.12 | AT | F | L | Saloon FWD CUUB;CVCA;DELA;DGMA | Date from:2016.07,For Engine code:CUUB/DELA,For PR code:7NU/7NJ,For Engine code:CVCA | GDS54013 | Drive Shaft | | 36 | | 59.5 | 40 | 479.5 | |
| | 2014.07-2017.12 | AT | F | R | Saloon FWD CUUB;CVCA;DELA;DGMA | | GDS54011 | Drive Shaft | | 36 | | 59.5 | 40 | 755 | |
| | 2014.07-2017.12 | AT | F | L/R | Saloon FWD CUUB;CVCA;DELA;DGMA | | GCI83006 | Inner Joint | | | 33 | | | 34 | |
| | 2014.07-2017.12 | MT | F | L | Saloon FWD CUUB;CVCA;DELA;DGMA | | GDS83295 | Drive Shaft | | 36 | | 59.5 | 40 | 491 | |
| | 2014.07-2017.12 | MT | F | R | Saloon FWD CUUB;CVCA;DELA;DGMA | | GDS61339 | Drive Shaft | | 36 | | 59.5 | 40 | 794 | |
| | 2014.07-2017.12 | MT | F | L/R | Saloon FWD CUUB;CVCA;DELA;DGMA | | GCO83002 | Outer Joint | | 36 | 27 | 59.5 | 40 | 66 | I |
| | 2014.07-2017.12 | MT | F | L/R | Saloon FWD CUUB;CVCA;DELA;DGMA | | GCO83037 | Outer Joint | | 36 | 30 | 59.5 | 40.5 | 56 | I |
| | 2014.07-2017.12 | MT | F | L/R | Saloon FWD CUUB;CVCA;DELA;DGMA | | GCI83011 | Inner Joint | | | 33 | | | 34 | |
| 2.0 (125 kw) | 2006.10-2010.10 | 6DCT | F | L | Saloon FWD BMN;CEGA | | GDS54013 | Drive Shaft | | 36 | | 59.5 | 40 | 479.5 | |
| | 2006.10-2010.10 | 6DCT | F | L | Saloon FWD BMN;CEGA | | GDS83241 | Drive Shaft | | 36 | | 59.5 | 40 | 475 | |
| | 2006.10-2010.10 | 6DCT | F | R | Saloon FWD BMN;CEGA | | GDS54011 | Drive Shaft | | 36 | | 59.5 | 40 | 755 | |
| | 2006.10-2010.10 | 6DCT | F | L/R | Saloon FWD BMN;CEGA | | GCI54004 | Inner Joint | | | 34 | | | 81 | |
| | 2006.10-2010.10 | 6DCT | F | L/R | Saloon FWD BMN;CEGA | | GCI61057 | Inner Joint | | | 34 | | | 89 | |
| | 2006.10-2010.10 | 6MT | F | L | Saloon FWD BMN;CEGA | | GDS83236 | Drive Shaft | | 36 | | 59.5 | 40 | 484 | |
| | 2006.10-2010.10 | 6MT | F | R | Saloon FWD BMN;CEGA | | GDS61126 | Drive Shaft | | 36 | | 59.5 | 40 | 793 | |
| | 2006.10-2010.10 | | F | L/R | Saloon FWD BMN;CEGA | | GCO83101 | Outer Joint | | 36 | 27 | 59.5 | 40 | 65 | M |
| 2.0 (147 kw) | 2005.10-2010.10 | 6DCT | F | L | Saloon FWD AXX;BWA;BPY;CAWB;CCTA;CBFA | | GDS83295 | Drive Shaft | | 36 | | 59.5 | 40 | 491 | |
| | 2005.10-2010.10 | 6DCT | F | R | Saloon FWD AXX;BWA;BPY;CAWB;CCTA;CBFA | For Engine code:BWA/CAWB/CCTA | GDS81653 | Drive Shaft | | 36 | | 59.5 | 40 | 785 | |
| | 2005.10-2010.10 | 6DCT | F | L/R | Saloon FWD AXX;BWA;BPY;CAWB;CCTA;CBFA | Date From:2008.07,Chassis no. from:1K-9-000001 | GCO83101 | Outer Joint | | 36 | 27 | 59.5 | 40 | 65 | M |
| | 2005.10-2010.10 | 6MT | F | R | Saloon FWD AXX;BWA;BPY;CAWB;CCTA;CBFA | For Engine code:BWA/CAWB | GDS61126 | Drive Shaft | | 36 | | 59.5 | 40 | 793 | |
| | 2005.10-2010.10 | 6MT | F | R | Saloon FWD AXX;BWA;BPY;CAWB;CCTA;CBFA | For Engine code:BWA/CAWB | GDS61147 | Drive Shaft | | 36 | | 59.5 | 40 | 795 | |
| | 2005.10-2010.10 | 6MT/6DCT | F | L/R | Saloon FWD AXX;BWA;BPY;CAWB;CCTA;CBFA | For Engine code:BWA/CAWB/CCTA,Chassis no. from:1K-9-000001 | GCO83002 | Outer Joint | | 36 | 27 | 59.5 | 40 | 66 | I |
| | 2005.10-2010.10 | AT | F | L/R | Saloon FWD AXX;BWA;BPY;CAWB;CCTA;CBFA | | GCI61038 | Inner Joint | | 26 | 34 | 31 | 68.5 | 88.5 | |
| | 2005.10-2010.10 | AT/MT | F | L | Saloon FWD AXX;BWA;BPY;CAWB;CCTA;CBFA | | GDS83236 | Drive Shaft | | 36 | | 59.5 | 40 | 484 | |
| | 2005.10-2010.10 | | F | L/R | Saloon FWD AXX;BWA;BPY;CAWB;CCTA;CBFA | For Engine code:BWA/CAWB/CCTA | GCI83016 | Inner Joint | | | 28 | | | 32 | |

| | YEAR | TRANSM. | F/R | L/R | BODY STYLE & DRIVE TYPE & ENGINE | REMARKS | G-AP Ref. | PRODUCT | ABS | Technical Specifications A | B | C | H | L | P |
|---|---|---|---|---|---|---|---|---|---|---|---|---|---|---|---|
| **VW** | | | | | | | | | | | | | | | |
| **Jetta** | | | | | | | | | | | | | | | |
| 2.0 (147 kw) | 2010.12-2014.07 | 6DCT | F | L | Saloon FWD CCTA;CBFA;CCZA | | GDS83295 | Drive Shaft | | 36 | | 59.5 | 40 | 491 | |
| | 2010.12-2014.07 | 6DCT | F | R | Saloon FWD CCTA;CBFA;CCZA | | GDS81653 | Drive Shaft | | 36 | | 59.5 | 40 | 785 | |
| | 2010.12-2014.07 | 6DCT | F | R | Saloon FWD CCTA;CBFA;CCZA | | GCI61069 | Inner Joint | | | 28 | | | 32 | |
| | 2010.12-2014.07 | 6MT | F | R | Saloon FWD CCTA;CBFA;CCZA | | GDS61147 | Drive Shaft | | 36 | | 59.5 | 40 | 795 | |
| | 2010.12-2014.07 | MT/DCT | F | L/R | Saloon FWD CCTA;CBFA;CCZA | Date to:2014.07 | GCO83101 | Outer Joint | | 36 | 27 | 59.5 | 40 | 65 | M |
| | 2010.12-2014.07 | | F | L/R | Saloon FWD CCTA;CBFA;CCZA | For Engine Code:CCTA | GCI83016 | Inner Joint | | | 28 | | | 32 | |
| 2.0 (155 kw) | 2012.12-2017.12 | 6DCT | F | R | Saloon FWD CPLA;CPPA | | GDS81653 | Drive Shaft | | 36 | | 59.5 | 40 | 785 | |
| | 2012.12-2017.12 | 6MT | F | R | Saloon FWD CPLA;CPPA | For Modelcode:162;Date to:2015.07;For Modelcode:163;Date from 2015.08 | GDS61147 | Drive Shaft | | 36 | | 59.5 | 40 | 795 | |
| | 2012.12-2017.12 | DCT | F | L | Saloon FWD CPLA;CPPA | | GDS83295 | Drive Shaft | | 36 | | 59.5 | 40 | 491 | |
| | 2012.12-2017.12 | DCT/MT | F | L/R | Saloon FWD CPLA;CPPA | | GCO83101 | Outer Joint | | 36 | 27 | 59.5 | 40 | 65 | M |
| | 2012.12-2017.12 | MT/DCT | F | L/R | Saloon FWD CPLA;CPPA | For Engine code:BWA/CAWB/CCTA | GCI83016 | Inner Joint | | | 28 | | | 32 | |
| 2.5 (110 kw) | 2006.01-2010.10 | 5MT | F | L | Saloon FWD BTK;BGP;BGQ | | GDS83294 | Drive Shaft | | 36 | | 59.5 | 38 | 519 | |
| | 2006.01-2010.10 | 5MT | F | R | Saloon FWD BTK;BGP;BGQ | | GDS61283 | Drive Shaft | | 36 | | 59.5 | 40 | 815 | |
| | 2006.01-2010.10 | 5MT | F | L/R | Saloon FWD BTK;BGP;BGQ | | GCI82447 | Inner Joint | | | 33 | | | 34 | |
| | 2006.01-2010.10 | 6AT | F | L | Saloon FWD BTK;BGP;BGQ | | GDS61153 | Drive Shaft | | 36 | 26 | 59.5 | 40 | 583 | |
| | 2006.01-2010.10 | AT | F | L | Saloon FWD BTK;BGP;BGQ | | GDS61111 | Drive Shaft | | 36 | 26 | 59.5 | 40 | 584 | |
| | 2006.01-2010.10 | AT | F | L/R | Saloon FWD BTK;BGP;BGQ | | GCO83002 | Outer Joint | | 36 | 27 | 59.5 | 40 | 66 | I |
| | 2006.01-2010.10 | MT | F | L/R | Saloon FWD BTK;BGP;BGQ | | GCO83037 | Outer Joint | | 36 | 30 | 59.5 | 40.5 | 56 | I |
| 2.5 (125 kw) | 2008.07-2010.10 | 5AT/6AT/5MT/6MT | F | L | Saloon FWD CBTA;CBUA;CCCA | | GDS61153 | Drive Shaft | | 36 | 26 | 59.5 | 40 | 583 | |
| | 2008.07-2010.10 | 6AT | F | L/R | Saloon FWD CBTA;CBUA;CCCA | | GCO83002 | Outer Joint | | 36 | 27 | 59.5 | 40 | 66 | I |
| | 2008.07-2010.10 | AT | F | L | Saloon FWD CBTA;CBUA;CCCA | | GDS61111 | Drive Shaft | | 36 | 26 | 59.5 | 40 | 584 | |
| | 2010.04-2017.12 | 5MT | F | L | Saloon FWD CBTA;CBUA;CCCA | | GDS83294 | Drive Shaft | | 36 | | 59.5 | 38 | 519 | |
| | 2010.04-2017.12 | 5MT | F | R | Saloon FWD CBTA;CBUA;CCCA | | GDS61283 | Drive Shaft | | 36 | | 59.5 | 40 | 815 | |
| | 2010.04-2017.12 | 5MT | F | L/R | Saloon FWD CBTA;CBUA;CCCA | | GCI82447 | Inner Joint | | | 33 | | | 34 | |
| | 2010.04-2017.12 | 5MT/6AT | F | L/R | Saloon FWD CBTA;CBUA;CCCA | | GCO83037 | Outer Joint | | 36 | 30 | 59.5 | 40.5 | 56 | I |
| | 2010.04-2017.12 | 6AT/5MT | F | L/R | Saloon FWD CBTA;CBUA;CCCA | | GCO83002 | Outer Joint | | 36 | 27 | 59.5 | 40 | 66 | I |
| | 2010.04-2017.12 | AT | F | L | Saloon FWD CBTA;CBUA;CCCA | | GDS61153 | Drive Shaft | | 36 | 26 | 59.5 | 40 | 583 | |
| | 2010.04-2017.12 | DCT | F | L/R | Saloon FWD CBTA;CBUA;CCCA | | GCO83101 | Outer Joint | | 36 | 27 | 59.5 | 40 | 65 | M |
| **Load Up** | | | | | | | | | | | | | | | |
| 1.0 (44 kw) | 2012.11-2019.11 | 5MT | F | L | Hatchback Van FWD CHYA;DAFA | Chassis no. to:AA_GD046879 | GDS50543 | Drive Shaft | | 22 | 28 | 46 | 78 | 814 | |
| | 2012.11-2019.11 | 5MT | F | L | Hatchback Van FWD CHYA;DAFA | Chassis no. from:AA_GD046880 | GDS81526 | Drive Shaft | | 22 | 28 | 46 | 78 | 654 | |
| | 2012.11-2019.11 | 5MT | F | R | Hatchback Van FWD CHYA;DAFA | Chassis no. to:AA_GD046879 | GDS50567 | Drive Shaft | | 22 | 28 | 46 | 78 | 650 | |
| | 2012.11-2019.11 | 5MT | F | R | Hatchback Van FWD CHYA;DAFA | Chassis no. from:AA_GD046880 | GDS82399 | Drive Shaft | | 22 | 28 | 46 | 78 | 817 | |
| | 2012.11-2019.11 | 5MT | F | L/R | Hatchback Van FWD CHYA;DAFA | Chassis no. to:AA_GD046879 | GCO50170 | Outer Joint | | 22 | 26 | 46 | 78 | 53 | M |
| | 2012.11-2019.11 | 5MT | F | L/R | Hatchback Van FWD CHYA;DAFA | Chassis no. from:AA_GD046880 | GCO81356 | Outer Joint | | 22 | 23 | 46 | 78 | 58 | M |
| | 2012.11-2019.11 | 5MT | F | L/R | Hatchback Van FWD CHYA;DAFA | Chassis no. from:AA_GD046880 | GCI81393 | Inner Joint | | 28 | 22 | 39.95 | 58 | 84.5 | |
| 1.0 (50 kw) | 2012.11-2020.08 | 5MT | F | L | Hatchback Van FWD CPGA | Chassis no. to:AA_GD046879 | GDS50543 | Drive Shaft | | 22 | 28 | 46 | 78 | 814 | |
| | 2012.11-2020.08 | 5MT | F | L | Hatchback Van FWD CPGA | Chassis no. from:AA_GD046880 | GDS81526 | Drive Shaft | | 22 | 28 | 46 | 78 | 654 | |
| | 2012.11-2020.08 | 5MT | F | R | Hatchback Van FWD CPGA | Chassis no. to:AA_GD046879 | GDS50567 | Drive Shaft | | 22 | 28 | 46 | 78 | 650 | |
| | 2012.11-2020.08 | 5MT | F | R | Hatchback Van FWD CPGA | Chassis no. from:AA_GD046880 | GDS82399 | Drive Shaft | | 22 | 28 | 46 | 78 | 817 | |
| | 2012.11-2020.08 | 5MT | F | L/R | Hatchback Van FWD CPGA | Chassis no. to:AA_GD046879 | GCO50170 | Outer Joint | | 22 | 26 | 46 | 78 | 53 | M |
| | 2012.11-2020.08 | 5MT | F | L/R | Hatchback Van FWD CPGA | Chassis no. from:AA_GD046880 | GCO81356 | Outer Joint | | 22 | 23 | 46 | 78 | 58 | M |
| | 2012.11-2020.08 | 5MT | F | L/R | Hatchback Van FWD CPGA | Chassis no. from:AA_GD046880 | GCI81393 | Inner Joint | | 28 | 22 | 39.95 | 58 | 84.5 | |
| 1.0 (55 kw) | 2016.05-2019.11 | 5MT | F | L | Hatchback Van FWD CHYB | | GDS81526 | Drive Shaft | | 22 | 28 | 46 | 78 | 654 | |
| | 2016.05-2019.11 | 5MT | F | R | Hatchback Van FWD CHYB | Date to:2017.06 | GDS82399 | Drive Shaft | | 22 | 28 | 46 | 78 | 817 | |
| | 2016.05-2019.11 | 5MT | F | L/R | Hatchback Van FWD CHYB | Date to:2017.06 | GCO81356 | Outer Joint | | 22 | 23 | 46 | 78 | 58 | M |
| | 2016.05-2019.11 | 5MT | F | L/R | Hatchback Van FWD CHYB | | GCI81393 | Inner Joint | | 28 | 22 | 39.95 | 58 | 84.5 | |
| **Lupo** | | | | | | | | | | | | | | | |
| 1.0 (37 kw) | 1998.10-2000.05 | 5MT | F | L/R | Hatchback FWD AHT | | GCO53005 | Outer Joint | | 22 | 30 | 53 | 78.5 | 51 | I |
| | 1998.10-2000.05 | 5MT | F | L/R | Hatchback FWD AHT | | GCI53001 | Inner Joint | | | 33 | | | 32 | |
| | 1998.10-2005.07 | 5MT | F | L | Hatchback FWD AER/ALD/ALL/ANV/AUC | | GDS61205 | Drive Shaft | | 22 | | 53 | 78.5 | 525 | |
| | 1998.10-2005.07 | 5MT | F | R | Hatchback FWD AER/ALD/ALL/ANV/AUC | | GDS61189 | Drive Shaft | | 22 | | 53 | 78.5 | 752 | |
| | 1998.10-2005.07 | MT | F | L/R | Hatchback FWD AER/ALD/ALL/ANV/AUC | | GCO53005 | Outer Joint | | 22 | 30 | 53 | 78.5 | 51 | I |
| | 1998.10-2005.07 | MT | F | L/R | Hatchback FWD AER/ALD/ALL/ANV/AUC | | GCI53001 | Inner Joint | | | 33 | | | 32 | |
| 1.2 (45 kw) | 1999.06-2005.07 | MT | F | L/R | Hatchback FWD ANY/AYZ | | GCO99268 | Outer Joint | | 20 | 26 | 43 | 56 | 45 | M |
| 1.4 (44 kw) | 2000.09-2005.07 | 5MT | F | L | Hatchback FWD AUD | | GDS61205 | Drive Shaft | | 22 | | 53 | 78.5 | 525 | |
| | 2000.09-2005.07 | 5MT | F | R | Hatchback FWD AUD | | GDS61189 | Drive Shaft | | 22 | | 53 | 78.5 | 752 | |
| | 2000.09-2005.07 | 5MT | F | L/R | Hatchback FWD AUD | | GCO53005 | Outer Joint | | 22 | 30 | 53 | 78.5 | 51 | I |
| | 2000.09-2005.07 | AT/MT | F | L/R | Hatchback FWD AUD | | GCI53001 | Inner Joint | | | 33 | | | 32 | |
| 1.4 (55 kw) | 1998.10-2005.07 | 4AT | F | L | Hatchback FWD AHW/AKQ/APE/AUA/BBY | For Engine code:AHW/AKQ/APE | GDS61007 | Drive Shaft | | 22 | | 53 | 78.5 | 517 | |
| | 1998.10-2005.07 | 4AT | F | R | Hatchback FWD AHW/AKQ/APE/AUA/BBY | For Engine code:AHW/AKQ/APE | GDS53002 | Drive Shaft | | 22 | | 53.2 | 78 | 769 | |
| | 1998.10-2005.07 | AT | F | L/R | Hatchback FWD AHW/AKQ/APE/AUA/BBY | | GCI61005 | Inner Joint | | | 30 | | | 57.6 | |
| | 1998.10-2005.07 | AT/MT | F | L/R | Hatchback FWD AHW/AKQ/APE/AUA/BBY | | GCO53005 | Outer Joint | | 22 | 30 | 53 | 78.5 | 51 | I |
| | 1998.10-2005.07 | MT | F | L | Hatchback FWD AHW/AKQ/APE/AUA/BBY | | GDS61205 | Drive Shaft | | 22 | | 53 | 78.5 | 525 | |
| | 1998.10-2005.07 | MT | F | R | Hatchback FWD AHW/AKQ/APE/AUA/BBY | | GDS61189 | Drive Shaft | | 22 | | 53 | 78.5 | 752 | |

| | YEAR | TRANSM. | F/R | L/R | BODY STYLE & DRIVE TYPE & ENGINE | REMARKS | G-AP Ref. | PRODUCT | ABS | Technical Specifications A | B | C | H | L | P |
|---|---|---|---|---|---|---|---|---|---|---|---|---|---|---|---|
| **VW** | | | | | | | | | | | | | | | |
| **Lupo** | | | | | | | | | | | | | | | |
| 1.4 (55 kw) | 1998.10-2005.07 | MT | F | L/R | Hatchback FWD AHW/AKQ/APE/AUA/BBY | | GCI53001 | Inner Joint | | | 33 | | | 32 | |
| | 1999.05-2005.07 | 5MT | F | L | Hatchback FWD AMF | Trans. code:EXB | GDS61075 | Drive Shaft | | 22 | | 53 | 78.5 | 525 | |
| | 1999.05-2005.07 | 5MT | F | R | Hatchback FWD AMF | Trans. code:EXB/GAX | GDS61074 | Drive Shaft | | 22 | | 53 | 78.5 | 712 | |
| | 1999.05-2005.07 | 5MT | F | L/R | Hatchback FWD AMF | | GCO61007 | Outer Joint | | 22 | 30 | 53 | 78.5 | 60 | I |
| | 1999.05-2005.07 | 5MT | F | L | Hatchback FWD AMF | Trans. code:GAX | GCI53002 | Inner Joint | | | 33 | | | 34 | |
| | 1999.05-2005.07 | 5MT | F | L/R | Hatchback FWD AMF | Trans. code:EXB | GCI61006 | Inner Joint | | | 30 | | | 57.6 | |
| 1.4 (74 kw) | 1998.10-2005.07 | 5MT | F | L | Hatchback FWD AFK/ANM/AQQ/AUB | | GDS61205 | Drive Shaft | | 22 | | 53 | 78.5 | 525 | |
| | 1998.10-2005.07 | 5MT | F | L/R | Hatchback FWD AFK/ANM/AQQ/AUB | | GCI53001 | Inner Joint | | | 33 | | | 32 | |
| | 1998.10-2005.07 | AT/MT | F | L/R | Hatchback FWD AFK/ANM/AQQ/AUB | | GCO53005 | Outer Joint | | 22 | 30 | 53 | 78.5 | 51 | I |
| | 1998.10-2005.07 | MT | F | R | Hatchback FWD AFK/ANM/AQQ/AUB | | GDS61189 | Drive Shaft | | 22 | | 53 | 78.5 | 752 | |
| 1.4 (77 kw) | 2000.09-2003.11 | AT/MT | F | L | Hatchback FWD ARR | | GDS61205 | Drive Shaft | | 22 | | 53 | 78.5 | 525 | |
| | 2000.09-2003.11 | AT/MT | F | L/R | Hatchback FWD ARR | | GCO53005 | Outer Joint | | 22 | 30 | 53 | 78.5 | 51 | I |
| | 2000.09-2003.11 | MT | F | R | Hatchback FWD ARR | | GDS61189 | Drive Shaft | | 22 | | 53 | 78.5 | 752 | |
| | 2000.09-2003.11 | | F | L/R | Hatchback FWD ARR | | GCI53001 | Inner Joint | | | 33 | | | 32 | |
| 1.6 (92 kw) | 2000.06-2005.07 | 5MT/6MT | F | R | Hatchback FWD AVY | | GCI83005 | Inner Joint | | | 33 | | | 32 | |
| | 2000.06-2005.07 | MT | F | L/R | Hatchback FWD AVY | | GCO61007 | Outer Joint | | 22 | 30 | 53 | 78.5 | 60 | I |
| | 2000.06-2005.07 | | F | R | Hatchback FWD AVY | | GDS61189 | Drive Shaft | | 22 | | 53 | 78.5 | 752 | |
| 1.7 (44 kw) | 1998.10-2005.07 | 5MT | F | L | Hatchback FWD AKU | | GDS61205 | Drive Shaft | | 22 | | 53 | 78.5 | 525 | |
| | 1998.10-2005.07 | 5MT | F | R | Hatchback FWD AKU | | GDS61189 | Drive Shaft | | 22 | | 53 | 78.5 | 752 | |
| | 1998.10-2005.07 | 5MT | F | L/R | Hatchback FWD AKU | | GCO53005 | Outer Joint | | 22 | 30 | 53 | 78.5 | 51 | I |
| | 1998.10-2005.07 | 5MT | F | L/R | Hatchback FWD AKU | | GCI53001 | Inner Joint | | | 33 | | | 32 | |
| **Multivan** | | | | | | | | | | | | | | | |
| 1.9 (62 kw) | 2006.01-2009.11 | 5MT | F | L | Bus FWD BRR | 6 balls | GDS61105 | Drive Shaft | | 38 | | 63 | 102.5 | 645 | |
| | 2006.01-2009.11 | 5MT | F | L | Bus FWD BRR | 8 balls | GDS81508 | Drive Shaft | | 38 | | 63 | 102.5 | 645 | |
| | 2006.01-2009.11 | 5MT | F | R | Bus FWD BRR | 8 balls | GDS81533 | Drive Shaft | | 38 | 26 | 63 | 102.5 | 858 | |
| | 2006.01-2009.11 | 5MT | F | R | Bus FWD BRR | 6 balls | GDS83246 | Drive Shaft | | 38 | 26 | 63 | 102.5 | 858 | |
| | 2006.01-2009.11 | 5MT | F | L/R | Bus FWD BRR | 6 balls | GCO61009 | Outer Joint | | 38 | 27 | 63 | 102 | 66 | M |
| | 2006.01-2009.11 | 5MT | F | L/R | Bus FWD BRR | 8 balls | GCO81348 | Outer Joint | | 38 | 28 | 63 | 102.5 | 64.5 | I |
| | 2006.01-2009.11 | 5MT | F | L | Bus FWD BRR | | GCI61010 | Inner Joint | | | 28 | | | 32 | |
| | 2006.01-2009.11 | 5MT | F | L | Bus FWD BRR | | GCI61069 | Inner Joint | | | 28 | | | 32 | |
| | 2006.01-2009.11 | 5MT | F | R | Bus FWD BRR | | GCI61020 | Inner Joint | | 26 | 28 | | 205.5 | 100.2 | |
| | 2006.01-2009.11 | | F | R | Bus FWD BRR | | GDS61190 | Stub Axle,differential | | 26 | 37 | | | 136.5 | |
| 1.9 (63 kw) | 2003.04-2009.11 | 5MT | F | L | Bus FWD AXC | 6 balls | GDS61105 | Drive Shaft | | 38 | | 63 | 102.5 | 645 | |
| | 2003.04-2009.11 | 5MT | F | L | Bus FWD AXC | 8 balls | GDS81508 | Drive Shaft | | 38 | | 63 | 102.5 | 645 | |
| | 2003.04-2009.11 | 5MT | F | R | Bus FWD AXC | 8 balls | GDS81533 | Drive Shaft | | 38 | 26 | 63 | 102.5 | 858 | |
| | 2003.04-2009.11 | 5MT | F | R | Bus FWD AXC | 6 balls | GDS83246 | Drive Shaft | | 38 | 26 | 63 | 102.5 | 858 | |
| | 2003.04-2009.11 | 5MT | F | L/R | Bus FWD AXC | 6 balls | GCO61009 | Outer Joint | | 38 | 27 | 63 | 102 | 66 | M |
| | 2003.04-2009.11 | 5MT | F | L/R | Bus FWD AXC | 8 balls | GCO81348 | Outer Joint | | 38 | 28 | 63 | 102.5 | 64.5 | I |
| | 2003.04-2009.11 | 5MT | F | L | Bus FWD AXC | | GCI61010 | Inner Joint | | | 28 | | | 32 | |
| | 2003.04-2009.11 | 5MT | F | L | Bus FWD AXC | | GCI61069 | Inner Joint | | | 28 | | | 32 | |
| | 2003.04-2009.11 | 5MT | F | R | Bus FWD AXC | | GCI61020 | Inner Joint | | 26 | 28 | | 205.5 | 100.2 | |
| | 2003.04-2009.11 | | F | R | Bus FWD AXC | | GDS61190 | Stub Axle,differential | | 26 | 37 | | | 136.5 | |
| 1.9 (75 kw) | 2006.01-2009.11 | 5MT | F | L | Bus FWD BRS | 6 balls | GDS61105 | Drive Shaft | | 38 | | 63 | 102.5 | 645 | |
| | 2006.01-2009.11 | 5MT | F | L | Bus FWD BRS | 8 balls | GDS81508 | Drive Shaft | | 38 | | 63 | 102.5 | 645 | |
| | 2006.01-2009.11 | 5MT | F | R | Bus FWD BRS | 8 balls | GDS81533 | Drive Shaft | | 38 | 26 | 63 | 102.5 | 858 | |
| | 2006.01-2009.11 | 5MT | F | R | Bus FWD BRS | 6 balls | GDS83246 | Drive Shaft | | 38 | 26 | 63 | 102.5 | 858 | |
| | 2006.01-2009.11 | 5MT | F | L/R | Bus FWD BRS | 6 balls | GCO61009 | Outer Joint | | 38 | 27 | 63 | 102 | 66 | M |
| | 2006.01-2009.11 | 5MT | F | L/R | Bus FWD BRS | 8 balls | GCO81348 | Outer Joint | | 38 | 28 | 63 | 102.5 | 64.5 | I |
| | 2006.01-2009.11 | 5MT | F | L | Bus FWD BRS | | GCI61010 | Inner Joint | | | 28 | | | 32 | |
| | 2006.01-2009.11 | 5MT | F | L | Bus FWD BRS | | GCI61069 | Inner Joint | | | 28 | | | 32 | |
| | 2006.01-2009.11 | 5MT | F | R | Bus FWD BRS | | GCI61020 | Inner Joint | | 26 | 28 | | 205.5 | 100.2 | |
| | 2006.01-2009.11 | | F | R | Bus FWD BRS | | GDS61190 | Stub Axle,differential | | 26 | 37 | | | 136.5 | |
| 1.9 (77 kw) | 2003.04-2009.11 | 5MT | F | L | Bus FWD AXB | 6 balls | GDS61105 | Drive Shaft | | 38 | | 63 | 102.5 | 645 | |
| | 2003.04-2009.11 | 5MT | F | L | Bus FWD AXB | 8 balls | GDS81508 | Drive Shaft | | 38 | | 63 | 102.5 | 645 | |
| | 2003.04-2009.11 | 5MT | F | R | Bus FWD AXB | 8 balls | GDS81533 | Drive Shaft | | 38 | 26 | 63 | 102.5 | 858 | |
| | 2003.04-2009.11 | 5MT | F | R | Bus FWD AXB | 6 balls | GDS83246 | Drive Shaft | | 38 | 26 | 63 | 102.5 | 858 | |
| | 2003.04-2009.11 | 5MT | F | L/R | Bus FWD AXB | 6 balls | GCO61009 | Outer Joint | | 38 | 27 | 63 | 102 | 66 | M |
| | 2003.04-2009.11 | 5MT | F | L/R | Bus FWD AXB | 8 balls | GCO81348 | Outer Joint | | 38 | 28 | 63 | 102.5 | 64.5 | I |
| | 2003.04-2009.11 | 5MT | F | L | Bus FWD AXB | | GCI61010 | Inner Joint | | | 28 | | | 32 | |
| | 2003.04-2009.11 | 5MT | F | L | Bus FWD AXB | | GCI61069 | Inner Joint | | | 28 | | | 32 | |
| | 2003.04-2009.11 | 5MT | F | R | Bus FWD AXB | | GCI61020 | Inner Joint | | 26 | 28 | | 205.5 | 100.2 | |
| | 2003.04-2009.11 | | F | R | Bus FWD AXB | | GDS61190 | Stub Axle,differential | | 26 | 37 | | | 136.5 | |
| 2.0 (62 kw) | 2009.09-2015.08 | 5MT | F | L | Bus FWD CAAA | 6 balls | GDS61105 | Drive Shaft | | 38 | | 63 | 102.5 | 645 | |
| | 2009.09-2015.08 | 5MT | F | L | Bus FWD CAAA | 8 balls | GDS81508 | Drive Shaft | | 38 | | 63 | 102.5 | 645 | |
| | 2009.09-2015.08 | 5MT | F | R | Bus FWD CAAA | Date from:2015.05 | GDS82724 | Drive Shaft | | 38 | 26 | 63 | 102.5 | 867 | |

| | YEAR | TRANSM. | F/R | L/R | BODY STYLE & DRIVE TYPE & ENGINE | REMARKS | G-AP Ref. | PRODUCT | ABS | Technical Specifications | | | | | |
|---|---|---|---|---|---|---|---|---|---|---|---|---|---|---|---|
| | | | | | | | | | | A | B | C | H | L | P |
| **VW Multivan** | | | | | | | | | | | | | | | |
| 2.0 (62 kw) | 2009.09-2015.08 | 5MT | F | R | Bus FWD CAAA | Date to:2015.04,Chassis no. from:7H_CG000001?H_CH000001?H_CX000001 | GDS83261 | Drive Shaft | | 38 | 26 | 63 | 102 | 857 | |
| | 2009.09-2015.08 | 5MT | F | L/R | Bus FWD CAAA | 6 balls | GCO61009 | Outer Joint | | 38 | 27 | 63 | 102 | 66 | M |
| | 2009.09-2015.08 | 5MT | F | L/R | Bus FWD CAAA | 8 balls | GCO81348 | Outer Joint | | 38 | 28 | 63 | 102.5 | 64.5 | I |
| | 2009.09-2015.08 | 5MT | F | L | Bus FWD CAAA | | GCI61069 | Inner Joint | | | 28 | | | 32 | |
| | 2009.09-2015.08 | 5MT | F | R | Bus FWD CAAA | Date to:2015.04 | GCI61053 | Inner Joint | | 26 | 28 | | 261 | 63 | |
| | 2009.09-2015.08 | 5MT | F | R | Bus FWD CAAA | Date from:2015.05 | GCI81969 | Inner Joint | | 26 | 28 | | 261 | 63 | |
| | 2009.09-2015.08 | 5MT | F | R | Bus FWD CAAA | | GDS61216 | Stub Axle,differential | | 26 | 37 | | | 145 | |
| | 2009.09-2015.08 | 6MT | F | L | Bus FWD CAAA | | GDS61213 | Stub Axle,differential | | 42 | 42 | | | 135.5 | |
| | 2015.04-2019.07 | 5MT | F | L | Bus FWD CAAA, CXGA | | GDS56700 | Drive Shaft | | 38 | | 63 | 102.5 | 657 | |
| | 2015.04-2019.07 | 5MT | F | R | Bus FWD CAAA, CXGA | | GDS56734 | Drive Shaft | | 38 | 26 | 63 | 102.5 | 854 | |
| | 2015.04-2019.07 | 5MT | F | L | Bus FWD CAAA, CXGA | | GCI61069 | Inner Joint | | | 28 | | | 32 | |
| | 2015.04-2019.07 | MT | F | L/R | Bus FWD CAAA, CXGA | | GCO81348 | Outer Joint | | 38 | 28 | 63 | 102.5 | 64.5 | I |
| 2.0 (75 kw) | 2009.09-2015.08 | 5MT | F | L | Bus FWD CAAB | 6 balls | GDS61105 | Drive Shaft | | 38 | | 63 | 102.5 | 645 | |
| | 2009.09-2015.08 | 5MT | F | L | Bus FWD CAAB | 8 balls | GDS81508 | Drive Shaft | | 38 | | 63 | 102.5 | 645 | |
| | 2009.09-2015.08 | 5MT | F | R | Bus FWD CAAB | Date from:2015.05 | GDS82724 | Drive Shaft | | 38 | 26 | 63 | 102.5 | 867 | |
| | 2009.09-2015.08 | 5MT | F | R | Bus FWD CAAB | Date to:2015.04,Chassis no. from:7H_CG000001?H_CH000001?H_CX000001 | GDS83261 | Drive Shaft | | 38 | 26 | 63 | 102 | 857 | |
| | 2009.09-2015.08 | 5MT | F | L/R | Bus FWD CAAB | 6 balls | GCO61009 | Outer Joint | | 38 | 27 | 63 | 102 | 66 | M |
| | 2009.09-2015.08 | 5MT | F | L/R | Bus FWD CAAB | 8 balls | GCO81348 | Outer Joint | | 38 | 28 | 63 | 102.5 | 64.5 | I |
| | 2009.09-2015.08 | 5MT | F | L | Bus FWD CAAB | | GCI61069 | Inner Joint | | | 28 | | | 32 | |
| | 2009.09-2015.08 | 5MT | F | R | Bus FWD CAAB | Date to:2015.04 | GCI61053 | Inner Joint | | 26 | 28 | | 261 | 63 | |
| | 2009.09-2015.08 | 5MT | F | R | Bus FWD CAAB | Date from:2015.05 | GCI81969 | Inner Joint | | 26 | 28 | | 261 | 63 | |
| | 2009.09-2015.08 | 5MT | F | R | Bus FWD CAAB | | GDS61216 | Stub Axle,differential | | 26 | 37 | | | 145 | |
| | 2009.09-2015.08 | 6MT | F | L | Bus FWD CAAB | | GDS61213 | Stub Axle,differential | | 42 | 42 | | | 135.5 | |
| | 2015.04-2019.12 | 5MT | F | L | Bus FWD CXGB, CAAB | For Engine code:CXGB | GDS56700 | Drive Shaft | | 38 | | 63 | 102.5 | 657 | |
| | 2015.04-2019.12 | 5MT | F | L | Bus FWD CXGB, CAAB | Date to:2017.03,For Engine code:CAAB | GDS61105 | Drive Shaft | | 38 | | 63 | 102.5 | 645 | |
| | 2015.04-2019.12 | 5MT | F | L | Bus FWD CXGB, CAAB | Date to:2017.03,For Engine code:CAAB;8 balls | GDS81508 | Drive Shaft | | 38 | | 63 | 102.5 | 645 | |
| | 2015.04-2019.12 | 5MT | F | R | Bus FWD CXGB, CAAB | For Engine code:CXGB | GDS56734 | Drive Shaft | | 38 | 26 | 63 | 102.5 | 854 | |
| | 2015.04-2019.12 | 5MT | F | R | Bus FWD CXGB, CAAB | For Engine code:CAAB | GDS82724 | Drive Shaft | | 38 | 26 | 63 | 102.5 | 867 | |
| | 2015.04-2019.12 | 5MT | F | L | Bus FWD CXGB, CAAB | | GCI61069 | Inner Joint | | | 28 | | | 32 | |
| | 2015.04-2019.12 | 5MT | F | R | Bus FWD CXGB, CAAB | For Engine code:CAAB | GCI81969 | Inner Joint | | 26 | 28 | | 261 | 63 | |
| | 2015.04-2019.12 | 5MT | F | R | Bus FWD CXGB, CAAB | | GDS61216 | Stub Axle,differential | | 26 | 37 | | | 145 | |
| | 2015.04-2019.12 | MT | F | L/R | Bus FWD CXGB, CAAB | | GCO81348 | Outer Joint | | 38 | 28 | 63 | 102.5 | 64.5 | I |
| 2.0 (81 kw) | 2019.07-2024.08 | 5MT | F | L | Bus FWD CXHC;DNAB | | GDS56700 | Drive Shaft | | 38 | | 63 | 102.5 | 657 | |
| | 2019.07-2024.08 | 5MT | F | R | Bus FWD CXHC;DNAB | Date to:2020.09 | GDS56734 | Drive Shaft | | 38 | 26 | 63 | 102.5 | 854 | |
| | 2019.07-2024.08 | 5MT | F | L/R | Bus FWD CXHC;DNAB | | GCO81348 | Outer Joint | | 38 | 28 | 63 | 102.5 | 64.5 | I |
| | 2019.07-2024.08 | 5MT | F | L | Bus FWD CXHC;DNAB | Date from:2020.12 | GCI82456 | Inner Joint | | | 28 | | | 32 | |
| | 2019.07-2024.08 | 5MT | F | R | Bus FWD CXHC;DNAB | Date to:2020.09 | GCI83461 | Inner Joint | | 26 | 28 | 44 | 250 | 63 | |
| 2.0 (84 kw) | 2011.05-2015.08 | 5MT | F | L | Bus FWD CAAD | 6 balls | GDS61105 | Drive Shaft | | 38 | | 63 | 102.5 | 645 | |
| | 2011.05-2015.08 | 5MT | F | L | Bus FWD CAAD | 8 balls | GDS81508 | Drive Shaft | | 38 | | 63 | 102.5 | 645 | |
| | 2011.05-2015.08 | 5MT | F | R | Bus FWD CAAD | Date from:2015.05 | GDS82724 | Drive Shaft | | 38 | 26 | 63 | 102.5 | 867 | |
| | 2011.05-2015.08 | 5MT | F | R | Bus FWD CAAD | Date to:2015.04 | GDS83261 | Drive Shaft | | 38 | 26 | 63 | 102 | 857 | |
| | 2011.05-2015.08 | 5MT | F | L/R | Bus FWD CAAD | 6 balls | GCO61009 | Outer Joint | | 38 | 27 | 63 | 102 | 66 | M |
| | 2011.05-2015.08 | 5MT | F | L/R | Bus FWD CAAD | 8 balls | GCO81348 | Outer Joint | | 38 | 28 | 63 | 102.5 | 64.5 | I |
| | 2011.05-2015.08 | 5MT | F | L | Bus FWD CAAD | | GCI61069 | Inner Joint | | | 28 | | | 32 | |
| | 2011.05-2015.08 | 5MT | F | R | Bus FWD CAAD | Date to:2015.04 | GCI61053 | Inner Joint | | 26 | 28 | | 261 | 63 | |
| | 2011.05-2015.08 | 5MT | F | R | Bus FWD CAAD | Date from:2015.05 | GCI81969 | Inner Joint | | 26 | 28 | | 261 | 63 | |
| | 2011.05-2015.08 | 5MT | F | R | Bus FWD CAAD | | GDS61216 | Stub Axle,differential | | 26 | 37 | | | 145 | |
| | 2011.05-2015.08 | 6MT | F | L | Bus FWD CAAD | | GDS61213 | Stub Axle,differential | | 42 | 42 | | | 135.5 | |
| | 2016.05-2019.08 | 5MT | F | L | Bus FWD CXHB | | GDS56700 | Drive Shaft | | 38 | | 63 | 102.5 | 657 | |
| | 2016.05-2019.08 | 5MT | F | R | Bus FWD CXHB | | GDS56734 | Drive Shaft | | 38 | 26 | 63 | 102.5 | 854 | |
| | 2016.05-2019.08 | 5MT | F | L | Bus FWD CXHB | | GCI61069 | Inner Joint | | | 28 | | | 32 | |
| | 2016.05-2019.08 | MT | F | L/R | Bus FWD CXHB | | GCO81348 | Outer Joint | | 38 | 28 | 63 | 102.5 | 64.5 | I |
| 2.0 (85 kw) | 2003.11-2015.08 | 5MT | F | L | Bus FWD AXA | 6 balls | GDS61105 | Drive Shaft | | 38 | | 63 | 102.5 | 645 | |
| | 2003.11-2015.08 | 5MT | F | L | Bus FWD AXA | 8 balls | GDS81508 | Drive Shaft | | 38 | | 63 | 102.5 | 645 | |
| | 2003.11-2015.08 | 5MT | F | R | Bus FWD AXA | 8 balls | GDS81533 | Drive Shaft | | 38 | 26 | 63 | 102.5 | 858 | |
| | 2003.11-2015.08 | 5MT | F | R | Bus FWD AXA | 6 balls | GDS83246 | Drive Shaft | | 38 | 26 | 63 | 102.5 | 858 | |
| | 2003.11-2015.08 | 5MT | F | L/R | Bus FWD AXA | 6 balls | GCO61009 | Outer Joint | | 38 | 27 | 63 | 102 | 66 | M |
| | 2003.11-2015.08 | 5MT | F | L/R | Bus FWD AXA | 8 balls | GCO81348 | Outer Joint | | 38 | 28 | 63 | 102.5 | 64.5 | I |
| | 2003.11-2015.08 | 5MT | F | L | Bus FWD AXA | | GCI61010 | Inner Joint | | | 28 | | | 32 | |
| | 2003.11-2015.08 | 5MT | F | L | Bus FWD AXA | | GCI61069 | Inner Joint | | | 28 | | | 32 | |
| | 2003.11-2015.08 | 5MT | F | R | Bus FWD AXA | | GCI61020 | Inner Joint | | 26 | 28 | | 205.5 | 100.2 | |
| | 2003.11-2015.08 | 5MT | F | R | Bus FWD AXA | | GDS61216 | Stub Axle,differential | | 26 | 37 | | | 145 | |
| | 2003.11-2015.08 | 6MT | F | L | Bus FWD AXA | | GDS61213 | Stub Axle,differential | | 42 | 42 | | | 135.5 | |
| | 2003.11-2015.08 | 6MT | F | R | Bus FWD AXA | | GDS61215 | Stub Axle,differential | | 26 | 42 | | | 143.5 | |
| 2.0 (100 kw) | 2010.05-2015.08 | 6MT | F | L | Bus 4WD CAAE;CCHB | Date to:2012.06,For PR code:FA0/FA5/FX0,Chassis no. to:7H8000000?H8H000000?H8W000000?J?or operating pressure valve | GDS61084 | Drive Shaft | | 38 | 26 | 63 | 102.5 | 613 | |

| | YEAR | TRANSM. | F/R | L/R | BODY STYLE & DRIVE TYPE & ENGINE | REMARKS | G-AP Ref. | PRODUCT | ABS | Technical Specifications | | | | | |
|---|---|---|---|---|---|---|---|---|---|---|---|---|---|---|---|
| | | | | | | | | | | A | B | C | H | L | P |
| **VW Multivan** | | | | | | | | | | | | | | | |
| 2.0 (100 kw) | 2010.05-2015.08 | 6MT | F | L | Bus 4WD CAAE;CCHB | Date From:2013.07 | GDS83360 | Drive Shaft | | 38 | 42 | 63 | 102.5 | 617 | |
| | 2010.05-2015.08 | 6MT | F | R | Bus 4WD CAAE;CCHB | Date to:2013.06 | GDS61084 | Drive Shaft | | 38 | 26 | 63 | 102.5 | 613 | |
| | 2010.05-2015.08 | 6MT | F | R | Bus 4WD CAAE;CCHB | Date from:2013.07 | GDS81666 | Drive Shaft | | 38 | 26 | 63 | 102.5 | 616 | |
| | 2010.05-2015.08 | 6MT | F | L/R | Bus 4WD CAAE;CCHB | Date to:2013.06 | GCO61011 | Outer Joint | | 38 | 29 | 63 | 102.5 | 70 | M |
| | 2010.05-2015.08 | 6MT | F | L/R | Bus 4WD CAAE;CCHB | Date From:2013.07;6 balls | GCO61060 | Outer Joint | | 38 | 30 | 63 | 102.5 | 68 | I |
| | 2010.05-2015.08 | 6MT | F | L/R | Bus 4WD CAAE;CCHB | Date From:2013.07;8 balls | GCO81467 | Outer Joint | | 38 | 30 | 63 | 102.5 | 67.5 | I |
| | 2010.05-2015.08 | 6MT | F | L | Bus 4WD CAAE;CCHB | Date to:2012.05,For PR code:F4D/F3K/F0Y,For special-purpose vehicles | GCI61029 | Inner Joint | | 26 | 30 | 46.8 | | 137 | |
| | 2010.05-2015.08 | 6MT | F | L | Bus 4WD CAAE;CCHB | Date From:2013.07 | GCI61104 | Inner Joint | | 42 | 30 | 35.6 | | 136 | |
| | 2010.05-2015.08 | 6MT | F | R | Bus 4WD CAAE;CCHB | | GCI61029 | Inner Joint | | 26 | 30 | 46.8 | | 137 | |
| | 2010.05-2015.08 | 6MT | F | R | Bus 4WD CAAE;CCHB | | GDS61216 | Stub Axle,differential | | 26 | 37 | | | 145 | |
| | 2010.05-2015.08 | 6MT | R | L | Bus 4WD CAAE;CCHB | | GDS61257 | Drive Shaft | | 38 | | 59 | 100 | 683 | |
| | 2010.05-2015.08 | 6MT | R | R | Bus 4WD CAAE;CCHB | | GDS61258 | Drive Shaft | | 38 | | 59 | 100 | 743 | |
| | 2010.05-2015.08 | 6MT | R | L/R | Bus 4WD CAAE;CCHB | | GCI82474 | Outer Joint | | 38 | 28 | 59 | 100 | 59 | |
| | 2010.05-2015.08 | 6MT | R | L/R | Bus 4WD CAAE;CCHB | | GCI61075 | Inner Joint | | | 28 | | | 26 | |
| | 2010.05-2015.08 | 6MT | F | L | Bus FWD CAAE;CCHB | Date to:2013.06 | GDS61084 | Drive Shaft | | 38 | 26 | 63 | 102.5 | 613 | |
| | 2010.05-2015.08 | 6MT | F | L | Bus FWD CAAE;CCHB | Date From:2013.07 | GDS83360 | Drive Shaft | | 38 | 42 | 63 | 102.5 | 617 | |
| | 2010.05-2015.08 | 6MT | F | R | Bus FWD CAAE;CCHB | Date From:2013.07,Date To:2015.04 | GDS82361 | Drive Shaft | | 38 | 26 | 63 | 102.5 | 879 | |
| | 2010.05-2015.08 | 6MT | F | R | Bus FWD CAAE;CCHB | | GDS83296 | Drive Shaft | | 38 | 26 | 63 | 102.5 | 880 | |
| | 2010.05-2015.08 | 6MT | F | R | Bus FWD CAAE;CCHB | Date From:2015.05 | GDS83361 | Drive Shaft | | 38 | 26 | 63 | 102.5 | 883 | |
| | 2010.05-2015.08 | 6MT | F | L | Bus FWD CAAE;CCHB | Date To:2013.06 | GCI61029 | Inner Joint | | 26 | 30 | 46.8 | | 137 | |
| | 2010.05-2015.08 | 6MT | F | L | Bus FWD CAAE;CCHB | Date From:2013.07 | GCI61104 | Inner Joint | | 42 | 30 | 35.6 | | 136 | |
| | 2010.05-2015.08 | 6MT | F | R | Bus FWD CAAE;CCHB | Date to:2015.04 | GCI61080 | Inner Joint | | 26 | 30 | | 281.5 | 106 | |
| | 2010.05-2015.08 | 6MT | F | R | Bus FWD CAAE;CCHB | Date from:2015.05 | GCI81381 | Inner Joint | | 26 | 30 | | 281.5 | 105 | |
| | 2010.05-2015.08 | 6MT/7DCT | F | L/R | Bus FWD CAAE;CCHB | Date to:2013.06 | GCO61011 | Outer Joint | | 38 | 29 | 63 | 102.5 | 70 | M |
| | 2010.05-2015.08 | 6MT/7DCT | F | L/R | Bus FWD CAAE;CCHB | Date From:2013.07;6 balls | GCO61060 | Outer Joint | | 38 | 30 | 63 | 102.5 | 68 | I |
| | 2010.05-2015.08 | 6MT/7DCT | F | L/R | Bus FWD CAAE;CCHB | Date From:2013.07;8 balls | GCO81467 | Outer Joint | | 38 | 30 | 63 | 102.5 | 67.5 | I |
| | 2010.05-2015.08 | 7DCT | F | L | Bus FWD CAAE;CCHB | | GDS83293 | Drive Shaft | | 38 | 37 | 63 | 102.5 | 645 | |
| | 2010.05-2015.08 | 7DCT | F | R | Bus FWD CAAE;CCHB | Chassis no. from:7HCG000001/7HCH000001/7HCX000001 | GDS82392 | Drive Shaft | | 38 | 37 | 63 | 102.5 | 1025 | |
| | 2010.05-2015.08 | 7DCT | F | R | Bus FWD CAAE;CCHB | Chassis no. to:7HBG500000/7HBH500000/7HBX500000 | GDS83353 | Drive Shaft | | 38 | 37 | 63 | 102.5 | 1027 | |
| | 2010.05-2015.08 | 7DCT | F | R | Bus FWD CAAE;CCHB | Date From:2013.07,For PR code:F4D/F3K/F0Y,Chassis no. from:7HBG000001/7HBH000001/7HBX000001,Chassis no. to:7HBG499999/7HBH499999/7HBX499999 | GCI81754 | Inner Joint | | 37 | 27 | 34.5 | 430.5 | 96 | |
| | 2010.05-2015.08 | 7DCT | F | R | Bus FWD CAAE;CCHB | Date From:2013.07,For PR code:F4D/F3K/F0Y,Chassis no. from:7HBG500001/7HBH500001/7HBX500001 | GCI83037 | Inner Joint | | 37 | 27 | 34.5 | 430.5 | 96 | |
| | 2010.05-2015.08 | 7DCT | F | R | Bus FWD CAAE;CCHB | | GDS61216 | Stub Axle,differential | | 26 | 37 | | | 145 | |
| 2.0 (103 kw) | 2009.09-2015.08 | 6MT | F | L | Bus 4WD CAAC;CCHA | Date:2012.05,For PR code:F4D/F3K/F0Y,Chassis no. to:7HBG000001/7HBH000001/7HBX000001,For special-purpose vehicles | GDS61084 | Drive Shaft | | 38 | 26 | 63 | 102.5 | 613 | |
| | 2009.09-2015.08 | 6MT | F | L | Bus 4WD CAAC;CCHA | Date From:2013.07 | GDS83360 | Drive Shaft | | 38 | 42 | 63 | 102.5 | 617 | |
| | 2009.09-2015.08 | 6MT | F | R | Bus 4WD CAAC;CCHA | Date to:2013.06 | GDS61084 | Drive Shaft | | 38 | 26 | 63 | 102.5 | 613 | |
| | 2009.09-2015.08 | 6MT | F | R | Bus 4WD CAAC;CCHA | Date from:2013.07 | GDS81666 | Drive Shaft | | 38 | 26 | 63 | 102.5 | 616 | |
| | 2009.09-2015.08 | 6MT | F | L/R | Bus 4WD CAAC;CCHA | Date to:2013.06 | GCO61011 | Outer Joint | | 38 | 29 | 63 | 102.5 | 70 | M |
| | 2009.09-2015.08 | 6MT | F | L/R | Bus 4WD CAAC;CCHA | Date From:2013.07;6 balls | GCO61060 | Outer Joint | | 38 | 30 | 63 | 102.5 | 68 | I |
| | 2009.09-2015.08 | 6MT | F | L/R | Bus 4WD CAAC;CCHA | Date From:2013.07;8 balls | GCO81467 | Outer Joint | | 38 | 30 | 63 | 102.5 | 67.5 | I |
| | 2009.09-2015.08 | 6MT | F | L | Bus 4WD CAAC;CCHA | Date to:2012.05,For PR code:F4D/F3K/F0Y,For special-purpose vehicles | GCI61029 | Inner Joint | | 26 | 30 | 46.8 | | 137 | |
| | 2009.09-2015.08 | 6MT | F | L | Bus 4WD CAAC;CCHA | Date From:2013.07 | GCI61104 | Inner Joint | | 42 | 30 | 35.6 | | 136 | |
| | 2009.09-2015.08 | 6MT | F | R | Bus 4WD CAAC;CCHA | Date to:2013.06 | GCI61029 | Inner Joint | | 26 | 30 | 46.8 | | 137 | |
| | 2009.09-2015.08 | 6MT | F | L | Bus 4WD CAAC;CCHA | | GDS61213 | Stub Axle,differential | | 42 | 42 | | | 135.5 | |
| | 2009.09-2015.08 | 6MT | F | R | Bus 4WD CAAC;CCHA | | GDS61216 | Stub Axle,differential | | 26 | 37 | | | 145 | |
| | 2009.09-2015.08 | 6MT | R | L | Bus 4WD CAAC;CCHA | | GDS61257 | Drive Shaft | | 38 | | 59 | 100 | 683 | |
| | 2009.09-2015.08 | 6MT | R | R | Bus 4WD CAAC;CCHA | | GDS61258 | Drive Shaft | | 38 | | 59 | 100 | 743 | |
| | 2009.09-2015.08 | 6MT | R | L/R | Bus 4WD CAAC;CCHA | | GCI82474 | Outer Joint | | 38 | 28 | 59 | 100 | 59 | |
| | 2009.09-2015.08 | 6MT | R | L/R | Bus 4WD CAAC;CCHA | | GCI61075 | Inner Joint | | | 28 | | | 26 | |
| | 2009.09-2015.08 | 5MT | F | R | Bus FWD CAAC;CCHA | | GDS61190 | Stub Axle,differential | | 26 | 37 | | | 136.5 | |
| | 2009.09-2015.08 | 6MT | F | L | Bus FWD CAAC;CCHA | Date to:2013.05 | GDS61084 | Drive Shaft | | 38 | 26 | 63 | 102.5 | 613 | |
| | 2009.09-2015.08 | 6MT | F | L | Bus FWD CAAC;CCHA | Date from:2015.05 | GDS83360 | Drive Shaft | | 38 | 42 | 63 | 102.5 | 617 | |
| | 2009.09-2015.08 | 6MT | F | R | Bus FWD CAAC;CCHA | Date from:2013.06,Date to:2015.04 | GDS82361 | Drive Shaft | | 38 | 26 | 63 | 102.5 | 879 | |
| | 2009.09-2015.08 | 6MT | F | R | Bus FWD CAAC;CCHA | Date to:2013.05 | GDS83296 | Drive Shaft | | 38 | 26 | 63 | 102.5 | 880 | |
| | 2009.09-2015.08 | 6MT | F | R | Bus FWD CAAC;CCHA | Date from:2015.05 | GDS83361 | Drive Shaft | | 38 | 26 | 63 | 102.5 | 883 | |
| | 2009.09-2015.08 | 6MT | F | L | Bus FWD CAAC;CCHA | Date to:2013.05 | GCI61029 | Inner Joint | | 26 | 30 | 46.8 | | 137 | |
| | 2009.09-2015.08 | 6MT | F | L | Bus FWD CAAC;CCHA | Date from:2015.05 | GCI61104 | Inner Joint | | 42 | 30 | 35.6 | | 136 | |
| | 2009.09-2015.08 | 6MT | F | R | Bus FWD CAAC;CCHA | Date to:2015.04 | GCI61080 | Inner Joint | | 26 | 30 | | 281.5 | 106 | |
| | 2009.09-2015.08 | 6MT | F | R | Bus FWD CAAC;CCHA | Date from:2015.05 | GCI81381 | Inner Joint | | 26 | 30 | | 281.5 | 105 | |
| | 2009.09-2015.08 | 6MT/7DCT | F | L/R | Bus FWD CAAC;CCHA | 6 balls | GCO61011 | Outer Joint | | 38 | 29 | 63 | 102.5 | 70 | M |
| | 2009.09-2015.08 | 6MT/7DCT | F | L/R | Bus FWD CAAC;CCHA | 6 balls | GCO61060 | Outer Joint | | 38 | 30 | 63 | 102.5 | 68 | I |
| | 2009.09-2015.08 | 6MT/7DCT | F | L/R | Bus FWD CAAC;CCHA | 8 balls | GCO81467 | Outer Joint | | 38 | 30 | 63 | 102.5 | 67.5 | I |
| | 2009.09-2015.08 | 6MT/7DCT | F | L | Bus FWD CAAC;CCHA | for OE number:0A5409343B | GDS61213 | Stub Axle,differential | | 42 | 42 | | | 135.5 | |
| | 2009.09-2015.08 | 6MT/7DCT | F | R | Bus FWD CAAC;CCHA | for OE number:0A5409343A | GDS61215 | Stub Axle,differential | | 26 | 42 | | | 143.5 | |
| | 2009.09-2015.08 | 6MT/7DCT | F | L/R | Bus FWD CAAC;CCHA | for OE number:0A5409343 | GDS61191 | Stub Axle,differential | | 26 | 42 | | | 135.5 | |
| | 2009.09-2015.08 | 7DCT | F | L | Bus FWD CAAC;CCHA | 6 balls,TJ | GDS83293 | Drive Shaft | | 38 | 37 | 63 | 102.5 | 645 | |

| | YEAR | TRANSM. | F/R | L/R | BODY STYLE & DRIVE TYPE & ENGINE | REMARKS | G-AP Ref. | PRODUCT | ABS | Technical Specifications A | B | C | H | L | P |
|---|---|---|---|---|---|---|---|---|---|---|---|---|---|---|---|
| **VW Multivan** | | | | | | | | | | | | | | | |
| 2.0 (103 kw) | 2009.09-2015.08 | 7DCT | F | R | Bus FWD CAAC;CCHA | 8 balls,AAR | GDS82392 | Drive Shaft | | 38 | 37 | 63 | 102.5 | 1025 | |
| | 2009.09-2015.08 | 7DCT | F | R | Bus FWD CAAC;CCHA | 6 balls,AAR | GDS83353 | Drive Shaft | | 38 | 37 | 63 | 102.5 | 1027 | |
| | 2009.09-2015.08 | 7DCT | F | R | Bus FWD CAAC;CCHA | Chassis no. From:7HCG000001/7HCH000001/7HCX000001 | GCI81754 | Inner Joint | | 37 | 27 | 34.5 | 430.5 | 96 | |
| | 2009.09-2015.08 | 7DCT | F | R | Bus FWD CAAC;CCHA | Chassis no. to:7HBG500000/7HBH500000/7HBX500000 | GCI83037 | Inner Joint | | 37 | 27 | 34.5 | 430.5 | 96 | |
| | 2009.09-2015.08 | 7DCT | F | R | Bus FWD CAAC;CCHA | | GDS61216 | Stub Axle,differential | | 26 | 37 | | | 145 | |
| | 2015.04-2019.12 | 5MT | F | R | Bus FWD CAAC | | GDS61190 | Stub Axle,differential | | 26 | 37 | | | 136.5 | |
| | 2015.04-2019.12 | 6MT | F | L | Bus FWD CAAC | date to:2017.01 | GDS83360 | Drive Shaft | | 38 | 42 | 63 | 102.5 | 617 | |
| | 2015.04-2019.12 | 6MT | F | R | Bus FWD CAAC | date to:2017.01 | GDS83361 | Drive Shaft | | 38 | 26 | 63 | 102.5 | 883 | |
| | 2015.04-2019.12 | 6MT | F | L/R | Bus FWD CAAC | Date from:2013.07 | GCO81467 | Outer Joint | | 38 | 30 | 63 | 102.5 | 67.5 | I |
| | 2015.04-2019.12 | 6MT | F | L | Bus FWD CAAC | | GCI61029 | Inner Joint | | 26 | 30 | 46.8 | | 137 | |
| | 2015.04-2019.12 | 6MT | F | R | Bus FWD CAAC | | GCI81381 | Inner Joint | | 26 | 30 | | 281.5 | 105 | |
| | 2015.04-2019.12 | 7AT/6MT | F | L/R | Bus FWD CAAC | | GDS61216 | Stub Axle,differential | | 26 | 37 | | | 145 | |
| | 2015.04-2019.12 | 7DCT | F | L | Bus FWD CAAC | | GDS83293 | Drive Shaft | | 38 | 37 | 63 | 102.5 | 645 | |
| | 2015.04-2019.12 | 7DCT | F | R | Bus FWD CAAC | | GDS82392 | Drive Shaft | | 38 | 37 | 63 | 102.5 | 1025 | |
| | 2015.04-2019.12 | 7DCT | F | R | Bus FWD CAAC | Date to:2017.01 | GCO61060 | Outer Joint | | 38 | 30 | 63 | 102.5 | 68 | I |
| | 2015.04-2019.12 | 7DCT | F | R | Bus FWD CAAC | Date to:2017.01 | GCI83037 | Inner Joint | | 37 | 27 | 34.5 | 430.5 | 96 | |
| | 2015.06-2019.12 | 6MT | F | L | Bus 4WD CAAC | date to:2017.01 | GDS83360 | Drive Shaft | | 38 | 42 | 63 | 102.5 | 617 | |
| | 2015.06-2019.12 | 6MT | F | R | Bus 4WD CAAC | Date to:2017.01 | GDS81666 | Drive Shaft | | 38 | 26 | 63 | 102.5 | 616 | |
| | 2015.06-2019.12 | 6MT | F | L | Bus 4WD CAAC | | GCI61029 | Inner Joint | | 26 | 30 | 46.8 | | 137 | |
| | 2015.06-2019.12 | 6MT | F | R | Bus 4WD CAAC | For PR code:F0X/F0Y/F4D | GCI81453 | Inner Joint | | 26 | 27 | 47 | | 128 | |
| | 2015.06-2019.12 | 6MT | F | R | Bus 4WD CAAC | | GDS61216 | Stub Axle,differential | | 26 | 37 | | | 145 | |
| | 2015.06-2019.12 | AT | F | L | Bus 4WD CAAC | | GDS83293 | Drive Shaft | | 38 | 37 | 63 | 102.5 | 645 | |
| | 2015.06-2019.12 | MT/6MT | F | L/R | Bus 4WD CAAC | Date from:2013.07 | GCO81467 | Outer Joint | | 38 | 30 | 63 | 102.5 | 67.5 | I |
| | 2015.06-2019.12 | 6MT | R | L | Bus 4WD CAAC | | GDS61257 | Drive Shaft | | 38 | | 59 | 100 | 683 | |
| | 2015.06-2019.12 | 6MT | R | R | Bus 4WD CAAC | | GDS61258 | Drive Shaft | | 38 | | 59 | 100 | 743 | |
| | 2015.06-2019.12 | | R | L | Bus 4WD CAAC | Date To:2016.04 | GCI61075 | Inner Joint | | | 28 | | | 26 | |
| 2.0 (110 kw) | 2012.07-2015.08 | 5MT | F | R | Bus FWD CJKB | | GDS61190 | Stub Axle,differential | | 26 | 37 | | | 136.5 | |
| | 2012.07-2015.08 | 6MT | F | L | Bus FWD CJKB | date from:2013.07 | GDS83360 | Drive Shaft | | 38 | 42 | 63 | 102.5 | 617 | |
| | 2012.07-2015.08 | 6MT | F | R | Bus FWD CJKB | Date From:2013.07,Date To:2015.04 | GDS82361 | Drive Shaft | | 38 | 26 | 63 | 102.5 | 879 | |
| | 2012.07-2015.08 | 6MT | F | R | Bus FWD CJKB | Date To:2013.06 | GDS83296 | Drive Shaft | | 38 | 26 | 63 | 102.5 | 880 | |
| | 2012.07-2015.08 | 6MT | F | R | Bus FWD CJKB | Date From:2015.05 | GDS83361 | Drive Shaft | | 38 | 26 | 63 | 102.5 | 883 | |
| | 2012.07-2015.08 | 6MT | F | L/R | Bus FWD CJKB | Date to:2013.06 | GCO61011 | Outer Joint | | 38 | 29 | 63 | 102.5 | 70 | M |
| | 2012.07-2015.08 | 6MT | F | L/R | Bus FWD CJKB | Date From:2013.07;6 balls | GCO61060 | Outer Joint | | 38 | 30 | 63 | 102.5 | 68 | I |
| | 2012.07-2015.08 | 6MT | F | L/R | Bus FWD CJKB | Date From:2013.07;8 balls | GCO81467 | Outer Joint | | 38 | 30 | 63 | 102.5 | 67.5 | I |
| | 2012.07-2015.08 | 6MT | F | L | Bus FWD CJKB | Date To:2013.06 | GCI61029 | Inner Joint | | 26 | 30 | 46.8 | | 137 | |
| | 2012.07-2015.08 | 6MT | F | L | Bus FWD CJKB | date from:2013.07 | GCI61104 | Inner Joint | | 42 | 30 | 35.6 | | 136 | |
| | 2012.07-2015.08 | 6MT | F | R | Bus FWD CJKB | Date to:2015.04 | GCI61080 | Inner Joint | | 26 | 30 | | 281.5 | 106 | |
| | 2012.07-2015.08 | 6MT | F | R | Bus FWD CJKB | Date from:2015.05 | GCI81381 | Inner Joint | | 26 | 30 | | 281.5 | 105 | |
| | 2012.07-2015.08 | 6MT | F | L | Bus FWD CJKB | | GDS61213 | Stub Axle,differential | | 42 | 42 | | | 135.5 | |
| | 2012.07-2015.08 | 6MT | F | R | Bus FWD CJKB | | GDS61216 | Stub Axle,differential | | 26 | 37 | | | 145 | |
| | 2015.04-2019.07 | 6MT | F | L | Bus FWD CJKB | Outer teeth of transm.side:42 | GDS83360 | Drive Shaft | | 38 | 42 | 63 | 102.5 | 617 | |
| | 2015.04-2019.07 | 6MT | F | R | Bus FWD CJKB | | GDS83361 | Drive Shaft | | 38 | 26 | 63 | 102.5 | 883 | |
| | 2015.04-2019.07 | 6MT | F | L | Bus FWD CJKB | | GCI61029 | Inner Joint | | 26 | 30 | 46.8 | | 137 | |
| | 2015.04-2019.07 | 6MT | F | R | Bus FWD CJKB | | GCI81381 | Inner Joint | | 26 | 30 | | 281.5 | 105 | |
| | 2015.04-2019.07 | 6MT | F | R | Bus FWD CJKB | | GDS61216 | Stub Axle,differential | | 26 | 37 | | | 145 | |
| | 2015.04-2019.07 | DCT | F | L/R | Bus FWD CJKB | Date from:2013.06 | GCO81467 | Outer Joint | | 38 | 30 | 63 | 102.5 | 67.5 | I |
| | 2015.04-2019.07 | MT | F | L/R | Bus FWD CJKB | Date from:2013.07 | GCO81467 | Outer Joint | | 38 | 30 | 63 | 102.5 | 67.5 | I |
| | 2015.04-2024.08 | 6MT | F | L | Bus FWD CXFA;CXHA;DNAA | For Model code:SGF/SGM/SGN | GDS83360 | Drive Shaft | | 38 | 42 | 63 | 102.5 | 617 | |
| | 2015.04-2024.08 | 6MT | F | R | Bus FWD CXFA;CXHA;DNAA | For Model code:SGF/SGM/SGN | GDS83361 | Drive Shaft | | 38 | 26 | 63 | 102.5 | 883 | |
| | 2015.04-2024.08 | 6MT | F | L | Bus FWD CXFA;CXHA;DNAA | For Model code:SGF/SGM/SGN | GCI61029 | Inner Joint | | 26 | 30 | 46.8 | | 137 | |
| | 2015.04-2024.08 | 6MT | F | L | Bus FWD CXFA;CXHA;DNAA | For Model code:SGF/SGM/SGN | GCI61104 | Inner Joint | | 42 | 30 | 35.6 | | 136 | |
| | 2015.04-2024.08 | 6MT | F | R | Bus FWD CXFA;CXHA;DNAA | For Modelcode:SGF/SGM/SGN | GCI81381 | Inner Joint | | 26 | 30 | | 281.5 | 105 | |
| | 2015.04-2024.08 | 6MT | F | L | Bus FWD CXFA;CXHA;DNAA | | GDS61213 | Stub Axle,differential | | 42 | 42 | | | 135.5 | |
| | 2015.04-2024.08 | 6MT/7DCT | F | L/R | Bus FWD CXFA;CXHA;DNAA | For Model code:SGF/SGM/SGN;6 balls | GCO61060 | Outer Joint | | 38 | 30 | 63 | 102.5 | 68 | I |
| | 2015.04-2024.08 | 6MT/7DCT | F | L/R | Bus FWD CXFA;CXHA;DNAA | For Model code:SGF/SGM/SGN;8 balls | GCO81467 | Outer Joint | | 38 | 30 | 63 | 102.5 | 67.5 | I |
| | 2015.04-2024.08 | 6MT/7DCT | F | L/R | Bus FWD CXFA;CXHA;DNAA | For Model code:SHM/SHN,Date to:2020.11 | GCO82386 | Outer Joint | | 38 | 31 | 63 | 103 | 69 | I |
| | 2015.04-2024.08 | 7AT/6MT | F | R | Bus FWD CXFA;CXHA;DNAA | | GDS61216 | Stub Axle,differential | | 26 | 37 | | | 145 | |
| | 2015.04-2024.08 | 7DCT | F | L | Bus FWD CXFA;CXHA;DNAA | For Model code:SGF/SGM/SGN | GDS83293 | Drive Shaft | | 38 | 37 | 63 | 102.5 | 645 | |
| | 2015.04-2024.08 | 7DCT | F | R | Bus FWD CXFA;CXHA;DNAA | Date to:2019.12 | GDS82392 | Drive Shaft | | 38 | 37 | 63 | 102.5 | 1025 | |
| | 2015.04-2024.08 | 7DCT | F | L | Bus FWD CXFA;CXHA;DNAA | For Model code:SHM/SHN | GCI81261 | Inner Joint | | 37 | 27 | 34.5 | 65.5 | 88.5 | |
| | 2015.04-2024.08 | 7DCT | F | R | Bus FWD CXFA;CXHA;DNAA | For Model code:SGF/SGM/SGN | GCI83037 | Inner Joint | | 37 | 27 | 34.5 | 430.5 | 96 | |
| | 2015.08-2024.08 | 6MT | F | L | Bus 4WD CXFA;CXHA;DNAA | Model code:SGF/SGM/SGN | GDS83360 | Drive Shaft | | 38 | 42 | 63 | 102.5 | 617 | |
| | 2015.08-2024.08 | 6MT | F | R | Bus 4WD CXFA;CXHA;DNAA | Model code:SHM/SHN,Date to:2020.11 | GDS81665 | Drive Shaft | | 38 | 26 | 63 | 102.5 | 614 | |
| | 2015.08-2024.08 | 6MT | F | R | Bus 4WD CXFA;CXHA;DNAA | Model code:SGF/SGM/SGN,Date to:2017.01 | GDS81666 | Drive Shaft | | 38 | 26 | 63 | 102.5 | 616 | |
| | 2015.08-2024.08 | 6MT | F | L/R | Bus 4WD CXFA;CXHA;DNAA | Model code:SHM/SHN,Date to:2020.11;For PR code:F0X/F0Y/F4D | GCO82386 | Outer Joint | | 38 | 31 | 63 | 103 | 69 | I |

| | YEAR | TRANSM. | F/R | L/R | BODY STYLE & DRIVE TYPE & ENGINE | REMARKS | G-AP Ref. | PRODUCT | ABS | Technical Specifications A | B | C | H | L | P |
|---|---|---|---|---|---|---|---|---|---|---|---|---|---|---|---|
| **VW Multivan** | | | | | | | | | | | | | | | |
| 2.0 (110 kw) | 2015.08-2024.08 | 6MT | F | L | Bus 4WD CXFA;CXHA;DNAA | Model code:SGF/SGM/SGN | GCI61104 | Inner Joint | | 42 | 30 | 35.6 | | 136 | |
| | 2015.08-2024.08 | 6MT | F | R | Bus 4WD CXFA;CXHA;DNAA | Model code:SGF/SGM/SGN | GCI61029 | Inner Joint | | 26 | 30 | 46.8 | | 137 | |
| | 2015.08-2024.08 | 6MT/7DCT | F | L/R | Bus 4WD CXFA;CXHA;DNAA | Model code:SGF/SGM/SGN | GCO81467 | Outer Joint | | 38 | 30 | 63 | 102.5 | 67.5 | I |
| | 2015.08-2024.08 | 7DCT | F | L | Bus 4WD CXFA;CXHA;DNAA | Date to:2020.11 | GDS83293 | Drive Shaft | | 38 | 37 | 63 | 102.5 | 645 | |
| | 2015.08-2024.08 | 7DCT | F | R | Bus 4WD CXFA;CXHA;DNAA | Date to:2020.11 | GDS81665 | Drive Shaft | | 38 | 26 | 63 | 102.5 | 614 | |
| | 2015.08-2024.08 | 7DCT | F | L/R | Bus 4WD CXFA;CXHA;DNAA | Model code:SHM/SHN,Date to:2020.11 | GCO82386 | Outer Joint | | 38 | 31 | 63 | 103 | 69 | I |
| | 2015.08-2024.08 | 7DCT | F | L | Bus 4WD CXFA;CXHA;DNAA | Model code:SHM/SHN | GCI81261 | Inner Joint | | 37 | 27 | 34.5 | 65.5 | 88.5 | |
| | 2015.08-2024.08 | 7DCT/6MT | F | R | Bus 4WD CXFA;CXHA;DNAA | Transmission:6MT;For FR code:F0XXFXYXFXZ;Transmission:7DCT;For Modelcode:SGF/SGM/SGN | GCI81453 | Inner Joint | | 26 | 27 | 47 | | 128 | |
| | 2015.08-2024.08 | | F | L | Bus 4WD CXFA;CXHA;DNAA | | GDS61213 | Stub Axle,differential | | 42 | 42 | | | 135.5 | |
| | 2015.08-2024.08 | 6MT/7DCT | R | L | Bus 4WD CXFA;CXHA;DNAA | | GDS61257 | Drive Shaft | | 38 | | 59 | 100 | 683 | |
| | 2015.08-2024.08 | 6MT/7DCT | R | R | Bus 4WD CXFA;CXHA;DNAA | | GDS61258 | Drive Shaft | | 38 | | 59 | 100 | 743 | |
| | 2015.08-2024.08 | 6MT/7DCT | R | L/R | Bus 4WD CXFA;CXHA;DNAA | | GCI82474 | Outer Joint | | 38 | 28 | 59 | 100 | 59 | |
| | 2015.08-2024.08 | 6MT/7DCT | R | L/R | Bus 4WD CXFA;CXHA;DNAA | | GCI61075 | Inner Joint | | | 28 | | | 26 | |
| 2.0 (132 kw) | 2009.09-2015.08 | 5MT | F | R | Bus 4WD CFCA | | GDS61190 | Stub Axle,differential | | 26 | 37 | | | 136.5 | |
| | 2009.09-2015.08 | 6MT | F | L | Bus 4WD CFCA | Date to:2013.06;For F0XXFXXFXYChassis no.:7HBG000001/7HBH000001/7HBX000001;For operating:gasoline vehicles | GDS61084 | Drive Shaft | | 38 | 26 | 63 | 102.5 | 613 | |
| | 2009.09-2015.08 | 6MT | F | L | Bus 4WD CFCA | Date From:2013.07 | GDS83360 | Drive Shaft | | 38 | 42 | 63 | 102.5 | 617 | |
| | 2009.09-2015.08 | 6MT | F | R | Bus 4WD CFCA | Date to:2013.06 | GDS61084 | Drive Shaft | | 38 | 26 | 63 | 102.5 | 613 | |
| | 2009.09-2015.08 | 6MT | F | R | Bus 4WD CFCA | Date from:2013.07 | GDS81666 | Drive Shaft | | 38 | 26 | 63 | 102.5 | 616 | |
| | 2009.09-2015.08 | 6MT | F | L | Bus 4WD CFCA | Date to:2013.06;For F0XXFXXFXYChassis no.:7HBG000001/7HBH000001/7HBX000001;For operating:gasoline vehicles | GCI61029 | Inner Joint | | 26 | 30 | 46.8 | | 137 | |
| | 2009.09-2015.08 | 6MT | F | L | Bus 4WD CFCA | Date From:2013.07 | GCI61104 | Inner Joint | | 42 | 30 | 35.6 | | 136 | |
| | 2009.09-2015.08 | 6MT | F | R | Bus 4WD CFCA | Date to:2013.06 | GCI61029 | Inner Joint | | 26 | 30 | 46.8 | | 137 | |
| | 2009.09-2015.08 | 6MT | F | L | Bus 4WD CFCA | | GDS61213 | Stub Axle,differential | | 42 | 42 | | | 135.5 | |
| | 2009.09-2015.08 | 6MT/7DCT | F | L/R | Bus 4WD CFCA | Date to:2013.06 | GCO61011 | Outer Joint | | 38 | 29 | 63 | 102.5 | 70 | M |
| | 2009.09-2015.08 | 6MT/7DCT | F | L/R | Bus 4WD CFCA | Date From:2013.07;6 balls | GCO61060 | Outer Joint | | 38 | 30 | 63 | 102.5 | 68 | I |
| | 2009.09-2015.08 | 6MT/7DCT | F | L/R | Bus 4WD CFCA | Date From:2013.07;8 balls | GCO81467 | Outer Joint | | 38 | 30 | 63 | 102.5 | 67.5 | I |
| | 2009.09-2015.08 | 7DCT | F | L | Bus 4WD CFCA | | GDS83293 | Drive Shaft | | 38 | 37 | 63 | 102.5 | 645 | |
| | 2009.09-2015.08 | 7DCT | F | R | Bus 4WD CFCA | 8 balls | GDS81665 | Drive Shaft | | 38 | 26 | 63 | 102.5 | 614 | |
| | 2009.09-2015.08 | 7DCT | F | R | Bus 4WD CFCA | 6 balls | GDS81920 | Drive Shaft | | 38 | 26 | 63 | 102.5 | 614 | |
| | 2009.09-2015.08 | 7DCT | F | R | Bus 4WD CFCA | | GCI81453 | Inner Joint | | 26 | 27 | 47 | | 128 | |
| | 2009.09-2015.08 | 6MT/7DCT | R | L | Bus 4WD CFCA | | GDS61257 | Drive Shaft | | 38 | | 59 | 100 | 683 | |
| | 2009.09-2015.08 | 6MT/7DCT | R | R | Bus 4WD CFCA | | GDS61258 | Drive Shaft | | 38 | | 59 | 100 | 743 | |
| | 2009.09-2015.08 | 6MT/7DCT | R | L/R | Bus 4WD CFCA | | GCI82474 | Outer Joint | | 38 | 28 | 59 | 100 | 59 | |
| | 2009.09-2015.08 | 6MT/7DCT | R | L/R | Bus 4WD CFCA | | GCI61075 | Inner Joint | | | 28 | | | 26 | |
| | 2009.09-2015.08 | 5MT | F | R | Bus FWD CFCA | | GDS61190 | Stub Axle,differential | | 26 | 37 | | | 136.5 | |
| | 2009.09-2015.08 | 6MT | F | L | Bus FWD CFCA | Date to:2013.05 | GDS61084 | Drive Shaft | | 38 | 26 | 63 | 102.5 | 613 | |
| | 2009.09-2015.08 | 6MT | F | L | Bus FWD CFCA | Date from:2015.05 | GDS83360 | Drive Shaft | | 38 | 42 | 63 | 102.5 | 617 | |
| | 2009.09-2015.08 | 6MT | F | R | Bus FWD CFCA | Date from:2013.06,Date to:2015.04 | GDS82361 | Drive Shaft | | 38 | 26 | 63 | 102.5 | 879 | |
| | 2009.09-2015.08 | 6MT | F | R | Bus FWD CFCA | Date to:2013.05 | GDS83296 | Drive Shaft | | 38 | 26 | 63 | 102.5 | 880 | |
| | 2009.09-2015.08 | 6MT | F | R | Bus FWD CFCA | Date from:2015.05 | GDS83361 | Drive Shaft | | 38 | 26 | 63 | 102.5 | 883 | |
| | 2009.09-2015.08 | 6MT | F | L | Bus FWD CFCA | Date to:2013.05 | GCI61029 | Inner Joint | | 26 | 30 | 46.8 | | 137 | |
| | 2009.09-2015.08 | 6MT | F | L | Bus FWD CFCA | Date from:2015.05 | GCI61104 | Inner Joint | | 42 | 30 | 35.6 | | 136 | |
| | 2009.09-2015.08 | 6MT | F | R | Bus FWD CFCA | Date to:2015.04 | GCI61080 | Inner Joint | | 26 | 30 | | 281.5 | 106 | |
| | 2009.09-2015.08 | 6MT | F | R | Bus FWD CFCA | Date from:2015.05 | GCI81381 | Inner Joint | | 26 | 30 | | 281.5 | 105 | |
| | 2009.09-2015.08 | 6MT | F | L | Bus FWD CFCA | | GDS61213 | Stub Axle,differential | | 42 | 42 | | | 135.5 | |
| | 2009.09-2015.08 | 6MT/7DCT | F | L/R | Bus FWD CFCA | 6 balls | GCO61011 | Outer Joint | | 38 | 29 | 63 | 102.5 | 70 | M |
| | 2009.09-2015.08 | 6MT/7DCT | F | L/R | Bus FWD CFCA | 6 balls | GCO61060 | Outer Joint | | 38 | 30 | 63 | 102.5 | 68 | I |
| | 2009.09-2015.08 | 6MT/7DCT | F | L/R | Bus FWD CFCA | 8 balls | GCO81467 | Outer Joint | | 38 | 30 | 63 | 102.5 | 67.5 | I |
| | 2009.09-2015.08 | 7AT/6MT | F | R | Bus FWD CFCA | | GDS61216 | Stub Axle,differential | | 26 | 37 | | | 145 | |
| | 2009.09-2015.08 | 7DCT | F | L | Bus FWD CFCA | 6 balls,TJ | GDS83293 | Drive Shaft | | 38 | 37 | 63 | 102.5 | 645 | |
| | 2009.09-2015.08 | 7DCT | F | R | Bus FWD CFCA | 8 balls,AAR | GDS82392 | Drive Shaft | | 38 | 37 | 63 | 102.5 | 1025 | |
| | 2009.09-2015.08 | 7DCT | F | R | Bus FWD CFCA | 6 balls,AAR | GDS83353 | Drive Shaft | | 38 | 37 | 63 | 102.5 | 1027 | |
| | 2009.09-2015.08 | 7DCT | F | R | Bus FWD CFCA | Chassis no. From:7HCG000001/7HCH000001/7HCX000001 | GCI81754 | Inner Joint | | 37 | 27 | 34.5 | 430.5 | 96 | |
| | 2009.09-2015.08 | 7DCT | F | R | Bus FWD CFCA | Chassis no. to:7HBG500000/7HBH500000/7HBX500000 | GCI83037 | Inner Joint | | 37 | 27 | 34.5 | 430.5 | 96 | |
| | 2015.04-2019.12 | 6MT | F | L | Bus FWD CFCA | | GDS61213 | Stub Axle,differential | | 42 | 42 | | | 135.5 | |
| | 2015.04-2019.12 | 7AT | F | L | Bus FWD CFCA | | GDS83293 | Drive Shaft | | 38 | 37 | 63 | 102.5 | 645 | |
| | 2015.04-2019.12 | 7AT | F | R | Bus FWD CFCA | Date to:2017.01 | GCO61060 | Outer Joint | | 38 | 30 | 63 | 102.5 | 68 | I |
| | 2015.04-2019.12 | 7AT | F | L/R | Bus FWD CFCA | | GCO81467 | Outer Joint | | 38 | 30 | 63 | 102.5 | 67.5 | I |
| | 2015.04-2019.12 | 7AT | F | R | Bus FWD CFCA | | GCI81754 | Inner Joint | | 37 | 27 | 34.5 | 430.5 | 96 | |
| | 2015.04-2019.12 | 7AT | F | R | Bus FWD CFCA | Date to:2017.01 | GCI83037 | Inner Joint | | 37 | 27 | 34.5 | 430.5 | 96 | |
| | 2015.04-2019.12 | 7AT | F | R | Bus FWD CFCA | | GDS61216 | Stub Axle,differential | | 26 | 37 | | | 145 | |
| | 2015.04-2019.12 | 7DCT | F | R | Bus FWD CFCA | | GDS82392 | Drive Shaft | | 38 | 37 | 63 | 102.5 | 1025 | |
| | 2015.06-2019.12 | 7AT | F | L | Bus 4WD CFCA | | GDS83293 | Drive Shaft | | 38 | 37 | 63 | 102.5 | 645 | |
| | 2015.06-2019.12 | 7AT | F | R | Bus 4WD CFCA | | GDS81665 | Drive Shaft | | 38 | 26 | 63 | 102.5 | 614 | |
| | 2015.06-2019.12 | 7AT | F | R | Bus 4WD CFCA | | GCI81453 | Inner Joint | | 26 | 27 | 47 | | 128 | |
| | 2015.06-2019.12 | 7AT | F | L/R | Bus 4WD CFCA | | GDS61216 | Stub Axle,differential | | 26 | 37 | | | 145 | |

| | YEAR | TRANSM. | F/R | L/R | BODY STYLE & DRIVE TYPE & ENGINE | REMARKS | G-AP Ref. | PRODUCT | ABS | Technical Specifications A | B | C | H | L | P |
|---|---|---|---|---|---|---|---|---|---|---|---|---|---|---|---|
| **VW Multivan** | | | | | | | | | | | | | | | |
| 2.0 (132 kw) | 2015.06-2019.12 | MT/6MT | F | L/R | Bus 4WD CFCA | Date from:2013.07 | GCO81467 | Outer Joint | | 38 | 30 | 63 | 102.5 | 67.5 | I |
| | 2015.06-2019.12 | 7DCT | R | L | Bus 4WD CFCA | | GDS61257 | Drive Shaft | | 38 | | 59 | 100 | 683 | |
| | 2015.06-2019.12 | 7DCT | R | R | Bus 4WD CFCA | | GDS61258 | Drive Shaft | | 38 | | 59 | 100 | 743 | |
| | 2015.06-2019.12 | | R | L | Bus 4WD CFCA | Date To:2016.04 | GCI61075 | Inner Joint | | | 28 | | | 26 | |
| 2.0 (146 kw) | 2018.08-2024.08 | 7AT | F | L | Bus 4WD CXEC | | GCO82386 | Outer Joint | | 38 | 31 | 63 | 103 | 69 | I |
| | 2018.08-2024.08 | 7AT | F | L | Bus 4WD CXEC | | GCI81261 | Inner Joint | | 37 | 27 | 34.5 | 65.5 | 88.5 | |
| | 2018.08-2024.08 | 7AT | F | R | Bus 4WD CXEC | For Modelcode:SGB/SGJ | GCI81453 | Inner Joint | | 26 | 27 | 47 | | 128 | |
| | 2018.08-2024.08 | 7DCT | F | L | Bus 4WD CXEC | Date To:2020.11 | GDS83497 | Drive Shaft | | 38 | 37 | 63 | 103 | 646 | |
| | 2018.08-2024.08 | 7DCT | R | L | Bus 4WD CXEC | | GDS61257 | Drive Shaft | | 38 | | 59 | 100 | 683 | |
| | 2018.08-2024.08 | 7DCT | R | R | Bus 4WD CXEC | | GDS61258 | Drive Shaft | | 38 | | 59 | 100 | 743 | |
| | 2018.08-2024.08 | 7AT | F | L | Bus FWD CXEC | Date to:2020.11 | GDS83497 | Drive Shaft | | 38 | 37 | 63 | 103 | 646 | |
| | 2018.08-2024.08 | 7AT | F | R | Bus FWD CXEC | Date to:2020.11 | GDS83496 | Drive Shaft | | 38 | 37 | 63 | 103 | 1025 | |
| | 2018.08-2024.08 | 7AT | F | L/R | Bus FWD CXEC | | GCO82386 | Outer Joint | | 38 | 31 | 63 | 103 | 69 | I |
| | 2018.08-2024.08 | 7AT | F | L | Bus FWD CXEC | For Model code:SHM/SHN | GCI81261 | Inner Joint | | 37 | 27 | 34.5 | 65.5 | 88.5 | |
| | 2018.08-2024.08 | 7AT | F | R | Bus FWD CXEC | For Model code:SHM/SHN | GCI81754 | Inner Joint | | 37 | 27 | 34.5 | 430.5 | 96 | |
| 2.0 (150 kw) | 2011.05-2015.08 | 5MT | F | R | Bus FWD CJKA | | GDS61190 | Stub Axle,differential | | 26 | 37 | | | 136.5 | |
| | 2011.05-2015.08 | 6MT | F | L | Bus FWD CJKA | Date to:2013.06 | GDS61084 | Drive Shaft | | 38 | 26 | 63 | 102.5 | 613 | |
| | 2011.05-2015.08 | 6MT | F | L | Bus FWD CJKA | Date from:2013.07 | GDS83360 | Drive Shaft | | 38 | 42 | 63 | 102.5 | 617 | |
| | 2011.05-2015.08 | 6MT | F | R | Bus FWD CJKA | Date From:2013.07,Date To:2015.04 | GDS82361 | Drive Shaft | | 38 | 26 | 63 | 102.5 | 879 | |
| | 2011.05-2015.08 | 6MT | F | R | Bus FWD CJKA | Date To:2013.06 | GDS83296 | Drive Shaft | | 38 | 26 | 63 | 102.5 | 880 | |
| | 2011.05-2015.08 | 6MT | F | R | Bus FWD CJKA | Date From:2015.05 | GDS83361 | Drive Shaft | | 38 | 26 | 63 | 102.5 | 883 | |
| | 2011.05-2015.08 | 6MT | F | L | Bus FWD CJKA | Date To:2013.06 | GCI61029 | Inner Joint | | 26 | 30 | 46.8 | | 137 | |
| | 2011.05-2015.08 | 6MT | F | L | Bus FWD CJKA | Date From:2013.07 | GCI61104 | Inner Joint | | 42 | 30 | 35.6 | | 136 | |
| | 2011.05-2015.08 | 6MT | F | R | Bus FWD CJKA | Date to:2015.04 | GCI61080 | Inner Joint | | 26 | 30 | | 281.5 | 106 | |
| | 2011.05-2015.08 | 6MT | F | R | Bus FWD CJKA | Date from:2015.05 | GCI81381 | Inner Joint | | 26 | 30 | | 281.5 | 105 | |
| | 2011.05-2015.08 | 6MT | F | L | Bus FWD CJKA | | GDS61213 | Stub Axle,differential | | 42 | 42 | | | 135.5 | |
| | 2011.05-2015.08 | 6MT/7DCT | F | L/R | Bus FWD CJKA | Date to:2013.06 | GCO61011 | Outer Joint | | 38 | 29 | 63 | 102.5 | 70 | M |
| | 2011.05-2015.08 | 6MT/7DCT | F | L/R | Bus FWD CJKA | Date From:2013.07;6 balls | GCO61060 | Outer Joint | | 38 | 30 | 63 | 102.5 | 68 | I |
| | 2011.05-2015.08 | 6MT/7DCT | F | L/R | Bus FWD CJKA | Date From:2013.07;8 balls | GCO81467 | Outer Joint | | 38 | 30 | 63 | 102.5 | 67.5 | I |
| | 2011.05-2015.08 | 6MT/7DCT | F | R | Bus FWD CJKA | | GDS61216 | Stub Axle,differential | | 26 | 37 | | | 145 | |
| | 2011.05-2015.08 | 7DCT | F | L | Bus FWD CJKA | | GDS83293 | Drive Shaft | | 38 | 37 | 63 | 102.5 | 645 | |
| | 2011.05-2015.08 | 7DCT | F | R | Bus FWD CJKA | | GDS82392 | Drive Shaft | | 38 | 37 | 63 | 102.5 | 1025 | |
| | 2011.05-2015.08 | 7DCT | F | R | Bus FWD CJKA | | GCI81754 | Inner Joint | | 37 | 27 | 34.5 | 430.5 | 96 | |
| | 2011.07-2015.08 | 5MT | F | R | Bus 4WD CJKA | | GDS61190 | Stub Axle,differential | | 26 | 37 | | | 136.5 | |
| | 2011.07-2015.08 | 6MT | F | L | Bus 4WD CJKA | | GDS61213 | Stub Axle,differential | | 42 | 42 | | | 135.5 | |
| | 2011.07-2015.08 | 7DCT | F | L | Bus 4WD CJKA | | GDS83293 | Drive Shaft | | 38 | 37 | 63 | 102.5 | 645 | |
| | 2011.07-2015.08 | 7DCT | F | R | Bus 4WD CJKA | | GDS81665 | Drive Shaft | | 38 | 26 | 63 | 102.5 | 614 | |
| | 2011.07-2015.08 | 7DCT | F | L/R | Bus 4WD CJKA | Date to:2013.06 | GCO61011 | Outer Joint | | 38 | 29 | 63 | 102.5 | 70 | M |
| | 2011.07-2015.08 | 7DCT | F | L/R | Bus 4WD CJKA | Date from:2013.07 | GCO81467 | Outer Joint | | 38 | 30 | 63 | 102.5 | 67.5 | I |
| | 2011.07-2015.08 | 7DCT | F | R | Bus 4WD CJKA | | GCI81453 | Inner Joint | | 26 | 27 | 47 | | 128 | |
| | 2011.07-2015.08 | 7DCT | F | R | Bus 4WD CJKA | | GDS61216 | Stub Axle,differential | | 26 | 37 | | | 145 | |
| | 2011.07-2015.08 | 7DCT | R | L | Bus 4WD CJKA | | GDS61257 | Drive Shaft | | 38 | | 59 | 100 | 683 | |
| | 2011.07-2015.08 | 7DCT | R | R | Bus 4WD CJKA | | GDS61258 | Drive Shaft | | 38 | | 59 | 100 | 743 | |
| | 2011.07-2015.08 | 7DCT | R | L/R | Bus 4WD CJKA | | GCI82474 | Outer Joint | | 38 | 28 | 59 | 100 | 59 | |
| | 2011.07-2015.08 | 7DCT | R | L/R | Bus 4WD CJKA | | GCI61075 | Inner Joint | | | 28 | | | 26 | |
| | 2015.04-2019.07 | 7AT | F | L | Bus FWD CJKA | | GDS83293 | Drive Shaft | | 38 | 37 | 63 | 102.5 | 645 | |
| | 2015.04-2019.07 | 7AT | F | R | Bus FWD CJKA | Date to:2017.01 | GCO61060 | Outer Joint | | 38 | 30 | 63 | 102.5 | 68 | I |
| | 2015.04-2019.07 | 7AT | F | R | Bus FWD CJKA | | GCI81754 | Inner Joint | | 37 | 27 | 34.5 | 430.5 | 96 | |
| | 2015.04-2019.07 | 7AT | F | R | Bus FWD CJKA | Date to:2017.01 | GCI83037 | Inner Joint | | 37 | 27 | 34.5 | 430.5 | 96 | |
| | 2015.04-2019.07 | 7AT | F | R | Bus FWD CJKA | | GDS61216 | Stub Axle,differential | | 26 | 37 | | | 145 | |
| | 2015.04-2019.07 | 7DCT | F | R | Bus FWD CJKA | | GDS82392 | Drive Shaft | | 38 | 37 | 63 | 102.5 | 1025 | |
| | 2015.04-2019.07 | DCT | F | L/R | Bus FWD CJKA | Date from:2013.06 | GCO81467 | Outer Joint | | 38 | 30 | 63 | 102.5 | 67.5 | I |
| | 2015.04-2019.07 | MT | F | L/R | Bus FWD CJKA | Date from:2013.07 | GCO81467 | Outer Joint | | 38 | 30 | 63 | 102.5 | 67.5 | I |
| | 2015.06-2019.07 | 7AT | F | L | Bus 4WD CJKA | | GDS83293 | Drive Shaft | | 38 | 37 | 63 | 102.5 | 645 | |
| | 2015.06-2019.07 | 7AT | F | R | Bus 4WD CJKA | | GDS81665 | Drive Shaft | | 38 | 26 | 63 | 102.5 | 614 | |
| | 2015.06-2019.07 | 7AT | F | R | Bus 4WD CJKA | | GCI81453 | Inner Joint | | 26 | 27 | 47 | | 128 | |
| | 2015.06-2019.07 | 7AT | F | R | Bus 4WD CJKA | | GDS61216 | Stub Axle,differential | | 26 | 37 | | | 145 | |
| | 2015.06-2019.07 | DCT | F | L/R | Bus 4WD CJKA | Date from:2013.06 | GCO81467 | Outer Joint | | 38 | 30 | 63 | 102.5 | 67.5 | I |
| | 2015.06-2019.07 | MT | F | L/R | Bus 4WD CJKA | Date from:2013.07 | GCO81467 | Outer Joint | | 38 | 30 | 63 | 102.5 | 67.5 | I |
| | 2015.06-2019.07 | 7DCT | R | L | Bus 4WD CJKA | | GDS61257 | Drive Shaft | | 38 | | 59 | 100 | 683 | |
| | 2015.06-2019.07 | 7DCT | R | R | Bus 4WD CJKA | | GDS61258 | Drive Shaft | | 38 | | 59 | 100 | 743 | |
| | 2015.06-2019.07 | | R | L | Bus 4WD CJKA | Date To:2016.04 | GCI61075 | Inner Joint | | | 28 | | | 26 | |
| | 2015.06-2024.08 | 6MT | F | R | Bus 4WD CXEB;DMZA | For model code:SHM/SHN | GDS81665 | Drive Shaft | | 38 | 26 | 63 | 102.5 | 614 | |
| | 2015.06-2024.08 | 6MT/7DCT | F | R | Bus 4WD CXEB;DMZA | | GCI81453 | Inner Joint | | 26 | 27 | 47 | | 128 | |
| | 2015.06-2024.08 | 6MT/7DCT | F | L/R | Bus 4WD CXEB;DMZA | | GDS61216 | Stub Axle,differential | | 26 | 37 | | | 145 | |

| | YEAR | TRANSM. | F/R | L/R | BODY STYLE & DRIVE TYPE & ENGINE | REMARKS | G-AP Ref. | PRODUCT | ABS | Technical Specifications | | | | | |
|---|---|---|---|---|---|---|---|---|---|---|---|---|---|---|---|
| | | | | | | | | | | A | B | C | H | L | P |
| **VW Multivan** | | | | | | | | | | | | | | | |
| 2.0 (150 kw) | 2015.06-2024.08 | 7AT/6MT | F | L/R | Bus 4WD CXEB;DMZA | For Modelcode:SHM/SHN | GCO81467 | Outer Joint | | 38 | 30 | 63 | 102.5 | 67.5 | I |
| | 2015.06-2024.08 | 7DCT | F | L | Bus 4WD CXEB;DMZA | Date From:2017.02,Date To:2020.11 | GDS83497 | Drive Shaft | | 38 | 37 | 63 | 103 | 646 | |
| | 2015.06-2024.08 | 7DCT | F | L | Bus 4WD CXEB;DMZA | Date from:2017.02 | GCO82386 | Outer Joint | | 38 | 31 | 63 | 103 | 69 | I |
| | 2015.06-2024.08 | 7DCT | F | L | Bus 4WD CXEB;DMZA | Date from:2017.02;AAR | GCI81261 | Inner Joint | | 37 | 27 | 34.5 | 65.5 | 88.5 | |
| | 2015.06-2024.08 | 6MT/7DCT | R | L | Bus 4WD CXEB;DMZA | | GDS61257 | Drive Shaft | | 38 | | 59 | 100 | 683 | |
| | 2015.06-2024.08 | 6MT/7DCT | R | R | Bus 4WD CXEB;DMZA | | GDS61258 | Drive Shaft | | 38 | | 59 | 100 | 743 | |
| | 2015.06-2024.08 | 6MT/7DCT | R | L/R | Bus 4WD CXEB;DMZA | | GCI82474 | Outer Joint | | 38 | 28 | 59 | 100 | 59 | |
| | 2015.06-2024.08 | 6MT/7DCT | R | L/R | Bus 4WD CXEB;DMZA | | GCI61075 | Inner Joint | | | 28 | | | 26 | |
| | 2015.06-2024.08 | 6MT | F | L/R | Bus FWD CXEB;DMZA | For Modelcode:SHM/SHN | GCO81467 | Outer Joint | | 38 | 30 | 63 | 102.5 | 67.5 | I |
| | 2015.06-2024.08 | 7AT/6MT | F | L/R | Bus FWD CXEB;DMZA | | GDS61216 | Stub Axle,differential | | 26 | 37 | | | 145 | |
| | 2015.06-2024.08 | 7DCT | F | L | Bus FWD CXEB;DMZA | Date From:2017.02,For Modelcode:SGF/SGM/SGN | GDS61105 | Drive Shaft | | 38 | | 63 | 102.5 | 645 | |
| | 2015.06-2024.08 | 7DCT | F | L | Bus FWD CXEB;DMZA | Date To:2020.11,For Modelcode:SHM/SHN | GDS83497 | Drive Shaft | | 38 | 37 | 63 | 103 | 646 | |
| | 2015.06-2024.08 | 7DCT | F | R | Bus FWD CXEB;DMZA | For Modelcode:SGF/SGM/SGN | GDS83496 | Drive Shaft | | 38 | 37 | 63 | 103 | 1025 | |
| | 2015.06-2024.08 | 7DCT | F | R | Bus FWD CXEB;DMZA | | GCO82386 | Outer Joint | | 38 | 31 | 63 | 103 | 69 | I |
| | 2015.06-2024.08 | 7DCT | F | L | Bus FWD CXEB;DMZA | For Modelcode:SHM/SHN | GCI81261 | Inner Joint | | 37 | 27 | 34.5 | 65.5 | 88.5 | |
| | 2015.06-2024.08 | 7DCT | F | R | Bus FWD CXEB;DMZA | | GCI81754 | Inner Joint | | 37 | 27 | 34.5 | 430.5 | 96 | |
| | 2015.06-2024.08 | MT | F | L | Bus FWD CXEB;DMZA | | GDS81508 | Drive Shaft | | 38 | | 63 | 102.5 | 645 | |
| | 2015.06-2024.08 | MT | F | L | Bus FWD CXEB;DMZA | | GCO81348 | Outer Joint | | 38 | 28 | 63 | 102.5 | 64.5 | I |
| | 2015.06-2024.08 | MT | F | L | Bus FWD CXEB;DMZA | | GCI61069 | Inner Joint | | | 28 | | | 32 | |
| 2.5 (96 kw) | 2003.04-2009.11 | 6AT | F | L | Bus FWD AXD;BNZ | | GDS83973 | Drive Shaft | | 38 | 26 | 63 | 102.5 | 615 | |
| | 2003.04-2009.11 | 6AT | F | R | Bus FWD AXD;BNZ | | GDS61210 | Drive Shaft | | 38 | 26 | 63 | 102.5 | 925 | |
| | 2003.04-2009.11 | 6AT | F | L | Bus FWD AXD;BNZ | AAR | GCI82441 | Inner Joint | | 26 | 27 | 47 | | 128 | |
| | 2003.04-2009.11 | 6AT | F | L | Bus FWD AXD;BNZ | Date To:2006.12 | GCI83033 | Inner Joint | | 26 | 29 | 47.1 | | 128 | |
| | 2003.04-2009.11 | 6AT | F | L/R | Bus FWD AXD;BNZ | | GDS61238 | Stub Axle,differential | | 26 | 30 | | | 114.5 | |
| | 2003.04-2009.11 | 6MT | F | L | Bus FWD AXD;BNZ | | GDS61084 | Drive Shaft | | 38 | 26 | 63 | 102.5 | 613 | |
| | 2003.04-2009.11 | 6MT | F | L | Bus FWD AXD;BNZ | | GDS83360 | Drive Shaft | | 38 | 42 | 63 | 102.5 | 617 | |
| | 2003.04-2009.11 | 6MT | F | R | Bus FWD AXD;BNZ | | GDS61140 | Drive Shaft | | 38 | 26 | 63 | 102.5 | 873 | |
| | 2003.04-2009.11 | 6MT | F | L | Bus FWD AXD;BNZ | | GCI61029 | Inner Joint | | 26 | 30 | 46.8 | | 137 | |
| | 2003.04-2009.11 | 6MT | F | R | Bus FWD AXD;BNZ | | GCI61021 | Inner Joint | | 26 | 30 | | 288 | 106 | |
| | 2003.04-2009.11 | 6MT | F | L/R | Bus FWD AXD;BNZ | | GDS61191 | Stub Axle,differential | | 26 | 42 | | | 135.5 | |
| | 2003.04-2009.11 | 6MT/6AT | F | L/R | Bus FWD AXD;BNZ | | GCO61011 | Outer Joint | | 38 | 29 | 63 | 102.5 | 70 | M |
| | 2004.07-2009.11 | 6MT | F | L | Bus 4WD AXD, BNZ | | GDS61084 | Drive Shaft | | 38 | 26 | 63 | 102.5 | 613 | |
| | 2004.07-2009.11 | 6MT | F | R | Bus 4WD AXD, BNZ | | GDS57411 | Drive Shaft | | 38 | 26 | 63 | 102.5 | 616 | |
| | 2004.07-2009.11 | 6MT | F | L/R | Bus 4WD AXD, BNZ | | GCO61011 | Outer Joint | | 38 | 29 | 63 | 102.5 | 70 | M |
| | 2004.07-2009.11 | 6MT | F | L | Bus 4WD AXD, BNZ | | GCI61029 | Inner Joint | | 26 | 30 | 46.8 | | 137 | |
| | 2004.07-2009.11 | 6MT | F | L | Bus 4WD AXD, BNZ | Outer teeth:42 | GCI61104 | Inner Joint | | 42 | 30 | 35.6 | | 136 | |
| | 2004.07-2009.11 | 6MT | F | R | Bus 4WD AXD, BNZ | | GCI83652 | Inner Joint | | 26 | 30 | 46.8 | | 137 | |
| | 2004.07-2009.11 | | F | L/R | Bus 4WD AXD, BNZ | | GDS61191 | Stub Axle,differential | | 26 | 42 | | | 135.5 | |
| | 2004.07-2009.11 | 6AT/6MT | R | L/R | Bus 4WD AXD, BNZ | | GCI82474 | Outer Joint | | 38 | 28 | 59 | 100 | 59 | |
| | 2004.07-2009.11 | 6AT/6MT | R | L/R | Bus 4WD AXD, BNZ | | GCI61075 | Inner Joint | | | 28 | | | 26 | |
| | 2004.07-2009.11 | 6MT | R | L | Bus 4WD AXD, BNZ | | GDS61257 | Drive Shaft | | 38 | | 59 | 100 | 683 | |
| | 2004.07-2009.11 | 6MT | R | R | Bus 4WD AXD, BNZ | | GDS61258 | Drive Shaft | | 38 | | 59 | 100 | 743 | |
| 2.5 (120 kw) | 2003.11-2009.11 | 6AT | F | L/R | Bus FWD BLJ | | GDS61238 | Stub Axle,differential | | 26 | 30 | | | 114.5 | |
| | 2003.11-2009.11 | 6MT | F | L | Bus FWD BLJ | | GDS61084 | Drive Shaft | | 38 | 26 | 63 | 102.5 | 613 | |
| | 2003.11-2009.11 | 6MT | F | L | Bus FWD BLJ | | GDS83360 | Drive Shaft | | 38 | 42 | 63 | 102.5 | 617 | |
| | 2003.11-2009.11 | 6MT | F | R | Bus FWD BLJ | | GDS61140 | Drive Shaft | | 38 | 26 | 63 | 102.5 | 873 | |
| | 2003.11-2009.11 | 6MT | F | L/R | Bus FWD BLJ | | GCO61011 | Outer Joint | | 38 | 29 | 63 | 102.5 | 70 | M |
| | 2003.11-2009.11 | 6MT | F | L | Bus FWD BLJ | | GCI61029 | Inner Joint | | 26 | 30 | 46.8 | | 137 | |
| | 2003.11-2009.11 | 6MT | F | R | Bus FWD BLJ | | GCI61021 | Inner Joint | | 26 | 30 | | 288 | 106 | |
| | 2003.11-2009.11 | 6MT | F | L/R | Bus FWD BLJ | | GDS61191 | Stub Axle,differential | | 26 | 42 | | | 135.5 | |
| 2.5 (128 kw) | 2003.04-2009.11 | 6AT | F | L | Bus FWD AXE;BPC | | GDS83973 | Drive Shaft | | 38 | 26 | 63 | 102.5 | 615 | |
| | 2003.04-2009.11 | 6AT | F | R | Bus FWD AXE;BPC | | GDS61210 | Drive Shaft | | 38 | 26 | 63 | 102.5 | 925 | |
| | 2003.04-2009.11 | 6AT | F | L | Bus FWD AXE;BPC | AAR | GCI82441 | Inner Joint | | 26 | 27 | 47 | | 128 | |
| | 2003.04-2009.11 | 6AT | F | L | Bus FWD AXE;BPC | Date To:2006.12 | GCI83033 | Inner Joint | | 26 | 29 | 47.1 | | 128 | |
| | 2003.04-2009.11 | 6AT | F | L/R | Bus FWD AXE;BPC | | GDS61238 | Stub Axle,differential | | 26 | 30 | | | 114.5 | |
| | 2003.04-2009.11 | 6MT | F | L | Bus FWD AXE;BPC | | GDS61084 | Drive Shaft | | 38 | 26 | 63 | 102.5 | 613 | |
| | 2003.04-2009.11 | 6MT | F | L | Bus FWD AXE;BPC | | GDS83360 | Drive Shaft | | 38 | 42 | 63 | 102.5 | 617 | |
| | 2003.04-2009.11 | 6MT | F | R | Bus FWD AXE;BPC | | GDS61140 | Drive Shaft | | 38 | 26 | 63 | 102.5 | 873 | |
| | 2003.04-2009.11 | 6MT | F | L | Bus FWD AXE;BPC | | GCI61029 | Inner Joint | | 26 | 30 | 46.8 | | 137 | |
| | 2003.04-2009.11 | 6MT | F | R | Bus FWD AXE;BPC | | GCI61021 | Inner Joint | | 26 | 30 | | 288 | 106 | |
| | 2003.04-2009.11 | 6MT/6AT | F | L/R | Bus FWD AXE;BPC | | GCO61011 | Outer Joint | | 38 | 29 | 63 | 102.5 | 70 | M |
| | 2004.07-2009.11 | 6MT | F | L | Bus 4WD AXE;BPC | | GDS61084 | Drive Shaft | | 38 | 26 | 63 | 102.5 | 613 | |
| | 2004.07-2009.11 | 6MT | F | R | Bus 4WD AXE;BPC | | GDS57411 | Drive Shaft | | 38 | 26 | 63 | 102.5 | 616 | |
| | 2004.07-2009.11 | 6MT | F | L/R | Bus 4WD AXE;BPC | | GCO61011 | Outer Joint | | 38 | 29 | 63 | 102.5 | 70 | M |
| | 2004.07-2009.11 | 6MT | F | L | Bus 4WD AXE;BPC | | GCI61029 | Inner Joint | | 26 | 30 | 46.8 | | 137 | |

| | YEAR | TRANSM. | F/R | L/R | BODY STYLE & DRIVE TYPE & ENGINE | REMARKS | G-AP Ref. | PRODUCT | ABS | Technical Specifications A | B | C | H | L | P |
|---|---|---|---|---|---|---|---|---|---|---|---|---|---|---|---|
| **VW** | | | | | | | | | | | | | | | |
| **Multivan** | | | | | | | | | | | | | | | |
| 2.5 (128 kw) | 2004.07-2009.11 | 6MT | F | L | Bus 4WD AXE;BPC | Outer teeth:42 | GCI61104 | Inner Joint | | 42 | 30 | 35.6 | | 136 | |
| | 2004.07-2009.11 | 6MT | F | R | Bus 4WD AXE;BPC | | GCI83652 | Inner Joint | | 26 | 30 | 46.8 | | 137 | |
| | 2004.07-2009.11 | | F | L/R | Bus 4WD AXE;BPC | | GDS61191 | Stub Axle,differential | | 26 | 42 | | | 135.5 | |
| | 2004.07-2009.11 | 6AT/6MT | R | L/R | Bus 4WD AXE;BPC | | GCI82474 | Outer Joint | | 38 | 28 | 59 | 100 | 59 | |
| | 2004.07-2009.11 | 6AT/6MT | R | L/R | Bus 4WD AXE;BPC | | GCI61075 | Inner Joint | | | 28 | | | 26 | |
| | 2004.07-2009.11 | 6MT | R | L | Bus 4WD AXE;BPC | | GDS61257 | Drive Shaft | | 38 | | 59 | 100 | 683 | |
| | 2004.07-2009.11 | 6MT | R | R | Bus 4WD AXE;BPC | | GDS61258 | Drive Shaft | | 38 | | 59 | 100 | 743 | |
| 3.2 (170 kw) | 2004.02-2004.06 | 6AT | F | L | Bus FWD BDL | | GDS83973 | Drive Shaft | | 38 | 26 | 63 | 102.5 | 615 | |
| | 2004.02-2004.06 | 6AT | F | L/R | Bus FWD BDL | | GCO61011 | Outer Joint | | 38 | 29 | 63 | 102.5 | 70 | M |
| | 2004.02-2004.06 | 6AT | F | L | Bus FWD BDL | | GCI61029 | Inner Joint | | 26 | 30 | 46.8 | | 137 | |
| 3.2 (173 kw) | 2004.02-2009.12 | 6AT | F | L | Bus FWD BKK, BDL, CFLA | | GDS83973 | Drive Shaft | | 38 | 26 | 63 | 102.5 | 615 | |
| | 2004.02-2009.12 | 6AT | F | R | Bus FWD BKK, BDL, CFLA | | GDS84521 | Drive Shaft | | 38 | 26 | 63 | 102.5 | 925 | |
| | 2004.02-2009.12 | 6AT | F | L/R | Bus FWD BKK, BDL, CFLA | | GCO61011 | Outer Joint | | 38 | 29 | 63 | 102.5 | 70 | M |
| | 2004.02-2009.12 | 6AT | F | L | Bus FWD BKK, BDL, CFLA | | GCI82441 | Inner Joint | | 26 | 27 | 47 | | 128 | |
| | 2004.02-2009.12 | 6AT | F | L | Bus FWD BKK, BDL, CFLA | Date To:2006.12 | GCI83033 | Inner Joint | | 26 | 29 | 47.1 | | 128 | |
| | 2004.02-2009.12 | 6AT | F | R | Bus FWD BKK, BDL, CFLA | | GCI82833 | Inner Joint | | 26 | 27 | | 341 | 90 | |
| | 2004.02-2009.12 | 6AT | F | L/R | Bus FWD BKK, BDL, CFLA | | GDS61238 | Stub Axle,differential | | 26 | 30 | | | 114.5 | |
| | 2004.07-2009.12 | 6MT | F | L | Bus 4WD BKK, BDL, CFLA | | GDS83973 | Drive Shaft | | 38 | 26 | 63 | 102.5 | 615 | |
| | 2004.07-2009.12 | 6MT | F | R | Bus 4WD BKK, BDL, CFLA | | GDS81920 | Drive Shaft | | 38 | 26 | 63 | 102.5 | 614 | |
| | 2004.07-2009.12 | 6MT | F | L/R | Bus 4WD BKK, BDL, CFLA | | GCO61011 | Outer Joint | | 38 | 29 | 63 | 102.5 | 70 | M |
| | 2004.07-2009.12 | 6MT | F | L | Bus 4WD BKK, BDL, CFLA | | GCI82441 | Inner Joint | | 26 | 27 | 47 | | 128 | |
| | 2004.07-2009.12 | 6MT | F | L | Bus 4WD BKK, BDL, CFLA | Date To:2006.12 | GCI83033 | Inner Joint | | 26 | 29 | 47.1 | | 128 | |
| | 2004.07-2009.12 | 6MT | F | R | Bus 4WD BKK, BDL, CFLA | | GCI81453 | Inner Joint | | 26 | 27 | 47 | | 128 | |
| | 2004.07-2009.12 | | F | L/R | Bus 4WD BKK, BDL, CFLA | | GDS61191 | Stub Axle,differential | | 26 | 42 | | | 135.5 | |
| | 2004.07-2009.12 | 6MT | R | L | Bus 4WD BKK, BDL, CFLA | | GDS61257 | Drive Shaft | | 38 | | 59 | 100 | 683 | |
| | 2004.07-2009.12 | 6MT | R | R | Bus 4WD BKK, BDL, CFLA | | GDS61258 | Drive Shaft | | 38 | | 59 | 100 | 743 | |
| | 2004.07-2009.12 | 6MT | R | L/R | Bus 4WD BKK, BDL, CFLA | | GCI82474 | Outer Joint | | 38 | 28 | 59 | 100 | 59 | |
| | 2004.07-2009.12 | 6MT | R | L/R | Bus 4WD BKK, BDL, CFLA | | GCI61075 | Inner Joint | | | 28 | | | 26 | |
| **New Beetle** | | | | | | | | | | | | | | | |
| 1.4 (55 kw) | 2001.08-2010.09 | 5MT | F | L | Hatchback FWD BCA | Date From:2007.08;Chassis no. from:9C8551122 | GDS83982 | Drive Shaft | | 36 | | 53 | 78.5 | 592 | |
| | 2001.08-2010.09 | 5MT | F | R | Hatchback FWD BCA | Date From:2007.08;Chassis no. from:9C8551122 | GDS83983 | Drive Shaft | | 36 | | 53 | 78.5 | 794 | |
| | 2001.08-2010.09 | 5MT | F | L/R | Hatchback FWD BCA | | GCO83033 | Outer Joint | | 36 | 30 | 53 | 78.5 | 51 | I |
| | 2001.08-2010.09 | 5MT | F | L/R | Hatchback FWD BCA | Date From:2007.08;Chassis no. from:9C8551122 | GCI82444 | Inner Joint | | | 33 | | | 32 | |
| | 2001.08-2010.09 | 5MT | F | L/R | Hatchback FWD BCA | | GCI83008 | Inner Joint | | | 33 | | | 32 | |
| | 2001.08-2010.09 | MT | F | L/R | Hatchback FWD BCA | | GCI83005 | Inner Joint | | | 33 | | | 32 | |
| | 2003.01-2010.09 | 5MT | F | L | Cabriolet FWD BCA | Date From:2007.12;Chassis no. from:1Y8401828 | GDS83982 | Drive Shaft | | 36 | | 53 | 78.5 | 592 | |
| | 2003.01-2010.09 | 5MT | F | R | Cabriolet FWD BCA | Date From:2007.12;Chassis no. from:1Y8401828 | GDS83983 | Drive Shaft | | 36 | | 53 | 78.5 | 794 | |
| | 2003.01-2010.09 | 5MT | F | L/R | Cabriolet FWD BCA | | GCO83033 | Outer Joint | | 36 | 30 | 53 | 78.5 | 51 | I |
| | 2003.01-2010.09 | 5MT | F | L/R | Cabriolet FWD BCA | Date From:2007.12;Chassis no. from:1Y8401828 | GCI82444 | Inner Joint | | | 33 | | | 32 | |
| | 2003.01-2010.09 | 5MT | F | L/R | Cabriolet FWD BCA | | GCI83008 | Inner Joint | | | 33 | | | 32 | |
| | 2003.01-2010.09 | MT | F | L/R | Cabriolet FWD BCA | | GCI83005 | Inner Joint | | | 33 | | | 32 | |
| 1.6 (74 kw) | 1999.09-2000.10 | 5MT | F | L | Hatchback FWD AWH | | GDS61314 | Drive Shaft | | 36 | | 53 | 78 | 558 | |
| | 1999.09-2000.10 | 5MT | F | L/R | Hatchback FWD AWH | | GCO83070 | Outer Joint | | 36 | 30 | 53 | 78 | 60 | I |
| | 1999.09-2000.10 | 5MT | F | L | Hatchback FWD AWH | | GCI82447 | Inner Joint | | | 33 | | | 34 | |
| | 1999.09-2000.10 | 5MT | F | L/R | Hatchback FWD AWH | | GCI83006 | Inner Joint | | | 33 | | | 34 | |
| | 1999.09-2000.10 | AT | F | L | Hatchback FWD AWH | | GDS61020 | Drive Shaft | | 36 | | 53.2 | 77.5 | 547 | |
| | 1999.09-2000.10 | AT | F | R | Hatchback FWD AWH | | GDS83011 | Drive Shaft | | 36 | | 53.2 | 77.5 | 810.5 | |
| | 1999.09-2000.10 | MT | F | L | Hatchback FWD AWH | | GDS83006 | Drive Shaft | | 36 | | 53.2 | 77.5 | 557 | |
| | 1999.09-2000.10 | MT | F | R | Hatchback FWD AWH | | GDS83004 | Drive Shaft | | 36 | | 53.2 | 77.5 | 822 | |
| | 1999.09-2000.10 | MT | F | R | Hatchback FWD AWH | | GCI83009 | Inner Joint | | | 33 | | | 34 | |
| 1.6 (75 kw) | 2000.06-2010.09 | AT | F | L | Hatchback FWD AYD/BFS | | GDS61020 | Drive Shaft | | 36 | | 53.2 | 77.5 | 547 | |
| | 2000.06-2010.09 | AT | F | R | Hatchback FWD AYD/BFS | | GDS83011 | Drive Shaft | | 36 | | 53.2 | 77.5 | 810.5 | |
| | 2000.06-2010.09 | AT/MT | F | L/R | Hatchback FWD AYD/BFS | | GCO83070 | Outer Joint | | 36 | 30 | 53 | 78 | 60 | I |
| | 2000.06-2010.09 | AT/MT | F | R | Hatchback FWD AYD/BFS | Date to:2001.05 | GCI83009 | Inner Joint | | | 33 | | | 34 | |
| | 2000.06-2010.09 | AT/MT | F | L/R | Hatchback FWD AYD/BFS | Position:Front Axle left and right;Position:Front Axle right;Date from:2001.06 | GCI82447 | Inner Joint | | | 33 | | | 34 | |
| | 2000.06-2010.09 | MT | F | L | Hatchback FWD AYD/BFS | | GDS61314 | Drive Shaft | | 36 | | 53 | 78 | 558 | |
| | 2000.06-2010.09 | MT | F | R | Hatchback FWD AYD/BFS | | GDS83004 | Drive Shaft | | 36 | | 53.2 | 77.5 | 822 | |
| | 2003.01-2010.09 | 5MT | F | L | Cabriolet FWD BFS | | GDS61314 | Drive Shaft | | 36 | | 53 | 78 | 558 | |
| | 2003.01-2010.09 | 5MT | F | R | Cabriolet FWD BFS | | GDS83004 | Drive Shaft | | 36 | | 53.2 | 77.5 | 822 | |
| | 2003.01-2010.09 | 5MT | F | L/R | Cabriolet FWD BFS | | GCO83070 | Outer Joint | | 36 | 30 | 53 | 78 | 60 | I |
| | 2003.01-2010.09 | 5MT | F | R | Cabriolet FWD BFS | Date to:2005.06 | GCI83009 | Inner Joint | | | 33 | | | 34 | |
| | 2003.01-2010.09 | 5MT | F | L/R | Cabriolet FWD BFS | Date from:2005.07 | GCI82447 | Inner Joint | | | 33 | | | 34 | |
| | 2003.01-2010.09 | 6AT | F | L | Cabriolet FWD BFS | | GDS56652 | Drive Shaft | | 36 | 26 | 53 | 77.5 | 624 | |
| | 2003.01-2010.09 | 6AT | F | L/R | Cabriolet FWD BFS | | GCO83035 | Outer Joint | | 36 | 27 | 53 | 77.5 | 65 | I |
| 1.8 (110 kw) | 1998.01-2010.09 | 4AT/6AT/5MT | F | L | Hatchback FWD AGU/APH/AVC/AWU/AWV | Model year from:2002,Model year to:2005,Engine code:AWU | GDS61020 | Drive Shaft | | 36 | | 53.2 | 77.5 | 547 | |

| | YEAR | TRANSM. | F/R | L/R | BODY STYLE & DRIVE TYPE & ENGINE | REMARKS | G-AP Ref. | PRODUCT | ABS | Technical Specifications A | B | C | H | L | P |
|---|---|---|---|---|---|---|---|---|---|---|---|---|---|---|---|
| **VW New Beetle** | | | | | | | | | | | | | | | |
| 1.8 (110 kw) | 1998.01-2010.09 | 4AT/6AT/5MT | F | R | Hatchback FWD AGU/APH/AVC/AWU/AWV | Model year from:2002,Model year to:2005,Engine code:AWU/AWV | GDS83011 | Drive Shaft | | 36 | | 53.2 | 77.5 | 810.5 | |
| | 1998.01-2010.09 | 4AT/6AT/5MT | F | L/R | Hatchback FWD AGU/APH/AVC/AWU/AWV | Model year from:2002,Model year to:2005,Engine code:AWU/AWV | GCI61006 | Inner Joint | | | 30 | | | 57.6 | |
| | 1998.01-2010.09 | 6AT | F | R | Hatchback FWD AGU/APH/AVC/AWU/AWV | Model year from:2002,Model year to:2005,Engine code:BKF,Model year from:2006,Engine code:AWU | GDS61337 | Drive Shaft | | 36 | 26 | 53 | 77.5 | 901 | |
| | 1998.01-2010.09 | 6AT | F | L/R | Hatchback FWD AGU/APH/AVC/AWU/AWV | | GCO83035 | Outer Joint | | 36 | 27 | 53 | 77.5 | 65 | I |
| | 1998.01-2010.09 | MT | F | L/R | Hatchback FWD AGU/APH/AVC/AWU/AWV | | GCO83070 | Outer Joint | | 36 | 30 | 53 | 78 | 60 | I |
| | 2003.01-2010.09 | 5MT | F | L | Cabriolet FWD AWU/AWV/BKF | | GDS61020 | Drive Shaft | | 36 | | 53.2 | 77.5 | 547 | |
| | 2003.01-2010.09 | 5MT | F | R | Cabriolet FWD AWU/AWV/BKF | Date from:2005.07 | GDS83011 | Drive Shaft | | 36 | | 53.2 | 77.5 | 810.5 | |
| | 2003.01-2010.09 | 5MT | F | L/R | Cabriolet FWD AWU/AWV/BKF | | GCI61006 | Inner Joint | | | 30 | | | 57.6 | |
| | 2003.01-2010.09 | 6AT | F | L | Cabriolet FWD AWU/AWV/BKF | Model year to:2005,Engine code:AWV/BKF | GDS56652 | Drive Shaft | | 36 | 26 | 53 | 77.5 | 624 | |
| | 2003.01-2010.09 | 6AT | F | R | Cabriolet FWD AWU/AWV/BKF | Model year to:2005,Engine code:AWV/BKF | GDS61337 | Drive Shaft | | 36 | 26 | 53 | 77.5 | 901 | |
| | 2003.01-2010.09 | 6AT | F | L/R | Cabriolet FWD AWU/AWV/BKF | | GCO83035 | Outer Joint | | 36 | 27 | 53 | 77.5 | 65 | I |
| | 2003.01-2010.09 | 6AT | F | L | Cabriolet FWD AWU/AWV/BKF | Model year to:2005,Engine code:AWV/BKF | GCI61050 | Inner Joint | | 26 | 32 | 31 | 68.5 | 89 | |
| | 2003.01-2010.09 | MT | F | L/R | Cabriolet FWD AWU/AWV/BKF | | GCO83070 | Outer Joint | | 36 | 30 | 53 | 78 | 60 | I |
| 1.8 (132 kw) | 2001.06-2005.06 | MT | F | L/R | Hatchback FWD AWP/BNU | | GCO83035 | Outer Joint | | 36 | 27 | 53 | 77.5 | 65 | I |
| | 2001.06-2005.06 | | F | L/R | Hatchback FWD AWP/BNU | | GCI83001 | Inner Joint | | | 28 | | | 32 | |
| 1.9 (66 kw) | 1998.01-2005.06 | AT | F | L | Hatchback FWD ALH | | GDS61020 | Drive Shaft | | 36 | | 53.2 | 77.5 | 547 | |
| | 1998.01-2005.06 | AT | F | R | Hatchback FWD ALH | | GDS83011 | Drive Shaft | | 36 | | 53.2 | 77.5 | 810.5 | |
| | 1998.01-2005.06 | AT/MT | F | L/R | Hatchback FWD ALH | | GCO83070 | Outer Joint | | 36 | 30 | 53 | 78 | 60 | I |
| | 1998.01-2005.06 | MT | F | L | Hatchback FWD ALH | | GDS83006 | Drive Shaft | | 36 | | 53.2 | 77.5 | 557 | |
| | 1998.01-2005.06 | MT | F | R | Hatchback FWD ALH | | GDS83004 | Drive Shaft | | 36 | | 53.2 | 77.5 | 822 | |
| | 1998.01-2005.06 | MT | F | L | Hatchback FWD ALH | | GCI83011 | Inner Joint | | | 33 | | | 34 | |
| | 1998.01-2005.06 | MT | F | R | Hatchback FWD ALH | | GCI83009 | Inner Joint | | | 33 | | | 34 | |
| 1.9 (74 kw) | 2000.10-2010.09 | AT | F | L/R | Hatchback FWD ATD/AXR/BEW | | GCO83035 | Outer Joint | | 36 | 27 | 53 | 77.5 | 65 | I |
| | 2000.10-2010.09 | AT/MT | F | L | Hatchback FWD ATD/AXR/BEW | | GDS83006 | Drive Shaft | | 36 | | 53.2 | 77.5 | 557 | |
| | 2000.10-2010.09 | AT/MT | F | R | Hatchback FWD ATD/AXR/BEW | | GDS83004 | Drive Shaft | | 36 | | 53.2 | 77.5 | 822 | |
| | 2000.10-2010.09 | MT | F | L/R | Hatchback FWD ATD/AXR/BEW | | GCO83070 | Outer Joint | | 36 | 30 | 53 | 78 | 60 | I |
| | 2000.10-2010.09 | MT | F | L | Hatchback FWD ATD/AXR/BEW | Date to:2005.06 | GCI82447 | Inner Joint | | | 33 | | | 34 | |
| | 2000.10-2010.09 | MT | F | L | Hatchback FWD ATD/AXR/BEW | Date from:2005.07 | GCI83011 | Inner Joint | | | 33 | | | 34 | |
| | 2000.10-2010.09 | MT | F | R | Hatchback FWD ATD/AXR/BEW | | GCI83009 | Inner Joint | | | 33 | | | 34 | |
| | 2003.06-2005.07 | 5MT | F | L | Cabriolet FWD AXR | | GDS83006 | Drive Shaft | | 36 | | 53.2 | 77.5 | 557 | |
| | 2003.06-2005.07 | 5MT | F | R | Cabriolet FWD AXR | | GDS83004 | Drive Shaft | | 36 | | 53.2 | 77.5 | 822 | |
| | 2003.06-2005.07 | 5MT | F | L/R | Cabriolet FWD AXR | | GCO83070 | Outer Joint | | 36 | 30 | 53 | 78 | 60 | I |
| | 2003.06-2005.07 | 5MT | F | L/R | Cabriolet FWD AXR | | GCI82447 | Inner Joint | | | 33 | | | 34 | |
| | 2003.06-2005.07 | 5MT | F | L/R | Cabriolet FWD AXR | | GCI83006 | Inner Joint | | | 33 | | | 34 | |
| 1.9 (77 kw) | 2005.07-2010.09 | 5MT | F | L | Cabriolet FWD BSW | | GDS83006 | Drive Shaft | | 36 | | 53.2 | 77.5 | 557 | |
| | 2005.07-2010.09 | MT | F | R | Cabriolet FWD BSW | | GDS83004 | Drive Shaft | | 36 | | 53.2 | 77.5 | 822 | |
| | 2005.07-2010.09 | MT | F | L/R | Cabriolet FWD BSW | | GCO83070 | Outer Joint | | 36 | 30 | 53 | 78 | 60 | I |
| | 2005.07-2010.09 | MT | F | L | Cabriolet FWD BSW | | GCI83011 | Inner Joint | | | 33 | | | 34 | |
| | 2005.07-2010.09 | MT | F | R | Cabriolet FWD BSW | | GCI83009 | Inner Joint | | | 33 | | | 34 | |
| | 2005.07-2010.09 | 5MT | F | L | Hatchback FWD BSW | | GDS83006 | Drive Shaft | | 36 | | 53.2 | 77.5 | 557 | |
| | 2005.07-2010.09 | MT | F | R | Hatchback FWD BSW | | GDS83004 | Drive Shaft | | 36 | | 53.2 | 77.5 | 822 | |
| | 2005.07-2010.09 | MT | F | L/R | Hatchback FWD BSW | | GCO83070 | Outer Joint | | 36 | 30 | 53 | 78 | 60 | I |
| | 2005.07-2010.09 | MT | F | L | Hatchback FWD BSW | | GCI83011 | Inner Joint | | | 33 | | | 34 | |
| | 2005.07-2010.09 | MT | F | R | Hatchback FWD BSW | | GCI83009 | Inner Joint | | | 33 | | | 34 | |
| 2.0 (85 kw) | 1998.01-2010.09 | 4AT/6AT/5MT/SAT | F | L | Hatchback FWD AEG/APK/AQY/AVH/AZG/AZJ/BE/JBER/BEV/BHP/CBPA | | GCI82447 | Inner Joint | | | 33 | | | 34 | |
| | 1998.01-2010.09 | 6AT | F | R | Hatchback FWD AEG/APK/AQY/AVH/AZG/AZJ/BE/JBER/BEV/BHP/CBPA | Model year from:2002,Model year to:2005,Engine code:BEV/CBPA/AZJ | GDS61337 | Drive Shaft | | 36 | 26 | 53 | 77.5 | 901 | |
| | 1998.01-2010.09 | AT | F | L | Hatchback FWD AEG/APK/AQY/AVH/AZG/AZJ/BE/JBER/BEV/BHP/CBPA | Model year from:2002,Model year to:2005,Engine code:AZJ/BER | GDS61020 | Drive Shaft | | 36 | | 53.2 | 77.5 | 547 | |
| | 1998.01-2010.09 | AT | F | R | Hatchback FWD AEG/APK/AQY/AVH/AZG/AZJ/BE/JBER/BEV/BHP/CBPA | Date To:2005.06;Date From:2005.07,For Engine Code:BHP | GDS83011 | Drive Shaft | | 36 | | 53.2 | 77.5 | 810.5 | |
| | 1998.01-2010.09 | AT | F | L/R | Hatchback FWD AEG/APK/AQY/AVH/AZG/AZJ/BE/JBER/BEV/BHP/CBPA | Date To:2005.06 | GCO83070 | Outer Joint | | 36 | 30 | 53 | 78 | 60 | I |
| | 1998.01-2010.09 | AT | F | L/R | Hatchback FWD AEG/APK/AQY/AVH/AZG/AZJ/BE/JBER/BEV/BHP/CBPA | Date To:2005.06 | GCI61006 | Inner Joint | | | 30 | | | 57.6 | |
| | 1998.01-2010.09 | MT | F | L | Hatchback FWD AEG/APK/AQY/AVH/AZG/AZJ/BE/JBER/BEV/BHP/CBPA | | GDS61314 | Drive Shaft | | 36 | | 53 | 78 | 558 | |
| | 1998.01-2010.09 | MT | F | L | Hatchback FWD AEG/APK/AQY/AVH/AZG/AZJ/BE/JBER/BEV/BHP/CBPA | | GDS83006 | Drive Shaft | | 36 | | 53.2 | 77.5 | 557 | |
| | 1998.01-2010.09 | MT | F | R | Hatchback FWD AEG/APK/AQY/AVH/AZG/AZJ/BE/JBER/BEV/BHP/CBPA | | GDS83004 | Drive Shaft | | 36 | | 53.2 | 77.5 | 822 | |
| | 1998.01-2010.09 | MT | F | L/R | Hatchback FWD AEG/APK/AQY/AVH/AZG/AZJ/BE/JBER/BEV/BHP/CBPA | | GCO83070 | Outer Joint | | 36 | 30 | 53 | 78 | 60 | I |
| | 1998.01-2010.09 | MT | F | R | Hatchback FWD AEG/APK/AQY/AVH/AZG/AZJ/BE/JBER/BEV/BHP/CBPA | | GCI83009 | Inner Joint | | | 33 | | | 34 | |
| | 1998.01-2010.09 | MT | F | L/R | Hatchback FWD AEG/APK/AQY/AVH/AZG/AZJ/BE/JBER/BEV/BHP/CBPA | | GCI83006 | Inner Joint | | | 33 | | | 34 | |
| | 2002.08-2010.10 | 6AT | F | L | Cabriolet FWD AZJ/BDC/BEV/BGD | Model year from:2003,Model year to:2005,Model year from:2006,Engine code:BEV/AZJ | GDS56652 | Drive Shaft | | 36 | 26 | 53 | 77.5 | 624 | |
| | 2002.08-2010.10 | 6AT | F | R | Cabriolet FWD AZJ/BDC/BEV/BGD | Model year from:2003,Model year to:2005,Model year from:2006,Engine code:BEV/AZJ | GDS61337 | Drive Shaft | | 36 | 26 | 53 | 77.5 | 901 | |
| | 2002.08-2010.10 | AT | F | L/R | Cabriolet FWD AZJ/BDC/BEV/BGD | For light alloy rims | GCO83035 | Outer Joint | | 36 | 27 | 53 | 77.5 | 65 | I |
| | 2002.08-2010.10 | AT/MT | F | L/R | Cabriolet FWD AZJ/BDC/BEV/BGD | | GCO83070 | Outer Joint | | 36 | 30 | 53 | 78 | 60 | I |
| | 2002.08-2010.10 | MT | F | L | Cabriolet FWD AZJ/BDC/BEV/BGD | | GDS61314 | Drive Shaft | | 36 | | 53 | 78 | 558 | |
| | 2002.08-2010.10 | MT | F | R | Cabriolet FWD AZJ/BDC/BEV/BGD | | GDS83004 | Drive Shaft | | 36 | | 53.2 | 77.5 | 822 | |
| | 2002.08-2010.10 | MT | F | L/R | Cabriolet FWD AZJ/BDC/BEV/BGD | | GCI82447 | Inner Joint | | | 33 | | | 34 | |
| 2.3 (125 kw) | 2000.10-2002.10 | 5MT | F | L | Hatchback FWD AQN | | GDS61020 | Drive Shaft | | 36 | | 53.2 | 77.5 | 547 | |
| | 2000.10-2002.10 | 5MT | F | R | Hatchback FWD AQN | | GDS83011 | Drive Shaft | | 36 | | 53.2 | 77.5 | 810.5 | |

| | YEAR | TRANSM. | F/R | L/R | BODY STYLE & DRIVE TYPE & ENGINE | REMARKS | G-AP Ref. | PRODUCT | ABS | Technical Specifications A | B | C | H | L | P |
|---|---|---|---|---|---|---|---|---|---|---|---|---|---|---|---|
| **VW** | | | | | | | | | | | | | | | |
| **New Beetle** | | | | | | | | | | | | | | | |
| 2.3 (125 kw) | 2000.10-2002.10 | MT | F | L/R | Hatchback FWD AQN | Date to:2002.10 | GCO83070 | Outer Joint | | 36 | 30 | 53 | 78 | 60 | I |
| | 2000.10-2002.10 | MT | F | L/R | Hatchback FWD AQN | | GCI83006 | Inner Joint | | | 33 | | | 34 | |
| 2.5 (110 kw) | 2005.07-2010.09 | AT | F | R | Cabriolet FWD BPR/BPS | | GDS61337 | Drive Shaft | | 36 | 26 | 53 | 77.5 | 901 | |
| | 2005.07-2010.09 | AT | F | L/R | Cabriolet FWD BPR/BPS | | GCO83035 | Outer Joint | | 36 | 27 | 53 | 77.5 | 65 | I |
| | 2005.07-2010.09 | AT/MT | F | L | Cabriolet FWD BPR/BPS | | GDS61336 | Drive Shaft | | 36 | 26 | 53 | 77.5 | 609 | |
| | 2005.07-2010.09 | MT | F | R | Cabriolet FWD BPR/BPS | | GDS83004 | Drive Shaft | | 36 | | 53.2 | 77.5 | 822 | |
| | 2005.07-2010.09 | MT | F | L/R | Cabriolet FWD BPR/BPS | | GCO83070 | Outer Joint | | 36 | 30 | 53 | 78 | 60 | I |
| | 2005.07-2010.09 | AT | F | L | Hatchback FWD BPR/BPS | | GDS61336 | Drive Shaft | | 36 | 26 | 53 | 77.5 | 609 | |
| | 2005.07-2010.09 | AT | F | R | Hatchback FWD BPR/BPS | | GDS61337 | Drive Shaft | | 36 | 26 | 53 | 77.5 | 901 | |
| | 2005.07-2010.09 | AT | F | L/R | Hatchback FWD BPR/BPS | | GCO83035 | Outer Joint | | 36 | 27 | 53 | 77.5 | 65 | I |
| | 2005.07-2010.09 | MT | F | R | Hatchback FWD BPR/BPS | | GDS83004 | Drive Shaft | | 36 | | 53.2 | 77.5 | 822 | |
| | 2005.07-2010.09 | MT | F | L/R | Hatchback FWD BPR/BPS | | GCO83070 | Outer Joint | | 36 | 30 | 53 | 78 | 60 | I |
| 3.2 (165 kw) | 2000.07-2001.05 | 6MT | F | L | Hatchback 4WD AXJ | | GDS83304 | Drive Shaft | | 36 | | 59.5 | 40 | 481 | |
| | 2000.07-2001.05 | 6MT | F | R | Hatchback 4WD AXJ | | GDS83322 | Drive Shaft | | 36 | | 59.5 | 40 | 613 | |
| | 2000.07-2001.05 | | F | L/R | Hatchback 4WD AXJ | | GCO61021 | Outer Joint | | 36 | 27 | 53 | 40 | 65 | I |
| | 2000.07-2001.05 | 6MT | R | L | Hatchback 4WD AXJ | | GDS82364 | Drive Shaft | | 36 | | 53 | 78.5 | 651 | |
| | 2000.07-2001.05 | 6MT | R | R | Hatchback 4WD AXJ | | GDS81587 | Drive Shaft | | 36 | | 53 | 78.5 | 522 | |
| | 2000.07-2001.05 | 6MT | R | L/R | Hatchback 4WD AXJ | | GCO83033 | Outer Joint | | 36 | 30 | 53 | 78.5 | 51 | I |
| | 2000.07-2001.05 | 6MT | R | L/R | Hatchback 4WD AXJ | | GCI53002 | Inner Joint | | | 33 | | | 34 | |
| | 2000.07-2001.05 | 6MT | R | L/R | Hatchback 4WD AXJ | | GCI82447 | Inner Joint | | | 33 | | | 34 | |
| | 2000.07-2001.05 | | R | L/R | Hatchback 4WD AXJ | Date From:2000.07 | GCI83011 | Inner Joint | | | 33 | | | 34 | |
| **Passat** | | | | | | | | | | | | | | | |
| 1.4 (90 kw) | 2007.05-2010.07 | AT | F | L | Saloon FWD CAXA | Date from:2008.11 | GDS61281 | Drive Shaft | | 36 | | 59.5 | 40 | 528 | |
| | 2007.05-2010.07 | AT | F | L | Saloon FWD CAXA | Date to:2008.10 | GDS81783 | Drive Shaft | | 36 | 40 | 59.5 | 40 | 531 | |
| | 2007.05-2010.07 | AT | F | R | Saloon FWD CAXA | Date from:2008.11 | GDS81653 | Drive Shaft | | 36 | | 59.5 | 40 | 785 | |
| | 2007.05-2010.07 | AT | F | R | Saloon FWD CAXA | Date to:2008.10 | GDS81784 | Drive Shaft | | 36 | 40 | 59.5 | 40 | 801 | |
| | 2007.05-2010.07 | AT | F | L/R | Saloon FWD CAXA | | GCO83002 | Outer Joint | | 36 | 27 | 59.5 | 40 | 66 | I |
| | 2007.05-2010.07 | AT | F | L/R | Saloon FWD CAXA | Date to:2008.10 | GCI61054 | Inner Joint | | 40 | 28 | 46.9 | 41 | 101.7 | |
| | 2007.05-2010.07 | AT | F | L/R | Saloon FWD CAXA | Date from:2008.11 | GCI83016 | Inner Joint | | | 28 | | | 32 | |
| | 2007.05-2010.07 | MT | F | L | Saloon FWD CAXA | | GDS61201 | Drive Shaft | | 36 | | 59.5 | 40.5 | 535 | |
| | 2007.05-2010.07 | MT | F | R | Saloon FWD CAXA | | GDS61096 | Drive Shaft | | 36 | | 59.5 | 40.5 | 799 | |
| | 2007.05-2010.07 | MT | F | L/R | Saloon FWD CAXA | | GCO83037 | Outer Joint | | 36 | 30 | 59.5 | 40.5 | 56 | I |
| | 2007.05-2010.07 | MT | F | L/R | Saloon FWD CAXA | Date from:2009.01 | GCI82447 | Inner Joint | | | 33 | | | 34 | |
| | 2007.05-2010.07 | | F | | Saloon FWD CAXA | | GCO83100 | Outer Joint | | 36 | 33 | 59.5 | 38 | 56 | I |
| | 2010.08-2014.12 | 6MT/7DCT | F | L | Saloon FWD CAXA | | GDS61201 | Drive Shaft | | 36 | | 59.5 | 40.5 | 535 | |
| | 2010.08-2014.12 | 6MT/7DCT | F | R | Saloon FWD CAXA | | GDS61096 | Drive Shaft | | 36 | | 59.5 | 40.5 | 799 | |
| | 2010.08-2014.12 | 6MT/7DCT | F | L/R | Saloon FWD CAXA | | GCO61059 | Outer Joint | | 36 | 33 | 59.5 | 40 | 59.5 | I |
| | 2010.08-2014.12 | 6MT/7DCT | F | L/R | Saloon FWD CAXA | | GCO83037 | Outer Joint | | 36 | 30 | 59.5 | 40.5 | 56 | I |
| | 2010.08-2014.12 | 6MT/7DCT | F | L/R | Saloon FWD CAXA | | GCI82447 | Inner Joint | | | 33 | | | 34 | |
| 1.4 (92 kw) | 2014.11-2018.11 | 6MT | F | L | Saloon FWD CZCA | | GDS82391 | Drive Shaft | | 36 | | 59.5 | 40 | 528 | |
| | 2014.11-2018.11 | 6MT | F | R | Saloon FWD CZCA | | GDS82390 | Drive Shaft | | 36 | | 59.5 | 40 | 830 | |
| | 2014.11-2018.11 | 6MT | F | L/R | Saloon FWD CZCA | | GCO81355 | Outer Joint | | 36 | 34 | 59.5 | 40 | 59.5 | M |
| | 2014.11-2018.11 | 6MT/7DCT | F | L/R | Saloon FWD CZCA | | GCI81398 | Inner Joint | | | 34 | | | 34 | |
| | 2014.11-2018.11 | 7DCT | F | L | Saloon FWD CZCA | | GDS61201 | Drive Shaft | | 36 | | 59.5 | 40.5 | 535 | |
| 1.4 (110 kw) | 2009.01-2010.07 | 6MT | F | R | Saloon FWD CDGA | | GDS61096 | Drive Shaft | | 36 | | 59.5 | 40.5 | 799 | |
| | 2009.01-2010.07 | 6MT | F | L/R | Saloon FWD CDGA | | GCO83037 | Outer Joint | | 36 | 30 | 59.5 | 40.5 | 56 | I |
| | 2009.01-2010.07 | 7AT/6MT | F | L/R | Saloon FWD CDGA | | GCI83016 | Inner Joint | | | 28 | | | 32 | |
| | 2009.01-2010.07 | AT | F | L | Saloon FWD CDGA | | GDS61281 | Drive Shaft | | 36 | | 59.5 | 40 | 528 | |
| | 2009.01-2010.07 | AT | F | R | Saloon FWD CDGA | | GDS81653 | Drive Shaft | | 36 | | 59.5 | 40 | 785 | |
| | 2009.01-2010.07 | AT/7DCT | F | L/R | Saloon FWD CDGA | | GCO83002 | Outer Joint | | 36 | 27 | 59.5 | 40 | 66 | I |
| | 2009.01-2010.07 | MT | F | L/R | Saloon FWD CDGA | | GCI82447 | Inner Joint | | | 33 | | | 34 | |
| | 2009.01-2010.07 | MT/6MT | F | L | Saloon FWD CDGA | | GDS61201 | Drive Shaft | | 36 | | 59.5 | 40.5 | 535 | |
| | 2010.08-2014.12 | 6MT | F | L | Saloon FWD CDGA | | GDS61201 | Drive Shaft | | 36 | | 59.5 | 40.5 | 535 | |
| | 2010.08-2014.12 | 6MT | F | R | Saloon FWD CDGA | | GDS61096 | Drive Shaft | | 36 | | 59.5 | 40.5 | 799 | |
| | 2010.08-2014.12 | 6MT | F | L/R | Saloon FWD CDGA | | GCO83037 | Outer Joint | | 36 | 30 | 59.5 | 40.5 | 56 | I |
| | 2010.08-2014.12 | 6MT | F | L/R | Saloon FWD CDGA | | GCI82447 | Inner Joint | | | 33 | | | 34 | |
| | 2010.08-2014.12 | 7AT/6MT | F | L/R | Saloon FWD CDGA | | GCI83016 | Inner Joint | | | 28 | | | 32 | |
| | 2010.08-2014.12 | 7DCT | F | L | Saloon FWD CDGA | | GDS61281 | Drive Shaft | | 36 | | 59.5 | 40 | 528 | |
| | 2010.08-2014.12 | 7DCT | F | R | Saloon FWD CDGA | | GDS81653 | Drive Shaft | | 36 | | 59.5 | 40 | 785 | |
| | 2010.08-2014.12 | 7DCT | F | L/R | Saloon FWD CDGA | | GCO83002 | Outer Joint | | 36 | 27 | 59.5 | 40 | 66 | I |
| | 2014.11-2024.03 | 6MT | F | R | Saloon FWD CZEA;CZDA | For Engine code:CZDA | GDS81890 | Drive Shaft | | 36 | | 59.5 | 40 | 818 | |
| | 2014.11-2024.03 | 6MT | F | R | Saloon FWD CZEA;CZDA | For Engine code:CZEA | GDS81987 | Drive Shaft | | 36 | | 59.5 | 40 | 817 | |
| | 2014.11-2024.03 | 6MT/7DCT | F | L | Saloon FWD CZEA;CZDA | For Engine code:CZEA | GDS82387 | Drive Shaft | | 36 | | 59.5 | 40 | 523 | |
| | 2014.11-2024.03 | 6MT/7DCT | F | L/R | Saloon FWD CZEA;CZDA | | GCO83101 | Outer Joint | | 36 | 27 | 59.5 | 40 | 65 | M |
| | 2014.11-2024.03 | 6MT/7DCT | F | L/R | Saloon FWD CZEA;CZDA | | GCI83016 | Inner Joint | | | 28 | | | 32 | |

| | YEAR | TRANSM. | F/R | L/R | BODY STYLE & DRIVE TYPE & ENGINE | REMARKS | G-AP Ref. | PRODUCT | ABS | Technical Specifications A | B | C | H | L | P |
|---|---|---|---|---|---|---|---|---|---|---|---|---|---|---|---|
| **VW Passat** | | | | | | | | | | | | | | | |
| 1.4 (110 kw) | 2014.11-2024.03 | 7DCT | F | R | Saloon FWD CZEA;CZDA | For Engine code:CZDA | GDS61101 | Drive Shaft | | 36 | | 59.5 | 40 | 803 | |
| | 2014.11-2024.03 | 7DCT | F | R | Saloon FWD CZEA;CZDA | For Engine code:CZEA | GDS82386 | Drive Shaft | | 36 | | 59.5 | 40 | 806 | |
| | 2015.02-2018.11 | 6MT | F | L | Saloon 4WD CZEA | | GDS81896 | Drive Shaft | | 36 | | 59.5 | 40 | 500 | |
| | 2015.02-2018.11 | 6MT | F | R | Saloon 4WD CZEA | | GDS82352 | Drive Shaft | | 36 | | 59.5 | 40 | 614 | |
| | 2015.02-2018.11 | 6MT | F | L/R | Saloon 4WD CZEA | | GCO83101 | Outer Joint | | 36 | 27 | 59.5 | 40 | 65 | M |
| | 2015.02-2018.11 | 7DCT | F | L/R | Saloon 4WD CZEA | | GCI83016 | Inner Joint | | | 28 | | | 32 | |
| | 2015.02-2018.11 | 6MT | R | L | Saloon 4WD CZEA | | GDS61331 | Drive Shaft | | 36 | | 59.5 | 40 | 606 | |
| | 2015.02-2018.11 | 6MT | R | R | Saloon 4WD CZEA | | GDS61332 | Drive Shaft | | 36 | | 59.5 | 40 | 650 | |
| | 2015.02-2018.11 | 6MT | R | L/R | Saloon 4WD CZEA | | GCI35026 | Outer Joint | | 36 | 33 | 59.5 | 40 | 61 | |
| 1.4 (118 kw) | 2010.11-2014.12 | 6MT | F | L | Saloon FWD CKMA | | GDS61201 | Drive Shaft | | 36 | | 59.5 | 40.5 | 535 | |
| | 2010.11-2014.12 | 6MT | F | R | Saloon FWD CKMA | | GDS61096 | Drive Shaft | | 36 | | 59.5 | 40.5 | 799 | |
| | 2010.11-2014.12 | 6MT | F | L/R | Saloon FWD CKMA | | GCO83037 | Outer Joint | | 36 | 30 | 59.5 | 40.5 | 56 | I |
| | 2010.11-2014.12 | 6MT | F | L/R | Saloon FWD CKMA | | GCI82447 | Inner Joint | | | 33 | | | 34 | |
| | 2010.11-2014.12 | 7AT/6MT | F | L/R | Saloon FWD CKMA | | GCI83016 | Inner Joint | | | 28 | | | 32 | |
| | 2010.11-2014.12 | 7DCT | F | L | Saloon FWD CKMA | | GDS61281 | Drive Shaft | | 36 | | 59.5 | 40 | 528 | |
| | 2010.11-2014.12 | 7DCT | F | R | Saloon FWD CKMA | | GDS81653 | Drive Shaft | | 36 | | 59.5 | 40 | 785 | |
| | 2010.11-2014.12 | 7DCT | F | L/R | Saloon FWD CKMA | | GCO83002 | Outer Joint | | 36 | 27 | 59.5 | 40 | 66 | I |
| | 2010.11-2014.12 | AT | F | L | Saloon FWD CKMA | | GDS83302 | Drive Shaft | | 36 | | 59.5 | 40 | 528 | |
| | 2012.11-2014.12 | 6MT | F | L | Saloon FWD CTHD | | GDS61201 | Drive Shaft | | 36 | | 59.5 | 40.5 | 535 | |
| | 2012.11-2014.12 | 6MT | F | R | Saloon FWD CTHD | | GDS61096 | Drive Shaft | | 36 | | 59.5 | 40.5 | 799 | |
| | 2012.11-2014.12 | 6MT | F | L/R | Saloon FWD CTHD | | GCI82447 | Inner Joint | | | 33 | | | 34 | |
| | 2012.11-2014.12 | 6MT/7AT | F | L/R | Saloon FWD CTHD | | GCO83037 | Outer Joint | | 36 | 30 | 59.5 | 40.5 | 56 | I |
| | 2012.11-2014.12 | 7AT/6MT | F | L/R | Saloon FWD CTHD | | GCO83002 | Outer Joint | | 36 | 27 | 59.5 | 40 | 66 | I |
| | 2012.11-2014.12 | 7AT/6MT | F | L/R | Saloon FWD CTHD | | GCI83016 | Inner Joint | | | 28 | | | 32 | |
| | 2012.11-2014.12 | 7DCT | F | L | Saloon FWD CTHD | | GDS61281 | Drive Shaft | | 36 | | 59.5 | 40 | 528 | |
| | 2012.11-2014.12 | 7DCT | F | R | Saloon FWD CTHD | | GDS81653 | Drive Shaft | | 36 | | 59.5 | 40 | 785 | |
| 1.4 (160 kw) | 2015.06-2024.03 | 6AT | F | L/R | Saloon FWD CUKC;DGEB | | GCO83101 | Outer Joint | | 36 | 27 | 59.5 | 40 | 65 | M |
| | 2015.06-2024.03 | 6AT | F | L | Saloon FWD CUKC;DGEB | | GCI81158 | Inner Joint | | 37 | 34 | 34.5 | 65.5 | 83 | |
| | 2015.06-2024.03 | 6AT | F | R | Saloon FWD CUKC;DGEB | | GCI82108 | Inner Joint | | 37 | 34 | 40 | 77.5 | 103.5 | |
| | 2015.06-2024.03 | 6DCT | F | L | Saloon FWD CUKC;DGEB | | GDS81265 | Drive Shaft | | 36 | 37 | 59.5 | 40 | 557 | |
| | 2015.06-2024.03 | 6DCT | F | R | Saloon FWD CUKC;DGEB | | GDS83613 | Drive Shaft | | 36 | 37 | 59.5 | 40 | 921 | |
| 1.5 (110 kw) | 2018.08-2024.03 | 6MT | F | L | Saloon FWD DADA;DPCA | For Engine code:DPCA | GDS61282 | Drive Shaft | | 36 | | 59.5 | 40 | 523 | |
| | 2018.08-2024.03 | 6MT | F | R | Saloon FWD DADA;DPCA | For Engine code:DPCA;For PR code:0ED | GDS58110 | Drive Shaft | | 36 | | 59.5 | 40 | 793 | |
| | 2018.08-2024.03 | 6MT | F | R | Saloon FWD DADA;DPCA | For Engine code:DADA;For PR code:0EJ | GDS82386 | Drive Shaft | | 36 | | 59.5 | 40 | 806 | |
| | 2018.08-2024.03 | 6MT | F | L/R | Saloon FWD DADA;DPCA | For Engine code:DPCA | GCO61059 | Outer Joint | | 36 | 33 | 59.5 | 40 | 59.5 | I |
| | 2018.08-2024.03 | 6MT | F | L/R | Saloon FWD DADA;DPCA | For Engine code:DPCA;Trans. code:MQ281 | GCI82447 | Inner Joint | | | 33 | | | 34 | |
| | 2018.08-2024.03 | 6MT | F | L/R | Saloon FWD DADA;DPCA | For Enginecode:DADA,Transm. code:MQ250 | GCI82456 | Inner Joint | | | 28 | | | 32 | |
| | 2018.08-2024.03 | 6MT/7DCT | F | L | Saloon FWD DADA;DPCA | | GDS82387 | Drive Shaft | | 36 | | 59.5 | 40 | 523 | |
| | 2018.08-2024.03 | 7AT/6MT | F | L/R | Saloon FWD DADA;DPCA | | GCI83016 | Inner Joint | | | 28 | | | 32 | |
| | 2018.08-2024.03 | 7DCT | F | R | Saloon FWD DADA;DPCA | | GDS84498 | Drive Shaft | | 36 | 40 | 59.5 | 40 | 834 | |
| | 2018.08-2024.03 | 7DCT | F | R | Saloon FWD DADA;DPCA | | GCO83101 | Outer Joint | | 36 | 27 | 59.5 | 40 | 65 | M |
| 1.6 (74 kw) | 1994.10-1996.12 | AT/MT | F | L/R | Saloon FWD AEK/AFT | | GCO53007 | Outer Joint | | 22 | 30 | 53.2 | 78 | 61 | I |
| | 1994.10-1996.12 | MT | F | L | Saloon FWD AEK/AFT | | GDS61001 | Drive Shaft | | 22 | | 53.2 | 78 | 557 | |
| | 1994.10-1996.12 | MT | F | R | Saloon FWD AEK/AFT | | GDS61002 | Drive Shaft | | 22 | | 53 | 78.5 | 793 | |
| | 1994.10-1996.12 | MT | F | R | Saloon FWD AEK/AFT | | GCI83009 | Inner Joint | | | 33 | | | 34 | |
| | 1994.10-1996.12 | MT | F | L/R | Saloon FWD AEK/AFT | | GCI83011 | Inner Joint | | | 33 | | | 34 | |
| | 1994.10-1996.12 | | F | | Saloon FWD AEK/AFT | | GCO53004 | Outer Joint | | 22 | 30 | 51 | 78 | 61 | I |
| | 1996.10-2000.08 | 4AT | F | L | Saloon FWD ADP/AHL/ANA/ARM | | GDS83012 | Drive Shaft | 45W | 33 | | 53 | 30 | 498 | |
| | 1996.10-2000.08 | 4AT | F | R | Saloon FWD ADP/AHL/ANA/ARM | | GDS99108 | Drive Shaft | 45W | 33 | | 53 | 30 | 586 | |
| | 1996.10-2000.08 | 4AT | F | L/R | Saloon FWD ADP/AHL/ANA/ARM | | GCI50019 | Inner Joint | | | 34 | | | 59.5 | |
| | 1996.10-2000.08 | 4AT/5MT | F | L/R | Saloon FWD ADP/AHL/ANA/ARM | | GCO61012 | Outer Joint | 45W | 33 | 30 | 53 | 30 | 62 | I |
| | 1996.10-2000.08 | 5MT | F | L | Saloon FWD ADP/AHL/ANA/ARM | | GDS83002 | Drive Shaft | 45W | 33 | | 53 | 30 | 614 | |
| | 1996.10-2000.08 | 5MT | F | R | Saloon FWD ADP/AHL/ANA/ARM | | GDS99111 | Drive Shaft | 45W | 33 | | 53 | 30 | 636 | |
| | 1996.10-2000.08 | 5MT | F | L/R | Saloon FWD ADP/AHL/ANA/ARM | | GCI83002 | Inner Joint | | | 33 | | | 32 | |
| 1.6 (75 kw) | 2000.11-2005.05 | 4AT/5MT | F | L | Saloon FWD ALZ | | GDS83002 | Drive Shaft | 45W | 33 | | 53 | 30 | 614 | |
| | 2000.11-2005.05 | 4AT/5MT | F | R | Saloon FWD ALZ | | GDS99111 | Drive Shaft | 45W | 33 | | 53 | 30 | 636 | |
| | 2000.11-2005.05 | 4AT/5MT | F | L/R | Saloon FWD ALZ | | GCO61012 | Outer Joint | 45W | 33 | 30 | 53 | 30 | 62 | I |
| | 2000.11-2005.05 | 4AT/5MT | F | L/R | Saloon FWD ALZ | | GCI83002 | Inner Joint | | | 33 | | | 32 | |
| | 2005.05-2010.07 | 5MT | F | L | Saloon FWD BSE;BSF | | GDS83373 | Drive Shaft | | 36 | | 59.5 | 38 | 511 | |
| | 2005.05-2010.07 | 5MT | F | R | Saloon FWD BSE;BSF | | GDS61042 | Drive Shaft | | 36 | | 59.5 | 40.5 | 814 | |
| | 2005.05-2010.07 | 5MT | F | L/R | Saloon FWD BSE;BSF | | GCO83037 | Outer Joint | | 36 | 30 | 59.5 | 40.5 | 56 | I |
| | 2005.05-2010.07 | 5MT | F | L/R | Saloon FWD BSE;BSF | | GCI82447 | Inner Joint | | | 33 | | | 34 | |
| | 2005.05-2010.07 | AT | F | L | Saloon FWD BSE;BSF | | GDS61093 | Drive Shaft | | 36 | 26 | 59.5 | 40.5 | 587.5 | |
| | 2005.05-2010.07 | AT | F | R | Saloon FWD BSE;BSF | | GDS61094 | Drive Shaft | | 36 | 26 | 59.5 | 40.5 | 884 | |
| | 2005.05-2010.07 | MT | F | L/R | Saloon FWD BSE;BSF | | GCI83006 | Inner Joint | | | 33 | | | 34 | |

| | YEAR | TRANSM. | F/R | L/R | BODY STYLE & DRIVE TYPE & ENGINE | REMARKS | G-AP Ref. | PRODUCT | ABS | Technical Specifications A | B | C | H | L | P |
|---|---|---|---|---|---|---|---|---|---|---|---|---|---|---|---|
| **VW Passat** | | | | | | | | | | | | | | | |
| 1.6 (75 kw) | 2005.05-2010.07 | MT | F | L/R | Saloon FWD BSE;BSF | | GCI83011 | Inner Joint | | | 33 | | | 34 | |
| 1.6 (77 kw) | 2009.08-2010.07 | 5MT | F | L | Saloon FWD CAYC | | GDS61282 | Drive Shaft | | 36 | | 59.5 | 40 | 523 | |
| | 2009.08-2010.07 | 5MT | F | R | Saloon FWD CAYC | | GDS61283 | Drive Shaft | | 36 | | 59.5 | 40 | 815 | |
| | 2009.08-2010.07 | 5MT | F | L/R | Saloon FWD CAYC | | GCI82447 | Inner Joint | | | 33 | | | 34 | |
| | 2009.08-2010.07 | 6MT | F | L | Saloon FWD CAYC | | GCO61059 | Outer Joint | | 36 | 33 | 59.5 | 40 | 59.5 | I |
| | 2009.08-2010.07 | 7DCT | F | L/R | Saloon FWD CAYC | | GCO83002 | Outer Joint | | 36 | 27 | 59.5 | 40 | 66 | I |
| | 2009.08-2010.07 | MT | F | L | Saloon FWD CAYC | | GDS83294 | Drive Shaft | | 36 | | 59.5 | 38 | 519 | |
| | 2009.08-2010.07 | MT | F | L | Saloon FWD CAYC | | GCO83037 | Outer Joint | | 36 | 30 | 59.5 | 40.5 | 56 | I |
| | 2009.08-2010.07 | MT | F | L/R | Saloon FWD CAYC | | GCI83006 | Inner Joint | | | 33 | | | 34 | |
| | 2009.08-2010.07 | MT/6MT | F | L/R | Saloon FWD CAYC | | GCI83011 | Inner Joint | | | 33 | | | 34 | |
| | 2009.08-2010.07 | | F | R | Saloon FWD CAYC | Date From:2009.11 | GDS61042 | Drive Shaft | | 36 | | 59.5 | 40.5 | 814 | |
| | 2010.08-2014.12 | 6MT | F | L | Saloon FWD CAYC | | GDS61282 | Drive Shaft | | 36 | | 59.5 | 40 | 523 | |
| | 2010.08-2014.12 | 6MT | F | R | Saloon FWD CAYC | | GDS61283 | Drive Shaft | | 36 | | 59.5 | 40 | 815 | |
| | 2010.08-2014.12 | 6MT | F | R | Saloon FWD CAYC | Date from:2013.03;Date to:2013.05 | GCO83037 | Outer Joint | | 36 | 30 | 59.5 | 40.5 | 56 | I |
| | 2010.08-2014.12 | 6MT | F | L/R | Saloon FWD CAYC | | GCO61059 | Outer Joint | | 36 | 33 | 59.5 | 40 | 59.5 | I |
| | 2010.08-2014.12 | 6MT | F | L/R | Saloon FWD CAYC | | GCI82447 | Inner Joint | | | 33 | | | 34 | |
| | 2010.08-2014.12 | 7AT/6MT | F | L/R | Saloon FWD CAYC | | GCI83016 | Inner Joint | | | 28 | | | 32 | |
| | 2010.08-2014.12 | 7DCT | F | L | Saloon FWD CAYC | | GDS61100 | Drive Shaft | | 36 | | 59.5 | 40 | 513 | |
| | 2010.08-2014.12 | 7DCT | F | R | Saloon FWD CAYC | | GDS61126 | Drive Shaft | | 36 | | 59.5 | 40 | 793 | |
| | 2010.08-2014.12 | 7DCT | F | R | Saloon FWD CAYC | | GDS83313 | Drive Shaft | | 36 | | 59.5 | 40 | 792 | |
| | 2010.08-2014.12 | 7DCT | F | L/R | Saloon FWD CAYC | | GCO83002 | Outer Joint | | 36 | 27 | 59.5 | 40 | 66 | I |
| | 2010.08-2014.12 | MT | F | L | Saloon FWD CAYC | | GDS83294 | Drive Shaft | | 36 | | 59.5 | 38 | 519 | |
| | 2010.08-2014.12 | | F | R | Saloon FWD CAYC | Date From:2009.11 | GDS61042 | Drive Shaft | | 36 | | 59.5 | 40.5 | 814 | |
| 1.6 (85 kw) | 2005.03-2008.06 | 6AT | F | L/R | Saloon FWD BLF | | GCI61011 | Inner Joint | | 26 | 32 | 31 | 68.5 | 85 | |
| | 2005.03-2008.06 | 6AT | F | L/R | Saloon FWD BLF | | GCI61050 | Inner Joint | | 26 | 32 | 31 | 68.5 | 89 | |
| | 2005.03-2008.06 | AT | F | L | Saloon FWD BLF | | GDS81582 | Drive Shaft | | 36 | 26 | 59.5 | 40 | 597 | |
| | 2005.03-2008.06 | AT | F | R | Saloon FWD BLF | | GDS81583 | Drive Shaft | | 36 | 26 | 59.5 | 40 | 873 | |
| | 2005.03-2008.06 | AT | F | L/R | Saloon FWD BLF | | GCO83037 | Outer Joint | | 36 | 30 | 59.5 | 40.5 | 56 | I |
| | 2005.03-2008.06 | MT | F | L | Saloon FWD BLF | | GDS61201 | Drive Shaft | | 36 | | 59.5 | 40.5 | 535 | |
| | 2005.03-2008.06 | MT | F | R | Saloon FWD BLF | | GDS61096 | Drive Shaft | | 36 | | 59.5 | 40.5 | 799 | |
| | 2005.03-2008.06 | MT | F | L/R | Saloon FWD BLF | | GCI83011 | Inner Joint | | | 33 | | | 34 | |
| 1.6 (88 kw) | 2014.08-2020.11 | 6MT | F | R | Saloon FWD DCXA;DCZA | | GDS81525 | Drive Shaft | | 36 | | 59.5 | 40 | 825 | |
| | 2014.08-2020.11 | 6MT | F | R | Saloon FWD DCXA;DCZA | | GCO81355 | Outer Joint | | 36 | 34 | 59.5 | 40 | 59.5 | M |
| | 2014.08-2020.11 | 6MT/7DCT | F | L | Saloon FWD DCXA;DCZA | | GDS61201 | Drive Shaft | | 36 | | 59.5 | 40.5 | 535 | |
| | 2014.08-2020.11 | 6MT/7DCT | F | L/R | Saloon FWD DCXA;DCZA | | GCI81398 | Inner Joint | | | 34 | | | 34 | |
| | 2014.08-2020.11 | 7DCT | F | R | Saloon FWD DCXA;DCZA | | GDS61283 | Drive Shaft | | 36 | | 59.5 | 40 | 815 | |
| | 2014.08-2020.11 | 7DCT | F | R | Saloon FWD DCXA;DCZA | | GCO61059 | Outer Joint | | 36 | 33 | 59.5 | 40 | 59.5 | I |
| 1.8 (55 kw) | 1990.08-1996.12 | AT/MT | F | L/R | Saloon FWD AAM | Chassis no. from:31-L-201814;Chassis no. to:31-N-105278 | GCO53007 | Outer Joint | | 22 | 30 | 53.2 | 78 | 61 | I |
| | 1990.08-1996.12 | AT/MT | F | L/R | Saloon FWD AAM | Chassis Number:31N105279-3AV300000 | GCI83011 | Inner Joint | | | 33 | | | 34 | |
| | 1990.08-1996.12 | MT | F | L | Saloon FWD AAM | Chassis no. from:31-L-201814;Chassis no. to:3A-V-300000 | GDS61001 | Drive Shaft | | 22 | | 53.2 | 78 | 557 | |
| | 1990.08-1996.12 | MT | F | R | Saloon FWD AAM | Chassis no. from:31-L-201814;Chassis no. to:3A-V-300000 | GDS61002 | Drive Shaft | | 22 | | 53 | 78.5 | 793 | |
| | 1990.08-1996.12 | MT | F | R | Saloon FWD AAM | Chassis no. from:31-L-201814;Chassis no. to:3A-V-300000 | GCI83009 | Inner Joint | | | 33 | | | 34 | |
| | 1990.08-1996.12 | | F | | Saloon FWD AAM | | GCO53004 | Outer Joint | | 22 | 30 | 51 | 78 | 61 | I |
| 1.8 (66 kw) | 1988.02-1996.12 | AT/MT | F | L/R | Saloon FWD ABS/ADZ/RP | Chassis no. from:31-L-201814;Chassis no. to:31-N-105278 | GCO53007 | Outer Joint | | 22 | 30 | 53.2 | 78 | 61 | I |
| | 1988.02-1996.12 | MT | F | L | Saloon FWD ABS/ADZ/RP | Chassis no. from:31-L-201814;Chassis no. to:3A-V-300000 | GDS61001 | Drive Shaft | | 22 | | 53.2 | 78 | 557 | |
| | 1988.02-1996.12 | MT | F | R | Saloon FWD ABS/ADZ/RP | Chassis no. from:31-L-201814;Chassis no. to:3A-V-300000 | GDS61002 | Drive Shaft | | 22 | | 53 | 78.5 | 793 | |
| 1.8 (85 kw) | 1996.11-2000.04 | 4AT | F | L | Saloon FWD AFY | | GDS83012 | Drive Shaft | 45W | 33 | | 53 | 30 | 498 | |
| | 1996.11-2000.04 | 4AT | F | R | Saloon FWD AFY | | GDS99108 | Drive Shaft | 45W | 33 | | 53 | 30 | 586 | |
| | 1996.11-2000.04 | 4AT | F | L/R | Saloon FWD AFY | | GCO61012 | Outer Joint | 45W | 33 | 30 | 53 | 30 | 62 | I |
| | 1996.11-2000.04 | 4AT | F | L/R | Saloon FWD AFY | | GCI50019 | Inner Joint | | | 34 | | | 59.5 | |
| | 1996.11-2000.04 | 5MT | F | L | Saloon FWD AFY | | GDS83005 | Drive Shaft | 45W | 33 | | 53 | 30 | 614 | |
| | 1996.11-2000.04 | 5MT | F | R | Saloon FWD AFY | | GDS83001 | Drive Shaft | 45W | 33 | | 53 | 30 | 634 | |
| | 1996.11-2000.04 | 5MT | F | L/R | Saloon FWD AFY | | GCO83018 | Outer Joint | 45W | 33 | 30 | 53 | 30 | 62 | I |
| | 1996.11-2000.04 | 5MT | F | L/R | Saloon FWD AFY | | GCI83001 | Inner Joint | | | 28 | | | 32 | |
| 1.8 (92 kw) | 1996.12-2000.08 | 5MT | F | L | Saloon 4WD ADR/APT/ARG | | GDS83002 | Drive Shaft | 45W | 33 | | 53 | 30 | 614 | |
| | 1996.12-2000.08 | 5MT | F | R | Saloon 4WD ADR/APT/ARG | | GDS99111 | Drive Shaft | 45W | 33 | | 53 | 30 | 636 | |
| | 1996.12-2000.08 | 5MT | F | L/R | Saloon 4WD ADR/APT/ARG | | GCO61012 | Outer Joint | 45W | 33 | 30 | 53 | 30 | 62 | I |
| | 1996.12-2000.08 | 5MT | R | L/R | Saloon 4WD ADR/APT/ARG | | GDS83672 | Drive Shaft | 45W | 33 | | 53 | 30 | 618 | |
| | 1996.12-2000.08 | 5MT | R | L/R | Saloon 4WD ADR/APT/ARG | | GCO83080 | Outer Joint | 45W | 33 | 30 | 53 | 30 | 62 | I |
| | 1996.12-2000.08 | 5MT | F/R | L/R | Saloon 4WD ADR/APT/ARG | | GCI83002 | Inner Joint | | | 33 | | | 32 | |
| | 1996.12-2000.08 | 4AT | F | L | Saloon FWD ADR/APT/ARG | | GDS83012 | Drive Shaft | 45W | 33 | | 53 | 30 | 498 | |
| | 1996.12-2000.08 | 4AT | F | R | Saloon FWD ADR/APT/ARG | | GDS99108 | Drive Shaft | 45W | 33 | | 53 | 30 | 586 | |
| | 1996.12-2000.08 | 4AT | F | L/R | Saloon FWD ADR/APT/ARG | | GCO61012 | Outer Joint | 45W | 33 | 30 | 53 | 30 | 62 | I |
| | 1996.12-2000.08 | 4AT | F | L/R | Saloon FWD ADR/APT/ARG | | GCI50019 | Inner Joint | | | 34 | | | 59.5 | |
| | 1996.12-2000.08 | 5MT | F | L | Saloon FWD ADR/APT/ARG | | GDS83005 | Drive Shaft | 45W | 33 | | 53 | 30 | 614 | |

| | YEAR | TRANSM. | F/R | L/R | BODY STYLE & DRIVE TYPE & ENGINE | REMARKS | G-AP Ref. | PRODUCT | ABS | Technical Specifications A | B | C | H | L | P |
|---|---|---|---|---|---|---|---|---|---|---|---|---|---|---|---|
| **VW Passat** | | | | | | | | | | | | | | | |
| 1.8 (92 kw) | 1996.12-2000.08 | 5MT | F | R | Saloon FWD ADR/APT/ARG | | GDS83001 | Drive Shaft | 45W | 33 | | 53 | 30 | 634 | |
| | 1996.12-2000.08 | 5MT | F | L/R | Saloon FWD ADR/APT/ARG | | GCO83018 | Outer Joint | 45W | 33 | 30 | 53 | 30 | 62 | I |
| | 1996.12-2000.08 | 5MT | F | L/R | Saloon FWD ADR/APT/ARG | | GCI83001 | Inner Joint | | | 28 | | | 32 | |
| 1.8 (110 kw) | 1996.10-2000.11 | 5AT | F | L | Saloon FWD AEB/ANB/APU | | GDS83036 | Drive Shaft | 45W | 33 | | 53 | 30 | 524 | |
| | 1996.10-2000.11 | 5AT | F | R | Saloon FWD AEB/ANB/APU | | GDS83012 | Drive Shaft | 45W | 33 | | 53 | 30 | 498 | |
| | 1996.10-2000.11 | 5AT | F | L/R | Saloon FWD AEB/ANB/APU | | GCO61012 | Outer Joint | 45W | 33 | 30 | 53 | 30 | 62 | I |
| | 1996.10-2000.11 | 5AT | F | L/R | Saloon FWD AEB/ANB/APU | | GCO83045 | Outer Joint | | 33 | 30 | 53 | 30 | 62 | I |
| | 1996.10-2000.11 | 5AT | F | L/R | Saloon FWD AEB/ANB/APU | | GCI50019 | Inner Joint | | | 34 | | | 59.5 | |
| | 1996.10-2000.11 | 5MT | F | L | Saloon FWD AEB/ANB/APU | | GDS83005 | Drive Shaft | 45W | 33 | | 53 | 30 | 614 | |
| | 1996.10-2000.11 | 5MT | F | R | Saloon FWD AEB/ANB/APU | | GDS83001 | Drive Shaft | 45W | 33 | | 53 | 30 | 634 | |
| | 1996.10-2000.11 | 5MT | F | L/R | Saloon FWD AEB/ANB/APU | | GCO83018 | Outer Joint | 45W | 33 | 30 | 53 | 30 | 62 | I |
| | 1996.10-2000.11 | 5MT | F | L/R | Saloon FWD AEB/ANB/APU | | GCI83001 | Inner Joint | | | 28 | | | 32 | |
| | 2000.11-2005.05 | 5AT | F | L | Saloon FWD AWT | Date to:2003.01 | GDS83015 | Drive Shaft | 45W | 38 | | 59.5 | 34.5 | 527 | |
| | 2000.11-2005.05 | 5AT | F | R | Saloon FWD AWT | Date to:2003.01 | GDS83048 | Drive Shaft | 45W | 38 | | 59.5 | 34.5 | 502 | |
| | 2000.11-2005.05 | 5AT | F | L/R | Saloon FWD AWT | | GCO83019 | Outer Joint | 45W | 38 | 27 | 59.5 | 34.5 | 63 | I |
| | 2000.11-2005.05 | 5AT | F | L/R | Saloon FWD AWT | | GCI50019 | Inner Joint | | | 34 | | | 59.5 | |
| | 2000.11-2005.05 | 5MT | F | L | Saloon FWD AWT | Date From:2001.05 | GDS61122 | Drive Shaft | 45W | 33 | | 53 | 30 | 602 | |
| | 2000.11-2005.05 | 5MT | F | L | Saloon FWD AWT | Date To:2001.04 | GDS83005 | Drive Shaft | 45W | 33 | | 53 | 30 | 614 | |
| | 2000.11-2005.05 | 5MT | F | R | Saloon FWD AWT | Date To:2001.04 | GDS83001 | Drive Shaft | 45W | 33 | | 53 | 30 | 634 | |
| | 2000.11-2005.05 | 5MT | F | R | Saloon FWD AWT | Date From:2001.05 | GDS83007 | Drive Shaft | 45W | 33 | | 53 | 30 | 622 | |
| | 2000.11-2005.05 | 5MT | F | R | Saloon FWD AWT | Date From:2001.05 | GDS83009 | Drive Shaft | 45W | 33 | | 53 | 30 | 617 | |
| | 2000.11-2005.05 | 5MT | F | L/R | Saloon FWD AWT | Date from:2001.05 | GCO61012 | Outer Joint | 45W | 33 | 30 | 53 | 30 | 62 | I |
| | 2000.11-2005.05 | 5MT | F | L/R | Saloon FWD AWT | Date to:2001.04 | GCO83018 | Outer Joint | 45W | 33 | 30 | 53 | 30 | 62 | I |
| | 2000.11-2005.05 | 5MT | F | L/R | Saloon FWD AWT | Date from:2001.05 | GCI50019 | Inner Joint | | | 34 | | | 59.5 | |
| | 2000.11-2005.05 | 5MT | F | L/R | Saloon FWD AWT | Date To:2001.04 | GCI83001 | Inner Joint | | | 28 | | | 32 | |
| 1.8 (112 kw) | 2009.11-2010.07 | 7AT | F | L | Saloon FWD CDAB;CGYA | | GDS61100 | Drive Shaft | | 36 | | 59.5 | 40 | 513 | |
| | 2009.11-2010.07 | 7AT | F | R | Saloon FWD CDAB;CGYA | | GDS83313 | Drive Shaft | | 36 | | 59.5 | 40 | 792 | |
| | 2009.11-2010.07 | 7DCT | F | R | Saloon FWD CDAB;CGYA | | GDS61126 | Drive Shaft | | 36 | | 59.5 | 40 | 793 | |
| | 2009.11-2010.07 | AT | F | L/R | Saloon FWD CDAB;CGYA | | GCO83101 | Outer Joint | | 36 | 27 | 59.5 | 40 | 65 | M |
| | 2009.11-2010.07 | MT | F | L | Saloon FWD CDAB;CGYA | For Engine code:CDAB,For PR code:0EJ | GDS61100 | Drive Shaft | | 36 | | 59.5 | 40 | 513 | |
| | 2009.11-2010.07 | MT | F | L | Saloon FWD CDAB;CGYA | For Engine code:CDAB,For PR code:0EN | GDS83295 | Drive Shaft | | 36 | | 59.5 | 40 | 491 | |
| | 2009.11-2010.07 | MT | F | R | Saloon FWD CDAB;CGYA | For Engine code:CDAB,For PR code:0EJ | GDS61341 | Drive Shaft | | 36 | | 59.5 | 40 | 806 | |
| | 2009.11-2010.07 | MT | F | R | Saloon FWD CDAB;CGYA | For Engine code:CDAB,For PR code:0EN | GDS83313 | Drive Shaft | | 36 | | 59.5 | 40 | 792 | |
| | 2009.11-2010.07 | MT | F | L/R | Saloon FWD CDAB;CGYA | For Engine code:CDAB | GCO83002 | Outer Joint | | 36 | 27 | 59.5 | 40 | 66 | I |
| | 2009.11-2010.07 | MT | F | L/R | Saloon FWD CDAB;CGYA | | GCI83016 | Inner Joint | | | 28 | | | 32 | |
| | 2011.02-2014.12 | 6MT | F | L | Saloon FWD CDAB | For PR code:A8B/A8C/A8G/A9I | GDS61100 | Drive Shaft | | 36 | | 59.5 | 40 | 513 | |
| | 2011.02-2014.12 | 6MT | F | L | Saloon FWD CDAB | For PR code:A8T | GDS83295 | Drive Shaft | | 36 | | 59.5 | 40 | 491 | |
| | 2011.02-2014.12 | 6MT | F | R | Saloon FWD CDAB | For PR code:A8T | GDS61147 | Drive Shaft | | 36 | | 59.5 | 40 | 795 | |
| | 2011.02-2014.12 | 6MT | F | R | Saloon FWD CDAB | For PR code:A8B/A8C/A8G/A9I | GDS61341 | Drive Shaft | | 36 | | 59.5 | 40 | 806 | |
| | 2011.02-2014.12 | 6MT | F | R | Saloon FWD CDAB | For PR code:A8T | GDS83313 | Drive Shaft | | 36 | | 59.5 | 40 | 792 | |
| | 2011.02-2014.12 | 6MT | F | L/R | Saloon FWD CDAB | For PR code:A8T | GCO83101 | Outer Joint | | 36 | 27 | 59.5 | 40 | 65 | M |
| | 2011.02-2014.12 | 6MT/7DCT | F | L/R | Saloon FWD CDAB | Transmission:6MT,For PR code:A8B/A8C/A8G/A9I/A8T;Transmission:7DCT | GCO83002 | Outer Joint | | 36 | 27 | 59.5 | 40 | 66 | I |
| | 2011.02-2014.12 | 6MT/7DCT | F | L/R | Saloon FWD CDAB | Original design | GCI61069 | Inner Joint | | | 28 | | | 32 | |
| | 2011.02-2014.12 | 7DCT | F | L | Saloon FWD CDAB | | GDS61100 | Drive Shaft | | 36 | | 59.5 | 40 | 513 | |
| | 2011.02-2014.12 | 7DCT | F | R | Saloon FWD CDAB | solid shaft | GDS61126 | Drive Shaft | | 36 | | 59.5 | 40 | 793 | |
| | 2011.02-2014.12 | 7DCT | F | R | Saloon FWD CDAB | hollow shaft | GDS61339 | Drive Shaft | | 36 | | 59.5 | 40 | 794 | |
| | 2011.02-2014.12 | 7DCT/6MT | F | L/R | Saloon FWD CDAB | Transmission:6MT,For PR code:A8B/A8C/A8G/A9I;Transmission:7DCT | GCI83016 | Inner Joint | | | 28 | | | 32 | |
| 1.8 (118 kw) | 2007.05-2010.07 | 6AT | F | L | Saloon FWD BZB;CDAA | For Engine Code:Bzb | GDS61111 | Drive Shaft | | 36 | 26 | 59.5 | 40 | 584 | |
| | 2007.05-2010.07 | 6AT | F | R | Saloon FWD BZB;CDAA | For Engine Code:Bzb | GDS61112 | Drive Shaft | | 36 | 26 | 59.5 | 40 | 883 | |
| | 2007.05-2010.07 | 6AT | F | L/R | Saloon FWD BZB;CDAA | | GCI61011 | Inner Joint | | 26 | 32 | 31 | 68.5 | 85 | |
| | 2007.05-2010.07 | 6AT | F | L/R | Saloon FWD BZB;CDAA | | GCI61050 | Inner Joint | | 26 | 32 | 31 | 68.5 | 89 | |
| | 2007.05-2010.07 | 6MT | F | L | Saloon FWD BZB;CDAA | For Engine Code:Cdaa,For Pr Code:0En | GDS83295 | Drive Shaft | | 36 | | 59.5 | 40 | 491 | |
| | 2007.05-2010.07 | 6MT/7DCT | F | L | Saloon FWD BZB;CDAA | For Engine Code:Bzb;Transmission:6MT,For Engine Code:Cdaa,For Pr Code:0EJ;Transmission:7DCT,For Engine Code:Cdaa | GDS61100 | Drive Shaft | | 36 | | 59.5 | 40 | 513 | |
| | 2007.05-2010.07 | 7AT | F | R | Saloon FWD BZB;CDAA | For Engine code:BZB/CDAA,Date from:2009.01 | GDS83313 | Drive Shaft | | 36 | | 59.5 | 40 | 792 | |
| | 2007.05-2010.07 | 7AT | F | L/R | Saloon FWD BZB;CDAA | | GCO83101 | Outer Joint | | 36 | 27 | 59.5 | 40 | 65 | M |
| | 2007.05-2010.07 | MT | F | R | Saloon FWD BZB;CDAA | For Engine code:CDAA,For PR code:0EN | GDS61126 | Drive Shaft | | 36 | | 59.5 | 40 | 793 | |
| | 2007.05-2010.07 | MT | F | R | Saloon FWD BZB;CDAA | For Engine code:CDAA,For PR code:0EN | GDS61339 | Drive Shaft | | 36 | | 59.5 | 40 | 794 | |
| | 2007.05-2010.07 | MT | F | R | Saloon FWD BZB;CDAA | For Engine code:BZB;For Engine code:CDAA,For PR code:0EJ | GDS61341 | Drive Shaft | | 36 | | 59.5 | 40 | 806 | |
| | 2007.05-2010.07 | MT/6AT | F | L/R | Saloon FWD BZB;CDAA | | GCO83002 | Outer Joint | | 36 | 27 | 59.5 | 40 | 66 | I |
| | 2007.05-2010.07 | MT/7AT | F | L/R | Saloon FWD BZB;CDAA | | GCI83016 | Inner Joint | | | 28 | | | 32 | |
| | 2010.08-2014.12 | 6MT | F | L | Saloon FWD CDAA | For PR code:A8B/A8C/A8G/A9I | GDS61100 | Drive Shaft | | 36 | | 59.5 | 40 | 513 | |
| | 2010.08-2014.12 | 6MT | F | L | Saloon FWD CDAA | For PR code:A8T | GDS83295 | Drive Shaft | | 36 | | 59.5 | 40 | 491 | |
| | 2010.08-2014.12 | 6MT | F | R | Saloon FWD CDAA | For PR code:A8T | GDS61147 | Drive Shaft | | 36 | | 59.5 | 40 | 795 | |
| | 2010.08-2014.12 | 6MT | F | R | Saloon FWD CDAA | For PR code:A8B/A8C/A8G/A9I | GDS61341 | Drive Shaft | | 36 | | 59.5 | 40 | 806 | |
| | 2010.08-2014.12 | 6MT | F | R | Saloon FWD CDAA | For PR code:A8T | GDS83313 | Drive Shaft | | 36 | | 59.5 | 40 | 792 | |

| | YEAR | TRANSM. | F/R | L/R | BODY STYLE & DRIVE TYPE & ENGINE | REMARKS | G-AP Ref. | PRODUCT | ABS | Technical Specifications A | B | C | H | L | P |
|---|---|---|---|---|---|---|---|---|---|---|---|---|---|---|---|
| **VW Passat** | | | | | | | | | | | | | | | |
| 1.8 (118 kw) | 2010.08-2014.12 | 6MT | F | R | Saloon FWD CDAA | For PR code:A8T | GCO83101 | Outer Joint | | 36 | 27 | 59.5 | 40 | 65 | M |
| | 2010.08-2014.12 | 6MT | F | L | Saloon FWD CDAA | For PR code:A8T | GCI61069 | Inner Joint | | | 28 | | | 32 | |
| | 2010.08-2014.12 | 6MT/7DCT | F | L/R | Saloon FWD CDAA | Transmission:6MT,For PR code:A8B/A8C/A8G/A9/A8T;Transmission:7DCT | GCO83002 | Outer Joint | | 36 | 27 | 59.5 | 40 | 66 | I |
| | 2010.08-2014.12 | 7DCT | F | L | Saloon FWD CDAA | | GDS61100 | Drive Shaft | | 36 | | 59.5 | 40 | 513 | |
| | 2010.08-2014.12 | 7DCT | F | R | Saloon FWD CDAA | | GDS61126 | Drive Shaft | | 36 | | 59.5 | 40 | 793 | |
| | 2010.08-2014.12 | 7DCT | F | R | Saloon FWD CDAA | | GDS61339 | Drive Shaft | | 36 | | 59.5 | 40 | 794 | |
| | 2010.08-2014.12 | 7DCT/6MT | F | L/R | Saloon FWD CDAA | Transmission:6MT,For PR code:A8B/A8C/A8G/A9/;Transmission:7DCT | GCI83016 | Inner Joint | | | 28 | | | 32 | |
| 1.8 (125 kw) | 2001.02-2005.11 | 5AT | F | L | Saloon FWD AWM | | GDS83015 | Drive Shaft | 45W | 38 | | 59.5 | 34.5 | 527 | |
| | 2001.02-2005.11 | 5AT | F | R | Saloon FWD AWM | | GDS83048 | Drive Shaft | 45W | 38 | | 59.5 | 34.5 | 502 | |
| | 2001.02-2005.11 | 5AT | F | L/R | Saloon FWD AWM | Chassis no. from:3B-3-402 001/3B-3B312 301/3B-3-402 000/3B-3B312 000,For Engine Code:AWM | GCO83019 | Outer Joint | 45W | 38 | 27 | 59.5 | 34.5 | 63 | I |
| | 2001.02-2005.11 | 5AT | F | L/R | Saloon FWD AWM | | GCI50019 | Inner Joint | | | 34 | | | 59.5 | |
| | 2001.02-2005.11 | 5MT | F | R | Saloon FWD AWM | For Engine Code:AWM | GDS61019 | Drive Shaft | 45W | 38 | | 59.5 | 34.5 | 624 | |
| | 2001.02-2005.11 | MT | F | L | Saloon FWD AWM | For Engine Code:AWM;Chassis no. to:3B-3-402 000;Chassis no. to:3B-3E312 000 | GDS83008 | Drive Shaft | 45W | 38 | | 59.5 | 34.5 | 603 | |
| 1.8 (132 kw) | 2015.02-2019.07 | 6MT | F | L | Saloon FWD CJSA;CJSC | | GDS81896 | Drive Shaft | | 36 | | 59.5 | 40 | 500 | |
| | 2015.02-2019.07 | 6MT/7DCT | F | R | Saloon FWD CJSA;CJSC | | GDS61101 | Drive Shaft | | 36 | | 59.5 | 40 | 803 | |
| | 2015.02-2019.07 | 6MT/7DCT | F | L/R | Saloon FWD CJSA;CJSC | | GCO83101 | Outer Joint | | 36 | 27 | 59.5 | 40 | 65 | M |
| | 2015.02-2019.07 | 6MT/7DCT | F | L/R | Saloon FWD CJSA;CJSC | | GCI83016 | Inner Joint | | | 28 | | | 32 | |
| 1.9 (55 kw) | 1991.03-1996.12 | AT/MT | F | L | Saloon FWD AAZ | Chassis no. from:31-K-296658;Chassis no. to:3A-V-300000 | GDS61001 | Drive Shaft | | 22 | | 53.2 | 78 | 557 | |
| | 1991.03-1996.12 | AT/MT | F | R | Saloon FWD AAZ | Chassis no. from:31-K-296658;Chassis no. to:3A-V-300000 | GDS61002 | Drive Shaft | | 22 | | 53 | 78.5 | 793 | |
| | 1991.03-1996.12 | AT/MT | F | L/R | Saloon FWD AAZ | Chassis no. from:31-K-296658;Chassis no. to:31-N-105278 | GCO53007 | Outer Joint | | 22 | 30 | 53.2 | 78 | 61 | I |
| | 1991.03-1996.12 | AT/MT | F | R | Saloon FWD AAZ | Chassis no. from:31-K-296658;Chassis no. to:3A-V-300000 | GCI83009 | Inner Joint | | | 33 | | | 34 | |
| | 1991.03-1996.12 | AT/MT | F | L/R | Saloon FWD AAZ | Chassis Number:31K296658-3AV300000 | GCI83011 | Inner Joint | | | 33 | | | 34 | |
| | 1991.03-1996.12 | | F | | Saloon FWD AAZ | | GCO53004 | Outer Joint | | 22 | 30 | 51 | 78 | 61 | I |
| 1.9 (66 kw) | 1993.10-1996.12 | MT | F | L | Saloon FWD 1Z/AHU | | GDS61001 | Drive Shaft | | 22 | | 53.2 | 78 | 557 | |
| | 1993.10-1996.12 | MT | F | R | Saloon FWD 1Z/AHU | | GDS61002 | Drive Shaft | | 22 | | 53 | 78.5 | 793 | |
| | 1993.10-1996.12 | MT | F | L/R | Saloon FWD 1Z/AHU | | GCO53004 | Outer Joint | | 22 | 30 | 51 | 78 | 61 | I |
| | 1993.10-1996.12 | MT | F | L/R | Saloon FWD 1Z/AHU | | GCI83011 | Inner Joint | | | 33 | | | 34 | |
| | 1996.10-2000.08 | 4AT | F | L | Saloon FWD AHH/AHU | Chassis no. to:3A_V_300000 | GDS61011 | Drive Shaft | | 22 | | 53.2 | 78 | 547 | |
| | 1996.10-2000.08 | 4AT | F | L | Saloon FWD AHH/AHU | Chassis no. from:3BV000001 | GDS83012 | Drive Shaft | 45W | 33 | | 53 | 30 | 498 | |
| | 1996.10-2000.08 | 4AT | F | R | Saloon FWD AHH/AHU | Chassis no. to:3A_V_300000 | GDS61028 | Drive Shaft | | 22 | | 53.2 | 78 | 767 | |
| | 1996.10-2000.08 | 4AT | F | R | Saloon FWD AHH/AHU | Chassis no. from:3BV000001 | GDS99108 | Drive Shaft | 45W | 33 | | 53 | 30 | 586 | |
| | 1996.10-2000.08 | 4AT/5MT | F | L/R | Saloon FWD AHH/AHU | Not for special-purpose vehicles | GCO61012 | Outer Joint | 45W | 33 | 30 | 53 | 30 | 62 | I |
| | 1996.10-2000.08 | 4AT/5MT | F | L/R | Saloon FWD AHH/AHU | For special-purpose vehicles | GCO83018 | Outer Joint | 45W | 33 | 30 | 53 | 30 | 62 | I |
| | 1996.10-2000.08 | 4AT/5MT | F | L/R | Saloon FWD AHH/AHU | Chassis no. from:3BV000001 | GCI50019 | Inner Joint | | | 34 | | | 59.5 | |
| | 1996.10-2000.08 | 5MT | F | L | Saloon FWD AHH/AHU | Chassis no. to:3AV300000 | GDS61001 | Drive Shaft | | 22 | | 53.2 | 78 | 557 | |
| | 1996.10-2000.08 | 5MT | F | L | Saloon FWD AHH/AHU | Chassis no. from:3BV000001 | GDS61122 | Drive Shaft | 45W | 33 | | 53 | 30 | 602 | |
| | 1996.10-2000.08 | 5MT | F | R | Saloon FWD AHH/AHU | Chassis no. to:3AV300000 | GDS61002 | Drive Shaft | | 22 | | 53 | 78.5 | 793 | |
| | 1996.10-2000.08 | 5MT | F | R | Saloon FWD AHH/AHU | Chassis no. from:3BV000001,For Europe | GDS83007 | Drive Shaft | 45W | 33 | | 53 | 30 | 622 | |
| | 1996.10-2000.08 | 5MT | F | R | Saloon FWD AHH/AHU | Chassis no. from:3BV000001,For North America | GDS83009 | Drive Shaft | 45W | 33 | | 53 | 30 | 617 | |
| | 1996.10-2000.08 | 5MT | F | L | Saloon FWD AHH/AHU | Chassis no. to:3AV300000 | GCO53007 | Outer Joint | | 22 | 30 | 53.2 | 78 | 61 | I |
| | 1996.10-2000.08 | 5MT | F | L | Saloon FWD AHH/AHU | Chassis no. to:3AV300000 | GCI83003 | Inner Joint | | | 33 | | | 32 | |
| | 1996.10-2000.08 | 5MT | F | L | Saloon FWD AHH/AHU | Chassis no. to:3AV300000 | GCI83011 | Inner Joint | | | 33 | | | 34 | |
| | 1996.10-2000.08 | 5MT | F | R | Saloon FWD AHH/AHU | Chassis no. to:3AV300000 | GCI83006 | Inner Joint | | | 33 | | | 34 | |
| | 1996.10-2000.08 | 5MT | F | R | Saloon FWD AHH/AHU | Chassis no. to:3AV300000 | GCI83009 | Inner Joint | | | 33 | | | 34 | |
| 1.9 (74 kw) | 2000.02-2000.11 | AT | F | R | Saloon FWD AVB | | GDS83048 | Drive Shaft | 45W | 38 | | 59.5 | 34.5 | 502 | |
| | 2000.02-2000.11 | AT | F | R | Saloon FWD AVB | for vehicles without heavy duty suspension | GDS99108 | Drive Shaft | 45W | 33 | | 53 | 30 | 586 | |
| | 2000.02-2000.11 | AT | F | L/R | Saloon FWD AVB | | GCO83019 | Outer Joint | 45W | 38 | 27 | 59.5 | 34.5 | 63 | I |
| | 2000.02-2000.11 | AT/MT | F | L/R | Saloon FWD AVB | | GCI50019 | Inner Joint | | | 34 | | | 59.5 | |
| | 2000.02-2000.11 | MT | F | L | Saloon FWD AVB | | GDS61083 | Drive Shaft | 45W | 33 | | 53 | 30 | 603 | |
| | 2000.02-2000.11 | MT | F | L | Saloon FWD AVB | | GDS61122 | Drive Shaft | 45W | 33 | | 53 | 30 | 602 | |
| | 2000.02-2000.11 | MT | F | R | Saloon FWD AVB | | GDS61082 | Drive Shaft | 45W | 33 | | 53 | 30 | 620 | |
| | 2000.02-2000.11 | MT | F | L/R | Saloon FWD AVB | | GCO83021 | Outer Joint | 45W | 33 | 27 | 53 | 30 | 63 | I |
| | 2000.11-2005.05 | 4AT | F | L | Saloon FWD AVB | Date to:2000.02;For PR code:1Ba/1BD/1BF/1BH;Date to:2000.02;For PR code:4B8;For vehicles with heavy duty suspension | GDS83048 | Drive Shaft | 45W | 38 | | 59.5 | 34.5 | 502 | |
| | 2000.11-2005.05 | 4AT | F | L/R | Saloon FWD AVB | | GCO83019 | Outer Joint | 45W | 38 | 27 | 59.5 | 34.5 | 63 | I |
| | 2000.11-2005.05 | 5MT | F | L | Saloon FWD AVB | | GDS61083 | Drive Shaft | 45W | 33 | | 53 | 30 | 603 | |
| | 2000.11-2005.05 | 5MT | F | R | Saloon FWD AVB | | GDS61082 | Drive Shaft | 45W | 33 | | 53 | 30 | 620 | |
| | 2000.11-2005.05 | 5MT | F | L/R | Saloon FWD AVB | | GCO83021 | Outer Joint | 45W | 33 | 27 | 53 | 30 | 63 | I |
| | 2000.11-2005.05 | 5MT | F | L/R | Saloon FWD AVB | | GCI50019 | Inner Joint | | | 34 | | | 59.5 | |
| 1.9 (77 kw) | 2005.03-2010.07 | 6AT/5MT | F | L/R | Saloon FWD BKC;BLS;BXE | TJ | GCI54004 | Inner Joint | | | 34 | | | 81 | |
| | 2005.03-2010.07 | 6AT/5MT | F | L/R | Saloon FWD BKC;BLS;BXE | AAR | GCI61057 | Inner Joint | | | 34 | | | 89 | |
| | 2005.03-2010.07 | AT | F | L | Saloon FWD BKC;BLS;BXE | | GDS54013 | Drive Shaft | | 36 | | 59.5 | 40 | 479.5 | |
| | 2005.03-2010.07 | AT | F | R | Saloon FWD BKC;BLS;BXE | | GDS54011 | Drive Shaft | | 36 | | 59.5 | 40 | 755 | |
| | 2005.03-2010.07 | AT | F | L/R | Saloon FWD BKC;BLS;BXE | | GCO83002 | Outer Joint | | 36 | 27 | 59.5 | 40 | 66 | I |
| | 2005.03-2010.07 | MT | F | L | Saloon FWD BKC;BLS;BXE | | GDS83294 | Drive Shaft | | 36 | | 59.5 | 38 | 519 | |
| | 2005.03-2010.07 | MT | F | R | Saloon FWD BKC;BLS;BXE | | GDS61042 | Drive Shaft | | 36 | | 59.5 | 40.5 | 814 | |

| | YEAR | TRANSM. | F/R | L/R | BODY STYLE & DRIVE TYPE & ENGINE | REMARKS | G-AP Ref. | PRODUCT | ABS | Technical Specifications A | B | C | H | L | P |
|---|---|---|---|---|---|---|---|---|---|---|---|---|---|---|---|
| **VW Passat** | | | | | | | | | | | | | | | |
| 1.9 (77 kw) | 2005.03-2010.07 | MT | F | L/R | Saloon FWD BKC;BLS;BXE | | GCO83037 | Outer Joint | | 36 | 30 | 59.5 | 40.5 | 56 | I |
| | 2005.03-2010.07 | MT | F | L/R | Saloon FWD BKC;BLS;BXE | | GCI82447 | Inner Joint | | | 33 | | | 34 | |
| 1.9 (81 kw) | 1996.03-1996.12 | AT/MT | F | L/R | Saloon FWD AFN | | GCO83070 | Outer Joint | | 36 | 30 | 53 | 78 | 60 | I |
| | 1996.03-1996.12 | MT | F | L | Saloon FWD AFN | | GDS83006 | Drive Shaft | | 36 | | 53.2 | 77.5 | 557 | |
| | 1996.03-1996.12 | MT | F | R | Saloon FWD AFN | | GDS83004 | Drive Shaft | | 36 | | 53.2 | 77.5 | 822 | |
| | 1996.10-2000.08 | 4AT | F | L | Saloon FWD AFN/AVG | | GDS83048 | Drive Shaft | 45W | 38 | | 59.5 | 34.5 | 502 | |
| | 1996.10-2000.08 | 4AT/5MT | F | L/R | Saloon FWD AFN/AVG | | GCO83019 | Outer Joint | 45W | 38 | 27 | 59.5 | 34.5 | 63 | I |
| | 1996.10-2000.08 | 4AT/5MT | F | L/R | Saloon FWD AFN/AVG | | GCO83070 | Outer Joint | | 36 | 30 | 53 | 78 | 60 | I |
| | 1996.10-2000.08 | 4AT/5MT | F | L | Saloon FWD AFN/AVG | | GCI83011 | Inner Joint | | | 33 | | | 34 | |
| | 1996.10-2000.08 | 4AT/5MT | F | R | Saloon FWD AFN/AVG | | GCI83009 | Inner Joint | | | 33 | | | 34 | |
| | 1996.10-2000.08 | 5MT | F | L | Saloon FWD AFN/AVG | Chassis no. to:3AV300000 | GDS61314 | Drive Shaft | | 36 | | 53 | 78 | 558 | |
| | 1996.10-2000.08 | 5MT | F | L | Saloon FWD AFN/AVG | Chassis no. from:3BV000001 | GDS83008 | Drive Shaft | 45W | 38 | | 59.5 | 34.5 | 603 | |
| | 1996.10-2000.08 | 5MT | F | R | Saloon FWD AFN/AVG | For PR code:1BA/1BE/1BF/F0A,Chassis no. from:3B_V_000001 | GDS61019 | Drive Shaft | 45W | 38 | | 59.5 | 34.5 | 624 | |
| | 1996.10-2000.08 | 5MT | F | R | Saloon FWD AFN/AVG | Chassis no. to:3A_V_300000 | GDS83004 | Drive Shaft | | 36 | | 53.2 | 77.5 | 822 | |
| | 1996.10-2000.08 | 5MT | F | L | Saloon FWD AFN/AVG | | GCI50019 | Inner Joint | | | 34 | | | 59.5 | |
| | 1997.06-2000.08 | 5MT | F | L | Saloon 4WD AFN/AVG | | GDS61122 | Drive Shaft | 45W | 33 | | 53 | 30 | 602 | |
| | 1997.06-2000.08 | 5MT | F | R | Saloon 4WD AFN/AVG | | GDS83007 | Drive Shaft | 45W | 33 | | 53 | 30 | 622 | |
| | 1997.06-2000.08 | AT | F | L | Saloon 4WD AFN/AVG | | GDS83048 | Drive Shaft | 45W | 38 | | 59.5 | 34.5 | 502 | |
| | 1997.06-2000.08 | AT/MT | F | L/R | Saloon 4WD AFN/AVG | Outer teeth of wheel side:38 | GCO83019 | Outer Joint | 45W | 38 | 27 | 59.5 | 34.5 | 63 | I |
| | 1997.06-2000.08 | MT | F | L | Saloon 4WD AFN/AVG | | GDS83008 | Drive Shaft | 45W | 38 | | 59.5 | 34.5 | 603 | |
| | 1997.06-2000.08 | MT | F | R | Saloon 4WD AFN/AVG | | GDS61019 | Drive Shaft | 45W | 38 | | 59.5 | 34.5 | 624 | |
| | 1997.06-2000.08 | MT | F | L/R | Saloon 4WD AFN/AVG | Date from:1997.05;Date to:1998.08 | GCO61012 | Outer Joint | 45W | 33 | 30 | 53 | 30 | 62 | I |
| | 1997.06-2000.08 | MT/5MT | F | L/R | Saloon 4WD AFN/AVG | | GCI50019 | Inner Joint | | | 34 | | | 59.5 | |
| | 1997.06-2000.08 | 5MT | R | L/R | Saloon 4WD AFN/AVG | | GDS83672 | Drive Shaft | 45W | 33 | | 53 | 30 | 618 | |
| | 1997.06-2000.08 | 5MT | R | L/R | Saloon 4WD AFN/AVG | Outer teeth of wheel side:33 | GCO83080 | Outer Joint | 45W | 33 | 30 | 53 | 30 | 62 | I |
| | 1997.06-2000.08 | 5MT | R | L/R | Saloon 4WD AFN/AVG | | GCI83002 | Inner Joint | | | 33 | | | 32 | |
| 1.9 (85 kw) | 1999.01-2000.08 | 5AT | F | L | Saloon FWD AJM/ATJ | PR code:1BA/1BE/1BF/F0A | GDS83015 | Drive Shaft | 45W | 38 | | 59.5 | 34.5 | 527 | |
| | 1999.01-2000.08 | 5AT | F | R | Saloon FWD AJM/ATJ | PR code:1BA/1BE/1BF/F0A | GDS83048 | Drive Shaft | 45W | 38 | | 59.5 | 34.5 | 502 | |
| | 1999.01-2000.08 | 5AT | F | L/R | Saloon FWD AJM/ATJ | | GCO83019 | Outer Joint | 45W | 38 | 27 | 59.5 | 34.5 | 63 | I |
| | 1999.01-2000.08 | 5MT | F | L | Saloon FWD AJM/ATJ | For Engine Code:AJM | GDS61083 | Drive Shaft | 45W | 33 | | 53 | 30 | 603 | |
| | 1999.01-2000.08 | 5MT | F | L | Saloon FWD AJM/ATJ | For Engine Code:ATJ | GDS83008 | Drive Shaft | 45W | 38 | | 59.5 | 34.5 | 603 | |
| | 1999.01-2000.08 | 5MT | F | R | Saloon FWD AJM/ATJ | For Engine Code:AJM | GDS61082 | Drive Shaft | 45W | 33 | | 53 | 30 | 620 | |
| | 1999.01-2000.08 | 5MT | F | L/R | Saloon FWD AJM/ATJ | For Engine Code:AJM | GCO83021 | Outer Joint | 45W | 33 | 27 | 53 | 30 | 63 | I |
| | 1999.01-2000.08 | 5MT/6MT | F | R | Saloon FWD AJM/ATJ | For Engine Code:ATJ | GDS61019 | Drive Shaft | 45W | 38 | | 59.5 | 34.5 | 624 | |
| | 1999.01-2000.08 | 5MT/6MT | F | L/R | Saloon FWD AJM/ATJ | For Engine Code:ATJ | GCO83019 | Outer Joint | 45W | 38 | 27 | 59.5 | 34.5 | 63 | I |
| | 1999.01-2000.08 | 5MT/6MT | F | L/R | Saloon FWD AJM/ATJ | For Engine Code:ATJ/AJM | GCI50019 | Inner Joint | | | 34 | | | 59.5 | |
| | 1999.01-2000.08 | 6MT | F | L | Saloon FWD AJM/ATJ | For Engine Code:ATJ | GDS61157 | Drive Shaft | 45W | 38 | | 59.5 | 34.5 | 601 | |
| | 2000.01-2000.08 | 5MT | F | L | Saloon 4WD ATJ | Date from:2000.01;Date to:2000.08;For Engine code:ATJ;For PR code:1BA/1BE/1BF/F0A | GDS83008 | Drive Shaft | 45W | 38 | | 59.5 | 34.5 | 603 | |
| | 2000.01-2000.08 | 6MT | F | L | Saloon 4WD ATJ | | GDS61157 | Drive Shaft | 45W | 38 | | 59.5 | 34.5 | 601 | |
| | 2000.01-2000.08 | 6MT | F | R | Saloon 4WD ATJ | | GDS61019 | Drive Shaft | 45W | 38 | | 59.5 | 34.5 | 624 | |
| | 2000.01-2000.08 | 6MT | F | L/R | Saloon 4WD ATJ | Date from:2000.01;Date to:2000.08;For Engine code:ATJ;For PR code:1BA/1BE/1BF/F0A | GCO61012 | Outer Joint | 45W | 33 | 30 | 53 | 30 | 62 | I |
| | 2000.01-2000.08 | 6MT | F | L/R | Saloon 4WD ATJ | | GCO83019 | Outer Joint | 45W | 38 | 27 | 59.5 | 34.5 | 63 | I |
| | 2000.01-2000.08 | 6MT | F | L/R | Saloon 4WD ATJ | | GCI50019 | Inner Joint | | | 34 | | | 59.5 | |
| | 2000.01-2000.08 | AT | F | L | Saloon 4WD ATJ | | GDS83048 | Drive Shaft | 45W | 38 | | 59.5 | 34.5 | 502 | |
| | 2000.01-2000.08 | AT/MT | F | L/R | Saloon 4WD ATJ | Date from:2000.01;Date to:2000.08 | GCO83021 | Outer Joint | 45W | 33 | 27 | 53 | 30 | 63 | I |
| | 2000.01-2000.08 | 6MT | R | L/R | Saloon 4WD ATJ | | GDS83672 | Drive Shaft | 45W | 33 | | 53 | 30 | 618 | |
| | 2000.01-2000.08 | 6MT | R | L/R | Saloon 4WD ATJ | | GCO83080 | Outer Joint | 45W | 33 | 30 | 53 | 30 | 62 | I |
| | 2000.01-2000.08 | 6MT | R | L/R | Saloon 4WD ATJ | | GCI83002 | Inner Joint | | | 33 | | | 32 | |
| 1.9 (96 kw) | 2000.11-2005.05 | 6MT | F | L | Saloon 4WD AVF | | GDS61157 | Drive Shaft | 45W | 38 | | 59.5 | 34.5 | 601 | |
| | 2000.11-2005.05 | 6MT | F | L | Saloon 4WD AVF | | GDS83008 | Drive Shaft | 45W | 38 | | 59.5 | 34.5 | 603 | |
| | 2000.11-2005.05 | 6MT | F | R | Saloon 4WD AVF | | GDS61019 | Drive Shaft | 45W | 38 | | 59.5 | 34.5 | 624 | |
| | 2000.11-2005.05 | 6MT | F | L/R | Saloon 4WD AVF | | GCO83019 | Outer Joint | 45W | 38 | 27 | 59.5 | 34.5 | 63 | I |
| | 2000.11-2005.05 | 6MT | F | L/R | Saloon 4WD AVF | | GCI50019 | Inner Joint | | | 34 | | | 59.5 | |
| | 2000.11-2005.05 | 6MT | R | L/R | Saloon 4WD AVF | | GDS83672 | Drive Shaft | 45W | 33 | | 53 | 30 | 618 | |
| | 2000.11-2005.05 | 6MT | R | L/R | Saloon 4WD AVF | | GCO83080 | Outer Joint | 45W | 33 | 30 | 53 | 30 | 62 | I |
| | 2000.11-2005.05 | 6MT | R | L/R | Saloon 4WD AVF | | GCI83002 | Inner Joint | | | 33 | | | 32 | |
| | 2000.11-2005.05 | 5AT | F | L | Saloon FWD AVF;AWX | | GDS83015 | Drive Shaft | 45W | 38 | | 59.5 | 34.5 | 527 | |
| | 2000.11-2005.05 | 5AT | F | R | Saloon FWD AVF;AWX | | GDS83048 | Drive Shaft | 45W | 38 | | 59.5 | 34.5 | 502 | |
| | 2000.11-2005.05 | 5AT/5MT/6MT | F | L/R | Saloon FWD AVF;AWX | | GCO83019 | Outer Joint | 45W | 38 | 27 | 59.5 | 34.5 | 63 | I |
| | 2000.11-2005.05 | 5AT/5MT/6MT | F | L/R | Saloon FWD AVF;AWX | | GCI50019 | Inner Joint | | | 34 | | | 59.5 | |
| | 2000.11-2005.05 | 5MT/6MT | F | L | Saloon FWD AVF;AWX | solid shaft | GDS61157 | Drive Shaft | 45W | 38 | | 59.5 | 34.5 | 601 | |
| | 2000.11-2005.05 | 5MT/6MT | F | L | Saloon FWD AVF;AWX | hollow shaft | GDS83008 | Drive Shaft | 45W | 38 | | 59.5 | 34.5 | 603 | |
| | 2000.11-2005.05 | 5MT/6MT | F | R | Saloon FWD AVF;AWX | hollow shaft | GDS61019 | Drive Shaft | 45W | 38 | | 59.5 | 34.5 | 624 | |
| 2.0 (79 kw) | 1995.03-1996.12 | AT/MT | F | L/R | Saloon FWD AEP | | GCO53007 | Outer Joint | | 22 | 30 | 53.2 | 78 | 61 | I |
| | 1995.03-1996.12 | MT | F | L | Saloon FWD AEP | | GDS61001 | Drive Shaft | | 22 | | 53.2 | 78 | 557 | |

| | YEAR | TRANSM. | F/R | L/R | BODY STYLE & DRIVE TYPE & ENGINE | REMARKS | G-AP Ref. | PRODUCT | ABS | Technical Specifications A | B | C | H | L | P |
|---|---|---|---|---|---|---|---|---|---|---|---|---|---|---|---|
| **VW Passat** | | | | | | | | | | | | | | | |
| 2.0 (79 kw) | 1995.03-1996.12 | MT | F | R | Saloon FWD AEP | | GDS61002 | Drive Shaft | | 22 | | 53 | 78.5 | 793 | |
| | 1995.03-1996.12 | MT | F | R | Saloon FWD AEP | | GCI83009 | Inner Joint | | | 33 | | | 34 | |
| | 1995.03-1996.12 | MT | F | L/R | Saloon FWD AEP | | GCI83011 | Inner Joint | | | 33 | | | 34 | |
| | 1995.03-1996.12 | | F | | Saloon FWD AEP | | GCO53004 | Outer Joint | | 22 | 30 | 51 | 78 | 61 | I |
| 2.0 (81 kw) | 2008.11-2010.07 | 5MT | F | L | Saloon FWD CBDC | With steel rim;With alloy rim | GDS61282 | Drive Shaft | | 36 | | 59.5 | 40 | 523 | |
| | 2008.11-2010.07 | 5MT | F | R | Saloon FWD CBDC | | GDS61283 | Drive Shaft | | 36 | | 59.5 | 40 | 815 | |
| | 2008.11-2010.07 | 5MT | F | L/R | Saloon FWD CBDC | | GCO61059 | Outer Joint | | 36 | 33 | 59.5 | 40 | 59.5 | I |
| | 2008.11-2010.07 | 5MT | F | L | Saloon FWD CBDC | With steel rim;With alloy rim | GCI53002 | Inner Joint | | | 33 | | | 34 | |
| | 2008.11-2010.07 | 5MT | F | R | Saloon FWD CBDC | | GCI53002 | Inner Joint | | | 33 | | | 34 | |
| | 2008.11-2010.07 | 5MT | F | L/R | Saloon FWD CBDC | | GCI82447 | Inner Joint | | | 33 | | | 34 | |
| | 2008.11-2010.07 | MT | F | L | Saloon FWD CBDC | | GDS83294 | Drive Shaft | | 36 | | 59.5 | 38 | 519 | |
| | 2008.11-2010.07 | MT | F | L | Saloon FWD CBDC | | GCO83037 | Outer Joint | | 36 | 30 | 59.5 | 40.5 | 56 | I |
| | 2008.11-2010.07 | MT | F | L/R | Saloon FWD CBDC | | GCI83006 | Inner Joint | | | 33 | | | 34 | |
| | 2008.11-2010.07 | | F | R | Saloon FWD CBDC | Date From:2009.11 | GDS61042 | Drive Shaft | | 36 | | 59.5 | 40.5 | 814 | |
| | 2008.11-2010.07 | | F | L/R | Saloon FWD CBDC | | GCO83002 | Outer Joint | | 36 | 27 | 59.5 | 40 | 66 | I |
| | 2008.11-2010.07 | | F | L/R | Saloon FWD CBDC | | GCI83011 | Inner Joint | | | 33 | | | 34 | |
| | 2016.01-2018.11 | 6MT | F | L | Saloon FWD CRLD;DFGB;DBGB | | GDS81896 | Drive Shaft | | 36 | | 59.5 | 40 | 500 | |
| | 2016.01-2018.11 | 6MT | F | R | Saloon FWD CRLD;DFGB;DBGB | | GDS61101 | Drive Shaft | | 36 | | 59.5 | 40 | 803 | |
| | 2016.01-2018.11 | 6MT | F | L/R | Saloon FWD CRLD;DFGB;DBGB | | GCO83101 | Outer Joint | | 36 | 27 | 59.5 | 40 | 65 | M |
| | 2016.01-2018.11 | 6MT | F | L/R | Saloon FWD CRLD;DFGB;DBGB | | GCI83016 | Inner Joint | | | 28 | | | 32 | |
| 2.0 (85 kw) | 1990.03-1996.12 | AT | F | | Saloon 4WD 2E/ADY/AGG | | GCO53004 | Outer Joint | | 22 | 30 | 51 | 78 | 61 | I |
| | 1990.03-1996.12 | AT/MT | F | R | Saloon 4WD 2E/ADY/AGG | Chassis Number:31L201814-31V300000 | GDS61002 | Drive Shaft | | 22 | | 53 | 78.5 | 793 | |
| | 1990.03-1996.12 | AT/MT | F | L/R | Saloon 4WD 2E/ADY/AGG | Chassis Number:31L201814-31V300000 | GCI83011 | Inner Joint | | | 33 | | | 34 | |
| | 1990.03-1996.12 | MT | F | L | Saloon 4WD 2E/ADY/AGG | Chassis Number:31L201814-31V300000 | GDS61001 | Drive Shaft | | 22 | | 53.2 | 78 | 557 | |
| | 1990.03-1996.12 | MT | F | L/R | Saloon 4WD 2E/ADY/AGG | Chassis no. from:31-L-000001;Chassis no. to:31-N-105278 | GCO53007 | Outer Joint | | 22 | 30 | 53.2 | 78 | 61 | I |
| | 1990.03-1996.12 | MT | F | R | Saloon 4WD 2E/ADY/AGG | Chassis no. from:31-L-000001;Chassis no. to:31-P-300000 | GCI83009 | Inner Joint | | | 33 | | | 34 | |
| | 1990.03-1996.12 | MT | R | L/R | Saloon 4WD 2E/ADY/AGG | Chassis no. from:31-L-000001;Chassis no. to:31-P-300000 | GCI83005 | Inner Joint | | | 33 | | | 32 | |
| | 1990.03-1996.12 | AT | F | | Saloon FWD 2E/ADY/AGG | | GCO53004 | Outer Joint | | 22 | 30 | 51 | 78 | 61 | I |
| | 1990.03-1996.12 | AT/MT | F | L/R | Saloon FWD 2E/ADY/AGG | Chassis no. from:31-L-201814;Chassis no. to:31-N-105278 | GCO53007 | Outer Joint | | 22 | 30 | 53.2 | 78 | 61 | I |
| | 1990.03-1996.12 | AT/MT | F | L/R | Saloon FWD 2E/ADY/AGG | | GCI83011 | Inner Joint | | | 33 | | | 34 | |
| | 1990.03-1996.12 | MT | F | L | Saloon FWD 2E/ADY/AGG | Chassis no. from:31-L-201814;Chassis no. to:3A-V-300000 | GDS61001 | Drive Shaft | | 22 | | 53.2 | 78 | 557 | |
| | 1990.03-1996.12 | MT | F | R | Saloon FWD 2E/ADY/AGG | Chassis no. from:31-L-201814;Chassis no. to:3A-V-300000 | GDS61002 | Drive Shaft | | 22 | | 53 | 78.5 | 793 | |
| | 1990.03-1996.12 | MT | F | R | Saloon FWD 2E/ADY/AGG | Chassis no. from:31-L-201814;Chassis no. to:3A-V-300000 | GCI83009 | Inner Joint | | | 33 | | | 34 | |
| | 2000.11-2005.05 | 4AT/5MT | F | L | Saloon 4WD AZM | | GDS83002 | Drive Shaft | 45W | 33 | | 53 | 30 | 614 | |
| | 2000.11-2005.05 | 4AT/5MT | F | R | Saloon 4WD AZM | | GDS99111 | Drive Shaft | 45W | 33 | | 53 | 30 | 636 | |
| | 2000.11-2005.05 | 4AT/5MT | F | L/R | Saloon 4WD AZM | From Drive Shaft | GCI83006 | Inner Joint | | | 33 | | | 34 | |
| | 2000.11-2005.05 | 5MT | F | L/R | Saloon 4WD AZM | | GCO61012 | Outer Joint | 45W | 33 | 30 | 53 | 30 | 62 | I |
| | 2000.11-2005.05 | | F | L/R | Saloon 4WD AZM | | GCI83002 | Inner Joint | | | 33 | | | 32 | |
| | 2000.11-2005.05 | 4AT/5MT | R | L/R | Saloon 4WD AZM | | GDS83672 | Drive Shaft | 45W | 33 | | 53 | 30 | 618 | |
| | 2000.11-2005.05 | 4AT/5MT | R | L/R | Saloon 4WD AZM | | GCO83080 | Outer Joint | 45W | 33 | 30 | 53 | 30 | 62 | I |
| | 2000.11-2005.05 | | R | L/R | Saloon 4WD AZM | | GCI83002 | Inner Joint | | | 33 | | | 32 | |
| | 2000.11-2005.05 | 4AT | F | L | Saloon FWD AZM | | GDS83012 | Drive Shaft | 45W | 33 | | 53 | 30 | 498 | |
| | 2000.11-2005.05 | 4AT | F | R | Saloon FWD AZM | | GDS99108 | Drive Shaft | 45W | 33 | | 53 | 30 | 586 | |
| | 2000.11-2005.05 | 4AT | F | L/R | Saloon FWD AZM | | GCO61012 | Outer Joint | 45W | 33 | 30 | 53 | 30 | 62 | I |
| | 2000.11-2005.05 | 4AT | F | L/R | Saloon FWD AZM | | GCI50019 | Inner Joint | | | 34 | | | 59.5 | |
| | 2000.11-2005.05 | 5MT | F | L | Saloon FWD AZM | | GDS83005 | Drive Shaft | 45W | 33 | | 53 | 30 | 614 | |
| | 2000.11-2005.05 | 5MT | F | R | Saloon FWD AZM | | GDS83001 | Drive Shaft | 45W | 33 | | 53 | 30 | 634 | |
| | 2000.11-2005.05 | 5MT | F | L/R | Saloon FWD AZM | | GCO83018 | Outer Joint | 45W | 33 | 30 | 53 | 30 | 62 | I |
| | 2000.11-2005.05 | 5MT | F | L/R | Saloon FWD AZM | | GCI83001 | Inner Joint | | | 28 | | | 32 | |
| 2.0 (88 kw) | 2005.11-2007.05 | 6AT/6MT | F | L/R | Saloon FWD BWV | | GCI54004 | Inner Joint | | | 34 | | | 81 | |
| | 2005.11-2007.05 | 6AT/6MT | F | L/R | Saloon FWD BWV | Original Tripod Design | GCI61057 | Inner Joint | | | 34 | | | 89 | |
| | 2005.11-2007.05 | 6AT/6MT | F | L/R | Saloon FWD BWV | | GCI83016 | Inner Joint | | | 28 | | | 32 | |
| | 2005.11-2007.05 | AT | F | L | Saloon FWD BWV | | GDS54013 | Drive Shaft | | 36 | | 59.5 | 40 | 479.5 | |
| | 2005.11-2007.05 | AT | F | R | Saloon FWD BWV | | GDS54011 | Drive Shaft | | 36 | | 59.5 | 40 | 755 | |
| | 2005.11-2007.05 | MT | F | L | Saloon FWD BWV | | GDS83295 | Drive Shaft | | 36 | | 59.5 | 40 | 491 | |
| | 2005.11-2007.05 | MT | F | R | Saloon FWD BWV | | GDS83236 | Drive Shaft | | 36 | | 59.5 | 40 | 484 | |
| | 2005.11-2007.05 | MT | F | R | Saloon FWD BWV | | GDS83313 | Drive Shaft | | 36 | | 59.5 | 40 | 792 | |
| | 2005.11-2007.05 | Semi-AT | F | L | Saloon FWD BWV | | GDS83241 | Drive Shaft | | 36 | | 59.5 | 40 | 475 | |
| | 2005.11-2007.05 | | F | L/R | Saloon FWD BWV | | GCO83002 | Outer Joint | | 36 | 27 | 59.5 | 40 | 66 | I |
| 2.0 (90 kw) | 2005.08-2006.07 | 6AT/6MT | F | L/R | Saloon FWD BVE | | GCI54004 | Inner Joint | | | 34 | | | 81 | |
| | 2005.08-2006.07 | 6AT/6MT | F | L/R | Saloon FWD BVE | Original Tripod Design | GCI61057 | Inner Joint | | | 34 | | | 89 | |
| | 2005.08-2006.07 | 6AT/6MT | F | L/R | Saloon FWD BVE | | GCI83016 | Inner Joint | | | 28 | | | 32 | |
| | 2005.08-2006.07 | AT | F | L | Saloon FWD BVE | | GDS54013 | Drive Shaft | | 36 | | 59.5 | 40 | 479.5 | |
| | 2005.08-2006.07 | AT | F | R | Saloon FWD BVE | | GDS54011 | Drive Shaft | | 36 | | 59.5 | 40 | 755 | |
| | 2005.08-2006.07 | MT | F | L | Saloon FWD BVE | | GDS83236 | Drive Shaft | | 36 | | 59.5 | 40 | 484 | |

| | YEAR | TRANSM. | F/R | L/R | BODY STYLE & DRIVE TYPE & ENGINE | REMARKS | G-AP Ref. | PRODUCT | ABS | Technical Specifications A | B | C | H | L | P |
|---|---|---|---|---|---|---|---|---|---|---|---|---|---|---|---|
| **VW** **Passat** | | | | | | | | | | | | | | | |
| 2.0 (90 kw) | 2005.08-2006.07 | MT | F | L | Saloon FWD BVE | | GDS83295 | Drive Shaft | | 36 | | 59.5 | 40 | 491 | |
| | 2005.08-2006.07 | MT | F | R | Saloon FWD BVE | | GDS83313 | Drive Shaft | | 36 | | 59.5 | 40 | 792 | |
| | 2005.08-2006.07 | Semi-AT | F | L | Saloon FWD BVE | | GDS83241 | Drive Shaft | | 36 | | 59.5 | 40 | 475 | |
| | 2005.08-2006.07 | | F | L/R | Saloon FWD BVE | | GCO83002 | Outer Joint | | 36 | 27 | 59.5 | 40 | 66 | I |
| | 2020.07-2024.03 | 7DCT | F | L | Saloon FWD DTRA | | GDS61201 | Drive Shaft | | 36 | | 59.5 | 40.5 | 535 | |
| | 2020.07-2024.03 | 7DCT | F | L | Saloon FWD DTRA | | GCO83037 | Outer Joint | | 36 | 30 | 59.5 | 40.5 | 56 | I |
| | 2020.07-2024.03 | 7DCT | F | L | Saloon FWD DTRA | | GCI53002 | Inner Joint | | | 33 | | | 34 | |
| 2.0 (96 kw) | 2001.11-2005.05 | 5AT/5MT | F | L | Saloon FWD ALT | | GDS61122 | Drive Shaft | 45W | 33 | | 53 | 30 | 602 | |
| | 2001.11-2005.05 | 5AT/5MT | F | R | Saloon FWD ALT | For Europe | GDS83007 | Drive Shaft | 45W | 33 | | 53 | 30 | 622 | |
| | 2001.11-2005.05 | 5AT/5MT | F | R | Saloon FWD ALT | For North America | GDS83009 | Drive Shaft | 45W | 33 | | 53 | 30 | 617 | |
| | 2001.11-2005.05 | 5AT/5MT | F | L | Saloon FWD ALT | | GCO61012 | Outer Joint | 45W | 33 | 30 | 53 | 30 | 62 | I |
| | 2001.11-2005.05 | 5AT/5MT | F | L/R | Saloon FWD ALT | | GCI50019 | Inner Joint | | | 34 | | | 59.5 | |
| 2.0 (100 kw) | 2003.12-2005.05 | 6MT | F | L | Saloon FWD BGW;BHW | | GDS83008 | Drive Shaft | 45W | 38 | | 59.5 | 34.5 | 603 | |
| | 2003.12-2005.05 | AT/MT | F | L/R | Saloon FWD BGW;BHW | | GCO83019 | Outer Joint | 45W | 38 | 27 | 59.5 | 34.5 | 63 | I |
| | 2003.12-2005.05 | MT | F | L | Saloon FWD BGW;BHW | | GDS83236 | Drive Shaft | | 36 | | 59.5 | 40 | 484 | |
| | 2003.12-2005.05 | MT | F | L/R | Saloon FWD BGW;BHW | | GCI50019 | Inner Joint | | | 34 | | | 59.5 | |
| | 2003.12-2005.05 | MT/6MT | F | R | Saloon FWD BGW;BHW | | GDS61019 | Drive Shaft | 45W | 38 | | 59.5 | 34.5 | 624 | |
| | 2005.03-2010.11 | 6AT/6MT | F | L/R | Saloon FWD BMA;CBAA | Date to:2007.02,Date from:2007.03 | GCO83002 | Outer Joint | | 36 | 27 | 59.5 | 40 | 66 | I |
| | 2005.03-2010.11 | 6AT/6MT | F | L/R | Saloon FWD BMA;CBAA | For PR code:F4E/F5F/F6L,Date from:2007.03,For PR code:F4E/F5F/F6L,Date from:2007.03,Date to:2007.12,For taxis | GCO83101 | Outer Joint | | 36 | 27 | 59.5 | 40 | 65 | M |
| | 2005.03-2010.11 | 6AT/6MT | F | L/R | Saloon FWD BMA;CBAA | | GCI54004 | Inner Joint | | | 34 | | | 81 | |
| | 2005.03-2010.11 | 6AT/6MT | F | L/R | Saloon FWD BMA;CBAA | Original Tripod Design | GCI61057 | Inner Joint | | | 34 | | | 89 | |
| | 2005.03-2010.11 | 6AT/6MT | F | L/R | Saloon FWD BMA;CBAA | | GCI83016 | Inner Joint | | | 28 | | | 32 | |
| | 2005.03-2010.11 | AT | F | L | Saloon FWD BMA;CBAA | Date to:2007.02,Date from:2007.03,For PR code:F0A/F4E/F4G/F4J/F4Q/F4X/F5G/F6K/F6M | GDS54013 | Drive Shaft | | 36 | | 59.5 | 40 | 479.5 | |
| | 2005.03-2010.11 | AT | F | L | Saloon FWD BMA;CBAA | | GDS83241 | Drive Shaft | | 36 | | 59.5 | 40 | 475 | |
| | 2005.03-2010.11 | AT | F | L | Saloon FWD BMA;CBAA | Date from:2007.03,For PR code:F4E/F5F/F6L,For taxis | GDS83381 | Drive Shaft | | 36 | | 59.5 | 40 | 483 | |
| | 2005.03-2010.11 | AT | F | R | Saloon FWD BMA;CBAA | date from:2007.03,PR code:F0A/F4E/F4G/F4J/F4Q/F4X/F5G/F6K/F6M,date to:2007.02 | GDS54011 | Drive Shaft | | 36 | | 59.5 | 40 | 755 | |
| | 2005.03-2010.11 | MT | F | L | Saloon FWD BMA;CBAA | date from:2007.03,PR code:F4E/F5F/F6L,For taxis | GDS83295 | Drive Shaft | | 36 | | 59.5 | 40 | 491 | |
| | 2005.03-2010.11 | MT | F | L | Saloon FWD BMA;CBAA | date to:2007.02,date from:2007.03,PR code:F0A/F4E/F4G/F4J/F4Q/F4X/F5G/F6K/F6M | GDS83295 | Drive Shaft | | 36 | | 59.5 | 40 | 491 | |
| | 2005.03-2010.11 | MT | F | R | Saloon FWD BMA;CBAA | For PR code:F4E/F5F/F6L | GDS61126 | Drive Shaft | | 36 | | 59.5 | 40 | 793 | |
| | 2005.03-2010.11 | MT | F | R | Saloon FWD BMA;CBAA | Date from:2008.03;For PR code:F4E/F5F/F6L | GDS61147 | Drive Shaft | | 36 | | 59.5 | 40 | 795 | |
| | 2005.03-2010.11 | MT | F | R | Saloon FWD BMA;CBAA | | GDS83236 | Drive Shaft | | 36 | | 59.5 | 40 | 484 | |
| | 2005.03-2010.11 | MT | F | R | Saloon FWD BMA;CBAA | Date to:2007.03,Date from:2007.03,PR code:F0A/F4E/F4G/F4J/F4Q/F4X/F5G/F6K/F6M,Engine code:CBAA,Rear Wheels | GDS83313 | Drive Shaft | | 36 | | 59.5 | 40 | 792 | |
| | 2010.08-2014.12 | 6MT | F | L | Saloon FWD CFFA | | GDS83295 | Drive Shaft | | 36 | | 59.5 | 40 | 491 | |
| | 2010.08-2014.12 | 6MT | F | R | Saloon FWD CFFA | Date from:2013.03 | GDS61147 | Drive Shaft | | 36 | | 59.5 | 40 | 795 | |
| | 2010.08-2014.12 | 6MT | F | R | Saloon FWD CFFA | Date to:2013.02 | GDS83313 | Drive Shaft | | 36 | | 59.5 | 40 | 792 | |
| | 2010.08-2014.12 | AT | F | L | Saloon FWD CFFA | | GDS83241 | Drive Shaft | | 36 | | 59.5 | 40 | 475 | |
| | 2010.08-2014.12 | AT | F | L/R | Saloon FWD CFFA | | GCI61057 | Inner Joint | | | 34 | | | 89 | |
| | 2010.08-2014.12 | MT | F | L | Saloon FWD CFFA | | GDS83236 | Drive Shaft | | 36 | | 59.5 | 40 | 484 | |
| | 2010.08-2014.12 | | F | L/R | Saloon FWD CFFA | Date From:2013.03 | GCO83002 | Outer Joint | | 36 | 27 | 59.5 | 40 | 66 | I |
| | 2010.08-2014.12 | | F | L/R | Saloon FWD CFFA | | GCI83016 | Inner Joint | | | 28 | | | 32 | |
| 2.0 (103 kw) | 2005.03-2009.05 | 6MT | F | L | Saloon 4WD BMP | | GDS83295 | Drive Shaft | | 36 | | 59.5 | 40 | 491 | |
| | 2005.03-2009.05 | 6MT | F | R | Saloon 4WD BMP | | GDS83266 | Drive Shaft | | 36 | | 59.5 | 40 | 601 | |
| | 2005.03-2009.05 | MT | F | L | Saloon 4WD BMP | | GDS83236 | Drive Shaft | | 36 | | 59.5 | 40 | 484 | |
| | 2005.03-2009.05 | | F | L/R | Saloon 4WD BMP | | GCO83002 | Outer Joint | | 36 | 27 | 59.5 | 40 | 66 | I |
| | 2005.03-2009.05 | | F | L/R | Saloon 4WD BMP | | GCI83016 | Inner Joint | | | 28 | | | 32 | |
| | 2005.03-2009.05 | 6MT | R | L | Saloon 4WD BMP | Date to:2006.05 | GDS54017 | Drive Shaft | | 36 | | 59.5 | 40 | 609 | |
| | 2005.03-2009.05 | 6MT | R | L | Saloon 4WD BMP | Date from:2006.06 | GDS61284 | Drive Shaft | | 36 | | 59.5 | 40 | 594 | |
| | 2005.03-2009.05 | 6MT | R | R | Saloon 4WD BMP | Date from:2006.06 | GDS61293 | Drive Shaft | | 36 | | 59.5 | 40 | 631 | |
| | 2005.03-2009.05 | 6MT | R | R | Saloon 4WD BMP | Date to:2006.05 | GDS81597 | Drive Shaft | | 36 | | 59.5 | 40 | 652 | |
| | 2005.03-2009.05 | 6MT | R | R | Saloon 4WD BMP | Date to:2006.05 | GCO83037 | Outer Joint | | 36 | 30 | 59.5 | 40.5 | 56 | I |
| | 2005.03-2009.05 | 6MT | R | L/R | Saloon 4WD BMP | | GCI35026 | Outer Joint | | 36 | 33 | 59.5 | 40 | 61 | |
| | 2005.03-2009.05 | 6MT | R | L/R | Saloon 4WD BMP | | GCI53002 | Inner Joint | | | 33 | | | 34 | |
| | 2005.03-2009.05 | 6MT | R | L/R | Saloon 4WD BMP | | GCI82447 | Inner Joint | | | 33 | | | 34 | |
| | 2005.03-2009.05 | AT | F | L | Saloon FWD BMP | Date to:2007.02,Date from:2007.03,For PR code:F0A/F4E/F4G/F4J/F4Q/F4X/F5G/F6K/F6M | GDS54013 | Drive Shaft | | 36 | | 59.5 | 40 | 479.5 | |
| | 2005.03-2009.05 | AT | F | L | Saloon FWD BMP | Date from:2007.03,For PR code:F4E/F5F/F6L | GDS83381 | Drive Shaft | | 36 | | 59.5 | 40 | 483 | |
| | 2005.03-2009.05 | AT | F | R | Saloon FWD BMP | TJ | GDS54011 | Drive Shaft | | 36 | | 59.5 | 40 | 755 | |
| | 2005.03-2009.05 | AT | F | L/R | Saloon FWD BMP | TJ | GCI54004 | Inner Joint | | | 34 | | | 81 | |
| | 2005.03-2009.05 | AT | F | L/R | Saloon FWD BMP | AAR | GCI61057 | Inner Joint | | | 34 | | | 89 | |
| | 2005.03-2009.05 | AT/MT | F | L/R | Saloon FWD BMP | | GCO83002 | Outer Joint | | 36 | 27 | 59.5 | 40 | 66 | I |
| | 2005.03-2009.05 | AT/MT | F | L/R | Saloon FWD BMP | | GCO83101 | Outer Joint | | 36 | 27 | 59.5 | 40 | 65 | M |
| | 2005.03-2009.05 | MT | F | L | Saloon FWD BMP | | GDS83295 | Drive Shaft | | 36 | | 59.5 | 40 | 491 | |
| | 2005.03-2009.05 | MT | F | R | Saloon FWD BMP | solid shaft | GDS61126 | Drive Shaft | | 36 | | 59.5 | 40 | 793 | |
| | 2005.03-2009.05 | MT | F | R | Saloon FWD BMP | hollow shaft | GDS61147 | Drive Shaft | | 36 | | 59.5 | 40 | 795 | |
| | 2005.03-2009.05 | MT | F | R | Saloon FWD BMP | solid shaft | GDS83313 | Drive Shaft | | 36 | | 59.5 | 40 | 792 | |
| | 2005.03-2009.05 | MT | F | L/R | Saloon FWD BMP | | GCI83016 | Inner Joint | | | 28 | | | 32 | |

| | YEAR | TRANSM. | F/R | L/R | BODY STYLE & DRIVE TYPE & ENGINE | REMARKS | G-AP Ref. | PRODUCT | ABS | Technical Specifications A | B | C | H | L | P |
|---|---|---|---|---|---|---|---|---|---|---|---|---|---|---|---|
| **VW Passat** | | | | | | | | | | | | | | | |
| 2.0 (103 kw) | 2005.03-2010.07 | 6AT/6MT | F | L/R | Saloon FWD BKP;CBAB | Date to:2007.02,Date from:2007.03 | GCO83002 | Outer Joint | | 36 | 27 | 59.5 | 40 | 66 | I |
| | 2005.03-2010.07 | 6AT/6MT | F | L/R | Saloon FWD BKP;CBAB | For PR code:F4E/F5F/F6L,Date from:2007.03;For PR code:F4E/F5F/F6L,Date from:2007.03;Date to:2007.12;For taxis | GCO83101 | Outer Joint | | 36 | 27 | 59.5 | 40 | 65 | M |
| | 2005.03-2010.07 | 6MT | F | L/R | Saloon FWD BKP;CBAB | | GCI83016 | Inner Joint | | | 28 | | | 32 | |
| | 2005.03-2010.07 | AT | F | L | Saloon FWD BKP;CBAB | Date to:2007.02;Date from:2007.03;For PR code:F0A/F4F/F4G/F4J/F4Q/F4X/F5G/F6K/F6M | GDS54013 | Drive Shaft | | 36 | | 59.5 | 40 | 479.5 | |
| | 2005.03-2010.07 | AT | F | L | Saloon FWD BKP;CBAB | TJ | GDS83241 | Drive Shaft | | 36 | | 59.5 | 40 | 475 | |
| | 2005.03-2010.07 | AT | F | L | Saloon FWD BKP;CBAB | Date from:2007.03;For PR code:F4E/F5F/F6L,For taxis | GDS83381 | Drive Shaft | | 36 | | 59.5 | 40 | 483 | |
| | 2005.03-2010.07 | AT | F | R | Saloon FWD BKP;CBAB | For PR code:F0A/F4F/F4G/F4J,For PR code:F4Q/F4X/F5G/F6K,For PR code:F8M | GDS54011 | Drive Shaft | | 36 | | 59.5 | 40 | 755 | |
| | 2005.03-2010.07 | AT | F | L/R | Saloon FWD BKP;CBAB | TJ | GCI54004 | Inner Joint | | | 34 | | | 81 | |
| | 2005.03-2010.07 | AT | F | L/R | Saloon FWD BKP;CBAB | AAR | GCI61057 | Inner Joint | | | 34 | | | 89 | |
| | 2005.03-2010.07 | MT | F | L | Saloon FWD BKP;CBAB | | GDS83236 | Drive Shaft | | 36 | | 59.5 | 40 | 484 | |
| | 2005.03-2010.07 | MT | F | L | Saloon FWD BKP;CBAB | For PR code:F0A/F4F/F4G/F4J,For PR code:02:F4Q/F4X/F5G/F6K | GDS83295 | Drive Shaft | | 36 | | 59.5 | 40 | 491 | |
| | 2005.03-2010.07 | MT | F | R | Saloon FWD BKP;CBAB | Date From:2008.03;For PR code:F4E/F5F/F6L;Solid shaft | GDS61126 | Drive Shaft | | 36 | | 59.5 | 40 | 793 | |
| | 2005.03-2010.07 | MT | F | R | Saloon FWD BKP;CBAB | Date From:2008.03;For PR code:F4E/F5F/F6L;Hollow shaft | GDS61147 | Drive Shaft | | 36 | | 59.5 | 40 | 795 | |
| | 2005.03-2010.07 | MT | F | R | Saloon FWD BKP;CBAB | For PR code:F0A/F0F/F0G/F4J,For PR code:02:F4Q/F4X/F5G/F6K,For no:CBAA;Wheels:Steel Wheel | GDS83313 | Drive Shaft | | 36 | | 59.5 | 40 | 792 | |
| | 2005.03-2010.07 | MT | F | L | Saloon FWD BKP;CBAB | For Engine no:CBAA;Wheels:Steel Wheels | GCI61069 | Inner Joint | | | 28 | | | 32 | |
| | 2005.03-2010.08 | 6MT | F | L | Saloon 4WD BKP;CBAB | | GDS83295 | Drive Shaft | | 36 | | 59.5 | 40 | 491 | |
| | 2005.03-2010.08 | 6MT | F | R | Saloon 4WD BKP;CBAB | | GDS83266 | Drive Shaft | | 36 | | 59.5 | 40 | 601 | |
| | 2005.03-2010.08 | 6MT | F | L/R | Saloon 4WD BKP;CBAB | | GCO83002 | Outer Joint | | 36 | 27 | 59.5 | 40 | 66 | I |
| | 2005.03-2010.08 | 6MT | F | L/R | Saloon 4WD BKP;CBAB | | GCI83016 | Inner Joint | | | 28 | | | 32 | |
| | 2005.03-2010.08 | 6MT | R | L | Saloon 4WD BKP;CBAB | Date to:2006.05 | GDS54017 | Drive Shaft | | 36 | | 59.5 | 40 | 609 | |
| | 2005.03-2010.08 | 6MT | R | L | Saloon 4WD BKP;CBAB | Date from:2006.06 | GDS61284 | Drive Shaft | | 36 | | 59.5 | 40 | 594 | |
| | 2005.03-2010.08 | 6MT | R | R | Saloon 4WD BKP;CBAB | Date from:2006.06 | GDS61293 | Drive Shaft | | 36 | | 59.5 | 40 | 631 | |
| | 2005.03-2010.08 | 6MT | R | R | Saloon 4WD BKP;CBAB | Date to:2006.05 | GDS81597 | Drive Shaft | | 36 | | 59.5 | 40 | 652 | |
| | 2005.03-2010.08 | 6MT | R | L/R | Saloon 4WD BKP;CBAB | | GCI35026 | Outer Joint | | 36 | 33 | 59.5 | 40 | 61 | |
| | 2005.03-2010.08 | 6MT | R | L/R | Saloon 4WD BKP;CBAB | | GCO83037 | Outer Joint | | 36 | 30 | 59.5 | 40.5 | 56 | I |
| | 2005.03-2010.08 | 6MT | R | L/R | Saloon 4WD BKP;CBAB | | GCI53002 | Inner Joint | | | 33 | | | 34 | |
| | 2005.03-2010.08 | 6MT | R | L/R | Saloon 4WD BKP;CBAB | | GCI82447 | Inner Joint | | | 33 | | | 34 | |
| | 2010.08-2014.12 | 6MT | F | L | Saloon 4WD CFFB | | GDS83295 | Drive Shaft | | 36 | | 59.5 | 40 | 491 | |
| | 2010.08-2014.12 | 6MT | F | R | Saloon 4WD CFFB | | GDS83266 | Drive Shaft | | 36 | | 59.5 | 40 | 601 | |
| | 2010.08-2014.12 | MT | F | L | Saloon 4WD CFFB | | GDS83236 | Drive Shaft | | 36 | | 59.5 | 40 | 484 | |
| | 2010.08-2014.12 | Semi-AT | F | L | Saloon 4WD CFFB | | GDS83241 | Drive Shaft | | 36 | | 59.5 | 40 | 475 | |
| | 2010.08-2014.12 | Semi-AT | F | L | Saloon 4WD CFFB | | GCI54004 | Inner Joint | | | 34 | | | 81 | |
| | 2010.08-2014.12 | | F | L/R | Saloon 4WD CFFB | Date From:2010.11 | GCO83002 | Outer Joint | | 36 | 27 | 59.5 | 40 | 66 | I |
| | 2010.08-2014.12 | | F | L/R | Saloon 4WD CFFB | | GCI83016 | Inner Joint | | | 28 | | | 32 | |
| | 2010.08-2014.12 | 6MT | R | L | Saloon 4WD CFFB | | GDS61284 | Drive Shaft | | 36 | | 59.5 | 40 | 594 | |
| | 2010.08-2014.12 | 6MT | R | R | Saloon 4WD CFFB | | GDS61293 | Drive Shaft | | 36 | | 59.5 | 40 | 631 | |
| | 2010.08-2014.12 | 6MT | R | L/R | Saloon 4WD CFFB | | GCI35026 | Outer Joint | | 36 | 33 | 59.5 | 40 | 61 | |
| | 2010.08-2014.12 | 6MT | R | L/R | Saloon 4WD CFFB | | GCI53002 | Inner Joint | | | 33 | | | 34 | |
| | 2010.08-2014.12 | 6MT | R | L/R | Saloon 4WD CFFB | | GCI82447 | Inner Joint | | | 33 | | | 34 | |
| | 2010.08-2014.12 | 6DCT | F | L | Saloon FWD CFFB | | GDS54013 | Drive Shaft | | 36 | | 59.5 | 40 | 479.5 | |
| | 2010.08-2014.12 | 6DCT | F | R | Saloon FWD CFFB | | GDS54011 | Drive Shaft | | 36 | | 59.5 | 40 | 755 | |
| | 2010.08-2014.12 | 6DCT | F | L/R | Saloon FWD CFFB | TJ | GCI54004 | Inner Joint | | | 34 | | | 81 | |
| | 2010.08-2014.12 | 6DCT | F | L/R | Saloon FWD CFFB | AAR | GCI61057 | Inner Joint | | | 34 | | | 89 | |
| | 2010.08-2014.12 | 6MT | F | L | Saloon FWD CFFB | | GDS83295 | Drive Shaft | | 36 | | 59.5 | 40 | 491 | |
| | 2010.08-2014.12 | 6MT | F | R | Saloon FWD CFFB | For PR code:A8B/A8C/A8G/A9I | GDS61126 | Drive Shaft | | 36 | | 59.5 | 40 | 793 | |
| | 2010.08-2014.12 | 6MT | F | R | Saloon FWD CFFB | For PR code:A8B/A8C/A8G/A9I | GDS83313 | Drive Shaft | | 36 | | 59.5 | 40 | 792 | |
| | 2010.08-2014.12 | 6MT | F | L/R | Saloon FWD CFFB | For PR code:A8T | GCO83101 | Outer Joint | | 36 | 27 | 59.5 | 40 | 65 | M |
| | 2010.08-2014.12 | 6MT | F | L/R | Saloon FWD CFFB | For PR code:A8T | GCI61069 | Inner Joint | | | 28 | | | 32 | |
| | 2010.08-2014.12 | 6MT | F | L/R | Saloon FWD CFFB | For PR code:A8B/A8C/A8G/A9I | GCI83016 | Inner Joint | | | 28 | | | 32 | |
| | 2010.08-2014.12 | 6MT/6DCT | F | L/R | Saloon FWD CFFB | Transmission:6MT;For PR code:A8B/A8C/A8G/A9I;Transmission:6DCT | GCO83002 | Outer Joint | | 36 | 27 | 59.5 | 40 | 66 | I |
| | 2010.08-2014.12 | MT | F | L | Saloon FWD CFFB | | GDS83236 | Drive Shaft | | 36 | | 59.5 | 40 | 484 | |
| | 2011.04-2015.06 | 6MT | F | L/R | Saloon FWD CFFB;CKRA | Date to:2014.12;Transmission:6MT;For PR code:A8B/A8C/A8G/A9I;Transmission:7DC7/4MCT | GCO83002 | Outer Joint | | 36 | 27 | 59.5 | 40 | 66 | I |
| 2.0 (105 kw) | 2009.01-2010.11 | 6AT/6MT | F | L/R | Saloon FWD CBAC | | GCI54004 | Inner Joint | | | 34 | | | 81 | |
| | 2009.01-2010.11 | 6AT/6MT | F | L/R | Saloon FWD CBAC | Original Tripod Design | GCI61057 | Inner Joint | | | 34 | | | 89 | |
| | 2009.01-2010.11 | 6AT/6MT | F | L/R | Saloon FWD CBAC | | GCI83016 | Inner Joint | | | 28 | | | 32 | |
| | 2009.01-2010.11 | AT | F | L | Saloon FWD CBAC | | GDS54013 | Drive Shaft | | 36 | | 59.5 | 40 | 479.5 | |
| | 2009.01-2010.11 | AT | F | L | Saloon FWD CBAC | | GDS83241 | Drive Shaft | | 36 | | 59.5 | 40 | 475 | |
| | 2009.01-2010.11 | AT | F | R | Saloon FWD CBAC | | GDS54011 | Drive Shaft | | 36 | | 59.5 | 40 | 755 | |
| | 2009.01-2010.11 | MT | F | L | Saloon FWD CBAC | | GDS83295 | Drive Shaft | | 36 | | 59.5 | 40 | 491 | |
| | 2009.01-2010.11 | MT | F | R | Saloon FWD CBAC | | GDS61126 | Drive Shaft | | 36 | | 59.5 | 40 | 793 | |
| | 2009.01-2010.11 | MT | F | R | Saloon FWD CBAC | Rims:With alloy rim;For no:CBAA;Wheels:Steel Wheels | GDS83313 | Drive Shaft | | 36 | | 59.5 | 40 | 792 | |
| | 2009.01-2010.11 | MT | F | L | Saloon FWD CBAC | For Engine code:CBAA;Wheels:Steel Wheels | GCO83101 | Outer Joint | | 36 | 27 | 59.5 | 40 | 65 | M |
| | 2009.01-2010.11 | | F | L/R | Saloon FWD CBAC | | GCO83002 | Outer Joint | | 36 | 27 | 59.5 | 40 | 66 | I |
| 2.0 (110 kw) | 1994.01-1996.12 | MT | F | L | Saloon FWD ABF | | GDS83006 | Drive Shaft | | 36 | | 53.2 | 77.5 | 557 | |
| | 1994.01-1996.12 | MT | F | R | Saloon FWD ABF | | GDS83004 | Drive Shaft | | 36 | | 53.2 | 77.5 | 822 | |

| | YEAR | TRANSM. | F/R | L/R | BODY STYLE & DRIVE TYPE & ENGINE | REMARKS | G-AP Ref. | PRODUCT | ABS | Technical Specifications A | B | C | H | L | P |
|---|---|---|---|---|---|---|---|---|---|---|---|---|---|---|---|
| **VW** **Passat** | | | | | | | | | | | | | | | |
| 2.0 (110 kw) | 1994.01-1996.12 | MT | F | L/R | Saloon FWD ABF | | GCO83070 | Outer Joint | | 36 | 30 | 53 | 78 | 60 | I |
| | 2005.03-2010.07 | 6AT | F | L/R | Saloon FWD BLY;BLR;BVY;BVZ;BVX | | GCI61011 | Inner Joint | | 26 | 32 | 31 | 68.5 | 85 | |
| | 2005.03-2010.07 | 6AT | F | L/R | Saloon FWD BLY;BLR;BVY;BVZ;BVX | | GCI61050 | Inner Joint | | 26 | 32 | 31 | 68.5 | 89 | |
| | 2005.03-2010.07 | 6AT/6MT | F | L/R | Saloon FWD BLY;BLR;BVY;BVZ;BVX | | GCO83037 | Outer Joint | | 36 | 30 | 59.5 | 40.5 | 56 | I |
| | 2005.03-2010.07 | AT | F | L | Saloon FWD BLY;BLR;BVY;BVZ;BVX | | GDS61093 | Drive Shaft | | 36 | 26 | 59.5 | 40.5 | 587.5 | |
| | 2005.03-2010.07 | AT | F | R | Saloon FWD BLY;BLR;BVY;BVZ;BVX | | GDS61094 | Drive Shaft | | 36 | 26 | 59.5 | 40.5 | 884 | |
| | 2005.03-2010.07 | MT | F | L | Saloon FWD BLY;BLR;BVY;BVZ;BVX | | GDS83294 | Drive Shaft | | 36 | | 59.5 | 38 | 519 | |
| | 2005.03-2010.07 | MT | F | R | Saloon FWD BLY;BLR;BVY;BVZ;BVX | | GDS61042 | Drive Shaft | | 36 | | 59.5 | 40.5 | 814 | |
| | 2005.03-2010.07 | MT | F | L/R | Saloon FWD BLY;BLR;BVY;BVZ;BVX | | GCI82447 | Inner Joint | | | 33 | | | 34 | |
| | 2005.09-2010.07 | 6MT | F | L | Saloon 4WD BLX;BLY;BVX | For Engine code:BLY/BVX | GDS83294 | Drive Shaft | | 36 | | 59.5 | 38 | 519 | |
| | 2005.09-2010.07 | 6MT | F | R | Saloon 4WD BLX;BLY;BVX | For Engine code:BLY/BVX | GDS61096 | Drive Shaft | | 36 | | 59.5 | 40.5 | 799 | |
| | 2005.09-2010.07 | 6MT | F | L/R | Saloon 4WD BLX;BLY;BVX | | GCO83037 | Outer Joint | | 36 | 30 | 59.5 | 40.5 | 56 | I |
| | 2005.09-2010.07 | 6MT | F | L/R | Saloon 4WD BLX;BLY;BVX | | GCI82447 | Inner Joint | | | 33 | | | 34 | |
| | 2005.09-2010.07 | 6MT | R | L | Saloon 4WD BLX;BLY;BVX | Date to:2006.05 | GDS54017 | Drive Shaft | | 36 | | 59.5 | 40 | 609 | |
| | 2005.09-2010.07 | 6MT | R | L | Saloon 4WD BLX;BLY;BVX | Date from:2006.06 | GDS61284 | Drive Shaft | | 36 | | 59.5 | 40 | 594 | |
| | 2005.09-2010.07 | 6MT | R | R | Saloon 4WD BLX;BLY;BVX | Date from:2006.06 | GDS61293 | Drive Shaft | | 36 | | 59.5 | 40 | 631 | |
| | 2005.09-2010.07 | 6MT | R | R | Saloon 4WD BLX;BLY;BVX | Date to:2006.05 | GDS81597 | Drive Shaft | | 36 | | 59.5 | 40 | 652 | |
| | 2005.09-2010.07 | 6MT | R | L/R | Saloon 4WD BLX;BLY;BVX | | GCI35026 | Outer Joint | | 36 | 33 | 59.5 | 40 | 61 | |
| | 2005.09-2010.07 | 6MT | R | L/R | Saloon 4WD BLX;BLY;BVX | | GCI53002 | Inner Joint | | | 33 | | | 34 | |
| | 2014.08-2024.03 | 6MT | F | L | Saloon 4WD CRLB;DFEA;DFGA;DTSA | | GDS81896 | Drive Shaft | | 36 | | 59.5 | 40 | 500 | |
| | 2014.08-2024.03 | 6MT | F | R | Saloon 4WD CRLB;DFEA;DFGA;DTSA | | GDS81889 | Drive Shaft | | 36 | | 59.5 | 40 | 614 | |
| | 2014.08-2024.03 | 6MT | F | L/R | Saloon 4WD CRLB;DFEA;DFGA;DTSA | | GCO83101 | Outer Joint | | 36 | 27 | 59.5 | 40 | 65 | M |
| | 2014.08-2024.03 | AT | F | L/R | Saloon 4WD CRLB;DFEA;DFGA;DTSA | | GCI83006 | Inner Joint | | | 33 | | | 34 | |
| | 2014.08-2024.03 | AT/6DCT | F | L/R | Saloon 4WD CRLB;DFEA;DFGA;DTSA | Date from:2015.01 | GCI61057 | Inner Joint | | | 34 | | | 89 | |
| | 2014.08-2024.03 | | F | L/R | Saloon 4WD CRLB;DFEA;DFGA;DTSA | | GCI83016 | Inner Joint | | | 28 | | | 32 | |
| | 2014.08-2024.03 | 6MT | R | L | Saloon 4WD CRLB;DFEA;DFGA;DTSA | | GDS61331 | Drive Shaft | | 36 | | 59.5 | 40 | 606 | |
| | 2014.08-2024.03 | 6MT | R | R | Saloon 4WD CRLB;DFEA;DFGA;DTSA | | GDS61332 | Drive Shaft | | 36 | | 59.5 | 40 | 650 | |
| | 2014.08-2024.03 | 6MT | R | L/R | Saloon 4WD CRLB;DFEA;DFGA;DTSA | | GCI35026 | Outer Joint | | 36 | 33 | 59.5 | 40 | 61 | |
| | 2014.08-2024.03 | | R | L/R | Saloon 4WD CRLB;DFEA;DFGA;DTSA | | GCI61103 | Inner Joint | | | 33 | | | 32 | |
| | 2014.11-2024.03 | 6DCT | F | L | Saloon FWD CRLB;DFGA;DBGA;DSRA;DSRB;DTSA;DTSB | For PR code:1PA/1PE | GDS83381 | Drive Shaft | | 36 | | 59.5 | 40 | 483 | |
| | 2014.11-2024.03 | 6DCT | F | R | Saloon FWD CRLB;DFGA;DBGA;DSRA;DSRB;DTSA;DTSB | | GDS61345 | Drive Shaft | | 36 | | 59.5 | 40 | 774 | |
| | 2014.11-2024.03 | 6DCT | F | L/R | Saloon FWD CRLB;DFGA;DBGA;DSRA;DSRB;DTSA;DTSB | | GCI61057 | Inner Joint | | | 34 | | | 89 | |
| | 2014.11-2024.03 | 6DCT/7DCT | F | L/R | Saloon FWD CRLB;DFGA;DBGA;DSRA;DSRB;DTSA;DTSB | | GCO83101 | Outer Joint | | 36 | 27 | 59.5 | 40 | 65 | M |
| | 2014.11-2024.03 | 6MT | F | L | Saloon FWD CRLB;DFGA;DBGA;DSRA;DSRB;DTSA;DTSB | | GDS81896 | Drive Shaft | | 36 | | 59.5 | 40 | 500 | |
| | 2014.11-2024.03 | 6MT | F | R | Saloon FWD CRLB;DFGA;DBGA;DSRA;DSRB;DTSA;DTSB | | GDS61101 | Drive Shaft | | 36 | | 59.5 | 40 | 803 | |
| | 2014.11-2024.03 | 6MT | F | L/R | Saloon FWD CRLB;DFGA;DBGA;DSRA;DSRB;DTSA;DTSB | | GCI83016 | Inner Joint | | | 28 | | | 32 | |
| | 2014.11-2024.03 | 7DCT | F | L | Saloon FWD CRLB;DFGA;DBGA;DSRA;DSRB;DTSA;DTSB | | GDS82351 | Drive Shaft | | 36 | 37 | 59.5 | 40 | 568 | |
| | 2014.11-2024.03 | 7DCT | F | R | Saloon FWD CRLB;DFGA;DBGA;DSRA;DSRB;DTSA;DTSB | | GDS83613 | Drive Shaft | | 36 | 37 | 59.5 | 40 | 921 | |
| | 2014.11-2024.03 | 7DCT | F | L | Saloon FWD CRLB;DFGA;DBGA;DSRA;DSRB;DTSA;DTSB | | GCI81158 | Inner Joint | | 37 | 34 | 34.5 | 65.5 | 83 | |
| | 2014.11-2024.03 | 7DCT | F | R | Saloon FWD CRLB;DFGA;DBGA;DSRA;DSRB;DTSA;DTSB | | GCI82108 | Inner Joint | | 37 | 34 | 40 | 77.5 | 103.5 | |
| 2.0 (120 kw) | 2005.08-2009.05 | 6AT/6MT | F | L/R | Saloon FWD BUZ | | GCO83101 | Outer Joint | | 36 | 27 | 59.5 | 40 | 65 | M |
| | 2005.08-2009.05 | AT | F | L | Saloon FWD BUZ | | GDS54013 | Drive Shaft | | 36 | | 59.5 | 40 | 479.5 | |
| | 2005.08-2009.05 | AT | F | L | Saloon FWD BUZ | | GDS83241 | Drive Shaft | | 36 | | 59.5 | 40 | 475 | |
| | 2005.08-2009.05 | AT | F | R | Saloon FWD BUZ | | GDS54011 | Drive Shaft | | 36 | | 59.5 | 40 | 755 | |
| | 2005.08-2009.05 | AT | F | L | Saloon FWD BUZ | | GCI54004 | Inner Joint | | | 34 | | | 81 | |
| | 2005.08-2009.05 | MT | F | L | Saloon FWD BUZ | | GDS83236 | Drive Shaft | | 36 | | 59.5 | 40 | 484 | |
| | 2005.08-2009.05 | MT | F | R | Saloon FWD BUZ | | GDS61126 | Drive Shaft | | 36 | | 59.5 | 40 | 793 | |
| 2.0 (125 kw) | 2005.08-2010.07 | 6AT/6MT | F | L/R | Saloon FWD BMR;CBBB | Date from:2006.02 | GCO83101 | Outer Joint | | 36 | 27 | 59.5 | 40 | 65 | M |
| | 2005.08-2010.07 | 6MT | F | L | Saloon FWD BMR;CBBB | For Engine code:CBBB,For light alloy rims;For Engine code:BMR | GDS83236 | Drive Shaft | | 36 | | 59.5 | 40 | 484 | |
| | 2005.08-2010.07 | 6MT | F | L | Saloon FWD BMR;CBBB | For Engine code:CBBB,For steel rims | GDS83295 | Drive Shaft | | 36 | | 59.5 | 40 | 491 | |
| | 2005.08-2010.07 | AT | F | L | Saloon FWD BMR;CBBB | Date from:2006.02;For Engine code:BMR | GDS54013 | Drive Shaft | | 36 | | 59.5 | 40 | 479.5 | |
| | 2005.08-2010.07 | AT | F | L | Saloon FWD BMR;CBBB | For Engine code:BMR | GDS83241 | Drive Shaft | | 36 | | 59.5 | 40 | 475 | |
| | 2005.08-2010.07 | AT | F | R | Saloon FWD BMR;CBBB | | GDS54011 | Drive Shaft | | 36 | | 59.5 | 40 | 755 | |
| | 2005.08-2010.07 | AT | F | L | Saloon FWD BMR;CBBB | Date from:2006.02 | GCI54004 | Inner Joint | | | 34 | | | 81 | |
| | 2005.08-2010.07 | MT | F | R | Saloon FWD BMR;CBBB | | GDS61126 | Drive Shaft | | 36 | | 59.5 | 40 | 793 | |
| | 2007.08-2010.07 | 6AT | F | L | Saloon FWD CCTB | | GDS61153 | Drive Shaft | | 36 | 26 | 59.5 | 40 | 583 | |
| | 2007.08-2010.07 | 6AT | F | L/R | Saloon FWD CCTB | | GCO83002 | Outer Joint | | 36 | 27 | 59.5 | 40 | 66 | I |
| | 2007.08-2010.07 | AT | F | L | Saloon FWD CCTB | | GCI61038 | Inner Joint | | 26 | 34 | 31 | 68.5 | 88.5 | |
| | 2009.05-2010.07 | 6AT | F | L | Saloon 4WD CBBB | | GDS54013 | Drive Shaft | | 36 | | 59.5 | 40 | 479.5 | |
| | 2009.05-2010.07 | 6AT | F | R | Saloon 4WD CBBB | | GDS61295 | Drive Shaft | | 36 | | 59.5 | 40 | 555 | |
| | 2009.05-2010.07 | 6AT | F | R | Saloon 4WD CBBB | | GCO83002 | Outer Joint | | 36 | 27 | 59.5 | 40 | 66 | I |
| | 2009.05-2010.07 | MT | F | L | Saloon 4WD CBBB | | GDS83236 | Drive Shaft | | 36 | | 59.5 | 40 | 484 | |
| | 2009.05-2010.07 | | F | L | Saloon 4WD CBBB | | GCI54004 | Inner Joint | | | 34 | | | 81 | |
| | 2009.05-2010.07 | 6AT | R | L | Saloon 4WD CBBB | | GDS61284 | Drive Shaft | | 36 | | 59.5 | 40 | 594 | |
| | 2009.05-2010.07 | 6AT | R | R | Saloon 4WD CBBB | | GDS61293 | Drive Shaft | | 36 | | 59.5 | 40 | 631 | |

| | YEAR | TRANSM. | F/R | L/R | BODY STYLE & DRIVE TYPE & ENGINE | REMARKS | G-AP Ref. | PRODUCT | ABS | Technical Specifications A | B | C | H | L | P |
|---|---|---|---|---|---|---|---|---|---|---|---|---|---|---|---|
| **VW Passat** | | | | | | | | | | | | | | | |
| 2.0 (125 kw) | 2009.05-2010.07 | 6AT | R | L/R | Saloon 4WD CBBB | | GCI35026 | Outer Joint | | 36 | 33 | 59.5 | 40 | 61 | |
| | 2009.05-2010.07 | 6AT | R | L/R | Saloon 4WD CBBB | | GCI53002 | Inner Joint | | | 33 | | | 34 | |
| | 2009.05-2010.07 | 6AT | R | L/R | Saloon 4WD CBBB | | GCI82447 | Inner Joint | | | 33 | | | 34 | |
| | 2010.08-2013.01 | 6DCT | F | L | Saloon 4WD CFGB | For PR code:A8B/A8C/A8G/A9I | GDS54013 | Drive Shaft | | 36 | | 59.5 | 40 | 479.5 | |
| | 2010.08-2013.01 | 6DCT | F | L | Saloon 4WD CFGB | For PR code:8AT | GDS83381 | Drive Shaft | | 36 | | 59.5 | 40 | 483 | |
| | 2010.08-2013.01 | 6DCT | F | R | Saloon 4WD CFGB | For PR code:A8B/A8C/A8G/A9I/8AT | GDS61295 | Drive Shaft | | 36 | | 59.5 | 40 | 555 | |
| | 2010.08-2013.01 | 6DCT | F | L/R | Saloon 4WD CFGB | Date from:2010.11;For PR code:A8B/A8C/A8G/A9I | GCO83002 | Outer Joint | | 36 | 27 | 59.5 | 40 | 66 | I |
| | 2010.08-2013.01 | 6DCT | F | L/R | Saloon 4WD CFGB | | GCO83101 | Outer Joint | | 36 | 27 | 59.5 | 40 | 65 | M |
| | 2010.08-2013.01 | 6DCT | F | L/R | Saloon 4WD CFGB | | GCI61057 | Inner Joint | | | 34 | | | 89 | |
| | 2010.08-2013.01 | AT | F | L | Saloon 4WD CFGB | Date from:2010.11 | GCI54004 | Inner Joint | | | 34 | | | 81 | |
| | 2010.08-2013.01 | MT | F | L | Saloon 4WD CFGB | | GDS83236 | Drive Shaft | | 36 | | 59.5 | 40 | 484 | |
| | 2010.08-2013.01 | 6AT/6MT | R | L | Saloon 4WD CFGB | | GDS61284 | Drive Shaft | | 36 | | 59.5 | 40 | 594 | |
| | 2010.08-2013.01 | 6AT/6MT | R | R | Saloon 4WD CFGB | Date From:2010.11 | GDS61293 | Drive Shaft | | 36 | | 59.5 | 40 | 631 | |
| | 2010.08-2013.01 | 6AT/6MT | R | L/R | Saloon 4WD CFGB | | GCI35026 | Outer Joint | | 36 | 33 | 59.5 | 40 | 61 | |
| | 2010.08-2013.01 | 6AT/6MT | R | L/R | Saloon 4WD CFGB | | GCI82447 | Inner Joint | | | 33 | | | 34 | |
| | 2010.08-2014.12 | 6DCT | F | L | Saloon FWD CFGB;CLLA | Date to:2013.05 | GDS54013 | Drive Shaft | | 36 | | 59.5 | 40 | 479.5 | |
| | 2010.08-2014.12 | 6DCT | F | L | Saloon FWD CFGB;CLLA | Date from:2013.06 | GDS61310 | Drive Shaft | | 36 | | 59.4 | 40 | 477 | |
| | 2010.08-2014.12 | 6DCT | F | L | Saloon FWD CFGB;CLLA | Date to:2013.05 | GDS83241 | Drive Shaft | | 36 | | 59.5 | 40 | 475 | |
| | 2010.08-2014.12 | 6DCT | F | R | Saloon FWD CFGB;CLLA | Date to:2013.05 | GDS54011 | Drive Shaft | | 36 | | 59.5 | 40 | 755 | |
| | 2010.08-2014.12 | 6DCT | F | R | Saloon FWD CFGB;CLLA | Date from:2013.06 | GDS83354 | Drive Shaft | | 36 | | 59.5 | 40 | 763 | |
| | 2010.08-2014.12 | 6MT | F | L | Saloon FWD CFGB;CLLA | Date to:2013.05 | GDS83236 | Drive Shaft | | 36 | | 59.5 | 40 | 484 | |
| | 2010.08-2014.12 | 6MT | F | R | Saloon FWD CFGB;CLLA | | GDS61126 | Drive Shaft | | 36 | | 59.5 | 40 | 793 | |
| | 2010.08-2014.12 | 6MT | F | R | Saloon FWD CFGB;CLLA | Date from:2013.06 | GDS83313 | Drive Shaft | | 36 | | 59.5 | 40 | 792 | |
| | 2010.08-2014.12 | 6MT | F | L/R | Saloon FWD CFGB;CLLA | Date from:2013.06 | GCO83104 | Outer Joint | | 36 | 28 | 59.4 | 40 | 65 | I |
| | 2010.08-2014.12 | 6MT/6DCT | F | L/R | Saloon FWD CFGB;CLLA | Date from:2013.06 | GCO81352 | Outer Joint | | 36 | 28 | 59.5 | 40 | 65 | I |
| | 2010.08-2014.12 | 6MT/6DCT | F | L/R | Saloon FWD CFGB;CLLA | Date to:2013.05 | GCO83101 | Outer Joint | | 36 | 27 | 59.5 | 40 | 65 | M |
| | 2010.08-2014.12 | AT | F | L | Saloon FWD CFGB;CLLA | | GCI54004 | Inner Joint | | | 34 | | | 81 | |
| | 2010.08-2014.12 | AT | F | L/R | Saloon FWD CFGB;CLLA | | GCI61057 | Inner Joint | | | 34 | | | 89 | |
| 2.0 (130 kw) | 2012.12-2014.12 | 6AT/6MT | F | L/R | Saloon FWD CFGC | | GCO83104 | Outer Joint | | 36 | 28 | 59.4 | 40 | 65 | I |
| | 2012.12-2014.12 | 6DCT | F | L | Saloon FWD CFGC | | GDS61310 | Drive Shaft | | 36 | | 59.4 | 40 | 477 | |
| | 2012.12-2014.12 | 6DCT | F | R | Saloon FWD CFGC | | GDS83354 | Drive Shaft | | 36 | | 59.5 | 40 | 763 | |
| | 2012.12-2014.12 | 6DCT | F | L | Saloon FWD CFGC | | GCI81075 | Inner Joint | | | 26 | | | 89 | |
| | 2012.12-2014.12 | 6DCT | F | R | Saloon FWD CFGC | | GCI61057 | Inner Joint | | | 34 | | | 89 | |
| | 2012.12-2014.12 | 6MT | F | L | Saloon FWD CFGC | | GDS83236 | Drive Shaft | | 36 | | 59.5 | 40 | 484 | |
| | 2012.12-2014.12 | 6MT | F | R | Saloon FWD CFGC | | GDS61126 | Drive Shaft | | 36 | | 59.5 | 40 | 793 | |
| | 2012.12-2014.12 | 6MT | F | R | Saloon FWD CFGC | Date from:2013.06 | GDS83313 | Drive Shaft | | 36 | | 59.5 | 40 | 792 | |
| | 2012.12-2014.12 | 6MT | F | L/R | Saloon FWD CFGC | Date to:2013.05 | GCO83101 | Outer Joint | | 36 | 27 | 59.5 | 40 | 65 | M |
| | 2012.12-2014.12 | 6MT/6DCT | F | L/R | Saloon FWD CFGC | Date from:2013.06 | GCO81352 | Outer Joint | | 36 | 28 | 59.5 | 40 | 65 | I |
| | 2013.01-2014.12 | 6AT | F | L | Saloon 4WD CFGC | For PR code:A8B/A8C/A8G/A9I | GDS54013 | Drive Shaft | | 36 | | 59.5 | 40 | 479.5 | |
| | 2013.01-2014.12 | 6AT | F | R | Saloon 4WD CFGC | | GDS61295 | Drive Shaft | | 36 | | 59.5 | 40 | 555 | |
| | 2013.01-2014.12 | 6DCT | F | L | Saloon 4WD CFGC | For PR code:8AT | GDS83381 | Drive Shaft | | 36 | | 59.5 | 40 | 483 | |
| | 2013.01-2014.12 | 6DCT | F | L/R | Saloon 4WD CFGC | | GCO83101 | Outer Joint | | 36 | 27 | 59.5 | 40 | 65 | M |
| | 2013.01-2014.12 | AT | F | L | Saloon 4WD CFGC | | GCI54004 | Inner Joint | | | 34 | | | 81 | |
| | 2013.01-2014.12 | AT/6DCT | F | L/R | Saloon 4WD CFGC | | GCI61057 | Inner Joint | | | 34 | | | 89 | |
| | 2013.01-2014.12 | | F | L/R | Saloon 4WD CFGC | | GCO83002 | Outer Joint | | 36 | 27 | 59.5 | 40 | 66 | I |
| | 2013.01-2014.12 | 6AT | R | L | Saloon 4WD CFGC | | GDS61284 | Drive Shaft | | 36 | | 59.5 | 40 | 594 | |
| | 2013.01-2014.12 | 6AT | R | R | Saloon 4WD CFGC | | GDS61293 | Drive Shaft | | 36 | | 59.5 | 40 | 631 | |
| | 2013.01-2014.12 | 6AT | R | L/R | Saloon 4WD CFGC | | GCI35026 | Outer Joint | | 36 | 33 | 59.5 | 40 | 61 | |
| | 2013.01-2014.12 | 6AT | R | L/R | Saloon 4WD CFGC | | GCI82447 | Inner Joint | | | 33 | | | 34 | |
| 2.0 (135 kw) | 2015.07-2016.05 | 6AT | F | R | Saloon FWD CUPA | | GDS61345 | Drive Shaft | | 36 | | 59.5 | 40 | 774 | |
| | 2015.07-2016.05 | 6DCT | F | L | Saloon FWD CUPA | | GDS83381 | Drive Shaft | | 36 | | 59.5 | 40 | 483 | |
| | 2015.07-2016.05 | 6DCT | F | L/R | Saloon FWD CUPA | | GCO83101 | Outer Joint | | 36 | 27 | 59.5 | 40 | 65 | M |
| | 2015.07-2016.05 | 6DCT | F | L/R | Saloon FWD CUPA | | GCI61057 | Inner Joint | | | 34 | | | 89 | |
| 2.0 (140 kw) | 2014.11-2024.03 | 6AT | F | R | Saloon 4WD DDAA;DFCA;DFHA | | GDS61346 | Drive Shaft | | 36 | | 59.5 | 40 | 589 | |
| | 2014.11-2024.03 | 6DCT | F | L | Saloon 4WD DDAA;DFCA;DFHA | | GDS83381 | Drive Shaft | | 36 | | 59.5 | 40 | 483 | |
| | 2014.11-2024.03 | 6DCT | F | L/R | Saloon 4WD DDAA;DFCA;DFHA | | GCI61057 | Inner Joint | | | 34 | | | 89 | |
| | 2014.11-2024.03 | 7DCT | F | L | Saloon 4WD DDAA;DFCA;DFHA | | GDS82351 | Drive Shaft | | 36 | 37 | 59.5 | 40 | 568 | |
| | 2014.11-2024.03 | 7DCT | F | L | Saloon 4WD DDAA;DFCA;DFHA | | GCI81158 | Inner Joint | | 37 | 34 | 34.5 | 65.5 | 83 | |
| | 2014.11-2024.03 | AT | F | L/R | Saloon 4WD DDAA;DFCA;DFHA | | GCI83006 | Inner Joint | | | 33 | | | 34 | |
| | 2014.11-2024.03 | DCT/6DCT | F | L/R | Saloon 4WD DDAA;DFCA;DFHA | | GCO83101 | Outer Joint | | 36 | 27 | 59.5 | 40 | 65 | M |
| | 2014.11-2024.03 | 6AT | R | L | Saloon 4WD DDAA;DFCA;DFHA | | GDS61331 | Drive Shaft | | 36 | | 59.5 | 40 | 606 | |
| | 2014.11-2024.03 | 6AT | R | R | Saloon 4WD DDAA;DFCA;DFHA | | GDS61332 | Drive Shaft | | 36 | | 59.5 | 40 | 650 | |
| | 2014.11-2024.03 | AT | R | L/R | Saloon 4WD DDAA;DFCA;DFHA | | GCI83011 | Inner Joint | | | 33 | | | 34 | |
| | 2014.11-2024.03 | | R | L/R | Saloon 4WD DDAA;DFCA;DFHA | | GCI61103 | Inner Joint | | | 33 | | | 32 | |
| | 2014.11-2024.03 | 6DCT | F | L | Saloon FWD DDAA;DFCA;DFHA | For PR code:1PA/1PE | GDS83381 | Drive Shaft | | 36 | | 59.5 | 40 | 483 | |

| | YEAR | TRANSM. | F/R | L/R | BODY STYLE & DRIVE TYPE & ENGINE | REMARKS | G-AP Ref. | PRODUCT | ABS | Technical Specifications A | B | C | H | L | P |
|---|---|---|---|---|---|---|---|---|---|---|---|---|---|---|---|
| **VW Passat** | | | | | | | | | | | | | | | |
| 2.0 (140 kw) | 2014.11-2024.03 | 6DCT | F | R | Saloon FWD DDAA;DFCA;DFHA | | GDS61345 | Drive Shaft | | 36 | | 59.5 | 40 | 774 | |
| | 2014.11-2024.03 | 6DCT | F | L/R | Saloon FWD DDAA;DFCA;DFHA | | GCI61057 | Inner Joint | | | 34 | | | 89 | |
| | 2014.11-2024.03 | 6DCT/6MT | F | L/R | Saloon FWD DDAA;DFCA;DFHA | | GCO83101 | Outer Joint | | 36 | 27 | 59.5 | 40 | 65 | M |
| | 2014.11-2024.03 | 6MT | F | L | Saloon FWD DDAA;DFCA;DFHA | | GDS81896 | Drive Shaft | | 36 | | 59.5 | 40 | 500 | |
| | 2014.11-2024.03 | 6MT | F | R | Saloon FWD DDAA;DFCA;DFHA | | GDS61101 | Drive Shaft | | 36 | | 59.5 | 40 | 803 | |
| | 2014.11-2024.03 | 6MT | F | L/R | Saloon FWD DDAA;DFCA;DFHA | | GCI83016 | Inner Joint | | | 28 | | | 32 | |
| | 2014.11-2024.03 | 7DCT | F | L | Saloon FWD DDAA;DFCA;DFHA | | GDS82351 | Drive Shaft | | 36 | 37 | 59.5 | 40 | 568 | |
| | 2014.11-2024.03 | 7DCT | F | R | Saloon FWD DDAA;DFCA;DFHA | | GDS83613 | Drive Shaft | | 36 | 37 | 59.5 | 40 | 921 | |
| | 2014.11-2024.03 | 7DCT | F | L | Saloon FWD DDAA;DFCA;DFHA | | GCI81158 | Inner Joint | | 37 | 34 | 34.5 | 65.5 | 83 | |
| | 2014.11-2024.03 | 7DCT | F | R | Saloon FWD DDAA;DFCA;DFHA | | GCI82108 | Inner Joint | | 37 | 34 | 40 | 77.5 | 103.5 | |
| 2.0 (147 kw) | 2005.07-2010.07 | 6AT/6MT | F | L/R | Saloon FWD AXX;BWA;BPY;CAWB;CCTA;CBFA;CCZA | Date from:2010.02,Transmission:MTDate from:2010.03,Transmission:AT,For PR code:0ES | GCO83101 | Outer Joint | | 36 | 27 | 59.5 | 40 | 65 | M |
| | 2005.07-2010.07 | 6AT/6MT | F | L/R | Saloon FWD AXX;BWA;BPY;CAWB;CCTA;CBFA;CCZA | For PR code:0ER | GCI61038 | Inner Joint | | 26 | 34 | 31 | 68.5 | 88.5 | |
| | 2005.07-2010.07 | 6AT/6MT | F | L/R | Saloon FWD AXX;BWA;BPY;CAWB;CCTA;CBFA;CCZA | For PR code:0ES | GCI83016 | Inner Joint | | | 28 | | | 32 | |
| | 2005.07-2010.07 | AT | F | L | Saloon FWD AXX;BWA;BPY;CAWB;CCTA;CBFA;CCZA | | GDS61093 | Drive Shaft | | 36 | 26 | 59.5 | 40.5 | 587.5 | |
| | 2005.07-2010.07 | AT | F | L | Saloon FWD AXX;BWA;BPY;CAWB;CCTA;CBFA;CCZA | Date to:2008.12 | GDS61153 | Drive Shaft | | 36 | 26 | 59.5 | 40 | 583 | |
| | 2005.07-2010.07 | AT | F | R | Saloon FWD AXX;BWA;BPY;CAWB;CCTA;CBFA;CCZA | For PR code:0ES | GDS81653 | Drive Shaft | | 36 | | 59.5 | 40 | 785 | |
| | 2005.07-2010.07 | AT/MT | F | L/R | Saloon FWD AXX;BWA;BPY;CAWB;CCTA;CBFA;CCZA | Date to:2010.01,Transmission:MTDate to:2010.02,Transmission:AT | GCO83002 | Outer Joint | | 36 | 27 | 59.5 | 40 | 66 | I |
| | 2005.07-2010.07 | MT | F | L | Saloon FWD AXX;BWA;BPY;CAWB;CCTA;CBFA;CCZA | | GDS83236 | Drive Shaft | | 36 | | 59.5 | 40 | 484 | |
| | 2005.07-2010.07 | MT | F | L | Saloon FWD AXX;BWA;BPY;CAWB;CCTA;CBFA;CCZA | | GDS83295 | Drive Shaft | | 36 | | 59.5 | 40 | 491 | |
| | 2005.07-2010.07 | MT | F | R | Saloon FWD AXX;BWA;BPY;CAWB;CCTA;CBFA;CCZA | Date to:2010.01 | GDS61126 | Drive Shaft | | 36 | | 59.5 | 40 | 793 | |
| | 2005.07-2010.07 | MT | F | R | Saloon FWD AXX;BWA;BPY;CAWB;CCTA;CBFA;CCZA | Date from:2010.02 | GDS61147 | Drive Shaft | | 36 | | 59.5 | 40 | 795 | |
| | 2005.07-2010.07 | MT | F | R | Saloon FWD AXX;BWA;BPY;CAWB;CCTA;CBFA;CCZA | Date to:2010.01 | GDS61339 | Drive Shaft | | 36 | | 59.5 | 40 | 794 | |
| | 2020.08-2024.03 | 7DCT | F | L | Saloon 4WD DTUA | | GDS82351 | Drive Shaft | | 36 | 37 | 59.5 | 40 | 568 | |
| | 2020.08-2024.03 | 7DCT | F | R | Saloon 4WD DTUA | | GDS61346 | Drive Shaft | | 36 | | 59.5 | 40 | 589 | |
| | 2020.08-2024.03 | 7DCT | F | L/R | Saloon 4WD DTUA | | GCO83101 | Outer Joint | | 36 | 27 | 59.5 | 40 | 65 | M |
| | 2020.08-2024.03 | 7DCT | F | L | Saloon 4WD DTUA | | GCI81158 | Inner Joint | | 37 | 34 | 34.5 | 65.5 | 83 | |
| | 2020.08-2024.03 | 7DCT | F | R | Saloon 4WD DTUA | | GCI61057 | Inner Joint | | | 34 | | | 89 | |
| | 2020.08-2024.03 | 7DCT | R | L | Saloon 4WD DTUA | | GDS61331 | Drive Shaft | | 36 | | 59.5 | 40 | 606 | |
| | 2020.08-2024.03 | 7DCT | R | R | Saloon 4WD DTUA | | GDS61332 | Drive Shaft | | 36 | | 59.5 | 40 | 650 | |
| | 2020.08-2024.03 | 7DCT | R | L/R | Saloon 4WD DTUA | | GCI61103 | Inner Joint | | | 33 | | | 32 | |
| | 2020.10-2024.03 | 7DCT | F | L | Saloon FWD DTUA | | GDS82351 | Drive Shaft | | 36 | 37 | 59.5 | 40 | 568 | |
| | 2020.10-2024.03 | 7DCT | F | R | Saloon FWD DTUA | | GDS83613 | Drive Shaft | | 36 | 37 | 59.5 | 40 | 921 | |
| | 2020.10-2024.03 | 7DCT | F | R | Saloon FWD DTUA | | GCO83101 | Outer Joint | | 36 | 27 | 59.5 | 40 | 65 | M |
| | 2020.10-2024.03 | 7DCT | F | L | Saloon FWD DTUA | | GCI81158 | Inner Joint | | 37 | 34 | 34.5 | 65.5 | 83 | |
| | 2020.10-2024.03 | 7DCT | F | R | Saloon FWD DTUA | | GCI82108 | Inner Joint | | 37 | 34 | 40 | 77.5 | 103.5 | |
| 2.0 (155 kw) | 2010.11-2014.12 | 6AT/6MT | F | L | Saloon FWD CCZB | | GDS83295 | Drive Shaft | | 36 | | 59.5 | 40 | 491 | |
| | 2010.11-2014.12 | 6DCT | F | R | Saloon FWD CCZB | | GDS81653 | Drive Shaft | | 36 | | 59.5 | 40 | 785 | |
| | 2010.11-2014.12 | 6DCT | F | R | Saloon FWD CCZB | | GCO83002 | Outer Joint | | 36 | 27 | 59.5 | 40 | 66 | I |
| | 2010.11-2014.12 | 6MT | F | R | Saloon FWD CCZB | | GDS83313 | Drive Shaft | | 36 | | 59.5 | 40 | 792 | |
| | 2010.11-2014.12 | MT | F | L/R | Saloon FWD CCZB | | GCI83016 | Inner Joint | | | 28 | | | 32 | |
| | 2010.11-2014.12 | | F | L/R | Saloon FWD CCZB | | GCO83101 | Outer Joint | | 36 | 27 | 59.5 | 40 | 65 | M |
| 2.0 (162 kw) | 2015.02-2024.03 | 6AT | F | L | Saloon FWD CHHB;CXDA | | GDS81896 | Drive Shaft | | 36 | | 59.5 | 40 | 500 | |
| | 2015.02-2024.03 | 6AT | F | R | Saloon FWD CHHB;CXDA | | GDS61147 | Drive Shaft | | 36 | | 59.5 | 40 | 795 | |
| | 2015.02-2024.03 | AT | F | L/R | Saloon FWD CHHB;CXDA | Date from:2015.05 | GCO83101 | Outer Joint | | 36 | 27 | 59.5 | 40 | 65 | M |
| | 2015.02-2024.03 | MT | F | L/R | Saloon FWD CHHB;CXDA | | GCI83016 | Inner Joint | | | 28 | | | 32 | |
| 2.0 (176 kw) | 2014.08-2020.11 | 6DCT | F | L/R | Saloon 4WD CUAA | | GCO83101 | Outer Joint | | 36 | 27 | 59.5 | 40 | 65 | M |
| | 2014.08-2020.11 | 7AT | F | L | Saloon 4WD CUAA | | GDS82351 | Drive Shaft | | 36 | 37 | 59.5 | 40 | 568 | |
| | 2014.08-2020.11 | 7AT | F | R | Saloon 4WD CUAA | | GDS61347 | Drive Shaft | | 36 | 40 | 59.5 | 40 | 593 | |
| | 2014.08-2020.11 | 7AT | F | L/R | Saloon 4WD CUAA | Date from:2016.03 | GDS61166 | Drive Shaft | | 36 | 40 | 59.5 | 40 | 611 | |
| | 2014.08-2020.11 | 7DCT | F | L | Saloon 4WD CUAA | | GCI81158 | Inner Joint | | 37 | 34 | 34.5 | 65.5 | 83 | |
| | 2014.08-2020.11 | AT | F | R | Saloon 4WD CUAA | | GCI61048 | Inner Joint | | 40 | 34 | 46.9 | | 127.5 | |
| | 2014.08-2020.11 | AT | F | L/R | Saloon 4WD CUAA | | GCI83006 | Inner Joint | | | 33 | | | 34 | |
| | 2014.08-2020.11 | 7AT | R | L | Saloon 4WD CUAA | | GDS61334 | Drive Shaft | | 36 | | 59.5 | 40 | 598 | |
| | 2014.08-2020.11 | 7AT | R | R | Saloon 4WD CUAA | | GDS61335 | Drive Shaft | | 36 | | 59.5 | 40 | 638 | |
| | 2014.08-2020.11 | 7DCT | R | L/R | Saloon 4WD CUAA | | GCI82447 | Inner Joint | | | 33 | | | 34 | |
| | 2014.08-2020.11 | | R | L/R | Saloon 4WD CUAA | | GCI83011 | Inner Joint | | | 33 | | | 34 | |
| 2.0 (200 kw) | 2018.09-2020.11 | 7AT | F | R | Saloon 4WD DNUA | | GDS81889 | Drive Shaft | | 36 | | 59.5 | 40 | 614 | |
| | 2018.09-2020.11 | 7AT | F | R | Saloon 4WD DNUA | | GCO83101 | Outer Joint | | 36 | 27 | 59.5 | 40 | 65 | M |
| | 2018.09-2020.11 | 7AT | F | R | Saloon 4WD DNUA | | GCI61069 | Inner Joint | | | 28 | | | 32 | |
| | 2018.09-2020.11 | 7DCT | R | L | Saloon 4WD DNUA | | GDS61331 | Drive Shaft | | 36 | | 59.5 | 40 | 606 | |
| | 2018.09-2020.11 | 7DCT | R | R | Saloon 4WD DNUA | | GDS61332 | Drive Shaft | | 36 | | 59.5 | 40 | 650 | |
| 2.0 (206 kw) | 2015.05-2024.03 | 6AT | F | R | Saloon 4WD CJXA;DNFE | | GDS81889 | Drive Shaft | | 36 | | 59.5 | 40 | 614 | |
| | 2015.05-2024.03 | 6AT | F | R | Saloon 4WD CJXA;DNFE | | GCO83101 | Outer Joint | | 36 | 27 | 59.5 | 40 | 65 | M |
| | 2015.05-2024.03 | 6AT | F | R | Saloon 4WD CJXA;DNFE | | GCI61069 | Inner Joint | | | 28 | | | 32 | |
| | 2015.05-2024.03 | 6DCT | F | L | Saloon 4WD CJXA;DNFE | | GDS81896 | Drive Shaft | | 36 | | 59.5 | 40 | 500 | |

| | YEAR | TRANSM. | F/R | L/R | BODY STYLE & DRIVE TYPE & ENGINE | REMARKS | G-AP Ref. | PRODUCT | ABS | Technical Specifications A | B | C | H | L | P |
|---|---|---|---|---|---|---|---|---|---|---|---|---|---|---|---|
| **VW** **Passat** | | | | | | | | | | | | | | | |
| 2.0 (206 kw) | 2015.05-2024.03 | 6AT | R | L | Saloon 4WD CJXA;DNFE | | GDS61331 | Drive Shaft | | 36 | | 59.5 | 40 | 606 | |
| | 2015.05-2024.03 | 6AT | R | R | Saloon 4WD CJXA;DNFE | | GDS61332 | Drive Shaft | | 36 | | 59.5 | 40 | 650 | |
| | 2015.05-2024.03 | 6AT | R | L/R | Saloon 4WD CJXA;DNFE | | GCI35026 | Outer Joint | | 36 | 33 | 59.5 | 40 | 61 | |
| | 2015.05-2024.03 | 6AT | R | L/R | Saloon 4WD CJXA;DNFE | | GCI61103 | Inner Joint | | | 33 | | | 32 | |
| 2.3 (110 kw) | 1996.11-2000.08 | 5AT | F | L | Saloon FWD AGZ | | GDS83037 | Drive Shaft | 45W | 38 | | 59.5 | 34 | 530 | |
| | 1996.11-2000.08 | 5AT | F | R | Saloon FWD AGZ | Inner teeth of wheel side:30 | GDS83038 | Drive Shaft | 45W | 38 | | 59.5 | 34 | 503 | |
| | 1996.11-2000.08 | 5AT | F | R | Saloon FWD AGZ | Inner teeth of wheel side:27 | GDS83048 | Drive Shaft | 45W | 38 | | 59.5 | 34.5 | 502 | |
| | 1996.11-2000.08 | 5AT | F | L/R | Saloon FWD AGZ | | GCO83020 | Outer Joint | 45W | 38 | 30 | 59.5 | 34 | 59.5 | I |
| | 1996.11-2000.08 | 5AT | F | L/R | Saloon FWD AGZ | | GCO83049 | Outer Joint | | 38 | 30 | 59.5 | 34 | 59.5 | I |
| | 1996.11-2000.08 | 5MT | F | L | Saloon FWD AGZ | | GDS61122 | Drive Shaft | 45W | 33 | | 53 | 30 | 602 | |
| | 1996.11-2000.08 | 5MT | F | R | Saloon FWD AGZ | For Europe | GDS83007 | Drive Shaft | 45W | 33 | | 53 | 30 | 622 | |
| | 1996.11-2000.08 | 5MT | F | R | Saloon FWD AGZ | For North America | GDS83009 | Drive Shaft | 45W | 33 | | 53 | 30 | 617 | |
| | 1996.11-2000.08 | 5MT | F | L | Saloon FWD AGZ | | GCO61012 | Outer Joint | 45W | 33 | 30 | 53 | 30 | 62 | I |
| | 1996.11-2000.08 | 5MT | F | L/R | Saloon FWD AGZ | | GCI50019 | Inner Joint | | | 34 | | | 59.5 | |
| | 1997.05-2000.08 | 5AT/5MT | F | L/R | Saloon 4WD AGZ | | GCI50019 | Inner Joint | | | 34 | | | 59.5 | |
| | 1997.05-2000.08 | 5MT | F | L | Saloon 4WD AGZ | | GDS61122 | Drive Shaft | 45W | 33 | | 53 | 30 | 602 | |
| | 1997.05-2000.08 | 5MT | F | R | Saloon 4WD AGZ | | GDS83007 | Drive Shaft | 45W | 33 | | 53 | 30 | 622 | |
| | 1997.05-2000.08 | 5MT | F | L/R | Saloon 4WD AGZ | | GCO61012 | Outer Joint | 45W | 33 | 30 | 53 | 30 | 62 | I |
| | 1997.05-2000.08 | MT | F | R | Saloon 4WD AGZ | | GDS83009 | Drive Shaft | 45W | 33 | | 53 | 30 | 617 | |
| | 1997.05-2000.08 | 5AT/5MT | R | L/R | Saloon 4WD AGZ | | GDS83672 | Drive Shaft | 45W | 33 | | 53 | 30 | 618 | |
| | 1997.05-2000.08 | 5AT/5MT | R | L/R | Saloon 4WD AGZ | | GCO83080 | Outer Joint | 45W | 33 | 30 | 53 | 30 | 62 | I |
| | 1997.05-2000.08 | 5AT/5MT | R | L/R | Saloon 4WD AGZ | | GCI83002 | Inner Joint | | | 33 | | | 32 | |
| 2.3 (125 kw) | 2000.11-2005.05 | 5AT/5MT | F | L | Saloon 4WD AZX | | GDS83008 | Drive Shaft | 45W | 38 | | 59.5 | 34.5 | 603 | |
| | 2000.11-2005.05 | 5AT/5MT | F | R | Saloon 4WD AZX | | GDS61019 | Drive Shaft | 45W | 38 | | 59.5 | 34.5 | 624 | |
| | 2000.11-2005.05 | 5MT | F | L/R | Saloon 4WD AZX | | GCO83019 | Outer Joint | 45W | 38 | 27 | 59.5 | 34.5 | 63 | I |
| | 2000.11-2005.05 | AT | F | L | Saloon 4WD AZX | | GDS83015 | Drive Shaft | 45W | 38 | | 59.5 | 34.5 | 527 | |
| | 2000.11-2005.05 | AT | F | R | Saloon 4WD AZX | | GDS83048 | Drive Shaft | 45W | 38 | | 59.5 | 34.5 | 502 | |
| | 2000.11-2005.05 | MT/5AT/5MT | F | L/R | Saloon 4WD AZX | | GCI50019 | Inner Joint | | | 34 | | | 59.5 | |
| | 2000.11-2005.05 | 5AT/5MT | R | L/R | Saloon 4WD AZX | | GDS83672 | Drive Shaft | 45W | 33 | | 53 | 30 | 618 | |
| | 2000.11-2005.05 | 5AT/5MT | R | L/R | Saloon 4WD AZX | | GCO83080 | Outer Joint | 45W | 33 | 30 | 53 | 30 | 62 | I |
| | 2000.11-2005.05 | 5AT/5MT | R | L/R | Saloon 4WD AZX | | GCI83002 | Inner Joint | | | 33 | | | 32 | |
| | 2000.11-2005.05 | 5AT | F | L | Saloon FWD AZX | Date to:2003.01 | GDS83015 | Drive Shaft | 45W | 38 | | 59.5 | 34.5 | 527 | |
| | 2000.11-2005.05 | 5AT | F | R | Saloon FWD AZX | Date to:2003.01 | GDS83048 | Drive Shaft | 45W | 38 | | 59.5 | 34.5 | 502 | |
| | 2000.11-2005.05 | 5AT/5MT | F | L/R | Saloon FWD AZX | Date from:2003.02 | GCO83019 | Outer Joint | 45W | 38 | 27 | 59.5 | 34.5 | 63 | I |
| | 2000.11-2005.05 | 5MT | F | L | Saloon FWD AZX | Date from:2003.02 | GDS83008 | Drive Shaft | 45W | 38 | | 59.5 | 34.5 | 603 | |
| | 2000.11-2005.05 | 5MT | F | R | Saloon FWD AZX | Date from:2003.02 | GDS61019 | Drive Shaft | 45W | 38 | | 59.5 | 34.5 | 624 | |
| | 2000.11-2005.05 | AT/MT | F | L/R | Saloon FWD AZX | | GCI50019 | Inner Joint | | | 34 | | | 59.5 | |
| 2.5 (110 kw) | 1998.07-2000.08 | 5AT | F | L | Saloon FWD AFB/AKN | | GDS83015 | Drive Shaft | 45W | 38 | | 59.5 | 34.5 | 527 | |
| | 1998.07-2000.08 | 5AT | F | R | Saloon FWD AFB/AKN | | GDS83048 | Drive Shaft | 45W | 38 | | 59.5 | 34.5 | 502 | |
| | 1998.07-2000.08 | 5AT/6MT | F | L/R | Saloon FWD AFB/AKN | | GCO83019 | Outer Joint | 45W | 38 | 27 | 59.5 | 34.5 | 63 | I |
| | 1998.07-2000.08 | 6MT | F | L | Saloon FWD AFB/AKN | | GDS83008 | Drive Shaft | 45W | 38 | | 59.5 | 34.5 | 603 | |
| | 1998.07-2000.08 | 6MT | F | R | Saloon FWD AFB/AKN | | GDS61019 | Drive Shaft | 45W | 38 | | 59.5 | 34.5 | 624 | |
| | 1998.07-2000.08 | AT/MT/6MT | F | L/R | Saloon FWD AFB/AKN | | GCI50019 | Inner Joint | | | 34 | | | 59.5 | |
| | 1999.02-2000.08 | 5AT | F | L | Saloon 4WD AFB | | GDS83037 | Drive Shaft | 45W | 38 | | 59.5 | 34 | 530 | |
| | 1999.02-2000.08 | 5AT | F | R | Saloon 4WD AFB | Inner teeth of wheel side:30 | GDS83038 | Drive Shaft | 45W | 38 | | 59.5 | 34 | 503 | |
| | 1999.02-2000.08 | 5AT | F | R | Saloon 4WD AFB | Inner teeth of wheel side:27 | GDS83048 | Drive Shaft | 45W | 38 | | 59.5 | 34.5 | 502 | |
| | 1999.02-2000.08 | 5AT | F | L/R | Saloon 4WD AFB | | GCO83020 | Outer Joint | 45W | 38 | 30 | 59.5 | 34 | 59.5 | I |
| | 1999.02-2000.08 | 5AT | F | L/R | Saloon 4WD AFB | | GCO83049 | Outer Joint | | 38 | 30 | 59.5 | 34 | 59.5 | I |
| | 1999.02-2000.08 | 6MT | F | L | Saloon 4WD AFB | | GDS83008 | Drive Shaft | 45W | 38 | | 59.5 | 34.5 | 603 | |
| | 1999.02-2000.08 | 6MT | F | R | Saloon 4WD AFB | | GDS61019 | Drive Shaft | 45W | 38 | | 59.5 | 34.5 | 624 | |
| | 1999.02-2000.08 | 6MT | F | L/R | Saloon 4WD AFB | | GCO83019 | Outer Joint | 45W | 38 | 27 | 59.5 | 34.5 | 63 | I |
| | 1999.02-2000.08 | 6MT | F | L/R | Saloon 4WD AFB | | GCI50019 | Inner Joint | | | 34 | | | 59.5 | |
| | 1999.02-2000.08 | 5AT/6MT | R | L/R | Saloon 4WD AFB | | GDS83672 | Drive Shaft | 45W | 33 | | 53 | 30 | 618 | |
| | 1999.02-2000.08 | 5AT/6MT | R | L/R | Saloon 4WD AFB | | GCO83080 | Outer Joint | 45W | 33 | 30 | 53 | 30 | 62 | I |
| | 1999.02-2000.08 | 5AT/6MT | R | L/R | Saloon 4WD AFB | | GCI83002 | Inner Joint | | | 33 | | | 32 | |
| | 2000.11-2005.05 | 5AT | F | L | Saloon 4WD AKN;AFB | | GDS83015 | Drive Shaft | 45W | 38 | | 59.5 | 34.5 | 527 | |
| | 2000.11-2005.05 | 5AT | F | R | Saloon 4WD AKN;AFB | | GDS83048 | Drive Shaft | 45W | 38 | | 59.5 | 34.5 | 502 | |
| | 2000.11-2005.05 | 5AT | F | L/R | Saloon 4WD AKN;AFB | | GCO83020 | Outer Joint | 45W | 38 | 30 | 59.5 | 34 | 59.5 | I |
| | 2000.11-2005.05 | 5AT | F | L/R | Saloon 4WD AKN;AFB | | GCO83049 | Outer Joint | | 38 | 30 | 59.5 | 34 | 59.5 | I |
| | 2000.11-2005.05 | 6MT | F | L | Saloon 4WD AKN;AFB | | GDS83008 | Drive Shaft | 45W | 38 | | 59.5 | 34.5 | 603 | |
| | 2000.11-2005.05 | 6MT | F | R | Saloon 4WD AKN;AFB | | GDS61019 | Drive Shaft | 45W | 38 | | 59.5 | 34.5 | 624 | |
| | 2000.11-2005.05 | 6MT | F | L/R | Saloon 4WD AKN;AFB | | GCO83019 | Outer Joint | 45W | 38 | 27 | 59.5 | 34.5 | 63 | I |
| | 2000.11-2005.05 | MT | F | L/R | Saloon 4WD AKN;AFB | | GCI50019 | Inner Joint | | | 34 | | | 59.5 | |
| | 2000.11-2005.05 | 5AT/6MT | R | L/R | Saloon 4WD AKN;AFB | | GDS83672 | Drive Shaft | 45W | 33 | | 53 | 30 | 618 | |
| | 2000.11-2005.05 | 5AT/6MT | R | L/R | Saloon 4WD AKN;AFB | | GCO83080 | Outer Joint | 45W | 33 | 30 | 53 | 30 | 62 | I |

| | YEAR | TRANSM. | F/R | L/R | BODY STYLE & DRIVE TYPE & ENGINE | REMARKS | G-AP Ref. | PRODUCT | ABS | Technical Specifications A | B | C | H | L | P |
|---|---|---|---|---|---|---|---|---|---|---|---|---|---|---|---|
| **VW Passat** | | | | | | | | | | | | | | | |
| 2.5 (110 kw) | 2000.11-2005.05 | | R | L/R | Saloon 4WD AKN;AFB | | GCI83002 | Inner Joint | | | 33 | | | 32 | |
| | 2000.11-2005.05 | 5AT | F | L | Saloon FWD AKN | | GDS83015 | Drive Shaft | 45W | 38 | | 59.5 | 34.5 | 527 | |
| | 2000.11-2005.05 | 5AT | F | R | Saloon FWD AKN | For Engine code:BAU | GDS83048 | Drive Shaft | 45W | 38 | | 59.5 | 34.5 | 502 | |
| | 2000.11-2005.05 | 5AT/6MT | F | L/R | Saloon FWD AKN | | GCO83019 | Outer Joint | 45W | 38 | 27 | 59.5 | 34.5 | 63 | I |
| | 2000.11-2005.05 | 6MT | F | L | Saloon FWD AKN | | GDS83008 | Drive Shaft | 45W | 38 | | 59.5 | 34.5 | 603 | |
| | 2000.11-2005.05 | 6MT | F | R | Saloon FWD AKN | | GDS61019 | Drive Shaft | 45W | 38 | | 59.5 | 34.5 | 624 | |
| | 2000.11-2005.05 | AT/MT/6MT | F | L/R | Saloon FWD AKN | | GCI50019 | Inner Joint | | | 34 | | | 59.5 | |
| 2.5 (120 kw) | 2003.05-2005.05 | 5AT | F | R | Saloon FWD BDG | | GDS83048 | Drive Shaft | 45W | 38 | | 59.5 | 34.5 | 502 | |
| | 2003.05-2005.05 | 6MT | F | L | Saloon FWD BDG | | GDS83008 | Drive Shaft | 45W | 38 | | 59.5 | 34.5 | 603 | |
| | 2003.05-2005.05 | 6MT | F | R | Saloon FWD BDG | | GDS61019 | Drive Shaft | 45W | 38 | | 59.5 | 34.5 | 624 | |
| | 2003.05-2005.05 | AT | F | L | Saloon FWD BDG | | GDS83015 | Drive Shaft | 45W | 38 | | 59.5 | 34.5 | 527 | |
| | 2003.05-2005.05 | AT/MT | F | L/R | Saloon FWD BDG | | GCI50019 | Inner Joint | | | 34 | | | 59.5 | |
| | 2003.05-2005.05 | AT/MT/6MT | F | L/R | Saloon FWD BDG | | GCO83019 | Outer Joint | 45W | 38 | 27 | 59.5 | 34.5 | 63 | I |
| 2.5 (125 kw) | 2011.01-2020.12 | 5MT | F | L/R | Saloon FWD CBTA;CBUA;CCCA | | GCI81250 | Inner Joint | | | 26 | | | 34 | |
| | 2011.01-2020.12 | 5MT/6AT | F | L/R | Saloon FWD CBTA;CBUA;CCCA | | GCO83037 | Outer Joint | | 36 | 30 | 59.5 | 40.5 | 56 | I |
| | 2011.01-2020.12 | 6AT | F | R | Saloon FWD CBTA;CBUA;CCCA | | GDS57452 | Drive Shaft | | 36 | 26 | 59.5 | 40.5 | 895 | |
| 2.5 (132 kw) | 2003.01-2005.05 | 5AT | F | L | Saloon 4WD BAU;BDH | | GDS83015 | Drive Shaft | 45W | 38 | | 59.5 | 34.5 | 527 | |
| | 2003.01-2005.05 | 5AT | F | R | Saloon 4WD BAU;BDH | For Engine code:BAU | GDS83048 | Drive Shaft | 45W | 38 | | 59.5 | 34.5 | 502 | |
| | 2003.01-2005.05 | 5AT/6MT | F | L/R | Saloon 4WD BAU;BDH | | GCO83019 | Outer Joint | 45W | 38 | 27 | 59.5 | 34.5 | 63 | I |
| | 2003.01-2005.05 | 6MT | F | L | Saloon 4WD BAU;BDH | | GDS83008 | Drive Shaft | 45W | 38 | | 59.5 | 34.5 | 603 | |
| | 2003.01-2005.05 | 6MT | F | R | Saloon 4WD BAU;BDH | | GDS61019 | Drive Shaft | 45W | 38 | | 59.5 | 34.5 | 624 | |
| | 2003.01-2005.05 | MT | F | L/R | Saloon 4WD BAU;BDH | For Engine code:BDH | GCI50019 | Inner Joint | | | 34 | | | 59.5 | |
| | 2003.01-2005.05 | 5AT/6MT | R | L/R | Saloon 4WD BAU;BDH | | GCO83080 | Outer Joint | 45W | 33 | 30 | 53 | 30 | 62 | I |
| | 2003.01-2005.05 | AT/MT | R | L/R | Saloon 4WD BAU;BDH | not for armoured vehicles | GCI83001 | Inner Joint | | | 28 | | | 32 | |
| | 2003.01-2005.05 | AT/MT | R | L/R | Saloon 4WD BAU;BDH | for armoured vehicles | GCI83002 | Inner Joint | | | 33 | | | 32 | |
| 2.8 (128 kw) | 1991.06-1996.12 | MT | F | L | Saloon FWD AAA | | GDS99116 | Drive Shaft | | 36 | | 53.2 | 77.5 | 548.5 | |
| | 1991.06-1996.12 | MT | F | R | Saloon FWD AAA | | GDS99112 | Drive Shaft | | 36 | | 53.2 | 77.5 | 783 | |
| | 1991.06-1996.12 | MT | F | L/R | Saloon FWD AAA | | GCO83070 | Outer Joint | | 36 | 30 | 53 | 78 | 60 | I |
| | 1991.06-1996.12 | MT | F | L/R | Saloon FWD AAA | | GCI83003 | Inner Joint | | | 33 | | | 32 | |
| | 1991.06-1996.12 | MT | F | L/R | Saloon FWD AAA | | GCI83009 | Inner Joint | | | 33 | | | 34 | |
| | 1991.06-1996.12 | MT | F | L/R | Saloon FWD AAA | | GCI83011 | Inner Joint | | | 33 | | | 34 | |
| 2.8 (132 kw) | 1997.05-1999.09 | 5AT | F | L | Saloon FWD AGE | | GDS83015 | Drive Shaft | 45W | 38 | | 59.5 | 34.5 | 527 | |
| | 1997.05-1999.09 | 5AT | F | R | Saloon FWD AGE | | GDS83048 | Drive Shaft | 45W | 38 | | 59.5 | 34.5 | 502 | |
| | 1997.05-1999.09 | 5AT/5MT | F | L/R | Saloon FWD AGE | | GCI50019 | Inner Joint | | | 34 | | | 59.5 | |
| | 1997.05-1999.09 | 5MT | F | L | Saloon FWD AGE | | GDS83008 | Drive Shaft | 45W | 38 | | 59.5 | 34.5 | 603 | |
| | 1997.05-1999.09 | 5MT | F | R | Saloon FWD AGE | | GDS61019 | Drive Shaft | 45W | 38 | | 59.5 | 34.5 | 624 | |
| | 1997.05-1999.09 | AT/MT/5MT | F | L/R | Saloon FWD AGE | | GCO83019 | Outer Joint | 45W | 38 | 27 | 59.5 | 34.5 | 63 | I |
| 2.8 (140 kw) | 1999.09-2000.08 | 5AT | F | L | Saloon FWD ATX | | GDS83015 | Drive Shaft | 45W | 38 | | 59.5 | 34.5 | 527 | |
| | 1999.09-2000.08 | 5AT | F | R | Saloon FWD ATX | | GDS83048 | Drive Shaft | 45W | 38 | | 59.5 | 34.5 | 502 | |
| | 1999.09-2000.08 | 5AT/5MT | F | L/R | Saloon FWD ATX | | GCI50019 | Inner Joint | | | 34 | | | 59.5 | |
| | 1999.09-2000.08 | 5MT | F | L | Saloon FWD ATX | | GDS83008 | Drive Shaft | 45W | 38 | | 59.5 | 34.5 | 603 | |
| | 1999.09-2000.08 | 5MT | F | R | Saloon FWD ATX | | GDS61019 | Drive Shaft | 45W | 38 | | 59.5 | 34.5 | 624 | |
| | 1999.09-2000.08 | 5MT | F | L/R | Saloon FWD ATX | | GCO83019 | Outer Joint | 45W | 38 | 27 | 59.5 | 34.5 | 63 | I |
| | 2000.10-2005.05 | 5AT | F | L | Saloon 4WD BBG | | GDS83037 | Drive Shaft | 45W | 38 | | 59.5 | 34 | 530 | |
| | 2000.10-2005.05 | 5AT | F | R | Saloon 4WD BBG | | GDS83038 | Drive Shaft | 45W | 38 | | 59.5 | 34 | 503 | |
| | 2000.10-2005.05 | AT | F | L | Saloon 4WD BBG | PR code:F4S | GDS83015 | Drive Shaft | 45W | 38 | | 59.5 | 34.5 | 527 | |
| | 2000.10-2005.05 | AT | F | R | Saloon 4WD BBG | PR code:F4S | GDS83048 | Drive Shaft | 45W | 38 | | 59.5 | 34.5 | 502 | |
| | 2000.10-2005.05 | AT | F | L/R | Saloon 4WD BBG | | GCO83020 | Outer Joint | 45W | 38 | 30 | 59.5 | 34 | 59.5 | I |
| | 2000.10-2005.05 | AT | F | L/R | Saloon 4WD BBG | | GCO83049 | Outer Joint | | 38 | 30 | 59.5 | 34 | 59.5 | I |
| | 2000.10-2005.05 | AT/MT | F | L/R | Saloon 4WD BBG | | GCI50019 | Inner Joint | | | 34 | | | 59.5 | |
| | 2000.10-2005.05 | MT | F | L | Saloon 4WD BBG | | GDS83008 | Drive Shaft | 45W | 38 | | 59.5 | 34.5 | 603 | |
| | 2000.10-2005.05 | MT | F | R | Saloon 4WD BBG | | GDS61019 | Drive Shaft | 45W | 38 | | 59.5 | 34.5 | 624 | |
| | 2000.10-2005.05 | MT | F | L/R | Saloon 4WD BBG | | GCO83019 | Outer Joint | 45W | 38 | 27 | 59.5 | 34.5 | 63 | I |
| | 2000.10-2005.05 | AT/MT | R | L/R | Saloon 4WD BBG | | GDS83672 | Drive Shaft | 45W | 33 | | 53 | 30 | 618 | |
| | 2000.10-2005.05 | AT/MT | R | L/R | Saloon 4WD BBG | | GCO83080 | Outer Joint | 45W | 33 | 30 | 53 | 30 | 62 | I |
| | 2000.10-2005.05 | AT/MT | R | L/R | Saloon 4WD BBG | | GCI83002 | Inner Joint | | | 33 | | | 32 | |
| | 2000.10-2005.05 | 5AT | F | L | Saloon FWD BBG | | GDS83015 | Drive Shaft | 45W | 38 | | 59.5 | 34.5 | 527 | |
| | 2000.10-2005.05 | 5AT | F | R | Saloon FWD BBG | | GDS83048 | Drive Shaft | 45W | 38 | | 59.5 | 34.5 | 502 | |
| | 2000.10-2005.05 | 5AT/5MT | F | L/R | Saloon FWD BBG | | GCO83019 | Outer Joint | 45W | 38 | 27 | 59.5 | 34.5 | 63 | I |
| | 2000.10-2005.05 | 5AT/5MT | F | L/R | Saloon FWD BBG | | GCI50019 | Inner Joint | | | 34 | | | 59.5 | |
| | 2000.10-2005.05 | 5MT | F | L | Saloon FWD BBG | | GDS83008 | Drive Shaft | 45W | 38 | | 59.5 | 34.5 | 603 | |
| | 2000.10-2005.05 | 5MT | F | R | Saloon FWD BBG | Date from:1998.04 | GDS61019 | Drive Shaft | 45W | 38 | | 59.5 | 34.5 | 624 | |
| 2.8 (142 kw) | 1997.06-2000.08 | 5AT | F | L | Saloon FWD APR/AQD | | GDS83015 | Drive Shaft | 45W | 38 | | 59.5 | 34.5 | 527 | |
| | 1997.06-2000.08 | 5AT | F | R | Saloon FWD APR/AQD | | GDS83048 | Drive Shaft | 45W | 38 | | 59.5 | 34.5 | 502 | |
| | 1997.06-2000.08 | 5MT | F | L | Saloon FWD APR/AQD | | GDS83008 | Drive Shaft | 45W | 38 | | 59.5 | 34.5 | 603 | |

| | YEAR | TRANSM. | F/R | L/R | BODY STYLE & DRIVE TYPE & ENGINE | REMARKS | G-AP Ref. | PRODUCT | ABS | Technical Specifications A | B | C | H | L | P |
|---|---|---|---|---|---|---|---|---|---|---|---|---|---|---|---|
| **VW** **Passat** | | | | | | | | | | | | | | | |
| 2.8 (142 kw) | 1997.06-2000.08 | 5MT | F | R | Saloon FWD APR/AQD | | GDS61019 | Drive Shaft | 45W | 38 | | 59.5 | 34.5 | 624 | |
| | 1997.06-2000.08 | 5MT | F | L/R | Saloon FWD APR/AQD | | GCO83019 | Outer Joint | 45W | 38 | 27 | 59.5 | 34.5 | 63 | I |
| | 1997.06-2000.08 | MT/5AT/5MT | F | L/R | Saloon FWD APR/AQD | | GCI50019 | Inner Joint | | | 34 | | | 59.5 | |
| | 1997.06-2000.11 | 5AT | F | L | Saloon 4WD ACK/ALG/APR/AQD | | GDS83037 | Drive Shaft | 45W | 38 | | 59.5 | 34 | 530 | |
| | 1997.06-2000.11 | 5AT | F | R | Saloon 4WD ACK/ALG/APR/AQD | | GDS83038 | Drive Shaft | 45W | 38 | | 59.5 | 34 | 503 | |
| | 1997.06-2000.11 | 5AT | F | L/R | Saloon 4WD ACK/ALG/APR/AQD | | GCO83049 | Outer Joint | | 38 | 30 | 59.5 | 34 | 59.5 | I |
| | 1997.06-2000.11 | 5AT/5MT | F | L/R | Saloon 4WD ACK/ALG/APR/AQD | | GCO83019 | Outer Joint | 45W | 38 | 27 | 59.5 | 34.5 | 63 | I |
| | 1997.06-2000.11 | 5AT/5MT | F | L/R | Saloon 4WD ACK/ALG/APR/AQD | | GCO83020 | Outer Joint | 45W | 38 | 30 | 59.5 | 34 | 59.5 | I |
| | 1997.06-2000.11 | 5MT | F | L | Saloon 4WD ACK/ALG/APR/AQD | | GDS83008 | Drive Shaft | 45W | 38 | | 59.5 | 34.5 | 603 | |
| | 1997.06-2000.11 | 5MT | F | L | Saloon 4WD ACK/ALG/APR/AQD | Date to:1998.03 | GDS83040 | Drive Shaft | 45W | 38 | | 59.5 | 34 | 617 | |
| | 1997.06-2000.11 | 5MT | F | R | Saloon 4WD ACK/ALG/APR/AQD | Date from:1998.04 | GDS61019 | Drive Shaft | 45W | 38 | | 59.5 | 34.5 | 624 | |
| | 1997.06-2000.11 | 5MT | F | R | Saloon 4WD ACK/ALG/APR/AQD | Date to:1998.03 | GDS83041 | Drive Shaft | 45W | 38 | | 59.5 | 34 | 640 | |
| | 1997.06-2000.11 | 5MT | F | L/R | Saloon 4WD ACK/ALG/APR/AQD | Date To:1998.03 | GCO83049 | Outer Joint | | 38 | 30 | 59.5 | 34 | 59.5 | I |
| | 1997.06-2000.11 | 5MT | F | L/R | Saloon 4WD ACK/ALG/APR/AQD | Date to:1998.03 | GCI83002 | Inner Joint | | | 33 | | | 32 | |
| | 1997.06-2000.11 | AT | F | L | Saloon 4WD ACK/ALG/APR/AQD | | GDS83015 | Drive Shaft | 45W | 38 | | 59.5 | 34.5 | 527 | |
| | 1997.06-2000.11 | AT | F | R | Saloon 4WD ACK/ALG/APR/AQD | | GDS83048 | Drive Shaft | 45W | 38 | | 59.5 | 34.5 | 502 | |
| | 1997.06-2000.11 | MT | F | R | Saloon 4WD ACK/ALG/APR/AQD | Date from:1997.06;Chassis no. to:3BWE394608 | GDS83058 | Drive Shaft | 45W | 38 | | 59.5 | 34.5 | 613 | |
| | 1997.06-2000.11 | MT/5AT/5MT | F | L/R | Saloon 4WD ACK/ALG/APR/AQD | | GCI50019 | Inner Joint | | | 34 | | | 59.5 | |
| | 1997.06-2000.11 | 5AT/5MT | R | L/R | Saloon 4WD ACK/ALG/APR/AQD | | GDS83672 | Drive Shaft | 45W | 33 | | 53 | 30 | 618 | |
| | 1997.06-2000.11 | 5AT/5MT | R | L/R | Saloon 4WD ACK/ALG/APR/AQD | | GCO83080 | Outer Joint | 45W | 33 | 30 | 53 | 30 | 62 | I |
| | 1997.06-2000.11 | | R | L/R | Saloon 4WD ACK/ALG/APR/AQD | | GCI83002 | Inner Joint | | | 33 | | | 32 | |
| | 2000.11-2005.05 | 5AT | F | L | Saloon 4WD AMX;ATQ | | GDS83037 | Drive Shaft | 45W | 38 | | 59.5 | 34 | 530 | |
| | 2000.11-2005.05 | 5AT | F | R | Saloon 4WD AMX;ATQ | | GDS83038 | Drive Shaft | 45W | 38 | | 59.5 | 34 | 503 | |
| | 2000.11-2005.05 | 5AT | F | L/R | Saloon 4WD AMX;ATQ | Not For armoured vehicles | GCO83020 | Outer Joint | 45W | 38 | 30 | 59.5 | 34 | 59.5 | I |
| | 2000.11-2005.05 | 5AT | F | L/R | Saloon 4WD AMX;ATQ | Not For armoured vehicles | GCO83049 | Outer Joint | | 38 | 30 | 59.5 | 34 | 59.5 | I |
| | 2000.11-2005.05 | 5AT/5MT | F | L/R | Saloon 4WD AMX;ATQ | Transmission:5AT,For armoured vehicles | GCO83019 | Outer Joint | 45W | 38 | 27 | 59.5 | 34.5 | 63 | I |
| | 2000.11-2005.05 | AT | F | L | Saloon 4WD AMX;ATQ | | GDS83015 | Drive Shaft | 45W | 38 | | 59.5 | 34.5 | 527 | |
| | 2000.11-2005.05 | AT | F | R | Saloon 4WD AMX;ATQ | | GDS83048 | Drive Shaft | 45W | 38 | | 59.5 | 34.5 | 502 | |
| | 2000.11-2005.05 | MT | F | L | Saloon 4WD AMX;ATQ | | GDS83008 | Drive Shaft | 45W | 38 | | 59.5 | 34.5 | 603 | |
| | 2000.11-2005.05 | MT | F | R | Saloon 4WD AMX;ATQ | | GDS61019 | Drive Shaft | 45W | 38 | | 59.5 | 34.5 | 624 | |
| | 2000.11-2005.05 | MT | F | L/R | Saloon 4WD AMX;ATQ | | GCI50019 | Inner Joint | | | 34 | | | 59.5 | |
| | 2000.11-2005.05 | 5AT/5MT | R | L/R | Saloon 4WD AMX;ATQ | | GDS83672 | Drive Shaft | 45W | 33 | | 53 | 30 | 618 | |
| | 2000.11-2005.05 | 5AT/5MT | R | L/R | Saloon 4WD AMX;ATQ | Outer teeth of wheel side:33 | GCO83080 | Outer Joint | 45W | 33 | 30 | 53 | 30 | 62 | I |
| | 2000.11-2005.05 | | R | L/R | Saloon 4WD AMX;ATQ | | GCI83002 | Inner Joint | | | 33 | | | 32 | |
| | 2000.11-2005.05 | | R | L/R | Saloon 4WD AMX;ATQ | For PR code:F4S,For armoured vehicles | GCI83002 | Inner Joint | | | 33 | | | 32 | |
| | 2002.05-2003.05 | 5AT | F | L | Saloon FWD AMX;ATQ | | GDS83015 | Drive Shaft | 45W | 38 | | 59.5 | 34.5 | 527 | |
| | 2002.05-2003.05 | 5AT | F | R | Saloon FWD AMX;ATQ | | GDS83048 | Drive Shaft | 45W | 38 | | 59.5 | 34.5 | 502 | |
| | 2002.05-2003.05 | 5AT/5MT | F | L/R | Saloon FWD AMX;ATQ | | GCO83019 | Outer Joint | 45W | 38 | 27 | 59.5 | 34.5 | 63 | I |
| | 2002.05-2003.05 | 5AT/5MT | F | L/R | Saloon FWD AMX;ATQ | | GCI50019 | Inner Joint | | | 34 | | | 59.5 | |
| | 2002.05-2003.05 | 5MT | F | L | Saloon FWD AMX;ATQ | | GDS83008 | Drive Shaft | 45W | 38 | | 59.5 | 34.5 | 603 | |
| | 2002.05-2003.05 | 5MT | F | R | Saloon FWD AMX;ATQ | Date from:1998.04 | GDS61019 | Drive Shaft | 45W | 38 | | 59.5 | 34.5 | 624 | |
| 3.2 (184 kw) | 2005.11-2010.07 | 6AT | F | L | Saloon 4WD AXZ | Date to:2006.10 | GDS54013 | Drive Shaft | | 36 | | 59.5 | 40 | 479.5 | |
| | 2005.11-2010.07 | 6AT | F | L | Saloon 4WD AXZ | Date from:2006.11 | GDS83295 | Drive Shaft | | 36 | | 59.5 | 40 | 491 | |
| | 2005.11-2010.07 | 6DCT | F | R | Saloon 4WD AXZ | Date to:2006.10 | GDS61346 | Drive Shaft | | 36 | | 59.5 | 40 | 589 | |
| | 2005.11-2010.07 | 6DCT | F | R | Saloon 4WD AXZ | Date from:2006.11 | GDS83266 | Drive Shaft | | 36 | | 59.5 | 40 | 601 | |
| | 2005.11-2010.07 | 6DCT | F | L | Saloon 4WD AXZ | | GDS98006 | Stub Axle-Flange | | 37 | | | 67 | 123.5 | |
| | 2005.11-2010.07 | AT | F | L | Saloon 4WD AXZ | | GDS83236 | Drive Shaft | | 36 | | 59.5 | 40 | 484 | |
| | 2005.11-2010.07 | AT | F | L | Saloon 4WD AXZ | | GDS83241 | Drive Shaft | | 36 | | 59.5 | 40 | 475 | |
| | 2005.11-2010.07 | AT | F | L/R | Saloon 4WD AXZ | | GCI83006 | Inner Joint | | | 33 | | | 34 | |
| | 2005.11-2010.07 | AT/MT | F | L/R | Saloon 4WD AXZ | Date to:2006.11 | GCI61057 | Inner Joint | | | 34 | | | 89 | |
| | 2005.11-2010.07 | | F | L/R | Saloon 4WD AXZ | | GCO83002 | Outer Joint | | 36 | 27 | 59.5 | 40 | 66 | I |
| | 2005.11-2010.07 | | F | L/R | Saloon 4WD AXZ | Date To:2006.10 | GCI54004 | Inner Joint | | | 34 | | | 81 | |
| | 2005.11-2010.07 | | F | L/R | Saloon 4WD AXZ | Date From:2006.11 | GCI83016 | Inner Joint | | | 28 | | | 32 | |
| | 2005.11-2010.07 | 6AT | R | L | Saloon 4WD AXZ | Date to:2006.05 | GDS54017 | Drive Shaft | | 36 | | 59.5 | 40 | 609 | |
| | 2005.11-2010.07 | 6AT | R | L | Saloon 4WD AXZ | Date from:2006.06 | GDS61284 | Drive Shaft | | 36 | | 59.5 | 40 | 594 | |
| | 2005.11-2010.07 | 6AT | R | R | Saloon 4WD AXZ | Date from:2006.06 | GDS61293 | Drive Shaft | | 36 | | 59.5 | 40 | 631 | |
| | 2005.11-2010.07 | 6AT | R | R | Saloon 4WD AXZ | Date to:2006.05 | GDS81597 | Drive Shaft | | 36 | | 59.5 | 40 | 652 | |
| | 2005.11-2010.07 | 6AT | R | L/R | Saloon 4WD AXZ | | GCI35026 | Outer Joint | | 36 | 33 | 59.5 | 40 | 61 | |
| | 2005.11-2010.07 | 6AT | R | L/R | Saloon 4WD AXZ | | GCI82447 | Inner Joint | | | 33 | | | 34 | |
| | 2005.11-2010.07 | AT/MT | R | L/R | Saloon 4WD AXZ | Date to:2007.05;Chassis no. to:3C7300000 | GCO83037 | Outer Joint | | 36 | 30 | 59.5 | 40.5 | 56 | I |
| 3.6 (220 kw) | 2007.04-2010.07 | 6DCT | F | L | Saloon 4WD BWS | | GDS83295 | Drive Shaft | | 36 | | 59.5 | 40 | 491 | |
| | 2007.04-2010.07 | 6DCT | F | R | Saloon 4WD BWS | Date from:2007.10 | GDS81892 | Drive Shaft | | 36 | | 59.5 | 40 | 602 | |
| | 2007.04-2010.07 | 6DCT | F | L | Saloon 4WD BWS | | GDS98006 | Stub Axle-Flange | | 37 | | | 67 | 123.5 | |
| | 2007.04-2010.07 | AT | F | L/R | Saloon 4WD BWS | | GCI83006 | Inner Joint | | | 33 | | | 34 | |
| | 2007.04-2010.07 | | F | L/R | Saloon 4WD BWS | | GCO83101 | Outer Joint | | 36 | 27 | 59.5 | 40 | 65 | M |

| | YEAR | TRANSM. | F/R | L/R | BODY STYLE & DRIVE TYPE & ENGINE | REMARKS | G-AP Ref. | PRODUCT | ABS | Technical Specifications A | B | C | H | L | P |
|---|---|---|---|---|---|---|---|---|---|---|---|---|---|---|---|
| **VW** | | | | | | | | | | | | | | | |
| **Passat** | | | | | | | | | | | | | | | |
| 3.6 (220 kw) | 2007.04-2010.07 | | F | L/R | Saloon 4WD BWS | | GCI83016 | Inner Joint | | | 28 | | | 32 | |
| | 2007.04-2010.07 | 6AT | R | L | Saloon 4WD BWS | | GDS61284 | Drive Shaft | | 36 | | 59.5 | 40 | 594 | |
| | 2007.04-2010.07 | 6AT | R | R | Saloon 4WD BWS | | GDS61293 | Drive Shaft | | 36 | | 59.5 | 40 | 631 | |
| | 2007.04-2010.07 | 6AT | R | L/R | Saloon 4WD BWS | | GCI35026 | Outer Joint | | 36 | 33 | 59.5 | 40 | 61 | |
| | 2007.04-2010.07 | 6AT | R | L/R | Saloon 4WD BWS | | GCO83037 | Outer Joint | | 36 | 30 | 59.5 | 40.5 | 56 | I |
| | 2007.04-2010.07 | 6AT | R | L/R | Saloon 4WD BWS | | GCI53002 | Inner Joint | | | 33 | | | 34 | |
| | 2007.04-2010.07 | 6AT | R | L/R | Saloon 4WD BWS | | GCI82447 | Inner Joint | | | 33 | | | 34 | |
| | 2011.01-2014.12 | 6AT | F | L | Saloon 4WD BWS | | GDS83295 | Drive Shaft | | 36 | | 59.5 | 40 | 491 | |
| | 2011.01-2014.12 | 6AT | F | R | Saloon 4WD BWS | | GDS83266 | Drive Shaft | | 36 | | 59.5 | 40 | 601 | |
| | 2011.01-2014.12 | AT | F | L/R | Saloon 4WD BWS | | GCI83006 | Inner Joint | | | 33 | | | 34 | |
| | 2011.01-2014.12 | | F | L/R | Saloon 4WD BWS | | GCO83101 | Outer Joint | | 36 | 27 | 59.5 | 40 | 65 | M |
| | 2011.01-2014.12 | | F | L/R | Saloon 4WD BWS | | GCI83016 | Inner Joint | | | 28 | | | 32 | |
| | 2011.01-2014.12 | 6AT | R | L | Saloon 4WD BWS | | GDS61284 | Drive Shaft | | 36 | | 59.5 | 40 | 594 | |
| | 2011.01-2014.12 | 6AT | R | R | Saloon 4WD BWS | | GDS61293 | Drive Shaft | | 36 | | 59.5 | 40 | 631 | |
| | 2011.01-2014.12 | 6AT | R | L/R | Saloon 4WD BWS | | GCI35026 | Outer Joint | | 36 | 33 | 59.5 | 40 | 61 | |
| | 2011.01-2014.12 | 6AT | R | L/R | Saloon 4WD BWS | | GCI53002 | Inner Joint | | | 33 | | | 34 | |
| | 2011.01-2014.12 | 6AT | R | L/R | Saloon 4WD BWS | | GCI82447 | Inner Joint | | | 33 | | | 34 | |
| 4.0 (202 kw) | 2001.09-2004.09 | 5AT | F | L | Saloon 4WD BDN;BDP | | GDS83015 | Drive Shaft | 45W | 38 | | 59.5 | 34.5 | 527 | |
| | 2001.09-2004.09 | 5AT | F | R | Saloon 4WD BDN;BDP | | GDS83048 | Drive Shaft | 45W | 38 | | 59.5 | 34.5 | 502 | |
| | 2001.09-2004.09 | 6MT | F | L | Saloon 4WD BDN;BDP | | GDS83008 | Drive Shaft | 45W | 38 | | 59.5 | 34.5 | 603 | |
| | 2001.09-2004.09 | 6MT | F | R | Saloon 4WD BDN;BDP | | GDS61019 | Drive Shaft | 45W | 38 | | 59.5 | 34.5 | 624 | |
| | 2001.09-2004.09 | AT/MT | F | L/R | Saloon 4WD BDN;BDP | | GCO83019 | Outer Joint | 45W | 38 | 27 | 59.5 | 34.5 | 63 | I |
| | 2001.09-2004.09 | MT | F | L/R | Saloon 4WD BDN;BDP | | GCI50019 | Inner Joint | | | 34 | | | 59.5 | |
| | 2001.09-2004.09 | AT/MT | R | L/R | Saloon 4WD BDN;BDP | not for armoured vehicles | GCI83001 | Inner Joint | | | 28 | | | 32 | |
| | 2001.09-2004.09 | | R | L/R | Saloon 4WD BDN;BDP | not for armoured vehicles | GCI83002 | Inner Joint | | | 33 | | | 32 | |
| **Passat Alltrack** | | | | | | | | | | | | | | | |
| 1.4 (110 kw) | 2015.05-2018.11 | 6MT | F | L | Estate 4WD CZEA | | GDS81896 | Drive Shaft | | 36 | | 59.5 | 40 | 500 | |
| | 2015.05-2018.11 | 6MT | F | R | Estate 4WD CZEA | | GDS82352 | Drive Shaft | | 36 | | 59.5 | 40 | 614 | |
| | 2015.05-2018.11 | 6MT | F | L/R | Estate 4WD CZEA | | GCO83101 | Outer Joint | | 36 | 27 | 59.5 | 40 | 65 | M |
| | 2015.05-2018.11 | 6MT | F | L/R | Estate 4WD CZEA | | GCI61069 | Inner Joint | | | 28 | | | 32 | |
| | 2015.05-2018.11 | | F | L/R | Estate 4WD CZEA | | GCI83016 | Inner Joint | | | 28 | | | 32 | |
| | 2015.05-2018.11 | 6MT | R | L | Estate 4WD CZEA | | GDS61331 | Drive Shaft | | 36 | | 59.5 | 40 | 606 | |
| | 2015.05-2018.11 | 6MT | R | R | Estate 4WD CZEA | | GDS61332 | Drive Shaft | | 36 | | 59.5 | 40 | 650 | |
| | 2015.05-2018.11 | 6MT | R | L/R | Estate 4WD CZEA | | GCI35026 | Outer Joint | | 36 | 33 | 59.5 | 40 | 61 | |
| | 2015.05-2018.11 | 6MT | R | L/R | Estate 4WD CZEA | | GCI61103 | Inner Joint | | | 33 | | | 32 | |
| 1.8 (112 kw) | 2012.01-2014.12 | 6MT | F | L | Estate FWD CDAB | For PR code:A8B/A8C/A8G/A9I | GDS61100 | Drive Shaft | | 36 | | 59.5 | 40 | 513 | |
| | 2012.01-2014.12 | 6MT | F | L | Estate FWD CDAB | For PR code:A8T | GDS83295 | Drive Shaft | | 36 | | 59.5 | 40 | 491 | |
| | 2012.01-2014.12 | 6MT | F | R | Estate FWD CDAB | For PR code:A8B/A8C/A8G/A9I | GDS61341 | Drive Shaft | | 36 | | 59.5 | 40 | 806 | |
| | 2012.01-2014.12 | 6MT | F | R | Estate FWD CDAB | For PR code:A8T | GDS83313 | Drive Shaft | | 36 | | 59.5 | 40 | 792 | |
| | 2012.01-2014.12 | 6MT | F | L/R | Estate FWD CDAB | For PR code:A8B/A8C/A8G/A9I/A8T | GCO83002 | Outer Joint | | 36 | 27 | 59.5 | 40 | 66 | I |
| | 2012.01-2014.12 | 6MT | F | L/R | Estate FWD CDAB | For PR code:A8T | GCO83101 | Outer Joint | | 36 | 27 | 59.5 | 40 | 65 | M |
| | 2012.01-2014.12 | 6MT | F | L | Estate FWD CDAB | For PR code:A8T | GCI61069 | Inner Joint | | | 28 | | | 32 | |
| | 2012.01-2014.12 | 6MT | F | R | Estate FWD CDAB | For PR code:A8B/A8C/A8G/A9I; | GCI61069 | Inner Joint | | | 28 | | | 32 | |
| | 2012.01-2014.12 | 6MT | F | L/R | Estate FWD CDAB | For PR code:A8B/A8C/A8G/A9I | GCI83016 | Inner Joint | | | 28 | | | 32 | |
| 1.8 (118 kw) | 2012.01-2014.12 | 6MT | F | L | Estate FWD CDAA | For PR code:A8B/A8C/A8G/A9I | GDS61100 | Drive Shaft | | 36 | | 59.5 | 40 | 513 | |
| | 2012.01-2014.12 | 6MT | F | L | Estate FWD CDAA | For PR code:A8T | GDS83295 | Drive Shaft | | 36 | | 59.5 | 40 | 491 | |
| | 2012.01-2014.12 | 6MT | F | R | Estate FWD CDAA | For PR code:A8B/A8C/A8G/A9I | GDS61341 | Drive Shaft | | 36 | | 59.5 | 40 | 806 | |
| | 2012.01-2014.12 | 6MT | F | R | Estate FWD CDAA | For PR code:A8T | GDS83313 | Drive Shaft | | 36 | | 59.5 | 40 | 792 | |
| | 2012.01-2014.12 | 6MT | F | L/R | Estate FWD CDAA | For PR code:A8B/A8C/A8G/A9I/A8T | GCO83002 | Outer Joint | | 36 | 27 | 59.5 | 40 | 66 | I |
| | 2012.01-2014.12 | 6MT | F | L/R | Estate FWD CDAA | For PR code:A8T | GCO83101 | Outer Joint | | 36 | 27 | 59.5 | 40 | 65 | M |
| | 2012.01-2014.12 | 6MT | F | L | Estate FWD CDAA | For PR code:A8T | GCI61069 | Inner Joint | | | 28 | | | 32 | |
| | 2012.01-2014.12 | 6MT | F | R | Estate FWD CDAA | For PR code:A8B/A8C/A8G/A9I | GCI61069 | Inner Joint | | | 28 | | | 32 | |
| | 2012.01-2014.12 | 6MT | F | L/R | Estate FWD CDAA | For PR code:A8B/A8C/A8G/A9I | GCI83016 | Inner Joint | | | 28 | | | 32 | |
| 2.0 (103 kw) | 2012.01-2014.12 | 6MT | F | L | Estate 4WD CFFB | | GDS83295 | Drive Shaft | | 36 | | 59.5 | 40 | 491 | |
| | 2012.01-2014.12 | 6MT | F | R | Estate 4WD CFFB | | GDS83266 | Drive Shaft | | 36 | | 59.5 | 40 | 601 | |
| | 2012.01-2014.12 | MT | F | L | Estate 4WD CFFB | | GDS83236 | Drive Shaft | | 36 | | 59.5 | 40 | 484 | |
| | 2012.01-2014.12 | | F | L/R | Estate 4WD CFFB | | GCO83002 | Outer Joint | | 36 | 27 | 59.5 | 40 | 66 | I |
| | 2012.01-2014.12 | | F | L/R | Estate 4WD CFFB | | GCI83016 | Inner Joint | | | 28 | | | 32 | |
| | 2012.01-2014.12 | 6MT | R | L | Estate 4WD CFFB | | GDS61284 | Drive Shaft | | 36 | | 59.5 | 40 | 594 | |
| | 2012.01-2014.12 | 6MT | R | R | Estate 4WD CFFB | | GDS61293 | Drive Shaft | | 36 | | 59.5 | 40 | 631 | |
| | 2012.01-2014.12 | 6MT | R | L/R | Estate 4WD CFFB | | GCI35026 | Outer Joint | | 36 | 33 | 59.5 | 40 | 61 | |
| | 2012.01-2014.12 | 6MT | R | L/R | Estate 4WD CFFB | | GCI53002 | Inner Joint | | | 33 | | | 34 | |
| | 2012.01-2014.12 | 6MT | R | L/R | Estate 4WD CFFB | | GCI82447 | Inner Joint | | | 33 | | | 34 | |
| | 2012.01-2014.12 | 6MT | F | L | Estate FWD CFFB | | GDS83295 | Drive Shaft | | 36 | | 59.5 | 40 | 491 | |
| | 2012.01-2014.12 | 6MT | F | R | Estate FWD CFFB | For PR code:A8B/A8C/A8G/A9I | GDS61126 | Drive Shaft | | 36 | | 59.5 | 40 | 793 | |

| | YEAR | TRANSM. | F/R | L/R | BODY STYLE & DRIVE TYPE & ENGINE | REMARKS | G-AP Ref. | PRODUCT | ABS | Technical Specifications A | B | C | H | L | P |
|---|---|---|---|---|---|---|---|---|---|---|---|---|---|---|---|
| **VW** **Passat Alltrack** | | | | | | | | | | | | | | | |
| 2.0 (103 kw) | 2012.01-2014.12 | 6MT | F | R | Estate FWD CFFB | For PR code:A8B/A8C/A8G/A9I | GDS83313 | Drive Shaft | | 36 | | 59.5 | 40 | 792 | |
| | 2012.01-2014.12 | 6MT | F | L/R | Estate FWD CFFB | For PR code:A8B/A8C/A8G/A9I | GCO83002 | Outer Joint | | 36 | 27 | 59.5 | 40 | 66 | I |
| | 2012.01-2014.12 | 6MT | F | L/R | Estate FWD CFFB | For PR code:A8T | GCO83101 | Outer Joint | | 36 | 27 | 59.5 | 40 | 65 | M |
| | 2012.01-2014.12 | 6MT | F | L/R | Estate FWD CFFB | For PR code:A8T | GCI61069 | Inner Joint | | | 28 | | | 32 | |
| | 2012.01-2014.12 | 6MT | F | L/R | Estate FWD CFFB | For PR code:A8B/A8C/A8G/A9I | GCI83016 | Inner Joint | | | 28 | | | 32 | |
| 2.0 (110 kw) | 2015.05-2017.11 | 6MT | F | L | Estate 4WD CRLB;DFEA;DFGA | | GDS81896 | Drive Shaft | | 36 | | 59.5 | 40 | 500 | |
| | 2015.05-2017.11 | 6MT | F | R | Estate 4WD CRLB;DFEA;DFGA | | GDS81889 | Drive Shaft | | 36 | | 59.5 | 40 | 614 | |
| | 2015.05-2017.11 | 6MT | F | L/R | Estate 4WD CRLB;DFEA;DFGA | | GCO83101 | Outer Joint | | 36 | 27 | 59.5 | 40 | 65 | M |
| | 2015.05-2017.11 | AT | F | L/R | Estate 4WD CRLB;DFEA;DFGA | | GCI83006 | Inner Joint | | | 33 | | | 34 | |
| | 2015.05-2017.11 | AT/6DCT | F | L/R | Estate 4WD CRLB;DFEA;DFGA | | GCI61057 | Inner Joint | | | 34 | | | 89 | |
| | 2015.05-2017.11 | | F | L/R | Estate 4WD CRLB;DFEA;DFGA | | GCI83016 | Inner Joint | | | 28 | | | 32 | |
| | 2015.05-2017.11 | 6MT | R | L | Estate 4WD CRLB;DFEA;DFGA | | GDS61334 | Drive Shaft | | 36 | | 59.5 | 40 | 598 | |
| | 2015.05-2017.11 | 6MT | R | R | Estate 4WD CRLB;DFEA;DFGA | | GDS61335 | Drive Shaft | | 36 | | 59.5 | 40 | 638 | |
| | 2015.05-2017.11 | 6MT | R | L/R | Estate 4WD CRLB;DFEA;DFGA | | GCI35026 | Outer Joint | | 36 | 33 | 59.5 | 40 | 61 | |
| | 2015.05-2017.11 | 6MT | R | L/R | Estate 4WD CRLB;DFEA;DFGA | | GCI82447 | Inner Joint | | | 33 | | | 34 | |
| | 2015.05-2017.11 | | R | L/R | Estate 4WD CRLB;DFEA;DFGA | | GCI83011 | Inner Joint | | | 33 | | | 34 | |
| 2.0 (125 kw) | 2012.01-2014.12 | 6AT | F | L | Estate 4WD CFGB | For PR code:A8B/A8C/A8G/A9I | GDS54013 | Drive Shaft | | 36 | | 59.5 | 40 | 479.5 | |
| | 2012.01-2014.12 | 6AT | F | R | Estate 4WD CFGB | | GDS61295 | Drive Shaft | | 36 | | 59.5 | 40 | 555 | |
| | 2012.01-2014.12 | 6AT | F | L | Estate 4WD CFGB | For PR code:8AT | GCO83101 | Outer Joint | | 36 | 27 | 59.5 | 40 | 65 | M |
| | 2012.01-2014.12 | 6AT | F | R | Estate 4WD CFGB | | GCO83002 | Outer Joint | | 36 | 27 | 59.5 | 40 | 66 | I |
| | 2012.01-2014.12 | 6DCT | F | L | Estate 4WD CFGB | For PR code:8AT | GDS83381 | Drive Shaft | | 36 | | 59.5 | 40 | 483 | |
| | 2012.01-2014.12 | AT | F | L/R | Estate 4WD CFGB | | GCI61057 | Inner Joint | | | 34 | | | 89 | |
| | 2012.01-2014.12 | | F | L | Estate 4WD CFGB | Date To:2013.01 | GCI54004 | Inner Joint | | | 34 | | | 81 | |
| | 2012.01-2014.12 | 6AT | R | L | Estate 4WD CFGB | | GDS61284 | Drive Shaft | | 36 | | 59.5 | 40 | 594 | |
| | 2012.01-2014.12 | 6AT | R | R | Estate 4WD CFGB | | GDS61293 | Drive Shaft | | 36 | | 59.5 | 40 | 631 | |
| | 2012.01-2014.12 | 6AT | R | L/R | Estate 4WD CFGB | | GCI35026 | Outer Joint | | 36 | 33 | 59.5 | 40 | 61 | |
| | 2012.01-2014.12 | 6AT | R | L/R | Estate 4WD CFGB | | GCI53002 | Inner Joint | | | 33 | | | 34 | |
| | 2012.01-2014.12 | 6AT | R | L/R | Estate 4WD CFGB | | GCI82447 | Inner Joint | | | 33 | | | 34 | |
| 2.0 (130 kw) | 2013.01-2014.12 | 6AT | F | L | Estate 4WD CFGC | For PR code:A8B/A8C/A8G/A9I | GDS54013 | Drive Shaft | | 36 | | 59.5 | 40 | 479.5 | |
| | 2013.01-2014.12 | 6AT | F | R | Estate 4WD CFGC | | GDS61295 | Drive Shaft | | 36 | | 59.5 | 40 | 555 | |
| | 2013.01-2014.12 | 6AT | F | L | Estate 4WD CFGC | For PR code:8AT | GCO83101 | Outer Joint | | 36 | 27 | 59.5 | 40 | 65 | M |
| | 2013.01-2014.12 | 6AT | F | R | Estate 4WD CFGC | | GCO83002 | Outer Joint | | 36 | 27 | 59.5 | 40 | 66 | I |
| | 2013.01-2014.12 | 6DCT | F | L | Estate 4WD CFGC | For PR code:8AT | GDS83381 | Drive Shaft | | 36 | | 59.5 | 40 | 483 | |
| | 2013.01-2014.12 | AT | F | L | Estate 4WD CFGC | | GCI54004 | Inner Joint | | | 34 | | | 81 | |
| | 2013.01-2014.12 | AT | F | L/R | Estate 4WD CFGC | | GCI61057 | Inner Joint | | | 34 | | | 89 | |
| | 2013.01-2014.12 | 6AT | R | L | Estate 4WD CFGC | | GDS61284 | Drive Shaft | | 36 | | 59.5 | 40 | 594 | |
| | 2013.01-2014.12 | 6AT | R | R | Estate 4WD CFGC | | GDS61293 | Drive Shaft | | 36 | | 59.5 | 40 | 631 | |
| | 2013.01-2014.12 | 6AT | R | L/R | Estate 4WD CFGC | | GCI35026 | Outer Joint | | 36 | 33 | 59.5 | 40 | 61 | |
| | 2013.01-2014.12 | 6AT | R | L/R | Estate 4WD CFGC | | GCI53002 | Inner Joint | | | 33 | | | 34 | |
| | 2013.01-2014.12 | 6AT | R | L/R | Estate 4WD CFGC | | GCI82447 | Inner Joint | | | 33 | | | 34 | |
| 2.0 (135 kw) | 2015.07-2016.05 | 6AT | F | R | Estate 4WD CUPA | | GDS61346 | Drive Shaft | | 36 | | 59.5 | 40 | 589 | |
| | 2015.07-2016.05 | 6AT | F | L/R | Estate 4WD CUPA | | GCO83101 | Outer Joint | | 36 | 27 | 59.5 | 40 | 65 | M |
| | 2015.07-2016.05 | 6DCT | F | L | Estate 4WD CUPA | | GDS83381 | Drive Shaft | | 36 | | 59.5 | 40 | 483 | |
| | 2015.07-2016.05 | AT | F | L/R | Estate 4WD CUPA | Date from:2016.01 | GCI61057 | Inner Joint | | | 34 | | | 89 | |
| | 2015.07-2016.05 | AT | F | L/R | Estate 4WD CUPA | | GCI83006 | Inner Joint | | | 33 | | | 34 | |
| | 2015.07-2016.05 | 6AT | R | L | Estate 4WD CUPA | | GDS61334 | Drive Shaft | | 36 | | 59.5 | 40 | 598 | |
| | 2015.07-2016.05 | 6AT | R | R | Estate 4WD CUPA | | GDS61335 | Drive Shaft | | 36 | | 59.5 | 40 | 638 | |
| | 2015.07-2016.05 | 6AT | R | L/R | Estate 4WD CUPA | | GCI35026 | Outer Joint | | 36 | 33 | 59.5 | 40 | 61 | |
| | 2015.07-2016.05 | 6AT | R | L/R | Estate 4WD CUPA | | GCI82447 | Inner Joint | | | 33 | | | 34 | |
| | 2015.07-2016.05 | | R | L/R | Estate 4WD CUPA | | GCI83011 | Inner Joint | | | 33 | | | 34 | |
| 2.0 (140 kw) | 2015.05-2024.03 | 6DCT | F | L | Estate 4WD DDAA;DFCA;DFHA | | GDS83381 | Drive Shaft | | 36 | | 59.5 | 40 | 483 | |
| | 2015.05-2024.03 | 6DCT | F | L/R | Estate 4WD DDAA;DFCA;DFHA | | GCI61057 | Inner Joint | | | 34 | | | 89 | |
| | 2015.05-2024.03 | 6DCT/7DCT | F | R | Estate 4WD DDAA;DFCA;DFHA | | GDS61346 | Drive Shaft | | 36 | | 59.5 | 40 | 589 | |
| | 2015.05-2024.03 | 6DCT/7DCT | F | L/R | Estate 4WD DDAA;DFCA;DFHA | | GCO83101 | Outer Joint | | 36 | 27 | 59.5 | 40 | 65 | M |
| | 2015.05-2024.03 | 7DCT | F | L | Estate 4WD DDAA;DFCA;DFHA | | GDS82351 | Drive Shaft | | 36 | 37 | 59.5 | 40 | 568 | |
| | 2015.05-2024.03 | 7DCT | F | L | Estate 4WD DDAA;DFCA;DFHA | | GCI81158 | Inner Joint | | 37 | 34 | 34.5 | 65.5 | 83 | |
| | 2015.05-2024.03 | 7DCT | F | R | Estate 4WD DDAA;DFCA;DFHA | | GCI61057 | Inner Joint | | | 34 | | | 89 | |
| | 2015.05-2024.03 | 6AT/7DCT | R | L/R | Estate 4WD DDAA;DFCA;DFHA | | GCI82447 | Inner Joint | | | 33 | | | 34 | |
| | 2015.05-2024.03 | 6DCT/7DCT | R | L | Estate 4WD DDAA;DFCA;DFHA | | GDS61334 | Drive Shaft | | 36 | | 59.5 | 40 | 598 | |
| | 2015.05-2024.03 | 6DCT/7DCT | R | R | Estate 4WD DDAA;DFCA;DFHA | | GDS61335 | Drive Shaft | | 36 | | 59.5 | 40 | 638 | |
| | 2015.05-2024.03 | 6DCT/7DCT | R | L/R | Estate 4WD DDAA;DFCA;DFHA | | GCI35026 | Outer Joint | | 36 | 33 | 59.5 | 40 | 61 | |
| | 2015.05-2024.03 | 6DCT/7DCT | R | L/R | Estate 4WD DDAA;DFCA;DFHA | | GCI53002 | Inner Joint | | | 33 | | | 34 | |
| 2.0 (147 kw) | 2020.08-2024.03 | 7AT | F | L | Estate 4WD DTUA | | GDS82351 | Drive Shaft | | 36 | 37 | 59.5 | 40 | 568 | |
| | 2020.08-2024.03 | 7AT | F | R | Estate 4WD DTUA | | GDS61346 | Drive Shaft | | 36 | | 59.5 | 40 | 589 | |
| | 2020.08-2024.03 | 7AT | F | L/R | Estate 4WD DTUA | | GCO83101 | Outer Joint | | 36 | 27 | 59.5 | 40 | 65 | M |

| | YEAR | TRANSM. | F/R | L/R | BODY STYLE & DRIVE TYPE & ENGINE | REMARKS | G-AP Ref. | PRODUCT | ABS | Technical Specifications A | B | C | H | L | P |
|---|---|---|---|---|---|---|---|---|---|---|---|---|---|---|---|
| **VW** | | | | | | | | | | | | | | | |
| **Passat Alltrack** | | | | | | | | | | | | | | | |
| 2.0 (147 kw) | 2020.08-2024.03 | 7AT | F | R | Estate 4WD DTUA | | GCI61057 | Inner Joint | | | 34 | | | 89 | |
| | 2020.08-2024.03 | 7DCT | F | L | Estate 4WD DTUA | | GCI81158 | Inner Joint | | 37 | 34 | 34.5 | 65.5 | 83 | |
| | 2020.08-2024.03 | 7AT | R | L | Estate 4WD DTUA | | GDS61334 | Drive Shaft | | 36 | | 59.5 | 40 | 598 | |
| | 2020.08-2024.03 | 7AT | R | R | Estate 4WD DTUA | | GDS61335 | Drive Shaft | | 36 | | 59.5 | 40 | 638 | |
| | 2020.08-2024.03 | 7AT | R | L/R | Estate 4WD DTUA | | GCI53002 | Inner Joint | | | 33 | | | 34 | |
| 2.0 (155 kw) | 2012.01-2014.12 | 6AT | F | L | Estate 4WD CCZB | | GDS83295 | Drive Shaft | | 36 | | 59.5 | 40 | 491 | |
| | 2012.01-2014.12 | 6AT | F | R | Estate 4WD CCZB | | GDS83266 | Drive Shaft | | 36 | | 59.5 | 40 | 601 | |
| | 2012.01-2014.12 | 6DCT | F | L | Estate 4WD CCZB | | GDS98006 | Stub Axle-Flange | | 37 | | | 67 | 123.5 | |
| | 2012.01-2014.12 | | F | L/R | Estate 4WD CCZB | | GCO83101 | Outer Joint | | 36 | 27 | 59.5 | 40 | 65 | M |
| | 2012.01-2014.12 | | F | L/R | Estate 4WD CCZB | | GCI83016 | Inner Joint | | | 28 | | | 32 | |
| | 2012.01-2014.12 | 6AT | R | L | Estate 4WD CCZB | | GDS61284 | Drive Shaft | | 36 | | 59.5 | 40 | 594 | |
| | 2012.01-2014.12 | 6AT | R | R | Estate 4WD CCZB | | GDS61293 | Drive Shaft | | 36 | | 59.5 | 40 | 631 | |
| | 2012.01-2014.12 | 6AT | R | L/R | Estate 4WD CCZB | | GCI35026 | Outer Joint | | 36 | 33 | 59.5 | 40 | 61 | |
| | 2012.01-2014.12 | 6AT | R | L/R | Estate 4WD CCZB | | GCI53002 | Inner Joint | | | 33 | | | 34 | |
| | 2012.01-2014.12 | 6AT | R | L/R | Estate 4WD CCZB | | GCI82447 | Inner Joint | | | 33 | | | 34 | |
| 2.0 (162 kw) | 2015.07-2024.03 | 7AT | F | L | Estate 4WD CHHB | | GDS82351 | Drive Shaft | | 36 | 37 | 59.5 | 40 | 568 | |
| | 2015.07-2024.03 | 7AT | F | R | Estate 4WD CHHB | | GDS61166 | Drive Shaft | | 36 | 40 | 59.5 | 40 | 611 | |
| | 2015.07-2024.03 | 7AT | F | L | Estate 4WD CHHB | | GCO83101 | Outer Joint | | 36 | 27 | 59.5 | 40 | 65 | M |
| | 2015.07-2024.03 | AT | F | L | Estate 4WD CHHB | Date from:2016.01 | GDS81265 | Drive Shaft | | 36 | 37 | 59.5 | 40 | 557 | |
| | 2015.07-2024.03 | AT | F | R | Estate 4WD CHHB | Date from:2016.01 | GDS61347 | Drive Shaft | | 36 | 40 | 59.5 | 40 | 593 | |
| | 2015.07-2024.03 | AT | F | R | Estate 4WD CHHB | | GCI61048 | Inner Joint | | 40 | 34 | 46.9 | | 127.5 | |
| | 2015.07-2024.03 | AT | F | | Estate 4WD CHHB | | GCI83016 | Inner Joint | | | 28 | | | 32 | |
| | 2015.07-2024.03 | | F | L | Estate 4WD CHHB | | GCI81158 | Inner Joint | | 37 | 34 | 34.5 | 65.5 | 83 | |
| | 2015.07-2024.03 | 7AT | R | L | Estate 4WD CHHB | | GDS61331 | Drive Shaft | | 36 | | 59.5 | 40 | 606 | |
| | 2015.07-2024.03 | 7AT | R | R | Estate 4WD CHHB | | GDS61332 | Drive Shaft | | 36 | | 59.5 | 40 | 650 | |
| | 2015.07-2024.03 | 7AT | R | L/R | Estate 4WD CHHB | | GCI35026 | Outer Joint | | 36 | 33 | 59.5 | 40 | 61 | |
| 2.0 (176 kw) | 2015.05-2020.11 | 7AT | F | L | Estate 4WD CUAA | | GDS82351 | Drive Shaft | | 36 | 37 | 59.5 | 40 | 568 | |
| | 2015.05-2020.11 | 7AT | F | R | Estate 4WD CUAA | | GDS61347 | Drive Shaft | | 36 | 40 | 59.5 | 40 | 593 | |
| | 2015.05-2020.11 | 7AT | F | L/R | Estate 4WD CUAA | Date from:2016.03 | GDS61166 | Drive Shaft | | 36 | 40 | 59.5 | 40 | 611 | |
| | 2015.05-2020.11 | AT | F | L/R | Estate 4WD CUAA | | GCO83101 | Outer Joint | | 36 | 27 | 59.5 | 40 | 65 | M |
| | 2015.05-2020.11 | AT | F | R | Estate 4WD CUAA | | GCI61048 | Inner Joint | | 40 | 34 | 46.9 | | 127.5 | |
| | 2015.05-2020.11 | AT | F | L/R | Estate 4WD CUAA | | GCI83006 | Inner Joint | | | 33 | | | 34 | |
| | 2015.05-2020.11 | | F | L | Estate 4WD CUAA | | GCI81158 | Inner Joint | | 37 | 34 | 34.5 | 65.5 | 83 | |
| | 2015.05-2020.11 | 7AT | R | L | Estate 4WD CUAA | | GDS61334 | Drive Shaft | | 36 | | 59.5 | 40 | 598 | |
| | 2015.05-2020.11 | 7AT | R | R | Estate 4WD CUAA | | GDS61335 | Drive Shaft | | 36 | | 59.5 | 40 | 638 | |
| | 2015.05-2020.11 | 7DCT | R | L/R | Estate 4WD CUAA | | GCI82447 | Inner Joint | | | 33 | | | 34 | |
| | 2015.05-2020.11 | | R | L/R | Estate 4WD CUAA | | GCI83011 | Inner Joint | | | 33 | | | 34 | |
| 2.0 (200 kw) | 2018.08-2020.11 | 7AT | F | R | Estate 4WD DNUA | | GDS81889 | Drive Shaft | | 36 | | 59.5 | 40 | 614 | |
| | 2018.08-2020.11 | 7AT | F | R | Estate 4WD DNUA | | GCO83101 | Outer Joint | | 36 | 27 | 59.5 | 40 | 65 | M |
| | 2018.08-2020.11 | 7AT | F | R | Estate 4WD DNUA | | GCI61069 | Inner Joint | | | 28 | | | 32 | |
| | 2018.08-2020.11 | 7AT | R | L | Estate 4WD DNUA | | GDS61331 | Drive Shaft | | 36 | | 59.5 | 40 | 606 | |
| | 2018.08-2020.11 | 7AT | R | R | Estate 4WD DNUA | | GDS61332 | Drive Shaft | | 36 | | 59.5 | 40 | 650 | |
| | 2018.08-2020.11 | 7AT | R | L/R | Estate 4WD DNUA | | GCI35026 | Outer Joint | | 36 | 33 | 59.5 | 40 | 61 | |
| | 2018.08-2020.11 | 7AT | R | L/R | Estate 4WD DNUA | | GCI61103 | Inner Joint | | | 33 | | | 32 | |
| 2.0 (206 kw) | 2018.11-2024.03 | 6AT | F | R | Estate 4WD CJXA;DNFE | | GDS81889 | Drive Shaft | | 36 | | 59.5 | 40 | 614 | |
| | 2018.11-2024.03 | 6AT | F | R | Estate 4WD CJXA;DNFE | | GCO83101 | Outer Joint | | 36 | 27 | 59.5 | 40 | 65 | M |
| | 2018.11-2024.03 | 6AT | F | R | Estate 4WD CJXA;DNFE | | GCI61069 | Inner Joint | | | 28 | | | 32 | |
| | 2018.11-2024.03 | 6DCT | F | L | Estate 4WD CJXA;DNFE | | GDS81896 | Drive Shaft | | 36 | | 59.5 | 40 | 500 | |
| | 2018.11-2024.03 | 7DCT | R | L | Estate 4WD CJXA;DNFE | | GDS61331 | Drive Shaft | | 36 | | 59.5 | 40 | 606 | |
| | 2018.11-2024.03 | 7DCT | R | R | Estate 4WD CJXA;DNFE | | GDS61332 | Drive Shaft | | 36 | | 59.5 | 40 | 650 | |
| **Passat CC** | | | | | | | | | | | | | | | |
| 1.4 (118 kw) | 2011.01-2012.01 | 6MT | F | L | Coupe FWD CKMA | | GDS61201 | Drive Shaft | | 36 | | 59.5 | 40.5 | 535 | |
| | 2011.01-2012.01 | 6MT | F | R | Coupe FWD CKMA | | GDS61096 | Drive Shaft | | 36 | | 59.5 | 40.5 | 799 | |
| | 2011.01-2012.01 | 6MT | F | L/R | Coupe FWD CKMA | | GCO83037 | Outer Joint | | 36 | 30 | 59.5 | 40.5 | 56 | I |
| | 2011.01-2012.01 | 6MT | F | L/R | Coupe FWD CKMA | | GCI82447 | Inner Joint | | | 33 | | | 34 | |
| | 2011.01-2012.01 | 7AT/6MT | F | L/R | Coupe FWD CKMA | | GCI83016 | Inner Joint | | | 28 | | | 32 | |
| | 2011.01-2012.01 | 7DCT | F | L | Coupe FWD CKMA | | GDS61281 | Drive Shaft | | 36 | | 59.5 | 40 | 528 | |
| | 2011.01-2012.01 | 7DCT | F | R | Coupe FWD CKMA | | GDS81653 | Drive Shaft | | 36 | | 59.5 | 40 | 785 | |
| | 2011.01-2012.01 | 7DCT | F | L/R | Coupe FWD CKMA | | GCO83002 | Outer Joint | | 36 | 27 | 59.5 | 40 | 66 | I |
| | 2011.01-2012.01 | AT | F | L | Coupe FWD CKMA | | GDS83302 | Drive Shaft | | 36 | | 59.5 | 40 | 528 | |
| 1.8 (112 kw) | 2008.11-2010.05 | 6MT | F | L | Coupe FWD CDAB;CGYA | For PR code:9EJ,Trans. code MQ350,For Engine Code:CDAB;For Engine Code:CGYA | GDS61100 | Drive Shaft | | 36 | | 59.5 | 40 | 513 | |
| | 2008.11-2010.05 | 6MT | F | R | Coupe FWD CDAB;CGYA | For PR code:9EJ,Trans. code MQ350,For Engine Code:CDAB;For Engine Code:CGYA | GDS61341 | Drive Shaft | | 36 | | 59.5 | 40 | 806 | |
| | 2008.11-2010.05 | 6MT | F | L/R | Coupe FWD CDAB;CGYA | | GCO83002 | Outer Joint | | 36 | 27 | 59.5 | 40 | 66 | I |
| | 2008.11-2010.05 | 6MT | F | R | Coupe FWD CDAB;CGYA | For PR code:9EJ,Trans. code MQ350,For Engine code:CDAB;For Engine code:CGYA | GCI61069 | Inner Joint | | | 28 | | | 32 | |
| | 2008.11-2010.05 | 7DCT | F | R | Coupe FWD CDAB;CGYA | | GDS83313 | Drive Shaft | | 36 | | 59.5 | 40 | 792 | |

| | YEAR | TRANSM. | F/R | L/R | BODY STYLE & DRIVE TYPE & ENGINE | REMARKS | G-AP Ref. | PRODUCT | ABS | Technical Specifications A | B | C | H | L | P |
|---|---|---|---|---|---|---|---|---|---|---|---|---|---|---|---|
| **VW** **Passat CC** | | | | | | | | | | | | | | | |
| 1.8 (112 kw) | 2008.11-2010.05 | 7DCT | F | L/R | Coupe FWD CDAB;CGYA | | GCO83101 | Outer Joint | | 36 | 27 | 59.5 | 40 | 65 | M |
| | 2008.11-2010.05 | | F | L/R | Coupe FWD CDAB;CGYA | | GCI83016 | Inner Joint | | | 28 | | | 32 | |
| 1.8 (118 kw) | 2008.06-2012.01 | 6MT | F | L | Coupe FWD BZB;CDAA | For Engine Code:BZB;For PR code:6EJ, Trans. code:MQ250;For Engine Code:CDAA | GDS61100 | Drive Shaft | | 36 | | 59.5 | 40 | 513 | |
| | 2008.06-2012.01 | 6MT | F | R | Coupe FWD BZB;CDAA | For Engine Code:BZB;For PR code:6EJ, Trans. code:MQ250;For Engine Code:CDAA | GDS61341 | Drive Shaft | | 36 | | 59.5 | 40 | 806 | |
| | 2008.06-2012.01 | 6MT | F | L/R | Coupe FWD BZB;CDAA | | GCO83002 | Outer Joint | | 36 | 27 | 59.5 | 40 | 66 | I |
| | 2008.06-2012.01 | 7AT | F | L | Coupe FWD BZB;CDAA | | GDS83236 | Drive Shaft | | 36 | | 59.5 | 40 | 484 | |
| | 2008.06-2012.01 | 7DCT | F | R | Coupe FWD BZB;CDAA | | GDS83313 | Drive Shaft | | 36 | | 59.5 | 40 | 792 | |
| | 2008.06-2012.01 | 7DCT | F | L/R | Coupe FWD BZB;CDAA | | GCO83101 | Outer Joint | | 36 | 27 | 59.5 | 40 | 65 | M |
| | 2008.06-2012.01 | AT | F | L | Coupe FWD BZB;CDAA | | GDS61093 | Drive Shaft | | 36 | 26 | 59.5 | 40.5 | 587.5 | |
| | 2008.06-2012.01 | AT | F | R | Coupe FWD BZB;CDAA | | GDS61094 | Drive Shaft | | 36 | 26 | 59.5 | 40.5 | 884 | |
| | 2008.06-2012.01 | | F | L/R | Coupe FWD BZB;CDAA | | GCI83016 | Inner Joint | | | 28 | | | 32 | |
| 2.0 (100 kw) | 2008.06-2011.05 | 6AT/6MT | F | L/R | Coupe FWD CBAA;CFFA | | GCI54004 | Inner Joint | | | 34 | | | 81 | |
| | 2008.06-2011.05 | 6AT/6MT | F | L/R | Coupe FWD CBAA;CFFA | Original Tripod Design | GCI61057 | Inner Joint | | | 34 | | | 89 | |
| | 2008.06-2011.05 | 6AT/6MT | F | L/R | Coupe FWD CBAA;CFFA | | GCI83016 | Inner Joint | | | 28 | | | 32 | |
| | 2008.06-2011.05 | 6DCT | F | L | Coupe FWD CBAA;CFFA | | GDS54013 | Drive Shaft | | 36 | | 59.5 | 40 | 479.5 | |
| | 2008.06-2011.05 | 6DCT | F | R | Coupe FWD CBAA;CFFA | | GDS54011 | Drive Shaft | | 36 | | 59.5 | 40 | 755 | |
| | 2008.06-2011.05 | 6MT | F | L | Coupe FWD CBAA;CFFA | | GDS83295 | Drive Shaft | | 36 | | 59.5 | 40 | 491 | |
| | 2008.06-2011.05 | 6MT | F | R | Coupe FWD CBAA;CFFA | | GDS61126 | Drive Shaft | | 36 | | 59.5 | 40 | 793 | |
| | 2008.06-2011.05 | AT | F | L | Coupe FWD CBAA;CFFA | | GDS83241 | Drive Shaft | | 36 | | 59.5 | 40 | 475 | |
| | 2008.06-2011.05 | MT | F | L | Coupe FWD CBAA;CFFA | | GDS83236 | Drive Shaft | | 36 | | 59.5 | 40 | 484 | |
| | 2008.06-2011.05 | MT/6MT | F | R | Coupe FWD CBAA;CFFA | | GDS83313 | Drive Shaft | | 36 | | 59.5 | 40 | 792 | |
| | 2008.06-2011.05 | | F | L/R | Coupe FWD CBAA;CFFA | | GCO83002 | Outer Joint | | 36 | 27 | 59.5 | 40 | 66 | I |
| 2.0 (103 kw) | 2008.06-2012.01 | 6DCT | F | L | Coupe FWD CBAB;CFFB | | GDS54013 | Drive Shaft | | 36 | | 59.5 | 40 | 479.5 | |
| | 2008.06-2012.01 | 6DCT | F | L | Coupe FWD CBAB;CFFB | | GDS83241 | Drive Shaft | | 36 | | 59.5 | 40 | 475 | |
| | 2008.06-2012.01 | 6DCT | F | R | Coupe FWD CBAB;CFFB | | GDS54011 | Drive Shaft | | 36 | | 59.5 | 40 | 755 | |
| | 2008.06-2012.01 | 6DCT | F | L/R | Coupe FWD CBAB;CFFB | TJ | GCI54004 | Inner Joint | | | 34 | | | 81 | |
| | 2008.06-2012.01 | 6DCT | F | L/R | Coupe FWD CBAB;CFFB | AAR | GCI61057 | Inner Joint | | | 34 | | | 89 | |
| | 2008.06-2012.01 | 6MT | F | L | Coupe FWD CBAB;CFFB | Inner teeth of tranm.side:28 | GDS83295 | Drive Shaft | | 36 | | 59.5 | 40 | 491 | |
| | 2008.06-2012.01 | 6MT | F | R | Coupe FWD CBAB;CFFB | | GDS61126 | Drive Shaft | | 36 | | 59.5 | 40 | 793 | |
| | 2008.06-2012.01 | 6MT | F | R | Coupe FWD CBAB;CFFB | | GDS83313 | Drive Shaft | | 36 | | 59.5 | 40 | 792 | |
| | 2008.06-2012.01 | 6MT | F | L | Coupe FWD CBAB;CFFB | | GCI61041 | Inner Joint | | | 28 | | | 32 | |
| | 2008.06-2012.01 | 6MT | F | R | Coupe FWD CBAB;CFFB | | GCI61002 | Inner Joint | | | 28 | | | 31.8 | |
| | 2008.06-2012.01 | 6MT | F | L/R | Coupe FWD CBAB;CFFB | | GCI83016 | Inner Joint | | | 28 | | | 32 | |
| | 2008.06-2012.01 | 6MT/6DCT | F | L/R | Coupe FWD CBAB;CFFB | | GCO83002 | Outer Joint | | 36 | 27 | 59.5 | 40 | 66 | I |
| | 2008.06-2012.01 | MT | F | L | Coupe FWD CBAB;CFFB | Inner teeth of tranm.side:33 | GDS83236 | Drive Shaft | | 36 | | 59.5 | 40 | 484 | |
| | 2009.08-2012.01 | 6MT | F | L | Coupe 4WD CBAB;CFFB | | GDS83295 | Drive Shaft | | 36 | | 59.5 | 40 | 491 | |
| | 2009.08-2012.01 | 6MT | F | R | Coupe 4WD CBAB;CFFB | | GDS83266 | Drive Shaft | | 36 | | 59.5 | 40 | 601 | |
| | 2009.08-2012.01 | 6MT | F | L/R | Coupe 4WD CBAB;CFFB | | GCI83016 | Inner Joint | | | 28 | | | 32 | |
| | 2009.08-2012.01 | MT | F | L | Coupe 4WD CBAB;CFFB | | GDS83236 | Drive Shaft | | 36 | | 59.5 | 40 | 484 | |
| | 2009.08-2012.01 | Semi-AT | F | L | Coupe 4WD CBAB;CFFB | | GDS83241 | Drive Shaft | | 36 | | 59.5 | 40 | 475 | |
| | 2009.08-2012.01 | Semi-AT | F | L | Coupe 4WD CBAB;CFFB | | GCI54004 | Inner Joint | | | 34 | | | 81 | |
| | 2009.08-2012.01 | | F | L/R | Coupe 4WD CBAB;CFFB | | GCO83002 | Outer Joint | | 36 | 27 | 59.5 | 40 | 66 | I |
| | 2009.08-2012.01 | 6MT | R | L | Coupe 4WD CBAB;CFFB | | GDS61284 | Drive Shaft | | 36 | | 59.5 | 40 | 594 | |
| | 2009.08-2012.01 | 6MT | R | R | Coupe 4WD CBAB;CFFB | | GDS61293 | Drive Shaft | | 36 | | 59.5 | 40 | 631 | |
| | 2009.08-2012.01 | 6MT | R | L/R | Coupe 4WD CBAB;CFFB | | GCI35026 | Outer Joint | | 36 | 33 | 59.5 | 40 | 61 | |
| | 2009.08-2012.01 | 6MT | R | L/R | Coupe 4WD CBAB;CFFB | | GCI53002 | Inner Joint | | | 33 | | | 34 | |
| | 2009.08-2012.01 | 6MT | R | L/R | Coupe 4WD CBAB;CFFB | | GCI82447 | Inner Joint | | | 33 | | | 34 | |
| 2.0 (105 kw) | 2009.05-2010.11 | 6AT/6MT | F | L/R | Coupe FWD CBAC | | GCO83002 | Outer Joint | | 36 | 27 | 59.5 | 40 | 66 | I |
| | 2009.05-2010.11 | 6AT/6MT | F | L/R | Coupe FWD CBAC | | GCI54004 | Inner Joint | | | 34 | | | 81 | |
| | 2009.05-2010.11 | 6AT/6MT | F | L/R | Coupe FWD CBAC | Original Tripod Design | GCI61057 | Inner Joint | | | 34 | | | 89 | |
| | 2009.05-2010.11 | 6AT/6MT | F | L/R | Coupe FWD CBAC | | GCI83016 | Inner Joint | | | 28 | | | 32 | |
| | 2009.05-2010.11 | 6DCT | F | L | Coupe FWD CBAC | | GDS54013 | Drive Shaft | | 36 | | 59.5 | 40 | 479.5 | |
| | 2009.05-2010.11 | 6DCT | F | R | Coupe FWD CBAC | | GDS54011 | Drive Shaft | | 36 | | 59.5 | 40 | 755 | |
| | 2009.05-2010.11 | 6MT | F | L | Coupe FWD CBAC | | GDS83295 | Drive Shaft | | 36 | | 59.5 | 40 | 491 | |
| | 2009.05-2010.11 | 6MT | F | R | Coupe FWD CBAC | | GDS61126 | Drive Shaft | | 36 | | 59.5 | 40 | 793 | |
| | 2009.05-2010.11 | MT/6MT | F | R | Coupe FWD CBAC | | GDS83313 | Drive Shaft | | 36 | | 59.5 | 40 | 792 | |
| | 2009.05-2010.11 | Semi-AT | F | L | Coupe FWD CBAC | | GDS83241 | Drive Shaft | | 36 | | 59.5 | 40 | 475 | |
| 2.0 (120 kw) | 2008.05-2011.05 | MT | F | L | Coupe FWD CBBA | | GDS83236 | Drive Shaft | | 36 | | 59.5 | 40 | 484 | |
| | 2008.05-2011.05 | Semi-AT | F | L | Coupe FWD CBBA | | GDS83241 | Drive Shaft | | 36 | | 59.5 | 40 | 475 | |
| | 2008.05-2011.05 | Semi-AT | F | L | Coupe FWD CBBA | | GCI54004 | Inner Joint | | | 34 | | | 81 | |
| | 2008.05-2011.05 | Semi-AT | F | L | Coupe FWD CBBA | Original Tripod Design | GCI61057 | Inner Joint | | | 34 | | | 89 | |
| 2.0 (125 kw) | 2008.06-2012.01 | 6DCT | F | L | Coupe FWD CBBB;CFGB;CLLA | | GDS54013 | Drive Shaft | | 36 | | 59.5 | 40 | 479.5 | |
| | 2008.06-2012.01 | 6DCT | F | L | Coupe FWD CBBB;CFGB;CLLA | | GDS83241 | Drive Shaft | | 36 | | 59.5 | 40 | 475 | |
| | 2008.06-2012.01 | 6DCT | F | R | Coupe FWD CBBB;CFGB;CLLA | | GDS54011 | Drive Shaft | | 36 | | 59.5 | 40 | 755 | |
| | 2008.06-2012.01 | 6DCT | F | L/R | Coupe FWD CBBB;CFGB;CLLA | TJ | GCI54004 | Inner Joint | | | 34 | | | 81 | |

| | YEAR | TRANSM. | F/R | L/R | BODY STYLE & DRIVE TYPE & ENGINE | REMARKS | G-AP Ref. | PRODUCT | ABS | Technical Specifications A | B | C | H | L | P |
|---|---|---|---|---|---|---|---|---|---|---|---|---|---|---|---|
| **VW** | | | | | | | | | | | | | | | |
| **Passat CC** | | | | | | | | | | | | | | | |
| 2.0 (125 kw) | 2008.06-2012.01 | 6DCT | F | L/R | Coupe FWD CBBB;CFGB;CLLA | AAR | GCI61057 | Inner Joint | | | 34 | | | 89 | |
| | 2008.06-2012.01 | 6MT | F | L | Coupe FWD CBBB;CFGB;CLLA | | GDS83236 | Drive Shaft | | 36 | | 59.5 | 40 | 484 | |
| | 2008.06-2012.01 | 6MT | F | R | Coupe FWD CBBB;CFGB;CLLA | | GDS61126 | Drive Shaft | | 36 | | 59.5 | 40 | 793 | |
| | 2008.06-2012.01 | 6MT/6DCT | F | L/R | Coupe FWD CBBB;CFGB;CLLA | | GCO83101 | Outer Joint | | 36 | 27 | 59.5 | 40 | 65 | M |
| | 2009.11-2012.01 | 6AT | F | L | Coupe 4WD CBBB;CFGB | | GDS54013 | Drive Shaft | | 36 | | 59.5 | 40 | 479.5 | |
| | 2009.11-2012.01 | 6AT | F | R | Coupe 4WD CBBB;CFGB | | GDS61295 | Drive Shaft | | 36 | | 59.5 | 40 | 555 | |
| | 2009.11-2012.01 | 6AT | F | R | Coupe 4WD CBBB;CFGB | | GCO83002 | Outer Joint | | 36 | 27 | 59.5 | 40 | 66 | I |
| | 2009.11-2012.01 | 6DCT | F | L/R | Coupe 4WD CBBB;CFGB | | GCI54004 | Inner Joint | | | 34 | | | 81 | |
| | 2009.11-2012.01 | 6DCT | F | L/R | Coupe 4WD CBBB;CFGB | | GCI61057 | Inner Joint | | | 34 | | | 89 | |
| | 2009.11-2012.01 | MT | F | L | Coupe 4WD CBBB;CFGB | | GDS83236 | Drive Shaft | | 36 | | 59.5 | 40 | 484 | |
| | 2009.11-2012.01 | 6AT | R | L | Coupe 4WD CBBB;CFGB | | GDS61284 | Drive Shaft | | 36 | | 59.5 | 40 | 594 | |
| | 2009.11-2012.01 | 6AT | R | R | Coupe 4WD CBBB;CFGB | | GDS61293 | Drive Shaft | | 36 | | 59.5 | 40 | 631 | |
| | 2009.11-2012.01 | 6AT | R | L/R | Coupe 4WD CBBB;CFGB | | GCI35026 | Outer Joint | | 36 | 33 | 59.5 | 40 | 61 | |
| | 2009.11-2012.01 | 6AT | R | L/R | Coupe 4WD CBBB;CFGB | | GCI53002 | Inner Joint | | | 33 | | | 34 | |
| | 2009.11-2012.01 | 6AT | R | L/R | Coupe 4WD CBBB;CFGB | | GCI82447 | Inner Joint | | | 33 | | | 34 | |
| 2.0 (147 kw) | 2008.06-2012.01 | 6AT | F | L | Coupe FWD CAWB;CCTA;CBFA;CCZA | | GDS61153 | Drive Shaft | | 36 | 26 | 59.5 | 40 | 583 | |
| | 2008.06-2012.01 | 6AT/6MT | F | L/R | Coupe FWD CAWB;CCTA;CBFA;CCZA | | GCI61038 | Inner Joint | | 26 | 34 | 31 | 68.5 | 88.5 | |
| | 2008.06-2012.01 | 6AT/6MT | F | L/R | Coupe FWD CAWB;CCTA;CBFA;CCZA | | GCI83016 | Inner Joint | | | 28 | | | 32 | |
| | 2008.06-2012.01 | 6AT/6MT/6DCT | F | L/R | Coupe FWD CAWB;CCTA;CBFA;CCZA | Date To:2010.01,Transmission:6MT,Transmission:6AT,Date To:2010.02,Transmission:6DCT | GCO83002 | Outer Joint | | 36 | 27 | 59.5 | 40 | 66 | I |
| | 2008.06-2012.01 | 6DCT | F | R | Coupe FWD CAWB;CCTA;CBFA;CCZA | Date from:2010.03 | GDS81653 | Drive Shaft | | 36 | | 59.5 | 40 | 785 | |
| | 2008.06-2012.01 | 6DCT | F | R | Coupe FWD CAWB;CCTA;CBFA;CCZA | Date to:2010.02 | GDS83349 | Drive Shaft | | 36 | | 59.5 | 40 | 784 | |
| | 2008.06-2012.01 | 6MT | F | L | Coupe FWD CAWB;CCTA;CBFA;CCZA | | GDS83295 | Drive Shaft | | 36 | | 59.5 | 40 | 491 | |
| | 2008.06-2012.01 | 6MT | F | R | Coupe FWD CAWB;CCTA;CBFA;CCZA | Date to:2010.01 | GDS61126 | Drive Shaft | | 36 | | 59.5 | 40 | 793 | |
| | 2008.06-2012.01 | 6MT | F | R | Coupe FWD CAWB;CCTA;CBFA;CCZA | Date from:2010.02 | GDS61147 | Drive Shaft | | 36 | | 59.5 | 40 | 795 | |
| | 2008.06-2012.01 | 6MT | F | R | Coupe FWD CAWB;CCTA;CBFA;CCZA | Date to:2010.01 | GDS61339 | Drive Shaft | | 36 | | 59.5 | 40 | 794 | |
| | 2008.06-2012.01 | 6MT/6DCT | F | L/R | Coupe FWD CAWB;CCTA;CBFA;CCZA | Date From:2010.02,Transmission:6MT,Date From:2010.03,Transmission:6DCT | GCO83101 | Outer Joint | | 36 | 27 | 59.5 | 40 | 65 | M |
| | 2008.06-2012.01 | MT | F | L | Coupe FWD CAWB;CCTA;CBFA;CCZA | | GDS83236 | Drive Shaft | | 36 | | 59.5 | 40 | 484 | |
| 2.0 (155 kw) | 2010.11-2012.01 | 6AT/6MT | F | L | Coupe FWD CCZB | | GDS83295 | Drive Shaft | | 36 | | 59.5 | 40 | 491 | |
| | 2010.11-2012.01 | 6DCT | F | R | Coupe FWD CCZB | | GDS81653 | Drive Shaft | | 36 | | 59.5 | 40 | 785 | |
| | 2010.11-2012.01 | 6MT | F | R | Coupe FWD CCZB | | GDS61147 | Drive Shaft | | 36 | | 59.5 | 40 | 795 | |
| | 2010.11-2012.01 | 6MT | F | L/R | Coupe FWD CCZB | Date from:2010.02 | GCO83101 | Outer Joint | | 36 | 27 | 59.5 | 40 | 65 | M |
| | 2010.11-2012.01 | 6MT | F | L/R | Coupe FWD CCZB | | GCI83016 | Inner Joint | | | 28 | | | 32 | |
| | 2010.11-2012.01 | MT | F | R | Coupe FWD CCZB | | GDS61126 | Drive Shaft | | 36 | | 59.5 | 40 | 793 | |
| 3.6 (206 kw) | 2008.06-2012.01 | 6DCT | F | L/R | Coupe 4WD BLV;CNNA | | GCO83101 | Outer Joint | | 36 | 27 | 59.5 | 40 | 65 | M |
| | 2008.06-2012.01 | 6DCT | F | L | Coupe 4WD BLV;CNNA | | GCI61038 | Inner Joint | | 26 | 34 | 31 | 68.5 | 88.5 | |
| | 2008.06-2012.01 | 6DCT | F | R | Coupe 4WD BLV;CNNA | | GCI61048 | Inner Joint | | 40 | 34 | 46.9 | | 127.5 | |
| | 2008.06-2012.01 | 6DCT | R | L | Coupe 4WD BLV;CNNA | | GDS61284 | Drive Shaft | | 36 | | 59.5 | 40 | 594 | |
| | 2008.06-2012.01 | 6DCT | R | R | Coupe 4WD BLV;CNNA | | GDS61293 | Drive Shaft | | 36 | | 59.5 | 40 | 631 | |
| | 2008.06-2012.01 | 6DCT | R | L/R | Coupe 4WD BLV;CNNA | | GCI35026 | Outer Joint | | 36 | 33 | 59.5 | 40 | 61 | |
| | 2008.06-2012.01 | 6DCT | R | L/R | Coupe 4WD BLV;CNNA | | GCI82447 | Inner Joint | | | 33 | | | 34 | |
| 3.6 (220 kw) | 2008.02-2011.12 | 6AT | F | L | Coupe 4WD BWS | | GDS83295 | Drive Shaft | | 36 | | 59.5 | 40 | 491 | |
| | 2008.02-2011.12 | 6AT | F | R | Coupe 4WD BWS | | GDS83266 | Drive Shaft | | 36 | | 59.5 | 40 | 601 | |
| | 2008.02-2011.12 | 6DCT | F | L | Coupe 4WD BWS | | GDS98006 | Stub Axle-Flange | | 37 | | | 67 | 123.5 | |
| | 2008.02-2011.12 | AT | F | L/R | Coupe 4WD BWS | | GCI83006 | Inner Joint | | | 33 | | | 34 | |
| | 2008.02-2011.12 | | F | L/R | Coupe 4WD BWS | | GCO83101 | Outer Joint | | 36 | 27 | 59.5 | 40 | 65 | M |
| | 2008.02-2011.12 | | F | L/R | Coupe 4WD BWS | | GCI83016 | Inner Joint | | | 28 | | | 32 | |
| | 2008.02-2011.12 | 6AT | R | L | Coupe 4WD BWS | | GDS61284 | Drive Shaft | | 36 | | 59.5 | 40 | 594 | |
| | 2008.02-2011.12 | 6AT | R | R | Coupe 4WD BWS | | GDS61293 | Drive Shaft | | 36 | | 59.5 | 40 | 631 | |
| | 2008.02-2011.12 | 6AT | R | L/R | Coupe 4WD BWS | | GCI35026 | Outer Joint | | 36 | 33 | 59.5 | 40 | 61 | |
| | 2008.02-2011.12 | 6AT | R | L/R | Coupe 4WD BWS | | GCI53002 | Inner Joint | | | 33 | | | 34 | |
| | 2008.02-2011.12 | 6AT | R | L/R | Coupe 4WD BWS | | GCI82447 | Inner Joint | | | 33 | | | 34 | |
| **Passat Estate/Variant** | | | | | | | | | | | | | | | |
| 1.4 (90 kw) | 2007.05-2010.11 | AT | F | L | Estate FWD CAXA | Date from:2008.11 | GDS61281 | Drive Shaft | | 36 | | 59.5 | 40 | 528 | |
| | 2007.05-2010.11 | AT | F | L | Estate FWD CAXA | Date to:2008.10 | GDS81783 | Drive Shaft | | 36 | 40 | 59.5 | 40 | 531 | |
| | 2007.05-2010.11 | AT | F | R | Estate FWD CAXA | Date from:2008.11 | GDS81653 | Drive Shaft | | 36 | | 59.5 | 40 | 785 | |
| | 2007.05-2010.11 | AT | F | R | Estate FWD CAXA | Date to:2008.10 | GDS81784 | Drive Shaft | | 36 | 40 | 59.5 | 40 | 801 | |
| | 2007.05-2010.11 | AT | F | L/R | Estate FWD CAXA | | GCO83002 | Outer Joint | | 36 | 27 | 59.5 | 40 | 66 | I |
| | 2007.05-2010.11 | AT | F | L/R | Estate FWD CAXA | Date to:2008.10 | GCI61054 | Inner Joint | | 40 | 28 | 46.9 | 41 | 101.7 | |
| | 2007.05-2010.11 | AT | F | L/R | Estate FWD CAXA | Date from:2008.11 | GCI83016 | Inner Joint | | | 28 | | | 32 | |
| | 2007.05-2010.11 | MT | F | L | Estate FWD CAXA | | GDS61201 | Drive Shaft | | 36 | | 59.5 | 40.5 | 535 | |
| | 2007.05-2010.11 | MT | F | R | Estate FWD CAXA | | GDS61096 | Drive Shaft | | 36 | | 59.5 | 40.5 | 799 | |
| | 2007.05-2010.11 | MT | F | L/R | Estate FWD CAXA | | GCO83037 | Outer Joint | | 36 | 30 | 59.5 | 40.5 | 56 | I |
| | 2007.05-2010.11 | MT | F | L/R | Estate FWD CAXA | Date from:2009.01 | GCI82447 | Inner Joint | | | 33 | | | 34 | |
| | 2007.05-2010.11 | | F | | Estate FWD CAXA | | GCO83100 | Outer Joint | | 36 | 33 | 59.5 | 38 | 56 | I |
| | 2010.08-2014.12 | 6MT/7DCT | F | L | Estate FWD CAXA | | GDS61201 | Drive Shaft | | 36 | | 59.5 | 40.5 | 535 | |

| | YEAR | TRANSM. | F/R | L/R | BODY STYLE & DRIVE TYPE & ENGINE | REMARKS | G-AP Ref. | PRODUCT | ABS | Technical Specifications A | B | C | H | L | P |
|---|---|---|---|---|---|---|---|---|---|---|---|---|---|---|---|
| **VW** **Passat Estate/Variant** | | | | | | | | | | | | | | | |
| 1.4 (90 kw) | 2010.08-2014.12 | 6MT/7DCT | F | R | Estate FWD CAXA | | GDS61096 | Drive Shaft | | 36 | | 59.5 | 40.5 | 799 | |
| | 2010.08-2014.12 | 6MT/7DCT | F | L/R | Estate FWD CAXA | | GCO61059 | Outer Joint | | 36 | 33 | 59.5 | 40 | 59.5 | I |
| | 2010.08-2014.12 | 6MT/7DCT | F | L/R | Estate FWD CAXA | | GCO83037 | Outer Joint | | 36 | 30 | 59.5 | 40.5 | 56 | I |
| | 2010.08-2014.12 | 6MT/7DCT | F | L/R | Estate FWD CAXA | | GCI82447 | Inner Joint | | | 33 | | | 34 | |
| | 2010.08-2014.12 | 6MT/7DCT | F | L | Estate Van FWD CAXA | | GDS61201 | Drive Shaft | | 36 | | 59.5 | 40.5 | 535 | |
| | 2010.08-2014.12 | 6MT/7DCT | F | R | Estate Van FWD CAXA | | GDS61096 | Drive Shaft | | 36 | | 59.5 | 40.5 | 799 | |
| | 2010.08-2014.12 | 6MT/7DCT | F | L | Estate Van FWD CAXA | | GCO83037 | Outer Joint | | 36 | 30 | 59.5 | 40.5 | 56 | I |
| | 2010.08-2014.12 | 6MT/7DCT | F | R | Estate Van FWD CAXA | | GCO61059 | Outer Joint | | 36 | 33 | 59.5 | 40 | 59.5 | I |
| | 2010.08-2014.12 | 7DCT/6MT | F | L/R | Estate Van FWD CAXA | | GCI82447 | Inner Joint | | | 33 | | | 34 | |
| | 2010.08-2014.12 | MT | F | L/R | Estate Van FWD CAXA | Date from:2011.01 | GCI83011 | Inner Joint | | | 33 | | | 34 | |
| 1.4 (92 kw) | 2014.11-2018.11 | 6MT | F | L | Estate FWD CZCA | | GDS82391 | Drive Shaft | | 36 | | 59.5 | 40 | 528 | |
| | 2014.11-2018.11 | 6MT | F | R | Estate FWD CZCA | | GDS82390 | Drive Shaft | | 36 | | 59.5 | 40 | 830 | |
| | 2014.11-2018.11 | 6MT | F | L/R | Estate FWD CZCA | | GCO81355 | Outer Joint | | 36 | 34 | 59.5 | 40 | 59.5 | M |
| | 2014.11-2018.11 | 6MT/7DCT | F | L/R | Estate FWD CZCA | | GCI81398 | Inner Joint | | | 34 | | | 34 | |
| | 2014.11-2018.11 | 7DCT | F | L | Estate FWD CZCA | | GDS61201 | Drive Shaft | | 36 | | 59.5 | 40.5 | 535 | |
| 1.4 (110 kw) | 2009.01-2010.11 | 6MT | F | R | Estate FWD CDGA | | GDS61096 | Drive Shaft | | 36 | | 59.5 | 40.5 | 799 | |
| | 2009.01-2010.11 | 7AT/6MT | F | L/R | Estate FWD CDGA | | GCI83016 | Inner Joint | | | 28 | | | 32 | |
| | 2009.01-2010.11 | AT | F | L | Estate FWD CDGA | | GDS61281 | Drive Shaft | | 36 | | 59.5 | 40 | 528 | |
| | 2009.01-2010.11 | AT | F | R | Estate FWD CDGA | | GDS81653 | Drive Shaft | | 36 | | 59.5 | 40 | 785 | |
| | 2009.01-2010.11 | AT | F | L/R | Estate FWD CDGA | | GCO83002 | Outer Joint | | 36 | 27 | 59.5 | 40 | 66 | I |
| | 2009.01-2010.11 | MT | F | L | Estate FWD CDGA | | GDS61201 | Drive Shaft | | 36 | | 59.5 | 40.5 | 535 | |
| | 2009.01-2010.11 | MT | F | L/R | Estate FWD CDGA | | GCO83037 | Outer Joint | | 36 | 30 | 59.5 | 40.5 | 56 | I |
| | 2009.01-2010.11 | MT | F | L/R | Estate FWD CDGA | | GCI82447 | Inner Joint | | | 33 | | | 34 | |
| | 2010.08-2014.12 | 6MT | F | L | Estate FWD CDGA | | GDS61201 | Drive Shaft | | 36 | | 59.5 | 40.5 | 535 | |
| | 2010.08-2014.12 | 6MT | F | R | Estate FWD CDGA | | GDS61096 | Drive Shaft | | 36 | | 59.5 | 40.5 | 799 | |
| | 2010.08-2014.12 | 6MT | F | L/R | Estate FWD CDGA | | GCI82447 | Inner Joint | | | 33 | | | 34 | |
| | 2010.08-2014.12 | 7AT/6MT | F | L/R | Estate FWD CDGA | | GCI83016 | Inner Joint | | | 28 | | | 32 | |
| | 2010.08-2014.12 | 7DCT | F | L | Estate FWD CDGA | | GDS61281 | Drive Shaft | | 36 | | 59.5 | 40 | 528 | |
| | 2010.08-2014.12 | 7DCT | F | R | Estate FWD CDGA | | GDS81653 | Drive Shaft | | 36 | | 59.5 | 40 | 785 | |
| | 2010.08-2014.12 | AT/7DCT | F | L/R | Estate FWD CDGA | | GCO83002 | Outer Joint | | 36 | 27 | 59.5 | 40 | 66 | I |
| | 2010.08-2014.12 | MT | F | L/R | Estate FWD CDGA | | GCO83037 | Outer Joint | | 36 | 30 | 59.5 | 40.5 | 56 | I |
| | 2014.11-2024.03 | 6MT | F | R | Estate FWD CZEA;CZDA | For Engine code:CZDA | GDS81890 | Drive Shaft | | 36 | | 59.5 | 40 | 818 | |
| | 2014.11-2024.03 | 6MT | F | R | Estate FWD CZEA;CZDA | For Engine code:CZEA | GDS81987 | Drive Shaft | | 36 | | 59.5 | 40 | 817 | |
| | 2014.11-2024.03 | 6MT | F | L/R | Estate FWD CZEA;CZDA | | GCO83101 | Outer Joint | | 36 | 27 | 59.5 | 40 | 65 | M |
| | 2014.11-2024.03 | 6MT/7DCT | F | L | Estate FWD CZEA;CZDA | | GDS82387 | Drive Shaft | | 36 | | 59.5 | 40 | 523 | |
| | 2014.11-2024.03 | 7DCT | F | R | Estate FWD CZEA;CZDA | For Engine code:CZDA | GDS61101 | Drive Shaft | | 36 | | 59.5 | 40 | 803 | |
| | 2014.11-2024.03 | 7DCT | F | R | Estate FWD CZEA;CZDA | For Engine code:CZEA | GDS82386 | Drive Shaft | | 36 | | 59.5 | 40 | 806 | |
| | 2014.11-2024.03 | 7DCT | F | L | Estate FWD CZEA;CZDA | | GCO83101 | Outer Joint | | 36 | 27 | 59.5 | 40 | 65 | M |
| | 2014.11-2024.03 | 7DCT | F | R | Estate FWD CZEA;CZDA | For Engine code:CZEA | GCO83101 | Outer Joint | | 36 | 27 | 59.5 | 40 | 65 | M |
| | 2014.11-2024.03 | 7DCT | F | L/R | Estate FWD CZEA;CZDA | | GCI83016 | Inner Joint | | | 28 | | | 32 | |
| | 2015.02-2018.11 | 6MT | F | L | Estate 4WD CZEA | | GDS81896 | Drive Shaft | | 36 | | 59.5 | 40 | 500 | |
| | 2015.02-2018.11 | 6MT | F | R | Estate 4WD CZEA | | GDS82352 | Drive Shaft | | 36 | | 59.5 | 40 | 614 | |
| | 2015.02-2018.11 | 6MT | F | L/R | Estate 4WD CZEA | | GCO83101 | Outer Joint | | 36 | 27 | 59.5 | 40 | 65 | M |
| | 2015.02-2018.11 | 7DCT | F | L/R | Estate 4WD CZEA | | GCI83016 | Inner Joint | | | 28 | | | 32 | |
| | 2015.02-2018.11 | 6MT | R | L | Estate 4WD CZEA | | GDS61331 | Drive Shaft | | 36 | | 59.5 | 40 | 606 | |
| | 2015.02-2018.11 | 6MT | R | R | Estate 4WD CZEA | | GDS61332 | Drive Shaft | | 36 | | 59.5 | 40 | 650 | |
| | 2015.02-2018.11 | 6MT | R | L/R | Estate 4WD CZEA | | GCI35026 | Outer Joint | | 36 | 33 | 59.5 | 40 | 61 | |
| 1.4 (118 kw) | 2010.11-2014.12 | 6MT | F | L | Estate FWD CKMA | | GDS61201 | Drive Shaft | | 36 | | 59.5 | 40.5 | 535 | |
| | 2010.11-2014.12 | 6MT | F | R | Estate FWD CKMA | | GDS61096 | Drive Shaft | | 36 | | 59.5 | 40.5 | 799 | |
| | 2010.11-2014.12 | 6MT | F | L/R | Estate FWD CKMA | | GCO83037 | Outer Joint | | 36 | 30 | 59.5 | 40.5 | 56 | I |
| | 2010.11-2014.12 | 6MT | F | L/R | Estate FWD CKMA | | GCI82447 | Inner Joint | | | 33 | | | 34 | |
| | 2010.11-2014.12 | 7AT/6MT | F | L/R | Estate FWD CKMA | | GCI83016 | Inner Joint | | | 28 | | | 32 | |
| | 2010.11-2014.12 | 7DCT | F | L | Estate FWD CKMA | | GDS61281 | Drive Shaft | | 36 | | 59.5 | 40 | 528 | |
| | 2010.11-2014.12 | 7DCT | F | R | Estate FWD CKMA | | GDS81653 | Drive Shaft | | 36 | | 59.5 | 40 | 785 | |
| | 2010.11-2014.12 | 7DCT | F | L/R | Estate FWD CKMA | | GCO83002 | Outer Joint | | 36 | 27 | 59.5 | 40 | 66 | I |
| | 2012.11-2014.12 | 6MT | F | L | Estate FWD CTHD | | GDS61201 | Drive Shaft | | 36 | | 59.5 | 40.5 | 535 | |
| | 2012.11-2014.12 | 6MT | F | R | Estate FWD CTHD | | GDS61096 | Drive Shaft | | 36 | | 59.5 | 40.5 | 799 | |
| | 2012.11-2014.12 | 6MT | F | L/R | Estate FWD CTHD | | GCI82447 | Inner Joint | | | 33 | | | 34 | |
| | 2012.11-2014.12 | 6MT/7AT | F | L/R | Estate FWD CTHD | | GCO83037 | Outer Joint | | 36 | 30 | 59.5 | 40.5 | 56 | I |
| | 2012.11-2014.12 | 7AT/6MT | F | L/R | Estate FWD CTHD | | GCO83002 | Outer Joint | | 36 | 27 | 59.5 | 40 | 66 | I |
| | 2012.11-2014.12 | 7AT/6MT | F | L/R | Estate FWD CTHD | | GCI83016 | Inner Joint | | | 28 | | | 32 | |
| | 2012.11-2014.12 | 7DCT | F | L | Estate FWD CTHD | | GDS61281 | Drive Shaft | | 36 | | 59.5 | 40 | 528 | |
| | 2012.11-2014.12 | 7DCT | F | R | Estate FWD CTHD | | GDS81653 | Drive Shaft | | 36 | | 59.5 | 40 | 785 | |
| 1.4 (160 kw) | 2015.06-2024.03 | 6AT | F | L/R | Estate FWD CUKC;DGEB | | GCO83101 | Outer Joint | | 36 | 27 | 59.5 | 40 | 65 | M |
| | 2015.06-2024.03 | 6AT | F | L | Estate FWD CUKC;DGEB | | GCI81158 | Inner Joint | | 37 | 34 | 34.5 | 65.5 | 83 | |

| | YEAR | TRANSM. | F/R | L/R | BODY STYLE & DRIVE TYPE & ENGINE | REMARKS | G-AP Ref. | PRODUCT | ABS | Technical Specifications A | B | C | H | L | P |
|---|---|---|---|---|---|---|---|---|---|---|---|---|---|---|---|
| **VW** **Passat Estate/Variant** | | | | | | | | | | | | | | | |
| 1.4 (160 kw) | 2015.06-2024.03 | 6AT | F | R | Estate FWD CUKC;DGEB | | GCI82108 | Inner Joint | | 37 | 34 | 40 | 77.5 | 103.5 | |
| | 2015.06-2024.03 | 6DCT | F | L | Estate FWD CUKC;DGEB | | GDS81265 | Drive Shaft | | 36 | 37 | 59.5 | 40 | 557 | |
| | 2015.06-2024.03 | 6DCT | F | R | Estate FWD CUKC;DGEB | | GDS83613 | Drive Shaft | | 36 | 37 | 59.5 | 40 | 921 | |
| 1.5 (110 kw) | 2018.08-2024.03 | 6MT | F | L | Estate FWD DADA;DPCA | For Engine code:DPCA,For PR code:0ED | GDS61282 | Drive Shaft | | 36 | | 59.5 | 40 | 523 | |
| | 2018.08-2024.03 | 6MT | F | R | Estate FWD DADA;DPCA | For Engine code:DPCA;For PR code:0ED | GDS58110 | Drive Shaft | | 36 | | 59.5 | 40 | 793 | |
| | 2018.08-2024.03 | 6MT | F | R | Estate FWD DADA;DPCA | For Engine code:DADA,Trans. code:MQ250 | GDS82386 | Drive Shaft | | 36 | | 59.5 | 40 | 806 | |
| | 2018.08-2024.03 | 6MT | F | L/R | Estate FWD DADA;DPCA | For Engine code:DPCA | GCO61059 | Outer Joint | | 36 | 33 | 59.5 | 40 | 59.5 | I |
| | 2018.08-2024.03 | 6MT | F | L/R | Estate FWD DADA;DPCA | For Engine code:DADA,Trans. code:MQ250 | GCI61069 | Inner Joint | | | 28 | | | 32 | |
| | 2018.08-2024.03 | 6MT | F | L/R | Estate FWD DADA;DPCA | For Engine code:DPCA,Trans. code:MQ281 | GCI82447 | Inner Joint | | | 33 | | | 34 | |
| | 2018.08-2024.03 | 6MT | F | L/R | Estate FWD DADA;DPCA | For Engine code:DADA,Trans. code:MQ250 | GCI82456 | Inner Joint | | | 28 | | | 32 | |
| | 2018.08-2024.03 | 6MT/7DCT | F | L | Estate FWD DADA;DPCA | Transmission:6MT;For Engine code:DADA;For PR code:9EJ;Transmission:7DCT | GDS82387 | Drive Shaft | | 36 | | 59.5 | 40 | 523 | |
| | 2018.08-2024.03 | 6MT/7DCT | F | L/R | Estate FWD DADA;DPCA | Transmission:6MT;For Engine code:DADA,Trans. code:MQ250;Transmission:7DCT | GCO83101 | Outer Joint | | 36 | 27 | 59.5 | 40 | 65 | M |
| | 2018.08-2024.03 | 7DCT | F | R | Estate FWD DADA;DPCA | | GDS84498 | Drive Shaft | | 36 | 40 | 59.5 | 40 | 834 | |
| | 2018.08-2024.03 | 7DCT | F | L/R | Estate FWD DADA;DPCA | | GCI83016 | Inner Joint | | | 28 | | | 32 | |
| | 2023.10- | 7AT | F | L | Estate FWD DXDB | | GDS82387 | Drive Shaft | | 36 | | 59.5 | 40 | 523 | |
| | 2023.10- | 7AT | F | R | Estate FWD DXDB | | GDS84498 | Drive Shaft | | 36 | 40 | 59.5 | 40 | 834 | |
| 1.5 (150 kw) | 2024.03- | 6DCT | F | L | Estate FWD DUCB;EANB | | GDS81265 | Drive Shaft | | 36 | 37 | 59.5 | 40 | 557 | |
| | 2024.03- | 6DCT | F | R | Estate FWD DUCB;EANB | | GDS83613 | Drive Shaft | | 36 | 37 | 59.5 | 40 | 921 | |
| | 2024.03- | AT | F | L | Estate FWD DUCB;EANB | | GCI81158 | Inner Joint | | 37 | 34 | 34.5 | 65.5 | 83 | |
| 1.5 (200 kw) | 2024.03- | 6DCT | F | L | Estate FWD DUCA;EANB | | GDS81265 | Drive Shaft | | 36 | 37 | 59.5 | 40 | 557 | |
| | 2024.03- | 6DCT | F | R | Estate FWD DUCA;EANB | | GDS83613 | Drive Shaft | | 36 | 37 | 59.5 | 40 | 921 | |
| | 2024.03- | AT | F | L | Estate FWD DUCA;EANB | | GCI81158 | Inner Joint | | 37 | 34 | 34.5 | 65.5 | 83 | |
| 1.6 (74 kw) | 1994.10-1996.12 | AT/MT | F | L/R | Estate FWD AEK/AFT | Date from:1994.10 | GCO53007 | Outer Joint | | 22 | 30 | 53.2 | 78 | 61 | I |
| | 1994.10-1996.12 | AT/MT | F | L/R | Estate FWD AEK/AFT | | GCI83011 | Inner Joint | | | 33 | | | 34 | |
| | 1994.10-1996.12 | MT | F | L | Estate FWD AEK/AFT | Date from:1994.10 | GDS61001 | Drive Shaft | | 22 | | 53.2 | 78 | 557 | |
| | 1994.10-1996.12 | MT | F | R | Estate FWD AEK/AFT | Date from:1994.10 | GDS61002 | Drive Shaft | | 22 | | 53 | 78.5 | 793 | |
| | 1994.10-1996.12 | MT | F | R | Estate FWD AEK/AFT | Date from:1994.10 | GCI83009 | Inner Joint | | | 33 | | | 34 | |
| | 1994.10-1996.12 | | F | | Estate FWD AEK/AFT | | GCO53004 | Outer Joint | | 22 | 30 | 51 | 78 | 61 | I |
| | 1997.05-2000.08 | 4AT | F | L | Estate FWD ADP/AHL/ANA/ARM | | GDS83012 | Drive Shaft | 45W | 33 | | 53 | 30 | 498 | |
| | 1997.05-2000.08 | 4AT | F | R | Estate FWD ADP/AHL/ANA/ARM | | GDS99108 | Drive Shaft | 45W | 33 | | 53 | 30 | 586 | |
| | 1997.05-2000.08 | 4AT | F | L/R | Estate FWD ADP/AHL/ANA/ARM | | GCI50019 | Inner Joint | | | 34 | | | 59.5 | |
| | 1997.05-2000.08 | 4AT/5MT | F | L/R | Estate FWD ADP/AHL/ANA/ARM | | GCO61012 | Outer Joint | 45W | 33 | 30 | 53 | 30 | 62 | I |
| | 1997.05-2000.08 | 5MT | F | L | Estate FWD ADP/AHL/ANA/ARM | | GDS83002 | Drive Shaft | 45W | 33 | | 53 | 30 | 614 | |
| | 1997.05-2000.08 | 5MT | F | R | Estate FWD ADP/AHL/ANA/ARM | | GDS99111 | Drive Shaft | 45W | 33 | | 53 | 30 | 636 | |
| | 1997.05-2000.08 | 5MT | F | L/R | Estate FWD ADP/AHL/ANA/ARM | | GCI83002 | Inner Joint | | | 33 | | | 32 | |
| 1.6 (75 kw) | 2000.11-2005.05 | 4AT/5MT | F | L | Estate FWD ALZ | | GDS83002 | Drive Shaft | 45W | 33 | | 53 | 30 | 614 | |
| | 2000.11-2005.05 | 4AT/5MT | F | R | Estate FWD ALZ | | GDS99111 | Drive Shaft | 45W | 33 | | 53 | 30 | 636 | |
| | 2000.11-2005.05 | MT | F | L/R | Estate FWD ALZ | | GCO61012 | Outer Joint | 45W | 33 | 30 | 53 | 30 | 62 | I |
| | 2000.11-2005.05 | MT/5MT | F | L/R | Estate FWD ALZ | | GCI83002 | Inner Joint | | | 33 | | | 32 | |
| | 2005.08-2010.11 | 5MT | F | L | Estate FWD BSE;BSF | | GDS83373 | Drive Shaft | | 36 | | 59.5 | 38 | 511 | |
| | 2005.08-2010.11 | 5MT | F | R | Estate FWD BSE;BSF | | GDS61042 | Drive Shaft | | 36 | | 59.5 | 40.5 | 814 | |
| | 2005.08-2010.11 | 5MT | F | L/R | Estate FWD BSE;BSF | | GCO83037 | Outer Joint | | 36 | 30 | 59.5 | 40.5 | 56 | I |
| | 2005.08-2010.11 | 5MT | F | L/R | Estate FWD BSE;BSF | | GCI82447 | Inner Joint | | | 33 | | | 34 | |
| | 2005.08-2010.11 | AT | F | L | Estate FWD BSE;BSF | | GDS61093 | Drive Shaft | | 36 | 26 | 59.5 | 40.5 | 587.5 | |
| | 2005.08-2010.11 | AT | F | R | Estate FWD BSE;BSF | | GDS61094 | Drive Shaft | | 36 | 26 | 59.5 | 40.5 | 884 | |
| | 2005.08-2010.11 | MT | F | L/R | Estate FWD BSE;BSF | | GCI83006 | Inner Joint | | | 33 | | | 34 | |
| | 2005.08-2010.11 | MT | F | L/R | Estate FWD BSE;BSF | | GCI83011 | Inner Joint | | | 33 | | | 34 | |
| 1.6 (77 kw) | 2009.08-2010.11 | 5MT | F | L | Estate FWD CAYC | | GDS61282 | Drive Shaft | | 36 | | 59.5 | 40 | 523 | |
| | 2009.08-2010.11 | 5MT | F | R | Estate FWD CAYC | | GDS61283 | Drive Shaft | | 36 | | 59.5 | 40 | 815 | |
| | 2009.08-2010.11 | 5MT | F | L/R | Estate FWD CAYC | | GCI82447 | Inner Joint | | | 33 | | | 34 | |
| | 2009.08-2010.11 | 6MT | F | L | Estate FWD CAYC | | GCO61059 | Outer Joint | | 36 | 33 | 59.5 | 40 | 59.5 | I |
| | 2009.08-2010.11 | 7DCT | F | L/R | Estate FWD CAYC | | GCO83002 | Outer Joint | | 36 | 27 | 59.5 | 40 | 66 | I |
| | 2009.08-2010.11 | MT | F | L | Estate FWD CAYC | | GDS83294 | Drive Shaft | | 36 | | 59.5 | 38 | 519 | |
| | 2009.08-2010.11 | MT | F | L | Estate FWD CAYC | | GCO83037 | Outer Joint | | 36 | 30 | 59.5 | 40.5 | 56 | I |
| | 2009.08-2010.11 | MT | F | L/R | Estate FWD CAYC | | GCI83006 | Inner Joint | | | 33 | | | 34 | |
| | 2009.08-2010.11 | MT/6MT | F | L/R | Estate FWD CAYC | | GCI83011 | Inner Joint | | | 33 | | | 34 | |
| | 2009.08-2010.11 | | F | R | Estate FWD CAYC | | GDS61042 | Drive Shaft | | 36 | | 59.5 | 40.5 | 814 | |
| | 2010.08-2014.12 | 6MT | F | L | Estate FWD CAYC | No Economy | GDS61282 | Drive Shaft | | 36 | | 59.5 | 40 | 523 | |
| | 2010.08-2014.12 | 6MT | F | R | Estate FWD CAYC | Inner teeth of wheel side:33 | GDS61283 | Drive Shaft | | 36 | | 59.5 | 40 | 815 | |
| | 2010.08-2014.12 | 6MT | F | L | Estate FWD CAYC | | GCO61059 | Outer Joint | | 36 | 33 | 59.5 | 40 | 59.5 | I |
| | 2010.08-2014.12 | 6MT | F | R | Estate FWD CAYC | Date from:2013.03;Date to:2013.05 | GCO83037 | Outer Joint | | 36 | 30 | 59.5 | 40.5 | 56 | I |
| | 2010.08-2014.12 | 6MT | F | L/R | Estate FWD CAYC | | GCI53002 | Inner Joint | | | 33 | | | 34 | |
| | 2010.08-2014.12 | 6MT | F | L/R | Estate FWD CAYC | | GCI82447 | Inner Joint | | | 33 | | | 34 | |
| | 2010.08-2014.12 | 7AT/6MT | F | L/R | Estate FWD CAYC | | GCI83016 | Inner Joint | | | 28 | | | 32 | |
| | 2010.08-2014.12 | 7DCT | F | L | Estate FWD CAYC | Date to:2009.11 | GDS61100 | Drive Shaft | | 36 | | 59.5 | 40 | 513 | |

| | YEAR | TRANSM. | F/R | L/R | BODY STYLE & DRIVE TYPE & ENGINE | REMARKS | G-AP Ref. | PRODUCT | ABS | Technical Specifications A | B | C | H | L | P |
|---|---|---|---|---|---|---|---|---|---|---|---|---|---|---|---|
| **VW** **Passat Estate/Variant** | | | | | | | | | | | | | | | |
| 1.6 (77 kw) | 2010.08-2014.12 | 7DCT | F | R | Estate FWD CAYC | | GDS61126 | Drive Shaft | | 36 | | 59.5 | 40 | 793 | |
| | 2010.08-2014.12 | 7DCT | F | R | Estate FWD CAYC | | GDS83313 | Drive Shaft | | 36 | | 59.5 | 40 | 792 | |
| | 2010.08-2014.12 | 7DCT | F | L/R | Estate FWD CAYC | | GCO83002 | Outer Joint | | 36 | 27 | 59.5 | 40 | 66 | I |
| | 2010.08-2014.12 | MT | F | L | Estate FWD CAYC | Economy | GDS83294 | Drive Shaft | | 36 | | 59.5 | 38 | 519 | |
| | 2010.08-2014.12 | MT | F | R | Estate FWD CAYC | Inner teeth of wheel side:30 | GDS61042 | Drive Shaft | | 36 | | 59.5 | 40.5 | 814 | |
| | 2010.08-2014.12 | 6MT | F | L | Estate Van FWD CAYC | | GDS61282 | Drive Shaft | | 36 | | 59.5 | 40 | 523 | |
| | 2010.08-2014.12 | 6MT | F | R | Estate Van FWD CAYC | | GDS61283 | Drive Shaft | | 36 | | 59.5 | 40 | 815 | |
| | 2010.08-2014.12 | 6MT | F | L/R | Estate Van FWD CAYC | | GCO61059 | Outer Joint | | 36 | 33 | 59.5 | 40 | 59.5 | I |
| | 2010.08-2014.12 | 6MT | F | L/R | Estate Van FWD CAYC | Date from:2013.03;Date to:2013.05 | GCO83037 | Outer Joint | | 36 | 30 | 59.5 | 40.5 | 56 | I |
| | 2010.08-2014.12 | 6MT | F | L/R | Estate Van FWD CAYC | | GCI82447 | Inner Joint | | | 33 | | | 34 | |
| 1.6 (85 kw) | 2005.08-2008.06 | 6AT | F | L/R | Estate FWD BLF | | GCI61011 | Inner Joint | | 26 | 32 | 31 | 68.5 | 85 | |
| | 2005.08-2008.06 | 6AT | F | L/R | Estate FWD BLF | | GCI61050 | Inner Joint | | 26 | 32 | 31 | 68.5 | 89 | |
| | 2005.08-2008.06 | AT | F | L | Estate FWD BLF | | GDS81582 | Drive Shaft | | 36 | 26 | 59.5 | 40 | 597 | |
| | 2005.08-2008.06 | AT | F | R | Estate FWD BLF | | GDS81583 | Drive Shaft | | 36 | 26 | 59.5 | 40 | 873 | |
| | 2005.08-2008.06 | AT | F | L/R | Estate FWD BLF | | GCO83037 | Outer Joint | | 36 | 30 | 59.5 | 40.5 | 56 | I |
| | 2005.08-2008.06 | MT | F | L | Estate FWD BLF | | GDS61201 | Drive Shaft | | 36 | | 59.5 | 40.5 | 535 | |
| | 2005.08-2008.06 | MT | F | R | Estate FWD BLF | | GDS61096 | Drive Shaft | | 36 | | 59.5 | 40.5 | 799 | |
| | 2005.08-2008.06 | MT | F | L/R | Estate FWD BLF | | GCI83011 | Inner Joint | | | 33 | | | 34 | |
| 1.6 (88 kw) | 2014.08-2020.11 | 6MT | F | R | Estate FWD DCXA;DCZA | | GDS81525 | Drive Shaft | | 36 | | 59.5 | 40 | 825 | |
| | 2014.08-2020.11 | 6MT/7DCT | F | L | Estate FWD DCXA;DCZA | | GDS61201 | Drive Shaft | | 36 | | 59.5 | 40.5 | 535 | |
| | 2014.08-2020.11 | 6MT/7DCT | F | L/R | Estate FWD DCXA;DCZA | | GCO81355 | Outer Joint | | 36 | 34 | 59.5 | 40 | 59.5 | M |
| | 2014.08-2020.11 | 6MT/7DCT | F | L/R | Estate FWD DCXA;DCZA | | GCI81398 | Inner Joint | | | 34 | | | 34 | |
| | 2014.08-2020.11 | 7DCT | F | R | Estate FWD DCXA;DCZA | | GDS61283 | Drive Shaft | | 36 | | 59.5 | 40 | 815 | |
| 1.8 (55 kw) | 1990.08-1996.12 | AT/MT | F | L/R | Estate FWD AAM | Date to:1996.12;Chassis no. from:31-L-201814;Chassis no. to:31-N-105278 | GCO53007 | Outer Joint | | 22 | 30 | 53.2 | 78 | 61 | I |
| | 1990.08-1996.12 | AT/MT | F | L/R | Estate FWD AAM | Chassis Number:31J000001-3AV300000 | GCI83011 | Inner Joint | | | 33 | | | 34 | |
| | 1990.08-1996.12 | MT | F | L | Estate FWD AAM | Date to:1996.12;Chassis no. from:31-L-201814;Chassis no. to:3A-V-300000 | GDS61001 | Drive Shaft | | 22 | | 53.2 | 78 | 557 | |
| | 1990.08-1996.12 | MT | F | R | Estate FWD AAM | Date to:1996.12;Chassis no. from:31-L-201814;Chassis no. to:3A-V-300000 | GDS61002 | Drive Shaft | | 22 | | 53 | 78.5 | 793 | |
| | 1990.08-1996.12 | MT | F | R | Estate FWD AAM | Date to:1996.12;Chassis no. from:31-L-201814;Chassis no. to:3A-V-300000 | GCI83009 | Inner Joint | | | 33 | | | 34 | |
| | 1990.08-1996.12 | | F | | Estate FWD AAM | | GCO53004 | Outer Joint | | 22 | 30 | 51 | 78 | 61 | I |
| 1.8 (66 kw) | 1988.04-1996.12 | AT/MT | F | L/R | Estate FWD ABS/ADZ/RP | Date to:1996.12;Chassis no. from:31-L-201814;Chassis no. to:31-N-105278 | GCO53007 | Outer Joint | | 22 | 30 | 53.2 | 78 | 61 | I |
| | 1988.04-1996.12 | MT | F | L | Estate FWD ABS/ADZ/RP | Date to:1996.12;Chassis no. from:31-L-201814;Chassis no. to:3A-V-300000 | GDS61001 | Drive Shaft | | 22 | | 53.2 | 78 | 557 | |
| | 1988.04-1996.12 | MT | F | R | Estate FWD ABS/ADZ/RP | Date to:1996.12;Chassis no. from:31-L-201814;Chassis no. to:3A-V-300000 | GDS61002 | Drive Shaft | | 22 | | 53 | 78.5 | 793 | |
| 1.8 (85 kw) | 1997.05-2000.04 | 4AT | F | L | Estate FWD AFY | | GDS83012 | Drive Shaft | 45W | 33 | | 53 | 30 | 498 | |
| | 1997.05-2000.04 | 4AT | F | R | Estate FWD AFY | | GDS99108 | Drive Shaft | 45W | 33 | | 53 | 30 | 586 | |
| | 1997.05-2000.04 | 4AT | F | L/R | Estate FWD AFY | | GCO61012 | Outer Joint | 45W | 33 | 30 | 53 | 30 | 62 | I |
| | 1997.05-2000.04 | 4AT | F | L/R | Estate FWD AFY | | GCI50019 | Inner Joint | | | 34 | | | 59.5 | |
| | 1997.05-2000.04 | 5MT | F | L | Estate FWD AFY | | GDS83005 | Drive Shaft | 45W | 33 | | 53 | 30 | 614 | |
| | 1997.05-2000.04 | 5MT | F | R | Estate FWD AFY | | GDS83001 | Drive Shaft | 45W | 33 | | 53 | 30 | 634 | |
| | 1997.05-2000.04 | 5MT | F | L/R | Estate FWD AFY | | GCO83018 | Outer Joint | 45W | 33 | 30 | 53 | 30 | 62 | I |
| | 1997.05-2000.04 | 5MT | F | L/R | Estate FWD AFY | | GCI83001 | Inner Joint | | | 28 | | | 32 | |
| 1.8 (92 kw) | 1996.12-2000.08 | 4AT | F | L | Estate FWD ADR/APT/ARG | | GDS83012 | Drive Shaft | 45W | 33 | | 53 | 30 | 498 | |
| | 1996.12-2000.08 | 4AT | F | R | Estate FWD ADR/APT/ARG | | GDS99108 | Drive Shaft | 45W | 33 | | 53 | 30 | 586 | |
| | 1996.12-2000.08 | 4AT | F | L/R | Estate FWD ADR/APT/ARG | | GCO61012 | Outer Joint | 45W | 33 | 30 | 53 | 30 | 62 | I |
| | 1996.12-2000.08 | 4AT | F | L/R | Estate FWD ADR/APT/ARG | | GCI50019 | Inner Joint | | | 34 | | | 59.5 | |
| | 1996.12-2000.08 | 5MT | F | L | Estate FWD ADR/APT/ARG | | GDS83005 | Drive Shaft | 45W | 33 | | 53 | 30 | 614 | |
| | 1996.12-2000.08 | 5MT | F | R | Estate FWD ADR/APT/ARG | | GDS83001 | Drive Shaft | 45W | 33 | | 53 | 30 | 634 | |
| | 1996.12-2000.08 | 5MT | F | L/R | Estate FWD ADR/APT/ARG | | GCO83018 | Outer Joint | 45W | 33 | 30 | 53 | 30 | 62 | I |
| | 1996.12-2000.08 | 5MT | F | L/R | Estate FWD ADR/APT/ARG | | GCI83001 | Inner Joint | | | 28 | | | 32 | |
| | 1997.05-2000.08 | 5MT | F | L | Estate 4WD ADR/APT/ARG | | GDS83002 | Drive Shaft | 45W | 33 | | 53 | 30 | 614 | |
| | 1997.05-2000.08 | 5MT | F | R | Estate 4WD ADR/APT/ARG | | GDS99111 | Drive Shaft | 45W | 33 | | 53 | 30 | 636 | |
| | 1997.05-2000.08 | 5MT | F | L/R | Estate 4WD ADR/APT/ARG | | GCO61012 | Outer Joint | 45W | 33 | 30 | 53 | 30 | 62 | I |
| | 1997.05-2000.08 | 5MT | F | L/R | Estate 4WD ADR/APT/ARG | | GCI83002 | Inner Joint | | | 33 | | | 32 | |
| | 1997.05-2000.08 | 5MT | F | L/R | Estate 4WD ADR/APT/ARG | From Drive Shaft | GCI83006 | Inner Joint | | | 33 | | | 34 | |
| | 1997.05-2000.08 | 5MT | R | L/R | Estate 4WD ADR/APT/ARG | | GDS83672 | Drive Shaft | 45W | 33 | | 53 | 30 | 618 | |
| | 1997.05-2000.08 | 5MT | R | L/R | Estate 4WD ADR/APT/ARG | | GCO83080 | Outer Joint | 45W | 33 | 30 | 53 | 30 | 62 | I |
| | 1997.05-2000.08 | 5MT | R | L/R | Estate 4WD ADR/APT/ARG | | GCI83002 | Inner Joint | | | 33 | | | 32 | |
| 1.8 (110 kw) | 1997.05-2000.11 | 5AT | F | L | Estate FWD AEB/ANB/APU | | GDS83036 | Drive Shaft | 45W | 33 | | 53 | 30 | 524 | |
| | 1997.05-2000.11 | 5AT | F | R | Estate FWD AEB/ANB/APU | | GDS83012 | Drive Shaft | 45W | 33 | | 53 | 30 | 498 | |
| | 1997.05-2000.11 | 5AT | F | L/R | Estate FWD AEB/ANB/APU | | GCO61012 | Outer Joint | 45W | 33 | 30 | 53 | 30 | 62 | I |
| | 1997.05-2000.11 | 5AT | F | L/R | Estate FWD AEB/ANB/APU | | GCO83045 | Outer Joint | | 33 | 30 | 53 | 30 | 62 | I |
| | 1997.05-2000.11 | 5AT | F | L/R | Estate FWD AEB/ANB/APU | | GCI50019 | Inner Joint | | | 34 | | | 59.5 | |
| | 1997.05-2000.11 | 5MT | F | L | Estate FWD AEB/ANB/APU | | GDS83005 | Drive Shaft | 45W | 33 | | 53 | 30 | 614 | |
| | 1997.05-2000.11 | 5MT | F | R | Estate FWD AEB/ANB/APU | | GDS83001 | Drive Shaft | 45W | 33 | | 53 | 30 | 634 | |
| | 1997.05-2000.11 | 5MT | F | L/R | Estate FWD AEB/ANB/APU | | GCO83018 | Outer Joint | 45W | 33 | 30 | 53 | 30 | 62 | I |
| | 1997.05-2000.11 | 5MT | F | L/R | Estate FWD AEB/ANB/APU | | GCI83001 | Inner Joint | | | 28 | | | 32 | |

| | YEAR | TRANSM. | F/R | L/R | BODY STYLE & DRIVE TYPE & ENGINE | REMARKS | G-AP Ref. | PRODUCT | ABS | Technical Specifications A | B | C | H | L | P |
|---|---|---|---|---|---|---|---|---|---|---|---|---|---|---|---|
| **VW** **Passat Estate/Variant** | | | | | | | | | | | | | | | |
| 1.8 (110 kw) | 2000.11-2005.05 | 5AT | F | L | Estate FWD AWT | Date to:2003.01 | GDS83015 | Drive Shaft | 45W | 38 | | 59.5 | 34.5 | 527 | |
| | 2000.11-2005.05 | 5AT | F | R | Estate FWD AWT | Date to:2003.01 | GDS83048 | Drive Shaft | 45W | 38 | | 59.5 | 34.5 | 502 | |
| | 2000.11-2005.05 | 5AT | F | L/R | Estate FWD AWT | | GCO83019 | Outer Joint | 45W | 38 | 27 | 59.5 | 34.5 | 63 | I |
| | 2000.11-2005.05 | 5AT | F | L/R | Estate FWD AWT | | GCI50019 | Inner Joint | | | 34 | | | 59.5 | |
| | 2000.11-2005.05 | 5MT | F | L | Estate FWD AWT | Date From:2001.05 | GDS61122 | Drive Shaft | 45W | 33 | | 53 | 30 | 602 | |
| | 2000.11-2005.05 | 5MT | F | L | Estate FWD AWT | Date To:2001.04 | GDS83005 | Drive Shaft | 45W | 33 | | 53 | 30 | 614 | |
| | 2000.11-2005.05 | 5MT | F | R | Estate FWD AWT | Date To:2001.04 | GDS83001 | Drive Shaft | 45W | 33 | | 53 | 30 | 634 | |
| | 2000.11-2005.05 | 5MT | F | R | Estate FWD AWT | Date From:2001.05 | GDS83007 | Drive Shaft | 45W | 33 | | 53 | 30 | 622 | |
| | 2000.11-2005.05 | 5MT | F | R | Estate FWD AWT | Date From:2001.05 | GDS83009 | Drive Shaft | 45W | 33 | | 53 | 30 | 617 | |
| | 2000.11-2005.05 | 5MT | F | L/R | Estate FWD AWT | Date from:2001.05 | GCO61012 | Outer Joint | 45W | 33 | 30 | 53 | 30 | 62 | I |
| | 2000.11-2005.05 | 5MT | F | L/R | Estate FWD AWT | Date to:2001.04 | GCO83018 | Outer Joint | 45W | 33 | 30 | 53 | 30 | 62 | I |
| | 2000.11-2005.05 | 5MT | F | L/R | Estate FWD AWT | Date from:2001.05 | GCI50019 | Inner Joint | | | 34 | | | 59.5 | |
| | 2000.11-2005.05 | 5MT | F | L/R | Estate FWD AWT | Date To:2001.04 | GCI83001 | Inner Joint | | | 28 | | | 32 | |
| 1.8 (112 kw) | 2009.11-2010.11 | 6MT | F | L/R | Estate FWD CDAB;CGYA | For PR code:A8B/A8C/A8G/A9I | GCI83016 | Inner Joint | | | 28 | | | 32 | |
| | 2009.11-2010.11 | 7DCT | F | R | Estate FWD CDAB;CGYA | | GDS61126 | Drive Shaft | | 36 | | 59.5 | 40 | 793 | |
| | 2009.11-2010.11 | AT | F | R | Estate FWD CDAB;CGYA | | GDS83313 | Drive Shaft | | 36 | | 59.5 | 40 | 792 | |
| | 2009.11-2010.11 | AT | F | L/R | Estate FWD CDAB;CGYA | | GCO83101 | Outer Joint | | 36 | 27 | 59.5 | 40 | 65 | M |
| | 2009.11-2010.11 | AT/MT | F | L | Estate FWD CDAB;CGYA | | GDS61100 | Drive Shaft | | 36 | | 59.5 | 40 | 513 | |
| | 2009.11-2010.11 | MT | F | L | Estate FWD CDAB;CGYA | For Engine code:CDAB,For PR code:0EN,Transm code:MQ350 | GDS83295 | Drive Shaft | | 36 | | 59.5 | 40 | 491 | |
| | 2009.11-2010.11 | MT | F | R | Estate FWD CDAB;CGYA | | GDS61341 | Drive Shaft | | 36 | | 59.5 | 40 | 806 | |
| | 2009.11-2010.11 | MT | F | R | Estate FWD CDAB;CGYA | For Engine code:CDAB,For PR code:0EN,Transm code:MQ350 | GDS83313 | Drive Shaft | | 36 | | 59.5 | 40 | 792 | |
| | 2009.11-2010.11 | MT | F | L/R | Estate FWD CDAB;CGYA | | GCO83002 | Outer Joint | | 36 | 27 | 59.5 | 40 | 66 | I |
| | 2010.08-2014.12 | 6MT | F | L | Estate Van FWD CDAB | For PR code:A8T | GDS83295 | Drive Shaft | | 36 | | 59.5 | 40 | 491 | |
| | 2010.08-2014.12 | 6MT | F | R | Estate Van FWD CDAB | For PR code:A8B/A8C/A8G/A9I | GDS61101 | Drive Shaft | | 36 | | 59.5 | 40 | 803 | |
| | 2010.08-2014.12 | 6MT | F | R | Estate Van FWD CDAB | For PR code:A8T | GDS83313 | Drive Shaft | | 36 | | 59.5 | 40 | 792 | |
| | 2010.08-2014.12 | 6MT | F | L/R | Estate Van FWD CDAB | For PR code:A8T | GCO83101 | Outer Joint | | 36 | 27 | 59.5 | 40 | 65 | M |
| | 2010.08-2014.12 | 6MT | F | L/R | Estate Van FWD CDAB | For PR code:A8T | GCI61069 | Inner Joint | | | 28 | | | 32 | |
| | 2010.08-2014.12 | 6MT/7DCT | F | L | Estate Van FWD CDAB | Transmission:7DCT;Transmission:6MT;For PR code:A8B/A8C/A8G/A9I | GDS61100 | Drive Shaft | | 36 | | 59.5 | 40 | 513 | |
| | 2010.08-2014.12 | 6MT/7DCT | F | L/R | Estate Van FWD CDAB | Transmission:7DCT;Transmission:6MT;For PR code:A8B/A8C/A8G/A9I | GCO83002 | Outer Joint | | 36 | 27 | 59.5 | 40 | 66 | I |
| | 2010.08-2014.12 | 6MT/7DCT | F | L/R | Estate Van FWD CDAB | Transmission:7DCT;Transmission:6MT;For PR code:A8B/A8C/A8G/A9I | GCI83016 | Inner Joint | | | 28 | | | 32 | |
| | 2010.08-2014.12 | 7DCT | F | R | Estate Van FWD CDAB | | GDS61126 | Drive Shaft | | 36 | | 59.5 | 40 | 793 | |
| | 2011.02-2014.12 | 6MT | F | L | Estate FWD CDAB | For PR code:A8B/A8C/A8G/A9I | GDS61100 | Drive Shaft | | 36 | | 59.5 | 40 | 513 | |
| | 2011.02-2014.12 | 6MT | F | L | Estate FWD CDAB | For PR code:A8T | GDS83295 | Drive Shaft | | 36 | | 59.5 | 40 | 491 | |
| | 2011.02-2014.12 | 6MT | F | R | Estate FWD CDAB | For PR code:A8T | GDS61147 | Drive Shaft | | 36 | | 59.5 | 40 | 795 | |
| | 2011.02-2014.12 | 6MT | F | R | Estate FWD CDAB | For PR code:A8B/A8C/A8G/A9I | GDS61341 | Drive Shaft | | 36 | | 59.5 | 40 | 806 | |
| | 2011.02-2014.12 | 6MT | F | R | Estate FWD CDAB | For PR code:A8T | GDS83313 | Drive Shaft | | 36 | | 59.5 | 40 | 792 | |
| | 2011.02-2014.12 | 6MT | F | R | Estate FWD CDAB | For PR code:A8T | GCO83101 | Outer Joint | | 36 | 27 | 59.5 | 40 | 65 | M |
| | 2011.02-2014.12 | 6MT | F | L | Estate FWD CDAB | For PR code:A8T | GCI61069 | Inner Joint | | | 28 | | | 32 | |
| | 2011.02-2014.12 | 6MT/7DCT | F | L/R | Estate FWD CDAB | Transmission:6MT;For PR code:A8B/A8C/A8G/A9I/A8T;Transmission:7DCT | GCO83002 | Outer Joint | | 36 | 27 | 59.5 | 40 | 66 | I |
| | 2011.02-2014.12 | 7DCT | F | L | Estate FWD CDAB | | GDS61100 | Drive Shaft | | 36 | | 59.5 | 40 | 513 | |
| | 2011.02-2014.12 | 7DCT | F | R | Estate FWD CDAB | | GDS61126 | Drive Shaft | | 36 | | 59.5 | 40 | 793 | |
| | 2011.02-2014.12 | 7DCT | F | R | Estate FWD CDAB | | GDS61339 | Drive Shaft | | 36 | | 59.5 | 40 | 794 | |
| | 2011.02-2014.12 | 7DCT/6MT | F | L/R | Estate FWD CDAB | Transmission:6MT;For PR code:A8B/A8C/A8G/A9I;Transmission:7DCT | GCI83016 | Inner Joint | | | 28 | | | 32 | |
| 1.8 (118 kw) | 2007.05-2011.10 | 6AT | F | L | Estate FWD BZB;CDAA | For Engine Code:Bzb | GDS61111 | Drive Shaft | | 36 | 26 | 59.5 | 40 | 584 | |
| | 2007.05-2011.10 | 6AT | F | R | Estate FWD BZB;CDAA | For Engine Code:Bzb | GDS61112 | Drive Shaft | | 36 | 26 | 59.5 | 40 | 883 | |
| | 2007.05-2011.10 | 6AT | F | L/R | Estate FWD BZB;CDAA | | GCI61011 | Inner Joint | | 26 | 32 | 31 | 68.5 | 85 | |
| | 2007.05-2011.10 | 6AT | F | L/R | Estate FWD BZB;CDAA | | GCI61050 | Inner Joint | | 26 | 32 | 31 | 68.5 | 89 | |
| | 2007.05-2011.10 | 6MT | F | L | Estate FWD BZB;CDAA | For Engine Code:Cdaa,For Pr Code:0En | GDS83295 | Drive Shaft | | 36 | | 59.5 | 40 | 491 | |
| | 2007.05-2011.10 | 6MT | F | R | Estate FWD BZB;CDAA | For Engine Code:Cdaa,For Pr Code:0En | GDS61126 | Drive Shaft | | 36 | | 59.5 | 40 | 793 | |
| | 2007.05-2011.10 | 6MT | F | R | Estate FWD BZB;CDAA | For Engine Code:Cdaa,For Pr Code:0En | GDS61339 | Drive Shaft | | 36 | | 59.5 | 40 | 794 | |
| | 2007.05-2011.10 | 6MT | F | R | Estate FWD BZB;CDAA | For Engine Code:Bzb;For Engine Code:Cdaa,For Pr Code:0EJ | GDS61341 | Drive Shaft | | 36 | | 59.5 | 40 | 806 | |
| | 2007.05-2011.10 | 6MT/7DCT | F | L | Estate FWD BZB;CDAA | For Engine Code:Bzb;Transmission:6MT;For Engine Code:Cdaa;For Pr Code:0EJ;Transmission:7DCT;For Engine Code:Cdaa;For | GDS61100 | Drive Shaft | | 36 | | 59.5 | 40 | 513 | |
| | 2007.05-2011.10 | 7AT | F | L/R | Estate FWD BZB;CDAA | | GCO83101 | Outer Joint | | 36 | 27 | 59.5 | 40 | 65 | M |
| | 2007.05-2011.10 | 7DCT | F | R | Estate FWD BZB;CDAA | For Engine Code:Bzb/Cdaa,Date From:2009.01 | GDS83313 | Drive Shaft | | 36 | | 59.5 | 40 | 792 | |
| | 2007.05-2011.10 | MT/6AT | F | L/R | Estate FWD BZB;CDAA | | GCO83002 | Outer Joint | | 36 | 27 | 59.5 | 40 | 66 | I |
| | 2007.05-2011.10 | MT/7AT | F | L/R | Estate FWD BZB;CDAA | | GCI83016 | Inner Joint | | | 28 | | | 32 | |
| | 2010.08-2014.12 | 6MT | F | L | Estate FWD CDAA | For PR code:A8B/A8C/A8G/A9I | GDS61100 | Drive Shaft | | 36 | | 59.5 | 40 | 513 | |
| | 2010.08-2014.12 | 6MT | F | L | Estate FWD CDAA | For PR code:A8T | GDS83295 | Drive Shaft | | 36 | | 59.5 | 40 | 491 | |
| | 2010.08-2014.12 | 6MT | F | R | Estate FWD CDAA | For PR code:A8T | GDS61147 | Drive Shaft | | 36 | | 59.5 | 40 | 795 | |
| | 2010.08-2014.12 | 6MT | F | R | Estate FWD CDAA | For PR code:A8B/A8C/A8G/A9I | GDS61341 | Drive Shaft | | 36 | | 59.5 | 40 | 806 | |
| | 2010.08-2014.12 | 6MT | F | R | Estate FWD CDAA | For PR code:A8T | GDS83313 | Drive Shaft | | 36 | | 59.5 | 40 | 792 | |
| | 2010.08-2014.12 | 6MT | F | R | Estate FWD CDAA | For PR code:A8T | GCO83101 | Outer Joint | | 36 | 27 | 59.5 | 40 | 65 | M |
| | 2010.08-2014.12 | 6MT | F | L | Estate FWD CDAA | For PR code:A8T | GCI61069 | Inner Joint | | | 28 | | | 32 | |
| | 2010.08-2014.12 | 6MT/7DCT | F | L/R | Estate FWD CDAA | Transmission:6MT;For PR code:A8B/A8C/A8G/A9I/A8T;Transmission:7DCT | GCO83002 | Outer Joint | | 36 | 27 | 59.5 | 40 | 66 | I |
| | 2010.08-2014.12 | 7DCT | F | L | Estate FWD CDAA | | GDS61100 | Drive Shaft | | 36 | | 59.5 | 40 | 513 | |

| | YEAR | TRANSM. | F/R | L/R | BODY STYLE & DRIVE TYPE & ENGINE | REMARKS | G-AP Ref. | PRODUCT | ABS | Technical Specifications A | B | C | H | L | P |
|---|---|---|---|---|---|---|---|---|---|---|---|---|---|---|---|
| **VW** **Passat Estate/Variant** | | | | | | | | | | | | | | | |
| 1.8 (118 kw) | 2010.08-2014.12 | 7DCT | F | R | Estate FWD CDAA | | GDS61126 | Drive Shaft | | 36 | | 59.5 | 40 | 793 | |
| | 2010.08-2014.12 | 7DCT | F | R | Estate FWD CDAA | | GDS61339 | Drive Shaft | | 36 | | 59.5 | 40 | 794 | |
| | 2010.08-2014.12 | 7DCT/6MT | F | L/R | Estate FWD CDAA | Transmission:6MT;For PR code:A8B/A8C/A8G/A9I;Transmission:7DCT | GCI83016 | Inner Joint | | | 28 | | | 32 | |
| | 2010.08-2014.12 | 6MT | F | L | Estate Van FWD CDAA | For PR code:A8B/A8C/A8G/A9I | GDS61100 | Drive Shaft | | 36 | | 59.5 | 40 | 513 | |
| | 2010.08-2014.12 | 6MT | F | L | Estate Van FWD CDAA | For PR code:A8T | GDS83295 | Drive Shaft | | 36 | | 59.5 | 40 | 491 | |
| | 2010.08-2014.12 | 6MT | F | R | Estate Van FWD CDAA | For PR code:A8T | GDS61147 | Drive Shaft | | 36 | | 59.5 | 40 | 795 | |
| | 2010.08-2014.12 | 6MT | F | R | Estate Van FWD CDAA | For PR code:A8B/A8C/A8G/A9I | GDS61341 | Drive Shaft | | 36 | | 59.5 | 40 | 806 | |
| | 2010.08-2014.12 | 6MT | F | R | Estate Van FWD CDAA | For PR code:A8T | GDS83313 | Drive Shaft | | 36 | | 59.5 | 40 | 792 | |
| | 2010.08-2014.12 | 6MT | F | R | Estate Van FWD CDAA | For PR code:A8T | GCO83101 | Outer Joint | | 36 | 27 | 59.5 | 40 | 65 | M |
| | 2010.08-2014.12 | 6MT | F | L | Estate Van FWD CDAA | For PR code:A8T | GCI61069 | Inner Joint | | | 28 | | | 32 | |
| | 2010.08-2014.12 | 6MT/7DCT | F | L/R | Estate Van FWD CDAA | Transmission:6MT;For PR code:A8B/A8C/A8G/A9I/A8T;Transmission:7DCT | GCO83002 | Outer Joint | | 36 | 27 | 59.5 | 40 | 66 | I |
| | 2010.08-2014.12 | 7DCT | F | L | Estate Van FWD CDAA | | GDS61100 | Drive Shaft | | 36 | | 59.5 | 40 | 513 | |
| | 2010.08-2014.12 | 7DCT | F | R | Estate Van FWD CDAA | | GDS61126 | Drive Shaft | | 36 | | 59.5 | 40 | 793 | |
| | 2010.08-2014.12 | 7DCT | F | R | Estate Van FWD CDAA | | GDS61339 | Drive Shaft | | 36 | | 59.5 | 40 | 794 | |
| | 2010.08-2014.12 | 7DCT/6MT | F | L/R | Estate Van FWD CDAA | Transmission:6MT;For PR code:A8B/A8C/A8G/A9I;Transmission:7DCT | GCI83016 | Inner Joint | | | 28 | | | 32 | |
| 1.8 (125 kw) | 2002.05-2005.08 | 5AT | F | L | Estate FWD AWM | | GDS83015 | Drive Shaft | 45W | 38 | | 59.5 | 34.5 | 527 | |
| | 2002.05-2005.08 | 5AT | F | R | Estate FWD AWM | | GDS83048 | Drive Shaft | 45W | 38 | | 59.5 | 34.5 | 502 | |
| | 2002.05-2005.08 | 5AT | F | L/R | Estate FWD AWM | Date to:2003.01 | GCO83019 | Outer Joint | 45W | 38 | 27 | 59.5 | 34.5 | 63 | I |
| | 2002.05-2005.08 | 5MT | F | L | Estate FWD AWM | | GDS83008 | Drive Shaft | 45W | 38 | | 59.5 | 34.5 | 603 | |
| | 2002.05-2005.08 | 5MT | F | R | Estate FWD AWM | | GDS61019 | Drive Shaft | 45W | 38 | | 59.5 | 34.5 | 624 | |
| | 2002.05-2005.08 | SAT/5AT/5MT | F | L/R | Estate FWD AWM | | GCI50019 | Inner Joint | | | 34 | | | 59.5 | |
| 1.8 (132 kw) | 2015.02-2019.07 | 6MT | F | L | Estate FWD CJSA;CJSC | | GDS81896 | Drive Shaft | | 36 | | 59.5 | 40 | 500 | |
| | 2015.02-2019.07 | 6MT | F | R | Estate FWD CJSA;CJSC | | GDS61101 | Drive Shaft | | 36 | | 59.5 | 40 | 803 | |
| | 2015.02-2019.07 | 6MT | F | L/R | Estate FWD CJSA;CJSC | For PR code:A8B/A8C/A8G/A9I | GCI83016 | Inner Joint | | | 28 | | | 32 | |
| | 2015.02-2019.07 | AT/MT | F | L/R | Estate FWD CJSA;CJSC | | GCO83101 | Outer Joint | | 36 | 27 | 59.5 | 40 | 65 | M |
| 1.9 (55 kw) | 1991.03-1996.12 | AT/MT | F | L | Estate FWD AAZ | Date to:1996.12;Chassis no. from:31-K-296658;Chassis no. to:3A-V-300000 | GDS61001 | Drive Shaft | | 22 | | 53.2 | 78 | 557 | |
| | 1991.03-1996.12 | AT/MT | F | R | Estate FWD AAZ | Date to:1996.12;Chassis no. from:31-K-296658;Chassis no. to:3A-V-300000 | GDS61002 | Drive Shaft | | 22 | | 53 | 78.5 | 793 | |
| | 1991.03-1996.12 | AT/MT | F | L/R | Estate FWD AAZ | Date to:1996.12;Chassis no. from:31-K-296658;Chassis no. to:31-N-105278 | GCO53007 | Outer Joint | | 22 | 30 | 53.2 | 78 | 61 | I |
| | 1991.03-1996.12 | AT/MT | F | R | Estate FWD AAZ | Date to:1996.12;Chassis no. from:31-K-296658;Chassis no. to:3A-V-300000 | GCI83009 | Inner Joint | | | 33 | | | 34 | |
| | 1991.03-1996.12 | AT/MT | F | L/R | Estate FWD AAZ | | GCI83011 | Inner Joint | | | 33 | | | 34 | |
| | 1991.03-1996.12 | | F | | Estate FWD AAZ | | GCO53004 | Outer Joint | | 22 | 30 | 51 | 78 | 61 | I |
| 1.9 (66 kw) | 1993.10-1996.12 | MT | F | L | Estate FWD 1Z/AHU | | GDS61001 | Drive Shaft | | 22 | | 53.2 | 78 | 557 | |
| | 1993.10-1996.12 | MT | F | R | Estate FWD 1Z/AHU | | GDS61002 | Drive Shaft | | 22 | | 53 | 78.5 | 793 | |
| | 1993.10-1996.12 | MT | F | L/R | Estate FWD 1Z/AHU | | GCO53004 | Outer Joint | | 22 | 30 | 51 | 78 | 61 | I |
| | 1993.10-1996.12 | MT | F | L/R | Estate FWD 1Z/AHU | | GCI83011 | Inner Joint | | | 33 | | | 34 | |
| | 1996.10-2000.08 | 4AT | F | L | Estate FWD AHH/AHU | Chassis no. to:3A_V_300000 | GDS61011 | Drive Shaft | | 22 | | 53.2 | 78 | 547 | |
| | 1996.10-2000.08 | 4AT | F | L | Estate FWD AHH/AHU | Chassis no. from:3BV000001 | GDS83012 | Drive Shaft | 45W | 33 | | 53 | 30 | 498 | |
| | 1996.10-2000.08 | 4AT | F | R | Estate FWD AHH/AHU | Chassis no. to:3A_V_300000 | GDS61028 | Drive Shaft | | 22 | | 53.2 | 78 | 767 | |
| | 1996.10-2000.08 | 4AT | F | R | Estate FWD AHH/AHU | Chassis no. from:3BV000001 | GDS99108 | Drive Shaft | 45W | 33 | | 53 | 30 | 586 | |
| | 1996.10-2000.08 | 4AT/5MT | F | L/R | Estate FWD AHH/AHU | Not for special-purpose vehicles | GCO61012 | Outer Joint | 45W | 33 | 30 | 53 | 30 | 62 | I |
| | 1996.10-2000.08 | 4AT/5MT | F | L/R | Estate FWD AHH/AHU | For special-purpose vehicles | GCO83018 | Outer Joint | 45W | 33 | 30 | 53 | 30 | 62 | I |
| | 1996.10-2000.08 | 4AT/5MT | F | L/R | Estate FWD AHH/AHU | Chassis no. from:3BV000001 | GCI50019 | Inner Joint | | | 34 | | | 59.5 | |
| | 1996.10-2000.08 | 5MT | F | L | Estate FWD AHH/AHU | Chassis no. to:3AV300000 | GDS61001 | Drive Shaft | | 22 | | 53.2 | 78 | 557 | |
| | 1996.10-2000.08 | 5MT | F | L | Estate FWD AHH/AHU | Chassis no. from:3BV000001 | GDS61122 | Drive Shaft | 45W | 33 | | 53 | 30 | 602 | |
| | 1996.10-2000.08 | 5MT | F | R | Estate FWD AHH/AHU | Chassis no. to:3AV300000 | GDS61002 | Drive Shaft | | 22 | | 53 | 78.5 | 793 | |
| | 1996.10-2000.08 | 5MT | F | R | Estate FWD AHH/AHU | Chassis no. from:3BV000001,For Europe | GDS83007 | Drive Shaft | 45W | 33 | | 53 | 30 | 622 | |
| | 1996.10-2000.08 | 5MT | F | R | Estate FWD AHH/AHU | Chassis no. from:3BV000001,For North America | GDS83009 | Drive Shaft | 45W | 33 | | 53 | 30 | 617 | |
| | 1996.10-2000.08 | 5MT | F | L/R | Estate FWD AHH/AHU | Chassis no. to:3AV300000 | GCO53007 | Outer Joint | | 22 | 30 | 53.2 | 78 | 61 | I |
| | 1996.10-2000.08 | 5MT | F | L | Estate FWD AHH/AHU | Chassis no. to:3AV300000 | GCI83003 | Inner Joint | | | 33 | | | 32 | |
| | 1996.10-2000.08 | 5MT | F | L | Estate FWD AHH/AHU | Chassis no. to:3AV300000 | GCI83011 | Inner Joint | | | 33 | | | 34 | |
| | 1996.10-2000.08 | 5MT | F | R | Estate FWD AHH/AHU | Chassis no. to:3AV300000 | GCI83006 | Inner Joint | | | 33 | | | 34 | |
| | 1996.10-2000.08 | 5MT | F | R | Estate FWD AHH/AHU | Chassis no. to:3AV300000 | GCI83009 | Inner Joint | | | 33 | | | 34 | |
| 1.9 (74 kw) | 2000.02-2000.11 | AT | F | R | Estate FWD AVB | | GDS83048 | Drive Shaft | 45W | 38 | | 59.5 | 34.5 | 502 | |
| | 2000.02-2000.11 | AT | F | R | Estate FWD AVB | for vehicles without heavy duty suspension | GDS99108 | Drive Shaft | 45W | 33 | | 53 | 30 | 586 | |
| | 2000.02-2000.11 | AT | F | L/R | Estate FWD AVB | | GCO83019 | Outer Joint | 45W | 38 | 27 | 59.5 | 34.5 | 63 | I |
| | 2000.02-2000.11 | AT/MT | F | L/R | Estate FWD AVB | | GCI50019 | Inner Joint | | | 34 | | | 59.5 | |
| | 2000.02-2000.11 | MT | F | L | Estate FWD AVB | | GDS61083 | Drive Shaft | 45W | 33 | | 53 | 30 | 603 | |
| | 2000.02-2000.11 | MT | F | L | Estate FWD AVB | | GDS61122 | Drive Shaft | 45W | 33 | | 53 | 30 | 602 | |
| | 2000.02-2000.11 | MT | F | R | Estate FWD AVB | | GDS61082 | Drive Shaft | 45W | 33 | | 53 | 30 | 620 | |
| | 2000.02-2000.11 | MT | F | L/R | Estate FWD AVB | | GCO83021 | Outer Joint | 45W | 33 | 27 | 53 | 30 | 63 | I |
| | 2000.11-2005.05 | 4AT | F | L | Estate FWD AVB | Date to:2003.05;For PR code:1BA/1BE/1BF/1BH;Date to:2003.05;For PR code:4B6;for vehicles with heavy duty suspension | GDS83048 | Drive Shaft | 45W | 38 | | 59.5 | 34.5 | 502 | |
| | 2000.11-2005.05 | 4AT | F | L/R | Estate FWD AVB | | GCO83019 | Outer Joint | 45W | 38 | 27 | 59.5 | 34.5 | 63 | I |
| | 2000.11-2005.05 | 5MT | F | L | Estate FWD AVB | | GDS61083 | Drive Shaft | 45W | 33 | | 53 | 30 | 603 | |
| | 2000.11-2005.05 | 5MT | F | R | Estate FWD AVB | | GDS61082 | Drive Shaft | 45W | 33 | | 53 | 30 | 620 | |
| | 2000.11-2005.05 | 5MT | F | L/R | Estate FWD AVB | | GCO83021 | Outer Joint | 45W | 33 | 27 | 53 | 30 | 63 | I |

| | YEAR | TRANSM. | F/R | L/R | BODY STYLE & DRIVE TYPE & ENGINE | REMARKS | G-AP Ref. | PRODUCT | ABS | Technical Specifications A | B | C | H | L | P |
|---|---|---|---|---|---|---|---|---|---|---|---|---|---|---|---|
| **VW**<br>**Passat Estate/Variant** | | | | | | | | | | | | | | | |
| 1.9 (74 kw) | 2000.11-2005.05 | 5MT | F | L/R | Estate FWD AVB | | GCI50019 | Inner Joint | | | 34 | | | 59.5 | |
| 1.9 (77 kw) | 2005.08-2010.11 | AT | F | L | Estate FWD BKC;BLS;BXE | | GDS54013 | Drive Shaft | | 36 | | 59.5 | 40 | 479.5 | |
| | 2005.08-2010.11 | AT | F | R | Estate FWD BKC;BLS;BXE | | GDS54011 | Drive Shaft | | 36 | | 59.5 | 40 | 755 | |
| | 2005.08-2010.11 | AT | F | L/R | Estate FWD BKC;BLS;BXE | | GCO83002 | Outer Joint | | 36 | 27 | 59.5 | 40 | 66 | I |
| | 2005.08-2010.11 | AT | F | L/R | Estate FWD BKC;BLS;BXE | TJ | GCI54004 | Inner Joint | | | 34 | | | 81 | |
| | 2005.08-2010.11 | AT | F | L/R | Estate FWD BKC;BLS;BXE | AAR | GCI61057 | Inner Joint | | | 34 | | | 89 | |
| | 2005.08-2010.11 | MT | F | L | Estate FWD BKC;BLS;BXE | | GDS83294 | Drive Shaft | | 36 | | 59.5 | 38 | 519 | |
| | 2005.08-2010.11 | MT | F | R | Estate FWD BKC;BLS;BXE | | GDS61042 | Drive Shaft | | 36 | | 59.5 | 40.5 | 814 | |
| | 2005.08-2010.11 | MT | F | L/R | Estate FWD BKC;BLS;BXE | | GCO83037 | Outer Joint | | 36 | 30 | 59.5 | 40.5 | 56 | I |
| | 2005.08-2010.11 | MT | F | L/R | Estate FWD BKC;BLS;BXE | | GCI82447 | Inner Joint | | | 33 | | | 34 | |
| 1.9 (81 kw) | 1996.03-1996.12 | AT/MT | F | L/R | Estate FWD AFN | | GCO83070 | Outer Joint | | 36 | 30 | 53 | 78 | 60 | I |
| | 1996.03-1996.12 | MT | F | L | Estate FWD AFN | | GDS83006 | Drive Shaft | | 36 | | 53.2 | 77.5 | 557 | |
| | 1996.03-1996.12 | MT | F | R | Estate FWD AFN | | GDS83004 | Drive Shaft | | 36 | | 53.2 | 77.5 | 822 | |
| | 1996.03-1996.12 | MT | F | L/R | Estate FWD AFN | | GCI83006 | Inner Joint | | | 33 | | | 34 | |
| | 1996.10-2000.08 | 4AT | F | L | Estate FWD AFN/AVG | Chassis no. from:3BV000001,For PR code:1BA/1BE/1BF/F0A | GDS83048 | Drive Shaft | 45W | 38 | | 59.5 | 34.5 | 502 | |
| | 1996.10-2000.08 | 4AT/5MT | F | L/R | Estate FWD AFN/AVG | Chassis no. from:3BV000001 | GCO83019 | Outer Joint | 45W | 38 | 27 | 59.5 | 34.5 | 63 | I |
| | 1996.10-2000.08 | 4AT/5MT | F | L/R | Estate FWD AFN/AVG | Chassis no. to:3AV300000 | GCO83070 | Outer Joint | | 36 | 30 | 53 | 78 | 60 | I |
| | 1996.10-2000.08 | 4AT/5MT | F | L | Estate FWD AFN/AVG | | GCI83011 | Inner Joint | | | 33 | | | 34 | |
| | 1996.10-2000.08 | 4AT/5MT | F | R | Estate FWD AFN/AVG | Chassis no. to:3AV300000 | GCI83009 | Inner Joint | | | 33 | | | 34 | |
| | 1996.10-2000.08 | 5MT | F | L | Estate FWD AFN/AVG | Chassis no. to:3AV300000 | GDS61314 | Drive Shaft | | 36 | | 53 | 78 | 558 | |
| | 1996.10-2000.08 | 5MT | F | L | Estate FWD AFN/AVG | Chassis no. from:3BV000001,For PR code:1BA/1BE/1BF/F0A | GDS83008 | Drive Shaft | 45W | 38 | | 59.5 | 34.5 | 603 | |
| | 1996.10-2000.08 | 5MT | F | R | Estate FWD AFN/AVG | Chassis no. from:3BV000001,For PR code:1BA/1BE/1BF/F0A,For vehicles with heavy duty suspension,For PR code:3W | GDS61019 | Drive Shaft | 45W | 38 | | 59.5 | 34.5 | 624 | |
| | 1996.10-2000.08 | 5MT | F | R | Estate FWD AFN/AVG | Chassis no. to:3A_V_300000 | GDS83004 | Drive Shaft | | 36 | | 53.2 | 77.5 | 822 | |
| | 1996.10-2000.08 | 5MT | F | L/R | Estate FWD AFN/AVG | | GCI50019 | Inner Joint | | | 34 | | | 59.5 | |
| | 1997.06-2000.08 | 5MT | F | L | Estate 4WD AFN/AVG | | GDS61122 | Drive Shaft | 45W | 33 | | 53 | 30 | 602 | |
| | 1997.06-2000.08 | 5MT | F | R | Estate 4WD AFN/AVG | | GDS83007 | Drive Shaft | 45W | 33 | | 53 | 30 | 622 | |
| | 1997.06-2000.08 | AT/MT | F | L/R | Estate 4WD AFN/AVG | | GCO83019 | Outer Joint | 45W | 38 | 27 | 59.5 | 34.5 | 63 | I |
| | 1997.06-2000.08 | MT | F | L | Estate 4WD AFN/AVG | | GDS83008 | Drive Shaft | 45W | 38 | | 59.5 | 34.5 | 603 | |
| | 1997.06-2000.08 | MT | F | L | Estate 4WD AFN/AVG | | GDS83048 | Drive Shaft | 45W | 38 | | 59.5 | 34.5 | 502 | |
| | 1997.06-2000.08 | MT | F | R | Estate 4WD AFN/AVG | | GDS61019 | Drive Shaft | 45W | 38 | | 59.5 | 34.5 | 624 | |
| | 1997.06-2000.08 | MT/5MT | F | L/R | Estate 4WD AFN/AVG | | GCI50019 | Inner Joint | | | 34 | | | 59.5 | |
| | 1997.06-2000.08 | | F | L/R | Estate 4WD AFN/AVG | | GCO61012 | Outer Joint | 45W | 33 | 30 | 53 | 30 | 62 | I |
| | 1997.06-2000.08 | 5MT | R | L/R | Estate 4WD AFN/AVG | | GDS83672 | Drive Shaft | 45W | 33 | | 53 | 30 | 618 | |
| | 1997.06-2000.08 | 5MT | R | L/R | Estate 4WD AFN/AVG | | GCO83080 | Outer Joint | 45W | 33 | 30 | 53 | 30 | 62 | I |
| | 1997.06-2000.08 | 5MT | R | L/R | Estate 4WD AFN/AVG | | GCI83002 | Inner Joint | | | 33 | | | 32 | |
| 1.9 (85 kw) | 1999.01-2000.08 | 5AT | F | L | Estate FWD AJM/ATJ | | GDS83015 | Drive Shaft | 45W | 38 | | 59.5 | 34.5 | 527 | |
| | 1999.01-2000.08 | 5AT | F | R | Estate FWD AJM/ATJ | | GDS83048 | Drive Shaft | 45W | 38 | | 59.5 | 34.5 | 502 | |
| | 1999.01-2000.08 | 5AT | F | L/R | Estate FWD AJM/ATJ | | GCO83019 | Outer Joint | 45W | 38 | 27 | 59.5 | 34.5 | 63 | I |
| | 1999.01-2000.08 | 5MT | F | L | Estate FWD AJM/ATJ | For Engine code:AJM | GDS61083 | Drive Shaft | 45W | 33 | | 53 | 30 | 603 | |
| | 1999.01-2000.08 | 5MT | F | L | Estate FWD AJM/ATJ | For Engine code:ATJ | GDS83008 | Drive Shaft | 45W | 38 | | 59.5 | 34.5 | 603 | |
| | 1999.01-2000.08 | 5MT | F | R | Estate FWD AJM/ATJ | For Engine code:AJM | GDS61082 | Drive Shaft | 45W | 33 | | 53 | 30 | 620 | |
| | 1999.01-2000.08 | 5MT | F | L/R | Estate FWD AJM/ATJ | For Engine code:AJM | GCO83021 | Outer Joint | 45W | 33 | 27 | 53 | 30 | 63 | I |
| | 1999.01-2000.08 | 5MT/6MT | F | R | Estate FWD AJM/ATJ | For Engine code:ATJ | GDS61019 | Drive Shaft | 45W | 38 | | 59.5 | 34.5 | 624 | |
| | 1999.01-2000.08 | 5MT/6MT | F | L/R | Estate FWD AJM/ATJ | For Engine code:ATJ | GCO83019 | Outer Joint | 45W | 38 | 27 | 59.5 | 34.5 | 63 | I |
| | 1999.01-2000.08 | 5MT/6MT | F | L/R | Estate FWD AJM/ATJ | For Engine code:ATJ | GCI50019 | Inner Joint | | | 34 | | | 59.5 | |
| | 1999.01-2000.08 | 6MT | F | L | Estate FWD AJM/ATJ | For Engine code:ATJ | GDS61157 | Drive Shaft | 45W | 38 | | 59.5 | 34.5 | 601 | |
| | 2000.01-2000.08 | 6MT | F | L | Estate 4WD ATJ | | GDS61157 | Drive Shaft | 45W | 38 | | 59.5 | 34.5 | 601 | |
| | 2000.01-2000.08 | 6MT | F | R | Estate 4WD ATJ | | GDS61019 | Drive Shaft | 45W | 38 | | 59.5 | 34.5 | 624 | |
| | 2000.01-2000.08 | 6MT | F | L/R | Estate 4WD ATJ | | GCO83019 | Outer Joint | 45W | 38 | 27 | 59.5 | 34.5 | 63 | I |
| | 2000.01-2000.08 | 6MT | F | L/R | Estate 4WD ATJ | | GCI50019 | Inner Joint | | | 34 | | | 59.5 | |
| | 2000.01-2000.08 | 6MT | R | L/R | Estate 4WD ATJ | | GDS83672 | Drive Shaft | 45W | 33 | | 53 | 30 | 618 | |
| | 2000.01-2000.08 | 6MT | R | L/R | Estate 4WD ATJ | | GCO83080 | Outer Joint | 45W | 33 | 30 | 53 | 30 | 62 | I |
| | 2000.01-2000.08 | 6MT | R | L/R | Estate 4WD ATJ | | GCI83002 | Inner Joint | | | 33 | | | 32 | |
| 1.9 (96 kw) | 2000.11-2005.05 | 6MT | F | L | Estate 4WD AVF | | GDS61157 | Drive Shaft | 45W | 38 | | 59.5 | 34.5 | 601 | |
| | 2000.11-2005.05 | 6MT | F | L | Estate 4WD AVF | | GDS83008 | Drive Shaft | 45W | 38 | | 59.5 | 34.5 | 603 | |
| | 2000.11-2005.05 | 6MT | F | R | Estate 4WD AVF | | GDS61019 | Drive Shaft | 45W | 38 | | 59.5 | 34.5 | 624 | |
| | 2000.11-2005.05 | 6MT | F | L/R | Estate 4WD AVF | | GCO83019 | Outer Joint | 45W | 38 | 27 | 59.5 | 34.5 | 63 | I |
| | 2000.11-2005.05 | 6MT | F | L/R | Estate 4WD AVF | | GCI50019 | Inner Joint | | | 34 | | | 59.5 | |
| | 2000.11-2005.05 | 6MT | R | L/R | Estate 4WD AVF | | GDS83672 | Drive Shaft | 45W | 33 | | 53 | 30 | 618 | |
| | 2000.11-2005.05 | 6MT | R | L/R | Estate 4WD AVF | | GCO83080 | Outer Joint | 45W | 33 | 30 | 53 | 30 | 62 | I |
| | 2000.11-2005.05 | 6MT | R | L/R | Estate 4WD AVF | | GCI83002 | Inner Joint | | | 33 | | | 32 | |
| | 2000.11-2005.05 | 5AT | F | L | Estate FWD AVF;AWX | | GDS83015 | Drive Shaft | 45W | 38 | | 59.5 | 34.5 | 527 | |
| | 2000.11-2005.05 | 5AT | F | R | Estate FWD AVF;AWX | | GDS83048 | Drive Shaft | 45W | 38 | | 59.5 | 34.5 | 502 | |
| | 2000.11-2005.05 | 5AT/5MT/6MT | F | L/R | Estate FWD AVF;AWX | | GCO83019 | Outer Joint | 45W | 38 | 27 | 59.5 | 34.5 | 63 | I |
| | 2000.11-2005.05 | 5AT/5MT/6MT | F | L/R | Estate FWD AVF;AWX | | GCI50019 | Inner Joint | | | 34 | | | 59.5 | |

| | YEAR | TRANSM. | F/R | L/R | BODY STYLE & DRIVE TYPE & ENGINE | REMARKS | G-AP Ref. | PRODUCT | ABS | Technical Specifications A | B | C | H | L | P |
|---|---|---|---|---|---|---|---|---|---|---|---|---|---|---|---|
| **VW** **Passat Estate/Variant** | | | | | | | | | | | | | | | |
| 1.9 (96 kw) | 2000.11-2005.05 | 5MT/6MT | F | L | Estate FWD AVF;AWX | solid shaft | GDS61157 | Drive Shaft | 45W | 38 | | 59.5 | 34.5 | 601 | |
| | 2000.11-2005.05 | 5MT/6MT | F | L | Estate FWD AVF;AWX | hollow shaft | GDS83008 | Drive Shaft | 45W | 38 | | 59.5 | 34.5 | 603 | |
| | 2000.11-2005.05 | 5MT/6MT | F | R | Estate FWD AVF;AWX | hollow shaft | GDS61019 | Drive Shaft | 45W | 38 | | 59.5 | 34.5 | 624 | |
| 2.0 (79 kw) | 1995.03-1996.12 | AT/MT | F | L/R | Estate FWD AEP | | GCO53007 | Outer Joint | | 22 | 30 | 53.2 | 78 | 61 | I |
| | 1995.03-1996.12 | MT | F | L | Estate FWD AEP | | GDS61001 | Drive Shaft | | 22 | | 53.2 | 78 | 557 | |
| | 1995.03-1996.12 | MT | F | R | Estate FWD AEP | | GDS61002 | Drive Shaft | | 22 | | 53 | 78.5 | 793 | |
| | 1995.03-1996.12 | MT | F | R | Estate FWD AEP | | GCI83009 | Inner Joint | | | 33 | | | 34 | |
| | 1995.03-1996.12 | MT | F | L/R | Estate FWD AEP | | GCI83011 | Inner Joint | | | 33 | | | 34 | |
| | 1995.03-1996.12 | | F | | Estate FWD AEP | | GCO53004 | Outer Joint | | 22 | 30 | 51 | 78 | 61 | I |
| 2.0 (81 kw) | 2008.11-2010.11 | 5MT | F | L | Estate FWD CBDC | With steel rim;With alloy rim | GDS61282 | Drive Shaft | | 36 | | 59.5 | 40 | 523 | |
| | 2008.11-2010.11 | 5MT | F | R | Estate FWD CBDC | | GDS61283 | Drive Shaft | | 36 | | 59.5 | 40 | 815 | |
| | 2008.11-2010.11 | 5MT | F | L/R | Estate FWD CBDC | | GCO61059 | Outer Joint | | 36 | 33 | 59.5 | 40 | 59.5 | I |
| | 2008.11-2010.11 | 5MT | F | L | Estate FWD CBDC | With steel rim;With alloy rim | GCI53002 | Inner Joint | | | 33 | | | 34 | |
| | 2008.11-2010.11 | 5MT | F | R | Estate FWD CBDC | | GCI53002 | Inner Joint | | | 33 | | | 34 | |
| | 2008.11-2010.11 | 5MT | F | L/R | Estate FWD CBDC | | GCI82447 | Inner Joint | | | 33 | | | 34 | |
| | 2008.11-2010.11 | MT | F | L | Estate FWD CBDC | | GDS83294 | Drive Shaft | | 36 | | 59.5 | 38 | 519 | |
| | 2008.11-2010.11 | MT | F | L | Estate FWD CBDC | | GCO83037 | Outer Joint | | 36 | 30 | 59.5 | 40.5 | 56 | I |
| | 2008.11-2010.11 | MT | F | L/R | Estate FWD CBDC | | GCI83006 | Inner Joint | | | 33 | | | 34 | |
| | 2008.11-2010.11 | | F | R | Estate FWD CBDC | Date From:2009.11 | GDS61042 | Drive Shaft | | 36 | | 59.5 | 40.5 | 814 | |
| | 2008.11-2010.11 | | F | L/R | Estate FWD CBDC | | GCO83002 | Outer Joint | | 36 | 27 | 59.5 | 40 | 66 | I |
| | 2008.11-2010.11 | | F | L/R | Estate FWD CBDC | | GCI83011 | Inner Joint | | | 33 | | | 34 | |
| | 2016.01-2018.07 | 6MT | F | L | Estate FWD DFGB | | GDS81896 | Drive Shaft | | 36 | | 59.5 | 40 | 500 | |
| | 2016.01-2018.07 | AT | F | R | Estate FWD DFGB | | GDS61101 | Drive Shaft | | 36 | | 59.5 | 40 | 803 | |
| | 2016.01-2018.07 | AT | F | L/R | Estate FWD DFGB | | GCO83101 | Outer Joint | | 36 | 27 | 59.5 | 40 | 65 | M |
| | 2016.01-2018.07 | AT | F | L/R | Estate FWD DFGB | | GCI83016 | Inner Joint | | | 28 | | | 32 | |
| 2.0 (85 kw) | 1990.03-1996.12 | AT/MT | F | L | Estate 4WD 2E/ADY/AGG | | GDS61001 | Drive Shaft | | 22 | | 53.2 | 78 | 557 | |
| | 1990.03-1996.12 | AT/MT | F | R | Estate 4WD 2E/ADY/AGG | | GDS61002 | Drive Shaft | | 22 | | 53 | 78.5 | 793 | |
| | 1990.03-1996.12 | AT/MT | F | L/R | Estate 4WD 2E/ADY/AGG | | GCI83011 | Inner Joint | | | 33 | | | 34 | |
| | 1990.03-1996.12 | MT | F | L/R | Estate 4WD 2E/ADY/AGG | Date to:1995.12;Chassis no. from:31-L-000001;Chassis no. to:31-N-105278 | GCO53007 | Outer Joint | | 22 | 30 | 53.2 | 78 | 61 | I |
| | 1990.03-1996.12 | MT | F | R | Estate 4WD 2E/ADY/AGG | Date to:1995.12;Chassis no. from:31-L-000001;Chassis no. to:31-P-300000 | GCI83009 | Inner Joint | | | 33 | | | 34 | |
| | 1990.03-1996.12 | MT | R | L/R | Estate 4WD 2E/ADY/AGG | Date to:1995.12;Chassis no. from:31-L-000001;Chassis no. to:31-P-300000 | GCI83005 | Inner Joint | | | 33 | | | 32 | |
| | 2000.11-2005.05 | 5MT | F | L | Estate 4WD AZM | | GDS83002 | Drive Shaft | 45W | 33 | | 53 | 30 | 614 | |
| | 2000.11-2005.05 | 5MT | F | R | Estate 4WD AZM | | GDS99111 | Drive Shaft | 45W | 33 | | 53 | 30 | 636 | |
| | 2000.11-2005.05 | 5MT | F | L/R | Estate 4WD AZM | | GCO61012 | Outer Joint | 45W | 33 | 30 | 53 | 30 | 62 | I |
| | 2000.11-2005.05 | 5MT | F | L/R | Estate 4WD AZM | | GCI83002 | Inner Joint | | | 33 | | | 32 | |
| | 2000.11-2005.05 | 5MT | F | L/R | Estate 4WD AZM | From Drive Shaft | GCI83006 | Inner Joint | | | 33 | | | 34 | |
| | 2000.11-2005.05 | 5MT | R | L/R | Estate 4WD AZM | | GDS83672 | Drive Shaft | 45W | 33 | | 53 | 30 | 618 | |
| | 2000.11-2005.05 | 5MT | R | L/R | Estate 4WD AZM | | GCO83080 | Outer Joint | 45W | 33 | 30 | 53 | 30 | 62 | I |
| | 2000.11-2005.05 | 5MT | R | L/R | Estate 4WD AZM | | GCI83002 | Inner Joint | | | 33 | | | 32 | |
| | 2000.11-2005.05 | 4AT | F | L | Estate FWD AZM | | GDS83012 | Drive Shaft | 45W | 33 | | 53 | 30 | 498 | |
| | 2000.11-2005.05 | 4AT | F | R | Estate FWD AZM | | GDS99108 | Drive Shaft | 45W | 33 | | 53 | 30 | 586 | |
| | 2000.11-2005.05 | 4AT | F | L/R | Estate FWD AZM | | GCO61012 | Outer Joint | 45W | 33 | 30 | 53 | 30 | 62 | I |
| | 2000.11-2005.05 | 4AT | F | L/R | Estate FWD AZM | | GCI50019 | Inner Joint | | | 34 | | | 59.5 | |
| | 2000.11-2005.05 | 5MT | F | L | Estate FWD AZM | | GDS83005 | Drive Shaft | 45W | 33 | | 53 | 30 | 614 | |
| | 2000.11-2005.05 | 5MT | F | R | Estate FWD AZM | | GDS83001 | Drive Shaft | 45W | 33 | | 53 | 30 | 634 | |
| | 2000.11-2005.05 | 5MT | F | L/R | Estate FWD AZM | | GCO83018 | Outer Joint | 45W | 33 | 30 | 53 | 30 | 62 | I |
| | 2000.11-2005.05 | 5MT | F | L/R | Estate FWD AZM | | GCI83001 | Inner Joint | | | 28 | | | 32 | |
| 2.0 (88 kw) | 2005.11-2007.05 | 6AT/6MT | F | L/R | Estate FWD BWV | | GCI54004 | Inner Joint | | | 34 | | | 81 | |
| | 2005.11-2007.05 | 6AT/6MT | F | L/R | Estate FWD BWV | Original Tripod Design | GCI61057 | Inner Joint | | | 34 | | | 89 | |
| | 2005.11-2007.05 | 6AT/6MT | F | L/R | Estate FWD BWV | | GCI83016 | Inner Joint | | | 28 | | | 32 | |
| | 2005.11-2007.05 | AT | F | L | Estate FWD BWV | | GDS54013 | Drive Shaft | | 36 | | 59.5 | 40 | 479.5 | |
| | 2005.11-2007.05 | AT | F | R | Estate FWD BWV | | GDS54011 | Drive Shaft | | 36 | | 59.5 | 40 | 755 | |
| | 2005.11-2007.05 | MT | F | L | Estate FWD BWV | | GDS83295 | Drive Shaft | | 36 | | 59.5 | 40 | 491 | |
| | 2005.11-2007.05 | MT | F | R | Estate FWD BWV | | GDS83313 | Drive Shaft | | 36 | | 59.5 | 40 | 792 | |
| | 2005.11-2007.05 | | F | L | Estate FWD BWV | | GDS83236 | Drive Shaft | | 36 | | 59.5 | 40 | 484 | |
| | 2005.11-2007.05 | | F | L/R | Estate FWD BWV | | GCO83002 | Outer Joint | | 36 | 27 | 59.5 | 40 | 66 | I |
| 2.0 (90 kw) | 2005.08-2006.02 | 6AT/6MT | F | L/R | Estate FWD BVE | | GCI54004 | Inner Joint | | | 34 | | | 81 | |
| | 2005.08-2006.02 | 6AT/6MT | F | L/R | Estate FWD BVE | Original Tripod Design | GCI61057 | Inner Joint | | | 34 | | | 89 | |
| | 2005.08-2006.02 | 6AT/6MT | F | L/R | Estate FWD BVE | | GCI83016 | Inner Joint | | | 28 | | | 32 | |
| | 2005.08-2006.02 | AT | F | L | Estate FWD BVE | | GDS54013 | Drive Shaft | | 36 | | 59.5 | 40 | 479.5 | |
| | 2005.08-2006.02 | AT | F | R | Estate FWD BVE | | GDS54011 | Drive Shaft | | 36 | | 59.5 | 40 | 755 | |
| | 2005.08-2006.02 | MT | F | L | Estate FWD BVE | | GDS83295 | Drive Shaft | | 36 | | 59.5 | 40 | 491 | |
| | 2005.08-2006.02 | MT | F | R | Estate FWD BVE | | GDS83313 | Drive Shaft | | 36 | | 59.5 | 40 | 792 | |
| | 2005.08-2006.02 | | F | L/R | Estate FWD BVE | | GCO83002 | Outer Joint | | 36 | 27 | 59.5 | 40 | 66 | I |
| | 2020.07-2024.03 | 7DCT | F | L | Estate FWD DTRA | | GDS61201 | Drive Shaft | | 36 | | 59.5 | 40.5 | 535 | |

| | YEAR | TRANSM. | F/R | L/R | BODY STYLE & DRIVE TYPE & ENGINE | REMARKS | G-AP Ref. | PRODUCT | ABS | Technical Specifications A | B | C | H | L | P |
|---|---|---|---|---|---|---|---|---|---|---|---|---|---|---|---|
| **VW** **Passat Estate/Variant** | | | | | | | | | | | | | | | |
| 2.0 (90 kw) | 2020.07-2024.03 | 7DCT | F | L | Estate FWD DTRA | | GCO83037 | Outer Joint | | 36 | 30 | 59.5 | 40.5 | 56 | I |
| | 2020.07-2024.03 | 7DCT | F | L | Estate FWD DTRA | | GCI53002 | Inner Joint | | | 33 | | | 34 | |
| | 2024.04- | 6DCT | F | R | Estate FWD DXPB | | GDS83613 | Drive Shaft | | 36 | 37 | 59.5 | 40 | 921 | |
| | 2024.04- | 7DCT | F | L | Estate FWD DXPB | | GDS82351 | Drive Shaft | | 36 | 37 | 59.5 | 40 | 568 | |
| | 2024.04- | AT | F | L | Estate FWD DXPB | | GCI81158 | Inner Joint | | 37 | 34 | 34.5 | 65.5 | 83 | |
| 2.0 (96 kw) | 2001.11-2005.05 | 5AT/5MT | F | L | Estate FWD ALT | | GDS61122 | Drive Shaft | 45W | 33 | | 53 | 30 | 602 | |
| | 2001.11-2005.05 | 5AT/5MT | F | R | Estate FWD ALT | For Europe | GDS83007 | Drive Shaft | 45W | 33 | | 53 | 30 | 622 | |
| | 2001.11-2005.05 | 5AT/5MT | F | R | Estate FWD ALT | For North America | GDS83009 | Drive Shaft | 45W | 33 | | 53 | 30 | 617 | |
| | 2001.11-2005.05 | 5AT/5MT | F | L/R | Estate FWD ALT | | GCI50019 | Inner Joint | | | 34 | | | 59.5 | |
| | 2001.11-2005.05 | 5MT | F | L/R | Estate FWD ALT | | GCO61012 | Outer Joint | 45W | 33 | 30 | 53 | 30 | 62 | I |
| 2.0 (100 kw) | 2003.12-2005.05 | 6MT | F | L | Estate FWD BGW;BHW | | GDS83008 | Drive Shaft | 45W | 38 | | 59.5 | 34.5 | 603 | |
| | 2003.12-2005.05 | AT/MT | F | L/R | Estate FWD BGW;BHW | | GCO83019 | Outer Joint | 45W | 38 | 27 | 59.5 | 34.5 | 63 | I |
| | 2003.12-2005.05 | MT | F | L/R | Estate FWD BGW;BHW | | GCI50019 | Inner Joint | | | 34 | | | 59.5 | |
| | 2003.12-2005.05 | MT/6MT | F | R | Estate FWD BGW;BHW | | GDS61019 | Drive Shaft | 45W | 38 | | 59.5 | 34.5 | 624 | |
| | 2005.08-2010.11 | 6AT/6MT | F | L/R | Estate FWD BMA;CBAA | Date to:2007.02,Date from:2007.03 | GCO83002 | Outer Joint | | 36 | 27 | 59.5 | 40 | 66 | I |
| | 2005.08-2010.11 | 6AT/6MT | F | L/R | Estate FWD BMA;CBAA | For PR code:F4E/F5F/F6L,Date from:2007.03 | GCO83101 | Outer Joint | | 36 | 27 | 59.5 | 40 | 65 | M |
| | 2005.08-2010.11 | 6AT/6MT | F | L/R | Estate FWD BMA;CBAA | | GCI54004 | Inner Joint | | | 34 | | | 81 | |
| | 2005.08-2010.11 | 6AT/6MT | F | L/R | Estate FWD BMA;CBAA | Original Tripod Design | GCI61057 | Inner Joint | | | 34 | | | 89 | |
| | 2005.08-2010.11 | 6AT/6MT | F | L/R | Estate FWD BMA;CBAA | | GCI83016 | Inner Joint | | | 28 | | | 32 | |
| | 2005.08-2010.11 | AT | F | L | Estate FWD BMA;CBAA | Date to:2007.02,Date from:2007.03,For PR code:F0A/F4F/F4G/F4J,F4E/F5F/F6L/F6K/F6M | GDS54013 | Drive Shaft | | 36 | | 59.5 | 40 | 479.5 | |
| | 2005.08-2010.11 | AT | F | L | Estate FWD BMA;CBAA | | GDS83241 | Drive Shaft | | 36 | | 59.5 | 40 | 475 | |
| | 2005.08-2010.11 | AT | F | L | Estate FWD BMA;CBAA | Date from:2007.03,For PR code:F4E/F5F/F6L,For taxis | GDS83381 | Drive Shaft | | 36 | | 59.5 | 40 | 483 | |
| | 2005.08-2010.11 | AT | F | R | Estate FWD BMA;CBAA | For PR code:F0A/F4F/F4G/F4J,For PR code:02:F4Q/F4X/F5G/F6K | GDS54011 | Drive Shaft | | 36 | | 59.5 | 40 | 755 | |
| | 2005.08-2010.11 | MT | F | L | Estate FWD BMA;CBAA | | GDS83236 | Drive Shaft | | 36 | | 59.5 | 40 | 484 | |
| | 2005.08-2010.11 | MT | F | L | Estate FWD BMA;CBAA | For PR code:F0A/F4F/F4G/F4J,For PR code:02:F4Q/F4X/F5G/F6K | GDS83295 | Drive Shaft | | 36 | | 59.5 | 40 | 491 | |
| | 2005.08-2010.11 | MT | F | R | Estate FWD BMA;CBAA | Date From:2007.03;For PR code:F4E/F5F/F6L;For taxis | GDS61126 | Drive Shaft | | 36 | | 59.5 | 40 | 793 | |
| | 2005.08-2010.11 | MT | F | R | Estate FWD BMA;CBAA | Date from:2008.03;For PR code:F4E/F5F/F6L;For taxis | GDS61147 | Drive Shaft | | 36 | | 59.5 | 40 | 795 | |
| | 2005.08-2010.11 | MT | F | R | Estate FWD BMA;CBAA | For PR code:F0A/F4F/F4G/F4J,For PR code:02:F4Q/F4X/F5G/F6K | GDS83313 | Drive Shaft | | 36 | | 59.5 | 40 | 792 | |
| | 2010.08-2014.12 | 6MT | F | L | Estate FWD CFFA | | GDS83295 | Drive Shaft | | 36 | | 59.5 | 40 | 491 | |
| | 2010.08-2014.12 | 6MT | F | R | Estate FWD CFFA | Date from:2013.03 | GDS61126 | Drive Shaft | | 36 | | 59.5 | 40 | 793 | |
| | 2010.08-2014.12 | 6MT | F | R | Estate FWD CFFA | Date to:2013.02 | GDS83313 | Drive Shaft | | 36 | | 59.5 | 40 | 792 | |
| | 2010.08-2014.12 | 6MT | F | L/R | Estate FWD CFFA | For PR code:A8B/A8C/A8G/A9I | GCO83002 | Outer Joint | | 36 | 27 | 59.5 | 40 | 66 | I |
| | 2010.08-2014.12 | 6MT | F | L/R | Estate FWD CFFA | For PR code:A8B/A8C/A8G/A9I | GCI83016 | Inner Joint | | | 28 | | | 32 | |
| | 2010.08-2014.12 | 6MT | F | L | Estate Van FWD CFFA | | GDS83295 | Drive Shaft | | 36 | | 59.5 | 40 | 491 | |
| | 2010.08-2014.12 | 6MT | F | R | Estate Van FWD CFFA | | GDS83313 | Drive Shaft | | 36 | | 59.5 | 40 | 792 | |
| | 2010.08-2014.12 | 6MT | F | L/R | Estate Van FWD CFFA | | GCO83002 | Outer Joint | | 36 | 27 | 59.5 | 40 | 66 | I |
| | 2010.08-2014.12 | 6MT | F | L/R | Estate Van FWD CFFA | Date from:2013.03 | GCI61069 | Inner Joint | | | 28 | | | 32 | |
| | 2010.08-2014.12 | 6MT | F | L/R | Estate Van FWD CFFA | Date to:2013.02 | GCI83016 | Inner Joint | | | 28 | | | 32 | |
| 2.0 (103 kw) | 2005.08-2009.05 | 6MT | F | L | Estate 4WD BMP | | GDS83295 | Drive Shaft | | 36 | | 59.5 | 40 | 491 | |
| | 2005.08-2009.05 | 6MT | F | R | Estate 4WD BMP | | GDS83266 | Drive Shaft | | 36 | | 59.5 | 40 | 601 | |
| | 2005.08-2009.05 | 6MT | F | L/R | Estate 4WD BMP | For PR code:A8B/A8C/A8G/A9I | GCI83016 | Inner Joint | | | 28 | | | 32 | |
| | 2005.08-2009.05 | MT | F | L | Estate 4WD BMP | | GDS83236 | Drive Shaft | | 36 | | 59.5 | 40 | 484 | |
| | 2005.08-2009.05 | Semi-AT | F | L | Estate 4WD BMP | | GDS83241 | Drive Shaft | | 36 | | 59.5 | 40 | 475 | |
| | 2005.08-2009.05 | Semi-AT | F | L | Estate 4WD BMP | | GCI54004 | Inner Joint | | | 34 | | | 81 | |
| | 2005.08-2009.05 | | F | L/R | Estate 4WD BMP | | GCO83002 | Outer Joint | | 36 | 27 | 59.5 | 40 | 66 | I |
| | 2005.08-2009.05 | 6MT | R | L | Estate 4WD BMP | Date to:2006.05 | GDS54017 | Drive Shaft | | 36 | | 59.5 | 40 | 609 | |
| | 2005.08-2009.05 | 6MT | R | L | Estate 4WD BMP | Date from:2006.06 | GDS61284 | Drive Shaft | | 36 | | 59.5 | 40 | 594 | |
| | 2005.08-2009.05 | 6MT | R | R | Estate 4WD BMP | Date from:2006.06 | GDS61293 | Drive Shaft | | 36 | | 59.5 | 40 | 631 | |
| | 2005.08-2009.05 | 6MT | R | R | Estate 4WD BMP | Date to:2006.05 | GDS81597 | Drive Shaft | | 36 | | 59.5 | 40 | 652 | |
| | 2005.08-2009.05 | 6MT | R | R | Estate 4WD BMP | Date to:2006.05 | GCO83037 | Outer Joint | | 36 | 30 | 59.5 | 40.5 | 56 | I |
| | 2005.08-2009.05 | 6MT | R | L/R | Estate 4WD BMP | | GCI35026 | Outer Joint | | 36 | 33 | 59.5 | 40 | 61 | |
| | 2005.08-2009.05 | 6MT | R | L/R | Estate 4WD BMP | | GCI53002 | Inner Joint | | | 33 | | | 34 | |
| | 2005.08-2009.05 | 6MT | R | L/R | Estate 4WD BMP | | GCI82447 | Inner Joint | | | 33 | | | 34 | |
| | 2005.08-2009.05 | AT | F | L | Estate FWD BMP | Date to:2007.02,Date from:2007.03,For PR code:F0A/F4F/F4G/F4J,F4E/F5F/F6L/F6K/F6M | GDS54013 | Drive Shaft | | 36 | | 59.5 | 40 | 479.5 | |
| | 2005.08-2009.05 | AT | F | L | Estate FWD BMP | Date from:2007.03,For PR code:F4E/F5F/F6L | GDS83381 | Drive Shaft | | 36 | | 59.5 | 40 | 483 | |
| | 2005.08-2009.05 | AT | F | R | Estate FWD BMP | TJ | GDS54011 | Drive Shaft | | 36 | | 59.5 | 40 | 755 | |
| | 2005.08-2009.05 | AT | F | L/R | Estate FWD BMP | TJ | GCI54004 | Inner Joint | | | 34 | | | 81 | |
| | 2005.08-2009.05 | AT | F | L/R | Estate FWD BMP | AAR | GCI61057 | Inner Joint | | | 34 | | | 89 | |
| | 2005.08-2009.05 | AT/MT | F | L/R | Estate FWD BMP | | GCO83002 | Outer Joint | | 36 | 27 | 59.5 | 40 | 66 | I |
| | 2005.08-2009.05 | AT/MT | F | L/R | Estate FWD BMP | | GCO83101 | Outer Joint | | 36 | 27 | 59.5 | 40 | 65 | M |
| | 2005.08-2009.05 | MT | F | L | Estate FWD BMP | | GDS83295 | Drive Shaft | | 36 | | 59.5 | 40 | 491 | |
| | 2005.08-2009.05 | MT | F | R | Estate FWD BMP | solid shaft | GDS61126 | Drive Shaft | | 36 | | 59.5 | 40 | 793 | |
| | 2005.08-2009.05 | MT | F | R | Estate FWD BMP | hollow shaft | GDS61147 | Drive Shaft | | 36 | | 59.5 | 40 | 795 | |
| | 2005.08-2009.05 | MT | F | R | Estate FWD BMP | solid shaft | GDS83313 | Drive Shaft | | 36 | | 59.5 | 40 | 792 | |
| | 2005.08-2009.05 | MT | F | L/R | Estate FWD BMP | | GCI83016 | Inner Joint | | | 28 | | | 32 | |

| | YEAR | TRANSM. | F/R | L/R | BODY STYLE & DRIVE TYPE & ENGINE | REMARKS | G-AP Ref. | PRODUCT | ABS | Technical Specifications A | B | C | H | L | P |
|---|---|---|---|---|---|---|---|---|---|---|---|---|---|---|---|
| **VW** **Passat Estate/Variant** | | | | | | | | | | | | | | | |
| 2.0 (103 kw) | 2005.08-2010.11 | 6MT | F | L | Estate 4WD BKP;CBAB | | GDS83295 | Drive Shaft | | 36 | | 59.5 | 40 | 491 | |
| | 2005.08-2010.11 | 6MT | F | R | Estate 4WD BKP;CBAB | | GDS83266 | Drive Shaft | | 36 | | 59.5 | 40 | 601 | |
| | 2005.08-2010.11 | 6MT | F | L/R | Estate 4WD BKP;CBAB | | GCO83002 | Outer Joint | | 36 | 27 | 59.5 | 40 | 66 | I |
| | 2005.08-2010.11 | 6MT | F | L/R | Estate 4WD BKP;CBAB | | GCI83016 | Inner Joint | | | 28 | | | 32 | |
| | 2005.08-2010.11 | 6MT | R | L | Estate 4WD BKP;CBAB | Date to:2006.05 | GDS54017 | Drive Shaft | | 36 | | 59.5 | 40 | 609 | |
| | 2005.08-2010.11 | 6MT | R | L | Estate 4WD BKP;CBAB | Date from:2006.06 | GDS61284 | Drive Shaft | | 36 | | 59.5 | 40 | 594 | |
| | 2005.08-2010.11 | 6MT | R | R | Estate 4WD BKP;CBAB | Date from:2006.06 | GDS61293 | Drive Shaft | | 36 | | 59.5 | 40 | 631 | |
| | 2005.08-2010.11 | 6MT | R | R | Estate 4WD BKP;CBAB | Date to:2006.05 | GDS81597 | Drive Shaft | | 36 | | 59.5 | 40 | 652 | |
| | 2005.08-2010.11 | 6MT | R | L/R | Estate 4WD BKP;CBAB | | GCI35026 | Outer Joint | | 36 | 33 | 59.5 | 40 | 61 | |
| | 2005.08-2010.11 | 6MT | R | L/R | Estate 4WD BKP;CBAB | | GCO83037 | Outer Joint | | 36 | 30 | 59.5 | 40.5 | 56 | I |
| | 2005.08-2010.11 | 6MT | R | L/R | Estate 4WD BKP;CBAB | | GCI53002 | Inner Joint | | | 33 | | | 34 | |
| | 2005.08-2010.11 | 6MT | R | L/R | Estate 4WD BKP;CBAB | | GCI82447 | Inner Joint | | | 33 | | | 34 | |
| | 2005.08-2010.11 | 6AT/6MT | F | L/R | Estate FWD BKP;CBAB | Date to:2007.02,Date from:2007.03 | GCO83002 | Outer Joint | | 36 | 27 | 59.5 | 40 | 66 | I |
| | 2005.08-2010.11 | 6AT/6MT | F | L/R | Estate FWD BKP;CBAB | For PR code:F4E/F5F/F6L,Date from:2007.03,For PR code:F4E/F5F/F6L,Date from:2007.03,Date to:2007.12,For taxis | GCO83101 | Outer Joint | | 36 | 27 | 59.5 | 40 | 65 | M |
| | 2005.08-2010.11 | AT | F | L | Estate FWD BKP;CBAB | Date to:2007.02,Date from:2007.03,For PR code:F5A/F4F/F4G/F4J/F4Q/F4X/F5G/F6K/F6M | GDS54013 | Drive Shaft | | 36 | | 59.5 | 40 | 479.5 | |
| | 2005.08-2010.11 | AT | F | L | Estate FWD BKP;CBAB | Date from:2007.03,TJ | GDS83241 | Drive Shaft | | 36 | | 59.5 | 40 | 475 | |
| | 2005.08-2010.11 | AT | F | L | Estate FWD BKP;CBAB | Date from:2007.03;For PR code:F4E/F5F/F6L,For taxis | GDS83381 | Drive Shaft | | 36 | | 59.5 | 40 | 483 | |
| | 2005.08-2010.11 | AT | F | R | Estate FWD BKP;CBAB | For PR code:F5A/F4F/F4G/F4J,For PR code:02:F4Q/F4X/F5G/F6K | GDS54011 | Drive Shaft | | 36 | | 59.5 | 40 | 755 | |
| | 2005.08-2010.11 | AT | F | L/R | Estate FWD BKP;CBAB | TJ | GCI54004 | Inner Joint | | | 34 | | | 81 | |
| | 2005.08-2010.11 | AT | F | L/R | Estate FWD BKP;CBAB | AAR | GCI61057 | Inner Joint | | | 34 | | | 89 | |
| | 2005.08-2010.11 | MT | F | L | Estate FWD BKP;CBAB | | GDS83236 | Drive Shaft | | 36 | | 59.5 | 40 | 484 | |
| | 2005.08-2010.11 | MT | F | L | Estate FWD BKP;CBAB | For Engine Code:CBAA,Wheels:Steel Wheels | GDS83295 | Drive Shaft | | 36 | | 59.5 | 40 | 491 | |
| | 2005.08-2010.11 | MT | F | R | Estate FWD BKP;CBAB | Date From:2007.03;For PR code:F4E/F5F/F6L | GDS61126 | Drive Shaft | | 36 | | 59.5 | 40 | 793 | |
| | 2005.08-2010.11 | MT | F | R | Estate FWD BKP;CBAB | Date from:2008.03;For PR code:F4E/F5F/F6L,For taxis | GDS61147 | Drive Shaft | | 36 | | 59.5 | 40 | 795 | |
| | 2005.08-2010.11 | MT | F | R | Estate FWD BKP;CBAB | For PR code:F5A/F4F/F4G/F4J,For PR code:02:F4Q/F4X/F5G/F6K,For Engine no:CBAA,Wheels:Steel Wheels | GDS83313 | Drive Shaft | | 36 | | 59.5 | 40 | 792 | |
| | 2005.08-2010.11 | MT | F | L | Estate FWD BKP;CBAB | For Engine no:CBAA;Wheels:Steel Wheels | GCI61069 | Inner Joint | | | 28 | | | 32 | |
| | 2005.08-2010.11 | MT | F | L/R | Estate FWD BKP;CBAB | | GCI83016 | Inner Joint | | | 28 | | | 32 | |
| | 2010.08-2014.12 | 6MT | F | L | Estate 4WD CFFB | | GDS83295 | Drive Shaft | | 36 | | 59.5 | 40 | 491 | |
| | 2010.08-2014.12 | 6MT | F | R | Estate 4WD CFFB | | GDS83266 | Drive Shaft | | 36 | | 59.5 | 40 | 601 | |
| | 2010.08-2014.12 | 6MT | F | L/R | Estate 4WD CFFB | | GCO83002 | Outer Joint | | 36 | 27 | 59.5 | 40 | 66 | I |
| | 2010.08-2014.12 | 6MT | F | L/R | Estate 4WD CFFB | | GCI83016 | Inner Joint | | | 28 | | | 32 | |
| | 2010.08-2014.12 | 6MT | R | L | Estate 4WD CFFB | | GDS61284 | Drive Shaft | | 36 | | 59.5 | 40 | 594 | |
| | 2010.08-2014.12 | 6MT | R | R | Estate 4WD CFFB | | GDS61293 | Drive Shaft | | 36 | | 59.5 | 40 | 631 | |
| | 2010.08-2014.12 | 6MT | R | L/R | Estate 4WD CFFB | | GCI35026 | Outer Joint | | 36 | 33 | 59.5 | 40 | 61 | |
| | 2010.08-2014.12 | 6MT | R | L/R | Estate 4WD CFFB | | GCI53002 | Inner Joint | | | 33 | | | 34 | |
| | 2010.08-2014.12 | 6MT | R | L/R | Estate 4WD CFFB | | GCI82447 | Inner Joint | | | 33 | | | 34 | |
| | 2010.08-2014.12 | 6DCT | F | L | Estate FWD CFFB | | GDS54013 | Drive Shaft | | 36 | | 59.5 | 40 | 479.5 | |
| | 2010.08-2014.12 | 6DCT | F | R | Estate FWD CFFB | | GDS54011 | Drive Shaft | | 36 | | 59.5 | 40 | 755 | |
| | 2010.08-2014.12 | 6DCT | F | L/R | Estate FWD CFFB | TJ | GCI54004 | Inner Joint | | | 34 | | | 81 | |
| | 2010.08-2014.12 | 6DCT | F | L/R | Estate FWD CFFB | AAR | GCI61057 | Inner Joint | | | 34 | | | 89 | |
| | 2010.08-2014.12 | 6MT | F | L | Estate FWD CFFB | | GDS83295 | Drive Shaft | | 36 | | 59.5 | 40 | 491 | |
| | 2010.08-2014.12 | 6MT | F | R | Estate FWD CFFB | For PR code:A8B/A8C/A8G/A9I | GDS61126 | Drive Shaft | | 36 | | 59.5 | 40 | 793 | |
| | 2010.08-2014.12 | 6MT | F | R | Estate FWD CFFB | For PR code:A8B/A8C/A8G/A9I | GDS83313 | Drive Shaft | | 36 | | 59.5 | 40 | 792 | |
| | 2010.08-2014.12 | 6MT | F | L/R | Estate FWD CFFB | For PR code:A8T | GCO83101 | Outer Joint | | 36 | 27 | 59.5 | 40 | 65 | M |
| | 2010.08-2014.12 | 6MT | F | L/R | Estate FWD CFFB | For PR code:A8T | GCI61069 | Inner Joint | | | 28 | | | 32 | |
| | 2010.08-2014.12 | 6MT | F | L/R | Estate FWD CFFB | For PR code:A8B/A8C/A8G/A9I | GCI83016 | Inner Joint | | | 28 | | | 32 | |
| | 2010.08-2014.12 | 6MT/7DCT | F | L/R | Estate FWD CFFB | Transmission:6MT;For PR code:A8B/A8C/A8G/A9I;Transmission:7DCT | GCO83002 | Outer Joint | | 36 | 27 | 59.5 | 40 | 66 | I |
| | 2010.08-2014.12 | MT | F | L | Estate FWD CFFB | | GDS83236 | Drive Shaft | | 36 | | 59.5 | 40 | 484 | |
| | 2010.08-2014.12 | 6DCT | F | L | Estate Van FWD CFFB | | GDS54013 | Drive Shaft | | 36 | | 59.5 | 40 | 479.5 | |
| | 2010.08-2014.12 | 6DCT | F | R | Estate Van FWD CFFB | | GDS54011 | Drive Shaft | | 36 | | 59.5 | 40 | 755 | |
| | 2010.08-2014.12 | 6DCT | F | L/R | Estate Van FWD CFFB | TJ | GCI54004 | Inner Joint | | | 34 | | | 81 | |
| | 2010.08-2014.12 | 6DCT | F | L/R | Estate Van FWD CFFB | AAR | GCI61057 | Inner Joint | | | 34 | | | 89 | |
| | 2010.08-2014.12 | 6MT | F | L | Estate Van FWD CFFB | | GDS83295 | Drive Shaft | | 36 | | 59.5 | 40 | 491 | |
| | 2010.08-2014.12 | 6MT | F | R | Estate Van FWD CFFB | For PR code:A8B/A8C/A8G/A9I | GDS61126 | Drive Shaft | | 36 | | 59.5 | 40 | 793 | |
| | 2010.08-2014.12 | 6MT | F | R | Estate Van FWD CFFB | For PR code:A8B/A8C/A8G/A9I | GDS83313 | Drive Shaft | | 36 | | 59.5 | 40 | 792 | |
| | 2010.08-2014.12 | 6MT | F | L/R | Estate Van FWD CFFB | Transmission:6MT;For PR code:A8B/A8C/A8G/A9I;Transmission:7DCT | GCO83002 | Outer Joint | | 36 | 27 | 59.5 | 40 | 66 | I |
| | 2010.08-2014.12 | 6MT | F | L/R | Estate Van FWD CFFB | For PR code:A8T | GCO83101 | Outer Joint | | 36 | 27 | 59.5 | 40 | 65 | M |
| | 2010.08-2014.12 | 6MT | F | L/R | Estate Van FWD CFFB | For PR code:A8T | GCI61069 | Inner Joint | | | 28 | | | 32 | |
| | 2010.08-2014.12 | 6MT | F | L/R | Estate Van FWD CFFB | For PR code:A8B/A8C/A8G/A9I | GCI83016 | Inner Joint | | | 28 | | | 32 | |
| 2.0 (105 kw) | 2009.01-2010.11 | 6AT/6MT | F | L/R | Estate FWD CBAC | | GCI54004 | Inner Joint | | | 34 | | | 81 | |
| | 2009.01-2010.11 | 6AT/6MT | F | L/R | Estate FWD CBAC | Original Tripod Design | GCI61057 | Inner Joint | | | 34 | | | 89 | |
| | 2009.01-2010.11 | 6AT/6MT | F | L/R | Estate FWD CBAC | | GCI83016 | Inner Joint | | | 28 | | | 32 | |
| | 2009.01-2010.11 | AT | F | L | Estate FWD CBAC | | GDS54013 | Drive Shaft | | 36 | | 59.5 | 40 | 479.5 | |
| | 2009.01-2010.11 | AT | F | L | Estate FWD CBAC | | GDS83241 | Drive Shaft | | 36 | | 59.5 | 40 | 475 | |
| | 2009.01-2010.11 | AT | F | R | Estate FWD CBAC | | GDS54011 | Drive Shaft | | 36 | | 59.5 | 40 | 755 | |

| | YEAR | TRANSM. | F/R | L/R | BODY STYLE & DRIVE TYPE & ENGINE | REMARKS | G-AP Ref. | PRODUCT | ABS | Technical Specifications A | B | C | H | L | P |
|---|---|---|---|---|---|---|---|---|---|---|---|---|---|---|---|
| **VW** **Passat Estate/Variant** | | | | | | | | | | | | | | | |
| 2.0 (105 kw) | 2009.01-2010.11 | MT | F | L | Estate FWD CBAC | | GDS83236 | Drive Shaft | | 36 | | 59.5 | 40 | 484 | |
| | 2009.01-2010.11 | MT | F | L | Estate FWD CBAC | | GDS83295 | Drive Shaft | | 36 | | 59.5 | 40 | 491 | |
| | 2009.01-2010.11 | MT | F | R | Estate FWD CBAC | | GDS61126 | Drive Shaft | | 36 | | 59.5 | 40 | 793 | |
| | 2009.01-2010.11 | MT | F | R | Estate FWD CBAC | | GDS83313 | Drive Shaft | | 36 | | 59.5 | 40 | 792 | |
| | 2009.01-2010.11 | MT | F | L | Estate FWD CBAC | | GCO83101 | Outer Joint | | 36 | 27 | 59.5 | 40 | 65 | M |
| | 2009.01-2010.11 | | F | L/R | Estate FWD CBAC | | GCO83002 | Outer Joint | | 36 | 27 | 59.5 | 40 | 66 | I |
| 2.0 (110 kw) | 1994.01-1996.12 | MT | F | L | Estate FWD ABF | | GDS83006 | Drive Shaft | | 36 | | 53.2 | 77.5 | 557 | |
| | 1994.01-1996.12 | MT | F | R | Estate FWD ABF | | GDS83004 | Drive Shaft | | 36 | | 53.2 | 77.5 | 822 | |
| | 1994.01-1996.12 | MT | F | L/R | Estate FWD ABF | | GCO83070 | Outer Joint | | 36 | 30 | 53 | 78 | 60 | I |
| | 2005.08-2010.11 | 6AT | F | L/R | Estate FWD BLY;BLR;BVY;BVZ | | GCI61011 | Inner Joint | | 26 | 32 | 31 | 68.5 | 85 | |
| | 2005.08-2010.11 | 6AT | F | L/R | Estate FWD BLY;BLR;BVY;BVZ | | GCI61050 | Inner Joint | | 26 | 32 | 31 | 68.5 | 89 | |
| | 2005.08-2010.11 | 6AT/6MT | F | L/R | Estate FWD BLY;BLR;BVY;BVZ | | GCO83037 | Outer Joint | | 36 | 30 | 59.5 | 40.5 | 56 | I |
| | 2005.08-2010.11 | AT | F | L | Estate FWD BLY;BLR;BVY;BVZ | | GDS61093 | Drive Shaft | | 36 | 26 | 59.5 | 40.5 | 587.5 | |
| | 2005.08-2010.11 | AT | F | R | Estate FWD BLY;BLR;BVY;BVZ | | GDS61094 | Drive Shaft | | 36 | 26 | 59.5 | 40.5 | 884 | |
| | 2005.08-2010.11 | MT | F | L | Estate FWD BLY;BLR;BVY;BVZ | | GDS83294 | Drive Shaft | | 36 | | 59.5 | 38 | 519 | |
| | 2005.08-2010.11 | MT | F | R | Estate FWD BLY;BLR;BVY;BVZ | | GDS61042 | Drive Shaft | | 36 | | 59.5 | 40.5 | 814 | |
| | 2005.08-2010.11 | MT | F | L/R | Estate FWD BLY;BLR;BVY;BVZ | | GCI82447 | Inner Joint | | | 33 | | | 34 | |
| | 2005.09-2010.11 | 6AT | F | L/R | Estate 4WD BLX;BLY;BVX | Model:Passat Variant,Engine code:BLY,Model year to:2007 | GCI61011 | Inner Joint | | 26 | 32 | 31 | 68.5 | 85 | |
| | 2005.09-2010.11 | 6AT/6MT | F | L/R | Estate 4WD BLX;BLY;BVX | | GCO83037 | Outer Joint | | 36 | 30 | 59.5 | 40.5 | 56 | I |
| | 2005.09-2010.11 | 6MT | F | L | Estate 4WD BLX;BLY;BVX | | GDS83294 | Drive Shaft | | 36 | | 59.5 | 38 | 519 | |
| | 2005.09-2010.11 | 6MT | F | R | Estate 4WD BLX;BLY;BVX | For Engine code:BLY/BVX | GDS61096 | Drive Shaft | | 36 | | 59.5 | 40.5 | 799 | |
| | 2005.09-2010.11 | AT | F | L | Estate 4WD BLX;BLY;BVX | For Engine code:BLY | GDS61093 | Drive Shaft | | 36 | 26 | 59.5 | 40.5 | 587.5 | |
| | 2005.09-2010.11 | AT | F | R | Estate 4WD BLX;BLY;BVX | For Engine code:BLY | GDS61094 | Drive Shaft | | 36 | 26 | 59.5 | 40.5 | 884 | |
| | 2005.09-2010.11 | MT | F | L/R | Estate 4WD BLX;BLY;BVX | | GCI83011 | Inner Joint | | | 33 | | | 34 | |
| | 2005.09-2010.11 | 6MT | R | L | Estate 4WD BLX;BLY;BVX | Date to:2006.05 | GDS54017 | Drive Shaft | | 36 | | 59.5 | 40 | 609 | |
| | 2005.09-2010.11 | 6MT | R | L | Estate 4WD BLX;BLY;BVX | Date from:2006.06 | GDS61284 | Drive Shaft | | 36 | | 59.5 | 40 | 594 | |
| | 2005.09-2010.11 | 6MT | R | R | Estate 4WD BLX;BLY;BVX | Date from:2006.06 | GDS61293 | Drive Shaft | | 36 | | 59.5 | 40 | 631 | |
| | 2005.09-2010.11 | 6MT | R | R | Estate 4WD BLX;BLY;BVX | Date to:2006.05 | GDS81597 | Drive Shaft | | 36 | | 59.5 | 40 | 652 | |
| | 2005.09-2010.11 | 6MT | F/R | L/R | Estate 4WD BLX;BLY;BVX | | GCI82447 | Inner Joint | | | 33 | | | 34 | |
| | 2014.08-2024.03 | 6MT | F | R | Estate 4WD CRLB;DFEA;DFGA;DTSA | | GDS81889 | Drive Shaft | | 36 | | 59.5 | 40 | 614 | |
| | 2014.08-2024.03 | 6MT | F | L/R | Estate 4WD CRLB;DFEA;DFGA;DTSA | | GCO83101 | Outer Joint | | 36 | 27 | 59.5 | 40 | 65 | M |
| | 2014.08-2024.03 | 6MT | F | L/R | Estate 4WD CRLB;DFEA;DFGA;DTSA | | GCI61069 | Inner Joint | | | 28 | | | 32 | |
| | 2014.08-2024.03 | 6MT | F | L/R | Estate 4WD CRLB;DFEA;DFGA;DTSA | | GCI83016 | Inner Joint | | | 28 | | | 32 | |
| | 2014.08-2024.03 | 6MT/7AT | F | L | Estate 4WD CRLB;DFEA;DFGA;DTSA | | GDS81896 | Drive Shaft | | 36 | | 59.5 | 40 | 500 | |
| | 2014.08-2024.03 | 6MT/7AT | R | L | Estate 4WD CRLB;DFEA;DFGA;DTSA | Date to:2014.11 | GDS61331 | Drive Shaft | | 36 | | 59.5 | 40 | 606 | |
| | 2014.08-2024.03 | 6MT/7AT | R | L | Estate 4WD CRLB;DFEA;DFGA;DTSA | Date from:2014.12 | GDS61334 | Drive Shaft | | 36 | | 59.5 | 40 | 598 | |
| | 2014.08-2024.03 | 6MT/7AT | R | R | Estate 4WD CRLB;DFEA;DFGA;DTSA | Date to:2014.11 | GDS61332 | Drive Shaft | | 36 | | 59.5 | 40 | 650 | |
| | 2014.08-2024.03 | 6MT/7AT | R | R | Estate 4WD CRLB;DFEA;DFGA;DTSA | Date from:2014.12 | GDS61335 | Drive Shaft | | 36 | | 59.5 | 40 | 638 | |
| | 2014.08-2024.03 | 7AT/6MT | R | L/R | Estate 4WD CRLB;DFEA;DFGA;DTSA | Date from:2014.12 | GCI35026 | Outer Joint | | 36 | 33 | 59.5 | 40 | 61 | |
| | 2014.08-2024.03 | 7AT/6MT | R | L/R | Estate 4WD CRLB;DFEA;DFGA;DTSA | Date to:2014.11 | GCI61103 | Inner Joint | | | 33 | | | 32 | |
| | 2014.08-2024.03 | 7AT/6MT | R | L/R | Estate 4WD CRLB;DFEA;DFGA;DTSA | Date from:2014.12 | GCI82447 | Inner Joint | | | 33 | | | 34 | |
| | 2014.11-2024.03 | 6DCT | F | L | Estate FWD CRLB;DFGA;DBGA;DSRA;DSRB;DTSA;DTSB | For PR code:1PA/1PE | GDS83381 | Drive Shaft | | 36 | | 59.5 | 40 | 483 | |
| | 2014.11-2024.03 | 6DCT | F | R | Estate FWD CRLB;DFGA;DBGA;DSRA;DSRB;DTSA;DTSB | | GDS61345 | Drive Shaft | | 36 | | 59.5 | 40 | 774 | |
| | 2014.11-2024.03 | 6DCT | F | L/R | Estate FWD CRLB;DFGA;DBGA;DSRA;DSRB;DTSA;DTSB | | GCI61057 | Inner Joint | | | 34 | | | 89 | |
| | 2014.11-2024.03 | 6MT | F | L | Estate FWD CRLB;DFGA;DBGA;DSRA;DSRB;DTSA;DTSB | | GDS81896 | Drive Shaft | | 36 | | 59.5 | 40 | 500 | |
| | 2014.11-2024.03 | 6MT | F | R | Estate FWD CRLB;DFGA;DBGA;DSRA;DSRB;DTSA;DTSB | | GDS61101 | Drive Shaft | | 36 | | 59.5 | 40 | 803 | |
| | 2014.11-2024.03 | 6MT | F | L/R | Estate FWD CRLB;DFGA;DBGA;DSRA;DSRB;DTSA;DTSB | | GCI83016 | Inner Joint | | | 28 | | | 32 | |
| | 2014.11-2024.03 | 6MT/6DCT/7DCT | F | L/R | Estate FWD CRLB;DFGA;DBGA;DSRA;DSRB;DTSA;DTSB | | GCO83101 | Outer Joint | | 36 | 27 | 59.5 | 40 | 65 | M |
| | 2014.11-2024.03 | 7DCT | F | L | Estate FWD CRLB;DFGA;DBGA;DSRA;DSRB;DTSA;DTSB | | GDS82351 | Drive Shaft | | 36 | 37 | 59.5 | 40 | 568 | |
| | 2014.11-2024.03 | 7DCT | F | R | Estate FWD CRLB;DFGA;DBGA;DSRA;DSRB;DTSA;DTSB | | GDS83613 | Drive Shaft | | 36 | 37 | 59.5 | 40 | 921 | |
| | 2014.11-2024.03 | 7DCT | F | L | Estate FWD CRLB;DFGA;DBGA;DSRA;DSRB;DTSA;DTSB | | GCI81158 | Inner Joint | | 37 | 34 | 34.5 | 65.5 | 83 | |
| | 2014.11-2024.03 | 7DCT | F | R | Estate FWD CRLB;DFGA;DBGA;DSRA;DSRB;DTSA;DTSB | | GCI82108 | Inner Joint | | 37 | 34 | 40 | 77.5 | 103.5 | |
| | 2024.04- | 7AT | F | L | Estate FWD DXPA | | GCI81158 | Inner Joint | | 37 | 34 | 34.5 | 65.5 | 83 | |
| | 2024.04- | 7DCT | F | L | Estate FWD DXPA | | GDS82351 | Drive Shaft | | 36 | 37 | 59.5 | 40 | 568 | |
| | 2024.04- | 7DCT | F | R | Estate FWD DXPA | | GDS83613 | Drive Shaft | | 36 | 37 | 59.5 | 40 | 921 | |
| 2.0 (120 kw) | 2005.08-2009.05 | AT | F | L | Estate FWD BUZ | | GDS54013 | Drive Shaft | | 36 | | 59.5 | 40 | 479.5 | |
| | 2005.08-2009.05 | AT | F | L | Estate FWD BUZ | | GDS83241 | Drive Shaft | | 36 | | 59.5 | 40 | 475 | |
| | 2005.08-2009.05 | AT | F | R | Estate FWD BUZ | | GDS54011 | Drive Shaft | | 36 | | 59.5 | 40 | 755 | |
| | 2005.08-2009.05 | AT | F | L | Estate FWD BUZ | | GCI54004 | Inner Joint | | | 34 | | | 81 | |
| | 2005.08-2009.05 | MT | F | L | Estate FWD BUZ | | GDS83236 | Drive Shaft | | 36 | | 59.5 | 40 | 484 | |
| | 2005.08-2009.05 | MT | F | R | Estate FWD BUZ | | GDS61126 | Drive Shaft | | 36 | | 59.5 | 40 | 793 | |
| | 2005.08-2009.05 | | F | L/R | Estate FWD BUZ | Date From:2007.03;Date To:2007.12;For PR code:F4E/F5F/F6L;For taxis | GCO83101 | Outer Joint | | 36 | 27 | 59.5 | 40 | 65 | M |
| 2.0 (125 kw) | 2005.08-2010.11 | 6MT | F | L | Estate FWD BMR;CBBB | For Engine code:CBBB,For light alloy rims;For Engine code:BMR | GDS83236 | Drive Shaft | | 36 | | 59.5 | 40 | 484 | |
| | 2005.08-2010.11 | 6MT | F | L | Estate FWD BMR;CBBB | For Engine code:CBBB,For steel rims | GDS83295 | Drive Shaft | | 36 | | 59.5 | 40 | 491 | |
| | 2005.08-2010.11 | AT | F | L | Estate FWD BMR;CBBB | | GDS83241 | Drive Shaft | | 36 | | 59.5 | 40 | 475 | |

| | YEAR | TRANSM. | F/R | L/R | BODY STYLE & DRIVE TYPE & ENGINE | REMARKS | G-AP Ref. | PRODUCT | ABS | Technical Specifications A | B | C | H | L | P |
|---|---|---|---|---|---|---|---|---|---|---|---|---|---|---|---|
| **VW** **Passat Estate/Variant** | | | | | | | | | | | | | | | |
| 2.0 (125 kw) | 2005.08-2010.11 | AT | F | R | Estate FWD BMR;CBBB | | GDS54011 | Drive Shaft | | 36 | | 59.5 | 40 | 755 | |
| | 2005.08-2010.11 | AT | F | L/R | Estate FWD BMR;CBBB | | GCI54004 | Inner Joint | | | 34 | | | 81 | |
| | 2005.08-2010.11 | AT/MT | F | L/R | Estate FWD BMR;CBBB | | GCO83101 | Outer Joint | | 36 | 27 | 59.5 | 40 | 65 | M |
| | 2005.08-2010.11 | MT | F | R | Estate FWD BMR;CBBB | | GDS61126 | Drive Shaft | | 36 | | 59.5 | 40 | 793 | |
| | 2005.08-2010.11 | MT | F | R | Estate FWD BMR;CBBB | | GDS83313 | Drive Shaft | | 36 | | 59.5 | 40 | 792 | |
| | 2005.08-2010.11 | MT | F | R | Estate FWD BMR;CBBB | | GCI61002 | Inner Joint | | | 28 | | | 31.8 | |
| | 2009.05-2010.11 | 6AT | F | L | Estate 4WD CBBB | | GDS54013 | Drive Shaft | | 36 | | 59.5 | 40 | 479.5 | |
| | 2009.05-2010.11 | 6AT | F | R | Estate 4WD CBBB | | GDS61295 | Drive Shaft | | 36 | | 59.5 | 40 | 555 | |
| | 2009.05-2010.11 | 6AT | F | R | Estate 4WD CBBB | | GCO83002 | Outer Joint | | 36 | 27 | 59.5 | 40 | 66 | I |
| | 2009.05-2010.11 | AT | F | L/R | Estate 4WD CBBB | | GCI61057 | Inner Joint | | | 34 | | | 89 | |
| | 2009.05-2010.11 | | F | L | Estate 4WD CBBB | Date From:2009.11 | GCI54004 | Inner Joint | | | 34 | | | 81 | |
| | 2009.05-2010.11 | 6AT | R | L | Estate 4WD CBBB | | GDS61284 | Drive Shaft | | 36 | | 59.5 | 40 | 594 | |
| | 2009.05-2010.11 | 6AT | R | R | Estate 4WD CBBB | | GDS61293 | Drive Shaft | | 36 | | 59.5 | 40 | 631 | |
| | 2009.05-2010.11 | 6AT | R | L/R | Estate 4WD CBBB | | GCI35026 | Outer Joint | | 36 | 33 | 59.5 | 40 | 61 | |
| | 2009.05-2010.11 | 6AT | R | L/R | Estate 4WD CBBB | | GCI53002 | Inner Joint | | | 33 | | | 34 | |
| | 2009.05-2010.11 | 6AT | R | L/R | Estate 4WD CBBB | | GCI82447 | Inner Joint | | | 33 | | | 34 | |
| | 2010.08-2013.01 | 6DCT | F | L | Estate 4WD CFGB | For PR code:A8B/A8C/A8G/A9I | GDS54013 | Drive Shaft | | 36 | | 59.5 | 40 | 479.5 | |
| | 2010.08-2013.01 | 6DCT | F | L | Estate 4WD CFGB | For PR code:8AT | GDS83381 | Drive Shaft | | 36 | | 59.5 | 40 | 483 | |
| | 2010.08-2013.01 | 6DCT | F | R | Estate 4WD CFGB | | GDS61295 | Drive Shaft | | 36 | | 59.5 | 40 | 555 | |
| | 2010.08-2013.01 | 6DCT | F | L/R | Estate 4WD CFGB | For PR code:A8B/A8C/A8G/A9I | GCO83002 | Outer Joint | | 36 | 27 | 59.5 | 40 | 66 | I |
| | 2010.08-2013.01 | 6DCT | F | L/R | Estate 4WD CFGB | For PR code:8AT | GCO83101 | Outer Joint | | 36 | 27 | 59.5 | 40 | 65 | M |
| | 2010.08-2013.01 | AT | F | L | Estate 4WD CFGB | | GCI54004 | Inner Joint | | | 34 | | | 81 | |
| | 2010.08-2013.01 | AT/6DCT | F | L/R | Estate 4WD CFGB | | GCI61057 | Inner Joint | | | 34 | | | 89 | |
| | 2010.08-2013.01 | MT/Semi-AT | F | L | Estate 4WD CFGB | | GDS83236 | Drive Shaft | | 36 | | 59.5 | 40 | 484 | |
| | 2010.08-2013.01 | 6AT/6MT | R | L | Estate 4WD CFGB | | GDS61284 | Drive Shaft | | 36 | | 59.5 | 40 | 594 | |
| | 2010.08-2013.01 | 6AT/6MT | R | R | Estate 4WD CFGB | | GDS61293 | Drive Shaft | | 36 | | 59.5 | 40 | 631 | |
| | 2010.08-2013.01 | 6AT/6MT | R | L/R | Estate 4WD CFGB | | GCI35026 | Outer Joint | | 36 | 33 | 59.5 | 40 | 61 | |
| | 2010.08-2013.01 | 6AT/6MT | R | L/R | Estate 4WD CFGB | | GCI82447 | Inner Joint | | | 33 | | | 34 | |
| | 2010.08-2014.12 | 6DCT | F | L | Estate FWD CFGB;CLLA | Date to:2013.05 | GDS54013 | Drive Shaft | | 36 | | 59.5 | 40 | 479.5 | |
| | 2010.08-2014.12 | 6DCT | F | L | Estate FWD CFGB;CLLA | Date from:2013.06 | GDS61310 | Drive Shaft | | 36 | | 59.4 | 40 | 477 | |
| | 2010.08-2014.12 | 6DCT | F | L | Estate FWD CFGB;CLLA | Date to:2013.05 | GDS83241 | Drive Shaft | | 36 | | 59.5 | 40 | 475 | |
| | 2010.08-2014.12 | 6DCT | F | R | Estate FWD CFGB;CLLA | Date to:2013.05 | GDS54011 | Drive Shaft | | 36 | | 59.5 | 40 | 755 | |
| | 2010.08-2014.12 | 6DCT | F | R | Estate FWD CFGB;CLLA | Date from:2013.06 | GDS83354 | Drive Shaft | | 36 | | 59.5 | 40 | 763 | |
| | 2010.08-2014.12 | 6MT | F | L | Estate FWD CFGB;CLLA | Date to:2013.05 | GDS83236 | Drive Shaft | | 36 | | 59.5 | 40 | 484 | |
| | 2010.08-2014.12 | 6MT | F | R | Estate FWD CFGB;CLLA | | GDS61126 | Drive Shaft | | 36 | | 59.5 | 40 | 793 | |
| | 2010.08-2014.12 | 6MT | F | R | Estate FWD CFGB;CLLA | Date from:2013.06 | GDS83313 | Drive Shaft | | 36 | | 59.5 | 40 | 792 | |
| | 2010.08-2014.12 | 6MT | F | L/R | Estate FWD CFGB;CLLA | Date from:2013.06 | GCO83104 | Outer Joint | | 36 | 28 | 59.4 | 40 | 65 | I |
| | 2010.08-2014.12 | 6MT/6DCT | F | L/R | Estate FWD CFGB;CLLA | Date from:2013.06 | GCO81352 | Outer Joint | | 36 | 28 | 59.5 | 40 | 65 | I |
| | 2010.08-2014.12 | 6MT/6DCT | F | L/R | Estate FWD CFGB;CLLA | Date to:2013.05 | GCO83101 | Outer Joint | | 36 | 27 | 59.5 | 40 | 65 | M |
| | 2010.08-2014.12 | AT | F | L | Estate FWD CFGB;CLLA | | GCI54004 | Inner Joint | | | 34 | | | 81 | |
| | 2010.08-2014.12 | 6DCT | F | L | Estate Van FWD CFGB;CLLA | Date to:2013.05 | GDS54013 | Drive Shaft | | 36 | | 59.5 | 40 | 479.5 | |
| | 2010.08-2014.12 | 6DCT | F | L | Estate Van FWD CFGB;CLLA | Date from:2013.06 | GDS61310 | Drive Shaft | | 36 | | 59.4 | 40 | 477 | |
| | 2010.08-2014.12 | 6DCT | F | L | Estate Van FWD CFGB;CLLA | Date to:2013.05 | GDS83241 | Drive Shaft | | 36 | | 59.5 | 40 | 475 | |
| | 2010.08-2014.12 | 6DCT | F | R | Estate Van FWD CFGB;CLLA | Date to:2013.05 | GDS54011 | Drive Shaft | | 36 | | 59.5 | 40 | 755 | |
| | 2010.08-2014.12 | 6DCT | F | R | Estate Van FWD CFGB;CLLA | Date from:2013.06 | GDS83354 | Drive Shaft | | 36 | | 59.5 | 40 | 763 | |
| | 2010.08-2014.12 | 6DCT | F | L | Estate Van FWD CFGB;CLLA | Date from:2013.06 | GCI81075 | Inner Joint | | | 26 | | | 89 | |
| | 2010.08-2014.12 | 6DCT | F | R | Estate Van FWD CFGB;CLLA | Date from:2013.06 | GCI61057 | Inner Joint | | | 34 | | | 89 | |
| | 2010.08-2014.12 | 6MT | F | L | Estate Van FWD CFGB;CLLA | Date to:2013.05 | GDS83236 | Drive Shaft | | 36 | | 59.5 | 40 | 484 | |
| | 2010.08-2014.12 | 6MT | F | R | Estate Van FWD CFGB;CLLA | Date to:2013.05 | GDS61126 | Drive Shaft | | 36 | | 59.5 | 40 | 793 | |
| | 2010.08-2014.12 | 6MT | F | R | Estate Van FWD CFGB;CLLA | | GDS83313 | Drive Shaft | | 36 | | 59.5 | 40 | 792 | |
| | 2010.08-2014.12 | 6MT | F | L/R | Estate Van FWD CFGB;CLLA | Date from:2013.06 | GCO83104 | Outer Joint | | 36 | 28 | 59.4 | 40 | 65 | I |
| | 2010.08-2014.12 | 6MT/6DCT | F | L/R | Estate Van FWD CFGB;CLLA | Date from:2013.06 | GCO81352 | Outer Joint | | 36 | 28 | 59.5 | 40 | 65 | I |
| | 2010.08-2014.12 | 6MT/6DCT | F | L/R | Estate Van FWD CFGB;CLLA | Date to:2013.05 | GCO83101 | Outer Joint | | 36 | 27 | 59.5 | 40 | 65 | M |
| 2.0 (130 kw) | 2010.08-2014.12 | 6DCT | F | L | Estate Van FWD CFGC | | GDS61310 | Drive Shaft | | 36 | | 59.4 | 40 | 477 | |
| | 2010.08-2014.12 | 6DCT | F | R | Estate Van FWD CFGC | | GDS83354 | Drive Shaft | | 36 | | 59.5 | 40 | 763 | |
| | 2010.08-2014.12 | 6MT | F | L | Estate Van FWD CFGC | Date from:2013.06 | GDS83236 | Drive Shaft | | 36 | | 59.5 | 40 | 484 | |
| | 2010.08-2014.12 | 6MT | F | R | Estate Van FWD CFGC | Date to:2013.05 | GDS61126 | Drive Shaft | | 36 | | 59.5 | 40 | 793 | |
| | 2010.08-2014.12 | 6MT | F | R | Estate Van FWD CFGC | Date from:2013.06 | GDS83313 | Drive Shaft | | 36 | | 59.5 | 40 | 792 | |
| | 2010.08-2014.12 | 6MT | F | L/R | Estate Van FWD CFGC | Date to:2013.05 | GCO83101 | Outer Joint | | 36 | 27 | 59.5 | 40 | 65 | M |
| | 2010.08-2014.12 | 6MT/6DCT | F | L/R | Estate Van FWD CFGC | Transmission:6MT,Date from:2013.06;Transmission:6DCT | GCO83104 | Outer Joint | | 36 | 28 | 59.4 | 40 | 65 | I |
| | 2012.12-2014.12 | 6AT/6MT | F | L/R | Estate FWD CFGC | | GCO83104 | Outer Joint | | 36 | 28 | 59.4 | 40 | 65 | I |
| | 2012.12-2014.12 | 6DCT | F | L | Estate FWD CFGC | | GDS61310 | Drive Shaft | | 36 | | 59.4 | 40 | 477 | |
| | 2012.12-2014.12 | 6DCT | F | R | Estate FWD CFGC | | GDS83354 | Drive Shaft | | 36 | | 59.5 | 40 | 763 | |
| | 2012.12-2014.12 | 6DCT | F | L | Estate FWD CFGC | | GCI81075 | Inner Joint | | | 26 | | | 89 | |
| | 2012.12-2014.12 | 6DCT | F | R | Estate FWD CFGC | | GCI61057 | Inner Joint | | | 34 | | | 89 | |

| | YEAR | TRANSM. | F/R | L/R | BODY STYLE & DRIVE TYPE & ENGINE | REMARKS | G-AP Ref. | PRODUCT | ABS | Technical Specifications A | B | C | H | L | P |
|---|---|---|---|---|---|---|---|---|---|---|---|---|---|---|---|
| **VW** **Passat Estate/Variant** | | | | | | | | | | | | | | | |
| 2.0 (130 kw) | 2012.12-2014.12 | 6MT | F | L | Estate FWD CFGC | | GDS83236 | Drive Shaft | | 36 | | 59.5 | 40 | 484 | |
| | 2012.12-2014.12 | 6MT | F | R | Estate FWD CFGC | | GDS61126 | Drive Shaft | | 36 | | 59.5 | 40 | 793 | |
| | 2012.12-2014.12 | 6MT | F | R | Estate FWD CFGC | Date from:2013.06 | GDS83313 | Drive Shaft | | 36 | | 59.5 | 40 | 792 | |
| | 2012.12-2014.12 | 6MT | F | L/R | Estate FWD CFGC | Date to:2013.05 | GCO83101 | Outer Joint | | 36 | 27 | 59.5 | 40 | 65 | M |
| | 2012.12-2014.12 | 6MT/6DCT | F | L/R | Estate FWD CFGC | Date from:2013.06 | GCO81352 | Outer Joint | | 36 | 28 | 59.5 | 40 | 65 | I |
| | 2013.01-2014.12 | 6AT | F | L | Estate 4WD CFGC | For PR code:A8B/A8C/A8G/A9I | GDS54013 | Drive Shaft | | 36 | | 59.5 | 40 | 479.5 | |
| | 2013.01-2014.12 | 6AT | F | R | Estate 4WD CFGC | | GDS61295 | Drive Shaft | | 36 | | 59.5 | 40 | 555 | |
| | 2013.01-2014.12 | 6DCT | F | L | Estate 4WD CFGC | For PR code:8AT | GDS83381 | Drive Shaft | | 36 | | 59.5 | 40 | 483 | |
| | 2013.01-2014.12 | 6MT | F | L/R | Estate 4WD CFGC | For PR code:A8T | GCO83101 | Outer Joint | | 36 | 27 | 59.5 | 40 | 65 | M |
| | 2013.01-2014.12 | AT | F | L | Estate 4WD CFGC | | GCI54004 | Inner Joint | | | 34 | | | 81 | |
| | 2013.01-2014.12 | AT/6DCT | F | L/R | Estate 4WD CFGC | | GCI61057 | Inner Joint | | | 34 | | | 89 | |
| | 2013.01-2014.12 | | F | L/R | Estate 4WD CFGC | | GCO83002 | Outer Joint | | 36 | 27 | 59.5 | 40 | 66 | I |
| | 2013.01-2014.12 | 6AT | R | L | Estate 4WD CFGC | | GDS61284 | Drive Shaft | | 36 | | 59.5 | 40 | 594 | |
| | 2013.01-2014.12 | 6AT | R | R | Estate 4WD CFGC | | GDS61293 | Drive Shaft | | 36 | | 59.5 | 40 | 631 | |
| | 2013.01-2014.12 | 6AT | R | L/R | Estate 4WD CFGC | | GCI35026 | Outer Joint | | 36 | 33 | 59.5 | 40 | 61 | |
| | 2013.01-2014.12 | 6AT | R | L/R | Estate 4WD CFGC | | GCI82447 | Inner Joint | | | 33 | | | 34 | |
| 2.0 (135 kw) | 2015.07-2016.05 | 6AT | F | R | Estate FWD CUPA | | GDS61345 | Drive Shaft | | 36 | | 59.5 | 40 | 774 | |
| | 2015.07-2016.05 | 6DCT | F | L | Estate FWD CUPA | | GDS83381 | Drive Shaft | | 36 | | 59.5 | 40 | 483 | |
| | 2015.07-2016.05 | 6DCT | F | L/R | Estate FWD CUPA | | GCI61057 | Inner Joint | | | 34 | | | 89 | |
| | 2015.07-2016.05 | 6MT | F | L/R | Estate FWD CUPA | For PR code:A8T | GCO83101 | Outer Joint | | 36 | 27 | 59.5 | 40 | 65 | M |
| 2.0 (140 kw) | 2014.11-2024.03 | 6DCT | F | L | Estate 4WD DDAA;DFCA;DFHA | | GDS83381 | Drive Shaft | | 36 | | 59.5 | 40 | 483 | |
| | 2014.11-2024.03 | 6DCT | F | L/R | Estate 4WD DDAA;DFCA;DFHA | | GCI61057 | Inner Joint | | | 34 | | | 89 | |
| | 2014.11-2024.03 | 6DCT/7DCT | F | R | Estate 4WD DDAA;DFCA;DFHA | | GDS61346 | Drive Shaft | | 36 | | 59.5 | 40 | 589 | |
| | 2014.11-2024.03 | 6DCT/7DCT | F | L/R | Estate 4WD DDAA;DFCA;DFHA | | GCO83101 | Outer Joint | | 36 | 27 | 59.5 | 40 | 65 | M |
| | 2014.11-2024.03 | 7DCT | F | L | Estate 4WD DDAA;DFCA;DFHA | | GDS82351 | Drive Shaft | | 36 | 37 | 59.5 | 40 | 568 | |
| | 2014.11-2024.03 | 7DCT | F | L | Estate 4WD DDAA;DFCA;DFHA | | GCI81158 | Inner Joint | | 37 | 34 | 34.5 | 65.5 | 83 | |
| | 2014.11-2024.03 | 7DCT | F | R | Estate 4WD DDAA;DFCA;DFHA | | GCI61057 | Inner Joint | | | 34 | | | 89 | |
| | 2014.11-2024.03 | 6AT/7AT | R | L | Estate 4WD DDAA;DFCA;DFHA | Date to:2014.11 | GDS61331 | Drive Shaft | | 36 | | 59.5 | 40 | 606 | |
| | 2014.11-2024.03 | 6AT/7AT | R | L | Estate 4WD DDAA;DFCA;DFHA | Date from:2014.12 | GDS61334 | Drive Shaft | | 36 | | 59.5 | 40 | 598 | |
| | 2014.11-2024.03 | 6AT/7AT | R | R | Estate 4WD DDAA;DFCA;DFHA | Date to:2014.11 | GDS61332 | Drive Shaft | | 36 | | 59.5 | 40 | 650 | |
| | 2014.11-2024.03 | 6AT/7AT | R | R | Estate 4WD DDAA;DFCA;DFHA | Date from:2014.12 | GDS61335 | Drive Shaft | | 36 | | 59.5 | 40 | 638 | |
| | 2014.11-2024.03 | 6DCT/7DCT | R | L/R | Estate 4WD DDAA;DFCA;DFHA | | GCI35026 | Outer Joint | | 36 | 33 | 59.5 | 40 | 61 | |
| | 2014.11-2024.03 | 6DCT/7DCT | R | L/R | Estate 4WD DDAA;DFCA;DFHA | Date from:2014.12 | GCI53002 | Inner Joint | | | 33 | | | 34 | |
| | 2014.11-2024.03 | 6DCT/7DCT | R | L/R | Estate 4WD DDAA;DFCA;DFHA | Date to:2014.11 | GCI61103 | Inner Joint | | | 33 | | | 32 | |
| | 2014.11-2024.03 | 6DCT/7DCT | R | L/R | Estate 4WD DDAA;DFCA;DFHA | Date from:2014.12 | GCI82447 | Inner Joint | | | 33 | | | 34 | |
| | 2014.11-2024.03 | 6DCT | F | L | Estate FWD DDAA;DFCA;DFHA | For PR code:1PA/1PE | GDS83381 | Drive Shaft | | 36 | | 59.5 | 40 | 483 | |
| | 2014.11-2024.03 | 6DCT | F | R | Estate FWD DDAA;DFCA;DFHA | | GDS61345 | Drive Shaft | | 36 | | 59.5 | 40 | 774 | |
| | 2014.11-2024.03 | 6DCT | F | L/R | Estate FWD DDAA;DFCA;DFHA | | GCI61057 | Inner Joint | | | 34 | | | 89 | |
| | 2014.11-2024.03 | 6MT | F | L | Estate FWD DDAA;DFCA;DFHA | | GDS81896 | Drive Shaft | | 36 | | 59.5 | 40 | 500 | |
| | 2014.11-2024.03 | 6MT | F | R | Estate FWD DDAA;DFCA;DFHA | | GDS61101 | Drive Shaft | | 36 | | 59.5 | 40 | 803 | |
| | 2014.11-2024.03 | 6MT | F | L/R | Estate FWD DDAA;DFCA;DFHA | For PR code:A8B/A8C/A8G/A9I | GCI83016 | Inner Joint | | | 28 | | | 32 | |
| | 2014.11-2024.03 | 6MT/6DCT | F | L/R | Estate FWD DDAA;DFCA;DFHA | | GCO83101 | Outer Joint | | 36 | 27 | 59.5 | 40 | 65 | M |
| | 2014.11-2024.03 | 7DCT | F | L | Estate FWD DDAA;DFCA;DFHA | | GDS82351 | Drive Shaft | | 36 | 37 | 59.5 | 40 | 568 | |
| | 2014.11-2024.03 | 7DCT | F | R | Estate FWD DDAA;DFCA;DFHA | | GDS83613 | Drive Shaft | | 36 | 37 | 59.5 | 40 | 921 | |
| | 2014.11-2024.03 | 7DCT | F | R | Estate FWD DDAA;DFCA;DFHA | | GCO83101 | Outer Joint | | 36 | 27 | 59.5 | 40 | 65 | M |
| | 2014.11-2024.03 | 7DCT | F | L | Estate FWD DDAA;DFCA;DFHA | | GCI81158 | Inner Joint | | 37 | 34 | 34.5 | 65.5 | 83 | |
| | 2014.11-2024.03 | 7DCT | F | R | Estate FWD DDAA;DFCA;DFHA | | GCI82108 | Inner Joint | | 37 | 34 | 40 | 77.5 | 103.5 | |
| 2.0 (142 kw) | 2023.10- | 7DCT | F | L | Estate 4WD DXNB | | GDS82351 | Drive Shaft | | 36 | 37 | 59.5 | 40 | 568 | |
| | 2023.10- | 7DCT | F | R | Estate 4WD DXNB | With flange | GDS61346 | Drive Shaft | | 36 | | 59.5 | 40 | 589 | |
| | 2023.10- | 7DCT | F | L | Estate 4WD DXNB | | GCI81158 | Inner Joint | | 37 | 34 | 34.5 | 65.5 | 83 | |
| | 2023.10- | 7DCT | R | L | Estate 4WD DXNB | | GDS61334 | Drive Shaft | | 36 | | 59.5 | 40 | 598 | |
| | 2023.10- | 7DCT | R | R | Estate 4WD DXNB | | GDS61335 | Drive Shaft | | 36 | | 59.5 | 40 | 638 | |
| 2.0 (147 kw) | 2005.08-2010.11 | 6AT/6MT | F | L/R | Estate FWD AXX;BWA;BPY;CAWB;CCTA;CBFA;CCZA | For PR code:0ER | GCI61038 | Inner Joint | | 26 | 34 | 31 | 68.5 | 88.5 | |
| | 2005.08-2010.11 | 6AT/6MT | F | L/R | Estate FWD AXX;BWA;BPY;CAWB;CCTA;CBFA;CCZA | For PR code:0ES | GCI83016 | Inner Joint | | | 28 | | | 32 | |
| | 2005.08-2010.11 | 6DCT | F | L | Estate FWD AXX;BWA;BPY;CAWB;CCTA;CBFA;CCZA | | GDS98006 | Stub Axle-Flange | | 37 | | | 67 | 123.5 | |
| | 2005.08-2010.11 | AT | F | L | Estate FWD AXX;BWA;BPY;CAWB;CCTA;CBFA;CCZA | | GDS61093 | Drive Shaft | | 36 | 26 | 59.5 | 40.5 | 587.5 | |
| | 2005.08-2010.11 | AT | F | L | Estate FWD AXX;BWA;BPY;CAWB;CCTA;CBFA;CCZA | Date to:2008.12 | GDS61153 | Drive Shaft | | 36 | 26 | 59.5 | 40 | 583 | |
| | 2005.08-2010.11 | AT | F | R | Estate FWD AXX;BWA;BPY;CAWB;CCTA;CBFA;CCZA | For PR code:0ES | GDS81653 | Drive Shaft | | 36 | | 59.5 | 40 | 785 | |
| | 2005.08-2010.11 | AT/MT | F | L/R | Estate FWD AXX;BWA;BPY;CAWB;CCTA;CBFA;CCZA | Date to:2010.01,Transmission:MT;Date to:2010.02,Transmission:AT | GCO83002 | Outer Joint | | 36 | 27 | 59.5 | 40 | 66 | I |
| | 2005.08-2010.11 | AT/MT | F | L/R | Estate FWD AXX;BWA;BPY;CAWB;CCTA;CBFA;CCZA | Date from:2010.02,Transmission:MT;Date from:2010.03,Transmission:AT;For PR code:0ES | GCO83101 | Outer Joint | | 36 | 27 | 59.5 | 40 | 65 | M |
| | 2005.08-2010.11 | MT | F | L | Estate FWD AXX;BWA;BPY;CAWB;CCTA;CBFA;CCZA | | GDS83236 | Drive Shaft | | 36 | | 59.5 | 40 | 484 | |
| | 2005.08-2010.11 | MT | F | L | Estate FWD AXX;BWA;BPY;CAWB;CCTA;CBFA;CCZA | | GDS83295 | Drive Shaft | | 36 | | 59.5 | 40 | 491 | |
| | 2005.08-2010.11 | MT | F | R | Estate FWD AXX;BWA;BPY;CAWB;CCTA;CBFA;CCZA | Date to:2010.01 | GDS61126 | Drive Shaft | | 36 | | 59.5 | 40 | 793 | |
| | 2005.08-2010.11 | MT | F | R | Estate FWD AXX;BWA;BPY;CAWB;CCTA;CBFA;CCZA | Date from:2010.02 | GDS61147 | Drive Shaft | | 36 | | 59.5 | 40 | 795 | |
| | 2005.08-2010.11 | MT | F | R | Estate FWD AXX;BWA;BPY;CAWB;CCTA;CBFA;CCZA | Date to:2010.01 | GDS61339 | Drive Shaft | | 36 | | 59.5 | 40 | 794 | |

| | YEAR | TRANSM. | F/R | L/R | BODY STYLE & DRIVE TYPE & ENGINE | REMARKS | G-AP Ref. | PRODUCT | ABS | Technical Specifications | | | | | |
|---|---|---|---|---|---|---|---|---|---|---|---|---|---|---|---|
| | | | | | | | | | | A | B | C | H | L | P |
| **VW**<br>**Passat Estate/Variant** | | | | | | | | | | | | | | | |
| 2.0 (147 kw) | 2020.08-2024.03 | 7AT | F | L | Estate 4WD DTUA | | GDS82351 | Drive Shaft | | 36 | 37 | 59.5 | 40 | 568 | |
| | 2020.08-2024.03 | 7AT | F | R | Estate 4WD DTUA | | GDS61346 | Drive Shaft | | 36 | | 59.5 | 40 | 589 | |
| | 2020.08-2024.03 | 7AT | F | L/R | Estate 4WD DTUA | | GCO83101 | Outer Joint | | 36 | 27 | 59.5 | 40 | 65 | M |
| | 2020.08-2024.03 | 7AT | F | R | Estate 4WD DTUA | | GCI61057 | Inner Joint | | | 34 | | | 89 | |
| | 2020.08-2024.03 | 7DCT | F | L | Estate 4WD DTUA | | GCI81158 | Inner Joint | | 37 | 34 | 34.5 | 65.5 | 83 | |
| | 2020.08-2024.03 | 7AT | R | L | Estate 4WD DTUA | | GDS61334 | Drive Shaft | | 36 | | 59.5 | 40 | 598 | |
| | 2020.08-2024.03 | 7AT | R | R | Estate 4WD DTUA | | GDS61335 | Drive Shaft | | 36 | | 59.5 | 40 | 638 | |
| | 2020.08-2024.03 | 7AT | R | L/R | Estate 4WD DTUA | | GCI53002 | Inner Joint | | | 33 | | | 34 | |
| | 2020.09-2024.03 | 7DCT | F | L | Estate FWD DTUA | | GDS82351 | Drive Shaft | | 36 | 37 | 59.5 | 40 | 568 | |
| | 2020.09-2024.03 | 7DCT | F | R | Estate FWD DTUA | | GDS83613 | Drive Shaft | | 36 | 37 | 59.5 | 40 | 921 | |
| | 2020.09-2024.03 | 7DCT | F | R | Estate FWD DTUA | | GCO83101 | Outer Joint | | 36 | 27 | 59.5 | 40 | 65 | M |
| | 2020.09-2024.03 | 7DCT | F | L | Estate FWD DTUA | | GCI81158 | Inner Joint | | 37 | 34 | 34.5 | 65.5 | 83 | |
| | 2020.09-2024.03 | 7DCT | F | R | Estate FWD DTUA | | GCI82108 | Inner Joint | | 37 | 34 | 40 | 77.5 | 103.5 | |
| 2.0 (155 kw) | 2010.11-2014.12 | 6AT/6MT | F | L | Estate Van FWD CCZB | | GDS83295 | Drive Shaft | | 36 | | 59.5 | 40 | 491 | |
| | 2010.11-2014.12 | 6DCT | F | R | Estate Van FWD CCZB | | GDS81653 | Drive Shaft | | 36 | | 59.5 | 40 | 785 | |
| | 2010.11-2014.12 | 6DCT | F | R | Estate Van FWD CCZB | | GCO83002 | Outer Joint | | 36 | 27 | 59.5 | 40 | 66 | I |
| | 2010.11-2014.12 | 6MT | F | R | Estate Van FWD CCZB | | GDS83313 | Drive Shaft | | 36 | | 59.5 | 40 | 792 | |
| | 2010.11-2014.12 | MT | F | L/R | Estate Van FWD CCZB | | GCI83016 | Inner Joint | | | 28 | | | 32 | |
| | 2010.11-2014.12 | | F | L/R | Estate Van FWD CCZB | | GCO83101 | Outer Joint | | 36 | 27 | 59.5 | 40 | 65 | M |
| | 2010.11-2015.12 | 6AT/6MT | F | L | Estate FWD CCZB | | GDS83295 | Drive Shaft | | 36 | | 59.5 | 40 | 491 | |
| | 2010.11-2015.12 | 6DCT | F | R | Estate FWD CCZB | | GDS81653 | Drive Shaft | | 36 | | 59.5 | 40 | 785 | |
| | 2010.11-2015.12 | 6DCT | F | R | Estate FWD CCZB | | GCO83002 | Outer Joint | | 36 | 27 | 59.5 | 40 | 66 | I |
| | 2010.11-2015.12 | 6DCT | F | L | Estate FWD CCZB | | GDS98006 | Stub Axle-Flange | | 37 | | | 67 | 123.5 | |
| | 2010.11-2015.12 | 6MT | F | R | Estate FWD CCZB | | GDS83313 | Drive Shaft | | 36 | | 59.5 | 40 | 792 | |
| | 2010.11-2015.12 | MT | F | L/R | Estate FWD CCZB | | GCI83016 | Inner Joint | | | 28 | | | 32 | |
| | 2010.11-2015.12 | | F | L/R | Estate FWD CCZB | | GCO83101 | Outer Joint | | 36 | 27 | 59.5 | 40 | 65 | M |
| 2.0 (162 kw) | 2014.08-2024.03 | 6AT | F | L | Estate FWD CHHB;CXDA | | GDS81896 | Drive Shaft | | 36 | | 59.5 | 40 | 500 | |
| | 2014.08-2024.03 | 6AT | F | R | Estate FWD CHHB;CXDA | | GDS61147 | Drive Shaft | | 36 | | 59.5 | 40 | 795 | |
| | 2014.08-2024.03 | 6DCT | F | L | Estate FWD CHHB;CXDA | | GDS98006 | Stub Axle-Flange | | 37 | | | 67 | 123.5 | |
| | 2014.08-2024.03 | AT | F | L/R | Estate FWD CHHB;CXDA | | GCO83101 | Outer Joint | | 36 | 27 | 59.5 | 40 | 65 | M |
| | 2014.08-2024.03 | MT | F | L/R | Estate FWD CHHB;CXDA | | GCI83016 | Inner Joint | | | 28 | | | 32 | |
| 2.0 (176 kw) | 2014.08-2020.11 | 6MT | F | L/R | Estate 4WD CUAA | For PR code:A8T | GCO83101 | Outer Joint | | 36 | 27 | 59.5 | 40 | 65 | M |
| | 2014.08-2020.11 | 7AT | F | L | Estate 4WD CUAA | | GDS82351 | Drive Shaft | | 36 | 37 | 59.5 | 40 | 568 | |
| | 2014.08-2020.11 | 7AT | F | R | Estate 4WD CUAA | | GDS61347 | Drive Shaft | | 36 | 40 | 59.5 | 40 | 593 | |
| | 2014.08-2020.11 | 7AT | F | L/R | Estate 4WD CUAA | Date from:2016.03 | GDS61166 | Drive Shaft | | 36 | 40 | 59.5 | 40 | 611 | |
| | 2014.08-2020.11 | 7DCT | F | L | Estate 4WD CUAA | | GCI81158 | Inner Joint | | 37 | 34 | 34.5 | 65.5 | 83 | |
| | 2014.08-2020.11 | AT | F | R | Estate 4WD CUAA | | GCI61048 | Inner Joint | | 40 | 34 | 46.9 | | 127.5 | |
| | 2014.08-2020.11 | AT | F | L/R | Estate 4WD CUAA | | GCI83006 | Inner Joint | | | 33 | | | 34 | |
| | 2014.08-2020.11 | 7AT | R | L | Estate 4WD CUAA | | GDS61334 | Drive Shaft | | 36 | | 59.5 | 40 | 598 | |
| | 2014.08-2020.11 | 7AT | R | R | Estate 4WD CUAA | | GDS61335 | Drive Shaft | | 36 | | 59.5 | 40 | 638 | |
| | 2014.08-2020.11 | 7DCT | R | L/R | Estate 4WD CUAA | | GCI82447 | Inner Joint | | | 33 | | | 34 | |
| | 2014.08-2020.11 | | R | L/R | Estate 4WD CUAA | | GCI83011 | Inner Joint | | | 33 | | | 34 | |
| 2.0 (195 kw) | 2024.05- | 7DCT | F | L | Estate 4WD DNPB | | GDS82351 | Drive Shaft | | 36 | 37 | 59.5 | 40 | 568 | |
| | 2024.05- | 7DCT | F | R | Estate 4WD DNPB | Date to:2025.07;With flange | GDS61346 | Drive Shaft | | 36 | | 59.5 | 40 | 589 | |
| | 2024.05- | 7DCT | F | L | Estate 4WD DNPB | | GCI81158 | Inner Joint | | 37 | 34 | 34.5 | 65.5 | 83 | |
| 2.0 (200 kw) | 2018.09-2020.11 | 7AT | F | R | Estate 4WD DNUA | | GDS81889 | Drive Shaft | | 36 | | 59.5 | 40 | 614 | |
| | 2018.09-2020.11 | 7AT | F | R | Estate 4WD DNUA | | GCO83101 | Outer Joint | | 36 | 27 | 59.5 | 40 | 65 | M |
| | 2018.09-2020.11 | 7AT | F | R | Estate 4WD DNUA | | GCI61069 | Inner Joint | | | 28 | | | 32 | |
| | 2018.09-2020.11 | 7AT | R | L | Estate 4WD DNUA | | GDS61331 | Drive Shaft | | 36 | | 59.5 | 40 | 606 | |
| | 2018.09-2020.11 | 7AT | R | R | Estate 4WD DNUA | | GDS61332 | Drive Shaft | | 36 | | 59.5 | 40 | 650 | |
| | 2018.09-2020.11 | 7AT | R | L/R | Estate 4WD DNUA | | GCI35026 | Outer Joint | | 36 | 33 | 59.5 | 40 | 61 | |
| | 2018.09-2020.11 | 7AT | R | L/R | Estate 4WD DNUA | | GCI61103 | Inner Joint | | | 33 | | | 32 | |
| 2.0 (206 kw) | 2015.05-2024.03 | 6AT | F | R | Estate 4WD CJXA;DNFE | | GDS81889 | Drive Shaft | | 36 | | 59.5 | 40 | 614 | |
| | 2015.05-2024.03 | 6AT | F | R | Estate 4WD CJXA;DNFE | | GCO83101 | Outer Joint | | 36 | 27 | 59.5 | 40 | 65 | M |
| | 2015.05-2024.03 | 6AT | F | R | Estate 4WD CJXA;DNFE | | GCI61069 | Inner Joint | | | 28 | | | 32 | |
| | 2015.05-2024.03 | 6DCT | F | L | Estate 4WD CJXA;DNFE | | GDS81896 | Drive Shaft | | 36 | | 59.5 | 40 | 500 | |
| | 2015.05-2024.03 | 6AT | R | L | Estate 4WD CJXA;DNFE | | GDS61331 | Drive Shaft | | 36 | | 59.5 | 40 | 606 | |
| | 2015.05-2024.03 | 6AT | R | R | Estate 4WD CJXA;DNFE | | GDS61332 | Drive Shaft | | 36 | | 59.5 | 40 | 650 | |
| | 2015.05-2024.03 | 6AT | R | L/R | Estate 4WD CJXA;DNFE | | GCI35026 | Outer Joint | | 36 | 33 | 59.5 | 40 | 61 | |
| | 2015.05-2024.03 | 6AT | R | L/R | Estate 4WD CJXA;DNFE | | GCI61103 | Inner Joint | | | 33 | | | 32 | |
| 2.3 (110 kw) | 1997.05-2000.08 | 5AT/5MT | F | L/R | Estate 4WD AGZ | | GCI50019 | Inner Joint | | | 34 | | | 59.5 | |
| | 1997.05-2000.08 | 5MT | F | L | Estate 4WD AGZ | | GDS61122 | Drive Shaft | 45W | 33 | | 53 | 30 | 602 | |
| | 1997.05-2000.08 | 5MT | F | R | Estate 4WD AGZ | | GDS83007 | Drive Shaft | 45W | 33 | | 53 | 30 | 622 | |
| | 1997.05-2000.08 | 5MT | F | L/R | Estate 4WD AGZ | | GCO61012 | Outer Joint | 45W | 33 | 30 | 53 | 30 | 62 | I |
| | 1997.05-2000.08 | 5AT/5MT | R | L/R | Estate 4WD AGZ | | GDS83672 | Drive Shaft | 45W | 33 | | 53 | 30 | 618 | |

| | YEAR | TRANSM. | F/R | L/R | BODY STYLE & DRIVE TYPE & ENGINE | REMARKS | G-AP Ref. | PRODUCT | ABS | Technical Specifications A | B | C | H | L | P |
|---|---|---|---|---|---|---|---|---|---|---|---|---|---|---|---|
| **VW** **Passat Estate/Variant** | | | | | | | | | | | | | | | |
| 2.3 (110 kw) | 1997.05-2000.08 | 5AT/5MT | R | L/R | Estate 4WD AGZ | | GCO83080 | Outer Joint | 45W | 33 | 30 | 53 | 30 | 62 | I |
| | 1997.05-2000.08 | 5AT/5MT | R | L/R | Estate 4WD AGZ | | GCI83002 | Inner Joint | | | 33 | | | 32 | |
| | 1997.05-2000.08 | 5AT | F | L | Estate FWD AGZ | | GDS83037 | Drive Shaft | 45W | 38 | | 59.5 | 34 | 530 | |
| | 1997.05-2000.08 | 5AT | F | R | Estate FWD AGZ | Inner teeth of wheel side:30 | GDS83038 | Drive Shaft | 45W | 38 | | 59.5 | 34 | 503 | |
| | 1997.05-2000.08 | 5AT | F | R | Estate FWD AGZ | Inner teeth of wheel side:27 | GDS83048 | Drive Shaft | 45W | 38 | | 59.5 | 34.5 | 502 | |
| | 1997.05-2000.08 | 5AT | F | L/R | Estate FWD AGZ | | GCO83020 | Outer Joint | 45W | 38 | 30 | 59.5 | 34 | 59.5 | I |
| | 1997.05-2000.08 | 5AT | F | L/R | Estate FWD AGZ | | GCO83049 | Outer Joint | | 38 | 30 | 59.5 | 34 | 59.5 | I |
| | 1997.05-2000.08 | 5MT | F | L | Estate FWD AGZ | | GDS61122 | Drive Shaft | 45W | 33 | | 53 | 30 | 602 | |
| | 1997.05-2000.08 | 5MT | F | R | Estate FWD AGZ | For Europe | GDS83007 | Drive Shaft | 45W | 33 | | 53 | 30 | 622 | |
| | 1997.05-2000.08 | 5MT | F | R | Estate FWD AGZ | For North America | GDS83009 | Drive Shaft | 45W | 33 | | 53 | 30 | 617 | |
| | 1997.05-2000.08 | 5MT | F | L/R | Estate FWD AGZ | | GCO61012 | Outer Joint | 45W | 33 | 30 | 53 | 30 | 62 | I |
| | 1997.05-2000.08 | 5MT | F | L/R | Estate FWD AGZ | | GCI50019 | Inner Joint | | | 34 | | | 59.5 | |
| 2.3 (125 kw) | 2000.11-2005.05 | 5AT/5MT | F | L | Estate 4WD AZX | | GDS83008 | Drive Shaft | 45W | 38 | | 59.5 | 34.5 | 603 | |
| | 2000.11-2005.05 | 5AT/5MT | F | R | Estate 4WD AZX | | GDS61019 | Drive Shaft | 45W | 38 | | 59.5 | 34.5 | 624 | |
| | 2000.11-2005.05 | AT | F | L | Estate 4WD AZX | | GDS83015 | Drive Shaft | 45W | 38 | | 59.5 | 34.5 | 527 | |
| | 2000.11-2005.05 | AT | F | R | Estate 4WD AZX | | GDS83048 | Drive Shaft | 45W | 38 | | 59.5 | 34.5 | 502 | |
| | 2000.11-2005.05 | MT | F | L/R | Estate 4WD AZX | | GCO83019 | Outer Joint | 45W | 38 | 27 | 59.5 | 34.5 | 63 | I |
| | 2000.11-2005.05 | MT/5AT/5MT | F | L/R | Estate 4WD AZX | | GCI50019 | Inner Joint | | | 34 | | | 59.5 | |
| | 2000.11-2005.05 | 5AT/5MT | R | L/R | Estate 4WD AZX | | GDS83672 | Drive Shaft | 45W | 33 | | 53 | 30 | 618 | |
| | 2000.11-2005.05 | 5AT/5MT | R | L/R | Estate 4WD AZX | | GCO83080 | Outer Joint | 45W | 33 | 30 | 53 | 30 | 62 | I |
| | 2000.11-2005.05 | 5AT/5MT | R | L/R | Estate 4WD AZX | | GCI83002 | Inner Joint | | | 33 | | | 32 | |
| | 2000.11-2005.05 | 5AT | F | L | Estate FWD AZX | Date to:2003.01 | GDS83015 | Drive Shaft | 45W | 38 | | 59.5 | 34.5 | 527 | |
| | 2000.11-2005.05 | 5AT | F | R | Estate FWD AZX | Date to:2003.01 | GDS83048 | Drive Shaft | 45W | 38 | | 59.5 | 34.5 | 502 | |
| | 2000.11-2005.05 | 5AT | F | L/R | Estate FWD AZX | Date from:2003.02 | GCO83019 | Outer Joint | 45W | 38 | 27 | 59.5 | 34.5 | 63 | I |
| | 2000.11-2005.05 | 5MT | F | L | Estate FWD AZX | Date from:2003.02 | GDS83008 | Drive Shaft | 45W | 38 | | 59.5 | 34.5 | 603 | |
| | 2000.11-2005.05 | 5MT | F | R | Estate FWD AZX | Date from:2003.02 | GDS61019 | Drive Shaft | 45W | 38 | | 59.5 | 34.5 | 624 | |
| | 2000.11-2005.05 | AT/MT | F | L/R | Estate FWD AZX | | GCI50019 | Inner Joint | | | 34 | | | 59.5 | |
| 2.5 (110 kw) | 1998.08-2000.08 | 5AT | F | L | Estate FWD AFB/AKN | | GDS83015 | Drive Shaft | 45W | 38 | | 59.5 | 34.5 | 527 | |
| | 1998.08-2000.08 | 5AT | F | R | Estate FWD AFB/AKN | | GDS83048 | Drive Shaft | 45W | 38 | | 59.5 | 34.5 | 502 | |
| | 1998.08-2000.08 | 5AT/6MT | F | L/R | Estate FWD AFB/AKN | | GCO83019 | Outer Joint | 45W | 38 | 27 | 59.5 | 34.5 | 63 | I |
| | 1998.08-2000.08 | 6MT | F | L | Estate FWD AFB/AKN | | GDS83008 | Drive Shaft | 45W | 38 | | 59.5 | 34.5 | 603 | |
| | 1998.08-2000.08 | 6MT | F | R | Estate FWD AFB/AKN | | GDS61019 | Drive Shaft | 45W | 38 | | 59.5 | 34.5 | 624 | |
| | 1998.08-2000.08 | AT/MT/6MT | F | L/R | Estate FWD AFB/AKN | | GCI50019 | Inner Joint | | | 34 | | | 59.5 | |
| | 1999.02-2000.08 | 5AT | F | L | Estate 4WD AFB | | GDS83037 | Drive Shaft | 45W | 38 | | 59.5 | 34 | 530 | |
| | 1999.02-2000.08 | 5AT | F | R | Estate 4WD AFB | Inner teeth of wheel side:30 | GDS83038 | Drive Shaft | 45W | 38 | | 59.5 | 34 | 503 | |
| | 1999.02-2000.08 | 5AT | F | R | Estate 4WD AFB | Inner teeth of wheel side:27 | GDS83048 | Drive Shaft | 45W | 38 | | 59.5 | 34.5 | 502 | |
| | 1999.02-2000.08 | 5AT | F | L/R | Estate 4WD AFB | | GCO83020 | Outer Joint | 45W | 38 | 30 | 59.5 | 34 | 59.5 | I |
| | 1999.02-2000.08 | 5AT | F | L/R | Estate 4WD AFB | | GCO83049 | Outer Joint | | 38 | 30 | 59.5 | 34 | 59.5 | I |
| | 1999.02-2000.08 | 6MT | F | L | Estate 4WD AFB | | GDS83008 | Drive Shaft | 45W | 38 | | 59.5 | 34.5 | 603 | |
| | 1999.02-2000.08 | 6MT | F | R | Estate 4WD AFB | | GDS61019 | Drive Shaft | 45W | 38 | | 59.5 | 34.5 | 624 | |
| | 1999.02-2000.08 | 6MT | F | L/R | Estate 4WD AFB | | GCO83019 | Outer Joint | 45W | 38 | 27 | 59.5 | 34.5 | 63 | I |
| | 1999.02-2000.08 | 6MT | F | L/R | Estate 4WD AFB | | GCI50019 | Inner Joint | | | 34 | | | 59.5 | |
| | 1999.02-2000.08 | 5AT/6MT | R | L/R | Estate 4WD AFB | | GDS83672 | Drive Shaft | 45W | 33 | | 53 | 30 | 618 | |
| | 1999.02-2000.08 | 5AT/6MT | R | L/R | Estate 4WD AFB | | GCO83080 | Outer Joint | 45W | 33 | 30 | 53 | 30 | 62 | I |
| | 1999.02-2000.08 | 5AT/6MT | R | L/R | Estate 4WD AFB | | GCI83002 | Inner Joint | | | 33 | | | 32 | |
| | 2000.11-2005.05 | 5AT | F | L/R | Estate 4WD AKN | | GCO83020 | Outer Joint | 45W | 38 | 30 | 59.5 | 34 | 59.5 | I |
| | 2000.11-2005.05 | 5AT | F | L/R | Estate 4WD AKN | | GCO83049 | Outer Joint | | 38 | 30 | 59.5 | 34 | 59.5 | I |
| | 2000.11-2005.05 | 6MT | F | L | Estate 4WD AKN | | GDS83008 | Drive Shaft | 45W | 38 | | 59.5 | 34.5 | 603 | |
| | 2000.11-2005.05 | 6MT | F | R | Estate 4WD AKN | | GDS61019 | Drive Shaft | 45W | 38 | | 59.5 | 34.5 | 624 | |
| | 2000.11-2005.05 | 6MT | F | L/R | Estate 4WD AKN | | GCO83019 | Outer Joint | 45W | 38 | 27 | 59.5 | 34.5 | 63 | I |
| | 2000.11-2005.05 | AT | F | L | Estate 4WD AKN | | GDS83015 | Drive Shaft | 45W | 38 | | 59.5 | 34.5 | 527 | |
| | 2000.11-2005.05 | AT | F | R | Estate 4WD AKN | | GDS83048 | Drive Shaft | 45W | 38 | | 59.5 | 34.5 | 502 | |
| | 2000.11-2005.05 | MT | F | L/R | Estate 4WD AKN | | GCI50019 | Inner Joint | | | 34 | | | 59.5 | |
| | 2000.11-2005.05 | 5AT/6MT | R | L/R | Estate 4WD AKN | | GDS83672 | Drive Shaft | 45W | 33 | | 53 | 30 | 618 | |
| | 2000.11-2005.05 | 5AT/6MT | R | L/R | Estate 4WD AKN | | GCO83080 | Outer Joint | 45W | 33 | 30 | 53 | 30 | 62 | I |
| | 2000.11-2005.05 | 5AT/6MT | R | L/R | Estate 4WD AKN | | GCI83002 | Inner Joint | | | 33 | | | 32 | |
| | 2000.11-2005.05 | 5AT | F | R | Estate FWD AKN | | GDS83048 | Drive Shaft | 45W | 38 | | 59.5 | 34.5 | 502 | |
| | 2000.11-2005.05 | 6MT | F | L | Estate FWD AKN | | GDS83008 | Drive Shaft | 45W | 38 | | 59.5 | 34.5 | 603 | |
| | 2000.11-2005.05 | 6MT | F | R | Estate FWD AKN | | GDS61019 | Drive Shaft | 45W | 38 | | 59.5 | 34.5 | 624 | |
| | 2000.11-2005.05 | 6MT | F | L/R | Estate FWD AKN | | GCO83019 | Outer Joint | 45W | 38 | 27 | 59.5 | 34.5 | 63 | I |
| | 2000.11-2005.05 | AT | F | L | Estate FWD AKN | Chassis no. to:3B3E306500 | GDS83015 | Drive Shaft | 45W | 38 | | 59.5 | 34.5 | 527 | |
| | 2000.11-2005.05 | AT/MT/6MT | F | L/R | Estate FWD AKN | | GCI50019 | Inner Joint | | | 34 | | | 59.5 | |
| 2.5 (120 kw) | 2003.05-2005.05 | 5AT | F | R | Estate FWD BDG | | GDS83048 | Drive Shaft | 45W | 38 | | 59.5 | 34.5 | 502 | |
| | 2003.05-2005.05 | 5AT/6MT | F | L/R | Estate FWD BDG | | GCI50019 | Inner Joint | | | 34 | | | 59.5 | |
| | 2003.05-2005.05 | 6MT | F | L | Estate FWD BDG | | GDS83008 | Drive Shaft | 45W | 38 | | 59.5 | 34.5 | 603 | |

| | YEAR | TRANSM. | F/R | L/R | BODY STYLE & DRIVE TYPE & ENGINE | REMARKS | G-AP Ref. | PRODUCT | ABS | Technical Specifications A | B | C | H | L | P |
|---|---|---|---|---|---|---|---|---|---|---|---|---|---|---|---|
| **VW** **Passat Estate/Variant** | | | | | | | | | | | | | | | |
| 2.5 (120 kw) | 2003.05-2005.05 | 6MT | F | R | Estate FWD BDG | | GDS61019 | Drive Shaft | 45W | 38 | | 59.5 | 34.5 | 624 | |
| | 2003.05-2005.05 | AT | F | L | Estate FWD BDG | | GDS83015 | Drive Shaft | 45W | 38 | | 59.5 | 34.5 | 527 | |
| | 2003.05-2005.05 | AT/MT/6MT | F | L/R | Estate FWD BDG | | GCO83019 | Outer Joint | 45W | 38 | 27 | 59.5 | 34.5 | 63 | I |
| 2.5 (132 kw) | 2003.01-2005.05 | 5AT | F | L | Estate 4WD BAU;BDH | For Engine code:BAU | GDS83015 | Drive Shaft | 45W | 38 | | 59.5 | 34.5 | 527 | |
| | 2003.01-2005.05 | 5AT | F | R | Estate 4WD BAU;BDH | | GDS83048 | Drive Shaft | 45W | 38 | | 59.5 | 34.5 | 502 | |
| | 2003.01-2005.05 | 6MT | F | L | Estate 4WD BAU;BDH | | GDS83008 | Drive Shaft | 45W | 38 | | 59.5 | 34.5 | 603 | |
| | 2003.01-2005.05 | 6MT | F | R | Estate 4WD BAU;BDH | | GDS61019 | Drive Shaft | 45W | 38 | | 59.5 | 34.5 | 624 | |
| | 2003.01-2005.05 | 6MT | F | L/R | Estate 4WD BAU;BDH | | GCO83019 | Outer Joint | 45W | 38 | 27 | 59.5 | 34.5 | 63 | I |
| | 2003.01-2005.05 | MT | F | L/R | Estate 4WD BAU;BDH | For Engine code:BDH | GCI50019 | Inner Joint | | | 34 | | | 59.5 | |
| | 2003.01-2005.05 | 5AT/6MT | R | L/R | Estate 4WD BAU;BDH | | GCO83080 | Outer Joint | 45W | 33 | 30 | 53 | 30 | 62 | I |
| | 2003.01-2005.05 | AT/MT | R | L/R | Estate 4WD BAU;BDH | | GCI83001 | Inner Joint | | | 28 | | | 32 | |
| | 2003.01-2005.05 | AT/MT | R | L/R | Estate 4WD BAU;BDH | For PR code:F4S | GCI83002 | Inner Joint | | | 33 | | | 32 | |
| 2.8 (128 kw) | 1991.06-1996.12 | MT | F | L | Estate FWD AAA | | GDS99116 | Drive Shaft | | 36 | | 53.2 | 77.5 | 548.5 | |
| | 1991.06-1996.12 | MT | F | R | Estate FWD AAA | | GDS99112 | Drive Shaft | | 36 | | 53.2 | 77.5 | 783 | |
| | 1991.06-1996.12 | MT | F | L/R | Estate FWD AAA | Date to:1996.12 | GCO83070 | Outer Joint | | 36 | 30 | 53 | 78 | 60 | I |
| | 1991.06-1996.12 | MT | F | R | Estate FWD AAA | Date to:1996.12 | GCI83009 | Inner Joint | | | 33 | | | 34 | |
| | 1991.06-1996.12 | MT | F | L/R | Estate FWD AAA | | GCI83011 | Inner Joint | | | 33 | | | 34 | |
| 2.8 (132 kw) | 1997.05-1999.09 | 5AT | F | L | Estate FWD AGE | | GDS83015 | Drive Shaft | 45W | 38 | | 59.5 | 34.5 | 527 | |
| | 1997.05-1999.09 | 5AT | F | R | Estate FWD AGE | | GDS83048 | Drive Shaft | 45W | 38 | | 59.5 | 34.5 | 502 | |
| | 1997.05-1999.09 | 5AT/5MT | F | L/R | Estate FWD AGE | | GCI50019 | Inner Joint | | | 34 | | | 59.5 | |
| | 1997.05-1999.09 | 5MT | F | L | Estate FWD AGE | | GDS83008 | Drive Shaft | 45W | 38 | | 59.5 | 34.5 | 603 | |
| | 1997.05-1999.09 | 5MT | F | R | Estate FWD AGE | | GDS61019 | Drive Shaft | 45W | 38 | | 59.5 | 34.5 | 624 | |
| | 1997.05-1999.09 | AT/MT | F | L/R | Estate FWD AGE | | GCO83019 | Outer Joint | 45W | 38 | 27 | 59.5 | 34.5 | 63 | I |
| 2.8 (140 kw) | 1999.09-2000.09 | 5AT | F | L | Estate FWD ATX | | GDS83015 | Drive Shaft | 45W | 38 | | 59.5 | 34.5 | 527 | |
| | 1999.09-2000.09 | 5AT | F | R | Estate FWD ATX | | GDS83048 | Drive Shaft | 45W | 38 | | 59.5 | 34.5 | 502 | |
| | 1999.09-2000.09 | 5AT/5MT | F | L/R | Estate FWD ATX | | GCI50019 | Inner Joint | | | 34 | | | 59.5 | |
| | 1999.09-2000.09 | 5MT | F | L | Estate FWD ATX | | GDS83008 | Drive Shaft | 45W | 38 | | 59.5 | 34.5 | 603 | |
| | 1999.09-2000.09 | 5MT | F | R | Estate FWD ATX | | GDS61019 | Drive Shaft | 45W | 38 | | 59.5 | 34.5 | 624 | |
| | 1999.09-2000.09 | 5MT | F | L/R | Estate FWD ATX | | GCO83019 | Outer Joint | 45W | 38 | 27 | 59.5 | 34.5 | 63 | I |
| | 2000.10-2005.05 | 5AT | F | L | Estate 4WD BBG | | GDS83037 | Drive Shaft | 45W | 38 | | 59.5 | 34 | 530 | |
| | 2000.10-2005.05 | 5AT | F | R | Estate 4WD BBG | | GDS83038 | Drive Shaft | 45W | 38 | | 59.5 | 34 | 503 | |
| | 2000.10-2005.05 | AT | F | L | Estate 4WD BBG | PR code:F4S | GDS83015 | Drive Shaft | 45W | 38 | | 59.5 | 34.5 | 527 | |
| | 2000.10-2005.05 | AT | F | R | Estate 4WD BBG | PR code:F4S | GDS83048 | Drive Shaft | 45W | 38 | | 59.5 | 34.5 | 502 | |
| | 2000.10-2005.05 | AT | F | L/R | Estate 4WD BBG | | GCO83020 | Outer Joint | 45W | 38 | 30 | 59.5 | 34 | 59.5 | I |
| | 2000.10-2005.05 | AT | F | L/R | Estate 4WD BBG | | GCO83049 | Outer Joint | | 38 | 30 | 59.5 | 34 | 59.5 | I |
| | 2000.10-2005.05 | AT/MT | F | L/R | Estate 4WD BBG | | GCI50019 | Inner Joint | | | 34 | | | 59.5 | |
| | 2000.10-2005.05 | MT | F | L | Estate 4WD BBG | | GDS83008 | Drive Shaft | 45W | 38 | | 59.5 | 34.5 | 603 | |
| | 2000.10-2005.05 | MT | F | R | Estate 4WD BBG | | GDS61019 | Drive Shaft | 45W | 38 | | 59.5 | 34.5 | 624 | |
| | 2000.10-2005.05 | MT | F | L/R | Estate 4WD BBG | | GCO83019 | Outer Joint | 45W | 38 | 27 | 59.5 | 34.5 | 63 | I |
| | 2000.10-2005.05 | AT/MT | R | L/R | Estate 4WD BBG | | GDS83672 | Drive Shaft | 45W | 33 | | 53 | 30 | 618 | |
| | 2000.10-2005.05 | AT/MT | R | L/R | Estate 4WD BBG | | GCO83080 | Outer Joint | 45W | 33 | 30 | 53 | 30 | 62 | I |
| | 2000.10-2005.05 | AT/MT | R | L/R | Estate 4WD BBG | | GCI83002 | Inner Joint | | | 33 | | | 32 | |
| | 2000.10-2005.05 | 5AT | F | L | Estate FWD BBG | Date to:2003.01 | GDS83015 | Drive Shaft | 45W | 38 | | 59.5 | 34.5 | 527 | |
| | 2000.10-2005.05 | 5AT | F | R | Estate FWD BBG | Date to:2003.01 | GDS83048 | Drive Shaft | 45W | 38 | | 59.5 | 34.5 | 502 | |
| | 2000.10-2005.05 | 5AT/5MT | F | L/R | Estate FWD BBG | | GCO83019 | Outer Joint | 45W | 38 | 27 | 59.5 | 34.5 | 63 | I |
| | 2000.10-2005.05 | 5AT/5MT | F | L/R | Estate FWD BBG | | GCI50019 | Inner Joint | | | 34 | | | 59.5 | |
| | 2000.10-2005.05 | 5MT | F | L | Estate FWD BBG | | GDS83008 | Drive Shaft | 45W | 38 | | 59.5 | 34.5 | 603 | |
| | 2000.10-2005.05 | 5MT | F | R | Estate FWD BBG | | GDS61019 | Drive Shaft | 45W | 38 | | 59.5 | 34.5 | 624 | |
| 2.8 (142 kw) | 1997.06-2000.11 | 5AT | F | L | Estate 4WD ACK/ALG/APR/AQD | | GDS83037 | Drive Shaft | 45W | 38 | | 59.5 | 34 | 530 | |
| | 1997.06-2000.11 | 5AT | F | R | Estate 4WD ACK/ALG/APR/AQD | | GDS83038 | Drive Shaft | 45W | 38 | | 59.5 | 34 | 503 | |
| | 1997.06-2000.11 | 5AT | F | L/R | Estate 4WD ACK/ALG/APR/AQD | | GCO83049 | Outer Joint | | 38 | 30 | 59.5 | 34 | 59.5 | I |
| | 1997.06-2000.11 | 5AT/5MT | F | L/R | Estate 4WD ACK/ALG/APR/AQD | | GCO83019 | Outer Joint | 45W | 38 | 27 | 59.5 | 34.5 | 63 | I |
| | 1997.06-2000.11 | 5AT/5MT | F | L/R | Estate 4WD ACK/ALG/APR/AQD | | GCO83020 | Outer Joint | 45W | 38 | 30 | 59.5 | 34 | 59.5 | I |
| | 1997.06-2000.11 | 5MT | F | L | Estate 4WD ACK/ALG/APR/AQD | | GDS83008 | Drive Shaft | 45W | 38 | | 59.5 | 34.5 | 603 | |
| | 1997.06-2000.11 | 5MT | F | L | Estate 4WD ACK/ALG/APR/AQD | Date to:1998.03 | GDS83040 | Drive Shaft | 45W | 38 | | 59.5 | 34 | 617 | |
| | 1997.06-2000.11 | 5MT | F | R | Estate 4WD ACK/ALG/APR/AQD | Date from:1998.04 | GDS61019 | Drive Shaft | 45W | 38 | | 59.5 | 34.5 | 624 | |
| | 1997.06-2000.11 | 5MT | F | R | Estate 4WD ACK/ALG/APR/AQD | Date to:1998.03 | GDS83041 | Drive Shaft | 45W | 38 | | 59.5 | 34 | 640 | |
| | 1997.06-2000.11 | 5MT | F | L/R | Estate 4WD ACK/ALG/APR/AQD | Date To:1998.03 | GCO83049 | Outer Joint | | 38 | 30 | 59.5 | 34 | 59.5 | I |
| | 1997.06-2000.11 | 5MT | F | L/R | Estate 4WD ACK/ALG/APR/AQD | Date to:1998.03 | GCI83002 | Inner Joint | | | 33 | | | 32 | |
| | 1997.06-2000.11 | AT | F | L | Estate 4WD ACK/ALG/APR/AQD | | GDS83015 | Drive Shaft | 45W | 38 | | 59.5 | 34.5 | 527 | |
| | 1997.06-2000.11 | AT | F | R | Estate 4WD ACK/ALG/APR/AQD | | GDS83048 | Drive Shaft | 45W | 38 | | 59.5 | 34.5 | 502 | |
| | 1997.06-2000.11 | MT | F | R | Estate 4WD ACK/ALG/APR/AQD | Chassis no. to:3BWE394608 | GDS83058 | Drive Shaft | 45W | 38 | | 59.5 | 34.5 | 613 | |
| | 1997.06-2000.11 | MT/5AT/5MT | F | L/R | Estate 4WD ACK/ALG/APR/AQD | | GCI50019 | Inner Joint | | | 34 | | | 59.5 | |
| | 1997.06-2000.11 | 5AT/5MT | R | L/R | Estate 4WD ACK/ALG/APR/AQD | | GDS83672 | Drive Shaft | 45W | 33 | | 53 | 30 | 618 | |
| | 1997.06-2000.11 | 5AT/5MT | R | L/R | Estate 4WD ACK/ALG/APR/AQD | | GCO83080 | Outer Joint | 45W | 33 | 30 | 53 | 30 | 62 | I |

| | YEAR | TRANSM. | F/R | L/R | BODY STYLE & DRIVE TYPE & ENGINE | REMARKS | G-AP Ref. | PRODUCT | ABS | Technical Specifications A | B | C | H | L | P |
|---|---|---|---|---|---|---|---|---|---|---|---|---|---|---|---|
| **VW** **Passat Estate/Variant** | | | | | | | | | | | | | | | |
| 2.8 (142 kw) | 1997.06-2000.11 | | R | L/R | Estate 4WD ACK/ALG/APR/AQD | | GCI83002 | Inner Joint | | | 33 | | | 32 | |
| | 1999.01-2000.08 | 5AT | F | L | Estate FWD APR | | GDS83015 | Drive Shaft | 45W | 38 | | 59.5 | 34.5 | 527 | |
| | 1999.01-2000.08 | 5AT | F | R | Estate FWD APR | | GDS83048 | Drive Shaft | 45W | 38 | | 59.5 | 34.5 | 502 | |
| | 1999.01-2000.08 | 5MT | F | L | Estate FWD APR | | GDS83008 | Drive Shaft | 45W | 38 | | 59.5 | 34.5 | 603 | |
| | 1999.01-2000.08 | 5MT | F | R | Estate FWD APR | | GDS61019 | Drive Shaft | 45W | 38 | | 59.5 | 34.5 | 624 | |
| | 1999.01-2000.08 | 5MT | F | L/R | Estate FWD APR | | GCO83019 | Outer Joint | 45W | 38 | 27 | 59.5 | 34.5 | 63 | I |
| | 1999.01-2000.08 | MT/5AT/5MT | F | L/R | Estate FWD APR | | GCI50019 | Inner Joint | | | 34 | | | 59.5 | |
| | 2000.10-2005.08 | 5AT | F | L | Estate FWD ATQ | | GDS83015 | Drive Shaft | 45W | 38 | | 59.5 | 34.5 | 527 | |
| | 2000.10-2005.08 | 5AT | F | R | Estate FWD ATQ | | GDS83048 | Drive Shaft | 45W | 38 | | 59.5 | 34.5 | 502 | |
| | 2000.10-2005.08 | 5AT/5MT | F | L/R | Estate FWD ATQ | | GCO83019 | Outer Joint | 45W | 38 | 27 | 59.5 | 34.5 | 63 | I |
| | 2000.10-2005.08 | 5MT | F | L | Estate FWD ATQ | Date from:2003.02 | GDS83008 | Drive Shaft | 45W | 38 | | 59.5 | 34.5 | 603 | |
| | 2000.10-2005.08 | 5MT | F | R | Estate FWD ATQ | Date from:1998.04 | GDS61019 | Drive Shaft | 45W | 38 | | 59.5 | 34.5 | 624 | |
| | 2000.10-2005.08 | 6MT | F | L/R | Estate FWD ATQ | | GCI50019 | Inner Joint | | | 34 | | | 59.5 | |
| | 2000.11-2005.05 | 5AT | F | L | Estate 4WD AMX;ATQ | | GDS83037 | Drive Shaft | 45W | 38 | | 59.5 | 34 | 530 | |
| | 2000.11-2005.05 | 5AT | F | R | Estate 4WD AMX;ATQ | | GDS83038 | Drive Shaft | 45W | 38 | | 59.5 | 34 | 503 | |
| | 2000.11-2005.05 | 5AT | F | L/R | Estate 4WD AMX;ATQ | Not For armoured vehicles | GCO83020 | Outer Joint | 45W | 38 | 30 | 59.5 | 34 | 59.5 | I |
| | 2000.11-2005.05 | 5AT | F | L/R | Estate 4WD AMX;ATQ | Not For armoured vehicles | GCO83049 | Outer Joint | | 38 | 30 | 59.5 | 34 | 59.5 | I |
| | 2000.11-2005.05 | 5MT | F | L | Estate 4WD AMX;ATQ | | GDS83008 | Drive Shaft | 45W | 38 | | 59.5 | 34.5 | 603 | |
| | 2000.11-2005.05 | 5MT | F | R | Estate 4WD AMX;ATQ | | GDS61019 | Drive Shaft | 45W | 38 | | 59.5 | 34.5 | 624 | |
| | 2000.11-2005.05 | AT | F | L | Estate 4WD AMX;ATQ | | GDS83015 | Drive Shaft | 45W | 38 | | 59.5 | 34.5 | 527 | |
| | 2000.11-2005.05 | AT | F | R | Estate 4WD AMX;ATQ | | GDS83048 | Drive Shaft | 45W | 38 | | 59.5 | 34.5 | 502 | |
| | 2000.11-2005.05 | AT/MT/5AT/5MT | F | L/R | Estate 4WD AMX;ATQ | Transmission:5AT,For armoured vehicles | GCO83019 | Outer Joint | 45W | 38 | 27 | 59.5 | 34.5 | 63 | I |
| | 2000.11-2005.05 | MT | F | L/R | Estate 4WD AMX;ATQ | For Engine code:AMX | GCI50019 | Inner Joint | | | 34 | | | 59.5 | |
| | 2000.11-2005.05 | 5AT/5MT | R | L/R | Estate 4WD AMX;ATQ | | GDS83672 | Drive Shaft | 45W | 33 | | 53 | 30 | 618 | |
| | 2000.11-2005.05 | 5AT/5MT | R | L/R | Estate 4WD AMX;ATQ | | GCO83080 | Outer Joint | 45W | 33 | 30 | 53 | 30 | 62 | I |
| | 2000.11-2005.05 | | R | L/R | Estate 4WD AMX;ATQ | | GCI83002 | Inner Joint | | | 33 | | | 32 | |
| | 2000.11-2005.05 | | R | L/R | Estate 4WD AMX;ATQ | For PR code:F4S,For armoured vehicles | GCI83002 | Inner Joint | | | 33 | | | 32 | |
| 2.9 (135 kw) | 1994.10-1996.12 | MT | F | L | Estate 4WD ABV | | GDS99116 | Drive Shaft | | 36 | | 53.2 | 77.5 | 548.5 | |
| | 1994.10-1996.12 | MT | F | R | Estate 4WD ABV | | GDS99112 | Drive Shaft | | 36 | | 53.2 | 77.5 | 783 | |
| | 1994.10-1996.12 | MT | F | L/R | Estate 4WD ABV | Date from:1994.10;Date to:1996.12;Chassis no. from:3A/R-000001;Chassis no. to:3A/V-000000 | GCO83070 | Outer Joint | | 36 | 30 | 53 | 78 | 60 | I |
| | 1994.10-1996.12 | MT | F | L/R | Estate 4WD ABV | | GCI83006 | Inner Joint | | | 33 | | | 34 | |
| | 1994.10-1996.12 | MT | F | L/R | Estate 4WD ABV | | GCI83011 | Inner Joint | | | 33 | | | 34 | |
| | 1994.10-1996.12 | MT | R | L/R | Estate 4WD ABV | Date from:1994.10;Date to:1996.12;Chassis no. from:3A/R-000001;Chassis no. to:3A/V-000000 | GCI83005 | Inner Joint | | | 33 | | | 32 | |
| 3.2 (184 kw) | 2005.11-2010.11 | 6AT | F | L | Estate 4WD AXZ | Date to:2006.10 | GDS54013 | Drive Shaft | | 36 | | 59.5 | 40 | 479.5 | |
| | 2005.11-2010.11 | 6AT | F | L | Estate 4WD AXZ | Date from:2006.11 | GDS83295 | Drive Shaft | | 36 | | 59.5 | 40 | 491 | |
| | 2005.11-2010.11 | 6DCT | F | R | Estate 4WD AXZ | Date to:2006.10 | GDS61346 | Drive Shaft | | 36 | | 59.5 | 40 | 589 | |
| | 2005.11-2010.11 | 6DCT | F | R | Estate 4WD AXZ | Date from:2006.11 | GDS83266 | Drive Shaft | | 36 | | 59.5 | 40 | 601 | |
| | 2005.11-2010.11 | AT | F | L | Estate 4WD AXZ | | GDS83236 | Drive Shaft | | 36 | | 59.5 | 40 | 484 | |
| | 2005.11-2010.11 | AT | F | L | Estate 4WD AXZ | | GDS83241 | Drive Shaft | | 36 | | 59.5 | 40 | 475 | |
| | 2005.11-2010.11 | AT | F | L/R | Estate 4WD AXZ | | GCI83006 | Inner Joint | | | 33 | | | 34 | |
| | 2005.11-2010.11 | AT/MT | F | L/R | Estate 4WD AXZ | Date to:2006.11 | GCI61057 | Inner Joint | | | 34 | | | 89 | |
| | 2005.11-2010.11 | | F | L/R | Estate 4WD AXZ | | GCO83002 | Outer Joint | | 36 | 27 | 59.5 | 40 | 66 | I |
| | 2005.11-2010.11 | | F | L/R | Estate 4WD AXZ | Date To:2006.10 | GCI54004 | Inner Joint | | | 34 | | | 81 | |
| | 2005.11-2010.11 | | F | L/R | Estate 4WD AXZ | Date From:2006.11 | GCI83016 | Inner Joint | | | 28 | | | 32 | |
| | 2005.11-2010.11 | 6AT | R | L | Estate 4WD AXZ | Date to:2006.05 | GDS54017 | Drive Shaft | | 36 | | 59.5 | 40 | 609 | |
| | 2005.11-2010.11 | 6AT | R | L | Estate 4WD AXZ | Date from:2006.06 | GDS61284 | Drive Shaft | | 36 | | 59.5 | 40 | 594 | |
| | 2005.11-2010.11 | 6AT | R | R | Estate 4WD AXZ | Date from:2006.06 | GDS61293 | Drive Shaft | | 36 | | 59.5 | 40 | 631 | |
| | 2005.11-2010.11 | 6AT | R | R | Estate 4WD AXZ | Date to:2006.05 | GDS81597 | Drive Shaft | | 36 | | 59.5 | 40 | 652 | |
| | 2005.11-2010.11 | 6AT | R | L/R | Estate 4WD AXZ | | GCI35026 | Outer Joint | | 36 | 33 | 59.5 | 40 | 61 | |
| | 2005.11-2010.11 | 6AT | R | L/R | Estate 4WD AXZ | | GCI82447 | Inner Joint | | | 33 | | | 34 | |
| | 2005.11-2010.11 | AT/MT | R | L/R | Estate 4WD AXZ | Date to:2007.05;Chassis no. to:3C7300000 | GCO83037 | Outer Joint | | 36 | 30 | 59.5 | 40.5 | 56 | I |
| 3.6 (220 kw) | 2007.04-2010.11 | 6DCT | F | L | Estate 4WD BWS | | GDS83295 | Drive Shaft | | 36 | | 59.5 | 40 | 491 | |
| | 2007.04-2010.11 | 6DCT | F | R | Estate 4WD BWS | Date from:2007.10 | GDS81892 | Drive Shaft | | 36 | | 59.5 | 40 | 602 | |
| | 2007.04-2010.11 | 6DCT | F | L | Estate 4WD BWS | | GDS98006 | Stub Axle-Flange | | 37 | | | 67 | 123.5 | |
| | 2007.04-2010.11 | AT | F | L/R | Estate 4WD BWS | | GCI83006 | Inner Joint | | | 33 | | | 34 | |
| | 2007.04-2010.11 | | F | L/R | Estate 4WD BWS | | GCO83101 | Outer Joint | | 36 | 27 | 59.5 | 40 | 65 | M |
| | 2007.04-2010.11 | | F | L/R | Estate 4WD BWS | | GCI83016 | Inner Joint | | | 28 | | | 32 | |
| | 2007.04-2010.11 | 6AT | R | L | Estate 4WD BWS | | GDS61284 | Drive Shaft | | 36 | | 59.5 | 40 | 594 | |
| | 2007.04-2010.11 | 6AT | R | R | Estate 4WD BWS | | GDS61293 | Drive Shaft | | 36 | | 59.5 | 40 | 631 | |
| | 2007.04-2010.11 | 6AT | R | L/R | Estate 4WD BWS | | GCI35026 | Outer Joint | | 36 | 33 | 59.5 | 40 | 61 | |
| | 2007.04-2010.11 | 6AT | R | L/R | Estate 4WD BWS | | GCO83037 | Outer Joint | | 36 | 30 | 59.5 | 40.5 | 56 | I |
| | 2007.04-2010.11 | 6AT | R | L/R | Estate 4WD BWS | | GCI53002 | Inner Joint | | | 33 | | | 34 | |
| | 2007.04-2010.11 | 6AT | R | L/R | Estate 4WD BWS | | GCI82447 | Inner Joint | | | 33 | | | 34 | |
| | 2011.01-2014.12 | 6AT | F | L | Estate 4WD BWS | | GDS83295 | Drive Shaft | | 36 | | 59.5 | 40 | 491 | |
| | 2011.01-2014.12 | 6AT | F | R | Estate 4WD BWS | | GDS83266 | Drive Shaft | | 36 | | 59.5 | 40 | 601 | |

| | YEAR | TRANSM. | F/R | L/R | BODY STYLE & DRIVE TYPE & ENGINE | REMARKS | G-AP Ref. | PRODUCT | ABS | Technical Specifications A | B | C | H | L | P |
|---|---|---|---|---|---|---|---|---|---|---|---|---|---|---|---|
| **VW** | | | | | | | | | | | | | | | |
| **Passat Estate/Variant** | | | | | | | | | | | | | | | |
| 3.6 (220 kw) | 2011.01-2014.12 | AT | F | L/R | Estate 4WD BWS | | GCI83006 | Inner Joint | | | 33 | | | 34 | |
| | 2011.01-2014.12 | | F | L/R | Estate 4WD BWS | | GCO83101 | Outer Joint | | 36 | 27 | 59.5 | 40 | 65 | M |
| | 2011.01-2014.12 | | F | L/R | Estate 4WD BWS | | GCI83016 | Inner Joint | | | 28 | | | 32 | |
| | 2011.01-2014.12 | 6AT | R | L | Estate 4WD BWS | | GDS61284 | Drive Shaft | | 36 | | 59.5 | 40 | 594 | |
| | 2011.01-2014.12 | 6AT | R | R | Estate 4WD BWS | | GDS61293 | Drive Shaft | | 36 | | 59.5 | 40 | 631 | |
| | 2011.01-2014.12 | 6AT | R | L/R | Estate 4WD BWS | | GCI35026 | Outer Joint | | 36 | 33 | 59.5 | 40 | 61 | |
| | 2011.01-2014.12 | 6AT | R | L/R | Estate 4WD BWS | | GCI53002 | Inner Joint | | | 33 | | | 34 | |
| | 2011.01-2014.12 | 6AT | R | L/R | Estate 4WD BWS | | GCI82447 | Inner Joint | | | 33 | | | 34 | |
| | 2011.01-2014.12 | 6DCT | F | R | Estate Van 4WD BWS | | GDS81892 | Drive Shaft | | 36 | | 59.5 | 40 | 602 | |
| | 2011.01-2014.12 | 6MT | F | L | Estate Van 4WD BWS | | GDS83295 | Drive Shaft | | 36 | | 59.5 | 40 | 491 | |
| | 2011.01-2014.12 | | F | L/R | Estate Van 4WD BWS | | GCO83101 | Outer Joint | | 36 | 27 | 59.5 | 40 | 65 | M |
| | 2011.01-2014.12 | | F | L/R | Estate Van 4WD BWS | | GCI83016 | Inner Joint | | | 28 | | | 32 | |
| | 2011.01-2014.12 | 6AT | R | L | Estate Van 4WD BWS | | GDS61284 | Drive Shaft | | 36 | | 59.5 | 40 | 594 | |
| | 2011.01-2014.12 | 6AT | R | R | Estate Van 4WD BWS | | GDS61293 | Drive Shaft | | 36 | | 59.5 | 40 | 631 | |
| | 2011.01-2014.12 | 6AT | R | L/R | Estate Van 4WD BWS | | GCI35026 | Outer Joint | | 36 | 33 | 59.5 | 40 | 61 | |
| | 2011.01-2014.12 | 6AT | R | L/R | Estate Van 4WD BWS | | GCI53002 | Inner Joint | | | 33 | | | 34 | |
| | 2011.01-2014.12 | 6MT | R | L/R | Estate Van 4WD BWS | | GCI82447 | Inner Joint | | | 33 | | | 34 | |
| 4.0 (202 kw) | 2001.09-2004.09 | 5AT | F | L | Estate 4WD BDN;BDP | | GDS83015 | Drive Shaft | 45W | 38 | | 59.5 | 34.5 | 527 | |
| | 2001.09-2004.09 | 5AT | F | R | Estate 4WD BDN;BDP | | GDS83048 | Drive Shaft | 45W | 38 | | 59.5 | 34.5 | 502 | |
| | 2001.09-2004.09 | 5AT/6MT | F | L/R | Estate 4WD BDN;BDP | | GCO83019 | Outer Joint | 45W | 38 | 27 | 59.5 | 34.5 | 63 | I |
| | 2001.09-2004.09 | 6MT | F | L | Estate 4WD BDN;BDP | | GDS83008 | Drive Shaft | 45W | 38 | | 59.5 | 34.5 | 603 | |
| | 2001.09-2004.09 | 6MT | F | R | Estate 4WD BDN;BDP | | GDS61019 | Drive Shaft | 45W | 38 | | 59.5 | 34.5 | 624 | |
| | 2001.09-2004.09 | 6MT | F | L/R | Estate 4WD BDN;BDP | | GCI50019 | Inner Joint | | | 34 | | | 59.5 | |
| | 2001.09-2004.09 | AT/MT | R | L/R | Estate 4WD BDN;BDP | not for armoured vehicles | GCI83001 | Inner Joint | | | 28 | | | 32 | |
| | 2001.09-2004.09 | | R | L/R | Estate 4WD BDN;BDP | not for armoured vehicles | GCI83002 | Inner Joint | | | 33 | | | 32 | |
| **Passat Variant** | | | | | | | | | | | | | | | |
| 2.0 (85 kw) | 1990.02-1997.05 | AT/MT | F | L/R | Estate FWD 2E (11.91-09.94), ADY (10.94-07.95), AGG (07.95-) | Chassis no. from:31-L-201814,Chassis no. to:31-N-105278 | GCO53007 | Outer Joint | | 22 | 30 | 53.2 | 78 | 61 | I |
| | 1990.02-1997.05 | MT | F | L | Estate FWD 2E (11.91-09.94), ADY (10.94-07.95), AGG (07.95-) | Date to:1996.12,Chassis no. from:31-L-201814,Chassis no. to:3A-V-300000 | GDS61001 | Drive Shaft | | 22 | | 53.2 | 78 | 557 | |
| | 1990.02-1997.05 | MT | F | R | Estate FWD 2E (11.91-09.94), ADY (10.94-07.95), AGG (07.95-) | Chassis no. from:31-L-201814,Chassis no. to:3A-V-300000 | GDS61002 | Drive Shaft | | 22 | | 53 | 78.5 | 793 | |
| | 1990.02-1997.05 | MT | F | R | Estate FWD 2E (11.91-09.94), ADY (10.94-07.95), AGG (07.95-) | Chassis no. from:31-L-201814,Chassis no. to:3A-V-300000 | GCI83009 | Inner Joint | | | 33 | | | 34 | |
| | 1990.02-1997.05 | MT | F | L/R | Estate FWD 2E (11.91-09.94), ADY (10.94-07.95), AGG (07.95-) | | GCI83006 | Inner Joint | | | 33 | | | 34 | |
| | 1990.02-1997.05 | MT | F | L/R | Estate FWD 2E (11.91-09.94), ADY (10.94-07.95), AGG (07.95-) | | GCI83011 | Inner Joint | | | 33 | | | 34 | |
| | 1990.02-1997.05 | | F | | Estate FWD 2E (11.91-09.94), ADY (10.94-07.95), AGG (07.95-) | | GCO53004 | Outer Joint | | 22 | 30 | 51 | 78 | 61 | I |
| 2.0 (150 kw) | 2024.11- | 7DCT | F | L | Estate FWD DNNE | | GDS82351 | Drive Shaft | | 36 | 37 | 59.5 | 40 | 568 | |
| | 2024.11- | 7DCT | F | R | Estate FWD DNNE | | GDS83613 | Drive Shaft | | 36 | 37 | 59.5 | 40 | 921 | |
| | 2024.11- | 7DCT | F | L | Estate FWD DNNE | | GCI81158 | Inner Joint | | 37 | 34 | 34.5 | 65.5 | 83 | |
| **Phaeton** | | | | | | | | | | | | | | | |
| 3.0 (165 kw) | 2004.09-2007.05 | 6AT | F | R | Saloon 4WD BMK | | GDS81595 | Drive Shaft | | 38 | | 59.5 | 34 | 535 | |
| | 2004.09-2007.05 | 6AT | F | R | Saloon 4WD BMK | | GCI61076 | Inner Joint | | | 34 | | | 85 | |
| | 2004.09-2007.05 | 6AT | R | L/R | Saloon 4WD BMK | | GDS81536 | Drive Shaft | | 38 | | 59.5 | 34 | 660 | |
| | 2004.09-2007.05 | 6AT | R | L/R | Saloon 4WD BMK | | GCI81399 | Inner Joint | | | 28 | | | 32 | |
| | 2004.09-2007.05 | 6AT | F/R | L/R | Saloon 4WD BMK | | GCO83077 | Outer Joint | | 38 | 27 | 59.5 | 34 | 63 | M |
| 3.0 (171 kw) | 2007.06-2008.11 | 6AT | F | R | Saloon 4WD CARA | | GDS81595 | Drive Shaft | | 38 | | 59.5 | 34 | 535 | |
| | 2007.06-2008.11 | 6AT | F | R | Saloon 4WD CARA | | GCI61076 | Inner Joint | | | 34 | | | 85 | |
| | 2007.06-2008.11 | 6AT | R | L/R | Saloon 4WD CARA | | GDS81536 | Drive Shaft | | 38 | | 59.5 | 34 | 660 | |
| | 2007.06-2008.11 | 6AT | R | L/R | Saloon 4WD CARA | | GCI81399 | Inner Joint | | | 28 | | | 32 | |
| | 2007.06-2008.11 | 6AT | F/R | L/R | Saloon 4WD CARA | | GCO83077 | Outer Joint | | 38 | 27 | 59.5 | 34 | 63 | M |
| 3.0 (176 kw) | 2008.11-2016.03 | SAT/6AT | F | R | Saloon 4WD CEXA;CARB | | GDS81595 | Drive Shaft | | 38 | | 59.5 | 34 | 535 | |
| | 2008.11-2016.03 | SAT/6AT | F | R | Saloon 4WD CEXA;CARB | | GCI61076 | Inner Joint | | | 34 | | | 85 | |
| | 2008.11-2016.03 | SAT/6AT | R | L/R | Saloon 4WD CEXA;CARB | | GDS81536 | Drive Shaft | | 38 | | 59.5 | 34 | 660 | |
| | 2008.11-2016.03 | SAT/6AT | R | L/R | Saloon 4WD CEXA;CARB | | GCI81399 | Inner Joint | | | 28 | | | 32 | |
| | 2008.11-2016.03 | SAT/6AT | F/R | L/R | Saloon 4WD CEXA;CARB | | GCO83077 | Outer Joint | | 38 | 27 | 59.5 | 34 | 63 | M |
| 3.0 (180 kw) | 2013.11-2016.03 | AT | F | R | Saloon 4WD CEXB | | GDS81595 | Drive Shaft | | 38 | | 59.5 | 34 | 535 | |
| | 2013.11-2016.03 | AT | F | R | Saloon 4WD CEXB | | GCI61076 | Inner Joint | | | 34 | | | 85 | |
| | 2013.11-2016.03 | AT | R | L/R | Saloon 4WD CEXB | | GDS81536 | Drive Shaft | | 38 | | 59.5 | 34 | 660 | |
| | 2013.11-2016.03 | AT | R | L/R | Saloon 4WD CEXB | | GCI81399 | Inner Joint | | | 28 | | | 32 | |
| | 2013.11-2016.03 | AT | F/R | L/R | Saloon 4WD CEXB | | GCO83077 | Outer Joint | | 38 | 27 | 59.5 | 34 | 63 | M |
| 3.2 (177 kw) | 2002.04-2005.05 | 5AT | F | L | Saloon FWD AYT;BKL | Date to:2002.12 | GDS81596 | Drive Shaft | | 38 | | 59.5 | 34 | 558 | |
| | 2002.04-2005.05 | 5AT | F | R | Saloon FWD AYT;BKL | | GDS81535 | Drive Shaft | | 38 | | 59.5 | 34 | 555 | |
| | 2002.04-2005.05 | 5AT/6MT | F | L/R | Saloon FWD AYT;BKL | | GCO99351 | Outer Joint | | 38 | 29 | 59.5 | 34 | 70 | M |
| | 2002.04-2005.05 | AT | F | R | Saloon FWD AYT;BKL | | GCI50019 | Inner Joint | | | 34 | | | 59.5 | |
| | 2002.04-2005.05 | | F | L/R | Saloon FWD AYT;BKL | Date To:2003.10 | GCO81360 | Outer Joint | | 38 | 27 | 59.5 | 34 | 63 | I |
| | 2004.02-2008.11 | 6AT | F | R | Saloon 4WD BKL;BRK | | GDS81595 | Drive Shaft | | 38 | | 59.5 | 34 | 535 | |
| | 2004.02-2008.11 | 6AT | F | R | Saloon 4WD BKL;BRK | | GCI61076 | Inner Joint | | | 34 | | | 85 | |
| | 2004.02-2008.11 | 6AT | R | L/R | Saloon 4WD BKL;BRK | | GDS81536 | Drive Shaft | | 38 | | 59.5 | 34 | 660 | |

| | YEAR | TRANSM. | F/R | L/R | BODY STYLE & DRIVE TYPE & ENGINE | REMARKS | G-AP Ref. | PRODUCT | ABS | Technical Specifications A | B | C | H | L | P |
|---|---|---|---|---|---|---|---|---|---|---|---|---|---|---|---|
| **VW** | | | | | | | | | | | | | | | |
| **Phaeton** | | | | | | | | | | | | | | | |
| 3.2 (177 kw) | 2004.02-2008.11 | 6AT | R | L/R | Saloon 4WD BKL;BRK | | GCI81399 | Inner Joint | | | 28 | | | 32 | |
| | 2004.02-2008.11 | 6AT | F/R | L/R | Saloon 4WD BKL;BRK | | GCO83077 | Outer Joint | | 38 | 27 | 59.5 | 34 | 63 | M |
| 3.6 (206 kw) | 2008.11-2016.03 | 6AT | F | R | Saloon 4WD CHNA;CMVA | | GDS81595 | Drive Shaft | | 38 | | 59.5 | 34 | 535 | |
| | 2008.11-2016.03 | 6AT | F | R | Saloon 4WD CHNA;CMVA | | GCI61076 | Inner Joint | | | 34 | | | 85 | |
| | 2008.11-2016.03 | 6AT | R | L/R | Saloon 4WD CHNA;CMVA | | GDS81536 | Drive Shaft | | 38 | | 59.5 | 34 | 660 | |
| | 2008.11-2016.03 | 6AT | R | L/R | Saloon 4WD CHNA;CMVA | | GCI81399 | Inner Joint | | | 28 | | | 32 | |
| | 2008.11-2016.03 | 6AT | F/R | L/R | Saloon 4WD CHNA;CMVA | | GCO83077 | Outer Joint | | 38 | 27 | 59.5 | 34 | 63 | M |
| 4.2 (246 kw) | 2003.05-2016.03 | 6AT | F | R | Saloon 4WD BGH;BGJ | | GDS81595 | Drive Shaft | | 38 | | 59.5 | 34 | 535 | |
| | 2003.05-2016.03 | 6AT | F | R | Saloon 4WD BGH;BGJ | | GCI61076 | Inner Joint | | | 34 | | | 85 | |
| | 2003.05-2016.03 | 6AT | R | L/R | Saloon 4WD BGH;BGJ | | GDS81534 | Drive Shaft | | 38 | | 59.5 | 34 | 636 | |
| | 2003.05-2016.03 | 6AT | R | L/R | Saloon 4WD BGH;BGJ | Groove Type:Inner | GCO82035 | Outer Joint | | 38 | 27 | 59.5 | 34 | 63 | I |
| | 2003.05-2016.03 | 6AT | R | L/R | Saloon 4WD BGH;BGJ | | GCI81399 | Inner Joint | | | 28 | | | 32 | |
| | 2003.05-2016.03 | 6AT | F/R | L/R | Saloon 4WD BGH;BGJ | Groove Type:Middle | GCO83077 | Outer Joint | | 38 | 27 | 59.5 | 34 | 63 | M |
| 4.9 (230 kw) | 2002.11-2006.10 | 6AT | F | L | Saloon 4WD AJS | | GDS82384 | Drive Shaft | | 38 | | 59.5 | 34 | 575 | |
| | 2002.11-2006.10 | 6AT | F | R | Saloon 4WD AJS | | GDS82385 | Drive Shaft | | 38 | | 59.5 | 34 | 497 | |
| | 2002.11-2006.10 | 6AT | F | L/R | Saloon 4WD AJS | Groove Type:Inner | GCO82035 | Outer Joint | | 38 | 27 | 59.5 | 34 | 63 | I |
| | 2002.11-2006.10 | 6AT | F | L/R | Saloon 4WD AJS | Groove Type:Middle | GCO99351 | Outer Joint | | 38 | 29 | 59.5 | 34 | 70 | M |
| | 2002.11-2006.10 | 6AT | F | L/R | Saloon 4WD AJS | | GCI61076 | Inner Joint | | | 34 | | | 85 | |
| | 2002.11-2006.10 | 6AT | R | L/R | Saloon 4WD AJS | | GDS81534 | Drive Shaft | | 38 | | 59.5 | 34 | 636 | |
| | 2002.11-2006.10 | 6AT | R | L/R | Saloon 4WD AJS | | GCI81399 | Inner Joint | | | 28 | | | 32 | |
| | 2002.11-2006.10 | | R | L/R | Saloon 4WD AJS | Date To:2004.11 | GCO83019 | Outer Joint | 45W | 38 | 27 | 59.5 | 34.5 | 63 | I |
| 6.0 (309 kw) | 2002.04-2005.12 | 5AT | F | L | Saloon 4WD BAN;BAP | | GDS81596 | Drive Shaft | | 38 | | 59.5 | 34 | 558 | |
| | 2002.04-2005.12 | 5AT | F | R | Saloon 4WD BAN;BAP | | GDS81588 | Drive Shaft | | 38 | | 59.5 | 34 | 477 | |
| | 2002.04-2005.12 | 5AT | F | L/R | Saloon 4WD BAN;BAP | | GCO81360 | Outer Joint | | 38 | 27 | 59.5 | 34 | 63 | I |
| | 2002.04-2005.12 | 5AT | R | L/R | Saloon 4WD BAN;BAP | | GDS81536 | Drive Shaft | | 38 | | 59.5 | 34 | 660 | |
| | 2002.04-2005.12 | 5AT | R | L/R | Saloon 4WD BAN;BAP | Date to:2004.11 | GCO82035 | Outer Joint | | 38 | 27 | 59.5 | 34 | 63 | I |
| | 2002.04-2005.12 | 5AT | R | L/R | Saloon 4WD BAN;BAP | Date to:2004.11 | GCO83019 | Outer Joint | 45W | 38 | 27 | 59.5 | 34.5 | 63 | I |
| | 2002.04-2005.12 | 5AT | R | L/R | Saloon 4WD BAN;BAP | | GCI81399 | Inner Joint | | | 28 | | | 32 | |
| 6.0 (331 kw) | 2005.05-2016.03 | 5AT | F | L | Saloon 4WD BRN;BTT | | GDS81596 | Drive Shaft | | 38 | | 59.5 | 34 | 558 | |
| | 2005.05-2016.03 | 5AT | F | R | Saloon 4WD BRN;BTT | | GDS81588 | Drive Shaft | | 38 | | 59.5 | 34 | 477 | |
| | 2005.05-2016.03 | | F | L/R | Saloon 4WD BRN;BTT | | GCO81360 | Outer Joint | | 38 | 27 | 59.5 | 34 | 63 | I |
| | 2005.05-2016.03 | 5AT | R | L/R | Saloon 4WD BRN;BTT | | GDS81536 | Drive Shaft | | 38 | | 59.5 | 34 | 660 | |
| | 2005.05-2016.03 | 5AT/6AT | R | L/R | Saloon 4WD BRN;BTT | | GCI81399 | Inner Joint | | | 28 | | | 32 | |
| **Polo** | | | | | | | | | | | | | | | |
| 1.0 (33 kw) | 1994.10-1996.09 | MT | F | L | Hatchback FWD AEV | | GDS61007 | Drive Shaft | | 22 | | 53 | 78.5 | 517 | |
| | 1994.10-1996.09 | MT | F | R | Hatchback FWD AEV | | GDS61010 | Drive Shaft | | 22 | | 53 | 78.5 | 740 | |
| | 1994.10-1996.09 | MT | F | L/R | Hatchback FWD AEV | | GCO53005 | Outer Joint | | 22 | 30 | 53 | 78.5 | 51 | I |
| | 1994.10-1996.09 | MT | F | L/R | Hatchback FWD AEV | | GCI53001 | Inner Joint | | | 33 | | | 32 | |
| 1.0 (37 kw) | 1996.09-1999.10 | AT/MT | F | L/R | Hatchback FWD AER (09.96-.), ALL | | GCO53005 | Outer Joint | | 22 | 30 | 53 | 78.5 | 51 | I |
| | 1996.09-1999.10 | MT | F | L | Hatchback FWD AER (09.96-.), ALL | For Engine code:AER/ALL | GDS61007 | Drive Shaft | | 22 | | 53 | 78.5 | 517 | |
| | 1996.09-1999.10 | MT | F | L | Hatchback FWD AER (09.96-.), ALL | For Engine code:ALD/AUC | GDS61205 | Drive Shaft | | 22 | | 53 | 78.5 | 525 | |
| | 1996.09-1999.10 | MT | F | R | Hatchback FWD AER (09.96-.), ALL | For Engine code:AER/ALL | GDS61010 | Drive Shaft | | 22 | | 53 | 78.5 | 740 | |
| | 1996.09-1999.10 | MT | F | R | Hatchback FWD AER (09.96-.), ALL | For Engine code:ALD/AUC | GDS61189 | Drive Shaft | | 22 | | 53 | 78.5 | 752 | |
| | 1996.09-1999.10 | MT/5MT | F | L/R | Hatchback FWD AER (09.96-.), ALL | | GCI53001 | Inner Joint | | | 33 | | | 32 | |
| | 1999.10-2001.09 | AT/MT | F | L/R | Hatchback FWD ALD, AUC | | GCO53005 | Outer Joint | | 22 | 30 | 53 | 78.5 | 51 | I |
| | 1999.10-2001.09 | MT | F | L | Hatchback FWD ALD, AUC | For Engine code:AER/ALL | GDS61007 | Drive Shaft | | 22 | | 53 | 78.5 | 517 | |
| | 1999.10-2001.09 | MT | F | L | Hatchback FWD ALD, AUC | For Engine code:ALD/AUC | GDS61205 | Drive Shaft | | 22 | | 53 | 78.5 | 525 | |
| | 1999.10-2001.09 | MT | F | R | Hatchback FWD ALD, AUC | For Engine code:AER/ALL | GDS61010 | Drive Shaft | | 22 | | 53 | 78.5 | 740 | |
| | 1999.10-2001.09 | MT | F | R | Hatchback FWD ALD, AUC | For Engine code:ALD/AUC | GDS61189 | Drive Shaft | | 22 | | 53 | 78.5 | 752 | |
| | 1999.10-2001.09 | MT/5MT | F | L/R | Hatchback FWD ALD, AUC | | GCI53001 | Inner Joint | | | 33 | | | 32 | |
| 1.0 (44 kw) | 2014.01-2017.10 | 5MT | F | L | Hatchback FWD CHYA | | GDS82038 | Drive Shaft | | 36 | 28 | 52 | 58.5 | 629 | |
| | 2014.01-2017.10 | 5MT | F | R | Hatchback FWD CHYA | | GDS82040 | Drive Shaft | | 36 | 28 | 52 | 58.5 | 821 | |
| | 2014.01-2017.10 | 5MT | F | L/R | Hatchback FWD CHYA | | GCO83027 | Outer Joint | | 36 | 30 | 50.7 | 58.5 | 47.5 | I |
| | 2014.01-2017.10 | 5MT | F | L/R | Hatchback FWD CHYA | | GCI81611 | Inner Joint | | 28 | 28 | 39.95 | 58 | 84 | |
| | 2014.01-2017.10 | 5MT | F | L | Hatchback Van FWD CHYA | | GDS82038 | Drive Shaft | | 36 | 28 | 52 | 58.5 | 629 | |
| | 2014.01-2017.10 | 5MT | F | L/R | Hatchback Van FWD CHYA | | GCO83027 | Outer Joint | | 36 | 30 | 50.7 | 58.5 | 47.5 | I |
| | 2014.01-2017.10 | 5MT | F | L | Hatchback Van FWD CHYA | | GCI81611 | Inner Joint | | 28 | 28 | 39.95 | 58 | 84 | |
| | 2014.01-2017.10 | MT | F | R | Hatchback Van FWD CHYA | | GDS82040 | Drive Shaft | | 36 | 28 | 52 | 58.5 | 821 | |
| 1.0 (48 kw) | 2017.08-2020.02 | 5MT | F | L | Hatchback FWD CHYC;DFNB | | GDS84459 | Drive Shaft | | 36 | 33 | 52 | 76 | 636 | |
| | 2017.08-2020.02 | 5MT | F | R | Hatchback FWD CHYC;DFNB | | GDS84456 | Drive Shaft | | 36 | 33 | 52 | 76 | 908 | |
| | 2017.08-2020.02 | 5MT | F | L/R | Hatchback FWD CHYC;DFNB | | GCO82705 | Outer Joint | | 36 | 23 | 52 | 76 | 54 | M |
| | 2017.08-2020.02 | 5MT | F | L/R | Hatchback FWD CHYC;DFNB | | GCI82767 | Inner Joint | | 33 | 22 | 40 | 59 | 88 | |
| 1.0 (55 kw) | 2014.01-2017.10 | 5MT | F | L | Hatchback FWD CHYB | | GDS82038 | Drive Shaft | | 36 | 28 | 52 | 58.5 | 629 | |
| | 2014.01-2017.10 | 5MT | F | L/R | Hatchback FWD CHYB | | GCO83027 | Outer Joint | | 36 | 30 | 50.7 | 58.5 | 47.5 | I |
| | 2014.01-2017.10 | MT | F | R | Hatchback FWD CHYB | | GDS82040 | Drive Shaft | | 36 | 28 | 52 | 58.5 | 821 | |

| | YEAR | TRANSM. | F/R | L/R | BODY STYLE & DRIVE TYPE & ENGINE | REMARKS | G-AP Ref. | PRODUCT | ABS | Technical Specifications | | | | | |
|---|---|---|---|---|---|---|---|---|---|---|---|---|---|---|---|
| | | | | | | | | | | A | B | C | H | L | P |
| **VW** **Polo** | | | | | | | | | | | | | | | |
| 1.0 (55 kw) | 2014.01-2017.10 | MT | F | L | Hatchback FWD CHYB | | GCI81611 | Inner Joint | | 28 | 28 | 39.95 | 58 | 84 | |
| | 2014.01-2017.10 | 5MT | F | L | Hatchback Van FWD CHYB | | GDS82038 | Drive Shaft | | 36 | 28 | 52 | 58.5 | 629 | |
| | 2014.01-2017.10 | 5MT | F | L/R | Hatchback Van FWD CHYB | | GCO83027 | Outer Joint | | 36 | 30 | 50.7 | 58.5 | 47.5 | I |
| | 2014.01-2017.10 | 5MT | F | L | Hatchback Van FWD CHYB | | GCI81611 | Inner Joint | | 28 | 28 | 39.95 | 58 | 84 | |
| | 2014.01-2017.10 | MT | F | R | Hatchback Van FWD CHYB | | GDS82040 | Drive Shaft | | 36 | 28 | 52 | 58.5 | 821 | |
| | 2017.06-2021.08 | 5MT | F | L | Hatchback FWD CHYB | | GDS84459 | Drive Shaft | | 36 | 33 | 52 | 76 | 636 | |
| | 2017.06-2021.08 | 5MT | F | R | Hatchback FWD CHYB | | GDS84456 | Drive Shaft | | 36 | 33 | 52 | 76 | 908 | |
| | 2017.06-2021.08 | 5MT | F | L/R | Hatchback FWD CHYB | | GCO82705 | Outer Joint | | 36 | 23 | 52 | 76 | 54 | M |
| | 2017.06-2021.08 | 5MT | F | L/R | Hatchback FWD CHYB | | GCI82767 | Inner Joint | | 33 | 22 | 40 | 59 | 88 | |
| 1.0 (59 kw) | 2018.09- | 5MT | F | L | Hatchback FWD DFNA;DSGB;DSGD | | GDS84459 | Drive Shaft | | 36 | 33 | 52 | 76 | 636 | |
| | 2018.09- | 5MT | F | R | Hatchback FWD DFNA;DSGB;DSGD | | GDS84456 | Drive Shaft | | 36 | 33 | 52 | 76 | 908 | |
| | 2018.09- | 5MT | F | L/R | Hatchback FWD DFNA;DSGB;DSGD | | GCO82705 | Outer Joint | | 36 | 23 | 52 | 76 | 54 | M |
| | 2018.09- | 5MT | F | L/R | Hatchback FWD DFNA;DSGB;DSGD | | GCI82767 | Inner Joint | | 33 | 22 | 40 | 59 | 88 | |
| 1.0 (66 kw) | 2017.09- | 5MT | F | L | Hatchback FWD DBYA | | GDS84011 | Drive Shaft | | 36 | 33 | 52 | 64.5 | 620 | |
| | 2017.09- | 5MT | F | L/R | Hatchback FWD DBYA | | GCO81744 | Outer Joint | | 36 | 30 | 52 | 64.5 | 55.5 | M |
| | 2017.09- | 5MT | F | L | Hatchback FWD DBYA | | GCI82449 | Inner Joint | | 33 | 30 | 39.9 | 58.5 | 105 | |
| | 2017.09- | 5MT | F | R | Hatchback FWD DBYA | Date to:2017.10,Date from:2018.01 | GCI82384 | Inner Joint | | 33 | 30 | 39.95 | 58.5 | 91.5 | |
| | 2017.09- | 5MT | F | R | Hatchback FWD DBYA | Date from:2017.11,Date to:2017.12 | GCI82449 | Inner Joint | | 33 | 30 | 39.9 | 58.5 | 105 | |
| | 2017.09- | 5MT/6MT | F | R | Hatchback FWD DBYA | Manufacturer:HA WOB | GDS83825 | Drive Shaft | | 36 | 33 | 52 | 64.5 | 896 | |
| 1.0 (70 kw) | 2014.11-2017.10 | 5MT | F | L | Hatchback FWD CHZB | | GDS81922 | Drive Shaft | | 36 | 33 | 52 | 59 | 581 | |
| | 2014.11-2017.10 | 5MT | F | R | Hatchback FWD CHZB | | GDS81924 | Drive Shaft | | 36 | 33 | 52 | 59 | 855 | |
| | 2014.11-2017.10 | 5MT | F | L/R | Hatchback FWD CHZB | | GCO54006 | Outer Joint | | 36 | 30 | 52 | 59 | 55.5 | I |
| | 2014.11-2017.10 | 5MT | F | L/R | Hatchback FWD CHZB | Date to:2017.10 | GCO83024 | Outer Joint | | 36 | 30 | 50.75 | 59 | 55.5 | I |
| | 2014.11-2017.10 | 5MT | F | L/R | Hatchback FWD CHZB | | GCI81546 | Inner Joint | | 33 | 32 | 39.9 | 58.5 | 105 | |
| | 2014.11-2017.10 | 7DCT | F | L | Hatchback FWD CHZB | | GDS82228 | Drive Shaft | | 36 | | 52 | 75 | 475 | |
| | 2014.11-2017.10 | 7DCT | F | R | Hatchback FWD CHZB | | GDS82358 | Drive Shaft | | 36 | | 52 | 75 | 762 | |
| | 2014.11-2017.10 | 7DCT | F | L/R | Hatchback FWD CHZB | | GCO61081 | Outer Joint | | 36 | 27 | 52 | 75 | 65 | I |
| | 2014.11-2017.10 | 7DCT | F | L/R | Hatchback FWD CHZB | | GCI81689 | Inner Joint | | | 32 | | | 89 | |
| | 2014.11-2017.10 | 5MT | F | L | Hatchback Van FWD CHZB | | GDS81922 | Drive Shaft | | 36 | 33 | 52 | 59 | 581 | |
| | 2014.11-2017.10 | 5MT | F | R | Hatchback Van FWD CHZB | | GDS81924 | Drive Shaft | | 36 | 33 | 52 | 59 | 855 | |
| | 2014.11-2017.10 | 5MT | F | L/R | Hatchback Van FWD CHZB | | GCO54006 | Outer Joint | | 36 | 30 | 52 | 59 | 55.5 | I |
| | 2014.11-2017.10 | 5MT | F | L/R | Hatchback Van FWD CHZB | Date to:2017.10 | GCO83024 | Outer Joint | | 36 | 30 | 50.75 | 59 | 55.5 | I |
| | 2014.11-2017.10 | 5MT | F | L/R | Hatchback Van FWD CHZB | | GCI81546 | Inner Joint | | 33 | 32 | 39.9 | 58.5 | 105 | |
| | 2014.11-2017.10 | 7DCT | F | L | Hatchback Van FWD CHZB | | GDS82228 | Drive Shaft | | 36 | | 52 | 75 | 475 | |
| | 2014.11-2017.10 | 7DCT | F | R | Hatchback Van FWD CHZB | | GDS82358 | Drive Shaft | | 36 | | 52 | 75 | 762 | |
| | 2014.11-2017.10 | 7DCT | F | L/R | Hatchback Van FWD CHZB | | GCO61081 | Outer Joint | | 36 | 27 | 52 | 75 | 65 | I |
| | 2014.11-2017.10 | 7DCT | F | L/R | Hatchback Van FWD CHZB | | GCI81689 | Inner Joint | | | 32 | | | 89 | |
| | 2017.06- | 5MT | F | L | Hatchback FWD CHZL;DKLA;DLAC;DXTA;DUSB | | GDS84011 | Drive Shaft | | 36 | 33 | 52 | 64.5 | 620 | |
| | 2017.06- | 5MT | F | R | Hatchback FWD CHZL;DKLA;DLAC;DXTA;DUSB | | GDS83825 | Drive Shaft | | 36 | 33 | 52 | 64.5 | 896 | |
| | 2017.06- | 5MT | F | L/R | Hatchback FWD CHZL;DKLA;DLAC;DXTA;DUSB | | GCO81744 | Outer Joint | | 36 | 30 | 52 | 64.5 | 55.5 | M |
| | 2017.06- | 5MT | F | L | Hatchback FWD CHZL;DKLA;DLAC;DXTA;DUSB | | GCI82449 | Inner Joint | | 33 | 30 | 39.9 | 58.5 | 105 | |
| | 2017.06- | 5MT | F | R | Hatchback FWD CHZL;DKLA;DLAC;DXTA;DUSB | Date to:2017.10,Date from:2018.01 | GCI82384 | Inner Joint | | 33 | 30 | 39.95 | 58.5 | 91.5 | |
| | 2017.06- | 5MT | F | R | Hatchback FWD CHZL;DKLA;DLAC;DXTA;DUSB | Date from:2017.11,Date to:2017.12 | GCI82449 | Inner Joint | | 33 | 30 | 39.9 | 58.5 | 105 | |
| | 2017.06- | 7DCT | F | L | Hatchback FWD CHZL;DKLA;DLAC;DXTA;DUSB | For Engine code:CHZL | GDS82232 | Drive Shaft | | 36 | | 52 | 64.5 | 500 | |
| | 2017.06- | 7DCT | F | L | Hatchback FWD CHZL;DKLA;DLAC;DXTA;DUSB | For Engine code:DLAC/DUSB | GDS84563 | Drive Shaft | | 36 | | 52 | 64.5 | 506 | |
| | 2017.06- | 7DCT | F | R | Hatchback FWD CHZL;DKLA;DLAC;DXTA;DUSB | For Engine code:DLAC/DUSB | GDS57885 | Drive Shaft | | 36 | | 52 | 64.5 | 765 | |
| | 2017.06- | 7DCT | F | R | Hatchback FWD CHZL;DKLA;DLAC;DXTA;DUSB | For Engine code:CHZL | GDS82233 | Drive Shaft | | 36 | | 52 | 64.5 | 778 | |
| | 2017.06- | 7DCT | F | L | Hatchback FWD CHZL;DKLA;DLAC;DXTA;DUSB | | GCO81743 | Outer Joint | | 36 | 33 | 52 | 64.5 | 59 | I |
| | 2017.06- | 7DCT | F | R | Hatchback FWD CHZL;DKLA;DLAC;DXTA;DUSB | | GCO81744 | Outer Joint | | 36 | 30 | 52 | 64.5 | 55.5 | M |
| | 2017.06- | 7DCT | F | L | Hatchback FWD CHZL;DKLA;DLAC;DXTA;DUSB | | GCI81689 | Inner Joint | | | 32 | | | 89 | |
| | 2017.06- | 7DCT | F | R | Hatchback FWD CHZL;DKLA;DLAC;DXTA;DUSB | | GCI81690 | Inner Joint | | | 30 | | | 89 | |
| 1.0 (81 kw) | 2014.11-2017.10 | 6MT | F | L | Hatchback FWD CHZC | | GDS81922 | Drive Shaft | | 36 | 33 | 52 | 59 | 581 | |
| | 2014.11-2017.10 | 6MT | F | R | Hatchback FWD CHZC | | GDS81924 | Drive Shaft | | 36 | 33 | 52 | 59 | 855 | |
| | 2014.11-2017.10 | 6MT | F | L/R | Hatchback FWD CHZC | | GCO54006 | Outer Joint | | 36 | 30 | 52 | 59 | 55.5 | I |
| | 2014.11-2017.10 | 6MT | F | L/R | Hatchback FWD CHZC | | GCI81546 | Inner Joint | | 33 | 32 | 39.9 | 58.5 | 105 | |
| | 2014.11-2017.10 | 7DCT | F | L | Hatchback FWD CHZC | | GDS82228 | Drive Shaft | | 36 | | 52 | 75 | 475 | |
| | 2014.11-2017.10 | 7DCT | F | R | Hatchback FWD CHZC | | GDS82358 | Drive Shaft | | 36 | | 52 | 75 | 762 | |
| | 2014.11-2017.10 | 7DCT | F | L/R | Hatchback FWD CHZC | | GCO61081 | Outer Joint | | 36 | 27 | 52 | 75 | 65 | I |
| | 2014.11-2017.10 | 7DCT | F | L/R | Hatchback FWD CHZC | | GCI81689 | Inner Joint | | | 32 | | | 89 | |
| | 2014.11-2017.10 | MT | F | L/R | Hatchback FWD CHZC | Date to:2017.10 | GCO83024 | Outer Joint | | 36 | 30 | 50.75 | 59 | 55.5 | I |
| | 2014.11-2017.10 | 6MT | F | L | Hatchback Van FWD CHZC | | GDS81922 | Drive Shaft | | 36 | 33 | 52 | 59 | 581 | |
| | 2014.11-2017.10 | 6MT | F | R | Hatchback Van FWD CHZC | | GDS81924 | Drive Shaft | | 36 | 33 | 52 | 59 | 855 | |
| | 2014.11-2017.10 | 6MT | F | L/R | Hatchback Van FWD CHZC | | GCO54006 | Outer Joint | | 36 | 30 | 52 | 59 | 55.5 | I |
| | 2014.11-2017.10 | 6MT | F | L/R | Hatchback Van FWD CHZC | | GCI81546 | Inner Joint | | 33 | 32 | 39.9 | 58.5 | 105 | |
| | 2014.11-2017.10 | 7DCT | F | L | Hatchback Van FWD CHZC | | GDS82228 | Drive Shaft | | 36 | | 52 | 75 | 475 | |

| | YEAR | TRANSM. | F/R | L/R | BODY STYLE & DRIVE TYPE & ENGINE | REMARKS | G-AP Ref. | PRODUCT | ABS | Technical Specifications A | B | C | H | L | P |
|---|---|---|---|---|---|---|---|---|---|---|---|---|---|---|---|
| **VW** **Polo** | | | | | | | | | | | | | | | |
| 1.0 (81 kw) | 2014.11-2017.10 | 7DCT | F | R | Hatchback Van FWD CHZC | | GDS82358 | Drive Shaft | | 36 | | 52 | 75 | 762 | |
| | 2014.11-2017.10 | 7DCT | F | L/R | Hatchback Van FWD CHZC | | GCO61081 | Outer Joint | | 36 | 27 | 52 | 75 | 65 | I |
| | 2020.07- | 6MT | F | L | Hatchback FWD DLAA | | GDS84558 | Drive Shaft | | 36 | | 52 | 64.5 | 496 | |
| | 2020.07- | 6MT | F | R | Hatchback FWD DLAA | | GDS82233 | Drive Shaft | | 36 | | 52 | 64.5 | 778 | |
| | 2020.07- | 6MT | F | L/R | Hatchback FWD DLAA | | GCO81744 | Outer Joint | | 36 | 30 | 52 | 64.5 | 55.5 | M |
| | 2020.07- | 6MT | F | R | Hatchback FWD DLAA | | GCI81690 | Inner Joint | | | 30 | | | 89 | |
| | 2020.07- | 7DCT | F | L | Hatchback FWD DLAA | | GDS84563 | Drive Shaft | | 36 | | 52 | 64.5 | 506 | |
| | 2020.07- | 7DCT | F | R | Hatchback FWD DLAA | | GDS57885 | Drive Shaft | | 36 | | 52 | 64.5 | 765 | |
| | 2020.07- | 7DCT | F | R | Hatchback FWD DLAA | | GCO81743 | Outer Joint | | 36 | 33 | 52 | 64.5 | 59 | I |
| | 2020.07- | 7DCT | F | R | Hatchback FWD DLAA | | GCI81689 | Inner Joint | | | 32 | | | 89 | |
| 1.0 (85 kw) | 2017.09- | 6MT | F | L | Hatchback FWD CHZJ;DKJA;DKRF;DXUA;DUSA | | GDS84558 | Drive Shaft | | 36 | | 52 | 64.5 | 496 | |
| | 2017.09- | 6MT | F | R | Hatchback FWD CHZJ;DKJA;DKRF;DXUA;DUSA | | GDS84562 | Drive Shaft | | 36 | | 52 | 64.5 | 799 | |
| | 2017.09- | 6MT | F | L/R | Hatchback FWD CHZJ;DKJA;DKRF;DXUA;DUSA | | GCO81744 | Outer Joint | | 36 | 30 | 52 | 64.5 | 55.5 | M |
| | 2017.09- | 7DCT | F | L | Hatchback FWD CHZJ;DKJA;DKRF;DXUA;DUSA | | GDS82232 | Drive Shaft | | 36 | | 52 | 64.5 | 500 | |
| | 2017.09- | 7DCT | F | L | Hatchback FWD CHZJ;DKJA;DKRF;DXUA;DUSA | For Engine code:DUSA/DXUA | GDS84563 | Drive Shaft | | 36 | | 52 | 64.5 | 506 | |
| | 2017.09- | 7DCT | F | R | Hatchback FWD CHZJ;DKJA;DKRF;DXUA;DUSA | For Engine code:DUSA/DXUA | GDS57885 | Drive Shaft | | 36 | | 52 | 64.5 | 765 | |
| | 2017.09- | 7DCT | F | R | Hatchback FWD CHZJ;DKJA;DKRF;DXUA;DUSA | For Engine code:DKJA/DKRF | GDS82233 | Drive Shaft | | 36 | | 52 | 64.5 | 778 | |
| | 2017.09- | 7DCT | F | L | Hatchback FWD CHZJ;DKJA;DKRF;DXUA;DUSA | | GCO81743 | Outer Joint | | 36 | 33 | 52 | 64.5 | 59 | I |
| | 2017.09- | 7DCT | F | R | Hatchback FWD CHZJ;DKJA;DKRF;DXUA;DUSA | | GCO81744 | Outer Joint | | 36 | 30 | 52 | 64.5 | 55.5 | M |
| | 2017.09- | 7DCT | F | L | Hatchback FWD CHZJ;DKJA;DKRF;DXUA;DUSA | | GCI81689 | Inner Joint | | | 32 | | | 89 | |
| | 2017.09- | 7DCT | F | R | Hatchback FWD CHZJ;DKJA;DKRF;DXUA;DUSA | | GCI81690 | Inner Joint | | | 30 | | | 89 | |
| 1.2 (40 kw) | 2002.01-2007.05 | 5MT | F | L | Hatchback FWD AWY;BMD | | GDS83063 | Drive Shaft | | 36 | | 50.7 | 58.5 | 501 | |
| | 2002.01-2007.05 | 5MT | F | R | Hatchback FWD AWY;BMD | For vehicles with power steering | GDS61063 | Drive Shaft | | 36 | | 50.7 | 58.5 | 751 | |
| | 2002.01-2007.05 | 5MT | F | L/R | Hatchback FWD AWY;BMD | For vehicles without power steering | GCO54002 | Outer Joint | | 20 | 30 | 52 | 59.5 | 49.5 | I |
| | 2002.01-2007.05 | 5MT | F | L/R | Hatchback FWD AWY;BMD | | GCI83008 | Inner Joint | | | 33 | | | 32 | |
| 1.2 (44 kw) | 2007.05-2009.11 | 5MT | F | L | Hatchback FWD BBM | | GDS83063 | Drive Shaft | | 36 | | 50.7 | 58.5 | 501 | |
| | 2007.05-2009.11 | 5MT | F | R | Hatchback FWD BBM | | GDS61063 | Drive Shaft | | 36 | | 50.7 | 58.5 | 751 | |
| | 2007.05-2009.11 | 5MT | F | L/R | Hatchback FWD BBM | | GCI83008 | Inner Joint | | | 33 | | | 32 | |
| | 2009.03-2014.05 | 5MT | F | L | Hatchback Van FWD CGPB | | GDS83330 | Drive Shaft | | 36 | | 50.7 | 58.5 | 515 | |
| | 2009.03-2014.05 | 5MT | F | R | Hatchback Van FWD CGPB | | GDS61288 | Drive Shaft | | 36 | | 50.7 | 58.5 | 765 | |
| | 2009.03-2014.05 | 5MT | F | R | Hatchback Van FWD CGPB | | GCO83027 | Outer Joint | | 36 | 30 | 50.7 | 58.5 | 47.5 | I |
| | 2009.03-2014.05 | 5MT | F | R | Hatchback Van FWD CGPB | | GCI83008 | Inner Joint | | | 33 | | | 32 | |
| | 2009.06-2014.05 | 5MT | F | L | Hatchback FWD CGPB | | GDS83330 | Drive Shaft | | 36 | | 50.7 | 58.5 | 515 | |
| | 2009.06-2014.05 | 5MT | F | R | Hatchback FWD CGPB | | GDS61288 | Drive Shaft | | 36 | | 50.7 | 58.5 | 765 | |
| | 2009.06-2014.05 | 5MT | F | L/R | Hatchback FWD CGPB | with Rim protector | GCO83027 | Outer Joint | | 36 | 30 | 50.7 | 58.5 | 47.5 | I |
| | 2009.06-2014.05 | 5MT | F | L/R | Hatchback FWD CGPB | | GCI83008 | Inner Joint | | | 33 | | | 32 | |
| 1.2 (47 kw) | 2001.10-2007.07 | 5MT | F | L | Hatchback FWD AZQ;BME | | GDS83063 | Drive Shaft | | 36 | | 50.7 | 58.5 | 501 | |
| | 2001.10-2007.07 | 5MT | F | R | Hatchback FWD AZQ;BME | | GDS61063 | Drive Shaft | | 36 | | 50.7 | 58.5 | 751 | |
| | 2001.10-2007.07 | 5MT | F | L/R | Hatchback FWD AZQ;BME | | GCI83008 | Inner Joint | | | 33 | | | 32 | |
| | 2001.10-2007.07 | MT | F | L/R | Hatchback FWD AZQ;BME | | GCI83005 | Inner Joint | | | 33 | | | 32 | |
| 1.2 (51 kw) | 2007.05-2009.11 | 5MT | F | L | Hatchback FWD BZG | | GDS83063 | Drive Shaft | | 36 | | 50.7 | 58.5 | 501 | |
| | 2007.05-2009.11 | 5MT | F | R | Hatchback FWD BZG | | GDS61063 | Drive Shaft | | 36 | | 50.7 | 58.5 | 751 | |
| | 2007.05-2009.11 | 5MT | F | L/R | Hatchback FWD BZG | | GCI83008 | Inner Joint | | | 33 | | | 32 | |
| | 2009.03-2014.05 | 5MT | F | L | Hatchback Van FWD CGPA | | GDS83330 | Drive Shaft | | 36 | | 50.7 | 58.5 | 515 | |
| | 2009.03-2014.05 | 5MT | F | R | Hatchback Van FWD CGPA | | GDS61288 | Drive Shaft | | 36 | | 50.7 | 58.5 | 765 | |
| | 2009.03-2014.05 | 5MT | F | R | Hatchback Van FWD CGPA | | GCO83027 | Outer Joint | | 36 | 30 | 50.7 | 58.5 | 47.5 | I |
| | 2009.03-2014.05 | 5MT | F | R | Hatchback Van FWD CGPA | | GCI83008 | Inner Joint | | | 33 | | | 32 | |
| | 2009.06-2014.05 | 5MT | F | L | Hatchback FWD CGPA | | GDS83330 | Drive Shaft | | 36 | | 50.7 | 58.5 | 515 | |
| | 2009.06-2014.05 | 5MT | F | R | Hatchback FWD CGPA | | GDS61288 | Drive Shaft | | 36 | | 50.7 | 58.5 | 765 | |
| | 2009.06-2014.05 | 5MT | F | L/R | Hatchback FWD CGPA | with Rim protector | GCO83027 | Outer Joint | | 36 | 30 | 50.7 | 58.5 | 47.5 | I |
| | 2009.06-2014.05 | 5MT | F | L/R | Hatchback FWD CGPA | | GCI83008 | Inner Joint | | | 33 | | | 32 | |
| 1.2 (55 kw) | 2009.10-2014.05 | 5MT | F | L | Hatchback FWD CFWA | | GDS61184 | Drive Shaft | | 36 | | 52 | 59 | 496 | |
| | 2009.10-2014.05 | 5MT | F | R | Hatchback FWD CFWA | | GDS61185 | Drive Shaft | | 36 | | 52 | 59 | 785 | |
| | 2009.10-2014.05 | 5MT | F | L/R | Hatchback FWD CFWA | | GCO54006 | Outer Joint | | 36 | 30 | 52 | 59 | 55.5 | I |
| | 2009.10-2014.05 | 5MT | F | L/R | Hatchback FWD CFWA | | GCO83024 | Outer Joint | | 36 | 30 | 50.75 | 59 | 55.5 | I |
| | 2009.10-2014.05 | 5MT | F | L/R | Hatchback FWD CFWA | | GCI61003 | Inner Joint | | | 33 | | | 32 | |
| | 2009.10-2014.05 | 5MT | F | L/R | Hatchback FWD CFWA | | GCI82447 | Inner Joint | | | 33 | | | 34 | |
| | 2009.10-2014.05 | 5MT | F | L/R | Hatchback FWD CFWA | | GCI83006 | Inner Joint | | | 33 | | | 34 | |
| | 2009.10-2014.05 | 5MT | F | L/R | Hatchback FWD CFWA | | GCI83011 | Inner Joint | | | 33 | | | 34 | |
| | 2009.10-2014.05 | 5MT | F | L | Hatchback Van FWD CFWA | | GDS61184 | Drive Shaft | | 36 | | 52 | 59 | 496 | |
| | 2009.10-2014.05 | 5MT | F | R | Hatchback Van FWD CFWA | | GDS61185 | Drive Shaft | | 36 | | 52 | 59 | 785 | |
| | 2009.10-2014.05 | 5MT | F | L/R | Hatchback Van FWD CFWA | | GCO83024 | Outer Joint | | 36 | 30 | 50.75 | 59 | 55.5 | I |
| | 2009.10-2014.05 | 5MT | F | L/R | Hatchback Van FWD CFWA | | GCI82447 | Inner Joint | | | 33 | | | 34 | |
| | 2009.10-2014.05 | | F | L/R | Hatchback Van FWD CFWA | | GCI83011 | Inner Joint | | | 33 | | | 34 | |
| 1.2 (66 kw) | 2011.05-2014.05 | 5MT | F | L | Hatchback FWD CBZC | | GDS61297 | Drive Shaft | | 36 | | 50.5 | 59 | 513 | |

| | YEAR | TRANSM. | F/R | L/R | BODY STYLE & DRIVE TYPE & ENGINE | REMARKS | G-AP Ref. | PRODUCT | ABS | Technical Specifications A | B | C | H | L | P |
|---|---|---|---|---|---|---|---|---|---|---|---|---|---|---|---|
| **VW** **Polo** | | | | | | | | | | | | | | | |
| 1.2 (66 kw) | 2011.05-2014.05 | 5MT | F | R | Hatchback FWD CBZC | | GDS61301 | Drive Shaft | | 36 | | 50.5 | 59 | 771 | |
| | 2011.05-2014.05 | 5MT/6MT/7DCT | F | L/R | Hatchback FWD CBZC | | GCI53002 | Inner Joint | | | 33 | | | 34 | |
| | 2011.05-2014.05 | 5MT/7AT | F | L/R | Hatchback FWD CBZC | | GCO83024 | Outer Joint | | 36 | 30 | 50.75 | 59 | 55.5 | I |
| | 2011.05-2014.05 | 7DCT | F | L | Hatchback FWD CBZC | | GDS61311 | Drive Shaft | | 36 | | 50.5 | 59 | 492 | |
| | 2011.05-2014.05 | 7DCT | F | R | Hatchback FWD CBZC | | GDS61308 | Drive Shaft | | 36 | | 50.5 | 59 | 786 | |
| | 2011.05-2014.05 | 7DCT/5MT | F | L/R | Hatchback FWD CBZC | | GCI82447 | Inner Joint | | | 33 | | | 34 | |
| | 2011.05-2014.05 | MT | F | L | Hatchback FWD CBZC | | GDS61274 | Drive Shaft | | 36 | | 50.5 | 59 | 514 | |
| | 2011.05-2014.05 | MT | F | L/R | Hatchback FWD CBZC | | GCI83011 | Inner Joint | | | 33 | | | 34 | |
| | 2011.05-2014.05 | | F | L | Hatchback FWD CBZC | | GCO54006 | Outer Joint | | 36 | 30 | 52 | 59 | 55.5 | I |
| | 2011.05-2014.05 | 5MT | F | L | Hatchback Van FWD CBZC | | GDS61297 | Drive Shaft | | 36 | | 50.5 | 59 | 513 | |
| | 2011.05-2014.05 | 5MT | F | R | Hatchback Van FWD CBZC | | GDS61301 | Drive Shaft | | 36 | | 50.5 | 59 | 771 | |
| | 2011.05-2014.05 | 5MT | F | L/R | Hatchback Van FWD CBZC | | GCI82447 | Inner Joint | | | 33 | | | 34 | |
| | 2011.05-2014.05 | 7AT/5MT | F | L/R | Hatchback Van FWD CBZC | | GCO83024 | Outer Joint | | 36 | 30 | 50.75 | 59 | 55.5 | I |
| | 2011.05-2014.05 | 7DCT | F | L | Hatchback Van FWD CBZC | | GDS61311 | Drive Shaft | | 36 | | 50.5 | 59 | 492 | |
| | 2011.05-2014.05 | 7DCT | F | R | Hatchback Van FWD CBZC | | GDS61308 | Drive Shaft | | 36 | | 50.5 | 59 | 786 | |
| | 2011.05-2014.05 | MT | F | L/R | Hatchback Van FWD CBZC | | GCI83011 | Inner Joint | | | 33 | | | 34 | |
| | 2014.02-2017.10 | 5MT | F | L | Hatchback FWD CJZC | | GDS61297 | Drive Shaft | | 36 | | 50.5 | 59 | 513 | |
| | 2014.02-2017.10 | 5MT | F | R | Hatchback FWD CJZC | | GDS61301 | Drive Shaft | | 36 | | 50.5 | 59 | 771 | |
| | 2014.02-2017.10 | 5MT | F | L/R | Hatchback FWD CJZC | | GCO83024 | Outer Joint | | 36 | 30 | 50.75 | 59 | 55.5 | I |
| | 2014.02-2017.10 | 5MT/7DCT | F | L/R | Hatchback FWD CJZC | | GCI53002 | Inner Joint | | | 33 | | | 34 | |
| | 2014.02-2017.10 | 5MT/7DCT | F | L/R | Hatchback FWD CJZC | | GCI82447 | Inner Joint | | | 33 | | | 34 | |
| | 2014.02-2017.10 | 7DCT | F | L | Hatchback FWD CJZC | Date to:2017.02 | GDS61311 | Drive Shaft | | 36 | | 50.5 | 59 | 492 | |
| | 2014.02-2017.10 | 7DCT | F | L | Hatchback FWD CJZC | Date from:2017.03 | GDS83988 | Drive Shaft | | 36 | | 52 | 64.5 | 500 | |
| | 2014.02-2017.10 | 7DCT | F | R | Hatchback FWD CJZC | | GDS57507 | Drive Shaft | | 36 | | 52 | 64.5 | 781 | |
| | 2014.02-2017.10 | 7DCT | F | L/R | Hatchback FWD CJZC | Date to:2017.02 | GCO54006 | Outer Joint | | 36 | 30 | 52 | 59 | 55.5 | I |
| | 2014.02-2017.10 | 7DCT | F | L/R | Hatchback FWD CJZC | Date from:2017.03 | GCO61081 | Outer Joint | | 36 | 27 | 52 | 75 | 65 | I |
| | 2014.02-2017.10 | 5MT | F | L | Hatchback Van FWD CJZC | | GDS61297 | Drive Shaft | | 36 | | 50.5 | 59 | 513 | |
| | 2014.02-2017.10 | 5MT | F | R | Hatchback Van FWD CJZC | | GDS61301 | Drive Shaft | | 36 | | 50.5 | 59 | 771 | |
| | 2014.02-2017.10 | 5MT | F | L/R | Hatchback Van FWD CJZC | | GCO83024 | Outer Joint | | 36 | 30 | 50.75 | 59 | 55.5 | I |
| | 2014.02-2017.10 | 7DCT | F | L | Hatchback Van FWD CJZC | Date to:2017.02 | GDS61311 | Drive Shaft | | 36 | | 50.5 | 59 | 492 | |
| | 2014.02-2017.10 | 7DCT | F | L | Hatchback Van FWD CJZC | Date from:2017.03 | GDS83988 | Drive Shaft | | 36 | | 52 | 64.5 | 500 | |
| | 2014.02-2017.10 | 7DCT | F | R | Hatchback Van FWD CJZC | | GDS57507 | Drive Shaft | | 36 | | 52 | 64.5 | 781 | |
| | 2014.02-2017.10 | 7DCT | F | L/R | Hatchback Van FWD CJZC | Date to:2017.02 | GCO54006 | Outer Joint | | 36 | 30 | 52 | 59 | 55.5 | I |
| | 2014.02-2017.10 | 7DCT | F | L/R | Hatchback Van FWD CJZC | Date from:2017.03 | GCO61081 | Outer Joint | | 36 | 27 | 52 | 75 | 65 | I |
| | 2014.02-2017.10 | 7DCT/5MT/6MT | F | L/R | Hatchback Van FWD CJZC | | GCI82447 | Inner Joint | | | 33 | | | 34 | |
| | 2014.02-2017.10 | MT | F | L/R | Hatchback Van FWD CJZC | | GCI83011 | Inner Joint | | | 33 | | | 34 | |
| 1.2 (77 kw) | 2009.11-2014.05 | 6MT | F | L | Hatchback Van FWD CBZB | | GDS61297 | Drive Shaft | | 36 | | 50.5 | 59 | 513 | |
| | 2009.11-2014.05 | 6MT | F | R | Hatchback Van FWD CBZB | | GDS61301 | Drive Shaft | | 36 | | 50.5 | 59 | 771 | |
| | 2009.11-2014.05 | 6MT/7AT | F | L/R | Hatchback Van FWD CBZB | | GCO83024 | Outer Joint | | 36 | 30 | 50.75 | 59 | 55.5 | I |
| | 2009.11-2014.05 | 7DCT | F | L | Hatchback Van FWD CBZB | | GDS61311 | Drive Shaft | | 36 | | 50.5 | 59 | 492 | |
| | 2009.11-2014.05 | 7DCT | F | R | Hatchback Van FWD CBZB | | GDS61308 | Drive Shaft | | 36 | | 50.5 | 59 | 786 | |
| | 2009.11-2014.05 | 7DCT/6MT | F | L/R | Hatchback Van FWD CBZB | | GCI82447 | Inner Joint | | | 33 | | | 34 | |
| | 2009.11-2014.05 | MT | F | L/R | Hatchback Van FWD CBZB | Date from:2010.01 | GCI83011 | Inner Joint | | | 33 | | | 34 | |
| | 2009.11-2022.05 | 6MT | F | L | Hatchback FWD CBZB | | GDS61297 | Drive Shaft | | 36 | | 50.5 | 59 | 513 | |
| | 2009.11-2022.05 | 6MT | F | R | Hatchback FWD CBZB | | GDS61301 | Drive Shaft | | 36 | | 50.5 | 59 | 771 | |
| | 2009.11-2022.05 | 6MT/7AT | F | L/R | Hatchback FWD CBZB | | GCO83024 | Outer Joint | | 36 | 30 | 50.75 | 59 | 55.5 | I |
| | 2009.11-2022.05 | 6MT/7DCT | F | L/R | Hatchback FWD CBZB | | GCI53002 | Inner Joint | | | 33 | | | 34 | |
| | 2009.11-2022.05 | 7DCT | F | L | Hatchback FWD CBZB | | GDS61311 | Drive Shaft | | 36 | | 50.5 | 59 | 492 | |
| | 2009.11-2022.05 | 7DCT | F | R | Hatchback FWD CBZB | | GDS61308 | Drive Shaft | | 36 | | 50.5 | 59 | 786 | |
| | 2009.11-2022.05 | 7DCT/6MT | F | L/R | Hatchback FWD CBZB | | GCI82447 | Inner Joint | | | 33 | | | 34 | |
| | 2009.11-2022.05 | MT | F | L | Hatchback FWD CBZB | | GDS61274 | Drive Shaft | | 36 | | 50.5 | 59 | 514 | |
| | 2009.11-2022.05 | MT | F | L | Hatchback FWD CBZB | | GCO54006 | Outer Joint | | 36 | 30 | 52 | 59 | 55.5 | I |
| | 2009.11-2022.05 | MT | F | L/R | Hatchback FWD CBZB | | GCI83011 | Inner Joint | | | 33 | | | 34 | |
| 1.2 (81 kw) | 2014.01-2017.10 | 6MT | F | L | Hatchback FWD CJZD | | GDS61297 | Drive Shaft | | 36 | | 50.5 | 59 | 513 | |
| | 2014.01-2017.10 | 6MT | F | R | Hatchback FWD CJZD | | GDS61301 | Drive Shaft | | 36 | | 50.5 | 59 | 771 | |
| | 2014.01-2017.10 | 6MT | F | L/R | Hatchback FWD CJZD | | GCO83024 | Outer Joint | | 36 | 30 | 50.75 | 59 | 55.5 | I |
| | 2014.01-2017.10 | 6MT/7DCT | F | L/R | Hatchback FWD CJZD | | GCI53002 | Inner Joint | | | 33 | | | 34 | |
| | 2014.01-2017.10 | 6MT/7DCT | F | L/R | Hatchback FWD CJZD | | GCI82447 | Inner Joint | | | 33 | | | 34 | |
| | 2014.01-2017.10 | 7DCT | F | L | Hatchback FWD CJZD | Date to:2017.02 | GDS61311 | Drive Shaft | | 36 | | 50.5 | 59 | 492 | |
| | 2014.01-2017.10 | 7DCT | F | L | Hatchback FWD CJZD | Date from:2017.03 | GDS83988 | Drive Shaft | | 36 | | 52 | 64.5 | 500 | |
| | 2014.01-2017.10 | 7DCT | F | R | Hatchback FWD CJZD | | GDS57507 | Drive Shaft | | 36 | | 52 | 64.5 | 781 | |
| | 2014.01-2017.10 | 7DCT | F | L/R | Hatchback FWD CJZD | Date to:2017.02 | GCO54006 | Outer Joint | | 36 | 30 | 52 | 59 | 55.5 | I |
| | 2014.01-2017.10 | 7DCT | F | L/R | Hatchback FWD CJZD | Date from:2017.03 | GCO61081 | Outer Joint | | 36 | 27 | 52 | 75 | 65 | I |
| | 2014.01-2017.10 | 6MT | F | L | Hatchback Van FWD CJZD | | GDS61297 | Drive Shaft | | 36 | | 50.5 | 59 | 513 | |
| | 2014.01-2017.10 | 6MT | F | R | Hatchback Van FWD CJZD | | GDS61301 | Drive Shaft | | 36 | | 50.5 | 59 | 771 | |

| | YEAR | TRANSM. | F/R | L/R | BODY STYLE & DRIVE TYPE & ENGINE | REMARKS | G-AP Ref. | PRODUCT | ABS | Technical Specifications | | | | | |
|---|---|---|---|---|---|---|---|---|---|---|---|---|---|---|---|
| | | | | | | | | | | A | B | C | H | L | P |
| **VW** | | | | | | | | | | | | | | | |
| **Polo** | | | | | | | | | | | | | | | |
| 1.2 (81 kw) | 2014.01-2017.10 | 6MT | F | L/R | Hatchback Van FWD CJZD | | GCO83024 | Outer Joint | | 36 | 30 | 50.75 | 59 | 55.5 | I |
| | 2014.01-2017.10 | 7DCT | F | L | Hatchback Van FWD CJZD | Date to:2017.02 | GDS61311 | Drive Shaft | | 36 | | 50.5 | 59 | 492 | |
| | 2014.01-2017.10 | 7DCT | F | L | Hatchback Van FWD CJZD | Date from:2017.03 | GDS83988 | Drive Shaft | | 36 | | 52 | 64.5 | 500 | |
| | 2014.01-2017.10 | 7DCT | F | R | Hatchback Van FWD CJZD | | GDS57507 | Drive Shaft | | 36 | | 52 | 64.5 | 781 | |
| | 2014.01-2017.10 | 7DCT | F | L/R | Hatchback Van FWD CJZD | Date to:2017.02 | GCO54006 | Outer Joint | | 36 | 30 | 52 | 59 | 55.5 | I |
| | 2014.01-2017.10 | 7DCT | F | L/R | Hatchback Van FWD CJZD | Date from:2017.03 | GCO61081 | Outer Joint | | 36 | 27 | 52 | 75 | 65 | I |
| | 2014.01-2017.10 | 7DCT/6MT | F | L/R | Hatchback Van FWD CJZD | | GCI82447 | Inner Joint | | | 33 | | | 34 | |
| | 2014.01-2017.10 | MT | F | L/R | Hatchback Van FWD CJZD | | GCI83011 | Inner Joint | | | 33 | | | 34 | |
| 1.3 (40 kw) | 1994.10-1997.04 | MT | F | L | Hatchback FWD ADX | | GDS61007 | Drive Shaft | | 22 | | 53 | 78.5 | 517 | |
| | 1994.10-1997.04 | MT | F | R | Hatchback FWD ADX | | GDS61010 | Drive Shaft | | 22 | | 53 | 78.5 | 740 | |
| | 1994.10-1997.04 | MT | F | L/R | Hatchback FWD ADX | | GCO53005 | Outer Joint | | 22 | 30 | 53 | 78.5 | 51 | I |
| | 1994.10-1997.04 | MT | F | L/R | Hatchback FWD ADX | | GCI53001 | Inner Joint | | | 33 | | | 32 | |
| 1.4 (40 kw) | 1995.07-2001.09 | 4AT | F | R | Hatchback FWD AEX/AKP/ANX | For Engine code:AEX/AKP;For vehicles without air conditioning | GDS53002 | Drive Shaft | | 22 | | 53.2 | 78 | 769 | |
| | 1995.07-2001.09 | 4AT/5MT | F | R | Hatchback FWD AEX/AKP/ANX | For Engine code:ANX,For vehicles without air conditioning | GDS61010 | Drive Shaft | | 22 | | 53 | 78.5 | 740 | |
| | 1995.07-2001.09 | 4AT/5MT | F | R | Hatchback FWD AEX/AKP/ANX | Transmission:6F2;For Engine code:6F/6AKP;Transmission:6Z;For Engine code:ANX;For vehicles with air conditioning | GDS61189 | Drive Shaft | | 22 | | 53 | 78.5 | 752 | |
| | 1995.07-2001.09 | AT | F | L/R | Hatchback FWD AEX/AKP/ANX | For Engine code:AKP/ANX,For vehicles with air conditioning | GCI61005 | Inner Joint | | | 30 | | | 57.6 | |
| | 1995.07-2001.09 | AT/MT | F | L | Hatchback FWD AEX/AKP/ANX | For Engine code:AKK;Transmission:5FT;For Engine code:AKK;Transmission:6Z;For vehicles without air conditioning | GDS61007 | Drive Shaft | | 22 | | 53 | 78.5 | 517 | |
| | 1995.07-2001.09 | AT/MT | F | R | Hatchback FWD AEX/AKP/ANX | For Engine code:ANX,For vehicles without air conditioning | GDS61010 | Drive Shaft | | 22 | | 53 | 78.5 | 740 | |
| | 1995.07-2001.09 | AT/MT | F | R | Hatchback FWD AEX/AKP/ANX | Transmission:6F2;For Engine code:6F/6AKP;Transmission:6Z;For Engine code:ANX;For vehicles with air conditioning | GDS61189 | Drive Shaft | | 22 | | 53 | 78.5 | 752 | |
| | 1995.07-2001.09 | AT/MT | F | L/R | Hatchback FWD AEX/AKP/ANX | | GCO53005 | Outer Joint | | 22 | 30 | 53 | 78.5 | 51 | I |
| | 1995.07-2001.09 | MT | F | L | Hatchback FWD AEX/AKP/ANX | For Engine code:AEX/AKP | GDS61205 | Drive Shaft | | 22 | | 53 | 78.5 | 525 | |
| | 1995.07-2001.09 | MT | F | L/R | Hatchback FWD AEX/AKP/ANX | For Engine code:AKP/ANX | GCI53001 | Inner Joint | | | 33 | | | 32 | |
| 1.4 (44 kw) | 1995.07-2001.10 | 4AT | F | R | Hatchback FWD AEX/AKK/AKV/APQ/AUD | For Engine code:AKK/AUD,For vehicles without air conditioning | GDS53002 | Drive Shaft | | 22 | | 53.2 | 78 | 769 | |
| | 1995.07-2001.10 | AT | F | L | Hatchback FWD AEX/AKK/AKV/APQ/AUD | For Engine code:AKK/AUD/AEX/AKV/APQ;For vehicles without air conditioning | GDS61007 | Drive Shaft | | 22 | | 53 | 78.5 | 517 | |
| | 1995.07-2001.10 | AT | F | R | Hatchback FWD AEX/AKK/AKV/APQ/AUD | For Engine code:AEX/AKV/APQ;For vehicles without air conditioning | GDS61010 | Drive Shaft | | 22 | | 53 | 78.5 | 740 | |
| | 1995.07-2001.10 | AT | F | L/R | Hatchback FWD AEX/AKK/AKV/APQ/AUD | For vehicles with air conditioning | GCI61005 | Inner Joint | | | 30 | | | 57.6 | |
| | 1995.07-2001.10 | MT | F | L | Hatchback FWD AEX/AKK/AKV/APQ/AUD | For Engine code:AEX/AKV/APQ | GDS61007 | Drive Shaft | | 22 | | 53 | 78.5 | 517 | |
| | 1995.07-2001.10 | MT | F | L | Hatchback FWD AEX/AKK/AKV/APQ/AUD | For Engine code:AKK/AUD | GDS61205 | Drive Shaft | | 22 | | 53 | 78.5 | 525 | |
| | 1995.07-2001.10 | MT | F | R | Hatchback FWD AEX/AKK/AKV/APQ/AUD | For Engine code:AEX/AKV/APQ | GDS61010 | Drive Shaft | | 22 | | 53 | 78.5 | 740 | |
| | 1995.07-2001.10 | MT | F | R | Hatchback FWD AEX/AKK/AKV/APQ/AUD | For Engine code:AKK/AUD | GDS61189 | Drive Shaft | | 22 | | 53 | 78.5 | 752 | |
| | 1995.07-2001.10 | MT | F | L/R | Hatchback FWD AEX/AKK/AKV/APQ/AUD | For Engine code:AKK/AUD/AEX/AKV/APQ | GCO53005 | Outer Joint | | 22 | 30 | 53 | 78.5 | 51 | I |
| | 1995.07-2001.10 | MT | F | L/R | Hatchback FWD AEX/AKK/AKV/APQ/AUD | For Engine code:AKK/AUD/AEX/AKV/APQ | GCI53001 | Inner Joint | | | 33 | | | 32 | |
| 1.4 (51 kw) | 2005.04-2009.11 | 5MT | F | L | Hatchback FWD BNM;BWB | For Engine Code:BNM | GDS61078 | Drive Shaft | | 36 | | 50.7 | 58.5 | 501 | |
| | 2005.04-2009.11 | 5MT | F | L | Hatchback FWD BNM;BWB | For Engine Code:BWB | GDS61098 | Drive Shaft | | 36 | | 50.5 | 59 | 472 | |
| | 2005.04-2009.11 | 5MT | F | R | Hatchback FWD BNM;BWB | VL | GDS61063 | Drive Shaft | | 36 | | 50.7 | 58.5 | 751 | |
| | 2005.04-2009.11 | 5MT | F | R | Hatchback FWD BNM;BWB | For Engine Code:BWB | GDS61099 | Drive Shaft | | 36 | | 50.5 | 59 | 759 | |
| | 2005.04-2009.11 | 5MT | F | R | Hatchback FWD BNM;BWB | For Engine Code:BNM;VL | GDS61223 | Drive Shaft | | 36 | | 52 | 59 | 757 | |
| | 2005.04-2009.11 | 5MT | F | R | Hatchback FWD BNM;BWB | | GCO54006 | Outer Joint | | 36 | 30 | 52 | 59 | 55.5 | I |
| | 2005.04-2009.11 | 5MT | F | L/R | Hatchback FWD BNM;BWB | | GCO83024 | Outer Joint | | 36 | 30 | 50.75 | 59 | 55.5 | I |
| | 2005.04-2009.11 | 5MT | F | L/R | Hatchback FWD BNM;BWB | For Engine Code:BWB | GCI61006 | Inner Joint | | | 30 | | | 57.6 | |
| | 2005.04-2009.11 | 5MT | F | L/R | Hatchback FWD BNM;BWB | For Engine Code:BNM | GCI83005 | Inner Joint | | | 33 | | | 32 | |
| | 2005.04-2009.11 | 5MT | F | L/R | Hatchback FWD BNM;BWB | For Engine Code:BNM | GCI83008 | Inner Joint | | | 33 | | | 32 | |
| 1.4 (55 kw) | 1999.10-2001.09 | 4AT | F | L | Hatchback FWD AHW/APE/AUA | For vehicles without air conditioning | GDS61007 | Drive Shaft | | 22 | | 53 | 78.5 | 517 | |
| | 1999.10-2001.09 | 4AT | F | R | Hatchback FWD AHW/APE/AUA | For vehicles without air conditioning | GDS53002 | Drive Shaft | | 22 | | 53.2 | 78 | 769 | |
| | 1999.10-2001.09 | AT | F | L/R | Hatchback FWD AHW/APE/AUA | For vehicles with air conditioning | GCI61005 | Inner Joint | | | 30 | | | 57.6 | |
| | 1999.10-2001.09 | MT | F | L | Hatchback FWD AHW/APE/AUA | | GDS61205 | Drive Shaft | | 22 | | 53 | 78.5 | 525 | |
| | 1999.10-2001.09 | MT | F | R | Hatchback FWD AHW/APE/AUA | | GDS61189 | Drive Shaft | | 22 | | 53 | 78.5 | 752 | |
| | 1999.10-2001.09 | MT | F | L/R | Hatchback FWD AHW/APE/AUA | | GCO53005 | Outer Joint | | 22 | 30 | 53 | 78.5 | 51 | I |
| | 1999.10-2001.09 | MT | F | L/R | Hatchback FWD AHW/APE/AUA | | GCI53001 | Inner Joint | | | 33 | | | 32 | |
| | 1999.10-2001.10 | MT | F | L | Hatchback FWD AMF | Trans. code:ESP/EXB | GDS61075 | Drive Shaft | | 22 | | 53 | 78.5 | 525 | |
| | 1999.10-2001.10 | MT | F | R | Hatchback FWD AMF | Trans. code:ESP/EXB/GAX | GDS61074 | Drive Shaft | | 22 | | 53 | 78.5 | 712 | |
| | 1999.10-2001.10 | MT | F | L/R | Hatchback FWD AMF | | GCO61007 | Outer Joint | | 22 | 30 | 53 | 78.5 | 60 | I |
| | 1999.10-2001.10 | MT | F | L | Hatchback FWD AMF | Trans. code:GAX | GCI53002 | Inner Joint | | | 33 | | | 34 | |
| | 1999.10-2001.10 | MT | F | L/R | Hatchback FWD AMF | Trans. code:ESP/EXB | GCI61006 | Inner Joint | | | 30 | | | 57.6 | |
| | 2001.10-2005.06 | 5MT | F | L | Hatchback FWD AMF;BAY | AAR | GDS61098 | Drive Shaft | | 36 | | 50.5 | 59 | 472 | |
| | 2001.10-2005.06 | 5MT | F | R | Hatchback FWD AMF;BAY | AAR | GDS61099 | Drive Shaft | | 36 | | 50.5 | 59 | 759 | |
| | 2001.10-2005.06 | 5MT | F | L/R | Hatchback FWD AMF;BAY | | GCO83024 | Outer Joint | | 36 | 30 | 50.75 | 59 | 55.5 | I |
| | 2001.10-2005.06 | 5MT | F | L/R | Hatchback FWD AMF;BAY | AAR | GCI61006 | Inner Joint | | | 30 | | | 57.6 | |
| | 2001.10-2008.05 | 4AT | F | L | Hatchback FWD AUA;BBY;BKY | | GDS81921 | Drive Shaft | | 36 | | 52 | 59 | 494 | |
| | 2001.10-2008.05 | 4AT | F | R | Hatchback FWD AUA;BBY;BKY | | GDS61252 | Drive Shaft | | 36 | | 53.7 | 58.5 | 730 | |
| | 2001.10-2008.05 | 4AT | F | L/R | Hatchback FWD AUA;BBY;BKY | Original design | GCO54006 | Outer Joint | | 36 | 30 | 52 | 59 | 55.5 | I |
| | 2001.10-2008.05 | 4AT | F | L/R | Hatchback FWD AUA;BBY;BKY | | GCO83024 | Outer Joint | | 36 | 30 | 50.75 | 59 | 55.5 | I |
| | 2001.10-2008.05 | 4AT | F | L/R | Hatchback FWD AUA;BBY;BKY | | GCI61005 | Inner Joint | | | 30 | | | 57.6 | |
| | 2001.10-2008.05 | 5MT | F | L | Hatchback FWD AUA;BBY;BKY | | GDS83063 | Drive Shaft | | 36 | | 50.7 | 58.5 | 501 | |
| | 2001.10-2008.05 | 5MT | F | R | Hatchback FWD AUA;BBY;BKY | | GDS61063 | Drive Shaft | | 36 | | 50.7 | 58.5 | 751 | |

| | YEAR | TRANSM. | F/R | L/R | BODY STYLE & DRIVE TYPE & ENGINE | REMARKS | G-AP Ref. | PRODUCT | ABS | Technical Specifications A | B | C | H | L | P |
|---|---|---|---|---|---|---|---|---|---|---|---|---|---|---|---|
| **VW** **Polo** | | | | | | | | | | | | | | | |
| 1.4 (55 kw) | 2001.10-2008.05 | 5MT | F | L/R | Hatchback FWD AUA;BBY;BKY | | GCI83008 | Inner Joint | | | 33 | | | 32 | |
| | 2002.11-2012.04 | 4AT | F | L | Saloon FWD BBY;BKY | | GDS81921 | Drive Shaft | | 36 | | 52 | 59 | 494 | |
| | 2002.11-2012.04 | 4AT | F | R | Saloon FWD BBY;BKY | | GDS61252 | Drive Shaft | | 36 | | 53.7 | 58.5 | 730 | |
| | 2002.11-2012.04 | 4AT | F | L/R | Saloon FWD BBY;BKY | | GCO83024 | Outer Joint | | 36 | 30 | 50.75 | 59 | 55.5 | I |
| | 2002.11-2012.04 | 4AT/5MT | F | L/R | Saloon FWD BBY;BKY | | GCI61005 | Inner Joint | | | 30 | | | 57.6 | |
| | 2002.11-2012.04 | 4AT/5MT | F | L/R | Saloon FWD BBY;BKY | | GCI83008 | Inner Joint | | | 33 | | | 32 | |
| | 2002.11-2012.04 | 5MT | F | L | Saloon FWD BBY;BKY | | GDS83063 | Drive Shaft | | 36 | | 50.7 | 58.5 | 501 | |
| | 2002.11-2012.04 | 5MT | F | R | Saloon FWD BBY;BKY | | GDS61063 | Drive Shaft | | 36 | | 50.7 | 58.5 | 751 | |
| | 2002.11-2012.04 | 5MT | F | L/R | Saloon FWD BBY;BKY | | GCO83027 | Outer Joint | | 36 | 30 | 50.7 | 58.5 | 47.5 | I |
| | 2002.11-2012.04 | AT | F | R | Saloon FWD BBY;BKY | Date to:2005.06 | GCO61070 | Outer Joint | | 36 | 30 | 53.7 | 58.5 | 55 | I |
| | 2002.11-2012.04 | MT | F | L/R | Saloon FWD BBY;BKY | | GCI83005 | Inner Joint | | | 33 | | | 32 | |
| | 2003.07-2005.06 | 5MT | F | L | Saloon FWD AMF;BAY | | GDS61098 | Drive Shaft | | 36 | | 50.5 | 59 | 472 | |
| | 2003.07-2005.06 | 5MT | F | R | Saloon FWD AMF;BAY | | GDS61099 | Drive Shaft | | 36 | | 50.5 | 59 | 759 | |
| | 2003.07-2005.06 | 5MT | F | L/R | Saloon FWD AMF;BAY | | GCO83024 | Outer Joint | | 36 | 30 | 50.75 | 59 | 55.5 | I |
| | 2003.07-2005.06 | MT | F | L/R | Saloon FWD AMF;BAY | Trans. code:ESP/EXB | GCI61006 | Inner Joint | | | 30 | | | 57.6 | |
| | 2014.03-2017.10 | 5MT | F | L | Hatchback FWD CUSA;CYZB | | GDS82039 | Drive Shaft | | 36 | | 52 | 59 | 549 | |
| | 2014.03-2017.10 | 5MT | F | R | Hatchback FWD CUSA;CYZB | | GDS82360 | Drive Shaft | | 36 | | 52 | 59 | 729 | |
| | 2014.03-2017.10 | 5MT | F | L/R | Hatchback FWD CUSA;CYZB | | GCO54006 | Outer Joint | | 36 | 30 | 52 | 59 | 55.5 | I |
| | 2014.03-2017.10 | 5MT | F | L/R | Hatchback FWD CUSA;CYZB | | GCO83024 | Outer Joint | | 36 | 30 | 50.75 | 59 | 55.5 | I |
| | 2014.03-2017.10 | 5MT | F | L/R | Hatchback FWD CUSA;CYZB | | GCI53002 | Inner Joint | | | 33 | | | 34 | |
| | 2014.03-2017.10 | 5MT | F | L/R | Hatchback FWD CUSA;CYZB | | GCI82447 | Inner Joint | | | 33 | | | 34 | |
| | 2014.03-2017.10 | 5MT | F | L | Hatchback Van FWD CUSA;CYZB | | GDS82039 | Drive Shaft | | 36 | | 52 | 59 | 549 | |
| | 2014.03-2017.10 | 5MT | F | R | Hatchback Van FWD CUSA;CYZB | | GDS82360 | Drive Shaft | | 36 | | 52 | 59 | 729 | |
| | 2014.03-2017.10 | 5MT | F | L/R | Hatchback Van FWD CUSA;CYZB | | GCO83024 | Outer Joint | | 36 | 30 | 50.75 | 59 | 55.5 | I |
| | 2014.03-2017.10 | 5MT | F | L/R | Hatchback Van FWD CUSA;CYZB | | GCI82447 | Inner Joint | | | 33 | | | 34 | |
| | 2014.03-2017.10 | | F | L/R | Hatchback Van FWD CUSA;CYZB | Date To:2017.10 | GCI83011 | Inner Joint | | | 33 | | | 34 | |
| 1.4 (59 kw) | 2005.04-2009.11 | 5MT | F | L | Hatchback FWD BMS;BNV | AAR | GDS61098 | Drive Shaft | | 36 | | 50.5 | 59 | 472 | |
| | 2005.04-2009.11 | 5MT | F | R | Hatchback FWD BMS;BNV | AAR | GDS61099 | Drive Shaft | | 36 | | 50.5 | 59 | 759 | |
| | 2005.04-2009.11 | 5MT | F | L/R | Hatchback FWD BMS;BNV | | GCO83024 | Outer Joint | | 36 | 30 | 50.75 | 59 | 55.5 | I |
| | 2005.04-2009.11 | 5MT | F | L/R | Hatchback FWD BMS;BNV | AAR | GCI61006 | Inner Joint | | | 30 | | | 57.6 | |
| | 2006.05-2009.11 | 5MT | F | L | Hatchback FWD BUD | | GDS83063 | Drive Shaft | | 36 | | 50.7 | 58.5 | 501 | |
| | 2006.05-2009.11 | 5MT | F | R | Hatchback FWD BUD | | GDS61063 | Drive Shaft | | 36 | | 50.7 | 58.5 | 751 | |
| | 2006.05-2009.11 | 5MT | F | L/R | Hatchback FWD BUD | | GCI83005 | Inner Joint | | | 33 | | | 32 | |
| | 2006.05-2009.11 | 5MT | F | L/R | Hatchback FWD BUD | | GCI83008 | Inner Joint | | | 33 | | | 32 | |
| | 2006.05-2009.11 | 6AT | F | L | Hatchback FWD BUD | | GDS61150 | Drive Shaft | | 36 | 26 | 52 | 75 | 557 | |
| | 2006.05-2009.11 | 6AT | F | R | Hatchback FWD BUD | Date to:2008.12 | GDS61133 | Drive Shaft | | 36 | 26 | 52 | 75 | 859 | |
| | 2006.05-2009.11 | 6AT | F | R | Hatchback FWD BUD | Date from:2009.01 | GDS81524 | Drive Shaft | | 36 | 26 | 52 | 75 | 856 | |
| | 2006.05-2009.11 | 6AT | F | L/R | Hatchback FWD BUD | without Rim protector | GCO61074 | Outer Joint | | 36 | 30 | 52 | 75 | 55.5 | I |
| | 2006.05-2009.11 | 6AT | F | L/R | Hatchback FWD BUD | without Rim protector | GCO83079 | Outer Joint | | 36 | 30 | 52 | 75 | 55.5 | I |
| | 2006.05-2009.11 | 6AT | F | L | Hatchback FWD BUD | | GCI61039 | Inner Joint | | 26 | 22 | 31 | 68.5 | 88.5 | |
| | 2006.05-2009.11 | 6AT | F | R | Hatchback FWD BUD | Date from:2007.08;Date to:2008.05;Chassis no.: to:0N_0_999999;Date to:2008.07;Chassis no.: from:0N_0_000001 | GCI61011 | Inner Joint | | 26 | 32 | 31 | 68.5 | 85 | |
| | 2006.05-2009.11 | 6AT | F | R | Hatchback FWD BUD | Date to:2007.07;Date from:2008.08 | GCI61039 | Inner Joint | | 26 | 22 | 31 | 68.5 | 88.5 | |
| | 2006.05-2009.11 | 6AT | F | R | Hatchback FWD BUD | Date from:2007.08;Date to:2008.05;Chassis no.: to:0N_0_999999;Date to:2008.07;Chassis no.: from:0N_0_000001 | GCI61050 | Inner Joint | | 26 | 32 | 31 | 68.5 | 89 | |
| | 2006.05-2009.11 | 6AT | F | R | Hatchback FWD BUD | Date from:2009.01 | GCI81396 | Inner Joint | | 26 | 22 | 31 | 68.5 | 86 | |
| 1.4 (60 kw) | 2006.05-2009.11 | 5MT | F | L | Hatchback FWD BUD | | GDS83063 | Drive Shaft | | 36 | | 50.7 | 58.5 | 501 | |
| | 2006.05-2009.11 | 5MT | F | R | Hatchback FWD BUD | | GDS61063 | Drive Shaft | | 36 | | 50.7 | 58.5 | 751 | |
| | 2006.05-2009.11 | 5MT | F | L/R | Hatchback FWD BUD | | GCI83008 | Inner Joint | | | 33 | | | 32 | |
| | 2006.05-2009.11 | 6AT | F | L | Hatchback FWD BUD | | GDS61150 | Drive Shaft | | 36 | 26 | 52 | 75 | 557 | |
| | 2006.05-2009.11 | 6AT | F | R | Hatchback FWD BUD | | GDS61133 | Drive Shaft | | 36 | 26 | 52 | 75 | 859 | |
| | 2006.05-2009.11 | 6AT | F | R | Hatchback FWD BUD | Date from:2009.01 | GDS81524 | Drive Shaft | | 36 | 26 | 52 | 75 | 856 | |
| | 2006.05-2009.11 | 6AT | F | L/R | Hatchback FWD BUD | Date from:2008.08 | GCO61074 | Outer Joint | | 36 | 30 | 52 | 75 | 55.5 | I |
| | 2006.05-2009.11 | 6AT | F | L/R | Hatchback FWD BUD | Date to:2008.07 | GCO83024 | Outer Joint | | 36 | 30 | 50.75 | 59 | 55.5 | I |
| | 2006.05-2009.11 | 6AT | F | L/R | Hatchback FWD BUD | Date from:2008.08,Type:UF100 | GCO83079 | Outer Joint | | 36 | 30 | 52 | 75 | 55.5 | I |
| | 2006.05-2009.11 | 6AT | F | L | Hatchback FWD BUD | | GCI61039 | Inner Joint | | 26 | 22 | 31 | 68.5 | 88.5 | |
| | 2006.05-2009.11 | 6AT | F | R | Hatchback FWD BUD | Date from:2007.08;Date to:2008.05;Chassis no.: to:0N_0_999999;Date from:2008.06;Date to:2008.07;Chassis no.: from:0N_0_000001 | GCI61011 | Inner Joint | | 26 | 32 | 31 | 68.5 | 85 | |
| | 2006.05-2009.11 | 6AT | F | R | Hatchback FWD BUD | Date to:2007.07;Date from:2008.08 | GCI61039 | Inner Joint | | 26 | 22 | 31 | 68.5 | 88.5 | |
| | 2006.05-2009.11 | 6AT | F | R | Hatchback FWD BUD | Date from:2007.08;Date to:2008.05;Chassis no.: to:0N_0_999999;Date from:2008.06;Date to:2008.07;Chassis no.: from:0N_0_000001 | GCI61050 | Inner Joint | | 26 | 32 | 31 | 68.5 | 89 | |
| | 2010.03-2011.01 | 5MT | F | L | Hatchback FWD CMAA | | GDS83330 | Drive Shaft | | 36 | | 50.7 | 58.5 | 515 | |
| | 2010.03-2011.01 | 5MT | F | R | Hatchback FWD CMAA | | GDS61288 | Drive Shaft | | 36 | | 50.7 | 58.5 | 765 | |
| | 2010.03-2011.01 | 5MT | F | L/R | Hatchback FWD CMAA | | GCI83008 | Inner Joint | | | 33 | | | 32 | |
| | 2010.03-2011.01 | MT | F | L/R | Hatchback FWD CMAA | | GCO83027 | Outer Joint | | 36 | 30 | 50.7 | 58.5 | 47.5 | I |
| | 2010.03-2011.01 | MT | F | L/R | Hatchback FWD CMAA | | GCI83005 | Inner Joint | | | 33 | | | 32 | |
| 1.4 (61 kw) | 2002.08-2009.11 | 5MT | F | L | Hatchback FWD BLM | | GDS83063 | Drive Shaft | | 36 | | 50.7 | 58.5 | 501 | |
| | 2002.08-2009.11 | 5MT | F | R | Hatchback FWD BLM | | GDS61063 | Drive Shaft | | 36 | | 50.7 | 58.5 | 751 | |
| | 2002.08-2009.11 | 5MT | F | L/R | Hatchback FWD BLM | | GCI83008 | Inner Joint | | | 33 | | | 32 | |

| | YEAR | TRANSM. | F/R | L/R | BODY STYLE & DRIVE TYPE & ENGINE | REMARKS | G-AP Ref. | PRODUCT | ABS | Technical Specifications A | B | C | H | L | P |
|---|---|---|---|---|---|---|---|---|---|---|---|---|---|---|---|
| **VW** **Polo** | | | | | | | | | | | | | | | |
| 1.4 (63 kw) | 2002.02-2006.07 | 5MT | F | L | Hatchback FWD AXU | | GDS83063 | Drive Shaft | | 36 | | 50.7 | 58.5 | 501 | |
| | 2002.02-2006.07 | 5MT | F | R | Hatchback FWD AXU | | GDS61063 | Drive Shaft | | 36 | | 50.7 | 58.5 | 751 | |
| | 2002.02-2006.07 | 5MT | F | L/R | Hatchback FWD AXU | | GCI83008 | Inner Joint | | | 33 | | | 32 | |
| | 2002.02-2006.07 | MT | F | L/R | Hatchback FWD AXU | | GCO83027 | Outer Joint | | 36 | 30 | 50.7 | 58.5 | 47.5 | I |
| | 2002.02-2006.07 | MT | F | L/R | Hatchback FWD AXU | | GCI83005 | Inner Joint | | | 33 | | | 32 | |
| | 2009.03-2014.05 | 5MT | F | L | Hatchback FWD CGGB;CDDA;CLPA | | GDS83330 | Drive Shaft | | 36 | | 50.7 | 58.5 | 515 | |
| | 2009.03-2014.05 | 5MT | F | R | Hatchback FWD CGGB;CDDA;CLPA | | GDS61288 | Drive Shaft | | 36 | | 50.7 | 58.5 | 765 | |
| | 2009.03-2014.05 | 5MT | F | L/R | Hatchback FWD CGGB;CDDA;CLPA | with Rim protector | GCO83027 | Outer Joint | | 36 | 30 | 50.7 | 58.5 | 47.5 | I |
| | 2009.03-2014.05 | 5MT | F | L/R | Hatchback FWD CGGB;CDDA;CLPA | | GCI83008 | Inner Joint | | | 33 | | | 32 | |
| | 2009.03-2014.05 | 7DCT | F | L | Hatchback FWD CGGB;CDDA;CLPA | | GDS61311 | Drive Shaft | | 36 | | 50.5 | 59 | 492 | |
| | 2009.03-2014.05 | 7DCT | F | R | Hatchback FWD CGGB;CDDA;CLPA | | GDS61308 | Drive Shaft | | 36 | | 50.5 | 59 | 786 | |
| | 2009.03-2014.05 | 7DCT | F | L/R | Hatchback FWD CGGB;CDDA;CLPA | Non-Original design | GCO54006 | Outer Joint | | 36 | 30 | 52 | 59 | 55.5 | I |
| | 2009.03-2014.05 | 7DCT | F | L/R | Hatchback FWD CGGB;CDDA;CLPA | Original design | GCO83024 | Outer Joint | | 36 | 30 | 50.75 | 59 | 55.5 | I |
| | 2009.03-2014.05 | 7DCT | F | L/R | Hatchback FWD CGGB;CDDA;CLPA | Original design | GCI53002 | Inner Joint | | | 33 | | | 34 | |
| | 2009.03-2014.05 | 7DCT | F | L/R | Hatchback FWD CGGB;CDDA;CLPA | Non-Original design | GCI82447 | Inner Joint | | | 33 | | | 34 | |
| | 2009.03-2014.05 | 5MT | F | L | Hatchback Van FWD CGGB | | GDS83330 | Drive Shaft | | 36 | | 50.7 | 58.5 | 515 | |
| | 2009.03-2014.05 | 5MT | F | R | Hatchback Van FWD CGGB | | GDS61288 | Drive Shaft | | 36 | | 50.7 | 58.5 | 765 | |
| | 2009.03-2014.05 | 7AT/5MT | F | L/R | Hatchback Van FWD CGGB | | GCI83008 | Inner Joint | | | 33 | | | 32 | |
| | 2009.03-2014.05 | 7DCT | F | L | Hatchback Van FWD CGGB | | GDS61311 | Drive Shaft | | 36 | | 50.5 | 59 | 492 | |
| | 2009.03-2014.05 | 7DCT | F | R | Hatchback Van FWD CGGB | | GDS61308 | Drive Shaft | | 36 | | 50.5 | 59 | 786 | |
| | 2009.03-2014.05 | 7DCT | F | L/R | Hatchback Van FWD CGGB | | GCO54006 | Outer Joint | | 36 | 30 | 52 | 59 | 55.5 | I |
| | 2009.03-2014.05 | 7DCT | F | L/R | Hatchback Van FWD CGGB | | GCI82447 | Inner Joint | | | 33 | | | 34 | |
| | 2009.03-2014.05 | AT | F | L/R | Hatchback Van FWD CGGB | | GCO83024 | Outer Joint | | 36 | 30 | 50.75 | 59 | 55.5 | I |
| 1.4 (66 kw) | 2014.02-2017.10 | 5MT | F | L | Hatchback FWD CUSB | | GDS82039 | Drive Shaft | | 36 | | 52 | 59 | 549 | |
| | 2014.02-2017.10 | 5MT | F | R | Hatchback FWD CUSB | | GDS82360 | Drive Shaft | | 36 | | 52 | 59 | 729 | |
| | 2014.02-2017.10 | 5MT | F | L/R | Hatchback FWD CUSB | | GCO54006 | Outer Joint | | 36 | 30 | 52 | 59 | 55.5 | I |
| | 2014.02-2017.10 | 5MT | F | L/R | Hatchback FWD CUSB | | GCO83024 | Outer Joint | | 36 | 30 | 50.75 | 59 | 55.5 | I |
| | 2014.02-2017.10 | 5MT | F | L/R | Hatchback FWD CUSB | | GCI53002 | Inner Joint | | | 33 | | | 34 | |
| | 2014.02-2017.10 | 5MT | F | L/R | Hatchback FWD CUSB | | GCI82447 | Inner Joint | | | 33 | | | 34 | |
| | 2014.02-2017.10 | 7AT/5MT | F | L | Hatchback FWD CUSB | | GCI83016 | Inner Joint | | | 28 | | | 32 | |
| | 2014.02-2017.10 | 7DCT | F | L | Hatchback FWD CUSB | | GDS81926 | Drive Shaft | | 36 | | 52 | 75 | 550 | |
| | 2014.02-2017.10 | 7DCT | F | R | Hatchback FWD CUSB | | GDS82359 | Drive Shaft | | 36 | 40 | 52 | 75 | 755 | |
| | 2014.02-2017.10 | 7DCT | F | L/R | Hatchback FWD CUSB | | GCO61081 | Outer Joint | | 36 | 27 | 52 | 75 | 65 | I |
| | 2014.02-2017.10 | 7DCT | F | L | Hatchback FWD CUSB | | GCI61069 | Inner Joint | | | 28 | | | 32 | |
| | 2014.02-2017.10 | 7DCT | F | R | Hatchback FWD CUSB | | GCI61054 | Inner Joint | | 40 | 28 | 46.9 | 41 | 101.7 | |
| | 2014.02-2017.10 | 7DCT | F | R | Hatchback FWD CUSB | | GCI61090 | Inner Joint | | 40 | 28 | 46.9 | | 133.2 | |
| | 2014.02-2017.10 | 5MT | F | L | Hatchback Van FWD CUSB | | GDS82039 | Drive Shaft | | 36 | | 52 | 59 | 549 | |
| | 2014.02-2017.10 | 5MT | F | R | Hatchback Van FWD CUSB | | GDS82360 | Drive Shaft | | 36 | | 52 | 59 | 729 | |
| | 2014.02-2017.10 | 5MT | F | L/R | Hatchback Van FWD CUSB | | GCO83024 | Outer Joint | | 36 | 30 | 50.75 | 59 | 55.5 | I |
| | 2014.02-2017.10 | 5MT | F | L/R | Hatchback Van FWD CUSB | | GCI82447 | Inner Joint | | | 33 | | | 34 | |
| | 2014.02-2017.10 | 7AT/5MT | F | L | Hatchback Van FWD CUSB | | GCI83016 | Inner Joint | | | 28 | | | 32 | |
| | 2014.02-2017.10 | 7DCT | F | L | Hatchback Van FWD CUSB | | GDS81926 | Drive Shaft | | 36 | | 52 | 75 | 550 | |
| | 2014.02-2017.10 | 7DCT | F | R | Hatchback Van FWD CUSB | | GDS82359 | Drive Shaft | | 36 | 40 | 52 | 75 | 755 | |
| | 2014.02-2017.10 | 7DCT | F | L/R | Hatchback Van FWD CUSB | | GCO61081 | Outer Joint | | 36 | 27 | 52 | 75 | 65 | I |
| | 2014.02-2017.10 | 7DCT | F | R | Hatchback Van FWD CUSB | | GCI61054 | Inner Joint | | 40 | 28 | 46.9 | 41 | 101.7 | |
| 1.4 (74 kw) | 1996.04-2001.09 | 5MT | F | L/R | Hatchback FWD AFH/AFK/AQQ/AUB | | GCI53001 | Inner Joint | | | 33 | | | 32 | |
| | 1996.04-2001.09 | AT/MT | F | L/R | Hatchback FWD AFH/AFK/AQQ/AUB | | GCO53005 | Outer Joint | | 22 | 30 | 53 | 78.5 | 51 | I |
| | 1996.04-2001.09 | MT | F | L | Hatchback FWD AFH/AFK/AQQ/AUB | For Engine code:AFH | GDS61007 | Drive Shaft | | 22 | | 53 | 78.5 | 517 | |
| | 1996.04-2001.09 | MT | F | L | Hatchback FWD AFH/AFK/AQQ/AUB | For Engine code:AEX/AKP/AKK/AUD | GDS61205 | Drive Shaft | | 22 | | 53 | 78.5 | 525 | |
| | 1996.04-2001.09 | MT | F | R | Hatchback FWD AFH/AFK/AQQ/AUB | For Engine code:ANX/AFK/AQQ/AUB | GDS61010 | Drive Shaft | | 22 | | 53 | 78.5 | 740 | |
| | 1996.04-2001.09 | MT | F | R | Hatchback FWD AFH/AFK/AQQ/AUB | For Engine code:AEX/AKP/AKK/AUD | GDS61189 | Drive Shaft | | 22 | | 53 | 78.5 | 752 | |
| | 2001.10-2008.05 | 5MT | F | L | Hatchback FWD AUB;BBZ | | GDS83063 | Drive Shaft | | 36 | | 50.7 | 58.5 | 501 | |
| | 2001.10-2008.05 | 5MT | F | R | Hatchback FWD AUB;BBZ | | GDS61063 | Drive Shaft | | 36 | | 50.7 | 58.5 | 751 | |
| | 2001.10-2008.05 | 5MT | F | L/R | Hatchback FWD AUB;BBZ | | GCI83005 | Inner Joint | | | 33 | | | 32 | |
| | 2001.10-2008.05 | 5MT | F | L/R | Hatchback FWD AUB;BBZ | | GCI83008 | Inner Joint | | | 33 | | | 32 | |
| | 2003.11-2005.06 | 5MT | F | L | Saloon FWD BBZ | | GDS83063 | Drive Shaft | | 36 | | 50.7 | 58.5 | 501 | |
| | 2003.11-2005.06 | 5MT | F | R | Saloon FWD BBZ | | GDS61063 | Drive Shaft | | 36 | | 50.7 | 58.5 | 751 | |
| | 2003.11-2005.06 | 5MT | F | L/R | Saloon FWD BBZ | | GCO83027 | Outer Joint | | 36 | 30 | 50.7 | 58.5 | 47.5 | I |
| | 2003.11-2005.06 | 5MT | F | L/R | Saloon FWD BBZ | | GCI83008 | Inner Joint | | | 33 | | | 32 | |
| | 2003.11-2005.06 | MT | F | L/R | Saloon FWD BBZ | | GCI83005 | Inner Joint | | | 33 | | | 32 | |
| 1.4 (77 kw) | 2014.03-2017.10 | 5MT | F | L/R | Hatchback Van FWD CUTA | | GCI82447 | Inner Joint | | | 33 | | | 34 | |
| | 2014.03-2017.10 | MT | F | L | Hatchback Van FWD CUTA | | GDS82039 | Drive Shaft | | 36 | | 52 | 59 | 549 | |
| | 2014.03-2017.10 | MT | F | R | Hatchback Van FWD CUTA | | GDS82360 | Drive Shaft | | 36 | | 52 | 59 | 729 | |
| | 2014.03-2017.10 | MT | F | L/R | Hatchback Van FWD CUTA | | GCO54006 | Outer Joint | | 36 | 30 | 52 | 59 | 55.5 | I |
| | 2014.05-2017.10 | 5MT | F | L | Hatchback FWD CYZA;CUTA | | GDS82039 | Drive Shaft | | 36 | | 52 | 59 | 549 | |

| | YEAR | TRANSM. | F/R | L/R | BODY STYLE & DRIVE TYPE & ENGINE | REMARKS | G-AP Ref. | PRODUCT | ABS | Technical Specifications | | | | | |
|---|---|---|---|---|---|---|---|---|---|---|---|---|---|---|---|
| | | | | | | | | | | A | B | C | H | L | P |
| **VW** **Polo** | | | | | | | | | | | | | | | |
| 1.4 (77 kw) | 2014.05-2017.10 | 5MT | F | R | Hatchback FWD CYZA;CUTA | | GDS82360 | Drive Shaft | | 36 | | 52 | 59 | 729 | |
| | 2014.05-2017.10 | 5MT | F | L/R | Hatchback FWD CYZA;CUTA | | GCO83024 | Outer Joint | | 36 | 30 | 50.75 | 59 | 55.5 | I |
| | 2014.05-2017.10 | 5MT | F | L/R | Hatchback FWD CYZA;CUTA | | GCI82447 | Inner Joint | | | 33 | | | 34 | |
| | 2014.05-2017.10 | MT | F | L/R | Hatchback FWD CYZA;CUTA | | GCI83006 | Inner Joint | | | 33 | | | 34 | |
| | 2014.05-2017.10 | | F | L/R | Hatchback FWD CYZA;CUTA | Date To:2017.10 | GCI83011 | Inner Joint | | | 33 | | | 34 | |
| 1.4 (92 kw) | 2016.05-2020.03 | 6MT | F | L | Saloon FWD CZCA | | GDS61297 | Drive Shaft | | 36 | | 50.5 | 59 | 513 | |
| | 2016.05-2020.03 | 6MT | F | R | Saloon FWD CZCA | | GDS61301 | Drive Shaft | | 36 | | 50.5 | 59 | 771 | |
| | 2016.05-2020.03 | 6MT | F | L/R | Saloon FWD CZCA | | GCO83024 | Outer Joint | | 36 | 30 | 50.75 | 59 | 55.5 | I |
| | 2016.05-2020.03 | 6MT/7DCT | F | L/R | Saloon FWD CZCA | Date to:2017.02 | GCO54006 | Outer Joint | | 36 | 30 | 52 | 59 | 55.5 | I |
| | 2016.05-2020.03 | 7DCT | F | L | Saloon FWD CZCA | Date to:2017.02 | GDS61311 | Drive Shaft | | 36 | | 50.5 | 59 | 492 | |
| | 2016.05-2020.03 | 7DCT | F | L | Saloon FWD CZCA | Date from:2017.03 | GDS83988 | Drive Shaft | | 36 | | 52 | 64.5 | 500 | |
| | 2016.05-2020.03 | 7DCT | F | R | Saloon FWD CZCA | | GDS57507 | Drive Shaft | | 36 | | 52 | 64.5 | 781 | |
| | 2016.05-2020.03 | 7DCT | F | L/R | Saloon FWD CZCA | Date from:2017.03 | GCO61081 | Outer Joint | | 36 | 27 | 52 | 75 | 65 | I |
| | 2016.05-2020.03 | 7DCT | F | L/R | Saloon FWD CZCA | Date to:2017.02 | GCO83024 | Outer Joint | | 36 | 30 | 50.75 | 59 | 55.5 | I |
| | 2016.05-2020.03 | 7DCT/6MT | F | L/R | Saloon FWD CZCA | | GCI82447 | Inner Joint | | | 33 | | | 34 | |
| | 2016.05-2020.03 | | F | L/R | Saloon FWD CZCA | | GCI83011 | Inner Joint | | | 33 | | | 34 | |
| 1.4 (103 kw) | 2012.10-2014.05 | 6MT | F | L | Hatchback FWD CPTA | | GCI61069 | Inner Joint | | | 28 | | | 32 | |
| | 2012.10-2014.05 | 6MT/7DCT | F | L/R | Hatchback FWD CPTA | | GCO61081 | Outer Joint | | 36 | 27 | 52 | 75 | 65 | I |
| | 2012.10-2014.05 | 7AT/6MT | F | L/R | Hatchback FWD CPTA | | GCI83016 | Inner Joint | | | 28 | | | 32 | |
| | 2012.10-2014.05 | 7DCT | F | L | Hatchback FWD CPTA | | GDS61260 | Drive Shaft | | 36 | | 52 | 75 | 498 | |
| | 2012.10-2014.05 | 7DCT | F | R | Hatchback FWD CPTA | | GDS61261 | Drive Shaft | | 36 | | 52 | 75 | 785 | |
| | 2012.10-2014.05 | 7DCT | F | L/R | Hatchback FWD CPTA | | GCI61069 | Inner Joint | | | 28 | | | 32 | |
| 1.4 (110 kw) | 2014.05-2017.10 | 6MT | F | L | Hatchback FWD CZEA | | GCI61069 | Inner Joint | | | 28 | | | 32 | |
| | 2014.05-2017.10 | 6MT/7DCT | F | L/R | Hatchback FWD CZEA | | GCO61081 | Outer Joint | | 36 | 27 | 52 | 75 | 65 | I |
| | 2014.05-2017.10 | 6MT/7DCT | F | L/R | Hatchback FWD CZEA | | GCI83016 | Inner Joint | | | 28 | | | 32 | |
| | 2014.05-2017.10 | 6MT | F | L | Hatchback Van FWD CZEA | | GCI61069 | Inner Joint | | | 28 | | | 32 | |
| | 2014.05-2017.10 | 6MT/7DCT | F | L/R | Hatchback Van FWD CZEA | | GCO61081 | Outer Joint | | 36 | 27 | 52 | 75 | 65 | I |
| | 2014.05-2017.10 | AT/MT | F | L/R | Hatchback Van FWD CZEA | | GCI83016 | Inner Joint | | | 28 | | | 32 | |
| 1.4 (132 kw) | 2010.05-2014.05 | 7AT | F | L | Hatchback FWD CAVE;CTHE | | GDS61260 | Drive Shaft | | 36 | | 52 | 75 | 498 | |
| | 2010.05-2014.05 | 7AT | F | L/R | Hatchback FWD CAVE;CTHE | | GCI61069 | Inner Joint | | | 28 | | | 32 | |
| | 2010.05-2014.05 | 7DCT | F | R | Hatchback FWD CAVE;CTHE | | GDS61261 | Drive Shaft | | 36 | | 52 | 75 | 785 | |
| | 2010.05-2014.05 | 7DCT | F | L/R | Hatchback FWD CAVE;CTHE | | GCO61081 | Outer Joint | | 36 | 27 | 52 | 75 | 65 | I |
| | 2010.05-2014.05 | | F | L/R | Hatchback FWD CAVE;CTHE | | GCI83016 | Inner Joint | | | 28 | | | 32 | |
| | 2010.05-2014.05 | 7AT | F | L | Hatchback Van FWD CAVE | | GDS61260 | Drive Shaft | | 36 | | 52 | 75 | 498 | |
| | 2010.05-2014.05 | 7AT | F | L/R | Hatchback Van FWD CAVE | | GCI61069 | Inner Joint | | | 28 | | | 32 | |
| | 2010.05-2014.05 | 7DCT | F | R | Hatchback Van FWD CAVE | | GDS61261 | Drive Shaft | | 36 | | 52 | 75 | 785 | |
| | 2010.05-2014.05 | 7DCT | F | L/R | Hatchback Van FWD CAVE | | GCO61081 | Outer Joint | | 36 | 27 | 52 | 75 | 65 | I |
| | 2010.05-2014.05 | | F | L/R | Hatchback Van FWD CAVE | | GCI83016 | Inner Joint | | | 28 | | | 32 | |
| 1.5 (110 kw) | 2018.10-2021.08 | 7AT | F | L/R | Hatchback FWD DADA;DPCA | | GCO82548 | Outer Joint | | 36 | 27 | 52 | 64.5 | 65 | M |
| | 2018.10-2021.08 | 7AT | F | L | Hatchback FWD DADA;DPCA | | GCI83016 | Inner Joint | | | 28 | | | 32 | |
| 1.6 (55 kw) | 1994.10-1999.12 | AT | F | L | Hatchback FWD AEA/AEE/AHS | For vehicles without air conditioning | GDS61007 | Drive Shaft | | 22 | | 53 | 78.5 | 517 | |
| | 1994.10-1999.12 | AT | F | R | Hatchback FWD AEA/AEE/AHS | For vehicles without air conditioning | GDS61010 | Drive Shaft | | 22 | | 53 | 78.5 | 740 | |
| | 1994.10-1999.12 | AT/MT | F | L/R | Hatchback FWD AEA/AEE/AHS | | GCO53005 | Outer Joint | | 22 | 30 | 53 | 78.5 | 51 | I |
| | 1994.10-1999.12 | MT | F | L | Hatchback FWD AEA/AEE/AHS | | GDS61007 | Drive Shaft | | 22 | | 53 | 78.5 | 517 | |
| | 1994.10-1999.12 | MT | F | R | Hatchback FWD AEA/AEE/AHS | | GDS61010 | Drive Shaft | | 22 | | 53 | 78.5 | 740 | |
| | 1994.10-1999.12 | MT | F | L/R | Hatchback FWD AEA/AEE/AHS | | GCI53001 | Inner Joint | | | 33 | | | 32 | |
| | 1995.08-1999.10 | | F | L | Hatchback 4WD AEA | | GDS61007 | Drive Shaft | | 22 | | 53 | 78.5 | 517 | |
| | 1995.08-1999.10 | | F | R | Hatchback 4WD AEA | | GDS61010 | Drive Shaft | | 22 | | 53 | 78.5 | 740 | |
| | 2009.06-2014.05 | 5MT | F | L | Hatchback FWD CAYA | | GDS61184 | Drive Shaft | | 36 | | 52 | 59 | 496 | |
| | 2009.06-2014.05 | 5MT | F | R | Hatchback FWD CAYA | | GDS61185 | Drive Shaft | | 36 | | 52 | 59 | 785 | |
| | 2009.06-2014.05 | 5MT | F | L/R | Hatchback FWD CAYA | | GCO83024 | Outer Joint | | 36 | 30 | 50.75 | 59 | 55.5 | I |
| | 2009.06-2014.05 | 5MT | F | L/R | Hatchback FWD CAYA | | GCI82447 | Inner Joint | | | 33 | | | 34 | |
| | 2009.06-2014.05 | 5MT | F | L | Hatchback Van FWD CAYA | | GDS61184 | Drive Shaft | | 36 | | 52 | 59 | 496 | |
| | 2009.06-2014.05 | 5MT | F | R | Hatchback Van FWD CAYA | | GDS61185 | Drive Shaft | | 36 | | 52 | 59 | 785 | |
| | 2009.06-2014.05 | 5MT | F | L/R | Hatchback Van FWD CAYA | | GCO83024 | Outer Joint | | 36 | 30 | 50.75 | 59 | 55.5 | I |
| | 2009.06-2014.05 | 5MT | F | L/R | Hatchback Van FWD CAYA | | GCI82447 | Inner Joint | | | 33 | | | 34 | |
| | 2009.06-2014.05 | | F | L/R | Hatchback Van FWD CAYA | | GCI83011 | Inner Joint | | | 33 | | | 34 | |
| 1.6 (59 kw) | 2017.11-2019.07 | 5MT | F | L | Hatchback FWD DGTC | | GDS84181 | Drive Shaft | | 36 | | 52 | 64.5 | 532 | |
| | 2017.11-2019.07 | 5MT | F | R | Hatchback FWD DGTC | | GDS84315 | Drive Shaft | | 36 | | 52 | 64.5 | 825 | |
| | 2017.11-2019.07 | 5MT | F | L/R | Hatchback FWD DGTC | | GCO81743 | Outer Joint | | 36 | 33 | 52 | 64.5 | 59 | I |
| | 2017.11-2019.07 | 5MT | F | L/R | Hatchback FWD DGTC | | GCI82447 | Inner Joint | | | 33 | | | 34 | |
| 1.6 (60 kw) | 2011.01-2014.05 | 5MT | F | L | Hatchback FWD CNKA | | GDS61297 | Drive Shaft | | 36 | | 50.5 | 59 | 513 | |
| | 2011.01-2014.05 | 5MT | F | R | Hatchback FWD CNKA | | GDS61301 | Drive Shaft | | 36 | | 50.5 | 59 | 771 | |
| | 2011.01-2014.05 | 5MT | F | L/R | Hatchback FWD CNKA | | GCO83024 | Outer Joint | | 36 | 30 | 50.75 | 59 | 55.5 | I |
| | 2011.01-2014.05 | 5MT | F | L | Hatchback FWD CNKA | | GCI53002 | Inner Joint | | | 33 | | | 34 | |

| | YEAR | TRANSM. | F/R | L/R | BODY STYLE & DRIVE TYPE & ENGINE | REMARKS | G-AP Ref. | PRODUCT | ABS | Technical Specifications A | B | C | H | L | P |
|---|---|---|---|---|---|---|---|---|---|---|---|---|---|---|---|
| **VW** **Polo** | | | | | | | | | | | | | | | |
| 1.6 (60 kw) | 2011.01-2014.05 | 5MT | F | L/R | Hatchback FWD CNKA | | GCI82447 | Inner Joint | | | 33 | | | 34 | |
| | 2011.01-2014.05 | MT | F | L | Hatchback FWD CNKA | | GDS61274 | Drive Shaft | | 36 | | 50.5 | 59 | 514 | |
| | 2011.01-2014.05 | MT | F | L/R | Hatchback FWD CNKA | | GCI83006 | Inner Joint | | | 33 | | | 34 | |
| | 2011.01-2014.05 | | F | L | Hatchback FWD CNKA | | GCO54006 | Outer Joint | | 36 | 30 | 52 | 59 | 55.5 | I |
| | 2011.01-2014.05 | | F | L/R | Hatchback FWD CNKA | Date To:2014.05 | GCI83011 | Inner Joint | | | 33 | | | 34 | |
| 1.6 (63 kw) | 2010.11-2015.05 | 5MT | F | L | Saloon FWD CFNB | | GDS61297 | Drive Shaft | | 36 | | 50.5 | 59 | 513 | |
| | 2010.11-2015.05 | 5MT | F | R | Saloon FWD CFNB | | GDS61301 | Drive Shaft | | 36 | | 50.5 | 59 | 771 | |
| | 2010.11-2015.05 | 5MT | F | L/R | Saloon FWD CFNB | | GCO83024 | Outer Joint | | 36 | 30 | 50.75 | 59 | 55.5 | I |
| | 2010.11-2015.05 | 5MT | F | L/R | Saloon FWD CFNB | | GCI82447 | Inner Joint | | | 33 | | | 34 | |
| 1.6 (66 kw) | 2009.06-2014.05 | 5MT | F | L | Hatchback FWD CAYB | | GDS61184 | Drive Shaft | | 36 | | 52 | 59 | 496 | |
| | 2009.06-2014.05 | 5MT | F | R | Hatchback FWD CAYB | | GDS61185 | Drive Shaft | | 36 | | 52 | 59 | 785 | |
| | 2009.06-2014.05 | 5MT | F | L/R | Hatchback FWD CAYB | | GCO83024 | Outer Joint | | 36 | 30 | 50.75 | 59 | 55.5 | I |
| | 2009.06-2014.05 | 5MT | F | L/R | Hatchback FWD CAYB | | GCI82447 | Inner Joint | | | 33 | | | 34 | |
| | 2009.06-2014.05 | 7DCT | F | L | Hatchback FWD CAYB | | GDS61260 | Drive Shaft | | 36 | | 52 | 75 | 498 | |
| | 2009.06-2014.05 | 7DCT | F | R | Hatchback FWD CAYB | | GDS61261 | Drive Shaft | | 36 | | 52 | 75 | 785 | |
| | 2009.06-2014.05 | 7DCT | F | L/R | Hatchback FWD CAYB | | GCO61081 | Outer Joint | | 36 | 27 | 52 | 75 | 65 | I |
| | 2009.06-2014.05 | 7DCT | F | L/R | Hatchback FWD CAYB | | GCI83016 | Inner Joint | | | 28 | | | 32 | |
| | 2009.06-2014.05 | 5MT | F | L | Hatchback Van FWD CAYB | | GDS61184 | Drive Shaft | | 36 | | 52 | 59 | 496 | |
| | 2009.06-2014.05 | 5MT | F | R | Hatchback Van FWD CAYB | | GDS61185 | Drive Shaft | | 36 | | 52 | 59 | 785 | |
| | 2009.06-2014.05 | 5MT | F | L/R | Hatchback Van FWD CAYB | | GCO83024 | Outer Joint | | 36 | 30 | 50.75 | 59 | 55.5 | I |
| | 2009.06-2014.05 | 5MT | F | L/R | Hatchback Van FWD CAYB | | GCI82447 | Inner Joint | | | 33 | | | 34 | |
| | 2009.06-2014.05 | 7AT/5MT | F | L/R | Hatchback Van FWD CAYB | | GCI83016 | Inner Joint | | | 28 | | | 32 | |
| | 2009.06-2014.05 | 7DCT | F | L | Hatchback Van FWD CAYB | | GDS61260 | Drive Shaft | | 36 | | 52 | 75 | 498 | |
| | 2009.06-2014.05 | 7DCT | F | R | Hatchback Van FWD CAYB | | GDS61261 | Drive Shaft | | 36 | | 52 | 75 | 785 | |
| | 2009.06-2014.05 | 7DCT | F | L/R | Hatchback Van FWD CAYB | | GCO61081 | Outer Joint | | 36 | 27 | 52 | 75 | 65 | I |
| | 2014.07-2017.10 | 5MT | F | L | Hatchback FWD CWVB | | GDS61297 | Drive Shaft | | 36 | | 50.5 | 59 | 513 | |
| | 2014.07-2017.10 | 5MT | F | R | Hatchback FWD CWVB | | GDS61301 | Drive Shaft | | 36 | | 50.5 | 59 | 771 | |
| | 2014.07-2017.10 | 5MT | F | L/R | Hatchback FWD CWVB | | GCO83024 | Outer Joint | | 36 | 30 | 50.75 | 59 | 55.5 | I |
| | 2014.07-2017.10 | 5MT | F | L/R | Hatchback FWD CWVB | | GCI82447 | Inner Joint | | | 33 | | | 34 | |
| | 2014.07-2017.10 | MT | F | L | Hatchback FWD CWVB | | GCO54006 | Outer Joint | | 36 | 30 | 52 | 59 | 55.5 | I |
| | 2015.05-2020.03 | 5MT | F | L | Saloon FWD CWVB | | GDS61297 | Drive Shaft | | 36 | | 50.5 | 59 | 513 | |
| | 2015.05-2020.03 | 5MT | F | R | Saloon FWD CWVB | | GDS61301 | Drive Shaft | | 36 | | 50.5 | 59 | 771 | |
| | 2015.05-2020.03 | 5MT | F | L/R | Saloon FWD CWVB | | GCO54006 | Outer Joint | | 36 | 30 | 52 | 59 | 55.5 | I |
| | 2015.05-2020.03 | 5MT | F | L/R | Saloon FWD CWVB | | GCI53002 | Inner Joint | | | 33 | | | 34 | |
| | 2015.05-2020.03 | 5MT | F | L/R | Saloon FWD CWVB | | GCI82447 | Inner Joint | | | 33 | | | 34 | |
| | 2015.05-2020.03 | MT | F | L/R | Saloon FWD CWVB | Date from:2015.05 | GCO83024 | Outer Joint | | 36 | 30 | 50.75 | 59 | 55.5 | I |
| 1.6 (70 kw) | 2017.11-2021.02 | 5MT | F | R | Hatchback FWD DGTD | | GDS84315 | Drive Shaft | | 36 | | 52 | 64.5 | 825 | |
| | 2017.11-2021.02 | 5MT | F | L/R | Hatchback FWD DGTD | | GCO81743 | Outer Joint | | 36 | 33 | 52 | 64.5 | 59 | I |
| | 2017.11-2021.02 | 5MT/7DCT | F | L | Hatchback FWD DGTD | | GDS84181 | Drive Shaft | | 36 | | 52 | 64.5 | 532 | |
| | 2017.11-2021.02 | 7DCT | F | R | Hatchback FWD DGTD | | GDS84337 | Drive Shaft | | 36 | | 52 | 64.5 | 812 | |
| | 2017.11-2021.02 | 7DCT/5MT | F | L/R | Hatchback FWD DGTD | | GCI82447 | Inner Joint | | | 33 | | | 34 | |
| 1.6 (74 kw) | 2002.09- | 5MT | F | L | Saloon FWD BAH;CCRA;CFZA | | GDS54018 | Drive Shaft | | 36 | | 50.5 | 59 | 500 | |
| | 2002.09- | 5MT | F | L/R | Saloon FWD BAH;CCRA;CFZA | | GCO61010 | Outer Joint | | 36 | 30 | 52 | 75 | 55.5 | I |
| | 2002.09- | 5MT | F | L | Saloon FWD BAH;CCRA;CFZA | | GCI53002 | Inner Joint | | | 33 | | | 34 | |
| 1.6 (77 kw) | 2006.05-2009.11 | 5MT | F | L | Hatchback FWD BTS | | GDS54018 | Drive Shaft | | 36 | | 50.5 | 59 | 500 | |
| | 2006.05-2009.11 | 5MT | F | R | Hatchback FWD BTS | | GDS61305 | Drive Shaft | | 36 | | 50.5 | 59 | 757 | |
| | 2006.05-2009.11 | 5MT | F | L/R | Hatchback FWD BTS | | GCI82447 | Inner Joint | | | 33 | | | 34 | |
| | 2006.05-2009.11 | 5MT/6AT | F | L/R | Hatchback FWD BTS | Transmission:5MT;Transmission:6AT,Date to:2008.07 | GCO83024 | Outer Joint | | 36 | 30 | 50.75 | 59 | 55.5 | I |
| | 2006.05-2009.11 | 6AT | F | L | Hatchback FWD BTS | | GDS61150 | Drive Shaft | | 36 | 26 | 52 | 75 | 557 | |
| | 2006.05-2009.11 | 6AT | F | R | Hatchback FWD BTS | | GDS61133 | Drive Shaft | | 36 | 26 | 52 | 75 | 859 | |
| | 2006.05-2009.11 | 6AT | F | R | Hatchback FWD BTS | Date from:2009.01 | GDS81524 | Drive Shaft | | 36 | 26 | 52 | 75 | 856 | |
| | 2006.05-2009.11 | 6AT | F | L/R | Hatchback FWD BTS | Date from:2008.08 | GCO61074 | Outer Joint | | 36 | 30 | 52 | 75 | 55.5 | I |
| | 2006.05-2009.11 | 6AT | F | L/R | Hatchback FWD BTS | Date from:2008.08,Type:UF100 | GCO83079 | Outer Joint | | 36 | 30 | 52 | 75 | 55.5 | I |
| | 2006.05-2009.11 | 6AT | F | L | Hatchback FWD BTS | | GCI61039 | Inner Joint | | 26 | 22 | 31 | 68.5 | 88.5 | |
| | 2006.05-2009.11 | 6AT | F | R | Hatchback FWD BTS | Date from:2007.08;Date to:2008.07;Chassis no.: to:VB_X_000002;Date from:2008.08;Date to:2008.07;Chassis no.: from:VB_X_00002 | GCI61011 | Inner Joint | | 26 | 32 | 31 | 68.5 | 85 | |
| | 2006.05-2009.11 | 6AT | F | R | Hatchback FWD BTS | Date to:2007.07;Date from:2008.08 | GCI61039 | Inner Joint | | 26 | 22 | 31 | 68.5 | 88.5 | |
| | 2006.05-2009.11 | 6AT | F | R | Hatchback FWD BTS | Date from:2007.08;Date to:2008.07;Chassis no.: to:VB_X_000002;Date from:2008.08;Date to:2008.07;Chassis no.: from:VB_X_00002 | GCI61050 | Inner Joint | | 26 | 32 | 31 | 68.5 | 89 | |
| | 2006.05-2009.11 | AT | F | L | Hatchback FWD BTS | | GCO54006 | Outer Joint | | 36 | 30 | 52 | 59 | 55.5 | I |
| | 2006.05-2009.11 | AT | F | L/R | Hatchback FWD BTS | | GCO61010 | Outer Joint | | 36 | 30 | 52 | 75 | 55.5 | I |
| | 2009.06-2014.05 | 5MT | F | L | Hatchback Van FWD CAYC | | GDS61184 | Drive Shaft | | 36 | | 52 | 59 | 496 | |
| | 2009.06-2014.05 | 5MT | F | R | Hatchback Van FWD CAYC | | GDS61185 | Drive Shaft | | 36 | | 52 | 59 | 785 | |
| | 2009.06-2014.05 | 5MT | F | L/R | Hatchback Van FWD CAYC | | GCO83024 | Outer Joint | | 36 | 30 | 50.75 | 59 | 55.5 | I |
| | 2009.06-2014.05 | 5MT | F | L/R | Hatchback Van FWD CAYC | | GCI82447 | Inner Joint | | | 33 | | | 34 | |
| | 2009.06-2014.05 | | F | L/R | Hatchback Van FWD CAYC | | GCI83011 | Inner Joint | | | 33 | | | 34 | |
| | 2009.06-2015.08 | 5MT | F | L | Hatchback FWD CAYC;CLNA | | GDS61184 | Drive Shaft | | 36 | | 52 | 59 | 496 | |

| | YEAR | TRANSM. | F/R | L/R | BODY STYLE & DRIVE TYPE & ENGINE | REMARKS | G-AP Ref. | PRODUCT | ABS | Technical Specifications A | B | C | H | L | P |
|---|---|---|---|---|---|---|---|---|---|---|---|---|---|---|---|
| **VW** **Polo** | | | | | | | | | | | | | | | |
| 1.6 (77 kw) | 2009.06-2015.08 | 5MT | F | R | Hatchback FWD CAYC;CLNA | | GDS61185 | Drive Shaft | | 36 | | 52 | 59 | 785 | |
| | 2009.06-2015.08 | 5MT | F | L/R | Hatchback FWD CAYC;CLNA | | GCO83024 | Outer Joint | | 36 | 30 | 50.75 | 59 | 55.5 | I |
| | 2009.06-2015.08 | 5MT | F | L/R | Hatchback FWD CAYC;CLNA | | GCI82447 | Inner Joint | | | 33 | | | 34 | |
| | 2010.01-2022.05 | 5MT | F | L | Hatchback FWD CFNA;CLSA | For Europe,For Engine code:CLSA,Date to:2014.12;For Russia | GDS61297 | Drive Shaft | | 36 | | 50.5 | 59 | 513 | |
| | 2010.01-2022.05 | 5MT | F | R | Hatchback FWD CFNA;CLSA | For Europe,For Engine code:CLSA,Date to:2014.12;For Russia | GDS61301 | Drive Shaft | | 36 | | 50.5 | 59 | 771 | |
| | 2010.01-2022.05 | 5MT | F | L/R | Hatchback FWD CFNA;CLSA | Modelcode:601/603,Date from:2011.08 | GCO61082 | Outer Joint | | 22 | 24 | 48.5 | 78 | 63.5 | M |
| | 2010.01-2022.05 | 5MT | F | L/R | Hatchback FWD CFNA;CLSA | | GCO83024 | Outer Joint | | 36 | 30 | 50.75 | 59 | 55.5 | I |
| | 2010.01-2022.05 | 5MT | F | L/R | Hatchback FWD CFNA;CLSA | Modelcode:601/603,Date from:2011.08 | GCI82415 | Inner Joint | | | 33 | | | 34 | |
| | 2010.01-2022.05 | 5MT | F | L/R | Hatchback FWD CFNA;CLSA | | GCI82447 | Inner Joint | | | 33 | | | 34 | |
| | 2010.01-2022.05 | 6AT | F | L | Hatchback FWD CFNA;CLSA | | GDS83842 | Drive Shaft | | 36 | 26 | 52 | 75 | 566 | |
| | 2010.01-2022.05 | 6AT | F | R | Hatchback FWD CFNA;CLSA | | GDS83843 | Drive Shaft | | 36 | 26 | 52 | 75 | 866 | |
| | 2010.01-2022.05 | 6AT | F | L/R | Hatchback FWD CFNA;CLSA | Type:UF100 | GCO83079 | Outer Joint | | 36 | 30 | 52 | 75 | 55.5 | I |
| | 2010.01-2022.05 | 6AT | F | L/R | Hatchback FWD CFNA;CLSA | TJ | GCI61039 | Inner Joint | | 26 | 22 | 31 | 68.5 | 88.5 | |
| | 2010.01-2022.05 | 6AT | F | L/R | Hatchback FWD CFNA;CLSA | AAR | GCI81396 | Inner Joint | | 26 | 22 | 31 | 68.5 | 86 | |
| | 2010.05-2022.05 | 5MT | F | L | Saloon FWD CFNA;CLSA | | GDS61297 | Drive Shaft | | 36 | | 50.5 | 59 | 513 | |
| | 2010.05-2022.05 | 5MT | F | R | Saloon FWD CFNA;CLSA | | GDS61301 | Drive Shaft | | 36 | | 50.5 | 59 | 771 | |
| | 2010.05-2022.05 | 5MT | F | L/R | Saloon FWD CFNA;CLSA | | GCO83024 | Outer Joint | | 36 | 30 | 50.75 | 59 | 55.5 | I |
| | 2010.05-2022.05 | 5MT | F | L/R | Saloon FWD CFNA;CLSA | | GCI53002 | Inner Joint | | | 33 | | | 34 | |
| | 2010.05-2022.05 | 5MT | F | L/R | Saloon FWD CFNA;CLSA | | GCI82447 | Inner Joint | | | 33 | | | 34 | |
| | 2010.05-2022.05 | 6AT | F | L | Saloon FWD CFNA;CLSA | | GDS83842 | Drive Shaft | | 36 | 26 | 52 | 75 | 566 | |
| | 2010.05-2022.05 | 6AT | F | R | Saloon FWD CFNA;CLSA | | GDS83843 | Drive Shaft | | 36 | 26 | 52 | 75 | 866 | |
| | 2010.05-2022.05 | 6AT | F | L/R | Saloon FWD CFNA;CLSA | Bellows Material:Thermoplastic | GCO61074 | Outer Joint | | 36 | 30 | 52 | 75 | 55.5 | I |
| | 2010.05-2022.05 | 6AT | F | L/R | Saloon FWD CFNA;CLSA | Bellows Material:Neoprene | GCO83079 | Outer Joint | | 36 | 30 | 52 | 75 | 55.5 | I |
| | 2010.05-2022.05 | 6AT | F | L/R | Saloon FWD CFNA;CLSA | TJ | GCI61039 | Inner Joint | | 26 | 22 | 31 | 68.5 | 88.5 | |
| | 2010.05-2022.05 | 6AT | F | L/R | Saloon FWD CFNA;CLSA | AAR | GCI81396 | Inner Joint | | 26 | 22 | 31 | 68.5 | 86 | |
| 1.6 (81 kw) | 2014.07-2017.10 | 5MT | F | L | Hatchback FWD CWVA | | GDS61297 | Drive Shaft | | 36 | | 50.5 | 59 | 513 | |
| | 2014.07-2017.10 | 5MT | F | R | Hatchback FWD CWVA | | GDS61301 | Drive Shaft | | 36 | | 50.5 | 59 | 771 | |
| | 2014.07-2017.10 | 5MT | F | L/R | Hatchback FWD CWVA | | GCO54006 | Outer Joint | | 36 | 30 | 52 | 59 | 55.5 | I |
| | 2014.07-2017.10 | 5MT | F | L/R | Hatchback FWD CWVA | | GCO83024 | Outer Joint | | 36 | 30 | 50.75 | 59 | 55.5 | I |
| | 2014.07-2017.10 | 5MT | F | L/R | Hatchback FWD CWVA | | GCI53002 | Inner Joint | | | 33 | | | 34 | |
| | 2014.07-2017.10 | 5MT | F | L/R | Hatchback FWD CWVA | | GCI82447 | Inner Joint | | | 33 | | | 34 | |
| | 2015.05-2020.03 | 5MT | F | L | Saloon FWD CWVA | | GDS61297 | Drive Shaft | | 36 | | 50.5 | 59 | 513 | |
| | 2015.05-2020.03 | 5MT | F | R | Saloon FWD CWVA | | GDS61301 | Drive Shaft | | 36 | | 50.5 | 59 | 771 | |
| | 2015.05-2020.03 | 5MT | F | L/R | Saloon FWD CWVA | | GCO54006 | Outer Joint | | 36 | 30 | 52 | 59 | 55.5 | I |
| | 2015.05-2020.03 | 5MT | F | L/R | Saloon FWD CWVA | | GCO83024 | Outer Joint | | 36 | 30 | 50.75 | 59 | 55.5 | I |
| | 2015.05-2020.03 | 5MT | F | L/R | Saloon FWD CWVA | | GCI53002 | Inner Joint | | | 33 | | | 34 | |
| | 2015.05-2020.03 | 5MT | F | L/R | Saloon FWD CWVA | | GCI82447 | Inner Joint | | | 33 | | | 34 | |
| 1.6 (88 kw) | 1998.09-1999.10 | 5MT | F | L/R | Hatchback FWD AJV | | GCO61007 | Outer Joint | | 22 | 30 | 53 | 78.5 | 60 | I |
| | 1998.09-1999.10 | MT | F | L/R | Hatchback FWD AJV | | GCI53001 | Inner Joint | | | 33 | | | 32 | |
| | 1998.09-1999.10 | | F | L | Hatchback FWD AJV | | GDS53001 | Drive Shaft | | 22 | | 53 | 78.5 | 535 | |
| | 1998.09-1999.10 | | F | | Hatchback FWD AJV | | GCO53004 | Outer Joint | | 22 | 30 | 51 | 78 | 61 | I |
| 1.6 (92 kw) | 1999.10-2001.09 | MT | F | L | Hatchback FWD ARC/AVY | | GDS61205 | Drive Shaft | | 22 | | 53 | 78.5 | 525 | |
| | 1999.10-2001.09 | MT | F | R | Hatchback FWD ARC/AVY | | GDS61189 | Drive Shaft | | 22 | | 53 | 78.5 | 752 | |
| | 1999.10-2001.09 | MT | F | L/R | Hatchback FWD ARC/AVY | | GCO61007 | Outer Joint | | 22 | 30 | 53 | 78.5 | 60 | I |
| | 1999.10-2001.09 | MT | F | L/R | Hatchback FWD ARC/AVY | | GCI53001 | Inner Joint | | | 33 | | | 32 | |
| 1.7 (42 kw) | 1997.04-1999.10 | MT | F | L | Hatchback FWD AHG | | GDS61007 | Drive Shaft | | 22 | | 53 | 78.5 | 517 | |
| | 1997.04-1999.10 | MT | F | R | Hatchback FWD AHG | | GDS61010 | Drive Shaft | | 22 | | 53 | 78.5 | 740 | |
| | 1997.04-1999.10 | MT | F | L/R | Hatchback FWD AHG | | GCO53005 | Outer Joint | | 22 | 30 | 53 | 78.5 | 51 | I |
| | 1997.04-1999.10 | MT | F | L/R | Hatchback FWD AHG | | GCI53001 | Inner Joint | | | 33 | | | 32 | |
| | 1997.04-1999.10 | | F | R | Hatchback FWD AHG | Date From:1999.09 | GDS61189 | Drive Shaft | | 22 | | 53 | 78.5 | 752 | |
| 1.7 (44 kw) | 1997.08-2001.09 | MT | F | L | Hatchback FWD AKU | | GDS61007 | Drive Shaft | | 22 | | 53 | 78.5 | 517 | |
| | 1997.08-2001.09 | MT | F | L | Hatchback FWD AKU | Date from:2000.01;Chassis no. from:6NYY050001 | GDS61205 | Drive Shaft | | 22 | | 53 | 78.5 | 525 | |
| | 1997.08-2001.09 | MT | F | R | Hatchback FWD AKU | | GDS61010 | Drive Shaft | | 22 | | 53 | 78.5 | 740 | |
| | 1997.08-2001.09 | MT | F | R | Hatchback FWD AKU | | GDS61189 | Drive Shaft | | 22 | | 53 | 78.5 | 752 | |
| | 1997.08-2001.09 | MT | F | L/R | Hatchback FWD AKU | | GCO53005 | Outer Joint | | 22 | 30 | 53 | 78.5 | 51 | I |
| | 1997.08-2001.09 | MT/5MT | F | L/R | Hatchback FWD AKU | | GCI53001 | Inner Joint | | | 33 | | | 32 | |
| 1.8 (110 kw) | 2005.09-2009.11 | 5MT | F | L | Hatchback FWD BJX | | GDS61248 | Drive Shaft | | 36 | | 52 | 59 | 480 | |
| | 2005.09-2009.11 | 5MT | F | R | Hatchback FWD BJX | | GDS61301 | Drive Shaft | | 36 | | 50.5 | 59 | 771 | |
| | 2005.09-2009.11 | 5MT | F | L/R | Hatchback FWD BJX | | GCO83024 | Outer Joint | | 36 | 30 | 50.75 | 59 | 55.5 | I |
| | 2005.09-2009.11 | 5MT | F | L/R | Hatchback FWD BJX | | GCI82447 | Inner Joint | | | 33 | | | 34 | |
| | 2005.09-2009.11 | MT | F | L | Hatchback FWD BJX | | GDS61302 | Drive Shaft | | 36 | | 50.5 | 59 | 479 | |
| | 2005.09-2009.11 | MT | F | L | Hatchback FWD BJX | | GCO54006 | Outer Joint | | 36 | 30 | 52 | 59 | 55.5 | I |
| | 2005.09-2009.11 | MT | F | L/R | Hatchback FWD BJX | | GCI83006 | Inner Joint | | | 33 | | | 34 | |
| | 2005.09-2009.11 | MT | F | L/R | Hatchback FWD BJX | | GCI83011 | Inner Joint | | | 33 | | | 34 | |
| 1.8 (132 kw) | 2006.05-2009.11 | 5MT | F | L | Hatchback FWD BBU | | GDS61248 | Drive Shaft | | 36 | | 52 | 59 | 480 | |

| | YEAR | TRANSM. | F/R | L/R | BODY STYLE & DRIVE TYPE & ENGINE | REMARKS | G-AP Ref. | PRODUCT | ABS | Technical Specifications A | B | C | H | L | P |
|---|---|---|---|---|---|---|---|---|---|---|---|---|---|---|---|
| **VW** **Polo** | | | | | | | | | | | | | | | |
| 1.8 (132 kw) | 2006.05-2009.11 | 5MT | F | R | Hatchback FWD BBU | | GDS61301 | Drive Shaft | | 36 | | 50.5 | 59 | 771 | |
| | 2006.05-2009.11 | 5MT | F | L/R | Hatchback FWD BBU | | GCO83024 | Outer Joint | | 36 | 30 | 50.75 | 59 | 55.5 | I |
| | 2006.05-2009.11 | 5MT | F | L/R | Hatchback FWD BBU | | GCI82447 | Inner Joint | | | 33 | | | 34 | |
| | 2006.05-2009.11 | MT | F | L/R | Hatchback FWD BBU | | GCI83006 | Inner Joint | | | 33 | | | 34 | |
| | 2006.05-2009.11 | MT | F | L/R | Hatchback FWD BBU | | GCI83011 | Inner Joint | | | 33 | | | 34 | |
| | 2006.05-2009.11 | | F | L | Hatchback FWD BBU | | GDS61302 | Drive Shaft | | 36 | | 50.5 | 59 | 479 | |
| | 2006.05-2009.11 | | F | L | Hatchback FWD BBU | | GCO54006 | Outer Joint | | 36 | 30 | 52 | 59 | 55.5 | I |
| 1.8 (141 kw) | 2014.11-2017.10 | 6MT | F | L | Hatchback FWD DAJB;DAJA | | GCI61069 | Inner Joint | | | 28 | | | 32 | |
| | 2014.11-2017.10 | 6MT | F | L/R | Hatchback FWD DAJB;DAJA | | GCI83016 | Inner Joint | | | 28 | | | 32 | |
| | 2014.11-2017.10 | 6MT/7DCT | F | L/R | Hatchback FWD DAJB;DAJA | | GCO61081 | Outer Joint | | 36 | 27 | 52 | 75 | 65 | I |
| | 2014.11-2017.10 | 7DCT | F | L | Hatchback FWD DAJB;DAJA | Bellows Material:Neoprene | GDS61260 | Drive Shaft | | 36 | | 52 | 75 | 498 | |
| | 2014.11-2017.10 | 7DCT | F | L | Hatchback FWD DAJB;DAJA | | GCI83016 | Inner Joint | | | 28 | | | 32 | |
| | 2014.11-2017.10 | 7DCT | F | R | Hatchback FWD DAJB;DAJA | | GCI61054 | Inner Joint | | 40 | 28 | 46.9 | 41 | 101.7 | |
| 1.9 (47 kw) | 1994.10-1999.10 | AT/MT | F | L/R | Hatchback FWD AEF (10.94-.) | | GCO53005 | Outer Joint | | 22 | 30 | 53 | 78.5 | 51 | I |
| | 1994.10-1999.10 | MT | F | L | Hatchback FWD AEF (10.94-.) | Date to:1999.08 | GDS61007 | Drive Shaft | | 22 | | 53 | 78.5 | 517 | |
| | 1994.10-1999.10 | MT | F | L | Hatchback FWD AEF (10.94-.) | Date from:1999.09 | GDS61205 | Drive Shaft | | 22 | | 53 | 78.5 | 525 | |
| | 1994.10-1999.10 | MT | F | R | Hatchback FWD AEF (10.94-.) | Date to:1999.08 | GDS61010 | Drive Shaft | | 22 | | 53 | 78.5 | 740 | |
| | 1994.10-1999.10 | MT | F | R | Hatchback FWD AEF (10.94-.) | Date from:1999.09 | GDS61189 | Drive Shaft | | 22 | | 53 | 78.5 | 752 | |
| | 1994.10-1999.10 | MT | F | L/R | Hatchback FWD AEF (10.94-.) | | GCI53001 | Inner Joint | | | 33 | | | 32 | |
| | 1996.07-1999.10 | AT/MT | F | L/R | Hatchback FWD AGD (07.96-.) | | GCO53005 | Outer Joint | | 22 | 30 | 53 | 78.5 | 51 | I |
| | 1996.07-1999.10 | MT | F | L | Hatchback FWD AGD (07.96-.) | Date to:1999.08 | GDS61007 | Drive Shaft | | 22 | | 53 | 78.5 | 517 | |
| | 1996.07-1999.10 | MT | F | L | Hatchback FWD AGD (07.96-.) | Date from:1999.09 | GDS61205 | Drive Shaft | | 22 | | 53 | 78.5 | 525 | |
| | 1996.07-1999.10 | MT | F | R | Hatchback FWD AGD (07.96-.) | Date to:1999.08 | GDS61010 | Drive Shaft | | 22 | | 53 | 78.5 | 740 | |
| | 1996.07-1999.10 | MT | F | R | Hatchback FWD AGD (07.96-.) | Date from:1999.09 | GDS61189 | Drive Shaft | | 22 | | 53 | 78.5 | 752 | |
| | 1996.07-1999.10 | MT | F | L/R | Hatchback FWD AGD (07.96-.) | | GCI53001 | Inner Joint | | | 33 | | | 32 | |
| | 1999.10-2001.09 | AT/MT | F | L/R | Hatchback FWD AEF (10.99-.) | | GCO53005 | Outer Joint | | 22 | 30 | 53 | 78.5 | 51 | I |
| | 1999.10-2001.09 | MT | F | L | Hatchback FWD AEF (10.99-.) | Date to:1999.08 | GDS61007 | Drive Shaft | | 22 | | 53 | 78.5 | 517 | |
| | 1999.10-2001.09 | MT | F | L | Hatchback FWD AEF (10.99-.) | Date from:1999.09 | GDS61205 | Drive Shaft | | 22 | | 53 | 78.5 | 525 | |
| | 1999.10-2001.09 | MT | F | R | Hatchback FWD AEF (10.99-.) | Date to:1999.08 | GDS61010 | Drive Shaft | | 22 | | 53 | 78.5 | 740 | |
| | 1999.10-2001.09 | MT | F | R | Hatchback FWD AEF (10.99-.) | Date from:1999.09 | GDS61189 | Drive Shaft | | 22 | | 53 | 78.5 | 752 | |
| | 1999.10-2001.09 | MT | F | L/R | Hatchback FWD AEF (10.99-.) | | GCI53001 | Inner Joint | | | 33 | | | 32 | |
| | 1999.10-2001.09 | AT/MT | F | L/R | Hatchback FWD AGD (10.99-.), ASX | | GCO53005 | Outer Joint | | 22 | 30 | 53 | 78.5 | 51 | I |
| | 1999.10-2001.09 | MT | F | L | Hatchback FWD AGD (10.99-.), ASX | Date to:1999.08 | GDS61007 | Drive Shaft | | 22 | | 53 | 78.5 | 517 | |
| | 1999.10-2001.09 | MT | F | L | Hatchback FWD AGD (10.99-.), ASX | Date from:1999.09 | GDS61205 | Drive Shaft | | 22 | | 53 | 78.5 | 525 | |
| | 1999.10-2001.09 | MT | F | R | Hatchback FWD AGD (10.99-.), ASX | Date to:1999.08 | GDS61010 | Drive Shaft | | 22 | | 53 | 78.5 | 740 | |
| | 1999.10-2001.09 | MT | F | R | Hatchback FWD AGD (10.99-.), ASX | Date from:1999.09 | GDS61189 | Drive Shaft | | 22 | | 53 | 78.5 | 752 | |
| | 1999.10-2001.09 | MT | F | L/R | Hatchback FWD AGD (10.99-.), ASX | | GCI53001 | Inner Joint | | | 33 | | | 32 | |
| | 2001.10-2009.11 | 5MT | F | L | Hatchback FWD ASY | | GDS83063 | Drive Shaft | | 36 | | 50.7 | 58.5 | 501 | |
| | 2001.10-2009.11 | 5MT | F | R | Hatchback FWD ASY | | GDS61063 | Drive Shaft | | 36 | | 50.7 | 58.5 | 751 | |
| | 2001.10-2009.11 | 5MT | F | L/R | Hatchback FWD ASY | | GCI83008 | Inner Joint | | | 33 | | | 32 | |
| | 2002.09-2012.04 | 5MT | F | L | Saloon FWD ASY | | GDS61262 | Drive Shaft | | 36 | | 52 | 75.5 | 525 | |
| | 2002.09-2012.04 | 5MT | F | R | Saloon FWD ASY | | GDS61063 | Drive Shaft | | 36 | | 50.7 | 58.5 | 751 | |
| | 2002.09-2012.04 | MT | F | L | Saloon FWD ASY | | GDS83063 | Drive Shaft | | 36 | | 50.7 | 58.5 | 501 | |
| | 2002.09-2012.04 | MT | F | L/R | Saloon FWD ASY | Date to:2006.06 | GCO83027 | Outer Joint | | 36 | 30 | 50.7 | 58.5 | 47.5 | I |
| | 2002.09-2012.04 | MT | F | L/R | Saloon FWD ASY | | GCI83005 | Inner Joint | | | 33 | | | 32 | |
| | 2002.09-2012.04 | | F | L/R | Saloon FWD ASY | | GCO54004 | Outer Joint | | 36 | 30 | 52 | 75.5 | 47.5 | I |
| 1.9 (74 kw) | 2001.10-2009.11 | 5MT | F | L | Hatchback FWD ATD;AXR;BMT | AAR | GDS61098 | Drive Shaft | | 36 | | 50.5 | 59 | 472 | |
| | 2001.10-2009.11 | 5MT | F | R | Hatchback FWD ATD;AXR;BMT | AAR | GDS61099 | Drive Shaft | | 36 | | 50.5 | 59 | 759 | |
| | 2001.10-2009.11 | 5MT | F | L/R | Hatchback FWD ATD;AXR;BMT | | GCO83024 | Outer Joint | | 36 | 30 | 50.75 | 59 | 55.5 | I |
| | 2001.10-2009.11 | 5MT | F | L/R | Hatchback FWD ATD;AXR;BMT | AAR | GCI61006 | Inner Joint | | | 30 | | | 57.6 | |
| | 2002.09- | MT | F | L | Saloon FWD ATD | For Engine Code:ATD | GDS61098 | Drive Shaft | | 36 | | 50.5 | 59 | 472 | |
| | 2002.09- | MT | F | R | Saloon FWD ATD | For Engine Code:ATD | GDS61099 | Drive Shaft | | 36 | | 50.5 | 59 | 759 | |
| | 2002.09- | MT | F | L/R | Saloon FWD ATD | Engine Code:ATD/AXR | GCO83024 | Outer Joint | | 36 | 30 | 50.75 | 59 | 55.5 | I |
| | 2003.07-2010.12 | 5MT | F | L/R | Saloon FWD ATD | | GCO83024 | Outer Joint | | 36 | 30 | 50.75 | 59 | 55.5 | I |
| | 2003.07-2010.12 | | F | L | Saloon FWD ATD | Wheels:Alloy Wheels | GDS61098 | Drive Shaft | | 36 | | 50.5 | 59 | 472 | |
| | 2003.07-2010.12 | | F | R | Saloon FWD ATD | | GDS61099 | Drive Shaft | | 36 | | 50.5 | 59 | 759 | |
| | 2003.07-2010.12 | | F | L/R | Saloon FWD ATD | | GCI61006 | Inner Joint | | | 30 | | | 57.6 | |
| 1.9 (96 kw) | 2003.11-2009.11 | 6MT | F | L | Hatchback FWD ASZ;BLT | | GDS61204 | Drive Shaft | | 36 | | 50.5 | 75 | 461 | |
| | 2003.11-2009.11 | 6MT | F | R | Hatchback FWD ASZ;BLT | | GDS61183 | Drive Shaft | | 36 | | 50.5 | 75 | 769 | |
| | 2003.11-2009.11 | 6MT | F | L/R | Hatchback FWD ASZ;BLT | | GCO53002 | Outer Joint | | 36 | 27 | 50.75 | 75 | 65 | I |
| | 2003.11-2009.11 | 6MT | F | L/R | Hatchback FWD ASZ;BLT | with Nylon spacer and Disc circlip | GCO83041 | Outer Joint | | 36 | 27 | 50.5 | 75 | 65 | I |
| | 2003.11-2009.11 | 6MT | F | L/R | Hatchback FWD ASZ;BLT | | GCI61002 | Inner Joint | | | 28 | | | 31.8 | |
| 2.0 (147 kw) | 2017.11- | 6AT/6MT | F | L | Hatchback FWD CZPC;DKZC | | GDS84411 | Drive Shaft | | 36 | | 52 | 64.5 | 496 | |
| | 2017.11- | 6AT/6MT | F | R | Hatchback FWD CZPC;DKZC | | GDS84410 | Drive Shaft | | 36 | | 52 | 64.5 | 791 | |
| | 2017.11- | 6AT/6MT | F | L/R | Hatchback FWD CZPC;DKZC | | GCO82548 | Outer Joint | | 36 | 27 | 52 | 64.5 | 65 | M |

| | YEAR | TRANSM. | F/R | L/R | BODY STYLE & DRIVE TYPE & ENGINE | REMARKS | G-AP Ref. | PRODUCT | ABS | Technical Specifications A | B | C | H | L | P |
|---|---|---|---|---|---|---|---|---|---|---|---|---|---|---|---|
| **VW** | | | | | | | | | | | | | | | |
| **Polo** | | | | | | | | | | | | | | | |
| 2.0 (147 kw) | 2017.11- | 6AT/6MT | F | L/R | Hatchback FWD CZPC;DKZC | | GCI61069 | Inner Joint | | | 28 | | | 32 | |
| 2.0 (152 kw) | 2021.04- | 7AT | F | L/R | Hatchback FWD DNND | | GCO82548 | Outer Joint | | 36 | 27 | 52 | 64.5 | 65 | M |
| 2.0 (162 kw) | 2013.08-2014.05 | 6MT | F | L/R | Hatchback FWD CDLJ | | GCO61081 | Outer Joint | | 36 | 27 | 52 | 75 | 65 | I |
| | 2013.08-2014.05 | | F | L/R | Hatchback FWD CDLJ | | GCI83016 | Inner Joint | | | 28 | | | 32 | |
| **Polo Classic** | | | | | | | | | | | | | | | |
| 1.4 (40 kw) | 1998.01-1999.08 | MT | F | L | Saloon FWD ANX | | GDS53004 | Drive Shaft | | 22 | | 50 | 78.5 | 562 | |
| | 1998.01-1999.08 | MT | F | L | Saloon FWD ANX | | GDS61205 | Drive Shaft | | 22 | | 53 | 78.5 | 525 | |
| | 1998.01-1999.08 | MT | F | L/R | Saloon FWD ANX | | GCO53008 | Outer Joint | | 22 | 30 | 53 | 78.5 | 51 | I |
| | 1998.01-1999.08 | MT | F | L/R | Saloon FWD ANX | | GCI53001 | Inner Joint | | | 33 | | | 32 | |
| 1.4 (44 kw) | 1995.12-2001.09 | MT | F | L | Saloon FWD AEX/AKK/AKV/ANW/APQ/AUD | | GDS53004 | Drive Shaft | | 22 | | 50 | 78.5 | 562 | |
| | 1995.12-2001.09 | MT | F | L/R | Saloon FWD AEX/AKK/AKV/ANW/APQ/AUD | | GCO53008 | Outer Joint | | 22 | 30 | 53 | 78.5 | 51 | I |
| | 1995.12-2001.09 | MT | F | L/R | Saloon FWD AEX/AKK/AKV/ANW/APQ/AUD | | GCI53001 | Inner Joint | | | 33 | | | 32 | |
| 1.4 (55 kw) | 1999.10-2001.09 | MT | F | L | Saloon FWD APE/AUA | | GDS53004 | Drive Shaft | | 22 | | 50 | 78.5 | 562 | |
| | 1999.10-2001.09 | MT | F | L/R | Saloon FWD APE/AUA | | GCO53005 | Outer Joint | | 22 | 30 | 53 | 78.5 | 51 | I |
| | 1999.10-2001.09 | MT | F | L/R | Saloon FWD APE/AUA | | GCO53008 | Outer Joint | | 22 | 30 | 53 | 78.5 | 51 | I |
| | 1999.10-2001.09 | MT | F | L/R | Saloon FWD APE/AUA | | GCI53001 | Inner Joint | | | 33 | | | 32 | |
| 1.6 (55 kw) | 1995.11-1997.09 | MT | F | L | Saloon FWD 1F | | GDS53001 | Drive Shaft | | 22 | | 53 | 78.5 | 535 | |
| | 1995.11-1997.09 | MT | F | R | Saloon FWD 1F | | GDS53002 | Drive Shaft | | 22 | | 53.2 | 78 | 769 | |
| | 1995.11-1997.09 | MT | F | L/R | Saloon FWD 1F | | GCO53007 | Outer Joint | | 22 | 30 | 53.2 | 78 | 61 | I |
| | 1995.11-1997.09 | MT | F | L | Saloon FWD 1F | | GCI83011 | Inner Joint | | | 33 | | | 34 | |
| | 1995.11-1997.09 | MT | F | R | Saloon FWD 1F | | GCI83009 | Inner Joint | | | 33 | | | 34 | |
| | 1995.11-1997.09 | MT | F | L/R | Saloon FWD 1F | | GCI83006 | Inner Joint | | | 33 | | | 34 | |
| | 1997.09-2001.09 | MT | F | L | Saloon FWD AEE/ALM | | GDS53004 | Drive Shaft | | 22 | | 50 | 78.5 | 562 | |
| | 1997.09-2001.09 | MT | F | L/R | Saloon FWD AEE/ALM | Date from:1997.09 | GCO53007 | Outer Joint | | 22 | 30 | 53.2 | 78 | 61 | I |
| | 1997.09-2001.09 | MT | F | L/R | Saloon FWD AEE/ALM | | GCO53008 | Outer Joint | | 22 | 30 | 53 | 78.5 | 51 | I |
| | 1997.09-2001.09 | MT | F | L | Saloon FWD AEE/ALM | | GCI83011 | Inner Joint | | | 33 | | | 34 | |
| | 1997.09-2001.09 | MT | F | R | Saloon FWD AEE/ALM | Date from:1997.09 | GCI83009 | Inner Joint | | | 33 | | | 34 | |
| | 1997.09-2001.09 | MT | F | L/R | Saloon FWD AEE/ALM | | GCI53001 | Inner Joint | | | 33 | | | 32 | |
| 1.6 (65 kw) | 1999.10-2001.09 | 5MT | F | L/R | Saloon FWD AKL | | GCO53008 | Outer Joint | | 22 | 30 | 53 | 78.5 | 51 | I |
| | 1999.10-2001.09 | MT | F | L | Saloon FWD AKL | For Engine Code:AKL | GDS53004 | Drive Shaft | | 22 | | 50 | 78.5 | 562 | |
| | 1999.10-2001.09 | MT | F | L/R | Saloon FWD AKL | For Engine Code:AKL | GCI83005 | Inner Joint | | | 33 | | | 32 | |
| | 1999.10-2001.09 | | F | R | Saloon FWD AKL | | GDS53005 | Drive Shaft | | 22 | | 53 | 78.5 | 774 | |
| 1.6 (74 kw) | 1995.12-2001.09 | 4AT/5MT | F | L | Saloon FWD AEH/AFT/AKL/APF/AUR | | GDS53003 | Drive Shaft | | 22 | | 53 | 78.5 | 539.5 | |
| | 1995.12-2001.09 | 4AT/5MT | F | R | Saloon FWD AEH/AFT/AKL/APF/AUR | | GDS53002 | Drive Shaft | | 22 | | 53.2 | 78 | 769 | |
| | 1995.12-2001.09 | 4AT/5MT | F | R | Saloon FWD AEH/AFT/AKL/APF/AUR | | GDS53005 | Drive Shaft | | 22 | | 53 | 78.5 | 774 | |
| | 1995.12-2001.09 | 4AT/5MT | F | L/R | Saloon FWD AEH/AFT/AKL/APF/AUR | For Engine Code:AFT | GCO53007 | Outer Joint | | 22 | 30 | 53.2 | 78 | 61 | I |
| | 1995.12-2001.09 | 4AT/5MT | F | L/R | Saloon FWD AEH/AFT/AKL/APF/AUR | For Engine Code:AEH/AKL/APF/AUR | GCO53008 | Outer Joint | | 22 | 30 | 53 | 78.5 | 51 | I |
| | 1995.12-2001.09 | 4AT/5MT | F | L/R | Saloon FWD AEH/AFT/AKL/APF/AUR | | GCI83011 | Inner Joint | | | 33 | | | 34 | |
| | 1995.12-2001.09 | MT | F | L | Saloon FWD AEH/AFT/AKL/APF/AUR | | GDS53001 | Drive Shaft | | 22 | | 53 | 78.5 | 535 | |
| | 1995.12-2001.09 | MT | F | L | Saloon FWD AEH/AFT/AKL/APF/AUR | For Engine code:AEH/AKL/APF/AUR | GDS53004 | Drive Shaft | | 22 | | 50 | 78.5 | 562 | |
| | 1995.12-2001.09 | MT | F | R | Saloon FWD AEH/AFT/AKL/APF/AUR | For Engine Code:AFT,(F) | GCI83009 | Inner Joint | | | 33 | | | 34 | |
| | 1995.12-2001.09 | MT | F | L/R | Saloon FWD AEH/AFT/AKL/APF/AUR | | GCI83005 | Inner Joint | | | 33 | | | 32 | |
| 1.7 (44 kw) | 1997.11-1999.08 | 5MT | F | L | Saloon FWD AKW | | GDS53003 | Drive Shaft | | 22 | | 53 | 78.5 | 539.5 | |
| | 1997.11-1999.08 | 5MT | F | R | Saloon FWD AKW | | GDS53005 | Drive Shaft | | 22 | | 53 | 78.5 | 774 | |
| | 1997.11-1999.08 | 5MT | F | L/R | Saloon FWD AKW | | GCO53008 | Outer Joint | | 22 | 30 | 53 | 78.5 | 51 | I |
| | 1997.11-1999.08 | 5MT | F | L/R | Saloon FWD AKW | Chassis no. to:6KV050000 | GCI83005 | Inner Joint | | | 33 | | | 32 | |
| 1.8 (66 kw) | 1998.03-2001.09 | 5MT | F | R | Saloon FWD ADD | | GCI83009 | Inner Joint | | | 33 | | | 34 | |
| | 1998.03-2001.09 | AT/MT | F | L/R | Saloon FWD ADD | | GCO53007 | Outer Joint | | 22 | 30 | 53.2 | 78 | 61 | I |
| | 1998.03-2001.09 | MT | F | L/R | Saloon FWD ADD | | GCI83006 | Inner Joint | | | 33 | | | 34 | |
| | 1998.03-2001.09 | | F | L | Saloon FWD ADD | | GDS53001 | Drive Shaft | | 22 | | 53 | 78.5 | 535 | |
| | 1998.03-2001.09 | | F | L | Saloon FWD ADD | Date From:1998.03 | GCI83011 | Inner Joint | | | 33 | | | 34 | |
| 1.9 (47 kw) | 1995.12-1999.08 | 5MT | F | L | Saloon FWD 1Y/AEY | | GDS53003 | Drive Shaft | | 22 | | 53 | 78.5 | 539.5 | |
| | 1995.12-1999.08 | 5MT | F | R | Saloon FWD 1Y/AEY | | GDS53005 | Drive Shaft | | 22 | | 53 | 78.5 | 774 | |
| | 1995.12-1999.08 | 5MT | F | L/R | Saloon FWD 1Y/AEY | | GCO53008 | Outer Joint | | 22 | 30 | 53 | 78.5 | 51 | I |
| | 1995.12-1999.08 | AT/MT | F | L/R | Saloon FWD 1Y/AEY | | GCO53005 | Outer Joint | | 22 | 30 | 53 | 78.5 | 51 | I |
| | 1995.12-1999.08 | MT | F | L/R | Saloon FWD 1Y/AEY | | GCI83005 | Inner Joint | | | 33 | | | 32 | |
| 1.9 (48 kw) | 1996.06-2001.09 | 5MT | F | L | Saloon FWD AEY | | GDS53003 | Drive Shaft | | 22 | | 53 | 78.5 | 539.5 | |
| | 1996.06-2001.09 | 5MT | F | R | Saloon FWD AEY | | GDS53005 | Drive Shaft | | 22 | | 53 | 78.5 | 774 | |
| | 1996.06-2001.09 | 5MT | F | L/R | Saloon FWD AEY | | GCO53008 | Outer Joint | | 22 | 30 | 53 | 78.5 | 51 | I |
| | 1996.06-2001.09 | 5MT | F | L/R | Saloon FWD AEY | | GCI83005 | Inner Joint | | | 33 | | | 32 | |
| 1.9 (50 kw) | 1999.08-2002.01 | 5MT | F | L | Saloon FWD AGP/AQM | | GDS53003 | Drive Shaft | | 22 | | 53 | 78.5 | 539.5 | |
| | 1999.08-2002.01 | 5MT | F | R | Saloon FWD AGP/AQM | | GDS53005 | Drive Shaft | | 22 | | 53 | 78.5 | 774 | |
| | 1999.08-2002.01 | 5MT | F | L/R | Saloon FWD AGP/AQM | | GCO53008 | Outer Joint | | 22 | 30 | 53 | 78.5 | 51 | I |
| | 1999.08-2002.01 | MT | F | L/R | Saloon FWD AGP/AQM | | GCI83005 | Inner Joint | | | 33 | | | 32 | |
| 1.9 (66 kw) | 1997.01-2001.09 | 5MT | F | L | Saloon FWD AGR/AHU/ALE/ALH | | GDS53001 | Drive Shaft | | 22 | | 53 | 78.5 | 535 | |

| | YEAR | TRANSM. | F/R | L/R | BODY STYLE & DRIVE TYPE & ENGINE | REMARKS | G-AP Ref. | PRODUCT | ABS | Technical Specifications A | B | C | H | L | P |
|---|---|---|---|---|---|---|---|---|---|---|---|---|---|---|---|
| **VW** | | | | | | | | | | | | | | | |
| **Polo Classic** | | | | | | | | | | | | | | | |
| 1.9 (66 kw) | 1997.01-2001.09 | 5MT | F | L/R | Saloon FWD AGR/AHU/ALE/ALH | | GCO53007 | Outer Joint | | 22 | 30 | 53.2 | 78 | 61 | I |
| | 1997.01-2001.09 | 5MT | F | L | Saloon FWD AGR/AHU/ALE/ALH | | GCI82447 | Inner Joint | | | 33 | | | 34 | |
| | 1997.01-2001.09 | MT | F | R | Saloon FWD AGR/AHU/ALE/ALH | Date from:1997.01 | GDS53002 | Drive Shaft | | 22 | | 53.2 | 78 | 769 | |
| | 1997.01-2001.09 | MT | F | R | Saloon FWD AGR/AHU/ALE/ALH | Date from:1997.01 | GCI83009 | Inner Joint | | | 33 | | | 34 | |
| | 1997.01-2001.09 | MT | F | L/R | Saloon FWD AGR/AHU/ALE/ALH | | GCI83011 | Inner Joint | | | 33 | | | 34 | |
| 1.9 (67 kw) | 1997.01-1999.08 | 5MT | F | L | Saloon FWD AHU | | GDS53001 | Drive Shaft | | 22 | | 53 | 78.5 | 535 | |
| | 1997.01-1999.08 | 5MT | F | R | Saloon FWD AHU | | GDS53002 | Drive Shaft | | 22 | | 53.2 | 78 | 769 | |
| | 1997.01-1999.08 | 5MT | F | L/R | Saloon FWD AHU | | GCO53007 | Outer Joint | | 22 | 30 | 53.2 | 78 | 61 | I |
| | 1997.01-1999.08 | 5MT | F | L | Saloon FWD AHU | | GCI82447 | Inner Joint | | | 33 | | | 34 | |
| | 1997.01-1999.08 | 5MT | F | R | Saloon FWD AHU | | GCI83009 | Inner Joint | | | 33 | | | 34 | |
| | 1997.01-1999.08 | MT | F | L/R | Saloon FWD AHU | | GCI83006 | Inner Joint | | | 33 | | | 34 | |
| 1.9 (81 kw) | 1998.06-2001.09 | 5MT | F | L | Saloon FWD AFN/ASV | | GDS53001 | Drive Shaft | | 22 | | 53 | 78.5 | 535 | |
| | 1998.06-2001.09 | 5MT | F | R | Saloon FWD AFN/ASV | | GDS53002 | Drive Shaft | | 22 | | 53.2 | 78 | 769 | |
| | 1998.06-2001.09 | 5MT | F | L/R | Saloon FWD AFN/ASV | | GCO53007 | Outer Joint | | 22 | 30 | 53.2 | 78 | 61 | I |
| | 1998.06-2001.09 | 5MT | F | L | Saloon FWD AFN/ASV | | GCI82447 | Inner Joint | | | 33 | | | 34 | |
| | 1998.06-2001.09 | 5MT | F | R | Saloon FWD AFN/ASV | | GCI83009 | Inner Joint | | | 33 | | | 34 | |
| | 1998.06-2001.09 | AT/MT | F | L/R | Saloon FWD AFN/ASV | | GCI83011 | Inner Joint | | | 33 | | | 34 | |
| | 1998.06-2001.09 | MT | F | L/R | Saloon FWD AFN/ASV | | GCI83006 | Inner Joint | | | 33 | | | 34 | |
| **Polo Estate/Variant** | | | | | | | | | | | | | | | |
| 1.4 (40 kw) | 1998.12-2001.09 | AT | F | L/R | Estate FWD AKP | for vehicles with automatic transmission | GCI61005 | Inner Joint | | | 30 | | | 57.6 | |
| | 1998.12-2001.09 | AT/MT | F | L/R | Estate FWD AKP | | GCO53005 | Outer Joint | | 22 | 30 | 53 | 78.5 | 51 | I |
| | 1998.12-2001.09 | | F | L | Estate FWD AKP | | GDS53004 | Drive Shaft | | 22 | | 50 | 78.5 | 562 | |
| | 1998.12-2001.09 | | F | L/R | Estate FWD AKP | | GCO53008 | Outer Joint | | 22 | 30 | 53 | 78.5 | 51 | I |
| | 1998.12-2001.09 | | F | L/R | Estate FWD AKP | | GCI53001 | Inner Joint | | | 33 | | | 32 | |
| 1.4 (44 kw) | 1997.05-2001.09 | MT | F | L | Estate FWD AEX/AKK/AKV/ANW/APQ/AUD | | GDS53004 | Drive Shaft | | 22 | | 50 | 78.5 | 562 | |
| | 1997.05-2001.09 | MT | F | L/R | Estate FWD AEX/AKK/AKV/ANW/APQ/AUD | | GCO53008 | Outer Joint | | 22 | 30 | 53 | 78.5 | 51 | I |
| | 1997.05-2001.09 | MT | F | L/R | Estate FWD AEX/AKK/AKV/ANW/APQ/AUD | | GCI53001 | Inner Joint | | | 33 | | | 32 | |
| 1.4 (55 kw) | 1999.10-2001.09 | 5MT | F | L | Estate FWD APE/AUA | | GDS53004 | Drive Shaft | | 22 | | 50 | 78.5 | 562 | |
| | 1999.10-2001.09 | 5MT | F | L/R | Estate FWD APE/AUA | | GCO53005 | Outer Joint | | 22 | 30 | 53 | 78.5 | 51 | I |
| | 1999.10-2001.09 | 5MT | F | L/R | Estate FWD APE/AUA | | GCO53008 | Outer Joint | | 22 | 30 | 53 | 78.5 | 51 | I |
| | 1999.10-2001.09 | 5MT | F | L/R | Estate FWD APE/AUA | | GCI53001 | Inner Joint | | | 33 | | | 32 | |
| 1.6 (55 kw) | 1997.05-2001.09 | 5MT | F | L | Estate FWD AEE/ALM | | GDS53004 | Drive Shaft | | 22 | | 50 | 78.5 | 562 | |
| | 1997.05-2001.09 | 5MT | F | L/R | Estate FWD AEE/ALM | | GCO53008 | Outer Joint | | 22 | 30 | 53 | 78.5 | 51 | I |
| | 1997.05-2001.09 | MT | F | L/R | Estate FWD AEE/ALM | | GCO53007 | Outer Joint | | 22 | 30 | 53.2 | 78 | 61 | I |
| | 1997.05-2001.09 | MT | F | L | Estate FWD AEE/ALM | | GCI83011 | Inner Joint | | | 33 | | | 34 | |
| | 1997.05-2001.09 | MT | F | R | Estate FWD AEE/ALM | | GCI83009 | Inner Joint | | | 33 | | | 34 | |
| | 1997.05-2001.09 | MT | F | L/R | Estate FWD AEE/ALM | | GCI53001 | Inner Joint | | | 33 | | | 32 | |
| 1.6 (74 kw) | 1996.05-2001.09 | 4AT/5MT | F | L | Estate FWD AEH/AFT/AKL/APF/AUR | | GDS53003 | Drive Shaft | | 22 | | 53 | 78.5 | 539.5 | |
| | 1996.05-2001.09 | 4AT/5MT | F | R | Estate FWD AEH/AFT/AKL/APF/AUR | For Engine Code:AFT,Joint Diam:90mm | GDS53002 | Drive Shaft | | 22 | | 53.2 | 78 | 769 | |
| | 1996.05-2001.09 | 4AT/5MT | F | R | Estate FWD AEH/AFT/AKL/APF/AUR | For Engine Code:AFT,Joint Diam:81mm | GDS53005 | Drive Shaft | | 22 | | 53 | 78.5 | 774 | |
| | 1996.05-2001.09 | 4AT/5MT | F | L/R | Estate FWD AEH/AFT/AKL/APF/AUR | For Engine Code:AFT | GCO53007 | Outer Joint | | 22 | 30 | 53.2 | 78 | 61 | I |
| | 1996.05-2001.09 | 4AT/5MT | F | L/R | Estate FWD AEH/AFT/AKL/APF/AUR | For Engine Code:AEH/AKL/APF/AUR | GCO53008 | Outer Joint | | 22 | 30 | 53 | 78.5 | 51 | I |
| | 1996.05-2001.09 | 4AT/5MT | F | L/R | Estate FWD AEH/AFT/AKL/APF/AUR | For Engine Code:AFT | GCI83011 | Inner Joint | | | 33 | | | 34 | |
| | 1996.05-2001.09 | MT | F | L | Estate FWD AEH/AFT/AKL/APF/AUR | For Engine code:AEH/AKL/APF/AUR | GDS53004 | Drive Shaft | | 22 | | 50 | 78.5 | 562 | |
| | 1996.05-2001.09 | MT | F | R | Estate FWD AEH/AFT/AKL/APF/AUR | For Engine Code:AFT,(F) | GCI83009 | Inner Joint | | | 33 | | | 34 | |
| | 1996.05-2001.09 | MT | F | L/R | Estate FWD AEH/AFT/AKL/APF/AUR | | GCI83005 | Inner Joint | | | 33 | | | 32 | |
| | 1996.05-2001.09 | | F | L | Estate FWD AEH/AFT/AKL/APF/AUR | For Engine code:AFT | GDS53001 | Drive Shaft | | 22 | | 53 | 78.5 | 535 | |
| 1.7 (44 kw) | 1997.11-1999.08 | 5MT | F | L | Estate FWD AKW | | GDS53003 | Drive Shaft | | 22 | | 53 | 78.5 | 539.5 | |
| | 1997.11-1999.08 | 5MT | F | R | Estate FWD AKW | | GDS53005 | Drive Shaft | | 22 | | 53 | 78.5 | 774 | |
| | 1997.11-1999.08 | 5MT | F | L/R | Estate FWD AKW | | GCO53008 | Outer Joint | | 22 | 30 | 53 | 78.5 | 51 | I |
| | 1997.11-1999.08 | 5MT | F | L/R | Estate FWD AKW | Chassis no. to:6KV050000 | GCI83005 | Inner Joint | | | 33 | | | 32 | |
| | 1997.11-1999.08 | MT | F | L/R | Estate FWD AKW | | GCO53005 | Outer Joint | | 22 | 30 | 53 | 78.5 | 51 | I |
| 1.9 (47 kw) | 1996.05-1999.08 | 5MT | F | L | Estate FWD AEY | | GDS53003 | Drive Shaft | | 22 | | 53 | 78.5 | 539.5 | |
| | 1996.05-1999.08 | 5MT | F | R | Estate FWD AEY | | GDS53005 | Drive Shaft | | 22 | | 53 | 78.5 | 774 | |
| | 1996.05-1999.08 | 5MT | F | L/R | Estate FWD AEY | | GCO53008 | Outer Joint | | 22 | 30 | 53 | 78.5 | 51 | I |
| | 1996.05-1999.08 | MT | F | L/R | Estate FWD AEY | Date to:1999.08 | GCI83005 | Inner Joint | | | 33 | | | 32 | |
| 1.9 (50 kw) | 1999.09-2001.09 | 5MT | F | L | Estate FWD AGP/AQM | | GDS53003 | Drive Shaft | | 22 | | 53 | 78.5 | 539.5 | |
| | 1999.09-2001.09 | 5MT | F | R | Estate FWD AGP/AQM | | GDS53005 | Drive Shaft | | 22 | | 53 | 78.5 | 774 | |
| | 1999.09-2001.09 | 5MT | F | L/R | Estate FWD AGP/AQM | | GCO53008 | Outer Joint | | 22 | 30 | 53 | 78.5 | 51 | I |
| | 1999.09-2001.09 | MT | F | L/R | Estate FWD AGP/AQM | | GCI83005 | Inner Joint | | | 33 | | | 32 | |
| 1.9 (66 kw) | 1997.05-2001.09 | 5MT | F | L | Estate FWD AGR/AHU/ALE/ALH | | GDS53001 | Drive Shaft | | 22 | | 53 | 78.5 | 535 | |
| | 1997.05-2001.09 | 5MT | F | L/R | Estate FWD AGR/AHU/ALE/ALH | | GCO53007 | Outer Joint | | 22 | 30 | 53.2 | 78 | 61 | I |
| | 1997.05-2001.09 | 5MT | F | L | Estate FWD AGR/AHU/ALE/ALH | | GCI82447 | Inner Joint | | | 33 | | | 34 | |
| | 1997.05-2001.09 | MT | F | R | Estate FWD AGR/AHU/ALE/ALH | | GDS53002 | Drive Shaft | | 22 | | 53.2 | 78 | 769 | |
| | 1997.05-2001.09 | MT | F | R | Estate FWD AGR/AHU/ALE/ALH | | GCI83009 | Inner Joint | | | 33 | | | 34 | |

| | YEAR | TRANSM. | F/R | L/R | BODY STYLE & DRIVE TYPE & ENGINE | REMARKS | G-AP Ref. | PRODUCT | ABS | Technical Specifications A | B | C | H | L | P |
|---|---|---|---|---|---|---|---|---|---|---|---|---|---|---|---|
| **VW** | | | | | | | | | | | | | | | |
| **Polo Estate/Variant** | | | | | | | | | | | | | | | |
| 1.9 (66 kw) | 1997.05-2001.09 | MT | F | L/R | Estate FWD AGR/AHU/ALE/ALH | | GCI83011 | Inner Joint | | | 33 | | | 34 | |
| 1.9 (81 kw) | 1998.06-2001.09 | 5MT | F | L | Estate FWD AFN/ASV | | GDS53001 | Drive Shaft | | 22 | | 53 | 78.5 | 535 | |
| | 1998.06-2001.09 | 5MT | F | R | Estate FWD AFN/ASV | For Engine code:AFN/ASV | GDS53002 | Drive Shaft | | 22 | | 53.2 | 78 | 769 | |
| | 1998.06-2001.09 | 5MT | F | L/R | Estate FWD AFN/ASV | | GCO53007 | Outer Joint | | 22 | 30 | 53.2 | 78 | 61 | I |
| | 1998.06-2001.09 | 5MT | F | L | Estate FWD AFN/ASV | | GCI82447 | Inner Joint | | | 33 | | | 34 | |
| | 1998.06-2001.09 | MT | F | R | Estate FWD AFN/ASV | | GCI83009 | Inner Joint | | | 33 | | | 34 | |
| | 1998.06-2001.09 | MT | F | L/R | Estate FWD AFN/ASV | | GCI83006 | Inner Joint | | | 33 | | | 34 | |
| | 1998.06-2001.09 | MT | F | L/R | Estate FWD AFN/ASV | | GCI83011 | Inner Joint | | | 33 | | | 34 | |
| **Polo Playa** | | | | | | | | | | | | | | | |
| 1.0 (37 kw) | 1999.05-2002.05 | AT/MT | F | L/R | Hatchback FWD ALD | | GCO53005 | Outer Joint | | 22 | 30 | 53 | 78.5 | 51 | I |
| | 1999.05-2002.05 | MT | F | L | Hatchback FWD ALD | For Engine code:AER/ALL | GDS61007 | Drive Shaft | | 22 | | 53 | 78.5 | 517 | |
| | 1999.05-2002.05 | MT | F | L | Hatchback FWD ALD | For Engine code:ALD/AUC | GDS61205 | Drive Shaft | | 22 | | 53 | 78.5 | 525 | |
| | 1999.05-2002.05 | MT | F | R | Hatchback FWD ALD | For Engine code:AER/ALL | GDS61010 | Drive Shaft | | 22 | | 53 | 78.5 | 740 | |
| | 1999.05-2002.05 | MT | F | R | Hatchback FWD ALD | For Engine code:ALD/AUC | GDS61189 | Drive Shaft | | 22 | | 53 | 78.5 | 752 | |
| | 1999.05-2002.05 | MT/5MT | F | L/R | Hatchback FWD ALD | | GCI53001 | Inner Joint | | | 33 | | | 32 | |
| **Polo Van (Hatchback)** | | | | | | | | | | | | | | | |
| 1.0 (33 kw) | 1994.10-1999.12 | MT | F | L | Hatchback Van FWD AEV | | GDS61007 | Drive Shaft | | 22 | | 53 | 78.5 | 517 | |
| | 1994.10-1999.12 | MT | F | R | Hatchback Van FWD AEV | | GDS61010 | Drive Shaft | | 22 | | 53 | 78.5 | 740 | |
| | 1994.10-1999.12 | MT | F | L/R | Hatchback Van FWD AEV | | GCO53005 | Outer Joint | | 22 | 30 | 53 | 78.5 | 51 | I |
| | 1994.10-1999.12 | MT | F | L/R | Hatchback Van FWD AEV | | GCI53001 | Inner Joint | | | 33 | | | 32 | |
| **Polo Van (Variant)** | | | | | | | | | | | | | | | |
| 1.4 (44 kw) | 1997.05-1999.12 | 4AT/5MT | F | L | Estate Van FWD AEX | | GDS53004 | Drive Shaft | | 22 | | 50 | 78.5 | 562 | |
| | 1997.05-1999.12 | 4AT/5MT | F | L/R | Estate Van FWD AEX | | GCO53008 | Outer Joint | | 22 | 30 | 53 | 78.5 | 51 | I |
| | 1997.05-1999.12 | AT/MT | F | L/R | Estate Van FWD AEX | | GCO53005 | Outer Joint | | 22 | 30 | 53 | 78.5 | 51 | I |
| | 1997.05-1999.12 | AT/MT | F | L/R | Estate Van FWD AEX | | GCI53001 | Inner Joint | | | 33 | | | 32 | |
| | 1997.05-1999.12 | MT | F | L | Estate Van FWD AEX | | GDS61007 | Drive Shaft | | 22 | | 53 | 78.5 | 517 | |
| | 1997.05-1999.12 | MT | F | R | Estate Van FWD AEX | | GDS61010 | Drive Shaft | | 22 | | 53 | 78.5 | 740 | |
| 1.4 (55 kw) | 2000.06-2001.09 | 5MT | F | L | Estate Van FWD AUA | | GDS53004 | Drive Shaft | | 22 | | 50 | 78.5 | 562 | |
| | 2000.06-2001.09 | 5MT | F | L/R | Estate Van FWD AUA | | GCO53008 | Outer Joint | | 22 | 30 | 53 | 78.5 | 51 | I |
| | 2000.06-2001.09 | | F | L/R | Estate Van FWD AUA | | GCI53001 | Inner Joint | | | 33 | | | 32 | |
| 1.6 (55 kw) | 1997.09-1998.12 | 5MT | F | L | Estate Van FWD AEE | | GDS53004 | Drive Shaft | | 22 | | 50 | 78.5 | 562 | |
| | 1997.09-1998.12 | 5MT | F | L/R | Estate Van FWD AEE | | GCO53008 | Outer Joint | | 22 | 30 | 53 | 78.5 | 51 | I |
| | 1997.09-1998.12 | | F | L/R | Estate Van FWD AEE | | GCI53001 | Inner Joint | | | 33 | | | 32 | |
| 1.7 (44 kw) | 1997.08-1999.12 | 5MT | F | L/R | Estate Van FWD AKU | | GCO53005 | Outer Joint | | 22 | 30 | 53 | 78.5 | 51 | I |
| | 1997.08-1999.12 | MT | F | L | Estate Van FWD AKU | | GDS61007 | Drive Shaft | | 22 | | 53 | 78.5 | 517 | |
| | 1997.08-1999.12 | MT | F | R | Estate Van FWD AKU | | GDS61010 | Drive Shaft | | 22 | | 53 | 78.5 | 740 | |
| | 1997.08-1999.12 | MT | F | L/R | Estate Van FWD AKU | | GCI53001 | Inner Joint | | | 33 | | | 32 | |
| 1.9 (47 kw) | 1996.05-1999.08 | 5MT | F | L | Estate Van FWD AEY | | GDS53003 | Drive Shaft | | 22 | | 53 | 78.5 | 539.5 | |
| | 1996.05-1999.08 | 5MT | F | R | Estate Van FWD AEY | | GDS53005 | Drive Shaft | | 22 | | 53 | 78.5 | 774 | |
| | 1996.05-1999.08 | 5MT | F | L/R | Estate Van FWD AEY | | GCO53008 | Outer Joint | | 22 | 30 | 53 | 78.5 | 51 | I |
| | 1996.05-1999.08 | 5MT | F | L/R | Estate Van FWD AEY | Chassis no. to:6KV050000 | GCI83005 | Inner Joint | | | 33 | | | 32 | |
| | 1996.05-1999.08 | MT | F | L | Estate Van FWD AEY | | GDS61007 | Drive Shaft | | 22 | | 53 | 78.5 | 517 | |
| | 1996.05-1999.08 | MT | F | R | Estate Van FWD AEY | | GDS61010 | Drive Shaft | | 22 | | 53 | 78.5 | 740 | |
| | 1996.05-1999.08 | MT | F | L/R | Estate Van FWD AEY | | GCO53005 | Outer Joint | | 22 | 30 | 53 | 78.5 | 51 | I |
| | 1996.05-1999.08 | MT | F | L/R | Estate Van FWD AEY | | GCI53001 | Inner Joint | | | 33 | | | 32 | |
| 1.9 (50 kw) | 1999.10-2001.09 | 5MT | F | L | Estate Van FWD AGP/AQM | | GDS53003 | Drive Shaft | | 22 | | 53 | 78.5 | 539.5 | |
| | 1999.10-2001.09 | 5MT | F | R | Estate Van FWD AGP/AQM | | GDS53005 | Drive Shaft | | 22 | | 53 | 78.5 | 774 | |
| | 1999.10-2001.09 | 5MT | F | L/R | Estate Van FWD AGP/AQM | | GCO53008 | Outer Joint | | 22 | 30 | 53 | 78.5 | 51 | I |
| | 1999.10-2001.09 | 5MT | F | L/R | Estate Van FWD AGP/AQM | | GCI83005 | Inner Joint | | | 33 | | | 32 | |
| **Scirocco** | | | | | | | | | | | | | | | |
| 1.4 (90 kw) | 2008.08-2014.05 | 6MT | F | L | Hatchback Van FWD CAXA | | GDS61201 | Drive Shaft | | 36 | | 59.5 | 40.5 | 535 | |
| | 2008.08-2014.05 | 6MT | F | R | Hatchback Van FWD CAXA | | GDS61096 | Drive Shaft | | 36 | | 59.5 | 40.5 | 799 | |
| | 2008.08-2014.05 | 6MT | F | L/R | Hatchback Van FWD CAXA | Date from:2009.11 | GCO61059 | Outer Joint | | 36 | 33 | 59.5 | 40 | 59.5 | I |
| | 2008.08-2014.05 | 6MT | F | L/R | Hatchback Van FWD CAXA | Date to:2009.10 | GCO83037 | Outer Joint | | 36 | 30 | 59.5 | 40.5 | 56 | I |
| | 2008.08-2014.05 | 6MT | F | L/R | Hatchback Van FWD CAXA | | GCI82447 | Inner Joint | | | 33 | | | 34 | |
| | 2008.08-2014.05 | | F | L/R | Hatchback Van FWD CAXA | | GCI83011 | Inner Joint | | | 33 | | | 34 | |
| | 2008.08-2017.11 | 6MT | F | L/R | Coupe FWD CAXA;CMSB | | GCO83037 | Outer Joint | | 36 | 30 | 59.5 | 40.5 | 56 | I |
| | 2008.08-2017.11 | 6MT/7DCT | F | L | Coupe FWD CAXA;CMSB | | GDS61201 | Drive Shaft | | 36 | | 59.5 | 40.5 | 535 | |
| | 2008.08-2017.11 | 6MT/7DCT | F | R | Coupe FWD CAXA;CMSB | | GDS61096 | Drive Shaft | | 36 | | 59.5 | 40.5 | 799 | |
| | 2008.08-2017.11 | 6MT/7DCT | F | L/R | Coupe FWD CAXA;CMSB | | GCO61059 | Outer Joint | | 36 | 33 | 59.5 | 40 | 59.5 | I |
| | 2008.08-2017.11 | 6MT/7DCT | F | L/R | Coupe FWD CAXA;CMSB | | GCI82447 | Inner Joint | | | 33 | | | 34 | |
| 1.4 (92 kw) | 2013.11-2017.11 | 6MT | F | L | Coupe FWD CXSB;CZCA | | GDS61282 | Drive Shaft | | 36 | | 59.5 | 40 | 523 | |
| | 2013.11-2017.11 | 6MT | F | R | Coupe FWD CXSB;CZCA | | GDS61307 | Drive Shaft | | 36 | | 59.5 | 40 | 819 | |
| | 2013.11-2017.11 | 6MT | F | L/R | Coupe FWD CXSB;CZCA | | GCO61059 | Outer Joint | | 36 | 33 | 59.5 | 40 | 59.5 | I |
| | 2013.11-2017.11 | 6MT | F | L/R | Coupe FWD CXSB;CZCA | | GCI53002 | Inner Joint | | | 33 | | | 34 | |

| | YEAR | TRANSM. | F/R | L/R | BODY STYLE & DRIVE TYPE & ENGINE | REMARKS | G-AP Ref. | PRODUCT | ABS | Technical Specifications A | B | C | H | L | P |
|---|---|---|---|---|---|---|---|---|---|---|---|---|---|---|---|
| **VW Scirocco** | | | | | | | | | | | | | | | |
| 1.4 (92 kw) | 2013.11-2017.11 | 6MT | F | L/R | Coupe FWD CXSB;CZCA | | GCI82447 | Inner Joint | | | 33 | | | 34 | |
| 1.4 (110 kw) | 2015.07-2017.11 | 7AT | F | L | Coupe FWD CZDA | | GDS61100 | Drive Shaft | | 36 | | 59.5 | 40 | 513 | |
| | 2015.07-2017.11 | 7AT | F | R | Coupe FWD CZDA | | GDS83313 | Drive Shaft | | 36 | | 59.5 | 40 | 792 | |
| | 2015.07-2017.11 | AT | F | L/R | Coupe FWD CZDA | | GCI83016 | Inner Joint | | | 28 | | | 32 | |
| | 2015.07-2017.11 | | F | L/R | Coupe FWD CZDA | | GCO83101 | Outer Joint | | 36 | 27 | 59.5 | 40 | 65 | M |
| 1.4 (118 kw) | 2008.05-2017.11 | 6MT | F | L | Coupe FWD CAVD;CNWA;CTHD;CTKA | | GDS61201 | Drive Shaft | | 36 | | 59.5 | 40.5 | 535 | |
| | 2008.05-2017.11 | 6MT | F | R | Coupe FWD CAVD;CNWA;CTHD;CTKA | | GDS61096 | Drive Shaft | | 36 | | 59.5 | 40.5 | 799 | |
| | 2008.05-2017.11 | 6MT | F | L/R | Coupe FWD CAVD;CNWA;CTHD;CTKA | Date from:2011.11 | GCO61059 | Outer Joint | | 36 | 33 | 59.5 | 40 | 59.5 | I |
| | 2008.05-2017.11 | 6MT | F | L/R | Coupe FWD CAVD;CNWA;CTHD;CTKA | Date to:2011.10 | GCO83037 | Outer Joint | | 36 | 30 | 59.5 | 40.5 | 56 | I |
| | 2008.05-2017.11 | 6MT | F | L/R | Coupe FWD CAVD;CNWA;CTHD;CTKA | | GCI82447 | Inner Joint | | | 33 | | | 34 | |
| | 2008.05-2017.11 | 7DCT | F | L | Coupe FWD CAVD;CNWA;CTHD;CTKA | | GDS61281 | Drive Shaft | | 36 | | 59.5 | 40 | 528 | |
| | 2008.05-2017.11 | 7DCT | F | R | Coupe FWD CAVD;CNWA;CTHD;CTKA | | GDS81653 | Drive Shaft | | 36 | | 59.5 | 40 | 785 | |
| | 2008.05-2017.11 | 7DCT | F | L/R | Coupe FWD CAVD;CNWA;CTHD;CTKA | | GCO83002 | Outer Joint | | 36 | 27 | 59.5 | 40 | 66 | I |
| | 2008.05-2017.11 | 7DCT | F | L/R | Coupe FWD CAVD;CNWA;CTHD;CTKA | | GCI83016 | Inner Joint | | | 28 | | | 32 | |
| | 2008.05-2017.11 | MT | F | L/R | Coupe FWD CAVD;CNWA;CTHD;CTKA | Date from:2011.11 | GCO83100 | Outer Joint | | 36 | 33 | 59.5 | 38 | 56 | I |
| | 2008.06-2014.05 | 6MT | F | L | Hatchback Van FWD CAVD | | GDS61201 | Drive Shaft | | 36 | | 59.5 | 40.5 | 535 | |
| | 2008.06-2014.05 | 6MT | F | L/R | Hatchback Van FWD CAVD | Date from:2011.11 | GCO61059 | Outer Joint | | 36 | 33 | 59.5 | 40 | 59.5 | I |
| | 2008.06-2014.05 | 6MT | F | L/R | Hatchback Van FWD CAVD | Date to:2011.10 | GCO83037 | Outer Joint | | 36 | 30 | 59.5 | 40.5 | 56 | I |
| | 2008.06-2014.05 | 6MT | F | L/R | Hatchback Van FWD CAVD | | GCI82447 | Inner Joint | | | 33 | | | 34 | |
| | 2008.06-2014.05 | 6MT/7DCT | F | R | Hatchback Van FWD CAVD | | GDS61096 | Drive Shaft | | 36 | | 59.5 | 40.5 | 799 | |
| | 2008.06-2014.05 | 7AT/6MT | F | L/R | Hatchback Van FWD CAVD | | GCI83016 | Inner Joint | | | 28 | | | 32 | |
| | 2008.06-2014.05 | 7DCT | F | L | Hatchback Van FWD CAVD | | GDS61281 | Drive Shaft | | 36 | | 59.5 | 40 | 528 | |
| | 2008.06-2014.05 | AT | F | L | Hatchback Van FWD CAVD | | GDS81653 | Drive Shaft | | 36 | | 59.5 | 40 | 785 | |
| | 2008.06-2014.05 | AT | F | L/R | Hatchback Van FWD CAVD | | GCO83002 | Outer Joint | | 36 | 27 | 59.5 | 40 | 66 | I |
| 2.0 (100 kw) | 2010.11-2017.11 | 6DCT | F | L/R | Coupe FWD CFHB | TJ | GCI54004 | Inner Joint | | | 34 | | | 81 | |
| | 2010.11-2017.11 | 6DCT | F | L/R | Coupe FWD CFHB | AAR | GCI61057 | Inner Joint | | | 34 | | | 89 | |
| | 2010.11-2017.11 | 6MT | F | L/R | Coupe FWD CFHB | Date from:2012.12 | GCI61069 | Inner Joint | | | 28 | | | 32 | |
| | 2010.11-2017.11 | 6MT | F | L/R | Coupe FWD CFHB | Date to:2012.11 | GCI83016 | Inner Joint | | | 28 | | | 32 | |
| | 2010.11-2017.11 | AT | F | L | Coupe FWD CFHB | | GDS54013 | Drive Shaft | | 36 | | 59.5 | 40 | 479.5 | |
| | 2010.11-2017.11 | AT | F | L | Coupe FWD CFHB | | GDS83241 | Drive Shaft | | 36 | | 59.5 | 40 | 475 | |
| | 2010.11-2017.11 | AT | F | R | Coupe FWD CFHB | | GDS54011 | Drive Shaft | | 36 | | 59.5 | 40 | 755 | |
| | 2010.11-2017.11 | MT | F | L | Coupe FWD CFHB | | GDS83236 | Drive Shaft | | 36 | | 59.5 | 40 | 484 | |
| | 2010.11-2017.11 | MT | F | L | Coupe FWD CFHB | | GDS83295 | Drive Shaft | | 36 | | 59.5 | 40 | 491 | |
| | 2010.11-2017.11 | MT | F | R | Coupe FWD CFHB | | GDS61126 | Drive Shaft | | 36 | | 59.5 | 40 | 793 | |
| | 2010.11-2017.11 | MT | F | R | Coupe FWD CFHB | | GDS83313 | Drive Shaft | | 36 | | 59.5 | 40 | 792 | |
| | 2010.11-2017.11 | MT | F | L | Coupe FWD CFHB | | GCO61059 | Outer Joint | | 36 | 33 | 59.5 | 40 | 59.5 | I |
| | 2010.11-2017.11 | | F | L/R | Coupe FWD CFHB | | GCO83002 | Outer Joint | | 36 | 27 | 59.5 | 40 | 66 | I |
| 2.0 (103 kw) | 2008.08-2014.05 | 6DCT | F | L/R | Hatchback Van FWD CBDB;CFHC | | GCI54004 | Inner Joint | | | 34 | | | 81 | |
| | 2008.08-2014.05 | 6DCT | F | L/R | Hatchback Van FWD CBDB;CFHC | | GCI61057 | Inner Joint | | | 34 | | | 89 | |
| | 2008.08-2014.05 | 6MT | F | L | Hatchback Van FWD CBDB;CFHC | | GDS83295 | Drive Shaft | | 36 | | 59.5 | 40 | 491 | |
| | 2008.08-2014.05 | 6MT | F | R | Hatchback Van FWD CBDB;CFHC | | GDS83313 | Drive Shaft | | 36 | | 59.5 | 40 | 792 | |
| | 2008.08-2014.05 | 6MT | F | L/R | Hatchback Van FWD CBDB;CFHC | Date from:2012.12 | GCI61069 | Inner Joint | | | 28 | | | 32 | |
| | 2008.08-2014.05 | 6MT | F | L/R | Hatchback Van FWD CBDB;CFHC | Date to:2012.11 | GCI83016 | Inner Joint | | | 28 | | | 32 | |
| | 2008.08-2014.05 | AT | F | L | Hatchback Van FWD CBDB;CFHC | | GDS54013 | Drive Shaft | | 36 | | 59.5 | 40 | 479.5 | |
| | 2008.08-2014.05 | AT | F | R | Hatchback Van FWD CBDB;CFHC | | GDS54011 | Drive Shaft | | 36 | | 59.5 | 40 | 755 | |
| | 2008.08-2014.05 | MT | F | L | Hatchback Van FWD CBDB;CFHC | | GCO61059 | Outer Joint | | 36 | 33 | 59.5 | 40 | 59.5 | I |
| | 2008.08-2014.05 | | F | L/R | Hatchback Van FWD CBDB;CFHC | | GCO83002 | Outer Joint | | 36 | 27 | 59.5 | 40 | 66 | I |
| | 2008.08-2017.11 | 6DCT | F | L | Coupe FWD CBDB;CFHC | | GDS54013 | Drive Shaft | | 36 | | 59.5 | 40 | 479.5 | |
| | 2008.08-2017.11 | 6DCT | F | R | Coupe FWD CBDB;CFHC | | GDS54011 | Drive Shaft | | 36 | | 59.5 | 40 | 755 | |
| | 2008.08-2017.11 | 6DCT | F | L/R | Coupe FWD CBDB;CFHC | TJ | GCI54004 | Inner Joint | | | 34 | | | 81 | |
| | 2008.08-2017.11 | 6DCT | F | L/R | Coupe FWD CBDB;CFHC | AAR | GCI61057 | Inner Joint | | | 34 | | | 89 | |
| | 2008.08-2017.11 | 6MT | F | L | Coupe FWD CBDB;CFHC | Inner teeth of tranm.side:28 | GDS83295 | Drive Shaft | | 36 | | 59.5 | 40 | 491 | |
| | 2008.08-2017.11 | 6MT | F | R | Coupe FWD CBDB;CFHC | | GDS83313 | Drive Shaft | | 36 | | 59.5 | 40 | 792 | |
| | 2008.08-2017.11 | 6MT | F | L/R | Coupe FWD CBDB;CFHC | Date from:2012.12 | GCI61069 | Inner Joint | | | 28 | | | 32 | |
| | 2008.08-2017.11 | 6MT | F | L/R | Coupe FWD CBDB;CFHC | Date to:2012.11 | GCI83016 | Inner Joint | | | 28 | | | 32 | |
| | 2008.08-2017.11 | AT | F | L | Coupe FWD CBDB;CFHC | | GDS83241 | Drive Shaft | | 36 | | 59.5 | 40 | 475 | |
| | 2008.08-2017.11 | MT | F | L | Coupe FWD CBDB;CFHC | Inner teeth of tranm.side:33 | GDS83236 | Drive Shaft | | 36 | | 59.5 | 40 | 484 | |
| | 2008.08-2017.11 | MT | F | R | Coupe FWD CBDB;CFHC | | GDS61126 | Drive Shaft | | 36 | | 59.5 | 40 | 793 | |
| | 2008.08-2017.11 | | F | L/R | Coupe FWD CBDB;CFHC | | GCO83002 | Outer Joint | | 36 | 27 | 59.5 | 40 | 66 | I |
| 2.0 (110 kw) | 2013.11-2017.11 | 6DCT | F | L | Coupe FWD CUUB | | GDS83381 | Drive Shaft | | 36 | | 59.5 | 40 | 483 | |
| | 2013.11-2017.11 | 6DCT | F | R | Coupe FWD CUUB | | GDS83354 | Drive Shaft | | 36 | | 59.5 | 40 | 763 | |
| | 2013.11-2017.11 | 6DCT | F | L/R | Coupe FWD CUUB | | GCI61057 | Inner Joint | | | 34 | | | 89 | |
| | 2013.11-2017.11 | 6MT | F | R | Coupe FWD CUUB | | GDS61126 | Drive Shaft | | 36 | | 59.5 | 40 | 793 | |
| | 2013.11-2017.11 | 6MT | F | R | Coupe FWD CUUB | | GDS61147 | Drive Shaft | | 36 | | 59.5 | 40 | 795 | |
| | 2013.11-2017.11 | 6MT | F | L/R | Coupe FWD CUUB | | GCI61069 | Inner Joint | | | 28 | | | 32 | |

| | YEAR | TRANSM. | F/R | L/R | BODY STYLE & DRIVE TYPE & ENGINE | REMARKS | G-AP Ref. | PRODUCT | ABS | Technical Specifications A | B | C | H | L | P |
|---|---|---|---|---|---|---|---|---|---|---|---|---|---|---|---|
| **VW Scirocco** | | | | | | | | | | | | | | | |
| 2.0 (110 kw) | 2013.11-2017.11 | MT | F | L | Coupe FWD CUUB | | GDS83295 | Drive Shaft | | 36 | | 59.5 | 40 | 491 | |
| | 2013.11-2017.11 | Semi-AT | F | L | Coupe FWD CUUB | | GDS83241 | Drive Shaft | | 36 | | 59.5 | 40 | 475 | |
| | 2013.11-2017.11 | Semi-AT | F | L | Coupe FWD CUUB | | GCI54004 | Inner Joint | | | 34 | | | 81 | |
| 2.0 (125 kw) | 2009.05-2014.05 | 6AT/6MT | F | L/R | Hatchback Van FWD CBBB;CFGB | | GCI54004 | Inner Joint | | | 34 | | | 81 | |
| | 2009.05-2014.05 | 6AT/6MT | F | L/R | Hatchback Van FWD CBBB;CFGB | Original Tripod Design | GCI61057 | Inner Joint | | | 34 | | | 89 | |
| | 2009.05-2014.05 | 6AT/6MT | F | L/R | Hatchback Van FWD CBBB;CFGB | | GCI83016 | Inner Joint | | | 28 | | | 32 | |
| | 2009.05-2014.05 | 6DCT | F | L | Hatchback Van FWD CBBB;CFGB | | GDS83381 | Drive Shaft | | 36 | | 59.5 | 40 | 483 | |
| | 2009.05-2014.05 | 6DCT | F | R | Hatchback Van FWD CBBB;CFGB | | GDS54011 | Drive Shaft | | 36 | | 59.5 | 40 | 755 | |
| | 2009.05-2014.05 | AT/MT | F | L/R | Hatchback Van FWD CBBB;CFGB | | GCO83101 | Outer Joint | | 36 | 27 | 59.5 | 40 | 65 | M |
| | 2009.05-2014.05 | MT | F | L | Hatchback Van FWD CBBB;CFGB | | GDS83295 | Drive Shaft | | 36 | | 59.5 | 40 | 491 | |
| | 2009.05-2014.05 | MT | F | R | Hatchback Van FWD CBBB;CFGB | | GDS61126 | Drive Shaft | | 36 | | 59.5 | 40 | 793 | |
| | 2009.05-2014.05 | MT | F | R | Hatchback Van FWD CBBB;CFGB | | GDS61147 | Drive Shaft | | 36 | | 59.5 | 40 | 795 | |
| | 2009.05-2014.05 | MT | F | R | Hatchback Van FWD CBBB;CFGB | | GDS83313 | Drive Shaft | | 36 | | 59.5 | 40 | 792 | |
| | 2009.05-2017.11 | 6AT/6MT | F | L/R | Coupe FWD CBBB;CFGB | | GCI54004 | Inner Joint | | | 34 | | | 81 | |
| | 2009.05-2017.11 | 6AT/6MT | F | L/R | Coupe FWD CBBB;CFGB | Original Tripod Design | GCI61057 | Inner Joint | | | 34 | | | 89 | |
| | 2009.05-2017.11 | 6AT/6MT | F | L/R | Coupe FWD CBBB;CFGB | | GCI83016 | Inner Joint | | | 28 | | | 32 | |
| | 2009.05-2017.11 | 6DCT | F | L | Coupe FWD CBBB;CFGB | | GDS83381 | Drive Shaft | | 36 | | 59.5 | 40 | 483 | |
| | 2009.05-2017.11 | 6DCT | F | R | Coupe FWD CBBB;CFGB | | GDS54011 | Drive Shaft | | 36 | | 59.5 | 40 | 755 | |
| | 2009.05-2017.11 | AT | F | L | Coupe FWD CBBB;CFGB | | GCO83101 | Outer Joint | | 36 | 27 | 59.5 | 40 | 65 | M |
| | 2009.05-2017.11 | MT | F | L | Coupe FWD CBBB;CFGB | | GDS83236 | Drive Shaft | | 36 | | 59.5 | 40 | 484 | |
| | 2009.05-2017.11 | MT | F | L | Coupe FWD CBBB;CFGB | | GDS83295 | Drive Shaft | | 36 | | 59.5 | 40 | 491 | |
| | 2009.05-2017.11 | MT | F | R | Coupe FWD CBBB;CFGB | | GDS61126 | Drive Shaft | | 36 | | 59.5 | 40 | 793 | |
| | 2009.05-2017.11 | MT | F | R | Coupe FWD CBBB;CFGB | | GDS61147 | Drive Shaft | | 36 | | 59.5 | 40 | 795 | |
| | 2009.05-2017.11 | MT | F | R | Coupe FWD CBBB;CFGB | | GDS83313 | Drive Shaft | | 36 | | 59.5 | 40 | 792 | |
| | 2009.05-2017.11 | Semi-AT | F | L | Coupe FWD CBBB;CFGB | | GDS83241 | Drive Shaft | | 36 | | 59.5 | 40 | 475 | |
| 2.0 (130 kw) | 2013.01-2017.11 | 6DCT | F | L | Coupe FWD CFGC | | GDS83381 | Drive Shaft | | 36 | | 59.5 | 40 | 483 | |
| | 2013.01-2017.11 | 6DCT | F | R | Coupe FWD CFGC | | GDS54011 | Drive Shaft | | 36 | | 59.5 | 40 | 755 | |
| | 2013.01-2017.11 | 6DCT | F | L/R | Coupe FWD CFGC | | GCI54004 | Inner Joint | | | 34 | | | 81 | |
| | 2013.01-2017.11 | 6DCT | F | L/R | Coupe FWD CFGC | | GCI61057 | Inner Joint | | | 34 | | | 89 | |
| | 2013.01-2017.11 | 6MT | F | L | Coupe FWD CFGC | | GDS83295 | Drive Shaft | | 36 | | 59.5 | 40 | 491 | |
| | 2013.01-2017.11 | 6MT | F | R | Coupe FWD CFGC | | GDS61126 | Drive Shaft | | 36 | | 59.5 | 40 | 793 | |
| | 2013.01-2017.11 | 6MT | F | L/R | Coupe FWD CFGC | | GCI83016 | Inner Joint | | | 28 | | | 32 | |
| 2.0 (132 kw) | 2013.11-2017.11 | 6DCT | F | R | Coupe FWD CULA | | GDS81891 | Drive Shaft | | 36 | | 59.5 | 40 | 781 | |
| | 2013.11-2017.11 | 6DCT/6MT | F | L | Coupe FWD CULA | | GDS83295 | Drive Shaft | | 36 | | 59.5 | 40 | 491 | |
| | 2013.11-2017.11 | 6DCT/6MT | F | L/R | Coupe FWD CULA | | GCO83101 | Outer Joint | | 36 | 27 | 59.5 | 40 | 65 | M |
| | 2013.11-2017.11 | 6DCT/6MT | F | L/R | Coupe FWD CULA | | GCI61069 | Inner Joint | | | 28 | | | 32 | |
| | 2013.11-2017.11 | 6MT | F | R | Coupe FWD CULA | | GDS61147 | Drive Shaft | | 36 | | 59.5 | 40 | 795 | |
| 2.0 (135 kw) | 2014.05-2017.11 | 6DCT | F | L | Coupe FWD CUWA;CUXA | | GDS83381 | Drive Shaft | | 36 | | 59.5 | 40 | 483 | |
| | 2014.05-2017.11 | 6DCT | F | R | Coupe FWD CUWA;CUXA | | GDS54011 | Drive Shaft | | 36 | | 59.5 | 40 | 755 | |
| | 2014.05-2017.11 | 6DCT | F | R | Coupe FWD CUWA;CUXA | | GCI54004 | Inner Joint | | | 34 | | | 81 | |
| | 2014.05-2017.11 | 6DCT | F | L/R | Coupe FWD CUWA;CUXA | | GCI61057 | Inner Joint | | | 34 | | | 89 | |
| | 2014.05-2017.11 | 6MT | F | L/R | Coupe FWD CUWA;CUXA | | GCI61069 | Inner Joint | | | 28 | | | 32 | |
| | 2014.05-2017.11 | AT/MT | F | L/R | Coupe FWD CUWA;CUXA | | GCO83101 | Outer Joint | | 36 | 27 | 59.5 | 40 | 65 | M |
| | 2014.05-2017.11 | MT | F | L | Coupe FWD CUWA;CUXA | | GDS83295 | Drive Shaft | | 36 | | 59.5 | 40 | 491 | |
| | 2014.05-2017.11 | MT | F | R | Coupe FWD CUWA;CUXA | | GDS61126 | Drive Shaft | | 36 | | 59.5 | 40 | 793 | |
| | 2014.05-2017.11 | MT | F | R | Coupe FWD CUWA;CUXA | | GDS61147 | Drive Shaft | | 36 | | 59.5 | 40 | 795 | |
| | 2014.05-2017.11 | MT | F | R | Coupe FWD CUWA;CUXA | | GDS83313 | Drive Shaft | | 36 | | 59.5 | 40 | 792 | |
| | 2014.05-2017.11 | Semi-AT | F | L | Coupe FWD CUWA;CUXA | | GDS83241 | Drive Shaft | | 36 | | 59.5 | 40 | 475 | |
| 2.0 (147 kw) | 2008.05-2009.11 | 6DCT | F | R | Coupe FWD CAWB | | GDS81891 | Drive Shaft | | 36 | | 59.5 | 40 | 781 | |
| | 2008.05-2009.11 | 6DCT | F | L/R | Coupe FWD CAWB | | GCO83101 | Outer Joint | | 36 | 27 | 59.5 | 40 | 65 | M |
| | 2008.05-2009.11 | 6MT | F | R | Coupe FWD CAWB | solid shaft | GDS61126 | Drive Shaft | | 36 | | 59.5 | 40 | 793 | |
| | 2008.05-2009.11 | 6MT | F | R | Coupe FWD CAWB | hollow shaft | GDS61339 | Drive Shaft | | 36 | | 59.5 | 40 | 794 | |
| | 2008.05-2009.11 | 6MT/6DCT | F | L | Coupe FWD CAWB | | GDS83295 | Drive Shaft | | 36 | | 59.5 | 40 | 491 | |
| | 2008.05-2009.11 | 6MT/6DCT | F | L/R | Coupe FWD CAWB | | GCO83002 | Outer Joint | | 36 | 27 | 59.5 | 40 | 66 | I |
| | 2008.05-2009.11 | 6MT/6DCT | F | L/R | Coupe FWD CAWB | | GCI83016 | Inner Joint | | | 28 | | | 32 | |
| 2.0 (155 kw) | 2009.11-2014.05 | 6DCT | F | R | Hatchback Van FWD CCZB | | GDS81891 | Drive Shaft | | 36 | | 59.5 | 40 | 781 | |
| | 2009.11-2014.05 | 6MT | F | R | Hatchback Van FWD CCZB | Date from:2009.12 | GDS61147 | Drive Shaft | | 36 | | 59.5 | 40 | 795 | |
| | 2009.11-2014.05 | 6MT | F | R | Hatchback Van FWD CCZB | Date to:2009.11 | GDS61339 | Drive Shaft | | 36 | | 59.5 | 40 | 794 | |
| | 2009.11-2014.05 | 6MT | F | R | Hatchback Van FWD CCZB | Date from:2009.12 | GDS83313 | Drive Shaft | | 36 | | 59.5 | 40 | 792 | |
| | 2009.11-2014.05 | 6MT/6DCT | F | L | Hatchback Van FWD CCZB | | GDS83295 | Drive Shaft | | 36 | | 59.5 | 40 | 491 | |
| | 2009.11-2014.05 | AT | F | L/R | Hatchback Van FWD CCZB | Date to:2010.10 | GCO83002 | Outer Joint | | 36 | 27 | 59.5 | 40 | 66 | I |
| | 2009.11-2014.05 | AT/MT | F | L/R | Hatchback Van FWD CCZB | Transmission:MT;Transmission:AT;Date from:2010.11 | GCO83101 | Outer Joint | | 36 | 27 | 59.5 | 40 | 65 | M |
| | 2009.11-2014.05 | AT/MT | F | L/R | Hatchback Van FWD CCZB | | GCI83016 | Inner Joint | | | 28 | | | 32 | |
| | 2009.11-2017.11 | 6DCT | F | R | Coupe FWD CCZB | | GDS81891 | Drive Shaft | | 36 | | 59.5 | 40 | 781 | |
| | 2009.11-2017.11 | 6DCT | F | L/R | Coupe FWD CCZB | Date from:2010.02;For Modelcode:137;For Modelcode:138 | GCO83101 | Outer Joint | | 36 | 27 | 59.5 | 40 | 65 | M |

| | YEAR | TRANSM. | F/R | L/R | BODY STYLE & DRIVE TYPE & ENGINE | REMARKS | G-AP Ref. | PRODUCT | ABS | Technical Specifications A | B | C | H | L | P |
|---|---|---|---|---|---|---|---|---|---|---|---|---|---|---|---|
| **VW** | | | | | | | | | | | | | | | |
| **Scirocco** | | | | | | | | | | | | | | | |
| 2.0 (155 kw) | 2009.11-2017.11 | 6DCT | F | L | Coupe FWD CCZB | | GDS98006 | Stub Axle-Flange | | 37 | | | 67 | 123.5 | |
| | 2009.11-2017.11 | 6MT | F | R | Coupe FWD CCZB | Date to:2009.11 | GDS61126 | Drive Shaft | | 36 | | 59.5 | 40 | 793 | |
| | 2009.11-2017.11 | 6MT | F | R | Coupe FWD CCZB | Date from:2009.12 | GDS83313 | Drive Shaft | | 36 | | 59.5 | 40 | 792 | |
| | 2009.11-2017.11 | 6MT | F | L/R | Coupe FWD CCZB | Date from:2009.12,For Modelcode:137;For Modelcode:138 | GCO83101 | Outer Joint | | 36 | 27 | 59.5 | 40 | 65 | M |
| | 2009.11-2017.11 | AT | F | L | Coupe FWD CCZB | | GDS83236 | Drive Shaft | | 36 | | 59.5 | 40 | 484 | |
| | 2009.11-2017.11 | AT | F | L/R | Coupe FWD CCZB | Date to:2010.10 | GCO83002 | Outer Joint | | 36 | 27 | 59.5 | 40 | 66 | I |
| | 2009.11-2017.11 | AT/MT | F | L | Coupe FWD CCZB | | GDS83295 | Drive Shaft | | 36 | | 59.5 | 40 | 491 | |
| | 2009.11-2017.11 | AT/MT | F | L/R | Coupe FWD CCZB | | GCI83016 | Inner Joint | | | 28 | | | 32 | |
| 2.0 (162 kw) | 2013.11-2017.11 | 6DCT | F | R | Coupe FWD CULC | | GDS81891 | Drive Shaft | | 36 | | 59.5 | 40 | 781 | |
| | 2013.11-2017.11 | 6DCT | F | R | Coupe FWD CULC | | GCI61069 | Inner Joint | | | 28 | | | 32 | |
| | 2013.11-2017.11 | 6MT | F | R | Coupe FWD CULC | | GDS61147 | Drive Shaft | | 36 | | 59.5 | 40 | 795 | |
| | 2013.11-2017.11 | 6MT/6DCT | F | L/R | Coupe FWD CULC | | GCO83101 | Outer Joint | | 36 | 27 | 59.5 | 40 | 65 | M |
| | 2013.11-2017.11 | AT | F | | Coupe FWD CULC | | GCI83016 | Inner Joint | | | 28 | | | 32 | |
| | 2013.11-2017.11 | MT/DCT | F | L | Coupe FWD CULC | | GDS83295 | Drive Shaft | | 36 | | 59.5 | 40 | 491 | |
| 2.0 (188 kw) | 2009.11-2017.11 | 6AT/6MT | F | L/R | Coupe FWD CDLC | For Modelcode:138 | GCI61069 | Inner Joint | | | 28 | | | 32 | |
| | 2009.11-2017.11 | 6DCT | F | R | Coupe FWD CDLC | For Modelcode:138 | GDS81653 | Drive Shaft | | 36 | | 59.5 | 40 | 785 | |
| | 2009.11-2017.11 | 6DCT | F | R | Coupe FWD CDLC | For Modelcode:137 | GDS81891 | Drive Shaft | | 36 | | 59.5 | 40 | 781 | |
| | 2009.11-2017.11 | 6DCT | F | L | Coupe FWD CDLC | | GDS98006 | Stub Axle-Flange | | 37 | | | 67 | 123.5 | |
| | 2009.11-2017.11 | 6MT | F | L | Coupe FWD CDLC | | GDS83295 | Drive Shaft | | 36 | | 59.5 | 40 | 491 | |
| | 2009.11-2017.11 | 6MT | F | R | Coupe FWD CDLC | Modelcode:137 | GDS83313 | Drive Shaft | | 36 | | 59.5 | 40 | 792 | |
| | 2009.11-2017.11 | AT/MT | F | L/R | Coupe FWD CDLC | | GCI83016 | Inner Joint | | | 28 | | | 32 | |
| | 2009.11-2017.11 | | F | L/R | Coupe FWD CDLC | | GCO83101 | Outer Joint | | 36 | 27 | 59.5 | 40 | 65 | M |
| 2.0 (195 kw) | 2009.11-2017.11 | 6DCT | F | R | Coupe FWD CDLA | | GDS81891 | Drive Shaft | | 36 | | 59.5 | 40 | 781 | |
| | 2009.11-2017.11 | 6DCT/6MT | F | L | Coupe FWD CDLA | | GDS83295 | Drive Shaft | | 36 | | 59.5 | 40 | 491 | |
| | 2009.11-2017.11 | 6DCT/6MT | F | L/R | Coupe FWD CDLA | | GCO83101 | Outer Joint | | 36 | 27 | 59.5 | 40 | 65 | M |
| | 2009.11-2017.11 | 6DCT/6MT | F | L/R | Coupe FWD CDLA | | GCI83016 | Inner Joint | | | 28 | | | 32 | |
| | 2009.11-2017.11 | 6MT | F | R | Coupe FWD CDLA | hollow shaft | GDS61147 | Drive Shaft | | 36 | | 59.5 | 40 | 795 | |
| | 2009.11-2017.11 | 6MT | F | R | Coupe FWD CDLA | solid shaft | GDS83313 | Drive Shaft | | 36 | | 59.5 | 40 | 792 | |
| | 2009.11-2017.11 | 6MT/6DCT | F | L/R | Coupe FWD CDLA | | GCI61069 | Inner Joint | | | 28 | | | 32 | |
| 2.0 (206 kw) | 2014.05-2017.11 | 6AT/6MT | F | L/R | Coupe FWD CDLK | | GCI61069 | Inner Joint | | | 28 | | | 32 | |
| | 2014.05-2017.11 | 6DCT | F | R | Coupe FWD CDLK | | GDS81653 | Drive Shaft | | 36 | | 59.5 | 40 | 785 | |
| | 2014.05-2017.11 | AT/MT | F | L | Coupe FWD CDLK | | GDS83295 | Drive Shaft | | 36 | | 59.5 | 40 | 491 | |
| | 2014.05-2017.11 | AT/MT | F | L/R | Coupe FWD CDLK | | GCO83101 | Outer Joint | | 36 | 27 | 59.5 | 40 | 65 | M |
| **Sharan** | | | | | | | | | | | | | | | |
| 1.4 (110 kw) | 2010.05-2015.11 | 6DCT | F | R | Box Body/MPV FWD CAVA;CTHA | Date to:2011.11 | GDS61126 | Drive Shaft | | 36 | | 59.5 | 40 | 793 | |
| | 2010.05-2015.11 | 6DCT/6MT | F | L | Box Body/MPV FWD CAVA;CTHA | | GDS83295 | Drive Shaft | | 36 | | 59.5 | 40 | 491 | |
| | 2010.05-2015.11 | 6MT | F | R | Box Body/MPV FWD CAVA;CTHA | Date to:2011.11 | GDS83313 | Drive Shaft | | 36 | | 59.5 | 40 | 792 | |
| | 2010.05-2015.11 | 6MT | F | L/R | Box Body/MPV FWD CAVA;CTHA | Date to:2011.12;8 balls | GCO81352 | Outer Joint | | 36 | 28 | 59.5 | 40 | 65 | I |
| | 2010.05-2015.11 | 6MT | F | L/R | Box Body/MPV FWD CAVA;CTHA | 6 balls | GCO83104 | Outer Joint | | 36 | 28 | 59.4 | 40 | 65 | I |
| | 2010.05-2015.11 | 6MT | F | L/R | Box Body/MPV FWD CAVA;CTHA | | GCI61002 | Inner Joint | | | 28 | | | 31.8 | |
| | 2010.05-2015.11 | 6MT | F | R | MPV FWD CAVA;CTHA | | GDS83313 | Drive Shaft | | 36 | | 59.5 | 40 | 792 | |
| | 2010.05-2015.11 | 6MT/6DCT | F | L | MPV FWD CAVA;CTHA | | GDS83295 | Drive Shaft | | 36 | | 59.5 | 40 | 491 | |
| | 2010.05-2015.11 | 6MT/6DCT | F | L/R | MPV FWD CAVA;CTHA | 8 balls | GCO81352 | Outer Joint | | 36 | 28 | 59.5 | 40 | 65 | I |
| | 2010.05-2015.11 | 6MT/6DCT | F | L/R | MPV FWD CAVA;CTHA | 6 balls | GCO83104 | Outer Joint | | 36 | 28 | 59.4 | 40 | 65 | I |
| | 2010.05-2015.11 | 6MT/6DCT | F | L/R | MPV FWD CAVA;CTHA | | GCI61002 | Inner Joint | | | 28 | | | 31.8 | |
| | 2015.05-2022.11 | 6AT/6MT | F | L | MPV FWD CZDA;DJKA | | GDS83295 | Drive Shaft | | 36 | | 59.5 | 40 | 491 | |
| | 2015.05-2022.11 | 6AT/6MT | F | R | MPV FWD CZDA;DJKA | | GDS83313 | Drive Shaft | | 36 | | 59.5 | 40 | 792 | |
| | 2015.05-2022.11 | 6AT/6MT | F | L/R | MPV FWD CZDA;DJKA | Date to:2017.06 | GCO83104 | Outer Joint | | 36 | 28 | 59.4 | 40 | 65 | I |
| | 2015.05-2022.11 | 6AT/6MT | F | L/R | MPV FWD CZDA;DJKA | | GCI61002 | Inner Joint | | | 28 | | | 31.8 | |
| | 2015.05-2022.11 | 6DCT | F | L | MPV FWD CZDA;DJKA | | GDS98006 | Stub Axle-Flange | | 37 | | | 67 | 123.5 | |
| | 2015.05-2022.11 | DCT | F | L/R | MPV FWD CZDA;DJKA | | GCO81352 | Outer Joint | | 36 | 28 | 59.5 | 40 | 65 | I |
| 1.8 (110 kw) | 1997.11-2010.03 | 4AT | F | L | MPV FWD AJH/AWC | Date from:1999.05 | GDS61085 | Drive Shaft | 48W | 38 | | 60 | 34.5 | 513 | |
| | 1997.11-2010.03 | 4AT | F | R | MPV FWD AJH/AWC | | GDS61065 | Drive Shaft | 48W | 38 | | 60 | 34.5 | 544 | |
| | 1997.11-2010.03 | 4AT | F | L/R | MPV FWD AJH/AWC | | GCI50019 | Inner Joint | | | 34 | | | 59.5 | |
| | 1997.11-2010.03 | 4AT/5AT/5MT/6MT | F | L/R | MPV FWD AJH/AWC | | GCO18025 | Outer Joint | 48W | 38 | 36 | 60 | 34 | 72.5 | I |
| | 1997.11-2010.03 | 4AT/5AT/5MT/6MT | F | L/R | MPV FWD AJH/AWC | | GCO18026 | Outer Joint | 48W | 38 | 27 | 60 | 34.5 | 65 | I |
| | 1997.11-2010.03 | 5AT | F | L/R | MPV FWD AJH/AWC | | GDS83022 | Drive Shaft | 48W | 38 | | 60 | 34 | 486 | |
| | 1997.11-2010.03 | 5AT/6MT | F | L/R | MPV FWD AJH/AWC | Date to:2009.02 | GCI61044 | Inner Joint | | | 34 | | | 85 | |
| | 1997.11-2010.03 | 5MT | F | L | MPV FWD AJH/AWC | | GDS18009 | Drive Shaft | 48W | 38 | 26 | 60 | 34.5 | 620 | |
| | 1997.11-2010.03 | 5MT | F | R | MPV FWD AJH/AWC | | GDS18008 | Drive Shaft | 48W | 38 | 35 | 60 | 34.5 | 559 | |
| | 1997.11-2010.03 | 5MT | F | L | MPV FWD AJH/AWC | | GCI99053 | Inner Joint | | 26 | 28 | 40 | 77.5 | 111.7 | |
| | 1997.11-2010.03 | 5MT | F | R | MPV FWD AJH/AWC | | GCI61028 | Inner Joint | | 35 | 28 | 42 | | 129.2 | |
| | 1997.11-2010.03 | 6MT | F | L/R | MPV FWD AJH/AWC | TJ | GDS83023 | Drive Shaft | 48W | 38 | | 60 | 34 | 507 | |
| | 1997.11-2010.03 | MT | F | R | MPV FWD AJH/AWC | Date From:2000.04,for OE number:02N409345/02N409345A | GDS61192 | Stub Axle,differential | | 26 | 37 | | | 129.5 | |
| | 1997.11-2010.03 | MT | F | R | MPV FWD AJH/AWC | | GDS61193 | Stub Axle-Flange | | 37 | | | 322 | 356 | |

| | YEAR | TRANSM. | F/R | L/R | BODY STYLE & DRIVE TYPE & ENGINE | REMARKS | G-AP Ref. | PRODUCT | ABS | Technical Specifications A | B | C | H | L | P |
|---|---|---|---|---|---|---|---|---|---|---|---|---|---|---|---|
| **VW Sharan** | | | | | | | | | | | | | | | |
| 1.8 (118 kw) | 2012.05-2015.11 | 6DCT | F | L | MPV FWD CDAA | | GDS98006 | Stub Axle-Flange | | 37 | | | 67 | 123.5 | |
| 1.9 (66 kw) | 1995.09-2010.03 | 5MT | F | L | MPV FWD 1Z/AHU/ANU | | GDS18009 | Drive Shaft | 48W | 38 | 26 | 60 | 34.5 | 620 | |
| | 1995.09-2010.03 | 5MT | F | R | MPV FWD 1Z/AHU/ANU | | GDS18008 | Drive Shaft | 48W | 38 | 35 | 60 | 34.5 | 559 | |
| | 1995.09-2010.03 | 5MT | F | L/R | MPV FWD 1Z/AHU/ANU | | GCO18026 | Outer Joint | 48W | 38 | 27 | 60 | 34.5 | 65 | I |
| | 1995.09-2010.03 | 5MT | F | L | MPV FWD 1Z/AHU/ANU | | GCI99053 | Inner Joint | | 26 | 28 | 40 | 77.5 | 111.7 | |
| | 1995.09-2010.03 | 5MT | F | R | MPV FWD 1Z/AHU/ANU | | GCI61028 | Inner Joint | | 35 | 28 | 42 | | 129.2 | |
| | 1995.09-2010.03 | 6MT | F | L/R | MPV FWD 1Z/AHU/ANU | Date from:2001.06 | GDS61087 | Drive Shaft | 48W | 38 | | 60 | 34.5 | 506 | |
| | 1995.09-2010.03 | 6MT | F | L/R | MPV FWD 1Z/AHU/ANU | Date to:2001.05 | GDS83023 | Drive Shaft | 48W | 38 | | 60 | 34 | 507 | |
| | 1995.09-2010.03 | 6MT | F | L/R | MPV FWD 1Z/AHU/ANU | | GCO18025 | Outer Joint | 48W | 38 | 36 | 60 | 34 | 72.5 | I |
| | 1995.09-2010.03 | 6MT | F | L/R | MPV FWD 1Z/AHU/ANU | Date from:2001.06 | GCI59006 | Inner Joint | | | 34 | | | 33.2 | |
| | 1995.09-2010.03 | 6MT | F | L/R | MPV FWD 1Z/AHU/ANU | Date from:2001.06 | GCI61032 | Inner Joint | | | 27 | | | 34 | |
| | 1995.09-2010.03 | 6MT | F | L/R | MPV FWD 1Z/AHU/ANU | Date to:2001.05 | GCI61044 | Inner Joint | | | 34 | | | 85 | |
| | 1995.09-2010.03 | 6MT | F | L/R | MPV FWD 1Z/AHU/ANU | Date to:2001.05 | GCI83007 | Inner Joint | | | 34 | | | 85 | |
| | 1995.09-2010.03 | MT | F | R | MPV FWD 1Z/AHU/ANU | For Engine Code:ANU | GDS61192 | Stub Axle,differential | | 26 | 37 | | | 129.5 | |
| | 1995.09-2010.03 | MT | F | R | MPV FWD 1Z/AHU/ANU | For Engine Code:ANU,Chassis no. from:7M-2-0700001/7M-6-020001 | GDS61245 | Stub Axle-Flange | | 26 | | | 231 | 290 | |
| | 1995.09-2010.03 | MT | F | R | MPV FWD 1Z/AHU/ANU | | GDS61255 | Stub Axle-Flange | | 37 | | | 322 | 381 | |
| 1.9 (81 kw) | 1996.07-2000.02 | 4AT | F | L | MPV FWD AFN/AVG | Date from:1999.05 | GDS61085 | Drive Shaft | 48W | 38 | | 60 | 34.5 | 513 | |
| | 1996.07-2000.02 | 4AT | F | R | MPV FWD AFN/AVG | | GDS61065 | Drive Shaft | 48W | 38 | | 60 | 34.5 | 544 | |
| | 1996.07-2000.02 | 4AT | F | L/R | MPV FWD AFN/AVG | | GCI50019 | Inner Joint | | | 34 | | | 59.5 | |
| | 1996.07-2000.02 | 4AT/5MT | F | L/R | MPV FWD AFN/AVG | | GCO18025 | Outer Joint | 48W | 38 | 36 | 60 | 34 | 72.5 | I |
| | 1996.07-2000.02 | 4AT/5MT | F | L/R | MPV FWD AFN/AVG | | GCO18026 | Outer Joint | 48W | 38 | 27 | 60 | 34.5 | 65 | I |
| | 1996.07-2000.02 | 5MT | F | L | MPV FWD AFN/AVG | | GDS18009 | Drive Shaft | 48W | 38 | 26 | 60 | 34.5 | 620 | |
| | 1996.07-2000.02 | 5MT | F | R | MPV FWD AFN/AVG | | GDS18008 | Drive Shaft | 48W | 38 | 35 | 60 | 34.5 | 559 | |
| | 1996.07-2000.02 | 5MT | F | L | MPV FWD AFN/AVG | | GCI99053 | Inner Joint | | 26 | 28 | 40 | 77.5 | 111.7 | |
| | 1996.07-2000.02 | 5MT | F | R | MPV FWD AFN/AVG | | GCI61028 | Inner Joint | | 35 | 28 | 42 | | 129.2 | |
| 1.9 (85 kw) | 2000.03-2010.03 | 6MT | F | L/R | MPV 4WD AUY/BVK | TJ | GDS83023 | Drive Shaft | 48W | 38 | | 60 | 34 | 507 | |
| | 2000.03-2010.03 | 6MT | F | L/R | MPV 4WD AUY/BVK | | GCO18025 | Outer Joint | 48W | 38 | 36 | 60 | 34 | 72.5 | I |
| | 2000.03-2010.03 | 6MT | F | L/R | MPV 4WD AUY/BVK | TJ | GCI61044 | Inner Joint | | | 34 | | | 85 | |
| | 2000.03-2010.03 | 6MT | F | R | MPV 4WD AUY/BVK | | GDS61193 | Stub Axle-Flange | | 37 | | | 322 | 356 | |
| | 2000.03-2010.03 | AT | F | R | MPV 4WD AUY/BVK | Transmission End | GDS81789 | Stub Axle-Flange | | 30 | | | 263.5 | 320.5 | |
| | 2000.03-2010.03 | AT | F | R | MPV 4WD AUY/BVK | Transmission End | GDS83383 | Stub Axle-Flange | | 30 | | | 355.5 | 412.5 | |
| | 2000.03-2010.03 | MT | F | R | MPV 4WD AUY/BVK | | GDS61192 | Stub Axle,differential | | 26 | 37 | | | 129.5 | |
| | 2000.03-2010.03 | 6MT | R | L | MPV 4WD AUY/BVK | | GDS81925 | Drive Shaft | 48W | 38 | | 60 | 34 | 628 | |
| | 2000.03-2010.03 | 5AT | F | L/R | MPV FWD AUY/BVK | | GDS83022 | Drive Shaft | 48W | 38 | | 60 | 34 | 486 | |
| | 2000.03-2010.03 | 5AT | F | L/R | MPV FWD AUY/BVK | Date to:2009.02 | GCI61044 | Inner Joint | | | 34 | | | 85 | |
| | 2000.03-2010.03 | 5AT | F | L/R | MPV FWD AUY/BVK | | GCI83007 | Inner Joint | | | 34 | | | 85 | |
| | 2000.03-2010.03 | 5AT/6MT | F | L/R | MPV FWD AUY/BVK | | GCO18025 | Outer Joint | 48W | 38 | 36 | 60 | 34 | 72.5 | I |
| | 2000.03-2010.03 | 6MT | F | L/R | MPV FWD AUY/BVK | Date from:2006.04 | GDS61087 | Drive Shaft | 48W | 38 | | 60 | 34.5 | 506 | |
| | 2000.03-2010.03 | 6MT | F | L/R | MPV FWD AUY/BVK | Date to:2006.03 | GDS83023 | Drive Shaft | 48W | 38 | | 60 | 34 | 507 | |
| | 2000.03-2010.03 | 6MT | F | L/R | MPV FWD AUY/BVK | Date from:2006.04 | GCI59006 | Inner Joint | | | 34 | | | 33.2 | |
| | 2000.03-2010.03 | 6MT | F | L/R | MPV FWD AUY/BVK | Date from:2006.04 | GCI61032 | Inner Joint | | | 27 | | | 34 | |
| | 2000.03-2010.03 | 6MT | F | L/R | MPV FWD AUY/BVK | Date to:2006.03 | GCI61044 | Inner Joint | | | 34 | | | 85 | |
| | 2000.03-2010.03 | 6MT | F | L/R | MPV FWD AUY/BVK | Date to:2006.03 | GCI83007 | Inner Joint | | | 34 | | | 85 | |
| | 2000.03-2010.03 | 6MT | F | R | MPV FWD AUY/BVK | | GDS61192 | Stub Axle,differential | | 26 | 37 | | | 129.5 | |
| | 2000.03-2010.03 | 6MT | F | R | MPV FWD AUY/BVK | Date to:2006.03 | GDS61193 | Stub Axle-Flange | | 37 | | | 322 | 356 | |
| | 2000.03-2010.03 | 6MT | F | R | MPV FWD AUY/BVK | Engine Code:AUY/BVK | GDS61245 | Stub Axle-Flange | | 26 | | | 231 | 290 | |
| | 2000.03-2010.03 | AT | F | R | MPV FWD AUY/BVK | | GDS81789 | Stub Axle-Flange | | 30 | | | 263.5 | 320.5 | |
| | 2000.03-2010.03 | AT | F | R | MPV FWD AUY/BVK | | GDS83383 | Stub Axle-Flange | | 30 | | | 355.5 | 412.5 | |
| 1.9 (96 kw) | 2002.11-2010.03 | 6MT | F | L/R | MPV FWD ASZ | | GDS83023 | Drive Shaft | 48W | 38 | | 60 | 34 | 507 | |
| | 2002.11-2010.03 | 6MT | F | L/R | MPV FWD ASZ | | GCO18025 | Outer Joint | 48W | 38 | 36 | 60 | 34 | 72.5 | I |
| | 2002.11-2010.03 | 6MT | F | L/R | MPV FWD ASZ | | GCI61044 | Inner Joint | | | 34 | | | 85 | |
| | 2002.11-2010.03 | 6MT | F | R | MPV FWD ASZ | | GDS61193 | Stub Axle-Flange | | 37 | | | 322 | 356 | |
| | 2002.11-2010.03 | AT | F | R | MPV FWD ASZ | Transmission End | GDS81789 | Stub Axle-Flange | | 30 | | | 263.5 | 320.5 | |
| | 2002.11-2010.03 | AT | F | R | MPV FWD ASZ | Transmission End | GDS83383 | Stub Axle-Flange | | 30 | | | 355.5 | 412.5 | |
| | 2002.11-2010.03 | MT | F | R | MPV FWD ASZ | | GDS61192 | Stub Axle,differential | | 26 | 37 | | | 129.5 | |
| 1.9 (110 kw) | 2005.01-2007.05 | 6MT | F | L/R | MPV FWD BTB | | GDS83023 | Drive Shaft | 48W | 38 | | 60 | 34 | 507 | |
| | 2005.01-2007.05 | 6MT | F | L/R | MPV FWD BTB | | GCO18025 | Outer Joint | 48W | 38 | 36 | 60 | 34 | 72.5 | I |
| | 2005.01-2007.05 | 6MT | F | L/R | MPV FWD BTB | | GCI61044 | Inner Joint | | | 34 | | | 85 | |
| | 2005.01-2007.05 | 6MT | F | L/R | MPV FWD BTB | | GCI83007 | Inner Joint | | | 34 | | | 85 | |
| | 2005.01-2007.05 | 6MT | F | R | MPV FWD BTB | | GDS61193 | Stub Axle-Flange | | 37 | | | 322 | 356 | |
| | 2005.01-2007.05 | AT | F | R | MPV FWD BTB | Transmission End | GDS81789 | Stub Axle-Flange | | 30 | | | 263.5 | 320.5 | |
| | 2005.01-2007.05 | AT | F | R | MPV FWD BTB | Transmission End | GDS83383 | Stub Axle-Flange | | 30 | | | 355.5 | 412.5 | |
| | 2005.01-2007.05 | MT | F | R | MPV FWD BTB | | GDS61192 | Stub Axle,differential | | 26 | 37 | | | 129.5 | |
| 2.0 (85 kw) | 1995.09-2010.03 | 4AT | F | L | MPV FWD ADY/ATM | | GDS61085 | Drive Shaft | 48W | 38 | | 60 | 34.5 | 513 | |
| | 1995.09-2010.03 | 4AT | F | R | MPV FWD ADY/ATM | | GDS61065 | Drive Shaft | 48W | 38 | | 60 | 34.5 | 544 | |

| | YEAR | TRANSM. | F/R | L/R | BODY STYLE & DRIVE TYPE & ENGINE | REMARKS | G-AP Ref. | PRODUCT | ABS | Technical Specifications A | B | C | H | L | P |
|---|---|---|---|---|---|---|---|---|---|---|---|---|---|---|---|
| **VW Sharan** | | | | | | | | | | | | | | | |
| 2.0 (85 kw) | 1995.09-2010.03 | 4AT | F | L/R | MPV FWD ADY/ATM | | GCI50019 | Inner Joint | | | 34 | | | 59.5 | |
| | 1995.09-2010.03 | 4AT/5MT/6MT | F | R | MPV FWD ADY/ATM | Date from:2000.05 | GDS61193 | Stub Axle-Flange | | 37 | | | 322 | 356 | |
| | 1995.09-2010.03 | 5MT | F | L | MPV FWD ADY/ATM | | GDS18009 | Drive Shaft | 48W | 38 | 26 | 60 | 34.5 | 620 | |
| | 1995.09-2010.03 | 5MT | F | R | MPV FWD ADY/ATM | | GDS18008 | Drive Shaft | 48W | 38 | 35 | 60 | 34.5 | 559 | |
| | 1995.09-2010.03 | 5MT | F | L | MPV FWD ADY/ATM | | GCI99053 | Inner Joint | | 26 | 28 | 40 | 77.5 | 111.7 | |
| | 1995.09-2010.03 | 5MT | F | R | MPV FWD ADY/ATM | | GCI61028 | Inner Joint | | 35 | 28 | 42 | | 129.2 | |
| | 1995.09-2010.03 | 5MT/4AT | F | L/R | MPV FWD ADY/ATM | Date from:1999.05 | GCO18025 | Outer Joint | 48W | 38 | 36 | 60 | 34 | 72.5 | I |
| | 1995.09-2010.03 | 5MT/4AT | F | L/R | MPV FWD ADY/ATM | Date to:1999.04 | GCO18026 | Outer Joint | 48W | 38 | 27 | 60 | 34.5 | 65 | I |
| | 1995.09-2010.03 | 6MT | F | L/R | MPV FWD ADY/ATM | Date from:2001.06 | GDS61087 | Drive Shaft | 48W | 38 | | 60 | 34.5 | 506 | |
| | 1995.09-2010.03 | 6MT | F | L/R | MPV FWD ADY/ATM | Date to:2001.05;TJ | GDS83023 | Drive Shaft | 48W | 38 | | 60 | 34 | 507 | |
| | 1995.09-2010.03 | 6MT | F | L/R | MPV FWD ADY/ATM | | GCO18025 | Outer Joint | 48W | 38 | 36 | 60 | 34 | 72.5 | I |
| | 1995.09-2010.03 | 6MT | F | L/R | MPV FWD ADY/ATM | Date from:2001.06 | GCI59006 | Inner Joint | | | 34 | | | 33.2 | |
| | 1995.09-2010.03 | 6MT | F | L/R | MPV FWD ADY/ATM | Date to:2001.05 | GCI61044 | Inner Joint | | | 34 | | | 85 | |
| | 1995.09-2010.03 | MT | F | R | MPV FWD ADY/ATM | | GDS61255 | Stub Axle-Flange | | 37 | | | 322 | 381 | |
| | 1995.09-2010.03 | | F | R | MPV FWD ADY/ATM | Date From:2000.04,for OE number:02N409345/02N409345A | GDS61192 | Stub Axle,differential | | 26 | 37 | | | 129.5 | |
| | 2000.04-2010.03 | 6MT | F | L/R | MPV FWD ATM | Date From:2001.06 | GDS61087 | Drive Shaft | 48W | 38 | | 60 | 34.5 | 506 | |
| | 2000.04-2010.03 | 6MT | F | L/R | MPV FWD ATM | Date To:2001.05 | GDS83023 | Drive Shaft | 48W | 38 | | 60 | 34 | 507 | |
| | 2000.04-2010.03 | 6MT | F | L/R | MPV FWD ATM | | GCO18025 | Outer Joint | 48W | 38 | 36 | 60 | 34 | 72.5 | I |
| | 2000.04-2010.03 | 6MT | F | L/R | MPV FWD ATM | Date From:2001.06 | GCI59006 | Inner Joint | | | 34 | | | 33.2 | |
| | 2000.04-2010.03 | 6MT | F | L/R | MPV FWD ATM | Date From:2001.06 | GCI61032 | Inner Joint | | | 27 | | | 34 | |
| | 2000.04-2010.03 | 6MT | F | L/R | MPV FWD ATM | Date To:2001.05 | GCI61044 | Inner Joint | | | 34 | | | 85 | |
| | 2000.04-2010.03 | 6MT | F | L/R | MPV FWD ATM | Date To:2001.05 | GCI83007 | Inner Joint | | | 34 | | | 85 | |
| | 2000.04-2010.03 | MT | F | R | MPV FWD ATM | | GDS61193 | Stub Axle-Flange | | 37 | | | 322 | 356 | |
| | 2000.04-2010.03 | MT | F | R | MPV FWD ATM | | GDS61255 | Stub Axle-Flange | | 37 | | | 322 | 381 | |
| | 2000.04-2010.03 | | F | R | MPV FWD ATM | for OE number:02N409345;for OE number:02N409345A | GDS61192 | Stub Axle,differential | | 26 | 37 | | | 129.5 | |
| | 2011.05-2015.11 | 6MT | F | L | Box Body/MPV FWD CFFE | | GDS83295 | Drive Shaft | | 36 | | 59.5 | 40 | 491 | |
| | 2011.05-2015.11 | 6MT | F | R | Box Body/MPV FWD CFFE | Date to:2012.08 | GDS83313 | Drive Shaft | | 36 | | 59.5 | 40 | 792 | |
| | 2011.05-2015.11 | 6MT | F | L/R | Box Body/MPV FWD CFFE | Date to:2011.12;8 balls | GCO81352 | Outer Joint | | 36 | 28 | 59.5 | 40 | 65 | I |
| | 2011.05-2015.11 | 6MT | F | L/R | Box Body/MPV FWD CFFE | 6 balls | GCO83104 | Outer Joint | | 36 | 28 | 59.4 | 40 | 65 | I |
| | 2011.05-2015.11 | 6MT | F | L/R | Box Body/MPV FWD CFFE | | GCI61002 | Inner Joint | | | 28 | | | 31.8 | |
| | 2011.05-2019.07 | 6MT | F | L | MPV FWD CFFE;CUVA;DFLD;DLTC | | GDS83295 | Drive Shaft | | 36 | | 59.5 | 40 | 491 | |
| | 2011.05-2019.07 | 6MT | F | R | MPV FWD CFFE;CUVA;DFLD;DLTC | | GDS83313 | Drive Shaft | | 36 | | 59.5 | 40 | 792 | |
| | 2011.05-2019.07 | 6MT | F | L/R | MPV FWD CFFE;CUVA;DFLD;DLTC | Date to:2011.12 | GCO81352 | Outer Joint | | 36 | 28 | 59.5 | 40 | 65 | I |
| | 2011.05-2019.07 | 6MT | F | L/R | MPV FWD CFFE;CUVA;DFLD;DLTC | Date from:2012.01 | GCO83104 | Outer Joint | | 36 | 28 | 59.4 | 40 | 65 | I |
| | 2011.05-2019.07 | 6MT | F | L/R | MPV FWD CFFE;CUVA;DFLD;DLTC | | GCI61002 | Inner Joint | | | 28 | | | 31.8 | |
| | 2011.05-2019.07 | MT | F | L/R | MPV FWD CFFE;CUVA;DFLD;DLTC | | GDS61214 | Stub Axle,differential | | 40 | 37 | | | 125 | |
| 2.0 (100 kw) | 2005.11-2010.03 | 6MT | F | L/R | MPV FWD BVH | | GDS83023 | Drive Shaft | 48W | 38 | | 60 | 34 | 507 | |
| | 2005.11-2010.03 | 6MT | F | L/R | MPV FWD BVH | | GCO18025 | Outer Joint | 48W | 38 | 36 | 60 | 34 | 72.5 | I |
| | 2005.11-2010.03 | 6MT | F | L/R | MPV FWD BVH | | GCI61044 | Inner Joint | | | 34 | | | 85 | |
| | 2005.11-2010.03 | 6MT | F | L/R | MPV FWD BVH | | GCI83007 | Inner Joint | | | 34 | | | 85 | |
| | 2005.11-2010.03 | | F | R | MPV FWD BVH | for OE number:02N409345;for OE number:02N409345A | GDS61192 | Stub Axle,differential | | 26 | 37 | | | 129.5 | |
| | 2010.05-2011.05 | 6MT | F | L | Box Body/MPV FWD CFFA | | GDS83295 | Drive Shaft | | 36 | | 59.5 | 40 | 491 | |
| | 2010.05-2011.05 | 6MT | F | R | Box Body/MPV FWD CFFA | | GDS83313 | Drive Shaft | | 36 | | 59.5 | 40 | 792 | |
| | 2010.05-2011.05 | 6MT | F | L/R | Box Body/MPV FWD CFFA | 8 balls | GCO81352 | Outer Joint | | 36 | 28 | 59.5 | 40 | 65 | I |
| | 2010.05-2011.05 | 6MT | F | L/R | Box Body/MPV FWD CFFA | 6 balls | GCO83104 | Outer Joint | | 36 | 28 | 59.4 | 40 | 65 | I |
| | 2010.05-2011.05 | 6MT | F | L/R | Box Body/MPV FWD CFFA | | GCI61002 | Inner Joint | | | 28 | | | 31.8 | |
| | 2010.05-2015.11 | 6AT/6MT | F | L/R | MPV FWD CFFA | | GCI61002 | Inner Joint | | | 28 | | | 31.8 | |
| | 2010.05-2015.11 | 6AT/6MT | F | L/R | MPV FWD CFFA | | GCI81075 | Inner Joint | | | 26 | | | 89 | |
| | 2010.05-2015.11 | 6DCT | F | L | MPV FWD CFFA | | GDS61310 | Drive Shaft | | 36 | | 59.4 | 40 | 477 | |
| | 2010.05-2015.11 | 6DCT | F | R | MPV FWD CFFA | | GDS83354 | Drive Shaft | | 36 | | 59.5 | 40 | 763 | |
| | 2010.05-2015.11 | 6MT | F | L | MPV FWD CFFA | | GDS83295 | Drive Shaft | | 36 | | 59.5 | 40 | 491 | |
| | 2010.05-2015.11 | 6MT | F | R | MPV FWD CFFA | | GDS83313 | Drive Shaft | | 36 | | 59.5 | 40 | 792 | |
| | 2010.05-2015.11 | AT/MT | F | L/R | MPV FWD CFFA | Date to:2015.11 | GCO81352 | Outer Joint | | 36 | 28 | 59.5 | 40 | 65 | I |
| | 2010.05-2015.11 | AT/MT | F | L/R | MPV FWD CFFA | 6 balls | GCO83104 | Outer Joint | | 36 | 28 | 59.4 | 40 | 65 | I |
| | 2010.05-2015.11 | MT | F | L/R | MPV FWD CFFA | | GDS61214 | Stub Axle,differential | | 40 | 37 | | | 125 | |
| 2.0 (103 kw) | 2005.11-2010.03 | 6MT | F | L/R | MPV FWD BRT | | GDS83023 | Drive Shaft | 48W | 38 | | 60 | 34 | 507 | |
| | 2005.11-2010.03 | 6MT | F | L/R | MPV FWD BRT | | GCO18025 | Outer Joint | 48W | 38 | 36 | 60 | 34 | 72.5 | I |
| | 2005.11-2010.03 | 6MT | F | L/R | MPV FWD BRT | | GCI61044 | Inner Joint | | | 34 | | | 85 | |
| | 2005.11-2010.03 | 6MT | F | R | MPV FWD BRT | for OE number:02N409345;for OE number:02N409345A | GDS61192 | Stub Axle,differential | | 26 | 37 | | | 129.5 | |
| | 2005.11-2010.03 | 6MT | F | R | MPV FWD BRT | | GDS61193 | Stub Axle-Flange | | 37 | | | 322 | 356 | |
| | 2005.11-2010.03 | AT | F | R | MPV FWD BRT | Transmission End | GDS81789 | Stub Axle-Flange | | 30 | | | 263.5 | 320.5 | |
| | 2005.11-2010.03 | AT | F | R | MPV FWD BRT | Transmission End | GDS83383 | Stub Axle-Flange | | 30 | | | 355.5 | 412.5 | |
| | 2010.05-2015.11 | 6AT/6MT | F | L/R | Box Body/MPV FWD CFFB | 8 balls | GCO81352 | Outer Joint | | 36 | 28 | 59.5 | 40 | 65 | I |
| | 2010.05-2015.11 | 6AT/6MT | F | L/R | Box Body/MPV FWD CFFB | 6 balls | GCO83104 | Outer Joint | | 36 | 28 | 59.4 | 40 | 65 | I |
| | 2010.05-2015.11 | 6DCT | F | L | Box Body/MPV FWD CFFB | | GDS61310 | Drive Shaft | | 36 | | 59.4 | 40 | 477 | |

| | YEAR | TRANSM. | F/R | L/R | BODY STYLE & DRIVE TYPE & ENGINE | REMARKS | G-AP Ref. | PRODUCT | ABS | Technical Specifications A | B | C | H | L | P |
|---|---|---|---|---|---|---|---|---|---|---|---|---|---|---|---|
| **VW Sharan** | | | | | | | | | | | | | | | |
| 2.0 (103 kw) | 2010.05-2015.11 | 6DCT | F | R | Box Body/MPV FWD CFFB | | GDS83354 | Drive Shaft | | 36 | | 59.5 | 40 | 763 | |
| | 2010.05-2015.11 | 6DCT | F | L/R | Box Body/MPV FWD CFFB | | GCI81075 | Inner Joint | | | 26 | | | 89 | |
| | 2010.05-2015.11 | 6MT | F | L | Box Body/MPV FWD CFFB | | GDS83295 | Drive Shaft | | 36 | | 59.5 | 40 | 491 | |
| | 2010.05-2015.11 | 6MT | F | R | Box Body/MPV FWD CFFB | | GDS83313 | Drive Shaft | | 36 | | 59.5 | 40 | 792 | |
| | 2010.05-2015.11 | 6MT | F | L/R | Box Body/MPV FWD CFFB | | GCI61002 | Inner Joint | | | 28 | | | 31.8 | |
| | 2010.05-2015.11 | 6AT/6MT | F | L/R | MPV FWD CFFB | VL | GCI61002 | Inner Joint | | | 28 | | | 31.8 | |
| | 2010.05-2015.11 | 6AT/6MT | F | L/R | MPV FWD CFFB | AAR | GCI81075 | Inner Joint | | | 26 | | | 89 | |
| | 2010.05-2015.11 | 6DCT | F | L | MPV FWD CFFB | | GDS61310 | Drive Shaft | | 36 | | 59.4 | 40 | 477 | |
| | 2010.05-2015.11 | 6DCT | F | R | MPV FWD CFFB | | GDS83354 | Drive Shaft | | 36 | | 59.5 | 40 | 763 | |
| | 2010.05-2015.11 | 6DCT | F | R | MPV FWD CFFB | 6 balls | GCO83101 | Outer Joint | | 36 | 27 | 59.5 | 40 | 65 | M |
| | 2010.05-2015.11 | 6DCT | F | R | MPV FWD CFFB | | GCI61057 | Inner Joint | | | 34 | | | 89 | |
| | 2010.05-2015.11 | 6MT | F | L | MPV FWD CFFB | Date to:2014.07 | GDS83295 | Drive Shaft | | 36 | | 59.5 | 40 | 491 | |
| | 2010.05-2015.11 | 6MT | F | R | MPV FWD CFFB | Date to:2011.11 | GDS83313 | Drive Shaft | | 36 | | 59.5 | 40 | 792 | |
| | 2010.05-2015.11 | AT/MT | F | L/R | MPV FWD CFFB | Date to:2015.11;8 balls | GCO81352 | Outer Joint | | 36 | 28 | 59.5 | 40 | 65 | I |
| | 2010.05-2015.11 | AT/MT | F | L/R | MPV FWD CFFB | 6 balls | GCO83104 | Outer Joint | | 36 | 28 | 59.4 | 40 | 65 | I |
| | 2010.05-2015.11 | MT | F | L/R | MPV FWD CFFB | | GDS61214 | Stub Axle,differential | | 40 | 37 | | | 125 | |
| | 2011.05-2015.11 | 6MT | F | L | MPV 4WD CFFB | | GDS81548 | Drive Shaft | | 36 | 40 | 59.5 | 40 | 494 | |
| | 2011.05-2015.11 | 6MT | F | R | MPV 4WD CFFB | | GDS82362 | Drive Shaft | | 36 | 40 | 59.5 | 40 | 587 | |
| | 2011.05-2015.11 | 6MT | F | L/R | MPV 4WD CFFB | 8 balls | GCO81352 | Outer Joint | | 36 | 28 | 59.5 | 40 | 65 | I |
| | 2011.05-2015.11 | 6MT | F | L/R | MPV 4WD CFFB | 6 balls | GCO83104 | Outer Joint | | 36 | 28 | 59.4 | 40 | 65 | I |
| | 2011.05-2015.11 | 6MT | F | L/R | MPV 4WD CFFB | | GCI61055 | Inner Joint | | 40 | 28 | 46.9 | | 107 | |
| | 2011.05-2015.11 | MT | F | L/R | MPV 4WD CFFB | | GDS61214 | Stub Axle,differential | | 40 | 37 | | | 125 | |
| | 2011.05-2015.11 | 6MT | R | L | MPV 4WD CFFB | | GDS81928 | Drive Shaft | | 36 | | 59.5 | 40 | 610 | |
| | 2011.05-2015.11 | 6MT | R | R | MPV 4WD CFFB | | GDS81946 | Drive Shaft | | 36 | | 59.5 | 40 | 649 | |
| | 2011.05-2015.11 | 6MT | R | L/R | MPV 4WD CFFB | | GCI53002 | Inner Joint | | | 33 | | | 34 | |
| 2.0 (110 kw) | 1995.09-2000.02 | AT | F | R | MPV FWD | | GDS61065 | Drive Shaft | 48W | 38 | | 60 | 34.5 | 544 | |
| | 1995.09-2000.02 | MT | F | L | MPV FWD | | GDS83024 | Drive Shaft | 48W | 38 | 26 | 60 | 34.5 | 617 | |
| | 1995.09-2000.02 | MT | F | | MPV FWD | | GCI59006 | Inner Joint | | | 34 | | | 33.2 | |
| | 1995.09-2000.02 | MT | F | R | MPV FWD | | GDS61193 | Stub Axle-Flange | | 37 | | | 322 | 356 | |
| | 2015.05-2019.07 | 6MT | F | L | MPV 4WD CUVC;DFLA;DLTA | | GDS81548 | Drive Shaft | | 36 | 40 | 59.5 | 40 | 494 | |
| | 2015.05-2019.07 | 6MT | F | R | MPV 4WD CUVC;DFLA;DLTA | | GDS82362 | Drive Shaft | | 36 | 40 | 59.5 | 40 | 587 | |
| | 2015.05-2019.07 | 6MT | F | L/R | MPV 4WD CUVC;DFLA;DLTA | | GCI61055 | Inner Joint | | 40 | 28 | 46.9 | | 107 | |
| | 2015.05-2019.07 | AT/MT | F | L/R | MPV 4WD CUVC;DFLA;DLTA | 6 balls | GCO83104 | Outer Joint | | 36 | 28 | 59.4 | 40 | 65 | I |
| | 2015.05-2019.07 | MT | F | L/R | MPV 4WD CUVC;DFLA;DLTA | 8 balls | GCO81352 | Outer Joint | | 36 | 28 | 59.5 | 40 | 65 | I |
| | 2015.05-2019.07 | MT | F | L/R | MPV 4WD CUVC;DFLA;DLTA | | GDS61214 | Stub Axle,differential | | 40 | 37 | | | 125 | |
| | 2015.05-2019.07 | 6MT | R | L | MPV 4WD CUVC;DFLA;DLTA | | GDS81928 | Drive Shaft | | 36 | | 59.5 | 40 | 610 | |
| | 2015.05-2019.07 | 6MT | R | R | MPV 4WD CUVC;DFLA;DLTA | | GDS81946 | Drive Shaft | | 36 | | 59.5 | 40 | 649 | |
| | 2015.05-2020.10 | 6AT/6MT | F | L/R | MPV FWD CUVC;DFLA;DLTA | Date From:2016.08;6 balls | GCO83104 | Outer Joint | | 36 | 28 | 59.4 | 40 | 65 | I |
| | 2015.05-2020.10 | 6AT/6MT | F | L/R | MPV FWD CUVC;DFLA;DLTA | | GCI61002 | Inner Joint | | | 28 | | | 31.8 | |
| | 2015.05-2020.10 | 6AT/6MT | F | L/R | MPV FWD CUVC;DFLA;DLTA | | GCI81075 | Inner Joint | | | 26 | | | 89 | |
| | 2015.05-2020.10 | 6DCT | F | L | MPV FWD CUVC;DFLA;DLTA | | GDS61310 | Drive Shaft | | 36 | | 59.4 | 40 | 477 | |
| | 2015.05-2020.10 | 6DCT | F | R | MPV FWD CUVC;DFLA;DLTA | | GDS83354 | Drive Shaft | | 36 | | 59.5 | 40 | 763 | |
| | 2015.05-2020.10 | 6MT | F | L | MPV FWD CUVC;DFLA;DLTA | | GDS83295 | Drive Shaft | | 36 | | 59.5 | 40 | 491 | |
| | 2015.05-2020.10 | 6MT | F | R | MPV FWD CUVC;DFLA;DLTA | | GDS83313 | Drive Shaft | | 36 | | 59.5 | 40 | 792 | |
| | 2015.05-2020.10 | MT | F | L/R | MPV FWD CUVC;DFLA;DLTA | 8 balls | GCO81352 | Outer Joint | | 36 | 28 | 59.5 | 40 | 65 | I |
| | 2015.05-2020.10 | MT | F | L/R | MPV FWD CUVC;DFLA;DLTA | | GDS61214 | Stub Axle,differential | | 40 | 37 | | | 125 | |
| 2.0 (125 kw) | 2010.05-2013.01 | 6AT/6MT | F | L/R | MPV FWD CFGB | | GCI61055 | Inner Joint | | 40 | 28 | 46.9 | | 107 | |
| | 2010.05-2013.01 | 6AT/6MT | F | L/R | MPV FWD CFGB | | GCI81075 | Inner Joint | | | 26 | | | 89 | |
| | 2010.05-2013.01 | 6DCT | F | L | MPV FWD CFGB | | GDS61310 | Drive Shaft | | 36 | | 59.4 | 40 | 477 | |
| | 2010.05-2013.01 | 6DCT | F | R | MPV FWD CFGB | | GDS83354 | Drive Shaft | | 36 | | 59.5 | 40 | 763 | |
| | 2010.05-2013.01 | 6MT | F | L | MPV FWD CFGB | | GDS81548 | Drive Shaft | | 36 | 40 | 59.5 | 40 | 494 | |
| | 2010.05-2013.01 | 6MT | F | R | MPV FWD CFGB | | GDS58318 | Drive Shaft | | 36 | 40 | 59.5 | 40 | 824 | |
| | 2010.05-2013.01 | AT/MT | F | L/R | MPV FWD CFGB | Date to:2013.01;8 balls | GCO81352 | Outer Joint | | 36 | 28 | 59.5 | 40 | 65 | I |
| | 2010.05-2013.01 | AT/MT | F | L/R | MPV FWD CFGB | 6 balls | GCO83104 | Outer Joint | | 36 | 28 | 59.4 | 40 | 65 | I |
| | 2010.05-2013.01 | MT | F | L/R | MPV FWD CFGB | | GDS61214 | Stub Axle,differential | | 40 | 37 | | | 125 | |
| | 2010.08-2013.01 | 6AT/6MT | F | L/R | Box Body/MPV FWD CFGB | Date to:2011.12;8 balls | GCO81352 | Outer Joint | | 36 | 28 | 59.5 | 40 | 65 | I |
| | 2010.08-2013.01 | 6AT/6MT | F | L/R | Box Body/MPV FWD CFGB | 6 balls | GCO83104 | Outer Joint | | 36 | 28 | 59.4 | 40 | 65 | I |
| | 2010.08-2013.01 | 6DCT | F | L | Box Body/MPV FWD CFGB | | GDS61310 | Drive Shaft | | 36 | | 59.4 | 40 | 477 | |
| | 2010.08-2013.01 | 6DCT | F | R | Box Body/MPV FWD CFGB | | GDS83354 | Drive Shaft | | 36 | | 59.5 | 40 | 763 | |
| | 2010.08-2013.01 | 6DCT | F | L/R | Box Body/MPV FWD CFGB | | GCI81075 | Inner Joint | | | 26 | | | 89 | |
| | 2010.08-2013.01 | 6MT | F | L | Box Body/MPV FWD CFGB | | GDS81548 | Drive Shaft | | 36 | 40 | 59.5 | 40 | 494 | |
| | 2010.08-2013.01 | 6MT | F | R | Box Body/MPV FWD CFGB | | GDS58318 | Drive Shaft | | 36 | 40 | 59.5 | 40 | 824 | |
| | 2010.08-2013.01 | 6MT | F | L/R | Box Body/MPV FWD CFGB | | GCI61055 | Inner Joint | | 40 | 28 | 46.9 | | 107 | |
| 2.0 (130 kw) | 2013.01-2022.06 | 6AT/6MT | F | L/R | MPV FWD CFGC;DLUB | | GCI61055 | Inner Joint | | 40 | 28 | 46.9 | | 107 | |
| | 2013.01-2022.06 | 6AT/6MT | F | L/R | MPV FWD CFGC;DLUB | | GCI81075 | Inner Joint | | | 26 | | | 89 | |

| | YEAR | TRANSM. | F/R | L/R | BODY STYLE & DRIVE TYPE & ENGINE | REMARKS | G-AP Ref. | PRODUCT | ABS | Technical Specifications | | | | | |
|---|---|---|---|---|---|---|---|---|---|---|---|---|---|---|---|
| | | | | | | | | | | A | B | C | H | L | P |
| **VW Sharan** | | | | | | | | | | | | | | | |
| 2.0 (130 kw) | 2013.01-2022.06 | 6DCT | F | L | MPV FWD CFGC;DLUB | | GDS61310 | Drive Shaft | | 36 | | 59.4 | 40 | 477 | |
| | 2013.01-2022.06 | 6DCT | F | R | MPV FWD CFGC;DLUB | | GDS83354 | Drive Shaft | | 36 | | 59.5 | 40 | 763 | |
| | 2013.01-2022.06 | 6MT | F | L | MPV FWD CFGC;DLUB | | GDS81548 | Drive Shaft | | 36 | 40 | 59.5 | 40 | 494 | |
| | 2013.01-2022.06 | 6MT | F | R | MPV FWD CFGC;DLUB | | GDS58318 | Drive Shaft | | 36 | 40 | 59.5 | 40 | 824 | |
| | 2013.01-2022.06 | AT/MT | F | L/R | MPV FWD CFGC;DLUB | 8 balls | GCO81352 | Outer Joint | | 36 | 28 | 59.5 | 40 | 65 | I |
| | 2013.01-2022.06 | AT/MT | F | L/R | MPV FWD CFGC;DLUB | 6 balls | GCO83104 | Outer Joint | | 36 | 28 | 59.4 | 40 | 65 | I |
| | 2013.01-2022.06 | MT | F | L/R | MPV FWD CFGC;DLUB | | GDS61214 | Stub Axle,differential | | 40 | 37 | | | 125 | |
| | 2018.07-2020.10 | | F | L/R | MPV 4WD DLUB | | GCO81352 | Outer Joint | | 36 | 28 | 59.5 | 40 | 65 | I |
| | 2018.07-2020.10 | 7AT | R | L/R | MPV 4WD DLUB | | GCI53002 | Inner Joint | | | 33 | | | 34 | |
| | 2018.07-2020.10 | | R | L | MPV 4WD DLUB | | GDS81928 | Drive Shaft | | 36 | | 59.5 | 40 | 610 | |
| | 2018.07-2020.10 | | R | R | MPV 4WD DLUB | | GDS81946 | Drive Shaft | | 36 | | 59.5 | 40 | 649 | |
| 2.0 (135 kw) | 2015.05-2018.07 | 6AT/6MT | F | L/R | MPV FWD CUWA;DFMA | | GCI61055 | Inner Joint | | 40 | 28 | 46.9 | | 107 | |
| | 2015.05-2018.07 | 6AT/6MT | F | L/R | MPV FWD CUWA;DFMA | | GCI81075 | Inner Joint | | | 26 | | | 89 | |
| | 2015.05-2018.07 | 6DCT | F | L | MPV FWD CUWA;DFMA | | GDS61310 | Drive Shaft | | 36 | | 59.4 | 40 | 477 | |
| | 2015.05-2018.07 | 6DCT | F | R | MPV FWD CUWA;DFMA | | GDS83354 | Drive Shaft | | 36 | | 59.5 | 40 | 763 | |
| | 2015.05-2018.07 | 6MT | F | L | MPV FWD CUWA;DFMA | | GDS81548 | Drive Shaft | | 36 | 40 | 59.5 | 40 | 494 | |
| | 2015.05-2018.07 | 6MT | F | R | MPV FWD CUWA;DFMA | | GDS58318 | Drive Shaft | | 36 | 40 | 59.5 | 40 | 824 | |
| | 2015.05-2018.07 | AT/MT | F | L/R | MPV FWD CUWA;DFMA | 6 balls | GCO83104 | Outer Joint | | 36 | 28 | 59.4 | 40 | 65 | I |
| | 2015.05-2018.07 | DCT | F | L/R | MPV FWD CUWA;DFMA | 8 balls | GCO81352 | Outer Joint | | 36 | 28 | 59.5 | 40 | 65 | I |
| | 2015.05-2018.07 | MT | F | L/R | MPV FWD CUWA;DFMA | | GDS61214 | Stub Axle,differential | | 40 | 37 | | | 125 | |
| | 2016.05-2018.07 | 7AT | F | L/R | MPV 4WD DFMA | Date From:2016.08 | GCO83104 | Outer Joint | | 36 | 28 | 59.4 | 40 | 65 | I |
| | 2016.05-2018.07 | MT | F | L/R | MPV 4WD DFMA | | GDS61214 | Stub Axle,differential | | 40 | 37 | | | 125 | |
| | 2016.05-2018.07 | | F | L/R | MPV 4WD DFMA | | GCO81352 | Outer Joint | | 36 | 28 | 59.5 | 40 | 65 | I |
| | 2016.05-2018.07 | 7AT | R | L | MPV 4WD DFMA | | GDS81928 | Drive Shaft | | 36 | | 59.5 | 40 | 610 | |
| | 2016.05-2018.07 | 7AT | R | R | MPV 4WD DFMA | | GDS81946 | Drive Shaft | | 36 | | 59.5 | 40 | 649 | |
| | 2016.05-2018.07 | 7AT | R | L/R | MPV 4WD DFMA | | GCI53002 | Inner Joint | | | 33 | | | 34 | |
| 2.0 (147 kw) | 2010.12-2015.11 | 6AT | F | L | Box Body/MPV FWD CCZA | | GDS83295 | Drive Shaft | | 36 | | 59.5 | 40 | 491 | |
| | 2010.12-2015.11 | 6AT | F | L/R | Box Body/MPV FWD CCZA | Date to:2011.12;8 balls | GCO81352 | Outer Joint | | 36 | 28 | 59.5 | 40 | 65 | I |
| | 2010.12-2015.11 | 6AT | F | L/R | Box Body/MPV FWD CCZA | 6 balls | GCO83104 | Outer Joint | | 36 | 28 | 59.4 | 40 | 65 | I |
| | 2010.12-2015.11 | 6AT | F | L/R | Box Body/MPV FWD CCZA | | GCI61002 | Inner Joint | | | 28 | | | 31.8 | |
| | 2010.12-2015.11 | 6DCT | F | R | Box Body/MPV FWD CCZA | Date to:2011.11 | GDS61126 | Drive Shaft | | 36 | | 59.5 | 40 | 793 | |
| | 2010.12-2015.11 | 6DCT | F | L | Box Body/MPV FWD CCZA | | GDS98006 | Stub Axle-Flange | | 37 | | | 67 | 123.5 | |
| | 2010.12-2015.11 | 6AT | F | L | MPV FWD CCZA | | GDS83295 | Drive Shaft | | 36 | | 59.5 | 40 | 491 | |
| | 2010.12-2015.11 | 6AT | F | L/R | MPV FWD CCZA | 8 balls | GCO81352 | Outer Joint | | 36 | 28 | 59.5 | 40 | 65 | I |
| | 2010.12-2015.11 | 6AT | F | L/R | MPV FWD CCZA | 6 balls | GCO83104 | Outer Joint | | 36 | 28 | 59.4 | 40 | 65 | I |
| | 2010.12-2015.11 | 6AT | F | L/R | MPV FWD CCZA | | GCI61002 | Inner Joint | | | 28 | | | 31.8 | |
| | 2010.12-2015.11 | 6DCT | F | R | MPV FWD CCZA | Date to:2011.11 | GDS61126 | Drive Shaft | | 36 | | 59.5 | 40 | 793 | |
| 2.0 (162 kw) | 2015.05-2020.12 | 6AT | F | L | MPV FWD DEDA | | GDS83295 | Drive Shaft | | 36 | | 59.5 | 40 | 491 | |
| | 2015.05-2020.12 | 6AT | F | L/R | MPV FWD DEDA | | GCI61002 | Inner Joint | | | 28 | | | 31.8 | |
| | 2015.05-2020.12 | 6DCT | F | L | MPV FWD DEDA | | GDS98006 | Stub Axle-Flange | | 37 | | | 67 | 123.5 | |
| | 2015.05-2020.12 | AT/MT | F | L/R | MPV FWD DEDA | 6 balls | GCO83104 | Outer Joint | | 36 | 28 | 59.4 | 40 | 65 | I |
| | 2015.05-2020.12 | MT | F | L/R | MPV FWD DEDA | 8 balls | GCO81352 | Outer Joint | | 36 | 28 | 59.5 | 40 | 65 | I |
| 2.8 (128 kw) | 1995.09-2000.02 | 4AT | F | L/R | MPV 4WD AAA/AMY | Date From:1999.05 | GDS18010 | Drive Shaft | 48W | 38 | | 60 | 34.5 | 550 | |
| | 1995.09-2000.02 | 4AT | F | L/R | MPV 4WD AAA/AMY | | GCI59006 | Inner Joint | | | 34 | | | 33.2 | |
| | 1995.09-2000.02 | 4AT/5MT | F | L/R | MPV 4WD AAA/AMY | Date From:1999.05 | GCO18025 | Outer Joint | 48W | 38 | 36 | 60 | 34 | 72.5 | I |
| | 1995.09-2000.02 | 4AT/5MT | F | L/R | MPV 4WD AAA/AMY | | GCO18026 | Outer Joint | 48W | 38 | 27 | 60 | 34.5 | 65 | I |
| | 1995.09-2000.02 | 5MT | F | L | MPV 4WD AAA/AMY | | GDS18009 | Drive Shaft | 48W | 38 | 26 | 60 | 34.5 | 620 | |
| | 1995.09-2000.02 | 5MT | F | R | MPV 4WD AAA/AMY | | GDS18106 | Drive Shaft | 48W | 38 | 35 | 60 | 34.5 | 634 | |
| | 1995.09-2000.02 | 5MT | F | L | MPV 4WD AAA/AMY | | GCI99053 | Inner Joint | | 26 | 28 | 40 | 77.5 | 111.7 | |
| | 1995.09-2000.02 | 5MT | F | R | MPV 4WD AAA/AMY | | GCI61028 | Inner Joint | | 35 | 28 | 42 | | 129.2 | |
| | 1995.09-2000.02 | 4AT/5MT | R | L | MPV 4WD AAA/AMY | | GDS81925 | Drive Shaft | 48W | 38 | | 60 | 34 | 628 | |
| | 1995.09-2000.02 | 4AT | F | L/R | MPV FWD AAA/AMY | Date From:1999.05 | GDS18010 | Drive Shaft | 48W | 38 | | 60 | 34.5 | 550 | |
| | 1995.09-2000.02 | 4AT | F | L/R | MPV FWD AAA/AMY | | GCI59006 | Inner Joint | | | 34 | | | 33.2 | |
| | 1995.09-2000.02 | 4AT/5MT | F | L/R | MPV FWD AAA/AMY | Date from:1999.05 | GCO18025 | Outer Joint | 48W | 38 | 36 | 60 | 34 | 72.5 | I |
| | 1995.09-2000.02 | 4AT/5MT | F | L/R | MPV FWD AAA/AMY | | GCO18026 | Outer Joint | 48W | 38 | 27 | 60 | 34.5 | 65 | I |
| | 1995.09-2000.02 | 5MT | F | L | MPV FWD AAA/AMY | | GDS18009 | Drive Shaft | 48W | 38 | 26 | 60 | 34.5 | 620 | |
| | 1995.09-2000.02 | 5MT | F | R | MPV FWD AAA/AMY | | GDS18106 | Drive Shaft | 48W | 38 | 35 | 60 | 34.5 | 634 | |
| | 1995.09-2000.02 | 5MT | F | L | MPV FWD AAA/AMY | | GCI99053 | Inner Joint | | 26 | 28 | 40 | 77.5 | 111.7 | |
| | 1995.09-2000.02 | 5MT | F | R | MPV FWD AAA/AMY | | GCI61028 | Inner Joint | | 35 | 28 | 42 | | 129.2 | |
| | 1995.09-2000.02 | 5MT | F | R | MPV FWD AAA/AMY | | GDS61226 | Intermediate Shaft | | 26 | 35 | | | 361.5 | |
| 2.8 (150 kw) | 2000.03-2010.03 | 5AT | F | L | MPV 4WD AYL | Chassis no. from:7M-3-055001 | GDS83022 | Drive Shaft | 48W | 38 | | 60 | 34 | 486 | |
| | 2000.03-2010.03 | 5AT | F | R | MPV 4WD AYL | Chassis no. from:7M-3-055001 | GDS99120 | Drive Shaft | 48W | 38 | 30 | 60 | 34 | 561 | |
| | 2000.03-2010.03 | 6MT | F | L/R | MPV 4WD AYL | | GDS83023 | Drive Shaft | 48W | 38 | | 60 | 34 | 507 | |
| | 2000.03-2010.03 | 6MT | F | L/R | MPV 4WD AYL | | GCO18025 | Outer Joint | 48W | 38 | 36 | 60 | 34 | 72.5 | I |
| | 2000.03-2010.03 | 6MT | F | L/R | MPV 4WD AYL | | GCI61044 | Inner Joint | | | 34 | | | 85 | |

| | YEAR | TRANSM. | F/R | L/R | BODY STYLE & DRIVE TYPE & ENGINE | REMARKS | G-AP Ref. | PRODUCT | ABS | Technical Specifications A | B | C | H | L | P |
|---|---|---|---|---|---|---|---|---|---|---|---|---|---|---|---|
| **VW** | | | | | | | | | | | | | | | |
| **Sharan** | | | | | | | | | | | | | | | |
| 2.8 (150 kw) | 2000.03-2010.03 | 6MT | F | L/R | MPV 4WD AYL | | GCI83007 | Inner Joint | | | 34 | | | 85 | |
| | 2000.03-2010.03 | MT | F | R | MPV 4WD AYL | | GDS61192 | Stub Axle,differential | | 26 | 37 | | | 129.5 | |
| | 2000.03-2010.03 | 6MT | R | L | MPV 4WD AYL | | GDS81925 | Drive Shaft | 48W | 38 | | 60 | 34 | 628 | |
| | 2000.03-2010.03 | 5AT | F | L | MPV FWD AYL | | GDS83022 | Drive Shaft | 48W | 38 | | 60 | 34 | 486 | |
| | 2000.03-2010.03 | 5AT | F | R | MPV FWD AYL | | GDS99120 | Drive Shaft | 48W | 38 | 30 | 60 | 34 | 561 | |
| | 2000.03-2010.03 | 5AT | F | L | MPV FWD AYL | TJ | GCI61044 | Inner Joint | | | 34 | | | 85 | |
| | 2000.03-2010.03 | 5AT | F | L | MPV FWD AYL | | GCI83007 | Inner Joint | | | 34 | | | 85 | |
| | 2000.03-2010.03 | 5AT/6MT | F | L/R | MPV FWD AYL | | GCO18025 | Outer Joint | 48W | 38 | 36 | 60 | 34 | 72.5 | I |
| | 2000.03-2010.03 | 6MT | F | L/R | MPV FWD AYL | | GDS83023 | Drive Shaft | 48W | 38 | | 60 | 34 | 507 | |
| | 2000.03-2010.03 | 6MT | F | L/R | MPV FWD AYL | TJ | GCI61044 | Inner Joint | | | 34 | | | 85 | |
| | 2000.03-2010.03 | 6MT | F | L/R | MPV FWD AYL | | GCI83007 | Inner Joint | | | 34 | | | 85 | |
| | 2000.03-2010.03 | MT | F | R | MPV FWD AYL | | GDS61192 | Stub Axle,differential | | 26 | 37 | | | 129.5 | |
| **Sharan Van** | | | | | | | | | | | | | | | |
| 1.9 (66 kw) | 1996.09-2003.05 | 5MT | F | L | MPV Van FWD AHU/ANU | | GDS18009 | Drive Shaft | 48W | 38 | 26 | 60 | 34.5 | 620 | |
| | 1996.09-2003.05 | 5MT | F | R | MPV Van FWD AHU/ANU | | GDS18008 | Drive Shaft | 48W | 38 | 35 | 60 | 34.5 | 559 | |
| | 1996.09-2003.05 | 5MT | F | L/R | MPV Van FWD AHU/ANU | Date from:1999.05 | GCO18025 | Outer Joint | 48W | 38 | 36 | 60 | 34 | 72.5 | I |
| | 1996.09-2003.05 | 5MT | F | L/R | MPV Van FWD AHU/ANU | Date to:1999.04 | GCO18026 | Outer Joint | 48W | 38 | 27 | 60 | 34.5 | 65 | I |
| | 1996.09-2003.05 | 5MT | F | L | MPV Van FWD AHU/ANU | | GCI99053 | Inner Joint | | 26 | 28 | 40 | 77.5 | 111.7 | |
| | 1996.09-2003.05 | 5MT | F | R | MPV Van FWD AHU/ANU | | GCI61028 | Inner Joint | | 35 | 28 | 42 | | 129.2 | |
| 1.9 (81 kw) | 1998.09-2000.05 | 4AT | F | L | MPV Van FWD AFN | | GDS61085 | Drive Shaft | 48W | 38 | | 60 | 34.5 | 513 | |
| | 1998.09-2000.05 | 4AT | F | R | MPV Van FWD AFN | | GDS61065 | Drive Shaft | 48W | 38 | | 60 | 34.5 | 544 | |
| | 1998.09-2000.05 | 4AT | F | L/R | MPV Van FWD AFN | | GCI50019 | Inner Joint | | | 34 | | | 59.5 | |
| | 1998.09-2000.05 | 4AT/5MT | F | L/R | MPV Van FWD AFN | | GCO18026 | Outer Joint | 48W | 38 | 27 | 60 | 34.5 | 65 | I |
| | 1998.09-2000.05 | 5MT | F | L | MPV Van FWD AFN | | GDS18009 | Drive Shaft | 48W | 38 | 26 | 60 | 34.5 | 620 | |
| | 1998.09-2000.05 | 5MT | F | R | MPV Van FWD AFN | | GDS18008 | Drive Shaft | 48W | 38 | 35 | 60 | 34.5 | 559 | |
| | 1998.09-2000.05 | 5MT | F | L | MPV Van FWD AFN | | GCI99053 | Inner Joint | | 26 | 28 | 40 | 77.5 | 111.7 | |
| | 1998.09-2000.05 | 5MT | F | R | MPV Van FWD AFN | | GCI61028 | Inner Joint | | 35 | 28 | 42 | | 129.2 | |
| 1.9 (85 kw) | 2000.04-2010.03 | 5AT | F | L/R | MPV Van FWD AUY | | GDS83022 | Drive Shaft | 48W | 38 | | 60 | 34 | 486 | |
| | 2000.04-2010.03 | 5AT/6MT | F | L/R | MPV Van FWD AUY | | GCO18025 | Outer Joint | 48W | 38 | 36 | 60 | 34 | 72.5 | I |
| | 2000.04-2010.03 | 5AT/6MT | F | L/R | MPV Van FWD AUY | | GCI61044 | Inner Joint | | | 34 | | | 85 | |
| | 2000.04-2010.03 | 6MT | F | L/R | MPV Van FWD AUY | | GDS61087 | Drive Shaft | 48W | 38 | | 60 | 34.5 | 506 | |
| | 2000.04-2010.03 | 6MT | F | L/R | MPV Van FWD AUY | | GDS83023 | Drive Shaft | 48W | 38 | | 60 | 34 | 507 | |
| | 2000.04-2010.03 | 6MT | F | L/R | MPV Van FWD AUY | | GCI59006 | Inner Joint | | | 34 | | | 33.2 | |
| 1.9 (96 kw) | 2002.11-2003.05 | 6MT | F | L/R | MPV Van FWD ASZ | | GDS83023 | Drive Shaft | 48W | 38 | | 60 | 34 | 507 | |
| | 2002.11-2003.05 | 6MT | F | L/R | MPV Van FWD ASZ | | GCO18025 | Outer Joint | 48W | 38 | 36 | 60 | 34 | 72.5 | I |
| | 2002.11-2003.05 | 6MT | F | L/R | MPV Van FWD ASZ | | GCI61044 | Inner Joint | | | 34 | | | 85 | |
| 2.0 (85 kw) | 1996.09-2002.07 | 4AT | F | L | MPV Van FWD ADY/ATM | | GDS61085 | Drive Shaft | 48W | 38 | | 60 | 34.5 | 513 | |
| | 1996.09-2002.07 | 4AT | F | R | MPV Van FWD ADY/ATM | | GDS61065 | Drive Shaft | 48W | 38 | | 60 | 34.5 | 544 | |
| | 1996.09-2002.07 | 4AT | F | L/R | MPV Van FWD ADY/ATM | | GCI50019 | Inner Joint | | | 34 | | | 59.5 | |
| | 1996.09-2002.07 | 4AT/5MT | F | L/R | MPV Van FWD ADY/ATM | Date From:1999.05 | GCO18025 | Outer Joint | 48W | 38 | 36 | 60 | 34 | 72.5 | I |
| | 1996.09-2002.07 | 4AT/5MT | F | L/R | MPV Van FWD ADY/ATM | Date To:1999.04 | GCO18026 | Outer Joint | 48W | 38 | 27 | 60 | 34.5 | 65 | I |
| | 1996.09-2002.07 | 5MT | F | L | MPV Van FWD ADY/ATM | | GDS18009 | Drive Shaft | 48W | 38 | 26 | 60 | 34.5 | 620 | |
| | 1996.09-2002.07 | 5MT | F | R | MPV Van FWD ADY/ATM | | GDS18008 | Drive Shaft | 48W | 38 | 35 | 60 | 34.5 | 559 | |
| | 1996.09-2002.07 | 5MT | F | L | MPV Van FWD ADY/ATM | | GCI99053 | Inner Joint | | 26 | 28 | 40 | 77.5 | 111.7 | |
| | 1996.09-2002.07 | 5MT | F | R | MPV Van FWD ADY/ATM | | GCI61028 | Inner Joint | | 35 | 28 | 42 | | 129.2 | |
| | 1996.09-2002.07 | 6MT | F | L/R | MPV Van FWD ADY/ATM | Date From:2001.06 | GDS61087 | Drive Shaft | 48W | 38 | | 60 | 34.5 | 506 | |
| | 1996.09-2002.07 | 6MT | F | L/R | MPV Van FWD ADY/ATM | Date To:2001.05 | GDS83023 | Drive Shaft | 48W | 38 | | 60 | 34 | 507 | |
| | 1996.09-2002.07 | 6MT | F | L/R | MPV Van FWD ADY/ATM | | GCO18025 | Outer Joint | 48W | 38 | 36 | 60 | 34 | 72.5 | I |
| | 1996.09-2002.07 | 6MT | F | L/R | MPV Van FWD ADY/ATM | Date From:2001.06 | GCI59006 | Inner Joint | | | 34 | | | 33.2 | |
| | 1996.09-2002.07 | 6MT | F | L/R | MPV Van FWD ADY/ATM | Date From:2001.06 | GCI61032 | Inner Joint | | | 27 | | | 34 | |
| | 1996.09-2002.07 | 6MT | F | L/R | MPV Van FWD ADY/ATM | Date To:2001.05 | GCI61044 | Inner Joint | | | 34 | | | 85 | |
| | 1996.09-2002.07 | 6MT | F | L/R | MPV Van FWD ADY/ATM | Date To:2001.05 | GCI83007 | Inner Joint | | | 34 | | | 85 | |
| 2.8 (128 kw) | 1996.09-2000.04 | 4AT | F | L/R | MPV Van FWD AAA | | GDS18010 | Drive Shaft | 48W | 38 | | 60 | 34.5 | 550 | |
| | 1996.09-2000.04 | 4AT | F | L/R | MPV Van FWD AAA | | GCI59006 | Inner Joint | | | 34 | | | 33.2 | |
| | 1996.09-2000.04 | 4AT/5MT | F | L/R | MPV Van FWD AAA | | GCO18026 | Outer Joint | 48W | 38 | 27 | 60 | 34.5 | 65 | I |
| | 1996.09-2000.04 | 5MT | F | L | MPV Van FWD AAA | | GDS18009 | Drive Shaft | 48W | 38 | 26 | 60 | 34.5 | 620 | |
| | 1996.09-2000.04 | 5MT | F | R | MPV Van FWD AAA | | GDS18106 | Drive Shaft | 48W | 38 | 35 | 60 | 34.5 | 634 | |
| | 1996.09-2000.04 | 5MT | F | L | MPV Van FWD AAA | | GCI99053 | Inner Joint | | 26 | 28 | 40 | 77.5 | 111.7 | |
| | 1996.09-2000.04 | 5MT | F | R | MPV Van FWD AAA | | GCI61028 | Inner Joint | | 35 | 28 | 42 | | 129.2 | |
| 2.8 (150 kw) | 2001.08-2003.05 | 5AT | F | L | MPV Van FWD AYL | | GDS83022 | Drive Shaft | 48W | 38 | | 60 | 34 | 486 | |
| | 2001.08-2003.05 | 5AT | F | R | MPV Van FWD AYL | | GDS99120 | Drive Shaft | 48W | 38 | 30 | 60 | 34 | 561 | |
| | 2001.08-2003.05 | 5AT | F | L/R | MPV Van FWD AYL | | GCO18025 | Outer Joint | 48W | 38 | 36 | 60 | 34 | 72.5 | I |
| | 2001.08-2003.05 | 5AT | F | L | MPV Van FWD AYL | | GCI61044 | Inner Joint | | | 34 | | | 85 | |

| | YEAR | TRANSM. | F/R | L/R | BODY STYLE & DRIVE TYPE & ENGINE | REMARKS | G-AP Ref. | PRODUCT | ABS | Technical Specifications A | B | C | H | L | P |
|---|---|---|---|---|---|---|---|---|---|---|---|---|---|---|---|
| **VW** | | | | | | | | | | | | | | | |
| **T-Cross** | | | | | | | | | | | | | | | |
| 1.0 (70 kw) | 2018.12- | 5MT | F | L | SUV FWD CHZL;DKLA;DLAC;DXTA;DUSB | For PR code:OEM/1NL | GDS84187 | Drive Shaft | | 36 | 33 | 52 | 64.5 | 623 | |
| | 2018.12- | 5MT | F | L | SUV FWD CHZL;DKLA;DLAC;DXTA;DUSB | For PR code:0EJ | GDS84563 | Drive Shaft | | 36 | | 52 | 64.5 | 506 | |
| | 2018.12- | 5MT | F | R | SUV FWD CHZL;DKLA;DLAC;DXTA;DUSB | For PR code:OEM | GDS57823 | Drive Shaft | | 36 | 33 | 52 | 64.5 | 900 | |
| | 2018.12- | 5MT | F | R | SUV FWD CHZL;DKLA;DLAC;DXTA;DUSB | For PR code:0EJ | GDS84562 | Drive Shaft | | 36 | | 52 | 64.5 | 799 | |
| | 2018.12- | 5MT | F | R | SUV FWD CHZL;DKLA;DLAC;DXTA;DUSB | | GCO81744 | Outer Joint | | 36 | 30 | 52 | 64.5 | 55.5 | M |
| | 2018.12- | 5MT | F | L | SUV FWD CHZL;DKLA;DLAC;DXTA;DUSB | For PR code:0EM | GCI81546 | Inner Joint | | 33 | 32 | 39.9 | 58.5 | 105 | |
| | 2018.12- | 5MT | F | R | SUV FWD CHZL;DKLA;DLAC;DXTA;DUSB | For PR code:0EM | GCI82449 | Inner Joint | | 33 | 30 | 39.9 | 58.5 | 105 | |
| 1.0 (81 kw) | 2020.06- | 6MT | F | L | SUV FWD DLAA | | GDS84563 | Drive Shaft | | 36 | | 52 | 64.5 | 506 | |
| | 2020.06- | 6MT | F | R | SUV FWD DLAA | | GDS82233 | Drive Shaft | | 36 | | 52 | 64.5 | 778 | |
| | 2020.06- | 6MT | F | R | SUV FWD DLAA | | GCO81744 | Outer Joint | | 36 | 30 | 52 | 64.5 | 55.5 | M |
| | 2020.06- | 6MT | F | R | SUV FWD DLAA | | GCI81690 | Inner Joint | | | 30 | | | 89 | |
| | 2020.06- | 6MT/7DCT | F | L | SUV FWD DLAA | | GCO82548 | Outer Joint | | 36 | 27 | 52 | 64.5 | 65 | M |
| | 2020.06- | 7DCT | F | R | SUV FWD DLAA | | GDS57885 | Drive Shaft | | 36 | | 52 | 64.5 | 765 | |
| | 2020.06- | 7DCT | F | R | SUV FWD DLAA | | GCO81743 | Outer Joint | | 36 | 33 | 52 | 64.5 | 59 | I |
| | 2020.06- | 7DCT | F | R | SUV FWD DLAA | | GCI81689 | Inner Joint | | | 32 | | | 89 | |
| 1.0 (85 kw) | 2018.12- | 6MT | F | L | SUV FWD DKJA;DKRF;DHSC;DXUA;DUSA | | GDS84563 | Drive Shaft | | 36 | | 52 | 64.5 | 506 | |
| | 2018.12- | 6MT | F | R | SUV FWD DKJA;DKRF;DHSC;DXUA;DUSA | | GDS84562 | Drive Shaft | | 36 | | 52 | 64.5 | 799 | |
| | 2018.12- | 6MT | F | R | SUV FWD DKJA;DKRF;DHSC;DXUA;DUSA | | GCO81744 | Outer Joint | | 36 | 30 | 52 | 64.5 | 55.5 | M |
| | 2018.12- | 6MT | F | L | SUV FWD DKJA;DKRF;DHSC;DXUA;DUSA | | GCI81689 | Inner Joint | | | 32 | | | 89 | |
| | 2018.12- | 7DCT | F | L | SUV FWD DKJA;DKRF;DHSC;DXUA;DUSA | | GDS84317 | Drive Shaft | | 36 | | 52 | 64.5 | 500 | |
| | 2018.12- | 7DCT | F | R | SUV FWD DKJA;DKRF;DHSC;DXUA;DUSA | | GDS82233 | Drive Shaft | | 36 | | 52 | 64.5 | 778 | |
| | 2018.12- | 7DCT | F | L | SUV FWD DKJA;DKRF;DHSC;DXUA;DUSA | | GCO82548 | Outer Joint | | 36 | 27 | 52 | 64.5 | 65 | M |
| | 2018.12- | 7DCT | F | R | SUV FWD DKJA;DKRF;DHSC;DXUA;DUSA | | GCO81743 | Outer Joint | | 36 | 33 | 52 | 64.5 | 59 | I |
| | 2018.12- | 7DCT | F | L/R | SUV FWD DKJA;DKRF;DHSC;DXUA;DUSA | | GCI81689 | Inner Joint | | | 32 | | | 89 | |
| 1.5 (110 kw) | 2020.01- | 7AT | F | L/R | SUV FWD DADA;DPCA;DXDB | | GCO82548 | Outer Joint | | 36 | 27 | 52 | 64.5 | 65 | M |
| | 2020.01- | 7DCT | F | L | SUV FWD DADA;DPCA;DXDB | | GDS58319 | Drive Shaft | | 36 | | 52 | 64.5 | 526 | |
| | 2020.01- | 7DCT | F | R | SUV FWD DADA;DPCA;DXDB | | GDS58333 | Drive Shaft | | 36 | 40 | 52 | 64.5 | 827 | |
| | 2020.01- | 7DCT | F | L | SUV FWD DADA;DPCA;DXDB | | GCI61069 | Inner Joint | | | 28 | | | 32 | |
| 1.6 (70 kw) | 2018.12- | 5MT/6MT | F | R | SUV FWD DGTD | | GDS84315 | Drive Shaft | | 36 | | 52 | 64.5 | 825 | |
| | 2018.12- | 5MT/6MT | F | R | SUV FWD DGTD | | GCI82447 | Inner Joint | | | 33 | | | 34 | |
| | 2018.12- | 5MT/6MT/7DCT | F | L | SUV FWD DGTD | | GDS84235 | Drive Shaft | | 36 | | 52 | 64.5 | 523 | |
| | 2018.12- | 5MT/6MT/7DCT | F | L | SUV FWD DGTD | | GCO82548 | Outer Joint | | 36 | 27 | 52 | 64.5 | 65 | M |
| | 2018.12- | 5MT/6MT/7DCT | F | R | SUV FWD DGTD | | GCO81743 | Outer Joint | | 36 | 33 | 52 | 64.5 | 59 | I |
| | 2018.12- | 5MT/6MT/7DCT | F | L | SUV FWD DGTD | | GCI82456 | Inner Joint | | | 28 | | | 32 | |
| | 2018.12- | 7DCT | F | R | SUV FWD DGTD | | GDS84337 | Drive Shaft | | 36 | | 52 | 64.5 | 812 | |
| **T-Roc** | | | | | | | | | | | | | | | |
| 1.0 (81 kw) | 2020.09- | 6MT | F | L | Convertible FWD DLAA | | GDS82231 | Drive Shaft | | 36 | | 59.5 | 40 | 486 | |
| | 2020.09- | 6MT | F | R | Convertible FWD DLAA | | GDS82229 | Drive Shaft | | 36 | | 59.5 | 40 | 767 | |
| | 2020.09- | 6MT | F | L/R | Convertible FWD DLAA | | GCO61059 | Outer Joint | | 36 | 33 | 59.5 | 40 | 59.5 | I |
| | 2020.09- | 6MT | F | L | Convertible FWD DLAA | | GCI81689 | Inner Joint | | | 32 | | | 89 | |
| | 2020.09- | 6MT | F | L | SUV FWD DLAA | | GDS82231 | Drive Shaft | | 36 | | 59.5 | 40 | 486 | |
| | 2020.09- | 6MT | F | R | SUV FWD DLAA | | GDS82229 | Drive Shaft | | 36 | | 59.5 | 40 | 767 | |
| | 2020.09- | 6MT | F | L/R | SUV FWD DLAA | | GCO61059 | Outer Joint | | 36 | 33 | 59.5 | 40 | 59.5 | I |
| | 2020.09- | 6MT | F | L | SUV FWD DLAA | | GCI81689 | Inner Joint | | | 32 | | | 89 | |
| 1.0 (85 kw) | 2017.07- | 6MT | F | L | SUV FWD CHZJ;DKRF;DUSA | | GDS82231 | Drive Shaft | | 36 | | 59.5 | 40 | 486 | |
| | 2017.07- | 6MT | F | R | SUV FWD CHZJ;DKRF;DUSA | | GDS82230 | Drive Shaft | | 36 | | 59.5 | 40 | 789 | |
| | 2017.07- | 6MT | F | L/R | SUV FWD CHZJ;DKRF;DUSA | | GCO61059 | Outer Joint | | 36 | 33 | 59.5 | 40 | 59.5 | I |
| | 2017.07- | 6MT | F | L/R | SUV FWD CHZJ;DKRF;DUSA | | GCI81689 | Inner Joint | | | 32 | | | 89 | |
| | 2019.12- | 6MT | F | L | Convertible FWD DKRF;DUSA | | GDS82231 | Drive Shaft | | 36 | | 59.5 | 40 | 486 | |
| | 2019.12- | 6MT | F | R | Convertible FWD DKRF;DUSA | For Engine code:DUSA | GDS82229 | Drive Shaft | | 36 | | 59.5 | 40 | 767 | |
| | 2019.12- | 6MT | F | R | Convertible FWD DKRF;DUSA | For Engine code:DKRF | GDS82230 | Drive Shaft | | 36 | | 59.5 | 40 | 789 | |
| | 2019.12- | 6MT | F | L/R | Convertible FWD DKRF;DUSA | | GCO61059 | Outer Joint | | 36 | 33 | 59.5 | 40 | 59.5 | I |
| | 2019.12- | 6MT | F | L/R | Convertible FWD DKRF;DUSA | | GCI81689 | Inner Joint | | | 32 | | | 89 | |
| 1.5 (110 kw) | 2017.11- | 6MT | F | L | SUV FWD DADA;DPCA;DXDB | | GDS61100 | Drive Shaft | | 36 | | 59.5 | 40 | 513 | |
| | 2017.11- | 7DCT | F | R | SUV FWD DADA;DPCA;DXDB | | GDS84503 | Drive Shaft | | 36 | 40 | 59.5 | 40 | 817 | |
| | 2017.11- | 7DCT | F | R | SUV FWD DADA;DPCA;DXDB | | GCO61059 | Outer Joint | | 36 | 33 | 59.5 | 40 | 59.5 | I |
| | 2018.05-2019.11 | 7AT | F | L | SUV 4WD DADA;DPCA | | GDS84237 | Drive Shaft | | 36 | 37 | 59.5 | 40 | 560 | |
| | 2018.05-2019.11 | 7AT | F | R | SUV 4WD DADA;DPCA | | GDS84203 | Drive Shaft | | 36 | | 59.5 | 40 | 602 | |
| | 2018.05-2019.11 | 7AT | F | L/R | SUV 4WD DADA;DPCA | | GCO83101 | Outer Joint | | 36 | 27 | 59.5 | 40 | 65 | M |
| | 2018.05-2019.11 | 7AT | F | L | SUV 4WD DADA;DPCA | | GCI83028 | Inner Joint | | 37 | 28 | | 65.5 | 90.2 | |
| | 2018.05-2019.11 | 7AT | F | R | SUV 4WD DADA;DPCA | | GCI82456 | Inner Joint | | | 28 | | | 32 | |
| | 2018.05-2019.11 | 7AT | R | L | SUV 4WD DADA;DPCA | | GDS61331 | Drive Shaft | | 36 | | 59.5 | 40 | 606 | |
| | 2018.05-2019.11 | 7AT | R | R | SUV 4WD DADA;DPCA | | GDS61332 | Drive Shaft | | 36 | | 59.5 | 40 | 650 | |
| | 2018.05-2019.11 | 7AT | R | L/R | SUV 4WD DADA;DPCA | | GCI35026 | Outer Joint | | 36 | 33 | 59.5 | 40 | 61 | |
| | 2018.05-2019.11 | 7AT | R | L/R | SUV 4WD DADA;DPCA | | GCI61103 | Inner Joint | | | 33 | | | 32 | |

| | YEAR | TRANSM. | F/R | L/R | BODY STYLE & DRIVE TYPE & ENGINE | REMARKS | G-AP Ref. | PRODUCT | ABS | Technical Specifications | | | | | |
|---|---|---|---|---|---|---|---|---|---|---|---|---|---|---|---|
| | | | | | | | | | | A | B | C | H | L | P |
| **VW** **T-Roc** | | | | | | | | | | | | | | | |
| 1.5 (110 kw) | 2019.12- | 6MT | F | R | Convertible FWD DPCA;DXDB | For PR code:0EJ | GDS83313 | Drive Shaft | | 36 | | 59.5 | 40 | 792 | |
| | 2019.12- | 6MT | F | L/R | Convertible FWD DPCA;DXDB | | GCO83101 | Outer Joint | | 36 | 27 | 59.5 | 40 | 65 | M |
| | 2019.12- | 6MT | F | L/R | Convertible FWD DPCA;DXDB | | GCI82456 | Inner Joint | | | 28 | | | 32 | |
| | 2019.12- | 7DCT | F | L | Convertible FWD DPCA;DXDB | | GDS61100 | Drive Shaft | | 36 | | 59.5 | 40 | 513 | |
| | 2019.12- | 7DCT | F | R | Convertible FWD DPCA;DXDB | | GDS84503 | Drive Shaft | | 36 | 40 | 59.5 | 40 | 817 | |
| | 2019.12- | 7DCT | F | L | Convertible FWD DPCA;DXDB | | GCO83101 | Outer Joint | | 36 | 27 | 59.5 | 40 | 65 | M |
| | 2019.12- | 7DCT | F | R | Convertible FWD DPCA;DXDB | | GCO61059 | Outer Joint | | 36 | 33 | 59.5 | 40 | 59.5 | I |
| 1.6 (85 kw) | 2018.03-2021.06 | 6MT | F | L | SUV FWD DGTE | | GDS61282 | Drive Shaft | | 36 | | 59.5 | 40 | 523 | |
| | 2018.03-2021.06 | 6MT | F | R | SUV FWD DGTE | | GDS61283 | Drive Shaft | | 36 | | 59.5 | 40 | 815 | |
| | 2018.03-2021.06 | 6MT | F | L/R | SUV FWD DGTE | | GCO61059 | Outer Joint | | 36 | 33 | 59.5 | 40 | 59.5 | I |
| | 2018.03-2021.06 | 6MT | F | L/R | SUV FWD DGTE | | GCI82447 | Inner Joint | | | 33 | | | 34 | |
| 2.0 (85 kw) | 2020.11- | 6MT | F | L | SUV FWD DTRD;DXRC | | GDS83295 | Drive Shaft | | 36 | | 59.5 | 40 | 491 | |
| | 2020.11- | 6MT | F | R | SUV FWD DTRD;DXRC | | GDS81891 | Drive Shaft | | 36 | | 59.5 | 40 | 781 | |
| | 2020.11- | 6MT | F | L/R | SUV FWD DTRD;DXRC | Groove Type:Inner | GCO83002 | Outer Joint | | 36 | 27 | 59.5 | 40 | 66 | I |
| | 2020.11- | 6MT | F | L/R | SUV FWD DTRD;DXRC | | GCO83101 | Outer Joint | | 36 | 27 | 59.5 | 40 | 65 | M |
| | 2020.11- | 6MT | F | L | SUV FWD DTRD;DXRC | | GCI61041 | Inner Joint | | | 28 | | | 32 | |
| | 2020.11- | 6MT | F | R | SUV FWD DTRD;DXRC | | GCI61069 | Inner Joint | | | 28 | | | 32 | |
| | 2020.11- | 6MT | F | R | SUV FWD DTRD;DXRC | | GDS98007 | Stub Axle-Flange | | 37 | | | 88 | 148 | |
| 2.0 (110 kw) | 2017.09- | 6MT | F | L | SUV 4WD DFFA;DTTC;DXRB | | GDS83295 | Drive Shaft | | 36 | | 59.5 | 40 | 491 | |
| | 2017.09- | 6MT | F | R | SUV 4WD DFFA;DTTC;DXRB | | GDS83266 | Drive Shaft | | 36 | | 59.5 | 40 | 601 | |
| | 2017.09- | 6MT | F | L/R | SUV 4WD DFFA;DTTC;DXRB | | GCI61069 | Inner Joint | | | 28 | | | 32 | |
| | 2017.09- | 6MT | F | L/R | SUV 4WD DFFA;DTTC;DXRB | | GCI83016 | Inner Joint | | | 28 | | | 32 | |
| | 2017.09- | 6MT/7DCT | F | L/R | SUV 4WD DFFA;DTTC;DXRB | | GCO83101 | Outer Joint | | 36 | 27 | 59.5 | 40 | 65 | M |
| | 2017.09- | 7DCT | F | L | SUV 4WD DFFA;DTTC;DXRB | | GDS81265 | Drive Shaft | | 36 | 37 | 59.5 | 40 | 557 | |
| | 2017.09- | 7DCT | F | R | SUV 4WD DFFA;DTTC;DXRB | | GDS81893 | Drive Shaft | | 36 | | 59.5 | 40 | 575 | |
| | 2017.09- | 7DCT | F | L | SUV 4WD DFFA;DTTC;DXRB | | GCI81158 | Inner Joint | | 37 | 34 | 34.5 | 65.5 | 83 | |
| | 2017.09- | 7DCT | F | R | SUV 4WD DFFA;DTTC;DXRB | | GCI61057 | Inner Joint | | | 34 | | | 89 | |
| | 2017.09- | 6MT/7DCT | R | L | SUV 4WD DFFA;DTTC;DXRB | | GDS61331 | Drive Shaft | | 36 | | 59.5 | 40 | 606 | |
| | 2017.09- | 6MT/7DCT | R | R | SUV 4WD DFFA;DTTC;DXRB | | GDS61332 | Drive Shaft | | 36 | | 59.5 | 40 | 650 | |
| | 2017.09- | 6MT/7DCT | R | L/R | SUV 4WD DFFA;DTTC;DXRB | | GCI35026 | Outer Joint | | 36 | 33 | 59.5 | 40 | 61 | |
| | 2017.09- | 6MT/7DCT | R | L/R | SUV 4WD DFFA;DTTC;DXRB | | GCI61103 | Inner Joint | | | 33 | | | 32 | |
| | 2018.03- | 6DCT | F | L | SUV FWD DFFA;DTTA;DTTC;DXRB | For Engine Code:DFFA | GDS83381 | Drive Shaft | | 36 | | 59.5 | 40 | 483 | |
| | 2018.03- | 6MT | F | L | SUV FWD DFFA;DTTA;DTTC;DXRB | | GDS83295 | Drive Shaft | | 36 | | 59.5 | 40 | 491 | |
| | 2018.03- | 6MT | F | R | SUV FWD DFFA;DTTA;DTTC;DXRB | | GDS83313 | Drive Shaft | | 36 | | 59.5 | 40 | 792 | |
| | 2018.03- | 6MT | F | L | SUV FWD DFFA;DTTA;DTTC;DXRB | | GCI61069 | Inner Joint | | | 28 | | | 32 | |
| | 2018.03- | 6MT/7DCT | F | L/R | SUV FWD DFFA;DTTA;DTTC;DXRB | | GCO83101 | Outer Joint | | 36 | 27 | 59.5 | 40 | 65 | M |
| | 2018.03- | 7DCT | F | L | SUV FWD DFFA;DTTA;DTTC;DXRB | | GDS81265 | Drive Shaft | | 36 | 37 | 59.5 | 40 | 557 | |
| | 2018.03- | 7DCT | F | R | SUV FWD DFFA;DTTA;DTTC;DXRB | | GDS83612 | Drive Shaft | | 36 | 37 | 59.5 | 40 | 907 | |
| | 2018.03- | 7DCT | F | L | SUV FWD DFFA;DTTA;DTTC;DXRB | | GCI81158 | Inner Joint | | 37 | 34 | 34.5 | 65.5 | 83 | |
| | 2018.03- | 7DCT | F | R | SUV FWD DFFA;DTTA;DTTC;DXRB | | GCI82108 | Inner Joint | | 37 | 34 | 40 | 77.5 | 103.5 | |
| 2.0 (140 kw) | 2017.07- | 7DCT | F | L | SUV 4WD CZPB;DKZA | For Engine code:DNNA | GDS81265 | Drive Shaft | | 36 | 37 | 59.5 | 40 | 557 | |
| | 2017.07- | 7DCT | F | L | SUV 4WD CZPB;DKZA | For Engine code:CZPB/DKZA | GDS84237 | Drive Shaft | | 36 | 37 | 59.5 | 40 | 560 | |
| | 2017.07- | 7DCT | F | R | SUV 4WD CZPB;DKZA | For Engine code:CZPB/DKZA | GDS81892 | Drive Shaft | | 36 | | 59.5 | 40 | 602 | |
| | 2017.07- | 7DCT | F | L/R | SUV 4WD CZPB;DKZA | | GCO83101 | Outer Joint | | 36 | 27 | 59.5 | 40 | 65 | M |
| | 2017.07- | 7DCT | F | L | SUV 4WD CZPB;DKZA | For Engine code:DNNA | GCI81158 | Inner Joint | | 37 | 34 | 34.5 | 65.5 | 83 | |
| | 2017.07- | 7DCT | F | L | SUV 4WD CZPB;DKZA | For Engine code:CZPB/DKZA | GCI83028 | Inner Joint | | 37 | 28 | | 65.5 | 90.2 | |
| | 2017.07- | 7DCT | F | R | SUV 4WD CZPB;DKZA | For Engine code:CZPB/DKZA | GCI61069 | Inner Joint | | | 28 | | | 32 | |
| | 2017.07- | 7DCT | F | R | SUV 4WD CZPB;DKZA | For Engine code:DNNA | GCI82108 | Inner Joint | | 37 | 34 | 40 | 77.5 | 103.5 | |
| | 2017.07- | 7DCT | R | L | SUV 4WD CZPB;DKZA | | GDS61331 | Drive Shaft | | 36 | | 59.5 | 40 | 606 | |
| | 2017.07- | 7DCT | R | R | SUV 4WD CZPB;DKZA | | GDS61332 | Drive Shaft | | 36 | | 59.5 | 40 | 650 | |
| | 2017.07- | 7DCT | R | L/R | SUV 4WD CZPB;DKZA | | GCI35026 | Outer Joint | | 36 | 33 | 59.5 | 40 | 61 | |
| | 2017.07- | 7DCT | R | L/R | SUV 4WD CZPB;DKZA | | GCI61103 | Inner Joint | | | 33 | | | 32 | |
| | 2019.07-2021.06 | 7DCT | F | L | SUV 4WD DFHA | | GDS81265 | Drive Shaft | | 36 | 37 | 59.5 | 40 | 557 | |
| | 2019.07-2021.06 | 7DCT | F | R | SUV 4WD DFHA | | GDS81893 | Drive Shaft | | 36 | | 59.5 | 40 | 575 | |
| | 2019.07-2021.06 | 7DCT | F | R | SUV 4WD DFHA | | GCO83101 | Outer Joint | | 36 | 27 | 59.5 | 40 | 65 | M |
| | 2019.07-2021.06 | 7DCT | F | L | SUV 4WD DFHA | | GCI81158 | Inner Joint | | 37 | 34 | 34.5 | 65.5 | 83 | |
| | 2019.07-2021.06 | 7DCT | F | R | SUV 4WD DFHA | | GCI61057 | Inner Joint | | | 34 | | | 89 | |
| | 2019.07-2021.06 | 7DCT | R | R | SUV 4WD DFHA | | GDS61332 | Drive Shaft | | 36 | | 59.5 | 40 | 650 | |
| | 2019.07-2021.06 | 7DCT | R | L/R | SUV 4WD DFHA | | GCI61103 | Inner Joint | | | 33 | | | 32 | |
| | 2019.07-2021.06 | AT | R | L | SUV 4WD DFHA | | GDS61331 | Drive Shaft | | 36 | | 59.5 | 40 | 606 | |
| | 2022.01- | 7DCT | F | L | SUV 4WD DNNA | For Engine code:DNNA | GDS81265 | Drive Shaft | | 36 | 37 | 59.5 | 40 | 557 | |
| | 2022.01- | 7DCT | F | L | SUV 4WD DNNA | For Engine code:CZPB/DKZA | GDS84237 | Drive Shaft | | 36 | 37 | 59.5 | 40 | 560 | |
| | 2022.01- | 7DCT | F | R | SUV 4WD DNNA | For Engine code:CZPB/DKZA | GDS81892 | Drive Shaft | | 36 | | 59.5 | 40 | 602 | |
| | 2022.01- | 7DCT | F | L/R | SUV 4WD DNNA | | GCO83101 | Outer Joint | | 36 | 27 | 59.5 | 40 | 65 | M |
| | 2022.01- | 7DCT | F | L | SUV 4WD DNNA | For Engine code:DNNA | GCI81158 | Inner Joint | | 37 | 34 | 34.5 | 65.5 | 83 | |

| | YEAR | TRANSM. | F/R | L/R | BODY STYLE & DRIVE TYPE & ENGINE | REMARKS | G-AP Ref. | PRODUCT | ABS | Technical Specifications A | B | C | H | L | P |
|---|---|---|---|---|---|---|---|---|---|---|---|---|---|---|---|
| **VW** | | | | | | | | | | | | | | | |
| **T-Roc** | | | | | | | | | | | | | | | |
| 2.0 (140 kw) | 2022.01- | 7DCT | F | L | SUV 4WD DNNA | For Engine code:CZPB/DKZA | GCI83028 | Inner Joint | | 37 | 28 | | 65.5 | 90.2 | |
| | 2022.01- | 7DCT | F | R | SUV 4WD DNNA | For Engine code:CZPB/DKZA | GCI61069 | Inner Joint | | | 28 | | | 32 | |
| | 2022.01- | 7DCT | F | R | SUV 4WD DNNA | For Engine code:DNNA | GCI82108 | Inner Joint | | 37 | 34 | 40 | 77.5 | 103.5 | |
| | 2022.01- | 7DCT | R | L | SUV 4WD DNNA | | GDS61331 | Drive Shaft | | 36 | | 59.5 | 40 | 606 | |
| | 2022.01- | 7DCT | R | R | SUV 4WD DNNA | | GDS61332 | Drive Shaft | | 36 | | 59.5 | 40 | 650 | |
| | 2022.01- | 7DCT | R | L/R | SUV 4WD DNNA | | GCI35026 | Outer Joint | | 36 | 33 | 59.5 | 40 | 61 | |
| | 2022.01- | 7DCT | R | L/R | SUV 4WD DNNA | | GCI61103 | Inner Joint | | | 33 | | | 32 | |
| 2.0 (221 kw) | 2019.09- | 7AT | F | L | SUV 4WD DNUE;DNFC | For Engine code:DNUE | GCI83028 | Inner Joint | | 37 | 28 | | 65.5 | 90.2 | |
| | 2019.09- | 7AT | F | R | SUV 4WD DNUE;DNFC | For Engine code:DNUE | GCI61069 | Inner Joint | | | 28 | | | 32 | |
| | 2019.09- | 7DCT | F | L | SUV 4WD DNUE;DNFC | For Engine code:DNFC | GDS81265 | Drive Shaft | | 36 | 37 | 59.5 | 40 | 557 | |
| | 2019.09- | 7DCT | F | L | SUV 4WD DNUE;DNFC | For Engine code:DNUE | GDS84237 | Drive Shaft | | 36 | 37 | 59.5 | 40 | 560 | |
| | 2019.09- | 7DCT | F | R | SUV 4WD DNUE;DNFC | Wheel Hub Diam:27,For Engine code:DNUE | GDS81892 | Drive Shaft | | 36 | | 59.5 | 40 | 602 | |
| | 2019.09- | 7DCT | F | L | SUV 4WD DNUE;DNFC | For Engine code:DNFC | GCI81158 | Inner Joint | | 37 | 34 | 34.5 | 65.5 | 83 | |
| | 2019.09- | 7DCT | R | L | SUV 4WD DNUE;DNFC | | GDS61331 | Drive Shaft | | 36 | | 59.5 | 40 | 606 | |
| | 2019.09- | 7DCT | R | R | SUV 4WD DNUE;DNFC | | GDS61332 | Drive Shaft | | 36 | | 59.5 | 40 | 650 | |
| | 2019.09- | 7DCT | R | L/R | SUV 4WD DNUE;DNFC | | GCI61103 | Inner Joint | | | 33 | | | 32 | |
| **Taigo** | | | | | | | | | | | | | | | |
| 1.0 (70 kw) | 2021.09- | 5MT | F | L | SUV FWD DLAC;DXTA;DUSB | Date from:2021.12 | GDS84187 | Drive Shaft | | 36 | 33 | 52 | 64.5 | 623 | |
| | 2021.09- | 5MT | F | R | SUV FWD DLAC;DXTA;DUSB | | GDS57823 | Drive Shaft | | 36 | 33 | 52 | 64.5 | 900 | |
| | 2021.09- | 5MT | F | L | SUV FWD DLAC;DXTA;DUSB | Date from:2021.12 | GCO81743 | Outer Joint | | 36 | 33 | 52 | 64.5 | 59 | I |
| | 2021.09- | 5MT | F | R | SUV FWD DLAC;DXTA;DUSB | | GCO81744 | Outer Joint | | 36 | 30 | 52 | 64.5 | 55.5 | M |
| | 2021.09- | 5MT | F | L | SUV FWD DLAC;DXTA;DUSB | | GCI81546 | Inner Joint | | 33 | 32 | 39.9 | 58.5 | 105 | |
| | 2021.09- | 5MT | F | R | SUV FWD DLAC;DXTA;DUSB | | GCI82449 | Inner Joint | | 33 | 30 | 39.9 | 58.5 | 105 | |
| | 2021.09- | ET | F | L/R | SUV FWD DLAC;DXTA;DUSB | | GCI81546 | Inner Joint | | 33 | 32 | 39.9 | 58.5 | 105 | |
| 1.0 (81 kw) | 2021.09-2024.03 | 6MT | F | L | SUV FWD DLAA | | GDS84563 | Drive Shaft | | 36 | | 52 | 64.5 | 506 | |
| | 2021.09-2024.03 | 6MT | F | R | SUV FWD DLAA | | GDS82233 | Drive Shaft | | 36 | | 52 | 64.5 | 778 | |
| | 2021.09-2024.03 | 6MT | F | R | SUV FWD DLAA | | GCO81744 | Outer Joint | | 36 | 30 | 52 | 64.5 | 55.5 | M |
| | 2021.09-2024.03 | 6MT | F | L | SUV FWD DLAA | | GCI81689 | Inner Joint | | | 32 | | | 89 | |
| | 2021.09-2024.03 | 6MT | F | R | SUV FWD DLAA | | GCI81690 | Inner Joint | | | 30 | | | 89 | |
| | 2021.09-2024.03 | 6MT/7DCT | F | L | SUV FWD DLAA | | GCO82548 | Outer Joint | | 36 | 27 | 52 | 64.5 | 65 | M |
| | 2021.09-2024.03 | 7DCT | F | R | SUV FWD DLAA | | GDS57885 | Drive Shaft | | 36 | | 52 | 64.5 | 765 | |
| | 2021.09-2024.03 | 7DCT | F | R | SUV FWD DLAA | | GCO81743 | Outer Joint | | 36 | 33 | 52 | 64.5 | 59 | I |
| | 2021.09-2024.03 | 7DCT | F | L/R | SUV FWD DLAA | | GCI81689 | Inner Joint | | | 32 | | | 89 | |
| 1.0 (85 kw) | 2021.11- | 6MT | F | L | SUV FWD DXUA;DUSA | | GDS84563 | Drive Shaft | | 36 | | 52 | 64.5 | 506 | |
| | 2021.11- | 6MT | F | R | SUV FWD DXUA;DUSA | | GDS82233 | Drive Shaft | | 36 | | 52 | 64.5 | 778 | |
| | 2021.11- | 6MT | F | L | SUV FWD DXUA;DUSA | | GCO82548 | Outer Joint | | 36 | 27 | 52 | 64.5 | 65 | M |
| | 2021.11- | 6MT | F | R | SUV FWD DXUA;DUSA | | GCO81744 | Outer Joint | | 36 | 30 | 52 | 64.5 | 55.5 | M |
| | 2021.11- | 6MT | F | L | SUV FWD DXUA;DUSA | | GCI81689 | Inner Joint | | | 32 | | | 89 | |
| | 2021.11- | 6MT | F | R | SUV FWD DXUA;DUSA | | GCI81690 | Inner Joint | | | 30 | | | 89 | |
| | 2021.11- | 7DCT | F | R | SUV FWD DXUA;DUSA | | GDS57885 | Drive Shaft | | 36 | | 52 | 64.5 | 765 | |
| | 2021.11- | 7DCT | F | R | SUV FWD DXUA;DUSA | | GCO81743 | Outer Joint | | 36 | 33 | 52 | 64.5 | 59 | I |
| 1.5 (110 kw) | 2021.09- | 7AT/6MT | F | L | SUV FWD DPCA;DXDB | | GDS58319 | Drive Shaft | | 36 | | 52 | 64.5 | 526 | |
| | 2021.09- | 7AT/6MT | F | R | SUV FWD DPCA;DXDB | | GDS58333 | Drive Shaft | | 36 | 40 | 52 | 64.5 | 827 | |
| | 2021.09- | 7AT/6MT | F | L | SUV FWD DPCA;DXDB | | GCI61069 | Inner Joint | | | 28 | | | 32 | |
| | 2021.09- | 7DCT | F | L | SUV FWD DPCA;DXDB | | GCO82548 | Outer Joint | | 36 | 27 | 52 | 64.5 | 65 | M |
| **Taos** | | | | | | | | | | | | | | | |
| 1.4 (110 kw) | 2020.10- | AT | F | L/R | SUV FWD DJKA;DSJA | | GCO83101 | Outer Joint | | 36 | 27 | 59.5 | 40 | 65 | M |
| | 2021.05- | 7DCT | F | L | SUV 4WD DJKA | | GDS83323 | Drive Shaft | | 36 | 37 | 59.5 | 40 | 570 | |
| | 2021.05- | 7DCT | F | R | SUV 4WD DJKA | | GDS82352 | Drive Shaft | | 36 | | 59.5 | 40 | 614 | |
| | 2021.05- | 7DCT | F | L | SUV 4WD DJKA | | GCO83101 | Outer Joint | | 36 | 27 | 59.5 | 40 | 65 | M |
| | 2021.05- | 7DCT | F | L | SUV 4WD DJKA | | GCI83028 | Inner Joint | | 37 | 28 | | 65.5 | 90.2 | |
| | 2021.05- | 7DCT | F | R | SUV 4WD DJKA | | GCI61069 | Inner Joint | | | 28 | | | 32 | |
| 1.6 (81 kw) | 2021.07- | 5MT | F | L | SUV FWD DWYA | | GDS82391 | Drive Shaft | | 36 | | 59.5 | 40 | 528 | |
| | 2021.07- | 5MT | F | R | SUV FWD DWYA | | GDS82390 | Drive Shaft | | 36 | | 59.5 | 40 | 830 | |
| | 2021.07- | 5MT | F | L/R | SUV FWD DWYA | | GCI81398 | Inner Joint | | | 34 | | | 34 | |
| | 2021.07- | 6DCT | F | L/R | SUV FWD DWYA | | GCO83101 | Outer Joint | | 36 | 27 | 59.5 | 40 | 65 | M |
| **Tayron** | | | | | | | | | | | | | | | |
| 1.5 (110 kw) | 2024.11- | 7DCT | F | L | SUV FWD DXDB | | GDS82351 | Drive Shaft | | 36 | 37 | 59.5 | 40 | 568 | |
| | 2024.11- | 7DCT | F | R | SUV FWD DXDB | | GDS58238 | Drive Shaft | | 36 | 37 | 59.5 | 40 | 919 | |
| | 2024.11- | 7DCT | F | L/R | SUV FWD DXDB | | GCO83101 | Outer Joint | | 36 | 27 | 59.5 | 40 | 65 | M |
| | 2024.11- | 7DCT | F | L | SUV FWD DXDB | | GCI81158 | Inner Joint | | 37 | 34 | 34.5 | 65.5 | 83 | |
| | 2024.11- | 7DCT | F | R | SUV FWD DXDB | | GCI82108 | Inner Joint | | 37 | 34 | 40 | 77.5 | 103.5 | |
| 1.5 (150 kw) | 2024.11- | 6DCT | F | L | SUV FWD DUCB, EANB | | GDS81265 | Drive Shaft | | 36 | 37 | 59.5 | 40 | 557 | |
| | 2024.11- | 6DCT | F | R | SUV FWD DUCB, EANB | | GDS57844 | Drive Shaft | | 36 | 37 | 59.5 | 40 | 929 | |
| | 2024.11- | 6DCT | F | L | SUV FWD DUCB, EANB | | GCI81158 | Inner Joint | | 37 | 34 | 34.5 | 65.5 | 83 | |

| | YEAR | TRANSM. | F/R | L/R | BODY STYLE & DRIVE TYPE & ENGINE | REMARKS | G-AP Ref. | PRODUCT | ABS | Technical Specifications A | B | C | H | L | P |
|---|---|---|---|---|---|---|---|---|---|---|---|---|---|---|---|
| **VW** | | | | | | | | | | | | | | | |
| **Tayron** | | | | | | | | | | | | | | | |
| 1.5 (200 kw) | 2024.11- | 6DCT | F | L | SUV FWD DUCA, EANB | | GDS81265 | Drive Shaft | | 36 | 37 | 59.5 | 40 | 557 | |
| | 2024.11- | 6DCT | F | R | SUV FWD DUCA, EANB | | GDS57844 | Drive Shaft | | 36 | 37 | 59.5 | 40 | 929 | |
| | 2024.11- | 6DCT | F | L | SUV FWD DUCA, EANB | | GCI81158 | Inner Joint | | 37 | 34 | 34.5 | 65.5 | 83 | |
| 2.0 (110 kw) | 2024.11- | 7DCT | F | L | SUV FWD DXPA | | GDS82351 | Drive Shaft | | 36 | 37 | 59.5 | 40 | 568 | |
| | 2024.11- | 7DCT | F | R | SUV FWD DXPA | | GDS58238 | Drive Shaft | | 36 | 37 | 59.5 | 40 | 919 | |
| | 2024.11- | 7DCT | F | L/R | SUV FWD DXPA | | GCO83101 | Outer Joint | | 36 | 27 | 59.5 | 40 | 65 | M |
| | 2024.11- | 7DCT | F | L | SUV FWD DXPA | | GCI81158 | Inner Joint | | 37 | 34 | 34.5 | 65.5 | 83 | |
| | 2024.11- | 7DCT | F | R | SUV FWD DXPA | | GCI82108 | Inner Joint | | 37 | 34 | 40 | 77.5 | 103.5 | |
| 2.0 (142 kw) | 2024.11- | 7DCT | F | L | SUV 4WD DXNB | | GCI81158 | Inner Joint | | 37 | 34 | 34.5 | 65.5 | 83 | |
| 2.0 (150 kw) | 2024.11- | 7DCT | F | L | SUV 4WD DNNE | | GCI81158 | Inner Joint | | 37 | 34 | 34.5 | 65.5 | 83 | |
| 2.0 (195 kw) | 2024.11- | 7DCT | F | L | SUV 4WD DNPB | | GCI81158 | Inner Joint | | 37 | 34 | 34.5 | 65.5 | 83 | |
| **Tiguan** | | | | | | | | | | | | | | | |
| 1.4 (90 kw) | 2010.08-2011.05 | 6MT | F | L | SUV Van FWD CAXA | | GDS83295 | Drive Shaft | | 36 | | 59.5 | 40 | 491 | |
| | 2010.08-2011.05 | 6MT | F | R | SUV Van FWD CAXA | | GDS61147 | Drive Shaft | | 36 | | 59.5 | 40 | 795 | |
| | 2010.08-2018.07 | 6MT | F | L | SUV FWD CAXA | | GDS83295 | Drive Shaft | | 36 | | 59.5 | 40 | 491 | |
| | 2010.08-2018.07 | 6MT | F | R | SUV FWD CAXA | | GDS61147 | Drive Shaft | | 36 | | 59.5 | 40 | 795 | |
| | 2010.08-2018.07 | 6MT | F | L/R | SUV FWD CAXA | | GCO83101 | Outer Joint | | 36 | 27 | 59.5 | 40 | 65 | M |
| | 2010.08-2018.07 | 6MT | F | L/R | SUV FWD CAXA | | GCI83016 | Inner Joint | | | 28 | | | 32 | |
| 1.4 (92 kw) | 2015.05-2018.07 | 6MT | F | L | SUV FWD CZDB | | GDS83295 | Drive Shaft | | 36 | | 59.5 | 40 | 491 | |
| | 2015.05-2018.07 | 6MT | F | R | SUV FWD CZDB | | GDS61147 | Drive Shaft | | 36 | | 59.5 | 40 | 795 | |
| | 2015.05-2018.07 | 6MT | F | L/R | SUV FWD CZDB | | GCO83101 | Outer Joint | | 36 | 27 | 59.5 | 40 | 65 | M |
| | 2015.05-2018.07 | 6MT | F | L/R | SUV FWD CZDB | | GCI83016 | Inner Joint | | | 28 | | | 32 | |
| | 2016.01-2022.03 | 6DCT | F | R | SUV FWD CZCA;CZDB | | GDS61126 | Drive Shaft | | 36 | | 59.5 | 40 | 793 | |
| | 2016.01-2022.03 | 6DCT | F | R | SUV FWD CZCA;CZDB | | GDS83313 | Drive Shaft | | 36 | | 59.5 | 40 | 792 | |
| | 2016.01-2022.03 | 6MT | F | R | SUV FWD CZCA;CZDB | | GDS82386 | Drive Shaft | | 36 | | 59.5 | 40 | 806 | |
| | 2016.01-2022.03 | 6MT/6DCT | F | L | SUV FWD CZCA;CZDB | | GDS81896 | Drive Shaft | | 36 | | 59.5 | 40 | 500 | |
| | 2016.01-2022.03 | 6MT/6DCT | F | L/R | SUV FWD CZCA;CZDB | | GCO83101 | Outer Joint | | 36 | 27 | 59.5 | 40 | 65 | M |
| | 2016.01-2022.03 | 6MT/6DCT | F | L/R | SUV FWD CZCA;CZDB | | GCI83016 | Inner Joint | | | 28 | | | 32 | |
| 1.4 (110 kw) | 2007.09-2018.07 | 6MT | F | L | SUV 4WD BWK;CAVA;CTHA | | GDS61296 | Drive Shaft | | 36 | 40 | 59.5 | 40 | 500 | |
| | 2007.09-2018.07 | 6MT | F | R | SUV 4WD BWK;CAVA;CTHA | | GDS83369 | Drive Shaft | | 36 | 40 | 59.5 | 40 | 598 | |
| | 2007.09-2018.07 | 6MT | F | L/R | SUV 4WD BWK;CAVA;CTHA | | GCO83002 | Outer Joint | | 36 | 27 | 59.5 | 40 | 66 | I |
| | 2007.09-2018.07 | 6MT | F | L | SUV 4WD BWK;CAVA;CTHA | | GCI61090 | Inner Joint | | 40 | 28 | 46.9 | | 133.2 | |
| | 2007.09-2018.07 | 6MT | F | R | SUV 4WD BWK;CAVA;CTHA | | GCI61054 | Inner Joint | | 40 | 28 | 46.9 | 41 | 101.7 | |
| | 2007.09-2018.07 | 6MT | R | L | SUV 4WD BWK;CAVA;CTHA | | GDS61284 | Drive Shaft | | 36 | | 59.5 | 40 | 594 | |
| | 2007.09-2018.07 | 6MT | R | R | SUV 4WD BWK;CAVA;CTHA | | GDS61293 | Drive Shaft | | 36 | | 59.5 | 40 | 631 | |
| | 2007.09-2018.07 | 6MT | R | L/R | SUV 4WD BWK;CAVA;CTHA | | GCI35026 | Outer Joint | | 36 | 33 | 59.5 | 40 | 61 | |
| | 2007.09-2018.07 | 6MT | R | L/R | SUV 4WD BWK;CAVA;CTHA | | GCI53002 | Inner Joint | | | 33 | | | 34 | |
| | 2007.09-2018.07 | 6MT | R | L/R | SUV 4WD BWK;CAVA;CTHA | | GCI82447 | Inner Joint | | | 33 | | | 34 | |
| | 2008.05-2010.05 | 6MT | F | L | SUV Van FWD CAVA | | GDS83295 | Drive Shaft | | 36 | | 59.5 | 40 | 491 | |
| | 2008.05-2010.05 | 6MT | F | R | SUV Van FWD CAVA | | GDS61147 | Drive Shaft | | 36 | | 59.5 | 40 | 795 | |
| | 2008.05-2018.07 | 6DCT | F | R | SUV FWD BWK;CAVA;CTHA | | GDS81891 | Drive Shaft | | 36 | | 59.5 | 40 | 781 | |
| | 2008.05-2018.07 | 6DCT | F | R | SUV FWD BWK;CAVA;CTHA | | GCI61069 | Inner Joint | | | 28 | | | 32 | |
| | 2008.05-2018.07 | 6MT | F | R | SUV FWD BWK;CAVA;CTHA | | GDS61147 | Drive Shaft | | 36 | | 59.5 | 40 | 795 | |
| | 2008.05-2018.07 | 6MT/6DCT | F | L | SUV FWD BWK;CAVA;CTHA | | GDS83295 | Drive Shaft | | 36 | | 59.5 | 40 | 491 | |
| | 2008.05-2018.07 | 6MT/6DCT | F | L/R | SUV FWD BWK;CAVA;CTHA | | GCO83101 | Outer Joint | | 36 | 27 | 59.5 | 40 | 65 | M |
| | 2008.05-2018.07 | 6MT/6DCT | F | L/R | SUV FWD BWK;CAVA;CTHA | | GCI83016 | Inner Joint | | | 28 | | | 32 | |
| | 2015.05-2018.07 | 6AT | F | L | SUV FWD CZDA | | GDS98006 | Stub Axle-Flange | | 37 | | | 67 | 123.5 | |
| | 2015.05-2018.07 | 6DCT | F | R | SUV FWD CZDA | | GDS81891 | Drive Shaft | | 36 | | 59.5 | 40 | 781 | |
| | 2015.05-2018.07 | 6DCT | F | L/R | SUV FWD CZDA | | GCI61069 | Inner Joint | | | 28 | | | 32 | |
| | 2015.05-2018.07 | 6MT | F | L | SUV FWD CZDA | | GDS83295 | Drive Shaft | | 36 | | 59.5 | 40 | 491 | |
| | 2015.05-2018.07 | 6MT | F | R | SUV FWD CZDA | | GDS61147 | Drive Shaft | | 36 | | 59.5 | 40 | 795 | |
| | 2015.05-2018.07 | 6MT/6DCT | F | L/R | SUV FWD CZDA | | GCO83101 | Outer Joint | | 36 | 27 | 59.5 | 40 | 65 | M |
| | 2015.05-2018.07 | 6MT/6DCT | F | L/R | SUV FWD CZDA | | GCI83016 | Inner Joint | | | 28 | | | 32 | |
| | 2016.05-2022.03 | 6AT | F | L | SUV 4WD CZEA;CZDA | | GDS98006 | Stub Axle-Flange | | 37 | | | 67 | 123.5 | |
| | 2016.05-2022.03 | 6AT/6MT | F | L | SUV 4WD CZEA;CZDA | | GDS81896 | Drive Shaft | | 36 | | 59.5 | 40 | 500 | |
| | 2016.05-2022.03 | 6AT/6MT | F | L/R | SUV 4WD CZEA;CZDA | | GCO83101 | Outer Joint | | 36 | 27 | 59.5 | 40 | 65 | M |
| | 2016.05-2022.03 | 6AT/6MT | F | L/R | SUV 4WD CZEA;CZDA | | GCI61069 | Inner Joint | | | 28 | | | 32 | |
| | 2016.05-2022.03 | 6AT/6MT | F | L/R | SUV 4WD CZEA;CZDA | | GCI83016 | Inner Joint | | | 28 | | | 32 | |
| | 2016.05-2022.03 | 6DCT/6MT | F | R | SUV 4WD CZEA;CZDA | | GDS82352 | Drive Shaft | | 36 | | 59.5 | 40 | 614 | |
| | 2016.05-2022.03 | 6AT/6MT | R | L | SUV 4WD CZEA;CZDA | For PR code:0BG | GDS61331 | Drive Shaft | | 36 | | 59.5 | 40 | 606 | |
| | 2016.05-2022.03 | 6AT/6MT | R | L | SUV 4WD CZEA;CZDA | For PR code:0BH | GDS61334 | Drive Shaft | | 36 | | 59.5 | 40 | 598 | |
| | 2016.05-2022.03 | 6AT/6MT | R | R | SUV 4WD CZEA;CZDA | For PR code:0BG | GDS61332 | Drive Shaft | | 36 | | 59.5 | 40 | 650 | |
| | 2016.05-2022.03 | 6AT/6MT | R | R | SUV 4WD CZEA;CZDA | For PR code:0BH | GDS61335 | Drive Shaft | | 36 | | 59.5 | 40 | 638 | |
| | 2016.05-2022.03 | 6AT/6MT | R | L/R | SUV 4WD CZEA;CZDA | For PR code:0BG/0BH | GCI35026 | Outer Joint | | 36 | 33 | 59.5 | 40 | 61 | |
| | 2016.05-2022.03 | 6AT/6MT | R | L/R | SUV 4WD CZEA;CZDA | For PR code:0BH | GCI53002 | Inner Joint | | | 33 | | | 34 | |

| | YEAR | TRANSM. | F/R | L/R | BODY STYLE & DRIVE TYPE & ENGINE | REMARKS | G-AP Ref. | PRODUCT | ABS | Technical Specifications A | B | C | H | L | P |
|---|---|---|---|---|---|---|---|---|---|---|---|---|---|---|---|
| **VW Tiguan** | | | | | | | | | | | | | | | |
| 1.4 (110 kw) | 2016.05-2022.03 | 6AT/6MT | R | L/R | SUV 4WD CZEA;CZDA | For PR code:0BG | GCI61103 | Inner Joint | | | 33 | | | 32 | |
| | 2016.05-2022.03 | 6DCT | F | R | SUV FWD CZEA;CZDA;DJVA | For Engine code:CZDA | GDS61126 | Drive Shaft | | 36 | | 59.5 | 40 | 793 | |
| | 2016.05-2022.03 | 6DCT | F | R | SUV FWD CZEA;CZDA;DJVA | For Engine code:CZEA | GDS83313 | Drive Shaft | | 36 | | 59.5 | 40 | 792 | |
| | 2016.05-2022.03 | 6DCT/6MT | F | L/R | SUV FWD CZEA;CZDA;DJVA | Transmission:6DCT;For Modelcode:AD1/BT1;Transmission:6MT | GCO83101 | Outer Joint | | 36 | 27 | 59.5 | 40 | 65 | M |
| | 2016.05-2022.03 | 6DCT/6MT | F | L/R | SUV FWD CZEA;CZDA;DJVA | Original design | GCI61069 | Inner Joint | | | 28 | | | 32 | |
| | 2016.05-2022.03 | 6DCT/6MT | F | L/R | SUV FWD CZEA;CZDA;DJVA | Non-Original design | GCI83016 | Inner Joint | | | 28 | | | 32 | |
| | 2016.05-2022.03 | 6MT | F | R | SUV FWD CZEA;CZDA;DJVA | | GDS82386 | Drive Shaft | | 36 | | 59.5 | 40 | 806 | |
| | 2016.05-2022.03 | 6MT/6DCT | F | L | SUV FWD CZEA;CZDA;DJVA | Transmission:6DCT;For Engine code:CZDA/CZEA;Transmission:6M | GDS81896 | Drive Shaft | | 36 | | 59.5 | 40 | 500 | |
| 1.4 (118 kw) | 2011.05-2018.07 | 6AT | F | L | SUV 4WD CAVD;CTHD | | GDS98006 | Stub Axle-Flange | | 37 | | | 67 | 123.5 | |
| | 2011.05-2018.07 | 6MT | F | L | SUV 4WD CAVD;CTHD | | GDS61296 | Drive Shaft | | 36 | 40 | 59.5 | 40 | 500 | |
| | 2011.05-2018.07 | 6MT | F | R | SUV 4WD CAVD;CTHD | | GDS83369 | Drive Shaft | | 36 | 40 | 59.5 | 40 | 598 | |
| | 2011.05-2018.07 | 6MT | F | L/R | SUV 4WD CAVD;CTHD | | GCO83002 | Outer Joint | | 36 | 27 | 59.5 | 40 | 66 | I |
| | 2011.05-2018.07 | 6MT | F | L | SUV 4WD CAVD;CTHD | | GCI61090 | Inner Joint | | 40 | 28 | 46.9 | | 133.2 | |
| | 2011.05-2018.07 | 6MT | F | L/R | SUV 4WD CAVD;CTHD | | GCI61054 | Inner Joint | | 40 | 28 | 46.9 | 41 | 101.7 | |
| | 2011.05-2018.07 | AT | F | L/R | SUV 4WD CAVD;CTHD | | GCI83006 | Inner Joint | | | 33 | | | 34 | |
| | 2011.05-2018.07 | 6MT | R | L | SUV 4WD CAVD;CTHD | | GDS61284 | Drive Shaft | | 36 | | 59.5 | 40 | 594 | |
| | 2011.05-2018.07 | 6MT | R | R | SUV 4WD CAVD;CTHD | | GDS61293 | Drive Shaft | | 36 | | 59.5 | 40 | 631 | |
| | 2011.05-2018.07 | 6MT | R | L/R | SUV 4WD CAVD;CTHD | | GCI35026 | Outer Joint | | 36 | 33 | 59.5 | 40 | 61 | |
| | 2011.05-2018.07 | 6MT | R | L/R | SUV 4WD CAVD;CTHD | | GCI53002 | Inner Joint | | | 33 | | | 34 | |
| | 2011.05-2018.07 | 6MT | R | L/R | SUV 4WD CAVD;CTHD | | GCI82447 | Inner Joint | | | 33 | | | 34 | |
| | 2011.05-2018.07 | 6AT | F | L | SUV FWD CAVD;CTHD | | GDS98006 | Stub Axle-Flange | | 37 | | | 67 | 123.5 | |
| | 2011.05-2018.07 | 6DCT | F | R | SUV FWD CAVD;CTHD | | GDS81891 | Drive Shaft | | 36 | | 59.5 | 40 | 781 | |
| | 2011.05-2018.07 | 6DCT | F | R | SUV FWD CAVD;CTHD | | GCO83101 | Outer Joint | | 36 | 27 | 59.5 | 40 | 65 | M |
| | 2011.05-2018.07 | 6MT | F | R | SUV FWD CAVD;CTHD | | GDS61147 | Drive Shaft | | 36 | | 59.5 | 40 | 795 | |
| | 2011.05-2018.07 | 6MT/6DCT | F | L | SUV FWD CAVD;CTHD | | GDS83295 | Drive Shaft | | 36 | | 59.5 | 40 | 491 | |
| | 2011.05-2018.07 | 6MT/6DCT | F | L/R | SUV FWD CAVD;CTHD | | GCI83016 | Inner Joint | | | 28 | | | 32 | |
| | 2012.09-2018.07 | 6MT | F | R | SUV Van 4WD CTHD | | GDS83369 | Drive Shaft | | 36 | 40 | 59.5 | 40 | 598 | |
| | 2012.09-2018.07 | 6MT | F | L/R | SUV Van 4WD CTHD | | GCO83002 | Outer Joint | | 36 | 27 | 59.5 | 40 | 66 | I |
| | 2012.09-2018.07 | 6MT | F | L/R | SUV Van 4WD CTHD | | GCI61054 | Inner Joint | | 40 | 28 | 46.9 | 41 | 101.7 | |
| | 2012.09-2018.07 | 6MT | R | L | SUV Van 4WD CTHD | | GDS61284 | Drive Shaft | | 36 | | 59.5 | 40 | 594 | |
| | 2012.09-2018.07 | 6MT | R | R | SUV Van 4WD CTHD | | GDS61293 | Drive Shaft | | 36 | | 59.5 | 40 | 631 | |
| | 2012.09-2018.07 | 6MT | R | L/R | SUV Van 4WD CTHD | | GCI35026 | Outer Joint | | 36 | 33 | 59.5 | 40 | 61 | |
| | 2012.09-2018.07 | 6MT | R | L/R | SUV Van 4WD CTHD | | GCI82447 | Inner Joint | | | 33 | | | 34 | |
| | 2012.09-2018.07 | 6MT | F | L | SUV Van FWD CTHD | | GDS83295 | Drive Shaft | | 36 | | 59.5 | 40 | 491 | |
| | 2012.09-2018.07 | 6MT | F | R | SUV Van FWD CTHD | | GDS61147 | Drive Shaft | | 36 | | 59.5 | 40 | 795 | |
| 1.4 (180 kw) | 2020.11-2024.04 | 6AT | F | L/R | SUV FWD DGEA | | GCO83101 | Outer Joint | | 36 | 27 | 59.5 | 40 | 65 | M |
| | 2020.11-2024.04 | 6AT | F | R | SUV FWD DGEA | | GCI82108 | Inner Joint | | 37 | 34 | 40 | 77.5 | 103.5 | |
| | 2020.11-2024.04 | 6DCT | F | L | SUV FWD DGEA | | GDS81265 | Drive Shaft | | 36 | 37 | 59.5 | 40 | 557 | |
| | 2020.11-2024.04 | 6DCT | F | R | SUV FWD DGEA | | GDS57844 | Drive Shaft | | 36 | 37 | 59.5 | 40 | 929 | |
| | 2020.11-2024.04 | 6DCT | F | L | SUV FWD DGEA | | GCI81158 | Inner Joint | | 37 | 34 | 34.5 | 65.5 | 83 | |
| 1.5 (96 kw) | 2018.07-2024.04 | 6MT | F | L | SUV FWD DPBE;DACB | | GDS81896 | Drive Shaft | | 36 | | 59.5 | 40 | 500 | |
| | 2018.07-2024.04 | 6MT | F | R | SUV FWD DPBE;DACB | For PR code:0EN | GDS82386 | Drive Shaft | | 36 | | 59.5 | 40 | 806 | |
| | 2018.07-2024.04 | 6MT | F | R | SUV FWD DPBE;DACB | For PR code:0ED | GDS83313 | Drive Shaft | | 36 | | 59.5 | 40 | 792 | |
| | 2018.07-2024.04 | 6MT | F | L/R | SUV FWD DPBE;DACB | | GCO83101 | Outer Joint | | 36 | 27 | 59.5 | 40 | 65 | M |
| | 2018.07-2024.04 | 6MT | F | L/R | SUV FWD DPBE;DACB | | GCI83016 | Inner Joint | | | 28 | | | 32 | |
| | 2023.09- | 7DCT | F | L | SUV FWD DXDC | | GDS82351 | Drive Shaft | | 36 | 37 | 59.5 | 40 | 568 | |
| | 2023.09- | 7DCT | F | R | SUV FWD DXDC | | GDS58238 | Drive Shaft | | 36 | 37 | 59.5 | 40 | 919 | |
| | 2023.09- | 7DCT | F | L/R | SUV FWD DXDC | | GCO83101 | Outer Joint | | 36 | 27 | 59.5 | 40 | 65 | M |
| | 2023.09- | 7DCT | F | L | SUV FWD DXDC | | GCI81158 | Inner Joint | | 37 | 34 | 34.5 | 65.5 | 83 | |
| | 2023.09- | 7DCT | F | R | SUV FWD DXDC | | GCI82108 | Inner Joint | | 37 | 34 | 40 | 77.5 | 103.5 | |
| 1.5 (110 kw) | 2018.11-2024.04 | 6MT | F | L | SUV FWD DADA;DPCA;DXDB | | GDS81896 | Drive Shaft | | 36 | | 59.5 | 40 | 500 | |
| | 2018.11-2024.04 | 6MT | F | R | SUV FWD DADA;DPCA;DXDB | For PR code:0EN | GDS82386 | Drive Shaft | | 36 | | 59.5 | 40 | 806 | |
| | 2018.11-2024.04 | 6MT | F | R | SUV FWD DADA;DPCA;DXDB | For PR code:0ED | GDS83313 | Drive Shaft | | 36 | | 59.5 | 40 | 792 | |
| | 2018.11-2024.04 | 6MT | F | L/R | SUV FWD DADA;DPCA;DXDB | | GCI83016 | Inner Joint | | | 28 | | | 32 | |
| | 2018.11-2024.04 | 6MT/7DCT | F | L/R | SUV FWD DADA;DPCA;DXDB | | GCO83101 | Outer Joint | | 36 | 27 | 59.5 | 40 | 65 | M |
| | 2018.11-2024.04 | 7DCT | F | L | SUV FWD DADA;DPCA;DXDB | | GDS83323 | Drive Shaft | | 36 | 37 | 59.5 | 40 | 570 | |
| | 2018.11-2024.04 | 7DCT | F | R | SUV FWD DADA;DPCA;DXDB | | GDS84510 | Drive Shaft | | 36 | 37 | 59.5 | 40 | 925 | |
| | 2018.11-2024.04 | 7DCT | F | L/R | SUV FWD DADA;DPCA;DXDB | | GCI83028 | Inner Joint | | 37 | 28 | | 65.5 | 90.2 | |
| | 2023.09- | 7DCT | F | L | SUV FWD DXDB | | GDS82351 | Drive Shaft | | 36 | 37 | 59.5 | 40 | 568 | |
| | 2023.09- | 7DCT | F | R | SUV FWD DXDB | | GDS58238 | Drive Shaft | | 36 | 37 | 59.5 | 40 | 919 | |
| | 2023.09- | 7DCT | F | L/R | SUV FWD DXDB | | GCO83101 | Outer Joint | | 36 | 27 | 59.5 | 40 | 65 | M |
| | 2023.09- | 7DCT | F | L | SUV FWD DXDB | | GCI81158 | Inner Joint | | 37 | 34 | 34.5 | 65.5 | 83 | |
| | 2023.09- | 7DCT | F | R | SUV FWD DXDB | | GCI82108 | Inner Joint | | 37 | 34 | 40 | 77.5 | 103.5 | |
| 1.5 (150 kw) | 2024.03- | 6DCT | F | L | SUV FWD DUCB;EANB | | GDS81265 | Drive Shaft | | 36 | 37 | 59.5 | 40 | 557 | |
| | 2024.03- | 6DCT | F | R | SUV FWD DUCB;EANB | | GDS57844 | Drive Shaft | | 36 | 37 | 59.5 | 40 | 929 | |

| | YEAR | TRANSM. | F/R | L/R | BODY STYLE & DRIVE TYPE & ENGINE | REMARKS | G-AP Ref. | PRODUCT | ABS | Technical Specifications A | B | C | H | L | P |
|---|---|---|---|---|---|---|---|---|---|---|---|---|---|---|---|
| **VW Tiguan** | | | | | | | | | | | | | | | |
| 1.5 (150 kw) | 2024.03- | 6DCT | F | L/R | SUV FWD DUCB;EANB | | GCO83101 | Outer Joint | | 36 | 27 | 59.5 | 40 | 65 | M |
| | 2024.03- | 6DCT | F | L | SUV FWD DUCB;EANB | | GCI81158 | Inner Joint | | 37 | 34 | 34.5 | 65.5 | 83 | |
| | 2024.03- | 6DCT | F | R | SUV FWD DUCB;EANB | | GCI82108 | Inner Joint | | 37 | 34 | 40 | 77.5 | 103.5 | |
| 1.5 (200 kw) | 2024.03- | 6DCT | F | L | SUV FWD DUCA;EANB | | GDS81265 | Drive Shaft | | 36 | 37 | 59.5 | 40 | 557 | |
| | 2024.03- | 6DCT | F | R | SUV FWD DUCA;EANB | | GDS57844 | Drive Shaft | | 36 | 37 | 59.5 | 40 | 929 | |
| | 2024.03- | 6DCT | F | L/R | SUV FWD DUCA;EANB | | GCO83101 | Outer Joint | | 36 | 27 | 59.5 | 40 | 65 | M |
| | 2024.03- | 6DCT | F | L | SUV FWD DUCA;EANB | | GCI81158 | Inner Joint | | 37 | 34 | 34.5 | 65.5 | 83 | |
| | 2024.03- | 6DCT | F | R | SUV FWD DUCA;EANB | | GCI82108 | Inner Joint | | 37 | 34 | 40 | 77.5 | 103.5 | |
| 1.6 (85 kw) | 2016.05-2020.06 | 6MT | F | L | SUV FWD DGDB | | GDS81896 | Drive Shaft | | 36 | | 59.5 | 40 | 500 | |
| | 2016.05-2020.06 | 6MT | F | R | SUV FWD DGDB | | GDS61101 | Drive Shaft | | 36 | | 59.5 | 40 | 803 | |
| | 2016.05-2020.06 | 6MT | F | L/R | SUV FWD DGDB | GrooveType:Inner | GCO83002 | Outer Joint | | 36 | 27 | 59.5 | 40 | 66 | I |
| | 2016.05-2020.06 | 6MT | F | L/R | SUV FWD DGDB | GrooveType:Middle | GCO83101 | Outer Joint | | 36 | 27 | 59.5 | 40 | 65 | M |
| 2.0 (81 kw) | 2010.05-2011.07 | 6MT | F | L | SUV Van FWD CFFD | For light alloy rims | GDS83295 | Drive Shaft | | 36 | | 59.5 | 40 | 491 | |
| | 2010.05-2011.07 | 6MT | F | R | SUV Van FWD CFFD | | GDS61147 | Drive Shaft | | 36 | | 59.5 | 40 | 795 | |
| | 2010.05-2018.07 | 6MT | F | L | SUV FWD CFFD;CUVE | For Engine code:CUVE;For Engine code:CFFD,For light alloy rims | GDS83295 | Drive Shaft | | 36 | | 59.5 | 40 | 491 | |
| | 2010.05-2018.07 | 6MT | F | R | SUV FWD CFFD;CUVE | | GDS61147 | Drive Shaft | | 36 | | 59.5 | 40 | 795 | |
| | 2010.05-2018.07 | 6MT | F | L/R | SUV FWD CFFD;CUVE | | GCO83101 | Outer Joint | | 36 | 27 | 59.5 | 40 | 65 | M |
| | 2010.05-2018.07 | 6MT | F | L/R | SUV FWD CFFD;CUVE | | GCI83016 | Inner Joint | | | 28 | | | 32 | |
| | 2016.08-2020.07 | 6MT | F | L | SUV FWD CYKC | | GDS81896 | Drive Shaft | | 36 | | 59.5 | 40 | 500 | |
| | 2016.08-2020.07 | 6MT | F | R | SUV FWD CYKC | | GDS61101 | Drive Shaft | | 36 | | 59.5 | 40 | 803 | |
| | 2016.08-2020.07 | 6MT | F | L/R | SUV FWD CYKC | | GCO83101 | Outer Joint | | 36 | 27 | 59.5 | 40 | 65 | M |
| | 2016.08-2020.07 | 6MT | F | L/R | SUV FWD CYKC | | GCI82456 | Inner Joint | | | 28 | | | 32 | |
| 2.0 (85 kw) | 2016.05-2019.07 | 6MT | F | L | SUV FWD DFGC | | GDS81896 | Drive Shaft | | 36 | | 59.5 | 40 | 500 | |
| | 2016.05-2019.07 | 6MT | F | R | SUV FWD DFGC | | GDS61101 | Drive Shaft | | 36 | | 59.5 | 40 | 803 | |
| | 2016.05-2019.07 | 6MT | F | L/R | SUV FWD DFGC | GrooveType:Inner | GCO83002 | Outer Joint | | 36 | 27 | 59.5 | 40 | 66 | I |
| | 2016.05-2019.07 | 6MT | F | L/R | SUV FWD DFGC | GrooveType:Middle | GCO83101 | Outer Joint | | 36 | 27 | 59.5 | 40 | 65 | M |
| 2.0 (90 kw) | 2020.07-2024.04 | 6MT | F | R | SUV FWD DTRC | | GDS83612 | Drive Shaft | | 36 | 37 | 59.5 | 40 | 907 | |
| | 2020.07-2024.04 | 6MT | F | R | SUV FWD DTRC | | GCO83101 | Outer Joint | | 36 | 27 | 59.5 | 40 | 65 | M |
| | 2020.07-2024.04 | 6MT | F | R | SUV FWD DTRC | | GCI82108 | Inner Joint | | 37 | 34 | 40 | 77.5 | 103.5 | |
| 2.0 (100 kw) | 2007.11-2018.07 | 6AT | F | L | SUV 4WD CBAA;CFFA | | GDS81715 | Drive Shaft | | 36 | 26 | 59.5 | 40 | 566 | |
| | 2007.11-2018.07 | 6AT | F | L | SUV 4WD CBAA;CFFA | | GCI61038 | Inner Joint | | 26 | 34 | 31 | 68.5 | 88.5 | |
| | 2007.11-2018.07 | 6AT | F | R | SUV 4WD CBAA;CFFA | | GCI61048 | Inner Joint | | 40 | 34 | 46.9 | | 127.5 | |
| | 2007.11-2018.07 | 6AT/6MT | F | L/R | SUV 4WD CBAA;CFFA | Date from:2010.03 | GCO83002 | Outer Joint | | 36 | 27 | 59.5 | 40 | 66 | I |
| | 2007.11-2018.07 | 6MT | F | L | SUV 4WD CBAA;CFFA | | GDS61296 | Drive Shaft | | 36 | 40 | 59.5 | 40 | 500 | |
| | 2007.11-2018.07 | 6MT | F | R | SUV 4WD CBAA;CFFA | | GDS83369 | Drive Shaft | | 36 | 40 | 59.5 | 40 | 598 | |
| | 2007.11-2018.07 | 6MT | F | L/R | SUV 4WD CBAA;CFFA | | GCI61054 | Inner Joint | | 40 | 28 | 46.9 | 41 | 101.7 | |
| | 2007.11-2018.07 | 7DCT | F | L | SUV 4WD CBAA;CFFA | Date To:2011.02,Date From:2012.08 | GDS81265 | Drive Shaft | | 36 | 37 | 59.5 | 40 | 557 | |
| | 2007.11-2018.07 | 7DCT | F | R | SUV 4WD CBAA;CFFA | Date To:2011.02,Date From:2012.08 | GDS61347 | Drive Shaft | | 36 | 40 | 59.5 | 40 | 593 | |
| | 2007.11-2018.07 | AT/MT | F | L/R | SUV 4WD CBAA;CFFA | Transmission:AT,Date to:2011.02;For Engine code:CFFA;Transmission:MT,Date to:2010.03 | GCO83101 | Outer Joint | | 36 | 27 | 59.5 | 40 | 65 | M |
| | 2007.11-2018.07 | MT | F | L | SUV 4WD CBAA;CFFA | | GCI61090 | Inner Joint | | 40 | 28 | 46.9 | | 133.2 | |
| | 2007.11-2018.07 | | F | L | SUV 4WD CBAA;CFFA | | GCI81158 | Inner Joint | | 37 | 34 | 34.5 | 65.5 | 83 | |
| | 2007.11-2018.07 | 6AT/7AT/6MT | R | L | SUV 4WD CBAA;CFFA | | GDS61284 | Drive Shaft | | 36 | | 59.5 | 40 | 594 | |
| | 2007.11-2018.07 | 6AT/7AT/6MT | R | R | SUV 4WD CBAA;CFFA | | GDS61293 | Drive Shaft | | 36 | | 59.5 | 40 | 631 | |
| | 2007.11-2018.07 | 6AT/7AT/6MT | R | L/R | SUV 4WD CBAA;CFFA | | GCI35026 | Outer Joint | | 36 | 33 | 59.5 | 40 | 61 | |
| | 2007.11-2018.07 | 6AT/7DCT/6MT | R | L/R | SUV 4WD CBAA;CFFA | | GCI82447 | Inner Joint | | | 33 | | | 34 | |
| 2.0 (103 kw) | 2007.09-2018.07 | 6AT | F | L | SUV 4WD CBAB;CFFB;CLJA | | GDS81715 | Drive Shaft | | 36 | 26 | 59.5 | 40 | 566 | |
| | 2007.09-2018.07 | 6AT | F | L | SUV 4WD CBAB;CFFB;CLJA | | GCI61038 | Inner Joint | | 26 | 34 | 31 | 68.5 | 88.5 | |
| | 2007.09-2018.07 | 6AT/6MT/7DCT | F | L/R | SUV 4WD CBAB;CFFB;CLJA | | GCO83002 | Outer Joint | | 36 | 27 | 59.5 | 40 | 66 | I |
| | 2007.09-2018.07 | 6AT/6MT/7DCT | F | L/R | SUV 4WD CBAB;CFFB;CLJA | | GCO83101 | Outer Joint | | 36 | 27 | 59.5 | 40 | 65 | M |
| | 2007.09-2018.07 | 6AT/7DCT | F | R | SUV 4WD CBAB;CFFB;CLJA | | GDS61347 | Drive Shaft | | 36 | 40 | 59.5 | 40 | 593 | |
| | 2007.09-2018.07 | 6AT/7DCT | F | R | SUV 4WD CBAB;CFFB;CLJA | TJ | GCI61048 | Inner Joint | | 40 | 34 | 46.9 | | 127.5 | |
| | 2007.09-2018.07 | 6MT | F | L | SUV 4WD CBAB;CFFB;CLJA | | GDS61296 | Drive Shaft | | 36 | 40 | 59.5 | 40 | 500 | |
| | 2007.09-2018.07 | 6MT | F | R | SUV 4WD CBAB;CFFB;CLJA | | GDS83369 | Drive Shaft | | 36 | 40 | 59.5 | 40 | 598 | |
| | 2007.09-2018.07 | 6MT | F | L | SUV 4WD CBAB;CFFB;CLJA | | GCI61090 | Inner Joint | | 40 | 28 | 46.9 | | 133.2 | |
| | 2007.09-2018.07 | 6MT | F | R | SUV 4WD CBAB;CFFB;CLJA | | GCI61054 | Inner Joint | | 40 | 28 | 46.9 | 41 | 101.7 | |
| | 2007.09-2018.07 | 7DCT | F | L | SUV 4WD CBAB;CFFB;CLJA | | GDS81265 | Drive Shaft | | 36 | 37 | 59.5 | 40 | 557 | |
| | 2007.09-2018.07 | 7DCT | F | L | SUV 4WD CBAB;CFFB;CLJA | | GCI81158 | Inner Joint | | 37 | 34 | 34.5 | 65.5 | 83 | |
| | 2007.09-2018.07 | 7DCT | F | R | SUV 4WD CBAB;CFFB;CLJA | AAR | GCI61084 | Inner Joint | | 40 | 34 | 46.9 | | 128 | |
| | 2007.09-2018.07 | MT | F | L/R | SUV 4WD CBAB;CFFB;CLJA | Transmission Side | GDS61214 | Stub Axle,differential | | 40 | 37 | | | 125 | |
| | 2007.09-2018.07 | 6AT/6MT/7DCT | R | L | SUV 4WD CBAB;CFFB;CLJA | | GDS61284 | Drive Shaft | | 36 | | 59.5 | 40 | 594 | |
| | 2007.09-2018.07 | 6AT/6MT/7DCT | R | R | SUV 4WD CBAB;CFFB;CLJA | | GDS61293 | Drive Shaft | | 36 | | 59.5 | 40 | 631 | |
| | 2007.09-2018.07 | 6AT/6MT/7DCT | R | L/R | SUV 4WD CBAB;CFFB;CLJA | | GCI35026 | Outer Joint | | 36 | 33 | 59.5 | 40 | 61 | |
| | 2007.09-2018.07 | 6AT/6MT/7DCT | R | L/R | SUV 4WD CBAB;CFFB;CLJA | | GCI53002 | Inner Joint | | | 33 | | | 34 | |
| | 2007.09-2018.07 | 6AT/6MT/7DCT | R | L/R | SUV 4WD CBAB;CFFB;CLJA | | GCI82447 | Inner Joint | | | 33 | | | 34 | |
| | 2007.11-2018.07 | 6AT | F | L | SUV Van 4WD CBAB;CFFB;CLJA | | GDS81715 | Drive Shaft | | 36 | 26 | 59.5 | 40 | 566 | |

| | YEAR | TRANSM. | F/R | L/R | BODY STYLE & DRIVE TYPE & ENGINE | REMARKS | G-AP Ref. | PRODUCT | ABS | A | B | C | H | L | P |
|---|---|---|---|---|---|---|---|---|---|---|---|---|---|---|---|
| **VW** **Tiguan** | | | | | | | | | | | | | | | |
| 2.0 (103 kw) | 2007.11-2018.07 | 6AT/6MT | F | L/R | SUV Van 4WD CBAB;CFFB;CLJA | Date to:2010.02 | GCO83101 | Outer Joint | | 36 | 27 | 59.5 | 40 | 65 | M |
| | 2007.11-2018.07 | 6AT/7DCT | F | R | SUV Van 4WD CBAB;CFFB;CLJA | Transmission:6AT,Date from:2010.03 | GDS61347 | Drive Shaft | | 36 | 40 | 59.5 | 40 | 593 | |
| | 2007.11-2018.07 | 6MT | F | L/R | SUV Van 4WD CBAB;CFFB;CLJA | Date From:2010.03,For Modelcode:5N1 | GCO83002 | Outer Joint | | 36 | 27 | 59.5 | 40 | 66 | I |
| | 2007.11-2018.07 | 6MT | F | L/R | SUV Van 4WD CBAB;CFFB;CLJA | | GCI61054 | Inner Joint | | 40 | 28 | 46.9 | 41 | 101.7 | |
| | 2007.11-2018.07 | 7DCT | F | L | SUV Van 4WD CBAB;CFFB;CLJA | Date to:2011.02;For Modelcode:5N2;Date from:2011.03,For Modelcode:5N1 | GDS81265 | Drive Shaft | | 36 | 37 | 59.5 | 40 | 557 | |
| | 2007.11-2018.07 | 7DCT | F | L/R | SUV Van 4WD CBAB;CFFB;CLJA | | GCO83101 | Outer Joint | | 36 | 27 | 59.5 | 40 | 65 | M |
| | 2007.11-2018.07 | 7AT/6MT | R | L | SUV Van 4WD CBAB;CFFB;CLJA | | GDS61284 | Drive Shaft | | 36 | | 59.5 | 40 | 594 | |
| | 2007.11-2018.07 | 7AT/6MT | R | R | SUV Van 4WD CBAB;CFFB;CLJA | | GDS61293 | Drive Shaft | | 36 | | 59.5 | 40 | 631 | |
| | 2007.11-2018.07 | 7DCT/6MT | R | L/R | SUV Van 4WD CBAB;CFFB;CLJA | | GCI82447 | Inner Joint | | | 33 | | | 34 | |
| | 2008.03-2018.07 | 6MT | F | L | SUV FWD CBAB;CFFB | Date to:2010.05,For PR code:G0K;Date from:2010.06,For PR code:7L3,Veh Equip:For vehicles without start-stop function | GDS61296 | Drive Shaft | | 36 | 40 | 59.5 | 40 | 500 | |
| | 2008.03-2018.07 | 6MT | F | L | SUV FWD CBAB;CFFB | Date to:2010.05,For PR code:G0M,Rims:For light alloy rims;Date from:2010.06,For PR code:7L6/7L7,Veh Equip:For vehicles with start-stop function,Rims:For light alloy rims | GDS83295 | Drive Shaft | | 36 | | 59.5 | 40 | 491 | |
| | 2008.03-2018.07 | 6MT | F | R | SUV FWD CBAB;CFFB | Date to:2010.05,For PR code:G0K;Date from:2010.06,For PR code:7L3,For vehicles without start-stop function | GDS57372 | Drive Shaft | | 36 | 40 | 59.5 | 40 | 828 | |
| | 2008.03-2018.07 | 6MT | F | R | SUV FWD CBAB;CFFB | Date to:2010.05,For PR code:G0M;Date from:2010.06,For PR code:7L6/7L7,Veh Equip:For vehicles with start-stop function | GDS61147 | Drive Shaft | | 36 | | 59.5 | 40 | 795 | |
| | 2008.03-2018.07 | 6MT | F | L | SUV FWD CBAB;CFFB | Date to:2010.05,For PR code:G0K;Date from:2010.06,For PR code:7L3,Veh Equip:For vehicles without start-stop function | GCO83002 | Outer Joint | | 36 | 27 | 59.5 | 40 | 66 | I |
| | 2008.03-2018.07 | 6MT | F | L/R | SUV FWD CBAB;CFFB | [illegible] | GCO83101 | Outer Joint | | 36 | 27 | 59.5 | 40 | 65 | M |
| | 2008.03-2018.07 | 6MT | F | L | SUV FWD CBAB;CFFB | Date to:2010.05,For PR code:G0K;Date from:2010.06,For PR code:7L3,Veh Equip:For vehicles without start-stop function | GCI61090 | Inner Joint | | 40 | 28 | 46.9 | | 133.2 | |
| | 2008.03-2018.07 | 6MT | F | L/R | SUV FWD CBAB;CFFB | Date to:2010.05,For PR code:G0K;Date from:2010.06,For PR code:7L3,Veh Equip:For vehicles without start-stop function | GCI61054 | Inner Joint | | 40 | 28 | 46.9 | 41 | 101.7 | |
| | 2008.03-2018.07 | 6MT | F | L/R | SUV FWD CBAB;CFFB | Date to:2010.05,For PR code:G0M;Date from:2010.06,For PR code:7L6/7L7,Veh Equip:For vehicles with start-stop function | GCI83016 | Inner Joint | | | 28 | | | 32 | |
| | 2008.03-2018.07 | AT | F | L/R | SUV FWD CBAB;CFFB | | GCI61038 | Inner Joint | | 26 | 34 | 31 | 68.5 | 88.5 | |
| | 2009.11-2018.07 | 6MT | F | L | SUV Van FWD CFFB | Date to:2010.05,For PR code:G0M,For light alloy rims;Date from:2010.06,For PR code:7L6/7L7,For vehicles with start-stop function,For light alloy rims | GDS83295 | Drive Shaft | | 36 | | 59.5 | 40 | 491 | |
| | 2009.11-2018.07 | 6MT | F | R | SUV Van FWD CFFB | Date to:2010.05,For PR code:G0K;Date from:2010.06,For PR code:7L3,For vehicles without start-stop function | GDS57372 | Drive Shaft | | 36 | 40 | 59.5 | 40 | 828 | |
| | 2009.11-2018.07 | 6MT | F | R | SUV Van FWD CFFB | Date to:2010.05,For PR code:G0M;Date from:2010.06,For PR code:7L6/7L7,For vehicles with start-stop function | GDS61147 | Drive Shaft | | 36 | | 59.5 | 40 | 795 | |
| 2.0 (110 kw) | 2015.05-2018.07 | 6MT | F | R | SUV 4WD CUVC | | GDS83266 | Drive Shaft | | 36 | | 59.5 | 40 | 601 | |
| | 2015.05-2018.07 | 6MT | F | L/R | SUV 4WD CUVC | | GCO83002 | Outer Joint | | 36 | 27 | 59.5 | 40 | 66 | I |
| | 2015.05-2018.07 | 6MT | F | L/R | SUV 4WD CUVC | | GCI83016 | Inner Joint | | | 28 | | | 32 | |
| | 2015.05-2018.07 | 7DCT | F | L | SUV 4WD CUVC | | GDS81265 | Drive Shaft | | 36 | 37 | 59.5 | 40 | 557 | |
| | 2015.05-2018.07 | 7DCT | F | R | SUV 4WD CUVC | | GDS61347 | Drive Shaft | | 36 | 40 | 59.5 | 40 | 593 | |
| | 2015.05-2018.07 | 7DCT | F | L/R | SUV 4WD CUVC | | GCO83101 | Outer Joint | | 36 | 27 | 59.5 | 40 | 65 | M |
| | 2015.05-2018.07 | 7DCT | F | L | SUV 4WD CUVC | | GCI81158 | Inner Joint | | 37 | 34 | 34.5 | 65.5 | 83 | |
| | 2015.05-2018.07 | 7DCT | F | R | SUV 4WD CUVC | | GCI61048 | Inner Joint | | 40 | 34 | 46.9 | | 127.5 | |
| | 2015.05-2018.07 | MT | F | L | SUV 4WD CUVC | | GDS83295 | Drive Shaft | | 36 | | 59.5 | 40 | 491 | |
| | 2015.05-2018.07 | 6MT/7DCT | R | L | SUV 4WD CUVC | | GDS61284 | Drive Shaft | | 36 | | 59.5 | 40 | 594 | |
| | 2015.05-2018.07 | 6MT/7DCT | R | R | SUV 4WD CUVC | | GDS61293 | Drive Shaft | | 36 | | 59.5 | 40 | 631 | |
| | 2015.05-2018.07 | 6MT/7DCT | R | L/R | SUV 4WD CUVC | | GCI35026 | Outer Joint | | 36 | 33 | 59.5 | 40 | 61 | |
| | 2015.05-2018.07 | 6MT/7DCT | R | L/R | SUV 4WD CUVC | | GCI53002 | Inner Joint | | | 33 | | | 34 | |
| | 2015.05-2018.07 | 7DCT/6MT | R | L/R | SUV 4WD CUVC | | GCI82447 | Inner Joint | | | 33 | | | 34 | |
| | 2015.05-2018.07 | 6MT | F | L | SUV FWD CUVC | | GDS83295 | Drive Shaft | | 36 | | 59.5 | 40 | 491 | |
| | 2015.05-2018.07 | 6MT | F | R | SUV FWD CUVC | Solid shaft | GDS61126 | Drive Shaft | | 36 | | 59.5 | 40 | 793 | |
| | 2015.05-2018.07 | 6MT | F | R | SUV FWD CUVC | Hollow shaft | GDS61147 | Drive Shaft | | 36 | | 59.5 | 40 | 795 | |
| | 2015.05-2018.07 | 6MT | F | R | SUV FWD CUVC | Solid shaft | GDS83313 | Drive Shaft | | 36 | | 59.5 | 40 | 792 | |
| | 2015.05-2018.07 | 6MT | F | L/R | SUV FWD CUVC | GrooveType:Inner | GCO83002 | Outer Joint | | 36 | 27 | 59.5 | 40 | 66 | I |
| | 2015.05-2018.07 | 6MT | F | L/R | SUV FWD CUVC | GrooveType:Middle | GCO83101 | Outer Joint | | 36 | 27 | 59.5 | 40 | 65 | M |
| | 2015.05-2018.07 | 6MT | F | L/R | SUV FWD CUVC | | GCI61002 | Inner Joint | | | 28 | | | 31.8 | |
| | 2015.05-2018.07 | 6MT | F | L/R | SUV FWD CUVC | | GCI61041 | Inner Joint | | | 28 | | | 32 | |
| | 2015.05-2018.07 | 6MT | F | L/R | SUV FWD CUVC | | GCI83016 | Inner Joint | | | 28 | | | 32 | |
| | 2016.01-2024.04 | 6MT | F | L | SUV 4WD DFGA;DBGC;DTSA;DTSB | For PR code:0EN | GDS81896 | Drive Shaft | | 36 | | 59.5 | 40 | 500 | |
| | 2016.01-2024.04 | 6MT | F | L | SUV 4WD DFGA;DBGC;DTSA;DTSB | For PR code:0EU,Trans. code:MQ500 | GDS83684 | Drive Shaft | | 36 | 40 | 59.5 | 40 | 514 | |
| | 2016.01-2024.04 | 6MT | F | R | SUV 4WD DFGA;DBGC;DTSA;DTSB | For PR code:0EU,Trans. code:MQ500 | GDS83683 | Drive Shaft | | 36 | 40 | 59.5 | 40 | 609 | |
| | 2016.01-2024.04 | 6MT | F | R | SUV 4WD DFGA;DBGC;DTSA;DTSB | For PR code:0EN,Trans. code:MQ350 | GDS84020 | Drive Shaft | | 36 | | 59.5 | 40 | 615 | |
| | 2016.01-2024.04 | 6MT | F | L | SUV 4WD DFGA;DBGC;DTSA;DTSB | For PR code:0EN | GCI83016 | Inner Joint | | | 28 | | | 32 | |
| | 2016.01-2024.04 | 6MT | F | L/R | SUV 4WD DFGA;DBGC;DTSA;DTSB | For PR code:0EU,Trans. code:MQ500 | GCI61054 | Inner Joint | | 40 | 28 | 46.9 | 41 | 101.7 | |
| | 2016.01-2024.04 | 6MT | F | L/R | SUV 4WD DFGA;DBGC;DTSA;DTSB | For PR code:0EN,Trans. code:MQ350 | GCI61069 | Inner Joint | | | 28 | | | 32 | |
| | 2016.01-2024.04 | 6MT/7DCT | F | L/R | SUV 4WD DFGA;DBGC;DTSA;DTSB | | GCO83101 | Outer Joint | | 36 | 27 | 59.5 | 40 | 65 | M |
| | 2016.01-2024.04 | 7DCT | F | L | SUV 4WD DFGA;DBGC;DTSA;DTSB | | GDS82351 | Drive Shaft | | 36 | 37 | 59.5 | 40 | 568 | |
| | 2016.01-2024.04 | 7DCT | F | R | SUV 4WD DFGA;DBGC;DTSA;DTSB | For PR code:0EX;Model code:AD1/AX1,Date to:2023.10;Model code:BT1/BT2,Date to:2024.04 | GDS61166 | Drive Shaft | | 36 | 40 | 59.5 | 40 | 611 | |
| | 2016.01-2024.04 | 7DCT | F | R | SUV 4WD DFGA;DBGC;DTSA;DTSB | For PR code:0IJ;Model code:AD1/AX1/BT1/BT2;With flange | GDS61346 | Drive Shaft | | 36 | | 59.5 | 40 | 589 | |
| | 2016.01-2024.04 | 7DCT | F | L | SUV 4WD DFGA;DBGC;DTSA;DTSB | AAR | GCI81158 | Inner Joint | | 37 | 34 | 34.5 | 65.5 | 83 | |
| | 2016.01-2024.04 | 7DCT | F | R | SUV 4WD DFGA;DBGC;DTSA;DTSB | TJ | GCI61048 | Inner Joint | | 40 | 34 | 46.9 | | 127.5 | |
| | 2016.01-2024.04 | 7DCT | F | R | SUV 4WD DFGA;DBGC;DTSA;DTSB | AAR | GCI61084 | Inner Joint | | 40 | 34 | 46.9 | | 128 | |
| | 2016.01-2024.04 | 6MT/7AT | R | L | SUV 4WD DFGA;DBGC;DTSA;DTSB | For PR code:0BG | GDS61331 | Drive Shaft | | 36 | | 59.5 | 40 | 606 | |
| | 2016.01-2024.04 | 6MT/7AT | R | L | SUV 4WD DFGA;DBGC;DTSA;DTSB | For PR code:0BH | GDS61334 | Drive Shaft | | 36 | | 59.5 | 40 | 598 | |
| | 2016.01-2024.04 | 6MT/7AT | R | R | SUV 4WD DFGA;DBGC;DTSA;DTSB | For PR code:0BG | GDS61332 | Drive Shaft | | 36 | | 59.5 | 40 | 650 | |
| | 2016.01-2024.04 | 6MT/7AT | R | R | SUV 4WD DFGA;DBGC;DTSA;DTSB | For PR code:0BH | GDS61335 | Drive Shaft | | 36 | | 59.5 | 40 | 638 | |
| | 2016.01-2024.04 | 6MT/7DCT | R | L/R | SUV 4WD DFGA;DBGC;DTSA;DTSB | For PR code:0BH | GCI53002 | Inner Joint | | | 33 | | | 34 | |
| | 2016.01-2024.04 | 6MT/7DCT | R | L/R | SUV 4WD DFGA;DBGC;DTSA;DTSB | For PR code:0BG | GCI61103 | Inner Joint | | | 33 | | | 32 | |

| | YEAR | TRANSM. | F/R | L/R | BODY STYLE & DRIVE TYPE & ENGINE | REMARKS | G-AP Ref. | PRODUCT | ABS | Technical Specifications A | B | C | H | L | P |
|---|---|---|---|---|---|---|---|---|---|---|---|---|---|---|---|
| **VW Tiguan** | | | | | | | | | | | | | | | |
| 2.0 (110 kw) | 2016.01-2024.04 | 6MT | F | L | SUV FWD DFGA;DTSA;DTSB | | GDS81896 | Drive Shaft | | 36 | | 59.5 | 40 | 500 | |
| | 2016.01-2024.04 | 6MT | F | R | SUV FWD DFGA;DTSA;DTSB | | GDS61101 | Drive Shaft | | 36 | | 59.5 | 40 | 803 | |
| | 2016.01-2024.04 | 6MT | F | L/R | SUV FWD DFGA;DTSA;DTSB | | GCI82456 | Inner Joint | | | 28 | | | 32 | |
| | 2016.01-2024.04 | 7DCT | F | L | SUV FWD DFGA;DTSA;DTSB | | GDS82351 | Drive Shaft | | 36 | 37 | 59.5 | 40 | 568 | |
| | 2016.01-2024.04 | 7DCT | F | R | SUV FWD DFGA;DTSA;DTSB | | GDS83613 | Drive Shaft | | 36 | 37 | 59.5 | 40 | 921 | |
| | 2016.01-2024.04 | 7DCT | F | L/R | SUV FWD DFGA;DTSA;DTSB | | GCO83101 | Outer Joint | | 36 | 27 | 59.5 | 40 | 65 | M |
| | 2016.01-2024.04 | 7DCT | F | L | SUV FWD DFGA;DTSA;DTSB | | GCI81158 | Inner Joint | | 37 | 34 | 34.5 | 65.5 | 83 | |
| | 2016.01-2024.04 | 7DCT | F | R | SUV FWD DFGA;DTSA;DTSB | | GCI82108 | Inner Joint | | 37 | 34 | 40 | 77.5 | 103.5 | |
| | 2023.09- | 7AT | F | L | SUV FWD DXPA | Date from:2024.05 | GDS82351 | Drive Shaft | | 36 | 37 | 59.5 | 40 | 568 | |
| | 2023.09- | 7AT | F | R | SUV FWD DXPA | | GDS83613 | Drive Shaft | | 36 | 37 | 59.5 | 40 | 921 | |
| | 2023.09- | 7AT | F | L/R | SUV FWD DXPA | | GCO83101 | Outer Joint | | 36 | 27 | 59.5 | 40 | 65 | M |
| | 2023.09- | 7AT | F | L | SUV FWD DXPA | | GCI81158 | Inner Joint | | 37 | 34 | 34.5 | 65.5 | 83 | |
| | 2023.09- | 7AT | F | R | SUV FWD DXPA | | GCI82108 | Inner Joint | | 37 | 34 | 40 | 77.5 | 103.5 | |
| 2.0 (120 kw) | 2008.02-2009.08 | 6MT | F | L | SUV 4WD CBBA | | GDS61296 | Drive Shaft | | 36 | 40 | 59.5 | 40 | 500 | |
| | 2008.02-2009.08 | 6MT | F | L/R | SUV 4WD CBBA | Date to:2010.02 | GCO83101 | Outer Joint | | 36 | 27 | 59.5 | 40 | 65 | M |
| | 2008.02-2009.08 | 6MT | F | L/R | SUV 4WD CBBA | | GCI61054 | Inner Joint | | 40 | 28 | 46.9 | 41 | 101.7 | |
| | 2008.02-2009.08 | AT | F | R | SUV 4WD CBBA | | GDS61347 | Drive Shaft | | 36 | 40 | 59.5 | 40 | 593 | |
| | 2008.02-2009.08 | MT | F | L/R | SUV 4WD CBBA | | GCI83006 | Inner Joint | | | 33 | | | 34 | |
| | 2008.02-2009.08 | 6MT | R | L | SUV 4WD CBBA | | GDS61284 | Drive Shaft | | 36 | | 59.5 | 40 | 594 | |
| | 2008.02-2009.08 | 6MT | R | R | SUV 4WD CBBA | | GDS61293 | Drive Shaft | | 36 | | 59.5 | 40 | 631 | |
| | 2008.02-2009.08 | 6MT | R | L/R | SUV 4WD CBBA | | GCI35026 | Outer Joint | | 36 | 33 | 59.5 | 40 | 61 | |
| | 2008.02-2009.08 | 6MT | R | L/R | SUV 4WD CBBA | | GCI82447 | Inner Joint | | | 33 | | | 34 | |
| 2.0 (125 kw) | 2007.09-2018.07 | 6AT | F | L | SUV 4WD CAWA;CCTB;CCZC | | GDS81715 | Drive Shaft | | 36 | 26 | 59.5 | 40 | 566 | |
| | 2007.09-2018.07 | 6AT | F | R | SUV 4WD CAWA;CCTB;CCZC | | GDS81775 | Drive Shaft | | 36 | 40 | 59.5 | 40 | 594 | |
| | 2007.09-2018.07 | 6AT | F | L | SUV 4WD CAWA;CCTB;CCZC | | GCI61038 | Inner Joint | | 26 | 34 | 31 | 68.5 | 88.5 | |
| | 2007.09-2018.07 | 6AT | F | R | SUV 4WD CAWA;CCTB;CCZC | AAR | GCI61084 | Inner Joint | | 40 | 34 | 46.9 | | 128 | |
| | 2007.09-2018.07 | 6MT | F | L | SUV 4WD CAWA;CCTB;CCZC | | GDS61296 | Drive Shaft | | 36 | 40 | 59.5 | 40 | 500 | |
| | 2007.09-2018.07 | 6MT | F | R | SUV 4WD CAWA;CCTB;CCZC | | GDS83269 | Drive Shaft | | 36 | 40 | 59.5 | 40 | 605 | |
| | 2007.09-2018.07 | 6MT | F | L/R | SUV 4WD CAWA;CCTB;CCZC | | GCI61054 | Inner Joint | | 40 | 28 | 46.9 | 41 | 101.7 | |
| | 2007.09-2018.07 | 6MT/6AT | F | L/R | SUV 4WD CAWA;CCTB;CCZC | | GCO83002 | Outer Joint | | 36 | 27 | 59.5 | 40 | 66 | I |
| | 2007.09-2018.07 | 7DCT | F | L | SUV 4WD CAWA;CCTB;CCZC | | GDS81265 | Drive Shaft | | 36 | 37 | 59.5 | 40 | 557 | |
| | 2007.09-2018.07 | 7DCT | F | R | SUV 4WD CAWA;CCTB;CCZC | | GDS61347 | Drive Shaft | | 36 | 40 | 59.5 | 40 | 593 | |
| | 2007.09-2018.07 | 7DCT | F | L/R | SUV 4WD CAWA;CCTB;CCZC | | GCO83101 | Outer Joint | | 36 | 27 | 59.5 | 40 | 65 | M |
| | 2007.09-2018.07 | 7DCT | F | L | SUV 4WD CAWA;CCTB;CCZC | | GCI81158 | Inner Joint | | 37 | 34 | 34.5 | 65.5 | 83 | |
| | 2007.09-2018.07 | 7DCT/6AT | F | R | SUV 4WD CAWA;CCTB;CCZC | TJ | GCI61048 | Inner Joint | | 40 | 34 | 46.9 | | 127.5 | |
| | 2007.09-2018.07 | 6AT/6MT/7DCT | R | L | SUV 4WD CAWA;CCTB;CCZC | | GDS61284 | Drive Shaft | | 36 | | 59.5 | 40 | 594 | |
| | 2007.09-2018.07 | 6AT/6MT/7DCT | R | R | SUV 4WD CAWA;CCTB;CCZC | | GDS61293 | Drive Shaft | | 36 | | 59.5 | 40 | 631 | |
| | 2007.09-2018.07 | 6AT/6MT/7DCT | R | L/R | SUV 4WD CAWA;CCTB;CCZC | | GCI35026 | Outer Joint | | 36 | 33 | 59.5 | 40 | 61 | |
| | 2007.09-2018.07 | 6AT/6MT/7DCT | R | L/R | SUV 4WD CAWA;CCTB;CCZC | | GCI53002 | Inner Joint | | | 33 | | | 34 | |
| | 2007.09-2018.07 | 6AT/6MT/7DCT | R | L/R | SUV 4WD CAWA;CCTB;CCZC | | GCI82447 | Inner Joint | | | 33 | | | 34 | |
| | 2007.09-2018.07 | 6MT | F | L | SUV 4WD CBBB;CFGB | | GDS61296 | Drive Shaft | | 36 | 40 | 59.5 | 40 | 500 | |
| | 2007.09-2018.07 | 6MT | F | R | SUV 4WD CBBB;CFGB | | GDS83369 | Drive Shaft | | 36 | 40 | 59.5 | 40 | 598 | |
| | 2007.09-2018.07 | 6MT | F | L/R | SUV 4WD CBBB;CFGB | GrooveType:Inner | GCO83002 | Outer Joint | | 36 | 27 | 59.5 | 40 | 66 | I |
| | 2007.09-2018.07 | 6MT | F | L/R | SUV 4WD CBBB;CFGB | GrooveType:Middle | GCO83101 | Outer Joint | | 36 | 27 | 59.5 | 40 | 65 | M |
| | 2007.09-2018.07 | 6MT | F | L/R | SUV 4WD CBBB;CFGB | | GCI61054 | Inner Joint | | 40 | 28 | 46.9 | 41 | 101.7 | |
| | 2007.09-2018.07 | 6MT | F | L/R | SUV 4WD CBBB;CFGB | | GCI61090 | Inner Joint | | 40 | 28 | 46.9 | | 133.2 | |
| | 2007.09-2018.07 | 6MT | F | L/R | SUV 4WD CBBB;CFGB | Transmission Side | GDS61214 | Stub Axle,differential | | 40 | 37 | | | 125 | |
| | 2007.09-2018.07 | AT | F | R | SUV 4WD CBBB;CFGB | | GDS61347 | Drive Shaft | | 36 | 40 | 59.5 | 40 | 593 | |
| | 2007.09-2018.07 | 6MT | R | L | SUV 4WD CBBB;CFGB | | GDS61284 | Drive Shaft | | 36 | | 59.5 | 40 | 594 | |
| | 2007.09-2018.07 | 6MT | R | R | SUV 4WD CBBB;CFGB | | GDS61293 | Drive Shaft | | 36 | | 59.5 | 40 | 631 | |
| | 2007.09-2018.07 | 6MT | R | L/R | SUV 4WD CBBB;CFGB | | GCI35026 | Outer Joint | | 36 | 33 | 59.5 | 40 | 61 | |
| | 2007.09-2018.07 | 6MT | R | L/R | SUV 4WD CBBB;CFGB | | GCI53002 | Inner Joint | | | 33 | | | 34 | |
| | 2007.09-2018.07 | 6MT | R | L/R | SUV 4WD CBBB;CFGB | | GCI82447 | Inner Joint | | | 33 | | | 34 | |
| | 2009.11-2011.05 | 6MT | F | R | SUV Van 4WD CCZC | | GDS83269 | Drive Shaft | | 36 | 40 | 59.5 | 40 | 605 | |
| | 2009.11-2011.05 | 6MT | F | L/R | SUV Van 4WD CCZC | | GCO83002 | Outer Joint | | 36 | 27 | 59.5 | 40 | 66 | I |
| | 2009.11-2011.05 | 6MT | F | L/R | SUV Van 4WD CCZC | | GCI61054 | Inner Joint | | 40 | 28 | 46.9 | 41 | 101.7 | |
| | 2009.11-2011.05 | 7DCT | F | L | SUV Van 4WD CCZC | | GDS81265 | Drive Shaft | | 36 | 37 | 59.5 | 40 | 557 | |
| | 2009.11-2011.05 | 7DCT | F | R | SUV Van 4WD CCZC | | GDS61347 | Drive Shaft | | 36 | 40 | 59.5 | 40 | 593 | |
| | 2009.11-2011.05 | 7DCT | F | L/R | SUV Van 4WD CCZC | | GCO83101 | Outer Joint | | 36 | 27 | 59.5 | 40 | 65 | M |
| | 2009.11-2011.05 | 7DCT | F | L | SUV Van 4WD CCZC | | GCI81158 | Inner Joint | | 37 | 34 | 34.5 | 65.5 | 83 | |
| | 2009.11-2011.05 | 7AT | R | L | SUV Van 4WD CCZC | | GDS61284 | Drive Shaft | | 36 | | 59.5 | 40 | 594 | |
| | 2009.11-2011.05 | 7AT | R | R | SUV Van 4WD CCZC | | GDS61293 | Drive Shaft | | 36 | | 59.5 | 40 | 631 | |
| | 2009.11-2011.05 | 7AT | R | L/R | SUV Van 4WD CCZC | Technical Information no.:UF 100 | GCI35026 | Outer Joint | | 36 | 33 | 59.5 | 40 | 61 | |
| | 2009.11-2011.05 | 7DCT | R | L/R | SUV Van 4WD CCZC | | GCI82447 | Inner Joint | | | 33 | | | 34 | |
| | 2010.05-2013.05 | 6MT | F | L | SUV Van 4WD CFGB | | GDS61296 | Drive Shaft | | 36 | 40 | 59.5 | 40 | 500 | |

| | YEAR | TRANSM. | F/R | L/R | BODY STYLE & DRIVE TYPE & ENGINE | REMARKS | G-AP Ref. | PRODUCT | ABS | Technical Specifications | | | | | |
|---|---|---|---|---|---|---|---|---|---|---|---|---|---|---|---|
| | | | | | | | | | | A | B | C | H | L | P |
| **VW**<br>**Tiguan** | | | | | | | | | | | | | | | |
| 2.0 (125 kw) | 2010.05-2013.05 | 6MT | F | L/R | SUV Van 4WD CFGB | | GCI61054 | Inner Joint | | 40 | 28 | 46.9 | 41 | 101.7 | |
| | 2010.05-2013.05 | 6MT | R | L | SUV Van 4WD CFGB | | GDS61284 | Drive Shaft | | 36 | | 59.5 | 40 | 594 | |
| | 2010.05-2013.05 | 6MT | R | R | SUV Van 4WD CFGB | | GDS61293 | Drive Shaft | | 36 | | 59.5 | 40 | 631 | |
| | 2010.05-2013.05 | 6MT | R | L/R | SUV Van 4WD CFGB | Technical Information no.:UF 100 | GCI35026 | Outer Joint | | 36 | 33 | 59.5 | 40 | 61 | |
| | 2010.05-2013.05 | 6MT | R | L/R | SUV Van 4WD CFGB | | GCI82447 | Inner Joint | | | 33 | | | 34 | |
| 2.0 (130 kw) | 2012.11-2018.07 | 6MT | F | L | SUV 4WD CFGC | | GDS61296 | Drive Shaft | | 36 | 40 | 59.5 | 40 | 500 | |
| | 2012.11-2018.07 | 6MT | F | R | SUV 4WD CFGC | | GDS83369 | Drive Shaft | | 36 | 40 | 59.5 | 40 | 598 | |
| | 2012.11-2018.07 | 6MT | F | L/R | SUV 4WD CFGC | GrooveType:Inner | GCO83002 | Outer Joint | | 36 | 27 | 59.5 | 40 | 66 | I |
| | 2012.11-2018.07 | 6MT | F | L/R | SUV 4WD CFGC | | GCI61054 | Inner Joint | | 40 | 28 | 46.9 | 41 | 101.7 | |
| | 2012.11-2018.07 | 6MT | F | L/R | SUV 4WD CFGC | | GCI61090 | Inner Joint | | 40 | 28 | 46.9 | | 133.2 | |
| | 2012.11-2018.07 | 6MT/7DCT | F | L/R | SUV 4WD CFGC | GrooveType:Middle | GCO83101 | Outer Joint | | 36 | 27 | 59.5 | 40 | 65 | M |
| | 2012.11-2018.07 | 7DCT | F | L | SUV 4WD CFGC | | GDS81265 | Drive Shaft | | 36 | 37 | 59.5 | 40 | 557 | |
| | 2012.11-2018.07 | 7DCT | F | R | SUV 4WD CFGC | | GDS61347 | Drive Shaft | | 36 | 40 | 59.5 | 40 | 593 | |
| | 2012.11-2018.07 | 7DCT | F | L | SUV 4WD CFGC | | GCI81158 | Inner Joint | | 37 | 34 | 34.5 | 65.5 | 83 | |
| | 2012.11-2018.07 | 7DCT | F | R | SUV 4WD CFGC | TJ | GCI61048 | Inner Joint | | 40 | 34 | 46.9 | | 127.5 | |
| | 2012.11-2018.07 | 7DCT | F | R | SUV 4WD CFGC | TJ | GCI61084 | Inner Joint | | 40 | 34 | 46.9 | | 128 | |
| | 2012.11-2018.07 | 6MT/7DCT | R | L | SUV 4WD CFGC | | GDS61284 | Drive Shaft | | 36 | | 59.5 | 40 | 594 | |
| | 2012.11-2018.07 | 6MT/7DCT | R | R | SUV 4WD CFGC | | GDS61293 | Drive Shaft | | 36 | | 59.5 | 40 | 631 | |
| | 2012.11-2018.07 | 6MT/7DCT | R | L/R | SUV 4WD CFGC | | GCI35026 | Outer Joint | | 36 | 33 | 59.5 | 40 | 61 | |
| | 2012.11-2018.07 | 6MT/7DCT | R | L/R | SUV 4WD CFGC | | GCI53002 | Inner Joint | | | 33 | | | 34 | |
| | 2012.11-2018.07 | 6MT/7DCT | R | L/R | SUV 4WD CFGC | | GCI82447 | Inner Joint | | | 33 | | | 34 | |
| | 2012.11-2018.07 | 6MT | F | L | SUV Van 4WD CFGC | | GDS61296 | Drive Shaft | | 36 | 40 | 59.5 | 40 | 500 | |
| | 2012.11-2018.07 | 6MT | F | L/R | SUV Van 4WD CFGC | | GCI61054 | Inner Joint | | 40 | 28 | 46.9 | 41 | 101.7 | |
| | 2012.11-2018.07 | 7DCT | F | L | SUV Van 4WD CFGC | | GDS81265 | Drive Shaft | | 36 | 37 | 59.5 | 40 | 557 | |
| | 2012.11-2018.07 | 7DCT | F | R | SUV Van 4WD CFGC | | GDS61347 | Drive Shaft | | 36 | 40 | 59.5 | 40 | 593 | |
| | 2012.11-2018.07 | 7DCT | F | L | SUV Van 4WD CFGC | | GCI81158 | Inner Joint | | 37 | 34 | 34.5 | 65.5 | 83 | |
| | 2012.11-2018.07 | 7AT/6MT | R | L | SUV Van 4WD CFGC | | GDS61284 | Drive Shaft | | 36 | | 59.5 | 40 | 594 | |
| | 2012.11-2018.07 | 7AT/6MT | R | R | SUV Van 4WD CFGC | | GDS61293 | Drive Shaft | | 36 | | 59.5 | 40 | 631 | |
| | 2012.11-2018.07 | 7AT/6MT | R | L/R | SUV Van 4WD CFGC | | GCI35026 | Outer Joint | | 36 | 33 | 59.5 | 40 | 61 | |
| | 2012.11-2018.07 | 7DCT/6MT | R | L/R | SUV Van 4WD CFGC | | GCI82447 | Inner Joint | | | 33 | | | 34 | |
| | 2016.08-2020.07 | 7AT | F | L | SUV 4WD CRGB | | GDS82351 | Drive Shaft | | 36 | 37 | 59.5 | 40 | 568 | |
| | 2016.08-2020.07 | 7AT | F | R | SUV 4WD CRGB | | GDS61346 | Drive Shaft | | 36 | | 59.5 | 40 | 589 | |
| | 2016.08-2020.07 | 7AT | F | L/R | SUV 4WD CRGB | | GCO83101 | Outer Joint | | 36 | 27 | 59.5 | 40 | 65 | M |
| | 2016.08-2020.07 | 7AT | F | R | SUV 4WD CRGB | | GCI61057 | Inner Joint | | | 34 | | | 89 | |
| | 2016.08-2020.07 | 7DCT | F | R | SUV 4WD CRGB | For PR code:0EX | GDS61166 | Drive Shaft | | 36 | 40 | 59.5 | 40 | 611 | |
| | 2016.08-2020.07 | 7DCT | F | L | SUV 4WD CRGB | For PR code:0IJ/0EX | GCI81158 | Inner Joint | | 37 | 34 | 34.5 | 65.5 | 83 | |
| | 2016.08-2020.07 | 7DCT | F | R | SUV 4WD CRGB | For PR code:0EX;TJ | GCI61048 | Inner Joint | | 40 | 34 | 46.9 | | 127.5 | |
| | 2016.08-2020.07 | 7DCT | F | R | SUV 4WD CRGB | For PR code:0EX;AAR | GCI61084 | Inner Joint | | 40 | 34 | 46.9 | | 128 | |
| | 2016.08-2020.07 | 7AT | R | L | SUV 4WD CRGB | For PR code:0BG | GDS61331 | Drive Shaft | | 36 | | 59.5 | 40 | 606 | |
| | 2016.08-2020.07 | 7AT | R | L | SUV 4WD CRGB | For PR code:0BH | GDS61334 | Drive Shaft | | 36 | | 59.5 | 40 | 598 | |
| | 2016.08-2020.07 | 7AT | R | R | SUV 4WD CRGB | For PR code:0BG | GDS61332 | Drive Shaft | | 36 | | 59.5 | 40 | 650 | |
| | 2016.08-2020.07 | 7AT | R | R | SUV 4WD CRGB | For PR code:0BH | GDS61335 | Drive Shaft | | 36 | | 59.5 | 40 | 638 | |
| | 2016.08-2020.07 | 7AT | R | L/R | SUV 4WD CRGB | For PR code:0BG | GCI61103 | Inner Joint | | | 33 | | | 32 | |
| 2.0 (132 kw) | 2011.05-2018.07 | 6AT | F | L | SUV 4WD CCZD | | GDS81715 | Drive Shaft | | 36 | 26 | 59.5 | 40 | 566 | |
| | 2011.05-2018.07 | 6AT | F | R | SUV 4WD CCZD | | GDS81775 | Drive Shaft | | 36 | 40 | 59.5 | 40 | 594 | |
| | 2011.05-2018.07 | 6AT | F | L | SUV 4WD CCZD | TJ | GCI61038 | Inner Joint | | 26 | 34 | 31 | 68.5 | 88.5 | |
| | 2011.05-2018.07 | 6AT/7DCT | F | R | SUV 4WD CCZD | AAR | GCI61084 | Inner Joint | | 40 | 34 | 46.9 | | 128 | |
| | 2011.05-2018.07 | 6MT | F | L | SUV 4WD CCZD | | GDS61296 | Drive Shaft | | 36 | 40 | 59.5 | 40 | 500 | |
| | 2011.05-2018.07 | 6MT | F | R | SUV 4WD CCZD | | GDS83269 | Drive Shaft | | 36 | 40 | 59.5 | 40 | 605 | |
| | 2011.05-2018.07 | 6MT | F | L/R | SUV 4WD CCZD | | GCI61054 | Inner Joint | | 40 | 28 | 46.9 | 41 | 101.7 | |
| | 2011.05-2018.07 | 6MT/6AT | F | L/R | SUV 4WD CCZD | | GCO83002 | Outer Joint | | 36 | 27 | 59.5 | 40 | 66 | I |
| | 2011.05-2018.07 | 7DCT | F | L | SUV 4WD CCZD | | GDS81265 | Drive Shaft | | 36 | 37 | 59.5 | 40 | 557 | |
| | 2011.05-2018.07 | 7DCT | F | R | SUV 4WD CCZD | | GDS61347 | Drive Shaft | | 36 | 40 | 59.5 | 40 | 593 | |
| | 2011.05-2018.07 | 7DCT | F | L/R | SUV 4WD CCZD | | GCO83101 | Outer Joint | | 36 | 27 | 59.5 | 40 | 65 | M |
| | 2011.05-2018.07 | 7DCT | F | L | SUV 4WD CCZD | AAR | GCI81158 | Inner Joint | | 37 | 34 | 34.5 | 65.5 | 83 | |
| | 2011.05-2018.07 | 7DCT/6AT | F | R | SUV 4WD CCZD | TJ | GCI61048 | Inner Joint | | 40 | 34 | 46.9 | | 127.5 | |
| | 2011.05-2018.07 | 6AT/6MT/7DCT | R | L | SUV 4WD CCZD | | GDS61284 | Drive Shaft | | 36 | | 59.5 | 40 | 594 | |
| | 2011.05-2018.07 | 6AT/6MT/7DCT | R | R | SUV 4WD CCZD | | GDS61293 | Drive Shaft | | 36 | | 59.5 | 40 | 631 | |
| | 2011.05-2018.07 | 6AT/6MT/7DCT | R | L/R | SUV 4WD CCZD | | GCI35026 | Outer Joint | | 36 | 33 | 59.5 | 40 | 61 | |
| | 2011.05-2018.07 | 6AT/6MT/7DCT | R | L/R | SUV 4WD CCZD | | GCI53002 | Inner Joint | | | 33 | | | 34 | |
| | 2011.05-2018.07 | 6AT/6MT/7DCT | R | L/R | SUV 4WD CCZD | | GCI82447 | Inner Joint | | | 33 | | | 34 | |
| | 2016.01-2024.04 | 6MT | F | L | SUV 4WD CZPA | | GDS81896 | Drive Shaft | | 36 | | 59.5 | 40 | 500 | |
| | 2016.01-2024.04 | 6MT | F | R | SUV 4WD CZPA | | GDS84020 | Drive Shaft | | 36 | | 59.5 | 40 | 615 | |
| | 2016.01-2024.04 | 6MT | F | L | SUV 4WD CZPA | | GCI83016 | Inner Joint | | | 28 | | | 32 | |
| | 2016.01-2024.04 | 6MT | F | R | SUV 4WD CZPA | | GCI82456 | Inner Joint | | | 28 | | | 32 | |

| | YEAR | TRANSM. | F/R | L/R | BODY STYLE & DRIVE TYPE & ENGINE | REMARKS | G-AP Ref. | PRODUCT | ABS | Technical Specifications A | B | C | H | L | P |
|---|---|---|---|---|---|---|---|---|---|---|---|---|---|---|---|
| **VW Tiguan** | | | | | | | | | | | | | | | |
| 2.0 (132 kw) | 2016.01-2024.04 | 6MT | F | L/R | SUV 4WD CZPA | | GCI61069 | Inner Joint | | | 28 | | | 32 | |
| | 2016.01-2024.04 | 6MT/7DCT | F | L/R | SUV 4WD CZPA | | GCO83101 | Outer Joint | | 36 | 27 | 59.5 | 40 | 65 | M |
| | 2016.01-2024.04 | 7DCT | F | R | SUV 4WD CZPA | | GDS81889 | Drive Shaft | | 36 | | 59.5 | 40 | 614 | |
| | 2016.01-2024.04 | 7DCT | F | R | SUV 4WD CZPA | For PR code:0EX;TJ | GCI61048 | Inner Joint | | 40 | 34 | 46.9 | | 127.5 | |
| | 2016.01-2024.04 | 7DCT | F | R | SUV 4WD CZPA | | GCI61069 | Inner Joint | | | 28 | | | 32 | |
| | 2016.01-2024.04 | 7DCT | F | R | SUV 4WD CZPA | For PR code:0EX;AAR | GCI61084 | Inner Joint | | 40 | 34 | 46.9 | | 128 | |
| | 2016.01-2024.04 | 6MT/7DCT | R | L | SUV 4WD CZPA | For PR code:0BG | GDS61331 | Drive Shaft | | 36 | | 59.5 | 40 | 606 | |
| | 2016.01-2024.04 | 6MT/7DCT | R | L | SUV 4WD CZPA | For PR code:0BH | GDS61334 | Drive Shaft | | 36 | | 59.5 | 40 | 598 | |
| | 2016.01-2024.04 | 6MT/7DCT | R | R | SUV 4WD CZPA | For PR code:0BG | GDS61332 | Drive Shaft | | 36 | | 59.5 | 40 | 650 | |
| | 2016.01-2024.04 | 6MT/7DCT | R | R | SUV 4WD CZPA | For PR code:0BH | GDS61335 | Drive Shaft | | 36 | | 59.5 | 40 | 638 | |
| | 2016.01-2024.04 | 6MT/7DCT | R | L/R | SUV 4WD CZPA | For PR code:0BG | GCI35026 | Outer Joint | | 36 | 33 | 59.5 | 40 | 61 | |
| | 2016.01-2024.04 | 6MT/7DCT | R | L/R | SUV 4WD CZPA | For PR code:0BH | GCI53002 | Inner Joint | | | 33 | | | 34 | |
| | 2016.01-2024.04 | 6MT/7DCT | R | L/R | SUV 4WD CZPA | For PR code:0BG | GCI61103 | Inner Joint | | | 33 | | | 32 | |
| 2.0 (135 kw) | 2015.05-2018.07 | 6AT | F | R | SUV 4WD CUWA | | GCI61048 | Inner Joint | | 40 | 34 | 46.9 | | 127.5 | |
| | 2015.05-2018.07 | 7AT | F | L | SUV 4WD CUWA | | GDS81265 | Drive Shaft | | 36 | 37 | 59.5 | 40 | 557 | |
| | 2015.05-2018.07 | 7AT | F | R | SUV 4WD CUWA | | GDS61347 | Drive Shaft | | 36 | 40 | 59.5 | 40 | 593 | |
| | 2015.05-2018.07 | AT | F | L/R | SUV 4WD CUWA | | GCO83101 | Outer Joint | | 36 | 27 | 59.5 | 40 | 65 | M |
| | 2015.05-2018.07 | | F | L | SUV 4WD CUWA | | GCI81158 | Inner Joint | | 37 | 34 | 34.5 | 65.5 | 83 | |
| | 2015.05-2018.07 | 7AT | R | L | SUV 4WD CUWA | | GDS61284 | Drive Shaft | | 36 | | 59.5 | 40 | 594 | |
| | 2015.05-2018.07 | 7AT | R | R | SUV 4WD CUWA | | GDS61293 | Drive Shaft | | 36 | | 59.5 | 40 | 631 | |
| | 2015.05-2018.07 | 7AT | R | L/R | SUV 4WD CUWA | | GCI35026 | Outer Joint | | 36 | 33 | 59.5 | 40 | 61 | |
| | 2015.05-2018.07 | 7DCT | R | L/R | SUV 4WD CUWA | | GCI82447 | Inner Joint | | | 33 | | | 34 | |
| 2.0 (140 kw) | 2016.01-2020.07 | 7DCT | F | L | SUV Van 4WD DFHA | | GDS82351 | Drive Shaft | | 36 | 37 | 59.5 | 40 | 568 | |
| | 2016.01-2020.07 | 7DCT | F | R | SUV Van 4WD DFHA | For PR code:0EX | GDS61166 | Drive Shaft | | 36 | 40 | 59.5 | 40 | 611 | |
| | 2016.01-2020.07 | 7DCT | F | R | SUV Van 4WD DFHA | For PR code:0IJ;With flange | GDS61346 | Drive Shaft | | 36 | | 59.5 | 40 | 589 | |
| | 2016.01-2020.07 | 7DCT | F | L/R | SUV Van 4WD DFHA | | GCO83101 | Outer Joint | | 36 | 27 | 59.5 | 40 | 65 | M |
| | 2016.01-2020.07 | 7DCT | F | L | SUV Van 4WD DFHA | | GCI81158 | Inner Joint | | 37 | 34 | 34.5 | 65.5 | 83 | |
| | 2016.01-2020.07 | 7DCT | F | R | SUV Van 4WD DFHA | TJ | GCI61048 | Inner Joint | | 40 | 34 | 46.9 | | 127.5 | |
| | 2016.01-2020.07 | 7DCT | F | R | SUV Van 4WD DFHA | AAR | GCI61084 | Inner Joint | | 40 | 34 | 46.9 | | 128 | |
| | 2016.01-2020.07 | 7DCT | R | L | SUV Van 4WD DFHA | For PR code:0BG | GDS61331 | Drive Shaft | | 36 | | 59.5 | 40 | 606 | |
| | 2016.01-2020.07 | 7DCT | R | L | SUV Van 4WD DFHA | For PR code:0BH | GDS61334 | Drive Shaft | | 36 | | 59.5 | 40 | 598 | |
| | 2016.01-2020.07 | 7DCT | R | R | SUV Van 4WD DFHA | For PR code:0BG | GDS61332 | Drive Shaft | | 36 | | 59.5 | 40 | 650 | |
| | 2016.01-2020.07 | 7DCT | R | R | SUV Van 4WD DFHA | For PR code:0BH | GDS61335 | Drive Shaft | | 36 | | 59.5 | 40 | 638 | |
| | 2016.01-2020.07 | 7DCT | R | L/R | SUV Van 4WD DFHA | For PR code:0BG | GCI61103 | Inner Joint | | | 33 | | | 32 | |
| | 2016.04-2020.07 | 7AT | F | L | SUV 4WD DFHA | | GDS82351 | Drive Shaft | | 36 | 37 | 59.5 | 40 | 568 | |
| | 2016.04-2020.07 | 7AT | F | R | SUV 4WD DFHA | | GDS61166 | Drive Shaft | | 36 | 40 | 59.5 | 40 | 611 | |
| | 2016.04-2020.07 | 7AT | F | L | SUV 4WD DFHA | | GCI81158 | Inner Joint | | 37 | 34 | 34.5 | 65.5 | 83 | |
| | 2016.04-2020.07 | 7AT | F | R | SUV 4WD DFHA | | GCI61048 | Inner Joint | | 40 | 34 | 46.9 | | 127.5 | |
| | 2016.04-2020.07 | 7DCT | F | R | SUV 4WD DFHA | For PR code:0IJ | GDS61346 | Drive Shaft | | 36 | | 59.5 | 40 | 589 | |
| | 2016.04-2020.07 | 7AT | R | L | SUV 4WD DFHA | For PR code:0BG | GDS61331 | Drive Shaft | | 36 | | 59.5 | 40 | 606 | |
| | 2016.04-2020.07 | 7AT | R | L | SUV 4WD DFHA | For PR code:0BH | GDS61334 | Drive Shaft | | 36 | | 59.5 | 40 | 598 | |
| | 2016.04-2020.07 | 7AT | R | R | SUV 4WD DFHA | For PR code:0BG | GDS61332 | Drive Shaft | | 36 | | 59.5 | 40 | 650 | |
| | 2016.04-2020.07 | 7AT | R | R | SUV 4WD DFHA | For PR code:0BH | GDS61335 | Drive Shaft | | 36 | | 59.5 | 40 | 638 | |
| | 2016.04-2020.07 | 7AT | R | L/R | SUV 4WD DFHA | For PR code:0BG/0BH | GCI35026 | Outer Joint | | 36 | 33 | 59.5 | 40 | 61 | |
| | 2016.04-2020.07 | 7AT | R | L/R | SUV 4WD DFHA | For PR code:0BH | GCI53002 | Inner Joint | | | 33 | | | 34 | |
| | 2016.04-2020.07 | 7AT | R | L/R | SUV 4WD DFHA | For PR code:0BG | GCI61103 | Inner Joint | | | 33 | | | 32 | |
| | 2018.09-2022.11 | 7AT | F | R | SUV 4WD DKZA | | GCO83101 | Outer Joint | | 36 | 27 | 59.5 | 40 | 65 | M |
| | 2018.09-2022.11 | 7DCT | F | L | SUV 4WD DKZA | For Engine code:DKZA,Trans. code:DQ500;For Engine code:DNNA,Trans. code:DQ381 | GDS82351 | Drive Shaft | | 36 | 37 | 59.5 | 40 | 568 | |
| | 2018.09-2022.11 | 7DCT | F | R | SUV 4WD DKZA | Date to:2023.10,For Engine code:DKZA,For PR code:0EX | GDS61166 | Drive Shaft | | 36 | 40 | 59.5 | 40 | 611 | |
| | 2018.09-2022.11 | 7DCT | F | R | SUV 4WD DKZA | For Engine code:DKZA/DNNA,For PR code:0IJ | GDS81889 | Drive Shaft | | 36 | | 59.5 | 40 | 614 | |
| | 2018.09-2022.11 | 7DCT | F | L | SUV 4WD DKZA | For Engine code:DKZA,For PR code:0EX;For Engine code:DNNA,For PR code:0IJ | GCI81158 | Inner Joint | | 37 | 34 | 34.5 | 65.5 | 83 | |
| | 2018.09-2022.11 | 7DCT | F | R | SUV 4WD DKZA | For Engine code:DKZA,For PR code:0EX;TJ | GCI61048 | Inner Joint | | 40 | 34 | 46.9 | | 127.5 | |
| | 2018.09-2022.11 | 7DCT | F | R | SUV 4WD DKZA | For Engine code:DKZA,For PR code:0EX;AAR | GCI61084 | Inner Joint | | 40 | 34 | 46.9 | | 128 | |
| | 2018.09-2022.11 | 7DCT | F | R | SUV 4WD DKZA | For Engine code:DNNA,For PR code:0IJ | GCI82456 | Inner Joint | | | 28 | | | 32 | |
| | 2018.09-2022.11 | 7AT | R | L | SUV 4WD DKZA | For PR code:0BG | GDS61331 | Drive Shaft | | 36 | | 59.5 | 40 | 606 | |
| | 2018.09-2022.11 | 7AT | R | L | SUV 4WD DKZA | For PR code:0BH | GDS61334 | Drive Shaft | | 36 | | 59.5 | 40 | 598 | |
| | 2018.09-2022.11 | 7AT | R | R | SUV 4WD DKZA | For PR code:0BG | GDS61332 | Drive Shaft | | 36 | | 59.5 | 40 | 650 | |
| | 2018.09-2022.11 | 7AT | R | R | SUV 4WD DKZA | For PR code:0BH | GDS61335 | Drive Shaft | | 36 | | 59.5 | 40 | 638 | |
| | 2018.09-2022.11 | 7AT | R | L/R | SUV 4WD DKZA | For PR code:0BG | GCI61103 | Inner Joint | | | 33 | | | 32 | |
| | 2018.09-2022.11 | | R | L/R | SUV 4WD DKZA | For PR code:0BH | GCI83011 | Inner Joint | | | 33 | | | 34 | |
| | 2021.03-2024.04 | 7DCT | F | L | SUV 4WD DNNA | For Engine code:DKZA,Trans. code:DQ500;For Engine code:DNNA,Trans. code:DQ381 | GDS82351 | Drive Shaft | | 36 | 37 | 59.5 | 40 | 568 | |
| | 2021.03-2024.04 | 7DCT | F | R | SUV 4WD DNNA | Date to:2023.10,For Engine code:DKZA,For PR code:0EX | GDS61166 | Drive Shaft | | 36 | 40 | 59.5 | 40 | 611 | |
| | 2021.03-2024.04 | 7DCT | F | R | SUV 4WD DNNA | For PR code:0IJ | GDS81889 | Drive Shaft | | 36 | | 59.5 | 40 | 614 | |
| | 2021.03-2024.04 | 7DCT | F | L | SUV 4WD DNNA | For Engine code:DKZA,For PR code:0EX;For Engine code:DNNA,For PR code:0IJ | GCI81158 | Inner Joint | | 37 | 34 | 34.5 | 65.5 | 83 | |
| | 2021.03-2024.04 | 7DCT | F | R | SUV 4WD DNNA | For Engine code:DKZA,For PR code:0EX;TJ | GCI61048 | Inner Joint | | 40 | 34 | 46.9 | | 127.5 | |

| | YEAR | TRANSM. | F/R | L/R | BODY STYLE & DRIVE TYPE & ENGINE | REMARKS | G-AP Ref. | PRODUCT | ABS | Technical Specifications A | B | C | H | L | P |
|---|---|---|---|---|---|---|---|---|---|---|---|---|---|---|---|
| **VW Tiguan** | | | | | | | | | | | | | | | |
| 2.0 (140 kw) | 2021.03-2024.04 | 7DCT | F | R | SUV 4WD DNNA | For Engine code:DKZA,For PR code:0EX;AAR | GCI61084 | Inner Joint | | 40 | 34 | 46.9 | | 128 | |
| | 2021.03-2024.04 | 7DCT | R | L | SUV 4WD DNNA | For PR code:0BH | GDS61334 | Drive Shaft | | 36 | | 59.5 | 40 | 598 | |
| | 2021.03-2024.04 | 7DCT | R | R | SUV 4WD DNNA | For PR code:0BH | GDS61335 | Drive Shaft | | 36 | | 59.5 | 40 | 638 | |
| | 2021.03-2024.04 | 7DCT | R | L/R | SUV 4WD DNNA | | GCI61103 | Inner Joint | | | 33 | | | 32 | |
| 2.0 (142 kw) | 2023.09- | 7DCT | F | L | SUV 4WD DXNB | | GDS82351 | Drive Shaft | | 36 | 37 | 59.5 | 40 | 568 | |
| | 2023.09- | 7DCT | F | L/R | SUV 4WD DXNB | | GCO83101 | Outer Joint | | 36 | 27 | 59.5 | 40 | 65 | M |
| | 2023.09- | 7DCT | F | L | SUV 4WD DXNB | | GCI81158 | Inner Joint | | 37 | 34 | 34.5 | 65.5 | 83 | |
| | 2023.09- | 7DCT | R | L | SUV 4WD DXNB | | GDS61331 | Drive Shaft | | 36 | | 59.5 | 40 | 606 | |
| | 2023.09- | 7DCT | R | R | SUV 4WD DXNB | | GDS61332 | Drive Shaft | | 36 | | 59.5 | 40 | 650 | |
| | 2023.09- | 7DCT | R | L/R | SUV 4WD DXNB | | GCI35026 | Outer Joint | | 36 | 33 | 59.5 | 40 | 61 | |
| | 2023.09- | 7DCT | R | L/R | SUV 4WD DXNB | | GCI61103 | Inner Joint | | | 33 | | | 32 | |
| 2.0 (147 kw) | 2007.09-2018.07 | 6AT | F | L | SUV 4WD CAWB;CCTA;CCZA | | GDS81715 | Drive Shaft | | 36 | 26 | 59.5 | 40 | 566 | |
| | 2007.09-2018.07 | 6AT | F | R | SUV 4WD CAWB;CCTA;CCZA | | GDS81775 | Drive Shaft | | 36 | 40 | 59.5 | 40 | 594 | |
| | 2007.09-2018.07 | 6AT | F | L | SUV 4WD CAWB;CCTA;CCZA | | GCI61038 | Inner Joint | | 26 | 34 | 31 | 68.5 | 88.5 | |
| | 2007.09-2018.07 | 6AT | F | R | SUV 4WD CAWB;CCTA;CCZA | AAR | GCI61084 | Inner Joint | | 40 | 34 | 46.9 | | 128 | |
| | 2007.09-2018.07 | 6MT | F | L | SUV 4WD CAWB;CCTA;CCZA | | GDS61296 | Drive Shaft | | 36 | 40 | 59.5 | 40 | 500 | |
| | 2007.09-2018.07 | 6MT | F | R | SUV 4WD CAWB;CCTA;CCZA | | GDS83269 | Drive Shaft | | 36 | 40 | 59.5 | 40 | 605 | |
| | 2007.09-2018.07 | 6MT | F | L/R | SUV 4WD CAWB;CCTA;CCZA | | GCI61054 | Inner Joint | | 40 | 28 | 46.9 | 41 | 101.7 | |
| | 2007.09-2018.07 | 6MT/6AT | F | L/R | SUV 4WD CAWB;CCTA;CCZA | | GCO83002 | Outer Joint | | 36 | 27 | 59.5 | 40 | 66 | I |
| | 2007.09-2018.07 | 7DCT | F | L | SUV 4WD CAWB;CCTA;CCZA | | GDS81265 | Drive Shaft | | 36 | 37 | 59.5 | 40 | 557 | |
| | 2007.09-2018.07 | 7DCT | F | R | SUV 4WD CAWB;CCTA;CCZA | | GDS61347 | Drive Shaft | | 36 | 40 | 59.5 | 40 | 593 | |
| | 2007.09-2018.07 | 7DCT | F | L/R | SUV 4WD CAWB;CCTA;CCZA | | GCO83101 | Outer Joint | | 36 | 27 | 59.5 | 40 | 65 | M |
| | 2007.09-2018.07 | 7DCT | F | L | SUV 4WD CAWB;CCTA;CCZA | | GCI81158 | Inner Joint | | 37 | 34 | 34.5 | 65.5 | 83 | |
| | 2007.09-2018.07 | 7DCT/6AT | F | R | SUV 4WD CAWB;CCTA;CCZA | TJ | GCI61048 | Inner Joint | | 40 | 34 | 46.9 | | 127.5 | |
| | 2007.09-2018.07 | 6AT/6MT/7DCT | R | L | SUV 4WD CAWB;CCTA;CCZA | | GDS61284 | Drive Shaft | | 36 | | 59.5 | 40 | 594 | |
| | 2007.09-2018.07 | 6AT/6MT/7DCT | R | R | SUV 4WD CAWB;CCTA;CCZA | | GDS61293 | Drive Shaft | | 36 | | 59.5 | 40 | 631 | |
| | 2007.09-2018.07 | 6AT/6MT/7DCT | R | L/R | SUV 4WD CAWB;CCTA;CCZA | | GCI35026 | Outer Joint | | 36 | 33 | 59.5 | 40 | 61 | |
| | 2007.09-2018.07 | 6AT/6MT/7DCT | R | L/R | SUV 4WD CAWB;CCTA;CCZA | | GCI53002 | Inner Joint | | | 33 | | | 34 | |
| | 2007.09-2018.07 | 6AT/6MT/7DCT | R | L/R | SUV 4WD CAWB;CCTA;CCZA | | GCI82447 | Inner Joint | | | 33 | | | 34 | |
| | 2007.11-2018.07 | 6AT | F | L | SUV FWD CAWB;CCTA | | GDS81715 | Drive Shaft | | 36 | 26 | 59.5 | 40 | 566 | |
| | 2007.11-2018.07 | 6DCT | F | R | SUV FWD CAWB;CCTA | For Engine Code:CCTA,for vehicles with start-stop function | GDS83313 | Drive Shaft | | 36 | | 59.5 | 40 | 792 | |
| | 2007.11-2018.07 | 6MT | F | L | SUV FWD CAWB;CCTA | | GDS61296 | Drive Shaft | | 36 | 40 | 59.5 | 40 | 500 | |
| | 2007.11-2018.07 | 6MT | F | R | SUV FWD CAWB;CCTA | | GDS57372 | Drive Shaft | | 36 | 40 | 59.5 | 40 | 828 | |
| | 2009.11-2011.05 | 6MT | F | R | SUV Van 4WD CCZA | | GDS83269 | Drive Shaft | | 36 | 40 | 59.5 | 40 | 605 | |
| | 2009.11-2011.05 | 6MT | F | L/R | SUV Van 4WD CCZA | | GCO83002 | Outer Joint | | 36 | 27 | 59.5 | 40 | 66 | I |
| | 2009.11-2011.05 | 6MT | F | L/R | SUV Van 4WD CCZA | | GCI61054 | Inner Joint | | 40 | 28 | 46.9 | 41 | 101.7 | |
| | 2009.11-2011.05 | 7DCT | F | L | SUV Van 4WD CCZA | | GDS81265 | Drive Shaft | | 36 | 37 | 59.5 | 40 | 557 | |
| | 2009.11-2011.05 | 7DCT | F | R | SUV Van 4WD CCZA | | GDS61347 | Drive Shaft | | 36 | 40 | 59.5 | 40 | 593 | |
| | 2009.11-2011.05 | 7AT/6MT | R | L | SUV Van 4WD CCZA | | GDS61284 | Drive Shaft | | 36 | | 59.5 | 40 | 594 | |
| | 2009.11-2011.05 | 7AT/6MT | R | R | SUV Van 4WD CCZA | | GDS61293 | Drive Shaft | | 36 | | 59.5 | 40 | 631 | |
| | 2009.11-2011.05 | 7DCT/6MT | R | L/R | SUV Van 4WD CCZA | | GCI82447 | Inner Joint | | | 33 | | | 34 | |
| | 2020.07-2024.04 | 7AT | F | L | SUV 4WD DTUA | | GDS82351 | Drive Shaft | | 36 | 37 | 59.5 | 40 | 568 | |
| | 2020.07-2024.04 | 7AT | F | R | SUV 4WD DTUA | | GDS61346 | Drive Shaft | | 36 | | 59.5 | 40 | 589 | |
| | 2020.07-2024.04 | 7AT | F | L/R | SUV 4WD DTUA | | GCO83101 | Outer Joint | | 36 | 27 | 59.5 | 40 | 65 | M |
| | 2020.07-2024.04 | 7AT | F | R | SUV 4WD DTUA | | GCI61057 | Inner Joint | | | 34 | | | 89 | |
| | 2020.07-2024.04 | 7DCT | F | L | SUV 4WD DTUA | | GCI81158 | Inner Joint | | 37 | 34 | 34.5 | 65.5 | 83 | |
| | 2020.07-2024.04 | 7AT | R | L | SUV 4WD DTUA | For PR code:0BG | GDS61331 | Drive Shaft | | 36 | | 59.5 | 40 | 606 | |
| | 2020.07-2024.04 | 7AT | R | L | SUV 4WD DTUA | For PR code:0BH | GDS61334 | Drive Shaft | | 36 | | 59.5 | 40 | 598 | |
| | 2020.07-2024.04 | 7AT | R | R | SUV 4WD DTUA | For PR code:0BG | GDS61332 | Drive Shaft | | 36 | | 59.5 | 40 | 650 | |
| | 2020.07-2024.04 | 7AT | R | R | SUV 4WD DTUA | For PR code:0BH | GDS61335 | Drive Shaft | | 36 | | 59.5 | 40 | 638 | |
| | 2020.07-2024.04 | 7AT | R | L/R | SUV 4WD DTUA | For PR code:0BG | GCI61103 | Inner Joint | | | 33 | | | 32 | |
| 2.0 (155 kw) | 2011.05-2018.07 | 6AT | F | R | SUV 4WD CCZB | | GCI61048 | Inner Joint | | 40 | 34 | 46.9 | | 127.5 | |
| | 2011.05-2018.07 | 6MT | F | L | SUV 4WD CCZB | | GDS61296 | Drive Shaft | | 36 | 40 | 59.5 | 40 | 500 | |
| | 2011.05-2018.07 | 6MT | F | R | SUV 4WD CCZB | | GDS83269 | Drive Shaft | | 36 | 40 | 59.5 | 40 | 605 | |
| | 2011.05-2018.07 | 6MT | F | L/R | SUV 4WD CCZB | | GCO83002 | Outer Joint | | 36 | 27 | 59.5 | 40 | 66 | I |
| | 2011.05-2018.07 | 6MT | F | L | SUV 4WD CCZB | | GCI61090 | Inner Joint | | 40 | 28 | 46.9 | | 133.2 | |
| | 2011.05-2018.07 | 6MT | F | L/R | SUV 4WD CCZB | | GCI61054 | Inner Joint | | 40 | 28 | 46.9 | 41 | 101.7 | |
| | 2011.05-2018.07 | 7DCT | F | L | SUV 4WD CCZB | | GDS81265 | Drive Shaft | | 36 | 37 | 59.5 | 40 | 557 | |
| | 2011.05-2018.07 | 7DCT | F | R | SUV 4WD CCZB | | GDS61347 | Drive Shaft | | 36 | 40 | 59.5 | 40 | 593 | |
| | 2011.05-2018.07 | 7DCT | F | L/R | SUV 4WD CCZB | | GCO83101 | Outer Joint | | 36 | 27 | 59.5 | 40 | 65 | M |
| | 2011.05-2018.07 | 7DCT | F | L | SUV 4WD CCZB | | GCI81158 | Inner Joint | | 37 | 34 | 34.5 | 65.5 | 83 | |
| | 2011.05-2018.07 | AT | F | L/R | SUV 4WD CCZB | | GCI83006 | Inner Joint | | | 33 | | | 34 | |
| | 2011.05-2018.07 | 7AT/6MT | R | L | SUV 4WD CCZB | | GDS61284 | Drive Shaft | | 36 | | 59.5 | 40 | 594 | |
| | 2011.05-2018.07 | 7AT/6MT | R | R | SUV 4WD CCZB | | GDS61293 | Drive Shaft | | 36 | | 59.5 | 40 | 631 | |
| | 2011.05-2018.07 | 7AT/6MT | R | L/R | SUV 4WD CCZB | | GCI35026 | Outer Joint | | 36 | 33 | 59.5 | 40 | 61 | |

| | YEAR | TRANSM. | F/R | L/R | BODY STYLE & DRIVE TYPE & ENGINE | REMARKS | G-AP Ref. | PRODUCT | ABS | Technical Specifications A | B | C | H | L | P |
|---|---|---|---|---|---|---|---|---|---|---|---|---|---|---|---|
| **VW** | | | | | | | | | | | | | | | |
| **Tiguan** | | | | | | | | | | | | | | | |
| 2.0 (155 kw) | 2011.05-2018.07 | 7DCT/6MT | R | L/R | SUV 4WD CCZB | | GCI82447 | Inner Joint | | | 33 | | | 34 | |
| | 2011.05-2018.07 | 6MT | F | R | SUV Van 4WD CCZB | | GDS83269 | Drive Shaft | | 36 | 40 | 59.5 | 40 | 605 | |
| | 2011.05-2018.07 | 6MT | F | L/R | SUV Van 4WD CCZB | | GCO83002 | Outer Joint | | 36 | 27 | 59.5 | 40 | 66 | I |
| | 2011.05-2018.07 | 6MT | F | L/R | SUV Van 4WD CCZB | | GCI61054 | Inner Joint | | 40 | 28 | 46.9 | 41 | 101.7 | |
| | 2011.05-2018.07 | 7DCT | F | L | SUV Van 4WD CCZB | | GDS81265 | Drive Shaft | | 36 | 37 | 59.5 | 40 | 557 | |
| | 2011.05-2018.07 | 7DCT | F | R | SUV Van 4WD CCZB | | GDS61347 | Drive Shaft | | 36 | 40 | 59.5 | 40 | 593 | |
| | 2011.05-2018.07 | 7DCT | F | L/R | SUV Van 4WD CCZB | | GCO83101 | Outer Joint | | 36 | 27 | 59.5 | 40 | 65 | M |
| | 2011.05-2018.07 | 7AT/6MT | R | L | SUV Van 4WD CCZB | | GDS61284 | Drive Shaft | | 36 | | 59.5 | 40 | 594 | |
| | 2011.05-2018.07 | 7AT/6MT | R | R | SUV Van 4WD CCZB | | GDS61293 | Drive Shaft | | 36 | | 59.5 | 40 | 631 | |
| | 2011.05-2018.07 | 7DCT/6MT | R | L/R | SUV Van 4WD CCZB | | GCI82447 | Inner Joint | | | 33 | | | 34 | |
| 2.0 (162 kw) | 2016.06-2024.04 | 7AT | F | L | SUV 4WD CHHB | For Model code:BT1/AD1 | GDS82351 | Drive Shaft | | 36 | 37 | 59.5 | 40 | 568 | |
| | 2016.06-2024.04 | 7AT | F | R | SUV 4WD CHHB | Date from:2017.02 | GDS84257 | Drive Shaft | | 36 | 40 | 59.5 | 40 | 609 | |
| | 2016.06-2024.04 | 7AT | F | L/R | SUV 4WD CHHB | | GCO83101 | Outer Joint | | 36 | 27 | 59.5 | 40 | 65 | M |
| | 2016.06-2024.04 | 7AT | F | L | SUV 4WD CHHB | | GCI81158 | Inner Joint | | 37 | 34 | 34.5 | 65.5 | 83 | |
| | 2016.06-2024.04 | 7AT | F | R | SUV 4WD CHHB | TJ | GCI61048 | Inner Joint | | 40 | 34 | 46.9 | | 127.5 | |
| | 2016.06-2024.04 | 7AT | F | R | SUV 4WD CHHB | Date From:2017.02 | GCI61084 | Inner Joint | | 40 | 34 | 46.9 | | 128 | |
| | 2016.06-2024.04 | 7AT | R | L | SUV 4WD CHHB | For PR code:0BG | GDS61331 | Drive Shaft | | 36 | | 59.5 | 40 | 606 | |
| | 2016.06-2024.04 | 7AT | R | L | SUV 4WD CHHB | For PR code:0BH | GDS61334 | Drive Shaft | | 36 | | 59.5 | 40 | 598 | |
| | 2016.06-2024.04 | 7AT | R | R | SUV 4WD CHHB | For PR code:0BG | GDS61332 | Drive Shaft | | 36 | | 59.5 | 40 | 650 | |
| | 2016.06-2024.04 | 7AT | R | R | SUV 4WD CHHB | For PR code:0BH | GDS61335 | Drive Shaft | | 36 | | 59.5 | 40 | 638 | |
| | 2016.06-2024.04 | 7AT | R | L/R | SUV 4WD CHHB | | GCI35026 | Outer Joint | | 36 | 33 | 59.5 | 40 | 61 | |
| | 2016.06-2024.04 | 7AT | R | L/R | SUV 4WD CHHB | For PR code:0BG | GCI61103 | Inner Joint | | | 33 | | | 32 | |
| 2.0 (169 kw) | 2018.09-2020.07 | 7AT | F | L | SUV 4WD DKTA | | GDS82351 | Drive Shaft | | 36 | 37 | 59.5 | 40 | 568 | |
| | 2018.09-2020.07 | 7AT | F | R | SUV 4WD DKTA | | GDS84257 | Drive Shaft | | 36 | 40 | 59.5 | 40 | 609 | |
| | 2018.09-2020.07 | 7AT | F | L | SUV 4WD DKTA | | GCI81158 | Inner Joint | | 37 | 34 | 34.5 | 65.5 | 83 | |
| | 2018.09-2020.07 | 7AT | F | R | SUV 4WD DKTA | TJ | GCI61048 | Inner Joint | | 40 | 34 | 46.9 | | 127.5 | |
| | 2018.09-2020.07 | 7AT | F | R | SUV 4WD DKTA | | GCI61084 | Inner Joint | | 40 | 34 | 46.9 | | 128 | |
| | 2018.09-2020.07 | 7AT | R | L | SUV 4WD DKTA | For PR code:0BG | GDS61331 | Drive Shaft | | 36 | | 59.5 | 40 | 606 | |
| | 2018.09-2020.07 | 7AT | R | L | SUV 4WD DKTA | For PR code:0BH | GDS61334 | Drive Shaft | | 36 | | 59.5 | 40 | 598 | |
| | 2018.09-2020.07 | 7AT | R | R | SUV 4WD DKTA | For PR code:0BG | GDS61332 | Drive Shaft | | 36 | | 59.5 | 40 | 650 | |
| | 2018.09-2020.07 | 7AT | R | R | SUV 4WD DKTA | For PR code:0BH | GDS61335 | Drive Shaft | | 36 | | 59.5 | 40 | 638 | |
| | 2018.09-2020.07 | 7AT | R | L/R | SUV 4WD DKTA | | GCI35026 | Outer Joint | | 36 | 33 | 59.5 | 40 | 61 | |
| | 2018.09-2020.07 | 7AT | R | L/R | SUV 4WD DKTA | For PR code:0BG | GCI61103 | Inner Joint | | | 33 | | | 32 | |
| 2.0 (176 kw) | 2016.05-2020.07 | 7AT | F | L | SUV 4WD CUAA | | GDS82351 | Drive Shaft | | 36 | 37 | 59.5 | 40 | 568 | |
| | 2016.05-2020.07 | 7AT | F | R | SUV 4WD CUAA | Date from:2017.02 | GDS84257 | Drive Shaft | | 36 | 40 | 59.5 | 40 | 609 | |
| | 2016.05-2020.07 | 7AT | F | L/R | SUV 4WD CUAA | | GCO83101 | Outer Joint | | 36 | 27 | 59.5 | 40 | 65 | M |
| | 2016.05-2020.07 | 7AT | F | L | SUV 4WD CUAA | | GCI81158 | Inner Joint | | 37 | 34 | 34.5 | 65.5 | 83 | |
| | 2016.05-2020.07 | 7AT | F | R | SUV 4WD CUAA | TJ | GCI61048 | Inner Joint | | 40 | 34 | 46.9 | | 127.5 | |
| | 2016.05-2020.07 | 7AT | F | R | SUV 4WD CUAA | Date From:2017.02 | GCI61084 | Inner Joint | | 40 | 34 | 46.9 | | 128 | |
| | 2016.05-2020.07 | 7AT | R | L | SUV 4WD CUAA | For PR code:0BG | GDS61331 | Drive Shaft | | 36 | | 59.5 | 40 | 606 | |
| | 2016.05-2020.07 | 7AT | R | L | SUV 4WD CUAA | For PR code:0BH | GDS61334 | Drive Shaft | | 36 | | 59.5 | 40 | 598 | |
| | 2016.05-2020.07 | 7AT | R | R | SUV 4WD CUAA | For PR code:0BG | GDS61332 | Drive Shaft | | 36 | | 59.5 | 40 | 650 | |
| | 2016.05-2020.07 | 7AT | R | R | SUV 4WD CUAA | For PR code:0BH | GDS61335 | Drive Shaft | | 36 | | 59.5 | 40 | 638 | |
| | 2016.05-2020.07 | 7AT | R | L/R | SUV 4WD CUAA | | GCI35026 | Outer Joint | | 36 | 33 | 59.5 | 40 | 61 | |
| | 2016.05-2020.07 | 7AT | R | L/R | SUV 4WD CUAA | For PR code:0BG | GCI61103 | Inner Joint | | | 33 | | | 32 | |
| 2.0 (180 kw) | 2021.01-2024.04 | 7AT | F | L/R | SUV 4WD DNPA | | GCO83101 | Outer Joint | | 36 | 27 | 59.5 | 40 | 65 | M |
| | 2021.01-2024.04 | 7DCT | F | L | SUV 4WD DNPA | Date to:2023.10 | GDS82351 | Drive Shaft | | 36 | 37 | 59.5 | 40 | 568 | |
| | 2021.01-2024.04 | 7DCT | F | L | SUV 4WD DNPA | | GCI81158 | Inner Joint | | 37 | 34 | 34.5 | 65.5 | 83 | |
| | 2021.01-2024.04 | 7AT | R | L | SUV 4WD DNPA | For PR code:0BG | GDS61331 | Drive Shaft | | 36 | | 59.5 | 40 | 606 | |
| | 2021.01-2024.04 | 7AT | R | L | SUV 4WD DNPA | For PR code:0BH | GDS61334 | Drive Shaft | | 36 | | 59.5 | 40 | 598 | |
| | 2021.01-2024.04 | 7AT | R | R | SUV 4WD DNPA | For PR code:0BG | GDS61332 | Drive Shaft | | 36 | | 59.5 | 40 | 650 | |
| | 2021.01-2024.04 | 7AT | R | R | SUV 4WD DNPA | For PR code:0BH | GDS61335 | Drive Shaft | | 36 | | 59.5 | 40 | 638 | |
| | 2021.01-2024.04 | 7DCT | R | L/R | SUV 4WD DNPA | | GCI61103 | Inner Joint | | | 33 | | | 32 | |
| 2.0 (195 kw) | 2024.05- | 7DCT | R | L | SUV FWD DNPB | | GDS61331 | Drive Shaft | | 36 | | 59.5 | 40 | 606 | |
| | 2024.05- | 7DCT | R | R | SUV FWD DNPB | | GDS61332 | Drive Shaft | | 36 | | 59.5 | 40 | 650 | |
| | 2024.05- | 7DCT | R | L/R | SUV FWD DNPB | | GCI35026 | Outer Joint | | 36 | 33 | 59.5 | 40 | 61 | |
| | 2024.05- | 7DCT | R | L/R | SUV FWD DNPB | | GCI61103 | Inner Joint | | | 33 | | | 32 | |
| 2.0 (235 kw) | 2020.11-2024.04 | 7AT | F | L | SUV 4WD DNFG;DSFE | | GDS82351 | Drive Shaft | | 36 | 37 | 59.5 | 40 | 568 | |
| | 2020.11-2024.04 | 7AT | F | R | SUV 4WD DNFG;DSFE | | GDS84257 | Drive Shaft | | 36 | 40 | 59.5 | 40 | 609 | |
| | 2020.11-2024.04 | 7AT | F | L/R | SUV 4WD DNFG;DSFE | | GCO83101 | Outer Joint | | 36 | 27 | 59.5 | 40 | 65 | M |
| | 2020.11-2024.04 | 7AT | F | L | SUV 4WD DNFG;DSFE | | GCI81158 | Inner Joint | | 37 | 34 | 34.5 | 65.5 | 83 | |
| | 2020.11-2024.04 | 7AT | F | R | SUV 4WD DNFG;DSFE | | GCI61084 | Inner Joint | | 40 | 34 | 46.9 | | 128 | |
| **Tiguan Allspace** | | | | | | | | | | | | | | | |
| 1.4 (110 kw) | 2017.06- | 6AT/6MT | F | L/R | SUV FWD CZEA;CZDA | | GCO81352 | Outer Joint | | 36 | 28 | 59.5 | 40 | 65 | I |
| | 2017.06- | 6MT/6AT | F | L/R | SUV FWD CZEA;CZDA | | GCI83523 | Inner Joint | | | 36 | | | 34.6 | |

| | YEAR | TRANSM. | F/R | L/R | BODY STYLE & DRIVE TYPE & ENGINE | REMARKS | G-AP Ref. | PRODUCT | ABS | Technical Specifications A | B | C | H | L | P |
|---|---|---|---|---|---|---|---|---|---|---|---|---|---|---|---|
| **VW** **Tiguan Allspace** | | | | | | | | | | | | | | | |
| 1.5 (110 kw) | 2018.09- | 6MT | F | L/R | SUV FWD DADA;DPCA;DXDB | Date from:2020.12,Date to:2021.07 | GCO81352 | Outer Joint | | 36 | 28 | 59.5 | 40 | 65 | I |
| | 2018.09- | 6MT | F | L/R | SUV FWD DADA;DPCA;DXDB | Date from:2021.08 | GCO83293 | Outer Joint | | 36 | 36 | 59.5 | 40 | 65 | M |
| | 2018.09- | 6MT | F | L/R | SUV FWD DADA;DPCA;DXDB | Date to:2020.11;Date from:2021.08 | GCI83523 | Inner Joint | | | 36 | | | 34.6 | |
| | 2018.09- | 7DCT | F | L | SUV FWD DADA;DPCA;DXDB | Date from:2021.08 | GDS58348 | Drive Shaft | | 36 | 37 | 59.5 | 40 | 569 | |
| | 2018.09- | 7DCT | F | L | SUV FWD DADA;DPCA;DXDB | Date To:2021.07 | GDS84414 | Drive Shaft | | 36 | 37 | 59.5 | 40 | 570 | |
| | 2018.09- | 7DCT | F | R | SUV FWD DADA;DPCA;DXDB | Date To:2021.07 | GDS58230 | Drive Shaft | | 36 | 37 | 59.5 | 40 | 921 | |
| | 2018.09- | 7DCT | F | R | SUV FWD DADA;DPCA;DXDB | Date from:2021.08 | GDS58347 | Drive Shaft | | 36 | 37 | 59.5 | 40 | 921 | |
| | 2018.09- | 7DCT | F | L/R | SUV FWD DADA;DPCA;DXDB | Date from:2021.04,Date to:2021.07 | GCO81352 | Outer Joint | | 36 | 28 | 59.5 | 40 | 65 | I |
| | 2018.09- | 7DCT | F | L/R | SUV FWD DADA;DPCA;DXDB | Date from:2021.12 | GCO83293 | Outer Joint | | 36 | 36 | 59.5 | 40 | 65 | M |
| | 2018.09- | 7DCT | F | L | SUV FWD DADA;DPCA;DXDB | Date To:2021.07 | GCI81158 | Inner Joint | | 37 | 34 | 34.5 | 65.5 | 83 | |
| | 2018.09- | 7DCT | F | L | SUV FWD DADA;DPCA;DXDB | Date from:2021.08 | GCI84080 | Inner Joint | | 37 | 34 | | 77.5 | 104.5 | |
| | 2018.09- | 7DCT | F | R | SUV FWD DADA;DPCA;DXDB | Date To:2021.07 | GCI82108 | Inner Joint | | 37 | 34 | 40 | 77.5 | 103.5 | |
| | 2018.09- | 7DCT | F | R | SUV FWD DADA;DPCA;DXDB | Date from:2021.08 | GCI84081 | Inner Joint | | 37 | 34 | | 66 | 88 | |
| 2.0 (110 kw) | 2017.06- | 6MT | F | L | SUV 4WD DFGA;DBGC;DTSA;DTSB | | GDS83684 | Drive Shaft | | 36 | 40 | 59.5 | 40 | 514 | |
| | 2017.06- | 6MT | F | R | SUV 4WD DFGA;DBGC;DTSA;DTSB | | GDS83683 | Drive Shaft | | 36 | 40 | 59.5 | 40 | 609 | |
| | 2017.06- | 6MT | F | L/R | SUV 4WD DFGA;DBGC;DTSA;DTSB | | GCO83101 | Outer Joint | | 36 | 27 | 59.5 | 40 | 65 | M |
| | 2017.06- | 6MT | F | L | SUV 4WD DFGA;DBGC;DTSA;DTSB | | GCI61090 | Inner Joint | | 40 | 28 | 46.9 | | 133.2 | |
| | 2017.06- | 6MT | F | R | SUV 4WD DFGA;DBGC;DTSA;DTSB | | GCI61054 | Inner Joint | | 40 | 28 | 46.9 | 41 | 101.7 | |
| | 2017.06- | 7DCT | F | L | SUV 4WD DFGA;DBGC;DTSA;DTSB | Date to:2021.07 | GDS84414 | Drive Shaft | | 36 | 37 | 59.5 | 40 | 570 | |
| | 2017.06- | 7DCT | F | R | SUV 4WD DFGA;DBGC;DTSA;DTSB | Date to:2021.07,For PR code:0IJ | GDS84412 | Drive Shaft | | 36 | | 59.5 | 40 | 587 | |
| | 2017.06- | 7DCT | F | R | SUV 4WD DFGA;DBGC;DTSA;DTSB | Date to:2021.07,For PR code:0EX | GDS84413 | Drive Shaft | | 36 | 40 | 59.5 | 40 | 605 | |
| | 2017.06- | 7DCT | F | L/R | SUV 4WD DFGA;DBGC;DTSA;DTSB | Date to:2021.07 | GCO81352 | Outer Joint | | 36 | 28 | 59.5 | 40 | 65 | I |
| | 2017.06- | 7DCT | F | L/R | SUV 4WD DFGA;DBGC;DTSA;DTSB | Date from:2021.08;For PR code:0IJ | GCO83293 | Outer Joint | | 36 | 36 | 59.5 | 40 | 65 | M |
| | 2017.06- | 7DCT | F | L | SUV 4WD DFGA;DBGC;DTSA;DTSB | Date to:2021.07 | GCI81158 | Inner Joint | | 37 | 34 | 34.5 | 65.5 | 83 | |
| | 2017.06- | 7DCT | F | R | SUV 4WD DFGA;DBGC;DTSA;DTSB | Date to:2021.02,For PR code:0EX;TJ | GCI61048 | Inner Joint | | 40 | 34 | 46.9 | | 127.5 | |
| | 2017.06- | 7DCT | F | R | SUV 4WD DFGA;DBGC;DTSA;DTSB | Date to:2021.07,For PR code:0IJ | GCI61057 | Inner Joint | | | 34 | | | 89 | |
| | 2017.06- | 7DCT | F | R | SUV 4WD DFGA;DBGC;DTSA;DTSB | Date to:2021.07,For PR code:0EX;AAR | GCI61084 | Inner Joint | | 40 | 34 | 46.9 | | 128 | |
| | 2017.06- | 6MT/7AT | R | L | SUV 4WD DFGA;DBGC;DTSA;DTSB | For PR code:0BG | GDS61331 | Drive Shaft | | 36 | | 59.5 | 40 | 606 | |
| | 2017.06- | 6MT/7AT | R | L | SUV 4WD DFGA;DBGC;DTSA;DTSB | For PR code:0BH | GDS61334 | Drive Shaft | | 36 | | 59.5 | 40 | 598 | |
| | 2017.06- | 6MT/7AT | R | R | SUV 4WD DFGA;DBGC;DTSA;DTSB | For PR code:0BG | GDS61332 | Drive Shaft | | 36 | | 59.5 | 40 | 650 | |
| | 2017.06- | 6MT/7AT | R | R | SUV 4WD DFGA;DBGC;DTSA;DTSB | For PR code:0BH/0HB | GDS61335 | Drive Shaft | | 36 | | 59.5 | 40 | 638 | |
| | 2017.06- | 6MT/7DCT | R | L/R | SUV 4WD DFGA;DBGC;DTSA;DTSB | For PR code:0BH/0BG | GCI35026 | Outer Joint | | 36 | 33 | 59.5 | 40 | 61 | |
| | 2017.06- | 6MT/7DCT | R | L/R | SUV 4WD DFGA;DBGC;DTSA;DTSB | For PR code:0BH | GCI53002 | Inner Joint | | | 33 | | | 34 | |
| | 2017.06- | 6MT/7DCT | R | L/R | SUV 4WD DFGA;DBGC;DTSA;DTSB | For PR code:0BG | GCI61103 | Inner Joint | | | 33 | | | 32 | |
| | 2017.06- | 6MT/7DCT | R | L/R | SUV 4WD DFGA;DBGC;DTSA;DTSB | For PR code:0BH | GCI82447 | Inner Joint | | | 33 | | | 34 | |
| | 2017.06- | 6MT | F | L | SUV FWD DFGA;DTSA;DTSB | | GDS81896 | Drive Shaft | | 36 | | 59.5 | 40 | 500 | |
| | 2017.06- | 6MT | F | R | SUV FWD DFGA;DTSA;DTSB | | GDS61101 | Drive Shaft | | 36 | | 59.5 | 40 | 803 | |
| | 2017.06- | 6MT | F | L/R | SUV FWD DFGA;DTSA;DTSB | | GCO83002 | Outer Joint | | 36 | 27 | 59.5 | 40 | 66 | I |
| | 2017.06- | 6MT | F | L/R | SUV FWD DFGA;DTSA;DTSB | | GCO83101 | Outer Joint | | 36 | 27 | 59.5 | 40 | 65 | M |
| | 2017.06- | 6MT | F | L/R | SUV FWD DFGA;DTSA;DTSB | | GCI83016 | Inner Joint | | | 28 | | | 32 | |
| | 2017.06- | 7AT | F | L/R | SUV FWD DFGA;DTSA;DTSB | Date from:2021.08 | GCO83293 | Outer Joint | | 36 | 36 | 59.5 | 40 | 65 | M |
| | 2017.06- | 7DCT | F | L | SUV FWD DFGA;DTSA;DTSB | Date to:2021.07 | GDS84414 | Drive Shaft | | 36 | 37 | 59.5 | 40 | 570 | |
| | 2017.06- | 7DCT | F | L/R | SUV FWD DFGA;DTSA;DTSB | Date to:2021.07 | GCO81352 | Outer Joint | | 36 | 28 | 59.5 | 40 | 65 | I |
| | 2017.06- | 7DCT | F | L | SUV FWD DFGA;DTSA;DTSB | Date to:2021.07 | GCI81158 | Inner Joint | | 37 | 34 | 34.5 | 65.5 | 83 | |
| 2.0 (132 kw) | 2017.03- | 7DCT | F | L | SUV 4WD DGVA | | GDS84414 | Drive Shaft | | 36 | 37 | 59.5 | 40 | 570 | |
| | 2017.03- | 7DCT | F | R | SUV 4WD DGVA | For PR code:0EX | GDS84413 | Drive Shaft | | 36 | 40 | 59.5 | 40 | 605 | |
| | 2017.03- | 7DCT | F | L/R | SUV 4WD DGVA | Date from:2021.04 | GCO81352 | Outer Joint | | 36 | 28 | 59.5 | 40 | 65 | I |
| | 2017.03- | 7DCT | F | L | SUV 4WD DGVA | AAR | GCI81158 | Inner Joint | | 37 | 34 | 34.5 | 65.5 | 83 | |
| | 2017.03- | 7DCT | F | R | SUV 4WD DGVA | For PR code:0EX | GCI61084 | Inner Joint | | 40 | 34 | 46.9 | | 128 | |
| | 2017.03- | 7DCT | R | L | SUV 4WD DGVA | For PR code:0BG | GDS61331 | Drive Shaft | | 36 | | 59.5 | 40 | 606 | |
| | 2017.03- | 7DCT | R | L | SUV 4WD DGVA | For PR code:0BH | GDS61334 | Drive Shaft | | 36 | | 59.5 | 40 | 598 | |
| | 2017.03- | 7DCT | R | R | SUV 4WD DGVA | For PR code:0BG | GDS61332 | Drive Shaft | | 36 | | 59.5 | 40 | 650 | |
| | 2017.03- | 7DCT | R | R | SUV 4WD DGVA | For PR code:0BH | GDS61335 | Drive Shaft | | 36 | | 59.5 | 40 | 638 | |
| | 2017.03- | 7DCT | R | L/R | SUV 4WD DGVA | | GCI35026 | Outer Joint | | 36 | 33 | 59.5 | 40 | 61 | |
| | 2017.03- | 7DCT | R | L/R | SUV 4WD DGVA | VL | GCI61103 | Inner Joint | | | 33 | | | 32 | |
| | 2017.03- | 7DCT | R | L/R | SUV 4WD DGVA | For PR code:0BH | GCI82447 | Inner Joint | | | 33 | | | 34 | |
| | 2017.03- | | R | L/R | SUV 4WD DGVA | Date to:2021.07,For PR code:0BH | GCI83011 | Inner Joint | | | 33 | | | 34 | |
| 2.0 (137 kw) | 2017.04- | 8AT | F | L | SUV 4WD DGUA;DTEA | | GDS56879 | Drive Shaft | | 36 | 37 | 59.5 | 40 | 546 | |
| | 2017.04- | 8AT | F | L/R | SUV 4WD DGUA;DTEA | Date from:2021.04,Date to:2021.07 | GCO81352 | Outer Joint | | 36 | 28 | 59.5 | 40 | 65 | I |
| | 2017.04- | 8AT | F | L/R | SUV 4WD DGUA;DTEA | Date from:2021.10 | GCO83293 | Outer Joint | | 36 | 36 | 59.5 | 40 | 65 | M |
| | 2017.04- | 8AT | F | L | SUV 4WD DGUA;DTEA | Date to:2020.11 | GCI83539 | Inner Joint | | 37 | 27 | | 66 | 88 | |
| | 2017.04- | 8AT | R | L | SUV 4WD DGUA;DTEA | For PR code:0BG | GDS61331 | Drive Shaft | | 36 | | 59.5 | 40 | 606 | |
| | 2017.04- | 8AT | R | L | SUV 4WD DGUA;DTEA | For PR code:0BH | GDS61334 | Drive Shaft | | 36 | | 59.5 | 40 | 598 | |
| | 2017.04- | 8AT | R | R | SUV 4WD DGUA;DTEA | For PR code:0BG | GDS61332 | Drive Shaft | | 36 | | 59.5 | 40 | 650 | |
| | 2017.04- | 8AT | R | R | SUV 4WD DGUA;DTEA | For PR code:0BH | GDS61335 | Drive Shaft | | 36 | | 59.5 | 40 | 638 | |

| | YEAR | TRANSM. | F/R | L/R | BODY STYLE & DRIVE TYPE & ENGINE | REMARKS | G-AP Ref. | PRODUCT | ABS | Technical Specifications A | B | C | H | L | P |
|---|---|---|---|---|---|---|---|---|---|---|---|---|---|---|---|
| **VW Tiguan Allspace** | | | | | | | | | | | | | | | |
| 2.0 (137 kw) | 2017.04- | 8AT | R | L/R | SUV 4WD DGUA;DTEA | For PR code:0BG | GCI61103 | Inner Joint | | | 33 | | | 32 | |
| | 2017.04- | 8AT | R | L/R | SUV 4WD DGUA;DTEA | For PR code:0BH | GCI82447 | Inner Joint | | | 33 | | | 34 | |
| | 2017.04- | 8AT | R | L/R | SUV 4WD DGUA;DTEA | For PR code:0BG | GCI83008 | Inner Joint | | | 33 | | | 32 | |
| | 2017.04- | 8AT | F | L | SUV FWD DGUA;DTEA | | GDS56879 | Drive Shaft | | 36 | 37 | 59.5 | 40 | 546 | |
| | 2017.04- | 8AT | F | R | SUV FWD DGUA;DTEA | | GDS56880 | Drive Shaft | | 36 | 37 | 59.5 | 40 | 944 | |
| | 2017.04- | 8AT | F | L/R | SUV FWD DGUA;DTEA | Date from:2021.04,Date to:2021.07 | GCO81352 | Outer Joint | | 36 | 28 | 59.5 | 40 | 65 | I |
| | 2017.04- | 8AT | F | L/R | SUV FWD DGUA;DTEA | Date from:2021.10 | GCO83293 | Outer Joint | | 36 | 36 | 59.5 | 40 | 65 | M |
| | 2017.04- | 8AT | F | L | SUV FWD DGUA;DTEA | Date to:2020.11 | GCI83539 | Inner Joint | | 37 | 27 | | 66 | 88 | |
| | 2017.04- | 8AT | F | R | SUV FWD DGUA;DTEA | | GCI83540 | Inner Joint | | 37 | 27 | | 77.5 | 104.5 | |
| 2.0 (140 kw) | 2017.06-2021.07 | 7DCT | F | L | SUV 4WD DFHA | | GDS84414 | Drive Shaft | | 36 | 37 | 59.5 | 40 | 570 | |
| | 2017.06-2021.07 | 7DCT | F | R | SUV 4WD DFHA | | GDS84413 | Drive Shaft | | 36 | 40 | 59.5 | 40 | 605 | |
| | 2017.06-2021.07 | 7DCT | F | L/R | SUV 4WD DFHA | | GCO81352 | Outer Joint | | 36 | 28 | 59.5 | 40 | 65 | I |
| | 2017.06-2021.07 | 7DCT | F | L | SUV 4WD DFHA | | GCI81158 | Inner Joint | | 37 | 34 | 34.5 | 65.5 | 83 | |
| | 2017.06-2021.07 | 7DCT | F | R | SUV 4WD DFHA | Date to:2021.02;TJ | GCI61048 | Inner Joint | | 40 | 34 | 46.9 | | 127.5 | |
| | 2017.06-2021.07 | 7DCT | F | R | SUV 4WD DFHA | AAR | GCI61084 | Inner Joint | | 40 | 34 | 46.9 | | 128 | |
| | 2017.06-2021.07 | 7DCT | R | L | SUV 4WD DFHA | For PR code:0BG | GDS61331 | Drive Shaft | | 36 | | 59.5 | 40 | 606 | |
| | 2017.06-2021.07 | 7DCT | R | L | SUV 4WD DFHA | For PR code:0BH | GDS61334 | Drive Shaft | | 36 | | 59.5 | 40 | 598 | |
| | 2017.06-2021.07 | 7DCT | R | R | SUV 4WD DFHA | For PR code:0BG | GDS61332 | Drive Shaft | | 36 | | 59.5 | 40 | 650 | |
| | 2017.06-2021.07 | 7DCT | R | R | SUV 4WD DFHA | For PR code:0BH/0HB | GDS61335 | Drive Shaft | | 36 | | 59.5 | 40 | 638 | |
| | 2017.06-2021.07 | 7DCT | R | L/R | SUV 4WD DFHA | For PR code:0BG/0BH | GCI35026 | Outer Joint | | 36 | 33 | 59.5 | 40 | 61 | |
| | 2017.06-2021.07 | 7DCT | R | L/R | SUV 4WD DFHA | For PR code:0BG | GCI61103 | Inner Joint | | | 33 | | | 32 | |
| | 2017.06-2021.07 | 7DCT | R | L/R | SUV 4WD DFHA | For PR code:0BH | GCI82447 | Inner Joint | | | 33 | | | 34 | |
| | 2017.06-2021.07 | 7DCT | R | L/R | SUV 4WD DFHA | For PR code:0BH | GCI83011 | Inner Joint | | | 33 | | | 34 | |
| | 2018.09- | 7AT | F | L/R | SUV 4WD DNLA;DNNA | Date from:2021.10 | GCO83293 | Outer Joint | | 36 | 36 | 59.5 | 40 | 65 | M |
| | 2018.09- | 7AT | F | L/R | SUV 4WD DNLA;DNNA | Date from:2021.08;For PR code:0IJ | GCI83523 | Inner Joint | | | 36 | | | 34.6 | |
| | 2018.09- | 7DCT | F | L | SUV 4WD DNLA;DNNA | Date to:2021.07 | GDS84414 | Drive Shaft | | 36 | 37 | 59.5 | 40 | 570 | |
| | 2018.09- | 7DCT | F | R | SUV 4WD DNLA;DNNA | For PR code:0EX | GDS84413 | Drive Shaft | | 36 | 40 | 59.5 | 40 | 605 | |
| | 2018.09- | 7DCT | F | L/R | SUV 4WD DNLA;DNNA | Date from:2021.04,Date to:2021.07 | GCO81352 | Outer Joint | | 36 | 28 | 59.5 | 40 | 65 | I |
| | 2018.09- | 7DCT | F | L | SUV 4WD DNLA;DNNA | Date to:2021.07 | GCI81158 | Inner Joint | | 37 | 34 | 34.5 | 65.5 | 83 | |
| | 2018.09- | 7DCT | F | R | SUV 4WD DNLA;DNNA | For PR code:0EX | GCI61084 | Inner Joint | | 40 | 34 | 46.9 | | 128 | |
| | 2018.09- | 7AT | R | L | SUV 4WD DNLA;DNNA | For PR code:0BG | GDS61331 | Drive Shaft | | 36 | | 59.5 | 40 | 606 | |
| | 2018.09- | 7AT | R | L | SUV 4WD DNLA;DNNA | For PR code:0BH | GDS61334 | Drive Shaft | | 36 | | 59.5 | 40 | 598 | |
| | 2018.09- | 7AT | R | R | SUV 4WD DNLA;DNNA | For PR code:0BG | GDS61332 | Drive Shaft | | 36 | | 59.5 | 40 | 650 | |
| | 2018.09- | 7AT | R | R | SUV 4WD DNLA;DNNA | For PR code:0BH/0HB | GDS61335 | Drive Shaft | | 36 | | 59.5 | 40 | 638 | |
| | 2018.09- | 7DCT | R | L/R | SUV 4WD DNLA;DNNA | For PR code:0BG/0BH | GCI35026 | Outer Joint | | 36 | 33 | 59.5 | 40 | 61 | |
| | 2018.09- | 7DCT | R | L/R | SUV 4WD DNLA;DNNA | For PR code:0BG | GCI61103 | Inner Joint | | | 33 | | | 32 | |
| | 2018.09- | 7DCT | R | L/R | SUV 4WD DNLA;DNNA | For PR code:0BH | GCI82447 | Inner Joint | | | 33 | | | 34 | |
| | 2018.09- | 7DCT | R | L/R | SUV 4WD DNLA;DNNA | For PR code:0BG | GCI83008 | Inner Joint | | | 33 | | | 32 | |
| 2.0 (147 kw) | 2020.06- | 7AT | F | L/R | SUV 4WD DTUA | Date from:2021.08 | GCO83293 | Outer Joint | | 36 | 36 | 59.5 | 40 | 65 | M |
| | 2020.06- | 7DCT | F | L | SUV 4WD DTUA | Date to:2021.07 | GDS84414 | Drive Shaft | | 36 | 37 | 59.5 | 40 | 570 | |
| | 2020.06- | 7DCT | F | R | SUV 4WD DTUA | Date to:2021.07 | GDS84412 | Drive Shaft | | 36 | | 59.5 | 40 | 587 | |
| | 2020.06- | 7DCT | F | L/R | SUV 4WD DTUA | Date from:2020.12,Date to:2021.07 | GCO81352 | Outer Joint | | 36 | 28 | 59.5 | 40 | 65 | I |
| | 2020.06- | 7DCT | F | L | SUV 4WD DTUA | Date to:2021.07 | GCI81158 | Inner Joint | | 37 | 34 | 34.5 | 65.5 | 83 | |
| | 2020.06- | 7DCT | F | R | SUV 4WD DTUA | Date to:2021.07 | GCI61057 | Inner Joint | | | 34 | | | 89 | |
| | 2020.06- | 7AT | R | L | SUV 4WD DTUA | For PR code:0BG | GDS61331 | Drive Shaft | | 36 | | 59.5 | 40 | 606 | |
| | 2020.06- | 7AT | R | L | SUV 4WD DTUA | For PR code:0BH | GDS61334 | Drive Shaft | | 36 | | 59.5 | 40 | 598 | |
| | 2020.06- | 7AT | R | R | SUV 4WD DTUA | For PR code:0BG | GDS61332 | Drive Shaft | | 36 | | 59.5 | 40 | 650 | |
| | 2020.06- | 7AT | R | R | SUV 4WD DTUA | For PR code:0BH | GDS61335 | Drive Shaft | | 36 | | 59.5 | 40 | 638 | |
| | 2020.06- | 7DCT | R | L/R | SUV 4WD DTUA | | GCI35026 | Outer Joint | | 36 | 33 | 59.5 | 40 | 61 | |
| | 2020.06- | 7DCT | R | L/R | SUV 4WD DTUA | For PR code:0BG | GCI61103 | Inner Joint | | | 33 | | | 32 | |
| | 2020.06- | 7DCT | R | L/R | SUV 4WD DTUA | For PR code:0BH | GCI82447 | Inner Joint | | | 33 | | | 34 | |
| | 2020.06- | 7DCT | R | L/R | SUV 4WD DTUA | For PR code:0BG | GCI83008 | Inner Joint | | | 33 | | | 32 | |
| 2.0 (162 kw) | 2017.07- | 7AT | F | L/R | SUV 4WD CXDA;DNJA | Date from:2021.10 | GCO83293 | Outer Joint | | 36 | 36 | 59.5 | 40 | 65 | M |
| | 2017.07- | 7DCT | F | L | SUV 4WD CXDA;DNJA | Date to:2021.07 | GDS84414 | Drive Shaft | | 36 | 37 | 59.5 | 40 | 570 | |
| | 2017.07- | 7DCT | F | R | SUV 4WD CXDA;DNJA | | GDS84413 | Drive Shaft | | 36 | 40 | 59.5 | 40 | 605 | |
| | 2017.07- | 7DCT | F | L/R | SUV 4WD CXDA;DNJA | Date from:2021.04,Date to:2021.07 | GCO81352 | Outer Joint | | 36 | 28 | 59.5 | 40 | 65 | I |
| | 2017.07- | 7DCT | F | L | SUV 4WD CXDA;DNJA | Date to:2021.07 | GCI81158 | Inner Joint | | 37 | 34 | 34.5 | 65.5 | 83 | |
| | 2017.07- | 7DCT | F | R | SUV 4WD CXDA;DNJA | | GCI61084 | Inner Joint | | 40 | 34 | 46.9 | | 128 | |
| | 2017.07- | 7AT | R | L | SUV 4WD CXDA;DNJA | For PR code:0BG | GDS61331 | Drive Shaft | | 36 | | 59.5 | 40 | 606 | |
| | 2017.07- | 7AT | R | L | SUV 4WD CXDA;DNJA | For PR code:0BH | GDS61334 | Drive Shaft | | 36 | | 59.5 | 40 | 598 | |
| | 2017.07- | 7AT | R | R | SUV 4WD CXDA;DNJA | For PR code:0BG | GDS61332 | Drive Shaft | | 36 | | 59.5 | 40 | 650 | |
| | 2017.07- | 7AT | R | R | SUV 4WD CXDA;DNJA | For PR code:0BH | GDS61335 | Drive Shaft | | 36 | | 59.5 | 40 | 638 | |
| | 2017.07- | 7DCT | R | L/R | SUV 4WD CXDA;DNJA | For PR code:0BG/0BH | GCI35026 | Outer Joint | | 36 | 33 | 59.5 | 40 | 61 | |
| | 2017.07- | 7DCT | R | L/R | SUV 4WD CXDA;DNJA | For PR code:0BG | GCI61103 | Inner Joint | | | 33 | | | 32 | |
| | 2017.07- | 7DCT | R | L/R | SUV 4WD CXDA;DNJA | For PR code:0BH | GCI82447 | Inner Joint | | | 33 | | | 34 | |

| | YEAR | TRANSM. | F/R | L/R | BODY STYLE & DRIVE TYPE & ENGINE | REMARKS | G-AP Ref. | PRODUCT | ABS | Technical Specifications A | B | C | H | L | P |
|---|---|---|---|---|---|---|---|---|---|---|---|---|---|---|---|
| **VW** | | | | | | | | | | | | | | | |
| **Tiguan Allspace** | | | | | | | | | | | | | | | |
| 2.0 (162 kw) | 2017.07- | 7DCT | R | L/R | SUV 4WD CXDA;DNJA | For PR code:0BH | GCI83011 | Inner Joint | | | 33 | | | 34 | |
| 2.0 (176 kw) | 2017.06-2020.09 | 7DCT | F | L | SUV 4WD CUAA | | GDS84414 | Drive Shaft | | 36 | 37 | 59.5 | 40 | 570 | |
| | 2017.06-2020.09 | 7DCT | F | R | SUV 4WD CUAA | | GDS84413 | Drive Shaft | | 36 | 40 | 59.5 | 40 | 605 | |
| | 2017.06-2020.09 | 7DCT | F | L/R | SUV 4WD CUAA | | GCO81352 | Outer Joint | | 36 | 28 | 59.5 | 40 | 65 | I |
| | 2017.06-2020.09 | 7DCT | F | L | SUV 4WD CUAA | | GCI81158 | Inner Joint | | 37 | 34 | 34.5 | 65.5 | 83 | |
| | 2017.06-2020.09 | 7DCT | F | R | SUV 4WD CUAA | TJ | GCI61048 | Inner Joint | | 40 | 34 | 46.9 | | 127.5 | |
| | 2017.06-2020.09 | 7DCT | F | R | SUV 4WD CUAA | AAR | GCI61084 | Inner Joint | | 40 | 34 | 46.9 | | 128 | |
| | 2017.06-2020.09 | 7AT | R | L | SUV 4WD CUAA | For PR code:0BG | GDS61331 | Drive Shaft | | 36 | | 59.5 | 40 | 606 | |
| | 2017.06-2020.09 | 7AT | R | L | SUV 4WD CUAA | For PR code:0BH | GDS61334 | Drive Shaft | | 36 | | 59.5 | 40 | 598 | |
| | 2017.06-2020.09 | 7AT | R | R | SUV 4WD CUAA | For PR code:0BG | GDS61332 | Drive Shaft | | 36 | | 59.5 | 40 | 650 | |
| | 2017.06-2020.09 | 7AT | R | R | SUV 4WD CUAA | For PR code:0BH/0HB | GDS61335 | Drive Shaft | | 36 | | 59.5 | 40 | 638 | |
| | 2017.06-2020.09 | 7DCT | R | L/R | SUV 4WD CUAA | For PR code:0BG/0BH | GCI35026 | Outer Joint | | 36 | 33 | 59.5 | 40 | 61 | |
| | 2017.06-2020.09 | 7DCT | R | L/R | SUV 4WD CUAA | For PR code:0BG | GCI61103 | Inner Joint | | | 33 | | | 32 | |
| | 2017.06-2020.09 | 7DCT | R | L/R | SUV 4WD CUAA | For PR code:0BH | GCI82447 | Inner Joint | | | 33 | | | 34 | |
| | 2017.06-2020.09 | 7DCT | R | L/R | SUV 4WD CUAA | For PR code:0BH | GCI83011 | Inner Joint | | | 33 | | | 34 | |
| 2.0 (180 kw) | 2020.09- | 7AT | F | L/R | SUV 4WD DNPA | Date from:2021.08 | GCO83293 | Outer Joint | | 36 | 36 | 59.5 | 40 | 65 | M |
| | 2020.09- | 7DCT | F | L | SUV 4WD DNPA | Date to:2021.07 | GDS84414 | Drive Shaft | | 36 | 37 | 59.5 | 40 | 570 | |
| | 2020.09- | 7DCT | F | R | SUV 4WD DNPA | Date to:2021.07 | GDS84412 | Drive Shaft | | 36 | | 59.5 | 40 | 587 | |
| | 2020.09- | 7DCT | F | L/R | SUV 4WD DNPA | Date to:2021.07 | GCO81352 | Outer Joint | | 36 | 28 | 59.5 | 40 | 65 | I |
| | 2020.09- | 7DCT | F | L | SUV 4WD DNPA | Date to:2021.07 | GCI81158 | Inner Joint | | 37 | 34 | 34.5 | 65.5 | 83 | |
| | 2020.09- | 7DCT | F | R | SUV 4WD DNPA | Date to:2021.07 | GCI61057 | Inner Joint | | | 34 | | | 89 | |
| | 2020.09- | 7AT | R | L | SUV 4WD DNPA | For PR code:0BH | GDS61334 | Drive Shaft | | 36 | | 59.5 | 40 | 598 | |
| | 2020.09- | 7AT | R | R | SUV 4WD DNPA | For PR code:0BH | GDS61335 | Drive Shaft | | 36 | | 59.5 | 40 | 638 | |
| | 2020.09- | 7AT | R | L/R | SUV 4WD DNPA | | GCI35026 | Outer Joint | | 36 | 33 | 59.5 | 40 | 61 | |
| | 2020.09- | 7DCT | R | L | SUV 4WD DNPA | For PR code:0BG | GDS61331 | Drive Shaft | | 36 | | 59.5 | 40 | 606 | |
| | 2020.09- | 7DCT | R | R | SUV 4WD DNPA | For PR code:0BG | GDS61332 | Drive Shaft | | 36 | | 59.5 | 40 | 650 | |
| | 2020.09- | 7DCT | R | L/R | SUV 4WD DNPA | For PR code:0BG | GCI61103 | Inner Joint | | | 33 | | | 32 | |
| | 2020.09- | 7DCT | R | L/R | SUV 4WD DNPA | For PR code:0BH | GCI82447 | Inner Joint | | | 33 | | | 34 | |
| | 2020.09- | 7DCT | R | L/R | SUV 4WD DNPA | For PR code:0BG | GCI83008 | Inner Joint | | | 33 | | | 32 | |
| **Touareg** | | | | | | | | | | | | | | | |
| 2.0 (183 kw) | 2018.05-2023.11 | 8AT | F | L/R | SUV 4WD CYRC | | GDS81531 | Drive Shaft | | 42 | | 76.5 | 34 | 504 | |
| | 2018.05-2023.11 | 8AT | F | L/R | SUV 4WD CYRC | | GCO81357 | Outer Joint | | 42 | 28 | 76.5 | 34 | 54 | I |
| | 2018.05-2023.11 | 8AT | F | L/R | SUV 4WD CYRC | | GCI61077 | Inner Joint | | | 34 | | | 88 | |
| | 2018.05-2023.11 | 8AT | R | L/R | SUV 4WD CYRC | | GDS84639 | Drive Shaft | | 42 | | 76.5 | 34 | 673 | |
| 2.5 (120 kw) | 2003.08-2010.05 | 6AT/6MT | F | L/R | SUV 4WD BLK;BPD | | GDS83300 | Drive Shaft | | 38 | | 63.9 | 102.5 | 523 | |
| | 2003.08-2010.05 | 6AT/6MT | F | L/R | SUV 4WD BLK;BPD | | GCO61042 | Outer Joint | | 38 | 27 | 63.9 | 102.5 | 63 | M |
| | 2003.08-2010.05 | 6AT/6MT | F | L/R | SUV 4WD BLK;BPD | | GCI99148 | Inner Joint | | | 28 | | | 34 | |
| | 2003.08-2010.05 | 6AT/6MT | R | L/R | SUV 4WD BLK;BPD | | GDS61323 | Drive Shaft | | 38 | | 63 | 102.5 | 733 | |
| | 2003.08-2010.05 | 6AT/6MT | R | L/R | SUV 4WD BLK;BPD | For PR code:1Y1,With differential lock | GCI35051 | Inner Joint | | | 30 | | | 30.5 | |
| | 2003.08-2010.05 | 6AT/6MT | R | L/R | SUV 4WD BLK;BPD | | GCI83027 | Inner Joint | | | 28 | | | 28 | |
| | 2003.08-2010.05 | | R | L/R | SUV 4WD BLK;BPD | Differential:With differential lock;For PR code:1Y1 | GDS35087 | Drive Shaft | | 38 | | | 102 | 723 | |
| 2.5 (128 kw) | 2003.01-2010.05 | 6AT/6MT | F | L/R | SUV 4WD BAC;BPE | | GDS83300 | Drive Shaft | | 38 | | 63.9 | 102.5 | 523 | |
| | 2003.01-2010.05 | 6AT/6MT | F | L/R | SUV 4WD BAC;BPE | | GCO61042 | Outer Joint | | 38 | 27 | 63.9 | 102.5 | 63 | M |
| | 2003.01-2010.05 | 6AT/6MT | F | L/R | SUV 4WD BAC;BPE | | GCI99148 | Inner Joint | | | 28 | | | 34 | |
| | 2003.01-2010.05 | 6AT/6MT | R | L/R | SUV 4WD BAC;BPE | For PR code:1Y1,With differential lock | GDS35087 | Drive Shaft | | 38 | | | 102 | 723 | |
| | 2003.01-2010.05 | 6AT/6MT | R | L/R | SUV 4WD BAC;BPE | For PR code:1Y0 | GDS61323 | Drive Shaft | | 38 | | 63 | 102.5 | 733 | |
| | 2003.01-2010.05 | 6AT/6MT | R | L/R | SUV 4WD BAC;BPE | For PR code:1Y1,With differential lock | GCI35051 | Inner Joint | | | 30 | | | 30.5 | |
| | 2003.01-2010.05 | 6AT/6MT | R | L/R | SUV 4WD BAC;BPE | For PR code:1Y0 | GCI83027 | Inner Joint | | | 28 | | | 28 | |
| 3.0 (150 kw) | 2010.01-2018.03 | 8AT | F | L/R | SUV 4WD CJMA;CASD;CVWA;CRCD | | GDS35085 | Drive Shaft | | 30 | | 64.4 | 103.5 | 525 | |
| | 2010.01-2018.03 | 8AT | F | L/R | SUV 4WD CJMA;CASD;CVWA;CRCD | Bellows Material:Neoprene | GCO35045 | Outer Joint | | 30 | 28 | 64.4 | 103.5 | 62.5 | I |
| | 2010.01-2018.03 | 8AT | F | L/R | SUV 4WD CJMA;CASD;CVWA;CRCD | Bellows Material:Thermoplastic | GCO83117 | Outer Joint | | 30 | 28 | 64.4 | 103.5 | 62.5 | I |
| | 2010.01-2018.03 | 8AT | F | L/R | SUV 4WD CJMA;CASD;CVWA;CRCD | | GCI99148 | Inner Joint | | | 28 | | | 34 | |
| | 2010.01-2018.03 | 8AT | R | L/R | SUV 4WD CJMA;CASD;CVWA;CRCD | Without differential lock | GDS61298 | Drive Shaft | | 30 | 37 | 64 | 103.5 | 863 | |
| | 2010.01-2018.03 | 8AT | R | L/R | SUV 4WD CJMA;CASD;CVWA;CRCD | Without differential lock | GCI81160 | Inner Joint | | 30 | 29 | 64 | 103.5 | 93.2 | |
| | 2010.01-2018.03 | 8AT | R | L/R | SUV 4WD CJMA;CASD;CVWA;CRCD | Without differential lock | GCI81161 | Inner Joint | | 37 | 29 | 44.95 | 79.5 | 109.2 | |
| 3.0 (155 kw) | 2006.04-2010.05 | 6AT | F | L/R | SUV 4WD BUN;CASB | | GDS35085 | Drive Shaft | | 30 | | 64.4 | 103.5 | 525 | |
| | 2006.04-2010.05 | AT | F | L/R | SUV 4WD BUN;CASB | | GCO61050 | Outer Joint | | 30 | 27 | 64 | 103.5 | 63.5 | M |
| | 2006.04-2010.05 | SAT/6AT | F | L/R | SUV 4WD BUN;CASB | | GCI99148 | Inner Joint | | | 28 | | | 34 | |
| | 2006.04-2010.05 | 6AT | R | L/R | SUV 4WD BUN;CASB | Without differential lock | GDS61236 | Drive Shaft | | 30 | | 64 | 103.5 | 734 | |
| | 2006.04-2010.05 | 6AT | R | L/R | SUV 4WD BUN;CASB | | GCI82450 | Outer Joint | | 30 | 28 | 64 | 103.5 | 64 | |
| | 2006.04-2010.05 | 6AT/SAT | R | L/R | SUV 4WD BUN;CASB | With differential lock | GDS35086 | Drive Shaft | | 30 | | 64.3 | 103.5 | 724 | |
| | 2006.04-2010.05 | SAT/6AT | R | L/R | SUV 4WD BUN;CASB | | GCI83027 | Inner Joint | | | 28 | | | 28 | |
| 3.0 (165 kw) | 2004.11-2010.05 | 6AT/6MT | F | L/R | SUV 4WD BKS;CATA | | GDS35085 | Drive Shaft | | 30 | | 64.4 | 103.5 | 525 | |
| | 2004.11-2010.05 | 6AT/6MT | F | L/R | SUV 4WD BKS;CATA | Inner Teeth:28 | GCO35045 | Outer Joint | | 30 | 28 | 64.4 | 103.5 | 62.5 | I |
| | 2004.11-2010.05 | 6AT/6MT | F | L/R | SUV 4WD BKS;CATA | Inner Teeth:27 | GCO61050 | Outer Joint | | 30 | 27 | 64 | 103.5 | 63.5 | M |

| | YEAR | TRANSM. | F/R | L/R | BODY STYLE & DRIVE TYPE & ENGINE | REMARKS | G-AP Ref. | PRODUCT | ABS | Technical Specifications A | B | C | H | L | P |
|---|---|---|---|---|---|---|---|---|---|---|---|---|---|---|---|
| **VW Touareg** | | | | | | | | | | | | | | | |
| 3.0 (165 kw) | 2004.11-2010.05 | 6AT/6MT | F | L/R | SUV 4WD BKS;CATA | | GCI99148 | Inner Joint | | | 28 | | | 34 | |
| | 2004.11-2010.05 | 6AT/6MT | R | L/R | SUV 4WD BKS;CATA | For PR code:1Y1,With differential lock | GDS35086 | Drive Shaft | | 30 | | 64.3 | 103.5 | 724 | |
| | 2004.11-2010.05 | 6AT/6MT | R | L/R | SUV 4WD BKS;CATA | For PR code:1Y0 | GDS61236 | Drive Shaft | | 30 | | 64 | 103.5 | 734 | |
| | 2004.11-2010.05 | 6AT/6MT | R | L/R | SUV 4WD BKS;CATA | For PR code:1Y0 | GCI82450 | Outer Joint | | 30 | 28 | 64 | 103.5 | 64 | |
| | 2004.11-2010.05 | 6AT/6MT | R | L/R | SUV 4WD BKS;CATA | For PR code:1Y1,With differential lock | GCI35051 | Inner Joint | | | 30 | | | 30.5 | |
| | 2004.11-2010.05 | 6AT/6MT | R | L/R | SUV 4WD BKS;CATA | For PR code:1Y0 | GCI83027 | Inner Joint | | | 28 | | | 28 | |
| | 2010.06-2018.03 | 8AT | F | L/R | SUV 4WD CATA | | GDS35085 | Drive Shaft | | 30 | | 64.4 | 103.5 | 525 | |
| | 2010.06-2018.03 | 8AT | F | L/R | SUV 4WD CATA | | GCO35045 | Outer Joint | | 30 | 28 | 64.4 | 103.5 | 62.5 | I |
| | 2010.06-2018.03 | 8AT | F | L/R | SUV 4WD CATA | | GCI99148 | Inner Joint | | | 28 | | | 34 | |
| | 2010.06-2018.03 | | F | L/R | SUV 4WD CATA | | GCO83117 | Outer Joint | | 30 | 28 | 64.4 | 103.5 | 62.5 | I |
| | 2010.06-2018.03 | 8AT | R | L/R | SUV 4WD CATA | Without differential lock | GDS61298 | Drive Shaft | | 30 | 37 | 64 | 103.5 | 863 | |
| | 2010.06-2018.03 | 8AT | R | L/R | SUV 4WD CATA | | GCI81160 | Inner Joint | | 30 | 29 | 64 | 103.5 | 93.2 | |
| | 2010.06-2018.03 | 8AT | R | L/R | SUV 4WD CATA | | GCI81161 | Inner Joint | | 37 | 29 | 44.95 | 79.5 | 109.2 | |
| 3.0 (170 kw) | 2018.05- | 8AT | F | L/R | SUV 4WD DEND;DPYC | | GDS81531 | Drive Shaft | | 42 | | 76.5 | 34 | 504 | |
| | 2018.05- | 8AT | F | L/R | SUV 4WD DEND;DPYC | | GCO81357 | Outer Joint | | 42 | 28 | 76.5 | 34 | 54 | I |
| | 2018.05- | AT | F | L/R | SUV 4WD DEND;DPYC | | GCI83022 | Inner Joint | | | 34 | | | 88.5 | |
| | 2018.05- | 8AT | R | L/R | SUV 4WD DEND;DPYC | | GDS84639 | Drive Shaft | | 42 | | 76.5 | 34 | 673 | |
| 3.0 (176 kw) | 2007.11-2010.05 | 6AT/6MT | F | L/R | SUV 4WD CASA;CASC | | GDS35085 | Drive Shaft | | 30 | | 64.4 | 103.5 | 525 | |
| | 2007.11-2010.05 | 6AT/6MT | F | L/R | SUV 4WD CASA;CASC | | GCO61050 | Outer Joint | | 30 | 27 | 64 | 103.5 | 63.5 | M |
| | 2007.11-2010.05 | 6AT/6MT | F | L/R | SUV 4WD CASA;CASC | | GCI99148 | Inner Joint | | | 28 | | | 34 | |
| | 2007.11-2010.05 | 6AT/6MT | R | L/R | SUV 4WD CASA;CASC | With differential lock | GDS35086 | Drive Shaft | | 30 | | 64.3 | 103.5 | 724 | |
| | 2007.11-2010.05 | 6AT/6MT | R | L/R | SUV 4WD CASA;CASC | Without differential lock | GDS61236 | Drive Shaft | | 30 | | 64 | 103.5 | 734 | |
| | 2007.11-2010.05 | 6AT/6MT | R | L/R | SUV 4WD CASA;CASC | Without differential lock | GCI82450 | Outer Joint | | 30 | 28 | 64 | 103.5 | 64 | |
| | 2007.11-2010.05 | 6AT/6MT | R | L/R | SUV 4WD CASA;CASC | Without differential lock | GCI83027 | Inner Joint | | | 28 | | | 28 | |
| | 2010.01-2018.03 | 8AT | F | L/R | SUV 4WD CASA;CNRB | | GDS35085 | Drive Shaft | | 30 | | 64.4 | 103.5 | 525 | |
| | 2010.01-2018.03 | 8AT | F | L/R | SUV 4WD CASA;CNRB | Bellows Material:Neoprene | GCO35045 | Outer Joint | | 30 | 28 | 64.4 | 103.5 | 62.5 | I |
| | 2010.01-2018.03 | 8AT | F | L/R | SUV 4WD CASA;CNRB | Bellows Material:Thermoplastic | GCO83117 | Outer Joint | | 30 | 28 | 64.4 | 103.5 | 62.5 | I |
| | 2010.01-2018.03 | 8AT | F | L/R | SUV 4WD CASA;CNRB | | GCI99148 | Inner Joint | | | 28 | | | 34 | |
| | 2010.01-2018.03 | 8AT | R | L/R | SUV 4WD CASA;CNRB | Without differential lock | GDS61298 | Drive Shaft | | 30 | 37 | 64 | 103.5 | 863 | |
| | 2010.01-2018.03 | 8AT | R | L/R | SUV 4WD CASA;CNRB | Without differential lock | GCI81160 | Inner Joint | | 30 | 29 | 64 | 103.5 | 93.2 | |
| | 2010.01-2018.03 | 8AT | R | L/R | SUV 4WD CASA;CNRB | Without differential lock | GCI81161 | Inner Joint | | 37 | 29 | 44.95 | 79.5 | 109.2 | |
| 3.0 (180 kw) | 2011.05-2014.12 | 8AT | F | L/R | SUV Van 4WD CRCA | | GDS35085 | Drive Shaft | | 30 | | 64.4 | 103.5 | 525 | |
| | 2011.05-2014.12 | 8AT | F | L/R | SUV Van 4WD CRCA | | GCO35045 | Outer Joint | | 30 | 28 | 64.4 | 103.5 | 62.5 | I |
| | 2011.05-2014.12 | 8AT | F | L/R | SUV Van 4WD CRCA | | GCO83117 | Outer Joint | | 30 | 28 | 64.4 | 103.5 | 62.5 | I |
| | 2011.05-2014.12 | 8AT | F | L/R | SUV Van 4WD CRCA | | GCI99148 | Inner Joint | | | 28 | | | 34 | |
| | 2011.05-2014.12 | 8AT | R | L/R | SUV Van 4WD CRCA | Without differential lock | GDS61298 | Drive Shaft | | 30 | 37 | 64 | 103.5 | 863 | |
| | 2011.05-2014.12 | 8AT | R | L | SUV Van 4WD CRCA | With differential lock | GCI81161 | Inner Joint | | 37 | 29 | 44.95 | 79.5 | 109.2 | |
| | 2011.05-2018.03 | 8AT | F | L/R | SUV 4WD CJGD;CRCA | | GDS35085 | Drive Shaft | | 30 | | 64.4 | 103.5 | 525 | |
| | 2011.05-2018.03 | 8AT | F | L/R | SUV 4WD CJGD;CRCA | Bellows Material:Neoprene | GCO35045 | Outer Joint | | 30 | 28 | 64.4 | 103.5 | 62.5 | I |
| | 2011.05-2018.03 | 8AT | F | L/R | SUV 4WD CJGD;CRCA | Bellows Material:Thermoplastic | GCO83117 | Outer Joint | | 30 | 28 | 64.4 | 103.5 | 62.5 | I |
| | 2011.05-2018.03 | 8AT | F | L/R | SUV 4WD CJGD;CRCA | | GCI99148 | Inner Joint | | | 28 | | | 34 | |
| | 2011.05-2018.03 | 8AT | R | L/R | SUV 4WD CJGD;CRCA | Without differential lock | GDS61298 | Drive Shaft | | 30 | 37 | 64 | 103.5 | 863 | |
| | 2011.05-2018.03 | 8AT | R | L/R | SUV 4WD CJGD;CRCA | Without differential lock | GCI81160 | Inner Joint | | 30 | 29 | 64 | 103.5 | 93.2 | |
| | 2011.05-2018.03 | 8AT | R | L/R | SUV 4WD CJGD;CRCA | Without differential lock | GCI81161 | Inner Joint | | 37 | 29 | 44.95 | 79.5 | 109.2 | |
| 3.0 (183 kw) | 2018.01-2023.11 | 8AT | F | L/R | SUV 4WD CVMD | | GDS81531 | Drive Shaft | | 42 | | 76.5 | 34 | 504 | |
| | 2018.01-2023.11 | 8AT | F | L/R | SUV 4WD CVMD | | GCO81357 | Outer Joint | | 42 | 28 | 76.5 | 34 | 54 | I |
| | 2018.01-2023.11 | 8AT | F | L/R | SUV 4WD CVMD | | GCI61077 | Inner Joint | | | 34 | | | 88 | |
| | 2018.01-2023.11 | 8AT | R | L/R | SUV 4WD CVMD | | GDS84639 | Drive Shaft | | 42 | | 76.5 | 34 | 673 | |
| 3.0 (193 kw) | 2014.09-2018.03 | 8AT | F | L/R | SUV 4WD CVVA | | GDS35085 | Drive Shaft | | 30 | | 64.4 | 103.5 | 525 | |
| | 2014.09-2018.03 | 8AT | F | L/R | SUV 4WD CVVA | Bellows Material:Neoprene | GCO35045 | Outer Joint | | 30 | 28 | 64.4 | 103.5 | 62.5 | I |
| | 2014.09-2018.03 | 8AT | F | L/R | SUV 4WD CVVA | Bellows Material:Thermoplastic | GCO83117 | Outer Joint | | 30 | 28 | 64.4 | 103.5 | 62.5 | I |
| | 2014.09-2018.03 | 8AT | F | L/R | SUV 4WD CVVA | | GCI99148 | Inner Joint | | | 28 | | | 34 | |
| | 2014.09-2018.03 | 8AT | R | L/R | SUV 4WD CVVA | Without differential lock | GDS61298 | Drive Shaft | | 30 | 37 | 64 | 103.5 | 863 | |
| | 2014.09-2018.03 | 8AT | R | L/R | SUV 4WD CVVA | | GCI81160 | Inner Joint | | 30 | 29 | 64 | 103.5 | 93.2 | |
| | 2014.09-2018.03 | 8AT | R | L/R | SUV 4WD CVVA | With differential lock | GCI81161 | Inner Joint | | 37 | 29 | 44.95 | 79.5 | 109.2 | |
| 3.0 (210 kw) | 2017.11- | 8AT | F | L/R | SUV 4WD DENA;DPYD | | GDS81531 | Drive Shaft | | 42 | | 76.5 | 34 | 504 | |
| | 2017.11- | 8AT | F | L/R | SUV 4WD DENA;DPYD | 8 balls | GCO81357 | Outer Joint | | 42 | 28 | 76.5 | 34 | 54 | I |
| | 2017.11- | AT | F | L/R | SUV 4WD DENA;DPYD | Date from:2018.01;6 balls | GCO83103 | Outer Joint | | 42 | 28 | 76.4 | 34 | 54 | I |
| | 2017.11- | AT | F | L/R | SUV 4WD DENA;DPYD | Date from:2018.01 | GCI83022 | Inner Joint | | | 34 | | | 88.5 | |
| | 2017.11- | 8AT | R | L/R | SUV 4WD DENA;DPYD | | GDS84639 | Drive Shaft | | 42 | | 76.5 | 34 | 673 | |
| 3.0 (213 kw) | 2010.08-2018.03 | AT | F | L/R | SUV 4WD CJTA | Date from:2011.01 | GDS35085 | Drive Shaft | | 30 | | 64.4 | 103.5 | 525 | |
| | 2010.08-2018.03 | AT | F | L/R | SUV 4WD CJTA | Date from:2011.01 | GCO35045 | Outer Joint | | 30 | 28 | 64.4 | 103.5 | 62.5 | I |
| | 2010.08-2018.03 | AT | F | L/R | SUV 4WD CJTA | Date from:2011.01 | GCI99148 | Inner Joint | | | 28 | | | 34 | |
| | 2010.08-2018.03 | | F | | SUV 4WD CJTA | | GCO83117 | Outer Joint | | 30 | 28 | 64.4 | 103.5 | 62.5 | I |
| | 2010.08-2018.03 | 8AT | R | L/R | SUV 4WD CJTA | For Modelcode:7P5,Without differential lock | GDS61298 | Drive Shaft | | 30 | 37 | 64 | 103.5 | 863 | |

| | YEAR | TRANSM. | F/R | L/R | BODY STYLE & DRIVE TYPE & ENGINE | REMARKS | G-AP Ref. | PRODUCT | ABS | Technical Specifications A | B | C | H | L | P |
|---|---|---|---|---|---|---|---|---|---|---|---|---|---|---|---|
| **VW Touareg** | | | | | | | | | | | | | | | |
| 3.0 (213 kw) | 2010.08-2018.03 | 8AT | R | L | SUV 4WD CJTA | | GCI81161 | Inner Joint | | 37 | 29 | 44.95 | 79.5 | 109.2 | |
| | 2010.08-2018.03 | AT | R | | SUV 4WD CJTA | | GCI81160 | Inner Joint | | 30 | 29 | 64 | 103.5 | 93.2 | |
| 3.0 (250 kw) | 2018.03- | 8AT | F | L/R | SUV 4WD DCBE | | GDS81531 | Drive Shaft | | 42 | | 76.5 | 34 | 504 | |
| | 2018.03- | 8AT | F | L/R | SUV 4WD DCBE | | GCO81357 | Outer Joint | | 42 | 28 | 76.5 | 34 | 54 | I |
| | 2018.03- | 8AT | F | L/R | SUV 4WD DCBE | | GCI61077 | Inner Joint | | | 34 | | | 88 | |
| | 2018.03- | 8AT | R | L/R | SUV 4WD DCBE | | GDS84639 | Drive Shaft | | 42 | | 76.5 | 34 | 673 | |
| 3.0 (279 kw) | 2010.04-2018.03 | 8AT | F | L/R | SUV 4WD CGFA;CGEA | | GDS35085 | Drive Shaft | | 30 | | 64.4 | 103.5 | 525 | |
| | 2010.04-2018.03 | 8AT | F | L/R | SUV 4WD CGFA;CGEA | | GCO35045 | Outer Joint | | 30 | 28 | 64.4 | 103.5 | 62.5 | I |
| | 2010.04-2018.03 | 8AT | F | L/R | SUV 4WD CGFA;CGEA | | GCI99148 | Inner Joint | | | 28 | | | 34 | |
| | 2010.04-2018.03 | | F | L/R | SUV 4WD CGFA;CGEA | | GCO83117 | Outer Joint | | 30 | 28 | 64.4 | 103.5 | 62.5 | I |
| | 2010.04-2018.03 | 8AT | R | L/R | SUV 4WD CGFA;CGEA | Without differential lock | GDS61298 | Drive Shaft | | 30 | 37 | 64 | 103.5 | 863 | |
| | 2010.04-2018.03 | 8AT | R | L/R | SUV 4WD CGFA;CGEA | | GCI81160 | Inner Joint | | 30 | 29 | 64 | 103.5 | 93.2 | |
| | 2010.04-2018.03 | 8AT | R | L/R | SUV 4WD CGFA;CGEA | | GCI81161 | Inner Joint | | 37 | 29 | 44.95 | 79.5 | 109.2 | |
| 3.0 (280 kw) | 2020.11- | 8AT | R | L/R | SUV 4WD DCBE | | GDS84639 | Drive Shaft | | 42 | | 76.5 | 34 | 673 | |
| 3.0 (340 kw) | 2020.09- | 8AT | R | L/R | SUV 4WD DCBE;EALD | | GDS84639 | Drive Shaft | | 42 | | 76.5 | 34 | 673 | |
| 3.2 (162 kw) | 2002.10-2006.11 | 6AT/6MT | F | L/R | SUV 4WD AZZ;BKJ;BMX;BMV;BRJ;BAA | For Engine Code:AZZ;For Engine Code:BKJ | GCI99148 | Inner Joint | | | 28 | | | 34 | |
| | 2002.10-2006.11 | AT/MT | F | L/R | SUV 4WD AZZ;BKJ;BMX;BMV;BRJ;BAA | | GDS35085 | Drive Shaft | | 30 | | 64.4 | 103.5 | 525 | |
| | 2002.10-2006.11 | AT/MT | F | L/R | SUV 4WD AZZ;BKJ;BMX;BMV;BRJ;BAA | | GCO61050 | Outer Joint | | 30 | 27 | 64 | 103.5 | 63.5 | M |
| | 2002.10-2006.11 | 6AT/6MT | R | L/R | SUV 4WD AZZ;BKJ;BMX;BMV;BRJ;BAA | PR code:1Y0 | GCI83027 | Inner Joint | | | 28 | | | 28 | |
| | 2002.10-2006.11 | AT/MT | R | L/R | SUV 4WD AZZ;BKJ;BMX;BMV;BRJ;BAA | with differential lock | GDS35086 | Drive Shaft | | 30 | | 64.3 | 103.5 | 724 | |
| | 2002.10-2006.11 | AT/MT | R | L/R | SUV 4WD AZZ;BKJ;BMX;BMV;BRJ;BAA | without differential lock | GDS61236 | Drive Shaft | | 30 | | 64 | 103.5 | 734 | |
| | 2002.10-2006.11 | AT/MT | R | L/R | SUV 4WD AZZ;BKJ;BMX;BMV;BRJ;BAA | without differential lock | GCI82450 | Outer Joint | | 30 | 28 | 64 | 103.5 | 64 | |
| | 2002.10-2006.11 | AT/MT | R | L/R | SUV 4WD AZZ;BKJ;BMX;BMV;BRJ;BAA | For PR code:1Y1,With differential lock | GCI35051 | Inner Joint | | | 30 | | | 30.5 | |
| 3.2 (177 kw) | 2004.11-2006.11 | AT/MT | F | L/R | SUV 4WD BMV | | GDS35085 | Drive Shaft | | 30 | | 64.4 | 103.5 | 525 | |
| | 2004.11-2006.11 | AT/MT | F | L/R | SUV 4WD BMV | | GCO61050 | Outer Joint | | 30 | 27 | 64 | 103.5 | 63.5 | M |
| | 2004.11-2006.11 | AT/MT | F | L/R | SUV 4WD BMV | | GCI99148 | Inner Joint | | | 28 | | | 34 | |
| | 2004.11-2006.11 | 6AT/6MT | R | L/R | SUV 4WD BMV | PR code:1Y0 | GCI83027 | Inner Joint | | | 28 | | | 28 | |
| | 2004.11-2006.11 | AT/MT | R | L/R | SUV 4WD BMV | with differential lock | GDS35086 | Drive Shaft | | 30 | | 64.3 | 103.5 | 724 | |
| | 2004.11-2006.11 | AT/MT | R | L/R | SUV 4WD BMV | without differential lock | GDS61236 | Drive Shaft | | 30 | | 64 | 103.5 | 734 | |
| | 2004.11-2006.11 | AT/MT | R | L/R | SUV 4WD BMV | without differential lock | GCI82450 | Outer Joint | | 30 | 28 | 64 | 103.5 | 64 | |
| | 2004.11-2006.11 | AT/MT | R | L/R | SUV 4WD BMV | With differential lock | GCI35051 | Inner Joint | | | 30 | | | 30.5 | |
| 3.6 (183 kw) | 2010.08-2018.03 | 8AT | F | L/R | SUV 4WD CMTA | | GDS35085 | Drive Shaft | | 30 | | 64.4 | 103.5 | 525 | |
| | 2010.08-2018.03 | 8AT | F | L/R | SUV 4WD CMTA | Bellows Material:Neoprene | GCO35045 | Outer Joint | | 30 | 28 | 64.4 | 103.5 | 62.5 | I |
| | 2010.08-2018.03 | 8AT | F | L/R | SUV 4WD CMTA | Bellows Material:Thermoplastic | GCO83117 | Outer Joint | | 30 | 28 | 64.4 | 103.5 | 62.5 | I |
| | 2010.08-2018.03 | 8AT | F | L/R | SUV 4WD CMTA | | GCI99148 | Inner Joint | | | 28 | | | 34 | |
| | 2010.08-2018.03 | 8AT | R | L/R | SUV 4WD CMTA | Without differential lock | GDS61298 | Drive Shaft | | 30 | 37 | 64 | 103.5 | 863 | |
| | 2010.08-2018.03 | 8AT | R | L/R | SUV 4WD CMTA | Without differential lock | GCI81160 | Inner Joint | | 30 | 29 | 64 | 103.5 | 93.2 | |
| | 2010.08-2018.03 | 8AT | R | L/R | SUV 4WD CMTA | Without differential lock | GCI81161 | Inner Joint | | 37 | 29 | 44.95 | 79.5 | 109.2 | |
| 3.6 (206 kw) | 2005.10-2010.05 | 6AT/6MT | F | L/R | SUV 4WD BHK;BHL | | GDS35085 | Drive Shaft | | 30 | | 64.4 | 103.5 | 525 | |
| | 2005.10-2010.05 | 6AT/6MT | F | L/R | SUV 4WD BHK;BHL | Date to:2007.06 | GCI99148 | Inner Joint | | | 28 | | | 34 | |
| | 2005.10-2010.05 | AT/MT | F | L/R | SUV 4WD BHK;BHL | | GCO61050 | Outer Joint | | 30 | 27 | 64 | 103.5 | 63.5 | M |
| | 2005.10-2010.05 | 6AT/6MT | R | L/R | SUV 4WD BHK;BHL | Without differential lock | GDS61236 | Drive Shaft | | 30 | | 64 | 103.5 | 734 | |
| | 2005.10-2010.05 | 6AT/6MT | R | L/R | SUV 4WD BHK;BHL | | GCI82450 | Outer Joint | | 30 | 28 | 64 | 103.5 | 64 | |
| | 2005.10-2010.05 | 6AT/6MT | R | L/R | SUV 4WD BHK;BHL | For Engine code:BHK;Differential:without differential lock | GCI83027 | Inner Joint | | | 28 | | | 28 | |
| | 2010.04-2018.03 | 8AT | F | L/R | SUV 4WD CGRA | | GDS35085 | Drive Shaft | | 30 | | 64.4 | 103.5 | 525 | |
| | 2010.04-2018.03 | 8AT | F | L/R | SUV 4WD CGRA | | GCI99148 | Inner Joint | | | 28 | | | 34 | |
| | 2010.04-2018.03 | AT | F | L/R | SUV 4WD CGRA | | GCO35045 | Outer Joint | | 30 | 28 | 64.4 | 103.5 | 62.5 | I |
| | 2010.04-2018.03 | | F | L/R | SUV 4WD CGRA | | GCO83117 | Outer Joint | | 30 | 28 | 64.4 | 103.5 | 62.5 | I |
| | 2010.04-2018.03 | 8AT | R | L/R | SUV 4WD CGRA | Without differential lock | GDS61298 | Drive Shaft | | 30 | 37 | 64 | 103.5 | 863 | |
| | 2010.04-2018.03 | 8AT | R | L/R | SUV 4WD CGRA | | GCI81161 | Inner Joint | | 37 | 29 | 44.95 | 79.5 | 109.2 | |
| | 2010.04-2018.03 | | R | L/R | SUV 4WD CGRA | Differential:Without differential lock | GCI81160 | Inner Joint | | 30 | 29 | 64 | 103.5 | 93.2 | |
| 4.0 (310 kw) | 2019.06-2021.11 | 8AT | F | L/R | SUV 4WD DMVB | | GCO82603 | Outer Joint | | 42 | 30 | 76.5 | 34 | 60 | I |
| 4.2 (228 kw) | 2002.12-2006.11 | 6AT | F | L/R | SUV 4WD AXQ | | GDS35085 | Drive Shaft | | 30 | | 64.4 | 103.5 | 525 | |
| | 2002.12-2006.11 | 6AT | F | L/R | SUV 4WD AXQ | | GCO35045 | Outer Joint | | 30 | 28 | 64.4 | 103.5 | 62.5 | I |
| | 2002.12-2006.11 | 6AT | F | L/R | SUV 4WD AXQ | | GCI99148 | Inner Joint | | | 28 | | | 34 | |
| | 2002.12-2006.11 | AT/MT | F | L/R | SUV 4WD AXQ | | GDS81127 | Drive Shaft | | 30 | | 64 | 103 | 522 | |
| | 2002.12-2006.11 | AT/MT | F | L/R | SUV 4WD AXQ | | GCO83085 | Outer Joint | | 30 | 29 | 64 | 103 | 72.5 | M |
| | 2002.12-2006.11 | AT/MT | F | L/R | SUV 4WD AXQ | | GCI35001 | Inner Joint | | | 30 | | | 36.2 | |
| | 2002.12-2006.11 | | F | L/R | SUV 4WD AXQ | | GCO61050 | Outer Joint | | 30 | 27 | 64 | 103.5 | 63.5 | M |
| | 2002.12-2006.11 | 6AT | R | L/R | SUV 4WD AXQ | With differential lock;Date to:2005.03;Without differential lock | GDS35086 | Drive Shaft | | 30 | | 64.3 | 103.5 | 724 | |
| | 2002.12-2006.11 | 6AT | R | L/R | SUV 4WD AXQ | Date from:2005.04;Without differential lock | GDS61236 | Drive Shaft | | 30 | | 64 | 103.5 | 734 | |
| | 2002.12-2006.11 | 6AT | R | L/R | SUV 4WD AXQ | | GCI82450 | Outer Joint | | 30 | 28 | 64 | 103.5 | 64 | |
| | 2002.12-2006.11 | 6AT | R | L/R | SUV 4WD AXQ | | GCI83027 | Inner Joint | | | 28 | | | 28 | |
| 4.2 (250 kw) | 2010.01-2018.03 | 8AT | F | L/R | SUV 4WD CKDA | | GDS35085 | Drive Shaft | | 30 | | 64.4 | 103.5 | 525 | |
| | 2010.01-2018.03 | 8AT | F | L/R | SUV 4WD CKDA | | GCO35045 | Outer Joint | | 30 | 28 | 64.4 | 103.5 | 62.5 | I |

| | YEAR | TRANSM. | F/R | L/R | BODY STYLE & DRIVE TYPE & ENGINE | REMARKS | G-AP Ref. | PRODUCT | ABS | Technical Specifications A | B | C | H | L | P |
|---|---|---|---|---|---|---|---|---|---|---|---|---|---|---|---|
| **VW** | | | | | | | | | | | | | | | |
| **Touareg** | | | | | | | | | | | | | | | |
| 4.2 (250 kw) | 2010.01-2018.03 | 8AT | F | L/R | SUV 4WD CKDA | | GCI99148 | Inner Joint | | | 28 | | | 34 | |
| | 2010.01-2018.03 | | F | L/R | SUV 4WD CKDA | | GCO83117 | Outer Joint | | 30 | 28 | 64.4 | 103.5 | 62.5 | I |
| | 2010.01-2018.03 | 8AT | R | L/R | SUV 4WD CKDA | Without differential lock | GDS81923 | Drive Shaft | | 30 | 32 | 64 | 103.5 | 865 | |
| | 2010.01-2018.03 | 8AT | R | L/R | SUV 4WD CKDA | | GCI81160 | Inner Joint | | 30 | 29 | 64 | 103.5 | 93.2 | |
| | 2010.01-2018.03 | 8AT | R | L/R | SUV 4WD CKDA | | GCI81547 | Inner Joint | | 32 | 29 | 50 | 94 | 109.2 | |
| | 2010.01-2018.03 | | R | L | SUV 4WD CKDA | Differential:With differential lock | GCI81161 | Inner Joint | | 37 | 29 | 44.95 | 79.5 | 109.2 | |
| 4.2 (257 kw) | 2006.06-2010.05 | AT | F | L/R | SUV 4WD BAR | | GDS35085 | Drive Shaft | | 30 | | 64.4 | 103.5 | 525 | |
| | 2006.06-2010.05 | AT | F | L/R | SUV 4WD BAR | | GCO61050 | Outer Joint | | 30 | 27 | 64 | 103.5 | 63.5 | M |
| | 2006.06-2010.05 | AT/MT | F | L/R | SUV 4WD BAR | | GCI99148 | Inner Joint | | | 28 | | | 34 | |
| | 2006.06-2010.05 | 6AT | R | L/R | SUV 4WD BAR | PR code:1Y0 | GCI83027 | Inner Joint | | | 28 | | | 28 | |
| | 2006.06-2010.05 | AT | R | L/R | SUV 4WD BAR | with differential lock | GDS35086 | Drive Shaft | | 30 | | 64.3 | 103.5 | 724 | |
| | 2006.06-2010.05 | AT | R | L/R | SUV 4WD BAR | without differential lock | GDS61236 | Drive Shaft | | 30 | | 64 | 103.5 | 734 | |
| | 2006.06-2010.05 | AT | R | L/R | SUV 4WD BAR | without differential lock | GCI82450 | Outer Joint | | 30 | 28 | 64 | 103.5 | 64 | |
| | 2006.06-2010.05 | AT | R | L/R | SUV 4WD BAR | With differential lock | GCI35051 | Inner Joint | | | 30 | | | 30.5 | |
| 4.2 (265 kw) | 2011.01-2018.03 | 8AT | F | L/R | SUV 4WD CGNA | | GDS35085 | Drive Shaft | | 30 | | 64.4 | 103.5 | 525 | |
| | 2011.01-2018.03 | 8AT | F | L/R | SUV 4WD CGNA | | GCO35045 | Outer Joint | | 30 | 28 | 64.4 | 103.5 | 62.5 | I |
| | 2011.01-2018.03 | 8AT | F | L/R | SUV 4WD CGNA | | GCI99148 | Inner Joint | | | 28 | | | 34 | |
| | 2011.01-2018.03 | | F | L/R | SUV 4WD CGNA | | GCO83117 | Outer Joint | | 30 | 28 | 64.4 | 103.5 | 62.5 | I |
| | 2011.01-2018.03 | 8AT | R | L/R | SUV 4WD CGNA | Without differential lock | GDS61298 | Drive Shaft | | 30 | 37 | 64 | 103.5 | 863 | |
| | 2011.01-2018.03 | 8AT | R | L/R | SUV 4WD CGNA | | GCI81160 | Inner Joint | | 30 | 29 | 64 | 103.5 | 93.2 | |
| | 2011.01-2018.03 | 8AT | R | L/R | SUV 4WD CGNA | | GCI81161 | Inner Joint | | 37 | 29 | 44.95 | 79.5 | 109.2 | |
| 5.0 (230 kw) | 2002.10-2010.05 | 6AT | F | L/R | SUV 4WD AYH;BLE;BWF;BKW | Date from:2007.07 | GDS35085 | Drive Shaft | | 30 | | 64.4 | 103.5 | 525 | |
| | 2002.10-2010.05 | 6AT | F | L/R | SUV 4WD AYH;BLE;BWF;BKW | Date to:2007.06 | GDS81127 | Drive Shaft | | 30 | | 64 | 103 | 522 | |
| | 2002.10-2010.05 | 6AT | F | L/R | SUV 4WD AYH;BLE;BWF;BKW | | GCO83085 | Outer Joint | | 30 | 29 | 64 | 103 | 72.5 | M |
| | 2002.10-2010.05 | 6AT | F | L/R | SUV 4WD AYH;BLE;BWF;BKW | | GCI35001 | Inner Joint | | | 30 | | | 36.2 | |
| | 2002.10-2010.05 | 6AT | R | L/R | SUV 4WD AYH;BLE;BWF;BKW | Without differential lock,Date from:2006.08 | GDS61236 | Drive Shaft | | 30 | | 64 | 103.5 | 734 | |
| | 2002.10-2010.05 | 6AT | R | L/R | SUV 4WD AYH;BLE;BWF;BKW | Without differential lock | GCI82450 | Outer Joint | | 30 | 28 | 64 | 103.5 | 64 | |
| | 2002.10-2010.05 | 6AT | R | L/R | SUV 4WD AYH;BLE;BWF;BKW | Without differential lock | GCI83027 | Inner Joint | | | 28 | | | 28 | |
| 5.0 (257 kw) | 2007.08-2010.05 | 6AT | F | L/R | SUV 4WD CBWA | | GDS81127 | Drive Shaft | | 30 | | 64 | 103 | 522 | |
| | 2007.08-2010.05 | 6AT | F | L/R | SUV 4WD CBWA | | GCO83085 | Outer Joint | | 30 | 29 | 64 | 103 | 72.5 | M |
| | 2007.08-2010.05 | 6AT | F | L/R | SUV 4WD CBWA | | GCI35001 | Inner Joint | | | 30 | | | 36.2 | |
| | 2007.08-2010.05 | 6AT | R | L/R | SUV 4WD CBWA | | GDS35086 | Drive Shaft | | 30 | | 64.3 | 103.5 | 724 | |
| | 2007.08-2010.05 | 6AT | R | L/R | SUV 4WD CBWA | | GCI35051 | Inner Joint | | | 30 | | | 30.5 | |
| 6.0 (331 kw) | 2004.08-2010.05 | 6AT | F | L/R | SUV 4WD BJN;CFRA | Date from:2007.05 | GDS35085 | Drive Shaft | | 30 | | 64.4 | 103.5 | 525 | |
| | 2004.08-2010.05 | AT/MT | F | L/R | SUV 4WD BJN;CFRA | | GCI35001 | Inner Joint | | | 30 | | | 36.2 | |
| | 2004.08-2010.05 | SAT/6AT | F | L/R | SUV 4WD BJN;CFRA | Date to:2007.04 | GDS81127 | Drive Shaft | | 30 | | 64 | 103 | 522 | |
| | 2004.08-2010.05 | SAT/6AT | F | L/R | SUV 4WD BJN;CFRA | Date from:2007.05 | GCO61050 | Outer Joint | | 30 | 27 | 64 | 103.5 | 63.5 | M |
| | 2004.08-2010.05 | SAT/6AT | F | L/R | SUV 4WD BJN;CFRA | Date to:2007.04 | GCO83085 | Outer Joint | | 30 | 29 | 64 | 103 | 72.5 | M |
| | 2004.08-2010.05 | SAT/6AT | F | L/R | SUV 4WD BJN;CFRA | | GCI99148 | Inner Joint | | | 28 | | | 34 | |
| | 2004.08-2010.05 | 6AT | R | L/R | SUV 4WD BJN;CFRA | With differential lock,Date to:2006.07,Without differential lock | GDS35086 | Drive Shaft | | 30 | | 64.3 | 103.5 | 724 | |
| | 2004.08-2010.05 | 6AT | R | L/R | SUV 4WD BJN;CFRA | Date from:2006.08,Without differential lock | GDS61236 | Drive Shaft | | 30 | | 64 | 103.5 | 734 | |
| | 2004.08-2010.05 | 6AT | R | L/R | SUV 4WD BJN;CFRA | | GCI82450 | Outer Joint | | 30 | 28 | 64 | 103.5 | 64 | |
| | 2004.08-2010.05 | SAT/6AT | R | L/R | SUV 4WD BJN;CFRA | | GCI83027 | Inner Joint | | | 28 | | | 28 | |
| **Touran** | | | | | | | | | | | | | | | |
| 1.0 (85 kw) | 2018.12-2019.07 | 6MT | F | L | MPV FWD DKRB | | GDS84505 | Drive Shaft | | 36 | | 59.5 | 40 | 506 | |
| | 2018.12-2019.07 | 6MT | F | R | MPV FWD DKRB | | GDS84504 | Drive Shaft | | 36 | | 59.5 | 40 | 808 | |
| | 2018.12-2019.07 | 6MT | F | L/R | MPV FWD DKRB | | GCO83101 | Outer Joint | | 36 | 27 | 59.5 | 40 | 65 | M |
| | 2018.12-2019.07 | 6MT | F | L/R | MPV FWD DKRB | | GCI81689 | Inner Joint | | | 32 | | | 89 | |
| 1.2 (77 kw) | 2010.05-2015.05 | 6MT | F | L | Box Body/MPV FWD CBZB | | GDS61201 | Drive Shaft | | 36 | | 59.5 | 40.5 | 535 | |
| | 2010.05-2015.05 | 6MT | F | R | Box Body/MPV FWD CBZB | | GDS61096 | Drive Shaft | | 36 | | 59.5 | 40.5 | 799 | |
| | 2010.05-2015.05 | 6MT | F | L/R | Box Body/MPV FWD CBZB | | GCO83037 | Outer Joint | | 36 | 30 | 59.5 | 40.5 | 56 | I |
| | 2010.05-2015.05 | 6MT | F | L/R | Box Body/MPV FWD CBZB | | GCI82447 | Inner Joint | | | 33 | | | 34 | |
| | 2010.05-2015.05 | 6MT | F | L | MPV FWD CBZB | | GDS61201 | Drive Shaft | | 36 | | 59.5 | 40.5 | 535 | |
| | 2010.05-2015.05 | 6MT | F | R | MPV FWD CBZB | | GDS61096 | Drive Shaft | | 36 | | 59.5 | 40.5 | 799 | |
| | 2010.05-2015.05 | 6MT | F | L/R | MPV FWD CBZB | | GCO83037 | Outer Joint | | 36 | 30 | 59.5 | 40.5 | 56 | I |
| | 2010.05-2015.05 | 6MT | F | L/R | MPV FWD CBZB | | GCI82447 | Inner Joint | | | 33 | | | 34 | |
| 1.2 (81 kw) | 2015.05-2018.07 | 6MT | F | L | MPV FWD CYVB | | GDS82391 | Drive Shaft | | 36 | | 59.5 | 40 | 528 | |
| | 2015.05-2018.07 | 6MT | F | R | MPV FWD CYVB | | GDS82390 | Drive Shaft | | 36 | | 59.5 | 40 | 830 | |
| | 2015.05-2018.07 | 6MT | F | L/R | MPV FWD CYVB | | GCO81355 | Outer Joint | | 36 | 34 | 59.5 | 40 | 59.5 | M |
| | 2015.05-2018.07 | 6MT | F | L/R | MPV FWD CYVB | | GCI81398 | Inner Joint | | | 34 | | | 34 | |
| 1.4 (103 kw) | 2006.02-2010.05 | 6DCT | F | L | MPV FWD BMY;CAVC | | GDS81896 | Drive Shaft | | 36 | | 59.5 | 40 | 500 | |
| | 2006.02-2010.05 | 6DCT | F | R | MPV FWD BMY;CAVC | For Engine Code :BMY | GDS61342 | Drive Shaft | | 36 | | 59.5 | 40 | 764 | |
| | 2006.02-2010.05 | 6DCT/7DCT | F | L/R | MPV FWD BMY;CAVC | | GCO83002 | Outer Joint | | 36 | 27 | 59.5 | 40 | 66 | I |
| | 2006.02-2010.05 | 6DCT/7DCT | F | L/R | MPV FWD BMY;CAVC | | GCI61069 | Inner Joint | | | 28 | | | 32 | |
| | 2006.02-2010.05 | 6DCT/7DCT | F | L/R | MPV FWD BMY;CAVC | | GCI83016 | Inner Joint | | | 28 | | | 32 | |

| | YEAR | TRANSM. | F/R | L/R | BODY STYLE & DRIVE TYPE & ENGINE | REMARKS | G-AP Ref. | PRODUCT | ABS | Technical Specifications A | B | C | H | L | P |
|---|---|---|---|---|---|---|---|---|---|---|---|---|---|---|---|
| **VW Touran** | | | | | | | | | | | | | | | |
| 1.4 (103 kw) | 2006.02-2010.05 | 6MT | F | L | MPV FWD BMY;CAVC | | GDS61201 | Drive Shaft | | 36 | | 59.5 | 40.5 | 535 | |
| | 2006.02-2010.05 | 6MT | F | R | MPV FWD BMY;CAVC | | GDS61096 | Drive Shaft | | 36 | | 59.5 | 40.5 | 799 | |
| | 2006.02-2010.05 | 6MT | F | L/R | MPV FWD BMY;CAVC | | GCO83037 | Outer Joint | | 36 | 30 | 59.5 | 40.5 | 56 | I |
| | 2006.02-2010.05 | 6MT | F | L/R | MPV FWD BMY;CAVC | | GCI82447 | Inner Joint | | | 33 | | | 34 | |
| | 2006.02-2010.05 | 7DCT | F | L | MPV FWD BMY;CAVC | For Engine code:CAVC | GDS61281 | Drive Shaft | | 36 | | 59.5 | 40 | 528 | |
| | 2006.02-2010.05 | 7DCT | F | R | MPV FWD BMY;CAVC | For Engine code:CAVC | GDS81653 | Drive Shaft | | 36 | | 59.5 | 40 | 785 | |
| | 2010.05-2015.05 | 6MT | F | L | Box Body/MPV FWD CAVC;CTHC | | GDS61201 | Drive Shaft | | 36 | | 59.5 | 40.5 | 535 | |
| | 2010.05-2015.05 | 6MT | F | R | Box Body/MPV FWD CAVC;CTHC | | GDS61096 | Drive Shaft | | 36 | | 59.5 | 40.5 | 799 | |
| | 2010.05-2015.05 | 6MT | F | L/R | Box Body/MPV FWD CAVC;CTHC | Date to:2011.08 | GCO83037 | Outer Joint | | 36 | 30 | 59.5 | 40.5 | 56 | I |
| | 2010.05-2015.05 | 6MT | F | L/R | Box Body/MPV FWD CAVC;CTHC | | GCI82447 | Inner Joint | | | 33 | | | 34 | |
| | 2010.05-2015.05 | 7DCT | F | L | Box Body/MPV FWD CAVC;CTHC | | GDS61281 | Drive Shaft | | 36 | | 59.5 | 40 | 528 | |
| | 2010.05-2015.05 | 7DCT | F | R | Box Body/MPV FWD CAVC;CTHC | | GDS81653 | Drive Shaft | | 36 | | 59.5 | 40 | 785 | |
| | 2010.05-2015.05 | 7DCT | F | L/R | Box Body/MPV FWD CAVC;CTHC | | GCO83002 | Outer Joint | | 36 | 27 | 59.5 | 40 | 66 | I |
| | 2010.05-2015.05 | 7DCT | F | L/R | Box Body/MPV FWD CAVC;CTHC | | GCI83016 | Inner Joint | | | 28 | | | 32 | |
| | 2010.05-2015.05 | 6MT | F | L | MPV FWD CAVC;CTHC | | GDS61201 | Drive Shaft | | 36 | | 59.5 | 40.5 | 535 | |
| | 2010.05-2015.05 | 6MT | F | R | MPV FWD CAVC;CTHC | | GDS61096 | Drive Shaft | | 36 | | 59.5 | 40.5 | 799 | |
| | 2010.05-2015.05 | 6MT | F | L/R | MPV FWD CAVC;CTHC | Date from:2011.09 | GCO61059 | Outer Joint | | 36 | 33 | 59.5 | 40 | 59.5 | I |
| | 2010.05-2015.05 | 6MT | F | L/R | MPV FWD CAVC;CTHC | | GCI82447 | Inner Joint | | | 33 | | | 34 | |
| | 2010.05-2015.05 | 6MT/7DCT | F | L/R | MPV FWD CAVC;CTHC | | GCI83016 | Inner Joint | | | 28 | | | 32 | |
| | 2010.05-2015.05 | 7DCT | F | L | MPV FWD CAVC;CTHC | Inner teeth of tranm.side:28 | GDS61281 | Drive Shaft | | 36 | | 59.5 | 40 | 528 | |
| | 2010.05-2015.05 | 7DCT | F | R | MPV FWD CAVC;CTHC | | GDS81653 | Drive Shaft | | 36 | | 59.5 | 40 | 785 | |
| | 2010.05-2015.05 | 7DCT | F | L/R | MPV FWD CAVC;CTHC | | GCI61069 | Inner Joint | | | 28 | | | 32 | |
| | 2010.05-2015.05 | AT | F | L | MPV FWD CAVC;CTHC | | GDS83236 | Drive Shaft | | 36 | | 59.5 | 40 | 484 | |
| | 2010.05-2015.05 | AT/7DCT | F | L | MPV FWD CAVC;CTHC | Inner teeth of tranm.side:33 | GDS83302 | Drive Shaft | | 36 | | 59.5 | 40 | 528 | |
| | 2010.05-2015.05 | AT/7DCT | F | L/R | MPV FWD CAVC;CTHC | | GCO83002 | Outer Joint | | 36 | 27 | 59.5 | 40 | 66 | I |
| | 2010.05-2015.05 | MT | F | L/R | MPV FWD CAVC;CTHC | | GCO83037 | Outer Joint | | 36 | 30 | 59.5 | 40.5 | 56 | I |
| 1.4 (110 kw) | 2009.05-2010.05 | 6MT | F | L/R | MPV FWD CDGA | | GCI82447 | Inner Joint | | | 33 | | | 34 | |
| | 2009.05-2010.05 | 7AT/6MT | F | L/R | MPV FWD CDGA | | GCI83016 | Inner Joint | | | 28 | | | 32 | |
| | 2009.05-2010.05 | 7DCT | F | R | MPV FWD CDGA | | GDS81653 | Drive Shaft | | 36 | | 59.5 | 40 | 785 | |
| | 2009.05-2010.05 | AT/7DCT | F | L | MPV FWD CDGA | | GDS61281 | Drive Shaft | | 36 | | 59.5 | 40 | 528 | |
| | 2009.05-2010.05 | AT/7DCT | F | L/R | MPV FWD CDGA | | GCO83002 | Outer Joint | | 36 | 27 | 59.5 | 40 | 66 | I |
| | 2009.05-2010.05 | MT | F | L | MPV FWD CDGA | | GDS61201 | Drive Shaft | | 36 | | 59.5 | 40.5 | 535 | |
| | 2009.05-2010.05 | MT | F | R | MPV FWD CDGA | | GDS61096 | Drive Shaft | | 36 | | 59.5 | 40.5 | 799 | |
| | 2009.05-2010.05 | MT | F | L/R | MPV FWD CDGA | | GCO83037 | Outer Joint | | 36 | 30 | 59.5 | 40.5 | 56 | I |
| | 2010.05-2015.05 | 6MT | F | L | Box Body/MPV FWD CDGA | | GDS61201 | Drive Shaft | | 36 | | 59.5 | 40.5 | 535 | |
| | 2010.05-2015.05 | 6MT | F | R | Box Body/MPV FWD CDGA | | GDS61096 | Drive Shaft | | 36 | | 59.5 | 40.5 | 799 | |
| | 2010.05-2015.05 | 6MT | F | L/R | Box Body/MPV FWD CDGA | Date to:2011.08 | GCO83037 | Outer Joint | | 36 | 30 | 59.5 | 40.5 | 56 | I |
| | 2010.05-2015.05 | 6MT | F | L/R | Box Body/MPV FWD CDGA | | GCI82447 | Inner Joint | | | 33 | | | 34 | |
| | 2010.05-2015.05 | 7DCT | F | L | Box Body/MPV FWD CDGA | | GDS61281 | Drive Shaft | | 36 | | 59.5 | 40 | 528 | |
| | 2010.05-2015.05 | 7DCT | F | R | Box Body/MPV FWD CDGA | | GDS81653 | Drive Shaft | | 36 | | 59.5 | 40 | 785 | |
| | 2010.05-2015.05 | 7DCT | F | L/R | Box Body/MPV FWD CDGA | | GCO83002 | Outer Joint | | 36 | 27 | 59.5 | 40 | 66 | I |
| | 2010.05-2015.05 | 7DCT | F | L/R | Box Body/MPV FWD CDGA | | GCI83016 | Inner Joint | | | 28 | | | 32 | |
| | 2010.05-2015.05 | 6MT | F | L | MPV FWD CDGA | | GDS61201 | Drive Shaft | | 36 | | 59.5 | 40.5 | 535 | |
| | 2010.05-2015.05 | 6MT | F | R | MPV FWD CDGA | | GDS61096 | Drive Shaft | | 36 | | 59.5 | 40.5 | 799 | |
| | 2010.05-2015.05 | 6MT | F | L/R | MPV FWD CDGA | Date from:2011.09 | GCO61059 | Outer Joint | | 36 | 33 | 59.5 | 40 | 59.5 | I |
| | 2010.05-2015.05 | 6MT | F | L/R | MPV FWD CDGA | | GCI82447 | Inner Joint | | | 33 | | | 34 | |
| | 2010.05-2015.05 | 7AT/6MT | F | L/R | MPV FWD CDGA | | GCI83016 | Inner Joint | | | 28 | | | 32 | |
| | 2010.05-2015.05 | 7DCT | F | L | MPV FWD CDGA | | GDS61281 | Drive Shaft | | 36 | | 59.5 | 40 | 528 | |
| | 2010.05-2015.05 | 7DCT | F | R | MPV FWD CDGA | | GDS81653 | Drive Shaft | | 36 | | 59.5 | 40 | 785 | |
| | 2010.05-2015.05 | 7DCT | F | L/R | MPV FWD CDGA | | GCO83002 | Outer Joint | | 36 | 27 | 59.5 | 40 | 66 | I |
| | 2010.05-2015.05 | MT | F | L/R | MPV FWD CDGA | Date to:2011.08 | GCO83037 | Outer Joint | | 36 | 30 | 59.5 | 40.5 | 56 | I |
| | 2015.05-2022.07 | 6MT/7DCT | F | L/R | MPV FWD CZDA | | GCO83101 | Outer Joint | | 36 | 27 | 59.5 | 40 | 65 | M |
| | 2015.05-2022.07 | 6MT/7DCT | F | L/R | MPV FWD CZDA | | GCI83016 | Inner Joint | | | 28 | | | 32 | |
| | 2015.05-2022.07 | 7DCT | F | L | MPV FWD CZDA | | GDS82387 | Drive Shaft | | 36 | | 59.5 | 40 | 523 | |
| | 2015.05-2022.07 | 7DCT | F | R | MPV FWD CZDA | | GDS82386 | Drive Shaft | | 36 | | 59.5 | 40 | 806 | |
| | 2015.05-2022.07 | 7DCT | F | L/R | MPV FWD CZDA | | GCI61069 | Inner Joint | | | 28 | | | 32 | |
| 1.4 (125 kw) | 2006.11-2010.05 | 6AT | F | R | MPV FWD BLG;CAVB | | GDS61342 | Drive Shaft | | 36 | | 59.5 | 40 | 764 | |
| | 2006.11-2010.05 | 6AT | F | R | MPV FWD BLG;CAVB | | GCI61069 | Inner Joint | | | 28 | | | 32 | |
| | 2006.11-2010.05 | 6DCT | F | L | MPV FWD BLG;CAVB | | GDS81896 | Drive Shaft | | 36 | | 59.5 | 40 | 500 | |
| | 2006.11-2010.05 | 7AT | F | L | MPV FWD BLG;CAVB | | GDS61281 | Drive Shaft | | 36 | | 59.5 | 40 | 528 | |
| | 2006.11-2010.05 | 7AT | F | R | MPV FWD BLG;CAVB | | GDS81653 | Drive Shaft | | 36 | | 59.5 | 40 | 785 | |
| | 2006.11-2010.05 | 7AT | F | L/R | MPV FWD BLG;CAVB | | GCI61069 | Inner Joint | | | 28 | | | 32 | |
| | 2006.11-2010.05 | AT | F | L | MPV FWD BLG;CAVB | | GDS83236 | Drive Shaft | | 36 | | 59.5 | 40 | 484 | |
| | 2006.11-2010.05 | AT | F | L/R | MPV FWD BLG;CAVB | | GCO83002 | Outer Joint | | 36 | 27 | 59.5 | 40 | 66 | I |
| | 2006.11-2010.05 | MT | F | L | MPV FWD BLG;CAVB | | GDS83302 | Drive Shaft | | 36 | | 59.5 | 40 | 528 | |

| | YEAR | TRANSM. | F/R | L/R | BODY STYLE & DRIVE TYPE & ENGINE | REMARKS | G-AP Ref. | PRODUCT | ABS | Technical Specifications A | B | C | H | L | P |
|---|---|---|---|---|---|---|---|---|---|---|---|---|---|---|---|
| **VW Touran** | | | | | | | | | | | | | | | |
| 1.4 (125 kw) | 2006.11-2010.05 | | F | L/R | MPV FWD BLG;CAVB | | GCI83016 | Inner Joint | | | 28 | | | 32 | |
| | 2010.05-2015.05 | 7AT | F | L/R | Box Body/MPV FWD CAVB;CTHB | | GCO83002 | Outer Joint | | 36 | 27 | 59.5 | 40 | 66 | I |
| | 2010.05-2015.05 | 7DCT | F | L | Box Body/MPV FWD CAVB;CTHB | | GDS61281 | Drive Shaft | | 36 | | 59.5 | 40 | 528 | |
| | 2010.05-2015.05 | 7DCT | F | R | Box Body/MPV FWD CAVB;CTHB | | GDS81653 | Drive Shaft | | 36 | | 59.5 | 40 | 785 | |
| | 2010.05-2015.05 | 7AT | F | L | MPV FWD CAVB;CTHB | | GDS61281 | Drive Shaft | | 36 | | 59.5 | 40 | 528 | |
| | 2010.05-2015.05 | 7AT | F | R | MPV FWD CAVB;CTHB | | GDS81653 | Drive Shaft | | 36 | | 59.5 | 40 | 785 | |
| | 2010.05-2015.05 | 7AT | F | L/R | MPV FWD CAVB;CTHB | | GCI61069 | Inner Joint | | | 28 | | | 32 | |
| | 2010.05-2015.05 | AT | F | L/R | MPV FWD CAVB;CTHB | | GCO83002 | Outer Joint | | 36 | 27 | 59.5 | 40 | 66 | I |
| | 2010.05-2015.05 | AT/MT | F | L | MPV FWD CAVB;CTHB | | GDS83302 | Drive Shaft | | 36 | | 59.5 | 40 | 528 | |
| | 2010.05-2015.05 | | F | L/R | MPV FWD CAVB;CTHB | | GCI83016 | Inner Joint | | | 28 | | | 32 | |
| 1.5 (110 kw) | 2018.11- | 6MT | F | L | MPV FWD DADA;DPCA;DXDB | For Engine code:DPCA/DXDB | GDS81896 | Drive Shaft | | 36 | | 59.5 | 40 | 500 | |
| | 2018.11- | 6MT | F | R | MPV FWD DADA;DPCA;DXDB | | GDS82386 | Drive Shaft | | 36 | | 59.5 | 40 | 806 | |
| | 2018.11- | 6MT | F | R | MPV FWD DADA;DPCA;DXDB | For PR code:0ED | GDS83313 | Drive Shaft | | 36 | | 59.5 | 40 | 792 | |
| | 2018.11- | 6MT | F | L/R | MPV FWD DADA;DPCA;DXDB | | GCI82456 | Inner Joint | | | 28 | | | 32 | |
| | 2018.11- | 6MT/7DCT | F | L | MPV FWD DADA;DPCA;DXDB | Transmission:6MT;For Engine code:DADA;Transmission:7DCT | GDS82387 | Drive Shaft | | 36 | | 59.5 | 40 | 523 | |
| | 2018.11- | 6MT/7DCT | F | L/R | MPV FWD DADA;DPCA;DXDB | | GCO83101 | Outer Joint | | 36 | 27 | 59.5 | 40 | 65 | M |
| | 2018.11- | 7DCT | F | R | MPV FWD DADA;DPCA;DXDB | | GDS84498 | Drive Shaft | | 36 | 40 | 59.5 | 40 | 834 | |
| | 2018.11- | 7DCT | F | L | MPV FWD DADA;DPCA;DXDB | | GCI83016 | Inner Joint | | | 28 | | | 32 | |
| 1.6 (66 kw) | 2010.05-2015.05 | 6MT | F | L | Box Body/MPV FWD CAYB | | GDS61282 | Drive Shaft | | 36 | | 59.5 | 40 | 523 | |
| | 2010.05-2015.05 | 6MT | F | R | Box Body/MPV FWD CAYB | | GDS61283 | Drive Shaft | | 36 | | 59.5 | 40 | 815 | |
| | 2010.05-2015.05 | 6MT | F | L/R | Box Body/MPV FWD CAYB | | GCI82447 | Inner Joint | | | 33 | | | 34 | |
| | 2010.05-2015.05 | 6MT | F | L | MPV FWD CAYB | | GDS61282 | Drive Shaft | | 36 | | 59.5 | 40 | 523 | |
| | 2010.05-2015.05 | 6MT | F | R | MPV FWD CAYB | | GDS61283 | Drive Shaft | | 36 | | 59.5 | 40 | 815 | |
| | 2010.05-2015.05 | 6MT | F | L/R | MPV FWD CAYB | | GCO61059 | Outer Joint | | 36 | 33 | 59.5 | 40 | 59.5 | I |
| | 2010.05-2015.05 | 6MT | F | L/R | MPV FWD CAYB | | GCI53002 | Inner Joint | | | 33 | | | 34 | |
| | 2010.05-2015.05 | 6MT | F | L/R | MPV FWD CAYB | | GCI82447 | Inner Joint | | | 33 | | | 34 | |
| | 2010.05-2015.05 | MT | F | L | MPV FWD CAYB | | GDS83294 | Drive Shaft | | 36 | | 59.5 | 38 | 519 | |
| | 2010.05-2015.05 | MT | F | L | MPV FWD CAYB | | GCO83037 | Outer Joint | | 36 | 30 | 59.5 | 40.5 | 56 | I |
| | 2010.05-2015.05 | MT | F | L/R | MPV FWD CAYB | | GCI83006 | Inner Joint | | | 33 | | | 34 | |
| | 2010.05-2015.05 | | F | R | MPV FWD CAYB | | GDS61042 | Drive Shaft | | 36 | | 59.5 | 40.5 | 814 | |
| | 2010.05-2015.05 | | F | L/R | MPV FWD CAYB | | GCI83011 | Inner Joint | | | 33 | | | 34 | |
| 1.6 (75 kw) | 2003.07-2010.05 | 5MT | F | L | MPV FWD BGU;BSE;BSF | | GDS83373 | Drive Shaft | | 36 | | 59.5 | 38 | 511 | |
| | 2003.07-2010.05 | 5MT | F | R | MPV FWD BGU;BSE;BSF | | GDS61042 | Drive Shaft | | 36 | | 59.5 | 40.5 | 814 | |
| | 2003.07-2010.05 | 5MT | F | L/R | MPV FWD BGU;BSE;BSF | | GCO83037 | Outer Joint | | 36 | 30 | 59.5 | 40.5 | 56 | I |
| | 2003.07-2010.05 | 5MT | F | L/R | MPV FWD BGU;BSE;BSF | | GCI82447 | Inner Joint | | | 33 | | | 34 | |
| | 2003.07-2010.05 | AT | F | L | MPV FWD BGU;BSE;BSF | | GDS61093 | Drive Shaft | | 36 | 26 | 59.5 | 40.5 | 587.5 | |
| | 2003.07-2010.05 | AT | F | R | MPV FWD BGU;BSE;BSF | | GDS61094 | Drive Shaft | | 36 | 26 | 59.5 | 40.5 | 884 | |
| | 2003.07-2010.05 | MT | F | L | MPV FWD BGU;BSE;BSF | | GDS83294 | Drive Shaft | | 36 | | 59.5 | 38 | 519 | |
| | 2003.07-2010.05 | MT | F | L/R | MPV FWD BGU;BSE;BSF | | GCI83006 | Inner Joint | | | 33 | | | 34 | |
| | 2003.07-2010.05 | MT | F | L/R | MPV FWD BGU;BSE;BSF | | GCI83011 | Inner Joint | | | 33 | | | 34 | |
| | 2003.07-2010.05 | MT | F | R | MPV FWD BGU;BSE;BSF | | GDS61237 | Stub Axle,differential | | 23 | 37 | | | 142.5 | |
| | 2006.11-2010.05 | 5MT | F | L | MPV FWD BSF | | GDS83373 | Drive Shaft | | 36 | | 59.5 | 38 | 511 | |
| | 2006.11-2010.05 | 5MT | F | R | MPV FWD BSF | | GDS61042 | Drive Shaft | | 36 | | 59.5 | 40.5 | 814 | |
| | 2006.11-2010.05 | 5MT | F | L/R | MPV FWD BSF | | GCO83037 | Outer Joint | | 36 | 30 | 59.5 | 40.5 | 56 | I |
| | 2006.11-2010.05 | 5MT | F | L/R | MPV FWD BSF | | GCI82447 | Inner Joint | | | 33 | | | 34 | |
| | 2006.11-2010.05 | | F | L/R | MPV FWD BSF | | GCI83011 | Inner Joint | | | 33 | | | 34 | |
| 1.6 (77 kw) | 2010.05-2015.05 | 6MT | F | L | Box Body/MPV FWD CAYC | | GDS61282 | Drive Shaft | | 36 | | 59.5 | 40 | 523 | |
| | 2010.05-2015.05 | 6MT | F | R | Box Body/MPV FWD CAYC | | GDS61283 | Drive Shaft | | 36 | | 59.5 | 40 | 815 | |
| | 2010.05-2015.05 | 6MT | F | L | Box Body/MPV FWD CAYC | Date to:2013.02,Date from:2013.05 | GCO61059 | Outer Joint | | 36 | 33 | 59.5 | 40 | 59.5 | I |
| | 2010.05-2015.05 | 6MT | F | R | Box Body/MPV FWD CAYC | Date from:2013.03,Date to:2013.04 | GCO83037 | Outer Joint | | 36 | 30 | 59.5 | 40.5 | 56 | I |
| | 2010.05-2015.05 | 6MT | F | L/R | Box Body/MPV FWD CAYC | | GCI82447 | Inner Joint | | | 33 | | | 34 | |
| | 2010.05-2015.05 | 7DCT | F | L | Box Body/MPV FWD CAYC | Date to:2011.05 | GDS61100 | Drive Shaft | | 36 | | 59.5 | 40 | 513 | |
| | 2010.05-2015.05 | 7DCT | F | L | Box Body/MPV FWD CAYC | Date from:2011.06 | GDS61282 | Drive Shaft | | 36 | | 59.5 | 40 | 523 | |
| | 2010.05-2015.05 | 7DCT | F | R | Box Body/MPV FWD CAYC | Date from:2011.06 | GDS61096 | Drive Shaft | | 36 | | 59.5 | 40.5 | 799 | |
| | 2010.05-2015.05 | 7DCT | F | R | Box Body/MPV FWD CAYC | Date to:2011.05 | GDS61339 | Drive Shaft | | 36 | | 59.5 | 40 | 794 | |
| | 2010.05-2015.05 | 7DCT | F | R | Box Body/MPV FWD CAYC | Date to:2011.05 | GDS83313 | Drive Shaft | | 36 | | 59.5 | 40 | 792 | |
| | 2010.05-2015.05 | 7DCT | F | L/R | Box Body/MPV FWD CAYC | | GCO83002 | Outer Joint | | 36 | 27 | 59.5 | 40 | 66 | I |
| | 2010.05-2015.05 | 7DCT | F | L/R | Box Body/MPV FWD CAYC | | GCI83016 | Inner Joint | | | 28 | | | 32 | |
| | 2010.05-2015.05 | 6MT | F | L | MPV FWD CAYC | | GDS61282 | Drive Shaft | | 36 | | 59.5 | 40 | 523 | |
| | 2010.05-2015.05 | 6MT | F | R | MPV FWD CAYC | | GDS61283 | Drive Shaft | | 36 | | 59.5 | 40 | 815 | |
| | 2010.05-2015.05 | 6MT | F | R | MPV FWD CAYC | Date from:2013.03;Date to:2013.04 | GCO83037 | Outer Joint | | 36 | 30 | 59.5 | 40.5 | 56 | I |
| | 2010.05-2015.05 | 6MT | F | L/R | MPV FWD CAYC | | GCO61059 | Outer Joint | | 36 | 33 | 59.5 | 40 | 59.5 | I |
| | 2010.05-2015.05 | 6MT | F | L/R | MPV FWD CAYC | | GCI53002 | Inner Joint | | | 33 | | | 34 | |
| | 2010.05-2015.05 | 7DCT | F | L | MPV FWD CAYC | Date to:2011.05 | GDS61100 | Drive Shaft | | 36 | | 59.5 | 40 | 513 | |
| | 2010.05-2015.05 | 7DCT | F | L | MPV FWD CAYC | Date from:2011.06 | GDS61282 | Drive Shaft | | 36 | | 59.5 | 40 | 523 | |

| | YEAR | TRANSM. | F/R | L/R | BODY STYLE & DRIVE TYPE & ENGINE | REMARKS | G-AP Ref. | PRODUCT | ABS | Technical Specifications A | B | C | H | L | P |
|---|---|---|---|---|---|---|---|---|---|---|---|---|---|---|---|
| **VW Touran** | | | | | | | | | | | | | | | |
| 1.6 (77 kw) | 2010.05-2015.05 | 7DCT | F | R | MPV FWD CAYC | Date from:2011.06 | GDS61096 | Drive Shaft | | 36 | | 59.5 | 40.5 | 799 | |
| | 2010.05-2015.05 | 7DCT | F | R | MPV FWD CAYC | Date to:2011.05 | GDS61339 | Drive Shaft | | 36 | | 59.5 | 40 | 794 | |
| | 2010.05-2015.05 | 7DCT | F | L/R | MPV FWD CAYC | | GCO83002 | Outer Joint | | 36 | 27 | 59.5 | 40 | 66 | I |
| | 2010.05-2015.05 | 7DCT | F | R | MPV FWD CAYC | Date to:2011.05 | GCI61069 | Inner Joint | | | 28 | | | 32 | |
| | 2010.05-2015.05 | 7DCT | F | L/R | MPV FWD CAYC | Date from:2011.06 | GCI82447 | Inner Joint | | | 33 | | | 34 | |
| | 2010.05-2015.05 | 7DCT | F | L/R | MPV FWD CAYC | Date to:2011.05 | GCI83016 | Inner Joint | | | 28 | | | 32 | |
| | 2010.05-2015.05 | DCT | F | L | MPV FWD CAYC | Date to:2011.06 | GDS83236 | Drive Shaft | | 36 | | 59.5 | 40 | 484 | |
| 1.6 (81 kw) | 2015.05-2016.05 | 6MT | F | R | MPV FWD CRKB | | GDS81525 | Drive Shaft | | 36 | | 59.5 | 40 | 825 | |
| | 2015.05-2016.05 | 6MT | F | R | MPV FWD CRKB | | GCO81355 | Outer Joint | | 36 | 34 | 59.5 | 40 | 59.5 | M |
| | 2015.05-2016.05 | 6MT/7DCT | F | L | MPV FWD CRKB | | GDS61201 | Drive Shaft | | 36 | | 59.5 | 40.5 | 535 | |
| | 2015.05-2016.05 | 6MT/7DCT | F | L/R | MPV FWD CRKB | | GCI81398 | Inner Joint | | | 34 | | | 34 | |
| | 2015.05-2016.05 | 7DCT | F | R | MPV FWD CRKB | | GDS61283 | Drive Shaft | | 36 | | 59.5 | 40 | 815 | |
| | 2015.05-2016.05 | 7DCT | F | R | MPV FWD CRKB | | GCO61059 | Outer Joint | | 36 | 33 | 59.5 | 40 | 59.5 | I |
| 1.6 (85 kw) | 2003.02-2006.11 | 6AT | F | L | Box Body/MPV FWD BAG;BLF;BLP | | GDS81582 | Drive Shaft | | 36 | 26 | 59.5 | 40 | 597 | |
| | 2003.02-2006.11 | 6AT | F | R | Box Body/MPV FWD BAG;BLF;BLP | | GDS81583 | Drive Shaft | | 36 | 26 | 59.5 | 40 | 873 | |
| | 2003.02-2006.11 | 6AT | F | L/R | Box Body/MPV FWD BAG;BLF;BLP | | GCI61011 | Inner Joint | | 26 | 32 | 31 | 68.5 | 85 | |
| | 2003.02-2006.11 | 6AT | F | L/R | Box Body/MPV FWD BAG;BLF;BLP | | GCI61050 | Inner Joint | | 26 | 32 | 31 | 68.5 | 89 | |
| | 2003.02-2006.11 | 6AT/6MT | F | L/R | Box Body/MPV FWD BAG;BLF;BLP | Date to:2005.05,Chassis no. to:1T_5_200000 | GCO83037 | Outer Joint | | 36 | 30 | 59.5 | 40.5 | 56 | I |
| | 2003.02-2006.11 | 6MT | F | L | Box Body/MPV FWD BAG;BLF;BLP | | GDS61201 | Drive Shaft | | 36 | | 59.5 | 40.5 | 535 | |
| | 2003.02-2006.11 | 6MT | F | R | Box Body/MPV FWD BAG;BLF;BLP | | GDS82272 | Drive Shaft | | 36 | | 59.5 | 40.5 | 805 | |
| | 2003.02-2006.11 | 6MT | F | R | Box Body/MPV FWD BAG;BLF;BLP | | GCI53002 | Inner Joint | | | 33 | | | 34 | |
| | 2003.02-2006.11 | 6MT | F | L/R | Box Body/MPV FWD BAG;BLF;BLP | | GCI82447 | Inner Joint | | | 33 | | | 34 | |
| | 2003.02-2007.01 | 6AT | F | L | MPV FWD BAG;BLF;BLP | | GDS81582 | Drive Shaft | | 36 | 26 | 59.5 | 40 | 597 | |
| | 2003.02-2007.01 | 6AT | F | R | MPV FWD BAG;BLF;BLP | | GDS81583 | Drive Shaft | | 36 | 26 | 59.5 | 40 | 873 | |
| | 2003.02-2007.01 | 6AT | F | L/R | MPV FWD BAG;BLF;BLP | | GCI61011 | Inner Joint | | 26 | 32 | 31 | 68.5 | 85 | |
| | 2003.02-2007.01 | 6AT | F | L/R | MPV FWD BAG;BLF;BLP | | GCI61050 | Inner Joint | | 26 | 32 | 31 | 68.5 | 89 | |
| | 2003.02-2007.01 | 6AT/6MT | F | L/R | MPV FWD BAG;BLF;BLP | | GCI53002 | Inner Joint | | | 33 | | | 34 | |
| | 2003.02-2007.01 | 6MT | F | L | MPV FWD BAG;BLF;BLP | | GDS61201 | Drive Shaft | | 36 | | 59.5 | 40.5 | 535 | |
| | 2003.02-2007.01 | 6MT | F | R | MPV FWD BAG;BLF;BLP | | GDS82272 | Drive Shaft | | 36 | | 59.5 | 40.5 | 805 | |
| | 2003.02-2007.01 | 6MT | F | L/R | MPV FWD BAG;BLF;BLP | | GCO83037 | Outer Joint | | 36 | 30 | 59.5 | 40.5 | 56 | I |
| | 2003.02-2007.01 | 6MT | F | L/R | MPV FWD BAG;BLF;BLP | Non-Original design | GCI82447 | Inner Joint | | | 33 | | | 34 | |
| | 2003.02-2007.01 | MT | F | L | MPV FWD BAG;BLF;BLP | | GDS83294 | Drive Shaft | | 36 | | 59.5 | 38 | 519 | |
| | 2003.02-2007.01 | MT | F | R | MPV FWD BAG;BLF;BLP | | GDS61237 | Stub Axle,differential | | 23 | 37 | | | 142.5 | |
| | 2016.05-2019.07 | 6MT | F | R | MPV FWD DGDA | | GDS81525 | Drive Shaft | | 36 | | 59.5 | 40 | 825 | |
| | 2016.05-2019.07 | 6MT/7DCT | F | L | MPV FWD DGDA | | GDS61201 | Drive Shaft | | 36 | | 59.5 | 40.5 | 535 | |
| | 2016.05-2019.07 | 6MT/7DCT | F | L/R | MPV FWD DGDA | | GCO81355 | Outer Joint | | 36 | 34 | 59.5 | 40 | 59.5 | M |
| | 2016.05-2019.07 | 6MT/7DCT | F | L/R | MPV FWD DGDA | | GCI81398 | Inner Joint | | | 34 | | | 34 | |
| | 2016.05-2019.07 | 7DCT | F | R | MPV FWD DGDA | | GDS61283 | Drive Shaft | | 36 | | 59.5 | 40 | 815 | |
| 1.8 (132 kw) | 2015.11-2018.07 | 7AT | F | R | MPV FWD CJSA | | GDS61101 | Drive Shaft | | 36 | | 59.5 | 40 | 803 | |
| | 2015.11-2018.07 | DCT | F | L/R | MPV FWD CJSA | | GCO83101 | Outer Joint | | 36 | 27 | 59.5 | 40 | 65 | M |
| | 2015.11-2018.07 | MT | F | L | MPV FWD CJSA | | GDS61100 | Drive Shaft | | 36 | | 59.5 | 40 | 513 | |
| | 2015.11-2018.07 | | F | L/R | MPV FWD CJSA | | GCI83016 | Inner Joint | | | 28 | | | 32 | |
| 1.9 (66 kw) | 2004.11-2010.05 | 6MT | F | L | Box Body/MPV FWD BRU;BXF;BXJ | Date from:2009.11,For PR code:0EJ | GDS61282 | Drive Shaft | | 36 | | 59.5 | 40 | 523 | |
| | 2004.11-2010.05 | 6MT | F | L | Box Body/MPV FWD BRU;BXF;BXJ | Date to:2009.10,For PR code:0EJ | GDS83294 | Drive Shaft | | 36 | | 59.5 | 38 | 519 | |
| | 2004.11-2010.05 | 6MT | F | L | Box Body/MPV FWD BRU;BXF;BXJ | For PR code:0EN | GDS83295 | Drive Shaft | | 36 | | 59.5 | 40 | 491 | |
| | 2004.11-2010.05 | 6MT | F | R | Box Body/MPV FWD BRU;BXF;BXJ | For PR code:0EJ | GDS61042 | Drive Shaft | | 36 | | 59.5 | 40.5 | 814 | |
| | 2004.11-2010.05 | 6MT | F | R | Box Body/MPV FWD BRU;BXF;BXJ | For PR code:0EN | GDS61126 | Drive Shaft | | 36 | | 59.5 | 40 | 793 | |
| | 2004.11-2010.05 | 6MT | F | R | Box Body/MPV FWD BRU;BXF;BXJ | Date from:2009.11,For PR code:0EJ | GDS61283 | Drive Shaft | | 36 | | 59.5 | 40 | 815 | |
| | 2004.11-2010.05 | 6MT | F | R | Box Body/MPV FWD BRU;BXF;BXJ | For PR code:0EN | GDS83313 | Drive Shaft | | 36 | | 59.5 | 40 | 792 | |
| | 2004.11-2010.05 | 6MT | F | L/R | Box Body/MPV FWD BRU;BXF;BXJ | Date from:2009.11,For PR code:0EJ | GCO61059 | Outer Joint | | 36 | 33 | 59.5 | 40 | 59.5 | I |
| | 2004.11-2010.05 | 6MT | F | L/R | Box Body/MPV FWD BRU;BXF;BXJ | For PR code:0EN | GCO83002 | Outer Joint | | 36 | 27 | 59.5 | 40 | 66 | I |
| | 2004.11-2010.05 | 6MT | F | L/R | Box Body/MPV FWD BRU;BXF;BXJ | Date to:2009.10,For PR code:0EJ | GCO83037 | Outer Joint | | 36 | 30 | 59.5 | 40.5 | 56 | I |
| | 2004.11-2010.05 | 6MT | F | L/R | Box Body/MPV FWD BRU;BXF;BXJ | For PR code:0EJ | GCI82447 | Inner Joint | | | 33 | | | 34 | |
| | 2004.11-2010.05 | 6MT | F | L/R | Box Body/MPV FWD BRU;BXF;BXJ | For PR code:0EN | GCI83016 | Inner Joint | | | 28 | | | 32 | |
| | 2004.11-2010.05 | 6MT | F | L | MPV FWD BRU;BXF;BXJ | Trans. code:MQ250,For PR code:0EJ,Date from:2009.11 | GDS61282 | Drive Shaft | | 36 | | 59.5 | 40 | 523 | |
| | 2004.11-2010.05 | 6MT | F | L | MPV FWD BRU;BXF;BXJ | Trans. code:MQ250,For PR code:0EJ,Date to:2009.10 | GDS83294 | Drive Shaft | | 36 | | 59.5 | 38 | 519 | |
| | 2004.11-2010.05 | 6MT | F | L | MPV FWD BRU;BXF;BXJ | Trans. code:MQ350,For PR code:0EN,date from:2009.11 | GDS83295 | Drive Shaft | | 36 | | 59.5 | 40 | 491 | |
| | 2004.11-2010.05 | 6MT | F | R | MPV FWD BRU;BXF;BXJ | Trans. code:MQ250,For PR code:0EJ,Date to:2009.10 | GDS61042 | Drive Shaft | | 36 | | 59.5 | 40.5 | 814 | |
| | 2004.11-2010.05 | 6MT | F | R | MPV FWD BRU;BXF;BXJ | Trans. code:MQ250,For PR code:0EJ,Date from:2009.11 | GDS61283 | Drive Shaft | | 36 | | 59.5 | 40 | 815 | |
| | 2004.11-2010.05 | 6MT | F | R | MPV FWD BRU;BXF;BXJ | Trans. code:MQ350,For PR code:0EN,date from:2009.11 | GDS83313 | Drive Shaft | | 36 | | 59.5 | 40 | 792 | |
| | 2004.11-2010.05 | 6MT | F | L/R | MPV FWD BRU;BXF;BXJ | Date from:2009.11;transm. type:MQ250 | GCO61059 | Outer Joint | | 36 | 33 | 59.5 | 40 | 59.5 | I |
| | 2004.11-2010.05 | 6MT | F | L/R | MPV FWD BRU;BXF;BXJ | Date from:2009.11;transm. type:MQ350 | GCO83002 | Outer Joint | | 36 | 27 | 59.5 | 40 | 66 | I |
| | 2004.11-2010.05 | 6MT | F | L/R | MPV FWD BRU;BXF;BXJ | Date to:2009.10;transm. type:MQ250 | GCO83037 | Outer Joint | | 36 | 30 | 59.5 | 40.5 | 56 | I |
| | 2004.11-2010.05 | 6MT | F | L/R | MPV FWD BRU;BXF;BXJ | For PR code:0EJ | GCI82447 | Inner Joint | | | 33 | | | 34 | |
| | 2004.11-2010.05 | 6MT | F | L/R | MPV FWD BRU;BXF;BXJ | | GCI83016 | Inner Joint | | | 28 | | | 32 | |

| | YEAR | TRANSM. | F/R | L/R | BODY STYLE & DRIVE TYPE & ENGINE | REMARKS | G-AP Ref. | PRODUCT | ABS | Technical Specifications A | B | C | H | L | P |
|---|---|---|---|---|---|---|---|---|---|---|---|---|---|---|---|
| **VW Touran** | | | | | | | | | | | | | | | |
| 1.9 (66 kw) | 2004.11-2010.05 | MT | F | R | MPV FWD BRU;BXF;BXJ | | GDS61126 | Drive Shaft | | 36 | | 59.5 | 40 | 793 | |
| | 2004.11-2010.05 | MT | F | L/R | MPV FWD BRU;BXF;BXJ | | GCI83006 | Inner Joint | | | 33 | | | 34 | |
| 1.9 (74 kw) | 2003.02-2004.05 | 5MT | F | L | MPV FWD AVQ | | GDS83294 | Drive Shaft | | 36 | | 59.5 | 38 | 519 | |
| | 2003.02-2004.05 | 5MT | F | R | MPV FWD AVQ | | GDS61042 | Drive Shaft | | 36 | | 59.5 | 40.5 | 814 | |
| | 2003.02-2004.05 | 5MT | F | L/R | MPV FWD AVQ | | GCO83037 | Outer Joint | | 36 | 30 | 59.5 | 40.5 | 56 | I |
| | 2003.02-2004.05 | 5MT | F | L/R | MPV FWD AVQ | | GCI82447 | Inner Joint | | | 33 | | | 34 | |
| | 2003.02-2004.05 | MT | F | R | MPV FWD AVQ | | GDS61237 | Stub Axle,differential | | 23 | 37 | | | 142.5 | |
| | 2003.10-2005.05 | 6MT | F | L | Box Body/MPV FWD AVQ | | GDS83294 | Drive Shaft | | 36 | | 59.5 | 38 | 519 | |
| | 2003.10-2005.05 | 6MT | F | R | Box Body/MPV FWD AVQ | | GDS61042 | Drive Shaft | | 36 | | 59.5 | 40.5 | 814 | |
| | 2003.10-2005.05 | 6MT | F | L/R | Box Body/MPV FWD AVQ | | GCO83037 | Outer Joint | | 36 | 30 | 59.5 | 40.5 | 56 | I |
| | 2003.10-2005.05 | 6MT | F | L/R | Box Body/MPV FWD AVQ | | GCI82447 | Inner Joint | | | 33 | | | 34 | |
| 1.9 (77 kw) | 2003.08-2006.11 | 6MT | F | L | Box Body/MPV FWD BKC;BXE | | GDS83294 | Drive Shaft | | 36 | | 59.5 | 38 | 519 | |
| | 2003.08-2006.11 | 6MT | F | R | Box Body/MPV FWD BKC;BXE | | GDS61042 | Drive Shaft | | 36 | | 59.5 | 40.5 | 814 | |
| | 2003.08-2006.11 | 6MT | F | L/R | Box Body/MPV FWD BKC;BXE | | GCO83037 | Outer Joint | | 36 | 30 | 59.5 | 40.5 | 56 | I |
| | 2003.08-2006.11 | 6MT | F | L/R | Box Body/MPV FWD BKC;BXE | | GCI82447 | Inner Joint | | | 33 | | | 34 | |
| | 2003.08-2010.05 | 6DCT | F | L | MPV FWD BKC;BLS;BXE | For Modelcode:1T1,For PR code:F5/F6/F7/G5/F7J/G6/F7G/G7G/G8/F7G1/F7G2/F7G3/F7G4/F7G5/F7G6/F7G7/F7G8/F7G9/F7H | GDS54013 | Drive Shaft | | 36 | | 59.5 | 40 | 479.5 | |
| | 2003.08-2010.05 | 6DCT | F | L | MPV FWD BKC;BLS;BXE | For Modelcode:1T2,For PR code:F4E/F4W/F5F/F6L | GDS83381 | Drive Shaft | | 36 | | 59.5 | 40 | 483 | |
| | 2003.08-2010.05 | 6DCT | F | R | MPV FWD BKC;BLS;BXE | ---------- | GDS54011 | Drive Shaft | | 36 | | 59.5 | 40 | 755 | |
| | 2003.08-2010.05 | 6DCT | F | R | MPV FWD BKC;BLS;BXE | Date from:2009.02,For Modelcode:1T2,For PR code:F4E/F4W/F5F/F6L | GDS83354 | Drive Shaft | | 36 | | 59.5 | 40 | 763 | |
| | 2003.08-2010.05 | 6DCT | F | L/R | MPV FWD BKC;BLS;BXE | For Modelcode:1T2,For PR code:F4E/F4W/F5F/F6L | GCO83101 | Outer Joint | | 36 | 27 | 59.5 | 40 | 65 | M |
| | 2003.08-2010.05 | 6DCT | F | L/R | MPV FWD BKC;BLS;BXE | TJ | GCI54004 | Inner Joint | | | 34 | | | 81 | |
| | 2003.08-2010.05 | 6DCT | F | L/R | MPV FWD BKC;BLS;BXE | AAR | GCI61057 | Inner Joint | | | 34 | | | 89 | |
| | 2003.08-2010.05 | 6MT | F | L | MPV FWD BKC;BLS;BXE | For PR code:0EJ,Date from:2009.11 | GDS61282 | Drive Shaft | | 36 | | 59.5 | 40 | 523 | |
| | 2003.08-2010.05 | 6MT | F | L | MPV FWD BKC;BLS;BXE | For PR code:0EJ,Date to:2009.10 | GDS83294 | Drive Shaft | | 36 | | 59.5 | 38 | 519 | |
| | 2003.08-2010.05 | 6MT | F | L | MPV FWD BKC;BLS;BXE | For PR code:0EN | GDS83295 | Drive Shaft | | 36 | | 59.5 | 40 | 491 | |
| | 2003.08-2010.05 | 6MT | F | R | MPV FWD BKC;BLS;BXE | For PR code:0EJ,Date to:2009.10 | GDS61042 | Drive Shaft | | 36 | | 59.5 | 40.5 | 814 | |
| | 2003.08-2010.05 | 6MT | F | R | MPV FWD BKC;BLS;BXE | For PR code:0EJ,Date from:2009.11 | GDS61283 | Drive Shaft | | 36 | | 59.5 | 40 | 815 | |
| | 2003.08-2010.05 | 6MT | F | R | MPV FWD BKC;BLS;BXE | For PR code:0EN | GDS83313 | Drive Shaft | | 36 | | 59.5 | 40 | 792 | |
| | 2003.08-2010.05 | 6MT | F | L/R | MPV FWD BKC;BLS;BXE | For PR code:0EJ,Date from:2009.11 | GCO61059 | Outer Joint | | 36 | 33 | 59.5 | 40 | 59.5 | I |
| | 2003.08-2010.05 | 6MT | F | L/R | MPV FWD BKC;BLS;BXE | For PR code:0EJ,Date to:2009.10 | GCO83037 | Outer Joint | | 36 | 30 | 59.5 | 40.5 | 56 | I |
| | 2003.08-2010.05 | 6MT | F | L/R | MPV FWD BKC;BLS;BXE | For PR code:0EJ | GCI53002 | Inner Joint | | | 33 | | | 34 | |
| | 2003.08-2010.05 | 6MT | F | L/R | MPV FWD BKC;BLS;BXE | For PR code:0EJ | GCI82447 | Inner Joint | | | 33 | | | 34 | |
| | 2003.08-2010.05 | 7DCT | F | L | MPV FWD BKC;BLS;BXE | Date from:2008.11 | GDS61100 | Drive Shaft | | 36 | | 59.5 | 40 | 513 | |
| | 2003.08-2010.05 | 7DCT | F | L | MPV FWD BKC;BLS;BXE | Date to:2008.10 | GDS82260 | Drive Shaft | | 36 | 40 | 59.5 | 40 | 519 | |
| | 2003.08-2010.05 | 7DCT | F | R | MPV FWD BKC;BLS;BXE | Date from:2008.11 | GDS61339 | Drive Shaft | | 36 | | 59.5 | 40 | 794 | |
| | 2003.08-2010.05 | 7DCT | F | R | MPV FWD BKC;BLS;BXE | Date to:2008.10 | GDS81916 | Drive Shaft | | 36 | 40 | 59.5 | 40 | 816 | |
| | 2003.08-2010.05 | 7DCT | F | L/R | MPV FWD BKC;BLS;BXE | Date to:2008.10 | GCI61054 | Inner Joint | | 40 | 28 | 46.9 | 41 | 101.7 | |
| | 2003.08-2010.05 | 7DCT | F | L/R | MPV FWD BKC;BLS;BXE | Date from:2008.11 | GCI61069 | Inner Joint | | | 28 | | | 32 | |
| | 2003.08-2010.05 | 7DCT/6MT | F | L/R | MPV FWD BKC;BLS;BXE | Transmission:6MT,For PR code:0EN,Transmission:7DCT,Date from:2008.11 | GCI83016 | Inner Joint | | | 28 | | | 32 | |
| | 2003.08-2010.05 | 7DCT/6MT/6DCT | F | L/R | MPV FWD BKC;BLS;BXE | ---------- | GCO83002 | Outer Joint | | 36 | 27 | 59.5 | 40 | 66 | I |
| | 2003.08-2010.05 | MT | F | R | MPV FWD BKC;BLS;BXE | | GDS61237 | Stub Axle,differential | | 23 | 37 | | | 142.5 | |
| 2.0 (80 kw) | 2006.02-2006.11 | 5MT | F | R | Box Body/MPV FWD BSX | | GDS61042 | Drive Shaft | | 36 | | 59.5 | 40.5 | 814 | |
| | 2006.02-2006.11 | 5MT | F | L/R | Box Body/MPV FWD BSX | | GCO83037 | Outer Joint | | 36 | 30 | 59.5 | 40.5 | 56 | I |
| | 2006.02-2006.11 | 5MT | F | L/R | Box Body/MPV FWD BSX | | GCI82447 | Inner Joint | | | 33 | | | 34 | |
| | 2006.02-2009.05 | 5MT | F | L | MPV FWD BSX | | GDS83373 | Drive Shaft | | 36 | | 59.5 | 38 | 511 | |
| | 2006.02-2009.05 | 5MT | F | R | MPV FWD BSX | | GDS61042 | Drive Shaft | | 36 | | 59.5 | 40.5 | 814 | |
| | 2006.02-2009.05 | 5MT | F | L/R | MPV FWD BSX | | GCO83037 | Outer Joint | | 36 | 30 | 59.5 | 40.5 | 56 | I |
| | 2006.02-2009.05 | 5MT | F | L/R | MPV FWD BSX | | GCI82447 | Inner Joint | | | 33 | | | 34 | |
| 2.0 (81 kw) | 2010.11-2015.05 | 6AT/6MT | F | L/R | MPV FWD CFHF;CLCA | | GCO83002 | Outer Joint | | 36 | 27 | 59.5 | 40 | 66 | I |
| | 2010.11-2015.05 | 6AT/6MT | F | L/R | MPV FWD CFHF;CLCA | | GCO83037 | Outer Joint | | 36 | 30 | 59.5 | 40.5 | 56 | I |
| | 2010.11-2015.05 | 6DCT | F | L | MPV FWD CFHF;CLCA | | GDS54013 | Drive Shaft | | 36 | | 59.5 | 40 | 479.5 | |
| | 2010.11-2015.05 | 6DCT | F | L | MPV FWD CFHF;CLCA | Rims:With alloy rim | GDS83241 | Drive Shaft | | 36 | | 59.5 | 40 | 475 | |
| | 2010.11-2015.05 | 6DCT | F | R | MPV FWD CFHF;CLCA | | GDS54011 | Drive Shaft | | 36 | | 59.5 | 40 | 755 | |
| | 2010.11-2015.05 | 6MT | F | L | MPV FWD CFHF;CLCA | | GDS83294 | Drive Shaft | | 36 | | 59.5 | 38 | 519 | |
| | 2010.11-2015.05 | 6MT | F | R | MPV FWD CFHF;CLCA | | GDS61042 | Drive Shaft | | 36 | | 59.5 | 40.5 | 814 | |
| | 2010.11-2015.05 | 6MT | F | L/R | MPV FWD CFHF;CLCA | | GCI82447 | Inner Joint | | | 33 | | | 34 | |
| | 2010.11-2015.05 | AT | F | L | MPV FWD CFHF;CLCA | | GDS83241 | Drive Shaft | | 36 | | 59.5 | 40 | 475 | |
| | 2010.11-2015.05 | AT | F | L | MPV FWD CFHF;CLCA | | GCI54004 | Inner Joint | | | 34 | | | 81 | |
| | 2010.11-2015.05 | AT/6DCT | F | L/R | MPV FWD CFHF;CLCA | | GCI61057 | Inner Joint | | | 34 | | | 89 | |
| | 2015.11-2019.07 | 6DCT | F | L | MPV FWD CRVA;CYKB;DFEB;DFGB | | GDS83381 | Drive Shaft | | 36 | | 59.5 | 40 | 483 | |
| | 2015.11-2019.07 | 6DCT | F | R | MPV FWD CRVA;CYKB;DFEB;DFGB | | GDS61345 | Drive Shaft | | 36 | | 59.5 | 40 | 774 | |
| | 2015.11-2019.07 | 6DCT | F | L/R | MPV FWD CRVA;CYKB;DFEB;DFGB | | GCI61057 | Inner Joint | | | 34 | | | 89 | |
| | 2015.11-2019.07 | 6MT | F | L | MPV FWD CRVA;CYKB;DFEB;DFGB | For Engine code:CRVA | GDS61201 | Drive Shaft | | 36 | | 59.5 | 40.5 | 535 | |
| | 2015.11-2019.07 | 6MT | F | L | MPV FWD CRVA;CYKB;DFEB;DFGB | For Engine code:CYKB/DFEB/DFGB | GDS81896 | Drive Shaft | | 36 | | 59.5 | 40 | 500 | |
| | 2015.11-2019.07 | 6MT | F | R | MPV FWD CRVA;CYKB;DFEB;DFGB | For Engine code:CYKB/DFEB/DFGB | GDS61101 | Drive Shaft | | 36 | | 59.5 | 40 | 803 | |

| | YEAR | TRANSM. | F/R | L/R | BODY STYLE & DRIVE TYPE & ENGINE | REMARKS | G-AP Ref. | PRODUCT | ABS | Technical Specifications | | | | | |
|---|---|---|---|---|---|---|---|---|---|---|---|---|---|---|---|
| | | | | | | | | | | A | B | C | H | L | P |
| **VW Touran** | | | | | | | | | | | | | | | |
| 2.0 (81 kw) | 2015.11-2019.07 | 6MT | F | R | MPV FWD CRVA;CYKB;DFEB;DFGB | For Engine code:CRVA | GDS81525 | Drive Shaft | | 36 | | 59.5 | 40 | 825 | |
| | 2015.11-2019.07 | 6MT | F | L/R | MPV FWD CRVA;CYKB;DFEB;DFGB | | GCO83101 | Outer Joint | | 36 | 27 | 59.5 | 40 | 65 | M |
| | 2015.11-2019.07 | 6MT | F | L/R | MPV FWD CRVA;CYKB;DFEB;DFGB | For Engine code:CRVA | GCI81398 | Inner Joint | | | 34 | | | 34 | |
| | 2015.11-2019.07 | 6MT | F | L/R | MPV FWD CRVA;CYKB;DFEB;DFGB | For Engine code:CYKB/DFEB/DFGB | GCI83016 | Inner Joint | | | 28 | | | 32 | |
| 2.0 (85 kw) | 2019.02-2020.11 | 6MT | F | L | MPV FWD DFGC | | GDS81896 | Drive Shaft | | 36 | | 59.5 | 40 | 500 | |
| | 2019.02-2020.11 | 6MT | F | R | MPV FWD DFGC | | GDS61101 | Drive Shaft | | 36 | | 59.5 | 40 | 803 | |
| | 2019.02-2020.11 | 6MT | F | L/R | MPV FWD DFGC | | GCI83016 | Inner Joint | | | 28 | | | 32 | |
| | 2019.02-2020.11 | 6MT/7DCT | F | L/R | MPV FWD DFGC | | GCO83101 | Outer Joint | | 36 | 27 | 59.5 | 40 | 65 | M |
| | 2019.02-2020.11 | 7DCT | F | L | MPV FWD DFGC | | GDS82351 | Drive Shaft | | 36 | 37 | 59.5 | 40 | 568 | |
| | 2019.02-2020.11 | 7DCT | F | R | MPV FWD DFGC | | GDS83613 | Drive Shaft | | 36 | 37 | 59.5 | 40 | 921 | |
| | 2019.02-2020.11 | 7DCT | F | L | MPV FWD DFGC | | GCI81158 | Inner Joint | | 37 | 34 | 34.5 | 65.5 | 83 | |
| | 2019.02-2020.11 | 7DCT | F | R | MPV FWD DFGC | | GCI82108 | Inner Joint | | 37 | 34 | 40 | 77.5 | 103.5 | |
| 2.0 (100 kw) | 2003.02-2010.05 | 6MT | F | L | Box Body/MPV FWD AZV | For Modelcode:1T1;For Modelcode:1T2;For PR code:F0A/F4F/F4G/F4J/F4E/F4W/F5F/F6L | GDS83295 | Drive Shaft | | 36 | | 59.5 | 40 | 491 | |
| | 2003.02-2010.05 | 6MT | F | R | Box Body/MPV FWD AZV | For Modelcode:1T2,For PR code:F4E/F4W/F5F/F6L | GDS61147 | Drive Shaft | | 36 | | 59.5 | 40 | 795 | |
| | 2003.02-2010.05 | 6MT | F | L/R | Box Body/MPV FWD AZV | | GCO83002 | Outer Joint | | 36 | 27 | 59.5 | 40 | 66 | I |
| | 2003.02-2010.05 | 6MT | F | L | MPV FWD AZV | For PR code:F0A/F4F/F4G/F4J,For PR code-02:F4Q/F4X/F5G/F9K | GDS83295 | Drive Shaft | | 36 | | 59.5 | 40 | 491 | |
| | 2003.02-2010.05 | 6MT | F | R | MPV FWD AZV | Date From:2008.03;For PR code:F4E/F4W/F5F/F6L;Solid shaft | GDS61126 | Drive Shaft | | 36 | | 59.5 | 40 | 793 | |
| | 2003.02-2010.05 | 6MT | F | R | MPV FWD AZV | For PR code:F0A/F4F/F4G/F4J,For PR code-02:F4Q/F4X/F5G/F9K | GDS83313 | Drive Shaft | | 36 | | 59.5 | 40 | 792 | |
| | 2003.02-2010.05 | 6MT | F | L/R | MPV FWD AZV | Date to:2006.11,Date from:2006.12 | GCO83002 | Outer Joint | | 36 | 27 | 59.5 | 40 | 66 | I |
| | 2003.02-2010.05 | 6MT | F | L/R | MPV FWD AZV | For PR code:F4E/F4W/F5F/F6L,Date from:2006.12 | GCO83101 | Outer Joint | | 36 | 27 | 59.5 | 40 | 65 | M |
| | 2003.02-2010.05 | 6MT | F | L/R | MPV FWD AZV | | GCI83016 | Inner Joint | | | 28 | | | 32 | |
| | 2003.02-2010.05 | AT | F | L | MPV FWD AZV | Date from:2004.01 | GDS83241 | Drive Shaft | | 36 | | 59.5 | 40 | 475 | |
| | 2003.02-2010.05 | AT | F | R | MPV FWD AZV | Date from:2004.01;Date from:2004.11 | GDS54011 | Drive Shaft | | 36 | | 59.5 | 40 | 755 | |
| | 2003.02-2010.05 | AT | F | R | MPV FWD AZV | Date from:2004.01;Date to:2004.10 | GDS83355 | Drive Shaft | | 36 | 23 | 59.5 | 40 | 799 | |
| | 2003.02-2010.05 | AT | F | L | MPV FWD AZV | Date from:2004.01;Date from:2004.11 | GCI61057 | Inner Joint | | | 34 | | | 89 | |
| | 2003.02-2010.05 | MT | F | R | MPV FWD AZV | Chassis no. to:1-T-5-083127 | GDS83236 | Drive Shaft | | 36 | | 59.5 | 40 | 484 | |
| | 2003.02-2010.05 | MT | F | R | MPV FWD AZV | | GDS61237 | Stub Axle,differential | | 23 | 37 | | | 142.5 | |
| | 2003.02-2010.05 | Semi-AT | F | L | MPV FWD AZV | | GCI54004 | Inner Joint | | | 34 | | | 81 | |
| | 2003.02-2010.05 | | F | R | MPV FWD AZV | Date From:2008.03;For PR code:F4E/F4W/F5F/F6L;Hollow shaft | GDS61147 | Drive Shaft | | 36 | | 59.5 | 40 | 795 | |
| 2.0 (103 kw) | 2003.08-2010.05 | 6DCT | F | L | Box Body/MPV FWD BKD | For Modelcode:1T1;For Modelcode:1T2;For PR code:F5G/F5F/F5D/F5J/F5G/F5X/F5D/F5Z/F6K/F6W/F6P | GDS54013 | Drive Shaft | | 36 | | 59.5 | 40 | 479.5 | |
| | 2003.08-2010.05 | 6DCT | F | L | Box Body/MPV FWD BKD | For Modelcode:1T2,For PR code:F4E/F4W/F5F/F6L | GDS83381 | Drive Shaft | | 36 | | 59.5 | 40 | 483 | |
| | 2003.08-2010.05 | 6DCT | F | R | Box Body/MPV FWD BKD | For Modelcode:1T1;For Modelcode:1T2;For PR code:F5G/F5F/F5D/F5J/F5G/F5X/F5D/F5Z/F6K/F6W/F6P | GDS54011 | Drive Shaft | | 36 | | 59.5 | 40 | 755 | |
| | 2003.08-2010.05 | 6DCT | F | R | Box Body/MPV FWD BKD | For Modelcode:1T2,For PR code:F4E/F4W/F5F/F6L | GDS83354 | Drive Shaft | | 36 | | 59.5 | 40 | 763 | |
| | 2003.08-2010.05 | 6DCT | F | R | Box Body/MPV FWD BKD | Date to:2004.10,For Modelcode:1T1 | GDS83355 | Drive Shaft | | 36 | 23 | 59.5 | 40 | 799 | |
| | 2003.08-2010.05 | 6DCT | F | R | Box Body/MPV FWD BKD | Date to:2004.10,Posision:Right | GCI83041 | Inner Joint | | 23 | 34 | | 319 | 88 | |
| | 2003.08-2010.05 | 6DCT | F | L/R | Box Body/MPV FWD BKD | Date to:2004.10,Posision:Left;Date from:2004.11,Posision:Left/Right | GCI54004 | Inner Joint | | | 34 | | | 81 | |
| | 2003.08-2010.05 | 6DCT | F | L/R | Box Body/MPV FWD BKD | Date to:2004.10,Posision:Left;Date from:2004.11,Posision:Left/Right | GCI61057 | Inner Joint | | | 34 | | | 89 | |
| | 2003.08-2010.05 | 6DCT/6MT | F | L/R | Box Body/MPV FWD BKD | For Modelcode:1T1;For Modelcode:1T2;For PR code:F5G/F5F/F5D/F5J/F5G/F5X/F5D/F5Z/F6K/F6W/F6P | GCO83002 | Outer Joint | | 36 | 27 | 59.5 | 40 | 66 | I |
| | 2003.08-2010.05 | 6DCT/6MT | F | L/R | Box Body/MPV FWD BKD | For Modelcode:1T2,For PR code:F4E/F4W/F5F/F6L | GCO83101 | Outer Joint | | 36 | 27 | 59.5 | 40 | 65 | M |
| | 2003.08-2010.05 | 6MT | F | L | Box Body/MPV FWD BKD | For Modelcode:1T1;For Modelcode:1T2;For PR code:F5G/F5F/F5D/F5J/F5G/F5X/F5D/F5Z/F6K/F6W/F6P | GDS83295 | Drive Shaft | | 36 | | 59.5 | 40 | 491 | |
| | 2003.08-2010.05 | 6MT | F | R | Box Body/MPV FWD BKD | For Modelcode:1T1;For Modelcode:1T2;For PR code:F5G/F5F/F5D/F5J/F5G/F5X/F5D/F5Z/F6K/F6W/F6P | GDS61126 | Drive Shaft | | 36 | | 59.5 | 40 | 793 | |
| | 2003.08-2010.05 | 6MT | F | R | Box Body/MPV FWD BKD | For Modelcode:1T2,For PR code:F4E/F4W/F5F/F6L | GDS61147 | Drive Shaft | | 36 | | 59.5 | 40 | 795 | |
| | 2003.08-2010.05 | 6MT | F | R | Box Body/MPV FWD BKD | For Modelcode:1T1;For Modelcode:1T2;For PR code:F5G/F5F/F5D/F5J/F5G/F5X/F5D/F5Z/F6K/F6W/F6P | GDS83313 | Drive Shaft | | 36 | | 59.5 | 40 | 792 | |
| | 2003.08-2010.05 | 6MT | F | L/R | Box Body/MPV FWD BKD | | GCI83016 | Inner Joint | | | 28 | | | 32 | |
| | 2003.08-2010.05 | 6DCT | F | L | MPV FWD BKD | For Modelcode:1T1;For Modelcode:1T2;For PR code:F5G/F5F/F5D/F5J/F5G/F5X/F5D/F5Z/F6K/F6W/F6P | GDS54013 | Drive Shaft | | 36 | | 59.5 | 40 | 479.5 | |
| | 2003.08-2010.05 | 6DCT | F | L | MPV FWD BKD | For Modelcode:1T2,For PR code:F4E/F4W/F5F/F6L | GDS83381 | Drive Shaft | | 36 | | 59.5 | 40 | 483 | |
| | 2003.08-2010.05 | 6DCT | F | R | MPV FWD BKD | TJ | GDS54011 | Drive Shaft | | 36 | | 59.5 | 40 | 755 | |
| | 2003.08-2010.05 | 6DCT | F | R | MPV FWD BKD | AAR | GDS83354 | Drive Shaft | | 36 | | 59.5 | 40 | 763 | |
| | 2003.08-2010.05 | 6DCT | F | R | MPV FWD BKD | Date to:2004.10,Posision:Right | GCI83041 | Inner Joint | | 23 | 34 | | 319 | 88 | |
| | 2003.08-2010.05 | 6DCT | F | L/R | MPV FWD BKD | Date to:2004.10,Posision:Left;Date from:2004.11,Posision:Left/Right | GCI54004 | Inner Joint | | | 34 | | | 81 | |
| | 2003.08-2010.05 | 6DCT | F | L/R | MPV FWD BKD | Date to:2004.10,Posision:Left;Date from:2004.11,Posision:Left/Right | GCI61057 | Inner Joint | | | 34 | | | 89 | |
| | 2003.08-2010.05 | 6MT | F | L | MPV FWD BKD | | GDS83295 | Drive Shaft | | 36 | | 59.5 | 40 | 491 | |
| | 2003.08-2010.05 | 6MT | F | R | MPV FWD BKD | solid shaft | GDS61126 | Drive Shaft | | 36 | | 59.5 | 40 | 793 | |
| | 2003.08-2010.05 | 6MT | F | R | MPV FWD BKD | hollow shaft | GDS61147 | Drive Shaft | | 36 | | 59.5 | 40 | 795 | |
| | 2003.08-2010.05 | 6MT | F | R | MPV FWD BKD | solid shaft | GDS83313 | Drive Shaft | | 36 | | 59.5 | 40 | 792 | |
| | 2003.08-2010.05 | 6MT | F | L/R | MPV FWD BKD | | GCI83016 | Inner Joint | | | 28 | | | 32 | |
| | 2003.08-2010.05 | 6MT/6DCT | F | L/R | MPV FWD BKD | | GCO83002 | Outer Joint | | 36 | 27 | 59.5 | 40 | 66 | I |
| | 2003.08-2010.05 | 6MT/6DCT | F | L/R | MPV FWD BKD | | GCO83101 | Outer Joint | | 36 | 27 | 59.5 | 40 | 65 | M |
| | 2003.08-2010.05 | MT | F | R | MPV FWD BKD | | GDS61237 | Stub Axle,differential | | 23 | 37 | | | 142.5 | |
| | 2005.12-2010.05 | 6DCT | F | L | Box Body/MPV FWD BMM | For Modelcode:1T1;For Modelcode:1T2;For PR code:F5G/F5F/F5D/F5J/F5G/F5X/F5D/F5Z/F6K/F6W/F6P | GDS54013 | Drive Shaft | | 36 | | 59.5 | 40 | 479.5 | |
| | 2005.12-2010.05 | 6DCT | F | L | Box Body/MPV FWD BMM | For Modelcode:1T2,For PR code:F4E/F4W/F5F/F6L | GDS83381 | Drive Shaft | | 36 | | 59.5 | 40 | 483 | |
| | 2005.12-2010.05 | 6DCT | F | R | Box Body/MPV FWD BMM | For Modelcode:1T1;For Modelcode:1T2;For PR code:F5G/F5F/F5D/F5J/F5G/F5X/F5D/F5Z/F6K/F6W/F6P | GDS54011 | Drive Shaft | | 36 | | 59.5 | 40 | 755 | |
| | 2005.12-2010.05 | 6DCT | F | R | Box Body/MPV FWD BMM | For Modelcode:1T2,For PR code:F4E/F4W/F5F/F6L | GDS83354 | Drive Shaft | | 36 | | 59.5 | 40 | 763 | |
| | 2005.12-2010.05 | 6DCT | F | L/R | Box Body/MPV FWD BMM | Date from:2009.01 | GCI54004 | Inner Joint | | | 34 | | | 81 | |
| | 2005.12-2010.05 | 6DCT | F | L/R | Box Body/MPV FWD BMM | | GCI61057 | Inner Joint | | | 34 | | | 89 | |

| Model | YEAR | TRANSM. | F/R | L/R | BODY STYLE & DRIVE TYPE & ENGINE | REMARKS | G-AP Ref. | PRODUCT | ABS | A | B | C | H | L | P |
|---|---|---|---|---|---|---|---|---|---|---|---|---|---|---|---|
| **VW Touran** | | | | | | | | | | | | | | | |
| 2.0 (103 kw) | 2005.12-2010.05 | 6DCT/6MT | F | L/R | Box Body/MPV FWD BMM | For Modelcode:1T2,For PR code:F0A/F4F/F4G/F4J/F4Q/F4X/F5G/F5X/F6J/F6K/F6M/F6N/F6P | GCO83002 | Outer Joint | | 36 | 27 | 59.5 | 40 | 66 | I |
| | 2005.12-2010.05 | 6DCT/6MT | F | L/R | Box Body/MPV FWD BMM | For Modelcode:1T2,For PR code:F4E/F4W/F5F/F6L | GCO83101 | Outer Joint | | 36 | 27 | 59.5 | 40 | 65 | M |
| | 2005.12-2010.05 | 6MT | F | L | Box Body/MPV FWD BMM | For Modelcode:1T1;For Modelcode:1T2,For PR code:F4E/F4W/F5F/F6L/F0A/F4F/F4G/F4J/F4Q/F4X/F5G/F5X/F6J/F6K/F6M/F6N/F6P | GDS83295 | Drive Shaft | | 36 | | 59.5 | 40 | 491 | |
| | 2005.12-2010.05 | 6MT | F | R | Box Body/MPV FWD BMM | For Modelcode:1T1;For Modelcode:1T2,For PR code:F4E/F4W/F5F/F6L/F0A/F4F/F4G/F4J/F4Q/F4X/F5G/F5X/F6J/F6K/F6M/F6N/F6P | GDS61126 | Drive Shaft | | 36 | | 59.5 | 40 | 793 | |
| | 2005.12-2010.05 | 6MT | F | R | Box Body/MPV FWD BMM | For Modelcode:1T2,For PR code:F4E/F4W/F5F/F6L | GDS61147 | Drive Shaft | | 36 | | 59.5 | 40 | 795 | |
| | 2005.12-2010.05 | 6MT | F | R | Box Body/MPV FWD BMM | For Modelcode:1T1;For Modelcode:1T2,For PR code:F4E/F4W/F5F/F6L/F0A/F4F/F4G/F4J/F4Q/F4X/F5G/F5X/F6J/F6K/F6M/F6N/F6P | GDS83313 | Drive Shaft | | 36 | | 59.5 | 40 | 792 | |
| | 2005.12-2010.05 | MT | F | L/R | Box Body/MPV FWD BMM | | GCI83016 | Inner Joint | | | 28 | | | 32 | |
| | 2005.12-2010.05 | 6DCT | F | L | MPV FWD BMM | For Modelcode:1T1;For Modelcode:1T2,For PR code:F0A/F4F/F4G/F4J/F4Q/F4X/F5G/F5X/F6J/F6K/F6M/F6N/F6P | GDS54013 | Drive Shaft | | 36 | | 59.5 | 40 | 479.5 | |
| | 2005.12-2010.05 | 6DCT | F | L | MPV FWD BMM | For Modelcode:1T2,For PR code:F4E/F4W/F5F/F6L | GDS83381 | Drive Shaft | | 36 | | 59.5 | 40 | 483 | |
| | 2005.12-2010.05 | 6DCT | F | R | MPV FWD BMM | TJ | GDS54011 | Drive Shaft | | 36 | | 59.5 | 40 | 755 | |
| | 2005.12-2010.05 | 6DCT | F | R | MPV FWD BMM | AAR | GDS83354 | Drive Shaft | | 36 | | 59.5 | 40 | 763 | |
| | 2005.12-2010.05 | 6DCT | F | L/R | MPV FWD BMM | TJ | GCI54004 | Inner Joint | | | 34 | | | 81 | |
| | 2005.12-2010.05 | 6DCT | F | L/R | MPV FWD BMM | AAR | GCI61057 | Inner Joint | | | 34 | | | 89 | |
| | 2005.12-2010.05 | 6MT | F | L | MPV FWD BMM | | GDS83295 | Drive Shaft | | 36 | | 59.5 | 40 | 491 | |
| | 2005.12-2010.05 | 6MT | F | R | MPV FWD BMM | solid shaft | GDS61126 | Drive Shaft | | 36 | | 59.5 | 40 | 793 | |
| | 2005.12-2010.05 | 6MT | F | R | MPV FWD BMM | hollow shaft | GDS61147 | Drive Shaft | | 36 | | 59.5 | 40 | 795 | |
| | 2005.12-2010.05 | 6MT | F | R | MPV FWD BMM | solid shaft | GDS83313 | Drive Shaft | | 36 | | 59.5 | 40 | 792 | |
| | 2005.12-2010.05 | 6MT | F | L/R | MPV FWD BMM | | GCI83016 | Inner Joint | | | 28 | | | 32 | |
| | 2005.12-2010.05 | 6MT/6DCT | F | L/R | MPV FWD BMM | | GCO83002 | Outer Joint | | 36 | 27 | 59.5 | 40 | 66 | I |
| | 2005.12-2010.05 | 6MT/6DCT | F | L/R | MPV FWD BMM | | GCO83101 | Outer Joint | | 36 | 27 | 59.5 | 40 | 65 | M |
| | 2010.05-2015.05 | 6DCT | F | L | Box Body/MPV FWD CFHC | | GDS54013 | Drive Shaft | | 36 | | 59.5 | 40 | 479.5 | |
| | 2010.05-2015.05 | 6DCT | F | R | Box Body/MPV FWD CFHC | | GDS54011 | Drive Shaft | | 36 | | 59.5 | 40 | 755 | |
| | 2010.05-2015.05 | 6DCT | F | L/R | Box Body/MPV FWD CFHC | | GCI61057 | Inner Joint | | | 34 | | | 89 | |
| | 2010.05-2015.05 | 6MT | F | L | Box Body/MPV FWD CFHC | | GDS83295 | Drive Shaft | | 36 | | 59.5 | 40 | 491 | |
| | 2010.05-2015.05 | 6MT | F | R | Box Body/MPV FWD CFHC | Date from:2013.03 | GDS61126 | Drive Shaft | | 36 | | 59.5 | 40 | 793 | |
| | 2010.05-2015.05 | 6MT | F | R | Box Body/MPV FWD CFHC | Date to:2013.02 | GDS83313 | Drive Shaft | | 36 | | 59.5 | 40 | 792 | |
| | 2010.05-2015.05 | 6MT | F | L/R | Box Body/MPV FWD CFHC | Date To:2013.02 | GCO83002 | Outer Joint | | 36 | 27 | 59.5 | 40 | 66 | I |
| | 2010.05-2015.05 | 6MT | F | L/R | Box Body/MPV FWD CFHC | Date To:2013.02 | GCI83016 | Inner Joint | | | 28 | | | 32 | |
| | 2010.05-2015.05 | 6DCT | F | L | MPV FWD CFHC | | GDS54013 | Drive Shaft | | 36 | | 59.5 | 40 | 479.5 | |
| | 2010.05-2015.05 | 6DCT | F | R | MPV FWD CFHC | | GDS54011 | Drive Shaft | | 36 | | 59.5 | 40 | 755 | |
| | 2010.05-2015.05 | 6DCT | F | L/R | MPV FWD CFHC | AAR | GCI61057 | Inner Joint | | | 34 | | | 89 | |
| | 2010.05-2015.05 | 6MT | F | L | MPV FWD CFHC | Inner teeth of tranm.side:28 | GDS83295 | Drive Shaft | | 36 | | 59.5 | 40 | 491 | |
| | 2010.05-2015.05 | 6MT | F | R | MPV FWD CFHC | | GDS61126 | Drive Shaft | | 36 | | 59.5 | 40 | 793 | |
| | 2010.05-2015.05 | 6MT | F | R | MPV FWD CFHC | | GDS83313 | Drive Shaft | | 36 | | 59.5 | 40 | 792 | |
| | 2010.05-2015.05 | 6MT | F | L | MPV FWD CFHC | Rims:With steel rim;Groove Type:Middle | GCO83101 | Outer Joint | | 36 | 27 | 59.5 | 40 | 65 | M |
| | 2010.05-2015.05 | 6MT | F | L | MPV FWD CFHC | Rims:With steel rim | GCI61069 | Inner Joint | | | 28 | | | 32 | |
| | 2010.05-2015.05 | 6MT | F | L/R | MPV FWD CFHC | | GCI83016 | Inner Joint | | | 28 | | | 32 | |
| | 2010.05-2015.05 | 6MT/6DCT | F | L/R | MPV FWD CFHC | Groove Type:Inner | GCO83002 | Outer Joint | | 36 | 27 | 59.5 | 40 | 66 | I |
| | 2010.05-2015.05 | AT | F | L | MPV FWD CFHC | TJ | GCI54004 | Inner Joint | | | 34 | | | 81 | |
| | 2010.05-2015.05 | MT | F | L | MPV FWD CFHC | Inner teeth of tranm.side:33 | GDS83236 | Drive Shaft | | 36 | | 59.5 | 40 | 484 | |
| 2.0 (110 kw) | 2003.10-2007.01 | 6AT | F | R | MPV FWD AXW;BLX;BLY;BLR;BVY;BVZ | | GDS61094 | Drive Shaft | | 36 | 26 | 59.5 | 40.5 | 884 | |
| | 2003.10-2007.01 | 6AT | F | L/R | MPV FWD AXW;BLX;BLY;BLR;BVY;BVZ | | GCI61011 | Inner Joint | | 26 | 32 | 31 | 68.5 | 85 | |
| | 2003.10-2007.01 | 6AT | F | L/R | MPV FWD AXW;BLX;BLY;BLR;BVY;BVZ | | GCI61050 | Inner Joint | | 26 | 32 | 31 | 68.5 | 89 | |
| | 2003.10-2007.01 | 6AT/6MT | F | L/R | MPV FWD AXW;BLX;BLY;BLR;BVY;BVZ | | GCO83037 | Outer Joint | | 36 | 30 | 59.5 | 40.5 | 56 | I |
| | 2003.10-2007.01 | 6MT | F | L | MPV FWD AXW;BLX;BLY;BLR;BVY;BVZ | | GDS83294 | Drive Shaft | | 36 | | 59.5 | 38 | 519 | |
| | 2003.10-2007.01 | 6MT | F | R | MPV FWD AXW;BLX;BLY;BLR;BVY;BVZ | Date to:2005.05,Chassis no. to:1T_5_200000 | GDS61042 | Drive Shaft | | 36 | | 59.5 | 40.5 | 814 | |
| | 2003.10-2007.01 | 6MT | F | R | MPV FWD AXW;BLX;BLY;BLR;BVY;BVZ | Date from:2005.06,Chassis no. from:1T_6_000001 | GDS61283 | Drive Shaft | | 36 | | 59.5 | 40 | 815 | |
| | 2003.10-2007.01 | 6MT | F | L/R | MPV FWD AXW;BLX;BLY;BLR;BVY;BVZ | | GCI82447 | Inner Joint | | | 33 | | | 34 | |
| | 2003.10-2007.01 | AT | F | L | MPV FWD AXW;BLX;BLY;BLR;BVY;BVZ | | GDS61093 | Drive Shaft | | 36 | 26 | 59.5 | 40.5 | 587.5 | |
| | 2003.10-2007.01 | MT | F | R | MPV FWD AXW;BLX;BLY;BLR;BVY;BVZ | | GDS61237 | Stub Axle,differential | | 23 | 37 | | | 142.5 | |
| | 2004.05-2007.01 | 6AT | F | L | Box Body/MPV FWD BLX;BLY;BLR;BVY;BVZ | | GDS61093 | Drive Shaft | | 36 | 26 | 59.5 | 40.5 | 587.5 | |
| | 2004.05-2007.01 | 6AT | F | L/R | Box Body/MPV FWD BLX;BLY;BLR;BVY;BVZ | | GCI61011 | Inner Joint | | 26 | 32 | 31 | 68.5 | 85 | |
| | 2004.05-2007.01 | 6AT | F | L/R | Box Body/MPV FWD BLX;BLY;BLR;BVY;BVZ | | GCI61050 | Inner Joint | | 26 | 32 | 31 | 68.5 | 89 | |
| | 2004.05-2007.01 | 6AT/6MT | F | L/R | Box Body/MPV FWD BLX;BLY;BLR;BVY;BVZ | | GCO83037 | Outer Joint | | 36 | 30 | 59.5 | 40.5 | 56 | I |
| | 2004.05-2007.01 | 6MT | F | L | Box Body/MPV FWD BLX;BLY;BLR;BVY;BVZ | | GDS83294 | Drive Shaft | | 36 | | 59.5 | 38 | 519 | |
| | 2004.05-2007.01 | 6MT | F | R | Box Body/MPV FWD BLX;BLY;BLR;BVY;BVZ | Date to:2005.05,Chassis no. to:1T_5_200000 | GDS61042 | Drive Shaft | | 36 | | 59.5 | 40.5 | 814 | |
| | 2004.05-2007.01 | 6MT | F | R | Box Body/MPV FWD BLX;BLY;BLR;BVY;BVZ | Date from:2005.06,Chassis no. from:1T_6_000001 | GDS61283 | Drive Shaft | | 36 | | 59.5 | 40 | 815 | |
| | 2004.05-2007.01 | 6MT | F | L/R | Box Body/MPV FWD BLX;BLY;BLR;BVY;BVZ | | GCI82447 | Inner Joint | | | 33 | | | 34 | |
| | 2015.05- | 6DCT | F | L | Box Body/MPV FWD DFEA;DFGA;DTSB | | GDS83381 | Drive Shaft | | 36 | | 59.5 | 40 | 483 | |
| | 2015.05- | 6DCT | F | R | Box Body/MPV FWD DFEA;DFGA;DTSB | | GDS61345 | Drive Shaft | | 36 | | 59.5 | 40 | 774 | |
| | 2015.05- | 6DCT | F | L/R | Box Body/MPV FWD DFEA;DFGA;DTSB | | GCI61057 | Inner Joint | | | 34 | | | 89 | |
| | 2015.05- | 6MT | F | L | Box Body/MPV FWD DFEA;DFGA;DTSB | | GDS81896 | Drive Shaft | | 36 | | 59.5 | 40 | 500 | |
| | 2015.05- | 6MT | F | R | Box Body/MPV FWD DFEA;DFGA;DTSB | | GDS61101 | Drive Shaft | | 36 | | 59.5 | 40 | 803 | |
| | 2015.05- | 6MT | F | L/R | Box Body/MPV FWD DFEA;DFGA;DTSB | Bellows Material:Plastic | GCI83016 | Inner Joint | | | 28 | | | 32 | |
| | 2015.05- | 7DCT | F | L | Box Body/MPV FWD DFEA;DFGA;DTSB | | GDS82351 | Drive Shaft | | 36 | 37 | 59.5 | 40 | 568 | |

| | YEAR | TRANSM. | F/R | L/R | BODY STYLE & DRIVE TYPE & ENGINE | REMARKS | G-AP Ref. | PRODUCT | ABS | Technical Specifications A | B | C | H | L | P |
|---|---|---|---|---|---|---|---|---|---|---|---|---|---|---|---|
| **VW** | | | | | | | | | | | | | | | |
| **Touran** | | | | | | | | | | | | | | | |
| 2.0 (110 kw) | 2015.05- | 7DCT | F | R | Box Body/MPV FWD DFEA;DFGA;DTSB | | GDS83613 | Drive Shaft | | 36 | 37 | 59.5 | 40 | 921 | |
| | 2015.05- | 7DCT | F | R | Box Body/MPV FWD DFEA;DFGA;DTSB | | GCO83101 | Outer Joint | | 36 | 27 | 59.5 | 40 | 65 | M |
| | 2015.05- | 7DCT | F | L | Box Body/MPV FWD DFEA;DFGA;DTSB | | GCI81158 | Inner Joint | | 37 | 34 | 34.5 | 65.5 | 83 | |
| | 2015.05- | 7DCT | F | R | Box Body/MPV FWD DFEA;DFGA;DTSB | | GCI82108 | Inner Joint | | 37 | 34 | 40 | 77.5 | 103.5 | |
| | 2015.05- | 6DCT | F | L | MPV FWD DFEA;DFGA;DTSB;DXPA | | GDS83381 | Drive Shaft | | 36 | | 59.5 | 40 | 483 | |
| | 2015.05- | 6DCT | F | R | MPV FWD DFEA;DFGA;DTSB;DXPA | | GDS61345 | Drive Shaft | | 36 | | 59.5 | 40 | 774 | |
| | 2015.05- | 6MT | F | L | MPV FWD DFEA;DFGA;DTSB;DXPA | | GDS81896 | Drive Shaft | | 36 | | 59.5 | 40 | 500 | |
| | 2015.05- | 6MT | F | R | MPV FWD DFEA;DFGA;DTSB;DXPA | | GDS61101 | Drive Shaft | | 36 | | 59.5 | 40 | 803 | |
| | 2015.05- | 6MT | F | L/R | MPV FWD DFEA;DFGA;DTSB;DXPA | | GCI83016 | Inner Joint | | | 28 | | | 32 | |
| | 2015.05- | 7DCT | F | L | MPV FWD DFEA;DFGA;DTSB;DXPA | | GDS82351 | Drive Shaft | | 36 | 37 | 59.5 | 40 | 568 | |
| | 2015.05- | 7DCT | F | R | MPV FWD DFEA;DFGA;DTSB;DXPA | | GDS83613 | Drive Shaft | | 36 | 37 | 59.5 | 40 | 921 | |
| | 2015.05- | 7DCT | F | L | MPV FWD DFEA;DFGA;DTSB;DXPA | | GCI81158 | Inner Joint | | 37 | 34 | 34.5 | 65.5 | 83 | |
| | 2015.05- | 7DCT | F | R | MPV FWD DFEA;DFGA;DTSB;DXPA | | GCI82108 | Inner Joint | | 37 | 34 | 40 | 77.5 | 103.5 | |
| | 2015.05- | AT/6DCT | F | L/R | MPV FWD DFEA;DFGA;DTSB;DXPA | | GCI61057 | Inner Joint | | | 34 | | | 89 | |
| | 2015.05- | AT/MT/6MT/7DCT | F | L/R | MPV FWD DFEA;DFGA;DTSB;DXPA | | GCO83101 | Outer Joint | | 36 | 27 | 59.5 | 40 | 65 | M |
| 2.0 (125 kw) | 2005.12-2010.05 | 6AT/6MT | F | L/R | MPV FWD BMN;CFJA | | GCI54004 | Inner Joint | | | 34 | | | 81 | |
| | 2005.12-2010.05 | 6AT/6MT | F | L/R | MPV FWD BMN;CFJA | Original Tripod Design | GCI61057 | Inner Joint | | | 34 | | | 89 | |
| | 2005.12-2010.05 | 6AT/6MT | F | L/R | MPV FWD BMN;CFJA | | GCI83016 | Inner Joint | | | 28 | | | 32 | |
| | 2005.12-2010.05 | 6DCT | F | L | MPV FWD BMN;CFJA | | GDS83381 | Drive Shaft | | 36 | | 59.5 | 40 | 483 | |
| | 2005.12-2010.05 | 6DCT | F | R | MPV FWD BMN;CFJA | | GDS83354 | Drive Shaft | | 36 | | 59.5 | 40 | 763 | |
| | 2005.12-2010.05 | AT | F | L | MPV FWD BMN;CFJA | | GDS83241 | Drive Shaft | | 36 | | 59.5 | 40 | 475 | |
| | 2005.12-2010.05 | AT | F | R | MPV FWD BMN;CFJA | TJ | GDS54011 | Drive Shaft | | 36 | | 59.5 | 40 | 755 | |
| | 2005.12-2010.05 | AT | F | L | MPV FWD BMN;CFJA | Date from:2008.06,For PR code:F4E/F4W/F5F/F6L | GCO83101 | Outer Joint | | 36 | 27 | 59.5 | 40 | 65 | M |
| | 2005.12-2010.05 | MT | F | L | MPV FWD BMN;CFJA | | GDS83236 | Drive Shaft | | 36 | | 59.5 | 40 | 484 | |
| | 2005.12-2010.05 | MT | F | L | MPV FWD BMN;CFJA | | GDS83295 | Drive Shaft | | 36 | | 59.5 | 40 | 491 | |
| | 2005.12-2010.05 | MT | F | R | MPV FWD BMN;CFJA | Date to:2008.02 | GDS61126 | Drive Shaft | | 36 | | 59.5 | 40 | 793 | |
| | 2005.12-2010.05 | MT | F | R | MPV FWD BMN;CFJA | Date from:2008.03;For PR code:F4E/F4W/F5F/F6L | GDS83313 | Drive Shaft | | 36 | | 59.5 | 40 | 792 | |
| | 2005.12-2010.05 | | F | R | MPV FWD BMN;CFJA | Date From:2008.03;For PR code:F4E/F4W/F5F/F6L | GDS61147 | Drive Shaft | | 36 | | 59.5 | 40 | 795 | |
| | 2010.05-2013.01 | 6AT | F | R | Box Body/MPV FWD CFJA | | GDS83354 | Drive Shaft | | 36 | | 59.5 | 40 | 763 | |
| | 2010.05-2013.01 | 6DCT | F | L | Box Body/MPV FWD CFJA | | GDS83381 | Drive Shaft | | 36 | | 59.5 | 40 | 483 | |
| | 2010.05-2013.01 | 6AT | F | R | MPV FWD CFJA | AAR | GDS83354 | Drive Shaft | | 36 | | 59.5 | 40 | 763 | |
| | 2010.05-2013.01 | 6AT | F | L/R | MPV FWD CFJA | | GCO83101 | Outer Joint | | 36 | 27 | 59.5 | 40 | 65 | M |
| | 2010.05-2013.01 | 6AT | F | L/R | MPV FWD CFJA | TJ | GCI54004 | Inner Joint | | | 34 | | | 81 | |
| | 2010.05-2013.01 | 6AT | F | L/R | MPV FWD CFJA | AAR | GCI61057 | Inner Joint | | | 34 | | | 89 | |
| | 2010.05-2013.01 | 6DCT | F | L | MPV FWD CFJA | AAR | GDS83381 | Drive Shaft | | 36 | | 59.5 | 40 | 483 | |
| 2.0 (130 kw) | 2013.01-2015.05 | 6AT | F | L | MPV FWD CFJB | | GDS61310 | Drive Shaft | | 36 | | 59.4 | 40 | 477 | |
| | 2013.01-2015.05 | 6AT | F | R | MPV FWD CFJB | | GDS83354 | Drive Shaft | | 36 | | 59.5 | 40 | 763 | |
| | 2013.01-2015.05 | 6AT | F | L | MPV FWD CFJB | | GCO83104 | Outer Joint | | 36 | 28 | 59.4 | 40 | 65 | I |
| | 2013.01-2015.05 | 6AT | F | R | MPV FWD CFJB | | GCO83101 | Outer Joint | | 36 | 27 | 59.5 | 40 | 65 | M |
| | 2013.01-2015.05 | 6AT | F | L | MPV FWD CFJB | | GCI81075 | Inner Joint | | | 26 | | | 89 | |
| | 2013.01-2015.05 | 6AT | F | R | MPV FWD CFJB | | GCI61057 | Inner Joint | | | 34 | | | 89 | |
| | 2013.01-2015.05 | | F | L/R | MPV FWD CFJB | | GCO81352 | Outer Joint | | 36 | 28 | 59.5 | 40 | 65 | I |
| 2.0 (140 kw) | 2015.11-2019.07 | 6AT | F | R | MPV FWD DFHA | | GDS61345 | Drive Shaft | | 36 | | 59.5 | 40 | 774 | |
| | 2015.11-2019.07 | 6DCT | F | L | MPV FWD DFHA | | GDS83381 | Drive Shaft | | 36 | | 59.5 | 40 | 483 | |
| | 2015.11-2019.07 | 6DCT | F | L/R | MPV FWD DFHA | | GCI61057 | Inner Joint | | | 34 | | | 89 | |
| | 2015.11-2019.07 | 7DCT | F | L | MPV FWD DFHA | | GDS82351 | Drive Shaft | | 36 | 37 | 59.5 | 40 | 568 | |
| | 2015.11-2019.07 | 7DCT | F | R | MPV FWD DFHA | | GDS83613 | Drive Shaft | | 36 | 37 | 59.5 | 40 | 921 | |
| | 2015.11-2019.07 | 7DCT | F | L | MPV FWD DFHA | | GCI81158 | Inner Joint | | 37 | 34 | 34.5 | 65.5 | 83 | |
| | 2015.11-2019.07 | 7DCT | F | R | MPV FWD DFHA | | GCI82108 | Inner Joint | | 37 | 34 | 40 | 77.5 | 103.5 | |
| | 2015.11-2019.07 | DCT/6MT | F | L/R | MPV FWD DFHA | | GCO83101 | Outer Joint | | 36 | 27 | 59.5 | 40 | 65 | M |
| | 2015.11-2019.07 | MT | F | L | MPV FWD DFHA | Date from:2016.01 | GDS61100 | Drive Shaft | | 36 | | 59.5 | 40 | 513 | |
| | 2015.11-2019.07 | MT | F | R | MPV FWD DFHA | Date from:2016.01 | GDS61101 | Drive Shaft | | 36 | | 59.5 | 40 | 803 | |
| **Transporter** | | | | | | | | | | | | | | | |
| 1.9 (50 kw) | 1992.10-2003.04 | 5MT | F | L/R | Platform/Chassis FWD ABL | Date From:1996.01,Chassis no. from:70_T_200001 | GDS61003 | Drive Shaft | | 38 | | 60.2 | 34.5 | 540.8 | |
| | 1992.10-2003.04 | 5MT | F | L/R | Platform/Chassis FWD ABL | Date From:1996.01,Chassis no. from:70_T_200001 | GDS61004 | Drive Shaft | 48T | 38 | | 60.2 | 34.5 | 540.8 | |
| | 1992.10-2003.04 | 5MT | F | L/R | Platform/Chassis FWD ABL | Date to:1995.12,Chassis no. from:70_B400001,Chassis no.:to:70_T_199999;Chassis no. to:70_K_200000 | GDS61052 | Drive Shaft | 48T | 38 | | 60.2 | 34.5 | 529 | |
| | 1992.10-2003.04 | 5MT | F | L/R | Platform/Chassis FWD ABL | Date to:1995.12,Chassis no. from:70_B400001,Chassis no.:to:70_T_199999;Chassis no. to:70_K_200000 | GDS61119 | Drive Shaft | | 38 | | 60.2 | 34.5 | 527 | |
| | 1992.10-2003.04 | 5MT | F | L/R | Platform/Chassis FWD ABL | | GCO61003 | Outer Joint | | 38 | 33 | 60.2 | 34.5 | 65 | I |
| | 1992.10-2003.04 | 5MT | F | L/R | Platform/Chassis FWD ABL | | GCO61004 | Outer Joint | 48T | 38 | 33 | 60.2 | 34.5 | 65 | I |
| | 1992.10-2003.04 | 5MT | F | L/R | Platform/Chassis FWD ABL | | GCO61005 | Outer Joint | | 38 | 27 | 60.2 | 34.5 | 65 | I |
| | 1992.10-2003.04 | 5MT | F | L/R | Platform/Chassis FWD ABL | | GCO61006 | Outer Joint | 48T | 38 | 27 | 60.2 | 34.5 | 65 | I |
| | 1992.10-2003.04 | 5MT | F | L/R | Platform/Chassis FWD ABL | | GCI61001 | Inner Joint | | | 33 | | | 31.8 | |
| | 1992.10-2003.04 | 5MT | F | L/R | Platform/Chassis FWD ABL | | GCI61002 | Inner Joint | | | 28 | | | 31.8 | |
| | 1992.10-2003.04 | 5MT | F | L/R | Van FWD ABL | Date From:1996.01,Chassis no. from:70_T_200001 | GDS61003 | Drive Shaft | | 38 | | 60.2 | 34.5 | 540.8 | |
| | 1992.10-2003.04 | 5MT | F | L/R | Van FWD ABL | Date From:1996.01,Chassis no. from:70_T_200001 | GDS61004 | Drive Shaft | 48T | 38 | | 60.2 | 34.5 | 540.8 | |

| | YEAR | TRANSM. | F/R | L/R | BODY STYLE & DRIVE TYPE & ENGINE | REMARKS | G-AP Ref. | PRODUCT | ABS | Technical Specifications A | B | C | H | L | P |
|---|---|---|---|---|---|---|---|---|---|---|---|---|---|---|---|
| **VW Transporter** | | | | | | | | | | | | | | | |
| 1.9 (50 kw) | 1992.10-2003.04 | 5MT | F | L/R | Van FWD ABL | Date to: 0995.12-Chassis no. from:70_9H000001-Chassis no.:to:70_T_1999999-Chassis no.: to:70_W_2999999 | GDS61052 | Drive Shaft | 48T | 38 | | 60.2 | 34.5 | 529 | |
| | 1992.10-2003.04 | 5MT | F | L/R | Van FWD ABL | Date to: 0995.12-Chassis no. from:70_9H000001-Chassis no.:to:70_T_1999999-Chassis no.: to:70_W_2999999 | GDS61119 | Drive Shaft | | 38 | | 60.2 | 34.5 | 527 | |
| | 1992.10-2003.04 | 5MT | F | L/R | Van FWD ABL | | GCO61003 | Outer Joint | | 38 | 33 | 60.2 | 34.5 | 65 | I |
| | 1992.10-2003.04 | 5MT | F | L/R | Van FWD ABL | | GCO61004 | Outer Joint | 48T | 38 | 33 | 60.2 | 34.5 | 65 | I |
| | 1992.10-2003.04 | 5MT | F | L/R | Van FWD ABL | | GCO61005 | Outer Joint | | 38 | 27 | 60.2 | 34.5 | 65 | I |
| | 1992.10-2003.04 | 5MT | F | L/R | Van FWD ABL | | GCO61006 | Outer Joint | 48T | 38 | 27 | 60.2 | 34.5 | 65 | I |
| | 1992.10-2003.04 | 5MT | F | L/R | Van FWD ABL | | GCI61001 | Inner Joint | | | 33 | | | 31.8 | |
| | 1992.10-2003.04 | 5MT | F | L/R | Van FWD ABL | | GCI61002 | Inner Joint | | | 28 | | | 31.8 | |
| | 1992.10-2003.04 | MT | F | R | Van FWD ABL | | GDS61225 | Stub Axle-Flange | | 37 | | | 338 | 394 | |
| 1.9 (62 kw) | 2006.01-2009.11 | 5MT | F | L | Bus FWD BRR | 6 balls | GDS61105 | Drive Shaft | | 38 | | 63 | 102.5 | 645 | |
| | 2006.01-2009.11 | 5MT | F | L | Bus FWD BRR | 8 balls | GDS81508 | Drive Shaft | | 38 | | 63 | 102.5 | 645 | |
| | 2006.01-2009.11 | 5MT | F | R | Bus FWD BRR | 8 balls | GDS81533 | Drive Shaft | | 38 | 26 | 63 | 102.5 | 858 | |
| | 2006.01-2009.11 | 5MT | F | R | Bus FWD BRR | 6 balls | GDS83246 | Drive Shaft | | 38 | 26 | 63 | 102.5 | 858 | |
| | 2006.01-2009.11 | 5MT | F | L/R | Bus FWD BRR | 6 balls | GCO61009 | Outer Joint | | 38 | 27 | 63 | 102 | 66 | M |
| | 2006.01-2009.11 | 5MT | F | L/R | Bus FWD BRR | 8 balls | GCO81348 | Outer Joint | | 38 | 28 | 63 | 102.5 | 64.5 | I |
| | 2006.01-2009.11 | 5MT | F | L | Bus FWD BRR | | GCI61010 | Inner Joint | | | 28 | | | 32 | |
| | 2006.01-2009.11 | 5MT | F | L | Bus FWD BRR | | GCI61069 | Inner Joint | | | 28 | | | 32 | |
| | 2006.01-2009.11 | 5MT | F | R | Bus FWD BRR | | GCI61020 | Inner Joint | | 26 | 28 | | 205.5 | 100.2 | |
| | 2006.01-2009.11 | | F | R | Bus FWD BRR | | GDS61190 | Stub Axle,differential | | 26 | 37 | | | 136.5 | |
| | 2006.01-2009.11 | 5MT | F | L | Platform/Chassis FWD BRR | 6 balls | GDS61105 | Drive Shaft | | 38 | | 63 | 102.5 | 645 | |
| | 2006.01-2009.11 | 5MT | F | L | Platform/Chassis FWD BRR | 8 balls | GDS81508 | Drive Shaft | | 38 | | 63 | 102.5 | 645 | |
| | 2006.01-2009.11 | 5MT | F | R | Platform/Chassis FWD BRR | 8 balls | GDS81533 | Drive Shaft | | 38 | 26 | 63 | 102.5 | 858 | |
| | 2006.01-2009.11 | 5MT | F | R | Platform/Chassis FWD BRR | 6 balls | GDS83246 | Drive Shaft | | 38 | 26 | 63 | 102.5 | 858 | |
| | 2006.01-2009.11 | 5MT | F | L/R | Platform/Chassis FWD BRR | 6 balls | GCO61009 | Outer Joint | | 38 | 27 | 63 | 102 | 66 | M |
| | 2006.01-2009.11 | 5MT | F | L/R | Platform/Chassis FWD BRR | 8 balls | GCO81348 | Outer Joint | | 38 | 28 | 63 | 102.5 | 64.5 | I |
| | 2006.01-2009.11 | 5MT | F | L | Platform/Chassis FWD BRR | | GCI61010 | Inner Joint | | | 28 | | | 32 | |
| | 2006.01-2009.11 | 5MT | F | L | Platform/Chassis FWD BRR | | GCI61069 | Inner Joint | | | 28 | | | 32 | |
| | 2006.01-2009.11 | 5MT | F | R | Platform/Chassis FWD BRR | | GCI61020 | Inner Joint | | 26 | 28 | | 205.5 | 100.2 | |
| | 2006.01-2009.11 | 5MT | F | R | Platform/Chassis FWD BRR | for OE number:02Z409345B | GDS61190 | Stub Axle,differential | | 26 | 37 | | | 136.5 | |
| | 2006.01-2009.11 | 5MT | F | L/R | Platform/Chassis FWD BRR | for OE number:0A5409355F | GDS61215 | Stub Axle,differential | | 26 | 42 | | | 143.5 | |
| | 2006.01-2009.11 | 5MT | F | L | Van FWD BRR | 6 balls | GDS61105 | Drive Shaft | | 38 | | 63 | 102.5 | 645 | |
| | 2006.01-2009.11 | 5MT | F | L | Van FWD BRR | 8 balls | GDS81508 | Drive Shaft | | 38 | | 63 | 102.5 | 645 | |
| | 2006.01-2009.11 | 5MT | F | R | Van FWD BRR | 8 balls | GDS81533 | Drive Shaft | | 38 | 26 | 63 | 102.5 | 858 | |
| | 2006.01-2009.11 | 5MT | F | R | Van FWD BRR | 6 balls | GDS83246 | Drive Shaft | | 38 | 26 | 63 | 102.5 | 858 | |
| | 2006.01-2009.11 | 5MT | F | L/R | Van FWD BRR | 6 balls | GCO61009 | Outer Joint | | 38 | 27 | 63 | 102 | 66 | M |
| | 2006.01-2009.11 | 5MT | F | L/R | Van FWD BRR | 8 balls | GCO81348 | Outer Joint | | 38 | 28 | 63 | 102.5 | 64.5 | I |
| | 2006.01-2009.11 | 5MT | F | L | Van FWD BRR | | GCI61010 | Inner Joint | | | 28 | | | 32 | |
| | 2006.01-2009.11 | 5MT | F | L | Van FWD BRR | | GCI61069 | Inner Joint | | | 28 | | | 32 | |
| | 2006.01-2009.11 | 5MT | F | R | Van FWD BRR | | GCI61020 | Inner Joint | | 26 | 28 | | 205.5 | 100.2 | |
| | 2006.01-2009.11 | 5MT | F | R | Van FWD BRR | for OE number:02Z409345B | GDS61190 | Stub Axle,differential | | 26 | 37 | | | 136.5 | |
| | 2006.01-2009.11 | 5MT | F | L/R | Van FWD BRR | for OE number:0A5409355F | GDS61215 | Stub Axle,differential | | 26 | 42 | | | 143.5 | |
| 1.9 (63 kw) | 2003.04-2009.11 | 5MT | F | L | Bus FWD AXC | 6 balls | GDS61105 | Drive Shaft | | 38 | | 63 | 102.5 | 645 | |
| | 2003.04-2009.11 | 5MT | F | L | Bus FWD AXC | 8 balls | GDS81508 | Drive Shaft | | 38 | | 63 | 102.5 | 645 | |
| | 2003.04-2009.11 | 5MT | F | R | Bus FWD AXC | 8 balls | GDS81533 | Drive Shaft | | 38 | 26 | 63 | 102.5 | 858 | |
| | 2003.04-2009.11 | 5MT | F | R | Bus FWD AXC | 6 balls | GDS83246 | Drive Shaft | | 38 | 26 | 63 | 102.5 | 858 | |
| | 2003.04-2009.11 | 5MT | F | L/R | Bus FWD AXC | 6 balls | GCO61009 | Outer Joint | | 38 | 27 | 63 | 102 | 66 | M |
| | 2003.04-2009.11 | 5MT | F | L/R | Bus FWD AXC | 8 balls | GCO81348 | Outer Joint | | 38 | 28 | 63 | 102.5 | 64.5 | I |
| | 2003.04-2009.11 | 5MT | F | L | Bus FWD AXC | | GCI61069 | Inner Joint | | | 28 | | | 32 | |
| | 2003.04-2009.11 | 5MT | F | R | Bus FWD AXC | | GCI61020 | Inner Joint | | 26 | 28 | | 205.5 | 100.2 | |
| | 2003.04-2009.11 | 5MT | F | R | Bus FWD AXC | for OE number:02Z409345B | GDS61190 | Stub Axle,differential | | 26 | 37 | | | 136.5 | |
| | 2003.04-2009.11 | 5MT | F | L/R | Bus FWD AXC | for OE number:0A5409355F | GDS61215 | Stub Axle,differential | | 26 | 42 | | | 143.5 | |
| | 2003.04-2009.11 | 5MT | F | L | Platform/Chassis FWD AXC | 6 balls | GDS61105 | Drive Shaft | | 38 | | 63 | 102.5 | 645 | |
| | 2003.04-2009.11 | 5MT | F | L | Platform/Chassis FWD AXC | 8 balls | GDS81508 | Drive Shaft | | 38 | | 63 | 102.5 | 645 | |
| | 2003.04-2009.11 | 5MT | F | R | Platform/Chassis FWD AXC | 8 balls | GDS81533 | Drive Shaft | | 38 | 26 | 63 | 102.5 | 858 | |
| | 2003.04-2009.11 | 5MT | F | R | Platform/Chassis FWD AXC | 6 balls | GDS83246 | Drive Shaft | | 38 | 26 | 63 | 102.5 | 858 | |
| | 2003.04-2009.11 | 5MT | F | L/R | Platform/Chassis FWD AXC | 6 balls | GCO61009 | Outer Joint | | 38 | 27 | 63 | 102 | 66 | M |
| | 2003.04-2009.11 | 5MT | F | L/R | Platform/Chassis FWD AXC | 8 balls | GCO81348 | Outer Joint | | 38 | 28 | 63 | 102.5 | 64.5 | I |
| | 2003.04-2009.11 | 5MT | F | L | Platform/Chassis FWD AXC | | GCI61010 | Inner Joint | | | 28 | | | 32 | |
| | 2003.04-2009.11 | 5MT | F | L | Platform/Chassis FWD AXC | | GCI61069 | Inner Joint | | | 28 | | | 32 | |
| | 2003.04-2009.11 | 5MT | F | R | Platform/Chassis FWD AXC | | GCI61020 | Inner Joint | | 26 | 28 | | 205.5 | 100.2 | |
| | 2003.04-2009.11 | 5MT | F | R | Platform/Chassis FWD AXC | for OE number:02Z409345B | GDS61190 | Stub Axle,differential | | 26 | 37 | | | 136.5 | |
| | 2003.04-2009.11 | 5MT | F | L/R | Platform/Chassis FWD AXC | for OE number:0A5409355F | GDS61215 | Stub Axle,differential | | 26 | 42 | | | 143.5 | |
| | 2003.04-2009.11 | 5MT | F | L | Van FWD AXC | 6 balls | GDS61105 | Drive Shaft | | 38 | | 63 | 102.5 | 645 | |
| | 2003.04-2009.11 | 5MT | F | L | Van FWD AXC | 8 balls | GDS81508 | Drive Shaft | | 38 | | 63 | 102.5 | 645 | |
| | 2003.04-2009.11 | 5MT | F | R | Van FWD AXC | 8 balls | GDS81533 | Drive Shaft | | 38 | 26 | 63 | 102.5 | 858 | |

| | YEAR | TRANSM. | F/R | L/R | BODY STYLE & DRIVE TYPE & ENGINE | REMARKS | G-AP Ref. | PRODUCT | ABS | Technical Specifications A | B | C | H | L | P |
|---|---|---|---|---|---|---|---|---|---|---|---|---|---|---|---|
| **VW Transporter** | | | | | | | | | | | | | | | |
| 1.9 (63 kw) | 2003.04-2009.11 | 5MT | F | R | Van FWD AXC | 6 balls | GDS83246 | Drive Shaft | | 38 | 26 | 63 | 102.5 | 858 | |
| | 2003.04-2009.11 | 5MT | F | L/R | Van FWD AXC | 6 balls | GCO61009 | Outer Joint | | 38 | 27 | 63 | 102 | 66 | M |
| | 2003.04-2009.11 | 5MT | F | L/R | Van FWD AXC | 8 balls | GCO81348 | Outer Joint | | 38 | 28 | 63 | 102.5 | 64.5 | I |
| | 2003.04-2009.11 | 5MT | F | L | Van FWD AXC | | GCI61069 | Inner Joint | | | 28 | | | 32 | |
| | 2003.04-2009.11 | 5MT | F | R | Van FWD AXC | | GCI61020 | Inner Joint | | 26 | 28 | | 205.5 | 100.2 | |
| | 2003.04-2009.11 | 5MT | F | R | Van FWD AXC | for OE number:02Z409345B | GDS61190 | Stub Axle,differential | | 26 | 37 | | | 136.5 | |
| | 2003.04-2009.11 | 5MT | F | L/R | Van FWD AXC | for OE number:0A5409355F | GDS61215 | Stub Axle,differential | | 26 | 42 | | | 143.5 | |
| 1.9 (75 kw) | 2006.01-2009.11 | 5MT | F | L | Bus FWD BRS | 6 balls | GDS61105 | Drive Shaft | | 38 | | 63 | 102.5 | 645 | |
| | 2006.01-2009.11 | 5MT | F | L | Bus FWD BRS | 8 balls | GDS81508 | Drive Shaft | | 38 | | 63 | 102.5 | 645 | |
| | 2006.01-2009.11 | 5MT | F | R | Bus FWD BRS | 8 balls | GDS81533 | Drive Shaft | | 38 | 26 | 63 | 102.5 | 858 | |
| | 2006.01-2009.11 | 5MT | F | R | Bus FWD BRS | 6 balls | GDS83246 | Drive Shaft | | 38 | 26 | 63 | 102.5 | 858 | |
| | 2006.01-2009.11 | 5MT | F | L/R | Bus FWD BRS | 6 balls | GCO61009 | Outer Joint | | 38 | 27 | 63 | 102 | 66 | M |
| | 2006.01-2009.11 | 5MT | F | L/R | Bus FWD BRS | 8 balls | GCO81348 | Outer Joint | | 38 | 28 | 63 | 102.5 | 64.5 | I |
| | 2006.01-2009.11 | 5MT | F | L | Bus FWD BRS | | GCI61069 | Inner Joint | | | 28 | | | 32 | |
| | 2006.01-2009.11 | 5MT | F | R | Bus FWD BRS | | GCI61020 | Inner Joint | | 26 | 28 | | 205.5 | 100.2 | |
| | 2006.01-2009.11 | 5MT | F | L | Platform/Chassis FWD BRS | 6 balls | GDS61105 | Drive Shaft | | 38 | | 63 | 102.5 | 645 | |
| | 2006.01-2009.11 | 5MT | F | L | Platform/Chassis FWD BRS | 8 balls | GDS81508 | Drive Shaft | | 38 | | 63 | 102.5 | 645 | |
| | 2006.01-2009.11 | 5MT | F | R | Platform/Chassis FWD BRS | 8 balls | GDS81533 | Drive Shaft | | 38 | 26 | 63 | 102.5 | 858 | |
| | 2006.01-2009.11 | 5MT | F | R | Platform/Chassis FWD BRS | 6 balls | GDS83246 | Drive Shaft | | 38 | 26 | 63 | 102.5 | 858 | |
| | 2006.01-2009.11 | 5MT | F | L/R | Platform/Chassis FWD BRS | 6 balls | GCO61009 | Outer Joint | | 38 | 27 | 63 | 102 | 66 | M |
| | 2006.01-2009.11 | 5MT | F | L/R | Platform/Chassis FWD BRS | 8 balls | GCO81348 | Outer Joint | | 38 | 28 | 63 | 102.5 | 64.5 | I |
| | 2006.01-2009.11 | 5MT | F | L | Platform/Chassis FWD BRS | | GCI61010 | Inner Joint | | | 28 | | | 32 | |
| | 2006.01-2009.11 | 5MT | F | L | Platform/Chassis FWD BRS | | GCI61069 | Inner Joint | | | 28 | | | 32 | |
| | 2006.01-2009.11 | 5MT | F | R | Platform/Chassis FWD BRS | | GCI61020 | Inner Joint | | 26 | 28 | | 205.5 | 100.2 | |
| | 2006.01-2009.11 | 5MT | F | R | Platform/Chassis FWD BRS | for OE number:02Z409345B | GDS61190 | Stub Axle,differential | | 26 | 37 | | | 136.5 | |
| | 2006.01-2009.11 | 5MT | F | L/R | Platform/Chassis FWD BRS | for OE number:0A5409355F | GDS61215 | Stub Axle,differential | | 26 | 42 | | | 143.5 | |
| | 2006.01-2009.11 | 5MT | F | L | Van FWD BRS | 6 balls | GDS61105 | Drive Shaft | | 38 | | 63 | 102.5 | 645 | |
| | 2006.01-2009.11 | 5MT | F | L | Van FWD BRS | 8 balls | GDS81508 | Drive Shaft | | 38 | | 63 | 102.5 | 645 | |
| | 2006.01-2009.11 | 5MT | F | R | Van FWD BRS | 8 balls | GDS81533 | Drive Shaft | | 38 | 26 | 63 | 102.5 | 858 | |
| | 2006.01-2009.11 | 5MT | F | R | Van FWD BRS | 6 balls | GDS83246 | Drive Shaft | | 38 | 26 | 63 | 102.5 | 858 | |
| | 2006.01-2009.11 | 5MT | F | L/R | Van FWD BRS | 6 balls | GCO61009 | Outer Joint | | 38 | 27 | 63 | 102 | 66 | M |
| | 2006.01-2009.11 | 5MT | F | L/R | Van FWD BRS | 8 balls | GCO81348 | Outer Joint | | 38 | 28 | 63 | 102.5 | 64.5 | I |
| | 2006.01-2009.11 | 5MT | F | L | Van FWD BRS | | GCI61069 | Inner Joint | | | 28 | | | 32 | |
| | 2006.01-2009.11 | 5MT | F | R | Van FWD BRS | | GCI61020 | Inner Joint | | 26 | 28 | | 205.5 | 100.2 | |
| | 2006.01-2009.11 | 5MT | F | R | Van FWD BRS | for OE number:02Z409345B | GDS61190 | Stub Axle,differential | | 26 | 37 | | | 136.5 | |
| | 2006.01-2009.11 | 5MT | F | L/R | Van FWD BRS | for OE number:0A5409355F | GDS61215 | Stub Axle,differential | | 26 | 42 | | | 143.5 | |
| 1.9 (77 kw) | 2003.04-2009.11 | 5MT | F | L | Platform/Chassis FWD AXB | 6 balls | GDS61105 | Drive Shaft | | 38 | | 63 | 102.5 | 645 | |
| | 2003.04-2009.11 | 5MT | F | L | Platform/Chassis FWD AXB | 8 balls | GDS81508 | Drive Shaft | | 38 | | 63 | 102.5 | 645 | |
| | 2003.04-2009.11 | 5MT | F | R | Platform/Chassis FWD AXB | 8 balls | GDS81533 | Drive Shaft | | 38 | 26 | 63 | 102.5 | 858 | |
| | 2003.04-2009.11 | 5MT | F | R | Platform/Chassis FWD AXB | 6 balls | GDS83246 | Drive Shaft | | 38 | 26 | 63 | 102.5 | 858 | |
| | 2003.04-2009.11 | 5MT | F | L/R | Platform/Chassis FWD AXB | 6 balls | GCO61009 | Outer Joint | | 38 | 27 | 63 | 102 | 66 | M |
| | 2003.04-2009.11 | 5MT | F | L/R | Platform/Chassis FWD AXB | 8 balls | GCO81348 | Outer Joint | | 38 | 28 | 63 | 102.5 | 64.5 | I |
| | 2003.04-2009.11 | 5MT | F | L | Platform/Chassis FWD AXB | | GCI61010 | Inner Joint | | | 28 | | | 32 | |
| | 2003.04-2009.11 | 5MT | F | L | Platform/Chassis FWD AXB | | GCI61069 | Inner Joint | | | 28 | | | 32 | |
| | 2003.04-2009.11 | 5MT | F | R | Platform/Chassis FWD AXB | | GCI61020 | Inner Joint | | 26 | 28 | | 205.5 | 100.2 | |
| | 2003.04-2009.11 | 5MT | F | R | Platform/Chassis FWD AXB | for OE number:02Z409345B | GDS61190 | Stub Axle,differential | | 26 | 37 | | | 136.5 | |
| | 2003.04-2009.11 | 5MT | F | L/R | Platform/Chassis FWD AXB | for OE number:0A5409355F | GDS61215 | Stub Axle,differential | | 26 | 42 | | | 143.5 | |
| | 2003.04-2009.11 | 5MT | F | L | Van FWD AXB | 6 balls | GDS61105 | Drive Shaft | | 38 | | 63 | 102.5 | 645 | |
| | 2003.04-2009.11 | 5MT | F | L | Van FWD AXB | 8 balls | GDS81508 | Drive Shaft | | 38 | | 63 | 102.5 | 645 | |
| | 2003.04-2009.11 | 5MT | F | R | Van FWD AXB | 8 balls | GDS81533 | Drive Shaft | | 38 | 26 | 63 | 102.5 | 858 | |
| | 2003.04-2009.11 | 5MT | F | R | Van FWD AXB | 6 balls | GDS83246 | Drive Shaft | | 38 | 26 | 63 | 102.5 | 858 | |
| | 2003.04-2009.11 | 5MT | F | L/R | Van FWD AXB | 6 balls | GCO61009 | Outer Joint | | 38 | 27 | 63 | 102 | 66 | M |
| | 2003.04-2009.11 | 5MT | F | L/R | Van FWD AXB | 8 balls | GCO81348 | Outer Joint | | 38 | 28 | 63 | 102.5 | 64.5 | I |
| | 2003.04-2009.11 | 5MT | F | L | Van FWD AXB | | GCI61069 | Inner Joint | | | 28 | | | 32 | |
| | 2003.04-2009.11 | 5MT | F | R | Van FWD AXB | | GCI61020 | Inner Joint | | 26 | 28 | | 205.5 | 100.2 | |
| | 2003.04-2009.11 | 5MT | F | R | Van FWD AXB | for OE number:02Z409345B | GDS61190 | Stub Axle,differential | | 26 | 37 | | | 136.5 | |
| | 2003.04-2009.11 | 5MT | F | L/R | Van FWD AXB | for OE number:0A5409355F | GDS61215 | Stub Axle,differential | | 26 | 42 | | | 143.5 | |
| 2.0 (62 kw) | 1990.07-2003.04 | 4AT | F | L | Platform/Chassis FWD AAC | Date to:1995.12,Chassis no. to:70T199999 | GDS61107 | Drive Shaft | 48T | 38 | | 60.2 | 34.5 | 520 | |
| | 1990.07-2003.04 | 4AT | F | R | Platform/Chassis FWD AAC | Date To:1995.12,Chassisno. to:70T199999 | GDS61034 | Drive Shaft | | 38 | | 60.2 | 34.5 | 529 | |
| | 1990.07-2003.04 | 4AT | F | R | Platform/Chassis FWD AAC | Date To:1995.12,Chassisno. to:70T199999 | GDS61052 | Drive Shaft | 48T | 38 | | 60.2 | 34.5 | 529 | |
| | 1990.07-2003.04 | 4AT | F | R | Platform/Chassis FWD AAC | Date to:1995.12,Chassis no. from:70B400001,Chassis no. to:70T199999,Chassis no. to:70R200000 | GDS61119 | Drive Shaft | | 38 | | 60.2 | 34.5 | 527 | |
| | 1990.07-2003.04 | 4AT/5MT | F | L/R | Platform/Chassis FWD AAC | Date From:1996.01,Chassis no. from:70T200001 | GDS61003 | Drive Shaft | | 38 | | 60.2 | 34.5 | 540.8 | |
| | 1990.07-2003.04 | 4AT/5MT | F | L/R | Platform/Chassis FWD AAC | Date From:1996.01,Chassis no. from:70T200001 | GDS61004 | Drive Shaft | 48T | 38 | | 60.2 | 34.5 | 540.8 | |
| | 1990.07-2003.04 | 4AT/5MT | F | L/R | Platform/Chassis FWD AAC | | GCO61003 | Outer Joint | | 38 | 33 | 60.2 | 34.5 | 65 | I |
| | 1990.07-2003.04 | 4AT/5MT | F | L/R | Platform/Chassis FWD AAC | | GCO61004 | Outer Joint | 48T | 38 | 33 | 60.2 | 34.5 | 65 | I |

| | YEAR | TRANSM. | F/R | L/R | BODY STYLE & DRIVE TYPE & ENGINE | REMARKS | G-AP Ref. | PRODUCT | ABS | Technical Specifications | | | | | |
|---|---|---|---|---|---|---|---|---|---|---|---|---|---|---|---|
| | | | | | | | | | | A | B | C | H | L | P |
| **VW Transporter** | | | | | | | | | | | | | | | |
| 2.0 (62 kw) | 1990.07-2003.04 | 4AT/5MT | F | L/R | Platform/Chassis FWD AAC | | GCO61005 | Outer Joint | | 38 | 27 | 60.2 | 34.5 | 65 | I |
| | 1990.07-2003.04 | 4AT/5MT | F | L/R | Platform/Chassis FWD AAC | | GCO61006 | Outer Joint | 48T | 38 | 27 | 60.2 | 34.5 | 65 | I |
| | 1990.07-2003.04 | 4AT/5MT | F | L/R | Platform/Chassis FWD AAC | | GCI61001 | Inner Joint | | | 33 | | | 31.8 | |
| | 1990.07-2003.04 | 4AT/5MT | F | L/R | Platform/Chassis FWD AAC | | GCI61002 | Inner Joint | | | 28 | | | 31.8 | |
| | 1990.07-2003.04 | 5MT | F | L/R | Platform/Chassis FWD AAC | Date To:1995.12,Chassis no. from:70SH600001,Chassis no. to:70T199999 | GDS61034 | Drive Shaft | | 38 | | 60.2 | 34.5 | 529 | |
| | 1990.07-2003.04 | 5MT | F | L/R | Platform/Chassis FWD AAC | Date To:1995.12,Chassis no. from:70SH600001,Chassis no. to:70T199999,Chassis no. to:70PG00000 | GDS61052 | Drive Shaft | 48T | 38 | | 60.2 | 34.5 | 529 | |
| | 1990.07-2003.04 | 5MT | F | L/R | Platform/Chassis FWD AAC | Date to:1995.12,Chassis no. from:70SH600001,Chassis no. to:70T199999,Chassis no. to:70PG00000 | GDS61119 | Drive Shaft | | 38 | | 60.2 | 34.5 | 527 | |
| | 1990.07-2003.04 | 4AT | F | L | Van FWD AAC | Date to:1995.12,Chassis no. to:70T199999 | GDS61107 | Drive Shaft | 48T | 38 | | 60.2 | 34.5 | 520 | |
| | 1990.07-2003.04 | 4AT | F | R | Van FWD AAC | Date To:1995.12,Chassisno. to:70T199999 | GDS61034 | Drive Shaft | | 38 | | 60.2 | 34.5 | 529 | |
| | 1990.07-2003.04 | 4AT | F | R | Van FWD AAC | Date To:1995.12,Chassisno. to:70T199999 | GDS61052 | Drive Shaft | 48T | 38 | | 60.2 | 34.5 | 529 | |
| | 1990.07-2003.04 | 4AT | F | R | Van FWD AAC | Date to:1995.12,Chassis no. from:70SH600001,Chassis no. to:70T199999,Chassis no. to:70PG00000 | GDS61119 | Drive Shaft | | 38 | | 60.2 | 34.5 | 527 | |
| | 1990.07-2003.04 | 4AT/5MT | F | L/R | Van FWD AAC | Date From:1996.01,Chassis no. from:70T200001 | GDS61003 | Drive Shaft | | 38 | | 60.2 | 34.5 | 540.8 | |
| | 1990.07-2003.04 | 4AT/5MT | F | L/R | Van FWD AAC | Date From:1996.01,Chassis no. from:70T200001 | GDS61004 | Drive Shaft | 48T | 38 | | 60.2 | 34.5 | 540.8 | |
| | 1990.07-2003.04 | 4AT/5MT | F | L/R | Van FWD AAC | | GCO61003 | Outer Joint | | 38 | 33 | 60.2 | 34.5 | 65 | I |
| | 1990.07-2003.04 | 4AT/5MT | F | L/R | Van FWD AAC | | GCO61004 | Outer Joint | 48T | 38 | 33 | 60.2 | 34.5 | 65 | I |
| | 1990.07-2003.04 | 4AT/5MT | F | L/R | Van FWD AAC | | GCO61005 | Outer Joint | | 38 | 27 | 60.2 | 34.5 | 65 | I |
| | 1990.07-2003.04 | 4AT/5MT | F | L/R | Van FWD AAC | | GCO61006 | Outer Joint | 48T | 38 | 27 | 60.2 | 34.5 | 65 | I |
| | 1990.07-2003.04 | 4AT/5MT | F | L/R | Van FWD AAC | | GCI61001 | Inner Joint | | | 33 | | | 31.8 | |
| | 1990.07-2003.04 | 4AT/5MT | F | L/R | Van FWD AAC | | GCI61002 | Inner Joint | | | 28 | | | 31.8 | |
| | 1990.07-2003.04 | 5MT | F | L/R | Van FWD AAC | Date To:1995.12,Chassis no. from:70SH600001,Chassis no. to:70T199999 | GDS61034 | Drive Shaft | | 38 | | 60.2 | 34.5 | 529 | |
| | 1990.07-2003.04 | 5MT | F | L/R | Van FWD AAC | Date To:1995.12,Chassis no. from:70SH600001,Chassis no. to:70T199999,Chassis no. to:70PG00000 | GDS61052 | Drive Shaft | 48T | 38 | | 60.2 | 34.5 | 529 | |
| | 1990.07-2003.04 | 5MT | F | L/R | Van FWD AAC | Date to:1995.12,Chassis no. from:70SH600001,Chassis no. to:70T199999,Chassis no. to:70PG00000 | GDS61119 | Drive Shaft | | 38 | | 60.2 | 34.5 | 527 | |
| | 1990.07-2003.04 | MT | F | R | Van FWD AAC | | GDS61225 | Stub Axle-Flange | | 37 | | | 338 | 394 | |
| | 2009.09-2015.08 | 5MT | F | L | Bus FWD CAAA | 6 balls | GDS61105 | Drive Shaft | | 38 | | 63 | 102.5 | 645 | |
| | 2009.09-2015.08 | 5MT | F | L | Bus FWD CAAA | 8 balls | GDS81508 | Drive Shaft | | 38 | | 63 | 102.5 | 645 | |
| | 2009.09-2015.08 | 5MT | F | R | Bus FWD CAAA | Date from:2015.05 | GDS82724 | Drive Shaft | | 38 | 26 | 63 | 102.5 | 867 | |
| | 2009.09-2015.08 | 5MT | F | R | Bus FWD CAAA | Date to:2015.04,Chassis no. from:7H_CG000001/7H_CH000001/7H_CK000001 | GDS83261 | Drive Shaft | | 38 | 26 | 63 | 102 | 857 | |
| | 2009.09-2015.08 | 5MT | F | L/R | Bus FWD CAAA | 6 balls | GCO61009 | Outer Joint | | 38 | 27 | 63 | 102 | 66 | M |
| | 2009.09-2015.08 | 5MT | F | L/R | Bus FWD CAAA | 8 balls | GCO81348 | Outer Joint | | 38 | 28 | 63 | 102.5 | 64.5 | I |
| | 2009.09-2015.08 | 5MT | F | L | Bus FWD CAAA | | GCI61069 | Inner Joint | | | 28 | | | 32 | |
| | 2009.09-2015.08 | 5MT | F | R | Bus FWD CAAA | Date to:2015.04 | GCI61053 | Inner Joint | | 26 | 28 | | 261 | 63 | |
| | 2009.09-2015.08 | 5MT | F | R | Bus FWD CAAA | Date from:2015.05 | GCI81969 | Inner Joint | | 26 | 28 | | 261 | 63 | |
| | 2009.09-2015.08 | 5MT | F | R | Bus FWD CAAA | for OE number:02Z409345B | GDS61190 | Stub Axle,differential | | 26 | 37 | | | 136.5 | |
| | 2009.09-2015.08 | 5MT | F | R | Bus FWD CAAA | | GDS61216 | Stub Axle,differential | | 26 | 37 | | | 145 | |
| | 2009.09-2015.08 | 5MT | F | L/R | Bus FWD CAAA | for OE number:0A5409355F | GDS61215 | Stub Axle,differential | | 26 | 42 | | | 143.5 | |
| | 2009.09-2015.08 | 5MT | F | L | Platform/Chassis FWD CAAA | 6 balls | GDS61105 | Drive Shaft | | 38 | | 63 | 102.5 | 645 | |
| | 2009.09-2015.08 | 5MT | F | L | Platform/Chassis FWD CAAA | 8 balls | GDS81508 | Drive Shaft | | 38 | | 63 | 102.5 | 645 | |
| | 2009.09-2015.08 | 5MT | F | R | Platform/Chassis FWD CAAA | Date from:2015.05 | GDS82724 | Drive Shaft | | 38 | 26 | 63 | 102.5 | 867 | |
| | 2009.09-2015.08 | 5MT | F | R | Platform/Chassis FWD CAAA | Date to:2015.04,Chassis no. from:7J_C_000001 | GDS83261 | Drive Shaft | | 38 | 26 | 63 | 102 | 857 | |
| | 2009.09-2015.08 | 5MT | F | L/R | Platform/Chassis FWD CAAA | 6 balls | GCO61009 | Outer Joint | | 38 | 27 | 63 | 102 | 66 | M |
| | 2009.09-2015.08 | 5MT | F | L/R | Platform/Chassis FWD CAAA | 8 balls | GCO81348 | Outer Joint | | 38 | 28 | 63 | 102.5 | 64.5 | I |
| | 2009.09-2015.08 | 5MT | F | L | Platform/Chassis FWD CAAA | | GCI61069 | Inner Joint | | | 28 | | | 32 | |
| | 2009.09-2015.08 | 5MT | F | R | Platform/Chassis FWD CAAA | Date to:2015.04 | GCI61053 | Inner Joint | | 26 | 28 | | 261 | 63 | |
| | 2009.09-2015.08 | 5MT | F | R | Platform/Chassis FWD CAAA | Date from:2015.05 | GCI81969 | Inner Joint | | 26 | 28 | | 261 | 63 | |
| | 2009.09-2015.08 | 5MT | F | R | Platform/Chassis FWD CAAA | for OE number:02Z409345B | GDS61190 | Stub Axle,differential | | 26 | 37 | | | 136.5 | |
| | 2009.09-2015.08 | 5MT | F | R | Platform/Chassis FWD CAAA | | GDS61216 | Stub Axle,differential | | 26 | 37 | | | 145 | |
| | 2009.09-2015.08 | 5MT | F | L/R | Platform/Chassis FWD CAAA | for OE number:0A5409355F | GDS61215 | Stub Axle,differential | | 26 | 42 | | | 143.5 | |
| | 2009.09-2015.08 | 5MT | F | L | Van FWD CAAA | 6 balls | GDS61105 | Drive Shaft | | 38 | | 63 | 102.5 | 645 | |
| | 2009.09-2015.08 | 5MT | F | L | Van FWD CAAA | 8 balls | GDS81508 | Drive Shaft | | 38 | | 63 | 102.5 | 645 | |
| | 2009.09-2015.08 | 5MT | F | R | Van FWD CAAA | Date from:2015.05 | GDS82724 | Drive Shaft | | 38 | 26 | 63 | 102.5 | 867 | |
| | 2009.09-2015.08 | 5MT | F | R | Van FWD CAAA | Date to:2015.04,Chassis no. from:7H_CG000001/7H_CH000001/7H_CK000001 | GDS83261 | Drive Shaft | | 38 | 26 | 63 | 102 | 857 | |
| | 2009.09-2015.08 | 5MT | F | L/R | Van FWD CAAA | 6 balls | GCO61009 | Outer Joint | | 38 | 27 | 63 | 102 | 66 | M |
| | 2009.09-2015.08 | 5MT | F | L/R | Van FWD CAAA | 8 balls | GCO81348 | Outer Joint | | 38 | 28 | 63 | 102.5 | 64.5 | I |
| | 2009.09-2015.08 | 5MT | F | L | Van FWD CAAA | | GCI61069 | Inner Joint | | | 28 | | | 32 | |
| | 2009.09-2015.08 | 5MT | F | R | Van FWD CAAA | Date to:2015.04 | GCI61053 | Inner Joint | | 26 | 28 | | 261 | 63 | |
| | 2009.09-2015.08 | 5MT | F | R | Van FWD CAAA | Date from:2015.05 | GCI81969 | Inner Joint | | 26 | 28 | | 261 | 63 | |
| | 2009.09-2015.08 | 5MT | F | R | Van FWD CAAA | for OE number:02Z409345B | GDS61190 | Stub Axle,differential | | 26 | 37 | | | 136.5 | |
| | 2009.09-2015.08 | 5MT | F | R | Van FWD CAAA | | GDS61216 | Stub Axle,differential | | 26 | 37 | | | 145 | |
| | 2009.09-2015.08 | 5MT | F | L/R | Van FWD CAAA | for OE number:0A5409355F | GDS61215 | Stub Axle,differential | | 26 | 42 | | | 143.5 | |
| | 2015.04-2019.07 | 5MT | F | L | Bus FWD CAAA;CXGA | For Engine code:CXGA | GDS56700 | Drive Shaft | | 38 | | 63 | 102.5 | 657 | |
| | 2015.04-2019.07 | 5MT | F | L | Bus FWD CAAA;CXGA | Date to:2017.03,For Engine code:CAAA | GDS61105 | Drive Shaft | | 38 | | 63 | 102.5 | 645 | |
| | 2015.04-2019.07 | 5MT | F | L | Bus FWD CAAA;CXGA | Date to:2017.03,For Engine code:CAAA,8 balls | GDS81508 | Drive Shaft | | 38 | | 63 | 102.5 | 645 | |
| | 2015.04-2019.07 | 5MT | F | R | Bus FWD CAAA;CXGA | For Engine code:CXGA | GDS56734 | Drive Shaft | | 38 | 26 | 63 | 102.5 | 854 | |
| | 2015.04-2019.07 | 5MT | F | R | Bus FWD CAAA;CXGA | For Engine code:CAAA | GDS82724 | Drive Shaft | | 38 | 26 | 63 | 102.5 | 867 | |
| | 2015.04-2019.07 | 5MT | F | L | Bus FWD CAAA;CXGA | | GCI61069 | Inner Joint | | | 28 | | | 32 | |

| | YEAR | TRANSM. | F/R | L/R | BODY STYLE & DRIVE TYPE & ENGINE | REMARKS | G-AP Ref. | PRODUCT | ABS | Technical Specifications | | | | | |
|---|---|---|---|---|---|---|---|---|---|---|---|---|---|---|---|
| | | | | | | | | | | A | B | C | H | L | P |
| **VW Transporter** | | | | | | | | | | | | | | | |
| 2.0 (62 kw) | 2015.04-2019.07 | 5MT | F | R | Bus FWD CAAA;CXGA | For Engine code:CAAA | GCI81969 | Inner Joint | | 26 | 28 | | 261 | 63 | |
| | 2015.04-2019.07 | 5MT | F | L/R | Bus FWD CAAA;CXGA | | GDS61216 | Stub Axle,differential | | 26 | 37 | | | 145 | |
| | 2015.04-2019.07 | MT | F | L/R | Bus FWD CAAA;CXGA | | GCO81348 | Outer Joint | | 38 | 28 | 63 | 102.5 | 64.5 | I |
| | 2015.04-2019.07 | 5MT | F | L | Van FWD CAAA;CXGA | For Engine code:CXGA | GDS56700 | Drive Shaft | | 38 | | 63 | 102.5 | 657 | |
| | 2015.04-2019.07 | 5MT | F | L | Van FWD CAAA;CXGA | For Engine code:CAAA,Date to:2017.03 | GDS61105 | Drive Shaft | | 38 | | 63 | 102.5 | 645 | |
| | 2015.04-2019.07 | 5MT | F | L | Van FWD CAAA;CXGA | For Engine code:CAAA,Date to:2017.03;8 balls | GDS81508 | Drive Shaft | | 38 | | 63 | 102.5 | 645 | |
| | 2015.04-2019.07 | 5MT | F | R | Van FWD CAAA;CXGA | For Engine code:CXGA | GDS56734 | Drive Shaft | | 38 | 26 | 63 | 102.5 | 854 | |
| | 2015.04-2019.07 | 5MT | F | R | Van FWD CAAA;CXGA | For Engine code:CAAA | GDS82724 | Drive Shaft | | 38 | 26 | 63 | 102.5 | 867 | |
| | 2015.04-2019.07 | 5MT | F | L/R | Van FWD CAAA;CXGA | For Engine code:CAAA | GCO81348 | Outer Joint | | 38 | 28 | 63 | 102.5 | 64.5 | I |
| | 2015.04-2019.07 | 5MT | F | L | Van FWD CAAA;CXGA | For Engine code:CXGA | GCI61010 | Inner Joint | | | 28 | | | 32 | |
| | 2015.04-2019.07 | 5MT | F | L | Van FWD CAAA;CXGA | For Engine code:CAAA,Date to:2017.03 | GCI61069 | Inner Joint | | | 28 | | | 32 | |
| | 2015.04-2019.07 | 5MT | F | R | Van FWD CAAA;CXGA | For Engine code:CAAA,Date from:2017.08 | GCI81969 | Inner Joint | | 26 | 28 | | 261 | 63 | |
| | 2015.04-2019.07 | 5MT | F | L/R | Van FWD CAAA;CXGA | | GDS61216 | Stub Axle,differential | | 26 | 37 | | | 145 | |
| | 2015.04-2019.11 | 5MT | F | L | Platform/Chassis FWD CAAA;CXGA | For Engine code:CXGA | GDS56700 | Drive Shaft | | 38 | | 63 | 102.5 | 657 | |
| | 2015.04-2019.11 | 5MT | F | L | Platform/Chassis FWD CAAA;CXGA | Date to:2017.03,For Engine code:CAAA | GDS61105 | Drive Shaft | | 38 | | 63 | 102.5 | 645 | |
| | 2015.04-2019.11 | 5MT | F | L | Platform/Chassis FWD CAAA;CXGA | Date to:2017.03,For Engine code:CAAA;8 balls | GDS81508 | Drive Shaft | | 38 | | 63 | 102.5 | 645 | |
| | 2015.04-2019.11 | 5MT | F | R | Platform/Chassis FWD CAAA;CXGA | For Engine code:CXGA | GDS56734 | Drive Shaft | | 38 | 26 | 63 | 102.5 | 854 | |
| | 2015.04-2019.11 | 5MT | F | R | Platform/Chassis FWD CAAA;CXGA | For Engine code:CAAA | GDS82724 | Drive Shaft | | 38 | 26 | 63 | 102.5 | 867 | |
| | 2015.04-2019.11 | 5MT | F | L | Platform/Chassis FWD CAAA;CXGA | | GCI61069 | Inner Joint | | | 28 | | | 32 | |
| | 2015.04-2019.11 | 5MT | F | R | Platform/Chassis FWD CAAA;CXGA | For Engine code:CAAA | GCI81969 | Inner Joint | | 26 | 28 | | 261 | 63 | |
| | 2015.04-2019.11 | 5MT | F | R | Platform/Chassis FWD CAAA;CXGA | | GDS61216 | Stub Axle,differential | | 26 | 37 | | | 145 | |
| | 2015.04-2019.11 | MT | F | L/R | Platform/Chassis FWD CAAA;CXGA | | GCO81348 | Outer Joint | | 38 | 28 | 63 | 102.5 | 64.5 | I |
| 2.0 (66 kw) | 2019.10-2024.08 | 5MT | F | L | Platform/Chassis FWD CXGD;DNAC | | GDS56700 | Drive Shaft | | 38 | | 63 | 102.5 | 657 | |
| | 2019.10-2024.08 | 5MT | F | R | Platform/Chassis FWD CXGD;DNAC | | GDS56734 | Drive Shaft | | 38 | 26 | 63 | 102.5 | 854 | |
| | 2019.10-2024.08 | 5MT | F | L/R | Platform/Chassis FWD CXGD;DNAC | | GCO81348 | Outer Joint | | 38 | 28 | 63 | 102.5 | 64.5 | I |
| | 2019.10-2024.08 | 5MT | F | L | Platform/Chassis FWD CXGD;DNAC | | GCI82456 | Inner Joint | | | 28 | | | 32 | |
| | 2019.10-2024.08 | 5MT | F | R | Platform/Chassis FWD CXGD;DNAC | | GCI83461 | Inner Joint | | 26 | 28 | 44 | 250 | 63 | |
| | 2019.10-2024.08 | 5MT | F | L | Van FWD CXGD;DNAC | | GDS56700 | Drive Shaft | | 38 | | 63 | 102.5 | 657 | |
| | 2019.10-2024.08 | 5MT | F | R | Van FWD CXGD;DNAC | Date to:2020.09 | GDS56734 | Drive Shaft | | 38 | 26 | 63 | 102.5 | 854 | |
| | 2019.10-2024.08 | 5MT | F | L/R | Van FWD CXGD;DNAC | | GCO81348 | Outer Joint | | 38 | 28 | 63 | 102.5 | 64.5 | I |
| | 2019.10-2024.08 | 5MT | F | L | Van FWD CXGD;DNAC | Date from:2020.12 | GCI82456 | Inner Joint | | | 28 | | | 32 | |
| | 2019.10-2024.08 | 5MT | F | R | Van FWD CXGD;DNAC | Date to:2020.09 | GCI83461 | Inner Joint | | 26 | 28 | 44 | 250 | 63 | |
| 2.0 (75 kw) | 2009.09-2015.08 | 5MT | F | L | Bus FWD CAAB | 6 balls | GDS61105 | Drive Shaft | | 38 | | 63 | 102.5 | 645 | |
| | 2009.09-2015.08 | 5MT | F | L | Bus FWD CAAB | 8 balls | GDS81508 | Drive Shaft | | 38 | | 63 | 102.5 | 645 | |
| | 2009.09-2015.08 | 5MT | F | R | Bus FWD CAAB | Date from:2015.05 | GDS82724 | Drive Shaft | | 38 | 26 | 63 | 102.5 | 867 | |
| | 2009.09-2015.08 | 5MT | F | R | Bus FWD CAAB | Date to:2015.04,Chassis no. from:7H_CG000001?H_CH000001?H_CX000001 | GDS83261 | Drive Shaft | | 38 | 26 | 63 | 102 | 857 | |
| | 2009.09-2015.08 | 5MT | F | L/R | Bus FWD CAAB | 6 balls | GCO61009 | Outer Joint | | 38 | 27 | 63 | 102 | 66 | M |
| | 2009.09-2015.08 | 5MT | F | L/R | Bus FWD CAAB | 8 balls | GCO81348 | Outer Joint | | 38 | 28 | 63 | 102.5 | 64.5 | I |
| | 2009.09-2015.08 | 5MT | F | L | Bus FWD CAAB | | GCI61069 | Inner Joint | | | 28 | | | 32 | |
| | 2009.09-2015.08 | 5MT | F | R | Bus FWD CAAB | Date to:2015.04 | GCI61053 | Inner Joint | | 26 | 28 | | 261 | 63 | |
| | 2009.09-2015.08 | 5MT | F | R | Bus FWD CAAB | Date from:2015.05 | GCI81969 | Inner Joint | | 26 | 28 | | 261 | 63 | |
| | 2009.09-2015.08 | 5MT | F | R | Bus FWD CAAB | for OE number:02Z409345B | GDS61190 | Stub Axle,differential | | 26 | 37 | | | 136.5 | |
| | 2009.09-2015.08 | 5MT | F | R | Bus FWD CAAB | | GDS61216 | Stub Axle,differential | | 26 | 37 | | | 145 | |
| | 2009.09-2015.08 | 5MT | F | L/R | Bus FWD CAAB | for OE number:0A5409355F | GDS61215 | Stub Axle,differential | | 26 | 42 | | | 143.5 | |
| | 2009.09-2015.08 | 5MT | F | L | Platform/Chassis FWD CAAB | 6 balls | GDS61105 | Drive Shaft | | 38 | | 63 | 102.5 | 645 | |
| | 2009.09-2015.08 | 5MT | F | L | Platform/Chassis FWD CAAB | 8 balls | GDS81508 | Drive Shaft | | 38 | | 63 | 102.5 | 645 | |
| | 2009.09-2015.08 | 5MT | F | R | Platform/Chassis FWD CAAB | Date from:2015.05 | GDS82724 | Drive Shaft | | 38 | 26 | 63 | 102.5 | 867 | |
| | 2009.09-2015.08 | 5MT | F | R | Platform/Chassis FWD CAAB | Date to:2015.04,Chassis no. from:7J_C_000001 | GDS83261 | Drive Shaft | | 38 | 26 | 63 | 102 | 857 | |
| | 2009.09-2015.08 | 5MT | F | L/R | Platform/Chassis FWD CAAB | 6 balls | GCO61009 | Outer Joint | | 38 | 27 | 63 | 102 | 66 | M |
| | 2009.09-2015.08 | 5MT | F | L/R | Platform/Chassis FWD CAAB | 8 balls | GCO81348 | Outer Joint | | 38 | 28 | 63 | 102.5 | 64.5 | I |
| | 2009.09-2015.08 | 5MT | F | L | Platform/Chassis FWD CAAB | | GCI61069 | Inner Joint | | | 28 | | | 32 | |
| | 2009.09-2015.08 | 5MT | F | R | Platform/Chassis FWD CAAB | Date to:2015.04 | GCI61053 | Inner Joint | | 26 | 28 | | 261 | 63 | |
| | 2009.09-2015.08 | 5MT | F | R | Platform/Chassis FWD CAAB | Date from:2015.05 | GCI81969 | Inner Joint | | 26 | 28 | | 261 | 63 | |
| | 2009.09-2015.08 | 5MT | F | R | Platform/Chassis FWD CAAB | for OE number:02Z409345B | GDS61190 | Stub Axle,differential | | 26 | 37 | | | 136.5 | |
| | 2009.09-2015.08 | 5MT | F | R | Platform/Chassis FWD CAAB | | GDS61216 | Stub Axle,differential | | 26 | 37 | | | 145 | |
| | 2009.09-2015.08 | 5MT | F | L/R | Platform/Chassis FWD CAAB | for OE number:0A5409355F | GDS61215 | Stub Axle,differential | | 26 | 42 | | | 143.5 | |
| | 2009.09-2015.08 | 5MT | F | L | Van FWD CAAB | 6 balls | GDS61105 | Drive Shaft | | 38 | | 63 | 102.5 | 645 | |
| | 2009.09-2015.08 | 5MT | F | L | Van FWD CAAB | 8 balls | GDS81508 | Drive Shaft | | 38 | | 63 | 102.5 | 645 | |
| | 2009.09-2015.08 | 5MT | F | R | Van FWD CAAB | Date from:2015.05 | GDS82724 | Drive Shaft | | 38 | 26 | 63 | 102.5 | 867 | |
| | 2009.09-2015.08 | 5MT | F | R | Van FWD CAAB | Date to:2015.04,Chassis no. from:7H_CG000001?H_CH000001?H_CX000001 | GDS83261 | Drive Shaft | | 38 | 26 | 63 | 102 | 857 | |
| | 2009.09-2015.08 | 5MT | F | L/R | Van FWD CAAB | 6 balls | GCO61009 | Outer Joint | | 38 | 27 | 63 | 102 | 66 | M |
| | 2009.09-2015.08 | 5MT | F | L/R | Van FWD CAAB | 8 balls | GCO81348 | Outer Joint | | 38 | 28 | 63 | 102.5 | 64.5 | I |
| | 2009.09-2015.08 | 5MT | F | L | Van FWD CAAB | | GCI61069 | Inner Joint | | | 28 | | | 32 | |
| | 2009.09-2015.08 | 5MT | F | R | Van FWD CAAB | Date to:2015.04 | GCI61053 | Inner Joint | | 26 | 28 | | 261 | 63 | |
| | 2009.09-2015.08 | 5MT | F | R | Van FWD CAAB | Date from:2015.05 | GCI81969 | Inner Joint | | 26 | 28 | | 261 | 63 | |

| | YEAR | TRANSM. | F/R | L/R | BODY STYLE & DRIVE TYPE & ENGINE | REMARKS | G-AP Ref. | PRODUCT | ABS | Technical Specifications | | | | | |
|---|---|---|---|---|---|---|---|---|---|---|---|---|---|---|---|
| | | | | | | | | | | A | B | C | H | L | P |
| **VW Transporter** | | | | | | | | | | | | | | | |
| 2.0 (75 kw) | 2009.09-2015.08 | 5MT | F | R | Van FWD CAAB | for OE number:02Z409345B | GDS61190 | Stub Axle,differential | | 26 | 37 | | | 136.5 | |
| | 2009.09-2015.08 | 5MT | F | R | Van FWD CAAB | | GDS61216 | Stub Axle,differential | | 26 | 37 | | | 145 | |
| | 2009.09-2015.08 | 5MT | F | L/R | Van FWD CAAB | for OE number:0A5409355F | GDS61215 | Stub Axle,differential | | 26 | 42 | | | 143.5 | |
| | 2015.04-2019.11 | 5MT | F | L | Platform/Chassis FWD CAAB;CXGB | For Engine code:CXGB | GDS56700 | Drive Shaft | | 38 | | 63 | 102.5 | 657 | |
| | 2015.04-2019.11 | 5MT | F | L | Platform/Chassis FWD CAAB;CXGB | Date to:2017.03,For Engine code:CAAB | GDS61105 | Drive Shaft | | 38 | | 63 | 102.5 | 645 | |
| | 2015.04-2019.11 | 5MT | F | L | Platform/Chassis FWD CAAB;CXGB | Date to:2017.03,For Engine code:CAAB;8 balls | GDS81508 | Drive Shaft | | 38 | | 63 | 102.5 | 645 | |
| | 2015.04-2019.11 | 5MT | F | R | Platform/Chassis FWD CAAB;CXGB | For Engine code:CXGB | GDS56734 | Drive Shaft | | 38 | 26 | 63 | 102.5 | 854 | |
| | 2015.04-2019.11 | 5MT | F | R | Platform/Chassis FWD CAAB;CXGB | For Engine code:CAAB | GDS82724 | Drive Shaft | | 38 | 26 | 63 | 102.5 | 867 | |
| | 2015.04-2019.11 | 5MT | F | L | Platform/Chassis FWD CAAB;CXGB | | GCI61069 | Inner Joint | | | 28 | | | 32 | |
| | 2015.04-2019.11 | 5MT | F | R | Platform/Chassis FWD CAAB;CXGB | For Engine code:CAAB | GCI81969 | Inner Joint | | 26 | 28 | | 261 | 63 | |
| | 2015.04-2019.11 | 5MT | F | L/R | Platform/Chassis FWD CAAB;CXGB | | GDS61216 | Stub Axle,differential | | 26 | 37 | | | 145 | |
| | 2015.04-2019.11 | MT | F | L/R | Platform/Chassis FWD CAAB;CXGB | | GCO81348 | Outer Joint | | 38 | 28 | 63 | 102.5 | 64.5 | I |
| | 2015.04-2019.12 | 5MT | F | L | Bus FWD CAAB;CXGB | For Engine code:CXGB | GDS56700 | Drive Shaft | | 38 | | 63 | 102.5 | 657 | |
| | 2015.04-2019.12 | 5MT | F | L | Bus FWD CAAB;CXGB | Date to:2017.03,For Engine code:CAAB;6 balls | GDS61105 | Drive Shaft | | 38 | | 63 | 102.5 | 645 | |
| | 2015.04-2019.12 | 5MT | F | L | Bus FWD CAAB;CXGB | Date to:2017.03,For Engine code:CAAB;8 balls | GDS81508 | Drive Shaft | | 38 | | 63 | 102.5 | 645 | |
| | 2015.04-2019.12 | 5MT | F | R | Bus FWD CAAB;CXGB | For Engine code:CXGB | GDS56734 | Drive Shaft | | 38 | 26 | 63 | 102.5 | 854 | |
| | 2015.04-2019.12 | 5MT | F | R | Bus FWD CAAB;CXGB | For Engine code:CAAB | GDS82724 | Drive Shaft | | 38 | 26 | 63 | 102.5 | 867 | |
| | 2015.04-2019.12 | 5MT | F | L/R | Bus FWD CAAB;CXGB | 8 balls | GCO81348 | Outer Joint | | 38 | 28 | 63 | 102.5 | 64.5 | I |
| | 2015.04-2019.12 | 5MT | F | L | Bus FWD CAAB;CXGB | | GCI61069 | Inner Joint | | | 28 | | | 32 | |
| | 2015.04-2019.12 | 5MT | F | R | Bus FWD CAAB;CXGB | For Engine code:CAAB | GCI81969 | Inner Joint | | 26 | 28 | | 261 | 63 | |
| | 2015.04-2019.12 | 5MT | F | L/R | Bus FWD CAAB;CXGB | | GDS61216 | Stub Axle,differential | | 26 | 37 | | | 145 | |
| | 2015.04-2019.12 | 5MT | F | L | Van FWD CAAB;CXGB | For Engine code:CXGB | GDS56700 | Drive Shaft | | 38 | | 63 | 102.5 | 657 | |
| | 2015.04-2019.12 | 5MT | F | L | Van FWD CAAB;CXGB | Date to:2017.03,For Engine code:CAAB | GDS61105 | Drive Shaft | | 38 | | 63 | 102.5 | 645 | |
| | 2015.04-2019.12 | 5MT | F | L | Van FWD CAAB;CXGB | Date to:2017.03,For Engine code:CAAB;8 balls | GDS81508 | Drive Shaft | | 38 | | 63 | 102.5 | 645 | |
| | 2015.04-2019.12 | 5MT | F | R | Van FWD CAAB;CXGB | For Engine code:CXGB | GDS56734 | Drive Shaft | | 38 | 26 | 63 | 102.5 | 854 | |
| | 2015.04-2019.12 | 5MT | F | R | Van FWD CAAB;CXGB | For Engine code:CAAB | GDS82724 | Drive Shaft | | 38 | 26 | 63 | 102.5 | 867 | |
| | 2015.04-2019.12 | 5MT | F | L/R | Van FWD CAAB;CXGB | | GCO81348 | Outer Joint | | 38 | 28 | 63 | 102.5 | 64.5 | I |
| | 2015.04-2019.12 | 5MT | F | L | Van FWD CAAB;CXGB | | GCI61069 | Inner Joint | | | 28 | | | 32 | |
| | 2015.04-2019.12 | 5MT | F | R | Van FWD CAAB;CXGB | For Engine code:CAAB | GCI81969 | Inner Joint | | 26 | 28 | | 261 | 63 | |
| | 2015.04-2019.12 | 5MT | F | L/R | Van FWD CAAB;CXGB | | GDS61216 | Stub Axle,differential | | 26 | 37 | | | 145 | |
| 2.0 (81 kw) | 2019.07-2024.08 | 5MT | F | L | Platform/Chassis FWD CXHC;DNAB | | GDS56700 | Drive Shaft | | 38 | | 63 | 102.5 | 657 | |
| | 2019.07-2024.08 | 5MT | F | R | Platform/Chassis FWD CXHC;DNAB | Date to:2020.09 | GDS56734 | Drive Shaft | | 38 | 26 | 63 | 102.5 | 854 | |
| | 2019.07-2024.08 | 5MT | F | L/R | Platform/Chassis FWD CXHC;DNAB | | GCO81348 | Outer Joint | | 38 | 28 | 63 | 102.5 | 64.5 | I |
| | 2019.07-2024.08 | 5MT | F | L | Platform/Chassis FWD CXHC;DNAB | Date from:2020.12 | GCI82456 | Inner Joint | | | 28 | | | 32 | |
| | 2019.07-2024.08 | 5MT | F | R | Platform/Chassis FWD CXHC;DNAB | Date to:2020.10 | GCI83461 | Inner Joint | | 26 | 28 | 44 | 250 | 63 | |
| | 2019.07-2024.08 | 5MT | F | L | Van FWD CXHC;DNAB | | GDS56700 | Drive Shaft | | 38 | | 63 | 102.5 | 657 | |
| | 2019.07-2024.08 | 5MT | F | R | Van FWD CXHC;DNAB | Date to:2020.09 | GDS56734 | Drive Shaft | | 38 | 26 | 63 | 102.5 | 854 | |
| | 2019.07-2024.08 | 5MT | F | L/R | Van FWD CXHC;DNAB | | GCO81348 | Outer Joint | | 38 | 28 | 63 | 102.5 | 64.5 | I |
| | 2019.07-2024.08 | 5MT | F | L | Van FWD CXHC;DNAB | Date from:2020.12 | GCI82456 | Inner Joint | | | 28 | | | 32 | |
| | 2019.07-2024.08 | 5MT | F | R | Van FWD CXHC;DNAB | Date to:2020.09 | GCI83461 | Inner Joint | | 26 | 28 | 44 | 250 | 63 | |
| 2.0 (84 kw) | 2011.05-2015.08 | 5MT | F | L | Bus FWD CAAD | 6 balls | GDS61105 | Drive Shaft | | 38 | | 63 | 102.5 | 645 | |
| | 2011.05-2015.08 | 5MT | F | L | Bus FWD CAAD | 8 balls | GDS81508 | Drive Shaft | | 38 | | 63 | 102.5 | 645 | |
| | 2011.05-2015.08 | 5MT | F | R | Bus FWD CAAD | Date from:2015.05 | GDS82724 | Drive Shaft | | 38 | 26 | 63 | 102.5 | 867 | |
| | 2011.05-2015.08 | 5MT | F | R | Bus FWD CAAD | Date to:2015.04 | GDS83261 | Drive Shaft | | 38 | 26 | 63 | 102 | 857 | |
| | 2011.05-2015.08 | 5MT | F | L/R | Bus FWD CAAD | 6 balls | GCO61009 | Outer Joint | | 38 | 27 | 63 | 102 | 66 | M |
| | 2011.05-2015.08 | 5MT | F | L/R | Bus FWD CAAD | 8 balls | GCO81348 | Outer Joint | | 38 | 28 | 63 | 102.5 | 64.5 | I |
| | 2011.05-2015.08 | 5MT | F | L | Bus FWD CAAD | | GCI61069 | Inner Joint | | | 28 | | | 32 | |
| | 2011.05-2015.08 | 5MT | F | R | Bus FWD CAAD | Date to:2015.04 | GCI61053 | Inner Joint | | 26 | 28 | | 261 | 63 | |
| | 2011.05-2015.08 | 5MT | F | R | Bus FWD CAAD | Date from:2015.05 | GCI81969 | Inner Joint | | 26 | 28 | | 261 | 63 | |
| | 2011.05-2015.08 | 5MT | F | R | Bus FWD CAAD | for OE number:02Z409345B | GDS61190 | Stub Axle,differential | | 26 | 37 | | | 136.5 | |
| | 2011.05-2015.08 | 5MT | F | R | Bus FWD CAAD | | GDS61216 | Stub Axle,differential | | 26 | 37 | | | 145 | |
| | 2011.05-2015.08 | 5MT | F | L/R | Bus FWD CAAD | for OE number:0A5409355F | GDS61215 | Stub Axle,differential | | 26 | 42 | | | 143.5 | |
| | 2011.05-2015.08 | 5MT | F | L | Platform/Chassis FWD CAAD | 6 balls | GDS61105 | Drive Shaft | | 38 | | 63 | 102.5 | 645 | |
| | 2011.05-2015.08 | 5MT | F | L | Platform/Chassis FWD CAAD | 8 balls | GDS81508 | Drive Shaft | | 38 | | 63 | 102.5 | 645 | |
| | 2011.05-2015.08 | 5MT | F | R | Platform/Chassis FWD CAAD | Date from:2015.05 | GDS82724 | Drive Shaft | | 38 | 26 | 63 | 102.5 | 867 | |
| | 2011.05-2015.08 | 5MT | F | R | Platform/Chassis FWD CAAD | Date to:2015.04 | GDS83261 | Drive Shaft | | 38 | 26 | 63 | 102 | 857 | |
| | 2011.05-2015.08 | 5MT | F | L/R | Platform/Chassis FWD CAAD | 6 balls | GCO61009 | Outer Joint | | 38 | 27 | 63 | 102 | 66 | M |
| | 2011.05-2015.08 | 5MT | F | L/R | Platform/Chassis FWD CAAD | 8 balls | GCO81348 | Outer Joint | | 38 | 28 | 63 | 102.5 | 64.5 | I |
| | 2011.05-2015.08 | 5MT | F | L | Platform/Chassis FWD CAAD | | GCI61069 | Inner Joint | | | 28 | | | 32 | |
| | 2011.05-2015.08 | 5MT | F | R | Platform/Chassis FWD CAAD | Date to:2015.04 | GCI61053 | Inner Joint | | 26 | 28 | | 261 | 63 | |
| | 2011.05-2015.08 | 5MT | F | R | Platform/Chassis FWD CAAD | Date from:2015.05 | GCI81969 | Inner Joint | | 26 | 28 | | 261 | 63 | |
| | 2011.05-2015.08 | 5MT | F | R | Platform/Chassis FWD CAAD | for OE number:02Z409345B | GDS61190 | Stub Axle,differential | | 26 | 37 | | | 136.5 | |
| | 2011.05-2015.08 | 5MT | F | R | Platform/Chassis FWD CAAD | | GDS61216 | Stub Axle,differential | | 26 | 37 | | | 145 | |
| | 2011.05-2015.08 | 5MT | F | L/R | Platform/Chassis FWD CAAD | for OE number:0A5409355F | GDS61215 | Stub Axle,differential | | 26 | 42 | | | 143.5 | |
| | 2011.05-2015.08 | 5MT | F | L | Van FWD CAAD | 6 balls | GDS61105 | Drive Shaft | | 38 | | 63 | 102.5 | 645 | |

| | YEAR | TRANSM. | F/R | L/R | BODY STYLE & DRIVE TYPE & ENGINE | REMARKS | G-AP Ref. | PRODUCT | ABS | Technical Specifications A | B | C | H | L | P |
|---|---|---|---|---|---|---|---|---|---|---|---|---|---|---|---|
| **VW Transporter** | | | | | | | | | | | | | | | |
| 2.0 (84 kw) | 2011.05-2015.08 | 5MT | F | L | Van FWD CAAD | 8 balls | GDS81508 | Drive Shaft | | 38 | | 63 | 102.5 | 645 | |
| | 2011.05-2015.08 | 5MT | F | R | Van FWD CAAD | Date from:2015.05 | GDS82724 | Drive Shaft | | 38 | 26 | 63 | 102.5 | 867 | |
| | 2011.05-2015.08 | 5MT | F | R | Van FWD CAAD | Date to:2015.04 | GDS83261 | Drive Shaft | | 38 | 26 | 63 | 102 | 857 | |
| | 2011.05-2015.08 | 5MT | F | L/R | Van FWD CAAD | 6 balls | GCO61009 | Outer Joint | | 38 | 27 | 63 | 102 | 66 | M |
| | 2011.05-2015.08 | 5MT | F | L/R | Van FWD CAAD | 8 balls | GCO81348 | Outer Joint | | 38 | 28 | 63 | 102.5 | 64.5 | I |
| | 2011.05-2015.08 | 5MT | F | L | Van FWD CAAD | | GCI61069 | Inner Joint | | | 28 | | | 32 | |
| | 2011.05-2015.08 | 5MT | F | R | Van FWD CAAD | Date to:2015.04 | GCI61053 | Inner Joint | | 26 | 28 | | 261 | 63 | |
| | 2011.05-2015.08 | 5MT | F | R | Van FWD CAAD | Date from:2015.05 | GCI81969 | Inner Joint | | 26 | 28 | | 261 | 63 | |
| | 2011.05-2015.08 | 5MT | F | R | Van FWD CAAD | for OE number:02Z409345B | GDS61190 | Stub Axle,differential | | 26 | 37 | | | 136.5 | |
| | 2011.05-2015.08 | 5MT | F | R | Van FWD CAAD | | GDS61216 | Stub Axle,differential | | 26 | 37 | | | 145 | |
| | 2011.05-2015.08 | 5MT | F | L/R | Van FWD CAAD | for OE number:0A5409355F | GDS61215 | Stub Axle,differential | | 26 | 42 | | | 143.5 | |
| | 2016.05-2019.08 | 5MT | F | L | Van FWD CXHB | | GDS56700 | Drive Shaft | | 38 | | 63 | 102.5 | 657 | |
| | 2016.05-2019.08 | 5MT | F | R | Van FWD CXHB | | GDS56734 | Drive Shaft | | 38 | 26 | 63 | 102.5 | 854 | |
| | 2016.05-2019.08 | MT | F | L/R | Van FWD CXHB | | GCO81348 | Outer Joint | | 38 | 28 | 63 | 102.5 | 64.5 | I |
| | 2016.05-2019.08 | MT | F | L | Van FWD CXHB | | GCI61069 | Inner Joint | | | 28 | | | 32 | |
| | 2016.05-2019.11 | 5MT | F | L | Platform/Chassis FWD CXHB | | GDS56700 | Drive Shaft | | 38 | | 63 | 102.5 | 657 | |
| | 2016.05-2019.11 | 5MT | F | R | Platform/Chassis FWD CXHB | | GDS56734 | Drive Shaft | | 38 | 26 | 63 | 102.5 | 854 | |
| | 2016.05-2019.11 | 5MT | F | L | Platform/Chassis FWD CXHB | | GCI61069 | Inner Joint | | | 28 | | | 32 | |
| | 2016.05-2019.11 | MT | F | L/R | Platform/Chassis FWD CXHB | | GCO81348 | Outer Joint | | 38 | 28 | 63 | 102.5 | 64.5 | I |
| 2.0 (85 kw) | 2003.11-2011.05 | 5MT | F | L | Platform/Chassis FWD AXA | 6 balls | GDS61105 | Drive Shaft | | 38 | | 63 | 102.5 | 645 | |
| | 2003.11-2011.05 | 5MT | F | L | Platform/Chassis FWD AXA | 8 balls | GDS81508 | Drive Shaft | | 38 | | 63 | 102.5 | 645 | |
| | 2003.11-2011.05 | 5MT | F | R | Platform/Chassis FWD AXA | 8 balls | GDS81533 | Drive Shaft | | 38 | 26 | 63 | 102.5 | 858 | |
| | 2003.11-2011.05 | 5MT | F | R | Platform/Chassis FWD AXA | 6 balls | GDS83246 | Drive Shaft | | 38 | 26 | 63 | 102.5 | 858 | |
| | 2003.11-2011.05 | 5MT | F | L/R | Platform/Chassis FWD AXA | 6 balls | GCO61009 | Outer Joint | | 38 | 27 | 63 | 102 | 66 | M |
| | 2003.11-2011.05 | 5MT | F | L/R | Platform/Chassis FWD AXA | 8 balls | GCO81348 | Outer Joint | | 38 | 28 | 63 | 102.5 | 64.5 | I |
| | 2003.11-2011.05 | 5MT | F | L | Platform/Chassis FWD AXA | | GCI61010 | Inner Joint | | | 28 | | | 32 | |
| | 2003.11-2011.05 | 5MT | F | L | Platform/Chassis FWD AXA | | GCI61069 | Inner Joint | | | 28 | | | 32 | |
| | 2003.11-2011.05 | 5MT | F | R | Platform/Chassis FWD AXA | | GCI61020 | Inner Joint | | 26 | 28 | | 205.5 | 100.2 | |
| | 2003.11-2011.05 | 5MT | F | R | Platform/Chassis FWD AXA | for OE number:02Z409345B | GDS61190 | Stub Axle,differential | | 26 | 37 | | | 136.5 | |
| | 2003.11-2011.05 | 5MT | F | L/R | Platform/Chassis FWD AXA | for OE number:0A5409355F | GDS61215 | Stub Axle,differential | | 26 | 42 | | | 143.5 | |
| | 2003.11-2013.05 | 5MT | F | L | Platform/Chassis FWD AXA | 6 balls | GDS61105 | Drive Shaft | | 38 | | 63 | 102.5 | 645 | |
| | 2003.11-2013.05 | 5MT | F | L | Platform/Chassis FWD AXA | 8 balls | GDS81508 | Drive Shaft | | 38 | | 63 | 102.5 | 645 | |
| | 2003.11-2013.05 | 5MT | F | R | Platform/Chassis FWD AXA | 8 balls | GDS81533 | Drive Shaft | | 38 | 26 | 63 | 102.5 | 858 | |
| | 2003.11-2013.05 | 5MT | F | R | Platform/Chassis FWD AXA | 6 balls | GDS83246 | Drive Shaft | | 38 | 26 | 63 | 102.5 | 858 | |
| | 2003.11-2013.05 | 5MT | F | L/R | Platform/Chassis FWD AXA | 6 balls | GCO61009 | Outer Joint | | 38 | 27 | 63 | 102 | 66 | M |
| | 2003.11-2013.05 | 5MT | F | L/R | Platform/Chassis FWD AXA | 8 balls | GCO81348 | Outer Joint | | 38 | 28 | 63 | 102.5 | 64.5 | I |
| | 2003.11-2013.05 | 5MT | F | L | Platform/Chassis FWD AXA | | GCI61010 | Inner Joint | | | 28 | | | 32 | |
| | 2003.11-2013.05 | 5MT | F | L | Platform/Chassis FWD AXA | | GCI61069 | Inner Joint | | | 28 | | | 32 | |
| | 2003.11-2013.05 | 5MT | F | R | Platform/Chassis FWD AXA | | GCI61020 | Inner Joint | | 26 | 28 | | 205.5 | 100.2 | |
| | 2003.11-2013.05 | 5MT | F | R | Platform/Chassis FWD AXA | for OE number:02Z409345B | GDS61190 | Stub Axle,differential | | 26 | 37 | | | 136.5 | |
| | 2003.11-2013.05 | 5MT | F | R | Platform/Chassis FWD AXA | | GDS61216 | Stub Axle,differential | | 26 | 37 | | | 145 | |
| | 2003.11-2013.05 | 5MT | F | L/R | Platform/Chassis FWD AXA | for OE number:0A5409355F | GDS61215 | Stub Axle,differential | | 26 | 42 | | | 143.5 | |
| | 2003.11-2015.08 | 5MT | F | L | Bus FWD AXA | 6 balls | GDS61105 | Drive Shaft | | 38 | | 63 | 102.5 | 645 | |
| | 2003.11-2015.08 | 5MT | F | L | Bus FWD AXA | 8 balls | GDS81508 | Drive Shaft | | 38 | | 63 | 102.5 | 645 | |
| | 2003.11-2015.08 | 5MT | F | R | Bus FWD AXA | 8 balls | GDS81533 | Drive Shaft | | 38 | 26 | 63 | 102.5 | 858 | |
| | 2003.11-2015.08 | 5MT | F | R | Bus FWD AXA | 6 balls | GDS83246 | Drive Shaft | | 38 | 26 | 63 | 102.5 | 858 | |
| | 2003.11-2015.08 | 5MT | F | L/R | Bus FWD AXA | 6 balls | GCO61009 | Outer Joint | | 38 | 27 | 63 | 102 | 66 | M |
| | 2003.11-2015.08 | 5MT | F | L/R | Bus FWD AXA | 8 balls | GCO81348 | Outer Joint | | 38 | 28 | 63 | 102.5 | 64.5 | I |
| | 2003.11-2015.08 | 5MT | F | L | Bus FWD AXA | | GCI61010 | Inner Joint | | | 28 | | | 32 | |
| | 2003.11-2015.08 | 5MT | F | L | Bus FWD AXA | | GCI61069 | Inner Joint | | | 28 | | | 32 | |
| | 2003.11-2015.08 | 5MT | F | R | Bus FWD AXA | | GCI61020 | Inner Joint | | 26 | 28 | | 205.5 | 100.2 | |
| | 2003.11-2015.08 | 5MT | F | R | Bus FWD AXA | for OE number:02Z409345B | GDS61190 | Stub Axle,differential | | 26 | 37 | | | 136.5 | |
| | 2003.11-2015.08 | 5MT | F | R | Bus FWD AXA | | GDS61216 | Stub Axle,differential | | 26 | 37 | | | 145 | |
| | 2003.11-2015.08 | 5MT | F | L/R | Bus FWD AXA | for OE number:0A5409355F | GDS61215 | Stub Axle,differential | | 26 | 42 | | | 143.5 | |
| | 2003.11-2015.08 | 5MT | F | L | Van FWD AXA | 6 balls | GDS61105 | Drive Shaft | | 38 | | 63 | 102.5 | 645 | |
| | 2003.11-2015.08 | 5MT | F | L | Van FWD AXA | 8 balls | GDS81508 | Drive Shaft | | 38 | | 63 | 102.5 | 645 | |
| | 2003.11-2015.08 | 5MT | F | R | Van FWD AXA | 8 balls | GDS81533 | Drive Shaft | | 38 | 26 | 63 | 102.5 | 858 | |
| | 2003.11-2015.08 | 5MT | F | R | Van FWD AXA | 6 balls | GDS83246 | Drive Shaft | | 38 | 26 | 63 | 102.5 | 858 | |
| | 2003.11-2015.08 | 5MT | F | L/R | Van FWD AXA | 6 balls | GCO61009 | Outer Joint | | 38 | 27 | 63 | 102 | 66 | M |
| | 2003.11-2015.08 | 5MT | F | L/R | Van FWD AXA | 8 balls | GCO81348 | Outer Joint | | 38 | 28 | 63 | 102.5 | 64.5 | I |
| | 2003.11-2015.08 | 5MT | F | L | Van FWD AXA | | GCI61010 | Inner Joint | | | 28 | | | 32 | |
| | 2003.11-2015.08 | 5MT | F | L | Van FWD AXA | | GCI61069 | Inner Joint | | | 28 | | | 32 | |
| | 2003.11-2015.08 | 5MT | F | R | Van FWD AXA | | GCI61020 | Inner Joint | | 26 | 28 | | 205.5 | 100.2 | |
| | 2003.11-2015.08 | 5MT | F | R | Van FWD AXA | for OE number:02Z409345B | GDS61190 | Stub Axle,differential | | 26 | 37 | | | 136.5 | |
| | 2003.11-2015.08 | 5MT | F | R | Van FWD AXA | | GDS61216 | Stub Axle,differential | | 26 | 37 | | | 145 | |

| | YEAR | TRANSM. | F/R | L/R | BODY STYLE & DRIVE TYPE & ENGINE | REMARKS | G-AP Ref. | PRODUCT | ABS | Technical Specifications A | B | C | H | L | P |
|---|---|---|---|---|---|---|---|---|---|---|---|---|---|---|---|
| **VW Transporter** | | | | | | | | | | | | | | | |
| 2.0 (85 kw) | 2003.11-2015.08 | 5MT | F | L/R | Van FWD AXA | for OE number:0A5409355F | GDS61215 | Stub Axle,differential | | 26 | 42 | | | 143.5 | |
| | 2006.01-2015.08 | 5MT | F | L | Bus FWD AXA | 6 balls | GDS61105 | Drive Shaft | | 38 | | 63 | 102.5 | 645 | |
| | 2006.01-2015.08 | 5MT | F | L | Bus FWD AXA | 8 balls | GDS81508 | Drive Shaft | | 38 | | 63 | 102.5 | 645 | |
| | 2006.01-2015.08 | 5MT | F | R | Bus FWD AXA | 8 balls | GDS81533 | Drive Shaft | | 38 | 26 | 63 | 102.5 | 858 | |
| | 2006.01-2015.08 | 5MT | F | R | Bus FWD AXA | 6 balls | GDS83246 | Drive Shaft | | 38 | 26 | 63 | 102.5 | 858 | |
| | 2006.01-2015.08 | 5MT | F | L/R | Bus FWD AXA | 6 balls | GCO61009 | Outer Joint | | 38 | 27 | 63 | 102 | 66 | M |
| | 2006.01-2015.08 | 5MT | F | L/R | Bus FWD AXA | 8 balls | GCO81348 | Outer Joint | | 38 | 28 | 63 | 102.5 | 64.5 | I |
| | 2006.01-2015.08 | 5MT | F | L | Bus FWD AXA | | GCI61010 | Inner Joint | | | 28 | | | 32 | |
| | 2006.01-2015.08 | 5MT | F | L | Bus FWD AXA | | GCI61069 | Inner Joint | | | 28 | | | 32 | |
| | 2006.01-2015.08 | 5MT | F | R | Bus FWD AXA | | GCI61020 | Inner Joint | | 26 | 28 | | 205.5 | 100.2 | |
| | 2006.01-2015.08 | 5MT | F | R | Bus FWD AXA | for OE number:02Z409345B | GDS61190 | Stub Axle,differential | | 26 | 37 | | | 136.5 | |
| | 2006.01-2015.08 | 5MT | F | L/R | Bus FWD AXA | for OE number:0A5409355F | GDS61215 | Stub Axle,differential | | 26 | 42 | | | 143.5 | |
| | 2007.06-2015.08 | 5MT | F | L | Van FWD AXA | 6 balls | GDS61105 | Drive Shaft | | 38 | | 63 | 102.5 | 645 | |
| | 2007.06-2015.08 | 5MT | F | L | Van FWD AXA | 8 balls | GDS81508 | Drive Shaft | | 38 | | 63 | 102.5 | 645 | |
| | 2007.06-2015.08 | 5MT | F | R | Van FWD AXA | 8 balls | GDS81533 | Drive Shaft | | 38 | 26 | 63 | 102.5 | 858 | |
| | 2007.06-2015.08 | 5MT | F | R | Van FWD AXA | 6 balls | GDS83246 | Drive Shaft | | 38 | 26 | 63 | 102.5 | 858 | |
| | 2007.06-2015.08 | 5MT | F | L/R | Van FWD AXA | 6 balls | GCO61009 | Outer Joint | | 38 | 27 | 63 | 102 | 66 | M |
| | 2007.06-2015.08 | 5MT | F | L/R | Van FWD AXA | 8 balls | GCO81348 | Outer Joint | | 38 | 28 | 63 | 102.5 | 64.5 | I |
| | 2007.06-2015.08 | 5MT | F | L | Van FWD AXA | | GCI61010 | Inner Joint | | | 28 | | | 32 | |
| | 2007.06-2015.08 | 5MT | F | L | Van FWD AXA | | GCI61069 | Inner Joint | | | 28 | | | 32 | |
| | 2007.06-2015.08 | 5MT | F | R | Van FWD AXA | | GCI61020 | Inner Joint | | 26 | 28 | | 205.5 | 100.2 | |
| | 2007.06-2015.08 | 5MT | F | R | Van FWD AXA | for OE number:02Z409345B | GDS61190 | Stub Axle,differential | | 26 | 37 | | | 136.5 | |
| | 2007.06-2015.08 | 5MT | F | L/R | Van FWD AXA | for OE number:0A5409355F | GDS61215 | Stub Axle,differential | | 26 | 42 | | | 143.5 | |
| 2.0 (100 kw) | 2010.05-2015.08 | 6MT | F | L | Bus 4WD CAAE, CCHB | ---------- | GDS61084 | Drive Shaft | | 38 | 26 | 63 | 102.5 | 613 | |
| | 2010.05-2015.08 | 6MT | F | L | Bus 4WD CAAE, CCHB | Date From:2013.07 | GDS83360 | Drive Shaft | | 38 | 42 | 63 | 102.5 | 617 | |
| | 2010.05-2015.08 | 6MT | F | R | Bus 4WD CAAE, CCHB | Date to:2013.06 | GDS61084 | Drive Shaft | | 38 | 26 | 63 | 102.5 | 613 | |
| | 2010.05-2015.08 | 6MT | F | R | Bus 4WD CAAE, CCHB | Date from:2013.07 | GDS81666 | Drive Shaft | | 38 | 26 | 63 | 102.5 | 616 | |
| | 2010.05-2015.08 | 6MT | F | L/R | Bus 4WD CAAE, CCHB | Date to:2013.06 | GCO61011 | Outer Joint | | 38 | 29 | 63 | 102.5 | 70 | M |
| | 2010.05-2015.08 | 6MT | F | L/R | Bus 4WD CAAE, CCHB | Date From:2013.07;6 balls | GCO61060 | Outer Joint | | 38 | 30 | 63 | 102.5 | 68 | I |
| | 2010.05-2015.08 | 6MT | F | L/R | Bus 4WD CAAE, CCHB | Date From:2013.07;8 balls | GCO81467 | Outer Joint | | 38 | 30 | 63 | 102.5 | 67.5 | I |
| | 2010.05-2015.08 | 6MT | F | L | Bus 4WD CAAE, CCHB | ---------- | GCI61029 | Inner Joint | | 26 | 30 | 46.8 | | 137 | |
| | 2010.05-2015.08 | 6MT | F | L | Bus 4WD CAAE, CCHB | Date From:2013.07 | GCI61104 | Inner Joint | | 42 | 30 | 35.6 | | 136 | |
| | 2010.05-2015.08 | 6MT | F | R | Bus 4WD CAAE, CCHB | Date to:2013.06 | GCI61029 | Inner Joint | | 26 | 30 | 46.8 | | 137 | |
| | 2010.05-2015.08 | 6MT | F | L | Bus 4WD CAAE, CCHB | Model:Transporter,for OE number:0A5409343B | GDS61213 | Stub Axle,differential | | 42 | 42 | | | 135.5 | |
| | 2010.05-2015.08 | 6MT | F | R | Bus 4WD CAAE, CCHB | Model:Transporter,for OE number:0A5409343A | GDS61215 | Stub Axle,differential | | 26 | 42 | | | 143.5 | |
| | 2010.05-2015.08 | 6MT | F | R | Bus 4WD CAAE, CCHB | | GDS61216 | Stub Axle,differential | | 26 | 37 | | | 145 | |
| | 2010.05-2015.08 | 6MT | F | L/R | Bus 4WD CAAE, CCHB | Model:Transporter,for OE number:0A5409343 | GDS61191 | Stub Axle,differential | | 26 | 42 | | | 135.5 | |
| | 2010.05-2015.08 | 6MT | R | L | Bus 4WD CAAE, CCHB | | GDS61257 | Drive Shaft | | 38 | | 59 | 100 | 683 | |
| | 2010.05-2015.08 | 6MT | R | R | Bus 4WD CAAE, CCHB | | GDS61258 | Drive Shaft | | 38 | | 59 | 100 | 743 | |
| | 2010.05-2015.08 | 6MT | R | L/R | Bus 4WD CAAE, CCHB | | GCI82474 | Outer Joint | | 38 | 28 | 59 | 100 | 59 | |
| | 2010.05-2015.08 | 6MT | R | L/R | Bus 4WD CAAE, CCHB | | GCI61075 | Inner Joint | | | 28 | | | 26 | |
| | 2010.05-2015.08 | 6MT | F | L | Bus FWD CAAE, CCHB | Date to:2013.06 | GDS61084 | Drive Shaft | | 38 | 26 | 63 | 102.5 | 613 | |
| | 2010.05-2015.08 | 6MT | F | L | Bus FWD CAAE, CCHB | Date From:2013.07 | GDS83360 | Drive Shaft | | 38 | 42 | 63 | 102.5 | 617 | |
| | 2010.05-2015.08 | 6MT | F | R | Bus FWD CAAE, CCHB | Date From:2013.07,Date To:2015.04 | GDS82361 | Drive Shaft | | 38 | 26 | 63 | 102.5 | 879 | |
| | 2010.05-2015.08 | 6MT | F | R | Bus FWD CAAE, CCHB | Date To:2013.06 | GDS83296 | Drive Shaft | | 38 | 26 | 63 | 102.5 | 880 | |
| | 2010.05-2015.08 | 6MT | F | R | Bus FWD CAAE, CCHB | Date From:2015.05 | GDS83361 | Drive Shaft | | 38 | 26 | 63 | 102.5 | 883 | |
| | 2010.05-2015.08 | 6MT | F | L | Bus FWD CAAE, CCHB | Date To:2013.06 | GCI61029 | Inner Joint | | 26 | 30 | 46.8 | | 137 | |
| | 2010.05-2015.08 | 6MT | F | L | Bus FWD CAAE, CCHB | Date From:2013.07 | GCI61104 | Inner Joint | | 42 | 30 | 35.6 | | 136 | |
| | 2010.05-2015.08 | 6MT | F | R | Bus FWD CAAE, CCHB | Date to:2015.04 | GCI61080 | Inner Joint | | 26 | 30 | | 281.5 | 106 | |
| | 2010.05-2015.08 | 6MT | F | R | Bus FWD CAAE, CCHB | Date from:2015.05 | GCI81381 | Inner Joint | | 26 | 30 | | 281.5 | 105 | |
| | 2010.05-2015.08 | 6MT | F | L | Bus FWD CAAE, CCHB | Model:Transporter,for OE number:0A5409343B | GDS61213 | Stub Axle,differential | | 42 | 42 | | | 135.5 | |
| | 2010.05-2015.08 | 6MT | F | R | Bus FWD CAAE, CCHB | Model:Transporter,for OE number:0A5409343A | GDS61215 | Stub Axle,differential | | 26 | 42 | | | 143.5 | |
| | 2010.05-2015.08 | 6MT | F | L/R | Bus FWD CAAE, CCHB | Model:Transporter,for OE number:0A5409343 | GDS61191 | Stub Axle,differential | | 26 | 42 | | | 135.5 | |
| | 2010.05-2015.08 | 6MT/7DCT | F | L/R | Bus FWD CAAE, CCHB | Date to:2013.06 | GCO61011 | Outer Joint | | 38 | 29 | 63 | 102.5 | 70 | M |
| | 2010.05-2015.08 | 6MT/7DCT | F | L/R | Bus FWD CAAE, CCHB | Date From:2013.07;6 balls | GCO61060 | Outer Joint | | 38 | 30 | 63 | 102.5 | 68 | I |
| | 2010.05-2015.08 | 6MT/7DCT | F | L/R | Bus FWD CAAE, CCHB | Date From:2013.07;8 balls | GCO81467 | Outer Joint | | 38 | 30 | 63 | 102.5 | 67.5 | I |
| | 2010.05-2015.08 | 6MT/7DCT | F | R | Bus FWD CAAE, CCHB | Model:Transporter | GDS61216 | Stub Axle,differential | | 26 | 37 | | | 145 | |
| | 2010.05-2015.08 | 7DCT | F | L | Bus FWD CAAE, CCHB | | GDS83293 | Drive Shaft | | 38 | 37 | 63 | 102.5 | 645 | |
| | 2010.05-2015.08 | 7DCT | F | R | Bus FWD CAAE, CCHB | Date From:2013.07 | GDS82392 | Drive Shaft | | 38 | 37 | 63 | 102.5 | 1025 | |
| | 2010.05-2015.08 | 7DCT | F | R | Bus FWD CAAE, CCHB | Date To:2013.06 | GDS83353 | Drive Shaft | | 38 | 37 | 63 | 102.5 | 1027 | |
| | 2010.05-2015.08 | 7DCT | F | R | Bus FWD CAAE, CCHB | Date From:2013.07 | GCI81754 | Inner Joint | | 37 | 27 | 34.5 | 430.5 | 96 | |
| | 2010.05-2015.08 | 7DCT | F | R | Bus FWD CAAE, CCHB | Date To:2013.06 | GCI83037 | Inner Joint | | 37 | 27 | 34.5 | 430.5 | 96 | |
| | 2010.05-2015.08 | 6MT | F | L | Platform/Chassis 4WD CAAE;CCHB | Date From:2013.07 | GDS83360 | Drive Shaft | | 38 | 42 | 63 | 102.5 | 617 | |
| | 2010.05-2015.08 | 6MT | F | R | Platform/Chassis 4WD CAAE;CCHB | Date from:2013.07 | GDS81666 | Drive Shaft | | 38 | 26 | 63 | 102.5 | 616 | |
| | 2010.05-2015.08 | 6MT | F | L/R | Platform/Chassis 4WD CAAE;CCHB | Date to:2013.06 | GDS61084 | Drive Shaft | | 38 | 26 | 63 | 102.5 | 613 | |

| Vehicle | YEAR | TRANSM. | F/R | L/R | BODY STYLE & DRIVE TYPE & ENGINE | REMARKS | G-AP Ref. | PRODUCT | ABS | A | B | C | H | L | P |
|---|---|---|---|---|---|---|---|---|---|---|---|---|---|---|---|
| **VW**<br>**Transporter** | | | | | | | | | | | | | | | |
| 2.0 (100 kw) | 2010.05-2015.08 | 6MT | F | L/R | Platform/Chassis 4WD CAAE;CCHB | Date to:2013.06 | GCO61011 | Outer Joint | | 38 | 29 | 63 | 102.5 | 70 | M |
| | 2010.05-2015.08 | 6MT | F | L/R | Platform/Chassis 4WD CAAE;CCHB | Date From:2013.07;6 balls | GCO61060 | Outer Joint | | 38 | 30 | 63 | 102.5 | 68 | I |
| | 2010.05-2015.08 | 6MT | F | L/R | Platform/Chassis 4WD CAAE;CCHB | Date From:2013.07;8 balls | GCO81467 | Outer Joint | | 38 | 30 | 63 | 102.5 | 67.5 | I |
| | 2010.05-2015.08 | 6MT | F | L | Platform/Chassis 4WD CAAE;CCHB | Date From:2013.07 | GCI61104 | Inner Joint | | 42 | 30 | 35.6 | | 136 | |
| | 2010.05-2015.08 | 6MT | F | L/R | Platform/Chassis 4WD CAAE;CCHB | Date to:2013.06 | GCI61029 | Inner Joint | | 26 | 30 | 46.8 | | 137 | |
| | 2010.05-2015.08 | 6MT | F | L | Platform/Chassis 4WD CAAE;CCHB | for OE number:0A5409343B | GDS61213 | Stub Axle,differential | | 42 | 42 | | | 135.5 | |
| | 2010.05-2015.08 | 6MT | F | R | Platform/Chassis 4WD CAAE;CCHB | for OE number:0A5409343A | GDS61215 | Stub Axle,differential | | 26 | 42 | | | 143.5 | |
| | 2010.05-2015.08 | 6MT | F | R | Platform/Chassis 4WD CAAE;CCHB | | GDS61216 | Stub Axle,differential | | 26 | 37 | | | 145 | |
| | 2010.05-2015.08 | 6MT | F | L/R | Platform/Chassis 4WD CAAE;CCHB | for OE number:0A5409343 | GDS61191 | Stub Axle,differential | | 26 | 42 | | | 135.5 | |
| | 2010.05-2015.08 | 6MT | R | L | Platform/Chassis 4WD CAAE;CCHB | | GDS61257 | Drive Shaft | | 38 | | 59 | 100 | 683 | |
| | 2010.05-2015.08 | 6MT | R | R | Platform/Chassis 4WD CAAE;CCHB | | GDS61258 | Drive Shaft | | 38 | | 59 | 100 | 743 | |
| | 2010.05-2015.08 | 6MT | R | L/R | Platform/Chassis 4WD CAAE;CCHB | | GCI82474 | Outer Joint | | 38 | 28 | 59 | 100 | 59 | |
| | 2010.05-2015.08 | 6MT | R | L/R | Platform/Chassis 4WD CAAE;CCHB | | GCI61075 | Inner Joint | | | 28 | | | 26 | |
| | 2010.05-2015.08 | 6MT | F | L | Platform/Chassis FWD CAAE | Date to:2013.06 | GDS61084 | Drive Shaft | | 38 | 26 | 63 | 102.5 | 613 | |
| | 2010.05-2015.08 | 6MT | F | L | Platform/Chassis FWD CAAE | Date From:2013.07 | GDS83360 | Drive Shaft | | 38 | 42 | 63 | 102.5 | 617 | |
| | 2010.05-2015.08 | 6MT | F | R | Platform/Chassis FWD CAAE | Date From:2013.07,Date To:2015.04 | GDS82361 | Drive Shaft | | 38 | 26 | 63 | 102.5 | 879 | |
| | 2010.05-2015.08 | 6MT | F | R | Platform/Chassis FWD CAAE | Date To:2013.06 | GDS83296 | Drive Shaft | | 38 | 26 | 63 | 102.5 | 880 | |
| | 2010.05-2015.08 | 6MT | F | R | Platform/Chassis FWD CAAE | Date From:2015.05 | GDS83361 | Drive Shaft | | 38 | 26 | 63 | 102.5 | 883 | |
| | 2010.05-2015.08 | 6MT | F | L | Platform/Chassis FWD CAAE | Date To:2013.06 | GCI61029 | Inner Joint | | 26 | 30 | 46.8 | | 137 | |
| | 2010.05-2015.08 | 6MT | F | L | Platform/Chassis FWD CAAE | Date From:2013.07 | GCI61104 | Inner Joint | | 42 | 30 | 35.6 | | 136 | |
| | 2010.05-2015.08 | 6MT | F | R | Platform/Chassis FWD CAAE | Date to:2015.04 | GCI61080 | Inner Joint | | 26 | 30 | | 281.5 | 106 | |
| | 2010.05-2015.08 | 6MT | F | R | Platform/Chassis FWD CAAE | Date from:2015.05 | GCI81381 | Inner Joint | | 26 | 30 | | 281.5 | 105 | |
| | 2010.05-2015.08 | 6MT | F | L | Platform/Chassis FWD CAAE | for OE number:0A5409343B | GDS61213 | Stub Axle,differential | | 42 | 42 | | | 135.5 | |
| | 2010.05-2015.08 | 6MT | F | R | Platform/Chassis FWD CAAE | for OE number:0A5409343A | GDS61215 | Stub Axle,differential | | 26 | 42 | | | 143.5 | |
| | 2010.05-2015.08 | 6MT | F | L/R | Platform/Chassis FWD CAAE | for OE number:0A5409343 | GDS61191 | Stub Axle,differential | | 26 | 42 | | | 135.5 | |
| | 2010.05-2015.08 | 6MT/7DCT | F | L/R | Platform/Chassis FWD CAAE | Date to:2013.06 | GCO61011 | Outer Joint | | 38 | 29 | 63 | 102.5 | 70 | M |
| | 2010.05-2015.08 | 6MT/7DCT | F | L/R | Platform/Chassis FWD CAAE | Date From:2013.07;6 balls | GCO61060 | Outer Joint | | 38 | 30 | 63 | 102.5 | 68 | I |
| | 2010.05-2015.08 | 6MT/7DCT | F | L/R | Platform/Chassis FWD CAAE | Date From:2013.07;8 balls | GCO81467 | Outer Joint | | 38 | 30 | 63 | 102.5 | 67.5 | I |
| | 2010.05-2015.08 | 7DCT | F | L | Platform/Chassis FWD CAAE | | GDS83293 | Drive Shaft | | 38 | 37 | 63 | 102.5 | 645 | |
| | 2010.05-2015.08 | 7DCT | F | R | Platform/Chassis FWD CAAE | Chassis no. code :WV1ZZZ-7H,Radstand kurz | GDS82392 | Drive Shaft | | 38 | 37 | 63 | 102.5 | 1025 | |
| | 2010.05-2015.08 | 7DCT | F | R | Platform/Chassis FWD CAAE | Chassis no. code:WV1ZZZ-7J,Radstand lang | GDS83353 | Drive Shaft | | 38 | 37 | 63 | 102.5 | 1027 | |
| | 2010.05-2015.08 | 7DCT | F | R | Platform/Chassis FWD CAAE | Chassis no. from:7HCG000001/7HCH000001/7HCX000001 | GCI81754 | Inner Joint | | 37 | 27 | 34.5 | 430.5 | 96 | |
| | 2010.05-2015.08 | 7DCT | F | R | Platform/Chassis FWD CAAE | Chassis no. to:7HBG500000/7HBH500000/7HBX500000 | GCI83037 | Inner Joint | | 37 | 27 | 34.5 | 430.5 | 96 | |
| | 2010.05-2015.08 | 7DCT | F | R | Platform/Chassis FWD CAAE | | GDS61216 | Stub Axle,differential | | 26 | 37 | | | 145 | |
| | 2010.05-2015.08 | 6MT | F | L | Van 4WD CAAE;CCHB | Date to:2012.04;For PR code:F4D/F0X/F0Y,Chassis no. to:7HBG500000/7HBH500000/7HBX500000,For special-purpose vehicles | GDS61084 | Drive Shaft | | 38 | 26 | 63 | 102.5 | 613 | |
| | 2010.05-2015.08 | 6MT | F | L | Van 4WD CAAE;CCHB | Date From:2013.07 | GDS83360 | Drive Shaft | | 38 | 42 | 63 | 102.5 | 617 | |
| | 2010.05-2015.08 | 6MT | F | R | Van 4WD CAAE;CCHB | Date to:2013.06 | GDS61084 | Drive Shaft | | 38 | 26 | 63 | 102.5 | 613 | |
| | 2010.05-2015.08 | 6MT | F | R | Van 4WD CAAE;CCHB | Date from:2013.07 | GDS81666 | Drive Shaft | | 38 | 26 | 63 | 102.5 | 616 | |
| | 2010.05-2015.08 | 6MT | F | L/R | Van 4WD CAAE;CCHB | Date to:2013.06 | GCO61011 | Outer Joint | | 38 | 29 | 63 | 102.5 | 70 | M |
| | 2010.05-2015.08 | 6MT | F | L/R | Van 4WD CAAE;CCHB | Date From:2013.07;6 balls | GCO61060 | Outer Joint | | 38 | 30 | 63 | 102.5 | 68 | I |
| | 2010.05-2015.08 | 6MT | F | L/R | Van 4WD CAAE;CCHB | Date From:2013.07;8 balls | GCO81467 | Outer Joint | | 38 | 30 | 63 | 102.5 | 67.5 | I |
| | 2010.05-2015.08 | 6MT | F | L | Van 4WD CAAE;CCHB | Date to:2012.05;For PR code:F4D/F0X/F0Y,For special-purpose vehicles | GCI61029 | Inner Joint | | 26 | 30 | 46.8 | | 137 | |
| | 2010.05-2015.08 | 6MT | F | L | Van 4WD CAAE;CCHB | Date From:2013.07 | GCI61104 | Inner Joint | | 42 | 30 | 35.6 | | 136 | |
| | 2010.05-2015.08 | 6MT | F | R | Van 4WD CAAE;CCHB | Date to:2013.06 | GCI61029 | Inner Joint | | 26 | 30 | 46.8 | | 137 | |
| | 2010.05-2015.08 | 6MT | F | L | Van 4WD CAAE;CCHB | for OE number:0A5409343B | GDS61213 | Stub Axle,differential | | 42 | 42 | | | 135.5 | |
| | 2010.05-2015.08 | 6MT | F | R | Van 4WD CAAE;CCHB | for OE number:0A5409343A | GDS61215 | Stub Axle,differential | | 26 | 42 | | | 143.5 | |
| | 2010.05-2015.08 | 6MT | F | R | Van 4WD CAAE;CCHB | | GDS61216 | Stub Axle,differential | | 26 | 37 | | | 145 | |
| | 2010.05-2015.08 | 6MT | F | L/R | Van 4WD CAAE;CCHB | for OE number:0A5409343 | GDS61191 | Stub Axle,differential | | 26 | 42 | | | 135.5 | |
| | 2010.05-2015.08 | 6MT | R | L | Van 4WD CAAE;CCHB | | GDS61257 | Drive Shaft | | 38 | | 59 | 100 | 683 | |
| | 2010.05-2015.08 | 6MT | R | R | Van 4WD CAAE;CCHB | | GDS61258 | Drive Shaft | | 38 | | 59 | 100 | 743 | |
| | 2010.05-2015.08 | 6MT | R | L/R | Van 4WD CAAE;CCHB | | GCI82474 | Outer Joint | | 38 | 28 | 59 | 100 | 59 | |
| | 2010.05-2015.08 | 6MT | R | L/R | Van 4WD CAAE;CCHB | | GCI61075 | Inner Joint | | | 28 | | | 26 | |
| | 2010.05-2015.08 | 5MT | F | R | Van FWD CAAE;CCHB | | GDS61190 | Stub Axle,differential | | 26 | 37 | | | 136.5 | |
| | 2010.05-2015.08 | 6MT | F | L | Van FWD CAAE;CCHB | Date to:2013.06 | GDS61084 | Drive Shaft | | 38 | 26 | 63 | 102.5 | 613 | |
| | 2010.05-2015.08 | 6MT | F | L | Van FWD CAAE;CCHB | Date From:2013.07 | GDS83360 | Drive Shaft | | 38 | 42 | 63 | 102.5 | 617 | |
| | 2010.05-2015.08 | 6MT | F | R | Van FWD CAAE;CCHB | Date From:2013.07,Date To:2015.04 | GDS82361 | Drive Shaft | | 38 | 26 | 63 | 102.5 | 879 | |
| | 2010.05-2015.08 | 6MT | F | R | Van FWD CAAE;CCHB | | GDS83296 | Drive Shaft | | 38 | 26 | 63 | 102.5 | 880 | |
| | 2010.05-2015.08 | 6MT | F | R | Van FWD CAAE;CCHB | Date From:2015.05 | GDS83361 | Drive Shaft | | 38 | 26 | 63 | 102.5 | 883 | |
| | 2010.05-2015.08 | 6MT | F | L | Van FWD CAAE;CCHB | Date To:2013.06 | GCI61029 | Inner Joint | | 26 | 30 | 46.8 | | 137 | |
| | 2010.05-2015.08 | 6MT | F | L | Van FWD CAAE;CCHB | Date From:2013.07 | GCI61104 | Inner Joint | | 42 | 30 | 35.6 | | 136 | |
| | 2010.05-2015.08 | 6MT | F | R | Van FWD CAAE;CCHB | Date to:2015.04 | GCI61080 | Inner Joint | | 26 | 30 | | 281.5 | 106 | |
| | 2010.05-2015.08 | 6MT | F | R | Van FWD CAAE;CCHB | Date from:2015.05 | GCI81381 | Inner Joint | | 26 | 30 | | 281.5 | 105 | |
| | 2010.05-2015.08 | 6MT | F | L | Van FWD CAAE;CCHB | for OE number:0A5409343B | GDS61213 | Stub Axle,differential | | 42 | 42 | | | 135.5 | |
| | 2010.05-2015.08 | 6MT | F | R | Van FWD CAAE;CCHB | for OE number:0A5409343A | GDS61215 | Stub Axle,differential | | 26 | 42 | | | 143.5 | |
| | 2010.05-2015.08 | 6MT | F | L/R | Van FWD CAAE;CCHB | for OE number:0A5409343 | GDS61191 | Stub Axle,differential | | 26 | 42 | | | 135.5 | |

| | YEAR | TRANSM. | F/R | L/R | BODY STYLE & DRIVE TYPE & ENGINE | REMARKS | G-AP Ref. | PRODUCT | ABS | Technical Specifications A | B | C | H | L | P |
|---|---|---|---|---|---|---|---|---|---|---|---|---|---|---|---|
| **VW Transporter** | | | | | | | | | | | | | | | |
| 2.0 (100 kw) | 2010.05-2015.08 | 6MT/7DCT | F | L/R | Van FWD CAAE;CCHB | Date to:2013.06 | GCO61011 | Outer Joint | | 38 | 29 | 63 | 102.5 | 70 | M |
| | 2010.05-2015.08 | 6MT/7DCT | F | L/R | Van FWD CAAE;CCHB | Date From:2013.07;6 balls | GCO61060 | Outer Joint | | 38 | 30 | 63 | 102.5 | 68 | I |
| | 2010.05-2015.08 | 6MT/7DCT | F | L/R | Van FWD CAAE;CCHB | Date From:2013.07;8 balls | GCO81467 | Outer Joint | | 38 | 30 | 63 | 102.5 | 67.5 | I |
| | 2010.05-2015.08 | 7DCT | F | L | Van FWD CAAE;CCHB | | GDS83293 | Drive Shaft | | 38 | 37 | 63 | 102.5 | 645 | |
| | 2010.05-2015.08 | 7DCT | F | R | Van FWD CAAE;CCHB | Chassis no. from:7HCG000001/7HCH000001/7HCX000001 | GDS82392 | Drive Shaft | | 38 | 37 | 63 | 102.5 | 1025 | |
| | 2010.05-2015.08 | 7DCT | F | R | Van FWD CAAE;CCHB | Chassis no. to:7HBG500000/7HBH500000/7HBX500000 | GDS83353 | Drive Shaft | | 38 | 37 | 63 | 102.5 | 1027 | |
| | 2010.05-2015.08 | 7DCT | F | R | Van FWD CAAE;CCHB | Chassis no. from:7HCG000001/7HCH000001/7HCX000001 | GCI81754 | Inner Joint | | 37 | 27 | 34.5 | 430.5 | 96 | |
| | 2010.05-2015.08 | 7DCT | F | R | Van FWD CAAE;CCHB | Chassis no. to:7HBG500000/7HBH500000/7HBX500000 | GCI83037 | Inner Joint | | 37 | 27 | 34.5 | 430.5 | 96 | |
| | 2010.05-2015.08 | 7DCT | F | R | Van FWD CAAE;CCHB | | GDS61216 | Stub Axle,differential | | 26 | 37 | | | 145 | |
| 2.0 (103 kw) | 2009.09-2015.08 | 5MT | F | R | Bus 4WD CAAC, CCHA | | GDS61190 | Stub Axle,differential | | 26 | 37 | | | 136.5 | |
| | 2009.09-2015.08 | 6MT | F | L | Bus 4WD CAAC, CCHA | [illegible] | GDS61084 | Drive Shaft | | 38 | 26 | 63 | 102.5 | 613 | |
| | 2009.09-2015.08 | 6MT | F | L | Bus 4WD CAAC, CCHA | Date From:2013.07 | GDS83360 | Drive Shaft | | 38 | 42 | 63 | 102.5 | 617 | |
| | 2009.09-2015.08 | 6MT | F | R | Bus 4WD CAAC, CCHA | Date to:2013.06 | GDS61084 | Drive Shaft | | 38 | 26 | 63 | 102.5 | 613 | |
| | 2009.09-2015.08 | 6MT | F | R | Bus 4WD CAAC, CCHA | Date from:2013.07 | GDS81666 | Drive Shaft | | 38 | 26 | 63 | 102.5 | 616 | |
| | 2009.09-2015.08 | 6MT | F | L/R | Bus 4WD CAAC, CCHA | Date to:2013.06 | GCO61011 | Outer Joint | | 38 | 29 | 63 | 102.5 | 70 | M |
| | 2009.09-2015.08 | 6MT | F | L/R | Bus 4WD CAAC, CCHA | Date From:2013.07;6 balls | GCO61060 | Outer Joint | | 38 | 30 | 63 | 102.5 | 68 | I |
| | 2009.09-2015.08 | 6MT | F | L/R | Bus 4WD CAAC, CCHA | Date From:2013.07;8 balls | GCO81467 | Outer Joint | | 38 | 30 | 63 | 102.5 | 67.5 | I |
| | 2009.09-2015.08 | 6MT | F | L | Bus 4WD CAAC, CCHA | [illegible] | GCI61029 | Inner Joint | | 26 | 30 | 46.8 | | 137 | |
| | 2009.09-2015.08 | 6MT | F | L | Bus 4WD CAAC, CCHA | Date From:2013.07 | GCI61104 | Inner Joint | | 42 | 30 | 35.6 | | 136 | |
| | 2009.09-2015.08 | 6MT | F | R | Bus 4WD CAAC, CCHA | Date to:2013.06 | GCI61029 | Inner Joint | | 26 | 30 | 46.8 | | 137 | |
| | 2009.09-2015.08 | 6MT | F | L | Bus 4WD CAAC, CCHA | Model:Transporter,for OE number:0A5409343B | GDS61213 | Stub Axle,differential | | 42 | 42 | | | 135.5 | |
| | 2009.09-2015.08 | 6MT | F | R | Bus 4WD CAAC, CCHA | Model:Transporter,for OE number:0A5409343A | GDS61215 | Stub Axle,differential | | 26 | 42 | | | 143.5 | |
| | 2009.09-2015.08 | 6MT | F | L/R | Bus 4WD CAAC, CCHA | Model:Transporter,for OE number:0A5409343 | GDS61191 | Stub Axle,differential | | 26 | 42 | | | 135.5 | |
| | 2009.09-2015.08 | 6MT | R | L | Bus 4WD CAAC, CCHA | | GDS61257 | Drive Shaft | | 38 | | 59 | 100 | 683 | |
| | 2009.09-2015.08 | 6MT | R | R | Bus 4WD CAAC, CCHA | | GDS61258 | Drive Shaft | | 38 | | 59 | 100 | 743 | |
| | 2009.09-2015.08 | 6MT | R | L/R | Bus 4WD CAAC, CCHA | | GCI82474 | Outer Joint | | 38 | 28 | 59 | 100 | 59 | |
| | 2009.09-2015.08 | 6MT | R | L/R | Bus 4WD CAAC, CCHA | | GCI61075 | Inner Joint | | | 28 | | | 26 | |
| | 2009.09-2015.08 | 6MT | F | L | Bus FWD CAAC, CCHA | Date to:2013.06 | GDS61084 | Drive Shaft | | 38 | 26 | 63 | 102.5 | 613 | |
| | 2009.09-2015.08 | 6MT | F | L | Bus FWD CAAC, CCHA | Date From:2013.07 | GDS83360 | Drive Shaft | | 38 | 42 | 63 | 102.5 | 617 | |
| | 2009.09-2015.08 | 6MT | F | R | Bus FWD CAAC, CCHA | Date From:2013.07,Date To:2015.04 | GDS82361 | Drive Shaft | | 38 | 26 | 63 | 102.5 | 879 | |
| | 2009.09-2015.08 | 6MT | F | R | Bus FWD CAAC, CCHA | Date To:2013.06 | GDS83296 | Drive Shaft | | 38 | 26 | 63 | 102.5 | 880 | |
| | 2009.09-2015.08 | 6MT | F | R | Bus FWD CAAC, CCHA | Date From:2015.05 | GDS83361 | Drive Shaft | | 38 | 26 | 63 | 102.5 | 883 | |
| | 2009.09-2015.08 | 6MT | F | L/R | Bus FWD CAAC, CCHA | Date From:2013.07;8 balls | GCO81467 | Outer Joint | | 38 | 30 | 63 | 102.5 | 67.5 | I |
| | 2009.09-2015.08 | 6MT | F | L | Bus FWD CAAC, CCHA | Date To:2013.06 | GCI61029 | Inner Joint | | 26 | 30 | 46.8 | | 137 | |
| | 2009.09-2015.08 | 6MT | F | L | Bus FWD CAAC, CCHA | Date From:2013.07 | GCI61104 | Inner Joint | | 42 | 30 | 35.6 | | 136 | |
| | 2009.09-2015.08 | 6MT | F | R | Bus FWD CAAC, CCHA | Date to:2015.04 | GCI61080 | Inner Joint | | 26 | 30 | | 281.5 | 106 | |
| | 2009.09-2015.08 | 6MT | F | R | Bus FWD CAAC, CCHA | Date from:2015.05 | GCI81381 | Inner Joint | | 26 | 30 | | 281.5 | 105 | |
| | 2009.09-2015.08 | 6MT | F | L | Bus FWD CAAC, CCHA | for OE number:0A5409343B | GDS61213 | Stub Axle,differential | | 42 | 42 | | | 135.5 | |
| | 2009.09-2015.08 | 6MT | F | R | Bus FWD CAAC, CCHA | for OE number:0A5409343A | GDS61215 | Stub Axle,differential | | 26 | 42 | | | 143.5 | |
| | 2009.09-2015.08 | 6MT | F | L/R | Bus FWD CAAC, CCHA | for OE number:0A5409343 | GDS61191 | Stub Axle,differential | | 26 | 42 | | | 135.5 | |
| | 2009.09-2015.08 | 6MT/7DCT | F | L/R | Bus FWD CAAC, CCHA | Date To:2013.06 | GCO61011 | Outer Joint | | 38 | 29 | 63 | 102.5 | 70 | M |
| | 2009.09-2015.08 | 6MT/7DCT | F | L/R | Bus FWD CAAC, CCHA | Date From:2013.07;6 balls | GCO61060 | Outer Joint | | 38 | 30 | 63 | 102.5 | 68 | I |
| | 2009.09-2015.08 | 7AT | F | R | Bus FWD CAAC, CCHA | | GDS61216 | Stub Axle,differential | | 26 | 37 | | | 145 | |
| | 2009.09-2015.08 | 7DCT | F | L | Bus FWD CAAC, CCHA | | GDS83293 | Drive Shaft | | 38 | 37 | 63 | 102.5 | 645 | |
| | 2009.09-2015.08 | 7DCT | F | R | Bus FWD CAAC, CCHA | Chassis no. From:7HCG000001/7HCH000001/7HCX000001 | GDS82392 | Drive Shaft | | 38 | 37 | 63 | 102.5 | 1025 | |
| | 2009.09-2015.08 | 7DCT | F | R | Bus FWD CAAC, CCHA | Chassis no. To:7HBG500000/7HBH500000/7HBX500000 | GDS83353 | Drive Shaft | | 38 | 37 | 63 | 102.5 | 1027 | |
| | 2009.09-2015.08 | 7DCT | F | R | Bus FWD CAAC, CCHA | Chassis no. From:7HCG000001/7HCH000001/7HCX000001 | GCI81754 | Inner Joint | | 37 | 27 | 34.5 | 430.5 | 96 | |
| | 2009.09-2015.08 | 7DCT | F | R | Bus FWD CAAC, CCHA | Chassis no. To:7HBG500000/7HBH500000/7HBX500000 | GCI83037 | Inner Joint | | 37 | 27 | 34.5 | 430.5 | 96 | |
| | 2009.09-2015.08 | 6MT | F | L | Platform/Chassis 4WD CAAC;CCHA | Date From:2013.07 | GDS83360 | Drive Shaft | | 38 | 42 | 63 | 102.5 | 617 | |
| | 2009.09-2015.08 | 6MT | F | R | Platform/Chassis 4WD CAAC;CCHA | Date from:2013.07 | GDS81666 | Drive Shaft | | 38 | 26 | 63 | 102.5 | 616 | |
| | 2009.09-2015.08 | 6MT | F | L/R | Platform/Chassis 4WD CAAC;CCHA | Date to:2013.06 | GDS61084 | Drive Shaft | | 38 | 26 | 63 | 102.5 | 613 | |
| | 2009.09-2015.08 | 6MT | F | L/R | Platform/Chassis 4WD CAAC;CCHA | Date to:2013.06 | GCO61011 | Outer Joint | | 38 | 29 | 63 | 102.5 | 70 | M |
| | 2009.09-2015.08 | 6MT | F | L/R | Platform/Chassis 4WD CAAC;CCHA | Date From:2013.07;6 balls | GCO61060 | Outer Joint | | 38 | 30 | 63 | 102.5 | 68 | I |
| | 2009.09-2015.08 | 6MT | F | L/R | Platform/Chassis 4WD CAAC;CCHA | Date From:2013.07;8 balls | GCO81467 | Outer Joint | | 38 | 30 | 63 | 102.5 | 67.5 | I |
| | 2009.09-2015.08 | 6MT | F | L | Platform/Chassis 4WD CAAC;CCHA | | GCI61029 | Inner Joint | | 26 | 30 | 46.8 | | 137 | |
| | 2009.09-2015.08 | 6MT | F | L | Platform/Chassis 4WD CAAC;CCHA | Date From:2013.07 | GCI61104 | Inner Joint | | 42 | 30 | 35.6 | | 136 | |
| | 2009.09-2015.08 | 6MT | F | L | Platform/Chassis 4WD CAAC;CCHA | for OE number:0A5409343B | GDS61213 | Stub Axle,differential | | 42 | 42 | | | 135.5 | |
| | 2009.09-2015.08 | 6MT | F | R | Platform/Chassis 4WD CAAC;CCHA | for OE number:0A5409343A | GDS61215 | Stub Axle,differential | | 26 | 42 | | | 143.5 | |
| | 2009.09-2015.08 | 6MT | F | R | Platform/Chassis 4WD CAAC;CCHA | | GDS61216 | Stub Axle,differential | | 26 | 37 | | | 145 | |
| | 2009.09-2015.08 | 6MT | F | L/R | Platform/Chassis 4WD CAAC;CCHA | for OE number:0A5409343 | GDS61191 | Stub Axle,differential | | 26 | 42 | | | 135.5 | |
| | 2009.09-2015.08 | 6MT | R | L | Platform/Chassis 4WD CAAC;CCHA | | GDS61257 | Drive Shaft | | 38 | | 59 | 100 | 683 | |
| | 2009.09-2015.08 | 6MT | R | R | Platform/Chassis 4WD CAAC;CCHA | | GDS61258 | Drive Shaft | | 38 | | 59 | 100 | 743 | |
| | 2009.09-2015.08 | 6MT | R | L/R | Platform/Chassis 4WD CAAC;CCHA | | GCI82474 | Outer Joint | | 38 | 28 | 59 | 100 | 59 | |
| | 2009.09-2015.08 | 6MT | R | L/R | Platform/Chassis 4WD CAAC;CCHA | | GCI61075 | Inner Joint | | | 28 | | | 26 | |
| | 2009.09-2015.08 | 6MT | F | L | Platform/Chassis FWD CAAC;CCHA | Date to:2013.06 | GDS61084 | Drive Shaft | | 38 | 26 | 63 | 102.5 | 613 | |

| | YEAR | TRANSM. | F/R | L/R | BODY STYLE & DRIVE TYPE & ENGINE | REMARKS | G-AP Ref. | PRODUCT | ABS | Technical Specifications A | B | C | H | L | P |
|---|---|---|---|---|---|---|---|---|---|---|---|---|---|---|---|
| **VW Transporter** | | | | | | | | | | | | | | | |
| 2.0 (103 kw) | 2009.09-2015.08 | 6MT | F | L | Platform/Chassis FWD CAAC;CCHA | Date From:2013.07 | GDS83360 | Drive Shaft | | 38 | 42 | 63 | 102.5 | 617 | |
| | 2009.09-2015.08 | 6MT | F | R | Platform/Chassis FWD CAAC;CCHA | Date From:2013.07,Date To:2015.04 | GDS82361 | Drive Shaft | | 38 | 26 | 63 | 102.5 | 879 | |
| | 2009.09-2015.08 | 6MT | F | R | Platform/Chassis FWD CAAC;CCHA | Date To:2013.06 | GDS83296 | Drive Shaft | | 38 | 26 | 63 | 102.5 | 880 | |
| | 2009.09-2015.08 | 6MT | F | R | Platform/Chassis FWD CAAC;CCHA | Date From:2015.05 | GDS83361 | Drive Shaft | | 38 | 26 | 63 | 102.5 | 883 | |
| | 2009.09-2015.08 | 6MT | F | L/R | Platform/Chassis FWD CAAC;CCHA | Date From:2013.07;8 balls | GCO81467 | Outer Joint | | 38 | 30 | 63 | 102.5 | 67.5 | I |
| | 2009.09-2015.08 | 6MT | F | L | Platform/Chassis FWD CAAC;CCHA | Date To:2013.06 | GCI61029 | Inner Joint | | 26 | 30 | 46.8 | | 137 | |
| | 2009.09-2015.08 | 6MT | F | L | Platform/Chassis FWD CAAC;CCHA | Date From:2013.07 | GCI61104 | Inner Joint | | 42 | 30 | 35.6 | | 136 | |
| | 2009.09-2015.08 | 6MT | F | R | Platform/Chassis FWD CAAC;CCHA | Date to:2015.04 | GCI61080 | Inner Joint | | 26 | 30 | | 281.5 | 106 | |
| | 2009.09-2015.08 | 6MT | F | R | Platform/Chassis FWD CAAC;CCHA | Date from:2015.05 | GCI81381 | Inner Joint | | 26 | 30 | | 281.5 | 105 | |
| | 2009.09-2015.08 | 6MT | F | L | Platform/Chassis FWD CAAC;CCHA | for OE number:0A5409343B | GDS61213 | Stub Axle,differential | | 42 | 42 | | | 135.5 | |
| | 2009.09-2015.08 | 6MT | F | R | Platform/Chassis FWD CAAC;CCHA | for OE number:0A5409343A | GDS61215 | Stub Axle,differential | | 26 | 42 | | | 143.5 | |
| | 2009.09-2015.08 | 6MT | F | L/R | Platform/Chassis FWD CAAC;CCHA | for OE number:0A5409343 | GDS61191 | Stub Axle,differential | | 26 | 42 | | | 135.5 | |
| | 2009.09-2015.08 | 6MT/7DCT | F | L/R | Platform/Chassis FWD CAAC;CCHA | Date To:2013.06 | GCO61011 | Outer Joint | | 38 | 29 | 63 | 102.5 | 70 | M |
| | 2009.09-2015.08 | 6MT/7DCT | F | L/R | Platform/Chassis FWD CAAC;CCHA | Date From:2013.07;6 balls | GCO61060 | Outer Joint | | 38 | 30 | 63 | 102.5 | 68 | I |
| | 2009.09-2015.08 | 7AT | F | R | Platform/Chassis FWD CAAC;CCHA | | GDS61216 | Stub Axle,differential | | 26 | 37 | | | 145 | |
| | 2009.09-2015.08 | 7DCT | F | L | Platform/Chassis FWD CAAC;CCHA | | GDS83293 | Drive Shaft | | 38 | 37 | 63 | 102.5 | 645 | |
| | 2009.09-2015.08 | 7DCT | F | R | Platform/Chassis FWD CAAC;CCHA | Chassis no. code :WV1ZZZ-7H,Radstand kurz | GDS82392 | Drive Shaft | | 38 | 37 | 63 | 102.5 | 1025 | |
| | 2009.09-2015.08 | 7DCT | F | R | Platform/Chassis FWD CAAC;CCHA | Chassis no. code:WV1ZZZ-7J,Radstand lang | GDS83353 | Drive Shaft | | 38 | 37 | 63 | 102.5 | 1027 | |
| | 2009.09-2015.08 | 7DCT | F | R | Platform/Chassis FWD CAAC;CCHA | Chassis no. From:7HCG000001/7HCH000001/7HCX000001 | GCI81754 | Inner Joint | | 37 | 27 | 34.5 | 430.5 | 96 | |
| | 2009.09-2015.08 | 7DCT | F | R | Platform/Chassis FWD CAAC;CCHA | Chassis no. To:7HBG500000/7HBH500000/7HBX500000 | GCI83037 | Inner Joint | | 37 | 27 | 34.5 | 430.5 | 96 | |
| | 2009.09-2015.08 | 5MT | F | R | Van 4WD CAAC;CCHA | | GDS61190 | Stub Axle,differential | | 26 | 37 | | | 136.5 | |
| | 2009.09-2015.08 | 6MT | F | L | Van 4WD CAAC;CCHA | Date to:2012.05;For PR code:F4D/F5K/F0Y/For special-purpose vehicles | GDS61084 | Drive Shaft | | 38 | 26 | 63 | 102.5 | 613 | |
| | 2009.09-2015.08 | 6MT | F | L | Van 4WD CAAC;CCHA | Date From:2013.07 | GDS83360 | Drive Shaft | | 38 | 42 | 63 | 102.5 | 617 | |
| | 2009.09-2015.08 | 6MT | F | R | Van 4WD CAAC;CCHA | Date to:2013.06 | GDS61084 | Drive Shaft | | 38 | 26 | 63 | 102.5 | 613 | |
| | 2009.09-2015.08 | 6MT | F | R | Van 4WD CAAC;CCHA | Date from:2013.07 | GDS81666 | Drive Shaft | | 38 | 26 | 63 | 102.5 | 616 | |
| | 2009.09-2015.08 | 6MT | F | L/R | Van 4WD CAAC;CCHA | Date to:2013.06 | GCO61011 | Outer Joint | | 38 | 29 | 63 | 102.5 | 70 | M |
| | 2009.09-2015.08 | 6MT | F | L/R | Van 4WD CAAC;CCHA | Date From:2013.07;6 balls | GCO61060 | Outer Joint | | 38 | 30 | 63 | 102.5 | 68 | I |
| | 2009.09-2015.08 | 6MT | F | L/R | Van 4WD CAAC;CCHA | Date From:2013.07;8 balls | GCO81467 | Outer Joint | | 38 | 30 | 63 | 102.5 | 67.5 | I |
| | 2009.09-2015.08 | 6MT | F | L | Van 4WD CAAC;CCHA | Date to:2012.05;For PR code:F4D/F5K/F0Y/For special-purpose vehicles | GCI61029 | Inner Joint | | 26 | 30 | 46.8 | | 137 | |
| | 2009.09-2015.08 | 6MT | F | L | Van 4WD CAAC;CCHA | Date From:2013.07 | GCI61104 | Inner Joint | | 42 | 30 | 35.6 | | 136 | |
| | 2009.09-2015.08 | 6MT | F | R | Van 4WD CAAC;CCHA | Date to:2013.06 | GCI61029 | Inner Joint | | 26 | 30 | 46.8 | | 137 | |
| | 2009.09-2015.08 | 6MT | F | L | Van 4WD CAAC;CCHA | for OE number:0A5409343B | GDS61213 | Stub Axle,differential | | 42 | 42 | | | 135.5 | |
| | 2009.09-2015.08 | 6MT | F | R | Van 4WD CAAC;CCHA | for OE number:0A5409343A | GDS61215 | Stub Axle,differential | | 26 | 42 | | | 143.5 | |
| | 2009.09-2015.08 | 6MT | F | R | Van 4WD CAAC;CCHA | | GDS61216 | Stub Axle,differential | | 26 | 37 | | | 145 | |
| | 2009.09-2015.08 | 6MT | F | L/R | Van 4WD CAAC;CCHA | for OE number:0A5409343 | GDS61191 | Stub Axle,differential | | 26 | 42 | | | 135.5 | |
| | 2009.09-2015.08 | 6MT | R | L | Van 4WD CAAC;CCHA | | GDS61257 | Drive Shaft | | 38 | | 59 | 100 | 683 | |
| | 2009.09-2015.08 | 6MT | R | R | Van 4WD CAAC;CCHA | | GDS61258 | Drive Shaft | | 38 | | 59 | 100 | 743 | |
| | 2009.09-2015.08 | 6MT | R | L/R | Van 4WD CAAC;CCHA | | GCI82474 | Outer Joint | | 38 | 28 | 59 | 100 | 59 | |
| | 2009.09-2015.08 | 6MT | R | L/R | Van 4WD CAAC;CCHA | | GCI61075 | Inner Joint | | | 28 | | | 26 | |
| | 2009.09-2015.08 | 5MT | F | R | Van FWD CAAC;CCHA | | GDS61190 | Stub Axle,differential | | 26 | 37 | | | 136.5 | |
| | 2009.09-2015.08 | 6MT | F | L | Van FWD CAAC;CCHA | Date to:2013.05 | GDS61084 | Drive Shaft | | 38 | 26 | 63 | 102.5 | 613 | |
| | 2009.09-2015.08 | 6MT | F | L | Van FWD CAAC;CCHA | Date from:2015.05 | GDS83360 | Drive Shaft | | 38 | 42 | 63 | 102.5 | 617 | |
| | 2009.09-2015.08 | 6MT | F | R | Van FWD CAAC;CCHA | Date from:2013.06,Date to:2015.04 | GDS82361 | Drive Shaft | | 38 | 26 | 63 | 102.5 | 879 | |
| | 2009.09-2015.08 | 6MT | F | R | Van FWD CAAC;CCHA | Date to:2013.05 | GDS83296 | Drive Shaft | | 38 | 26 | 63 | 102.5 | 880 | |
| | 2009.09-2015.08 | 6MT | F | R | Van FWD CAAC;CCHA | Date from:2015.05 | GDS83361 | Drive Shaft | | 38 | 26 | 63 | 102.5 | 883 | |
| | 2009.09-2015.08 | 6MT | F | L | Van FWD CAAC;CCHA | Date to:2013.05 | GCI61029 | Inner Joint | | 26 | 30 | 46.8 | | 137 | |
| | 2009.09-2015.08 | 6MT | F | L | Van FWD CAAC;CCHA | Date from:2015.05 | GCI61104 | Inner Joint | | 42 | 30 | 35.6 | | 136 | |
| | 2009.09-2015.08 | 6MT | F | R | Van FWD CAAC;CCHA | Date to:2015.04 | GCI61080 | Inner Joint | | 26 | 30 | | 281.5 | 106 | |
| | 2009.09-2015.08 | 6MT | F | R | Van FWD CAAC;CCHA | Date from:2015.05 | GCI81381 | Inner Joint | | 26 | 30 | | 281.5 | 105 | |
| | 2009.09-2015.08 | 6MT | F | L | Van FWD CAAC;CCHA | for OE number:0A5409343B | GDS61213 | Stub Axle,differential | | 42 | 42 | | | 135.5 | |
| | 2009.09-2015.08 | 6MT | F | R | Van FWD CAAC;CCHA | for OE number:0A5409343A | GDS61215 | Stub Axle,differential | | 26 | 42 | | | 143.5 | |
| | 2009.09-2015.08 | 6MT | F | L/R | Van FWD CAAC;CCHA | for OE number:0A5409343 | GDS61191 | Stub Axle,differential | | 26 | 42 | | | 135.5 | |
| | 2009.09-2015.08 | 6MT/7DCT | F | L/R | Van FWD CAAC;CCHA | 6 balls | GCO61011 | Outer Joint | | 38 | 29 | 63 | 102.5 | 70 | M |
| | 2009.09-2015.08 | 6MT/7DCT | F | L/R | Van FWD CAAC;CCHA | 6 balls | GCO61060 | Outer Joint | | 38 | 30 | 63 | 102.5 | 68 | I |
| | 2009.09-2015.08 | 6MT/7DCT | F | L/R | Van FWD CAAC;CCHA | 8 balls | GCO81467 | Outer Joint | | 38 | 30 | 63 | 102.5 | 67.5 | I |
| | 2009.09-2015.08 | 7DCT | F | L | Van FWD CAAC;CCHA | 6 balls,TJ | GDS83293 | Drive Shaft | | 38 | 37 | 63 | 102.5 | 645 | |
| | 2009.09-2015.08 | 7DCT | F | R | Van FWD CAAC;CCHA | 8 balls,AAR | GDS82392 | Drive Shaft | | 38 | 37 | 63 | 102.5 | 1025 | |
| | 2009.09-2015.08 | 7DCT | F | R | Van FWD CAAC;CCHA | 6 balls,AAR | GDS83353 | Drive Shaft | | 38 | 37 | 63 | 102.5 | 1027 | |
| | 2009.09-2015.08 | 7DCT | F | R | Van FWD CAAC;CCHA | Chassis no. From:7HCG000001/7HCH000001/7HCX000001 | GCI81754 | Inner Joint | | 37 | 27 | 34.5 | 430.5 | 96 | |
| | 2009.09-2015.08 | 7DCT | F | R | Van FWD CAAC;CCHA | Chassis no. to:7HBG500000/7HBH500000/7HBX500000 | GCI83037 | Inner Joint | | 37 | 27 | 34.5 | 430.5 | 96 | |
| | 2009.09-2015.08 | 7DCT | F | R | Van FWD CAAC;CCHA | | GDS61216 | Stub Axle,differential | | 26 | 37 | | | 145 | |
| | 2015.04-2019.11 | 6MT | F | L | Platform/Chassis FWD CAAC | date to:2017.01 | GDS83360 | Drive Shaft | | 38 | 42 | 63 | 102.5 | 617 | |
| | 2015.04-2019.11 | 6MT | F | R | Platform/Chassis FWD CAAC | date to:2017.01 | GDS83361 | Drive Shaft | | 38 | 26 | 63 | 102.5 | 883 | |
| | 2015.04-2019.11 | 6MT | F | L | Platform/Chassis FWD CAAC | | GCI61029 | Inner Joint | | 26 | 30 | 46.8 | | 137 | |
| | 2015.04-2019.11 | 6MT | F | R | Platform/Chassis FWD CAAC | | GCI81381 | Inner Joint | | 26 | 30 | | 281.5 | 105 | |

| | YEAR | TRANSM. | F/R | L/R | BODY STYLE & DRIVE TYPE & ENGINE | REMARKS | G-AP Ref. | PRODUCT | ABS | Technical Specifications | | | | | |
|---|---|---|---|---|---|---|---|---|---|---|---|---|---|---|---|
| | | | | | | | | | | A | B | C | H | L | P |
| **VW Transporter** | | | | | | | | | | | | | | | |
| 2.0 (103 kw) | 2015.04-2019.11 | 6MT | F | L | Platform/Chassis FWD CAAC | for OE number:0A5409343B | GDS61213 | Stub Axle,differential | | 42 | 42 | | | 135.5 | |
| | 2015.04-2019.11 | 6MT | F | R | Platform/Chassis FWD CAAC | for OE number:0A5409343A | GDS61215 | Stub Axle,differential | | 26 | 42 | | | 143.5 | |
| | 2015.04-2019.11 | 7AT/6MT | F | L/R | Platform/Chassis FWD CAAC | | GDS61216 | Stub Axle,differential | | 26 | 37 | | | 145 | |
| | 2015.04-2019.11 | 7DCT | F | L | Platform/Chassis FWD CAAC | | GDS83293 | Drive Shaft | | 38 | 37 | 63 | 102.5 | 645 | |
| | 2015.04-2019.11 | 7DCT | F | R | Platform/Chassis FWD CAAC | | GDS82392 | Drive Shaft | | 38 | 37 | 63 | 102.5 | 1025 | |
| | 2015.04-2019.11 | 7DCT | F | R | Platform/Chassis FWD CAAC | Date to:2017.01 | GCO61060 | Outer Joint | | 38 | 30 | 63 | 102.5 | 68 | I |
| | 2015.04-2019.11 | 7DCT | F | R | Platform/Chassis FWD CAAC | Date to:2017.01 | GCI83037 | Inner Joint | | 37 | 27 | 34.5 | 430.5 | 96 | |
| | 2015.04-2019.11 | MT/6MT | F | L/R | Platform/Chassis FWD CAAC | Date from:2013.07 | GCO81467 | Outer Joint | | 38 | 30 | 63 | 102.5 | 67.5 | I |
| | 2015.04-2019.12 | 6MT | F | L | Bus FWD CAAC | | GDS83360 | Drive Shaft | | 38 | 42 | 63 | 102.5 | 617 | |
| | 2015.04-2019.12 | 6MT | F | R | Bus FWD CAAC | | GDS83361 | Drive Shaft | | 38 | 26 | 63 | 102.5 | 883 | |
| | 2015.04-2019.12 | 6MT | F | L | Bus FWD CAAC | | GCI61029 | Inner Joint | | 26 | 30 | 46.8 | | 137 | |
| | 2015.04-2019.12 | 6MT | F | L | Bus FWD CAAC | | GCI61104 | Inner Joint | | 42 | 30 | 35.6 | | 136 | |
| | 2015.04-2019.12 | 6MT | F | R | Bus FWD CAAC | | GCI81381 | Inner Joint | | 26 | 30 | | 281.5 | 105 | |
| | 2015.04-2019.12 | 6MT | F | L | Bus FWD CAAC | Model:Transporter | GDS61213 | Stub Axle,differential | | 42 | 42 | | | 135.5 | |
| | 2015.04-2019.12 | 6MT | F | R | Bus FWD CAAC | Model:Transporter | GDS61215 | Stub Axle,differential | | 26 | 42 | | | 143.5 | |
| | 2015.04-2019.12 | 6MT/7DCT | F | L/R | Bus FWD CAAC | | GCO81467 | Outer Joint | | 38 | 30 | 63 | 102.5 | 67.5 | I |
| | 2015.04-2019.12 | 6MT/7DCT | F | L/R | Bus FWD CAAC | Model:Caravelle | GDS61216 | Stub Axle,differential | | 26 | 37 | | | 145 | |
| | 2015.04-2019.12 | 7DCT | F | L | Bus FWD CAAC | | GDS83293 | Drive Shaft | | 38 | 37 | 63 | 102.5 | 645 | |
| | 2015.04-2019.12 | 7DCT | F | R | Bus FWD CAAC | | GDS82392 | Drive Shaft | | 38 | 37 | 63 | 102.5 | 1025 | |
| | 2015.04-2019.12 | 7DCT | F | R | Bus FWD CAAC | Date to:2017.01;6 balls | GCO61060 | Outer Joint | | 38 | 30 | 63 | 102.5 | 68 | I |
| | 2015.04-2019.12 | 7DCT | F | R | Bus FWD CAAC | Date to:2017.01 | GCI83037 | Inner Joint | | 37 | 27 | 34.5 | 430.5 | 96 | |
| | 2015.04-2019.12 | 6MT | F | L | Van FWD CAAC | | GDS83360 | Drive Shaft | | 38 | 42 | 63 | 102.5 | 617 | |
| | 2015.04-2019.12 | 6MT | F | R | Van FWD CAAC | Date to:2017.01 | GDS83361 | Drive Shaft | | 38 | 26 | 63 | 102.5 | 883 | |
| | 2015.04-2019.12 | 6MT | F | L/R | Van FWD CAAC | | GCO81467 | Outer Joint | | 38 | 30 | 63 | 102.5 | 67.5 | I |
| | 2015.04-2019.12 | 6MT | F | L | Van FWD CAAC | | GCI61029 | Inner Joint | | 26 | 30 | 46.8 | | 137 | |
| | 2015.04-2019.12 | 6MT | F | L | Van FWD CAAC | | GCI61104 | Inner Joint | | 42 | 30 | 35.6 | | 136 | |
| | 2015.04-2019.12 | 6MT | F | R | Van FWD CAAC | | GCI81381 | Inner Joint | | 26 | 30 | | 281.5 | 105 | |
| | 2015.04-2019.12 | 6MT/7DCT | F | L/R | Van FWD CAAC | | GDS61216 | Stub Axle,differential | | 26 | 37 | | | 145 | |
| | 2015.04-2019.12 | 7DCT | F | L | Van FWD CAAC | | GDS83293 | Drive Shaft | | 38 | 37 | 63 | 102.5 | 645 | |
| | 2015.04-2019.12 | 7DCT | F | R | Van FWD CAAC | | GDS82392 | Drive Shaft | | 38 | 37 | 63 | 102.5 | 1025 | |
| | 2015.04-2019.12 | 7DCT | F | R | Van FWD CAAC | Date to:2017.01;6 balls | GCO61060 | Outer Joint | | 38 | 30 | 63 | 102.5 | 68 | I |
| | 2015.04-2019.12 | 7DCT | F | R | Van FWD CAAC | Date to:2017.01 | GCI83037 | Inner Joint | | 37 | 27 | 34.5 | 430.5 | 96 | |
| | 2015.06-2019.11 | 6MT | F | L | Platform/Chassis 4WD CAAC | date to:2017.01 | GDS83360 | Drive Shaft | | 38 | 42 | 63 | 102.5 | 617 | |
| | 2015.06-2019.11 | 6MT | F | R | Platform/Chassis 4WD CAAC | Date to:2017.01 | GDS81666 | Drive Shaft | | 38 | 26 | 63 | 102.5 | 616 | |
| | 2015.06-2019.11 | 6MT | F | L | Platform/Chassis 4WD CAAC | | GCI61029 | Inner Joint | | 26 | 30 | 46.8 | | 137 | |
| | 2015.06-2019.11 | 6MT | F | R | Platform/Chassis 4WD CAAC | | GDS61216 | Stub Axle,differential | | 26 | 37 | | | 145 | |
| | 2015.06-2019.11 | AT | F | L | Platform/Chassis 4WD CAAC | | GDS83293 | Drive Shaft | | 38 | 37 | 63 | 102.5 | 645 | |
| | 2015.06-2019.11 | MT/6MT | F | L/R | Platform/Chassis 4WD CAAC | Date from:2013.07 | GCO81467 | Outer Joint | | 38 | 30 | 63 | 102.5 | 67.5 | I |
| | 2015.06-2019.11 | | F | L | Platform/Chassis 4WD CAAC | for OE number:0A5409343B | GDS61213 | Stub Axle,differential | | 42 | 42 | | | 135.5 | |
| | 2015.06-2019.11 | | F | R | Platform/Chassis 4WD CAAC | for OE number:0A5409343A | GDS61215 | Stub Axle,differential | | 26 | 42 | | | 143.5 | |
| | 2015.06-2019.11 | 6MT | R | L | Platform/Chassis 4WD CAAC | | GDS61257 | Drive Shaft | | 38 | | 59 | 100 | 683 | |
| | 2015.06-2019.11 | 6MT | R | R | Platform/Chassis 4WD CAAC | | GDS61258 | Drive Shaft | | 38 | | 59 | 100 | 743 | |
| | 2015.06-2019.11 | | R | L | Platform/Chassis 4WD CAAC | Date To:2016.04 | GCI61075 | Inner Joint | | | 28 | | | 26 | |
| | 2015.06-2019.12 | 6MT | F | L | Bus 4WD CAAC | date to:2017.01 | GDS83360 | Drive Shaft | | 38 | 42 | 63 | 102.5 | 617 | |
| | 2015.06-2019.12 | 6MT | F | R | Bus 4WD CAAC | Date to:2017.01 | GDS81666 | Drive Shaft | | 38 | 26 | 63 | 102.5 | 616 | |
| | 2015.06-2019.12 | 6MT | F | L | Bus 4WD CAAC | | GCI61029 | Inner Joint | | 26 | 30 | 46.8 | | 137 | |
| | 2015.06-2019.12 | 6MT | F | R | Bus 4WD CAAC | For PR code:F0X/F0Y/F4D | GCI81453 | Inner Joint | | 26 | 27 | 47 | | 128 | |
| | 2015.06-2019.12 | 6MT | F | R | Bus 4WD CAAC | | GDS61216 | Stub Axle,differential | | 26 | 37 | | | 145 | |
| | 2015.06-2019.12 | AT | F | L | Bus 4WD CAAC | | GDS83293 | Drive Shaft | | 38 | 37 | 63 | 102.5 | 645 | |
| | 2015.06-2019.12 | MT/6MT | F | L/R | Bus 4WD CAAC | Date from:2013.07 | GCO81467 | Outer Joint | | 38 | 30 | 63 | 102.5 | 67.5 | I |
| | 2015.06-2019.12 | | F | L | Bus 4WD CAAC | for OE number:0A5409343B | GDS61213 | Stub Axle,differential | | 42 | 42 | | | 135.5 | |
| | 2015.06-2019.12 | | F | R | Bus 4WD CAAC | for OE number:0A5409343A | GDS61215 | Stub Axle,differential | | 26 | 42 | | | 143.5 | |
| | 2015.06-2019.12 | 6MT | R | L | Bus 4WD CAAC | | GDS61257 | Drive Shaft | | 38 | | 59 | 100 | 683 | |
| | 2015.06-2019.12 | 6MT | R | R | Bus 4WD CAAC | | GDS61258 | Drive Shaft | | 38 | | 59 | 100 | 743 | |
| | 2015.06-2019.12 | | R | L | Bus 4WD CAAC | Date To:2016.04 | GCI61075 | Inner Joint | | | 28 | | | 26 | |
| | 2015.06-2019.12 | 6MT | F | L | Van 4WD CAAC | date to:2017.01 | GDS83360 | Drive Shaft | | 38 | 42 | 63 | 102.5 | 617 | |
| | 2015.06-2019.12 | 6MT | F | R | Van 4WD CAAC | | GDS81666 | Drive Shaft | | 38 | 26 | 63 | 102.5 | 616 | |
| | 2015.06-2019.12 | 6MT | F | L | Van 4WD CAAC | | GCI61029 | Inner Joint | | 26 | 30 | 46.8 | | 137 | |
| | 2015.06-2019.12 | 6MT | F | R | Van 4WD CAAC | For PR code:F0X/F0Y/F4D | GCI81453 | Inner Joint | | 26 | 27 | 47 | | 128 | |
| | 2015.06-2019.12 | 6MT | F | L/R | Van 4WD CAAC | | GDS61216 | Stub Axle,differential | | 26 | 37 | | | 145 | |
| | 2015.06-2019.12 | AT | F | L | Van 4WD CAAC | | GDS83293 | Drive Shaft | | 38 | 37 | 63 | 102.5 | 645 | |
| | 2015.06-2019.12 | MT/6MT | F | L/R | Van 4WD CAAC | Date from:2013.07 | GCO81467 | Outer Joint | | 38 | 30 | 63 | 102.5 | 67.5 | I |
| | 2015.06-2019.12 | | F | L | Van 4WD CAAC | for OE number:0A5409343B | GDS61213 | Stub Axle,differential | | 42 | 42 | | | 135.5 | |
| | 2015.06-2019.12 | | F | R | Van 4WD CAAC | for OE number:0A5409343A | GDS61215 | Stub Axle,differential | | 26 | 42 | | | 143.5 | |
| | 2015.06-2019.12 | 6MT | R | L | Van 4WD CAAC | | GDS61257 | Drive Shaft | | 38 | | 59 | 100 | 683 | |

| | YEAR | TRANSM. | F/R | L/R | BODY STYLE & DRIVE TYPE & ENGINE | REMARKS | G-AP Ref. | PRODUCT | ABS | Technical Specifications A | B | C | H | L | P |
|---|---|---|---|---|---|---|---|---|---|---|---|---|---|---|---|
| **VW Transporter** | | | | | | | | | | | | | | | |
| 2.0 (103 kw) | 2015.06-2019.12 | 6MT | R | R | Van 4WD CAAC | | GDS61258 | Drive Shaft | | 38 | | 59 | 100 | 743 | |
| | 2015.06-2019.12 | | R | L | Van 4WD CAAC | Date To:2016.04 | GCI61075 | Inner Joint | | | 28 | | | 26 | |
| 2.0 (110 kw) | 2012.07-2015.08 | 6MT | F | L | Bus FWD CJKB | Date to:2013.06 | GDS61084 | Drive Shaft | | 38 | 26 | 63 | 102.5 | 613 | |
| | 2012.07-2015.08 | 6MT | F | L | Bus FWD CJKB | Date From:2013.07 | GDS83360 | Drive Shaft | | 38 | 42 | 63 | 102.5 | 617 | |
| | 2012.07-2015.08 | 6MT | F | R | Bus FWD CJKB | Date From:2013.07,Date To:2015.04 | GDS82361 | Drive Shaft | | 38 | 26 | 63 | 102.5 | 879 | |
| | 2012.07-2015.08 | 6MT | F | R | Bus FWD CJKB | Date To:2013.06 | GDS83296 | Drive Shaft | | 38 | 26 | 63 | 102.5 | 880 | |
| | 2012.07-2015.08 | 6MT | F | R | Bus FWD CJKB | Date From:2015.05 | GDS83361 | Drive Shaft | | 38 | 26 | 63 | 102.5 | 883 | |
| | 2012.07-2015.08 | 6MT | F | L/R | Bus FWD CJKB | Date To:2013.06 | GCO61011 | Outer Joint | | 38 | 29 | 63 | 102.5 | 70 | M |
| | 2012.07-2015.08 | 6MT | F | L/R | Bus FWD CJKB | Date From:2013.07;6 balls | GCO61060 | Outer Joint | | 38 | 30 | 63 | 102.5 | 68 | I |
| | 2012.07-2015.08 | 6MT | F | L/R | Bus FWD CJKB | Date From:2013.07;8 balls | GCO81467 | Outer Joint | | 38 | 30 | 63 | 102.5 | 67.5 | I |
| | 2012.07-2015.08 | 6MT | F | L | Bus FWD CJKB | Date To:2013.06 | GCI61029 | Inner Joint | | 26 | 30 | 46.8 | | 137 | |
| | 2012.07-2015.08 | 6MT | F | L | Bus FWD CJKB | Date From:2013.07 | GCI61104 | Inner Joint | | 42 | 30 | 35.6 | | 136 | |
| | 2012.07-2015.08 | 6MT | F | R | Bus FWD CJKB | Date to:2015.04 | GCI61080 | Inner Joint | | 26 | 30 | | 281.5 | 106 | |
| | 2012.07-2015.08 | 6MT | F | R | Bus FWD CJKB | Date from:2015.05 | GCI81381 | Inner Joint | | 26 | 30 | | 281.5 | 105 | |
| | 2012.07-2015.08 | 6MT | F | L | Bus FWD CJKB | Model:Transporter,for OE number:0A5409343B | GDS61213 | Stub Axle,differential | | 42 | 42 | | | 135.5 | |
| | 2012.07-2015.08 | 6MT | F | R | Bus FWD CJKB | Model:Transporter,for OE number:0A5409343A | GDS61215 | Stub Axle,differential | | 26 | 42 | | | 143.5 | |
| | 2012.07-2015.08 | 6MT | F | R | Bus FWD CJKB | | GDS61216 | Stub Axle,differential | | 26 | 37 | | | 145 | |
| | 2012.07-2015.08 | 6MT | F | L/R | Bus FWD CJKB | Model:Transporter,for OE number:0A5409343 | GDS61191 | Stub Axle,differential | | 26 | 42 | | | 135.5 | |
| | 2012.07-2015.08 | 6MT | F | L | Platform/Chassis FWD CJKB | date from:2013.07 | GDS83360 | Drive Shaft | | 38 | 42 | 63 | 102.5 | 617 | |
| | 2012.07-2015.08 | 6MT | F | R | Platform/Chassis FWD CJKB | Date From:2013.07,Date To:2015.04 | GDS82361 | Drive Shaft | | 38 | 26 | 63 | 102.5 | 879 | |
| | 2012.07-2015.08 | 6MT | F | R | Platform/Chassis FWD CJKB | Date To:2013.06 | GDS83296 | Drive Shaft | | 38 | 26 | 63 | 102.5 | 880 | |
| | 2012.07-2015.08 | 6MT | F | R | Platform/Chassis FWD CJKB | Date From:2015.05 | GDS83361 | Drive Shaft | | 38 | 26 | 63 | 102.5 | 883 | |
| | 2012.07-2015.08 | 6MT | F | L/R | Platform/Chassis FWD CJKB | Date to:2013.06 | GCO61011 | Outer Joint | | 38 | 29 | 63 | 102.5 | 70 | M |
| | 2012.07-2015.08 | 6MT | F | L/R | Platform/Chassis FWD CJKB | Date From:2013.07;6 balls | GCO61060 | Outer Joint | | 38 | 30 | 63 | 102.5 | 68 | I |
| | 2012.07-2015.08 | 6MT | F | L/R | Platform/Chassis FWD CJKB | Date From:2013.07;8 balls | GCO81467 | Outer Joint | | 38 | 30 | 63 | 102.5 | 67.5 | I |
| | 2012.07-2015.08 | 6MT | F | L | Platform/Chassis FWD CJKB | Date To:2013.06 | GCI61029 | Inner Joint | | 26 | 30 | 46.8 | | 137 | |
| | 2012.07-2015.08 | 6MT | F | L | Platform/Chassis FWD CJKB | date from:2013.07 | GCI61104 | Inner Joint | | 42 | 30 | 35.6 | | 136 | |
| | 2012.07-2015.08 | 6MT | F | R | Platform/Chassis FWD CJKB | Date to:2015.04 | GCI61080 | Inner Joint | | 26 | 30 | | 281.5 | 106 | |
| | 2012.07-2015.08 | 6MT | F | R | Platform/Chassis FWD CJKB | Date from:2015.05 | GCI81381 | Inner Joint | | 26 | 30 | | 281.5 | 105 | |
| | 2012.07-2015.08 | 6MT | F | L | Platform/Chassis FWD CJKB | for OE number:0A5409343B | GDS61213 | Stub Axle,differential | | 42 | 42 | | | 135.5 | |
| | 2012.07-2015.08 | 6MT | F | R | Platform/Chassis FWD CJKB | for OE number:0A5409343A | GDS61215 | Stub Axle,differential | | 26 | 42 | | | 143.5 | |
| | 2012.07-2015.08 | 6MT | F | R | Platform/Chassis FWD CJKB | | GDS61216 | Stub Axle,differential | | 26 | 37 | | | 145 | |
| | 2012.07-2015.08 | 6MT | F | L/R | Platform/Chassis FWD CJKB | for OE number:0A5409343 | GDS61191 | Stub Axle,differential | | 26 | 42 | | | 135.5 | |
| | 2012.07-2015.08 | AT | F | L | Platform/Chassis FWD CJKB | | GDS83293 | Drive Shaft | | 38 | 37 | 63 | 102.5 | 645 | |
| | 2012.07-2015.08 | AT | F | R | Platform/Chassis FWD CJKB | | GDS83353 | Drive Shaft | | 38 | 37 | 63 | 102.5 | 1027 | |
| | 2012.07-2015.08 | 6MT | F | L | Van FWD CJKB | date from:2013.07 | GDS83360 | Drive Shaft | | 38 | 42 | 63 | 102.5 | 617 | |
| | 2012.07-2015.08 | 6MT | F | R | Van FWD CJKB | Date From:2013.07,Date To:2015.04 | GDS82361 | Drive Shaft | | 38 | 26 | 63 | 102.5 | 879 | |
| | 2012.07-2015.08 | 6MT | F | R | Van FWD CJKB | Date To:2013.06 | GDS83296 | Drive Shaft | | 38 | 26 | 63 | 102.5 | 880 | |
| | 2012.07-2015.08 | 6MT | F | R | Van FWD CJKB | Date From:2015.05 | GDS83361 | Drive Shaft | | 38 | 26 | 63 | 102.5 | 883 | |
| | 2012.07-2015.08 | 6MT | F | L/R | Van FWD CJKB | Date to:2013.06 | GCO61011 | Outer Joint | | 38 | 29 | 63 | 102.5 | 70 | M |
| | 2012.07-2015.08 | 6MT | F | L/R | Van FWD CJKB | Date From:2013.07;6 balls | GCO61060 | Outer Joint | | 38 | 30 | 63 | 102.5 | 68 | I |
| | 2012.07-2015.08 | 6MT | F | L/R | Van FWD CJKB | Date From:2013.07;8 balls | GCO81467 | Outer Joint | | 38 | 30 | 63 | 102.5 | 67.5 | I |
| | 2012.07-2015.08 | 6MT | F | L | Van FWD CJKB | Date To:2013.06 | GCI61029 | Inner Joint | | 26 | 30 | 46.8 | | 137 | |
| | 2012.07-2015.08 | 6MT | F | L | Van FWD CJKB | date from:2013.07 | GCI61104 | Inner Joint | | 42 | 30 | 35.6 | | 136 | |
| | 2012.07-2015.08 | 6MT | F | R | Van FWD CJKB | Date to:2015.04 | GCI61080 | Inner Joint | | 26 | 30 | | 281.5 | 106 | |
| | 2012.07-2015.08 | 6MT | F | R | Van FWD CJKB | Date from:2015.05 | GCI81381 | Inner Joint | | 26 | 30 | | 281.5 | 105 | |
| | 2012.07-2015.08 | 6MT | F | L | Van FWD CJKB | for OE number:0A5409343B | GDS61213 | Stub Axle,differential | | 42 | 42 | | | 135.5 | |
| | 2012.07-2015.08 | 6MT | F | R | Van FWD CJKB | for OE number:0A5409343A | GDS61215 | Stub Axle,differential | | 26 | 42 | | | 143.5 | |
| | 2012.07-2015.08 | 6MT | F | R | Van FWD CJKB | | GDS61216 | Stub Axle,differential | | 26 | 37 | | | 145 | |
| | 2012.07-2015.08 | 6MT | F | L/R | Van FWD CJKB | for OE number:0A5409343 | GDS61191 | Stub Axle,differential | | 26 | 42 | | | 135.5 | |
| | 2012.07-2015.08 | AT | F | L | Van FWD CJKB | | GDS83293 | Drive Shaft | | 38 | 37 | 63 | 102.5 | 645 | |
| | 2012.07-2015.08 | AT | F | R | Van FWD CJKB | | GDS83353 | Drive Shaft | | 38 | 37 | 63 | 102.5 | 1027 | |
| | 2015.04-2019.06 | 6MT | F | L | Platform/Chassis FWD CJKB | Date From:2013.06 | GDS83360 | Drive Shaft | | 38 | 42 | 63 | 102.5 | 617 | |
| | 2015.04-2019.06 | 6MT | F | R | Platform/Chassis FWD CJKB | Date From:2012.05 | GDS83361 | Drive Shaft | | 38 | 26 | 63 | 102.5 | 883 | |
| | 2015.04-2019.06 | 6MT | F | L | Platform/Chassis FWD CJKB | | GCI61029 | Inner Joint | | 26 | 30 | 46.8 | | 137 | |
| | 2015.04-2019.06 | 6MT | F | R | Platform/Chassis FWD CJKB | | GCI81381 | Inner Joint | | 26 | 30 | | 281.5 | 105 | |
| | 2015.04-2019.06 | 6MT | F | L/R | Platform/Chassis FWD CJKB | | GDS61216 | Stub Axle,differential | | 26 | 37 | | | 145 | |
| | 2015.04-2019.06 | 7AT | F | L | Platform/Chassis FWD CJKB | | GDS83293 | Drive Shaft | | 38 | 37 | 63 | 102.5 | 645 | |
| | 2015.04-2019.06 | DCT | F | L/R | Platform/Chassis FWD CJKB | Date from:2013.06 | GCO81467 | Outer Joint | | 38 | 30 | 63 | 102.5 | 67.5 | I |
| | 2015.04-2019.06 | | F | L | Platform/Chassis FWD CJKB | for OE number:0A5409343B | GDS61213 | Stub Axle,differential | | 42 | 42 | | | 135.5 | |
| | 2015.04-2019.06 | | F | R | Platform/Chassis FWD CJKB | for OE number:0A5409343A | GDS61215 | Stub Axle,differential | | 26 | 42 | | | 143.5 | |
| | 2015.04-2019.07 | 6MT | F | L | Van FWD CJKB | Date From:2013.06 | GDS83360 | Drive Shaft | | 38 | 42 | 63 | 102.5 | 617 | |
| | 2015.04-2019.07 | 6MT | F | R | Van FWD CJKB | Date From:2012.05 | GDS83361 | Drive Shaft | | 38 | 26 | 63 | 102.5 | 883 | |
| | 2015.04-2019.07 | 6MT | F | L | Van FWD CJKB | | GCI61029 | Inner Joint | | 26 | 30 | 46.8 | | 137 | |
| | 2015.04-2019.07 | 6MT | F | R | Van FWD CJKB | | GCI81381 | Inner Joint | | 26 | 30 | | 281.5 | 105 | |

| | YEAR | TRANSM. | F/R | L/R | BODY STYLE & DRIVE TYPE & ENGINE | REMARKS | G-AP Ref. | PRODUCT | ABS | Technical Specifications A | B | C | H | L | P |
|---|---|---|---|---|---|---|---|---|---|---|---|---|---|---|---|
| **VW Transporter** | | | | | | | | | | | | | | | |
| 2.0 (110 kw) | 2015.04-2019.07 | 6MT | F | R | Van FWD CJKB | | GDS61216 | Stub Axle,differential | | 26 | 37 | | | 145 | |
| | 2015.04-2019.07 | 7AT | F | L | Van FWD CJKB | | GDS83293 | Drive Shaft | | 38 | 37 | 63 | 102.5 | 645 | |
| | 2015.04-2019.07 | DCT | F | L/R | Van FWD CJKB | Date from:2013.06 | GCO81467 | Outer Joint | | 38 | 30 | 63 | 102.5 | 67.5 | I |
| | 2015.04-2019.07 | | F | L | Van FWD CJKB | for OE number:0A5409343B | GDS61213 | Stub Axle,differential | | 42 | 42 | | | 135.5 | |
| | 2015.04-2019.07 | | F | R | Van FWD CJKB | for OE number:0A5409343A | GDS61215 | Stub Axle,differential | | 26 | 42 | | | 143.5 | |
| | 2015.04-2024.08 | 6MT | F | L | Van FWD CXFA;CXHA;DNAA | date to:2017.01 | GDS83360 | Drive Shaft | | 38 | 42 | 63 | 102.5 | 617 | |
| | 2015.04-2024.08 | 6MT | F | R | Van FWD CXFA;CXHA;DNAA | date to:2017.01 | GDS83361 | Drive Shaft | | 38 | 26 | 63 | 102.5 | 883 | |
| | 2015.04-2024.08 | 6MT | F | R | Van FWD CXFA;CXHA;DNAA | Date to:2017.01;6 balls | GCO61060 | Outer Joint | | 38 | 30 | 63 | 102.5 | 68 | I |
| | 2015.04-2024.08 | 6MT | F | L | Van FWD CXFA;CXHA;DNAA | For Modelcode:SGA/SGH | GCI61029 | Inner Joint | | 26 | 30 | 46.8 | | 137 | |
| | 2015.04-2024.08 | 6MT | F | R | Van FWD CXFA;CXHA;DNAA | For Modelcode:SGA/SGH | GCI81381 | Inner Joint | | 26 | 30 | | 281.5 | 105 | |
| | 2015.04-2024.08 | 6MT | F | L | Van FWD CXFA;CXHA;DNAA | for OE number:0A5409343B | GDS61213 | Stub Axle,differential | | 42 | 42 | | | 135.5 | |
| | 2015.04-2024.08 | 6MT | F | R | Van FWD CXFA;CXHA;DNAA | for OE number:0A5409343A | GDS61215 | Stub Axle,differential | | 26 | 42 | | | 143.5 | |
| | 2015.04-2024.08 | 7AT/6MT | F | L/R | Van FWD CXFA;CXHA;DNAA | | GDS61216 | Stub Axle,differential | | 26 | 37 | | | 145 | |
| | 2015.04-2024.08 | 7DCT | F | L | Van FWD CXFA;CXHA;DNAA | | GDS83293 | Drive Shaft | | 38 | 37 | 63 | 102.5 | 645 | |
| | 2015.04-2024.08 | 7DCT | F | R | Van FWD CXFA;CXHA;DNAA | Date to:2019.12 | GDS82392 | Drive Shaft | | 38 | 37 | 63 | 102.5 | 1025 | |
| | 2015.04-2024.08 | 7DCT | F | R | Van FWD CXFA;CXHA;DNAA | Date to:2017.01;For Model code:SGA/SGH | GCO61060 | Outer Joint | | 38 | 30 | 63 | 102.5 | 68 | I |
| | 2015.04-2024.08 | 7DCT | F | L | Van FWD CXFA;CXHA;DNAA | For Modelcode:SHA/SHH;AAR | GCI81261 | Inner Joint | | 37 | 27 | 34.5 | 65.5 | 88.5 | |
| | 2015.04-2024.08 | 7DCT | F | R | Van FWD CXFA;CXHA;DNAA | Date to:2017.01;For Model code:SGA/SGH | GCI83037 | Inner Joint | | 37 | 27 | 34.5 | 430.5 | 96 | |
| | 2015.04-2024.08 | MT | F | L | Van FWD CXFA;CXHA;DNAA | Date from:2012.06 | GCI61104 | Inner Joint | | 42 | 30 | 35.6 | | 136 | |
| | 2015.04-2024.08 | MT/6MT | F | L/R | Van FWD CXFA;CXHA;DNAA | Date from:2013.07;8 balls | GCO81467 | Outer Joint | | 38 | 30 | 63 | 102.5 | 67.5 | I |
| | 2015.08-2024.08 | 6MT | F | L | Platform/Chassis FWD CXHA;DNAA | date to:2017.01 | GDS83360 | Drive Shaft | | 38 | 42 | 63 | 102.5 | 617 | |
| | 2015.08-2024.08 | 6MT | F | R | Platform/Chassis FWD CXHA;DNAA | date to:2017.01 | GDS83361 | Drive Shaft | | 38 | 26 | 63 | 102.5 | 883 | |
| | 2015.08-2024.08 | 6MT | F | L/R | Platform/Chassis FWD CXHA;DNAA | 6 balls | GCO61060 | Outer Joint | | 38 | 30 | 63 | 102.5 | 68 | I |
| | 2015.08-2024.08 | 6MT | F | L | Platform/Chassis FWD CXHA;DNAA | | GCI61104 | Inner Joint | | 42 | 30 | 35.6 | | 136 | |
| | 2015.08-2024.08 | 6MT | F | R | Platform/Chassis FWD CXHA;DNAA | For Modelcode:SFD/SFE/SFL/SFZ | GCI81381 | Inner Joint | | 26 | 30 | | 281.5 | 105 | |
| | 2015.08-2024.08 | 6MT | F | L | Platform/Chassis FWD CXHA;DNAA | for OE number:0A5409343B | GDS61213 | Stub Axle,differential | | 42 | 42 | | | 135.5 | |
| | 2015.08-2024.08 | 6MT | F | R | Platform/Chassis FWD CXHA;DNAA | for OE number:0A5409343A | GDS61215 | Stub Axle,differential | | 26 | 42 | | | 143.5 | |
| | 2015.08-2024.08 | 6MT/7DCT | F | L/R | Platform/Chassis FWD CXHA;DNAA | | GCO81467 | Outer Joint | | 38 | 30 | 63 | 102.5 | 67.5 | I |
| | 2015.08-2024.08 | 7DCT | F | L | Platform/Chassis FWD CXHA;DNAA | | GDS83293 | Drive Shaft | | 38 | 37 | 63 | 102.5 | 645 | |
| | 2015.08-2024.08 | 7DCT | F | R | Platform/Chassis FWD CXHA;DNAA | Date to:2019.12 | GDS82392 | Drive Shaft | | 38 | 37 | 63 | 102.5 | 1025 | |
| | 2015.08-2024.08 | 7DCT | F | R | Platform/Chassis FWD CXHA;DNAA | Date to:2017.01;For Model code:SFD/SFE/SFL/SFZ | GCO61060 | Outer Joint | | 38 | 30 | 63 | 102.5 | 68 | I |
| | 2015.08-2024.08 | 7DCT | F | L/R | Platform/Chassis FWD CXHA;DNAA | | GCO61011 | Outer Joint | | 38 | 29 | 63 | 102.5 | 70 | M |
| | 2015.08-2024.08 | 7DCT | F | L | Platform/Chassis FWD CXHA;DNAA | For Modelcode:SJD/SJE/SJL/SJZ | GCI81261 | Inner Joint | | 37 | 27 | 34.5 | 65.5 | 88.5 | |
| | 2015.08-2024.08 | 7DCT | F | R | Platform/Chassis FWD CXHA;DNAA | | GCI81754 | Inner Joint | | 37 | 27 | 34.5 | 430.5 | 96 | |
| | 2015.08-2024.08 | 7DCT | F | R | Platform/Chassis FWD CXHA;DNAA | Date to:2017.01;For Model code:SFD/SFE/SFL/SFZ | GCI83037 | Inner Joint | | 37 | 27 | 34.5 | 430.5 | 96 | |
| | 2015.08-2024.08 | 6MT | F | L | Van 4WD CXFA;CXHA;DNAA | date to:2017.01 | GDS83360 | Drive Shaft | | 38 | 42 | 63 | 102.5 | 617 | |
| | 2015.08-2024.08 | 6MT | F | R | Van 4WD CXFA;CXHA;DNAA | Date to:2017.01,Model code:SGA/SGH | GDS81666 | Drive Shaft | | 38 | 26 | 63 | 102.5 | 616 | |
| | 2015.08-2024.08 | 6MT | F | L | Van 4WD CXFA;CXHA;DNAA | For Modelcode:SGA/SGH | GCI61029 | Inner Joint | | 26 | 30 | 46.8 | | 137 | |
| | 2015.08-2024.08 | 6MT | F | L | Van 4WD CXFA;CXHA;DNAA | for OE number:0A5409343B | GDS61213 | Stub Axle,differential | | 42 | 42 | | | 135.5 | |
| | 2015.08-2024.08 | 6MT | F | R | Van 4WD CXFA;CXHA;DNAA | for OE number:0A5409343A | GDS61215 | Stub Axle,differential | | 26 | 42 | | | 143.5 | |
| | 2015.08-2024.08 | 6MT/7DCT | F | R | Van 4WD CXFA;CXHA;DNAA | Transmission:6MT,Date to:2020.11;for model code:SHA/SHH;Transmission:7DCT | GDS81665 | Drive Shaft | | 38 | 26 | 63 | 102.5 | 614 | |
| | 2015.08-2024.08 | 7DCT | F | L | Van 4WD CXFA;CXHA;DNAA | For Modelcode:SHA/SHH | GCI81261 | Inner Joint | | 37 | 27 | 34.5 | 65.5 | 88.5 | |
| | 2015.08-2024.08 | AT | F | L | Van 4WD CXFA;CXHA;DNAA | | GDS83293 | Drive Shaft | | 38 | 37 | 63 | 102.5 | 645 | |
| | 2015.08-2024.08 | MT/6MT | F | L/R | Van 4WD CXFA;CXHA;DNAA | Date from:2013.07 | GCO81467 | Outer Joint | | 38 | 30 | 63 | 102.5 | 67.5 | I |
| | 2015.08-2024.08 | 6MT/7DCT | R | L | Van 4WD CXFA;CXHA;DNAA | | GDS61257 | Drive Shaft | | 38 | | 59 | 100 | 683 | |
| | 2015.08-2024.08 | 6MT/7DCT | R | R | Van 4WD CXFA;CXHA;DNAA | | GDS61258 | Drive Shaft | | 38 | | 59 | 100 | 743 | |
| | 2015.08-2024.08 | | R | L | Van 4WD CXFA;CXHA;DNAA | Date To:2016.04 | GCI61075 | Inner Joint | | | 28 | | | 26 | |
| | 2016.05-2024.08 | 6MT | F | L | Platform/Chassis 4WD CXHA;DNAA | date to:2017.01 | GDS83360 | Drive Shaft | | 38 | 42 | 63 | 102.5 | 617 | |
| | 2016.05-2024.08 | 6MT | F | R | Platform/Chassis 4WD CXHA;DNAA | Date to:2017.01,Model code:SFD/SFE/SFL | GDS81666 | Drive Shaft | | 38 | 26 | 63 | 102.5 | 616 | |
| | 2016.05-2024.08 | 6MT | F | L/R | Platform/Chassis 4WD CXHA;DNAA | Date from:2013.07 | GCO81467 | Outer Joint | | 38 | 30 | 63 | 102.5 | 67.5 | I |
| | 2016.05-2024.08 | 6MT | F | L | Platform/Chassis 4WD CXHA;DNAA | | GCI61029 | Inner Joint | | 26 | 30 | 46.8 | | 137 | |
| | 2016.05-2024.08 | 6MT | F | L | Platform/Chassis 4WD CXHA;DNAA | for OE number:0A5409343B | GDS61213 | Stub Axle,differential | | 42 | 42 | | | 135.5 | |
| | 2016.05-2024.08 | 6MT | F | R | Platform/Chassis 4WD CXHA;DNAA | for OE number:0A5409343A | GDS61215 | Stub Axle,differential | | 26 | 42 | | | 143.5 | |
| | 2016.05-2024.08 | 7DCT | F | L | Platform/Chassis 4WD CXHA;DNAA | | GDS83293 | Drive Shaft | | 38 | 37 | 63 | 102.5 | 645 | |
| | 2016.05-2024.08 | 7DCT | F | R | Platform/Chassis 4WD CXHA;DNAA | | GDS81665 | Drive Shaft | | 38 | 26 | 63 | 102.5 | 614 | |
| | 2016.05-2024.08 | 7DCT | F | L | Platform/Chassis 4WD CXHA;DNAA | For PR code:SJD/SJE/SJL | GCI81261 | Inner Joint | | 37 | 27 | 34.5 | 65.5 | 88.5 | |
| | 2016.05-2024.08 | 7DCT | F | R | Platform/Chassis 4WD CXHA;DNAA | For Modelcode:SFD/SFE/SFL | GCI81453 | Inner Joint | | 26 | 27 | 47 | | 128 | |
| | 2016.05-2024.08 | 7AT/6MT | R | R | Platform/Chassis 4WD CXHA;DNAA | | GDS61258 | Drive Shaft | | 38 | | 59 | 100 | 743 | |
| | 2016.05-2024.08 | 7DCT/6MT | R | L | Platform/Chassis 4WD CXHA;DNAA | | GDS61257 | Drive Shaft | | 38 | | 59 | 100 | 683 | |
| 2.0 (132 kw) | 2009.09-2015.08 | 6MT | F | L | Bus 4WD CFCA | Date to:2013.06;For PR code:FB4;FB5;FH1;Chassis no.: w.7H_B.000000.7H_B000000.7H_B000000.7H_B000000;For operation program version:[illegible] | GDS61084 | Drive Shaft | | 38 | 26 | 63 | 102.5 | 613 | |
| | 2009.09-2015.08 | 6MT | F | L | Bus 4WD CFCA | Date From:2013.07 | GDS83360 | Drive Shaft | | 38 | 42 | 63 | 102.5 | 617 | |
| | 2009.09-2015.08 | 6MT | F | R | Bus 4WD CFCA | Date to:2013.06\|Norma | GDS61084 | Drive Shaft | | 38 | 26 | 63 | 102.5 | 613 | |
| | 2009.09-2015.08 | 6MT | F | R | Bus 4WD CFCA | Date from:2013.07 | GDS81666 | Drive Shaft | | 38 | 26 | 63 | 102.5 | 616 | |
| | 2009.09-2015.08 | 6MT | F | L | Bus 4WD CFCA | Date to:2013.06;For PR code:FB4;FB5;FH1;Chassis no.: w.7H_B.000000.7H_B000000.7H_B000000.7H_B000000;For operation program version:[illegible] | GCI61029 | Inner Joint | | 26 | 30 | 46.8 | | 137 | |
| | 2009.09-2015.08 | 6MT | F | L | Bus 4WD CFCA | Date From:2013.07 | GCI61104 | Inner Joint | | 42 | 30 | 35.6 | | 136 | |

| | YEAR | TRANSM. | F/R | L/R | BODY STYLE & DRIVE TYPE & ENGINE | REMARKS | G-AP Ref. | PRODUCT | ABS | Technical Specifications A | B | C | H | L | P |
|---|---|---|---|---|---|---|---|---|---|---|---|---|---|---|---|
| **VW Transporter** | | | | | | | | | | | | | | | |
| 2.0 (132 kw) | 2009.09-2015.08 | 6MT | F | R | Bus 4WD CFCA | Date to:2013.06 | GCI61029 | Inner Joint | | 26 | 30 | 46.8 | | 137 | |
| | 2009.09-2015.08 | 6MT | F | L | Bus 4WD CFCA | Date From:2010.01,Model:Transporter,for OE number:0A5409343B | GDS61213 | Stub Axle,differential | | 42 | 42 | | | 135.5 | |
| | 2009.09-2015.08 | 6MT | F | R | Bus 4WD CFCA | Date From:2010.01,Model:Transporter,for OE number:0A5409343A | GDS61215 | Stub Axle,differential | | 26 | 42 | | | 143.5 | |
| | 2009.09-2015.08 | 6MT | F | L/R | Bus 4WD CFCA | Date From:2010.01,Model:Transporter,for OE number:0A5409343 | GDS61191 | Stub Axle,differential | | 26 | 42 | | | 135.5 | |
| | 2009.09-2015.08 | 6MT/7DCT | F | L/R | Bus 4WD CFCA | Date to:2013.06 | GCO61011 | Outer Joint | | 38 | 29 | 63 | 102.5 | 70 | M |
| | 2009.09-2015.08 | 6MT/7DCT | F | L/R | Bus 4WD CFCA | Date from:2013.07 | GCO61060 | Outer Joint | | 38 | 30 | 63 | 102.5 | 68 | I |
| | 2009.09-2015.08 | 6MT/7DCT | F | L/R | Bus 4WD CFCA | Date from:2013.07 | GCO81467 | Outer Joint | | 38 | 30 | 63 | 102.5 | 67.5 | I |
| | 2009.09-2015.08 | 7DCT | F | L | Bus 4WD CFCA | | GDS83293 | Drive Shaft | | 38 | 37 | 63 | 102.5 | 645 | |
| | 2009.09-2015.08 | 7DCT | F | R | Bus 4WD CFCA | Date From:2013.07 | GDS81665 | Drive Shaft | | 38 | 26 | 63 | 102.5 | 614 | |
| | 2009.09-2015.08 | 7DCT | F | R | Bus 4WD CFCA | Model:California/Caravelle/Transporter,Chassis no. to:7HBG0000001/7HBH000000/7HBX000000 | GDS81920 | Drive Shaft | | 38 | 26 | 63 | 102.5 | 614 | |
| | 2009.09-2015.08 | 7DCT | F | R | Bus 4WD CFCA | | GCI81453 | Inner Joint | | 26 | 27 | 47 | | 128 | |
| | 2009.09-2015.08 | 7DCT | F | R | Bus 4WD CFCA | | GDS61216 | Stub Axle,differential | | 26 | 37 | | | 145 | |
| | 2009.09-2015.08 | 6MT/7DCT | R | L | Bus 4WD CFCA | | GDS61257 | Drive Shaft | | 38 | | 59 | 100 | 683 | |
| | 2009.09-2015.08 | 6MT/7DCT | R | R | Bus 4WD CFCA | | GDS61258 | Drive Shaft | | 38 | | 59 | 100 | 743 | |
| | 2009.09-2015.08 | 6MT/7DCT | R | L/R | Bus 4WD CFCA | | GCI82474 | Outer Joint | | 38 | 28 | 59 | 100 | 59 | |
| | 2009.09-2015.08 | 6MT/7DCT | R | L/R | Bus 4WD CFCA | | GCI61075 | Inner Joint | | | 28 | | | 26 | |
| | 2009.09-2015.08 | 5MT | F | R | Bus FWD CFCA | | GDS61190 | Stub Axle,differential | | 26 | 37 | | | 136.5 | |
| | 2009.09-2015.08 | 6MT | F | L | Bus FWD CFCA | Date to:2013.06 | GDS61084 | Drive Shaft | | 38 | 26 | 63 | 102.5 | 613 | |
| | 2009.09-2015.08 | 6MT | F | L | Bus FWD CFCA | Date From:2013.07 | GDS83360 | Drive Shaft | | 38 | 42 | 63 | 102.5 | 617 | |
| | 2009.09-2015.08 | 6MT | F | R | Bus FWD CFCA | Date From:2013.07,Date To:2015.04 | GDS82361 | Drive Shaft | | 38 | 26 | 63 | 102.5 | 879 | |
| | 2009.09-2015.08 | 6MT | F | R | Bus FWD CFCA | Date To:2013.06 | GDS83296 | Drive Shaft | | 38 | 26 | 63 | 102.5 | 880 | |
| | 2009.09-2015.08 | 6MT | F | R | Bus FWD CFCA | Date From:2015.05 | GDS83361 | Drive Shaft | | 38 | 26 | 63 | 102.5 | 883 | |
| | 2009.09-2015.08 | 6MT | F | L/R | Bus FWD CFCA | Date From:2013.07;8 balls | GCO81467 | Outer Joint | | 38 | 30 | 63 | 102.5 | 67.5 | I |
| | 2009.09-2015.08 | 6MT | F | L | Bus FWD CFCA | Date To:2013.06 | GCI61029 | Inner Joint | | 26 | 30 | 46.8 | | 137 | |
| | 2009.09-2015.08 | 6MT | F | L | Bus FWD CFCA | Date From:2013.07 | GCI61104 | Inner Joint | | 42 | 30 | 35.6 | | 136 | |
| | 2009.09-2015.08 | 6MT | F | R | Bus FWD CFCA | Model:Caravelle,Date to:2015.04 | GCI61080 | Inner Joint | | 26 | 30 | | 281.5 | 106 | |
| | 2009.09-2015.08 | 6MT | F | R | Bus FWD CFCA | Model:Caravelle,Date from:2015.05 | GCI81381 | Inner Joint | | 26 | 30 | | 281.5 | 105 | |
| | 2009.09-2015.08 | 6MT | F | L | Bus FWD CFCA | for OE number:0A5409343B | GDS61213 | Stub Axle,differential | | 42 | 42 | | | 135.5 | |
| | 2009.09-2015.08 | 6MT | F | R | Bus FWD CFCA | for OE number:0A5409343A | GDS61215 | Stub Axle,differential | | 26 | 42 | | | 143.5 | |
| | 2009.09-2015.08 | 6MT | F | L/R | Bus FWD CFCA | for OE number:0A5409343 | GDS61191 | Stub Axle,differential | | 26 | 42 | | | 135.5 | |
| | 2009.09-2015.08 | 6MT/7DCT | F | L/R | Bus FWD CFCA | Date To:2013.06 | GCO61011 | Outer Joint | | 38 | 29 | 63 | 102.5 | 70 | M |
| | 2009.09-2015.08 | 6MT/7DCT | F | L/R | Bus FWD CFCA | Date From:2013.07;6 balls | GCO61060 | Outer Joint | | 38 | 30 | 63 | 102.5 | 68 | I |
| | 2009.09-2015.08 | 7AT | F | R | Bus FWD CFCA | | GDS61216 | Stub Axle,differential | | 26 | 37 | | | 145 | |
| | 2009.09-2015.08 | 7DCT | F | L | Bus FWD CFCA | | GDS83293 | Drive Shaft | | 38 | 37 | 63 | 102.5 | 645 | |
| | 2009.09-2015.08 | 7DCT | F | R | Bus FWD CFCA | Chassis no. From:7HCG000001/7HCH000001/7HCX000001 | GDS82392 | Drive Shaft | | 38 | 37 | 63 | 102.5 | 1025 | |
| | 2009.09-2015.08 | 7DCT | F | R | Bus FWD CFCA | Chassis no. To:7HBG500000/7HBH500000/7HBX500000 | GDS83353 | Drive Shaft | | 38 | 37 | 63 | 102.5 | 1027 | |
| | 2009.09-2015.08 | 7DCT | F | R | Bus FWD CFCA | Chassis no. From:7HCG000001/7HCH000001/7HCX000001 | GCI81754 | Inner Joint | | 37 | 27 | 34.5 | 430.5 | 96 | |
| | 2009.09-2015.08 | 7DCT | F | R | Bus FWD CFCA | Chassis no. To:7HBG500000/7HBH500000/7HBX500000 | GCI83037 | Inner Joint | | 37 | 27 | 34.5 | 430.5 | 96 | |
| | 2009.09-2015.08 | 6MT | F | L | Platform/Chassis 4WD CFCA | Date From:2013.07 | GDS83360 | Drive Shaft | | 38 | 42 | 63 | 102.5 | 617 | |
| | 2009.09-2015.08 | 6MT | F | R | Platform/Chassis 4WD CFCA | Date from:2013.07 | GDS81666 | Drive Shaft | | 38 | 26 | 63 | 102.5 | 616 | |
| | 2009.09-2015.08 | 6MT | F | L/R | Platform/Chassis 4WD CFCA | Date to:2013.06 | GDS61084 | Drive Shaft | | 38 | 26 | 63 | 102.5 | 613 | |
| | 2009.09-2015.08 | 6MT | F | L/R | Platform/Chassis 4WD CFCA | Date to:2013.06 | GCO61011 | Outer Joint | | 38 | 29 | 63 | 102.5 | 70 | M |
| | 2009.09-2015.08 | 6MT | F | L/R | Platform/Chassis 4WD CFCA | Date From:2013.07;6 balls | GCO61060 | Outer Joint | | 38 | 30 | 63 | 102.5 | 68 | I |
| | 2009.09-2015.08 | 6MT | F | L/R | Platform/Chassis 4WD CFCA | Date From:2013.07;8 balls | GCO81467 | Outer Joint | | 38 | 30 | 63 | 102.5 | 67.5 | I |
| | 2009.09-2015.08 | 6MT | F | L | Platform/Chassis 4WD CFCA | Date From:2013.07 | GCI61104 | Inner Joint | | 42 | 30 | 35.6 | | 136 | |
| | 2009.09-2015.08 | 6MT | F | L | Platform/Chassis 4WD CFCA | Date from:2010.01,for OE number:0A5409343B | GDS61213 | Stub Axle,differential | | 42 | 42 | | | 135.5 | |
| | 2009.09-2015.08 | 6MT | F | R | Platform/Chassis 4WD CFCA | Date from:2010.01,for OE number:0A5409343A | GDS61215 | Stub Axle,differential | | 26 | 42 | | | 143.5 | |
| | 2009.09-2015.08 | 6MT | F | L/R | Platform/Chassis 4WD CFCA | Date from:2010.01,for OE number:0A5409343 | GDS61191 | Stub Axle,differential | | 26 | 42 | | | 135.5 | |
| | 2009.09-2015.08 | 7DCT | F | L | Platform/Chassis 4WD CFCA | | GDS83293 | Drive Shaft | | 38 | 37 | 63 | 102.5 | 645 | |
| | 2009.09-2015.08 | 7DCT | F | R | Platform/Chassis 4WD CFCA | | GDS81665 | Drive Shaft | | 38 | 26 | 63 | 102.5 | 614 | |
| | 2009.09-2015.08 | 7DCT | F | R | Platform/Chassis 4WD CFCA | | GCI81453 | Inner Joint | | 26 | 27 | 47 | | 128 | |
| | 2009.09-2015.08 | 7DCT | F | R | Platform/Chassis 4WD CFCA | | GDS61216 | Stub Axle,differential | | 26 | 37 | | | 145 | |
| | 2009.09-2015.08 | 6MT/7DCT | R | L | Platform/Chassis 4WD CFCA | | GDS61257 | Drive Shaft | | 38 | | 59 | 100 | 683 | |
| | 2009.09-2015.08 | 6MT/7DCT | R | R | Platform/Chassis 4WD CFCA | | GDS61258 | Drive Shaft | | 38 | | 59 | 100 | 743 | |
| | 2009.09-2015.08 | 6MT/7DCT | R | L/R | Platform/Chassis 4WD CFCA | | GCI82474 | Outer Joint | | 38 | 28 | 59 | 100 | 59 | |
| | 2009.09-2015.08 | 6MT/7DCT | R | L/R | Platform/Chassis 4WD CFCA | | GCI61075 | Inner Joint | | | 28 | | | 26 | |
| | 2009.09-2015.08 | 6MT | F | L | Platform/Chassis FWD CFCA | Date to:2013.06 | GDS61084 | Drive Shaft | | 38 | 26 | 63 | 102.5 | 613 | |
| | 2009.09-2015.08 | 6MT | F | L | Platform/Chassis FWD CFCA | Date From:2013.07 | GDS83360 | Drive Shaft | | 38 | 42 | 63 | 102.5 | 617 | |
| | 2009.09-2015.08 | 6MT | F | R | Platform/Chassis FWD CFCA | Date From:2013.07,Date To:2015.04 | GDS82361 | Drive Shaft | | 38 | 26 | 63 | 102.5 | 879 | |
| | 2009.09-2015.08 | 6MT | F | R | Platform/Chassis FWD CFCA | Date To:2013.06 | GDS83296 | Drive Shaft | | 38 | 26 | 63 | 102.5 | 880 | |
| | 2009.09-2015.08 | 6MT | F | R | Platform/Chassis FWD CFCA | Date From:2015.05 | GDS83361 | Drive Shaft | | 38 | 26 | 63 | 102.5 | 883 | |
| | 2009.09-2015.08 | 6MT | F | L/R | Platform/Chassis FWD CFCA | Date From:2013.07;8 balls | GCO81467 | Outer Joint | | 38 | 30 | 63 | 102.5 | 67.5 | I |
| | 2009.09-2015.08 | 6MT | F | L | Platform/Chassis FWD CFCA | Date To:2013.06 | GCI61029 | Inner Joint | | 26 | 30 | 46.8 | | 137 | |
| | 2009.09-2015.08 | 6MT | F | L | Platform/Chassis FWD CFCA | Date From:2013.07 | GCI61104 | Inner Joint | | 42 | 30 | 35.6 | | 136 | |
| | 2009.09-2015.08 | 6MT | F | R | Platform/Chassis FWD CFCA | Date to:2015.04 | GCI61080 | Inner Joint | | 26 | 30 | | 281.5 | 106 | |

| | YEAR | TRANSM. | F/R | L/R | BODY STYLE & DRIVE TYPE & ENGINE | REMARKS | G-AP Ref. | PRODUCT | ABS | Technical Specifications A | B | C | H | L | P |
|---|---|---|---|---|---|---|---|---|---|---|---|---|---|---|---|
| **VW Transporter** | | | | | | | | | | | | | | | |
| 2.0 (132 kw) | 2009.09-2015.08 | 6MT | F | R | Platform/Chassis FWD CFCA | Date from:2015.05 | GCI81381 | Inner Joint | | 26 | 30 | | 281.5 | 105 | |
| | 2009.09-2015.08 | 6MT | F | L | Platform/Chassis FWD CFCA | for OE number:0A5409343B | GDS61213 | Stub Axle,differential | | 42 | 42 | | | 135.5 | |
| | 2009.09-2015.08 | 6MT | F | R | Platform/Chassis FWD CFCA | for OE number:0A5409343A | GDS61215 | Stub Axle,differential | | 26 | 42 | | | 143.5 | |
| | 2009.09-2015.08 | 6MT | F | L/R | Platform/Chassis FWD CFCA | for OE number:0A5409343 | GDS61191 | Stub Axle,differential | | 26 | 42 | | | 135.5 | |
| | 2009.09-2015.08 | 6MT/7DCT | F | L/R | Platform/Chassis FWD CFCA | Date To:2013.06 | GCO61011 | Outer Joint | | 38 | 29 | 63 | 102.5 | 70 | M |
| | 2009.09-2015.08 | 6MT/7DCT | F | L/R | Platform/Chassis FWD CFCA | Date From:2013.07;6 balls | GCO61060 | Outer Joint | | 38 | 30 | 63 | 102.5 | 68 | I |
| | 2009.09-2015.08 | 7AT | F | R | Platform/Chassis FWD CFCA | | GDS61216 | Stub Axle,differential | | 26 | 37 | | | 145 | |
| | 2009.09-2015.08 | 7DCT | F | L | Platform/Chassis FWD CFCA | | GDS83293 | Drive Shaft | | 38 | 37 | 63 | 102.5 | 645 | |
| | 2009.09-2015.08 | 7DCT | F | R | Platform/Chassis FWD CFCA | Chassis no. code :WV1ZZZ-7H,Radstand kurz | GDS82392 | Drive Shaft | | 38 | 37 | 63 | 102.5 | 1025 | |
| | 2009.09-2015.08 | 7DCT | F | R | Platform/Chassis FWD CFCA | Chassis no. code:WV1ZZZ-7J,Radstand lang | GDS83353 | Drive Shaft | | 38 | 37 | 63 | 102.5 | 1027 | |
| | 2009.09-2015.08 | 7DCT | F | R | Platform/Chassis FWD CFCA | Chassis no. From:7HCG000001/7HCH000001/7HCX000001 | GCI81754 | Inner Joint | | 37 | 27 | 34.5 | 430.5 | 96 | |
| | 2009.09-2015.08 | 7DCT | F | R | Platform/Chassis FWD CFCA | Chassis no. To:7HBG500000/7HBH500000/7HBX500000 | GCI83037 | Inner Joint | | 37 | 27 | 34.5 | 430.5 | 96 | |
| | 2009.09-2015.08 | 6MT | F | L | Van 4WD CFCA | Date to:2012.04;For PR code:F4D/F5K/F0Y/For special-purpose vehicles | GDS61084 | Drive Shaft | | 38 | 26 | 63 | 102.5 | 613 | |
| | 2009.09-2015.08 | 6MT | F | L | Van 4WD CFCA | Date From:2013.07 | GDS83360 | Drive Shaft | | 38 | 42 | 63 | 102.5 | 617 | |
| | 2009.09-2015.08 | 6MT | F | R | Van 4WD CFCA | Date to:2013.06 | GDS61084 | Drive Shaft | | 38 | 26 | 63 | 102.5 | 613 | |
| | 2009.09-2015.08 | 6MT | F | R | Van 4WD CFCA | Date from:2013.07 | GDS81666 | Drive Shaft | | 38 | 26 | 63 | 102.5 | 616 | |
| | 2009.09-2015.08 | 6MT | F | L | Van 4WD CFCA | Date to:2012.04;For PR code:F4D/F5K/F0Y/For special-purpose vehicles | GCI61029 | Inner Joint | | 26 | 30 | 46.8 | | 137 | |
| | 2009.09-2015.08 | 6MT | F | L | Van 4WD CFCA | Date From:2013.07 | GCI61104 | Inner Joint | | 42 | 30 | 35.6 | | 136 | |
| | 2009.09-2015.08 | 6MT | F | R | Van 4WD CFCA | Date to:2013.06 | GCI61029 | Inner Joint | | 26 | 30 | 46.8 | | 137 | |
| | 2009.09-2015.08 | 6MT | F | L | Van 4WD CFCA | Date from:2010.01,for OE number:0A5409343B | GDS61213 | Stub Axle,differential | | 42 | 42 | | | 135.5 | |
| | 2009.09-2015.08 | 6MT | F | R | Van 4WD CFCA | Date from:2010.01,for OE number:0A5409343A | GDS61215 | Stub Axle,differential | | 26 | 42 | | | 143.5 | |
| | 2009.09-2015.08 | 6MT | F | L/R | Van 4WD CFCA | Date from:2010.01,for OE number:0A5409343 | GDS61191 | Stub Axle,differential | | 26 | 42 | | | 135.5 | |
| | 2009.09-2015.08 | 6MT/7DCT | F | L/R | Van 4WD CFCA | Date to:2013.06 | GCO61011 | Outer Joint | | 38 | 29 | 63 | 102.5 | 70 | M |
| | 2009.09-2015.08 | 6MT/7DCT | F | L/R | Van 4WD CFCA | Date From:2013.07;6 balls | GCO61060 | Outer Joint | | 38 | 30 | 63 | 102.5 | 68 | I |
| | 2009.09-2015.08 | 6MT/7DCT | F | L/R | Van 4WD CFCA | Date From:2013.07;8 balls | GCO81467 | Outer Joint | | 38 | 30 | 63 | 102.5 | 67.5 | I |
| | 2009.09-2015.08 | 7DCT | F | L | Van 4WD CFCA | | GDS83293 | Drive Shaft | | 38 | 37 | 63 | 102.5 | 645 | |
| | 2009.09-2015.08 | 7DCT | F | R | Van 4WD CFCA | 8 balls | GDS81665 | Drive Shaft | | 38 | 26 | 63 | 102.5 | 614 | |
| | 2009.09-2015.08 | 7DCT | F | R | Van 4WD CFCA | 6 balls | GDS81920 | Drive Shaft | | 38 | 26 | 63 | 102.5 | 614 | |
| | 2009.09-2015.08 | 7DCT | F | R | Van 4WD CFCA | | GCI81453 | Inner Joint | | 26 | 27 | 47 | | 128 | |
| | 2009.09-2015.08 | 7DCT | F | R | Van 4WD CFCA | | GDS61216 | Stub Axle,differential | | 26 | 37 | | | 145 | |
| | 2009.09-2015.08 | 6MT/7DCT | R | L | Van 4WD CFCA | | GDS61257 | Drive Shaft | | 38 | | 59 | 100 | 683 | |
| | 2009.09-2015.08 | 6MT/7DCT | R | R | Van 4WD CFCA | | GDS61258 | Drive Shaft | | 38 | | 59 | 100 | 743 | |
| | 2009.09-2015.08 | 6MT/7DCT | R | L/R | Van 4WD CFCA | | GCI82474 | Outer Joint | | 38 | 28 | 59 | 100 | 59 | |
| | 2009.09-2015.08 | 6MT/7DCT | R | L/R | Van 4WD CFCA | | GCI61075 | Inner Joint | | | 28 | | | 26 | |
| | 2009.09-2015.08 | 5MT | F | R | Van FWD CFCA | | GDS61190 | Stub Axle,differential | | 26 | 37 | | | 136.5 | |
| | 2009.09-2015.08 | 6MT | F | L | Van FWD CFCA | Date to:2013.06 | GDS61084 | Drive Shaft | | 38 | 26 | 63 | 102.5 | 613 | |
| | 2009.09-2015.08 | 6MT | F | L | Van FWD CFCA | Date from:2013.07 | GDS83360 | Drive Shaft | | 38 | 42 | 63 | 102.5 | 617 | |
| | 2009.09-2015.08 | 6MT | F | R | Van FWD CFCA | Date from:2013.07,Date to:2015.04 | GDS82361 | Drive Shaft | | 38 | 26 | 63 | 102.5 | 879 | |
| | 2009.09-2015.08 | 6MT | F | R | Van FWD CFCA | Date to:2013.06 | GDS83296 | Drive Shaft | | 38 | 26 | 63 | 102.5 | 880 | |
| | 2009.09-2015.08 | 6MT | F | R | Van FWD CFCA | Date from:2015.05 | GDS83361 | Drive Shaft | | 38 | 26 | 63 | 102.5 | 883 | |
| | 2009.09-2015.08 | 6MT | F | L | Van FWD CFCA | Date to:2013.06 | GCI61029 | Inner Joint | | 26 | 30 | 46.8 | | 137 | |
| | 2009.09-2015.08 | 6MT | F | L | Van FWD CFCA | Date from:2013.07 | GCI61104 | Inner Joint | | 42 | 30 | 35.6 | | 136 | |
| | 2009.09-2015.08 | 6MT | F | R | Van FWD CFCA | Date to:2015.04 | GCI61080 | Inner Joint | | 26 | 30 | | 281.5 | 106 | |
| | 2009.09-2015.08 | 6MT | F | L | Van FWD CFCA | for OE number:0A5409343B | GDS61213 | Stub Axle,differential | | 42 | 42 | | | 135.5 | |
| | 2009.09-2015.08 | 6MT | F | R | Van FWD CFCA | for OE number:0A5409343A | GDS61215 | Stub Axle,differential | | 26 | 42 | | | 143.5 | |
| | 2009.09-2015.08 | 6MT | F | L/R | Van FWD CFCA | for OE number:0A5409343 | GDS61191 | Stub Axle,differential | | 26 | 42 | | | 135.5 | |
| | 2009.09-2015.08 | 6MT/7DCT | F | L/R | Van FWD CFCA | 6 balls | GCO61011 | Outer Joint | | 38 | 29 | 63 | 102.5 | 70 | M |
| | 2009.09-2015.08 | 6MT/7DCT | F | L/R | Van FWD CFCA | 8 balls | GCO81467 | Outer Joint | | 38 | 30 | 63 | 102.5 | 67.5 | I |
| | 2009.09-2015.08 | 7AT | F | R | Van FWD CFCA | | GDS61216 | Stub Axle,differential | | 26 | 37 | | | 145 | |
| | 2009.09-2015.08 | 7DCT | F | L | Van FWD CFCA | | GDS83293 | Drive Shaft | | 38 | 37 | 63 | 102.5 | 645 | |
| | 2009.09-2015.08 | 7DCT | F | R | Van FWD CFCA | Chassis no. from:7H_CG000001/7H_CH000001/7H_CX000001 | GDS82392 | Drive Shaft | | 38 | 37 | 63 | 102.5 | 1025 | |
| | 2009.09-2015.08 | 7DCT | F | R | Van FWD CFCA | Chassis no. to:7H_BG500000/7H_BH500000/7H_BX500000 | GDS83353 | Drive Shaft | | 38 | 37 | 63 | 102.5 | 1027 | |
| | 2015.04-2019.11 | 6MT | F | L | Platform/Chassis FWD CFCA | date to:2017.01 | GDS83360 | Drive Shaft | | 38 | 42 | 63 | 102.5 | 617 | |
| | 2015.04-2019.11 | 6MT | F | R | Platform/Chassis FWD CFCA | date to:2017.01 | GDS83361 | Drive Shaft | | 38 | 26 | 63 | 102.5 | 883 | |
| | 2015.04-2019.11 | 6MT | F | L | Platform/Chassis FWD CFCA | | GCI61029 | Inner Joint | | 26 | 30 | 46.8 | | 137 | |
| | 2015.04-2019.11 | 6MT | F | R | Platform/Chassis FWD CFCA | | GCI81381 | Inner Joint | | 26 | 30 | | 281.5 | 105 | |
| | 2015.04-2019.11 | 6MT | F | L | Platform/Chassis FWD CFCA | for OE number:0A5409343B | GDS61213 | Stub Axle,differential | | 42 | 42 | | | 135.5 | |
| | 2015.04-2019.11 | 6MT | F | R | Platform/Chassis FWD CFCA | for OE number:0A5409343A | GDS61215 | Stub Axle,differential | | 26 | 42 | | | 143.5 | |
| | 2015.04-2019.11 | 7AT/6MT | F | L/R | Platform/Chassis FWD CFCA | | GDS61216 | Stub Axle,differential | | 26 | 37 | | | 145 | |
| | 2015.04-2019.11 | 7DCT | F | L | Platform/Chassis FWD CFCA | | GDS83293 | Drive Shaft | | 38 | 37 | 63 | 102.5 | 645 | |
| | 2015.04-2019.11 | 7DCT | F | R | Platform/Chassis FWD CFCA | | GDS82392 | Drive Shaft | | 38 | 37 | 63 | 102.5 | 1025 | |
| | 2015.04-2019.11 | 7DCT | F | R | Platform/Chassis FWD CFCA | Date to:2017.01 | GCO61060 | Outer Joint | | 38 | 30 | 63 | 102.5 | 68 | I |
| | 2015.04-2019.11 | 7DCT | F | R | Platform/Chassis FWD CFCA | Date to:2017.01 | GCI83037 | Inner Joint | | 37 | 27 | 34.5 | 430.5 | 96 | |
| | 2015.04-2019.11 | MT/6MT | F | L/R | Platform/Chassis FWD CFCA | Date from:2013.07 | GCO81467 | Outer Joint | | 38 | 30 | 63 | 102.5 | 67.5 | I |
| | 2015.04-2019.12 | 6MT | F | L | Van FWD CFCA | date to:2017.01 | GDS83360 | Drive Shaft | | 38 | 42 | 63 | 102.5 | 617 | |

| | YEAR | TRANSM. | F/R | L/R | BODY STYLE & DRIVE TYPE & ENGINE | REMARKS | G-AP Ref. | PRODUCT | ABS | Technical Specifications A | B | C | H | L | P |
|---|---|---|---|---|---|---|---|---|---|---|---|---|---|---|---|
| **VW Transporter** | | | | | | | | | | | | | | | |
| 2.0 (132 kw) | 2015.04-2019.12 | 6MT | F | R | Van FWD CFCA | date to:2017.01 | GDS83361 | Drive Shaft | | 38 | 26 | 63 | 102.5 | 883 | |
| | 2015.04-2019.12 | 6MT | F | L | Van FWD CFCA | | GCI61029 | Inner Joint | | 26 | 30 | 46.8 | | 137 | |
| | 2015.04-2019.12 | 6MT | F | R | Van FWD CFCA | | GCI81381 | Inner Joint | | 26 | 30 | | 281.5 | 105 | |
| | 2015.04-2019.12 | 6MT | F | L | Van FWD CFCA | for OE number:0A5409343B | GDS61213 | Stub Axle,differential | | 42 | 42 | | | 135.5 | |
| | 2015.04-2019.12 | 6MT | F | R | Van FWD CFCA | for OE number:0A5409343A | GDS61215 | Stub Axle,differential | | 26 | 42 | | | 143.5 | |
| | 2015.04-2019.12 | 7AT/6MT | F | L/R | Van FWD CFCA | | GDS61216 | Stub Axle,differential | | 26 | 37 | | | 145 | |
| | 2015.04-2019.12 | 7DCT | F | L | Van FWD CFCA | | GDS83293 | Drive Shaft | | 38 | 37 | 63 | 102.5 | 645 | |
| | 2015.04-2019.12 | 7DCT | F | R | Van FWD CFCA | | GDS82392 | Drive Shaft | | 38 | 37 | 63 | 102.5 | 1025 | |
| | 2015.04-2019.12 | 7DCT | F | R | Van FWD CFCA | Date to:2017.01 | GCO61060 | Outer Joint | | 38 | 30 | 63 | 102.5 | 68 | I |
| | 2015.04-2019.12 | 7DCT | F | R | Van FWD CFCA | Date to:2017.01 | GCI83037 | Inner Joint | | 37 | 27 | 34.5 | 430.5 | 96 | |
| | 2015.04-2019.12 | MT/6MT | F | L/R | Van FWD CFCA | Date from:2013.07 | GCO81467 | Outer Joint | | 38 | 30 | 63 | 102.5 | 67.5 | I |
| | 2015.06-2019.11 | 6MT | F | L | Platform/Chassis 4WD CFCA | date to:2017.01 | GDS83360 | Drive Shaft | | 38 | 42 | 63 | 102.5 | 617 | |
| | 2015.06-2019.11 | 6MT | F | R | Platform/Chassis 4WD CFCA | Date to:2017.01 | GDS81666 | Drive Shaft | | 38 | 26 | 63 | 102.5 | 616 | |
| | 2015.06-2019.11 | 6MT | F | L | Platform/Chassis 4WD CFCA | | GCI61029 | Inner Joint | | 26 | 30 | 46.8 | | 137 | |
| | 2015.06-2019.11 | 6MT | F | L | Platform/Chassis 4WD CFCA | for OE number:0A5409343B | GDS61213 | Stub Axle,differential | | 42 | 42 | | | 135.5 | |
| | 2015.06-2019.11 | 6MT | F | R | Platform/Chassis 4WD CFCA | for OE number:0A5409343A | GDS61215 | Stub Axle,differential | | 26 | 42 | | | 143.5 | |
| | 2015.06-2019.11 | 7AT/6MT | F | L/R | Platform/Chassis 4WD CFCA | | GDS61216 | Stub Axle,differential | | 26 | 37 | | | 145 | |
| | 2015.06-2019.11 | 7DCT | F | L | Platform/Chassis 4WD CFCA | | GDS83293 | Drive Shaft | | 38 | 37 | 63 | 102.5 | 645 | |
| | 2015.06-2019.11 | 7DCT | F | R | Platform/Chassis 4WD CFCA | | GDS81665 | Drive Shaft | | 38 | 26 | 63 | 102.5 | 614 | |
| | 2015.06-2019.11 | 7DCT | F | R | Platform/Chassis 4WD CFCA | | GCI81453 | Inner Joint | | 26 | 27 | 47 | | 128 | |
| | 2015.06-2019.11 | MT/6MT | F | L/R | Platform/Chassis 4WD CFCA | Date from:2013.07 | GCO81467 | Outer Joint | | 38 | 30 | 63 | 102.5 | 67.5 | I |
| | 2015.06-2019.11 | 6MT/7DCT | R | L | Platform/Chassis 4WD CFCA | | GDS61257 | Drive Shaft | | 38 | | 59 | 100 | 683 | |
| | 2015.06-2019.11 | 6MT/7DCT | R | R | Platform/Chassis 4WD CFCA | | GDS61258 | Drive Shaft | | 38 | | 59 | 100 | 743 | |
| | 2015.06-2019.11 | | R | L | Platform/Chassis 4WD CFCA | Date To:2016.04 | GCI61075 | Inner Joint | | | 28 | | | 26 | |
| | 2015.06-2019.12 | 6MT | F | L | Van 4WD CFCA | date to:2017.01 | GDS83360 | Drive Shaft | | 38 | 42 | 63 | 102.5 | 617 | |
| | 2015.06-2019.12 | 6MT | F | R | Van 4WD CFCA | Date to:2017.01 | GDS81666 | Drive Shaft | | 38 | 26 | 63 | 102.5 | 616 | |
| | 2015.06-2019.12 | 6MT | F | L/R | Van 4WD CFCA | For PR code:F0X/F0Y/F4D | GCO82386 | Outer Joint | | 38 | 31 | 63 | 103 | 69 | I |
| | 2015.06-2019.12 | 6MT | F | L | Van 4WD CFCA | | GCI61029 | Inner Joint | | 26 | 30 | 46.8 | | 137 | |
| | 2015.06-2019.12 | 6MT | F | L | Van 4WD CFCA | for OE number:0A5409343B | GDS61213 | Stub Axle,differential | | 42 | 42 | | | 135.5 | |
| | 2015.06-2019.12 | 6MT | F | R | Van 4WD CFCA | for OE number:0A5409343A | GDS61215 | Stub Axle,differential | | 26 | 42 | | | 143.5 | |
| | 2015.06-2019.12 | 6MT/7DCT | F | L/R | Van 4WD CFCA | | GCO81467 | Outer Joint | | 38 | 30 | 63 | 102.5 | 67.5 | I |
| | 2015.06-2019.12 | 7AT/6MT | F | L/R | Van 4WD CFCA | | GDS61216 | Stub Axle,differential | | 26 | 37 | | | 145 | |
| | 2015.06-2019.12 | 7DCT | F | L | Van 4WD CFCA | | GDS83293 | Drive Shaft | | 38 | 37 | 63 | 102.5 | 645 | |
| | 2015.06-2019.12 | 7DCT | F | R | Van 4WD CFCA | | GDS81665 | Drive Shaft | | 38 | 26 | 63 | 102.5 | 614 | |
| | 2015.06-2019.12 | 7DCT/6MT | F | R | Van 4WD CFCA | Transmission:6MT;For PR code:F0X/F0Y/F4D;Transmission:7DCT | GCI81453 | Inner Joint | | 26 | 27 | 47 | | 128 | |
| | 2015.06-2019.12 | 6MT/7DCT | R | L | Van 4WD CFCA | | GDS61257 | Drive Shaft | | 38 | | 59 | 100 | 683 | |
| | 2015.06-2019.12 | 6MT/7DCT | R | R | Van 4WD CFCA | | GDS61258 | Drive Shaft | | 38 | | 59 | 100 | 743 | |
| | 2015.06-2019.12 | | R | L | Van 4WD CFCA | Date To:2016.04 | GCI61075 | Inner Joint | | | 28 | | | 26 | |
| 2.0 (146 kw) | 2018.08-2024.08 | 7AT | F | L | Van 4WD CXEC | | GCO82386 | Outer Joint | | 38 | 31 | 63 | 103 | 69 | I |
| | 2018.08-2024.08 | 7AT | F | L | Van 4WD CXEC | | GCI81261 | Inner Joint | | 37 | 27 | 34.5 | 65.5 | 88.5 | |
| | 2018.08-2024.08 | 7AT | F | R | Van 4WD CXEC | | GCI81453 | Inner Joint | | 26 | 27 | 47 | | 128 | |
| | 2018.08-2024.08 | 7DCT | F | L | Van 4WD CXEC | Date To:2020.11 | GDS83497 | Drive Shaft | | 38 | 37 | 63 | 103 | 646 | |
| | 2018.08-2024.08 | 7AT | R | R | Van 4WD CXEC | | GDS61258 | Drive Shaft | | 38 | | 59 | 100 | 743 | |
| | 2018.08-2024.08 | 7DCT | R | L | Van 4WD CXEC | | GDS61257 | Drive Shaft | | 38 | | 59 | 100 | 683 | |
| | 2019.08-2024.08 | 7AT | F | L | Platform/Chassis 4WD CXEC | | GCO82386 | Outer Joint | | 38 | 31 | 63 | 103 | 69 | I |
| | 2019.08-2024.08 | 7AT | F | L | Platform/Chassis 4WD CXEC | | GCI81261 | Inner Joint | | 37 | 27 | 34.5 | 65.5 | 88.5 | |
| | 2019.08-2024.08 | 7DCT | F | L | Platform/Chassis 4WD CXEC | Date To:2020.11 | GDS83497 | Drive Shaft | | 38 | 37 | 63 | 103 | 646 | |
| | 2019.08-2024.08 | 7AT | R | R | Platform/Chassis 4WD CXEC | | GDS61258 | Drive Shaft | | 38 | | 59 | 100 | 743 | |
| | 2019.08-2024.08 | 7DCT | R | L | Platform/Chassis 4WD CXEC | | GDS61257 | Drive Shaft | | 38 | | 59 | 100 | 683 | |
| | 2019.08-2024.08 | 7AT | F | L | Platform/Chassis FWD CXEC | | GCO82386 | Outer Joint | | 38 | 31 | 63 | 103 | 69 | I |
| | 2019.08-2024.08 | 7AT | F | L | Platform/Chassis FWD CXEC | | GCI81261 | Inner Joint | | 37 | 27 | 34.5 | 65.5 | 88.5 | |
| | 2019.08-2024.08 | 7DCT | F | L | Platform/Chassis FWD CXEC | Date To:2020.11 | GDS83497 | Drive Shaft | | 38 | 37 | 63 | 103 | 646 | |
| | 2019.08-2024.08 | 7DCT | F | R | Platform/Chassis FWD CXEC | Date to:2020.11 | GDS83496 | Drive Shaft | | 38 | 37 | 63 | 103 | 1025 | |
| | 2019.08-2024.08 | 7DCT | F | R | Platform/Chassis FWD CXEC | Date to:2020.11 | GCI81754 | Inner Joint | | 37 | 27 | 34.5 | 430.5 | 96 | |
| | 2019.08-2024.08 | 7AT | F | L | Van FWD CXEC | | GCO82386 | Outer Joint | | 38 | 31 | 63 | 103 | 69 | I |
| | 2019.08-2024.08 | 7AT | F | L | Van FWD CXEC | | GCI81261 | Inner Joint | | 37 | 27 | 34.5 | 65.5 | 88.5 | |
| | 2019.08-2024.08 | 7DCT | F | L | Van FWD CXEC | Date To:2020.11 | GDS83497 | Drive Shaft | | 38 | 37 | 63 | 103 | 646 | |
| | 2019.08-2024.08 | 7DCT | F | R | Van FWD CXEC | Date to:2020.11 | GDS83496 | Drive Shaft | | 38 | 37 | 63 | 103 | 1025 | |
| | 2019.08-2024.08 | 7DCT | F | R | Van FWD CXEC | Date to:2020.11 | GCI81754 | Inner Joint | | 37 | 27 | 34.5 | 430.5 | 96 | |
| 2.0 (150 kw) | 2011.05-2015.08 | 6MT | F | L | Bus FWD CJKA | Date to:2013.06 | GDS61084 | Drive Shaft | | 38 | 26 | 63 | 102.5 | 613 | |
| | 2011.05-2015.08 | 6MT | F | L | Bus FWD CJKA | Date From:2013.07 | GDS83360 | Drive Shaft | | 38 | 42 | 63 | 102.5 | 617 | |
| | 2011.05-2015.08 | 6MT | F | R | Bus FWD CJKA | Date From:2013.07,Date To:2015.04 | GDS82361 | Drive Shaft | | 38 | 26 | 63 | 102.5 | 879 | |
| | 2011.05-2015.08 | 6MT | F | R | Bus FWD CJKA | Date To:2013.06 | GDS83296 | Drive Shaft | | 38 | 26 | 63 | 102.5 | 880 | |
| | 2011.05-2015.08 | 6MT | F | R | Bus FWD CJKA | Date From:2015.05 | GDS83361 | Drive Shaft | | 38 | 26 | 63 | 102.5 | 883 | |
| | 2011.05-2015.08 | 6MT | F | L | Bus FWD CJKA | Date To:2013.06 | GCI61029 | Inner Joint | | 26 | 30 | 46.8 | | 137 | |

| | YEAR | TRANSM. | F/R | L/R | BODY STYLE & DRIVE TYPE & ENGINE | REMARKS | G-AP Ref. | PRODUCT | ABS | Technical Specifications | | | | | |
|---|---|---|---|---|---|---|---|---|---|---|---|---|---|---|---|
| | | | | | | | | | | A | B | C | H | L | P |
| **VW Transporter** | | | | | | | | | | | | | | | |
| 2.0 (150 kw) | 2011.05-2015.08 | 6MT | F | L | Bus FWD CJKA | Date From:2013.07 | GCI61104 | Inner Joint | | 42 | 30 | 35.6 | | 136 | |
| | 2011.05-2015.08 | 6MT | F | R | Bus FWD CJKA | Date to:2015.04 | GCI61080 | Inner Joint | | 26 | 30 | | 281.5 | 106 | |
| | 2011.05-2015.08 | 6MT | F | R | Bus FWD CJKA | Date from:2015.05 | GCI81381 | Inner Joint | | 26 | 30 | | 281.5 | 105 | |
| | 2011.05-2015.08 | 6MT | F | L | Bus FWD CJKA | Model:Transporter,for OE number:0A5409343B | GDS61213 | Stub Axle,differential | | 42 | 42 | | | 135.5 | |
| | 2011.05-2015.08 | 6MT | F | R | Bus FWD CJKA | Model:Transporter,for OE number:0A5409343A | GDS61215 | Stub Axle,differential | | 26 | 42 | | | 143.5 | |
| | 2011.05-2015.08 | 6MT | F | L/R | Bus FWD CJKA | Model:Transporter,for OE number:0A5409343 | GDS61191 | Stub Axle,differential | | 26 | 42 | | | 135.5 | |
| | 2011.05-2015.08 | 6MT/7DCT | F | L/R | Bus FWD CJKA | Date to:2013.06 | GCO61011 | Outer Joint | | 38 | 29 | 63 | 102.5 | 70 | M |
| | 2011.05-2015.08 | 6MT/7DCT | F | L/R | Bus FWD CJKA | Date From:2013.07;6 balls | GCO61060 | Outer Joint | | 38 | 30 | 63 | 102.5 | 68 | I |
| | 2011.05-2015.08 | 6MT/7DCT | F | L/R | Bus FWD CJKA | Date From:2013.07;8 balls | GCO81467 | Outer Joint | | 38 | 30 | 63 | 102.5 | 67.5 | I |
| | 2011.05-2015.08 | 6MT/7DCT | F | R | Bus FWD CJKA | | GDS61216 | Stub Axle,differential | | 26 | 37 | | | 145 | |
| | 2011.05-2015.08 | 7DCT | F | L | Bus FWD CJKA | | GDS83293 | Drive Shaft | | 38 | 37 | 63 | 102.5 | 645 | |
| | 2011.05-2015.08 | 7DCT | F | R | Bus FWD CJKA | Date From:2013.07 | GDS82392 | Drive Shaft | | 38 | 37 | 63 | 102.5 | 1025 | |
| | 2011.05-2015.08 | 7DCT | F | R | Bus FWD CJKA | Date To:2013.06 | GDS83353 | Drive Shaft | | 38 | 37 | 63 | 102.5 | 1027 | |
| | 2011.05-2015.08 | 7DCT | F | R | Bus FWD CJKA | Date From:2013.07 | GCI81754 | Inner Joint | | 37 | 27 | 34.5 | 430.5 | 96 | |
| | 2011.05-2015.08 | 7DCT | F | R | Bus FWD CJKA | Date To:2013.06 | GCI83037 | Inner Joint | | 37 | 27 | 34.5 | 430.5 | 96 | |
| | 2011.05-2015.08 | 6MT | F | L | Van FWD CJKA | Date to:2013.06 | GDS61084 | Drive Shaft | | 38 | 26 | 63 | 102.5 | 613 | |
| | 2011.05-2015.08 | 6MT | F | L | Van FWD CJKA | Date from:2013.07 | GDS83360 | Drive Shaft | | 38 | 42 | 63 | 102.5 | 617 | |
| | 2011.05-2015.08 | 6MT | F | R | Van FWD CJKA | Date From:2013.07,Date To:2015.04 | GDS82361 | Drive Shaft | | 38 | 26 | 63 | 102.5 | 879 | |
| | 2011.05-2015.08 | 6MT | F | R | Van FWD CJKA | Date To:2013.06 | GDS83296 | Drive Shaft | | 38 | 26 | 63 | 102.5 | 880 | |
| | 2011.05-2015.08 | 6MT | F | R | Van FWD CJKA | Date From:2015.05 | GDS83361 | Drive Shaft | | 38 | 26 | 63 | 102.5 | 883 | |
| | 2011.05-2015.08 | 6MT | F | L | Van FWD CJKA | Date To:2013.06 | GCI61029 | Inner Joint | | 26 | 30 | 46.8 | | 137 | |
| | 2011.05-2015.08 | 6MT | F | L | Van FWD CJKA | Date From:2013.07 | GCI61104 | Inner Joint | | 42 | 30 | 35.6 | | 136 | |
| | 2011.05-2015.08 | 6MT | F | R | Van FWD CJKA | Date to:2015.04 | GCI61080 | Inner Joint | | 26 | 30 | | 281.5 | 106 | |
| | 2011.05-2015.08 | 6MT | F | R | Van FWD CJKA | Date from:2015.05 | GCI81381 | Inner Joint | | 26 | 30 | | 281.5 | 105 | |
| | 2011.05-2015.08 | 6MT | F | L | Van FWD CJKA | for OE number:0A5409343B | GDS61213 | Stub Axle,differential | | 42 | 42 | | | 135.5 | |
| | 2011.05-2015.08 | 6MT | F | R | Van FWD CJKA | for OE number:0A5409343A | GDS61215 | Stub Axle,differential | | 26 | 42 | | | 143.5 | |
| | 2011.05-2015.08 | 6MT | F | L/R | Van FWD CJKA | for OE number:0A5409343 | GDS61191 | Stub Axle,differential | | 26 | 42 | | | 135.5 | |
| | 2011.05-2015.08 | 6MT/7DCT | F | L/R | Van FWD CJKA | Date to:2013.06 | GCO61011 | Outer Joint | | 38 | 29 | 63 | 102.5 | 70 | M |
| | 2011.05-2015.08 | 6MT/7DCT | F | L/R | Van FWD CJKA | Date From:2013.07;6 balls | GCO61060 | Outer Joint | | 38 | 30 | 63 | 102.5 | 68 | I |
| | 2011.05-2015.08 | 6MT/7DCT | F | L/R | Van FWD CJKA | Date From:2013.07;8 balls | GCO81467 | Outer Joint | | 38 | 30 | 63 | 102.5 | 67.5 | I |
| | 2011.05-2015.08 | 7DCT | F | L | Van FWD CJKA | | GDS83293 | Drive Shaft | | 38 | 37 | 63 | 102.5 | 645 | |
| | 2011.05-2015.08 | 7DCT | F | R | Van FWD CJKA | | GDS82392 | Drive Shaft | | 38 | 37 | 63 | 102.5 | 1025 | |
| | 2011.05-2015.08 | 7DCT | F | R | Van FWD CJKA | | GCI81754 | Inner Joint | | 37 | 27 | 34.5 | 430.5 | 96 | |
| | 2011.05-2015.08 | 7DCT | F | R | Van FWD CJKA | | GDS61216 | Stub Axle,differential | | 26 | 37 | | | 145 | |
| | 2011.07-2015.08 | 7DCT | F | L | Bus 4WD CJKA | | GDS83293 | Drive Shaft | | 38 | 37 | 63 | 102.5 | 645 | |
| | 2011.07-2015.08 | 7DCT | F | R | Bus 4WD CJKA | | GDS81665 | Drive Shaft | | 38 | 26 | 63 | 102.5 | 614 | |
| | 2011.07-2015.08 | 7DCT | F | L/R | Bus 4WD CJKA | Date to:2013.06 | GCO61011 | Outer Joint | | 38 | 29 | 63 | 102.5 | 70 | M |
| | 2011.07-2015.08 | 7DCT | F | L/R | Bus 4WD CJKA | Date from:2013.07 | GCO81467 | Outer Joint | | 38 | 30 | 63 | 102.5 | 67.5 | I |
| | 2011.07-2015.08 | 7DCT | F | R | Bus 4WD CJKA | | GCI81453 | Inner Joint | | 26 | 27 | 47 | | 128 | |
| | 2011.07-2015.08 | 7DCT | F | R | Bus 4WD CJKA | | GDS61216 | Stub Axle,differential | | 26 | 37 | | | 145 | |
| | 2011.07-2015.08 | | F | L | Bus 4WD CJKA | Date from:201211 | GDS61213 | Stub Axle,differential | | 42 | 42 | | | 135.5 | |
| | 2011.07-2015.08 | 7DCT | R | L | Bus 4WD CJKA | | GDS61257 | Drive Shaft | | 38 | | 59 | 100 | 683 | |
| | 2011.07-2015.08 | 7DCT | R | R | Bus 4WD CJKA | | GDS61258 | Drive Shaft | | 38 | | 59 | 100 | 743 | |
| | 2011.07-2015.08 | 7DCT | R | L/R | Bus 4WD CJKA | | GCI82474 | Outer Joint | | 38 | 28 | 59 | 100 | 59 | |
| | 2011.07-2015.08 | 7DCT | R | L/R | Bus 4WD CJKA | | GCI61075 | Inner Joint | | | 28 | | | 26 | |
| | 2011.07-2015.08 | 7DCT | F | L | Van 4WD CJKA | | GDS83293 | Drive Shaft | | 38 | 37 | 63 | 102.5 | 645 | |
| | 2011.07-2015.08 | 7DCT | F | R | Van 4WD CJKA | | GDS81665 | Drive Shaft | | 38 | 26 | 63 | 102.5 | 614 | |
| | 2011.07-2015.08 | 7DCT | F | L/R | Van 4WD CJKA | Date to:2013.06 | GCO61011 | Outer Joint | | 38 | 29 | 63 | 102.5 | 70 | M |
| | 2011.07-2015.08 | 7DCT | F | L/R | Van 4WD CJKA | Date from:2013.07 | GCO81467 | Outer Joint | | 38 | 30 | 63 | 102.5 | 67.5 | I |
| | 2011.07-2015.08 | 7DCT | F | R | Van 4WD CJKA | | GCI81453 | Inner Joint | | 26 | 27 | 47 | | 128 | |
| | 2011.07-2015.08 | 7DCT | F | R | Van 4WD CJKA | | GDS61216 | Stub Axle,differential | | 26 | 37 | | | 145 | |
| | 2011.07-2015.08 | | F | L | Van 4WD CJKA | Date from:2012.11 | GDS61213 | Stub Axle,differential | | 42 | 42 | | | 135.5 | |
| | 2011.07-2015.08 | 7DCT | R | L | Van 4WD CJKA | | GDS61257 | Drive Shaft | | 38 | | 59 | 100 | 683 | |
| | 2011.07-2015.08 | 7DCT | R | R | Van 4WD CJKA | | GDS61258 | Drive Shaft | | 38 | | 59 | 100 | 743 | |
| | 2011.07-2015.08 | 7DCT | R | L/R | Van 4WD CJKA | | GCI82474 | Outer Joint | | 38 | 28 | 59 | 100 | 59 | |
| | 2011.07-2015.08 | 7DCT | R | L/R | Van 4WD CJKA | | GCI61075 | Inner Joint | | | 28 | | | 26 | |
| | 2015.04-2019.07 | 7AT | F | L | Van FWD CJKA | | GDS83293 | Drive Shaft | | 38 | 37 | 63 | 102.5 | 645 | |
| | 2015.04-2019.07 | 7AT | F | R | Van FWD CJKA | Date to:2017.01 | GCO61060 | Outer Joint | | 38 | 30 | 63 | 102.5 | 68 | I |
| | 2015.04-2019.07 | 7AT | F | L/R | Van FWD CJKA | | GCO81467 | Outer Joint | | 38 | 30 | 63 | 102.5 | 67.5 | I |
| | 2015.04-2019.07 | 7AT | F | R | Van FWD CJKA | | GCI81754 | Inner Joint | | 37 | 27 | 34.5 | 430.5 | 96 | |
| | 2015.04-2019.07 | 7AT | F | R | Van FWD CJKA | Date to:2017.01 | GCI83037 | Inner Joint | | 37 | 27 | 34.5 | 430.5 | 96 | |
| | 2015.04-2019.07 | 7AT | F | R | Van FWD CJKA | | GDS61216 | Stub Axle,differential | | 26 | 37 | | | 145 | |
| | 2015.04-2019.07 | 7DCT | F | R | Van FWD CJKA | | GDS82392 | Drive Shaft | | 38 | 37 | 63 | 102.5 | 1025 | |
| | 2015.06-2019.07 | 7AT | F | L | Van 4WD CJKA | | GDS83293 | Drive Shaft | | 38 | 37 | 63 | 102.5 | 645 | |
| | 2015.06-2019.07 | 7AT | F | R | Van 4WD CJKA | | GDS81665 | Drive Shaft | | 38 | 26 | 63 | 102.5 | 614 | |

| | YEAR | TRANSM. | F/R | L/R | BODY STYLE & DRIVE TYPE & ENGINE | REMARKS | G-AP Ref. | PRODUCT | ABS | Technical Specifications A | B | C | H | L | P |
|---|---|---|---|---|---|---|---|---|---|---|---|---|---|---|---|
| **VW Transporter** | | | | | | | | | | | | | | | |
| 2.0 (150 kw) | 2015.06-2019.07 | 7AT | F | R | Van 4WD CJKA | | GCI81453 | Inner Joint | | 26 | 27 | 47 | | 128 | |
| | 2015.06-2019.07 | 7AT | F | R | Van 4WD CJKA | | GDS61216 | Stub Axle,differential | | 26 | 37 | | | 145 | |
| | 2015.06-2019.07 | DCT | F | L/R | Van 4WD CJKA | Date from:2013.06 | GCO81467 | Outer Joint | | 38 | 30 | 63 | 102.5 | 67.5 | I |
| | 2015.06-2019.07 | 7DCT | R | L | Van 4WD CJKA | | GDS61257 | Drive Shaft | | 38 | | 59 | 100 | 683 | |
| | 2015.06-2019.07 | 7DCT | R | R | Van 4WD CJKA | | GDS61258 | Drive Shaft | | 38 | | 59 | 100 | 743 | |
| | 2015.06-2019.07 | | R | L | Van 4WD CJKA | Date To:2016.04 | GCI61075 | Inner Joint | | | 28 | | | 26 | |
| | 2015.06-2024.08 | 6MT | F | R | Van 4WD CXEB;DMZA | For model code:SHA/SHH | GDS81665 | Drive Shaft | | 38 | 26 | 63 | 102.5 | 614 | |
| | 2015.06-2024.08 | 6MT | F | L | Van 4WD CXEB;DMZA | for OE number:0A5409343B | GDS61213 | Stub Axle,differential | | 42 | 42 | | | 135.5 | |
| | 2015.06-2024.08 | 6MT | F | R | Van 4WD CXEB;DMZA | for OE number:0A5409343A | GDS61215 | Stub Axle,differential | | 26 | 42 | | | 143.5 | |
| | 2015.06-2024.08 | 6MT/7DCT | F | R | Van 4WD CXEB;DMZA | Modelcode:SGA/SGH | GCI81453 | Inner Joint | | 26 | 27 | 47 | | 128 | |
| | 2015.06-2024.08 | 7AT/6MT | F | L/R | Van 4WD CXEB;DMZA | For Modelcode:SHA/SHH | GCO81467 | Outer Joint | | 38 | 30 | 63 | 102.5 | 67.5 | I |
| | 2015.06-2024.08 | 7AT/6MT | F | R | Van 4WD CXEB;DMZA | | GDS61216 | Stub Axle,differential | | 26 | 37 | | | 145 | |
| | 2015.06-2024.08 | 7DCT | F | L | Van 4WD CXEB;DMZA | Date From:2017.01,Date To:2020.11 | GDS83497 | Drive Shaft | | 38 | 37 | 63 | 103 | 646 | |
| | 2015.06-2024.08 | 7DCT | F | L | Van 4WD CXEB;DMZA | | GCO82386 | Outer Joint | | 38 | 31 | 63 | 103 | 69 | I |
| | 2015.06-2024.08 | 7DCT | F | L | Van 4WD CXEB;DMZA | | GCI81261 | Inner Joint | | 37 | 27 | 34.5 | 65.5 | 88.5 | |
| | 2015.06-2024.08 | 6MT/7DCT | R | L | Van 4WD CXEB;DMZA | | GDS61257 | Drive Shaft | | 38 | | 59 | 100 | 683 | |
| | 2015.06-2024.08 | 6MT/7DCT | R | R | Van 4WD CXEB;DMZA | | GDS61258 | Drive Shaft | | 38 | | 59 | 100 | 743 | |
| | 2015.06-2024.08 | | R | L | Van 4WD CXEB;DMZA | Date To:2016.04 | GCI61075 | Inner Joint | | | 28 | | | 26 | |
| | 2015.06-2024.08 | 6MT | F | L/R | Van FWD CXEB;DMZA | For Modelcode:SHA/SHH | GCO81467 | Outer Joint | | 38 | 30 | 63 | 102.5 | 67.5 | I |
| | 2015.06-2024.08 | 6MT | F | L | Van FWD CXEB;DMZA | for OE number:0A5409343B | GDS61213 | Stub Axle,differential | | 42 | 42 | | | 135.5 | |
| | 2015.06-2024.08 | 6MT | F | R | Van FWD CXEB;DMZA | for OE number:0A5409343A | GDS61215 | Stub Axle,differential | | 26 | 42 | | | 143.5 | |
| | 2015.06-2024.08 | 6MT/7DCT | F | L/R | Van FWD CXEB;DMZA | Transmission:6MT,Date to:2020.10,For Modelcode:SHA/SHH;Transmission:6MT/7DCT,For Modelcode:SGA/SGH | GCO82386 | Outer Joint | | 38 | 31 | 63 | 103 | 69 | I |
| | 2015.06-2024.08 | 7DCT | F | L | Van FWD CXEB;DMZA | Date from:2017.02;For Modelcode:SGB/SGJ;6 balls | GDS61105 | Drive Shaft | | 38 | | 63 | 102.5 | 645 | |
| | 2015.06-2024.08 | 7DCT | F | L | Van FWD CXEB;DMZA | Date from:2017.02,For Modelcode:SGA/SGH;8 balls | GDS81508 | Drive Shaft | | 38 | | 63 | 102.5 | 645 | |
| | 2015.06-2024.08 | 7DCT | F | L | Van FWD CXEB;DMZA | Date to:2020.11,For Modelcode:SHA/SHH | GDS83497 | Drive Shaft | | 38 | 37 | 63 | 103 | 646 | |
| | 2015.06-2024.08 | 7DCT | F | R | Van FWD CXEB;DMZA | For Modelcode:SGA/SGH | GDS83496 | Drive Shaft | | 38 | 37 | 63 | 103 | 1025 | |
| | 2015.06-2024.08 | 7DCT | F | L | Van FWD CXEB;DMZA | AAR | GCI81261 | Inner Joint | | 37 | 27 | 34.5 | 65.5 | 88.5 | |
| | 2015.06-2024.08 | | F | R | Van FWD CXEB;DMZA | | GDS61216 | Stub Axle,differential | | 26 | 37 | | | 145 | |
| | 2016.05-2024.08 | 6MT | F | R | Platform/Chassis 4WD CXEB;DMZA | For model code:SJD/SJE/SJL/SJZ | GDS81665 | Drive Shaft | | 38 | 26 | 63 | 102.5 | 614 | |
| | 2016.05-2024.08 | 6MT | F | L | Platform/Chassis 4WD CXEB;DMZA | for OE number:0A5409343B | GDS61213 | Stub Axle,differential | | 42 | 42 | | | 135.5 | |
| | 2016.05-2024.08 | 6MT | F | R | Platform/Chassis 4WD CXEB;DMZA | for OE number:0A5409343A | GDS61215 | Stub Axle,differential | | 26 | 42 | | | 143.5 | |
| | 2016.05-2024.08 | 7AT/6MT | F | L/R | Platform/Chassis 4WD CXEB;DMZA | For Modelcode:SJD/SJE/SJL/SJZ | GCO81467 | Outer Joint | | 38 | 30 | 63 | 102.5 | 67.5 | I |
| | 2016.05-2024.08 | 7AT/6MT | F | R | Platform/Chassis 4WD CXEB;DMZA | Modelcode:SFD/SFE/SFL | GCI81453 | Inner Joint | | 26 | 27 | 47 | | 128 | |
| | 2016.05-2024.08 | 7DCT | F | L | Platform/Chassis 4WD CXEB;DMZA | Date from:2017.02 | GDS83497 | Drive Shaft | | 38 | 37 | 63 | 103 | 646 | |
| | 2016.05-2024.08 | 7DCT | F | L | Platform/Chassis 4WD CXEB;DMZA | | GCO82386 | Outer Joint | | 38 | 31 | 63 | 103 | 69 | I |
| | 2016.05-2024.08 | 7DCT | F | L | Platform/Chassis 4WD CXEB;DMZA | | GCI81261 | Inner Joint | | 37 | 27 | 34.5 | 65.5 | 88.5 | |
| | 2016.05-2024.08 | 7AT/6MT | R | R | Platform/Chassis 4WD CXEB;DMZA | | GDS61258 | Drive Shaft | | 38 | | 59 | 100 | 743 | |
| | 2016.05-2024.08 | 7AT/6MT | R | L/R | Platform/Chassis 4WD CXEB;DMZA | | GCI61075 | Inner Joint | | | 28 | | | 26 | |
| | 2016.05-2024.08 | 7DCT/6MT | R | L | Platform/Chassis 4WD CXEB;DMZA | | GDS61257 | Drive Shaft | | 38 | | 59 | 100 | 683 | |
| | 2016.05-2024.08 | 6MT | F | L/R | Platform/Chassis FWD CXEB;DMZA | For Modelcode:SJD/SJE/SJL/SJZ | GCO81467 | Outer Joint | | 38 | 30 | 63 | 102.5 | 67.5 | I |
| | 2016.05-2024.08 | 6MT | F | L | Platform/Chassis FWD CXEB;DMZA | for OE number:0A5409343B | GDS61213 | Stub Axle,differential | | 42 | 42 | | | 135.5 | |
| | 2016.05-2024.08 | 6MT | F | R | Platform/Chassis FWD CXEB;DMZA | for OE number:0A5409343A | GDS61215 | Stub Axle,differential | | 26 | 42 | | | 143.5 | |
| | 2016.05-2024.08 | 7DCT | F | L | Platform/Chassis FWD CXEB;DMZA | Date from:2017.02;For Modelcode:SGB/SGJ;6 balls | GDS61105 | Drive Shaft | | 38 | | 63 | 102.5 | 645 | |
| | 2016.05-2024.08 | 7DCT | F | L | Platform/Chassis FWD CXEB;DMZA | Date from:2017.02,For Modelcode:SFD/SFE/SFL/SFZ,8 balls | GDS81508 | Drive Shaft | | 38 | | 63 | 102.5 | 645 | |
| | 2016.05-2024.08 | 7DCT | F | L | Platform/Chassis FWD CXEB;DMZA | Date to:2020.11,For Modelcode:SJD/SJE/SJL/SJZ | GDS83497 | Drive Shaft | | 38 | 37 | 63 | 103 | 646 | |
| | 2016.05-2024.08 | 7DCT | F | R | Platform/Chassis FWD CXEB;DMZA | | GDS83496 | Drive Shaft | | 38 | 37 | 63 | 103 | 1025 | |
| | 2016.05-2024.08 | 7DCT | F | L/R | Platform/Chassis FWD CXEB;DMZA | | GCO82386 | Outer Joint | | 38 | 31 | 63 | 103 | 69 | I |
| | 2016.05-2024.08 | 7DCT | F | L | Platform/Chassis FWD CXEB;DMZA | | GCI81261 | Inner Joint | | 37 | 27 | 34.5 | 65.5 | 88.5 | |
| | 2016.05-2024.08 | 7DCT | F | R | Platform/Chassis FWD CXEB;DMZA | | GCI81754 | Inner Joint | | 37 | 27 | 34.5 | 430.5 | 96 | |
| 2.4 (55 kw) | 1997.08-2003.04 | 4AT | F | R | Platform/Chassis FWD AJA | | GDS61003 | Drive Shaft | | 38 | | 60.2 | 34.5 | 540.8 | |
| | 1997.08-2003.04 | 4AT | F | R | Platform/Chassis FWD AJA | | GDS61004 | Drive Shaft | 48T | 38 | | 60.2 | 34.5 | 540.8 | |
| | 1997.08-2003.04 | 4AT/5MT | F | L/R | Platform/Chassis FWD AJA | | GCO61005 | Outer Joint | | 38 | 27 | 60.2 | 34.5 | 65 | I |
| | 1997.08-2003.04 | 4AT/5MT | F | L/R | Platform/Chassis FWD AJA | | GCO61006 | Outer Joint | 48T | 38 | 27 | 60.2 | 34.5 | 65 | I |
| | 1997.08-2003.04 | 4AT/5MT | F | L/R | Platform/Chassis FWD AJA | | GCI61002 | Inner Joint | | | 28 | | | 31.8 | |
| | 1997.08-2003.04 | 5MT | F | L/R | Platform/Chassis FWD AJA | | GDS61003 | Drive Shaft | | 38 | | 60.2 | 34.5 | 540.8 | |
| | 1997.08-2003.04 | 5MT | F | L/R | Platform/Chassis FWD AJA | | GDS61004 | Drive Shaft | 48T | 38 | | 60.2 | 34.5 | 540.8 | |
| | 1997.08-2003.04 | 4AT | F | L | Van FWD AJA | | GDS61052 | Drive Shaft | 48T | 38 | | 60.2 | 34.5 | 529 | |
| | 1997.08-2003.04 | 4AT | F | R | Van FWD AJA | | GDS61003 | Drive Shaft | | 38 | | 60.2 | 34.5 | 540.8 | |
| | 1997.08-2003.04 | 4AT | F | R | Van FWD AJA | | GDS61004 | Drive Shaft | 48T | 38 | | 60.2 | 34.5 | 540.8 | |
| | 1997.08-2003.04 | 4AT/5MT | F | L/R | Van FWD AJA | | GCO61005 | Outer Joint | | 38 | 27 | 60.2 | 34.5 | 65 | I |
| | 1997.08-2003.04 | 4AT/5MT | F | L/R | Van FWD AJA | | GCO61006 | Outer Joint | 48T | 38 | 27 | 60.2 | 34.5 | 65 | I |
| | 1997.08-2003.04 | 4AT/5MT | F | L/R | Van FWD AJA | | GCI61002 | Inner Joint | | | 28 | | | 31.8 | |
| | 1997.08-2003.04 | 5MT | F | L/R | Van FWD AJA | | GDS61003 | Drive Shaft | | 38 | | 60.2 | 34.5 | 540.8 | |
| | 1997.08-2003.04 | 5MT | F | L/R | Van FWD AJA | | GDS61004 | Drive Shaft | 48T | 38 | | 60.2 | 34.5 | 540.8 | |
| | 1997.08-2003.04 | MT | F | R | Van FWD AJA | | GDS61225 | Stub Axle-Flange | | 37 | | | 338 | 394 | |

| | YEAR | TRANSM. | F/R | L/R | BODY STYLE & DRIVE TYPE & ENGINE | REMARKS | G-AP Ref. | PRODUCT | ABS | Technical Specifications A | B | C | H | L | P |
|---|---|---|---|---|---|---|---|---|---|---|---|---|---|---|---|
| **VW Transporter** | | | | | | | | | | | | | | | |
| 2.4 (57 kw) | 1990.07-1998.04 | 4AT | F | L | Van FWD AAB | Date from:1996.01,Chassis no. from:70T200001 | GDS61034 | Drive Shaft | | 38 | | 60.2 | 34.5 | 529 | |
| | 1990.07-1998.04 | 4AT | F | L | Van FWD AAB | Date from:1996.01,Chassis no. from:70T200001 | GDS61052 | Drive Shaft | 48T | 38 | | 60.2 | 34.5 | 529 | |
| | 1990.07-1998.04 | 4AT | F | L | Van FWD AAB | Date to:1995.12,Chassis no. to:70_T_199999 | GDS61107 | Drive Shaft | 48T | 38 | | 60.2 | 34.5 | 520 | |
| | 1990.07-1998.04 | 4AT | F | R | Van FWD AAB | Date from:1996.01,Chassis no. from:70T200001 | GDS61003 | Drive Shaft | | 38 | | 60.2 | 34.5 | 540.8 | |
| | 1990.07-1998.04 | 4AT | F | R | Van FWD AAB | Date from:1996.01,Chassis no. from:70T200001 | GDS61004 | Drive Shaft | 48T | 38 | | 60.2 | 34.5 | 540.8 | |
| | 1990.07-1998.04 | 4AT | F | R | Van FWD AAB | Date to:1995.12,Chassis no. to:70T199999 | GDS61034 | Drive Shaft | | 38 | | 60.2 | 34.5 | 529 | |
| | 1990.07-1998.04 | 4AT | F | R | Van FWD AAB | Date to:1995.12,Chassis no. to:70T199999 | GDS61052 | Drive Shaft | 48T | 38 | | 60.2 | 34.5 | 529 | |
| | 1990.07-1998.04 | 4AT | F | R | Van FWD AAB | Date to:1995.12,Chassis no. From:70SH000001,Chassis no. to:70T199999,Chassis no. to:70R200000 | GDS61119 | Drive Shaft | | 38 | | 60.2 | 34.5 | 527 | |
| | 1990.07-1998.04 | 4AT/5MT | F | L/R | Van FWD AAB | | GCO61003 | Outer Joint | | 38 | 33 | 60.2 | 34.5 | 65 | I |
| | 1990.07-1998.04 | 4AT/5MT | F | L/R | Van FWD AAB | | GCO61004 | Outer Joint | 48T | 38 | 33 | 60.2 | 34.5 | 65 | I |
| | 1990.07-1998.04 | 4AT/5MT | F | L/R | Van FWD AAB | | GCO61005 | Outer Joint | | 38 | 27 | 60.2 | 34.5 | 65 | I |
| | 1990.07-1998.04 | 4AT/5MT | F | L/R | Van FWD AAB | | GCO61006 | Outer Joint | 48T | 38 | 27 | 60.2 | 34.5 | 65 | I |
| | 1990.07-1998.04 | 4AT/5MT | F | L/R | Van FWD AAB | | GCI61001 | Inner Joint | | | 33 | | | 31.8 | |
| | 1990.07-1998.04 | 4AT/5MT | F | L/R | Van FWD AAB | | GCI61002 | Inner Joint | | | 28 | | | 31.8 | |
| | 1990.07-1998.04 | 5MT | F | L/R | Van FWD AAB | Date from:1996.01,Chassis no. from:70T200001 | GDS61003 | Drive Shaft | | 38 | | 60.2 | 34.5 | 540.8 | |
| | 1990.07-1998.04 | 5MT | F | L/R | Van FWD AAB | Date from:1996.01,Chassis no. from:70T200001 | GDS61004 | Drive Shaft | 48T | 38 | | 60.2 | 34.5 | 540.8 | |
| | 1990.07-1998.04 | 5MT | F | L/R | Van FWD AAB | Date to:1995.12,Chassis no. from:70SH000001,Chassis no. to:70T199999 | GDS61034 | Drive Shaft | | 38 | | 60.2 | 34.5 | 529 | |
| | 1990.07-1998.04 | 5MT | F | L/R | Van FWD AAB | Date to:1995.12,Chassis no. to:70T199999,Chassis no. to:70R200000 | GDS61052 | Drive Shaft | 48T | 38 | | 60.2 | 34.5 | 529 | |
| | 1990.07-1998.04 | 5MT | F | L/R | Van FWD AAB | Date to:1995.12,Chassis no. From:70SH000001,Chassis no. to:70T199999,Chassis no. to:70R200000 | GDS61119 | Drive Shaft | | 38 | | 60.2 | 34.5 | 527 | |
| | 1990.07-1998.04 | MT | F | R | Van FWD AAB | | GDS61225 | Stub Axle-Flange | | 37 | | | 338 | 394 | |
| | 1990.09-1998.04 | 4AT | F | L | Platform/Chassis FWD AAB | Date to:1995.12,Chassis no. to:70T199999 | GDS61107 | Drive Shaft | 48T | 38 | | 60.2 | 34.5 | 520 | |
| | 1990.09-1998.04 | 4AT | F | R | Platform/Chassis FWD AAB | Date To:1995.12,Chassisno. to:70T199999 | GDS61034 | Drive Shaft | | 38 | | 60.2 | 34.5 | 529 | |
| | 1990.09-1998.04 | 4AT | F | R | Platform/Chassis FWD AAB | Date To:1995.12,Chassisno. to:70T199999 | GDS61052 | Drive Shaft | 48T | 38 | | 60.2 | 34.5 | 529 | |
| | 1990.09-1998.04 | 4AT | F | R | Platform/Chassis FWD AAB | Date to:1995.12,Chassis no. from:70SH000001,Chassis no. to:70T199999,Chassis no. to:70R200000 | GDS61119 | Drive Shaft | | 38 | | 60.2 | 34.5 | 527 | |
| | 1990.09-1998.04 | 4AT/5MT | F | L/R | Platform/Chassis FWD AAB | Date From:1996.01,Chassis no. from:70T200001 | GDS61003 | Drive Shaft | | 38 | | 60.2 | 34.5 | 540.8 | |
| | 1990.09-1998.04 | 4AT/5MT | F | L/R | Platform/Chassis FWD AAB | Date From:1996.01,Chassis no. from:70T200001 | GDS61004 | Drive Shaft | 48T | 38 | | 60.2 | 34.5 | 540.8 | |
| | 1990.09-1998.04 | 4AT/5MT | F | L/R | Platform/Chassis FWD AAB | | GCO61003 | Outer Joint | | 38 | 33 | 60.2 | 34.5 | 65 | I |
| | 1990.09-1998.04 | 4AT/5MT | F | L/R | Platform/Chassis FWD AAB | | GCO61004 | Outer Joint | 48T | 38 | 33 | 60.2 | 34.5 | 65 | I |
| | 1990.09-1998.04 | 4AT/5MT | F | L/R | Platform/Chassis FWD AAB | | GCO61005 | Outer Joint | | 38 | 27 | 60.2 | 34.5 | 65 | I |
| | 1990.09-1998.04 | 4AT/5MT | F | L/R | Platform/Chassis FWD AAB | | GCO61006 | Outer Joint | 48T | 38 | 27 | 60.2 | 34.5 | 65 | I |
| | 1990.09-1998.04 | 4AT/5MT | F | L/R | Platform/Chassis FWD AAB | | GCI61001 | Inner Joint | | | 33 | | | 31.8 | |
| | 1990.09-1998.04 | 4AT/5MT | F | L/R | Platform/Chassis FWD AAB | | GCI61002 | Inner Joint | | | 28 | | | 31.8 | |
| | 1990.09-1998.04 | 5MT | F | L/R | Platform/Chassis FWD AAB | Date To:1995.12,Chassis no. from:70SH000001,Chassis no. to:70T199999 | GDS61034 | Drive Shaft | | 38 | | 60.2 | 34.5 | 529 | |
| | 1990.09-1998.04 | 5MT | F | L/R | Platform/Chassis FWD AAB | Date To:1995.12,Chassis no. from:70SH000001,Chassis no. to:70T199999,Chassis no. to:70R200000 | GDS61052 | Drive Shaft | 48T | 38 | | 60.2 | 34.5 | 529 | |
| | 1990.09-1998.04 | 5MT | F | L/R | Platform/Chassis FWD AAB | Date to:1995.12,Chassis no. from:70SH000001,Chassis no. to:70T199999,Chassis no. to:70R200000 | GDS61119 | Drive Shaft | | 38 | | 60.2 | 34.5 | 527 | |
| | 1992.10-1998.09 | 5MT | F | L/R | Platform/Chassis 4WD AAB | Chassis no. from:70T200000 | GDS61003 | Drive Shaft | | 38 | | 60.2 | 34.5 | 540.8 | |
| | 1992.10-1998.09 | 5MT | F | L/R | Platform/Chassis 4WD AAB | Chassis no. from:70T200000 | GDS61004 | Drive Shaft | 48T | 38 | | 60.2 | 34.5 | 540.8 | |
| | 1992.10-1998.09 | 5MT | F | L/R | Platform/Chassis 4WD AAB | Chassis no. to:70T199999 | GDS61034 | Drive Shaft | | 38 | | 60.2 | 34.5 | 529 | |
| | 1992.10-1998.09 | 5MT | F | L/R | Platform/Chassis 4WD AAB | Chassis no. to:70T199999 | GDS61119 | Drive Shaft | | 38 | | 60.2 | 34.5 | 527 | |
| | 1992.10-1998.09 | 5MT | F | L/R | Platform/Chassis 4WD AAB | | GCO61005 | Outer Joint | | 38 | 27 | 60.2 | 34.5 | 65 | I |
| | 1992.10-1998.09 | 5MT | F | L/R | Platform/Chassis 4WD AAB | | GCO61006 | Outer Joint | 48T | 38 | 27 | 60.2 | 34.5 | 65 | I |
| | 1992.10-1998.09 | 5MT | F | L/R | Platform/Chassis 4WD AAB | | GCI61002 | Inner Joint | | | 28 | | | 31.8 | |
| | 1992.10-1998.09 | MT | F | L/R | Platform/Chassis 4WD AAB | Chassis no. to:70T199999 | GDS61052 | Drive Shaft | 48T | 38 | | 60.2 | 34.5 | 529 | |
| | 1992.10-1998.09 | 5MT | F | L/R | Van 4WD AAB | Chassis no. from:70T200000 | GDS61003 | Drive Shaft | | 38 | | 60.2 | 34.5 | 540.8 | |
| | 1992.10-1998.09 | 5MT | F | L/R | Van 4WD AAB | Chassis no. from:70T200000 | GDS61004 | Drive Shaft | 48T | 38 | | 60.2 | 34.5 | 540.8 | |
| | 1992.10-1998.09 | 5MT | F | L/R | Van 4WD AAB | Chassis no. to:70T199999 | GDS61034 | Drive Shaft | | 38 | | 60.2 | 34.5 | 529 | |
| | 1992.10-1998.09 | 5MT | F | L/R | Van 4WD AAB | Chassis no. to:70T199999 | GDS61052 | Drive Shaft | 48T | 38 | | 60.2 | 34.5 | 529 | |
| | 1992.10-1998.09 | 5MT | F | L/R | Van 4WD AAB | Chassis no. to:70T199999 | GDS61119 | Drive Shaft | | 38 | | 60.2 | 34.5 | 527 | |
| | 1992.10-1998.09 | 5MT | F | L/R | Van 4WD AAB | | GCO61005 | Outer Joint | | 38 | 27 | 60.2 | 34.5 | 65 | I |
| | 1992.10-1998.09 | 5MT | F | L/R | Van 4WD AAB | | GCO61006 | Outer Joint | 48T | 38 | 27 | 60.2 | 34.5 | 65 | I |
| | 1992.10-1998.09 | 5MT | F | L/R | Van 4WD AAB | | GCI61002 | Inner Joint | | | 28 | | | 31.8 | |
| 2.5 (65 kw) | 1998.05-2003.04 | 5MT | F | L/R | Bus FWD AJT, AYY | | GDS61003 | Drive Shaft | | 38 | | 60.2 | 34.5 | 540.8 | |
| | 1998.05-2003.04 | 5MT | F | L/R | Bus FWD AJT, AYY | | GDS61004 | Drive Shaft | 48T | 38 | | 60.2 | 34.5 | 540.8 | |
| | 1998.05-2003.04 | 5MT | F | L/R | Bus FWD AJT, AYY | | GCO61005 | Outer Joint | | 38 | 27 | 60.2 | 34.5 | 65 | I |
| | 1998.05-2003.04 | 5MT | F | L/R | Bus FWD AJT, AYY | | GCO61006 | Outer Joint | 48T | 38 | 27 | 60.2 | 34.5 | 65 | I |
| | 1998.05-2003.04 | MT | F | R | Bus FWD AJT, AYY | | GDS61225 | Stub Axle-Flange | | 37 | | | 338 | 394 | |
| | 1998.05-2003.04 | MT/5MT | F | L/R | Bus FWD AJT, AYY | | GCI61002 | Inner Joint | | | 28 | | | 31.8 | |
| | 1998.05-2003.04 | 5MT | F | L/R | Platform/Chassis FWD AJT, AYY | | GDS61003 | Drive Shaft | | 38 | | 60.2 | 34.5 | 540.8 | |
| | 1998.05-2003.04 | 5MT | F | L/R | Platform/Chassis FWD AJT, AYY | | GDS61004 | Drive Shaft | 48T | 38 | | 60.2 | 34.5 | 540.8 | |
| | 1998.05-2003.04 | 5MT | F | L/R | Platform/Chassis FWD AJT, AYY | | GCO61005 | Outer Joint | | 38 | 27 | 60.2 | 34.5 | 65 | I |
| | 1998.05-2003.04 | 5MT | F | L/R | Platform/Chassis FWD AJT, AYY | | GCO61006 | Outer Joint | 48T | 38 | 27 | 60.2 | 34.5 | 65 | I |
| | 1998.05-2003.04 | 5MT | F | L/R | Platform/Chassis FWD AJT, AYY | | GCI61002 | Inner Joint | | | 28 | | | 31.8 | |
| | 1998.12-2003.04 | 5MT | F | L/R | Van FWD AJT, AYY | | GDS61003 | Drive Shaft | | 38 | | 60.2 | 34.5 | 540.8 | |
| | 1998.12-2003.04 | 5MT | F | L/R | Van FWD AJT, AYY | | GDS61004 | Drive Shaft | 48T | 38 | | 60.2 | 34.5 | 540.8 | |
| | 1998.12-2003.04 | 5MT | F | L/R | Van FWD AJT, AYY | | GCO61005 | Outer Joint | | 38 | 27 | 60.2 | 34.5 | 65 | I |

| | YEAR | TRANSM. | F/R | L/R | BODY STYLE & DRIVE TYPE & ENGINE | REMARKS | G-AP Ref. | PRODUCT | ABS | Technical Specifications A | B | C | H | L | P |
|---|---|---|---|---|---|---|---|---|---|---|---|---|---|---|---|
| **VW Transporter** | | | | | | | | | | | | | | | |
| 2.5 (65 kw) | 1998.12-2003.04 | 5MT | F | L/R | Van FWD AJT, AYY | | GCO61006 | Outer Joint | 48T | 38 | 27 | 60.2 | 34.5 | 65 | I |
| | 1998.12-2003.04 | 5MT | F | L/R | Van FWD AJT, AYY | | GCI61002 | Inner Joint | | | 28 | | | 31.8 | |
| | 1998.12-2003.04 | MT | F | R | Van FWD AJT, AYY | | GDS61225 | Stub Axle-Flange | | 37 | | | 338 | 394 | |
| 2.5 (75 kw) | 1995.09-2003.04 | 4AT | F | L | Platform/Chassis FWD ACV, AUF, AYC | Date to:1995.12,Chassis no. to:70T199999 | GDS61107 | Drive Shaft | 48T | 38 | | 60.2 | 34.5 | 520 | |
| | 1995.09-2003.04 | 4AT | F | R | Platform/Chassis FWD ACV, AUF, AYC | Date From:1996.01,Chassis no. from:70T200001 | GDS61003 | Drive Shaft | | 38 | | 60.2 | 34.5 | 540.8 | |
| | 1995.09-2003.04 | 4AT | F | R | Platform/Chassis FWD ACV, AUF, AYC | Date From:1996.01,Chassis no. from:70T200001 | GDS61004 | Drive Shaft | 48T | 38 | | 60.2 | 34.5 | 540.8 | |
| | 1995.09-2003.04 | 4AT | F | R | Platform/Chassis FWD ACV, AUF, AYC | Date To:1995.12,Chassisno. to:70T199999 | GDS61034 | Drive Shaft | | 38 | | 60.2 | 34.5 | 529 | |
| | 1995.09-2003.04 | 4AT | F | R | Platform/Chassis FWD ACV, AUF, AYC | Date To:1995.12,Chassisno. to:70T199999 | GDS61052 | Drive Shaft | 48T | 38 | | 60.2 | 34.5 | 529 | |
| | 1995.09-2003.04 | 4AT | F | R | Platform/Chassis FWD ACV, AUF, AYC | Date to:1995.12,Chassisno. to:70T199999 | GDS61119 | Drive Shaft | | 38 | | 60.2 | 34.5 | 527 | |
| | 1995.09-2003.04 | 4AT/5MT | F | L/R | Platform/Chassis FWD ACV, AUF, AYC | | GCO61005 | Outer Joint | | 38 | 27 | 60.2 | 34.5 | 65 | I |
| | 1995.09-2003.04 | 4AT/5MT | F | L/R | Platform/Chassis FWD ACV, AUF, AYC | | GCO61006 | Outer Joint | 48T | 38 | 27 | 60.2 | 34.5 | 65 | I |
| | 1995.09-2003.04 | 4AT/5MT | F | L/R | Platform/Chassis FWD ACV, AUF, AYC | | GCI61002 | Inner Joint | | | 28 | | | 31.8 | |
| | 1995.09-2003.04 | 5MT | F | L/R | Platform/Chassis FWD ACV, AUF, AYC | Date From:1996.01,Chassis no. from:70T200001 | GDS61003 | Drive Shaft | | 38 | | 60.2 | 34.5 | 540.8 | |
| | 1995.09-2003.04 | 5MT | F | L/R | Platform/Chassis FWD ACV, AUF, AYC | Date From:1996.01,Chassis no. from:70T200001 | GDS61004 | Drive Shaft | 48T | 38 | | 60.2 | 34.5 | 540.8 | |
| | 1995.09-2003.04 | 5MT | F | L/R | Platform/Chassis FWD ACV, AUF, AYC | Date To:1995.12,Chassisno. to:70T199999 | GDS61034 | Drive Shaft | | 38 | | 60.2 | 34.5 | 529 | |
| | 1995.09-2003.04 | 5MT | F | L/R | Platform/Chassis FWD ACV, AUF, AYC | Date To:1995.12,Chassisno. to:70T199999 | GDS61052 | Drive Shaft | 48T | 38 | | 60.2 | 34.5 | 529 | |
| | 1995.09-2003.04 | 5MT | F | L/R | Platform/Chassis FWD ACV, AUF, AYC | Date to:1995.12,Chassisno. to:70T199999 | GDS61119 | Drive Shaft | | 38 | | 60.2 | 34.5 | 527 | |
| | 1995.09-2003.04 | 5MT | F | L/R | Van 4WD ACV, AXL | | GDS61003 | Drive Shaft | | 38 | | 60.2 | 34.5 | 540.8 | |
| | 1995.09-2003.04 | 5MT | F | L/R | Van 4WD ACV, AXL | | GDS61004 | Drive Shaft | 48T | 38 | | 60.2 | 34.5 | 540.8 | |
| | 1995.09-2003.04 | 5MT | F | L/R | Van 4WD ACV, AXL | | GCO61005 | Outer Joint | | 38 | 27 | 60.2 | 34.5 | 65 | I |
| | 1995.09-2003.04 | 5MT | F | L/R | Van 4WD ACV, AXL | | GCO61006 | Outer Joint | 48T | 38 | 27 | 60.2 | 34.5 | 65 | I |
| | 1995.09-2003.04 | 5MT | F | L/R | Van 4WD ACV, AXL | | GCI61002 | Inner Joint | | | 28 | | | 31.8 | |
| | 1995.09-2003.04 | 4AT | F | L | Van FWD ACV, AUF, AYC | Date from:1996.01,Chassis no. from:70T200001 | GDS61034 | Drive Shaft | | 38 | | 60.2 | 34.5 | 529 | |
| | 1995.09-2003.04 | 4AT | F | L | Van FWD ACV, AUF, AYC | Date from:1996.01,Chassis no. from:70T200001 | GDS61052 | Drive Shaft | 48T | 38 | | 60.2 | 34.5 | 529 | |
| | 1995.09-2003.04 | 4AT | F | L | Van FWD ACV, AUF, AYC | Date to:1995.12,Chassis no. to:70_T_199999 | GDS61107 | Drive Shaft | 48T | 38 | | 60.2 | 34.5 | 520 | |
| | 1995.09-2003.04 | 4AT | F | R | Van FWD ACV, AUF, AYC | Date from:1996.01,Chassis no. from:70T200001 | GDS61003 | Drive Shaft | | 38 | | 60.2 | 34.5 | 540.8 | |
| | 1995.09-2003.04 | 4AT | F | R | Van FWD ACV, AUF, AYC | Date from:1996.01,Chassis no. from:70T200001 | GDS61004 | Drive Shaft | 48T | 38 | | 60.2 | 34.5 | 540.8 | |
| | 1995.09-2003.04 | 4AT | F | R | Van FWD ACV, AUF, AYC | Date to:1995.12,Chassis no. to:70T199999 | GDS61034 | Drive Shaft | | 38 | | 60.2 | 34.5 | 529 | |
| | 1995.09-2003.04 | 4AT | F | R | Van FWD ACV, AUF, AYC | Date to:1995.12,Chassis no. to:70T199999 | GDS61052 | Drive Shaft | 48T | 38 | | 60.2 | 34.5 | 529 | |
| | 1995.09-2003.04 | 4AT | F | R | Van FWD ACV, AUF, AYC | Date to:1995.12,Chassis no. from:70SH000001,Chassis no. to:70T199999;Chassis no. to:70PC000000 | GDS61119 | Drive Shaft | | 38 | | 60.2 | 34.5 | 527 | |
| | 1995.09-2003.04 | 4AT/5MT | F | L/R | Van FWD ACV, AUF, AYC | | GCO61005 | Outer Joint | | 38 | 27 | 60.2 | 34.5 | 65 | I |
| | 1995.09-2003.04 | 4AT/5MT | F | L/R | Van FWD ACV, AUF, AYC | | GCO61006 | Outer Joint | 48T | 38 | 27 | 60.2 | 34.5 | 65 | I |
| | 1995.09-2003.04 | 4AT/5MT | F | L/R | Van FWD ACV, AUF, AYC | | GCI61002 | Inner Joint | | | 28 | | | 31.8 | |
| | 1995.09-2003.04 | 5MT | F | L/R | Van FWD ACV, AUF, AYC | Date from:1996.01,Chassis no. from:70T200001 | GDS61003 | Drive Shaft | | 38 | | 60.2 | 34.5 | 540.8 | |
| | 1995.09-2003.04 | 5MT | F | L/R | Van FWD ACV, AUF, AYC | Date from:1996.01,Chassis no. from:70T200001 | GDS61004 | Drive Shaft | 48T | 38 | | 60.2 | 34.5 | 540.8 | |
| | 1995.09-2003.04 | 5MT | F | L/R | Van FWD ACV, AUF, AYC | Date to:1995.12,Chassis no. to:70T199999 | GDS61034 | Drive Shaft | | 38 | | 60.2 | 34.5 | 529 | |
| | 1995.09-2003.04 | 5MT | F | L/R | Van FWD ACV, AUF, AYC | Date to:1995.12,Chassis no. to:70T199999;Chassis no. to:70PC000000 | GDS61052 | Drive Shaft | 48T | 38 | | 60.2 | 34.5 | 529 | |
| | 1995.09-2003.04 | 5MT | F | L/R | Van FWD ACV, AUF, AYC | Date to:1995.12,Chassis no. from:70SH000001,Chassis no. to:70T199999;Chassis no. to:70PC000000 | GDS61119 | Drive Shaft | | 38 | | 60.2 | 34.5 | 527 | |
| | 1995.09-2003.04 | AT/MT | F | R | Van FWD ACV, AUF, AYC | | GDS61225 | Stub Axle-Flange | | 37 | | | 338 | 394 | |
| | 1998.05-2003.04 | 5MT | F | L/R | Platform/Chassis 4WD ACV, AXL | Chassis no. from:70T200000 | GDS61003 | Drive Shaft | | 38 | | 60.2 | 34.5 | 540.8 | |
| | 1998.05-2003.04 | 5MT | F | L/R | Platform/Chassis 4WD ACV, AXL | Chassis no. from:70T200000 | GDS61004 | Drive Shaft | 48T | 38 | | 60.2 | 34.5 | 540.8 | |
| | 1998.05-2003.04 | 5MT | F | L/R | Platform/Chassis 4WD ACV, AXL | Chassisno. to:70T199999 | GDS61034 | Drive Shaft | | 38 | | 60.2 | 34.5 | 529 | |
| | 1998.05-2003.04 | 5MT | F | L/R | Platform/Chassis 4WD ACV, AXL | Chassisno. to:70T199999 | GDS61052 | Drive Shaft | 48T | 38 | | 60.2 | 34.5 | 529 | |
| | 1998.05-2003.04 | 5MT | F | L/R | Platform/Chassis 4WD ACV, AXL | Chassisno. to:70T199999 | GDS61119 | Drive Shaft | | 38 | | 60.2 | 34.5 | 527 | |
| | 1998.05-2003.04 | 5MT | F | L/R | Platform/Chassis 4WD ACV, AXL | | GCO61005 | Outer Joint | | 38 | 27 | 60.2 | 34.5 | 65 | I |
| | 1998.05-2003.04 | 5MT | F | L/R | Platform/Chassis 4WD ACV, AXL | | GCO61006 | Outer Joint | 48T | 38 | 27 | 60.2 | 34.5 | 65 | I |
| | 1998.05-2003.04 | 5MT | F | L/R | Platform/Chassis 4WD ACV, AXL | | GCI61002 | Inner Joint | | | 28 | | | 31.8 | |
| 2.5 (81 kw) | 1990.11-2003.04 | 4AT | F | L | Platform/Chassis FWD AAF (11.90-12.93), ACU (01.94-08.96), AEN, AEU | Date to:1995.12,Chassis no. to:70T199999 | GDS61107 | Drive Shaft | 48T | 38 | | 60.2 | 34.5 | 520 | |
| | 1990.11-2003.04 | 4AT | F | R | Platform/Chassis FWD AAF (11.90-12.93), ACU (01.94-08.96), AEN, AEU | Date To:1995.12,Chassisno. to:70T199999 | GDS61034 | Drive Shaft | | 38 | | 60.2 | 34.5 | 529 | |
| | 1990.11-2003.04 | 4AT | F | R | Platform/Chassis FWD AAF (11.90-12.93), ACU (01.94-08.96), AEN, AEU | Date To:1995.12,Chassisno. to:70T199999 | GDS61052 | Drive Shaft | 48T | 38 | | 60.2 | 34.5 | 529 | |
| | 1990.11-2003.04 | 4AT | F | R | Platform/Chassis FWD AAF (11.90-12.93), ACU (01.94-08.96), AEN, AEU | Date to:1995.12,Chassis no. from:70SH000001,Chassis no. to:70T199999;Chassis no. to:70PC000000 | GDS61119 | Drive Shaft | | 38 | | 60.2 | 34.5 | 527 | |
| | 1990.11-2003.04 | 4AT/5MT | F | L/R | Platform/Chassis FWD AAF (11.90-12.93), ACU (01.94-08.96), AEN, AEU | Date From:1996.01,Chassis no. from:70T200001 | GDS61003 | Drive Shaft | | 38 | | 60.2 | 34.5 | 540.8 | |
| | 1990.11-2003.04 | 4AT/5MT | F | L/R | Platform/Chassis FWD AAF (11.90-12.93), ACU (01.94-08.96), AEN, AEU | Date From:1996.01,Chassis no. from:70T200001 | GDS61004 | Drive Shaft | 48T | 38 | | 60.2 | 34.5 | 540.8 | |
| | 1990.11-2003.04 | 4AT/5MT | F | L/R | Platform/Chassis FWD AAF (11.90-12.93), ACU (01.94-08.96), AEN, AEU | | GCO61003 | Outer Joint | | 38 | 33 | 60.2 | 34.5 | 65 | I |
| | 1990.11-2003.04 | 4AT/5MT | F | L/R | Platform/Chassis FWD AAF (11.90-12.93), ACU (01.94-08.96), AEN, AEU | | GCO61004 | Outer Joint | 48T | 38 | 33 | 60.2 | 34.5 | 65 | I |
| | 1990.11-2003.04 | 4AT/5MT | F | L/R | Platform/Chassis FWD AAF (11.90-12.93), ACU (01.94-08.96), AEN, AEU | | GCO61005 | Outer Joint | | 38 | 27 | 60.2 | 34.5 | 65 | I |
| | 1990.11-2003.04 | 4AT/5MT | F | L/R | Platform/Chassis FWD AAF (11.90-12.93), ACU (01.94-08.96), AEN, AEU | | GCO61006 | Outer Joint | 48T | 38 | 27 | 60.2 | 34.5 | 65 | I |
| | 1990.11-2003.04 | 4AT/5MT | F | L/R | Platform/Chassis FWD AAF (11.90-12.93), ACU (01.94-08.96), AEN, AEU | | GCI61001 | Inner Joint | | | 33 | | | 31.8 | |
| | 1990.11-2003.04 | 4AT/5MT | F | L/R | Platform/Chassis FWD AAF (11.90-12.93), ACU (01.94-08.96), AEN, AEU | | GCI61002 | Inner Joint | | | 28 | | | 31.8 | |
| | 1990.11-2003.04 | 5MT | F | L/R | Platform/Chassis FWD AAF (11.90-12.93), ACU (01.94-08.96), AEN, AEU | Date To:1995.12,Chassis no. from:70SH000001,Chassis no. to:70T199999 | GDS61034 | Drive Shaft | | 38 | | 60.2 | 34.5 | 529 | |
| | 1990.11-2003.04 | 5MT | F | L/R | Platform/Chassis FWD AAF (11.90-12.93), ACU (01.94-08.96), AEN, AEU | Date To:1995.12,Chassis no. from:70SH000001,Chassis no. to:70T199999;Chassis no. to:70PC000000 | GDS61052 | Drive Shaft | 48T | 38 | | 60.2 | 34.5 | 529 | |
| | 1990.11-2003.04 | 5MT | F | L/R | Platform/Chassis FWD AAF (11.90-12.93), ACU (01.94-08.96), AEN, AEU | Date to:1995.12,Chassis no. from:70SH000001,Chassis no. to:70T199999;Chassis no. to:70PC000000 | GDS61119 | Drive Shaft | | 38 | | 60.2 | 34.5 | 527 | |
| | 1990.11-2003.04 | 4AT | F | L | Van FWD AAF (11.90-12.93), ACU (01.94-08.96), AEN, AEU | Date to:1995.12,Chassis no. to:70T199999 | GDS61107 | Drive Shaft | 48T | 38 | | 60.2 | 34.5 | 520 | |
| | 1990.11-2003.04 | 4AT | F | R | Van FWD AAF (11.90-12.93), ACU (01.94-08.96), AEN, AEU | Date To:1995.12,Chassisno. to:70T199999 | GDS61034 | Drive Shaft | | 38 | | 60.2 | 34.5 | 529 | |
| | 1990.11-2003.04 | 4AT | F | R | Van FWD AAF (11.90-12.93), ACU (01.94-08.96), AEN, AEU | Date To:1995.12,Chassisno. to:70T199999 | GDS61052 | Drive Shaft | 48T | 38 | | 60.2 | 34.5 | 529 | |

| | YEAR | TRANSM. | F/R | L/R | BODY STYLE & DRIVE TYPE & ENGINE | REMARKS | G-AP Ref. | PRODUCT | ABS | A | B | C | H | L | P |
|---|---|---|---|---|---|---|---|---|---|---|---|---|---|---|---|
| **VW Transporter** | | | | | | | | | | | | | | | |
| 2.5 (81 kw) | 1990.11-2003.04 | 4AT | F | R | Van FWD AAF (11.90-12.93), ACU (01.94-08.96), AEN, AEU | Date to:1995.12,Chassis no. from:70SH000001,Chassis no. to:70T199999;Chassis no. to:70R200000 | GDS61119 | Drive Shaft | | 38 | | 60.2 | 34.5 | 527 | |
| | 1990.11-2003.04 | 4AT/5MT | F | L/R | Van FWD AAF (11.90-12.93), ACU (01.94-08.96), AEN, AEU | Date From:1996.01,Chassis no. from:70T200001 | GDS61003 | Drive Shaft | | 38 | | 60.2 | 34.5 | 540.8 | |
| | 1990.11-2003.04 | 4AT/5MT | F | L/R | Van FWD AAF (11.90-12.93), ACU (01.94-08.96), AEN, AEU | Date From:1996.01,Chassis no. from:70T200001 | GDS61004 | Drive Shaft | 48T | 38 | | 60.2 | 34.5 | 540.8 | |
| | 1990.11-2003.04 | 4AT/5MT | F | L/R | Van FWD AAF (11.90-12.93), ACU (01.94-08.96), AEN, AEU | | GCO61003 | Outer Joint | | 38 | 33 | 60.2 | 34.5 | 65 | I |
| | 1990.11-2003.04 | 4AT/5MT | F | L/R | Van FWD AAF (11.90-12.93), ACU (01.94-08.96), AEN, AEU | | GCO61004 | Outer Joint | 48T | 38 | 33 | 60.2 | 34.5 | 65 | I |
| | 1990.11-2003.04 | 4AT/5MT | F | L/R | Van FWD AAF (11.90-12.93), ACU (01.94-08.96), AEN, AEU | | GCO61005 | Outer Joint | | 38 | 27 | 60.2 | 34.5 | 65 | I |
| | 1990.11-2003.04 | 4AT/5MT | F | L/R | Van FWD AAF (11.90-12.93), ACU (01.94-08.96), AEN, AEU | | GCO61006 | Outer Joint | 48T | 38 | 27 | 60.2 | 34.5 | 65 | I |
| | 1990.11-2003.04 | 4AT/5MT | F | L/R | Van FWD AAF (11.90-12.93), ACU (01.94-08.96), AEN, AEU | | GCI61001 | Inner Joint | | | 33 | | | 31.8 | |
| | 1990.11-2003.04 | 4AT/5MT | F | L/R | Van FWD AAF (11.90-12.93), ACU (01.94-08.96), AEN, AEU | | GCI61002 | Inner Joint | | | 28 | | | 31.8 | |
| | 1990.11-2003.04 | 5MT | F | L/R | Van FWD AAF (11.90-12.93), ACU (01.94-08.96), AEN, AEU | Date To:1995.12,Chassis no. from:70SH000001,Chassis no. to:70T199999 | GDS61034 | Drive Shaft | | 38 | | 60.2 | 34.5 | 529 | |
| | 1990.11-2003.04 | 5MT | F | L/R | Van FWD AAF (11.90-12.93), ACU (01.94-08.96), AEN, AEU | Date To:1995.12,Chassis no. from:70SH000001,Chassis no. to:70T199999;Chassis no. to:70R200000 | GDS61052 | Drive Shaft | 48T | 38 | | 60.2 | 34.5 | 529 | |
| | 1990.11-2003.04 | 5MT | F | L/R | Van FWD AAF (11.90-12.93), ACU (01.94-08.96), AEN, AEU | Date to:1995.12,Chassis no. from:70SH000001,Chassis no. to:70T199999;Chassis no. to:70R200000 | GDS61119 | Drive Shaft | | 38 | | 60.2 | 34.5 | 527 | |
| | 1990.11-2003.04 | AT/MT | F | R | Van FWD AAF (11.90-12.93), ACU (01.94-08.96), AEN, AEU | | GDS61225 | Stub Axle-Flange | | 37 | | | 338 | 394 | |
| | 1992.11-2001.11 | 5MT | F | L/R | Platform/Chassis 4WD AAF (11.92-12.93), ACU (01.94-10.96), AEU (06.97-11.01) | Chassis no. from:70T200000 | GDS61003 | Drive Shaft | | 38 | | 60.2 | 34.5 | 540.8 | |
| | 1992.11-2001.11 | 5MT | F | L/R | Platform/Chassis 4WD AAF (11.92-12.93), ACU (01.94-10.96), AEU (06.97-11.01) | Chassis no. from:70T200000 | GDS61004 | Drive Shaft | 48T | 38 | | 60.2 | 34.5 | 540.8 | |
| | 1992.11-2001.11 | 5MT | F | L/R | Platform/Chassis 4WD AAF (11.92-12.93), ACU (01.94-10.96), AEU (06.97-11.01) | Chassis no. to:70T199999 | GDS61034 | Drive Shaft | | 38 | | 60.2 | 34.5 | 529 | |
| | 1992.11-2001.11 | 5MT | F | L/R | Platform/Chassis 4WD AAF (11.92-12.93), ACU (01.94-10.96), AEU (06.97-11.01) | Chassis no. to:70T199999 | GDS61052 | Drive Shaft | 48T | 38 | | 60.2 | 34.5 | 529 | |
| | 1992.11-2001.11 | 5MT | F | L/R | Platform/Chassis 4WD AAF (11.92-12.93), ACU (01.94-10.96), AEU (06.97-11.01) | Chassis no. to:70T199999 | GDS61119 | Drive Shaft | | 38 | | 60.2 | 34.5 | 527 | |
| | 1992.11-2001.11 | 5MT | F | L/R | Platform/Chassis 4WD AAF (11.92-12.93), ACU (01.94-10.96), AEU (06.97-11.01) | | GCO61003 | Outer Joint | | 38 | 33 | 60.2 | 34.5 | 65 | I |
| | 1992.11-2001.11 | 5MT | F | L/R | Platform/Chassis 4WD AAF (11.92-12.93), ACU (01.94-10.96), AEU (06.97-11.01) | | GCO61004 | Outer Joint | 48T | 38 | 33 | 60.2 | 34.5 | 65 | I |
| | 1992.11-2001.11 | 5MT | F | L/R | Platform/Chassis 4WD AAF (11.92-12.93), ACU (01.94-10.96), AEU (06.97-11.01) | | GCO61005 | Outer Joint | | 38 | 27 | 60.2 | 34.5 | 65 | I |
| | 1992.11-2001.11 | 5MT | F | L/R | Platform/Chassis 4WD AAF (11.92-12.93), ACU (01.94-10.96), AEU (06.97-11.01) | | GCO61006 | Outer Joint | 48T | 38 | 27 | 60.2 | 34.5 | 65 | I |
| | 1992.11-2001.11 | 5MT | F | L/R | Platform/Chassis 4WD AAF (11.92-12.93), ACU (01.94-10.96), AEU (06.97-11.01) | | GCI61002 | Inner Joint | | | 28 | | | 31.8 | |
| | 1992.11-2001.11 | 5MT | F | L/R | Van 4WD AAF (11.92-12.93), ACU (01.94-10.96), AEU (06.97-11.01) | | GDS61003 | Drive Shaft | | 38 | | 60.2 | 34.5 | 540.8 | |
| | 1992.11-2001.11 | 5MT | F | L/R | Van 4WD AAF (11.92-12.93), ACU (01.94-10.96), AEU (06.97-11.01) | | GDS61004 | Drive Shaft | 48T | 38 | | 60.2 | 34.5 | 540.8 | |
| | 1992.11-2001.11 | 5MT | F | L/R | Van 4WD AAF (11.92-12.93), ACU (01.94-10.96), AEU (06.97-11.01) | | GCO61005 | Outer Joint | | 38 | 27 | 60.2 | 34.5 | 65 | I |
| | 1992.11-2001.11 | 5MT | F | L/R | Van 4WD AAF (11.92-12.93), ACU (01.94-10.96), AEU (06.97-11.01) | | GCO61006 | Outer Joint | 48T | 38 | 27 | 60.2 | 34.5 | 65 | I |
| | 1992.11-2001.11 | AT/MT | F | L/R | Van 4WD AAF (11.92-12.93), ACU (01.94-10.96), AEU (06.97-11.01) | | GCI61002 | Inner Joint | | | 28 | | | 31.8 | |
| 2.5 (85 kw) | 1996.08-2003.04 | 5MT | F | L/R | Platform/Chassis 4WD AET (08.96-.), APL (05.99-.), AVT | | GDS61003 | Drive Shaft | | 38 | | 60.2 | 34.5 | 540.8 | |
| | 1996.08-2003.04 | 5MT | F | L/R | Platform/Chassis 4WD AET (08.96-.), APL (05.99-.), AVT | | GDS61004 | Drive Shaft | 48T | 38 | | 60.2 | 34.5 | 540.8 | |
| | 1996.08-2003.04 | 5MT | F | L/R | Platform/Chassis 4WD AET (08.96-.), APL (05.99-.), AVT | | GCO61005 | Outer Joint | | 38 | 27 | 60.2 | 34.5 | 65 | I |
| | 1996.08-2003.04 | 5MT | F | L/R | Platform/Chassis 4WD AET (08.96-.), APL (05.99-.), AVT | | GCO61006 | Outer Joint | 48T | 38 | 27 | 60.2 | 34.5 | 65 | I |
| | 1996.08-2003.04 | 5MT | F | L/R | Platform/Chassis 4WD AET (08.96-.), APL (05.99-.), AVT | | GCI61002 | Inner Joint | | | 28 | | | 31.8 | |
| | 1996.08-2003.04 | 4AT | F | R | Platform/Chassis FWD AET (08.96-.), APL (05.99-.), AVT | | GDS61003 | Drive Shaft | | 38 | | 60.2 | 34.5 | 540.8 | |
| | 1996.08-2003.04 | 4AT | F | R | Platform/Chassis FWD AET (08.96-.), APL (05.99-.), AVT | | GDS61004 | Drive Shaft | 48T | 38 | | 60.2 | 34.5 | 540.8 | |
| | 1996.08-2003.04 | 4AT/5MT | F | L/R | Platform/Chassis FWD AET (08.96-.), APL (05.99-.), AVT | | GCO61005 | Outer Joint | | 38 | 27 | 60.2 | 34.5 | 65 | I |
| | 1996.08-2003.04 | 4AT/5MT | F | L/R | Platform/Chassis FWD AET (08.96-.), APL (05.99-.), AVT | | GCO61006 | Outer Joint | 48T | 38 | 27 | 60.2 | 34.5 | 65 | I |
| | 1996.08-2003.04 | 4AT/5MT | F | L/R | Platform/Chassis FWD AET (08.96-.), APL (05.99-.), AVT | | GCI61002 | Inner Joint | | | 28 | | | 31.8 | |
| | 1996.08-2003.04 | 5MT | F | L/R | Platform/Chassis FWD AET (08.96-.), APL (05.99-.), AVT | | GDS61003 | Drive Shaft | | 38 | | 60.2 | 34.5 | 540.8 | |
| | 1996.08-2003.04 | 5MT | F | L/R | Platform/Chassis FWD AET (08.96-.), APL (05.99-.), AVT | | GDS61004 | Drive Shaft | 48T | 38 | | 60.2 | 34.5 | 540.8 | |
| | 1996.08-2003.04 | 5MT | F | L/R | Van 4WD AET (08.96-.), APL (05.99-.), AVT | | GDS61003 | Drive Shaft | | 38 | | 60.2 | 34.5 | 540.8 | |
| | 1996.08-2003.04 | 5MT | F | L/R | Van 4WD AET (08.96-.), APL (05.99-.), AVT | | GDS61004 | Drive Shaft | 48T | 38 | | 60.2 | 34.5 | 540.8 | |
| | 1996.08-2003.04 | 5MT | F | L/R | Van 4WD AET (08.96-.), APL (05.99-.), AVT | | GCO61005 | Outer Joint | | 38 | 27 | 60.2 | 34.5 | 65 | I |
| | 1996.08-2003.04 | 5MT | F | L/R | Van 4WD AET (08.96-.), APL (05.99-.), AVT | | GCO61006 | Outer Joint | 48T | 38 | 27 | 60.2 | 34.5 | 65 | I |
| | 1996.08-2003.04 | 5MT | F | L/R | Van 4WD AET (08.96-.), APL (05.99-.), AVT | | GCI61002 | Inner Joint | | | 28 | | | 31.8 | |
| | 1996.08-2003.04 | 4AT | F | L | Van FWD AET (08.96-.), APL (05.99-.), AVT | | GDS61052 | Drive Shaft | 48T | 38 | | 60.2 | 34.5 | 529 | |
| | 1996.08-2003.04 | 4AT | F | R | Van FWD AET (08.96-.), APL (05.99-.), AVT | | GDS61003 | Drive Shaft | | 38 | | 60.2 | 34.5 | 540.8 | |
| | 1996.08-2003.04 | 4AT | F | R | Van FWD AET (08.96-.), APL (05.99-.), AVT | | GDS61004 | Drive Shaft | 48T | 38 | | 60.2 | 34.5 | 540.8 | |
| | 1996.08-2003.04 | 4AT/5MT | F | L/R | Van FWD AET (08.96-.), APL (05.99-.), AVT | | GCO61005 | Outer Joint | | 38 | 27 | 60.2 | 34.5 | 65 | I |
| | 1996.08-2003.04 | 4AT/5MT | F | L/R | Van FWD AET (08.96-.), APL (05.99-.), AVT | | GCO61006 | Outer Joint | 48T | 38 | 27 | 60.2 | 34.5 | 65 | I |
| | 1996.08-2003.04 | 4AT/5MT | F | L/R | Van FWD AET (08.96-.), APL (05.99-.), AVT | | GCI61002 | Inner Joint | | | 28 | | | 31.8 | |
| | 1996.08-2003.04 | 5MT | F | L/R | Van FWD AET (08.96-.), APL (05.99-.), AVT | | GDS61003 | Drive Shaft | | 38 | | 60.2 | 34.5 | 540.8 | |
| | 1996.08-2003.04 | 5MT | F | L/R | Van FWD AET (08.96-.), APL (05.99-.), AVT | | GDS61004 | Drive Shaft | 48T | 38 | | 60.2 | 34.5 | 540.8 | |
| | 1996.08-2003.04 | MT | F | R | Van FWD AET (08.96-.), APL (05.99-.), AVT | | GDS61225 | Stub Axle-Flange | | 37 | | | 338 | 394 | |
| 2.5 (96 kw) | 2003.04-2009.11 | 6AT | F | L | Bus FWD AXD, BNZ | | GDS83973 | Drive Shaft | | 38 | 26 | 63 | 102.5 | 615 | |
| | 2003.04-2009.11 | 6AT | F | R | Bus FWD AXD, BNZ | | GDS61210 | Drive Shaft | | 38 | 26 | 63 | 102.5 | 925 | |
| | 2003.04-2009.11 | 6AT | F | L | Bus FWD AXD, BNZ | | GCI82441 | Inner Joint | | 26 | 27 | 47 | | 128 | |
| | 2003.04-2009.11 | 6AT | F | L | Bus FWD AXD, BNZ | Date To:2006.12 | GCI83033 | Inner Joint | | 26 | 29 | 47.1 | | 128 | |
| | 2003.04-2009.11 | 6AT | F | L/R | Bus FWD AXD, BNZ | | GDS61238 | Stub Axle,differential | | 26 | 30 | | | 114.5 | |
| | 2003.04-2009.11 | 6AT/6MT | F | L/R | Bus FWD AXD, BNZ | | GCO61011 | Outer Joint | | 38 | 29 | 63 | 102.5 | 70 | M |
| | 2003.04-2009.11 | 6MT | F | L | Bus FWD AXD, BNZ | | GDS61084 | Drive Shaft | | 38 | 26 | 63 | 102.5 | 613 | |
| | 2003.04-2009.11 | 6MT | F | L | Bus FWD AXD, BNZ | | GDS83360 | Drive Shaft | | 38 | 42 | 63 | 102.5 | 617 | |
| | 2003.04-2009.11 | 6MT | F | R | Bus FWD AXD, BNZ | | GDS61140 | Drive Shaft | | 38 | 26 | 63 | 102.5 | 873 | |
| | 2003.04-2009.11 | 6MT | F | L | Bus FWD AXD, BNZ | | GCI61029 | Inner Joint | | 26 | 30 | 46.8 | | 137 | |
| | 2003.04-2009.11 | 6MT | F | R | Bus FWD AXD, BNZ | | GCI61021 | Inner Joint | | 26 | 30 | | 288 | 106 | |

| | YEAR | TRANSM. | F/R | L/R | BODY STYLE & DRIVE TYPE & ENGINE | REMARKS | G-AP Ref. | PRODUCT | ABS | Technical Specifications | | | | | |
|---|---|---|---|---|---|---|---|---|---|---|---|---|---|---|---|
| | | | | | | | | | | A | B | C | H | L | P |
| **VW Transporter** | | | | | | | | | | | | | | | |
| 2.5 (96 kw) | 2003.04-2009.11 | 6MT | F | L | Bus FWD AXD, BNZ | for OE number:0A5409343B | GDS61213 | Stub Axle,differential | | 42 | 42 | | | 135.5 | |
| | 2003.04-2009.11 | 6MT | F | R | Bus FWD AXD, BNZ | for OE number:0A5409343A | GDS61215 | Stub Axle,differential | | 26 | 42 | | | 143.5 | |
| | 2003.04-2009.11 | 6MT | F | L/R | Bus FWD AXD, BNZ | for OE number:0A5409343 | GDS61191 | Stub Axle,differential | | 26 | 42 | | | 135.5 | |
| | 2003.04-2009.11 | 6AT | F | L | Platform/Chassis FWD AXD;BNZ | | GDS83973 | Drive Shaft | | 38 | 26 | 63 | 102.5 | 615 | |
| | 2003.04-2009.11 | 6AT | F | R | Platform/Chassis FWD AXD;BNZ | Inner teeth of tranm.side:27 | GDS61210 | Drive Shaft | | 38 | 26 | 63 | 102.5 | 925 | |
| | 2003.04-2009.11 | 6AT | F | R | Platform/Chassis FWD AXD;BNZ | Inner teeth of tranm.side:29 | GDS83267 | Drive Shaft | | 38 | 26 | 63 | 102.5 | 925 | |
| | 2003.04-2009.11 | 6AT | F | L | Platform/Chassis FWD AXD;BNZ | | GCI82441 | Inner Joint | | 26 | 27 | 47 | | 128 | |
| | 2003.04-2009.11 | 6AT | F | L | Platform/Chassis FWD AXD;BNZ | Date To:2006.12 | GCI83033 | Inner Joint | | 26 | 29 | 47.1 | | 128 | |
| | 2003.04-2009.11 | 6AT | F | L/R | Platform/Chassis FWD AXD;BNZ | | GDS61238 | Stub Axle,differential | | 26 | 30 | | | 114.5 | |
| | 2003.04-2009.11 | 6AT/6MT | F | L/R | Platform/Chassis FWD AXD;BNZ | | GCO61011 | Outer Joint | | 38 | 29 | 63 | 102.5 | 70 | M |
| | 2003.04-2009.11 | 6MT | F | L | Platform/Chassis FWD AXD;BNZ | | GDS61084 | Drive Shaft | | 38 | 26 | 63 | 102.5 | 613 | |
| | 2003.04-2009.11 | 6MT | F | L | Platform/Chassis FWD AXD;BNZ | | GDS83360 | Drive Shaft | | 38 | 42 | 63 | 102.5 | 617 | |
| | 2003.04-2009.11 | 6MT | F | R | Platform/Chassis FWD AXD;BNZ | | GDS61140 | Drive Shaft | | 38 | 26 | 63 | 102.5 | 873 | |
| | 2003.04-2009.11 | 6MT | F | L | Platform/Chassis FWD AXD;BNZ | | GCI61029 | Inner Joint | | 26 | 30 | 46.8 | | 137 | |
| | 2003.04-2009.11 | 6MT | F | R | Platform/Chassis FWD AXD;BNZ | | GCI61021 | Inner Joint | | 26 | 30 | | 288 | 106 | |
| | 2003.04-2009.11 | 6MT | F | L | Platform/Chassis FWD AXD;BNZ | for OE number:0A5409343B | GDS61213 | Stub Axle,differential | | 42 | 42 | | | 135.5 | |
| | 2003.04-2009.11 | 6MT | F | R | Platform/Chassis FWD AXD;BNZ | for OE number:0A5409343A | GDS61215 | Stub Axle,differential | | 26 | 42 | | | 143.5 | |
| | 2003.04-2009.11 | 6MT | F | L/R | Platform/Chassis FWD AXD;BNZ | for OE number:0A5409343 | GDS61191 | Stub Axle,differential | | 26 | 42 | | | 135.5 | |
| | 2003.04-2009.11 | 6AT | F | L | Van FWD AXD;BNZ | | GDS83973 | Drive Shaft | | 38 | 26 | 63 | 102.5 | 615 | |
| | 2003.04-2009.11 | 6AT | F | R | Van FWD AXD;BNZ | | GDS61210 | Drive Shaft | | 38 | 26 | 63 | 102.5 | 925 | |
| | 2003.04-2009.11 | 6AT | F | L | Van FWD AXD;BNZ | AAR | GCI82441 | Inner Joint | | 26 | 27 | 47 | | 128 | |
| | 2003.04-2009.11 | 6AT | F | L | Van FWD AXD;BNZ | Date To:2006.12 | GCI83033 | Inner Joint | | 26 | 29 | 47.1 | | 128 | |
| | 2003.04-2009.11 | 6AT | F | L/R | Van FWD AXD;BNZ | | GDS61238 | Stub Axle,differential | | 26 | 30 | | | 114.5 | |
| | 2003.04-2009.11 | 6MT | F | L | Van FWD AXD;BNZ | | GDS61084 | Drive Shaft | | 38 | 26 | 63 | 102.5 | 613 | |
| | 2003.04-2009.11 | 6MT | F | L | Van FWD AXD;BNZ | | GDS83360 | Drive Shaft | | 38 | 42 | 63 | 102.5 | 617 | |
| | 2003.04-2009.11 | 6MT | F | R | Van FWD AXD;BNZ | | GDS61140 | Drive Shaft | | 38 | 26 | 63 | 102.5 | 873 | |
| | 2003.04-2009.11 | 6MT | F | L | Van FWD AXD;BNZ | | GCI61029 | Inner Joint | | 26 | 30 | 46.8 | | 137 | |
| | 2003.04-2009.11 | 6MT | F | R | Van FWD AXD;BNZ | | GCI61021 | Inner Joint | | 26 | 30 | | 288 | 106 | |
| | 2003.04-2009.11 | 6MT | F | L | Van FWD AXD;BNZ | for OE number:0A5409343B | GDS61213 | Stub Axle,differential | | 42 | 42 | | | 135.5 | |
| | 2003.04-2009.11 | 6MT | F | R | Van FWD AXD;BNZ | for OE number:0A5409343A | GDS61215 | Stub Axle,differential | | 26 | 42 | | | 143.5 | |
| | 2003.04-2009.11 | 6MT | F | L/R | Van FWD AXD;BNZ | for OE number:0A5409343 | GDS61191 | Stub Axle,differential | | 26 | 42 | | | 135.5 | |
| | 2003.04-2009.11 | 6MT/6AT | F | L/R | Van FWD AXD;BNZ | | GCO61011 | Outer Joint | | 38 | 29 | 63 | 102.5 | 70 | M |
| | 2004.07-2009.11 | 6AT | F | L/R | Bus 4WD AXD, BNZ | Model:Transporter Shuttle,for OE number:09K409352 | GDS61238 | Stub Axle,differential | | 26 | 30 | | | 114.5 | |
| | 2004.07-2009.11 | 6MT | F | L | Bus 4WD AXD, BNZ | | GDS61084 | Drive Shaft | | 38 | 26 | 63 | 102.5 | 613 | |
| | 2004.07-2009.11 | 6MT | F | R | Bus 4WD AXD, BNZ | | GDS57411 | Drive Shaft | | 38 | 26 | 63 | 102.5 | 616 | |
| | 2004.07-2009.11 | 6MT | F | L/R | Bus 4WD AXD, BNZ | | GCO61011 | Outer Joint | | 38 | 29 | 63 | 102.5 | 70 | M |
| | 2004.07-2009.11 | 6MT | F | L | Bus 4WD AXD, BNZ | | GCI61104 | Inner Joint | | 42 | 30 | 35.6 | | 136 | |
| | 2004.07-2009.11 | 6MT | F | R | Bus 4WD AXD, BNZ | | GCI83652 | Inner Joint | | 26 | 30 | 46.8 | | 137 | |
| | 2004.07-2009.11 | 6MT | F | L | Bus 4WD AXD, BNZ | Model:Transporter Shuttle,for OE number:0A5409343B | GDS61213 | Stub Axle,differential | | 42 | 42 | | | 135.5 | |
| | 2004.07-2009.11 | 6MT | F | R | Bus 4WD AXD, BNZ | Model:Transporter Shuttle,for OE number:0A5409343A | GDS61215 | Stub Axle,differential | | 26 | 42 | | | 143.5 | |
| | 2004.07-2009.11 | 6MT | F | L/R | Bus 4WD AXD, BNZ | Model:Transporter Shuttle,for OE number:0A5409343 | GDS61191 | Stub Axle,differential | | 26 | 42 | | | 135.5 | |
| | 2004.07-2009.11 | 6MT | R | L | Bus 4WD AXD, BNZ | | GDS61257 | Drive Shaft | | 38 | | 59 | 100 | 683 | |
| | 2004.07-2009.11 | 6MT | R | R | Bus 4WD AXD, BNZ | | GDS61258 | Drive Shaft | | 38 | | 59 | 100 | 743 | |
| | 2004.07-2009.11 | 6MT | R | L/R | Bus 4WD AXD, BNZ | | GCI82474 | Outer Joint | | 38 | 28 | 59 | 100 | 59 | |
| | 2004.07-2009.11 | 6MT | R | L/R | Bus 4WD AXD, BNZ | | GCI61075 | Inner Joint | | | 28 | | | 26 | |
| | 2004.07-2009.11 | 6AT | F | L/R | Platform/Chassis 4WD AXD;BNZ | for OE number:09K409352 | GDS61238 | Stub Axle,differential | | 26 | 30 | | | 114.5 | |
| | 2004.07-2009.11 | 6MT | F | L | Platform/Chassis 4WD AXD;BNZ | | GDS61084 | Drive Shaft | | 38 | 26 | 63 | 102.5 | 613 | |
| | 2004.07-2009.11 | 6MT | F | R | Platform/Chassis 4WD AXD;BNZ | | GDS57411 | Drive Shaft | | 38 | 26 | 63 | 102.5 | 616 | |
| | 2004.07-2009.11 | 6MT | F | L/R | Platform/Chassis 4WD AXD;BNZ | | GCO61011 | Outer Joint | | 38 | 29 | 63 | 102.5 | 70 | M |
| | 2004.07-2009.11 | 6MT | F | L | Platform/Chassis 4WD AXD;BNZ | | GCI61029 | Inner Joint | | 26 | 30 | 46.8 | | 137 | |
| | 2004.07-2009.11 | 6MT | F | L | Platform/Chassis 4WD AXD;BNZ | Outer teeth:42 | GCI61104 | Inner Joint | | 42 | 30 | 35.6 | | 136 | |
| | 2004.07-2009.11 | 6MT | F | R | Platform/Chassis 4WD AXD;BNZ | | GCI83652 | Inner Joint | | 26 | 30 | 46.8 | | 137 | |
| | 2004.07-2009.11 | 6MT | F | L | Platform/Chassis 4WD AXD;BNZ | for OE number:0A5409343B | GDS61213 | Stub Axle,differential | | 42 | 42 | | | 135.5 | |
| | 2004.07-2009.11 | 6MT | F | R | Platform/Chassis 4WD AXD;BNZ | for OE number:0A5409343A | GDS61215 | Stub Axle,differential | | 26 | 42 | | | 143.5 | |
| | 2004.07-2009.11 | 6MT | F | L/R | Platform/Chassis 4WD AXD;BNZ | for OE number:0A5409343 | GDS61191 | Stub Axle,differential | | 26 | 42 | | | 135.5 | |
| | 2004.07-2009.11 | 6AT/6MT | R | L | Platform/Chassis 4WD AXD;BNZ | | GDS61257 | Drive Shaft | | 38 | | 59 | 100 | 683 | |
| | 2004.07-2009.11 | 6AT/6MT | R | R | Platform/Chassis 4WD AXD;BNZ | | GDS61258 | Drive Shaft | | 38 | | 59 | 100 | 743 | |
| | 2004.07-2009.11 | 6AT/6MT | R | L/R | Platform/Chassis 4WD AXD;BNZ | | GCI82474 | Outer Joint | | 38 | 28 | 59 | 100 | 59 | |
| | 2004.07-2009.11 | 6AT/6MT | R | L/R | Platform/Chassis 4WD AXD;BNZ | | GCI61075 | Inner Joint | | | 28 | | | 26 | |
| | 2004.07-2009.11 | 6MT | F | L | Van 4WD AXD;BNZ | | GDS61084 | Drive Shaft | | 38 | 26 | 63 | 102.5 | 613 | |
| | 2004.07-2009.11 | 6MT | F | R | Van 4WD AXD;BNZ | | GDS57411 | Drive Shaft | | 38 | 26 | 63 | 102.5 | 616 | |
| | 2004.07-2009.11 | 6MT | F | L/R | Van 4WD AXD;BNZ | | GCO61011 | Outer Joint | | 38 | 29 | 63 | 102.5 | 70 | M |
| | 2004.07-2009.11 | 6MT | F | L | Van 4WD AXD;BNZ | | GCI61029 | Inner Joint | | 26 | 30 | 46.8 | | 137 | |
| | 2004.07-2009.11 | 6MT | F | L | Van 4WD AXD;BNZ | | GCI61104 | Inner Joint | | 42 | 30 | 35.6 | | 136 | |
| | 2004.07-2009.11 | 6MT | F | R | Van 4WD AXD;BNZ | | GCI83652 | Inner Joint | | 26 | 30 | 46.8 | | 137 | |

| | YEAR | TRANSM. | F/R | L/R | BODY STYLE & DRIVE TYPE & ENGINE | REMARKS | G-AP Ref. | PRODUCT | ABS | Technical Specifications A | B | C | H | L | P |
|---|---|---|---|---|---|---|---|---|---|---|---|---|---|---|---|
| **VW Transporter** | | | | | | | | | | | | | | | |
| 2.5 (96 kw) | 2004.07-2009.11 | 6MT | F | L | Van 4WD AXD;BNZ | for OE number:0A5409343B | GDS61213 | Stub Axle,differential | | 42 | 42 | | | 135.5 | |
| | 2004.07-2009.11 | 6MT | F | R | Van 4WD AXD;BNZ | for OE number:0A5409343A | GDS61215 | Stub Axle,differential | | 26 | 42 | | | 143.5 | |
| | 2004.07-2009.11 | 6MT | F | L/R | Van 4WD AXD;BNZ | for OE number:0A5409343 | GDS61191 | Stub Axle,differential | | 26 | 42 | | | 135.5 | |
| | 2004.07-2009.11 | 6AT/6MT | R | L/R | Van 4WD AXD;BNZ | | GCI82474 | Outer Joint | | 38 | 28 | 59 | 100 | 59 | |
| | 2004.07-2009.11 | 6AT/6MT | R | L/R | Van 4WD AXD;BNZ | | GCI61075 | Inner Joint | | | 28 | | | 26 | |
| | 2004.07-2009.11 | 6MT | R | L | Van 4WD AXD;BNZ | | GDS61257 | Drive Shaft | | 38 | | 59 | 100 | 683 | |
| | 2004.07-2009.11 | 6MT | R | R | Van 4WD AXD;BNZ | | GDS61258 | Drive Shaft | | 38 | | 59 | 100 | 743 | |
| 2.5 (111 kw) | 2000.09-2003.04 | 4AT/5MT | F | L/R | Van FWD AHY, AXG | | GDS61033 | Drive Shaft | 48T | 38 | | 60.2 | 34.5 | 545 | |
| | 2000.09-2003.04 | 4AT/5MT | F | L/R | Van FWD AHY, AXG | | GCO61005 | Outer Joint | | 38 | 27 | 60.2 | 34.5 | 65 | I |
| | 2000.09-2003.04 | 4AT/5MT | F | L/R | Van FWD AHY, AXG | | GCO61006 | Outer Joint | 48T | 38 | 27 | 60.2 | 34.5 | 65 | I |
| | 2000.09-2003.04 | 4AT/5MT | F | L/R | Van FWD AHY, AXG | | GCI61030 | Inner Joint | | | 30 | | | 32 | |
| 2.5 (120 kw) | 2003.11-2009.11 | 6MT | F | L | Bus FWD BLJ | | GDS61084 | Drive Shaft | | 38 | 26 | 63 | 102.5 | 613 | |
| | 2003.11-2009.11 | 6MT | F | L | Bus FWD BLJ | | GDS83360 | Drive Shaft | | 38 | 42 | 63 | 102.5 | 617 | |
| | 2003.11-2009.11 | 6MT | F | R | Bus FWD BLJ | | GDS61140 | Drive Shaft | | 38 | 26 | 63 | 102.5 | 873 | |
| | 2003.11-2009.11 | 6MT | F | L/R | Bus FWD BLJ | | GCO61011 | Outer Joint | | 38 | 29 | 63 | 102.5 | 70 | M |
| | 2003.11-2009.11 | 6MT | F | L | Bus FWD BLJ | | GCI61029 | Inner Joint | | 26 | 30 | 46.8 | | 137 | |
| | 2003.11-2009.11 | 6MT | F | R | Bus FWD BLJ | | GCI61021 | Inner Joint | | 26 | 30 | | 288 | 106 | |
| | 2003.11-2009.11 | 6MT | F | L | Bus FWD BLJ | for OE number:0A5409343B | GDS61213 | Stub Axle,differential | | 42 | 42 | | | 135.5 | |
| | 2003.11-2009.11 | 6MT | F | R | Bus FWD BLJ | for OE number:0A5409343A | GDS61215 | Stub Axle,differential | | 26 | 42 | | | 143.5 | |
| | 2003.11-2009.11 | 6MT | F | L/R | Bus FWD BLJ | for OE number:0A5409343 | GDS61191 | Stub Axle,differential | | 26 | 42 | | | 135.5 | |
| 2.5 (128 kw) | 2003.04-2009.11 | 6AT | F | L | Bus FWD AXE, BPC | | GDS83973 | Drive Shaft | | 38 | 26 | 63 | 102.5 | 615 | |
| | 2003.04-2009.11 | 6AT | F | R | Bus FWD AXE, BPC | | GDS61210 | Drive Shaft | | 38 | 26 | 63 | 102.5 | 925 | |
| | 2003.04-2009.11 | 6AT | F | L | Bus FWD AXE, BPC | | GCI82441 | Inner Joint | | 26 | 27 | 47 | | 128 | |
| | 2003.04-2009.11 | 6AT | F | L | Bus FWD AXE, BPC | Date To:2006.12 | GCI83033 | Inner Joint | | 26 | 29 | 47.1 | | 128 | |
| | 2003.04-2009.11 | 6AT | F | L/R | Bus FWD AXE, BPC | | GDS61238 | Stub Axle,differential | | 26 | 30 | | | 114.5 | |
| | 2003.04-2009.11 | 6AT/6MT | F | L/R | Bus FWD AXE, BPC | | GCO61011 | Outer Joint | | 38 | 29 | 63 | 102.5 | 70 | M |
| | 2003.04-2009.11 | 6MT | F | L | Bus FWD AXE, BPC | | GDS83360 | Drive Shaft | | 38 | 42 | 63 | 102.5 | 617 | |
| | 2003.04-2009.11 | 6MT | F | R | Bus FWD AXE, BPC | | GDS61140 | Drive Shaft | | 38 | 26 | 63 | 102.5 | 873 | |
| | 2003.04-2009.11 | 6MT | F | L | Bus FWD AXE, BPC | | GCI61029 | Inner Joint | | 26 | 30 | 46.8 | | 137 | |
| | 2003.04-2009.11 | 6MT | F | L | Bus FWD AXE, BPC | | GCI61104 | Inner Joint | | 42 | 30 | 35.6 | | 136 | |
| | 2003.04-2009.11 | 6MT | F | R | Bus FWD AXE, BPC | | GCI61021 | Inner Joint | | 26 | 30 | | 288 | 106 | |
| | 2003.04-2009.11 | 6MT | F | L | Bus FWD AXE, BPC | for OE number:0A5409343B | GDS61213 | Stub Axle,differential | | 42 | 42 | | | 135.5 | |
| | 2003.04-2009.11 | 6MT | F | R | Bus FWD AXE, BPC | for OE number:0A5409343A | GDS61215 | Stub Axle,differential | | 26 | 42 | | | 143.5 | |
| | 2003.04-2009.11 | 6MT | F | L/R | Bus FWD AXE, BPC | for OE number:0A5409343 | GDS61191 | Stub Axle,differential | | 26 | 42 | | | 135.5 | |
| | 2003.04-2009.11 | 6AT | F | L | Platform/Chassis FWD AXE;BPC | | GDS83973 | Drive Shaft | | 38 | 26 | 63 | 102.5 | 615 | |
| | 2003.04-2009.11 | 6AT | F | R | Platform/Chassis FWD AXE;BPC | Inner teeth of tranm.side:27 | GDS61210 | Drive Shaft | | 38 | 26 | 63 | 102.5 | 925 | |
| | 2003.04-2009.11 | 6AT | F | R | Platform/Chassis FWD AXE;BPC | Inner teeth of tranm.side:29 | GDS83267 | Drive Shaft | | 38 | 26 | 63 | 102.5 | 925 | |
| | 2003.04-2009.11 | 6AT | F | L | Platform/Chassis FWD AXE;BPC | | GCI82441 | Inner Joint | | 26 | 27 | 47 | | 128 | |
| | 2003.04-2009.11 | 6AT | F | L | Platform/Chassis FWD AXE;BPC | Date To:2006.12 | GCI83033 | Inner Joint | | 26 | 29 | 47.1 | | 128 | |
| | 2003.04-2009.11 | 6AT | F | L/R | Platform/Chassis FWD AXE;BPC | | GDS61238 | Stub Axle,differential | | 26 | 30 | | | 114.5 | |
| | 2003.04-2009.11 | 6AT/6MT | F | L/R | Platform/Chassis FWD AXE;BPC | | GCO61011 | Outer Joint | | 38 | 29 | 63 | 102.5 | 70 | M |
| | 2003.04-2009.11 | 6MT | F | L | Platform/Chassis FWD AXE;BPC | | GDS61084 | Drive Shaft | | 38 | 26 | 63 | 102.5 | 613 | |
| | 2003.04-2009.11 | 6MT | F | L | Platform/Chassis FWD AXE;BPC | | GDS83360 | Drive Shaft | | 38 | 42 | 63 | 102.5 | 617 | |
| | 2003.04-2009.11 | 6MT | F | R | Platform/Chassis FWD AXE;BPC | | GDS61140 | Drive Shaft | | 38 | 26 | 63 | 102.5 | 873 | |
| | 2003.04-2009.11 | 6MT | F | L | Platform/Chassis FWD AXE;BPC | | GCI61029 | Inner Joint | | 26 | 30 | 46.8 | | 137 | |
| | 2003.04-2009.11 | 6MT | F | R | Platform/Chassis FWD AXE;BPC | | GCI61021 | Inner Joint | | 26 | 30 | | 288 | 106 | |
| | 2003.04-2009.11 | 6MT | F | L | Platform/Chassis FWD AXE;BPC | for OE number:0A5409343B | GDS61213 | Stub Axle,differential | | 42 | 42 | | | 135.5 | |
| | 2003.04-2009.11 | 6MT | F | R | Platform/Chassis FWD AXE;BPC | for OE number:0A5409343A | GDS61215 | Stub Axle,differential | | 26 | 42 | | | 143.5 | |
| | 2003.04-2009.11 | 6MT | F | L/R | Platform/Chassis FWD AXE;BPC | for OE number:0A5409343 | GDS61191 | Stub Axle,differential | | 26 | 42 | | | 135.5 | |
| | 2003.04-2009.11 | 6AT | F | L | Van FWD AXE;BPC | | GDS83973 | Drive Shaft | | 38 | 26 | 63 | 102.5 | 615 | |
| | 2003.04-2009.11 | 6AT | F | R | Van FWD AXE;BPC | Inner teeth of tranm.side:27 | GDS61210 | Drive Shaft | | 38 | 26 | 63 | 102.5 | 925 | |
| | 2003.04-2009.11 | 6AT | F | R | Van FWD AXE;BPC | Inner teeth of tranm.side:29 | GDS83267 | Drive Shaft | | 38 | 26 | 63 | 102.5 | 925 | |
| | 2003.04-2009.11 | 6AT | F | L | Van FWD AXE;BPC | | GCI82441 | Inner Joint | | 26 | 27 | 47 | | 128 | |
| | 2003.04-2009.11 | 6AT | F | L | Van FWD AXE;BPC | Date To:2006.12 | GCI83033 | Inner Joint | | 26 | 29 | 47.1 | | 128 | |
| | 2003.04-2009.11 | 6AT | F | L/R | Van FWD AXE;BPC | | GDS61238 | Stub Axle,differential | | 26 | 30 | | | 114.5 | |
| | 2003.04-2009.11 | 6AT/6MT | F | L/R | Van FWD AXE;BPC | | GCO61011 | Outer Joint | | 38 | 29 | 63 | 102.5 | 70 | M |
| | 2003.04-2009.11 | 6MT | F | L | Van FWD AXE;BPC | | GDS61084 | Drive Shaft | | 38 | 26 | 63 | 102.5 | 613 | |
| | 2003.04-2009.11 | 6MT | F | L | Van FWD AXE;BPC | | GDS83360 | Drive Shaft | | 38 | 42 | 63 | 102.5 | 617 | |
| | 2003.04-2009.11 | 6MT | F | R | Van FWD AXE;BPC | | GDS61140 | Drive Shaft | | 38 | 26 | 63 | 102.5 | 873 | |
| | 2003.04-2009.11 | 6MT | F | L | Van FWD AXE;BPC | | GCI61029 | Inner Joint | | 26 | 30 | 46.8 | | 137 | |
| | 2003.04-2009.11 | 6MT | F | R | Van FWD AXE;BPC | | GCI61021 | Inner Joint | | 26 | 30 | | 288 | 106 | |
| | 2003.04-2009.11 | 6MT | F | L | Van FWD AXE;BPC | for OE number:0A5409343B | GDS61213 | Stub Axle,differential | | 42 | 42 | | | 135.5 | |
| | 2003.04-2009.11 | 6MT | F | R | Van FWD AXE;BPC | for OE number:0A5409343A | GDS61215 | Stub Axle,differential | | 26 | 42 | | | 143.5 | |
| | 2003.04-2009.11 | 6MT | F | L/R | Van FWD AXE;BPC | for OE number:0A5409343 | GDS61191 | Stub Axle,differential | | 26 | 42 | | | 135.5 | |
| | 2004.04-2009.11 | 6AT | F | L/R | Platform/Chassis 4WD AXE;BPC | for OE number:09K409352 | GDS61238 | Stub Axle,differential | | 26 | 30 | | | 114.5 | |

| | YEAR | TRANSM. | F/R | L/R | BODY STYLE & DRIVE TYPE & ENGINE | REMARKS | G-AP Ref. | PRODUCT | ABS | Technical Specifications A | B | C | H | L | P |
|---|---|---|---|---|---|---|---|---|---|---|---|---|---|---|---|
| **VW Transporter** | | | | | | | | | | | | | | | |
| 2.5 (128 kw) | 2004.04-2009.11 | 6MT | F | L | Platform/Chassis 4WD AXE;BPC | | GDS61084 | Drive Shaft | | 38 | 26 | 63 | 102.5 | 613 | |
| | 2004.04-2009.11 | 6MT | F | R | Platform/Chassis 4WD AXE;BPC | | GDS57411 | Drive Shaft | | 38 | 26 | 63 | 102.5 | 616 | |
| | 2004.04-2009.11 | 6MT | F | L/R | Platform/Chassis 4WD AXE;BPC | | GCO61011 | Outer Joint | | 38 | 29 | 63 | 102.5 | 70 | M |
| | 2004.04-2009.11 | 6MT | F | L | Platform/Chassis 4WD AXE;BPC | | GCI61029 | Inner Joint | | 26 | 30 | 46.8 | | 137 | |
| | 2004.04-2009.11 | 6MT | F | L | Platform/Chassis 4WD AXE;BPC | Outer teeth:42 | GCI61104 | Inner Joint | | 42 | 30 | 35.6 | | 136 | |
| | 2004.04-2009.11 | 6MT | F | R | Platform/Chassis 4WD AXE;BPC | | GCI83652 | Inner Joint | | 26 | 30 | 46.8 | | 137 | |
| | 2004.04-2009.11 | 6MT | F | L | Platform/Chassis 4WD AXE;BPC | for OE number:0A5409343B | GDS61213 | Stub Axle,differential | | 42 | 42 | | | 135.5 | |
| | 2004.04-2009.11 | 6MT | F | R | Platform/Chassis 4WD AXE;BPC | for OE number:0A5409343A | GDS61215 | Stub Axle,differential | | 26 | 42 | | | 143.5 | |
| | 2004.04-2009.11 | 6MT | F | L/R | Platform/Chassis 4WD AXE;BPC | for OE number:0A5409343 | GDS61191 | Stub Axle,differential | | 26 | 42 | | | 135.5 | |
| | 2004.04-2009.11 | 6AT/6MT | R | L | Platform/Chassis 4WD AXE;BPC | | GDS61257 | Drive Shaft | | 38 | | 59 | 100 | 683 | |
| | 2004.04-2009.11 | 6AT/6MT | R | R | Platform/Chassis 4WD AXE;BPC | | GDS61258 | Drive Shaft | | 38 | | 59 | 100 | 743 | |
| | 2004.04-2009.11 | 6AT/6MT | R | L/R | Platform/Chassis 4WD AXE;BPC | | GCI82474 | Outer Joint | | 38 | 28 | 59 | 100 | 59 | |
| | 2004.04-2009.11 | 6AT/6MT | R | L/R | Platform/Chassis 4WD AXE;BPC | | GCI61075 | Inner Joint | | | 28 | | | 26 | |
| | 2004.07-2009.11 | 6MT | F | L | Bus 4WD AXE, BPC | | GDS61084 | Drive Shaft | | 38 | 26 | 63 | 102.5 | 613 | |
| | 2004.07-2009.11 | 6MT | F | R | Bus 4WD AXE, BPC | | GDS57411 | Drive Shaft | | 38 | 26 | 63 | 102.5 | 616 | |
| | 2004.07-2009.11 | 6MT | F | L/R | Bus 4WD AXE, BPC | | GCO61011 | Outer Joint | | 38 | 29 | 63 | 102.5 | 70 | M |
| | 2004.07-2009.11 | 6MT | F | L | Bus 4WD AXE, BPC | | GCI61029 | Inner Joint | | 26 | 30 | 46.8 | | 137 | |
| | 2004.07-2009.11 | 6MT | F | L | Bus 4WD AXE, BPC | | GCI61104 | Inner Joint | | 42 | 30 | 35.6 | | 136 | |
| | 2004.07-2009.11 | 6MT | F | R | Bus 4WD AXE, BPC | | GCI83652 | Inner Joint | | 26 | 30 | 46.8 | | 137 | |
| | 2004.07-2009.11 | 6MT | F | L | Bus 4WD AXE, BPC | Model:Transporter Shuttle,for OE number:0A5409343B | GDS61213 | Stub Axle,differential | | 42 | 42 | | | 135.5 | |
| | 2004.07-2009.11 | 6MT | F | R | Bus 4WD AXE, BPC | Model:Transporter Shuttle,for OE number:0A5409343A | GDS61215 | Stub Axle,differential | | 26 | 42 | | | 143.5 | |
| | 2004.07-2009.11 | 6MT | F | L/R | Bus 4WD AXE, BPC | Model:Transporter Shuttle,for OE number:0A5409343 | GDS61191 | Stub Axle,differential | | 26 | 42 | | | 135.5 | |
| | 2004.07-2009.11 | 6MT | R | L | Bus 4WD AXE, BPC | | GDS61257 | Drive Shaft | | 38 | | 59 | 100 | 683 | |
| | 2004.07-2009.11 | 6MT | R | R | Bus 4WD AXE, BPC | | GDS61258 | Drive Shaft | | 38 | | 59 | 100 | 743 | |
| | 2004.07-2009.11 | 6MT | R | L/R | Bus 4WD AXE, BPC | | GCI82474 | Outer Joint | | 38 | 28 | 59 | 100 | 59 | |
| | 2004.07-2009.11 | 6MT | R | L/R | Bus 4WD AXE, BPC | | GCI61075 | Inner Joint | | | 28 | | | 26 | |
| | 2004.07-2009.11 | 6MT | F | L | Van 4WD AXE;BPC | | GDS61084 | Drive Shaft | | 38 | 26 | 63 | 102.5 | 613 | |
| | 2004.07-2009.11 | 6MT | F | R | Van 4WD AXE;BPC | | GDS57411 | Drive Shaft | | 38 | 26 | 63 | 102.5 | 616 | |
| | 2004.07-2009.11 | 6MT | F | L/R | Van 4WD AXE;BPC | | GCO61011 | Outer Joint | | 38 | 29 | 63 | 102.5 | 70 | M |
| | 2004.07-2009.11 | 6MT | F | L | Van 4WD AXE;BPC | | GCI61029 | Inner Joint | | 26 | 30 | 46.8 | | 137 | |
| | 2004.07-2009.11 | 6MT | F | L | Van 4WD AXE;BPC | Outer teeth:42 | GCI61104 | Inner Joint | | 42 | 30 | 35.6 | | 136 | |
| | 2004.07-2009.11 | 6MT | F | R | Van 4WD AXE;BPC | | GCI83652 | Inner Joint | | 26 | 30 | 46.8 | | 137 | |
| | 2004.07-2009.11 | 6MT | F | L | Van 4WD AXE;BPC | for OE number:0A5409343B | GDS61213 | Stub Axle,differential | | 42 | 42 | | | 135.5 | |
| | 2004.07-2009.11 | 6MT | F | R | Van 4WD AXE;BPC | for OE number:0A5409343A | GDS61215 | Stub Axle,differential | | 26 | 42 | | | 143.5 | |
| | 2004.07-2009.11 | 6MT | F | L/R | Van 4WD AXE;BPC | for OE number:0A5409343 | GDS61191 | Stub Axle,differential | | 26 | 42 | | | 135.5 | |
| | 2004.07-2009.11 | 6AT/6MT | R | L/R | Van 4WD AXE;BPC | | GCI82474 | Outer Joint | | 38 | 28 | 59 | 100 | 59 | |
| | 2004.07-2009.11 | 6AT/6MT | R | L/R | Van 4WD AXE;BPC | | GCI61075 | Inner Joint | | | 28 | | | 26 | |
| | 2004.07-2009.11 | 6MT | R | L | Van 4WD AXE;BPC | | GDS61257 | Drive Shaft | | 38 | | 59 | 100 | 683 | |
| | 2004.07-2009.11 | 6MT | R | R | Van 4WD AXE;BPC | | GDS61258 | Drive Shaft | | 38 | | 59 | 100 | 743 | |
| 2.8 (103 kw) | 1996.05-2000.05 | 4AT | F | R | Platform/Chassis FWD AES | | GDS61003 | Drive Shaft | | 38 | | 60.2 | 34.5 | 540.8 | |
| | 1996.05-2000.05 | 4AT | F | R | Platform/Chassis FWD AES | | GDS61004 | Drive Shaft | 48T | 38 | | 60.2 | 34.5 | 540.8 | |
| | 1996.05-2000.05 | 4AT/5MT | F | L/R | Platform/Chassis FWD AES | | GCO61005 | Outer Joint | | 38 | 27 | 60.2 | 34.5 | 65 | I |
| | 1996.05-2000.05 | 4AT/5MT | F | L/R | Platform/Chassis FWD AES | | GCO61006 | Outer Joint | 48T | 38 | 27 | 60.2 | 34.5 | 65 | I |
| | 1996.05-2000.05 | 4AT/5MT | F | L/R | Platform/Chassis FWD AES | | GCI61002 | Inner Joint | | | 28 | | | 31.8 | |
| | 1996.05-2000.05 | 5MT | F | L/R | Platform/Chassis FWD AES | | GDS61003 | Drive Shaft | | 38 | | 60.2 | 34.5 | 540.8 | |
| | 1996.05-2000.05 | 5MT | F | L/R | Platform/Chassis FWD AES | | GDS61004 | Drive Shaft | 48T | 38 | | 60.2 | 34.5 | 540.8 | |
| | 1996.05-2000.05 | 4AT | F | L | Van FWD AES (05.96-.) | | GDS61052 | Drive Shaft | 48T | 38 | | 60.2 | 34.5 | 529 | |
| | 1996.05-2000.05 | 4AT | F | R | Van FWD AES (05.96-.) | | GDS61003 | Drive Shaft | | 38 | | 60.2 | 34.5 | 540.8 | |
| | 1996.05-2000.05 | 4AT | F | R | Van FWD AES (05.96-.) | | GDS61004 | Drive Shaft | 48T | 38 | | 60.2 | 34.5 | 540.8 | |
| | 1996.05-2000.05 | 4AT/5MT | F | L/R | Van FWD AES (05.96-.) | | GCO61005 | Outer Joint | | 38 | 27 | 60.2 | 34.5 | 65 | I |
| | 1996.05-2000.05 | 4AT/5MT | F | L/R | Van FWD AES (05.96-.) | | GCO61006 | Outer Joint | 48T | 38 | 27 | 60.2 | 34.5 | 65 | I |
| | 1996.05-2000.05 | 4AT/5MT | F | L/R | Van FWD AES (05.96-.) | | GCI61002 | Inner Joint | | | 28 | | | 31.8 | |
| | 1996.05-2000.05 | 5MT | F | L/R | Van FWD AES (05.96-.) | | GDS61003 | Drive Shaft | | 38 | | 60.2 | 34.5 | 540.8 | |
| | 1996.05-2000.05 | 5MT | F | L/R | Van FWD AES (05.96-.) | | GDS61004 | Drive Shaft | 48T | 38 | | 60.2 | 34.5 | 540.8 | |
| | 1996.05-2000.05 | MT | F | R | Van FWD AES (05.96-.) | | GDS61225 | Stub Axle-Flange | | 37 | | | 338 | 394 | |
| 2.8 (150 kw) | 2000.06-2003.04 | 4AT | F | R | Van FWD AMV, AXK | | GDS61033 | Drive Shaft | 48T | 38 | | 60.2 | 34.5 | 545 | |
| | 2000.06-2003.04 | 4AT | F | L/R | Van FWD AMV, AXK | | GCO61005 | Outer Joint | | 38 | 27 | 60.2 | 34.5 | 65 | I |
| | 2000.06-2003.04 | 4AT | F | L/R | Van FWD AMV, AXK | | GCI61030 | Inner Joint | | | 30 | | | 32 | |
| 3.2 (170 kw) | 2004.02-2004.06 | 6AT | F | L/R | Van FWD BDL | | GCO61011 | Outer Joint | | 38 | 29 | 63 | 102.5 | 70 | M |
| | 2004.02-2004.06 | 6AT | F | L | Van FWD BDL | | GCI61029 | Inner Joint | | 26 | 30 | 46.8 | | 137 | |
| | 2004.02-2009.11 | 6AT | F | L/R | Platform/Chassis FWD BDL | | GCO61011 | Outer Joint | | 38 | 29 | 63 | 102.5 | 70 | M |
| | 2004.02-2009.11 | 6AT | F | L | Platform/Chassis FWD BDL | | GCI82441 | Inner Joint | | 26 | 27 | 47 | | 128 | |
| 3.2 (173 kw) | 2003.08-2009.11 | 6AT | F | L | Platform/Chassis FWD BDL;BKK | | GDS83973 | Drive Shaft | | 38 | 26 | 63 | 102.5 | 615 | |
| | 2003.08-2009.11 | 6AT | F | R | Platform/Chassis FWD BDL;BKK | | GDS84521 | Drive Shaft | | 38 | 26 | 63 | 102.5 | 925 | |
| | 2003.08-2009.11 | 6AT | F | L/R | Platform/Chassis FWD BDL;BKK | | GCO61011 | Outer Joint | | 38 | 29 | 63 | 102.5 | 70 | M |

| | YEAR | TRANSM. | F/R | L/R | BODY STYLE & DRIVE TYPE & ENGINE | REMARKS | G-AP Ref. | PRODUCT | ABS | Technical Specifications A | B | C | H | L | P |
|---|---|---|---|---|---|---|---|---|---|---|---|---|---|---|---|
| **VW** | | | | | | | | | | | | | | | |
| **Transporter** | | | | | | | | | | | | | | | |
| 3.2 (173 kw) | 2003.08-2009.11 | 6AT | F | L | Platform/Chassis FWD BDL;BKK | | GCI61021 | Inner Joint | | 26 | 30 | | 288 | 106 | |
| | 2003.08-2009.11 | 6AT | F | L | Platform/Chassis FWD BDL;BKK | | GCI82441 | Inner Joint | | 26 | 27 | 47 | | 128 | |
| | 2003.08-2009.11 | 6AT | F | L | Platform/Chassis FWD BDL;BKK | Date To:2006.12 | GCI83033 | Inner Joint | | 26 | 29 | 47.1 | | 128 | |
| | 2003.08-2009.11 | 6AT | F | R | Platform/Chassis FWD BDL;BKK | | GCI82833 | Inner Joint | | 26 | 27 | | 341 | 90 | |
| | 2003.08-2009.11 | 6AT | F | L/R | Platform/Chassis FWD BDL;BKK | for OE number:0A5409355F | GDS61215 | Stub Axle,differential | | 26 | 42 | | | 143.5 | |
| | 2003.08-2009.11 | 6AT | F | L/R | Platform/Chassis FWD BDL;BKK | for OE number:09K409352 | GDS61238 | Stub Axle,differential | | 26 | 30 | | | 114.5 | |
| | 2003.11-2009.11 | 6AT/6MT | F | L | Platform/Chassis 4WD BDL | Date To:2006.12 | GCI83033 | Inner Joint | | 26 | 29 | 47.1 | | 128 | |
| | 2003.11-2009.11 | 6MT | F | L | Platform/Chassis 4WD BDL | | GDS83973 | Drive Shaft | | 38 | 26 | 63 | 102.5 | 615 | |
| | 2003.11-2009.11 | 6MT | F | R | Platform/Chassis 4WD BDL | | GDS81920 | Drive Shaft | | 38 | 26 | 63 | 102.5 | 614 | |
| | 2003.11-2009.11 | 6MT | F | L/R | Platform/Chassis 4WD BDL | | GCO61011 | Outer Joint | | 38 | 29 | 63 | 102.5 | 70 | M |
| | 2003.11-2009.11 | 6MT | F | L | Platform/Chassis 4WD BDL | | GCI61029 | Inner Joint | | 26 | 30 | 46.8 | | 137 | |
| | 2003.11-2009.11 | 6MT | F | R | Platform/Chassis 4WD BDL | | GCI81453 | Inner Joint | | 26 | 27 | 47 | | 128 | |
| | 2003.11-2009.11 | 6MT | F | L | Platform/Chassis 4WD BDL | for OE number:0A5409343B | GDS61213 | Stub Axle,differential | | 42 | 42 | | | 135.5 | |
| | 2003.11-2009.11 | 6MT | F | R | Platform/Chassis 4WD BDL | for OE number:0A5409343A | GDS61215 | Stub Axle,differential | | 26 | 42 | | | 143.5 | |
| | 2003.11-2009.11 | 6MT | F | L/R | Platform/Chassis 4WD BDL | for OE number:0A5409343 | GDS61191 | Stub Axle,differential | | 26 | 42 | | | 135.5 | |
| | 2003.11-2009.11 | 6MT | R | L | Platform/Chassis 4WD BDL | | GDS61257 | Drive Shaft | | 38 | | 59 | 100 | 683 | |
| | 2003.11-2009.11 | 6MT | R | R | Platform/Chassis 4WD BDL | | GDS61258 | Drive Shaft | | 38 | | 59 | 100 | 743 | |
| | 2003.11-2009.11 | 6MT | R | L/R | Platform/Chassis 4WD BDL | | GCI82474 | Outer Joint | | 38 | 28 | 59 | 100 | 59 | |
| | 2003.11-2009.11 | 6MT | R | L/R | Platform/Chassis 4WD BDL | | GCI61075 | Inner Joint | | | 28 | | | 26 | |
| | 2003.11-2009.11 | 6AT | F | L/R | Van 4WD BDL;BKK;CFLA | Date from:2004.07,for OE number:09K409352 | GDS61238 | Stub Axle,differential | | 26 | 30 | | | 114.5 | |
| | 2003.11-2009.11 | 6AT/6MT | F | L | Van 4WD BDL;BKK;CFLA | | GDS83973 | Drive Shaft | | 38 | 26 | 63 | 102.5 | 615 | |
| | 2003.11-2009.11 | 6AT/6MT | F | R | Van 4WD BDL;BKK;CFLA | | GDS81920 | Drive Shaft | | 38 | 26 | 63 | 102.5 | 614 | |
| | 2003.11-2009.11 | 6AT/6MT | F | L/R | Van 4WD BDL;BKK;CFLA | | GCO61011 | Outer Joint | | 38 | 29 | 63 | 102.5 | 70 | M |
| | 2003.11-2009.11 | 6AT/6MT | F | L | Van 4WD BDL;BKK;CFLA | | GCI82441 | Inner Joint | | 26 | 27 | 47 | | 128 | |
| | 2003.11-2009.11 | 6AT/6MT | F | L | Van 4WD BDL;BKK;CFLA | Date To:2006.12 | GCI83033 | Inner Joint | | 26 | 29 | 47.1 | | 128 | |
| | 2003.11-2009.11 | 6AT/6MT | F | R | Van 4WD BDL;BKK;CFLA | | GCI81453 | Inner Joint | | 26 | 27 | 47 | | 128 | |
| | 2003.11-2009.11 | 6MT | F | L | Van 4WD BDL;BKK;CFLA | Date from:2004.07,for OE number:0A5409343B | GDS61213 | Stub Axle,differential | | 42 | 42 | | | 135.5 | |
| | 2003.11-2009.11 | 6MT | F | R | Van 4WD BDL;BKK;CFLA | Date from:2004.07,for OE number:0A5409343A | GDS61215 | Stub Axle,differential | | 26 | 42 | | | 143.5 | |
| | 2003.11-2009.11 | 6MT | F | L/R | Van 4WD BDL;BKK;CFLA | Date from:2004.07,for OE number:0A5409343 | GDS61191 | Stub Axle,differential | | 26 | 42 | | | 135.5 | |
| | 2003.11-2009.11 | 6AT/6MT | R | L | Van 4WD BDL;BKK;CFLA | | GDS61257 | Drive Shaft | | 38 | | 59 | 100 | 683 | |
| | 2003.11-2009.11 | 6AT/6MT | R | R | Van 4WD BDL;BKK;CFLA | | GDS61258 | Drive Shaft | | 38 | | 59 | 100 | 743 | |
| | 2003.11-2009.11 | 6AT/6MT | R | L/R | Van 4WD BDL;BKK;CFLA | | GCI82474 | Outer Joint | | 38 | 28 | 59 | 100 | 59 | |
| | 2003.11-2009.11 | 6AT/6MT | R | L/R | Van 4WD BDL;BKK;CFLA | | GCI61075 | Inner Joint | | | 28 | | | 26 | |
| | 2003.11-2009.12 | 6MT | F | L | Bus 4WD BKK, BDL, CFLA | | GDS83973 | Drive Shaft | | 38 | 26 | 63 | 102.5 | 615 | |
| | 2003.11-2009.12 | 6MT | F | R | Bus 4WD BKK, BDL, CFLA | | GDS81920 | Drive Shaft | | 38 | 26 | 63 | 102.5 | 614 | |
| | 2003.11-2009.12 | 6MT | F | L/R | Bus 4WD BKK, BDL, CFLA | | GCO61011 | Outer Joint | | 38 | 29 | 63 | 102.5 | 70 | M |
| | 2003.11-2009.12 | 6MT | F | L | Bus 4WD BKK, BDL, CFLA | | GCI82441 | Inner Joint | | 26 | 27 | 47 | | 128 | |
| | 2003.11-2009.12 | 6MT | F | L | Bus 4WD BKK, BDL, CFLA | Date To:2006.12 | GCI83033 | Inner Joint | | 26 | 29 | 47.1 | | 128 | |
| | 2003.11-2009.12 | 6MT | F | R | Bus 4WD BKK, BDL, CFLA | | GCI81453 | Inner Joint | | 26 | 27 | 47 | | 128 | |
| | 2003.11-2009.12 | 6MT | F | L | Bus 4WD BKK, BDL, CFLA | for OE number:0A5409343B | GDS61213 | Stub Axle,differential | | 42 | 42 | | | 135.5 | |
| | 2003.11-2009.12 | 6MT | F | R | Bus 4WD BKK, BDL, CFLA | for OE number:0A5409343A | GDS61215 | Stub Axle,differential | | 26 | 42 | | | 143.5 | |
| | 2003.11-2009.12 | 6MT | F | L/R | Bus 4WD BKK, BDL, CFLA | for OE number:0A5409343 | GDS61191 | Stub Axle,differential | | 26 | 42 | | | 135.5 | |
| | 2003.11-2009.12 | 6MT | R | L | Bus 4WD BKK, BDL, CFLA | | GDS61257 | Drive Shaft | | 38 | | 59 | 100 | 683 | |
| | 2003.11-2009.12 | 6MT | R | R | Bus 4WD BKK, BDL, CFLA | | GDS61258 | Drive Shaft | | 38 | | 59 | 100 | 743 | |
| | 2003.11-2009.12 | 6MT | R | L/R | Bus 4WD BKK, BDL, CFLA | | GCI82474 | Outer Joint | | 38 | 28 | 59 | 100 | 59 | |
| | 2003.11-2009.12 | 6MT | R | L/R | Bus 4WD BKK, BDL, CFLA | | GCI61075 | Inner Joint | | | 28 | | | 26 | |
| | 2004.02-2009.11 | 6AT | F | L | Bus FWD BKK, BDL, CFLA | | GDS83973 | Drive Shaft | | 38 | 26 | 63 | 102.5 | 615 | |
| | 2004.02-2009.11 | 6AT | F | R | Bus FWD BKK, BDL, CFLA | | GDS84521 | Drive Shaft | | 38 | 26 | 63 | 102.5 | 925 | |
| | 2004.02-2009.11 | 6AT | F | L/R | Bus FWD BKK, BDL, CFLA | | GCO61011 | Outer Joint | | 38 | 29 | 63 | 102.5 | 70 | M |
| | 2004.02-2009.11 | 6AT | F | L | Bus FWD BKK, BDL, CFLA | | GCI82441 | Inner Joint | | 26 | 27 | 47 | | 128 | |
| | 2004.02-2009.11 | 6AT | F | L | Bus FWD BKK, BDL, CFLA | Date To:2006.12 | GCI83033 | Inner Joint | | 26 | 29 | 47.1 | | 128 | |
| | 2004.02-2009.11 | 6AT | F | R | Bus FWD BKK, BDL, CFLA | | GCI82833 | Inner Joint | | 26 | 27 | | 341 | 90 | |
| | 2004.02-2009.11 | 6AT | F | L/R | Bus FWD BKK, BDL, CFLA | for OE number:0A5409355F | GDS61215 | Stub Axle,differential | | 26 | 42 | | | 143.5 | |
| | 2004.02-2009.11 | 6AT | F | L | Van FWD BDL;BKK;CFLA | | GDS83973 | Drive Shaft | | 38 | 26 | 63 | 102.5 | 615 | |
| | 2004.02-2009.11 | 6AT | F | R | Van FWD BDL;BKK;CFLA | | GDS84521 | Drive Shaft | | 38 | 26 | 63 | 102.5 | 925 | |
| | 2004.02-2009.11 | 6AT | F | L/R | Van FWD BDL;BKK;CFLA | | GCO61011 | Outer Joint | | 38 | 29 | 63 | 102.5 | 70 | M |
| | 2004.02-2009.11 | 6AT | F | L | Van FWD BDL;BKK;CFLA | | GCI82441 | Inner Joint | | 26 | 27 | 47 | | 128 | |
| | 2004.02-2009.11 | 6AT | F | L | Van FWD BDL;BKK;CFLA | Date To:2006.12 | GCI83033 | Inner Joint | | 26 | 29 | 47.1 | | 128 | |
| | 2004.02-2009.11 | 6AT | F | R | Van FWD BDL;BKK;CFLA | | GCI82833 | Inner Joint | | 26 | 27 | | 341 | 90 | |
| | 2004.02-2009.11 | 6AT | F | L/R | Van FWD BDL;BKK;CFLA | for OE number:0A5409355F | GDS61215 | Stub Axle,differential | | 26 | 42 | | | 143.5 | |
| | 2004.02-2009.11 | 6AT | F | L/R | Van FWD BDL;BKK;CFLA | for OE number:09K409352 | GDS61238 | Stub Axle,differential | | 26 | 30 | | | 114.5 | |
| **Transporter Shuttle** | | | | | | | | | | | | | | | |
| 1.9 (77 kw) | 2003.04-2009.11 | 5MT | F | L | Bus FWD AXB | 6 balls | GDS61105 | Drive Shaft | | 38 | | 63 | 102.5 | 645 | |
| | 2003.04-2009.11 | 5MT | F | L | Bus FWD AXB | 8 balls | GDS81508 | Drive Shaft | | 38 | | 63 | 102.5 | 645 | |
| | 2003.04-2009.11 | 5MT | F | R | Bus FWD AXB | 8 balls | GDS81533 | Drive Shaft | | 38 | 26 | 63 | 102.5 | 858 | |

| | YEAR | TRANSM. | F/R | L/R | BODY STYLE & DRIVE TYPE & ENGINE | REMARKS | G-AP Ref. | PRODUCT | ABS | Technical Specifications A | B | C | H | L | P |
|---|---|---|---|---|---|---|---|---|---|---|---|---|---|---|---|
| **VW** | | | | | | | | | | | | | | | |
| **Transporter Shuttle** | | | | | | | | | | | | | | | |
| 1.9 (77 kw) | 2003.04-2009.11 | 5MT | F | R | Bus FWD AXB | 6 balls | GDS83246 | Drive Shaft | | 38 | 26 | 63 | 102.5 | 858 | |
| | 2003.04-2009.11 | 5MT | F | L/R | Bus FWD AXB | 6 balls | GCO61009 | Outer Joint | | 38 | 27 | 63 | 102 | 66 | M |
| | 2003.04-2009.11 | 5MT | F | L/R | Bus FWD AXB | 8 balls | GCO81348 | Outer Joint | | 38 | 28 | 63 | 102.5 | 64.5 | I |
| | 2003.04-2009.11 | 5MT | F | L | Bus FWD AXB | | GCI61069 | Inner Joint | | | 28 | | | 32 | |
| | 2003.04-2009.11 | 5MT | F | R | Bus FWD AXB | | GCI61020 | Inner Joint | | 26 | 28 | | 205.5 | 100.2 | |
| | 2003.04-2009.11 | 5MT | F | R | Bus FWD AXB | for OE number:02Z409345B | GDS61190 | Stub Axle,differential | | 26 | 37 | | | 136.5 | |
| | 2003.04-2009.11 | 5MT | F | L/R | Bus FWD AXB | for OE number:0A5409355F | GDS61215 | Stub Axle,differential | | 26 | 42 | | | 143.5 | |
| **Transporter/Caravelle** | | | | | | | | | | | | | | | |
| 2.0 (66 kw) | 2019.10-2024.08 | 5MT | F | L | Bus FWD DNAC, CXGD | | GDS56700 | Drive Shaft | | 38 | | 63 | 102.5 | 657 | |
| | 2019.10-2024.08 | 5MT | F | R | Bus FWD DNAC, CXGD | Date to:2020.09 | GDS56734 | Drive Shaft | | 38 | 26 | 63 | 102.5 | 854 | |
| | 2019.10-2024.08 | 5MT | F | L/R | Bus FWD DNAC, CXGD | | GCO81348 | Outer Joint | | 38 | 28 | 63 | 102.5 | 64.5 | I |
| | 2019.10-2024.08 | 5MT | F | L | Bus FWD DNAC, CXGD | Date from:2020.12 | GCI82456 | Inner Joint | | | 28 | | | 32 | |
| | 2019.10-2024.08 | 5MT | F | R | Bus FWD DNAC, CXGD | Date to:2020.09 | GCI83461 | Inner Joint | | 26 | 28 | 44 | 250 | 63 | |
| 2.0 (81 kw) | 2019.07-2024.08 | 5MT | F | L | Bus FWD CXHC, DNAB | | GDS56700 | Drive Shaft | | 38 | | 63 | 102.5 | 657 | |
| | 2019.07-2024.08 | 5MT | F | R | Bus FWD CXHC, DNAB | Date to:2020.09 | GDS56734 | Drive Shaft | | 38 | 26 | 63 | 102.5 | 854 | |
| | 2019.07-2024.08 | 5MT | F | L/R | Bus FWD CXHC, DNAB | | GCO81348 | Outer Joint | | 38 | 28 | 63 | 102.5 | 64.5 | I |
| | 2019.07-2024.08 | 5MT | F | L | Bus FWD CXHC, DNAB | Date from:2020.12 | GCI82456 | Inner Joint | | | 28 | | | 32 | |
| | 2019.07-2024.08 | 5MT | F | R | Bus FWD CXHC, DNAB | Date to:2020.09 | GCI83461 | Inner Joint | | 26 | 28 | 44 | 250 | 63 | |
| 2.0 (84 kw) | 2016.05-2019.08 | 5MT | F | L | Bus FWD CXHB | | GDS56700 | Drive Shaft | | 38 | | 63 | 102.5 | 657 | |
| | 2016.05-2019.08 | 5MT | F | R | Bus FWD CXHB | | GDS56734 | Drive Shaft | | 38 | 26 | 63 | 102.5 | 854 | |
| | 2016.05-2019.08 | 5MT | F | L | Bus FWD CXHB | | GCI61069 | Inner Joint | | | 28 | | | 32 | |
| | 2016.05-2019.08 | MT | F | L/R | Bus FWD CXHB | Date from:2013.07 | GCO81348 | Outer Joint | | 38 | 28 | 63 | 102.5 | 64.5 | I |
| 2.0 (110 kw) | 2015.04-2019.07 | 6MT | F | L | Bus FWD CJKB | Date From:2013.06 | GDS83360 | Drive Shaft | | 38 | 42 | 63 | 102.5 | 617 | |
| | 2015.04-2019.07 | 6MT | F | R | Bus FWD CJKB | Date From:2012.05 | GDS83361 | Drive Shaft | | 38 | 26 | 63 | 102.5 | 883 | |
| | 2015.04-2019.07 | 6MT | F | L | Bus FWD CJKB | | GCI61029 | Inner Joint | | 26 | 30 | 46.8 | | 137 | |
| | 2015.04-2019.07 | 6MT | F | R | Bus FWD CJKB | | GCI81381 | Inner Joint | | 26 | 30 | | 281.5 | 105 | |
| | 2015.04-2019.07 | 6MT | F | L/R | Bus FWD CJKB | | GDS61216 | Stub Axle,differential | | 26 | 37 | | | 145 | |
| | 2015.04-2019.07 | 7AT | F | L | Bus FWD CJKB | | GDS83293 | Drive Shaft | | 38 | 37 | 63 | 102.5 | 645 | |
| | 2015.04-2019.07 | DCT | F | L/R | Bus FWD CJKB | | GCO81467 | Outer Joint | | 38 | 30 | 63 | 102.5 | 67.5 | I |
| | 2015.04-2019.07 | MT | F | L/R | Bus FWD CJKB | Date from:2013.07 | GCO81467 | Outer Joint | | 38 | 30 | 63 | 102.5 | 67.5 | I |
| | 2015.04-2019.07 | | F | L | Bus FWD CJKB | Type:Transporter;for OE number:0A5409343B | GDS61213 | Stub Axle,differential | | 42 | 42 | | | 135.5 | |
| | 2015.04-2019.07 | | F | R | Bus FWD CJKB | Type:Transporter;for OE number:0A5409343A | GDS61215 | Stub Axle,differential | | 26 | 42 | | | 143.5 | |
| | 2015.04-2024.08 | 6MT | F | L | Bus FWD DNAA, CXHA, CXFA | For Model code:SGF/SGM/SGN | GDS83360 | Drive Shaft | | 38 | 42 | 63 | 102.5 | 617 | |
| | 2015.04-2024.08 | 6MT | F | R | Bus FWD DNAA, CXHA, CXFA | For Model code:SGF/SGM/SGN | GDS83361 | Drive Shaft | | 38 | 26 | 63 | 102.5 | 883 | |
| | 2015.04-2024.08 | 6MT | F | L | Bus FWD DNAA, CXHA, CXFA | For Modelcode:SGB/SGJ | GCI61104 | Inner Joint | | 42 | 30 | 35.6 | | 136 | |
| | 2015.04-2024.08 | 6MT | F | R | Bus FWD DNAA, CXHA, CXFA | For Modelcode:SGB/SGJ | GCI81381 | Inner Joint | | 26 | 30 | | 281.5 | 105 | |
| | 2015.04-2024.08 | 6MT | F | L | Bus FWD DNAA, CXHA, CXFA | | GDS61213 | Stub Axle,differential | | 42 | 42 | | | 135.5 | |
| | 2015.04-2024.08 | 6MT/7DCT | F | L/R | Bus FWD DNAA, CXHA, CXFA | For Model code:SGF/SGM/SGN;6 balls | GCO61060 | Outer Joint | | 38 | 30 | 63 | 102.5 | 68 | I |
| | 2015.04-2024.08 | 6MT/7DCT | F | L/R | Bus FWD DNAA, CXHA, CXFA | For Model code:SGF/SGM/SGN;8 balls | GCO81467 | Outer Joint | | 38 | 30 | 63 | 102.5 | 67.5 | I |
| | 2015.04-2024.08 | 6MT/7DCT | F | L/R | Bus FWD DNAA, CXHA, CXFA | Inner Teeth:31 | GCO82386 | Outer Joint | | 38 | 31 | 63 | 103 | 69 | I |
| | 2015.04-2024.08 | 7AT/6MT | F | R | Bus FWD DNAA, CXHA, CXFA | | GDS61216 | Stub Axle,differential | | 26 | 37 | | | 145 | |
| | 2015.04-2024.08 | 7DCT | F | L | Bus FWD DNAA, CXHA, CXFA | For Model code:SGF/SGM/SGN | GDS83293 | Drive Shaft | | 38 | 37 | 63 | 102.5 | 645 | |
| | 2015.04-2024.08 | 7DCT | F | R | Bus FWD DNAA, CXHA, CXFA | Date to:2019.12 | GDS82392 | Drive Shaft | | 38 | 37 | 63 | 102.5 | 1025 | |
| | 2015.04-2024.08 | 7DCT | F | L | Bus FWD DNAA, CXHA, CXFA | For Model code:SHM/SHN;AAR | GCI81261 | Inner Joint | | 37 | 27 | 34.5 | 65.5 | 88.5 | |
| | 2015.04-2024.08 | 7DCT | F | R | Bus FWD DNAA, CXHA, CXFA | For Model code:SGF/SGM/SGN | GCI83037 | Inner Joint | | 37 | 27 | 34.5 | 430.5 | 96 | |
| | 2015.08-2024.08 | 6MT | F | L | Bus 4WD DNAA, CXHA, CXFA | Model code:SGF/SGM/SGN | GDS83360 | Drive Shaft | | 38 | 42 | 63 | 102.5 | 617 | |
| | 2015.08-2024.08 | 6MT | F | R | Bus 4WD DNAA, CXHA, CXFA | For Model code:SHB/SHJ | GDS81665 | Drive Shaft | | 38 | 26 | 63 | 102.5 | 614 | |
| | 2015.08-2024.08 | 6MT | F | R | Bus 4WD DNAA, CXHA, CXFA | Model code:SHM/SHN,Date to:2020.11 | GDS81665 | Drive Shaft | | 38 | 26 | 63 | 102.5 | 614 | |
| | 2015.08-2024.08 | 6MT | F | R | Bus 4WD DNAA, CXHA, CXFA | Model code:SGF/SGM/SGN,Date to:2017.01 | GDS81666 | Drive Shaft | | 38 | 26 | 63 | 102.5 | 616 | |
| | 2015.08-2024.08 | 6MT | F | L | Bus 4WD DNAA, CXHA, CXFA | For Model code:SGB/SGJ | GCI61104 | Inner Joint | | 42 | 30 | 35.6 | | 136 | |
| | 2015.08-2024.08 | 6MT | F | R | Bus 4WD DNAA, CXHA, CXFA | Model code:SGF/SGM/SGN | GCI61029 | Inner Joint | | 26 | 30 | 46.8 | | 137 | |
| | 2015.08-2024.08 | 6MT/7DCT | F | L/R | Bus 4WD DNAA, CXHA, CXFA | For Model code:SHB/SHJ,Date to:2020.11 | GCO82386 | Outer Joint | | 38 | 31 | 63 | 103 | 69 | I |
| | 2015.08-2024.08 | 7DCT | F | L | Bus 4WD DNAA, CXHA, CXFA | Date to:2020.11 | GDS83293 | Drive Shaft | | 38 | 37 | 63 | 102.5 | 645 | |
| | 2015.08-2024.08 | 7DCT | F | R | Bus 4WD DNAA, CXHA, CXFA | Date to:2020.11 | GDS81665 | Drive Shaft | | 38 | 26 | 63 | 102.5 | 614 | |
| | 2015.08-2024.08 | 7DCT | F | L/R | Bus 4WD DNAA, CXHA, CXFA | Model code:SGF/SGM/SGN | GCO81467 | Outer Joint | | 38 | 30 | 63 | 102.5 | 67.5 | I |
| | 2015.08-2024.08 | 7DCT | F | L | Bus 4WD DNAA, CXHA, CXFA | Model code:SHM/SHN;AAR | GCI81261 | Inner Joint | | 37 | 27 | 34.5 | 65.5 | 88.5 | |
| | 2015.08-2024.08 | 7DCT | F | R | Bus 4WD DNAA, CXHA, CXFA | For Modelcode:SGB/SGJ | GCI81453 | Inner Joint | | 26 | 27 | 47 | | 128 | |
| | 2015.08-2024.08 | | F | L | Bus 4WD DNAA, CXHA, CXFA | | GDS61213 | Stub Axle,differential | | 42 | 42 | | | 135.5 | |
| | 2015.08-2024.08 | 6MT/7DCT | R | L | Bus 4WD DNAA, CXHA, CXFA | | GDS61257 | Drive Shaft | | 38 | | 59 | 100 | 683 | |
| | 2015.08-2024.08 | 6MT/7DCT | R | R | Bus 4WD DNAA, CXHA, CXFA | | GDS61258 | Drive Shaft | | 38 | | 59 | 100 | 743 | |
| | 2015.08-2024.08 | 6MT/7DCT | R | L/R | Bus 4WD DNAA, CXHA, CXFA | | GCI82474 | Outer Joint | | 38 | 28 | 59 | 100 | 59 | |
| | 2015.08-2024.08 | 6MT/7DCT | R | L/R | Bus 4WD DNAA, CXHA, CXFA | | GCI61075 | Inner Joint | | | 28 | | | 26 | |
| 2.0 (132 kw) | 2015.04-2019.12 | 6MT | F | L | Bus FWD CFCA | Outer teeth of transm.side:42 | GDS83360 | Drive Shaft | | 38 | 42 | 63 | 102.5 | 617 | |
| | 2015.04-2019.12 | 6MT | F | R | Bus FWD CFCA | | GDS83361 | Drive Shaft | | 38 | 26 | 63 | 102.5 | 883 | |
| | 2015.04-2019.12 | 6MT | F | L | Bus FWD CFCA | | GCI61029 | Inner Joint | | 26 | 30 | 46.8 | | 137 | |

| | YEAR | TRANSM. | F/R | L/R | BODY STYLE & DRIVE TYPE & ENGINE | REMARKS | G-AP Ref. | PRODUCT | ABS | Technical Specifications A | B | C | H | L | P |
|---|---|---|---|---|---|---|---|---|---|---|---|---|---|---|---|
| **VW Transporter/Caravelle** | | | | | | | | | | | | | | | |
| 2.0 (132 kw) | 2015.04-2019.12 | 6MT | F | R | Bus FWD CFCA | | GCI81381 | Inner Joint | | 26 | 30 | | 281.5 | 105 | |
| | 2015.04-2019.12 | 6MT | F | L | Bus FWD CFCA | Type:Transporter;for OE number:0A5409343B | GDS61213 | Stub Axle,differential | | 42 | 42 | | | 135.5 | |
| | 2015.04-2019.12 | 6MT | F | R | Bus FWD CFCA | Type:Transporter;for OE number:0A5409343A | GDS61215 | Stub Axle,differential | | 26 | 42 | | | 143.5 | |
| | 2015.04-2019.12 | 7AT | F | R | Bus FWD CFCA | | GDS61216 | Stub Axle,differential | | 26 | 37 | | | 145 | |
| | 2015.04-2019.12 | 7AT/7DCT | F | L | Bus FWD CFCA | | GDS83293 | Drive Shaft | | 38 | 37 | 63 | 102.5 | 645 | |
| | 2015.04-2019.12 | 7DCT | F | R | Bus FWD CFCA | | GDS82392 | Drive Shaft | | 38 | 37 | 63 | 102.5 | 1025 | |
| | 2015.04-2019.12 | 7DCT | F | R | Bus FWD CFCA | Date to:2017.01 | GCO61060 | Outer Joint | | 38 | 30 | 63 | 102.5 | 68 | I |
| | 2015.04-2019.12 | 7DCT | F | L/R | Bus FWD CFCA | | GCO81467 | Outer Joint | | 38 | 30 | 63 | 102.5 | 67.5 | I |
| | 2015.04-2019.12 | 7DCT | F | R | Bus FWD CFCA | Date to:2017.01 | GCI83037 | Inner Joint | | 37 | 27 | 34.5 | 430.5 | 96 | |
| | 2015.06-2019.12 | 6MT | F | L | Bus 4WD CFCA | Outer teeth of transm.side:42 | GDS83360 | Drive Shaft | | 38 | 42 | 63 | 102.5 | 617 | |
| | 2015.06-2019.12 | 6MT | F | R | Bus 4WD CFCA | Date to:2017.01 | GDS81666 | Drive Shaft | | 38 | 26 | 63 | 102.5 | 616 | |
| | 2015.06-2019.12 | 6MT | F | L/R | Bus 4WD CFCA | For PR code:F0X/F0Y/F4D | GCO82386 | Outer Joint | | 38 | 31 | 63 | 103 | 69 | I |
| | 2015.06-2019.12 | 6MT | F | L | Bus 4WD CFCA | | GCI61029 | Inner Joint | | 26 | 30 | 46.8 | | 137 | |
| | 2015.06-2019.12 | 6MT | F | L | Bus 4WD CFCA | Type:Transporter;for OE number:0A5409343B | GDS61213 | Stub Axle,differential | | 42 | 42 | | | 135.5 | |
| | 2015.06-2019.12 | 6MT | F | R | Bus 4WD CFCA | Type:Transporter;for OE number:0A5409343A | GDS61215 | Stub Axle,differential | | 26 | 42 | | | 143.5 | |
| | 2015.06-2019.12 | 6MT/7DCT | F | L/R | Bus 4WD CFCA | | GCO81467 | Outer Joint | | 38 | 30 | 63 | 102.5 | 67.5 | I |
| | 2015.06-2019.12 | 7AT | F | L/R | Bus 4WD CFCA | | GDS61216 | Stub Axle,differential | | 26 | 37 | | | 145 | |
| | 2015.06-2019.12 | 7AT/7DCT | F | L | Bus 4WD CFCA | | GDS83293 | Drive Shaft | | 38 | 37 | 63 | 102.5 | 645 | |
| | 2015.06-2019.12 | 7AT/7DCT | F | R | Bus 4WD CFCA | | GDS81665 | Drive Shaft | | 38 | 26 | 63 | 102.5 | 614 | |
| | 2015.06-2019.12 | 7DCT | F | R | Bus 4WD CFCA | | GCI81453 | Inner Joint | | 26 | 27 | 47 | | 128 | |
| | 2015.06-2019.12 | 7DCT | R | L | Bus 4WD CFCA | | GDS61257 | Drive Shaft | | 38 | | 59 | 100 | 683 | |
| | 2015.06-2019.12 | 7DCT | R | R | Bus 4WD CFCA | | GDS61258 | Drive Shaft | | 38 | | 59 | 100 | 743 | |
| | 2015.06-2019.12 | | R | L | Bus 4WD CFCA | Date To:2016.04 | GCI61075 | Inner Joint | | | 28 | | | 26 | |
| 2.0 (146 kw) | 2018.08-2024.08 | 7AT | F | L | Bus 4WD CXEC | For Modelcode:SHB/SHJ | GCI81261 | Inner Joint | | 37 | 27 | 34.5 | 65.5 | 88.5 | |
| | 2018.08-2024.08 | 7DCT | F | L | Bus 4WD CXEC | Date To:2020.11 | GDS83497 | Drive Shaft | | 38 | 37 | 63 | 103 | 646 | |
| | 2018.08-2024.08 | 7DCT | F | L | Bus 4WD CXEC | Date To:2020.11 | GCO82386 | Outer Joint | | 38 | 31 | 63 | 103 | 69 | I |
| | 2018.08-2024.08 | 7AT | R | R | Bus 4WD CXEC | | GDS61258 | Drive Shaft | | 38 | | 59 | 100 | 743 | |
| | 2018.08-2024.08 | 7DCT | R | L | Bus 4WD CXEC | | GDS61257 | Drive Shaft | | 38 | | 59 | 100 | 683 | |
| | 2018.08-2024.08 | 7DCT | R | L | Bus 4WD CXEC | | GCI82474 | Outer Joint | | 38 | 28 | 59 | 100 | 59 | |
| | 2018.08-2024.08 | 7AT | F | L/R | Bus FWD CXEC | | GCO82386 | Outer Joint | | 38 | 31 | 63 | 103 | 69 | I |
| | 2018.08-2024.08 | 7AT | F | L | Bus FWD CXEC | | GCI81261 | Inner Joint | | 37 | 27 | 34.5 | 65.5 | 88.5 | |
| | 2018.08-2024.08 | 7AT | F | R | Bus FWD CXEC | | GCI81754 | Inner Joint | | 37 | 27 | 34.5 | 430.5 | 96 | |
| | 2018.08-2024.08 | 7DCT | F | L | Bus FWD CXEC | Date To:2020.11 | GDS83497 | Drive Shaft | | 38 | 37 | 63 | 103 | 646 | |
| | 2018.08-2024.08 | 7DCT | F | R | Bus FWD CXEC | For Modelcode:SGB/SGJ | GDS83496 | Drive Shaft | | 38 | 37 | 63 | 103 | 1025 | |
| 2.0 (150 kw) | 2015.04-2019.07 | 7AT | F | L | Bus FWD CJKA | | GDS83293 | Drive Shaft | | 38 | 37 | 63 | 102.5 | 645 | |
| | 2015.04-2019.07 | 7AT | F | R | Bus FWD CJKA | Date to:2017.01 | GCO61060 | Outer Joint | | 38 | 30 | 63 | 102.5 | 68 | I |
| | 2015.04-2019.07 | 7AT | F | L/R | Bus FWD CJKA | | GCO81467 | Outer Joint | | 38 | 30 | 63 | 102.5 | 67.5 | I |
| | 2015.04-2019.07 | 7AT | F | R | Bus FWD CJKA | | GCI81754 | Inner Joint | | 37 | 27 | 34.5 | 430.5 | 96 | |
| | 2015.04-2019.07 | 7AT | F | R | Bus FWD CJKA | Date to:2017.01 | GCI83037 | Inner Joint | | 37 | 27 | 34.5 | 430.5 | 96 | |
| | 2015.04-2019.07 | 7AT | F | R | Bus FWD CJKA | | GDS61216 | Stub Axle,differential | | 26 | 37 | | | 145 | |
| | 2015.04-2019.07 | 7DCT | F | R | Bus FWD CJKA | | GDS82392 | Drive Shaft | | 38 | 37 | 63 | 102.5 | 1025 | |
| | 2015.06-2019.07 | 7AT | F | L | Bus 4WD CJKA | | GDS83293 | Drive Shaft | | 38 | 37 | 63 | 102.5 | 645 | |
| | 2015.06-2019.07 | 7AT | F | R | Bus 4WD CJKA | | GDS81665 | Drive Shaft | | 38 | 26 | 63 | 102.5 | 614 | |
| | 2015.06-2019.07 | 7AT | F | L/R | Bus 4WD CJKA | | GDS61216 | Stub Axle,differential | | 26 | 37 | | | 145 | |
| | 2015.06-2019.07 | 7DCT | F | R | Bus 4WD CJKA | | GCI81453 | Inner Joint | | 26 | 27 | 47 | | 128 | |
| | 2015.06-2019.07 | DCT | F | L/R | Bus 4WD CJKA | | GCO81467 | Outer Joint | | 38 | 30 | 63 | 102.5 | 67.5 | I |
| | 2015.06-2019.07 | MT | F | L/R | Bus 4WD CJKA | Date from:2013.07 | GCO81467 | Outer Joint | | 38 | 30 | 63 | 102.5 | 67.5 | I |
| | 2015.06-2019.07 | 7DCT | R | L | Bus 4WD CJKA | | GDS61257 | Drive Shaft | | 38 | | 59 | 100 | 683 | |
| | 2015.06-2019.07 | 7DCT | R | R | Bus 4WD CJKA | | GDS61258 | Drive Shaft | | 38 | | 59 | 100 | 743 | |
| | 2015.06-2019.07 | | R | L | Bus 4WD CJKA | Date To:2016.04 | GCI61075 | Inner Joint | | | 28 | | | 26 | |
| | 2015.06-2024.08 | 6MT | F | R | Bus 4WD DMZA, CXEB | For model code:SHB/SHJ | GDS81665 | Drive Shaft | | 38 | 26 | 63 | 102.5 | 614 | |
| | 2015.06-2024.08 | 6MT | F | L | Bus 4WD DMZA, CXEB | Type:Transporter;for OE number:0A5409343B | GDS61213 | Stub Axle,differential | | 42 | 42 | | | 135.5 | |
| | 2015.06-2024.08 | 6MT | F | R | Bus 4WD DMZA, CXEB | Type:Transporter;for OE number:0A5409343A | GDS61215 | Stub Axle,differential | | 26 | 42 | | | 143.5 | |
| | 2015.06-2024.08 | 7AT/6MT | F | L/R | Bus 4WD DMZA, CXEB | For Modelcode:SHB/SHJ | GCO81467 | Outer Joint | | 38 | 30 | 63 | 102.5 | 67.5 | I |
| | 2015.06-2024.08 | 7AT/6MT | F | L/R | Bus 4WD DMZA, CXEB | | GDS61216 | Stub Axle,differential | | 26 | 37 | | | 145 | |
| | 2015.06-2024.08 | 7DCT | F | L | Bus 4WD DMZA, CXEB | Date From:2017.01,Date To:2020.11 | GDS83497 | Drive Shaft | | 38 | 37 | 63 | 103 | 646 | |
| | 2015.06-2024.08 | 7DCT | F | L | Bus 4WD DMZA, CXEB | | GCO82386 | Outer Joint | | 38 | 31 | 63 | 103 | 69 | I |
| | 2015.06-2024.08 | 7DCT | F | L | Bus 4WD DMZA, CXEB | | GCI81261 | Inner Joint | | 37 | 27 | 34.5 | 65.5 | 88.5 | |
| | 2015.06-2024.08 | 7DCT/6MT | F | R | Bus 4WD DMZA, CXEB | Transmission:7DCT;For Modelcode:SGB/SGJ;Transmission:6MT | GCI81453 | Inner Joint | | 26 | 27 | 47 | | 128 | |
| | 2015.06-2024.08 | 6MT/7DCT | R | L | Bus 4WD DMZA, CXEB | | GDS61257 | Drive Shaft | | 38 | | 59 | 100 | 683 | |
| | 2015.06-2024.08 | 6MT/7DCT | R | R | Bus 4WD DMZA, CXEB | | GDS61258 | Drive Shaft | | 38 | | 59 | 100 | 743 | |
| | 2015.06-2024.08 | | R | L | Bus 4WD DMZA, CXEB | Date To:2016.04 | GCI61075 | Inner Joint | | | 28 | | | 26 | |
| | 2015.06-2024.08 | 6MT | F | L/R | Bus FWD DMZA, CXEB | For Modelcode:SHB/SHJ | GCO81467 | Outer Joint | | 38 | 30 | 63 | 102.5 | 67.5 | I |
| | 2015.06-2024.08 | 6MT | F | L | Bus FWD DMZA, CXEB | Type:Transporter;for OE number:0A5409343B | GDS61213 | Stub Axle,differential | | 42 | 42 | | | 135.5 | |
| | 2015.06-2024.08 | 6MT | F | R | Bus FWD DMZA, CXEB | Type:Transporter;for OE number:0A5409343A | GDS61215 | Stub Axle,differential | | 26 | 42 | | | 143.5 | |

| | YEAR | TRANSM. | F/R | L/R | BODY STYLE & DRIVE TYPE & ENGINE | REMARKS | G-AP Ref. | PRODUCT | ABS | Technical Specifications A | B | C | H | L | P |
|---|---|---|---|---|---|---|---|---|---|---|---|---|---|---|---|
| **VW Transporter/Caravelle** | | | | | | | | | | | | | | | |
| 2.0 (150 kw) | 2015.06-2024.08 | 7DCT | F | L | Bus FWD DMZA, CXEB | Date from:2017.02;For Modelcode:SGB/SGJ;6 balls | GDS61105 | Drive Shaft | | 38 | | 63 | 102.5 | 645 | |
| | 2015.06-2024.08 | 7DCT | F | L | Bus FWD DMZA, CXEB | Date from:2017.02;For Modelcode:SGB/SGJ;8 balls | GDS81508 | Drive Shaft | | 38 | | 63 | 102.5 | 645 | |
| | 2015.06-2024.08 | 7DCT | F | L | Bus FWD DMZA, CXEB | Date to:2020.11,For Modelcode:SHB/SHJ | GDS83497 | Drive Shaft | | 38 | 37 | 63 | 103 | 646 | |
| | 2015.06-2024.08 | 7DCT | F | R | Bus FWD DMZA, CXEB | For Modelcode:SGB/SGJ | GDS83496 | Drive Shaft | | 38 | 37 | 63 | 103 | 1025 | |
| | 2015.06-2024.08 | 7DCT | F | L/R | Bus FWD DMZA, CXEB | | GCO82386 | Outer Joint | | 38 | 31 | 63 | 103 | 69 | I |
| | 2015.06-2024.08 | 7DCT | F | L | Bus FWD DMZA, CXEB | | GCI81261 | Inner Joint | | 37 | 27 | 34.5 | 65.5 | 88.5 | |
| | 2015.06-2024.08 | 7DCT | F | R | Bus FWD DMZA, CXEB | | GCI81754 | Inner Joint | | 37 | 27 | 34.5 | 430.5 | 96 | |
| | 2015.06-2024.08 | | F | L/R | Bus FWD DMZA, CXEB | | GDS61216 | Stub Axle,differential | | 26 | 37 | | | 145 | |
| 2.5 (75 kw) | 1995.09-2003.04 | 4AT | F | L | Bus FWD ACV, AUF, AYC | Chassis no. from:70T200001,Date from:1996.01 | GDS61034 | Drive Shaft | | 38 | | 60.2 | 34.5 | 529 | |
| | 1995.09-2003.04 | 4AT | F | L | Bus FWD ACV, AUF, AYC | | GDS61052 | Drive Shaft | 48T | 38 | | 60.2 | 34.5 | 529 | |
| | 1995.09-2003.04 | 4AT | F | L | Bus FWD ACV, AUF, AYC | Model:Caravelle/Multivan/Transporter;Date to:1995.12;Chassis no. to:70T199999 | GDS61107 | Drive Shaft | 48T | 38 | | 60.2 | 34.5 | 520 | |
| | 1995.09-2003.04 | 4AT | F | R | Bus FWD ACV, AUF, AYC | | GDS61003 | Drive Shaft | | 38 | | 60.2 | 34.5 | 540.8 | |
| | 1995.09-2003.04 | 4AT | F | R | Bus FWD ACV, AUF, AYC | | GDS61004 | Drive Shaft | 48T | 38 | | 60.2 | 34.5 | 540.8 | |
| | 1995.09-2003.04 | 4AT | F | R | Bus FWD ACV, AUF, AYC | Chassis no. to:70T199999,Date to:1995.12 | GDS61034 | Drive Shaft | | 38 | | 60.2 | 34.5 | 529 | |
| | 1995.09-2003.04 | 4AT | F | R | Bus FWD ACV, AUF, AYC | Chassis no. to:70T199999,Date to:1995.12 | GDS61052 | Drive Shaft | 48T | 38 | | 60.2 | 34.5 | 529 | |
| | 1995.09-2003.04 | 4AT/5MT | F | L/R | Bus FWD ACV, AUF, AYC | | GCO61005 | Outer Joint | | 38 | 27 | 60.2 | 34.5 | 65 | I |
| | 1995.09-2003.04 | 4AT/5MT | F | L/R | Bus FWD ACV, AUF, AYC | | GCO61006 | Outer Joint | 48T | 38 | 27 | 60.2 | 34.5 | 65 | I |
| | 1995.09-2003.04 | 4AT/5MT | F | L/R | Bus FWD ACV, AUF, AYC | | GCI61002 | Inner Joint | | | 28 | | | 31.8 | |
| | 1995.09-2003.04 | 5MT | F | L/R | Bus FWD ACV, AUF, AYC | | GDS61003 | Drive Shaft | | 38 | | 60.2 | 34.5 | 540.8 | |
| | 1995.09-2003.04 | 5MT | F | L/R | Bus FWD ACV, AUF, AYC | | GDS61004 | Drive Shaft | 48T | 38 | | 60.2 | 34.5 | 540.8 | |
| | 1995.09-2003.04 | 5MT | F | L/R | Bus FWD ACV, AUF, AYC | Chassis no. to:70T199999,Date to:1995.12 | GDS61034 | Drive Shaft | | 38 | | 60.2 | 34.5 | 529 | |
| | 1995.09-2003.04 | 5MT | F | L/R | Bus FWD ACV, AUF, AYC | Chassis no. to:70T199999,Date to:1995.12 | GDS61052 | Drive Shaft | 48T | 38 | | 60.2 | 34.5 | 529 | |
| | 1995.09-2003.04 | AT/MT | F | R | Bus FWD ACV, AUF, AYC | | GDS61225 | Stub Axle-Flange | | 37 | | | 338 | 394 | |
| **Up** | | | | | | | | | | | | | | | |
| 1.0 (44 kw) | 2011.08-2020.08 | 5MT | F | L | Hatchback FWD CHYA;DAFA;CHYE | Chassis no. to:AA_GD046879 | GDS50543 | Drive Shaft | | 22 | 28 | 46 | 78 | 814 | |
| | 2011.08-2020.08 | 5MT | F | L | Hatchback FWD CHYA;DAFA;CHYE | Chassis no. from:AA_GD046880 | GDS81526 | Drive Shaft | | 22 | 28 | 46 | 78 | 654 | |
| | 2011.08-2020.08 | 5MT | F | R | Hatchback FWD CHYA;DAFA;CHYE | Chassis no. to:AA_GD046879 | GDS50567 | Drive Shaft | | 22 | 28 | 46 | 78 | 650 | |
| | 2011.08-2020.08 | 5MT | F | R | Hatchback FWD CHYA;DAFA;CHYE | Chassis no. from:AA_GD046880 | GDS82399 | Drive Shaft | | 22 | 28 | 46 | 78 | 817 | |
| | 2011.08-2020.08 | 5MT | F | L/R | Hatchback FWD CHYA;DAFA;CHYE | Chassis no. to:AA_GD046879 | GCO50170 | Outer Joint | | 22 | 26 | 46 | 78 | 53 | M |
| | 2011.08-2020.08 | 5MT | F | L/R | Hatchback FWD CHYA;DAFA;CHYE | Chassis no. from:AA_GD046880 | GCO81356 | Outer Joint | | 22 | 23 | 46 | 78 | 58 | M |
| | 2011.08-2020.08 | 5MT | F | L/R | Hatchback FWD CHYA;DAFA;CHYE | Chassis no. from:AA_GD046880 | GCI81393 | Inner Joint | | 28 | 22 | 39.95 | 58 | 84.5 | |
| 1.0 (48 kw) | 2020.08-2023.11 | 5MT | F | L | Hatchback FWD DSGC | | GDS81526 | Drive Shaft | | 22 | 28 | 46 | 78 | 654 | |
| | 2020.08-2023.11 | 5MT | F | R | Hatchback FWD DSGC | | GDS82399 | Drive Shaft | | 22 | 28 | 46 | 78 | 817 | |
| | 2020.08-2023.11 | 5MT | F | L/R | Hatchback FWD DSGC | | GCO81356 | Outer Joint | | 22 | 23 | 46 | 78 | 58 | M |
| | 2020.08-2023.11 | 5MT | F | L/R | Hatchback FWD DSGC | | GCI81393 | Inner Joint | | 28 | 22 | 39.95 | 58 | 84.5 | |
| 1.0 (50 kw) | 2012.11-2023.11 | 5MT | F | L | Hatchback FWD CPGA | Chassis no. to:AA_GD046879 | GDS50543 | Drive Shaft | | 22 | 28 | 46 | 78 | 814 | |
| | 2012.11-2023.11 | 5MT | F | L | Hatchback FWD CPGA | Chassis no. from:AA_GD046880 | GDS81526 | Drive Shaft | | 22 | 28 | 46 | 78 | 654 | |
| | 2012.11-2023.11 | 5MT | F | R | Hatchback FWD CPGA | Chassis no. to:AA_GD046879 | GDS50567 | Drive Shaft | | 22 | 28 | 46 | 78 | 650 | |
| | 2012.11-2023.11 | 5MT | F | R | Hatchback FWD CPGA | Chassis no. from:AA_GD046880 | GDS82399 | Drive Shaft | | 22 | 28 | 46 | 78 | 817 | |
| | 2012.11-2023.11 | 5MT | F | L/R | Hatchback FWD CPGA | Chassis no. to:AA_GD046879 | GCO50170 | Outer Joint | | 22 | 26 | 46 | 78 | 53 | M |
| | 2012.11-2023.11 | 5MT | F | L/R | Hatchback FWD CPGA | Chassis no. from:AA_GD046880 | GCO81356 | Outer Joint | | 22 | 23 | 46 | 78 | 58 | M |
| | 2012.11-2023.11 | 5MT | F | L/R | Hatchback FWD CPGA | Chassis no. from:AA_GD046880 | GCI81393 | Inner Joint | | 28 | 22 | 39.95 | 58 | 84.5 | |
| 1.0 (55 kw) | 2011.08-2019.11 | 5MT | F | L | Hatchback FWD CHYB;CWRA | Chassis no. to:AA_GD046879 | GDS50543 | Drive Shaft | | 22 | 28 | 46 | 78 | 814 | |
| | 2011.08-2019.11 | 5MT | F | L | Hatchback FWD CHYB;CWRA | Chassis no. from:AA_GD046880 | GDS81526 | Drive Shaft | | 22 | 28 | 46 | 78 | 654 | |
| | 2011.08-2019.11 | 5MT | F | R | Hatchback FWD CHYB;CWRA | Chassis no. to:AA_GD046879 | GDS50567 | Drive Shaft | | 22 | 28 | 46 | 78 | 650 | |
| | 2011.08-2019.11 | 5MT | F | R | Hatchback FWD CHYB;CWRA | Chassis no. from:AA_GD046880 | GDS82399 | Drive Shaft | | 22 | 28 | 46 | 78 | 817 | |
| | 2011.08-2019.11 | 5MT | F | L/R | Hatchback FWD CHYB;CWRA | Chassis no. to:AA_GD046879 | GCO50170 | Outer Joint | | 22 | 26 | 46 | 78 | 53 | M |
| | 2011.08-2019.11 | 5MT | F | L/R | Hatchback FWD CHYB;CWRA | Chassis no. from:AA_GD046880 | GCO81356 | Outer Joint | | 22 | 23 | 46 | 78 | 58 | M |
| | 2011.08-2019.11 | 5MT | F | L/R | Hatchback FWD CHYB;CWRA | Chassis no. from:AA_GD046880 | GCI81393 | Inner Joint | | 28 | 22 | 39.95 | 58 | 84.5 | |
| 1.0 (66 kw) | 2016.05-2019.08 | 5MT | F | L | Hatchback FWD CHZA;DKLC | For Engine Code:CHZA | GDS50567 | Drive Shaft | | 22 | 28 | 46 | 78 | 650 | |
| | 2016.05-2019.08 | 5MT | F | R | Hatchback FWD CHZA;DKLC | For Engine Code:CHZA | GDS82399 | Drive Shaft | | 22 | 28 | 46 | 78 | 817 | |
| **Vento** | | | | | | | | | | | | | | | |
| 1.4 (44 kw) | 1992.01-1997.12 | MT | F | L | Saloon FWD ABD/AEX/APQ | Date to:1997.12 | GDS61172 | Drive Shaft | | 22 | | 53 | 78 | 584.5 | |
| | 1992.01-1997.12 | MT | F | R | Saloon FWD ABD/AEX/APQ | Date to:1997.12;Chassis no. to:1H-N-990000 | GDS61055 | Drive Shaft | | 22 | | 53 | 78.5 | 796 | |
| | 1992.01-1997.12 | MT | F | R | Saloon FWD ABD/AEX/APQ | Date to:1997.12;Chassis no. from:1H-P-000001 | GDS61067 | Drive Shaft | | 22 | | 51 | 78.7 | 781 | |
| | 1992.01-1997.12 | MT | F | L/R | Saloon FWD ABD/AEX/APQ | Date to:1997.12 | GCO53008 | Outer Joint | | 22 | 30 | 53 | 78.5 | 51 | I |
| | 1992.01-1997.12 | MT | F | L/R | Saloon FWD ABD/AEX/APQ | Date to:1997.12 | GCI53001 | Inner Joint | | | 33 | | | 32 | |
| | 1992.01-1997.12 | MT | F | L/R | Saloon FWD ABD/AEX/APQ | Date to:1997.12;Chassis no. from:1H-T-000001 | GCI83005 | Inner Joint | | | 33 | | | 32 | |
| 1.6 (55 kw) | 1992.08-1997.12 | MT | F | L | Saloon FWD ABU/AEA/AEE | Date to:1997.12;Chassis no. from:1H-S-180001 | GDS53004 | Drive Shaft | | 22 | | 50 | 78.5 | 562 | |
| | 1992.08-1997.12 | MT | F | L | Saloon FWD ABU/AEA/AEE | Date to:1997.12;Chassis no. from:1H-P-160001;Chassis no. to:1H-S-180000 | GDS61172 | Drive Shaft | | 22 | | 53 | 78 | 584.5 | |
| | 1992.08-1997.12 | MT | F | R | Saloon FWD ABU/AEA/AEE | Date to:1997.12;Chassis no. from:1H-S-180001;Chassis no. to:1H-S-700000 | GDS61055 | Drive Shaft | | 22 | | 53 | 78.5 | 796 | |
| | 1992.08-1997.12 | MT | F | R | Saloon FWD ABU/AEA/AEE | Date to:1997.12;Chassis no. from:1H-P-160001;Chassis no. to:1H-S-180000 | GDS61067 | Drive Shaft | | 22 | | 51 | 78.7 | 781 | |
| | 1992.08-1997.12 | MT | F | L/R | Saloon FWD ABU/AEA/AEE | Date to:1997.12 | GCO53008 | Outer Joint | | 22 | 30 | 53 | 78.5 | 51 | I |
| | 1992.08-1997.12 | MT | F | L/R | Saloon FWD ABU/AEA/AEE | Date to:1997.12;Chassis no. from:1H-P-160001;Chassis no. to:1H-S-180000 | GCI53001 | Inner Joint | | | 33 | | | 32 | |
| | 1992.08-1997.12 | MT | F | L/R | Saloon FWD ABU/AEA/AEE | Date to:1997.12;Chassis no. from:1H-S-180001 | GCI83005 | Inner Joint | | | 33 | | | 32 | |

| | YEAR | TRANSM. | F/R | L/R | BODY STYLE & DRIVE TYPE & ENGINE | REMARKS | G-AP Ref. | PRODUCT | ABS | Technical Specifications A | B | C | H | L | P |
|---|---|---|---|---|---|---|---|---|---|---|---|---|---|---|---|
| **VW Vento** | | | | | | | | | | | | | | | |
| 1.6 (55 kw) | 1992.08-1997.12 | | F | | Saloon FWD ABU/AEA/AEE | | GCO53006 | Outer Joint | | 22 | 30 | 50 | 78.5 | 52 | I |
| 1.6 (74 kw) | 1994.10-1997.12 | AT | F | L | Saloon FWD AEK/AFT/AKS | | GDS61011 | Drive Shaft | | 22 | | 53.2 | 78 | 547 | |
| | 1994.10-1997.12 | AT | F | R | Saloon FWD AEK/AFT/AKS | Date to:1997.12 | GDS61028 | Drive Shaft | | 22 | | 53.2 | 78 | 767 | |
| | 1994.10-1997.12 | AT | F | L/R | Saloon FWD AEK/AFT/AKS | Date to:1997.12 | GCO53007 | Outer Joint | | 22 | 30 | 53.2 | 78 | 61 | I |
| | 1994.10-1997.12 | AT | F | L | Saloon FWD AEK/AFT/AKS | | GCI61004 | Inner Joint | | | 34 | | | 59.2 | |
| | 1994.10-1997.12 | MT | F | L | Saloon FWD AEK/AFT/AKS | Date to:1997.12 | GDS53004 | Drive Shaft | | 22 | | 50 | 78.5 | 562 | |
| | 1994.10-1997.12 | MT | F | R | Saloon FWD AEK/AFT/AKS | Date to:1997.12;Chassis no. to:1H-S-700000 | GDS61055 | Drive Shaft | | 22 | | 53 | 78.5 | 796 | |
| | 1994.10-1997.12 | MT | F | L/R | Saloon FWD AEK/AFT/AKS | Date to:1997.12 | GCO53008 | Outer Joint | | 22 | 30 | 53 | 78.5 | 51 | I |
| | 1994.10-1997.12 | MT | F | L/R | Saloon FWD AEK/AFT/AKS | Date to:1997.12 | GCI83005 | Inner Joint | | | 33 | | | 32 | |
| | 1994.10-1997.12 | | F | | Saloon FWD AEK/AFT/AKS | | GCO53006 | Outer Joint | | 22 | 30 | 50 | 78.5 | 52 | I |
| 1.8 (55 kw) | 1992.01-1997.12 | 4AT | F | R | Saloon FWD AAM | | GDS61002 | Drive Shaft | | 22 | | 53 | 78.5 | 793 | |
| | 1992.01-1997.12 | AT | F | L | Saloon FWD AAM | | GDS61011 | Drive Shaft | | 22 | | 53.2 | 78 | 547 | |
| | 1992.01-1997.12 | AT | F | L | Saloon FWD AAM | | GCI61004 | Inner Joint | | | 34 | | | 59.2 | |
| | 1992.01-1997.12 | MT | F | L | Saloon FWD AAM | Date to:1997.12 | GDS61001 | Drive Shaft | | 22 | | 53.2 | 78 | 557 | |
| | 1992.01-1997.12 | MT | F | L/R | Saloon FWD AAM | Date to:1997.12 | GCO53007 | Outer Joint | | 22 | 30 | 53.2 | 78 | 61 | I |
| | 1992.01-1997.12 | MT | F | R | Saloon FWD AAM | Date to:1997.12 | GCI83009 | Inner Joint | | | 33 | | | 34 | |
| | 1992.01-1997.12 | MT | F | L/R | Saloon FWD AAM | | GCI83011 | Inner Joint | | | 33 | | | 34 | |
| | 1992.01-1997.12 | | F | | Saloon FWD AAM | | GCO53004 | Outer Joint | | 22 | 30 | 51 | 78 | 61 | I |
| 1.8 (66 kw) | 1991.11-1997.07 | 4AT | F | R | Saloon FWD ABS/ADZ | | GDS61002 | Drive Shaft | | 22 | | 53 | 78.5 | 793 | |
| | 1991.11-1997.07 | AT | F | L | Saloon FWD ABS/ADZ | Date to:1997.07;Chassis no. to:1H-R-990000 | GDS61001 | Drive Shaft | | 22 | | 53.2 | 78 | 557 | |
| | 1991.11-1997.07 | AT | F | L | Saloon FWD ABS/ADZ | | GDS61011 | Drive Shaft | | 22 | | 53.2 | 78 | 547 | |
| | 1991.11-1997.07 | AT | F | R | Saloon FWD ABS/ADZ | Date to:1997.07;Chassis no. from:1H-S-000001 | GDS61028 | Drive Shaft | | 22 | | 53.2 | 78 | 767 | |
| | 1991.11-1997.07 | AT | F | L | Saloon FWD ABS/ADZ | | GCI61004 | Inner Joint | | | 34 | | | 59.2 | |
| | 1991.11-1997.07 | AT | F | R | Saloon FWD ABS/ADZ | Date to:1997.07;Chassis no. to:1H-R-990000 | GCI83009 | Inner Joint | | | 33 | | | 34 | |
| | 1991.11-1997.07 | AT/MT | F | L/R | Saloon FWD ABS/ADZ | Date to:1997.07 | GCO53007 | Outer Joint | | 22 | 30 | 53.2 | 78 | 61 | I |
| | 1991.11-1997.07 | MT | F | L | Saloon FWD ABS/ADZ | Date to:1997.07 | GDS61001 | Drive Shaft | | 22 | | 53.2 | 78 | 557 | |
| | 1991.11-1997.07 | MT | F | R | Saloon FWD ABS/ADZ | | GDS61009 | Drive Shaft | | 22 | | 53.2 | 78 | 789 | |
| | 1991.11-1997.07 | MT | F | R | Saloon FWD ABS/ADZ | Date to:1997.07 | GCI83009 | Inner Joint | | | 33 | | | 34 | |
| | 1991.11-1997.07 | MT | F | L/R | Saloon FWD ABS/ADZ | | GCI83011 | Inner Joint | | | 33 | | | 34 | |
| | 1991.11-1997.07 | | F | | Saloon FWD ABS/ADZ | | GCO53004 | Outer Joint | | 22 | 30 | 51 | 78 | 61 | I |
| 1.9 (47 kw) | 1995.08-1997.12 | 5MT | F | R | Saloon FWD AEY | For Engine Code:AEY | GDS61055 | Drive Shaft | | 22 | | 53 | 78.5 | 796 | |
| | 1995.08-1997.12 | | F | | Saloon FWD AEY | | GCO53006 | Outer Joint | | 22 | 30 | 50 | 78.5 | 52 | I |
| 1.9 (48 kw) | 1992.01-1997.12 | MT | F | L | Saloon FWD 1Y | Date to:1997.12 | GDS53004 | Drive Shaft | | 22 | | 50 | 78.5 | 562 | |
| | 1992.01-1997.12 | MT | F | R | Saloon FWD 1Y | Date to:1997.12 | GDS61055 | Drive Shaft | | 22 | | 53 | 78.5 | 796 | |
| | 1992.01-1997.12 | MT | F | L/R | Saloon FWD 1Y | | GCO53007 | Outer Joint | | 22 | 30 | 53.2 | 78 | 61 | I |
| | 1992.01-1997.12 | MT | F | L/R | Saloon FWD 1Y | Date to:1997.12 | GCO53008 | Outer Joint | | 22 | 30 | 53 | 78.5 | 51 | I |
| | 1992.01-1997.12 | MT | F | L/R | Saloon FWD 1Y | Date to:1997.12 | GCI83005 | Inner Joint | | | 33 | | | 32 | |
| 1.9 (55 kw) | 1992.01-1997.12 | AT | F | L | Saloon FWD AAZ | Date to:1997.12;Chassis no. to:1H-R-990000 | GDS61001 | Drive Shaft | | 22 | | 53.2 | 78 | 557 | |
| | 1992.01-1997.12 | AT | F | L | Saloon FWD AAZ | | GDS61011 | Drive Shaft | | 22 | | 53.2 | 78 | 547 | |
| | 1992.01-1997.12 | AT | F | R | Saloon FWD AAZ | Date to:1997.12;Chassis no. from:1H-S-000001 | GDS61028 | Drive Shaft | | 22 | | 53.2 | 78 | 767 | |
| | 1992.01-1997.12 | AT | F | L | Saloon FWD AAZ | | GCI61004 | Inner Joint | | | 34 | | | 59.2 | |
| | 1992.01-1997.12 | AT | F | R | Saloon FWD AAZ | Date to:1997.12;Chassis no. to:1H-R-990000 | GCI83009 | Inner Joint | | | 33 | | | 34 | |
| | 1992.01-1997.12 | AT/MT | F | L/R | Saloon FWD AAZ | Date to:1997.12 | GCO53007 | Outer Joint | | 22 | 30 | 53.2 | 78 | 61 | I |
| | 1992.01-1997.12 | AT/MT | F | L/R | Saloon FWD AAZ | Chassis no. to:1H-R-990000 | GCI83011 | Inner Joint | | | 33 | | | 34 | |
| | 1992.01-1997.12 | MT | F | L | Saloon FWD AAZ | Date to:1997.12 | GDS61001 | Drive Shaft | | 22 | | 53.2 | 78 | 557 | |
| | 1992.01-1997.12 | MT | F | R | Saloon FWD AAZ | hollow shaft | GDS61002 | Drive Shaft | | 22 | | 53 | 78.5 | 793 | |
| | 1992.01-1997.12 | MT | F | R | Saloon FWD AAZ | solid shaft | GDS61009 | Drive Shaft | | 22 | | 53.2 | 78 | 789 | |
| | 1992.01-1997.12 | MT | F | R | Saloon FWD AAZ | Date to:1997.12 | GCI83009 | Inner Joint | | | 33 | | | 34 | |
| | 1992.01-1997.12 | MT | F | L/R | Saloon FWD AAZ | | GCI83006 | Inner Joint | | | 33 | | | 34 | |
| | 1992.01-1997.12 | | F | | Saloon FWD AAZ | | GCO53004 | Outer Joint | | 22 | 30 | 51 | 78 | 61 | I |
| 1.9 (66 kw) | 1992.10-1997.12 | MT | F | L | Saloon FWD 1Z/AHU/ALE | Date to:1997.12 | GDS61001 | Drive Shaft | | 22 | | 53.2 | 78 | 557 | |
| | 1992.10-1997.12 | MT | F | L | Saloon FWD 1Z/AHU/ALE | | GDS61011 | Drive Shaft | | 22 | | 53.2 | 78 | 547 | |
| | 1992.10-1997.12 | MT | F | R | Saloon FWD 1Z/AHU/ALE | Date to:1997.12 | GDS61002 | Drive Shaft | | 22 | | 53 | 78.5 | 793 | |
| | 1992.10-1997.12 | MT | F | L/R | Saloon FWD 1Z/AHU/ALE | | GCO53007 | Outer Joint | | 22 | 30 | 53.2 | 78 | 61 | I |
| | 1992.10-1997.12 | MT | F | L | Saloon FWD 1Z/AHU/ALE | | GCI61004 | Inner Joint | | | 34 | | | 59.2 | |
| | 1992.10-1997.12 | MT | F | R | Saloon FWD 1Z/AHU/ALE | Date to:1997.12 | GCI83009 | Inner Joint | | | 33 | | | 34 | |
| | 1992.10-1997.12 | MT | F | L/R | Saloon FWD 1Z/AHU/ALE | | GCI83011 | Inner Joint | | | 33 | | | 34 | |
| | 1992.10-1997.12 | | F | | Saloon FWD 1Z/AHU/ALE | | GCO53004 | Outer Joint | | 22 | 30 | 51 | 78 | 61 | I |
| 1.9 (81 kw) | 1996.02-1997.12 | MT | F | L | Saloon FWD AFN | Date to:1997.12 | GDS61001 | Drive Shaft | | 22 | | 53.2 | 78 | 557 | |
| | 1996.02-1997.12 | MT | F | R | Saloon FWD AFN | Date to:1997.12 | GDS61002 | Drive Shaft | | 22 | | 53 | 78.5 | 793 | |
| | 1996.02-1997.12 | MT | F | L/R | Saloon FWD AFN | | GCO53007 | Outer Joint | | 22 | 30 | 53.2 | 78 | 61 | I |
| | 1996.02-1997.12 | MT | F | R | Saloon FWD AFN | Date to:1997.12 | GCI83009 | Inner Joint | | | 33 | | | 34 | |
| | 1996.02-1997.12 | MT | F | L/R | Saloon FWD AFN | | GCI83011 | Inner Joint | | | 33 | | | 34 | |
| | 1996.02-1997.12 | | F | | Saloon FWD AFN | | GCO53004 | Outer Joint | | 22 | 30 | 51 | 78 | 61 | I |
| 2.0 (85 kw) | 1991.11-1997.12 | AT | F | L | Saloon FWD 2E/ADY/AGG/AKR | Date to:1997.12;Chassis no. to:1H-R-990000 | GDS61001 | Drive Shaft | | 22 | | 53.2 | 78 | 557 | |

| | YEAR | TRANSM. | F/R | L/R | BODY STYLE & DRIVE TYPE & ENGINE | REMARKS | G-AP Ref. | PRODUCT | ABS | Technical Specifications A | B | C | H | L | P |
|---|---|---|---|---|---|---|---|---|---|---|---|---|---|---|---|
| **VW** | | | | | | | | | | | | | | | |
| **Vento** | | | | | | | | | | | | | | | |
| 2.0 (85 kw) | 1991.11-1997.12 | AT | F | L | Saloon FWD 2E/ADY/AGG/AKR | | GDS61011 | Drive Shaft | | 22 | | 53.2 | 78 | 547 | |
| | 1991.11-1997.12 | AT | F | R | Saloon FWD 2E/ADY/AGG/AKR | Date to:1997.12;Chassis no. from:1H-S-000001 | GDS61028 | Drive Shaft | | 22 | | 53.2 | 78 | 767 | |
| | 1991.11-1997.12 | AT | F | L/R | Saloon FWD 2E/ADY/AGG/AKR | Date to:1997.12 | GCO53007 | Outer Joint | | 22 | 30 | 53.2 | 78 | 61 | I |
| | 1991.11-1997.12 | AT | F | L | Saloon FWD 2E/ADY/AGG/AKR | | GCI61004 | Inner Joint | | | 34 | | | 59.2 | |
| | 1991.11-1997.12 | AT | F | R | Saloon FWD 2E/ADY/AGG/AKR | Date to:1997.12;Chassis no. to:1H-R-990000 | GCI83009 | Inner Joint | | | 33 | | | 34 | |
| | 1991.11-1997.12 | AT/MT | F | L/R | Saloon FWD 2E/ADY/AGG/AKR | | GCI83011 | Inner Joint | | | 33 | | | 34 | |
| | 1991.11-1997.12 | MT | F | L | Saloon FWD 2E/ADY/AGG/AKR | Date to:1997.12;Chassis no. from:1H-S-000001 | GDS61001 | Drive Shaft | | 22 | | 53.2 | 78 | 557 | |
| | 1991.11-1997.12 | MT | F | L | Saloon FWD 2E/ADY/AGG/AKR | | GDS99116 | Drive Shaft | | 36 | | 53.2 | 77.5 | 548.5 | |
| | 1991.11-1997.12 | MT | F | R | Saloon FWD 2E/ADY/AGG/AKR | Chassis no. from:1H-S-000001 | GDS61002 | Drive Shaft | | 22 | | 53 | 78.5 | 793 | |
| | 1991.11-1997.12 | MT | F | R | Saloon FWD 2E/ADY/AGG/AKR | Chassis no. to:1H-R-990000 | GDS61009 | Drive Shaft | | 22 | | 53.2 | 78 | 789 | |
| | 1991.11-1997.12 | MT | F | L/R | Saloon FWD 2E/ADY/AGG/AKR | Date to:1997.12;Chassis no. to:1H-R-990000;Date to:1997.12;Chassis no. from:1H-S-000001 | GCO83070 | Outer Joint | | 36 | 30 | 53 | 78 | 60 | I |
| | 1991.11-1997.12 | MT | F | R | Saloon FWD 2E/ADY/AGG/AKR | Date to:1997.12 | GCI83009 | Inner Joint | | | 33 | | | 34 | |
| | 1991.11-1997.12 | | F | | Saloon FWD 2E/ADY/AGG/AKR | | GCO53004 | Outer Joint | | 22 | 30 | 51 | 78 | 61 | I |
| 2.8 (120 kw) | 1995.08-1996.04 | AT/MT | F | L | Saloon FWD AAA | For Engine Code:AAA | GDS83006 | Drive Shaft | | 36 | | 53.2 | 77.5 | 557 | |
| 2.8 (128 kw) | 1992.01-1997.12 | MT | F | L | Saloon FWD AAA | | GDS99116 | Drive Shaft | | 36 | | 53.2 | 77.5 | 548.5 | |
| | 1992.01-1997.12 | MT | F | R | Saloon FWD AAA | | GDS99112 | Drive Shaft | | 36 | | 53.2 | 77.5 | 783 | |
| | 1992.01-1997.12 | MT | F | L/R | Saloon FWD AAA | Date to:1997.12 | GCO83070 | Outer Joint | | 36 | 30 | 53 | 78 | 60 | I |
| | 1992.01-1997.12 | MT | F | R | Saloon FWD AAA | Date to:1997.12 | GCI83009 | Inner Joint | | | 33 | | | 34 | |
| | 1992.01-1997.12 | MT | F | L/R | Saloon FWD AAA | | GCI83011 | Inner Joint | | | 33 | | | 34 | |
| | 1992.01-1997.12 | | F | | Saloon FWD AAA | | GCO53004 | Outer Joint | | 22 | 30 | 51 | 78 | 61 | I |
| **VW (FAW)** | | | | | | | | | | | | | | | |
| **Bora** | | | | | | | | | | | | | | | |
| 1.4 (96 kw) | 2010.06-2016.03 | 5MT/7DCT | F | L | Saloon FWD CFB | | GDS61240 | Drive Shaft | | 36 | | 53 | 78 | 537 | |
| **CC** | | | | | | | | | | | | | | | |
| 2.0 (147 kw) | 2010.07-2018.12 | 6DCT | F | L | Saloon FWD CGMA | | GDS98006 | Stub Axle-Flange | | 37 | | | 67 | 123.5 | |
| 3.0 (184 kw) | 2012.03- | 6DCT | F | L | Saloon FWD CNGA | | GDS98006 | Stub Axle-Flange | | 37 | | | 67 | 123.5 | |
| **Golf** | | | | | | | | | | | | | | | |
| 2.0 (147 kw) | 2010.03-2014.12 | 6DCT | F | L | Hatchback FWD CGMA | | GDS98006 | Stub Axle-Flange | | 37 | | | 67 | 123.5 | |
| **Magotan** | | | | | | | | | | | | | | | |
| 1.8 (118 kw) | 2007.06-2011.07 | 5MT | F | R | Saloon FWD BYJ | | GDS61101 | Drive Shaft | | 36 | | 59.5 | 40 | 803 | |
| | 2007.06-2011.07 | 6AT | F | R | Saloon FWD BYJ | | GDS61112 | Drive Shaft | | 36 | 26 | 59.5 | 40 | 883 | |
| | 2007.06-2011.07 | 6DCT | F | L | Saloon FWD BYJ | | GDS98006 | Stub Axle-Flange | | 37 | | | 67 | 123.5 | |
| | 2011.07-2016.12 | AT | F | L | Saloon FWD CEAA | | GDS61111 | Drive Shaft | | 36 | 26 | 59.5 | 40 | 584 | |
| | 2011.07-2016.12 | AT | F | R | Saloon FWD CEAA | | GDS61101 | Drive Shaft | | 36 | | 59.5 | 40 | 803 | |
| | 2011.07-2016.12 | AT | F | R | Saloon FWD CEAA | | GDS61112 | Drive Shaft | | 36 | 26 | 59.5 | 40 | 883 | |
| 2.0 (85 kw) | 2007.06-2008.04 | 6AT | F | R | Saloon FWD BJZ | | GDS61112 | Drive Shaft | | 36 | 26 | 59.5 | 40 | 883 | |
| 2.0 (147 kw) | 2008.04-2011.07 | 6DCT | F | L | Saloon FWD CBLA | | GDS98006 | Stub Axle-Flange | | 37 | | | 67 | 123.5 | |
| | 2008.04-2011.07 | AT | F | L | Saloon FWD CBLA | | GDS61111 | Drive Shaft | | 36 | 26 | 59.5 | 40 | 584 | |
| | 2008.04-2011.07 | AT | F | R | Saloon FWD CBLA | | GDS61112 | Drive Shaft | | 36 | 26 | 59.5 | 40 | 883 | |
| | 2008.04-2011.07 | AT | F | R | Saloon FWD CBLA | | GDS81653 | Drive Shaft | | 36 | | 59.5 | 40 | 785 | |
| | 2011.07-2015.12 | 6DCT | F | L | Saloon FWD CGMA | | GDS98006 | Stub Axle-Flange | | 37 | | | 67 | 123.5 | |
| | 2011.07-2015.12 | AT | F | L | Saloon FWD CGMA | | GDS61111 | Drive Shaft | | 36 | 26 | 59.5 | 40 | 584 | |
| | 2011.07-2015.12 | AT | F | R | Saloon FWD CGMA | | GDS61112 | Drive Shaft | | 36 | 26 | 59.5 | 40 | 883 | |
| | 2011.07-2015.12 | AT | F | R | Saloon FWD CGMA | | GDS81653 | Drive Shaft | | 36 | | 59.5 | 40 | 785 | |
| **Sagitar** | | | | | | | | | | | | | | | |
| 1.6 (74 kw) | 2006.02-2012.12 | 5MT | F | L | Saloon FWD BWH | | GDS61109 | Drive Shaft | | 36 | | 59.5 | 40 | 545 | |
| | 2006.02-2012.12 | 5MT | F | R | Saloon FWD BWH | | GDS61110 | Drive Shaft | | 36 | | 59.5 | 40 | 796 | |
| | 2006.02-2012.12 | 6AT | F | L | Saloon FWD BWH | | GDS61108 | Drive Shaft | | 36 | 26 | 59.5 | 40 | 585 | |
| | 2006.02-2012.12 | 6AT | F | R | Saloon FWD BWH | | GDS54004 | Drive Shaft | | 36 | 26 | 59.5 | 40 | 881 | |
| 1.6 (77 kw) | 2012.03-2015.02 | AT | F | L | Saloon FWD CLR | | GDS61108 | Drive Shaft | | 36 | 26 | 59.5 | 40 | 585 | |
| | 2012.03-2015.02 | AT | F | R | Saloon FWD CLR | | GDS54004 | Drive Shaft | | 36 | 26 | 59.5 | 40 | 881 | |
| | 2012.03-2015.02 | AT/MT | F | L | Saloon FWD CLR | | GDS61109 | Drive Shaft | | 36 | | 59.5 | 40 | 545 | |
| | 2012.03-2015.02 | AT/MT | F | R | Saloon FWD CLR | | GDS61110 | Drive Shaft | | 36 | | 59.5 | 40 | 796 | |
| 1.8 (110 kw) | 2006.04-2008.04 | MT | F | L | Saloon FWD BPL | | GDS61114 | Drive Shaft | | 36 | | 59.5 | 40 | 524 | |
| 1.8 (118 kw) | 2008.07-2012.12 | MT | F | L | Saloon FWD BYJ | | GDS61114 | Drive Shaft | | 36 | | 59.5 | 40 | 524 | |
| | 2012.03-2016.12 | | F | R | Saloon FWD CEAA | | GDS61114 | Drive Shaft | | 36 | | 59.5 | 40 | 524 | |
| 2.0 (85 kw) | 2006.04-2009.06 | AT | F | L | Saloon FWD BJZ | | GDS61108 | Drive Shaft | | 36 | 26 | 59.5 | 40 | 585 | |
| | 2006.04-2009.06 | AT | F | R | Saloon FWD BJZ | | GDS54004 | Drive Shaft | | 36 | 26 | 59.5 | 40 | 881 | |
| 2.0 (147 kw) | 2013.04-2019.12 | 6DCT | F | L | Saloon FWD CGMA | | GDS98006 | Stub Axle-Flange | | 37 | | | 67 | 123.5 | |
| | 2013.04-2019.12 | AT | F | L | Saloon FWD CGMA | | GDS61108 | Drive Shaft | | 36 | 26 | 59.5 | 40 | 585 | |
| | 2013.04-2019.12 | AT | F | R | Saloon FWD CGMA | | GDS54004 | Drive Shaft | | 36 | 26 | 59.5 | 40 | 881 | |
| **T-Roc** | | | | | | | | | | | | | | | |
| 1.4 (96 kw) | 2018.07- | 7DCT | F | L | SUV FWD CSTA, DJRA | | GDS61100 | Drive Shaft | | 36 | | 59.5 | 40 | 513 | |
| | 2018.07- | 7DCT | F | R | SUV FWD CSTA, DJRA | | GDS61147 | Drive Shaft | | 36 | | 59.5 | 40 | 795 | |
| | 2018.07- | 7DCT | F | L | SUV FWD CSTA, DJRA | | GCO83002 | Outer Joint | | 36 | 27 | 59.5 | 40 | 66 | I |

| | YEAR | TRANSM. | F/R | L/R | BODY STYLE & DRIVE TYPE & ENGINE | REMARKS | G-AP Ref. | PRODUCT | ABS | Technical Specifications A | B | C | H | L | P |
|---|---|---|---|---|---|---|---|---|---|---|---|---|---|---|---|
| **VW (FAW)** | | | | | | | | | | | | | | | |
| **T-Roc** | | | | | | | | | | | | | | | |
| 1.4 (96 kw) | 2018.07- | 7DCT | F | R | SUV FWD CSTA, DJRA | | GCI83016 | Inner Joint | | | 28 | | | 32 | |
| **VW (SVW)** | | | | | | | | | | | | | | | |
| **Gran Lavida** | | | | | | | | | | | | | | | |
| 1.4 (96 kw) | 2013.07- | 5MT | F | L | Hatchback FWD CSTA | | GDS61240 | Drive Shaft | | 36 | | 53 | 78 | 537 | |
| **Lavida** | | | | | | | | | | | | | | | |
| 1.4 (96 kw) | 2010.03-2013.12 | 5MT/7DCT | F | L | Saloon FWD CFB, CFBA | | GDS61240 | Drive Shaft | | 36 | | 53 | 78 | 537 | |
| | 2012.09-2013.12 | 5MT/7DCT | F | L | Saloon FWD CFBA | | GDS61240 | Drive Shaft | | 36 | | 53 | 78 | 537 | |
| | 2013.10- | 5MT | F | L | Saloon FWD CSTA | | GDS61240 | Drive Shaft | | 36 | | 53 | 78 | 537 | |
| **Passat** | | | | | | | | | | | | | | | |
| 1.8 (110 kw) | 2001.01-2009.04 | 6AT | F | L | Saloon FWD AWL, BGC | | GDS61232 | Drive Shaft | | 36 | 26 | 59.5 | 40 | 600 | |
| | 2001.01-2009.04 | 6AT | F | R | Saloon FWD AWL, BGC | | GDS61233 | Drive Shaft | | 36 | 26 | 59.5 | 40 | 899 | |
| | 2001.01-2009.04 | 7AT | F | R | Saloon FWD AWL, BGC | | GDS61222 | Drive Shaft | | 36 | | 59.5 | 40 | 806 | |
| 1.8 (118 kw) | 2011.04-2018.12 | 6AT | F | L | Saloon FWD CEAA | | GDS61232 | Drive Shaft | | 36 | 26 | 59.5 | 40 | 600 | |
| | 2011.04-2018.12 | 6AT | F | R | Saloon FWD CEAA | | GDS61233 | Drive Shaft | | 36 | 26 | 59.5 | 40 | 899 | |
| | 2011.04-2018.12 | 7AT | F | R | Saloon FWD CEAA | | GDS61222 | Drive Shaft | | 36 | | 59.5 | 40 | 806 | |
| 2.0 (147 kw) | 2011.04- | 6DCT | F | L | Saloon FWD CGMA | | GDS98006 | Stub Axle-Flange | | 37 | | | 67 | 123.5 | |
| 3.0 (184 kw) | 2011.11- | 6DCT | F | L | Saloon FWD CNGA | | GDS98006 | Stub Axle-Flange | | 37 | | | 67 | 123.5 | |
| **Polo** | | | | | | | | | | | | | | | |
| 1.4 (55 kw) | 2002.01-2006.03 | MT | F | L | Hatchback FWD BCC | | GDS61041 | Drive Shaft | | 36 | | 52 | 75.5 | 518 | |
| | 2003.06-2006.03 | MT | F | L | Saloon FWD BCC | | GDS61041 | Drive Shaft | | 36 | | 52 | 75.5 | 518 | |
| 1.4 (96 kw) | 2012.09-2015.12 | MT | F | L | Hatchback FWD CFBA | | GDS61041 | Drive Shaft | | 36 | | 52 | 75.5 | 518 | |
| **Polo JinQin** | | | | | | | | | | | | | | | |
| 1.4 (55 kw) | 2006.06-2008.12 | MT | F | L | Hatchback FWD BMG | | GDS61041 | Drive Shaft | | 36 | | 52 | 75.5 | 518 | |
| 1.4 (63 kw) | 2007.12-2012.12 | MT | F | L | Hatchback FWD CDD | | GDS61041 | Drive Shaft | | 36 | | 52 | 75.5 | 518 | |
| **Polo Jinqu** | | | | | | | | | | | | | | | |
| 1.4 (55 kw) | 2006.06-2008.12 | MT | F | L | Saloon FWD BMG | | GDS61041 | Drive Shaft | | 36 | | 52 | 75.5 | 518 | |
| 1.4 (63 kw) | 2007.12-2012.12 | MT | F | L | Saloon FWD CDD | | GDS61041 | Drive Shaft | | 36 | | 52 | 75.5 | 518 | |
| **Santana 3000** | | | | | | | | | | | | | | | |
| 1.8 (71 kw) | 2004.03-2007.10 | AT | F | L/R | Saloon FWD AYJ | | GCI50019 | Inner Joint | | | 34 | | | 59.5 | |
| 1.8 (74 kw) | 2005.06-2008.12 | AT | F | L/R | Saloon FWD BKT, BSA | | GCI50019 | Inner Joint | | | 34 | | | 59.5 | |
| **T-Cross** | | | | | | | | | | | | | | | |
| 1.5 (81 kw) | 2023.05- | 6AT | F | L/R | SUV FWD DRZA | | GCI81396 | Inner Joint | | 26 | 22 | 31 | 68.5 | 86 | |
| 1.5 (83 kw) | 2019.04- | 6AT | F | L/R | SUV FWD DMBA | | GCI81396 | Inner Joint | | 26 | 22 | 31 | 68.5 | 86 | |
| **Tiguan** | | | | | | | | | | | | | | | |
| 1.4 (110 kw) | 2016.09- | 6DCT | F | L | SUV FWD CSSA | | GDS98006 | Stub Axle-Flange | | 37 | | | 67 | 123.5 | |
| 1.8 (118 kw) | 2010.03-2017.12 | AT | F | R | SUV 4WD CEAA | | GDS61149 | Drive Shaft | | 36 | 26 | 59.5 | 40 | 905 | |
| | 2010.03-2019.12 | AT | F | R | SUV FWD CEAA | | GDS61149 | Drive Shaft | | 36 | 26 | 59.5 | 40 | 905 | |
| 2.0 (147 kw) | 2010.03-2017.12 | AT/MT | F | | SUV 4WD CGMA | | GDS61166 | Drive Shaft | | 36 | 40 | 59.5 | 40 | 611 | |
| **Tiguan L** | | | | | | | | | | | | | | | |
| 1.4 (110 kw) | 2018.07- | 6DCT | F | L | SUV FWD CSSA, DJSA | | GDS98006 | Stub Axle-Flange | | 37 | | | 67 | 123.5 | |
| **WEY** | | | | | | | | | | | | | | | |
| **VV5** | | | | | | | | | | | | | | | |
| 1.5 (124 kw) | 2019.05- | 7DCT | F | L | SUV FWD GW4B15A | for Model year:2019 | GDS56567 | Drive Shaft | 48T | 28 | 37 | 68 | 90 | 623 | |
| | 2019.05- | 7DCT | F | R | SUV FWD GW4B15A | for Model year:2019 | GDS56648 | Drive Shaft | 48T | 28 | 37 | 68 | 90 | 1000 | |
| | 2019.05- | 7DCT | F | L/R | SUV FWD GW4B15A | for Model year:2019 | GCO83344 | Outer Joint | 48T | 28 | 26 | 68 | 90 | 64 | M |
| | 2019.05- | 7DCT | F | L | SUV FWD GW4B15A | for Model year:2019 | GCI83377 | Inner Joint | | 37 | 26 | 42 | 64 | 112 | |
| | 2019.05- | 7DCT | F | R | SUV FWD GW4B15A | for Model year:2019 | GCI83420 | Inner Joint | | 37 | 26 | 42 | 384 | 120 | |
| 1.5 (126 kw) | 2019.10- | 7DCT | F | L | SUV FWD E15BA | Model year to:2020 | GDS56567 | Drive Shaft | 48T | 28 | 37 | 68 | 90 | 623 | |
| | 2019.10- | 7DCT | F | R | SUV FWD E15BA | Model year to:2020 | GDS56648 | Drive Shaft | 48T | 28 | 37 | 68 | 90 | 1000 | |
| | 2019.10- | 7DCT | F | L/R | SUV FWD E15BA | Model year to:2020 | GCO83344 | Outer Joint | 48T | 28 | 26 | 68 | 90 | 64 | M |
| | 2019.10- | 7DCT | F | L | SUV FWD E15BA | Model year to:2020 | GCI83377 | Inner Joint | | 37 | 26 | 42 | 64 | 112 | |
| | 2019.10- | 7DCT | F | R | SUV FWD E15BA | Model year to:2020 | GCI83420 | Inner Joint | | 37 | 26 | 42 | 384 | 120 | |
| 2.0 (145 kw) | 2017.08- | 7DCT | F | L | SUV FWD GW4C20NT | Model year to:2019 | GDS56567 | Drive Shaft | 48T | 28 | 37 | 68 | 90 | 623 | |
| | 2017.08- | 7DCT | F | R | SUV FWD GW4C20NT | Model year to:2019 | GDS56648 | Drive Shaft | 48T | 28 | 37 | 68 | 90 | 1000 | |
| | 2017.08- | 7DCT | F | L/R | SUV FWD GW4C20NT | Model year to:2019 | GCO83344 | Outer Joint | 48T | 28 | 26 | 68 | 90 | 64 | M |
| | 2017.08- | 7DCT | F | L | SUV FWD GW4C20NT | Model year to:2019 | GCI83377 | Inner Joint | | 37 | 26 | 42 | 64 | 112 | |
| | 2017.08- | 7DCT | F | R | SUV FWD GW4C20NT | Model year to:2019 | GCI83420 | Inner Joint | | 37 | 26 | 42 | 384 | 120 | |
| | 2018.10- | 7DCT | F | L | SUV 4WD GW4C20NT | Model year to:2019 | GDS56567 | Drive Shaft | 48T | 28 | 37 | 68 | 90 | 623 | |
| | 2018.10- | 7DCT | F | R | SUV 4WD GW4C20NT | Model year to:2019 | GDS56648 | Drive Shaft | 48T | 28 | 37 | 68 | 90 | 1000 | |
| | 2018.10- | 7DCT | F | L/R | SUV 4WD GW4C20NT | Model year to:2019 | GCO83344 | Outer Joint | 48T | 28 | 26 | 68 | 90 | 64 | M |
| | 2018.10- | 7DCT | F | L | SUV 4WD GW4C20NT | Model year to:2019 | GCI83377 | Inner Joint | | 37 | 26 | 42 | 64 | 112 | |
| | 2018.10- | 7DCT | F | R | SUV 4WD GW4C20NT | Model year to:2019 | GCI83420 | Inner Joint | | 37 | 26 | 42 | 384 | 120 | |
| 2.0 (165 kw) | 2019.05- | 7DCT | F | L | SUV FWD GW4C20B | for Model year:2019 | GDS56567 | Drive Shaft | 48T | 28 | 37 | 68 | 90 | 623 | |
| | 2019.05- | 7DCT | F | R | SUV FWD GW4C20B | for Model year:2019 | GDS56648 | Drive Shaft | 48T | 28 | 37 | 68 | 90 | 1000 | |
| | 2019.05- | 7DCT | F | L/R | SUV FWD GW4C20B | for Model year:2019 | GCO83344 | Outer Joint | 48T | 28 | 26 | 68 | 90 | 64 | M |

| | YEAR | TRANSM. | F/R | L/R | BODY STYLE & DRIVE TYPE & ENGINE | REMARKS | G-AP Ref. | PRODUCT | ABS | Technical Specifications A | B | C | H | L | P |
|---|---|---|---|---|---|---|---|---|---|---|---|---|---|---|---|
| **WEY** | | | | | | | | | | | | | | | |
| **VV5** | | | | | | | | | | | | | | | |
| 2.0 (165 kw) | 2019.05- | 7DCT | F | L | SUV FWD GW4C20B | for Model year:2019 | GCI83377 | Inner Joint | | 37 | 26 | 42 | 64 | 112 | |
| | 2019.05- | 7DCT | F | R | SUV FWD GW4C20B | for Model year:2019 | GCI83420 | Inner Joint | | 37 | 26 | 42 | 384 | 120 | |
| 2.0 (167 kw) | 2019.10- | 7DCT | F | L | SUV FWD E20CB | Model year to:2020 | GDS56567 | Drive Shaft | 48T | 28 | 37 | 68 | 90 | 623 | |
| | 2019.10- | 7DCT | F | R | SUV FWD E20CB | Model year to:2020 | GDS56648 | Drive Shaft | 48T | 28 | 37 | 68 | 90 | 1000 | |
| | 2019.10- | 7DCT | F | L/R | SUV FWD E20CB | Model year to:2020 | GCO83344 | Outer Joint | 48T | 28 | 26 | 68 | 90 | 64 | M |
| | 2019.10- | 7DCT | F | L | SUV FWD E20CB | Model year to:2020 | GCI83377 | Inner Joint | | 37 | 26 | 42 | 64 | 112 | |
| | 2019.10- | 7DCT | F | R | SUV FWD E20CB | Model year to:2020 | GCI83420 | Inner Joint | | 37 | 26 | 42 | 384 | 120 | |
| **VV6** | | | | | | | | | | | | | | | |
| 2.0 (145 kw) | 2018.08- | 7DCT | F | L | SUV FWD GW4C20NT | Model year to:2019 | GDS56567 | Drive Shaft | 48T | 28 | 37 | 68 | 90 | 623 | |
| | 2018.08- | 7DCT | F | R | SUV FWD GW4C20NT | Model year to:2019 | GDS56648 | Drive Shaft | 48T | 28 | 37 | 68 | 90 | 1000 | |
| | 2018.08- | 7DCT | F | L/R | SUV FWD GW4C20NT | Model year to:2019 | GCO83344 | Outer Joint | 48T | 28 | 26 | 68 | 90 | 64 | M |
| | 2018.08- | 7DCT | F | L | SUV FWD GW4C20NT | Model year to:2019 | GCI83377 | Inner Joint | | 37 | 26 | 42 | 64 | 112 | |
| | 2018.08- | 7DCT | F | R | SUV FWD GW4C20NT | Model year to:2019 | GCI83420 | Inner Joint | | 37 | 26 | 42 | 384 | 120 | |
| 2.0 (165 kw) | 2019.05- | 7DCT | F | R | SUV 4WD GW4C20B | | GDS57429 | Drive Shaft | 48T | 28 | 37 | 68 | 90 | 1006 | |
| | 2019.05- | 7DCT | F | L/R | SUV 4WD GW4C20B | | GCO83344 | Outer Joint | 48T | 28 | 26 | 68 | 90 | 64 | M |
| | 2019.05- | 7DCT | F | R | SUV 4WD GW4C20B | | GCI83663 | Inner Joint | | 37 | 26 | | 421 | 103 | |
| | 2019.05- | 7DCT | R | L | SUV 4WD GW4C20B | For model year:2019 | GDS56454 | Drive Shaft | 48T | 28 | 22 | 55 | 90 | 776 | |
| | 2019.05- | 7DCT | R | R | SUV 4WD GW4C20B | For model year:2019 | GDS56453 | Drive Shaft | 48T | 28 | 22 | 55 | 90 | 818 | |
| | 2019.05- | 7DCT | R | L/R | SUV 4WD GW4C20B | For model year:2019 | GCO83300 | Outer Joint | 48T | 28 | 22 | 55 | 90 | 60 | M |
| | 2019.05- | 7DCT | R | L/R | SUV 4WD GW4C20B | For model year:2019 | GCI83315 | Inner Joint | | 22 | 22 | 36 | 69 | 115.5 | |
| | 2019.05- | 7DCT | F | L | SUV FWD GW4C20B | for Model year:2019 | GDS56567 | Drive Shaft | 48T | 28 | 37 | 68 | 90 | 623 | |
| | 2019.05- | 7DCT | F | R | SUV FWD GW4C20B | for Model year:2019 | GDS56648 | Drive Shaft | 48T | 28 | 37 | 68 | 90 | 1000 | |
| | 2019.05- | 7DCT | F | L/R | SUV FWD GW4C20B | for Model year:2019 | GCO83344 | Outer Joint | 48T | 28 | 26 | 68 | 90 | 64 | M |
| | 2019.05- | 7DCT | F | L | SUV FWD GW4C20B | for Model year:2019 | GCI83377 | Inner Joint | | 37 | 26 | 42 | 64 | 112 | |
| | 2019.05- | 7DCT | F | R | SUV FWD GW4C20B | for Model year:2019 | GCI83420 | Inner Joint | | 37 | 26 | 42 | 384 | 120 | |
| 2.0 (167 kw) | 2019.07- | 7DCT | F | R | SUV 4WD E20CB | | GDS57429 | Drive Shaft | 48T | 28 | 37 | 68 | 90 | 1006 | |
| | 2019.07- | 7DCT | F | L/R | SUV 4WD E20CB | | GCO83344 | Outer Joint | 48T | 28 | 26 | 68 | 90 | 64 | M |
| | 2019.07- | 7DCT | F | R | SUV 4WD E20CB | | GCI83663 | Inner Joint | | 37 | 26 | | 421 | 103 | |
| | 2019.07- | 7DCT | R | L | SUV 4WD E20CB | Model year to:2020 | GDS56454 | Drive Shaft | 48T | 28 | 22 | 55 | 90 | 776 | |
| | 2019.07- | 7DCT | R | R | SUV 4WD E20CB | Model year to:2020 | GDS56453 | Drive Shaft | 48T | 28 | 22 | 55 | 90 | 818 | |
| | 2019.07- | 7DCT | R | L/R | SUV 4WD E20CB | Model year to:2020 | GCO83300 | Outer Joint | 48T | 28 | 22 | 55 | 90 | 60 | M |
| | 2019.07- | 7DCT | R | L/R | SUV 4WD E20CB | Model year to:2020 | GCI83315 | Inner Joint | | 22 | 22 | 36 | 69 | 115.5 | |
| | 2019.07- | 7DCT | F | L | SUV FWD E20CB | Model year to:2020 | GDS56567 | Drive Shaft | 48T | 28 | 37 | 68 | 90 | 623 | |
| | 2019.07- | 7DCT | F | R | SUV FWD E20CB | Model year to:2020 | GDS56648 | Drive Shaft | 48T | 28 | 37 | 68 | 90 | 1000 | |
| | 2019.07- | 7DCT | F | L/R | SUV FWD E20CB | Model year to:2020 | GCO83344 | Outer Joint | 48T | 28 | 26 | 68 | 90 | 64 | M |
| | 2019.07- | 7DCT | F | L | SUV FWD E20CB | Model year to:2020 | GCI83377 | Inner Joint | | 37 | 26 | 42 | 64 | 112 | |
| | 2019.07- | 7DCT | F | R | SUV FWD E20CB | Model year to:2020 | GCI83420 | Inner Joint | | 37 | 26 | 42 | 384 | 120 | |
| **VV7** | | | | | | | | | | | | | | | |
| 2.0 (167 kw) | 2019.05- | 7DCT | F | L | SUV FWD E20CB, GW4C20B | Date to:2020.07 | GDS57512 | Drive Shaft | 48T | 30 | 37 | 70 | 87 | 656 | |
| | 2019.05- | 7DCT | F | R | SUV FWD E20CB, GW4C20B | Date to:2020.07 | GDS57511 | Drive Shaft | 48T | 30 | 37 | 70 | 87 | 1015 | |
| | 2019.05- | 7DCT | F | L/R | SUV FWD E20CB, GW4C20B | Date to:2020.07 | GCO83540 | Outer Joint | 48T | 30 | 27 | 70 | 87 | 65 | M |
| | 2019.05- | 7DCT | F | L | SUV FWD E20CB, GW4C20B | Date to:2020.07 | GCI83653 | Inner Joint | | 37 | 27 | 42 | 63.5 | 122.5 | |
| | 2019.05- | 7DCT | F | R | SUV FWD E20CB, GW4C20B | Date to:2020.07 | GCI83673 | Inner Joint | | 37 | 27 | 42 | 384 | 130 | |
| 2.0 (172 kw) | 2017.04- | 7DCT | F | L | SUV FWD GW4C20A | Model year to:2019 | GDS57412 | Drive Shaft | 48T | 30 | 37 | 70 | 87 | 668 | |
| | 2017.04- | 7DCT | F | R | SUV FWD GW4C20A | Model year to:2019 | GDS57443 | Drive Shaft | 48T | 30 | 37 | 70 | 87 | 1007 | |
| | 2017.04- | 7DCT | F | L/R | SUV FWD GW4C20A | Model year to:2019 | GCO83540 | Outer Joint | 48T | 30 | 27 | 70 | 87 | 65 | M |
| | 2017.04- | 7DCT | F | L | SUV FWD GW4C20A | Model year to:2019 | GCI83653 | Inner Joint | | 37 | 27 | 42 | 63.5 | 122.5 | |
| | 2017.04- | 7DCT | F | R | SUV FWD GW4C20A | Model year to:2019 | GCI83673 | Inner Joint | | 37 | 27 | 42 | 384 | 130 | |
| **VV7 GT** | | | | | | | | | | | | | | | |
| 2.0 (167 kw) | 2019.09- | 7DCT | F | L | SUV FWD E20CB | | GDS57512 | Drive Shaft | 48T | 30 | 37 | 70 | 87 | 656 | |
| | 2019.09- | 7DCT | F | R | SUV FWD E20CB | | GDS57511 | Drive Shaft | 48T | 30 | 37 | 70 | 87 | 1015 | |
| | 2019.09- | 7DCT | F | L/R | SUV FWD E20CB | | GCO83540 | Outer Joint | 48T | 30 | 27 | 70 | 87 | 65 | M |
| | 2019.09- | 7DCT | F | L | SUV FWD E20CB | | GCI83653 | Inner Joint | | 37 | 27 | 42 | 63.5 | 122.5 | |
| | 2019.09- | 7DCT | F | R | SUV FWD E20CB | | GCI83673 | Inner Joint | | 37 | 27 | 42 | 384 | 130 | |
| **XPENG** | | | | | | | | | | | | | | | |
| **G3** | | | | | | | | | | | | | | | |
| EV (145 kw) | 2018.12- | ET | F | L/R | SUV FWD TZ220XS518, TZ228XS68H, TZ230XS65A | Model year from:2020,Model yeat to:2021 | GDS56387 | Drive Shaft | | 30 | 26 | 59 | 98 | 812 | |
| | 2018.12- | ET | F | L/R | SUV FWD TZ220XS518, TZ228XS68H, TZ230XS65A | Model year from:2020,Model yeat to:2021 | GCO83277 | Outer Joint | | 30 | 24 | 59 | 98 | 59 | I |
| | 2018.12- | ET | F | L/R | SUV FWD TZ220XS518, TZ228XS68H, TZ230XS65A | Model year from:2020,Model yeat to:2021 | GCI83282 | Inner Joint | | 26 | 32 | 35 | 61 | 122.5 | |
| **P7** | | | | | | | | | | | | | | | |
| EV (196 kw) | 2020.04- | ET | R | R | Saloon RWD TZ220XS701, TZ220XSFDM80 | Date from:2021.11 | GDS87076 | Intermediate Shaft | | 28 | 27 | | | 326 | |
| EV (316 kw) | 2020.04- | ET | F | L | Saloon 4WD TZ220XS529/TZ220XS701 | Model year from:2021 | GDS56485 | Drive Shaft | | 30 | 27 | 55 | 96 | 928 | |
| | 2020.04- | ET | F | R | Saloon 4WD TZ220XS529/TZ220XS701 | Model year from:2021 | GDS56484 | Drive Shaft | | 30 | 27 | 55 | 96 | 709 | |
| | 2020.04- | ET | F | L/R | Saloon 4WD TZ220XS529/TZ220XS701 | Model year from:2021 | GCO83311 | Outer Joint | | 30 | 23 | 55 | 96 | 58.5 | I |
| | 2020.04- | ET | F | L | Saloon 4WD TZ220XS529/TZ220XS701 | Model year from:2021 | GCI83326 | Inner Joint | | 27 | 24 | 40 | 266 | 128.5 | |

| | YEAR | TRANSM. | F/R | L/R | BODY STYLE & DRIVE TYPE & ENGINE | REMARKS | G-AP Ref. | PRODUCT | ABS | Technical Specifications | | | | | |
|---|---|---|---|---|---|---|---|---|---|---|---|---|---|---|---|
| | | | | | | | | | | A | B | C | H | L | P |
| **XPENG** | | | | | | | | | | | | | | | |
| **P7** | | | | | | | | | | | | | | | |
| EV (316 kw) | 2020.04- | ET | F | R | Saloon 4WD TZ220XS529/TZ220XS701 | Model year from:2021 | GCI83325 | Inner Joint | | 27 | 24 | 40 | 51 | 115.5 | |
| | 2020.04- | ET | R | L | Saloon 4WD TZ220XS529/TZ220XS701 | Model year from:2021 | GDS56378 | Drive Shaft | | 30 | 27 | 55 | 96 | 680 | |
| | 2020.04- | ET | R | R | Saloon 4WD TZ220XS529/TZ220XS701 | Model year from:2021 | GDS56377 | Drive Shaft | | 30 | 28 | 55 | 96 | 669 | |
| | 2020.04- | ET | R | L/R | Saloon 4WD TZ220XS529/TZ220XS701 | Model year from:2021 | GCO83271 | Outer Joint | | 30 | 28 | 55 | 96 | 70 | M |
| | 2020.04- | ET | R | L | Saloon 4WD TZ220XS529/TZ220XS701 | Model year from:2021 | GCI83277 | Inner Joint | | 27 | 28 | 40 | 56 | 110 | |
| | 2020.04- | ET | R | R | Saloon 4WD TZ220XS529/TZ220XS701 | Model year from:2021 | GCI83276 | Inner Joint | | 28 | 28 | 42.75 | | 129.5 | |
| **ZAZ** | | | | | | | | | | | | | | | |
| **Tavria** | | | | | | | | | | | | | | | |
| 1.1 (37 kw) | 1989.01-1998.09 | AT/MT | F | L/R | Hatchback FWD MEMZ245 | | GCO64001 | Outer Joint | | 22 | 22 | 42 | 92 | 66 | I |
| 1.3 (44 kw) | 2000.04-2007.12 | AT/MT | F | L/R | Hatchback FWD MEMZ310 | | GCO64001 | Outer Joint | | 22 | 22 | 42 | 92 | 66 | I |
| **ZHONGHUA (BRILLIANCE)** | | | | | | | | | | | | | | | |
| **H530** | | | | | | | | | | | | | | | |
| 1.5 (110 kw) | 2014.01- | 5MT | F | L/R | Saloon FWD BM15TB | Model year for:2016 | GCI71003 | Inner Joint | | 25 | 24 | 41 | 62.5 | 91 | |
| **V5** | | | | | | | | | | | | | | | |
| 1.5 (100 kw) | 2011.11- | 5MT | F | L/R | SUV FWD BM15T | Model year from:2012,Model year to:2015 | GCI71003 | Inner Joint | | 25 | 24 | 41 | 62.5 | 91 | |
| **Zunchi** | | | | | | | | | | | | | | | |
| 1.8 (125 kw) | 2007.03-2013.12 | AT | F | R | Saloon FWD BL18T | | GDS82767 | Drive Shaft | 43T | 25 | 27 | 58.9 | 94.5 | 992 | |
| | 2007.03-2013.12 | AT | F | L/R | Saloon FWD BL18T | | GCO82160 | Outer Joint | 43T | 25 | 30 | 58.9 | 94.5 | 61 | I |
| | 2007.03-2013.12 | AT | F | R | Saloon FWD BL18T | | GCI51029 | Inner Joint | | 27 | 24 | 41 | 62 | 91 | |
| **ZOTYE** | | | | | | | | | | | | | | | |
| **T600** | | | | | | | | | | | | | | | |
| 1.5 (119 kw) | 2013.12- | 5MT | F | L | SUV FWD 15S4G | Model year to:2017 | GDS81953 | Drive Shaft | 48T | 27 | 25 | 62.2 | 95 | 677 | |
| | 2013.12- | 5MT | F | R | SUV FWD 15S4G | Model year to:2017 | GDS81954 | Drive Shaft | 48T | 27 | 25 | 62.2 | 95 | 982 | |
| | 2013.12- | 5MT | F | R | SUV FWD 15S4G | Model year to:2017 | GCO81583 | Outer Joint | 48T | 27 | 25 | 62.2 | 95 | 63 | M |
| | 2013.12- | 5MT | F | L | SUV FWD 15S4G | Model year to:2017 | GCI81561 | Inner Joint | | 25 | 24 | 48 | 61 | 113 | |
| | 2013.12- | 5MT | F | R | SUV FWD 15S4G | Model year to:2017 | GCI81562 | Inner Joint | | 25 | 24 | 48 | 400 | 149 | |
| 2.0 (140 kw) | 2014.11-2018.12 | 5MT | F | L/R | SUV FWD 4G63-S4T | | GCO81583 | Outer Joint | 48T | 27 | 25 | 62.2 | 95 | 63 | M |

| COMPETITOR | G-AP Ref. | COMPETITOR | G-AP Ref. | COMPETITOR | G-AP Ref. | COMPETITOR | G-AP Ref. | COMPETITOR | G-AP Ref. |
|---|---|---|---|---|---|---|---|---|---|
| **LÖBRO** | | 304313 | **GCI82011** | 302801 | **GCO12019** | 303113 | **GCO17042** | GKNJ20613 | **GCO18269** |
| | | GKNJ50030 | **GCI82429** | 302803 | **GCO12019** | 303117 | **GCO17042** | 306290 | **GCO18286** |
| 304608 | **GCI10038** | GKNJ50029 | **GCI82446** | 303339 | **GCO12021** | 303271 | **GCO17042** | GKNJ30037 | **GCO18286** |
| 304605 | **GCI17020** | 302282 | **GCI83001** | 303908 | **GCO12023** | 304653 | **GCO17043** | 306291 | **GCO18293** |
| 304610 | **GCI17021** | 302287 | **GCI83001** | 303906 | **GCO12027** | 304383 | **GCO17051** | GKNJ30038 | **GCO18293** |
| 304609 | **GCI17022** | 302463 | **GCI83001** | 303910 | **GCO12027** | 304697 | **GCO17051** | 305671 | **GCO18298** |
| 304603 | **GCI17028** | 301134 | **GCI83002** | 302451 | **GCO12034** | 304613 | **GCO17052** | 304863 | **GCO21038** |
| 304606 | **GCI17042** | 302246 | **GCI83002** | 303836 | **GCO14002** | 306771 | **GCO17052** | 306443 | **GCO21038** |
| 302207 | **GCI18002** | 302248 | **GCI83002** | 303976 | **GCO14004** | 304611 | **GCO17053** | 306445 | **GCO21038** |
| 302252 | **GCI18070** | 302247 | **GCI83003** | 300894 | **GCO14006** | 305198 | **GCO17053** | 306779 | **GCO21049** |
| 306782 | **GCI21030** | 302260 | **GCI83003** | 301990 | **GCO14006** | 306775 | **GCO17053** | 306442 | **GCO21051** |
| 302875 | **GCI34032** | 301106 | **GCI83005** | 303830 | **GCO14010** | 304598 | **GCO17054** | 304866 | **GCO21057** |
| 303540 | **GCI35001** | 301116 | **GCI83005** | 302784 | **GCO14013** | 304601 | **GCO17055** | 306970 | **GCO21057** |
| 304737 | **GCI35001** | 302219 | **GCI83005** | 302366 | **GCO14020** | 304600 | **GCO17060** | 304701 | **GCO23001** |
| 302271 | **GCI35006** | 302230 | **GCI83005** | 302450 | **GCO14020** | 305152 | **GCO17063** | 303487 | **GCO23002** |
| 304832 | **GCI35014** | 302231 | **GCI83005** | 303835 | **GCO14027** | 306688 | **GCO17064** | 302049 | **GCO23007** |
| 304904 | **GCI35020** | 302232 | **GCI83005** | 303912 | **GCO14030** | 305150 | **GCO17070** | 302050 | **GCO23008** |
| 304559 | **GCI35051** | 301141 | **GCI83006** | 303831 | **GCO14046** | 306685 | **GCO17079** | 300958 | **GCO23010** |
| 301124 | **GCI44001** | 305021 | **GCI83008** | 303833 | **GCO14073** | 306770 | **GCO17089** | 302047 | **GCO23010** |
| 302228 | **GCI44001** | 302258 | **GCI83009** | 300886 | **GCO17001** | 303743 | **GCO18002** | 302013 | **GCO23013** |
| 301144 | **GCI44002** | 302262 | **GCI83009** | 301976 | **GCO17001** | 303384 | **GCO18003** | 302014 | **GCO23014** |
| 302253 | **GCI44002** | 302257 | **GCI83011** | 301977 | **GCO17001** | 303385 | **GCO18003** | 300847 | **GCO23016** |
| 301123 | **GCI44004** | 302261 | **GCI83011** | 301980 | **GCO17001** | 300872 | **GCO18004** | 301941 | **GCO23016** |
| 302227 | **GCI44004** | 306844 | **GCI83011** | 300906 | **GCO17002** | 300881 | **GCO18004** | 301942 | **GCO23016** |
| 302254 | **GCI44005** | 302249 | **GCI83014** | 301041 | **GCO17002** | 301973 | **GCO18004** | 300842 | **GCO23017** |
| 306676 | **GCI44005** | 306654 | **GCI83022** | 301997 | **GCO17002** | 302870 | **GCO18004** | 301943 | **GCO23017** |
| 306444 | **GCI44008** | 304558 | **GCI83027** | 302141 | **GCO17002** | 302871 | **GCO18004** | 301986 | **GCO23022** |
| 306780 | **GCI44013** | 302225 | **GCI85001** | 301998 | **GCO17003** | 303610 | **GCO18007** | 303837 | **GCO23023** |
| 301169 | **GCI48002** | 301149 | **GCI99052** | 302011 | **GCO17003** | 302857 | **GCO18011** | 303840 | **GCO23024** |
| 302297 | **GCI48002** | 302273 | **GCI99052** | 300918 | **GCO17004** | 303085 | **GCO18011** | 304683 | **GCO23030** |
| 302303 | **GCI48002** | 302307 | **GCI99075** | 302007 | **GCO17004** | 302869 | **GCO18012** | 303843 | **GCO23032** |
| 301129 | **GCI48004** | 302644 | **GCI99099** | 302008 | **GCO17004** | 302872 | **GCO18012** | 304310 | **GCO23033** |
| 301136 | **GCI48004** | 302702 | **GCI99099** | 300947 | **GCO17005** | 303332 | **GCO18013** | 305457 | **GCO23033** |
| 302240 | **GCI48004** | 302721 | **GCI99099** | 302036 | **GCO17005** | 303333 | **GCO18013** | 305304 | **GCO23034** |
| 302241 | **GCI48004** | 302279 | **GCI99143** | 300883 | **GCO17006** | 306931 | **GCO18014** | 304734 | **GCO23036** |
| 302251 | **GCI48004** | 304556 | **GCI99148** | 301974 | **GCO17006** | 301972 | **GCO18015** | 305303 | **GCO23039** |
| 302266 | **GCI48004** | 303403 | **GCO10002** | 304380 | **GCO17007** | 303436 | **GCO18016** | 303320 | **GCO23047** |
| 302277 | **GCI48004** | 303474 | **GCO10002** | 303195 | **GCO17009** | 302030 | **GCO18017** | 303981 | **GCO23047** |
| 301117 | **GCI53001** | 303434 | **GCO10003** | 303274 | **GCO17009** | 300938 | **GCO18018** | 303363 | **GCO23063** |
| 302215 | **GCI53001** | 303475 | **GCO10003** | 303608 | **GCO17009** | 302029 | **GCO18018** | 303838 | **GCO23083** |
| 302229 | **GCI53001** | 303435 | **GCO10004** | 300866 | **GCO17010** | 300900 | **GCO18021** | 303839 | **GCO23083** |
| 302317 | **GCI54002** | 303430 | **GCO10005** | 301966 | **GCO17010** | 302455 | **GCO18021** | 304699 | **GCO23095** |
| 302318 | **GCI54003** | 303535 | **GCO10006** | 303269 | **GCO17011** | 302856 | **GCO18024** | 305456 | **GCO23126** |
| 306450 | **GCI59006** | 303536 | **GCO10007** | 301979 | **GCO17012** | 303084 | **GCO18024** | 303902 | **GCO24002** |
| 301177 | **GCI61001** | 302995 | **GCO10011** | 302010 | **GCO17013** | 303511 | **GCO18025** | 303874 | **GCO24004** |
| 302305 | **GCI61001** | 302997 | **GCO10011** | 303189 | **GCO17014** | GKNJ20706 | **GCO18025** | 303869 | **GCO24011** |
| 302374 | **GCI61002** | 303099 | **GCO10012** | 303268 | **GCO17014** | 303509 | **GCO18026** | 305463 | **GCO24029** |
| 302464 | **GCI61002** | 303096 | **GCO10013** | 306663 | **GCO17014** | 301016 | **GCO18027** | 305305 | **GCO24036** |
| 301137 | **GCI61003** | 303098 | **GCO10013** | 303188 | **GCO17017** | 302111 | **GCO18027** | 304695 | **GCO24041** |
| 302255 | **GCI61003** | GKNJ20703 | **GCO10013** | 303267 | **GCO17017** | 302792 | **GCO18028** | 303904 | **GCO24046** |
| 302269 | **GCI61003** | 304816 | **GCO10015** | 300915 | **GCO17018** | 303851 | **GCO18029** | 306224 | **GCO24077** |
| 305530 | **GCI61006** | 304818 | **GCO10015** | 303266 | **GCO17019** | 300869 | **GCO18030** | 305964 | **GCO24087** |
| 304837 | **GCI61020** | 303537 | **GCO10021** | 303186 | **GCO17020** | 302982 | **GCO18030** | 305003 | **GCO24095** |
| 304841 | **GCI61021** | 303405 | **GCO10024** | 303265 | **GCO17020** | 302023 | **GCO18031** | 306752 | **GCO24126** |
| 304843 | **GCI61029** | 303936 | **GCO10025** | 302452 | **GCO17021** | 303964 | **GCO18031** | 305965 | **GCO24129** |
| 303999 | **GCI61030** | 303407 | **GCO10043** | 302453 | **GCO17022** | 302783 | **GCO18033** | 305007 | **GCO24152** |
| 304839 | **GCI61041** | 302998 | **GCO10050** | 303111 | **GCO17023** | 303325 | **GCO18034** | 303886 | **GCO24173** |
| 305017 | **GCI61044** | 304799 | **GCO10059** | 304900 | **GCO17024** | 303326 | **GCO18034** | 302640 | **GCO26003** |
| 306659 | **GCI61048** | 303928 | **GCO10069** | 303921 | **GCO17026** | 302763 | **GCO18035** | 302969 | **GCO27001** |
| 305400 | **GCI61057** | 303565 | **GCO10075** | 303920 | **GCO17028** | 302788 | **GCO18035** | 303984 | **GCO27003** |
| 306656 | **GCI61057** | 303419 | **GCO10086** | 304964 | **GCO17028** | 303988 | **GCO18036** | 305462 | **GCO27004** |
| 306292 | **GCI61069** | GKNJ20695 | **GCO10115** | 306684 | **GCO17028** | 305346 | **GCO18067** | 303120 | **GCO27005** |
| 306653 | **GCI61069** | GKNJ20697 | **GCO10115** | 303607 | **GCO17030** | 305176 | **GCO18203** | 303295 | **GCO27010** |
| 307024 | **GCI61075** | 306633 | **GCO10125** | 303916 | **GCO17031** | 305358 | **GCO18207** | 305005 | **GCO27080** |
| GKNJ40147 | **GCI61104** | 303174 | **GCO12001** | 303116 | **GCO17032** | 306632 | **GCO18222** | 300952 | **GCO28001** |
| 301126 | **GCI62015** | 302984 | **GCO12006** | 300884 | **GCO17039** | 305023 | **GCO18230** | 302040 | **GCO28001** |
| 302243 | **GCI62015** | 302985 | **GCO12006** | 301975 | **GCO17039** | 306802 | **GCO18244** | 301030 | **GCO28002** |
| 306972 | **GCI81641** | 305238 | **GCO12011** | 301978 | **GCO17039** | 306842 | **GCO18258** | 302130 | **GCO28002** |

| COMPETITOR | G-AP Ref. | COMPETITOR | G-AP Ref. | COMPETITOR | G-AP Ref. | COMPETITOR | G-AP Ref. | COMPETITOR | G-AP Ref. |
|---|---|---|---|---|---|---|---|---|---|
| **LÖBRO** | | 303390 | **GCO39036** | 303888 | **GCO44014** | 302796 | **GCO53005** | 301095 | **GCO59050** |
| | | 303391 | **GCO39036** | 302454 | **GCO44020** | 300849 | **GCO53007** | 302785 | **GCO59054** |
| 302457 | **GCO29001** | 300951 | **GCO39040** | 304596 | **GCO44020** | 301070 | **GCO53007** | 303864 | **GCO59065** |
| 302814 | **GCO31001** | 302076 | **GCO39040** | 303438 | **GCO44025** | 301947 | **GCO53007** | 305451 | **GCO59085** |
| 300898 | **GCO34003** | 302074 | **GCO39054** | 303437 | **GCO44026** | 301948 | **GCO53007** | 303865 | **GCO59120** |
| 301995 | **GCO34003** | 303852 | **GCO39054** | 304397 | **GCO44027** | 302175 | **GCO53007** | 305310 | **GCO59130** |
| 301993 | **GCO34004** | 303745 | **GCO39084** | 304386 | **GCO44028** | 302177 | **GCO53007** | 304703 | **GCO59137** |
| 303181 | **GCO34005** | 303525 | **GCO39098** | 303342 | **GCO44030** | 301023 | **GCO53008** | 305307 | **GCO59137** |
| 303183 | **GCO34005** | 304306 | **GCO39102** | 303358 | **GCO44030** | 302118 | **GCO53008** | 305452 | **GCO59153** |
| 303184 | **GCO34006** | 305718 | **GCO39178** | 303934 | **GCO44034** | 302123 | **GCO53008** | 305297 | **GCO59154** |
| 300896 | **GCO34007** | 302319 | **GCO40001** | 300976 | **GCO44041** | 302041 | **GCO54001** | 303868 | **GCO59155** |
| 301994 | **GCO34007** | 302794 | **GCO40001** | 302065 | **GCO44041** | 303001 | **GCO54001** | 302799 | **GCO59161** |
| 303365 | **GCO34008** | 300893 | **GCO41001** | 302066 | **GCO44041** | 303555 | **GCO54002** | 302860 | **GCO59161** |
| 303369 | **GCO34008** | 301989 | **GCO41001** | 302067 | **GCO44046** | 306214 | **GCO54002** | 304650 | **GCO59167** |
| 303367 | **GCO34010** | 303336 | **GCO41003** | 300978 | **GCO44051** | 304624 | **GCO54004** | 305309 | **GCO59168** |
| 303371 | **GCO34010** | 303337 | **GCO41003** | 302069 | **GCO44051** | 300929 | **GCO56003** | 305298 | **GCO59173** |
| 305300 | **GCO34015** | 302015 | **GCO41006** | 301065 | **GCO44056** | 302022 | **GCO56003** | 305299 | **GCO59175** |
| 303366 | **GCO34026** | 302016 | **GCO41007** | 302169 | **GCO44056** | 300848 | **GCO56004** | 305450 | **GCO59175** |
| 303370 | **GCO34026** | 300891 | **GCO41009** | 301064 | **GCO44057** | 301946 | **GCO56004** | GKNJ20685 | **GCO59199** |
| 306217 | **GCO34048** | 301987 | **GCO41009** | 302170 | **GCO44057** | 300895 | **GCO56005** | 305252 | **GCO59213** |
| 303848 | **GCO34056** | 301988 | **GCO41010** | 305184 | **GCO44085** | 301991 | **GCO56005** | GKNJ20711 | **GCO59213** |
| 303985 | **GCO34072** | 303126 | **GCO41011** | 305861 | **GCO44088** | 302781 | **GCO56006** | 304823 | **GCO59226** |
| 303849 | **GCO34080** | 303311 | **GCO41012** | 306774 | **GCO44088** | 305465 | **GCO56009** | 305512 | **GCO59232** |
| 301996 | **GCO34081** | 303308 | **GCO41013** | 305490 | **GCO44090** | 303987 | **GCO56010** | 305308 | **GCO59288** |
| 302977 | **GCO34082** | 303310 | **GCO41013** | 306441 | **GCO44093** | 303870 | **GCO56039** | 306108 | **GCO59303** |
| 303850 | **GCO34100** | 303862 | **GCO41016** | 303432 | **GCO45001** | 302980 | **GCO57001** | GKNJ20612 | **GCO59441** |
| 305461 | **GCO34110** | 303288 | **GCO41021** | 303431 | **GCO45004** | 303178 | **GCO57001** | 305133 | **GCO60005** |
| 305460 | **GCO34121** | 303860 | **GCO41021** | 303400 | **GCO45006** | 303004 | **GCO57003** | 300861 | **GCO61003** |
| 303746 | **GCO34130** | 304912 | **GCO41025** | 303401 | **GCO45006** | 302628 | **GCO57007** | 301963 | **GCO61003** |
| 304691 | **GCO34135** | 303604 | **GCO41026** | 303473 | **GCO45011** | 302586 | **GCO57011** | 300862 | **GCO61004** |
| GKNJ20678 | **GCO34146** | 303447 | **GCO41028** | 303930 | **GCO45033** | 302629 | **GCO57011** | 301964 | **GCO61004** |
| 305306 | **GCO34156** | 303380 | **GCO41030** | 303931 | **GCO45045** | 303128 | **GCO57014** | 302363 | **GCO61005** |
| 306219 | **GCO34174** | 303305 | **GCO41040** | 305360 | **GCO45058** | 303739 | **GCO57015** | 302446 | **GCO61005** |
| 306218 | **GCO34177** | 303307 | **GCO41040** | 303997 | **GCO45065** | 303872 | **GCO57017** | 303450 | **GCO61005** |
| 306220 | **GCO34178** | 304729 | **GCO41046** | 304543 | **GCO45067** | 303738 | **GCO57019** | GKNJ20705 | **GCO61005** |
| 302854 | **GCO35001** | 305241 | **GCO41047** | GKNJ20694 | **GCO45074** | 301970 | **GCO57035** | GKNJ20709 | **GCO61005** |
| 303095 | **GCO35001** | 304820 | **GCO41048** | GKNJ20696 | **GCO45074** | 303740 | **GCO57037** | 302447 | **GCO61006** |
| 305805 | **GCO35001** | 304803 | **GCO41052** | 303433 | **GCO50008** | 305464 | **GCO57041** | 303451 | **GCO61006** |
| 303382 | **GCO35002** | 304809 | **GCO41057** | 303561 | **GCO50026** | 305523 | **GCO57042** | 304814 | **GCO61007** |
| GKNJ20704 | **GCO35002** | 303304 | **GCO41058** | 303562 | **GCO50056** | 303179 | **GCO57048** | 303993 | **GCO61009** |
| 303882 | **GCO35004** | 303306 | **GCO41058** | 303563 | **GCO50105** | 303873 | **GCO57086** | 303995 | **GCO61011** |
| 303878 | **GCO35005** | 300902 | **GCO41078** | 305645 | **GCO50130** | 304914 | **GCO57100** | 303605 | **GCO61012** |
| 303880 | **GCO35022** | 302019 | **GCO41078** | 305517 | **GCO50150** | 303884 | **GCO57105** | 306680 | **GCO61021** |
| 303876 | **GCO35023** | 302789 | **GCO41078** | 305522 | **GCO50152** | 305808 | **GCO57105** | 304557 | **GCO61050** |
| 302461 | **GCO35033** | 304722 | **GCO41086** | 305521 | **GCO50161** | 302108 | **GCO59001** | 306801 | **GCO61059** |
| 304902 | **GCO35034** | 304821 | **GCO41138** | 305834 | **GCO50170** | 302110 | **GCO59001** | 306245 | **GCO61062** |
| 306809 | **GCO35034** | 305459 | **GCO41142** | 302137 | **GCO51001** | 302800 | **GCO59004** | 306745 | **GCO61065** |
| 306286 | **GCO35045** | 305763 | **GCO41142** | 302138 | **GCO51001** | 302859 | **GCO59004** | 306679 | **GCO61074** |
| 306174 | **GCO35053** | 305458 | **GCO41159** | 301032 | **GCO51002** | 303866 | **GCO59006** | 306655 | **GCO61081** |
| 306175 | **GCO35064** | 302638 | **GCO41163** | 302132 | **GCO51002** | 303140 | **GCO59007** | 301028 | **GCO62001** |
| 304704 | **GCO38002** | 306027 | **GCO41214** | 303480 | **GCO51003** | 302768 | **GCO59009** | 302148 | **GCO62001** |
| 304706 | **GCO38003** | 304890 | **GCO41240** | 303481 | **GCO51004** | 302967 | **GCO59009** | GKNJ20702 | **GCO62001** |
| 301984 | **GCO39002** | 305519 | **GCO41244** | 302133 | **GCO51005** | 303867 | **GCO59015** | 302192 | **GCO62002** |
| 304324 | **GCO39004** | 306741 | **GCO41249** | 303486 | **GCO51007** | 303283 | **GCO59017** | 303427 | **GCO62003** |
| 303523 | **GCO39007** | 306800 | **GCO41294** | 300963 | **GCO51010** | 303587 | **GCO59019** | 302142 | **GCO62004** |
| 303590 | **GCO39008** | 306751 | **GCO41304** | 302052 | **GCO51010** | 300878 | **GCO59020** | 302143 | **GCO62005** |
| 300877 | **GCO39009** | 303861 | **GCO41314** | 303476 | **GCO51011** | 301992 | **GCO59020** | 302057 | **GCO62006** |
| 301985 | **GCO39009** | GKNJ20698 | **GCO41348** | 302044 | **GCO51013** | 304322 | **GCO59021** | 302058 | **GCO62007** |
| 301982 | **GCO39011** | 304459 | **GCO44001** | 302136 | **GCO51017** | 303894 | **GCO59022** | 303416 | **GCO62008** |
| 302631 | **GCO39014** | 304391 | **GCO44002** | 303412 | **GCO51020** | 303445 | **GCO59024** | 303526 | **GCO62009** |
| 303317 | **GCO39015** | 304384 | **GCO44003** | 302459 | **GCO52001** | 303896 | **GCO59026** | 303560 | **GCO62010** |
| 303393 | **GCO39016** | 304388 | **GCO44004** | 301056 | **GCO52002** | 304827 | **GCO59028** | 303426 | **GCO62011** |
| 303394 | **GCO39016** | 304390 | **GCO44005** | 302165 | **GCO52002** | 305455 | **GCO59034** | 303423 | **GCO62012** |
| 301983 | **GCO39019** | 302816 | **GCO44006** | 302201 | **GCO52007** | 305454 | **GCO59036** | 306681 | **GCO62031** |
| 303527 | **GCO39021** | 302863 | **GCO44006** | 302200 | **GCO52011** | 304693 | **GCO59037** | 300950 | **GCO64001** |
| 303529 | **GCO39022** | 302861 | **GCO44007** | 304325 | **GCO53001** | 303992 | **GCO59041** | 302039 | **GCO64001** |
| 304304 | **GCO39024** | 304458 | **GCO44011** | 304436 | **GCO53002** | 303318 | **GCO59046** | 304908 | **GCO75007** |
| 302637 | **GCO39027** | 303890 | **GCO44013** | 302764 | **GCO53005** | 305453 | **GCO59047** | 305860 | **GCO81305** |

| COMPETITOR | G-AP Ref. | COMPETITOR | G-AP Ref. | COMPETITOR | G-AP Ref. | COMPETITOR | G-AP Ref. | COMPETITOR | G-AP Ref. |
|---|---|---|---|---|---|---|---|---|---|
| **LÖBRO** | | 301953 | **GCO83016** | 303898 | **GCO88034** | 301930 | **GDS10040** | 302884 | **GDS10189** |
| | | 301954 | **GCO83016** | 306247 | **GCO88077** | 303237 | **GDS10040** | 303576 | **GDS10192** |
| 306283 | **GCO81348** | 300857 | **GCO83017** | 302075 | **GCO89002** | 301931 | **GDS10042** | 302441 | **GDS10193** |
| 306193 | **GCO81352** | 301957 | **GCO83017** | 302988 | **GCO89002** | 303199 | **GDS10043** | 302879 | **GDS10193** |
| 306277 | **GCO81357** | 301960 | **GCO83017** | 302989 | **GCO89002** | 303239 | **GDS10043** | 302880 | **GDS10194** |
| 306288 | **GCO81413** | 300841 | **GCO83018** | 302990 | **GCO89002** | 301802 | **GDS10044** | 302881 | **GDS10195** |
| 306284 | **GCO81467** | 301955 | **GCO83018** | 302983 | **GCO89003** | 301804 | **GDS10044** | 302885 | **GDS10195** |
| 306776 | **GCO81515** | 305750 | **GCO83018** | 300981 | **GCO89004** | 303349 | **GDS10048** | 302882 | **GDS10196** |
| 306198 | **GCO81520** | 300856 | **GCO83019** | 302073 | **GCO89004** | 303350 | **GDS10049** | 302930 | **GDS10200** |
| 306772 | **GCO81547** | 301961 | **GCO83019** | 303933 | **GCO99008** | 303680 | **GDS10057** | 302938 | **GDS10202** |
| 306773 | **GCO81547** | 301962 | **GCO83019** | 304831 | **GCO99037** | 303051 | **GDS10066** | 302940 | **GDS10202** |
| GKNJ20681 | **GCO81640** | 304333 | **GCO83019** | 303372 | **GCO99042** | 303050 | **GDS10067** | 303240 | **GDS10203** |
| 306965 | **GCO81667** | 306433 | **GCO83019** | 303538 | **GCO99089** | 303043 | **GDS10069** | 303245 | **GDS10204** |
| 306690 | **GCO81741** | 301956 | **GCO83020** | 305154 | **GCO99128** | 304009 | **GDS10070** | 302919 | **GDS10205** |
| 306278 | **GCO81750** | 303408 | **GCO83021** | 305174 | **GCO99129** | 303058 | **GDS10072** | 303244 | **GDS10205** |
| 306201 | **GCO81813** | 303409 | **GCO83021** | 303482 | **GCO99151** | 305065 | **GDS10072** | 303246 | **GDS10205** |
| 306777 | **GCO81814** | 303557 | **GCO83024** | 304308 | **GCO99159** | 301933 | **GDS10077** | 303472 | **GDS10206** |
| 306917 | **GCO81973** | 306216 | **GCO83024** | 303330 | **GCO99181** | 302877 | **GDS10077** | 303583 | **GDS10207** |
| 306691 | **GCO81974** | 302184 | **GCO83026** | 302048 | **GCO99209** | 303249 | **GDS10077** | 303584 | **GDS10208** |
| 306199 | **GCO81975** | 303556 | **GCO83027** | 301061 | **GCO99212** | 303251 | **GDS10078** | 305396 | **GDS10218** |
| 303270 | **GCO82002** | 306215 | **GCO83027** | 302166 | **GCO99212** | 303057 | **GDS10081** | 304785 | **GDS10231** |
| 300913 | **GCO82004** | 302941 | **GCO83033** | 303364 | **GCO99225** | 303056 | **GDS10082** | 304784 | **GDS10232** |
| 300919 | **GCO82004** | 302961 | **GCO83033** | 304893 | **GCO99254** | 301927 | **GDS10089** | 305129 | **GDS10238** |
| 302001 | **GCO82004** | 302962 | **GCO83033** | 304312 | **GCO99273** | 302913 | **GDS10089** | 305130 | **GDS10239** |
| 302002 | **GCO82004** | 303551 | **GCO83035** | 304728 | **GCO99282** | 301507 | **GDS10090** | 303466 | **GDS10242** |
| 302006 | **GCO82004** | GKNJ20707 | **GCO83035** | 304983 | **GCO99288** | 301791 | **GDS10090** | 304540 | **GDS10242** |
| 302009 | **GCO82004** | 304327 | **GCO83037** | 306662 | **GCO99298** | 301793 | **GDS10090** | 304573 | **GDS10242** |
| 303112 | **GCO82005** | 306689 | **GCO83037** | 306664 | **GCO99298** | 301934 | **GDS10090** | 305661 | **GDS10243** |
| 303114 | **GCO82006** | 300850 | **GCO83051** | 305520 | **GCO99318** | 301936 | **GDS10090** | 305338 | **GDS10248** |
| 303118 | **GCO82006** | 301951 | **GCO83051** | 306678 | **GCO99351** | 303248 | **GDS10090** | 305340 | **GDS10249** |
| 302025 | **GCO82009** | 304331 | **GCO83058** | 306631 | **GCO99366** | 303046 | **GDS10102** | 304939 | **GDS10250** |
| 302190 | **GCO82011** | GKNJ20714 | **GCO83058** | 303465 | **GDS10001** | 303047 | **GDS10103** | 305339 | **GDS10250** |
| 303196 | **GCO82012** | 304335 | **GCO83067** | 303467 | **GDS10001** | 303045 | **GDS10104** | 305409 | **GDS10250** |
| 303275 | **GCO82012** | GKNJ20708 | **GCO83067** | 304539 | **GDS10001** | 303042 | **GDS10105** | 304940 | **GDS10251** |
| 303194 | **GCO82013** | 300905 | **GCO83070** | 304572 | **GDS10001** | 303054 | **GDS10112** | 305043 | **GDS10251** |
| 303273 | **GCO82013** | 302024 | **GCO83070** | 304576 | **GDS10001** | 302436 | **GDS10113** | 304941 | **GDS10253** |
| 303609 | **GCO82014** | 302963 | **GCO83070** | 303468 | **GDS10002** | 302437 | **GDS10114** | 305040 | **GDS10254** |
| 303193 | **GCO82017** | 304952 | **GCO83077** | 304542 | **GDS10002** | 302917 | **GDS10118** | 305039 | **GDS10255** |
| 303272 | **GCO82017** | 305969 | **GCO83077** | 304577 | **GDS10002** | 303055 | **GDS10120** | 303681 | **GDS10264** |
| 303914 | **GCO82018** | 305117 | **GCO83078** | 301929 | **GDS10004** | 303579 | **GDS10121** | 304580 | **GDS10265** |
| 302456 | **GCO82019** | 304735 | **GCO83085** | 301921 | **GDS10007** | 304642 | **GDS10121** | 304579 | **GDS10266** |
| 306677 | **GCO82023** | 304956 | **GCO83086** | 301906 | **GDS10008** | 303464 | **GDS10124** | 304595 | **GDS10267** |
| 305364 | **GCO82024** | 304954 | **GCO83087** | 301926 | **GDS10008** | 304571 | **GDS10124** | 304685 | **GDS10268** |
| 304811 | **GCO82025** | 304958 | **GCO83087** | 301905 | **GDS10009** | 303463 | **GDS10125** | 305064 | **GDS10284** |
| 305366 | **GCO82026** | 304962 | **GCO83088** | 301925 | **GDS10009** | 304541 | **GDS10125** | 305406 | **GDS10295** |
| 306281 | **GCO82353** | 305119 | **GCO83092** | 303061 | **GDS10014** | 304570 | **GDS10125** | GKND12390 | **GDS10301** |
| 306282 | **GCO82353** | GKNJ20710 | **GCO83092** | 303060 | **GDS10016** | 304574 | **GDS10125** | GKND13064 | **GDS10301** |
| 306634 | **GCO82376** | 304640 | **GCO83101** | 303238 | **GDS10017** | 305576 | **GDS10125** | 304986 | **GDS10302** |
| 306285 | **GCO82386** | 305448 | **GCO83101** | 303241 | **GDS10018** | 302878 | **GDS10131** | 305343 | **GDS10302** |
| 306710 | **GCO82542** | 306658 | **GCO83101** | 303242 | **GDS10019** | 303253 | **GDS10131** | 306518 | **GDS10306** |
| 306692 | **GCO82603** | 306661 | **GCO83102** | 302914 | **GDS10020** | 303351 | **GDS10138** | GKND12184 | **GDS10309** |
| 306769 | **GCO82703** | 306275 | **GCO83103** | 302928 | **GDS10020** | 303582 | **GDS10139** | GKND13063 | **GDS10309** |
| 306289 | **GCO82734** | 302203 | **GCO83106** | 303247 | **GDS10021** | 303580 | **GDS10140** | 304581 | **GDS10310** |
| 306686 | **GCO82930** | 306276 | **GCO83107** | 302420 | **GDS10022** | 303581 | **GDS10141** | 304586 | **GDS10311** |
| 304329 | **GCO83002** | 306687 | **GCO83422** | 302440 | **GDS10025** | 303578 | **GDS10142** | 304644 | **GDS10312** |
| 306740 | **GCO83002** | GKNJ30032 | **GCO83522** | 303250 | **GDS10025** | 303577 | **GDS10143** | 304645 | **GDS10313** |
| 300971 | **GCO83007** | 306778 | **GCO83865** | 302918 | **GDS10026** | 303348 | **GDS10152** | 304987 | **GDS10314** |
| 302060 | **GCO83007** | 306709 | **GCO83893** | 303243 | **GDS10026** | 303059 | **GDS10155** | 305432 | **GDS10314** |
| 304623 | **GCO83007** | 300946 | **GCO84001** | 302931 | **GDS10028** | 303344 | **GDS10156** | 305578 | **GDS10314** |
| 301026 | **GCO83009** | 300948 | **GCO84001** | 303053 | **GDS10032** | 303347 | **GDS10157** | 305662 | **GDS10314** |
| 302129 | **GCO83009** | 302035 | **GCO84001** | 303052 | **GDS10033** | 303343 | **GDS10161** | 304988 | **GDS10320** |
| 300853 | **GCO83012** | 302038 | **GCO84001** | 303048 | **GDS10035** | 303493 | **GDS10162** | 305577 | **GDS10320** |
| 301950 | **GCO83012** | 306968 | **GCO85001** | 305831 | **GDS10035** | 303252 | **GDS10163** | 305663 | **GDS10320** |
| 301075 | **GCO83014** | 303892 | **GCO88002** | 303049 | **GDS10036** | 301928 | **GDS10164** | 304942 | **GDS10325** |
| 302182 | **GCO83014** | 300936 | **GCO88004** | 303044 | **GDS10037** | 302929 | **GDS10174** | 304989 | **GDS10335** |
| 302183 | **GCO83014** | 302027 | **GCO88004** | 301932 | **GDS10038** | 301830 | **GDS10177** | 305660 | **GDS10335** |
| 300855 | **GCO83016** | 305237 | **GCO88019** | 301920 | **GDS10039** | 303471 | **GDS10181** | GKND12223 | **GDS10339** |
| 301952 | **GCO83016** | 303900 | **GCO88021** | 301922 | **GDS10039** | 302915 | **GDS10186** | GKND10206 | **GDS10340** |

| COMPETITOR | G-AP Ref. | COMPETITOR | G-AP Ref. | COMPETITOR | G-AP Ref. | COMPETITOR | G-AP Ref. | COMPETITOR | G-AP Ref. |
|---|---|---|---|---|---|---|---|---|---|
| **LÖBRO** | | 306146 | **GDS17071** | 304538 | **GDS18201** | 305713 | **GDS18435** | 305475 | **GDS34252** |
| | | 304655 | **GDS17082** | 305487 | **GDS18201** | 306724 | **GDS18445** | 300690 | **GDS35001** |
| 303585 | **GDS10344** | GKND12444 | **GDS17088** | GKND12133 | **GDS18201** | 305403 | **GDS18455** | 302843 | **GDS35002** |
| 304648 | **GDS10348** | GKND11823 | **GDS17101** | GKND12265 | **GDS18201** | 304450 | **GDS18456** | 303152 | **GDS35003** |
| 305042 | **GDS10362** | GKND11824 | **GDS17112** | 306163 | **GDS18209** | 304448 | **GDS18457** | 300749 | **GDS35005** |
| 304946 | **GDS10363** | 305275 | **GDS17122** | 304531 | **GDS18216** | 304519 | **GDS18471** | 300689 | **GDS35006** |
| 303469 | **GDS10364** | GKND12130 | **GDS17141** | 304535 | **GDS18216** | 305582 | **GDS18472** | 303355 | **GDS35007** |
| 304730 | **GDS10364** | 304658 | **GDS17146** | 304537 | **GDS18216** | GKND12109 | **GDS18515** | 303356 | **GDS35008** |
| 304945 | **GDS10380** | 304659 | **GDS17147** | 305486 | **GDS18216** | 304873 | **GDS21032** | 303357 | **GDS35009** |
| 304646 | **GDS10381** | GKND12131 | **GDS17149** | GKND11694 | **GDS18216** | 304874 | **GDS21032** | 302865 | **GDS35010** |
| 304647 | **GDS10382** | GKND12385 | **GDS17152** | GKND12134 | **GDS18216** | 305212 | **GDS21035** | 305034 | **GDS35021** |
| 305045 | **GDS10383** | GKND12384 | **GDS17153** | 305116 | **GDS18218** | 305962 | **GDS21043** | 304515 | **GDS35022** |
| 305412 | **GDS10413** | 305585 | **GDS17170** | 305126 | **GDS18218** | 306889 | **GDS21043** | 305790 | **GDS35032** |
| 305411 | **GDS10415** | 305586 | **GDS17171** | 305156 | **GDS18218** | 305213 | **GDS21045** | 304378 | **GDS35037** |
| 305579 | **GDS10416** | GKND13067 | **GDS17171** | 305344 | **GDS18218** | 305207 | **GDS21051** | 304379 | **GDS35038** |
| 304944 | **GDS10421** | 304657 | **GDS17172** | 305112 | **GDS18219** | 305211 | **GDS21051** | GKND11726 | **GDS35039** |
| 305091 | **GDS10422** | 303652 | **GDS17187** | 305127 | **GDS18219** | 305233 | **GDS21053** | 306166 | **GDS35052** |
| 305093 | **GDS10423** | 303654 | **GDS17188** | 305345 | **GDS18219** | 304429 | **GDS21055** | 306167 | **GDS35053** |
| 305094 | **GDS10424** | 303655 | **GDS17189** | 305929 | **GDS18220** | 304431 | **GDS21056** | 305792 | **GDS35055** |
| 305098 | **GDS10425** | 304374 | **GDS17190** | 305466 | **GDS18231** | 305202 | **GDS21056** | 306373 | **GDS35067** |
| 304943 | **GDS10427** | 304375 | **GDS17191** | 305467 | **GDS18232** | 305408 | **GDS21061** | 306850 | **GDS35067** |
| 303679 | **GDS10430** | 304522 | **GDS17192** | 305716 | **GDS18242** | 304435 | **GDS21062** | GKND12138 | **GDS35067** |
| 305096 | **GDS10430** | 304523 | **GDS17193** | 305484 | **GDS18247** | 304428 | **GDS21063** | 306374 | **GDS35068** |
| 305097 | **GDS10431** | 304568 | **GDS17194** | 305485 | **GDS18248** | 304434 | **GDS21071** | GKND12371 | **GDS35068** |
| 304990 | **GDS10435** | 304368 | **GDS17201** | 305711 | **GDS18259** | 305210 | **GDS21073** | GKND11725 | **GDS35074** |
| 305341 | **GDS10435** | 304369 | **GDS17206** | GKND12438 | **GDS18261** | 305918 | **GDS21074** | 305791 | **GDS35075** |
| 305100 | **GDS10440** | GKND12918 | **GDS17231** | 305655 | **GDS18265** | 305958 | **GDS21075** | GKND12110 | **GDS35078** |
| 303522 | **GDS11003** | 302403 | **GDS18001** | 305712 | **GDS18265** | 305234 | **GDS21092** | 304806 | **GDS35084** |
| 304513 | **GDS11014** | 302400 | **GDS18002** | 304781 | **GDS18271** | 305920 | **GDS21093** | 304545 | **GDS35085** |
| 304514 | **GDS11014** | 302405 | **GDS18002** | 305827 | **GDS18271** | 305921 | **GDS21093** | 305621 | **GDS35085** |
| 306732 | **GDS11020** | 302404 | **GDS18003** | 304779 | **GDS18274** | 306171 | **GDS21094** | 304544 | **GDS35086** |
| 304511 | **GDS11021** | 302406 | **GDS18004** | 304270 | **GDS18284** | 305208 | **GDS21110** | 305441 | **GDS35086** |
| 304512 | **GDS11021** | 302397 | **GDS18005** | 301347 | **GDS18289** | 305209 | **GDS21111** | 304549 | **GDS35087** |
| 306725 | **GDS11021** | 302399 | **GDS18006** | 305778 | **GDS18290** | GKND12079 | **GDS21114** | GKND11784 | **GDS35094** |
| 306388 | **GDS11024** | 303545 | **GDS18007** | 305103 | **GDS18291** | 304278 | **GDS23038** | GKND11785 | **GDS35095** |
| 306398 | **GDS11024** | 302831 | **GDS18008** | GKND11766 | **GDS18294** | 304279 | **GDS23039** | 306380 | **GDS35096** |
| 305653 | **GDS14053** | 302835 | **GDS18008** | GKND12216 | **GDS18294** | 301430 | **GDS23040** | 306851 | **GDS35104** |
| GKND12426 | **GDS14053** | 302830 | **GDS18009** | GKND12989 | **GDS18294** | GKND12380 | **GDS23070** | GKND12139 | **GDS35104** |
| 302972 | **GDS17001** | 302832 | **GDS18009** | GKND11765 | **GDS18295** | GKND12381 | **GDS23071** | GKND12401 | **GDS35119** |
| 303668 | **GDS17010** | 302834 | **GDS18009** | GKND12974 | **GDS18295** | 304275 | **GDS23078** | 306870 | **GDS35121** |
| 303669 | **GDS17011** | 302838 | **GDS18010** | 304783 | **GDS18301** | 304274 | **GDS23122** | GKND11733 | **GDS35133** |
| 305809 | **GDS17013** | 304272 | **GDS18015** | 305633 | **GDS18315** | GKND12387 | **GDS23174** | 304218 | **GDS38001** |
| 305825 | **GDS17014** | 302398 | **GDS18016** | 305632 | **GDS18319** | 305928 | **GDS23198** | 304219 | **GDS38002** |
| 303700 | **GDS17015** | 304273 | **GDS18019** | 306798 | **GDS18319** | 305601 | **GDS23199** | GKND12392 | **GDS39006** |
| 303701 | **GDS17016** | 305710 | **GDS18036** | 304536 | **GDS18326** | GKND12356 | **GDS23325** | GKND12423 | **GDS39007** |
| 303656 | **GDS17018** | 306451 | **GDS18036** | 304534 | **GDS18333** | GKND12386 | **GDS23326** | 301376 | **GDS41001** |
| 303657 | **GDS17022** | 301359 | **GDS18039** | 306024 | **GDS18334** | GKND12414 | **GDS24033** | 301375 | **GDS41004** |
| 303648 | **GDS17025** | 301360 | **GDS18040** | 306890 | **GDS18334** | GKND12388 | **GDS24153** | 301377 | **GDS41005** |
| 304366 | **GDS17032** | 305035 | **GDS18041** | 306891 | **GDS18334** | GKND12416 | **GDS24194** | 301394 | **GDS41024** |
| 304367 | **GDS17033** | 305037 | **GDS18041** | 306553 | **GDS18335** | GKND12417 | **GDS24282** | 304797 | **GDS41055** |
| 303658 | **GDS17037** | 304232 | **GDS18042** | GKND12200 | **GDS18340** | GKND12419 | **GDS24283** | 301374 | **GDS41094** |
| 302971 | **GDS17038** | 305930 | **GDS18043** | 305907 | **GDS18343** | GKND12372 | **GDS24299** | 301378 | **GDS41130** |
| 303659 | **GDS17039** | 301358 | **GDS18044** | 304533 | **GDS18351** | GKND12373 | **GDS24362** | 304996 | **GDS41200** |
| GKND12443 | **GDS17039** | 304233 | **GDS18046** | 305104 | **GDS18358** | GKND12402 | **GDS24523** | 304997 | **GDS41200** |
| 304907 | **GDS17040** | 304234 | **GDS18101** | 305105 | **GDS18359** | GKND12418 | **GDS24528** | GKND12267 | **GDS41200** |
| 303653 | **GDS17048** | 304236 | **GDS18101** | GKND12436 | **GDS18359** | GKND12382 | **GDS24529** | GKND12187 | **GDS41260** |
| 305815 | **GDS17050** | 304235 | **GDS18102** | 306435 | **GDS18361** | GKND12389 | **GDS24530** | 304999 | **GDS41261** |
| 305832 | **GDS17050** | 304237 | **GDS18102** | GKND13040 | **GDS18365** | GKND12420 | **GDS24531** | 304889 | **GDS41262** |
| 306160 | **GDS17052** | 302833 | **GDS18106** | 305747 | **GDS18367** | GKND12415 | **GDS24533** | 305164 | **GDS41299** |
| 305814 | **GDS17053** | 301330 | **GDS18118** | GKND12185 | **GDS18380** | GKND12383 | **GDS24542** | 306298 | **GDS41300** |
| 304526 | **GDS17054** | 301346 | **GDS18118** | GKND12218 | **GDS18389** | GKND12421 | **GDS24566** | 305330 | **GDS41327** |
| 305862 | **GDS17055** | 300659 | **GDS18128** | 305468 | **GDS18402** | GKND12422 | **GDS27017** | 305329 | **GDS41328** |
| 305838 | **GDS17064** | 300660 | **GDS18129** | GKND12186 | **GDS18405** | 301467 | **GDS28001** | GKND12144 | **GDS41329** |
| 304656 | **GDS17066** | 305709 | **GDS18142** | GKND12206 | **GDS18406** | 301468 | **GDS28002** | GKND12143 | **GDS41330** |
| 304660 | **GDS17066** | 301357 | **GDS18179** | GKND12913 | **GDS18408** | GKND12257 | **GDS30002** | GKND12231 | **GDS41337** |
| 305839 | **GDS17069** | 306172 | **GDS18193** | 305906 | **GDS18410** | GKND12980 | **GDS30002** | 305168 | **GDS41365** |
| 305054 | **GDS17070** | 305254 | **GDS18197** | 306436 | **GDS18414** | 303786 | **GDS34044** | 305853 | **GDS41365** |
| 305053 | **GDS17071** | 304532 | **GDS18201** | 305584 | **GDS18434** | GKND12237 | **GDS34171** | 305000 | **GDS41407** |

| COMPETITOR | G-AP Ref. | COMPETITOR | G-AP Ref. | COMPETITOR | G-AP Ref. | COMPETITOR | G-AP Ref. | COMPETITOR | G-AP Ref. |
|---|---|---|---|---|---|---|---|---|---|
| **LÖBRO** | | 305057 | **GDS44078** | 302922 | **GDS45151** | 302904 | **GDS50093** | 303066 | **GDS50311** |
| | | 305059 | **GDS44078** | 303488 | **GDS45152** | 301900 | **GDS50095** | 303623 | **GDS50311** |
| 305002 | **GDS41408** | 305060 | **GDS44078** | 302425 | **GDS45153** | 303071 | **GDS50099** | 304343 | **GDS50313** |
| 304998 | **GDS41409** | 305052 | **GDS44079** | 302429 | **GDS45153** | 303072 | **GDS50100** | 305128 | **GDS50313** |
| 305166 | **GDS41441** | 305058 | **GDS44079** | 304791 | **GDS45157** | 304365 | **GDS50102** | 303457 | **GDS50316** |
| 304995 | **GDS41451** | 304875 | **GDS44080** | 304792 | **GDS45158** | 302889 | **GDS50105** | 303456 | **GDS50320** |
| 305001 | **GDS41452** | 305223 | **GDS44094** | 301842 | **GDS45160** | 301887 | **GDS50116** | 303614 | **GDS50323** |
| 305012 | **GDS41453** | 304398 | **GDS44095** | GKND12972 | **GDS45174** | 301866 | **GDS50118** | 303618 | **GDS50323** |
| 305165 | **GDS41475** | 304399 | **GDS44096** | GKND13145 | **GDS45175** | 301870 | **GDS50120** | 303617 | **GDS50324** |
| 305169 | **GDS41481** | 304432 | **GDS44097** | 302920 | **GDS45182** | 304465 | **GDS50125** | 303622 | **GDS50327** |
| GKND12232 | **GDS41485** | 304433 | **GDS44098** | 304593 | **GDS45193** | 303080 | **GDS50130** | 303632 | **GDS50328** |
| GKND12960 | **GDS41486** | 305206 | **GDS44099** | 304592 | **GDS45194** | 303068 | **GDS50131** | 303633 | **GDS50329** |
| GKND12961 | **GDS41489** | 305220 | **GDS44100** | 301837 | **GDS45198** | 302899 | **GDS50132** | 303634 | **GDS50330** |
| GKND13041 | **GDS41490** | 305106 | **GDS44101** | 304590 | **GDS45200** | 302907 | **GDS50134** | 304719 | **GDS50348** |
| GKND12205 | **GDS41495** | 302923 | **GDS45002** | 304591 | **GDS45201** | 301855 | **GDS50145** | 304733 | **GDS50353** |
| 305327 | **GDS41509** | 301834 | **GDS45004** | 304594 | **GDS45202** | 303616 | **GDS50148** | 305193 | **GDS50353** |
| 305328 | **GDS41510** | 302926 | **GDS45007** | 304588 | **GDS45203** | 301899 | **GDS50150** | 304710 | **GDS50354** |
| 305170 | **GDS41538** | 301848 | **GDS45008** | 304589 | **GDS45204** | 303228 | **GDS50150** | 304726 | **GDS50354** |
| 305167 | **GDS41577** | 303208 | **GDS45009** | 305401 | **GDS45220** | 303229 | **GDS50151** | 303231 | **GDS50357** |
| GKND12393 | **GDS41586** | 303209 | **GDS45010** | 305402 | **GDS45223** | 303615 | **GDS50159** | 304364 | **GDS50359** |
| GKND12394 | **GDS41587** | 303207 | **GDS45011** | 305749 | **GDS45225** | 303620 | **GDS50159** | 305258 | **GDS50364** |
| 302385 | **GDS44001** | 303206 | **GDS45012** | 302946 | **GDS48002** | 303742 | **GDS50160** | 305541 | **GDS50364** |
| 301505 | **GDS44002** | 301835 | **GDS45014** | 301862 | **GDS50001** | 303234 | **GDS50162** | 305580 | **GDS50364** |
| 305224 | **GDS44002** | 301801 | **GDS45015** | 301878 | **GDS50001** | 305535 | **GDS50162** | 304567 | **GDS50365** |
| 303495 | **GDS44003** | 301803 | **GDS45015** | 301882 | **GDS50001** | 303505 | **GDS50166** | 304845 | **GDS50366** |
| 303219 | **GDS44004** | 303217 | **GDS45016** | 301895 | **GDS50001** | 301877 | **GDS50173** | 304712 | **GDS50369** |
| 303218 | **GDS44005** | 302427 | **GDS45017** | 301879 | **GDS50002** | 304303 | **GDS50193** | 304724 | **GDS50372** |
| 301885 | **GDS44006** | 303489 | **GDS45020** | 301873 | **GDS50003** | 304301 | **GDS50194** | 304967 | **GDS50377** |
| 301709 | **GDS44011** | 301836 | **GDS45021** | 303233 | **GDS50004** | 303549 | **GDS50197** | 305319 | **GDS50379** |
| 303503 | **GDS44012** | 301509 | **GDS45023** | 301859 | **GDS50006** | 303069 | **GDS50199** | 304910 | **GDS50380** |
| 303496 | **GDS44013** | 301838 | **GDS45023** | 302888 | **GDS50008** | 303462 | **GDS50200** | 304917 | **GDS50380** |
| 301706 | **GDS44014** | 302428 | **GDS45024** | 303064 | **GDS50009** | 301868 | **GDS50201** | 305766 | **GDS50383** |
| 303502 | **GDS44016** | 301833 | **GDS45025** | 303613 | **GDS50009** | 301888 | **GDS50205** | 305257 | **GDS50386** |
| 303500 | **GDS44017** | 303490 | **GDS45026** | 303621 | **GDS50009** | 303625 | **GDS50207** | 303619 | **GDS50389** |
| 304906 | **GDS44020** | 303202 | **GDS45027** | 303220 | **GDS50010** | 304849 | **GDS50207** | 304258 | **GDS50390** |
| 303514 | **GDS44021** | 303204 | **GDS45031** | 303221 | **GDS50011** | 303459 | **GDS50211** | 304259 | **GDS50391** |
| 303498 | **GDS44022** | 303205 | **GDS45032** | 301890 | **GDS50014** | 303501 | **GDS50214** | 304857 | **GDS50391** |
| 305217 | **GDS44025** | 303203 | **GDS45035** | 301891 | **GDS50015** | 302898 | **GDS50215** | 304260 | **GDS50392** |
| 304405 | **GDS44026** | 301789 | **GDS45066** | 301898 | **GDS50015** | 303460 | **GDS50221** | 304261 | **GDS50393** |
| 304400 | **GDS44027** | 301841 | **GDS45070** | 303461 | **GDS50019** | 304969 | **GDS50223** | 304300 | **GDS50394** |
| 304404 | **GDS44027** | 301847 | **GDS45070** | 303065 | **GDS50021** | 305482 | **GDS50225** | 304302 | **GDS50395** |
| 304426 | **GDS44028** | 304507 | **GDS45084** | 301886 | **GDS50022** | 303631 | **GDS50226** | 304461 | **GDS50397** |
| 304424 | **GDS44029** | 304508 | **GDS45084** | 301865 | **GDS50023** | 303636 | **GDS50227** | 304466 | **GDS50398** |
| 304427 | **GDS44030** | 305480 | **GDS45084** | 302908 | **GDS50026** | 303626 | **GDS50228** | 304565 | **GDS50399** |
| 305201 | **GDS44030** | 304509 | **GDS45085** | 303067 | **GDS50027** | 304800 | **GDS50245** | 304687 | **GDS50400** |
| 304425 | **GDS44031** | 304510 | **GDS45085** | 303078 | **GDS50028** | 303497 | **GDS50246** | 304802 | **GDS50400** |
| 305219 | **GDS44032** | 303200 | **GDS45094** | 302435 | **GDS50031** | 303079 | **GDS50247** | 304689 | **GDS50401** |
| 304415 | **GDS44033** | 303216 | **GDS45101** | 301869 | **GDS50032** | 303458 | **GDS50247** | 304716 | **GDS50402** |
| 303553 | **GDS44036** | 303470 | **GDS45103** | 301880 | **GDS50036** | 303504 | **GDS50249** | 304718 | **GDS50403** |
| 304410 | **GDS44038** | 304731 | **GDS45103** | 301881 | **GDS50037** | 303081 | **GDS50252** | 305197 | **GDS50403** |
| 304411 | **GDS44039** | 303571 | **GDS45104** | 301894 | **GDS50037** | 303612 | **GDS50253** | 304853 | **GDS50404** |
| 305055 | **GDS44040** | 303572 | **GDS45105** | 303455 | **GDS50038** | 305111 | **GDS50255** | 304860 | **GDS50405** |
| 305971 | **GDS44040** | 303491 | **GDS45106** | 304337 | **GDS50038** | 304723 | **GDS50256** | 304899 | **GDS50405** |
| 306144 | **GDS44040** | 303494 | **GDS45108** | 303550 | **GDS50043** | 304972 | **GDS50260** | 305603 | **GDS50410** |
| 305056 | **GDS44042** | 303575 | **GDS45113** | 303624 | **GDS50043** | 304805 | **GDS50261** | 305312 | **GDS50416** |
| GKND12145 | **GDS44043** | 303574 | **GDS45119** | 301867 | **GDS50044** | 305195 | **GDS50261** | 305313 | **GDS50416** |
| 304420 | **GDS44044** | 303682 | **GDS45120** | 302903 | **GDS50046** | 304973 | **GDS50263** | 305027 | **GDS50422** |
| 301705 | **GDS44048** | 303570 | **GDS45126** | 301889 | **GDS50050** | 305503 | **GDS50263** | 305324 | **GDS50425** |
| 305204 | **GDS44051** | 304985 | **GDS45133** | 301872 | **GDS50052** | 305536 | **GDS50263** | 305326 | **GDS50426** |
| 305205 | **GDS44052** | 305131 | **GDS45133** | 301874 | **GDS50052** | 303637 | **GDS50268** | 305793 | **GDS50426** |
| 301708 | **GDS44059** | 305342 | **GDS45133** | 302905 | **GDS50053** | 303070 | **GDS50271** | 305765 | **GDS50427** |
| 305788 | **GDS44064** | 301829 | **GDS45134** | 303077 | **GDS50054** | 306113 | **GDS50272** | 305903 | **GDS50428** |
| 305789 | **GDS44065** | 301840 | **GDS45134** | 303076 | **GDS50055** | 304862 | **GDS50279** | 305317 | **GDS50429** |
| 305719 | **GDS44068** | 303215 | **GDS45137** | 303507 | **GDS50057** | 305255 | **GDS50280** | 305325 | **GDS50430** |
| 304401 | **GDS44075** | 304790 | **GDS45137** | 303499 | **GDS50058** | 303628 | **GDS50281** | 304463 | **GDS50437** |
| 304408 | **GDS44076** | 303214 | **GDS45138** | 303508 | **GDS50059** | 303074 | **GDS50295** | 304690 | **GDS50438** |
| 304409 | **GDS44077** | 302921 | **GDS45150** | 303515 | **GDS50060** | 303075 | **GDS50296** | 304338 | **GDS50440** |
| 305051 | **GDS44078** | 302925 | **GDS45150** | 303073 | **GDS50074** | 302906 | **GDS50309** | 304342 | **GDS50441** |

| COMPETITOR | G-AP Ref. | COMPETITOR | G-AP Ref. | COMPETITOR | G-AP Ref. | COMPETITOR | G-AP Ref. | COMPETITOR | G-AP Ref. |
|---|---|---|---|---|---|---|---|---|---|
| **LÖBRO** | | 304713 | **GDS50562** | GKND30024 | **GDS56119** | GKND12146 | **GDS59206** | 301287 | **GDS61019** |
| | | 306395 | **GDS50563** | GKND30023 | **GDS56120** | GKND12151 | **GDS59206** | 303312 | **GDS61019** |
| 304777 | **GDS50442** | 306392 | **GDS50564** | 306788 | **GDS56127** | 305890 | **GDS59207** | 304321 | **GDS61019** |
| 304778 | **GDS50442** | 306733 | **GDS50564** | 306747 | **GDS56186** | GKND12147 | **GDS59208** | 304359 | **GDS61019** |
| 304714 | **GDS50443** | GKND12165 | **GDS50567** | 306792 | **GDS56216** | GKND12411 | **GDS59209** | 305251 | **GDS61020** |
| 304852 | **GDS50444** | 305362 | **GDS50570** | 305988 | **GDS56271** | GKND12360 | **GDS59212** | 301620 | **GDS61028** |
| 304569 | **GDS50445** | 305574 | **GDS50572** | 305987 | **GDS56272** | 304949 | **GDS59268** | 304360 | **GDS61033** |
| 303629 | **GDS50446** | 305446 | **GDS50573** | GKND11997 | **GDS56334** | GKND12034 | **GDS59270** | 302380 | **GDS61034** |
| 304562 | **GDS50446** | 305434 | **GDS50574** | GKND12970 | **GDS56367** | GKND12991 | **GDS59270** | 306296 | **GDS61040** |
| 304688 | **GDS50447** | 303235 | **GDS50579** | GKND12971 | **GDS56370** | 305893 | **GDS59272** | 304750 | **GDS61042** |
| 304951 | **GDS50451** | 305545 | **GDS50586** | GKND12959 | **GDS56654** | 304947 | **GDS59316** | 304771 | **GDS61042** |
| 305188 | **GDS50452** | 305905 | **GDS50586** | 305923 | **GDS56692** | 304948 | **GDS59317** | 303153 | **GDS61045** |
| 305602 | **GDS50453** | 305544 | **GDS50587** | 306255 | **GDS56869** | GKND12152 | **GDS59343** | 303155 | **GDS61045** |
| 304922 | **GDS50455** | 303236 | **GDS50588** | 306256 | **GDS56873** | GKND12253 | **GDS59344** | 301322 | **GDS61052** |
| 304851 | **GDS50460** | 305321 | **GDS50591** | 306828 | **GDS56874** | GKND12154 | **GDS59345** | 302375 | **GDS61052** |
| 302911 | **GDS50461** | 305322 | **GDS50592** | 306829 | **GDS56875** | GKND12254 | **GDS59346** | 302379 | **GDS61052** |
| 304464 | **GDS50462** | 305363 | **GDS50593** | GKND13047 | **GDS56879** | GKND12412 | **GDS59445** | 303164 | **GDS61052** |
| 304468 | **GDS50462** | 304918 | **GDS50596** | GKND13048 | **GDS56880** | 304950 | **GDS59447** | 301549 | **GDS61055** |
| 305932 | **GDS50463** | 305318 | **GDS50604** | GKND13146 | **GDS56985** | 305418 | **GDS59494** | 301552 | **GDS61055** |
| 305931 | **GDS50464** | 305357 | **GDS50605** | GKND12405 | **GDS57004** | 304786 | **GDS59495** | 301554 | **GDS61055** |
| 305592 | **GDS50465** | 306738 | **GDS50608** | 302840 | **GDS57039** | 306608 | **GDS59505** | 304444 | **GDS61063** |
| 304344 | **GDS50471** | 306248 | **GDS50612** | 302839 | **GDS57040** | 305425 | **GDS59520** | 302837 | **GDS61065** |
| 305194 | **GDS50483** | GKND12666 | **GDS50612** | 305110 | **GDS57077** | GKND12249 | **GDS59535** | 301553 | **GDS61067** |
| 305934 | **GDS50487** | 306734 | **GDS50617** | 305109 | **GDS57078** | 305419 | **GDS59552** | 304442 | **GDS61074** |
| 306394 | **GDS50487** | 305935 | **GDS50618** | GKND12454 | **GDS57086** | 305423 | **GDS59553** | 304441 | **GDS61075** |
| 306396 | **GDS50487** | 306737 | **GDS50620** | 305474 | **GDS57165** | 305421 | **GDS59589** | 304619 | **GDS61078** |
| 306397 | **GDS50488** | 304919 | **GDS50622** | GKND12261 | **GDS57165** | 305414 | **GDS59621** | 303925 | **GDS61082** |
| 306114 | **GDS50489** | 305904 | **GDS50625** | GKND12453 | **GDS57183** | 305417 | **GDS59621** | 303924 | **GDS61083** |
| 305479 | **GDS50492** | 304007 | **GDS50627** | 304871 | **GDS57197** | GKND12115 | **GDS59623** | 304501 | **GDS61084** |
| 305478 | **GDS50493** | 305909 | **GDS50630** | 304869 | **GDS57221** | 305416 | **GDS59633** | 304506 | **GDS61084** |
| 304895 | **GDS50494** | 303627 | **GDS50632** | 304868 | **GDS57222** | 305624 | **GDS59635** | 305511 | **GDS61084** |
| 304970 | **GDS50495** | 305908 | **GDS50632** | 304870 | **GDS57223** | 305625 | **GDS59636** | 302836 | **GDS61085** |
| 304911 | **GDS50496** | 304003 | **GDS50634** | 305314 | **GDS57265** | 305415 | **GDS59657** | 305483 | **GDS61087** |
| 304782 | **GDS50497** | 301423 | **GDS51001** | GKND13068 | **GDS57276** | 305420 | **GDS59658** | 304356 | **GDS61088** |
| 306389 | **GDS50501** | 301574 | **GDS51004** | GKND12954 | **GDS57336** | 305424 | **GDS59659** | 304760 | **GDS61093** |
| 304005 | **GDS50506** | 301424 | **GDS51010** | 304491 | **GDS57411** | 305422 | **GDS59660** | 304769 | **GDS61094** |
| 305836 | **GDS50507** | 304456 | **GDS51021** | GKND12669 | **GDS57423** | 305426 | **GDS59661** | 304753 | **GDS61096** |
| 306391 | **GDS50507** | GKND12258 | **GDS51025** | 306455 | **GDS57452** | 305413 | **GDS59662** | 304749 | **GDS61097** |
| 306390 | **GDS50508** | 305626 | **GDS51036** | 306228 | **GDS57486** | GKND12150 | **GDS59665** | 304445 | **GDS61098** |
| 305764 | **GDS50510** | GKND12251 | **GDS51038** | GKND30025 | **GDS57555** | GKND13115 | **GDS59665** | 304446 | **GDS61099** |
| GKND12235 | **GDS50512** | GKND12252 | **GDS51039** | GKND30026 | **GDS57556** | GKND12197 | **GDS59666** | 305785 | **GDS61100** |
| GKND12236 | **GDS50513** | GKND12427 | **GDS51048** | 306645 | **GDS57577** | GKND12209 | **GDS59674** | GKND12993 | **GDS61100** |
| 305186 | **GDS50514** | 304518 | **GDS51068** | GKND12123 | **GDS57578** | GKND12199 | **GDS59681** | 305786 | **GDS61101** |
| 305187 | **GDS50515** | 304447 | **GDS51069** | 305829 | **GDS57622** | 301506 | **GDS60002** | GKND12982 | **GDS61101** |
| 304725 | **GDS50516** | 304449 | **GDS51070** | GKND12964 | **GDS57656** | 302386 | **GDS60002** | 304499 | **GDS61105** |
| 304711 | **GDS50517** | 304517 | **GDS51071** | GKND12984 | **GDS57760** | 303554 | **GDS60002** | 305652 | **GDS61105** |
| 304717 | **GDS50518** | 304520 | **GDS51072** | GKND13089 | **GDS57876** | 304414 | **GDS60013** | 301324 | **GDS61107** |
| 304721 | **GDS50519** | 302949 | **GDS52001** | GKND12962 | **GDS57878** | 304418 | **GDS60013** | 302377 | **GDS61107** |
| 304855 | **GDS50520** | 302950 | **GDS52001** | 306428 | **GDS57935** | 305858 | **GDS60015** | 306259 | **GDS61112** |
| 304959 | **GDS50521** | 302951 | **GDS52002** | 306427 | **GDS57936** | 305232 | **GDS60016** | 301323 | **GDS61119** |
| 304960 | **GDS50522** | 301715 | **GDS53001** | 306545 | **GDS57960** | 305218 | **GDS60021** | 302376 | **GDS61119** |
| 304961 | **GDS50523** | 301718 | **GDS53002** | 306098 | **GDS58072** | 305222 | **GDS60021** | 303927 | **GDS61121** |
| 304971 | **GDS50524** | 301532 | **GDS53003** | GKND30028 | **GDS58120** | 304780 | **GDS60022** | 301220 | **GDS61122** |
| 305030 | **GDS50525** | 301537 | **GDS53003** | 306461 | **GDS58195** | 305449 | **GDS60022** | 304351 | **GDS61123** |
| 305031 | **GDS50526** | 301534 | **GDS53004** | GKND12660 | **GDS58206** | 305216 | **GDS60025** | 304772 | **GDS61126** |
| 304004 | **GDS50527** | 301548 | **GDS53004** | GKND12661 | **GDS58207** | 305215 | **GDS60026** | 304775 | **GDS61126** |
| 304006 | **GDS50527** | 301533 | **GDS53005** | 306864 | **GDS58211** | 305214 | **GDS60027** | 305753 | **GDS61133** |
| 305316 | **GDS50536** | 301535 | **GDS53005** | 306862 | **GDS58213** | 305922 | **GDS60027** | 306866 | **GDS61138** |
| 305139 | **GDS50538** | 301538 | **GDS53005** | GKND13046 | **GDS58230** | 304419 | **GDS60035** | 304502 | **GDS61140** |
| 305140 | **GDS50539** | 301547 | **GDS53005** | GKND12952 | **GDS58248** | 301241 | **GDS61001** | 305769 | **GDS61147** |
| 305575 | **GDS50540** | 304755 | **GDS53007** | GKND12957 | **GDS58298** | 301242 | **GDS61002** | 305752 | **GDS61150** |
| 305029 | **GDS50541** | 306056 | **GDS53008** | GKND12968 | **GDS58299** | 303167 | **GDS61003** | 306161 | **GDS61153** |
| 305136 | **GDS50542** | 301470 | **GDS54001** | GKND12956 | **GDS58300** | 303165 | **GDS61004** | 306162 | **GDS61153** |
| GKND12167 | **GDS50543** | 301469 | **GDS54002** | GKND13190 | **GDS58367** | 303546 | **GDS61007** | 304287 | **GDS61157** |
| 305135 | **GDS50544** | 304751 | **GDS54011** | GKND13191 | **GDS58372** | 304847 | **GDS61007** | 301551 | **GDS61172** |
| 304467 | **GDS50552** | 304747 | **GDS54013** | GKND12406 | **GDS59011** | 301722 | **GDS61009** | GKND12158 | **GDS61173** |
| 304715 | **GDS50554** | 305157 | **GDS56093** | GKND12168 | **GDS59015** | 303547 | **GDS61010** | GKND12159 | **GDS61173** |
| 305656 | **GDS50557** | GKND13090 | **GDS56110** | GKND12157 | **GDS59077** | 301619 | **GDS61011** | 304618 | **GDS61183** |

| COMPETITOR | G-AP Ref. | COMPETITOR | G-AP Ref. | COMPETITOR | G-AP Ref. | COMPETITOR | G-AP Ref. | COMPETITOR | G-AP Ref. |
|---|---|---|---|---|---|---|---|---|---|
| **LÖBRO** | | 305516 | **GDS62026** | 306465 | **GDS81531** | 305919 | **GDS82083** | 301290 | **GDS83015** |
| | | GKND11696 | **GDS62028** | GKND13139 | **GDS81531** | 305203 | **GDS82084** | 303314 | **GDS83019** |
| 305820 | **GDS61184** | 305555 | **GDS62029** | 305941 | **GDS81561** | 306852 | **GDS82085** | 304861 | **GDS83019** |
| 305821 | **GDS61185** | 305560 | **GDS62031** | 306226 | **GDS81580** | GKND12434 | **GDS82086** | 303315 | **GDS83020** |
| 304352 | **GDS61186** | 305513 | **GDS62033** | 305945 | **GDS81581** | 306785 | **GDS82094** | 303922 | **GDS83022** |
| 304439 | **GDS61189** | 306549 | **GDS62033** | 304756 | **GDS81582** | 305077 | **GDS82156** | 303592 | **GDS83023** |
| 305617 | **GDS61190** | 305514 | **GDS62034** | 304765 | **GDS81583** | 305081 | **GDS82168** | 305532 | **GDS83025** |
| 305616 | **GDS61191** | 305664 | **GDS62039** | 306462 | **GDS81588** | 305082 | **GDS82168** | 306463 | **GDS83025** |
| 305900 | **GDS61192** | 305559 | **GDS62057** | 306468 | **GDS81588** | GKND11158 | **GDS82173** | 306464 | **GDS83026** |
| 305901 | **GDS61193** | 304743 | **GDS62060** | 306459 | **GDS81589** | GKND12289 | **GDS82173** | 306524 | **GDS83026** |
| 304763 | **GDS61201** | 305937 | **GDS62060** | 306371 | **GDS81591** | GKND12195 | **GDS82174** | 304615 | **GDS83036** |
| GKND12127 | **GDS61201** | 305779 | **GDS62062** | 304290 | **GDS81593** | GKND12180 | **GDS82177** | 301212 | **GDS83040** |
| GKND12999 | **GDS61201** | 304744 | **GDS62063** | 306460 | **GDS81596** | 306168 | **GDS82185** | 301260 | **GDS83044** |
| 303160 | **GDS61203** | 306457 | **GDS62063** | GKND11983 | **GDS81596** | 306706 | **GDS82185** | 303154 | **GDS83046** |
| 304354 | **GDS61203** | 305665 | **GDS62065** | GKND12408 | **GDS81615** | GKND12226 | **GDS82229** | 303156 | **GDS83046** |
| 304859 | **GDS61204** | 305889 | **GDS62083** | GKND12407 | **GDS81616** | GKND12192 | **GDS82230** | 301289 | **GDS83048** |
| 304438 | **GDS61205** | 306541 | **GDS62124** | 306295 | **GDS81653** | GKND12194 | **GDS82231** | 301307 | **GDS83050** |
| 304504 | **GDS61210** | 306540 | **GDS62126** | 306375 | **GDS81662** | GKND12111 | **GDS82232** | 301313 | **GDS83051** |
| 304774 | **GDS61211** | 305722 | **GDS62136** | 306376 | **GDS81663** | 305080 | **GDS82239** | 304617 | **GDS83052** |
| 305896 | **GDS61213** | 305566 | **GDS62140** | 306469 | **GDS81665** | GKND12413 | **GDS82244** | 305076 | **GDS83052** |
| 305648 | **GDS61215** | 305568 | **GDS62141** | 305948 | **GDS81681** | GKND12234 | **GDS82245** | 304286 | **GDS83057** |
| 305895 | **GDS61215** | GKND12001 | **GDS62143** | 306456 | **GDS81715** | GKND13088 | **GDS82256** | 304291 | **GDS83057** |
| 304826 | **GDS61223** | 305469 | **GDS75056** | GKND12106 | **GDS81715** | 306855 | **GDS82258** | 305070 | **GDS83057** |
| 304850 | **GDS61236** | 301429 | **GDS81020** | 305949 | **GDS81716** | 305973 | **GDS82262** | 305075 | **GDS83057** |
| 305618 | **GDS61238** | 306674 | **GDS81066** | 306225 | **GDS81728** | 305975 | **GDS82266** | 304288 | **GDS83058** |
| 304285 | **GDS61243** | 305399 | **GDS81105** | 306149 | **GDS81761** | GKND12676 | **GDS82284** | 304292 | **GDS83058** |
| 304284 | **GDS61244** | 306820 | **GDS81107** | 306331 | **GDS81767** | 304676 | **GDS82294** | 305078 | **GDS83058** |
| 304616 | **GDS61252** | 305651 | **GDS81108** | 306437 | **GDS81767** | GKND12188 | **GDS82320** | 305079 | **GDS83058** |
| 305902 | **GDS61255** | 305650 | **GDS81109** | GKND12288 | **GDS81767** | 306227 | **GDS82326** | 301320 | **GDS83060** |
| 304528 | **GDS61257** | 306299 | **GDS81110** | GKND12098 | **GDS81771** | 304295 | **GDS82350** | 301321 | **GDS83061** |
| 305295 | **GDS61257** | 305292 | **GDS81114** | GKND13101 | **GDS81772** | GKND12173 | **GDS82351** | 304443 | **GDS83063** |
| 304529 | **GDS61258** | 305243 | **GDS81120** | 305856 | **GDS81783** | 306410 | **GDS82358** | 304844 | **GDS83066** |
| 305296 | **GDS61258** | 305293 | **GDS81121** | 305857 | **GDS81784** | GKND10147 | **GDS82359** | GKND12342 | **GDS83108** |
| GKND12979 | **GDS61282** | 304548 | **GDS81127** | GKND13031 | **GDS81896** | GKND12196 | **GDS82381** | GKND12178 | **GDS83109** |
| GKND12125 | **GDS61283** | GKND12302 | **GDS81129** | 304355 | **GDS81913** | 306867 | **GDS82388** | GKND12174 | **GDS83110** |
| GKND12994 | **GDS61283** | 305073 | **GDS81132** | 305936 | **GDS81913** | GKND12100 | **GDS82392** | 305924 | **GDS83136** |
| 305526 | **GDS61284** | 306786 | **GDS81194** | 304530 | **GDS81920** | 306893 | **GDS82393** | GKND10695 | **GDS83151** |
| 306791 | **GDS61285** | 306783 | **GDS81195** | 305442 | **GDS81928** | GKND12078 | **GDS82394** | GKND12014 | **GDS83157** |
| 305819 | **GDS61288** | GKND12449 | **GDS81245** | GKND12425 | **GDS81933** | 306861 | **GDS82395** | GKND12015 | **GDS83158** |
| 305068 | **GDS61290** | GKND12450 | **GDS81254** | GKND12391 | **GDS81941** | GKND12166 | **GDS82399** | GKND12248 | **GDS83159** |
| 306554 | **GDS61290** | 306629 | **GDS81265** | 305443 | **GDS81946** | 305084 | **GDS82410** | 306843 | **GDS83179** |
| 305527 | **GDS61293** | 306815 | **GDS81369** | GKND12433 | **GDS81992** | GKND12189 | **GDS82435** | GKND12670 | **GDS83189** |
| 305767 | **GDS61296** | GKND20027 | **GDS81370** | 303530 | **GDS82001** | GKND12399 | **GDS82448** | 306332 | **GDS83192** |
| 305768 | **GDS61296** | GKND20020 | **GDS81371** | 303531 | **GDS82002** | GKND12400 | **GDS82449** | 306333 | **GDS83193** |
| 306508 | **GDS61297** | 306447 | **GDS81373** | 303532 | **GDS82003** | 306154 | **GDS82450** | GKND12324 | **GDS83206** |
| 305444 | **GDS61298** | GKND20021 | **GDS81375** | 303533 | **GDS82004** | 306393 | **GDS82451** | 306520 | **GDS83207** |
| 306408 | **GDS61301** | 306439 | **GDS81376** | 304370 | **GDS82005** | GKND12103 | **GDS82461** | 306519 | **GDS83208** |
| 303159 | **GDS61312** | GKND20022 | **GDS81378** | 304371 | **GDS82009** | GKND12102 | **GDS82462** | 305959 | **GDS83209** |
| 304353 | **GDS61312** | GKND20023 | **GDS81379** | 304759 | **GDS82009** | 305927 | **GDS82511** | 306136 | **GDS83209** |
| 303157 | **GDS61314** | GKND20026 | **GDS81382** | 304377 | **GDS82011** | 306425 | **GDS82518** | 306438 | **GDS83212** |
| 304546 | **GDS61323** | 305727 | **GDS81385** | GKND11763 | **GDS82037** | 306426 | **GDS82519** | 306718 | **GDS83212** |
| 306538 | **GDS61338** | 305724 | **GDS81386** | GKND12190 | **GDS82038** | 306723 | **GDS82548** | GKND12262 | **GDS83216** |
| 306539 | **GDS61338** | 306646 | **GDS81386** | GKND11755 | **GDS82044** | 305952 | **GDS82600** | GKND12224 | **GDS83217** |
| GKND12983 | **GDS61341** | 305726 | **GDS81387** | GKND12404 | **GDS82046** | GKND12370 | **GDS82613** | 305830 | **GDS83224** |
| 304776 | **GDS61342** | 305725 | **GDS81390** | 306358 | **GDS82052** | 305986 | **GDS82729** | 306071 | **GDS83226** |
| GKND12181 | **GDS61345** | 306647 | **GDS81390** | 306359 | **GDS82053** | 305944 | **GDS82730** | 306134 | **GDS83226** |
| GKND12445 | **GDS61346** | 305721 | **GDS81402** | 305994 | **GDS82056** | 305161 | **GDS82846** | GKND10227 | **GDS83231** |
| 305762 | **GDS61347** | 306379 | **GDS81405** | 305995 | **GDS82057** | GKND12437 | **GDS82978** | 306301 | **GDS83236** |
| 305771 | **GDS61347** | GKND11759 | **GDS81425** | 306360 | **GDS82058** | 301222 | **GDS83001** | 306141 | **GDS83239** |
| 306630 | **GDS61347** | 304709 | **GDS81463** | 306361 | **GDS82059** | 301218 | **GDS83002** | 306142 | **GDS83240** |
| 301397 | **GDS62001** | GKND12266 | **GDS81470** | 306947 | **GDS82060** | 301258 | **GDS83003** | 304500 | **GDS83246** |
| 301771 | **GDS62001** | GKND12562 | **GDS81471** | 306948 | **GDS82061** | 303158 | **GDS83004** | 305508 | **GDS83246** |
| 301398 | **GDS62002** | 304787 | **GDS81476** | GKND12163 | **GDS82074** | 303162 | **GDS83004** | 305504 | **GDS83261** |
| 304282 | **GDS62004** | 305074 | **GDS81493** | GKND12939 | **GDS82075** | 301219 | **GDS83005** | 305654 | **GDS83264** |
| 305562 | **GDS62017** | 305083 | **GDS81494** | GKND12069 | **GDS82076** | 303161 | **GDS83006** | 304767 | **GDS83266** |
| 305557 | **GDS62022** | GKND12164 | **GDS81526** | 306819 | **GDS82077** | 301223 | **GDS83007** | 305770 | **GDS83269** |
| 305561 | **GDS62022** | 306821 | **GDS81530** | GKND11825 | **GDS82081** | 301288 | **GDS83008** | 306523 | **GDS83271** |
| 305515 | **GDS62025** | GKND13124 | **GDS81530** | GKND12203 | **GDS82082** | 301209 | **GDS83012** | 304923 | **GDS83273** |

| COMPETITOR | G-AP Ref. |
|---|---|
| **LÖBRO** | |
| GKND13104 | **GDS83273** |
| GKND12214 | **GDS83288** |
| GKND12215 | **GDS83289** |
| 306370 | **GDS83290** |
| 306372 | **GDS83291** |
| 306001 | **GDS83293** |
| 304746 | **GDS83294** |
| 304758 | **GDS83294** |
| 304762 | **GDS83294** |
| GKND13027 | **GDS83294** |
| GKND13036 | **GDS83294** |
| GKND13037 | **GDS83294** |
| 304748 | **GDS83295** |
| 304764 | **GDS83295** |
| 305659 | **GDS83295** |
| 306978 | **GDS83295** |
| GKND11996 | **GDS83295** |
| GKND12128 | **GDS83295** |
| GKND13038 | **GDS83295** |
| 305510 | **GDS83296** |
| 306004 | **GDS83296** |
| 301257 | **GDS83297** |
| 304547 | **GDS83300** |
| 305069 | **GDS83310** |
| 304752 | **GDS83313** |
| 305707 | **GDS83313** |
| GKND13029 | **GDS83313** |
| GKND13030 | **GDS83313** |
| 305067 | **GDS83316** |
| 304757 | **GDS83318** |
| 304761 | **GDS83319** |
| 304926 | **GDS83321** |
| 304925 | **GDS83328** |
| 305818 | **GDS83330** |
| 304924 | **GDS83345** |
| 304773 | **GDS83346** |
| 305071 | **GDS83347** |
| 305509 | **GDS83353** |
| GKND13059 | **GDS83354** |
| 304766 | **GDS83355** |
| GKND11734 | **GDS83360** |
| GKND12368 | **GDS83360** |
| 304297 | **GDS83363** |
| 305072 | **GDS83364** |
| 305772 | **GDS83369** |
| 305773 | **GDS83369** |
| 305774 | **GDS83369** |
| 306369 | **GDS83371** |
| 305395 | **GDS83373** |
| 305531 | **GDS83381** |
| GKND12179 | **GDS83381** |
| GKND12322 | **GDS83381** |
| 306254 | **GDS83389** |
| 306849 | **GDS83409** |
| 305598 | **GDS83415** |
| 303586 | **GDS83416** |
| 306899 | **GDS83442** |
| GKND13135 | **GDS83497** |
| 305891 | **GDS83501** |
| 305547 | **GDS83582** |
| GKND12198 | **GDS83607** |
| GKND12177 | **GDS83608** |
| 305950 | **GDS83611** |
| GKND12374 | **GDS83613** |
| GKND12191 | **GDS83616** |
| GKND12201 | **GDS83617** |

| COMPETITOR | G-AP Ref. |
|---|---|
| GKND12202 | **GDS83618** |
| 306335 | **GDS83620** |
| 306720 | **GDS83621** |
| GKND12255 | **GDS83633** |
| GKND12376 | **GDS83645** |
| GKND12182 | **GDS83646** |
| GKND12256 | **GDS83650** |
| GKND12183 | **GDS83652** |
| GKND10697 | **GDS83656** |
| GKND12220 | **GDS83663** |
| GKND13123 | **GDS83679** |
| GKND12378 | **GDS83712** |
| GKND12379 | **GDS83713** |
| 306853 | **GDS83742** |
| GKND13061 | **GDS83765** |
| GKND12442 | **GDS83775** |
| GKND12441 | **GDS83778** |
| 305583 | **GDS83779** |
| GKND12377 | **GDS83806** |
| GKND12375 | **GDS83809** |
| 305260 | **GDS83826** |
| 306407 | **GDS83842** |
| 306409 | **GDS83843** |
| 306863 | **GDS83852** |
| 306854 | **GDS83853** |
| 306789 | **GDS83858** |
| 306378 | **GDS83872** |
| 306728 | **GDS83912** |
| 306155 | **GDS83926** |
| 306721 | **GDS83931** |
| GKND13072 | **GDS83935** |
| GKND13077 | **GDS83936** |
| GKND13076 | **GDS83937** |
| GKND13079 | **GDS83938** |
| 306505 | **GDS83941** |
| 305946 | **GDS83946** |
| 306787 | **GDS83970** |
| 304503 | **GDS83973** |
| 306624 | **GDS84011** |
| GKND12347 | **GDS84016** |
| GKND12352 | **GDS84059** |
| 305723 | **GDS84080** |
| GKND12945 | **GDS84081** |
| 305960 | **GDS84082** |
| 306137 | **GDS84082** |
| GKND12429 | **GDS84132** |
| GKND12430 | **GDS84137** |
| 305942 | **GDS84138** |
| 306399 | **GDS84140** |
| 306625 | **GDS84181** |
| GKND13098 | **GDS84215** |
| GKND30016 | **GDS84215** |
| GKND13097 | **GDS84216** |
| GKND30017 | **GDS84216** |
| GKND13233 | **GDS84218** |
| GKND13091 | **GDS84227** |
| 305581 | **GDS84239** |
| 306400 | **GDS84244** |
| 306714 | **GDS84260** |
| 306884 | **GDS84292** |
| 305553 | **GDS84300** |
| GKND12600 | **GDS84397** |
| GKND13043 | **GDS84412** |
| GKND13044 | **GDS84413** |
| GKND13042 | **GDS84414** |
| GKND12949 | **GDS84423** |
| 306648 | **GDS84428** |
| GKND12662 | **GDS84449** |

| COMPETITOR | G-AP Ref. |
|---|---|
| 305972 | **GDS84460** |
| 306145 | **GDS84460** |
| 304505 | **GDS84521** |
| 306748 | **GDS84534** |
| GKND12332 | **GDS84553** |
| GKND12333 | **GDS84553** |
| GKND13128 | **GDS84553** |
| GKND12334 | **GDS84556** |
| GKND12953 | **GDS84559** |
| 306735 | **GDS84609** |
| 306900 | **GDS84622** |
| GKND13087 | **GDS84639** |
| 306099 | **GDS84640** |
| 300681 | **GDS85001** |
| 300682 | **GDS85001** |
| 300645 | **GDS85002** |
| 300694 | **GDS85007** |
| 304622 | **GDS85017** |
| 304496 | **GDS85018** |
| 302349 | **GDS85021** |
| 304477 | **GDS85022** |
| 304480 | **GDS85022** |
| 304478 | **GDS85023** |
| 304479 | **GDS85023** |
| GKND11746 | **GDS85024** |
| GKND12973 | **GDS85024** |
| 304495 | **GDS85029** |
| 304469 | **GDS85036** |
| 304471 | **GDS85036** |
| 304481 | **GDS85036** |
| 305162 | **GDS85036** |
| 304470 | **GDS85037** |
| 304472 | **GDS85037** |
| 304482 | **GDS85037** |
| 305048 | **GDS85037** |
| 304474 | **GDS85039** |
| 304476 | **GDS85039** |
| 304484 | **GDS85039** |
| 305046 | **GDS85039** |
| GKND12366 | **GDS85039** |
| GKND11818 | **GDS85041** |
| GKND12990 | **GDS85041** |
| 304682 | **GDS85042** |
| 305729 | **GDS85043** |
| GKND11819 | **GDS85045** |
| GKND12976 | **GDS85045** |
| 304620 | **GDS85047** |
| 304621 | **GDS85048** |
| 304497 | **GDS85049** |
| 304498 | **GDS85050** |
| 304740 | **GDS85051** |
| 305728 | **GDS85052** |
| 304214 | **GDS85053** |
| GKND12242 | **GDS85058** |
| 305938 | **GDS85060** |
| 304663 | **GDS85062** |
| 304673 | **GDS85062** |
| 304675 | **GDS85062** |
| 306083 | **GDS85063** |
| 305244 | **GDS85064** |
| GKND12260 | **GDS85066** |
| 305978 | **GDS85067** |
| GKND11738 | **GDS85067** |
| 305940 | **GDS85068** |
| 304671 | **GDS85069** |
| 306272 | **GDS85070** |
| 305047 | **GDS85073** |
| 305159 | **GDS85073** |

| COMPETITOR | G-AP Ref. |
|---|---|
| 305160 | **GDS85073** |
| 304664 | **GDS85074** |
| 304674 | **GDS85074** |
| 304678 | **GDS85074** |
| 304880 | **GDS85075** |
| 304881 | **GDS85076** |
| 304668 | **GDS85078** |
| 304670 | **GDS85078** |
| 304807 | **GDS85082** |
| 305288 | **GDS85082** |
| 305289 | **GDS85082** |
| 305290 | **GDS85082** |
| 305436 | **GDS85082** |
| 305394 | **GDS85085** |
| GKND11817 | **GDS85086** |
| GKND12975 | **GDS85086** |
| 304672 | **GDS85093** |
| 304788 | **GDS85098** |
| 305985 | **GDS85101** |
| 305646 | **GDS85104** |
| 305647 | **GDS85105** |
| 305706 | **GDS85106** |
| 305227 | **GDS85107** |
| 305953 | **GDS85110** |
| GKND12328 | **GDS85110** |
| 306556 | **GDS85111** |
| 305983 | **GDS85112** |
| 305989 | **GDS85112** |
| 305984 | **GDS85113** |
| GKND12273 | **GDS85113** |
| 305981 | **GDS85114** |
| 305982 | **GDS85115** |
| 305438 | **GDS85116** |
| 305996 | **GDS85117** |
| 305998 | **GDS85117** |
| 306249 | **GDS85118** |
| 305125 | **GDS85119** |
| 305997 | **GDS85121** |
| 305999 | **GDS85121** |
| 306025 | **GDS85121** |
| 306300 | **GDS85123** |
| 306150 | **GDS85124** |
| 306151 | **GDS85125** |
| 306897 | **GDS85126** |
| 306898 | **GDS85129** |
| 304473 | **GDS85134** |
| 304475 | **GDS85134** |
| 304483 | **GDS85134** |
| 305158 | **GDS85134** |
| 305291 | **GDS85134** |
| GKND12367 | **GDS85134** |
| 305835 | **GDS85135** |
| 306152 | **GDS85142** |
| 305294 | **GDS85149** |
| GKND12172 | **GDS86016** |
| 306148 | **GDS86065** |
| 304421 | **GDS88011** |
| 302817 | **GDS88024** |
| 302819 | **GDS88024** |
| 302821 | **GDS88024** |
| 306057 | **GDS88077** |
| 304686 | **GDS88082** |
| 302818 | **GDS89039** |
| 302820 | **GDS89039** |
| 302822 | **GDS89039** |
| 303492 | **GDS99003** |
| 303345 | **GDS99006** |
| 303346 | **GDS99010** |

| COMPETITOR | G-AP Ref. |
|---|---|
| 304796 | **GDS99037** |
| 305036 | **GDS99042** |
| 305038 | **GDS99042** |
| 303544 | **GDS99044** |
| 303661 | **GDS99049** |
| 304745 | **GDS99070** |
| 304801 | **GDS99070** |
| 304339 | **GDS99071** |
| 304341 | **GDS99071** |
| 301210 | **GDS99108** |
| 301221 | **GDS99111** |
| GKND11679 | **GDS99112** |
| 303313 | **GDS99113** |
| GKND11680 | **GDS99116** |
| 303923 | **GDS99120** |
| 305644 | **GDS99133** |
| 305643 | **GDS99134** |
| 304795 | **GDS99135** |
| 303506 | **GDS99151** |
| 305221 | **GDS99157** |
| 304564 | **GDS99186** |
| 305356 | **GDS99186** |
| 304856 | **GDS99188** |
| 304582 | **GDS99190** |
| 304583 | **GDS99191** |
| 305404 | **GDS99194** |
| 305348 | **GDS99195** |
| 305349 | **GDS99196** |
| 304643 | **GDS99197** |
| 304340 | **GDS99201** |
| GKND11762 | **GDS99211** |
| GKND11826 | **GDS99212** |
| GKND12076 | **GDS99212** |
| GKND12977 | **GDS99212** |
| 305132 | **GDS99214** |
| 304667 | **GDS99215** |
| 304669 | **GDS99215** |
| 304798 | **GDS99217** |
| 304993 | **GDS99228** |
| 305026 | **GDS99228** |
| 305933 | **GDS99228** |
| 304994 | **GDS99229** |
| 304585 | **GDS99271** |
| 304587 | **GDS99271** |
| 304584 | **GDS99272** |
| 304212 | **GDS99285** |
| 305191 | **GDS99286** |
| **SKF** | |
| VKJA8030 | **GCI10038** |
| VKJA8019 | **GCI17020** |
| VKJA8061 | **GCI17021** |
| VKJA8028 | **GCI17022** |
| VKJA8010 | **GCI17028** |
| VKJA8576 | **GCI17028** |
| VKJA8023 | **GCI17042** |
| VKJA8961 | **GCI17042** |
| VKJA8610 | **GCI18002** |
| VKJA8688 | **GCI18070** |
| VKJA8201 | **GCI18085** |
| VKJA8349 | **GCI18086** |
| VKJA8988 | **GCI18208** |
| VKJA8347 | **GCI18263** |
| VKJA48005A | **GCI21014** |
| VKJA8441 | **GCI21028** |
| VKJA8064 | **GCI21034** |
| VKJA8138 | **GCI23086** |
| VKJA8674 | **GCI24019** |

| COMPETITOR | G-AP Ref. | COMPETITOR | G-AP Ref. | COMPETITOR | G-AP Ref. | COMPETITOR | G-AP Ref. | COMPETITOR | G-AP Ref. |
|---|---|---|---|---|---|---|---|---|---|
| **SKF** | | VKJA8830 | **GCI85001** | VKJA41054A | **GCO17009** | VKJA5407 | **GCO18013** | VKJA41110A | **GCO24046** |
| | | VKJA8229 | **GCI86028** | VKJA5304 | **GCO17010** | VKJA41012A | **GCO18014** | VKJA5653 | **GCO24046** |
| VKJA8972 | **GCI28001** | VKJA8234 | **GCI88070** | VKJA3202 | **GCO17011** | VKJA5596 | **GCO18014** | VKJA5751 | **GCO24047** |
| VKJA8608 | **GCI35001** | VKJA8233 | **GCI88071** | VKJA3157 | **GCO17015** | VKJA5414 | **GCO18015** | VKJA2004A | **GCO24048** |
| VKJA8100 | **GCI39052** | VKJA8724 | **GCI99025** | VKJA3160 | **GCO17016** | VKJA41005A | **GCO18016** | VKJA41074A | **GCO24048** |
| VKJA8975 | **GCI41076** | VKJA8112 | **GCI99038** | VKJA3161 | **GCO17017** | VKJA5406 | **GCO18016** | VKJA5738 | **GCO24061** |
| VKJA8973 | **GCI41091** | VKJA8826 | **GCI99052** | VKJA41006A | **GCO17017** | VKJA5402 | **GCO18017** | VKJA41072A | **GCO24072** |
| VKJA8971 | **GCI41092** | VKJA8797 | **GCI99075** | VKJA41020A | **GCO17017** | VKJA5517 | **GCO18018** | VKJA41068A | **GCO24077** |
| VKJA8939 | **GCI41157** | VKJA8578 | **GCI99148** | VKJA3152 | **GCO17019** | VKJA5412 | **GCO18021** | VKJA41073A | **GCO24090** |
| VKJA8951 | **GCI41168** | VKJA8725 | **GCI99148** | VKJA3163 | **GCO17019** | VKJA5410 | **GCO18023** | VKJA41071A | **GCO24091** |
| VKJA8942 | **GCI41191** | VKJA5314 | **GCO10002** | VKJA41001A | **GCO17019** | VKJA3007 | **GCO18025** | VKJA5745 | **GCO24091** |
| VKJA8037 | **GCI44003** | VKJA5312 | **GCO10003** | VKJA3151 | **GCO17020** | VKJA5271 | **GCO18026** | VKJA5996 | **GCO24095** |
| VKJA8025 | **GCI44004** | VKJA5321 | **GCO10004** | VKJA3149 | **GCO17021** | VKJA5124 | **GCO18027** | VKJA5789 | **GCO24117** |
| VKJA8811 | **GCI44005** | VKJA5320 | **GCO10005** | VKJA3150 | **GCO17022** | VKJA5143 | **GCO18029** | VKJA5049 | **GCO24131** |
| VKJA8752 | **GCI44013** | VKJA5306 | **GCO10009** | VKJA3066 | **GCO17023** | VKJA5135 | **GCO18030** | VKJA5819 | **GCO24152** |
| VKJA8609 | **GCI48002** | VKJA3235 | **GCO10011** | VKJA5305 | **GCO17024** | VKJA5804 | **GCO18030** | VKJA41070A | **GCO24153** |
| VKJA8829 | **GCI48002** | VKJA41034A | **GCO10011** | VKJA3165 | **GCO17026** | VKJA5127 | **GCO18031** | VKJA5428 | **GCO24156** |
| VKJA8490 | **GCI50019** | VKJA5926 | **GCO10012** | VKJA41100A | **GCO17026** | VKJA5139 | **GCO18035** | VKJA5783 | **GCO24221** |
| VKJA8057 | **GCI50045** | VKJA3945 | **GCO10013** | VKJA3170 | **GCO17028** | VKJA5303 | **GCO18067** | VKJA5978 | **GCO26003** |
| VKJA8062 | **GCI50046** | VKJA41035A | **GCO10013** | VKJA3173 | **GCO17028** | VKJA5285 | **GCO18069** | VKJA5583 | **GCO27001** |
| VKJA8816 | **GCI50061** | VKJA5924 | **GCO10014** | VKJA41101A | **GCO17028** | VKJA5396 | **GCO18098** | VKJA5810 | **GCO27005** |
| VKJA8815 | **GCI50083** | VKJA5324 | **GCO10015** | VKJA3162 | **GCO17029** | VKJA41094A | **GCO18203** | VKJA5500 | **GCO27014** |
| VKJA8017 | **GCI53001** | VKJA5922 | **GCO10016** | VKJA41014A | **GCO17029** | VKJA5597 | **GCO18203** | VKJA5506 | **GCO27016** |
| VKJA8954 | **GCI57111** | VKJA5329 | **GCO10019** | VKJA3168 | **GCO17031** | VKJA5984 | **GCO18207** | VKJA5144 | **GCO27027** |
| VKJA8463 | **GCI59002** | VKJA5327 | **GCO10021** | VKJA3168A | **GCO17031** | VKJA5418 | **GCO18222** | VKJA5737 | **GCO27053** |
| VKJA8006 | **GCI61001** | VKJA41053A | **GCO10022** | VKJA41057A | **GCO17031** | VKJA5784 | **GCO18227** | VKJA41069A | **GCO27067** |
| VKJA8008 | **GCI61002** | VKJA41082A | **GCO10025** | VKJA3155 | **GCO17032** | VKJA3956 | **GCO18230** | VKJA5499 | **GCO27068** |
| VKJA8004 | **GCI61003** | VKJA5346 | **GCO10025** | VKJA41097A | **GCO17034** | VKJA3921 | **GCO18286** | VKJA5457 | **GCO27070** |
| VKJA8013 | **GCI61006** | VKJA5328 | **GCO10029** | VKJA3158 | **GCO17037** | VKJA3040 | **GCO18289** | VKJA5479 | **GCO27072** |
| VKJA8114 | **GCI61020** | VKJA5311 | **GCO10043** | VKJA41013A | **GCO17037** | VKJA3912 | **GCO18293** | VKJA5812 | **GCO27080** |
| VKJA8543 | **GCI61021** | VKJA41034 | **GCO10050** | VKJA3206 | **GCO17039** | VKJA3038 | **GCO21030** | VKJA5768 | **GCO27097** |
| VKJA8541 | **GCI61029** | VKJA5349 | **GCO10051** | VKJA3068 | **GCO17042** | VKJA5921 | **GCO21038** | VKJA5850 | **GCO27115** |
| VKJA8958 | **GCI61041** | VKJA5348 | **GCO10052** | VKJA3154 | **GCO17042** | VKJA5941 | **GCO21038** | VKJA5708 | **GCO28001** |
| VKJA8509 | **GCI61044** | VKJA5369 | **GCO10053** | VKJA3171 | **GCO17043** | VKJA3233 | **GCO21043** | VKJA5722 | **GCO28002** |
| VKJA8726 | **GCI61048** | VKJA5323 | **GCO10059** | VKJA5395 | **GCO17044** | VKJA5449 | **GCO21051** | VKJA5841 | **GCO28004** |
| VKJA8484 | **GCI61050** | VKJA5366G | **GCO10067** | VKJA3032 | **GCO17045** | VKJA5945 | **GCO21057** | VKJA5778 | **GCO28010** |
| VKJA8554 | **GCI61053** | VKJA5341 | **GCO10069** | VKJA41086A | **GCO17045** | VKJA5468 | **GCO21059** | VKJA5717 | **GCO29001** |
| VKJA8791 | **GCI61054** | VKJA5333 | **GCO10076** | VKJA5822 | **GCO17045** | VKJA41122A | **GCO21076** | VKJA3193 | **GCO29002** |
| VKJA8788 | **GCI61057** | VKJA41088A | **GCO10077** | VKJA5817 | **GCO17048** | VKJA5731 | **GCO23001** | VKJA5553 | **GCO31001** |
| VKJA8538 | **GCI61080** | VKJA5371 | **GCO10077** | VKJA3120 | **GCO17051** | VKJA3218 | **GCO23002** | VKJA5576 | **GCO31001** |
| VKJA8729 | **GCI81158** | VKJA5368 | **GCO10085** | VKJA3174 | **GCO17051** | VKJA5554 | **GCO23007** | VKJA5134 | **GCO34003** |
| VKJA8440 | **GCI81338** | VKJA5363 | **GCO10096** | VKJA3166 | **GCO17052** | VKJA5647 | **GCO23008** | VKJA5129 | **GCO34004** |
| VKJA8618 | **GCI81393** | VKJA5944 | **GCO10098** | VKJA41103A | **GCO17052** | VKJA5555 | **GCO23010** | VKJA5581 | **GCO34005** |
| VKJA8822 | **GCI81661** | VKJA5571 | **GCO12001** | VKJA3175 | **GCO17053** | VKJA5534 | **GCO23013** | VKJA3416 | **GCO34006** |
| VKJA8414 | **GCI81690** | VKJA5532 | **GCO12006** | VKJA3025 | **GCO17055** | VKJA5535 | **GCO23014** | VKJA5536 | **GCO34007** |
| VKJA8612 | **GCI82003** | VKJA5602 | **GCO12008** | VKJA5823 | **GCO17055** | VKJA5522 | **GCO23016** | VKJA3644 | **GCO34008** |
| VKJA48014A | **GCI82005** | VKJA5556 | **GCO12019** | VKJA3024 | **GCO17060** | VKJA5523 | **GCO23017** | VKJA3627 | **GCO34010** |
| VKJA8080 | **GCI82011** | VKJA5606 | **GCO12020** | VKJA3933 | **GCO17060** | VKJA5724 | **GCO23020** | VKJA5397 | **GCO34015** |
| VKJA8615 | **GCI82108** | VKJA5567 | **GCO12021** | VKJA41087A | **GCO17061** | VKJA5560 | **GCO23023** | VKJA5575 | **GCO34021** |
| VKJA8139 | **GCI82345** | VKJA3930 | **GCO12023** | VKJA5911 | **GCO17063** | VKJA5570 | **GCO23024** | VKJA5131 | **GCO34022** |
| VKJA8765 | **GCI82440** | VKJA5582 | **GCO12027** | VKJA3181 | **GCO17065** | VKJA5645 | **GCO23030** | VKJA5141 | **GCO34023** |
| VKJA8251 | **GCI82506** | VKJA5953 | **GCO12027** | VKJA41104A | **GCO17074** | VKJA5821 | **GCO23033** | VKJA5146 | **GCO34026** |
| VKJA6555 | **GCI82507** | VKJA5976 | **GCO14002** | VKJA5849 | **GCO17079** | VKJA5641 | **GCO23036** | VKJA5142 | **GCO34058** |
| VKJA48009A | **GCI83001** | VKJA5542 | **GCO14006** | VKJA3237 | **GCO17089** | VKJA5729 | **GCO23039** | VKJA5892 | **GCO34059** |
| VKJA8005 | **GCI83001** | VKJA5568 | **GCO14013** | VKJA41093A | **GCO18001** | VKJA41063A | **GCO23087** | VKJA5808 | **GCO34060** |
| VKJA8580 | **GCI83002** | VKJA5955 | **GCO14027** | VKJA5638 | **GCO18001** | VKJA5730 | **GCO23095** | VKJA3952 | **GCO34074** |
| VKJA8002 | **GCI83005** | VKJA5954 | **GCO14073** | VKJA5289 | **GCO18002** | VKJA41065A | **GCO23107** | VKJA3670 | **GCO34084** |
| VKJA8014 | **GCI83007** | VKJA5686 | **GCO14101** | VKJA3931 | **GCO18003** | VKJA41064A | **GCO23110** | VKJA5818 | **GCO34084** |
| VKJA8046 | **GCI83007** | VKJA5510 | **GCO17001** | VKJA41011A | **GCO18004** | VKJA41066A | **GCO23124** | VKJA5744 | **GCO34093** |
| VKJA48010A | **GCI83008** | VKJA3159 | **GCO17004** | VKJA5301 | **GCO18004** | VKJA5121 | **GCO23125** | VKJA5487 | **GCO34094** |
| VKJA8009 | **GCI83008** | VKJA41003A | **GCO17004** | VKJA5415 | **GCO18004** | VKJA41067A | **GCO23160** | VKJA3442 | **GCO34130** |
| VKJA48012A | **GCI83011** | VKJA5512 | **GCO17004** | VKJA5748 | **GCO18005** | VKJA5968 | **GCO24002** | VKJA5795 | **GCO34194** |
| VKJA8001 | **GCI83011** | VKJA3016 | **GCO17005** | VKJA5297 | **GCO18007** | VKJA5648 | **GCO24004** | VKJA5149 | **GCO34237** |
| VKJA8003 | **GCI83011** | VKJA41018A | **GCO17005** | VKJA5403 | **GCO18009** | VKJA5651 | **GCO24006** | VKJA5352 | **GCO35001** |
| VKJA8015 | **GCI83016** | VKJA3208 | **GCO17006** | VKJA5411 | **GCO18011** | VKJA5920 | **GCO24029** | VKJA5351 | **GCO35002** |
| VKJA6018 | **GCI83022** | VKJA3118 | **GCO17007** | VKJA41092A | **GCO18012** | VKJA5793 | **GCO24036** | VKJA3950 | **GCO35007** |
| VKJA8226 | **GCI83027** | VKJA3190 | **GCO17008** | VKJA5296 | **GCO18012** | VKJA5752 | **GCO24038** | VKJA3203 | **GCO35016** |
| VKJA8821 | **GCI83206** | VKJA3075 | **GCO17009** | VKJA41058A | **GCO18013** | VKJA5652 | **GCO24041** | VKJA5405 | **GCO35022** |

| COMPETITOR | G-AP Ref. | COMPETITOR | G-AP Ref. | COMPETITOR | G-AP Ref. | COMPETITOR | G-AP Ref. | COMPETITOR | G-AP Ref. |
|---|---|---|---|---|---|---|---|---|---|
| **SKF** | | VKJA41114A | GCO41271 | VKJA5383 | GCO50080 | VKJA5609 | GCO59007 | VKJA3070 | GCO82013 |
| | | VKJA5885 | GCO41279 | VKJA5672 | GCO50080 | VKJA5826 | GCO59016 | VKJA3073 | GCO82014 |
| VKJA3453 | GCO35026 | VKJA5829 | GCO41285 | VKJA5675 | GCO50083 | VKJA5598 | GCO59019 | VKJA3072 | GCO82017 |
| VKJA5378 | GCO35028 | VKJA5813 | GCO41286 | VKJA5667 | GCO50089 | VKJA5599 | GCO59020 | VKJA3228 | GCO82018 |
| VKJA5975 | GCO35033 | VKJA5884 | GCO41294 | VKJA5386 | GCO50093 | VKJA5600 | GCO59021 | VKJA41098A | GCO82018 |
| VKJA3612 | GCO35045 | VKJA5887 | GCO41294 | VKJA5674 | GCO50093 | VKJA3867 | GCO59022 | VKJA3080 | GCO82023 |
| VKJA5379 | GCO35069 | VKJA5340 | GCO44001 | VKJA5981 | GCO50101 | VKJA3955 | GCO59024 | VKJA3079 | GCO82024 |
| VKJA3141 | GCO38002 | VKJA3111 | GCO44002 | VKJA5677 | GCO50103 | VKJA5618 | GCO59025 | VKJA3077 | GCO82025 |
| VKJA41051A | GCO38002 | VKJA41115A | GCO44002 | VKJA5669 | GCO50106 | VKJA5471 | GCO59026 | VKJA5398 | GCO82025 |
| VKJA5990 | GCO38003 | VKJA3127 | GCO44003 | VKJA5676 | GCO50108 | VKJA5108 | GCO59035 | VKJA5798 | GCO82495 |
| VKJA5538 | GCO39002 | VKJA3122 | GCO44004 | VKJA5757 | GCO50108 | VKJA3513 | GCO59037 | VKJA5842 | GCO82919 |
| VKJA5654 | GCO39007 | VKJA3121 | GCO44005 | VKJA5683 | GCO50109 | VKJA3513A | GCO59037 | VKJA5771 | GCO82930 |
| VKJA41077A | GCO39008 | VKJA3101 | GCO44007 | VKJA5390 | GCO50112 | VKJA5089 | GCO59042 | VKJA3028 | GCO83002 |
| VKJA5716 | GCO39011 | VKJA41055A | GCO44008 | VKJA5743 | GCO50116 | VKJA5962 | GCO59046 | VKJA41079A | GCO83002 |
| VKJA5650 | GCO39014 | VKJA5338 | GCO44008 | VKJA5680 | GCO50117 | VKJA5989 | GCO59050 | VKJA3934 | GCO83007 |
| VKJA5665 | GCO39016 | VKJA3104 | GCO44011 | VKJA5391 | GCO50137 | VKJA5561 | GCO59054 | VKJA41008A | GCO83007 |
| VKJA41075A | GCO39018 | VKJA3062 | GCO44012 | VKJA5679 | GCO50143 | VKJA5640 | GCO59117 | VKJA41023A | GCO83007 |
| VKJA5664 | GCO39020 | VKJA3063 | GCO44013 | VKJA41121A | GCO50148 | VKJA41124A | GCO59120 | VKJA41128A | GCO83007 |
| VKJA5404 | GCO39021 | VKJA5210 | GCO44025 | VKJA5684 | GCO50149 | VKJA5610 | GCO59127 | VKJA5237 | GCO83009 |
| VKJA5655 | GCO39022 | VKJA41116A | GCO44026 | VKJA5678 | GCO50150 | VKJA3782 | GCO59137 | VKJA3019 | GCO83012 |
| VKJA5946 | GCO39024 | VKJA5344 | GCO44026 | VKJA5834 | GCO50162 | VKJA5728 | GCO59155 | VKJA5181 | GCO83014 |
| VKJA5145 | GCO39027 | VKJA5344A | GCO44026 | VKJA5114 | GCO50170 | VKJA5800 | GCO59155 | VKJA3013 | GCO83016 |
| VKJA5539 | GCO39036 | VKJA3129 | GCO44027 | VKJA5061 | GCO50206 | VKJA5613 | GCO59161 | VKJA5261 | GCO83017 |
| VKJA5721 | GCO39040 | VKJA3126 | GCO44028 | VKJA3211 | GCO51001 | VKJA3749 | GCO59167 | VKJA3001 | GCO83018 |
| VKJA5656 | GCO39054 | VKJA3103 | GCO44030 | VKJA3146 | GCO51002 | VKJA3515 | GCO59226 | VKJA3002 | GCO83019 |
| VKJA5927 | GCO39067 | VKJA41029A | GCO44032 | VKJA3219 | GCO51003 | VKJA5874 | GCO59270 | VKJA5276 | GCO83020 |
| VKJA5952 | GCO39084 | VKJA5400 | GCO44041 | VKJA3221 | GCO51004 | VKJA4000 | GCO59288 | VKJA3005 | GCO83021 |
| VKJA5979 | GCO39100 | VKJA3096 | GCO44046 | VKJA3201 | GCO51005 | VKJA5886 | GCO59425 | VKJA5265 | GCO83024 |
| VKJA5929 | GCO39102 | VKJA3105 | GCO44049 | VKJA3224 | GCO51007 | VKJA5852 | GCO59510 | VKJA5264 | GCO83027 |
| VKJA5659 | GCO39104 | VKJA3099 | GCO44051 | VKJA3217 | GCO51008 | VKJA5836 | GCO60005 | VKJA3022 | GCO83033 |
| VKJA5359 | GCO39134 | VKJA3100 | GCO44056 | VKJA3144 | GCO51011 | VKJA3003 | GCO61003 | VKJA5399 | GCO83035 |
| VKJA5662 | GCO39146 | VKJA3107 | GCO44057 | VKJA3145 | GCO51013 | VKJA3020 | GCO61004 | VKJA3026 | GCO83037 |
| VKJA41076A | GCO39159 | VKJA3124 | GCO44080 | VKJA5726 | GCO51018 | VKJA3010 | GCO61005 | VKJA3009 | GCO83051 |
| VKJA41078A | GCO39186 | VKJA3093 | GCO44083 | VKJA5508 | GCO51020 | VKJA3012 | GCO61006 | VKJA5279 | GCO83058 |
| VKJA5649 | GCO39190 | VKJA5791 | GCO44085 | VKJA5563 | GCO52001 | VKJA5267 | GCO61007 | VKJA3011 | GCO83070 |
| VKJA5413 | GCO40001 | VKJA3239 | GCO44088 | VKJA5546 | GCO52002 | VKJA5269 | GCO61009 | VKJA41032A | GCO83070 |
| VKJA5543 | GCO41001 | VKJA5448 | GCO44093 | VKJA5547 | GCO52007 | VKJA5270 | GCO61011 | VKJA41056A | GCO83070 |
| VKJA5620 | GCO41002 | VKJA5322 | GCO45001 | VKJA3059 | GCO52008 | VKJA3029 | GCO61021 | VKJA5199 | GCO83077 |
| VKJA5566 | GCO41003 | VKJA5332 | GCO45002 | VKJA5590 | GCO52012 | VKJA5224 | GCO61050 | VKJA5244 | GCO83078 |
| VKJA5544 | GCO41009 | VKJA5310 | GCO45004 | VKJA5255 | GCO53001 | VKJA5837 | GCO61059 | VKJA2152A | GCO83079 |
| VKJA5663 | GCO41010 | VKJA5326 | GCO45006 | VKJA5266 | GCO53002 | VKJA5779 | GCO61062 | VKJA3117 | GCO83086 |
| VKJA5551 | GCO41012 | VKJA5339 | GCO45033 | VKJA41127A | GCO53004 | VKJA5443 | GCO61065 | VKJA41052A | GCO83087 |
| VKJA5550 | GCO41013 | VKJA5357 | GCO45038 | VKJA3021 | GCO53005 | VKJA5444 | GCO61065 | VKJA5206 | GCO83087 |
| VKJA5626 | GCO41018 | VKJA5361 | GCO45049 | VKJA3004 | GCO53008 | VKJA3033 | GCO62001 | VKJA3457 | GCO83088 |
| VKJA3953 | GCO41019 | VKJA5925 | GCO45049 | VKJA3008 | GCO54001 | VKJA3035 | GCO62002 | VKJA5824 | GCO83101 |
| VKJA5971 | GCO41021 | VKJA5347 | GCO45052 | VKJA5263 | GCO54002 | VKJA3942 | GCO62003 | VKJA3115 | GCO83103 |
| VKJA5827 | GCO41025 | VKJA41084A | GCO45057 | VKJA5208 | GCO54004 | VKJA3091 | GCO62004 | VKJA3608 | GCO83104 |
| VKJA5578 | GCO41028 | VKJA5364 | GCO45057 | VKJA5709 | GCO56004 | VKJA3090 | GCO62005 | VKJA5260 | GCO83106 |
| VKJA5577 | GCO41030 | VKJA5374 | GCO45058 | VKJA5557 | GCO56005 | VKJA5565 | GCO62006 | VKJA5470 | GCO83590 |
| VKJA5741 | GCO41038 | VKJA41089A | GCO45065 | VKJA5901 | GCO56022 | VKJA5446 | GCO62007 | VKJA3179 | GCO84001 |
| VKJA5719 | GCO41040 | VKJA5880 | GCO45093 | VKJA5895 | GCO56039 | VKJA5394 | GCO62009 | VKJA41017A | GCO84001 |
| VKJA5733 | GCO41046 | VKJA5807 | GCO50003 | VKJA5897 | GCO56057 | VKJA3949 | GCO62010 | VKJA5923 | GCO85001 |
| VKJA5734 | GCO41047 | VKJA41117A | GCO50004 | VKJA5881 | GCO57002 | VKJA5966 | GCO62011 | VKJA4015 | GCO85002 |
| VKJA5621 | GCO41048 | VKJA5354 | GCO50004 | VKJA5426 | GCO57007 | VKJA5980 | GCO62031 | VKJA3241 | GCO85007 |
| VKJA3954 | GCO41049 | VKJA5762 | GCO50004 | VKJA5905 | GCO57009 | VKJA5831 | GCO62035 | VKJA3205 | GCO85010 |
| VKJA5735 | GCO41050 | VKJA5342 | GCO50005 | VKJA5540 | GCO57011 | VKJA3602 | GCO81348 | VKJA5607 | GCO88002 |
| VKJA5622 | GCO41052 | VKJA5307 | GCO50007 | VKJA5635 | GCO57012 | VKJA5105 | GCO81356 | VKJA5642 | GCO88004 |
| VKJA5623 | GCO41057 | VKJA5319 | GCO50008 | VKJA5562 | GCO57014 | VKJA5198 | GCO81358 | VKJA5888 | GCO88019 |
| VKJA5552 | GCO41058 | VKJA5909 | GCO50026 | VKJA3963 | GCO57015 | VKJA4016 | GCO81467 | VKJA5604 | GCO88021 |
| VKJA5558 | GCO41078 | VKJA5309 | GCO50027 | VKJA5585 | GCO57035 | VKJA5209 | GCO81520 | VKJA5603 | GCO88034 |
| VKJA5835 | GCO41100 | VKJA5268 | GCO50043 | VKJA5580 | GCO57037 | VKJA3619 | GCO81744 | VKJA5521 | GCO89002 |
| VKJA5749 | GCO41138 | VKJA5337 | GCO50045 | VKJA5750 | GCO57042 | VKJA3071 | GCO82002 | VKJA5809 | GCO89002 |
| VKJA5947 | GCO41141 | VKJA5960 | GCO50056 | VKJA5579 | GCO57048 | VKJA3085 | GCO82004 | VKJA5657 | GCO89003 |
| VKJA5740 | GCO41142 | VKJA41120A | GCO50058 | VKJA5639 | GCO57062 | VKJA3067 | GCO82005 | VKJA5514 | GCO89004 |
| VKJA5816 | GCO41214 | VKJA5380 | GCO50058 | VKJA5790 | GCO57103 | VKJA3065 | GCO82006 | VKJA5658 | GCO89004 |
| VKJA41113A | GCO41217 | VKJA5671 | GCO50066 | VKJA5787 | GCO57112 | VKJA3083 | GCO82009 | VKJA5803 | GCO89005 |
| VKJA5838 | GCO41240 | VKJA5381 | GCO50069 | VKJA5528 | GCO59001 | VKJA3197 | GCO82011 | VKJA5732 | GCO89029 |
| VKJA5832 | GCO41249 | VKJA5382 | GCO50079 | VKJA3959 | GCO59004 | VKJA3069 | GCO82012 | VKJA3961 | GCO89036 |

| COMPETITOR | G-AP Ref. | COMPETITOR | G-AP Ref. | COMPETITOR | G-AP Ref. | COMPETITOR | G-AP Ref. | COMPETITOR | G-AP Ref. |
|---|---|---|---|---|---|---|---|---|---|
| **SKF** | | VKJC8320 | **GDS10043** | VKJC8347 | **GDS10255** | VKJC2913 | **GDS17018** | VKJC5556 | **GDS18003** |
| | | VKJC4386 | **GDS10044** | VKJC3872 | **GDS10264** | VKJC2316 | **GDS17019** | VKJC5555 | **GDS18004** |
| VKJA41083A | **GCO99008** | VKJC4455 | **GDS10044** | VKJC4526 | **GDS10265** | VKJC2944 | **GDS17022** | VKJC5842 | **GDS18005** |
| VKJA5360 | **GCO99008** | VKJC3898 | **GDS10048** | VKJC3985 | **GDS10266** | VKJC2923 | **GDS17025** | VKJC5841 | **GDS18006** |
| VKJA3178 | **GCO99018** | VKJC4438 | **GDS10049** | VKJC8309 | **GDS10267** | VKJC2278 | **GDS17032** | VKJC5810 | **GDS18007** |
| VKJA5356 | **GCO99037** | VKJC4127 | **GDS10054** | VKJC3978 | **GDS10268** | VKJC2380 | **GDS17033** | VKJC5273 | **GDS18008** |
| VKJA41119A | **GCO99085** | VKJC2100 | **GDS10057** | VKJC3689 | **GDS10281** | VKJC2911 | **GDS17037** | VKJC1040 | **GDS18009** |
| VKJA5388 | **GCO99085** | VKJC4928 | **GDS10070** | VKJC8318 | **GDS10286** | VKJC2146 | **GDS17038** | VKJC7002 | **GDS18009** |
| VKJA5335 | **GCO99086** | VKJC4068 | **GDS10071** | VKJC4471 | **GDS10287** | VKJC2255 | **GDS17038** | VKJC5245 | **GDS18010** |
| VKJA3525 | **GCO99128** | VKJC5302 | **GDS10077** | VKJC4481 | **GDS10291** | VKJC2912 | **GDS17039** | VKJC5707 | **GDS18011** |
| VKJA5747 | **GCO99129** | VKJC5303 | **GDS10077** | VKJC8350 | **GDS10293** | VKJC1462 | **GDS17040** | VKJC5847 | **GDS18027** |
| VKJA3214 | **GCO99151** | VKJC8559 | **GDS10077** | VKJC8358 | **GDS10295** | VKJC8290 | **GDS17040** | VKJC5704 | **GDS18032** |
| VKJA5746 | **GCO99155** | VKJC4978 | **GDS10081** | VKJC8581 | **GDS10302** | VKJC6173 | **GDS17048** | VKJC5925 | **GDS18036** |
| VKJA5545 | **GCO99212** | VKJC4041 | **GDS10082** | VKJC8865 | **GDS10306** | VKJC4647 | **GDS17050** | VKJC5622 | **GDS18038** |
| VKJA41118A | **GCO99213** | VKJC4383 | **GDS10089** | VKJC8861 | **GDS10307** | VKJC8696 | **GDS17050** | VKJC5653 | **GDS18039** |
| VKJA5682 | **GCO99213** | VKJC3892 | **GDS10090** | VKJC8862 | **GDS10308** | VKJC8698 | **GDS17050** | VKJC5635 | **GDS18040** |
| VKJA3947 | **GCO99230** | VKJC5092 | **GDS10090** | VKJC8617 | **GDS10309** | VKJC8883 | **GDS17052** | VKJC5941 | **GDS18041** |
| VKJA3948 | **GCO99230** | VKJC8558 | **GDS10090** | VKJC3983 | **GDS10310** | VKJC4646 | **GDS17053** | VKJC5942 | **GDS18041** |
| VKJA5949 | **GCO99233** | VKJC4507 | **GDS10104** | VKJC8387 | **GDS10311** | VKJC8697 | **GDS17053** | VKJC5728 | **GDS18042** |
| VKJA3061 | **GCO99254** | VKJC9322A | **GDS10104** | VKJC8500 | **GDS10312** | VKJC8914 | **GDS17061** | VKJC5848 | **GDS18043** |
| VKJA5201 | **GCO99268** | VKJC3859 | **GDS10113** | VKJC8506 | **GDS10313** | VKJC8915 | **GDS17062** | VKJC5730 | **GDS18046** |
| VKJA3935 | **GCO99271** | VKJC4551 | **GDS10114** | VKJC8523 | **GDS10314** | VKJC4094 | **GDS17064** | VKJC5729 | **GDS18101** |
| VKJA5251 | **GCO99271** | VKJC4981 | **GDS10118** | VKJC8663 | **GDS10314** | VKJC8263 | **GDS17070** | VKJC5738 | **GDS18101** |
| VKJA3512 | **GCO99282** | VKJC5118 | **GDS10121** | VKJC8525 | **GDS10320** | VKJC8262 | **GDS17071** | VKJC5731 | **GDS18102** |
| VKJA5857 | **GCO99284** | VKJC3506 | **GDS10124** | VKJC8638 | **GDS10325** | VKJC2400 | **GDS17077** | VKJC5737 | **GDS18102** |
| VKJA5366 | **GCO99293** | VKJC5263 | **GDS10124** | VKJC8480 | **GDS10335** | VKJC5905 | **GDS17079** | VKJC5676 | **GDS18118** |
| VKJA3076 | **GCO99298** | VKJC3495 | **GDS10125** | VKJC8618 | **GDS10339** | VKJC2462 | **GDS17080** | VKJC5702 | **GDS18141** |
| VKJA5830 | **GCO99310** | VKJC3518 | **GDS10125** | VKJC8867 | **GDS10340** | VKJC8195 | **GDS17082** | VKJC5759 | **GDS18191** |
| VKJA3970 | **GCO99318** | VKJC5138 | **GDS10125** | VKJC5121 | **GDS10344** | VKJC2393 | **GDS17099** | VKJC5758 | **GDS18193** |
| VKJA5345 | **GCO99366** | VKJC5144 | **GDS10125** | VKJC5309 | **GDS10348** | VKJC2580 | **GDS17101** | VKJC6065 | **GDS18197** |
| VKJC3511 | **GDS10001** | VKJC3976 | **GDS10131** | VKJC8502 | **GDS10348** | VKJC8125 | **GDS17101** | VKJC8346 | **GDS18199** |
| VKJC5123 | **GDS10001** | VKJC3766 | **GDS10138** | VKJC8643 | **GDS10362** | VKJC3693 | **GDS17102** | VKJC5713 | **GDS18201** |
| VKJC5137 | **GDS10001** | VKJC5264 | **GDS10139** | VKJC8642 | **GDS10363** | VKJC2634 | **GDS17106** | VKJC5714 | **GDS18201** |
| VKJC5140 | **GDS10001** | VKJC5265 | **GDS10139** | VKJC5126 | **GDS10364** | VKJC1889 | **GDS17107** | VKJC5717 | **GDS18201** |
| VKJC8466 | **GDS10001** | VKJC5119 | **GDS10141** | VKJC5176 | **GDS10364** | VKJC8196 | **GDS17109** | VKJC5718 | **GDS18201** |
| VKJC5269 | **GDS10002** | VKJC5060 | **GDS10142** | VKJC5178 | **GDS10381** | VKJC8409 | **GDS17110** | VKJC8045 | **GDS18201** |
| VKJC5296 | **GDS10002** | VKJC5251 | **GDS10143** | VKJC8489 | **GDS10382** | VKJC2699 | **GDS17111** | VKJC8462 | **GDS18209** |
| VKJC5298 | **GDS10002** | VKJC4434 | **GDS10152** | VKJC8644 | **GDS10383** | VKJC2584 | **GDS17112** | VKJC5715 | **GDS18216** |
| VKJC8331 | **GDS10002** | VKJC3703 | **GDS10157** | VKJC3991 | **GDS10385** | VKJC8122 | **GDS17112** | VKJC5720 | **GDS18216** |
| VKJC8336 | **GDS10002** | VKJC3737 | **GDS10162** | VKJC8874 | **GDS10399** | VKJC1893 | **GDS17117** | VKJC5721 | **GDS18216** |
| VKJC5237 | **GDS10004** | VKJC3887 | **GDS10164** | VKJC1229 | **GDS10413** | VKJC8126 | **GDS17119** | VKJC8593 | **GDS18216** |
| VKJC5316 | **GDS10004** | VKJC4232 | **GDS10174** | VKJC1195 | **GDS10415** | VKJC8124 | **GDS17120** | VKJC5747 | **GDS18218** |
| VKJC4980 | **GDS10007** | VKJC4563 | **GDS10177** | VKJC8483 | **GDS10416** | VKJC1907 | **GDS17122** | VKJC5751 | **GDS18218** |
| VKJC3527 | **GDS10008** | VKJC5125 | **GDS10181** | VKJC2101 | **GDS10430** | VKJC8240 | **GDS17124** | VKJC5767 | **GDS18218** |
| VKJC4369 | **GDS10008** | VKJC5329 | **GDS10189** | VKJC3992 | **GDS10430** | VKJC1813 | **GDS17131** | VKJC5768 | **GDS18218** |
| VKJC3525 | **GDS10009** | VKJC7000 | **GDS10190** | VKJC8145 | **GDS11014** | VKJC8185 | **GDS17137** | VKJC5754 | **GDS18219** |
| VKJC4208 | **GDS10009** | VKJC3742 | **GDS10191** | VKJC8146 | **GDS11021** | VKJC2570 | **GDS17141** | VKJC5762 | **GDS18219** |
| VKJC4234 | **GDS10014** | VKJC5056 | **GDS10192** | VKJC5019 | **GDS11024** | VKJC2593 | **GDS17147** | VKJC5766 | **GDS18219** |
| VKJC4173 | **GDS10016** | VKJC4475 | **GDS10193** | VKJC8853 | **GDS12004** | VKJC8186 | **GDS17149** | VKJC5921 | **GDS18242** |
| VKJC6997 | **GDS10019** | VKJC4478 | **GDS10193** | VKJC6342 | **GDS12011** | VKJC8379 | **GDS17150** | VKJC1353 | **GDS18247** |
| VKJC6996 | **GDS10021** | VKJC5181 | **GDS10194** | VKJC6344 | **GDS12025** | VKJC8882 | **GDS17151** | VKJC1352 | **GDS18248** |
| VKJC3900 | **GDS10022** | VKJC3990 | **GDS10196** | VKJC4113 | **GDS12040** | VKJC4266 | **GDS17157** | VKJC8463 | **GDS18265** |
| VKJC4224 | **GDS10025** | VKJC4169 | **GDS10200** | VKJC6332 | **GDS12042** | VKJC1800 | **GDS17159** | VKJC8592 | **GDS18271** |
| VKJC6994 | **GDS10026** | VKJC5330 | **GDS10202** | VKJC6345 | **GDS12044** | VKJC2569 | **GDS17181** | VKJC8646 | **GDS18274** |
| VKJC4229 | **GDS10028** | VKJC5270 | **GDS10206** | VKJC7762 | **GDS14022** | VKJC6172 | **GDS17187** | VKJC5701 | **GDS18284** |
| VKJC4435 | **GDS10028** | VKJC5120 | **GDS10207** | VKJC7760 | **GDS14029** | VKJC6174 | **GDS17188** | VKJC5678 | **GDS18289** |
| VKJC4389 | **GDS10032** | VKJC5266 | **GDS10208** | VKJC6966 | **GDS14073** | VKJC6175 | **GDS17189** | VKJC4918 | **GDS18290** |
| VKJC3942 | **GDS10033** | VKJC3503 | **GDS10231** | VKJC6967 | **GDS14074** | VKJC2231 | **GDS17190** | VKJC4540 | **GDS18291** |
| VKJC5142 | **GDS10035** | VKJC3911 | **GDS10232** | VKJC2061 | **GDS16014** | VKJC2237 | **GDS17191** | VKJC5948 | **GDS18292** |
| VKJC3676 | **GDS10036** | VKJC1498 | **GDS10239** | VKJC2059 | **GDS16016** | VKJC2291 | **GDS17194** | VKJC5949 | **GDS18293** |
| VKJC4508 | **GDS10036** | VKJC3516 | **GDS10242** | VKJC2142 | **GDS17001** | VKJC4093 | **GDS17194** | VKJC7068 | **GDS18294** |
| VKJC3933 | **GDS10037** | VKJC5262 | **GDS10242** | VKJC2273 | **GDS17005** | VKJC2931 | **GDS17197** | VKJC1895 | **GDS18295** |
| VKJC9317A | **GDS10037** | VKJC4851 | **GDS10249** | VKJC2274 | **GDS17007** | VKJC2258 | **GDS17201** | VKJC8659 | **GDS18301** |
| VKJC3565 | **GDS10038** | VKJC4051 | **GDS10250** | VKJC2848 | **GDS17010** | VKJC2260 | **GDS17206** | VKJC5723 | **GDS18326** |
| VKJC4125 | **GDS10039** | VKJC8585 | **GDS10251** | VKJC2909 | **GDS17011** | VKJC2511 | **GDS17214** | VKJC5724 | **GDS18333** |
| VKJC5185 | **GDS10040** | VKJC8637 | **GDS10251** | VKJC5906 | **GDS17013** | VKJC2721 | **GDS17222** | VKJC6323 | **GDS18334** |
| VKJC7006 | **GDS10040** | VKJC8613 | **GDS10253** | VKJC5793 | **GDS17014** | VKJC5588 | **GDS18001** | VKJC7954 | **GDS18334** |
| VKJC3751 | **GDS10043** | VKJC8355 | **GDS10254** | VKJC3686 | **GDS17017** | VKJC5586 | **GDS18002** | VKJC7951 | **GDS18335** |

| COMPETITOR | G-AP Ref. | COMPETITOR | G-AP Ref. | COMPETITOR | G-AP Ref. | COMPETITOR | G-AP Ref. | COMPETITOR | G-AP Ref. |
|---|---|---|---|---|---|---|---|---|---|
| **SKF** | | VKJC3244 | **GDS35001** | VKJC8662 | **GDS41299** | VKJC8686 | **GDS44078** | VKJC4846 | **GDS45201** |
| | | VKJC6161 | **GDS35002** | VKJC8549 | **GDS41300** | VKJC8573 | **GDS44079** | VKJC8308 | **GDS45202** |
| VKJC7952 | **GDS18335** | VKJC6160 | **GDS35003** | VKJC8548 | **GDS41301** | VKJC8684 | **GDS44079** | VKJC4039 | **GDS45203** |
| VKJC5786 | **GDS18343** | VKJC3319 | **GDS35006** | VKJC8636 | **GDS41329** | VKJC1431 | **GDS44080** | VKJC4844 | **GDS45204** |
| VKJC5769 | **GDS18358** | VKJC3324 | **GDS35006** | VKJC8635 | **GDS41330** | VKJC1382 | **GDS44094** | VKJC8614 | **GDS45221** |
| VKJC8690 | **GDS18358** | VKJC6985 | **GDS35010** | VKJC8665 | **GDS41365** | VKJC1536 | **GDS44100** | VKJC1299 | **GDS50001** |
| VKJC5756 | **GDS18359** | VKJC6166 | **GDS35011** | VKJC6310 | **GDS41407** | VKJC1745 | **GDS44101** | VKJC8381 | **GDS50001** |
| VKJC5761 | **GDS18359** | VKJC6165 | **GDS35016** | VKJC6287 | **GDS41408** | VKJC3571 | **GDS45004** | VKJC8606 | **GDS50001** |
| VKJC8742 | **GDS18361** | VKJC7102 | **GDS35022** | VKJC7424 | **GDS41409** | VKJC3704 | **GDS45004** | VKJC2685 | **GDS50002** |
| VKJC1821 | **GDS18380** | VKJC6163 | **GDS35037** | VKJC8733 | **GDS41428** | VKJC3966 | **GDS45008** | VKJC9612A | **GDS50002** |
| VKJC1830 | **GDS18405** | VKJC6164 | **GDS35038** | VKJC2879 | **GDS41437** | VKJC4223 | **GDS45009** | VKJC2961 | **GDS50003** |
| VKJC5785 | **GDS18410** | VKJC3298 | **GDS35039** | VKJC8660 | **GDS41441** | VKJC4488 | **GDS45010** | VKJC1283 | **GDS50004** |
| VKJC8741 | **GDS18414** | VKJC8363 | **GDS35052** | VKJC6306 | **GDS41451** | VKJC4485 | **GDS45011** | VKJC1295 | **GDS50004** |
| VKJC4328 | **GDS18421** | VKJC8362 | **GDS35053** | VKJC8668 | **GDS41452** | VKJC3905 | **GDS45012** | VKJC7886 | **GDS50006** |
| VKJC2003 | **GDS18424** | VKJC3303 | **GDS35055** | VKJC8669 | **GDS41453** | VKJC6991 | **GDS45014** | VKJC9610A | **GDS50006** |
| VKJC8527 | **GDS18434** | VKJC8996 | **GDS35067** | VKJC7338 | **GDS41474** | VKJC3563 | **GDS45015** | VKJC1222 | **GDS50009** |
| VKJC8528 | **GDS18435** | VKJC8997 | **GDS35068** | VKJC8661 | **GDS41475** | VKJC4121 | **GDS45015** | VKJC1286 | **GDS50009** |
| VKJC7748 | **GDS18445** | VKJC8999 | **GDS35068** | VKJC8666 | **GDS41475** | VKJC4263 | **GDS45016** | VKJC1751 | **GDS50010** |
| VKJC6737 | **GDS18455** | VKJC3297 | **GDS35074** | VKJC8667 | **GDS41481** | VKJC4281 | **GDS45017** | VKJC7020 | **GDS50010** |
| VKJC1885 | **GDS18484** | VKJC3301 | **GDS35078** | VKJC7423 | **GDS41523** | VKJC6993 | **GDS45017** | VKJC1638 | **GDS50011** |
| VKJC2887 | **GDS18515** | VKJC3299 | **GDS35081** | VKJC8664 | **GDS41577** | VKJC4408 | **GDS45020** | VKJC1028 | **GDS50014** |
| VKJC1429 | **GDS21032** | VKJC4439 | **GDS35084** | VKJC1568 | **GDS44002** | VKJC6990 | **GDS45021** | VKJC2747 | **GDS50014** |
| VKJC1453 | **GDS21032** | VKJC5225 | **GDS35085** | VKJC1771 | **GDS44003** | VKJC6992 | **GDS45024** | VKJC1024 | **GDS50015** |
| VKJC8276 | **GDS21035** | VKJC5946 | **GDS35085** | VKJC7019 | **GDS44004** | VKJC4914 | **GDS45025** | VKJC2996 | **GDS50019** |
| VKJC1376 | **GDS21036** | VKJC1654 | **GDS35095** | VKJC5997 | **GDS44005** | VKJC3569 | **GDS45026** | VKJC2671 | **GDS50023** |
| VKJC8370 | **GDS21043** | VKJC7577 | **GDS35096** | VKJC7021 | **GDS44005** | VKJC3627 | **GDS45027** | VKJC3043 | **GDS50026** |
| VKJC8278 | **GDS21051** | VKJC8995 | **GDS35104** | VKJC9645A | **GDS44005** | VKJC3835 | **GDS45031** | VKJC2794 | **GDS50027** |
| VKJC1425 | **GDS21053** | VKJC3447 | **GDS35115** | VKJC7887 | **GDS44006** | VKJC3722 | **GDS45032** | VKJC2755 | **GDS50031** |
| VKJC1471 | **GDS21056** | VKJC3436 | **GDS35116** | VKJC1577 | **GDS44011** | VKJC4318 | **GDS45035** | VKJC2704 | **GDS50032** |
| VKJC8277 | **GDS21056** | VKJC4848 | **GDS35133** | VKJC1653 | **GDS44013** | VKJC3956 | **GDS45059** | VKJC1298 | **GDS50036** |
| VKJC1388 | **GDS21062** | VKJC1029 | **GDS35134** | VKJC1670 | **GDS44014** | VKJC4889 | **GDS45070** | VKJC2712 | **GDS50037** |
| VKJC1402 | **GDS21063** | VKJC2596 | **GDS38001** | VKJC6114 | **GDS44016** | VKJC8148 | **GDS45084** | VKJC1223 | **GDS50038** |
| VKJC4185 | **GDS21070** | VKJC2597 | **GDS38002** | VKJC6115 | **GDS44017** | VKJC8150 | **GDS45084** | VKJC3209 | **GDS50043** |
| VKJC1387 | **GDS21071** | VKJC7112 | **GDS39006** | VKJC1460 | **GDS44020** | VKJC8149 | **GDS45085** | VKJC7894 | **GDS50043** |
| VKJC1472 | **GDS21073** | VKJC7223 | **GDS39007** | VKJC8291 | **GDS44020** | VKJC4983 | **GDS45088** | VKJC1038 | **GDS50044** |
| VKJC5797 | **GDS21074** | VKJC7137 | **GDS39114** | VKJC1640 | **GDS44021** | VKJC4335 | **GDS45094** | VKJC6058 | **GDS50044** |
| VKJC4989 | **GDS21076** | VKJC7221 | **GDS39114** | VKJC1531 | **GDS44026** | VKJC8321 | **GDS45094** | VKJC2678 | **GDS50050** |
| VKJC1423 | **GDS21092** | VKJC7201 | **GDS39163** | VKJC8339 | **GDS44026** | VKJC4227 | **GDS45101** | VKJC1031 | **GDS50052** |
| VKJC8575 | **GDS21102** | VKJC7280 | **GDS39164** | VKJC8343 | **GDS44026** | VKJC5271 | **GDS45103** | VKJC2790 | **GDS50053** |
| VKJC8576 | **GDS21103** | VKJC7264 | **GDS39236** | VKJC1530 | **GDS44027** | VKJC5307 | **GDS45103** | VKJC8403 | **GDS50057** |
| VKJC6837 | **GDS21114** | VKJC7268 | **GDS39236** | VKJC8338 | **GDS44027** | VKJC4479 | **GDS45104** | VKJC8404 | **GDS50059** |
| VKJC4062 | **GDS22003** | VKJC6482 | **GDS41001** | VKJC8342 | **GDS44027** | VKJC3858 | **GDS45105** | VKJC7892 | **GDS50074** |
| VKJC7885 | **GDS23039** | VKJC6271 | **GDS41002** | VKJC1390 | **GDS44028** | VKJC4146 | **GDS45106** | VKJC2752 | **GDS50095** |
| VKJC2889 | **GDS23040** | VKJC6294 | **GDS41003** | VKJC1385 | **GDS44029** | VKJC4412 | **GDS45108** | VKJC2804 | **GDS50099** |
| VKJC8461 | **GDS23083** | VKJC6406 | **GDS41004** | VKJC1445 | **GDS44030** | VKJC4483 | **GDS45113** | VKJC7891 | **GDS50100** |
| VKJC2875 | **GDS23122** | VKJC6407 | **GDS41005** | VKJC1463 | **GDS44030** | VKJC3741 | **GDS45119** | VKJC2780 | **GDS50102** |
| VKJC4032 | **GDS23198** | VKJC3702 | **GDS41006** | VKJC1386 | **GDS44031** | VKJC3899 | **GDS45126** | VKJC6093 | **GDS50102** |
| VKJC4031 | **GDS23199** | VKJC3707 | **GDS41007** | VKJC1375 | **GDS44032** | VKJC8580 | **GDS45133** | VKJC6142 | **GDS50102** |
| VKJC4015 | **GDS23241** | VKJC6403 | **GDS41024** | VKJC1658 | **GDS44033** | VKJC3868 | **GDS45134** | VKJC8054 | **GDS50105** |
| VKJC6646 | **GDS24034** | VKJC6298 | **GDS41025** | VKJC1476 | **GDS44036** | VKJC4365 | **GDS45137** | VKJC2672 | **GDS50118** |
| VKJC7853 | **GDS24153** | VKJC6301 | **GDS41025** | VKJC1624 | **GDS44036** | VKJC3902 | **GDS45138** | VKJC1034 | **GDS50120** |
| VKJC6336 | **GDS24176** | VKJC6410 | **GDS41055** | VKJC1620 | **GDS44038** | VKJC4131 | **GDS45151** | VKJC2703 | **GDS50120** |
| VKJC6335 | **GDS24177** | VKJC6300 | **GDS41081** | VKJC1598 | **GDS44039** | VKJC3605 | **GDS45152** | VKJC6057 | **GDS50120** |
| VKJC5238 | **GDS24246** | VKJC6183 | **GDS41083** | VKJC7903 | **GDS44040** | VKJC4858 | **GDS45153** | VKJC2988 | **GDS50131** |
| VKJC5240 | **GDS24247** | VKJC6182 | **GDS41084** | VKJC7902 | **GDS44042** | VKJC4890 | **GDS45153** | VKJC2795 | **GDS50132** |
| VKJC5239 | **GDS24260** | VKJC6481 | **GDS41094** | VKJC1659 | **GDS44044** | VKJC4915 | **GDS45156** | VKJC1275 | **GDS50134** |
| VKJC5253 | **GDS24299** | VKJC6206 | **GDS41096** | VKJC1662 | **GDS44048** | VKJC4030 | **GDS45157** | VKJC2681 | **GDS50145** |
| VKJC5252 | **GDS24362** | VKJC6201 | **GDS41156** | VKJC1444 | **GDS44051** | VKJC4044 | **GDS45157** | VKJC1296 | **GDS50150** |
| VKJC5258 | **GDS24526** | VKJC7324 | **GDS41178** | VKJC1464 | **GDS44052** | VKJC4322 | **GDS45158** | VKJC2896 | **GDS50151** |
| VKJC7970 | **GDS24529** | VKJC7475 | **GDS41179** | VKJC1580 | **GDS44059** | VKJC8600 | **GDS45158** | VKJC1242 | **GDS50159** |
| VKJC7979 | **GDS24542** | VKJC6185 | **GDS41193** | VKJC5908 | **GDS44064** | VKJC3952 | **GDS45160** | VKJC1215 | **GDS50160** |
| VKJC5257 | **GDS24546** | VKJC6283 | **GDS41200** | VKJC5907 | **GDS44065** | VKJC8705 | **GDS45174** | VKJC1294 | **GDS50162** |
| VKJC6857 | **GDS27132** | VKJC6286 | **GDS41200** | VKJC8712 | **GDS44068** | VKJC8704 | **GDS45175** | VKJC6125 | **GDS50162** |
| VKJC1737 | **GDS34171** | VKJC7305 | **GDS41200** | VKJC1593 | **GDS44076** | VKJC8695 | **GDS45176** | VKJC8087 | **GDS50162** |
| VKJC1896 | **GDS34220** | VKJC7476 | **GDS41221** | VKJC1603 | **GDS44077** | VKJC4135 | **GDS45182** | VKJC5996 | **GDS50166** |
| VKJC5764 | **GDS34252** | VKJC7343 | **GDS41261** | VKJC7898 | **GDS44078** | VKJC8307 | **GDS45193** | VKJC6127 | **GDS50193** |
| VKJC4329 | **GDS34254** | VKJC7362 | **GDS41262** | VKJC8574 | **GDS44078** | VKJC8306 | **GDS45194** | VKJC6144 | **GDS50194** |
| VKJC1705 | **GDS34257** | VKJC6479 | **GDS41280** | VKJC8685 | **GDS44078** | VKJC4045 | **GDS45200** | VKJC1273 | **GDS50197** |

| COMPETITOR | G-AP Ref. | COMPETITOR | G-AP Ref. | COMPETITOR | G-AP Ref. | COMPETITOR | G-AP Ref. | COMPETITOR | G-AP Ref. |
|---|---|---|---|---|---|---|---|---|---|
| **SKF** | | VKJC6004 | **GDS50390** | VKJC6980 | **GDS50527** | VKJC8004 | **GDS56905** | VKJC1665 | **GDS60035** |
| | | VKJC6030 | **GDS50391** | VKJC6492 | **GDS50535** | VKJC3332 | **GDS56985** | VKJC1002 | **GDS61001** |
| VKJC6150 | **GDS50197** | VKJC6005 | **GDS50392** | VKJC6488 | **GDS50536** | VKJC6950 | **GDS57004** | VKJC1104 | **GDS61001** |
| VKJC2995 | **GDS50200** | VKJC6012 | **GDS50393** | VKJC8168 | **GDS50538** | VKJC7879 | **GDS57004** | VKJC1003 | **GDS61002** |
| VKJC1235 | **GDS50207** | VKJC6096 | **GDS50395** | VKJC8170 | **GDS50539** | VKJC6212 | **GDS57032** | VKJC1007 | **GDS61002** |
| VKJC1248 | **GDS50207** | VKJC6099 | **GDS50399** | VKJC8171 | **GDS50542** | VKJC6230 | **GDS57039** | VKJC5159 | **GDS61003** |
| VKJC1267 | **GDS50209** | VKJC6013 | **GDS50400** | VKJC8166 | **GDS50544** | VKJC6233 | **GDS57040** | VKJC5151 | **GDS61004** |
| VKJC3224 | **GDS50211** | VKJC8647 | **GDS50400** | VKJC6963 | **GDS50552** | VKJC8407 | **GDS57040** | VKJC1127 | **GDS61007** |
| VKJC3202 | **GDS50214** | VKJC6053 | **GDS50402** | VKJC6064 | **GDS50554** | VKJC6948 | **GDS57083** | VKJC1084 | **GDS61010** |
| VKJC2796 | **GDS50215** | VKJC6017 | **GDS50403** | VKJC1769 | **GDS50557** | VKJC2935 | **GDS57124** | VKJC1109 | **GDS61011** |
| VKJC6148 | **GDS50221** | VKJC8590 | **GDS50405** | VKJC5994 | **GDS50557** | VKJC6973 | **GDS57149** | VKJC4879 | **GDS61019** |
| VKJC6149 | **GDS50223** | VKJC6128 | **GDS50410** | VKJC6116 | **GDS50562** | VKJC8541 | **GDS57197** | VKJC5471 | **GDS61019** |
| VKJC1231 | **GDS50226** | VKJC5012 | **GDS50416** | VKJC8948 | **GDS50563** | VKJC2928 | **GDS57211** | VKJC5530 | **GDS61019** |
| VKJC8431 | **GDS50227** | VKJC1371 | **GDS50421** | VKJC8934 | **GDS50564** | VKJC8539 | **GDS57221** | VKJC8723 | **GDS61019** |
| VKJC1237 | **GDS50228** | VKJC6198 | **GDS50425** | VKJC1348 | **GDS50567** | VKJC8538 | **GDS57222** | VKJA1053 | **GDS61020** |
| VKJC1238 | **GDS50228** | VKJC6204 | **GDS50426** | VKJC8175 | **GDS50573** | VKJC8540 | **GDS57223** | VKJC1053 | **GDS61020** |
| VKJC6068 | **GDS50245** | VKJC5913 | **GDS50427** | VKJC5977 | **GDS50574** | VKJC6960 | **GDS57247** | VKJC1110 | **GDS61028** |
| VKJC8405 | **GDS50246** | VKJC8963 | **GDS50428** | VKJC8179 | **GDS50574** | VKJC5057 | **GDS57265** | VKJC5193 | **GDS61033** |
| VKJC1227 | **GDS50253** | VKJC1279 | **GDS50429** | VKJC5979 | **GDS50579** | VKJC6923 | **GDS57290** | VKJC5158 | **GDS61034** |
| VKJC5972 | **GDS50255** | VKJC1277 | **GDS50430** | VKJC5043 | **GDS50586** | VKJC2049 | **GDS57385** | VKJC5131 | **GDS61040** |
| VKJC5975 | **GDS50255** | VKJC6092 | **GDS50438** | VKJC1292 | **GDS50588** | VKJC2475 | **GDS57407** | VKJC1094 | **GDS61042** |
| VKJC1266 | **GDS50256** | VKJC6070 | **GDS50440** | VKJC8167 | **GDS50591** | VKJC5219 | **GDS57411** | VKJC4622 | **GDS61042** |
| VKJC6082 | **GDS50260** | VKJC6060 | **GDS50441** | VKJC5989 | **GDS50592** | VKJC2004 | **GDS57463** | VKJC1032 | **GDS61045** |
| VKJC6085 | **GDS50261** | VKJC6038 | **GDS50442** | VKJC8132 | **GDS50596** | VKJC4399 | **GDS57507** | VKJC5160 | **GDS61052** |
| VKJC6079 | **GDS50263** | VKJC6100 | **GDS50442** | VKJC5947 | **GDS50604** | VKJC8922 | **GDS57626** | VKJC1016 | **GDS61055** |
| VKJC6089 | **GDS50263** | VKJC6075 | **GDS50443** | VKJC8933 | **GDS50615** | VKJC3480 | **GDS57728** | VKJC1108 | **GDS61055** |
| VKJC8434 | **GDS50268** | VKJC6035 | **GDS50444** | VKJC8932 | **GDS50617** | VKJC8418 | **GDS57877** | VKJC5097 | **GDS61063** |
| VKJC8082 | **GDS50271** | VKJC8599 | **GDS50445** | VKJC8931 | **GDS50618** | VKJC4191 | **GDS57906** | VKJC5103 | **GDS61063** |
| VKJC6076 | **GDS50279** | VKJC1220 | **GDS50446** | VKJC6028 | **GDS50624** | VKJC4133 | **GDS57935** | VKJC5290 | **GDS61065** |
| VKJC5966 | **GDS50280** | VKJC1230 | **GDS50446** | VKJC8448 | **GDS50627** | VKJC4132 | **GDS57936** | VKJC1015 | **GDS61067** |
| VKJC8080 | **GDS50295** | VKJC6014 | **GDS50447** | VKJC1239 | **GDS50632** | VKJC2111 | **GDS58213** | VKJC5134 | **GDS61074** |
| VKJC8079 | **GDS50296** | VKJC8655 | **GDS50447** | VKJC1251 | **GDS50633** | VKJC8584 | **GDS59077** | VKJC5132 | **GDS61075** |
| VKJC2793 | **GDS50309** | VKJC8139 | **GDS50451** | VKJC8656 | **GDS50634** | VKJC3904 | **GDS59206** | VKJC4899 | **GDS61076** |
| VKJC1241 | **GDS50311** | VKJC1257 | **GDS50452** | VKJC6032 | **GDS50637** | VKJC3494 | **GDS59208** | VKJC5084 | **GDS61078** |
| VKJC1255 | **GDS50311** | VKJC6029 | **GDS50454** | VKJC8447 | **GDS51017** | VKJC8583 | **GDS59209** | VKJC5480 | **GDS61082** |
| VKJC1240 | **GDS50313** | VKJC8138 | **GDS50455** | VKJC8428 | **GDS52001** | VKJC8536 | **GDS59268** | VKJC5453 | **GDS61083** |
| VKJC1269 | **GDS50313** | VKJC2761 | **GDS50461** | VKJC1011 | **GDS53001** | VKJC1313 | **GDS59270** | VKJC5198 | **GDS61084** |
| VKJC1226 | **GDS50323** | VKJC5004 | **GDS50463** | VKJC1013 | **GDS53002** | VKJC1314 | **GDS59271** | VKJC8601 | **GDS61084** |
| VKJC1243 | **GDS50323** | VKJC5003 | **GDS50464** | VKJC8608 | **GDS53002** | VKJC3873 | **GDS59272** | VKJC5288 | **GDS61085** |
| VKJC1290 | **GDS50324** | VKJC8410 | **GDS50465** | VKJC1005 | **GDS53003** | VKJC3469 | **GDS59273** | VKJC5280 | **GDS61087** |
| VKJC1254 | **GDS50327** | VKJC8417 | **GDS50466** | VKJC1012 | **GDS53005** | VKJC8534 | **GDS59316** | VKJC4590 | **GDS61093** |
| VKJC1218 | **GDS50328** | VKJC1247 | **GDS50471** | VKJC4585 | **GDS53007** | VKJC8535 | **GDS59317** | VKJC4595 | **GDS61093** |
| VKJC1219 | **GDS50329** | VKJC6009 | **GDS50483** | VKJC4615 | **GDS53008** | VKJC3634 | **GDS59393** | VKJC4609 | **GDS61094** |
| VKJC1246 | **GDS50330** | VKJC5071 | **GDS50487** | VKJC6158 | **GDS54001** | VKJC5496 | **GDS59417** | VKJC4623 | **GDS61094** |
| VKJC1289 | **GDS50336** | VKJC8937 | **GDS50487** | VKJC6159 | **GDS54002** | VKJC3885 | **GDS59445** | VKJC4638 | **GDS61094** |
| VKJC6002 | **GDS50348** | VKJC8942 | **GDS50487** | VKJC4621 | **GDS54011** | VKJC3462 | **GDS59446** | VKJC4628 | **GDS61096** |
| VKJC5086 | **GDS50353** | VKJC8938 | **GDS50488** | VKJC5079 | **GDS54018** | VKJC8537 | **GDS59447** | VKJC8205 | **GDS61096** |
| VKJC5985 | **GDS50353** | VKJC8943 | **GDS50489** | VKJC7518 | **GDS56052** | VKJC3919 | **GDS59495** | VKJC4597 | **GDS61097** |
| VKJC5992 | **GDS50353** | VKJC5988 | **GDS50493** | VKJC7573 | **GDS56055** | VKJC5535 | **GDS59518** | VKJC5083 | **GDS61098** |
| VKJC6019 | **GDS50353** | VKJC6039 | **GDS50494** | VKJC7551 | **GDS56069** | VKJC6423 | **GDS59552** | VKJC5107 | **GDS61099** |
| VKJC5090 | **GDS50354** | VKJC8648 | **GDS50495** | VKJC2592 | **GDS56089** | VKJC6450 | **GDS59553** | VKJC5124 | **GDS61099** |
| VKJC5991 | **GDS50354** | VKJC8135 | **GDS50496** | VKJC2583 | **GDS56090** | VKJC4642 | **GDS59589** | VKJC1095 | **GDS61100** |
| VKJC6045 | **GDS50354** | VKJC8658 | **GDS50497** | VKJC5755 | **GDS56093** | VKJC6535 | **GDS59621** | VKJC6539 | **GDS61100** |
| VKJC6046 | **GDS50354** | VKJC5021 | **GDS50498** | VKJC3317 | **GDS56168** | VKJC5557 | **GDS59622** | VKJC1096 | **GDS61101** |
| VKJC6095 | **GDS50359** | VKJC5020 | **GDS50501** | VKJC7742 | **GDS56186** | VKJC6580 | **GDS59633** | VKJC5204 | **GDS61105** |
| VKJC5967 | **GDS50364** | VKJC6049 | **GDS50506** | VKJC8416 | **GDS56234** | VKJC3906 | **GDS59635** | VKJC1049 | **GDS61121** |
| VKJC6042 | **GDS50364** | VKJC5017 | **GDS50507** | VKJC4423 | **GDS56452** | VKJC5636 | **GDS59671** | VKJC5441 | **GDS61122** |
| VKJC8460 | **GDS50364** | VKJC5075 | **GDS50507** | VKJC6556 | **GDS56501** | VKJC1473 | **GDS60002** | VKJC1048 | **GDS61123** |
| VKJC6081 | **GDS50365** | VKJC1234 | **GDS50509** | VKJC4909 | **GDS56692** | VKJC1569 | **GDS60002** | VKJC8283 | **GDS61133** |
| VKJC8775 | **GDS50366** | VKJC6191 | **GDS50510** | VKJC4735 | **GDS56700** | VKJC1627 | **GDS60002** | VKJC5205 | **GDS61140** |
| VKJC6048 | **GDS50369** | VKJC6024 | **GDS50514** | VKJC4736 | **GDS56734** | VKJC1657 | **GDS60013** | VKJC4632 | **GDS61147** |
| VKJC6037 | **GDS50372** | VKJC1244 | **GDS50517** | VKJC3548 | **GDS56736** | VKJC1664 | **GDS60013** | VKJC8281 | **GDS61150** |
| VKJC8130 | **GDS50377** | VKJC5978 | **GDS50519** | VKJC4192 | **GDS56785** | VKJC1415 | **GDS60016** | VKJC5435 | **GDS61157** |
| VKJC6010 | **GDS50379** | VKJC6106 | **GDS50520** | VKJC2637 | **GDS56840** | VKJC1407 | **GDS60021** | VKJC6964 | **GDS61166** |
| VKJC8134 | **GDS50380** | VKJC3221 | **GDS50521** | VKJC2629 | **GDS56841** | VKJC1409 | **GDS60021** | VKJC1014 | **GDS61172** |
| VKJC6199 | **GDS50383** | VKJC3220 | **GDS50522** | VKJC7100 | **GDS56855** | VKJC8591 | **GDS60022** | VKJC8808 | **GDS61173** |
| VKJC6066 | **GDS50386** | VKJC6143 | **GDS50523** | VKJC1976 | **GDS56869** | VKJC8374 | **GDS60026** | VKJC8808A | **GDS61173** |
| VKJC1291 | **GDS50389** | VKJC6131 | **GDS50524** | VKJC1974 | **GDS56873** | VKJC5823 | **GDS60027** | VKJC5115 | **GDS61183** |

| COMPETITOR | G-AP Ref. | COMPETITOR | G-AP Ref. | COMPETITOR | G-AP Ref. | COMPETITOR | G-AP Ref. | COMPETITOR | G-AP Ref. |
|---|---|---|---|---|---|---|---|---|---|
| **SKF** | | VKJC2984 | **GDS62087** | VKJC1874 | **GDS82082** | VKJC5072 | **GDS83063** | VKJC7637 | **GDS83918** |
| | | VKJC4066 | **GDS62091** | VKJC4904 | **GDS82083** | VKJC8021 | **GDS83067** | VKJC1322 | **GDS83926** |
| VKJC4974 | **GDS61184** | VKJC4183 | **GDS62109** | VKJC8275 | **GDS82084** | VKJC4927 | **GDS83136** | VKJC8866 | **GDS83941** |
| VKJC5904 | **GDS61185** | VKJC4178 | **GDS62116** | VKJC8377 | **GDS82085** | VKJC1491 | **GDS83137** | VKJC5828 | **GDS83946** |
| VKJC1060 | **GDS61186** | VKJC4098 | **GDS62120** | VKJC4343 | **GDS82086** | VKJC3465 | **GDS83192** | VKJC3398 | **GDS83978** |
| VKJC1075 | **GDS61186** | VKJC6598 | **GDS62132** | VKJC4342 | **GDS82087** | VKJC3466 | **GDS83193** | VKJC4971 | **GDS83988** |
| VKJC5054 | **GDS61189** | VKJC8433 | **GDS81010** | VKJC5520 | **GDS82168** | VKJC3468 | **GDS83212** | VKJC8634 | **GDS84012** |
| VKJC1046 | **GDS61190** | VKJC8582 | **GDS81054** | VKJC8014 | **GDS82174** | VKJC8900 | **GDS83216** | VKJC6925 | **GDS84111** |
| VKJC1045 | **GDS61191** | VKJC5937 | **GDS81109** | VKJC8005 | **GDS82177** | VKJC6809 | **GDS83217** | VKJC8954 | **GDS84140** |
| VKJC6350 | **GDS61192** | VKJC2024 | **GDS81110** | VKJC1978 | **GDS82266** | VKJC8873 | **GDS83218** | VKJC8884 | **GDS84233** |
| VKJC4605 | **GDS61201** | VKJC5513 | **GDS81132** | VKJC8940 | **GDS82284** | VKJC4175 | **GDS83219** | VKJC8956 | **GDS84244** |
| VKJC8203 | **GDS61201** | VKJC5637 | **GDS81234** | VKJC3826 | **GDS82315** | VKJC4176 | **GDS83220** | VKJC8373 | **GDS84292** |
| VKJC8204 | **GDS61201** | VKJC5572 | **GDS81235** | VKJC3819 | **GDS82316** | VKJC2279 | **GDS83226** | VKJC3305 | **GDS84300** |
| VKJC1051 | **GDS61203** | VKJC1114 | **GDS81265** | VKJC6548 | **GDS82351** | VKJC2847 | **GDS83231** | VKJC3178 | **GDS84363** |
| VKJC5088 | **GDS61204** | VKJC4222 | **GDS81265** | VKJC6544 | **GDS82359** | VKJC5208 | **GDS83246** | VKJC3828 | **GDS84395** |
| VKJC5045 | **GDS61205** | VKJC6815 | **GDS81288** | VKJC6542 | **GDS82360** | VKJC4614 | **GDS83266** | VKJC4797 | **GDS84397** |
| VKJC5207 | **GDS61210** | VKJC6816 | **GDS81291** | VKJC6726 | **GDS82361** | VKJC8680 | **GDS83273** | VKJC6555 | **GDS84519** |
| VKJC4626 | **GDS61211** | VKJC6920 | **GDS81324** | VKJC1758 | **GDS82365** | VKJC4733 | **GDS83293** | VKJC7743 | **GDS84534** |
| VKJC6484 | **GDS61213** | VKJC8033 | **GDS81371** | VKJC2016 | **GDS82381** | VKJC4588 | **GDS83294** | VKJC4390 | **GDS84562** |
| VKJC6180 | **GDS61215** | VKJC6658 | **GDS81375** | VKJC2172 | **GDS82395** | VKJC4594 | **GDS83294** | VKJC8875 | **GDS84579** |
| VKJC4315 | **GDS61216** | VKJC6651 | **GDS81377** | VKJC2112 | **GDS82396** | VKJC4598 | **GDS83294** | VKJC8876 | **GDS84582** |
| VKJC5110 | **GDS61223** | VKJC6671 | **GDS81378** | VKJC1347 | **GDS82399** | VKJC4592 | **GDS83295** | VKJC8936 | **GDS84609** |
| VKJC5294 | **GDS61236** | VKJC6653 | **GDS81379** | VKJC8944 | **GDS82447** | VKJC1008 | **GDS83297** | VKJC8901 | **GDS84640** |
| VKJC6111 | **GDS61238** | VKJC5918 | **GDS81385** | VKJC6356 | **GDS82450** | VKJC5229 | **GDS83300** | VKJC1130 | **GDS85001** |
| VKJC1069 | **GDS61243** | VKJC6494 | **GDS81388** | VKJC8935 | **GDS82451** | VKJC4620 | **GDS83313** | VKJC1059 | **GDS85002** |
| VKJC1067 | **GDS61244** | VKJC8030 | **GDS81392** | VKJC3459 | **GDS82455** | VKJC8670 | **GDS83316** | VKJC1155 | **GDS85006** |
| VKJC6353 | **GDS61245** | VKJC7576 | **GDS81405** | VKJC6493 | **GDS82518** | VKJC4596 | **GDS83319** | VKJC1131 | **GDS85007** |
| VKJC5085 | **GDS61248** | VKJC8550 | **GDS81419** | VKJC6670 | **GDS82519** | VKJC8683 | **GDS83321** | VKJC1158 | **GDS85017** |
| VKJC5108 | **GDS61252** | VKJC6852 | **GDS81425** | VKJC7745 | **GDS82548** | VKJC4958 | **GDS83329** | VKJC1210 | **GDS85018** |
| VKJC5224 | **GDS61258** | VKJC3505 | **GDS81476** | VKJC6775 | **GDS82724** | VKJC5902 | **GDS83330** | VKJC1058 | **GDS85021** |
| VKJC5130 | **GDS61262** | VKJC5515 | **GDS81493** | VKJC5826 | **GDS82730** | VKJC8681 | **GDS83345** | VKJC8092 | **GDS85022** |
| VKJC4201 | **GDS61282** | VKJC5827 | **GDS81581** | VKJC8904 | **GDS82736** | VKJC5508 | **GDS83347** | VKJC8093 | **GDS85023** |
| VKJC8268 | **GDS61284** | VKJC4608 | **GDS81583** | VKJC8978 | **GDS82810** | VKJC6728 | **GDS83353** | VKJC8097 | **GDS85023** |
| VKJC4210 | **GDS61285** | VKJC4953 | **GDS81589** | VKJC8673 | **GDS82846** | VKJC4611 | **GDS83355** | VKJC8106 | **GDS85024** |
| VKJC4215 | **GDS61285** | VKJC1019 | **GDS81615** | VKJC4245 | **GDS82847** | VKJC5511 | **GDS83364** | VKJC1209 | **GDS85029** |
| VKJC5903 | **GDS61288** | VKJC1052 | **GDS81616** | VKJC1026 | **GDS83001** | VKJC4512 | **GDS83369** | VKJC8095 | **GDS85036** |
| VKJC8671 | **GDS61290** | VKJC4644 | **GDS81653** | VKJC5438 | **GDS83002** | VKJC1092 | **GDS83373** | VKJC8099 | **GDS85036** |
| VKJC8269 | **GDS61293** | VKJC7740 | **GDS81662** | VKJC1021 | **GDS83003** | VKJC4282 | **GDS83373** | VKJC8672 | **GDS85036** |
| VKJC4503 | **GDS61296** | VKJC7741 | **GDS81663** | VKJC1035 | **GDS83004** | VKJC4591 | **GDS83381** | VKJC8094 | **GDS85037** |
| VKJC4923 | **GDS61297** | VKJC5851 | **GDS81681** | VKJC1098 | **GDS83004** | VKJC4251 | **GDS83382** | VKJC8098 | **GDS85037** |
| VKJC6414 | **GDS61298** | VKJC4518 | **GDS81715** | VKJC1025 | **GDS83005** | VKJC2484 | **GDS83387** | VKJC8678 | **GDS85037** |
| VKJC5113 | **GDS61301** | VKJC8551 | **GDS81760** | VKJC1037 | **GDS83006** | VKJC1970 | **GDS83389** | VKJC8598 | **GDS85039** |
| VKJC5109 | **GDS61305** | VKJC3467 | **GDS81767** | VKJC1105 | **GDS83006** | VKJC5884 | **GDS83397** | VKJC8129 | **GDS85041** |
| VKJC4205 | **GDS61307** | VKJC4017 | **GDS81778** | VKJC6170 | **GDS83006** | VKJC8360 | **GDS83400** | VKJC1152 | **GDS85042** |
| VKJC1050 | **GDS61312** | VKJC8206 | **GDS81783** | VKJC5444 | **GDS83008** | VKJC6587 | **GDS83405** | VKJC8109 | **GDS85043** |
| VKJC8051 | **GDS61342** | VKJC8207 | **GDS81784** | VKJC5468 | **GDS83009** | VKJC6503 | **GDS83406** | VKJC8018 | **GDS85045** |
| VKJC6559 | **GDS61345** | VKJC4219 | **GDS81893** | VKJA1054 | **GDS83011** | VKJC3551 | **GDS83407** | VKJC1153 | **GDS85047** |
| VKJC7040 | **GDS61346** | VKJC8050 | **GDS81896** | VKJC1054 | **GDS83011** | VKJC3358 | **GDS83409** | VKJC1154 | **GDS85048** |
| VKJC4513 | **GDS61347** | VKJC6543 | **GDS81926** | VKJC5429 | **GDS83012** | VKJC5267 | **GDS83416** | VKJC1211 | **GDS85049** |
| VKJC4529 | **GDS61347** | VKJC7566 | **GDS81947** | VKJC4872 | **GDS83019** | VKJC8619 | **GDS83515** | VKJC1212 | **GDS85050** |
| VKJC1319 | **GDS62001** | VKJC1802 | **GDS82001** | VKJC4893 | **GDS83020** | VKJC7489 | **GDS83522** | VKJC1151 | **GDS85051** |
| VKJC1372 | **GDS62001** | VKJC1803 | **GDS82002** | VKJC7003 | **GDS83022** | VKJC8885 | **GDS83558** | VKJC8105 | **GDS85052** |
| VKJC8435 | **GDS62001** | VKJC2317 | **GDS82005** | VKJC7004 | **GDS83023** | VKJC1115 | **GDS83607** | VKJC2608 | **GDS85053** |
| VKJC1312 | **GDS62002** | VKJC8292 | **GDS82008** | VKJC8851 | **GDS83037** | VKJC1100 | **GDS83608** | VKJC6531 | **GDS85058** |
| VKJC6770 | **GDS62004** | VKJC1814 | **GDS82009** | VKJC5456 | **GDS83038** | VKJC4206 | **GDS83612** | VKJC8366 | **GDS85058** |
| VKJC4942 | **GDS62017** | VKJC1815 | **GDS82009** | VKJC5424 | **GDS83040** | VKJC6562 | **GDS83613** | VKJC7089 | **GDS85060** |
| VKJC4941 | **GDS62022** | VKJC2319 | **GDS82009** | VKJC5577 | **GDS83044** | VKJC8897 | **GDS83616** | VKJC7090 | **GDS85061** |
| VKJC1365 | **GDS62023** | VKJC1858 | **GDS82011** | VKJC1033 | **GDS83046** | VKJC8939 | **GDS83632** | VKJC1199 | **GDS85062** |
| VKJC4938 | **GDS62028** | VKJC4394 | **GDS82038** | VKJC1042 | **GDS83046** | VKJC3168 | **GDS83645** | VKJC1201 | **GDS85062** |
| VKJC4937 | **GDS62029** | VKJC6541 | **GDS82039** | VKJC1030 | **GDS83050** | VKJC8949 | **GDS83659** | VKJC1915 | **GDS85063** |
| VKJC6000 | **GDS62031** | VKJC4397 | **GDS82040** | VKJC1043 | **GDS83051** | VKJC8925 | **GDS83663** | VKJC1173 | **GDS85064** |
| VKJC4868 | **GDS62053** | VKJC8790 | **GDS82052** | VKJC5519 | **GDS83052** | VKJC1880 | **GDS83670** | VKJC8981 | **GDS85066** |
| VKJC6001 | **GDS62057** | VKJC8806 | **GDS82053** | VKJC5506 | **GDS83057** | VKJC3226 | **GDS83671** | VKJC8011 | **GDS85067** |
| VKJC8725 | **GDS62060** | VKJC2812 | **GDS82058** | VKJC5507 | **GDS83057** | VKJC7598 | **GDS83679** | VKJC8982 | **GDS85067** |
| VKJC4919 | **GDS62062** | VKJC2817 | **GDS82059** | VKJC5524 | **GDS83058** | VKJC6962 | **GDS83780** | VKJC1205 | **GDS85069** |
| VKJC8596 | **GDS62063** | VKJC8923 | **GDS82060** | VKJC5525 | **GDS83058** | VKJC3355 | **GDS83794** | VKJC2023 | **GDS85071** |
| VKJC4863 | **GDS62078** | VKJC8924 | **GDS82061** | VKJC5580 | **GDS83058** | VKJC8745 | **GDS83807** | VKJC8674 | **GDS85073** |
| VKJC4058 | **GDS62086** | VKJC8970 | **GDS82077** | VKJC4810 | **GDS83060** | VKJC6926 | **GDS83835** | VKJC8675 | **GDS85073** |

| COMPETITOR | G-AP Ref. |
|---|---|
| **SKF** | |
| VKJC8679 | GDS85073 |
| VKJC1200 | GDS85074 |
| VKJC1202 | GDS85074 |
| VKJC1198 | GDS85078 |
| VKJC1612 | GDS85082 |
| VKJC6525 | GDS85083 |
| VKJC8364 | GDS85083 |
| VKJC3046 | GDS85085 |
| VKJC8020 | GDS85086 |
| VKJC1206 | GDS85093 |
| VKJC5927 | GDS85106 |
| VKJC5995 | GDS85107 |
| VKJC8984 | GDS85109 |
| VKJC8983 | GDS85110 |
| VKJC1615 | GDS85112 |
| VKJC1616 | GDS85113 |
| VKJC1908 | GDS85117 |
| VKJC1909 | GDS85121 |
| VKJC2025 | GDS85123 |
| VKJC8676 | GDS85134 |
| VKJC8965 | GDS85134 |
| VKJC8964 | GDS85135 |
| VKJC2138 | GDS85137 |
| VKJC2163 | GDS85139 |
| VKJC6390 | GDS85142 |
| VKJC6839 | GDS86064 |
| VKJC6836 | GDS86065 |
| VKJC1748 | GDS88011 |
| VKJC4056 | GDS88016 |
| VKJC7881 | GDS88024 |
| VKJC6343 | GDS88059 |
| VKJC2216 | GDS88077 |
| VKJC4519 | GDS88082 |
| VKJC7882 | GDS89039 |
| VKJC4988 | GDS99003 |
| VKJC3606 | GDS99006 |
| VKJC4431 | GDS99010 |
| VKJC5939 | GDS99042 |
| VKJC6596 | GDS99042 |
| VKJC5811 | GDS99044 |
| VKJC2155 | GDS99049 |
| VKJC2184 | GDS99049 |
| VKJC5987 | GDS99070 |
| VKJC8653 | GDS99070 |
| VKJC8654 | GDS99070 |
| VKJC6072 | GDS99071 |
| VKJC6073 | GDS99071 |
| VKJC6916 | GDS99080 |
| VKJC6213 | GDS99095 |
| VKJC3878 | GDS99101 |
| VKJC3473 | GDS99106 |
| VKJC3880 | GDS99107 |
| VKJC5467 | GDS99108 |
| VKJC5466 | GDS99111 |
| VKJC1106 | GDS99112 |
| VKJC5287 | GDS99120 |
| VKJC5953 | GDS99133 |
| VKJC5962 | GDS99134 |
| VKJC7893 | GDS99151 |
| VKJC3889 | GDS99181 |
| VKJC7688 | GDS99184 |
| VKJC7689 | GDS99184 |
| VKJC5971 | GDS99186 |
| VKJC5973 | GDS99186 |
| VKJC5974 | GDS99186 |
| VKJC6036 | GDS99188 |

| COMPETITOR | G-AP Ref. |
|---|---|
| VKJC6167 | GDS99190 |
| VKJC6168 | GDS99191 |
| VKJC6736 | GDS99194 |
| VKJC4037 | GDS99195 |
| VKJC4840 | GDS99196 |
| VKJC5308 | GDS99197 |
| VKJC6103 | GDS99201 |
| VKJC1534 | GDS99204 |
| VKJC1535 | GDS99205 |
| VKJC5885 | GDS99212 |
| VKJC8220 | GDS99214 |
| VKJC1197 | GDS99215 |
| VKJC6859 | GDS99216 |
| VKJC8645 | GDS99217 |
| VKJC8649 | GDS99228 |
| VKJC8650 | GDS99229 |
| VKJC8689 | GDS99229 |
| VKJC4843 | GDS99271 |
| VKJC8390 | GDS99271 |
| VKJC4038 | GDS99272 |
| VKJC2599 | GDS99285 |
| VKJC8533 | GDS99286 |
| VKJC1601 | GDS99290 |
| **SPIDAN** | |
| 24292 | GCI10038 |
| 24289 | GCI17020 |
| 24294 | GCI17021 |
| 24293 | GCI17022 |
| 24287 | GCI17028 |
| 24290 | GCI17042 |
| 21752 | GCI18002 |
| 21241 | GCI18070 |
| 36603 | GCI21030 |
| 21727 | GCI35001 |
| 24464 | GCI35001 |
| 22701 | GCI35006 |
| 24559 | GCI35014 |
| 24633 | GCI35020 |
| 24239 | GCI35051 |
| 21467 | GCI44001 |
| 21457 | GCI44002 |
| 21476 | GCI44002 |
| 21451 | GCI44004 |
| 21498 | GCI44005 |
| 36497 | GCI44005 |
| 36265 | GCI44008 |
| 36601 | GCI44013 |
| 20394 | GCI48002 |
| 21490 | GCI48002 |
| 21897 | GCI48002 |
| 21311 | GCI48004 |
| 21327 | GCI48004 |
| 21888 | GCI48004 |
| 21896 | GCI48004 |
| 23522 | GCI48004 |
| 20286 | GCI53001 |
| 22455 | GCI53001 |
| 23154 | GCI54002 |
| 23155 | GCI54003 |
| 36271 | GCI59006 |
| 20597 | GCI61001 |
| 22902 | GCI61002 |
| 20643 | GCI61003 |
| 22407 | GCI61003 |
| 24915 | GCI61003 |
| 25307 | GCI61006 |
| 24564 | GCI61020 |

| COMPETITOR | G-AP Ref. |
|---|---|
| 24568 | GCI61021 |
| 24570 | GCI61029 |
| 23626 | GCI61030 |
| 24566 | GCI61041 |
| 24745 | GCI61044 |
| 36480 | GCI61048 |
| 25177 | GCI61057 |
| 36477 | GCI61057 |
| 36113 | GCI61069 |
| 36474 | GCI61069 |
| 36845 | GCI61075 |
| GKNJ40147 | GCI61104 |
| 20934 | GCI62015 |
| 36793 | GCI81641 |
| 23677 | GCI82011 |
| GKNJ50030 | GCI82429 |
| GKNJ50029 | GCI82446 |
| 20273 | GCI83001 |
| 23521 | GCI83001 |
| 23845 | GCI83001 |
| 21312 | GCI83002 |
| 22487 | GCI83002 |
| 22522 | GCI83002 |
| 20289 | GCI83003 |
| 22545 | GCI83003 |
| 20258 | GCI83005 |
| 20414 | GCI83005 |
| 21222 | GCI83005 |
| 22405 | GCI83005 |
| 22793 | GCI83005 |
| 20438 | GCI83006 |
| 24749 | GCI83008 |
| 22498 | GCI83009 |
| 22497 | GCI83011 |
| 36665 | GCI83011 |
| 22632 | GCI83014 |
| 36475 | GCI83022 |
| 24238 | GCI83027 |
| 21989 | GCI85001 |
| 20542 | GCI99052 |
| 21761 | GCI99075 |
| 21084 | GCI99099 |
| 21085 | GCI99099 |
| 22714 | GCI99143 |
| 24236 | GCI99148 |
| 21075 | GCO10002 |
| 21288 | GCO10002 |
| 21097 | GCO10003 |
| 21289 | GCO10003 |
| 21098 | GCO10004 |
| 21093 | GCO10005 |
| 21580 | GCO10006 |
| 21581 | GCO10007 |
| 20633 | GCO10011 |
| 20987 | GCO10012 |
| 20986 | GCO10013 |
| GKNJ20703 | GCO10013 |
| 24543 | GCO10015 |
| 24545 | GCO10015 |
| 21582 | GCO10021 |
| 21076 | GCO10024 |
| 22276 | GCO10025 |
| 21077 | GCO10043 |
| 20634 | GCO10050 |
| 24526 | GCO10059 |
| 22268 | GCO10069 |
| 21593 | GCO10075 |
| 21078 | GCO10086 |

| COMPETITOR | G-AP Ref. |
|---|---|
| GKNJ20695 | GCO10115 |
| GKNJ20697 | GCO10115 |
| 36454 | GCO10125 |
| 21027 | GCO12001 |
| 20351 | GCO12006 |
| 24989 | GCO12011 |
| 21482 | GCO12019 |
| 21189 | GCO12021 |
| 21949 | GCO12023 |
| 21947 | GCO12027 |
| 22197 | GCO12027 |
| 24811 | GCO12034 |
| 23941 | GCO14002 |
| 22957 | GCO14004 |
| 24805 | GCO14006 |
| 23935 | GCO14010 |
| 24813 | GCO14013 |
| 24810 | GCO14020 |
| 23940 | GCO14027 |
| 22199 | GCO14030 |
| 23936 | GCO14046 |
| 23938 | GCO14073 |
| 20526 | GCO17001 |
| 21234 | GCO17001 |
| 21235 | GCO17001 |
| 21329 | GCO17001 |
| 21290 | GCO17002 |
| 21307 | GCO17002 |
| 23519 | GCO17002 |
| 21242 | GCO17003 |
| 23520 | GCO17003 |
| 21232 | GCO17004 |
| 21239 | GCO17004 |
| 21213 | GCO17005 |
| 21252 | GCO17005 |
| 21258 | GCO17006 |
| 23798 | GCO17007 |
| 21153 | GCO17009 |
| 22212 | GCO17009 |
| 21230 | GCO17010 |
| 21148 | GCO17011 |
| 20527 | GCO17012 |
| 21237 | GCO17012 |
| 21240 | GCO17013 |
| 21147 | GCO17014 |
| 36484 | GCO17014 |
| 21146 | GCO17017 |
| 21227 | GCO17018 |
| 21145 | GCO17019 |
| 21144 | GCO17020 |
| 21247 | GCO17021 |
| 21248 | GCO17022 |
| 20991 | GCO17023 |
| 24629 | GCO17024 |
| 22252 | GCO17026 |
| 22251 | GCO17028 |
| 24693 | GCO17028 |
| 36505 | GCO17028 |
| 22213 | GCO17030 |
| 22208 | GCO17031 |
| 20996 | GCO17032 |
| 21224 | GCO17039 |
| 21231 | GCO17039 |
| 21236 | GCO17039 |
| 20993 | GCO17042 |
| 20997 | GCO17042 |
| 21150 | GCO17042 |
| 24341 | GCO17043 |

| COMPETITOR | G-AP Ref. |
|---|---|
| 23984 | GCO17051 |
| 24385 | GCO17051 |
| 24297 | GCO17052 |
| 36592 | GCO17052 |
| 24295 | GCO17053 |
| 24949 | GCO17053 |
| 36596 | GCO17053 |
| 24282 | GCO17054 |
| 24285 | GCO17055 |
| 24284 | GCO17060 |
| 24893 | GCO17063 |
| 36509 | GCO17064 |
| 24891 | GCO17070 |
| 36506 | GCO17079 |
| 36591 | GCO17089 |
| 21449 | GCO18002 |
| 20322 | GCO18003 |
| 20186 | GCO18004 |
| 20187 | GCO18004 |
| 23736 | GCO18004 |
| 23738 | GCO18004 |
| 21363 | GCO18007 |
| 20979 | GCO18011 |
| 20188 | GCO18012 |
| 21184 | GCO18013 |
| 36752 | GCO18014 |
| 23735 | GCO18015 |
| 21099 | GCO18016 |
| 23734 | GCO18017 |
| 21751 | GCO18018 |
| 23610 | GCO18021 |
| 20978 | GCO18024 |
| 21574 | GCO18025 |
| GKNJ20706 | GCO18025 |
| 21572 | GCO18026 |
| 21370 | GCO18027 |
| 24044 | GCO18028 |
| 23956 | GCO18029 |
| 20636 | GCO18030 |
| 22945 | GCO18031 |
| 24007 | GCO18031 |
| 24048 | GCO18033 |
| 21175 | GCO18034 |
| 24047 | GCO18035 |
| 22969 | GCO18036 |
| 25123 | GCO18067 |
| 24927 | GCO18203 |
| 25135 | GCO18207 |
| 36453 | GCO18222 |
| 24751 | GCO18230 |
| 36623 | GCO18244 |
| 36663 | GCO18258 |
| GKNJ20613 | GCO18269 |
| 36111 | GCO18286 |
| GKNJ30037 | GCO18286 |
| 36112 | GCO18293 |
| GKNJ30038 | GCO18293 |
| 25448 | GCO18298 |
| 24590 | GCO21038 |
| 36264 | GCO21038 |
| 36266 | GCO21038 |
| 36600 | GCO21049 |
| 36263 | GCO21051 |
| 24593 | GCO21057 |
| 36791 | GCO21057 |
| 24389 | GCO23001 |
| 21544 | GCO23002 |
| 20892 | GCO23007 |

| COMPETITOR | G-AP Ref. | COMPETITOR | G-AP Ref. | COMPETITOR | G-AP Ref. | COMPETITOR | G-AP Ref. | COMPETITOR | G-AP Ref. |
|---|---|---|---|---|---|---|---|---|---|
| **SPIDAN** | | 23955 | GCO34100 | 20085 | GCO41040 | 21591 | GCO50105 | 23972 | GCO59015 |
| | | 25238 | GCO34110 | 24456 | GCO41046 | 25422 | GCO50130 | 21158 | GCO59017 |
| 20893 | GCO23008 | 25237 | GCO34121 | 24992 | GCO41047 | 25294 | GCO50150 | 21765 | GCO59019 |
| 20890 | GCO23010 | 21777 | GCO34130 | 24547 | GCO41048 | 25299 | GCO50152 | 22311 | GCO59020 |
| 22355 | GCO23013 | 24379 | GCO34135 | 24530 | GCO41052 | 25298 | GCO50161 | 23683 | GCO59021 |
| 22352 | GCO23014 | GKNJ20678 | GCO34146 | 24536 | GCO41057 | 25640 | GCO50170 | 21843 | GCO59022 |
| 22354 | GCO23016 | 25083 | GCO34156 | 20090 | GCO41058 | 20918 | GCO51001 | 21297 | GCO59024 |
| 22365 | GCO23016 | 36040 | GCO34174 | 20094 | GCO41058 | 20919 | GCO51001 | 21845 | GCO59026 |
| 22349 | GCO23017 | 36039 | GCO34177 | 24434 | GCO41078 | 20914 | GCO51002 | 24554 | GCO59028 |
| 22953 | GCO23017 | 36041 | GCO34178 | 24439 | GCO41078 | 21537 | GCO51003 | 25232 | GCO59034 |
| 22952 | GCO23020 | 20176 | GCO35001 | 24450 | GCO41086 | 21538 | GCO51004 | 25231 | GCO59036 |
| 22353 | GCO23022 | 20985 | GCO35001 | 24548 | GCO41138 | 20889 | GCO51005 | 24381 | GCO59037 |
| 23942 | GCO23023 | 25611 | GCO35001 | 25236 | GCO41142 | 21543 | GCO51007 | 22973 | GCO59041 |
| 23945 | GCO23024 | 20228 | GCO35002 | 25569 | GCO41142 | 20899 | GCO51010 | 21177 | GCO59046 |
| 24371 | GCO23030 | GKNJ20704 | GCO35002 | 25235 | GCO41159 | 21533 | GCO51011 | 25230 | GCO59047 |
| 23948 | GCO23032 | 22264 | GCO35004 | 24437 | GCO41163 | 20896 | GCO51013 | 22310 | GCO59050 |
| 23673 | GCO23033 | 22260 | GCO35005 | 25833 | GCO41214 | 20920 | GCO51017 | 22312 | GCO59054 |
| 25234 | GCO23033 | 22262 | GCO35022 | 24619 | GCO41240 | 20604 | GCO51020 | 23969 | GCO59065 |
| 25080 | GCO23034 | 22258 | GCO35023 | 25296 | GCO41244 | 23639 | GCO52001 | 25228 | GCO59085 |
| 24461 | GCO23036 | 22711 | GCO35033 | 36562 | GCO41249 | 23657 | GCO52002 | 23970 | GCO59120 |
| 25079 | GCO23039 | 24631 | GCO35034 | 36621 | GCO41294 | 23659 | GCO52007 | 25087 | GCO59130 |
| 21178 | GCO23047 | 36630 | GCO35034 | 36572 | GCO41304 | 23658 | GCO52011 | 24391 | GCO59137 |
| 22962 | GCO23047 | 36107 | GCO35045 | 23966 | GCO41314 | 23687 | GCO53001 | 25084 | GCO59137 |
| 21528 | GCO23063 | 25980 | GCO35053 | GKNJ20698 | GCO41348 | 24089 | GCO53002 | 25229 | GCO59153 |
| 23943 | GCO23083 | 25981 | GCO35064 | 24112 | GCO44001 | 23675 | GCO53005 | 25073 | GCO59154 |
| 23944 | GCO23083 | 24392 | GCO38002 | 23992 | GCO44002 | 20399 | GCO53007 | 23973 | GCO59155 |
| 24387 | GCO23095 | 24394 | GCO38003 | 23985 | GCO44003 | 22494 | GCO53007 | 20178 | GCO59161 |
| 25233 | GCO23126 | 24215 | GCO39002 | 23989 | GCO44004 | 22600 | GCO53007 | 24338 | GCO59167 |
| 21975 | GCO24002 | 23686 | GCO39004 | 23991 | GCO44005 | 23548 | GCO53007 | 25086 | GCO59168 |
| 20689 | GCO24004 | 21718 | GCO39007 | 20183 | GCO44006 | 24911 | GCO53007 | 25074 | GCO59173 |
| 23974 | GCO24011 | 21790 | GCO39008 | 20181 | GCO44007 | 22461 | GCO53008 | 25075 | GCO59175 |
| 25240 | GCO24029 | 24216 | GCO39009 | 24111 | GCO44011 | 22669 | GCO53008 | 25227 | GCO59175 |
| 25082 | GCO24036 | 24212 | GCO39011 | 21800 | GCO44013 | 22782 | GCO53008 | GKNJ20685 | GCO59199 |
| 24383 | GCO24041 | 24225 | GCO39014 | 21822 | GCO44014 | 20639 | GCO54001 | 25009 | GCO59213 |
| 21977 | GCO24046 | 21176 | GCO39015 | 21429 | GCO44020 | 23152 | GCO54001 | GKNJ20711 | GCO59213 |
| 36045 | GCO24077 | 20926 | GCO39016 | 24280 | GCO44020 | 21585 | GCO54002 | 24550 | GCO59226 |
| 25770 | GCO24087 | 24214 | GCO39019 | 20713 | GCO44025 | 36035 | GCO54002 | 25289 | GCO59232 |
| 24731 | GCO24095 | 21759 | GCO39021 | 20712 | GCO44026 | 24308 | GCO54004 | 25085 | GCO59288 |
| 36573 | GCO24126 | 21747 | GCO39022 | 23997 | GCO44027 | 22179 | GCO56003 | 25914 | GCO59303 |
| 25771 | GCO24129 | 23667 | GCO39024 | 23987 | GCO44028 | 22175 | GCO56004 | GKNJ20612 | GCO59441 |
| 24735 | GCO24152 | 24226 | GCO39027 | 21195 | GCO44030 | 22177 | GCO56005 | 24874 | GCO60005 |
| 21802 | GCO24173 | 20924 | GCO39036 | 22274 | GCO44034 | 22185 | GCO56006 | 20595 | GCO61003 |
| 21483 | GCO26003 | 20184 | GCO39040 | 21450 | GCO44041 | 25242 | GCO56009 | 20596 | GCO61004 |
| 24049 | GCO27001 | 21382 | GCO39054 | 21452 | GCO44041 | 22968 | GCO56010 | 21945 | GCO61005 |
| 22965 | GCO27003 | 23957 | GCO39054 | 24913 | GCO44041 | 23975 | GCO56039 | 22900 | GCO61005 |
| 25239 | GCO27004 | 20621 | GCO39084 | 21432 | GCO44046 | 21030 | GCO57001 | GKNJ20705 | GCO61005 |
| 21002 | GCO27005 | 21720 | GCO39098 | 21428 | GCO44051 | 21090 | GCO57003 | GKNJ20709 | GCO61005 |
| 21166 | GCO27010 | 23669 | GCO39102 | 21427 | GCO44056 | 21087 | GCO57007 | 21946 | GCO61006 |
| 24733 | GCO27080 | 25495 | GCO39178 | 21497 | GCO44057 | 21088 | GCO57011 | 22901 | GCO61006 |
| 20817 | GCO28001 | 22996 | GCO40001 | 24935 | GCO44085 | 21007 | GCO57014 | 24541 | GCO61007 |
| 20698 | GCO28002 | 23162 | GCO40001 | 25667 | GCO44088 | 22935 | GCO57015 | 23979 | GCO61009 |
| 21336 | GCO29001 | 24432 | GCO41001 | 36595 | GCO44088 | 23977 | GCO57017 | 23981 | GCO61011 |
| 20136 | GCO31001 | 21188 | GCO41003 | 25267 | GCO44090 | 22934 | GCO57019 | 21812 | GCO61012 |
| 23077 | GCO34003 | 24430 | GCO41006 | 36262 | GCO44093 | 21082 | GCO57035 | 36501 | GCO61021 |
| 21368 | GCO34004 | 24431 | GCO41007 | 21095 | GCO45001 | 22936 | GCO57037 | 24237 | GCO61050 |
| 21033 | GCO34005 | 24428 | GCO41009 | 21094 | GCO45004 | 25241 | GCO57041 | 36622 | GCO61059 |
| 21034 | GCO34006 | 24429 | GCO41010 | 21074 | GCO45006 | 25300 | GCO57042 | 36066 | GCO61062 |
| 21649 | GCO34007 | 21006 | GCO41011 | 20300 | GCO45011 | 21031 | GCO57048 | 36566 | GCO61065 |
| 21197 | GCO34008 | 20099 | GCO41012 | 22270 | GCO45033 | 23978 | GCO57086 | 36500 | GCO61074 |
| 21199 | GCO34010 | 20104 | GCO41013 | 22271 | GCO45045 | 24643 | GCO57100 | 36476 | GCO61081 |
| 25076 | GCO34015 | 23967 | GCO41016 | 25137 | GCO45058 | 21516 | GCO57105 | 20931 | GCO62001 |
| 21198 | GCO34026 | 21162 | GCO41021 | 22121 | GCO45065 | 25614 | GCO57105 | GKNJ20702 | GCO62001 |
| 36038 | GCO34048 | 23965 | GCO41021 | 24196 | GCO45067 | 22305 | GCO59001 | 20930 | GCO62002 |
| 23953 | GCO34056 | 24641 | GCO41025 | GKNJ20694 | GCO45074 | 22307 | GCO59001 | 20928 | GCO62003 |
| 22966 | GCO34072 | 20559 | GCO41026 | GKNJ20696 | GCO45074 | 20179 | GCO59004 | 20827 | GCO62004 |
| 23954 | GCO34080 | 21531 | GCO41028 | 21096 | GCO50008 | 23971 | GCO59006 | 20828 | GCO62005 |
| 24008 | GCO34081 | 20232 | GCO41030 | 20357 | GCO50026 | 21009 | GCO59007 | 20812 | GCO62006 |
| 24051 | GCO34082 | 20079 | GCO41040 | 21590 | GCO50056 | 20180 | GCO59009 | 20826 | GCO62007 |

| COMPETITOR | G-AP Ref. | COMPETITOR | G-AP Ref. | COMPETITOR | G-AP Ref. | COMPETITOR | G-AP Ref. | COMPETITOR | G-AP Ref. |
|---|---|---|---|---|---|---|---|---|---|
| **SPIDAN** | | 22552 | GCO83016 | 22273 | GCO99008 | 22870 | GDS10057 | 20630 | GDS10202 |
| | | 22591 | GCO83017 | 24558 | GCO99037 | 20949 | GDS10066 | 20632 | GDS10202 |
| 20583 | GCO62008 | 22639 | GCO83017 | 21200 | GCO99042 | 20948 | GDS10067 | 21120 | GDS10203 |
| 21299 | GCO62009 | 22681 | GCO83018 | 21438 | GCO99089 | 20941 | GDS10069 | 21126 | GDS10204 |
| 20431 | GCO62010 | 24910 | GCO83018 | 20981 | GCO99122 | 20688 | GDS10070 | 21125 | GDS10205 |
| 20587 | GCO62011 | 25556 | GCO83018 | 24895 | GCO99128 | 20956 | GDS10072 | 21127 | GDS10205 |
| 20585 | GCO62012 | 22763 | GCO83019 | 24925 | GCO99129 | 24793 | GDS10072 | 23353 | GDS10205 |
| 36502 | GCO62031 | 22804 | GCO83019 | 21539 | GCO99151 | 20662 | GDS10077 | 22120 | GDS10206 |
| 23159 | GCO64001 | 23695 | GCO83019 | 23671 | GCO99159 | 20672 | GDS10077 | 21971 | GDS10207 |
| 24637 | GCO75007 | 24912 | GCO83019 | 21182 | GCO99181 | 21130 | GDS10077 | 21972 | GDS10208 |
| 25666 | GCO81305 | 36254 | GCO83019 | 20891 | GCO99209 | 21132 | GDS10078 | 25173 | GDS10218 |
| 36104 | GCO81348 | 22747 | GCO83020 | 23656 | GCO99212 | 20955 | GDS10081 | 24512 | GDS10231 |
| 36015 | GCO81352 | 21091 | GCO83021 | 21529 | GCO99225 | 20954 | GDS10082 | 24511 | GDS10232 |
| 36098 | GCO81357 | 24917 | GCO83021 | 24622 | GCO99254 | 20652 | GDS10089 | 24870 | GDS10238 |
| 36109 | GCO81413 | 21587 | GCO83024 | 23676 | GCO99273 | 23347 | GDS10089 | 24871 | GDS10239 |
| 36105 | GCO81467 | 36037 | GCO83024 | 24455 | GCO99282 | 20628 | GDS10090 | 22114 | GDS10242 |
| 36597 | GCO81515 | 22748 | GCO83026 | 24711 | GCO99288 | 20661 | GDS10090 | 24193 | GDS10242 |
| 36020 | GCO81520 | 21586 | GCO83027 | 36483 | GCO99298 | 20663 | GDS10090 | 24253 | GDS10242 |
| 36593 | GCO81547 | 36036 | GCO83027 | 36485 | GCO99298 | 21129 | GDS10090 | 25438 | GDS10243 |
| 36594 | GCO81547 | 20338 | GCO83033 | 25297 | GCO99318 | 21620 | GDS10090 | 25115 | GDS10248 |
| GKNJ20681 | GCO81640 | 20339 | GCO83033 | 36499 | GCO99351 | 21622 | GDS10090 | 25117 | GDS10249 |
| 36786 | GCO81667 | 21522 | GCO83035 | 36452 | GCO99366 | 20944 | GDS10102 | 24668 | GDS10250 |
| 36511 | GCO81741 | GKNJ20707 | GCO83035 | 22113 | GDS10001 | 20945 | GDS10103 | 25116 | GDS10250 |
| 36099 | GCO81750 | 23689 | GCO83037 | 22115 | GDS10001 | 20943 | GDS10104 | 25186 | GDS10250 |
| 36023 | GCO81813 | 36510 | GCO83037 | 24192 | GDS10001 | 20940 | GDS10105 | 24669 | GDS10251 |
| 36598 | GCO81814 | 22551 | GCO83051 | 24252 | GDS10001 | 20952 | GDS10112 | 24771 | GDS10251 |
| 36738 | GCO81973 | 23693 | GCO83058 | 24256 | GDS10001 | 20657 | GDS10113 | 24670 | GDS10253 |
| 36512 | GCO81974 | GKNJ20714 | GCO83058 | 22116 | GDS10002 | 20658 | GDS10114 | 24768 | GDS10254 |
| 36021 | GCO81975 | 23697 | GCO83067 | 24195 | GDS10002 | 23351 | GDS10118 | 24767 | GDS10255 |
| 21149 | GCO82002 | GKNJ20708 | GCO83067 | 24257 | GDS10002 | 20953 | GDS10120 | 22871 | GDS10264 |
| 21233 | GCO82004 | 20340 | GCO83070 | 20654 | GDS10004 | 21967 | GDS10121 | 24260 | GDS10265 |
| 21238 | GCO82004 | 22627 | GCO83070 | 21616 | GDS10007 | 24328 | GDS10121 | 24259 | GDS10266 |
| 23830 | GCO82004 | 24681 | GCO83077 | 20607 | GDS10008 | 22112 | GDS10124 | 24279 | GDS10267 |
| 23838 | GCO82004 | 25775 | GCO83077 | 20650 | GDS10008 | 24251 | GDS10124 | 24373 | GDS10268 |
| 20992 | GCO82005 | 24858 | GCO83078 | 20606 | GDS10009 | 22111 | GDS10125 | 24792 | GDS10284 |
| 20994 | GCO82006 | 24462 | GCO83085 | 20649 | GDS10009 | 24194 | GDS10125 | 25183 | GDS10295 |
| 20998 | GCO82006 | 24685 | GCO83086 | 20959 | GDS10014 | 24250 | GDS10125 | GKND12390 | GDS10301 |
| 23839 | GCO82009 | 24683 | GCO83087 | 20958 | GDS10016 | 24254 | GDS10125 | GKND13064 | GDS10301 |
| 23831 | GCO82011 | 24687 | GCO83087 | 21116 | GDS10017 | 25353 | GDS10125 | 24714 | GDS10302 |
| 21154 | GCO82012 | 24691 | GCO83088 | 21122 | GDS10018 | 20673 | GDS10131 | 25120 | GDS10302 |
| 21152 | GCO82013 | 24860 | GCO83092 | 21123 | GDS10019 | 21134 | GDS10131 | 36339 | GDS10306 |
| 20208 | GCO82014 | GKNJ20710 | GCO83092 | 21697 | GDS10020 | 21345 | GDS10138 | GKND12184 | GDS10309 |
| 21151 | GCO82017 | 24326 | GCO83101 | 23348 | GDS10020 | 21970 | GDS10139 | GKND13063 | GDS10309 |
| 22203 | GCO82018 | 25225 | GCO83101 | 21128 | GDS10021 | 21968 | GDS10140 | 24261 | GDS10310 |
| 23844 | GCO82019 | 36479 | GCO83101 | 21673 | GDS10022 | 21969 | GDS10141 | 24270 | GDS10311 |
| 36498 | GCO82023 | 36482 | GCO83102 | 20669 | GDS10025 | 21966 | GDS10142 | 24330 | GDS10312 |
| 25141 | GCO82024 | 36096 | GCO83103 | 21131 | GDS10025 | 21965 | GDS10143 | 24331 | GDS10313 |
| 24538 | GCO82025 | 22568 | GCO83106 | 21124 | GDS10026 | 21342 | GDS10152 | 24715 | GDS10314 |
| 25143 | GCO82026 | 36097 | GCO83107 | 23352 | GDS10026 | 20957 | GDS10155 | 25209 | GDS10314 |
| 36102 | GCO82353 | 36508 | GCO83422 | 21700 | GDS10028 | 21338 | GDS10156 | 25355 | GDS10314 |
| 36103 | GCO82353 | GKNJ30032 | GCO83522 | 20951 | GDS10032 | 21341 | GDS10157 | 25439 | GDS10314 |
| 36455 | GCO82376 | 36599 | GCO83865 | 20950 | GDS10033 | 21337 | GDS10161 | 24716 | GDS10320 |
| 36106 | GCO82386 | 36530 | GCO83893 | 20946 | GDS10035 | 21960 | GDS10162 | 25354 | GDS10320 |
| 36531 | GCO82542 | 21105 | GCO84001 | 25637 | GDS10035 | 21133 | GDS10163 | 25440 | GDS10320 |
| 36513 | GCO82603 | 21250 | GCO84001 | 20947 | GDS10036 | 20651 | GDS10164 | 24671 | GDS10325 |
| 36590 | GCO82703 | 21255 | GCO84001 | 20942 | GDS10037 | 21698 | GDS10174 | 24717 | GDS10335 |
| 36110 | GCO82734 | 36789 | GCO85001 | 20655 | GDS10038 | 21666 | GDS10177 | 25437 | GDS10335 |
| 36507 | GCO82930 | 21824 | GCO88002 | 21615 | GDS10039 | 22119 | GDS10181 | GKND12223 | GDS10339 |
| 23691 | GCO83002 | 21080 | GCO88004 | 21617 | GDS10039 | 23349 | GDS10186 | GKND10206 | GDS10340 |
| 36561 | GCO83002 | 24988 | GCO88019 | 20653 | GDS10040 | 20679 | GDS10189 | 21973 | GDS10344 |
| 20260 | GCO83007 | 21865 | GCO88021 | 21115 | GDS10040 | 21964 | GDS10192 | 24334 | GDS10348 |
| 22773 | GCO83007 | 21847 | GCO88034 | 20656 | GDS10042 | 20670 | GDS10193 | 24770 | GDS10362 |
| 24307 | GCO83007 | 36068 | GCO88077 | 21036 | GDS10043 | 20674 | GDS10193 | 24675 | GDS10363 |
| 22544 | GCO83009 | 20353 | GCO89002 | 21119 | GDS10043 | 20675 | GDS10194 | 22117 | GDS10364 |
| 22550 | GCO83012 | 20354 | GCO89002 | 21635 | GDS10044 | 20676 | GDS10195 | 24457 | GDS10364 |
| 22566 | GCO83014 | 24210 | GCO89002 | 21637 | GDS10044 | 20680 | GDS10195 | 24674 | GDS10380 |
| 22581 | GCO83014 | 20637 | GCO89003 | 21343 | GDS10048 | 20677 | GDS10196 | 24332 | GDS10381 |
| 22541 | GCO83016 | 21381 | GCO89004 | 21344 | GDS10049 | 21699 | GDS10200 | 24333 | GDS10382 |

| COMPETITOR | G-AP Ref. | COMPETITOR | G-AP Ref. | COMPETITOR | G-AP Ref. | COMPETITOR | G-AP Ref. | COMPETITOR | G-AP Ref. |
|---|---|---|---|---|---|---|---|---|---|
| **SPIDAN** | | GKND12131 | **GDS17149** | 25263 | **GDS18216** | 24600 | **GDS21032** | 22716 | **GDS35010** |
| | | GKND12385 | **GDS17152** | GKND11694 | **GDS18216** | 24603 | **GDS21032** | 24762 | **GDS35021** |
| 24773 | **GDS10383** | GKND12384 | **GDS17153** | GKND12134 | **GDS18216** | 24963 | **GDS21035** | 24168 | **GDS35022** |
| 25189 | **GDS10413** | 25362 | **GDS17170** | 24857 | **GDS18218** | 25768 | **GDS21043** | 25597 | **GDS35032** |
| 25188 | **GDS10415** | 25363 | **GDS17171** | 24867 | **GDS18218** | 36710 | **GDS21043** | 23796 | **GDS35037** |
| 25356 | **GDS10416** | GKND13067 | **GDS17171** | 24897 | **GDS18218** | 24964 | **GDS21045** | 23797 | **GDS35038** |
| 24673 | **GDS10421** | 24345 | **GDS17172** | 25121 | **GDS18218** | 24958 | **GDS21051** | GKND11726 | **GDS35039** |
| 24832 | **GDS10422** | 22842 | **GDS17187** | 24853 | **GDS18219** | 24962 | **GDS21051** | 25972 | **GDS35052** |
| 24834 | **GDS10423** | 22844 | **GDS17188** | 24868 | **GDS18219** | 24984 | **GDS21053** | 25973 | **GDS35053** |
| 24835 | **GDS10424** | 22845 | **GDS17189** | 25122 | **GDS18219** | 24082 | **GDS21055** | 25599 | **GDS35055** |
| 24839 | **GDS10425** | 23792 | **GDS17190** | 25735 | **GDS18220** | 24084 | **GDS21056** | 36194 | **GDS35067** |
| 24672 | **GDS10427** | 23793 | **GDS17191** | 25243 | **GDS18231** | 24953 | **GDS21056** | 36671 | **GDS35067** |
| 22869 | **GDS10430** | 24175 | **GDS17192** | 25244 | **GDS18232** | 25185 | **GDS21061** | GKND12138 | **GDS35067** |
| 24837 | **GDS10430** | 24176 | **GDS17193** | 25493 | **GDS18242** | 24088 | **GDS21062** | 36195 | **GDS35068** |
| 24838 | **GDS10431** | 24248 | **GDS17194** | 25261 | **GDS18247** | 24081 | **GDS21063** | GKND12371 | **GDS35068** |
| 24718 | **GDS10435** | 23786 | **GDS17201** | 25262 | **GDS18248** | 24087 | **GDS21071** | GKND11725 | **GDS35074** |
| 25118 | **GDS10435** | 23787 | **GDS17206** | 25488 | **GDS18259** | 24961 | **GDS21073** | 25598 | **GDS35075** |
| 24841 | **GDS10440** | GKND12918 | **GDS17231** | GKND12438 | **GDS18261** | 25724 | **GDS21074** | GKND12110 | **GDS35078** |
| 21546 | **GDS11003** | 21513 | **GDS18001** | 25432 | **GDS18265** | 25764 | **GDS21075** | 24533 | **GDS35084** |
| 24166 | **GDS11014** | 21521 | **GDS18002** | 25489 | **GDS18265** | 24985 | **GDS21092** | 24198 | **GDS35085** |
| 24167 | **GDS11014** | 21523 | **GDS18002** | 24508 | **GDS18271** | 25726 | **GDS21093** | 25398 | **GDS35085** |
| 36553 | **GDS11020** | 21514 | **GDS18003** | 25633 | **GDS18271** | 25727 | **GDS21093** | 24197 | **GDS35086** |
| 24164 | **GDS11021** | 21520 | **GDS18004** | 24506 | **GDS18274** | 25977 | **GDS21094** | 25218 | **GDS35086** |
| 24165 | **GDS11021** | 21512 | **GDS18005** | 23336 | **GDS18284** | 24959 | **GDS21110** | 24229 | **GDS35087** |
| 36546 | **GDS11021** | 21518 | **GDS18006** | 23728 | **GDS18289** | 24960 | **GDS21111** | GKND11784 | **GDS35094** |
| 36209 | **GDS11024** | 21707 | **GDS18007** | 25585 | **GDS18290** | GKND12079 | **GDS21114** | GKND11785 | **GDS35095** |
| 36219 | **GDS11024** | 20151 | **GDS18008** | 24844 | **GDS18291** | 23362 | **GDS23038** | 36201 | **GDS35096** |
| 25430 | **GDS14053** | 20155 | **GDS18008** | GKND11766 | **GDS18294** | 23589 | **GDS23039** | 36672 | **GDS35104** |
| GKND12426 | **GDS14053** | 20150 | **GDS18009** | GKND12216 | **GDS18294** | GKND12380 | **GDS23070** | GKND12139 | **GDS35104** |
| 20342 | **GDS17001** | 20152 | **GDS18009** | GKND12989 | **GDS18294** | GKND12381 | **GDS23071** | GKND12401 | **GDS35119** |
| 22858 | **GDS17010** | 20154 | **GDS18009** | GKND11765 | **GDS18295** | 23359 | **GDS23078** | 36691 | **GDS35121** |
| 22859 | **GDS17011** | 20158 | **GDS18010** | GKND12974 | **GDS18295** | 23358 | **GDS23122** | GKND11733 | **GDS35133** |
| 25615 | **GDS17013** | 23356 | **GDS18015** | 24510 | **GDS18301** | GKND12387 | **GDS23174** | 23284 | **GDS38001** |
| 25631 | **GDS17014** | 21511 | **GDS18016** | 25410 | **GDS18315** | 25734 | **GDS23198** | 23285 | **GDS38002** |
| 22890 | **GDS17015** | 23357 | **GDS18019** | 25409 | **GDS18319** | 25378 | **GDS23199** | GKND12392 | **GDS39006** |
| 22891 | **GDS17016** | 25485 | **GDS18035** | 36619 | **GDS18319** | GKND12356 | **GDS23325** | GKND12423 | **GDS39007** |
| 22846 | **GDS17018** | 25487 | **GDS18036** | 24189 | **GDS18326** | GKND12386 | **GDS23326** | 24415 | **GDS41001** |
| 22847 | **GDS17022** | 36272 | **GDS18036** | 24187 | **GDS18333** | GKND12414 | **GDS24033** | 24410 | **GDS41004** |
| 22838 | **GDS17025** | 23607 | **GDS18039** | 25830 | **GDS18334** | GKND12388 | **GDS24153** | 24414 | **GDS41005** |
| 23784 | **GDS17032** | 23619 | **GDS18040** | 36711 | **GDS18334** | GKND12416 | **GDS24194** | 24426 | **GDS41024** |
| 23785 | **GDS17033** | 24763 | **GDS18041** | 36712 | **GDS18334** | GKND12417 | **GDS24282** | 24524 | **GDS41055** |
| 22848 | **GDS17037** | 24765 | **GDS18041** | 36374 | **GDS18335** | GKND12419 | **GDS24283** | 24411 | **GDS41094** |
| 20341 | **GDS17038** | 23298 | **GDS18042** | GKND12200 | **GDS18340** | GKND12372 | **GDS24299** | 24416 | **GDS41130** |
| 22849 | **GDS17039** | 25736 | **GDS18043** | 25713 | **GDS18343** | GKND12373 | **GDS24362** | 24724 | **GDS41200** |
| GKND12443 | **GDS17039** | 23621 | **GDS18044** | 24186 | **GDS18351** | GKND12402 | **GDS24523** | 24725 | **GDS41200** |
| 24636 | **GDS17040** | 23299 | **GDS18046** | 24845 | **GDS18358** | GKND12418 | **GDS24528** | GKND12267 | **GDS41200** |
| 22843 | **GDS17048** | 23300 | **GDS18101** | 24846 | **GDS18359** | GKND12382 | **GDS24529** | GKND12187 | **GDS41260** |
| 25621 | **GDS17050** | 23302 | **GDS18101** | GKND12436 | **GDS18359** | GKND12389 | **GDS24530** | 24727 | **GDS41261** |
| 25638 | **GDS17050** | 23301 | **GDS18102** | 36256 | **GDS18361** | GKND12420 | **GDS24531** | 24618 | **GDS41262** |
| 25966 | **GDS17052** | 23303 | **GDS18102** | GKND13040 | **GDS18365** | GKND12415 | **GDS24533** | 24905 | **GDS41299** |
| 25620 | **GDS17053** | 20153 | **GDS18106** | 25553 | **GDS18367** | GKND12383 | **GDS24542** | 36119 | **GDS41300** |
| 24179 | **GDS17054** | 23710 | **GDS18118** | GKND12185 | **GDS18380** | GKND12421 | **GDS24566** | 25107 | **GDS41327** |
| 25668 | **GDS17055** | 23726 | **GDS18118** | GKND12218 | **GDS18389** | GKND12422 | **GDS27017** | 25106 | **GDS41328** |
| 25644 | **GDS17064** | 21781 | **GDS18128** | 25245 | **GDS18402** | 20815 | **GDS28001** | GKND12144 | **GDS41329** |
| 24344 | **GDS17066** | 21799 | **GDS18129** | GKND12186 | **GDS18405** | 20816 | **GDS28002** | GKND12143 | **GDS41330** |
| 24348 | **GDS17066** | 25486 | **GDS18142** | GKND12206 | **GDS18406** | GKND12257 | **GDS30002** | GKND12231 | **GDS41337** |
| 25645 | **GDS17069** | 23609 | **GDS18179** | GKND12913 | **GDS18408** | GKND12980 | **GDS30002** | 24919 | **GDS41365** |
| 24782 | **GDS17070** | 25978 | **GDS18193** | 25712 | **GDS18410** | 23891 | **GDS34044** | 25659 | **GDS41365** |
| 24781 | **GDS17071** | 25011 | **GDS18197** | 36257 | **GDS18414** | GKND12237 | **GDS34171** | 24728 | **GDS41407** |
| 25952 | **GDS17071** | 24185 | **GDS18201** | 25361 | **GDS18434** | 25252 | **GDS34252** | 24730 | **GDS41408** |
| 24343 | **GDS17082** | 24191 | **GDS18201** | 25490 | **GDS18435** | 22695 | **GDS35001** | 24726 | **GDS41409** |
| GKND12444 | **GDS17088** | 25264 | **GDS18201** | 36545 | **GDS18445** | 20163 | **GDS35002** | 24907 | **GDS41441** |
| GKND11823 | **GDS17101** | GKND12133 | **GDS18201** | 25180 | **GDS18455** | 21011 | **GDS35003** | 24723 | **GDS41451** |
| GKND11824 | **GDS17112** | GKND12265 | **GDS18201** | 24103 | **GDS18456** | 22697 | **GDS35005** | 24729 | **GDS41452** |
| 25035 | **GDS17122** | 25969 | **GDS18209** | 24101 | **GDS18457** | 22704 | **GDS35006** | 24740 | **GDS41453** |
| GKND12130 | **GDS17141** | 24184 | **GDS18216** | 24172 | **GDS18471** | 21192 | **GDS35007** | 24906 | **GDS41475** |
| 24346 | **GDS17146** | 24188 | **GDS18216** | 25359 | **GDS18472** | 21193 | **GDS35008** | 24920 | **GDS41481** |
| 24347 | **GDS17147** | 24190 | **GDS18216** | GKND12109 | **GDS18515** | 21194 | **GDS35009** | GKND12232 | **GDS41485** |

| COMPETITOR | G-AP Ref. | COMPETITOR | G-AP Ref. | COMPETITOR | G-AP Ref. | COMPETITOR | G-AP Ref. | COMPETITOR | G-AP Ref. |
|---|---|---|---|---|---|---|---|---|---|
| **SPIDAN** | | 24085 | GDS44097 | 21689 | GDS45182 | 22046 | GDS50120 | 22319 | GDS50324 |
| | | 24086 | GDS44098 | 24277 | GDS45193 | 24118 | GDS50125 | 22324 | GDS50327 |
| GKND12960 | GDS41486 | 24957 | GDS44099 | 24276 | GDS45194 | 20976 | GDS50130 | 22334 | GDS50328 |
| GKND12961 | GDS41489 | 24971 | GDS44100 | 21664 | GDS45198 | 20964 | GDS50131 | 22335 | GDS50329 |
| GKND13041 | GDS41490 | 24847 | GDS44101 | 24274 | GDS45200 | 22126 | GDS50132 | 22336 | GDS50330 |
| GKND12205 | GDS41495 | 21692 | GDS45002 | 24275 | GDS45201 | 22136 | GDS50134 | 24447 | GDS50348 |
| 25104 | GDS41509 | 21659 | GDS45004 | 24278 | GDS45202 | 22022 | GDS50145 | 24460 | GDS50353 |
| 25105 | GDS41510 | 21695 | GDS45007 | 24272 | GDS45203 | 22318 | GDS50148 | 24944 | GDS50353 |
| 24921 | GDS41538 | 21671 | GDS45008 | 24273 | GDS45204 | 21061 | GDS50150 | 24398 | GDS50354 |
| 24918 | GDS41577 | 21045 | GDS45009 | 25178 | GDS45220 | 22089 | GDS50150 | 21064 | GDS50357 |
| GKND12393 | GDS41586 | 21046 | GDS45010 | 25179 | GDS45223 | 21062 | GDS50151 | 23782 | GDS50359 |
| GKND12394 | GDS41587 | 21044 | GDS45011 | 25555 | GDS45225 | 22317 | GDS50159 | 25015 | GDS50364 |
| 21471 | GDS44001 | 21043 | GDS45012 | 20193 | GDS48002 | 22322 | GDS50159 | 25318 | GDS50364 |
| 21407 | GDS44002 | 21662 | GDS45014 | 22031 | GDS50001 | 22928 | GDS50160 | 25357 | GDS50364 |
| 24975 | GDS44002 | 21636 | GDS45015 | 22067 | GDS50001 | 21067 | GDS50162 | 24247 | GDS50365 |
| 21962 | GDS44003 | 21638 | GDS45015 | 22069 | GDS50001 | 25312 | GDS50162 | 24572 | GDS50366 |
| 21052 | GDS44004 | 21050 | GDS45016 | 22072 | GDS50001 | 21551 | GDS50166 | 24400 | GDS50369 |
| 21051 | GDS44005 | 21684 | GDS45017 | 22068 | GDS50002 | 22063 | GDS50173 | 24452 | GDS50372 |
| 22077 | GDS44006 | 21956 | GDS45020 | 22055 | GDS50003 | 23666 | GDS50193 | 24696 | GDS50377 |
| 21433 | GDS44011 | 21661 | GDS45021 | 21063 | GDS50004 | 23664 | GDS50194 | 25096 | GDS50379 |
| 21549 | GDS44012 | 21642 | GDS45023 | 21066 | GDS50004 | 21711 | GDS50197 | 24639 | GDS50380 |
| 21963 | GDS44013 | 21663 | GDS45023 | 22028 | GDS50006 | 20965 | GDS50199 | 24646 | GDS50380 |
| 21408 | GDS44014 | 21683 | GDS45024 | 23338 | GDS50008 | 21571 | GDS50200 | 25573 | GDS50383 |
| 21060 | GDS44016 | 21660 | GDS45025 | 20960 | GDS50009 | 22044 | GDS50201 | 25014 | GDS50386 |
| 21058 | GDS44017 | 21957 | GDS45026 | 22315 | GDS50009 | 22086 | GDS50205 | 22321 | GDS50389 |
| 24635 | GDS44020 | 21039 | GDS45027 | 22323 | GDS50009 | 22327 | GDS50207 | 24324 | GDS50390 |
| 21284 | GDS44021 | 21041 | GDS45031 | 21053 | GDS50010 | 24576 | GDS50207 | 24325 | GDS50391 |
| 21056 | GDS44022 | 21042 | GDS45032 | 21054 | GDS50011 | 21568 | GDS50211 | 24584 | GDS50391 |
| 24968 | GDS44025 | 21040 | GDS45035 | 22083 | GDS50014 | 21059 | GDS50214 | 23326 | GDS50392 |
| 24057 | GDS44026 | 21618 | GDS45066 | 22087 | GDS50015 | 22125 | GDS50215 | 23327 | GDS50393 |
| 24052 | GDS44027 | 21670 | GDS45070 | 22088 | GDS50015 | 21569 | GDS50221 | 23663 | GDS50394 |
| 24056 | GDS44027 | 21672 | GDS45070 | 21570 | GDS50019 | 24697 | GDS50223 | 23665 | GDS50395 |
| 24079 | GDS44028 | 24160 | GDS45084 | 20961 | GDS50021 | 25259 | GDS50225 | 24114 | GDS50397 |
| 24077 | GDS44029 | 24161 | GDS45084 | 22082 | GDS50022 | 22333 | GDS50226 | 24119 | GDS50398 |
| 24080 | GDS44030 | 25257 | GDS45084 | 22043 | GDS50023 | 22338 | GDS50227 | 24245 | GDS50399 |
| 24952 | GDS44030 | 24162 | GDS45085 | 22137 | GDS50026 | 22328 | GDS50228 | 24375 | GDS50400 |
| 24078 | GDS44031 | 24163 | GDS45085 | 20963 | GDS50027 | 24527 | GDS50245 | 24529 | GDS50400 |
| 24970 | GDS44032 | 21037 | GDS45094 | 20974 | GDS50028 | 21055 | GDS50246 | 24377 | GDS50401 |
| 24068 | GDS44033 | 21049 | GDS45101 | 22131 | GDS50031 | 20975 | GDS50247 | 24444 | GDS50402 |
| 21583 | GDS44036 | 22118 | GDS45103 | 22047 | GDS50032 | 21567 | GDS50247 | 24446 | GDS50403 |
| 24062 | GDS44038 | 24458 | GDS45103 | 22071 | GDS50036 | 21550 | GDS50249 | 24948 | GDS50403 |
| 24063 | GDS44039 | 21730 | GDS45104 | 22066 | GDS50037 | 20977 | GDS50252 | 24580 | GDS50404 |
| 24783 | GDS44040 | 21731 | GDS45105 | 22070 | GDS50037 | 22314 | GDS50253 | 24587 | GDS50405 |
| 25777 | GDS44040 | 21958 | GDS45106 | 21564 | GDS50038 | 24852 | GDS50255 | 25380 | GDS50410 |
| 25950 | GDS44040 | 21961 | GDS45108 | 23699 | GDS50038 | 24451 | GDS50256 | 25089 | GDS50416 |
| 24784 | GDS44042 | 21734 | GDS45113 | 21721 | GDS50043 | 24700 | GDS50260 | 25090 | GDS50416 |
| GKND12145 | GDS44043 | 21733 | GDS45119 | 22326 | GDS50043 | 24532 | GDS50261 | 24755 | GDS50422 |
| 24073 | GDS44044 | 22872 | GDS45120 | 22045 | GDS50044 | 24946 | GDS50261 | 25101 | GDS50425 |
| 21409 | GDS44048 | 21729 | GDS45126 | 22132 | GDS50046 | 24701 | GDS50263 | 25103 | GDS50426 |
| 24955 | GDS44051 | 24713 | GDS45133 | 22085 | GDS50050 | 25280 | GDS50263 | 25570 | GDS50426 |
| 24956 | GDS44052 | 24872 | GDS45133 | 22050 | GDS50052 | 25313 | GDS50263 | 25572 | GDS50427 |
| 21434 | GDS44059 | 25119 | GDS45133 | 22056 | GDS50052 | 22339 | GDS50268 | 25709 | GDS50428 |
| 25595 | GDS44064 | 21665 | GDS45134 | 22134 | GDS50053 | 20966 | GDS50271 | 25094 | GDS50429 |
| 25596 | GDS44065 | 21667 | GDS45134 | 20973 | GDS50054 | 25920 | GDS50272 | 25102 | GDS50430 |
| 25496 | GDS44068 | 21048 | GDS45137 | 20972 | GDS50055 | 24589 | GDS50279 | 24116 | GDS50437 |
| 24053 | GDS44075 | 24517 | GDS45137 | 21553 | GDS50057 | 25012 | GDS50280 | 24378 | GDS50438 |
| 24060 | GDS44076 | 21047 | GDS45138 | 21057 | GDS50058 | 22330 | GDS50281 | 23739 | GDS50440 |
| 24061 | GDS44077 | 21690 | GDS45150 | 21554 | GDS50059 | 20970 | GDS50295 | 23743 | GDS50441 |
| 24779 | GDS44078 | 21694 | GDS45150 | 21286 | GDS50060 | 20971 | GDS50296 | 24504 | GDS50442 |
| 24785 | GDS44078 | 21691 | GDS45151 | 20969 | GDS50074 | 22135 | GDS50309 | 24505 | GDS50442 |
| 24787 | GDS44078 | 21955 | GDS45152 | 22133 | GDS50093 | 20962 | GDS50311 | 24442 | GDS50443 |
| 24788 | GDS44078 | 21682 | GDS45153 | 22090 | GDS50095 | 22325 | GDS50311 | 24579 | GDS50444 |
| 24780 | GDS44079 | 21686 | GDS45153 | 20967 | GDS50099 | 23744 | GDS50313 | 24249 | GDS50445 |
| 24786 | GDS44079 | 24518 | GDS45157 | 20968 | GDS50100 | 24869 | GDS50313 | 22331 | GDS50446 |
| 24604 | GDS44080 | 24519 | GDS45158 | 23783 | GDS50102 | 21566 | GDS50316 | 24242 | GDS50446 |
| 24974 | GDS44094 | 21669 | GDS45160 | 23339 | GDS50105 | 21565 | GDS50320 | 24376 | GDS50447 |
| 23999 | GDS44095 | GKND12972 | GDS45174 | 22084 | GDS50116 | 22316 | GDS50323 | 24680 | GDS50451 |
| 24000 | GDS44096 | GKND13145 | GDS45175 | 22042 | GDS50118 | 22320 | GDS50323 | 24939 | GDS50452 |

| COMPETITOR | G-AP Ref. | COMPETITOR | G-AP Ref. | COMPETITOR | G-AP Ref. | COMPETITOR | G-AP Ref. | COMPETITOR | G-AP Ref. |
|---|---|---|---|---|---|---|---|---|---|
| **SPIDAN** | | 25322 | **GDS50586** | 36076 | **GDS56869** | GKND12152 | **GDS59343** | 21012 | **GDS61045** |
| | | 25711 | **GDS50586** | 36077 | **GDS56873** | GKND12253 | **GDS59344** | 21014 | **GDS61045** |
| 25379 | **GDS50453** | 25321 | **GDS50587** | 36649 | **GDS56874** | GKND12154 | **GDS59345** | 20591 | **GDS61052** |
| 24651 | **GDS50455** | 21069 | **GDS50588** | 36650 | **GDS56875** | GKND12254 | **GDS59346** | 20599 | **GDS61052** |
| 24578 | **GDS50460** | 25098 | **GDS50591** | GKND13047 | **GDS56879** | GKND12412 | **GDS59445** | 20601 | **GDS61052** |
| 22147 | **GDS50461** | 25099 | **GDS50592** | GKND13048 | **GDS56880** | 24679 | **GDS59447** | 21022 | **GDS61052** |
| 24117 | **GDS50462** | 25140 | **GDS50593** | GKND13146 | **GDS56985** | 25195 | **GDS59494** | 22626 | **GDS61055** |
| 24121 | **GDS50462** | 24647 | **GDS50596** | GKND12405 | **GDS57004** | 24513 | **GDS59495** | 22630 | **GDS61055** |
| 25738 | **GDS50463** | 25095 | **GDS50604** | 20160 | **GDS57039** | 36429 | **GDS59505** | 23543 | **GDS61055** |
| 25737 | **GDS50464** | 25134 | **GDS50605** | 20159 | **GDS57040** | 25202 | **GDS59520** | 24097 | **GDS61063** |
| 25369 | **GDS50465** | 36559 | **GDS50608** | 24851 | **GDS57077** | GKND12249 | **GDS59535** | 20157 | **GDS61065** |
| 23745 | **GDS50471** | 36069 | **GDS50612** | 24850 | **GDS57078** | 25196 | **GDS59552** | 22628 | **GDS61067** |
| 24945 | **GDS50483** | GKND12666 | **GDS50612** | GKND12454 | **GDS57086** | 25200 | **GDS59553** | 24095 | **GDS61074** |
| 25740 | **GDS50487** | 36555 | **GDS50617** | 25251 | **GDS57165** | 25198 | **GDS59589** | 24094 | **GDS61075** |
| 36215 | **GDS50487** | 25741 | **GDS50618** | GKND12261 | **GDS57165** | 25191 | **GDS59621** | 24303 | **GDS61078** |
| 36217 | **GDS50487** | 36558 | **GDS50620** | GKND12453 | **GDS57183** | 25194 | **GDS59621** | 22256 | **GDS61082** |
| 36218 | **GDS50488** | 24648 | **GDS50622** | 24598 | **GDS57197** | GKND12115 | **GDS59623** | 22255 | **GDS61083** |
| 25916 | **GDS50489** | 25710 | **GDS50625** | 24596 | **GDS57221** | 25193 | **GDS59633** | 24154 | **GDS61084** |
| 25256 | **GDS50492** | 21603 | **GDS50627** | 24595 | **GDS57222** | 25401 | **GDS59635** | 24159 | **GDS61084** |
| 25255 | **GDS50493** | 25715 | **GDS50630** | 24597 | **GDS57223** | 25402 | **GDS59636** | 25288 | **GDS61084** |
| 24624 | **GDS50494** | 22329 | **GDS50632** | 25091 | **GDS57265** | 25192 | **GDS59657** | 20156 | **GDS61085** |
| 24698 | **GDS50495** | 25714 | **GDS50632** | GKND13068 | **GDS57276** | 25197 | **GDS59658** | 25260 | **GDS61087** |
| 24640 | **GDS50496** | 21597 | **GDS50634** | GKND12954 | **GDS57336** | 25201 | **GDS59659** | 23774 | **GDS61088** |
| 24509 | **GDS50497** | 20851 | **GDS51001** | 24144 | **GDS57411** | 25199 | **GDS59660** | 24487 | **GDS61093** |
| 36210 | **GDS50501** | 20861 | **GDS51004** | GKND12669 | **GDS57423** | 25203 | **GDS59661** | 24496 | **GDS61094** |
| 21599 | **GDS50506** | 20852 | **GDS51010** | 36276 | **GDS57452** | 25190 | **GDS59662** | 24480 | **GDS61096** |
| 25642 | **GDS50507** | 24109 | **GDS51021** | 36049 | **GDS57486** | GKND12150 | **GDS59665** | 24476 | **GDS61097** |
| 36212 | **GDS50507** | GKND12258 | **GDS51025** | GKND30025 | **GDS57555** | GKND13115 | **GDS59665** | 24098 | **GDS61098** |
| 36211 | **GDS50508** | 25403 | **GDS51036** | GKND30026 | **GDS57556** | GKND12197 | **GDS59666** | 24099 | **GDS61099** |
| 25571 | **GDS50510** | GKND12251 | **GDS51038** | 36466 | **GDS57577** | GKND12209 | **GDS59674** | 25592 | **GDS61100** |
| GKND12235 | **GDS50512** | GKND12252 | **GDS51039** | GKND12123 | **GDS57578** | GKND12199 | **GDS59681** | GKND12993 | **GDS61100** |
| GKND12236 | **GDS50513** | GKND12427 | **GDS51048** | 25635 | **GDS57622** | 21406 | **GDS60002** | 25593 | **GDS61101** |
| 24937 | **GDS50514** | 24171 | **GDS51068** | GKND12964 | **GDS57656** | 21470 | **GDS60002** | GKND12982 | **GDS61101** |
| 24938 | **GDS50515** | 24100 | **GDS51069** | GKND12984 | **GDS57760** | 21584 | **GDS60002** | 24152 | **GDS61105** |
| 24453 | **GDS50516** | 24102 | **GDS51070** | GKND13089 | **GDS57876** | 24066 | **GDS60013** | 25429 | **GDS61105** |
| 24399 | **GDS50517** | 24170 | **GDS51071** | GKND12962 | **GDS57878** | 24071 | **GDS60013** | 20593 | **GDS61107** |
| 24445 | **GDS50518** | 24173 | **GDS51072** | 36249 | **GDS57935** | 25664 | **GDS60015** | 20603 | **GDS61107** |
| 24449 | **GDS50519** | 20196 | **GDS52001** | 36248 | **GDS57936** | 24983 | **GDS60016** | 36080 | **GDS61112** |
| 24582 | **GDS50520** | 20197 | **GDS52001** | 36366 | **GDS57960** | 24969 | **GDS60021** | 20592 | **GDS61119** |
| 24688 | **GDS50521** | 20198 | **GDS52002** | 25904 | **GDS58072** | 24973 | **GDS60021** | 20598 | **GDS61119** |
| 24689 | **GDS50522** | 22495 | **GDS53001** | GKND30028 | **GDS58120** | 24507 | **GDS60022** | 22267 | **GDS61121** |
| 24690 | **GDS50523** | 22437 | **GDS53002** | 36282 | **GDS58195** | 25226 | **GDS60022** | 22689 | **GDS61122** |
| 24699 | **GDS50524** | 22466 | **GDS53003** | GKND12660 | **GDS58206** | 24967 | **GDS60025** | 23769 | **GDS61123** |
| 24758 | **GDS50525** | 22462 | **GDS53004** | GKND12661 | **GDS58207** | 24966 | **GDS60026** | 24499 | **GDS61126** |
| 24759 | **GDS50526** | 23542 | **GDS53004** | 36685 | **GDS58211** | 24965 | **GDS60027** | 24502 | **GDS61126** |
| 21598 | **GDS50527** | 22463 | **GDS53005** | 36683 | **GDS58213** | 25728 | **GDS60027** | 25559 | **GDS61133** |
| 21600 | **GDS50527** | 22467 | **GDS53005** | GKND13046 | **GDS58230** | 24072 | **GDS60035** | 36687 | **GDS61138** |
| 25093 | **GDS50536** | 23541 | **GDS53005** | GKND12952 | **GDS58248** | 23544 | **GDS61001** | 24155 | **GDS61140** |
| 24880 | **GDS50538** | 24482 | **GDS53007** | GKND12957 | **GDS58298** | 23546 | **GDS61001** | 25576 | **GDS61147** |
| 24881 | **GDS50539** | 25862 | **GDS53008** | GKND12968 | **GDS58299** | 23547 | **GDS61002** | 25558 | **GDS61150** |
| 25352 | **GDS50540** | 23150 | **GDS54001** | GKND12956 | **GDS58300** | 21025 | **GDS61003** | 25967 | **GDS61153** |
| 24757 | **GDS50541** | 23151 | **GDS54002** | GKND13190 | **GDS58367** | 21023 | **GDS61004** | 25968 | **GDS61153** |
| 24877 | **GDS50542** | 24478 | **GDS54011** | GKND13191 | **GDS58372** | 21708 | **GDS61007** | 23616 | **GDS61157** |
| GKND12167 | **GDS50543** | 24474 | **GDS54013** | GKND12406 | **GDS59011** | 24574 | **GDS61007** | 22625 | **GDS61172** |
| 24876 | **GDS50544** | 24898 | **GDS56093** | GKND12168 | **GDS59015** | 22622 | **GDS61009** | GKND12158 | **GDS61173** |
| 24120 | **GDS50552** | GKND13090 | **GDS56110** | GKND12157 | **GDS59077** | 21709 | **GDS61010** | GKND12159 | **GDS61173** |
| 24443 | **GDS50554** | GKND30024 | **GDS56119** | GKND12146 | **GDS59206** | 22931 | **GDS61011** | 24302 | **GDS61183** |
| 25433 | **GDS50557** | GKND30023 | **GDS56120** | GKND12151 | **GDS59206** | 21171 | **GDS61019** | 25626 | **GDS61184** |
| 24441 | **GDS50562** | 36609 | **GDS56127** | 25696 | **GDS59207** | 22686 | **GDS61019** | 25627 | **GDS61185** |
| 36216 | **GDS50563** | 36568 | **GDS56186** | GKND12147 | **GDS59208** | 23661 | **GDS61019** | 23770 | **GDS61186** |
| 36213 | **GDS50564** | 36613 | **GDS56216** | GKND12411 | **GDS59209** | 23777 | **GDS61019** | 24092 | **GDS61189** |
| 36554 | **GDS50564** | 25794 | **GDS56271** | GKND12360 | **GDS59212** | 25005 | **GDS61020** | 25394 | **GDS61190** |
| GKND12165 | **GDS50567** | 25793 | **GDS56272** | 24678 | **GDS59268** | 22930 | **GDS61028** | 25393 | **GDS61191** |
| 25139 | **GDS50570** | GKND11997 | **GDS56334** | GKND12034 | **GDS59270** | 23778 | **GDS61033** | 25706 | **GDS61192** |
| 25351 | **GDS50572** | GKND12970 | **GDS56367** | GKND12991 | **GDS59270** | 20600 | **GDS61034** | 25707 | **GDS61193** |
| 25223 | **GDS50573** | GKND12971 | **GDS56370** | 25699 | **GDS59272** | 36117 | **GDS61040** | 24490 | **GDS61201** |
| 25211 | **GDS50574** | GKND12959 | **GDS56654** | 24676 | **GDS59316** | 24477 | **GDS61042** | GKND12127 | **GDS61201** |
| 21068 | **GDS50579** | 25729 | **GDS56692** | 24677 | **GDS59317** | 24498 | **GDS61042** | GKND12999 | **GDS61201** |

| COMPETITOR | G-AP Ref. | COMPETITOR | G-AP Ref. | COMPETITOR | G-AP Ref. | COMPETITOR | G-AP Ref. | COMPETITOR | G-AP Ref. |
|---|---|---|---|---|---|---|---|---|---|
| **SPIDAN** | | 25586 | **GDS62062** | 23622 | **GDS81593** | GKND12180 | **GDS82177** | 21013 | **GDS83046** |
| | | 24471 | **GDS62063** | 36281 | **GDS81596** | 25974 | **GDS82185** | 21015 | **GDS83046** |
| 21019 | **GDS61203** | 36278 | **GDS62063** | GKND11983 | **GDS81596** | 36527 | **GDS82185** | 22676 | **GDS83048** |
| 23772 | **GDS61203** | 25442 | **GDS62065** | GKND12408 | **GDS81615** | GKND12226 | **GDS82229** | 22589 | **GDS83050** |
| 24586 | **GDS61204** | 25536 | **GDS62083** | GKND12407 | **GDS81616** | GKND12192 | **GDS82230** | 22590 | **GDS83051** |
| 24091 | **GDS61205** | 25695 | **GDS62083** | 36116 | **GDS81653** | GKND12194 | **GDS82231** | 24301 | **GDS83052** |
| 24157 | **GDS61210** | 36362 | **GDS62124** | 36196 | **GDS81662** | GKND12111 | **GDS82232** | 24817 | **GDS83052** |
| 24501 | **GDS61211** | 36361 | **GDS62126** | 36197 | **GDS81663** | 24821 | **GDS82239** | 23614 | **GDS83057** |
| 25702 | **GDS61213** | 25499 | **GDS62136** | 36290 | **GDS81665** | GKND12413 | **GDS82244** | 23628 | **GDS83057** |
| 25425 | **GDS61215** | 25343 | **GDS62140** | 25754 | **GDS81681** | GKND12234 | **GDS82245** | 24798 | **GDS83057** |
| 25701 | **GDS61215** | 25345 | **GDS62141** | 36277 | **GDS81715** | GKND13088 | **GDS82256** | 24816 | **GDS83057** |
| 24553 | **GDS61223** | GKND12001 | **GDS62143** | GKND12106 | **GDS81715** | 36676 | **GDS82258** | 23618 | **GDS83058** |
| 24577 | **GDS61236** | 25246 | **GDS75056** | 25755 | **GDS81716** | 25779 | **GDS82262** | 23629 | **GDS83058** |
| 25395 | **GDS61238** | 36495 | **GDS81066** | 36046 | **GDS81728** | 25781 | **GDS82266** | 24819 | **GDS83058** |
| 23612 | **GDS61243** | 25176 | **GDS81105** | 25955 | **GDS81761** | GKND12676 | **GDS82284** | 24820 | **GDS83058** |
| 23608 | **GDS61244** | 36641 | **GDS81107** | 36152 | **GDS81767** | 24364 | **GDS82294** | 22619 | **GDS83060** |
| 24300 | **GDS61252** | 25428 | **GDS81108** | 36258 | **GDS81767** | GKND12188 | **GDS82320** | 22618 | **GDS83061** |
| 25708 | **GDS61255** | 25427 | **GDS81109** | GKND12288 | **GDS81767** | 36048 | **GDS82326** | 24096 | **GDS83063** |
| 24181 | **GDS61257** | 36120 | **GDS81110** | GKND12098 | **GDS81771** | 23632 | **GDS82350** | 24571 | **GDS83066** |
| 25071 | **GDS61257** | 25068 | **GDS81114** | GKND13101 | **GDS81772** | GKND12173 | **GDS82351** | GKND12342 | **GDS83108** |
| 24182 | **GDS61258** | 24994 | **GDS81120** | 25662 | **GDS81783** | 36231 | **GDS82358** | GKND12178 | **GDS83109** |
| 25072 | **GDS61258** | 25069 | **GDS81121** | 25663 | **GDS81784** | GKND10147 | **GDS82359** | GKND12174 | **GDS83110** |
| GKND12979 | **GDS61282** | 24228 | **GDS81127** | GKND13031 | **GDS81896** | GKND12196 | **GDS82381** | 25730 | **GDS83136** |
| GKND12125 | **GDS61283** | GKND12302 | **GDS81129** | 23773 | **GDS81913** | 36688 | **GDS82388** | GKND10695 | **GDS83151** |
| GKND12994 | **GDS61283** | 24814 | **GDS81132** | 25742 | **GDS81913** | GKND12100 | **GDS82392** | GKND12014 | **GDS83157** |
| 25303 | **GDS61284** | 36607 | **GDS81194** | 24183 | **GDS81920** | 36714 | **GDS82393** | GKND12015 | **GDS83158** |
| 36612 | **GDS61285** | 36604 | **GDS81195** | 25219 | **GDS81928** | GKND12078 | **GDS82394** | GKND12248 | **GDS83159** |
| 25625 | **GDS61288** | GKND12449 | **GDS81245** | GKND12425 | **GDS81933** | 36682 | **GDS82395** | 36664 | **GDS83179** |
| 24796 | **GDS61290** | GKND12450 | **GDS81254** | GKND12391 | **GDS81941** | GKND12166 | **GDS82399** | GKND12670 | **GDS83189** |
| 36375 | **GDS61290** | 36450 | **GDS81265** | 25220 | **GDS81946** | 24825 | **GDS82410** | 36153 | **GDS83192** |
| 25304 | **GDS61293** | 36636 | **GDS81369** | GKND12433 | **GDS81992** | GKND12189 | **GDS82435** | 36154 | **GDS83193** |
| 25574 | **GDS61296** | GKND20027 | **GDS81370** | 21576 | **GDS82001** | GKND12399 | **GDS82448** | GKND12324 | **GDS83206** |
| 25575 | **GDS61296** | GKND20020 | **GDS81371** | 21577 | **GDS82002** | GKND12400 | **GDS82449** | 36341 | **GDS83207** |
| 36329 | **GDS61297** | 36268 | **GDS81373** | 21578 | **GDS82003** | 25960 | **GDS82450** | 36340 | **GDS83208** |
| 25221 | **GDS61298** | GKND20021 | **GDS81375** | 21579 | **GDS82004** | 36214 | **GDS82451** | 25765 | **GDS83209** |
| 36229 | **GDS61301** | 36260 | **GDS81376** | 23788 | **GDS82005** | GKND12103 | **GDS82461** | 25942 | **GDS83209** |
| 21018 | **GDS61312** | GKND20022 | **GDS81378** | 23789 | **GDS82009** | GKND12102 | **GDS82462** | 36259 | **GDS83212** |
| 23771 | **GDS61312** | GKND20023 | **GDS81379** | 24486 | **GDS82009** | 25733 | **GDS82511** | 36539 | **GDS83212** |
| 21016 | **GDS61314** | GKND20026 | **GDS81382** | 23795 | **GDS82011** | 36246 | **GDS82518** | GKND12262 | **GDS83216** |
| 24199 | **GDS61323** | 25533 | **GDS81385** | GKND11763 | **GDS82037** | 36247 | **GDS82519** | GKND12224 | **GDS83217** |
| 36359 | **GDS61338** | 25530 | **GDS81386** | GKND12190 | **GDS82038** | 36544 | **GDS82548** | 25636 | **GDS83224** |
| 36360 | **GDS61338** | 36467 | **GDS81386** | GKND11755 | **GDS82044** | 25758 | **GDS82600** | 25877 | **GDS83226** |
| GKND12983 | **GDS61341** | 25532 | **GDS81387** | GKND12404 | **GDS82046** | GKND12370 | **GDS82613** | 25940 | **GDS83226** |
| 24503 | **GDS61342** | 25531 | **GDS81390** | 36179 | **GDS82052** | 25792 | **GDS82729** | GKND10227 | **GDS83231** |
| GKND12181 | **GDS61345** | 36468 | **GDS81390** | 36180 | **GDS82053** | 25750 | **GDS82730** | 36122 | **GDS83236** |
| GKND12445 | **GDS61346** | 25498 | **GDS81402** | 25800 | **GDS82056** | 24902 | **GDS82846** | 25947 | **GDS83239** |
| 25568 | **GDS61347** | 36200 | **GDS81405** | 25801 | **GDS82057** | GKND12437 | **GDS82978** | 25948 | **GDS83240** |
| 25578 | **GDS61347** | GKND11759 | **GDS81425** | 36181 | **GDS82058** | 22684 | **GDS83001** | 24153 | **GDS83246** |
| 36451 | **GDS61347** | 24397 | **GDS81463** | 36182 | **GDS82059** | 22683 | **GDS83002** | 25285 | **GDS83246** |
| 20833 | **GDS62001** | GKND12266 | **GDS81470** | 36768 | **GDS82060** | 22538 | **GDS83003** | 25281 | **GDS83261** |
| 20835 | **GDS62001** | GKND12562 | **GDS81471** | 36769 | **GDS82061** | 21017 | **GDS83004** | 25431 | **GDS83264** |
| 20834 | **GDS62002** | 24514 | **GDS81476** | GKND12163 | **GDS82074** | 21021 | **GDS83004** | 24494 | **GDS83266** |
| 23604 | **GDS62004** | 24815 | **GDS81493** | GKND12939 | **GDS82075** | 22685 | **GDS83005** | 25577 | **GDS83269** |
| 25339 | **GDS62017** | 24824 | **GDS81494** | GKND12069 | **GDS82076** | 21020 | **GDS83006** | 36344 | **GDS83271** |
| 25334 | **GDS62022** | GKND12164 | **GDS81526** | 36640 | **GDS82077** | 22688 | **GDS83007** | 24652 | **GDS83273** |
| 25338 | **GDS62022** | 36642 | **GDS81530** | GKND11825 | **GDS82081** | 22687 | **GDS83008** | GKND13104 | **GDS83273** |
| 25292 | **GDS62025** | GKND13124 | **GDS81530** | GKND12203 | **GDS82082** | 22679 | **GDS83012** | GKND12214 | **GDS83288** |
| 25293 | **GDS62026** | 36286 | **GDS81531** | 25725 | **GDS82083** | 21173 | **GDS83019** | GKND12215 | **GDS83289** |
| GKND11696 | **GDS62028** | GKND13139 | **GDS81531** | 24954 | **GDS82084** | 24588 | **GDS83019** | 36191 | **GDS83290** |
| 25332 | **GDS62029** | 25747 | **GDS81561** | 36673 | **GDS82085** | 21174 | **GDS83020** | 36193 | **GDS83291** |
| 25337 | **GDS62031** | 36047 | **GDS81580** | GKND12434 | **GDS82086** | 22253 | **GDS83022** | 25807 | **GDS83293** |
| 25290 | **GDS62033** | 25751 | **GDS81581** | 36606 | **GDS82094** | 20579 | **GDS83023** | 24473 | **GDS83294** |
| 36370 | **GDS62033** | 24483 | **GDS81582** | 24818 | **GDS82156** | 25309 | **GDS83025** | 24485 | **GDS83294** |
| 25291 | **GDS62034** | 24492 | **GDS81583** | 24822 | **GDS82168** | 36284 | **GDS83025** | 24489 | **GDS83294** |
| 25441 | **GDS62039** | 36283 | **GDS81588** | 24823 | **GDS82168** | 36285 | **GDS83026** | GKND13027 | **GDS83294** |
| 25336 | **GDS62057** | 36289 | **GDS81588** | GKND11158 | **GDS82173** | 36345 | **GDS83026** | GKND13036 | **GDS83294** |
| 24470 | **GDS62060** | 36280 | **GDS81589** | GKND12289 | **GDS82173** | 24299 | **GDS83036** | GKND13037 | **GDS83294** |
| 25743 | **GDS62060** | 36192 | **GDS81591** | GKND12195 | **GDS82174** | 22675 | **GDS83040** | 24475 | **GDS83295** |

| COMPETITOR | G-AP Ref. |
|---|---|
| **SPIDAN** | |
| 24491 | GDS83295 |
| 25436 | GDS83295 |
| 36799 | GDS83295 |
| GKND11996 | GDS83295 |
| GKND12128 | GDS83295 |
| GKND13038 | GDS83295 |
| 25287 | GDS83296 |
| 25810 | GDS83296 |
| 22537 | GDS83297 |
| 24200 | GDS83300 |
| 24797 | GDS83310 |
| 24479 | GDS83313 |
| 25484 | GDS83313 |
| GKND13029 | GDS83313 |
| GKND13030 | GDS83313 |
| 24795 | GDS83316 |
| 24484 | GDS83318 |
| 24488 | GDS83319 |
| 24655 | GDS83321 |
| 24654 | GDS83328 |
| 25624 | GDS83330 |
| 24653 | GDS83345 |
| 24500 | GDS83346 |
| 24799 | GDS83347 |
| 25286 | GDS83353 |
| GKND13059 | GDS83354 |
| 24493 | GDS83355 |
| GKND11734 | GDS83360 |
| GKND12368 | GDS83360 |
| 23660 | GDS83363 |
| 24800 | GDS83364 |
| 25579 | GDS83369 |
| 25580 | GDS83369 |
| 25581 | GDS83369 |
| 36190 | GDS83371 |
| 25172 | GDS83373 |
| 25308 | GDS83381 |
| GKND12179 | GDS83381 |
| GKND12322 | GDS83381 |
| 36075 | GDS83389 |
| 36670 | GDS83409 |
| 25375 | GDS83415 |
| 21974 | GDS83416 |
| 36720 | GDS83442 |
| GKND13135 | GDS83497 |
| 25697 | GDS83501 |
| 25324 | GDS83582 |
| GKND12198 | GDS83607 |
| GKND12177 | GDS83608 |
| 25756 | GDS83611 |
| GKND12374 | GDS83613 |
| GKND12191 | GDS83616 |
| GKND12201 | GDS83617 |
| GKND12202 | GDS83618 |
| 36156 | GDS83620 |
| 36541 | GDS83621 |
| GKND12255 | GDS83633 |
| GKND12376 | GDS83645 |
| GKND12182 | GDS83646 |
| GKND12256 | GDS83650 |
| GKND12183 | GDS83652 |
| GKND10697 | GDS83656 |
| GKND12220 | GDS83663 |
| GKND13123 | GDS83679 |
| GKND12378 | GDS83712 |
| GKND12379 | GDS83713 |

| COMPETITOR | G-AP Ref. |
|---|---|
| 36674 | GDS83742 |
| GKND13061 | GDS83765 |
| GKND12442 | GDS83775 |
| GKND12441 | GDS83778 |
| 25360 | GDS83779 |
| GKND12377 | GDS83806 |
| GKND12375 | GDS83809 |
| 25017 | GDS83826 |
| 36228 | GDS83842 |
| 36230 | GDS83843 |
| 36684 | GDS83852 |
| 36675 | GDS83853 |
| 36610 | GDS83858 |
| 36199 | GDS83872 |
| 36549 | GDS83912 |
| 25961 | GDS83926 |
| 36542 | GDS83931 |
| GKND13072 | GDS83935 |
| GKND13077 | GDS83936 |
| GKND13076 | GDS83937 |
| GKND13079 | GDS83938 |
| 36326 | GDS83941 |
| 25752 | GDS83946 |
| 36608 | GDS83970 |
| 24156 | GDS83973 |
| 36445 | GDS84011 |
| GKND12347 | GDS84016 |
| GKND12352 | GDS84059 |
| 25529 | GDS84080 |
| GKND12945 | GDS84081 |
| 25766 | GDS84082 |
| 25943 | GDS84082 |
| GKND12429 | GDS84132 |
| GKND12430 | GDS84137 |
| 25748 | GDS84138 |
| 36220 | GDS84140 |
| 36446 | GDS84181 |
| GKND13098 | GDS84215 |
| GKND30016 | GDS84215 |
| GKND13097 | GDS84216 |
| GKND30017 | GDS84216 |
| GKND13233 | GDS84218 |
| GKND13091 | GDS84227 |
| 25358 | GDS84239 |
| 36221 | GDS84244 |
| 36535 | GDS84260 |
| 36705 | GDS84292 |
| 25330 | GDS84300 |
| GKND12600 | GDS84397 |
| GKND13043 | GDS84412 |
| GKND13044 | GDS84413 |
| GKND13042 | GDS84414 |
| GKND12949 | GDS84423 |
| 36469 | GDS84428 |
| GKND12662 | GDS84449 |
| 25778 | GDS84460 |
| 25951 | GDS84460 |
| 24158 | GDS84521 |
| 36569 | GDS84534 |
| GKND12332 | GDS84553 |
| GKND12333 | GDS84553 |
| GKND13128 | GDS84553 |
| GKND12334 | GDS84556 |
| GKND12953 | GDS84559 |
| 36556 | GDS84609 |
| 36721 | GDS84622 |
| GKND13087 | GDS84639 |
| 25905 | GDS84640 |

| COMPETITOR | G-AP Ref. |
|---|---|
| 20541 | GDS85001 |
| 21982 | GDS85001 |
| 21998 | GDS85002 |
| 22000 | GDS85007 |
| 24306 | GDS85017 |
| 24149 | GDS85018 |
| 21979 | GDS85021 |
| 24130 | GDS85022 |
| 24133 | GDS85022 |
| 24131 | GDS85023 |
| 24132 | GDS85023 |
| GKND11746 | GDS85024 |
| GKND12973 | GDS85024 |
| 24148 | GDS85029 |
| 24122 | GDS85036 |
| 24124 | GDS85036 |
| 24134 | GDS85036 |
| 24903 | GDS85036 |
| 24123 | GDS85037 |
| 24125 | GDS85037 |
| 24135 | GDS85037 |
| 24776 | GDS85037 |
| 24127 | GDS85039 |
| 24129 | GDS85039 |
| 24137 | GDS85039 |
| 24774 | GDS85039 |
| GKND12366 | GDS85039 |
| GKND11818 | GDS85041 |
| GKND12990 | GDS85041 |
| 24370 | GDS85042 |
| 25535 | GDS85043 |
| GKND11819 | GDS85045 |
| GKND12976 | GDS85045 |
| 24304 | GDS85047 |
| 24305 | GDS85048 |
| 24150 | GDS85049 |
| 24151 | GDS85050 |
| 24467 | GDS85051 |
| 25534 | GDS85052 |
| 23279 | GDS85053 |
| GKND12242 | GDS85058 |
| 25744 | GDS85060 |
| 24351 | GDS85062 |
| 24361 | GDS85062 |
| 24363 | GDS85062 |
| 25889 | GDS85063 |
| 24995 | GDS85064 |
| GKND12260 | GDS85066 |
| 25784 | GDS85067 |
| GKND11738 | GDS85067 |
| 25746 | GDS85068 |
| 24359 | GDS85069 |
| 36093 | GDS85070 |
| 24775 | GDS85073 |
| 24900 | GDS85073 |
| 24901 | GDS85073 |
| 24352 | GDS85074 |
| 24362 | GDS85074 |
| 24366 | GDS85074 |
| 24609 | GDS85075 |
| 24610 | GDS85076 |
| 24356 | GDS85078 |
| 24358 | GDS85078 |
| 24534 | GDS85082 |
| 25064 | GDS85082 |
| 25065 | GDS85082 |
| 25066 | GDS85082 |
| 25213 | GDS85082 |

| COMPETITOR | G-AP Ref. |
|---|---|
| 25171 | GDS85085 |
| GKND11817 | GDS85086 |
| GKND12975 | GDS85086 |
| 24360 | GDS85093 |
| 24515 | GDS85098 |
| 25791 | GDS85101 |
| 25423 | GDS85104 |
| 25424 | GDS85105 |
| 25483 | GDS85106 |
| 24978 | GDS85107 |
| 25759 | GDS85110 |
| GKND12328 | GDS85110 |
| 36377 | GDS85111 |
| 25789 | GDS85112 |
| 25795 | GDS85112 |
| 25790 | GDS85113 |
| GKND12273 | GDS85113 |
| 25787 | GDS85114 |
| 25788 | GDS85115 |
| 25215 | GDS85116 |
| 25802 | GDS85117 |
| 25804 | GDS85117 |
| 36070 | GDS85118 |
| 24866 | GDS85119 |
| 25803 | GDS85121 |
| 25805 | GDS85121 |
| 25831 | GDS85121 |
| 36121 | GDS85123 |
| 25956 | GDS85124 |
| 25957 | GDS85125 |
| 36718 | GDS85126 |
| 36719 | GDS85129 |
| 24126 | GDS85134 |
| 24128 | GDS85134 |
| 24136 | GDS85134 |
| 24899 | GDS85134 |
| 25067 | GDS85134 |
| GKND12367 | GDS85134 |
| 25641 | GDS85135 |
| 25958 | GDS85142 |
| 25070 | GDS85149 |
| GKND12172 | GDS86016 |
| 25954 | GDS86065 |
| 24074 | GDS88011 |
| 20140 | GDS88024 |
| 20142 | GDS88024 |
| 20144 | GDS88024 |
| 25863 | GDS88077 |
| 24374 | GDS88082 |
| 20141 | GDS89039 |
| 20143 | GDS89039 |
| 20145 | GDS89039 |
| 21959 | GDS99003 |
| 21339 | GDS99006 |
| 21340 | GDS99010 |
| 24523 | GDS99037 |
| 24764 | GDS99042 |
| 24766 | GDS99042 |
| 21706 | GDS99044 |
| 22851 | GDS99049 |
| 24472 | GDS99070 |
| 24528 | GDS99070 |
| 23740 | GDS99071 |
| 23742 | GDS99071 |
| 22678 | GDS99108 |
| 22682 | GDS99111 |
| 22672 | GDS99112 |
| GKND11679 | GDS99112 |

| COMPETITOR | G-AP Ref. |
|---|---|
| 21172 | GDS99113 |
| 22673 | GDS99116 |
| GKND11680 | GDS99116 |
| 22254 | GDS99120 |
| 25421 | GDS99133 |
| 25420 | GDS99134 |
| 24522 | GDS99135 |
| 21552 | GDS99151 |
| 24972 | GDS99157 |
| 24244 | GDS99186 |
| 25133 | GDS99186 |
| 24583 | GDS99188 |
| 24262 | GDS99190 |
| 24263 | GDS99191 |
| 25181 | GDS99194 |
| 25125 | GDS99195 |
| 25126 | GDS99196 |
| 24329 | GDS99197 |
| 23741 | GDS99201 |
| GKND11762 | GDS99211 |
| GKND11826 | GDS99212 |
| GKND12076 | GDS99212 |
| GKND12977 | GDS99212 |
| 24873 | GDS99214 |
| 24355 | GDS99215 |
| 24357 | GDS99215 |
| 24525 | GDS99217 |
| 24721 | GDS99228 |
| 24754 | GDS99228 |
| 25739 | GDS99228 |
| 24722 | GDS99229 |
| 24269 | GDS99271 |
| 24271 | GDS99271 |
| 24268 | GDS99272 |
| 23277 | GDS99285 |
| 24942 | GDS99286 |
| **OE** | |
| 32736V | GCI10004 |
| 32724Q | GCI10006 |
| 32725Q | GCI10006 |
| 1487936088 | GCI10009 |
| 327309 | GCI10009 |
| 327310 | GCI10009 |
| 327313 | GCI10009 |
| 32735V | GCI10009 |
| 32735W | GCI10009 |
| 3273CN | GCI10009 |
| 3273R2 | GCI10009 |
| 3273R3 | GCI10009 |
| 1478551080 | GCI10010 |
| 1491243080 | GCI10010 |
| 32729K | GCI10010 |
| 3272V4 | GCI10010 |
| 3272V5 | GCI10010 |
| 32727K | GCI10013 |
| 3272J5 | GCI10013 |
| 9617408180 | GCI10015 |
| 32700 | GCI10020 |
| 32720F | GCI10020 |
| 3272E1 | GCI10020 |
| 32726F | GCI10023 |
| 32733X | GCI10024 |
| 32733Y | GCI10024 |
| 3273CQ | GCI10024 |
| 3273CR | GCI10024 |
| 1463106080 | GCI10034 |
| 1481451080 | GCI10034 |

| COMPETITOR | G-AP Ref. | COMPETITOR | G-AP Ref. | COMPETITOR | G-AP Ref. | COMPETITOR | G-AP Ref. | COMPETITOR | G-AP Ref. |
|---|---|---|---|---|---|---|---|---|---|
| OE | | 3272RY | GCI10095 | 96220403 | GCI12002 | 71771312 | GCI17020 | 46308032 | GCI17048 |
| | | 3272WG | GCI10095 | 96245286 | GCI12003 | 1349787080 | GCI17021 | 46308713 | GCI17051 |
| 1491236080 | GCI10034 | 3272WH | GCI10095 | 96349956 | GCI12003 | 1355333080 | GCI17021 | 46308292 | GCI17055 |
| 327306 | GCI10034 | 3273SK | GCI10096 | 96489849 | GCI12003 | 1369959080 | GCI17021 | 46308750 | GCI17055 |
| 327315 | GCI10034 | 3273SL | GCI10096 | P96349956 | GCI12003 | 46308316 | GCI17021 | 55197717 | GCI17056 |
| 32733Q | GCI10034 | 3272EQ | GCI10098 | 96245311 | GCI12004 | 46308488 | GCI17021 | 71789849 | GCI17056 |
| 32735S | GCI10034 | 3272ER | GCI10098 | 96245288 | GCI12006 | 46308502 | GCI17021 | 55207526 | GCI17057 |
| 32735Y | GCI10034 | 3272ES | GCI10098 | 4804594 | GCI12009 | 1349790080 | GCI17022 | 55209140 | GCI17058 |
| 32735Z | GCI10034 | 3272ET | GCI10098 | 93743419 | GCI12009 | 1355334080 | GCI17022 | 55214866 | GCI17063 |
| 32737E | GCI10034 | 3272HR | GCI10098 | 43408B9350 | GCI14017 | 1357488080 | GCI17022 | 46307859 | GCI17069 |
| 3273CJ | GCI10034 | 3272HS | GCI10098 | 0K63B22520 | GCI14034 | 1607113380 | GCI17022 | 55197722 | GCI17072 |
| 3273Q8 | GCI10034 | 3272RT | GCI10098 | 0K63B22620 | GCI14035 | 3272PE | GCI17022 | 46308081 | GCI17076 |
| 3273Q9 | GCI10034 | 3272SG | GCI10098 | 1064000293 | GCI14038 | 3272PF | GCI17022 | 60802065 | GCI17076 |
| 3273S1 | GCI10034 | 3272SH | GCI10098 | 05105660AC | GCI15012 | 3272PL | GCI17022 | 55214915 | GCI17083 |
| 3273S2 | GCI10034 | 9638016980 | GCI10098 | 5105660AC | GCI15012 | 3272PQ | GCI17022 | 55210063 | GCI17084 |
| 95569340 | GCI10034 | 9638017680 | GCI10098 | K05105660AC | GCI15012 | 3272SS | GCI17022 | 55199296 | GCI17085 |
| 9617303380 | GCI10034 | 9638226480 | GCI10098 | 5189278AA | GCI16003 | 46308315 | GCI17022 | 4630804771738960 | GCI17086 |
| 9617408288 | GCI10034 | 3273QN | GCI10105 | 52111778AB | GCI16003 | 46308488 | GCI17022 | 46308229 | GCI17086 |
| 9626084088 | GCI10034 | 3273QP | GCI10105 | 5189279AA | GCI16004 | 46308501 | GCI17022 | 71738960 | GCI17086 |
| 1349786080 | GCI10038 | 3273ZP | GCI10105 | 52104590AA | GCI16008 | 46308651 | GCI17022 | 51877234 | GCI17088 |
| 46308391 | GCI10038 | 3273ZQ | GCI10105 | 46307368 | GCI17001 | 71771443 | GCI17022 | 1366928080 | GCI17091 |
| 46308487 | GCI10038 | 9684135180 | GCI10105 | 46307369 | GCI17001 | 55207525 | GCI17025 | 55233322 | GCI17093 |
| 46308498 | GCI10038 | 1609610280 | GCI10120 | 46476612 | GCI17001 | 6000100351 | GCI17025 | 55230623 | GCI17096 |
| 71771441 | GCI10038 | 1610276180 | GCI10120 | 46476613 | GCI17001 | 55209968 | GCI17026 | 55255159 | GCI17098 |
| 1614919680 | GCI10040 | 3272RF | GCI10120 | 55183134 | GCI17001 | 46307884 | GCI17027 | 5525515946308470 | GCI17098 |
| 9806153080 | GCI10040 | 3272RG | GCI10120 | 551831347540062 | GCI17001 | 46775436 | GCI17027 | 1607440280 | GCI17106 |
| 1614919780 | GCI10041 | 3272YK | GCI10120 | 6000100064 | GCI17001 | 55182803 | GCI17027 | 55228304 | GCI17107 |
| 3273GE | GCI10041 | 3272YL | GCI10120 | 60001000647540062 | GCI17001 | 6000100065 | GCI17027 | 46308965 | GCI17111 |
| 3273SW | GCI10041 | 9685693680 | GCI10120 | 7672181 | GCI17001 | 7702606 | GCI17027 | 68263105AA | GCI17111 |
| 9806153180 | GCI10041 | 9686039980 | GCI10120 | 7739015 | GCI17001 | 1349788080 | GCI17028 | 52010996 | GCI17113 |
| 32726V | GCI10043 | 9804894680 | GCI10120 | 51787864 | GCI17004 | 1614305580 | GCI17028 | 52044588 | GCI17113 |
| 32727V | GCI10043 | 9804895280 | GCI10120 | 51905706 | GCI17004 | 3272PG | GCI17028 | 52052451 | GCI17113 |
| 3272EK | GCI10043 | 9817720580 | GCI10129 | 51905707 | GCI17004 | 46308335 | GCI17028 | 55214685 | GCI17114 |
| 3272RZ | GCI10043 | 9821573080 | GCI10129 | 51929168 | GCI17004 | 46308488 | GCI17028 | 51983794 | GCI17116 |
| 3272SA | GCI10043 | 9839512780 | GCI10129 | 46307522 | GCI17005 | 46308499 | GCI17028 | 52061594 | GCI17116 |
| 1608957780 | GCI10054 | 1637186980 | GCI10139 | 60801882 | GCI17005 | 46308787 | GCI17028 | 55273549 | GCI17116 |
| 9803019580 | GCI10054 | 9807559980 | GCI10139 | 71887013 | GCI17005 | 71771442 | GCI17028 | 55281864 | GCI17116 |
| 9803959580 | GCI10054 | 9811934080 | GCI10139 | 46307865 | GCI17006 | 9803023680 | GCI17029 | 59259006 | GCI17116 |
| 1611143280 | GCI10057 | 1677230080 | GCI10141 | 60802017 | GCI17006 | 3273SZ | GCI17030 | 68322642AA | GCI17116 |
| 1611524380 | GCI10057 | 9836232080 | GCI10141 | 71787151 | GCI17006 | 3273TA | GCI17030 | 68413627AA | GCI17116 |
| 3272YH | GCI10057 | 3273LJ | GCI10142 | 71787154 | GCI17006 | 51783825 | GCI17030 | K68322642AA | GCI17116 |
| 9677477080 | GCI10057 | 3272TC | GCI10143 | 46308442 | GCI17007 | 371395 | GCI17031 | K68413627AA | GCI17116 |
| 9807160780 | GCI10057 | 3272TE | GCI10143 | 46308729 | GCI17007 | 55221323 | GCI17031 | 52010998 | GCI17118 |
| 3273LR | GCI10058 | 9686650380 | GCI10143 | 71771189 | GCI17007 | 55256720 | GCI17031 | 77367398 | GCI17118 |
| 3273LS | GCI10058 | 3273TR | GCI10144 | 46308257 | GCI17008 | 71771199 | GCI17031 | 51983847 | GCI17119 |
| 3273VH | GCI10058 | 3273TS | GCI10144 | 46308714 | GCI17008 | 55199295 | GCI17035 | 52061590 | GCI17119 |
| 3273ZA | GCI10058 | 9800389380 | GCI10148 | 55197729 | GCI17011 | 6000100099 | GCI17035 | 51839109 | GCI17123 |
| 3273ZG | GCI10058 | 1613214580 | GCI10157 | 6000100350 | GCI17011 | 71791757 | GCI17035 | 51892626 | GCI17123 |
| 9656329480 | GCI10058 | 9811045380 | GCI10157 | 71786573 | GCI17011 | 51742366 | GCI17036 | 55237698 | GCI17123 |
| 9672959880 | GCI10058 | 3273RY | GCI10160 | 55197730 | GCI17012 | 71786561 | GCI17036 | 55237699 | GCI17123 |
| 3273YC | GCI10067 | 1613214680 | GCI10161 | 71790952 | GCI17012 | 3740231011 | GCI17041 | 51821105 | GCI17124 |
| 3272XJ | GCI10068 | 3272SZ | GCI10161 | 46308044 | GCI17013 | 3740231016 | GCI17041 | 51933673 | GCI17124 |
| 1613229680 | GCI10070 | 9811045480 | GCI10161 | 46307820 | GCI17014 | 3910095F0A | GCI17041 | 46308911 | GCI17126 |
| 3272LG | GCI10070 | 9800389280 | GCI10162 | 55186192 | GCI17014 | 1349789080 | GCI17042 | 55221323 | GCI17126 |
| 3272LH | GCI10070 | 9800425580 | GCI10162 | 71787215 | GCI17014 | 46308399 | GCI17042 | 5522132346308126 | GCI17126 |
| 3272TZ | GCI10070 | 9816309180 | GCI10162 | 46307543 | GCI17015 | 46308497 | GCI17042 | 59259210 | GCI17126 |
| 3272VA | GCI10070 | 1611524180 | GCI10165 | 46307678 | GCI17015 | 71771311 | GCI17042 | 6073690 | GCI18002 |
| 3272ZK | GCI10070 | 3273VK | GCI10165 | 55205034 | GCI17015 | 51742367 | GCI17043 | 6073691 | GCI18002 |
| 9683944580 | GCI10070 | 3273VL | GCI10165 | 71787227 | GCI17015 | 1538689 | GCI17046 | 77TT3K177EB | GCI18002 |
| 9680667780 | GCI10080 | 9677477180 | GCI10165 | 46818889 | GCI17016 | 52109008 | GCI17046 | F01325600A | GCI18006 |
| 9680667380 | GCI10082 | 1401317888 | GCI10167 | 1349785080 | GCI17020 | 52121988 | GCI17046 | F01325600C | GCI18006 |
| 3273PA | GCI10090 | 9645249180 | GCI10167 | 3273PP | GCI17020 | 52121989 | GCI17046 | F01325600E | GCI18006 |
| 3273RQ | GCI10090 | 1401317788 | GCI10168 | 40308336 | GCI17020 | 55183134 | GCI17046 | F02322520C | GCI18006 |
| 3273RR | GCI10090 | 1490611080 | GCI10168 | 46308336 | GCI17020 | 5518313446308007 | GCI17046 | F02322520D | GCI18006 |
| 3273QS | GCI10091 | 9645249080 | GCI10168 | 46308401 | GCI17020 | 6000100064 | GCI17046 | F02325600A | GCI18006 |
| 3273QT | GCI10091 | 96273572 | GCI12001 | 46308488 | GCI17020 | 600010006446308007 | GCI17046 | F02325600C | GCI18006 |
| 3273TW | GCI10091 | 96396135 | GCI12001 | 46308500 | GCI17020 | 9S513B414AA | GCI17046 | F02422520 | GCI18006 |
| 3272RX | GCI10095 | 512189 | GCI12002 | 46308796 | GCI17020 | 46307720 | GCI17048 | F02422520A | GCI18006 |

| COMPETITOR | G-AP Ref. | COMPETITOR | G-AP Ref. | COMPETITOR | G-AP Ref. | COMPETITOR | G-AP Ref. | COMPETITOR | G-AP Ref. |
|---|---|---|---|---|---|---|---|---|---|
| OE | | 2S6W3C356BA | GCI18085 | 6G913C356AA | GCI18128 | 4130009213 | GCI18256 | 93743413 | GCI21023 |
| | | 2S6W3C356BB | GCI18085 | 1446280 | GCI18129 | 4130009214 | GCI18256 | 13166591 | GCI21024 |
| F02422520C | GCI18006 | 8V513C356AA | GCI18085 | 1459764 | GCI18129 | F1F13C356NA | GCI18260 | 374593 | GCI21024 |
| F02422520E | GCI18006 | 8V513C356AB | GCI18085 | 1459773 | GCI18129 | 1692094 | GCI18263 | 1692093 | GCI21028 |
| F02425600A | GCI18006 | 1306054 | GCI18086 | 36002894 | GCI18129 | 1713002 | GCI18263 | AV613C356CA | GCI21028 |
| F04025400 | GCI18006 | 1420588 | GCI18086 | 6G913C313BA | GCI18129 | 1774031 | GCI18263 | 13296195 | GCI21030 |
| F04025400B | GCI18006 | 1459302 | GCI18086 | 6G913C313CA | GCI18129 | 1844843 | GCI18263 | 374848 | GCI21030 |
| F04025400C | GCI18006 | 1493018 | GCI18086 | 6G913C313DA | GCI18129 | 1875686 | GCI18263 | 1603262 | GCI21034 |
| FS1722520A | GCI18006 | 1676318 | GCI18086 | 1761382 | GCI18135 | 1900480 | GCI18263 | 93180020 | GCI21034 |
| FS1722520C | GCI18006 | 1692089 | GCI18086 | BV613C313CB | GCI18135 | AV613C313EA | GCI18263 | 2201020N01AA | GCI21039 |
| FS1722520E | GCI18006 | 1763564 | GCI18086 | 1710057 | GCI18139 | AV613C313EB | GCI18263 | CD1010570200 | GCI21039 |
| FS1722620 | GCI18006 | 1774035 | GCI18086 | BV613C356CA | GCI18139 | BV613C313HA | GCI18263 | 25946578 | GCI21041 |
| FS1722620B | GCI18006 | 1790566 | GCI18086 | 1710059 | GCI18140 | BV613C313UA | GCI18263 | 4802978 | GCI21041 |
| FZ0122520 | GCI18006 | 3M513C356AC | GCI18086 | 1761376 | GCI18140 | BV613C313UB | GCI18263 | 4819361 | GCI21041 |
| FZ0222520A | GCI18006 | 3M513C356AD | GCI18086 | BV613C313BA | GCI18140 | F1F13C313NA | GCI18263 | 95299895 | GCI21041 |
| G56022520 | GCI18015 | 3M513C356AE | GCI18086 | BV613C313BB | GCI18140 | 2201310AK01 | GCI18264 | 95480033 | GCI21041 |
| G56422520 | GCI18015 | AV613C356EA | GCI18086 | FD8022520 | GCI18141 | 2203320BE03 | GCI18264 | 95981838 | GCI21050 |
| 1S653B418AA | GCI18022 | BV613C356UA | GCI18086 | CV613B436HF | GCI18155 | 2203320BS02 | GCI18264 | 95981840 | GCI21050 |
| XS463B418DA | GCI18022 | CV173C356AA | GCI18086 | CV6Z3B436AP | GCI18155 | B2110380800 | GCI18264 | 96335422 | GCI21050 |
| 1322224 | GCI18044 | CV173C356AB | GCI18086 | 2048643 | GCI18157 | B3110540701 | GCI18264 | 96437237 | GCI21050 |
| 1451974 | GCI18044 | 1306051 | GCI18087 | EV613B437GA | GCI18157 | 2203320BE01 | GCI18265 | 96453393 | GCI21050 |
| 1552941 | GCI18044 | 1420587 | GCI18087 | 36000437 | GCI18159 | 2203420BE01 | GCI18265 | 96453396 | GCI21050 |
| 36001360 | GCI18044 | 1459284 | GCI18087 | 1322222 | GCI18161 | B3110540600 | GCI18265 | 96945483 | GCI21050 |
| 3M513C356CA | GCI18044 | 1481244 | GCI18087 | 1345645 | GCI18161 | B3110540700 | GCI18265 | 96639083 | GCI21051 |
| 3M513C356CB | GCI18044 | 1493052 | GCI18087 | 1552930 | GCI18161 | 1504139 | GCI18267 | 95228718 | GCI21057 |
| 3M513C356CC | GCI18044 | 1676316 | GCI18087 | 3M513C313CA | GCI18161 | 1505654 | GCI18267 | 4130008012 | GCI21065 |
| XS4C3B418EB | GCI18044 | 1722079 | GCI18087 | 3M513C313CB | GCI18161 | 1600374 | GCI18267 | 44310S01970 | GCI23004 |
| 3652045 | GCI18045 | 1821970 | GCI18087 | 3M513C313HA | GCI18161 | 6G913B437CC | GCI18267 | 44310SH3970 | GCI23004 |
| C9120B071000 | GCI18045 | 3M513C313AA | GCI18087 | 1061868 | GCI18162 | 6G913C356LA | GCI18267 | 44310SH3J10 | GCI23004 |
| XS4C3C092BA | GCI18045 | 3M513C313AB | GCI18087 | 1349160 | GCI18162 | 8200725514 | GCI18272 | 44310SK3E50 | GCI23004 |
| XS4W3B436BB | GCI18045 | 3M513C313AC | GCI18087 | XS614K259AA | GCI18162 | 1C153C313AA | GCI18274 | 44310SR3900 | GCI23004 |
| 1C153C356AA | GCI18055 | 3M513C313AD | GCI18087 | 8251543 | GCI18171 | 4558416 | GCI18274 | 44310S01960 | GCI23005 |
| 4558430 | GCI18055 | 3M513C313AE | GCI18087 | 8603360 | GCI18172 | 2203200M03 | GCI18275 | 44310SH3960 | GCI23005 |
| 1383753 | GCI18058 | 3M513C313AF | GCI18087 | 1522574 | GCI18173 | 2203100M03 | GCI18276 | 44310SH3J00 | GCI23005 |
| 1451463 | GCI18058 | CV173B436AF | GCI18087 | 538450082 | GCI18174 | 2201010W04 | GCI18278 | 44310SK3E00 | GCI23005 |
| 1477380 | GCI18058 | 3749570 | GCI18100 | 538450102 | GCI18174 | 2201020W04 | GCI18279 | 44310SR3300 | GCI23005 |
| 1501261 | GCI18058 | 55214684 | GCI18100 | 1495673 | GCI18177 | S1010510302 | GCI18279 | 44310SR3A00 | GCI23005 |
| 4371788 | GCI18058 | 5521468446308126 | GCI18100 | 6W834K138AA | GCI18179 | S1010510402 | GCI18279 | 44010S47000 | GCI23009 |
| 4371795 | GCI18058 | 95511579 | GCI18100 | C2P3968 | GCI18179 | 2203200M06 | GCI18282 | 44010SX0000 | GCI23009 |
| 4490557 | GCI18058 | 2T143C356BA | GCI18101 | 1754399 | GCI18180 | 2203100M06 | GCI18283 | 44011S47010 | GCI23009 |
| 4994092 | GCI18058 | 4511915 | GCI18101 | 3C113C356AC | GCI18180 | 2203320AW02 | GCI18286 | 44011SX1000 | GCI23009 |
| 5083615 | GCI18058 | 5035054 | GCI18101 | 4558433 | GCI18180 | 2203320BH02 | GCI18286 | 44310S4X300 | GCI23009 |
| 2T143C356AA | GCI18059 | 9T163C356AA | GCI18101 | 4602022 | GCI18180 | 3210001ASV0100 | GCI18286 | 44310S84A10 | GCI23009 |
| 4511913 | GCI18059 | 2T143C313BA | GCI18102 | 4738257 | GCI18180 | C3010330800 | GCI18286 | 44310S84A50 | GCI23009 |
| 1214379 | GCI18061 | 4371796 | GCI18102 | 1565594 | GCI18187 | S2010470801 | GCI18286 | 44310S9A300 | GCI23009 |
| 1355199 | GCI18061 | 1513996 | GCI18103 | 36000930 | GCI18187 | 4304702030 | GCI19001 | 44310SM1300 | GCI23009 |
| 1447554 | GCI18061 | 1537382 | GCI18103 | 36000931 | GCI18187 | 96298520 | GCI21005 | 44310SM1980 | GCI23009 |
| 1S713C313BA | GCI18061 | 4S613C313AB | GCI18103 | 8603625 | GCI18187 | 96489848 | GCI21005 | 44310SM4310 | GCI23009 |
| 1S713C313BB | GCI18061 | 397111HC3B | GCI18110 | BJ324B402AC | GCI18187 | 71740562 | GCI21011 | 44310SM4980 | GCI23009 |
| 1S713C313BC | GCI18061 | 397111HC3C | GCI18111 | LR025959 | GCI18187 | 71789081 | GCI21011 | 44310SMTG00 | GCI23009 |
| 42601388 | GCI18070 | 1356786 | GCI18113 | LR060412 | GCI18187 | 93225237 | GCI21011 | 44310TA0A50 | GCI23009 |
| 42601892 | GCI18070 | 1782219 | GCI18113 | LR061904 | GCI18187 | 9322528 | GCI21011 | 44310TA0A60 | GCI23009 |
| 1005411 | GCI18072 | 1890176 | GCI18113 | 1782217 | GCI18190 | 93225289 | GCI21011 | 44310TA0A61 | GCI23009 |
| 96FG3B418CA | GCI18072 | 2S613C356BA | GCI18113 | CN153C313AA | GCI18190 | 13296189 | GCI21014 | 44305S9AN00 | GCI23013 |
| 1464645 | GCI18076 | CN153C356AA | GCI18113 | C92051KC0A | GCI18208 | 1603271 | GCI21014 | 44305TA2J50 | GCI23013 |
| 6M343B414BA | GCI18076 | CN153C356CA | GCI18113 | 4166489 | GCI18213 | 374673 | GCI21014 | 44310S3X300 | GCI23013 |
| PP0122620 | GCI18076 | CN1Z3B436Q | GCI18113 | 4166490 | GCI18213 | 93182585 | GCI21014 | 44310S4X900 | GCI23013 |
| 6M343B414AB | GCI18077 | 1520686 | GCI18119 | 1486232 | GCI18219 | 39066134 | GCI21016 | 44310S9A305 | GCI23013 |
| 1301444 | GCI18085 | 8C113C356AA | GCI18119 | 1552948 | GCI18219 | 46308288 | GCI21016 | 44310S9A900 | GCI23013 |
| 1357781 | GCI18085 | 1499551 | GCI18120 | 1686116 | GCI18219 | 46308725 | GCI21016 | 44310SDAA60 | GCI23013 |
| 1372171 | GCI18085 | 6C113C313AB | GCI18120 | 5M513C356AA | GCI18219 | 46308243 | GCI21017 | 44310SDAA61 | GCI23013 |
| 1520188 | GCI18085 | 1469165 | GCI18121 | 5M513C356AB | GCI18219 | 46308712 | GCI21017 | 44310SL5N00 | GCI23013 |
| 1520189 | GCI18085 | 1494214 | GCI18121 | C9711EB31B | GCI18226 | 55213545 | GCI21017 | 44310SR3A12 | GCI23013 |
| 1539165 | GCI18085 | 1512911 | GCI18121 | FB5Z3B437B | GCI18246 | 6000100080 | GCI21017 | 44310ST7900 | GCI23013 |
| 1802536 | GCI18085 | 1520685 | GCI18121 | 391018696R | GCI18247 | 71771190 | GCI21017 | 44310TA0307 | GCI23013 |
| 2S613C356CA | GCI18085 | 8C113C313AA | GCI18121 | GP2722520A | GCI18255 | 13124679 | GCI21018 | 44310S04N00 | GCI23017 |
| 2S613C356CB | GCI18085 | 1446283 | GCI18128 | 4130009203 | GCI18256 | 374561 | GCI21018 | 44310S10310 | GCI23017 |
| 2S6W3C356AA | GCI18085 | 36002891 | GCI18128 | 4130009204 | GCI18256 | 4804588 | GCI21023 | 44310S10320 | GCI23017 |

| COMPETITOR | G-AP Ref. | COMPETITOR | G-AP Ref. | COMPETITOR | G-AP Ref. | COMPETITOR | G-AP Ref. | COMPETITOR | G-AP Ref. |
|---|---|---|---|---|---|---|---|---|---|
| OE | | 42310SWA000 | GCI23105 | 4950526B00 | GCI24043 | 495052BA30 | GCI24095 | 49635D3740 | GCI24154 |
| | | 42311SWA000 | GCI23105 | 495052CA50 | GCI24043 | 495361M101 | GCI24097 | 496922S010 | GCI24154 |
| 44310S5A300 | GCI23018 | 44305S9VA51 | GCI23107 | 4950526800 | GCI24044 | 495362L401 | GCI24097 | 496922Y010 | GCI24154 |
| 44310S5AJ00 | GCI23018 | 44310S3V306 | GCI23107 | 495052EA50 | GCI24044 | 496913J601 | GCI24097 | 495002B800 | GCI24155 |
| 44310S5AJ50 | GCI23018 | 44310S3VA51 | GCI23107 | 495001C000 | GCI24045 | 495352L201 | GCI24098 | 495012B800 | GCI24156 |
| 44310S04300 | GCI23020 | 44310STX305 | GCI23107 | 495001C010 | GCI24045 | 495362L201 | GCI24098 | 495012P250 | GCI24156 |
| 44310SO4300 | GCI23020 | 44310STX306 | GCI23107 | 495051CA00 | GCI24045 | 495823S300 | GCI24100 | 496051UA00 | GCI24156 |
| 44310S04900 | GCI23021 | 44310SZP305 | GCI23107 | 495921H210 | GCI24047 | 495823S301 | GCI24100 | 496052PA20 | GCI24156 |
| 44310S2GJ00 | GCI23021 | 44310TKN305 | GCI23107 | 495000X005 | GCI24048 | 49582A8000 | GCI24100 | 495052PA30 | GCI24157 |
| 44310SO4900 | GCI23021 | 44310TMA305 | GCI23107 | 49500B4600 | GCI24048 | MR581872 | GCI24102 | 495922S200 | GCI24158 |
| 44310S0A900 | GCI23023 | 4950038442 | GCI24001 | 49501B4600 | GCI24048 | 49535M4001 | GCI24105 | 495922Y200 | GCI24158 |
| 44310S10901 | GCI23023 | 4950526T00 | GCI24001 | 49535B4000 | GCI24048 | 49536A0001 | GCI24105 | 495923W300 | GCI24158 |
| 44310S10902 | GCI23023 | 4950538E00 | GCI24001 | 495052CA10 | GCI24049 | 49536M4001 | GCI24105 | 495013Z550 | GCI24159 |
| 44310TA0A00 | GCI23023 | 4950538M01 | GCI24001 | 495351Y101 | GCI24050 | 49535M0201 | GCI24107 | 49582A4351 | GCI24159 |
| 44310TL1305 | GCI23023 | 495053KA10 | GCI24001 | 49535B9000 | GCI24050 | 49536M0201 | GCI24107 | 495822W000 | GCI24160 |
| 44310SEFE00 | GCI23037 | 4950502A00 | GCI24002 | 495361J001 | GCI24050 | 49535M0401 | GCI24108 | 495361P201 | GCI27002 |
| 44310TL0G20 | GCI23037 | 4950538C00 | GCI24008 | 495361Y101 | GCI24050 | 2201100AP01 | GCI24110 | 0K2JT22520 | GCI27004 |
| 44310TL0G21 | GCI23037 | 4950025200 | GCI24009 | 495012Y200 | GCI24053 | 2201100M03 | GCI24110 | 0K2JT25500A | GCI27004 |
| 44310TL0G22 | GCI23037 | 495051CB00 | GCI24009 | 49535A5201 | GCI24053 | 2201200AP01 | GCI24110 | 0K2NC22520 | GCI27004 |
| 44310SKN305 | GCI23038 | 4950522A00 | GCI24009 | 49536A6202 | GCI24053 | 2201200M03 | GCI24110 | 0K2NC25500A | GCI27004 |
| 44310STKA91 | GCI23038 | 4950525A00 | GCI24009 | 495012P200 | GCI24054 | S4010250500 | GCI24110 | 0K2NE2550XA | GCI27004 |
| 44310TV2305 | GCI23040 | 495001A110 | GCI24010 | 495012P201 | GCI24054 | S4010250600 | GCI24110 | 1K2JT2550XA | GCI27004 |
| 42320SCAE21 | GCI23045 | 495001C302 | GCI24010 | 495823S200 | GCI24056 | 495004N100 | GCI24112 | 0K2N222520 | GCI27005 |
| 42320SXSA01 | GCI23045 | 495051CC00 | GCI24010 | 495823S201 | GCI24056 | 495014N100 | GCI24112 | 0K55222520 | GCI27013 |
| 42320SXSA11 | GCI23045 | 495051E030 | GCI24010 | 495R3O3000 | GCI24056 | 495004N000 | GCI24113 | 0K55222520A | GCI27013 |
| 42330S9A305 | GCI23046 | 4950525B00 | GCI24010 | 495053JA00 | GCI24057 | 495014N000 | GCI24113 | 495922F500 | GCI27018 |
| 44306TF0N00 | GCI23050 | 495052BA60 | GCI24010 | 495003J100 | GCI24058 | 49535A7450 | GCI24115 | 495001G011 | GCI27019 |
| 44306TF0N01 | GCI23050 | 495052PA60 | GCI24010 | 495003J120 | GCI24058 | 49535C7401 | GCI24115 | 495001G051 | GCI27019 |
| 44310TF0300 | GCI23050 | 495052PA70 | GCI24010 | 495352L101 | GCI24061 | 49536C7401 | GCI24115 | 495362L001 | GCI27019 |
| 44310TF0J00 | GCI23050 | 496051CA00 | GCI24010 | 495352L401 | GCI24061 | 49500D3130 | GCI24126 | 495921G090 | GCI27019 |
| 44310SEAE90 | GCI23052 | 496051E000 | GCI24010 | 495923X2A0 | GCI24061 | 49535D3710 | GCI24126 | 495921G190 | GCI27019 |
| 44310TL1306 | GCI23052 | 4960525B00 | GCI24010 | 495923X2A5 | GCI24061 | 49535D3711 | GCI24126 | 4950509800 | GCI27020 |
| 44310TY4305 | GCI23052 | 495051E050 | GCI24012 | 495922Y050 | GCI24064 | 49535D7710 | GCI24126 | 495921F400 | GCI27020 |
| 44310TZ8305 | GCI23052 | 495052HA21 | GCI24012 | 495923R900 | GCI24064 | 49535D7711 | GCI24126 | 495924D250 | GCI27020 |
| 44310SEAE00 | GCI23053 | 49582F9000 | GCI24012 | 495972G503 | GCI24064 | 495922Y800 | GCI24128 | 495002E650 | GCI27024 |
| 44310TY4A00 | GCI23053 | 49583F9000 | GCI24012 | 495972S000 | GCI24064 | 496002B010 | GCI24129 | 495002F060 | GCI27024 |
| 44310TZ8H00 | GCI23053 | 495012E910 | GCI24013 | 49500A6400 | GCI24065 | 496052BA00 | GCI24129 | 495911F210 | GCI27024 |
| 42330S0E306 | GCI23054 | 495052EA20 | GCI24013 | 49534H6900 | GCI24065 | 495053AA20 | GCI24135 | 495921F500 | GCI27024 |
| 42330S71306 | GCI23054 | 495052EA90 | GCI24013 | 49534S4200 | GCI24065 | 496052HA00 | GCI24135 | 495922F080 | GCI27024 |
| 44310T2A305 | GCI23056 | 495052EJ10 | GCI24013 | 495351R101 | GCI24065 | 49535H5000 | GCI24137 | 495922F000 | GCI27025 |
| 44310T2L305 | GCI23056 | 495052HA00 | GCI24013 | 49535H5100 | GCI24065 | 49535H5005 | GCI24137 | 495002S300 | GCI27031 |
| 44310SAB900 | GCI23059 | 495052EJ50 | GCI24014 | 49535H5105 | GCI24065 | 495923X0A5 | GCI24137 | 495002Y300 | GCI27031 |
| 44310SYZ305 | GCI23059 | 496052EA90 | GCI24014 | 49535S4200 | GCI24065 | 495R3Q0100 | GCI24137 | 495002Y900 | GCI27031 |
| 42320S0E300 | GCI23069 | 495052HA31 | GCI24015 | 495361R101 | GCI24065 | 495822W650 | GCI24139 | 495012F060 | GCI27031 |
| 42320S71300 | GCI23069 | 49582F3000 | GCI24015 | 495922V1A0 | GCI24065 | 49500G8100 | GCI24140 | 495012Y900 | GCI27031 |
| 44310T0AA00 | GCI23072 | 49582H8400 | GCI24015 | 495922V1A5 | GCI24065 | 495822W600 | GCI24140 | 495921F200 | GCI27031 |
| 44310T2AA00 | GCI23072 | 49582H8450 | GCI24015 | 495923X1A0 | GCI24065 | 495822W630 | GCI24140 | 495922F060 | GCI27031 |
| 44310T2LH00 | GCI23072 | 49583F3000 | GCI24015 | 495923X1A5 | GCI24065 | 49582C5200 | GCI24140 | 495922S300 | GCI27031 |
| 44310T7B300 | GCI23072 | 49583H8400 | GCI24015 | 49592A64A0 | GCI24065 | 49582D4300 | GCI24140 | 495922Y660 | GCI27032 |
| 44310TS4305 | GCI23073 | 49583H8450 | GCI24015 | 49592A64A5 | GCI24065 | 49582C1100 | GCI24141 | 495972Y200 | GCI27032 |
| 44310TV1305 | GCI23073 | 495002D312 | GCI24016 | 495L3K8500 | GCI24065 | 49582C2210 | GCI24141 | 495003F030 | GCI27041 |
| 44310SMB300 | GCI23079 | 495012D312 | GCI24016 | 495R3K8500 | GCI24065 | 49582D4100 | GCI24141 | 495922F100 | GCI27042 |
| 42320S2L003 | GCI23083 | 495351Y001 | GCI24019 | 495002B900 | GCI24066 | 495L3L1200 | GCI24141 | 496921F000 | GCI27042 |
| 44310S0A300 | GCI23086 | 495361Y001 | GCI24019 | 495002P200 | GCI24066 | 495L3O3000 | GCI24141 | 495351R201 | GCI27043 |
| 44310S2X300 | GCI23086 | 4959207000 | GCI24019 | 495002P400 | GCI24066 | 495R3L1250 | GCI24141 | 495361R201 | GCI27043 |
| 443063M1T01 | GCI23093 | 495052BA10 | GCI24021 | 495052PA20 | GCI24066 | 495822W100 | GCI24144 | 49536A5101 | GCI27044 |
| 443053M1T01 | GCI23094 | 4950126511 | GCI24025 | 96870388 | GCI24068 | 495822W110 | GCI24144 | 495922K450 | GCI27044 |
| 44310TLA305 | GCI23094 | 495002E550 | GCI24030 | 96888653 | GCI24068 | 49582C5130 | GCI24144 | 495052BA70 | GCI27052 |
| 44310TR0300 | GCI23100 | 495052CA40 | GCI24030 | 4950117050 | GCI24072 | 495822W200 | GCI24145 | 495052PA00 | GCI27052 |
| 44310TR0310 | GCI23100 | 495052EA00 | GCI24030 | 4950517A00 | GCI24072 | 49582C5430 | GCI24145 | 495012P000 | GCI27053 |
| 44310TR0J10 | GCI23100 | 496051CD00 | GCI24031 | 4950529A00 | GCI24072 | 496052BA30 | GCI24146 | 496052PA00 | GCI27053 |
| 44310TR0J11 | GCI23100 | 496052EA50 | GCI24031 | 495922Y600 | GCI24077 | 495052BA75 | GCI24147 | 495013F030 | GCI27055 |
| 44310STXA11 | GCI23101 | 4950517A10 | GCI24032 | 49583K0220 | GCI24080 | 495052PA10 | GCI24147 | 495922Y000 | GCI27056 |
| 44310STXA12 | GCI23101 | 495052DA00 | GCI24032 | 495L3BU200 | GCI24080 | 49535C7001 | GCI24151 | 495923W000 | GCI27056 |
| 42320S10305 | GCI23103 | 495052EA40 | GCI24032 | 495R3BU200 | GCI24080 | 49536C7001 | GCI24151 | 495011D700 | GCI27057 |
| 42320SCA305 | GCI23103 | 496822W050 | GCI24032 | 495003Z400 | GCI24092 | 496002M200 | GCI24152 | 495922S100 | GCI27057 |
| 42320S10306 | GCI23104 | 495921H010 | GCI24039 | 495823K250 | GCI24092 | 496502M200 | GCI24152 | 495923W200 | GCI27057 |
| 42320SCA306 | GCI23104 | 495972G500 | GCI24041 | 496052BA30 | GCI24094 | 495823K300 | GCI24153 | 21080221505600 | GCI28001 |

| COMPETITOR | G-AP Ref. | COMPETITOR | G-AP Ref. | COMPETITOR | G-AP Ref. | COMPETITOR | G-AP Ref. | COMPETITOR | G-AP Ref. |
|---|---|---|---|---|---|---|---|---|---|
| OE | | FG0122620 | GCI34091 | A1693605272 | GCI35011 | 2463308900 | GCI35071 | MN110515 | GCI39054 |
| | | FG0122620A | GCI34091 | A1693606072 | GCI35011 | A2463308900 | GCI35071 | 495821W100 | GCI39055 |
| 21080221505686 | GCI28001 | FF0522620A | GCI34092 | 1693601572 | GCI35012 | 1663301500 | GCI35073 | MN147089 | GCI39057 |
| 21082215056 | GCI28001 | GP0722620 | GCI34092 | 1693603272 | GCI35012 | A1663301500 | GCI35073 | MR980002 | GCI39057 |
| 21700221501011 | GCI28001 | GP072560X | GCI34092 | 1693604472 | GCI35012 | 1447555 | GCI36001 | MR580504 | GCI39060 |
| 21080221505600 | GCI28002 | GG2522520 | GCI34099 | 1693605472 | GCI35012 | 1S713C356AD | GCI36001 | MB526147 | GCI39061 |
| 21080221505686 | GCI28002 | GG2522520A | GCI34099 | 1693606472 | GCI35012 | 31607514479 | GCI38001 | 495052EA10 | GCI39063 |
| 21082215056 | GCI28002 | GG4425500B | GCI34099 | A1693601572 | GCI35012 | 31607574852 | GCI38001 | MN147087 | GCI39074 |
| 21212215055 | GCI28003 | GG4425500D | GCI34099 | A1693603272 | GCI35012 | 31607514480 | GCI38002 | MR953745 | GCI39074 |
| 21212215057 | GCI28003 | 31280669 | GCI34111 | A1693604472 | GCI35012 | 31607574850 | GCI38002 | MR470226 | GCI39077 |
| 21212215054 | GCI28004 | 36000675 | GCI34111 | A1693605472 | GCI35012 | MB196876 | GCI39005 | MR515192 | GCI39077 |
| 21212215056 | GCI28004 | 538450081 | GCI34112 | A1693606472 | GCI35012 | MB526892 | GCI39005 | 1154626100 | GCI39083 |
| 21213221501020 | GCI28016 | 538450101 | GCI34112 | 1693608372 | GCI35014 | MB526919 | GCI39005 | E6F2203300CC1 | GCI39083 |
| 21213221501120 | GCI28019 | 1749218 | GCI34117 | A1693604372 | GCI35014 | MB837166 | GCI39005 | 4236022040 | GCI39089 |
| 21232215055 | GCI28019 | GG6222520 | GCI34124 | A1693608372 | GCI35014 | MR196876 | GCI39005 | 2203200V17 | GCI39092 |
| 4340917010 | GCI31001 | GG6225500A | GCI34124 | 9013300001 | GCI35020 | MB526273 | GCI39006 | 2303400XKZ13A | GCI39092 |
| 4340928010 | GCI31001 | GG2722620 | GCI34125 | A9013300001 | GCI35020 | MB937996 | GCI39010 | 3817A159 | GCI39093 |
| 4304020020 | GCI31004 | GG3722620 | GCI34125 | 2113500156 | GCI35021 | 495020B000 | GCI39020 | J602203010CL | GCI39101 |
| 4303030020 | GCI31007 | GG3722620A | GCI34125 | 2123501810 | GCI35021 | MR276445 | GCI39023 | J602203020CL | GCI39101 |
| 4303030040 | GCI31007 | GG3722620B | GCI34125 | 2123502110 | GCI35021 | MR331245 | GCI39023 | GD6822520 | GCI39114 |
| 0K2N122520 | GCI34008 | GG6222620 | GCI34125 | 2123502510 | GCI35021 | 4950524A01 | GCI39025 | GD6822520A | GCI39114 |
| KK38822520 | GCI34008 | GG6225600 | GCI34125 | 2123508211 | GCI35021 | MB297341 | GCI39025 | 3815A196 | GCI39121 |
| KK38825600 | GCI34008 | FTB222520 | GCI34127 | A2113500156 | GCI35021 | MB399348 | GCI39028 | 3815A284 | GCI39121 |
| GD1722620 | GCI34009 | FTB22550XA | GCI34127 | A2123501810 | GCI35021 | MR336585 | GCI39028 | 3971102A05 | GCI41001 |
| GD1722620A | GCI34009 | FTB122520 | GCI34128 | A2123502110 | GCI35021 | MR399351 | GCI39028 | 3971202A25 | GCI41001 |
| F06122520 | GCI34014 | FTB12550XA | GCI34128 | A2123502510 | GCI35021 | MR222052 | GCI39029 | 3971164J03 | GCI41002 |
| F06322520 | GCI34014 | FTB122620 | GCI34129 | 2043301500 | GCI35023 | MN110628 | GCI39032 | 3974105U87 | GCI41014 |
| MD1922520A | GCI34019 | FTB12560XA | GCI34129 | 2043301501 | GCI35023 | MN171194 | GCI39032 | 391012F210 | GCI41028 |
| 2200200U8020 | GCI34022 | FTB62560X | GCI34129 | A2043301500 | GCI35023 | MN171195 | GCI39033 | 392042F226 | GCI41028 |
| FA5122520 | GCI34022 | FTR322620 | GCI34129 | A2043301501 | GCI35023 | 3815A184 | GCI39036 | 397113U000 | GCI41033 |
| FA5122520A | GCI34022 | FTB82550X | GCI34130 | 33207605486 | GCI35025 | 3817A318 | GCI39036 | 392041F526 | GCI41045 |
| FA8122520 | GCI34022 | RTA122520 | GCI34131 | 33217561784 | GCI35025 | MK385056 | GCI39036 | 392044F525 | GCI41045 |
| FA8125500A | GCI34022 | GA352560XC | GCI34135 | 1K0501203GX | GCI35026 | 3815A183 | GCI39037 | 392044F527 | GCI41045 |
| GD6222520 | GCI34026 | GP0622620 | GCI34135 | 1K0598099 | GCI35026 | 3817A313 | GCI39037 | 392051F525 | GCI41045 |
| GD6222520A | GCI34026 | GP0622620A | GCI34135 | 1K0598099X | GCI35026 | 3817A018 | GCI39038 | 392054F425 | GCI41045 |
| FA6022620 | GCI34027 | GP0622620B | GCI34135 | 5Q0598099 | GCI35026 | MN171538 | GCI39038 | 392054F527 | GCI41045 |
| FA6022620A | GCI34027 | GG4622620 | GCI34139 | 8V0598099 | GCI35026 | 3817A136 | GCI39040 | 39771JN00A | GCI41054 |
| FD5122620A | GCI34027 | GG4622620A | GCI34139 | 8V0598099X | GCI35026 | 495002D012 | GCI39041 | 3817A195 | GCI41056 |
| GF0922620 | GCI34029 | GG4625600 | GCI34139 | 1633300401 | GCI35039 | 495002D013 | GCI39041 | 39711JG32C | GCI41056 |
| G56822620 | GCI34032 | GG4625600A | GCI34139 | 1633300501 | GCI35039 | 495012D010 | GCI39041 | 3971187E00 | GCI41062 |
| G57022620 | GCI34032 | GG4625600B | GCI34139 | A1633300401 | GCI35039 | 495012D012 | GCI39041 | 39205AV325 | GCI41067 |
| G57022620A | GCI34032 | GG4625600C | GCI34139 | A1633300501 | GCI35039 | 495012D013 | GCI39041 | 391008H615 | GCI41068 |
| G57022620B | GCI34032 | GG6122620 | GCI34141 | 1693704772 | GCI35040 | 496002W050 | GCI39041 | 39101EN000 | GCI41073 |
| G59222620 | GCI34032 | GP2722620 | GCI34142 | 1693704872 | GCI35040 | 496012W050 | GCI39041 | 391209AA0A | GCI41073 |
| G56822520 | GCI34033 | GP2722620A | GCI34142 | 1693705672 | GCI35040 | MB160655 | GCI39049 | 39711EN000 | GCI41073 |
| G57022520 | GCI34033 | GP322560X | GCI34142 | 1693706472 | GCI35040 | MB526146 | GCI39049 | 8201030260 | GCI41073 |
| G57022520A | GCI34033 | GP322560XD | GCI34142 | A1693704772 | GCI35040 | 3274C9 | GCI39050 | 39711EB30A | GCI41075 |
| G59222520 | GCI34033 | GG2522620 | GCI34146 | A1693704872 | GCI35040 | 3274D0 | GCI39050 | 397417Y028 | GCI41075 |
| FG0222520 | GCI34045 | 36000681 | GCI34150 | A1693705672 | GCI35040 | 3717A016 | GCI39050 | 397417Y029 | GCI41075 |
| FG0222520A | GCI34045 | FTA322620 | GCI34158 | A1693706472 | GCI35040 | 5085141AB | GCI39050 | 39711JG72B | GCI41076 |
| FG0222620 | GCI34047 | 6383342334 | GCI35001 | 4KE501203D | GCI35051 | 5085141AC | GCI39050 | C9205JD72B | GCI41076 |
| FG0222620A | GCI34047 | 7L6407331A | GCI35001 | 4M0598103A | GCI35051 | 5085240AB | GCI39050 | C9205JD74B | GCI41076 |
| AE5Z3A428C | GCI34048 | 7L6498103 | GCI35001 | 7L0501331A | GCI35051 | 495001R000 | GCI39052 | 391003RZ0C | GCI41082 |
| GG2822620 | GCI34049 | 7L6498103A | GCI35001 | 7L0598103A | GCI35051 | 49534S4100 | GCI39052 | 397713DD1A | GCI41082 |
| GG2822620A | GCI34049 | 7L6498103AX | GCI35001 | 7L0598103AX | GCI35051 | 495351R001 | GCI39052 | 39771EW60A | GCI41082 |
| GD5522520B | GCI34050 | 7L6498103V | GCI35001 | 1663301600 | GCI35057 | 495352L001 | GCI39052 | C97713LM0A | GCI41082 |
| 2203131FB01 | GCI34052 | 7L6498103X | GCI35001 | A1663301600 | GCI35057 | 49535C7101 | GCI39052 | C97713LM0B | GCI41082 |
| MA1222620 | GCI34052 | A6383342334 | GCI35001 | 2203300001 | GCI35059 | 49535C8301 | GCI39052 | C97716LB0A | GCI41082 |
| 495003E110 | GCI34078 | 2013500813 | GCI35006 | 2203300200 | GCI35059 | 49535H9000 | GCI39052 | 391013VD0B | GCI41084 |
| 495014E000 | GCI34078 | A2013500813 | GCI35006 | A2203300001 | GCI35059 | 49535S4100 | GCI39052 | 39101BJ00A | GCI41084 |
| 495923E110 | GCI34078 | C2S16509 | GCI35007 | 2203300101 | GCI35061 | 495361M001 | GCI39052 | 39101JX00A | GCI41084 |
| 495004E000 | GCI34079 | C2S43420 | GCI35007 | A2203300101 | GCI35061 | 495361R001 | GCI39052 | 397113RA1B | GCI41084 |
| 495923E000 | GCI34079 | 1683603372 | GCI35010 | 2113301101 | GCI35062 | 49536C7101 | GCI39052 | 397113RA1A | GCI41085 |
| GD5522620 | GCI34085 | A1683603372 | GCI35010 | 2113301701 | GCI35062 | 49536H9000 | GCI39052 | 391014M465 | GCI41089 |
| GD5522620A | GCI34085 | 1683604772 | GCI35011 | A2113301101 | GCI35062 | 495751R001 | GCI39052 | 3971177A00 | GCI41089 |
| GG3222520 | GCI34086 | 1693605272 | GCI35011 | A2113301701 | GCI35062 | 495922K050 | GCI39052 | 39204BM527 | GCI41090 |
| GG3222520A | GCI34086 | 1693606072 | GCI35011 | 6393501810 | GCI35069 | 495923X0A0 | GCI39052 | 39205BM525 | GCI41090 |
| GG3222520B | GCI34086 | A1683604772 | GCI35011 | A6393501810 | GCI35069 | 49592A63A5 | GCI39052 | 39711JD52B | GCI41091 |

| COMPETITOR | G-AP Ref. | COMPETITOR | G-AP Ref. | COMPETITOR | G-AP Ref. | COMPETITOR | G-AP Ref. | COMPETITOR | G-AP Ref. |
|---|---|---|---|---|---|---|---|---|---|
| OE | | 39101JG04C | GCI41181 | 26089776 | GCI44003 | 95157492 | GCI44024 | 9936769 | GCI48004 |
| | | 39711JD24C | GCI41181 | 374091 | GCI44003 | 95199665 | GCI44024 | 420498103 | GCI48007 |
| 39100BB32B | GCI41092 | 39711JG34C | GCI41181 | 374378 | GCI44003 | 95199667 | GCI44024 | 99633202407 | GCI48009 |
| 39771JD52B | GCI41092 | 397111AA0A | GCI41183 | 7839614 | GCI44003 | 95226871 | GCI44024 | 8200499306 | GCI50008 |
| 397712Y007 | GCI41096 | 397111AA0C | GCI41183 | 0374013 | GCI44004 | 95962904 | GCI44024 | 391005347R | GCI50015 |
| 219022215056 | GCI41098 | 39771ED805 | GCI41186 | 0374027 | GCI44004 | 95975621 | GCI44024 | 391006435R | GCI50015 |
| 21902221505600 | GCI41098 | 397114BE0B | GCI41187 | 199051483 | GCI44004 | 374397 | GCI44025 | 8200893509 | GCI50015 |
| 397111HS0A | GCI41098 | 397114BE3B | GCI41187 | 26019245 | GCI44004 | 9200408 | GCI44025 | 3B0498103A | GCI50019 |
| C97113HC0A | GCI41098 | 39711CC40A | GCI41187 | 374013 | GCI44004 | 8603682 | GCI44031 | 3B0498103B | GCI50019 |
| 39100EA000 | GCI41100 | 391016521R | GCI41188 | 374027 | GCI44004 | 8603709 | GCI44031 | 3B0498103BX | GCI50019 |
| 391269AA0A | GCI41101 | 391004855R | GCI41189 | 90095159 | GCI44004 | 31367828 | GCI44032 | 3D0498103B | GCI50019 |
| 39720ET000 | GCI41101 | 391008165R | GCI41190 | 93290260 | GCI44004 | 36012479 | GCI44032 | 3D0498103BX | GCI50019 |
| 39720ET225 | GCI41101 | 3910100Q5M | GCI41191 | 0374130 | GCI44005 | 8603709 | GCI44032 | 4A0407341B | GCI50019 |
| C97713LN0A | GCI41101 | 391015061R | GCI41191 | 13296193 | GCI44005 | 32726E | GCI45011 | 8D0407417 | GCI50019 |
| 392041U625 | GCI41102 | 391014EB2A | GCI41192 | 1603236 | GCI44005 | 32727E | GCI45011 | 8D0407417C | GCI50019 |
| 39204AY125 | GCI41102 | 397111LB0A | GCI41195 | 1603272 | GCI44005 | 3272CQ | GCI45011 | 8D0407417D | GCI50019 |
| 39204AY126 | GCI41102 | MR528645 | GCI41195 | 374130 | GCI44005 | 3272CR | GCI45011 | 8D0407417E | GCI50019 |
| 39205AY126 | GCI41102 | 391003NT0A | GCI41196 | 374674 | GCI44005 | 9630767080 | GCI45011 | 8D0407417F | GCI50019 |
| 39711JD02B | GCI41103 | 391004M470 | GCI41198 | 4242328 | GCI44005 | 9630767180 | GCI45011 | 8D0407417L | GCI50019 |
| 397712Y005 | GCI41104 | 391014M470 | GCI41198 | 90304156 | GCI44005 | 9638753080 | GCI45011 | 8D0407417N | GCI50019 |
| 397712Y007 | GCI41104 | 391014BB4D | GCI41199 | 93173429 | GCI44005 | 9638753480 | GCI45011 | 8D0407418B | GCI50019 |
| 3977131U00 | GCI41104 | 391014BC0B | GCI41199 | 93182622 | GCI44005 | 1473299080 | GCI45013 | 8D0407418E | GCI50019 |
| 39711EE32B | GCI41112 | 391014BC0C | GCI41199 | 13296191 | GCI44008 | 1491235080 | GCI45013 | 8D0407418L | GCI50019 |
| 39720ET028 | GCI41117 | 391014EF2C | GCI41199 | 1603269 | GCI44008 | 3272CJ | GCI45013 | 8200531904 | GCI50040 |
| 3971102E07 | GCI41123 | 39711ED105 | GCI41201 | 374845 | GCI44008 | 3272GG | GCI45018 | 8200623792 | GCI50040 |
| 3971102E08 | GCI41123 | 391009EL0B | GCI41202 | 3748450 | GCI44008 | 9643054380 | GCI45020 | 8200216625 | GCI50041 |
| 3971102E10 | GCI41123 | 397111LB0B | GCI41203 | 93182522 | GCI44008 | 1497187088 | GCI45032 | 8200647066 | GCI50041 |
| 3971164J00 | GCI41123 | 39101ET80B | GCI41205 | 0374446 | GCI44009 | 3272GL | GCI45032 | 301012675R | GCI50045 |
| 3971164J01 | GCI41123 | 39101JD24B | GCI41205 | 1603409 | GCI44009 | 3272GN | GCI45032 | 3910100Q3G | GCI50045 |
| 3971164J05 | GCI41123 | 39101JG34B | GCI41205 | 374446 | GCI44009 | 3272NP | GCI45032 | 3910100Q4E | GCI50045 |
| 39120ET000 | GCI41126 | 39711JD24B | GCI41205 | 93170397 | GCI44009 | 3272NQ | GCI45032 | 3910100Q4F | GCI50045 |
| 39720ET026 | GCI41126 | 39711JG34B | GCI41205 | 93190191 | GCI44009 | 3272S7 | GCI45032 | 3910100Q4K | GCI50045 |
| 391001189R | GCI41131 | 397111HS0B | GCI41206 | 13189073 | GCI44011 | 3272S8 | GCI45032 | 391012360R | GCI50045 |
| 391002053R | GCI41131 | 391007S000 | GCI41207 | 24405345 | GCI44011 | 3272SE | GCI45032 | 391012849R | GCI50045 |
| 39100JD74B | GCI41131 | 397711AA0A | GCI41208 | 374088 | GCI44011 | 3272SF | GCI45032 | 391016979R | GCI50045 |
| 39100JY04B | GCI41131 | 39600EA000 | GCI41209 | 374600 | GCI44011 | 71792564 | GCI45032 | 4406234 | GCI50045 |
| 39126EL005 | GCI41133 | 397111HC3A | GCI41210 | 71740561 | GCI44011 | 9809154580 | GCI45032 | 4406518 | GCI50045 |
| 39720EW625 | GCI41133 | 39100AV911 | GCI41217 | 71789078 | GCI44011 | 1610276080 | GCI45033 | 4420055 | GCI50045 |
| 3740131005 | GCI41134 | 391006KG0A | GCI41220 | 9194469 | GCI44011 | 3273SA | GCI45033 | 4422058 | GCI50045 |
| 3740231001 | GCI41134 | 397114KH0A | GCI41220 | 1603408 | GCI44012 | 3273SC | GCI45033 | 4422671 | GCI50045 |
| 3740231006 | GCI41134 | 3817A207 | GCI41226 | 93190190 | GCI44012 | 3273ZE | GCI45033 | 8200842365 | GCI50045 |
| 3910095F0C | GCI41134 | 0374099 | GCI44001 | 1603321 | GCI44013 | 3273ZF | GCI45033 | 93167651 | GCI50045 |
| 39204BM525 | GCI41134 | 0374100 | GCI44001 | 1603413 | GCI44013 | 9685693780 | GCI45033 | 93453896 | GCI50045 |
| 39204BM526 | GCI41134 | 374099 | GCI44001 | 93190195 | GCI44013 | 9804894580 | GCI45033 | 95513818 | GCI50045 |
| 39711JG74A | GCI41135 | 374100 | GCI44001 | 95518274 | GCI44013 | 1637186880 | GCI45038 | 95514705 | GCI50045 |
| C9205JD74A | GCI41135 | 374136 | GCI44001 | 95520771 | GCI44013 | 9811933980 | GCI45038 | 95516047 | GCI50045 |
| 391003ZN0B | GCI41142 | 90142329 | GCI44001 | 13149834 | GCI44014 | 1608420180 | GCI45040 | 391005187R | GCI50046 |
| 391009U20A | GCI41142 | 90199039 | GCI44001 | 1603407 | GCI44014 | 9671572880 | GCI45040 | 4406169 | GCI50046 |
| 391013ZM0B | GCI41143 | 90348316 | GCI44001 | 374791 | GCI44014 | 9800425680 | GCI45040 | 4417910 | GCI50046 |
| 391019U20A | GCI41143 | 0374048 | GCI44002 | 55199297 | GCI44014 | 9816309280 | GCI45040 | 93169667 | GCI50046 |
| 39771JD02B | GCI41157 | 0374118 | GCI44002 | 93190189 | GCI44014 | 9800425880 | GCI45041 | 93856308 | GCI50046 |
| C92043VD0B | GCI41159 | 0374195 | GCI44002 | 1603300 | GCI44016 | 9803959680 | GCI45041 | 95516046 | GCI50046 |
| C9204BJ41A | GCI41159 | 1603237 | GCI44002 | 93189381 | GCI44016 | 9800425780 | GCI45042 | R1640077 | GCI50046 |
| 391016654R | GCI41166 | 374048 | GCI44002 | 13335199 | GCI44017 | 9816308780 | GCI45042 | 7711368623 | GCI50047 |
| 39711JD22B | GCI41166 | 374067 | GCI44002 | 1603410 | GCI44017 | 0414204 | GCI48002 | 8200486092 | GCI50047 |
| 39100JD22C | GCI41167 | 37408 | GCI44002 | 374688 | GCI44017 | 414204 | GCI48002 | 8200726970 | GCI50048 |
| 39771JD22C | GCI41167 | 374118 | GCI44002 | 93190192 | GCI44017 | 6383341734 | GCI48002 | 3740131010 | GCI50050 |
| 39101JD22C | GCI41168 | 374148 | GCI44002 | 374396 | GCI44018 | 90297728 | GCI48002 | 3740131015 | GCI50050 |
| 39711JA01A | GCI41168 | 374195 | GCI44002 | 9200407 | GCI44018 | 91133203001 | GCI48002 | 3910195F0C | GCI50050 |
| 39711JD22C | GCI41168 | 4242319 | GCI44002 | 4700645 | GCI44019 | 91133292301 | GCI48002 | 8200687740 | GCI50051 |
| 39771JD24C | GCI41170 | 90125876 | GCI44002 | 9204529 | GCI44019 | A6383341734 | GCI48002 | 391006995R | GCI50054 |
| 39100BV80B | GCI41173 | 90157212 | GCI44002 | 0374632 | GCI44020 | 4315132 | GCI48004 | 391011406R | GCI50057 |
| 39101BV80B | GCI41174 | 90278734 | GCI44002 | 0374633 | GCI44020 | 60806930 | GCI48004 | 391013552R | GCI50057 |
| 391013NA0B | GCI41175 | 90375228 | GCI44002 | 1603404 | GCI44020 | 82282139 | GCI48004 | 391019232R | GCI50057 |
| 391003NA0B | GCI41176 | 9317340 | GCI44002 | 4130009002 | GCI44022 | 92601388 | GCI48004 | 4153600115 | GCI50057 |
| 397713NA0A | GCI41176 | 93173430 | GCI44002 | 4130008001 | GCI44023 | 92601892 | GCI48004 | 8450030790 | GCI50057 |
| 391001KA5B | GCI41179 | 93274614 | GCI44002 | 94564026 | GCI44024 | 95133190100 | GCI48004 | 8450030791 | GCI50057 |
| 391011KA0B | GCI41179 | 0374091 | GCI44003 | 95154420 | GCI44024 | 95133290100 | GCI48004 | A4153600115 | GCI50057 |

| COMPETITOR | G-AP Ref. | COMPETITOR | G-AP Ref. | COMPETITOR | G-AP Ref. | COMPETITOR | G-AP Ref. | COMPETITOR | G-AP Ref. |
|---|---|---|---|---|---|---|---|---|---|
| OE | | 8200786810 | GCI50123 | 377498103E | GCI53002 | 9204528 | GCI57092 | 7M0498103A | GCI59006 |
| | | 391002615R | GCI50124 | 6X0407331 | GCI53002 | 9206563 | GCI57092 | 7M0498103AX | GCI59006 |
| 1534272 | GCI50061 | 391011319R | GCI50129 | 6X0498103 | GCI53002 | 4410167D01 | GCI57102 | 95VW3B193AA | GCI59006 |
| 1595118 | GCI50061 | 391012511R | GCI50132 | 115421210 | GCI54002 | 4411467D01 | GCI57102 | 4340312060 | GCI59012 |
| 8V413C356AA | GCI50061 | 391019395R | GCI50132 | 115421211 | GCI54002 | 4411467D50 | GCI57102 | 4343026021 | GCI59014 |
| 8V413C356AB | GCI50061 | 8200866824 | GCI50132 | 6U0407271A | GCI54002 | 4410251K00 | GCI57105 | 4343035011 | GCI59014 |
| 3971153J00 | GCI50065 | 391004605R | GCI50133 | 6U0407271AV | GCI54002 | 4710013 | GCI57105 | 4343035012 | GCI59014 |
| 3971160A00 | GCI50065 | 391005153R | GCI50133 | 6U0407271AX | GCI54002 | 4710017 | GCI57105 | 4343035023 | GCI59014 |
| 3971164Y00 | GCI50065 | 391006506R | GCI50133 | 6U0407271F | GCI54002 | 93194650 | GCI57105 | 4340335030 | GCI59015 |
| 391005468R | GCI50070 | 391006331R | GCI50134 | 6U0407271FX | GCI54002 | 93194655 | GCI57105 | 4340316020 | GCI59017 |
| 391019386R | GCI50070 | 391008310R | GCI50134 | 6U0407272A | GCI54002 | 495000X405 | GCI57109 | 4340310010 | GCI59023 |
| 8200586377 | GCI50070 | 391017355R | GCI50134 | 6U0407272AV | GCI54002 | 396001HC1C | GCI57111 | 4340310011 | GCI59023 |
| 8200926133 | GCI50070 | 391018983R | GCI50134 | 6U0407272AX | GCI54002 | 396005AA0A | GCI57111 | 4340319045 | GCI59023 |
| 7711368482 | GCI50071 | 8201055632 | GCI50134 | 6U0407272F | GCI54002 | 39600JD60A | GCI57111 | 4340319046 | GCI59023 |
| 8200383707 | GCI50071 | 391002659R | GCI50135 | 6U0407272FX | GCI54002 | 39600JD60B | GCI57111 | 4303033010 | GCI59024 |
| 8200618176 | GCI50071 | 391006270R | GCI50135 | 115420171 | GCI54003 | 397112U600 | GCI57111 | 4304006080 | GCI59026 |
| 7700112689 | GCI50079 | 391003491R | GCI50136 | 6U0407271K | GCI54003 | 1418957 | GCI57115 | 4304009030 | GCI59026 |
| 7711135220 | GCI50079 | 391006849R | GCI50136 | 6U0407331 | GCI54003 | 4S613C356AB | GCI57115 | 4303028010 | GCI59027 |
| 8200137917 | GCI50079 | 391007525R | GCI50137 | 6U0498103A | GCI54003 | 4411768L00 | GCI57123 | 4303028011 | GCI59027 |
| 8200144764 | GCI50079 | A4153600715 | GCI50137 | 1J0407363E | GCI54004 | 4411768L00000 | GCI57123 | 4304005080 | GCI59033 |
| 8200351864 | GCI50079 | 391000166R | GCI50138 | 1K0407271NM | GCI54004 | 4411768L01 | GCI57123 | 4304006040 | GCI59033 |
| 1534273 | GCI50083 | 391001225R | GCI50138 | 1K0498103E | GCI54004 | 4411565J00 | GCI57127 | 4342006151 | GCI59033 |
| 1595111 | GCI50083 | 391002592R | GCI50138 | 1K0498103EX | GCI54004 | 396004652R | GCI57129 | 430400K010 | GCI59039 |
| 8V413C313AA | GCI50083 | 391002885R | GCI50138 | 1K0498103F | GCI54004 | 4411770L00 | GCI57135 | 430400K020 | GCI59039 |
| 8V413C313AB | GCI50083 | 391005624R | GCI50139 | 1K0498103FX | GCI54004 | 4411779J20 | GCI57137 | 430400K040 | GCI59039 |
| 7711368568 | GCI50085 | 391010433R | GCI50140 | 3B0407341B | GCI54004 | 4410579J00 | GCI57142 | 4304005050 | GCI59040 |
| 7711368569 | GCI50085 | 391015201R | GCI50140 | 3C0498103F | GCI54004 | 4410679J00 | GCI57142 | 4304005120 | GCI59040 |
| 7711368632 | GCI50085 | 391000978R | GCI50145 | 3C0498103FX | GCI54004 | 4411761M50 | GCI57142 | 4342005180 | GCI59040 |
| 8200407659 | GCI50085 | 391005763R | GCI50145 | 4411465J00 | GCI54006 | 4411779JA0 | GCI57142 | 4342005260 | GCI59040 |
| 8200407660 | GCI50085 | 391008707R | GCI50145 | 4411465J01 | GCI54006 | 71742713 | GCI57142 | 4304005070 | GCI59041 |
| 8200467490 | GCI50085 | 391012926R | GCI50146 | 4411768L80 | GCI54010 | 71768644 | GCI57142 | 4304002050 | GCI59042 |
| 8200535798 | GCI50085 | 391013958R | GCI50146 | 4513570601 | GCI55001 | 71790808 | GCI57142 | 4303005120 | GCI59045 |
| 7711368631 | GCI50086 | 391006802R | GCI50148 | A4513570501 | GCI55001 | 71790810 | GCI57142 | 4304002020 | GCI59046 |
| 8200535802 | GCI50086 | 8200687910 | GCI50150 | A4513570601 | GCI55001 | 4411771LA0 | GCI57151 | 4304020010 | GCI59046 |
| 391006609R | GCI50087 | 8200725516 | GCI50150 | 28021AC200 | GCI56004 | 4411771LB0 | GCI57152 | 4304032040 | GCI59046 |
| 8200363697 | GCI50087 | 7711135218 | GCI50152 | 28021AC220 | GCI56004 | 4410154PB1 | GCI57153 | 4340360020 | GCI59049 |
| 391002397R | GCI50088 | TDB104980 | GCI51005 | 28093FC000 | GCI56004 | 4410166MB0 | GCI57153 | 4340360040 | GCI59049 |
| 391005064R | GCI50088 | TDB104990 | GCI51005 | 28021AC130 | GCI56006 | 10375719 | GCI57154 | 4343060080 | GCI59049 |
| 391010115R | GCI50096 | 1609899980 | GCI51021 | 28392AG000 | GCI56013 | 4410154P12 | GCI57154 | 4303052020 | GCI59063 |
| 4411698 | GCI50097 | 3273PY | GCI51021 | 28392XA00A | GCI56013 | 4410254P10 | GCI57154 | 4303052030 | GCI59063 |
| 7711135322 | GCI50097 | 2203100V17 | GCI51029 | 28492AG010 | GCI56019 | 4410185L00 | GCI57156 | 4340360030 | GCI59065 |
| 7711135440 | GCI50097 | 2303300XKZ13A | GCI51029 | 28492AG011 | GCI56019 | 4410285L00 | GCI57156 | 430300D020 | GCI59067 |
| 7711368091 | GCI50097 | 3099825 | GCI51029 | 28093AC030 | GCI56023 | 4411768L40 | GCI57157 | 4304074030 | GCI59067 |
| 8200133289 | GCI50097 | 39101SN160 | GCI51029 | 28392FE020 | GCI56023 | 4411768L30 | GCI57158 | 3272JZ | GCI59069 |
| 8200169163 | GCI50097 | 1606291380 | GCI51034 | 28392SC000 | GCI56027 | 4411755L20 | GCI57159 | 3273JS | GCI59069 |
| 8200436849 | GCI50097 | 327915 | GCI51034 | 28392SC001 | GCI56027 | 4411780J10 | GCI57159 | 434030H020 | GCI59069 |
| 8200439891 | GCI50097 | 3817A141 | GCI51034 | 28392SC002 | GCI56027 | 4411780J10000 | GCI57159 | 434100H060 | GCI59069 |
| 93850890 | GCI50097 | 3817A264 | GCI51034 | 28392SG000 | GCI56027 | 4411665J10 | GCI57160 | 434200H060 | GCI59069 |
| 391000823R | GCI50100 | 171407331C | GCI53001 | 4410160G00 | GCI57002 | 4411757LA0 | GCI57161 | 4304028010 | GCI59073 |
| 391001267R | GCI50100 | 171407331E | GCI53001 | 4410160G20 | GCI57005 | 4411579K00 | GCI57162 | 4304028011 | GCI59073 |
| 391008834R | GCI50100 | 171407331L | GCI53001 | 4410160G22 | GCI57005 | 4411755L71 | GCI57163 | 4304033050 | GCI59073 |
| 3910100Q6B | GCI50105 | 171498103B | GCI53001 | 4410163B10 | GCI57009 | 4411755LH1 | GCI57163 | 434200R130 | GCI59073 |
| 391017275R | GCI50105 | 171498103D | GCI53001 | 4411560G22 | GCI57022 | 4411755L80 | GCI57164 | 4342042220 | GCI59073 |
| 391019671R | GCI50105 | 171498103DV | GCI53001 | 4411760G20 | GCI57023 | 4411761MB0 | GCI57165 | 4304002080 | GCI59077 |
| 3910000Q5C | GCI50106 | 171498103DX | GCI53001 | 4411760G21 | GCI57023 | 4411771LR0 | GCI57166 | 4304005110 | GCI59077 |
| 3910000Q5F | GCI50106 | 171498350V | GCI53001 | 4411760G22 | GCI57023 | 4411761M10 | GCI57167 | 430400D010 | GCI59077 |
| 3910000Q6A | GCI50106 | 171498350X | GCI53001 | 4410263J32000 | GCI57024 | 4411779J80 | GCI57168 | 430400D020 | GCI59077 |
| 391001162R | GCI50106 | 1H0407331 | GCI53001 | 44127M79F01 | GCI57034 | 4411761MC0 | GCI57169 | 4303044020 | GCI59078 |
| 391009882R | GCI50106 | 6N0407331 | GCI53001 | 4411754G20 | GCI57035 | 4411761M00 | GCI57170 | 4303044021 | GCI59078 |
| 391007857R | GCI50107 | 6N0498103 | GCI53001 | 4411754G21 | GCI57035 | 4411757L71 | GCI57171 | 4303042020 | GCI59079 |
| 391010905R | GCI50107 | 6N0498103X | GCI53001 | 4411754G10 | GCI57036 | 4411479K00 | GCI57172 | 4303042021 | GCI59079 |
| 391016376R | GCI50107 | 6N0498350X | GCI53001 | 4410186G02 | GCI57042 | 4411578K00 | GCI57172 | 430400W030 | GCI59082 |
| 8200934679 | GCI50110 | 861498103A | GCI53001 | 4411779J00 | GCI57049 | 4411578K01 | GCI57172 | 4304042020 | GCI59084 |
| 391012636R | GCI50116 | 861498103AX | GCI53001 | 4410262J01 | GCI57053 | 4411755L00 | GCI57173 | 4304042021 | GCI59084 |
| 391013297R | GCI50116 | 871498103 | GCI53001 | LR001160 | GCI57071 | 4341010090 | GCI59002 | 434030D061 | GCI59092 |
| 391006553R | GCI50118 | JZW498350CX | GCI53001 | 4411772K50 | GCI57082 | 4341010091 | GCI59002 | 434030W050 | GCI59092 |
| 8450009548 | GCI50118 | JZW498350X | GCI53001 | 4411763J00 | GCI57085 | 4340316020 | GCI59003 | 434100D320 | GCI59092 |
| 8200725517 | GCI50123 | 2QB498103C | GCI53002 | 4411763J01 | GCI57085 | 1008248 | GCI59006 | 43420K0060 | GCI59092 |

| COMPETITOR | G-AP Ref. | COMPETITOR | G-AP Ref. | COMPETITOR | G-AP Ref. | COMPETITOR | G-AP Ref. | COMPETITOR | G-AP Ref. |
|---|---|---|---|---|---|---|---|---|---|
| OE | | 4342006A40 | GCI59183 | 93189682 | GCI60005 | 7E0498104BX | GCI61029 | 3C0498103F | GCI61057 |
| | | 4342006C10 | GCI59183 | 701407331A | GCI61001 | 7H0407331 | GCI61029 | 3C0498103FX | GCI61057 |
| 4342012A60 | GCI59094 | 434200R082 | GCI59183 | 701498103 | GCI61001 | 7H0407331E | GCI61029 | 3Q0498103 | GCI61057 |
| 4341012B30 | GCI59095 | 4303005110 | GCI59184 | 701498103X | GCI61001 | 7H0498103C | GCI61029 | 3Q0498103B | GCI61057 |
| 4341028170 | GCI59095 | 4303006410 | GCI59184 | 701498350X | GCI61001 | 7H0498103CX | GCI61029 | 3Q0498103BX | GCI61057 |
| 4341047031 | GCI59095 | 4341006880 | GCI59184 | 3C0498103M | GCI61002 | 7H0498103E | GCI61029 | 3Q0498103X | GCI61057 |
| 4235042010 | GCI59099 | 430300E010 | GCI59191 | 3C0498103MX | GCI61002 | 7H0498103EX | GCI61029 | 5QN498103H | GCI61057 |
| 4235042020 | GCI59099 | 430400E010 | GCI59192 | 701407331B | GCI61002 | 7D0498103 | GCI61030 | 8N0498103C | GCI61057 |
| 4304012120 | GCI59100 | 430400E110 | GCI59193 | 701498103A | GCI61002 | 7D0498103X | GCI61030 | 8N0498103CX | GCI61057 |
| 4203020020 | GCI59105 | 430400E140 | GCI59193 | 701498103AX | GCI61002 | 7D0498331 | GCI61030 | 1K0407272EP | GCI61069 |
| 4303005010 | GCI59105 | 4304048050 | GCI59193 | 701498311 | GCI61002 | 7M3407332 | GCI61033 | 1K0468103N | GCI61069 |
| 4303005040 | GCI59105 | 4304058020 | GCI59193 | 701498350AX | GCI61002 | 3C0498103A | GCI61038 | 1K0498103AV | GCI61069 |
| 4303005050 | GCI59105 | 4342008040 | GCI59193 | 7N0498103 | GCI61002 | 3C0498103AX | GCI61038 | 1K0498103M | GCI61069 |
| 4303020030 | GCI59105 | 4342008090 | GCI59193 | 7N0498103X | GCI61002 | 3C0498103D | GCI61038 | 1K0498103MX | GCI61069 |
| 4303032030 | GCI59105 | 4342008091 | GCI59193 | JZW498350DX | GCI61002 | 3C0498103G | GCI61038 | 1K0498103N | GCI61069 |
| 4303032040 | GCI59105 | LR071930 | GCI59194 | 211501331B | GCI61003 | 3C0498103GV | GCI61038 | 1K0498103NX | GCI61069 |
| 4303032060 | GCI59105 | TDB500080 | GCI59194 | 211598101 | GCI61003 | 3C0498103GX | GCI61038 | 5C0498103A | GCI61069 |
| 4340360010 | GCI59107 | LR047294 | GCI59195 | 212501331 | GCI61003 | 6Q0498103E | GCI61039 | 5Q0407271H | GCI61069 |
| 4303042070 | GCI59108 | LR072070 | GCI59195 | 251498103A | GCI61003 | 6Q0498103EX | GCI61039 | 5Q0498103P | GCI61069 |
| 4304028020 | GCI59109 | TDB500100 | GCI59195 | 251501331 | GCI61003 | 6QD498103 | GCI61039 | 5QM498103C | GCI61069 |
| 4304028021 | GCI59109 | 4236028010 | GCI59203 | 251598101 | GCI61003 | 6QD498103X | GCI61039 | 5QM498103G | GCI61069 |
| 4304005040 | GCI59111 | 3817A140 | GCI59205 | 251598101X | GCI61003 | 7H0407331B | GCI61041 | 7E0498103 | GCI61069 |
| 4304047020 | GCI59114 | 4303006350 | GCI59206 | 301501203 | GCI61003 | 7H0498103 | GCI61041 | 7E0498103X | GCI61069 |
| LR047293 | GCI59115 | 4303006540 | GCI59206 | 3015012031 | GCI61003 | 7H0498103X | GCI61041 | 8K0598103C | GCI61069 |
| LR072067 | GCI59115 | 4303033040 | GCI59206 | 477501185 | GCI61003 | 1308629 | GCI61044 | 8K0598103CX | GCI61069 |
| TDB500090 | GCI59115 | 4303033041 | GCI59206 | 1H0407331E | GCI61004 | 3M217L606EA | GCI61044 | 8R0501203C | GCI61069 |
| 4303009030 | GCI59116 | 4303033080 | GCI59206 | 6Q0498103D | GCI61005 | 4E0498103 | GCI61044 | 8R0501203CX | GCI61069 |
| 430300W040 | GCI59116 | 4303042040 | GCI59206 | 6Q0498103DX | GCI61005 | 4E0498103X | GCI61044 | 8R0501203D | GCI61069 |
| 4303005100 | GCI59117 | 4303058010 | GCI59206 | 1J0407341D | GCI61006 | 4Z7498103 | GCI61044 | 8R0501203DX | GCI61069 |
| 4341005180 | GCI59117 | 4303058011 | GCI59206 | 1J0407341F | GCI61006 | 7M3498103 | GCI61044 | 8R0598103 | GCI61069 |
| 4304002270 | GCI59123 | 4341002250 | GCI59207 | 1J0498103K | GCI61006 | 7M3498103H | GCI61044 | 8R0598103X | GCI61069 |
| 4304006190 | GCI59125 | 4341002251 | GCI59207 | 1J0498103KV | GCI61006 | 7M3498103HX | GCI61044 | 8E0498103B | GCI61070 |
| 430400R010 | GCI59125 | 4341002550 | GCI59207 | 1J0498103KX | GCI61006 | 7M3498103X | GCI61044 | 8E0498103BX | GCI61070 |
| 4304028010 | GCI59125 | 4236042010 | GCI59210 | JJ0498103K | GCI61006 | 8E0498103C | GCI61044 | 8K0498103B | GCI61070 |
| 4304028011 | GCI59125 | 430400W050 | GCI59211 | 1J0407271EP | GCI61010 | 8E0498103CX | GCI61044 | 8K0498103BX | GCI61070 |
| 434200R100 | GCI59125 | 4304048060 | GCI59211 | 7H0407331B | GCI61010 | 5N0498103A | GCI61048 | 33207564558 | GCI61075 |
| 4342012760 | GCI59125 | 434200W280 | GCI59211 | 7H0498103 | GCI61010 | 5N0498103AV | GCI61048 | 33207582141 | GCI61075 |
| 4342028090 | GCI59125 | 4233042060 | GCI59213 | 8E0498103A | GCI61010 | 5N0498103AX | GCI61048 | 7H0501331 | GCI61075 |
| 4342042160 | GCI59125 | 4236012010 | GCI59213 | 8E0498103AX | GCI61010 | 5N0498103C | GCI61048 | 7H0598103 | GCI61075 |
| 4342042180 | GCI59125 | 4304030020 | GCI59225 | 1K0498103C | GCI61011 | 5N0498103CX | GCI61048 | 7H0598103X | GCI61075 |
| 4342042200 | GCI59125 | 4304030030 | GCI59225 | 1K0498103CX | GCI61011 | 1K0498103C | GCI61050 | 3D0498103A | GCI61076 |
| 4342042230 | GCI59125 | 4341028120 | GCI59226 | 1K0498103J | GCI61011 | 1K0498103CX | GCI61050 | 4M0498103 | GCI61077 |
| 4342042240 | GCI59125 | 4304002360 | GCI59227 | 1K0498103JX | GCI61011 | 1K0498103J | GCI61050 | 4N0498103A | GCI61077 |
| 4342048091 | GCI59125 | 4304047030 | GCI59227 | 1K0498103L | GCI61011 | 1K0498103JX | GCI61050 | 8W0498103B | GCI61077 |
| 4342048140 | GCI59125 | 4304002350 | GCI59228 | 1K0498103LX | GCI61011 | 1K0498103L | GCI61050 | 7E0498104H | GCI61080 |
| 4342068010 | GCI59125 | 4304047010 | GCI59228 | 7H0407332P | GCI61020 | 1K0498103LX | GCI61050 | 7E0498104HX | GCI61080 |
| 4342078030 | GCI59125 | 4303042100 | GCI59235 | 7H0498104 | GCI61020 | FA012550XA | GCI61051 | 7E0498104J | GCI61080 |
| 430300R030 | GCI59127 | 434030D170 | GCI59236 | 7H0498104AK | GCI61020 | FA012560XA | GCI61051 | 7E0498104JX | GCI61080 |
| 434100R140 | GCI59127 | 4303005200 | GCI59237 | 7H0498104F | GCI61020 | 7E0498104C | GCI61053 | 2463303100 | GCI61082 |
| 430300R010 | GCI59128 | 430400K060 | GCI59238 | 7H0498104K | GCI61020 | 7E0498104CX | GCI61053 | A2463303100 | GCI61082 |
| 434100R160 | GCI59128 | 4303042050 | GCI59241 | 7H0498104KX | GCI61020 | 7E0498104G | GCI61053 | 5N0498103C | GCI61084 |
| 4304002450 | GCI59139 | 4342047030 | GCI59246 | 7H0498104L | GCI61020 | 7E0498104GX | GCI61053 | 5N0498103CX | GCI61084 |
| 4304002540 | GCI59139 | 4342047031 | GCI59246 | 7H0498104LX | GCI61020 | 7E0498104N | GCI61053 | 5QJ498103A | GCI61084 |
| 4304005150 | GCI59139 | 4342047040 | GCI59246 | 7E0498104P | GCI61021 | 7E0498104NX | GCI61053 | 5N0498103D | GCI61090 |
| 4341005450 | GCI59139 | 1603283 | GCI60001 | 7E0498104PX | GCI61021 | 5N0498103 | GCI61054 | 5N0498103DX | GCI61090 |
| 05085224AB | GCI59140 | 1603285 | GCI60001 | 7H0407332 | GCI61021 | 5N0498103X | GCI61054 | 5Q0598103 | GCI61103 |
| 3272PT | GCI59140 | 26067602 | GCI60001 | 7H0407332J | GCI61021 | 7N0498103A | GCI61055 | 5Q0598103A | GCI61103 |
| 4304006330 | GCI59142 | 26073420 | GCI60001 | 7H0498104A | GCI61021 | 7N0498103AX | GCI61055 | 5Q0598103X | GCI61103 |
| 4340312050 | GCI59160 | 26122222 | GCI60001 | 7H0498104AX | GCI61021 | 1J0407363E | GCI61057 | 8V0598103 | GCI61103 |
| 4304002040 | GCI59166 | 374376 | GCI60001 | 7H0498104G | GCI61021 | 1J0498103L | GCI61057 | 8V0598103X | GCI61103 |
| 4303042030 | GCI59168 | 374381 | GCI60001 | 7H0498104GX | GCI61021 | 1J0498103LX | GCI61057 | 7E0498103B | GCI61104 |
| 4303007010 | GCI59172 | 13159533 | GCI60003 | 1008247 | GCI61028 | 1K0407271NM | GCI61057 | 7E0498103BX | GCI61104 |
| 4303009060 | GCI59172 | 374526 | GCI60003 | 7M0498104 | GCI61028 | 1K0498103E | GCI61057 | 95B501203 | GCI61106 |
| 4341006690 | GCI59172 | 374647 | GCI60004 | 7M0498104X | GCI61028 | 1K0498103EV | GCI61057 | 8K0598099C | GCI61107 |
| 4304005180 | GCI59173 | 93189675 | GCI60004 | 7M0498350AX | GCI61028 | 1K0498103EX | GCI61057 | 30735344 | GCI62012 |
| 4303005230 | GCI59182 | 1603306 | GCI60005 | 95VW3B183AA | GCI61028 | 1K0498103Q | GCI61057 | 30783102 | GCI62014 |
| 4304006270 | GCI59183 | 374650 | GCI60005 | JZW498350FX | GCI61028 | 1K0498103QX | GCI61057 | 36000531 | GCI62014 |
| 4304006320 | GCI59183 | 93189677 | GCI60005 | 7E0498104B | GCI61029 | 3B0407341B | GCI61057 | 36000536 | GCI62014 |

| COMPETITOR | G-AP Ref. | COMPETITOR | G-AP Ref. | COMPETITOR | G-AP Ref. | COMPETITOR | G-AP Ref. | COMPETITOR | G-AP Ref. |
|---|---|---|---|---|---|---|---|---|---|
| OE | | 31280676 | GCI62067 | 95833290310 | GCI81053 | 495922S260 | GCI81105 | 4303012130 | GCI81166 |
| | | 31325570 | GCI62067 | 95833290320 | GCI81053 | 495923W260 | GCI81105 | 4303012131 | GCI81166 |
| 8252047 | GCI62014 | 31367627 | GCI62067 | 95833290330 | GCI81053 | 495923W400 | GCI81105 | 33208609838 | GCI81169 |
| 8252053 | GCI62014 | 36001875 | GCI62067 | 95833290340 | GCI81053 | 495972S200 | GCI81105 | 7711368095 | GCI81173 |
| 36001181 | GCI62017 | 36012437 | GCI62067 | 4M4407271 | GCI81054 | 495922S211 | GCI81106 | 8200387558 | GCI81173 |
| 31367019 | GCI62027 | 31256095 | GCI62072 | 8K0407341B | GCI81054 | 495922Y610 | GCI81106 | 8450006570 | GCI81174 |
| 31367149 | GCI62027 | 36001059 | GCI62072 | 8T0498103 | GCI81054 | 495923W211 | GCI81106 | 8450006571 | GCI81174 |
| 36002144 | GCI62027 | 31325960 | GCI62073 | 8T0498103X | GCI81054 | 495822T750 | GCI81109 | 4304002170 | GCI81176 |
| 36000530 | GCI62029 | 36011350 | GCI62073 | 8W0498103A | GCI81054 | 495822T700 | GCI81110 | 3971164E00 | GCI81178 |
| 8252046 | GCI62029 | 31437066 | GCI62074 | 31607597693 | GCI81055 | 49582C1330 | GCI81110 | 3971164E10 | GCI81178 |
| 36011299 | GCI62033 | 31437595 | GCI62074 | 31607606027 | GCI81055 | 49582A4000 | GCI81112 | 4304002200 | GCI81180 |
| 36010054 | GCI62034 | 36010213 | GCI62074 | 31607618681 | GCI81055 | 49582A4050 | GCI81112 | 4342001120 | GCI81180 |
| 36010126 | GCI62034 | 36000524 | GCI62075 | 31608664675 | GCI81055 | 49582A4051 | GCI81112 | 1890174 | GCI81181 |
| 36011288 | GCI62034 | 8252040 | GCI62075 | 31608682367 | GCI81055 | 49583B2200 | GCI81112 | CN153C313FA | GCI81181 |
| 36001876 | GCI62035 | 495012D013 | GCI68001 | 31609452629 | GCI81055 | 391006913R | GCI81137 | 4342074020 | GCI81186 |
| 36000716 | GCI62040 | A21XLB3AF2203050 | GCI68004 | 31609846769 | GCI81055 | 391008653R | GCI81137 | 4341074020 | GCI81187 |
| 36002066 | GCI62041 | 4668919AA | GCI68007 | 7597693 | GCI81055 | 4304002280 | GCI81138 | 4342074010 | GCI81188 |
| 36011300 | GCI62043 | 4668921AA | GCI68007 | AT866467502 | GCI81055 | 4304002210 | GCI81139 | 1894839 | GCI81193 |
| 36012412 | GCI62044 | 2203100V08 | GCI71001 | 33208603108 | GCI81056 | 4303048060 | GCI81140 | E3B54K258BA | GCI81193 |
| 36002669 | GCI62045 | A21XLB3AF2203050D | GCI71001 | 33208603109 | GCI81056 | 4341008171 | GCI81140 | 13311881 | GCI81196 |
| 36000561 | GCI62046 | B112203010 | GCI71001 | 33208644244 | GCI81056 | 4341008172 | GCI81140 | 1604014 | GCI81196 |
| 36002670 | GCI62047 | J26XLB3AF2203050B | GCI71001 | 33208644245 | GCI81056 | 434100T030 | GCI81140 | 22823297 | GCI81196 |
| 36001449 | GCI62048 | T11XLB3AF2203060B | GCI71001 | 31367306 | GCI81057 | 434100T031 | GCI81140 | 13311882 | GCI81197 |
| 36000676 | GCI62050 | T11XLB3AH2203050 | GCI71003 | 36002063 | GCI81057 | 434100T040 | GCI81141 | 1604015 | GCI81197 |
| 36002896 | GCI62052 | T11XLB3AH2203050B | GCI71003 | 6843516 | GCI81059 | 4304005170 | GCI81142 | 44310T7W306 | GCI81198 |
| 1704647 | GCI62053 | B112203010BA | GCI74001 | 6843866 | GCI81060 | 4342002A50 | GCI81142 | 44310TBCA01 | GCI81198 |
| AV613C356BA | GCI62053 | M11XLB3AF2203050F | GCI74001 | 9207804 | GCI81060 | 434200T030 | GCI81142 | 44310TGG305 | GCI81198 |
| 1704645 | GCI62055 | MB886682 | GCI75004 | 8603680 | GCI81062 | 4341006740 | GCI81143 | 44310T7WA81 | GCI81199 |
| 1758456 | GCI62055 | 2201010N01AA | GCI75015 | P04726091AB | GCI81063 | 4341006A20 | GCI81143 | 44310TBCA11 | GCI81199 |
| 36000680 | GCI62055 | 2201010N02 | GCI75015 | 39771JG74B | GCI81064 | 4341008070 | GCI81143 | 44310TGGA11 | GCI81199 |
| BV613C313AA | GCI62055 | 2203100BM02 | GCI75015 | 495822W050 | GCI81068 | 4304005141 | GCI81145 | 3817A176 | GCI81206 |
| BV613C313AB | GCI62055 | 2GP498103 | GCI75015 | 495822W080 | GCI81068 | 4304005142 | GCI81145 | 3815A683 | GCI81207 |
| 31280667 | GCI62056 | CD1010570100 | GCI75015 | 49582C5050 | GCI81068 | 39711BV81C | GCI81146 | 3817A151 | GCI81207 |
| 31280675 | GCI62056 | FA042550X | GCI75015 | 49592A76A5 | GCI81069 | 49582B2400 | GCI81148 | 3817A252 | GCI81207 |
| 31325686 | GCI62056 | FA042560X | GCI75015 | 49592A76A0 | GCI81071 | 49583B2400 | GCI81148 | 3817A460 | GCI81207 |
| 31367539 | GCI62056 | V301S0540100 | GCI75015 | 28392FJ000 | GCI81072 | 49535D3730 | GCI81149 | 13306854 | GCI81210 |
| 36001874 | GCI62056 | 2303300AKZ08A | GCI75025 | 7711497235 | GCI81074 | 49535D7730 | GCI81149 | 1603063 | GCI81210 |
| 36011265 | GCI62056 | 391016UB5A | GCI75036 | 8200387541 | GCI81074 | 49535D7731 | GCI81149 | 26682936 | GCI81210 |
| 31325762 | GCI62057 | 391018H315 | GCI75036 | 7N0498103B | GCI81075 | 49501D3140 | GCI81150 | 39005063 | GCI81210 |
| 36001972 | GCI62057 | 391018H710 | GCI75036 | 7N0498103BX | GCI81075 | 49535D7840 | GCI81150 | 5374146 | GCI81210 |
| 1683417 | GCI62059 | 39101CN000 | GCI75036 | 1453070 | GCI81076 | 49535G2000 | GCI81150 | 1727133 | GCI81231 |
| 1727260 | GCI62059 | 39101CN00A | GCI75036 | 1803627 | GCI81076 | 49535G5000 | GCI81150 | 1791959 | GCI81231 |
| 1757879 | GCI62059 | 8832004BAD0000 | GCI75040 | 36011296 | GCI81076 | 495R3D7680 | GCI81150 | BK213C356BA | GCI81231 |
| 31256252 | GCI62059 | 8832005BAD0000 | GCI75042 | 36011295 | GCI81077 | 495R3Q9100 | GCI81150 | CC113C356AA | GCI81231 |
| 36002493 | GCI62059 | 8832001BAD0000 | GCI75043 | 36012413 | GCI81078 | 4303052070 | GCI81156 | 4304058010 | GCI81234 |
| 36011290 | GCI62059 | 8832003BAD0000 | GCI75044 | 13333934 | GCI81079 | 3QG498103B | GCI81158 | 4304078010 | GCI81234 |
| AG913B437DC | GCI62059 | 2303400XKZ20A | GCI75050 | 13481238 | GCI81079 | 5N0498103B | GCI81158 | 4342008050 | GCI81234 |
| 31325116 | GCI62060 | 44310S10A00 | GCI81001 | 7711135490 | GCI81081 | 5N0498103BV | GCI81158 | 5C0498103 | GCI81250 |
| 36010060 | GCI62060 | 44310SK7J02 | GCI81001 | 1606291280 | GCI81083 | 5N0498103BX | GCI81158 | 3815A363 | GCI81252 |
| 31259435 | GCI62061 | 44010SL5N01 | GCI81003 | 327916 | GCI81083 | 5Q0498103K | GCI81158 | 3817A195 | GCI81252 |
| 31272229 | GCI62061 | 44010SS0010 | GCI81003 | 327918 | GCI81083 | 5Q0498103KX | GCI81158 | 3817A244 | GCI81252 |
| 31280679 | GCI62061 | 44010SS0030 | GCI81003 | 3815A388 | GCI81083 | 5QJ498103 | GCI81158 | 3817A411 | GCI81252 |
| 31280683 | GCI62061 | 44010SS0960 | GCI81003 | 3815A482 | GCI81083 | 8V0498103 | GCI81158 | 52123890AA | GCI81252 |
| 31367529 | GCI62061 | 44014SV4000 | GCI81003 | 3817A142 | GCI81083 | 8V0498103A | GCI81158 | 44101M66R00 | GCI81260 |
| 31367540 | GCI62061 | 44310SK7J12 | GCI81003 | 4411762J01 | GCI81085 | 8V0498103AX | GCI81158 | 44101M68P00 | GCI81260 |
| 36001461 | GCI62061 | 44310SM1900 | GCI81003 | 495822W680 | GCI81096 | 8V0498103B | GCI81158 | 44101M68PA0 | GCI81260 |
| 36011266 | GCI62061 | 44310SM4901 | GCI81003 | 49582C5250 | GCI81096 | 8V0498103BX | GCI81158 | 44101M69RB0 | GCI81260 |
| 36011289 | GCI62061 | 9809068180 | GCI81023 | 49582D4350 | GCI81096 | 8V0498103X | GCI81158 | 44102M68P00 | GCI81260 |
| 31325117 | GCI62062 | 9810160180 | GCI81023 | 4304012050 | GCI81097 | 7P0598099 | GCI81160 | 44102M68PA0 | GCI81260 |
| 36010062 | GCI62062 | 9810160780 | GCI81023 | 496003T200 | GCI81098 | 7P0598099X | GCI81160 | 44102M69RB0 | GCI81260 |
| 36011351 | GCI62063 | 1064000294 | GCI81042 | 496013T200 | GCI81098 | 7P0598103B | GCI81161 | 44117M68P01 | GCI81260 |
| 36011800 | GCI62063 | 95833290200 | GCI81044 | 496003T200 | GCI81099 | 7P0598103BX | GCI81161 | 44117M68P01000 | GCI81260 |
| 36013035 | GCI62063 | 95833290210 | GCI81044 | 496013T200 | GCI81099 | 8200786815 | GCI81162 | 7E0407274H | GCI81261 |
| 31325109 | GCI62065 | 396001350R | GCI81048 | 49582A4100 | GCI81103 | 8200805489 | GCI81163 | 7LA498103B | GCI81261 |
| 36010056 | GCI62065 | 6843516 | GCI81049 | 49582A4101 | GCI81103 | 8200974682 | GCI81164 | 7LA498103BX | GCI81261 |
| 36010214 | GCI62065 | 9207804 | GCI81050 | 495922S710 | GCI81104 | 4304002120 | GCI81165 | 44305TEZT01 | GCI81271 |
| 31367546 | GCI62066 | 8603680 | GCI81051 | 495922Y710 | GCI81104 | 4304002460 | GCI81165 | 44305TR3A51 | GCI81271 |
| 36012423 | GCI62066 | 95833290300 | GCI81053 | 495923W710 | GCI81104 | 4304012120 | GCI81165 | 44305TR3A52 | GCI81271 |

| COMPETITOR | G-AP Ref. | COMPETITOR | G-AP Ref. | COMPETITOR | G-AP Ref. | COMPETITOR | G-AP Ref. | COMPETITOR | G-AP Ref. |
|---|---|---|---|---|---|---|---|---|---|
| OE | | 6R0407764F | GCI81396 | A2033300701 | GCI81451 | 4F0498103AX | GCI81545 | 95090834 | GCI81612 |
| | | 6R0407764FX | GCI81396 | A2123300200 | GCI81451 | 12E498103 | GCI81546 | 39005053 | GCI81613 |
| 443103W0305 | GCI81271 | 6RF498103D | GCI81396 | A2123301401 | GCI81451 | 12E498103A | GCI81546 | GDB722620 | GCI81614 |
| 44310T4P305 | GCI81271 | 6RF498103H | GCI81396 | A2123301601 | GCI81451 | 12E498103AX | GCI81546 | GDB722520 | GCI81615 |
| 44310TBC305 | GCI81271 | 4H0498103 | GCI81397 | A2123301801 | GCI81451 | 12E498103X | GCI81546 | GT0B2550X | GCI81615 |
| 44310TGG306 | GCI81271 | 4H0498103X | GCI81397 | A2183301300 | GCI81451 | 2Q0498103G | GCI81546 | 391001KA0A | GCI81616 |
| 4303006300 | GCI81276 | 4K0498103 | GCI81397 | A2213300801 | GCI81451 | 2Q0498103GX | GCI81546 | 391011KA0A | GCI81616 |
| 4303032060 | GCI81280 | 4M0498103A | GCI81397 | A2213301201 | GCI81451 | 2Q0498103N | GCI81546 | 8E0598103 | GCI81618 |
| 430300E150 | GCI81292 | 4M0498103C | GCI81397 | A2213301401 | GCI81451 | 2Q0498103NX | GCI81546 | 8E0598103X | GCI81618 |
| 434100T010 | GCI81292 | 80A498103 | GCI81397 | A2213301601 | GCI81451 | 6C0498103A | GCI81546 | 8K0598103B | GCI81618 |
| 434100T011 | GCI81292 | 80D498103 | GCI81397 | A2213302101 | GCI81451 | 6C0498103AX | GCI81546 | 8K0598103BX | GCI81618 |
| 434100W240 | GCI81292 | 5QM498103 | GCI81398 | 2123301100 | GCI81452 | 7P0598103A | GCI81547 | FTD122620 | GCI81621 |
| 1774029 | GCI81295 | 5QM498103X | GCI81398 | 2213306400 | GCI81452 | 7P0598103AX | GCI81547 | FTT12560X | GCI81621 |
| 1857347 | GCI81295 | 3D0598103 | GCI81399 | A2123301100 | GCI81452 | 3717A029 | GCI81548 | FTT422520 | GCI81622 |
| 1857349 | GCI81295 | 3D0598103X | GCI81399 | A2213306400 | GCI81452 | 3817A160 | GCI81550 | FTD422620 | GCI81623 |
| BV613C313TA | GCI81295 | 4E0598201 | GCI81399 | 7E0498104E | GCI81453 | 44310SMJG11 | GCI81551 | FTT422620 | GCI81623 |
| BV613C313TB | GCI81295 | 4E0598201A | GCI81399 | 7E0498104EX | GCI81453 | 3817A163 | GCI81552 | 2203330BH02 | GCI81624 |
| 39771CC40A | GCI81299 | 2403100AKZ17B | GCI81402 | 7H0498104N | GCI81453 | 3817A161 | GCI81553 | 2203420AW02 | GCI81624 |
| 397111AA0B | GCI81300 | 2403200AKZ17B | GCI81402 | 7H0498104NX | GCI81453 | 44306TEZT01 | GCI81555 | C3010330200 | GCI81624 |
| 2303100XSZ08A | GCI81301 | 13335127 | GCI81411 | 31607593040 | GCI81457 | 44310S5DA01 | GCI81555 | C3010330600 | GCI81624 |
| 2303300XKZ20A | GCI81301 | 1603327 | GCI81411 | 31607593044 | GCI81457 | 44310SNEA11 | GCI81555 | S2010470901 | GCI81624 |
| 4303005240 | GCI81308 | 26251440 | GCI81411 | 31607618678 | GCI81457 | 44310TEAT01 | GCI81555 | 2203420AW01 | GCI81627 |
| 4341002840 | GCI81308 | 39005062 | GCI81411 | 31607618680 | GCI81457 | 44310TR0A11 | GCI81555 | 2203420BM03 | GCI81627 |
| 4341005491 | GCI81308 | 39013544 | GCI81411 | 31608664676 | GCI81457 | 2303010001B11 | GCI81561 | S2010470900 | GCI81627 |
| 396001350R | GCI81314 | 39040807 | GCI81411 | 31608682366 | GCI81457 | 2303020001B11 | GCI81562 | V3010540821 | GCI81627 |
| 3272CC | GCI81321 | 39129617 | GCI81411 | 31609452630 | GCI81457 | 28092AC010 | GCI81564 | 2203320AW01 | GCI81628 |
| 3272CE | GCI81321 | 95518280 | GCI81411 | 31609846770 | GCI81457 | 28492FE010 | GCI81564 | 2203320BM03 | GCI81628 |
| 1608419980 | GCI81325 | 49582H8000 | GCI81412 | AU866467602 | GCI81457 | 28492FE011 | GCI81564 | S2010470800 | GCI81628 |
| 9816308880 | GCI81325 | 49583H8000 | GCI81412 | 44310T7W305 | GCI81464 | 4410256P60 | GCI81566 | V3010540811 | GCI81628 |
| 4340497231 | GCI81329 | 1084781700 | GCI81415 | 100771901A | GCI81465 | 4410256P60000 | GCI81566 | 2203100BN09 | GCI81635 |
| 1692095 | GCI81338 | S62203200A | GCI81415 | 102711100B | GCI81466 | 4412854P60 | GCI81566 | 2203100U70 | GCI81635 |
| 1713001 | GCI81338 | 3815A226 | GCI81416 | 103061500A | GCI81466 | 3910000Q6M | GCI81567 | C2010540211 | GCI81635 |
| 1875690 | GCI81338 | FTD222520 | GCI81417 | 102711500B | GCI81467 | 3910000Q7B | GCI81567 | C211F2501010206 | GCI81635 |
| 1909743 | GCI81338 | FTT12550X | GCI81417 | 103061600A | GCI81467 | 391005010R | GCI81567 | 39100JG04B | GCI81640 |
| 2455190 | GCI81338 | 2113301801 | GCI81423 | 103061600B | GCI81467 | 391008636R | GCI81567 | 7P5498103 | GCI81641 |
| 2552737 | GCI81338 | A2113301801 | GCI81423 | 103061600D | GCI81467 | 4422670 | GCI81567 | 95834990200 | GCI81641 |
| AV613C313CA | GCI81338 | 1603336 | GCI81431 | 113804200B | GCI81467 | 6000618516 | GCI81567 | 44310T0CG00 | GCI81644 |
| AV613C313CB | GCI81338 | 42341583 | GCI81431 | 31607593046 | GCI81477 | 93453895 | GCI81567 | 49535A9200 | GCI81646 |
| AV613C313FA | GCI81338 | 42529906 | GCI81431 | 31607606026 | GCI81477 | 495922V2A0 | GCI81569 | 495974D500 | GCI81646 |
| FV663B436AB | GCI81338 | 42697381 | GCI81431 | 31607618682 | GCI81477 | 49592A20A0 | GCI81569 | 44310T0C305 | GCI81649 |
| FV663B436AC | GCI81338 | 5374210 | GCI81431 | 31608639522 | GCI81477 | 49592A20A5 | GCI81569 | 44310S7A300 | GCI81650 |
| FV663C313AA | GCI81338 | 5747210 | GCI81431 | 31608657290 | GCI81477 | MR357809 | GCI81580 | 44306TA9E01 | GCI81651 |
| 95132294 | GCI81349 | 95394776 | GCI81431 | 3817A422 | GCI81480 | MR357811 | GCI81580 | 44310TA9E01 | GCI81651 |
| 391001702R | GCI81351 | 28092FA050 | GCI81442 | 3817A423 | GCI81481 | MR470021 | GCI81580 | 44305TA9E01 | GCI81652 |
| 8200725513 | GCI81351 | 28492FE030 | GCI81442 | 8V513B437DB | GCI81482 | 9809068280 | GCI81595 | 44310TA9305 | GCI81652 |
| 8201353435 | GCI81351 | 28492FE031 | GCI81442 | 3273SN | GCI81492 | 31607597694 | GCI81597 | 42320T0GA01 | GCI81653 |
| 391017898R | GCI81352 | 49535A9201 | GCI81443 | 3273SP | GCI81492 | 31607638776 | GCI81597 | 42310TLAA01 | GCI81654 |
| 430400K010 | GCI81372 | 495924D500 | GCI81443 | 3971131G10 | GCI81497 | 7597694 | GCI81597 | 42311TLAA01 | GCI81654 |
| 4304002240 | GCI81374 | GP342560X | GCI81444 | 3971135F10 | GCI81497 | 31607619657 | GCI81598 | 33207646867 | GCI81658 |
| 4303002100 | GCI81375 | 4130034001 | GCI81446 | 44305T86K53 | GCI81504 | 31608687781 | GCI81598 | 31605A2DFC5 | GCI81659 |
| 7E0498104T | GCI81381 | FF0522520 | GCI81449 | 44306T7WA02 | GCI81504 | A21XLB3KT2203040G | GCI81600 | 31605A2E055 | GCI81659 |
| 7E0498104TX | GCI81381 | GF0922520 | GCI81449 | 44306T86K53 | GCI81504 | J52XLB3KT2203040 | GCI81600 | 31608482645 | GCI81659 |
| 49500B9400 | GCI81391 | GP0622520 | GCI81449 | 44310T7WA11 | GCI81504 | J602203010CS | GCI81601 | 31608643375 | GCI81659 |
| 49501B9400 | GCI81391 | GP1822520 | GCI81449 | 391014PA0A | GCI81505 | M112203020VB | GCI81601 | 8643375 | GCI81659 |
| 49535B9405 | GCI81391 | GP1822520A | GCI81449 | 391014PA0B | GCI81505 | J42XLB3AF2203050G | GCI81603 | 2168926 | GCI81660 |
| 49535G6000 | GCI81391 | GP3422520 | GCI81449 | C92054EA0A | GCI81505 | 31607619658 | GCI81605 | CV614K138AD | GCI81660 |
| 49535G6005 | GCI81391 | 2033300200 | GCI81451 | 31609806471 | GCI81508 | 33212284115 | GCI81606 | 1703237 | GCI81661 |
| 49600M0000 | GCI81391 | 2033300701 | GCI81451 | 3817A273 | GCI81511 | 33212284116 | GCI81606 | 2006602 | GCI81661 |
| 49601M0000 | GCI81391 | 2123300200 | GCI81451 | 1909748 | GCI81526 | 33212284115 | GCI81607 | AV4N3C356AA | GCI81661 |
| 1704648 | GCI81392 | 2123301401 | GCI81451 | FV663B437AA | GCI81526 | 33212284116 | GCI81608 | DV6P3C356BA | GCI81661 |
| BV613C356AA | GCI81392 | 2123301601 | GCI81451 | FV663C356AA | GCI81526 | 8K0598103E | GCI81610 | 10289304 | GCI81665 |
| 1S0498103A | GCI81393 | 2123301801 | GCI81451 | 2271331 | GCI81533 | 6C0498103 | GCI81611 | 10289306 | GCI81666 |
| 1S0498103AX | GCI81393 | 2183301300 | GCI81451 | DG913C356JD | GCI81533 | 6C0498103X | GCI81611 | 10289305 | GCI81667 |
| 2QB498103D | GCI81396 | 2213300801 | GCI81451 | 4304058030 | GCI81534 | 5374015 | GCI81612 | 4130034101 | GCI81670 |
| 2QD407271H | GCI81396 | 2213301201 | GCI81451 | 4304078020 | GCI81534 | 5374160 | GCI81612 | 49535D3810 | GCI81676 |
| 2QD407272H | GCI81396 | 2213301401 | GCI81451 | 4342006A70 | GCI81534 | 5374204 | GCI81612 | 49535D7810 | GCI81676 |
| 6R0407763F | GCI81396 | 2213301601 | GCI81451 | 42320SCAE31 | GCI81538 | 94522011 | GCI81612 | 391004ED2A | GCI81685 |
| 6R0407763FX | GCI81396 | 2213302101 | GCI81451 | 4F0498103A | GCI81545 | 94560844 | GCI81612 | 391011979R | GCI81686 |

| COMPETITOR | G-AP Ref. | COMPETITOR | G-AP Ref. | COMPETITOR | G-AP Ref. | COMPETITOR | G-AP Ref. | COMPETITOR | G-AP Ref. |
|---|---|---|---|---|---|---|---|---|---|
| OE | | 49537J9000 | GCI81749 | 49535D7510 | GCI81781 | 2313991 | GCI81896 | 2203200XS56XB | GCI81948 |
| | | 8W0598099 | GCI81751 | 49535D7511 | GCI81781 | H1B53B436BB | GCI81896 | 52083441 | GCI81960 |
| 391014ED2A | GCI81686 | 4K0501203A | GCI81752 | 4132035360 | GCI81788 | H1B53B436FB | GCI81896 | 7L1Z3B414A | GCI81961 |
| 391004ED0A | GCI81687 | 4K0501204 | GCI81752 | 4411757L80 | GCI81789 | H1B53B436FC | GCI81896 | AL1Z3B414B | GCI81961 |
| 2Q0498103E | GCI81689 | 8R0598103B | GCI81752 | 4411757L81 | GCI81789 | H1B53B436FD | GCI81896 | 7L1Z3B414B | GCI81962 |
| 2Q0498103EX | GCI81689 | 8R0598103BX | GCI81752 | FP1022520 | GCI81798 | H1B53B437FC | GCI81896 | AL1Z3B414A | GCI81962 |
| 2Q0498103M | GCI81689 | 8W0598103 | GCI81752 | FP1022520A | GCI81798 | H1B53C313FA | GCI81896 | 495053F850 | GCI81963 |
| 2Q0498103MX | GCI81689 | 8R0598099B | GCI81753 | FP1022620 | GCI81799 | H1B53C313FB | GCI81896 | 7E0498104Q | GCI81969 |
| 5Q0498103 | GCI81689 | 8R0598099BX | GCI81753 | 397714BB1B | GCI81800 | 10368338 | GCI81898 | 7E0498104QX | GCI81969 |
| 5Q0498103F | GCI81689 | 7E0407761D | GCI81754 | 2403100AKY01B | GCI81801 | 10368339 | GCI81899 | 22710926 | GCI81973 |
| 5Q0498103X | GCI81689 | 31608643377 | GCI81756 | 2403200AKY01B | GCI81801 | 44310STKA00 | GCI81901 | 52123748AC | GCI81975 |
| 6C0498103B | GCI81689 | 31605A2DFB7 | GCI81758 | 391002304R | GCI81808 | 44310STKA10 | GCI81901 | 7T4Z3A427A | GCI81978 |
| 6C0498103BX | GCI81689 | 31608611927 | GCI81758 | 391004EB0A | GCI81819 | 44310STKA11 | GCI81901 | 7T4Z3A427B | GCI81978 |
| 2Q0407272CB | GCI81690 | 31608643361 | GCI81758 | 391014EB0A | GCI81820 | 44310STKA12 | GCI81901 | 7T4Z3A427C | GCI81978 |
| 2Q0407452GX | GCI81690 | 1609609680 | GCI81759 | 1663301400 | GCI81822 | 495922J000 | GCI81905 | AA5Z3B437A | GCI81978 |
| 2Q0498103B | GCI81690 | 9677916180 | GCI81759 | 1663301601 | GCI81822 | 495922J010 | GCI81906 | 46307515 | GCI82003 |
| 2Q0498103BX | GCI81690 | 1863066 | GCI81761 | A1663301400 | GCI81822 | 396002941R | GCI81907 | 46307103 | GCI82005 |
| 2Q0498103F | GCI81690 | 2007394 | GCI81761 | A1663301601 | GCI81822 | 396002998R | GCI81907 | 60812691 | GCI82005 |
| 2Q0498103FX | GCI81690 | 2271327 | GCI81761 | 4234008021 | GCI81825 | 396003780R | GCI81907 | 71781901 | GCI82005 |
| 495351R700 | GCI81692 | DG913C313KB | GCI81761 | 397711KD0A | GCI81826 | 396004528R | GCI81907 | 1493963 | GCI82006 |
| 495351R705 | GCI81692 | DG913C313KC | GCI81761 | 397111KD0A | GCI81827 | 396006593R | GCI81907 | 46307855 | GCI82007 |
| 49535D7720 | GCI81693 | DG913C313KD | GCI81761 | 397111KD1A | GCI81828 | 396008196R | GCI81907 | 46307856 | GCI82007 |
| 49535D7721 | GCI81693 | 1863087 | GCI81762 | 39711JG04B | GCI81829 | 396009397R | GCI81907 | 46548165 | GCI82007 |
| 397714BA1B | GCI81699 | 1909749 | GCI81762 | 95525697 | GCI81831 | 4533503500 | GCI81907 | 46308296 | GCI82009 |
| 391014BA0B | GCI81700 | 2007399 | GCI81762 | 95525701 | GCI81831 | 4533503600 | GCI81907 | 46308726 | GCI82009 |
| 391015SN0A | GCI81700 | 2032797 | GCI81762 | GDT122620 | GCI81834 | 4533504801 | GCI81907 | 71771196 | GCI82009 |
| 397114BA0B | GCI81700 | 2271332 | GCI81762 | GDT122520 | GCI81835 | 4533506000 | GCI81907 | 46308272 | GCI82010 |
| 397714BA0B | GCI81701 | DG913B437KE | GCI81762 | LR163276 | GCI81849 | 4533506100 | GCI81907 | 46308728 | GCI82010 |
| 8W0598099A | GCI81702 | DG913C356KB | GCI81762 | M8E23D402BB | GCI81849 | 4533509300 | GCI81907 | 71771198 | GCI82010 |
| 430400F040 | GCI81703 | DG913C356KC | GCI81762 | 95228741 | GCI81850 | 4533509400 | GCI81907 | 51855521 | GCI82011 |
| 430300F020 | GCI81704 | DG913C356KD | GCI81762 | 2203200V08 | GCI81852 | A4533503500 | GCI81907 | 5893875 | GCI82011 |
| 13335200 | GCI81705 | FV663C356BA | GCI81762 | 2203100BS16 | GCI81859 | A4533503600 | GCI81907 | 60584662 | GCI82011 |
| 1603026 | GCI81705 | LR078570 | GCI81763 | 2203200BS16 | GCI81859 | A4533504801 | GCI81907 | 60806693 | GCI82011 |
| 13306857 | GCI81706 | 2176664 | GCI81764 | 4411780J30 | GCI81865 | A4533506000 | GCI81907 | 60811129 | GCI82011 |
| 1603339 | GCI81706 | DG914K138AE | GCI81764 | 4411780J32 | GCI81865 | A4533506100 | GCI81907 | 7082704 | GCI82011 |
| 4303074020 | GCI81710 | 1921978 | GCI81765 | 49535F2500 | GCI81867 | A4533509300 | GCI81907 | 7630645 | GCI82011 |
| 44310T1W305 | GCI81722 | 2007408 | GCI81765 | 49535F2505 | GCI81867 | A4533509400 | GCI81907 | 7771582 | GCI82011 |
| 44310T1WA11 | GCI81723 | 2271367 | GCI81765 | 49535G4700 | GCI81867 | 28421FJ000 | GCI81913 | 7778365 | GCI82011 |
| 1727125 | GCI81725 | E1G13C356CA | GCI81765 | 49535G4705 | GCI81867 | 495001H310 | GCI81914 | 9945300 | GCI82011 |
| CC113C313AA | GCI81725 | E1G13C356CB | GCI81765 | 49535J9400 | GCI81867 | 495003F800 | GCI81914 | 46308291 | GCI82014 |
| 1004978200 | GCI81735 | E1G13C356CC | GCI81765 | 49536J9100 | GCI81867 | 495011H310 | GCI81914 | 46308749 | GCI82014 |
| 1004978300 | GCI81735 | 1921976 | GCI81766 | 49536J9400 | GCI81867 | 495053F800 | GCI81914 | 4341001140 | GCI82018 |
| 1097706100 | GCI81735 | 2007406 | GCI81766 | 495R3S6620 | GCI81867 | 495921H310 | GCI81914 | 495054AA00 | GCI82083 |
| 1097706200 | GCI81735 | 2271365 | GCI81766 | 49536J9150 | GCI81868 | 42320S2A310 | GCI81915 | 51611H1000 | GCI82083 |
| 5A2203010 | GCI81735 | E1G13C313CA | GCI81766 | 49535J9100 | GCI81869 | 31605A2DFB8 | GCI81917 | 2510245 | GCI82085 |
| 5A2203010C1 | GCI81735 | E1G13C313CB | GCI81766 | 49635J9000 | GCI81870 | 31608611928 | GCI81917 | JT763B436AB | GCI82085 |
| 5A2203020 | GCI81735 | E1G13C313CC | GCI81766 | 2200300U2212 | GCI81874 | 31608643362 | GCI81917 | JT763B436AC | GCI82085 |
| 5A2203020C1 | GCI81735 | 13462060 | GCI81767 | 2200400U2212 | GCI81874 | 31608643364 | GCI81917 | JT763B437AB | GCI82085 |
| IB52203010 | GCI81735 | 49535A0101 | GCI81768 | 1014027859 | GCI81877 | 391013TA1B | GCI81922 | 2512654 | GCI82086 |
| IB52203020 | GCI81735 | 49536A0101 | GCI81768 | 4082005700 | GCI81877 | 391015SA1A | GCI81922 | JX673B436HAE | GCI82086 |
| MA1222520 | GCI81737 | 496054AA00 | GCI81769 | 1084782300 | GCI81878 | 391015SA2A | GCI81922 | JX673C313HA | GCI82086 |
| SA0022520M1 | GCI81740 | 51621H1000 | GCI81770 | S62203400A | GCI81878 | 397713TA1B | GCI81923 | 2512516 | GCI82087 |
| SA0025020M1 | GCI81740 | 0374649 | GCI81774 | 1135458700 | GCI81886 | 31605A2DFC6 | GCI81924 | JX673C356HA | GCI82087 |
| 4130035301 | GCI81744 | 13296350 | GCI81774 | 1135458800 | GCI81886 | 31605A2E052 | GCI81924 | 1611524280 | GCI82092 |
| FTF222520 | GCI81745 | 13306852 | GCI81774 | 5AEV2203010 | GCI81886 | 31608611938 | GCI81924 | 9677476580 | GCI82092 |
| 4236021010 | GCI81746 | 13307853 | GCI81774 | 5AEV2203020 | GCI81886 | 55229420 | GCI81925 | 9825391880 | GCI82092 |
| 49536G2000 | GCI81747 | 1603064 | GCI81774 | 2303300K85 | GCI81887 | 5085180AG | GCI81929 | 2112419 | GCI82094 |
| 49536G5000 | GCI81747 | 1603077 | GCI81774 | 495974D000 | GCI81891 | 2203100XG47XA | GCI81940 | 2112857 | GCI82094 |
| 495L3D7700 | GCI81747 | 374649 | GCI81774 | 31607556931 | GCI81892 | 2203200XG47XA | GCI81940 | 2112875 | GCI82094 |
| 495L3Q9100 | GCI81747 | 7N0498103A | GCI81776 | 31609806472 | GCI81893 | 2303300XJZ08A | GCI81940 | 2182763 | GCI82094 |
| 49535D3850 | GCI81748 | 7N0498103AX | GCI81776 | 31609813715 | GCI81893 | 2203100XG85XA | GCI81941 | 2182765 | GCI82094 |
| 49535D6300 | GCI81748 | 8E0498103 | GCI81777 | 2112425 | GCI81896 | 2203100XS74XA | GCI81941 | H1B53C313BA | GCI82094 |
| 49535D7850 | GCI81748 | 8E0498103D | GCI81777 | 2112449 | GCI81896 | 2203200XG85XA | GCI81941 | H1B53C313BB | GCI82094 |
| 495R3CM000 | GCI81748 | 1603248 | GCI81778 | 2112457 | GCI81896 | 2403200XKW09B | GCI81944 | H1B53C356BA | GCI82094 |
| 49535G4500 | GCI81749 | 26300282 | GCI81778 | 2182300 | GCI81896 | 2403100XKW09B | GCI81945 | H1B53C356BB | GCI82094 |
| 49535G4505 | GCI81749 | 93176744 | GCI81778 | 2182303 | GCI81896 | 2303200XKW09A | GCI81946 | 3817A139 | GCI82095 |
| 49535G7000 | GCI81749 | 4230035000 | GCI81779 | 2182764 | GCI81896 | 2303100XKW09A | GCI81947 | 44310T6A300 | GCI82104 |
| 49535J9000 | GCI81749 | 39005064 | GCI81780 | 2313985 | GCI81896 | 2203100XY23XA | GCI81948 | 44310THAH00 | GCI82104 |

| COMPETITOR | G-AP Ref. | COMPETITOR | G-AP Ref. | COMPETITOR | G-AP Ref. | COMPETITOR | G-AP Ref. | COMPETITOR | G-AP Ref. |
|---|---|---|---|---|---|---|---|---|---|
| OE | | 391000797R | GCI82153 | 49680C5000 | GCI82200 | BB5Z3B436X | GCI82269 | 49583H8100 | GCI82316 |
| | | 391011681R | GCI82154 | 49682C5000 | GCI82201 | FB5Z3B436H | GCI82269 | 495922V3A0 | GCI82317 |
| 44310TJHH00 | GCI82104 | LR024754 | GCI82155 | 2053503919 | GCI82204 | 391013130R | GCI82271 | 84138328 | GCI82318 |
| 44310THA305 | GCI82105 | 68248718AD | GCI82156 | 2053508113 | GCI82204 | 397114GA0A | GCI82272 | 84138317 | GCI82319 |
| 9826944180 | GCI82106 | 391011905R | GCI82157 | A2053503919 | GCI82204 | 423400E050 | GCI82274 | 84257939 | GCI82319 |
| YL01323280 | GCI82106 | 391018240R | GCI82157 | A2053508113 | GCI82204 | 423400E060 | GCI82274 | 84257940 | GCI82319 |
| 9826944080 | GCI82107 | 391018508R | GCI82157 | 8251794 | GCI82205 | 4236048030 | GCI82274 | 84337384 | GCI82319 |
| YL01323180 | GCI82107 | 391000897R | GCI82158 | 391003TA0A | GCI82207 | FTF122620 | GCI82275 | 95525670 | GCI82319 |
| 5Q0498104A | GCI82108 | 391004850R | GCI82158 | MN156833 | GCI82208 | 397111BP0A | GCI82276 | 95525672 | GCI82319 |
| 5Q0498104AX | GCI82108 | 391009398R | GCI82158 | CH523B436AA | GCI82209 | 397115RD0B | GCI82278 | 1631813280 | GCI82320 |
| 5Q0498104E | GCI82108 | 2053303906 | GCI82159 | EJ323B436CB | GCI82209 | LR060478 | GCI82281 | 9810710780 | GCI82320 |
| 5QJ498103B | GCI82108 | 2223305000 | GCI82159 | LR024755 | GCI82209 | LR062317 | GCI82281 | 9819435780 | GCI82320 |
| 5QN498103D | GCI82108 | A2053303906 | GCI82159 | LR032113 | GCI82209 | 23301162 | GCI82284 | 1613966680 | GCI82321 |
| 8V0498104 | GCI82108 | A2223305000 | GCI82159 | LR061598 | GCI82209 | 23301163 | GCI82284 | 9808076180 | GCI82321 |
| 8V0498104C | GCI82108 | 2133303503 | GCI82161 | LR061603 | GCI82209 | FTB422520 | GCI82285 | 1613966780 | GCI82322 |
| 8V0498104X | GCI82108 | 2533301300 | GCI82161 | 44310TR0305 | GCI82213 | FTF122520 | GCI82285 | 9808076080 | GCI82322 |
| 1612862980 | GCI82118 | A2133303503 | GCI82161 | 4473302000 | GCI82214 | 8603886 | GCI82286 | 9809528380 | GCI82323 |
| 1617300580 | GCI82118 | A2533301300 | GCI82161 | A4473302000 | GCI82214 | 0K55222620 | GCI82287 | 391004PD1A | GCI82324 |
| 1647577580 | GCI82118 | 391004EB2A | GCI82162 | 31609806467 | GCI82216 | 0K55222620A | GCI82287 | 2513162 | GCI82325 |
| 9809528180 | GCI82118 | FTH122620 | GCI82163 | 22813176 | GCI82218 | 4130008B02 | GCI82293 | JX673C313AA | GCI82325 |
| 9811176480 | GCI82118 | FTH72560X | GCI82163 | 22813177 | GCI82218 | 495R3CZ000 | GCI82294 | 4304007030 | GCI82327 |
| 9825392880 | GCI82118 | FTH72550X | GCI82165 | 22813178 | GCI82218 | 495R3L4250 | GCI82294 | 391003ZM0B | GCI82328 |
| 1611142680 | GCI82119 | FTD522520 | GCI82168 | 92238377 | GCI82218 | 495R3N7120 | GCI82294 | 39720ET025 | GCI82328 |
| 1613306680 | GCI82119 | FTD52550X | GCI82168 | 92246759 | GCI82218 | 495R3N8100 | GCI82294 | 23301165 | GCI82329 |
| 9677914480 | GCI82119 | FTD52550XA | GCI82168 | 92246760 | GCI82218 | 495R3Q2800 | GCI82294 | 84228346 | GCI82329 |
| 9807974580 | GCI82119 | 36010221 | GCI82176 | 44310TX4A00 | GCI82224 | 495L3CZ000 | GCI82295 | 1773301801 | GCI82332 |
| 9808771480 | GCI82119 | 391004EA0A | GCI82177 | 44310TX4305 | GCI82225 | 495L3L4250 | GCI82295 | 1773303102 | GCI82332 |
| 9808800680 | GCI82119 | 391004EA0B | GCI82177 | 495821W400 | GCI82228 | 495L3N7090 | GCI82295 | A1773301801 | GCI82332 |
| 9825392980 | GCI82119 | 391004PC0A | GCI82177 | 495822K670 | GCI82228 | 495L3N8000 | GCI82295 | A1773303102 | GCI82332 |
| 9825391780 | GCI82122 | 391004PC0B | GCI82177 | 495832K670 | GCI82228 | 495L3Q2800 | GCI82295 | 44310T5AJ00 | GCI82333 |
| 2243084 | GCI82124 | 1803626 | GCI82178 | 391004751R | GCI82231 | 495A3H8315 | GCI82296 | 2112451 | GCI82339 |
| DV6P3C313JA | GCI82124 | RM8G913B436B1B | GCI82178 | 496003M000 | GCI82232 | 495L3BU100 | GCI82296 | 2182298 | GCI82339 |
| 4303050010 | GCI82127 | 1909745 | GCI82179 | 496503M000 | GCI82233 | 495R3BU100 | GCI82296 | 2313981 | GCI82339 |
| 4303050011 | GCI82127 | FV663C313DA | GCI82179 | 496003M000 | GCI82235 | FTH82550X | GCI82298 | 2391977 | GCI82339 |
| 4304050010 | GCI82128 | 1824948 | GCI82180 | 496503M000 | GCI82236 | 9809527980 | GCI82300 | H1B53B436CA | GCI82339 |
| 4304050011 | GCI82128 | 1909750 | GCI82180 | 496922J100 | GCI82238 | 9811176780 | GCI82300 | H1B53B436CB | GCI82339 |
| 4304006350 | GCI82129 | DV613C356KA | GCI82180 | 04593388AB | GCI82239 | 1675960580 | GCI82301 | H1B53B436CC | GCI82339 |
| 4304033030 | GCI82129 | FV663C356DA | GCI82180 | 04593448AB | GCI82239 | 3555146 | GCI82301 | H1B53B436CD | GCI82339 |
| 9824359680 | GCI82130 | 9677914880 | GCI82181 | 05017654AA | GCI82239 | 9809149380 | GCI82301 | 2112465 | GCI82340 |
| 9825390980 | GCI82130 | 9677915180 | GCI82181 | 4593388AB | GCI82239 | 9811176880 | GCI82301 | 2115369 | GCI82340 |
| 1610561580 | GCI82131 | 9807280380 | GCI82182 | 4593466AA | GCI82239 | 9815636180 | GCI82301 | 2182302 | GCI82340 |
| 1613732480 | GCI82131 | 9808800780 | GCI82182 | 5017654AA | GCI82239 | 97034903804 | GCI82302 | 2313979 | GCI82340 |
| 9677561480 | GCI82131 | 2053300003 | GCI82185 | LR034532 | GCI82248 | 36000512 | GCI82303 | H1B53B437CA | GCI82340 |
| 9800387380 | GCI82131 | 2053303806 | GCI82185 | LR041970 | GCI82248 | 36010165 | GCI82304 | H1B53B437CB | GCI82340 |
| 9806459180 | GCI82131 | 2053308406 | GCI82185 | LR045440 | GCI82248 | 36010336 | GCI82304 | H1B53B437CC | GCI82340 |
| 9806699880 | GCI82131 | 2223300902 | GCI82185 | LR064252 | GCI82248 | 4341008091 | GCI82306 | H1B53B437CD | GCI82340 |
| 9824878280 | GCI82131 | 2223306700 | GCI82185 | 4340333010 | GCI82249 | 4341008092 | GCI82306 | 2133303603 | GCI82342 |
| 9825391080 | GCI82131 | A2053300003 | GCI82185 | 434100E230 | GCI82249 | 434040E020 | GCI82307 | 2533301401 | GCI82342 |
| 49582C5080 | GCI82132 | A2053303806 | GCI82185 | 4578777AA | GCI82250 | 434200E150 | GCI82307 | 2533305601 | GCI82342 |
| 495R3P2050 | GCI82132 | A2053308406 | GCI82185 | 4578777AB | GCI82250 | 391004269R | GCI82308 | A2133303603 | GCI82342 |
| 3815A570 | GCI82136 | A2223300902 | GCI82185 | FTA322520 | GCI82251 | 391005516R | GCI82308 | A2533301401 | GCI82342 |
| 3817A292 | GCI82136 | A2223306700 | GCI82185 | 3272VW | GCI82252 | 391006653R | GCI82308 | A2533305601 | GCI82342 |
| 49535F2100 | GCI82142 | 31367199 | GCI82186 | 3272VX | GCI82252 | 391017093R | GCI82309 | 2513166 | GCI82343 |
| 49535F2105 | GCI82142 | 36010171 | GCI82186 | 3273WJ | GCI82253 | 391017989R | GCI82309 | JX673C313DA | GCI82343 |
| 49535G4600 | GCI82142 | 31367198 | GCI82187 | 3273WK | GCI82253 | 391018946R | GCI82310 | 2304333 | GCI82344 |
| 49535G4605 | GCI82142 | 36010164 | GCI82187 | 391001CA0A | GCI82256 | 391016613R | GCI82311 | JX673B437DAD | GCI82344 |
| 495L3BX120 | GCI82142 | 36010167 | GCI82187 | 39711CG000 | GCI82256 | 391018112R | GCI82311 | 44310S5AN00 | GCI82345 |
| 495L3F2150 | GCI82142 | 36010170 | GCI82187 | 39711CG00A | GCI82256 | 8450020058 | GCI82311 | 36000508 | GCI82346 |
| 495R3AA100 | GCI82142 | 13335155 | GCI82188 | 28021AC280 | GCI82257 | 3910100Q7F | GCI82312 | 31605A2E013 | GCI82347 |
| 495R3BX120 | GCI82142 | 374899 | GCI82188 | 28021AC281 | GCI82257 | 2133309902 | GCI82313 | 31607642109 | GCI82347 |
| 33207609351 | GCI82145 | GG3125500E | GCI82189 | 28093AC030 | GCI82257 | 2533305501 | GCI82313 | 31608643383 | GCI82347 |
| 33207609352 | GCI82145 | 4303042060 | GCI82193 | 28392FE020 | GCI82257 | 2533307900 | GCI82313 | 31605A2E014 | GCI82348 |
| TOB500280 | GCI82146 | 13447244 | GCI82194 | 49535G4000 | GCI82265 | 2533308000 | GCI82313 | 31607642108 | GCI82348 |
| TOB500250 | GCI82147 | 1603082 | GCI82194 | 49535G4005 | GCI82265 | A2133309902 | GCI82313 | 31608657704 | GCI82348 |
| 391004BB0B | GCI82149 | 3273LW | GCI82199 | 8251761 | GCI82266 | A2533305501 | GCI82313 | 4341008050 | GCI82350 |
| 397714BB0B | GCI82149 | 3273LX | GCI82199 | LR041968 | GCI82268 | A2533307900 | GCI82313 | 4341008120 | GCI82350 |
| 52050099 | GCI82150 | 3273RS | GCI82199 | LR045441 | GCI82268 | A2533308000 | GCI82313 | 4341008200 | GCI82350 |
| 55270992 | GCI82150 | 3273RT | GCI82199 | LR064251 | GCI82268 | 49582H8100 | GCI82316 | 4341008201 | GCI82350 |

| COMPETITOR | G-AP Ref. | COMPETITOR | G-AP Ref. | COMPETITOR | G-AP Ref. | COMPETITOR | G-AP Ref. | COMPETITOR | G-AP Ref. |
|---|---|---|---|---|---|---|---|---|---|
| **OE** | | 391001324R | GCI82386 | 3715A140 | GCI82430 | 7L0501817B | GCI82450 | BK213C313BA | GCI82507 |
| | | 391002171R | GCI82386 | 3715A099 | GCI82431 | 36000514 | GCI82451 | FK263C313AA | GCI82507 |
| 430300W060 | GCI82351 | 391007345R | GCI82386 | 3715A141 | GCI82431 | LR073345 | GCI82452 | 4303048070 | GCI82511 |
| 434100W250 | GCI82351 | 391010516R | GCI82387 | DG9Z3B437AF | GCI82432 | 4578601AA | GCI82453 | 49582C2400 | GCI82512 |
| 434100W350 | GCI82351 | 391017448R | GCI82387 | FV613B437CA | GCI82432 | 5Q0498103L | GCI82456 | 31605A2E056 | GCI82517 |
| 49500F2300 | GCI82352 | 4411779J60 | GCI82388 | FV6Z3B437A | GCI82432 | 5Q0498103LX | GCI82456 | 31608482286 | GCI82517 |
| 49501F2300 | GCI82352 | 43030F4020 | GCI82389 | 4473305400 | GCI82438 | 7LA498103 | GCI82456 | 31608611942 | GCI82517 |
| 49535F2300 | GCI82352 | 44310TR0J80 | GCI82391 | A4473305400 | GCI82438 | 7LA498103D | GCI82456 | 391005SA1A | GCI82518 |
| 49535F2305 | GCI82352 | 44310TR0J81 | GCI82391 | 50521847 | GCI82439 | 7LA498103X | GCI82456 | 391005SA2A | GCI82518 |
| 49582F3100 | GCI82352 | 44310TR0J82 | GCI82391 | 50545413 | GCI82439 | 81A498103A | GCI82456 | 49534K4000 | GCI82519 |
| 495L3G4150 | GCI82352 | 4341005330 | GCI82392 | 46308947 | GCI82440 | 81A498103AX | GCI82456 | 495L3M5000 | GCI82519 |
| 1773301500 | GCI82361 | 2271326 | GCI82393 | 50545417 | GCI82440 | 4578885AC | GCI82457 | 9836054280 | GCI82520 |
| A1773301500 | GCI82361 | DG913C313JD | GCI82393 | 52054179 | GCI82440 | FTH222520 | GCI82459 | 391001458R | GCI82521 |
| 4303028100 | GCI82362 | 3715A097 | GCI82396 | 59259020 | GCI82440 | 104411900D | GCI82460 | 391009206R | GCI82521 |
| 4341021100 | GCI82362 | 3715A139 | GCI82396 | 59259217 | GCI82440 | 104416100D | GCI82461 | 391016661R | GCI82521 |
| 9808075780 | GCI82363 | 28421SG020 | GCI82397 | 7H0407331F | GCI82441 | 2Q0498104A | GCI82462 | 4KE498103 | GCI82522 |
| 9809837880 | GCI82363 | 5273558AD | GCI82400 | 7H0407332R | GCI82441 | 2Q0498104AX | GCI82462 | 391003980R | GCI82523 |
| 9808075680 | GCI82364 | 5273558AG | GCI82400 | 7H0498103D | GCI82441 | 6F0498103A | GCI82462 | 391005002R | GCI82523 |
| 9809837980 | GCI82364 | BJ323B436BA | GCI82401 | 7H0498103DX | GCI82441 | 33207500915 | GCI82463 | 391005551R | GCI82523 |
| 391004692R | GCI82365 | LR024753 | GCI82401 | 7H0498103F | GCI82441 | 33207564558 | GCI82468 | 391009996R | GCI82523 |
| 43040F4010 | GCI82367 | 495822K620 | GCI82403 | 7H0498103FV | GCI82441 | 33207582141 | GCI82468 | 4KE501203 | GCI82524 |
| 43040F4020 | GCI82368 | 49582H8250 | GCI82403 | 7H0498103FX | GCI82441 | 33211227585 | GCI82470 | 4KE501203B | GCI82524 |
| 4411779J70 | GCI82369 | 49583H8250 | GCI82403 | 7H0498104E | GCI82441 | 33217530965 | GCI82470 | 4KE501204B | GCI82524 |
| XR86853 | GCI82370 | 2033300100 | GCI82404 | 7H0498104EX | GCI82441 | 7H0501817A | GCI82474 | 4KE501204C | GCI82524 |
| XR86855 | GCI82370 | 2033300300 | GCI82404 | 7H0498104NU | GCI82441 | 7H0501818A | GCI82474 | 4411779J90 | GCI82525 |
| XW4W4K138AA | GCI82370 | 2033300801 | GCI82404 | 7H0498104NV | GCI82441 | 1686114 | GCI82479 | 391003142R | GCI82526 |
| XW4W4K139AA | GCI82370 | A2033300100 | GCI82404 | 1773300700 | GCI82442 | LR048485 | GCI82480 | 391014807R | GCI82527 |
| 20997646 | GCI82371 | A2033300801 | GCI82404 | 1773302300 | GCI82442 | LR061600 | GCI82480 | 391016789R | GCI82527 |
| 22816826 | GCI82371 | GDB122520 | GCI82405 | 1773309900 | GCI82442 | 52123739AF | GCI82481 | 391018503R | GCI82527 |
| 25958185 | GCI82371 | 391005876R | GCI82408 | A1773300700 | GCI82442 | 68265869AA | GCI82481 | 52123761AH | GCI82531 |
| 374927 | GCI82371 | 391015184R | GCI82409 | A1773302300 | GCI82442 | 68265869AB | GCI82481 | 68305410AA | GCI82531 |
| 2272744 | GCI82372 | 8200896393 | GCI82410 | A1773309900 | GCI82442 | 68265869AF | GCI82481 | 4473304800 | GCI82604 |
| K1B63C356AA | GCI82372 | 8200908694 | GCI82411 | 1773302200 | GCI82443 | 68271585AA | GCI82481 | A4473304800 | GCI82604 |
| 4578600AA | GCI82373 | 8200908696 | GCI82412 | 1773302701 | GCI82443 | 68271585AB | GCI82481 | 10575351 | GCI82608 |
| 4578600AB | GCI82373 | 8252055 | GCI82414 | 1773302801 | GCI82443 | 68289671AA | GCI82481 | 10719314 | GCI82608 |
| R4578600AA | GCI82373 | 8689220 | GCI82414 | 1773309000 | GCI82443 | 68299151AA | GCI82481 | 10719315 | GCI82608 |
| 1613489780 | GCI82374 | 6RF498103A | GCI82415 | 1773309800 | GCI82443 | 68299152AA | GCI82481 | 10766843 | GCI82608 |
| 1677686280 | GCI82374 | 6RF498103E | GCI82415 | A1773302200 | GCI82443 | 423300C010 | GCI82482 | 10832507 | GCI82608 |
| 9800387480 | GCI82374 | 1440106080 | GCI82416 | A1773302701 | GCI82443 | 423400C010 | GCI82482 | 11629072 | GCI82608 |
| 9806459280 | GCI82374 | 39100HV80A | GCI82418 | A1773302801 | GCI82443 | 4233050070 | GCI82483 | 10295936 | GCI82609 |
| 9813122880 | GCI82374 | 391001155R | GCI82419 | A1773309000 | GCI82443 | 4234050070 | GCI82483 | 10295941 | GCI82609 |
| 2112861 | GCI82375 | 4304005100 | GCI82420 | A1773309800 | GCI82443 | 4303006530 | GCI82484 | 10413745 | GCI82609 |
| 2184425 | GCI82375 | 4304005101 | GCI82420 | 1J0407271PR | GCI82444 | 4303033070 | GCI82484 | 10413746 | GCI82609 |
| H1B53C356DA | GCI82375 | 4342006201 | GCI82420 | 1J0407272NG | GCI82444 | 4304007020 | GCI82488 | 10628312 | GCI82610 |
| H1B53C356DB | GCI82375 | 39101HV80A | GCI82421 | 1614305680 | GCI82445 | 391000090R | GCI82496 | 10628314 | GCI82611 |
| 2112423 | GCI82376 | 39101HV80B | GCI82421 | 46308983 | GCI82445 | 36001217 | GCI82497 | 10368341 | GCI82612 |
| 2184426 | GCI82376 | 8251774 | GCI82422 | 4630898346308312 | GCI82445 | FTH522520 | GCI82498 | 10385803 | GCI82612 |
| H1B53C313DA | GCI82376 | 33207641212 | GCI82423 | 2N0498104A | GCI82446 | FTH622520 | GCI82499 | 49582C5030 | GCI82621 |
| H1B53C313DB | GCI82376 | 33207641213 | GCI82423 | 2N0498104AX | GCI82446 | FTH122520 | GCI82500 | 49535D3830 | GCI82622 |
| 84138325 | GCI82377 | EBJ95MBE341B | GCI82423 | 2N0498104E | GCI82446 | RTA622520 | GCI82501 | 49535D7830 | GCI82622 |
| 84527913 | GCI82377 | DG9Z3B436BT | GCI82424 | 65391066031 | GCI82446 | RTA62550X | GCI82501 | 495L3CM000 | GCI82622 |
| 84675882 | GCI82377 | FV613B436CA | GCI82424 | 65391069031 | GCI82446 | 4578884AB | GCI82502 | 1266999600 | GCI82624 |
| 95525700 | GCI82377 | FV6Z3B436A | GCI82424 | 1J0498103D | GCI82447 | 4578884AC | GCI82502 | MEEC2203010 | GCI82624 |
| 95529586 | GCI82377 | 391000804R | GCI82425 | 1K0498103 | GCI82447 | 1EA501203G | GCI82504 | 49535F2200 | GCI82628 |
| 25946579 | GCI82378 | 391000849R | GCI82425 | 1K0498103X | GCI82447 | 1EA501203GX | GCI82504 | 49535F2205 | GCI82628 |
| 4802979 | GCI82378 | 391008720R | GCI82425 | 2Q0498104 | GCI82447 | 1EA501204G | GCI82504 | 49535G4200 | GCI82628 |
| 4819409 | GCI82378 | 28321VA010 | GCI82426 | 2Q0498104C | GCI82447 | 1EA501204GX | GCI82504 | 49535G4205 | GCI82628 |
| 95299896 | GCI82378 | 28392AJ020 | GCI82426 | 2Q0498104X | GCI82447 | 391018882R | GCI82505 | GJ323B436CC | GCI82629 |
| 95480034 | GCI82378 | 28392SJ000 | GCI82426 | 357498103BV | GCI82447 | 1787348 | GCI82506 | J9C23044 | GCI82629 |
| 495921H110 | GCI82380 | 2N0498104B | GCI82428 | 5K0498103 | GCI82447 | BK213C356AB | GCI82506 | LR071947 | GCI82629 |
| GDB122620 | GCI82383 | 2N0498104BX | GCI82428 | 5K0498103X | GCI82447 | 1774294 | GCI82507 | LR137029 | GCI82629 |
| 2Q0498103C | GCI82384 | 2N0498104D | GCI82428 | 6C0407271AE | GCI82447 | 1787347 | GCI82507 | J9C22851 | GCI82630 |
| 2Q0498103CX | GCI82384 | 2N0498103A | GCI82429 | 6R0498103 | GCI82447 | 1791960 | GCI82507 | BJ323B437BA | GCI82631 |
| 2Q0498103H | GCI82384 | 2N0498103AX | GCI82429 | 6R0498103X | GCI82447 | 2280111 | GCI82507 | EJ323B437BC | GCI82631 |
| 2Q0498103HX | GCI82384 | 2N0498103B | GCI82429 | 2Q0498103A | GCI82449 | 2335147 | GCI82507 | J9C1683 | GCI82631 |
| 391011313R | GCI82385 | 65391066030 | GCI82429 | 2Q0498103AX | GCI82449 | BK213C313AA | GCI82507 | J9C22855 | GCI82631 |
| 391011816R | GCI82385 | 65391069030 | GCI82429 | 2Q0498103J | GCI82449 | BK213C313AB | GCI82507 | LR024756 | GCI82631 |
| 391015778R | GCI82385 | 3715A098 | GCI82430 | 2Q0498103JX | GCI82449 | BK213C313AC | GCI82507 | LR117131 | GCI82631 |

| COMPETITOR | G-AP Ref. | COMPETITOR | G-AP Ref. | COMPETITOR | G-AP Ref. | COMPETITOR | G-AP Ref. | COMPETITOR | G-AP Ref. |
|---|---|---|---|---|---|---|---|---|---|
| OE | | A1693706372 | GCI82700 | 1673308601 | GCI82763 | 9825384080 | GCI82860 | 431407331 | GCI83001 |
| | | A2043301600 | GCI82700 | A1673308601 | GCI82763 | 3815A684 | GCI82861 | 431407331G | GCI83001 |
| LR149101 | GCI82631 | A2043301601 | GCI82700 | 1673308501 | GCI82764 | GT0D22520 | GCI82863 | 431498103C | GCI83001 |
| RMEJ323B437BC | GCI82631 | A2043302301 | GCI82700 | A1673308501 | GCI82764 | GT0D2560X | GCI82864 | 431498103CX | GCI83001 |
| 51993490 | GCI82637 | 2303100XKM01A | GCI82703 | FTC922520 | GCI82766 | 10749894 | GCI82865 | 431498104CX | GCI83001 |
| 1663303400 | GCI82640 | 2303101XKM01A | GCI82703 | 2Q0498103 | GCI82767 | 391019563R | GCI82868 | 443407331D | GCI83001 |
| A1663303400 | GCI82640 | 2303102XGW04A | GCI82703 | 2Q0498103X | GCI82767 | 2513168 | GCI82869 | 443407331G | GCI83001 |
| 4340302110 | GCI82641 | 2303103XGW04A | GCI82703 | 28492AG000 | GCI82768 | JX673C313EA | GCI82869 | 443498103A | GCI83001 |
| 495L3J7130 | GCI82642 | 2303126XGW04A | GCI82703 | 28492AG001 | GCI82768 | 2513184 | GCI82870 | 46307223 | GCI83001 |
| 495R3J7130 | GCI82642 | 2303127XGW04A | GCI82703 | 1610205680 | GCI82769 | JX673C356EA | GCI82870 | 46307457 | GCI83001 |
| 10368340 | GCI82644 | 2203100BE50 | GCI82710 | 9806699780 | GCI82769 | 1253820200 | GCI82872 | 4D0598103 | GCI83001 |
| 10385794 | GCI82644 | 2203200BE50 | GCI82710 | 49500QE000 | GCI82770 | SA2H2203010 | GCI82872 | 4D0598103X | GCI83001 |
| 2123501910 | GCI82646 | 391005SN0A | GCI82711 | 49500T9010 | GCI82770 | 1149136200 | GCI82882 | 3B0498103 | GCI83002 |
| A2123501910 | GCI82646 | 495000R010 | GCI82713 | 49501QE000 | GCI82770 | S6DM2203020A | GCI82882 | 3B0498103X | GCI83002 |
| 31608486201 | GCI82647 | 495000R060 | GCI82713 | 49501T9020 | GCI82770 | 1169194900 | GCI82883 | 431407331H | GCI83002 |
| 31608643183 | GCI82647 | 495822K820 | GCI82713 | FTD822520 | GCI82778 | SEH2203010 | GCI82883 | 443498103 | GCI83002 |
| 31605A2E044 | GCI82648 | 495823S001 | GCI82713 | 2310002 | GCI82779 | 1081451500 | GCI82884 | 443498103X | GCI83002 |
| 31608681522 | GCI82648 | 495832K820 | GCI82713 | JB3G3A428BC | GCI82779 | F3T2203020 | GCI82884 | 811407331 | GCI83002 |
| 31605A2E043 | GCI82649 | 1909744 | GCI82714 | 2217846 | GCI82780 | 1081451000 | GCI82885 | 8D0498103 | GCI83002 |
| 31605A2E045 | GCI82649 | FV663C313BA | GCI82714 | JB3G3A427BB | GCI82780 | F3T2203010 | GCI82885 | 8D0498103A | GCI83002 |
| 31608681521 | GCI82649 | 49582A8050 | GCI82715 | 1284950100 | GCI82787 | 1253820100 | GCI82886 | 8D0498103AX | GCI83002 |
| 31608681529 | GCI82649 | 4303048050 | GCI82716 | 1284950200 | GCI82787 | SA2H2203020 | GCI82886 | 321498103B | GCI83003 |
| 31608681528 | GCI82650 | 3210002AVN1000 | GCI82717 | 1352645100 | GCI82787 | 2203200CD03AA | GCI82887 | 811498103A | GCI83003 |
| 31608681530 | GCI82650 | 3210001AVN1001 | GCI82718 | HA2ER2203010 | GCI82787 | 2203100CD03AA | GCI82888 | 893498103 | GCI83003 |
| 4236042030 | GCI82651 | 3210002ARD0200 | GCI82719 | HADEK2203010A | GCI82787 | 2203100CR01AB | GCI82888 | 893498103X | GCI83003 |
| 391007254R | GCI82652 | 3210001ARD0200 | GCI82720 | HADEK2203020A | GCI82787 | 2203100MK07CD08 | GCI82888 | 113501331 | GCI83005 |
| 391001011R | GCI82653 | 495924D050 | GCI82721 | 430400D150 | GCI82788 | CD569F2501010300AB | GCI82888 | 113598101 | GCI83005 |
| 391003844R | GCI82653 | 8943126760 | GCI82722 | GT0522620 | GCI82825 | S311F2501010204 | GCI82888 | 171498103 | GCI83005 |
| 391009375R | GCI82653 | FT0H22520 | GCI82728 | GT0L2560X | GCI82825 | 1103353400 | GCI82889 | 171498103CX | GCI83005 |
| FTD622520 | GCI82654 | FT0J2550X | GCI82728 | 9103300900 | GCI82827 | 1103360100 | GCI82889 | 1H0407331A | GCI83005 |
| 3910100Q7K | GCI82655 | 3210002ARD0100 | GCI82729 | A9103300900 | GCI82827 | 1127923700 | GCI82889 | 321407331 | GCI83005 |
| 391019506R | GCI82655 | 3210001ARD0100 | GCI82730 | 9103300400 | GCI82828 | 1146406500 | GCI82889 | 321498103 | GCI83005 |
| 391007937R | GCI82656 | 3210001AFC0000 | GCI82731 | A9103300400 | GCI82828 | HA2203010 | GCI82889 | 321498103V | GCI83005 |
| 1773301002 | GCI82657 | 3210002AFC0000 | GCI82731 | 9103301100 | GCI82829 | HA2203010B | GCI82889 | 321498103X | GCI83005 |
| 1773305300 | GCI82657 | 52044144 | GCI82732 | A9103301100 | GCI82829 | HA2203020 | GCI82889 | 321498350V | GCI83005 |
| A1773301002 | GCI82657 | 52044145 | GCI82732 | 9103301000 | GCI82830 | HA2203020B | GCI82889 | 321498350X | GCI83005 |
| A1773305300 | GCI82657 | 4304002410 | GCI82733 | A9103301000 | GCI82830 | 10762786 | GCI82892 | 4402235 | GCI83005 |
| 8943131030 | GCI82662 | 4304002560 | GCI82733 | 36012426 | GCI82831 | 10762788 | GCI82893 | 547498103 | GCI83005 |
| 3910000Q7D | GCI82663 | 4303002150 | GCI82734 | GP1822620 | GCI82832 | 3817A198 | GCI82894 | 6Q0498103 | GCI83005 |
| 391002670R | GCI82663 | 4304002550 | GCI82734 | GP1822620B | GCI82832 | 31609806468 | GCI82895 | 807407331 | GCI83005 |
| 44310T50305 | GCI82666 | GT0522520 | GCI82735 | GP1822620C | GCI82832 | 391011804R | GCI82896 | JZW498350AX | GCI83005 |
| 44310TWB305 | GCI82666 | GT0L2550X | GCI82735 | GP1822620D | GCI82832 | 391019799R | GCI82896 | 191407331 | GCI83006 |
| 44310T50300 | GCI82667 | 496922J150 | GCI82737 | 7H0498104B | GCI82833 | 391001097R | GCI82897 | 191407331A | GCI83006 |
| 44310T51300 | GCI82667 | 1673308801 | GCI82738 | 7H0498104BX | GCI82833 | 391002354R | GCI82897 | 1H0407331B | GCI83006 |
| 44310TWBH00 | GCI82667 | A1673308801 | GCI82738 | 4340402010 | GCI82834 | 391006890R | GCI82898 | 1H0407331D | GCI83006 |
| 31608486205 | GCI82668 | 1673308701 | GCI82739 | 31608643371 | GCI82835 | 391013701R | GCI82899 | 1J0407331H | GCI83006 |
| 31608643184 | GCI82668 | 1673308901 | GCI82739 | 31608643373 | GCI82835 | 11022056 | GCI82900 | 321407331D | GCI83006 |
| 423400E040 | GCI82670 | A1673308701 | GCI82739 | 31608661689 | GCI82835 | 10896492 | GCI82902 | A11XLB3AH2203051E | GCI83006 |
| 423600E010 | GCI82670 | A1673308901 | GCI82739 | 31608643372 | GCI82836 | 10715587 | GCI82903 | 1J0498103J | GCI83007 |
| 391005742R | GCI82671 | 1617416480 | GCI82740 | 31608643374 | GCI82836 | 3817A464 | GCI82906 | 1J0498103JX | GCI83007 |
| 391009804R | GCI82671 | 9839513280 | GCI82740 | FT0222520A | GCI82837 | 3817A463 | GCI82907 | 4B0198103 | GCI83007 |
| 36051050 | GCI82676 | 49500J7230 | GCI82741 | FT0N22520A | GCI82837 | 10986215 | GCI82910 | 4B0498103 | GCI83007 |
| 2303100XKV09A | GCI82687 | 49501J7230 | GCI82741 | FT0222620 | GCI82838 | T15XLB3AF2203050C | GCI82911 | 4B0498103X | GCI83007 |
| 2303100XKV09B | GCI82687 | FTC822620 | GCI82742 | FT0J22620 | GCI82838 | T15XLB3AF2203060C | GCI82911 | 8E0407272BA | GCI83007 |
| G1FZ3B436C | GCI82695 | GT0B2560X | GCI82742 | 52116197 | GCI82842 | T21XLB3AF2203050F | GCI82911 | 8E498103C | GCI83007 |
| 1693605600 | GCI82700 | FTC122620 | GCI82743 | 53489835 | GCI82842 | T21XLB3AF2203060F | GCI82911 | 171407331F | GCI83008 |
| 169360560080 | GCI82700 | FTC122520 | GCI82744 | 68469887AA | GCI82842 | 423400E140 | GCI82919 | 171498103C | GCI83008 |
| 1693701572 | GCI82700 | 49535G4400 | GCI82745 | 68504362AA | GCI82842 | 423400E150 | GCI82919 | 191407331E | GCI83008 |
| 1693702772 | GCI82700 | 49535G4405 | GCI82745 | 77368733 | GCI82842 | 423400E160 | GCI82919 | 1H0407331H | GCI83008 |
| 1693705572 | GCI82700 | 49535G3000 | GCI82746 | K68504362AA | GCI82842 | 423400E170 | GCI82919 | 1J0498103 | GCI83008 |
| 169370557280 | GCI82700 | 49535G3005 | GCI82746 | 52170753 | GCI82843 | 33207646872 | GCI82920 | 1J0498103X | GCI83008 |
| 1693706372 | GCI82700 | 4340406020 | GCI82747 | 53489834 | GCI82843 | 33207646869 | GCI82921 | 1K0498103B | GCI83008 |
| 2043301600 | GCI82700 | 4340406050 | GCI82747 | 68469878AA | GCI82843 | 495R3M5000 | GCI82922 | 1K0498103BX | GCI83008 |
| 2043301601 | GCI82700 | 434040A020 | GCI82747 | 7092939 | GCI82843 | 495L3P2400 | GCI82923 | 321498103A | GCI83008 |
| 2043302301 | GCI82700 | 1642344480 | GCI82748 | 77368728 | GCI82843 | 1J0498103E | GCI83001 | 431407331E | GCI83008 |
| A1693701572 | GCI82700 | 9827832680 | GCI82748 | 39069611 | GCI82849 | 1J0498103EX | GCI83001 | 5Q0598103 | GCI83008 |
| A1693702772 | GCI82700 | 10766803 | GCI82749 | 13334725 | GCI82850 | 251598101A | GCI83001 | 5Q0598103X | GCI83008 |
| A1693705572 | GCI82700 | 495001C451 | GCI82762 | 9825384180 | GCI82859 | 431407311G | GCI83001 | 6Q0498103A | GCI83008 |

| COMPETITOR | G-AP Ref. | COMPETITOR | G-AP Ref. | COMPETITOR | G-AP Ref. | COMPETITOR | G-AP Ref. | COMPETITOR | G-AP Ref. |
|---|---|---|---|---|---|---|---|---|---|
| OE | | 8R0598099 | GCI83039 | GX734K139DB | GCI83188 | 2280159 | GCI83226 | 3210H04DB1PA01 | GCI83282 |
| | | 8R0598099X | GCI83039 | HK834K138AA | GCI83188 | 2527106 | GCI83226 | 118816500A | GCI83283 |
| 6Q0498103AX | GCI83008 | 8K0501203M | GCI83040 | HK834K139AA | GCI83188 | GK213C313CA | GCI83226 | 118816599A | GCI83283 |
| ZBC407331 | GCI83008 | 8K0501203MX | GCI83040 | LR092750 | GCI83188 | 39711AR402 | GCI83227 | 142011900B | GCI83284 |
| 191498104 | GCI83009 | 1K0498104 | GCI83041 | LR092751 | GCI83188 | 68248719AD | GCI83228 | 162663800A | GCI83284 |
| 191498104A | GCI83009 | 1K0498104A | GCI83041 | T2H3341 | GCI83188 | 68248718AD | GCI83229 | 142011300B | GCI83285 |
| 191498104X | GCI83009 | 1K0498104AX | GCI83041 | T4A1808 | GCI83188 | 2203100AW10 | GCI83230 | 155310900B | GCI83285 |
| 321498103C | GCI83009 | 1K0498104X | GCI83041 | T4A1810 | GCI83188 | 2203200BN09 | GCI83231 | 162663600A | GCI83285 |
| 321498103CV | GCI83009 | 8K0501203M | GCI83044 | T4N11522 | GCI83188 | C211F2501010305 | GCI83231 | 9X433B436AA | GCI83286 |
| 321498103CX | GCI83009 | 8K0501203MX | GCI83044 | T4N19016 | GCI83188 | 4304012160 | GCI83232 | C2S47416 | GCI83286 |
| 357498104 | GCI83009 | HK833N129AB | GCI83083 | 52043358 | GCI83189 | 2311990 | GCI83233 | 44101M68P10 | GCI83287 |
| 357498104V | GCI83009 | T4A1863 | GCI83083 | 59259017 | GCI83189 | DV6P3C313HA | GCI83233 | 44102M68P10 | GCI83287 |
| 357498104X | GCI83009 | HK833N128AB | GCI83084 | K68421427AA | GCI83189 | 2203200MK06CD06 | GCI83236 | 11339390 | GCI83288 |
| 535498104 | GCI83009 | T4A1862 | GCI83084 | 31608742386 | GCI83190 | S311F2501010303 | GCI83236 | 11339389 | GCI83289 |
| 191498103 | GCI83011 | T15XLB3AF2203060B | GCI83087 | 1246405500 | GCI83191 | SA6225520 | GCI83239 | 4881214AG | GCI83291 |
| 191498103A | GCI83011 | T11XLB3AH2203070D | GCI83090 | STE2201020 | GCI83191 | 2326009 | GCI83240 | 1886892 | GCI83292 |
| 191498103C | GCI83011 | 154000284AA | GCI83091 | 1246336700 | GCI83192 | KV663C356BA | GCI83240 | F1F13C313EA | GCI83292 |
| 191498103CV | GCI83011 | 154000285AA | GCI83091 | 1246336900 | GCI83192 | 52123523AA | GCI83241 | 2203200BQ05 | GCI83293 |
| 191498103CX | GCI83011 | J422203020CA | GCI83091 | 1307607300 | GCI83192 | 4303050030 | GCI83242 | S111F2501010302 | GCI83293 |
| 191498103X | GCI83011 | J602203020CS | GCI83091 | STE2201010B | GCI83192 | 1607039480 | GCI83244 | 36051042 | GCI83295 |
| 191498104C | GCI83011 | RDB122520 | GCI83092 | STE2203010 | GCI83192 | 9671931780 | GCI83244 | 495922F600 | GCI83296 |
| 1J0498103A | GCI83011 | FG0522520 | GCI83093 | STE2203020 | GCI83192 | 1607039580 | GCI83245 | 495922F606 | GCI83296 |
| 1J0498103AX | GCI83011 | FG0522520A | GCI83093 | 10489298 | GCI83193 | 9671931880 | GCI83245 | EJ323B436BB | GCI83302 |
| 321498103D | GCI83011 | 4411481P00 | GCI83096 | 2203200CD02 | GCI83194 | 32324586 | GCI83248 | LR061595 | GCI83302 |
| 357498103 | GCI83011 | 4411481P01 | GCI83096 | S311F2501010301 | GCI83194 | 36003706 | GCI83248 | LR149105 | GCI83302 |
| 357498103A | GCI83011 | 2303102XST11A | GCI83097 | 2203100CD02 | GCI83195 | 2592567 | GCI83249 | RMEJ323B436BB | GCI83302 |
| 357498103B | GCI83011 | T11XLB3AH2203060D | GCI83098 | S311F2501010201 | GCI83195 | NK414K138AD | GCI83249 | 118816100D | GCI83303 |
| 357498103BX | GCI83011 | 154000353AA | GCI83099 | 4341042390 | GCI83199 | 2592568 | GCI83250 | 104416800A | GCI83304 |
| 357498103V | GCI83011 | 154000354AA | GCI83099 | 4342042280 | GCI83200 | NK414K139AD | GCI83250 | 118811599A | GCI83304 |
| 357498103X | GCI83011 | 2303104XST11A | GCI83100 | 495A3MA000 | GCI83202 | EA4125620 | GCI83251 | 36000562 | GCI83312 |
| 357498350V | GCI83011 | 2403100XST11A | GCI83101 | J9D34B402AC | GCI83204 | EA3125520 | GCI83252 | 6393300801 | GCI83314 |
| 357498350X | GCI83011 | 2403101XST11A | GCI83101 | T4K1076 | GCI83204 | 59347002 | GCI83253 | A6393300801 | GCI83314 |
| A11XLB3AH2203050E | GCI83011 | 2303105XST11A | GCI83102 | 46308972 | GCI83205 | SA6225620 | GCI83255 | 2403100XKY88A | GCI83315 |
| JZW498350BX | GCI83011 | 154000259AA | GCI83103 | 46354308 | GCI83205 | 4473305800 | GCI83256 | 2403200XKY88A | GCI83315 |
| 893498103B | GCI83014 | 154000260AA | GCI83103 | 52062977 | GCI83205 | 4473306800 | GCI83256 | 59259117 | GCI83316 |
| 893498103BX | GCI83014 | J682203010 | GCI83103 | 53489836 | GCI83205 | A4473305800 | GCI83256 | T21XLB3AF2203050E | GCI83319 |
| 1K0407331 | GCI83016 | J682203020 | GCI83103 | 68267182AA | GCI83205 | A4473306800 | GCI83256 | 3210H06ED1PA01 | GCI83325 |
| 1K0498103A | GCI83016 | T11XLB3AH2203051 | GCI83104 | K68267182AA | GCI83205 | 4473308500 | GCI83257 | 3210H03ED1PA01 | GCI83326 |
| 1K0498103AX | GCI83016 | T15XLB3AF2203050W | GCI83105 | 1703236 | GCI83206 | 4473308700 | GCI83257 | 154000098AA | GCI83327 |
| 4H0498103A | GCI83022 | 154000009AA | GCI83106 | AV4N3C313AA | GCI83206 | A4473308500 | GCI83257 | 154000099AA | GCI83327 |
| 4H0498103AV | GCI83022 | 154000079AA | GCI83107 | RD022550X | GCI83207 | A4473308700 | GCI83257 | 154000100AA | GCI83328 |
| 4H0498103AX | GCI83022 | 154000078AA | GCI83108 | RD022560X | GCI83207 | 36003707 | GCI83258 | 154000101AA | GCI83328 |
| 8K0407271Q | GCI83022 | 154000173AA | GCI83109 | 4303078020 | GCI83208 | 36003709 | GCI83258 | 4082049600 | GCI83329 |
| 8K0498103 | GCI83022 | 154000195AA | GCI83109 | 68292313AB | GCI83209 | 36011712 | GCI83259 | 4082086700 | GCI83329 |
| 8K0498103D | GCI83022 | 154000196AA | GCI83109 | 68292314AB | GCI83209 | 434100E180 | GCI83260 | 4082079000 | GCI83330 |
| 8K0498103DV | GCI83022 | 154000203AA | GCI83109 | 44310TGN306 | GCI83210 | 31602375507 | GCI83261 | 4082079100 | GCI83331 |
| 8K0498103DX | GCI83022 | 154000204AA | GCI83109 | 28492AL000 | GCI83211 | 31602397421 | GCI83261 | 31325076 | GCI83335 |
| 8R0407271C | GCI83022 | 154000153AA | GCI83110 | 42320TX4A11 | GCI83212 | 31608611931 | GCI83261 | 36012422 | GCI83335 |
| 8R0498103 | GCI83022 | 154000307AA | GCI83111 | 2203100MK06CD06 | GCI83213 | 31608643381 | GCI83261 | 4082101300 | GCI83336 |
| 7L0501331 | GCI83027 | 154000305AA | GCI83112 | 2203100MK06DS01 | GCI83213 | 31608661685 | GCI83261 | 4082100800 | GCI83337 |
| 7L0598103 | GCI83027 | 31437065 | GCI83116 | S311F2501010203 | GCI83213 | 434030R020 | GCI83262 | 4082101000 | GCI83338 |
| 7L0598103X | GCI83027 | 36010139 | GCI83116 | 2203100BQ04 | GCI83214 | 2203200BQ04 | GCI83265 | 8890389697 | GCI83338 |
| 95533290200 | GCI83027 | 49582C5230 | GCI83117 | S111F2501010202 | GCI83214 | S111F2501010303 | GCI83265 | 4082102500 | GCI83339 |
| 5Q0407271DG | GCI83028 | 495L3P2200 | GCI83117 | 2203100BQ05 | GCI83215 | 4303005120 | GCI83266 | 4082094900 | GCI83340 |
| 5Q0498103A | GCI83028 | 49582C5280 | GCI83118 | S111F2501010203 | GCI83215 | 2203200MK07CD08 | GCI83267 | 4082083000 | GCI83341 |
| 5Q0498103AX | GCI83028 | 495R3CY000 | GCI83118 | J9D33D402AD | GCI83219 | S311F2501010304 | GCI83267 | 4082101700 | GCI83341 |
| 1481245 | GCI83031 | 495R3P2250 | GCI83118 | T4K10281 | GCI83219 | 2203200AW10 | GCI83269 | 4082094800 | GCI83342 |
| 7G913C313BA | GCI83031 | 2303103XST11A | GCI83180 | 4082008800 | GCI83220 | 4703300300 | GCI83273 | 4082576400 | GCI83343 |
| 1481247 | GCI83032 | 2303101XST01A | GCI83181 | 4630812655263578 | GCI83221 | A4703300300 | GCI83273 | 391013501R | GCI83345 |
| 7G913C356BA | GCI83032 | 2303101XST11A | GCI83181 | 55263578 | GCI83221 | 10621766 | GCI83274 | 391019099R | GCI83345 |
| 7H0498103B | GCI83033 | 2303100XST01A | GCI83182 | 42310TLAA21 | GCI83222 | 10621770 | GCI83275 | 2303300XK85XB | GCI83346 |
| 7H0498103BX | GCI83033 | 2303100XST11A | GCI83182 | 42311TLAA21 | GCI83222 | 3220H06ED1PA01 | GCI83276 | 391000372R | GCI83347 |
| 7E0407272AE | GCI83037 | 4082006900 | GCI83183 | 495L3R4000 | GCI83223 | 3220H03ED1PA01 | GCI83277 | 391003955R | GCI83347 |
| 7E0407272Q | GCI83037 | 154000174AA | GCI83184 | 4303058060 | GCI83224 | 10564480 | GCI83278 | J692203010 | GCI83348 |
| 8R0501203C | GCI83039 | 9W834K138CD | GCI83188 | 4303078010 | GCI83224 | C00186050 | GCI83279 | J692203020 | GCI83348 |
| 8R0501203CX | GCI83039 | C2Z4812 | GCI83188 | 2280161 | GCI83225 | C00186051 | GCI83279 | 154000094AA | GCI83349 |
| 8R0501203D | GCI83039 | GX734K138DB | GCI83188 | 2527108 | GCI83225 | 391004JA2A | GCI83280 | 154000095AA | GCI83349 |
| 8R0501203DX | GCI83039 | GX734K138GA | GCI83188 | GK213C356CA | GCI83225 | 397114JA1A | GCI83280 | T21XLB3AF2203050 | GCI83350 |

| COMPETITOR | G-AP Ref. | COMPETITOR | G-AP Ref. | COMPETITOR | G-AP Ref. | COMPETITOR | G-AP Ref. | COMPETITOR | G-AP Ref. |
|---|---|---|---|---|---|---|---|---|---|
| OE | | L1T63C356BB | GCI83409 | A2963303400 | GCI83465 | 3QG498103D | GCI83540 | 2006412 | GCI83648 |
| | | 2513172 | GCI83410 | A2973305501 | GCI83465 | 5QN407272N | GCI83540 | DV6P3C356FA | GCI83648 |
| 4082071500 | GCI83351 | JX673C313KA | GCI83410 | 4082576500 | GCI83466 | GD0022520 | GCI83544 | 2001844 | GCI83649 |
| 4082082900 | GCI83351 | 2512530 | GCI83411 | 9103302900 | GCI83467 | GD0022620 | GCI83545 | DV6P3C313GA | GCI83649 |
| 8891405225 | GCI83351 | JX673C356KA | GCI83411 | 9103304100 | GCI83467 | 2066184 | GCI83546 | FG0122520 | GCI83651 |
| 2201200XSZ09B | GCI83352 | 36003562 | GCI83412 | A9103302900 | GCI83467 | EV6P3B436BB | GCI83546 | 7H0498104M | GCI83652 |
| 2201100XSZ09B | GCI83353 | 36003561 | GCI83413 | A9103304100 | GCI83467 | 55233397 | GCI83547 | 7H0498104MX | GCI83652 |
| 4082049500 | GCI83354 | 2550693 | GCI83414 | 154000235AA | GCI83469 | 5523339746308281 | GCI83547 | 2303300XKU29A | GCI83653 |
| 4082066700 | GCI83354 | L1T63C313BB | GCI83414 | 154000234AA | GCI83470 | 55233396 | GCI83548 | 2303300XKU87A | GCI83653 |
| 2303100XSZ20B | GCI83355 | 1609609280 | GCI83415 | 154000236AA | GCI83471 | 5523339646308281 | GCI83548 | 391008349R | GCI83654 |
| FTC922620 | GCI83356 | 9804895180 | GCI83415 | 154000237AA | GCI83471 | 59259037 | GCI83548 | 391018515R | GCI83659 |
| 4304012170 | GCI83357 | 391004534R | GCI83417 | 495L3N7170 | GCI83472 | 4340433010 | GCI83552 | 2303300XKY48B | GCI83662 |
| 3210002CAD0200 | GCI83358 | 391009795R | GCI83417 | 495R3N7060 | GCI83473 | 31608607263 | GCI83553 | 2303400XKY88A | GCI83663 |
| 2303200XSZ09A | GCI83359 | 391011074R | GCI83418 | 1682747780 | GCI83474 | 31608643367 | GCI83553 | 2303400XKU29A | GCI83673 |
| 2303400XKZ21A | GCI83359 | 391011951R | GCI83418 | 9837405680 | GCI83474 | 4082006000 | GCI83556 | 2303400XKU87A | GCI83673 |
| 4082064500 | GCI83360 | 391006307R | GCI83419 | 1682747880 | GCI83475 | 4082006300 | GCI83556 | 982501517 | GCI83674 |
| 4082581500 | GCI83361 | 2303400XKY28A | GCI83420 | 9841939180 | GCI83475 | 397716RC2D | GCI83557 | 391010424R | GCI83676 |
| 4082581600 | GCI83362 | 2933501100 | GCI83421 | 44310T1TE11 | GCI83476 | 1349073800 | GCI83558 | FD8022620 | GCI83681 |
| T152203020BW | GCI83363 | A2933501100 | GCI83421 | 44310TLZH11 | GCI83476 | 1349074000 | GCI83558 | 2303127XGW01A | GCI83689 |
| 4082064800 | GCI83364 | 1642344580 | GCI83423 | 397116RC2D | GCI83479 | 1350015600 | GCI83558 | 2303400XKZ4UA | GCI83693 |
| 4082073700 | GCI83364 | 9827832580 | GCI83423 | 8450008103 | GCI83480 | 1350015900 | GCI83558 | 8450032632 | GCI83712 |
| 4082008600 | GCI83365 | 391019028R | GCI83425 | 8450008104 | GCI83480 | 1361133200 | GCI83558 | 8450032633 | GCI83712 |
| 4082064200 | GCI83366 | 4411481PP0 | GCI83426 | 8450020013 | GCI83480 | 1361133300 | GCI83558 | 77368732 | GCI83713 |
| 10564473 | GCI83367 | 4411481PP1 | GCI83426 | 8450020014 | GCI83480 | EM2EU2203020B | GCI83558 | 2303300AKZ65A | GCI83717 |
| 495L3Q0200 | GCI83368 | 2476042 | GCI83431 | 2433301400 | GCI83482 | SC2EE2203010E | GCI83558 | 2303300XKZ65A | GCI83717 |
| 495L3Q6250 | GCI83368 | 2476044 | GCI83431 | A2433301400 | GCI83482 | SC2EE2203020E | GCI83558 | 9X433B437AA | GCI83722 |
| 495R3Q0200 | GCI83368 | 2481573 | GCI83431 | 31609806473 | GCI83483 | 391006UM2D | GCI83559 | C2S47417 | GCI83722 |
| 495R3Q6250 | GCI83368 | BK3V3B436AB | GCI83431 | 44310T1GE00 | GCI83485 | 391016UM2D | GCI83559 | 495L3N7070 | GCI83724 |
| 1673508401 | GCI83369 | BK3V3B437AB | GCI83431 | 44310T1G405 | GCI83486 | 154000238AA | GCI83560 | 495L3N7210 | GCI83724 |
| A1673508401 | GCI83369 | GK3V3B437AB | GCI83431 | 3910000Q7E | GCI83487 | 154000239AA | GCI83561 | 495R3N7070 | GCI83725 |
| 1673508301 | GCI83370 | 95228732 | GCI83432 | 391008943R | GCI83487 | 391006UB6A | GCI83562 | 495R3N7210 | GCI83725 |
| A1673508301 | GCI83370 | 1311375000 | GCI83433 | 3910100Q7E | GCI83488 | 1EA501203J | GCI83571 | 495R3N7050 | GCI83727 |
| 4411761MA0 | GCI83371 | 95228724 | GCI83434 | 391014587R | GCI83488 | 1EA501204J | GCI83571 | 495L3N7050 | GCI83728 |
| 11135813 | GCI83372 | FTD722620 | GCI83436 | 32240092 | GCI83489 | 2303102XNW01A | GCI83582 | 391006526R | GCI83729 |
| 11135812 | GCI83373 | K00301061 | GCI83439 | 36012752 | GCI83489 | 2303103XNW01B | GCI83583 | 391008444R | GCI83729 |
| 3230005CAD0000 | GCI83375 | K00301063 | GCI83439 | 2303124XGW01A | GCI83490 | 46308963 | GCI83584 | 391014926R | GCI83730 |
| 3230006CAD0000 | GCI83375 | K00301065 | GCI83439 | 2303104XNW01A | GCI83491 | 59259218 | GCI83584 | 391018755R | GCI83730 |
| 3210001CAD0100 | GCI83376 | 4082579600 | GCI83440 | 2303105XNW01A | GCI83492 | 68275022AA | GCI83584 | 1603060 | GCI83731 |
| 2303300XKY28A | GCI83377 | 4304050020 | GCI83443 | 397714BE3B | GCI83493 | 68413632AA | GCI83584 | 95908474 | GCI83731 |
| 4082064000 | GCI83378 | 2224940 | GCI83448 | 43410K0060 | GCI83494 | K68275022AA | GCI83584 | 33207597677 | GCI83732 |
| 8892775359 | GCI83379 | 2481567 | GCI83448 | 43420K0050 | GCI83494 | K68413632AA | GCI83584 | 33207597678 | GCI83732 |
| 4082071000 | GCI83380 | GK3V3B436AB | GCI83448 | 2463308800 | GCI83495 | 46308944 | GCI83585 | 33207624206 | GCI83732 |
| 4082090000 | GCI83380 | KTGK3V3C313AA | GCI83448 | A2463308800 | GCI83495 | 59259219 | GCI83585 | 391010581R | GCI83736 |
| 8891560262 | GCI83380 | 9073301000 | GCI83449 | LR047285 | GCI83500 | 68193667AC | GCI83586 | 391015630R | GCI83736 |
| 4082071200 | GCI83381 | A9073301000 | GCI83449 | 49500S1010 | GCI83505 | 2303100XPW01A | GCI83592 | 2485280 | GCI83740 |
| 32240101 | GCI83382 | 49582G8250 | GCI83450 | 2483523 | GCI83509 | 2303101XPW01A | GCI83592 | M1T63C313FA | GCI83740 |
| 4082057200 | GCI83382 | 4340360050 | GCI83451 | M1T63C356FA | GCI83509 | 2303102XPW01A | GCI83592 | 391006019R | GCI83741 |
| 4082057400 | GCI83383 | 2HJ407271A | GCI83453 | GG6422620 | GCI83510 | 2303103XPW01A | GCI83592 | 2303400AKZ65A | GCI83742 |
| 4082092500 | GCI83384 | MB3Z3A427G | GCI83453 | 430400D130 | GCI83511 | 2456259 | GCI83604 | 2303400XKZ65A | GCI83742 |
| 4082092700 | GCI83385 | 2HJ407272B | GCI83454 | 4340402050 | GCI83511 | KTLX673C356BAA | GCI83604 | 391002423R | GCI83743 |
| 31607646816 | GCI83386 | MB3Z3A428K | GCI83454 | 4342002K00 | GCI83511 | LX6Z3B437B | GCI83604 | 391009653R | GCI83748 |
| 1666449580 | GCI83388 | 2973500702 | GCI83455 | 52123760AB | GCI83515 | 43040K0020 | GCI83605 | 2512518 | GCI83756 |
| 9836235180 | GCI83388 | A2973500702 | GCI83455 | 495L3G4250 | GCI83516 | 3210002ARD0500 | GCI83606 | JX673C356DA | GCI83756 |
| 1675589880 | GCI83389 | 2973500602 | GCI83456 | 495R3G4250 | GCI83516 | 3210001AVN1300 | GCI83607 | 8893033493 | GCI83760 |
| 9836235280 | GCI83389 | A2973500602 | GCI83456 | 31607639442 | GCI83518 | 2303104AGW01A | GCI83609 | 8893033487 | GCI83761 |
| 8832011BAD0000 | GCI83390 | 1305634500 | GCI83458 | GDD522620 | GCI83519 | 2303103AGW01A | GCI83610 | 391007589R | GCI83762 |
| 2303200ASZ20B | GCI83391 | SA3HE2203010A | GCI83458 | GDD522520 | GCI83520 | 430400E100 | GCI83627 | 391011511R | GCI83762 |
| T152203010BV | GCI83392 | 1305634400 | GCI83459 | C97715FP0B | GCI83521 | 430400E101 | GCI83627 | 392943002R | GCI83762 |
| T15XLB3AF2203050B | GCI83393 | SA3HE2203020A | GCI83459 | 5QN498103 | GCI83523 | 2203200CN02 | GCI83629 | LR165021 | GCI83763 |
| 2513170 | GCI83394 | 7LA498104D | GCI83461 | 5QN498103M | GCI83523 | 2203100CN02 | GCI83630 | M8E23N128AC | GCI83763 |
| JX673C313JA | GCI83394 | 6393502310 | GCI83462 | 1611143380 | GCI83528 | 59259178 | GCI83632 | 31608742385 | GCI83767 |
| 2512520 | GCI83395 | A6393502310 | GCI83462 | 9807160680 | GCI83528 | 50563995 | GCI83633 | 11389284 | GCI83768 |
| JX673C356JA | GCI83395 | 2933300600 | GCI83463 | 1609609380 | GCI83529 | 59259009 | GCI83637 | 11389285 | GCI83769 |
| 36003708 | GCI83396 | A2933300600 | GCI83463 | 9675025780 | GCI83529 | 391005190R | GCI83638 | 10986197 | GCI83771 |
| 3230006BAD0002 | GCI83397 | 2963303500 | GCI83464 | 4304002050 | GCI83530 | 1773300902 | GCI83641 | 10368337 | GCI83773 |
| 3815A680 | GCI83398 | A2963303500 | GCI83464 | 397114BB2B | GCI83532 | 1773303103 | GCI83641 | 10211906 | GCI83776 |
| 3210002CAD0100 | GCI83400 | A2973305601 | GCI83464 | 36012943 | GCI83536 | A1773300902 | GCI83641 | 10385798 | GCI83777 |
| 2550699 | GCI83409 | 2963303400 | GCI83465 | 5QN498103A | GCI83539 | A1773303103 | GCI83641 | 495L3J9510 | GCI83781 |

| COMPETITOR | G-AP Ref. | COMPETITOR | G-AP Ref. | COMPETITOR | G-AP Ref. | COMPETITOR | G-AP Ref. | COMPETITOR | G-AP Ref. |
|---|---|---|---|---|---|---|---|---|---|
| OE | | 44310TGNE81 | GCI83843 | C211F2501010301 | GCI83918 | 31605A4E432 | GCI83986 | 3910000Q5M | GCI84053 |
| | | 1337164500 | GCI83850 | 2203100BN02 | GCI83919 | 391006107R | GCI83987 | 4411754P60 | GCI84054 |
| 495R3J9510 | GCI83781 | 1337164800 | GCI83850 | C211F2501010201 | GCI83919 | 391012121R | GCI83987 | 4411754P61 | GCI84054 |
| 391017183R | GCI83782 | 1353476700 | GCI83850 | 1332122500 | GCI83920 | 392943002R | GCI83987 | 2461399 | GCI84055 |
| 4203370300 | GCI83782 | 1353476800 | GCI83850 | 1332122700 | GCI83920 | 391005721R | GCI83988 | KTLX673C356MAA | GCI84055 |
| A4203370300 | GCI83782 | EKEB2201010A | GCI83850 | EKEB2201010 | GCI83920 | 4203371200 | GCI83988 | 2456253 | GCI84056 |
| 8975289800 | GCI83783 | EKEB2201020A | GCI83850 | EKEB2201020 | GCI83920 | A4203371200 | GCI83988 | KTLX673C313CAA | GCI84056 |
| 4473503900 | GCI83784 | SA3EK2203010 | GCI83850 | 4082096600 | GCI83921 | 391019476R | GCI83989 | 2460712 | GCI84057 |
| A4473503900 | GCI83784 | SA3EK2203020 | GCI83850 | 4082096700 | GCI83922 | 4203370500 | GCI83989 | KTLX673C313MAA | GCI84057 |
| FTB422620 | GCI83785 | GJ323B436BB | GCI83851 | 10143065 | GCI83925 | A4203370500 | GCI83989 | 2203200CR01AB | GCI84058 |
| 391003401R | GCI83786 | LR117133 | GCI83851 | 31609884798 | GCI83935 | 2203200MK06CD09 | GCI83991 | CD569F2501010403AB | GCI84058 |
| 10287675 | GCI83787 | 2543307901 | GCI83852 | 4533506300 | GCI83944 | 2203200MK06DS01 | GCI83991 | 1EA501203S | GCI84059 |
| 10368336 | GCI83789 | A2543307901 | GCI83852 | A4533506300 | GCI83944 | S311F2501010305 | GCI83991 | 1EA501204S | GCI84059 |
| 42438078 | GCI83790 | 2543308101 | GCI83853 | 4533506200 | GCI83945 | 2203100MK04CD11 | GCI83992 | 154000785AA | GCI84060 |
| 10415793 | GCI83793 | A2543308101 | GCI83853 | A4533506200 | GCI83945 | S311F2501010211 | GCI83992 | 154000786AA | GCI84060 |
| 327531 | GCI83795 | 1337162400 | GCI83858 | 391008095R | GCI83949 | 2203200MK04CD11 | GCI83993 | C97715FN0A | GCI84063 |
| 9686348680 | GCI83795 | 1337164600 | GCI83858 | 391009452R | GCI83949 | S311F2501010311 | GCI83993 | 4411484M00 | GCI84064 |
| 10575349 | GCI83796 | 1337164700 | GCI83858 | 2203100MK09 | GCI83953 | 43030F4070 | GCI83994 | 4411484M01 | GCI84064 |
| 10832505 | GCI83796 | 1337164900 | GCI83858 | C281F2501010401 | GCI83953 | 2203200AW14 | GCI83996 | 495L3Q0100 | GCI84066 |
| 59259285 | GCI83797 | EKEA2201010A | GCI83858 | 2203200MK09 | GCI83954 | S203F2501010301 | GCI83996 | 397714BE4B | GCI84067 |
| 10056946 | GCI83798 | EKEA2201020A | GCI83858 | C281F2501010301 | GCI83954 | 2203200BQ07 | GCI83997 | 3960000Q0A | GCI84068 |
| 10059645 | GCI83798 | EKEB2203010A | GCI83858 | 11447861 | GCI83955 | 2203200BQ11 | GCI83997 | 2461086 | GCI84069 |
| A00041400 | GCI83799 | EKEB2203020A | GCI83858 | 11447859 | GCI83956 | S111F2501010405 | GCI83997 | KTLX673C356DAA | GCI84069 |
| A00041401 | GCI83800 | 2200300P3060F05 | GCI83859 | 11362268 | GCI83957 | S111F2501010406 | GCI83997 | 4473507900 | GCI84070 |
| A00041402 | GCI83800 | 4233024050 | GCI83863 | 11447860 | GCI83957 | 9836046380 | GCI83998 | A4473507900 | GCI84070 |
| 1314130200 | GCI83801 | 4234024080 | GCI83863 | 11824413 | GCI83957 | 391001535R | GCI84005 | 495A3GI000 | GCI84073 |
| 1314130300 | GCI83801 | 1332120400 | GCI83866 | 2203100AW14 | GCI83958 | 391007305R | GCI84005 | 59259036 | GCI84077 |
| 1345613700 | GCI83801 | 1332122600 | GCI83866 | 2203100BQ07 | GCI83958 | 391015146R | GCI84006 | 5QN407272AA | GCI84080 |
| 1345622800 | GCI83801 | 1332122800 | GCI83866 | 2203100MK04CJ05 | GCI83958 | 391017471R | GCI84006 | 5Q0407271DS | GCI84081 |
| 1350222800 | GCI83801 | 1332122900 | GCI83866 | S111F2501010205 | GCI83958 | 2179891 | GCI84010 | 9103304300 | GCI84082 |
| 1350222900 | GCI83801 | EKEA2201010 | GCI83866 | S203F2501010201 | GCI83958 | 2584845 | GCI84010 | A9103304300 | GCI84082 |
| SA3EB2203010A | GCI83801 | EKEA2201020 | GCI83866 | 31605A44AB7 | GCI83960 | GN153C313GA | GCI84010 | 7LE498104 | GCI84088 |
| SA3EB2203020A | GCI83801 | EKEB2203010 | GCI83866 | 31605A4E431 | GCI83960 | JN153C313GA | GCI84010 | 7LE498104A | GCI84088 |
| 1349073900 | GCI83802 | EKEB2203020 | GCI83866 | 391003721R | GCI83962 | 2326007 | GCI84014 | 7LE498104C | GCI84088 |
| 1349074100 | GCI83802 | 36002494 | GCI83868 | 391005711R | GCI83962 | KV663C313CA | GCI84014 | 7LE498104X | GCI84088 |
| RD0422520 | GCI83803 | 1350015700 | GCI83869 | 434200D760 | GCI83966 | 95C501201AF | GCI84015 | 2326001 | GCI84311 |
| 2303106XGW02A | GCI83804 | 1350015800 | GCI83869 | 2203200MK04CJ05 | GCI83967 | 2584847 | GCI84016 | KV663C313BA | GCI84311 |
| 2200300U3410XZF041 | GCI83805 | SC2EE2203010F | GCI83869 | 1169209200 | GCI83968 | JN153C356GA | GCI84016 | 33211227599 | GCI85001 |
| 11440043 | GCI83807 | SC2EE2203020F | GCI83869 | SEH2203020 | GCI83968 | 52123521AD | GCI84017 | 33211227032 | GCI85005 |
| 11440044 | GCI83808 | 31608661686 | GCI83873 | 44310T1T305 | GCI83969 | 68035017AB | GCI84018 | 33211227172 | GCI85005 |
| 2303105XGW02A | GCI83810 | 4340924010 | GCI83880 | 2203200MK03 | GCI83970 | 8W0598103A | GCI84020 | 33211227597 | GCI85005 |
| 154000283AA | GCI83811 | GG4625500 | GCI83886 | 2203200MK03AW19AA | GCI83970 | 36010578 | GCI84021 | 33211227606 | GCI85005 |
| 154000282AA | GCI83812 | GG4625500A | GCI83886 | 2203200MK03AW23 | GCI83970 | 36003735 | GCI84022 | 33211229392 | GCI85005 |
| 2303400XKZ78A | GCI83813 | GG4625500B | GCI83886 | 2203200MK03DY21 | GCI83970 | 391003200R | GCI84023 | 33211229587 | GCI85005 |
| 1603322 | GCI83814 | GG4625500C | GCI83886 | C281F2501010404 | GCI83970 | 397714BE0B | GCI84025 | 33211227032 | GCI85009 |
| 95518275 | GCI83814 | 2203200AW11 | GCI83898 | C589F2501010301 | GCI83970 | 32249416 | GCI84029 | 33211227172 | GCI85009 |
| 2303300XKZ78A | GCI83818 | S2010470203 | GCI83898 | 2203100MK03 | GCI83971 | 31345297 | GCI84030 | 33211227597 | GCI85009 |
| 154000609AA | GCI83819 | 2203100AW11 | GCI83899 | 2203100MK03AW19AA | GCI83971 | 31345299 | GCI84031 | 33211227606 | GCI85009 |
| 154000355AA | GCI83820 | S2010470103 | GCI83899 | 2203100MK03AW23 | GCI83971 | 31345298 | GCI84032 | 33211229392 | GCI85009 |
| 154000536AA | GCI83820 | 2201100CR01AA | GCI83900 | 2203100MK03DY21 | GCI83971 | 31345295 | GCI84033 | 33211229587 | GCI85009 |
| 154000547AA | GCI83820 | 2201200CR01AA | GCI83900 | C281F2501010304 | GCI83971 | K8D24K138AC | GCI84035 | 31607609211 | GCI85012 |
| 154000608AA | GCI83820 | CD569F2502010200AA | GCI83900 | C589F2501010201 | GCI83971 | K8D24K139AB | GCI84035 | 31608605469 | GCI85012 |
| 2303200XSZ08B | GCI83821 | CD569F2502010301AA | GCI83900 | 31609884797 | GCI83973 | LR117567 | GCI84035 | 98133202450 | GCI85013 |
| 1014027860 | GCI83822 | C2D42128 | GCI83904 | 4340442020 | GCI83974 | LR133241 | GCI84035 | 31607545126 | GCI85014 |
| 4082005600 | GCI83822 | DW933N128AB | GCI83904 | 11339018 | GCI83975 | 43040F4100 | GCI84036 | 31607503538 | GCI85019 |
| 2226746 | GCI83823 | C2D42129 | GCI83905 | 11824411 | GCI83975 | 55213053 | GCI84039 | 31607505006 | GCI85019 |
| GN153C313NA | GCI83823 | DW933N129AB | GCI83905 | 10143174 | GCI83976 | 59259257 | GCI84040 | 31607565314 | GCI85019 |
| 59259126 | GCI83824 | 59259284 | GCI83906 | 2203100MK05ER01 | GCI83977 | 2226895 | GCI84042 | 33207568471 | GCI85020 |
| 391003170R | GCI83825 | 44116M68P41 | GCI83907 | 2203200MK05ER01 | GCI83977 | GN153C356SA | GCI84042 | 33207598037 | GCI85020 |
| 391009335R | GCI83825 | 44117M68P41 | GCI83907 | 391003037R | GCI83979 | 59259211 | GCI84043 | 33207598038 | GCI85020 |
| 4203372000 | GCI83825 | 113804000B | GCI83908 | 391011411R | GCI83980 | 2460704 | GCI84044 | 31607503537 | GCI85021 |
| A4203372000 | GCI83825 | 142016100A | GCI83908 | 31605A44AC0 | GCI83983 | KTLX673C313DAA | GCI84044 | 31607505005 | GCI85021 |
| 434030D010 | GCI83826 | 391017079R | GCI83909 | 31605A4E434 | GCI83983 | 495R3P1160 | GCI84045 | 31607561341 | GCI85021 |
| RTC322520 | GCI83836 | 391017833R | GCI83909 | 2692443 | GCI83984 | 495L3P1160 | GCI84046 | 31607565313 | GCI85021 |
| 1314365700 | GCI83837 | 31367905 | GCI83914 | PZ363C356AA | GCI83984 | 36003617 | GCI84047 | 31603450563 | GCI85026 |
| 1314367400 | GCI83837 | 22868218 | GCI83915 | 2692433 | GCI83985 | X0122030011 | GCI84049 | 31603450565 | GCI85026 |
| SC2EE2203010 | GCI83837 | 52123522AA | GCI83916 | PZ363C313AA | GCI83985 | X0122030012 | GCI84050 | 31607545125 | GCI85030 |
| SC2EE2203020 | GCI83837 | 2203200BN02 | GCI83918 | 31605A44AB8 | GCI83986 | 2200400U3450F041 | GCI84051 | 31607553945 | GCI85030 |

| COMPETITOR | G-AP Ref. | COMPETITOR | G-AP Ref. | COMPETITOR | G-AP Ref. | COMPETITOR | G-AP Ref. | COMPETITOR | G-AP Ref. |
|---|---|---|---|---|---|---|---|---|---|
| OE | | LR047284 | GCI85059 | 4668936AC | GCI88057 | MR528710 | GCI99084 | 8200436365 | GCI99160 |
| | | 33207566074 | GCI85063 | 32736Y | GCI88058 | MR331258 | GCI99085 | 8200436366 | GCI99160 |
| 31607622883 | GCI85030 | 33207566075 | GCI85063 | 32736Z | GCI88058 | MR528711 | GCI99085 | 8200790517 | GCI99160 |
| 31608631751 | GCI85030 | 33207581017 | GCI85063 | 1603038 | GCI88070 | MN147088 | GCI99089 | 8200790519 | GCI99160 |
| 3815A014 | GCI85031 | 33207581018 | GCI85063 | 95908475 | GCI88070 | MR276870 | GCI99092 | 2043301400 | GCI99166 |
| 33207561795 | GCI85036 | 33207581022 | GCI85063 | 1603050 | GCI88071 | MR350587 | GCI99092 | A2043301400 | GCI99166 |
| 33207561796 | GCI85036 | 33207614289 | GCI85063 | 95908478 | GCI88071 | ADU4378EVA | GCI99098 | 391001510R | GCI99169 |
| 33207568730 | GCI85036 | 33207614290 | GCI85063 | 68079566AA | GCI88093 | RV705 | GCI99098 | 8200264668 | GCI99169 |
| 33207580945 | GCI85036 | 33207614492 | GCI85063 | 68079566AB | GCI88093 | 51613H1000 | GCI99099 | 8200300713 | GCI99169 |
| 33207580946 | GCI85036 | 33207614493 | GCI85063 | 68193347AA | GCI88093 | 4950005100 | GCI99106 | 8200375538 | GCI99169 |
| 33207604591 | GCI85036 | 33207581021 | GCI85064 | K68079566AA | GCI88093 | 512229 | GCI99107 | 8200626038 | GCI99169 |
| 33207604592 | GCI85036 | 31607570275 | GCI85066 | K68079566AB | GCI88093 | 96391556 | GCI99107 | 8200661558 | GCI99169 |
| 33217553559 | GCI85036 | 31607605511 | GCI85066 | K68193347AA | GCI88093 | 96567442 | GCI99107 | 13166588 | GCI99186 |
| 33217553560 | GCI85036 | 31607558950 | GCI85067 | 68079565AA | GCI88094 | 36000550 | GCI99109 | 374625 | GCI99186 |
| 33217553563 | GCI85036 | 31607570274 | GCI85067 | 68079565AB | GCI88094 | 4950526A00 | GCI99112 | 93169677 | GCI99186 |
| 33217553564 | GCI85036 | 31607591682 | GCI85067 | 05017653AA | GCI89010 | 92225296 | GCI99127 | 13124680 | GCI99187 |
| 1643300701 | GCI85039 | 31607605512 | GCI85067 | 4886263AA | GCI89010 | 93225296 | GCI99127 | 24462250 | GCI99187 |
| 1643500010 | GCI85039 | 31607607938 | GCI85068 | 5017653AA | GCI89010 | 8200087857 | GCI99131 | 374552 | GCI99187 |
| 1643502910 | GCI85039 | 33209813708 | GCI85069 | 32728V | GCI99001 | 1693603972 | GCI99136 | 374580 | GCI99187 |
| A1643300701 | GCI85039 | 31609806465 | GCI85070 | 3272QC | GCI99001 | 1693606672 | GCI99136 | 93169670 | GCI99187 |
| A1643500010 | GCI85039 | 31609806469 | GCI85072 | 3272QE | GCI99001 | A1693603972 | GCI99136 | 93182583 | GCI99187 |
| A1643502910 | GCI85039 | 33207581018 | GCI85074 | 3272YW | GCI99001 | A1693606672 | GCI99136 | 374385 | GCI99188 |
| 1643300801 | GCI85041 | 33208609838 | GCI85075 | 9660896080 | GCI99001 | 13166587 | GCI99138 | 374386 | GCI99188 |
| A1643300801 | GCI85041 | 31608605466 | GCI85077 | 46307542 | GCI99008 | 374470 | GCI99138 | 9200333 | GCI99188 |
| 1643301300 | GCI85042 | 33212283458 | GCI85081 | 26010773 | GCI99025 | 374536 | GCI99138 | 9200334 | GCI99188 |
| 1643301901 | GCI85042 | 33207637444 | GCI85082 | 42702772 | GCI99025 | 374537 | GCI99138 | 327202 | GCO10002 |
| 1663301300 | GCI85042 | 33207637445 | GCI85082 | 96243576 | GCI99025 | 9186550 | GCI99138 | 327209 | GCO10002 |
| 1663301501 | GCI85042 | 33201229371 | GCI85089 | 96243577 | GCI99025 | 1293504010 | GCI99143 | 327210 | GCO10002 |
| A1643301300 | GCI85042 | 13296358 | GCI86015 | 96489845 | GCI99025 | 1403500813 | GCI99143 | 327211 | GCO10002 |
| A1643301901 | GCI85042 | 13306860 | GCI86015 | 0374402 | GCI99026 | 2103500802 | GCI99143 | 327212 | GCO10002 |
| A1663301300 | GCI85042 | 374677 | GCI86015 | 0374431 | GCI99026 | 2103508710 | GCI99143 | 327371 | GCO10002 |
| A1663301501 | GCI85042 | 3748070 | GCI86015 | 13136382 | GCI99026 | A1293504010 | GCI99143 | 327379 | GCO10002 |
| 31607531721 | GCI85044 | 374851 | GCI86015 | 374320 | GCI99026 | A1403500813 | GCI99143 | 327381 | GCO10002 |
| 31607533215 | GCI85044 | 3748510 | GCI86015 | 374402 | GCI99026 | A2103500802 | GCI99143 | 95615878 | GCO10002 |
| 31607574869 | GCI85044 | 93190579 | GCI86015 | 374431 | GCI99026 | A2103508710 | GCI99143 | 3272E5 | GCO10003 |
| 4230009100 | GCI85048 | 13306862 | GCI86021 | 374547 | GCI99026 | 33207589058 | GCI99145 | 3273E6 | GCO10003 |
| 4230009101 | GCI85048 | 374679 | GCI86021 | 90575610 | GCI99026 | 33217533446 | GCI99145 | 95656495 | GCO10003 |
| CH523B437AB | GCI85049 | 9038764 | GCI86021 | 9201724 | GCI99026 | 33217547073 | GCI99145 | 95656595 | GCO10003 |
| EJ323B437CB | GCI85049 | 9038948 | GCI86021 | 92100313 | GCI99026 | 33217547074 | GCI99145 | 327283 | GCO10004 |
| EJ323B437CC | GCI85049 | 1603043 | GCI86028 | 932902609 | GCI99026 | 33217547075 | GCI99145 | 327383 | GCO10004 |
| J9C15403 | GCI85049 | 95908479 | GCI86028 | 4304002030 | GCI99038 | 33217547076 | GCI99145 | 3273G9 | GCO10004 |
| LR024758 | GCI85049 | 10749893 | GCI86030 | 4304002070 | GCI99038 | 16870648 | GCI99148 | 96141635 | GCO10004 |
| LR061554 | GCI85049 | 23275435 | GCI86030 | 4304005060 | GCI99038 | 19495343219 | GCI99148 | 96164213 | GCO10004 |
| LR061604 | GCI85049 | 26251498 | GCI86030 | 4304032010 | GCI99040 | 2H0407271DV | GCI99148 | 3272E4 | GCO10005 |
| LR062664 | GCI85049 | 26674618 | GCI86030 | 434030A011 | GCI99046 | 2H0498103 | GCI99148 | 3273L5 | GCO10005 |
| LR117057 | GCI85049 | 84057099 | GCI86030 | 4340310010 | GCI99046 | 7L0407331A | GCI99148 | 95643689 | GCO10005 |
| 6G9N3B436ME | GCI85050 | 4340302040 | GCI88015 | 4340319046 | GCI99046 | 7L0498103 | GCI99148 | 3273K1 | GCO10007 |
| LR002619 | GCI85050 | 4340312040 | GCI88015 | 26111229075 | GCI99052 | 7L0498103A | GCI99148 | 95653010 | GCO10007 |
| 33207566067 | GCI85054 | 4410260G00 | GCI88017 | 33211226333 | GCI99052 | 7L0498103AX | GCI99148 | 327235 | GCO10008 |
| 33207566068 | GCI85054 | 4411772F00 | GCI88017 | 33211226720 | GCI99052 | 95534990200 | GCI99148 | 32725N | GCO10008 |
| 33207581027 | GCI85054 | 96335428 | GCI88019 | 7M049103 | GCI99053 | 95534990201 | GCI99148 | 3272N0 | GCO10008 |
| 33207581028 | GCI85054 | 96832203 | GCI88021 | 7M0498103 | GCI99053 | 7711135420 | GCI99150 | 32736P | GCO10008 |
| 33207581029 | GCI85054 | 96832204 | GCI88021 | 7M0498103X | GCI99053 | 8200198016 | GCI99150 | 3273A6 | GCO10008 |
| 33207581030 | GCI85054 | 96943259 | GCI88021 | 7M0498350X | GCI99053 | 1440100788 | GCI99159 | 3273T6 | GCO10008 |
| 33207598037 | GCI85054 | 13296196 | GCI88026 | 7M098103X | GCI99053 | 3273QH | GCI99159 | 95653009 | GCO10008 |
| 33207598038 | GCI85054 | 13301969 | GCI88030 | JZW498350EX | GCI99053 | 3273QJ | GCI99159 | 327355 | GCO10009 |
| 33207630183 | GCI85054 | 374690 | GCI88030 | 4641981K | GCI99059 | 71765688 | GCI99159 | 327364 | GCO10009 |
| 33207630184 | GCI85054 | 374883 | GCI88030 | 6069108 | GCI99075 | 7701352552 | GCI99160 | 327365 | GCO10009 |
| 33207566067 | GCI85055 | 4804590 | GCI88034 | 6069109 | GCI99075 | 7701352983 | GCI99160 | 327366 | GCO10009 |
| 33207566068 | GCI85055 | 93743415 | GCI88034 | 81TT3K177AA | GCI99075 | 7711134419 | GCI99160 | 327367 | GCO10009 |
| 33207581027 | GCI85055 | 4804589 | GCI88035 | 81TT3K177AB | GCI99075 | 7711135414 | GCI99160 | 327369 | GCO10009 |
| 33207581028 | GCI85055 | 93743414 | GCI88035 | 1214378 | GCI99076 | 7711497234 | GCI99160 | 327389 | GCO10009 |
| 33207581029 | GCI85055 | 96624724 | GCI88035 | 1447553 | GCI99076 | 7711497286 | GCI99160 | 95598210 | GCO10009 |
| 33207581030 | GCI85055 | 13318012 | GCI88039 | 1S713C313AC | GCI99076 | 7711497287 | GCI99160 | 1478551080 | GCO10011 |
| 33207630183 | GCI85055 | 13318013 | GCI88040 | 44310SYR310 | GCI99079 | 8200197978 | GCI99160 | 1496138080 | GCO10011 |
| 33207630184 | GCI85055 | 13318014 | GCI88041 | 44310TL1E00 | GCI99079 | 8200198015 | GCI99160 | 3272AN | GCO10011 |
| 33217547069 | GCI85056 | 13306856 | GCI88054 | MB886681 | GCI99083 | 8200278603 | GCI99160 | 3273AR | GCO10011 |
| 33217547070 | GCI85056 | 374691 | GCI88054 | MR453383 | GCI99084 | 8200285908 | GCI99160 | 9566722380 | GCO10011 |

| COMPETITOR | G-AP Ref. | COMPETITOR | G-AP Ref. | COMPETITOR | G-AP Ref. | COMPETITOR | G-AP Ref. | COMPETITOR | G-AP Ref. |
|---|---|---|---|---|---|---|---|---|---|
| OE | | 3273EG | GCO10052 | 9806153080 | GCO10098 | 3642357 | GCO10148 | 510734A | GCO12019 |
| | | 3273VY | GCO10052 | 9806153180 | GCO10098 | 1608032680 | GCO10151 | 513315 | GCO12019 |
| 9567582280 | GCO10011 | 3273YY | GCO10052 | SU001A6109 | GCO10098 | 3272VV | GCO10151 | 96243569 | GCO12020 |
| 9567582298 | GCO10011 | 3273ZG | GCO10052 | SU001A6116 | GCO10098 | 9801388580 | GCO10151 | 96257804 | GCO12020 |
| 9566722180 | GCO10012 | 327531 | GCO10052 | SU001A6117 | GCO10098 | 3272QF | GCO10155 | 96474834 | GCO12020 |
| 1495537080 | GCO10013 | 9686348580 | GCO10052 | SU001A6924 | GCO10098 | 3272TH | GCO10155 | 96474835 | GCO12020 |
| 1495541080 | GCO10013 | 9686348680 | GCO10052 | SU001A6925 | GCO10098 | 3272TK | GCO10155 | 96481061 | GCO12020 |
| 3272CJ | GCO10013 | 3272FW | GCO10053 | SU001A8332 | GCO10098 | 3272WX | GCO10155 | 96481062 | GCO12020 |
| 9566722180 | GCO10013 | 3273EA | GCO10053 | 3272EV | GCO10100 | 3273QQ | GCO10155 | 512395 | GCO12021 |
| 9617408188 | GCO10014 | 32725F | GCO10056 | 3272EW | GCO10100 | 3273TT | GCO10155 | 93741015 | GCO12021 |
| 9617408288 | GCO10014 | SLBA22003 | GCO10058 | 3272QN | GCO10115 | 3273TW | GCO10155 | 9627357 | GCO12021 |
| 1481451080 | GCO10015 | 9619947580 | GCO10059 | 3272QP | GCO10115 | 3273XR | GCO10155 | 96273570 | GCO12021 |
| 1481452080 | GCO10015 | 9619947588 | GCO10059 | 3272RZ | GCO10115 | 3272TC | GCO10156 | 96273571 | GCO12021 |
| 32723L | GCO10015 | 9619947680 | GCO10059 | 3272SA | GCO10115 | 3273TR | GCO10156 | 96396133 | GCO12021 |
| 32729C | GCO10015 | 9619947688 | GCO10059 | 3272WK | GCO10115 | 9803023680 | GCO10156 | 96396134 | GCO12021 |
| 3272GY | GCO10015 | 9621456388 | GCO10059 | 3273QY | GCO10115 | 3272RF | GCO10170 | 96564144 | GCO12021 |
| 3272RL | GCO10015 | 9621456488 | GCO10059 | 3273SN | GCO10115 | 3272RG | GCO10170 | 512292 | GCO12023 |
| 32733Q | GCO10015 | 3272EN | GCO10069 | 3273SP | GCO10115 | 9686039980 | GCO10170 | 96245285 | GCO12023 |
| 3273AX | GCO10015 | 3272ES | GCO10069 | 3273SR | GCO10115 | 1637186880 | GCO10199 | 96267017 | GCO12023 |
| 3273GQ | GCO10015 | 3272ET | GCO10069 | 3273XF | GCO10115 | 1637186980 | GCO10199 | 96267048 | GCO12023 |
| 3273TF | GCO10015 | 3272JA | GCO10069 | 9656211180 | GCO10115 | 9811933980 | GCO10199 | 96349953 | GCO12023 |
| 9617408188 | GCO10015 | 3273ET | GCO10069 | 9656212880 | GCO10115 | 9811934080 | GCO10199 | 96451520 | GCO12023 |
| 9617408288 | GCO10015 | 3273HS | GCO10069 | 9682497280 | GCO10115 | 9826944080 | GCO10199 | 96489832 | GCO12023 |
| 9626084088 | GCO10015 | 3273EL | GCO10075 | 9682497980 | GCO10115 | 9826944180 | GCO10199 | 96499696 | GCO12023 |
| 3272M0 | GCO10016 | 3272FP | GCO10076 | 9682498180 | GCO10115 | YL01323180 | GCO10199 | 96499697 | GCO12023 |
| 3273AV | GCO10016 | 32739Z | GCO10076 | 9682498380 | GCO10115 | YL01323280 | GCO10199 | D96349953 | GCO12023 |
| 3273AW | GCO10016 | 3272HR | GCO10077 | 9682498880 | GCO10115 | 8200985007 | GCO11004 | 96387459 | GCO12024 |
| 3273Z7 | GCO10019 | 3273HH | GCO10077 | 9682500780 | GCO10115 | 8200985010 | GCO11004 | 96481050 | GCO12024 |
| 3273Z8 | GCO10019 | 3273HN | GCO10077 | 9682501080 | GCO10115 | 26010774 | GCO12001 | 510851 | GCO12027 |
| 3273E1 | GCO10021 | 3272FT | GCO10085 | 9682501180 | GCO10115 | 510433 | GCO12001 | 511315 | GCO12027 |
| 3273W7 | GCO10021 | 3272ST | GCO10085 | 9683163880 | GCO10115 | 510736 | GCO12001 | 93486853 | GCO12027 |
| 3272Y3 | GCO10022 | 3273CY | GCO10085 | 9683163980 | GCO10115 | 510736A | GCO12001 | 96176922 | GCO12027 |
| 3272Z7 | GCO10022 | 3273TJ | GCO10085 | 9683164080 | GCO10115 | 513316 | GCO12001 | 96176923 | GCO12027 |
| 3272C7 | GCO10024 | 46308610 | GCO10094 | 9683164180 | GCO10115 | 96243573 | GCO12001 | 96181328 | GCO12027 |
| 96141637 | GCO10024 | 46308703 | GCO10094 | 9683381980 | GCO10115 | 96257802 | GCO12001 | 96181874 | GCO12027 |
| 32725X | GCO10025 | 71771178 | GCO10094 | 9683382080 | GCO10115 | 96489840 | GCO12001 | 96181875 | GCO12027 |
| 3272KY | GCO10025 | 3272EH | GCO10096 | 9683382280 | GCO10115 | 26013813 | GCO12003 | 96181882 | GCO12027 |
| 3272LA | GCO10025 | 3273GZ | GCO10096 | 9683383480 | GCO10115 | 26013831 | GCO12003 | 96181883 | GCO12027 |
| 3273AH | GCO10025 | 1497187088 | GCO10098 | 9683383580 | GCO10115 | 26073810 | GCO12003 | 96183142 | GCO12027 |
| 3273KL | GCO10025 | 1497188088 | GCO10098 | 9683383680 | GCO10115 | 510734 | GCO12003 | 96183143 | GCO12027 |
| 3273KP | GCO10025 | 1606877280 | GCO10098 | 9686923480 | GCO10115 | 513315 | GCO12003 | 96183144 | GCO12027 |
| 3273ES | GCO10026 | 1614919680 | GCO10098 | 9686923680 | GCO10115 | P510734 | GCO12003 | 96229095 | GCO12027 |
| 327298 | GCO10027 | 1614919780 | GCO10098 | 9688716480 | GCO10115 | 96160618A | GCO12004 | 96229096 | GCO12027 |
| 3272A1 | GCO10027 | 1664472280 | GCO10098 | 9688716580 | GCO10115 | 96251135 | GCO12004 | 96241957 | GCO12027 |
| 3273J6 | GCO10027 | 3272NP | GCO10098 | 3272LZ | GCO10118 | 96251136 | GCO12004 | 96241975 | GCO12027 |
| 3273J9 | GCO10027 | 3272NQ | GCO10098 | 3272NA | GCO10118 | 96183138 | GCO12005 | 96241976 | GCO12027 |
| 9812781180 | GCO10028 | 3272SE | GCO10098 | 3273LT | GCO10118 | 96183139 | GCO12005 | 96241977 | GCO12027 |
| 327260 | GCO10029 | 3272YH | GCO10098 | 3273LV | GCO10118 | 96225969 | GCO12005 | 96243575 | GCO12027 |
| 3272N1 | GCO10029 | 3272YK | GCO10098 | 1497191088 | GCO10124 | 96225970 | GCO12005 | 96251131 | GCO12027 |
| 3272F5 | GCO10043 | 3272YL | GCO10098 | 1497192088 | GCO10124 | 96483138 | GCO12005 | 96251133 | GCO12027 |
| 327378 | GCO10043 | 3272YR | GCO10098 | 3272NK | GCO10124 | 4410478800 | GCO12006 | 96256953 | GCO12027 |
| 3273N2 | GCO10043 | 3272YS | GCO10098 | 3273NK | GCO10124 | 4410478800000 | GCO12006 | 96256954 | GCO12027 |
| 327200 | GCO10048 | 3272ZF | GCO10098 | 1696390 | GCO10125 | 4410578B00 | GCO12006 | 96256965 | GCO12027 |
| 327220 | GCO10048 | 3273GE | GCO10098 | 1696410 | GCO10125 | 4410578B00000 | GCO12006 | 96256966 | GCO12027 |
| 3272Y3 | GCO10049 | 3273GK | GCO10098 | 1696770 | GCO10125 | 96273570 | GCO12007 | 96257801 | GCO12027 |
| 3272Z7 | GCO10049 | 3273GL | GCO10098 | 1697470 | GCO10125 | 510418 | GCO12008 | 96257853 | GCO12027 |
| 1495545080 | GCO10050 | 3273NP | GCO10098 | 9800389280 | GCO10125 | 96160589 | GCO12008 | 96257854 | GCO12027 |
| 9566722380 | GCO10050 | 3273NQ | GCO10098 | 9800436080 | GCO10125 | 96160590 | GCO12008 | 96267769 | GCO12027 |
| 3272GJ | GCO10051 | 3273SW | GCO10098 | 9803960080 | GCO10125 | 96243573 | GCO12009 | 96267770 | GCO12027 |
| 3272GL | GCO10051 | 3273VJ | GCO10098 | 3272S7 | GCO10127 | 96273759 | GCO12011 | 96290590 | GCO12027 |
| 3272JJ | GCO10051 | 3273ZA | GCO10098 | 3272S8 | GCO10127 | 96951691 | GCO12011 | 96290591 | GCO12027 |
| 3273GC | GCO10051 | 3273ZE | GCO10098 | 3272NR | GCO10130 | P96273759 | GCO12011 | 96298453 | GCO12027 |
| 3273SV | GCO10051 | 3273ZF | GCO10098 | 3272PR | GCO10130 | 96241974 | GCO12018 | 96298454 | GCO12027 |
| 3272GE | GCO10052 | 9672959880 | GCO10098 | 3272VP | GCO10130 | 96251183 | GCO12018 | 96298455 | GCO12027 |
| 3272GG | GCO10052 | 9685693680 | GCO10098 | 3273NR | GCO10130 | 26013813 | GCO12019 | 96298456 | GCO12027 |
| 3272YF | GCO10052 | 9685693780 | GCO10098 | 3273WA | GCO10130 | 26013831 | GCO12019 | 96298467 | GCO12027 |
| 3272YN | GCO10052 | 9687854680 | GCO10098 | 9807974680 | GCO10143 | 26073810 | GCO12019 | 96298468 | GCO12027 |
| 3272YP | GCO10052 | 9806152880 | GCO10098 | 9825391780 | GCO10143 | 510734 | GCO12019 | 96391014 | GCO12027 |

| COMPETITOR | G-AP Ref. | COMPETITOR | G-AP Ref. | COMPETITOR | G-AP Ref. | COMPETITOR | G-AP Ref. | COMPETITOR | G-AP Ref. |
|---|---|---|---|---|---|---|---|---|---|
| OE | | 4342087234 | GCO14009 | 43411B9060000 | GCO14028 | 05085224AB | GCO15010 | 737319 | GCO17006 |
| | | 4341087612 | GCO14010 | 43411B9070 | GCO14028 | 05085224AE | GCO15010 | 7373193 | GCO17006 |
| 96481015 | GCO12027 | 4341087612000 | GCO14010 | 43411B9070000 | GCO14028 | 05085250AG | GCO15010 | 7573193 | GCO17006 |
| 96481016 | GCO12027 | 4342087612 | GCO14010 | 43412B9030 | GCO14028 | 05105660AC | GCO15010 | 7608632 | GCO17006 |
| 96481017 | GCO12027 | 4342087612000 | GCO14010 | 43412B9030000 | GCO14028 | 5105660AC | GCO15010 | 7656788 | GCO17006 |
| 96481018 | GCO12027 | 4346087602 | GCO14010 | 43412B9110 | GCO14028 | K05105660AC | GCO15010 | 7698632 | GCO17006 |
| 96481033 | GCO12027 | 4346087602000 | GCO14010 | 43412B9110000 | GCO14028 | 3815A167 | GCO15011 | 7703689 | GCO17006 |
| 96481067 | GCO12027 | 4347087601 | GCO14010 | 43412B9111 | GCO14028 | 3815A168 | GCO15011 | 82443746 | GCO17006 |
| 96481068 | GCO12027 | 4347087601000 | GCO14010 | 43420B2010000 | GCO14028 | 3815A169 | GCO15011 | 82448780 | GCO17006 |
| 96486854 | GCO12027 | 4341087405 | GCO14011 | 96328841 | GCO14030 | 3815A170 | GCO15011 | 0374471 | GCO17007 |
| 96489842 | GCO12027 | 4342087405 | GCO14011 | 96328842 | GCO14030 | 3815A455 | GCO15011 | 0374472 | GCO17007 |
| 96396133 | GCO12028 | 4342087406 | GCO14011 | 96481004 | GCO14030 | 83500201 | GCO16004 | 0374473 | GCO17007 |
| P96273570 | GCO12028 | 4342087721 | GCO14013 | 4346087789 | GCO14034 | 05012456AC | GCO16005 | 0374474 | GCO17007 |
| 4341087242 | GCO12034 | 4342087722 | GCO14013 | 4347087789 | GCO14034 | RL012749AC | GCO16005 | 1603233 | GCO17007 |
| 96832203 | GCO12042 | 4342087725 | GCO14013 | 4341087406 | GCO14037 | RX012748AC | GCO16005 | 374471 | GCO17007 |
| 96832204 | GCO12042 | 4342087730 | GCO14013 | 4342087408 | GCO14037 | 07629168 | GCO17001 | 374472 | GCO17007 |
| 4341087746 | GCO14001 | 4346087F86 | GCO14013 | 4341097404 | GCO14038 | 07629457 | GCO17001 | 71740557 | GCO17007 |
| 4342087746 | GCO14001 | 4347087F87 | GCO14013 | 4341097405 | GCO14038 | 07660834 | GCO17001 | 71789075 | GCO17007 |
| 4346087780 | GCO14001 | 4347087F88 | GCO14013 | 4341097406000 | GCO14038 | 71720751 | GCO17001 | 77364889 | GCO17007 |
| 4346087782 | GCO14001 | 4347087F89 | GCO14013 | 4342097403 | GCO14038 | 7629168 | GCO17001 | 9186552 | GCO17007 |
| 4346087783 | GCO14001 | 4341087721 | GCO14014 | 4342097406000 | GCO14038 | 7629457 | GCO17001 | 9186553 | GCO17007 |
| 4347087785 | GCO14001 | 4342087720 | GCO14014 | 4341097203 | GCO14040 | 7659167 | GCO17001 | 93173409 | GCO17007 |
| 4242087402 | GCO14002 | 4341087606 | GCO14017 | 341087754 | GCO14046 | 7659169 | GCO17001 | 46307394 | GCO17008 |
| 4341087401000 | GCO14002 | 4341087608 | GCO14017 | 4341087745 | GCO14046 | 7660834 | GCO17001 | 71720777 | GCO17008 |
| 4341087402 | GCO14002 | 4342087606 | GCO14017 | 4341087747 | GCO14046 | 92601903 | GCO17001 | 46307730 | GCO17009 |
| 4341087402000 | GCO14002 | 4342087608 | GCO14017 | 4341097201 | GCO14061 | 5929237 | GCO17002 | 46307742 | GCO17009 |
| 4342087401000 | GCO14002 | 4341087235 | GCO14018 | 4341097205 | GCO14061 | 5929240 | GCO17002 | 46307887 | GCO17009 |
| 4342087402 | GCO14002 | 4341087246 | GCO14018 | 4341097208 | GCO14061 | 5990430 | GCO17002 | 46307924 | GCO17009 |
| 4342087402000 | GCO14002 | 4341087247 | GCO14018 | 4341097211 | GCO14061 | 82301373 | GCO17002 | 60802000 | GCO17009 |
| 4341087604 | GCO14004 | 4341087248 | GCO14018 | 4341097217 | GCO14061 | 82333811 | GCO17002 | 71721346 | GCO17009 |
| 4341087605 | GCO14004 | 4341087249 | GCO14018 | 4341097243 | GCO14061 | 82362521 | GCO17002 | 71781940 | GCO17009 |
| 4341087611 | GCO14004 | 4341087250 | GCO14018 | 4341097244 | GCO14061 | 82362523 | GCO17002 | 77365984 | GCO17009 |
| 4342087604 | GCO14004 | 4341087252 | GCO14018 | 4341097255 | GCO14061 | 82362524 | GCO17002 | 71720725 | GCO17010 |
| 4342087605 | GCO14004 | 4341087253 | GCO14018 | 4342097204 | GCO14061 | 8236523 | GCO17002 | 71781855 | GCO17010 |
| 4342087611 | GCO14004 | 4341087256 | GCO14018 | 4342097218 | GCO14061 | 82428432 | GCO17002 | 7647244 | GCO17010 |
| 4341087013 | GCO14006 | 4341087257 | GCO14018 | 4342097221 | GCO14061 | 82439756 | GCO17002 | 7647245 | GCO17010 |
| 4341087103 | GCO14006 | 4341087258 | GCO14018 | 43420B2010000 | GCO14061 | 82440166 | GCO17002 | 76472452A | GCO17010 |
| 4341087104 | GCO14006 | 4341087265 | GCO14018 | 43420B2012 | GCO14061 | 82413699 | GCO17003 | 7720510 | GCO17010 |
| 4341087113 | GCO14006 | 4341087266 | GCO14018 | 4341097403000 | GCO14062 | 82443532 | GCO17003 | 7736915 | GCO17010 |
| 4341087114 | GCO14006 | 4341087267 | GCO14018 | 4342097402000 | GCO14062 | 164001704701 | GCO17004 | 46307234 | GCO17011 |
| 4341087115 | GCO14006 | 4341087268 | GCO14018 | 4341087772 | GCO14072 | 5890430 | GCO17004 | 60815368 | GCO17011 |
| 4341087117 | GCO14006 | 4341087269 | GCO14018 | 4341087782 | GCO14072 | 60584659 | GCO17004 | 7081971 | GCO17011 |
| 4341087119 | GCO14006 | 4341087275 | GCO14018 | 4341087786 | GCO14072 | 60809696 | GCO17004 | 71781903 | GCO17011 |
| 4341087120 | GCO14006 | 4341087276 | GCO14018 | 4341087789 | GCO14072 | 60810018 | GCO17004 | 7633434 | GCO17012 |
| 4341087123 | GCO14006 | 4342087239 | GCO14018 | 4341087790 | GCO14072 | 60810224 | GCO17004 | 7656944 | GCO17012 |
| 4341087126 | GCO14006 | 4342087240 | GCO14018 | 4341087791 | GCO14072 | 7081660 | GCO17004 | 7750299 | GCO17012 |
| 4342087103 | GCO14006 | 4342087241 | GCO14018 | 4342087773 | GCO14072 | 71781833 | GCO17004 | 82466864 | GCO17013 |
| 4342087104 | GCO14006 | 4342087243 | GCO14018 | 4342087775 | GCO14072 | 7646401 | GCO17004 | 46307557 | GCO17014 |
| 4342087113 | GCO14006 | 4342087246 | GCO14018 | 4341087788 | GCO14073 | 7652957 | GCO17004 | 46307889 | GCO17014 |
| 4342087114 | GCO14006 | 4342087250 | GCO14018 | 4342087776 | GCO14073 | 7656945 | GCO17004 | 46308928 | GCO17014 |
| 4342087115 | GCO14006 | 4342087254 | GCO14018 | 4342087778 | GCO14073 | 7698900 | GCO17004 | 46808337 | GCO17014 |
| 4342087117 | GCO14006 | 4342087255 | GCO14018 | 4341097403 | GCO14077 | 7700010 | GCO17004 | 68173936AA | GCO17014 |
| 4342087119 | GCO14006 | 4341087223 | GCO14020 | 4342097402 | GCO14077 | 7750301 | GCO17004 | 77365981 | GCO17014 |
| 4342087120 | GCO14006 | 4341087225 | GCO14020 | 43410B2060 | GCO14078 | 82486231 | GCO17004 | 77365996 | GCO17014 |
| 4342087123 | GCO14006 | 4341087226 | GCO14020 | 43410B2061 | GCO14078 | 06X039531340 | GCO17005 | 46307322 | GCO17015 |
| 4342087126 | GCO14006 | 4341087242 | GCO14020 | 4342087739 | GCO14096 | 06X039534340 | GCO17005 | 46307406 | GCO17016 |
| 4346087180 | GCO14006 | 4342087223 | GCO14020 | 4342087765 | GCO14096 | 4127460 | GCO17005 | 46307047 | GCO17017 |
| 4346087181 | GCO14006 | 4342087225 | GCO14020 | 4342087766 | GCO14096 | 4390952 | GCO17005 | 46307420 | GCO17017 |
| 4347087180 | GCO14006 | 4342087226 | GCO14020 | 4346087N82 | GCO14096 | 71781841 | GCO17005 | 7079221 | GCO17017 |
| 4347087181 | GCO14006 | 4346087285 | GCO14020 | 4347087N82 | GCO14096 | 7560070 | GCO17005 | 71720788 | GCO17017 |
| 4341087251 | GCO14008 | 4346087287 | GCO14020 | 43410B2320 | GCO14098 | 7577041 | GCO17005 | 7758266 | GCO17017 |
| 4342087523 | GCO14008 | 4347087285 | GCO14020 | 43420B2150 | GCO14098 | 7599433 | GCO17005 | 82449123 | GCO17018 |
| 4346087295 | GCO14008 | 4347087287 | GCO14020 | 1064000291 | GCO14100 | 7656786 | GCO17005 | 82480859 | GCO17018 |
| 4346087682 | GCO14008 | 05758072 | GCO14027 | 4410579J00 | GCO14101 | SE022141915 | GCO17005 | 46307122 | GCO17019 |
| 4346087682000 | GCO14008 | 4341087401 | GCO14027 | 4410679J00 | GCO14101 | SE022141915A | GCO17005 | 46307617 | GCO17019 |
| 4347087294 | GCO14008 | 4342087401 | GCO14027 | 71742704 | GCO14101 | SE138141915A | GCO17005 | 7078573 | GCO17019 |
| 4347087298 | GCO14008 | 43410B2010000 | GCO14028 | 71742705 | GCO14101 | 4393155 | GCO17006 | 7085573 | GCO17019 |
| 4341087234 | GCO14009 | 43411B9060 | GCO14028 | MB526557 | GCO15003 | 4393157 | GCO17006 | 71781902 | GCO17019 |

| COMPETITOR | G-AP Ref. | COMPETITOR | G-AP Ref. | COMPETITOR | G-AP Ref. | COMPETITOR | G-AP Ref. | COMPETITOR | G-AP Ref. |
|---|---|---|---|---|---|---|---|---|---|
| OE | | 46308695 | GCO17031 | 4543301101 | GCO17048 | 3272PF | GCO17060 | 2S613A327AB | GCO18001 |
| | | 59259318 | GCO17031 | 4543301201 | GCO17048 | 3272PQ | GCO17060 | 2S6W3A327AB | GCO18001 |
| 46307121 | GCO17020 | 7084108 | GCO17031 | A4543301101 | GCO17048 | 3272SS | GCO17060 | E3B53A327AA | GCO18001 |
| 80078574 | GCO17020 | 71781943 | GCO17031 | A4543301201 | GCO17048 | 3273PL | GCO17060 | E3B53A328AA | GCO18001 |
| 87078574 | GCO17020 | 77365985 | GCO17031 | MR582021 | GCO17048 | 3273PN | GCO17060 | GG1122510A | GCO18001 |
| 46307094 | GCO17021 | 77365995 | GCO17031 | MR582022 | GCO17048 | 3273PX | GCO17060 | GG1222610A | GCO18001 |
| 71720741 | GCO17021 | 46307182 | GCO17032 | MR980747 | GCO17048 | 46308370 | GCO17060 | GG1225600B | GCO18001 |
| 46307107 | GCO17022 | 46429632 | GCO17032 | MR980748 | GCO17048 | 46308485 | GCO17060 | 1214374 | GCO18002 |
| 46307108 | GCO17022 | 60812755 | GCO17032 | 0374843 | GCO17051 | 71771176 | GCO17060 | 1326261 | GCO18002 |
| 71781870 | GCO17022 | 71720731 | GCO17032 | 13296059 | GCO17051 | 71790817 | GCO17060 | 1329497 | GCO18002 |
| 46307082 | GCO17023 | 82466865 | GCO17033 | 1603234 | GCO17051 | 71790997 | GCO17060 | 1S7W3B413DA | GCO18002 |
| 60813079 | GCO17023 | 46307366 | GCO17037 | 1603275 | GCO17051 | 71791753 | GCO17060 | 1S7W3B436DA | GCO18002 |
| 71781863 | GCO17023 | 46307080 | GCO17039 | 46308230 | GCO17051 | 71795709 | GCO17060 | 235290201 | GCO18002 |
| 46307367 | GCO17024 | 71720749 | GCO17039 | 71787461 | GCO17051 | 46308403 | GCO17061 | 2S713A327AA | GCO18002 |
| 71720784 | GCO17024 | 7631082 | GCO17039 | 71791757 | GCO17051 | 7087161 | GCO17061 | 2S713A327AB | GCO18002 |
| 71720785 | GCO17024 | 7659161 | GCO17039 | 93173410 | GCO17051 | 7087176 | GCO17061 | 4106372 | GCO18002 |
| 77365988 | GCO17024 | 0046307241 | GCO17042 | 93182576 | GCO17051 | 71789291 | GCO17061 | 9X433B436AA | GCO18002 |
| 1543826 | GCO17026 | 0046307398 | GCO17042 | 1603315 | GCO17052 | 46308463 | GCO17063 | 9X433B437AA | GCO18002 |
| 1546264 | GCO17026 | 0060515370 | GCO17042 | 1603411 | GCO17052 | 46308551 | GCO17063 | C2S47416 | GCO18002 |
| 374942 | GCO17026 | 0060815227 | GCO17042 | 46308337 | GCO17052 | 46308629 | GCO17063 | C2S47417 | GCO18002 |
| 374944 | GCO17026 | 0060815370 | GCO17042 | 55700562 | GCO17052 | 46308706 | GCO17063 | RM2S713A327AB | GCO18002 |
| 46307886 | GCO17026 | 463007241 | GCO17042 | 71789087 | GCO17052 | 46308759 | GCO17063 | 1063496 | GCO18003 |
| 46308229 | GCO17026 | 46307032 | GCO17042 | 93190193 | GCO17052 | 46308875 | GCO17063 | XS4C3B413AA | GCO18003 |
| 46308671 | GCO17026 | 46307134 | GCO17042 | 95518268 | GCO17052 | 46308915 | GCO17063 | XSC43B413AA | GCO18003 |
| 46308735 | GCO17026 | 46307171 | GCO17042 | 1603319 | GCO17053 | 46308917 | GCO17063 | 06483685 | GCO18004 |
| 46308872 | GCO17026 | 46307241 | GCO17042 | 1603405 | GCO17053 | 51809992 | GCO17063 | 1003550 | GCO18004 |
| 52061675 | GCO17026 | 46307398 | GCO17042 | 46308322 | GCO17053 | 59259055 | GCO17063 | 1078675 | GCO18004 |
| 52062144 | GCO17026 | 60515370 | GCO17042 | 46308519 | GCO17053 | 59259080 | GCO17063 | 1078677 | GCO18004 |
| 71771182 | GCO17026 | 60812753 | GCO17042 | 46308707 | GCO17053 | 71771179 | GCO17063 | 1689902 | GCO18004 |
| 71781939 | GCO17026 | 60815227 | GCO17042 | 46308936 | GCO17053 | 374940 | GCO17064 | 1689904 | GCO18004 |
| 77365993 | GCO17026 | 60815370 | GCO17042 | 51854039 | GCO17053 | 46308564 | GCO17064 | 1E0525700 | GCO18004 |
| 95511567 | GCO17026 | 71720733 | GCO17042 | 71771452 | GCO17053 | 46308682 | GCO17064 | 1E0525700A | GCO18004 |
| 95511569 | GCO17026 | 71720787 | GCO17042 | 71793068 | GCO17053 | 46308795 | GCO17064 | 1E0525700B | GCO18004 |
| 9S513B414DA | GCO17026 | 71781860 | GCO17042 | 77365986 | GCO17053 | 59259001 | GCO17064 | 240608ENE0265 | GCO18004 |
| 9S513K677BA | GCO17026 | 71781861 | GCO17042 | 93190187 | GCO17053 | 59259157 | GCO17064 | 46307687 | GCO18004 |
| 1603406 | GCO17027 | 71781905 | GCO17042 | 95518272 | GCO17053 | 68189930AA | GCO17064 | 46307689 | GCO18004 |
| 46308020 | GCO17027 | 77365983 | GCO17042 | 1361514080 | GCO17054 | 71771184 | GCO17064 | 46307698 | GCO18004 |
| 52150615 | GCO17027 | 77365989 | GCO17042 | 1361515080 | GCO17054 | 71745011 | GCO17065 | 46307699 | GCO18004 |
| 52150618 | GCO17027 | 1546263 | GCO17043 | 1369960080 | GCO17054 | 71789090 | GCO17065 | 6195781 | GCO18004 |
| 59259275 | GCO17027 | 1904984 | GCO17043 | 1369961080 | GCO17054 | 1607734980 | GCO17068 | 6483685 | GCO18004 |
| 93190188 | GCO17027 | 46308000 | GCO17043 | 53126894 | GCO17054 | 3273TC | GCO17068 | 6895155 | GCO18004 |
| 1607074780 | GCO17028 | 46308935 | GCO17043 | 53126895 | GCO17054 | 3273TE | GCO17068 | 92AG3K183BA | GCO18004 |
| 3272ZP | GCO17028 | 71784151 | GCO17043 | 68173895AA | GCO17054 | 1603331 | GCO17070 | 92AG3K183DA | GCO18004 |
| 46307710 | GCO17028 | 77365994 | GCO17043 | 71771181 | GCO17054 | 46308538 | GCO17070 | 92AG3K187BA | GCO18004 |
| 46307877 | GCO17028 | 9S513B414CA | GCO17043 | 1349786080 | GCO17055 | 46308552 | GCO17070 | 92AG3K187DA | GCO18004 |
| 46308067 | GCO17028 | F1F13A328BB | GCO17043 | 1349789080 | GCO17055 | 46308816 | GCO17070 | 96AG3K183BB | GCO18004 |
| 4630808067 | GCO17028 | 1401317488 | GCO17044 | 3272PA | GCO17055 | 51783853 | GCO17070 | 96AG3K183DA | GCO18004 |
| 46308518 | GCO17028 | 1401317788 | GCO17044 | 3272PC | GCO17055 | 95518807 | GCO17070 | 97FU4K258CA | GCO18004 |
| 46308524 | GCO17028 | 1401317888 | GCO17044 | 3273PJ | GCO17055 | 46308772 | GCO17074 | R98FX3C242BA | GCO18004 |
| 46308592 | GCO17028 | 1485691080 | GCO17044 | 3273PK | GCO17055 | 46308743 | GCO17075 | R98FX3C242CA | GCO18004 |
| 46308756 | GCO17028 | 1490611080 | GCO17044 | 46308369 | GCO17055 | 59259249 | GCO17075 | RE98FX3C242B1A | GCO18004 |
| 46308869 | GCO17028 | 9645248980 | GCO17044 | 46308483 | GCO17055 | 59259253 | GCO17075 | RE98FX3C242C1A | GCO18004 |
| 46308890 | GCO17028 | 9645249080 | GCO17044 | 71771174 | GCO17055 | 46308702 | GCO17079 | 1754360 | GCO18005 |
| 51783824 | GCO17028 | 9645249180 | GCO17044 | 71790991 | GCO17055 | 59259181 | GCO17079 | 1C153A327AA | GCO18005 |
| 5187180 | GCO17028 | 1349785080 | GCO17045 | 71791000 | GCO17055 | 1603314 | GCO17089 | 1C153A327BA | GCO18005 |
| 52002399 | GCO17028 | 1349788080 | GCO17045 | 46308873 | GCO17057 | 1603431 | GCO17089 | 4119948 | GCO18005 |
| 59259042 | GCO17028 | 1608505480 | GCO17045 | 51983794 | GCO17057 | 375027 | GCO17089 | 4119951 | GCO18005 |
| 68305433AA | GCO17028 | 1608505580 | GCO17045 | 51983847 | GCO17057 | 375056 | GCO17089 | RM1C153A327B1A | GCO18005 |
| 71785602 | GCO17028 | 3272PG | GCO17045 | 52061590 | GCO17057 | 93169660 | GCO17089 | 1326260 | GCO18007 |
| 71793067 | GCO17028 | 3273PP | GCO17045 | 52061594 | GCO17057 | 93169672 | GCO17089 | 1S713A327AB | GCO18007 |
| 77365998 | GCO17028 | 46308371 | GCO17045 | 1349787080 | GCO17060 | 93195147 | GCO17089 | 1S7W3B413AA | GCO18007 |
| 46307516 | GCO17029 | 46308484 | GCO17045 | 1349790080 | GCO17060 | 95518267 | GCO17089 | 235280201 | GCO18007 |
| 46307914 | GCO17030 | 71724582 | GCO17045 | 1355333080 | GCO17060 | 7087179 | GCO17093 | 4106369 | GCO18007 |
| 59259244 | GCO17030 | 71771175 | GCO17045 | 1355334080 | GCO17060 | 1142787 | GCO18001 | 1148219 | GCO18009 |
| 71781942 | GCO17030 | 71795708 | GCO17045 | 1357488080 | GCO17060 | 1537377 | GCO18001 | 1357739 | GCO18009 |
| 46307659 | GCO17031 | 46308052 | GCO17047 | 1369959080 | GCO17060 | 1894965 | GCO18001 | 1490447 | GCO18009 |
| 46307906 | GCO17031 | 71783757 | GCO17047 | 1369962080 | GCO17060 | 1894966 | GCO18001 | 1493223 | GCO18009 |
| 46308206 | GCO17031 | 3815A201 | GCO17048 | 3272PE | GCO17060 | 2S613A327AA | GCO18001 | 1539136 | GCO18009 |

| COMPETITOR | G-AP Ref. | COMPETITOR | G-AP Ref. | COMPETITOR | G-AP Ref. | COMPETITOR | G-AP Ref. | COMPETITOR | G-AP Ref. |
|---|---|---|---|---|---|---|---|---|---|
| **OE** | | XS4W3B436DB | GCO18013 | R98BX3C242BA | GCO18023 | F00725600B | GCO18027 | B00525400 | GCO18033 |
| | | XS4W3B437BB | GCO18013 | RE98BX3C242B1A | GCO18023 | F00725600D | GCO18027 | B00525400D | GCO18033 |
| 1802796 | GCO18009 | XS4W3B437DA | GCO18013 | 93BG3B413AAB | GCO18024 | F00725600E | GCO18027 | B00525600 | GCO18033 |
| 1840174 | GCO18009 | 1100639 | GCO18014 | 93BG3B413AB | GCO18024 | F01122510 | GCO18027 | B00525600D | GCO18033 |
| 2047420 | GCO18009 | 1142788 | GCO18014 | 93BG3B413AE | GCO18024 | F01122610A | GCO18027 | K99999112 | GCO18033 |
| 2S6W3A327AA | GCO18009 | 1418951 | GCO18014 | 93BG3B413CE | GCO18024 | F03122610 | GCO18027 | 0K2A522510 | GCO18034 |
| 2S6W3A327BA | GCO18009 | 1804619 | GCO18014 | 96BG3B413AB | GCO18024 | F03325400E | GCO18027 | 0K2A522510A | GCO18034 |
| 2S6W3A327BB | GCO18009 | 1837622 | GCO18014 | 1111900 | GCO18025 | F03325600E | GCO18027 | 0K2A622510 | GCO18034 |
| 2S6W3B437FC | GCO18009 | 1863619 | GCO18014 | 1202578 | GCO18025 | KK37022510 | GCO18027 | F02422510 | GCO18034 |
| 8V513A327AA | GCO18009 | 2002914 | GCO18014 | 7M0407321B | GCO18025 | KK37022610 | GCO18027 | F02422510B | GCO18034 |
| 8V513A327AB | GCO18009 | 2S613A327BA | GCO18014 | 7M0498099A | GCO18025 | G05325500 | GCO18028 | F02422510C | GCO18034 |
| 8V513A327AC | GCO18009 | 2S613A327BB | GCO18014 | 7M0498099AX | GCO18025 | G05325500B | GCO18028 | F02422610 | GCO18034 |
| C20225500A | GCO18009 | AE8Z3B437B | GCO18014 | 7M0498340AX | GCO18025 | G05325600 | GCO18028 | F02422610A | GCO18034 |
| C20225500C | GCO18009 | ET763A327AA | GCO18014 | 95VW3B413AB | GCO18025 | G05325600C | GCO18028 | F02425400 | GCO18034 |
| C20225600A | GCO18009 | ET763A327AB | GCO18014 | 95VW3BA413AB | GCO18025 | G0632500A | GCO18028 | F02425400A | GCO18034 |
| C20225600C | GCO18009 | ET763A327AC | GCO18014 | 95VW3K187BB | GCO18025 | G06325500 | GCO18028 | F02425400C | GCO18034 |
| C60225500A | GCO18009 | GG1322510A | GCO18014 | JZW498340GX | GCO18025 | G06325500A | GCO18028 | F02425400D | GCO18034 |
| C60225600 | GCO18009 | GG1422610A | GCO18014 | YM213B413AA | GCO18025 | G06325600 | GCO18028 | F02425400E | GCO18034 |
| RM8V513A327A2B | GCO18009 | RM2S613A327B1B | GCO18014 | 1007695 | GCO18026 | G06325600A | GCO18028 | F02425400F | GCO18034 |
| 7294547 | GCO18010 | XS4C3B413A | GCO18014 | 1084716 | GCO18026 | G56422510A | GCO18028 | F02425400G | GCO18034 |
| 93BG3B413BE | GCO18010 | XS614K258BA | GCO18014 | 1690336 | GCO18026 | G56422610A | GCO18028 | F02425600 | GCO18034 |
| 1023247 | GCO18011 | 1078680 | GCO18015 | 7M0407321A | GCO18026 | G5642510A | GCO18028 | F02425600C | GCO18034 |
| 1079583 | GCO18011 | 1659059 | GCO18015 | 7M0498099 | GCO18026 | G56425500 | GCO18028 | F02425600E | GCO18034 |
| 1690327 | GCO18011 | 1690331 | GCO18015 | 7M0498099V | GCO18026 | G56425600 | GCO18028 | F02425600H | GCO18034 |
| 6757622 | GCO18011 | 6168423 | GCO18015 | 7M0498099X | GCO18026 | G57022510A | GCO18028 | F02455600H | GCO18034 |
| 7294548 | GCO18011 | 6485414 | GCO18015 | 7M0498340 | GCO18026 | G05325500A | GCO18029 | F06322610 | GCO18034 |
| 93BG3B413ABB | GCO18011 | 89FG3K183CA | GCO18015 | 7M0498340X | GCO18026 | G05425500A | GCO18029 | F06322610A | GCO18034 |
| 93BG3B413BB | GCO18011 | 89FG3K187BA | GCO18015 | 95VW3K187BA | GCO18026 | G05425600C | GCO18029 | F06325500C | GCO18034 |
| 93BG3B413DD | GCO18011 | 89FG3K187CA | GCO18015 | JZW498340FX | GCO18026 | G05425600D | GCO18029 | F06325600 | GCO18034 |
| 93BG3B413DE | GCO18011 | R98FX3C242EA | GCO18015 | R98VW3C242AA | GCO18026 | G06425500 | GCO18029 | F06325600A | GCO18034 |
| 96BG3B413ABB | GCO18011 | 1074308 | GCO18016 | R98VWX3C242AA | GCO18026 | G06425500A | GCO18029 | F06422610B | GCO18034 |
| R98BX3C242AA | GCO18011 | 1117155 | GCO18016 | R98X3C242AA | GCO18026 | G06425600 | GCO18029 | F0642560X | GCO18034 |
| RE98BX3C242A1A | GCO18011 | 1690326 | GCO18016 | RE98VW3C242A1A | GCO18026 | G06425600A | GCO18029 | F0642560XB | GCO18034 |
| 1003548 | GCO18012 | 98AG3K183BA | GCO18016 | F00122510 | GCO18027 | G56422510 | GCO18029 | F0652560X | GCO18034 |
| 1078670 | GCO18012 | 98AGK183BA | GCO18016 | F00122540 | GCO18027 | G56425500A | GCO18029 | F0652560XB | GCO18034 |
| 1689895 | GCO18012 | 98AX3C242DA | GCO18016 | F00125400 | GCO18027 | G57022510 | GCO18029 | F0662560X | GCO18034 |
| 6667974 | GCO18012 | RE98AX3C242D1A | GCO18016 | F00125400A | GCO18027 | G57022600 | GCO18029 | F06922610A | GCO18034 |
| 6667975 | GCO18012 | RM98AX3C242DA | GCO18016 | F00125400B | GCO18027 | G57025500B | GCO18029 | F06922610C | GCO18034 |
| 92AG3K183CA | GCO18012 | 1033616 | GCO18017 | F00125600A | GCO18027 | G57025600A | GCO18029 | F06925600D | GCO18034 |
| 96AG3K183AB | GCO18012 | 1078682 | GCO18017 | F00125600B | GCO18027 | B00225400 | GCO18030 | F0692560X | GCO18034 |
| 97FU4K258AA | GCO18012 | 1690332 | GCO18017 | F00322610B | GCO18027 | B00225400B | GCO18030 | F0692560XB | GCO18034 |
| R98FX3C242AA | GCO18012 | 6168422 | GCO18017 | F00325400 | GCO18027 | B00225500 | GCO18030 | F0692560XC | GCO18034 |
| RE98FX3C242A1A | GCO18012 | 6485412 | GCO18017 | F00325400A | GCO18027 | B00225500B | GCO18030 | F06925610 | GCO18034 |
| 1063498 | GCO18013 | 89FG3K183AA | GCO18017 | F00325400B | GCO18027 | B0022560 | GCO18030 | F07022610 | GCO18034 |
| 1119199 | GCO18013 | 89FG3K187AA | GCO18017 | F00325400C | GCO18027 | B00225600 | GCO18030 | F07022610A | GCO18034 |
| 1122811 | GCO18013 | R98FX3C242FA | GCO18017 | F00325400E | GCO18027 | B00225600A | GCO18030 | F07025600 | GCO18034 |
| 1129668 | GCO18013 | RE98FX3C242F1A | GCO18017 | F00325400F | GCO18027 | B00225600B | GCO18030 | F07025600A | GCO18034 |
| 1134142 | GCO18013 | 1079589 | GCO18018 | F00325600 | GCO18027 | B00225600D | GCO18030 | F07122610B | GCO18034 |
| 1345864 | GCO18013 | 1690325 | GCO18018 | F00325600A | GCO18027 | B00325400 | GCO18030 | F0712560X | GCO18034 |
| 1348325 | GCO18013 | 6071774 | GCO18018 | F00325600B | GCO18027 | B00325400C | GCO18030 | FA0122510E | GCO18034 |
| 1361301 | GCO18013 | 79TT3K187AA | GCO18018 | F00325600C | GCO18027 | B00325400D | GCO18030 | FA012540X | GCO18034 |
| 1602947 | GCO18013 | 79TT3K187M | GCO18018 | F00325600E | GCO18027 | B00325600 | GCO18030 | FA012540XB | GCO18034 |
| 1753934 | GCO18013 | R98AX3C242CA | GCO18018 | F00325600F | GCO18027 | B00325600C | GCO18030 | FA012540XC | GCO18034 |
| 1753951 | GCO18013 | RE98AX3C242C1A | GCO18018 | F00522510A | GCO18027 | B00325600D | GCO18030 | FA0222510C | GCO18034 |
| 1803084 | GCO18013 | 1079587 | GCO18021 | F00522610A | GCO18027 | KK33122510 | GCO18030 | FA062560XB | GCO18034 |
| 3652045 | GCO18013 | 1690322 | GCO18021 | F00525400 | GCO18027 | KK33122610 | GCO18030 | FA082550XB | GCO18034 |
| 3652047 | GCO18013 | 6485415 | GCO18021 | F00525400A | GCO18027 | KK33325400 | GCO18030 | FA0922510 | GCO18034 |
| 3667428 | GCO18013 | 92AG3K183AA | GCO18021 | F00525400B | GCO18027 | KK33325600 | GCO18030 | FA0922510A | GCO18034 |
| 3667429 | GCO18013 | 92AG3K183M | GCO18021 | F00525400C | GCO18027 | 6F442550 | GCO18031 | FA132550X | GCO18034 |
| 3959551 | GCO18013 | 92AG3K187M | GCO18021 | F00525400D | GCO18027 | G03322510 | GCO18031 | FA152550X | GCO18034 |
| 4N113A327AA | GCO18013 | R98AX3C242AA | GCO18021 | F00525400E | GCO18027 | G03325500 | GCO18031 | FZ012540XC | GCO18034 |
| 98FX3C242A1A | GCO18013 | RE98AX3C242A1A | GCO18021 | F00525600A | GCO18027 | G03325500B | GCO18031 | FZ022540X | GCO18034 |
| RM4N113A327A1A | GCO18013 | 1023250 | GCO18023 | F00525600B | GCO18027 | G03325600 | GCO18031 | FZ2425400 | GCO18034 |
| RMXS4W3B436D1B | GCO18013 | 1079584 | GCO18023 | F00525600C | GCO18027 | G03325600D | GCO18031 | 3799036 | GCO18035 |
| RMXS4W3B437D1B | GCO18013 | 1690328 | GCO18023 | F00525600D | GCO18027 | G04325500 | GCO18031 | G56022510 | GCO18035 |
| XS4C3B413BA | GCO18013 | 7024787 | GCO18023 | F00525600E | GCO18027 | G04325500B | GCO18031 | G56022510A | GCO18035 |
| XS4W3B436BB | GCO18013 | 7024788 | GCO18023 | F00722610A | GCO18027 | G04325600 | GCO18031 | G56022510B | GCO18035 |
| XS4W3B436DA | GCO18013 | 96BG3B413AAB | GCO18023 | F00725600A | GCO18027 | G04325600D | GCO18031 | G56025500 | GCO18035 |

| COMPETITOR | G-AP Ref. | COMPETITOR | G-AP Ref. | COMPETITOR | G-AP Ref. | COMPETITOR | G-AP Ref. | COMPETITOR | G-AP Ref. |
|---|---|---|---|---|---|---|---|---|---|
| OE | | 2T143B436AC | GCO18067 | 1479768 | GCO18203 | 2T143B437CD | GCO18207 | 5H224997CB | GCO18229 |
| | | 2T143B436AD | GCO18067 | 1479770 | GCO18203 | 2T143B437CE | GCO18207 | LR060384 | GCO18229 |
| G56025500A | GCO18035 | 2T143B436AE | GCO18067 | 1486228 | GCO18203 | 2T143E327BA | GCO18207 | TDJ500050 | GCO18229 |
| G56025510 | GCO18035 | 2T143B436AF | GCO18067 | 1492854 | GCO18203 | 4417588 | GCO18207 | 1223723 | GCO18230 |
| G56025510A | GCO18035 | 2T143B436AG | GCO18067 | 1510273 | GCO18203 | 4512586 | GCO18207 | 1302514 | GCO18230 |
| G56025600 | GCO18035 | 4371788 | GCO18067 | 1545803 | GCO18203 | 4512588 | GCO18207 | 1359656 | GCO18230 |
| G56025600A | GCO18035 | 4490557 | GCO18067 | 1548224 | GCO18203 | 4994093 | GCO18207 | 1417775 | GCO18230 |
| G56822510 | GCO18035 | 4512585 | GCO18067 | 1548227 | GCO18203 | 9T163B437AA | GCO18207 | 1431359 | GCO18230 |
| G56822510A | GCO18035 | 4512587 | GCO18067 | 1548229 | GCO18203 | C2S24982 | GCO18216 | 1474624 | GCO18230 |
| G56822510B | GCO18035 | 4512587K | GCO18067 | 1551135 | GCO18203 | C2S29730 | GCO18216 | 1493007 | GCO18230 |
| G56825500 | GCO18035 | 4515857 | GCO18067 | 1551329 | GCO18203 | C2S29732 | GCO18216 | 1676315 | GCO18230 |
| G56825500A | GCO18035 | 5083615 | GCO18067 | 1551332 | GCO18203 | C2S39944 | GCO18216 | 1702520 | GCO18230 |
| G56825500B | GCO18035 | RM2T143A328A1A | GCO18067 | 1551335 | GCO18203 | C2S39945 | GCO18216 | 1784747 | GCO18230 |
| G56825510A | GCO18035 | 1S4W3B413AA | GCO18069 | 1551337 | GCO18203 | C2S40434 | GCO18216 | 3M513A327BA | GCO18230 |
| G56825600 | GCO18035 | 4166906 | GCO18069 | 1685799 | GCO18203 | C2S40435 | GCO18216 | 3M513A327BB | GCO18230 |
| G56825600A | GCO18035 | 1329495 | GCO18072 | 1687410 | GCO18203 | C2S51185 | GCO18216 | 3M513A327BC | GCO18230 |
| G56825600B | GCO18035 | RM1S713A327AB | GCO18072 | 1712296 | GCO18203 | C2S51198 | GCO18216 | 3M513A327BD | GCO18230 |
| G57225500 | GCO18035 | G56525500B | GCO18078 | 1712297 | GCO18203 | C2S6659 | GCO18216 | 3M513A327BE | GCO18230 |
| G57225600 | GCO18035 | G57222510 | GCO18078 | 1716444 | GCO18203 | C2S6660 | GCO18216 | 3M513B436DAC | GCO18230 |
| G57622510A | GCO18035 | G59222510 | GCO18078 | 1716448 | GCO18203 | 7T433A427AE | GCO18218 | 3M513B436DAE | GCO18230 |
| G57625500 | GCO18035 | G59222510A | GCO18078 | 1716453 | GCO18203 | 7T4Z3A427C | GCO18218 | 3M513B436DAF | GCO18230 |
| G57625600 | GCO18035 | 1214375 | GCO18095 | 1798089 | GCO18203 | 7T4Z3A428D | GCO18218 | RM3M513A327B2E | GCO18230 |
| GD1922510 | GCO18035 | 1326262 | GCO18095 | 1798095 | GCO18203 | DT4Z3A428A | GCO18218 | RM3M513B436DAD | GCO18230 |
| B00122510A | GCO18036 | 2S713A327BA | GCO18095 | 36000440 | GCO18203 | DT4Z3A428B | GCO18218 | 2L1Z3B414AA | GCO18234 |
| B00222610A | GCO18036 | 2S713A327BB | GCO18095 | 36000549 | GCO18203 | GP312550XA | GCO18218 | 5L1Z3B436AA | GCO18234 |
| B00225400A | GCO18036 | 4106377 | GCO18095 | 36001356 | GCO18203 | GP312550XB | GCO18218 | AL1Z3A427B | GCO18234 |
| B00225500A | GCO18036 | 1485695080 | GCO18098 | 3M513A327CA | GCO18203 | GP312550XC | GCO18218 | AL1Z3B436A | GCO18234 |
| B00322510 | GCO18036 | 9645249280 | GCO18098 | 3M513A327CB | GCO18203 | GP312550XD | GCO18218 | GL1Z3A427A | GCO18234 |
| B00322610 | GCO18036 | 3910000Q4E | GCO18105 | 3M513A327CC | GCO18203 | GP312550XE | GCO18218 | GL1Z3A428A | GCO18234 |
| BS0425400 | GCO18036 | 3910000QAL | GCO18105 | 3M513A327GA | GCO18203 | GP312550XF | GCO18218 | 1520498 | GCO18237 |
| BS0425600 | GCO18036 | 3910000QAN | GCO18105 | 3M513A327GB | GCO18203 | GP312560XA | GCO18218 | 8C113A327AA | GCO18237 |
| FA3022510A | GCO18036 | 391018828R | GCO18105 | 3M513A327GC | GCO18203 | GP312560XB | GCO18218 | 1710063 | GCO18238 |
| FA3022510B | GCO18036 | 4406217 | GCO18105 | 3M513A327MA | GCO18203 | GP312560XC | GCO18218 | 1710064 | GCO18238 |
| FA3025400 | GCO18036 | 4406218 | GCO18105 | 3M513A328CA | GCO18203 | GP312560XD | GCO18218 | 1710066 | GCO18238 |
| FA3025600 | GCO18036 | 4409208 | GCO18105 | 3M513A328CB | GCO18203 | GP312560XE | GCO18218 | 1809711 | GCO18238 |
| FA3225400 | GCO18036 | 4409210 | GCO18105 | 3M513A328CC | GCO18203 | GP312560XF | GCO18218 | 2161188 | GCO18238 |
| FA3225600 | GCO18036 | 4413397 | GCO18105 | 3M513A328FA | GCO18203 | GP322550XD | GCO18218 | 6V613B437XA | GCO18238 |
| FA3422510A | GCO18036 | 4414516 | GCO18105 | 3M513A328FB | GCO18203 | 4615962 | GCO18220 | BV613A327BA | GCO18238 |
| FA3422610 | GCO18036 | 4414517 | GCO18105 | 3M513A328FC | GCO18203 | 1539142 | GCO18222 | BV613A328BA | GCO18238 |
| FA3425400 | GCO18036 | 4430547 | GCO18105 | 3M513A328GA | GCO18203 | 1763563 | GCO18222 | EV613A328EA | GCO18238 |
| FA3425400A | GCO18036 | 7711135189 | GCO18105 | 3M513A328GB | GCO18203 | 1802807 | GCO18222 | EV613B436DB | GCO18238 |
| FA3425600 | GCO18036 | 7711135190 | GCO18105 | 3M513A328GC | GCO18203 | 1837849 | GCO18222 | FV6Z3B436R | GCO18238 |
| FA3622510 | GCO18036 | 8200069146 | GCO18105 | 3M514C062FA | GCO18203 | 1840169 | GCO18222 | RMBV613A328B1A | GCO18238 |
| FA3622610 | GCO18036 | 8200069147 | GCO18105 | 3M514C062LA | GCO18203 | 1840175 | GCO18222 | 1692097 | GCO18239 |
| FA3625400 | GCO18036 | 8200169291 | GCO18105 | 5M513A327AA | GCO18203 | 1840176 | GCO18222 | 1875680 | GCO18239 |
| FA3625600 | GCO18036 | 8200179212 | GCO18105 | 5M513A327AB | GCO18203 | 1840181 | GCO18222 | 2141118 | GCO18239 |
| FA3722510A | GCO18036 | 8200334338 | GCO18105 | 5M513A328AA | GCO18203 | 2044105 | GCO18222 | 2442552 | GCO18239 |
| FA3722610 | GCO18036 | 8200485589 | GCO18105 | 5M513A328AB | GCO18203 | 2047400 | GCO18222 | AV613A327CA | GCO18239 |
| FA3725400 | GCO18036 | 91166707 | GCO18105 | RM3M513A328C1C | GCO18203 | 8U513B436DC | GCO18222 | AV613A327LA | GCO18239 |
| FA3725400A | GCO18036 | 91166708 | GCO18105 | RM5M513A328A1B | GCO18203 | 8V513A327CA | GCO18222 | F1F63A327GA | GCO18239 |
| FA3725600 | GCO18036 | 91168794 | GCO18105 | 41226062 | GCO18204 | 8V513A327CB | GCO18222 | F1F63A327GB | GCO18239 |
| FA3822610A | GCO18036 | 91168795 | GCO18105 | 4126063 | GCO18204 | 8V513A327CC | GCO18222 | 1692096 | GCO18240 |
| FA6422610 | GCO18036 | 93852699 | GCO18105 | 4126065 | GCO18204 | 8V513A327CD | GCO18222 | 1824941 | GCO18240 |
| FS2022510 | GCO18036 | 93856470 | GCO18105 | 4126066 | GCO18204 | D1B73A328CA | GCO18222 | 1840093 | GCO18240 |
| FS2022610A | GCO18036 | 93866080 | GCO18105 | YL844234BC | GCO18204 | D1B73A328CB | GCO18222 | 1875683 | GCO18240 |
| FS2122610A | GCO18036 | 93866081 | GCO18105 | YL844725AC | GCO18204 | D1BZ3B436A | GCO18222 | 2141077 | GCO18240 |
| 1329584 | GCO18067 | TDJ000020 | GCO18200 | YL844725BC | GCO18204 | RM8V513A327C2B | GCO18222 | 2444127 | GCO18240 |
| 1329586 | GCO18067 | 1322204 | GCO18203 | 1447140 | GCO18206 | RM8V513A327C2C | GCO18222 | AV613A328CA | GCO18240 |
| 1383753 | GCO18067 | 1322219 | GCO18203 | 1464645 | GCO18206 | RM8V513B436C2D | GCO18222 | AV613A328LA | GCO18240 |
| 1451463 | GCO18067 | 1345637 | GCO18203 | 6M343B437CA | GCO18206 | RM8V513B437C2C | GCO18222 | F1F63A328GA | GCO18240 |
| 1477380 | GCO18067 | 1345638 | GCO18203 | 1383755 | GCO18207 | RMD1B73A328C2A | GCO18222 | F1F63A328GB | GCO18240 |
| 1501261 | GCO18067 | 1345639 | GCO18203 | 1451465 | GCO18207 | FA8125500A | GCO18223 | RMAV613A328C2A | GCO18240 |
| 1601959 | GCO18067 | 1353399 | GCO18203 | 1501263 | GCO18207 | FA8225600A | GCO18223 | 1704638 | GCO18241 |
| 1804607 | GCO18067 | 1369431 | GCO18203 | 2T143A327BA | GCO18207 | 1782211 | GCO18226 | 1809703 | GCO18241 |
| 2T143A327AA | GCO18067 | 1417776 | GCO18203 | 2T143A328BA | GCO18207 | CN153A327BA | GCO18226 | 2255524 | GCO18241 |
| 2T143A328AA | GCO18067 | 1456975 | GCO18203 | 2T143B437CA | GCO18207 | CN154K258CA | GCO18226 | 2255526 | GCO18241 |
| 2T143A328AAK | GCO18067 | 1474893 | GCO18203 | 2T143B437CB | GCO18207 | 392111HC3A | GCO18227 | BV613A327AA | GCO18241 |
| 2T143B436AB | GCO18067 | 1476895 | GCO18203 | 2T143B437CC | GCO18207 | 5H224997CA | GCO18229 | GV613A327BA | GCO18241 |

| COMPETITOR | G-AP Ref. | COMPETITOR | G-AP Ref. | COMPETITOR | G-AP Ref. | COMPETITOR | G-AP Ref. | COMPETITOR | G-AP Ref. |
|---|---|---|---|---|---|---|---|---|---|
| OE | | F1F13A328EA | GCO18252 | 2497546 | GCO18277 | BK213A327BC | GCO18293 | RMDV6P3A328A1A | GCO18326 |
| | | F1F13A328EB | GCO18252 | 2552763 | GCO18277 | BK213A327BD | GCO18293 | RMDV6P3A328B1A | GCO18326 |
| GV613A328BA | GCO18241 | RMDV6P3A327C1A | GCO18252 | BV613A327TA | GCO18277 | BK213A328BA | GCO18293 | 3910000Q6M | GCO18327 |
| RMBV613A327A1A | GCO18241 | RMDV6P3A328C1A | GCO18252 | BV613A327TB | GCO18277 | BK213A328BB | GCO18293 | 3910000Q7B | GCO18327 |
| 1710062 | GCO18242 | BB533B436EG | GCO18257 | BV613A328TA | GCO18277 | BK213A328BC | GCO18293 | 4422670 | GCO18327 |
| 1710065 | GCO18242 | BB5Z3B436N | GCO18257 | BV613A328TB | GCO18277 | BK213A328BD | GCO18293 | 6000618516 | GCO18327 |
| 1809705 | GCO18242 | BB5Z3B436P | GCO18257 | DV613B437KB | GCO18277 | BK213B436BA | GCO18293 | 93453895 | GCO18327 |
| 1809712 | GCO18242 | BB5Z3B436X | GCO18257 | F1F63A327JA | GCO18277 | BK213B437BA | GCO18293 | 3210001ASV0100 | GCO18331 |
| BV613A327CA | GCO18242 | BB5Z3B436Y | GCO18257 | F1F63A327JB | GCO18277 | GK213B436CA | GCO18293 | 12793840 | GCO21030 |
| BV613A327GA | GCO18242 | 1763562 | GCO18258 | FV663A328KC | GCO18277 | GK213B437CA | GCO18293 | 1603291 | GCO21030 |
| BV613A328CA | GCO18242 | 1790563 | GCO18258 | KV663A327CA | GCO18277 | RMBK213A328A1B | GCO18293 | 93188212 | GCO21030 |
| ED8G3A327AA | GCO18242 | 1821970 | GCO18258 | KV663A327CB | GCO18277 | RMBK213A328B1B | GCO18293 | 0374842 | GCO21038 |
| ED8G3A328AA | GCO18242 | 1837850 | GCO18258 | KV663A327CC | GCO18277 | 1727115 | GCO18298 | 13296057 | GCO21038 |
| RMBV613A327C1A | GCO18242 | 1837851 | GCO18258 | KV663A328CA | GCO18277 | 1727116 | GCO18298 | 13296185 | GCO21038 |
| RMBV613A328C1A | GCO18242 | 1840087 | GCO18258 | KV663A328CB | GCO18277 | 1782561 | GCO18298 | 1603452 | GCO21038 |
| 1692086 | GCO18244 | 2112385 | GCO18258 | RMDV613A328KA | GCO18277 | 1782562 | GCO18298 | 20861588 | GCO21038 |
| 1692088 | GCO18244 | 2112409 | GCO18258 | 391016100R | GCO18281 | 1793821 | GCO18298 | 20861589 | GCO21038 |
| 1710066 | GCO18244 | 2112414 | GCO18258 | 93454308 | GCO18281 | CC113A327AA | GCO18298 | 22743793 | GCO21038 |
| 1840094 | GCO18244 | 2118141 | GCO18258 | 1774273 | GCO18286 | CC113A328AA | GCO18298 | 22743794 | GCO21038 |
| 1875681 | GCO18244 | 2182303 | GCO18258 | 1774279 | GCO18286 | RMCC113A327A1A | GCO18298 | 374842 | GCO21038 |
| 2141691 | GCO18244 | 2313991 | GCO18258 | 1783968 | GCO18286 | RMCC113A328A1A | GCO18298 | 93190460 | GCO21038 |
| AV613A328EA | GCO18244 | 2403032 | GCO18258 | 1787343 | GCO18286 | 2201010AK03 | GCO18315 | 13318006 | GCO21043 |
| BV613A327BA | GCO18244 | 2403040 | GCO18258 | 1787345 | GCO18286 | 2201410AK01 | GCO18315 | 13334699 | GCO21043 |
| F1F63A328AA | GCO18244 | CV173A327AA | GCO18258 | 1841528 | GCO18286 | 2203310AK03 | GCO18315 | 13334713 | GCO21043 |
| RMAV613A328E2A | GCO18244 | CV173A327AB | GCO18258 | 1841531 | GCO18286 | 2203310BE01 | GCO18315 | 13339430 | GCO21043 |
| GD782550XB | GCO18245 | CV173A327AC | GCO18258 | 1841533 | GCO18286 | B2110380102 | GCO18315 | 13444470 | GCO21043 |
| GD782550XC | GCO18245 | CV173A327BB | GCO18258 | 2280103 | GCO18286 | B2110380700 | GCO18315 | 13481236 | GCO21043 |
| GD782560XB | GCO18245 | CV173B436AF | GCO18258 | 2280105 | GCO18286 | B2110380701 | GCO18315 | 93745994 | GCO21043 |
| GD782560XC | GCO18245 | H1B53A327DA | GCO18258 | 2335138 | GCO18286 | B3110540400 | GCO18315 | 4804595 | GCO21047 |
| 2R834K327CA | GCO18246 | H1B53A327FA | GCO18258 | 2335143 | GCO18286 | 2201100M03 | GCO18321 | 93743421 | GCO21047 |
| C2C39566 | GCO18246 | H1B53A327FB | GCO18258 | BK213A327AA | GCO18286 | 2201200M03 | GCO18321 | 96624822 | GCO21047 |
| 4130009204 | GCO18247 | H1B53A328DA | GCO18258 | BK213A327AB | GCO18286 | 2203100M03 | GCO18323 | MR528647 | GCO21048 |
| 4130009213 | GCO18247 | H1B53A328FA | GCO18258 | BK213A327AC | GCO18286 | 2203200M03 | GCO18323 | 13296187 | GCO21049 |
| 4130009214 | GCO18247 | H1B53A328FB | GCO18258 | BK213A327AD | GCO18286 | 2201010W04 | GCO18325 | 374843 | GCO21049 |
| 02J9C7756 | GCO18250 | H1B53B437FC | GCO18258 | BK213A328AA | GCO18286 | 2201020W04 | GCO18325 | 3748430 | GCO21049 |
| BJ323B413AA | GCO18250 | RMCV173A327B2B | GCO18258 | BK213A328AB | GCO18286 | S1010510302 | GCO18325 | 13335208 | GCO21051 |
| LR025067 | GCO18250 | 1782212 | GCO18261 | BK213A328AC | GCO18286 | S1010510402 | GCO18325 | 1603028 | GCO21051 |
| LR124673 | GCO18250 | 1788449 | GCO18261 | BK213A328AD | GCO18286 | 1704636 | GCO18326 | 13296060 | GCO21057 |
| 1682458 | GCO18252 | CN153A327CA | GCO18261 | BK213B436AA | GCO18286 | 1704637 | GCO18326 | 13296188 | GCO21057 |
| 1682459 | GCO18252 | CN153A328AA | GCO18261 | BK213B436AB | GCO18286 | 1704639 | GCO18326 | 1603309 | GCO21057 |
| 1682460 | GCO18252 | 1829458 | GCO18262 | BK213B436AC | GCO18286 | 1783753 | GCO18326 | 374844 | GCO21057 |
| 1692122 | GCO18252 | CN153A327EA | GCO18262 | BK213B437AB | GCO18286 | 1797212 | GCO18326 | 93190857 | GCO21057 |
| 1712270 | GCO18252 | 1600572 | GCO18264 | BK213B437AC | GCO18286 | 1797215 | GCO18326 | 94739288 | GCO21058 |
| 1746979 | GCO18252 | RL3M513B437BAX | GCO18264 | BK3V3B436AB | GCO18286 | 1797219 | GCO18326 | 94760581 | GCO21058 |
| 1746980 | GCO18252 | 2203100M06 | GCO18265 | BK3V3B437AB | GCO18286 | 1841593 | GCO18326 | 94760583 | GCO21058 |
| 1776427 | GCO18252 | 2203200M06 | GCO18265 | RMBK213A327A1B | GCO18286 | 1841599 | GCO18326 | 1603041 | GCO21059 |
| 1797214 | GCO18252 | 1803626 | GCO18269 | 391002176R | GCO18289 | 1841602 | GCO18326 | 95908458 | GCO21059 |
| 1797218 | GCO18252 | 36002493 | GCO18269 | 391006019R | GCO18289 | 1947206 | GCO18326 | 95908459 | GCO21059 |
| 1841590 | GCO18252 | 36002494 | GCO18269 | 4406234 | GCO18289 | 2087694 | GCO18326 | 4130034001 | GCO21070 |
| 1841605 | GCO18252 | 36011290 | GCO18269 | 4406518 | GCO18289 | 2160644 | GCO18326 | 4130034201 | GCO21070 |
| 1879574 | GCO18252 | 36011297 | GCO18269 | 4420055 | GCO18289 | 2160659 | GCO18326 | 88957233 | GCO21071 |
| 1886888 | GCO18252 | RM8G913B436B1B | GCO18269 | 4422058 | GCO18289 | 2311968 | GCO18326 | 95228721 | GCO21076 |
| 2001839 | GCO18252 | 1825218 | GCO18276 | 93167651 | GCO18289 | 2354561 | GCO18326 | 95228729 | GCO21076 |
| 2160683 | GCO18252 | 2167022 | GCO18276 | 95513818 | GCO18289 | AV613A327AA | GCO18326 | 95228738 | GCO21076 |
| 2160704 | GCO18252 | DV613A328KA | GCO18276 | 95516047 | GCO18289 | AV613A327AB | GCO18326 | 96852712 | GCO21076 |
| 2225260 | GCO18252 | FV663A328KA | GCO18276 | 36000930 | GCO18290 | AV613A327BA | GCO18326 | 4804570 | GCO22009 |
| AV613B436EB | GCO18252 | 1773989 | GCO18277 | 1774274 | GCO18293 | AV613A328AA | GCO18326 | 4804592 | GCO22009 |
| AV613B436EC | GCO18252 | 1774016 | GCO18277 | 1783969 | GCO18293 | AV613A328AB | GCO18326 | 93743417 | GCO22009 |
| AV613B436ED | GCO18252 | 1857343 | GCO18277 | 1787344 | GCO18293 | DV6P3A327JA | GCO18326 | 44014S6FE01 | GCO23001 |
| AV613B437EB | GCO18252 | 1857344 | GCO18277 | 1787346 | GCO18293 | DV6P3A328AA | GCO18326 | 44014S6FE02 | GCO23001 |
| AV613B437EC | GCO18252 | 1860750 | GCO18277 | 1841529 | GCO18293 | DV6P3A328BA | GCO18326 | 44305S74E00 | GCO23002 |
| AV613B437ED | GCO18252 | 1867867 | GCO18277 | 1841530 | GCO18293 | DV6P3B437AA | GCO18326 | 44305S74E01 | GCO23002 |
| DV6P3A327CA | GCO18252 | 2141443 | GCO18277 | 2280115 | GCO18293 | EV6P3A327BB | GCO18326 | 44305S74E50 | GCO23002 |
| DV6P3A328CA | GCO18252 | 2325982 | GCO18277 | 2280133 | GCO18293 | EV6P3A327MA | GCO18326 | 44305S74E51 | GCO23002 |
| EV6P3A327AA | GCO18252 | 2325992 | GCO18277 | 2335141 | GCO18293 | EV6P3A327MB | GCO18326 | GCV1123 | GCO23002 |
| EV6P3A328AA | GCO18252 | 2425838 | GCO18277 | 2335145 | GCO18293 | GV613B436BA | GCO18326 | TFB000070 | GCO23002 |
| F1F13A327EA | GCO18252 | 2444123 | GCO18277 | BK213A327BA | GCO18293 | RMAV613A327B1A | GCO18326 | TFB000070E | GCO23002 |
| F1F13A327EB | GCO18252 | 2497538 | GCO18277 | BK213A327BB | GCO18293 | RMDV6P3A327J1A | GCO18326 | 44011SK3E00 | GCO23007 |

| COMPETITOR | G-AP Ref. | COMPETITOR | G-AP Ref. | COMPETITOR | G-AP Ref. | COMPETITOR | G-AP Ref. | COMPETITOR | G-AP Ref. |
|---|---|---|---|---|---|---|---|---|---|
| OE | | 44010SL5N80 | GCO23014 | 44305SM1A81 | GCO23014 | 44011SR7030 | GCO23016 | 44305SF1970 | GCO23017 |
| | | 44010SL5N82 | GCO23014 | 44305SM4950 | GCO23014 | 44011SR7040 | GCO23016 | 44305SF1971 | GCO23017 |
| GVC1069 | GCO23007 | 44010SM1952 | GCO23014 | 44305SM4951 | GCO23014 | 44011SR7954 | GCO23016 | 44305SF1972 | GCO23017 |
| 44011SK3E10 | GCO23008 | 44010SM4950 | GCO23014 | 44305SM4952 | GCO23014 | 44011ST7N00 | GCO23016 | 44305SF1973 | GCO23017 |
| 03CGV1053 | GCO23010 | 44010SM4951 | GCO23014 | 44305SM4953 | GCO23014 | 44011ST7N50 | GCO23016 | 44305SH3N71 | GCO23017 |
| EJP1506 | GCO23010 | 44010SM4952 | GCO23014 | 44305SM4954 | GCO23014 | 44305SF1305 | GCO23016 | 44305SH7J83 | GCO23017 |
| GVC1053 | GCO23010 | 44010SM4953 | GCO23014 | 44305SM4955 | GCO23014 | 44305SF1910 | GCO23016 | 44305SK7J70 | GCO23017 |
| 43405SM4010 | GCO23013 | 44010SM4A12 | GCO23014 | 44305SM4982 | GCO23014 | 44305SF1911 | GCO23016 | 44305SK7J71 | GCO23017 |
| 44010SL4010 | GCO23013 | 44010SS0000 | GCO23014 | 44305SM4J80 | GCO23014 | 44305SF1912 | GCO23016 | 44305SK7J72 | GCO23017 |
| 44010SL4020 | GCO23013 | 44010SS0020 | GCO23014 | 44305SM4J81 | GCO23014 | 44305SF1913 | GCO23016 | 44305SK7J73 | GCO23017 |
| 44010SL5N01 | GCO23013 | 44010SS0930 | GCO23014 | 44305SM4J82 | GCO23014 | 44305SF1914 | GCO23016 | 44305SK7J74 | GCO23017 |
| 44010SM4010 | GCO23013 | 44010SS0980 | GCO23014 | 44305SM4J83 | GCO23014 | 44305SF1970HS | GCO23016 | 44305SK7J75 | GCO23017 |
| 44010SM4A00 | GCO23013 | 44010SS0981 | GCO23014 | 44305SM4J84 | GCO23014 | 44305SF1G10 | GCO23016 | 44305SK7J81 | GCO23017 |
| 44010SS0000 | GCO23013 | 44010SS0982 | GCO23014 | 44306SF1975 | GCO23014 | 44305SF1G11 | GCO23016 | 44305SK7J82 | GCO23017 |
| 44010SS0010 | GCO23013 | 44010SS0983 | GCO23014 | 44306SF1976 | GCO23014 | 44305SF1G12 | GCO23016 | 44305SK7J83 | GCO23017 |
| 44010SS0020 | GCO23013 | 44010SS0J80 | GCO23014 | 44306SF1J71 | GCO23014 | 44305SF1G13 | GCO23016 | 44305SK7J84 | GCO23017 |
| 44010SS0030 | GCO23013 | 44010SS0J81 | GCO23014 | 44306SM1950 | GCO23014 | 44305SF1G14 | GCO23016 | 44305ST7J50 | GCO23017 |
| 44010SS0960 | GCO23013 | 44010SS0J82 | GCO23014 | 44306SM1951 | GCO23014 | 44305SK7J21 | GCO23016 | 44306SF1405 | GCO23017 |
| 44010SV4000 | GCO23013 | 44010SS0J83 | GCO23014 | 44306SM1952 | GCO23014 | 44305SK7J22 | GCO23016 | 44306SF1970 | GCO23017 |
| 44010SV4010 | GCO23013 | 44010SS0J84 | GCO23014 | 44306SM1980 | GCO23014 | 44305SK7J23 | GCO23016 | 44306SF1971 | GCO23017 |
| 44010SVA000 | GCO23013 | 44010SV1000 | GCO23014 | 44306SM1981 | GCO23014 | 44305SK7J24 | GCO23016 | 44306SF1972 | GCO23017 |
| 44011SL5N01 | GCO23013 | 44010SV1010 | GCO23014 | 44306SM1A80 | GCO23014 | 44305SR3901HS | GCO23016 | 44306SF1973 | GCO23017 |
| 44011SM4981 | GCO23013 | 44010SV1950 | GCO23014 | 44306SM1A81 | GCO23014 | 44306SF1305 | GCO23016 | 44306SF1974 | GCO23017 |
| 44011SS0000 | GCO23013 | 44010SV1951 | GCO23014 | 44306SM4950 | GCO23014 | 44306SF1307 | GCO23016 | 44306SH3N71 | GCO23017 |
| 44011SS0010 | GCO23013 | 44010SV1A00 | GCO23014 | 44306SM4951 | GCO23014 | 44306SF1315 | GCO23016 | 44306SK7J73 | GCO23017 |
| 44011SS0020 | GCO23013 | 44010SV1A50 | GCO23014 | 44306SM4952 | GCO23014 | 44306SF1406 | GCO23016 | 44306SK7J74 | GCO23017 |
| 44011SS0030 | GCO23013 | 44010SV1A51 | GCO23014 | 44306SM4953 | GCO23014 | 44306SF1910 | GCO23016 | 44306SK7J75 | GCO23017 |
| 44011SS0940 | GCO23013 | 44010SV4950 | GCO23014 | 44306SM4954 | GCO23014 | 44306SF1911 | GCO23016 | 44306SK7J81 | GCO23017 |
| 44011SS0N00 | GCO23013 | 44010SV4951 | GCO23014 | 44306SM4955 | GCO23014 | 44306SF1912 | GCO23016 | 44306SK7J82 | GCO23017 |
| 44011SS0N01 | GCO23013 | 44010SV4952 | GCO23014 | 44306SM4956 | GCO23014 | 44306SF1913 | GCO23016 | 44306SK7J83 | GCO23017 |
| 44011SS0N02 | GCO23013 | 44010SV4N60 | GCO23014 | 44306SM4982 | GCO23014 | 44306SF1914 | GCO23016 | 44306ST7J50 | GCO23017 |
| 44011SS0N10 | GCO23013 | 44010SV4N61 | GCO23014 | 44306SM4J80 | GCO23014 | 44306SF1G10 | GCO23016 | 44010S08000 | GCO23019 |
| 44011SV4N00 | GCO23013 | 44011SL5N80 | GCO23014 | 44306SM4J81 | GCO23014 | 44306SF1G11 | GCO23016 | 44010S09000 | GCO23019 |
| 44014SM4020 | GCO23013 | 44011SM4000 | GCO23014 | 44306SM4J82 | GCO23014 | 44306SF1G12 | GCO23016 | 44010SH9000 | GCO23020 |
| 44014SS0000 | GCO23013 | 44011SM4010 | GCO23014 | 44306SM4J83 | GCO23014 | 44306SF1G13 | GCO23016 | 44305SD9013 | GCO23020 |
| 44014SV4000 | GCO23013 | 44011SM4951 | GCO23014 | 44306SM4J84 | GCO23014 | 44306SF1G14 | GCO23016 | 44305SH9000 | GCO23020 |
| 44014SV4950 | GCO23013 | 44011SM4J81 | GCO23014 | 44010S07000 | GCO23016 | 44306SF1G15 | GCO23016 | 44305SH9003 | GCO23020 |
| 44305SF1915 | GCO23013 | 44011SS0000 | GCO23014 | 44010S10010 | GCO23016 | 44306SK7J13 | GCO23016 | 44010SR3020 | GCO23022 |
| 44305SM1000 | GCO23013 | 44011SS0020 | GCO23014 | 44010SR3J01 | GCO23016 | 44306SK7J21 | GCO23016 | 44010S04J01 | GCO23023 |
| 44305SM1010 | GCO23013 | 44011SS0930 | GCO23014 | 44010SR3J02 | GCO23016 | 44306SK7J22 | GCO23016 | 44010SR1003 | GCO23023 |
| 44305SM4000 | GCO23013 | 44011SS0980 | GCO23014 | 44010SR3J03 | GCO23016 | 44306SK7J23 | GCO23016 | 44010SR3030 | GCO23023 |
| 44305SM4010 | GCO23013 | 44011SS0981 | GCO23014 | 44010SR3J04 | GCO23016 | 440108T7N60 | GCO23017 | 44010SR3040 | GCO23023 |
| 44305SM4020 | GCO23013 | 44011SS0982 | GCO23014 | 44010SR3J05 | GCO23016 | 44010S07950 | GCO23017 | 44010SR3901 | GCO23023 |
| 44305SM4030 | GCO23013 | 44011SS0J82 | GCO23014 | 44010SR3J51 | GCO23016 | 44010S10951 | GCO23017 | 44010SR3902 | GCO23023 |
| 44305SM4040 | GCO23013 | 44011SS0J84 | GCO23014 | 44010SR3J52 | GCO23016 | 44010SK7J73 | GCO23017 | 44010SR3903 | GCO23023 |
| 44305SM4050 | GCO23013 | 44011SS0N60 | GCO23014 | 44010SR3J53 | GCO23016 | 44010SK7J82 | GCO23017 | 44010SR3952 | GCO23023 |
| 44305SM4980 | GCO23013 | 44011SS0N91 | GCO23014 | 44010SR3J54 | GCO23016 | 44010SR7953 | GCO23017 | 44010ST7900 | GCO23023 |
| 44305SM4981 | GCO23013 | 44011SV1A10 | GCO23014 | 44010SR3J55 | GCO23016 | 44010SR7954 | GCO23017 | 44011S04J01 | GCO23023 |
| 44305SM4982 | GCO23013 | 44011SV1A60 | GCO23014 | 44010SR7000 | GCO23016 | 44010ST7954 | GCO23017 | 44011SR3020 | GCO23023 |
| 44305SM4983 | GCO23013 | 44011SV1N00 | GCO23014 | 44010SR7010 | GCO23016 | 44010ST7J50 | GCO23017 | 44011SR3030 | GCO23023 |
| 44305SM4984 | GCO23013 | 44011SV1N01 | GCO23014 | 44010SR7020 | GCO23016 | 44010ST7N10 | GCO23017 | 44011SR3040 | GCO23023 |
| 44306SF1916 | GCO23013 | 44011SV1N50 | GCO23014 | 44010SR7030 | GCO23016 | 44010ST7N60 | GCO23017 | 44011SR3900 | GCO23023 |
| 44306SM1000 | GCO23013 | 44011SV1N51 | GCO23014 | 44010SR7040 | GCO23016 | 44011S07950 | GCO23017 | 44011SR3901 | GCO23023 |
| 44306SM1010 | GCO23013 | 44011SV4J00 | GCO23014 | 44010ST7N00 | GCO23016 | 44011S10951 | GCO23017 | 44011SR3902 | GCO23023 |
| 44306SM4000 | GCO23013 | 44011SV4J50 | GCO23014 | 44010ST7N50 | GCO23016 | 44011SK7J73 | GCO23017 | 44011SR3903 | GCO23023 |
| 44306SM4010 | GCO23013 | 44011SV4N01 | GCO23014 | 44011S07000 | GCO23016 | 44011SK7J82 | GCO23017 | 44011SR3952 | GCO23023 |
| 44306SM4020 | GCO23013 | 44011SV4N50 | GCO23014 | 44011SR3J01 | GCO23016 | 44011SR3J55 | GCO23017 | 44011ST7900 | GCO23023 |
| 44306SM4030 | GCO23013 | 44014SF1970 | GCO23014 | 44011SR3J02 | GCO23016 | 44011SR7952 | GCO23017 | 44014SR3C00 | GCO23023 |
| 44306SM4040 | GCO23013 | 44014SM4000 | GCO23014 | 44011SR3J03 | GCO23016 | 44011SR7953 | GCO23017 | 44010S04000 | GCO23024 |
| 44306SM4050 | GCO23013 | 44014SV4010 | GCO23014 | 44011SR3J04 | GCO23016 | 44011ST3E50 | GCO23017 | 44010S04010 | GCO23024 |
| 44306SM4060 | GCO23013 | 44014SV4951 | GCO23014 | 44011SR3J50 | GCO23016 | 44011ST7954 | GCO23017 | 44010S04901 | GCO23024 |
| 44306SM4980 | GCO23013 | 44305SF1974 | GCO23014 | 44011SR3J51 | GCO23016 | 44011ST7J50 | GCO23017 | 44010S04951 | GCO23024 |
| 44306SM4981 | GCO23013 | 44305SF1975 | GCO23014 | 44011SR3J52 | GCO23016 | 44011ST7J70 | GCO23017 | 44010S04961 | GCO23024 |
| 44306SM4982 | GCO23013 | 44305SM1950 | GCO23014 | 44011SR3J53 | GCO23016 | 44011ST7J71 | GCO23017 | 44011S04010 | GCO23024 |
| 44306SM4983 | GCO23013 | 44305SM1951 | GCO23014 | 44011SR3J54 | GCO23016 | 44011ST7N60 | GCO23017 | 44011S04951 | GCO23024 |
| 44306SM4984 | GCO23013 | 44305SM1980 | GCO23014 | 44011SR7000 | GCO23016 | 44014SF1971 | GCO23017 | 44011S0A951 | GCO23024 |
| 44010SL4950 | GCO23014 | 44305SM1981 | GCO23014 | 44011SR7010 | GCO23016 | 44305SF0910 | GCO23017 | 44014S01003 | GCO23024 |
| 44010SL5N02 | GCO23014 | 44305SM1A80 | GCO23014 | 44011SR7020 | GCO23016 | 44305SF1405 | GCO23017 | 44014S04000 | GCO23024 |

| COMPETITOR | G-AP Ref. | COMPETITOR | G-AP Ref. | COMPETITOR | G-AP Ref. | COMPETITOR | G-AP Ref. | COMPETITOR | G-AP Ref. |
|---|---|---|---|---|---|---|---|---|---|
| OE | | 44011S0A950 | GCO23033 | 44305SCAG00 | GCO23034 | 44010S01961 | GCO23086 | 44305S1AE21 | GCO23118 |
| | | 44011S0AN50 | GCO23033 | 44305SEAN00 | GCO23034 | 44010S04J00 | GCO23086 | 44305S3R951 | GCO23118 |
| 44014S04010 | GCO23024 | 44011SOA950 | GCO23033 | 44305SMTG01 | GCO23034 | 44010S04J51 | GCO23086 | 44305S47N50 | GCO23118 |
| 44014S04020 | GCO23024 | 44011SOAN50 | GCO23033 | 44305T50000 | GCO23034 | 44010S09950 | GCO23086 | 44305S7A950 | GCO23118 |
| 44014S04950 | GCO23024 | 44014S5AJ51 | GCO23033 | 44306S9AN00 | GCO23034 | 44010SR3953 | GCO23086 | 44305SX0C51 | GCO23118 |
| 44014S04951 | GCO23024 | 44014S5AJ52 | GCO23033 | 44306SCAG00 | GCO23034 | 44010ST7950 | GCO23086 | 44306S0AJ60 | GCO23118 |
| 44014S04952 | GCO23024 | 44014S5C950 | GCO23033 | 44306SEAN00 | GCO23034 | 44011S01951 | GCO23086 | 44306S0AJ61 | GCO23118 |
| 44014S04953 | GCO23024 | 44014S5TA50 | GCO23033 | 44306SEAN50 | GCO23034 | 44011S04J51 | GCO23086 | 44306S1AE21 | GCO23118 |
| 44014S04N00 | GCO23024 | 44014S6M950 | GCO23033 | 44306T50000 | GCO23034 | 44011S09950 | GCO23086 | 44306S47N50 | GCO23118 |
| 44014S04N01 | GCO23024 | 44014S6M951 | GCO23033 | 44010S47000 | GCO23035 | 44011SR1003 | GCO23086 | 44306S7A950 | GCO23118 |
| 44014S04N02 | GCO23024 | 44014S7AJ50 | GCO23033 | 44010SW5000 | GCO23035 | 44011SR3953 | GCO23086 | 44306SX0C51 | GCO23118 |
| 44014S04N51 | GCO23024 | 44014S7C950 | GCO23033 | 44010SX0000 | GCO23035 | 44011ST7950 | GCO23086 | 440143A0307 | GCO23124 |
| 44014S04N52 | GCO23024 | 44014SDZT00 | GCO23033 | 44011S47000 | GCO23035 | 44014S01952 | GCO23086 | 440143A0309 | GCO23124 |
| 44014S2G950 | GCO23024 | 44014ST7C00 | GCO23033 | 44011S47010 | GCO23035 | 44014S04J01 | GCO23086 | 440143A0317 | GCO23124 |
| 44014S2G951 | GCO23024 | 44014ST7C01 | GCO23033 | 44011SW5000 | GCO23035 | 44014S04J50 | GCO23086 | 440143A0319 | GCO23124 |
| 44018S04C03 | GCO23024 | 44014ST7C50 | GCO23033 | 44011SX1000 | GCO23035 | 44014S04J51 | GCO23086 | 44014SJK000 | GCO23124 |
| 44010S0AJ50 | GCO23029 | 44014ST7C51 | GCO23033 | 44014S1AE00 | GCO23036 | 44014S04J52 | GCO23086 | 44014SJK010 | GCO23124 |
| 44010S10A60 | GCO23029 | 44014ST7C52 | GCO23033 | 44014S1AE01 | GCO23036 | 44014SR3C50 | GCO23086 | 44014SWA010 | GCO23124 |
| 44010S30950 | GCO23029 | 44014ST7C53 | GCO23033 | 44014S1AE20 | GCO23036 | 44014SR3C51 | GCO23086 | 44014SWA020 | GCO23124 |
| 44010S30951 | GCO23029 | 4430582HN50 | GCO23033 | 44014S1BE01 | GCO23036 | 44014S5DA01 | GCO23087 | 44014SWET00 | GCO23124 |
| 44010S30N20 | GCO23029 | 44305S04J60 | GCO23033 | 44011S04020 | GCO23038 | 44014S5DA50 | GCO23087 | 44014SWET01 | GCO23124 |
| 44010S30N21 | GCO23029 | 44305S0A960 | GCO23033 | 44011S05N00 | GCO23038 | 44014S5DA51 | GCO23087 | 44014SXSA00 | GCO23124 |
| 44010S30N22 | GCO23029 | 44305S0AN60 | GCO23033 | 5860052290 | GCO23038 | 44014S6DE01 | GCO23095 | 44014SXSA01 | GCO23124 |
| 44010S30N50 | GCO23029 | 44305S2H010 | GCO23033 | 44014S5A951 | GCO23039 | 44014S6DE02 | GCO23095 | 44014T3VA01 | GCO23124 |
| 44010S47950 | GCO23029 | 44305S2H050 | GCO23033 | 44014S5A952 | GCO23039 | 44014T0A305 | GCO23103 | 44014T3VA02 | GCO23124 |
| 44010SOAJ50 | GCO23029 | 44305S2H950 | GCO23033 | 44014S6DG50 | GCO23039 | 44014T0AA00 | GCO23103 | 44014T6LH01 | GCO23124 |
| 44010SW5950 | GCO23029 | 44305S2H951 | GCO23033 | 44305S5A950 | GCO23039 | 44014T0AA01 | GCO23103 | 44014TA0A50 | GCO23124 |
| 44010SX0950 | GCO23029 | 44305S2HN50 | GCO23033 | 44305S6A950 | GCO23039 | 44014T2A000 | GCO23103 | 44014TA0A51 | GCO23124 |
| 44011S30950 | GCO23029 | 44305S5AJ50 | GCO23033 | 44306S5A950 | GCO23039 | 44014T2LH61 | GCO23103 | 44014TA0A52 | GCO23124 |
| 44011S30J50 | GCO23029 | 44305S5AJ60 | GCO23033 | 44310SS0910 | GCO23046 | 44014TA0A00 | GCO23103 | 44014TA1A00 | GCO23124 |
| 44011S30N20 | GCO23029 | 44305S5AJ61 | GCO23033 | 44010S04010 | GCO23047 | 44014TA0A01 | GCO23103 | 44014TA1A01 | GCO23124 |
| 44011S47951 | GCO23029 | 44305S5AJ62 | GCO23033 | 44011S04010 | GCO23047 | 44014TA0A02 | GCO23103 | 44014TA1A02 | GCO23124 |
| 44011SW5950 | GCO23029 | 44305S5C950 | GCO23033 | 44014S04010 | GCO23047 | 44014TL1E00 | GCO23103 | 44305TFS000 | GCO23124 |
| 44014S30C50 | GCO23029 | 44305S5CN50 | GCO23033 | 44014SDCA00 | GCO23056 | 44014TL1E01 | GCO23103 | 44305TWBH00 | GCO23124 |
| 44014S3X950 | GCO23029 | 44305S5CN51 | GCO23033 | 44014SDET00 | GCO23056 | 44014TL1E02 | GCO23103 | 44306T6LH00 | GCO23124 |
| 44014SX0C61 | GCO23029 | 44305S7B950 | GCO23033 | 44014SDETOOL | GCO23056 | 44014SELTOO | GCO23106 | 44306TFS000 | GCO23124 |
| 44305S3N950 | GCO23029 | 44305S7C950 | GCO23033 | 44014SJFJ01 | GCO23056 | 44014SENP00 | GCO23106 | 44306TWBH00 | GCO23124 |
| 44305S3N951 | GCO23029 | 44305SDZT00 | GCO23033 | 44014SNG000 | GCO23056 | 44014TF0J00 | GCO23106 | 44014SMGE00 | GCO23125 |
| 44305SOAJ60 | GCO23029 | 44305SOA960 | GCO23033 | 44305SDET00 | GCO23056 | 44014TF0J01 | GCO23106 | 44014SMGE01 | GCO23125 |
| 44305SOAJ61 | GCO23029 | 44305SOAN60 | GCO23033 | 44305SDETOOL | GCO23056 | 44014TF0J02 | GCO23106 | 44014SNAN01 | GCO23125 |
| 44306S10C51 | GCO23029 | 44306S0A960 | GCO23033 | 44305SEA000 | GCO23056 | 44305SAAE00 | GCO23106 | 44305SNLT50 | GCO23125 |
| 44306S3N950 | GCO23029 | 44306S0AN60 | GCO23033 | 44305SNG010 | GCO23056 | 44305SABN10 | GCO23106 | 44306SNLT50 | GCO23125 |
| 44306S3N951 | GCO23029 | 44306S2H010 | GCO23033 | 44305SNG020 | GCO23056 | 44305SELTOOL | GCO23106 | 44010S50951 | GCO23126 |
| 44306S3R951 | GCO23029 | 44306S2H950 | GCO23033 | 44306SDCA00 | GCO23056 | 44305TF0J00 | GCO23106 | 44305S50960 | GCO23126 |
| 44306SOAJ60 | GCO23029 | 44306S2H951 | GCO23033 | 44306SDET00 | GCO23056 | 44306SELTOOL | GCO23106 | 44014SWET00 | GCO23131 |
| 44306SOAJ61 | GCO23029 | 44306S5AJ51 | GCO23033 | 44306SDETOOL | GCO23056 | 44306TF0J00 | GCO23106 | 44014T3VA00 | GCO23131 |
| 44014SABN20 | GCO23030 | 44306S5AJ61 | GCO23033 | 44306SNG010 | GCO23056 | 44305TBAA01 | GCO23107 | 44305T3V000 | GCO23131 |
| 44014SABN21 | GCO23030 | 44306S5AJ62 | GCO23033 | 44014ST7C01 | GCO23060 | 44011ST3G00 | GCO23108 | 44305T3VA00 | GCO23131 |
| 44014SABN22 | GCO23030 | 44306S5C951 | GCO23033 | 44305S2H010 | GCO23060 | 44014ST3E01 | GCO23109 | 44305T3VA01 | GCO23131 |
| 44014SABN23 | GCO23030 | 44306S5C952 | GCO23033 | 44306S2H010 | GCO23060 | 44014SNEA01 | GCO23110 | 44306T3V000 | GCO23131 |
| 44014SELT00 | GCO23030 | 44306S7B950 | GCO23033 | 44014SLA000 | GCO23066 | 44014SNEA02 | GCO23110 | 44306T3VA00 | GCO23131 |
| 44333S04N01 | GCO23030 | 44306S7C950 | GCO23033 | 44014SNA010 | GCO23066 | 44014TR0A01 | GCO23110 | 44306T3VA01 | GCO23131 |
| 44014S0KC00 | GCO23031 | 44306SOA960 | GCO23033 | 44014SNLT00 | GCO23066 | 44014TR0A91 | GCO23110 | 44014TF6N01 | GCO23138 |
| 44014S0KC10 | GCO23031 | 44306SOAN60 | GCO23033 | 44305SNLT00 | GCO23066 | 44014SEPA02 | GCO23117 | 44014TF6N03 | GCO23138 |
| 44011SX1950 | GCO23032 | 44014S9A000 | GCO23034 | 44010S2G950 | GCO23073 | 44014SKNE00 | GCO23117 | 44014TF6N13 | GCO23138 |
| 44011SX1951 | GCO23032 | 44014S9A020 | GCO23034 | 44011S2G950 | GCO23073 | 44014SKNE01 | GCO23117 | 44305TR0J01 | GCO23138 |
| 44014S0AJ50 | GCO23032 | 44014S9A030 | GCO23034 | 44305S2G950 | GCO23073 | 44014S3X951 | GCO23118 | 44306TF0N00 | GCO23138 |
| 44014S0AJ51 | GCO23032 | 44014S9ET00 | GCO23034 | 44305S2G960 | GCO23073 | 44014S3X960 | GCO23118 | 44306TF0N01 | GCO23138 |
| 44014S0AJ52 | GCO23032 | 44014S9ET01 | GCO23034 | 44305S2T950 | GCO23073 | 44014S3X961 | GCO23118 | 44014S30C60 | GCO23139 |
| 44014S0AJ53 | GCO23032 | 44014SCAE01 | GCO23034 | 44306S2G950 | GCO23073 | 44014S7A950 | GCO23118 | 44014S30C62 | GCO23139 |
| 44014SZ3A50 | GCO23032 | 44014SDCA50 | GCO23034 | 44306S2G960 | GCO23073 | 44014S7A951 | GCO23118 | 44014S7A952 | GCO23139 |
| 44014SZ3A51 | GCO23032 | 44014SDCA51 | GCO23034 | 44306S2T950 | GCO23073 | 44014SX0C10 | GCO23118 | 44014STKA00 | GCO23145 |
| 44014SZ3A52 | GCO23032 | 44014SDCA52 | GCO23034 | 44014S10A00 | GCO23080 | 44014SX0C11 | GCO23118 | 44014STKA01 | GCO23145 |
| 42330S2L316 | GCO23033 | 44014SDDA00 | GCO23034 | 44014S10A50 | GCO23080 | 44014SX0C50 | GCO23118 | 44014STKA02 | GCO23145 |
| 44010S0A950 | GCO23033 | 44014SMTG01 | GCO23034 | 44014S10A51 | GCO23080 | 44014SX0C60 | GCO23118 | 44014STKA03 | GCO23145 |
| 44010S0AN50 | GCO23033 | 44101SDCA51 | GCO23034 | 44014S10A52 | GCO23080 | 44014SX0C62 | GCO23118 | 44014SWY000 | GCO23145 |
| 44010SOA950 | GCO23033 | 44101SDET51 | GCO23034 | 44014S30C61 | GCO23080 | 44305S0AJ60 | GCO23118 | 44014SWY010 | GCO23145 |
| 44010SOAN50 | GCO23033 | 44305S9AN00 | GCO23034 | 44010S08950 | GCO23083 | 44305S0AJ61 | GCO23118 | 44014T0C305 | GCO23145 |

| COMPETITOR | G-AP Ref. | COMPETITOR | G-AP Ref. | COMPETITOR | G-AP Ref. | COMPETITOR | G-AP Ref. | COMPETITOR | G-AP Ref. |
|---|---|---|---|---|---|---|---|---|---|
| OE | | 4950722E00 | GCO24002 | 495013A201 | GCO24029 | 495002E200 | GCO24048 | 495002P400 | GCO24072 |
| | | 4950822 | GCO24002 | 495013A202 | GCO24029 | 495012E200 | GCO24048 | 495003J000 | GCO24072 |
| 44014T0C405 | GCO23145 | 4950822A00 | GCO24002 | 495013A210 | GCO24029 | 495012E201 | GCO24048 | 495003J050 | GCO24072 |
| 44014T0CG00 | GCO23145 | 4950822B00 | GCO24002 | 495013A211 | GCO24029 | 495012E900 | GCO24049 | 495003J100 | GCO24072 |
| 44014T0CG01 | GCO23145 | 4950822C00 | GCO24002 | 495013A212 | GCO24029 | 495082EJ00 | GCO24049 | 495003J120 | GCO24072 |
| 44014TL1E50 | GCO23145 | 4950822E00 | GCO24002 | 495013A217 | GCO24029 | 4110154G50 | GCO24050 | 495011U200 | GCO24072 |
| 44014TL1E51 | GCO23145 | 4950702A00 | GCO24004 | 4950738F00 | GCO24029 | 4110254G50 | GCO24050 | 495012B850 | GCO24072 |
| 44014TL1E52 | GCO23145 | 4950702A10 | GCO24004 | 4950838F00 | GCO24029 | 4410154G10 | GCO24050 | 495012P200 | GCO24072 |
| 44305TY4A20 | GCO23145 | 4950702A11 | GCO24004 | 4950725A00 | GCO24033 | 4410165G00 | GCO24050 | 495012P250 | GCO24072 |
| 44306TY4A20 | GCO23145 | 4950702A41 | GCO24004 | 4950725B00 | GCO24033 | 4410254G20 | GCO24050 | 495012P300 | GCO24072 |
| 44014SEFE00 | GCO23146 | 4950729A10 | GCO24004 | 4950825A00 | GCO24033 | 495002H112 | GCO24055 | 495013J150 | GCO24072 |
| 44014SEFE01 | GCO23146 | 4950802A00 | GCO24004 | 4950825B00 | GCO24033 | 495012H112 | GCO24055 | 4950738J00 | GCO24073 |
| 44305SEFE00 | GCO23146 | 4950802A10 | GCO24004 | 4950017000 | GCO24036 | 495003K300 | GCO24058 | 4950738K00 | GCO24073 |
| 44306SEFE00 | GCO23146 | 4950802A41 | GCO24004 | 4950017050 | GCO24036 | 495003K350 | GCO24058 | 4950838J00 | GCO24073 |
| 44305SMJG01 | GCO23147 | 4950805A10 | GCO24004 | 4950117000 | GCO24036 | 495002C112 | GCO24060 | 4950838K00 | GCO24073 |
| 44305TV2E01 | GCO23147 | 4950702A00 | GCO24005 | 4950117050 | GCO24036 | 495002C113 | GCO24060 | 4950025200 | GCO24075 |
| 44306SMJG01 | GCO23147 | 4950702A10 | GCO24005 | 495072DA20 | GCO24036 | 495012C100 | GCO24060 | 4950025311 | GCO24075 |
| 44306TV2E01 | GCO23147 | 4950802A00 | GCO24005 | 495082DA20 | GCO24036 | 495012C101 | GCO24060 | 4950025400 | GCO24075 |
| 44014STXA02 | GCO23148 | 4950802A10 | GCO24005 | 4950638640 | GCO24037 | 495012C110 | GCO24060 | 495002H002 | GCO24077 |
| 44014STXA03 | GCO23148 | 4950729C10 | GCO24006 | 4950017510 | GCO24038 | 495012C111 | GCO24060 | 495002H010 | GCO24077 |
| 44014SZAA01 | GCO23148 | 4950729L20 | GCO24006 | 495002D411 | GCO24038 | 495012C511 | GCO24060 | 495002H011 | GCO24077 |
| 44014SZAA02 | GCO23148 | 4950729M00 | GCO24006 | 4950117510 | GCO24038 | 4950017100 | GCO24061 | 495002L000 | GCO24077 |
| 44305T5A900 | GCO23149 | 4950729M10 | GCO24006 | 495072DA10 | GCO24038 | 4950017150 | GCO24061 | 495012H002 | GCO24077 |
| 44306T5A900 | GCO23149 | 4950828H00 | GCO24006 | 4950829L20 | GCO24038 | 495002D001 | GCO24061 | 495012H010 | GCO24077 |
| 44014S0XA51 | GCO23152 | 4950828H01 | GCO24006 | 495082DA10 | GCO24038 | 495002D502 | GCO24061 | 495012H011 | GCO24077 |
| 44014S0XA52 | GCO23152 | 4950828J00 | GCO24006 | 465001C060 | GCO24041 | 495002D510 | GCO24061 | 495012L000 | GCO24077 |
| 44014SWA000 | GCO23153 | 4950828J01 | GCO24006 | 495001C000 | GCO24041 | 495002D511 | GCO24061 | 495012L010 | GCO24077 |
| 44305SNW000 | GCO23153 | 4950828K00 | GCO24006 | 495001C010 | GCO24041 | 495002D512 | GCO24061 | 495803Y000 | GCO24077 |
| 44305SNW010 | GCO23153 | 4950828K01 | GCO24006 | 495001C050 | GCO24041 | 495002D513 | GCO24061 | 495000X000 | GCO24087 |
| 44305SWA900 | GCO23153 | 4950829A00 | GCO24006 | 495001C060 | GCO24041 | 4950117100 | GCO24061 | 495000X200 | GCO24087 |
| 44305TA1A00 | GCO23153 | 4950829C10 | GCO24006 | 495002C110 | GCO24044 | 4950117150 | GCO24061 | 495002E250 | GCO24090 |
| 44306SNW000 | GCO23153 | 4950728G00 | GCO24009 | 495002C111 | GCO24044 | 495012D500 | GCO24061 | 495002E500 | GCO24090 |
| 44306SWA900 | GCO23153 | 4950728G01 | GCO24009 | 495002D612 | GCO24044 | 495012D501 | GCO24061 | 495002E550 | GCO24090 |
| 44014SNA000 | GCO23155 | 4950002010 | GCO24011 | 495002D613 | GCO24044 | 495012D502 | GCO24061 | 495012E700 | GCO24090 |
| 44305SNA000 | GCO23155 | 4950702A20 | GCO24011 | 495000P050 | GCO24046 | 495012D512 | GCO24061 | 495013S250 | GCO24090 |
| 44305SNAN00 | GCO23155 | 4950702A30 | GCO24011 | 495001C210 | GCO24046 | 495012D513 | GCO24061 | 495013S270 | GCO24090 |
| 44305SNAN01 | GCO23155 | 4950702A40 | GCO24011 | 495001C212 | GCO24046 | 495072DA00 | GCO24061 | 495072EE00 | GCO24090 |
| 44305SNC010 | GCO23155 | 4950802A20 | GCO24011 | 495001C250 | GCO24046 | 495003K060 | GCO24062 | 495072EJ00 | GCO24090 |
| 44305SYZ000 | GCO23155 | 4950802A30 | GCO24011 | 495001C260 | GCO24046 | 495003K110 | GCO24062 | 495072EJ10 | GCO24090 |
| 44306SNA000 | GCO23155 | 4950802A40 | GCO24011 | 495001C262 | GCO24046 | 495003K160 | GCO24062 | 495082E550 | GCO24090 |
| 44306SNA900 | GCO23155 | 4950802A11 | GCO24018 | 495001C351 | GCO24046 | 495003K320 | GCO24062 | 495082EF50 | GCO24090 |
| 44306SNAN00 | GCO23155 | 96335418 | GCO24021 | 495001C352 | GCO24046 | 495003K370 | GCO24062 | 4950026100 | GCO24091 |
| 44306SNC010 | GCO23155 | 96481002 | GCO24021 | 495001C352SJ | GCO24046 | 495003K510 | GCO24062 | 4950026101 | GCO24091 |
| 44306SYZ000 | GCO23155 | 96639081 | GCO24021 | 495001C361 | GCO24046 | 495003K860 | GCO24062 | 4950026110 | GCO24091 |
| 44014S04N53 | GCO23156 | 495001C301 | GCO24025 | 495001C362 | GCO24046 | 495003K410 | GCO24063 | 4950026111 | GCO24091 |
| 423305XSA01 | GCO23160 | 495001C302 | GCO24025 | 495001C362SJ | GCO24046 | 495003K460 | GCO24063 | 4950026150 | GCO24091 |
| 42330SXSA01 | GCO23160 | 4950038340 | GCO24027 | 495001E000 | GCO24046 | 4950025311 | GCO24065 | 4950026151 | GCO24091 |
| 44014S3VA61 | GCO23162 | 4950038391 | GCO24027 | 495001E001 | GCO24046 | 4950725A10 | GCO24065 | 4950026160 | GCO24091 |
| 44305TF6N01 | GCO23165 | 495003C391 | GCO24027 | 495001E011 | GCO24046 | 4950725A20 | GCO24065 | 4950026161 | GCO24091 |
| 44010ST3E50 | GCO23179 | 4950738B00 | GCO24027 | 495001E061 | GCO24046 | 4950725B10 | GCO24065 | 4950026400 | GCO24091 |
| 44010ST3E59 | GCO23179 | 4950738C00 | GCO24027 | 495001E101 | GCO24046 | 4950725B20 | GCO24065 | 4950026401 | GCO24091 |
| 44010ST3E70 | GCO23179 | 4950738D00 | GCO24027 | 495001E111 | GCO24046 | 4950825A10 | GCO24065 | 4950026410 | GCO24091 |
| 44010ST3F00 | GCO23179 | 4950838B00 | GCO24027 | 495001E151 | GCO24046 | 4950825A20 | GCO24065 | 4950026411 | GCO24091 |
| 44010ST3G01 | GCO23179 | 4950838C00 | GCO24027 | 495001E161 | GCO24046 | 4950825B10 | GCO24065 | 4950026450 | GCO24091 |
| 4434S1LM010 | GCO23179 | 4950838D00 | GCO24027 | 495001E200 | GCO24046 | 4950825B20 | GCO24065 | 4950026460 | GCO24091 |
| 44305TF0000 | GCO23184 | 4950038930 | GCO24028 | 495001E300 | GCO24046 | 495003A310 | GCO24066 | 4950026461 | GCO24091 |
| 44306TF6N01 | GCO23184 | 4950038980 | GCO24028 | 495001E310 | GCO24046 | 495003A311 | GCO24066 | 4950026561 | GCO24091 |
| 44014SYY000 | GCO23208 | 495003A312 | GCO24028 | 495001G105 | GCO24046 | 495003A312 | GCO24066 | 4950026810 | GCO24091 |
| 44306T0AA02 | GCO23221 | 495013A520 | GCO24028 | 495001G110 | GCO24046 | 495013A390 | GCO24066 | 4950126301 | GCO24091 |
| 44014SZAA11 | GCO23251 | 4950038470 | GCO24029 | 495001G115 | GCO24046 | 495013A392 | GCO24066 | 4950126310 | GCO24091 |
| 44014SZAA21 | GCO23251 | 495003A205 | GCO24029 | 495001G141 | GCO24046 | 495002B000 | GCO24072 | 4950126350 | GCO24091 |
| 44305TR0J90 | GCO23253 | 495003A206 | GCO24029 | 495001G151 | GCO24046 | 495002B010 | GCO24072 | 4950126351 | GCO24091 |
| 44306SZTG00 | GCO23253 | 495003A207 | GCO24029 | 495001C450 | GCO24047 | 495002B110 | GCO24072 | 4950126410 | GCO24091 |
| 44014TK6A51 | GCO23260 | 495003A215 | GCO24029 | 495001C451 | GCO24047 | 495002B350 | GCO24072 | 4950126411 | GCO24091 |
| 4950000 | GCO24002 | 495003A216 | GCO24029 | 495001C460 | GCO24047 | 495002B500 | GCO24072 | 4950126560 | GCO24091 |
| 4950722A00 | GCO24002 | 495003A217 | GCO24029 | 495001C550 | GCO24047 | 495002B510 | GCO24072 | 4950126561 | GCO24091 |
| 4950722B00 | GCO24002 | 495003A230 | GCO24029 | 495001E610 | GCO24047 | 495002B520 | GCO24072 | 4950126860 | GCO24091 |
| 4950722C00 | GCO24002 | 495013A200 | GCO24029 | 495001E650 | GCO24047 | 495002P200 | GCO24072 | 495002E600 | GCO24094 |

| COMPETITOR | G-AP Ref. | COMPETITOR | G-AP Ref. | COMPETITOR | G-AP Ref. | COMPETITOR | G-AP Ref. | COMPETITOR | G-AP Ref. |
|---|---|---|---|---|---|---|---|---|---|
| OE | | 495011M010 | GCO24132 | 495911F300 | GCO24156 | 496002Y000 | GCO24311 | 97131395 | GCO26004 |
| | | 495012H012 | GCO24132 | 495911F400 | GCO24156 | 49600M0000 | GCO24311 | 8971172150 | GCO26007 |
| 495072EH00 | GCO24094 | 495013X000 | GCO24132 | 495911F410 | GCO24156 | 496012Y000 | GCO24311 | 8971172440 | GCO26007 |
| 495082EG00 | GCO24094 | 495013X010 | GCO24132 | 495911F800 | GCO24156 | 49601M0000 | GCO24311 | 8971839460 | GCO26007 |
| 495082EH00 | GCO24094 | 495813Y000 | GCO24132 | 495912G500 | GCO24156 | 496002M200 | GCO24313 | 8971839480 | GCO26007 |
| 495082EH50 | GCO24094 | 495913X0A0 | GCO24132 | 495912G505 | GCO24156 | 496502M200 | GCO24313 | 8972001010 | GCO26007 |
| 495001H010 | GCO24095 | 495913X0B0 | GCO24132 | 4950705A00 | GCO24159 | 496002Y010 | GCO24315 | 8972001020 | GCO26007 |
| 495001L010 | GCO24095 | 49591A63A5 | GCO24132 | 4950805A00 | GCO24159 | 4960026210 | GCO24319 | 0K20222510 | GCO27001 |
| 495011H010 | GCO24095 | 495001R010 | GCO24136 | 495012V100 | GCO24161 | 4960026211 | GCO24319 | 0K20222610 | GCO27001 |
| 495011H011 | GCO24095 | 495001R610 | GCO24136 | 49525A7450 | GCO24161 | 496012W050 | GCO24321 | 0K20225400 | GCO27001 |
| 495011L010 | GCO24095 | 495011R010 | GCO24136 | 51610H1000 | GCO24173 | 496000W110 | GCO24323 | 0K20225600 | GCO27001 |
| 495911H011 | GCO24095 | 495011R510 | GCO24136 | 51614H1000 | GCO24173 | 496002B010 | GCO24323 | 0K21125400 | GCO27001 |
| 495911H012 | GCO24095 | 495011R610 | GCO24136 | 51620H1000 | GCO24173 | 4960026011 | GCO24325 | 0K21125600 | GCO27001 |
| 495001E050 | GCO24098 | 495251R602 | GCO24136 | 51624H1000 | GCO24173 | 495002B260 | GCO24327 | 0K2A122610 | GCO27001 |
| 495001E051 | GCO24098 | 495261R602 | GCO24136 | 496002E000 | GCO24178 | 495002B360 | GCO24327 | 0K2A222510 | GCO27001 |
| 495001E150 | GCO24098 | 495001M610 | GCO24137 | 49525G7000 | GCO24196 | 495002B610 | GCO24327 | 0K2A222610 | GCO27001 |
| 495004C362 | GCO24098 | 49500A5900 | GCO24137 | 49526G7000 | GCO24196 | 495002B620 | GCO24327 | OK20225400 | GCO27001 |
| 4950705A10 | GCO24099 | 49500A7100 | GCO24137 | 495251R202 | GCO24197 | 495002B800 | GCO24327 | OK20225600 | GCO27001 |
| 495001G050 | GCO24101 | 49500A7110 | GCO24137 | 495261R202 | GCO24197 | 495002B850 | GCO24327 | 0K01122510 | GCO27002 |
| 495072EC01 | GCO24103 | 495011M610 | GCO24137 | 495261R302 | GCO24197 | 495002P100 | GCO24327 | 0K01122610 | GCO27002 |
| 495082EC00 | GCO24103 | 495011P200 | GCO24137 | 495004N100 | GCO24198 | 495012B800 | GCO24327 | 0K01222510 | GCO27002 |
| 495082EC50 | GCO24103 | 495012K400 | GCO24137 | 495014N100 | GCO24198 | 495003X010 | GCO24332 | 0K01222510A | GCO27002 |
| 496911F000 | GCO24111 | 495012K410 | GCO24137 | 495004N000 | GCO24199 | 495913X2A0 | GCO24332 | 0K01222610 | GCO27002 |
| 495001C200 | GCO24112 | 49501A7100 | GCO24137 | 495014N000 | GCO24199 | 495002L212 | GCO24339 | FS1825400 | GCO27003 |
| 495001C202 | GCO24112 | 49526A6101 | GCO24137 | 495912G202 | GCO24206 | 495012L211 | GCO24339 | FS1825400C | GCO27003 |
| 495030B002 | GCO24112 | 495913X1B0 | GCO24137 | 495002Y000 | GCO24221 | 8944230371 | GCO26002 | FS1825600 | GCO27003 |
| 495251J001 | GCO24117 | 495913X1B5 | GCO24137 | 495002Y100 | GCO24221 | 8944230381 | GCO26002 | 0K2N225400 | GCO27004 |
| 495251J002 | GCO24117 | 49591A76B0 | GCO24137 | 495002Y900 | GCO24221 | 8944264013 | GCO26002 | 0K2N42540X | GCO27004 |
| 495261J001 | GCO24117 | 49591A76B5 | GCO24137 | 495012S050 | GCO24221 | 8944264023 | GCO26002 | 0K2N425600 | GCO27004 |
| 495261J002 | GCO24117 | 495003S900 | GCO24138 | 495012Y050 | GCO24221 | 94426401 | GCO26002 | 0K2NC22510 | GCO27004 |
| 495002D013 | GCO24120 | 495003V200 | GCO24138 | 49500A2200 | GCO24227 | 94426402 | GCO26002 | KK33125400A | GCO27005 |
| 495012D013 | GCO24120 | 495012T370 | GCO24138 | 49526A6101 | GCO24227 | 374208 | GCO26003 | KK33125600 | GCO27005 |
| 495002S200 | GCO24124 | 495013V270 | GCO24138 | 495913X1B0 | GCO24227 | 374209 | GCO26003 | 0K20125600 | GCO27006 |
| 495002S210 | GCO24124 | 495803Z300 | GCO24138 | 495913X1B5 | GCO24227 | 8914733053 | GCO26003 | 0K2022520 | GCO27006 |
| 495003W200 | GCO24124 | 495803Z350 | GCO24138 | 49591A64A0 | GCO24227 | 8941733042 | GCO26003 | 0K20322510 | GCO27006 |
| 495012S250 | GCO24124 | 495804C001 | GCO24138 | 49525G4000 | GCO24267 | 8941733043 | GCO26003 | 0K20322520 | GCO27006 |
| 495012S260 | GCO24124 | 495804R200 | GCO24138 | 49526G4000 | GCO24267 | 8941733053 | GCO26003 | 0K20322610 | GCO27006 |
| 495013W200 | GCO24124 | 49581A4100 | GCO24138 | 495L1AA100 | GCO24267 | 8942476490 | GCO26003 | 0K20325400 | GCO27006 |
| 495013W211 | GCO24124 | 49581A4350 | GCO24138 | 495R1AA100 | GCO24267 | 8943130950 | GCO26003 | 0K20325600 | GCO27006 |
| 495013W211SJ | GCO24124 | 495002F060 | GCO24139 | 495912Y200 | GCO24284 | 894313096 | GCO26003 | 0K2162540X | GCO27006 |
| 495013W250 | GCO24124 | 495002F510 | GCO24139 | 495912Y210 | GCO24284 | 8943747790 | GCO26003 | 0K2162560X | GCO27006 |
| 495013W260 | GCO24124 | 495012F060 | GCO24139 | 495912Y250 | GCO24284 | 8943747791 | GCO26003 | 0K25422510 | GCO27006 |
| 495002L210 | GCO24126 | 495012F510 | GCO24139 | 495912Y800 | GCO24284 | 8943747800 | GCO26003 | 0K25422520 | GCO27006 |
| 495012L210 | GCO24126 | 495912F060 | GCO24139 | 495912Y801 | GCO24284 | 8943747801 | GCO26003 | 0K25422610 | GCO27006 |
| 22030010S10 | GCO24128 | 495912F080 | GCO24139 | 495002W600 | GCO24296 | 8970160980 | GCO26003 | 0K25425400 | GCO27006 |
| 22030020S10 | GCO24128 | 495002E800 | GCO24148 | 495012W350 | GCO24296 | 8970160990 | GCO26003 | 0K25425600 | GCO27006 |
| 4950026631 | GCO24128 | 495002T700 | GCO24148 | 495012W650 | GCO24296 | 8970636200 | GCO26003 | 0K2A125400 | GCO27006 |
| 495000X004 | GCO24129 | 495012E800 | GCO24148 | 49500D4100 | GCO24299 | 8970636210 | GCO26003 | 0K2A125600 | GCO27006 |
| 495000X014 | GCO24129 | 495012T750 | GCO24148 | 495803Z120 | GCO24299 | 8970636220 | GCO26003 | 0K2A225600 | GCO27006 |
| 495000X204 | GCO24129 | 495030B003 | GCO24151 | 49580A8000 | GCO24299 | 8970636222 | GCO26003 | 4950038312 | GCO27008 |
| 495000X214 | GCO24129 | 495030B013 | GCO24151 | 49580C1000 | GCO24299 | 8970651190 | GCO26003 | 4950038362 | GCO27008 |
| 495000X900 | GCO24129 | 495001H210 | GCO24152 | 49580C2210 | GCO24299 | 8971097620 | GCO26003 | 4950038390 | GCO27008 |
| 495000X910 | GCO24129 | 495001H310 | GCO24152 | 49580D4000 | GCO24299 | 94313095 | GCO26003 | 4951038200 | GCO27008 |
| 495003A240 | GCO24130 | 495001L210 | GCO24152 | 49580D4700 | GCO24299 | 94374779 | GCO26003 | MR111327 | GCO27008 |
| 495013A240 | GCO24130 | 495001L310 | GCO24152 | 495002W000 | GCO24301 | 94374780 | GCO26003 | 495003A202 | GCO27009 |
| 495001R000 | GCO24131 | 495002K011 | GCO24152 | 495002W200 | GCO24301 | 97063620 | GCO26003 | 4951038500 | GCO27009 |
| 495001R100 | GCO24131 | 495011H210 | GCO24152 | 495002W300 | GCO24301 | 97063621 | GCO26003 | 0K20022610 | GCO27010 |
| 495011R000 | GCO24131 | 495011H310 | GCO24152 | 495002W400 | GCO24301 | 374280 | GCO26004 | 0K2C022510 | GCO27010 |
| 495011R100 | GCO24131 | 495011L210 | GCO24152 | 495012W050 | GCO24301 | 8971313950 | GCO26004 | 0K2C022610 | GCO27010 |
| 495251R001 | GCO24131 | 495011L310 | GCO24152 | 495012W350 | GCO24301 | 8971368880 | GCO26004 | 0K2C122510 | GCO27010 |
| 495251R003 | GCO24131 | 495911H211 | GCO24152 | 49580C5000 | GCO24301 | 8971368881 | GCO26004 | 0K2C22510 | GCO27010 |
| 495251R501 | GCO24131 | 495911H212 | GCO24152 | 495913X4B0 | GCO24302 | 8971390930 | GCO26004 | 0K2FA22510 | GCO27010 |
| 495261R001 | GCO24131 | 495911H311 | GCO24152 | 495001M110 | GCO24304 | 8972156971 | GCO26004 | 0K2FA22610 | GCO27010 |
| 495261R002 | GCO24131 | 495911H312 | GCO24152 | 495011M110 | GCO24304 | 8973499520 | GCO26004 | 0K2FE22610 | GCO27010 |
| 495261R101 | GCO24131 | 495911F350 | GCO24153 | 495912V2A0 | GCO24304 | 8973499521 | GCO26004 | 0K2KB22510 | GCO27010 |
| 49526H5210 | GCO24131 | 495911F710 | GCO24153 | 495913X0B5 | GCO24304 | 8973600460 | GCO26004 | 0K2KB22610 | GCO27010 |
| 495001M010 | GCO24132 | 495911D700 | GCO24156 | 495003Y100 | GCO24305 | 8973876640 | GCO26004 | 0K2KB25400 | GCO27010 |
| 49500A6300 | GCO24132 | 495911D705 | GCO24156 | 495803Y100 | GCO24305 | 8973876741 | GCO26004 | 0K2KB25600 | GCO27010 |

| COMPETITOR | G-AP Ref. | COMPETITOR | G-AP Ref. | COMPETITOR | G-AP Ref. | COMPETITOR | G-AP Ref. | COMPETITOR | G-AP Ref. |
|---|---|---|---|---|---|---|---|---|---|
| OE | | 495912F110 | GCO27066 | 495001P000 | GCO27088 | 4342020191 | GCO31001 | GR052560XE | GCO34013 |
| | | 495912F191 | GCO27066 | 495911G013 | GCO27097 | 4342020193 | GCO31001 | G03725500 | GCO34014 |
| 0K2NA22510 | GCO27010 | 495001D201 | GCO27067 | 495911G091 | GCO27097 | 4342020431 | GCO31001 | G03725500B | GCO34014 |
| 0K9A222550 | GCO27010 | 495001F210 | GCO27067 | 495911G092 | GCO27097 | 4347039135 | GCO31001 | G03725600 | GCO34014 |
| 0K9A422510 | GCO27010 | 495011D211 | GCO27067 | 495911G093 | GCO27097 | 4347039178 | GCO31001 | G04725500 | GCO34014 |
| 0K9A425500 | GCO27010 | 495082EG50 | GCO27067 | 495911G101 | GCO27097 | B00425400A | GCO34003 | G04725500A | GCO34014 |
| 0K9A425600 | GCO27010 | 495911F200 | GCO27067 | 495911G102 | GCO27097 | B00425600A | GCO34003 | G04725600 | GCO34014 |
| 0K9A62550X | GCO27010 | 495911F210 | GCO27067 | 495003F030 | GCO27098 | F00622610A | GCO34003 | G04725600B | GCO34014 |
| 0K9B322510 | GCO27010 | 495911F500 | GCO27067 | 495013F030 | GCO27098 | F00625400 | GCO34003 | FG0125500D | GCO34015 |
| 0K9B322610 | GCO27010 | 495911F600 | GCO27067 | 495912G503 | GCO27099 | F00625400A | GCO34003 | FG0125600D | GCO34015 |
| K9A422510 | GCO27010 | 495912G200 | GCO27067 | 49500B9400 | GCO27110 | F00625400B | GCO34003 | FG0225500C | GCO34015 |
| KA9422510 | GCO27010 | 495912G201 | GCO27067 | 49501B9400 | GCO27110 | F00625400C | GCO34003 | FG0225600C | GCO34015 |
| 495003E010 | GCO27014 | 495911G510 | GCO27068 | 49525C8001 | GCO27110 | F00625500 | GCO34003 | FGY125500 | GCO34015 |
| 495003E111 | GCO27014 | 495911G590 | GCO27068 | 49526C8001 | GCO27110 | F00625500A | GCO34003 | FGY125500A | GCO34015 |
| 495003E201 | GCO27014 | 495911G591 | GCO27068 | 495801W000 | GCO27115 | F00625500B | GCO34003 | FGY125500B | GCO34015 |
| 495013E111 | GCO27014 | 0K30A22510 | GCO27070 | 495801W010 | GCO27115 | F00625500C | GCO34003 | FR012550X | GCO34015 |
| 495913E000 | GCO27014 | 0K30A22610 | GCO27070 | 495811W000 | GCO27115 | F00625600 | GCO34003 | FR012560X | GCO34015 |
| 495913E001 | GCO27014 | 0K30A25400 | GCO27070 | 495261Y313 | GCO27126 | F00625600A | GCO34003 | FR022550X | GCO34015 |
| 495913E201 | GCO27014 | 0K30B22510 | GCO27070 | 495002S000 | GCO27128 | F00625600B | GCO34003 | FR022560X | GCO34015 |
| KK38822510 | GCO27016 | 0K30B22610 | GCO27070 | 495002S100 | GCO27128 | F00625600C | GCO34003 | GG2525500C | GCO34015 |
| KK38822610 | GCO27016 | 0K30B25400 | GCO27070 | 495002Y010 | GCO27128 | G01325500 | GCO34004 | GG2525600C | GCO34015 |
| KK38825400 | GCO27016 | 0K30B25600 | GCO27070 | 495003W000 | GCO27128 | G01325500A | GCO34004 | GR252550XB | GCO34015 |
| KK38825400A | GCO27016 | 1K30B2560X | GCO27070 | 495012S101 | GCO27128 | G01325500B | GCO34004 | GR252560XB | GCO34015 |
| KK38825600 | GCO27016 | K30A22510 | GCO27070 | 495012Y060 | GCO27128 | G01325600 | GCO34004 | M02422510 | GCO34017 |
| KK38825600A | GCO27016 | OK30B25400 | GCO27070 | 21080221501286 | GCO28001 | G01325600C | GCO34004 | M02422510A | GCO34017 |
| 4551506 | GCO27017 | OK30B25600 | GCO27070 | 21082215010 | GCO28001 | G02325500 | GCO34004 | M02525500A | GCO34017 |
| MD1922510 | GCO27017 | 4950007010 | GCO27072 | 21082215011 | GCO28001 | G02325500B | GCO34004 | M02525500B | GCO34017 |
| MD1922510A | GCO27017 | 4950007060 | GCO27072 | 21082215012 | GCO28001 | G02325600 | GCO34004 | M02525600A | GCO34017 |
| MD192550X | GCO27017 | 4950107010 | GCO27072 | 21100221501200 | GCO28001 | GA2325500A | GCO34004 | M02525600B | GCO34017 |
| MD202560XB | GCO27017 | 4950107300 | GCO27072 | 21102215012 | GCO28001 | GA2325500B | GCO34004 | MD1025500 | GCO34017 |
| G024256 | GCO27027 | 4950107310 | GCO27072 | 21212215012 | GCO28002 | GA2325600C | GCO34004 | MD1025600 | GCO34017 |
| GS0122610A | GCO27027 | 4959107091 | GCO27072 | 21213221501286 | GCO28004 | GO1325500A | GCO34004 | MD1325500A | GCO34017 |
| GS022550XA | GCO27027 | 4959107110 | GCO27072 | 21232215012 | GCO28004 | GO1325600C | GCO34004 | MD1325600 | GCO34017 |
| GS022560XA | GCO27027 | 4959107190 | GCO27072 | 111862215012 | GCO28010 | F0662560XB | GCO34005 | MD1525500A | GCO34017 |
| 0K9A02550XA | GCO27029 | 4959107191 | GCO27072 | 11186221501200 | GCO28010 | 0K2172540X | GCO34006 | MD1525600 | GCO34017 |
| 0K9A62560X | GCO27029 | 4959107310 | GCO27072 | 21100221501200 | GCO28010 | 0K2172560X | GCO34006 | MD2525500A | GCO34017 |
| 0K5522550XA | GCO27030 | 4959107390 | GCO27072 | 21700221501011 | GCO28010 | F02825400 | GCO34006 | MD2525600A | GCO34017 |
| 0K5522560XA | GCO27030 | 495002F310 | GCO27073 | 21700221501287 | GCO28010 | F0662550X | GCO34006 | B00422510 | GCO34018 |
| 0K5582550X | GCO27031 | 495912F210 | GCO27073 | 21702215012 | GCO28010 | F07922610 | GCO34006 | B00422610 | GCO34018 |
| 0K5582560X | GCO27031 | 495912F291 | GCO27073 | 46307105 | GCO29001 | F07922610A | GCO34006 | B00425400 | GCO34018 |
| 0K2N122610 | GCO27032 | 495912F310 | GCO27073 | 51704100 | GCO29002 | FA1322510B | GCO34006 | B00425510 | GCO34018 |
| 0K2N222610 | GCO27032 | 495004D401 | GCO27075 | 7770910 | GCO29003 | F0245600H | GCO34007 | B00425600 | GCO34018 |
| 0K2N225600 | GCO27032 | 495014D000 | GCO27075 | STC3051 | GCO30004 | F06922610B | GCO34007 | BS0525600 | GCO34018 |
| 0K2N42560X | GCO27032 | 495014D001 | GCO27075 | TDJ000010 | GCO30004 | FA0922510B | GCO34007 | F00625400D | GCO34018 |
| 0K2NC22510A | GCO27032 | 495914D000 | GCO27075 | STC3204 | GCO30006 | FA0922510C | GCO34007 | F00625500E | GCO34018 |
| KK3892560XA | GCO27033 | 495914D050 | GCO27075 | BAV5439 | GCO30009 | FZ2425400A | GCO34007 | F00625600E | GCO34018 |
| 0K55222510 | GCO27053 | 495914D250 | GCO27075 | BAV5440 | GCO30009 | FA5922510 | GCO34008 | F00625600F | GCO34018 |
| 0K55222510A | GCO27053 | 495914D400 | GCO27075 | TDB104980 | GCO30009 | FA5922510A | GCO34008 | F00625600G | GCO34018 |
| 0K55422610 | GCO27053 | 495914D500 | GCO27075 | TDB104990 | GCO30009 | FA5922510B | GCO34008 | F0062560A | GCO34018 |
| 0K55422610A | GCO27053 | 495914D550 | GCO27075 | BH223B436BA | GCO30012 | FA6122510 | GCO34008 | F0062560B | GCO34018 |
| 0K55C22510 | GCO27053 | 4950025312 | GCO27076 | BH223B437BA | GCO30012 | FA6122510A | GCO34008 | F0062560C | GCO34018 |
| 0K55C22510A | GCO27053 | 4950007050 | GCO27077 | LR025872 | GCO30012 | FA6122510B | GCO34008 | FS1825400 | GCO34018 |
| 0K55C25500 | GCO27053 | 4950107000 | GCO27077 | LR025874 | GCO30012 | FD5122510 | GCO34008 | FS1825400C | GCO34018 |
| 0K55C25600 | GCO27053 | 4959107000 | GCO27077 | LR060383 | GCO30012 | FD5922510 | GCO34008 | FS1825600 | GCO34018 |
| 495003F750 | GCO27056 | 4959107090 | GCO27077 | TDB500090 | GCO30012 | GD2322510 | GCO34008 | FS1825600C | GCO34018 |
| 0K55222510 | GCO27059 | 1K30A2540X | GCO27078 | TDJ500040 | GCO30012 | GD2322510A | GCO34008 | FS2125400A | GCO34018 |
| 0K55222510A | GCO27059 | 1K30A2560X | GCO27078 | LR060385 | GCO30014 | GD1722510 | GCO34010 | FS2125400C | GCO34018 |
| 0K55C2250Y | GCO27059 | 495001H110 | GCO27080 | TDJ500060 | GCO30014 | GD1725500 | GCO34010 | FS2125600A | GCO34018 |
| 0K55C22510 | GCO27059 | 495001L110 | GCO27080 | TOB500250 | GCO30014 | G03425500 | GCO34011 | FS2125600C | GCO34018 |
| 0K55C22510A | GCO27059 | 495011H110 | GCO27080 | LR047294 | GCO30015 | G03425600 | GCO34011 | F0502540XA | GCO34020 |
| 0K55C2560Y | GCO27059 | 495011L110 | GCO27080 | LR060382 | GCO30015 | G0342560X | GCO34011 | F0502560XA | GCO34020 |
| 0K56P22610 | GCO27062 | 495911H111 | GCO27080 | TDJ500030 | GCO30015 | G04425500 | GCO34011 | F05522510 | GCO34020 |
| 0K56P22610A | GCO27062 | 495911H112 | GCO27080 | TDJ000020 | GCO30016 | G04425500A | GCO34011 | F05522610 | GCO34020 |
| 495002F000 | GCO27063 | FG0625500C | GCO27082 | TDJ000060 | GCO30016 | G04425600C | GCO34011 | FA5022610A | GCO34020 |
| 495012F000 | GCO27063 | FG0625600C | GCO27082 | TOB000110 | GCO30016 | G0442560X | GCO34011 | FA5022610B | GCO34020 |
| 495912F000 | GCO27063 | FG3125600 | GCO27082 | 4341020240 | GCO31001 | GA4425500 | GCO34011 | FA502540XA | GCO34020 |
| 495912F090 | GCO27063 | FG3225500 | GCO27082 | 4341020241 | GCO31001 | GD192560X | GCO34013 | FA502540XB | GCO34020 |
| 495012F100 | GCO27066 | FG3225600 | GCO27082 | 4342020190 | GCO31001 | GR052550XE | GCO34013 | FA502560XB | GCO34020 |

| COMPETITOR | G-AP Ref. | COMPETITOR | G-AP Ref. | COMPETITOR | G-AP Ref. | COMPETITOR | G-AP Ref. | COMPETITOR | G-AP Ref. |
|---|---|---|---|---|---|---|---|---|---|
| OE | | F05225600 | GCO34055 | GF092560XA | GCO34084 | GA202560XB | GCO34117 | 495000X014 | GCO34146 |
| | | F05925500 | GCO34055 | GG0522510A | GCO34090 | GA222550X | GCO34117 | 495000X404 | GCO34146 |
| FA5222510 | GCO34020 | M07022510 | GCO34056 | GG0622510A | GCO34090 | GA222560X | GCO34117 | 495000X414 | GCO34146 |
| FA5222510A | GCO34020 | M07022510A | GCO34056 | GG062550XC | GCO34090 | GA322550X | GCO34118 | 495001Y000 | GCO34156 |
| FA5222510B | GCO34020 | M07025500C | GCO34056 | GG062550XD | GCO34090 | GA322550XA | GCO34118 | 495001Y010 | GCO34156 |
| FA522550X | GCO34020 | M07025500D | GCO34056 | GG062560XD | GCO34090 | GA322550XB | GCO34118 | 495001Y210 | GCO34156 |
| FA5422510 | GCO34020 | M07025600A | GCO34056 | GG062560XE | GCO34090 | GA322560X | GCO34118 | 495011Y010 | GCO34156 |
| FA582550X | GCO34020 | M07025600B | GCO34056 | GG062560XF | GCO34090 | GA322560XA | GCO34118 | 495011Y210 | GCO34156 |
| FA602540X | GCO34020 | MD0922510 | GCO34056 | GG062560XG | GCO34090 | GA322560XB | GCO34118 | 4959107010 | GCO34157 |
| FA602560X | GCO34020 | MD0925500 | GCO34056 | GG082560XC | GCO34090 | 0K2N125600 | GCO34120 | GD552550X | GCO34161 |
| FD502540XA | GCO34020 | MD182550X | GCO34056 | GG162550X | GCO34090 | F06122510 | GCO34120 | GD552560X | GCO34161 |
| FD502560XA | GCO34020 | F03922510B | GCO34058 | GG182560X | GCO34090 | GD2122510 | GCO34120 | 1749218 | GCO34165 |
| FD5522510 | GCO34020 | F03925510B | GCO34058 | GG362550X | GCO34090 | GD212550X | GCO34120 | 1749219 | GCO34165 |
| FD5522610 | GCO34020 | F06925600B | GCO34058 | GG362560X | GCO34090 | GD212560X | GCO34120 | GD762550XC | GCO34173 |
| FD552560X | GCO34020 | FA252560XA | GCO34059 | GG2725500F | GCO34091 | GD2222610 | GCO34120 | GD762560XC | GCO34173 |
| 3799036 | GCO34021 | FA6122510A | GCO34060 | GG2725600F | GCO34091 | GD222560X | GCO34120 | GP342550XB | GCO34173 |
| G03722510 | GCO34021 | FA6122610 | GCO34060 | 1329816 | GCO34093 | GG012550X | GCO34121 | GP342550XC | GCO34173 |
| G0372550X | GCO34021 | FA6122610A | GCO34060 | 1329820 | GCO34093 | GG012560X | GCO34121 | GP342560XC | GCO34173 |
| G0372560X | GCO34021 | FA6122610B | GCO34060 | 1548228 | GCO34093 | GG012560XB | GCO34121 | GP342560XD | GCO34173 |
| G0472560X | GCO34021 | FD5122610A | GCO34060 | 1551331 | GCO34093 | GG0922510B | GCO34121 | GP342560XE | GCO34173 |
| G56025500A | GCO34021 | FD5122610B | GCO34060 | 1754448 | GCO34093 | GG0922510C | GCO34121 | GP352550XB | GCO34173 |
| G56025500B | GCO34021 | BS0525400 | GCO34062 | 1754449 | GCO34093 | GG0922610 | GCO34121 | GP352560XB | GCO34173 |
| G56025600A | GCO34021 | GD3022610 | GCO34064 | 3M513A327EA | GCO34093 | GG092550XD | GCO34121 | FG0625500A | GCO34174 |
| G56025600B | GCO34021 | GF0122510 | GCO34065 | 3M513A327EB | GCO34093 | GG092550XE | GCO34121 | FG0625500B | GCO34174 |
| G56025600C | GCO34021 | GF0322610 | GCO34065 | 3M513A328EA | GCO34093 | GG092560XF | GCO34121 | FG0625600A | GCO34174 |
| G56822510 | GCO34021 | GR0122510 | GCO34065 | 3M513A328EB | GCO34093 | FA5122510 | GCO34123 | FG0625600B | GCO34174 |
| G56822510B | GCO34021 | GR0322610 | GCO34065 | GG2925500A | GCO34093 | FA5122610 | GCO34123 | GG4425500B | GCO34174 |
| G56825500A | GCO34021 | GU0122510 | GCO34065 | GG292550XA | GCO34093 | FA512550X | GCO34123 | GG4425500D | GCO34174 |
| G5682550X | GCO34021 | 1328615 | GCO34067 | RM3M513A327E1B | GCO34093 | FA512550XA | GCO34123 | GG4525600B | GCO34174 |
| G56825600A | GCO34021 | 2M343B436CB | GCO34067 | RM3M513A328E1B | GCO34093 | FA512550XB | GCO34123 | GG3425600E | GCO34177 |
| G56825600B | GCO34021 | 2M353B437AA | GCO34067 | 4959107210 | GCO34094 | FA512550XC | GCO34123 | GG3425600G | GCO34177 |
| GA142550XA | GCO34021 | 3M353B436AA | GCO34067 | 4959107291 | GCO34094 | FA512560X | GCO34123 | GG3625500C | GCO34177 |
| GA142560XA | GCO34021 | MD2022510 | GCO34067 | FG0125500E | GCO34099 | FA522560XB | GCO34123 | GG6225500A | GCO34177 |
| GD192550XA | GCO34021 | MD2022510A | GCO34067 | FG0125600E | GCO34099 | FA522560XC | GCO34123 | GG6225600 | GCO34177 |
| GD192560XA | GCO34021 | MD202550XB | GCO34067 | FG0125600G | GCO34099 | FF042550X | GCO34123 | GG6625500 | GCO34177 |
| GJ012550XA | GCO34021 | MD202560XD | GCO34067 | FG0525500A | GCO34103 | FF042550XA | GCO34123 | GG4625500 | GCO34178 |
| GJ012560X | GCO34021 | MD206060XD | GCO34067 | FG0525500B | GCO34103 | FF072560X | GCO34123 | GG4625500A | GCO34178 |
| GJ012560XB | GCO34021 | MD242550X | GCO34067 | FG0525500C | GCO34103 | GD2322610B | GCO34123 | GG4625500B | GCO34178 |
| F02422510A | GCO34022 | TR192560X | GCO34067 | FG0525500D | GCO34103 | GD2322610C | GCO34123 | GG4625500C | GCO34178 |
| F06925400 | GCO34022 | GF0922510 | GCO34070 | FG0525600A | GCO34103 | GD2522610A | GCO34123 | GG4625600 | GCO34178 |
| F06925600 | GCO34022 | GF0922510A | GCO34070 | FG0525600B | GCO34103 | FA5822510A | GCO34124 | GG4625600A | GCO34178 |
| F06925600C | GCO34022 | GF0922610 | GCO34070 | FG0525600C | GCO34103 | FA6022610 | GCO34124 | GG4625600B | GCO34178 |
| F02525400 | GCO34023 | GF0922610A | GCO34070 | FG0525600D | GCO34103 | FA6022610A | GCO34124 | GG4625600C | GCO34178 |
| F02525600 | GCO34023 | GF1122610A | GCO34070 | GF092550X | GCO34110 | FA6022610B | GCO34124 | GD622560XD | GCO34180 |
| FA5422510 | GCO34026 | GD172550XB | GCO34072 | GF092550XA | GCO34110 | FA6025600A | GCO34124 | CTA125500 | GCO34181 |
| FA5822510 | GCO34026 | GD1725600 | GCO34072 | GF092560X | GCO34110 | FD542560X | GCO34124 | FA8025500A | GCO34181 |
| FA5822510A | GCO34026 | GD172560X | GCO34072 | GF092560XB | GCO34110 | FD552550XA | GCO34124 | FA8025600B | GCO34181 |
| FA5822510B | GCO34026 | GD172560XA | GCO34072 | GF092560XC | GCO34110 | FD552560AC | GCO34124 | FA8125600B | GCO34181 |
| FA782550XA | GCO34026 | GD172560XB | GCO34072 | GF112560X | GCO34110 | FD552560XA | GCO34124 | FA8225500A | GCO34181 |
| 0K2N122510 | GCO34032 | G03425500A | GCO34074 | GP062550X | GCO34110 | 495004D301 | GCO34128 | FP0125500C | GCO34181 |
| 0K2N122610 | GCO34032 | G03425600A | GCO34074 | GP062560XB | GCO34110 | 495014D301 | GCO34128 | 31280669 | GCO34194 |
| 0K2NC22510A | GCO34032 | G03425600B | GCO34074 | GP062560XD | GCO34110 | FA3022510 | GCO34130 | 31367905 | GCO34194 |
| GG2725500E | GCO34048 | G03425600C | GCO34074 | GP102560XB | GCO34110 | FA4222510 | GCO34130 | 31437065 | GCO34194 |
| GG2725600E | GCO34048 | G04425600 | GCO34074 | GP182550X | GCO34110 | FA4225400 | GCO34130 | 31437066 | GCO34194 |
| GG2825500C | GCO34048 | GA4425500A | GCO34074 | GP182550XA | GCO34110 | FS2022610 | GCO34130 | 31437595 | GCO34194 |
| GG2825600C | GCO34048 | GA4425600 | GCO34074 | GP182550XB | GCO34110 | FS2122510A | GCO34130 | 36000675 | GCO34194 |
| GR2725500E | GCO34048 | GA4425600C | GCO34074 | GP182550XC | GCO34110 | FG0225500D | GCO34131 | 36000681 | GCO34194 |
| GR272550XB | GCO34048 | GS022550X | GCO34075 | GP182560X | GCO34110 | FG0225500E | GCO34131 | 36010139 | GCO34194 |
| GR2725600E | GCO34048 | GS022560X | GCO34075 | GP182560XB | GCO34110 | FG0225600D | GCO34131 | 36010213 | GCO34194 |
| GR272560XB | GCO34048 | FF0722510A | GCO34077 | GP182560XC | GCO34110 | FG0225600E | GCO34131 | 36012752 | GCO34194 |
| GR282550X | GCO34048 | GP072550X | GCO34077 | GP182560XD | GCO34110 | FG0225600F | GCO34131 | GG6225600B | GCO34200 |
| GR282560X | GCO34048 | GP072560X | GCO34077 | GP182560XE | GCO34110 | FG0225600H | GCO34131 | GG6825600 | GCO34200 |
| F02325400A | GCO34051 | GP072560XR00 | GCO34077 | GP182560XF | GCO34110 | GD362560X | GCO34135 | AE5Z3A428A | GCO34201 |
| F02325400C | GCO34051 | F03725500B | GCO34081 | GP202560X | GCO34110 | GD3822610 | GCO34135 | GF092550XA | GCO34201 |
| GD0125500 | GCO34051 | G57025500 | GCO34082 | GP202560XB | GCO34110 | GD602560X | GCO34135 | GF092560X | GCO34201 |
| GD0125500C | GCO34051 | G57025500A | GCO34082 | GD552550XC | GCO34114 | GD602560XA | GCO34135 | GF112560X | GCO34201 |
| GD022550XA | GCO34051 | GD3822510 | GCO34084 | GD552560XB | GCO34114 | GD602560XB | GCO34135 | GP062550X | GCO34201 |
| F02425600D | GCO34055 | GD382550XA | GCO34084 | GA202550XB | GCO34117 | 495000X004 | GCO34146 | GP182550X | GCO34201 |

| COMPETITOR | G-AP Ref. | COMPETITOR | G-AP Ref. | COMPETITOR | G-AP Ref. | COMPETITOR | G-AP Ref. | COMPETITOR | G-AP Ref. |
|---|---|---|---|---|---|---|---|---|---|
| OE | | 6383380534 | GCO35001 | 4603303601 | GCO35033 | 4613300101 | GCO35034 | 1663301500 | GCO35073 |
| | | 6383381634 | GCO35001 | 4603303701 | GCO35033 | 4613300701 | GCO35034 | 1663301601 | GCO35073 |
| GP182550XA | GCO34201 | 6383381734 | GCO35001 | 4603304601 | GCO35033 | 4623300001 | GCO35034 | A1663301400 | GCO35073 |
| GP182550XB | GCO34201 | A0003300036 | GCO35001 | 4603304801 | GCO35033 | 4623300301 | GCO35034 | A1663301500 | GCO35073 |
| GP182550XC | GCO34201 | A0003301585 | GCO35001 | 4603305101 | GCO35033 | 6023300001 | GCO35034 | A1663301601 | GCO35073 |
| GP182560X | GCO34201 | A3300036 | GCO35001 | 4603305201 | GCO35033 | 6023300101 | GCO35034 | 31607514479 | GCO38001 |
| GP182560XB | GCO34201 | A3301585 | GCO35001 | 4603305501 | GCO35033 | 6023300201 | GCO35034 | 31607518237 | GCO38002 |
| GP182560XC | GCO34201 | A6383380534 | GCO35001 | 4603307001 | GCO35033 | 9013300001 | GCO35034 | 31607518238 | GCO38002 |
| GP182560XD | GCO34201 | A6383381634 | GCO35001 | 4603307101 | GCO35033 | A4603304001 | GCO35034 | 31607518247 | GCO38002 |
| GP182560XE | GCO34201 | A6383381734 | GCO35001 | 4603307501 | GCO35033 | A4603304101 | GCO35034 | 31607518248 | GCO38002 |
| GP182560XF | GCO34201 | 0003301885 | GCO35002 | 4603307801 | GCO35033 | A4603304201 | GCO35034 | 31607574866 | GCO38002 |
| 1459743 | GCO34202 | 6383342334 | GCO35002 | 4603307901 | GCO35033 | A4603304701 | GCO35034 | 31607574869 | GCO38002 |
| 1481213 | GCO34202 | A0003301885 | GCO35002 | 4603308001 | GCO35033 | A4603305301 | GCO35034 | 31601493977 | GCO38003 |
| 1826471 | GCO34202 | A6383342334 | GCO35002 | 4613300301 | GCO35033 | A4603307201 | GCO35034 | 31601503306 | GCO38003 |
| 1948857 | GCO34202 | 1683602372 | GCO35003 | 4613300401 | GCO35033 | A4603307301 | GCO35034 | 31601503307 | GCO38003 |
| 7G913A327AA | GCO34202 | A1683602372 | GCO35003 | 4613300501 | GCO35033 | A4603307401 | GCO35034 | 31607518260 | GCO38003 |
| 7G913A327AB | GCO34202 | 1683603772 | GCO35004 | 4613300601 | GCO35033 | A4603307601 | GCO35034 | 31607518261 | GCO38003 |
| F1481213 | GCO34202 | 1683702172 | GCO35004 | 4613300801 | GCO35033 | A4603307701 | GCO35034 | 31607525128 | GCO38003 |
| RM7G913B437A2A | GCO34202 | 1683702272 | GCO35004 | 4613300901 | GCO35033 | A4603308101 | GCO35034 | 31607560383 | GCO38003 |
| FTB122510 | GCO34207 | A1683702172 | GCO35004 | 4613301001 | GCO35033 | A4613300101 | GCO35034 | MB297991 | GCO39002 |
| FTB12550XA | GCO34207 | A1683702272 | GCO35004 | 4633302401 | GCO35033 | A4613300701 | GCO35034 | MB297992 | GCO39002 |
| FTB12560XA | GCO34207 | 1683700872 | GCO35005 | 6023300601 | GCO35033 | A4623300001 | GCO35034 | MB526972 | GCO39002 |
| FTB22550XA | GCO34207 | 1683701572 | GCO35005 | 6023300701 | GCO35033 | A4623300301 | GCO35034 | MB526973 | GCO39002 |
| FTB622510 | GCO34207 | 1683701872 | GCO35005 | 6023300801 | GCO35033 | A6023300001 | GCO35034 | MB620166 | GCO39002 |
| FTB62550X | GCO34207 | A1683700872 | GCO35005 | 6023301101 | GCO35033 | A6023300101 | GCO35034 | MB837697 | GCO39002 |
| FTB62560X | GCO34207 | A1683701572 | GCO35005 | 6023301201 | GCO35033 | A6023300201 | GCO35034 | MB97992 | GCO39002 |
| FTB82550X | GCO34208 | A1683701872 | GCO35005 | 6023301401 | GCO35033 | A9013300001 | GCO35034 | MR222093 | GCO39002 |
| FTB82560X | GCO34208 | 6383340534 | GCO35007 | 6023301601 | GCO35033 | 6393501910 | GCO35036 | MR222094 | GCO39002 |
| RTA12550XA | GCO34213 | A6383340534 | GCO35007 | A4603303601 | GCO35033 | A6393501910 | GCO35036 | MR232361 | GCO39004 |
| RTA12550XB | GCO34213 | 1633300101 | GCO35016 | A4603303701 | GCO35033 | 2043301600 | GCO35038 | MR232363 | GCO39004 |
| MA042550XA | GCO34233 | 1633300201 | GCO35016 | A4603304601 | GCO35033 | 204330160080 | GCO35038 | MR246960 | GCO39004 |
| MA042550XB | GCO34233 | 1633300301 | GCO35016 | A4603304801 | GCO35033 | 2043301601 | GCO35038 | MR246962 | GCO39004 |
| MA042560XA | GCO34233 | 1633300401 | GCO35016 | A4603305101 | GCO35033 | 2043302701 | GCO35038 | MR290409 | GCO39004 |
| MA042560XB | GCO34233 | 1633300501 | GCO35016 | A4603305201 | GCO35033 | A2043301600 | GCO35038 | MR336084 | GCO39004 |
| GG2825600D | GCO34237 | 163330050164 | GCO35016 | A4603305501 | GCO35033 | A2043302701 | GCO35038 | MR580561 | GCO39004 |
| GG2825600E | GCO34237 | A1633300101 | GCO35016 | A4603307001 | GCO35033 | 9063300201 | GCO35041 | MR580562 | GCO39004 |
| GG2825600G | GCO34237 | A1633300201 | GCO35016 | A4603307101 | GCO35033 | A9063300201 | GCO35041 | MN156271 | GCO39005 |
| GG2825600H | GCO34237 | A1633300301 | GCO35016 | A4603307501 | GCO35033 | 7P0407271CX | GCO35045 | MN156272 | GCO39005 |
| GG2825600R0G | GCO34237 | A1633300401 | GCO35016 | A4603307801 | GCO35033 | 7P0498099A | GCO35045 | MN156276 | GCO39005 |
| GG3025600 | GCO34237 | A1633300501 | GCO35016 | A4603307901 | GCO35033 | 7P0498099AX | GCO35045 | MN156278 | GCO39005 |
| GG3025600A | GCO34237 | 1683601872 | GCO35022 | A4603308001 | GCO35033 | 7P0498099B | GCO35045 | MR196751 | GCO39005 |
| GG3025600B | GCO34237 | 1683601972 | GCO35022 | A4613300301 | GCO35033 | 7P0498099BX | GCO35045 | MR196752 | GCO39005 |
| GG3025600C | GCO34237 | 1683603172 | GCO35022 | A4613300401 | GCO35033 | 95834990101 | GCO35045 | MR196753 | GCO39005 |
| GG3025600D | GCO34237 | 1683603372 | GCO35022 | A4613300501 | GCO35033 | 2043301300 | GCO35049 | MR196754 | GCO39005 |
| GG3025600E | GCO34237 | A1683601872 | GCO35022 | A4613300601 | GCO35033 | 2043301400 | GCO35049 | MR305605 | GCO39005 |
| GG3025600R0E | GCO34237 | A1683601972 | GCO35022 | A4613300801 | GCO35033 | A2043301300 | GCO35049 | MR305719 | GCO39005 |
| GG3125500E | GCO34237 | A1683603172 | GCO35022 | A4613300901 | GCO35033 | A2043301400 | GCO35049 | MR528640 | GCO39006 |
| GG3125500F | GCO34237 | A1683603372 | GCO35022 | A4613301001 | GCO35033 | 2113300001 | GCO35053 | MR528641 | GCO39006 |
| GG3125500G | GCO34237 | 1683603472 | GCO35023 | A4633302401 | GCO35033 | 2113300101 | GCO35053 | MR110193 | GCO39007 |
| GG3125500H | GCO34237 | 1683604572 | GCO35023 | A6023300601 | GCO35033 | A2113300001 | GCO35053 | MR377295 | GCO39007 |
| GG3125600 | GCO34237 | A1683603472 | GCO35023 | A6023300701 | GCO35033 | A2113300101 | GCO35053 | MR911927 | GCO39007 |
| GG3125600A | GCO34237 | A1683604572 | GCO35023 | A6023300801 | GCO35033 | 1663301300 | GCO35059 | MR911928 | GCO39007 |
| GG3125600B | GCO34237 | 6393500710 | GCO35024 | A6023301101 | GCO35033 | 1663301600 | GCO35059 | MR232359 | GCO39008 |
| GG3125600C | GCO34237 | 6393501510 | GCO35024 | A6023301201 | GCO35033 | A1663301300 | GCO35059 | MR290598 | GCO39008 |
| GG3125600D | GCO34237 | A6393500710 | GCO35024 | A6023301401 | GCO35033 | A1663301600 | GCO35059 | MR290600 | GCO39008 |
| GG3225500C | GCO34237 | A6393501510 | GCO35024 | A6023301601 | GCO35033 | 2203300101 | GCO35064 | MR377042 | GCO39008 |
| GG3225500F | GCO34237 | 169360807 | GCO35027 | C006015034 | GCO35033 | A2203300101 | GCO35064 | MR580552 | GCO39008 |
| GG3325600C | GCO34237 | A169360807 | GCO35027 | 4603304001 | GCO35034 | 6393501210 | GCO35069 | MR580553 | GCO39008 |
| GG3325600D | GCO34237 | 1693702772 | GCO35030 | 4603304101 | GCO35034 | 6393501810 | GCO35069 | MR580554 | GCO39008 |
| GG3325600E | GCO34237 | 1693704872 | GCO35030 | 4603304201 | GCO35034 | 6393502310 | GCO35069 | RR580553G | GCO39008 |
| GD752550XB | GCO34252 | 1693705672 | GCO35030 | 4603304701 | GCO35034 | A6393501210 | GCO35069 | MB526437 | GCO39009 |
| GD752550XC | GCO34252 | 1693706372 | GCO35030 | 4603305301 | GCO35034 | A6393501810 | GCO35069 | MB526438 | GCO39009 |
| GD752560XB | GCO34252 | 1693706472 | GCO35030 | 4603307201 | GCO35034 | A6393502310 | GCO35069 | MB526914 | GCO39009 |
| GD752560XC | GCO34252 | A1693702772 | GCO35030 | 4603307301 | GCO35034 | 1643300701 | GCO35070 | MB620034 | GCO39009 |
| 0003300036 | GCO35001 | A1693704872 | GCO35030 | 4603307401 | GCO35034 | A1643300701 | GCO35070 | MB620957 | GCO39009 |
| 0003301585 | GCO35001 | A1693705672 | GCO35030 | 4603307601 | GCO35034 | 2463605001 | GCO35071 | MB837261 | GCO39009 |
| 3300036 | GCO35001 | A1693706372 | GCO35030 | 4603307701 | GCO35034 | A2463605001 | GCO35071 | MB837262 | GCO39009 |
| 3301585 | GCO35001 | A1693706472 | GCO35030 | 4603308101 | GCO35034 | 1663301400 | GCO35073 | MB837263 | GCO39009 |

| COMPETITOR | G-AP Ref. | COMPETITOR | G-AP Ref. | COMPETITOR | G-AP Ref. | COMPETITOR | G-AP Ref. | COMPETITOR | G-AP Ref. |
|---|---|---|---|---|---|---|---|---|---|
| OE | | MB896788 | GCO39016 | MR910298 | GCO39024 | MB526456 | GCO39054 | MR453384 | GCO39124 |
| | | MB896789 | GCO39016 | MR911163 | GCO39024 | MB526464 | GCO39054 | MR580733 | GCO39124 |
| MB837264 | GCO39009 | MB896790 | GCO39016 | MB620701 | GCO39025 | MI208006 | GCO39054 | MR580734 | GCO39124 |
| MB837265 | GCO39009 | MB936363 | GCO39016 | MB620702 | GCO39025 | MB896315 | GCO39064 | 4950025955 | GCO39128 |
| MB837433 | GCO39009 | MB936365 | GCO39016 | MB886265 | GCO39025 | MB896316 | GCO39064 | 4950125955 | GCO39128 |
| MB837434 | GCO39009 | MR110120 | GCO39016 | MB886266 | GCO39025 | MB936362 | GCO39064 | 3815A101 | GCO39134 |
| MB837517 | GCO39009 | MR110199 | GCO39016 | MR196416 | GCO39025 | MR165844 | GCO39064 | 3815A102 | GCO39134 |
| MB837600 | GCO39009 | MR110207 | GCO39016 | MR196417 | GCO39025 | MR936361 | GCO39064 | MR580449 | GCO39134 |
| MB837641 | GCO39009 | MR110208 | GCO39016 | MB526140 | GCO39027 | 4950829C00 | GCO39067 | MR580450 | GCO39134 |
| MB837642 | GCO39009 | MR176639 | GCO39016 | MB526142 | GCO39027 | MR196738 | GCO39075 | MR580453 | GCO39135 |
| MB837707 | GCO39009 | MR176640 | GCO39016 | MB526145 | GCO39027 | MR196740 | GCO39075 | MR580454 | GCO39135 |
| MB837708 | GCO39009 | MR196868 | GCO39016 | MB526270 | GCO39027 | MR357809 | GCO39075 | MR336527 | GCO39136 |
| MB886230 | GCO39009 | MR196869 | GCO39016 | MB526271 | GCO39027 | MR357811 | GCO39075 | MR336528 | GCO39136 |
| MB886436 | GCO39009 | MR196872 | GCO39016 | MB526272 | GCO39027 | MR912133 | GCO39084 | MR367165 | GCO39136 |
| MB936359 | GCO39009 | MB837402 | GCO39017 | MB620251 | GCO39027 | MR912134 | GCO39084 | MR367166 | GCO39136 |
| MB936778 | GCO39009 | MB886254 | GCO39017 | MB620252 | GCO39027 | MR912135 | GCO39084 | MR515191 | GCO39136 |
| MB936779 | GCO39009 | MB896789 | GCO39017 | MB620253 | GCO39027 | MR912136 | GCO39084 | MR515192 | GCO39136 |
| MN147105 | GCO39009 | MB936774 | GCO39017 | MB620625 | GCO39027 | MR377293 | GCO39098 | MR515193 | GCO39136 |
| MR110091 | GCO39009 | MR176642 | GCO39017 | MB620833 | GCO39027 | MR377294 | GCO39098 | MR515194 | GCO39136 |
| MR110402 | GCO39009 | MR176649 | GCO39017 | MB886680 | GCO39027 | 8251754 | GCO39100 | 1609899980 | GCO39137 |
| MR110406 | GCO39009 | MR176650 | GCO39017 | MB886761 | GCO39027 | 8601767 | GCO39100 | 3272PT | GCO39137 |
| MR110763 | GCO39009 | MR196435 | GCO39017 | MB896948 | GCO39027 | 8601994 | GCO39100 | 3273PY | GCO39137 |
| MR111060 | GCO39009 | MR196436 | GCO39017 | MN107602 | GCO39027 | 8602170 | GCO39100 | 3815A075 | GCO39137 |
| MR111061 | GCO39009 | MR232727 | GCO39017 | MR111573 | GCO39027 | MR377713 | GCO39102 | 3815A076 | GCO39137 |
| MR165842 | GCO39009 | MB620653 | GCO39018 | MR111574 | GCO39027 | MR377715 | GCO39102 | 3815A140 | GCO39137 |
| MR176993 | GCO39009 | MB620834 | GCO39018 | MR276859 | GCO39027 | MR911159 | GCO39102 | MR528565 | GCO39141 |
| MR936359 | GCO39009 | MB886677 | GCO39018 | MR276860 | GCO39027 | MR911160 | GCO39102 | MR528566 | GCO39141 |
| MB526558 | GCO39011 | MB886678 | GCO39018 | 3815A196 | GCO39028 | 4950738E00 | GCO39104 | MR567003 | GCO39141 |
| MB526613 | GCO39011 | MR232855 | GCO39018 | MR528643 | GCO39028 | 4950838E00 | GCO39104 | MR567004 | GCO39141 |
| MB526614 | GCO39011 | MR232856 | GCO39018 | MR528644 | GCO39028 | 4950025310 | GCO39105 | MN147042 | GCO39143 |
| MB526859 | GCO39011 | MR232857 | GCO39018 | 4950033200 | GCO39033 | LMN180244 | GCO39112 | MN156463 | GCO39143 |
| MB526867 | GCO39011 | MR232858 | GCO39018 | 4950728F00 | GCO39034 | LMR580861 | GCO39112 | MN156464 | GCO39143 |
| MB526868 | GCO39011 | MR276870 | GCO39018 | 4950828F00 | GCO39034 | MN156219 | GCO39112 | MN156487 | GCO39143 |
| MB526869 | GCO39011 | MR276871 | GCO39018 | MB297384 | GCO39034 | MR498477 | GCO39112 | MN156490 | GCO39143 |
| MB837523 | GCO39011 | RR276871G | GCO39018 | MB297826 | GCO39034 | MR498478 | GCO39112 | MR498969 | GCO39143 |
| MB837524 | GCO39011 | MB896525 | GCO39019 | MB297871 | GCO39036 | MR580251 | GCO39112 | MR498974 | GCO39143 |
| MB886539 | GCO39011 | MB896526 | GCO39019 | MB297872 | GCO39036 | MR580252 | GCO39112 | MR580213 | GCO39143 |
| MB886540 | GCO39011 | MB937996 | GCO39019 | MB526908 | GCO39036 | MR580374 | GCO39112 | MR580470 | GCO39143 |
| 4951029000 | GCO39014 | MR111854 | GCO39019 | MB526909 | GCO39036 | 3815A189 | GCO39113 | MR580849 | GCO39143 |
| MB526541 | GCO39014 | MB896215 | GCO39020 | MB886311 | GCO39036 | 3815A190 | GCO39113 | MR580850 | GCO39143 |
| MB526542 | GCO39014 | MB896216 | GCO39020 | MB886312 | GCO39036 | 5085220AE | GCO39113 | MR580851 | GCO39143 |
| MB526544 | GCO39014 | MB896527 | GCO39020 | MB887513 | GCO39036 | 5105772AE | GCO39113 | MR581309 | GCO39143 |
| MB526551 | GCO39014 | MR111856 | GCO39020 | 2081207 | GCO39040 | 5273438AG | GCO39113 | 3815A009 | GCO39146 |
| MB526553 | GCO39014 | MR357127 | GCO39020 | MB896742 | GCO39040 | MR528569 | GCO39114 | 3815A010 | GCO39146 |
| MB526890 | GCO39014 | 30871328 | GCO39021 | MB896744 | GCO39040 | MR528570 | GCO39114 | 4543301401 | GCO39146 |
| MB526911 | GCO39014 | MR110029 | GCO39021 | MB886261 | GCO39042 | MR953583 | GCO39114 | 4543301501 | GCO39146 |
| MB620120 | GCO39014 | MR110030 | GCO39021 | MB620178 | GCO39045 | MR953584 | GCO39114 | 495002D100 | GCO39147 |
| MB620239 | GCO39014 | MR111365 | GCO39021 | 4950728E00 | GCO39054 | 3272RR | GCO39117 | 495002D101 | GCO39147 |
| MB620247 | GCO39014 | MR111366 | GCO39021 | 4950733A00 | GCO39054 | 3273SE | GCO39117 | 495002D102 | GCO39147 |
| MB526772 | GCO39015 | MR176551 | GCO39021 | 4950733A10 | GCO39054 | 3273SF | GCO39117 | 495012D101 | GCO39147 |
| MB526774 | GCO39015 | MR263884 | GCO39021 | 4950733A20 | GCO39054 | 3815A065 | GCO39117 | 495012D102 | GCO39147 |
| MB620481 | GCO39015 | MR377575 | GCO39021 | 4950733B00 | GCO39054 | 3815A068 | GCO39117 | MR222052 | GCO39149 |
| MB620482 | GCO39015 | MR377576 | GCO39021 | 4950733B10 | GCO39054 | MR222962 | GCO39119 | MR222053 | GCO39149 |
| MB620752 | GCO39015 | 3815A133 | GCO39022 | MB176872 | GCO39054 | MR222963 | GCO39119 | MR263947 | GCO39149 |
| MB620755 | GCO39015 | MR110031 | GCO39022 | MB176876 | GCO39054 | MR222966 | GCO39119 | MR263948 | GCO39149 |
| MB620756 | GCO39015 | MR110032 | GCO39022 | MB176878 | GCO39054 | MR222967 | GCO39119 | MR263949 | GCO39149 |
| MB620758 | GCO39015 | MR111367 | GCO39022 | MB297320 | GCO39054 | MR222050 | GCO39120 | MR263950 | GCO39149 |
| MB620807 | GCO39015 | MR111368 | GCO39022 | MB297375 | GCO39054 | MR222051 | GCO39120 | MR196758 | GCO39150 |
| MB620808 | GCO39015 | MR176553 | GCO39022 | MB297376 | GCO39054 | MR222960 | GCO39121 | 3815A181 | GCO39159 |
| MR110883 | GCO39015 | MR263886 | GCO39022 | MB297377 | GCO39054 | MR222961 | GCO39121 | 3815A181V | GCO39159 |
| MR110886 | GCO39015 | MR331193 | GCO39022 | MB297385 | GCO39054 | MR222964 | GCO39121 | 3815A182 | GCO39159 |
| MB620899 | GCO39016 | RR176553G | GCO39022 | MB297500 | GCO39054 | MR222965 | GCO39121 | 3815A182V | GCO39159 |
| MB620900 | GCO39016 | MB837399 | GCO39023 | MB297501 | GCO39054 | G07622510 | GCO39123 | 3815A307 | GCO39159 |
| MB837184 | GCO39016 | MB837400 | GCO39023 | MB297815 | GCO39054 | G07622610 | GCO39123 | 3815A308 | GCO39159 |
| MB837195 | GCO39016 | MB936148 | GCO39023 | MB297818 | GCO39054 | G07625500 | GCO39123 | 3817A314 | GCO39159 |
| MB837426 | GCO39016 | MR580911 | GCO39023 | MB297928 | GCO39054 | G07625600 | GCO39123 | MN110547 | GCO39159 |
| MB896778 | GCO39016 | MR263176 | GCO39024 | MB297929 | GCO39054 | G07822610 | GCO39123 | MN110548 | GCO39159 |
| MB896787 | GCO39016 | MR910297 | GCO39024 | MB526455 | GCO39054 | MR453383 | GCO39124 | MR580452 | GCO39161 |

| COMPETITOR | G-AP Ref. | COMPETITOR | G-AP Ref. | COMPETITOR | G-AP Ref. | COMPETITOR | G-AP Ref. | COMPETITOR | G-AP Ref. |
|---|---|---|---|---|---|---|---|---|---|
| OE | | 3815A199 | GCO39207 | 3921150Y10 | GCO41002 | 392114F426 | GCO41013 | 3910164J00 | GCO41023 |
| | | 3815A200 | GCO39207 | 391000M910 | GCO41003 | 391004N115 | GCO41015 | 3910165J10 | GCO41023 |
| 3817A319 | GCO39166 | 3815A205 | GCO39211 | 391004M560 | GCO41003 | 391004U110 | GCO41015 | 3910170A10 | GCO41023 |
| MN156752 | GCO39168 | 3815A207 | GCO39211 | 391004M761 | GCO41003 | 392115V010 | GCO41015 | 3910170A20 | GCO41023 |
| 3715A031 | GCO39175 | 3815A208 | GCO39211 | 3910060Y10 | GCO41003 | 3910058G00 | GCO41016 | 3910171N00 | GCO41023 |
| 3715A032 | GCO39175 | 3815A148 | GCO39229 | 3910060Y15 | GCO41003 | 3910058G60 | GCO41016 | 3910171N01 | GCO41023 |
| MN156465 | GCO39176 | 3815A151 | GCO39229 | 3910061Y16 | GCO41003 | 3910088G00 | GCO41016 | 3910180E03 | GCO41023 |
| MN156466 | GCO39176 | MB297565 | GCO39245 | 3910062Y00 | GCO41003 | 3921158G00 | GCO41016 | 3921165J10 | GCO41023 |
| MN156497 | GCO39176 | MB297981 | GCO39245 | 3910062Y10 | GCO41003 | 3921158GX0 | GCO41016 | 391001C110 | GCO41024 |
| MN156498 | GCO39176 | MB297982 | GCO39245 | 3910062Y15 | GCO41003 | 3910072J15 | GCO41017 | 391003J210 | GCO41024 |
| MN168518 | GCO39176 | 391005N410 | GCO39248 | 3910063Y10 | GCO41003 | 3910172J15 | GCO41017 | 391005C510 | GCO41024 |
| MN180244 | GCO39176 | 391015N410 | GCO39248 | 3910063Y11 | GCO41003 | 3921073J26 | GCO41017 | 3910064E10 | GCO41024 |
| MN580862 | GCO39176 | 392115N400 | GCO39248 | 391010M910 | GCO41003 | 3971070A10 | GCO41017 | 3910065J10 | GCO41024 |
| MR498555 | GCO39176 | MN156841 | GCO39252 | 391014M700 | GCO41003 | 3971170A10 | GCO41017 | 3910070N10 | GCO41024 |
| MR498556 | GCO39176 | MN156842 | GCO39252 | 391014M761 | GCO41003 | 391001C100 | GCO41018 | 3910071N15 | GCO41024 |
| MR580473 | GCO39176 | 1154626200 | GCO39254 | 3910160Y10 | GCO41003 | 391002J205 | GCO41018 | 391012J210 | GCO41024 |
| MR580474 | GCO39176 | E6F2203400CC1 | GCO39254 | 3910160Y15 | GCO41003 | 3910050R10 | GCO41018 | 391013J210 | GCO41024 |
| MR580778 | GCO39176 | 2303100XSZ08A | GCO39258 | 3910161Y17 | GCO41003 | 3910061E00 | GCO41018 | 3910164E10 | GCO41024 |
| MR580861 | GCO39176 | 49500B9100 | GCO39261 | 3910162Y00 | GCO41003 | 3910062E00 | GCO41018 | 3910165J15 | GCO41024 |
| MR580862 | GCO39176 | 49500B9500 | GCO39261 | 3910162Y10 | GCO41003 | 3910064E05 | GCO41018 | 3910170N10 | GCO41024 |
| MR580863 | GCO39176 | 49500C8100 | GCO39261 | 3910162Y15 | GCO41003 | 3910065J00 | GCO41018 | 3910170N15 | GCO41024 |
| MR580864 | GCO39176 | 49525C8101 | GCO39261 | 3910162Y16 | GCO41003 | 3910070N00 | GCO41018 | 3910171N10 | GCO41024 |
| MR580896 | GCO39176 | 49525C8501 | GCO39261 | 3910163Y11 | GCO41003 | 3910070N05 | GCO41018 | 3910175N10 | GCO41024 |
| MR581557 | GCO39176 | 49525H5200 | GCO39261 | 3910163Y15 | GCO41003 | 3910071N04 | GCO41018 | 3910180N15 | GCO41024 |
| MR581558 | GCO39176 | 49526C8101 | GCO39261 | 3921160Y10 | GCO41003 | 3910071N05 | GCO41018 | 392111C100 | GCO41024 |
| MR953569 | GCO39176 | 49526C8201 | GCO39261 | 3910170J00 | GCO41006 | 3910074N00 | GCO41018 | 392115C510 | GCO41024 |
| MR980261 | GCO39176 | 49526C8551 | GCO39261 | 3921171J00 | GCO41006 | 3910080E05 | GCO41018 | 392110F000 | GCO41025 |
| 3815A008 | GCO39177 | 49526H5300 | GCO39261 | 3921171J25 | GCO41006 | 39100D4600 | GCO41018 | 392117F000 | GCO41025 |
| 3815A011 | GCO39177 | 49526H5310 | GCO39261 | 3921171J27 | GCO41006 | 391012J205 | GCO41018 | 3910001J00 | GCO41026 |
| MR980745 | GCO39177 | 49501B4700 | GCO39263 | 3910071J10 | GCO41007 | 3910150R00 | GCO41018 | 3910001J10 | GCO41026 |
| MR980746 | GCO39177 | 49500B4700 | GCO39265 | 3910170J10 | GCO41007 | 3910150R10 | GCO41018 | 3910010J00 | GCO41026 |
| 2815A189 | GCO39178 | 495002D002 | GCO39276 | 3921171J26 | GCO41007 | 3910161E00 | GCO41018 | 3910010J10 | GCO41026 |
| 2815A190 | GCO39178 | 495012D002 | GCO39276 | 3910072J10 | GCO41009 | 3910162E00 | GCO41018 | 3910101700 | GCO41026 |
| 3815A203 | GCO39178 | T11XLB3AH2203030C | GCO39336 | 3910072J20 | GCO41009 | 3910165J00 | GCO41018 | 3910101J00 | GCO41026 |
| 3815A204 | GCO39178 | GD702550X | GCO39364 | 3910073J00 | GCO41009 | 3910165J05 | GCO41018 | 3910101J10 | GCO41026 |
| 3815A390 | GCO39178 | GD702550XA | GCO39364 | 3910173J00 | GCO41009 | 3910170N00 | GCO41018 | 3910110J00 | GCO41026 |
| 3815A462 | GCO39178 | 3817A177 | GCO39371 | 3921173J00 | GCO41009 | 3910170N05 | GCO41018 | 3910110J10 | GCO41026 |
| 3815A464 | GCO39178 | 3817A178 | GCO39371 | 3921173J25 | GCO41009 | 3910172N00 | GCO41018 | 391002F210 | GCO41028 |
| 3815A469 | GCO39178 | 3817A315 | GCO39371 | 3921173J26 | GCO41009 | 3910174N00 | GCO41018 | 391002F605 | GCO41028 |
| 3815A470 | GCO39178 | 3817A320 | GCO39371 | 3910072J10 | GCO41010 | 3910175N00 | GCO41018 | 391002F615 | GCO41028 |
| MR580445 | GCO39180 | 3817A315 | GCO39372 | 3910073J20 | GCO41010 | 3910180E00 | GCO41018 | 391009F601 | GCO41028 |
| MR580448 | GCO39180 | 3817A320 | GCO39372 | 3910173J20 | GCO41010 | 3910180E05 | GCO41018 | 391009F611 | GCO41028 |
| 495261J502 | GCO39181 | 21412215012 | GCO40001 | 3921172J25 | GCO41010 | 39101D4600 | GCO41018 | 391009F615 | GCO41028 |
| 495261J503 | GCO39181 | M21412215054 | GCO40001 | 3921173J27 | GCO41010 | 3921132R00 | GCO41018 | 391009F620 | GCO41028 |
| MN168518 | GCO39182 | 391000M000 | GCO41001 | 39100173N10 | GCO41011 | 3921165J00 | GCO41018 | 391012F605 | GCO41028 |
| MN180244 | GCO39182 | 391000M005 | GCO41001 | 3910073N00 | GCO41011 | 3910031U10 | GCO41021 | 391012F615 | GCO41028 |
| MR515196 | GCO39186 | 3910050Y00 | GCO41001 | 3910173N00 | GCO41011 | 3910032U05 | GCO41021 | 391019F600 | GCO41028 |
| 495002D000 | GCO39190 | 3910051Y00 | GCO41001 | 3910173N01 | GCO41011 | 3910131U00 | GCO41021 | 391019F610 | GCO41028 |
| 495002D012 | GCO39190 | 3910052Y00 | GCO41001 | 3921158E10 | GCO41011 | 3910132U05 | GCO41021 | 391019F620 | GCO41028 |
| 495012C800 | GCO39190 | 3910053Y00 | GCO41001 | 3921158E15 | GCO41011 | 391002Y016 | GCO41022 | 392112F225 | GCO41028 |
| 495012D000 | GCO39190 | 391010M000 | GCO41001 | 3921171E15 | GCO41011 | 3910032U15 | GCO41022 | 391002F000 | GCO41029 |
| 495012D001 | GCO39190 | 391010M005 | GCO41001 | 3921185E00 | GCO41011 | 3910032U16 | GCO41022 | 392042F025 | GCO41029 |
| 495012D012 | GCO39190 | 3910150Y00 | GCO41001 | 3921199999 | GCO41011 | 3910131U10 | GCO41022 | 392112F026 | GCO41029 |
| 495012D401 | GCO39190 | 3910150Y01 | GCO41001 | 3910041B00 | GCO41012 | 3910132U15 | GCO41022 | 391002F010 | GCO41030 |
| 495012D402 | GCO39190 | 3910151Y00 | GCO41001 | 391004F400 | GCO41012 | 392112Y010 | GCO41022 | 391012F011 | GCO41030 |
| 495261J401 | GCO39192 | 3910152Y00 | GCO41001 | 391014F400 | GCO41012 | 3921131U00 | GCO41022 | 392112F025 | GCO41030 |
| 495801W200 | GCO39198 | 3910153Y00 | GCO41001 | 391014F401 | GCO41012 | 3921131U10 | GCO41022 | 391000M600 | GCO41033 |
| 495801W400 | GCO39198 | 3921150Y00 | GCO41001 | 392114F125 | GCO41012 | 3910032R00 | GCO41023 | 391000M605 | GCO41033 |
| 495811W200 | GCO39198 | 9321150Y00 | GCO41001 | 392114F425 | GCO41012 | 3910063E00 | GCO41023 | 3910040Y00 | GCO41033 |
| 495811W300 | GCO39198 | 3910050Y10 | GCO41002 | 3924141F25 | GCO41012 | 3910070A10 | GCO41023 | 3910040Y06 | GCO41033 |
| 495811W400 | GCO39198 | 3910051Y10 | GCO41002 | 3910044B00 | GCO41013 | 3910070A20 | GCO41023 | 391004M500 | GCO41033 |
| MR567159 | GCO39200 | 3910052Y10 | GCO41002 | 3910044B02 | GCO41013 | 3910071N00 | GCO41023 | 391010M600 | GCO41033 |
| MR567160 | GCO39200 | 3910053Y10 | GCO41002 | 3910044B10 | GCO41013 | 3910080E00 | GCO41023 | 391010M605 | GCO41033 |
| MR580575 | GCO39200 | 3910150Y10 | GCO41002 | 3910044B12 | GCO41013 | 39100D4000 | GCO41023 | 3910140Y00 | GCO41033 |
| MR580577 | GCO39200 | 3910150Y11 | GCO41002 | 3910144B00 | GCO41013 | 39100G8100 | GCO41023 | 3910140Y06 | GCO41033 |
| MR953745 | GCO39200 | 3910151Y10 | GCO41002 | 3910144B02 | GCO41013 | 3910132R00 | GCO41023 | 3910162Y06 | GCO41033 |
| MR953865 | GCO39200 | 3910152Y10 | GCO41002 | 3910144B10 | GCO41013 | 3910163E00 | GCO41023 | 3910163Y05 | GCO41033 |
| 3815A195 | GCO39207 | 3910153Y10 | GCO41002 | 3910144B12 | GCO41013 | 3910164E05 | GCO41023 | 391000M311 | GCO41034 |

| COMPETITOR | G-AP Ref. | COMPETITOR | G-AP Ref. | COMPETITOR | G-AP Ref. | COMPETITOR | G-AP Ref. | COMPETITOR | G-AP Ref. |
|---|---|---|---|---|---|---|---|---|---|
| OE | | 39211BM726 | GCO41052 | 3910041B00 | GCO41114 | 39101WD210 | GCO41155 | 391011V10C | GCO41188 |
| | | 39100VB000 | GCO41053 | 3910041B05 | GCO41114 | 39101WD215 | GCO41155 | 39101AX000 | GCO41188 |
| 391000M615 | GCO41034 | 39100VB001 | GCO41053 | 3910045B00 | GCO41114 | 3910132U16 | GCO41157 | 39101AX005 | GCO41188 |
| 391000M915 | GCO41034 | 39101VB000 | GCO41053 | 3910141B00 | GCO41114 | 391000M010 | GCO41159 | 39211AX000 | GCO41188 |
| 3910040Y10 | GCO41034 | 39101VB001 | GCO41053 | 3910141B05 | GCO41114 | 391000M015 | GCO41159 | 391002J201 | GCO41189 |
| 391004M510 | GCO41034 | 391000E410 | GCO41054 | 391000M801 | GCO41118 | 391004M410 | GCO41159 | 391002J206 | GCO41189 |
| 391004M570 | GCO41034 | 391000E415 | GCO41054 | 391000M806 | GCO41118 | 391004M470 | GCO41159 | 391005J016 | GCO41189 |
| 391004M776 | GCO41034 | 391003J110 | GCO41054 | 3910040Y05 | GCO41118 | 391010M015 | GCO41159 | 391006J011 | GCO41189 |
| 391006N215 | GCO41034 | 3910064E15 | GCO41054 | 39100OM316 | GCO41118 | 391014M470 | GCO41159 | 391006J016 | GCO41189 |
| 391010M311 | GCO41034 | 391010E410 | GCO41054 | 39100OM806 | GCO41118 | 39100ED100 | GCO41167 | 391012J201 | GCO41189 |
| 391010M915 | GCO41034 | 391010E415 | GCO41054 | 39100WD200 | GCO41118 | 39211ED100 | GCO41167 | 391012J206 | GCO41189 |
| 391011N515 | GCO41034 | 3910164E15 | GCO41054 | 39100WD205 | GCO41118 | C9211EL10A | GCO41167 | 391012J211 | GCO41189 |
| 3910140Y10 | GCO41034 | 39101OE410 | GCO41054 | 391010M801 | GCO41118 | 391000100 | GCO41176 | 391012J216 | GCO41189 |
| 391014M570 | GCO41034 | 391002J211 | GCO41055 | 391010M806 | GCO41118 | 3910078G00 | GCO41178 | 391015J016 | GCO41189 |
| 391014M575 | GCO41034 | 391002J216 | GCO41055 | 3910140Y05 | GCO41118 | 391002J210 | GCO41184 | 391016J011 | GCO41189 |
| 391014M771 | GCO41034 | 392115M427 | GCO41057 | 39101OM316 | GCO41118 | 391002J215 | GCO41184 | 391016J016 | GCO41189 |
| 3910163Y10 | GCO41034 | 39211BM427 | GCO41057 | 39101OM806 | GCO41118 | 391003J171 | GCO41184 | 392110M306 | GCO41210 |
| 391016N215 | GCO41034 | 392114F126 | GCO41058 | 39101WD200 | GCO41118 | 391004N175 | GCO41184 | 392112N560 | GCO41210 |
| 3910031U00 | GCO41036 | 3910073N10 | GCO41062 | 39101WD205 | GCO41118 | 391004N275 | GCO41184 | 39100JA000 | GCO41214 |
| 3910032U05 | GCO41036 | 3910158E10 | GCO41062 | 3910144800 | GCO41119 | 391005J010 | GCO41184 | 39100JA010 | GCO41214 |
| 3910131U00 | GCO41036 | 3910173N10 | GCO41062 | 3910144802 | GCO41119 | 391006J071 | GCO41184 | 39100JD24B | GCO41214 |
| 3910132U05 | GCO41036 | 391008000L | GCO41068 | 1N0025500 | GCO41124 | 391006J076 | GCO41184 | 39100JD52B | GCO41214 |
| 39211AV625 | GCO41038 | 391000M301 | GCO41078 | 1N0225500 | GCO41124 | 391006J915 | GCO41184 | 39101JA010 | GCO41214 |
| 39211BU125 | GCO41038 | 391000M900 | GCO41078 | 1N0225600 | GCO41124 | 39100AE415 | GCO41184 | 39101JD52B | GCO41214 |
| 3910041F100 | GCO41040 | 391000M905 | GCO41078 | 1N0325500 | GCO41124 | 39100AU415 | GCO41184 | 39211JA00A | GCO41214 |
| 3910041F400 | GCO41040 | 391000M910 | GCO41078 | 326906 | GCO41135 | 39100AU416 | GCO41184 | 39211JD22B | GCO41214 |
| 391004F100 | GCO41040 | 391000M970 | GCO41078 | 4237009008 | GCO41135 | 39100AW010 | GCO41184 | C9211JA00A | GCO41214 |
| 3910141F100 | GCO41040 | 391004M761 | GCO41078 | 391015M310 | GCO41137 | 39100CX015 | GCO41184 | C9211JD22B | GCO41214 |
| 3910141F400 | GCO41040 | 3910060Y00 | GCO41078 | 392115M325 | GCO41137 | 39100CX016 | GCO41184 | C92AAJA00A | GCO41214 |
| 3910145B00 | GCO41040 | 3910060Y05 | GCO41078 | 392118V010 | GCO41137 | 39100CX115 | GCO41184 | C92AAJD22B | GCO41214 |
| 391014F100 | GCO41040 | 3910061Y06 | GCO41078 | 391008H615 | GCO41138 | 39100CX215 | GCO41184 | C9B11JA00A | GCO41214 |
| 392114F125 | GCO41040 | 3910062Y05 | GCO41078 | 391008H712 | GCO41138 | 39100WA015 | GCO41184 | C9B1AJA00A | GCO41214 |
| 3910064E00 | GCO41042 | 3910063Y00 | GCO41078 | 391012Y175 | GCO41138 | 39100WF110 | GCO41184 | C9BAAJA00A | GCO41214 |
| 3910164E00 | GCO41042 | 3910063Y01 | GCO41078 | 392112Y070 | GCO41138 | 391010E478 | GCO41184 | 39125EL000 | GCO41217 |
| 39101D4000 | GCO41042 | 391010M301 | GCO41078 | 39211BM527 | GCO41141 | 391012J215 | GCO41184 | C9211EL00B | GCO41217 |
| 3920202E25 | GCO41042 | 391010M900 | GCO41078 | 391014U075 | GCO41142 | 391014N175 | GCO41184 | 39100JN10A | GCO41222 |
| 3921161E06 | GCO41042 | 391010M905 | GCO41078 | 392115V471 | GCO41142 | 391014N177 | GCO41184 | 39101JN10A | GCO41222 |
| 39100WA210 | GCO41043 | 391010M910 | GCO41078 | 392119F626 | GCO41142 | 391014N275 | GCO41184 | 39211CG000 | GCO41227 |
| 39100WA270 | GCO41043 | 391010M970 | GCO41078 | 39211AU325 | GCO41142 | 391015J010 | GCO41184 | 39100EB70A | GCO41231 |
| 39100WF815 | GCO41043 | 391014M700 | GCO41078 | 39211BU025 | GCO41142 | 391016J010 | GCO41184 | 39100CA100 | GCO41232 |
| 391010E417 | GCO41043 | 391014M761 | GCO41078 | C9211AU31A | GCO41142 | 391016J071 | GCO41184 | 39100CC20B | GCO41232 |
| 39101WA210 | GCO41043 | 3910160Y00 | GCO41078 | 391000M610 | GCO41145 | 391016J076 | GCO41184 | 39101CA100 | GCO41232 |
| 39101WA270 | GCO41043 | 3910160Y05 | GCO41078 | 391010N510 | GCO41145 | 391016J915 | GCO41184 | 39211CA100 | GCO41232 |
| 39101WF815 | GCO41043 | 3910161Y07 | GCO41078 | 391002Y011 | GCO41152 | 39101AE415 | GCO41184 | 39211EL20B | GCO41233 |
| 392110E015 | GCO41043 | 3910162Y05 | GCO41078 | 391012Y010 | GCO41152 | 39101AU415 | GCO41184 | 39211EL00B | GCO41234 |
| 391014U010 | GCO41044 | 3910163Y00 | GCO41078 | 391012Y011 | GCO41152 | 39101AU416 | GCO41184 | 392115M425 | GCO41236 |
| 392112J200 | GCO41044 | 3910163Y01 | GCO41078 | 391002U010 | GCO41154 | 39101AW110 | GCO41184 | 391004M400 | GCO41239 |
| 39100AY100 | GCO41046 | 3921160Y00 | GCO41078 | 391002U210 | GCO41154 | 39101CX116 | GCO41184 | 391004M465 | GCO41239 |
| 39100AY105 | GCO41046 | 392118V000 | GCO41078 | 391002U310 | GCO41154 | 39101OE478 | GCO41184 | 39211EB30A | GCO41240 |
| 39100AY10A | GCO41046 | 391005347R | GCO41081 | 3910041B10 | GCO41154 | 39101WF110 | GCO41184 | C9211EB30A | GCO41240 |
| 39101AY100 | GCO41046 | 3910100QAF | GCO41081 | 3910045B10 | GCO41154 | 39101WF115 | GCO41184 | 39100C6000 | GCO41241 |
| 39101AY105 | GCO41046 | 391015022R | GCO41081 | 391012U310 | GCO41154 | 39101WF715 | GCO41184 | 39100C7400 | GCO41241 |
| 39211AY125 | GCO41046 | 3921131G00 | GCO41086 | 3910141B10 | GCO41154 | 39101WF716 | GCO41184 | 39100G9600 | GCO41241 |
| 39211AY126 | GCO41046 | 3921178G00 | GCO41086 | 3910145B10 | GCO41154 | 391008H515 | GCO41185 | 39101C6000 | GCO41241 |
| 39100AY600 | GCO41047 | 3921178GX0 | GCO41086 | 391000M316 | GCO41155 | 391012Y070 | GCO41185 | 39101C7400 | GCO41241 |
| 39101AY600 | GCO41047 | 392114F128 | GCO41090 | 391000M811 | GCO41155 | 391012Y176 | GCO41185 | 39101G9600 | GCO41241 |
| 39211AY625 | GCO41047 | 392119E100 | GCO41091 | 391000M816 | GCO41155 | 391018H315 | GCO41185 | 39211BM528 | GCO41243 |
| 39211BC50J | GCO41047 | 39210F4125 | GCO41092 | 3910040Y15 | GCO41155 | 391018H810 | GCO41185 | 39211BM580 | GCO41243 |
| 3740231006 | GCO41048 | 39210F4300 | GCO41092 | 391005M810 | GCO41155 | 391002Y076 | GCO41187 | 39211BC625 | GCO41244 |
| 3910095F0F | GCO41048 | 392115M300 | GCO41099 | 391006M010 | GCO41155 | 391002Y210 | GCO41187 | 39100CA000 | GCO41245 |
| 39100BM510 | GCO41048 | 391002S600 | GCO41100 | 39100WD210 | GCO41155 | 391012Y076 | GCO41187 | 39101CA000 | GCO41245 |
| 39101BM510 | GCO41048 | 391002S660 | GCO41100 | 39100WD215 | GCO41155 | 391012Y215 | GCO41187 | 39100JD74ARP | GCO41249 |
| 39211BM526 | GCO41048 | 3921158G60 | GCO41100 | 391010M316 | GCO41155 | 392112Y210 | GCO41187 | 39100JD74BRP | GCO41249 |
| 39211AV325 | GCO41049 | 391003J100 | GCO41106 | 391010M811 | GCO41155 | 391001V10A | GCO41188 | 39100JY04A | GCO41249 |
| C9211AU32A | GCO41049 | 392112J200 | GCO41107 | 391010M816 | GCO41155 | 39100AX000 | GCO41188 | 39101JD74BRP | GCO41249 |
| 39211AW325 | GCO41050 | 39211BM525 | GCO41109 | 3910140Y15 | GCO41155 | 39100AX005 | GCO41188 | 39101JD74DRP | GCO41249 |
| 39100BN710 | GCO41052 | 39210F4127 | GCO41112 | 391015M810 | GCO41155 | 39100AX00A | GCO41188 | 39101JY04A | GCO41249 |
| 39101BN710 | GCO41052 | 39211BM725 | GCO41112 | 391016M010 | GCO41155 | 39100AX00B | GCO41188 | 39101JY04B | GCO41249 |

| COMPETITOR | G-AP Ref. | COMPETITOR | G-AP Ref. | COMPETITOR | G-AP Ref. | COMPETITOR | G-AP Ref. | COMPETITOR | G-AP Ref. |
|---|---|---|---|---|---|---|---|---|---|
| OE | | 391011HS0A | GCO41297 | 39101AV315 | GCO41339 | 93182575 | GCO44003 | 901571131 | GCO44023 |
| | | 391018GA0A | GCO41297 | 391001U600 | GCO41340 | 1603261 | GCO44004 | 90157131 | GCO44023 |
| 39211JD72B | GCO41249 | 392111HS0A | GCO41297 | 391009U005 | GCO41340 | 1603398 | GCO44004 | 8200169285 | GCO44025 |
| 39211JG72B | GCO41249 | 39100ED005 | GCO41303 | 39100BC500 | GCO41340 | 91380019 | GCO44004 | 8200169288 | GCO44025 |
| 39211JG74B | GCO41249 | 39100ED00A | GCO41303 | 39100BC55A | GCO41340 | 93180019 | GCO44004 | 8200178618 | GCO44025 |
| 391009Y115 | GCO41250 | 39100JJ01A | GCO41303 | 391011U600 | GCO41340 | 93187468 | GCO44004 | 8200178624 | GCO44025 |
| 391009Y315 | GCO41250 | 39101ED005 | GCO41303 | 39101BC500 | GCO41340 | 1603251 | GCO44005 | 8200196277 | GCO44025 |
| 39100CN200 | GCO41250 | 39101ED00A | GCO41303 | 39101BC55A | GCO41340 | 93176743 | GCO44005 | 8200776533 | GCO44025 |
| 391019Y110 | GCO41250 | 39101JJ01A | GCO41303 | 8450009548 | GCO41340 | 0374241 | GCO44006 | 3910000Q0A | GCO44026 |
| 391019Y115 | GCO41250 | 39211ED000 | GCO41303 | 391009U20A | GCO41341 | 0374262 | GCO44006 | 3910000Q0L | GCO44026 |
| 391019Y315 | GCO41250 | 391001FA0B | GCO41304 | 391001KA0B | GCO41343 | 374003 | GCO44006 | 3910000QAH | GCO44026 |
| 39101CN200 | GCO41250 | 391001FA0C | GCO41304 | 391011KA0B | GCO41343 | 374241 | GCO44006 | 3910000QAJ | GCO44026 |
| 392119Y300 | GCO41250 | 391001HC1A | GCO41304 | C92111KA0B | GCO41343 | 374262 | GCO44006 | 3910100Q0K | GCO44026 |
| 391001KD0A | GCO41251 | 391001HC1B | GCO41304 | 39211ET025 | GCO41345 | 374461 | GCO44006 | 3910100QAJ | GCO44026 |
| 391009Y015 | GCO41251 | 391001HC5B | GCO41304 | 391003ZM0B | GCO41348 | 90496368 | GCO44006 | 3910100QAK | GCO44026 |
| 39100EN100 | GCO41251 | 391001HH5C | GCO41304 | 391013ZM0B | GCO41348 | 90498412 | GCO44006 | 4401720 | GCO44026 |
| 39100EN110 | GCO41251 | 391001HS0D | GCO41304 | 392113LS25 | GCO41348 | 93172152 | GCO44006 | 4401727 | GCO44026 |
| 391011KD0A | GCO41251 | 391003U005 | GCO41304 | 392113ZN0B | GCO41348 | 9503080 | GCO44006 | 4417247 | GCO44026 |
| 391019Y015 | GCO41251 | 391003U007 | GCO41304 | C92113LS0B | GCO41348 | 0374211 | GCO44007 | 8200169277 | GCO44026 |
| 39101EN000 | GCO41251 | 391003U505 | GCO41304 | C92113ZN0B | GCO41348 | 0374213 | GCO44007 | 8200169281 | GCO44026 |
| 39101EN100 | GCO41251 | 391003U507 | GCO41304 | C9B113ZN0B | GCO41348 | 0374263 | GCO44007 | 8200169285 | GCO44026 |
| 392119Y015 | GCO41251 | 391004V51A | GCO41304 | 39100CK005 | GCO41352 | 374211 | GCO44007 | 8200169288 | GCO44026 |
| 39211CN100 | GCO41251 | 391004V70A | GCO41304 | 391008J065 | GCO41354 | 374213 | GCO44007 | 8200178618 | GCO44026 |
| 39211JN30A | GCO41251 | 391011FA0B | GCO41304 | 391008J075 | GCO41354 | 374263 | GCO44007 | 8200178624 | GCO44026 |
| 39100JC20B | GCO41252 | 391011FA0C | GCO41304 | 391009N00B | GCO41366 | 90345303 | GCO44007 | 8200414937 | GCO44026 |
| 39101JC20B | GCO41252 | 391011HC1A | GCO41304 | 391009N00F | GCO41366 | 90498406 | GCO44007 | 8200485578 | GCO44026 |
| 391005M420 | GCO41255 | 391011HC1B | GCO41304 | 391009N01A | GCO41366 | 93172156 | GCO44007 | 8200499895 | GCO44026 |
| 391015M420 | GCO41255 | 391011HH0C | GCO41304 | 391019N00B | GCO41366 | 7700102978 | GCO44008 | 8200776533 | GCO44026 |
| 391015M310 | GCO41256 | 391011HS0D | GCO41304 | 391019N00F | GCO41366 | 7700102980 | GCO44008 | 1603270 | GCO44027 |
| 392115M426 | GCO41256 | 391013U005 | GCO41304 | 391019N01A | GCO41366 | 7700102998 | GCO44008 | 93182571 | GCO44027 |
| 39211EB31A | GCO41257 | 391013U505 | GCO41304 | 392111LB0A | GCO41393 | 7700102999 | GCO44008 | 93182577 | GCO44027 |
| C9211EB31A | GCO41257 | 391014V01C | GCO41304 | 391013TA1B | GCO41395 | 8200052426 | GCO44008 | 93185428 | GCO44027 |
| 39211BM529 | GCO41264 | 391014V51A | GCO41304 | 392113TA1A | GCO41395 | 374002 | GCO44009 | 0374672 | GCO44028 |
| 39211BM560 | GCO41264 | 391014V70A | GCO41304 | 391001KA5B | GCO41399 | 90538427 | GCO44009 | 13296186 | GCO44028 |
| 39100EB70B | GCO41270 | 392113U000 | GCO41304 | 391011KA5B | GCO41399 | 0374351 | GCO44011 | 1603274 | GCO44028 |
| 39100EB70C | GCO41270 | 3910030R00 | GCO41305 | 392113RA1A | GCO41399 | 374351 | GCO44011 | 374672 | GCO44028 |
| 392114KH0A | GCO41270 | 3910053J00 | GCO41305 | 392111AA0A | GCO41400 | 90538428 | GCO44011 | 3746720 | GCO44028 |
| 392111HS0B | GCO41271 | 3910053J20 | GCO41305 | 392111AA3A | GCO41400 | 0374346 | GCO44012 | 93182543 | GCO44028 |
| 39211EE70B | GCO41271 | 3910130R00 | GCO41305 | 39100JD22C | GCO41402 | 26060700 | GCO44012 | 0374002 | GCO44030 |
| C9211EL10D | GCO41271 | 3910153J00 | GCO41305 | 391007S000 | GCO41403 | 374346 | GCO44012 | 374002 | GCO44030 |
| 39100EA000 | GCO41273 | 3910153J10 | GCO41305 | 39600EA000 | GCO41404 | 0374053 | GCO44013 | 90538427 | GCO44030 |
| 39211ZS00A | GCO41273 | 391000E510 | GCO41306 | 39600EB310 | GCO41408 | 0374368 | GCO44013 | 93292610 | GCO44032 |
| C9211ZS00A | GCO41273 | 391000E515 | GCO41306 | C9211EB31B | GCO41408 | 26060699 | GCO44013 | 0374066 | GCO44041 |
| 391001KA0B | GCO41279 | 391010E510 | GCO41306 | 396001AA0B | GCO41413 | 26067600 | GCO44013 | 374066 | GCO44041 |
| 391011KA0B | GCO41279 | 391010E515 | GCO41306 | 396005AA0A | GCO41413 | 374053 | GCO44013 | 901571131 | GCO44041 |
| C92111KA0B | GCO41279 | 392115J000 | GCO41306 | 3815A423 | GCO41421 | 374368 | GCO44013 | 90157131 | GCO44041 |
| 39100AU115 | GCO41282 | 391002B015 | GCO41307 | 3815A424 | GCO41421 | 374329 | GCO44014 | 93326472 | GCO44044 |
| 39101AU075 | GCO41282 | 391005V010 | GCO41307 | 3815A569 | GCO41423 | 9117611 | GCO44014 | 0374077 | GCO44046 |
| 39211EN100 | GCO41285 | 391012B016 | GCO41307 | 3815A570 | GCO41423 | 26032411 | GCO44019 | 0374092 | GCO44046 |
| 39100JD02B | GCO41286 | 3910032U15 | GCO41314 | 4410183E10 | GCO44001 | 26089775 | GCO44019 | 07837456 | GCO44046 |
| 39101JD02B | GCO41286 | 391012Y016 | GCO41314 | 4410183E11 | GCO44001 | 374218 | GCO44019 | 07837457 | GCO44046 |
| 39211JE22B | GCO41286 | 3910131U10 | GCO41314 | 4410283E10 | GCO44001 | 374377 | GCO44019 | 07839615 | GCO44046 |
| C9211JD02B | GCO41286 | 3910132U15 | GCO41314 | 470110 | GCO44001 | 0374218 | GCO44020 | 374077 | GCO44046 |
| C9B11JD02B | GCO41286 | 4342087745 | GCO41323 | 4701110 | GCO44001 | 0374221 | GCO44020 | 374078 | GCO44046 |
| 392111FA0B | GCO41289 | 4346087F98 | GCO41323 | 4705753 | GCO44001 | 0374377 | GCO44020 | 374092 | GCO44046 |
| 391003NA0D | GCO41294 | 4346087F99 | GCO41323 | 4705754 | GCO44001 | 2603241 | GCO44020 | 7837456 | GCO44046 |
| 391003NF0A | GCO41294 | 392111LB0B | GCO41324 | 4707991 | GCO44001 | 26032411 | GCO44020 | 7837457 | GCO44046 |
| 391003NF0C | GCO41294 | 3740131005 | GCO41327 | 9206563 | GCO44001 | 26089775 | GCO44020 | 7839615 | GCO44046 |
| 39100JX00A | GCO41294 | 3740131015 | GCO41327 | 93170265 | GCO44001 | 374218 | GCO44020 | 90095157 | GCO44046 |
| 391013NA0D | GCO41294 | 3740231016 | GCO41327 | 93170266 | GCO44001 | 374377 | GCO44020 | 0374003 | GCO44049 |
| 391013NF0A | GCO41294 | 39100BM500 | GCO41327 | 93184127 | GCO44001 | 374460 | GCO44020 | 374430 | GCO44049 |
| 391013NF0C | GCO41294 | 39100BM520 | GCO41327 | 0374403 | GCO44002 | 93172150 | GCO44020 | 90538595 | GCO44049 |
| 392113NF0C | GCO41294 | 39101BM500 | GCO41327 | 09201725 | GCO44002 | R1640026 | GCO44020 | 92100312 | GCO44049 |
| 392113RA1B | GCO41294 | 39101BM520 | GCO41327 | 374403 | GCO44002 | 374250 | GCO44021 | 93176549 | GCO44049 |
| C92111KA0A | GCO41294 | 391003TA0A | GCO41331 | 9201725 | GCO44002 | 374251 | GCO44021 | 0374175 | GCO44051 |
| 391001HS0A | GCO41297 | 391013TA0B | GCO41331 | 13296181 | GCO44003 | 90512384 | GCO44021 | 374145 | GCO44051 |
| 391001HS0B | GCO41297 | 391002J200 | GCO41338 | 1603273 | GCO44003 | 90512385 | GCO44021 | 374175 | GCO44051 |
| 391008GA0A | GCO41297 | 39100AV315 | GCO41339 | 374671 | GCO44003 | 374066 | GCO44023 | 90334947 | GCO44051 |

| COMPETITOR | G-AP Ref. | COMPETITOR | G-AP Ref. | COMPETITOR | G-AP Ref. | COMPETITOR | G-AP Ref. | COMPETITOR | G-AP Ref. |
|---|---|---|---|---|---|---|---|---|---|
| OE | | 3273KJ | GCO45011 | 1485685080 | GCO45059 | 7701349839 | GCO50007 | 8200064731 | GCO50069 |
| | | 9630767080 | GCO45011 | 3272CQ | GCO45065 | 7701351124 | GCO50007 | 8200236110 | GCO50069 |
| 9117957 | GCO44051 | 9630767180 | GCO45011 | 3273EV | GCO45065 | 7701351264 | GCO50007 | 8200535798 | GCO50069 |
| 15868123 | GCO44054 | 9638753080 | GCO45011 | 3273EW | GCO45065 | 7701352020 | GCO50007 | 8200535799 | GCO50069 |
| 26057639 | GCO44054 | 9638753480 | GCO45011 | 9639475280 | GCO45065 | 7701352025 | GCO50007 | 8200535800 | GCO50069 |
| 0374176 | GCO44056 | 32724F | GCO45012 | 3272CS | GCO45067 | 7701394697 | GCO50007 | 820064731 | GCO50069 |
| 374176 | GCO44056 | 32730M | GCO45012 | 3273CS | GCO45067 | 7701498918 | GCO50007 | 7701352413 | GCO50076 |
| 90334948 | GCO44056 | 32734E | GCO45012 | 3272WL | GCO45068 | 7701498919 | GCO50007 | 7701352416 | GCO50076 |
| 0374015 | GCO44057 | 327204 | GCO45014 | 9803598480 | GCO45068 | 7701498921 | GCO50007 | 7701352420 | GCO50076 |
| 0374126 | GCO44057 | 327222 | GCO45014 | 1440106180 | GCO45074 | 2991461XD | GCO50008 | 7701352424 | GCO50076 |
| 374015 | GCO44057 | 327291 | GCO45014 | 1607019280 | GCO45074 | 7701349874 | GCO50008 | 7701352425 | GCO50076 |
| 374126 | GCO44057 | 327330 | GCO45014 | 1613214580 | GCO45074 | 7701349880 | GCO50008 | 7701352472 | GCO50076 |
| 90235271 | GCO44057 | 327354 | GCO45014 | 1613214680 | GCO45074 | 7701349938 | GCO50008 | 7701352473 | GCO50076 |
| 374387 | GCO44065 | 327355 | GCO45014 | 1613436180 | GCO45074 | 7701351479 | GCO50008 | 7701352474 | GCO50076 |
| 374410 | GCO44065 | 327357 | GCO45014 | 1613436280 | GCO45074 | 7701351480 | GCO50008 | 7701352597 | GCO50076 |
| 9198504 | GCO44065 | 327358 | GCO45014 | 1613967780 | GCO45074 | 7701351481 | GCO50008 | 7701468840 | GCO50076 |
| 9200335 | GCO44065 | 327373 | GCO45014 | 1613967880 | GCO45074 | 7701351484 | GCO50008 | 7701468843 | GCO50076 |
| 9201984 | GCO44065 | 327391 | GCO45014 | 3272RX | GCO45074 | 7701351571 | GCO50008 | 7701469375 | GCO50076 |
| 4410185E50 | GCO44080 | 3273H9 | GCO45014 | 3272RY | GCO45074 | 7701351572 | GCO50008 | 7711497524 | GCO50076 |
| 4410285E50 | GCO44080 | 3273J5 | GCO45014 | 3272TA | GCO45074 | 7701469363 | GCO50011 | 7711134777 | GCO50078 |
| 4707438 | GCO44080 | 3273P7 | GCO45014 | 3272WG | GCO45074 | 360113KTX | GCO50012 | 7711134778 | GCO50078 |
| 93180229 | GCO44080 | P056T9 | GCO45014 | 3272WH | GCO45074 | 7701352829 | GCO50017 | 7711497235 | GCO50078 |
| 374788 | GCO44081 | P057T0 | GCO45014 | 3273SK | GCO45074 | 7700112507 | GCO50025 | 8200079912 | GCO50078 |
| 374789 | GCO44081 | 32731H | GCO45023 | 3273TP | GCO45074 | 7700112511 | GCO50025 | 8200079913 | GCO50078 |
| 46308340 | GCO44081 | 3273L3 | GCO45023 | 3273TQ | GCO45074 | 8200032887 | GCO50025 | 8200169176 | GCO50078 |
| 77365999 | GCO44081 | 3273AC | GCO45027 | 3273WY | GCO45074 | 8200063808 | GCO50025 | 8200387541 | GCO50078 |
| 374068 | GCO44083 | 9812781280 | GCO45027 | 3273XA | GCO45074 | 7700874197 | GCO50026 | 8200387558 | GCO50078 |
| 4410151K00 | GCO44085 | 32723C | GCO45033 | 9681935280 | GCO45074 | 7701349955 | GCO50026 | 8200470129 | GCO50078 |
| 4410251K00 | GCO44085 | 32724C | GCO45033 | 9681935480 | GCO45074 | 7701351995 | GCO50026 | 8200014111 | GCO50079 |
| 4710013 | GCO44085 | 32733M | GCO45033 | 9682499980 | GCO45074 | 7701352001 | GCO50026 | 8200035673 | GCO50079 |
| 4710017 | GCO44085 | S32723C | GCO45033 | 9682500180 | GCO45074 | 7701348089 | GCO50027 | 4430546 | GCO50080 |
| 4711836 | GCO44085 | 32736V | GCO45035 | 9682500380 | GCO45074 | 7701348109 | GCO50027 | 7711134776 | GCO50080 |
| 93194650 | GCO44085 | 3272KY | GCO45036 | 9682500480 | GCO45074 | 7701349769 | GCO50027 | 7711135490 | GCO50080 |
| 93194655 | GCO44085 | 32731C | GCO45036 | 9683386580 | GCO45074 | 7701351172 | GCO50027 | 7711368095 | GCO50080 |
| 13296183 | GCO44088 | 32733Z | GCO45036 | 9683387480 | GCO45074 | 7701498775 | GCO50027 | 8200014114 | GCO50080 |
| 13335161 | GCO44088 | 32734J | GCO45036 | 9685209580 | GCO45074 | 7701498955 | GCO50027 | 8200079915 | GCO50080 |
| 13366782 | GCO44088 | 32736H | GCO45036 | 9685441180 | GCO45074 | 7701352415 | GCO50043 | 8200079916 | GCO50080 |
| 13366783 | GCO44088 | 32724T | GCO45038 | 9685441380 | GCO45074 | 7701352471 | GCO50043 | 8200169177 | GCO50080 |
| 13462049 | GCO44088 | 32728V | GCO45038 | 9685615280 | GCO45074 | 7701351948 | GCO50045 | 8200387548 | GCO50080 |
| 13465164 | GCO44088 | 32729V | GCO45038 | 9685615480 | GCO45074 | 3910000QAC | GCO50048 | 8200436848 | GCO50080 |
| 374646 | GCO44088 | 32738G | GCO45038 | 9685632780 | GCO45074 | 3910000QAD | GCO50048 | 8200436849 | GCO50080 |
| 94564013 | GCO44090 | 32738W | GCO45038 | 9685632880 | GCO45074 | 3910100QBE | GCO50048 | 8200467679 | GCO50080 |
| 94564015 | GCO44090 | 32738Y | GCO45038 | 9685634380 | GCO45074 | 7700108465 | GCO50056 | 8200470131 | GCO50080 |
| 95077537 | GCO44090 | 3272AA | GCO45045 | 9685634480 | GCO45074 | 7701352488 | GCO50056 | 8200647679 | GCO50080 |
| 95077539 | GCO44090 | 3272AC | GCO45045 | 9811045380 | GCO45074 | 7701352489 | GCO50056 | 8200255027 | GCO50082 |
| 95132295 | GCO44090 | 32734Y | GCO45045 | 9811045480 | GCO45074 | 7701352618 | GCO50056 | 8200331518 | GCO50082 |
| 9H2423B | GCO44090 | 32734Z | GCO45045 | 9811047580 | GCO45074 | 7701352619 | GCO50056 | 8200014109 | GCO50083 |
| 13335207 | GCO44093 | 3272AH | GCO45049 | 9811047680 | GCO45074 | 7701352622 | GCO50056 | 8200030623 | GCO50083 |
| 374871 | GCO44093 | 32730Y | GCO45049 | 9812139680 | GCO45074 | 7701352907 | GCO50056 | 7711135263 | GCO50089 |
| 3272000 | GCO45001 | 32725P | GCO45052 | 9812139780 | GCO45074 | 7701469542 | GCO50056 | 820011225 | GCO50092 |
| 3272E3 | GCO45001 | 32736Y | GCO45052 | 9812140080 | GCO45074 | 7701469543 | GCO50056 | 8200261840 | GCO50092 |
| 3272F6 | GCO45001 | 3272HP | GCO45056 | 9812210980 | GCO45074 | 7701469962 | GCO50056 | 8200261841 | GCO50092 |
| 3273L1 | GCO45001 | 3273HF | GCO45056 | 9812211080 | GCO45074 | 7701469965 | GCO50056 | 8200482435 | GCO50092 |
| 3272S6 | GCO45003 | 3272EQ | GCO45057 | 9812212780 | GCO45074 | 7701469966 | GCO50056 | 8200511225 | GCO50092 |
| 3272E0 | GCO45004 | 3272EX | GCO45057 | 9812212880 | GCO45074 | 7700111914 | GCO50058 | 8200557125 | GCO50092 |
| 3272E2 | GCO45004 | 3272FR | GCO45057 | 3272XJ | GCO45093 | 7700111916 | GCO50058 | 8200559377 | GCO50092 |
| 3273L2 | GCO45004 | 3272HY | GCO45057 | 3273YC | GCO45093 | 7700112116 | GCO50058 | 8200216519 | GCO50093 |
| 3273L4 | GCO45004 | 3272KW | GCO45057 | 7701349992 | GCO50003 | 8200110754 | GCO50058 | 8200216523 | GCO50093 |
| 3272S5 | GCO45005 | 3273EQ | GCO45057 | 7701351130 | GCO50003 | 7700112501 | GCO50065 | 8200432517 | GCO50093 |
| 327206 | GCO45006 | 9801611180 | GCO45057 | 7700110484 | GCO50004 | 7701470174 | GCO50065 | 8200623806 | GCO50093 |
| 327375 | GCO45006 | 3272JZ | GCO45058 | 7700111364 | GCO50004 | 8200029470 | GCO50065 | 8200262686 | GCO50101 |
| 32726E | GCO45011 | 3273JS | GCO45058 | 7701349994 | GCO50005 | 8200031149 | GCO50065 | 8200362064 | GCO50103 |
| 32727E | GCO45011 | 434100H020B | GCO45058 | 7701352133 | GCO50005 | 7700111077 | GCO50066 | 7701349958 | GCO50105 |
| 32728E | GCO45011 | 434200H020 | GCO45058 | 7701349025 | GCO50007 | 8200168513 | GCO50066 | 7701349990 | GCO50105 |
| 32729E | GCO45011 | 434200H020B | GCO45058 | 7701349026 | GCO50007 | 8200236089 | GCO50066 | 7701352128 | GCO50105 |
| 3272CR | GCO45011 | 4346009C90 | GCO45058 | 7701349028 | GCO50007 | 8200240430 | GCO50066 | 7701352493 | GCO50105 |
| 32733X | GCO45011 | 4346009D00 | GCO45058 | 7701349034 | GCO50007 | 7700111918 | GCO50069 | 7701352495 | GCO50105 |
| 32733Y | GCO45011 | 4347009D00 | GCO45058 | 7701349689 | GCO50007 | 82000236110 | GCO50069 | 8200065334 | GCO50106 |

| COMPETITOR | G-AP Ref. | COMPETITOR | G-AP Ref. | COMPETITOR | G-AP Ref. | COMPETITOR | G-AP Ref. | COMPETITOR | G-AP Ref. |
|---|---|---|---|---|---|---|---|---|---|
| OE | | 8200444606 | GCO50149 | 391001458R | GCO50219 | 4242236 | GCO52001 | JZW498340X | GCO53008 |
| | | 8200934673 | GCO50150 | 391011434R | GCO50219 | 4399325 | GCO52001 | 115420170 | GCO54001 |
| 8200383707 | GCO50108 | 8200934675 | GCO50150 | 391013297R | GCO50219 | 4610580 | GCO52001 | 115420174 | GCO54001 |
| 8200383708 | GCO50108 | 8200618165 | GCO50152 | 391018662R | GCO50219 | 8952905 | GCO52002 | 115420214 | GCO54001 |
| 8200387466 | GCO50108 | 3910000Q5M | GCO50157 | 391019117R | GCO50219 | 4103263 | GCO52007 | 115420217 | GCO54001 |
| 8200776962 | GCO50108 | 391001162R | GCO50157 | 8200174903 | GCO50222 | 4610572 | GCO52007 | 441072651586 | GCO54001 |
| 8200285909 | GCO50109 | 391005468R | GCO50157 | 391007937R | GCO50223 | 4686960 | GCO52008 | 441072651706 | GCO54001 |
| 8200436365 | GCO50109 | 391008165R | GCO50157 | 44340SN7315 | GCO51001 | 5171186 | GCO52008 | 6U0407311 | GCO54001 |
| 7711368368 | GCO50112 | 3910100Q5M | GCO50157 | 44430SN7315 | GCO51001 | 5232897 | GCO52008 | 6U0498099 | GCO54001 |
| 8200341698 | GCO50112 | 391019671R | GCO50157 | GCV1112 | GCO51001 | 4103255 | GCO52011 | 6U0498099A | GCO54001 |
| 8200378880 | GCO50112 | 8200725503 | GCO50157 | GCV1117 | GCO51001 | 12804149 | GCO52012 | 6U0498099AX | GCO54001 |
| 8200482429 | GCO50112 | 8200725504 | GCO50157 | BAU5439 | GCO51002 | 12804150 | GCO52012 | 6Q0498099A | GCO54002 |
| 8200684084 | GCO50112 | 8200725510 | GCO50157 | BAU5440 | GCO51002 | 93186026 | GCO52012 | 6Q0498099C | GCO54002 |
| 8200327707 | GCO50116 | 8200725511 | GCO50157 | GCV1088 | GCO51003 | 1K0407311F | GCO53001 | 6Q0498099CX | GCO54002 |
| 8200575489 | GCO50116 | 8200930507 | GCO50157 | GCV1214 | GCO51003 | 1K0498099D | GCO53001 | 6QE407311C | GCO54004 |
| 8200575490 | GCO50116 | 391001702R | GCO50160 | TFB000090 | GCO51003 | 1K0498099DX | GCO53001 | 6QE498099B | GCO54004 |
| 8200184199 | GCO50117 | 391012511R | GCO50160 | TFB000090E | GCO51003 | 6Q0407311D | GCO53002 | 6C0498099A | GCO54006 |
| 8200676172 | GCO50130 | 391019395R | GCO50160 | GCV1119 | GCO51004 | 6Q0498099F | GCO53002 | 6C0498099AX | GCO54006 |
| 8200363697 | GCO50131 | 8200725513 | GCO50160 | GVC1119 | GCO51004 | 6Q0498099FX | GCO53002 | 4410154J00 | GCO54007 |
| 8200363698 | GCO50131 | 8200866824 | GCO50160 | TFB0000110 | GCO51004 | 6N0407311 | GCO53005 | 4410154J01 | GCO54007 |
| 8200433371 | GCO50131 | 8201353435 | GCO50160 | TFB000110 | GCO51004 | 6N0498099 | GCO53005 | 4410254J00 | GCO54007 |
| 8200470134 | GCO50131 | 8200618168 | GCO50161 | TFB000110E | GCO51004 | 6N0498099V | GCO53005 | 4513570601 | GCO55002 |
| 391004255R | GCO50132 | 8200618182 | GCO50161 | GCV1076 | GCO51005 | 6N0498099X | GCO53005 | A4513570501 | GCO55002 |
| 391005187R | GCO50132 | 8200786810 | GCO50161 | TDJ10016 | GCO51005 | 6N0498340X | GCO53005 | A4513570601 | GCO55002 |
| 391009620R | GCO50132 | 391001063R | GCO50162 | TDJ10016E | GCO51005 | JZW498340CX | GCO53005 | 28021AA051 | GCO56003 |
| 391012360R | GCO50132 | 391003112R | GCO50162 | GCV1146 | GCO51007 | 171407311K | GCO53006 | 28021AA052 | GCO56003 |
| 391012849R | GCO50132 | 391004751R | GCO50162 | TFB000140 | GCO51007 | 191407311B | GCO53007 | 28021AA053 | GCO56003 |
| 8200842365 | GCO50132 | 391005002R | GCO50162 | TFB000140E | GCO51007 | 191407311C | GCO53007 | 28021AA150 | GCO56003 |
| 8200842369 | GCO50132 | 391005763R | GCO50162 | GCV1122 | GCO51008 | 191407311F | GCO53007 | 28021AA151 | GCO56003 |
| 8200843365 | GCO50132 | 391006276R | GCO50162 | TFB000060 | GCO51008 | 191407311J | GCO53007 | 28021AA152 | GCO56003 |
| 4153600115 | GCO50136 | 391011406R | GCO50162 | TFB000060E | GCO51008 | 191407311L | GCO53007 | 28021AA501 | GCO56003 |
| 8200687739 | GCO50136 | 391013387R | GCO50162 | BAU5466 | GCO51010 | 191497311J | GCO53007 | 28021AA530 | GCO56003 |
| 8200687740 | GCO50136 | 391014021R | GCO50162 | GCV1181 | GCO51011 | 191498099A | GCO53007 | 28021FC031 | GCO56003 |
| 8201235167 | GCO50136 | 391017079R | GCO50162 | TDJ100580 | GCO51011 | 191498099AV | GCO53007 | 302022 | GCO56003 |
| 8201235754 | GCO50136 | 391019110R | GCO50162 | 27H7567 | GCO51013 | 191498099AX | GCO53007 | 28021AA011 | GCO56004 |
| A4153600115 | GCO50136 | 8200788672 | GCO50162 | BAU2018 | GCO51013 | 191498099B | GCO53007 | 28021AA012 | GCO56004 |
| 7711135822 | GCO50137 | 8200788674 | GCO50162 | BAU4444 | GCO51013 | 191498099BV | GCO53007 | 28021AA023 | GCO56004 |
| 7711135825 | GCO50137 | 391010115R | GCO50167 | BAU4444EVA | GCO51013 | 191498099BX | GCO53007 | 28021FC030 | GCO56004 |
| 7711135954 | GCO50137 | 391017355R | GCO50167 | TDB001101EVA | GCO51013 | 1H0407311D | GCO53007 | 28021FC031 | GCO56004 |
| 7711368884 | GCO50137 | 391006802R | GCO50168 | RTC6862 | GCO51016 | 1H0498099 | GCO53007 | 28091AA010 | GCO56004 |
| 8200117068 | GCO50137 | 8201055673 | GCO50168 | GCV1118 | GCO51018 | 1H0498099V | GCO53007 | 28091AA011 | GCO56004 |
| 8200351250 | GCO50137 | 1S0498099 | GCO50170 | TFB000100 | GCO51018 | 1H0498099X | GCO53007 | 28091AA012 | GCO56004 |
| 8200375537 | GCO50137 | 1S0498099X | GCO50170 | TFB000100E | GCO51018 | 1H0498340X | GCO53007 | 28091AA014 | GCO56004 |
| 8200432516 | GCO50137 | 391000367R | GCO50171 | TDJ100470 | GCO51020 | 357407311 | GCO53007 | 28091AA014AT | GCO56004 |
| 3740131010 | GCO50139 | 391005064R | GCO50171 | 44011ST3E70 | GCO51021 | 357498099 | GCO53007 | 28091AA020 | GCO56004 |
| 3740231001 | GCO50139 | 391006995R | GCO50171 | 44011ST3G50 | GCO51021 | 357498099A | GCO53007 | 28091AA021 | GCO56004 |
| 3740231011 | GCO50139 | 391015184R | GCO50171 | 44011ST3G70 | GCO51021 | 357498099B | GCO53007 | 28091AA022 | GCO56004 |
| 3910095F0A | GCO50139 | 391006553R | GCO50173 | 44014ST3E51 | GCO51021 | 357498099D | GCO53007 | 28091AA023 | GCO56004 |
| 3910195F0A | GCO50139 | 391014946R | GCO50173 | 4401ST3G70 | GCO51021 | 357498099DV | GCO53007 | 28091AA024 | GCO56004 |
| 8200722147 | GCO50140 | 391007857R | GCO50175 | 44306SD9013 | GCO51024 | 357498099DX | GCO53007 | 28091AA024AT | GCO56004 |
| 7701210040 | GCO50143 | 391018946R | GCO50175 | 3815A149 | GCO51028 | 357498099V | GCO53007 | 28091AA042 | GCO56004 |
| 8200441337 | GCO50143 | 391015814R | GCO50186 | 3815A152 | GCO51028 | 357498099X | GCO53007 | 28091AA043 | GCO56004 |
| 8200441340 | GCO50143 | 8200666593 | GCO50186 | 4410579K10 | GCO51029 | 357498340AX | GCO53007 | 28091AA094AT | GCO56004 |
| 8200486092 | GCO50143 | 8200725514 | GCO50186 | 4411778K00 | GCO51029 | 357498340X | GCO53007 | 28021FC030 | GCO56005 |
| 8200598563 | GCO50143 | 8200974682 | GCO50186 | 4411778K00000 | GCO51029 | JZW498340AX | GCO53007 | 28021FC031 | GCO56005 |
| 391010433R | GCO50145 | 8201236047 | GCO50186 | 4411878K00 | GCO51029 | JZW498340BX | GCO53007 | 28091AA000 | GCO56005 |
| 7711497435 | GCO50145 | 8450006570 | GCO50206 | 4411878K00000 | GCO51029 | 171407311F | GCO53008 | 28091AA001 | GCO56005 |
| 8200724499 | GCO50145 | 8450030512 | GCO50206 | 4411965J10 | GCO51029 | 171407311J | GCO53008 | 28091AA002 | GCO56005 |
| 8200725499 | GCO50145 | 8450030513 | GCO50206 | 4411965J10000 | GCO51029 | 171498099A | GCO53008 | 28091AA003 | GCO56005 |
| 8200725500 | GCO50145 | 1608419980 | GCO50211 | 4410579K20 | GCO51030 | 171498099C | GCO53008 | 28091AA004 | GCO56005 |
| 8201353624 | GCO50145 | 9803966280 | GCO50211 | 4411779K20 | GCO51030 | 191407311 | GCO53008 | 28091AA004AT | GCO56005 |
| 3910000Q6A | GCO50148 | 9803966380 | GCO50211 | 4411879K20 | GCO51030 | 191407311H | GCO53008 | 28091AA090 | GCO56005 |
| 391008653R | GCO50148 | 9816308880 | GCO50211 | 3715A007 | GCO51033 | 191498099 | GCO53008 | 28091AA091 | GCO56005 |
| 391009882R | GCO50148 | 9816309180 | GCO50211 | 3715A008 | GCO51033 | 191498099F | GCO53008 | 28091AA092 | GCO56005 |
| 391017275R | GCO50148 | 391006270R | GCO50212 | 5085141AB | GCO51033 | 191498099FV | GCO53008 | 28091AA093 | GCO56005 |
| 7711135956 | GCO50149 | 391005624R | GCO50213 | 5085141AC | GCO51033 | 191498099FX | GCO53008 | 28091AA094 | GCO56005 |
| 8200278602 | GCO50149 | 391007556R | GCO50213 | 5085240AB | GCO51033 | 191498340X | GCO53008 | 28091AC050 | GCO56005 |
| 8200444605 | GCO50149 | 391016376R | GCO50213 | 30583376 | GCO52001 | 1H0407311C | GCO53008 | 723220041 | GCO56006 |

| COMPETITOR | G-AP Ref. | COMPETITOR | G-AP Ref. | COMPETITOR | G-AP Ref. | COMPETITOR | G-AP Ref. | COMPETITOR | G-AP Ref. |
|---|---|---|---|---|---|---|---|---|---|
| OE | | 4410260G80 | GCO57002 | 4410164B11000 | GCO57011 | 4410175F52 | GCO57024 | 4410158J12 | GCO57039 |
| | | 4410171C10 | GCO57003 | 4410164B12000 | GCO57011 | 4410178F20 | GCO57024 | 4410158J30 | GCO57039 |
| 723221971 | GCO56006 | 4410171C30 | GCO57003 | 4410164B20 | GCO57011 | 4410178G30 | GCO57024 | 4410158J32 | GCO57039 |
| 723291530 | GCO56006 | 4410171C31 | GCO57003 | 4410171C12 | GCO57011 | 4410275F02 | GCO57024 | 4410158J50 | GCO57039 |
| 723291540 | GCO56006 | 4410171C40 | GCO57003 | 4410264B10 | GCO57011 | 4410275F20 | GCO57024 | 4410158J52 | GCO57039 |
| 28021AC200 | GCO56009 | 4410171C41 | GCO57003 | 4410264B11 | GCO57011 | 4410275F31 | GCO57024 | 4410173H11 | GCO57039 |
| 28091AC120 | GCO56009 | 4411463B60 | GCO57003 | 4410264B20 | GCO57011 | 44101M79F | GCO57027 | 4410173H23 | GCO57039 |
| 28091AC200 | GCO56009 | 4410162D00 | GCO57006 | 4411664B10 | GCO57011 | 44101M79F50 | GCO57027 | 4410175H10 | GCO57039 |
| 28393FE020 | GCO56009 | 4410162D01 | GCO57006 | 4410172F00 | GCO57012 | 44101M79F60 | GCO57027 | 4410175H11 | GCO57039 |
| 28393FE040 | GCO56009 | 4410170B12 | GCO57006 | 4410180E21 | GCO57012 | 44101M79F70 | GCO57027 | 4410176G70 | GCO57039 |
| 28393FE050 | GCO56009 | 4410170B50 | GCO57006 | 44101M70F00 | GCO57012 | 44102M79F5 | GCO57027 | 4410178G20 | GCO57039 |
| 4410175F02 | GCO56010 | 4410182013 | GCO57006 | 44101M72F00 | GCO57012 | 44102M79F50 | GCO57027 | 4410179A10 | GCO57039 |
| 4410175F02000 | GCO56010 | 4410282013 | GCO57006 | 44101M72F20 | GCO57012 | 44102M79F60 | GCO57027 | 4410180G00 | GCO57039 |
| 4410175F20 | GCO56010 | 4411582020 | GCO57006 | 4410280E21 | GCO57012 | 4401083000 | GCO57033 | 4410180G10 | GCO57039 |
| 4410175F32 | GCO56010 | 4411663B20 | GCO57006 | 44102M72F00 | GCO57012 | 4401060A20 | GCO57035 | 4410180G11 | GCO57039 |
| 4410275F32 | GCO56010 | 4410160820 | GCO57007 | 44102M72F20 | GCO57012 | 4410160A00 | GCO57035 | 4410180G20 | GCO57039 |
| 28094AC050 | GCO56017 | 4410160830 | GCO57007 | 44101M72F30 | GCO57013 | 4410160A1V | GCO57035 | 4410180G20000 | GCO57039 |
| 28391AJ000 | GCO56022 | 4410160842 | GCO57007 | 44102M72F30 | GCO57013 | 4410160A20 | GCO57035 | 4410180G21000 | GCO57039 |
| 28391AJ001 | GCO56022 | 4410160B12 | GCO57007 | 4410160G20 | GCO57014 | 441016DA10 | GCO57035 | 4410180G22000 | GCO57039 |
| 28391AJ002 | GCO56022 | 4410160B20 | GCO57007 | 4410160G22 | GCO57014 | 441016DA20 | GCO57035 | 4410180G23 | GCO57039 |
| 28391AJ020 | GCO56022 | 4410160B30 | GCO57007 | 4410160G22000 | GCO57014 | 4410260A20 | GCO57035 | 4410180G23000 | GCO57039 |
| 28391FJ020 | GCO56022 | 4410160B42 | GCO57007 | 4410260G22 | GCO57014 | 4413160A01 | GCO57035 | 4410184G00 | GCO57039 |
| 28393AG002 | GCO56022 | 4410162B10 | GCO57007 | 4410160G23 | GCO57015 | 4413260A00 | GCO57035 | 4410184G01 | GCO57039 |
| 28021AC220 | GCO56026 | 4410162B11 | GCO57007 | 4410160G33 | GCO57015 | 4413260A00000 | GCO57035 | 4410258J00 | GCO57039 |
| 28094AC060 | GCO56026 | 4410162B12 | GCO57007 | 4410160G50 | GCO57015 | 4410160G00 | GCO57037 | 4410258J02 | GCO57039 |
| 28094AC070 | GCO56026 | 4410162B22 | GCO57007 | 4410160G51 | GCO57015 | 4410160G01 | GCO57037 | 4410258J12 | GCO57039 |
| 28321AE012 | GCO56026 | 4410163820 | GCO57007 | 4410160G62 | GCO57015 | 4410160G01000 | GCO57037 | 4410258J30 | GCO57039 |
| 28321FE080 | GCO56026 | 4410163B10 | GCO57007 | 4410160G72 | GCO57015 | 4410160GB0 | GCO57037 | 4410258J32 | GCO57039 |
| 28321FE082AT | GCO56026 | 4410163B11 | GCO57007 | 4410260G23 | GCO57015 | 4410160GH0 | GCO57037 | 4410272J10 | GCO57039 |
| 28391SA001 | GCO56026 | 4410163B20 | GCO57007 | 4410260G30 | GCO57015 | 4410160GN0 | GCO57037 | 4410272J12 | GCO57039 |
| 28321FC090 | GCO56027 | 4410163B21 | GCO57007 | 4410260G33 | GCO57015 | 4410260G00 | GCO57037 | 4410272J30 | GCO57039 |
| 28091KC000 | GCO56032 | 4410260B12 | GCO57007 | 4410260G50 | GCO57015 | 4410260GB0 | GCO57037 | 4410272J32 | GCO57039 |
| 28091KC010 | GCO56032 | 4410260B20 | GCO57007 | 4410260G62 | GCO57015 | 4410260GH0 | GCO57037 | 4410273H11 | GCO57039 |
| 28091KC030 | GCO56032 | 4410260B22 | GCO57007 | 4410160G60 | GCO57016 | 4410260GN0 | GCO57037 | 4410273H12 | GCO57039 |
| 28321KC011 | GCO56032 | 4410260B30 | GCO57007 | 4410160G61 | GCO57016 | 1A0125500 | GCO57039 | 4410276G70 | GCO57039 |
| 28021FA110 | GCO56039 | 4410262B10 | GCO57007 | 4410260G60 | GCO57016 | 1A0825020B | GCO57039 | 4410276G82 | GCO57039 |
| 28021AC210 | GCO56040 | 4410262B11 | GCO57007 | 4410177E00 | GCO57017 | 1A0825030B | GCO57039 | 4410278F10 | GCO57039 |
| 28091AC130 | GCO56040 | 4410262B12 | GCO57007 | 4410177E01 | GCO57017 | 1A0925020A | GCO57039 | 4410279A10 | GCO57039 |
| 28393AG000 | GCO56042 | 4410262B22 | GCO57007 | 4410177E10 | GCO57017 | 1A0925020B | GCO57039 | 4410279C00 | GCO57039 |
| 28393AG001 | GCO56042 | 4410263B10 | GCO57007 | 4410177E11 | GCO57017 | 1A0925030B | GCO57039 | 4410279C01 | GCO57039 |
| 28393AG010 | GCO56042 | 4410263B11 | GCO57007 | 4410177E12 | GCO57017 | 1A1225030C | GCO57039 | 4410280G00 | GCO57039 |
| 28393AG011 | GCO56042 | 4410263B20 | GCO57007 | 4410177E12000 | GCO57017 | 1A1325020A | GCO57039 | 4410280G01 | GCO57039 |
| 28393AG030 | GCO56042 | 4410263B21 | GCO57007 | 4410277E00 | GCO57017 | 1A1925020C | GCO57039 | 4410280G10 | GCO57039 |
| 28321FE000 | GCO56057 | 4411660830 | GCO57007 | 4410277E01 | GCO57017 | 1A2425020D | GCO57039 | 4410280G40 | GCO57039 |
| 28321FE001 | GCO56057 | 4411660B20 | GCO57007 | 4410277E02 | GCO57017 | 1A2425030B | GCO57039 | 4410284H00 | GCO57039 |
| 28321FE020 | GCO56057 | 4411660B30 | GCO57007 | 4410160G42 | GCO57018 | 1A2525030D | GCO57039 | 4410284H10 | GCO57039 |
| 28321FE110 | GCO56057 | 4411662B10 | GCO57007 | 4410160G43 | GCO57018 | 1A2625020E | GCO57039 | 441080G00 | GCO57039 |
| 28321FE191 | GCO56058 | 4411663B10 | GCO57007 | 4410160G44 | GCO57018 | 1A2625030E | GCO57039 | 4410160G21 | GCO57040 |
| 28321FE192 | GCO56058 | 4411663E10 | GCO57007 | 4410164B12 | GCO57018 | 1A2725020E | GCO57039 | 4410160GC2 | GCO57040 |
| 28321XA00C | GCO56061 | 4411762B10 | GCO57007 | 4410171C11 | GCO57018 | 1A2725030E | GCO57039 | 4410154G50 | GCO57041 |
| 28321FE061 | GCO56067 | 4411763B20 | GCO57007 | 4410260G42 | GCO57018 | 391004A00A | GCO57039 | 4410155G00 | GCO57041 |
| 28321FE081 | GCO56067 | 4410272F00 | GCO57008 | 4410264B12 | GCO57018 | 391004A00B | GCO57039 | 4410155G01 | GCO57041 |
| 28321FE082 | GCO56067 | 4410167D00 | GCO57009 | 4410271C10 | GCO57018 | 391004A00C | GCO57039 | 4410155G10 | GCO57041 |
| 28321FE090 | GCO56067 | 4410167D01 | GCO57009 | 4410271C11 | GCO57018 | 391004A00F | GCO57039 | 4410254G50 | GCO57041 |
| 28321FE091 | GCO56067 | 4410178E00 | GCO57009 | 4410271C12 | GCO57018 | 391004A00H | GCO57039 | 4410254G5000109 | GCO57041 |
| 28321FE092 | GCO56067 | 4410267D00 | GCO57009 | 4410183000 | GCO57019 | 391004A01G | GCO57039 | 4410254G51 | GCO57041 |
| 28321FE130 | GCO56067 | 4410267D01 | GCO57009 | 4410183300 | GCO57019 | 391004A01H | GCO57039 | 4410255G00 | GCO57041 |
| 28321FE131 | GCO56067 | 4410278E00 | GCO57009 | 4410183301 | GCO57019 | 391004A01J | GCO57039 | 4410255G01 | GCO57041 |
| 28321FE150 | GCO56067 | 44101160A10 | GCO57010 | 4410283000 | GCO57019 | 391004A02B | GCO57039 | 4410160J00 | GCO57042 |
| 28321FE151 | GCO56067 | 4410160A00 | GCO57010 | 4410283300 | GCO57019 | 391004A0A4 | GCO57039 | 4410162J01 | GCO57042 |
| 28321FE170 | GCO56067 | 4410160A01 | GCO57010 | 4410283301 | GCO57019 | 391004A0A5 | GCO57039 | 4410162J90 | GCO57042 |
| 28321FE180 | GCO56067 | 4410160A10 | GCO57010 | 44101A83300 | GCO57020 | 391014A00A | GCO57039 | 4410163J00 | GCO57042 |
| 28321FE181 | GCO56067 | 4410285C00 | GCO57010 | 4410276GK0 | GCO57022 | 391014A00B | GCO57039 | 4410163J01 | GCO57042 |
| 44102M70F00 | GCO57001 | 4413160A00 | GCO57010 | 4410160G22 | GCO57023 | 391014A01M | GCO57039 | 4410163J10 | GCO57042 |
| 44102M72F12 | GCO57001 | 4413260A10 | GCO57010 | 4410160G22000 | GCO57023 | 391014A02B | GCO57039 | 4410163J11 | GCO57042 |
| 44102M72F21 | GCO57001 | 4410164B10 | GCO57011 | 4410175F01 | GCO57024 | 391014A02M | GCO57039 | 4410163J21 | GCO57042 |
| 44102M72F41 | GCO57001 | 4410164B10000 | GCO57011 | 4410175F31 | GCO57024 | 391014A0A3 | GCO57039 | 4410163J70 | GCO57042 |
| 4410260G52 | GCO57002 | 4410164B11 | GCO57011 | 4410175F51 | GCO57024 | 4410158J02 | GCO57039 | 4410163J71 | GCO57042 |

| COMPETITOR | G-AP Ref. | COMPETITOR | G-AP Ref. | COMPETITOR | G-AP Ref. | COMPETITOR | G-AP Ref. | COMPETITOR | G-AP Ref. |
|---|---|---|---|---|---|---|---|---|---|
| OE | | 4710019 | GCO57103 | 4410254P50 | GCO57212 | 4342012141 | GCO59001 | 4341005120 | GCO59004 |
| | | 4710020 | GCO57103 | 4410254P60 | GCO57212 | 4342012230 | GCO59001 | 4341005121 | GCO59004 |
| 4410163J80 | GCO57042 | 93194657 | GCO57103 | 4410256P60 | GCO57212 | 4342012331 | GCO59001 | 4341006060 | GCO59004 |
| 4410262J00 | GCO57042 | 93194658 | GCO57103 | 4410256P60000 | GCO57212 | 4342012332 | GCO59001 | 4341006161 | GCO59004 |
| 4410262J90 | GCO57042 | 95508548 | GCO57103 | 4410171LC1 | GCO57213 | 4342012333 | GCO59001 | 4342006060 | GCO59004 |
| 4410263J00 | GCO57042 | 4410186G30 | GCO57105 | 3432012100 | GCO59001 | 4342020010 | GCO59001 | 4342006161 | GCO59004 |
| 4410263J30 | GCO57042 | 4410186G31 | GCO57105 | 4233017020 | GCO59001 | 4342020020 | GCO59001 | 4346009070 | GCO59004 |
| 4410263J50 | GCO57042 | 4410186GG30 | GCO57105 | 4341002010 | GCO59001 | 4342020060 | GCO59001 | 4346009080 | GCO59004 |
| 4410263J80 | GCO57042 | 4410286G30 | GCO57105 | 4341002011 | GCO59001 | 4342020070 | GCO59001 | 4346009160 | GCO59004 |
| 4410180E00 | GCO57048 | 4410286G30000 | GCO57105 | 4341012030 | GCO59001 | 4342020120 | GCO59001 | 4347009120 | GCO59004 |
| 4410180E01 | GCO57048 | 392114A00C | GCO57112 | 4341012040 | GCO59001 | 4342020170 | GCO59001 | 4347009240 | GCO59004 |
| 4410280E00 | GCO57048 | 44115M68K50 | GCO57112 | 4341012070 | GCO59001 | 4342020171 | GCO59001 | 4347009250 | GCO59004 |
| 4410280E01 | GCO57048 | 44115M68K50000 | GCO57112 | 4341012090 | GCO59001 | 4342020172 | GCO59001 | 4341010200 | GCO59005 |
| 4411584312 | GCO57053 | 44135M68K50 | GCO57112 | 4341012091 | GCO59001 | 4342020173 | GCO59001 | 4341012190 | GCO59005 |
| 4411584332 | GCO57053 | 44135M68K50000 | GCO57112 | 4341012100 | GCO59001 | 4342020291 | GCO59001 | 4341020142 | GCO59005 |
| 4411584342 | GCO57053 | 44135M76M00 | GCO57112 | 4341012101 | GCO59001 | 4342020293 | GCO59001 | 4342010180 | GCO59005 |
| 4411684332 | GCO57053 | G18005PC | GCO57112 | 4341012102 | GCO59001 | 4342020301 | GCO59001 | 4342012031 | GCO59005 |
| 4411684342 | GCO57053 | 4410168L80 | GCO57114 | 4341012140 | GCO59001 | 4342020302 | GCO59001 | 4342012160 | GCO59005 |
| 4410179FA0 | GCO57061 | 4410157KA0 | GCO57117 | 4341012141 | GCO59001 | 4342020304 | GCO59001 | 43420A12090 | GCO59005 |
| 44101M79F75 | GCO57061 | 4410257KA0 | GCO57117 | 4341012150 | GCO59001 | 4342020340 | GCO59001 | 4347080151 | GCO59005 |
| 44101M79FA0 | GCO57061 | 4410157K00 | GCO57121 | 4341012151 | GCO59001 | 4342020380 | GCO59001 | 4341010160 | GCO59006 |
| 4410279FA0 | GCO57061 | LR001160 | GCO57132 | 4341012170 | GCO59001 | 4342032010 | GCO59001 | 4341010180 | GCO59006 |
| 4410186G00 | GCO57062 | LR003162 | GCO57132 | 4341012171 | GCO59001 | 4342032011 | GCO59001 | 434101060 | GCO59006 |
| 4410186G01 | GCO57062 | LR014491 | GCO57132 | 4341012180 | GCO59001 | 4342032030 | GCO59001 | 4341012271 | GCO59006 |
| 4410186G02 | GCO57062 | 4410179J01 | GCO57140 | 4341012210 | GCO59001 | 4342032031 | GCO59001 | 4341012300 | GCO59006 |
| 4410186G10 | GCO57062 | 4410179J30 | GCO57140 | 4341012350 | GCO59001 | 4342032040 | GCO59001 | 4341016100 | GCO59006 |
| 441027502 | GCO57062 | 4410180J01 | GCO57140 | 4341012352 | GCO59001 | 4342032041 | GCO59001 | 4341016101 | GCO59006 |
| 441027520 | GCO57062 | 4410180J10 | GCO57140 | 4341012H00 | GCO59001 | 4342041Y10 | GCO59001 | 4341016120 | GCO59006 |
| 441027531 | GCO57062 | 4410180J22 | GCO57140 | 4341020010 | GCO59001 | 4342042021 | GCO59001 | 4341020450 | GCO59006 |
| 4410286G00 | GCO57062 | 4410279J00 | GCO57140 | 4341020020 | GCO59001 | 4342051Y10 | GCO59001 | 4341020451 | GCO59006 |
| 4410286G60 | GCO57062 | 4410279J30 | GCO57140 | 4341020031 | GCO59001 | 4346019286 | GCO59001 | 4341020452 | GCO59006 |
| 4411765J00 | GCO57067 | 4410280J00 | GCO57140 | 4341020040 | GCO59001 | 4346019306 | GCO59001 | 4341020515 | GCO59006 |
| 4411765J00000 | GCO57067 | 4410280J10 | GCO57140 | 4341020100 | GCO59001 | 4346019309 | GCO59001 | 4342010160 | GCO59006 |
| 4411865J00 | GCO57067 | 71746741 | GCO57140 | 4341020170 | GCO59001 | 4347019236 | GCO59001 | 4342016111 | GCO59006 |
| 4411865J00000 | GCO57067 | 71747061 | GCO57140 | 4341020180 | GCO59001 | 4347039086 | GCO59001 | 4342016150 | GCO59006 |
| 4410186G60 | GCO57079 | 4410180J50 | GCO57141 | 4341020181 | GCO59001 | 4347039087 | GCO59001 | 4342020280 | GCO59006 |
| 4410286G50 | GCO57079 | 4410180JE0 | GCO57141 | 4341020182 | GCO59001 | 4347039088 | GCO59001 | 4342020282 | GCO59006 |
| 4410186GA0 | GCO57081 | 4410280J50 | GCO57141 | 4341020220 | GCO59001 | 4347039089 | GCO59001 | 4342020350 | GCO59006 |
| 4410286GD0 | GCO57081 | 4410160G31 | GCO57159 | 4341020342 | GCO59001 | 4347039090 | GCO59001 | 4346019525 | GCO59006 |
| 44117M79F01 | GCO57083 | 4410160G70 | GCO57159 | 4341020343 | GCO59001 | 4347039145 | GCO59001 | 4346019527 | GCO59006 |
| 4410179J21 | GCO57092 | 4410260G20 | GCO57159 | 4341020344 | GCO59001 | 4347039285 | GCO59001 | 4346019546 | GCO59006 |
| 4410179JC0000 | GCO57092 | 4410260G70 | GCO57159 | 4341020530 | GCO59001 | 4341020310 | GCO59002 | 4346019547 | GCO59006 |
| 4410180J10000 | GCO57092 | 4410160G10 | GCO57160 | 4341032010 | GCO59001 | 4341020311 | GCO59002 | 4346019566 | GCO59006 |
| 4410180J11 | GCO57092 | 4410160G90 | GCO57160 | 4341032011 | GCO59001 | 4341020740 | GCO59002 | 4346019615 | GCO59006 |
| 4410180J11000 | GCO57092 | 4410260G01 | GCO57160 | 4341032020 | GCO59001 | 4341020741 | GCO59002 | 4346019616 | GCO59006 |
| 4410180J20000 | GCO57092 | 4410260G10 | GCO57160 | 4341032021 | GCO59001 | 4341020742 | GCO59002 | 4346029086 | GCO59006 |
| 4410180J22000 | GCO57092 | 4410170L00 | GCO57180 | 4341032022 | GCO59001 | 4341021010 | GCO59002 | 4346029095 | GCO59006 |
| 4410180J23000 | GCO57092 | 4410270L00 | GCO57180 | 4341032023 | GCO59001 | 4341021021 | GCO59002 | 4346080078 | GCO59006 |
| 71743873 | GCO57092 | 10375719 | GCO57200 | 4341032030 | GCO59001 | 4341021031 | GCO59002 | 4347019506 | GCO59006 |
| 4410163J20 | GCO57095 | 4410154P12 | GCO57200 | 4341032031 | GCO59001 | 4342020241 | GCO59002 | 4347019526 | GCO59006 |
| 4410262J30 | GCO57095 | 4410154PB1 | GCO57200 | 4341032040 | GCO59001 | 4342020510 | GCO59002 | 4347019527 | GCO59006 |
| 4410263J20 | GCO57095 | 4410254P10 | GCO57200 | 4341032041 | GCO59001 | 4342020511 | GCO59002 | 4347019546 | GCO59006 |
| 4410263J31 | GCO57095 | 396004652R | GCO57203 | 4341032060 | GCO59001 | 4342020512 | GCO59002 | 4347029237 | GCO59006 |
| 4410151K90 | GCO57100 | 4410155L71 | GCO57205 | 4341032061 | GCO59001 | 4342021031 | GCO59002 | 4347029315 | GCO59006 |
| 44101T51K90000 | GCO57100 | 4410254L52 | GCO57205 | 4341032141 | GCO59001 | 4346019815 | GCO59002 | 4347080142 | GCO59006 |
| 4410251K90 | GCO57100 | 4410157LB0 | GCO57207 | 4341042021 | GCO59001 | 4347029395 | GCO59002 | 4340560040 | GCO59007 |
| 44102T51K90000 | GCO57100 | 4410257L11 | GCO57207 | 4342002010 | GCO59001 | 4347029396 | GCO59002 | 4430560040 | GCO59007 |
| 4710021 | GCO57100 | 4410257L12 | GCO57207 | 4342005070 | GCO59001 | 4347080005 | GCO59002 | 4341033182 | GCO59009 |
| 4711022 | GCO57100 | 4410161M01 | GCO57208 | 4342012040 | GCO59001 | 4341020281 | GCO59003 | 4347039335 | GCO59009 |
| 93194659 | GCO57100 | 4410161MB0 | GCO57208 | 4342012041 | GCO59001 | 4341020301 | GCO59003 | 4347039355 | GCO59009 |
| 93194660 | GCO57100 | 4410261M00 | GCO57208 | 4342012070 | GCO59001 | 4341020730 | GCO59003 | 4347039366 | GCO59009 |
| 4410168L32 | GCO57103 | 4410261M10 | GCO57208 | 4342012071 | GCO59001 | 4341032070 | GCO59003 | 4347039367 | GCO59009 |
| 4410172K00 | GCO57103 | 4410179JC0 | GCO57210 | 4342012100 | GCO59001 | 4342020231 | GCO59003 | 4341020670 | GCO59011 |
| 4410268L01 | GCO57103 | 4410280J10 | GCO57210 | 4342012101 | GCO59001 | 4342020500 | GCO59003 | 4341032130 | GCO59011 |
| 4410268L02 | GCO57103 | 4410280J11 | GCO57210 | 4342012110 | GCO59001 | 4342032050 | GCO59003 | 4341032131 | GCO59011 |
| 4410268L32 | GCO57103 | 4410154P63 | GCO57212 | 4342012111 | GCO59001 | 4341005020 | GCO59004 | 4341032180 | GCO59011 |
| 4410272K00 | GCO57103 | 4410154P63000 | GCO57212 | 4342012112 | GCO59001 | 4341005110 | GCO59004 | 4341032181 | GCO59011 |
| 4700078 | GCO57103 | 4410154PE1 | GCO57212 | 4342012140 | GCO59001 | 4341005111 | GCO59004 | 4341033010 | GCO59011 |

| COMPETITOR | G-AP Ref. | COMPETITOR | G-AP Ref. | COMPETITOR | G-AP Ref. | COMPETITOR | G-AP Ref. | COMPETITOR | G-AP Ref. |
|---|---|---|---|---|---|---|---|---|---|
| OE | | 4341022020 | GCO59018 | 4342020421 | GCO59019 | 4347029099 | GCO59020 | 4341005280 | GCO59024 |
| | | 4341032140 | GCO59018 | 4342020422 | GCO59019 | 4347029107 | GCO59020 | 4341005310 | GCO59024 |
| 4342020430 | GCO59011 | 4341032160 | GCO59018 | 4342020423 | GCO59019 | 4347029108 | GCO59020 | 4342005130 | GCO59024 |
| 4342032110 | GCO59011 | 4341032170 | GCO59018 | 4342020490 | GCO59019 | 4347080148 | GCO59020 | 4342005140 | GCO59024 |
| 4342032111 | GCO59011 | 4341032230 | GCO59018 | 4342032121 | GCO59019 | 4237019115 | GCO59021 | 4346009331 | GCO59024 |
| 4342033010 | GCO59011 | 4341032231 | GCO59018 | 4342032122 | GCO59019 | 4237019116 | GCO59021 | 4346009510 | GCO59024 |
| 4341020251 | GCO59012 | 4341032250 | GCO59018 | 4342032160 | GCO59019 | 4237019205 | GCO59021 | 4347009541 | GCO59024 |
| 4341020680 | GCO59012 | 4341032251 | GCO59018 | 4342032161 | GCO59019 | 4237049075 | GCO59021 | 4347009760 | GCO59024 |
| 4341032150 | GCO59012 | 4342012150 | GCO59018 | 4342032162 | GCO59019 | 4237049095 | GCO59021 | 4347009F40 | GCO59024 |
| 4341033020 | GCO59012 | 4342012151 | GCO59018 | 4342032163 | GCO59019 | 4237049215 | GCO59021 | 4641005310 | GCO59024 |
| 4341033022 | GCO59012 | 4342012190 | GCO59018 | 4342032200 | GCO59019 | 4341012191 | GCO59021 | 4646009331 | GCO59024 |
| 4342020201 | GCO59012 | 4342012191 | GCO59018 | 4342032201 | GCO59019 | 4341020101 | GCO59021 | 4346059015 | GCO59025 |
| 4342020440 | GCO59012 | 4342012210 | GCO59018 | 4342042010 | GCO59019 | 4341020331 | GCO59021 | 4347059015 | GCO59025 |
| 4342033020 | GCO59012 | 4342012211 | GCO59018 | 4342042011 | GCO59019 | 4341020432 | GCO59021 | 4341052040 | GCO59026 |
| 4342033021 | GCO59012 | 4342012310 | GCO59018 | 4342042020 | GCO59019 | 4341020444 | GCO59021 | 4341059050 | GCO59026 |
| 4341026040 | GCO59015 | 4342012320 | GCO59018 | 4342044020 | GCO59019 | 4342002080 | GCO59021 | 4342052040 | GCO59026 |
| 4343026031 | GCO59015 | 4342012370 | GCO59018 | 4342044021 | GCO59019 | 4342005010 | GCO59021 | 4342052050 | GCO59026 |
| 4343035010 | GCO59015 | 4342020030 | GCO59018 | 4347019645 | GCO59019 | 4342012161 | GCO59021 | 4342059050 | GCO59026 |
| 4346029065 | GCO59015 | 4342020080 | GCO59018 | 4347019646 | GCO59019 | 4342020121 | GCO59021 | 4346059025 | GCO59026 |
| 4346029066 | GCO59015 | 4342020090 | GCO59018 | 4347019647 | GCO59019 | 4346019365 | GCO59021 | 4347059025 | GCO59026 |
| 4346035070 | GCO59015 | 4342020130 | GCO59018 | 4347019648 | GCO59019 | 4346029167 | GCO59021 | 4340560100 | GCO59027 |
| 4346039025 | GCO59015 | 4342020160 | GCO59018 | 4347019655 | GCO59019 | 4346029168 | GCO59021 | 4340560110 | GCO59027 |
| 4346039026 | GCO59015 | 4342020290 | GCO59018 | 4347019656 | GCO59019 | 434602918 | GCO59021 | 4346009270 | GCO59028 |
| 4346039027 | GCO59015 | 4342020341 | GCO59018 | 4347019657 | GCO59019 | 4346080095 | GCO59021 | 4347009440 | GCO59028 |
| 4346039045 | GCO59015 | 4342032120 | GCO59018 | 4347019658 | GCO59019 | 4347019316 | GCO59021 | 4347009560 | GCO59028 |
| 4346039046 | GCO59015 | 4342032140 | GCO59018 | 4347019659 | GCO59019 | 4346005180 | GCO59022 | 4341052010 | GCO59029 |
| 4346039175 | GCO59015 | 4342032190 | GCO59018 | 4347029228 | GCO59019 | 4346009290 | GCO59022 | 4342052010 | GCO59029 |
| 4346039275 | GCO59015 | 4341005040 | GCO59019 | 4341005060 | GCO59020 | 4346009480 | GCO59022 | 4343035030 | GCO59034 |
| 4346039276 | GCO59015 | 4341012181 | GCO59019 | 4341012122 | GCO59020 | 4346009490 | GCO59022 | 4346039065 | GCO59034 |
| 9031660001 | GCO59015 | 4341012200 | GCO59019 | 4341012131 | GCO59020 | 4347005240 | GCO59022 | 4346059065 | GCO59035 |
| 9031660002 | GCO59015 | 4341012201 | GCO59019 | 4341012260 | GCO59020 | 4347009400 | GCO59022 | 4346059066 | GCO59035 |
| 9031660004 | GCO59015 | 4341012220 | GCO59019 | 4341012270 | GCO59020 | 4347009460 | GCO59022 | 4346059125 | GCO59035 |
| 4343026013 | GCO59016 | 4341012221 | GCO59019 | 4341012350 | GCO59020 | 4347009500 | GCO59022 | 4346059345 | GCO59035 |
| 4343026021 | GCO59016 | 4341012360 | GCO59019 | 4341012352 | GCO59020 | 4347009730 | GCO59022 | 4347059065 | GCO59035 |
| 4343026030 | GCO59016 | 4341012370 | GCO59019 | 4341012420 | GCO59020 | 4347009740 | GCO59022 | 4347059115 | GCO59035 |
| 4343026032 | GCO59016 | 4341012410 | GCO59019 | 4341012430 | GCO59020 | 4341016070 | GCO59023 | 4347059125 | GCO59035 |
| 4343026033 | GCO59016 | 4341012411 | GCO59019 | 4341016132 | GCO59020 | 4341016071 | GCO59023 | 4347059465 | GCO59035 |
| 4343026040 | GCO59016 | 4341020222 | GCO59019 | 4341016191 | GCO59020 | 4341016111 | GCO59023 | 4347059466 | GCO59035 |
| 4343026041 | GCO59016 | 4341020230 | GCO59019 | 4341020151 | GCO59020 | 4341016131 | GCO59023 | 4341002180 | GCO59036 |
| 4343035011 | GCO59016 | 4341020231 | GCO59019 | 4341020152 | GCO59020 | 4341016150 | GCO59023 | 4341012500 | GCO59036 |
| 4343035021 | GCO59016 | 4341020291 | GCO59019 | 4341020330 | GCO59020 | 4341016151 | GCO59023 | 4341012530 | GCO59036 |
| 4343035022 | GCO59016 | 4341020540 | GCO59019 | 4341020342 | GCO59020 | 4341016160 | GCO59023 | 4341032301 | GCO59036 |
| 4346029067 | GCO59016 | 4341020570 | GCO59019 | 4341020343 | GCO59020 | 4341016161 | GCO59023 | 4342002200 | GCO59036 |
| 4346029285 | GCO59016 | 4341020610 | GCO59019 | 4341020344 | GCO59020 | 4341016210 | GCO59023 | 4342012450 | GCO59036 |
| 4346029385 | GCO59016 | 4341032200 | GCO59019 | 4341020430 | GCO59020 | 4342016070 | GCO59023 | 4342032231 | GCO59036 |
| 4346029455 | GCO59016 | 4341032201 | GCO59019 | 4341020431 | GCO59020 | 4342016071 | GCO59023 | 4341002240 | GCO59037 |
| 4346029595 | GCO59016 | 4341032240 | GCO59019 | 4341020440 | GCO59020 | 4342016101 | GCO59023 | 4341002440 | GCO59037 |
| 4346029596 | GCO59016 | 4341032241 | GCO59019 | 4341020450 | GCO59020 | 4342016121 | GCO59023 | 4341005330 | GCO59037 |
| 4341016190 | GCO59017 | 4341032260 | GCO59019 | 4341020451 | GCO59020 | 4342016122 | GCO59023 | 4341005340 | GCO59037 |
| 4341016270 | GCO59017 | 4341032261 | GCO59019 | 4341020452 | GCO59020 | 4342016140 | GCO59023 | 4342002270 | GCO59037 |
| 4341016281 | GCO59017 | 4341042010 | GCO59019 | 4341020470 | GCO59020 | 4342016141 | GCO59023 | 4346002210 | GCO59037 |
| 4342016200 | GCO59017 | 4341042011 | GCO59019 | 4342005020 | GCO59020 | 4342016151 | GCO59023 | 4346009600 | GCO59037 |
| 4342016201 | GCO59017 | 4341042020 | GCO59019 | 4342005080 | GCO59020 | 4346019165 | GCO59023 | 4346009601 | GCO59037 |
| 4347019827 | GCO59017 | 4341044020 | GCO59019 | 4342012091 | GCO59020 | 4346019166 | GCO59023 | 4346009890 | GCO59037 |
| 4341012211 | GCO59018 | 4341044021 | GCO59019 | 4342012250 | GCO59020 | 4346019167 | GCO59023 | 4346009G40 | GCO59037 |
| 4341012230 | GCO59018 | 4342012170 | GCO59019 | 4342012260 | GCO59020 | 4346019516 | GCO59023 | 4346009P40 | GCO59037 |
| 4341012320 | GCO59018 | 4342012171 | GCO59019 | 4342020281 | GCO59020 | 4346019536 | GCO59023 | 4346009T70 | GCO59037 |
| 4341012700 | GCO59018 | 4342012200 | GCO59019 | 4346019275 | GCO59020 | 4346019556 | GCO59023 | 4347005280B | GCO59037 |
| 4341020050 | GCO59018 | 4342012201 | GCO59019 | 4346019276 | GCO59020 | 4346019625 | GCO59023 | 4347009A14 | GCO59037 |
| 4341020110 | GCO59018 | 4342012340 | GCO59019 | 4346019277 | GCO59020 | 4346019626 | GCO59023 | 4347009A21 | GCO59037 |
| 4341020111 | GCO59018 | 4342012360 | GCO59019 | 4346029097 | GCO59020 | 4346080077 | GCO59023 | 4347009N30 | GCO59037 |
| 4341020160 | GCO59018 | 4342020161 | GCO59019 | 4346029098 | GCO59020 | 4346O19166 | GCO59023 | 4347009N40 | GCO59037 |
| 4341020221 | GCO59018 | 4342020180 | GCO59019 | 4346029099 | GCO59020 | 4347019137 | GCO59023 | 4347009Q30 | GCO59037 |
| 4341020340 | GCO59018 | 4342020181 | GCO59019 | 4346080094 | GCO59020 | 4347019496 | GCO59023 | 4347009W80 | GCO59037 |
| 4341020350 | GCO59018 | 4342020221 | GCO59019 | 4346080145 | GCO59020 | 4347019516 | GCO59023 | 4351002410 | GCO59037 |
| 4341020351 | GCO59018 | 4342020380 | GCO59019 | 4347019215 | GCO59020 | 4347019517 | GCO59023 | 4341052060 | GCO59038 |
| 4341020420 | GCO59018 | 4342020390 | GCO59019 | 4347019216 | GCO59020 | 4347019536 | GCO59023 | 4342052060 | GCO59038 |
| 4341020720 | GCO59018 | 4342020420 | GCO59019 | 4347029098 | GCO59020 | 4347080141 | GCO59023 | 4342010050 | GCO59039 |

| COMPETITOR | G-AP Ref. | COMPETITOR | G-AP Ref. | COMPETITOR | G-AP Ref. | COMPETITOR | G-AP Ref. | COMPETITOR | G-AP Ref. |
|---|---|---|---|---|---|---|---|---|---|
| OE | | 4341010270 | GCO59054 | 4346069145 | GCO59085 | 4346019845 | GCO59131 | 4341020321 | GCO59155 |
| | | 4342010010 | GCO59054 | 4341028010 | GCO59089 | 4346019855 | GCO59131 | 4342020271 | GCO59155 |
| 4342010091 | GCO59039 | 4342010020 | GCO59054 | 4341032211 | GCO59089 | 4346049037 | GCO59131 | 4341033040 | GCO59161 |
| 4342010131 | GCO59039 | 4342010021 | GCO59054 | 4341032221 | GCO59089 | 4346049038 | GCO59131 | 4341033140 | GCO59161 |
| 4341010101 | GCO59040 | 4342010022 | GCO59054 | 4342028010 | GCO59089 | 4346080001 | GCO59131 | 4342006180 | GCO59161 |
| 4341010110 | GCO59040 | 4342010030 | GCO59054 | 4342032171 | GCO59089 | 4346080004 | GCO59131 | 4342033040 | GCO59161 |
| 4341010121 | GCO59040 | 4342010040 | GCO59054 | 4342032181 | GCO59089 | 4346080043 | GCO59131 | 4342033130 | GCO59161 |
| 4342010101 | GCO59040 | 4342010060 | GCO59054 | 4343028021 | GCO59089 | 4346080113 | GCO59131 | 4342033172 | GCO59161 |
| 4342010110 | GCO59040 | 4342010090 | GCO59054 | 4341006151 | GCO59095 | 4346080125 | GCO59131 | 4341002070 | GCO59163 |
| 4342010121 | GCO59040 | 4342010111 | GCO59054 | 4343060081 | GCO59097 | 4346080126 | GCO59131 | 4342002040 | GCO59163 |
| 4346019446 | GCO59040 | 4342010130 | GCO59054 | 4343060082 | GCO59097 | 4347009700 | GCO59131 | 4341006670 | GCO59167 |
| 4346019496 | GCO59040 | 4342010151 | GCO59054 | 4346069055 | GCO59097 | 4347009W20 | GCO59131 | 4341013050 | GCO59167 |
| 4346080101 | GCO59040 | 4342010200 | GCO59054 | 4346069105 | GCO59097 | 4347029655 | GCO59131 | 4342042050 | GCO59167 |
| 4347019426 | GCO59040 | 4342010240 | GCO59054 | 4346069106 | GCO59097 | 4347080015 | GCO59131 | 4342042140 | GCO59167 |
| 4340560070 | GCO59041 | 4346010H01 | GCO59054 | 4346069185 | GCO59097 | 4347080020 | GCO59131 | 4346049065 | GCO59167 |
| 4340560080 | GCO59041 | 4346019085 | GCO59054 | 4346069205 | GCO59097 | 4347080095 | GCO59131 | 4346049105 | GCO59167 |
| 4346039165 | GCO59042 | 4346019086 | GCO59054 | 4346069215 | GCO59097 | 4347080096 | GCO59131 | 4346049106 | GCO59167 |
| 4346049146 | GCO59042 | 4347010H01 | GCO59054 | 4346069225 | GCO59097 | 4347080291 | GCO59131 | 4346049115 | GCO59167 |
| 4347029605 | GCO59042 | 4347010H05 | GCO59054 | 4410181A00 | GCO59117 | 4347080297 | GCO59131 | 4346049116 | GCO59167 |
| 4347049226 | GCO59042 | 43470110H05 | GCO59054 | 4410181A80 | GCO59117 | 4346009A18 | GCO59135 | 4346049125 | GCO59167 |
| 4347029636 | GCO59043 | 4347019195 | GCO59054 | 4410182A00 | GCO59117 | 4347080031 | GCO59135 | 4346049126 | GCO59167 |
| 4346009611 | GCO59044 | 4342005030 | GCO59059 | 4410183350 | GCO59117 | 4341002180 | GCO59136 | 4346049165 | GCO59167 |
| 4343028011 | GCO59045 | 4342005040 | GCO59059 | 4410281A00 | GCO59117 | 4341012500 | GCO59136 | 4346049166 | GCO59167 |
| 4346029056 | GCO59045 | 4347009140 | GCO59059 | 4410281A00000 | GCO59117 | 4341012530 | GCO59136 | 4346049167 | GCO59167 |
| 4346029057 | GCO59045 | 4347009150 | GCO59059 | 4410281A80 | GCO59117 | 4341032301 | GCO59136 | 4346049295 | GCO59167 |
| 4340560030 | GCO59046 | 4347009220 | GCO59059 | 4410282A00 | GCO59117 | 4342002200 | GCO59136 | 4346049355 | GCO59167 |
| 4341002220 | GCO59047 | 4347009230 | GCO59059 | 4410283350 | GCO59117 | 4342012450 | GCO59136 | 4346049365 | GCO59167 |
| 4341002230 | GCO59047 | 4342033030 | GCO59060 | 4341005140 | GCO59120 | 4342032231 | GCO59136 | 4347029635 | GCO59167 |
| 4341012510 | GCO59047 | 4342033120 | GCO59060 | 4341020581 | GCO59120 | 4341052031 | GCO59137 | 4347049115 | GCO59167 |
| 4341012520 | GCO59047 | 4347039185 | GCO59060 | 4341020582 | GCO59120 | 4341052070 | GCO59137 | 4347049116 | GCO59167 |
| 4341012610 | GCO59047 | 4441033030 | GCO59060 | 4341032202 | GCO59120 | 4342052030 | GCO59137 | 4347049195 | GCO59167 |
| 4341012680 | GCO59047 | 4237049015 | GCO59062 | 4342005100 | GCO59120 | 4346059045 | GCO59137 | 4347049205 | GCO59167 |
| 4342002240 | GCO59047 | 4347929055 | GCO59062 | 4342012330 | GCO59120 | 4346059076 | GCO59137 | 4347049206 | GCO59167 |
| 4342002260 | GCO59047 | 4340560050 | GCO59064 | 4342012380 | GCO59120 | 4346059165 | GCO59137 | 4347080029 | GCO59167 |
| 4342012430 | GCO59047 | 4340560120 | GCO59064 | 4347049025 | GCO59124 | 4346059195 | GCO59137 | 4347080064 | GCO59167 |
| 4342012440 | GCO59047 | 4341033030 | GCO59065 | 4347080280 | GCO59124 | 4346059225 | GCO59137 | 4341033200 | GCO59173 |
| 4342012460 | GCO59047 | 4340560060 | GCO59074 | 4341020242 | GCO59125 | 4346059365 | GCO59137 | 4341033202 | GCO59173 |
| 4342012530 | GCO59047 | 4340560070 | GCO59074 | 4341020243 | GCO59125 | 4346059366 | GCO59137 | 4342048040 | GCO59173 |
| 4342012540 | GCO59047 | 4346059055 | GCO59078 | 4342020192 | GCO59125 | 4346059367 | GCO59137 | 4342048042 | GCO59173 |
| 4342042090 | GCO59047 | 4346059115 | GCO59078 | 4340560030 | GCO59127 | 4346059368 | GCO59137 | 4341005412 | GCO59175 |
| 4341006040 | GCO59048 | 4346059545 | GCO59078 | 4340560050 | GCO59127 | 4346059376 | GCO59137 | 4341021070 | GCO59175 |
| 4341006100 | GCO59048 | 4347059055 | GCO59078 | 4342052131 | GCO59129 | 4347009A44 | GCO59137 | 4341028030 | GCO59175 |
| 4341006180 | GCO59048 | 4347059105 | GCO59078 | 4344619776 | GCO59130 | 4347059045 | GCO59137 | 4341028040 | GCO59175 |
| 4341033190 | GCO59048 | 4347059505 | GCO59078 | 4346019795 | GCO59130 | 4347059076 | GCO59137 | 4341028080 | GCO59175 |
| 4341033191 | GCO59048 | 4341042120 | GCO59081 | 4346019805 | GCO59130 | 4347059155 | GCO59137 | 4341028130 | GCO59175 |
| 4341033192 | GCO59048 | 4346049106 | GCO59081 | 4346019806 | GCO59130 | 4347059175 | GCO59137 | 4341028140 | GCO59175 |
| 4342006040 | GCO59048 | 4347049196 | GCO59081 | 4346080024 | GCO59130 | 4347059195 | GCO59137 | 4341033240 | GCO59175 |
| 4342006100 | GCO59048 | 4347049575 | GCO59081 | 4346080045 | GCO59130 | 4347059225 | GCO59137 | 4341033260 | GCO59175 |
| 4342033170 | GCO59048 | 4344619776 | GCO59082 | 4346080046 | GCO59130 | 4347059355 | GCO59137 | 4341042060 | GCO59175 |
| 4342033171 | GCO59048 | 4346019805 | GCO59082 | 4346080047 | GCO59130 | 4347059455 | GCO59137 | 4341044040 | GCO59175 |
| 4347009340 | GCO59048 | 4346019806 | GCO59082 | 4346080128 | GCO59130 | 4347059456 | GCO59137 | 4341044050 | GCO59175 |
| 4340560015 | GCO59050 | 4346080024 | GCO59082 | 4347009670 | GCO59130 | 4347059457 | GCO59137 | 4341048050 | GCO59175 |
| 4340560016 | GCO59050 | 4346080045 | GCO59082 | 4347080003 | GCO59130 | 4347009810 | GCO59138 | 4341048060 | GCO59175 |
| 4340560020 | GCO59050 | 4346080046 | GCO59082 | 4347080004 | GCO59130 | 4346059085 | GCO59152 | 4341048061 | GCO59175 |
| 4341010010 | GCO59054 | 4346080047 | GCO59082 | 4347080097 | GCO59130 | 4341012600 | GCO59153 | 4342021050 | GCO59175 |
| 4341010020 | GCO59054 | 4346080128 | GCO59082 | 4347080118 | GCO59130 | 4341020780 | GCO59153 | 4342028030 | GCO59175 |
| 4341010021 | GCO59054 | 4347009670 | GCO59082 | 4347080165 | GCO59130 | 4341047010 | GCO59153 | 4342028040 | GCO59175 |
| 4341010022 | GCO59054 | 4347080003 | GCO59082 | 4347080294 | GCO59130 | 4342032230 | GCO59153 | 4342044040 | GCO59175 |
| 4341010030 | GCO59054 | 4347080004 | GCO59082 | 4347080298 | GCO59130 | 4341028051 | GCO59154 | 4342044060 | GCO59175 |
| 4341010040 | GCO59054 | 4347080097 | GCO59082 | 4347080299 | GCO59130 | 4341028060 | GCO59154 | 4342044120 | GCO59175 |
| 4341010050 | GCO59054 | 4347080118 | GCO59082 | 4341012660 | GCO59131 | 4341028061 | GCO59154 | 4342048060 | GCO59175 |
| 4341010060 | GCO59054 | 4347080165 | GCO59082 | 4346009430 | GCO59131 | 4341033230 | GCO59154 | 4342048061 | GCO59175 |
| 4341010090 | GCO59054 | 4347080294 | GCO59082 | 4346009440 | GCO59131 | 4341058010 | GCO59154 | 4342048090 | GCO59175 |
| 4341010130 | GCO59054 | 4347080298 | GCO59082 | 4346009470 | GCO59131 | 4342033200 | GCO59154 | 4342048100 | GCO59175 |
| 4341010131 | GCO59054 | 4347080299 | GCO59082 | 4346009T10 | GCO59131 | 4342033230 | GCO59154 | 4342058030 | GCO59175 |
| 4341010151 | GCO59054 | 4343060020 | GCO59085 | 4346019765 | GCO59131 | 4342048070 | GCO59154 | 4347029625 | GCO59175 |
| 4341010171 | GCO59054 | 4346069035 | GCO59085 | 4346019766 | GCO59131 | 4342048081 | GCO59154 | 4347029895 | GCO59175 |
| 4341010220 | GCO59054 | 4346069036 | GCO59085 | 4346019775 | GCO59131 | 4347039385 | GCO59154 | 4347080057 | GCO59175 |

| COMPETITOR | G-AP Ref. | COMPETITOR | G-AP Ref. | COMPETITOR | G-AP Ref. | COMPETITOR | G-AP Ref. | COMPETITOR | G-AP Ref. |
|---|---|---|---|---|---|---|---|---|---|
| OE | | 4347080378 | GCO59206 | 4346009P70 | GCO59226 | 4347080369 | GCO59244 | 43420BZ020 | GCO59266 |
| | | 4347080392 | GCO59206 | 4347009A15 | GCO59226 | 4347080383 | GCO59244 | 43410B1010 | GCO59268 |
| 4341016140 | GCO59177 | 4347080406 | GCO59206 | 4347009A38 | GCO59226 | 434708Z271 | GCO59244 | 43410B1030 | GCO59268 |
| 4341016141 | GCO59177 | 434708Z210 | GCO59206 | 4347009A39 | GCO59226 | 4341033430 | GCO59245 | 43410B2030 | GCO59268 |
| 4341016171 | GCO59177 | 4346059105 | GCO59211 | 4347009P10 | GCO59226 | 4341042170 | GCO59245 | 43410B2031 | GCO59268 |
| 4341016172 | GCO59177 | 4346059235 | GCO59211 | 434100D380 | GCO59231 | 4341042230 | GCO59245 | 43410BZ010 | GCO59268 |
| 4341016200 | GCO59177 | 4346059236 | GCO59211 | 434200D370 | GCO59231 | 4341042270 | GCO59245 | 43411B9170 | GCO59268 |
| 4341016300 | GCO59177 | 4340502230 | GCO59213 | 434050D080A | GCO59232 | 4342042220 | GCO59245 | 43412B9070 | GCO59268 |
| 4342016112 | GCO59177 | 4341002570 | GCO59213 | 434100D380 | GCO59232 | 4347039615 | GCO59245 | 43420B1010 | GCO59268 |
| 4342016130 | GCO59177 | 4341002580 | GCO59213 | 434200D370 | GCO59232 | 4347049635 | GCO59245 | 43420B2030 | GCO59268 |
| 4342016131 | GCO59177 | 4341002581 | GCO59213 | 4346009M70 | GCO59232 | 4347049636 | GCO59245 | 43420B2031 | GCO59268 |
| 4342016132 | GCO59177 | 4342002610 | GCO59213 | 4347009L40 | GCO59232 | 4347049645 | GCO59245 | 43420BZ010 | GCO59268 |
| 4342016230 | GCO59177 | 4342002611 | GCO59213 | 4347009M10 | GCO59233 | 4347049646 | GCO59245 | 4341005240 | GCO59269 |
| 4342016280 | GCO59177 | 4342002620 | GCO59213 | 4341008030 | GCO59234 | 4347049665 | GCO59245 | 4341005241 | GCO59269 |
| 4342002280 | GCO59182 | 4342002621 | GCO59213 | 4341008050 | GCO59234 | 4347049666 | GCO59245 | 4342005260 | GCO59269 |
| 4346009A21 | GCO59182 | 4342002640 | GCO59213 | 4341008091 | GCO59234 | 4347049835 | GCO59245 | 4347009420 | GCO59269 |
| 4346009P05 | GCO59182 | 4346009R20 | GCO59213 | 4341008092 | GCO59234 | 4347049836 | GCO59245 | 434100D390 | GCO59270 |
| 4346009P50 | GCO59182 | 4346009R21 | GCO59213 | 4341008120 | GCO59234 | 4347049846 | GCO59245 | 4346009M60 | GCO59270 |
| 4347009A40 | GCO59182 | 4346009R30 | GCO59213 | 4341008171 | GCO59234 | 4347049855 | GCO59245 | 4346009T90 | GCO59270 |
| 4347009N90 | GCO59182 | 4346009R31 | GCO59213 | 4341008172 | GCO59234 | 4347049856 | GCO59245 | 4346009U50 | GCO59270 |
| 4347009P00 | GCO59182 | 4346009S50 | GCO59213 | 4341008200 | GCO59234 | 4347049897 | GCO59245 | 4346009V00 | GCO59270 |
| 4347009Q50 | GCO59182 | 4346009V40 | GCO59213 | 4341008201 | GCO59234 | 4347080126 | GCO59245 | 4346009V60 | GCO59270 |
| 4347009U00 | GCO59188 | 4346080121 | GCO59213 | 4342008020 | GCO59234 | 4347080127 | GCO59245 | 4347009L30 | GCO59270 |
| 4341052120 | GCO59190 | 4347009S50 | GCO59213 | 4342008040 | GCO59234 | 4347080166 | GCO59245 | 4347009X20 | GCO59270 |
| 4341052130 | GCO59190 | 4347009S51 | GCO59213 | 4342008071 | GCO59234 | 4347080330 | GCO59245 | 434708Z006 | GCO59270 |
| 4342052120 | GCO59190 | 4347009S60 | GCO59213 | 4342008090 | GCO59234 | 4347080412 | GCO59245 | 434708Z012 | GCO59270 |
| 4342052130 | GCO59190 | 4347009S61 | GCO59213 | 4342008091 | GCO59234 | 4347080466 | GCO59245 | 434708Z044 | GCO59270 |
| 4341003030 | GCO59193 | 4347009U90 | GCO59213 | 434708Z264 | GCO59234 | 4347080467 | GCO59245 | 4341052220 | GCO59274 |
| 434300K020 | GCO59199 | 4347009Y10 | GCO59213 | 434708Z023 | GCO59235 | 4347080469 | GCO59245 | 43410522210 | GCO59274 |
| 434300K022 | GCO59199 | 4347009Y11 | GCO59213 | 4346059315 | GCO59238 | 434708Z295 | GCO59245 | 4341052330 | GCO59274 |
| 434300K030 | GCO59199 | 4347080206 | GCO59213 | 4346059316 | GCO59238 | 434708Z297 | GCO59245 | 4342052220 | GCO59274 |
| 434300K04 | GCO59199 | 4347080210 | GCO59213 | 4346059317 | GCO59238 | 434708Z298 | GCO59245 | 4342052271 | GCO59274 |
| 4346009V10 | GCO59199 | 434708Z033 | GCO59213 | 4347059335 | GCO59238 | 434708Z300 | GCO59245 | 36000363 | GCO59285 |
| 4346009V11 | GCO59199 | 434708Z036 | GCO59213 | 4347059336 | GCO59238 | 434708Z825 | GCO59245 | 36000716 | GCO59285 |
| 4346009V20 | GCO59199 | 4341006A20 | GCO59214 | 4343026080 | GCO59243 | 434708Z827 | GCO59245 | 36001191 | GCO59285 |
| 4346080033 | GCO59199 | 434100E041 | GCO59214 | 4343026081 | GCO59243 | 434708Z856 | GCO59245 | 36001194 | GCO59285 |
| 4346080035 | GCO59199 | 434100E230 | GCO59214 | 4343026090 | GCO59243 | 4347009M10 | GCO59254 | 36001232 | GCO59285 |
| 4341028020 | GCO59201 | 434100W240 | GCO59214 | 4343026091 | GCO59243 | 4347009M20 | GCO59254 | 36011285 | GCO59285 |
| 4341028050 | GCO59201 | 434100W250 | GCO59214 | 4342052250 | GCO59244 | 4346080112 | GCO59259 | 36011292 | GCO59285 |
| 4342028020 | GCO59201 | 434100W350 | GCO59214 | 4346009S10 | GCO59244 | 4347080192 | GCO59259 | 36011296 | GCO59285 |
| 4342028031 | GCO59201 | 4342006A70 | GCO59214 | 4346009S11 | GCO59244 | 4347080328 | GCO59259 | 36011303 | GCO59285 |
| 4342028050 | GCO59201 | 434200E150 | GCO59214 | 4346009S20 | GCO59244 | 4341001140 | GCO59260 | 6G9N3A327AA | GCO59285 |
| 4343028031 | GCO59201 | 434200W280 | GCO59214 | 4346009S21 | GCO59244 | 4342001120 | GCO59260 | LR003159 | GCO59285 |
| 4343028051 | GCO59201 | 4346009A40 | GCO59214 | 4346009Y21 | GCO59244 | 434708Z001 | GCO59260 | LR005870 | GCO59285 |
| 4341052290 | GCO59206 | 4346009M20 | GCO59214 | 4346059615 | GCO59244 | 434708Z002 | GCO59260 | 4346049175 | GCO59288 |
| 4346009R40 | GCO59206 | 4346009R00 | GCO59214 | 4346059616 | GCO59244 | 4341020560 | GCO59261 | 4346049385 | GCO59288 |
| 4346009R41 | GCO59206 | 4346009W60 | GCO59214 | 4346059617 | GCO59244 | 4341020600 | GCO59261 | 4346049386 | GCO59288 |
| 4346009X10 | GCO59206 | 4347009B30 | GCO59214 | 4346059655 | GCO59244 | 4341021011 | GCO59261 | 4347049305 | GCO59288 |
| 4346059415 | GCO59206 | 4347009M60 | GCO59214 | 4346080071 | GCO59244 | 4341021040 | GCO59261 | 4347049595 | GCO59288 |
| 4346059416 | GCO59206 | 4347009S10 | GCO59214 | 4346080153 | GCO59244 | 4341021041 | GCO59261 | 4347049596 | GCO59288 |
| 4346059665 | GCO59206 | 4347009V20 | GCO59214 | 4346080167 | GCO59244 | 4342020530 | GCO59261 | 4237049026 | GCO59289 |
| 4346059666 | GCO59206 | 4347009V30 | GCO59214 | 4347009U30 | GCO59244 | 4342020560 | GCO59261 | 4238049025 | GCO59289 |
| 4346059669 | GCO59206 | 434708Z027 | GCO59214 | 4347009U31 | GCO59244 | 4342020590 | GCO59261 | 4238049026 | GCO59289 |
| 4346059805 | GCO59206 | 4347079115 | GCO59219 | 4347009U40 | GCO59244 | 4342021030 | GCO59261 | 4238049045 | GCO59289 |
| 4346059806 | GCO59206 | 4346059305S2 | GCO59222 | 4347009U41 | GCO59244 | 4341012531 | GCO59262 | 4341033290 | GCO59290 |
| 4346059895 | GCO59206 | 4346059575S2 | GCO59222 | 4347009U42 | GCO59244 | 4341020781 | GCO59262 | 4342006700 | GCO59290 |
| 4346080124 | GCO59206 | 4347059745S2 | GCO59222 | 4347059595 | GCO59244 | 4341021060 | GCO59262 | 4342033250 | GCO59290 |
| 4346080174 | GCO59206 | 4347059795 | GCO59222 | 4347059685 | GCO59244 | 4341032302 | GCO59262 | 4347039545 | GCO59290 |
| 4346080179 | GCO59206 | 4346009130 | GCO59225 | 4347059686 | GCO59244 | 4342020581 | GCO59262 | 4347039585 | GCO59290 |
| 4347009T70 | GCO59206 | 4346039155 | GCO59225 | 4347079015 | GCO59244 | 4342032232 | GCO59262 | 4347080013 | GCO59294 |
| 4347009T71 | GCO59206 | 4347039375 | GCO59225 | 4347079016 | GCO59244 | 4341002290 | GCO59265 | 4346059575 | GCO59297 |
| 4347059315 | GCO59206 | 4347039376 | GCO59225 | 4347079017 | GCO59244 | 4341002320 | GCO59265 | 4346059775 | GCO59297 |
| 4347059696 | GCO59206 | 4341002270 | GCO59226 | 4347080134 | GCO59244 | 4342002320 | GCO59265 | 4346059795 | GCO59297 |
| 4347059776 | GCO59206 | 4341005350 | GCO59226 | 4347080317 | GCO59244 | 43410B1020 | GCO59266 | 4347059325 | GCO59297 |
| 4347059815 | GCO59206 | 4342002300 | GCO59226 | 4347080318 | GCO59244 | 43410BZ020 | GCO59266 | 4347059745 | GCO59297 |
| 4347059816 | GCO59206 | 4346009621 | GCO59226 | 4347080345 | GCO59244 | 43411B9180 | GCO59266 | 4341060170 | GCO59303 |
| 4347080290 | GCO59206 | 4346009A22 | GCO59226 | 4347080347 | GCO59244 | 43412B9080 | GCO59266 | 4342060230 | GCO59303 |
| 4347080344 | GCO59206 | 4346009G60 | GCO59226 | 4347080360 | GCO59244 | 43420B1020 | GCO59266 | 434300C020 | GCO59303 |

| COMPETITOR | G-AP Ref. | COMPETITOR | G-AP Ref. | COMPETITOR | G-AP Ref. | COMPETITOR | G-AP Ref. | COMPETITOR | G-AP Ref. |
|---|---|---|---|---|---|---|---|---|---|
| OE | | 4341002031 | GCO59337 | 4347059345 | GCO59385 | 434300K070 | GCO59496 | 7H0407321 | GCO61011 |
| | | 4342016340 | GCO59340 | 4347059346 | GCO59385 | 4346009Y60 | GCO59496 | 7H0407321C | GCO61011 |
| 4343060070 | GCO59303 | 4346049405 | GCO59340 | 4237039135 | GCO59390 | 4346009Y61 | GCO59496 | 7H0407321D | GCO61011 |
| 4343060071 | GCO59303 | 4346049406 | GCO59340 | 4237039136 | GCO59390 | 43420K0060 | GCO59510 | 7H0498099A | GCO61011 |
| 4346069115 | GCO59303 | 4346049407 | GCO59340 | 4237039205 | GCO59390 | 4346009U60 | GCO59510 | 7H0498099B | GCO61011 |
| 4346069175 | GCO59303 | 4346049408 | GCO59340 | 4237039235 | GCO59390 | 434708Z008 | GCO59510 | 7H0498099BX | GCO61011 |
| 4346069176 | GCO59303 | 4346049435 | GCO59340 | 4237039295 | GCO59390 | 43460F9010 | GCO59528 | 3B0498099 | GCO61012 |
| 4346069177 | GCO59303 | 4346080181 | GCO59340 | 4237059055 | GCO59390 | 43460F9012 | GCO59528 | 3B0498099A | GCO61012 |
| 4346069236 | GCO59303 | 4347080267 | GCO59340 | 4237059056 | GCO59390 | 43470F9040 | GCO59528 | 3B0498099AV | GCO61012 |
| 434100E020 | GCO59304 | 4347080396 | GCO59340 | 4237059057 | GCO59390 | 391015750R | GCO60005 | 3B0498099AX | GCO61012 |
| 434100W160 | GCO59304 | 4347080407 | GCO59340 | 4238059055 | GCO59390 | 4406169 | GCO60005 | 3B0498099D | GCO61012 |
| 43410OE020 | GCO59304 | 36011289 | GCO59344 | 4238059056 | GCO59390 | 4406173 | GCO60005 | 3B0498099DX | GCO61012 |
| 43410OW160 | GCO59304 | 4347009Z90 | GCO59345 | 4238059057 | GCO59390 | 4417909 | GCO60005 | 8D0407305Q | GCO61012 |
| 434200E021 | GCO59304 | 4347009Z91 | GCO59345 | 4347009S20 | GCO59407 | 4417910 | GCO60005 | 8N0498099 | GCO61021 |
| 434200W190 | GCO59304 | 4347080208 | GCO59345 | 4347009V10 | GCO59407 | 4417911 | GCO60005 | 8N0498099A | GCO61021 |
| 43420OE021 | GCO59304 | 4347080240 | GCO59345 | 4341097401 | GCO59423 | 4418899 | GCO60005 | 8N0498099AX | GCO61021 |
| 43420OW190 | GCO59304 | 434708Z000 | GCO59345 | 4341097402 | GCO59423 | 8200452268 | GCO60005 | 8N0498099X | GCO61021 |
| 4346009E21 | GCO59304 | 434708Z034 | GCO59345 | 4342097401 | GCO59423 | 8200452269 | GCO60005 | 7L6407271G | GCO61042 |
| 434100E011 | GCO59305 | 434708Z042 | GCO59345 | C92111KB0B | GCO59425 | 8200452272 | GCO60005 | 7L6498099 | GCO61042 |
| 43410OE011 | GCO59305 | 4346080118 | GCO59357 | 4346009X60 | GCO59427 | 8200452273 | GCO60005 | 7L6498099B | GCO61042 |
| 434200E011 | GCO59305 | 4346080151 | GCO59357 | 434708Z226 | GCO59427 | 8200776535 | GCO60005 | 7L6498099BX | GCO61042 |
| 43420OE011 | GCO59305 | 4346080162 | GCO59357 | 434708Z227 | GCO59427 | 8200776537 | GCO60005 | 0L07407321D | GCO61050 |
| 434708Z115 | GCO59305 | 4346080173 | GCO59357 | 434708Z229 | GCO59427 | 93169667 | GCO60005 | 7L0407321D | GCO61050 |
| 4341030021 | GCO59306 | 4347080198 | GCO59357 | 4341002760 | GCO59428 | 93169696 | GCO60005 | 7L0498099 | GCO61050 |
| 4342030021 | GCO59306 | 4347080311 | GCO59357 | 4341002A00 | GCO59428 | 93856307 | GCO60005 | 7L0498099A | GCO61050 |
| 4341052180 | GCO59308 | 4347080315 | GCO59357 | 4342002C11 | GCO59428 | 93856308 | GCO60005 | 7L0498099AX | GCO61050 |
| 4341052280 | GCO59308 | 434708Z280 | GCO59359 | 4347039575 | GCO59431 | 93856309 | GCO60005 | 7L0498099B | GCO61050 |
| 4342052180 | GCO59308 | 434708Z281 | GCO59359 | 36012426 | GCO59441 | R1640077 | GCO60005 | 7L0498099C | GCO61050 |
| 4342052280 | GCO59308 | 4347079135 | GCO59365 | 4341033120 | GCO59446 | R1640106 | GCO60005 | 7L0498099CX | GCO61050 |
| 4341044041 | GCO59314 | 4347079145 | GCO59365 | 4341033201 | GCO59446 | 374651 | GCO60006 | 7L5498099 | GCO61050 |
| 4346049335 | GCO59314 | 4347079155 | GCO59365 | 4342033070 | GCO59446 | 374652 | GCO60006 | 95534990100 | GCO61050 |
| 4347029626 | GCO59314 | 4347079165 | GCO59365 | 4342033181 | GCO59446 | 374653 | GCO60006 | 95534990101 | GCO61050 |
| 4347029675 | GCO59314 | 4347080250 | GCO59365 | 4342048020 | GCO59446 | 93189678 | GCO60006 | 95534990102 | GCO61050 |
| 4347029676 | GCO59314 | 434708Z039 | GCO59365 | 4347039186 | GCO59446 | 93189679 | GCO60006 | 95534990103 | GCO61050 |
| 4347029885 | GCO59314 | 4237049175 | GCO59366 | 4347039187 | GCO59446 | 93189680 | GCO60006 | 2Q0498099M | GCO61059 |
| 4347049525 | GCO59314 | 4237049285 | GCO59366 | 4347039205 | GCO59446 | 701407321B | GCO61003 | 2Q0498099MX | GCO61059 |
| 4347049545 | GCO59314 | 4347079025 | GCO59367 | 4347039206 | GCO59446 | 701498099 | GCO61003 | 2Q0498099U | GCO61059 |
| 4347080065 | GCO59314 | 4347079035 | GCO59367 | 4347039207 | GCO59446 | 701498099V | GCO61003 | 5K0407311 | GCO61059 |
| 4347080066 | GCO59314 | 4347079085 | GCO59367 | 4347039209 | GCO59446 | 701498099X | GCO61003 | 5M0498099 | GCO61059 |
| 4347080167 | GCO59314 | 4341022010 | GCO59370 | 4347039365 | GCO59446 | 701498340X | GCO61003 | 5M0498099A | GCO61059 |
| 4347080178 | GCO59314 | 4342022010 | GCO59370 | 4341030020 | GCO59453 | 701407321C | GCO61004 | 5M0498099AX | GCO61059 |
| 4347080284 | GCO59314 | 4347029425 | GCO59370 | 4346039215 | GCO59453 | 701498099A | GCO61004 | 5M0498099X | GCO61059 |
| 4347009S90 | GCO59318 | 4347029426 | GCO59370 | 4346039216 | GCO59453 | 701498099AV | GCO61004 | 5Q0498099B | GCO61059 |
| 4347009S91 | GCO59318 | 4347080074 | GCO59370 | 4346039217 | GCO59453 | 701498099AX | GCO61004 | 5Q0498099BX | GCO61059 |
| 4347009T00 | GCO59318 | 4347080322 | GCO59370 | 4346039305 | GCO59453 | 701498340AX | GCO61004 | 7E0407272AE | GCO61060 |
| 4347009T01 | GCO59318 | 4347080402 | GCO59370 | 4347039425 | GCO59453 | 701407321D | GCO61005 | 7E0407272Q | GCO61060 |
| 4341048010 | GCO59320 | 4347009X30 | GCO59378 | 4347039426 | GCO59453 | 701498099B | GCO61005 | 7E0407761F | GCO61060 |
| 4341048030 | GCO59320 | 4347009X50 | GCO59378 | 4347039427 | GCO59453 | 701498099BX | GCO61005 | 2H0407321 | GCO61062 |
| 4341048040 | GCO59320 | 4347009X51 | GCO59378 | 4347039595 | GCO59453 | 701498340BX | GCO61005 | 2H04073212AM | GCO61062 |
| 4342048010 | GCO59320 | 4347009X52 | GCO59378 | 4347039605 | GCO59453 | JZW498340D | GCO61005 | 2H0407321A | GCO61062 |
| 4342048030 | GCO59320 | 4347009X70 | GCO59378 | 4341012800 | GCO59459 | JZW498340DX | GCO61005 | 2H0498099 | GCO61062 |
| 4342048050 | GCO59320 | 434708Z181 | GCO59378 | 4342012740 | GCO59459 | 701407321 | GCO61006 | 2H0498099A | GCO61062 |
| 4346049045 | GCO59320 | 434708Z296 | GCO59378 | 434100W270 | GCO59460 | 701407321E | GCO61006 | 2H0498099AX | GCO61062 |
| 4346049055 | GCO59320 | 434708Z299 | GCO59378 | 4341012670 | GCO59460 | 701407321G | GCO61006 | 2H0498099B | GCO61062 |
| 4347049095 | GCO59320 | 434708Z824 | GCO59378 | 434200W260 | GCO59460 | 701498099C | GCO61006 | 2H0498099BX | GCO61062 |
| 4347049105 | GCO59320 | 434708Z828 | GCO59378 | 4342012600 | GCO59460 | 701498099CX | GCO61006 | 2H0498099X | GCO61062 |
| 4341042160 | GCO59321 | 4341042180 | GCO59383 | 4342042091 | GCO59460 | 701498340CX | GCO61006 | 2463600075 | GCO61065 |
| 4341058020 | GCO59321 | 434100D190 | GCO59384 | 4347080018 | GCO59460 | 7D0498099 | GCO61006 | 2463600175 | GCO61065 |
| 4342028090 | GCO59321 | 4341074060 | GCO59384 | 4347039465 | GCO59486 | JZW498340E | GCO61006 | 2463604001 | GCO61065 |
| 4347049875 | GCO59321 | 434200D190 | GCO59384 | 4347039486 | GCO59486 | JZW498340EX | GCO61006 | 2463605101 | GCO61065 |
| 4347049876 | GCO59321 | 4342074050 | GCO59384 | 4347039576 | GCO59486 | JZW498340JX | GCO61006 | 2463605201 | GCO61065 |
| 4347080176 | GCO59321 | 4341052190 | GCO59385 | 4347049225 | GCO59486 | 6X0498099 | GCO61007 | A2463600075 | GCO61065 |
| 4347080353 | GCO59321 | 4341052191 | GCO59385 | 4347049355 | GCO59486 | 6X0498099X | GCO61007 | A2463600175 | GCO61065 |
| 434100D010 | GCO59326 | 4341052340 | GCO59385 | 4347080270 | GCO59486 | 7H0407321A | GCO61009 | A2463604001 | GCO61065 |
| 434200D010 | GCO59326 | 4342052190 | GCO59385 | 4347080271 | GCO59486 | 7H0407321B | GCO61009 | A2463605101 | GCO61065 |
| 4346009M50 | GCO59332 | 4342052191 | GCO59385 | 4347080354 | GCO59486 | 7H0498099 | GCO61009 | A2463605201 | GCO61065 |
| 4347059095 | GCO59334 | 4346059325 | GCO59385 | 4233042060 | GCO59488 | 7H0498099X | GCO61009 | 6Q0498099G | GCO61074 |
| 4347059245 | GCO59334 | 4346059326 | GCO59385 | 4343004070 | GCO59496 | 6QE498099 | GCO61010 | 6Q0498099GV | GCO61074 |

| COMPETITOR | G-AP Ref. | COMPETITOR | G-AP Ref. | COMPETITOR | G-AP Ref. | COMPETITOR | G-AP Ref. | COMPETITOR | G-AP Ref. |
|---|---|---|---|---|---|---|---|---|---|
| OE | | 8602579 | GCO62009 | 36000337 | GCO62031 | 36012422 | GCO62042 | 9810160780 | GCO81018 |
| | | 8602607 | GCO62009 | 36051041 | GCO62031 | 1504139 | GCO62045 | 9810160880 | GCO81018 |
| 6Q0498099GX | GCO61074 | 8602608 | GCO62009 | 36051042 | GCO62031 | 1505645 | GCO62045 | 1014014596 | GCO81028 |
| 6R0498099A | GCO61081 | 8602662 | GCO62009 | 36051043 | GCO62031 | 1727237 | GCO62045 | P04726091AB | GCO81031 |
| 6R0498099AX | GCO61081 | 8603787 | GCO62009 | 36051044 | GCO62031 | 1743449 | GCO62045 | 49580C5000 | GCO81038 |
| 6RF407764J | GCO61082 | 8603789 | GCO62009 | 36051048 | GCO62031 | 1805115 | GCO62045 | 49580C5050 | GCO81038 |
| 6RF498099B | GCO61082 | 8603794 | GCO62009 | 36051049 | GCO62031 | 36011289 | GCO62045 | 49580C5100 | GCO81038 |
| 6RF498099D | GCO61082 | 8603805 | GCO62009 | 36051050 | GCO62031 | 36011300 | GCO62045 | 28391FJ000 | GCO81045 |
| 6RF498099K | GCO61082 | 8603806 | GCO62009 | 36051051 | GCO62031 | 6G913A327LA | GCO62045 | 7711135218 | GCO81059 |
| 5003846 | GCO62001 | 8603873 | GCO62009 | 36051052 | GCO62031 | 6G913A327LB | GCO62045 | 49580C1300 | GCO81064 |
| 5003847 | GCO62001 | 8603876 | GCO62009 | 36051054 | GCO62031 | 6G913B437CC | GCO62045 | 49580C1330 | GCO81064 |
| 6843198 | GCO62001 | 8689206 | GCO62009 | 8603311 | GCO62031 | RM6G913A327L1B | GCO62045 | 49580C1330SJ | GCO81064 |
| 8111303 | GCO62001 | 8689218 | GCO62009 | 8603436 | GCO62031 | 31325960 | GCO62049 | 49580D4300 | GCO81064 |
| 8111304 | GCO62001 | 8689236 | GCO62009 | 8603802 | GCO62031 | 36000676 | GCO62049 | 49580D4350 | GCO81064 |
| 8601100 | GCO62001 | 8689237 | GCO62009 | 8603881 | GCO62031 | 36011350 | GCO62049 | 43410YV020 | GCO81068 |
| 8601101 | GCO62001 | 8689238 | GCO62009 | 8603882 | GCO62031 | 36010164 | GCO62052 | 43420YV020 | GCO81068 |
| 9122567 | GCO62001 | 8689468 | GCO62009 | 8603886 | GCO62031 | 36010165 | GCO62052 | B000904080 | GCO81068 |
| 9122833 | GCO62001 | 9463378 | GCO62009 | 8603887 | GCO62031 | 36010167 | GCO62052 | B000904180 | GCO81068 |
| 9163595 | GCO62001 | 9463759 | GCO62009 | 8603977 | GCO62031 | 36010336 | GCO62052 | 49580A4000 | GCO81069 |
| 5003911 | GCO62002 | 9463760 | GCO62009 | 30783173 | GCO62033 | 36010054 | GCO62053 | 49580A4050 | GCO81069 |
| 5003912 | GCO62002 | 9470934 | GCO62009 | 30783174 | GCO62033 | 36010056 | GCO62053 | 434100R040 | GCO81083 |
| 8111307 | GCO62002 | 9473958 | GCO62009 | 30787774 | GCO62033 | 36010214 | GCO62053 | 434100R092 | GCO81083 |
| 8111308 | GCO62002 | 30735132 | GCO62010 | 30787784 | GCO62033 | 9389200 | GCO64001 | 434100R211 | GCO81083 |
| 8601102 | GCO62002 | 30735342 | GCO62010 | 36000183 | GCO62033 | A21XLB3AF2203030C | GCO68002 | 434200R082 | GCO81083 |
| 8601103 | GCO62002 | 30735343 | GCO62010 | 36000184 | GCO62033 | A11XLB3AH2203030E | GCO68003 | 434200R150 | GCO81083 |
| 9122919 | GCO62002 | 30735350 | GCO62010 | 36000241 | GCO62033 | S12XLB3AH2203030A | GCO68005 | 4347009Y30 | GCO81083 |
| 9122920 | GCO62002 | 30783098 | GCO62010 | 36000439 | GCO62033 | XLB3AF2203030C | GCO68005 | 4347009Y31 | GCO81083 |
| 9163594 | GCO62002 | 30783099 | GCO62010 | 36000441 | GCO62033 | 96639350 | GCO68008 | 495912Y860 | GCO81085 |
| 30819291 | GCO62003 | 8251517 | GCO62010 | 36000449 | GCO62033 | S112203010GB | GCO68009 | 49500B2400 | GCO81087 |
| 30870499 | GCO62003 | 8251777 | GCO62010 | 36000450 | GCO62033 | S112203020GB | GCO68009 | 49500B2500 | GCO81087 |
| 3430396 | GCO62004 | 8601571 | GCO62010 | 36000451 | GCO62033 | A13XLB3AF2203030B | GCO68010 | 495012K680 | GCO81087 |
| 34303966 | GCO62004 | 8601572 | GCO62010 | 36000548 | GCO62033 | 1025989000 | GCO69005 | 49501B2200 | GCO81087 |
| 3433105 | GCO62005 | 8602572 | GCO62010 | 36000550 | GCO62033 | B2203100 | GCO69005 | 49501B2400 | GCO81087 |
| 34331058 | GCO62005 | 8602590 | GCO62010 | 36000558 | GCO62033 | B2203200 | GCO69005 | 49501B2500 | GCO81087 |
| 34349050 | GCO62006 | 8602840 | GCO62010 | 36000560 | GCO62033 | F32203012 | GCO69005 | 495802W630 | GCO81089 |
| 34331017 | GCO62007 | 8689208 | GCO62010 | 36051061 | GCO62033 | F3D2203100 | GCO69005 | 495802W680 | GCO81089 |
| 30611702 | GCO62008 | 8689209 | GCO62010 | 8603119 | GCO62033 | F3D2203200 | GCO69005 | 49580C5200 | GCO81089 |
| 8251547 | GCO62008 | 8689217 | GCO62010 | 8603120 | GCO62033 | 4237029245 | GCO75002 | 495L1N7050 | GCO81090 |
| 30735122 | GCO62009 | 8689223 | GCO62010 | 8603819 | GCO62033 | 4237029246 | GCO75002 | 495L1N7070 | GCO81090 |
| 30735138 | GCO62009 | 8689225 | GCO62010 | 8603820 | GCO62033 | 4237029565 | GCO75002 | 495L1N7160 | GCO81090 |
| 30735151 | GCO62009 | 8689866 | GCO62010 | 36000505 | GCO62035 | 4237029566 | GCO75002 | 495L1N7170 | GCO81090 |
| 30735339 | GCO62009 | 8689867 | GCO62010 | 36000508 | GCO62035 | 614627 | GCO75007 | 495L1N7210 | GCO81090 |
| 30735340 | GCO62009 | 8689873 | GCO62010 | 36000512 | GCO62035 | 614628 | GCO75007 | 495L1P1160 | GCO81090 |
| 30735341 | GCO62009 | 9463379 | GCO62010 | 36000514 | GCO62035 | 614694 | GCO75007 | 495R1N7060 | GCO81090 |
| 30735376 | GCO62009 | 9463397 | GCO62010 | 36000515 | GCO62035 | FA042550X | GCO75019 | 495R1N7160 | GCO81090 |
| 30735377 | GCO62009 | 30610835 | GCO62011 | 30783109 | GCO62037 | FA042560X | GCO75019 | 495R1N7180 | GCO81090 |
| 30735378 | GCO62009 | 30611947 | GCO62012 | 36000243 | GCO62037 | FA012550XA | GCO75020 | 495R1P1160 | GCO81090 |
| 30735379 | GCO62009 | 8215530 | GCO62012 | 36000524 | GCO62037 | FA012560XA | GCO75020 | 49501D3140 | GCO81091 |
| 30783087 | GCO62009 | 8215531 | GCO62012 | 36000538 | GCO62037 | 2303300AKZ08A | GCO75026 | 49501D9130 | GCO81091 |
| 30783100 | GCO62009 | 8215533 | GCO62012 | 8252040 | GCO62037 | 3210001BAD0000 | GCO75035 | 49525D7050 | GCO81091 |
| 30783103 | GCO62009 | 8251529 | GCO62012 | 8252056 | GCO62037 | 3210001BAD0100 | GCO75035 | 49525D7180 | GCO81091 |
| 36000518 | GCO62009 | 8251531 | GCO62012 | 8603700 | GCO62037 | 3210002BAD0000 | GCO75035 | 49525D7200 | GCO81091 |
| 36000519 | GCO62009 | 8251532 | GCO62012 | 1707966 | GCO62039 | 3210002BAD0100 | GCO75035 | 49525D9170 | GCO81091 |
| 36000530 | GCO62009 | 8251536 | GCO62012 | 1726946 | GCO62039 | 2303300K85 | GCO75046 | 49526D7050 | GCO81091 |
| 36000534 | GCO62009 | 86018314 | GCO62012 | 30783070 | GCO62042 | 2303300XK85XB | GCO75046 | 49526D7180 | GCO81091 |
| 36000537 | GCO62009 | 8601967 | GCO62012 | 31272542 | GCO62042 | 44010S10A00 | GCO81006 | 49526D7200 | GCO81091 |
| 8251758 | GCO62009 | 8601968 | GCO62012 | 31325076 | GCO62042 | 44010S10A10 | GCO81006 | 49526D9170 | GCO81091 |
| 8251759 | GCO62009 | 8602132 | GCO62012 | 31367556 | GCO62042 | 44010S17J30 | GCO81006 | 495L1D7680 | GCO81091 |
| 8251794 | GCO62009 | 30735563 | GCO62031 | 36001019 | GCO62042 | 44010ST7J30 | GCO81006 | 495L1D7700 | GCO81091 |
| 8252039 | GCO62009 | 30735564 | GCO62031 | 36001182 | GCO62042 | 44011S10A00 | GCO81006 | 495R1D7680 | GCO81091 |
| 8252055 | GCO62009 | 30735642 | GCO62031 | 36001813 | GCO62042 | 44011ST7J30 | GCO81006 | 495L1CZ200 | GCO81092 |
| 8601570 | GCO62009 | 30735883 | GCO62031 | 36002544 | GCO62042 | 44310SL0A10 | GCO81006 | 495L1N7090 | GCO81092 |
| 8601573 | GCO62009 | 30735884 | GCO62031 | 36002545 | GCO62042 | 9809068180 | GCO81018 | 495R1CZ100 | GCO81092 |
| 8601574 | GCO62009 | 30735885 | GCO62031 | 36011292 | GCO62042 | 9809068280 | GCO81018 | 495R1N7120 | GCO81092 |
| 8602482 | GCO62009 | 30735886 | GCO62031 | 36012414 | GCO62042 | 9810160180 | GCO81018 | 49501D9150 | GCO81093 |
| 8602570 | GCO62009 | 30735888 | GCO62031 | 36012415 | GCO62042 | 9810160280 | GCO81018 | 49525D7010 | GCO81093 |
| 8602574 | GCO62009 | 30735889 | GCO62031 | 36012418 | GCO62042 | 9810160580 | GCO81018 | 49526D3010 | GCO81093 |
| 8602577 | GCO62009 | 30759075 | GCO62031 | 36012420 | GCO62042 | 9810160680 | GCO81018 | 49526D7070 | GCO81093 |

| COMPETITOR | G-AP Ref. | COMPETITOR | G-AP Ref. | COMPETITOR | G-AP Ref. | COMPETITOR | G-AP Ref. | COMPETITOR | G-AP Ref. |
|---|---|---|---|---|---|---|---|---|---|
| OE | | 95194888 | GCO81192 | 1610205680 | GCO81397 | 4130034302 | GCO81458 | 39101ET80B | GCO81540 |
| | | 95194889 | GCO81192 | 9675025780 | GCO81397 | 4130034400 | GCO81458 | 39211JA00A | GCO81540 |
| 49526D9010 | GCO81093 | 95194890 | GCO81192 | 9677916180 | GCO81397 | 4130034402 | GCO81458 | 39211JD22B | GCO81540 |
| 495L1M5000 | GCO81093 | 95194891 | GCO81192 | 9806699580 | GCO81397 | 2043300585 | GCO81466 | C92AAJD22B | GCO81540 |
| 495R1M5000 | GCO81093 | 95215439 | GCO81192 | 9806699780 | GCO81397 | 2213300185 | GCO81466 | C9B11JA00A | GCO81540 |
| 49525D3030 | GCO81095 | 95215440 | GCO81192 | FTD222510 | GCO81406 | A2043300585 | GCO81466 | 1603067 | GCO81547 |
| 49525D7030 | GCO81095 | 95228797 | GCO81192 | FTT12550X | GCO81406 | A2213300185 | GCO81466 | 1603317 | GCO81547 |
| 49526D3090 | GCO81095 | 96639210 | GCO81192 | FTT12560X | GCO81406 | 7E0498099C | GCO81467 | 1603340 | GCO81547 |
| 49526D3100 | GCO81095 | 28391SG050 | GCO81193 | FTT22550X | GCO81406 | 7E0498099CX | GCO81467 | 1603341 | GCO81547 |
| 49526D7030 | GCO81095 | F2GZ3B436A | GCO81209 | 4130008101 | GCO81408 | 7E0498099F | GCO81467 | 95515296 | GCO81547 |
| 49526D7090 | GCO81095 | F2GZ3B436AF | GCO81209 | 4130009000 | GCO81408 | 7E0498099FX | GCO81467 | 95518270 | GCO81547 |
| 49526D7100 | GCO81095 | F2GZ3B436AG | GCO81209 | 4130009002 | GCO81408 | 7LA498099 | GCO81467 | 95518888 | GCO81547 |
| 1014014892 | GCO81097 | F2GZ3B437A | GCO81209 | 3815A454 | GCO81409 | 7LA498099C | GCO81467 | 95519224 | GCO81547 |
| 8200618176 | GCO81101 | F2GZ3B437G | GCO81209 | 3815A713 | GCO81409 | 7LA498099X | GCO81467 | GG6525600 | GCO81551 |
| 8200687910 | GCO81101 | F2GZ3B437M | GCO81209 | 3815A714 | GCO81409 | 440143W0305 | GCO81485 | 1860302 | GCO81552 |
| 8200786810 | GCO81101 | IED000071 | GCO81284 | 3815A715 | GCO81409 | 440143W0306 | GCO81485 | 1860306 | GCO81552 |
| 8200805489 | GCO81101 | IED000072 | GCO81284 | 3815A716 | GCO81409 | 44014T7W315 | GCO81485 | 1860310 | GCO81552 |
| 8200725516 | GCO81102 | IED500032 | GCO81284 | 31607593040 | GCO81413 | 44305T8PT03 | GCO81485 | 1865557 | GCO81552 |
| 8200725517 | GCO81102 | IED500120 | GCO81284 | 31607593042 | GCO81413 | 44306T7WA02 | GCO81485 | 2271321 | GCO81552 |
| 4346009X50 | GCO81143 | 0374880 | GCO81305 | 31607593043 | GCO81413 | 44306T7WA03 | GCO81485 | 2271322 | GCO81552 |
| 4347080220 | GCO81143 | 13296184 | GCO81305 | 31607593044 | GCO81413 | 44306T8NT03 | GCO81485 | 2271323 | GCO81552 |
| 434708Z037 | GCO81143 | 1604010 | GCO81305 | 31607593046 | GCO81413 | 44306T8NT030M1 | GCO81485 | DG913A327JA | GCO81552 |
| 4346009W70 | GCO81144 | 31367306 | GCO81347 | 31607606026 | GCO81413 | 44306T8PT03 | GCO81485 | DG913A327JB | GCO81552 |
| 4346009X20 | GCO81144 | 36002063 | GCO81347 | 31607606027 | GCO81413 | 100771900C | GCO81487 | DG913A327KA | GCO81552 |
| 4346009X21 | GCO81144 | 7E0498099B | GCO81348 | 31607618678 | GCO81413 | 100771901A | GCO81487 | DG913A327KB | GCO81552 |
| 434708Z203 | GCO81144 | 7E0498099BX | GCO81348 | 31607618680 | GCO81413 | 102711100B | GCO81487 | DG913A328JA | GCO81552 |
| 434708Z213 | GCO81144 | 7E0498099E | GCO81348 | 31607618681 | GCO81413 | 102711500B | GCO81487 | DG913A328JB | GCO81552 |
| 434708Z292 | GCO81144 | 7E0498099EX | GCO81348 | 1603334 | GCO81420 | 103061500A | GCO81487 | DG913B437KE | GCO81552 |
| 4341006760 | GCO81154 | 7E0498099H | GCO81348 | 95394767 | GCO81420 | 103061500B | GCO81487 | 42330SCA405 | GCO81558 |
| 4341006761 | GCO81154 | 7E0498099HX | GCO81348 | 36011292 | GCO81424 | 103061500D | GCO81487 | 39211JX00A | GCO81560 |
| 4341006880 | GCO81154 | 7LA498099B | GCO81348 | 30783076 | GCO81426 | 103061600A | GCO81487 | 28321AJ003 | GCO81561 |
| 4342006A40 | GCO81154 | 3QD498099A | GCO81352 | 36012421 | GCO81426 | 103061600B | GCO81487 | 28391AJ000 | GCO81561 |
| 434708Z015 | GCO81154 | 3QD498099C | GCO81352 | 36010057 | GCO81427 | 103061600D | GCO81487 | 28391AJ001 | GCO81561 |
| 434708Z016 | GCO81154 | 5QN498099 | GCO81352 | 36010216 | GCO81427 | 113804000B | GCO81487 | 28391AJ002 | GCO81561 |
| 434708Z017 | GCO81154 | 5QN498099A | GCO81352 | 36010063 | GCO81428 | 113804200B | GCO81487 | 3715A207 | GCO81565 |
| 434708Z112 | GCO81154 | 7N0498099 | GCO81352 | 36010217 | GCO81428 | 36000507 | GCO81514 | 3715A208 | GCO81565 |
| 434708Z238 | GCO81154 | 7N0498099D | GCO81352 | 31325701 | GCO81429 | 36000510 | GCO81514 | 3815A448 | GCO81567 |
| 434708Z239 | GCO81154 | 4G0407271D | GCO81353 | 36010064 | GCO81429 | 36000513 | GCO81514 | 3815A486 | GCO81567 |
| 434708Z253 | GCO81154 | 3Q0407271AQ | GCO81355 | 36012414 | GCO81430 | 36001215 | GCO81514 | 3815A496 | GCO81567 |
| 434708Z254 | GCO81154 | 3Q0407271S | GCO81355 | 30783070 | GCO81431 | 36001216 | GCO81514 | 52123890AA | GCO81568 |
| 434708Z257 | GCO81154 | 3Q0407272 | GCO81355 | 31272542 | GCO81431 | 36001217 | GCO81514 | 2303010001B11 | GCO81583 |
| 21902221501200 | GCO81156 | 3Q0407272BN | GCO81355 | 31367556 | GCO81431 | 36001218 | GCO81514 | 2303010003B11 | GCO81583 |
| 49500M0400 | GCO81162 | 3Q0407272BP | GCO81355 | 36001182 | GCO81431 | 1603318 | GCO81515 | 2303020001B11 | GCO81583 |
| 49501M0400 | GCO81162 | 3Q0407761X | GCO81355 | 36002545 | GCO81431 | 5374146 | GCO81515 | 2303020003B11 | GCO81583 |
| 49526M4201 | GCO81162 | 3Q0407762X | GCO81355 | 36012418 | GCO81431 | 95518271 | GCO81515 | 28491FE020 | GCO81584 |
| P494DSL3 | GCO81162 | 5QM498099 | GCO81355 | 36011303 | GCO81432 | 1860307 | GCO81519 | 28491FE220 | GCO81584 |
| 25946578 | GCO81163 | 5QM498099G | GCO81355 | 36001191 | GCO81433 | 1862949 | GCO81519 | 28491FE221 | GCO81584 |
| 25946579 | GCO81163 | 5QM498099GX | GCO81355 | 36012420 | GCO81433 | 1865553 | GCO81519 | 28491FE190 | GCO81585 |
| 4802978 | GCO81163 | 5QM498099X | GCO81355 | 36012419 | GCO81435 | 2405269 | GCO81519 | 28491FE191 | GCO81585 |
| 4802979 | GCO81163 | 1S0498099A | GCO81356 | 36051044 | GCO81437 | 2405274 | GCO81519 | 420407271 | GCO81599 |
| 4819361 | GCO81163 | 1S0498099AX | GCO81356 | 8603436 | GCO81437 | DG913A327AB | GCO81519 | 420407271A | GCO81599 |
| 4819409 | GCO81163 | 1S0498099C | GCO81356 | 8603882 | GCO81437 | DG913A327AC | GCO81519 | 420407451AX | GCO81599 |
| 4820720 | GCO81163 | 1S0498099CX | GCO81356 | 8603977 | GCO81438 | DG913A328AA | GCO81519 | 420407451X | GCO81599 |
| 95299892 | GCO81163 | 1S0498099D | GCO81356 | 1804511 | GCO81441 | DG913A328AB | GCO81519 | 31607597693 | GCO81603 |
| 95299893 | GCO81163 | 1S0498099E | GCO81356 | 1840178 | GCO81441 | DG913B437DE | GCO81519 | 31607597694 | GCO81603 |
| 95299895 | GCO81163 | 4M0498099 | GCO81357 | C1BY3A328AA | GCO81441 | 391004BA1D | GCO81520 | 31607605511 | GCO81603 |
| 95299896 | GCO81163 | 760498099E | GCO81357 | RMC1BY3A328A2A | GCO81441 | 391004BB4D | GCO81520 | 31607605512 | GCO81603 |
| 95480033 | GCO81163 | 760498099X | GCO81357 | 2201100AP01 | GCO81448 | 391004BC0C | GCO81520 | 7597694 | GCO81603 |
| 95480034 | GCO81163 | 8W0498099D | GCO81357 | 2201200AP01 | GCO81448 | 391004BC1B | GCO81520 | 31607619657 | GCO81604 |
| 22816826 | GCO81171 | 4E0598099B | GCO81358 | S4010250500 | GCO81448 | 391014BC0C | GCO81520 | 31607619658 | GCO81604 |
| 22868218 | GCO81171 | 4E0598099D | GCO81358 | S4010250600 | GCO81448 | 391014EF0C | GCO81520 | J52XLB3KT2203030 | GCO81621 |
| 36010055 | GCO81181 | 4E0598099DX | GCO81358 | M112203020VA | GCO81455 | C92114ED0A | GCO81520 | J602203010CL | GCO81622 |
| 36010057 | GCO81181 | 3D0498099 | GCO81360 | 28421SG020 | GCO81456 | 3815A523 | GCO81524 | J602203010CS | GCO81622 |
| 36010058 | GCO81181 | 3D0498099X | GCO81360 | 4130034011 | GCO81458 | 3815A524 | GCO81524 | J602203020CL | GCO81622 |
| 36010063 | GCO81181 | 2403100AKZ17B | GCO81364 | 4130034101 | GCO81458 | 3715A203 | GCO81538 | J602203020CS | GCO81622 |
| 36010064 | GCO81181 | 2403200AKZ17B | GCO81364 | 4130034201 | GCO81458 | 3715A204 | GCO81538 | M112203010VB | GCO81622 |
| 36010216 | GCO81181 | 1609609380 | GCO81397 | 4130034300 | GCO81458 | 3715A313 | GCO81538 | M112203020VB | GCO81622 |
| 36010217 | GCO81181 | 1609609680 | GCO81397 | 4130034301 | GCO81458 | 39100ET80B | GCO81540 | J42XLB3AF2203030B | GCO81628 |

| COMPETITOR | G-AP Ref. | COMPETITOR | G-AP Ref. | COMPETITOR | G-AP Ref. | COMPETITOR | G-AP Ref. | COMPETITOR | G-AP Ref. |
|---|---|---|---|---|---|---|---|---|---|
| OE | | 2Q0498099B | GCO81743 | 49525G4400 | GCO81818 | 391005010R | GCO81973 | 46307169 | GCO82006 |
| | | 2Q0498099BX | GCO81743 | 49525G4700 | GCO81818 | 391005751R | GCO81973 | 60812760 | GCO82006 |
| M11XLB3AF2203030 | GCO81632 | 2Q0498099G | GCO81743 | 49525G5000 | GCO81818 | 391008636R | GCO81973 | 71720727 | GCO82006 |
| 3815A363 | GCO81634 | 2Q0498099GX | GCO81743 | 49525J9100 | GCO81818 | 391009653R | GCO81973 | 71720747 | GCO82006 |
| 3815A464 | GCO81634 | 2Q0498099R | GCO81743 | 49525J9400 | GCO81818 | 391013827R | GCO81973 | 71781874 | GCO82006 |
| 3815A465 | GCO81634 | 2Q0498099RX | GCO81743 | 49526G2000 | GCO81818 | 391018696R | GCO81973 | 60541802 | GCO82009 |
| 3815A540 | GCO81634 | 2Q0498099V | GCO81743 | 49526G4400 | GCO81818 | 4422671 | GCO81973 | 60809609 | GCO82009 |
| GDC322510 | GCO81639 | 3Q0498099B | GCO81743 | 49526G4700 | GCO81818 | 8201189892 | GCO81973 | 82489521 | GCO82011 |
| 13462050 | GCO81640 | 2Q0498099A | GCO81744 | 49526G5000 | GCO81818 | 93453896 | GCO81973 | 46307246 | GCO82012 |
| 4346009X70 | GCO81642 | 2Q0498099AX | GCO81744 | 49526J9100 | GCO81818 | 391004PD1A | GCO81974 | 60815021 | GCO82012 |
| 434708Z234 | GCO81642 | 2Q0498099F | GCO81744 | 49526J9150 | GCO81818 | C92114EB0A | GCO81974 | 71720767 | GCO82012 |
| FTT422510 | GCO81645 | 2Q0498099FX | GCO81744 | 49526J9400 | GCO81818 | 02J9C7756 | GCO81975 | 71781907 | GCO82012 |
| 2203100AW02 | GCO81650 | 2Q0498099H | GCO81744 | 49527G2000 | GCO81818 | BJ323B413AA | GCO81975 | 77365982 | GCO82012 |
| 2203200AW02 | GCO81650 | 2Q0498099HX | GCO81744 | 495L1CM000 | GCO81818 | CPLA3B436AA | GCO81975 | 46307299 | GCO82013 |
| S2010470101 | GCO81650 | 2Q0498099S | GCO81744 | 495L1J7130 | GCO81818 | DPLA3B436BA | GCO81975 | 60815163 | GCO82013 |
| S2010470201 | GCO81650 | 391004BA8A | GCO81748 | 495R1CM000 | GCO81818 | EJ323B436CB | GCO81975 | 71781882 | GCO82013 |
| 2203100AW01 | GCO81656 | 392114BA0B | GCO81748 | 495R1J7130 | GCO81818 | GJ323B436CC | GCO81975 | 46307685 | GCO82014 |
| 2203200AW01 | GCO81656 | 4341002840 | GCO81749 | 495004A100 | GCO81819 | J9C18071 | GCO81975 | 71781928 | GCO82014 |
| S2010470100 | GCO81656 | 4341006A01 | GCO81749 | 495004A150 | GCO81819 | J9C7756 | GCO81975 | 77365997 | GCO82014 |
| S2010470200 | GCO81656 | 434100F080 | GCO81749 | 495074AA00 | GCO81819 | J9D33B413AA | GCO81975 | 46307301 | GCO82017 |
| 2203100AP01AA | GCO81660 | 4342002A50 | GCO81749 | 495084AA00 | GCO81819 | K8D23B413AA | GCO81975 | 46307309 | GCO82017 |
| 2203200AP01AA | GCO81660 | 4342006B41 | GCO81749 | 4346009Z30 | GCO81824 | LR024754 | GCO81975 | 46307901 | GCO82017 |
| 2203200AP02AA | GCO81660 | 434200F090 | GCO81749 | 434708Z278 | GCO81824 | LR025067 | GCO81975 | 7081591 | GCO82017 |
| S4010250100AA | GCO81660 | 4346009W00 | GCO81749 | 4230035000 | GCO81826 | LR034529 | GCO81975 | 77366004 | GCO82017 |
| S4010250200AA | GCO81660 | 4346009X80 | GCO81749 | 44305TBCA51 | GCO81828 | LR048167 | GCO81975 | 46307572 | GCO82018 |
| S4010250700AA | GCO81660 | 434708Z235 | GCO81749 | 44306TBCA51 | GCO81828 | LR061554 | GCO81975 | 46307913 | GCO82018 |
| 7P5407321B | GCO81667 | 4M0407305A | GCO81750 | 44305TBCA01 | GCO81829 | LR061598 | GCO81975 | 46308205 | GCO82018 |
| 7P5498099A | GCO81667 | 80D498099 | GCO81750 | 44306TBCA01 | GCO81829 | LR061603 | GCO81975 | 52126410 | GCO82018 |
| 95834990110 | GCO81667 | 8W0498099 | GCO81750 | 495001H111 | GCO81872 | LR124673 | GCO81975 | 52126412 | GCO82018 |
| 44014TA9E01 | GCO81675 | 1097706100 | GCO81791 | 495011H111 | GCO81872 | LR165021 | GCO81975 | 59259251 | GCO82018 |
| 42330T0G305 | GCO81678 | 1097706200 | GCO81791 | FP102550X | GCO81876 | M8E23N128AC | GCO81975 | 68543080AA | GCO82018 |
| 42330T0GA01 | GCO81678 | 5A2203010 | GCO81791 | FP102550XA | GCO81876 | T4K6501 | GCO81975 | 68543081AA | GCO82018 |
| 42330T1GE01 | GCO81679 | 5A2203010C1 | GCO81791 | FP102560X | GCO81876 | 49525A0001 | GCO81987 | 71785305 | GCO82018 |
| 31605A2DFB7 | GCO81683 | 5A2203020 | GCO81791 | FP102560XA | GCO81876 | 49525A0101 | GCO81987 | 77365990 | GCO82018 |
| 31605A2DFB8 | GCO81683 | 5A2203020C1 | GCO81791 | FTA32550X | GCO81876 | 49525M4001 | GCO81987 | 60541801 | GCO82019 |
| 31605A2DFC5 | GCO81683 | MA1225510 | GCO81795 | FTA32560X | GCO81876 | 49525M4101 | GCO81987 | 60812880 | GCO82019 |
| 31605A2DFC6 | GCO81683 | SA0022510M1 | GCO81799 | 391003491R | GCO81927 | 49526A0001 | GCO81987 | 46308266 | GCO82023 |
| 31608611927 | GCO81683 | SA0025020M1 | GCO81799 | 391006653R | GCO81927 | 49526A0101 | GCO81987 | 46308722 | GCO82023 |
| 31608611928 | GCO81683 | 4130035301 | GCO81801 | 391017093R | GCO81927 | 49526M0601 | GCO81987 | 46308801 | GCO82023 |
| 31608643361 | GCO81683 | 4132035360 | GCO81801 | 391018401R | GCO81927 | 49526M4001 | GCO81987 | 71771186 | GCO82023 |
| 31608643362 | GCO81683 | FTB422510 | GCO81805 | 4234008021 | GCO81934 | 49526M4101 | GCO81987 | 4630798 | GCO82024 |
| 31608643364 | GCO81683 | FTF122510 | GCO81805 | 43460WB002 | GCO81944 | 2200300U2212 | GCO81994 | 46308235 | GCO82024 |
| 31605A2E052 | GCO81684 | FTF122610 | GCO81805 | GDD122510 | GCO81944 | 2200400U2212 | GCO81994 | 46308710 | GCO82024 |
| 31605A2E055 | GCO81684 | 4237049125 | GCO81806 | GDT122510 | GCO81944 | 1084781600 | GCO81995 | 46308798 | GCO82024 |
| 31605A2E056 | GCO81684 | 49580H8000 | GCO81807 | 84138317 | GCO81945 | S62203100A | GCO81995 | 50500529 | GCO82024 |
| 31608482286 | GCO81684 | 31607639432 | GCO81811 | 84138325 | GCO81945 | 1014027857 | GCO81996 | 50517138 | GCO82024 |
| 31608482645 | GCO81684 | 31607639433 | GCO81811 | 84138328 | GCO81945 | 4082005800 | GCO81996 | 505C00529 | GCO82024 |
| 31608611938 | GCO81684 | 31607639442 | GCO81811 | 84257939 | GCO81945 | 4082584700 | GCO81996 | 51876349 | GCO82024 |
| 31608611939 | GCO81684 | 31608607271 | GCO81811 | 84257940 | GCO81945 | 46307308 | GCO82002 | 71771180 | GCO82024 |
| 31608611942 | GCO81684 | 31608643369 | GCO81811 | 84337384 | GCO81945 | 60815250 | GCO82002 | 717771180 | GCO82024 |
| 31608643375 | GCO81684 | 31608643371 | GCO81811 | 84527913 | GCO81945 | 60605055 | GCO82004 | 46308070 | GCO82025 |
| 33207646867 | GCO81685 | 31608643372 | GCO81811 | 84675882 | GCO81945 | 60810223 | GCO82004 | 46308922 | GCO82025 |
| 33207646869 | GCO81685 | 31608643373 | GCO81811 | 95525670 | GCO81945 | 60811033 | GCO82004 | 46308999 | GCO82025 |
| 33207646872 | GCO81685 | 31608643374 | GCO81811 | 95525672 | GCO81945 | 71720723 | GCO82004 | 59259096 | GCO82025 |
| 2168926 | GCO81687 | 31608643377 | GCO81811 | 95525700 | GCO81945 | 71781944 | GCO82004 | 60802035 | GCO82025 |
| CV614K138AD | GCO81687 | 31608661689 | GCO81811 | 95529586 | GCO81945 | 7627971 | GCO82004 | 71783512 | GCO82025 |
| 10289302 | GCO81695 | 33207641212 | GCO81811 | 2203100V08 | GCO81962 | 7646402 | GCO82004 | 71783514 | GCO82025 |
| 10119551 | GCO81697 | 33207641213 | GCO81811 | 2203100V17 | GCO81962 | 7652958 | GCO82004 | 71783876 | GCO82025 |
| 10119552 | GCO81697 | 2176664 | GCO81812 | 2203200V08 | GCO81962 | 7656949 | GCO82004 | 77366001 | GCO82025 |
| 50015633 | GCO81697 | DG914K138AE | GCO81812 | 2203200V17 | GCO81962 | 7688157 | GCO82004 | 95524310 | GCO82025 |
| 50015634 | GCO81697 | CPLA4K327AA | GCO81813 | 2403100AKY01B | GCO81964 | 7692993 | GCO82004 | 46308276 | GCO82026 |
| 3910000Q7E | GCO81741 | LR034511 | GCO81813 | 2403200AKY01B | GCO81964 | 7750300 | GCO82004 | 46308746 | GCO82026 |
| 391008943R | GCO81741 | 13462051 | GCO81814 | 2203100S16B | GCO81969 | 82486230 | GCO82004 | 46308807 | GCO82026 |
| 3910100Q7E | GCO81741 | 49500F2500 | GCO81818 | 2203200S16B | GCO81969 | 9945298 | GCO82004 | 49625J9000 | GCO82027 |
| 391014587R | GCO81741 | 49500J7230 | GCO81818 | 2203100BS16 | GCO81970 | 46307083 | GCO82005 | 49626J9000 | GCO82027 |
| C92114ED2A | GCO81741 | 49501F2500 | GCO81818 | 2203200BS16 | GCO81970 | 60813096 | GCO82005 | 443053M1T01 | GCO82029 |
| 2Q0407271AK | GCO81743 | 49501J7230 | GCO81818 | 2303500M16 | GCO81972 | 71781865 | GCO82005 | 443063M1T01 | GCO82029 |
| 2Q0407451FX | GCO81743 | 49525G2000 | GCO81818 | 2303600M16 | GCO81972 | 46307034 | GCO82006 | 39211DF32A | GCO82030 |

| COMPETITOR | G-AP Ref. | COMPETITOR | G-AP Ref. | COMPETITOR | G-AP Ref. | COMPETITOR | G-AP Ref. | COMPETITOR | G-AP Ref. |
|---|---|---|---|---|---|---|---|---|---|
| OE | | 22710926 | GCO82139 | 9809528180 | GCO82273 | F1F63A328KB | GCO82320 | 9806459280 | GCO82355 |
| | | EJ7Z3B436C | GCO82141 | 9809528380 | GCO82273 | FV663A328AA | GCO82320 | 9807280280 | GCO82355 |
| 3D0598099 | GCO82035 | EJ7Z3B436E | GCO82141 | 9811176480 | GCO82273 | FV663A328AB | GCO82320 | 9808800480 | GCO82355 |
| 3D0598099X | GCO82035 | EJ7Z3B437A | GCO82141 | 9811176780 | GCO82273 | FV663B436AB | GCO82320 | 9808800680 | GCO82355 |
| 1135458700 | GCO82048 | EJ7Z3B437B | GCO82141 | 9811176880 | GCO82273 | FV663B436AC | GCO82320 | 9809258480 | GCO82355 |
| 1135458800 | GCO82048 | AA5Z3B437A | GCO82142 | 9812229080 | GCO82273 | FV663B437DA | GCO82320 | 9813122880 | GCO82355 |
| 5AEV2203010 | GCO82048 | 52123748AC | GCO82143 | 9815636180 | GCO82273 | KV663A327BC | GCO82320 | 4346059845 | GCO82357 |
| 5AEV2203020 | GCO82048 | 52123761AH | GCO82143 | 9819435780 | GCO82273 | KV663A328BB | GCO82320 | 4346059865 | GCO82357 |
| 4082006000 | GCO82049 | 1004978200 | GCO82154 | 9837946780 | GCO82273 | 391002423R | GCO82323 | 4346059866 | GCO82357 |
| 4082007200 | GCO82049 | 1004978300 | GCO82154 | 0K63B22510 | GCO82275 | 391004850R | GCO82323 | 4346059867 | GCO82357 |
| 4082576700 | GCO82049 | IB52203010 | GCO82154 | 0K63B22510A | GCO82275 | 391005190R | GCO82323 | 4347059856 | GCO82357 |
| 2048643 | GCO82052 | IB52203020 | GCO82154 | 4346059645 | GCO82277 | 391009398R | GCO82323 | 4347059865 | GCO82357 |
| EV613B437GA | GCO82052 | 3099825 | GCO82160 | 4346059646 | GCO82277 | 391011816R | GCO82323 | 4347059866 | GCO82357 |
| 10211910 | GCO82058 | 495002E810 | GCO82188 | 4346059647 | GCO82277 | 391015778R | GCO82323 | 4347059867 | GCO82357 |
| 10368328 | GCO82058 | 495012E810 | GCO82188 | 4346059648 | GCO82277 | 391017898R | GCO82323 | MR580504 | GCO82367 |
| 10368457 | GCO82058 | 44305TEAT01 | GCO82189 | 4347059605 | GCO82277 | 391018240R | GCO82323 | 4473302000 | GCO82369 |
| 10368459 | GCO82058 | 44305TEZT01 | GCO82189 | 4347059606 | GCO82277 | 391018508R | GCO82323 | 4473304800 | GCO82369 |
| 10749896 | GCO82058 | 44306TEAT01 | GCO82189 | 4347059607 | GCO82277 | FTH522510 | GCO82330 | 4473305300 | GCO82369 |
| 396002941R | GCO82066 | 44306TEZT01 | GCO82189 | 1611524280 | GCO82278 | FTH72550X | GCO82330 | 4473305400 | GCO82369 |
| 396002998R | GCO82066 | 2485311 | GCO82249 | 9677476580 | GCO82278 | FTH72560X | GCO82330 | A4473302000 | GCO82369 |
| 396003780R | GCO82066 | 2485315 | GCO82249 | 9801048580 | GCO82278 | FTH82550X | GCO82330 | A4473304800 | GCO82369 |
| 396008196R | GCO82066 | 2512524 | GCO82249 | 9807974580 | GCO82278 | 391002304R | GCO82331 | A4473305300 | GCO82369 |
| 4533503500 | GCO82066 | 2512532 | GCO82249 | 9825391880 | GCO82278 | 391010905R | GCO82331 | A4473305400 | GCO82369 |
| 4533503600 | GCO82066 | 2513150 | GCO82249 | 9826052780 | GCO82278 | 36003561 | GCO82347 | 4668919AA | GCO82374 |
| 4533506000 | GCO82066 | 2513154 | GCO82249 | 9826052880 | GCO82278 | 36003562 | GCO82347 | 4668921AA | GCO82374 |
| 4533506100 | GCO82066 | JX673A327DA | GCO82249 | 1647577580 | GCO82279 | 36010126 | GCO82347 | 4668936AC | GCO82374 |
| 4533506200 | GCO82066 | JX673A327FA | GCO82249 | 1682747780 | GCO82279 | 36010221 | GCO82347 | 22813176 | GCO82375 |
| 4533506300 | GCO82066 | JX673A327HA | GCO82249 | 1682747880 | GCO82279 | 1643500010 | GCO82348 | 22813177 | GCO82375 |
| A4533503500 | GCO82066 | JX673A328DA | GCO82249 | 9824359680 | GCO82279 | A1643500010 | GCO82348 | 22813178 | GCO82375 |
| A4533503600 | GCO82066 | M1T63A327FA | GCO82249 | 9824878280 | GCO82279 | 1909740 | GCO82350 | 92238377 | GCO82375 |
| A4533506000 | GCO82066 | M1T63A328FA | GCO82249 | 9825390980 | GCO82279 | 2166937 | GCO82350 | 92246759 | GCO82375 |
| A4533506100 | GCO82066 | 2313975 | GCO82251 | 9825391080 | GCO82279 | FV663A327DA | GCO82350 | 92246760 | GCO82375 |
| A4533506200 | GCO82066 | 2313995 | GCO82251 | 9825392880 | GCO82279 | FV663A327DB | GCO82350 | 1696780 | GCO82376 |
| A4533506300 | GCO82066 | 2393811 | GCO82251 | 9825392980 | GCO82279 | 3272WS | GCO82351 | 1697460 | GCO82376 |
| 391006609R | GCO82070 | 2403010 | GCO82251 | 9837405680 | GCO82279 | 3272WT | GCO82351 | 9800389380 | GCO82376 |
| 391012511R | GCO82070 | H1B53B436BE | GCO82251 | 9841939180 | GCO82279 | 3273TY | GCO82351 | 9800436180 | GCO82376 |
| 28421FJ000 | GCO82072 | H1B53B436BF | GCO82251 | 496012S000 | GCO82286 | 9687853480 | GCO82351 | 9803959680 | GCO82376 |
| 495003F800 | GCO82073 | H1B53B437BG | GCO82251 | 49525G6000 | GCO82287 | 9807280380 | GCO82351 | 9803960180 | GCO82376 |
| 495003F850 | GCO82073 | H1B53B437BH | GCO82251 | 49525G6300 | GCO82287 | 9808800780 | GCO82351 | DG9Z3B436BT | GCO82377 |
| 44014S2A951 | GCO82074 | 49525C7401 | GCO82252 | 49526G6000 | GCO82287 | 2053300003 | GCO82353 | DG9Z3B437AF | GCO82377 |
| 44014S2A952 | GCO82074 | 49526C7401 | GCO82252 | 49526G6300 | GCO82287 | 2053309910 | GCO82353 | HG9Z3B436D | GCO82377 |
| 44014S2A953 | GCO82074 | 495251R700 | GCO82253 | 495L1H7110 | GCO82287 | 2053600200 | GCO82353 | HG9Z3B436E | GCO82377 |
| 44014S2A954 | GCO82074 | 495261R700 | GCO82253 | 495R1H7110 | GCO82287 | 2053600300 | GCO82353 | HG9Z3B437B | GCO82377 |
| FTC622510 | GCO82093 | 2510245 | GCO82257 | 495L1BX120 | GCO82303 | 2223300902 | GCO82353 | 44305T1TE01 | GCO82378 |
| FTC62550X | GCO82093 | 2510247 | GCO82257 | 495L1BX220 | GCO82303 | 2223304503 | GCO82353 | 44305T2AA71 | GCO82378 |
| FTC62560XA | GCO82093 | JT763B436AB | GCO82257 | 495L1Q6250 | GCO82303 | 2223600175 | GCO82353 | 44306T1TE01 | GCO82378 |
| FTD522510 | GCO82093 | JT763B436AC | GCO82257 | 495R1BX120 | GCO82303 | 2533301300 | GCO82353 | 44306T2AA71 | GCO82378 |
| FTR722510 | GCO82093 | JT763B437AB | GCO82257 | 495R1BX220 | GCO82303 | 2533307900 | GCO82353 | 44305T1GE00 | GCO82380 |
| 2203100XG47XA | GCO82108 | JT763B437AC | GCO82257 | 495R1Q6200 | GCO82303 | 2533308000 | GCO82353 | 44305TX4A01 | GCO82380 |
| 2203200XG47XA | GCO82108 | 05189278AA | GCO82260 | 495R1Q6250 | GCO82303 | A2053300003 | GCO82353 | 44306T1GE00 | GCO82380 |
| 2203100XG85XA | GCO82109 | 05189279AA | GCO82260 | 33207609351 | GCO82308 | A2053309910 | GCO82353 | 44306TX4A01 | GCO82380 |
| 2203200XG85XA | GCO82109 | 5189278AA | GCO82260 | 33207609352 | GCO82308 | A2053600200 | GCO82353 | 7E0498099D | GCO82386 |
| 2403100XKW09B | GCO82110 | 5189279AA | GCO82260 | 49625D7000 | GCO82315 | A2053600300 | GCO82353 | 7E0498099DX | GCO82386 |
| 2403200XKW09B | GCO82110 | 1610561580 | GCO82273 | 391000797R | GCO82317 | A2223300902 | GCO82353 | 7LA498099A | GCO82386 |
| 2303100XKW09A | GCO82111 | 1611142680 | GCO82273 | 391001155R | GCO82317 | A2223304503 | GCO82353 | 7LA498099AX | GCO82386 |
| 2303200XKW09A | GCO82111 | 1612862980 | GCO82273 | 391011681R | GCO82317 | A2223600175 | GCO82353 | 496912J000 | GCO82387 |
| 2203100XS74XA | GCO82112 | 1613306680 | GCO82273 | 68248718AD | GCO82318 | A2533301300 | GCO82353 | 496912J001 | GCO82387 |
| 2203100XY23XA | GCO82112 | 1617300580 | GCO82273 | 68248719AD | GCO82318 | A2533307900 | GCO82353 | 05017654AA | GCO82388 |
| 2203200XS56XB | GCO82112 | 1631813280 | GCO82273 | 1909741 | GCO82320 | A2533308000 | GCO82353 | 4593466AA | GCO82388 |
| 2203200XS74XA | GCO82112 | 1675955380 | GCO82273 | 2141546 | GCO82320 | 1613489780 | GCO82355 | 5017654AA | GCO82388 |
| 3815A479 | GCO82124 | 9677561480 | GCO82273 | 2166958 | GCO82320 | 1613732480 | GCO82355 | 4578777AA | GCO82398 |
| 3815A480 | GCO82124 | 9677914480 | GCO82273 | 2355701 | GCO82320 | 3642355 | GCO82355 | 4578777AB | GCO82398 |
| 3815A482 | GCO82124 | 9677914880 | GCO82273 | 2405559 | GCO82320 | 3642359 | GCO82355 | 3272VW | GCO82399 |
| 3815A487 | GCO82124 | 9677915180 | GCO82273 | 2455190 | GCO82320 | 3642360 | GCO82355 | 3272VX | GCO82399 |
| 3815A502 | GCO82124 | 9806699880 | GCO82273 | 2497556 | GCO82320 | 3642361 | GCO82355 | 3273WJ | GCO82399 |
| 3815A764 | GCO82124 | 9808771480 | GCO82273 | 2497562 | GCO82320 | 9800387380 | GCO82355 | 3273WK | GCO82399 |
| 52083441 | GCO82129 | 9809149380 | GCO82273 | 2552737 | GCO82320 | 9800387480 | GCO82355 | 392114GB0A | GCO82402 |
| 52083442 | GCO82129 | 9809527980 | GCO82273 | F1F63A328KA | GCO82320 | 9806459180 | GCO82355 | 50565118 | GCO82404 |

| COMPETITOR | G-AP Ref. | COMPETITOR | G-AP Ref. | COMPETITOR | G-AP Ref. | COMPETITOR | G-AP Ref. | COMPETITOR | G-AP Ref. |
|---|---|---|---|---|---|---|---|---|---|
| **OE** | | TDB500290 | GCO82447 | 391015201R | GCO82484 | 2033300300 | GCO82527 | 68267177AA | GCO82554 |
| | | 49525C8401 | GCO82448 | 434100A110 | GCO82485 | 2033300701 | GCO82527 | 68411678AA | GCO82554 |
| 50565120 | GCO82404 | 49526C8401 | GCO82448 | 434200A120 | GCO82485 | 2033300801 | GCO82527 | K68267177AA | GCO82554 |
| 52123810AA | GCO82404 | 1613966680 | GCO82449 | 4346080189 | GCO82485 | A2033300701 | GCO82527 | K68411678AA | GCO82554 |
| 52123810AB | GCO82404 | 1613966780 | GCO82449 | 434608Z012 | GCO82485 | A2033300801 | GCO82527 | 4578884AB | GCO82555 |
| 52123849AA | GCO82404 | 9808075680 | GCO82449 | 43460F9020 | GCO82485 | 8200896393 | GCO82528 | 4578884AC | GCO82555 |
| 52123849AB | GCO82404 | 9808075780 | GCO82449 | 4347080471 | GCO82485 | 8201030260 | GCO82528 | 4578885AC | GCO82555 |
| DB5Z3B436A | GCO82407 | 9808076080 | GCO82449 | 434708Z819 | GCO82485 | 391006890R | GCO82529 | 104411900D | GCO82557 |
| FB5Z3B436F | GCO82407 | 9808076180 | GCO82449 | 434708Z849 | GCO82485 | 391013701R | GCO82529 | 104416100D | GCO82557 |
| FB5Z3B436H | GCO82407 | 2512528 | GCO82450 | 43470F9020 | GCO82485 | 8200908694 | GCO82529 | 2Q0498099J | GCO82558 |
| FB5Z3B437B | GCO82407 | 2512538 | GCO82450 | 43470F9050 | GCO82485 | 8200908696 | GCO82529 | 6F0498099 | GCO82558 |
| 52123760AB | GCO82412 | 2513144 | GCO82450 | 4410161MC0 | GCO82486 | 4347080361 | GCO82530 | CV613B436HF | GCO82562 |
| 68291656AA | GCO82412 | 2513152 | GCO82450 | 4410179J70 | GCO82486 | 4347080365 | GCO82530 | CV6Z3B436AP | GCO82562 |
| 68291656AD | GCO82412 | 2513178 | GCO82450 | 4410179JG0 | GCO82486 | 4347080436 | GCO82530 | 423300C010 | GCO82563 |
| 423400E050 | GCO82413 | 2550695 | GCO82450 | 4410279J60 | GCO82486 | 4347080437 | GCO82530 | 423400C010 | GCO82563 |
| 423400E060 | GCO82413 | 2665937 | GCO82450 | 4410279J70 | GCO82486 | 4347080439 | GCO82530 | 4233050070 | GCO82564 |
| 4237049315 | GCO82413 | 2758409 | GCO82450 | 71746603 | GCO82486 | 1440106080 | GCO82534 | 4234050070 | GCO82564 |
| 4237049316 | GCO82413 | JX673A327CA | GCO82450 | XR86853 | GCO82487 | 8251774 | GCO82538 | 68265869AA | GCO82565 |
| 4237049325 | GCO82413 | JX673A327EA | GCO82450 | XR86855 | GCO82487 | FV613B436CA | GCO82539 | 68265869AB | GCO82565 |
| 4237049335 | GCO82413 | JX673A327GA | GCO82450 | XW4W4K138AA | GCO82487 | FV613B437CA | GCO82539 | 68265869AF | GCO82565 |
| DPLA4K327AA | GCO82414 | JX673A328AA | GCO82450 | XW4W4K139AA | GCO82487 | FV6Z3B436A | GCO82539 | 68271585AA | GCO82565 |
| LR079502 | GCO82414 | JX673A328EA | GCO82450 | 1609609280 | GCO82489 | FV6Z3B437A | GCO82539 | 68271585AB | GCO82565 |
| 392114GA0A | GCO82415 | L1T63A327BB | GCO82450 | 1609610280 | GCO82489 | 391000849R | GCO82540 | 68289671AA | GCO82565 |
| 3273SZ | GCO82416 | L1T63A328BC | GCO82450 | 1610276080 | GCO82489 | 391008720R | GCO82540 | 68299151AA | GCO82565 |
| 3273TA | GCO82416 | NX673A327BA | GCO82450 | 1610276180 | GCO82489 | 391013552R | GCO82540 | 68299152AA | GCO82565 |
| 51783825 | GCO82416 | 4346009P20 | GCO82454 | 1611143280 | GCO82489 | 391019232R | GCO82540 | 4237049265 | GCO82576 |
| 391003200R | GCO82418 | 4347009N20 | GCO82454 | 1611143380 | GCO82489 | 28321VA010 | GCO82541 | 4237049266 | GCO82576 |
| 391005876R | GCO82418 | 4347009V00 | GCO82454 | 9804894580 | GCO82489 | 28391VA010 | GCO82541 | 49525C8201 | GCO82577 |
| 391013130R | GCO82418 | 23301165 | GCO82455 | 9804894680 | GCO82489 | 2N0498099A | GCO82542 | 49525H9000 | GCO82577 |
| 392111BA0A | GCO82420 | 84228346 | GCO82455 | 9804895180 | GCO82489 | 2N0498099AX | GCO82542 | 49526C8211 | GCO82577 |
| 392115RD0B | GCO82424 | 1773301500 | GCO82462 | 9804895280 | GCO82489 | 2N0498099B | GCO82542 | 49526H9000 | GCO82577 |
| BJ324B402AC | GCO82426 | 1773301801 | GCO82462 | 9807160680 | GCO82489 | 65391066014 | GCO82542 | RTA62550X | GCO82578 |
| LR060412 | GCO82426 | 1773303102 | GCO82462 | 9807160780 | GCO82489 | 65391069014 | GCO82542 | RTA62560X | GCO82578 |
| LR061904 | GCO82426 | A1773301500 | GCO82462 | 2272738 | GCO82490 | 1608420180 | GCO82546 | 49680S1000 | GCO82582 |
| LR062317 | GCO82426 | A1773301801 | GCO82462 | K1B63A328AA | GCO82490 | 9671572880 | GCO82546 | 49580C2400 | GCO82590 |
| 23301162 | GCO82427 | A1773303102 | GCO82462 | 4578600AA | GCO82491 | 9816309280 | GCO82546 | 434100E160 | GCO82593 |
| 23301163 | GCO82427 | 44014T5A010 | GCO82463 | 4578600AB | GCO82491 | 496002S010 | GCO82547 | 434100E180 | GCO82593 |
| 443053L1T01 | GCO82428 | 31605A2E013 | GCO82471 | 4578601AA | GCO82491 | 496012S010 | GCO82547 | 434200E120 | GCO82593 |
| 44305TLCA01 | GCO82428 | 31605A2E014 | GCO82471 | R4578600AA | GCO82491 | 2Q0498099C | GCO82548 | 434200E130 | GCO82593 |
| 44305TVAA51 | GCO82428 | 31607642108 | GCO82471 | 391000897R | GCO82492 | 2Q0498099CX | GCO82548 | 49580F6100 | GCO82596 |
| 44306TLCA01 | GCO82428 | 31607642109 | GCO82471 | 391006307R | GCO82492 | 2Q0498099D | GCO82548 | 49580F6150 | GCO82596 |
| 44306TVAA51 | GCO82428 | 31608643383 | GCO82471 | 391011905R | GCO82492 | 2Q0498099DX | GCO82548 | 49580G8100 | GCO82596 |
| 3815A386 | GCO82438 | 31608657704 | GCO82471 | 391019028R | GCO82492 | 2Q0498099E | GCO82548 | 49580G8150 | GCO82596 |
| 97034902900 | GCO82439 | 49500F2100 | GCO82472 | GDB122510 | GCO82495 | 2Q0498099EX | GCO82548 | 49525K4000 | GCO82597 |
| 97034903801 | GCO82439 | 49500F2200 | GCO82472 | GDB722510 | GCO82495 | 2Q0498099N | GCO82548 | 49525Q4000 | GCO82597 |
| 97034903802 | GCO82439 | 49501F2100 | GCO82472 | 3715A097 | GCO82518 | 2Q0498099NX | GCO82548 | 49526Q4000 | GCO82597 |
| 97034903805 | GCO82439 | 49501F2200 | GCO82472 | 3715A098 | GCO82518 | 2Q0498099Q | GCO82548 | 9836054280 | GCO82602 |
| 49580H8100 | GCO82442 | 495L1F2220 | GCO82472 | 3715A099 | GCO82518 | 2Q0498099QX | GCO82548 | 4KE498099 | GCO82603 |
| 49525G6400 | GCO82443 | 495R1F2150 | GCO82472 | 2203310BS02 | GCO82519 | 4M0598099A | GCO82550 | 4KE498099A | GCO82603 |
| 49525H5000 | GCO82443 | 4347049165 | GCO82477 | 5085180AG | GCO82522 | 391000166R | GCO82552 | 4ML498099 | GCO82603 |
| 49525H5100 | GCO82443 | 495912J000 | GCO82478 | 5273558AD | GCO82522 | 391002354R | GCO82552 | 760498099AX | GCO82603 |
| 49525H5300 | GCO82443 | 495912J001 | GCO82478 | 5273558AG | GCO82522 | 391002592R | GCO82552 | 4KE501203 | GCO82604 |
| 49526G6400 | GCO82443 | 2533305501 | GCO82479 | 3273SA | GCO82523 | 391004269R | GCO82552 | 4KE501203B | GCO82604 |
| 49526H5000 | GCO82443 | 2533305601 | GCO82479 | 3273SC | GCO82523 | 391007254R | GCO82552 | 4KE501204B | GCO82604 |
| 49526H5100 | GCO82443 | A2533305501 | GCO82479 | 52116197 | GCO82524 | 391007345R | GCO82552 | 4KE501204C | GCO82604 |
| 49526H5110 | GCO82443 | A2533305601 | GCO82479 | 52170753 | GCO82524 | 391009375R | GCO82552 | 391003142R | GCO82606 |
| 49526H5200 | GCO82443 | 391003RZ0C | GCO82480 | 53489834 | GCO82524 | 391009804R | GCO82552 | 391016661R | GCO82606 |
| 49526H6900 | GCO82443 | 391013RC0A | GCO82480 | 53489835 | GCO82524 | 3910100Q7J | GCO82552 | 391000823R | GCO82607 |
| 495L1Q0300 | GCO82443 | 391013RZ0C | GCO82480 | 68469878AA | GCO82524 | 3910100Q7K | GCO82552 | 391001097R | GCO82607 |
| 495R1Q0300 | GCO82443 | 392113DD2A | GCO82480 | 68469887AA | GCO82524 | 391010516R | GCO82552 | 391001267R | GCO82607 |
| 391001225R | GCO82446 | 392113RC1A | GCO82480 | 68504358AA | GCO82524 | 391011804R | GCO82552 | 391003844R | GCO82607 |
| 391002171R | GCO82446 | 392115TA0A | GCO82480 | 77367303 | GCO82524 | 391016789R | GCO82552 | 391010581R | GCO82607 |
| 391005153R | GCO82446 | C92113RC0A | GCO82480 | 77368729 | GCO82524 | 391019386R | GCO82552 | 391014807R | GCO82607 |
| 391005516R | GCO82446 | 9809837880 | GCO82483 | K68504358AA | GCO82524 | 391019506R | GCO82552 | 391018503R | GCO82607 |
| 391016654R | GCO82446 | 9809837980 | GCO82483 | 495802K620 | GCO82525 | 52123739AF | GCO82553 | 391019799R | GCO82607 |
| 391017448R | GCO82446 | 391004605R | GCO82484 | 495802K620SJ | GCO82525 | 46308974 | GCO82554 | C92113NF1C | GCO82703 |
| 391017989R | GCO82446 | 391006506R | GCO82484 | 4130008B02 | GCO82526 | 53489836 | GCO82554 | C92113NF1D | GCO82703 |
| TDB500280 | GCO82447 | 391011319R | GCO82484 | 2033300200 | GCO82527 | 59259192 | GCO82554 | 2Q0498099 | GCO82705 |

| COMPETITOR | G-AP Ref. | COMPETITOR | G-AP Ref. | COMPETITOR | G-AP Ref. | COMPETITOR | G-AP Ref. | COMPETITOR | G-AP Ref. |
|---|---|---|---|---|---|---|---|---|---|
| OE | | 1773309900 | GCO82739 | FT0822510B | GCO82793 | JB3G3A428BC | GCO82846 | 423400E160 | GCO82932 |
| | | A1773300700 | GCO82739 | FT0822610 | GCO82793 | 52044144 | GCO82855 | 423400E170 | GCO82932 |
| 2Q0498099X | GCO82705 | A1773302701 | GCO82739 | FT0H22510 | GCO82793 | 9103300400 | GCO82856 | 495L2P2400 | GCO82933 |
| 10719314 | GCO82706 | A1773302801 | GCO82739 | FT0J22610 | GCO82793 | 9103300900 | GCO82856 | 495R2P2050 | GCO82933 |
| 10719315 | GCO82706 | A1773309000 | GCO82739 | FT0J2550X | GCO82793 | 9103301000 | GCO82856 | 1K0407272EP | GCO83002 |
| 10233398 | GCO82707 | A1773309800 | GCO82739 | FT0N22510A | GCO82793 | 9103301100 | GCO82856 | 1K0407311J | GCO83002 |
| 10233400 | GCO82707 | A1773309900 | GCO82739 | FT0N22610 | GCO82793 | 9103304300 | GCO82856 | 1K0498099B | GCO83002 |
| 10296400 | GCO82707 | 4233042090 | GCO82740 | GT0022510 | GCO82793 | A9103300400 | GCO82856 | 1K0498099BX | GCO83002 |
| 10296401 | GCO82707 | 4234042070 | GCO82740 | GT0022610 | GCO82793 | A9103300900 | GCO82856 | 1K0498099J | GCO83002 |
| 49580S1000 | GCO82721 | 4237049375 | GCO82740 | 3210001AFC0000 | GCO82794 | A9103301000 | GCO82856 | 1K0498099JX | GCO83002 |
| 49580S1050 | GCO82721 | 4237049395 | GCO82740 | 3210002AFC0000 | GCO82794 | A9103301100 | GCO82856 | 1K0498099K | GCO83002 |
| 49580S1060 | GCO82721 | 1773300902 | GCO82746 | 3815A683 | GCO82795 | A9103304300 | GCO82856 | 1K0498099KX | GCO83002 |
| 49580S1100 | GCO82721 | 1773301002 | GCO82746 | 3815A684 | GCO82795 | GT0B2550X | GCO82857 | 1K0498099L | GCO83002 |
| 49525G3000 | GCO82724 | 1773609400 | GCO82746 | 52044145 | GCO82797 | GT0B2560X | GCO82857 | 1K0498099LX | GCO83002 |
| 49525G4200 | GCO82724 | A1773300902 | GCO82746 | 4347079235 | GCO82798 | 36003149 | GCO82859 | 1K0498311J | GCO83002 |
| 49525G4500 | GCO82724 | A1773301002 | GCO82746 | 4347079245 | GCO82798 | 36003151 | GCO82859 | 1KM498099 | GCO83002 |
| 49525G4600 | GCO82724 | A1773609400 | GCO82746 | GT0D22510 | GCO82801 | 1253820200 | GCO82880 | 5C0498099 | GCO83002 |
| 49525G7100 | GCO82724 | 1666449580 | GCO82749 | GT0D2560X | GCO82801 | SA2H2203010 | GCO82880 | 5C0498099D | GCO83002 |
| 49525J9000 | GCO82724 | 1675589880 | GCO82749 | GT0L22510 | GCO82801 | 495L1Q2800 | GCO82885 | 8J0498099 | GCO83002 |
| 49526G3000 | GCO82724 | 1677230080 | GCO82749 | GT0L22610 | GCO82801 | 495R1Q2800 | GCO82885 | 8J0498099A | GCO83002 |
| 49526G4200 | GCO82724 | 1677230180 | GCO82749 | GT0L2550X | GCO82801 | 1149136200 | GCO82895 | 8J0498099X | GCO83002 |
| 49526G4500 | GCO82724 | 9825384080 | GCO82749 | GT0L2560X | GCO82801 | 1169194900 | GCO82895 | 171407311L | GCO83007 |
| 49526G4600 | GCO82724 | 9825384180 | GCO82749 | 1673305501 | GCO82803 | 1169209200 | GCO82895 | 191598099 | GCO83007 |
| 49526J9000 | GCO82724 | 9836232080 | GCO82749 | A1673305501 | GCO82803 | S6DM2203020A | GCO82895 | 3054073111 | GCO83007 |
| 1266999600 | GCO82725 | 9836232180 | GCO82749 | 1614920280 | GCO82805 | SEH2203010 | GCO82895 | 305407311B | GCO83007 |
| MEEC2203010 | GCO82725 | 9836235180 | GCO82749 | 1614920480 | GCO82805 | SEH2203020 | GCO82895 | 305407311C | GCO83007 |
| 495A2H8310 | GCO82726 | 9836235280 | GCO82749 | 1617416480 | GCO82805 | 1081451000 | GCO82896 | 305407311G | GCO83007 |
| 495L1Q0200 | GCO82726 | 391005742R | GCO82755 | 9813090980 | GCO82805 | 1081451500 | GCO82896 | 305407711C | GCO83007 |
| 495R1Q0200 | GCO82726 | 391019563R | GCO82755 | 9813091880 | GCO82805 | F3T2203010 | GCO82896 | 321407311L | GCO83007 |
| 1663303400 | GCO82731 | 44101M55RA0 | GCO82756 | 9821573080 | GCO82805 | F3T2203020 | GCO82896 | 321407311M | GCO83007 |
| A1663303400 | GCO82731 | 44101M68P00 | GCO82756 | 9839512780 | GCO82805 | 1253820100 | GCO82898 | 321498099A | GCO83007 |
| 49580H8250 | GCO82732 | 44101M68P10 | GCO82756 | 9839513280 | GCO82805 | SA2H2203020 | GCO82898 | 321498099B | GCO83007 |
| 49580H8400 | GCO82732 | 44101M68PA0 | GCO82756 | FTC122510 | GCO82807 | 2203100CD03AA | GCO82899 | 321498099E | GCO83007 |
| 31608639519 | GCO82734 | 44102M55RA0 | GCO82756 | 28491FE120 | GCO82808 | 2203200CD03AA | GCO82899 | 321498099EX | GCO83007 |
| 31608639520 | GCO82734 | 44102M68P00 | GCO82756 | 28491FE121 | GCO82808 | 1103353400 | GCO82900 | 321498099F | GCO83007 |
| 31608639521 | GCO82734 | 44102M68P10 | GCO82756 | 28491FE130 | GCO82808 | 1103360100 | GCO82900 | 377407311 | GCO83007 |
| 31608639522 | GCO82734 | 44102M68PA0 | GCO82756 | 28491FE131 | GCO82808 | 1127923700 | GCO82900 | 377407311C | GCO83007 |
| 31608657289 | GCO82734 | 2303100XKV09A | GCO82759 | 28491FE240 | GCO82808 | 1146406500 | GCO82900 | 377498099L | GCO83007 |
| 31608657290 | GCO82734 | 2303100XKV09B | GCO82759 | 28491FE241 | GCO82808 | HA2203010 | GCO82900 | 5X0498099A | GCO83007 |
| 31608657291 | GCO82734 | G1FZ3B436G | GCO82770 | 1642344480 | GCO82810 | HA2203010B | GCO82900 | 5Z0498099A | GCO83007 |
| 31608657292 | GCO82734 | 423400R010 | GCO82771 | 1642344580 | GCO82810 | HA2203020 | GCO82900 | 811498099E | GCO83007 |
| 31608664675 | GCO82734 | 4237049305 | GCO82771 | 9827832580 | GCO82810 | HA2203020B | GCO82900 | 811498099EX | GCO83007 |
| 31608664676 | GCO82734 | 4237049346 | GCO82771 | 9827832680 | GCO82810 | 10762790 | GCO82903 | 811498099F | GCO83007 |
| AT866467502 | GCO82734 | 4237079005 | GCO82771 | 4410184M00 | GCO82816 | 10784998 | GCO82905 | 893498099G | GCO83009 |
| AU866467602 | GCO82734 | 2303100XKM01A | GCO82781 | 4410184M10000 | GCO82816 | 10784999 | GCO82905 | 893498099GX | GCO83009 |
| 31608486201 | GCO82735 | 2303101XKM01A | GCO82781 | 4410284M00 | GCO82816 | 10896495 | GCO82911 | 895407305 | GCO83009 |
| 31608486205 | GCO82735 | 2203100BE50 | GCO82783 | 1673308501 | GCO82817 | GA352550X | GCO82914 | 895498099B | GCO83009 |
| 31608643183 | GCO82735 | 2203200BE50 | GCO82783 | 1673308601 | GCO82817 | GA352550XA | GCO82914 | 893407305N | GCO83012 |
| 31608643184 | GCO82735 | 391005SN0A | GCO82784 | A1673308501 | GCO82817 | GA352560X | GCO82914 | 893498099M | GCO83012 |
| 2123501910 | GCO82736 | 391015SN0A | GCO82784 | A1673308601 | GCO82817 | GA352560XC | GCO82914 | 893498099MX | GCO83012 |
| A2123501910 | GCO82736 | 1909739 | GCO82786 | FTD722510 | GCO82818 | 3815A679 | GCO82915 | 895407305B | GCO83012 |
| 2133303503 | GCO82737 | 1909742 | GCO82786 | GDD722510 | GCO82818 | 3815A680 | GCO82915 | 895498099A | GCO83012 |
| 2133309902 | GCO82737 | 2422416 | GCO82786 | FTC922510 | GCO82819 | 3815A682 | GCO82915 | 895498099H | GCO83012 |
| 2133309905 | GCO82737 | 2422420 | GCO82786 | 28491SC000 | GCO82822 | 52015489 | GCO82919 | 8A0498099 | GCO83012 |
| A2133303503 | GCO82737 | FV663A327BA | GCO82786 | 28491SC001 | GCO82822 | 77366260 | GCO82919 | 8A0498099X | GCO83012 |
| A2133309902 | GCO82737 | FV663A327BB | GCO82786 | 28491SC002 | GCO82822 | 495L2L1200 | GCO82920 | 443407305B | GCO83014 |
| A2133309905 | GCO82737 | FV663A328BA | GCO82786 | 495002K670 | GCO82823 | 495R2L1250 | GCO82920 | 443498099B | GCO83014 |
| 31605A2E043 | GCO82738 | FV663A328BB | GCO82786 | 495012K670 | GCO82823 | 46308946 | GCO82930 | 443498099BX | GCO83014 |
| 31605A2E044 | GCO82738 | 49580A8050 | GCO82789 | GD712550X | GCO82824 | 52054177 | GCO82930 | 443498099C | GCO83014 |
| 31608681529 | GCO82738 | 3210001ARD0200 | GCO82791 | GD712550XA | GCO82824 | 52054179 | GCO82930 | 443498099CX | GCO83014 |
| 31608681530 | GCO82738 | 3210001AVN0700 | GCO82791 | GD712550XB | GCO82824 | 59259021 | GCO82930 | 4A0407305E | GCO83014 |
| 31608742385 | GCO82738 | 3210001AVN1001 | GCO82791 | GD712560XA | GCO82824 | 59259151 | GCO82930 | 4A0407305A | GCO83016 |
| 31608742386 | GCO82738 | 3210002ARD0200 | GCO82791 | GD712560XB | GCO82824 | 68275020AA | GCO82930 | 4A0407305F | GCO83016 |
| 1773300700 | GCO82739 | 3210002AVN0700 | GCO82791 | 10766805 | GCO82828 | 68356466AA | GCO82930 | 4A0498099B | GCO83016 |
| 1773302701 | GCO82739 | 3210002AVN1000 | GCO82791 | GP342560X | GCO82829 | K68275020AA | GCO82930 | 4A0498099C | GCO83016 |
| 1773302801 | GCO82739 | 495914D100 | GCO82792 | 2217846 | GCO82846 | K68356466AA | GCO82930 | 4A0498099J | GCO83016 |
| 1773309000 | GCO82739 | 495914D150 | GCO82792 | 2310002 | GCO82846 | 423400E140 | GCO82932 | 895407305A | GCO83016 |
| 1773309800 | GCO82739 | FT0222610 | GCO82793 | JB3G3A427BB | GCO82846 | 423400E150 | GCO82932 | 895498099C | GCO83016 |

| COMPETITOR | G-AP Ref. | COMPETITOR | G-AP Ref. | COMPETITOR | G-AP Ref. | COMPETITOR | G-AP Ref. | COMPETITOR | G-AP Ref. |
|---|---|---|---|---|---|---|---|---|---|
| OE | | 8E0407305D | GCO83030 | 1J0498099B | GCO83070 | 5N0498099 | GCO83101 | 31608682366 | GCO83161 |
| | | 8E0498099 | GCO83030 | 1J0498099BX | GCO83070 | 5N0498099A | GCO83101 | 31608682367 | GCO83161 |
| 895498099D | GCO83016 | 8E0498099D | GCO83030 | 1J0498099F | GCO83070 | 5N0498099AX | GCO83101 | 4410153R02 | GCO83162 |
| 441407305B | GCO83017 | 8E0498099DX | GCO83030 | 1J0498099G | GCO83070 | 5N0498099B | GCO83101 | 4410153R12 | GCO83162 |
| 4A0407305G | GCO83017 | 8E0498099X | GCO83030 | 1J0498311 | GCO83070 | 5N0498099BX | GCO83101 | 4410253R00 | GCO83162 |
| 4A0407311B | GCO83017 | 150498099 | GCO83033 | 357498099E | GCO83070 | 5N0498099C | GCO83101 | 4410253R10 | GCO83162 |
| 4A0498099 | GCO83017 | 150498099A | GCO83033 | 357498099EV | GCO83070 | 5N0498099CX | GCO83101 | 2303100XST11A | GCO83163 |
| 4A0498099D | GCO83017 | 1J0407271PR | GCO83033 | 357498099EX | GCO83070 | 5N0498099D | GCO83101 | 2303101XST11A | GCO83163 |
| 893407305G | GCO83017 | 1J0407272NG | GCO83033 | 4E0407305D | GCO83077 | 5N0498099DX | GCO83101 | 2303102XST11A | GCO83163 |
| 893498099L | GCO83017 | 1J0407311 | GCO83033 | 4E0498099 | GCO83077 | 5N0498099X | GCO83101 | 2303103XST11A | GCO83163 |
| 893498099LX | GCO83017 | 1J0498099 | GCO83033 | 4E0498099A | GCO83077 | 5Q0407271H | GCO83101 | 154000353AA | GCO83164 |
| 8A0407305F | GCO83017 | 1J0498099A | GCO83033 | 4E0498099AX | GCO83077 | 5Q0498099 | GCO83101 | 154000354AA | GCO83164 |
| 8D0407305G | GCO83018 | 1J0498099AX | GCO83033 | 4F0498099A | GCO83077 | 5Q0498099A | GCO83101 | 154000355AA | GCO83164 |
| 8D0498099 | GCO83018 | SK1J0498099A | GCO83033 | 4F0498099AX | GCO83077 | 5Q0498099AX | GCO83101 | 154000536AA | GCO83164 |
| 8D0498099B | GCO83018 | 1J0407311K | GCO83035 | 4F0498099C | GCO83077 | 5Q0498099C | GCO83101 | 154000547AA | GCO83164 |
| 8D0498099BX | GCO83018 | 1J0407311R | GCO83035 | 8E0498099E | GCO83078 | 5Q0498099CX | GCO83101 | 154000548AA | GCO83164 |
| 1H0407271GX | GCO83019 | 1J0498099E | GCO83035 | 8E0498099EX | GCO83078 | 5Q0498099X | GCO83101 | 154000608AA | GCO83164 |
| 3B0498099E | GCO83019 | 1J0498099EV | GCO83035 | 8E0498099F | GCO83078 | 81A498099 | GCO83101 | 154000609AA | GCO83164 |
| 3B0498099EX | GCO83019 | 1J0498099EX | GCO83035 | 8E0498099FX | GCO83078 | 81A498099X | GCO83101 | T152203020BW | GCO83164 |
| 3B0498099G | GCO83019 | 1J0498099H | GCO83035 | 6Q0498099G | GCO83079 | 8V0498099 | GCO83101 | 49580F3000 | GCO83165 |
| 3B0498099GX | GCO83019 | 1J0498099HX | GCO83035 | 6Q0498099GX | GCO83079 | 8V0498099X | GCO83101 | 31609846769 | GCO83166 |
| 3B0498099J | GCO83019 | 1KM498099A | GCO83035 | 3B0598099 | GCO83080 | 8V0498104A | GCO83101 | 31609846770 | GCO83166 |
| 3B0498099JX | GCO83019 | 1J0407311G | GCO83037 | 3B0598099X | GCO83080 | 80A498099 | GCO83102 | 2303104XST11A | GCO83168 |
| 3B0498099K | GCO83019 | 1K0407311G | GCO83037 | 7L6407321E | GCO83085 | 8K0498099E | GCO83102 | 2303105XST11A | GCO83168 |
| 3B0498099KX | GCO83019 | 1K0407311H | GCO83037 | 7L6498099A | GCO83085 | 8K0498099EX | GCO83102 | 2403100XST11A | GCO83169 |
| 3D0598099 | GCO83019 | 1K0407311L | GCO83037 | 7L6498099C | GCO83085 | 4H0498099 | GCO83103 | 2403101XST11A | GCO83169 |
| 4D0498099 | GCO83019 | 1K0407311R | GCO83037 | 7L6498099CX | GCO83085 | 4H0498099A | GCO83103 | 154000259AA | GCO83170 |
| 4D0498099A | GCO83019 | 1K0498099 | GCO83037 | 8K0407305C | GCO83086 | 4H0498099AX | GCO83103 | 154000260AA | GCO83170 |
| 4D0498099AX | GCO83019 | 1K0498099A | GCO83037 | 8K0498099B | GCO83086 | 8K0407305K | GCO83103 | J682203010 | GCO83170 |
| 4D0498099X | GCO83019 | 1K0498099AX | GCO83037 | 8K0498099BV | GCO83086 | 8K0498099F | GCO83103 | J682203020 | GCO83170 |
| 4D0598099 | GCO83019 | 1K0498099C | GCO83037 | 8K0498099BX | GCO83086 | 8K0498099FX | GCO83103 | 154000078AA | GCO83171 |
| 4D0598099A | GCO83019 | 1K0498099E | GCO83037 | 8K0407271QS | GCO83087 | 7N0498099A | GCO83104 | 154000079AA | GCO83171 |
| 8D0407305J | GCO83019 | 1K0498099EX | GCO83037 | 8K0407305D | GCO83087 | 7N0498099AX | GCO83104 | 154000153AA | GCO83172 |
| 8D0498099D | GCO83019 | 1K0498099H | GCO83037 | 8K0407305F | GCO83087 | 7N0498099B | GCO83104 | 154000305AA | GCO83172 |
| 8D0498099DX | GCO83019 | 1K0498099HX | GCO83037 | 8K0407305H | GCO83087 | 7N0498099BX | GCO83104 | 154000307AA | GCO83172 |
| 8D0498099E | GCO83019 | 1K0498099X | GCO83037 | 8K0498099 | GCO83087 | 7N0498099C | GCO83104 | 49580S1200 | GCO83174 |
| 8D0498099EX | GCO83019 | 5C0498099A | GCO83037 | 8K0498099C | GCO83087 | 7N0498099CX | GCO83104 | 49580S1250 | GCO83174 |
| JZW498340HX | GCO83019 | 6Q0498099F | GCO83041 | 8K0498099CX | GCO83087 | 7N0498099X | GCO83104 | HK833B436BA | GCO83197 |
| 8D0407305H | GCO83020 | 6Q0498099FX | GCO83041 | 8K0498099D | GCO83087 | 443498099F | GCO83106 | HK833B437AA | GCO83197 |
| 8D0498099A | GCO83020 | 8D0407271AM | GCO83045 | 8K0498099DX | GCO83087 | 447407305 | GCO83106 | J9D34K327AA | GCO83197 |
| 8D0498099C | GCO83020 | 8D0407271BF | GCO83045 | 8K0498099X | GCO83087 | 447498099 | GCO83106 | LR092754 | GCO83197 |
| 8D0498099CX | GCO83020 | 8D0407271DN | GCO83045 | 8K0598099A | GCO83087 | 447498099X | GCO83106 | LR092755 | GCO83197 |
| 3B0498099B | GCO83021 | 8D0407451GX | GCO83045 | 8K0598099AX | GCO83087 | 8K0407305J | GCO83107 | T4A12492 | GCO83197 |
| 3B0498099BX | GCO83021 | 8D0407305H | GCO83049 | 8K0407305E | GCO83088 | 8K0407305M | GCO83107 | T4A12493 | GCO83197 |
| 3B0498099C | GCO83021 | 8D0498099A | GCO83049 | 8K0498099A | GCO83088 | 8R0498099 | GCO83107 | T4K6506 | GCO83197 |
| 3B0498099CX | GCO83021 | 8D0498099C | GCO83049 | 8K0498099AV | GCO83088 | 8T0498099 | GCO83107 | 1246336700 | GCO83198 |
| 3B0498099F | GCO83021 | 8D0498099CX | GCO83049 | 8K0498099AX | GCO83088 | 8T0498099X | GCO83107 | 1246336900 | GCO83198 |
| 3B0498099FX | GCO83021 | 893407311D | GCO83051 | 4D0407305B | GCO83092 | 95B407305B | GCO83107 | 1246405500 | GCO83198 |
| 3B0498099H | GCO83021 | 893498099B | GCO83051 | 8E0498099A | GCO83092 | 7P0498099 | GCO83117 | 1307607300 | GCO83198 |
| 3B0498099HX | GCO83021 | 893498099F | GCO83051 | 8E0498099G | GCO83092 | 7P0498099A | GCO83117 | STE2201010B | GCO83198 |
| 8D0407305M | GCO83021 | 893498099H | GCO83051 | 8E0498099GX | GCO83092 | 7P0498099AX | GCO83117 | STE2201020 | GCO83198 |
| 6C0498099B | GCO83024 | 8E0407305A | GCO83058 | 1K0498099F | GCO83101 | 7P0498099B | GCO83117 | STE2203010 | GCO83198 |
| 6C0498099BX | GCO83024 | 8E0407305D | GCO83058 | 1K0498099G | GCO83101 | 7P0498099BX | GCO83117 | STE2203020 | GCO83198 |
| 6Q0407271DA | GCO83024 | 8E0498099 | GCO83058 | 1K0498099GX | GCO83101 | 7P0498099X | GCO83117 | 10489291 | GCO83201 |
| 6Q0407311Q | GCO83024 | 8E0498099D | GCO83058 | 1K0498099M | GCO83101 | 95834990101 | GCO83117 | 12E498099A | GCO83202 |
| 6Q0498099B | GCO83024 | 8E0498099DX | GCO83058 | 1K0498099MX | GCO83101 | T11XLB3AF2203030 | GCO83155 | 12E498099AX | GCO83202 |
| 6Q0498099BX | GCO83024 | 8E0498099X | GCO83058 | 2Q0498099L | GCO83101 | T11XLB3AH2203030F | GCO83155 | 2203100CD02 | GCO83204 |
| 6Q0498099E | GCO83024 | 8E0598099 | GCO83058 | 2Q0498099LX | GCO83101 | C2D51310 | GCO83156 | 2203200CD02 | GCO83204 |
| 6Q0498099EX | GCO83024 | 8E0598099A | GCO83058 | 3C0407311A | GCO83101 | HK833B436AB | GCO83156 | S311F2501010201 | GCO83204 |
| 6QD498099 | GCO83024 | 8E0407305B | GCO83067 | 3C0498099 | GCO83101 | LR092752 | GCO83156 | S311F2501010301 | GCO83204 |
| 893498099P | GCO83026 | 8E0498099C | GCO83067 | 3C0498099X | GCO83101 | 154000173AA | GCO83157 | 8251779 | GCO83208 |
| 893498099PV | GCO83026 | 8E0498099CX | GCO83067 | 3CD498099 | GCO83101 | 154000174AA | GCO83157 | 8251780 | GCO83208 |
| 893498099PX | GCO83026 | 1771289 | GCO83070 | 3Q0498099A | GCO83101 | 154000203AA | GCO83157 | 4341042390 | GCO83209 |
| 8A0407305G | GCO83026 | 1H0407311 | GCO83070 | 3Q0498099AX | GCO83101 | 154000204AA | GCO83157 | 4342042280 | GCO83209 |
| 6Q0498099 | GCO83027 | 1H0498099A | GCO83070 | 3Q0498099E | GCO83101 | T15XLB3AF2203030B | GCO83157 | 495L1MA000 | GCO83210 |
| 6Q0498099D | GCO83027 | 1H0498099E | GCO83070 | 5C0498099B | GCO83101 | 154000284AA | GCO83159 | 495R1MA000 | GCO83210 |
| 6Q0498099DX | GCO83027 | 1J0407311C | GCO83070 | 5C0498099E | GCO83101 | 154000285AA | GCO83159 | 2303300AKZ6HA | GCO83211 |
| 8E0407305A | GCO83030 | 1J0407311D | GCO83070 | 5N0407311B | GCO83101 | RDB22550X | GCO83160 | 2303300XKZ20A | GCO83211 |

| COMPETITOR | G-AP Ref. | COMPETITOR | G-AP Ref. | COMPETITOR | G-AP Ref. | COMPETITOR | G-AP Ref. | COMPETITOR | G-AP Ref. |
|---|---|---|---|---|---|---|---|---|---|
| OE | | 4473305800 | GCO83260 | 3210H04ED1PA01 | GCO83311 | 2303200ASZ20B | GCO83350 | 2303124XGW01A | GCO83433 |
| | | 4473308500 | GCO83260 | 154000098AA | GCO83312 | T15XLB3AF2203030B | GCO83351 | 2303127XGW01A | GCO83433 |
| 2303300XKZ78A | GCO83211 | A4473305800 | GCO83260 | 154000099AA | GCO83312 | 2512488 | GCO83353 | 2303104XNW01A | GCO83434 |
| 2303400AKZ08A | GCO83211 | A4473308500 | GCO83260 | 154000100AA | GCO83312 | 2512644 | GCO83353 | 2303105XGW02A | GCO83434 |
| 2303400AKZ6HA | GCO83211 | 31602375507 | GCO83263 | 154000101AA | GCO83312 | 2513182 | GCO83353 | 2303105XNW01A | GCO83434 |
| 2303400XKZ20A | GCO83211 | 31602397421 | GCO83263 | 4082049700 | GCO83314 | JX673A327JA | GCO83353 | 2303106XGW02A | GCO83434 |
| 2303400XKZ78A | GCO83211 | 31605A2E045 | GCO83263 | 4082067000 | GCO83314 | JX673A328JA | GCO83353 | 392114BE0B | GCO83436 |
| 49500QE000 | GCO83212 | 31607646816 | GCO83263 | 4082086500 | GCO83315 | JX673A328KA | GCO83353 | 495003S001 | GCO83441 |
| 49501QE000 | GCO83212 | 31608607263 | GCO83263 | T11XLB3AH2203030 | GCO83318 | 3210001ARD0100 | GCO83354 | 495013S071 | GCO83441 |
| NL3Z4K138A | GCO83213 | 31608611931 | GCO83263 | 4082100700 | GCO83320 | 3210002ARD0100 | GCO83354 | 495L2S1010 | GCO83443 |
| NL3Z4K139A | GCO83213 | 31608643367 | GCO83263 | 4082100900 | GCO83320 | 4082106400 | GCO83355 | 495R2S1070 | GCO83443 |
| RD022550X | GCO83215 | 31608643381 | GCO83263 | 4082101100 | GCO83320 | 4082106500 | GCO83355 | CH523A427AA | GCO83445 |
| RD022560X | GCO83215 | 31608661685 | GCO83263 | 4082101400 | GCO83320 | 32249416 | GCO83356 | CH523A428AA | GCO83445 |
| 68292313AB | GCO83216 | 31608661686 | GCO83263 | 4082091000 | GCO83321 | 36003617 | GCO83356 | LR032115 | GCO83445 |
| 68292314AB | GCO83216 | 31608681521 | GCO83263 | 4082584700 | GCO83321 | 36003708 | GCO83356 | LR032116 | GCO83445 |
| 28391SJ000 | GCO83217 | 31608681522 | GCO83263 | 4082101500 | GCO83322 | 36003709 | GCO83356 | 391004752R | GCO83446 |
| 28391FL030 | GCO83218 | 31608681528 | GCO83263 | 4082101800 | GCO83322 | 391009795R | GCO83368 | 391008349R | GCO83446 |
| 44014TGN306 | GCO83219 | 4473306800 | GCO83266 | T15XLB3AF2203030C | GCO83323 | 391011074R | GCO83368 | 391011979R | GCO83446 |
| 44014TGNE91 | GCO83219 | 4473308700 | GCO83266 | 391000372R | GCO83324 | 2933501100 | GCO83373 | 8450008103 | GCO83446 |
| 28491FL020 | GCO83220 | 9103302900 | GCO83266 | 391019099R | GCO83324 | A2933501100 | GCO83373 | 8450008104 | GCO83446 |
| 2203100MK06CD06 | GCO83224 | 9103304100 | GCO83266 | J692203010 | GCO83325 | 1311375000 | GCO83375 | 8450030790 | GCO83446 |
| 2203200MK06CD06 | GCO83224 | A4473306800 | GCO83266 | J692203020 | GCO83325 | 2203100MK07CD08 | GCO83388 | 8450030791 | GCO83446 |
| S311F2501010203 | GCO83224 | A4473308700 | GCO83266 | 154000094AA | GCO83326 | 2203200MK07CD08 | GCO83388 | 4237029435 | GCO83449 |
| S311F2501010303 | GCO83224 | A9103302900 | GCO83266 | 154000095AA | GCO83326 | S311F2501010204 | GCO83388 | 495L1G4150 | GCO83450 |
| 2203100BQ04 | GCO83227 | A9103304100 | GCO83266 | T21XLB3AF2203030 | GCO83327 | S311F2501010304 | GCO83388 | 495L1G4250 | GCO83450 |
| 2203100BQ05 | GCO83227 | 4703300300 | GCO83269 | 4082071600 | GCO83328 | 392115RA0A | GCO83390 | 495R1G4250 | GCO83450 |
| 2203200BQ04 | GCO83227 | A4703300300 | GCO83269 | 4082082500 | GCO83328 | K00301065 | GCO83390 | 391005FP0A | GCO83451 |
| 2203200BQ05 | GCO83227 | 10621764 | GCO83270 | 4082082600 | GCO83328 | 2409030QR01 | GCO83391 | 391005FP0B | GCO83451 |
| S111F2501010202 | GCO83227 | 3220H01ED1PA01 | GCO83271 | 2201100XSZ09B | GCO83330 | 327536 | GCO83404 | 391015FP0A | GCO83451 |
| S111F2501010203 | GCO83227 | 3220H04ED1PA01 | GCO83271 | 2201200XSZ09B | GCO83330 | K00301061 | GCO83406 | 391015FP0B | GCO83451 |
| S111F2501010302 | GCO83227 | C00186050 | GCO83272 | 2303100XSZ20B | GCO83331 | K00301063 | GCO83406 | 4M4407271 | GCO83460 |
| S111F2501010303 | GCO83227 | C00186051 | GCO83272 | 3210001CAD0100 | GCO83332 | 2659217 | GCO83408 | 3815A886 | GCO83462 |
| 2280152 | GCO83240 | 39211EG000 | GCO83273 | 3210002CAD0100 | GCO83332 | 2663816 | GCO83408 | 3815A941 | GCO83462 |
| 2280155 | GCO83240 | 391004JA2A | GCO83274 | 3210002CAD0200 | GCO83332 | 2HJ407271A | GCO83408 | 32240101 | GCO83463 |
| 2527106 | GCO83240 | 3210100DC10003 | GCO83277 | 2303200XSZ08B | GCO83333 | 2HJ407272B | GCO83408 | 36011800 | GCO83463 |
| 2527108 | GCO83240 | 118816500A | GCO83278 | 2303200XSZ09A | GCO83333 | MB3W3A427GC | GCO83408 | 36012942 | GCO83463 |
| GK213A327CA | GCO83240 | 118816599A | GCO83278 | 4082064100 | GCO83334 | MB3W3A428GB | GCO83408 | 36012943 | GCO83463 |
| GK213A328CA | GCO83240 | 142011300B | GCO83279 | 4082064300 | GCO83334 | MB3Z3A427G | GCO83408 | 36013035 | GCO83463 |
| 3921173L00 | GCO83242 | 142011900B | GCO83279 | 4082064400 | GCO83334 | MB3Z3A428K | GCO83408 | GD0022510 | GCO83466 |
| 2203100AW10 | GCO83244 | 155310900B | GCO83279 | 4082064700 | GCO83334 | 1305634400 | GCO83410 | GD0022610 | GCO83466 |
| 2203100AW11 | GCO83244 | 162663600A | GCO83279 | 4082585900 | GCO83335 | 1305634500 | GCO83410 | 4347039625 | GCO83471 |
| 2203200AW10 | GCO83244 | 162663800A | GCO83279 | 4082064900 | GCO83336 | SA3HE2203010A | GCO83410 | 4347039635 | GCO83471 |
| 2203200AW11 | GCO83244 | 11339393 | GCO83280 | 4082073800 | GCO83336 | SA3HE2203020A | GCO83410 | C92116UB2B | GCO83476 |
| S2010470103 | GCO83244 | 32739J | GCO83282 | 4082008400 | GCO83337 | 2933300600 | GCO83415 | C92116UM2B | GCO83477 |
| S2010470203 | GCO83244 | 32739K | GCO83282 | 1673508301 | GCO83340 | A2933300600 | GCO83415 | 495L2P2200 | GCO83480 |
| 36000931 | GCO83248 | 495912F600 | GCO83285 | 1673508401 | GCO83340 | 2973309800 | GCO83416 | 495R2P2250 | GCO83480 |
| 36001876 | GCO83248 | 495912F606 | GCO83285 | A1673508301 | GCO83340 | A2973309800 | GCO83416 | 154000238AA | GCO83487 |
| SA6225510 | GCO83250 | 8975289810 | GCO83288 | A1673508401 | GCO83340 | 154000234AA | GCO83419 | 154000239AA | GCO83487 |
| 52123522AA | GCO83253 | 118816100D | GCO83289 | 11135812 | GCO83341 | 154000235AA | GCO83419 | 1EA501203J | GCO83488 |
| 52123523AA | GCO83253 | 118811599A | GCO83290 | 11135813 | GCO83341 | 154000236AA | GCO83419 | 1EA501204J | GCO83488 |
| 68035017AB | GCO83253 | 10129372 | GCO83292 | 3230005CAD0000 | GCO83343 | 154000237AA | GCO83419 | 2303102XNW01A | GCO83493 |
| 4346059885 | GCO83254 | 10129464 | GCO83292 | 3230006CAD0000 | GCO83343 | 46308942 | GCO83422 | 2303103AGW01A | GCO83493 |
| 4347059875 | GCO83254 | 10537002 | GCO83292 | 2303300AKZ65A | GCO83344 | 59259013 | GCO83422 | 2303103XNW01B | GCO83493 |
| 1607039480 | GCO83255 | 5QN498099B | GCO83293 | 2303300XKY28A | GCO83344 | 59259200 | GCO83422 | 2303104AGW01A | GCO83493 |
| 1607039580 | GCO83255 | 5QN498099C | GCO83293 | 2303300XKY48B | GCO83344 | K68421425AA | GCO83422 | 68193667AC | GCO83495 |
| 9671931780 | GCO83255 | 5QN498099D | GCO83293 | 2303300XKZ65A | GCO83344 | 1607735380 | GCO83423 | 2303100XPW01A | GCO83500 |
| 9671931880 | GCO83255 | 6393300801 | GCO83299 | 2303400AKZ65A | GCO83344 | 1608901980 | GCO83423 | 2303101XPW01A | GCO83500 |
| 32324586 | GCO83257 | A6393300801 | GCO83299 | 2303400XKY28A | GCO83344 | 3272SL | GCO83423 | 2303102XPW01A | GCO83500 |
| 36003706 | GCO83257 | 2403100XKY88A | GCO83300 | 2303400XKY88A | GCO83344 | 3272SN | GCO83423 | 2303103XPW01A | GCO83500 |
| 36003707 | GCO83257 | 2403200XKY88A | GCO83300 | 2303400XKZ4UA | GCO83344 | 392116RA5D | GCO83428 | 2419979 | GCO83505 |
| 36003735 | GCO83257 | 59259201 | GCO83301 | 2303400XKZ65A | GCO83344 | 2433301600 | GCO83430 | 2420133 | GCO83505 |
| 36010578 | GCO83257 | T21XLB3AF2203030C | GCO83303 | 4082071100 | GCO83345 | A2433301600 | GCO83430 | 2420199 | GCO83505 |
| 36011712 | GCO83257 | 13348263 | GCO83304 | 4082071300 | GCO83345 | 2203100BN09 | GCO83431 | 2421126 | GCO83505 |
| 2592567 | GCO83258 | 13377898 | GCO83304 | 4082102700 | GCO83345 | 2203200BN09 | GCO83431 | 2421137 | GCO83505 |
| 2592568 | GCO83258 | 2309030QR01 | GCO83305 | 4082102800 | GCO83345 | C211F2501010206 | GCO83431 | 2421160 | GCO83505 |
| NK414K138AD | GCO83258 | T21XLB3AF2203030E | GCO83306 | 4082057100 | GCO83346 | C211F2501010305 | GCO83431 | KTLX673A327AAA | GCO83505 |
| NK414K139AD | GCO83258 | 4082075700 | GCO83309 | 4082094300 | GCO83347 | 495802K820 | GCO83432 | KTLX673A327CAA | GCO83505 |
| SA1122510 | GCO83259 | 3210H01ED1PA01 | GCO83311 | 8832010BAD0000 | GCO83349 | 495812K820 | GCO83432 | KTLX673A327DAA | GCO83505 |

| COMPETITOR | G-AP Ref. | COMPETITOR | G-AP Ref. | COMPETITOR | G-AP Ref. | COMPETITOR | G-AP Ref. | COMPETITOR | G-AP Ref. |
|---|---|---|---|---|---|---|---|---|---|
| OE | | 31609452629 | GCO83608 | 1350015900 | GCO83684 | 4082083100 | GCO83781 | 2799591 | GCO83826 |
| | | 31609452630 | GCO83608 | 1361133200 | GCO83684 | 2203100BN02 | GCO83783 | PZ363A327AB | GCO83826 |
| KTLX673A328BAA | GCO83505 | 59259101 | GCO83610 | 1361133300 | GCO83684 | 2203200BN02 | GCO83783 | PZ363A328AB | GCO83826 |
| KTLX673A328DAA | GCO83505 | 59259120 | GCO83610 | EM2EU2203020B | GCO83684 | C211F2501010201 | GCO83783 | 391006107R | GCO83827 |
| KTLX673A328MAA | GCO83505 | 4473503900 | GCO83616 | SC2EE2203010E | GCO83684 | C211F2501010301 | GCO83783 | 391012121R | GCO83827 |
| LX6Z3B437B | GCO83505 | 4473507900 | GCO83616 | SC2EE2203020E | GCO83684 | 1332122500 | GCO83784 | 2203100MK06DS01 | GCO83829 |
| 43460K9025 | GCO83506 | A4473503900 | GCO83616 | 59347000 | GCO83686 | 1332122700 | GCO83784 | 2203200MK06DS01 | GCO83829 |
| 43460K9035 | GCO83506 | A4473507900 | GCO83616 | 11292322 | GCO83695 | EKEB2201010 | GCO83784 | 2203200MK06CD09 | GCO83830 |
| 43470K9025 | GCO83506 | 49525D7110 | GCO83620 | 11292323 | GCO83695 | EKEB2201020 | GCO83784 | S311F2501010305 | GCO83830 |
| 3210001AVN1300 | GCO83507 | 49526D7110 | GCO83620 | RTC42550X | GCO83696 | 9848820780 | GCO83785 | 2203100MK04CD11 | GCO83831 |
| 3210002ARD0500 | GCO83507 | 495913J602 | GCO83630 | RTC42550XA | GCO83696 | 9848820880 | GCO83785 | 2203200MK04CD11 | GCO83831 |
| 9W834K138CD | GCO83508 | J42XLB3AF2203030G | GCO83632 | RTC42560X | GCO83696 | 4082096600 | GCO83786 | S311F2501010211 | GCO83831 |
| C2Z4812 | GCO83508 | 3274C9 | GCO83634 | RTC42560XA | GCO83696 | 4082096700 | GCO83786 | S311F2501010311 | GCO83831 |
| GX734K138DB | GCO83508 | 3274D0 | GCO83634 | 1314365700 | GCO83697 | 10143064 | GCO83787 | 43410F4210 | GCO83832 |
| GX734K139DB | GCO83508 | 8893033487 | GCO83635 | 1314367400 | GCO83697 | 31609884797 | GCO83795 | 43420F4160 | GCO83832 |
| T2H15164 | GCO83508 | 8893033493 | GCO83635 | SC2EE2203010 | GCO83697 | 31609884798 | GCO83795 | 9836046380 | GCO83833 |
| T2H15167 | GCO83508 | 391007589R | GCO83636 | SC2EE2203020 | GCO83697 | 2203100MK09 | GCO83807 | 495812K620 | GCO83835 |
| T2H3341 | GCO83508 | 391011511R | GCO83636 | 10259524 | GCO83698 | 2203200MK09 | GCO83807 | 9837646580 | GCO83838 |
| 4K0498099 | GCO83511 | 11620525 | GCO83638 | 10259525 | GCO83698 | C281F2501010301 | GCO83807 | 9837647980 | GCO83838 |
| 4K0498099A | GCO83511 | 10900478 | GCO83639 | 1353476700 | GCO83703 | C281F2501010401 | GCO83807 | 1284950100 | GCO83844 |
| 2203100CN02 | GCO83519 | 495L1J9510 | GCO83645 | 1353476800 | GCO83703 | 11339023 | GCO83808 | 1284950200 | GCO83844 |
| 2203200CN02 | GCO83519 | 495R1J9510 | GCO83645 | SA3EK2203010 | GCO83703 | 2203100BQ07 | GCO83809 | HADEK2203010A | GCO83844 |
| 49525G6200 | GCO83520 | 391003037R | GCO83656 | SA3EK2203020 | GCO83703 | 2203200BQ07 | GCO83809 | HADEK2203020A | GCO83844 |
| 49526G6200 | GCO83520 | 391003401R | GCO83656 | 2543308801 | GCO83704 | 2203200BQ10 | GCO83809 | 434100D810 | GCO83845 |
| 50563995 | GCO83522 | 391003955R | GCO83656 | A2543308801 | GCO83704 | 2203200BQ11 | GCO83809 | 434200D740 | GCO83845 |
| 59259139 | GCO83522 | 391011411R | GCO83656 | 1337164600 | GCO83707 | S111F2501010205 | GCO83809 | 1EA501203S | GCO83846 |
| 59259259 | GCO83522 | 391013501R | GCO83656 | 1337164900 | GCO83707 | S111F2501010405 | GCO83809 | 1EA501203T | GCO83846 |
| 68321278AA | GCO83522 | 42438076 | GCO83662 | EKEB2203010A | GCO83707 | S111F2501010406 | GCO83809 | 1EA501204S | GCO83846 |
| 2303300XKU29A | GCO83540 | 10233401 | GCO83664 | EKEB2203020A | GCO83707 | S111F2501010409 | GCO83809 | 1EA501204T | GCO83846 |
| 2303300XKU87A | GCO83540 | 10233402 | GCO83664 | 2200300P3060F03 | GCO83708 | 31605A44AB7 | GCO83810 | 2116604 | GCO83848 |
| 2303400XKU29A | GCO83540 | 30005113 | GCO83669 | 4233024050 | GCO83710 | 31605A44AB8 | GCO83810 | 2187951 | GCO83848 |
| 2303400XKU87A | GCO83540 | 30005114 | GCO83669 | 4234024080 | GCO83710 | 31605A44AC0 | GCO83810 | GN153A327GA | GCO83848 |
| 2303102XGW04A | GCO83543 | A00041394 | GCO83671 | 1337162400 | GCO83711 | 31605A4E431 | GCO83810 | JN154K258CA | GCO83848 |
| 2303103XGW04A | GCO83543 | A00041400 | GCO83671 | 1337164500 | GCO83711 | 31605A4E432 | GCO83810 | 95C501201AF | GCO83852 |
| 391005551R | GCO83544 | A00041401 | GCO83671 | 1337164700 | GCO83711 | 31605A4E434 | GCO83810 | 52123521AD | GCO83853 |
| 391018515R | GCO83544 | A00041402 | GCO83671 | 1337164800 | GCO83711 | 391001535R | GCO83811 | 391017833R | GCO83854 |
| 391000804R | GCO83550 | 1314130200 | GCO83672 | EKEA2201010A | GCO83711 | 391003170R | GCO83811 | 31345295 | GCO83858 |
| 391010424R | GCO83550 | 1314130300 | GCO83672 | EKEA2201020A | GCO83711 | 391003721R | GCO83811 | 31345297 | GCO83858 |
| FD8025500B | GCO83556 | 1345613700 | GCO83672 | EKEB2201010A | GCO83711 | 391005721R | GCO83811 | 31345298 | GCO83859 |
| FD8025600A | GCO83556 | 1345622800 | GCO83672 | EKEB2201020A | GCO83711 | 391009452R | GCO83811 | 31345299 | GCO83859 |
| 8450032632 | GCO83580 | 1349073900 | GCO83672 | 1332122800 | GCO83718 | 391011951R | GCO83811 | 434100H060 | GCO83860 |
| 8450032633 | GCO83580 | 1349074100 | GCO83672 | 1332122900 | GCO83718 | 391015146R | GCO83811 | 434200H060 | GCO83860 |
| 495R1N7050 | GCO83587 | 1350222800 | GCO83672 | EKEB2203010 | GCO83718 | 391019476R | GCO83811 | K8D24K138AC | GCO83861 |
| 495R1N7070 | GCO83587 | 1350222900 | GCO83672 | EKEB2203020 | GCO83718 | 2203100AW14 | GCO83813 | K8D24K139AB | GCO83861 |
| 495R1N7210 | GCO83587 | SA3EB2203010A | GCO83672 | 1350015700 | GCO83727 | 2203100MK04CJ05 | GCO83813 | LR060478 | GCO83861 |
| 391004534R | GCO83588 | SA3EB2203020A | GCO83672 | 1350015800 | GCO83727 | 2203200AW14 | GCO83813 | LR117567 | GCO83861 |
| 391005711R | GCO83588 | RD042550X | GCO83673 | SC2EE2203010F | GCO83727 | 2203200MK04CJ05 | GCO83813 | LR133241 | GCO83861 |
| 391006526R | GCO83588 | RD042560X | GCO83673 | SC2EE2203020F | GCO83727 | S203F2501010201 | GCO83813 | 4410162R22 | GCO83862 |
| 391007305R | GCO83588 | 89A498099 | GCO83674 | 1332120400 | GCO83734 | S203F2501010301 | GCO83813 | 4410262R20 | GCO83862 |
| 391008095R | GCO83588 | 21230221501210 | GCO83676 | 1332122600 | GCO83734 | 1675960580 | GCO83814 | 49580C5030 | GCO83863 |
| 391008444R | GCO83588 | 21230221501287 | GCO83676 | EKEA2201010 | GCO83734 | 2203100MK03 | GCO83817 | 49580C5080 | GCO83863 |
| 391009335R | GCO83588 | 154000282AA | GCO83680 | EKEA2201020 | GCO83734 | 2203200MK03 | GCO83817 | 396004528R | GCO83864 |
| 391014926R | GCO83588 | 154000283AA | GCO83680 | 3273GN | GCO83743 | C281F2501010304 | GCO83817 | 396006593R | GCO83864 |
| 391017183R | GCO83588 | 2116611 | GCO83682 | 2200300U3400XZF011 | GCO83750 | C281F2501010404 | GCO83817 | 396009397R | GCO83864 |
| 391017471R | GCO83588 | 2129262 | GCO83682 | 2201100CR01AA | GCO83757 | 2203100MK03AW19AA | GCO83818 | 4533504801 | GCO83864 |
| 391018755R | GCO83588 | 2129529 | GCO83682 | 2201200CR01AA | GCO83757 | 2203100MK03AW23 | GCO83818 | 4533509300 | GCO83864 |
| 4203370300 | GCO83588 | 5546858 | GCO83682 | CD569F2502010200AA | GCO83757 | 2203100MK03DY21 | GCO83818 | 4533509400 | GCO83864 |
| 4203370500 | GCO83588 | 5546868 | GCO83682 | CD569F2502010301AA | GCO83757 | 2203200MK03AW19AA | GCO83818 | A4533504801 | GCO83864 |
| 4203371200 | GCO83588 | GN153A327SA | GCO83682 | C2D23746 | GCO83766 | 2203200MK03AW23 | GCO83818 | A4533509300 | GCO83864 |
| 4203372000 | GCO83588 | GN153A328GA | GCO83682 | DW933B436AA | GCO83766 | 2203200MK03DY21 | GCO83818 | A4533509400 | GCO83864 |
| A4203370300 | GCO83588 | GN153A328NA | GCO83682 | 44101M68P40 | GCO83767 | C589F2501010201 | GCO83818 | 39005050 | GCO83865 |
| A4203370500 | GCO83588 | GN154K258NA | GCO83682 | 44102M68P40 | GCO83767 | C589F2501010301 | GCO83818 | 391001324R | GCO83866 |
| A4203371200 | GCO83588 | GN154K258VA | GCO83682 | 104416800A | GCO83768 | 4343042010 | GCO83820 | 391001011R | GCO83867 |
| A4203372000 | GCO83588 | 59259100 | GCO83683 | 142016100A | GCO83769 | 391000352R | GCO83821 | 391015630R | GCO83867 |
| 1603058 | GCO83590 | 59259123 | GCO83683 | 2203100CR01AB | GCO83778 | 391015970R | GCO83821 | 2116611 | GCO83869 |
| 95908454 | GCO83590 | 1349073800 | GCO83684 | 2203200CR01AB | GCO83778 | 2203100MK05ER01 | GCO83822 | 2129529 | GCO83869 |
| 31608687781 | GCO83608 | 1349074000 | GCO83684 | CD569F2501010300AB | GCO83778 | 2203200MK05ER01 | GCO83822 | 5546858 | GCO83869 |
| 31608687782 | GCO83608 | 1350015600 | GCO83684 | CD569F2501010403AB | GCO83778 | 2799575 | GCO83826 | GN153A327SA | GCO83869 |

| COMPETITOR | G-AP Ref. | COMPETITOR | G-AP Ref. | COMPETITOR | G-AP Ref. | COMPETITOR | G-AP Ref. | COMPETITOR | G-AP Ref. |
|---|---|---|---|---|---|---|---|---|---|
| OE | | 31607585381 | GCO85008 | 93225238 | GCO88003 | MB526666 | GCO89002 | MB526873 | GCO89004 |
| | | 31607585382 | GCO85008 | 93225287 | GCO88003 | 4950823B00 | GCO89003 | MB526897 | GCO89004 |
| GN153A328NA | GCO83869 | 31607596059 | GCO85008 | 4410160DD0 | GCO88004 | 4950828E00 | GCO89003 | MB526898 | GCO89004 |
| GN154K258NA | GCO83869 | 31607596060 | GCO85008 | 4410178010 | GCO88004 | 4960733A00 | GCO89003 | MB526999 | GCO89004 |
| 10564333 | GCO83871 | 31608605466 | GCO85008 | 4410178011 | GCO88004 | 4960733A20 | GCO89003 | MB620770 | GCO89004 |
| 10564335 | GCO83871 | 31608605467 | GCO85008 | 4410178012 | GCO88004 | MB297438 | GCO89003 | 4384702 | GCO89005 |
| 154000785AA | GCO83876 | 31604853485 | GCO85009 | 4410182020 | GCO88004 | MB297678 | GCO89003 | 4384734 | GCO89005 |
| 154000786AA | GCO83876 | 31604853486 | GCO85009 | 4410182021 | GCO88004 | MB297696 | GCO89003 | 326807 | GCO89011 |
| 3960000Q0A | GCO83877 | 31607589767 | GCO85009 | 4410182313 | GCO88004 | MB297699 | GCO89003 | 04641856AA | GCO89029 |
| 495A1GI000 | GCO83882 | 31607589768 | GCO85009 | 4410182611 | GCO88004 | MB526473 | GCO89003 | 04641960AA | GCO89029 |
| 1352645100 | GCO83884 | 31608605473 | GCO85009 | 4410186041 | GCO88004 | MB526831 | GCO89003 | 04660288AB | GCO89029 |
| HA2ER2203010 | GCO83884 | 31608605474 | GCO85009 | 4410278010 | GCO88004 | 4950528B01 | GCO89004 | 04808298AB | GCO89029 |
| 2N0498099 | GCO83893 | 31603450565 | GCO85010 | 4410278011 | GCO88004 | 4950721000 | GCO89004 | 4641881AA | GCO89029 |
| 2N0498099X | GCO83893 | 31603450566 | GCO85010 | 4410278012 | GCO88004 | 4950721000EH | GCO89004 | 4641883AA | GCO89029 |
| 7E0498099M | GCO83893 | 31607524045 | GCO85010 | 4410282020 | GCO88004 | 4950721A00 | GCO89004 | 4641883AC | GCO89029 |
| 06X039481190 | GCO84001 | 31607524046 | GCO85010 | 4410282021 | GCO88004 | 4950724B00 | GCO89004 | 4641960AA | GCO89029 |
| 4087120 | GCO84001 | 31607529201 | GCO85010 | 4410282313 | GCO88004 | 4950728A00 | GCO89004 | 4660288AB | GCO89029 |
| 4247399 | GCO84001 | 31607529202 | GCO85010 | 4410282611 | GCO88004 | 4950821000 | GCO89004 | 4808298AB | GCO89029 |
| 4308412 | GCO84001 | 31607556931 | GCO85010 | 4410286041 | GCO88004 | 4950821A00 | GCO89004 | 4808883 | GCO89029 |
| 4308413 | GCO84001 | 1643302001 | GCO85015 | 4411578010 | GCO88004 | 4950828A00 | GCO89004 | K04511435 | GCO89029 |
| 4308418 | GCO84001 | 1643302101 | GCO85015 | 4411582611 | GCO88004 | MB109180 | GCO89004 | 04668706AB | GCO89032 |
| 4313087 | GCO84001 | A1643302001 | GCO85015 | 7837075 | GCO88008 | MB109181 | GCO89004 | 05274806AB | GCO89032 |
| 4328468 | GCO84001 | A1643302101 | GCO85015 | 7842037 | GCO88008 | MB176160 | GCO89004 | 05274806AC | GCO89032 |
| 4465504 | GCO84001 | 31607558950 | GCO85020 | 7843919 | GCO88008 | MB176161 | GCO89004 | 05274807AB | GCO89032 |
| 4475837 | GCO84001 | 31607558951 | GCO85020 | 7845024 | GCO88008 | MB176463 | GCO89004 | 05274807AC | GCO89032 |
| 5944689 | GCO84001 | 31607558952 | GCO85020 | 96273760 | GCO88019 | MB176464 | GCO89004 | 05274807AD | GCO89032 |
| 5944690 | GCO84001 | 31607570273 | GCO85020 | 96549104 | GCO88019 | MB176864 | GCO89004 | 4668706AB | GCO89032 |
| 5959385 | GCO84001 | 31607570274 | GCO85020 | 96951692 | GCO88019 | MB176865 | GCO89004 | 5274806AB | GCO89032 |
| 5998669 | GCO84001 | 31607570275 | GCO85020 | 96348790 | GCO88021 | MB176866 | GCO89004 | 5274806AC | GCO89032 |
| 5998706 | GCO84001 | 33209813708 | GCO85021 | 96348791 | GCO88021 | MB176867 | GCO89004 | 5274807AB | GCO89032 |
| 7076344 | GCO84001 | 31609806465 | GCO85022 | 96391550 | GCO88021 | MB178865 | GCO89004 | 5274807AC | GCO89032 |
| 71781886 | GCO84001 | 31609806467 | GCO85022 | 96391551 | GCO88021 | MB297121KD | GCO89004 | 5274807AD | GCO89032 |
| 7643642 | GCO84001 | 31609806468 | GCO85022 | 96348782 | GCO88034 | MB297148 | GCO89004 | RL274806AC | GCO89032 |
| SE025141514B | GCO84001 | 31609806469 | GCO85023 | 96348783 | GCO88034 | MB297341 | GCO89004 | RX274806AC | GCO89032 |
| 2303100XST01A | GCO84435 | 31609806470 | GCO85023 | 96391554 | GCO88034 | MB297343 | GCO89004 | 326807 | GCO89036 |
| 2303101XST01A | GCO84435 | 31609806471 | GCO85023 | 96391555 | GCO88034 | MB297344 | GCO89004 | 4668914AA | GCO89040 |
| 31607505005 | GCO85001 | 31609806472 | GCO85023 | 96963323 | GCO88034 | MB297345 | GCO89004 | 4668915AA | GCO89040 |
| 31607505006 | GCO85001 | 31609806473 | GCO85023 | 96963324 | GCO88034 | MB297346 | GCO89004 | 4668952AE | GCO89040 |
| 31607565313 | GCO85001 | 31609806474 | GCO85023 | 96391554 | GCO88037 | MB297347 | GCO89004 | 4668953AC | GCO89040 |
| 31607565314 | GCO85001 | 31609806475 | GCO85023 | 95962302 | GCO88038 | MB297348 | GCO89004 | 4668956AD | GCO89040 |
| 31607586433 | GCO85001 | 31609813715 | GCO85023 | 95981833 | GCO88038 | MB297352 | GCO89004 | 5037445AB | GCO89040 |
| 31607502731 | GCO85002 | 31609813718 | GCO85023 | 95981834 | GCO88038 | MB297353 | GCO89004 | 5037622AA | GCO89040 |
| 31607505199 | GCO85002 | 33207637444 | GCO85024 | 95981838 | GCO88038 | MB297661 | GCO89004 | 5066022AA | GCO89049 |
| 31607505200 | GCO85002 | 33207637445 | GCO85024 | 96238258 | GCO88038 | MB297662 | GCO89004 | 5066023AA | GCO89049 |
| IED000510 | GCO85004 | 33208603108 | GCO85024 | 96238259 | GCO88038 | MB297874 | GCO89004 | 52111778AB | GCO89049 |
| IED000540 | GCO85004 | 33208603109 | GCO85024 | 96639083 | GCO88038 | MB297999 | GCO89004 | 52111780AB | GCO89049 |
| LR032577 | GCO85004 | 33208644244 | GCO85024 | 10564476 | GCO88046 | MB525577 | GCO89004 | 52111781AB | GCO89049 |
| TFB000010 | GCO85004 | 33208644245 | GCO85024 | 13296187 | GCO88046 | MB526063 | GCO89004 | 04880210AE | GCO89051 |
| TOB500330 | GCO85004 | 26058362 | GCO87001 | 374843 | GCO88046 | MB526064 | GCO89004 | 04880210AF | GCO89051 |
| 31607545123 | GCO85006 | 96243571 | GCO88002 | 0374646 | GCO88047 | MB526066 | GCO89004 | 04880211AE | GCO89051 |
| 31607545125 | GCO85006 | 96243574 | GCO88002 | 13318008 | GCO88066 | MB526067 | GCO89004 | 04880212AH | GCO89051 |
| 31607545126 | GCO85006 | 96245306 | GCO88002 | 13334725 | GCO88066 | MB526117 | GCO89004 | 04880213AG | GCO89051 |
| 1643300901 | GCO85007 | 96251184 | GCO88002 | 39069611 | GCO88066 | MB526118 | GCO89004 | 4881214AG | GCO89051 |
| 1643302301 | GCO85007 | 96251185 | GCO88002 | 93745993 | GCO88066 | MB526139 | GCO89004 | 68079565AA | GCO89054 |
| 1643302401 | GCO85007 | 96257803 | GCO88002 | 1603036 | GCO88077 | MB526443 | GCO89004 | 68079565AB | GCO89054 |
| 1643302701 | GCO85007 | 96298465 | GCO88002 | 1603045 | GCO88077 | MB526444 | GCO89004 | 68079566AA | GCO89054 |
| 164330280 | GCO85007 | 96298466 | GCO88002 | 95908455 | GCO88077 | MB526453 | GCO89004 | 68079566AB | GCO89054 |
| 1663301200 | GCO85007 | 96474836 | GCO88002 | 95908456 | GCO88077 | MB526454 | GCO89004 | 68193347AA | GCO89054 |
| 1663301600 | GCO85007 | 96474837 | GCO88002 | 95908457 | GCO88077 | MB526531 | GCO89004 | K52123583AB | GCO89054 |
| 1663507000 | GCO85007 | 96481065 | GCO88002 | MB297372 | GCO89002 | MB526547 | GCO89004 | K52123583AC | GCO89054 |
| A1643300901 | GCO85007 | 96481066 | GCO88002 | MB297373 | GCO89002 | MB526548 | GCO89004 | K68079566AA | GCO89054 |
| A1643302301 | GCO85007 | D96257803 | GCO88002 | MB297492 | GCO89002 | MB526581 | GCO89004 | K68079566AB | GCO89054 |
| A1643302401 | GCO85007 | 0374049 | GCO88003 | MB526350 | GCO89002 | MB526582 | GCO89004 | K68193347AA | GCO89054 |
| A1643302701 | GCO85007 | 0374061 | GCO88003 | MB526353 | GCO89002 | MB526853 | GCO89004 | 52104590AA | GCO89056 |
| A164330280 | GCO85007 | 374049 | GCO88003 | MB526377 | GCO89002 | MB526854 | GCO89004 | 52104701AA | GCO89056 |
| A1663301200 | GCO85007 | 374061 | GCO88003 | MB526453 | GCO89002 | MB526860 | GCO89004 | 52104701AB | GCO89056 |
| A1663301600 | GCO85007 | 90125875 | GCO88003 | MB526463 | GCO89002 | MB526865 | GCO89004 | K52104590AA | GCO89056 |
| A1663507000 | GCO85007 | 90147008 | GCO88003 | MB526533 | GCO89002 | MB526866 | GCO89004 | K52104701AB | GCO89056 |

| COMPETITOR | G-AP Ref. | COMPETITOR | G-AP Ref. | COMPETITOR | G-AP Ref. | COMPETITOR | G-AP Ref. | COMPETITOR | G-AP Ref. |
|---|---|---|---|---|---|---|---|---|---|
| OE | | 8200623792 | GCO99085 | 1784746 | GCO99129 | 3910172J10 | GCO99203 | 36000692 | GCO99271 |
| | | 8200626043 | GCO99085 | 1784748 | GCO99129 | GCV1054 | GCO99209 | 36001075 | GCO99271 |
| RL104701AB | GCO89056 | 8200661557 | GCO99085 | 36000166 | GCO99129 | TFB001054EVA | GCO99209 | 36001076 | GCO99271 |
| 3272AE | GCO99008 | 8201052990 | GCO99085 | 36000699 | GCO99129 | TDR100790 | GCO99211 | 36001451 | GCO99271 |
| 3273AL | GCO99008 | 7700107765 | GCO99086 | 36000703 | GCO99129 | 4000642 | GCO99212 | 36001452 | GCO99271 |
| 111102215012 | GCO99012 | 7700110218 | GCO99086 | 36001355 | GCO99129 | E152120186009 | GCO99212 | 36001531 | GCO99271 |
| 11112215012 | GCO99012 | 7701352750 | GCO99086 | 36001359 | GCO99129 | 8200198016 | GCO99213 | 36002892 | GCO99271 |
| 96348788 | GCO99013 | 7701352869 | GCO99086 | 36001651 | GCO99129 | 8200436366 | GCO99213 | 6G913A327AA | GCO99271 |
| 96348789 | GCO99013 | 7701471377 | GCO99086 | 3M513A327AA | GCO99129 | 8200790517 | GCO99213 | 6G913A328AA | GCO99271 |
| 96391550 | GCO99013 | 7711134407 | GCO99086 | 3M513A327AB | GCO99129 | 8201030262 | GCO99213 | 7G913A327BA | GCO99271 |
| 1603403 | GCO99018 | 8200029444 | GCO99086 | 3M513A327AC | GCO99129 | 44014ST3E00 | GCO99225 | 7G913A328AA | GCO99271 |
| 26119537 | GCO99018 | 8200031134 | GCO99086 | 3M513A327AD | GCO99129 | MR196310 | GCO99230 | 7G913B436BF | GCO99271 |
| 51733777 | GCO99018 | 7711368631 | GCO99087 | 3M513A327AE | GCO99129 | MR263174 | GCO99230 | 7G913B437BE | GCO99271 |
| 09118846 | GCO99020 | 7711368632 | GCO99087 | 3M513A327AF | GCO99129 | 1K30A2540X | GCO99232 | RM6G913A327A2A | GCO99271 |
| 09118847 | GCO99020 | 8200626048 | GCO99087 | 3M513A328AA | GCO99129 | 1K30A2560X | GCO99232 | RM6G913A328A2A | GCO99271 |
| 13335209 | GCO99024 | 2203050 | GCO99103 | 3M513A328AB | GCO99129 | F06122510A | GCO99233 | RM7G913A327B2A | GCO99271 |
| 5374051 | GCO99024 | 4410183EC0 | GCO99110 | 3M513A328AC | GCO99129 | TFB0000150 | GCO99242 | RM7G913A328A2A | GCO99271 |
| 4950705A00 | GCO99025 | 4410183EC1 | GCO99110 | 3M513A328AD | GCO99129 | 44014S10J50 | GCO99248 | GD3822510 | GCO99273 |
| 4950805A00 | GCO99025 | 4410183EC1000 | GCO99110 | 3M513A328AE | GCO99129 | 44305S10J50 | GCO99248 | GD382550X | GCO99273 |
| 1693600975 | GCO99037 | 4410283EC0 | GCO99110 | 3M513A328AF | GCO99129 | 44306S10J50 | GCO99248 | GD4022510 | GCO99273 |
| 1693601268 | GCO99037 | 4410283EC0000 | GCO99110 | 3M513B436BAC | GCO99129 | 39211BM727 | GCO99252 | GD4022510A | GCO99273 |
| 1693601572 | GCO99037 | AEU2522 | GCO99113 | 3M513B436BAD | GCO99129 | 5235031 | GCO99254 | GD4022610 | GCO99273 |
| 1693601768 | GCO99037 | 4346080111 | GCO99116 | 3M513B436BAE | GCO99129 | 5390489 | GCO99254 | GD4022610A | GCO99273 |
| 1693604472 | GCO99037 | 4347080191 | GCO99116 | 3M513B436BAF | GCO99129 | 5392691 | GCO99254 | GD402550XA | GCO99273 |
| 1693608372 | GCO99037 | 4347080329 | GCO99116 | 3M513B437BAC | GCO99129 | 5392956 | GCO99254 | GD402550XC | GCO99273 |
| A1693600975 | GCO99037 | 4341005040 | GCO99122 | 3M513B437BAD | GCO99129 | 5392972 | GCO99254 | GD402560XA | GCO99273 |
| A1693601268 | GCO99037 | 4347029225 | GCO99122 | 3M513B437BAE | GCO99129 | 5393020 | GCO99254 | GD622550X | GCO99273 |
| A1693601572 | GCO99037 | 4347029226 | GCO99122 | 3M513B437BAF | GCO99129 | 5393038 | GCO99254 | GD622550XA | GCO99273 |
| A1693601768 | GCO99037 | 4347029227 | GCO99122 | RM3M513A327A2F | GCO99129 | QVJ1165 | GCO99262 | GD622550XB | GCO99273 |
| A1693604372 | GCO99037 | 4343028020 | GCO99123 | RM3M513A327AB | GCO99129 | 6E0407311 | GCO99268 | GD622550XC | GCO99273 |
| A1693604472 | GCO99037 | 3272JY | GCO99128 | RM3M513A328A2F | GCO99129 | 6E0498099 | GCO99268 | 434100D080 | GCO99282 |
| A1693608372 | GCO99037 | 3273JR | GCO99128 | RM3M513A328AB | GCO99129 | 6E0498099X | GCO99268 | 434100D150 | GCO99282 |
| 4960733A10 | GCO99038 | 327608 | GCO99128 | RM3M513B436BAD | GCO99129 | 1434479 | GCO99270 | 434200D020 | GCO99282 |
| GD1522510 | GCO99042 | 327610 | GCO99128 | RM3M513B437BAD | GCO99129 | 1434481 | GCO99270 | 434200D080 | GCO99282 |
| 502623 | GCO99046 | 434030H010 | GCO99128 | 1479769 | GCO99132 | 1496579 | GCO99270 | 434200D150 | GCO99282 |
| GA2022510 | GCO99046 | 434100H010 | GCO99128 | 1479771 | GCO99132 | 1522566 | GCO99270 | 4346009520 | GCO99282 |
| MD0422510 | GCO99046 | 434100H010A | GCO99128 | 8603360 | GCO99132 | 6C113A327AB | GCO99270 | 4346009530 | GCO99282 |
| 0K01125500A | GCO99053 | 434200H010 | GCO99128 | GCV1194 | GCO99151 | 1417222 | GCO99271 | 4346009K10 | GCO99282 |
| 4130005006X | GCO99059 | 434200H010A | GCO99128 | TDJ100590 | GCO99151 | 1437736 | GCO99271 | 4347009780 | GCO99282 |
| 4130005100X | GCO99059 | 4346009C80 | GCO99128 | 1322209 | GCO99155 | 1446223 | GCO99271 | 4347009G70 | GCO99282 |
| 4130008012 | GCO99059 | 4346009C800 | GCO99128 | 1322221 | GCO99155 | 1446227 | GCO99271 | 7700112688 | GCO99283 |
| 374396 | GCO99061 | 4347009C90 | GCO99128 | 1444316 | GCO99155 | 1459738 | GCO99271 | 7700115005 | GCO99283 |
| 374397 | GCO99061 | 1306055 | GCO99129 | 1501157 | GCO99155 | 1460786 | GCO99271 | 7711135219 | GCO99283 |
| 374416 | GCO99061 | 1306057 | GCO99129 | 1547479 | GCO99155 | 1481215 | GCO99271 | 8200137918 | GCO99283 |
| 9198503 | GCO99061 | 1306775 | GCO99129 | 1548230 | GCO99155 | 1483807 | GCO99271 | 1426735 | GCO99284 |
| 9200407 | GCO99061 | 1306777 | GCO99129 | 1551330 | GCO99155 | 1483808 | GCO99271 | 1511458 | GCO99284 |
| 9200408 | GCO99061 | 1360388 | GCO99129 | 1798080 | GCO99155 | 1493218 | GCO99271 | 1782547 | GCO99284 |
| 3910000Q4F | GCO99085 | 1360389 | GCO99129 | 1798088 | GCO99155 | 1600577 | GCO99271 | 6C113A327BA | GCO99284 |
| 391000153R | GCO99085 | 1420577 | GCO99129 | 1798090 | GCO99155 | 1600604 | GCO99271 | 6C113A327BB | GCO99284 |
| 391004AA0A | GCO99085 | 1420578 | GCO99129 | 36000561 | GCO99155 | 1600605 | GCO99271 | RM6C113A327B2B | GCO99284 |
| 3910100Q1G | GCO99085 | 1446221 | GCO99129 | 36000562 | GCO99155 | 1600607 | GCO99271 | 1223785 | GCO99288 |
| 391010737R | GCO99085 | 1446225 | GCO99129 | 3M513A327DA | GCO99155 | 1600613 | GCO99271 | 1302514DX | GCO99288 |
| 391014AA0A | GCO99085 | 1446232 | GCO99129 | 3M513A327RA | GCO99155 | 1607461 | GCO99271 | 1302515 | GCO99288 |
| 391014AD0B | GCO99085 | 1446235 | GCO99129 | 3M513A327RB | GCO99155 | 1607475 | GCO99271 | 1359663 | GCO99288 |
| 391015451R | GCO99085 | 1474431 | GCO99129 | 3M513A328DA | GCO99155 | 1667774 | GCO99271 | 1417778 | GCO99288 |
| 8200167535 | GCO99085 | 1474438 | GCO99129 | 3M513A328DB | GCO99155 | 1667811 | GCO99271 | 1431163 | GCO99288 |
| 8200261838 | GCO99085 | 1493004 | GCO99129 | 7M513A327AA | GCO99155 | 1667941 | GCO99271 | 1493015 | GCO99288 |
| 8200264664 | GCO99085 | 1493012 | GCO99129 | 7M513A327AB | GCO99155 | 1667957 | GCO99271 | 1676314 | GCO99288 |
| 8200264667 | GCO99085 | 1495063 | GCO99129 | RM3M513A327R1B | GCO99155 | 1670061 | GCO99271 | 1702524 | GCO99288 |
| 8200356803 | GCO99085 | 1600562 | GCO99129 | RM3M513A328D1B | GCO99155 | 1788201 | GCO99271 | 1784749 | GCO99288 |
| 8200358163 | GCO99085 | 1607951 | GCO99129 | RM7M513A327A1B | GCO99155 | 1788202 | GCO99271 | 36000141 | GCO99288 |
| 8200358164 | GCO99085 | 1607956 | GCO99129 | 4130008001 | GCO99158 | 1788206 | GCO99271 | 36000700 | GCO99288 |
| 8200408418 | GCO99085 | 1676312 | GCO99129 | 4130008001S | GCO99158 | 1788208 | GCO99271 | 36001358 | GCO99288 |
| 8200432514 | GCO99085 | 1676313 | GCO99129 | 44014S91010 | GCO99159 | 1788209 | GCO99271 | 36001448 | GCO99288 |
| 8200499306 | GCO99085 | 1702519 | GCO99129 | 44014S9A010 | GCO99159 | 1840089 | GCO99271 | 36001450 | GCO99288 |
| 8200511122 | GCO99085 | 1702527 | GCO99129 | 4950025210 | GCO99172 | 1840092 | GCO99271 | 36002144 | GCO99288 |
| 8200511220 | GCO99085 | 1722076 | GCO99129 | B11XLB3AC2203030 | GCO99175 | 1840099 | GCO99271 | 36002896 | GCO99288 |
| 8200618501 | GCO99085 | 1722077 | GCO99129 | B11XLB3AF2203030 | GCO99175 | 1840100 | GCO99271 | 36002897 | GCO99288 |

| COMPETITOR | G-AP Ref. | COMPETITOR | G-AP Ref. | COMPETITOR | G-AP Ref. | COMPETITOR | G-AP Ref. | COMPETITOR | G-AP Ref. |
|---|---|---|---|---|---|---|---|---|---|
| OE | | 1594945 | GCO99318 | 4410184A00 | GCO99354 | 9646326680 | GDS10002 | 9617408288 | GDS10014 |
| | | 1594946 | GCO99318 | 4410284A00 | GCO99354 | 9646327880 | GDS10002 | 9626083880 | GDS10014 |
| 3M513A328BA | GCO99288 | 1595087 | GCO99318 | 4410284A00000 | GCO99354 | 9650624180 | GDS10002 | 9626084080 | GDS10014 |
| 3M513A328BB | GCO99288 | 1595088 | GCO99318 | 1622959880 | GCO99366 | 32735J | GDS10003 | 9626084088 | GDS10014 |
| 3M513A328BC | GCO99288 | 1595093 | GCO99318 | 32721X | GCO99366 | 95601867 | GDS10003 | 3273X | GDS10015 |
| 3M513A328BD | GCO99288 | 1595105 | GCO99318 | 32728W | GCO99366 | 95624995 | GDS10003 | 32722L | GDS10016 |
| 3M513A328BE | GCO99288 | 1603121 | GCO99318 | 3272FZ | GCO99366 | 95648548 | GDS10003 | 32723L | GDS10016 |
| 3M513A328BF | GCO99288 | 1603122 | GCO99318 | 3272LE | GCO99366 | 96033369 | GDS10003 | 3272K7 | GDS10016 |
| 3M513B437DAF | GCO99288 | 1703221 | GCO99318 | 3272LG | GCO99366 | 96042942 | GDS10003 | 3272K8 | GDS10016 |
| RM3M513A328B2F | GCO99288 | 1703228 | GCO99318 | 3272LH | GCO99366 | 327307 | GDS10004 | 3272L0 | GDS10016 |
| 43410B4010 | GCO99290 | 1703321 | GCO99318 | 3272LT | GCO99366 | 3273Y3 | GDS10004 | 3272V0 | GDS10016 |
| 43420B4010 | GCO99290 | 1717731 | GCO99318 | 3272LW | GCO99366 | 95669014 | GDS10004 | 3272V7 | GDS10016 |
| 3272FG | GCO99293 | 1803606 | GCO99318 | 3272LX | GCO99366 | 96072989 | GDS10004 | 9617408180 | GDS10016 |
| 3272FJ | GCO99293 | 1803613 | GCO99318 | 3272LY | GCO99366 | 327265 | GDS10007 | 9626083780 | GDS10016 |
| 3272FK | GCO99293 | 1805098 | GCO99318 | 3272PZ | GCO99366 | 32735Q | GDS10007 | 9626083980 | GDS10016 |
| 3272FL | GCO99293 | 1805103 | GCO99318 | 3272QC | GCO99366 | 32735R | GDS10007 | 9626083988 | GDS10016 |
| 3272KL | GCO99293 | 1805104 | GCO99318 | 3272TN | GCO99366 | 327364 | GDS10007 | 32732Y | GDS10017 |
| 3272LP | GCO99293 | 8V413A327AA | GCO99318 | 3272TZ | GCO99366 | 327365 | GDS10007 | 32732Z | GDS10017 |
| 3273FJ | GCO99293 | 8V413A327AB | GCO99318 | 3272VC | GCO99366 | 327369 | GDS10007 | 3273Y2 | GDS10017 |
| 3273FK | GCO99293 | 8V413A327AC | GCO99318 | 3272WV | GCO99366 | 327389 | GDS10007 | 32721F | GDS10018 |
| 9642426880 | GCO99293 | 8V413A327AX | GCO99318 | 3273AF | GCO99366 | 3273F4 | GDS10007 | 32725W | GDS10018 |
| 9642426980 | GCO99293 | 8V413A328AA | GCO99318 | 3273AG | GCO99366 | 3273G2 | GDS10007 | 9632118880 | GDS10018 |
| 495002F000 | GCO99294 | 8V413A328AB | GCO99318 | 3273LP | GCO99366 | 3273JL | GDS10007 | 32731C | GDS10019 |
| 495002F010 | GCO99294 | 8V413A328AX | GCO99318 | 3273LQ | GCO99366 | 3273JN | GDS10007 | 32731E | GDS10019 |
| 495012F000 | GCO99294 | 9V4N3A327AA | GCO99318 | 3273LR | GCO99366 | 3273L9 | GDS10007 | 32731F | GDS10019 |
| 495012F010 | GCO99294 | 9V4N3A328AA | GCO99318 | 3273LS | GCO99366 | 3273R6 | GDS10007 | 32732P | GDS10019 |
| 495912F000 | GCO99294 | AV4N3A327AA | GCO99318 | 3273QK | GCO99366 | 3273Y0 | GDS10007 | 32732R | GDS10019 |
| 495912F010 | GCO99294 | AV4N3A328AA | GCO99318 | 3273XP | GCO99366 | 3273Y1 | GDS10007 | 32732T | GDS10019 |
| 495912F090 | GCO99294 | RM8V413A327A1B | GCO99318 | 3642356 | GCO99366 | 95591074 | GDS10007 | 32733A | GDS10019 |
| 495912F091 | GCO99294 | RM8V413A327A1C | GCO99318 | 9808800580 | GCO99366 | 95619482 | GDS10007 | 32733C | GDS10019 |
| 374939 | GCO99298 | RM8V413A328A1B | GCO99318 | 9816028680 | GCO99366 | 95654731 | GDS10007 | 32733Z | GDS10019 |
| 374945 | GCO99298 | RMAV4N3A327A1A | GCO99318 | 3272EQ | GDS10001 | 9622263980 | GDS10007 | 32734H | GDS10019 |
| 46307834 | GCO99298 | RMAV4N3A328A1A | GCO99318 | 3272ER | GDS10001 | 9653795580 | GDS10007 | 32734J | GDS10019 |
| 46307934 | GCO99298 | 4341042280 | GCO99320 | 3272ES | GDS10001 | 9654773380 | GDS10007 | 32736E | GDS10019 |
| 46308648 | GCO99298 | 4347049655 | GCO99320 | 3272ET | GDS10001 | P054T1 | GDS10007 | 32736F | GDS10019 |
| 46308679 | GCO99298 | 4347049656 | GCO99320 | 3272FR | GDS10001 | 327000 | GDS10008 | 32736H | GDS10019 |
| 46308773 | GCO99298 | 4347049675 | GCO99320 | 3272FS | GDS10001 | 327300 | GDS10008 | 9626445380 | GDS10019 |
| 46308958 | GCO99298 | 4347049676 | GCO99320 | 3272HR | GDS10001 | 327356 | GDS10008 | 9626445480 | GDS10019 |
| 46308959 | GCO99298 | 4347049815 | GCO99320 | 3272HS | GDS10001 | 32735C | GDS10008 | 9629634380 | GDS10019 |
| 46308985 | GCO99298 | 4347049865 | GCO99320 | 3272HY | GDS10001 | 32735J | GDS10008 | 9632118680 | GDS10019 |
| 51936050 | GCO99298 | 4347080340 | GCO99320 | 3272HZ | GDS10001 | 327368 | GDS10008 | 000032727J | GDS10020 |
| 51993490 | GCO99298 | 4347080352 | GCO99320 | 3272PL | GDS10001 | 3273C8 | GDS10008 | 00003272X3 | GDS10020 |
| 52050099 | GCO99298 | 4347080459 | GCO99320 | 3272RH | GDS10001 | 3273E2 | GDS10008 | 24969905 | GDS10020 |
| 52088372 | GCO99298 | 4347080461 | GCO99320 | 3272RT | GDS10001 | 95601867 | GDS10008 | 32727J | GDS10020 |
| 52128756 | GCO99298 | 4347080465 | GCO99320 | 3272SG | GDS10001 | 95601887 | GDS10008 | 3272AX | GDS10020 |
| 52128757 | GCO99298 | 434708Z274 | GCO99320 | 3272SH | GDS10001 | 95624995 | GDS10008 | 3272G1 | GDS10020 |
| 5374101 | GCO99298 | 434708Z276 | GCO99320 | 9638016980 | GDS10001 | 95648548 | GDS10008 | 3272JE | GDS10020 |
| 59259245 | GCO99298 | 4410165J00 | GCO99322 | 9638017680 | GDS10001 | 96033369 | GDS10008 | 3272SQ | GDS10020 |
| 68263103AA | GCO99298 | 4410265J00 | GCO99322 | 9638226480 | GDS10001 | 96042942 | GDS10008 | 3272T9 | GDS10020 |
| 68263496 | GCO99298 | 28391SC000 | GCO99339 | 9642756380 | GDS10001 | P0591T | GDS10008 | 3272X3 | GDS10020 |
| 68263496AA | GCO99298 | 28391SC001 | GCO99339 | 9642756580 | GDS10001 | 32723J | GDS10009 | 3272X4 | GDS10020 |
| 71771458 | GCO99298 | 28391SC002 | GCO99339 | 9646326780 | GDS10001 | 327250 | GDS10009 | 3272X7 | GDS10020 |
| 95524309 | GCO99298 | 28391SG030 | GCO99339 | 9646327980 | GDS10001 | 327254 | GDS10009 | 3272X9 | GDS10020 |
| 4950007300 | GCO99300 | 46308677 | GCO99348 | 9647107180 | GDS10001 | 32728J | GDS10009 | 32726F | GDS10021 |
| 4950007310 | GCO99300 | 53345186 | GCO99348 | 3273ES | GDS10002 | 3272W5 | GDS10009 | 32727F | GDS10021 |
| 4341005380 | GCO99302 | 53406882 | GCO99348 | 3273ET | GDS10002 | 95601868 | GDS10009 | 32728F | GDS10021 |
| 4341005420 | GCO99302 | 59259171 | GCO99348 | 3273HN | GDS10002 | 95624994 | GDS10009 | 32728L | GDS10021 |
| 4342005331 | GCO99302 | 68263107AA | GCO99348 | 3273HP | GDS10002 | 95648547 | GDS10009 | 3272Z3 | GDS10021 |
| 4342005360 | GCO99302 | 71771177 | GCO99348 | 3273HQ | GDS10002 | 96033355 | GDS10009 | 3272Z4 | GDS10021 |
| 4410161M20 | GCO99310 | 71771185 | GCO99348 | 3273HR | GDS10002 | 96042941 | GDS10009 | 72728L | GDS10021 |
| 4410161M21 | GCO99310 | 3C113A327BA | GCO99349 | 3273HS | GDS10002 | P0592T | GDS10009 | 9626445580 | GDS10021 |
| 4410179J60 | GCO99310 | 4558415 | GCO99349 | 3273HT | GDS10002 | 327306 | GDS10014 | 9626445680 | GDS10021 |
| 4410261M20 | GCO99310 | 3D0498099A | GCO99351 | 3273PT | GDS10002 | 32735Y | GDS10014 | 9632119080 | GDS10021 |
| 4410261M21 | GCO99310 | 3D0498099AX | GCO99351 | 3273PV | GDS10002 | 32737E | GDS10014 | 9632119180 | GDS10021 |
| 1502109 | GCO99318 | 4F0407271K | GCO99351 | 3273ST | GDS10002 | 3273S1 | GDS10014 | 327294 | GDS10022 |
| 1502118 | GCO99318 | 4F0407272K | GCO99351 | 3273SX | GDS10002 | 3273S2 | GDS10014 | 3272A1 | GDS10022 |
| 1534270 | GCO99318 | 4F0498099B | GCO99351 | 3273SY | GDS10002 | 3273S4 | GDS10014 | 32721N | GDS10025 |
| 1534271 | GCO99318 | 4F0498099BX | GCO99351 | 9638226380 | GDS10002 | 9617408280 | GDS10014 | 32721NA | GDS10025 |

| COMPETITOR | G-AP Ref. | COMPETITOR | G-AP Ref. | COMPETITOR | G-AP Ref. | COMPETITOR | G-AP Ref. | COMPETITOR | G-AP Ref. |
|---|---|---|---|---|---|---|---|---|---|
| OE | | 3272V3 | GDS10033 | 327367 | GDS10039 | 9617303380 | GDS10069 | 3272M0 | GDS10082 |
| | | 3272V4 | GDS10033 | 95591073 | GDS10039 | 32736P | GDS10070 | 3272P5 | GDS10082 |
| 32726W | GDS10025 | 3272V5 | GDS10033 | 95619481 | GDS10039 | 3273T6 | GDS10070 | 9619947380 | GDS10082 |
| 32727W | GDS10025 | 51872271 | GDS10033 | 95654730 | GDS10039 | 32725N | GDS10071 | 9619947580 | GDS10082 |
| 32728R | GDS10025 | 71720923 | GDS10033 | 9622264080 | GDS10039 | 3272N0 | GDS10071 | 9619947588 | GDS10082 |
| 32729R | GDS10025 | 71721373 | GDS10033 | 9653795680 | GDS10039 | 95644260 | GDS10071 | 9621456388 | GDS10082 |
| 3272A4 | GDS10025 | 71753965 | GDS10033 | 9654773480 | GDS10039 | 96145818 | GDS10071 | 327241 | GDS10083 |
| 3272A6 | GDS10025 | 71794733 | GDS10033 | P054T2 | GDS10039 | 1401064180 | GDS10072 | 327253 | GDS10083 |
| 3272Y3 | GDS10025 | 1463107080 | GDS10035 | 327218 | GDS10040 | 1401069880 | GDS10072 | 3272A2 | GDS10083 |
| 3272Y4 | GDS10025 | 1473301080 | GDS10035 | 32722Z | GDS10040 | 1499070080 | GDS10072 | 3272P8 | GDS10083 |
| 3272Y5 | GDS10025 | 1491237080 | GDS10035 | 32723R | GDS10040 | 1499078080 | GDS10072 | 3273P9 | GDS10083 |
| 96031844 | GDS10025 | 1491239080 | GDS10035 | 3272R7 | GDS10040 | 32722L | GDS10072 | 3273C2 | GDS10084 |
| 96091415 | GDS10025 | 1495541080 | GDS10035 | 3272R8 | GDS10040 | 32723L | GDS10072 | 3273Q4 | GDS10084 |
| 96167303 | GDS10025 | 32727K | GDS10035 | 3272V1 | GDS10040 | 3272AV | GDS10072 | 3273W4 | GDS10084 |
| 96171637 | GDS10025 | 3272CK | GDS10035 | 95669013 | GDS10040 | 3272AW | GDS10072 | 32700000 | GDS10089 |
| 96171874 | GDS10025 | 3272CL | GDS10035 | 96072988 | GDS10040 | 3272GY | GDS10072 | 327263 | GDS10089 |
| 96173637 | GDS10025 | 3272J1 | GDS10035 | 327308 | GDS10042 | 3272GZ | GDS10072 | 3273000 | GDS10089 |
| 96176303 | GDS10025 | 3272J5 | GDS10035 | 32735F | GDS10042 | 3272K7 | GDS10072 | 32730000 | GDS10089 |
| 9623687180 | GDS10025 | 3272J6 | GDS10035 | 3273E3 | GDS10042 | 3272K8 | GDS10072 | 32730H | GDS10089 |
| 9640156380 | GDS10025 | 71721351 | GDS10035 | 32726E | GDS10043 | 3272PJ | GDS10072 | 32730K | GDS10089 |
| 32720N | GDS10026 | 71784649 | GDS10035 | 32727E | GDS10043 | 3272PK | GDS10072 | 32735E | GDS10089 |
| 32725L | GDS10026 | 1463108080 | GDS10036 | 32727G | GDS10043 | 3272RL | GDS10072 | 32735K | GDS10089 |
| 32726Y | GDS10026 | 1491238080 | GDS10036 | 3272CQ | GDS10043 | 3272RN | GDS10072 | 32735L | GDS10089 |
| 3272Y6 | GDS10026 | 1491240080 | GDS10036 | 3272CR | GDS10043 | 3272V0 | GDS10072 | 327363 | GDS10089 |
| 3272Y7 | GDS10026 | 1495542080 | GDS10036 | 9630767080 | GDS10043 | 9617408180 | GDS10072 | 3273C9 | GDS10089 |
| 3272Y8 | GDS10026 | 32735T | GDS10036 | 9630767180 | GDS10043 | 9617408188 | GDS10072 | 3273E4 | GDS10089 |
| 9622264480 | GDS10026 | 3273CK | GDS10036 | 9638753080 | GDS10043 | 9626083780 | GDS10072 | 3273OK | GDS10089 |
| 9623026480 | GDS10026 | 3273CL | GDS10036 | 9638753480 | GDS10043 | 9626083980 | GDS10072 | 95666909 | GDS10089 |
| 327303 | GDS10028 | 3273Q6 | GDS10036 | 3025 | GDS10044 | 9626083988 | GDS10072 | 95666941 | GDS10089 |
| 32733P | GDS10028 | 3273R0 | GDS10036 | 32735P | GDS10044 | 32730Q | GDS10077 | 9566694187 | GDS10089 |
| 32735N | GDS10028 | 3273R1 | GDS10036 | 327384 | GDS10044 | 32731K | GDS10077 | 96048667 | GDS10089 |
| 32737N | GDS10028 | 51872270 | GDS10036 | 327385 | GDS10044 | 327320 | GDS10077 | 96095216 | GDS10089 |
| 32738B | GDS10028 | 71721385 | GDS10036 | 327387 | GDS10044 | 327321 | GDS10077 | P0593T | GDS10089 |
| 1478213080 | GDS10032 | 71753964 | GDS10036 | 327388 | GDS10044 | 32736J | GDS10077 | 3272000000000 | GDS10090 |
| 1478552080 | GDS10032 | 71784652 | GDS10036 | 3273X8 | GDS10044 | 32736L | GDS10077 | 32720H | GDS10090 |
| 1487936088 | GDS10032 | 1463105080 | GDS10037 | 95644404 | GDS10044 | 3273K4 | GDS10077 | 32722N | GDS10090 |
| 1487936098 | GDS10032 | 1473299080 | GDS10037 | 96021731 | GDS10044 | 3273K5 | GDS10077 | 3272A8 | GDS10090 |
| 1491244080 | GDS10032 | 1491235080 | GDS10037 | P0595T | GDS10044 | 3273K7 | GDS10077 | 3272A9 | GDS10090 |
| 1495554080 | GDS10032 | 1495537080 | GDS10037 | 32728Q | GDS10048 | 3273L8 | GDS10077 | 3272C0 | GDS10090 |
| 1611568380 | GDS10032 | 32726K | GDS10037 | 32729Q | GDS10048 | 3273N3 | GDS10077 | 3272C3 | GDS10090 |
| 327309 | GDS10032 | 3272CH | GDS10037 | 32737Q | GDS10049 | 95624471 | GDS10077 | 3272E9 | GDS10090 |
| 327310 | GDS10032 | 3272CJ | GDS10037 | 32737R | GDS10049 | 95631414 | GDS10077 | 3272F0 | GDS10090 |
| 327313 | GDS10032 | 3272J0 | GDS10037 | 1481449080 | GDS10057 | 95648545 | GDS10077 | 3272F7 | GDS10090 |
| 32735V | GDS10032 | 3272J3 | GDS10037 | 32733R | GDS10057 | 96048975 | GDS10077 | 3272G3 | GDS10090 |
| 32735W | GDS10032 | 3272J4 | GDS10037 | 32735Z | GDS10057 | 96049018 | GDS10077 | 3272Y2 | GDS10090 |
| 3273CN | GDS10032 | 71720919 | GDS10037 | 71787905 | GDS10057 | 96171857 | GDS10077 | 327317 | GDS10090 |
| 3273CP | GDS10032 | 71721371 | GDS10037 | 1463102080 | GDS10066 | 96171861 | GDS10077 | 327318 | GDS10090 |
| 3273NC | GDS10032 | 71783034 | GDS10037 | 1478213080 | GDS10066 | 96177247 | GDS10077 | 327482 | GDS10090 |
| 3273Q7 | GDS10032 | 71783035 | GDS10037 | 1478552080 | GDS10066 | 9624445180 | GDS10077 | 327483 | GDS10090 |
| 3273R2 | GDS10032 | 71784343 | GDS10037 | 1487936098 | GDS10066 | 32730R | GDS10078 | 95602238 | GDS10090 |
| 3273R3 | GDS10032 | 71784643 | GDS10037 | 1495546080 | GDS10066 | 32736K | GDS10078 | 95602338 | GDS10090 |
| 3273ZZ | GDS10032 | 327255 | GDS10038 | 1495554080 | GDS10066 | 32737W | GDS10078 | 95606796 | GDS10090 |
| 51872272 | GDS10032 | 32725J | GDS10038 | 1496137080 | GDS10066 | 32737X | GDS10078 | 95619479 | GDS10090 |
| 71794736 | GDS10032 | 3272V2 | GDS10038 | 327310 | GDS10066 | 32739Z | GDS10078 | 95624470 | GDS10090 |
| 1478551080 | GDS10033 | 9566694077 | GDS10038 | 3273CN | GDS10066 | 96086458 | GDS10078 | 95648544 | GDS10090 |
| 1487937088 | GDS10033 | 9566694087 | GDS10038 | 3273Q7 | GDS10066 | 96173638 | GDS10078 | 96009409 | GDS10090 |
| 1487937098 | GDS10033 | 327200 | GDS10039 | 1478551080 | GDS10067 | 9640156480 | GDS10078 | 96048974 | GDS10090 |
| 1491243080 | GDS10033 | 327220 | GDS10039 | 1495545080 | GDS10067 | 32735X | GDS10081 | 96171856 | GDS10090 |
| 1495553080 | GDS10033 | 32724K | GDS10039 | 1496136080 | GDS10067 | 3273T3 | GDS10081 | 96171858 | GDS10090 |
| 1611568180 | GDS10033 | 32725K | GDS10039 | 3272J2 | GDS10067 | 3273T4 | GDS10081 | 96173635 | GDS10090 |
| 32728K | GDS10033 | 327266 | GDS10039 | 3272V5 | GDS10067 | 3273V7 | GDS10081 | 96177248 | GDS10090 |
| 32729K | GDS10033 | 327276 | GDS10039 | 1463106080 | GDS10069 | 3273W0 | GDS10081 | 327218 | GDS10097 |
| 3272CN | GDS10033 | 3272JT | GDS10039 | 1491234080 | GDS10069 | 9619947480 | GDS10081 | 32722Z | GDS10097 |
| 3272CP | GDS10033 | 3272JV | GDS10039 | 1491236080 | GDS10069 | 9619947680 | GDS10081 | 3272R7 | GDS10097 |
| 3272J7 | GDS10033 | 3272K2 | GDS10039 | 32735S | GDS10069 | 9619947688 | GDS10081 | 3272R8 | GDS10097 |
| 3272J8 | GDS10033 | 3272R5 | GDS10039 | 3273Q8 | GDS10069 | 9621456488 | GDS10081 | 3272V1 | GDS10097 |
| 3272NF | GDS10033 | 3272R6 | GDS10039 | 71783073 | GDS10069 | 32721L | GDS10082 | 95669013 | GDS10097 |
| 3272TY | GDS10033 | 327366 | GDS10039 | 95569340 | GDS10069 | 3272L1 | GDS10082 | 96072988 | GDS10097 |

| COMPETITOR | G-AP Ref. | COMPETITOR | G-AP Ref. | COMPETITOR | G-AP Ref. | COMPETITOR | G-AP Ref. | COMPETITOR | G-AP Ref. |
|---|---|---|---|---|---|---|---|---|---|
| **OE** | | 3273HG | GDS10124 | 9617408280 | GDS10155 | 3273K3 | GDS10193 | 327608 | GDS10231 |
| | | 9638016480 | GDS10124 | 9626083880 | GDS10155 | 72737X | GDS10193 | 434100H010 | GDS10231 |
| 32727K | GDS10102 | 9640127680 | GDS10124 | 9626084080 | GDS10155 | 96031845 | GDS10193 | 434100H010A | GDS10231 |
| 3272J1 | GDS10102 | 3272EN | GDS10125 | 32737F | GDS10156 | 96091416 | GDS10193 | 434100H050 | GDS10231 |
| 3272J5 | GDS10102 | 3272EP | GDS10125 | 32737G | GDS10156 | 96167304 | GDS10193 | B000903580 | GDS10231 |
| 96214541 | GDS10102 | 3272FW | GDS10125 | 32724Q | GDS10157 | 96171873 | GDS10193 | 1612346780 | GDS10232 |
| 32735T | GDS10103 | 3272FX | GDS10125 | 32725Q | GDS10157 | 96171875 | GDS10193 | 3272JY | GDS10232 |
| 3273R1 | GDS10103 | 3272HP | GDS10125 | 32721Q | GDS10161 | 96173636 | GDS10193 | 327610 | GDS10232 |
| 96214540 | GDS10103 | 3272HQ | GDS10125 | 32729P | GDS10161 | 9623687380 | GDS10193 | 434200H010 | GDS10232 |
| 1473300080 | GDS10104 | 3272HW | GDS10125 | 3272IQ | GDS10161 | 9639711880 | GDS10193 | 434200H010A | GDS10232 |
| 1491236080 | GDS10104 | 3272HX | GDS10125 | 9635484280 | GDS10161 | 3272G8 | GDS10194 | 434200H050 | GDS10232 |
| 1495538080 | GDS10104 | 3272JA | GDS10125 | 32725P | GDS10162 | 3273P3 | GDS10195 | 1440100680 | GDS10238 |
| 32735S | GDS10104 | 3272JC | GDS10125 | 32726P | GDS10162 | 3272G7 | GDS10196 | 1440100688 | GDS10238 |
| 3273CH | GDS10104 | 3272SC | GDS10125 | 9806676680 | GDS10162 | 26980105 | GDS10200 | 1497191080 | GDS10238 |
| 3273CJ | GDS10104 | 9638016580 | GDS10125 | 32720J | GDS10163 | 32722K | GDS10200 | 1497191088 | GDS10238 |
| 3273Q5 | GDS10104 | 9640127580 | GDS10125 | 9623687280 | GDS10163 | 32728C | GDS10200 | 1497196080 | GDS10238 |
| 3273Q8 | GDS10104 | 9640127880 | GDS10125 | 9624445080 | GDS10163 | 3272T7 | GDS10200 | 1607947180 | GDS10238 |
| 3273Q9 | GDS10104 | 9650624280 | GDS10125 | 32721K | GDS10164 | 3272Z1 | GDS10200 | 3272NK | GDS10238 |
| 71784646 | GDS10104 | 9652371980 | GDS10125 | 32724J | GDS10164 | 3273W8 | GDS10202 | 3272NL | GDS10238 |
| 1463105080 | GDS10105 | 9652372280 | GDS10125 | 327251 | GDS10164 | 3273W9 | GDS10202 | 3272VL | GDS10238 |
| 32726K | GDS10105 | 9684256180 | GDS10125 | 327256 | GDS10164 | 3273X3 | GDS10202 | 3272VN | GDS10238 |
| 3272J3 | GDS10105 | 3270000000 | GDS10126 | 32729J | GDS10164 | 32734S | GDS10203 | 3272XL | GDS10238 |
| 3272J4 | GDS10105 | 32721S | GDS10131 | 3272V2 | GDS10164 | 32722C | GDS10204 | 3272XN | GDS10238 |
| 327315 | GDS10108 | 32722S | GDS10131 | 3272W8 | GDS10164 | 32727L | GDS10204 | 3272YF | GDS10238 |
| 32721L | GDS10112 | 32727S | GDS10131 | 95666908 | GDS10164 | 32729G | GDS10204 | 3272YG | GDS10238 |
| 3272L1 | GDS10112 | 32728S | GDS10131 | 95666940 | GDS10164 | 9632118480 | GDS10204 | 71765687 | GDS10238 |
| 3272L9 | GDS10112 | 3272A5 | GDS10131 | 96048666 | GDS10164 | 9632118580 | GDS10204 | 71792558 | GDS10238 |
| 3272M0 | GDS10112 | 3272A7 | GDS10131 | 96095217 | GDS10164 | 9802747280 | GDS10204 | 71795421 | GDS10238 |
| 9619947380 | GDS10112 | 3272FP | GDS10131 | 96666908 | GDS10164 | 32730V | GDS10205 | 9801611980 | GDS10238 |
| 9619947580 | GDS10112 | 3272FQ | GDS10131 | P0594T | GDS10164 | 32730W | GDS10205 | SU001A0968 | GDS10238 |
| 9619947588 | GDS10112 | 3272Z7 | GDS10131 | 24969815 | GDS10174 | 32730X | GDS10205 | 1440100788 | GDS10239 |
| 9621456388 | GDS10112 | 3272Z8 | GDS10131 | 327305 | GDS10174 | 32732Q | GDS10205 | 1497192080 | GDS10239 |
| 327238 | GDS10113 | 96085457 | GDS10131 | 32730E | GDS10174 | 32732V | GDS10205 | 1497192088 | GDS10239 |
| 327239 | GDS10113 | 96171871 | GDS10131 | 32730F | GDS10174 | 32733K | GDS10205 | 1497197080 | GDS10239 |
| 32723N | GDS10113 | 9623687280 | GDS10131 | 32735H | GDS10174 | 32734T | GDS10205 | 1607947080 | GDS10239 |
| 327290 | GDS10113 | 9643517980 | GDS10131 | 3273N7 | GDS10174 | 32736A | GDS10205 | 3272VZ | GDS10239 |
| 3272J9 | GDS10113 | 32730M | GDS10137 | 327371 | GDS10177 | 32736C | GDS10205 | 3273NK | GDS10239 |
| 95644258 | GDS10113 | 32721T | GDS10138 | 3273J1 | GDS10177 | 32736G | GDS10205 | 3273NL | GDS10239 |
| 9614188080 | GDS10113 | 32726Q | GDS10138 | 3272EV | GDS10181 | 9622264380 | GDS10205 | 3273VY | GDS10239 |
| 32736N | GDS10114 | 32738J | GDS10139 | 3272EW | GDS10181 | 9623026780 | GDS10205 | 3273VZ | GDS10239 |
| 32738X | GDS10114 | 32738K | GDS10139 | 9639475180 | GDS10181 | 9629769880 | GDS10205 | 3273YF | GDS10239 |
| 3273A9 | GDS10114 | 32738P | GDS10139 | 000032730A | GDS10186 | 9629769980 | GDS10205 | 3273YG | GDS10239 |
| 3273C0 | GDS10114 | 32738Q | GDS10139 | 32730J | GDS10186 | 9632118080 | GDS10205 | 3273YY | GDS10239 |
| 3273H4 | GDS10114 | 3273EJ | GDS10139 | 32730L | GDS10186 | 9632118180 | GDS10205 | 3273YZ | GDS10239 |
| 3273H8 | GDS10114 | 32738L | GDS10140 | 4246Y5 | GDS10186 | 9632118780 | GDS10205 | 71765688 | GDS10239 |
| 3273W3 | GDS10114 | 32738N | GDS10140 | 4246Y9 | GDS10186 | 3273EV | GDS10206 | 71792555 | GDS10239 |
| 95643956 | GDS10114 | 3273EH | GDS10140 | 32726L | GDS10187 | 3273EW | GDS10206 | 71795456 | GDS10239 |
| 9614188180 | GDS10114 | 3273NY | GDS10140 | 3272Z2 | GDS10187 | 9639475280 | GDS10206 | 9640848080 | GDS10239 |
| 327304 | GDS10118 | 32722V | GDS10141 | 3272G9 | GDS10189 | 32726V | GDS10207 | 9801618880 | GDS10239 |
| 32735G | GDS10118 | 32723V | GDS10141 | 3272Q7 | GDS10189 | 32727V | GDS10207 | SU001A0970 | GDS10239 |
| 3273Y4 | GDS10118 | 32728T | GDS10141 | 3272R0 | GDS10189 | 3272EK | GDS10207 | 3273CW | GDS10242 |
| 32735X | GDS10120 | 32729T | GDS10141 | 3273A6 | GDS10190 | 32738T | GDS10208 | 3273CX | GDS10242 |
| 3273V7 | GDS10120 | 3272EJ | GDS10141 | 3273C1 | GDS10190 | 32738V | GDS10208 | 3273EQ | GDS10242 |
| 71722969 | GDS10120 | 32726T | GDS10142 | 3273C6 | GDS10190 | 3273EK | GDS10208 | 3273ER | GDS10242 |
| 9619947688 | GDS10120 | 32727T | GDS10142 | 3273H5 | GDS10190 | 9642877280 | GDS10208 | 3273HH | GDS10242 |
| 32721V | GDS10121 | 32738G | GDS10143 | 95643952 | GDS10190 | 32725S | GDS10218 | 3273HJ | GDS10242 |
| 32721W | GDS10121 | 32738H | GDS10143 | 96145819 | GDS10190 | 32726S | GDS10218 | 3273RV | GDS10242 |
| 3272EH | GDS10121 | 96326879 | GDS10143 | 327235 | GDS10191 | 9628457980 | GDS10218 | 3273SG | GDS10242 |
| 3272NT | GDS10121 | 32737K | GDS10152 | 327240 | GDS10191 | 32731W | GDS10221 | 9638016880 | GDS10242 |
| 3272NV | GDS10121 | 32737L | GDS10152 | 327260 | GDS10191 | 32731X | GDS10221 | 9638017580 | GDS10242 |
| 3272RA | GDS10121 | 32737A | GDS10153 | 327287 | GDS10191 | 32738E | GDS10221 | 9642756480 | GDS10242 |
| 3272RC | GDS10121 | 32737C | GDS10153 | 32724T | GDS10192 | 9806134080 | GDS10221 | 9642756680 | GDS10242 |
| 9642876780 | GDS10121 | 3273Z2 | GDS10153 | 32725T | GDS10192 | 32729L | GDS10227 | 9647107080 | GDS10242 |
| 3273EA | GDS10124 | 3273Z3 | GDS10153 | 32730S | GDS10193 | 9624444980 | GDS10227 | 9647107680 | GDS10242 |
| 3273EC | GDS10124 | 32735Y | GDS10155 | 32730T | GDS10193 | 1612346880 | GDS10231 | 3273JV | GDS10243 |
| 3273EN | GDS10124 | 32737E | GDS10155 | 32736KA | GDS10193 | 1677685680 | GDS10231 | 3273QZ | GDS10243 |
| 3273EP | GDS10124 | 3273S2 | GDS10155 | 3273AA | GDS10193 | 1677686380 | GDS10231 | 3273RA | GDS10243 |
| 3273HF | GDS10124 | 3273S4 | GDS10155 | 3273K2 | GDS10193 | 3273JR | GDS10231 | 9682498480 | GDS10243 |

| COMPETITOR | G-AP Ref. | COMPETITOR | G-AP Ref. | COMPETITOR | G-AP Ref. | COMPETITOR | G-AP Ref. | COMPETITOR | G-AP Ref. |
|---|---|---|---|---|---|---|---|---|---|
| OE | | 3273AY | GDS10284 | 3272NX | GDS10312 | 3272QE | GDS10362 | 3273QQ | GDS10421 |
| | | 3273GQ | GDS10284 | 3272QY | GDS10312 | 3272YW | GDS10362 | 3273QR | GDS10421 |
| 3272LE | GDS10248 | 3273GR | GDS10284 | 3272QZ | GDS10312 | 3272YX | GDS10362 | 3273TT | GDS10421 |
| 3272LF | GDS10248 | 3273TF | GDS10284 | 3272TJ | GDS10312 | 9660896080 | GDS10362 | 1485686080 | GDS10422 |
| 3273KR | GDS10249 | 3283TFC | GDS10284 | 9685126080 | GDS10312 | 3273QS | GDS10363 | 3272AS | GDS10422 |
| 3273KS | GDS10249 | 3272GP | GDS10285 | 3273NW | GDS10313 | 3273QT | GDS10363 | 3272AT | GDS10422 |
| 9656135080 | GDS10249 | 3272GQ | GDS10285 | 3273NX | GDS10313 | 3273TW | GDS10363 | 71787257 | GDS10422 |
| 1613229680 | GDS10250 | 9640848180 | GDS10285 | 3273RH | GDS10313 | 3273TX | GDS10363 | 3272CC | GDS10423 |
| 3272LG | GDS10250 | 1045574 | GDS10286 | 3273RJ | GDS10313 | 3272EX | GDS10364 | 3272CE | GDS10423 |
| 3272LH | GDS10250 | 32724X | GDS10286 | 3273TV | GDS10313 | 3272EY | GDS10364 | 3272RJ | GDS10424 |
| 3272TZ | GDS10250 | 3272LT | GDS10286 | 3272KF | GDS10314 | 3272NR | GDS10364 | 3272RK | GDS10424 |
| 3272VA | GDS10250 | 9637378180 | GDS10286 | 3272QT | GDS10314 | 3272NS | GDS10364 | 3273CC | GDS10425 |
| 3272ZK | GDS10250 | 9660783380 | GDS10286 | 3272QV | GDS10314 | 3272PR | GDS10364 | 3273CE | GDS10425 |
| 3272ZL | GDS10250 | 32739N | GDS10287 | 3272RX | GDS10314 | 3272PS | GDS10364 | 3272QF | GDS10427 |
| 9656135280 | GDS10250 | 32739P | GDS10287 | 3272RY | GDS10314 | 9641777180 | GDS10364 | 3272QG | GDS10427 |
| 9683174280 | GDS10250 | 1041558 | GDS10291 | 3272WG | GDS10314 | 9680667780 | GDS10364 | 3272TH | GDS10427 |
| 9683944580 | GDS10250 | 3273AF | GDS10291 | 3272WH | GDS10314 | 3272QH | GDS10380 | 1481450080 | GDS10430 |
| 9684164780 | GDS10250 | 3273AG | GDS10291 | 3273JX | GDS10320 | 3272QJ | GDS10380 | 1481452080 | GDS10430 |
| 1613229580 | GDS10251 | 3273LQ | GDS10291 | 3273RE | GDS10320 | 3272TK | GDS10380 | 1485694080 | GDS10430 |
| 3273QH | GDS10251 | 9639858280 | GDS10291 | 3273SK | GDS10320 | 3272TL | GDS10380 | 32721E | GDS10430 |
| 3273QJ | GDS10251 | 3272LZ | GDS10293 | 3273SL | GDS10320 | 3272HL | GDS10381 | 32722E | GDS10430 |
| 3273VN | GDS10251 | 3272NA | GDS10293 | 1606498680 | GDS10325 | 3272HN | GDS10381 | 3272AY | GDS10430 |
| 3273VP | GDS10251 | 9657555480 | GDS10293 | 3273QK | GDS10325 | 3272NY | GDS10381 | 3272JF | GDS10430 |
| 9684134880 | GDS10251 | 3273LT | GDS10295 | 3273QL | GDS10325 | 3272NZ | GDS10381 | 71720925 | GDS10430 |
| 1606498580 | GDS10253 | 3273LV | GDS10295 | 9661107480 | GDS10325 | 3272QW | GDS10381 | 9645234080 | GDS10430 |
| 1613187180 | GDS10253 | 9657555580 | GDS10295 | 9677522880 | GDS10325 | 3272QX | GDS10381 | 3273AV | GDS10431 |
| 1638139280 | GDS10253 | 9657555880 | GDS10295 | 9684135480 | GDS10325 | 3273HC | GDS10382 | 3273AW | GDS10431 |
| 3272PZ | GDS10253 | 1612690280 | GDS10301 | 32734E | GDS10326 | 3273PG | GDS10382 | 32739N | GDS10433 |
| 3272QA | GDS10253 | 3273WA | GDS10301 | 3272KA | GDS10335 | 3273RF | GDS10382 | 32739P | GDS10433 |
| 9661107380 | GDS10253 | 3273WC | GDS10301 | 3272KC | GDS10335 | 3273RG | GDS10382 | 3273LJ | GDS10435 |
| 9677522680 | GDS10253 | 9686025480 | GDS10301 | 3272QR | GDS10335 | 3273QN | GDS10383 | 3273LK | GDS10435 |
| 9684135380 | GDS10253 | 9801048680 | GDS10301 | 3272QS | GDS10335 | 3273QP | GDS10383 | 3273SN | GDS10435 |
| 9809258480 | GDS10253 | 1613436180 | GDS10302 | 3272RZ | GDS10335 | 3273ZP | GDS10383 | 3273SP | GDS10435 |
| 3273LR | GDS10254 | 3273GC | GDS10302 | 3272SA | GDS10335 | 3273ZQ | GDS10383 | 3273WW | GDS10435 |
| 3273LS | GDS10254 | 3273GE | GDS10302 | 9682500880 | GDS10335 | 9684135180 | GDS10383 | 3273WX | GDS10435 |
| 3273VH | GDS10254 | 3273RC | GDS10302 | 1608032780 | GDS10339 | 1609019280 | GDS10385 | 9652248680 | GDS10435 |
| 9656329480 | GDS10254 | 3273SH | GDS10302 | 1608032880 | GDS10339 | 3272GW | GDS10385 | 9652263280 | GDS10435 |
| 9671133680 | GDS10254 | 3273SJ | GDS10302 | 3273WG | GDS10339 | 3272GX | GDS10385 | 3273PR | GDS10440 |
| 3272LX | GDS10255 | 3273SV | GDS10302 | 3273WH | GDS10339 | 3272JP | GDS10385 | 3273PS | GDS10440 |
| 3272LY | GDS10255 | 3273SW | GDS10302 | 3273WL | GDS10339 | 3272JQ | GDS10385 | 3273RY | GDS10440 |
| 3272ZE | GDS10255 | 3273XA | GDS10302 | 3273WN | GDS10339 | 3272QN | GDS10385 | 3273RZ | GDS10440 |
| 9656329380 | GDS10255 | 9644292980 | GDS10302 | 3273WR | GDS10339 | 3272QP | GDS10385 | 32720R | GDS10441 |
| 1481450080 | GDS10264 | 9812139980 | GDS10302 | 3273WS | GDS10339 | 9644775880 | GDS10385 | 32720S | GDS10441 |
| 1481452080 | GDS10264 | 1607237280 | GDS10306 | 327538 | GDS10339 | 9647906880 | GDS10385 | 32723T | GDS10441 |
| 32721E | GDS10264 | 1608732680 | GDS10306 | 9801388680 | GDS10339 | 9804336480 | GDS10385 | 9806107980 | GDS10441 |
| 32724L | GDS10264 | 1608957780 | GDS10306 | 9801388780 | GDS10339 | 3273JH | GDS10396 | 32731T | GDS10442 |
| 32729C | GDS10264 | 3272WJ | GDS10306 | 1608032680 | GDS10340 | 3273JJ | GDS10396 | 32731V | GDS10442 |
| 7120925 | GDS10264 | 9801611180 | GDS10306 | 3272VT | GDS10340 | 3273QX | GDS10396 | 32738F | GDS10442 |
| 3273EG | GDS10265 | 9803019580 | GDS10306 | 3272VV | GDS10340 | 3273QY | GDS10396 | 9806120080 | GDS10442 |
| 3273FA | GDS10265 | 9803603080 | GDS10306 | 9801388580 | GDS10340 | 1610205380 | GDS10399 | 32728V | GDS10443 |
| 3272GE | GDS10266 | 9803959580 | GDS10306 | 3272YR | GDS10343 | 9670725580 | GDS10399 | 32729V | GDS10443 |
| 3272GF | GDS10266 | 1608419780 | GDS10307 | 3272YS | GDS10343 | 1609763980 | GDS10413 | 32738W | GDS10444 |
| 3273KY | GDS10267 | 9671573180 | GDS10307 | 32724V | GDS10344 | 3273TR | GDS10413 | 32738Y | GDS10444 |
| 3273KZ | GDS10267 | 1608420280 | GDS10308 | 32725V | GDS10344 | 3273TS | GDS10413 | 6000591282 | GDS11003 |
| 9656098180 | GDS10267 | 9671573280 | GDS10308 | 3272EL | GDS10344 | 9677211280 | GDS10413 | 6001543327 | GDS11006 |
| 3272FT | GDS10268 | 1612690380 | GDS10309 | 32722F | GDS10345 | 9683174180 | GDS10413 | 6001548121 | GDS11006 |
| 3272FV | GDS10268 | 3272DV | GDS10309 | 32723F | GDS10345 | 3272TC | GDS10415 | 8200388903 | GDS11006 |
| 3272ST | GDS10268 | 3272VP | GDS10309 | 9634393680 | GDS10345 | 3272TE | GDS10415 | 8201074123 | GDS11006 |
| 3272SV | GDS10268 | 3272VQ | GDS10309 | 1608419280 | GDS10346 | 9686650380 | GDS10415 | 6001548120 | GDS11007 |
| 9645219080 | GDS10268 | 9686025580 | GDS10309 | 9803966280 | GDS10346 | 1440106180 | GDS10416 | 8200388900 | GDS11007 |
| 9683117880 | GDS10268 | 9801048580 | GDS10309 | 9816308980 | GDS10346 | 1607019280 | GDS10416 | 8201074124 | GDS11007 |
| 32724F | GDS10281 | 3272GG | GDS10310 | 1608419880 | GDS10347 | 3273TP | GDS10416 | 391000620R | GDS11014 |
| 32725F | GDS10281 | 3272GH | GDS10310 | 9803966380 | GDS10347 | 3273TQ | GDS10416 | 391000982R | GDS11014 |
| 9634379280 | GDS10281 | 1608882180 | GDS10311 | 9816309080 | GDS10347 | 3273WY | GDS10416 | 391004298R | GDS11014 |
| 3273GF | GDS10283 | 3272PV | GDS10311 | 3273PA | GDS10348 | 3273WZ | GDS10416 | 391004943R | GDS11014 |
| 3273GG | GDS10283 | 3272PW | GDS10311 | 3273RQ | GDS10348 | 9685209680 | GDS10416 | 391006435R | GDS11014 |
| 9640848280 | GDS10283 | 9803027580 | GDS10311 | 3273RR | GDS10348 | 9685635280 | GDS10416 | 6001548660 | GDS11014 |
| 3273AX | GDS10284 | 3272NW | GDS10312 | 3272QC | GDS10362 | SU001A0279 | GDS10416 | 6001548661 | GDS11014 |

| COMPETITOR | G-AP Ref. | COMPETITOR | G-AP Ref. | COMPETITOR | G-AP Ref. | COMPETITOR | G-AP Ref. | COMPETITOR | G-AP Ref. |
|---|---|---|---|---|---|---|---|---|---|
| OE | | 42702794 | GDS12042 | 05085220AE | GDS15053 | 4874303 | GDS16012 | 71791712 | GDS17032 |
| | | 96485018 | GDS12042 | 5085220AA | GDS15053 | 5252585 | GDS16012 | 46307467 | GDS17033 |
| 7711497480 | GDS11014 | 96870386 | GDS12042 | 5085220AB | GDS15053 | 5252584 | GDS16013 | 46307792 | GDS17033 |
| 8200503359 | GDS11014 | 96257824 | GDS12044 | 5085220AC | GDS15053 | 52104701AA | GDS16014 | 71787055 | GDS17033 |
| 391004AA0A | GDS11016 | 96549101 | GDS12045 | 5085220AD | GDS15053 | 52104701AB | GDS16014 | 71791713 | GDS17033 |
| 8200499306 | GDS11016 | 96549102 | GDS12046 | 5085220AE | GDS15053 | K52104701AB | GDS16014 | 51789890 | GDS17034 |
| 391015144R | GDS11017 | 96951691 | GDS12046 | R5085220AC | GDS15053 | KR2104701AB | GDS16014 | 51810404 | GDS17034 |
| 391019651R | GDS11017 | 42702777 | GDS12057 | RL085220AE | GDS15053 | R2104701AB | GDS16014 | 7739015 | GDS17037 |
| 391019671R | GDS11017 | 96348791 | GDS12057 | 05085224AA | GDS15054 | RL104701AB | GDS16014 | 7750160 | GDS17037 |
| 397953005R | GDS11017 | 42702769 | GDS12058 | 05085224AB | GDS15054 | RX104701AB | GDS16014 | 182AMGBAE | GDS17038 |
| 391006331R | GDS11018 | 96348790 | GDS12058 | 05085224AC | GDS15054 | 52104591AA | GDS16015 | 46307110 | GDS17038 |
| 391008310R | GDS11018 | 4341087405 | GDS14022 | 05085224AD | GDS15054 | 52104591AB | GDS16015 | 46307408 | GDS17038 |
| 391001162R | GDS11019 | 4341087405000 | GDS14022 | 05085224AE | GDS15054 | R2104591AB | GDS16015 | 71720862 | GDS17038 |
| 391002885R | GDS11020 | 4342087402000 | GDS14029 | 5085224AA | GDS15054 | 052104590AA | GDS16016 | 71720959 | GDS17038 |
| 391006725R | GDS11020 | 4342087405000 | GDS14029 | 5085224AB | GDS15054 | 52104590AA | GDS16016 | 46307147 | GDS17039 |
| 391010167R | GDS11021 | 4342087406 | GDS14029 | 5085224AC | GDS15054 | 52104590AB | GDS16016 | 13238094 | GDS17040 |
| 391011434R | GDS11021 | 4342087406000 | GDS14029 | 5085224AD | GDS15054 | K52104590AA | GDS16016 | 24451256 | GDS17040 |
| 391014626R | GDS11021 | 43420B2010 | GDS14035 | 5085224AE | GDS15054 | KR2104590AA | GDS16016 | 374474 | GDS17040 |
| 391017186R | GDS11021 | 43420B2010000 | GDS14035 | 52123891AA | GDS15054 | R2104590AA | GDS16016 | 374784 | GDS17040 |
| 391017561R | GDS11021 | 43410B2060 | GDS14036 | K05085224AE | GDS15054 | 46307109 | GDS17001 | 51705516 | GDS17040 |
| 391017723R | GDS11021 | 43410B2060000 | GDS14036 | RL085224AE | GDS15054 | 71783060 | GDS17001 | 51792343 | GDS17040 |
| 391018492R | GDS11021 | 4410282A00 | GDS14053 | 04880213AC | GDS15057 | 46801689 | GDS17002 | 71790940 | GDS17040 |
| 391019117R | GDS11021 | 4410284A00 | GDS14053 | 04880213AD | GDS15057 | 71722311 | GDS17002 | 73503002 | GDS17040 |
| 392410919R | GDS11021 | 4410579J00 | GDS14073 | 04880213AE | GDS15057 | 46801690 | GDS17003 | 95520743 | GDS17040 |
| 6001548658 | GDS11021 | 71742704 | GDS14073 | 04880213AF | GDS15057 | 71722313 | GDS17003 | 95520801 | GDS17040 |
| 6001548659 | GDS11021 | 4410679J00 | GDS14074 | 04880213AG | GDS15057 | 46307119 | GDS17005 | 51754514 | GDS17045 |
| 7711497479 | GDS11021 | 71742705 | GDS14074 | 04880213AI | GDS15057 | 46307506 | GDS17005 | 55700560 | GDS17045 |
| 8200499304 | GDS11021 | S2203100 | GDS14075 | 04880213AJ | GDS15057 | 46307640 | GDS17005 | 71789846 | GDS17045 |
| 8200503358 | GDS11021 | 1064001338 | GDS14087 | 4880213AC | GDS15057 | 46307120 | GDS17007 | 46470436 | GDS17048 |
| 8200893511 | GDS11021 | 5066021AA | GDS15019 | 4880213AD | GDS15057 | 46307371 | GDS17007 | 46476614 | GDS17048 |
| 391018983R | GDS11022 | 52111779AB | GDS15019 | 4880213AE | GDS15057 | 46307508 | GDS17007 | 7699037 | GDS17048 |
| 391002615R | GDS11023 | R2111779AB | GDS15019 | 4880213AF | GDS15057 | 46307645 | GDS17007 | 1349785080 | GDS17050 |
| 8201045819 | GDS11023 | 05012456AA | GDS15020 | 4880213AG | GDS15057 | 7635796 | GDS17010 | 1349786080 | GDS17050 |
| 2DB765491R | GDS11024 | 05012456AB | GDS15020 | 4880213AI | GDS15057 | 7694584 | GDS17010 | 1361515080 | GDS17050 |
| 2DB765760R | GDS11024 | 05012456AC | GDS15020 | 4880213AJ | GDS15057 | 7694839 | GDS17010 | 1369960080 | GDS17050 |
| 391010178R | GDS11024 | 5012456AA | GDS15020 | 7B0407271 | GDS15057 | 7735107 | GDS17011 | 1607113480 | GDS17050 |
| 391011406R | GDS11024 | 5012456AB | GDS15020 | 7B0407271A | GDS15057 | 46302200SX | GDS17013 | 1607113680 | GDS17050 |
| 391014021R | GDS11024 | 5012456AC | GDS15020 | 7B0407271B | GDS15057 | 46307614 | GDS17013 | 1608505580 | GDS17050 |
| 391015654R | GDS11024 | R2073988AC | GDS15020 | R4880213AF | GDS15057 | 46308133 | GDS17013 | 1608506480 | GDS17050 |
| 391018293R | GDS11024 | 5037622AA | GDS15042 | 4713189 | GDS16003 | 46308200 | GDS17013 | 160855580 | GDS17050 |
| 391019906R | GDS11024 | 5286710AC | GDS15042 | 4720381 | GDS16003 | 71785737 | GDS17013 | 3273PJ | GDS17050 |
| 391019924R | GDS11024 | 5286710AD | GDS15042 | 53000227 | GDS16003 | 46302199SX | GDS17014 | 3273PK | GDS17050 |
| 8200907789 | GDS11024 | 5286710AE | GDS15042 | 4720380 | GDS16004 | 46308199 | GDS17014 | 3273PP | GDS17050 |
| 8201529151 | GDS11024 | 05105649AC | GDS15051 | 4882518 | GDS16005 | 51806760 | GDS17014 | 3273PQ | GDS17050 |
| 96183134 | GDS12003 | 5105649AC | GDS15051 | 4882520 | GDS16005 | 71791737 | GDS17014 | 71724579 | GDS17050 |
| 96251135 | GDS12003 | 5105649AD | GDS15051 | 05012748AA | GDS16006 | 7637734 | GDS17015 | 71791000 | GDS17050 |
| 96474834 | GDS12003 | 5105649AE | GDS15051 | 05012748AB | GDS16006 | 7682656 | GDS17016 | 71791002 | GDS17050 |
| 96481061 | GDS12003 | 5105649AF | GDS15051 | 05012748AC | GDS16006 | 46307674 | GDS17017 | 71791003 | GDS17050 |
| 96251136 | GDS12004 | 5105658AC | GDS15051 | 5012748AA | GDS16006 | 71787230 | GDS17017 | 1607734980 | GDS17052 |
| 96474835 | GDS12004 | 5105658AD | GDS15051 | 5012748AB | GDS16006 | 7739015 | GDS17018 | 3273TC | GDS17052 |
| 96481062 | GDS12004 | 5105658AE | GDS15051 | 5012748AC | GDS16006 | 7740977 | GDS17018 | 3273TE | GDS17052 |
| 96257821 | GDS12011 | 5105658AF | GDS15051 | O5012748AA | GDS16006 | 46307678 | GDS17019 | 51783852 | GDS17052 |
| 96396114 | GDS12012 | 05105660AC | GDS15052 | O5012748AB | GDS16006 | 71787224 | GDS17019 | 1349788080 | GDS17053 |
| 96897308 | GDS12012 | 05105660AD | GDS15052 | RL012748AC | GDS16006 | 71786887 | GDS17022 | 1369961080 | GDS17053 |
| 96241943 | GDS12014 | 05105660AE | GDS15052 | RX012748AC | GDS16006 | 71786890 | GDS17022 | 1607113380 | GDS17053 |
| 96251189 | GDS12014 | 05105660AF | GDS15052 | 05012749AA | GDS16009 | 7739016 | GDS17022 | 1607113580 | GDS17053 |
| 96343263 | GDS12014 | 05105660AG | GDS15052 | 05012749AB | GDS16009 | 7794472 | GDS17022 | 1608505480 | GDS17053 |
| 96387459 | GDS12014 | 5105660AC | GDS15052 | 05012749AC | GDS16009 | 71786866 | GDS17025 | 1608506380 | GDS17053 |
| 96257823 | GDS12025 | 5105660AD | GDS15052 | 5012749AA | GDS16009 | 7765363 | GDS17025 | 3272PG | GDS17053 |
| 96396113 | GDS12025 | 5105660AE | GDS15052 | 5012749AB | GDS16009 | 7765364 | GDS17025 | 3272PH | GDS17053 |
| 96897307 | GDS12025 | 5105660AF | GDS15052 | 5012749AC | GDS16009 | 46307898 | GDS17029 | 71724582 | GDS17053 |
| 96328842 | GDS12026 | 5105660AG | GDS15052 | RL012749AC | GDS16009 | 46307899 | GDS17030 | 71790994 | GDS17053 |
| 96328841 | GDS12027 | K05105660AC | GDS15052 | RX012749AC | GDS16009 | 4630745 | GDS17032 | 801203001 | GDS17053 |
| 96481075 | GDS12028 | RL105660AE | GDS15052 | 5066023AA | GDS16010 | 46307466 | GDS17032 | 46308409 | GDS17054 |
| 96481076 | GDS12029 | 05085220AA | GDS15053 | 52111781AB | GDS16010 | 46307565 | GDS17032 | 46308523 | GDS17054 |
| 42702793 | GDS12040 | 05085220AB | GDS15053 | K52111781AB | GDS16010 | 71787052 | GDS17032 | 51787180 | GDS17055 |
| 96485017 | GDS12040 | 05085220AC | GDS15053 | 5066022AA | GDS16011 | 71787054 | GDS17032 | 51902615 | GDS17055 |
| 96870385 | GDS12040 | 05085220AD | GDS15053 | 52111780AB | GDS16011 | 71791710 | GDS17032 | 51934087 | GDS17055 |

| COMPETITOR | G-AP Ref. | COMPETITOR | G-AP Ref. | COMPETITOR | G-AP Ref. | COMPETITOR | G-AP Ref. | COMPETITOR | G-AP Ref. |
|---|---|---|---|---|---|---|---|---|---|
| OE | | 71796906 | GDS17076 | DS513B437AA | GDS17101 | 51757653 | GDS17113 | 50504072 | GDS17124 |
| | | 7179690655221323 | GDS17076 | RM9S513B437A1A | GDS17101 | 5175765355182803 | GDS17113 | 50504073 | GDS17124 |
| 51785055 | GDS17057 | 71799571 | GDS17076 | RMDS513B437A1A | GDS17101 | 50517131 | GDS17115 | 50517122 | GDS17124 |
| 5178505555209968 | GDS17057 | 7179957155221323 | GDS17076 | 46307796 | GDS17102 | 51876365 | GDS17115 | 50517124 | GDS17124 |
| 51816768 | GDS17057 | 46307863 | GDS17077 | 51757652 | GDS17102 | 71794584 | GDS17115 | 51876371 | GDS17124 |
| 5181676855209968 | GDS17057 | 46307909 | GDS17077 | 71787236 | GDS17102 | 71794586 | GDS17115 | 51876372 | GDS17124 |
| 51960120 | GDS17057 | 46308066 | GDS17077 | 51822813 | GDS17106 | 50517143 | GDS17116 | 71792276 | GDS17124 |
| 5196012055209968 | GDS17057 | 46308180 | GDS17077 | 51933670 | GDS17106 | 51876357 | GDS17116 | 71792288 | GDS17124 |
| 52055941 | GDS17057 | 71791716 | GDS17077 | 52130452 | GDS17106 | 71794581 | GDS17116 | 71792290 | GDS17124 |
| 5205594155209968 | GDS17057 | 10349448 | GDS17078 | 46308025 | GDS17107 | 46308089 | GDS17117 | 71792294 | GDS17124 |
| 51787180 | GDS17061 | 374943 | GDS17078 | 46308071 | GDS17107 | 46308090 | GDS17117 | 71792297 | GDS17124 |
| 5178718055205034 | GDS17061 | 51810626 | GDS17078 | 60802018 | GDS17107 | 71787335 | GDS17117 | 71793645 | GDS17124 |
| 5178780 | GDS17061 | 51961297 | GDS17078 | 71787113 | GDS17107 | 46307713 | GDS17118 | 71793911 | GDS17124 |
| 51902615 | GDS17061 | 52027047 | GDS17078 | 46307864 | GDS17108 | 46307736 | GDS17118 | 71794538 | GDS17124 |
| 51934087 | GDS17061 | 5374107 | GDS17078 | 46307910 | GDS17108 | 71796674 | GDS17118 | 71794540 | GDS17124 |
| 5193408755205034 | GDS17061 | 71797042 | GDS17078 | 46308178 | GDS17108 | 1541822 | GDS17119 | 71794593 | GDS17124 |
| 71797913 | GDS17061 | 95511568 | GDS17078 | 46308179 | GDS17108 | 1798117 | GDS17119 | 46307447 | GDS17131 |
| 7179791355205034 | GDS17061 | 95516446 | GDS17078 | 71785743 | GDS17108 | 1835998 | GDS17119 | 46307514 | GDS17131 |
| 51783824 | GDS17062 | 95520657 | GDS17078 | 71791722 | GDS17108 | 1838413 | GDS17119 | 936AB4MAE | GDS17131 |
| 51934091 | GDS17062 | 95520665 | GDS17078 | 46308329 | GDS17109 | 51787864 | GDS17119 | 46307857 | GDS17136 |
| 71793062 | GDS17062 | 374941 | GDS17079 | 46308367 | GDS17109 | 51839648 | GDS17119 | 46307993 | GDS17137 |
| 51785056 | GDS17064 | 51810625 | GDS17079 | 46308522 | GDS17109 | 51846621 | GDS17119 | 46308008 | GDS17137 |
| 51816764 | GDS17064 | 5181062555209968 | GDS17079 | 51827229 | GDS17109 | 51955482 | GDS17119 | 46308259 | GDS17137 |
| 51960121 | GDS17064 | 51961296 | GDS17079 | 51947024 | GDS17109 | 51955787 | GDS17119 | 71787323 | GDS17137 |
| 52055942 | GDS17064 | 5196129655209968 | GDS17079 | 51947833 | GDS17109 | 51955850 | GDS17119 | 71791780 | GDS17137 |
| 46308329 | GDS17066 | 52027046 | GDS17079 | 55700558 | GDS17109 | 71797944 | GDS17119 | 51885860 | GDS17140 |
| 46308367 | GDS17066 | 5374106 | GDS17079 | 71789852 | GDS17109 | 9S513B437BA | GDS17119 | 51929168 | GDS17140 |
| 46308522 | GDS17066 | 71798471 | GDS17079 | 71790949 | GDS17109 | DS513B437BA | GDS17119 | 52134270 | GDS17140 |
| 51854040 | GDS17066 | 7179874155209968 | GDS17079 | 71790951 | GDS17109 | RM9S513B437B1A | GDS17119 | 46307994 | GDS17141 |
| 51947833 | GDS17066 | 95511562 | GDS17079 | 71791079 | GDS17109 | RMDS513B437B1A | GDS17119 | 46308262 | GDS17141 |
| 51955480 | GDS17066 | 95516445 | GDS17079 | 71791081 | GDS17109 | 1541814 | GDS17120 | 46308275 | GDS17141 |
| 55700558 | GDS17066 | 95520683 | GDS17079 | 71793054 | GDS17109 | 1835989 | GDS17120 | 71786965 | GDS17141 |
| 51810625 | GDS17069 | 95520725 | GDS17079 | 71795166 | GDS17109 | 51787862 | GDS17120 | 71791765 | GDS17141 |
| 51961296 | GDS17069 | 95524212 | GDS17079 | 71797845 | GDS17109 | 51791164 | GDS17120 | 55700614 | GDS17142 |
| 13149834 | GDS17070 | 95524213 | GDS17079 | 46307741 | GDS17110 | 51839644 | GDS17120 | 71745016 | GDS17142 |
| 374791 | GDS17070 | 46307989 | GDS17080 | 46308092 | GDS17110 | 51955477 | GDS17120 | 55197722 | GDS17143 |
| 375043 | GDS17070 | 46308034 | GDS17080 | 71787048 | GDS17110 | 51955478 | GDS17120 | 55700614 | GDS17143 |
| 51808108 | GDS17070 | 46308035 | GDS17080 | 00717912820000 | GDS17111 | 51955849 | GDS17120 | 71745016 | GDS17143 |
| 5180810855199297 | GDS17070 | 51815194 | GDS17081 | 46308339 | GDS17111 | 9S513B436BA | GDS17120 | 46308437 | GDS17144 |
| 5374178 | GDS17070 | 5181519455214684 | GDS17081 | 51754513 | GDS17111 | DS513B436BA | GDS17120 | 4630843746307543 | GDS17144 |
| 55702108 | GDS17070 | 51933669 | GDS17081 | 51807675 | GDS17111 | 51812053 | GDS17121 | 4630843755205034 | GDS17144 |
| 5570210855199297 | GDS17070 | 5193366955214684 | GDS17081 | 51934090 | GDS17111 | 51902631 | GDS17121 | 46308524 | GDS17144 |
| 71793058 | GDS17070 | 52130451 | GDS17081 | 51947021 | GDS17111 | 46308297 | GDS17122 | 4630852446307543 | GDS17144 |
| 7179305855199297 | GDS17070 | 5213045155214684 | GDS17081 | 55700557 | GDS17111 | 50500528 | GDS17122 | 4630852455205034 | GDS17144 |
| 93169688 | GDS17070 | 71796906 | GDS17081 | 55700559 | GDS17111 | 50517134 | GDS17122 | 51785203 | GDS17144 |
| 95518744 | GDS17070 | 7179690655214684 | GDS17081 | 71789837 | GDS17111 | 50517144 | GDS17122 | 5178520346307543 | GDS17144 |
| R1640098 | GDS17070 | 71799571 | GDS17081 | 71789843 | GDS17111 | 51876370 | GDS17122 | 5178520355205034 | GDS17144 |
| 13149833 | GDS17071 | 7179957155214684 | GDS17081 | 71791082 | GDS17111 | 51876377 | GDS17122 | 71792093 | GDS17144 |
| 13312276 | GDS17071 | 46308345 | GDS17082 | 71791084 | GDS17111 | 71787437 | GDS17122 | 7179209346307543 | GDS17144 |
| 1677186180 | GDS17071 | 51808106 | GDS17082 | 71796831 | GDS17111 | 71791798 | GDS17122 | 7179209355205034 | GDS17144 |
| 374698 | GDS17071 | 51947835 | GDS17082 | 71797971 | GDS17111 | 71791800 | GDS17122 | 71793055 | GDS17144 |
| 374790 | GDS17071 | 55700561 | GDS17082 | 1541812 | GDS17112 | 71793914 | GDS17122 | 7179305546307543 | GDS17144 |
| 375029 | GDS17071 | 51807676 | GDS17088 | 1798105 | GDS17112 | 71794361 | GDS17122 | 7179305555205034 | GDS17144 |
| 93169676 | GDS17071 | 51934093 | GDS17088 | 1835992 | GDS17112 | 71794541 | GDS17122 | 50500523 | GDS17145 |
| 95520631 | GDS17071 | 46307851 | GDS17099 | 1838401 | GDS17112 | 71794543 | GDS17122 | 50517126 | GDS17145 |
| R1640086 | GDS17071 | 46307852 | GDS17099 | 51787861 | GDS17112 | 46308250 | GDS17123 | 51876350 | GDS17145 |
| 51815194 | GDS17076 | 1541818 | GDS17101 | 51839645 | GDS17112 | 50500529 | GDS17123 | 71791792 | GDS17145 |
| 5181519455221323 | GDS17076 | 1798116 | GDS17101 | 51902277 | GDS17112 | 50517138 | GDS17123 | 71791794 | GDS17145 |
| 51933669 | GDS17076 | 1835997 | GDS17101 | 51955476 | GDS17112 | 51876349 | GDS17123 | 71793912 | GDS17145 |
| 5193366955221323 | GDS17076 | 1838405 | GDS17101 | 51956411 | GDS17112 | 71787407 | GDS17123 | 71794381 | GDS17145 |
| 52018004 | GDS17076 | 51787863 | GDS17101 | 52126658 | GDS17112 | 71791801 | GDS17123 | 71794383 | GDS17145 |
| 5201800455221323 | GDS17076 | 51839649 | GDS17101 | 71797024 | GDS17112 | 71793916 | GDS17123 | 46308324 | GDS17146 |
| 52062146 | GDS17076 | 51902278 | GDS17101 | 71797027 | GDS17112 | 71794378 | GDS17123 | 51808105 | GDS17146 |
| 5206214655221323 | GDS17076 | 51955481 | GDS17101 | 71797153 | GDS17112 | 46308273 | GDS17124 | 51934088 | GDS17146 |
| 52129594 | GDS17076 | 51956412 | GDS17101 | 9S513B436AA | GDS17112 | 46308434 | GDS17124 | 55702107 | GDS17146 |
| 5212959455221323 | GDS17076 | 52126660 | GDS17101 | DS513B436AA | GDS17112 | 50500521 | GDS17124 | 71792099 | GDS17146 |
| 52130451 | GDS17076 | 71797039 | GDS17101 | RM9S513B436A1A | GDS17112 | 50500522 | GDS17124 | 71793053 | GDS17146 |
| 5213045155221323 | GDS17076 | 9S513B437AA | GDS17101 | RMDS513B436A1A | GDS17112 | 50504034 | GDS17124 | 71795585 | GDS17146 |

| COMPETITOR | G-AP Ref. | COMPETITOR | G-AP Ref. | COMPETITOR | G-AP Ref. | COMPETITOR | G-AP Ref. | COMPETITOR | G-AP Ref. |
|---|---|---|---|---|---|---|---|---|---|
| OE | | 51787863 | GDS17170 | 3273CG | GDS17217 | 46857067 | GDS17231 | R93BG3B436AE | GDS18005 |
| | | 51955481 | GDS17170 | 3273GS | GDS17217 | 71796603 | GDS17231 | 1023209 | GDS18006 |
| 46308366 | GDS17147 | 9S513B437AA | GDS17170 | 3273GT | GDS17217 | 71799867 | GDS17231 | 1132653 | GDS18006 |
| 46308521 | GDS17147 | 1541812 | GDS17171 | 3273TH | GDS17217 | 1366928080 | GDS17232 | 1690723 | GDS18006 |
| 51934092 | GDS17147 | 51787861 | GDS17171 | 9645249180 | GDS17217 | 71796535 | GDS17232 | 1690726 | GDS18006 |
| 71793052 | GDS17147 | 51955476 | GDS17171 | 1485685080 | GDS17218 | 55199976 | GDS17238 | 1692055 | GDS18006 |
| 50517838 | GDS17148 | 9S513B436AA | GDS17171 | 71787254 | GDS17218 | 7783804 | GDS17238 | 5029036 | GDS18006 |
| 51809992 | GDS17148 | 46308330 | GDS17172 | 1485684080 | GDS17220 | 1008428 | GDS18001 | 7024789 | GDS18006 |
| 51947023 | GDS17148 | 51808108 | GDS17172 | 3272AZ | GDS17220 | 1023213 | GDS18001 | 93BG3B436AAD | GDS18006 |
| 71797667 | GDS17148 | 55702108 | GDS17172 | 3272CA | GDS17220 | 5029044 | GDS18001 | 93BG3B436AAE | GDS18006 |
| 46303261 | GDS17149 | 71792102 | GDS17172 | 71787251 | GDS17220 | 6757676 | GDS18001 | 96BG3B436AAB | GDS18006 |
| 46308218 | GDS17149 | 71793058 | GDS17172 | 1401317788 | GDS17221 | 7294553 | GDS18001 | R93BG3B436A | GDS18006 |
| 46308221 | GDS17149 | 5179551155210063 | GDS17179 | 1490611080 | GDS17221 | 93BG3B437BD | GDS18001 | R93BG3B436AAE | GDS18006 |
| 46308261 | GDS17149 | 51794995 | GDS17180 | 3272CG | GDS17221 | 96BG3B437ABB | GDS18001 | RE93BG3B436A1AE | GDS18006 |
| 71791783 | GDS17149 | 51861636 | GDS17180 | 3272HA | GDS17221 | R93BG3B437BD | GDS18001 | RE93BG3B436A1BE | GDS18006 |
| 46308023 | GDS17150 | 71792552 | GDS17180 | 3272HC | GDS17221 | R93BG3B437BE | GDS18001 | RE96BX3B436A1AB | GDS18006 |
| 717208790000 | GDS17150 | 46308005 | GDS17181 | 3272SR | GDS17221 | 1008402 | GDS18002 | RM96BX3B436AAB | GDS18006 |
| 717830090000 | GDS17150 | 46308260 | GDS17181 | 71793430 | GDS17221 | 1023212 | GDS18002 | 1026903 | GDS18007 |
| 71791731 | GDS17150 | 46308274 | GDS17181 | 9645249080 | GDS17221 | 1023213 | GDS18002 | 1040542 | GDS18007 |
| 1607735380 | GDS17151 | 71786968 | GDS17181 | 46308340 | GDS17222 | 1690732 | GDS18002 | 1059534 | GDS18007 |
| 1607735480 | GDS17151 | 71791336 | GDS17181 | 51947026 | GDS17222 | 1690734 | GDS18002 | 1063415 | GDS18007 |
| 1608901980 | GDS17151 | 46308345 | GDS17182 | 55700562 | GDS17222 | 1690738 | GDS18002 | 1689911 | GDS18007 |
| 3272SL | GDS17151 | 51808106 | GDS17182 | 71789840 | GDS17222 | 5029040 | GDS18002 | R94FX3220BA | GDS18007 |
| 3272SN | GDS17151 | 55700561 | GDS17182 | 71791285 | GDS17222 | 5029041 | GDS18002 | R97FX3220EA | GDS18007 |
| 51783854 | GDS17151 | 71791375 | GDS17182 | 71791287 | GDS17222 | 6757672 | GDS18002 | RE97FX3220E1A | GDS18007 |
| 374939 | GDS17152 | 71791377 | GDS17182 | 71795377 | GDS17222 | 7024791 | GDS18002 | 1020964 | GDS18008 |
| 51822813 | GDS17152 | 71793056 | GDS17182 | 13238093 | GDS17223 | 7294551 | GDS18002 | 1097313 | GDS18008 |
| 51933670 | GDS17152 | 71795167 | GDS17182 | 374783 | GDS17223 | 93BB3B437ABB | GDS18002 | 1097317 | GDS18008 |
| 5193367055221323 | GDS17152 | 46477176 | GDS17187 | 51706611 | GDS17223 | 93BG3B437AAE | GDS18002 | 1125044 | GDS18008 |
| 52012148 | GDS17152 | 7668798 | GDS17187 | 51792341 | GDS17223 | 93BG3B437ABD | GDS18002 | 1131680 | GDS18008 |
| 52130452 | GDS17152 | 46476612 | GDS17188 | 71790943 | GDS17223 | 93BG3B437ABE | GDS18002 | 1132480 | GDS18008 |
| 95511556 | GDS17152 | 7721633 | GDS17188 | 95520763 | GDS17223 | 96BG3B437AAB | GDS18002 | 1132482 | GDS18008 |
| 9551155655256720 | GDS17152 | 77216333 | GDS17188 | 51905707 | GDS17224 | 96BG3B437ABB | GDS18002 | 1132487 | GDS18008 |
| 374939 | GDS17153 | 46409864 | GDS17189 | 51927069 | GDS17224 | R93BG3B437A | GDS18002 | 1689838 | GDS18008 |
| 51822813 | GDS17153 | 46476613 | GDS17189 | 51947029 | GDS17224 | R93BG3B437AAE | GDS18002 | 1689841 | GDS18008 |
| 51933670 | GDS17153 | 46307368 | GDS17190 | 51905706 | GDS17225 | R93BG3B437ABD | GDS18002 | 1689846 | GDS18008 |
| 5193367055214684 | GDS17153 | 46307369 | GDS17191 | 51947025 | GDS17225 | R93BG3B437ABE | GDS18002 | 1689946 | GDS18008 |
| 52130452 | GDS17153 | 46308405 | GDS17192 | 51868091 | GDS17226 | RE93BG3B437A1AE | GDS18002 | 7201674 | GDS18008 |
| 95511556 | GDS17153 | 51808314 | GDS17192 | 5186809155237698 | GDS17226 | RE93BG3B437A1BE | GDS18002 | 7M0407272A | GDS18008 |
| 9551155695511579 | GDS17153 | 46308404 | GDS17193 | 46307890 | GDS17227 | RE96BX3B437A1AB | GDS18002 | 7M0407272AV | GDS18008 |
| 51975576 | GDS17157 | 51808313 | GDS17193 | 46308147 | GDS17227 | 1008385 | GDS18003 | 7M0407272AX | GDS18008 |
| 55228304 | GDS17157 | 51854039 | GDS17193 | 46308161 | GDS17227 | 1023211 | GDS18003 | 7M0407272E | GDS18008 |
| 71797021 | GDS17157 | 51955483 | GDS17193 | 46308162 | GDS17227 | 5029039 | GDS18003 | 7M0407272F | GDS18008 |
| 46307787 | GDS17158 | 51795511 | GDS17194 | 71787302 | GDS17227 | 6757668 | GDS18003 | 7M0407272H | GDS18008 |
| 46307144 | GDS17159 | 7765366 | GDS17197 | 71791774 | GDS17227 | 7294550 | GDS18003 | 7M0407272K | GDS18008 |
| 46307301 | GDS17159 | 7765367 | GDS17197 | 68079566AB | GDS17228 | 93BG3B436BD | GDS18003 | 7M0407450AX | GDS18008 |
| 46307304 | GDS17159 | 7778448 | GDS17197 | 68193347AA | GDS17228 | 93BG3B436BE | GDS18003 | 7M0407450X | GDS18008 |
| 46307316 | GDS17159 | 46307428 | GDS17201 | K68066180AA | GDS17228 | 96BG3B436ABB | GDS18003 | 7M0407452 | GDS18008 |
| 46307342 | GDS17159 | 463078428 | GDS17201 | K68079566AA | GDS17228 | R93BG3B436BD | GDS18003 | 7M0407452BX | GDS18008 |
| 463073420000 | GDS17159 | 46307429 | GDS17206 | K68079566AB | GDS17228 | R93BG3B436BE | GDS18003 | 7M0407452X | GDS18008 |
| 71786902 | GDS17159 | 51987807 | GDS17207 | K68193347AA | GDS17228 | 1008381 | GDS18004 | 7M3407272A | GDS18008 |
| 717869020000 | GDS17159 | 52068573 | GDS17207 | P68193347AA | GDS17228 | 1023211 | GDS18004 | 7M3407452AX | GDS18008 |
| 71787030 | GDS17159 | 52078097 | GDS17207 | 68079565AA | GDS17229 | 1132654 | GDS18004 | 95VW3B436BA | GDS18008 |
| 717870300000 | GDS17159 | 51983848 | GDS17208 | 68079565AB | GDS17229 | 1690758 | GDS18004 | 95VW3B436BB | GDS18008 |
| 51896520 | GDS17165 | 52068572 | GDS17208 | K68079565AA | GDS17229 | 5029037 | GDS18004 | 95VW3B436FA | GDS18008 |
| 3272ZH | GDS17166 | 52078096 | GDS17208 | K68079565AB | GDS17229 | 6757666 | GDS18004 | 95VW3B436FB | GDS18008 |
| 3272ZH1607440280 | GDS17166 | 51965272 | GDS17212 | K68193346AA | GDS17229 | 7294549 | GDS18004 | JZW407450GX | GDS18008 |
| 3272ZP | GDS17166 | 52134278 | GDS17212 | P68193346AA | GDS17229 | 93BG3B436ABD | GDS18004 | JZW407450HX | GDS18008 |
| 3272ZP1607440280 | GDS17166 | 51983793 | GDS17213 | 46308093 | GDS17230 | 93BG3B436ABE | GDS18004 | RE95VW3219B1A | GDS18008 |
| 1607440180 | GDS17167 | 52062144 | GDS17213 | 46308094 | GDS17230 | 96BG3B436ABB | GDS18004 | RE95VW3219F1A | GDS18008 |
| 1610826980 | GDS17167 | 71797639 | GDS17213 | 46308349 | GDS17230 | R93BG3B436ABD | GDS18004 | RE95VX3B436B1B | GDS18008 |
| 1610827480 | GDS17167 | 46308112 | GDS17214 | 51753392 | GDS17230 | R93BG3B436ABE | GDS18004 | RE95VX3B436F1B | GDS18008 |
| 1612383480 | GDS17167 | 46308115 | GDS17214 | 71787489 | GDS17230 | RE96BX3B436A1BB | GDS18004 | RM95VX3B436BB | GDS18008 |
| 3272ZH | GDS17167 | 51983845 | GDS17214 | 71791771 | GDS17230 | RM96BX3B436ABB | GDS18004 | RM95VX3B436FB | GDS18008 |
| 3272ZH1607440180 | GDS17167 | 52061675 | GDS17214 | 71791777 | GDS17230 | 5029038 | GDS18005 | XM213B436AA | GDS18008 |
| 3272ZP | GDS17167 | 71797765 | GDS17214 | 1366929080 | GDS17231 | 7024790 | GDS18005 | YM213B436BA | GDS18008 |
| 3272ZP1607440180 | GDS17167 | 1401317888 | GDS17217 | 1396529080 | GDS17231 | 93BG3B436AD | GDS18005 | 1016692 | GDS18009 |
| 1541818 | GDS17170 | 3273CF | GDS17217 | 1399859080 | GDS17231 | 93BG3B436AE | GDS18005 | 1020967 | GDS18009 |

| COMPETITOR | G-AP Ref. | COMPETITOR | G-AP Ref. | COMPETITOR | G-AP Ref. | COMPETITOR | G-AP Ref. | COMPETITOR | G-AP Ref. |
|---|---|---|---|---|---|---|---|---|---|
| **OE** | | RE97FX3219C1A | **GDS18011** | 94AG3A427EA | **GDS18039** | RM9T163B437A1A | **GDS18041** | 1122810 | **GDS18046** |
| | | 1058827 | **GDS18015** | R91AX3219HA | **GDS18039** | 1069356 | **GDS18042** | 1348325 | **GDS18046** |
| 1054925 | **GDS18009** | R97AX3219FA | **GDS18015** | R92AX3219DA | **GDS18039** | 1092755 | **GDS18042** | 1420536 | **GDS18046** |
| 1054927 | **GDS18009** | 1690736 | **GDS18016** | R94AX3219AA | **GDS18039** | 1111959 | **GDS18042** | 1602942 | **GDS18046** |
| 1097318 | **GDS18009** | 5029043 | **GDS18016** | R94AX3219BA | **GDS18039** | 1122811 | **GDS18042** | 1753934 | **GDS18046** |
| 1097321 | **GDS18009** | 6757674 | **GDS18016** | R94AX3219CA | **GDS18039** | 1345864 | **GDS18042** | 3667428 | **GDS18046** |
| 1097322 | **GDS18009** | 7024792 | **GDS18016** | R94AX3219DA | **GDS18039** | 1420537 | **GDS18042** | RMXS4W3219BA | **GDS18046** |
| 1112537 | **GDS18009** | 93BG3B437AD | **GDS18016** | RE91AX3219H1A | **GDS18039** | 1602947 | **GDS18042** | RMXS4W3B436D1B | **GDS18046** |
| 1125047 | **GDS18009** | 93BG3B437AE | **GDS18016** | 1014111 | **GDS18040** | 1753951 | **GDS18042** | RMXS4W3B436DB | **GDS18046** |
| 1132492 | **GDS18009** | R93BG3B437AE | **GDS18016** | 1026643 | **GDS18040** | 2M5Z3B437BB | **GDS18042** | XS4W3B436DA | **GDS18046** |
| 1132493 | **GDS18009** | RE93BG3B437A1E | **GDS18016** | 1059524 | **GDS18040** | 3652046 | **GDS18042** | XS4W3B436DB | **GDS18046** |
| 1132497 | **GDS18009** | 1026650 | **GDS18019** | 1690355 | **GDS18040** | 3667429 | **GDS18042** | GD1725500 | **GDS18050** |
| 1132498 | **GDS18009** | 1132509 | **GDS18027** | 1690692 | **GDS18040** | RLXS4W3B437DX | **GDS18042** | GD1725500A | **GDS18050** |
| 1689844 | **GDS18009** | 1366591 | **GDS18027** | 5024574 | **GDS18040** | RMXS4W3220BA | **GDS18042** | GD1725500B | **GDS18050** |
| 1689845 | **GDS18009** | 1600650 | **GDS18027** | 5024575 | **GDS18040** | RMXS4W3B437D1B | **GDS18042** | F02325600 | **GDS18056** |
| 1689947 | **GDS18009** | C2S29731 | **GDS18027** | 5026653 | **GDS18040** | RMXS4W3B437DB | **GDS18042** | F42Z3B436A | **GDS18083** |
| 1689948 | **GDS18009** | C2S4864 | **GDS18027** | 6596778 | **GDS18040** | XS413B436CA | **GDS18042** | G59025600 | **GDS18083** |
| 1689949 | **GDS18009** | RM1S713B437AC | **GDS18027** | 6596779 | **GDS18040** | XS413B436CB | **GDS18042** | G59025600A | **GDS18083** |
| 7201677 | **GDS18009** | RM1S713B437AX | **GDS18027** | 91AX3220DA | **GDS18040** | XS4W3B437AA | **GDS18042** | G59025600B | **GDS18083** |
| 7M0407271A | **GDS18009** | RM1S7J3B437AA | **GDS18027** | 94AG3A428DA | **GDS18040** | XS4W3B437AB | **GDS18042** | G59025600R0B | **GDS18083** |
| 7M0407271AV | **GDS18009** | 1358229 | **GDS18028** | R91AX3220CA | **GDS18040** | XS4W3B437DA | **GDS18042** | G59025600RMB | **GDS18083** |
| 7M0407271AX | **GDS18009** | 1447467 | **GDS18028** | R91AX3220DA | **GDS18040** | XS4W3B437DB | **GDS18042** | G5682550XA | **GDS18085** |
| 7M0407271F | **GDS18009** | 1600646 | **GDS18028** | R92AX3220DA | **GDS18040** | 1132508 | **GDS18043** | G57025500C | **GDS18085** |
| 7M0407271J | **GDS18009** | 1S713B436AB | **GDS18028** | R94AX3220BA | **GDS18040** | 1209061 | **GDS18043** | 0K2A625600 | **GDS18088** |
| 7M0407271L | **GDS18009** | 1S713B436AC | **GDS18028** | R97FX3220CA | **GDS18040** | 1312785 | **GDS18043** | 0K2A625600A | **GDS18088** |
| 7M0407271Q | **GDS18009** | RM1S713B436AX | **GDS18028** | RE91AX3220C1A | **GDS18040** | 1314258 | **GDS18043** | F01725600A | **GDS18088** |
| 7M0407271R | **GDS18009** | 1059520 | **GDS18032** | RE97FX3220C1A | **GDS18040** | 1328335 | **GDS18043** | F01725600C | **GDS18088** |
| 7M0407449AX | **GDS18009** | 1690685 | **GDS18032** | 1328365 | **GDS18041** | 1328336 | **GDS18043** | F02425600C | **GDS18088** |
| 7M0407449X | **GDS18009** | 97FX3219DA | **GDS18032** | 1383755 | **GDS18041** | 1358232 | **GDS18043** | F7CZ3B437AA | **GDS18088** |
| 7M0407451AX | **GDS18009** | R97FX3219DA | **GDS18032** | 1383756 | **GDS18041** | 1358233 | **GDS18043** | FS1725600A | **GDS18088** |
| 7M0407451BX | **GDS18009** | RE97FX3219D1A | **GDS18032** | 1417751 | **GDS18041** | 1358234 | **GDS18043** | FS1725600C | **GDS18088** |
| 7M0407451X | **GDS18009** | 1634970 | **GDS18033** | 1417752 | **GDS18041** | 1366430 | **GDS18043** | 1141767 | **GDS18101** |
| 95VW3B437BA | **GDS18009** | V85BB3A427AA | **GDS18033** | 1451465 | **GDS18041** | 1366563 | **GDS18043** | 1328500 | **GDS18101** |
| 95VW3B437BB | **GDS18009** | 2C143B437AB | **GDS18035** | 1451466 | **GDS18041** | 1447470 | **GDS18043** | 1602944 | **GDS18101** |
| 95VW3B437EA | **GDS18009** | 4166491 | **GDS18035** | 1501263 | **GDS18041** | 1447471 | **GDS18043** | 1602965 | **GDS18101** |
| 95VW3B437FA | **GDS18009** | 4421003 | **GDS18035** | 1600420 | **GDS18041** | 1447472 | **GDS18043** | 1S4W3B437AA | **GDS18101** |
| 95VW3B437FB | **GDS18009** | 1132835 | **GDS18036** | 1600421 | **GDS18041** | 1600648 | **GDS18043** | 1S4W3B437AB | **GDS18101** |
| 95VW3B437GA | **GDS18009** | 1600251 | **GDS18036** | 1754404 | **GDS18041** | 1600649 | **GDS18043** | 2M5Z3B437CA | **GDS18101** |
| 95VW3B437HA | **GDS18009** | 1754390 | **GDS18036** | 1804605 | **GDS18041** | 1S7W3B436DA | **GDS18043** | 3652047 | **GDS18101** |
| 95VW3B437HB | **GDS18009** | 1C153B437AD | **GDS18036** | 2T143B437AB | **GDS18041** | 1S7W3B436EB | **GDS18043** | 3959551 | **GDS18101** |
| JZW407449KX | **GDS18009** | 1C153B437AE | **GDS18036** | 2T143B437AC | **GDS18041** | 2S713B436AA | **GDS18043** | 4166909 | **GDS18101** |
| JZW407449LX | **GDS18009** | 1C153B437AF | **GDS18036** | 2T143B437AG | **GDS18041** | 2S713B436AB | **GDS18043** | 4187268 | **GDS18101** |
| RE95VW3220F1A | **GDS18009** | 1C153B437CD | **GDS18036** | 2T143B437CA | **GDS18041** | 2S713B436AC | **GDS18043** | 4S4Z3B437EA | **GDS18101** |
| RE95VW3220H1A | **GDS18009** | 1C153B437CE | **GDS18036** | 2T143B437CB | **GDS18041** | 2S713B436BA | **GDS18043** | 5S4Z3B437AA | **GDS18101** |
| RE95VX3B437B1B | **GDS18009** | 1C153B437CF | **GDS18036** | 2T143B437CC | **GDS18041** | 2S713B436BB | **GDS18043** | 6S4Z3B437AA | **GDS18101** |
| RE95VX3B437F1B | **GDS18009** | 2C143B437BB | **GDS18036** | 2T143B437CD | **GDS18041** | 2S713B436BC | **GDS18043** | 6S4Z3B437BA | **GDS18101** |
| RE95VX3B437H1B | **GDS18009** | 4104910 | **GDS18036** | 2T143B437CE | **GDS18041** | 2S713B436DA | **GDS18043** | 8S4Z3B437A | **GDS18101** |
| RM95VW3220BA | **GDS18009** | 4104911 | **GDS18036** | 2T143B437DA | **GDS18041** | 2S713B436DB | **GDS18043** | 8S4Z3B437B | **GDS18101** |
| RM95VX3B437BB | **GDS18009** | 4166492 | **GDS18036** | 2T143B437FA | **GDS18041** | 2S713B436DC | **GDS18043** | RL1S4W3B437AX | **GDS18101** |
| RM95VX3B437FB | **GDS18009** | 4421004 | **GDS18036** | 2T143B437FB | **GDS18041** | 2S7W3B436AA | **GDS18043** | RM1S4W3B437AB | **GDS18101** |
| RM95VX3B437HB | **GDS18009** | RL1C153B437CX | **GDS18036** | 2T143B437FC | **GDS18041** | 2S7W3B436BA | **GDS18043** | RMXS4W3220AA | **GDS18101** |
| RMYM2J3B437KA | **GDS18009** | RM1C153B437C1F | **GDS18036** | 2T143B437FD | **GDS18041** | 4106377 | **GDS18043** | XS4W3B437BB | **GDS18101** |
| YM213B437KA | **GDS18009** | RM1C1J3B437CF | **GDS18036** | 4371791 | **GDS18041** | 4121448 | **GDS18043** | XS4W3B437BC | **GDS18101** |
| 1097319 | **GDS18010** | RM2C143B437B1B | **GDS18036** | 4417588 | **GDS18041** | 4132634 | **GDS18043** | YS4Z3B437BA | **GDS18101** |
| 1132495 | **GDS18010** | 1049275 | **GDS18038** | 4476255 | **GDS18041** | 4372691 | **GDS18043** | YS4Z3B437BB | **GDS18101** |
| 7201678 | **GDS18010** | 97AG3A381AA | **GDS18038** | 4490558 | **GDS18041** | 4398068 | **GDS18043** | YS4Z3B437CA | **GDS18101** |
| 7M0407271C | **GDS18010** | 1014109 | **GDS18039** | 4494315 | **GDS18041** | 4398072 | **GDS18043** | YS4Z3B437CB | **GDS18101** |
| 7M0407271CX | **GDS18010** | 1026631 | **GDS18039** | 4501957 | **GDS18041** | RM1S7J3B436EB | **GDS18043** | 1141768 | **GDS18102** |
| 7M0407271M | **GDS18010** | 1026635 | **GDS18039** | 4994093 | **GDS18041** | RM2S713B436BA | **GDS18043** | 1328490 | **GDS18102** |
| 7M0407271MX | **GDS18010** | 1026637 | **GDS18039** | 5083616 | **GDS18041** | RM2S713B436BB | **GDS18043** | 1602933 | **GDS18102** |
| 95VW3B437CB | **GDS18010** | 1026638 | **GDS18039** | 9T163B437AA | **GDS18041** | RM2S713B436BX | **GDS18043** | 1602943 | **GDS18102** |
| 95VW3B437CC | **GDS18010** | 1690346 | **GDS18039** | 9T163B437AAD | **GDS18041** | RM2S713B436DA | **GDS18043** | 1S4W3B436AA | **GDS18102** |
| RM95VX3B437CC | **GDS18010** | 5024568 | **GDS18039** | 9T1Z3B437A | **GDS18041** | RM2S713B436DB | **GDS18043** | 2M5Z3B436CA | **GDS18102** |
| 1059518 | **GDS18011** | 5024569 | **GDS18039** | RL2T143B437FX | **GDS18041** | RM2S713B436DX | **GDS18043** | 3652045 | **GDS18102** |
| 1690683 | **GDS18011** | 5026652 | **GDS18039** | RM2T143B437C1E | **GDS18041** | VP2S7W3B436DA | **GDS18043** | 4166907 | **GDS18102** |
| 1690684 | **GDS18011** | 6596773 | **GDS18039** | RM2T143B437CB | **GDS18041** | 0446605010 | **GDS18044** | 4S4Z3B436DA | **GDS18102** |
| 96FG3A428DB | **GDS18011** | 6669786 | **GDS18039** | RM2T143B437CC | **GDS18041** | 5024576 | **GDS18044** | 5S4Z3B436AA | **GDS18102** |
| R97FX3219CA | **GDS18011** | 91AX3219DA | **GDS18039** | RM2T143B437FB | **GDS18041** | 91AX3220EA | **GDS18044** | 5S4Z3B436BA | **GDS18102** |

| COMPETITOR | G-AP Ref. | COMPETITOR | G-AP Ref. | COMPETITOR | G-AP Ref. | COMPETITOR | G-AP Ref. | COMPETITOR | G-AP Ref. |
|---|---|---|---|---|---|---|---|---|---|
| OE | | 2C143B436AB | GDS18142 | 1754455 | GDS18195 | 1881057 | GDS18201 | 1328359 | GDS18209 |
| | | 4104908 | GDS18142 | 2M5V3B437BA | GDS18195 | 2002893 | GDS18201 | 1417750 | GDS18209 |
| 6S4Z3B436BA | GDS18102 | 4166489 | GDS18142 | 2M5V3B437BB | GDS18195 | 2S613B436AB | GDS18201 | 1417762 | GDS18209 |
| 8S4Z3B436A | GDS18102 | 4421008 | GDS18142 | 4351864 | GDS18195 | 2S613B436AC | GDS18201 | 1600253 | GDS18209 |
| RL1S4W3B436AX | GDS18102 | 1059482 | GDS18175 | 4392937 | GDS18195 | 2S613B436AD | GDS18201 | 1600255 | GDS18209 |
| RLXS4W3B436BX | GDS18102 | 1129587 | GDS18175 | RM1M5O3B437A1B | GDS18195 | 2S613B436AE | GDS18201 | 1754397 | GDS18209 |
| RM1S4W3B436AA | GDS18102 | 1689909 | GDS18175 | RM2M5V3B437B1B | GDS18195 | 2S613B436AF | GDS18201 | 1C153B437AG | GDS18209 |
| RMXS4W3219AA | GDS18102 | 1690686 | GDS18175 | 7711135956 | GDS18197 | 2S613B436AG | GDS18201 | 1C153B437AH | GDS18209 |
| TX307 | GDS18102 | 1690687 | GDS18175 | 8200278602 | GDS18197 | 2S613B436BB | GDS18201 | 1C153B437CG | GDS18209 |
| XS4W3B436BB | GDS18102 | R97FX3219FA | GDS18175 | 5057682 | GDS18199 | 2S613B436BC | GDS18201 | 1C153B437CH | GDS18209 |
| YS4Z3B436BA | GDS18102 | RE97FX3219D1B | GDS18175 | 1142790 | GDS18201 | 2S613B436BD | GDS18201 | 3C113B437BB | GDS18209 |
| YS4Z3B436CA | GDS18102 | RE97FX3219F1A | GDS18175 | 1142791 | GDS18201 | 2S613B436BE | GDS18201 | 4507296 | GDS18209 |
| 1097314 | GDS18106 | REYS6W3220A1A | GDS18175 | 1148219 | GDS18201 | 2S613B436BF | GDS18201 | 4529635 | GDS18209 |
| 1132484 | GDS18106 | RYS6W3220AA | GDS18175 | 1328370 | GDS18201 | 2S613B436BG | GDS18201 | 4602015 | GDS18209 |
| 7201675 | GDS18106 | G56525600A | GDS18176 | 1334284 | GDS18201 | 2S6W3B436AA | GDS18201 | 4602016 | GDS18209 |
| 7M0407272B | GDS18106 | G56525600B | GDS18176 | 1341965 | GDS18201 | 2S6W3B436FA | GDS18201 | RL1C153B437CY | GDS18209 |
| 7M0407272BV | GDS18106 | G56525600D | GDS18176 | 1341966 | GDS18201 | 2S6W3B436FB | GDS18201 | RM1C153B437CG | GDS18209 |
| 7M0407272BX | GDS18106 | G56725600 | GDS18176 | 1359342 | GDS18201 | 2S6W3B436FC | GDS18201 | RM1C153B437CH | GDS18209 |
| 7M0407272J | GDS18106 | G56825600A | GDS18176 | 1361897 | GDS18201 | 2S6W3B436FD | GDS18201 | RM1C1J3B437CH | GDS18209 |
| 7M0407450BX | GDS18106 | G5682560X | GDS18176 | 1386145 | GDS18201 | 4330604 | GDS18201 | 1447139 | GDS18210 |
| 7M0407452AX | GDS18106 | G5682560XA | GDS18176 | 1416633 | GDS18201 | 5S613B436AA | GDS18201 | 1447140 | GDS18210 |
| 95VW3B436CA | GDS18106 | G57025600A | GDS18176 | 1416634 | GDS18201 | 5S613B436AB | GDS18201 | 1454573 | GDS18210 |
| 95VW3B436CB | GDS18106 | G5702560XB | GDS18176 | 1416717 | GDS18201 | 5S613B436AC | GDS18201 | 6M343B436DA | GDS18210 |
| JZW407450JX | GDS18106 | G58425600A | GDS18176 | 1416720 | GDS18201 | 5S613B436AD | GDS18201 | 6M343B437BA | GDS18210 |
| RM95VX3B436CB | GDS18106 | G59225600 | GDS18176 | 1468572 | GDS18201 | 8V513B436AA | GDS18201 | 6M343B437CA | GDS18210 |
| 1690675 | GDS18118 | G59225600A | GDS18176 | 1468574 | GDS18201 | 8V513B436AAA | GDS18201 | PP042560X | GDS18210 |
| 5022283 | GDS18118 | G59425600 | GDS18176 | 1471723 | GDS18201 | 8V513B436AAB | GDS18201 | PP042560XA | GDS18210 |
| 5022285 | GDS18118 | G59425600A | GDS18176 | 1478994 | GDS18201 | 8V513B436AAC | GDS18201 | 1447177 | GDS18211 |
| 5022287 | GDS18118 | G59425600C | GDS18176 | 1489439 | GDS18201 | 8V513B436AAD | GDS18201 | 1447178 | GDS18211 |
| 5026503 | GDS18118 | GD172560X | GDS18176 | 1489440 | GDS18201 | 8V513B436AAE | GDS18201 | 1454575 | GDS18211 |
| 5026505 | GDS18118 | GD172560XA | GDS18176 | 1490474 | GDS18201 | 8V513B436AAF | GDS18201 | 6M343B436BA | GDS18211 |
| 6779200 | GDS18118 | GD172560XB | GDS18176 | 1490477 | GDS18201 | 8V513B436AB | GDS18201 | 6M343B436CA | GDS18211 |
| 89FX3220CA | GDS18118 | GD192560XA | GDS18176 | 1493222 | GDS18201 | 8V513B436AC | GDS18201 | 6M343B437DA | GDS18211 |
| 90FX3220BA | GDS18118 | 5024570 | GDS18179 | 1494091 | GDS18201 | 8V513B436AD | GDS18201 | PP042550XA | GDS18211 |
| 90FX3220CA | GDS18118 | 6596774 | GDS18179 | 1506723 | GDS18201 | 8V513B436AE | GDS18201 | 1142794 | GDS18216 |
| R89FX3220BA | GDS18118 | 91AX3219EA | GDS18179 | 1513993 | GDS18201 | 8V513B436CA | GDS18201 | 1142795 | GDS18216 |
| R89FX3220CA | GDS18118 | R91AX3219E | GDS18179 | 1514106 | GDS18201 | 8V513B436CB | GDS18201 | 1328373 | GDS18216 |
| R89FX3220DA | GDS18118 | 1310251 | GDS18189 | 1514107 | GDS18201 | 8V513B436CC | GDS18201 | 1333976 | GDS18216 |
| R90FX3220BA | GDS18118 | 1686114 | GDS18189 | 1514108 | GDS18201 | 8V513B436CD | GDS18201 | 1334285 | GDS18216 |
| R90FX3220CA | GDS18118 | 1707966 | GDS18189 | 1538077 | GDS18201 | 8V513B436CE | GDS18201 | 1341967 | GDS18216 |
| RE90FX3220B1A | GDS18118 | 1306776 | GDS18191 | 1538078 | GDS18201 | 8V513B436HA | GDS18201 | 1341968 | GDS18216 |
| 1020789 | GDS18128 | 1308668 | GDS18191 | 1547749 | GDS18201 | 8V513B436HB | GDS18201 | 1359345 | GDS18216 |
| 1629459 | GDS18128 | 1321083 | GDS18191 | 1547915 | GDS18201 | 8V513B436HD | GDS18201 | 1361898 | GDS18216 |
| 5018713 | GDS18128 | 1454205 | GDS18191 | 1564070 | GDS18201 | 8V513B436HE | GDS18201 | 1386146 | GDS18216 |
| 6747789 | GDS18128 | 1479769 | GDS18191 | 1564075 | GDS18201 | C60225500 | GDS18201 | 1416636 | GDS18216 |
| 6962758 | GDS18128 | 1754453 | GDS18191 | 1599034 | GDS18201 | RL2S613B436AX | GDS18201 | 1416637 | GDS18216 |
| 85GG4234CA | GDS18128 | 3M513B436MD | GDS18191 | 1599087 | GDS18201 | RL5S613B436AX | GDS18201 | 1416711 | GDS18216 |
| 92GG4234CA | GDS18128 | 3M513B436ME | GDS18191 | 1599099 | GDS18201 | RM2S613B436AB | GDS18201 | 1416715 | GDS18216 |
| R92GG4234CA | GDS18128 | 3M513B436MF | GDS18191 | 1599953 | GDS18201 | RM2S613B436AC | GDS18201 | 1468576 | GDS18216 |
| 1020794 | GDS18129 | 3M513B436MG | GDS18191 | 1600353 | GDS18201 | RM2S613B436AE | GDS18201 | 1468577 | GDS18216 |
| 5018714 | GDS18129 | 3M513B436MH | GDS18191 | 1697349 | GDS18201 | RM2S613B436BB | GDS18201 | 1468579 | GDS18216 |
| 6146498 | GDS18129 | RM3M513B436M1H | GDS18191 | 1697488 | GDS18201 | RM2S613B436BC | GDS18201 | 1471724 | GDS18216 |
| 6747790 | GDS18129 | 1306773 | GDS18193 | 1716096 | GDS18201 | RM2S613B436FA | GDS18201 | 1478996 | GDS18216 |
| 6962759 | GDS18129 | 1308669 | GDS18193 | 1716542 | GDS18201 | RM2S6W3B436AA | GDS18201 | 1489441 | GDS18216 |
| 85GG4234DA | GDS18129 | 1321084 | GDS18193 | 1742888 | GDS18201 | RM2S6W3B436F2D | GDS18201 | 1489442 | GDS18216 |
| 92GG4234DA | GDS18129 | 1479771 | GDS18193 | 1742891 | GDS18201 | RM2S6W3B436FA | GDS18201 | 1490475 | GDS18216 |
| 1059483 | GDS18141 | 1495059 | GDS18193 | 1749260 | GDS18201 | RM2S6W3B436FC | GDS18201 | 1493223 | GDS18216 |
| 1059528 | GDS18141 | 1673960 | GDS18193 | 1756196 | GDS18201 | RM5S613B436A2D | GDS18201 | 1494093 | GDS18216 |
| 1201481 | GDS18141 | 1754456 | GDS18193 | 1756197 | GDS18201 | RM5S613B436AA | GDS18201 | 1506722 | GDS18216 |
| 1690693 | GDS18141 | 3M513B437MD | GDS18193 | 1764838 | GDS18201 | RM5S613B436AC | GDS18201 | 1513990 | GDS18216 |
| 97FX3220FA | GDS18141 | 3M513B437ME | GDS18193 | 1764839 | GDS18201 | RM8V513B436AA2E | GDS18201 | 1513991 | GDS18216 |
| R97FX3220DA | GDS18141 | 3M513B437MF | GDS18193 | 1799209 | GDS18201 | RM8V513B436C2D | GDS18201 | 1514124 | GDS18216 |
| R97FX3220FA | GDS18141 | 3M513B437MG | GDS18193 | 1799212 | GDS18201 | 1510274 | GDS18206 | 1514126 | GDS18216 |
| RE97FX3220D1A | GDS18141 | 8603360 | GDS18193 | 1807540 | GDS18201 | 1686113 | GDS18206 | 1514127 | GDS18216 |
| RM97FX3220GA | GDS18141 | RL3M513B437MX | GDS18193 | 1821964 | GDS18201 | 1726946 | GDS18206 | 1565309 | GDS18216 |
| 1C153B436AD | GDS18142 | RM3M513B437M1G | GDS18193 | 1822704 | GDS18201 | 36000703 | GDS18206 | 1599058 | GDS18216 |
| 1C153B436AE | GDS18142 | RM3M513B437MG | GDS18193 | 1840187 | GDS18201 | 36001359 | GDS18206 | 1599060 | GDS18216 |
| 1C153B436AF | GDS18142 | 1753952 | GDS18195 | 1840189 | GDS18201 | 36001651 | GDS18206 | 1599065 | GDS18216 |

| COMPETITOR | G-AP Ref. | COMPETITOR | G-AP Ref. | COMPETITOR | G-AP Ref. | COMPETITOR | G-AP Ref. | COMPETITOR | G-AP Ref. |
|---|---|---|---|---|---|---|---|---|---|
| **OE** | | 1223788 | **GDS18218** | 3M513B437NE | **GDS18218** | 1798098 | **GDS18219** | 1600653 | **GDS18220** |
| | | 1223791 | **GDS18218** | 3M513B437NF | **GDS18218** | 1798099 | **GDS18219** | 1S713B437AB | **GDS18220** |
| 1599115 | **GDS18216** | 1302703 | **GDS18218** | 3M513B437NG | **GDS18218** | 1798102 | **GDS18219** | 1S713B437AC | **GDS18220** |
| 1599119 | **GDS18216** | 1302704 | **GDS18218** | 3M513B437NH | **GDS18218** | 30681127 | **GDS18219** | 1S713B437AD | **GDS18220** |
| 1697348 | **GDS18216** | 1305327 | **GDS18218** | 5M513B437SA | **GDS18218** | 30681129 | **GDS18219** | 1S7W3B437AA | **GDS18220** |
| 1697491 | **GDS18216** | 1305328 | **GDS18218** | 5M513B437SB | **GDS18218** | 30783002 | **GDS18219** | 1S7W3B437DA | **GDS18220** |
| 1697493 | **GDS18216** | 1305939 | **GDS18218** | 5M513B437SC | **GDS18218** | 30783168 | **GDS18219** | 2S713B437CA | **GDS18220** |
| 1764840 | **GDS18216** | 1353398 | **GDS18218** | 5M513B437SD | **GDS18218** | 30787783 | **GDS18219** | 2S713B437CB | **GDS18220** |
| 1764841 | **GDS18216** | 1353399 | **GDS18218** | 5M513B437SE | **GDS18218** | 31256930 | **GDS18219** | 2S713B437CC | **GDS18220** |
| 1799219 | **GDS18216** | 1354068 | **GDS18218** | 5N513B437SE | **GDS18218** | 36000143 | **GDS18219** | 2S713B437CD | **GDS18220** |
| 1799220 | **GDS18216** | 1364029 | **GDS18218** | 8063258 | **GDS18218** | 36000448 | **GDS18219** | 2S7W3B437CA | **GDS18220** |
| 1804617 | **GDS18216** | 1437541 | **GDS18218** | 8252073 | **GDS18218** | 36000557 | **GDS18219** | 4106378 | **GDS18220** |
| 1822711 | **GDS18216** | 1446236 | **GDS18218** | 8603251 | **GDS18218** | 36000700 | **GDS18219** | 4106380 | **GDS18220** |
| 1840168 | **GDS18216** | 1454214 | **GDS18218** | 8603362 | **GDS18218** | 36001358 | **GDS18219** | 4372692 | **GDS18220** |
| 1840169 | **GDS18216** | 1456975 | **GDS18218** | 8603486 | **GDS18218** | 36001360 | **GDS18219** | RM2S713B437CA | **GDS18220** |
| 1881061 | **GDS18216** | 1456976 | **GDS18218** | 8603487 | **GDS18218** | 36001652 | **GDS18219** | RM2S713B437CC | **GDS18220** |
| 2002895 | **GDS18216** | 1473145 | **GDS18218** | 8603594 | **GDS18218** | 3M513A327BB | **GDS18219** | RM2S713B437CX | **GDS18220** |
| 2S613B437AB | **GDS18216** | 1474893 | **GDS18218** | RL3M513B437DAX | **GDS18218** | 3M513B436DAC | **GDS18219** | 538450081 | **GDS18231** |
| 2S613B437AC | **GDS18216** | 1475131 | **GDS18218** | RL3M513B437KX | **GDS18218** | 3M513B436DAD | **GDS18219** | 538450101 | **GDS18231** |
| 2S613B437AD | **GDS18216** | 1475136 | **GDS18218** | RM3M513B437D2AG | **GDS18218** | 3M513B436DAE | **GDS18219** | 538450082 | **GDS18232** |
| 2S613B437AE | **GDS18216** | 1495049 | **GDS18218** | RM3M513B437DA | **GDS18218** | 3M513B436DAF | **GDS18219** | 538450102 | **GDS18232** |
| 2S613B437AF | **GDS18216** | 1495057 | **GDS18218** | RM3M513B437DAF | **GDS18218** | 3M513B436DAG | **GDS18219** | C2S29729 | **GDS18240** |
| 2S613B437BB | **GDS18216** | 1495069 | **GDS18218** | RM3M513B437K1J | **GDS18218** | 3M513B436DAH | **GDS18219** | 1132834 | **GDS18242** |
| 2S613B437BC | **GDS18216** | 1528657 | **GDS18218** | RM3M513B437KF | **GDS18218** | 3M513B436DC | **GDS18219** | 1754370 | **GDS18242** |
| 2S613B437BD | **GDS18216** | 1538273 | **GDS18218** | RM3M513B437KH | **GDS18218** | 3M513B436DD | **GDS18219** | 1754373 | **GDS18242** |
| 2S613B437BE | **GDS18216** | 1599079 | **GDS18218** | RM3M513B437N1H | **GDS18218** | 3M513B436DF | **GDS18219** | 1C153B436CD | **GDS18242** |
| 2S613B437BF | **GDS18216** | 1600575 | **GDS18218** | RM3M513B437NH | **GDS18218** | 3M513B436DG | **GDS18219** | 1C153B436CE | **GDS18242** |
| 2S6W3B437AA | **GDS18216** | 1682285 | **GDS18218** | RM5M513B437S1E | **GDS18218** | 3M513B436KC | **GDS18219** | 1C153B436CF | **GDS18242** |
| 2S6W3B437FA | **GDS18216** | 1685799 | **GDS18218** | 1223723 | **GDS18219** | 3M513B436KD | **GDS18219** | 2C143B436BB | **GDS18242** |
| 2S6W3B437FB | **GDS18216** | 1686116 | **GDS18218** | 1223725 | **GDS18219** | 3M513B436KE | **GDS18219** | 4104909 | **GDS18242** |
| 2S6W3B437FC | **GDS18216** | 1784754 | **GDS18218** | 1302701 | **GDS18219** | 3M513B436KF | **GDS18219** | 4166490 | **GDS18242** |
| 4330605 | **GDS18216** | 1798108 | **GDS18218** | 1302702 | **GDS18219** | 3M513B436KG | **GDS18219** | 4421013 | **GDS18242** |
| 4N113B437CA | **GDS18216** | 1798110 | **GDS18218** | 1305325 | **GDS18219** | 3M513B436KH | **GDS18219** | RM1C153B436C1F | **GDS18242** |
| 4N113B437CB | **GDS18216** | 1798113 | **GDS18218** | 1305938 | **GDS18219** | 3M513B436KJ | **GDS18219** | RM1C1J3B436CF | **GDS18242** |
| 4N113B437CC | **GDS18216** | 30681126 | **GDS18218** | 1318942 | **GDS18219** | 3M513B436LC | **GDS18219** | RM2C143B436B1B | **GDS18242** |
| 4N113B437CD | **GDS18216** | 30681128 | **GDS18218** | 1321950 | **GDS18219** | 3M513B436LD | **GDS18219** | 301012675R | **GDS18247** |
| 5S613B437AA | **GDS18216** | 30681130 | **GDS18218** | 1326809 | **GDS18219** | 3M513B436LE | **GDS18219** | 3910100Q3G | **GDS18247** |
| 5S613B437AB | **GDS18216** | 30711770 | **GDS18218** | 1328279 | **GDS18219** | 3M513B436LF | **GDS18219** | 3910100Q4E | **GDS18247** |
| 5S613B437AC | **GDS18216** | 30711772 | **GDS18218** | 1359656 | **GDS18219** | 3M513B436LG | **GDS18219** | 3910100Q4F | **GDS18247** |
| 8V513B437AA | **GDS18216** | 30783167 | **GDS18218** | 1364028 | **GDS18219** | 3M513B436ND | **GDS18219** | 3910100Q4J | **GDS18247** |
| 8V513B437AAA | **GDS18216** | 30783171 | **GDS18218** | 1417775 | **GDS18219** | 5M513B436SA | **GDS18219** | 3910100Q4K | **GDS18247** |
| 8V513B437AAB | **GDS18216** | 30787775 | **GDS18218** | 1431359 | **GDS18219** | 5M513B436SB | **GDS18219** | 3910100Q7M | **GDS18247** |
| 8V513B437AAC | **GDS18216** | 30787778 | **GDS18218** | 1437453 | **GDS18219** | 5M513B436SC | **GDS18219** | 391012360R | **GDS18247** |
| 8V513B437CA | **GDS18216** | 31256931 | **GDS18218** | 1454202 | **GDS18219** | 5M513B436SD | **GDS18219** | 391012675R | **GDS18247** |
| 8V513B437CB | **GDS18216** | 36000141 | **GDS18218** | 1454211 | **GDS18219** | 5M513B436SE | **GDS18219** | 391012849R | **GDS18247** |
| 8V513B437CC | **GDS18216** | 36000433 | **GDS18218** | 1456973 | **GDS18219** | 8603259 | **GDS18219** | 391016979R | **GDS18247** |
| 8V513B437CD | **GDS18216** | 36000440 | **GDS18218** | 1474624 | **GDS18219** | 8603363 | **GDS18219** | 391017007R | **GDS18247** |
| 8V513B437HA | **GDS18216** | 36000443 | **GDS18218** | 1474892 | **GDS18219** | RL3M513B436DAX | **GDS18219** | 4406234 | **GDS18247** |
| R2S6W3B437FA | **GDS18216** | 36000549 | **GDS18218** | 1475130 | **GDS18219** | RL3M513B436NX | **GDS18219** | 4406518 | **GDS18247** |
| RL2S613B437AX | **GDS18216** | 36000552 | **GDS18218** | 1476892 | **GDS18219** | RM3M513B436D1G | **GDS18219** | 4420055 | **GDS18247** |
| RM2S613B437AB | **GDS18216** | 36001356 | **GDS18218** | 1493007 | **GDS18219** | RM3M513B436D2AH | **GDS18219** | 4422058 | **GDS18247** |
| RM2S613B437AC | **GDS18216** | 36001357 | **GDS18218** | 1495046 | **GDS18219** | RM3M513B436DA | **GDS18219** | 5374213 | **GDS18247** |
| RM2S613B437AE | **GDS18216** | 3M513B437ASD | **GDS18218** | 1495047 | **GDS18219** | RM3M513B436DAF | **GDS18219** | 8200842365 | **GDS18247** |
| RM2S613B437BB | **GDS18216** | 3M513B437ASE | **GDS18218** | 1495064 | **GDS18219** | RM3M513B436K1J | **GDS18219** | 93167651 | **GDS18247** |
| RM2S613B437BC | **GDS18216** | 3M513B437DAC | **GDS18218** | 1517700 | **GDS18219** | RM3M513B436L1G | **GDS18219** | 95513818 | **GDS18247** |
| RM2S613B437BE | **GDS18216** | 3M513B437DAD | **GDS18218** | 1528656 | **GDS18219** | RM3M513B436N1H | **GDS18219** | 95514705 | **GDS18247** |
| RM2S6W3B437AA | **GDS18216** | 3M513B437DAE | **GDS18218** | 1599050 | **GDS18219** | RM3M513B436NE | **GDS18219** | 95516047 | **GDS18247** |
| RM2S6W3B437F2C | **GDS18216** | 3M513B437DAF | **GDS18218** | 1599062 | **GDS18219** | RM3M513B436NH | **GDS18219** | 95520456 | **GDS18247** |
| RM2S6W3B437FA | **GDS18216** | 3M513B437DAG | **GDS18218** | 1600571 | **GDS18219** | RM5M513B436S1E | **GDS18219** | 95529513 | **GDS18247** |
| RM2S6W3B437FC | **GDS18216** | 3M513B437KC | **GDS18218** | 1682436 | **GDS18219** | 1314256 | **GDS18220** | 95529515 | **GDS18247** |
| RM4N113B437C1D | **GDS18216** | 3M513B437KD | **GDS18218** | 1685795 | **GDS18219** | 1328339 | **GDS18220** | 1677186980 | **GDS18248** |
| RM4N113B437CA | **GDS18216** | 3M513B437KE | **GDS18218** | 1686115 | **GDS18219** | 1359008 | **GDS18220** | 3910000Q3M | **GDS18248** |
| RM5S613B437A2C | **GDS18216** | 3M513B437KF | **GDS18218** | 1687408 | **GDS18219** | 1359012 | **GDS18220** | 3910000Q4G | **GDS18248** |
| RM5S613B437AA | **GDS18216** | 3M513B437KG | **GDS18218** | 1710782 | **GDS18219** | 1363582 | **GDS18220** | 3910000Q4H | **GDS18248** |
| RM8V513B437AA2B | **GDS18216** | 3M513B437KH | **GDS18218** | 1726275 | **GDS18219** | 1363792 | **GDS18220** | 3910000Q5A | **GDS18248** |
| RM8V513B437C2C | **GDS18216** | 3M513B437KJ | **GDS18218** | 1784751 | **GDS18219** | 1366603 | **GDS18220** | 3910000Q5B | **GDS18248** |
| Y40225600A | **GDS18216** | 3M513B437NC | **GDS18218** | 1798096 | **GDS18219** | 1447468 | **GDS18220** | 391004255R | **GDS18248** |
| 1223785 | **GDS18218** | 3M513B437ND | **GDS18218** | 1798097 | **GDS18219** | 1447476 | **GDS18220** | 391005187R | **GDS18248** |

| COMPETITOR | G-AP Ref. | COMPETITOR | G-AP Ref. | COMPETITOR | G-AP Ref. | COMPETITOR | G-AP Ref. | COMPETITOR | G-AP Ref. |
|---|---|---|---|---|---|---|---|---|---|
| OE | | 1059526 | GDS18284 | 71793427 | GDS18291 | 2481774 | GDS18295 | BV613B436KC | GDS18315 |
| | | 1690691 | GDS18284 | 9645248980 | GDS18291 | 2557555 | GDS18295 | BV6Z3B436A | GDS18315 |
| 391005573R | GDS18248 | R97FX3220BA | GDS18284 | 9645249380 | GDS18291 | 2638730 | GDS18295 | CV613B436UA | GDS18315 |
| 391009620R | GDS18248 | RE97FX3220B1A | GDS18284 | 1469165 | GDS18292 | AV613B437CB | GDS18295 | 1692462 | GDS18319 |
| 4406235 | GDS18248 | 1690676 | GDS18289 | 1494214 | GDS18292 | AV613B437CC | GDS18295 | 1759594 | GDS18319 |
| 4406519 | GDS18248 | 5022284 | GDS18289 | 1512911 | GDS18292 | BV613B437CA | GDS18295 | 1766465 | GDS18319 |
| 4420054 | GDS18248 | 5022286 | GDS18289 | 1782555 | GDS18292 | BV613B437CB | GDS18295 | 1807076 | GDS18319 |
| 4422057 | GDS18248 | 5022288 | GDS18289 | 8C113B436AB | GDS18292 | BV613B437TA | GDS18295 | 5202453 | GDS18319 |
| 8200842369 | GDS18248 | 5022295 | GDS18289 | 8C113B436AC | GDS18292 | BV613B437TB | GDS18295 | BV613B437F | GDS18319 |
| 93167650 | GDS18248 | 5026502 | GDS18289 | 8C113B436AD | GDS18292 | F1F63B437GA | GDS18295 | BV613B437FA | GDS18319 |
| 95513819 | GDS18248 | 5026504 | GDS18289 | RM8C113B436A2D | GDS18292 | F1F63B437GB | GDS18295 | BV613B437KA | GDS18319 |
| 95514706 | GDS18248 | 5026506 | GDS18289 | 1469166 | GDS18293 | F1F63B437GC | GDS18295 | BV613B437KB | GDS18319 |
| 95516046 | GDS18248 | 6779182 | GDS18289 | 1494215 | GDS18293 | F1F63B437JA | GDS18295 | BV613B437KC | GDS18319 |
| 95520463 | GDS18248 | 6779184 | GDS18289 | 1512912 | GDS18293 | F1F63B437JC | GDS18295 | BV6Z3B437A | GDS18319 |
| 1754407 | GDS18259 | 89FX3219BA | GDS18289 | 1782560 | GDS18293 | RMAV613B437C2B | GDS18295 | CV613B437UA | GDS18319 |
| 3C113B437BC | GDS18259 | 90FX3219BA | GDS18289 | 8C113B437AB | GDS18293 | RMAV613B437C2C | GDS18295 | 1682702 | GDS18322 |
| 4507300 | GDS18259 | 90FX3219CA | GDS18289 | 8C113B437AC | GDS18293 | RMBV613B437C1A | GDS18295 | 1758156 | GDS18322 |
| 4602023 | GDS18259 | 90FX3219EA | GDS18289 | 8C113B437AD | GDS18293 | RMBV613B437T2A | GDS18295 | 1762790 | GDS18322 |
| RM3C113B437B1C | GDS18259 | R89FX3219BA | GDS18289 | RM8C113B437A2D | GDS18293 | 1692463 | GDS18296 | 1818933 | GDS18322 |
| RM3C113B437BC | GDS18259 | R89FX3219CA | GDS18289 | 1686588 | GDS18294 | 1742276 | GDS18296 | 1818934 | GDS18322 |
| 9M513B437BA | GDS18261 | R89FX3219DA | GDS18289 | 1713000 | GDS18294 | 1809730 | GDS18296 | 1840139 | GDS18322 |
| 9M513B436BB | GDS18262 | R90FX3219BA | GDS18289 | 1756525 | GDS18294 | 2066256 | GDS18296 | 1840140 | GDS18322 |
| 1328356 | GDS18265 | R90FX3219CA | GDS18289 | 1774246 | GDS18294 | BV613B437BA | GDS18296 | 1840143 | GDS18322 |
| 1417747 | GDS18265 | R90FX3219EA | GDS18289 | 1828480 | GDS18294 | BV6Z3B437B | GDS18296 | 1840144 | GDS18322 |
| 1417761 | GDS18265 | RE90FX3219B1A | GDS18289 | 1828481 | GDS18294 | CV6Z3B437D | GDS18296 | 2006996 | GDS18322 |
| 1600221 | GDS18265 | 1344683 | GDS18290 | 1840103 | GDS18294 | EV613B437EA | GDS18296 | 2006997 | GDS18322 |
| 1601966 | GDS18265 | 1370413 | GDS18290 | 1840104 | GDS18294 | FV6Z3B437G | GDS18296 | 2513783 | GDS18322 |
| 1754372 | GDS18265 | 1388628 | GDS18290 | 1840119 | GDS18294 | RMBV613B437B1A | GDS18296 | AV613B437AA | GDS18322 |
| 1754384 | GDS18265 | 1437542 | GDS18290 | 1840120 | GDS18294 | TX642 | GDS18296 | AV613B437AC | GDS18322 |
| 1C153B436CG | GDS18265 | 1468438 | GDS18290 | 1840126 | GDS18294 | 1236786 | GDS18297 | AV613B437AD | GDS18322 |
| 1C153B436CH | GDS18265 | 1477842 | GDS18290 | 1857347 | GDS18294 | 1328337 | GDS18297 | AV613B437AE | GDS18322 |
| 3C113B436BB | GDS18265 | 1798111 | GDS18290 | 2006987 | GDS18294 | 2S713B437AA | GDS18297 | AV613B437HA | GDS18322 |
| 3C113B436BC | GDS18265 | 30684289 | GDS18290 | 2006991 | GDS18294 | 2S7W3B437AA | GDS18297 | AV613B437HB | GDS18322 |
| 4507298 | GDS18265 | 30735974 | GDS18290 | 2006992 | GDS18294 | 4350592 | GDS18297 | CV613B437PB | GDS18322 |
| 4615961 | GDS18265 | 30756035 | GDS18290 | 2459530 | GDS18294 | RM2S713B437AA | GDS18297 | F1F63B437AA | GDS18322 |
| 4615963 | GDS18265 | 30759760 | GDS18290 | 2557549 | GDS18294 | 1686193 | GDS18299 | F1F63B437BA | GDS18322 |
| RL1C153B436CY | GDS18265 | 30783184 | GDS18290 | 2557565 | GDS18294 | 1712273 | GDS18299 | RMAV613B437A2D | GDS18322 |
| RM1C153B436C1H | GDS18265 | 31219035 | GDS18290 | 2557599 | GDS18294 | 1809718 | GDS18299 | RMAV613B437A2E | GDS18322 |
| RM1C153B436CG | GDS18265 | 36000071 | GDS18290 | AV613B436CB | GDS18294 | BV613B436CA | GDS18299 | RMAV613B437H2A | GDS18322 |
| RM1C153B436CH | GDS18265 | 36000181 | GDS18290 | AV613B436CC | GDS18294 | BV613B436CB | GDS18299 | RMAV613B437H2B | GDS18322 |
| RM3C113B436BC | GDS18265 | 360001812 | GDS18290 | AV613B436CD | GDS18294 | RMBV613B436C1B | GDS18299 | RMF1F63B437B2A | GDS18322 |
| 3910000Q4A | GDS18271 | 36000437 | GDS18290 | AV613B436JA | GDS18294 | 3910000QAM | GDS18301 | 1682701 | GDS18323 |
| 3910000Q4B | GDS18271 | 36000546 | GDS18290 | AV613B436JB | GDS18294 | 4406173 | GDS18301 | 1712999 | GDS18323 |
| 3910000Q5G | GDS18271 | 3M513B437RE | GDS18290 | BV613B436TA | GDS18294 | 4417909 | GDS18301 | 1758155 | GDS18323 |
| 3910000Q6E | GDS18271 | 3M513B437RF | GDS18290 | BV613B436TB | GDS18294 | 7711368832 | GDS18301 | 1762789 | GDS18323 |
| 3910000Q6F | GDS18271 | 3M513B437RG | GDS18290 | F1F63B436GA | GDS18294 | 8200452273 | GDS18301 | 1818927 | GDS18323 |
| 391003953R | GDS18271 | 3M513B437RH | GDS18290 | F1F63B436GC | GDS18294 | 93169696 | GDS18301 | 1818928 | GDS18323 |
| 391005928R | GDS18271 | 3M513B437RJ | GDS18290 | F1F63B436HA | GDS18294 | 93856307 | GDS18301 | 1840101 | GDS18323 |
| 391008471R | GDS18271 | 3M513B437RK | GDS18290 | F1F63B436HC | GDS18294 | R1640106 | GDS18301 | 1840102 | GDS18323 |
| 3910100Q0E | GDS18271 | 8603250 | GDS18290 | F1F63B436JA | GDS18294 | 1682457 | GDS18315 | 1840105 | GDS18323 |
| 4406169 | GDS18271 | 86032505 | GDS18290 | F1F63B436JB | GDS18294 | 1692121 | GDS18315 | 1840106 | GDS18323 |
| 4406216 | GDS18271 | 8603816 | GDS18290 | F1F63B436JC | GDS18294 | 1692460 | GDS18315 | 2006986 | GDS18323 |
| 4417910 | GDS18271 | 86038171 | GDS18290 | RMAV613B436C2C | GDS18294 | 1708355 | GDS18315 | 2006988 | GDS18323 |
| 4420950 | GDS18271 | RM3M513B437R1K | GDS18290 | RMAV613B436C2D | GDS18294 | 1712269 | GDS18315 | 2513800 | GDS18323 |
| 4422037 | GDS18271 | RM3M513B437RK | GDS18290 | RMAV613B436J2A | GDS18294 | 1759590 | GDS18315 | AV613B436AA | GDS18323 |
| 7711368831 | GDS18271 | 1401317488 | GDS18291 | RMAV613B436J2B | GDS18294 | 1766461 | GDS18315 | AV613B436AD | GDS18323 |
| 8200452268 | GDS18271 | 1401317688 | GDS18291 | RMBV613B436T2A | GDS18294 | 1807079 | GDS18315 | AV613B436AE | GDS18323 |
| 8200823167 | GDS18271 | 1485691080 | GDS18291 | 1686194 | GDS18295 | 2286713 | GDS18315 | AV613B436AF | GDS18323 |
| 93169667 | GDS18271 | 1485695080 | GDS18291 | 1686592 | GDS18295 | 5202451 | GDS18315 | AV613B436AG | GDS18323 |
| 93454307 | GDS18271 | 3273AZ | GDS18291 | 1774249 | GDS18295 | AV613B436DB | GDS18315 | AV613B436HA | GDS18323 |
| 93856308 | GDS18271 | 3273CA | GDS18291 | 1809731 | GDS18295 | AV613B436DC | GDS18315 | AV613B436HB | GDS18323 |
| 93861973 | GDS18271 | 3273HV | GDS18291 | 1828482 | GDS18295 | AV613B436DD | GDS18315 | CV613B436PB | GDS18323 |
| 93865409 | GDS18271 | 3273HW | GDS18291 | 1840141 | GDS18295 | AV613B436DE | GDS18315 | F1F63B436AA | GDS18323 |
| 95520477 | GDS18271 | 3273TG | GDS18291 | 1840142 | GDS18295 | BV613B436F | GDS18315 | F1F63B436BA | GDS18323 |
| R1640077 | GDS18271 | 71787275 | GDS18291 | 1840152 | GDS18295 | BV613B436FA | GDS18315 | RMAV613B436A2F | GDS18323 |
| 8200409664 | GDS18274 | 71787277 | GDS18291 | 1857348 | GDS18295 | BV613B436FB | GDS18315 | RMAV613B436A2G | GDS18323 |
| 8200664841 | GDS18274 | 71789667 | GDS18291 | 2006995 | GDS18295 | BV613B436KA | GDS18315 | RMAV613B436H2A | GDS18323 |
| 8201187847 | GDS18274 | 71789669 | GDS18291 | 2007001 | GDS18295 | BV613B436KB | GDS18315 | RMAV613B436H2B | GDS18323 |

| COMPETITOR | G-AP Ref. | COMPETITOR | G-AP Ref. | COMPETITOR | G-AP Ref. | COMPETITOR | G-AP Ref. | COMPETITOR | G-AP Ref. |
|---|---|---|---|---|---|---|---|---|---|
| **OE** | | KK213B437AC | **GDS18334** | RMAG913B436D1C | **GDS18341** | RM4S613B437A1G | **GDS18351** | 4M513B437JD | **GDS18359** |
| | | KK213B437BA | **GDS18334** | RMAG913B436D1D | **GDS18341** | 1306777 | **GDS18358** | 4M513B437JE | **GDS18359** |
| RMF1F63B436B2A | **GDS18323** | KK213B437BB | **GDS18334** | 2R834K138BB | **GDS18342** | 1310250 | **GDS18358** | 8603364 | **GDS18359** |
| FD8025500A | **GDS18324** | KK213B437BC | **GDS18334** | 2R834K138BC | **GDS18342** | 1324168 | **GDS18358** | RM4M513B437J1E | **GDS18359** |
| FD8025500B | **GDS18324** | RMBK213B437A1B | **GDS18334** | 2R834K138BD | **GDS18342** | 1420577 | **GDS18358** | RM4M513B437JB | **GDS18359** |
| GD782550XB | **GDS18325** | RMBK213B437B1B | **GDS18334** | 2R834K138BE | **GDS18342** | 1431161 | **GDS18358** | RM9M513B437B2A | **GDS18359** |
| GD782550XC | **GDS18325** | 1774275 | **GDS18335** | 2R834K138BF | **GDS18342** | 1446232 | **GDS18358** | 391011KC0A | **GDS18361** |
| 1333973 | **GDS18326** | 1774277 | **GDS18335** | C2C12258 | **GDS18342** | 1450574 | **GDS18358** | 391011KC0B | **GDS18361** |
| 1416635 | **GDS18326** | 1841532 | **GDS18335** | C2C18744 | **GDS18342** | 1474431 | **GDS18358** | 391011KB0B | **GDS18362** |
| 1468573 | **GDS18326** | 1841534 | **GDS18335** | C2C22868 | **GDS18342** | 1474807 | **GDS18358** | 1505030 | **GDS18363** |
| 1490072 | **GDS18326** | 1901269 | **GDS18335** | C2C5938 | **GDS18342** | 1495063 | **GDS18358** | 1641301 | **GDS18363** |
| 1496809 | **GDS18326** | 2009673 | **GDS18335** | XR842607 | **GDS18342** | 1510274 | **GDS18358** | 1726452 | **GDS18363** |
| 1599035 | **GDS18326** | 2214801 | **GDS18335** | 1682458 | **GDS18343** | 1567824 | **GDS18358** | 1805107 | **GDS18363** |
| 1697490 | **GDS18326** | 2214803 | **GDS18335** | 1692122 | **GDS18343** | 1600562 | **GDS18358** | 8G913B437AA | **GDS18363** |
| 1804616 | **GDS18326** | 2323888 | **GDS18335** | 1712270 | **GDS18343** | 1682435 | **GDS18358** | 8G913B437AB | **GDS18363** |
| 4N113B436CA | **GDS18326** | 2348193 | **GDS18335** | 1746979 | **GDS18343** | 16861113 | **GDS18358** | 8G913B437AC | **GDS18363** |
| 4N113B436CB | **GDS18326** | 2348218 | **GDS18335** | 1809716 | **GDS18343** | 1686113 | **GDS18358** | RM8G913B437A1C | **GDS18363** |
| 4N113B436CC | **GDS18326** | 2364917 | **GDS18335** | AV613B436EB | **GDS18343** | 1707965 | **GDS18358** | 391001KB0B | **GDS18365** |
| 4N113B436CD | **GDS18326** | 2364918 | **GDS18335** | AV613B436EC | **GDS18343** | 1726946 | **GDS18358** | 1505270 | **GDS18367** |
| RM4N113B436C1D | **GDS18326** | 2712154 | **GDS18335** | AV613B436ED | **GDS18343** | 1784752 | **GDS18358** | 1762530 | **GDS18367** |
| RM4N113B436CA | **GDS18326** | 2712156 | **GDS18335** | AV613B436EE | **GDS18343** | 1798100 | **GDS18358** | 1798114 | **GDS18367** |
| 1308638 | **GDS18333** | BK213B436AB | **GDS18335** | RMAV613B436E1E | **GDS18343** | 3601651 | **GDS18358** | 36001180 | **GDS18367** |
| 1318854 | **GDS18333** | BK213B436AC | **GDS18335** | 1504139 | **GDS18346** | 3M513B436BAC | **GDS18358** | 36002447 | **GDS18367** |
| 1326339 | **GDS18333** | BK213B436AD | **GDS18335** | 1727237 | **GDS18346** | 3M513B436BAD | **GDS18358** | 7M513B437CC | **GDS18367** |
| 1361879 | **GDS18333** | BK213B436AE | **GDS18335** | 1803660 | **GDS18346** | 3M513B436BAE | **GDS18358** | 7M513B437CD | **GDS18367** |
| 1416719 | **GDS18333** | BK213B436BB | **GDS18335** | 6G913B437CC | **GDS18346** | 3M513B436BAF | **GDS18358** | RM7M513B437C1D | **GDS18367** |
| 1478995 | **GDS18333** | BK213B436BC | **GDS18335** | 6G913B437CD | **GDS18346** | 3M513B436BAG | **GDS18358** | 1783753 | **GDS18373** |
| 1490406 | **GDS18333** | BK213B436BD | **GDS18335** | RM6G913B437C1D | **GDS18346** | 4M513B436JA | **GDS18358** | 1841613 | **GDS18373** |
| 1513996 | **GDS18333** | KK213B436AA | **GDS18335** | 1752114 | **GDS18347** | 4M513B436JB | **GDS18358** | DV613B437SA | **GDS18373** |
| 1599036 | **GDS18333** | KK213B436AB | **GDS18335** | 1752115 | **GDS18347** | 4M513B436JC | **GDS18358** | DV613B437SB | **GDS18373** |
| 1756199 | **GDS18333** | KK213B436AC | **GDS18335** | 1786065 | **GDS18347** | 4M513B436JD | **GDS18358** | DV613B437SC | **GDS18373** |
| 1804600 | **GDS18333** | KK213B436BA | **GDS18335** | 1805110 | **GDS18347** | 4M513B436JE | **GDS18358** | DV613B437SD | **GDS18373** |
| 4S613B436AB | **GDS18333** | KK213B436BB | **GDS18335** | 1827181 | **GDS18347** | 4M513B436JF | **GDS18358** | DV613B437UA | **GDS18373** |
| 4S613B436AC | **GDS18333** | KK213B436BC | **GDS18335** | AG913B436JA | **GDS18347** | 9M513B436BA | **GDS18358** | DV6P3B437AA | **GDS18373** |
| 4S613B436AD | **GDS18333** | RMBK213B436A1B | **GDS18335** | AG913B436JB | **GDS18347** | RL3M513B436BAX | **GDS18358** | RMDV6P3B437A1A | **GDS18373** |
| 4S613B436AE | **GDS18333** | RMBK213B436B1B | **GDS18335** | AG913B436JC | **GDS18347** | RM3M513B436BAD | **GDS18358** | 1783750 | **GDS18374** |
| 4S613B436AF | **GDS18333** | 1600572 | **GDS18336** | AG913B436JD | **GDS18347** | RM3M513B436BAF | **GDS18358** | 1841610 | **GDS18374** |
| 4S613B436AG | **GDS18333** | RL3M513B437BAX | **GDS18336** | RMAG913B436J1C | **GDS18347** | RM4M513B436J1F | **GDS18358** | DV613B436SA | **GDS18374** |
| 4S613B436AH | **GDS18333** | 1675007 | **GDS18340** | 1380048 | **GDS18348** | RM4M513B436JB | **GDS18358** | DV613B436SB | **GDS18374** |
| RM4S613B436A1H | **GDS18333** | 1683417 | **GDS18340** | 1386969 | **GDS18348** | RM9M513B436B2B | **GDS18358** | DV613B436SC | **GDS18374** |
| RM4S613B436AE | **GDS18333** | 1727260 | **GDS18340** | 1453070 | **GDS18348** | 1306775 | **GDS18359** | DV613B436SD | **GDS18374** |
| RM4S613B436AG | **GDS18333** | 1752117 | **GDS18340** | 1803627 | **GDS18348** | 1310251 | **GDS18359** | DV613B436SE | **GDS18374** |
| 1774279 | **GDS18334** | 1754170 | **GDS18340** | 6G9N3B436CB | **GDS18348** | 1324166 | **GDS18359** | DV6P3B436JA | **GDS18374** |
| 1774281 | **GDS18334** | 1757879 | **GDS18340** | 6G9N3B436CC | **GDS18348** | 1420578 | **GDS18359** | RMDV6P3B436J1A | **GDS18374** |
| 1841533 | **GDS18334** | 1786064 | **GDS18340** | 6G9N3B436CD | **GDS18348** | 1431162 | **GDS18359** | 1751987 | **GDS18380** |
| 1841535 | **GDS18334** | 1803654 | **GDS18340** | RM6G9N3B436C1D | **GDS18348** | 1446235 | **GDS18359** | 1753615 | **GDS18380** |
| 1901270 | **GDS18334** | 1803658 | **GDS18340** | 1505029 | **GDS18350** | 1474438 | **GDS18359** | 1764399 | **GDS18380** |
| 2009676 | **GDS18334** | 1805111 | **GDS18340** | 1512662 | **GDS18350** | 1475135 | **GDS18359** | 1777142 | **GDS18380** |
| 2214807 | **GDS18334** | 8G913B437BA | **GDS18340** | 1641300 | **GDS18350** | 1510974 | **GDS18359** | 1783799 | **GDS18380** |
| 2214811 | **GDS18334** | AG913B437DA | **GDS18340** | 1726342 | **GDS18350** | 1567848 | **GDS18359** | 1789457 | **GDS18380** |
| 2256324 | **GDS18334** | AG913B437DB | **GDS18340** | 1805105 | **GDS18350** | 1682437 | **GDS18359** | 1821970 | **GDS18380** |
| 2348206 | **GDS18334** | AG913B437DC | **GDS18340** | 8G913B436AA | **GDS18350** | 16861114 | **GDS18359** | 1822698 | **GDS18380** |
| 2348216 | **GDS18334** | AG913B437JA | **GDS18340** | 8G913B436AB | **GDS18350** | 1686114 | **GDS18359** | 1840184 | **GDS18380** |
| 2364920 | **GDS18334** | AG913B437JB | **GDS18340** | 8G913B436AC | **GDS18350** | 1707966 | **GDS18359** | 1840185 | **GDS18380** |
| 2364921 | **GDS18334** | AG913B437JC | **GDS18340** | 8G913B436AD | **GDS18350** | 1784753 | **GDS18359** | AE8Z3B436A | **GDS18380** |
| 2712143 | **GDS18334** | RM8G913B437B1A | **GDS18340** | 1308639 | **GDS18351** | 1798112 | **GDS18359** | AE8Z3B436AB | **GDS18380** |
| 2712147 | **GDS18334** | RMAG913B437D1C | **GDS18340** | 1318855 | **GDS18351** | 36000166 | **GDS18359** | CV173B436AA | **GDS18380** |
| BK213B437AA | **GDS18334** | RMAG913B437J1C | **GDS18340** | 1326340 | **GDS18351** | 36000699 | **GDS18359** | CV173B436AB | **GDS18380** |
| BK213B437AB | **GDS18334** | 1683416 | **GDS18341** | 1361877 | **GDS18351** | 36001355 | **GDS18359** | CV173B436AC | **GDS18380** |
| BK213B437AC | **GDS18334** | 1727251 | **GDS18341** | 1478997 | **GDS18351** | 3603364 | **GDS18359** | CV173B436AD | **GDS18380** |
| BK213B437AD | **GDS18334** | 1752111 | **GDS18341** | 1520669 | **GDS18351** | 3M513B437BAC | **GDS18359** | CV173B436AE | **GDS18380** |
| BK213B437AE | **GDS18334** | 1803634 | **GDS18341** | 1804601 | **GDS18351** | 3M513B437BAD | **GDS18359** | CV173B436AF | **GDS18380** |
| BK213B437BA | **GDS18334** | 1807112 | **GDS18341** | 4S613B437AB | **GDS18351** | 3M513B437BAE | **GDS18359** | CV173B436BC | **GDS18380** |
| BK213B437BB | **GDS18334** | 1838455 | **GDS18341** | 4S613B437AC | **GDS18351** | 3M513B437BAF | **GDS18359** | CV173B436BD | **GDS18380** |
| BK213B437BC | **GDS18334** | AG913B436DA | **GDS18341** | 4S613B437AD | **GDS18351** | 3M513B437BAG | **GDS18359** | CV1Z3B436A | **GDS18380** |
| BK213B437BD | **GDS18334** | AG913B436DB | **GDS18341** | 4S613B437AE | **GDS18351** | 4M513B437JA | **GDS18359** | RMCV173B436A2F | **GDS18380** |
| KK213B437AA | **GDS18334** | AG913B436DC | **GDS18341** | 4S613B437AF | **GDS18351** | 4M513B437JB | **GDS18359** | RMCV173B436B2D | **GDS18380** |
| KK213B437AB | **GDS18334** | AG913B436DD | **GDS18341** | 4S613B437AG | **GDS18351** | 4M513B437JC | **GDS18359** | TX555 | **GDS18380** |

| COMPETITOR | G-AP Ref. | COMPETITOR | G-AP Ref. | COMPETITOR | G-AP Ref. | COMPETITOR | G-AP Ref. | COMPETITOR | G-AP Ref. |
|---|---|---|---|---|---|---|---|---|---|
| OE | | D1B73B436CC | GDS18406 | 6C113B437DC | GDS18455 | 3910000Q7G | GDS18515 | 375040 | GDS21035 |
| | | D1BZ3B436A | GDS18406 | 6C113B437DD | GDS18455 | 391002176R | GDS18515 | 93169685 | GDS21035 |
| TX625 | GDS18380 | RMD1B73B436C2B | GDS18406 | 6C113B437DE | GDS18455 | 391005058R | GDS18515 | R1640095 | GDS21035 |
| 1761349 | GDS18381 | TX626 | GDS18406 | RM6C113B437D2E | GDS18455 | 8201314807 | GDS18515 | 12762089 | GDS21036 |
| 1809720 | GDS18381 | BJ323B437BA | GDS18408 | TDB104960 | GDS18456 | 95522705 | GDS18515 | 12771474 | GDS21036 |
| 2048645 | GDS18381 | LR024756 | GDS18408 | TDB104940 | GDS18457 | 95522713 | GDS18515 | 12786415 | GDS21036 |
| BV613B436LB | GDS18381 | LR125164 | GDS18408 | TDB104880 | GDS18471 | 1804599 | GDS18516 | 12801899 | GDS21036 |
| BV6Z3B436C | GDS18381 | LR031710 | GDS18409 | 1727122 | GDS18472 | 1833717 | GDS18516 | 374624 | GDS21036 |
| EV613B436GA | GDS18381 | 1682460 | GDS18410 | 1782564 | GDS18472 | 1929644 | GDS18516 | 93167306 | GDS21036 |
| RMBV613B436L1B | GDS18381 | 1746980 | GDS18410 | 1793822 | GDS18472 | D3BZ3B437C | GDS18516 | VP3GKW3B437CB | GDS21036 |
| 1682459 | GDS18382 | 1776427 | GDS18410 | 1841537 | GDS18472 | ET763B437AA | GDS18516 | 13228214 | GDS21042 |
| 1761350 | GDS18382 | 1809728 | GDS18410 | CC113B437BA | GDS18472 | ET763B437AB | GDS18516 | 13265649 | GDS21043 |
| 1809727 | GDS18382 | AV613B437EB | GDS18410 | CC113B437BB | GDS18472 | RM2S613B437B1F | GDS18516 | 22796273 | GDS21043 |
| 2286711 | GDS18382 | AV613B437EC | GDS18410 | RMCC113B437B1A | GDS18472 | 1804598 | GDS18517 | 374841 | GDS21043 |
| AV613B437DB | GDS18382 | AV613B437ED | GDS18410 | RMCC113B437B1B | GDS18472 | 1833714 | GDS18517 | 374932 | GDS21043 |
| AV613B437DC | GDS18382 | RMAV613B437E1D | GDS18410 | FA8225600 | GDS18473 | 1929643 | GDS18517 | 95520547 | GDS21043 |
| BV613B437LB | GDS18382 | 391001KC0A | GDS18414 | FA8225600A | GDS18473 | D3BZ3B436D | GDS18517 | 13228199 | GDS21045 |
| BV6Z3B437C | GDS18382 | 391001KC0B | GDS18414 | FA8225600B | GDS18473 | ET763B436AA | GDS18517 | 374832 | GDS21045 |
| 1751991 | GDS18389 | 1808652 | GDS18420 | 1742274 | GDS18477 | ET763B436AB | GDS18517 | 374930 | GDS21045 |
| 1768179 | GDS18389 | 1867866 | GDS18420 | 1809717 | GDS18477 | RM2S613B436B1G | GDS18517 | 375059 | GDS21045 |
| D1B73B437CA | GDS18389 | 1924279 | GDS18420 | 2048637 | GDS18477 | 30009523 | GDS19009 | 93169653 | GDS21045 |
| D1B73B437CB | GDS18389 | 2355679 | GDS18420 | BV613B436BB | GDS18477 | 30018151 | GDS19009 | R1640063 | GDS21045 |
| 1782215 | GDS18392 | 2455209 | GDS18420 | EV613B436EA | GDS18477 | 4410260A00 | GDS19009 | 13228195 | GDS21050 |
| 1902493 | GDS18392 | 2552715 | GDS18420 | RMBV613B436B1B | GDS18477 | 4410260A10 | GDS19009 | 374830 | GDS21050 |
| CN153B437EB | GDS18392 | DV613B436KA | GDS18420 | 1782216 | GDS18483 | 4410260AA0 | GDS19009 | 95520611 | GDS21050 |
| CN153B437EC | GDS18392 | DV613B436KB | GDS18420 | 1806084 | GDS18483 | 4410260AA1 | GDS19009 | 13214836 | GDS21051 |
| 1800098 | GDS18393 | FV663B436KA | GDS18420 | CN153B437FB | GDS18483 | 4410160A00 | GDS19011 | 13245912 | GDS21051 |
| 1838129 | GDS18393 | FV663B436KB | GDS18420 | CN153B437FC | GDS18483 | 4410160A01 | GDS19011 | 374641 | GDS21051 |
| 1877405 | GDS18393 | FV663B436KC | GDS18420 | 1774251 | GDS18484 | 4410160A10 | GDS19011 | 374802 | GDS21051 |
| 1933642 | GDS18393 | RMDV613B436KB | GDS18420 | 1777140 | GDS18484 | 4410160AA0 | GDS19011 | 375033 | GDS21051 |
| 2119512 | GDS18393 | FG0525500A | GDS18421 | 1818932 | GDS18484 | 4410165DA3 | GDS19015 | 93169677 | GDS21051 |
| CN153B436EC | GDS18393 | FG0525500B | GDS18421 | 1840153 | GDS18484 | 4341002030 | GDS19017 | R1640087 | GDS21051 |
| CN153B436ED | GDS18393 | FG0525500C | GDS18421 | 1840155 | GDS18484 | 4341002031 | GDS19017 | 13166589 | GDS21053 |
| CN153B436MA | GDS18393 | FG0525500D | GDS18421 | 1876364 | GDS18484 | 4341002040 | GDS19017 | 374626 | GDS21053 |
| CN153B436MB | GDS18393 | FG3225500 | GDS18421 | 1898094 | GDS18484 | 4341002041 | GDS19017 | 93169691 | GDS21053 |
| CN153B436MC | GDS18393 | FA8125500 | GDS18424 | 2006999 | GDS18484 | 4341002070 | GDS19017 | 13228196 | GDS21054 |
| 538450085 | GDS18402 | FA8125500A | GDS18424 | BV613B437UA | GDS18484 | 4341002071 | GDS19017 | 22792281 | GDS21054 |
| 538450103 | GDS18402 | 3C113B437AB | GDS18434 | BV613B437UB | GDS18484 | 4341002080 | GDS19017 | 374831 | GDS21054 |
| 1751990 | GDS18405 | 3C113B437AC | GDS18434 | BV613B437UC | GDS18484 | 4341002081 | GDS19017 | 5374075 | GDS21054 |
| 1753616 | GDS18405 | 4507299 | GDS18434 | F1F13B437LA | GDS18484 | 4341002090 | GDS19017 | 95520643 | GDS21054 |
| 1764400 | GDS18405 | 4602017 | GDS18434 | F1F13B437LB | GDS18484 | 4341002091 | GDS19017 | 95520695 | GDS21054 |
| 1777143 | GDS18405 | 3C113B436AB | GDS18435 | F1F63B437CA | GDS18484 | 4341002100 | GDS19017 | 13136380 | GDS21055 |
| 1783800 | GDS18405 | 3C113B436AC | GDS18435 | RMBV613B437U2B | GDS18484 | 4341002101 | GDS19017 | 13191328 | GDS21055 |
| 1789458 | GDS18405 | 4507297 | GDS18435 | RMBV613B437U2C | GDS18484 | 4341020460 | GDS19017 | 374546 | GDS21055 |
| 1821977 | GDS18405 | 4615962 | GDS18435 | 1782214 | GDS18485 | 4341020461 | GDS19017 | 374591 | GDS21055 |
| 1822709 | GDS18405 | 4130009213 | GDS18438 | 1806083 | GDS18485 | 4341020462 | GDS19017 | 375037 | GDS21055 |
| 1840191 | GDS18405 | 4130009214 | GDS18438 | CN153B436FB | GDS18485 | 4341020463 | GDS19017 | 93169681 | GDS21055 |
| 1840192 | GDS18405 | GP322550X | GDS18439 | CN153B436FC | GDS18485 | 96549092 | GDS21021 | R1640091 | GDS21055 |
| AE8Z3B437A | GDS18405 | GP322550XA | GDS18439 | 2203100BE01 | GDS18491 | 96870368 | GDS21021 | 13245911 | GDS21056 |
| CV173B437AA | GDS18405 | GP322550XB | GDS18439 | B3110540100 | GDS18491 | 13109194 | GDS21032 | 24462250 | GDS21056 |
| CV173B437AB | GDS18405 | GP322550XC | GDS18439 | 2203200BE01 | GDS18492 | 13166587 | GDS21032 | 374552 | GDS21056 |
| CV173B437AC | GDS18405 | GP322550XD | GDS18439 | B3110540200 | GDS18492 | 13166590 | GDS21032 | 374806 | GDS21056 |
| CV173B437AD | GDS18405 | 3910000Q6M | GDS18445 | 2201010W04 | GDS18494 | 13250870 | GDS21032 | 374991 | GDS21056 |
| CV173B437AE | GDS18405 | 3910000Q7B | GDS18445 | S1010510402 | GDS18494 | 13335143 | GDS21032 | 374996 | GDS21056 |
| CV173B437AF | GDS18405 | 391005010R | GDS18445 | 2201020W04 | GDS18495 | 1677187880 | GDS21032 | 375025 | GDS21056 |
| CV173B437BC | GDS18405 | 391008636R | GDS18445 | S1010510302 | GDS18495 | 374470 | GDS21032 | 93169652 | GDS21056 |
| CV173B437BD | GDS18405 | 4422670 | GDS18445 | 2203100M03 | GDS18505 | 374536 | GDS21032 | 93169658 | GDS21056 |
| CV1Z3B437A | GDS18405 | 6000618516 | GDS18445 | 2203200M03 | GDS18506 | 374537 | GDS21032 | 93169670 | GDS21056 |
| RMCV173B437A2F | GDS18405 | 8201189907 | GDS18445 | 2201100M03 | GDS18507 | 374640 | GDS21032 | R1640062 | GDS21056 |
| RMCV173B437B2D | GDS18405 | 93453895 | GDS18445 | 2201200M03 | GDS18508 | 374893 | GDS21032 | R1640068 | GDS21056 |
| 1751988 | GDS18406 | 1370696 | GDS18455 | 1783751 | GDS18509 | 375052 | GDS21032 | R1640080 | GDS21056 |
| 1768178 | GDS18406 | 1385394 | GDS18455 | 1841611 | GDS18509 | 9186550 | GDS21032 | 13170876 | GDS21061 |
| 1840188 | GDS18406 | 1417891 | GDS18455 | DV6P3B436MA | GDS18509 | 93169699 | GDS21032 | 374538 | GDS21061 |
| 1881058 | GDS18406 | 1445101 | GDS18455 | RMDV6P3B436M1A | GDS18509 | 95520491 | GDS21032 | 13124680 | GDS21062 |
| AE8Z3B436B | GDS18406 | 1495673 | GDS18455 | 2203200M06 | GDS18510 | 95520713 | GDS21032 | 374562 | GDS21062 |
| AE8Z3B436C | GDS18406 | 1782559 | GDS18455 | 2203100M06 | GDS18511 | 95520755 | GDS21032 | 13136382 | GDS21063 |
| D1B73B436CA | GDS18406 | 6C113B437DA | GDS18455 | 3210001ASV0100 | GDS18514 | 13245906 | GDS21035 | 374547 | GDS21063 |
| D1B73B436CB | GDS18406 | 6C113B437DB | GDS18455 | 3910000Q5L | GDS18515 | 374811 | GDS21035 | 375034 | GDS21063 |

| COMPETITOR | G-AP Ref. | COMPETITOR | G-AP Ref. | COMPETITOR | G-AP Ref. | COMPETITOR | G-AP Ref. | COMPETITOR | G-AP Ref. |
|---|---|---|---|---|---|---|---|---|---|
| OE | | 5374016 | GDS21094 | 44306SCAG00 | GDS23011 | 44305S5AJ60 | GDS23127 | 44306TL0G23 | GDS23270 |
| | | 5374096 | GDS21094 | 44306SDAA51 | GDS23011 | 44305S5AJ61 | GDS23127 | 44306TL0G24 | GDS23270 |
| 93169678 | GDS21063 | 5374156 | GDS21094 | 44306SDCA51 | GDS23011 | 44305S5DA11 | GDS23127 | 44305S5TE50 | GDS23284 |
| 95520605 | GDS21063 | 5374199 | GDS21094 | 44010S87A50 | GDS23012 | 44305S5DA31 | GDS23127 | 44305SMTG00 | GDS23287 |
| R1640088 | GDS21063 | 94522003 | GDS21094 | 44305S0KA00 | GDS23012 | 44305S5DA61 | GDS23127 | 44305SMTG01 | GDS23287 |
| 10374204 | GDS21067 | 94522004 | GDS21094 | 44305S0KC10 | GDS23012 | 44305S5DA81 | GDS23127 | 44306SMTG00 | GDS23291 |
| 15886012 | GDS21067 | 94560848 | GDS21094 | 44305S0KC11 | GDS23012 | 44306S5DA61 | GDS23128 | 44306S5DA01 | GDS23304 |
| 15905106 | GDS21067 | 94560849 | GDS21094 | 44305S4LA52 | GDS23012 | 44011ST7J50 | GDS23155 | 44306S5DA51 | GDS23304 |
| 1380049 | GDS21070 | 95090835 | GDS21094 | 44305S87A50 | GDS23012 | 44306SMGE00 | GDS23164 | 44306T0AA00 | GDS23306 |
| 1386970 | GDS21070 | 95090843 | GDS21094 | 44305S87C51 | GDS23012 | 44306SMGE01 | GDS23164 | 44306T0AA01 | GDS23306 |
| 1457601 | GDS21070 | 95390015 | GDS21094 | 44305S87C52 | GDS23012 | 44306SMGG00 | GDS23164 | 44306T0AA02 | GDS23306 |
| 1465780 | GDS21070 | 95390016 | GDS21094 | 44011SS0982 | GDS23017 | 44306SMGG01 | GDS23164 | 44306T0CG00 | GDS23306 |
| 1803656 | GDS21070 | 95522308 | GDS21094 | 44011SR3020 | GDS23020 | 44305SMGG00 | GDS23165 | 44306T0CG01 | GDS23306 |
| 30651670 | GDS21070 | 95522309 | GDS21094 | 44305SDAA51 | GDS23021 | 44305SMGG01 | GDS23165 | 44306TL1E50 | GDS23311 |
| 30783201 | GDS21070 | 46308234 | GDS21102 | 44305SDCA51 | GDS23021 | 44305TF6N01 | GDS23173 | 44306TL1E51 | GDS23311 |
| 31367526 | GDS21070 | 51739262 | GDS21102 | 44306SNA000 | GDS23022 | 44305TF6N02 | GDS23173 | 44306TL1E52 | GDS23311 |
| 36000158 | GDS21070 | 71791757 | GDS21102 | 44306SNA900 | GDS23022 | 44306TF0000 | GDS23174 | 44306TL1E53 | GDS23311 |
| 36000363 | GDS21070 | 51742366 | GDS21103 | 44306SNLT10 | GDS23022 | 44306TF0010 | GDS23174 | 44306TL2E50 | GDS23311 |
| 36011285 | GDS21070 | 71786561 | GDS21103 | 44305SNA000 | GDS23023 | 44306TF0J00 | GDS23174 | 44306TL2E51 | GDS23311 |
| 36050784 | GDS21070 | 24462247 | GDS21107 | 44305SNLT00 | GDS23023 | 44306TF0J01 | GDS23174 | 44306TL2E52 | GDS23311 |
| 6G923B437CD | GDS21070 | 374565 | GDS21107 | 44306SEFE00 | GDS23026 | 44306TF6N01 | GDS23174 | 44306TL2E53 | GDS23311 |
| 6G9N3B437CC | GDS21070 | 95520767 | GDS21107 | 44305SEFE00 | GDS23027 | 44305SWA900 | GDS23175 | 44306TA0A50 | GDS23324 |
| 6G9N3B437CD | GDS21070 | 13271556 | GDS21109 | 44011SN7E90 | GDS23038 | 44305SWA901 | GDS23175 | 44306TA0A51 | GDS23324 |
| 7G9N3B437HA | GDS21070 | 13335146 | GDS21109 | TDJ001173EVA | GDS23038 | 44305T0AA00 | GDS23175 | 44306TA0A52 | GDS23324 |
| RM7G9N3B437H1A | GDS21070 | 374542 | GDS21109 | TDR100650EVA | GDS23039 | 44305T0AA01 | GDS23175 | 44306TA0A53 | GDS23324 |
| 13124679 | GDS21071 | 374895 | GDS21109 | GVC1064 | GDS23040 | 44306SJHE02 | GDS23188 | 44305TA0A50 | GDS23325 |
| 374561 | GDS21071 | 95520601 | GDS21109 | 44010SW5950 | GDS23042 | 44306SKNE00 | GDS23188 | 44305TA0A51 | GDS23325 |
| 375048 | GDS21071 | 13109125 | GDS21110 | 44011S10A50 | GDS23042 | 44035SWY010 | GDS23189 | 44305TA0A52 | GDS23325 |
| 93169693 | GDS21071 | 13245904 | GDS21110 | 44306S10C00 | GDS23042 | 44305SWY000 | GDS23189 | 44305TA0A53 | GDS23325 |
| R1640103 | GDS21071 | 374558 | GDS21110 | 44306S10C51 | GDS23042 | 44305SWY010 | GDS23189 | 44305TF0000 | GDS23326 |
| 0374999 | GDS21073 | 374809 | GDS21110 | 44011S04010 | GDS23051 | 44305SWY020 | GDS23189 | 44305TF0010 | GDS23326 |
| 24462251 | GDS21073 | 375041 | GDS21110 | 44011S04951 | GDS23051 | 44305SJHE02 | GDS23190 | 44305TF0J00 | GDS23326 |
| 374569 | GDS21073 | 93169686 | GDS21110 | 44011SX8M01 | GDS23051 | 44305SKNE00 | GDS23190 | 44305TF0J01 | GDS23326 |
| 374999 | GDS21073 | 95520667 | GDS21110 | 44306SAAE00 | GDS23070 | 44305SMJG01 | GDS23191 | 42310SWA000 | GDS23329 |
| 93169662 | GDS21073 | R1640096 | GDS21110 | 44306SELT00 | GDS23070 | 44305TV2E01 | GDS23191 | 42311SWE000 | GDS23329 |
| 13250839 | GDS21074 | 13245903 | GDS21111 | 44306SENP00 | GDS23070 | 42310SXSA01 | GDS23198 | 42310SWE000 | GDS23330 |
| 13335136 | GDS21074 | 374808 | GDS21111 | 44305SAAE00 | GDS23071 | 42310SXSA010M1 | GDS23198 | 42311SWA000 | GDS23330 |
| 13354383 | GDS21074 | 375050 | GDS21111 | 44305SELT00 | GDS23071 | 42311SXSA01 | GDS23199 | 44306TL1E00 | GDS23331 |
| 374566 | GDS21074 | 93169697 | GDS21111 | 44305SENP00 | GDS23071 | 42311SXSA010M1 | GDS23199 | 44306TL1E01 | GDS23331 |
| 374886 | GDS21074 | R1640107 | GDS21111 | 44305S9A000 | GDS23074 | 44306SNAN00 | GDS23214 | 44306TL1E02 | GDS23331 |
| 374919 | GDS21074 | 5374007 | GDS21114 | 44305S9AN00 | GDS23074 | 44306TR0A92 | GDS23214 | 44305TL1E00 | GDS23332 |
| 95520493 | GDS21074 | 5374155 | GDS21114 | 44305S9ET00 | GDS23074 | 44305SNAN00 | GDS23215 | 44305TL1E01 | GDS23332 |
| 95520513 | GDS21074 | 94560845 | GDS21114 | 44305SCAG00 | GDS23074 | 44305SNAN01 | GDS23215 | 44305TL1E02 | GDS23332 |
| 13250869 | GDS21075 | 95090836 | GDS21114 | 44306SB0020 | GDS23078 | 44305SNEA21 | GDS23215 | 44305TL1E50 | GDS23332 |
| 13335142 | GDS21075 | 95520551 | GDS21114 | 44306SB0970 | GDS23078 | 44305SNEA22 | GDS23215 | 44305TL1E51 | GDS23332 |
| 374599 | GDS21075 | 95520647 | GDS21114 | 44306SB0971 | GDS23078 | 44305TR0A92 | GDS23215 | 44305TL1E52 | GDS23332 |
| 374892 | GDS21075 | 4130021102 | GDS21122 | 44011SR1902 | GDS23083 | 44306SWY000 | GDS23216 | 44305TL1E53 | GDS23332 |
| 95520507 | GDS21075 | 4130021104 | GDS21122 | 44306S5A950 | GDS23089 | 44306SWY010 | GDS23216 | 44306SZTG00 | GDS23333 |
| 0374556 | GDS21076 | 4130021106 | GDS21122 | 44306S5AJ01 | GDS23089 | 44306SWY020 | GDS23216 | 44306SZTG01 | GDS23333 |
| 13250834 | GDS21076 | 4341020432 | GDS22002 | 44306S5JM11 | GDS23089 | 44306SWYE00 | GDS23216 | 44305T0AA02 | GDS23335 |
| 13335135 | GDS21076 | 4342020282 | GDS22003 | 44306S6DE51 | GDS23089 | 44306SWYE01 | GDS23216 | 44306TR0J00 | GDS23345 |
| 13354382 | GDS21076 | 4804569 | GDS22008 | 44306S6DG50 | GDS23089 | 44306SWA900 | GDS23241 | 44306TR0J01 | GDS23345 |
| 13396740 | GDS21076 | 95520529 | GDS22008 | 44010S30950 | GDS23095 | 44306SWET10 | GDS23241 | 44306STXA02 | GDS23346 |
| 13396741 | GDS21076 | 96624723 | GDS22008 | 44010S30951 | GDS23095 | 44306SXSA10 | GDS23241 | 44306STXA02RM | GDS23346 |
| 374556 | GDS21076 | 4804570 | GDS22009 | 44305S30C51 | GDS23095 | 44305S2H950 | GDS23249 | 44306SZAA01 | GDS23346 |
| 374885 | GDS21076 | 95520515 | GDS22009 | 44305S5AJ00 | GDS23097 | 44305SEAE50 | GDS23250 | 44306SZAA01RM | GDS23346 |
| 374918 | GDS21076 | 96624724 | GDS22009 | 44305S5DA01 | GDS23097 | 44306S2H951 | GDS23251 | 44306SZAA11 | GDS23346 |
| 5374054 | GDS21076 | 95981837 | GDS22012 | 44305S5DA51 | GDS23097 | 44306S5TE50 | GDS23266 | 44306SZAA12 | GDS23346 |
| 5374055 | GDS21076 | 96639083 | GDS22012 | 44305S6A950 | GDS23097 | 44305S6DE51 | GDS23268 | 44305SZAA11 | GDS23347 |
| 95520479 | GDS21076 | 95981838 | GDS22013 | 44011S30950 | GDS23101 | 44306TL0G00 | GDS23270 | 44305SZAA11RM | GDS23347 |
| 95520497 | GDS21076 | 96453397 | GDS22013 | 44011S30951 | GDS23101 | 44306TL0G10 | GDS23270 | 44305SZAA21 | GDS23347 |
| 13166588 | GDS21092 | 44305SEAN00 | GDS22019 | 44011S30N20 | GDS23101 | 44306TL0G11 | GDS23270 | 44306TK8A11 | GDS23348 |
| 374625 | GDS21092 | 44305SJDE00 | GDS23011 | 44011S30N21 | GDS23101 | 44306TL0G12 | GDS23270 | 44306TK8A22 | GDS23348 |
| 93169698 | GDS21092 | 44306S9A000 | GDS23011 | 44306S30C51 | GDS23101 | 44306TL0G13 | GDS23270 | 44305TR0J01 | GDS23349 |
| 13307211 | GDS21093 | 44306S9AN00 | GDS23011 | 44306S30N22 | GDS23101 | 44306TL0G14 | GDS23270 | 44305TR0J02 | GDS23349 |
| 13335157 | GDS21093 | 44306S9ET00 | GDS23011 | 44305SF0030 | GDS23122 | 44306TL0G20 | GDS23270 | 44306TF6N02 | GDS23350 |
| 374901 | GDS21093 | 44306SCAA00 | GDS23011 | 44305S5AJ10 | GDS23127 | 44306TL0G21 | GDS23270 | 44305TK8A11 | GDS23351 |
| 95520531 | GDS21093 | 44306SCAE00 | GDS23011 | 44305S5AJ30 | GDS23127 | 44306TL0G22 | GDS23270 | 44305TK8A21 | GDS23351 |

| COMPETITOR | G-AP Ref. | COMPETITOR | G-AP Ref. | COMPETITOR | G-AP Ref. | COMPETITOR | G-AP Ref. | COMPETITOR | G-AP Ref. |
|---|---|---|---|---|---|---|---|---|---|
| OE | | 4950039811 | GDS24087 | 495002D413 | GDS24149 | 4950126561SJ | GDS24217 | 49500A6400 | GDS24264 |
| | | 4950139800 | GDS24087 | 495001J000 | GDS24152 | 4956226200 | GDS24217 | 49500A7100 | GDS24264 |
| 44305TL0G00 | GDS23355 | 4950539800 | GDS24087 | 495001J005 | GDS24152 | 4950126501 | GDS24218 | 49500B0100 | GDS24264 |
| 44305TL0G01 | GDS23355 | 4950038640 | GDS24094 | 495001J050 | GDS24153 | 4950126510 | GDS24218 | 495013X110 | GDS24265 |
| 44305TL0G02 | GDS23355 | 495003C620 | GDS24094 | 495011J005 | GDS24153 | 4950126511 | GDS24218 | 495003V500 | GDS24270 |
| 44305TL0G03 | GDS23355 | 495003C642 | GDS24094 | 495000X000 | GDS24156 | 4950126511SJ | GDS24218 | 495003V510 | GDS24270 |
| 4950009800 | GDS24014 | 495003C643 | GDS24094 | 495000X010 | GDS24157 | 495003K300 | GDS24220 | 4950039850 | GDS24274 |
| 4950038400 | GDS24014 | 495011F220 | GDS24110 | 495003A300 | GDS24158 | 495001F610 | GDS24221 | 4950039851 | GDS24274 |
| 4950038401 | GDS24014 | 495002E500 | GDS24111 | 495003A301 | GDS24158 | 495003J100 | GDS24222 | 4950039852 | GDS24274 |
| 4950038402 | GDS24014 | 495002E200 | GDS24112 | 495003A302 | GDS24158 | 495003J120 | GDS24222 | 4950039853 | GDS24274 |
| 4950038440 | GDS24014 | 4950729C10 | GDS24113 | 495003A310 | GDS24158 | 495013J150 | GDS24222 | 4950039860 | GDS24274 |
| 4950038441 | GDS24014 | 495002B110 | GDS24116 | 495003A311 | GDS24158 | 4950126560 | GDS24225 | 4950039861 | GDS24274 |
| 4950038442 | GDS24014 | 495002B160 | GDS24116 | 495003A312 | GDS24158 | 4950126561 | GDS24225 | 4950139850 | GDS24274 |
| 495003C401 | GDS24014 | 495002B510 | GDS24117 | 495003A312SJ | GDS24158 | 495013S260 | GDS24228 | 4950026300 | GDS24276 |
| 495003C402 | GDS24014 | 495002B520 | GDS24117 | 4950722B00 | GDS24165 | 495013S261 | GDS24228 | 4950026301 | GDS24276 |
| 495003C441 | GDS24014 | 495000P610 | GDS24120 | 4950722C00 | GDS24165 | 495013S280 | GDS24228 | 4950026310 | GDS24276 |
| 495003C442 | GDS24014 | 495001E610 | GDS24120 | 495001F600 | GDS24173 | 495003S210 | GDS24229 | 4950026311 | GDS24276 |
| 4950038450 | GDS24015 | 4950038362 | GDS24123 | 495002E550 | GDS24173 | 495003S211 | GDS24229 | 4950026370 | GDS24277 |
| 4950038451 | GDS24015 | 4950038390 | GDS24123 | 495002E650 | GDS24173 | 495012S200 | GDS24230 | 4950026371 | GDS24277 |
| 4950038452 | GDS24015 | 4950038392 | GDS24123 | 495002E950 | GDS24173 | 495012S200SJ | GDS24230 | 4950026380 | GDS24277 |
| 4950038470 | GDS24015 | 495003C362 | GDS24123 | 495002H001 | GDS24176 | 495012Y200 | GDS24230 | 4950026381 | GDS24277 |
| 4950038490 | GDS24015 | 495003C392 | GDS24123 | 495002H002 | GDS24176 | 495013W200 | GDS24230 | 495002L000 | GDS24282 |
| 4950038491 | GDS24015 | 4950038312 | GDS24124 | 495002H010 | GDS24176 | 495002S200 | GDS24231 | 495002L010 | GDS24282 |
| 4950038492 | GDS24015 | 4950038342 | GDS24124 | 495002H012 | GDS24176 | 495003W200 | GDS24231 | 495012L000 | GDS24283 |
| 4950038492SJ | GDS24015 | 495003C312 | GDS24124 | 495012H001 | GDS24177 | 495003W210 | GDS24231 | 495012L010 | GDS24283 |
| 495003C451 | GDS24015 | 495003C342 | GDS24124 | 495012H002 | GDS24177 | 495003W210SJ | GDS24231 | 495002V100 | GDS24288 |
| 495003C452 | GDS24015 | 4950038790 | GDS24125 | 495012H010 | GDS24177 | 495012P200 | GDS24232 | 495012V100 | GDS24289 |
| 495003C491 | GDS24015 | 4950038791 | GDS24125 | 495012H012 | GDS24177 | 495012P201 | GDS24232 | 495001R200 | GDS24290 |
| 495003C492 | GDS24015 | 4950038792 | GDS24125 | 495012K000 | GDS24181 | 495002B900 | GDS24233 | 495011R200 | GDS24291 |
| 4950002460 | GDS24033 | 495003C791 | GDS24125 | 495012K010 | GDS24181 | 495002P200 | GDS24233 | 495011R300 | GDS24293 |
| 4950002560 | GDS24033 | 4950038700 | GDS24126 | 495001E000 | GDS24188 | 495002P201 | GDS24233 | 495001R300 | GDS24294 |
| 4950002050 | GDS24034 | 4950038701 | GDS24126 | 495001E001 | GDS24188 | 495002P400 | GDS24233 | 495012L210 | GDS24296 |
| 4950002150 | GDS24034 | 4950038740 | GDS24126 | 495001E010 | GDS24188 | 495001C311 | GDS24235 | 495002S100 | GDS24299 |
| 4950025200 | GDS24038 | 4950038741 | GDS24126 | 495001E011 | GDS24188 | 495001C312 | GDS24235 | 495002Y900 | GDS24299 |
| 495001E050 | GDS24044 | 495003C701 | GDS24126 | 495001G000 | GDS24188 | 495001C361 | GDS24235 | 495002Y900SJ | GDS24299 |
| 495001E051 | GDS24044 | 495003C741 | GDS24126 | 4950017200 | GDS24193 | 495001C362 | GDS24235 | 495002Y930 | GDS24299 |
| 495001E061 | GDS24044 | 495000A410 | GDS24127 | 4950017250 | GDS24193 | 495001C362SJ | GDS24235 | 495011F350 | GDS24300 |
| 495001G050 | GDS24044 | 495003K410 | GDS24127 | 4950017250SJ | GDS24193 | 495000X200 | GDS24240 | 495001F710 | GDS24301 |
| 495000P600 | GDS24045 | 495003L800 | GDS24127 | 495001C210 | GDS24194 | 495000X300 | GDS24240 | 495001J200 | GDS24304 |
| 495001E600 | GDS24045 | 495003K460 | GDS24128 | 495002B260 | GDS24195 | 495000X210 | GDS24241 | 495012L410 | GDS24305 |
| 495001E650 | GDS24046 | 4950025210 | GDS24129 | 495001E150 | GDS24201 | 495000X310 | GDS24241 | 495012L411 | GDS24305 |
| 495001E660 | GDS24046 | 495001C500 | GDS24140 | 495001E151 | GDS24201 | 495001J205 | GDS24246 | 495001P200 | GDS24318 |
| 495012D310 | GDS24053 | 495001C550 | GDS24140 | 495001E151SJ | GDS24201 | 495001R000 | GDS24246 | 495013V550 | GDS24320 |
| 495012D312 | GDS24053 | 495001C510 | GDS24141 | 495001E161 | GDS24201 | 495011R000 | GDS24247 | 495013V560 | GDS24320 |
| 495013A350 | GDS24058 | 495003L550 | GDS24142 | 495012C700 | GDS24203 | 495011R500 | GDS24247 | 495013X100 | GDS24321 |
| 495013A351 | GDS24058 | 495003L551 | GDS24142 | 495012C710 | GDS24203 | 495003X200 | GDS24248 | 49501A5400 | GDS24321 |
| 495013A352 | GDS24058 | 495003L500 | GDS24143 | 495012C710SJ | GDS24203 | 495013X200 | GDS24249 | 49501A6400 | GDS24321 |
| 495013A390 | GDS24058 | 495003K860 | GDS24144 | 495012D500 | GDS24203 | 495011R010 | GDS24259 | 49501A7100 | GDS24321 |
| 495013A391 | GDS24058 | 495002C810 | GDS24149 | 495012D501 | GDS24203 | 495011R510 | GDS24259 | 49501A7180 | GDS24321 |
| 495013A392 | GDS24058 | 495002D000 | GDS24149 | 495012D502 | GDS24203 | 495001R010 | GDS24260 | 49501B0180 | GDS24321 |
| 495013A392SJ | GDS24058 | 495002D001 | GDS24149 | 495012D503 | GDS24203 | 495012T370 | GDS24261 | 496002E000 | GDS24324 |
| 4950126800 | GDS24074 | 495002D002 | GDS24149 | 495012D510 | GDS24203 | 495012T370SJ | GDS24261 | 51610H1000 | GDS24339 |
| 4950126810 | GDS24074 | 495002D003 | GDS24149 | 495012D511 | GDS24203 | 495013S201 | GDS24261 | 495003Z500 | GDS24340 |
| 495002H101 | GDS24076 | 495002D010 | GDS24149 | 495012D512 | GDS24203 | 495013S251 | GDS24261 | 49500A4350 | GDS24340 |
| 495002H102 | GDS24076 | 495002D012 | GDS24149 | 495012D513 | GDS24203 | 495013S271 | GDS24261 | 495013Z450 | GDS24347 |
| 495002H110 | GDS24076 | 495002D013 | GDS24149 | 495002C710 | GDS24204 | 495013S350 | GDS24261 | 4950126400 | GDS24358 |
| 495002H111 | GDS24076 | 495002D101 | GDS24149 | 495002D502 | GDS24204 | 495013S350SJ | GDS24261 | 4950126401 | GDS24358 |
| 495002H112 | GDS24076 | 495002D102 | GDS24149 | 495002D510 | GDS24204 | 495013V270 | GDS24261 | 4950126410 | GDS24358 |
| 495012H101 | GDS24077 | 495002D110 | GDS24149 | 495002D511 | GDS24204 | 495003S201 | GDS24262 | 4950126411 | GDS24358 |
| 495012H102 | GDS24077 | 495002D112 | GDS24149 | 495002D512 | GDS24204 | 495003S300 | GDS24262 | 495012Y900 | GDS24362 |
| 495012H110 | GDS24077 | 495002D113 | GDS24149 | 495002D513 | GDS24204 | 495003S300SJ | GDS24262 | 495012Y900SJ | GDS24362 |
| 495012H111 | GDS24077 | 495002D200 | GDS24149 | 495002F310 | GDS24204 | 495003S900 | GDS24262 | 495012Y930 | GDS24362 |
| 495012H112 | GDS24077 | 495002D202 | GDS24149 | 495001C460 | GDS24211 | 495003V200 | GDS24262 | 495012Y930SJ | GDS24362 |
| 4950039800 | GDS24087 | 495002D212 | GDS24149 | 495001C560 | GDS24211 | 495003Z200 | GDS24262 | 495012C610 | GDS24364 |
| 4950039801 | GDS24087 | 495002D213 | GDS24149 | 495012E400 | GDS24216 | 495004C320 | GDS24262 | 495012C800 | GDS24364 |
| 4950039802 | GDS24087 | 495002D410 | GDS24149 | 4950126550 | GDS24217 | 49500A4150 | GDS24262 | 495012D000 | GDS24364 |
| 4950039803 | GDS24087 | 495002D411 | GDS24149 | 4950126560 | GDS24217 | 495003X100 | GDS24264 | 495012D001 | GDS24364 |
| 4950039810 | GDS24087 | 495002D412 | GDS24149 | 4950126561 | GDS24217 | 49500A5200 | GDS24264 | 495012D002 | GDS24364 |

| COMPETITOR | G-AP Ref. | COMPETITOR | G-AP Ref. | COMPETITOR | G-AP Ref. | COMPETITOR | G-AP Ref. | COMPETITOR | G-AP Ref. |
|---|---|---|---|---|---|---|---|---|---|
| OE | | 495001R100 | GDS24409 | 495003X000 | GDS24510 | 4960026211 | GDS24556 | KK33125400A | GDS27042 |
| | | 495001E101 | GDS24412 | 495012Y660 | GDS24518 | 4960026211SJ | GDS24556 | 1362928 | GDS27046 |
| 495012D003 | GDS24364 | 495001E111 | GDS24412 | 49500A6000 | GDS24519 | 4960026000 | GDS24557 | 2M343B437DA | GDS27046 |
| 495012D010 | GDS24364 | 495001E200 | GDS24412 | 49500A6100 | GDS24519 | 4960026001 | GDS24557 | MD192560XB | GDS27046 |
| 495012D011 | GDS24364 | 495001E210 | GDS24412 | 495001C050 | GDS24520 | 4960026010 | GDS24557 | MD232560X | GDS27046 |
| 495012D012 | GDS24364 | 495001E300 | GDS24412 | 49501A6000 | GDS24521 | 4960026011 | GDS24557 | FDY12560X | GDS27047 |
| 495012D013 | GDS24364 | 495001E310 | GDS24412 | 49501A6100 | GDS24521 | 4960026011SJ | GDS24557 | F06325600 | GDS27048 |
| 495012D100 | GDS24364 | 495001D700 | GDS24417 | 495012S030 | GDS24522 | 4950025202 | GDS24558 | F06925600 | GDS27048 |
| 495012D101 | GDS24364 | 495001D701 | GDS24417 | 495012S030SJ | GDS24522 | 4950025301 | GDS24558 | F06925600B | GDS27048 |
| 495012D102 | GDS24364 | 495001D800 | GDS24417 | 495012Y050 | GDS24522 | 4950025301SJ | GDS24558 | F06925600D | GDS27048 |
| 495012D103 | GDS24364 | 495012L110 | GDS24429 | 495002Y100 | GDS24523 | 4950025302 | GDS24558 | F07025600 | GDS27048 |
| 495012D110 | GDS24364 | 495014N100 | GDS24432 | 496002S000 | GDS24524 | 4950025302SJ | GDS24558 | 1328094 | GDS27062 |
| 495012D111 | GDS24364 | 495004N000 | GDS24433 | 496002Y000 | GDS24524 | 495003X010 | GDS24559 | 1332806 | GDS27062 |
| 495012D112 | GDS24364 | 495002L110 | GDS24440 | 495002Y300 | GDS24525 | 49500A7010 | GDS24559 | 2M343B436EB | GDS27062 |
| 495012D113 | GDS24364 | 495002W100 | GDS24447 | 495002Y800 | GDS24526 | 49500C7100 | GDS24560 | 3M353B436AA | GDS27062 |
| 495012D200 | GDS24364 | 495002W400 | GDS24448 | 495002Y800SJ | GDS24526 | 49500C8100 | GDS24560 | MD242550X | GDS27062 |
| 495012D201 | GDS24364 | 495002W600 | GDS24449 | 4950002060 | GDS24528 | 495012B700 | GDS24561 | 1328616 | GDS27063 |
| 495012D202 | GDS24364 | 495012W450 | GDS24451 | 49500B9000 | GDS24529 | 495001J550 | GDS24562 | 1339667 | GDS27063 |
| 495012D212 | GDS24364 | 495002B250 | GDS24459 | 49500C8000 | GDS24530 | 495011J505 | GDS24562 | 2M353B437AA | GDS27063 |
| 495012D213 | GDS24364 | 495002B250A | GDS24459 | 495000B050 | GDS24531 | 495013Z550 | GDS24563 | 2M353B437CB | GDS27063 |
| 495012D400 | GDS24364 | 495002B320 | GDS24462 | 495001C200 | GDS24531 | 495012P000 | GDS24564 | MD242560X | GDS27063 |
| 495012D401 | GDS24364 | 495002B350 | GDS24462 | 495001C202 | GDS24531 | 495012P001 | GDS24564 | 495003E010 | GDS27064 |
| 495012D402 | GDS24364 | 495002B360 | GDS24462 | 495001C250 | GDS24531 | 495012L211 | GDS24565 | 495003E110 | GDS27064 |
| 495012D403 | GDS24364 | 495002B370 | GDS24462 | 495001C252 | GDS24531 | 495002L210 | GDS24566 | 495003E111 | GDS27064 |
| 495012D410 | GDS24364 | 495002B620 | GDS24463 | 496002M200 | GDS24532 | 495002L212 | GDS24566 | 495003E201 | GDS27064 |
| 495012D411 | GDS24364 | 495002B700 | GDS24464 | 495001C210 | GDS24533 | 495002W000 | GDS24567 | 495003E000 | GDS27065 |
| 495012D412 | GDS24364 | 495002P000 | GDS24464 | 495001C212 | GDS24533 | 495012Y250 | GDS24568 | 495013E111 | GDS27065 |
| 495012D413 | GDS24364 | 495002P001 | GDS24464 | 495001C260 | GDS24533 | 495602P200 | GDS24585 | 495013E201 | GDS27065 |
| 495042D201 | GDS24364 | 495002B750 | GDS24465 | 495001C262 | GDS24533 | 495602W600 | GDS24585 | 0K01125500A | GDS27067 |
| 49500B4100 | GDS24366 | 495002B800 | GDS24466 | 495001C262SJ | GDS24533 | 2303390K01 | GDS26008 | 0K01225500 | GDS27067 |
| 49500B4110 | GDS24366 | 495002B850 | GDS24467 | 496502M200 | GDS24534 | 94713061 | GDS26016 | 0K01225500A | GDS27067 |
| 49500B4700 | GDS24366 | 495002P300 | GDS24467 | 495012Y300 | GDS24535 | 8973876630 | GDS26017 | 0K01225500B | GDS27067 |
| 49500B4710 | GDS24366 | 495002P301 | GDS24467 | 496012Y000 | GDS24536 | 8973876741 | GDS26017 | 0K2C025500 | GDS27070 |
| 495001R210 | GDS24368 | 495002P100 | GDS24470 | 495012Y760 | GDS24537 | 8973876751 | GDS26017 | 0K2C22550X | GDS27070 |
| 495001R310 | GDS24368 | 495012H000 | GDS24475 | 496012Y010 | GDS24538 | 4950038250 | GDS27002 | 0K2C32550X | GDS27070 |
| 49501B4700 | GDS24371 | 495011U200 | GDS24477 | 49501C7110 | GDS24540 | 4950038290 | GDS27002 | 0K2N52550X | GDS27070 |
| 49501B4710 | GDS24371 | 495011U250 | GDS24477 | 49501C8100 | GDS24540 | 4950038450 | GDS27002 | 0K2NA25500 | GDS27070 |
| 49501B4100 | GDS24372 | 495012B850 | GDS24477 | 495001J500 | GDS24541 | 4950038451 | GDS27002 | 0K2C025600 | GDS27071 |
| 49501B4110 | GDS24372 | 495012P250 | GDS24477 | 495001J505 | GDS24541 | 4950038490 | GDS27002 | 0K2C125600 | GDS27071 |
| 495004N100 | GDS24381 | 495012P251 | GDS24477 | 49501B9000 | GDS24542 | 4950038491 | GDS27002 | 0K2C22560X | GDS27071 |
| 495014N000 | GDS24382 | 495012W350 | GDS24479 | 495002C110 | GDS24543 | 495003C451 | GDS27002 | 0K2N52560X | GDS27071 |
| 495011R210 | GDS24386 | 495012W650 | GDS24479 | 495002C111 | GDS24543 | 495003C491 | GDS27002 | 0K2NA25600 | GDS27071 |
| 495013X400 | GDS24387 | 4950025412 | GDS24482 | 495002C112 | GDS24543 | 0K2N42560X | GDS27011 | 0K2NB25600 | GDS27071 |
| 49501A7400 | GDS24387 | 4950025511 | GDS24482 | 495002C113 | GDS24543 | 4950038340 | GDS27015 | 495003F700 | GDS27074 |
| 49501A7450 | GDS24387 | 4950025512 | GDS24482 | 4950005010 | GDS24544 | 4950038391 | GDS27016 | 495003F800 | GDS27074 |
| 495003X400 | GDS24388 | 4950025512SJ | GDS24482 | 4950005110 | GDS24544 | 495003C391 | GDS27016 | 0K01225600D | GDS27076 |
| 49500A7400 | GDS24388 | 49501C1250 | GDS24496 | 495003K350 | GDS24545 | 4950002450 | GDS27017 | 0K55C25500 | GDS27078 |
| 495013Z150 | GDS24389 | 49501C2260 | GDS24496 | 495012Y800 | GDS24546 | 4950002550 | GDS27017 | 0K55C25500A | GDS27078 |
| 495013Z350 | GDS24389 | 49501D4250 | GDS24496 | 495012Y800SJ | GDS24546 | 0K56P25500 | GDS27018 | 0K55C2550X | GDS27078 |
| 495003Z100 | GDS24390 | 49500C1200 | GDS24497 | 4950005000 | GDS24547 | 0K56P25500A | GDS27018 | 0K55C2550XA | GDS27078 |
| 495003Z300 | GDS24390 | 49500C2210 | GDS24497 | 4950005100 | GDS24547 | 1K56P2550X | GDS27019 | 0K55C25600 | GDS27079 |
| 495013Z250 | GDS24391 | 49500D4200 | GDS24497 | 495001P000 | GDS24548 | 1K56P2550XA | GDS27019 | 0K55C25600A | GDS27079 |
| 49501A4150 | GDS24391 | 495012F050 | GDS24498 | 495002V000 | GDS24548 | 0K56P25600 | GDS27020 | 0K30D25600 | GDS27088 |
| 495003Z400 | GDS24392 | 495012F060 | GDS24498 | 49500A6300 | GDS24548 | 0K56P25600A | GDS27020 | 0K30D25600A | GDS27088 |
| 49600B1100 | GDS24393 | 495002F050 | GDS24499 | 49500A7000 | GDS24548 | 1K30A2560X | GDS27025 | 1K30F2560X | GDS27088 |
| 485012V000 | GDS24398 | 495002F060 | GDS24499 | 496002B000 | GDS24549 | KK38825600 | GDS27025 | 1K30F2560XA | GDS27088 |
| 495012V000 | GDS24398 | 495002D301 | GDS24501 | 496002B010 | GDS24549 | KK38825600A | GDS27025 | 0K2A525500 | GDS27089 |
| 495013X000 | GDS24398 | 495002D302 | GDS24501 | 495002Y000 | GDS24550 | KK3892560X | GDS27025 | 0K2A525500A | GDS27089 |
| 495013X010 | GDS24398 | 495002L411 | GDS24505 | 495002Y010 | GDS24550 | KK3892560XA | GDS27025 | 0K2A625500 | GDS27089 |
| 49501A6300 | GDS24398 | 4950025212 | GDS24507 | 495012Y101 | GDS24551 | 0K30A25400 | GDS27026 | 0K2AE2550X | GDS27089 |
| 49501A7000 | GDS24398 | 4950025311 | GDS24507 | 495001C351 | GDS24552 | 1K30A2540X | GDS27027 | 0K2AE2550XA | GDS27089 |
| 495001H010 | GDS24399 | 4950025312 | GDS24507 | 495001C352 | GDS24552 | KK3892540X | GDS27027 | 0K2AF2550X | GDS27089 |
| 495011P200 | GDS24400 | 495012C100 | GDS24508 | 495001C352SJ | GDS24552 | KK3892540XA | GDS27027 | 0K55425500 | GDS27096 |
| 495001G500 | GDS24401 | 495012C101 | GDS24508 | 496012W050 | GDS24554 | 0K2NE2550XA | GDS27030 | 0K55425500A | GDS27096 |
| 495001G501 | GDS24401 | 495012C110 | GDS24508 | 496002W050 | GDS24555 | 0K5582560X | GDS27037 | 0K5542550X | GDS27096 |
| 495001G510 | GDS24401 | 495012C111 | GDS24508 | 4960026200 | GDS24556 | 0K5582560XA | GDS27037 | 0K5542550XA | GDS27096 |
| 495001G511 | GDS24401 | 495012C310 | GDS24508 | 4960026201 | GDS24556 | KK33125600A | GDS27040 | 0K5542550XB | GDS27096 |
| 495011R100 | GDS24408 | 495013X410 | GDS24509 | 4960026210 | GDS24556 | KK33125400 | GDS27042 | 0K5542550Y | GDS27096 |

| COMPETITOR | G-AP Ref. | COMPETITOR | G-AP Ref. | COMPETITOR | G-AP Ref. | COMPETITOR | G-AP Ref. | COMPETITOR | G-AP Ref. |
|---|---|---|---|---|---|---|---|---|---|
| **OE** | | 495001G110 | **GDS27186** | 212152215010 | **GDS28006** | GG2625600C | **GDS34085** | GR252560XB | **GDS34102** |
| | | 495001G115 | **GDS27186** | 21215221501020 | **GDS28006** | GG2625600E | **GDS34085** | GG2525500D | **GDS34104** |
| 0K55225600 | **GDS27097** | 495011Y310 | **GDS27191** | 11110221501100 | **GDS28008** | GG2825600 | **GDS34085** | GG2525500E | **GDS34104** |
| 0K55225600A | **GDS27097** | 0K30B25400 | **GDS27199** | 11110221501103 | **GDS28008** | GG2825600C | **GDS34085** | GG2525500F | **GDS34104** |
| 0K5522560A | **GDS27097** | 1K30B2540X | **GDS27199** | 11112215011 | **GDS28008** | GR282560X | **GDS34085** | GG2525500G | **GDS34104** |
| 0K5522560X | **GDS27097** | 495013F030 | **GDS27203** | 1111221501101 | **GDS28008** | 4154572 | **GDS34087** | GG2725500F | **GDS34104** |
| 0K5522560XA | **GDS27097** | 495003F030 | **GDS27204** | 1111221501102 | **GDS28008** | 4766807 | **GDS34087** | GG2725500G | **GDS34104** |
| 0K5522560XB | **GDS27097** | 4950007150 | **GDS27206** | 1111221501103 | **GDS28008** | 5L843A427EA | **GDS34087** | GG2725500H | **GDS34104** |
| 0K5522560Y | **GDS27097** | 4950007160 | **GDS27206** | 211002215011 | **GDS28009** | 5L8Z3A428DA | **GDS34087** | GG2725500J | **GDS34104** |
| 0K2KB25400 | **GDS27098** | 4950007300 | **GDS27206** | 21100221501100 | **GDS28009** | 5L8Z3A428DB | **GDS34087** | GG2725500K | **GDS34104** |
| 1K2KB2540X | **GDS27098** | 4950007310 | **GDS27206** | 11180221501010 | **GDS28024** | GG052550XD | **GDS34087** | GG2725500L | **GDS34104** |
| 0K55425600 | **GDS27099** | 4950007100 | **GDS27207** | 11180221501011 | **GDS28024** | GG062550XD | **GDS34087** | GG2725500R0L | **GDS34104** |
| 0K55425600A | **GDS27099** | 4950007110 | **GDS27207** | 1118221501010 | **GDS28024** | GG362550X | **GDS34087** | GG3225500G | **GDS34104** |
| 0K5542560X | **GDS27099** | 495002Y200 | **GDS27217** | 11180221501100 | **GDS28025** | GG362550XA | **GDS34087** | GG4425500A | **GDS34104** |
| 0K5542560XA | **GDS27099** | 495013Y100 | **GDS27218** | 11180221501110 | **GDS28025** | YL843A427FA | **GDS34087** | GG4425500B | **GDS34104** |
| 495001D200 | **GDS27102** | 49501A6200 | **GDS27218** | 11180221501111 | **GDS28025** | YL8Z3A428DA | **GDS34087** | GG4425500C | **GDS34104** |
| 495001D201 | **GDS27102** | 49500A6200 | **GDS27219** | 11182215011 | **GDS28025** | GG2725600F | **GDS34090** | GG4425500D | **GDS34104** |
| 495001F400 | **GDS27105** | 495602P250 | **GDS27221** | 21700221501100 | **GDS28025** | GG2725600G | **GDS34090** | GG4425500R0D | **GDS34104** |
| 495001F500 | **GDS27105** | 495602W650 | **GDS27221** | 21700221501110 | **GDS28025** | GG2725600H | **GDS34090** | GG6225500 | **GDS34104** |
| 495001F800 | **GDS27105** | 495011Y600 | **GDS27224** | 21700221501111 | **GDS28025** | GG2725600J | **GDS34090** | GG6225500A | **GDS34104** |
| 0K30A25600 | **GDS27106** | 495011Y610 | **GDS27224** | 21702215011 | **GDS28025** | GG2725600K | **GDS34090** | GG2525600D | **GDS34116** |
| KK38825600 | **GDS27106** | 495001Y600 | **GDS27226** | 2170221501110 | **GDS28025** | GG2725600L | **GDS34090** | GG2525600E | **GDS34116** |
| KK38825600A | **GDS27106** | 495001Y610 | **GDS27226** | 11180221501000 | **GDS28026** | GG2825600D | **GDS34091** | GG2525600F | **GDS34116** |
| KK38825400 | **GDS27107** | 495602S600 | **GDS27229** | 11180221501001 | **GDS28026** | GG2825600E | **GDS34091** | GG2525600G | **GDS34116** |
| KK38825400A | **GDS27107** | 495001F200 | **GDS27231** | 11182215010 | **GDS28026** | GG2825600G | **GDS34091** | GG2525600H | **GDS34116** |
| 495011D200 | **GDS27111** | 495011F200 | **GDS27232** | 1118221501000 | **GDS28026** | GG2825600H | **GDS34091** | GG2525600R0H | **GDS34116** |
| 495011D211 | **GDS27111** | 495011F400 | **GDS27232** | 5H227A684BA | **GDS30002** | GG2825600R0G | **GDS34091** | GD602560XB | **GDS34137** |
| 495014D201 | **GDS27114** | 495012E500 | **GDS27232** | 5H227A684BB | **GDS30002** | GG3125600 | **GDS34091** | GF092560X | **GDS34137** |
| 495004D201 | **GDS27115** | 495012E700 | **GDS27232** | 5H227A684BC | **GDS30002** | GG3125600A | **GDS34091** | GD552560X | **GDS34153** |
| 495002F210 | **GDS27130** | 495012E900 | **GDS27232** | LR025874 | **GDS30002** | GG3125600B | **GDS34091** | GD552560XA | **GDS34153** |
| 495012F210 | **GDS27131** | 495012E910 | **GDS27232** | LR047293 | **GDS30002** | GG3125600C | **GDS34091** | GD552560XB | **GDS34153** |
| 4950007000 | **GDS27132** | 495002S000 | **GDS27233** | LR072067 | **GDS30002** | GG3125600D | **GDS34091** | GD552550X | **GDS34165** |
| 4950007010 | **GDS27132** | 495003W000 | **GDS27233** | TDB500090 | **GDS30002** | FG0125600E | **GDS34095** | GD552550XA | **GDS34165** |
| 495003F750 | **GDS27136** | 495012S050 | **GDS27235** | FTC3465 | **GDS30006** | FG0125600F | **GDS34095** | GD552550XB | **GDS34165** |
| 495003F850 | **GDS27136** | 495013Q750 | **GDS27235** | TDB104090 | **GDS30006** | FG0125600G | **GDS34095** | GD552550XC | **GDS34165** |
| 0K55C2560X | **GDS27138** | 495013W030 | **GDS27235** | 4341033150 | **GDS31001** | FG0125600H | **GDS34095** | 0K55225500 | **GDS34166** |
| 0K55C2560XA | **GDS27138** | 495013W050 | **GDS27235** | 4341033201 | **GDS31001** | FG0125600J | **GDS34095** | 0K55225500A | **GDS34166** |
| 495001M001 | **GDS27142** | 495003W100 | **GDS27236** | 4341033202 | **GDS31001** | FG0725600 | **GDS34095** | 0K5522550X | **GDS34166** |
| 495001M010 | **GDS27142** | 495003W110 | **GDS27236** | 4342048020 | **GDS31001** | FG0725600A | **GDS34095** | 0K5522550XA | **GDS34166** |
| 495001M011 | **GDS27142** | 495012S101 | **GDS27237** | 4342048041 | **GDS31001** | FG0725600B | **GDS34095** | 0K5522550XB | **GDS34166** |
| 495011M001 | **GDS27143** | 495013W101 | **GDS27237** | 4342048042 | **GDS31001** | 4096487 | **GDS34096** | 0K5522550Y | **GDS34166** |
| 495011M010 | **GDS27143** | 495012L310 | **GDS27238** | 434200E011 | **GDS31005** | 4121052 | **GDS34096** | 495011Y010 | **GDS34171** |
| 495001G001 | **GDS27155** | 495002L310 | **GDS27239** | 434100E011 | **GDS31009** | 4139351 | **GDS34096** | 495011Y200 | **GDS34171** |
| 495001G010 | **GDS27155** | 210802215011 | **GDS28001** | 4234048020 | **GDS31010** | 4139752 | **GDS34096** | 495011Y210 | **GDS34171** |
| 495001G011 | **GDS27155** | 21080221501100 | **GDS28001** | 44101M79F50 | **GDS32007** | 4484606 | **GDS34096** | 495011Y300 | **GDS34171** |
| 495001G031 | **GDS27155** | 21082215011 | **GDS28001** | 44101M79F70 | **GDS32007** | 4484607 | **GDS34096** | FG0625500 | **GDS34189** |
| 495001G041 | **GDS27156** | 2108221501100 | **GDS28001** | 44102M79F50 | **GDS32008** | 4618427 | **GDS34096** | FG0625500A | **GDS34189** |
| 495001G051 | **GDS27156** | 21102215011 | **GDS28001** | 44102M79F70 | **GDS32008** | 4986459 | **GDS34096** | FG0625500B | **GDS34189** |
| 495001M600 | **GDS27157** | 2110221501100 | **GDS28001** | GJ0122510A | **GDS34001** | 5156335 | **GDS34096** | FG0625500C | **GDS34189** |
| 495001M610 | **GDS27157** | 210802215010 | **GDS28002** | FDY22550X | **GDS34005** | 5156336 | **GDS34096** | FG0625600 | **GDS34192** |
| 495001M710 | **GDS27157** | 21080221501000 | **GDS28002** | M07025500A | **GDS34012** | 5L843A428BA | **GDS34096** | FG0625600A | **GDS34192** |
| 495011M600 | **GDS27158** | 21082215010 | **GDS28002** | M07025500C | **GDS34012** | 5L843A428HA | **GDS34096** | FG0625600B | **GDS34192** |
| 495011M610 | **GDS27158** | 2108221501000 | **GDS28002** | M07025500D | **GDS34012** | 5L843A428HB | **GDS34096** | FG0625600C | **GDS34192** |
| 495011M710 | **GDS27158** | 211002215010 | **GDS28004** | MD0925500A | **GDS34019** | YL843A428AH | **GDS34096** | FG3225600 | **GDS34192** |
| 495002G500 | **GDS27161** | 21100221501000 | **GDS28004** | MD0925600A | **GDS34020** | YL843A428AJ | **GDS34096** | GG6125500 | **GDS34195** |
| 495002G501 | **GDS27161** | 21100221501001 | **GDS28004** | 1362929 | **GDS34031** | YL843A428BE | **GDS34096** | GG6325500 | **GDS34195** |
| 495012G500 | **GDS27162** | 21102215010 | **GDS28004** | 2M343B436FA | **GDS34031** | YL843A428BF | **GDS34096** | GG6325500A | **GDS34195** |
| 495012G501 | **GDS27162** | 2110221501000 | **GDS28004** | MD192550XB | **GDS34031** | YL843A428BH | **GDS34096** | 4096480 | **GDS34196** |
| 495012G510 | **GDS27162** | 21212215011 | **GDS28005** | MD232550X | **GDS34031** | YL843A428BJ | **GDS34096** | 4139314 | **GDS34196** |
| 495011W210 | **GDS27164** | 2121221501110 | **GDS28005** | GD402560XA | **GDS34039** | YL843A428BK | **GDS34096** | 4154570 | **GDS34196** |
| 495012F100 | **GDS27168** | 212122150111L | **GDS28005** | GD402560XB | **GDS34039** | FG0225500C | **GDS34101** | 4484605 | **GDS34196** |
| 495012F110 | **GDS27168** | 21213221501000 | **GDS28005** | GD402560XC | **GDS34039** | FR022550X | **GDS34101** | 4621198 | **GDS34196** |
| 495002F110 | **GDS27169** | 212152215011 | **GDS28005** | F02325400 | **GDS34044** | GG2525500A | **GDS34101** | 5L843A427AA | **GDS34196** |
| 495001G141 | **GDS27185** | 21215221501120 | **GDS28005** | FD6425500 | **GDS34044** | GG2525500B | **GDS34101** | YL843A427AD | **GDS34196** |
| 495001G150 | **GDS27185** | 21212215010 | **GDS28006** | GD242560XA | **GDS34057** | GG2525500C | **GDS34101** | YL843A427AE | **GDS34196** |
| 495001G151 | **GDS27185** | 2121221501010 | **GDS28006** | GD5225600 | **GDS34057** | GG2525600A | **GDS34102** | YL843A427AF | **GDS34196** |
| 495001G100 | **GDS27186** | 212122150111R | **GDS28006** | M07025600A | **GDS34067** | GG2525600B | **GDS34102** | YL843A427EA | **GDS34196** |
| 495001G105 | **GDS27186** | 21213221501100 | **GDS28006** | M07025600B | **GDS34067** | GG2525600C | **GDS34102** | 5L8Z3A427BA | **GDS34203** |

| COMPETITOR | G-AP Ref. | COMPETITOR | G-AP Ref. | COMPETITOR | G-AP Ref. | COMPETITOR | G-AP Ref. | COMPETITOR | G-AP Ref. |
|---|---|---|---|---|---|---|---|---|---|
| OE | | P31280669 | GDS34224 | A6383340634 | GDS35002 | 1683702272 | GDS35023 | A4513500410 | GDS35052 |
| | | GG3325500 | GDS34225 | A6383341634 | GDS35002 | A1683701872 | GDS35023 | A451350041028 | GDS35052 |
| 5L8Z3A427BB | GDS34203 | GG3325500A | GDS34225 | A6383341734 | GDS35002 | A1683702272 | GDS35023 | A4513570501 | GDS35052 |
| 6L8Z3A427A | GDS34203 | GG3325500B | GDS34225 | 6383342334 | GDS35003 | 1633300101 | GDS35027 | A4513570701 | GDS35052 |
| 6L8Z3A427C | GDS34203 | GG3325500C | GDS34225 | A6383342334 | GDS35003 | 1633300401 | GDS35027 | A4513571201 | GDS35052 |
| GG312560X | GDS34203 | GG3325500D | GDS34225 | 1243503010 | GDS35005 | A1633300101 | GDS35027 | A451357120128 | GDS35052 |
| ZZC02560X | GDS34203 | GG3325600A | GDS34226 | 1293504010 | GDS35005 | A1633300401 | GDS35027 | 4513570601 | GDS35053 |
| ZZC02560XA | GDS34203 | GG3325600B | GDS34226 | A1243503010 | GDS35005 | C2S16874 | GDS35029 | 4513570801 | GDS35053 |
| MD0225500B | GDS34204 | GG3325600C | GDS34226 | A1293504010 | GDS35005 | C2S27352 | GDS35029 | 4513571300 | GDS35053 |
| MD0325500A | GDS34204 | GG3325600D | GDS34226 | A129350410 | GDS35005 | C2S2740 | GDS35029 | 4513571301 | GDS35053 |
| MD0325500B | GDS34204 | GG3325600E | GDS34226 | 2013501810 | GDS35006 | C2S43419 | GDS35029 | A4513570601 | GDS35053 |
| MD0325500C | GDS34204 | FTB12550XA | GDS34235 | 2013508010 | GDS35006 | C2S50486 | GDS35029 | A4513570801 | GDS35053 |
| MD1125500 | GDS34204 | FTB12560XA | GDS34236 | 2023500002 | GDS35006 | C2S16873 | GDS35030 | A4513571300 | GDS35053 |
| MD1125500A | GDS34204 | FTB62560X | GDS34236 | A2013501810 | GDS35006 | C2S27351 | GDS35030 | A4513571301 | GDS35053 |
| MD1222510 | GDS34204 | FTB22550XA | GDS34237 | A2013508010 | GDS35006 | C2S2739 | GDS35030 | 1693605700 | GDS35055 |
| MD1222510A | GDS34204 | FTB82550X | GDS34238 | A2023500002 | GDS35006 | C2S43418 | GDS35030 | 1693701272 | GDS35055 |
| MD1222510B | GDS34204 | FTB32560XA | GDS34239 | 2023505610 | GDS35007 | C2S50485 | GDS35030 | 1693702872 | GDS35055 |
| MD1225500 | GDS34204 | FTB82560X | GDS34239 | A2023505610 | GDS35007 | 1693601172 | GDS35032 | 1693704672 | GDS35055 |
| MD1225500A | GDS34204 | RTA12560XA | GDS34240 | 2103500402 | GDS35008 | A1693601172 | GDS35032 | 1693704772 | GDS35055 |
| MD1225500B | GDS34204 | RTA12560XB | GDS34240 | 2103508210 | GDS35008 | 1683601872 | GDS35037 | 1693704872 | GDS35055 |
| MD1225500C | GDS34204 | GG6225600 | GDS34241 | A2103500402 | GDS35008 | 1683602372 | GDS35037 | 1693705672 | GDS35055 |
| MD2125500 | GDS34204 | GG6225600B | GDS34241 | A2103508210 | GDS35008 | 1683603172 | GDS35037 | 1693706472 | GDS35055 |
| MD2125500R00 | GDS34204 | 1318955 | GDS34252 | 2103508410 | GDS35009 | A1683601872 | GDS35037 | A1693605700 | GDS35055 |
| MD2125500R0A | GDS34204 | 1328280 | GDS34252 | A2103508410 | GDS35009 | A1683602372 | GDS35037 | A1693701272 | GDS35055 |
| 495014D301 | GDS34210 | 1369431 | GDS34252 | 6313300236 | GDS35010 | A1683603172 | GDS35037 | A1693702872 | GDS35055 |
| MA042560XA | GDS34211 | 1476895 | GDS34252 | 6313300335 | GDS35010 | 1683601372 | GDS35038 | A1693704672 | GDS35055 |
| MA042560XB | GDS34211 | 1687410 | GDS34252 | 6313300501 | GDS35010 | 1683601972 | GDS35038 | A1693704772 | GDS35055 |
| MA042550XA | GDS34212 | 1798107 | GDS34252 | 6313300701 | GDS35010 | 1683603372 | GDS35038 | A1693704872 | GDS35055 |
| MA042550XB | GDS34212 | 31280977 | GDS34252 | 6313301301 | GDS35010 | 1683604672 | GDS35038 | A1693705672 | GDS35055 |
| 1749218 | GDS34220 | 3M513B437AZD | GDS34252 | 6313370010 | GDS35010 | A1683601372 | GDS35038 | A1693706472 | GDS35055 |
| 1945327 | GDS34220 | 3M513B437AZE | GDS34252 | A6313300236 | GDS35010 | A1683601972 | GDS35038 | 6393501910 | GDS35059 |
| 2039603 | GDS34220 | 3M513B437DC | GDS34252 | A6313300335 | GDS35010 | A1683603372 | GDS35038 | A6393501910 | GDS35059 |
| 2053435 | GDS34220 | 3M513B437DD | GDS34252 | A6313300501 | GDS35010 | A1683604672 | GDS35038 | 2513500110 | GDS35063 |
| 2124797 | GDS34220 | 3M513B437DE | GDS34252 | A6313300701 | GDS35010 | 1693601272 | GDS35039 | 2513500610 | GDS35063 |
| 5345951 | GDS34220 | 3M513B437DF | GDS34252 | A6313301301 | GDS35010 | 1693604072 | GDS35039 | 2513501410 | GDS35063 |
| AB393A427CA | GDS34220 | 3M513B437DG | GDS34252 | A6313370010 | GDS35010 | 1693605272 | GDS35039 | 2513501610 | GDS35063 |
| AB393A427CC | GDS34220 | 4M513B437GD | GDS34252 | 6383340534 | GDS35016 | 1693606072 | GDS35039 | A2513500110 | GDS35063 |
| AB393A427DA | GDS34220 | RM3M513B437D1G | GDS34252 | 6383340634 | GDS35016 | 1693606272 | GDS35039 | A2513500610 | GDS35063 |
| EB3G3A427BB | GDS34220 | FG3125600 | GDS34254 | 6383341634 | GDS35016 | 1693606572 | GDS35039 | A2513501410 | GDS35063 |
| EB3G3A427CA | GDS34220 | 495001Y000 | GDS34257 | 6383341734 | GDS35016 | 1693606872 | GDS35039 | A2513501610 | GDS35063 |
| EB3G3A427DA | GDS34220 | 495001Y010 | GDS34257 | A6383340534 | GDS35016 | 1693606972 | GDS35039 | 2103301001 | GDS35065 |
| EB3G3A427EA | GDS34220 | 495001Y200 | GDS34257 | A6383340634 | GDS35016 | 1693607672 | GDS35039 | A2103301001 | GDS35065 |
| UC9T2550XA | GDS34220 | 495001Y210 | GDS34257 | A6383341634 | GDS35016 | 1693607872 | GDS35039 | 1693602972 | GDS35066 |
| UF9T2550X | GDS34220 | 495001Y300 | GDS34257 | A6383341734 | GDS35016 | 1693608072 | GDS35039 | 1693603372 | GDS35066 |
| UF9T2550XB | GDS34220 | 495001Y310 | GDS34257 | 1633300201 | GDS35018 | 1693608272 | GDS35039 | 1693604372 | GDS35066 |
| 1749219 | GDS34221 | GG4625600 | GDS34258 | 1633300301 | GDS35018 | A1693601272 | GDS35039 | 1693608372 | GDS35066 |
| 1945373 | GDS34221 | GG4625600A | GDS34258 | 1633300501 | GDS35018 | A1693604072 | GDS35039 | A1693602972 | GDS35066 |
| 2039605 | GDS34221 | GG4625600B | GDS34258 | 163330050164 | GDS35018 | A1693605272 | GDS35039 | A1693603372 | GDS35066 |
| 2053156 | GDS34221 | GG4625600C | GDS34258 | A1633300201 | GDS35018 | A1693606072 | GDS35039 | A1693604372 | GDS35066 |
| 2124799 | GDS34221 | GG6125600 | GDS34261 | A1633300301 | GDS35018 | A1693606272 | GDS35039 | A1693608372 | GDS35066 |
| 5345953 | GDS34221 | GG6125600A | GDS34261 | A1633300501 | GDS35018 | A1693606572 | GDS35039 | 2423300100 | GDS35067 |
| AB393A428CA | GDS34221 | GA2525700 | GDS34267 | 1633500110 | GDS35019 | A1693606872 | GDS35039 | 2423600372 | GDS35067 |
| AB393A428CC | GDS34221 | GA2525700A | GDS34267 | 1633500210 | GDS35019 | A1693606972 | GDS35039 | 2463301201 | GDS35067 |
| AB393A428LA | GDS34221 | GA2525700B | GDS34267 | A1633500110 | GDS35019 | A1693607672 | GDS35039 | 2463301401 | GDS35067 |
| EB3G3A428BA | GDS34221 | GA2525700C | GDS34267 | A1633500210 | GDS35019 | A1693607872 | GDS35039 | 2463301801 | GDS35067 |
| EB3G3A428BB | GDS34221 | GA2525700D | GDS34267 | 1683701572 | GDS35021 | A1693608072 | GDS35039 | 2463302001 | GDS35067 |
| EB3G3A428CA | GDS34221 | 36000681 | GDS34270 | 1683702172 | GDS35021 | A1693608272 | GDS35039 | 2463302500 | GDS35067 |
| EB3G3A428DA | GDS34221 | 1243502910 | GDS35001 | A1683701572 | GDS35021 | 0015418908 | GDS35052 | 2463302501 | GDS35067 |
| EB3G3A428EA | GDS34221 | 1243508810 | GDS35001 | A1683702172 | GDS35021 | 15418908 | GDS35052 | 2463302701 | GDS35067 |
| UC9T2560XA | GDS34221 | 1343508810 | GDS35001 | 6393500710 | GDS35022 | 4513500010 | GDS35052 | 2463302900 | GDS35067 |
| UF9T2560X | GDS34221 | A1243502910 | GDS35001 | 6393501510 | GDS35022 | 4513500410 | GDS35052 | 2463303001 | GDS35067 |
| UF9T2560XB | GDS34221 | A1243508810 | GDS35001 | 6393501610 | GDS35022 | 451350041028 | GDS35052 | 2463303100 | GDS35067 |
| 391004084R | GDS34222 | A1343508810 | GDS35001 | 6393501710 | GDS35022 | 4513570501 | GDS35052 | 2463307600 | GDS35067 |
| 8200936306 | GDS34222 | 6383340534 | GDS35002 | A6393500710 | GDS35022 | 4513570701 | GDS35052 | 2463309000 | GDS35067 |
| 391017624R | GDS34223 | 6383340634 | GDS35002 | A6393501510 | GDS35022 | 4513571201 | GDS35052 | 2463309200 | GDS35067 |
| 8200936309 | GDS34223 | 6383341634 | GDS35002 | A6393501610 | GDS35022 | 451357120128 | GDS35052 | 2463309400 | GDS35067 |
| 31280669 | GDS34224 | 6383341734 | GDS35002 | A6393501710 | GDS35022 | A0015418908 | GDS35052 | 2463309600 | GDS35067 |
| 36000675 | GDS34224 | A6383340534 | GDS35002 | 1683701872 | GDS35023 | A4513500010 | GDS35052 | 2463309800 | GDS35067 |

| COMPETITOR | G-AP Ref. | COMPETITOR | G-AP Ref. | COMPETITOR | G-AP Ref. | COMPETITOR | G-AP Ref. | COMPETITOR | G-AP Ref. |
|---|---|---|---|---|---|---|---|---|---|
| OE | | A1693604372 | GDS35076 | 7L6501201C | GDS35087 | 2463302800 | GDS35104 | A2113503956 | GDS35117 |
| | | A1693608372 | GDS35076 | 7L6501201E | GDS35087 | 2463303101 | GDS35104 | 2113500902 | GDS35118 |
| A2423300100 | GDS35067 | 1693602972 | GDS35078 | 7L6501201EX | GDS35087 | 2463307700 | GDS35104 | 2113501656 | GDS35118 |
| A2423600372 | GDS35067 | 1693603372 | GDS35078 | 7L6501817A | GDS35087 | 2463308900 | GDS35104 | A2113500902 | GDS35118 |
| A2463301201 | GDS35067 | 1693604372 | GDS35078 | 7L6501817C | GDS35087 | 2463309900 | GDS35104 | A2113501656 | GDS35118 |
| A2463301401 | GDS35067 | 1693608372 | GDS35078 | 7L6501817E | GDS35087 | A2463301301 | GDS35104 | 2053502509 | GDS35119 |
| A2463301600 | GDS35067 | A1693602972 | GDS35078 | 1663301300 | GDS35088 | A2463302401 | GDS35104 | 2123502210 | GDS35119 |
| A2463301801 | GDS35067 | A1693603372 | GDS35078 | 1663301501 | GDS35088 | A2463302800 | GDS35104 | 2213500002 | GDS35119 |
| A2463302001 | GDS35067 | A1693604372 | GDS35078 | A1663301300 | GDS35088 | A2463303101 | GDS35104 | 2213502010 | GDS35119 |
| A2463302501 | GDS35067 | A1693608372 | GDS35078 | A1663301501 | GDS35088 | A2463307700 | GDS35104 | 221350201080 | GDS35119 |
| A2463302701 | GDS35067 | 1693601572 | GDS35081 | 1663301200 | GDS35089 | A2463308900 | GDS35104 | 2213502810 | GDS35119 |
| A2463302900 | GDS35067 | 1693603272 | GDS35081 | 1663301401 | GDS35089 | A2463309900 | GDS35104 | 2213503510 | GDS35119 |
| A2463303001 | GDS35067 | 1693603472 | GDS35081 | 1663301600 | GDS35089 | 2203509210 | GDS35105 | 2213504802 | GDS35119 |
| A2463303100 | GDS35067 | 1693604272 | GDS35081 | A1663301200 | GDS35089 | A2203509210 | GDS35105 | 221350480280 | GDS35119 |
| A2463307600 | GDS35067 | 1693605472 | GDS35081 | A1663301401 | GDS35089 | 2053500010 | GDS35106 | 2213505202 | GDS35119 |
| A2463309000 | GDS35067 | 1693605672 | GDS35081 | A1663301600 | GDS35089 | 2053509608 | GDS35106 | A2053502509 | GDS35119 |
| A2463309200 | GDS35067 | 1693606472 | GDS35081 | 1663501110 | GDS35090 | A2053500010 | GDS35106 | A2123502210 | GDS35119 |
| A2463309400 | GDS35067 | 1693607072 | GDS35081 | A1663501110 | GDS35090 | A2053509608 | GDS35106 | A2213500002 | GDS35119 |
| A2463309600 | GDS35067 | 1693607272 | GDS35081 | 6393500810 | GDS35093 | 1723500110 | GDS35107 | A2213502010 | GDS35119 |
| A2463309800 | GDS35067 | 1693608472 | GDS35081 | 6393501210 | GDS35093 | 1723501704 | GDS35107 | A2213502810 | GDS35119 |
| 2423300200 | GDS35068 | 1693608572 | GDS35081 | 6393501810 | GDS35093 | 1723508900 | GDS35107 | A2213503510 | GDS35119 |
| 2463301501 | GDS35068 | A1693601572 | GDS35081 | A6393500810 | GDS35093 | A1723500110 | GDS35107 | A2213504802 | GDS35119 |
| 2463302101 | GDS35068 | A1693603272 | GDS35081 | A6393501210 | GDS35093 | 2303505710 | GDS35108 | A221350480280 | GDS35119 |
| 2463302601 | GDS35068 | A1693603472 | GDS35081 | A6393501810 | GDS35093 | A2303505710 | GDS35108 | A2213505202 | GDS35119 |
| 2463302801 | GDS35068 | A1693604272 | GDS35081 | 2043301500 | GDS35094 | 2053507608 | GDS35109 | 2213501810 | GDS35120 |
| 2463303000 | GDS35068 | A1693605472 | GDS35081 | 204330150080 | GDS35094 | 2053509708 | GDS35109 | 2213502910 | GDS35120 |
| 2463303200 | GDS35068 | A1693605672 | GDS35081 | 2043301501 | GDS35094 | A2053507608 | GDS35109 | 2213504010 | GDS35120 |
| 2463309100 | GDS35068 | A1693606472 | GDS35081 | 2043302201 | GDS35094 | A2053509708 | GDS35109 | 2213504602 | GDS35120 |
| 2463309300 | GDS35068 | A1693607072 | GDS35081 | 2043302601 | GDS35094 | 2033501302 | GDS35110 | 2213505602 | GDS35120 |
| 2463309500 | GDS35068 | A1693607272 | GDS35081 | 2043305700 | GDS35094 | 2033502556 | GDS35110 | A2213501810 | GDS35120 |
| 2463309700 | GDS35068 | A1693608472 | GDS35081 | 204330570080 | GDS35094 | 2093500210 | GDS35110 | A2213502910 | GDS35120 |
| A2423300200 | GDS35068 | A1693608572 | GDS35081 | A2043301500 | GDS35094 | A2033502556 | GDS35110 | A2213504010 | GDS35120 |
| A2463301501 | GDS35068 | 6393300301 | GDS35084 | A204330150080 | GDS35094 | A2093500210 | GDS35110 | A2213504602 | GDS35120 |
| A2463302101 | GDS35068 | 6393300701 | GDS35084 | A2043301501 | GDS35094 | 2043501810 | GDS35111 | A2213505602 | GDS35120 |
| A2463302601 | GDS35068 | A6393300301 | GDS35084 | A2043302201 | GDS35094 | 204350181005 | GDS35111 | 1663501000 | GDS35121 |
| A2463302801 | GDS35068 | A6393300701 | GDS35084 | A2043302601 | GDS35094 | 2043508123 | GDS35111 | 1663501210 | GDS35121 |
| A2463303000 | GDS35068 | 7L0407271 | GDS35085 | A2043305700 | GDS35094 | A2043501810 | GDS35111 | 1663507900 | GDS35121 |
| A2463303200 | GDS35068 | 7L0407271A | GDS35085 | A204330570080 | GDS35094 | A204350181005 | GDS35111 | 4473503501 | GDS35121 |
| A2463309100 | GDS35068 | 7L0407271B | GDS35085 | 2043301600 | GDS35095 | A2043508123 | GDS35111 | 4473506600 | GDS35121 |
| A2463309300 | GDS35068 | 7L0407271C | GDS35085 | 204330160080 | GDS35095 | 1723500510 | GDS35112 | A1663501000 | GDS35121 |
| A2463309500 | GDS35068 | 7L0407271CX | GDS35085 | 2043301601 | GDS35095 | A1723500510 | GDS35112 | A1663501210 | GDS35121 |
| A2463309700 | GDS35068 | 7L0407271D | GDS35085 | 2043302301 | GDS35095 | 1663301500 | GDS35113 | A4473503501 | GDS35121 |
| 1693603972 | GDS35074 | 7L0407271E | GDS35085 | 2043302701 | GDS35095 | 1663301701 | GDS35113 | A4473506600 | GDS35121 |
| 1693605772 | GDS35074 | 7L0407271EX | GDS35085 | A2043301600 | GDS35095 | A1663301500 | GDS35113 | 2033502956 | GDS35122 |
| 1693606772 | GDS35074 | 7L0407271F | GDS35085 | A2043301601 | GDS35095 | A1663301701 | GDS35113 | A2033502956 | GDS35122 |
| 1693607172 | GDS35074 | 7L0407271FX | GDS35085 | A2043302301 | GDS35095 | 2113501202 | GDS35114 | 2043501610 | GDS35123 |
| 1693607372 | GDS35074 | 7L8407271 | GDS35085 | A2043302701 | GDS35095 | 2113502256 | GDS35114 | 2043507923 | GDS35123 |
| 1693607472 | GDS35074 | 7P0407271A | GDS35085 | 2043301201 | GDS35096 | 2113503856 | GDS35114 | A2043501610 | GDS35123 |
| A1693603972 | GDS35074 | 7P0407271AX | GDS35085 | 2043301400 | GDS35096 | A2113501202 | GDS35114 | A2043507923 | GDS35123 |
| A1693605772 | GDS35074 | 7P0407271B | GDS35085 | 204330140080 | GDS35096 | A2113502256 | GDS35114 | 2033504456 | GDS35124 |
| A1693606772 | GDS35074 | 7P0407271BX | GDS35085 | 2043302101 | GDS35096 | A2113503856 | GDS35114 | A2033504456 | GDS35124 |
| A1693607172 | GDS35074 | 7P0407271C | GDS35085 | 2043302501 | GDS35096 | 2113500302 | GDS35115 | 2043502110 | GDS35125 |
| A1693607372 | GDS35074 | 7P0407271CX | GDS35085 | 2043305200 | GDS35096 | 211350030228 | GDS35115 | 2043508423 | GDS35125 |
| A1693607472 | GDS35074 | 95534903810 | GDS35085 | 204330520064 | GDS35096 | 2113500556 | GDS35115 | A2043502110 | GDS35125 |
| 1693601272 | GDS35075 | 95534903811 | GDS35085 | 204330520080 | GDS35096 | 2113500916 | GDS35115 | A2043508423 | GDS35125 |
| 1693606672 | GDS35075 | 95534903812 | GDS35085 | 204330520087 | GDS35096 | A2113500302 | GDS35115 | 2113500802 | GDS35126 |
| 1693606972 | GDS35075 | 95534903813 | GDS35085 | 2043305600 | GDS35096 | A211350030228 | GDS35115 | 2113501156 | GDS35126 |
| 1693607672 | GDS35075 | 95834903810 | GDS35085 | 204330560080 | GDS35096 | A2113500556 | GDS35115 | A2113501156 | GDS35126 |
| A1693601272 | GDS35075 | 95834903811 | GDS35085 | A2043301201 | GDS35096 | A2113500916 | GDS35115 | 2213500810 | GDS35127 |
| A1693606672 | GDS35075 | 95834903812 | GDS35085 | A2043301400 | GDS35096 | 2113500116 | GDS35116 | 2213501910 | GDS35127 |
| A1693606972 | GDS35075 | 7L0501201A | GDS35086 | A2043302101 | GDS35096 | 2113500202 | GDS35116 | 2213504702 | GDS35127 |
| A1693607672 | GDS35075 | 7L0501201C | GDS35086 | A2043302501 | GDS35096 | 2113500356 | GDS35116 | A2213500810 | GDS35127 |
| 1693602972 | GDS35076 | 7L0501201CX | GDS35086 | A2043305200 | GDS35096 | 2113504056 | GDS35116 | A2213501910 | GDS35127 |
| 1693603372 | GDS35076 | 7L8501201A | GDS35086 | A2043305600 | GDS35096 | A2113500116 | GDS35116 | A2213504702 | GDS35127 |
| 1693604372 | GDS35076 | 7L8501201AX | GDS35086 | 1643300701 | GDS35103 | A2113500202 | GDS35116 | 2303505610 | GDS35128 |
| 1693608372 | GDS35076 | 95533202410 | GDS35086 | A1643300701 | GDS35103 | A2113500356 | GDS35116 | A2303505610 | GDS35128 |
| A1693602972 | GDS35076 | 95533202411 | GDS35086 | 2463301301 | GDS35104 | A2113504056 | GDS35116 | 2303507810 | GDS35129 |
| A1693603372 | GDS35076 | 7L6501201A | GDS35087 | 2463302401 | GDS35104 | 2113503956 | GDS35117 | A2303507810 | GDS35129 |

| COMPETITOR | G-AP Ref. | COMPETITOR | G-AP Ref. | COMPETITOR | G-AP Ref. | COMPETITOR | G-AP Ref. | COMPETITOR | G-AP Ref. |
|---|---|---|---|---|---|---|---|---|---|
| OE | | 31607514477 | GDS38001 | MN147042 | GDS39146 | MR581935 | GDS39228 | 46307999 | GDS41007 |
| | | 31607514479 | GDS38001 | MN156486 | GDS39146 | MR953745 | GDS39228 | 46308347 | GDS41007 |
| 04578732AB | GDS35130 | 31607518260 | GDS38001 | MN156490 | GDS39146 | MR953863 | GDS39228 | 46308348 | GDS41007 |
| 04578732AC | GDS35130 | 31607574852 | GDS38001 | MR580468 | GDS39146 | MR953865 | GDS39228 | 71787129 | GDS41007 |
| 04578732AD | GDS35130 | 31607576096 | GDS38001 | MR580470 | GDS39146 | 3815A189 | GDS39229 | 3910071J10 | GDS41024 |
| 04578732AE | GDS35130 | 31601503306 | GDS38002 | MR980132 | GDS39146 | 3815A190 | GDS39230 | 391012F210 | GDS41025 |
| 4578732AB | GDS35130 | 31607514478 | GDS38002 | MR580692 | GDS39148 | 3815A466 | GDS39230 | 391015J010 | GDS41025 |
| 4578732AC | GDS35130 | 31607514480 | GDS38002 | 3815A307 | GDS39163 | MR515196 | GDS39236 | 391017J110 | GDS41025 |
| 4578732AD | GDS35130 | 31607515578 | GDS38002 | 3815A309 | GDS39163 | MR515198 | GDS39236 | 391010M000 | GDS41035 |
| 4578732AE | GDS35130 | 31607574850 | GDS38002 | 3815A579 | GDS39163 | 495011P000 | GDS39237 | 391010M010 | GDS41035 |
| 68194754AA | GDS35130 | 31607576094 | GDS38002 | 3815A581 | GDS39163 | MR528645 | GDS39243 | 391001N000 | GDS41036 |
| 04578733AB | GDS35131 | 31607514450 | GDS38003 | MN107605 | GDS39163 | MR528647 | GDS39243 | 391001N010 | GDS41036 |
| 04578733AC | GDS35131 | 31607514476 | GDS38003 | MN110547 | GDS39163 | 495002B360 | GDS39247 | 391000M600 | GDS41039 |
| 04578733AE | GDS35131 | 31607518238 | GDS38003 | 3815A308 | GDS39164 | 4950017560 | GDS39249 | 391000M610 | GDS41039 |
| 4578733AB | GDS35131 | 3636350 | GDS39001 | 3815A310 | GDS39164 | 4950117150 | GDS39249 | 391000N500 | GDS41039 |
| 4578733AC | GDS35131 | MB620834 | GDS39006 | 3815A580 | GDS39164 | 495002B610 | GDS39250 | 391000N510 | GDS41039 |
| 4578733AE | GDS35131 | MR276870 | GDS39006 | 3815A582 | GDS39164 | 30614137 | GDS39255 | 391014M700 | GDS41040 |
| 68194755AA | GDS35131 | MR276874 | GDS39006 | 6000605863 | GDS39164 | MR910888 | GDS39255 | 391014M761 | GDS41040 |
| 1713501210 | GDS35132 | MB886761 | GDS39007 | MN110546 | GDS39164 | MR910890 | GDS39255 | 391014M700 | GDS41041 |
| 1713503400 | GDS35132 | MR276871 | GDS39007 | 495001J250 | GDS39167 | 3815A196 | GDS39261 | 391014M761 | GDS41041 |
| A1713501210 | GDS35132 | MB160653 | GDS39036 | 495001J350 | GDS39167 | 3815A200 | GDS39261 | 391014M771 | GDS41041 |
| A1713503400 | GDS35132 | MB160655 | GDS39036 | 495011J205 | GDS39167 | 4950017150 | GDS39262 | 39101BM700 | GDS41041 |
| 2033501610 | GDS35133 | MB526146 | GDS39036 | 495011J305 | GDS39167 | 495011H210 | GDS39263 | 39101BM710 | GDS41041 |
| 2033501702 | GDS35133 | MB526270 | GDS39036 | 3274C9 | GDS39169 | 495011H211 | GDS39263 | 1962373 | GDS41055 |
| 2033501710 | GDS35133 | MB526273 | GDS39036 | 3715A031 | GDS39169 | 495012K410 | GDS39263 | 391000F000 | GDS41055 |
| 2033502302 | GDS35133 | MB620327 | GDS39036 | MR580378 | GDS39173 | MR567160 | GDS39282 | 3910078G00 | GDS41055 |
| 2033502510 | GDS35133 | MR410664 | GDS39064 | MR567006 | GDS39174 | MR580851 | GDS39286 | 391007F002 | GDS41055 |
| 2033502610 | GDS35133 | MR453383 | GDS39064 | MR567008 | GDS39174 | 3815A137 | GDS39287 | 391007F00A | GDS41055 |
| 2033502810 | GDS35133 | MR410665 | GDS39095 | MR580578 | GDS39174 | MR567159 | GDS39300 | 5458020 | GDS41055 |
| 2033503056 | GDS35133 | MR453384 | GDS39095 | MR580762 | GDS39174 | GD702560X | GDS39302 | 392042S600 | GDS41057 |
| 2033503256 | GDS35133 | 8251757 | GDS39096 | MR580764 | GDS39174 | GD702560XA | GDS39302 | 392042S680 | GDS41057 |
| 2033506456 | GDS35133 | 6000605861 | GDS39104 | MR581936 | GDS39174 | GD702550X | GDS39303 | 391014F500 | GDS41066 |
| 2033506656 | GDS35133 | MN110546 | GDS39104 | MR953746 | GDS39174 | GD702550XA | GDS39303 | 391014F501 | GDS41066 |
| 2093500410 | GDS35133 | MB620255 | GDS39114 | MR953866 | GDS39174 | 3815A379 | GDS39321 | 391012F605 | GDS41081 |
| A2033501610 | GDS35133 | MB620833 | GDS39114 | 495001W200 | GDS39177 | 3815A585 | GDS39321 | 391012F615 | GDS41081 |
| A2033502610 | GDS35133 | MR276859 | GDS39114 | 495001W200SJ | GDS39177 | 3815A380 | GDS39322 | 391014F100 | GDS41083 |
| A2033502810 | GDS35133 | MR276869 | GDS39114 | 495011W200 | GDS39178 | 3815A586 | GDS39322 | 391004F100 | GDS41084 |
| A2033503056 | GDS35133 | MR276873 | GDS39114 | 495011W200SJ | GDS39178 | 495001G541 | GDS39323 | 3910170N00 | GDS41094 |
| A2033503256 | GDS35133 | MR336805 | GDS39114 | 495011W300 | GDS39178 | 495001G550 | GDS39323 | 3910170N01 | GDS41094 |
| A2033506456 | GDS35133 | MN156273 | GDS39118 | 495011W300SJ | GDS39178 | 495001G551 | GDS39323 | 3910173J00 | GDS41094 |
| A2033506656 | GDS35133 | MR399347 | GDS39118 | 96639088 | GDS39182 | 3815A010 | GDS39324 | 3910173J05 | GDS41094 |
| A2093500410 | GDS35133 | MR399349 | GDS39118 | 96639087 | GDS39183 | 3815A188 | GDS39324 | 3910180N01 | GDS41094 |
| 2043501710 | GDS35134 | MR399351 | GDS39118 | 495001J400 | GDS39189 | 4543301601 | GDS39324 | 391014F300 | GDS41096 |
| 2043502010 | GDS35134 | MR399353 | GDS39118 | 495261J401 | GDS39189 | 4543302401 | GDS39324 | 391015F710 | GDS41096 |
| 2043502610 | GDS35134 | MN156272 | GDS39119 | 495001J450 | GDS39190 | A4543301601 | GDS39324 | 391015F711 | GDS41096 |
| 2043504310 | GDS35134 | MN156274 | GDS39119 | 495000X100 | GDS39191 | A4543302401 | GDS39324 | 391017Y010 | GDS41127 |
| 2043508023 | GDS35134 | MN156276 | GDS39119 | 495000X110 | GDS39192 | 1113788600 | GDS39328 | 391018J100 | GDS41127 |
| 2043508523 | GDS35134 | MR196752 | GDS39119 | MR580729 | GDS39206 | 1170177500 | GDS39328 | 3910072J20 | GDS41130 |
| A2043501710 | GDS35134 | MR196754 | GDS39119 | MR580731 | GDS39206 | E6F2203010C | GDS39328 | 391012Y010 | GDS41146 |
| A2043502010 | GDS35134 | MR317132 | GDS39119 | MR580730 | GDS39207 | E6F2203010CD1 | GDS39328 | 391012Y070 | GDS41146 |
| A2043504310 | GDS35134 | MR317134 | GDS39119 | MR580732 | GDS39207 | 1113789000 | GDS39329 | 391011F500 | GDS41156 |
| A2043508023 | GDS35134 | MR339350 | GDS39119 | 495001H210 | GDS39210 | E6F2203020C | GDS39329 | 391014F400 | GDS41156 |
| 2053502709 | GDS35136 | MR399348 | GDS39119 | 495001H211 | GDS39210 | 3910173J20 | GDS41001 | 391014F401 | GDS41156 |
| 2113500156 | GDS35136 | MR399350 | GDS39119 | 495002K000 | GDS39210 | 391002F210 | GDS41002 | 391000M615 | GDS41176 |
| 2113500816 | GDS35136 | 1609900080 | GDS39120 | 495002K001 | GDS39210 | 391012F000 | GDS41003 | 3910031G00 | GDS41178 |
| A2053502709 | GDS35136 | 3815A108 | GDS39120 | 495002K011 | GDS39210 | 391012F001 | GDS41003 | 3910058G00 | GDS41178 |
| A2113500156 | GDS35136 | 3815A364 | GDS39120 | 495002K400 | GDS39210 | 391012F011 | GDS41003 | 3910058G60 | GDS41178 |
| A2113500816 | GDS35136 | 3815A462 | GDS39120 | 4950025300 | GDS39211 | 3910070N00 | GDS41004 | 3910078G00 | GDS41178 |
| 2123501810 | GDS35137 | 3815A640 | GDS39120 | 4950025410 | GDS39212 | 3910073J00 | GDS41004 | 3910078G60 | GDS41178 |
| 2123502110 | GDS35137 | 3815A642 | GDS39120 | 4950025510 | GDS39212 | 3910070N10 | GDS41005 | 39100VB000 | GDS41179 |
| 2123502510 | GDS35137 | 3815A107 | GDS39121 | 4950025400 | GDS39213 | 3910073J20 | GDS41005 | 39100VB001 | GDS41179 |
| 2123508211 | GDS35137 | 3815A461 | GDS39121 | 4950025500 | GDS39213 | 46307623 | GDS41006 | 391001F501 | GDS41193 |
| A2123501810 | GDS35137 | 4950025905 | GDS39122 | 4950025310 | GDS39214 | 46307998 | GDS41006 | 391004F400 | GDS41193 |
| A2123502110 | GDS35137 | 4950025955 | GDS39122 | MR580503 | GDS39216 | 71787126 | GDS41006 | 391004F500 | GDS41193 |
| A2123502510 | GDS35137 | 4950125905 | GDS39123 | MR567005 | GDS39228 | 46307619 | GDS41007 | 391004F501 | GDS41193 |
| 2463600274 | GDS35140 | 4950125955 | GDS39123 | MR567007 | GDS39228 | 46307622 | GDS41007 | 39100BU010 | GDS41194 |
| A2463600274 | GDS35140 | MB837512 | GDS39136 | MR580575 | GDS39228 | 46307988 | GDS41007 | 39101BU010 | GDS41195 |
| 31601503307 | GDS38001 | MR910297 | GDS39142 | MR580577 | GDS39228 | 46307997 | GDS41007 | 391001U600 | GDS41200 |

| COMPETITOR | G-AP Ref. | COMPETITOR | G-AP Ref. | COMPETITOR | G-AP Ref. | COMPETITOR | G-AP Ref. | COMPETITOR | G-AP Ref. |
|---|---|---|---|---|---|---|---|---|---|
| OE | | 39101JN00A | GDS41377 | 391011541R | GDS41481 | 39101EL10B | GDS41554 | 7700102980 | GDS44004 |
| | | 39100JN00A | GDS41378 | 391019806R | GDS41481 | 391003NT0A | GDS41559 | 7700102999 | GDS44004 |
| 39100AY100 | GDS41200 | 391011HS0A | GDS41379 | 39101JD74B | GDS41481 | 391013NT0A | GDS41560 | 7711135279 | GDS44004 |
| 39100AY10A | GDS41200 | 391001HS0A | GDS41380 | 39101JG72B | GDS41481 | 391013TA0B | GDS41561 | 8200052426 | GDS44004 |
| 39100BC500 | GDS41200 | 391014M410 | GDS41385 | 39101JG74B | GDS41481 | 391013TA0D | GDS41561 | 8200169281 | GDS44004 |
| 39100BC55A | GDS41200 | 392058M180 | GDS41385 | 39101JY04B | GDS41481 | 391019DL0A | GDS41561 | 9109190 | GDS44004 |
| 391002F000 | GDS41201 | 391004M410 | GDS41386 | 39100JG72B | GDS41482 | 391004M771 | GDS41562 | 9109332 | GDS44004 |
| 391002F010 | GDS41201 | 39100AU310 | GDS41392 | 39100JG74B | GDS41482 | 39100BM700 | GDS41562 | 9109575 | GDS44004 |
| 391009F611 | GDS41201 | 391002S600 | GDS41393 | 391001KA0B | GDS41483 | 39100BM710 | GDS41562 | 4401720 | GDS44005 |
| 391009F620 | GDS41201 | 391002S660 | GDS41393 | 391001KA5B | GDS41483 | 396001LB0A | GDS41565 | 4401721 | GDS44005 |
| 391014V01C | GDS41202 | 39100JC04C | GDS41399 | 391011KA0B | GDS41484 | 396001LB0C | GDS41565 | 7700102978 | GDS44005 |
| 39101EE405 | GDS41202 | 39100JG04C | GDS41399 | 391011KA5B | GDS41484 | 39100EA000 | GDS41566 | 7700102998 | GDS44005 |
| 39100EE405 | GDS41203 | 39100JM10A | GDS41399 | 391001HC3C | GDS41485 | 391001LB0B | GDS41568 | 7711135277 | GDS44005 |
| 391002F605 | GDS41206 | 39101JD22C | GDS41400 | 391003ZN0B | GDS41486 | 391004KH0A | GDS41574 | 8200052428 | GDS44005 |
| 391002F615 | GDS41206 | 39101JG32C | GDS41400 | 39100BV80B | GDS41487 | 39100AV911 | GDS41576 | 8200178618 | GDS44005 |
| 39112F615 | GDS41206 | 39101JZ42C | GDS41400 | 391011HC3C | GDS41488 | 391016974R | GDS41577 | 8200485576 | GDS44005 |
| 39101AV611 | GDS41214 | 39101AY600 | GDS41407 | 391013ZN0B | GDS41489 | 391019179R | GDS41577 | 9109720 | GDS44005 |
| 39100AV611 | GDS41215 | 39101BC600 | GDS41407 | 39101BV80B | GDS41490 | 39101JD72B | GDS41577 | 9109721 | GDS44005 |
| 39101VB000 | GDS41221 | 39101BH00A | GDS41407 | 391003VD0B | GDS41491 | 39101JY02B | GDS41577 | 93190133 | GDS44005 |
| 39101VB001 | GDS41221 | 39100BC600 | GDS41408 | 391013VD0B | GDS41492 | 3815A423 | GDS41578 | 7700351607 | GDS44006 |
| 39100AY600 | GDS41245 | 39100BH00A | GDS41408 | 391013NA0A | GDS41493 | 3815A424 | GDS41579 | 7700850487 | GDS44006 |
| 391004M715 | GDS41258 | 391019U005 | GDS41409 | 391013NA0B | GDS41493 | 3815A427 | GDS41586 | 7700850488 | GDS44006 |
| 391004M776 | GDS41258 | 39600EB310 | GDS41416 | 391013NA0C | GDS41493 | 3815A428 | GDS41587 | 7700851720 | GDS44006 |
| 3910031U00 | GDS41259 | 391001KA0A | GDS41428 | 391013NA0D | GDS41493 | 38230CA000 | GDS41588 | 7700860563 | GDS44006 |
| 3910031U10 | GDS41259 | 391011HC3B | GDS41437 | 391003NA0A | GDS41494 | 26029828 | GDS44001 | 7700869706 | GDS44006 |
| 3910032U05 | GDS41259 | 391013VA0A | GDS41437 | 391003NA0B | GDS41494 | 26032412 | GDS44001 | 7701352288 | GDS44006 |
| 3910032U15 | GDS41259 | 391001189R | GDS41441 | 391003NA0C | GDS41494 | 374222 | GDS44001 | 374183 | GDS44011 |
| 39101AY105 | GDS41260 | 391002053R | GDS41441 | 391001HC3B | GDS41495 | 374366 | GDS44001 | 374235 | GDS44011 |
| 391009U005 | GDS41261 | 39100JD74B | GDS41441 | 391003VA0A | GDS41495 | 374741 | GDS44001 | 374739 | GDS44011 |
| 39111AY10A | GDS41261 | 39100JY04B | GDS41441 | 39101BJ00A | GDS41497 | 374821 | GDS44001 | 90350824 | GDS44011 |
| 391005X20A | GDS41262 | 3740131000 | GDS41442 | 39101JX00A | GDS41497 | 90540552 | GDS44001 | 90350908 | GDS44011 |
| 39100EA000 | GDS41262 | 3910195F0A | GDS41442 | 39101JX00E | GDS41497 | 93192081 | GDS44001 | 90511247 | GDS44011 |
| 39100EB300 | GDS41262 | 3740231001 | GDS41443 | 39101ET80C | GDS41507 | 93192082 | GDS44001 | 90511255 | GDS44011 |
| 39100EB310 | GDS41262 | 3910095F0C | GDS41443 | 39101JG02C | GDS41507 | R1210003 | GDS44001 | 90540533 | GDS44011 |
| 39204EB31A | GDS41262 | 3910095F0E | GDS41443 | 39101BM560 | GDS41509 | 374178 | GDS44002 | 90540865 | GDS44011 |
| 3910131U00 | GDS41275 | 3740231015 | GDS41444 | 39100BM560 | GDS41510 | 374211 | GDS44002 | 8200178625 | GDS44012 |
| 3910131U10 | GDS41275 | 3740231016 | GDS41444 | 391001AA0B | GDS41511 | 374230 | GDS44002 | 3910000Q4E | GDS44013 |
| 3910132U05 | GDS41275 | 3910095F0B | GDS41444 | 391011AA0C | GDS41515 | 374513 | GDS44002 | 3910000QAL | GDS44013 |
| 3910132U15 | GDS41275 | 3740131015 | GDS41445 | 39101CA000 | GDS41516 | 374737 | GDS44002 | 3910000QAN | GDS44013 |
| 3910170J10 | GDS41280 | 3910195F0D | GDS41445 | 39101CC40A | GDS41516 | 90350865 | GDS44002 | 391001682R | GDS44013 |
| 3920570J25 | GDS41280 | 391011U600 | GDS41451 | 39101CC40B | GDS41516 | 90444327 | GDS44002 | 391002150R | GDS44013 |
| 39101JD72B | GDS41286 | 39101AY100 | GDS41451 | 391002Y115 | GDS41518 | 90486687 | GDS44002 | 4406217 | GDS44013 |
| 3740131010 | GDS41298 | 39101BC500 | GDS41451 | 391002Y175 | GDS41518 | 90540520 | GDS44002 | 4409208 | GDS44013 |
| 3910195F0C | GDS41298 | 39101BC55A | GDS41451 | 3910032U77 | GDS41518 | 90542781 | GDS44002 | 4414516 | GDS44013 |
| 391000606R | GDS41299 | 39205AY125 | GDS41451 | 391005Y815 | GDS41518 | 93169700 | GDS44002 | 7711135190 | GDS44013 |
| 391004202R | GDS41299 | 391009U20A | GDS41452 | 39101JG04C | GDS41521 | 93299251 | GDS44002 | 8200051353 | GDS44013 |
| 39100JD72B | GDS41299 | 391019U20A | GDS41453 | 391018H315 | GDS41522 | 391018828R | GDS44003 | 8200069146 | GDS44013 |
| 39100JY02B | GDS41299 | 39100JA000 | GDS41456 | 391018H710 | GDS41523 | 4406218 | GDS44003 | 8200169291 | GDS44013 |
| 38225JD22B | GDS41300 | 39100BB24B | GDS41461 | 39100JG32C | GDS41524 | 4409210 | GDS44003 | 91166707 | GDS44013 |
| 39101BB02B | GDS41300 | 39100JD24B | GDS41461 | 391004M470 | GDS41525 | 4413397 | GDS44003 | 91168794 | GDS44013 |
| 39101JD02B | GDS41300 | 39100JG34B | GDS41461 | 391004M705 | GDS41526 | 4414517 | GDS44003 | 93866080 | GDS44013 |
| C9B11JD02B | GDS41300 | 391003LS0B | GDS41466 | 391004M766 | GDS41526 | 4430547 | GDS44003 | 95520599 | GDS44013 |
| 39100BB | GDS41301 | 39100BJ41A | GDS41466 | 391014M470 | GDS41527 | 7711135189 | GDS44003 | 374010 | GDS44014 |
| 39100BB02B | GDS41301 | 39100JX51A | GDS41466 | 39101JN10A | GDS41533 | 8200069147 | GDS44003 | 374145 | GDS44014 |
| 39100JD02B | GDS41301 | 39100JX51B | GDS41466 | 39101JN11A | GDS41533 | 8200179212 | GDS44003 | 374766 | GDS44014 |
| 39100BB90C | GDS41325 | 391008H615 | GDS41474 | 396008H510 | GDS41534 | 8200334338 | GDS44003 | 90348324 | GDS44014 |
| 39101BB90C | GDS41326 | 391008H710 | GDS41474 | 39600JD60A | GDS41538 | 8200485589 | GDS44003 | 9117957 | GDS44014 |
| 39100BM580 | GDS41327 | 391008H712 | GDS41474 | 39600JD60B | GDS41538 | 91158609 | GDS44003 | 9195952 | GDS44014 |
| 39101BM580 | GDS41328 | 391008H715 | GDS41474 | 391007S000 | GDS41541 | 91166708 | GDS44003 | 4417359 | GDS44016 |
| 39101JD52B | GDS41329 | 391009H610 | GDS41474 | 39101JD24C | GDS41542 | 91168795 | GDS44003 | 4502441 | GDS44016 |
| 39100BB32B | GDS41330 | 391003113R | GDS41475 | 39101JG34C | GDS41542 | 93852699 | GDS44003 | 7701473014 | GDS44016 |
| 39100JD52B | GDS41330 | 391009742R | GDS41475 | 396001AA0B | GDS41544 | 93856470 | GDS44003 | 8200026912 | GDS44016 |
| 391011HC0C | GDS41337 | 39100JD74A | GDS41475 | 396006CA0A | GDS41544 | 93866081 | GDS44003 | 8200169277 | GDS44016 |
| 39101JD74A | GDS41365 | 39100JG74A | GDS41475 | 39600CA000 | GDS41544 | 95520557 | GDS44003 | 7701473013 | GDS44017 |
| 39101JD74D | GDS41365 | 39100JY02A | GDS41475 | 391011HS0B | GDS41546 | R1210056 | GDS44003 | 8200052423 | GDS44017 |
| 39101JG74D | GDS41365 | 39100JY04A | GDS41475 | 391001HS0B | GDS41547 | 4401190 | GDS44004 | 8200169272 | GDS44017 |
| 39101JY04A | GDS41365 | 39100BB22C | GDS41478 | 391001HC3A | GDS41548 | 4401332 | GDS44004 | 24451255 | GDS44020 |
| 391011FA0A | GDS41366 | 39100JD22C | GDS41478 | 39101EL10A | GDS41553 | 4401575 | GDS44004 | 374473 | GDS44020 |

| COMPETITOR | G-AP Ref. | COMPETITOR | G-AP Ref. | COMPETITOR | G-AP Ref. | COMPETITOR | G-AP Ref. | COMPETITOR | G-AP Ref. |
|---|---|---|---|---|---|---|---|---|---|
| OE | | 93169655 | GDS44031 | 4701109 | GDS44043 | 26095017 | GDS44075 | 13116174 | GDS44094 |
| | | R1640065 | GDS44031 | 9204529 | GDS44043 | 374370 | GDS44075 | 374524 | GDS44094 |
| 73503003 | GDS44020 | 13101629 | GDS44032 | 0374323 | GDS44044 | 374443 | GDS44075 | 93169679 | GDS44094 |
| 95520709 | GDS44020 | 374523 | GDS44032 | 374323 | GDS44044 | 374468 | GDS44075 | 26076883 | GDS44095 |
| 4401693 | GDS44021 | 375042 | GDS44032 | 374425 | GDS44044 | 374798 | GDS44075 | 374373 | GDS44095 |
| 8200052427 | GDS44021 | 93169687 | GDS44032 | 374770 | GDS44044 | 93190102 | GDS44075 | 374801 | GDS44095 |
| 8200169286 | GDS44021 | 13243461 | GDS44033 | 90538604 | GDS44044 | 374087 | GDS44076 | 93190108 | GDS44095 |
| 9109693 | GDS44021 | 374322 | GDS44033 | 9117409 | GDS44044 | 374251 | GDS44076 | 26076882 | GDS44096 |
| 7711135532 | GDS44022 | 374639 | GDS44033 | 92082707 | GDS44044 | 90496973 | GDS44076 | 374372 | GDS44096 |
| 8200169273 | GDS44022 | 374769 | GDS44033 | 93184258 | GDS44044 | 90512384 | GDS44076 | 374800 | GDS44096 |
| 374396 | GDS44025 | 90538603 | GDS44033 | 374020 | GDS44048 | 9195412 | GDS44076 | 93190106 | GDS44096 |
| 375045 | GDS44025 | 9117408 | GDS44033 | 374144 | GDS44048 | 374250 | GDS44077 | 13124206 | GDS44097 |
| 9200407 | GDS44025 | 93184256 | GDS44033 | 90348325 | GDS44048 | 374252 | GDS44077 | 374559 | GDS44097 |
| 93169690 | GDS44025 | R1640034 | GDS44033 | 9117958 | GDS44048 | 90496974 | GDS44077 | 24462246 | GDS44098 |
| R1640100 | GDS44025 | 374259 | GDS44036 | 13189073 | GDS44051 | 90512385 | GDS44077 | 374550 | GDS44098 |
| 0374370 | GDS44026 | 374317 | GDS44036 | 374600 | GDS44051 | 90512387 | GDS44077 | 95520589 | GDS44098 |
| 0374468 | GDS44026 | 90576706 | GDS44036 | 93169666 | GDS44051 | 9195410 | GDS44077 | 13214837 | GDS44099 |
| 24427064 | GDS44026 | 0374261 | GDS44038 | 24462244 | GDS44052 | 974104 | GDS44077 | 374642 | GDS44099 |
| 26076878 | GDS44026 | 374187 | GDS44038 | 374549 | GDS44052 | 13149829 | GDS44078 | 375021 | GDS44099 |
| 26095017 | GDS44026 | 374203 | GDS44038 | 375024 | GDS44052 | 13248652 | GDS44078 | 93169663 | GDS44099 |
| 374370 | GDS44026 | 374226 | GDS44038 | 93169669 | GDS44052 | 13248676 | GDS44078 | R1640073 | GDS44099 |
| 374443 | GDS44026 | 374237 | GDS44038 | 374385 | GDS44058 | 13250859 | GDS44078 | 26111100 | GDS44100 |
| 374468 | GDS44026 | 374247 | GDS44038 | 375039 | GDS44058 | 1677185280 | GDS44078 | 374511 | GDS44100 |
| 374773 | GDS44026 | 374261 | GDS44038 | 9200333 | GDS44058 | 26119529 | GDS44078 | 374553 | GDS44100 |
| 93184282 | GDS44026 | 374282 | GDS44038 | 93169684 | GDS44058 | 374632 | GDS44078 | 374992 | GDS44100 |
| R1640042 | GDS44026 | 374315 | GDS44038 | 374184 | GDS44059 | 374788 | GDS44078 | 93169654 | GDS44100 |
| 0374466 | GDS44027 | 374357 | GDS44038 | 374236 | GDS44059 | 374818 | GDS44078 | 93299247 | GDS44100 |
| 24427062 | GDS44027 | 374358 | GDS44038 | 374275 | GDS44059 | 374825 | GDS44078 | 374456 | GDS44101 |
| 26076879 | GDS44027 | 374749 | GDS44038 | 374278 | GDS44059 | 374827 | GDS44078 | 375038 | GDS44101 |
| 26076892 | GDS44027 | 90465499 | GDS44038 | 374748 | GDS44059 | 374988 | GDS44078 | 93169682 | GDS44101 |
| 26094867 | GDS44027 | 90496357 | GDS44038 | 90350907 | GDS44059 | 375056 | GDS44078 | 93171793 | GDS44101 |
| 374371 | GDS44027 | 90498637 | GDS44038 | 90511248 | GDS44059 | 5374174 | GDS44078 | 95520623 | GDS44106 |
| 374375 | GDS44027 | 90511447 | GDS44038 | 90540536 | GDS44059 | 5374175 | GDS44078 | 96624822 | GDS44106 |
| 374442 | GDS44027 | 90512983 | GDS44038 | 90540911 | GDS44059 | 93169648 | GDS44078 | 4804632 | GDS44107 |
| 374466 | GDS44027 | 90540541 | GDS44038 | 26086195 | GDS44060 | 93169660 | GDS44078 | 9013597 | GDS44107 |
| 374772 | GDS44027 | 90543598 | GDS44038 | 13250860 | GDS44064 | 95518745 | GDS44078 | 95520609 | GDS44107 |
| 93184280 | GDS44027 | 9195430 | GDS44038 | 13335140 | GDS44064 | 95518747 | GDS44078 | 96624821 | GDS44107 |
| 93190104 | GDS44027 | 9195432 | GDS44038 | 13335153 | GDS44064 | 95520597 | GDS44078 | 327275 | GDS45004 |
| R1640041 | GDS44027 | R1640009 | GDS44038 | 374486 | GDS44064 | R1640058 | GDS44078 | 3272H8 | GDS45004 |
| 13136379 | GDS44028 | 374103 | GDS44039 | 374890 | GDS44064 | R1640070 | GDS44078 | 3272T2 | GDS45004 |
| 374545 | GDS44028 | 374249 | GDS44039 | 374897 | GDS44064 | 13149830 | GDS44079 | 3272S3 | GDS45007 |
| 374989 | GDS44028 | 90496976 | GDS44039 | 95520495 | GDS44064 | 13248675 | GDS44079 | 3272S6 | GDS45007 |
| 93169650 | GDS44028 | 90512386 | GDS44039 | 95520799 | GDS44064 | 26119530 | GDS44079 | 32720A | GDS45008 |
| R1640060 | GDS44028 | 9195408 | GDS44039 | 13250861 | GDS44065 | 374633 | GDS44079 | 3272F6 | GDS45008 |
| 13124675 | GDS44029 | R1640003 | GDS44039 | 13335141 | GDS44065 | 374789 | GDS44079 | 3272F8 | GDS45008 |
| 374543 | GDS44029 | 13150502 | GDS44040 | 13335154 | GDS44065 | 374826 | GDS44079 | 3272AP | GDS45009 |
| 375028 | GDS44029 | 13320255 | GDS44040 | 1677188180 | GDS44065 | 375027 | GDS44079 | 3272AQ | GDS45009 |
| 93169675 | GDS44029 | 13412223 | GDS44040 | 374487 | GDS44065 | 5374176 | GDS44079 | 3272Y0 | GDS45009 |
| R1640085 | GDS44029 | 374792 | GDS44040 | 374891 | GDS44065 | 5374177 | GDS44079 | 3272Y1 | GDS45009 |
| 13191326 | GDS44030 | 374873 | GDS44040 | 374898 | GDS44065 | 93169672 | GDS44079 | 9630768280 | GDS45009 |
| 13264667 | GDS44030 | 374994 | GDS44040 | 95520501 | GDS44065 | 95518746 | GDS44079 | 32730N | GDS45010 |
| 24462241 | GDS44030 | 5374037 | GDS44040 | 95522457 | GDS44065 | 95518748 | GDS44079 | 32730P | GDS45010 |
| 374548 | GDS44030 | 93169656 | GDS44040 | 30759249 | GDS44068 | 95520465 | GDS44079 | 3273AS | GDS45010 |
| 374601 | GDS44030 | 9503151 | GDS44040 | 36000930 | GDS44068 | R1640082 | GDS44079 | 9630768080 | GDS45010 |
| 374819 | GDS44030 | 9503316 | GDS44040 | 8602597 | GDS44068 | 13166591 | GDS44080 | 3273AL | GDS45011 |
| 374997 | GDS44030 | 95520473 | GDS44040 | 8603562 | GDS44068 | 374593 | GDS44080 | 3273AN | GDS45011 |
| 375049 | GDS44030 | 95520474 | GDS44040 | 8603625 | GDS44068 | 95520549 | GDS44080 | 9636798880 | GDS45011 |
| 375054 | GDS44030 | 95520765 | GDS44040 | 96832203 | GDS44069 | 26067664 | GDS44082 | 3272AE | GDS45012 |
| 93169659 | GDS44030 | 95520766 | GDS44040 | 96832204 | GDS44070 | 374110 | GDS44082 | 3272AF | GDS45012 |
| 93169695 | GDS44030 | R1640066 | GDS44040 | 96348782 | GDS44071 | 374397 | GDS44082 | 9636798680 | GDS45012 |
| 93169701 | GDS44030 | 13150503 | GDS44042 | 96963323 | GDS44071 | 374824 | GDS44082 | 3273G3 | GDS45014 |
| R1640069 | GDS44030 | 374793 | GDS44042 | 96348783 | GDS44072 | 9200408 | GDS44082 | 3273Q1 | GDS45014 |
| R1640105 | GDS44030 | 374995 | GDS44042 | 96963322 | GDS44072 | 93192090 | GDS44082 | 3273Z5 | GDS45014 |
| R1640111 | GDS44030 | 93169657 | GDS44042 | 96963324 | GDS44072 | 13302768 | GDS44088 | 327215 | GDS45015 |
| 0374544 | GDS44031 | R1640067 | GDS44042 | 0374370 | GDS44075 | 374870 | GDS44088 | 327216 | GDS45015 |
| 13124676 | GDS44031 | 4410183E30 | GDS44043 | 0374468 | GDS44075 | 95520651 | GDS44088 | 327219 | GDS45015 |
| 374544 | GDS44031 | 44101T83E30 | GDS44043 | 24427064 | GDS44075 | 95077140 | GDS44090 | 32723K | GDS45015 |
| 374993 | GDS44031 | 4700645 | GDS44043 | 26076878 | GDS44075 | 95199676 | GDS44090 | 3272R3 | GDS45015 |

| COMPETITOR | G-AP Ref. | COMPETITOR | G-AP Ref. | COMPETITOR | G-AP Ref. | COMPETITOR | G-AP Ref. | COMPETITOR | G-AP Ref. |
|---|---|---|---|---|---|---|---|---|---|
| OE | | 9624445480 | GDS45038 | 32721X | GDS45105 | 3272S2 | GDS45151 | 3273Z7 | GDS45179 |
| | | 3272S9 | GDS45044 | 32722X | GDS45105 | 3272S5 | GDS45151 | 3273Z8 | GDS45179 |
| 95644403 | GDS45015 | 3272T0 | GDS45044 | 3272LW | GDS45105 | 32728N | GDS45152 | 9806676480 | GDS45179 |
| 96021730 | GDS45015 | 3273AQ | GDS45065 | 9637117780 | GDS45105 | 32729N | GDS45152 | 3272S2 | GDS45182 |
| P0596T | GDS45015 | 32731G | GDS45070 | 9812781180 | GDS45105 | 3272KP | GDS45152 | 3272S5 | GDS45182 |
| 32730Y | GDS45016 | 327378 | GDS45070 | 3272S7 | GDS45106 | 327377 | GDS45153 | 3273KW | GDS45193 |
| 32730Z | GDS45016 | 3273L4 | GDS45070 | 3272S8 | GDS45106 | 3273A3 | GDS45153 | 3273KX | GDS45193 |
| 3272L2 | GDS45017 | 3273L7 | GDS45070 | 32736Y | GDS45108 | 3273L2 | GDS45153 | 3272LJ | GDS45194 |
| 3272L3 | GDS45017 | 3273P5 | GDS45070 | 32736Z | GDS45108 | 3273G9 | GDS45156 | 3272LK | GDS45194 |
| 3273000000000 | GDS45017 | P060T5 | GDS45070 | 9806676780 | GDS45108 | 3273H0 | GDS45156 | 3273P7 | GDS45198 |
| 32731H | GDS45017 | 391010446R | GDS45084 | 32734K | GDS45113 | 3273Q3 | GDS45156 | 3272LA | GDS45200 |
| 32731J | GDS45017 | 391016594R | GDS45084 | 3273AH | GDS45113 | 32722H | GDS45157 | 3272LC | GDS45200 |
| 327380 | GDS45017 | 391016826R | GDS45084 | 3273AJ | GDS45113 | 32727C | GDS45157 | 9803023680 | GDS45200 |
| 3273C5 | GDS45017 | 391018299R | GDS45084 | 3273QV | GDS45113 | 3272K1 | GDS45157 | 3273KP | GDS45201 |
| 3273E6 | GDS45017 | 391018830R | GDS45084 | 3273QW | GDS45113 | 3272K4 | GDS45157 | 3273KQ | GDS45201 |
| 3273E9 | GDS45017 | 6001547028 | GDS45084 | 3273VG | GDS45113 | 3272L4 | GDS45157 | 961309880 | GDS45201 |
| 3273G8 | GDS45017 | 6001548102 | GDS45084 | 9636786880 | GDS45113 | 3272W0 | GDS45157 | 3272LL | GDS45202 |
| 3273K6 | GDS45017 | 7711497474 | GDS45084 | 9670881980 | GDS45113 | 327325 | GDS45158 | 3272LN | GDS45202 |
| 3273L1 | GDS45017 | 7711497477 | GDS45084 | 9680994580 | GDS45113 | 32733N | GDS45158 | 3272KY | GDS45203 |
| 3273L3 | GDS45017 | 8200204209 | GDS45084 | 32725X | GDS45119 | 32734V | GDS45158 | 3272KZ | GDS45203 |
| 32736T | GDS45020 | 8200272322 | GDS45084 | 32726X | GDS45119 | 3273R5 | GDS45158 | 3273KL | GDS45204 |
| 32736V | GDS45020 | 8200444438 | GDS45084 | 3272QK | GDS45119 | 3273R8 | GDS45158 | 3273KN | GDS45204 |
| 327277 | GDS45021 | 8200698520 | GDS45084 | 3272TV | GDS45119 | 3273R9 | GDS45158 | 32739L | GDS45214 |
| 3272H7 | GDS45021 | 8200698524 | GDS45084 | 9636786780 | GDS45119 | 3273S8 | GDS45158 | 32739Q | GDS45214 |
| 3272T3 | GDS45021 | 8200941856 | GDS45084 | 9670881880 | GDS45119 | 327209 | GDS45160 | 9640626580 | GDS45214 |
| 327379 | GDS45022 | 8200985010 | GDS45084 | 9670882080 | GDS45119 | 3272E2 | GDS45160 | 3272XJ | GDS45220 |
| 327381 | GDS45022 | 391001251R | GDS45085 | 9680994480 | GDS45119 | 3272E7 | GDS45160 | 3272XK | GDS45220 |
| 3273N2 | GDS45022 | 391008930R | GDS45085 | 1481451080 | GDS45120 | 3272H1 | GDS45160 | 9670634880 | GDS45220 |
| 9624645880 | GDS45022 | 391009230R | GDS45085 | 32733Q | GDS45120 | 3272H3 | GDS45160 | 1609763780 | GDS45221 |
| 327210 | GDS45023 | 6001547029 | GDS45085 | 32733R | GDS45120 | 9623687580 | GDS45160 | 1613687980 | GDS45221 |
| 327211 | GDS45023 | 6001548103 | GDS45085 | 32735Z | GDS45120 | 32737Y | GDS45165 | 3273VK | GDS45221 |
| 327212 | GDS45023 | 7711497475 | GDS45085 | 71787905 | GDS45120 | 32737Z | GDS45165 | 3273VL | GDS45221 |
| 9626446080 | GDS45023 | 7711497478 | GDS45085 | 71787907 | GDS45120 | 9806134180 | GDS45165 | 9677211480 | GDS45221 |
| P060T4 | GDS45023 | 8200318010 | GDS45085 | 32728W | GDS45126 | 1349787080 | GDS45174 | 9682513680 | GDS45221 |
| 32700 | GDS45024 | 8200484373 | GDS45085 | 32729W | GDS45126 | 1355333080 | GDS45174 | 9811805880 | GDS45221 |
| 32720C | GDS45024 | 8200484376 | GDS45085 | 3272LV | GDS45126 | 1369959080 | GDS45174 | 1607237180 | GDS45222 |
| 32720F | GDS45024 | 8200698526 | GDS45085 | 9637378080 | GDS45126 | 1608509380 | GDS45174 | 9801611280 | GDS45222 |
| 32720G | GDS45024 | 8200985007 | GDS45085 | 1497187080 | GDS45133 | 1608509580 | GDS45174 | 3273YC | GDS45223 |
| 327261 | GDS45024 | 8201045819 | GDS45085 | 1497187088 | GDS45133 | 3273PL | GDS45174 | 3273YE | GDS45223 |
| 3272C9 | GDS45024 | 3273Y7 | GDS45088 | 1497198080 | GDS45133 | 3273PN | GDS45174 | 9670634780 | GDS45223 |
| 3272E1 | GDS45024 | 3273Y9 | GDS45088 | 1606883880 | GDS45133 | 3273PX | GDS45174 | 3272SZ | GDS45225 |
| 3272F5 | GDS45024 | 32733X | GDS45094 | 1613401980 | GDS45133 | 53307464 | GDS45174 | 3272TA | GDS45225 |
| 32735A | GDS45025 | 32733Y | GDS45094 | 3272GL | GDS45133 | 68167997AB | GDS45174 | 4882517 | GDS46007 |
| 32737S | GDS45025 | 3273CQ | GDS45094 | 3272GN | GDS45133 | 71724576 | GDS45174 | 4882519 | GDS46007 |
| 3273G1 | GDS45025 | 3273CR | GDS45094 | 3272NP | GDS45133 | 71790997 | GDS45174 | 98633202450 | GDS48002 |
| 3273Q2 | GDS45025 | 9630766880 | GDS45094 | 3272NQ | GDS45133 | 71791061 | GDS45174 | 98633202452 | GDS48002 |
| 3273Z4 | GDS45025 | 3272AH | GDS45101 | 3272RV | GDS45133 | 1349790080 | GDS45175 | 98133202450 | GDS48006 |
| 32721P | GDS45026 | 3272AJ | GDS45101 | 3272RW | GDS45133 | 1355334080 | GDS45175 | 98133202451 | GDS48006 |
| 32722P | GDS45026 | 3272EZ | GDS45101 | 3272SE | GDS45133 | 1357488080 | GDS45175 | 98133202452 | GDS48006 |
| 32723C | GDS45027 | 3272FA | GDS45101 | 3272SF | GDS45133 | 1369962080 | GDS45175 | PW868211 | GDS49009 |
| 32724C | GDS45027 | 3272Y9 | GDS45101 | 71792564 | GDS45133 | 1608509280 | GDS45175 | PW868212 | GDS49010 |
| 3272CS | GDS45027 | 3272YE | GDS45101 | 71792565 | GDS45133 | 1608509480 | GDS45175 | PW826963 | GDS49011 |
| 3272CT | GDS45027 | 3272Z0 | GDS45101 | 9644292880 | GDS45133 | 3272PF | GDS45175 | PW826964 | GDS49012 |
| 32728E | GDS45031 | 3273EX | GDS45103 | 9687854380 | GDS45133 | 3272PQ | GDS45175 | 711106122 | GDS50001 |
| 32729E | GDS45031 | 3273EY | GDS45103 | 9809154580 | GDS45133 | 3272SS | GDS45175 | 711106227 | GDS50001 |
| 32725C | GDS45032 | 3273NR | GDS45103 | SU001A0967 | GDS45133 | 369962080 | GDS45175 | 7700109008 | GDS50001 |
| 32726C | GDS45032 | 3273NS | GDS45103 | 327201 | GDS45134 | 71724585 | GDS45175 | 7700109025 | GDS50001 |
| 3272ZV | GDS45032 | 9639507880 | GDS45103 | 327202 | GDS45134 | 71790988 | GDS45175 | 7700349881 | GDS50001 |
| 3272ZW | GDS45032 | 9639508780 | GDS45103 | 327293 | GDS45134 | 71791064 | GDS45175 | 7700684344 | GDS50001 |
| 9630767880 | GDS45032 | 9680667380 | GDS45103 | P060T0 | GDS45134 | 71793299 | GDS45175 | 7700743629 | GDS50001 |
| 9675863680 | GDS45032 | 1677686180 | GDS45104 | 32734Y | GDS45137 | 1349789080 | GDS45176 | 7700747826 | GDS50001 |
| 9802762280 | GDS45032 | 3273AC | GDS45104 | 32734Z | GDS45137 | 3272PA | GDS45176 | 7700753332 | GDS50001 |
| 32733L | GDS45035 | 3273AE | GDS45104 | 3272AA | GDS45138 | 3272PC | GDS45176 | 7700755302 | GDS50001 |
| 32733M | GDS45035 | 3273LP | GDS45104 | 3272AC | GDS45138 | 71790991 | GDS45176 | 7700766817 | GDS50001 |
| 3273CS | GDS45035 | 9637117880 | GDS45104 | 32724F | GDS45146 | 3272T5 | GDS45178 | 7700771594 | GDS50001 |
| 3273CT | GDS45035 | 9660782880 | GDS45104 | 32734E | GDS45147 | 3272T6 | GDS45178 | 7700771595 | GDS50001 |
| 9630767280 | GDS45035 | 9812781280 | GDS45104 | 32734F | GDS45147 | 327301 | GDS45178 | 7700771596 | GDS50001 |
| 9638753180 | GDS45035 | 1679830780 | GDS45105 | 3273Y9 | GDS45150 | 3273Z9 | GDS45178 | 7700856717 | GDS50001 |

| COMPETITOR | G-AP Ref. | COMPETITOR | G-AP Ref. | COMPETITOR | G-AP Ref. | COMPETITOR | G-AP Ref. | COMPETITOR | G-AP Ref. |
|---|---|---|---|---|---|---|---|---|---|
| OE | | 7701352416 | GDS50009 | 7701349847 | GDS50023 | 7700103528 | GDS50052 | 7701349915 | GDS50116 |
| | | 7701352417 | GDS50009 | 7701351160 | GDS50023 | 7701349689 | GDS50052 | 7701351699 | GDS50116 |
| 7700866636 | GDS50001 | 7701352418 | GDS50009 | 7702144365 | GDS50023 | 7701349734 | GDS50052 | 7701351700 | GDS50116 |
| 7701349359 | GDS50001 | 7701352471 | GDS50009 | 7708758050 | GDS50023 | 7701349902 | GDS50052 | 7701352223 | GDS50116 |
| 7701349692 | GDS50001 | 7701352472 | GDS50009 | 7711106217 | GDS50023 | 7701349940 | GDS50052 | 7711106224 | GDS50116 |
| 7701349757 | GDS50001 | 7701352595 | GDS50009 | 7701349994 | GDS50026 | 7701351124 | GDS50052 | 711106216 | GDS50118 |
| 7701349880 | GDS50001 | 7701468836 | GDS50009 | 7701352133 | GDS50026 | 7701351125 | GDS50052 | 7700714758 | GDS50118 |
| 7701349881 | GDS50001 | 7701468839 | GDS50009 | 7711130027 | GDS50026 | 7701352020 | GDS50052 | 7700748701 | GDS50118 |
| 7701349974 | GDS50001 | 7701469374 | GDS50009 | 7701352422 | GDS50027 | 7701352024 | GDS50052 | 7700749046 | GDS50118 |
| 7701351020 | GDS50001 | 7711135233 | GDS50009 | 7701352414 | GDS50028 | 7700106045 | GDS50053 | 7700755306 | GDS50118 |
| 7701351127 | GDS50001 | 7711497525 | GDS50009 | 7701351841 | GDS50031 | 7700865780 | GDS50053 | 7700776188 | GDS50118 |
| 7701351207 | GDS50001 | 8200090175 | GDS50009 | 7701352021 | GDS50031 | 7700866670 | GDS50053 | 7701349727 | GDS50118 |
| 7701351484 | GDS50001 | 4401186 | GDS50010 | 711106220 | GDS50032 | 7701349997 | GDS50053 | 7701349848 | GDS50118 |
| 7701351486 | GDS50001 | 4416435 | GDS50010 | 7111106220 | GDS50032 | 7701352385 | GDS50053 | 7701351162 | GDS50118 |
| 7701351572 | GDS50001 | 7700102979 | GDS50010 | 7701349740 | GDS50032 | 7701468886 | GDS50053 | 7702144363 | GDS50118 |
| 7701498958 | GDS50001 | 7711135278 | GDS50010 | 7701351193 | GDS50032 | 7711130044 | GDS50053 | 7702144368 | GDS50118 |
| 7701498959 | GDS50001 | 9109186 | GDS50010 | 7711106220 | GDS50032 | 7701352598 | GDS50054 | 7708758047 | GDS50118 |
| 7702112154 | GDS50001 | 93187692 | GDS50010 | 7701349879 | GDS50036 | 7700873311 | GDS50055 | 7711106216 | GDS50118 |
| 7702144359 | GDS50001 | 4401575 | GDS50011 | 7701351483 | GDS50036 | 7701352596 | GDS50055 | 711106218 | GDS50120 |
| 7708751980 | GDS50001 | 7700102981 | GDS50011 | 7701349691 | GDS50037 | 7711368647 | GDS50057 | 7700102134 | GDS50120 |
| 7708758045 | GDS50001 | 7711135280 | GDS50011 | 7701349873 | GDS50037 | 8200164147 | GDS50057 | 7700102135 | GDS50120 |
| 7711106122 | GDS50001 | 8200169282 | GDS50011 | 7701351126 | GDS50037 | 820029984 | GDS50057 | 7700102704 | GDS50120 |
| 7711106227 | GDS50001 | 9109575 | GDS50011 | 7701351478 | GDS50037 | 8200299844 | GDS50057 | 7700102705 | GDS50120 |
| 711106228 | GDS50002 | 9109728 | GDS50011 | 7700102148 | GDS50038 | 8200477656 | GDS50057 | 7700109021 | GDS50120 |
| 7701349874 | GDS50002 | 711106222 | GDS50014 | 7700105484 | GDS50038 | 8200776539 | GDS50057 | 7700109829 | GDS50120 |
| 7701349972 | GDS50002 | 7701349914 | GDS50014 | 7700105486 | GDS50038 | 7701473010 | GDS50058 | 7700109830 | GDS50120 |
| 7701351479 | GDS50002 | 7701351697 | GDS50014 | 7700111077 | GDS50038 | 8200052420 | GDS50058 | 7700272531 | GDS50120 |
| 7701351480 | GDS50002 | 7711106222 | GDS50014 | 7700111810 | GDS50038 | 3910000Q2H | GDS50059 | 7700272534 | GDS50120 |
| 7701351571 | GDS50002 | 711106221 | GDS50015 | 7700111812 | GDS50038 | 4415354 | GDS50059 | 7700272535 | GDS50120 |
| 7702150462 | GDS50002 | 7700349915 | GDS50015 | 7700111814 | GDS50038 | 7711135912 | GDS50059 | 7700717774 | GDS50120 |
| 7711106228 | GDS50002 | 7701349915 | GDS50015 | 7700111819 | GDS50038 | 8200164149 | GDS50059 | 7700738294 | GDS50120 |
| 7700724142 | GDS50003 | 7701349923 | GDS50015 | 7700873321 | GDS50038 | 8200477655 | GDS50059 | 7700748700 | GDS50120 |
| 7700857369 | GDS50003 | 7701351701 | GDS50015 | 7700875246 | GDS50038 | 93180975 | GDS50059 | 7700748855 | GDS50120 |
| 7701348090 | GDS50003 | 7701351801 | GDS50015 | 7711135236 | GDS50038 | 8200169285 | GDS50060 | 7700749045 | GDS50120 |
| 7701462861 | GDS50003 | 7711106221 | GDS50015 | 8200168513 | GDS50038 | 7700100068 | GDS50074 | 7700755308 | GDS50120 |
| 7701463343 | GDS50003 | 7700106009 | GDS50017 | 7701352750 | GDS50043 | 7700106559 | GDS50074 | 7700774370 | GDS50120 |
| 7701499223 | GDS50003 | 7700106013 | GDS50017 | 7701352914 | GDS50043 | 7701352619 | GDS50074 | 7700776186 | GDS50120 |
| 7700103729 | GDS50004 | 7700110483 | GDS50017 | 7701470700 | GDS50043 | 7701469965 | GDS50074 | 7700776187 | GDS50120 |
| 7700103731 | GDS50004 | 7700111190 | GDS50017 | 7701471173 | GDS50043 | 7700111365 | GDS50082 | 7700858638 | GDS50120 |
| 7700106007 | GDS50004 | 7700114453 | GDS50017 | 7701471377 | GDS50043 | 7701349994 | GDS50093 | 7700858639 | GDS50120 |
| 7700108248 | GDS50004 | 7700115010 | GDS50017 | 7711130057 | GDS50043 | 7701352134 | GDS50093 | 7700858642 | GDS50120 |
| 7700109213 | GDS50004 | 7701056623 | GDS50017 | 7711134407 | GDS50043 | 7711130027 | GDS50093 | 7701349741 | GDS50120 |
| 7700110484 | GDS50004 | 7701352882 | GDS50017 | 7711135194 | GDS50043 | 7700102137 | GDS50095 | 7701349803 | GDS50120 |
| 7700111259 | GDS50004 | 7701471084 | GDS50017 | 7711135197 | GDS50043 | 7701351989 | GDS50095 | 7701349945 | GDS50120 |
| 7700111506 | GDS50004 | 7701471284 | GDS50017 | 7711368882 | GDS50043 | 7701352489 | GDS50099 | 7701351194 | GDS50120 |
| 7700115011 | GDS50004 | 8200105214 | GDS50017 | 8200024622 | GDS50043 | 7701469543 | GDS50099 | 7701351290 | GDS50120 |
| 7701056621 | GDS50004 | 8200274162 | GDS50017 | 8200029444 | GDS50043 | 7700100066 | GDS50100 | 7701351937 | GDS50120 |
| 7701056622 | GDS50004 | 7701352631 | GDS50019 | 711106219 | GDS50044 | 7700106561 | GDS50100 | 7701352086 | GDS50120 |
| 7701352770 | GDS50004 | 7701470175 | GDS50019 | 7700748695 | GDS50044 | 7701352618 | GDS50100 | 8200323960 | GDS50120 |
| 7701352771 | GDS50004 | 7701352425 | GDS50021 | 7701349771 | GDS50044 | 7701469962 | GDS50100 | 7700103726 | GDS50125 |
| 7701352772 | GDS50004 | 7701352597 | GDS50021 | 7701349804 | GDS50044 | 7700109334 | GDS50102 | 7700106010 | GDS50125 |
| 7701352881 | GDS50004 | 711106223 | GDS50022 | 7701349946 | GDS50044 | 7700112149 | GDS50102 | 7700108322 | GDS50125 |
| 7711135180 | GDS50004 | 7701349916 | GDS50022 | 7701351192 | GDS50044 | 7700113948 | GDS50102 | 7700109210 | GDS50125 |
| 7711135246 | GDS50004 | 7701351695 | GDS50022 | 7701351292 | GDS50044 | 7701349980 | GDS50102 | 7700109218 | GDS50125 |
| 7711135247 | GDS50004 | 7701351696 | GDS50022 | 7701351363 | GDS50044 | 7701352318 | GDS50102 | 7700111191 | GDS50125 |
| 8200410080 | GDS50004 | 7701351804 | GDS50022 | 7701351936 | GDS50044 | 7701468548 | GDS50102 | 7700111258 | GDS50125 |
| 7700769035 | GDS50006 | 7701352224 | GDS50022 | 7701470304 | GDS50044 | 7711135016 | GDS50102 | 7700111509 | GDS50125 |
| 7700769036 | GDS50006 | 7711106223 | GDS50022 | 7711106219 | GDS50044 | 8200163679 | GDS50102 | 7700111887 | GDS50125 |
| 7700858470 | GDS50006 | 711106217 | GDS50023 | 8200323959 | GDS50044 | 8200231953 | GDS50102 | 7700113958 | GDS50125 |
| 7701349769 | GDS50006 | 7111106217 | GDS50023 | 7700111364 | GDS50045 | 8200231956 | GDS50102 | 7700114790 | GDS50125 |
| 7701351172 | GDS50006 | 7700714760 | GDS50023 | 7700869106 | GDS50046 | 8200844447 | GDS50102 | 7700114904 | GDS50125 |
| 7701498955 | GDS50006 | 7700748696 | GDS50023 | 7701349998 | GDS50046 | 8200844448 | GDS50102 | 8200027494 | GDS50125 |
| 7701498956 | GDS50006 | 7700749063 | GDS50023 | 7701352141 | GDS50046 | 7701349959 | GDS50105 | 8200114514 | GDS50125 |
| 7701349955 | GDS50008 | 7700755312 | GDS50023 | 7701352870 | GDS50046 | 7701351959 | GDS50105 | 8200142882 | GDS50125 |
| 7701351995 | GDS50008 | 7700776192 | GDS50023 | 7700349913 | GDS50050 | 7701351960 | GDS50105 | 8200231936 | GDS50125 |
| 7700103564 | GDS50009 | 7700850626 | GDS50023 | 7701349913 | GDS50050 | 7701352001 | GDS50105 | 7700104460 | GDS50130 |
| 7700111079 | GDS50009 | 7700864171 | GDS50023 | 7701349938 | GDS50050 | 711106224 | GDS50116 | 7701352562 | GDS50130 |
| 7701352413 | GDS50009 | 7701349726 | GDS50023 | 7701351806 | GDS50050 | 7700108119 | GDS50116 | 7701352563 | GDS50130 |

| COMPETITOR | G-AP Ref. | COMPETITOR | G-AP Ref. | COMPETITOR | G-AP Ref. | COMPETITOR | G-AP Ref. | COMPETITOR | G-AP Ref. |
|---|---|---|---|---|---|---|---|---|---|
| OE | | 7700111916 | GDS50160 | 8200065334 | GDS50194 | 7700112506 | GDS50227 | 8200622834 | GDS50261 |
| | | 7700115197 | GDS50160 | 8200065339 | GDS50194 | 7711135196 | GDS50227 | 8200623787 | GDS50261 |
| 7701352744 | GDS50130 | 7711135207 | GDS50160 | 7700107765 | GDS50197 | 8200032891 | GDS50227 | 8201187723 | GDS50261 |
| 7701352562 | GDS50131 | 7711135217 | GDS50160 | 7700110218 | GDS50197 | 7711134778 | GDS50228 | 3910000Q1K | GDS50263 |
| 7701352563 | GDS50131 | 7711497522 | GDS50160 | 7700112315 | GDS50197 | 7711135321 | GDS50228 | 391004165R | GDS50263 |
| 7700104545 | GDS50132 | 8200030389 | GDS50160 | 7701352869 | GDS50197 | 8200014118 | GDS50228 | 7711135932 | GDS50263 |
| 7700109680 | GDS50132 | 8200110754 | GDS50160 | 7711135195 | GDS50197 | 8200079912 | GDS50228 | 7711368657 | GDS50263 |
| 7701352427 | GDS50132 | 7700106009 | GDS50162 | 7711135204 | GDS50197 | 8200169176 | GDS50228 | 7711497394 | GDS50263 |
| 7701352755 | GDS50132 | 7700106013 | GDS50162 | 8200031134 | GDS50197 | 8200387466 | GDS50228 | 8200231664 | GDS50263 |
| 7701470708 | GDS50132 | 7700110482 | GDS50162 | 8200031137 | GDS50197 | 7711135250 | GDS50245 | 8200236096 | GDS50263 |
| 7701684757 | GDS50132 | 7700110483 | GDS50162 | 820031134 | GDS50197 | 7711368908 | GDS50245 | 8200236100 | GDS50263 |
| 7701349998 | GDS50134 | 7700111190 | GDS50162 | 7701352560 | GDS50199 | 8200236114 | GDS50245 | 8200236113 | GDS50263 |
| 7701352144 | GDS50134 | 7700111508 | GDS50162 | 7701352561 | GDS50199 | 8200274161 | GDS50245 | 8200240430 | GDS50263 |
| 7711130028 | GDS50134 | 7700113258 | GDS50162 | 7701469847 | GDS50199 | 8200571878 | GDS50245 | 8200266021 | GDS50263 |
| 711106130 | GDS50145 | 7700114453 | GDS50162 | 7701352629 | GDS50200 | 7711135530 | GDS50246 | 8200274166 | GDS50263 |
| 7700873326 | GDS50145 | 7700115010 | GDS50162 | 7701470173 | GDS50200 | 8200052421 | GDS50246 | 8200534580 | GDS50263 |
| 7701348968 | GDS50145 | 7701056623 | GDS50162 | 7700109022 | GDS50201 | 7701352421 | GDS50247 | 8200571880 | GDS50263 |
| 7701498923 | GDS50145 | 7701352774 | GDS50162 | 7701349742 | GDS50201 | 8200169289 | GDS50249 | 8200613812 | GDS50263 |
| 7701498924 | GDS50145 | 7701352776 | GDS50162 | 7701349828 | GDS50201 | 7700103725 | GDS50250 | 8200844454 | GDS50263 |
| 7711106130 | GDS50145 | 7701352882 | GDS50162 | 7701351195 | GDS50201 | 7701469847 | GDS50252 | 8200844455 | GDS50263 |
| 8200090634 | GDS50146 | 7701470721 | GDS50162 | 7701465455 | GDS50201 | 7700106263 | GDS50253 | 8201187716 | GDS50263 |
| 7700111920 | GDS50148 | 7701471084 | GDS50162 | 7701349939 | GDS50205 | 7700112131 | GDS50253 | 8201353622 | GDS50263 |
| 7711134285 | GDS50148 | 7701471284 | GDS50162 | 7701351807 | GDS50205 | 7700115818 | GDS50253 | 7700112507 | GDS50268 |
| 7711134286 | GDS50148 | 8200024815 | GDS50162 | 7711134777 | GDS50207 | 7701352568 | GDS50253 | 7700112511 | GDS50268 |
| 7711368859 | GDS50148 | 8200105214 | GDS50162 | 7711135536 | GDS50207 | 7701469849 | GDS50253 | 8200032887 | GDS50268 |
| 8200064731 | GDS50148 | 8200114508 | GDS50162 | 7711368541 | GDS50207 | 7711135213 | GDS50253 | 8200063808 | GDS50268 |
| 8200114832 | GDS50148 | 8200116063 | GDS50162 | 8200014352 | GDS50207 | 7711135223 | GDS50253 | 7700100065 | GDS50271 |
| 8600064731 | GDS50148 | 8200128122 | GDS50162 | 8200079913 | GDS50207 | 8200088665 | GDS50253 | 7700101680 | GDS50271 |
| 7700103730 | GDS50150 | 8200142879 | GDS50162 | 8200243985 | GDS50207 | 8200188956 | GDS50253 | 7701352488 | GDS50271 |
| 7700104727 | GDS50150 | 8200231935 | GDS50162 | 8200387542 | GDS50207 | 8200283723 | GDS50253 | 7701469542 | GDS50271 |
| 7700106007 | GDS50150 | 8200274162 | GDS50162 | 8200470129 | GDS50207 | 8200283724 | GDS50253 | 7700105447 | GDS50272 |
| 7700106008 | GDS50150 | 8200624049 | GDS50162 | 8200470130 | GDS50207 | 8200283725 | GDS50253 | 7700114056 | GDS50272 |
| 7700108248 | GDS50150 | 8201236025 | GDS50162 | 8201188222 | GDS50207 | 8200283726 | GDS50253 | 7701472850 | GDS50272 |
| 7700109013 | GDS50150 | 4401189 | GDS50166 | 7711135322 | GDS50209 | 8200531861 | GDS50253 | 7701472852 | GDS50272 |
| 7700109214 | GDS50150 | 4401727 | GDS50166 | 8200169177 | GDS50209 | 8200531886 | GDS50253 | 8200169307 | GDS50272 |
| 7700109216 | GDS50150 | 4416436 | GDS50166 | 8200436848 | GDS50209 | 7700115958 | GDS50254 | 8200255027 | GDS50279 |
| 7700109333 | GDS50150 | 7711135287 | GDS50166 | 8200441361 | GDS50209 | 7711368869 | GDS50255 | 7711368677 | GDS50280 |
| 7700110484 | GDS50150 | 8200178624 | GDS50166 | 8200444442 | GDS50209 | 8200184197 | GDS50255 | 8200543868 | GDS50280 |
| 7700111260 | GDS50150 | 8200485578 | GDS50166 | 7700112501 | GDS50211 | 8200197992 | GDS50255 | 7711134783 | GDS50281 |
| 7700111363 | GDS50150 | 9109189 | GDS50166 | 7700872598 | GDS50211 | 8200267040 | GDS50255 | 7700111923 | GDS50294 |
| 7700111506 | GDS50150 | 93187701 | GDS50166 | 7701352630 | GDS50211 | 8200287545 | GDS50255 | 7711135209 | GDS50294 |
| 7701351990 | GDS50150 | 711106259 | GDS50173 | 7701470174 | GDS50211 | 8200287546 | GDS50255 | 7700108465 | GDS50295 |
| 7701352771 | GDS50150 | 7701349786 | GDS50173 | 7711135263 | GDS50211 | 8200531904 | GDS50255 | 7701352907 | GDS50295 |
| 7701352773 | GDS50150 | 7701349979 | GDS50173 | 8200029470 | GDS50211 | 8200531911 | GDS50255 | 7700100071 | GDS50296 |
| 7711135242 | GDS50150 | 7701351267 | GDS50173 | 7711135531 | GDS50214 | 8200613829 | GDS50255 | 7701352622 | GDS50296 |
| 7711135243 | GDS50150 | 7701468549 | GDS50173 | 8200169279 | GDS50214 | 8201187819 | GDS50255 | 7701469966 | GDS50296 |
| 8200231680 | GDS50150 | 7701470183 | GDS50173 | 7701352142 | GDS50215 | 7711135320 | GDS50256 | 7701352386 | GDS50309 |
| 8200844451 | GDS50150 | 7701470298 | GDS50173 | 7701352428 | GDS50215 | 8200079915 | GDS50256 | 7701354993 | GDS50309 |
| 7701352775 | GDS50151 | 7702123601 | GDS50173 | 7700863182 | GDS50218 | 8200470131 | GDS50256 | 7701468887 | GDS50309 |
| 7701352777 | GDS50151 | 7711106259 | GDS50173 | 7700865458 | GDS50218 | 7711135883 | GDS50260 | 7711130045 | GDS50309 |
| 8200114509 | GDS50151 | 8200231949 | GDS50173 | 7700106291 | GDS50221 | 7711368906 | GDS50260 | 7700112116 | GDS50311 |
| 8200116064 | GDS50151 | 7700856462 | GDS50174 | 7700109765 | GDS50221 | 7711368907 | GDS50260 | 7701352415 | GDS50311 |
| 8200240421 | GDS50151 | 7700856463 | GDS50174 | 7700112496 | GDS50221 | 8200236099 | GDS50260 | 7701352417 | GDS50311 |
| 8200087859 | GDS50156 | 7700856464 | GDS50174 | 7701352628 | GDS50221 | 8200236116 | GDS50260 | 7701352730 | GDS50311 |
| 8200213353 | GDS50156 | 7700856465 | GDS50174 | 7701470172 | GDS50221 | 8200613816 | GDS50260 | 7701470617 | GDS50311 |
| 7700111748 | GDS50159 | 7700862042 | GDS50174 | 7711135267 | GDS50221 | 8200613820 | GDS50260 | 7711134941 | GDS50311 |
| 7700111914 | GDS50159 | 7700862043 | GDS50174 | 7711135268 | GDS50221 | 8200622835 | GDS50260 | 7711135237 | GDS50313 |
| 7700111918 | GDS50159 | 7700862708 | GDS50174 | 8200031149 | GDS50221 | 8200623784 | GDS50260 | 7711368447 | GDS50313 |
| 7700115196 | GDS50159 | 7700862949 | GDS50174 | 7711135265 | GDS50223 | 8200626032 | GDS50260 | 8200087856 | GDS50313 |
| 7701352729 | GDS50159 | 7701351949 | GDS50174 | 8200031144 | GDS50223 | 7711135895 | GDS50261 | 8200087857 | GDS50313 |
| 7701468842 | GDS50159 | 7701351996 | GDS50174 | 7700105450 | GDS50225 | 7711135906 | GDS50261 | 8200095539 | GDS50313 |
| 7701470616 | GDS50159 | 7701351607 | GDS50183 | 7700114057 | GDS50225 | 7711368905 | GDS50261 | 8200096353 | GDS50313 |
| 7711134288 | GDS50159 | 7701351608 | GDS50183 | 7701472848 | GDS50225 | 8200236109 | GDS50261 | 7700105485 | GDS50316 |
| 7711134289 | GDS50159 | 7701465773 | GDS50183 | 7701472851 | GDS50225 | 8200236110 | GDS50261 | 7700105487 | GDS50316 |
| 7711135206 | GDS50159 | 7701468452 | GDS50183 | 8200252245 | GDS50225 | 8200240425 | GDS50261 | 7700111809 | GDS50316 |
| 7711135208 | GDS50159 | 7711134959 | GDS50193 | 7711134780 | GDS50226 | 8200274159 | GDS50261 | 7700111811 | GDS50316 |
| 7711135216 | GDS50159 | 8200114426 | GDS50193 | 7711368296 | GDS50226 | 8200534635 | GDS50261 | 7700111813 | GDS50316 |
| 8200173584 | GDS50159 | 7711134957 | GDS50194 | 8200035673 | GDS50226 | 8200613824 | GDS50261 | 7700111820 | GDS50316 |

| COMPETITOR | G-AP Ref. | COMPETITOR | G-AP Ref. | COMPETITOR | G-AP Ref. | COMPETITOR | G-AP Ref. | COMPETITOR | G-AP Ref. |
|---|---|---|---|---|---|---|---|---|---|
| OE | | 7701352809 | GDS50359 | 7711134957 | GDS50394 | 391016204R | GDS50426 | 7711368621 | GDS50452 |
| | | 7701468549 | GDS50359 | 8200065334 | GDS50394 | 391019566R | GDS50426 | 8200379208 | GDS50452 |
| 7700873322 | GDS50316 | 7701470183 | GDS50359 | 8200065339 | GDS50394 | 7711497441 | GDS50426 | 8200383708 | GDS50453 |
| 7700875247 | GDS50316 | 7701470298 | GDS50359 | 8200070950 | GDS50394 | 8200788672 | GDS50426 | 8200776962 | GDS50453 |
| 7700107509 | GDS50320 | 7711135493 | GDS50359 | 7700106018 | GDS50395 | 8200847584 | GDS50426 | 8201187713 | GDS50453 |
| 7700111818 | GDS50320 | 8200231949 | GDS50359 | 7701471155 | GDS50395 | 8201353627 | GDS50426 | 7711368095 | GDS50454 |
| 7700112114 | GDS50320 | 8200844449 | GDS50359 | 7711134738 | GDS50395 | 391001339R | GDS50427 | 8200171564 | GDS50454 |
| 7700113086 | GDS50320 | 391008788R | GDS50364 | 7711135415 | GDS50399 | 8200725511 | GDS50427 | 8200387432 | GDS50454 |
| 7700106265 | GDS50323 | 7711368570 | GDS50364 | 7711135825 | GDS50399 | 8201353431 | GDS50427 | 8200618166 | GDS50455 |
| 7700111313 | GDS50323 | 8200362064 | GDS50364 | 8200216625 | GDS50399 | 7711497440 | GDS50428 | 8200934679 | GDS50455 |
| 7700112132 | GDS50323 | 8200450241 | GDS50364 | 7711135414 | GDS50400 | 8200725510 | GDS50428 | 8201353625 | GDS50455 |
| 7701111313 | GDS50323 | 8200538738 | GDS50364 | 7711497286 | GDS50400 | 391001702R | GDS50429 | 8200565217 | GDS50460 |
| 7711135214 | GDS50323 | 8200749390 | GDS50364 | 8200198015 | GDS50400 | 8200722513 | GDS50429 | 7701349992 | GDS50461 |
| 7711135215 | GDS50323 | 8201187708 | GDS50364 | 8200436366 | GDS50400 | 8200725513 | GDS50429 | 7701352129 | GDS50461 |
| 7700112688 | GDS50324 | 8200236118 | GDS50365 | 8200790517 | GDS50400 | 8201353435 | GDS50429 | 7701468642 | GDS50461 |
| 7700115005 | GDS50324 | 8200613821 | GDS50365 | 391014440R | GDS50401 | 7711497514 | GDS50430 | 8200065333 | GDS50462 |
| 7711135219 | GDS50324 | 3910100Q0D | GDS50366 | 7700109336 | GDS50401 | 8200725512 | GDS50430 | 8200626048 | GDS50462 |
| 8200137918 | GDS50324 | 4417084 | GDS50366 | 7700112154 | GDS50401 | 7700102136 | GDS50438 | 8200626991 | GDS50462 |
| 7701352420 | GDS50327 | 8200414937 | GDS50366 | 7701352548 | GDS50401 | 7700103777 | GDS50438 | 8201235847 | GDS50462 |
| 7701352424 | GDS50327 | 8201187695 | GDS50366 | 7701469826 | GDS50401 | 7700104631 | GDS50438 | 391009882R | GDS50463 |
| 7701352473 | GDS50327 | 93189874 | GDS50366 | 7711135005 | GDS50401 | 7700109249 | GDS50438 | 8200939994 | GDS50463 |
| 7701352474 | GDS50327 | 7711368363 | GDS50369 | 7711368656 | GDS50401 | 7700867519 | GDS50438 | 8201505583 | GDS50463 |
| 7701468840 | GDS50327 | 8200341698 | GDS50369 | 8200075522 | GDS50401 | 7711135875 | GDS50438 | 391016840R | GDS50464 |
| 7701468843 | GDS50327 | 7711368368 | GDS50372 | 8200236091 | GDS50401 | 8200075500 | GDS50438 | 391017275R | GDS50464 |
| 7701469375 | GDS50327 | 8200378880 | GDS50372 | 8200236092 | GDS50401 | 8200236089 | GDS50438 | 8201505590 | GDS50464 |
| 7711497524 | GDS50327 | 7711368631 | GDS50375 | 8200236107 | GDS50401 | 8200722147 | GDS50438 | 1502102 | GDS50465 |
| 7711134785 | GDS50328 | 8200535802 | GDS50375 | 8200274159 | GDS50401 | 7711135775 | GDS50440 | 1594943 | GDS50465 |
| 8200014109 | GDS50328 | 7711368632 | GDS50376 | 8200534635 | GDS50401 | 8200167554 | GDS50440 | 1683584 | GDS50465 |
| 7711134786 | GDS50329 | 8200676172 | GDS50377 | 8200571876 | GDS50401 | 8200267041 | GDS50440 | 1803628 | GDS50465 |
| 8200030623 | GDS50329 | 8200934677 | GDS50377 | 8200613822 | GDS50401 | 8200283034 | GDS50440 | 1803629 | GDS50465 |
| 7711134776 | GDS50330 | 8201235920 | GDS50377 | 8200722155 | GDS50401 | 8200613828 | GDS50440 | 8V413B436AB | GDS50465 |
| 8200014114 | GDS50330 | 391016312R | GDS50378 | 7711497229 | GDS50402 | 8200623805 | GDS50440 | 8V413B436AC | GDS50465 |
| 8200079916 | GDS50330 | 8200538941 | GDS50378 | 8200330413 | GDS50402 | 8201236170 | GDS50440 | 8V413B436AD | GDS50465 |
| 8200387548 | GDS50330 | 8200934676 | GDS50378 | 7711135954 | GDS50403 | 7711135425 | GDS50441 | BV413B436AC | GDS50465 |
| 7711497233 | GDS50348 | 8201353630 | GDS50378 | 8200216523 | GDS50403 | 8200197979 | GDS50441 | BV413B436AD | GDS50465 |
| 8200330414 | GDS50348 | 7701210040 | GDS50379 | 8200351250 | GDS50403 | 8200285909 | GDS50441 | RM8V413B436A1C | GDS50465 |
| 8200472158 | GDS50348 | 8200441337 | GDS50379 | 8200375537 | GDS50403 | 7711135779 | GDS50442 | RM8V413B436A1D | GDS50465 |
| 7711368913 | GDS50350 | 8201187718 | GDS50379 | 8200432516 | GDS50403 | 7711368884 | GDS50442 | 1502118 | GDS50466 |
| 6001548718 | GDS50353 | 7711497204 | GDS50380 | 8200432517 | GDS50403 | 8200117068 | GDS50442 | 1594946 | GDS50466 |
| 711497150 | GDS50353 | 8200618168 | GDS50380 | 8200302828 | GDS50405 | 8200216519 | GDS50442 | 1803655 | GDS50466 |
| 7711368512 | GDS50353 | 8200659627 | GDS50380 | 8200531917 | GDS50405 | 8200275490 | GDS50442 | 8V413B437AB | GDS50466 |
| 7711497150 | GDS50353 | 8201235845 | GDS50380 | 8200613830 | GDS50405 | 8200327707 | GDS50442 | 8V413B437AC | GDS50466 |
| 8200261840 | GDS50353 | 8200725499 | GDS50383 | 8200618069 | GDS50405 | 8200376095 | GDS50442 | RM8V413B437A1C | GDS50466 |
| 8200408417 | GDS50353 | 7711135824 | GDS50386 | 7711497228 | GDS50410 | 8200575490 | GDS50442 | 7711368836 | GDS50467 |
| 8200411381 | GDS50353 | 8200276404 | GDS50386 | 8200113931 | GDS50410 | 8200626040 | GDS50442 | 8200444606 | GDS50467 |
| 8200440187 | GDS50353 | 8200623761 | GDS50386 | 391011327R | GDS50415 | 6001550794 | GDS50443 | 7711368837 | GDS50468 |
| 8200499585 | GDS50353 | 7700112689 | GDS50389 | 391012991R | GDS50415 | 7711368652 | GDS50443 | 8200444605 | GDS50468 |
| 8200511220 | GDS50353 | 7711135220 | GDS50389 | 391015061R | GDS50415 | 8200261838 | GDS50443 | 2780072KA0MOD | GDS50470 |
| 8200511225 | GDS50353 | 8200137917 | GDS50389 | 371003840R | GDS50416 | 7711368482 | GDS50444 | 4410151K90MOD | GDS50470 |
| 8200543477 | GDS50353 | 7711135403 | GDS50390 | 391001387R | GDS50416 | 8200383707 | GDS50444 | 7711134775 | GDS50471 |
| 8200559377 | GDS50353 | 8200226056 | GDS50390 | 8200930507 | GDS50416 | 8200276640 | GDS50445 | 8200022321 | GDS50471 |
| 8200618501 | GDS50353 | 8200228393 | GDS50390 | 8200930509 | GDS50416 | 8200416682 | GDS50445 | 8200387550 | GDS50471 |
| 391000153R | GDS50354 | 8200470133 | GDS50390 | 8251755 | GDS50421 | 7711134779 | GDS50446 | 391006435R | GDS50475 |
| 391007095R | GDS50354 | 7711135411 | GDS50391 | 8601676 | GDS50421 | 7711135307 | GDS50446 | 8200893509 | GDS50475 |
| 6001548720 | GDS50354 | 7711368273 | GDS50391 | 8601678 | GDS50421 | 8200014107 | GDS50446 | 7711368885 | GDS50483 |
| 7711497417 | GDS50354 | 8200171562 | GDS50391 | 8602182 | GDS50421 | 8200014111 | GDS50446 | 8200441340 | GDS50483 |
| 8200261841 | GDS50354 | 8200259911 | GDS50391 | 8602294 | GDS50421 | 8200232886 | GDS50446 | 8200598563 | GDS50483 |
| 8200270510 | GDS50354 | 8200387424 | GDS50391 | 391007374R | GDS50422 | 7701352552 | GDS50447 | 7711497283 | GDS50485 |
| 8200358164 | GDS50354 | 8200387439 | GDS50391 | 8200597306 | GDS50422 | 7701352983 | GDS50447 | 8200240423 | GDS50485 |
| 8200358168 | GDS50354 | 8200590972 | GDS50391 | 8201235851 | GDS50422 | 7711134419 | GDS50447 | 8200621187 | GDS50485 |
| 8200455157 | GDS50354 | 7711135401 | GDS50392 | 391006777R | GDS50425 | 7711497287 | GDS50447 | 391010115R | GDS50487 |
| 8200460992 | GDS50354 | 8200226057 | GDS50392 | 8200725502 | GDS50425 | 8200197978 | GDS50447 | 391011305R | GDS50487 |
| 8200499586 | GDS50354 | 8200467679 | GDS50392 | 8200896391 | GDS50425 | 8200285908 | GDS50447 | 391012838R | GDS50487 |
| 8200618111 | GDS50354 | 7711368091 | GDS50393 | 8201353438 | GDS50425 | 8200436365 | GDS50447 | 391017355R | GDS50487 |
| 8201052989 | GDS50354 | 8200133289 | GDS50393 | 391011358R | GDS50426 | 8200790519 | GDS50447 | 391018662R | GDS50487 |
| 7700112147 | GDS50359 | 8200436849 | GDS50393 | 391012745R | GDS50426 | 8200618165 | GDS50451 | 391019516R | GDS50487 |
| 7701352319 | GDS50359 | 8200439891 | GDS50393 | 391013387R | GDS50426 | 8200934678 | GDS50451 | 7701209469 | GDS50487 |
| 7701352808 | GDS50359 | 7711134956 | GDS50394 | 391013732R | GDS50426 | 8201353631 | GDS50451 | 391000926R | GDS50488 |

| COMPETITOR | G-AP Ref. | COMPETITOR | G-AP Ref. | COMPETITOR | G-AP Ref. | COMPETITOR | G-AP Ref. | COMPETITOR | G-AP Ref. |
|---|---|---|---|---|---|---|---|---|---|
| OE | | 8200387522 | GDS50509 | 8200269195 | GDS50527 | 391009893R | GDS50573 | 391008707R | GDS50607 |
| | | 391003112R | GDS50510 | 8201187732 | GDS50527 | 8200557126 | GDS50573 | 391008751R | GDS50607 |
| 391003429R | GDS50488 | 391003533R | GDS50510 | 391016076R | GDS50535 | 8201187693 | GDS50573 | 391010195R | GDS50608 |
| 391000262R | GDS50489 | 391008976R | GDS50510 | 391019932R | GDS50535 | 8201272592 | GDS50573 | 391012926R | GDS50608 |
| 391008239R | GDS50489 | 391009002R | GDS50510 | 8200966862 | GDS50535 | 391014511R | GDS50574 | 391013124R | GDS50608 |
| 8200096340 | GDS50492 | 7711497448 | GDS50510 | 391003813R | GDS50536 | 391018148R | GDS50574 | 391013958R | GDS50608 |
| 8201235795 | GDS50492 | 7711497488 | GDS50510 | 391009864R | GDS50536 | 8200261837 | GDS50574 | 391014832R | GDS50608 |
| 8200500684 | GDS50493 | 8200725500 | GDS50510 | 8201061544 | GDS50536 | 8200531900 | GDS50574 | 391015215R | GDS50608 |
| 8201235775 | GDS50493 | 8200788674 | GDS50510 | 8200482436 | GDS50538 | 8200623794 | GDS50574 | 391017712R | GDS50608 |
| 7711135777 | GDS50494 | 8200890089 | GDS50510 | 8201235803 | GDS50538 | 8200696900 | GDS50574 | 8201494687 | GDS50608 |
| 7711368868 | GDS50494 | 8201353624 | GDS50510 | 8200482435 | GDS50539 | 8201235822 | GDS50574 | 8201494916 | GDS50608 |
| 8200117069 | GDS50494 | 8201535624 | GDS50510 | 8200661507 | GDS50539 | 391002983R | GDS50575 | 391018406R | GDS50609 |
| 8200310122 | GDS50494 | 391014946R | GDS50512 | 8201235806 | GDS50539 | 7700106015 | GDS50579 | 391001137R | GDS50610 |
| 8200376094 | GDS50494 | 391018888R | GDS50512 | 8200666595 | GDS50540 | 7700114752 | GDS50579 | 391000044R | GDS50612 |
| 8200575489 | GDS50494 | 391006553R | GDS50513 | 8201236028 | GDS50540 | 7701352848 | GDS50579 | 391001290R | GDS50612 |
| 8200714635 | GDS50494 | 391009822R | GDS50513 | 391005791R | GDS50541 | 7711134326 | GDS50579 | 391001916R | GDS50612 |
| 7711135316 | GDS50495 | 7711368568 | GDS50514 | 7711497639 | GDS50541 | 7711134955 | GDS50579 | 391007525R | GDS50612 |
| 8200351249 | GDS50495 | 7711368569 | GDS50514 | 8200661556 | GDS50541 | 8200126445 | GDS50579 | 4153600015 | GDS50612 |
| 8200375538 | GDS50495 | 8200362062 | GDS50514 | 8200768656 | GDS50541 | 8200235096 | GDS50579 | 4153600815 | GDS50612 |
| 8200618182 | GDS50496 | 8200407659 | GDS50514 | 8201272648 | GDS50541 | 391016521R | GDS50584 | A4153600015 | GDS50612 |
| 8200659626 | GDS50496 | 8200407660 | GDS50514 | 8200684084 | GDS50542 | 391004855R | GDS50585 | A4153600815 | GDS50612 |
| 8201235787 | GDS50496 | 8200467490 | GDS50514 | 8201235764 | GDS50542 | 391003147R | GDS50586 | 391017156R | GDS50614 |
| 4417911 | GDS50497 | 8200535798 | GDS50514 | 1S0407762B | GDS50543 | 391003471R | GDS50586 | 8200647065 | GDS50614 |
| 4418900 | GDS50497 | 8200535799 | GDS50514 | 1S0407762BX | GDS50543 | 391003840R | GDS50586 | 391006849R | GDS50615 |
| 8200406879 | GDS50497 | 7711368573 | GDS50515 | 1S0407762D | GDS50543 | 391008165R | GDS50586 | 391008191R | GDS50615 |
| 8200452272 | GDS50497 | 8200362060 | GDS50515 | 1S0407762DX | GDS50543 | 391009234R | GDS50586 | 391005432R | GDS50616 |
| 8200776535 | GDS50497 | 8200535800 | GDS50515 | 391012385R | GDS50544 | 391009964R | GDS50586 | 8200647066 | GDS50616 |
| 8201187931 | GDS50497 | 8200535802 | GDS50515 | 8200482429 | GDS50544 | 8201505574 | GDS50586 | 391010433R | GDS50617 |
| 93856309 | GDS50497 | 7711135952 | GDS50516 | 8201235782 | GDS50544 | 3910100Q5M | GDS50587 | 391010582R | GDS50617 |
| 93861972 | GDS50497 | 8200351247 | GDS50516 | 7700106017 | GDS50552 | 3910100Q8E | GDS50587 | 391015196R | GDS50617 |
| 95520539 | GDS50497 | 8200379236 | GDS50516 | 7711497234 | GDS50554 | 391015061R | GDS50587 | 391005338R | GDS50618 |
| 391011023R | GDS50498 | 8200432515 | GDS50516 | 8200278603 | GDS50554 | 8201505587 | GDS50587 | 391005624R | GDS50618 |
| 391015149R | GDS50498 | 7711368470 | GDS50517 | 391005064R | GDS50555 | 7700114751 | GDS50588 | 8201457089 | GDS50618 |
| 391016491R | GDS50498 | 8200087860 | GDS50517 | 4411699 | GDS50557 | 7701352849 | GDS50588 | 391016376R | GDS50620 |
| 392413815R | GDS50498 | 8200088110 | GDS50517 | 4430546 | GDS50557 | 7701470884 | GDS50588 | 391016776R | GDS50620 |
| 7711497435 | GDS50498 | 7711368565 | GDS50518 | 7711135441 | GDS50557 | 7711134327 | GDS50588 | 7711368297 | GDS50622 |
| 8201505588 | GDS50498 | 8200363697 | GDS50518 | 8200169164 | GDS50557 | 8200107090 | GDS50588 | 8200379207 | GDS50622 |
| 391002167R | GDS50501 | 7711368634 | GDS50519 | 8200485590 | GDS50557 | 7711497600 | GDS50591 | 8200405334 | GDS50622 |
| 391002807R | GDS50501 | 8200236108 | GDS50519 | 93850891 | GDS50557 | 8200482431 | GDS50591 | 8200676174 | GDS50622 |
| 391006130R | GDS50501 | 8200236112 | GDS50519 | 93856471 | GDS50557 | 8200500683 | GDS50592 | 8200726970 | GDS50622 |
| 391006276R | GDS50501 | 8200531889 | GDS50519 | 95520699 | GDS50557 | 8201187698 | GDS50592 | 8200934673 | GDS50622 |
| 8201030532 | GDS50501 | 8200613823 | GDS50519 | 4406174 | GDS50562 | 6001550692 | GDS50593 | 7711135490 | GDS50624 |
| 8201529157 | GDS50501 | 8200621196 | GDS50519 | 4411698 | GDS50562 | 6001550693 | GDS50593 | 8200387438 | GDS50624 |
| 8200372167 | GDS50504 | 8200184199 | GDS50520 | 7711135440 | GDS50562 | 6001551093 | GDS50593 | 391006802R | GDS50625 |
| 8201187799 | GDS50504 | 7700114988 | GDS50521 | 8200169163 | GDS50562 | 6001551094 | GDS50593 | 39100BH40A | GDS50625 |
| 8200372166 | GDS50505 | 7711134954 | GDS50521 | 93169703 | GDS50562 | 8200820344 | GDS50593 | 39100BH40B | GDS50625 |
| 7711135295 | GDS50506 | 7711135254 | GDS50521 | 93850890 | GDS50562 | 8201187694 | GDS50593 | 8201055673 | GDS50625 |
| 8200045471 | GDS50506 | 8200027881 | GDS50521 | R1640113 | GDS50562 | 8200687911 | GDS50596 | 8201505566 | GDS50625 |
| 8200144781 | GDS50506 | 8200257766 | GDS50521 | 391008834R | GDS50563 | 8200786810 | GDS50596 | 7711497199 | GDS50626 |
| 8200331639 | GDS50506 | 7700114987 | GDS50522 | 391009101R | GDS50563 | 8200908716 | GDS50596 | 8200687910 | GDS50626 |
| 391002033R | GDS50507 | 7711134459 | GDS50522 | 391010466R | GDS50564 | 8201236068 | GDS50596 | 8200174903 | GDS50627 |
| 391004571R | GDS50507 | 7711135253 | GDS50522 | 391010474R | GDS50564 | 391008683R | GDS50604 | 8200176931 | GDS50627 |
| 391005598R | GDS50507 | 8200027842 | GDS50522 | 391016363R | GDS50564 | 391009728R | GDS50604 | 8201036738 | GDS50627 |
| 391007212R | GDS50507 | 7711134740 | GDS50523 | 8201296232 | GDS50564 | 8200725504 | GDS50604 | 82100174903 | GDS50627 |
| 391007857R | GDS50507 | 8200072831 | GDS50523 | 1S0407761B | GDS50567 | 8200896388 | GDS50604 | 7700105045 | GDS50628 |
| 391008333R | GDS50507 | 7711135835 | GDS50524 | 1S0407761BX | GDS50567 | 8201343442 | GDS50604 | 7700106251 | GDS50628 |
| 391009727R | GDS50507 | 8200088974 | GDS50524 | 391014232R | GDS50570 | 8201353442 | GDS50604 | 7701352829 | GDS50628 |
| 8201130468 | GDS50507 | 7711497282 | GDS50525 | 6001550690 | GDS50570 | 8200586377 | GDS50605 | 8201055669 | GDS50630 |
| 8201130510 | GDS50507 | 8200236103 | GDS50525 | 6001550691 | GDS50570 | 8200926133 | GDS50605 | 8200500683 | GDS50631 |
| 8450009549 | GDS50507 | 8200613818 | GDS50525 | 6001551095 | GDS50570 | 8201187936 | GDS50605 | 8201187698 | GDS50631 |
| 391012689R | GDS50508 | 7700111257 | GDS50526 | 6001551096 | GDS50570 | 391012511R | GDS50606 | 7711135354 | GDS50632 |
| 391014613R | GDS50508 | 7700111504 | GDS50526 | 8200863524 | GDS50570 | 391019395R | GDS50606 | 7711368294 | GDS50632 |
| 391016613R | GDS50508 | 7711368650 | GDS50526 | 8200863653 | GDS50570 | 8200866824 | GDS50606 | 8200014353 | GDS50632 |
| 391017832R | GDS50508 | 8200231663 | GDS50526 | 8201187935 | GDS50570 | 391000978R | GDS50607 | 8200225099 | GDS50632 |
| 391018112R | GDS50508 | 8200262685 | GDS50526 | 391015814R | GDS50572 | 391001855R | GDS50607 | 8200233728 | GDS50632 |
| 7711135353 | GDS50509 | 8200844453 | GDS50526 | 8200666593 | GDS50572 | 391003770R | GDS50607 | 8200387523 | GDS50632 |
| 7711497231 | GDS50509 | 8200144764 | GDS50527 | 8201236047 | GDS50572 | 391005763R | GDS50607 | 8200387536 | GDS50632 |
| 8200216017 | GDS50509 | 8200144765 | GDS50527 | 391009067R | GDS50573 | 391007238R | GDS50607 | 8200531894 | GDS50632 |

| COMPETITOR | G-AP Ref. | COMPETITOR | G-AP Ref. | COMPETITOR | G-AP Ref. | COMPETITOR | G-AP Ref. | COMPETITOR | G-AP Ref. |
|---|---|---|---|---|---|---|---|---|---|
| **OE** | | 1609899280 | **GDS51047** | 191407271TV | **GDS53001** | 6K0407271D | **GDS53004** | 1K0407271KA | **GDS54013** |
| | | 1677685480 | **GDS51047** | 191407271TX | **GDS53001** | 6K0407271F | **GDS53004** | 1K0407271KG | **GDS54013** |
| 8200243986 | **GDS50633** | 3272PT | **GDS51047** | 191407451X | **GDS53001** | JZW407449BX | **GDS53004** | 1K0407271KS | **GDS54013** |
| 8200387558 | **GDS50633** | 4410165J01 | **GDS51048** | 1L0407451X | **GDS53001** | 191407272 | **GDS53005** | 1K0407271LG | **GDS54013** |
| 7700112478 | **GDS50634** | 4410178K00 | **GDS51048** | 6K0407271J | **GDS53001** | 191407272A | **GDS53005** | 1K0407271LK | **GDS54013** |
| 7711135218 | **GDS50634** | 4410579K20 | **GDS51049** | 191407272AF | **GDS53002** | 191407272AA | **GDS53005** | 1K0407271NT | **GDS54013** |
| 8200226054 | **GDS50634** | 1609899980 | **GDS51050** | 191407272AG | **GDS53002** | 191407272AC | **GDS53005** | 1K0407271PA | **GDS54013** |
| 7711368093 | **GDS50637** | 1677685580 | **GDS51050** | 191407272BD | **GDS53002** | 191407272AD | **GDS53005** | 1K0407451QX | **GDS54013** |
| 8200133292 | **GDS50637** | 3273PY | **GDS51050** | 191407272BK | **GDS53002** | 191407272AE | **GDS53005** | 1K0407453FX | **GDS54013** |
| 8200387408 | **GDS50637** | 05085141AA | **GDS51055** | 191407272BL | **GDS53002** | 191407272B | **GDS53005** | 1K0407453GX | **GDS54013** |
| GCV1059 | **GDS51001** | 05085141AB | **GDS51055** | 191407272BN | **GDS53002** | 191407272BA | **GDS53005** | 1K0407761Q | **GDS54013** |
| TDB104020 | **GDS51002** | 05085141AC | **GDS51055** | 191407272BV | **GDS53002** | 191407272C | **GDS53005** | 1K0407761QX | **GDS54013** |
| TDB104030 | **GDS51003** | 5085141AA | **GDS51055** | 191407272BX | **GDS53002** | 191407272X | **GDS53005** | 1K0407763AX | **GDS54013** |
| TDB000520 | **GDS51008** | 5085141AB | **GDS51055** | 191407272CV | **GDS53002** | 191407274 | **GDS53005** | 1K0407763DX | **GDS54013** |
| TDB000360 | **GDS51009** | 5085141AC | **GDS51055** | 191407272CX | **GDS53002** | 191407274BV | **GDS53005** | 1K0407763HX | **GDS54013** |
| TDB103520 | **GDS51009** | RL085141AC | **GDS51055** | 191407272F | **GDS53002** | 191407274BX | **GDS53005** | 1K0407763NX | **GDS54013** |
| GCV1060 | **GDS51010** | 05085240AA | **GDS51056** | 191407272H | **GDS53002** | 191407274X | **GDS53005** | 1K0407763PX | **GDS54013** |
| TDB103311 | **GDS51017** | 05085240AB | **GDS51056** | 191407274BV | **GDS53002** | 1914074500V | **GDS53005** | 4410165J00 | **GDS54014** |
| GCV1217 | **GDS51018** | 05085240AC | **GDS51056** | 191407274CV | **GDS53002** | 191407450V | **GDS53005** | 1K0501203G | **GDS54017** |
| TDC000160 | **GDS51019** | 5085240AA | **GDS51056** | 191407274CX | **GDS53002** | 191407450X | **GDS53005** | 1K0501203GX | **GDS54017** |
| TOB000070 | **GDS51025** | 5085240AB | **GDS51056** | 191407274DX | **GDS53002** | 19140772B | **GDS53005** | 3C0501203F | **GDS54017** |
| TOB100000 | **GDS51025** | 5085240AC | **GDS51056** | 191407450V | **GDS53002** | 6K0407272A | **GDS53005** | 3C0501203FX | **GDS54017** |
| TOB000110 | **GDS51030** | K05085240AC | **GDS51056** | 191407452BV | **GDS53002** | 6K0407272H | **GDS53005** | 5Z0407271N | **GDS54018** |
| TFB0000150 | **GDS51035** | RL085240AC | **GDS51056** | 191407452BX | **GDS53002** | 6K0407272J | **GDS53005** | 6Q0407271DA | **GDS54018** |
| IED000081 | **GDS51036** | 05105772AA | **GDS51067** | 1L0407272 | **GDS53002** | 6K0407452FX | **GDS53005** | 6Q0407271DR | **GDS54018** |
| IED500040 | **GDS51036** | 05105772AB | **GDS51067** | 6K0407272S | **GDS53002** | JZW407450X | **GDS53005** | 6Q0407451RX | **GDS54018** |
| TOB500330 | **GDS51036** | 05105772AC | **GDS51067** | 6K0407272T | **GDS53002** | 1K0407271AP | **GDS53007** | 6QE407271 | **GDS54018** |
| TOB000110 | **GDS51037** | 05105772AD | **GDS51067** | 6K0407452HX | **GDS53002** | 1K0407451X | **GDS53007** | 28021FC031 | **GDS56006** |
| LR002621 | **GDS51038** | 05105772AE | **GDS51067** | 6N0407272J | **GDS53002** | 1K0407272BE | **GDS53008** | 28321FE050 | **GDS56006** |
| LR062666 | **GDS51038** | 05105772AF | **GDS51067** | 6N0407452DX | **GDS53002** | 1K0407272BS | **GDS53008** | 28021AA501 | **GDS56007** |
| LR125176 | **GDS51038** | 05105772AG | **GDS51067** | 191407271A | **GDS53003** | 1K0407272DM | **GDS53008** | 28021FC031 | **GDS56007** |
| RM6G9N3B437LF | **GDS51038** | 5105772AA | **GDS51067** | 191407271AX | **GDS53003** | 1K0407452AX | **GDS53008** | 28321AG000 | **GDS56013** |
| LR002618 | **GDS51039** | 5105772AB | **GDS51067** | 191407271B | **GDS53003** | 1K0407452X | **GDS53008** | 28321AG010 | **GDS56013** |
| LR006707 | **GDS51039** | 5105772AC | **GDS51067** | 191407271BV | **GDS53003** | 115420214 | **GDS54001** | 28321AG011 | **GDS56013** |
| LR062661 | **GDS51039** | 5105772AD | **GDS51067** | 191407271BX | **GDS53003** | 115421210 | **GDS54001** | 28321AG012 | **GDS56013** |
| LR125179 | **GDS51039** | 5105772AE | **GDS51067** | 191407271C | **GDS53003** | 6U0407271A | **GDS54001** | 28321AG020 | **GDS56013** |
| RM6G9N3B436LG | **GDS51039** | 5105772AF | **GDS51067** | 191407271CV | **GDS53003** | 6U0407271AV | **GDS54001** | 28321AG021 | **GDS56013** |
| 05085250AB | **GDS51041** | 5105772AG | **GDS51067** | 191407271CX | **GDS53003** | 6U0407271AX | **GDS54001** | 28321AG022 | **GDS56013** |
| 05085250AC | **GDS51041** | R5105772AG | **GDS51067** | 191407271L | **GDS53003** | 6U0407271F | **GDS54001** | 28321AG023 | **GDS56013** |
| 05085250AD | **GDS51041** | RL105772AG | **GDS51067** | 191407271P | **GDS53003** | 6U0407271FX | **GDS54001** | 28321AG023AT | **GDS56013** |
| 05085250AE | **GDS51041** | TDB104890 | **GDS51068** | 191407271Q | **GDS53003** | 115420217 | **GDS54002** | 28321FG001 | **GDS56013** |
| 05085250AF | **GDS51041** | TDB104950 | **GDS51069** | 191407271R | **GDS53003** | 115421211 | **GDS54002** | 28321FG003 | **GDS56013** |
| 05085250AG | **GDS51041** | TDB104970 | **GDS51070** | 191407271RV | **GDS53003** | 6U0407272A | **GDS54002** | 28421AG022 | **GDS56013** |
| 5085250AB | **GDS51041** | TDB104870 | **GDS51071** | 191407271RX | **GDS53003** | 6U0407272AF | **GDS54002** | 28321FE170 | **GDS56014** |
| 5085250AC | **GDS51041** | TDB103301 | **GDS51072** | 191407449V | **GDS53003** | 6U0407272AV | **GDS54002** | 28321FE171 | **GDS56014** |
| 5085250AD | **GDS51041** | FTC4762 | **GDS51074** | 191407449X | **GDS53003** | 6U0407272AX | **GDS54002** | 28321FE180 | **GDS56014** |
| 5085250AE | **GDS51041** | TDB000220 | **GDS51074** | 191407451V | **GDS53003** | 6U0407272F | **GDS54002** | 28321SA030 | **GDS56014** |
| 5085250AF | **GDS51041** | TDB500240 | **GDS51074** | 191497449X | **GDS53003** | 6U0407272FX | **GDS54002** | 28321SA031 | **GDS56014** |
| 5085250AG | **GDS51041** | FTC4763 | **GDS51075** | 6K0407271 | **GDS53003** | 1K0407272HF | **GDS54004** | 28321SA032 | **GDS56014** |
| K05085250AG | **GDS51041** | TDB000230 | **GDS51075** | 6K0407271A | **GDS53003** | 1K0407272DQ | **GDS54011** | 28321SA033 | **GDS56014** |
| TDB10047 | **GDS51043** | TDB500250 | **GDS51075** | 6K0407271AC | **GDS53003** | 1K0407272EG | **GDS54011** | 28321SA040 | **GDS56014** |
| 05273438AA | **GDS51045** | 5057690 | **GDS52001** | 6K0407271C | **GDS53003** | 1K0407272ER | **GDS54011** | 28321SA050 | **GDS56014** |
| 05273438AB | **GDS51045** | 5057708 | **GDS52001** | 6K0407451BX | **GDS53003** | 1K0407272HR | **GDS54011** | 28321SA051 | **GDS56014** |
| 05273438AC | **GDS51045** | 5057682 | **GDS52002** | 6K0407451X | **GDS53003** | 1K0407272KG | **GDS54011** | 28021AC101 | **GDS56024** |
| 05273438AD | **GDS51045** | 5171236 | **GDS52002** | JZW407449X | **GDS53003** | 1K0407272NK | **GDS54011** | 28021FA000 | **GDS56024** |
| 05273438AE | **GDS51045** | 4686655 | **GDS52006** | 191407271 | **GDS53004** | 1K0407272QE | **GDS54011** | 28021FA001 | **GDS56024** |
| 05273438AF | **GDS51045** | 4686887 | **GDS52006** | 191407271N | **GDS53004** | 1K0407272RG | **GDS54011** | 28321FG020 | **GDS56031** |
| 05273438AG | **GDS51045** | 191407271AC | **GDS53001** | 191407271NV | **GDS53004** | 1K0407272TQ | **GDS54011** | 28321FG021 | **GDS56031** |
| 5273438AA | **GDS51045** | 191407271F | **GDS53001** | 191407271NX | **GDS53004** | 1K0407454HX | **GDS54011** | 28021AC200 | **GDS56032** |
| 5273438AB | **GDS51045** | 191407271FX | **GDS53001** | 191407272N | **GDS53004** | 1K0407454X | **GDS54011** | 28321AE02A | **GDS56032** |
| 5273438AC | **GDS51045** | 191407271H | **GDS53001** | 1H0407271F | **GDS53004** | 1K0407762C | **GDS54011** | 28321AE02B | **GDS56032** |
| 5273438AD | **GDS51045** | 191407271HX | **GDS53001** | 1H0407271FV | **GDS53004** | 1K0407762CX | **GDS54011** | 28321AE07A | **GDS56032** |
| 5273438AE | **GDS51045** | 191407271K | **GDS53001** | 1H0407271FX | **GDS53004** | 1K0407764BX | **GDS54011** | 28321AE07B | **GDS56032** |
| 5273438AF | **GDS51045** | 191407271LX | **GDS53001** | 1H0407271J | **GDS53004** | 1K0407764PX | **GDS54011** | 28421AG00A | **GDS56052** |
| 5273438AG | **GDS51045** | 191407271S | **GDS53001** | 1H0407271QX | **GDS53004** | 3C0407272AK | **GDS54011** | 28421AG00B | **GDS56052** |
| R5273438AG | **GDS51045** | 191407271SV | **GDS53001** | 1H0407449BX | **GDS53004** | 1K0407271BF | **GDS54013** | 28421AG00C | **GDS56052** |
| RL273438AG | **GDS51045** | 191407271SX | **GDS53001** | 357407271D | **GDS53004** | 1K0407271BQ | **GDS54013** | 28421AG010 | **GDS56052** |
| 3815A076 | **GDS51046** | 191407271T | **GDS53001** | 357407271DX | **GDS53004** | 1K0407271EG | **GDS54013** | 28421AG011 | **GDS56052** |

| COMPETITOR | G-AP Ref. | COMPETITOR | G-AP Ref. | COMPETITOR | G-AP Ref. | COMPETITOR | G-AP Ref. | COMPETITOR | G-AP Ref. |
|---|---|---|---|---|---|---|---|---|---|
| OE | | 1475129 | GDS56093 | 4410253R11 | GDS56122 | 52027047 | GDS56172 | 49500F0050 | GDS56217 |
| | | 30681131 | GDS56093 | 4410253R12 | GDS56122 | 52027046 | GDS56173 | 49501F0050 | GDS56218 |
| 28421AG01A | GDS56052 | 30783004 | GDS56093 | 2303102XST11A | GDS56123 | 1938195 | GDS56174 | 4341042390 | GDS56219 |
| 28421AG02A | GDS56052 | 30783172 | GDS56093 | T112203020FA | GDS56124 | 2115978 | GDS56174 | 4341042391 | GDS56219 |
| 28421AG02B | GDS56052 | 30787788 | GDS56093 | 154000353AA | GDS56125 | 2171530 | GDS56174 | 43410F6050 | GDS56219 |
| 28421AG02C | GDS56052 | 36000293 | GDS56093 | 154000354AA | GDS56126 | FV613B437BB | GDS56174 | 4342042280 | GDS56220 |
| 28421FE280 | GDS56055 | 36000453 | GDS56093 | 1608419680 | GDS56127 | FV613B437BC | GDS56174 | 4342042281 | GDS56220 |
| 28421FE281 | GDS56055 | 36000562 | GDS56093 | 9671572780 | GDS56127 | FV613B437BD | GDS56174 | 43420F6030 | GDS56220 |
| 28421FE282 | GDS56055 | 3M513B436NC | GDS56093 | 9816309180 | GDS56127 | 495003S001 | GDS56176 | 4234042070 | GDS56221 |
| 28421FG010 | GDS56057 | 3M513B436NE | GDS56093 | 3815A540 | GDS56128 | 49600P2000 | GDS56177 | 42340F6020 | GDS56221 |
| 28421FG011 | GDS56057 | 3M513B436NF | GDS56093 | EW2325030A | GDS56129 | 2303103XST11A | GDS56179 | 4233042090 | GDS56222 |
| 28421FG040 | GDS56057 | 3M513B436NG | GDS56093 | GA352560X | GDS56129 | 2303101XST11A | GDS56180 | 42330F6020 | GDS56222 |
| 28421FG041 | GDS56057 | 3M513B436NH | GDS56093 | GA352560XA | GDS56129 | 2303100XST11A | GDS56181 | 49500MA000 | GDS56223 |
| 28021AC200 | GDS56061 | 8603252 | GDS56093 | GA352560XB | GDS56129 | 4082007400 | GDS56182 | 49501MA000 | GDS56224 |
| 28021FC090 | GDS56061 | 51935910 | GDS56094 | GA352560XC | GDS56129 | 4082037900 | GDS56182 | 2303300AKZ20A | GDS56225 |
| 28021FC091 | GDS56061 | 52054179 | GDS56094 | GA352560XPA0 | GDS56129 | 4082037900661 | GDS56182 | 2303300BKZ20A | GDS56225 |
| 28021FC093 | GDS56061 | 52055291 | GDS56094 | GA35E25030AA | GDS56129 | 154000174AA | GDS56183 | 2303300XKZ20A | GDS56225 |
| 28321AE02A | GDS56061 | 52088373 | GDS56094 | GA35E25030AB | GDS56129 | C2D42133 | GDS56184 | 49501G7000 | GDS56226 |
| 28321AE02B | GDS56061 | 71796643 | GDS56094 | EW2325020A | GDS56130 | C2Z4814 | GDS56184 | 49501QE000 | GDS56227 |
| 28321AE050 | GDS56061 | 71796646 | GDS56094 | GA352550X | GDS56130 | HK834K139AA | GDS56184 | 49500QE000 | GDS56228 |
| 28321AE07A | GDS56061 | 71796647 | GDS56094 | GA352550XA | GDS56130 | LR092751 | GDS56184 | EJ323B436BA | GDS56229 |
| 28321AE07B | GDS56061 | 50167265 | GDS56098 | GA352550XP00 | GDS56130 | LR181114 | GDS56184 | EJ323B436BB | GDS56229 |
| 28321FE081 | GDS56061 | 52116197 | GDS56098 | GA35E25020AA | GDS56130 | T4A1810 | GDS56184 | LR048486 | GDS56229 |
| 28321FE082 | GDS56061 | 68469887AA | GDS56098 | GA35E25020AB | GDS56130 | T4A50403 | GDS56184 | LR061595 | GDS56229 |
| 28321FE090 | GDS56061 | K68469887AA | GDS56098 | 39101AU310 | GDS56131 | HK834K138AA | GDS56185 | LR149105 | GDS56229 |
| 28321XA00A | GDS56064 | 50167267 | GDS56099 | 39101AU315 | GDS56131 | LR092750 | GDS56185 | RMEJ323B436BB | GDS56229 |
| 28321XA00B | GDS56064 | 52116196 | GDS56099 | 49501F3350 | GDS56132 | T4A1808 | GDS56185 | NL3Z4K138A | GDS56230 |
| 28321XA00C | GDS56064 | 52170753 | GDS56099 | 49500F3300 | GDS56133 | 2223305000 | GDS56186 | NL3Z4K139A | GDS56231 |
| 28321XA00D | GDS56064 | 68469878AA | GDS56099 | 2303104XST11A | GDS56137 | A2223305000 | GDS56186 | J9D34B402AC | GDS56233 |
| 28321SG030 | GDS56067 | K68469878AA | GDS56099 | 2403101XST11A | GDS56138 | 44305SZYT01 | GDS56189 | T4K1076 | GDS56233 |
| 28321SC000 | GDS56068 | 423400E150 | GDS56100 | 2403100XST11A | GDS56139 | 1614920180 | GDS56190 | T4K9541 | GDS56233 |
| 28321SC001 | GDS56068 | 423400E140 | GDS56101 | 2303105XST11A | GDS56141 | 1614920280 | GDS56190 | 1684192 | GDS56234 |
| 28321SC002 | GDS56068 | 49501CL850 | GDS56102 | 154000260AA | GDS56142 | 6001080011 | GDS56190 | 1803637 | GDS56234 |
| 28321SC003 | GDS56068 | 49501P4850 | GDS56102 | J682203020 | GDS56142 | 9810608380 | GDS56190 | AV4N3B436AB | GDS56234 |
| 28321FE110 | GDS56069 | 49501R5650 | GDS56102 | T112203020BC | GDS56143 | 9813090980 | GDS56190 | RMAV4N3B436A1B | GDS56234 |
| 28321FE111 | GDS56069 | 33205A5DAA2 | GDS56103 | 154000080AA | GDS56144 | 1614920080 | GDS56191 | 4341078010 | GDS56235 |
| 3815A682 | GDS56080 | 33207646872 | GDS56103 | T152203010BW | GDS56144 | 1614920480 | GDS56191 | 4341078030 | GDS56235 |
| 3815A679 | GDS56081 | 33205A5DAA1 | GDS56104 | 154000009AA | GDS56145 | 9810608280 | GDS56191 | RD022550X | GDS56236 |
| 1808655 | GDS56085 | 33207646869 | GDS56104 | 154000008AA | GDS56146 | 9813091880 | GDS56191 | RD022560X | GDS56237 |
| 1860765 | GDS56085 | 49500M5000 | GDS56105 | 154000079AA | GDS56147 | 31608742386 | GDS56194 | 4341078020 | GDS56238 |
| 1867867 | GDS56085 | 49501M5000 | GDS56106 | 154000078AA | GDS56148 | 1246405500 | GDS56195 | 4342078010 | GDS56239 |
| 1924280 | GDS56085 | 49500CL800 | GDS56107 | 154000204AA | GDS56149 | 1246465500 | GDS56195 | 423400E160 | GDS56240 |
| 2355693 | GDS56085 | HK833N129AB | GDS56109 | 154000203AA | GDS56150 | STE2201020 | GDS56195 | 423400E170 | GDS56241 |
| 2455221 | GDS56085 | LR092740 | GDS56109 | 154000196AA | GDS56151 | 1246336700 | GDS56196 | 68292313AB | GDS56242 |
| DV613B437KA | GDS56085 | LR181112 | GDS56109 | 154000195AA | GDS56152 | STE2203020 | GDS56196 | 68292314AB | GDS56243 |
| DV613B437KB | GDS56085 | T4A1863 | GDS56109 | 154000153AA | GDS56153 | 1307607300 | GDS56197 | 28321SJ000 | GDS56244 |
| FV663B437KA | GDS56085 | T4A50400 | GDS56109 | 154000307 | GDS56157 | STE2201010B | GDS56197 | 28321FL030 | GDS56245 |
| FV663B437KB | GDS56085 | HK833N128AB | GDS56110 | 154000307AA | GDS56157 | 1246336900 | GDS56198 | 44305TGNE91 | GDS56246 |
| RMDV613B437KA | GDS56085 | HK833N128AC | GDS56110 | 154000305AA | GDS56158 | STE2203010 | GDS56198 | 28421FL000 | GDS56247 |
| RMDV613B437KB | GDS56085 | LR092738 | GDS56110 | 154000285AA | GDS56159 | 12E407762F | GDS56200 | 28421FL020 | GDS56247 |
| 391013LM0A | GDS56086 | LR181111 | GDS56110 | 154000173AA | GDS56160 | 12E407762FX | GDS56200 | 42310TX4A11 | GDS56248 |
| 10927728 | GDS56087 | T4A1862 | GDS56110 | 391006506R | GDS56164 | 12E407762G | GDS56200 | 42310TX4A12 | GDS56248 |
| 391004BB1B | GDS56088 | T4A50399 | GDS56110 | 44306SZYT01 | GDS56165 | 12E407762GX | GDS56200 | 42311TX4A11 | GDS56249 |
| 391004BB6E | GDS56088 | 4233030170 | GDS56111 | 52012149 | GDS56166 | 12E407761F | GDS56201 | 42311TX4A12 | GDS56249 |
| 391006MA1C | GDS56088 | 49601P2000 | GDS56112 | 52128756 | GDS56166 | 12E407761FX | GDS56201 | 2203100MK06CD06 | GDS56250 |
| 391006MA1E | GDS56088 | T112203010FA | GDS56114 | 52012150 | GDS56167 | 12E407761G | GDS56201 | S311F2501010203 | GDS56250 |
| 51929897 | GDS56089 | 154000284AA | GDS56115 | 52128757 | GDS56167 | 12E407761GX | GDS56201 | 2203100BQ04 | GDS56251 |
| 52015489 | GDS56089 | RDB22550X | GDS56116 | 50522035 | GDS56168 | 2203200CD02 | GDS56213 | S111F2501010202 | GDS56251 |
| EBJ82MB1126A | GDS56089 | FG0525500A | GDS56117 | 50522037 | GDS56168 | S311F2501010301 | GDS56213 | 2203100BQ05 | GDS56252 |
| 51928329 | GDS56090 | FG0525500B | GDS56117 | 50546430 | GDS56168 | 2203100CD02 | GDS56214 | S111F2501010203 | GDS56252 |
| 52015488 | GDS56090 | FG0525500C | GDS56117 | 50546606 | GDS56168 | S311F2501010201 | GDS56214 | 4410179J70 | GDS56260 |
| 49501L1300 | GDS56091 | FG0525500D | GDS56117 | 51806989 | GDS56168 | 30735137 | GDS56216 | J9D33D402AC | GDS56261 |
| 49500L1300 | GDS56092 | 31608485717 | GDS56119 | 71796617 | GDS56168 | 8251779 | GDS56216 | J9D33D402AD | GDS56261 |
| 1223726 | GDS56093 | 31608682367 | GDS56119 | 71796620 | GDS56168 | 8601386 | GDS56216 | T4K10281 | GDS56261 |
| 1305326 | GDS56093 | 8682367 | GDS56119 | 31437065 | GDS56169 | 8602570 | GDS56216 | T4K5302 | GDS56261 |
| 1417777 | GDS56093 | 31608485716 | GDS56120 | 36010139 | GDS56169 | 8603787 | GDS56216 | 1014024857 | GDS56263 |
| 1444318 | GDS56093 | 31608682366 | GDS56120 | 49500S1200 | GDS56170 | 8689206 | GDS56216 | 4082008000 | GDS56263 |
| 1456974 | GDS56093 | 4410253R10 | GDS56122 | 49501S1250 | GDS56171 | 9181537 | GDS56216 | 80A501204C | GDS56267 |

| COMPETITOR | G-AP Ref. | COMPETITOR | G-AP Ref. | COMPETITOR | G-AP Ref. | COMPETITOR | G-AP Ref. | COMPETITOR | G-AP Ref. |
|---|---|---|---|---|---|---|---|---|---|
| OE | | 68248719AB | GDS56289 | A4473309100 | GDS56343 | LR048488 | GDS56383 | 495003K370 | GDS56446 |
| | | 68248719AD | GDS56289 | 4473308500 | GDS56344 | LR061605 | GDS56383 | 495003K370SJ | GDS56446 |
| 80A501204G | GDS56267 | 52123694AB | GDS56290 | 4473309300 | GDS56344 | LR117131 | GDS56383 | 495003K320 | GDS56447 |
| 80D501204 | GDS56267 | 68248718AA | GDS56290 | A4473308500 | GDS56344 | LR149101 | GDS56383 | 6393300801 | GDS56452 |
| 80A501203G | GDS56268 | 68248718AB | GDS56290 | A4473309300 | GDS56344 | RMEJ323B437BC | GDS56383 | A6393300801 | GDS56452 |
| 80A501203H | GDS56268 | 68248718AD | GDS56290 | 32249324 | GDS56348 | 423400E010 | GDS56384 | 2403200XKY88A | GDS56453 |
| 80D501203 | GDS56268 | 68248718AE | GDS56290 | 32249501 | GDS56348 | 39100EG000 | GDS56385 | 2403100XKY88A | GDS56454 |
| 5201214955263578 | GDS56269 | 2203100MK07CD08 | GDS56293 | 32249901 | GDS56348 | 391004JA0A | GDS56386 | 33205A4C691 | GDS56455 |
| 5212875655263578 | GDS56269 | S311F2501010204 | GDS56293 | 32324587 | GDS56348 | 391004JA0B | GDS56386 | 33205A733B3 | GDS56455 |
| 33207606568 | GDS56271 | 2203100AW10 | GDS56296 | 32324588 | GDS56348 | 391004JA2A | GDS56386 | 33208487123 | GDS56455 |
| 33207606567 | GDS56272 | 2203200BN09 | GDS56298 | 32339344 | GDS56348 | 3210100DC10003 | GDS56387 | 33208666073 | GDS56455 |
| 42310TLAA21 | GDS56273 | C211F2501010305 | GDS56298 | 32339345 | GDS56348 | 118816500A | GDS56388 | 33205A4C692 | GDS56456 |
| 42311TLAA21 | GDS56274 | 2203100BN09 | GDS56299 | 32339531 | GDS56348 | 118816599A | GDS56388 | 33205A733B4 | GDS56456 |
| 1J0407271EP | GDS56276 | C211F2501010206 | GDS56299 | 36003707 | GDS56348 | 118816600A | GDS56388 | 33205A733B6 | GDS56456 |
| 1J0407271GC | GDS56276 | 4341076020 | GDS56300 | 36010553 | GDS56348 | 142011900B | GDS56389 | 33208487124 | GDS56456 |
| 1J0407451GX | GDS56276 | 1882116 | GDS56302 | 36010610 | GDS56348 | 142011300B | GDS56390 | 33208666074 | GDS56456 |
| 49500R4000 | GDS56278 | 2043855 | GDS56302 | 36011665 | GDS56348 | 162663600A | GDS56391 | 33209452904 | GDS56456 |
| 2007677 | GDS56279 | EV6P3B436MA | GDS56302 | 32249900 | GDS56349 | 162663800A | GDS56392 | 00505504240 | GDS56457 |
| 2348214 | GDS56279 | EV6P3B436MB | GDS56302 | 36011664 | GDS56349 | 9X433B436AA | GDS56393 | 00505595800 | GDS56457 |
| 2364922 | GDS56279 | 32721G | GDS56307 | 36011712 | GDS56349 | C2S47416 | GDS56393 | 46359437 | GDS56457 |
| 2527108 | GDS56279 | 32722G | GDS56307 | 434100E180 | GDS56350 | 44101M68P10 | GDS56394 | 50535674 | GDS56457 |
| 2607517 | GDS56279 | 3272FJ | GDS56307 | 391015SN0A | GDS56351 | 44102M68P10 | GDS56395 | 50550424 | GDS56457 |
| 2712150 | GDS56279 | 3272FK | GDS56307 | 434100R211 | GDS56352 | 44101M68P00 | GDS56396 | 50559580 | GDS56457 |
| 2712152 | GDS56279 | 9642426880 | GDS56307 | 434200R150 | GDS56353 | 44101M68PA0 | GDS56396 | 50563997 | GDS56457 |
| 2821652 | GDS56279 | 32739T | GDS56308 | 4234048110 | GDS56354 | 44102M68P00 | GDS56397 | 71797777 | GDS56457 |
| GK213B437CB | GDS56279 | 32739V | GDS56308 | 4234047010 | GDS56355 | 44102M68PA0 | GDS56397 | 71798748 | GDS56457 |
| GK213B437CC | GDS56279 | 3273FJ | GDS56308 | 31602375507 | GDS56356 | 10929071 | GDS56398 | 71798749 | GDS56457 |
| KK213B437CC | GDS56279 | 3273FK | GDS56308 | 31602397421 | GDS56356 | 10929069 | GDS56399 | 71798750 | GDS56457 |
| KK213B437CD | GDS56279 | 9642426980 | GDS56308 | 31605A2DFE7 | GDS56356 | 32739J | GDS56402 | T212203020FA | GDS56460 |
| KK213B437CE | GDS56279 | 2203200MK06CD06 | GDS56319 | 31608611931 | GDS56356 | 32739K | GDS56402 | T212203010FA | GDS56461 |
| KK213B437CF | GDS56279 | S311F2501010303 | GDS56319 | 31608643381 | GDS56356 | 9638829080 | GDS56402 | T212203020CA | GDS56462 |
| KK213B437DA | GDS56279 | SA6225020 | GDS56320 | 31608661685 | GDS56356 | 04881214AG | GDS56403 | T212203010CA | GDS56463 |
| KK213B437DB | GDS56279 | 2310032 | GDS56321 | 8661685 | GDS56356 | 4881214AC | GDS56403 | 10257370 | GDS56464 |
| 2007676 | GDS56280 | 2500924 | GDS56321 | 4234048140 | GDS56357 | 4881214AD | GDS56403 | 13377898 | GDS56464 |
| 2348212 | GDS56280 | 2586010 | GDS56321 | 4234076010 | GDS56358 | 4881214AE | GDS56403 | 5374060 | GDS56464 |
| 2364919 | GDS56280 | KV663B437BC | GDS56321 | 42340AQ010 | GDS56358 | 4881214AF | GDS56403 | 95520573 | GDS56464 |
| 2527106 | GDS56280 | KV663B437BD | GDS56321 | 2203200BQ04 | GDS56360 | 4881214AG | GDS56403 | 13348263 | GDS56465 |
| 2607515 | GDS56280 | KV663B437BE | GDS56321 | S111F2501010303 | GDS56360 | 4881214AH | GDS56403 | 374909 | GDS56465 |
| 2712139 | GDS56280 | 52123523AA | GDS56324 | 4341005350 | GDS56361 | R4881214AE | GDS56403 | 95520633 | GDS56465 |
| 2712158 | GDS56280 | 52123523AB | GDS56324 | 4341005351 | GDS56361 | 1EB407271B | GDS56405 | 2309020QR01 | GDS56466 |
| 2821651 | GDS56280 | 4341050040 | GDS56325 | 2203200MK07CD08 | GDS56366 | 1EB407271C | GDS56405 | 1380047080 | GDS56467 |
| GK213B436CB | GDS56280 | 443063M1T01 | GDS56326 | S311F2501010304 | GDS56366 | 1886891 | GDS56408 | 1614305580 | GDS56467 |
| GK213B436CC | GDS56280 | 443053M1T01 | GDS56327 | 4473306800 | GDS56367 | 2138084 | GDS56408 | 1614306180 | GDS56467 |
| KK213B436CC | GDS56280 | 1607039480 | GDS56332 | 4473309200 | GDS56367 | F1F13B436EA | GDS56408 | 46358213 | GDS56467 |
| KK213B436CD | GDS56280 | 9671931780 | GDS56332 | A4473306800 | GDS56367 | F1F13B436EB | GDS56408 | 71799979 | GDS56467 |
| KK213B436CE | GDS56280 | 1607039580 | GDS56333 | A4473309200 | GDS56367 | 2203200BQ05 | GDS56409 | J422203020CA | GDS56468 |
| KK213B436CF | GDS56280 | 9671931880 | GDS56333 | 2203200AW10 | GDS56369 | S111F2501010302 | GDS56409 | J602203020CS | GDS56468 |
| KK213B436DA | GDS56280 | 391004850R | GDS56334 | 4473308700 | GDS56370 | 30651740 | GDS56412 | T212203020EA | GDS56469 |
| KK213B436DB | GDS56280 | 391005165R | GDS56334 | 4473309400 | GDS56370 | 30681387 | GDS56412 | T212203010EA | GDS56470 |
| GJ323B436CA | GDS56284 | 32324586 | GDS56335 | A4473308700 | GDS56370 | 36051042 | GDS56412 | 1650309880 | GDS56472 |
| GJ323B436CB | GDS56284 | 36003432 | GDS56335 | A4473309400 | GDS56370 | 8602527 | GDS56412 | 9826052880 | GDS56472 |
| GJ323B436CC | GDS56284 | 36003706 | GDS56335 | 4K0501203A | GDS56373 | 8602915 | GDS56412 | 1650309780 | GDS56473 |
| J9C1445 | GDS56284 | 36010552 | GDS56335 | 391005XA0A | GDS56374 | 8603311 | GDS56412 | 9826052780 | GDS56473 |
| J9C15404 | GDS56284 | 36010609 | GDS56335 | 4703300300 | GDS56374 | 8603802 | GDS56412 | J602203020CL | GDS56475 |
| K8D23B436BA | GDS56284 | 2592567 | GDS56336 | A4703300300 | GDS56374 | 8653579 | GDS56412 | J602203010CL | GDS56476 |
| K8D23B436CA | GDS56284 | 2768204 | GDS56336 | 10550924 | GDS56375 | 495002F600 | GDS56415 | 44306TFS000 | GDS56481 |
| LR071947 | GDS56284 | NK414K138AD | GDS56336 | 10550925 | GDS56376 | 495012F600 | GDS56416 | 3210200ED1 | GDS56484 |
| LR112408 | GDS56284 | NK414K138AF | GDS56336 | 3220200ED1 | GDS56377 | 495012F610 | GDS56416 | 3210200ED10003 | GDS56484 |
| LR117134 | GDS56284 | 2592568 | GDS56337 | 3220200ED10003 | GDS56377 | 118816100D | GDS56429 | 3210100ED1 | GDS56485 |
| LR133644 | GDS56284 | 2768201 | GDS56337 | 3220100ED1 | GDS56378 | 118816101C | GDS56429 | 3210100ED10003 | GDS56485 |
| LR137029 | GDS56284 | NK414K139AD | GDS56337 | 3220100ED10003 | GDS56378 | 118811599A | GDS56430 | 154000099AA | GDS56486 |
| LR149103 | GDS56284 | NK414K139AF | GDS56337 | 10252873 | GDS56379 | 118811900A | GDS56430 | J602203020VA | GDS56486 |
| 39601AR400 | GDS56285 | SA412560X | GDS56338 | 10252872 | GDS56380 | 10129373 | GDS56434 | 154000098AA | GDS56487 |
| 39601AM600 | GDS56286 | SA412550X | GDS56339 | C00186051 | GDS56381 | 10537002 | GDS56434 | 154000101AA | GDS56488 |
| 1609610280 | GDS56288 | SA6225030 | GDS56342 | C00186050 | GDS56382 | 10719317 | GDS56434 | 154000100AA | GDS56489 |
| 9804895280 | GDS56288 | 4473305800 | GDS56343 | EJ323B437BA | GDS56383 | 391001225R | GDS56439 | M112203010VA | GDS56489 |
| 52123695AB | GDS56289 | 4473309100 | GDS56343 | EJ323B437BB | GDS56383 | 391001097R | GDS56440 | 4082048200 | GDS56490 |
| 68248719AA | GDS56289 | A4473305800 | GDS56343 | EJ323B437BC | GDS56383 | 391019799R | GDS56441 | 4082067100 | GDS56490 |

| COMPETITOR | G-AP Ref. | COMPETITOR | G-AP Ref. | COMPETITOR | G-AP Ref. | COMPETITOR | G-AP Ref. | COMPETITOR | G-AP Ref. |
|---|---|---|---|---|---|---|---|---|---|
| OE | | 6600044186 | GDS56544 | 8251780 | GDS56586 | 52123761AD | GDS56625 | 2476044 | GDS56658 |
| | | 4082059400 | GDS56545 | 8601387 | GDS56586 | 52123761AE | GDS56625 | BK3V3B437AA | GDS56658 |
| 4082086600 | GDS56491 | 4082581600 | GDS56545 | 8602571 | GDS56586 | 52123761AG | GDS56625 | BK3V3B437AB | GDS56658 |
| 4082343200 | GDS56492 | T152203020BW | GDS56546 | 8603806 | GDS56586 | 52123761AH | GDS56625 | 1851663 | GDS56659 |
| 2309015QR01 | GDS56496 | 4082065200 | GDS56547 | T152203010BV | GDS56587 | 2250332 | GDS56627 | 2030916 | GDS56659 |
| T112203010BC | GDS56497 | 4082073900 | GDS56547 | 155310900B | GDS56588 | 2256163 | GDS56627 | 2476042 | GDS56659 |
| GP312550XA | GDS56500 | 8889481654 | GDS56547 | 154000007AA | GDS56589 | 2304229 | GDS56627 | 2481573 | GDS56659 |
| GP312550XB | GDS56500 | 4082007900 | GDS56548 | 154000006AA | GDS56590 | 2454845 | GDS56627 | BK3V3B436AA | GDS56659 |
| GP312550XC | GDS56500 | 391011MA0B | GDS56549 | 2250336 | GDS56592 | 2537181 | GDS56627 | BK3V3B436AB | GDS56659 |
| GP312550XD | GDS56500 | 4082064300 | GDS56550 | 2256162 | GDS56592 | JX673B436KAB | GDS56627 | GK3V3B437AA | GDS56659 |
| GP312550XE | GDS56500 | 10259525 | GDS56552 | 2454837 | GDS56592 | JX673B436KAC | GDS56627 | GK3V3B437AB | GDS56659 |
| GP312550XF | GDS56500 | 6R0407762E | GDS56553 | 2537148 | GDS56592 | JX673B436KAD | GDS56627 | 95262207 | GDS56660 |
| 31325076 | GDS56501 | 49501Q0200 | GDS56554 | JX673B436JAB | GDS56592 | JX673B436KAE | GDS56627 | 96852719 | GDS56660 |
| 31367557 | GDS56501 | 49501Q0400 | GDS56554 | JX673B436JAC | GDS56592 | JX673B436KAF | GDS56627 | 1311375000 | GDS56669 |
| 36001399 | GDS56501 | 49500Q0200 | GDS56555 | JX673B436JAD | GDS56592 | 2250344 | GDS56628 | EM2EB2203010 | GDS56669 |
| 36012422 | GDS56501 | 31602375519 | GDS56556 | JX673B436JAE | GDS56592 | 2256166 | GDS56628 | 96852718 | GDS56670 |
| P31325076 | GDS56501 | 31608607269 | GDS56556 | 2250342 | GDS56593 | 2304232 | GDS56628 | 4082102800 | GDS56671 |
| 3740231010 | GDS56502 | 31608643369 | GDS56556 | 2256165 | GDS56593 | 2454865 | GDS56628 | 8892393275 | GDS56671 |
| 3740231011 | GDS56502 | 31608661689 | GDS56556 | 2454863 | GDS56593 | 2537154 | GDS56628 | 10474179 | GDS56676 |
| 3910095F0A | GDS56502 | 1673502301 | GDS56557 | 2537209 | GDS56593 | JX673B437KAB | GDS56628 | K00301065 | GDS56676 |
| J9C19866 | GDS56503 | 1673507001 | GDS56557 | JX673B437JAB | GDS56593 | JX673B437KAC | GDS56628 | 4082579600 | GDS56678 |
| J9C22855 | GDS56503 | 1673508401 | GDS56557 | JX673B437JAC | GDS56593 | JX673B437KAD | GDS56628 | 2409015QR01 | GDS56679 |
| J9C33B437AB | GDS56503 | 167350840164 | GDS56557 | JX673B437JAD | GDS56593 | JX673B437KAE | GDS56628 | 2409020QR01 | GDS56680 |
| J9C33B437AC | GDS56503 | A1673502301 | GDS56557 | JX673B437JAE | GDS56593 | JX673B437KAF | GDS56628 | 39101EJ71A | GDS56681 |
| J9C33B437AD | GDS56503 | A1673507001 | GDS56557 | J422203020BT | GDS56594 | 32240677 | GDS56629 | 13356123 | GDS56692 |
| J9C39446 | GDS56503 | A1673508401 | GDS56557 | 4082106500 | GDS56595 | 32249687 | GDS56629 | 5374044 | GDS56692 |
| LR113620 | GDS56503 | A167350840164 | GDS56557 | 8891540387 | GDS56595 | 32339535 | GDS56629 | 95520519 | GDS56692 |
| LR136628 | GDS56503 | 1673502401 | GDS56558 | 4082106400 | GDS56596 | 32339536 | GDS56629 | 13245909 | GDS56693 |
| LR180090 | GDS56503 | 1673506901 | GDS56558 | 8891540394 | GDS56596 | 36003562 | GDS56629 | 374804 | GDS56693 |
| 4082101400 | GDS56504 | 1673508301 | GDS56558 | 31492397 | GDS56597 | 36013015 | GDS56629 | 95520733 | GDS56693 |
| 4082100900 | GDS56505 | A1673502401 | GDS56558 | 32249902 | GDS56597 | 32240676 | GDS56630 | 4342050030 | GDS56694 |
| 4082101100 | GDS56506 | A1673506901 | GDS56558 | 32339346 | GDS56597 | 32339534 | GDS56630 | 5QE407271B | GDS56697 |
| 4082100700 | GDS56507 | A1673508301 | GDS56558 | 36003708 | GDS56597 | 36003561 | GDS56630 | 5QE407271C | GDS56697 |
| 4082095200 | GDS56508 | 4410161M00 | GDS56559 | 36010550 | GDS56597 | 36013014 | GDS56630 | 5QE407761AX | GDS56697 |
| 4082101800 | GDS56510 | 4410161M01 | GDS56559 | 36011662 | GDS56597 | 2413048 | GDS56633 | 5QE407761X | GDS56697 |
| 4082101500 | GDS56511 | 4410161M01000 | GDS56559 | 36011711 | GDS56597 | 2434345 | GDS56633 | 7E0407274C | GDS56700 |
| 4082095100 | GDS56512 | 11135813 | GDS56560 | 31492398 | GDS56598 | 2517631 | GDS56633 | 7E0407274G | GDS56700 |
| T152203010CA | GDS56513 | 11135812 | GDS56561 | 32249502 | GDS56598 | L1T63B436BA | GDS56633 | 7E0407451FX | GDS56700 |
| J422203010BT | GDS56514 | 3230006CAD0000 | GDS56564 | 32249903 | GDS56598 | L1T63B436BB | GDS56633 | 7E0407451LX | GDS56700 |
| 4082007500 | GDS56515 | 3230005CAD0000 | GDS56565 | 32339347 | GDS56598 | L1T63B436BC | GDS56633 | 7LA407271B | GDS56700 |
| 4082037800 | GDS56515 | 3210001CAD0100 | GDS56566 | 32339348 | GDS56598 | 1609609280 | GDS56634 | 31325816 | GDS56701 |
| 4082043100 | GDS56515 | 2303300XKY28A | GDS56567 | 36003709 | GDS56598 | 9804895180 | GDS56634 | 36010091 | GDS56701 |
| 391019099R | GDS56517 | 4082064100 | GDS56568 | 36010551 | GDS56598 | 49500AA100 | GDS56635 | 36011787 | GDS56701 |
| 2303300XK85XB | GDS56518 | 4082102700 | GDS56569 | 36011663 | GDS56598 | 49500AB200 | GDS56635 | 2030917 | GDS56707 |
| 391000372R | GDS56519 | 8892393292 | GDS56569 | 68289671AA | GDS56599 | 49501AA100 | GDS56636 | 2481567 | GDS56707 |
| J692203010 | GDS56521 | 4082071100 | GDS56570 | 68584175AA | GDS56599 | 49501AB200 | GDS56636 | GK3V3B436AA | GDS56707 |
| J692203020 | GDS56522 | 4082071300 | GDS56571 | 3230006BAD0002 | GDS56600 | 391009795R | GDS56639 | GK3V3B436AB | GDS56707 |
| 391007556R | GDS56523 | 4082057200 | GDS56572 | 3815A680 | GDS56602 | 391011074R | GDS56640 | 9073301000 | GDS56708 |
| T152203020CA | GDS56524 | 4082057400 | GDS56573 | 3210002CAD0100 | GDS56605 | 49500D3090 | GDS56643 | A9073301000 | GDS56708 |
| 154000095AA | GDS56525 | 4082092600 | GDS56574 | 3272NE | GDS56611 | 49500D7090 | GDS56643 | 327536 | GDS56709 |
| 154000094AA | GDS56526 | 4082092400 | GDS56575 | 3272NG | GDS56611 | 391006307R | GDS56644 | SM5903TG001 | GDS56709 |
| T212203020 | GDS56528 | 4082056800 | GDS56576 | 3272RF | GDS56611 | 2303400XKY28A | GDS56648 | 49501G8250 | GDS56710 |
| T212203010 | GDS56529 | 8888470459 | GDS56576 | 3272RG | GDS56611 | 2303400XKZ70A | GDS56648 | 4342060230 | GDS56711 |
| 4082071600 | GDS56530 | 4082056700 | GDS56577 | 9656191880 | GDS56611 | 23454672 | GDS56650 | 4341060170 | GDS56712 |
| 4082082600 | GDS56530 | 8888470456 | GDS56577 | 9686039980 | GDS56611 | 95523424 | GDS56650 | 2252841 | GDS56713 |
| 8890288318 | GDS56530 | 4082579700 | GDS56578 | 49601M0000 | GDS56613 | 1J0407271NE | GDS56652 | 2422454 | GDS56713 |
| 2201200XSZ09B | GDS56531 | 31605A2E012 | GDS56579 | 49600M0000 | GDS56614 | 1J0407271PB | GDS56652 | 2500934 | GDS56713 |
| 2201100XSZ09B | GDS56532 | 31607646816 | GDS56579 | 3815A502 | GDS56617 | 1J0407453JX | GDS56652 | 2586012 | GDS56713 |
| 4082048100 | GDS56533 | 31608643368 | GDS56579 | 3815A562 | GDS56617 | 2933501100 | GDS56653 | KV663B436BB | GDS56713 |
| 4082066800 | GDS56533 | 1666449580 | GDS56581 | 2413052 | GDS56624 | A2933501100 | GDS56653 | KV663B436BC | GDS56713 |
| 2303100XSZ20B | GDS56534 | 9836235180 | GDS56581 | 2517635 | GDS56624 | 1642344580 | GDS56654 | KV663B436BD | GDS56713 |
| T152203020BV | GDS56535 | 1675589880 | GDS56582 | 2679030 | GDS56624 | 9827832580 | GDS56654 | KV663B436BE | GDS56713 |
| FTC92560X | GDS56536 | 9836235280 | GDS56582 | L1T63B437BA | GDS56624 | 391019028R | GDS56655 | 4341042090 | GDS56714 |
| 3210002CAD0200 | GDS56541 | 9846457080 | GDS56582 | L1T63B437BB | GDS56624 | 4410153R00 | GDS56656 | 4341042080 | GDS56715 |
| 2303200XSZ09A | GDS56542 | 3230005BAD0000 | GDS56584 | L1T63B437BC | GDS56624 | 4410153R01 | GDS56656 | 10474091 | GDS56716 |
| 4082064400 | GDS56543 | 3230005BAD0002 | GDS56584 | 52123761AA | GDS56625 | 4410153R02 | GDS56656 | K00301061 | GDS56716 |
| 4082059000 | GDS56544 | 2303200ASZ20A | GDS56585 | 52123761AB | GDS56625 | 4341033430 | GDS56657 | 10474306 | GDS56717 |
| 4082581500 | GDS56544 | 2303200ASZ20B | GDS56585 | 52123761AC | GDS56625 | 1851661 | GDS56658 | K00301063 | GDS56717 |

| COMPETITOR | G-AP Ref. | COMPETITOR | G-AP Ref. | COMPETITOR | G-AP Ref. | COMPETITOR | G-AP Ref. | COMPETITOR | G-AP Ref. |
|---|---|---|---|---|---|---|---|---|---|
| OE | | 2963304000 | GDS56740 | 2463302301 | GDS56795 | 3272YK | GDS56858 | 4342033350 | GDS56904 |
| | | 2973305501 | GDS56740 | 2463302700 | GDS56795 | 3272YL | GDS56858 | 4342078060 | GDS56904 |
| 49500D3030 | GDS56718 | 2973306200 | GDS56740 | 2463308800 | GDS56795 | 9685693680 | GDS56858 | 43420F6020 | GDS56904 |
| 49500D7030 | GDS56718 | A2943300000 | GDS56740 | A2463302301 | GDS56795 | 3273ZE | GDS56859 | 31605A2E011 | GDS56905 |
| 2663816 | GDS56722 | A2963303400 | GDS56740 | A2463302700 | GDS56795 | 3273ZF | GDS56859 | 31608607263 | GDS56905 |
| 2HJ407271 | GDS56722 | A296330340064 | GDS56740 | A2463308800 | GDS56795 | 9685693780 | GDS56859 | 31608643367 | GDS56905 |
| 2HJ407271A | GDS56722 | A2963304000 | GDS56740 | 10316866 | GDS56800 | 4342005280 | GDS56861 | 4082006000 | GDS56912 |
| MB3W3A428BB | GDS56722 | A2973305501 | GDS56740 | 33209806478 | GDS56800 | 391014BB2B | GDS56864 | 4082006600 | GDS56912 |
| MB3W3A428GB | GDS56722 | A2973306200 | GDS56740 | 33209813708 | GDS56800 | 4M4407271 | GDS56865 | 391006RC2D | GDS56913 |
| MB3Z3A427G | GDS56722 | 4082042900 | GDS56741 | 49500S1010 | GDS56808 | 95840727100 | GDS56865 | 391006RC5D | GDS56913 |
| 2659217 | GDS56723 | 9103302400 | GDS56742 | 495011D700 | GDS56810 | PAB407271B | GDS56865 | 391016UB2D | GDS56918 |
| 2HJ407272A | GDS56723 | 9103302900 | GDS56742 | 495011D701 | GDS56810 | PAD407271 | GDS56865 | 391016UB4A | GDS56918 |
| 2HJ407272B | GDS56723 | 9103304100 | GDS56742 | 495011D800 | GDS56810 | 3815A886 | GDS56867 | 391016UB5A | GDS56918 |
| MB3W3A427BC | GDS56723 | A9103302400 | GDS56742 | 2391980 | GDS56811 | 3815A942 | GDS56867 | 391006UM2D | GDS56919 |
| MB3W3A427GC | GDS56723 | A9103302900 | GDS56742 | 2449420 | GDS56811 | 3815A941 | GDS56868 | 391016UM2D | GDS56920 |
| MB3Z3A428K | GDS56723 | A9103304100 | GDS56742 | 2521698 | GDS56811 | 13248626 | GDS56869 | 154000238AA | GDS56921 |
| 2973500702 | GDS56724 | 10129464 | GDS56744 | M1T63B437FA | GDS56811 | 374787 | GDS56869 | 154000239AA | GDS56922 |
| 2973506400 | GDS56724 | 10719316 | GDS56744 | M1T63B437FB | GDS56811 | 95520669 | GDS56869 | 391006UB2B | GDS56923 |
| A2973500702 | GDS56724 | 154000235AA | GDS56747 | M1T63B437FC | GDS56811 | 95520670 | GDS56869 | 391006UB2D | GDS56923 |
| A2973506400 | GDS56724 | 154000234AA | GDS56748 | GG6525600 | GDS56812 | 44305TFS000 | GDS56870 | 391006UB4A | GDS56923 |
| 2973500602 | GDS56725 | 154000236AA | GDS56749 | CH523B436AA | GDS56813 | 13248627 | GDS56873 | 391006UB4B | GDS56923 |
| 2973506300 | GDS56725 | 49500N7170 | GDS56750 | CH523B436AB | GDS56813 | 374838 | GDS56873 | 391006UB6A | GDS56923 |
| A2973500602 | GDS56725 | 49501N7180 | GDS56751 | LR032113 | GDS56813 | 95520607 | GDS56873 | 49500P2200 | GDS56928 |
| A2973506300 | GDS56725 | 154000237AA | GDS56752 | LR062654 | GDS56813 | 95520608 | GDS56873 | 49501P2250 | GDS56929 |
| 31609806471 | GDS56726 | 1682747780 | GDS56753 | LR125160 | GDS56813 | 31492990 | GDS56874 | 6R0407761E | GDS56954 |
| 1305634400 | GDS56730 | 9837405680 | GDS56753 | 8450008104 | GDS56814 | 36011607 | GDS56874 | 6R0407761L | GDS56954 |
| SA3HE2203020A | GDS56730 | 1682747880 | GDS56754 | 8450008103 | GDS56815 | 36012844 | GDS56874 | 1EA501201B | GDS56955 |
| 1305634500 | GDS56731 | 9841939180 | GDS56754 | 8450030790 | GDS56816 | 360128440 | GDS56874 | 1EA501201F | GDS56955 |
| SA3HE2203010A | GDS56731 | 391016RC2D | GDS56761 | 8450030791 | GDS56817 | 36012943 | GDS56874 | 1EA501203F | GDS56955 |
| 7E0407276L | GDS56734 | 391016RC5D | GDS56761 | CH523B437AA | GDS56818 | 360129430 | GDS56874 | 1EA501203J | GDS56955 |
| 7E0407454KX | GDS56734 | 49500N7090 | GDS56762 | CH523B437AB | GDS56818 | 32240098 | GDS56875 | 1EA501203M | GDS56955 |
| 7E0407454X | GDS56734 | 49501CZ100 | GDS56763 | LR032114 | GDS56818 | 32336217 | GDS56875 | 1EA501202B | GDS56956 |
| 7E0407456X | GDS56734 | 49501N7120 | GDS56763 | LR062664 | GDS56818 | 32339047 | GDS56875 | 1EA501202F | GDS56956 |
| 7E0407761B | GDS56734 | 49501Q6250 | GDS56764 | LR125155 | GDS56818 | 36011542 | GDS56875 | 1EA501204F | GDS56956 |
| 7E0407761K | GDS56734 | 49500Q6250 | GDS56765 | 4342002K00 | GDS56819 | 36011606 | GDS56875 | 1EA501204J | GDS56956 |
| 7LA407272B | GDS56734 | 1613214580 | GDS56767 | 4234028090 | GDS56832 | 36011800 | GDS56875 | 1EA501204M | GDS56956 |
| 7LA407452BX | GDS56734 | 9811045380 | GDS56767 | 4234028091 | GDS56832 | 360118000 | GDS56875 | 391001BA0A | GDS56960 |
| 6393502310 | GDS56736 | 1613214680 | GDS56768 | 52123760AA | GDS56833 | 36013035 | GDS56875 | 2303101XST01A | GDS56968 |
| A6393502310 | GDS56736 | 9811045480 | GDS56768 | 52123760AB | GDS56833 | 8889006418 | GDS56875 | 2303100XST01A | GDS56969 |
| 1683602472 | GDS56737 | 2433301400 | GDS56771 | 52123760AC | GDS56833 | 4M0407271A | GDS56876 | 1EB407272B | GDS56971 |
| 1683603472 | GDS56737 | 2433301500 | GDS56771 | 52123760AF | GDS56833 | 4M0407271E | GDS56876 | 1EB407272C | GDS56971 |
| 1683603772 | GDS56737 | A2433301400 | GDS56771 | P52123760AB | GDS56833 | 4M0407271R | GDS56876 | 4342076020 | GDS56972 |
| 1683604572 | GDS56737 | A2433301500 | GDS56771 | 49500G4250 | GDS56834 | 5QN407271A | GDS56879 | 2303102XNW01A | GDS56975 |
| 1683604772 | GDS56737 | 31609806473 | GDS56772 | 49501G4250 | GDS56835 | 5QN407271N | GDS56879 | 2303103XNW01B | GDS56976 |
| A1683602472 | GDS56737 | 495012K800 | GDS56779 | 31602375524 | GDS56836 | 5QN407272N | GDS56880 | 5QE407272B | GDS56977 |
| A1683603472 | GDS56737 | 495012K820 | GDS56779 | 31607639442 | GDS56836 | 5QN407272S | GDS56880 | 5QE407272C | GDS56977 |
| A1683603772 | GDS56737 | 495012K820SJ | GDS56779 | 31608643366 | GDS56836 | GD002550X | GDS56892 | 5QE407762AX | GDS56977 |
| A1683604572 | GDS56737 | 495002K800 | GDS56780 | 31608643370 | GDS56836 | GD002560X | GDS56893 | 5QE407762X | GDS56977 |
| A1683604772 | GDS56737 | 495002K820 | GDS56780 | 31608661688 | GDS56836 | 1783748 | GDS56894 | 1366012080 | GDS56982 |
| 2933300300 | GDS56738 | 495002K820SJ | GDS56780 | 31608661690 | GDS56836 | 1841607 | GDS56894 | 71796569 | GDS56982 |
| 2933300500 | GDS56738 | 44306T1GE00 | GDS56781 | 44306T1TE01 | GDS56837 | 1882115 | GDS56894 | 1366013080 | GDS56983 |
| 2933300600 | GDS56738 | 44305T1GE00 | GDS56782 | 44306T1TE011M1 | GDS56837 | 2066184 | GDS56894 | 71796606 | GDS56983 |
| A2933300300 | GDS56738 | 3910000Q7E | GDS56783 | GDD52560X | GDS56840 | DV6P3B436BA | GDS56894 | 51938590 | GDS56984 |
| A2933300500 | GDS56738 | 391008943R | GDS56783 | GDD52560XA | GDS56840 | EV6P3B436BA | GDS56894 | 52055292 | GDS56984 |
| A2933300600 | GDS56738 | 3910100Q7E | GDS56784 | 39100GDD5A | GDS56841 | EV6P3B436BB | GDS56894 | 52088374 | GDS56984 |
| 2943300100 | GDS56739 | 391014587R | GDS56784 | GDD52550X | GDS56841 | RMDV6P3B436B1A | GDS56894 | 68348155AA | GDS56984 |
| 2963303500 | GDS56739 | 31367904 | GDS56785 | GDD52550XA | GDS56841 | 51887291 | GDS56897 | 68410245AA | GDS56984 |
| 2963303900 | GDS56739 | 36012752 | GDS56785 | 391015FP0B | GDS56842 | 5188729155233397 | GDS56897 | 71796630 | GDS56984 |
| 2973305601 | GDS56739 | 2303124XGW01A | GDS56786 | 391005FP0B | GDS56843 | 51933681 | GDS56897 | 71796633 | GDS56984 |
| 2973306300 | GDS56739 | 2303104XNW01A | GDS56787 | 4K0501204 | GDS56844 | 5193368155233397 | GDS56897 | 71796634 | GDS56984 |
| A2943300100 | GDS56739 | 2303105XNW01A | GDS56788 | 31607639426 | GDS56851 | 51887291 | GDS56898 | K68348155AA | GDS56984 |
| A2963303500 | GDS56739 | FK724B402AB | GDS56790 | 31608643372 | GDS56851 | 5188729155233396 | GDS56898 | K68410245AA | GDS56984 |
| A2963303900 | GDS56739 | J9C1483 | GDS56790 | 1611143280 | GDS56852 | 51933681 | GDS56898 | 51959852 | GDS56985 |
| A2973305601 | GDS56739 | LR060412 | GDS56790 | 9807160780 | GDS56852 | 5193368155233396 | GDS56898 | 52070637 | GDS56985 |
| A2973306300 | GDS56739 | 391014BE3B | GDS56791 | 1611143380 | GDS56853 | 4342006B50 | GDS56904 | 52088375 | GDS56985 |
| 2943300000 | GDS56740 | 391004BE3B | GDS56792 | 9807160680 | GDS56853 | 4342006B51 | GDS56904 | 71796530 | GDS56985 |
| 2963303400 | GDS56740 | 43420K0050 | GDS56793 | 1609609380 | GDS56855 | 4342007100 | GDS56904 | 71796533 | GDS56985 |
| 296330340064 | GDS56740 | 43410K0060 | GDS56794 | 9675025780 | GDS56855 | 4342007101 | GDS56904 | 71796534 | GDS56985 |

| COMPETITOR | G-AP Ref. | COMPETITOR | G-AP Ref. | COMPETITOR | G-AP Ref. | COMPETITOR | G-AP Ref. | COMPETITOR | G-AP Ref. |
|---|---|---|---|---|---|---|---|---|---|
| OE | | 4410260G42 | GDS57102 | 4711835 | GDS57221 | 4411861MB0 | GDS57288 | 2203100CN02 | GDS57376 |
| | | 44102M79FA0 | GDS57119 | 93169664 | GDS57221 | 4411961MB0 | GDS57288 | 391014BE4B | GDS57378 |
| 84138315 | GDS56988 | 44102M79FC0 | GDS57119 | 93194650 | GDS57221 | 4410261M00 | GDS57289 | 49501G6200 | GDS57379 |
| 84527909 | GDS56988 | 44102M79FC1 | GDS57119 | 95508236 | GDS57221 | 4410261M01 | GDS57289 | 49500G6200 | GDS57380 |
| 84675882 | GDS56988 | 44102M79FC1000 | GDS57119 | 95520701 | GDS57221 | 4410155L20 | GDS57290 | 50535672 | GDS57381 |
| 95525665 | GDS56988 | 44101M79F75 | GDS57120 | 374985 | GDS57222 | 4410155LC0 | GDS57290 | 50547149 | GDS57381 |
| 95528994 | GDS56988 | 44101M79F75000 | GDS57120 | 4410251K00 | GDS57222 | 4410179J21 | GDS57290 | 50563996 | GDS57381 |
| 95530300 | GDS56988 | 44101M79FA0 | GDS57120 | 4410251K00000 | GDS57222 | 4410179JC0 | GDS57290 | 50566877 | GDS57381 |
| YR00060880 | GDS56988 | 44101M79FC0 | GDS57120 | 4710017 | GDS57222 | 4410179JG1 | GDS57290 | 670312478 | GDS57381 |
| 68193667AA | GDS56993 | 44101M79FC1 | GDS57120 | 93169674 | GDS57222 | 4410179JG1000 | GDS57290 | 50535595 | GDS57382 |
| 68193667AB | GDS56993 | 44101M79FC1000 | GDS57120 | 93194655 | GDS57222 | 4410180J11 | GDS57290 | 50563995 | GDS57382 |
| 68193667AC | GDS56993 | 391004A03A | GDS57124 | 4410251K90 | GDS57223 | 4410180J22 | GDS57290 | 71797602 | GDS57382 |
| 4410262J30 | GDS57004 | 391004A06E | GDS57124 | 4410251K90000 | GDS57223 | 4410180J23 | GDS57290 | 71798365 | GDS57382 |
| 4410262J31 | GDS57004 | 44101M68K50 | GDS57124 | 4711022 | GDS57223 | 71742702 | GDS57290 | 50534103 | GDS57385 |
| 4410263J30 | GDS57004 | 44101M68K51 | GDS57124 | 93194660 | GDS57223 | 71743873 | GDS57290 | 50546428 | GDS57385 |
| 4410263J32 | GDS57004 | 44102M79F75 | GDS57128 | 95520769 | GDS57223 | 71746741 | GDS57290 | 391017898R | GDS57389 |
| 4410263J32000 | GDS57004 | 44102M79F75000 | GDS57128 | 4410168L01 | GDS57228 | 71768592 | GDS57290 | 391005190R | GDS57390 |
| 4410163B10 | GDS57032 | 495000X400 | GDS57145 | 44101M74L00 | GDS57228 | 71790964 | GDS57290 | 49501S1070 | GDS57392 |
| 4410163B11 | GDS57032 | 4410260G21 | GDS57148 | 44101M74L01 | GDS57228 | 4410255L01 | GDS57292 | 1773302901 | GDS57394 |
| 4410163E10 | GDS57032 | 4410260G22 | GDS57148 | 44101M74L01000 | GDS57228 | 4410270L00 | GDS57293 | 1773303103 | GDS57394 |
| 4410163E11 | GDS57032 | 4410260G23 | GDS57148 | 44101M74LA0 | GDS57228 | 44102H70L00 | GDS57293 | 1773304403 | GDS57394 |
| 4410162B12 | GDS57039 | 4410260GC2 | GDS57148 | 4410168L80 | GDS57234 | 4410557L01 | GDS57294 | A1773302901 | GDS57394 |
| 4410180 | GDS57039 | 30024183 | GDS57149 | 44101M74L80 | GDS57234 | 4410657L01 | GDS57295 | A1773303103 | GDS57394 |
| 4410180E00 | GDS57039 | 4410154J01 | GDS57149 | 44101M74L81 | GDS57234 | 4410285L00 | GDS57296 | A1773304403 | GDS57394 |
| 4410180E01 | GDS57039 | 4410167D01 | GDS57149 | 44101M74L82 | GDS57234 | 4410168L32 | GDS57297 | 2001842 | GDS57402 |
| 4410180E01000 | GDS57039 | 4410177E12 | GDS57149 | 4410268L01 | GDS57240 | 4411868L31 | GDS57297 | GV6P3B437LA | GDS57402 |
| 4410262B12 | GDS57040 | 4410160G21 | GDS57151 | 4410268L02 | GDS57240 | 4411968L30 | GDS57297 | 2001841 | GDS57403 |
| 4410280 | GDS57040 | 4410160G22 | GDS57151 | 44102M74L00 | GDS57240 | 4410268L32 | GDS57298 | GV6P3B436LA | GDS57403 |
| 4410280E00 | GDS57040 | 4410160G23 | GDS57151 | 44102M74L01 | GDS57240 | 4410255L80 | GDS57299 | FG0125500D | GDS57407 |
| 4410280E01 | GDS57040 | 4410160GC2 | GDS57151 | 44102M74L01000 | GDS57240 | 71750898 | GDS57299 | FGY125500 | GDS57407 |
| 4410280E0100 | GDS57040 | 6G9N4B402AA | GDS57165 | 44102M74LA0 | GDS57240 | 4410155LH2 | GDS57300 | FGY125500A | GDS57407 |
| 4410280E01000 | GDS57040 | 6G9N4B402AB | GDS57165 | 4410265J00 | GDS57246 | 4410155L71 | GDS57301 | FGY125500B | GDS57407 |
| 30018144 | GDS57050 | LR001160 | GDS57165 | 4410279J00 | GDS57247 | 2303100XPW01A | GDS57318 | FR012550X | GDS57407 |
| 4410160A20 | GDS57050 | LR014491 | GDS57165 | 4410280J00 | GDS57247 | 2303101XPW01A | GDS57318 | 4341006A70 | GDS57410 |
| 4410160AB1 | GDS57050 | LR024525 | GDS57165 | 4410280J00000 | GDS57247 | 2303102XPW01A | GDS57319 | 4341006A71 | GDS57410 |
| 4410185C20 | GDS57050 | LR025959 | GDS57165 | 4410280J01 | GDS57247 | 2303103XPW01A | GDS57320 | 4341007090 | GDS57410 |
| 4410254G50 | GDS57060 | LR041309 | GDS57165 | 4410280J01000 | GDS57247 | 495002W200 | GDS57331 | 4341007091 | GDS57410 |
| 4410254G51 | GDS57060 | LR061592 | GDS57165 | 4410280J02 | GDS57247 | 2375664 | GDS57336 | 4341033370 | GDS57410 |
| 4410154G50 | GDS57061 | 4410272K00 | GDS57166 | 4410280J02000 | GDS57247 | 2414542 | GDS57336 | 7H0407272AH | GDS57411 |
| 4410154G5000 | GDS57061 | 4410172K00 | GDS57167 | 71742703 | GDS57247 | LX673B437BA | GDS57336 | 7H0407272AK | GDS57411 |
| 4410000 | GDS57066 | 4410272K40 | GDS57168 | 396004652R | GDS57265 | LX673B437BAB | GDS57336 | 7H0407272AR | GDS57411 |
| 4410283 | GDS57066 | 4410172K20 | GDS57169 | 396005911R | GDS57265 | LX673B437BAC | GDS57336 | 7H0407272BG | GDS57411 |
| 4410172F00 | GDS57077 | 96287814 | GDS57176 | 8200939996 | GDS57265 | LX6Z3B437B | GDS57336 | 7H0407272BN | GDS57411 |
| 44101M72F12 | GDS57077 | 96396122 | GDS57176 | 8201505593 | GDS57265 | TX1091 | GDS57336 | 7H0407272CJ | GDS57411 |
| 44101M72F13 | GDS57077 | 96897322 | GDS57176 | 4410271LA1 | GDS57275 | 43420K0080 | GDS57337 | 7H0407452BV | GDS57411 |
| 4410272F00 | GDS57078 | 96287813 | GDS57177 | 4410154PB1 | GDS57276 | 43410K0090 | GDS57338 | 7H0407452BX | GDS57411 |
| 44102M72F12 | GDS57078 | 96396121 | GDS57177 | 4410171LC1 | GDS57277 | 3210002ARD0500 | GDS57339 | 7H0407452FV | GDS57411 |
| 44102M72F13 | GDS57078 | 96897321 | GDS57177 | 4410254P10 | GDS57278 | 3210001AVN1300 | GDS57340 | 7H0407452FX | GDS57411 |
| 4410262J20 | GDS57083 | 4410162J00 | GDS57183 | 4410254P11 | GDS57278 | 9W834K138CD | GDS57341 | 7H0407452KX | GDS57411 |
| 4410262J21 | GDS57083 | 4410163J01 | GDS57183 | 4410257L11 | GDS57280 | 9W834K138CE | GDS57341 | 7H0407454X | GDS57411 |
| 4410263J20 | GDS57083 | 4342006180 | GDS57185 | 4410257L12 | GDS57280 | C2D42131 | GDS57341 | 2303300XKU29A | GDS57412 |
| 4410263J21 | GDS57083 | 495000X410 | GDS57195 | 4410179J61 | GDS57281 | C2Z4812 | GDS57341 | 391008349R | GDS57413 |
| 4410263J22 | GDS57083 | 495000X510 | GDS57195 | 4410261M20 | GDS57282 | GX734K138DB | GDS57341 | 2303103XGW04A | GDS57421 |
| 4410263J23 | GDS57083 | 495000X515 | GDS57195 | 4410261M21 | GDS57282 | GX734K138DC | GDS57341 | 2303102XGW04A | GDS57422 |
| 4410260G51 | GDS57084 | 495000X525 | GDS57195 | 4411861MC0 | GDS57282 | T2H3340 | GDS57341 | 391005551R | GDS57423 |
| 4410260G52 | GDS57084 | 4410151K90 | GDS57197 | 4411961MC0 | GDS57282 | T2H59081 | GDS57341 | 391018515R | GDS57424 |
| 4410160G51 | GDS57085 | 4710021 | GDS57197 | 4410571L00 | GDS57283 | 2303104AGW01A | GDS57344 | 2303300XKY48B | GDS57428 |
| 4410160G52 | GDS57085 | 93194659 | GDS57197 | 4410571L01 | GDS57283 | 2303103AGW01A | GDS57345 | 2303400XKY88A | GDS57429 |
| 4410262J00 | GDS57086 | 95520757 | GDS57197 | 4410671L00 | GDS57284 | 496001F000 | GDS57348 | 2303400XKU29A | GDS57443 |
| 4410262J01 | GDS57086 | 391014A04C | GDS57211 | 4410671L01 | GDS57284 | 496001F001 | GDS57348 | 982501203C | GDS57444 |
| 4701110 | GDS57087 | 44102M68K50 | GDS57211 | 4410278K00 | GDS57285 | 4K0407271A | GDS57360 | 982501203D | GDS57444 |
| 9206563 | GDS57087 | 44102M76M00 | GDS57211 | 4410278K00000 | GDS57285 | 4K0407271K | GDS57360 | 982501203J | GDS57444 |
| 42702796 | GDS57093 | 44102M76M10 | GDS57211 | J24B1109459 | GDS57285 | 5N0407764C | GDS57372 | 391010424R | GDS57447 |
| 96485019 | GDS57093 | S122203020AB | GDS57218 | 4410565J10 | GDS57286 | 5N0407764CX | GDS57372 | 391000804R | GDS57448 |
| 96870387 | GDS57093 | S212203020AB | GDS57218 | 4410579K10 | GDS57286 | 5N0407766G | GDS57372 | 561407272Q | GDS57452 |
| 42702795 | GDS57094 | 374984 | GDS57221 | 4410261M10 | GDS57287 | 5N0407766GX | GDS57372 | 52012152 | GDS57453 |
| 96485020 | GDS57094 | 4410151K00 | GDS57221 | 4410261M11 | GDS57287 | 434200E130 | GDS57373 | 52128759 | GDS57453 |
| 96870388 | GDS57094 | 4710013 | GDS57221 | 4410161MB0 | GDS57288 | 2203200CN02 | GDS57375 | 52012151 | GDS57454 |

| COMPETITOR | G-AP Ref. | COMPETITOR | G-AP Ref. | COMPETITOR | G-AP Ref. | COMPETITOR | G-AP Ref. | COMPETITOR | G-AP Ref. |
|---|---|---|---|---|---|---|---|---|---|
| OE | | M1T63B436FA | GDS57558 | 33211229757 | GDS57626 | 11650739 | GDS57697 | SC2EE2203020 | GDS57752 |
| | | M1T63B436FB | GDS57558 | 33217504521 | GDS57626 | 11292323 | GDS57698 | 10259524 | GDS57753 |
| 52128758 | GDS57454 | M1T63B436FC | GDS57558 | 10095989 | GDS57628 | 11650740 | GDS57698 | 44306TGNE91 | GDS57756 |
| 5212875855263578 | GDS57454 | 46359431 | GDS57561 | 10129372 | GDS57629 | 154000259AA | GDS57699 | 2133303603 | GDS57760 |
| 2303400XKZ21A | GDS57455 | 50542738 | GDS57561 | 49501J9510 | GDS57635 | J682203010 | GDS57699 | 2133308205 | GDS57760 |
| 391011979R | GDS57456 | 50549851 | GDS57561 | 49501J9510SJ | GDS57635 | 2303105XGW02A | GDS57703 | A2133303603 | GDS57760 |
| FD8025600 | GDS57463 | 50560277 | GDS57561 | 49500J9510 | GDS57636 | 154000283AA | GDS57705 | A2133308205 | GDS57760 |
| FD8025600A | GDS57463 | 71797719 | GDS57561 | 49500J9510SJ | GDS57636 | 154000386AA | GDS57705 | 1314130300 | GDS57766 |
| 2303127XGW01A | GDS57479 | 71798408 | GDS57561 | 391017183R | GDS57637 | 154000282AA | GDS57706 | SA3EB2203020A | GDS57766 |
| 2203300101 | GDS57486 | 71799516 | GDS57561 | 4203370300 | GDS57637 | 154000385AA | GDS57706 | 1314130200 | GDS57767 |
| A2203300101 | GDS57486 | 3910000Q8C | GDS57562 | A4203370300 | GDS57637 | 44305T50000 | GDS57707 | SA3EB2203010A | GDS57767 |
| 2303400XKZ4UA | GDS57489 | 391006019R | GDS57562 | 49501N7060 | GDS57639 | 44305T50010 | GDS57707 | 13348265 | GDS57771 |
| 495013S071 | GDS57490 | 95529514 | GDS57562 | 391003401R | GDS57640 | 44306T50000 | GDS57708 | 374913 | GDS57771 |
| 495013S071SJ | GDS57490 | 95529516 | GDS57562 | 391003955R | GDS57641 | 44306T50010 | GDS57708 | 95520721 | GDS57771 |
| 495002G503 | GDS57492 | 2303400AKZ65A | GDS57563 | 10094042 | GDS57642 | 13375235 | GDS57709 | 13335126 | GDS57772 |
| 8450032632 | GDS57498 | 2303400XKZ65A | GDS57563 | 10281288 | GDS57645 | 13479751 | GDS57709 | 374882 | GDS57772 |
| 8450032633 | GDS57499 | 2303400XKZ65B | GDS57563 | 42437963 | GDS57646 | 5374136 | GDS57709 | 95520735 | GDS57772 |
| 46354606 | GDS57500 | 2303400XKZ65C | GDS57563 | 3273ZK | GDS57651 | 5374180 | GDS57709 | 1353476800 | GDS57774 |
| 52154895 | GDS57500 | 391002423R | GDS57571 | 327531 | GDS57651 | 95520737 | GDS57709 | SA3EK2203010 | GDS57774 |
| 68486131AA | GDS57500 | 4410153R10 | GDS57576 | 9686348680 | GDS57651 | 391009335R | GDS57712 | GJ323B436BA | GDS57776 |
| 2303300AKZ65A | GDS57505 | 4410153R11 | GDS57576 | 10233402 | GDS57652 | 4203372000 | GDS57712 | GJ323B436BB | GDS57776 |
| 2303300XKZ65A | GDS57505 | 4410153R12 | GDS57576 | 10233401 | GDS57653 | A4203372000 | GDS57712 | LR071950 | GDS57776 |
| 2303300XKZ65B | GDS57505 | 4473503900 | GDS57577 | 10211254 | GDS57654 | 2303400XKZ78A | GDS57715 | LR117133 | GDS57776 |
| 6C0407272AF | GDS57507 | 447350390064 | GDS57577 | 10719312 | GDS57654 | 2303300XKZ78A | GDS57716 | LR149104 | GDS57776 |
| 6C0407272AG | GDS57507 | A4473503900 | GDS57577 | 10211255 | GDS57655 | 154000609AA | GDS57717 | RMGJ323B436BB | GDS57776 |
| 6C0407272E | GDS57507 | A447350390064 | GDS57577 | 10719313 | GDS57655 | 154000355AA | GDS57718 | 4341050020 | GDS57777 |
| 6C0407272EX | GDS57507 | 2D6695820R | GDS57578 | 46351965 | GDS57656 | 154000608AA | GDS57718 | 4341050021 | GDS57777 |
| 6C0407452DX | GDS57507 | 3910000Q7L | GDS57578 | 46357027 | GDS57656 | 2303200XSZ08B | GDS57719 | 4342050020 | GDS57778 |
| 495003Z220 | GDS57508 | 391009653R | GDS57578 | 46857595 | GDS57656 | 4082012800 | GDS57720 | 4342050021 | GDS57778 |
| 495003Z220SJ | GDS57508 | 93461763 | GDS57578 | 71799804 | GDS57656 | 4082012800661 | GDS57720 | 2543307901 | GDS57779 |
| 495013Z270 | GDS57509 | 496003J000 | GDS57581 | 10284933 | GDS57657 | 2129537 | GDS57721 | A2543307901 | GDS57779 |
| 495013Z270SJ | GDS57509 | 496003J050 | GDS57581 | 30005114 | GDS57657 | 2137577 | GDS57721 | 2543308101 | GDS57780 |
| 2303400XKU87A | GDS57511 | J422203020BG | GDS57584 | 10166400 | GDS57658 | GN153B436SA | GDS57721 | A2543308101 | GDS57780 |
| 2303300XKU87A | GDS57512 | 3274D0 | GDS57586 | 30005113 | GDS57658 | GN153B436SB | GDS57721 | 391001MA0B | GDS57787 |
| 9X433B437AA | GDS57519 | 8893033493 | GDS57587 | A00041400 | GDS57660 | GN1Z3B436AC | GDS57721 | 1353476700 | GDS57790 |
| C2S47417 | GDS57519 | 8893033487 | GDS57588 | A00041394 | GDS57661 | 00505427370 | GDS57722 | SA3EK2203020 | GDS57790 |
| 49500N7210 | GDS57522 | 391007589R | GDS57589 | A00041401 | GDS57662 | 50542737 | GDS57722 | 1337164900 | GDS57791 |
| 49501N7210 | GDS57523 | 391011511R | GDS57593 | A00041402 | GDS57663 | 50549850 | GDS57722 | EKEB2203010A | GDS57791 |
| 49501N7050 | GDS57525 | LR165021 | GDS57596 | 1350222800 | GDS57664 | 1349074000 | GDS57723 | 1337164600 | GDS57792 |
| 49500N7050 | GDS57526 | M8E23N128AC | GDS57596 | EM2EF2203020C | GDS57664 | 1361133300 | GDS57723 | EKEB2203020A | GDS57792 |
| 391008444R | GDS57527 | 3815A764 | GDS57597 | 1350222900 | GDS57665 | EM2EF2203020B | GDS57723 | 2200400P3060 | GDS57793 |
| 3910100Q9C | GDS57528 | 31608742385 | GDS57610 | EM2EF2203010C | GDS57665 | EM2EU2203020B | GDS57723 | 2200300P3060 | GDS57794 |
| 3910100Q9F | GDS57528 | 50565120 | GDS57611 | 1349073900 | GDS57666 | 1349073800 | GDS57724 | 4234024080 | GDS57797 |
| 391014926R | GDS57528 | 68622459AA | GDS57611 | EM2EF2203020A | GDS57666 | 1361133200 | GDS57724 | 1337162400 | GDS57798 |
| FG0125500E | GDS57533 | 71799903 | GDS57611 | 1349074100 | GDS57667 | EM2EF2203010B | GDS57724 | EKEA2201020A | GDS57798 |
| FG0125500F | GDS57533 | 50565118 | GDS57612 | EM2EF2203010A | GDS57667 | EM2EU2203010B | GDS57724 | 1337164700 | GDS57799 |
| FGY225500 | GDS57533 | 68622458AA | GDS57612 | 1345613700 | GDS57668 | 1664472280 | GDS57725 | EKEA2201010A | GDS57799 |
| FGY225500A | GDS57533 | 11339360 | GDS57613 | SC2EE2203020B | GDS57668 | 9806152880 | GDS57725 | 1337164500 | GDS57800 |
| FGY225500B | GDS57533 | 11643315 | GDS57613 | 1345622800 | GDS57669 | SU001B2781 | GDS57725 | EKEB2201020A | GDS57800 |
| FGY225500C | GDS57533 | 11339361 | GDS57614 | SC2EE2203010B | GDS57669 | 52138422 | GDS57726 | 1337164800 | GDS57801 |
| 1380050080 | GDS57538 | 11643316 | GDS57614 | 1609609580 | GDS57671 | 52182454 | GDS57726 | EKEB2201010A | GDS57801 |
| 1614305780 | GDS57538 | 49501N7070 | GDS57615 | 9806699580 | GDS57671 | 71799807 | GDS57726 | 4233024050 | GDS57802 |
| 1614306380 | GDS57538 | 4082064700 | GDS57616 | RD042560X | GDS57675 | 434100D020 | GDS57728 | 1332122800 | GDS57810 |
| 46358211 | GDS57538 | 8450006570 | GDS57617 | RD042550X | GDS57676 | 4341052050 | GDS57728 | EKEB2203010 | GDS57810 |
| 71799976 | GDS57538 | 49500N7070 | GDS57618 | 1EC407271B | GDS57677 | 434200W230 | GDS57735 | 1332122900 | GDS57811 |
| 1773300902 | GDS57546 | 49500N7160 | GDS57619 | 1EC407271C | GDS57677 | 434200W280 | GDS57735 | EKEB2203020 | GDS57811 |
| 1773301501 | GDS57546 | 22830707 | GDS57620 | 1EC407272B | GDS57678 | 36002494 | GDS57739 | 1350015700 | GDS57816 |
| 1773309401 | GDS57546 | 5374071 | GDS57620 | 49500CZ200 | GDS57679 | 1350015900 | GDS57741 | SC2EE2203010F | GDS57816 |
| A1773300902 | GDS57546 | 95520545 | GDS57620 | 2303106XGW02A | GDS57680 | SC2EE2203020E | GDS57741 | 1350015800 | GDS57817 |
| A1773301501 | GDS57546 | 46308227 | GDS57622 | J422203010BG | GDS57685 | 1350015600 | GDS57742 | SC2EE2203020F | GDS57817 |
| A1773309401 | GDS57546 | 4630822771738960 | GDS57622 | 2200300U3450 | GDS57686 | SC2EE2203010E | GDS57742 | 31602375512 | GDS57818 |
| 391010581R | GDS57547 | 46308232 | GDS57622 | 212142215010 | GDS57692 | RTC42550X | GDS57748 | 31602397422 | GDS57818 |
| 391004752R | GDS57551 | 71786971 | GDS57622 | 2123221501011 | GDS57692 | RTC42550XA | GDS57748 | 31605A2DFE8 | GDS57818 |
| 31609452629 | GDS57555 | 71791504 | GDS57622 | 212142215011 | GDS57693 | RTC42560X | GDS57749 | 31608611932 | GDS57818 |
| 31609452630 | GDS57556 | 71791506 | GDS57622 | 2123221501111 | GDS57693 | RTC42560XA | GDS57749 | 31608661686 | GDS57818 |
| 2391982 | GDS57558 | 10927727 | GDS57623 | FA612560X | GDS57696 | 1314367400 | GDS57751 | 50521848 | GDS57819 |
| 2449419 | GDS57558 | 10985239 | GDS57624 | FA612560XA | GDS57696 | SC2EE2203010 | GDS57751 | 5180698955237698 | GDS57819 |
| 2521694 | GDS57558 | 10281287 | GDS57625 | 11292322 | GDS57697 | 1314365700 | GDS57752 | 4234053040 | GDS57820 |

| COMPETITOR | G-AP Ref. | COMPETITOR | G-AP Ref. | COMPETITOR | G-AP Ref. | COMPETITOR | G-AP Ref. | COMPETITOR | G-AP Ref. |
|---|---|---|---|---|---|---|---|---|---|
| OE | | 71799928 | GDS57878 | 6001080250 | GDS57916 | 2203100AW14 | GDS57968 | 2203200AW14 | GDS58063 |
| | | 44101M68P40 | GDS57879 | 9848820780 | GDS57916 | 2203100MK04CJ05 | GDS57968 | S203F2501010301 | GDS58063 |
| 4234050080 | GDS57821 | 104416800A | GDS57880 | 6001080251 | GDS57917 | S203F2501010201 | GDS57968 | 2203200BQ07 | GDS58065 |
| 2Q0407272CL | GDS57823 | 142016100A | GDS57882 | 9848820880 | GDS57917 | 1675960580 | GDS57969 | 2203200BQ11 | GDS58065 |
| 2Q0407452JX | GDS57823 | 142016700B | GDS57882 | 4082096600 | GDS57918 | 9844355880 | GDS57969 | S111F2501010405 | GDS58065 |
| 1332122600 | GDS57825 | 391014627R | GDS57883 | 8891732015 | GDS57918 | SU001B3803 | GDS57969 | S111F2501010406 | GDS58065 |
| EKEA2201020 | GDS57825 | 391016992R | GDS57883 | 4082096700 | GDS57919 | 1169209200 | GDS57970 | 1675887780 | GDS58066 |
| 1332120400 | GDS57826 | 391017079R | GDS57883 | 8891732013 | GDS57919 | SEH2203020 | GDS57970 | 9836046380 | GDS58066 |
| EKEA2201010 | GDS57826 | 44102M68P40 | GDS57884 | 10026306 | GDS57920 | 44305T1TE01 | GDS57972 | 4N0501203A | GDS58068 |
| 2K0407271K | GDS57830 | 2Q0407272CH | GDS57885 | 31605B3D928 | GDS57926 | 2203200MK03 | GDS57973 | 3272TN | GDS58072 |
| 2K0407271KX | GDS57830 | 2Q0407454X | GDS57885 | 31609884798 | GDS57926 | C281F2501010404 | GDS57973 | 3272TP | GDS58072 |
| 5WA407272A | GDS57831 | 4410253R00 | GDS57886 | 1613822980 | GDS57933 | 2203100MK03 | GDS57974 | 3272VC | GDS58072 |
| 4234024060 | GDS57832 | 4410253R01 | GDS57886 | 9807974580 | GDS57933 | C281F2501010304 | GDS57974 | 3272VE | GDS58072 |
| 4233024030 | GDS57833 | 4410253R02 | GDS57886 | 396005384R | GDS57935 | 2203200MK03AW19AA | GDS57975 | 9685084580 | GDS58072 |
| 391004534R | GDS57834 | 1818641 | GDS57887 | 396008321R | GDS57935 | 2203200MK03DY21 | GDS57975 | 9685085180 | GDS58072 |
| 4203371700 | GDS57834 | 2179712 | GDS57887 | 4533503800 | GDS57935 | C589F2501010301 | GDS57975 | 391001535R | GDS58073 |
| A4203371700 | GDS57834 | 2463810 | GDS57887 | 4533506300 | GDS57935 | 2203100MK03DY21 | GDS57976 | 4203371800 | GDS58073 |
| 391008653R | GDS57835 | BK3W4234AA | GDS57887 | A4533503800 | GDS57935 | C589F2501010201 | GDS57976 | A4203371800 | GDS58073 |
| 391009570R | GDS57835 | BK3W4234AB | GDS57887 | A4533506300 | GDS57935 | 31609884797 | GDS57978 | 391015146R | GDS58074 |
| 391013501R | GDS57839 | BK3W4364AA | GDS57887 | 396000937R | GDS57936 | 4343042010 | GDS57979 | 4203370700 | GDS58074 |
| 32720Q | GDS57840 | 2256285 | GDS57888 | 396002725R | GDS57936 | 2203100MK03AW23 | GDS57981 | A4203370700 | GDS58074 |
| 32731S | GDS57841 | 2465176 | GDS57888 | 4533503700 | GDS57936 | 2203200MK03AW23 | GDS57982 | 391003170R | GDS58075 |
| 495002W030 | GDS57842 | KK3W4234AA | GDS57888 | 4533506200 | GDS57936 | 2203100MK03AW19AA | GDS57983 | 4203371900 | GDS58075 |
| GG4625500 | GDS57843 | KK3W4234AB | GDS57888 | A4533503700 | GDS57936 | 391000352R | GDS57984 | A4203371900 | GDS58075 |
| GG4625500A | GDS57843 | 2203100CR01 | GDS57894 | A4533506200 | GDS57936 | 391007804R | GDS57984 | 1684455380 | GDS58077 |
| GG4625500B | GDS57843 | 2203100CR01AA | GDS57894 | 28421FE270 | GDS57937 | 11502506 | GDS57985 | 6001080008 | GDS58077 |
| GG4625500C | GDS57843 | 2203100CR01AB | GDS57894 | 28421FE271 | GDS57937 | 10026307 | GDS57986 | 6001080023 | GDS58077 |
| 3Q0407272DH | GDS57844 | CD569F2501010300 | GDS57894 | 28421FE272 | GDS57937 | 2203200MK05ER01 | GDS57988 | 6001080249 | GDS58077 |
| 3Q0407272EA | GDS57844 | CD569F2501010300AA | GDS57894 | 391008095R | GDS57941 | 2203100MK05ER01 | GDS57989 | 9837647980 | GDS58077 |
| 3273GN | GDS57852 | CD569F2501010300AB | GDS57894 | 4203371000 | GDS57941 | 11502508 | GDS57995 | 391005711R | GDS58078 |
| 3273GP | GDS57852 | 3272YN | GDS57897 | A4203371000 | GDS57941 | 391006526R | GDS57996 | 4203372100 | GDS58078 |
| 3273WT | GDS57852 | 3272ZJ | GDS57897 | 2203100MK02 | GDS57945 | 391003037R | GDS57998 | A4203372100 | GDS58078 |
| 3273WV | GDS57852 | 9686348380 | GDS57897 | 2203100MK09 | GDS57945 | 391011411R | GDS57999 | 391009452R | GDS58079 |
| 434200W220 | GDS57853 | 3272YP | GDS57898 | C281F2501010300 | GDS57945 | 31605A44AC0 | GDS58026 | 4203371100 | GDS58079 |
| 2203200AW11 | GDS57864 | 3272YQ | GDS57898 | C281F2501010401 | GDS57945 | 31605A4E434 | GDS58026 | A4203371100 | GDS58079 |
| S2010470203 | GDS57864 | 9686348580 | GDS57898 | 2203200MK02 | GDS57946 | 52154898 | GDS58040 | 495012W080 | GDS58080 |
| 2203100AW11 | GDS57865 | 2143502702 | GDS57899 | 2203200MK09 | GDS57946 | 2656049 | GDS58041 | 33217849969 | GDS58081 |
| S2010470103 | GDS57865 | 2543501603 | GDS57899 | C281F2501010301 | GDS57946 | 2823142 | GDS58041 | 1284950200 | GDS58090 |
| 31605A2DFC5 | GDS57867 | A2143502702 | GDS57899 | C281F2501010400 | GDS57946 | PZ363B437AA | GDS58041 | HADEK2203020A | GDS58090 |
| 31608617053 | GDS57867 | A2543501603 | GDS57899 | 11502511 | GDS57947 | PZ363B437AB | GDS58041 | 1284950100 | GDS58091 |
| 31605A2DFC6 | GDS57868 | 4082082800 | GDS57900 | 11502509 | GDS57948 | 2825641 | GDS58042 | HADEK2203010A | GDS58091 |
| 31608617054 | GDS57868 | 8890491533 | GDS57900 | 11502510 | GDS57949 | PZ363B436AC | GDS58042 | 4342078020 | GDS58092 |
| 2201200CR01 | GDS57869 | 4082082700 | GDS57901 | 2203100BQ07 | GDS57950 | 391015970R | GDS58043 | 4342078050 | GDS58092 |
| 2201200CR01AA | GDS57869 | 8890491470 | GDS57901 | S111F2501010205 | GDS57950 | 391017957R | GDS58043 | 391017471R | GDS58093 |
| CD569F2502010301 | GDS57869 | 52121989 | GDS57904 | 31605A44AB7 | GDS57952 | 31605A44AB8 | GDS58044 | 4203372200 | GDS58093 |
| CD569F2502010301AA | GDS57869 | 71799813 | GDS57904 | 31605A4E431 | GDS57952 | 31605A4E432 | GDS58044 | A4203372200 | GDS58093 |
| 2201100CR01 | GDS57870 | 52121988 | GDS57905 | 31608607271 | GDS57953 | 31609884770 | GDS58044 | 2252845 | GDS58094 |
| 2201100CR01AA | GDS57870 | 71799801 | GDS57905 | 31608643371 | GDS57953 | 391006107R | GDS58045 | 2422450 | GDS58094 |
| CD569F2502010200 | GDS57870 | 31367905 | GDS57906 | 4342016340 | GDS57954 | 391005721R | GDS58046 | 2500930 | GDS58094 |
| CD569F2502010200AA | GDS57870 | 36012753 | GDS57906 | 3273ZG | GDS57955 | 4203371300 | GDS58046 | KV663B436CB | GDS58094 |
| C2D19744 | GDS57875 | 20997647 | GDS57907 | 3273ZH | GDS57955 | A4203371300 | GDS58046 | KV663B436CC | GDS58094 |
| C2D42128 | GDS57875 | 22800053 | GDS57907 | 9686348480 | GDS57955 | 391011951R | GDS58047 | KV663B436CD | GDS58094 |
| DW933N128AA | GDS57875 | 22868218 | GDS57907 | 391003721R | GDS57958 | 4203370400 | GDS58047 | 1613823080 | GDS58095 |
| DW933N128AB | GDS57875 | 25958186 | GDS57907 | 4203371400 | GDS57958 | A4203370400 | GDS58047 | 9807974680 | GDS58095 |
| DW933N128AC | GDS57875 | 374926 | GDS57907 | A4203371400 | GDS57958 | 4203371200 | GDS58048 | 434200D740 | GDS58098 |
| T2H59079 | GDS57875 | 5374017 | GDS57907 | 495012K600 | GDS57959 | A4203371200 | GDS58048 | 434100D810 | GDS58099 |
| C2D19745 | GDS57876 | 5374062 | GDS57907 | 495012K610 | GDS57959 | 4203370500 | GDS58049 | 1EA501204T | GDS58101 |
| C2D42129 | GDS57876 | 95520587 | GDS57907 | 495012K620 | GDS57959 | A4203370500 | GDS58049 | 1EA501203T | GDS58102 |
| DW933N129AA | GDS57876 | 52123522AA | GDS57910 | 495012K620SJ | GDS57959 | 4N0501204A | GDS58054 | 2129533 | GDS58109 |
| DW933N129AB | GDS57876 | 52123522AB | GDS57910 | 495012K630 | GDS57959 | 2203200MK06DS01 | GDS58056 | 2137576 | GDS58109 |
| DW933N129AC | GDS57876 | 2203200BN02 | GDS57912 | 391018240R | GDS57960 | 2203100MK06DS01 | GDS58057 | 2187908 | GDS58109 |
| T2H59080 | GDS57876 | C211F2501010301 | GDS57912 | 391019810R | GDS57960 | 2203200MK06CD09 | GDS58058 | 2513196 | GDS58109 |
| 1684193 | GDS57877 | 2203100BN02 | GDS57913 | 4082082500 | GDS57961 | S311F2501010305 | GDS58058 | GN153B436GA | GDS58109 |
| 1803642 | GDS57877 | C211F2501010201 | GDS57913 | 8890288308 | GDS57961 | 2203100MK04CD11 | GDS58059 | GN153B436GB | GDS58109 |
| AV4N3B437AA | GDS57877 | 1332122500 | GDS57914 | 49501N7160 | GDS57962 | S311F2501010211 | GDS58059 | JN153B436GA | GDS58109 |
| RMAV4N3B437A1A | GDS57877 | EKEB2201010 | GDS57914 | 434100D690 | GDS57965 | 2203200MK04CD11 | GDS58060 | JN153B436GB | GDS58109 |
| 46357028 | GDS57878 | 1332122700 | GDS57915 | 434200D760 | GDS57966 | S311F2501010311 | GDS58060 | 5Q0407272EC | GDS58110 |
| 46857597 | GDS57878 | EKEB2201020 | GDS57915 | 2203200MK04CJ05 | GDS57967 | 43410F4210 | GDS58061 | 5Q0407764FX | GDS58110 |

| COMPETITOR | G-AP Ref. | COMPETITOR | G-AP Ref. | COMPETITOR | G-AP Ref. | COMPETITOR | G-AP Ref. | COMPETITOR | G-AP Ref. |
|---|---|---|---|---|---|---|---|---|---|
| OE | | 36012681 | GDS58139 | 9808075680 | GDS58209 | 2200400U3450 | GDS58265 | LR158156 | GDS58309 |
| | | 31437722 | GDS58140 | 1618043480 | GDS58210 | 4341058070 | GDS58266 | LR162687 | GDS58309 |
| GX734K139BB | GDS58111 | 31492387 | GDS58140 | 9808075780 | GDS58210 | 4341058071 | GDS58266 | 52088638 | GDS58315 |
| GX734K139GA | GDS58111 | 32324454 | GDS58140 | 13367067 | GDS58211 | 4342058050 | GDS58267 | 71799891 | GDS58315 |
| GX734K139GB | GDS58111 | 32349300 | GDS58140 | 95522363 | GDS58211 | 4342058051 | GDS58267 | 391005FP0A | GDS58316 |
| T4N11522 | GDS58111 | 36003735 | GDS58140 | 13367068 | GDS58212 | 391003844R | GDS58282 | 391015FP0A | GDS58317 |
| T4N19017 | GDS58111 | 36011783 | GDS58140 | 95522365 | GDS58212 | 98733202430 | GDS58284 | 7N0407764E | GDS58318 |
| T4N39156 | GDS58111 | 36012682 | GDS58140 | 13367052 | GDS58213 | 98733202432 | GDS58284 | 7N0407764EX | GDS58318 |
| GX734K138BB | GDS58112 | 391003200R | GDS58142 | 95522353 | GDS58213 | 3910000Q5M | GDS58296 | 7N0407764S | GDS58318 |
| GX734K138GA | GDS58112 | 32249416 | GDS58190 | 43420F4160 | GDS58215 | 3910000Q8L | GDS58296 | 7N0407764SX | GDS58318 |
| T4N11521 | GDS58112 | 32324315 | GDS58190 | 391015778R | GDS58219 | 4410154P60 | GDS58297 | 2Q0407271AR | GDS58319 |
| T4N19016 | GDS58112 | 36003616 | GDS58190 | 391001324R | GDS58220 | 4410154P60000 | GDS58297 | 2Q0407451TX | GDS58319 |
| GX734K139DB | GDS58113 | 36003623 | GDS58190 | 2063501313 | GDS58223 | 4410154P61 | GDS58297 | 4410184M00 | GDS58320 |
| GX734K139DC | GDS58113 | 31345297 | GDS58191 | 2063506800 | GDS58223 | 4410154P61000 | GDS58297 | 4410284M00 | GDS58321 |
| T2H3341 | GDS58113 | 36003766 | GDS58191 | A2063501313 | GDS58223 | 4410154P62 | GDS58297 | 49500Q0300 | GDS58325 |
| T2H59082 | GDS58113 | 31345299 | GDS58192 | A2063506800 | GDS58223 | 4410154P62000 | GDS58297 | 391004BE4B | GDS58328 |
| 49500D7110 | GDS58114 | 36003769 | GDS58192 | 31605A2E041 | GDS58224 | 4410154P63 | GDS58297 | 1684455480 | GDS58329 |
| 49501D7110 | GDS58115 | 31345298 | GDS58193 | 31605A2E045 | GDS58224 | 4410154P63000 | GDS58297 | 9837646580 | GDS58329 |
| 49500C8550 | GDS58116 | 36003768 | GDS58193 | 31608681521 | GDS58224 | 4410154P64 | GDS58297 | 391012121R | GDS58330 |
| 49501C8500 | GDS58117 | 80019385 | GDS58193 | 31608681527 | GDS58224 | 4410154P64000 | GDS58297 | 2Q0407272CE | GDS58333 |
| 2063501913 | GDS58118 | 31345295 | GDS58194 | 31605A2E042 | GDS58225 | 2375685 | GDS58298 | 2Q0407454AX | GDS58333 |
| 2063502211 | GDS58118 | 36003765 | GDS58194 | 31608681522 | GDS58225 | 2412221 | GDS58298 | 52148210 | GDS58334 |
| 2063506700 | GDS58118 | 4E0407272N | GDS58195 | 391001011R | GDS58226 | 2433888 | GDS58298 | 52148211 | GDS58335 |
| A2063501913 | GDS58118 | 4E0407452BX | GDS58195 | 391005792R | GDS58226 | LX673B437MAB | GDS58298 | 4410162R20 | GDS58336 |
| A2063502211 | GDS58118 | 51885863 | GDS58196 | 391015630R | GDS58227 | LX673B437MAC | GDS58298 | 4410162R21 | GDS58336 |
| A2063506700 | GDS58118 | 5188586355205034 | GDS58196 | 391016947R | GDS58227 | LX673B437MAD | GDS58298 | 4410162R21000 | GDS58336 |
| 31608639522 | GDS58120 | 52134275 | GDS58196 | 5QN407272P | GDS58230 | LX6Z3B437C | GDS58298 | 4410162R22 | GDS58336 |
| 31608657290 | GDS58120 | 5213427555205034 | GDS58196 | 5180698955213053 | GDS58233 | LX6Z3B437E | GDS58298 | 3960000Q0A | GDS58337 |
| 2252860 | GDS58121 | 71797812 | GDS58196 | 46857068 | GDS58235 | TX1092 | GDS58298 | 3960000Q0C | GDS58337 |
| 2310033 | GDS58121 | 7179781255205034 | GDS58196 | 98733202431 | GDS58236 | 2375634 | GDS58299 | 2432810 | GDS58338 |
| 2350091 | GDS58121 | 71797815 | GDS58196 | 98733202433 | GDS58236 | 2414541 | GDS58299 | 2535175 | GDS58338 |
| 2500898 | GDS58121 | 7179781555205034 | GDS58196 | 98733202438 | GDS58236 | LX673B436CAB | GDS58299 | 2702296 | GDS58338 |
| KV663B437CB | GDS58121 | 434200H060 | GDS58197 | 98733202470 | GDS58236 | LX673B436CAC | GDS58299 | LX673B437CB | GDS58338 |
| KV663B437CC | GDS58121 | 434100H060 | GDS58198 | 391011816R | GDS58237 | LX6Z3B436B | GDS58299 | LX673B437DAB | GDS58338 |
| KV663B437CD | GDS58121 | J9C34718 | GDS58199 | 5QS407272 | GDS58238 | TX1087 | GDS58299 | LX673B437DAC | GDS58338 |
| KV663B437CE | GDS58121 | J9C37935 | GDS58199 | 391018755R | GDS58239 | 2375642 | GDS58300 | 4473507900 | GDS58339 |
| 95C501201AA | GDS58122 | K8D24K138AB | GDS58199 | 2129559 | GDS58242 | 2381159 | GDS58300 | A4473507900 | GDS58339 |
| 95C501201AF | GDS58122 | K8D24K138AC | GDS58199 | GN153B437SA | GDS58242 | LX673B436HBF | GDS58300 | 49500GI000 | GDS58344 |
| 2063501613 | GDS58123 | K8D24K138AD | GDS58199 | 391019476R | GDS58243 | LX673B436MAB | GDS58300 | 1352645100 | GDS58346 |
| 2063507501 | GDS58123 | K8D24K138AE | GDS58199 | 4203370600 | GDS58243 | LX673B436MAC | GDS58300 | 1359307900 | GDS58346 |
| A2063501613 | GDS58123 | K8D24K138BA | GDS58199 | A4203370600 | GDS58243 | LX6Z3B436CZ | GDS58300 | HA2ER2203010 | GDS58346 |
| A2063507501 | GDS58123 | LR117566 | GDS58199 | 1675960480 | GDS58244 | LX6Z3B436D | GDS58300 | HA2ER2203010A | GDS58346 |
| 2129557 | GDS58124 | LR133241 | GDS58199 | 9844355780 | GDS58244 | LX6Z3B436DA | GDS58300 | 5QN407272AA | GDS58347 |
| 2513529 | GDS58124 | LR133247 | GDS58199 | SU001B3802 | GDS58244 | LX6Z3B436E | GDS58300 | 5Q0407271DS | GDS58348 |
| GN153B437GA | GDS58124 | LR158150 | GDS58199 | 52088637 | GDS58246 | TX1096 | GDS58300 | 9103302300 | GDS58349 |
| JN153B437GA | GDS58124 | LR162688 | GDS58199 | 71799825 | GDS58246 | LR163276 | GDS58302 | 9103304300 | GDS58349 |
| 52123521AA | GDS58125 | 4410262R20 | GDS58200 | 2432753 | GDS58248 | M8E23D402BB | GDS58302 | A9103302300 | GDS58349 |
| 52123521AB | GDS58125 | 4410262R21 | GDS58200 | 2658686 | GDS58248 | 2203200CR01AB | GDS58303 | A9103304300 | GDS58349 |
| 52123521AC | GDS58125 | 4410262R22 | GDS58200 | 2702294 | GDS58248 | CD569F2501010403AB | GDS58303 | 7LE407271 | GDS58367 |
| 52123521AD | GDS58125 | 49501C5080 | GDS58202 | LX673B436DA | GDS58248 | 95B501203B | GDS58304 | 7LE407271A | GDS58367 |
| 68035017AB | GDS58126 | 49500C5030 | GDS58203 | LX673B436DAB | GDS58248 | 95B501203J | GDS58304 | 7LE407451X | GDS58367 |
| 391012782R | GDS58128 | 396006593R | GDS58206 | LX673B436DB | GDS58248 | 95B501203N | GDS58304 | 7LE407272 | GDS58372 |
| 391017833R | GDS58128 | 4533509300 | GDS58206 | 391018946R | GDS58249 | 95B501203S | GDS58304 | 7LE407272A | GDS58372 |
| 4153606100 | GDS58128 | A4533509300 | GDS58206 | 49501D7680 | GDS58251 | 1EA501204S | GDS58305 | 7LE407272B | GDS58372 |
| A4153606100 | GDS58128 | 396004528R | GDS58207 | 49500D7700 | GDS58252 | 1EA501203S | GDS58306 | 7LE407452X | GDS58372 |
| 49500G4150 | GDS58130 | 396009397R | GDS58207 | 49501P1160 | GDS58253 | 154000786AA | GDS58307 | 4341052060 | GDS59011 |
| 49501G4150 | GDS58131 | 4533504801 | GDS58207 | 49500P1160 | GDS58254 | 154000785AA | GDS58308 | 4341052070 | GDS59011 |
| 391004BE0B | GDS58132 | 4533509200 | GDS58207 | 49500B9400 | GDS58255 | J9C21059 | GDS58309 | 4343004070 | GDS59015 |
| 391014BE0D | GDS58133 | 4533509400 | GDS58207 | 49501B9400 | GDS58256 | J9C34719 | GDS58309 | 4343004071 | GDS59015 |
| 8W0501203K | GDS58134 | A4533504801 | GDS58207 | 10564335 | GDS58257 | J9C37942 | GDS58309 | 4343060060 | GDS59015 |
| 8W0501204J | GDS58135 | A4533509200 | GDS58207 | 10695262 | GDS58257 | K8D24K139AB | GDS58309 | 4343060061 | GDS59015 |
| 8W0501203F | GDS58136 | A4533509400 | GDS58207 | 10564333 | GDS58258 | K8D24K139AC | GDS58309 | 4343060080 | GDS59015 |
| 8W0501204F | GDS58137 | 32240890 | GDS58208 | 10695261 | GDS58258 | K8D24K139AD | GDS58309 | 4343060081 | GDS59015 |
| 31367046 | GDS58139 | 32336183 | GDS58208 | 32249417 | GDS58259 | K8D24K139AE | GDS58309 | 4343060082 | GDS59015 |
| 32336234 | GDS58139 | 32336184 | GDS58208 | 32324616 | GDS58259 | K8D24K139BA | GDS58309 | 4343060090 | GDS59015 |
| 32339235 | GDS58139 | 36003233 | GDS58208 | 36003617 | GDS58259 | LR117567 | GDS58309 | 4343060020 | GDS59017 |
| 36010578 | GDS58139 | 36011788 | GDS58208 | X0122030011 | GDS58261 | LR133248 | GDS58309 | 4343060040 | GDS59017 |
| 36011774 | GDS58139 | 1618043380 | GDS58209 | X0122030012 | GDS58262 | LR133251 | GDS58309 | 4341006030 | GDS59027 |

| COMPETITOR | G-AP Ref. | COMPETITOR | G-AP Ref. | COMPETITOR | G-AP Ref. | COMPETITOR | G-AP Ref. | COMPETITOR | G-AP Ref. |
|---|---|---|---|---|---|---|---|---|---|
| OE | | 4341013050 | GDS59114 | 434200D450 | GDS59202 | 4342052200 | GDS59295 | 4341020580 | GDS59383 |
| | | 4341006170 | GDS59117 | 4342052210 | GDS59202 | 4342052201 | GDS59295 | 4341020581 | GDS59383 |
| 4341006040 | GDS59027 | 4341006430 | GDS59117 | 4342052211 | GDS59202 | 4342002610 | GDS59316 | 4341020582 | GDS59383 |
| 4341006080 | GDS59027 | 4341007030 | GDS59117 | 4342052261 | GDS59202 | 4342002611 | GDS59316 | 4341020583 | GDS59383 |
| 4341006100 | GDS59027 | 4341007031 | GDS59117 | 4342052300 | GDS59202 | 4342002640 | GDS59316 | 2650112003 | GDS59392 |
| 4341033030 | GDS59027 | 4341008010 | GDS59117 | 4341002410 | GDS59205 | 4341002570 | GDS59317 | 4341020440 | GDS59392 |
| 4341033040 | GDS59027 | 4341008020 | GDS59117 | 434200D160 | GDS59206 | 4341002571 | GDS59317 | 4341020441 | GDS59392 |
| 4342006030 | GDS59027 | 4342020430 | GDS59126 | 434200D170 | GDS59206 | 4341006640 | GDS59323 | 4341020442 | GDS59392 |
| 4342006040 | GDS59027 | 4342020431 | GDS59126 | 434200D240 | GDS59206 | 4341006750 | GDS59323 | 4341020450 | GDS59393 |
| 4342006070 | GDS59027 | 4342020432 | GDS59126 | 434200D370 | GDS59206 | 4341006780 | GDS59323 | 4341020451 | GDS59393 |
| 4342006080 | GDS59027 | 4342020440 | GDS59126 | 434200D380 | GDS59206 | 4341006A10 | GDS59323 | 4341020452 | GDS59393 |
| 4342033040 | GDS59027 | 4342020441 | GDS59126 | 434200W250 | GDS59206 | 4341006A40 | GDS59323 | 4341006180 | GDS59401 |
| 4343026020 | GDS59031 | 4342020442 | GDS59126 | 4342052180 | GDS59206 | 4341006A50 | GDS59323 | 4341012A30 | GDS59404 |
| 4343026021 | GDS59031 | 4341020670 | GDS59127 | 4342005380 | GDS59207 | 4341006B70 | GDS59323 | 4342012860 | GDS59405 |
| 4343035010 | GDS59036 | 4341052010 | GDS59146 | 434200F020 | GDS59207 | 4341006B80 | GDS59323 | 4342068021 | GDS59405 |
| 4343035011 | GDS59036 | 4342017010 | GDS59150 | 434100D160 | GDS59208 | 434100W180 | GDS59323 | 4342048060 | GDS59415 |
| 4343035012 | GDS59036 | 4342020570 | GDS59150 | 434100D170 | GDS59208 | 4342006510 | GDS59324 | 4342048061 | GDS59415 |
| 4343035020 | GDS59036 | 4342020571 | GDS59150 | 434100D380 | GDS59208 | 4342006670 | GDS59324 | 4342048100 | GDS59415 |
| 4343035021 | GDS59036 | 4342020580 | GDS59150 | 434100W220 | GDS59208 | 4342006860 | GDS59324 | 4342042180 | GDS59417 |
| 4343004020 | GDS59038 | 4342020581 | GDS59150 | 4341052180 | GDS59208 | 4342006A60 | GDS59324 | 4342042181 | GDS59417 |
| 4343035030 | GDS59038 | 4342006010 | GDS59159 | 434200D080 | GDS59209 | 4342006B00 | GDS59324 | 434100R030 | GDS59425 |
| 4342028030 | GDS59051 | 4342006020 | GDS59159 | 4341042060 | GDS59211 | 434200W210 | GDS59324 | 434100R191 | GDS59425 |
| 4342048091 | GDS59051 | 4342006050 | GDS59159 | 4341042070 | GDS59211 | 4343060070 | GDS59325 | 4341042170 | GDS59425 |
| 4342010090 | GDS59052 | 4342006060 | GDS59159 | 4341006221 | GDS59212 | 4343060071 | GDS59325 | 36000159 | GDS59443 |
| 4342010091 | GDS59052 | 4342006160 | GDS59159 | 4341006231 | GDS59212 | 434300K020 | GDS59326 | 36000364 | GDS59443 |
| 4342010110 | GDS59052 | 4342006161 | GDS59159 | 4341006460 | GDS59212 | 434300K021 | GDS59326 | 36001232 | GDS59443 |
| 4342010111 | GDS59052 | 4342033010 | GDS59159 | 434100W061 | GDS59212 | 434300K022 | GDS59326 | 36011287 | GDS59443 |
| 4342010200 | GDS59052 | 4341006020 | GDS59160 | 434100W071 | GDS59212 | 434300K030 | GDS59326 | 30711537 | GDS59444 |
| 4342052010 | GDS59057 | 4341006060 | GDS59160 | 434100W081 | GDS59212 | 434200D322 | GDS59343 | 30783204 | GDS59444 |
| 4342006151 | GDS59059 | 4341033020 | GDS59160 | 434100W091 | GDS59212 | LR002620 | GDS59344 | 31272550 | GDS59444 |
| 4342033010 | GDS59059 | 4341033021 | GDS59160 | 4341048070 | GDS59212 | LR005870 | GDS59344 | 36000163 | GDS59444 |
| 4342033011 | GDS59059 | 4341033022 | GDS59160 | 4341048071 | GDS59212 | LR062665 | GDS59344 | 36000370 | GDS59444 |
| 4342033012 | GDS59059 | 4342006170 | GDS59163 | 4343035022 | GDS59219 | LR125177 | GDS59344 | 36001195 | GDS59444 |
| 4342033020 | GDS59059 | 4342007030 | GDS59163 | 4342020540 | GDS59223 | RM6G9N3B437KG | GDS59344 | 36011298 | GDS59444 |
| 4342033021 | GDS59059 | 434300K040 | GDS59168 | 4342020550 | GDS59223 | 434100D292 | GDS59345 | 36050790 | GDS59444 |
| 4342033022 | GDS59059 | 434300K041 | GDS59168 | 4342020560 | GDS59223 | LR002614 | GDS59346 | 4342005371 | GDS59445 |
| 4341006050 | GDS59060 | 434300K050 | GDS59168 | 4341020600 | GDS59224 | LR006706 | GDS59346 | 4342005372 | GDS59445 |
| 4341006150 | GDS59060 | 4341005180 | GDS59172 | 4341006660 | GDS59235 | LR062660 | GDS59346 | 4341005320 | GDS59446 |
| 4341006151 | GDS59060 | 4341005400 | GDS59172 | 4341006680 | GDS59235 | LR125181 | GDS59346 | 4341005321 | GDS59446 |
| 4341033010 | GDS59060 | 4341002250 | GDS59183 | 4341048050 | GDS59242 | RM6G9N3B436KG | GDS59346 | 4341002580 | GDS59447 |
| 4341033011 | GDS59060 | 4341002251 | GDS59183 | 4342006350 | GDS59244 | 4233042030 | GDS59349 | 4341002581 | GDS59447 |
| 4341033012 | GDS59060 | 4341002550 | GDS59183 | 4342006450 | GDS59244 | 4233042031 | GDS59349 | 434100R010 | GDS59472 |
| 4341028030 | GDS59064 | 4342006700 | GDS59184 | 434200E020 | GDS59244 | 4243042031 | GDS59349 | 434100R011 | GDS59472 |
| 4342012580 | GDS59069 | 4342033250 | GDS59184 | 434200E021 | GDS59244 | 4347009L30 | GDS59352 | 4341042140 | GDS59472 |
| 4342013050 | GDS59069 | 4341006670 | GDS59185 | 434200W101 | GDS59244 | 4346009M60 | GDS59354 | 4341042141 | GDS59472 |
| 4342013051 | GDS59069 | 4341033290 | GDS59185 | 434200W140 | GDS59244 | 4342047020 | GDS59368 | 434100F040 | GDS59494 |
| 4342002440 | GDS59072 | 4341002220 | GDS59191 | 434200W150 | GDS59244 | 4341047020 | GDS59369 | 434100F041 | GDS59494 |
| 4342012420 | GDS59072 | 4341012670 | GDS59191 | 434200W170 | GDS59244 | 4341042200 | GDS59370 | 434100F090 | GDS59494 |
| 4341002410 | GDS59073 | 4342002240 | GDS59192 | 4342033200 | GDS59244 | 4341042201 | GDS59370 | 3272JZ | GDS59495 |
| 4341012490 | GDS59073 | 4342012590 | GDS59192 | 4342033240 | GDS59244 | 434200E030 | GDS59371 | 327611 | GDS59495 |
| 434100D120 | GDS59076 | 4341012350 | GDS59195 | 4341044040 | GDS59250 | 434200E100 | GDS59371 | 434200H020 | GDS59495 |
| 434100D080 | GDS59077 | 4341012351 | GDS59195 | 4342044040 | GDS59251 | 4342006830 | GDS59372 | 434200H020B | GDS59495 |
| 4341052130 | GDS59077 | 4341012352 | GDS59195 | 4342044041 | GDS59251 | 4342006A90 | GDS59372 | 434200F010 | GDS59505 |
| 4341052131 | GDS59077 | 4341012353 | GDS59195 | 4342002620 | GDS59268 | 4342033290 | GDS59372 | 434200F011 | GDS59505 |
| 434200D100 | GDS59077 | 4342012340 | GDS59196 | 4342002621 | GDS59268 | 4341028050 | GDS59375 | 4342002A40 | GDS59508 |
| 434200D110 | GDS59077 | 4342012341 | GDS59196 | 4342002270 | GDS59270 | 4341028051 | GDS59375 | 4342002B20 | GDS59508 |
| 4234017150 | GDS59078 | 4342012342 | GDS59196 | 4342002271 | GDS59270 | 4342006610 | GDS59376 | 4342002B30 | GDS59508 |
| 4234017151 | GDS59078 | 4342012343 | GDS59196 | 4341002240 | GDS59271 | 4342006750 | GDS59376 | 4342002B40 | GDS59508 |
| 4342013060 | GDS59078 | 434100D280 | GDS59201 | 4341005200 | GDS59271 | 4342033280 | GDS59376 | 4342002D40 | GDS59508 |
| 4342013061 | GDS59078 | 434100D430 | GDS59201 | 4342002701 | GDS59272 | 4342047030 | GDS59377 | 4342002D50 | GDS59508 |
| 4341012660 | GDS59080 | 434100D470 | GDS59201 | 4342005240 | GDS59272 | 4342047031 | GDS59377 | 4342002D60 | GDS59508 |
| 434300C010 | GDS59101 | 434100D471 | GDS59201 | 4342005241 | GDS59272 | 4341047030 | GDS59378 | 4342002D70 | GDS59508 |
| 4342052060 | GDS59102 | 4341052210 | GDS59201 | 4341002710 | GDS59273 | 4341047031 | GDS59378 | 4341002830 | GDS59509 |
| 4342052061 | GDS59102 | 4341052270 | GDS59201 | 4341005340 | GDS59273 | 4341028070 | GDS59379 | 4341002B50 | GDS59509 |
| 4342052070 | GDS59102 | 4341052290 | GDS59201 | 4342048080 | GDS59278 | 4341028071 | GDS59379 | 4342006870 | GDS59510 |
| 4341002270 | GDS59114 | 4341052320 | GDS59201 | 4342048081 | GDS59278 | 4342028060 | GDS59379 | 4341006790 | GDS59511 |
| 4341002271 | GDS59114 | 434200D210 | GDS59202 | 4341052200 | GDS59294 | 4342028061 | GDS59379 | 4341042210 | GDS59518 |
| 434100F021 | GDS59114 | 434200D420 | GDS59202 | 4341052201 | GDS59294 | 4346049146 | GDS59379 | 4341042211 | GDS59518 |

| COMPETITOR | G-AP Ref. | COMPETITOR | G-AP Ref. | COMPETITOR | G-AP Ref. | COMPETITOR | G-AP Ref. | COMPETITOR | G-AP Ref. |
|---|---|---|---|---|---|---|---|---|---|
| OE | | 4342002720 | GDS59618 | 4341042240 | GDS59672 | 374210 | GDS60002 | 8201187933 | GDS60022 |
| | | 4342002B50 | GDS59621 | 4341042241 | GDS59672 | 374221 | GDS60002 | 93169668 | GDS60022 |
| 4341005430 | GDS59519 | 4342002D80 | GDS59621 | 4342002A60 | GDS59673 | 374229 | GDS60002 | 93454308 | GDS60022 |
| 4342005430 | GDS59520 | 434200F030 | GDS59621 | 4341002850 | GDS59674 | 374260 | GDS60002 | 93856310 | GDS60022 |
| 4342005431 | GDS59520 | 434200F031 | GDS59621 | 4234052020 | GDS59675 | 374304 | GDS60002 | 93861971 | GDS60022 |
| 434200E040 | GDS59521 | 434200F070 | GDS59621 | 4234052021 | GDS59675 | 374312 | GDS60002 | 93865408 | GDS60022 |
| 43420OE040 | GDS59521 | 434200F071 | GDS59621 | 434300K023 | GDS59676 | 374318 | GDS60002 | 95520503 | GDS60022 |
| 434100E050 | GDS59522 | 4342042200 | GDS59622 | 434300K051 | GDS59676 | 374738 | GDS60002 | R1640078 | GDS60022 |
| 43410OE050 | GDS59522 | 4342042201 | GDS59622 | 4341052300 | GDS59677 | 90350905 | GDS60002 | 13198707 | GDS60024 |
| 434100R080 | GDS59523 | 5H227A684AA | GDS59623 | 4342033360 | GDS59678 | 90444328 | GDS60002 | 374650 | GDS60024 |
| 434200R030 | GDS59524 | 5H227A684AB | GDS59623 | 4342042220 | GDS59678 | 90486688 | GDS60002 | 39039962 | GDS60024 |
| 434200R070 | GDS59524 | 5H227A684AC | GDS59623 | 4342042221 | GDS59678 | 90512848 | GDS60002 | 93189677 | GDS60024 |
| 4342042170 | GDS59524 | 5H227A684CA | GDS59623 | 434100F050 | GDS59679 | 90540523 | GDS60002 | 95520575 | GDS60024 |
| 434100F010 | GDS59531 | 5H227A684CB | GDS59623 | 434100F051 | GDS59679 | 90540553 | GDS60002 | 95524154 | GDS60024 |
| 5H227A684DA | GDS59535 | 5H227A684CC | GDS59623 | 434200D390 | GDS59680 | 90542782 | GDS60002 | 1677186580 | GDS60025 |
| 5H227A684DC | GDS59535 | LR025872 | GDS59623 | 434200D310 | GDS59681 | 90576707 | GDS60002 | 374647 | GDS60025 |
| LR047295 | GDS59535 | LR047292 | GDS59623 | 434200D480 | GDS59681 | 13248624 | GDS60013 | 375044 | GDS60025 |
| LR072069 | GDS59535 | LR047294 | GDS59623 | 4341042280 | GDS59685 | 374321 | GDS60013 | 93169689 | GDS60025 |
| TDB500110 | GDS59535 | LR071930 | GDS59623 | 4341042281 | GDS59685 | 374327 | GDS60013 | 93189675 | GDS60025 |
| 434100R070 | GDS59536 | LR072070 | GDS59623 | 4341030040 | GDS59686 | 374611 | GDS60013 | R1640099 | GDS60025 |
| 4342002660 | GDS59538 | TDB500080 | GDS59623 | 4342012730 | GDS59687 | 374774 | GDS60013 | 13228204 | GDS60026 |
| 434200R060 | GDS59539 | TDB500100 | GDS59623 | 4342012731 | GDS59687 | 374775 | GDS60013 | 22796270 | GDS60026 |
| 434200R100 | GDS59539 | 4342006A00 | GDS59624 | 4341002630 | GDS59688 | 90538602 | GDS60013 | 374835 | GDS60026 |
| 434100R060 | GDS59540 | 4342033300 | GDS59624 | 4341012760 | GDS59688 | 90539771 | GDS60013 | 375060 | GDS60026 |
| 434200R050 | GDS59541 | 4342033301 | GDS59624 | 4341012B50 | GDS59688 | 9117407 | GDS60013 | 93169694 | GDS60026 |
| 434200R120 | GDS59541 | 4341052260 | GDS59627 | 4342012700 | GDS59689 | 9117413 | GDS60013 | R1640104 | GDS60026 |
| 434100R050 | GDS59542 | 434100F030 | GDS59633 | 4342012A90 | GDS59689 | 93184254 | GDS60013 | 13219092 | GDS60027 |
| 4341052350 | GDS59545 | 434100F031 | GDS59633 | 4341042270 | GDS59692 | 93187070 | GDS60013 | 13348259 | GDS60027 |
| 4341052351 | GDS59545 | 434200D180 | GDS59635 | 4341042271 | GDS59692 | 95520629 | GDS60013 | 22830707 | GDS60027 |
| 4342052310 | GDS59546 | 434100D180 | GDS59636 | 4342052290 | GDS59693 | 95520630 | GDS60013 | 374829 | GDS60027 |
| 4342052311 | GDS59546 | 4233042050 | GDS59637 | 4341042230 | GDS59695 | R1640033 | GDS60013 | 374905 | GDS60027 |
| 4341005450 | GDS59552 | 4342012A60 | GDS59639 | 4341048100 | GDS59695 | R1640045 | GDS60013 | 375057 | GDS60027 |
| 4341005451 | GDS59552 | 4341012B30 | GDS59640 | 4341048101 | GDS59695 | 13166585 | GDS60015 | 5374071 | GDS60027 |
| 4342005400 | GDS59553 | 434200R010 | GDS59645 | 4341042250 | GDS59696 | 374471 | GDS60015 | 93169644 | GDS60027 |
| 4342005401 | GDS59553 | 4342042070 | GDS59647 | 4341042251 | GDS59696 | 374529 | GDS60015 | 95520489 | GDS60027 |
| 4342002710 | GDS59561 | 4233022010 | GDS59652 | 434100D331 | GDS59699 | 51706612 | GDS60015 | 95520545 | GDS60027 |
| 4342002A10 | GDS59561 | 4233022090 | GDS59652 | 434200D331 | GDS59700 | 51792342 | GDS60015 | R1640054 | GDS60027 |
| 4342042091 | GDS59561 | 4233022091 | GDS59652 | 4341002590 | GDS59701 | 71787911 | GDS60015 | 0374557 | GDS60034 |
| 4341002660 | GDS59562 | 4234022180 | GDS59653 | 4341002591 | GDS59701 | 73503005 | GDS60015 | 13109124 | GDS60034 |
| 4341012B00 | GDS59562 | 4234022181 | GDS59653 | 4342002630 | GDS59702 | 9186552 | GDS60015 | 374557 | GDS60034 |
| 4342002C40 | GDS59572 | 4341033310 | GDS59654 | 4342002631 | GDS59702 | 95520741 | GDS60015 | 95520727 | GDS60034 |
| 4342012760 | GDS59583 | 4341033311 | GDS59654 | FH124B457AA | GDS59712 | 13166586 | GDS60016 | 374328 | GDS60035 |
| 4342012761 | GDS59583 | 423300R020 | GDS59656 | LR072976 | GDS59712 | 374472 | GDS60016 | 374612 | GDS60035 |
| 4341005240 | GDS59584 | 4233042060 | GDS59656 | TOB500020 | GDS59712 | 374535 | GDS60016 | 90539783 | GDS60035 |
| 4341005241 | GDS59584 | 434200F080 | GDS59657 | XH124B457AA | GDS59712 | 375055 | GDS60016 | 9117414 | GDS60035 |
| 4341005480 | GDS59589 | 434200F081 | GDS59657 | FH124B457BA | GDS59713 | 9186553 | GDS60016 | 93187066 | GDS60035 |
| 4341005481 | GDS59589 | 4341005460 | GDS59658 | LR072977 | GDS59713 | 93169702 | GDS60016 | R1640044 | GDS60035 |
| 4341006880 | GDS59594 | 4341005461 | GDS59658 | TOB500030 | GDS59713 | 374137 | GDS60019 | 1H0407271A | GDS61001 |
| 4342006A40 | GDS59595 | 4342005411 | GDS59659 | XH124B457BA | GDS59713 | 90348317 | GDS60019 | 1H0407271AV | GDS61001 |
| 434100E070 | GDS59597 | 4342005412 | GDS59659 | 4341002690 | GDS59714 | 13159533 | GDS60021 | 1H0407271AX | GDS61001 |
| 4341048110 | GDS59597 | 4341005490 | GDS59660 | 434300K060 | GDS59715 | 13159534 | GDS60021 | 1H0407271K | GDS61001 |
| 434200E060 | GDS59598 | 4341005491 | GDS59660 | 434300K070 | GDS59715 | 374525 | GDS60021 | 1H0407449AX | GDS61001 |
| 4341042160 | GDS59608 | 4342005440 | GDS59661 | 434300K080 | GDS59715 | 374526 | GDS60021 | 3574072171PX | GDS61001 |
| 4341042161 | GDS59608 | 4342005441 | GDS59661 | 4231160052 | GDS59731 | 893498203B | GDS60021 | 357407271A | GDS61001 |
| 4342030030 | GDS59609 | 434100F070 | GDS59662 | 4231160053 | GDS59731 | 93169671 | GDS60021 | 357407271B | GDS61001 |
| 434200R130 | GDS59610 | 434100F071 | GDS59662 | 4231160190 | GDS59732 | 93169692 | GDS60021 | 357407271E | GDS61001 |
| 4342028090 | GDS59610 | 434100D341 | GDS59665 | 4231160200 | GDS59732 | 3910100Q1K | GDS60022 | 357407271EX | GDS61001 |
| 4342028091 | GDS59610 | 43410K0070 | GDS59665 | 4231160201 | GDS59732 | 391015750R | GDS60022 | 357407271G | GDS61001 |
| 434200D190 | GDS59611 | 434100D480 | GDS59666 | 4231260140 | GDS59733 | 391016100R | GDS60022 | 357407271GV | GDS61001 |
| 4342074050 | GDS59611 | 434100D510 | GDS59666 | 4231260141 | GDS59733 | 4406170 | GDS60022 | 357407271GX | GDS61001 |
| 434300C020 | GDS59613 | 434100D520 | GDS59666 | 4231260042 | GDS59734 | 4406215 | GDS60022 | 357407271H | GDS61001 |
| 434300C040 | GDS59613 | 4342074020 | GDS59667 | 4231260043 | GDS59734 | 4417912 | GDS60022 | 357407271HX | GDS61001 |
| 4341012790 | GDS59614 | 4341074020 | GDS59668 | 4341160070 | GDS59735 | 4418899 | GDS60022 | 357407271P | GDS61001 |
| 4341047011 | GDS59614 | 4342074010 | GDS59669 | 4341260100 | GDS59736 | 4422038 | GDS60022 | 357407271PV | GDS61001 |
| 4341047012 | GDS59614 | 4342042240 | GDS59670 | 0374318 | GDS60002 | 8200452259 | GDS60022 | 357407271PX | GDS61001 |
| 4341012820 | GDS59615 | 4342042241 | GDS59670 | 26029827 | GDS60002 | 8200452269 | GDS60022 | 357407271Q | GDS61001 |
| 4341012821 | GDS59615 | 4342042230 | GDS59671 | 26032414 | GDS60002 | 8200776537 | GDS60022 | 357407449AX | GDS61001 |
| 4341002670 | GDS59617 | 4342042231 | GDS59671 | 374188 | GDS60002 | 8200776538 | GDS60022 | 357407449X | GDS61001 |

| COMPETITOR | G-AP Ref. | COMPETITOR | G-AP Ref. | COMPETITOR | G-AP Ref. | COMPETITOR | G-AP Ref. | COMPETITOR | G-AP Ref. |
|---|---|---|---|---|---|---|---|---|---|
| OE | | 6N04707272 | GDS61010 | 1J0407451DV | GDS61020 | 1H0407272AB | GDS61055 | 1H0407450AX | GDS61067 |
| | | 871407272EX | GDS61010 | 1J0407451DX | GDS61020 | 1H0407272AD | GDS61055 | 6X0407272E | GDS61074 |
| JZW407449AX | GDS61001 | 871407272G | GDS61010 | 1J0407451EX | GDS61020 | 1H0407272AR | GDS61055 | 6X0407272L | GDS61074 |
| JZW407449CX | GDS61001 | 871407272GX | GDS61010 | 1J0407451KX | GDS61020 | 1H0407272Q | GDS61055 | 6X0407452V | GDS61074 |
| JZW407449DX | GDS61001 | JZW407450FX | GDS61010 | 1J0407451LX | GDS61020 | 1H0407272QV | GDS61055 | 6X0407452X | GDS61074 |
| 1H0407272A | GDS61002 | 1EM407273 | GDS61011 | 1EM407274 | GDS61028 | 1H0407272QX | GDS61055 | JZW407450PX | GDS61074 |
| 1H0407272MX | GDS61002 | 1H0407271N | GDS61011 | 1H0407272AM | GDS61028 | 1H0407272X | GDS61055 | 6X0407271H | GDS61075 |
| 1H0407272N | GDS61002 | 1H0407271NV | GDS61011 | 1H0407272BA | GDS61028 | 1H0407450CV | GDS61055 | 6X0407271K | GDS61075 |
| 1H0407450BX | GDS61002 | 1H0407271NX | GDS61011 | 1H0407418 | GDS61028 | 1H0407450CX | GDS61055 | 6X0407451AX | GDS61075 |
| 1HM407274 | GDS61002 | 1H0407271P | GDS61011 | 1H0407452V | GDS61028 | 1H0407450DX | GDS61055 | 6X0407451X | GDS61075 |
| 1HM407274B | GDS61002 | 1H0407271R | GDS61011 | 1H0407452X | GDS61028 | 1H0407450X | GDS61055 | JZW407451AX | GDS61075 |
| 357407272 | GDS61002 | 1H0407451X | GDS61011 | 1HM407272C | GDS61028 | 1H0407452AX | GDS61055 | JZW407451BX | GDS61075 |
| 357407272A | GDS61002 | 1HM407271B | GDS61011 | 1HM407274C | GDS61028 | 357407272E | GDS61055 | 4B0407272C | GDS61076 |
| 357407272B | GDS61002 | 1HM407273B | GDS61011 | JZW407450TX | GDS61028 | 357407272EX | GDS61055 | 4B0407272M | GDS61076 |
| 357407272F | GDS61002 | JZW407451FX | GDS61011 | 7D0407271A | GDS61033 | JZW407450BX | GDS61055 | 4B0407452CX | GDS61076 |
| 357407272FV | GDS61002 | 3B0407272M | GDS61019 | 7D0407451X | GDS61033 | JZW407450CX | GDS61055 | 6Q0407271DJ | GDS61078 |
| 357407272FX | GDS61002 | 3B0407272MX | GDS61019 | JZW407451JX | GDS61033 | 6Q0407272AN | GDS61063 | 6Q0407451PX | GDS61078 |
| 357407272L | GDS61002 | 4B0407271C | GDS61019 | 701407271AB | GDS61034 | 6Q0407272AP | GDS61063 | 6QE407271DJ | GDS61078 |
| 357407272LV | GDS61002 | 4B0407271M | GDS61019 | 5Z0407272E | GDS61040 | 6Q0407272AQ | GDS61063 | 6QE407271J | GDS61078 |
| 357407272LX | GDS61002 | 4B0407451CX | GDS61019 | 6QD407272 | GDS61040 | 6Q0407272BD | GDS61063 | 6QE407451PX | GDS61078 |
| 357407272M | GDS61002 | 8D0407272AJ | GDS61019 | 6QE407272N | GDS61040 | 6Q0407272BE | GDS61063 | 8D0407272BQ | GDS61082 |
| 357407272MV | GDS61002 | 8D0407272BB | GDS61019 | 6QD407271 | GDS61041 | 6Q0407272BH | GDS61063 | 8D0407272EK | GDS61082 |
| 357407272MX | GDS61002 | 8D0407272DF | GDS61019 | 1K0407272CC | GDS61042 | 6Q0407272DR | GDS61063 | 8D0407452M | GDS61082 |
| 357407450V | GDS61002 | 8D0407272DG | GDS61019 | 1K0407272DN | GDS61042 | 6Q0407272S | GDS61063 | 8D0407452MX | GDS61082 |
| 357407450X | GDS61002 | 8D0407272DQ | GDS61019 | 1K0407272EC | GDS61042 | 6Q0407452AX | GDS61063 | 8D0407271BQ | GDS61083 |
| A112203020AE | GDS61002 | 8D0407272DT | GDS61019 | 1K0407272FR | GDS61042 | 6Q0407452DX | GDS61063 | 8D0407271EK | GDS61083 |
| JZW407450AX | GDS61002 | 8D0407272EC | GDS61019 | 1K0407272GK | GDS61042 | 6Q0407452FX | GDS61063 | 8D0407451N | GDS61083 |
| JZW407450DX | GDS61002 | 8D0407272EF | GDS61019 | 1K0407272GM | GDS61042 | 6Q0407452GX | GDS61063 | 8D0407451NX | GDS61083 |
| JZW407450EX | GDS61002 | 8D0407272EH | GDS61019 | 1K0407272HN | GDS61042 | 6Q0407452PX | GDS61063 | 8D0407451TX | GDS61083 |
| 701407271M | GDS61003 | 8D0407272EL | GDS61019 | 1K0407272KA | GDS61042 | 6QE407272P | GDS61063 | 7E0407271E | GDS61084 |
| 701407449FX | GDS61003 | 8D0407452CV | GDS61019 | 1K0407272KH | GDS61042 | 6R0407764J | GDS61063 | 7E0407271EX | GDS61084 |
| 701407451FX | GDS61003 | 8D0407452CX | GDS61019 | 1K0407452DX | GDS61042 | 6R0407764JX | GDS61063 | 7E0407271J | GDS61084 |
| 701407451X | GDS61003 | 8D0407452LX | GDS61019 | 1K0407452GX | GDS61042 | 8Z0407272AM | GDS61063 | 7E0407271Q | GDS61084 |
| JZW407449FX | GDS61003 | 8D0407452NV | GDS61019 | 1K0407452MX | GDS61042 | 8Z0407272AP | GDS61063 | 7E0407272AD | GDS61084 |
| 172560335 | GDS61004 | 8D0407452NX | GDS61019 | 1K0407454BX | GDS61042 | 8Z0407272BK | GDS61063 | 7H0407271AA | GDS61084 |
| 701407271P | GDS61004 | 8D0407452PX | GDS61019 | 1K0407454PX | GDS61042 | 8Z0407452BX | GDS61063 | 7H0407271AC | GDS61084 |
| 701407449GX | GDS61004 | 8D0407452QX | GDS61019 | 1K0407456CX | GDS61042 | 8Z0407452DX | GDS61063 | 7H0407271AF | GDS61084 |
| 701407451A | GDS61004 | 8D0407454CV | GDS61019 | 1Q0407272 | GDS61042 | JZW407272HX | GDS61063 | 7H0407271AH | GDS61084 |
| 701407451AX | GDS61004 | 8D0407454CX | GDS61019 | 1Q0407272X | GDS61042 | 1016691 | GDS61065 | 7H0407271AL | GDS61084 |
| 7D0407271D | GDS61004 | 8D0407454FX | GDS61019 | 2K0407272F | GDS61042 | 1097315 | GDS61065 | 7H0407271AS | GDS61084 |
| 7D0407271P | GDS61004 | 8E0407272BJ | GDS61019 | 3C0407272BS | GDS61042 | 1112535 | GDS61065 | 7H0407271Q | GDS61084 |
| JZW407449GX | GDS61004 | 8E0407452LX | GDS61019 | 5Q0407272EX | GDS61042 | 1122173 | GDS61065 | 7H0407451AX | GDS61084 |
| 6N0407271 | GDS61007 | JZW407452BX | GDS61019 | 5Q0407452CX | GDS61042 | 1132481 | GDS61065 | 7H0407451CV | GDS61084 |
| 6N0407271B | GDS61007 | JZW407452DX | GDS61019 | JZW407272DX | GDS61042 | 1233814 | GDS61065 | 7H0407451CX | GDS61084 |
| 6N0407271J | GDS61007 | JZW407452FX | GDS61019 | JZW407272EX | GDS61042 | 1689840 | GDS61065 | 7H0407451DV | GDS61084 |
| 6N0407271V | GDS61007 | 1J0407271CG | GDS61020 | 1J0407271AC | GDS61045 | 1689945 | GDS61065 | 7H0407451DX | GDS61084 |
| 6N0407271X | GDS61007 | 1J0407271CH | GDS61020 | 1J0407271AH | GDS61045 | 740407272D | GDS61065 | 7H0407451GX | GDS61084 |
| 6N0407449V | GDS61007 | 1J0407271CT | GDS61020 | 1J0407271AL | GDS61045 | 740407272F | GDS61065 | 7H0407451TX | GDS61084 |
| 6N0407449X | GDS61007 | 1J0407271DD | GDS61020 | 1J0407271AM | GDS61045 | 740407272G | GDS61065 | 1016689 | GDS61085 |
| 6N0407451EX | GDS61007 | 1J0407271DH | GDS61020 | 1J0407271F | GDS61045 | 7M0407272C | GDS61065 | 1097320 | GDS61085 |
| 6N0407451X | GDS61007 | 1J0407271EF | GDS61020 | 1J0407271Q | GDS61045 | 7M0407272CV | GDS61065 | 1122174 | GDS61085 |
| JZW407449EX | GDS61007 | 1J0407271EG | GDS61020 | 1J0407451BX | GDS61045 | 7M0407272CX | GDS61065 | 1132490 | GDS61085 |
| 1H0407272AF | GDS61009 | 1J0407271EH | GDS61020 | 1J0407451V | GDS61045 | 7M0407272G | GDS61065 | 1250860 | GDS61085 |
| 1H0407272AX | GDS61009 | 1J0407271ER | GDS61020 | 1J0407451X | GDS61045 | 7M3407272D | GDS61065 | 7M0407271D | GDS61085 |
| 1H0407272M | GDS61009 | 1J0407271FG | GDS61020 | 701407271AC | GDS61052 | 7M3407272F | GDS61065 | 7M0407271DX | GDS61085 |
| 1H0407272MV | GDS61009 | 1J0407271GA | GDS61020 | 701407271C | GDS61052 | 7M3407272FX | GDS61065 | 7M0407271N | GDS61085 |
| 1HM407272 | GDS61009 | 1J0407271GJ | GDS61020 | 701407271CX | GDS61052 | 95VW3B436DA | GDS61065 | 7M3407271H | GDS61085 |
| 1HM407272B | GDS61009 | 1J0407271JA | GDS61020 | 701407271J | GDS61052 | 95VW3B436DB | GDS61065 | 7M3407271R | GDS61085 |
| 357407272L | GDS61009 | 1J0407271LG | GDS61020 | 701407271JV | GDS61052 | RE95VW3219D1A | GDS61065 | 7M3407271RX | GDS61085 |
| 357407272LX | GDS61009 | 1J0407271LH | GDS61020 | 701407271JX | GDS61052 | RE95VX3B436D1B | GDS61065 | 7M3407451CV | GDS61085 |
| 357407272M | GDS61009 | 1J0407271LJ | GDS61020 | 701407271Q | GDS61052 | RM95VW3219DA | GDS61065 | 7M3407451CX | GDS61085 |
| 6N0407272 | GDS61010 | 1J0407271LK | GDS61020 | 701407449AX | GDS61052 | RMYM2J3B436EA | GDS61065 | 95VW3B437DA | GDS61085 |
| 6N0407272C | GDS61010 | 1J0407271LL | GDS61020 | 701407449CX | GDS61052 | YM213B436EA | GDS61065 | 95VW3B437DB | GDS61085 |
| 6N0407272V | GDS61010 | 1J0407271PG | GDS61020 | 701407449JX | GDS61052 | YM213B436EB | GDS61065 | RM95VX3B437DB | GDS61085 |
| 6N0407272X | GDS61010 | 1J0407271PH | GDS61020 | 701407451C | GDS61052 | 1H0407272AC | GDS61067 | RMYM2J3B437JA | GDS61085 |
| 6N0407450V | GDS61010 | 1J0407271PL | GDS61020 | 701407451CX | GDS61052 | 1H0407272AG | GDS61067 | YM213B437JA | GDS61085 |
| 6N0407450X | GDS61010 | 1J0407417Q | GDS61020 | JZW407449JX | GDS61052 | 1H0407274V | GDS61067 | YM213B437JB | GDS61085 |
| 6N0407452X | GDS61010 | 1J0407451CX | GDS61020 | 1H0407272 | GDS61055 | 1H0407274X | GDS61067 | 1125046 | GDS61087 |

| COMPETITOR | G-AP Ref. | COMPETITOR | G-AP Ref. | COMPETITOR | G-AP Ref. | COMPETITOR | G-AP Ref. | COMPETITOR | G-AP Ref. |
|---|---|---|---|---|---|---|---|---|---|
| OE | | 1K0407454SX | GDS61096 | 5Q0407271BT | GDS61100 | 1J0407272BJ | GDS61121 | 7H0407452AV | GDS61140 |
| | | 1K0407456DX | GDS61096 | 5Q0407271CF | GDS61100 | 1J0407272GC | GDS61121 | 7H0407452AX | GDS61140 |
| 1449540 | GDS61087 | 1K0407456EX | GDS61096 | 5Q0407271G | GDS61100 | 1J0407272GD | GDS61121 | 7H0407452JV | GDS61140 |
| 1754225 | GDS61087 | 1K0407456FX | GDS61096 | 5Q0407761DX | GDS61100 | 1J0407272KT | GDS61121 | 7H0407452JX | GDS61140 |
| 6M213B437AA | GDS61087 | 1K0407762GX | GDS61096 | 5Q0407761EX | GDS61100 | 1J0407452KX | GDS61121 | 7H0407452PX | GDS61140 |
| 7M3407271G | GDS61087 | 1K0407762LX | GDS61096 | 5Q0407761NX | GDS61100 | 1J0407452Q | GDS61121 | 16D407272C | GDS61147 |
| 7M3407271S | GDS61087 | 1K0407764JV | GDS61096 | 5QD407271AT | GDS61100 | 1J0407452QV | GDS61121 | 1K0407272JC | GDS61147 |
| 7M3407271SX | GDS61087 | 1K0407764JX | GDS61096 | JZW407271X | GDS61100 | 1J0407452QX | GDS61121 | 1K0407272PF | GDS61147 |
| 7M3407271T | GDS61087 | 1K0407764NX | GDS61096 | 1K0407456AX | GDS61101 | 1J0407454DX | GDS61121 | 1K0407272RE | GDS61147 |
| 7M3407271TX | GDS61087 | 1K0407764RX | GDS61096 | 2K0407272E | GDS61101 | JZW407452X | GDS61121 | 1K0407272RQ | GDS61147 |
| 7M3407451D | GDS61087 | 1K0407764X | GDS61096 | 2K0407272EX | GDS61101 | 8D040271CL | GDS61122 | 1K0407272RS | GDS61147 |
| 7M3407451DX | GDS61087 | 3C0407272AR | GDS61096 | 3Q0407272AA | GDS61101 | 8D0407271AN | GDS61122 | 1K0407272TJ | GDS61147 |
| YM213B437CB | GDS61087 | 3C0407452CX | GDS61096 | 3Q0407272AB | GDS61101 | 8D0407271BJ | GDS61122 | 1K0407272TN | GDS61147 |
| 8N0407272G | GDS61088 | 5C0407272CK | GDS61096 | 3Q0407272C | GDS61101 | 8D0407271CL | GDS61122 | 1K0407762TX | GDS61147 |
| 8N0407272P | GDS61088 | 5Q0407272BN | GDS61096 | 3Q0407762DX | GDS61101 | 8D0407271DJ | GDS61122 | 1K0407764GX | GDS61147 |
| 8N0407452A | GDS61088 | 5Q0407272CC | GDS61096 | 3Q0407762LX | GDS61101 | 8D0407271DP | GDS61122 | 1K0407764TX | GDS61147 |
| 8N0407452AX | GDS61088 | 5Q0407272FG | GDS61096 | 3Q0407764X | GDS61101 | 8D0407451BV | GDS61122 | 2K0407272G | GDS61147 |
| 8N0407452EX | GDS61088 | 5Q0407452DX | GDS61096 | 5Q0407272CF | GDS61101 | 8D0407451BX | GDS61122 | 2K0407272GX | GDS61147 |
| JZW407450N | GDS61088 | 5Q0407762BX | GDS61096 | 5Q0407272DR | GDS61101 | 8D0407451FV | GDS61122 | 3C8407272 | GDS61147 |
| JZW407450NX | GDS61088 | 5Q0407762X | GDS61096 | 8J0407762F | GDS61101 | 8D0407451FX | GDS61122 | 5C0407272BR | GDS61147 |
| 1K0407271CQ | GDS61093 | JZW407272AX | GDS61096 | JZW407272X | GDS61101 | 1J0407271AA | GDS61123 | 5C0407272CN | GDS61147 |
| 1K0407271PJ | GDS61093 | JZW407272CX | GDS61096 | 7E0407271AA | GDS61105 | 1J0407271ES | GDS61123 | 5N0407762F | GDS61147 |
| 1K0407271PK | GDS61093 | 1K0407271AQ | GDS61097 | 7E0407271FX | GDS61105 | 1J0407271FD | GDS61123 | 5N0407762FX | GDS61147 |
| 1K0407451PV | GDS61093 | 1K0407271CD | GDS61097 | 7E0407271H | GDS61105 | 1J0407271LM | GDS61123 | 5N0407766B | GDS61147 |
| 1K0407451PX | GDS61093 | 1K0407271DJ | GDS61097 | 7E0407271T | GDS61105 | 1J0407271LN | GDS61123 | 5N0407766BX | GDS61147 |
| 1K0407453LX | GDS61093 | 1K0407271GH | GDS61097 | 7E0407451BX | GDS61105 | 1J0407451HX | GDS61123 | 5Q0407272CG | GDS61147 |
| 1K0407763MX | GDS61093 | 1K0407451AX | GDS61097 | 7E0407451KX | GDS61105 | 1J0407451P | GDS61123 | 5Q0407272DS | GDS61147 |
| 5Q0407271CE | GDS61093 | 1K0407451JX | GDS61097 | 7E0407451X | GDS61105 | 1J0407451PV | GDS61123 | 5Q0407762TX | GDS61147 |
| 5Q0407271DA | GDS61093 | 5Q0407271B | GDS61097 | 7H0407271AK | GDS61105 | 1J0407451PX | GDS61123 | 5QD407272BD | GDS61147 |
| 5Q0407761SX | GDS61093 | 5Q0407271CA | GDS61097 | 7H0407271E | GDS61105 | 1J0407453FX | GDS61123 | 5ND407762B | GDS61149 |
| 1K0407272FS | GDS61094 | 5Q0407761BX | GDS61097 | 7H0407271T | GDS61105 | 8L0407451X | GDS61123 | 5ND407762D | GDS61149 |
| 1K0407452QX | GDS61094 | 5Q0407761QX | GDS61097 | 7H0407451JX | GDS61105 | 1K0407272KF | GDS61126 | 5ND407762J | GDS61149 |
| 1K0407456GV | GDS61094 | JZW407271AX | GDS61097 | 7H0407451X | GDS61105 | 1K0407272NJ | GDS61126 | 6Q0407271EE | GDS61150 |
| 1K0407456GX | GDS61094 | 6Q0407271BE | GDS61098 | 1446790 | GDS61106 | 1K0407272RC | GDS61126 | 6Q0407451SX | GDS61150 |
| 1K0407762KV | GDS61094 | 6Q0407271BS | GDS61098 | 1464451 | GDS61106 | 1K0407272TP | GDS61126 | 6QD407271G | GDS61150 |
| 1K0407762KX | GDS61094 | 6Q0407271CT | GDS61098 | 1479171 | GDS61106 | 1K0407454GX | GDS61126 | 6QD407271GX | GDS61150 |
| 1K0407766V | GDS61094 | 6Q0407271DB | GDS61098 | 1504137 | GDS61106 | 1K0407762BX | GDS61126 | 1K0407271BP | GDS61153 |
| 1K0407766X | GDS61094 | 6Q0407271DC | GDS61098 | 1727233 | GDS61106 | 1K0407762PX | GDS61126 | 3C0407271AS | GDS61153 |
| 5K0407272E | GDS61094 | 6Q0407271DE | GDS61098 | 1803623 | GDS61106 | 1K0407764SX | GDS61126 | 3C0407271D | GDS61153 |
| 5K0407272F | GDS61094 | 6Q0407271H | GDS61098 | 6G913B436CB | GDS61106 | 3C0407272AJ | GDS61126 | 3C0407271DV | GDS61153 |
| 5K0407272J | GDS61094 | 6Q0407271T | GDS61098 | 6G913B436CC | GDS61106 | 3C0407452AX | GDS61126 | 3C0407271DX | GDS61153 |
| 5K0407452AX | GDS61094 | 6Q0407451FX | GDS61098 | 6G913B436CD | GDS61106 | 5N0407762 | GDS61126 | 3C0407451HX | GDS61153 |
| 5K0407452DV | GDS61094 | 6Q0407451HX | GDS61098 | RM6G913B436C1D | GDS61106 | 5Q0407762PX | GDS61126 | 5Q6407271 | GDS61153 |
| 5K0407452DX | GDS61094 | 6Q0407451KX | GDS61098 | 701407271G | GDS61107 | 7N0407764B | GDS61126 | 8D0407271DF | GDS61157 |
| 5Q0407764DX | GDS61094 | 6Q0407451LX | GDS61098 | 701407271L | GDS61107 | JZW407272BX | GDS61126 | 8D0407271DQ | GDS61157 |
| 1K0407272BG | GDS61096 | 6Q0407451MX | GDS61098 | 701407271LX | GDS61107 | 6Q0407272EN | GDS61133 | 8D0407271RX | GDS61157 |
| 1K0407272CA | GDS61096 | JZW407451HX | GDS61098 | 701407449EX | GDS61107 | 6Q0407454X | GDS61133 | 8D0407451PV | GDS61157 |
| 1K0407272CL | GDS61096 | 6Q0407272BK | GDS61099 | 1K0407271DL | GDS61108 | 6QD407272EN | GDS61133 | 8D0407451PX | GDS61157 |
| 1K0407272DR | GDS61096 | 6Q0407272DH | GDS61099 | 1K0407271FF | GDS61109 | 6QD407272L | GDS61133 | 8D0407451RX | GDS61157 |
| 1K0407272HK | GDS61096 | 6Q0407272H | GDS61099 | 5QD407271F | GDS61109 | 6QD407272LX | GDS61133 | 3Q0407272BH | GDS61166 |
| 1K0407272HL | GDS61096 | 6Q0407452BX | GDS61099 | 1K0407272KL | GDS61110 | 6QD407452TX | GDS61133 | 3Q0407762PX | GDS61166 |
| 1K0407272HP | GDS61096 | 6Q0407452HQ | GDS61099 | 5QD407272AR | GDS61110 | 13250846 | GDS61137 | 3Q0407762TX | GDS61166 |
| 1K0407272JT | GDS61096 | 6Q0407452HX | GDS61099 | 1K0407271DE | GDS61111 | 13335139 | GDS61137 | 1H0407271 | GDS61172 |
| 1K0407272ML | GDS61096 | 6Q0407452LX | GDS61099 | 1K0407761CX | GDS61111 | 374583 | GDS61137 | 1H0407271H | GDS61172 |
| 1K0407272MP | GDS61096 | JZW407450LX | GDS61099 | 3C0407271D | GDS61111 | 374889 | GDS61137 | 1H0407271V | GDS61172 |
| 1K0407272NN | GDS61096 | 16D407271C | GDS61100 | 5Q0407271DF | GDS61111 | 95520703 | GDS61137 | 1H0407271X | GDS61172 |
| 1K0407272PH | GDS61096 | 1K0407271JG | GDS61100 | 5Q0407763DX | GDS61111 | 13250845 | GDS61138 | 1H0407449X | GDS61172 |
| 1K0407272PJ | GDS61096 | 1K0407271JK | GDS61100 | 1K0407272GE | GDS61112 | 13335138 | GDS61138 | 2H0407271B | GDS61173 |
| 1K0407272QM | GDS61096 | 1K0407271LF | GDS61100 | 5Q0407272EF | GDS61112 | 374582 | GDS61138 | 2H0407271BX | GDS61173 |
| 1K0407272QT | GDS61096 | 1K0407271ME | GDS61100 | 1K0407271EM | GDS61114 | 374888 | GDS61138 | 2H0407271D | GDS61173 |
| 1K0407272SP | GDS61096 | 1K0407271PF | GDS61100 | 701407271B | GDS61119 | 95520509 | GDS61138 | 2H0407271DX | GDS61173 |
| 1K0407272ST | GDS61096 | 1K0407453NX | GDS61100 | 701407271BV | GDS61119 | 7E0407272BB | GDS61140 | 2H0407271E | GDS61173 |
| 1K0407452BV | GDS61096 | 1K0407761RX | GDS61100 | 701407271BX | GDS61119 | 7E0407452KX | GDS61140 | 2H0407271EX | GDS61173 |
| 1K0407452BX | GDS61096 | 1K0407763JX | GDS61100 | 701407271H | GDS61119 | 7H0407272AC | GDS61140 | 2H0407271F | GDS61173 |
| 1K0407452KX | GDS61096 | 2K0407271E | GDS61100 | 701407271HV | GDS61119 | 7H0407272AL | GDS61140 | 2H0407271FX | GDS61173 |
| 1K0407452LX | GDS61096 | 2K0407271EX | GDS61100 | 701407271HX | GDS61119 | 7H0407272BB | GDS61140 | 2H0407271J | GDS61173 |
| 1K0407452SX | GDS61096 | 2K3407271B | GDS61100 | 701407449BX | GDS61119 | 7H0407272BD | GDS61140 | 2H0407271JX | GDS61173 |
| 1K0407454JX | GDS61096 | 2K3407271BX | GDS61100 | 701407449X | GDS61119 | 7H0407272BL | GDS61140 | 2H0407271K | GDS61173 |

| COMPETITOR | G-AP Ref. | COMPETITOR | G-AP Ref. | COMPETITOR | G-AP Ref. | COMPETITOR | G-AP Ref. | COMPETITOR | G-AP Ref. |
|---|---|---|---|---|---|---|---|---|---|
| OE | | 3C0407271AB | GDS61201 | 7L0501201B | GDS61236 | 8Z0407452AX | GDS61278 | 8R0407271A | GDS61290 |
| | | 3C0407271AC | GDS61201 | 7L0501201BX | GDS61236 | 8Z0407452EX | GDS61278 | 8R0407271C | GDS61290 |
| 2HO407271E | GDS61173 | 3C0407451X | GDS61201 | 95533202400 | GDS61236 | 1K0407271JJ | GDS61281 | 8R0407271CX | GDS61290 |
| 6Q0407272CL | GDS61183 | 3Q0407271AR | GDS61201 | 95533202401 | GDS61236 | 1K0407271LD | GDS61281 | 8R0501203D | GDS61291 |
| 6Q0407272J | GDS61183 | 3Q0407271AS | GDS61201 | 02Q409345 | GDS61237 | 1K0407761PX | GDS61281 | 8R0501203DX | GDS61291 |
| 6Q0407452KX | GDS61183 | 3Q0407271D | GDS61201 | 09K409352 | GDS61238 | 1K0407763BX | GDS61281 | 1K0501204A | GDS61293 |
| 6R0407761A | GDS61184 | 3Q0407761DX | GDS61201 | 180407271K | GDS61240 | 5C0407271R | GDS61281 | 1K0501204AX | GDS61293 |
| 6R0407761AX | GDS61184 | 3Q0407761EV | GDS61201 | 1J0407272HD | GDS61243 | 8J0407271G | GDS61281 | 1K0501204D | GDS61293 |
| 6R0407763Q | GDS61184 | 3Q0407761EX | GDS61201 | 1J0407272KH | GDS61243 | 8J0407271GX | GDS61281 | 1K0501204DX | GDS61293 |
| 6R0407762A | GDS61185 | 1J0407272BT | GDS61203 | 1J0407272LB | GDS61243 | 8J0407761C | GDS61281 | 1K0501204F | GDS61293 |
| 6R0407762AX | GDS61185 | 1J0407272DC | GDS61203 | 1J0407272NL | GDS61243 | 1K0407271KQ | GDS61282 | 1K0501204FX | GDS61293 |
| 1J0407272AA | GDS61186 | 1J0407272GE | GDS61203 | 1J0407452SX | GDS61243 | 1K0407271LB | GDS61282 | 3AA407272D | GDS61295 |
| 1J0407272FD | GDS61186 | 1J0407272JC | GDS61203 | 1J0407271HJ | GDS61244 | 1K0407763KX | GDS61282 | 3AA407762X | GDS61295 |
| 1J0407272FL | GDS61186 | 1J0407418H | GDS61203 | 1J0407271HK | GDS61244 | 3C0407271BA | GDS61282 | 3C0407272CA | GDS61295 |
| 1J0407272FQ | GDS61186 | 1J0407452NX | GDS61203 | 1J0407271LQ | GDS61244 | 5Q0407271A | GDS61282 | 3C0407272CB | GDS61295 |
| 1J0407272LA | GDS61186 | 1J0407452RV | GDS61203 | 1J0407451RX | GDS61244 | 5Q0407271BP | GDS61282 | 3C0407452RX | GDS61295 |
| 1J0407452LX | GDS61186 | 1J0407452RX | GDS61203 | 1J0407451SX | GDS61244 | 5Q0407271BR | GDS61282 | 3C0407452TX | GDS61295 |
| 8L0407452AX | GDS61186 | 1J0407452TV | GDS61203 | 1J0407453GX | GDS61244 | 5Q0407271DD | GDS61282 | 5N0407761Q | GDS61296 |
| 6E0407272H | GDS61189 | 1J0407452TX | GDS61203 | JZW407449RX | GDS61244 | 5Q0407451X | GDS61282 | 5N0407761QX | GDS61296 |
| 6E0407452AX | GDS61189 | JZW407450MX | GDS61203 | 02N409344F | GDS61245 | 5Q0407761JX | GDS61282 | 5N0407761S | GDS61296 |
| 6N0407272F | GDS61189 | JZW407450RX | GDS61203 | 6Q0407271DP | GDS61248 | 5Q0407763FX | GDS61282 | 5N0407761SX | GDS61296 |
| 6N0407272H | GDS61189 | 6Q0407271CE | GDS61204 | 6Q0407451QX | GDS61248 | 1K0407272BJ | GDS61283 | 5N0407763 | GDS61296 |
| 6N0407272L | GDS61189 | 6Q0407271CL | GDS61204 | 6Q0407272AR | GDS61252 | 1K0407272EB | GDS61283 | 5N0407763A | GDS61296 |
| 6N0407272R | GDS61189 | 6Q0407271J | GDS61204 | 6Q0407272BA | GDS61252 | 1K0407272QN | GDS61283 | 5N0407763AX | GDS61296 |
| 6N0407452AX | GDS61189 | 6Q0407451JX | GDS61204 | 6Q0407272BL | GDS61252 | 1K0407272QS | GDS61283 | 5N0407763K | GDS61296 |
| 6N0407452CX | GDS61189 | 6N0407271G | GDS61205 | 6Q0407272DJ | GDS61252 | 1K0407762JX | GDS61283 | 5N0407763X | GDS61296 |
| 6N0407452FX | GDS61189 | 6N0407271H | GDS61205 | 6Q0407452JX | GDS61252 | 1K0407764KX | GDS61283 | JZW407271FX | GDS61296 |
| 6N0407452GX | GDS61189 | 6N0407451BX | GDS61205 | 6Q0407452MX | GDS61252 | 3Q0407272BR | GDS61283 | 6R0407761K | GDS61297 |
| JZW407450KX | GDS61189 | 6N0407451DX | GDS61205 | 02N409344F | GDS61255 | 3Q0407762MX | GDS61283 | 6R0407761KX | GDS61297 |
| 02Z409345B | GDS61190 | JZW407451X | GDS61205 | 1140359 | GDS61255 | 5Q0407272DB | GDS61283 | 7P0501201G | GDS61298 |
| 900000231B | GDS61190 | 7E0407272BE | GDS61210 | 1M213B428BA | GDS61255 | 5Q0407272FF | GDS61283 | 7P0501201GX | GDS61298 |
| 0A5409343 | GDS61191 | 7E0407454H | GDS61210 | 7E0501201B | GDS61257 | 5Q0407272H | GDS61283 | 7P0501201Q | GDS61298 |
| 0A5409355C | GDS61191 | 7E0407454HX | GDS61210 | 7E0501201BX | GDS61257 | 5Q0407762EX | GDS61283 | 7P0501201QX | GDS61298 |
| 02N409345 | GDS61192 | 7H0407272AF | GDS61210 | 7E0501201C | GDS61257 | 5Q0407762LX | GDS61283 | 7P0501201S | GDS61298 |
| 02N409345A | GDS61192 | 7H0407272AP | GDS61210 | 7E0501201CX | GDS61257 | 1K0501203A | GDS61284 | 7P0501201SX | GDS61298 |
| 1121392 | GDS61192 | 7H0407272AS | GDS61210 | 7H0501201C | GDS61257 | 1K0501203AX | GDS61284 | 95833202430 | GDS61298 |
| 1135711 | GDS61192 | 7H0407272BE | GDS61210 | 7H0501201CX | GDS61257 | 1K0501203D | GDS61284 | 95833202431 | GDS61298 |
| 1313097 | GDS61192 | 7H0407272BJ | GDS61210 | 7H0501201D | GDS61257 | 1K0501203DX | GDS61284 | 95833202432 | GDS61298 |
| 3M213A426AA | GDS61192 | 7H0407272BQ | GDS61210 | 7H0501201DX | GDS61257 | 1K0501203F | GDS61284 | 6Q0407272EA | GDS61301 |
| YM213A426AA | GDS61192 | 7H0407272EE | GDS61210 | 7E0501202 | GDS61258 | 1K0501203FX | GDS61284 | 6Q0407452RX | GDS61301 |
| YM213A426BA | GDS61192 | 7H0407452DX | GDS61210 | 7E0501202A | GDS61258 | 1Q0407271B | GDS61285 | 6R0407762K | GDS61301 |
| 02N409344E | GDS61193 | 7H0407452HX | GDS61210 | 7E0501202AX | GDS61258 | 1Q0407271BX | GDS61285 | 6R0407762KX | GDS61301 |
| 1140358 | GDS61193 | 7H0407452QX | GDS61210 | 7E0501202X | GDS61258 | 1Q0407271C | GDS61285 | 6Q0407271DS | GDS61302 |
| 1M213B428AA | GDS61193 | 7H0407452RX | GDS61210 | 7H0501202B | GDS61258 | 1Q0407271CX | GDS61285 | 6R0407763K | GDS61302 |
| 1K0407271AS | GDS61201 | JZW407450QX | GDS61210 | 7H0501202BX | GDS61258 | 1Q0407271D | GDS61285 | 5Z0407272T | GDS61305 |
| 1K0407271DP | GDS61201 | 1K0407272DT | GDS61211 | 7H0501202C | GDS61258 | 1Q0407271DX | GDS61285 | 6Q0407272BF | GDS61305 |
| 1K0407271DS | GDS61201 | 1K0407272HB | GDS61211 | 7H0501202CX | GDS61258 | 5Q0407271BL | GDS61285 | 6Q0407272DG | GDS61305 |
| 1K0407271HH | GDS61201 | 1K0407272KC | GDS61211 | 7H0501202D | GDS61258 | 5Q0407271BQ | GDS61285 | 6Q0407272DL | GDS61305 |
| 1K0407271HQ | GDS61201 | 1K0407272MF | GDS61211 | 7H0501202DX | GDS61258 | 5Q0407271L | GDS61285 | 6Q0407272EC | GDS61305 |
| 1K0407271HT | GDS61201 | 1K0407452CX | GDS61211 | 6R0407761S | GDS61260 | 5Q0407271M | GDS61285 | 6Q0407452SX | GDS61305 |
| 1K0407271JA | GDS61201 | 1K0407452NX | GDS61211 | 6R0407761SX | GDS61260 | 5Q0407761CX | GDS61285 | 6QE407272F | GDS61305 |
| 1K0407271JF | GDS61201 | 1K0407762X | GDS61211 | 6R0407762S | GDS61261 | 5Q0407761LV | GDS61285 | 5Q0407272B | GDS61307 |
| 1K0407271KP | GDS61201 | 0A5409343B | GDS61213 | 6R0407762SX | GDS61261 | 5Q0407761LX | GDS61285 | 5Q0407272C | GDS61307 |
| 1K0407271LA | GDS61201 | 0A6409343B | GDS61214 | 6R0407764M | GDS61261 | 5Q0407761MV | GDS61285 | 5Q0407762CX | GDS61307 |
| 1K0407451HV | GDS61201 | 0A6409343C | GDS61214 | 6R0407764MX | GDS61261 | 5Q0407761MX | GDS61285 | 5Q0407762DX | GDS61307 |
| 1K0407451HX | GDS61201 | 0A5409343A | GDS61215 | 5Z0407271C | GDS61262 | 5Q0407761X | GDS61285 | 6R0407762B | GDS61308 |
| 1K0407451NV | GDS61201 | 0A5409355F | GDS61215 | 6QE407271C | GDS61262 | 5Q0501203A | GDS61286 | 6R0407762BX | GDS61308 |
| 1K0407451NX | GDS61201 | 02Z409345D | GDS61216 | 6QE407271H | GDS61262 | 5Q0501203AX | GDS61286 | 3AA407271A | GDS61310 |
| 1K0407453EX | GDS61201 | 56D407272A | GDS61222 | 8Z0407271AL | GDS61265 | 5Q0501204A | GDS61287 | 3AA407451AX | GDS61310 |
| 1K0407761AX | GDS61201 | 6Q0407272DM | GDS61223 | 8Z0407271AN | GDS61265 | 5Q0501204AX | GDS61287 | 7N0407761P | GDS61310 |
| 1K0407761DX | GDS61201 | 6Q0407452QX | GDS61223 | 8Z0407271AP | GDS61265 | 6R0407762 | GDS61288 | 7N0407761PX | GDS61310 |
| 1K0407761EX | GDS61201 | 02G409356C | GDS61225 | 8Z0407271AS | GDS61265 | 6R0407762X | GDS61288 | 7N0407763A | GDS61310 |
| 1K0407761MV | GDS61201 | 7M0409313B | GDS61226 | 8Z0407271BJ | GDS61265 | 4G0407271F | GDS61290 | 7N0407763AX | GDS61310 |
| 1K0407761MX | GDS61201 | 7M0409313C | GDS61226 | 8Z0407451AX | GDS61265 | 4G0407451BV | GDS61290 | 6R0407761B | GDS61311 |
| 1K0407761NV | GDS61201 | 7M0409313E | GDS61226 | 8Z0407451EX | GDS61265 | 4G0407451BX | GDS61290 | 6R0407761BX | GDS61311 |
| 1K0407761NX | GDS61201 | 56D407271F | GDS61232 | 8Z0407272AC | GDS61278 | 4H0407451AV | GDS61290 | 1J0407271BG | GDS61312 |
| 1K0407763CX | GDS61201 | 56D407272F | GDS61233 | 8Z0407272AN | GDS61278 | 4H0407451AX | GDS61290 | 1J0407271CJ | GDS61312 |
| 1K0407763GX | GDS61201 | 7L0501201 | GDS61236 | 8Z0407272BJ | GDS61278 | 4H0407451BX | GDS61290 | 1J0407271GD | GDS61312 |

| COMPETITOR | G-AP Ref. | COMPETITOR | G-AP Ref. | COMPETITOR | G-AP Ref. | COMPETITOR | G-AP Ref. | COMPETITOR | G-AP Ref. |
|---|---|---|---|---|---|---|---|---|---|
| OE | | 5C0407272S | GDS61339 | 8111308 | GDS62002 | 8601679 | GDS62023 | 8602589 | GDS62034 |
| | | 1K0407272LF | GDS61341 | 8111310 | GDS62002 | 8602181 | GDS62023 | 8603877 | GDS62034 |
| 1J0407271JL | GDS61312 | 5C0407272AC | GDS61341 | 8601097 | GDS62002 | 1505269 | GDS62024 | 8603879 | GDS62034 |
| 1J0407451J | GDS61312 | 8J0407272H | GDS61341 | 8601099 | GDS62002 | 1759939 | GDS62024 | 8689226 | GDS62034 |
| 1J0407451JX | GDS61312 | 8J0407272T | GDS61341 | 8601101 | GDS62002 | 1798103 | GDS62024 | 9207795 | GDS62034 |
| 1J0407451NV | GDS61312 | 8J0407452AX | GDS61341 | 8601103 | GDS62002 | 36001181 | GDS62024 | 30614076 | GDS62035 |
| 1J0407451NX | GDS61312 | 1K0407272KP | GDS61342 | 9122568 | GDS62002 | 36002448 | GDS62024 | 30620826 | GDS62035 |
| 1J0407451TV | GDS61312 | 1K0407762HX | GDS61342 | 9122570 | GDS62002 | 7M513B436CC | GDS62024 | 8251528 | GDS62035 |
| 1J0407451TX | GDS61312 | 3Q0407272AT | GDS61345 | 91225706 | GDS62002 | 7M513B436CD | GDS62024 | 8251533 | GDS62035 |
| JZW407451DX | GDS61312 | 3Q0407762HX | GDS61345 | 9122920 | GDS62002 | RM7M513B436C1D | GDS62024 | 8251548 | GDS62035 |
| JZW407451KX | GDS61312 | 561407272S | GDS61345 | 9163584 | GDS62002 | 30735134 | GDS62025 | 8601829 | GDS62035 |
| 1J0407271AD | GDS61314 | 3C0407272L | GDS61346 | 9163588 | GDS62002 | 8251781 | GDS62025 | 8601988 | GDS62035 |
| 1J0407271AQ | GDS61314 | 3Q0407272BA | GDS61346 | 9163592 | GDS62002 | 8601381 | GDS62025 | 8601991 | GDS62035 |
| 1J0407271B | GDS61314 | 3Q0407272BB | GDS61346 | 8250472 | GDS62004 | 86013810 | GDS62025 | 8602288 | GDS62035 |
| 1J0407271DF | GDS61314 | 3Q0407762JX | GDS61346 | 8602072 | GDS62004 | 8602567 | GDS62025 | 30735152 | GDS62039 |
| 1J0407271DL | GDS61314 | 3Q0407762SX | GDS61346 | MR377575 | GDS62004 | 8603786 | GDS62025 | 30783086 | GDS62039 |
| 1J0407271DS | GDS61314 | 3Q0407272BG | GDS61347 | 8251513 | GDS62009 | 8689203 | GDS62025 | 36000522 | GDS62039 |
| 1J0407271EN | GDS61314 | 5N0407764AX | GDS61347 | 8251517 | GDS62009 | 9181533 | GDS62025 | 8252038 | GDS62039 |
| 1J0407271GS | GDS61314 | 5N0407764B | GDS61347 | 8251525 | GDS62009 | 30735135 | GDS62026 | 8601963 | GDS62039 |
| 1J0407271QE | GDS61314 | 5N0407764BX | GDS61347 | 8251758 | GDS62009 | 8251782 | GDS62026 | 8602583 | GDS62039 |
| 1J0407271QF | GDS61314 | 5N0407764L | GDS61347 | 8601395 | GDS62009 | 8601382 | GDS62026 | 8603797 | GDS62039 |
| 1J0407451MX | GDS61314 | 5N0407764LX | GDS61347 | 8601399 | GDS62009 | 8602568 | GDS62026 | 8689219 | GDS62039 |
| 1J0407453EX | GDS61314 | 5N0407764P | GDS61347 | 8601553 | GDS62009 | 8603804 | GDS62026 | 9480545 | GDS62039 |
| 357407271R | GDS61314 | 5N0407764PX | GDS61347 | 8601566 | GDS62009 | 8689204 | GDS62026 | 30866281 | GDS62044 |
| 357407271RV | GDS61314 | 5N0407764T | GDS61347 | 8601571 | GDS62009 | 36000533 | GDS62028 | 8251541 | GDS62044 |
| 357407271RX | GDS61314 | 5N0407764TX | GDS61347 | 8601573 | GDS62009 | 36000541 | GDS62028 | 8251543 | GDS62044 |
| 7L6201201B | GDS61323 | 5N0407766 | GDS61347 | 8601637 | GDS62009 | 8252050 | GDS62028 | 8602188 | GDS62044 |
| 7L6501201 | GDS61323 | 5N0407766D | GDS61347 | 8602607 | GDS62009 | 8252059 | GDS62028 | 8602190 | GDS62044 |
| 7L6501201B | GDS61323 | 5N0407766DX | GDS61347 | 30735130 | GDS62017 | 8602843 | GDS62028 | 31259516 | GDS62053 |
| 7L6501201BX | GDS61323 | 5N0407766H | GDS61347 | 30783096 | GDS62017 | 86028438 | GDS62028 | 31367019 | GDS62053 |
| 7L6501201D | GDS61323 | 5N0407766X | GDS61347 | 36000530 | GDS62017 | 8603596 | GDS62028 | 31367149 | GDS62053 |
| 7L6501201DX | GDS61323 | 5WA407272R | GDS61347 | 36000535 | GDS62017 | 8603974 | GDS62028 | 36001450 | GDS62053 |
| 3Q0501203 | GDS61331 | 39600EB30A | GDS61349 | 8252046 | GDS62017 | 30735349 | GDS62029 | 36002144 | GDS62053 |
| 3Q0501203B | GDS61331 | 39600EB30B | GDS61349 | 8252052 | GDS62017 | 30783085 | GDS62029 | 36002897 | GDS62053 |
| 3Q0501203BX | GDS61331 | 495602B150 | GDS61351 | 8601854 | GDS62017 | 36000520 | GDS62029 | MR377713 | GDS62056 |
| 5Q0501203C | GDS61331 | 495602P050 | GDS61352 | 8602575 | GDS62017 | 8252035 | GDS62029 | MR377715 | GDS62056 |
| 5Q0501203CX | GDS61331 | 495603A410 | GDS61353 | 8602581 | GDS62017 | 8252043 | GDS62029 | 30735120 | GDS62057 |
| 3Q0501204B | GDS61332 | 5003845 | GDS62001 | 8603791 | GDS62017 | 8601859 | GDS62029 | 30783083 | GDS62057 |
| 3Q0501204BX | GDS61332 | 5003913 | GDS62001 | 8603874 | GDS62017 | 8602591 | GDS62029 | 36000519 | GDS62057 |
| 5Q0501204C | GDS61332 | 8111304 | GDS62001 | 8689211 | GDS62017 | 8602842 | GDS62029 | 8252034 | GDS62057 |
| 5Q0501204CX | GDS61332 | 8111306 | GDS62001 | 9181252 | GDS62017 | 8603795 | GDS62029 | 8601855 | GDS62057 |
| 1K0501204G | GDS61333 | 8111307 | GDS62001 | 8251550 | GDS62021 | 8689227 | GDS62029 | 8602577 | GDS62057 |
| 1K0501204GX | GDS61333 | 8111309 | GDS62001 | 8601990 | GDS62021 | 8689872 | GDS62029 | 8603794 | GDS62057 |
| 3Q0501203C | GDS61334 | 8251510 | GDS62001 | 8602290 | GDS62021 | 9181261 | GDS62029 | 8689213 | GDS62057 |
| 3Q0501203CX | GDS61334 | 8601096 | GDS62001 | 30735129 | GDS62022 | 30735121 | GDS62031 | 9181255 | GDS62057 |
| 3Q0501204D | GDS61335 | 8601098 | GDS62001 | 30735131 | GDS62022 | 30783097 | GDS62031 | 30783173 | GDS62060 |
| 3Q0501204DX | GDS61335 | 8601100 | GDS62001 | 30783082 | GDS62022 | 36000532 | GDS62031 | 30783179 | GDS62060 |
| 1J0407271NS | GDS61336 | 8601102 | GDS62001 | 30783084 | GDS62022 | 8252049 | GDS62031 | 30787774 | GDS62060 |
| 1J0407271QA | GDS61336 | 8601462 | GDS62001 | 36000365 | GDS62022 | 8601856 | GDS62031 | 30787776 | GDS62060 |
| 1J0407272MH | GDS61337 | 8643437 | GDS62001 | 36000518 | GDS62022 | 8602578 | GDS62031 | 36000183 | GDS62060 |
| 1J0407272MT | GDS61337 | 9122567 | GDS62001 | 36000521 | GDS62022 | 8603793 | GDS62031 | 360001838 | GDS62060 |
| 1J0407272NJ | GDS61337 | 91225672 | GDS62001 | 36002653 | GDS62022 | 8689214 | GDS62031 | 36000439 | GDS62060 |
| 1J0407454FX | GDS61337 | 9122569 | GDS62001 | 36011293 | GDS62022 | 9181256 | GDS62031 | 36000441 | GDS62060 |
| 95B501203 | GDS61338 | 91225698 | GDS62001 | 36050796 | GDS62022 | 30735348 | GDS62033 | 36000442 | GDS62060 |
| 95B501203A | GDS61338 | 9122833 | GDS62001 | 8252033 | GDS62022 | 8251775 | GDS62033 | 36000548 | GDS62060 |
| 95B501203E | GDS61338 | 9122919 | GDS62001 | 8252037 | GDS62022 | 8251777 | GDS62033 | 36000550 | GDS62060 |
| 95B501203G | GDS61338 | 9122921 | GDS62001 | 8601853 | GDS62022 | 8601659 | GDS62033 | 36000551 | GDS62060 |
| 95B501203H | GDS61338 | 9163581 | GDS62001 | 8601857 | GDS62022 | 8602586 | GDS62033 | 4N513B437AP | GDS62060 |
| 95B501203L | GDS61338 | 9163585 | GDS62001 | 8602574 | GDS62022 | 8602587 | GDS62033 | 4N513B437PH | GDS62060 |
| 95B501203M | GDS61338 | 9163589 | GDS62001 | 8602580 | GDS62022 | 8603799 | GDS62033 | 4N513B437PJ | GDS62060 |
| 95B501203Q | GDS61338 | 9163593 | GDS62001 | 8603789 | GDS62022 | 8603800 | GDS62033 | 8603119 | GDS62060 |
| 95B501203R | GDS61338 | 9183785 | GDS62001 | 8603796 | GDS62022 | 8689222 | GDS62033 | 86031212 | GDS62060 |
| 1K0407272EK | GDS61339 | 9601096 | GDS62001 | 8689210 | GDS62022 | 9470930 | GDS62033 | 860312128 | GDS62060 |
| 1K0407272EP | GDS61339 | 5003844 | GDS62002 | 8689216 | GDS62022 | 30735344 | GDS62034 | 8603260 | GDS62060 |
| 1K0407272JB | GDS61339 | 5003914 | GDS62002 | 9480544 | GDS62022 | 8251776 | GDS62034 | 8603819 | GDS62060 |
| 1K0407272RF | GDS61339 | 6843202 | GDS62002 | 9480546 | GDS62022 | 8251778 | GDS62034 | 8603821 | GDS62060 |
| 1K0407272RR | GDS61339 | 8111303 | GDS62002 | 8251754 | GDS62023 | 8601983 | GDS62034 | 8603824 | GDS62060 |
| 1K0407764DX | GDS61339 | 8111305 | GDS62002 | 8601677 | GDS62023 | 8602588 | GDS62034 | 86038247 | GDS62060 |

| COMPETITOR | G-AP Ref. | COMPETITOR | G-AP Ref. | COMPETITOR | G-AP Ref. | COMPETITOR | G-AP Ref. | COMPETITOR | G-AP Ref. |
|---|---|---|---|---|---|---|---|---|---|
| OE | | 31256779 | GDS62076 | 31367541 | GDS62095 | 36010215 | GDS62117 | 8251506 | GDS62138 |
| | | 31367525 | GDS62076 | 36011295 | GDS62095 | 8251542 | GDS62118 | 8601378 | GDS62138 |
| 1344682 | GDS62062 | 31367530 | GDS62076 | 31259624 | GDS62096 | 8602189 | GDS62118 | 30735133 | GDS62140 |
| 1370412 | GDS62062 | 36000362 | GDS62076 | 31367584 | GDS62096 | 31325116 | GDS62119 | 30783100 | GDS62140 |
| 1402340 | GDS62062 | 36011288 | GDS62076 | 36012413 | GDS62096 | 36010060 | GDS62119 | 36000531 | GDS62140 |
| 1431360 | GDS62062 | 36011294 | GDS62076 | 36000447 | GDS62098 | 31280680 | GDS62120 | 8251783 | GDS62140 |
| 1468437 | GDS62062 | 31325135 | GDS62077 | 36000556 | GDS62098 | 36002060 | GDS62120 | 8252047 | GDS62140 |
| 1477841 | GDS62062 | 36001876 | GDS62077 | 6901318 | GDS62098 | 31325961 | GDS62121 | 8601888 | GDS62140 |
| 1798101 | GDS62062 | P31325135AC | GDS62077 | 8603818 | GDS62098 | 36011351 | GDS62121 | 8602576 | GDS62140 |
| 30787781 | GDS62062 | 31259517 | GDS62078 | 36000452 | GDS62100 | 31325690 | GDS62122 | 8602661 | GDS62140 |
| 36000182 | GDS62062 | 31367150 | GDS62078 | 36000561 | GDS62100 | 31325960 | GDS62122 | 8603792 | GDS62140 |
| 36000446 | GDS62062 | 36001448 | GDS62078 | 8603826 | GDS62100 | 36011350 | GDS62122 | 8603878 | GDS62140 |
| 36000555 | GDS62062 | 36002896 | GDS62078 | 36002669 | GDS62101 | 31367546 | GDS62123 | 8689212 | GDS62140 |
| 36002452 | GDS62062 | 31367155 | GDS62081 | 31216659 | GDS62102 | 36012423 | GDS62123 | 9183934 | GDS62140 |
| 4N513B436XE | GDS62062 | 36001451 | GDS62081 | 36002670 | GDS62102 | 31325109 | GDS62124 | 30759007 | GDS62141 |
| 4N513B436XF | GDS62062 | 36002893 | GDS62081 | 36001449 | GDS62103 | 31437520 | GDS62124 | 30783090 | GDS62141 |
| 4N513B436XG | GDS62062 | 31367154 | GDS62082 | 36000445 | GDS62105 | 36010056 | GDS62124 | 36000524 | GDS62141 |
| 4N513B436XH | GDS62062 | 30783088 | GDS62083 | 36000554 | GDS62105 | 36010214 | GDS62124 | 8252040 | GDS62141 |
| 4N513B436XJ | GDS62062 | 31280867 | GDS62083 | 36000438 | GDS62106 | 50785570 | GDS62124 | 8603888 | GDS62141 |
| 4N513B436XK | GDS62062 | 36000507 | GDS62083 | 36000547 | GDS62106 | 31325288 | GDS62125 | P30759007 | GDS62141 |
| 86032497 | GDS62062 | 36001215 | GDS62083 | 31256825 | GDS62107 | 31367531 | GDS62125 | 36051046 | GDS62142 |
| 86032570 | GDS62062 | 31259623 | GDS62084 | 31367828 | GDS62107 | 36012416 | GDS62125 | 8602531 | GDS62142 |
| 8603815 | GDS62062 | 31367067 | GDS62084 | 36012352 | GDS62107 | 31325108 | GDS62126 | 8603972 | GDS62142 |
| RM4N513B436X1K | GDS62062 | 36001532 | GDS62084 | 36012479 | GDS62107 | 36010054 | GDS62126 | 30735378 | GDS62143 |
| RM4N513B436XK | GDS62062 | 36002066 | GDS62084 | 31272229 | GDS62108 | 50709465 | GDS62126 | 8251760 | GDS62143 |
| 30684190 | GDS62063 | 30651671 | GDS62086 | 36001461 | GDS62108 | 31325686 | GDS62127 | 8601578 | GDS62143 |
| 30735971 | GDS62063 | 30783202 | GDS62086 | 30651674 | GDS62109 | 36001874 | GDS62127 | 8602609 | GDS62143 |
| 30735973 | GDS62063 | 31272548 | GDS62086 | 31259435 | GDS62109 | 31280676 | GDS62128 | 8689238 | GDS62143 |
| 30759763 | GDS62063 | 31367543 | GDS62086 | 31367300 | GDS62109 | 31367627 | GDS62128 | 9470934 | GDS62143 |
| 30783174 | GDS62063 | 36000162 | GDS62086 | 31367527 | GDS62109 | 36012437 | GDS62128 | 8251529 | GDS62144 |
| 30783187 | GDS62063 | 36000368 | GDS62086 | 31367529 | GDS62109 | 31280666 | GDS62129 | 4130008012 | GDS66003 |
| 30787784 | GDS62063 | 36001194 | GDS62086 | 36000160 | GDS62109 | 31280674 | GDS62129 | 4130008001 | GDS66004 |
| 30787785 | GDS62063 | 36011296 | GDS62086 | 36000366 | GDS62109 | 31367564 | GDS62129 | A212203010CA | GDS68005 |
| 36000184 | GDS62063 | 6G9N3B436CE | GDS62086 | 36002654 | GDS62109 | 36011267 | GDS62129 | A212203020CA | GDS68006 |
| 360001846 | GDS62063 | P31272548 | GDS62086 | 36011286 | GDS62109 | 31325963 | GDS62130 | A112203010AE | GDS68007 |
| 36000241 | GDS62063 | 31280681 | GDS62087 | 36011289 | GDS62109 | 31437518 | GDS62130 | LK2203010B | GDS69003 |
| 36000449 | GDS62063 | 36000676 | GDS62087 | 36012359 | GDS62109 | 36011353 | GDS62130 | LK2203020B | GDS69004 |
| 36000450 | GDS62063 | 30614081 | GDS62089 | 31280668 | GDS62110 | 36012679 | GDS62130 | 2200310U2010 | GDS74003 |
| 36000451 | GDS62063 | 30614410 | GDS62089 | 36000680 | GDS62110 | 31325962 | GDS62131 | 2200300U7050 | GDS74004 |
| 36000558 | GDS62063 | 36050314 | GDS62089 | P31280668 | GDS62110 | 31437517 | GDS62131 | 2200100U8010 | GDS74005 |
| 36000559 | GDS62063 | 8601984 | GDS62089 | 31280667 | GDS62111 | 36011352 | GDS62131 | 2200200U8010 | GDS74006 |
| 36000560 | GDS62063 | 8602741 | GDS62089 | 31280675 | GDS62111 | 36012678 | GDS62131 | 2200100U8020 | GDS74007 |
| 36051060 | GDS62063 | 31272549 | GDS62091 | 31367539 | GDS62111 | P31437517 | GDS62131 | 2200200U8020 | GDS74008 |
| 36051061 | GDS62063 | 31367544 | GDS62091 | 36011265 | GDS62111 | 31280677 | GDS62132 | 2200100U8130 | GDS74009 |
| 4N513B436PG | GDS62063 | 36000164 | GDS62091 | 31256096 | GDS62112 | 31280682 | GDS62132 | 2200200U8130 | GDS74010 |
| 4N513B436PH | GDS62063 | 36000372 | GDS62091 | 31325762 | GDS62112 | 36002061 | GDS62132 | FA042560X | GDS75024 |
| 8603120 | GDS62063 | 36001459 | GDS62091 | 36001061 | GDS62112 | 36002127 | GDS62132 | FA042550X | GDS75025 |
| 86031226 | GDS62063 | 36002657 | GDS62091 | 36001972 | GDS62112 | 36011269 | GDS62132 | FA012560XA | GDS75026 |
| 86032612 | GDS62063 | 36011300 | GDS62091 | 50510865 | GDS62112 | 31325570 | GDS62133 | FA012550XA | GDS75027 |
| 8603820 | GDS62063 | 30614483 | GDS62092 | AG913B436AA | GDS62112 | 36001875 | GDS62133 | 2201020U01 | GDS75028 |
| 8603825 | GDS62063 | 31259439 | GDS62092 | 31256252 | GDS62113 | 31256095 | GDS62134 | 2201020U01CC | GDS75028 |
| 8251531 | GDS62064 | 31272553 | GDS62092 | 31367538 | GDS62113 | 36001059 | GDS62134 | C2010540100 | GDS75028 |
| 8601967 | GDS62064 | 31367549 | GDS62092 | 36001060 | GDS62113 | 50510864 | GDS62134 | C2010540105 | GDS75028 |
| 30783102 | GDS62065 | 36000517 | GDS62092 | 36011290 | GDS62113 | AG913B437AA | GDS62134 | 2201010U01 | GDS75029 |
| 36000536 | GDS62065 | 36001202 | GDS62092 | 36050795 | GDS62113 | 31437066 | GDS62135 | 2201010U01CC | GDS75029 |
| 8252053 | GDS62065 | 36002656 | GDS62092 | 31256251 | GDS62114 | 31437595 | GDS62135 | C2010540200 | GDS75029 |
| 8601962 | GDS62065 | 36012412 | GDS62092 | 31325761 | GDS62114 | 36010140 | GDS62135 | C2010540205 | GDS75029 |
| 8602582 | GDS62065 | 31367152 | GDS62093 | 36011297 | GDS62114 | 36010213 | GDS62135 | 2201020U02 | GDS75030 |
| 8603875 | GDS62065 | 36000692 | GDS62093 | 36002493 | GDS62115 | 30651437 | GDS62136 | 2201020U02BB | GDS75030 |
| 8251527 | GDS62072 | 36001075 | GDS62093 | 31280679 | GDS62116 | 30735277 | GDS62136 | C2010540101 | GDS75030 |
| 8251549 | GDS62072 | 36002891 | GDS62093 | 31280683 | GDS62116 | 30735886 | GDS62136 | C2010540106 | GDS75030 |
| 8601828 | GDS62072 | 31259787 | GDS62094 | 31367540 | GDS62116 | 36051048 | GDS62136 | 2201010U02 | GDS75031 |
| 8601989 | GDS62072 | 31367151 | GDS62094 | 36000677 | GDS62116 | 8601582 | GDS62136 | 2201010U02BB | GDS75031 |
| 8602289 | GDS62072 | 36001076 | GDS62094 | 36002126 | GDS62116 | 8602528 | GDS62136 | C2010540201 | GDS75031 |
| MR912136 | GDS62073 | 36002264 | GDS62094 | 36011266 | GDS62116 | 8603884 | GDS62136 | C2010540206 | GDS75031 |
| 30711542 | GDS62076 | 36002894 | GDS62094 | 31325117 | GDS62117 | 8603885 | GDS62136 | 2201020W03 | GDS75032 |
| 30783199 | GDS62076 | 36002898 | GDS62094 | 31437521 | GDS62117 | 8251524 | GDS62137 | S1010510301 | GDS75032 |
| 30783203 | GDS62076 | 31259626 | GDS62095 | 36010062 | GDS62117 | 8601596 | GDS62137 | 2201010W03 | GDS75033 |

| COMPETITOR | G-AP Ref. | COMPETITOR | G-AP Ref. | COMPETITOR | G-AP Ref. | COMPETITOR | G-AP Ref. | COMPETITOR | G-AP Ref. |
|---|---|---|---|---|---|---|---|---|---|
| OE | | 8971839480 | GDS81049 | 36002063 | GDS81122 | 495012S250 | GDS81188 | 434100T062 | GDS81231 |
| | | 8971839481 | GDS81049 | P31367306 | GDS81122 | 495012S260 | GDS81188 | 434100W190 | GDS81231 |
| S1010510401 | GDS75033 | 8972214160 | GDS81049 | P31367306AA | GDS81122 | 495012S260SJ | GDS81188 | 434100W240 | GDS81231 |
| 2201010W02 | GDS75034 | 8973613490 | GDS81049 | 396001350R | GDS81123 | 495013W250 | GDS81188 | 4341042150 | GDS81233 |
| S1010510400 | GDS75034 | 44010SR1013 | GDS81054 | 51706610 | GDS81124 | 495013W250SJ | GDS81188 | 4341042151 | GDS81233 |
| 2201020W02 | GDS75035 | 44010ST7J50 | GDS81056 | 51792340 | GDS81124 | 495013W260 | GDS81188 | 434100R160 | GDS81234 |
| S1010510300 | GDS75035 | 31607514002 | GDS81066 | 71787908 | GDS81124 | 495002S610 | GDS81189 | 4341042220 | GDS81234 |
| 2203200Q01 | GDS75036 | 31607518240 | GDS81066 | 6843516 | GDS81125 | 495002S610SJ | GDS81189 | 4341042221 | GDS81234 |
| B3010450002 | GDS75036 | 31607574868 | GDS81066 | 6843866 | GDS81126 | 495003W610 | GDS81189 | 4341042260 | GDS81235 |
| 2203100Q01 | GDS75037 | 31607576104 | GDS81066 | 7L6407271A | GDS81127 | 43420YV020 | GDS81194 | 4341042261 | GDS81235 |
| B3010450001 | GDS75037 | 31607525128 | GDS81067 | 7L6407271AX | GDS81127 | B000904080 | GDS81194 | 4342002A90 | GDS81236 |
| 2203100Q03 | GDS75038 | 49500M0200 | GDS81068 | 7L6407271H | GDS81127 | 4341002820 | GDS81195 | 434200F050 | GDS81237 |
| B3010450005 | GDS75038 | 49500M4200 | GDS81068 | 7L6407271HX | GDS81127 | 4341002B40 | GDS81195 | 434200F051 | GDS81237 |
| 2203200Q03 | GDS75039 | 9809068180 | GDS81075 | 8251511 | GDS81128 | 4342002A30 | GDS81196 | 391001KB0A | GDS81238 |
| B3010450006 | GDS75039 | 9810160180 | GDS81075 | 8251512 | GDS81128 | 4342002D30 | GDS81196 | 3910095B0A | GDS81238 |
| 2303300AKZ08A | GDS75040 | 1014019573 | GDS81102 | 8601509 | GDS81128 | 4341052310 | GDS81197 | 495002Y210 | GDS81239 |
| 2303400AKZ08A | GDS75041 | 1064001339 | GDS81103 | 8601521 | GDS81128 | 44500SWYE00 | GDS81199 | 495002Y610 | GDS81239 |
| 2303400M16 | GDS75044 | 3273LL | GDS81105 | 9143895 | GDS81128 | 44500TL0G10 | GDS81199 | 495002Y810 | GDS81240 |
| 2303300M16 | GDS75045 | 3273LN | GDS81105 | 9207804 | GDS81128 | 44500SEFE00 | GDS81201 | 495002Y810SJ | GDS81240 |
| 538450086 | GDS75056 | 9653263880 | GDS81105 | 8603680 | GDS81129 | 44500T0CP10 | GDS81202 | 49500B2400 | GDS81241 |
| 538450104 | GDS75056 | 7P5501201A | GDS81106 | 8603682 | GDS81130 | 49500A4050 | GDS81206 | 49500B2500 | GDS81242 |
| 3210001BAD0100 | GDS75059 | 7P5501201C | GDS81106 | 8603288 | GDS81131 | 49501A4100 | GDS81207 | 49500C5200 | GDS81243 |
| 3210002BAD0100 | GDS75061 | 95833202420 | GDS81106 | 8603452 | GDS81131 | 49501A4350 | GDS81208 | 49500D3050 | GDS81244 |
| 3210001BAD0000 | GDS75062 | 95833202421 | GDS81106 | 8603709 | GDS81131 | 49501A4050 | GDS81209 | 49500D7050 | GDS81244 |
| 3210002BAD0000 | GDS75063 | 95B407271 | GDS81107 | 8603919 | GDS81131 | 49500A4100 | GDS81210 | 49500D3060 | GDS81245 |
| 44010S01003 | GDS81010 | 95B407271A | GDS81107 | 8E0407271BK | GDS81132 | 39100BB24C | GDS81220 | 49500D7060 | GDS81245 |
| 44010SR1003 | GDS81010 | 95B407271B | GDS81107 | 8E0407451SX | GDS81132 | 39100JD24C | GDS81220 | 49500D7070 | GDS81246 |
| 44010SR1013 | GDS81010 | 95B407271D | GDS81107 | P04726091AB | GDS81133 | 39100JG34C | GDS81220 | 49500D7080 | GDS81247 |
| 44010SR3020 | GDS81010 | 95B407271F | GDS81107 | S2203200 | GDS81134 | 4342002880 | GDS81222 | 49500D9130 | GDS81248 |
| 44010SR3030 | GDS81010 | 95B407271H | GDS81107 | T112203010BD | GDS81136 | 4341002A60 | GDS81223 | 495012K680 | GDS81249 |
| 44010SR3040 | GDS81010 | 95B407271K | GDS81107 | 8N0407272R | GDS81138 | 4341002A70 | GDS81224 | 49501B2200 | GDS81249 |
| 44010SR3902 | GDS81010 | 31607558952 | GDS81108 | 8N0407452DX | GDS81138 | 4342002C30 | GDS81225 | 49501B2300 | GDS81249 |
| 44010SR3952 | GDS81010 | 31607570272 | GDS81108 | 49501C5450 | GDS81147 | 4341001130 | GDS81226 | 49501B2500 | GDS81249 |
| 44010SR3953 | GDS81010 | 31607570274 | GDS81108 | 49500A7600 | GDS81148 | 4341001131 | GDS81226 | 49501B2400 | GDS81250 |
| 44010ST7900 | GDS81010 | 31607558951 | GDS81109 | 49500C5400 | GDS81149 | 4341002760 | GDS81226 | 49501C5250 | GDS81251 |
| 44305S01A21 | GDS81010 | 31607570273 | GDS81109 | 49501A7600 | GDS81152 | 4341002A00 | GDS81226 | 49501D3060 | GDS81252 |
| 44305S04N00 | GDS81010 | 31607570275 | GDS81109 | 49500C5300 | GDS81153 | 4341002A01 | GDS81226 | 49501D7060 | GDS81252 |
| 44010S04J51 | GDS81016 | 31607607937 | GDS81110 | 28321FJ000 | GDS81158 | 4341002A02 | GDS81226 | 49501D7070 | GDS81253 |
| 44010ST7N00 | GDS81016 | 31607622913 | GDS81110 | 28321FJ030 | GDS81158 | 4341002A03 | GDS81226 | 49501D7190 | GDS81254 |
| 44010ST7N50 | GDS81016 | 31607629881 | GDS81110 | 49500D4300 | GDS81167 | 4341002A51 | GDS81226 | 49501D3140 | GDS81255 |
| 44011S04J01 | GDS81023 | 31608631747 | GDS81110 | 49501C2350 | GDS81168 | 4341002A52 | GDS81226 | 49501D9140 | GDS81255 |
| 44011S04J51 | GDS81023 | 33201229371 | GDS81111 | 49501D4350 | GDS81168 | 4341002A53 | GDS81226 | 1014019574 | GDS81256 |
| 44011ST7J50 | GDS81023 | 33211229140 | GDS81111 | 495012T750 | GDS81171 | 434100E040 | GDS81227 | 1014012017 | GDS81257 |
| 44011ST7J60 | GDS81023 | 33211229374 | GDS81111 | 495014C750 | GDS81171 | 434100E041 | GDS81227 | 1014012016 | GDS81258 |
| 44011ST7J61 | GDS81023 | 1229730 | GDS81113 | 495002T700 | GDS81172 | 434100E130 | GDS81227 | 1014014436 | GDS81259 |
| 44011ST7N00 | GDS81023 | 33201229730 | GDS81113 | 495004C700 | GDS81172 | 434100E220 | GDS81227 | 1014014437 | GDS81260 |
| 44011ST7N50 | GDS81023 | 33207508136 | GDS81113 | 495004R200 | GDS81173 | 434100T030 | GDS81227 | 3Q0407271AJ | GDS81265 |
| 44306S03950 | GDS81023 | 33207523694 | GDS81114 | 49500C1100 | GDS81174 | 434100T031 | GDS81227 | 3Q0407271CC | GDS81265 |
| 44306S04J10 | GDS81023 | 33207572688 | GDS81114 | 49500C1600 | GDS81174 | 434100T040 | GDS81227 | 3Q0407271CF | GDS81265 |
| 44306S04J60 | GDS81023 | 33207588784 | GDS81115 | 49500D4100 | GDS81174 | 434100T041 | GDS81227 | 3Q0407761RX | GDS81265 |
| 44306ST7A50 | GDS81023 | 33207589058 | GDS81115 | 49501C1150 | GDS81175 | 434100W340 | GDS81227 | 5N0407763F | GDS81265 |
| 44010S04000 | GDS81025 | 33202229727 | GDS81116 | 49501D4150 | GDS81175 | 434100T070 | GDS81229 | 5N0407763FX | GDS81265 |
| 44010S04010 | GDS81025 | 33207839465 | GDS81116 | 495003S800 | GDS81176 | 4342006780 | GDS81230 | 5N0407763J | GDS81265 |
| 44010S04901 | GDS81025 | 33207839467 | GDS81116 | 4342012830 | GDS81177 | 434200T010 | GDS81230 | 5N0407763JX | GDS81265 |
| 44010S04951 | GDS81025 | 33212229727 | GDS81116 | 4342012831 | GDS81177 | 434200T011 | GDS81230 | 5N0407763L | GDS81265 |
| 44010S04952 | GDS81025 | 33208603108 | GDS81117 | 4342012841 | GDS81178 | 434200T020 | GDS81230 | 5Q0407271CR | GDS81265 |
| 44010S04961 | GDS81025 | 33208644244 | GDS81117 | 496003T200 | GDS81179 | 434200T021 | GDS81230 | 5Q0407763EX | GDS81265 |
| 44305S04N10 | GDS81025 | 33208603109 | GDS81118 | 496013T200 | GDS81180 | 434200T030 | GDS81230 | 8200786810 | GDS81267 |
| 44306SDAA01 | GDS81026 | 33208644245 | GDS81118 | 5201215055221323 | GDS81182 | 434200T031 | GDS81230 | 391010587R | GDS81268 |
| 44306SDCA01 | GDS81026 | 33207617540 | GDS81119 | 5212875755221323 | GDS81182 | 4341006770 | GDS81231 | 8200687910 | GDS81268 |
| 44306SJDE20 | GDS81026 | 33208603101 | GDS81119 | 495002S710 | GDS81185 | 434100E140 | GDS81231 | 7711497288 | GDS81269 |
| 44305SDCA00 | GDS81027 | 33208609842 | GDS81119 | 495003W710 | GDS81185 | 434100T010 | GDS81231 | 8200805489 | GDS81269 |
| 44305SJDE20 | GDS81027 | 33217505290 | GDS81120 | 495012S760 | GDS81186 | 434100T011 | GDS81231 | 8200618176 | GDS81270 |
| 44306SEAE50 | GDS81047 | 33217510622 | GDS81120 | 495012S760SJ | GDS81186 | 434100T020 | GDS81231 | 8200725516 | GDS81271 |
| 44306SEAN00 | GDS81047 | 33217527073 | GDS81121 | 495013W760 | GDS81186 | 434100T021 | GDS81231 | 8200725517 | GDS81272 |
| 44306SEAN50 | GDS81047 | 33217561781 | GDS81121 | 495012S660 | GDS81187 | 434100T022 | GDS81231 | 495602W150 | GDS81273 |
| 8971163340 | GDS81049 | 31367306 | GDS81122 | 495012S660SJ | GDS81187 | 434100T060 | GDS81231 | 8200974682 | GDS81274 |
| 8971390930 | GDS81049 | 31367306AA | GDS81122 | 495013W660 | GDS81187 | 434100T061 | GDS81231 | 8200725514 | GDS81275 |

| COMPETITOR | G-AP Ref. | COMPETITOR | G-AP Ref. | COMPETITOR | G-AP Ref. | COMPETITOR | G-AP Ref. | COMPETITOR | G-AP Ref. |
|---|---|---|---|---|---|---|---|---|---|
| OE | | 31325704 | GDS81376 | 30783072 | GDS81388 | IED500110 | GDS81463 | 7E0407271N | GDS81508 |
| | | 31437525 | GDS81376 | 31272546 | GDS81388 | TDB000540 | GDS81463 | 6Q0407272EP | GDS81524 |
| 3910023U00 | GDS81278 | 36010063 | GDS81376 | 31367563 | GDS81388 | 43410BZ140 | GDS81468 | 6Q0407272L | GDS81524 |
| 8450006571 | GDS81283 | 31325701 | GDS81377 | 36012420 | GDS81388 | 43420BZ140 | GDS81469 | 6QD407272L | GDS81524 |
| 8450030512 | GDS81288 | 36010064 | GDS81377 | 36051325 | GDS81388 | 43420BZ150 | GDS81469 | 3Q0407272A | GDS81525 |
| 21902221501010 | GDS81290 | 31325111 | GDS81378 | 30783076 | GDS81389 | 2423300200 | GDS81470 | 3Q0407272BP | GDS81525 |
| 8450030513 | GDS81291 | 31437522 | GDS81378 | 36001814 | GDS81389 | 2463301701 | GDS81470 | 3Q0407762EX | GDS81525 |
| 21902221501110 | GDS81292 | 36010059 | GDS81378 | 36012421 | GDS81389 | 2463301901 | GDS81470 | 1S0407761D | GDS81526 |
| 4342001120 | GDS81302 | 36010216 | GDS81378 | 31216448 | GDS81390 | 2463302101 | GDS81470 | 1S0407761DX | GDS81526 |
| 4342002830 | GDS81302 | 31325702 | GDS81379 | 31367561 | GDS81390 | 2463303000 | GDS81470 | 1S0407761F | GDS81526 |
| 4342033320 | GDS81303 | 31437523 | GDS81379 | 31492178 | GDS81390 | 2463303200 | GDS81470 | 1S0407761FX | GDS81526 |
| 4342033321 | GDS81303 | 36010217 | GDS81379 | 36001071 | GDS81390 | 2463309300 | GDS81470 | 1S0407761G | GDS81526 |
| 4341033340 | GDS81304 | 36011305 | GDS81379 | 36011453 | GDS81390 | 2463309500 | GDS81470 | 1S0407761H | GDS81526 |
| 4341033341 | GDS81304 | 30651672 | GDS81380 | 36012424 | GDS81390 | A2423300200 | GDS81470 | 4H0501203C | GDS81527 |
| 1783651 | GDS81305 | 31325100 | GDS81380 | 50566750 | GDS81390 | A2463301701 | GDS81470 | 4H0501203CX | GDS81527 |
| 1836659 | GDS81305 | 31367533 | GDS81380 | 50836939 | GDS81390 | A2463301901 | GDS81470 | 4H0407271A | GDS81528 |
| 1855632 | GDS81305 | 36000711 | GDS81380 | AG9N3B436DB | GDS81390 | A2463302101 | GDS81470 | 4H0407271G | GDS81528 |
| CN153B436HC | GDS81305 | 36000981 | GDS81380 | 36051055 | GDS81392 | A2463303000 | GDS81470 | 4H0407451X | GDS81528 |
| CN153B436LA | GDS81305 | 36001402 | GDS81380 | 8602532 | GDS81392 | A2463303200 | GDS81470 | 4G0407271A | GDS81529 |
| CN153B436LB | GDS81305 | 36011291 | GDS81380 | 8603977 | GDS81392 | A2463309300 | GDS81470 | 4G0407271E | GDS81529 |
| 1783541 | GDS81306 | 30711429 | GDS81381 | 30651584 | GDS81402 | A2463309500 | GDS81470 | 4G0407451AX | GDS81529 |
| 1836662 | GDS81306 | 36001815 | GDS81381 | 30735276 | GDS81402 | 4341006730 | GDS81471 | 4G0407271D | GDS81530 |
| CN153B437HB | GDS81306 | 36011292 | GDS81381 | 30735885 | GDS81402 | 4341006731 | GDS81471 | 4GD407271D | GDS81530 |
| CN153B437LA | GDS81306 | P31259467 | GDS81381 | 36051041 | GDS81402 | 4341006732 | GDS81471 | 95B407271C | GDS81530 |
| 4410179J01 | GDS81324 | 30651673 | GDS81382 | 8601581 | GDS81402 | 4341006760 | GDS81471 | 95B407271E | GDS81530 |
| 4410179J01000 | GDS81324 | 31272537 | GDS81382 | 8603801 | GDS81402 | 4341006761 | GDS81471 | 95B407271G | GDS81530 |
| 4130035100 | GDS81330 | 31367550 | GDS81382 | 30759075 | GDS81403 | 4341006762 | GDS81471 | 95B407271J | GDS81530 |
| 4132035100 | GDS81331 | 36000713 | GDS81382 | 36000337 | GDS81403 | 4341006840 | GDS81471 | 95B407271L | GDS81530 |
| 13228224 | GDS81333 | 36001188 | GDS81382 | 36051053 | GDS81403 | 4341006B50 | GDS81471 | 4M0407271 | GDS81531 |
| 13267108 | GDS81333 | 36011301 | GDS81382 | 30735563 | GDS81404 | 4341006B51 | GDS81471 | 4M0407271AD | GDS81531 |
| 22823298 | GDS81333 | 30651679 | GDS81383 | 36051054 | GDS81404 | 4342006810 | GDS81473 | 4M0407271D | GDS81531 |
| 22823299 | GDS81333 | 31272538 | GDS81383 | 8603437 | GDS81404 | 4342006811 | GDS81473 | 4M0407271L | GDS81531 |
| 414013 | GDS81333 | 31367554 | GDS81383 | 8603881 | GDS81404 | 4342006812 | GDS81473 | 4M0407271LX | GDS81531 |
| 414716 | GDS81333 | 36011303 | GDS81383 | 2043301101 | GDS81405 | 4342006840 | GDS81473 | 760407451LX | GDS81531 |
| 414718 | GDS81333 | 36000715 | GDS81384 | 2043301300 | GDS81405 | 4342006841 | GDS81473 | 4E0501203C | GDS81532 |
| 95520617 | GDS81333 | 36001191 | GDS81384 | 204330130080 | GDS81405 | 4342006842 | GDS81473 | 4E0501203E | GDS81532 |
| 1905857 | GDS81341 | 30783068 | GDS81385 | 2043302001 | GDS81405 | 4342006A20 | GDS81473 | 4E0501203EX | GDS81532 |
| E3B53B437CA | GDS81341 | 31325573 | GDS81385 | 2043302401 | GDS81405 | 3273JS | GDS81476 | 7E0407272AJ | GDS81533 |
| 1905856 | GDS81342 | 31367536 | GDS81385 | 2043305100 | GDS81405 | 327609 | GDS81476 | 3D0501203 | GDS81534 |
| E3B53B436CA | GDS81342 | 36001019 | GDS81385 | 204330510080 | GDS81405 | 434100H020 | GDS81476 | 3D0501203X | GDS81534 |
| 1K0407272BH | GDS81343 | 36001813 | GDS81385 | 204330510087 | GDS81405 | 434100H020B | GDS81476 | 4E0501203A | GDS81534 |
| 1K0407452JX | GDS81343 | 36002544 | GDS81385 | 2043305500 | GDS81405 | F2GZ3B436AB | GDS81477 | 3D0407272G | GDS81535 |
| 4130009204 | GDS81345 | 36012415 | GDS81385 | 204330550080 | GDS81405 | F2GZ3B436AE | GDS81477 | 4E0501203 | GDS81536 |
| 44305TY4A20 | GDS81347 | 50463394 | GDS81385 | A2043301101 | GDS81405 | F2GZ3B436C | GDS81477 | 4E0501203B | GDS81536 |
| 44306TY4A20 | GDS81348 | 50643687 | GDS81385 | A2043301300 | GDS81405 | F2GZ3B436K | GDS81477 | 4E0501203D | GDS81536 |
| 31325575 | GDS81369 | 8G9N3B437AA | GDS81385 | A2043302001 | GDS81405 | TX690 | GDS81477 | 4E0501203DX | GDS81536 |
| 31367534 | GDS81369 | P31367536 | GDS81385 | A2043302401 | GDS81405 | TX755 | GDS81477 | 2403200AKZ17B | GDS81537 |
| 36000936 | GDS81369 | 31216447 | GDS81386 | A2043305100 | GDS81405 | F2GZ3B437C | GDS81478 | 2403100AKZ17B | GDS81538 |
| 36011292 | GDS81369 | 31367537 | GDS81386 | A2043305500 | GDS81405 | F2GZ3B437F | GDS81478 | 7N0407761Q | GDS81548 |
| 36051322 | GDS81369 | 31492177 | GDS81386 | 39100BB22B | GDS81419 | F2GZ3B437N | GDS81478 | 7N0407761QX | GDS81548 |
| P31367534 | GDS81369 | 36001069 | GDS81386 | 39100JD22B | GDS81419 | 1879572 | GDS81479 | 7N0407763B | GDS81548 |
| 31272540 | GDS81370 | 36011452 | GDS81386 | 3815A195 | GDS81421 | 2048627 | GDS81479 | 7N0407763BX | GDS81548 |
| 31367553 | GDS81370 | 36012417 | GDS81386 | 3815A199 | GDS81421 | F1F13B437EA | GDS81479 | 4130034201 | GDS81556 |
| 36011304 | GDS81370 | 50520915 | GDS81386 | 374977 | GDS81425 | F1F13B437EB | GDS81479 | 4130034400 | GDS81556 |
| 30783089 | GDS81371 | 50836938 | GDS81386 | 5374153 | GDS81425 | 1879571 | GDS81480 | 4130034402 | GDS81556 |
| 36000509 | GDS81371 | AG9N3B437DA | GDS81386 | 94560842 | GDS81425 | 2048629 | GDS81480 | 2513300601 | GDS81561 |
| 36000937 | GDS81371 | 30783071 | GDS81387 | 95090831 | GDS81425 | F1F13B436AA | GDS81480 | 2513301401 | GDS81561 |
| 36001216 | GDS81371 | 31272545 | GDS81387 | 95520807 | GDS81425 | F1F13B436AB | GDS81480 | 2513302201 | GDS81561 |
| 30783107 | GDS81372 | 31367560 | GDS81387 | 95194888 | GDS81427 | 8E0407271BN | GDS81493 | 251330220180 | GDS81561 |
| 36001220 | GDS81372 | 36001183 | GDS81387 | 95215439 | GDS81427 | 8E0407451TX | GDS81493 | A2513300601 | GDS81561 |
| 31325699 | GDS81373 | 36002546 | GDS81387 | 95194889 | GDS81429 | 8E0407272BN | GDS81494 | A2513301401 | GDS81561 |
| 36010055 | GDS81373 | 36012419 | GDS81387 | 95215440 | GDS81429 | 8E0407452QX | GDS81494 | A2513302201 | GDS81561 |
| 50709468 | GDS81373 | 360124192 | GDS81387 | 3H423N128BB | GDS81463 | 43410YV020 | GDS81497 | A251330220180 | GDS81561 |
| 31325700 | GDS81374 | 50463398 | GDS81387 | IED000061 | GDS81463 | B000904180 | GDS81497 | 4130008101 | GDS81562 |
| 36010057 | GDS81374 | 50558699 | GDS81387 | IED000062 | GDS81463 | 39100JX00B | GDS81498 | 4130009000 | GDS81562 |
| 36010218 | GDS81374 | 8G9N3B436AA | GDS81387 | IED500020 | GDS81463 | 2303100XSZ08A | GDS81501 | 4130009001 | GDS81562 |
| 31325110 | GDS81375 | 8G9N3B436AB | GDS81387 | IED500021 | GDS81463 | 2303400XKZ20A | GDS81502 | 4130009002 | GDS81562 |
| 36010058 | GDS81375 | P31367560 | GDS81387 | IED500022 | GDS81463 | 7E0407271F | GDS81508 | 495001W000 | GDS81565 |

| COMPETITOR | G-AP Ref. | COMPETITOR | G-AP Ref. | COMPETITOR | G-AP Ref. | COMPETITOR | G-AP Ref. | COMPETITOR | G-AP Ref. |
|---|---|---|---|---|---|---|---|---|---|
| OE | | 95522304 | GDS81615 | 2213301201 | GDS81662 | 495602S350 | GDS81695 | 39101JD22B | GDS81760 |
| | | 95522306 | GDS81615 | 2213301401 | GDS81662 | 2213300701 | GDS81696 | 42758447 | GDS81761 |
| 495001W000SJ | GDS81565 | 95524260 | GDS81615 | 2213301601 | GDS81662 | A2213300701 | GDS81696 | 5374014 | GDS81761 |
| 495011W000 | GDS81566 | 95524262 | GDS81615 | 2213302101 | GDS81662 | 103061500A | GDS81698 | 5374158 | GDS81761 |
| 3815A167 | GDS81574 | 42341582 | GDS81616 | 2213306300 | GDS81662 | 103061500B | GDS81698 | 5374201 | GDS81761 |
| 3815A453 | GDS81574 | 42529905 | GDS81616 | 221330630080 | GDS81662 | 103061500D | GDS81698 | 94522007 | GDS81761 |
| 3815A168 | GDS81575 | 42697355 | GDS81616 | 2213309701 | GDS81662 | 162663700A | GDS81698 | 94560852 | GDS81761 |
| 3815A454 | GDS81575 | 5374209 | GDS81616 | 221330970164 | GDS81662 | 100771900C | GDS81699 | 95090833 | GDS81761 |
| 43410WB001 | GDS81576 | 95522302 | GDS81616 | 2213309901 | GDS81662 | 100771901A | GDS81699 | 95390019 | GDS81761 |
| 43410WB003 | GDS81576 | 95524257 | GDS81616 | A2183301300 | GDS81662 | 100771901B | GDS81699 | 95520809 | GDS81761 |
| FTD22550X | GDS81576 | 13335128 | GDS81619 | A2213300801 | GDS81662 | 100771901C | GDS81699 | 49560C9400 | GDS81763 |
| FTD22550XA | GDS81576 | 39040808 | GDS81619 | A2213301201 | GDS81662 | 102716100B | GDS81699 | 49560S3060 | GDS81763 |
| FTT12550X | GDS81576 | 5374040 | GDS81619 | A2213301401 | GDS81662 | 102716100C | GDS81699 | 49501C8000 | GDS81765 |
| 2113300101 | GDS81580 | 95524073 | GDS81619 | A2213301601 | GDS81662 | 102711100A | GDS81700 | 1865554 | GDS81766 |
| 2113300400 | GDS81580 | 13335127 | GDS81620 | A2213302101 | GDS81662 | 102711100B | GDS81700 | DG913B437EE | GDS81766 |
| 211330040080 | GDS81580 | 39040807 | GDS81620 | A2213306300 | GDS81662 | 102711100D | GDS81700 | 391014EA0A | GDS81767 |
| 2113301201 | GDS81580 | 39129617 | GDS81620 | A221330630080 | GDS81662 | 103061600A | GDS81701 | 391014EA0B | GDS81767 |
| 2113301801 | GDS81580 | 5374039 | GDS81620 | A2213309701 | GDS81662 | 103061600B | GDS81701 | 391014ED0C | GDS81767 |
| 211330180180 | GDS81580 | 95527524 | GDS81620 | A2213309901 | GDS81662 | 103061600D | GDS81701 | 391014ED0D | GDS81767 |
| A2113300101 | GDS81580 | GD562560XA | GDS81621 | 2183301400 | GDS81663 | 102711500A | GDS81702 | 391014PA0A | GDS81767 |
| A2113300400 | GDS81580 | GD562560XB | GDS81621 | 2213300901 | GDS81663 | 102711500B | GDS81702 | 391014PA0B | GDS81767 |
| A2113301201 | GDS81580 | 1796125 | GDS81622 | 2213301301 | GDS81663 | 102711500D | GDS81702 | 396006572R | GDS81767 |
| A2113301801 | GDS81580 | 1840194 | GDS81622 | 2213301501 | GDS81663 | 103063200A | GDS81703 | 51861637 | GDS81768 |
| 31607593043 | GDS81581 | 2126181 | GDS81622 | 2213302201 | GDS81663 | 5N0407761M | GDS81715 | 55209140 | GDS81768 |
| 31607618681 | GDS81581 | C1BY3B437AA | GDS81622 | 2213302301 | GDS81663 | 5N0407761MX | GDS81715 | 51820349 | GDS81769 |
| 7593043 | GDS81581 | C1BY3B437AB | GDS81622 | 2213303202 | GDS81663 | 5N0407761N | GDS81715 | 5182034955209967 | GDS81769 |
| 7618681 | GDS81581 | RMC1BY3B437A2A | GDS81622 | 221330320280 | GDS81663 | 5N0407761NX | GDS81715 | 51955479 | GDS81769 |
| AY759304304 | GDS81581 | 44305T1WA01 | GDS81624 | 2213306400 | GDS81663 | 5N0407761P | GDS81715 | 5195547955209967 | GDS81769 |
| 1K0407271BC | GDS81582 | 44305T2AA00 | GDS81624 | 221330640080 | GDS81663 | 5N0407761PX | GDS81715 | 71797018 | GDS81769 |
| 1K0407451EX | GDS81582 | 44306T2AA00 | GDS81625 | 2213309801 | GDS81663 | 5N0407763C | GDS81715 | 7179701855209967 | GDS81769 |
| 5C0407271AB | GDS81582 | 2201200AP01 | GDS81626 | 221330980164 | GDS81663 | 5N0407763CX | GDS81715 | 1796123 | GDS81770 |
| 1K0407272BL | GDS81583 | S4010250600 | GDS81626 | 221330980180 | GDS81663 | 31607593042 | GDS81716 | 1840186 | GDS81770 |
| 1K0407272KE | GDS81583 | 2201100AP01 | GDS81627 | A2183301400 | GDS81663 | 31607593046 | GDS81716 | 2126177 | GDS81770 |
| 1K0407452FX | GDS81583 | S4010250500 | GDS81627 | A2213300901 | GDS81663 | 31607606026 | GDS81716 | C1BY3B436AA | GDS81770 |
| 1K0407454RX | GDS81583 | M112203010VC | GDS81639 | A2213301301 | GDS81663 | 31607618682 | GDS81716 | C1BY3B436AB | GDS81770 |
| 1K0407271GR | GDS81584 | M112203020VA | GDS81640 | A2213301501 | GDS81663 | 1521768 | GDS81717 | C1BZ3B436A | GDS81770 |
| 1J0501204B | GDS81587 | 49501D3050 | GDS81641 | A2213302201 | GDS81663 | 1559560 | GDS81717 | C1BZ3B436G | GDS81770 |
| 1J0501204BX | GDS81587 | 49501D7050 | GDS81641 | A2213302301 | GDS81663 | 1805656 | GDS81717 | RMC1BY3B436A2A | GDS81770 |
| 4E0407272B | GDS81588 | 4130034300 | GDS81644 | A2213303202 | GDS81663 | 1840170 | GDS81717 | 31609806475 | GDS81771 |
| 4E0407272BX | GDS81588 | 4130034301 | GDS81644 | A2213306400 | GDS81663 | 8V513B437DA | GDS81717 | 31609806474 | GDS81772 |
| 4E0407272Q | GDS81588 | 4130034302 | GDS81644 | A2213309801 | GDS81663 | 8V513B437DB | GDS81717 | 31609813718 | GDS81772 |
| 4E0407452X | GDS81588 | GP432550X | GDS81645 | A221330980180 | GDS81663 | 8V513B437DC | GDS81717 | 5N0407764J | GDS81775 |
| 4E0407271P | GDS81589 | GP432550XA | GDS81645 | 7E0407272AL | GDS81665 | RM8V513B437D2C | GDS81717 | 5N0407764JX | GDS81775 |
| 4E0407451AX | GDS81589 | GP432560X | GDS81646 | 7E0407272BG | GDS81665 | 1521776 | GDS81718 | 44306T7WA92 | GDS81777 |
| 4F0407272J | GDS81590 | GP432560XA | GDS81646 | 7E0407452SX | GDS81665 | 1559559 | GDS81718 | 44306T7WA93 | GDS81777 |
| 4F0407452X | GDS81590 | 1K0407272JR | GDS81653 | 7E0407454P | GDS81665 | 1716540 | GDS81718 | 44306T7YT91 | GDS81777 |
| 4F0407452AX | GDS81591 | 1K0407272KJ | GDS81653 | 7E0407454PX | GDS81665 | 1805655 | GDS81718 | 44306T7YT92 | GDS81777 |
| 8E0407272AB | GDS81593 | 1K0407272KQ | GDS81653 | 7LA407272J | GDS81665 | 1840190 | GDS81718 | 44306T7YT93 | GDS81777 |
| 8E0407452AX | GDS81593 | 1K0407272PK | GDS81653 | 7E0407272AK | GDS81666 | 8V513B436DA | GDS81718 | 44305T8PT01 | GDS81778 |
| 3D0407272E | GDS81595 | 1K0407272RD | GDS81653 | 7E0407272BF | GDS81666 | 8V513B436DB | GDS81718 | 44305T8PT02 | GDS81778 |
| 3D0407272EX | GDS81595 | 1K0407272RL | GDS81653 | 7E0407452PX | GDS81666 | 8V513B436DC | GDS81718 | 44305T8PT03 | GDS81778 |
| 4E0407271A | GDS81596 | 1K0407272RP | GDS81653 | 44305TS4T01 | GDS81675 | 8V513B436DD | GDS81718 | 44305T7YT91 | GDS81779 |
| 4E0407271AX | GDS81596 | 1K0407272RT | GDS81653 | 44306TS4T01 | GDS81676 | RM8V513B436D2D | GDS81718 | 44305T7YT92 | GDS81779 |
| 4E0407271N | GDS81596 | 1K0407272SB | GDS81653 | 31607593044 | GDS81681 | 3815A715 | GDS81719 | 44305T7YT93 | GDS81779 |
| 4E0407451X | GDS81596 | 1K0407272TK | GDS81653 | 31607618680 | GDS81681 | 3815A716 | GDS81720 | 44306T8PT01 | GDS81780 |
| 3C0501204 | GDS81597 | 1K0407762AX | GDS81653 | 7593044 | GDS81681 | 2113300001 | GDS81728 | 44306T8PT02 | GDS81780 |
| 3C0501204F | GDS81597 | 1K0407764AX | GDS81653 | 7618680 | GDS81681 | 2113300300 | GDS81728 | 44306T8PT03 | GDS81780 |
| 3C0501204FX | GDS81597 | 1K0407764FX | GDS81653 | 44305T2CJ00 | GDS81686 | 211330030080 | GDS81728 | 1K0407271JB | GDS81783 |
| 8J0501204A | GDS81597 | 1K0407764HX | GDS81653 | 44305T2CJ01 | GDS81686 | 2113301101 | GDS81728 | 1K0407761LX | GDS81783 |
| 434100R140 | GDS81604 | 1K0407764MX | GDS81653 | 44305T2LH10 | GDS81686 | 2113301701 | GDS81728 | 1K0407272PB | GDS81784 |
| 42341583 | GDS81615 | 3C8407272A | GDS81653 | 44306T2A010 | GDS81687 | 211330170164 | GDS81728 | 1K0407762SX | GDS81784 |
| 42341596 | GDS81615 | 5C0407272BT | GDS81653 | 44306T2AA01 | GDS81687 | 211330170180 | GDS81728 | 3815A523 | GDS81785 |
| 42529906 | GDS81615 | 5C0407272CP | GDS81653 | 44306T2CJ01 | GDS81687 | A2113300001 | GDS81728 | 3815A524 | GDS81786 |
| 42529913 | GDS81615 | 5K0407272D | GDS81653 | 44306T2LH10 | GDS81687 | A2113300300 | GDS81728 | 3815B230 | GDS81786 |
| 42697356 | GDS81615 | 5K0407762AX | GDS81653 | 44306T2LH60 | GDS81687 | A2113301101 | GDS81728 | 09B409356 | GDS81789 |
| 5374210 | GDS81615 | 5Q407272DQ | GDS81653 | 44305T2A010 | GDS81688 | A2113301701 | GDS81728 | 1115713 | GDS81789 |
| 5374211 | GDS81615 | 2183301300 | GDS81662 | 44305T2AA01 | GDS81688 | 49501A7010 | GDS81757 | 1133088 | GDS81789 |
| 5747210 | GDS81615 | 2213300801 | GDS81662 | 44305T2LH60 | GDS81688 | 495014D600 | GDS81759 | 95VW3A380EA | GDS81789 |

| COMPETITOR | G-AP Ref. | COMPETITOR | G-AP Ref. | COMPETITOR | G-AP Ref. | COMPETITOR | G-AP Ref. | COMPETITOR | G-AP Ref. |
|---|---|---|---|---|---|---|---|---|---|
| OE | | 1K0407271FQ | GDS81896 | 7H0407272BP | GDS81920 | 28321FE000 | GDS81949 | 71783009 | GDS82009 |
| | | 1K0407761BX | GDS81896 | 7H0407272CK | GDS81920 | 28321FE001 | GDS81949 | 71783013 | GDS82009 |
| YM213C081BA | GDS81789 | 3Q0407271 | GDS81896 | 7H0407452CV | GDS81920 | 2303010001B11 | GDS81953 | 46307654 | GDS82011 |
| 3715A008 | GDS81823 | 3Q0407271A | GDS81896 | 7H0407452CX | GDS81920 | 2303020001B11 | GDS81954 | 71720884 | GDS82011 |
| 3715A204 | GDS81823 | 3Q0407271AB | GDS81896 | 7H0407452GV | GDS81920 | 4410254P60 | GDS81959 | 71783011 | GDS82011 |
| 3715A320 | GDS81823 | 3Q0407271AE | GDS81896 | 7H0407452GX | GDS81920 | 4410254P61 | GDS81959 | A112203010BL | GDS82012 |
| 3715A007 | GDS81824 | 3Q0407271AL | GDS81896 | 7H0407452LX | GDS81920 | 4410254P62 | GDS81959 | J522203010 | GDS82013 |
| 3715A203 | GDS81824 | 3Q0407271N | GDS81896 | 7H0407454AX | GDS81920 | 4410256P60 | GDS81959 | J522203020 | GDS82014 |
| 3715A209 | GDS81824 | 3Q0407761CX | GDS81896 | 6Q0407271AM | GDS81921 | 4410256P60000 | GDS81959 | J602203010CS | GDS82015 |
| 3715A301 | GDS81824 | 3Q0407761FX | GDS81896 | 6Q0407271AQ | GDS81921 | 420407271 | GDS81984 | M112203010VB | GDS82015 |
| 3715A313 | GDS81824 | 3Q0407761GX | GDS81896 | 6Q0407271BF | GDS81921 | 420407271A | GDS81984 | M112203020VB | GDS82016 |
| 3715A319 | GDS81824 | 3Q0407761HX | GDS81896 | 6Q0407271DD | GDS81921 | 420407451AX | GDS81984 | M112203010BF | GDS82019 |
| 1865227 | GDS81847 | 3Q0407761JX | GDS81896 | 6Q0407451GX | GDS81921 | 420407451X | GDS81984 | A212203010DA | GDS82020 |
| DG913B436EF | GDS81847 | 3Q0407761KX | GDS81896 | 6Q0407451NX | GDS81921 | 5Q0407271CM | GDS81985 | A212203020DA | GDS82021 |
| 9809068280 | GDS81864 | 3Q0407763X | GDS81896 | 6C0407271T | GDS81922 | 5Q0407761TX | GDS81985 | M112203020BF | GDS82023 |
| 1885159 | GDS81874 | 5C0407271AA | GDS81896 | 6C0407451X | GDS81922 | 5C0407272AN | GDS81986 | B112203020FL | GDS82028 |
| 1943312 | GDS81874 | 5C0407271S | GDS81896 | 7P0501201D | GDS81923 | 5C0407272J | GDS81986 | B112203010FT | GDS82030 |
| 2032953 | GDS81874 | 8J0407271AA | GDS81896 | 7P0501201DX | GDS81923 | 3Q0407272AQ | GDS81987 | J422203010BA | GDS82031 |
| 2147261 | GDS81874 | 8J0407271N | GDS81896 | 7P0501201M | GDS81923 | 3Q0407762AX | GDS81987 | J422203020BA | GDS82032 |
| 2503816 | GDS81874 | 8J0407451BX | GDS81896 | 7P0501201MX | GDS81923 | 3Q0407762BX | GDS81987 | A152203010 | GDS82035 |
| E1G13B437DC | GDS81874 | 8J0407451X | GDS81896 | 7P0501201R | GDS81923 | FTB42560X | GDS81992 | A152203020 | GDS82036 |
| E1G13B437DD | GDS81874 | 8J0407761A | GDS81896 | 7P0501201RX | GDS81923 | FTB42560XA | GDS81992 | 0374875 | GDS82037 |
| E1G13B437DE | GDS81874 | 8J0407761AX | GDS81896 | 95833202400 | GDS81923 | FTB42550X | GDS81993 | 13248645 | GDS82037 |
| E1G13B437DF | GDS81874 | 8J0407761D | GDS81896 | 95833202401 | GDS81923 | FTB42550XA | GDS81993 | 374875 | GDS82037 |
| E1G13B437DG | GDS81874 | 8J0407761E | GDS81896 | 95833202402 | GDS81923 | 495012Y810 | GDS81996 | 95520583 | GDS82037 |
| 4342006850 | GDS81875 | T112203020BD | GDS81899 | 6C0407272AB | GDS81924 | 495012Y810SJ | GDS81996 | 6C0407271H | GDS82038 |
| 4342006A70 | GDS81875 | 28321AJ000 | GDS81902 | 6C0407452AX | GDS81924 | 13420982 | GDS82000 | 6C0407271HX | GDS82038 |
| 4342006A80 | GDS81875 | 28321AJ001 | GDS81902 | 7M0501201 | GDS81925 | 39013543 | GDS82000 | 6C0407271E | GDS82039 |
| 8K0501204L | GDS81885 | 28321AJ002 | GDS81902 | 7M0501201X | GDS81925 | 39040800 | GDS82000 | 6C0407271EX | GDS82039 |
| 8K0501204LX | GDS81885 | 28321AJ003 | GDS81902 | 6C0407271F | GDS81926 | 39083500 | GDS82000 | 6C0407272H | GDS82040 |
| 8K0501203L | GDS81886 | 28321AJ030 | GDS81902 | 6C0407271FX | GDS81926 | 95522377 | GDS82000 | 6C0407272HX | GDS82040 |
| 8K0501203LX | GDS81886 | 28321AJ031 | GDS81902 | 7N0501203 | GDS81928 | 95524089 | GDS82000 | 13367049 | GDS82041 |
| 42311SCAE21 | GDS81887 | 28321AJ032 | GDS81902 | 7N0501203X | GDS81928 | 95527517 | GDS82000 | 95522530 | GDS82041 |
| 3Q0407272AG | GDS81889 | 28321AJ033 | GDS81902 | 3715A207 | GDS81929 | 46307345 | GDS82001 | 5374015 | GDS82044 |
| 3Q0407272G | GDS81889 | 28321FJ020 | GDS81902 | 3715A208 | GDS81930 | 46548056 | GDS82001 | 5374160 | GDS82044 |
| 3Q0407762GX | GDS81889 | 28321SC030 | GDS81902 | 3815A032 | GDS81933 | 71720847 | GDS82001 | 5374204 | GDS82044 |
| 3Q0407762RX | GDS81889 | 28321SC031 | GDS81902 | 3815A034 | GDS81933 | 71720909 | GDS82001 | 94522011 | GDS82044 |
| 8J0407762A | GDS81889 | 28321SC032 | GDS81902 | 3815A437 | GDS81934 | 46307346 | GDS82002 | 94560844 | GDS82044 |
| 8J0407762AX | GDS81889 | 28321SC033 | GDS81902 | 3815A457 | GDS81934 | 60651295 | GDS82002 | 95090834 | GDS82044 |
| 8J0407762J | GDS81889 | 8N0407271R | GDS81912 | 3815A491 | GDS81935 | 71720849 | GDS82002 | 95520811 | GDS82044 |
| 3Q0407272P | GDS81890 | 8N0407451CX | GDS81912 | 3815A509 | GDS81935 | 46308025 | GDS82003 | 391011KA0A | GDS82046 |
| 8J0407272G | GDS81890 | 1J0407271LA | GDS81913 | 3815A448 | GDS81936 | 46308071 | GDS82003 | 391011KA0REX | GDS82046 |
| 8J0407272GX | GDS81890 | 1J0407271NK | GDS81913 | 3815A510 | GDS81936 | 60802018 | GDS82003 | 31607597693 | GDS82052 |
| 8J0407762E | GDS81890 | 1J0407453 | GDS81913 | 3815A930 | GDS81936 | 71787113 | GDS82003 | 7597693 | GDS82052 |
| 2K0407272K | GDS81891 | 1J0407453H | GDS81913 | 3815A176 | GDS81940 | 46308026 | GDS82004 | 7638777 | GDS82052 |
| 2K0407452X | GDS81891 | 1J0407453HX | GDS81913 | 3815A498 | GDS81940 | 46308072 | GDS82004 | 31607597694 | GDS82053 |
| 5Q0407272CH | GDS81891 | 1J0407453X | GDS81913 | 3815A075 | GDS81941 | 60802019 | GDS82004 | 31607638776 | GDS82053 |
| 5Q0407272DQ | GDS81891 | 8E0407272E | GDS81913 | 3815A497 | GDS81941 | 1600013742 | GDS82005 | 7597694 | GDS82053 |
| 5Q0407762NX | GDS81891 | 8N0407271N | GDS81913 | 42310SCAE21 | GDS81942 | 46307687 | GDS82005 | 7638776 | GDS82053 |
| 5Q0407764BX | GDS81891 | 8N0407271NX | GDS81913 | 2177676 | GDS81943 | 46307689 | GDS82005 | 2284115 | GDS82056 |
| 5WA407272H | GDS81891 | JZW407449NX | GDS81913 | 5331603 | GDS81943 | 46307698 | GDS82005 | 33212284115 | GDS82056 |
| 5WA407452AX | GDS81891 | 4F0501203 | GDS81915 | FR334K139BC | GDS81943 | 46307699 | GDS82005 | 2284116 | GDS82057 |
| 3C0407272BD | GDS81892 | 4F0501203F | GDS81915 | FR334K139BE | GDS81943 | 71720886 | GDS82005 | 33212284116 | GDS82057 |
| 5Q0407272BL | GDS81892 | 4F0501203X | GDS81915 | FR3Z4K139D | GDS81943 | 71720890 | GDS82005 | 31607591681 | GDS82058 |
| 5Q0407272ER | GDS81892 | 1K0407272PC | GDS81916 | 5331599 | GDS81944 | 71787039 | GDS82005 | 31607605511 | GDS82058 |
| 5Q0407272FN | GDS81892 | 1K0407762RX | GDS81916 | FR334K138BC | GDS81944 | 71787041 | GDS82005 | 7591681 | GDS82058 |
| 5Q0407272K | GDS81892 | 4F0407272AC | GDS81917 | FR3Z4K138D | GDS81944 | 46308024 | GDS82008 | 7594681 | GDS82058 |
| 5Q0407452AX | GDS81892 | 4F0407452GX | GDS81917 | 4341002840 | GDS81945 | 717830080000 | GDS82008 | 7606299 | GDS82058 |
| 5Q0407762MX | GDS81892 | 8E0407272BM | GDS81918 | 7N0501204 | GDS81946 | 71787183 | GDS82008 | 31607591682 | GDS82059 |
| 5Q0407272DA | GDS81893 | 8E0407272CA | GDS81918 | 7N0501204X | GDS81946 | 7178751 | GDS82008 | 31607605512 | GDS82059 |
| 5Q0407272EP | GDS81893 | 8E0407452MX | GDS81918 | 28421FE020 | GDS81947 | 71791734 | GDS82008 | 7591682 | GDS82059 |
| 5Q0407452BX | GDS81893 | 8E0407454BX | GDS81918 | 28421FE021 | GDS81947 | 46307650 | GDS82009 | 7591982 | GDS82059 |
| 5Q0407764X | GDS81893 | 4F0407271AC | GDS81919 | 28421FE230 | GDS81947 | 46307651 | GDS82009 | 7606300 | GDS82059 |
| 8K0501203C | GDS81894 | 4F0407451GX | GDS81919 | 28421FE231 | GDS81947 | 46307688 | GDS82009 | 31607619657 | GDS82060 |
| 8K0501203K | GDS81894 | 7E0407272AF | GDS81920 | 28421FE232 | GDS81947 | 46307690 | GDS82009 | 31608675013 | GDS82060 |
| 8K0501203KX | GDS81894 | 7H0407272AN | GDS81920 | 28421FE190 | GDS81948 | 71720888 | GDS82009 | 7598027 | GDS82060 |
| 1K0407271DT | GDS81896 | 7H0407272AQ | GDS81920 | 28421FE191 | GDS81948 | 71720892 | GDS82009 | 31607619658 | GDS82061 |
| 1K0407271FP | GDS81896 | 7H0407272BH | GDS81920 | 28421FE1918A | GDS81948 | 71783008 | GDS82009 | 31608675014 | GDS82061 |

| COMPETITOR | G-AP Ref. | COMPETITOR | G-AP Ref. | COMPETITOR | G-AP Ref. | COMPETITOR | G-AP Ref. | COMPETITOR | G-AP Ref. |
|---|---|---|---|---|---|---|---|---|---|
| OE | | FTC32560X | GDS82086 | 8E0407272AA | GDS82168 | 1845818 | GDS82183 | 8W0501203E | GDS82252 |
| | | GDC12560X | GDS82086 | 8E0407272BC | GDS82168 | EV6P3B437DA | GDS82183 | 434100F080 | GDS82253 |
| 7598028 | GDS82061 | FTC32550X | GDS82087 | 8E0407272BF | GDS82168 | 30783106 | GDS82185 | 4342002A50 | GDS82254 |
| 8E0501203J | GDS82073 | GDC32550X | GDS82087 | 8E0407272F | GDS82168 | 31280872 | GDS82185 | 434200F090 | GDS82255 |
| 8E0501203JX | GDS82073 | 39100BM720 | GDS82088 | 8E0407452NX | GDS82168 | 36000513 | GDS82185 | 8W0407271F | GDS82256 |
| 8E0501203R | GDS82073 | 13238091 | GDS82089 | 8E0407452RX | GDS82168 | 36001218 | GDS82185 | 8W0407271P | GDS82256 |
| 8E0501203RX | GDS82073 | 374781 | GDS82089 | 8E0407452X | GDS82168 | 36051056 | GDS82185 | 495002Y830 | GDS82257 |
| 8W0407271 | GDS82074 | 13166592 | GDS82090 | 8P0501203 | GDS82169 | 50634613 | GDS82185 | 13362755 | GDS82258 |
| 8W0407271B | GDS82074 | 374627 | GDS82090 | 8P0501204 | GDS82170 | P30783106 | GDS82185 | 5374059 | GDS82258 |
| 8W0407271D | GDS82074 | 95520759 | GDS82090 | 495001M110 | GDS82171 | 10119551 | GDS82192 | 95520661 | GDS82258 |
| 8W0407271L | GDS82074 | 374986 | GDS82091 | 495001M510 | GDS82171 | 50015635 | GDS82192 | 6R0407764N | GDS82259 |
| 8W0407271A | GDS82075 | 93169647 | GDS82091 | 495011M110 | GDS82172 | 10119552 | GDS82193 | 1K0407271JC | GDS82260 |
| 8W0407271E | GDS82075 | 374990 | GDS82092 | 391004ED0A | GDS82173 | 50015636 | GDS82193 | 1K0407761KX | GDS82260 |
| 8W0407271G | GDS82075 | 93169651 | GDS82092 | 391004ED0C | GDS82173 | 50015633 | GDS82194 | 13228231 | GDS82261 |
| 8W0407271M | GDS82075 | 434100H040 | GDS82093 | 391004PA0A | GDS82173 | 50015634 | GDS82195 | 22823296 | GDS82261 |
| 8W0407271Q | GDS82075 | 1677686480 | GDS82094 | 391004PA0B | GDS82173 | 10073247 | GDS82196 | 414012 | GDS82261 |
| 8WD407271B | GDS82075 | 434200H040 | GDS82094 | 391008200R | GDS82173 | 10119554 | GDS82196 | 414717 | GDS82261 |
| 8K0501203B | GDS82076 | B000903680 | GDS82094 | 31605A2DFB8 | GDS82174 | 10279794 | GDS82196 | 95520595 | GDS82261 |
| 8K0501203J | GDS82076 | 4341074060 | GDS82095 | 31608611928 | GDS82174 | 10073246 | GDS82197 | 13248647 | GDS82262 |
| 8K0501203JX | GDS82076 | 43420WB001 | GDS82097 | 31608643362 | GDS82174 | 10119553 | GDS82197 | 374853 | GDS82262 |
| 8R0407271G | GDS82077 | 43420WB003 | GDS82097 | 8643362 | GDS82174 | 10279793 | GDS82197 | 95520517 | GDS82262 |
| 8K0501201 | GDS82078 | FTD22560X | GDS82097 | 33207646867 | GDS82176 | 10279791 | GDS82200 | 95520518 | GDS82262 |
| 8K0501201X | GDS82078 | FTD22560XA | GDS82097 | 31605A2E055 | GDS82177 | 10279792 | GDS82201 | 13248650 | GDS82266 |
| 8K0501202 | GDS82079 | FTT12560X | GDS82097 | 31605A2E057 | GDS82177 | 4342052250 | GDS82210 | 5374036 | GDS82266 |
| 8K0501202X | GDS82079 | FTT42550X | GDS82098 | 31608482645 | GDS82177 | 4130034101 | GDS82212 | 95520553 | GDS82266 |
| 8K0501203N | GDS82080 | FTT42560X | GDS82099 | 31608611939 | GDS82177 | 4130034110 | GDS82212 | 95520554 | GDS82266 |
| 8K0501203NX | GDS82080 | 2203200BE03 | GDS82104 | 31608643375 | GDS82177 | 4130034111 | GDS82212 | 28421AJ010 | GDS82268 |
| 4F0407271K | GDS82081 | B3110540201 | GDS82104 | 8643375 | GDS82177 | 49500D3010 | GDS82221 | 28421AJ011 | GDS82268 |
| 4F0407451DX | GDS82081 | 2203100BE03AA | GDS82105 | 1217657 | GDS82178 | 49500D7010 | GDS82221 | 28421AJ020 | GDS82268 |
| 1774248 | GDS82082 | B3110540101AA | GDS82105 | 1255280 | GDS82178 | 49500D9010 | GDS82221 | 28421AJ021 | GDS82268 |
| 1777139 | GDS82082 | 2203200AW02 | GDS82106 | 1303938 | GDS82178 | 391004ED2A | GDS82225 | 28421SC010 | GDS82268 |
| 1785638 | GDS82082 | S2010470201 | GDS82106 | 1310490 | GDS82178 | 391014ED2A | GDS82226 | 28421SC011 | GDS82268 |
| 1818929 | GDS82082 | 2203100AW02 | GDS82107 | 1537956 | GDS82178 | 6R0407763E | GDS82227 | 28421SC020 | GDS82268 |
| 1818930 | GDS82082 | S2010470101 | GDS82107 | 1537957 | GDS82178 | 6C0407271AB | GDS82228 | 28421SC021 | GDS82268 |
| 1840124 | GDS82082 | 2203200AW01 | GDS82116 | 1753966 | GDS82178 | 6C0407451AX | GDS82228 | 4341074030 | GDS82271 |
| 1840125 | GDS82082 | S2010470200 | GDS82116 | 1753968 | GDS82178 | 5Q0407272EA | GDS82229 | 1K0407272BN | GDS82272 |
| 1840127 | GDS82082 | 2203100AW01 | GDS82117 | 1S5W3B436AA | GDS82178 | 5Q0407764CX | GDS82229 | 1K0407272EA | GDS82272 |
| 1840129 | GDS82082 | S2010470100 | GDS82117 | 1S5W3B436AB | GDS82178 | 5WA407272B | GDS82229 | 1K0407272HM | GDS82272 |
| 2006989 | GDS82082 | 2203200AP02AA | GDS82120 | 3S5W3A427AB | GDS82178 | 5Q0407272DT | GDS82230 | 1K0407272KD | GDS82272 |
| 2513858 | GDS82082 | S4010250700AA | GDS82120 | 3S5W3A427AC | GDS82178 | 5Q0407764AX | GDS82230 | 1K0407452HX | GDS82272 |
| BV613B436RA | GDS82082 | 2203100AP01AA | GDS82121 | 3S5W3B436AA | GDS82178 | 5Q0407271DB | GDS82231 | 1K0407452PX | GDS82272 |
| BV613B436RB | GDS82082 | S4010250100AA | GDS82121 | 3S5W3B436AB | GDS82178 | 5Q0407271DC | GDS82231 | 1K0407454QX | GDS82272 |
| BV613B436UA | GDS82082 | 2203200AP01AA | GDS82122 | RM1S5W3B436A1B | GDS82178 | 5Q0407763BX | GDS82231 | 391014886R | GDS82284 |
| BV613B436UB | GDS82082 | S4010250200AA | GDS82122 | RM3S5W3B436A1B | GDS82178 | 5Q0407763CX | GDS82231 | 391018401R | GDS82284 |
| BV613B436UC | GDS82082 | 44305SWC900 | GDS82134 | 1222325 | GDS82179 | 2Q0407271AK | GDS82232 | 33213417392 | GDS82294 |
| F1F63B436DA | GDS82082 | 44305SWW900 | GDS82134 | 1303939 | GDS82179 | 2Q0407451FX | GDS82232 | 33213420710 | GDS82294 |
| RMBV613B436R2A | GDS82082 | 44306SNC000 | GDS82135 | 1537959 | GDS82179 | 2Q0407272CB | GDS82233 | 1097706100 | GDS82295 |
| RMBV613B436R2B | GDS82082 | 44306SNC010 | GDS82135 | 1753969 | GDS82179 | 2Q0407272CC | GDS82233 | 5A2203010 | GDS82295 |
| RMBV613B436U2B | GDS82082 | 44305T0CG00 | GDS82155 | 3S5W3A428AA | GDS82179 | 2Q0407452GX | GDS82233 | 5A2203010C1 | GDS82295 |
| RMBV613B436U2C | GDS82082 | 44305T0CG01 | GDS82155 | 3S5W3B437AA | GDS82179 | 2Q0407452KX | GDS82233 | 1097706200 | GDS82296 |
| RMF1F63B436D2A | GDS82082 | 8E0407271BM | GDS82156 | 3S5W3B437AB | GDS82179 | 8E0407272BA | GDS82239 | 5A2203020 | GDS82296 |
| 13271555 | GDS82083 | 8E0407271CA | GDS82156 | RM3S5W3B437A1B | GDS82179 | 8E0407452KX | GDS82239 | 5A2203020C1 | GDS82296 |
| 13335145 | GDS82083 | 8E0407451MV | GDS82156 | 6W834K138AA | GDS82180 | 495002V200 | GDS82241 | MA1225020 | GDS82299 |
| 165125 | GDS82083 | 8E0407451MX | GDS82156 | C2P3968 | GDS82180 | 49500A2000 | GDS82241 | MA1225030 | GDS82300 |
| 1651250 | GDS82083 | 8E0407453BX | GDS82156 | 2W934K139BC | GDS82181 | 49501A2000 | GDS82242 | SA0025020M1 | GDS82305 |
| 374502 | GDS82083 | 8E0501203P | GDS82156 | 2W934K139BD | GDS82181 | 495012Y830 | GDS82243 | SA002550XM1 | GDS82305 |
| 95520521 | GDS82083 | 8E0501203PX | GDS82156 | 2W934K139BE | GDS82181 | 49501A5900 | GDS82244 | 4132035350 | GDS82309 |
| 13245907 | GDS82084 | 8E0501203T | GDS82156 | 6W834K139AA | GDS82181 | 49501A6900 | GDS82244 | 4132035360 | GDS82309 |
| 374812 | GDS82084 | 8E0501203TX | GDS82156 | C2C12261 | GDS82181 | 49501D7180 | GDS82245 | 4130035301 | GDS82310 |
| 375022 | GDS82084 | 44306SJDE00 | GDS82157 | C2C22871 | GDS82181 | 391004BA1B | GDS82248 | 8R0501203B | GDS82311 |
| 93169665 | GDS82084 | 44306TA9E01 | GDS82158 | C2P3969 | GDS82181 | 391014BA0B | GDS82249 | 8R0501203BX | GDS82311 |
| R1640075 | GDS82084 | 44305TA9E01 | GDS82159 | XR843491 | GDS82181 | 391004BA0B | GDS82250 | 4230035000 | GDS82312 |
| 13228203 | GDS82085 | 42310T0GA01 | GDS82162 | 1947217 | GDS82182 | 391004BA0C | GDS82250 | FTB52550X | GDS82313 |
| 22764225 | GDS82085 | 42310T1WA01 | GDS82162 | 2168926 | GDS82182 | 391004BA5A | GDS82250 | FTB52550XA | GDS82313 |
| 22796269 | GDS82085 | 42311T0GA01 | GDS82163 | 5158310 | GDS82182 | 391004BA5E | GDS82250 | RTA12550XA | GDS82314 |
| 374834 | GDS82085 | 42311T1WA01 | GDS82163 | CV614K138AA | GDS82182 | 391004BA8A | GDS82250 | RTA12550XB | GDS82314 |
| 374879 | GDS82085 | 42310T1GE01 | GDS82164 | CV614K138AB | GDS82182 | 8R0501204D | GDS82251 | 1614921280 | GDS82315 |
| 95520487 | GDS82085 | 42311T1GE01 | GDS82165 | CV614K138AD | GDS82182 | 8R0501204DX | GDS82251 | 1675953180 | GDS82315 |

| COMPETITOR | G-AP Ref. | COMPETITOR | G-AP Ref. | COMPETITOR | G-AP Ref. | COMPETITOR | G-AP Ref. | COMPETITOR | G-AP Ref. |
|---|---|---|---|---|---|---|---|---|---|
| OE | | 2163306 | GDS82340 | 5QS407271 | GDS82351 | 374881 | GDS82388 | 434100D401 | GDS82435 |
| | | EG913B436BC | GDS82340 | 3Q0407272BF | GDS82352 | 374908 | GDS82388 | 434100D660 | GDS82435 |
| 9814611880 | GDS82315 | EG913B436BD | GDS82340 | 3Q0407762FX | GDS82352 | 95520561 | GDS82388 | 391003032R | GDS82447 |
| 9820048180 | GDS82315 | EG913B436BE | GDS82340 | 4F0407272K | GDS82353 | 95520567 | GDS82388 | 391014EB0A | GDS82448 |
| 9821017880 | GDS82315 | 1863157 | GDS82341 | 4F0407452DX | GDS82353 | 13250832 | GDS82389 | 391004EB0A | GDS82449 |
| 9839529480 | GDS82315 | 1865557 | GDS82341 | 51620H1000 | GDS82354 | 13335133 | GDS82389 | 3273FE | GDS82450 |
| SU001A6112 | GDS82315 | 1940607 | GDS82341 | 51620H1010 | GDS82354 | 374365 | GDS82389 | 3273FF | GDS82450 |
| SU001A8375 | GDS82315 | 2032797 | GDS82341 | 5C0407271BH | GDS82355 | 374884 | GDS82389 | 9642599880 | GDS82450 |
| SU001B3039 | GDS82315 | 2163270 | GDS82341 | 5C0407271Q | GDS82356 | 95520499 | GDS82389 | 9642601880 | GDS82450 |
| SU001C2314 | GDS82315 | DG913B437KD | GDS82341 | 6C0407272AD | GDS82358 | 3Q0407272 | GDS82390 | 391000367R | GDS82451 |
| 1614921180 | GDS82316 | DG913B437KE | GDS82341 | 6C0407272AH | GDS82358 | 3Q0407272BN | GDS82390 | 391000883R | GDS82451 |
| 1675503980 | GDS82316 | DG913B437KF | GDS82341 | 6C0407452CX | GDS82358 | 3Q0407762X | GDS82390 | 2113500702 | GDS82455 |
| 9814611780 | GDS82316 | DG913B437KG | GDS82341 | 6C0407272AA | GDS82359 | 3Q0407271AQ | GDS82391 | 2113500956 | GDS82455 |
| 9820048080 | GDS82316 | DG913B437KH | GDS82341 | 6C0407272N | GDS82359 | 3Q0407271S | GDS82391 | 2113501016 | GDS82455 |
| 9821017680 | GDS82316 | 1860245 | GDS82342 | 6C0407272NX | GDS82359 | 3Q0407761X | GDS82391 | A2113500702 | GDS82455 |
| 9839532280 | GDS82316 | 1865550 | GDS82342 | 6C0407452X | GDS82359 | 7E0407276P | GDS82392 | A2113500956 | GDS82455 |
| SU001B1651 | GDS82316 | 1940606 | GDS82342 | 6C0407272C | GDS82360 | 7E0407454CX | GDS82392 | A2113501016 | GDS82455 |
| SU001B2787 | GDS82316 | 2032786 | GDS82342 | 6C0407272CX | GDS82360 | 7E0407454NX | GDS82392 | 1663301400 | GDS82456 |
| SU001C2416 | GDS82316 | 2163255 | GDS82342 | 6C0407272G | GDS82360 | 7E0407761C | GDS82392 | 1663301601 | GDS82456 |
| 4234048030 | GDS82317 | 2425805 | GDS82342 | 6C0407272GX | GDS82360 | 7LA407272C | GDS82392 | A1663301400 | GDS82456 |
| 4341012B60 | GDS82318 | 2535025 | GDS82342 | 7E0407272AC | GDS82361 | 7LA407452CX | GDS82392 | A1663301601 | GDS82456 |
| 4341047040 | GDS82318 | DG913B436KD | GDS82342 | 7E0407452NX | GDS82361 | 13367065 | GDS82393 | 4234008020 | GDS82460 |
| 4342047040 | GDS82319 | DG913B436KE | GDS82342 | 7N0407764T | GDS82362 | 95522359 | GDS82393 | 4234008021 | GDS82460 |
| 4342047050 | GDS82319 | DG913B436KF | GDS82342 | 7N0407764TX | GDS82362 | 13367066 | GDS82394 | 391001KD0A | GDS82461 |
| 434200D411 | GDS82320 | DG913B436KG | GDS82342 | 8W0501203D | GDS82363 | 95522361 | GDS82394 | 391001KD0B | GDS82461 |
| 434200D650 | GDS82320 | DG913B436KH | GDS82342 | 1J0501203B | GDS82364 | 13367051 | GDS82395 | 391011KD0A | GDS82462 |
| 44306TBCA51 | GDS82322 | DG913B436KJ | GDS82342 | 1J0501203BX | GDS82364 | 13367061 | GDS82395 | 391011KD0B | GDS82462 |
| 44306TGGA51 | GDS82322 | DG913B436KK | GDS82342 | 26111119 | GDS82365 | 95522351 | GDS82395 | 396001KD0A | GDS82463 |
| 44305TBCA51 | GDS82323 | 3C0501203 | GDS82343 | 374554 | GDS82365 | 95522355 | GDS82395 | 391019972R | GDS82464 |
| 44305TGGA51 | GDS82323 | 8J0501203A | GDS82343 | 374998 | GDS82365 | 13367074 | GDS82396 | 39101JG04B | GDS82464 |
| 44306TGLE91 | GDS82324 | 1807541 | GDS82344 | 93169661 | GDS82365 | 95522371 | GDS82396 | 43420WB004 | GDS82465 |
| 44305TGLE91 | GDS82325 | 1821967 | GDS82344 | S112203020PB | GDS82371 | 13432218 | GDS82397 | GDD12560X | GDS82465 |
| 2203300001 | GDS82326 | 1874311 | GDS82344 | S122203010AB | GDS82372 | 39040805 | GDS82397 | GDD12560XA | GDS82465 |
| 2203300200 | GDS82326 | 8V513B437HB | GDS82344 | 49501A0100 | GDS82373 | 39052113 | GDS82397 | GDT12560X | GDS82465 |
| 2203300901 | GDS82326 | 8V513B437HC | GDS82344 | 49500A0100 | GDS82374 | 39129618 | GDS82397 | GDD12550X | GDS82466 |
| A2203300001 | GDS82326 | 8V513B437HD | GDS82344 | 49500A0110 | GDS82374 | 5374144 | GDS82397 | GDD12550XA | GDS82466 |
| A2203300200 | GDS82326 | CPLA4K138AA | GDS82345 | 495004A150 | GDS82375 | 95520655 | GDS82397 | GDT12550X | GDS82466 |
| A2203300901 | GDS82326 | CPLA4K138AB | GDS82345 | 49500G7000 | GDS82376 | 95524077 | GDS82397 | 84138327 | GDS82470 |
| 49500H8000 | GDS82327 | LR034534 | GDS82345 | 44500SNC000 | GDS82377 | 95524171 | GDS82397 | 84527905 | GDS82470 |
| 49501H8000 | GDS82328 | LR053789 | GDS82345 | 44500TA9E01 | GDS82378 | 95527041 | GDS82397 | 84675878 | GDS82470 |
| 49500G2000 | GDS82329 | CPLA4K139CA | GDS82346 | 4F0407271S | GDS82379 | 1S0407762E | GDS82399 | 95525701 | GDS82470 |
| 49500G5000 | GDS82329 | CPLA4K139CB | GDS82346 | 4F0407451FX | GDS82379 | 1S0407762EX | GDS82399 | 95528935 | GDS82470 |
| 49501G2000 | GDS82330 | CPLA4K139CE | GDS82346 | 31602380426 | GDS82380 | 1S0407762G | GDS82399 | 95530296 | GDS82470 |
| 49501G2100 | GDS82330 | CPLA4K139EA | GDS82346 | 31605A2E038 | GDS82380 | 1S0407762GX | GDS82399 | YR00060980 | GDS82470 |
| 49501G5000 | GDS82330 | LR034536 | GDS82346 | 31607639432 | GDS82380 | 1S0407762H | GDS82399 | 84138320 | GDS82471 |
| 49500D7200 | GDS82331 | LR053791 | GDS82346 | 31608611936 | GDS82380 | 1S0407762J | GDS82399 | 84527906 | GDS82471 |
| 49501D7200 | GDS82332 | LR069104 | GDS82346 | 31605A2DFB7 | GDS82381 | 8E0501203K | GDS82401 | 95525697 | GDS82471 |
| 49500D3100 | GDS82334 | LR073346 | GDS82346 | 31608611927 | GDS82381 | 8E0501203KX | GDS82401 | 95529522 | GDS82471 |
| 49500D7100 | GDS82334 | LR161705 | GDS82346 | 31608643361 | GDS82381 | 8E0501203S | GDS82401 | 95530297 | GDS82471 |
| 49500D3170 | GDS82335 | 44305SNC000 | GDS82347 | 31602380427 | GDS82382 | 8E0501203SX | GDS82401 | 2303600M16 | GDS82477 |
| 49500D9170 | GDS82335 | 44305SNC010 | GDS82347 | 31605A2E037 | GDS82382 | 1J0407272LB | GDS82405 | 2303500M16 | GDS82478 |
| 49501D3170 | GDS82336 | 4F0501203B | GDS82348 | 31607639433 | GDS82382 | 1J0407454EX | GDS82405 | 2203200S08 | GDS82479 |
| 49501D9170 | GDS82336 | 4F0501203BX | GDS82348 | 31608611935 | GDS82382 | JZW407452CX | GDS82405 | 2203100S08 | GDS82480 |
| 49501D7010 | GDS82337 | 8E0407272AE | GDS82350 | 31608643377 | GDS82382 | 8E0407272BQ | GDS82410 | 2203200G08A | GDS82497 |
| 2176664 | GDS82338 | 8E0407272BS | GDS82350 | 31608643385 | GDS82382 | 8E0407454X | GDS82410 | 2203100G08A | GDS82498 |
| 2415930 | GDS82338 | 8E0407452BX | GDS82350 | 3D0407271E | GDS82384 | 9812036280 | GDS82411 | 2203200V17 | GDS82499 |
| 5242998 | GDS82338 | 8E0407454CX | GDS82350 | 3D0407271EX | GDS82384 | 1613396080 | GDS82412 | 2203100V17 | GDS82500 |
| DG914K138AD | GDS82338 | 3Q0407271AG | GDS82351 | 3D0407272D | GDS82385 | 9812035480 | GDS82412 | 2203200S16B | GDS82501 |
| DG914K138AE | GDS82338 | 3Q0407271AH | GDS82351 | 3D0407272DX | GDS82385 | 4410157LB0 | GDS82419 | 2203100S16B | GDS82502 |
| DG914K138AF | GDS82338 | 3Q0407271AP | GDS82351 | 3Q0407272AR | GDS82386 | 4410157LB2 | GDS82419 | 2203200BS16 | GDS82503 |
| 1936877 | GDS82339 | 3Q0407271CD | GDS82351 | 3Q0407762NX | GDS82386 | 391014BB0B | GDS82428 | 2203100BS16 | GDS82504 |
| 2032788 | GDS82339 | 3Q0407761PV | GDS82351 | 5N0407766J | GDS82386 | 391014BB8E | GDS82428 | 2203200V08 | GDS82507 |
| 2163309 | GDS82339 | 3Q0407761PX | GDS82351 | 3Q0407271AA | GDS82387 | 391016MA0C | GDS82428 | 2203100V08 | GDS82508 |
| EG913B437BC | GDS82339 | 3Q0407761QV | GDS82351 | 3Q0407271M | GDS82387 | 391016MA0E | GDS82428 | 2403200AKY01B | GDS82509 |
| EG913B437BD | GDS82339 | 3Q0407761QX | GDS82351 | 3Q0407761AX | GDS82387 | FP102550X | GDS82429 | 2403100AKY01B | GDS82510 |
| EG913B437BE | GDS82339 | 3Q0407761TX | GDS82351 | 3Q0407761BX | GDS82387 | FP102550XA | GDS82429 | 13432215 | GDS82511 |
| 1936876 | GDS82340 | 5QF407271K | GDS82351 | 13335125 | GDS82388 | FP102560X | GDS82430 | 13486866 | GDS82511 |
| 2032792 | GDS82340 | 5QF407761AX | GDS82351 | 13348262 | GDS82388 | FP102560XA | GDS82430 | 5374141 | GDS82511 |

| COMPETITOR | G-AP Ref. | COMPETITOR | G-AP Ref. | COMPETITOR | G-AP Ref. | COMPETITOR | G-AP Ref. | COMPETITOR | G-AP Ref. |
|---|---|---|---|---|---|---|---|---|---|
| OE | | 391018696R | GDS82548 | 44306TBCA01 | GDS82618 | 495003F850 | GDS82709 | 95527521 | GDS82790 |
| | | 4422671 | GDS82548 | 44306TGGA01 | GDS82618 | 495602B100 | GDS82711 | 95015622 | GDS82797 |
| 5374193 | GDS82511 | 6000618517 | GDS82548 | 44305TBCA01 | GDS82619 | 44306TEAT01 | GDS82720 | 1609763680 | GDS82810 |
| 95520753 | GDS82511 | 71798474 | GDS82548 | 44305TGGA01 | GDS82619 | 44306TEXY51 | GDS82720 | 1611524080 | GDS82810 |
| 39101JD24B | GDS82512 | 8201189892 | GDS82548 | 4410663J00 | GDS82624 | 44306TEZT01 | GDS82720 | 9677209880 | GDS82810 |
| 39101JG34B | GDS82512 | 93453896 | GDS82548 | 4410563J00 | GDS82625 | 44305TEAT01 | GDS82721 | 9677476680 | GDS82810 |
| 96852740 | GDS82513 | 49501J9100 | GDS82553 | 391013TA1B | GDS82626 | 44305TEZT01 | GDS82721 | 49560D3020 | GDS82811 |
| LR041969 | GDS82515 | 49501M7800 | GDS82553 | 391003TA1B | GDS82627 | 7E0407276K | GDS82724 | 49560G2000 | GDS82812 |
| LR064634 | GDS82515 | 49500J9100 | GDS82554 | 391013TC1A | GDS82628 | 7E0407452TX | GDS82724 | 44500T4PJ00 | GDS82813 |
| LR161124 | GDS82515 | 49500J9400 | GDS82554 | 391003TC1A | GDS82629 | 7E0407454JX | GDS82724 | 44500T72H00 | GDS82813 |
| 10318751 | GDS82516 | 49500M7800 | GDS82554 | 31605A2DFC1 | GDS82631 | 7E0407454TX | GDS82724 | 44500TESH90 | GDS82814 |
| CPLA3N128AB | GDS82516 | 49500J9150 | GDS82555 | 31608611929 | GDS82631 | 7E0407761A | GDS82724 | MA1027700 | GDS82832 |
| CPLA3N128AC | GDS82516 | 49600J9000 | GDS82556 | 31608643363 | GDS82631 | 7E0407761J | GDS82724 | PA3327721 | GDS82832 |
| DPLA3N128AB | GDS82516 | 49601J9000 | GDS82557 | 31605A2DFC2 | GDS82632 | 33207566068 | GDS82729 | 495001R700 | GDS82833 |
| DPLA3N128AD | GDS82516 | 1053507600 | GDS82558 | 31608611930 | GDS82632 | 31607593039 | GDS82730 | 495011R700 | GDS82834 |
| DPLA3N128BB | GDS82516 | S62203010 | GDS82558 | 31608643364 | GDS82632 | 31607606027 | GDS82730 | CV6Z3B436A | GDS82844 |
| DPLA3N128BC | GDS82516 | 1053511900 | GDS82559 | 31608651276 | GDS82632 | 7593039 | GDS82730 | CV6Z3B436AH | GDS82844 |
| DPLA3N128BD | GDS82516 | S62203020 | GDS82559 | 31605A2E052 | GDS82633 | 7606027 | GDS82730 | CV6Z3B436AN | GDS82844 |
| LR034531 | GDS82516 | 2200400U2212 | GDS82563 | 31608611938 | GDS82633 | 22710926 | GDS82731 | CV6Z3B436AW | GDS82844 |
| LR041967 | GDS82516 | 2200300U2212 | GDS82564 | 51947023 | GDS82634 | 9675749980 | GDS82733 | TX607 | GDS82844 |
| LR041968 | GDS82516 | 1135458700 | GDS82569 | 51827230 | GDS82635 | 9675750080 | GDS82734 | TX822 | GDS82844 |
| LR045441 | GDS82516 | 5AEV2203010 | GDS82569 | 51947028 | GDS82635 | 1613187080 | GDS82735 | TX863 | GDS82844 |
| LR064251 | GDS82516 | 2303300K85 | GDS82570 | 71797848 | GDS82635 | 9802363680 | GDS82735 | 33207521130 | GDS82846 |
| LR064635 | GDS82516 | 2112449 | GDS82576 | 51965271 | GDS82636 | 9802363780 | GDS82736 | 33217521130 | GDS82846 |
| LR161123 | GDS82516 | 2112457 | GDS82576 | 52134279 | GDS82636 | 52123748AC | GDS82738 | 33217527074 | GDS82846 |
| RMDPLA3N128BD | GDS82516 | 2182300 | GDS82576 | 4410161MC0 | GDS82637 | 52123748AD | GDS82738 | 33217527321 | GDS82846 |
| 396002941R | GDS82518 | 2313985 | GDS82576 | 4410161MC1 | GDS82637 | 52123764AA | GDS82738 | 33217561782 | GDS82846 |
| 396003780R | GDS82518 | 2393814 | GDS82576 | 4410268L80 | GDS82638 | 52123764AB | GDS82738 | 7527074AI03 | GDS82846 |
| 4533503500 | GDS82518 | 2522098 | GDS82576 | 5085130AA | GDS82639 | 52123764AC | GDS82738 | 1614919780 | GDS82847 |
| 4533506000 | GDS82518 | H1B53B436BB | GDS82576 | 5085130AB | GDS82639 | 52123764AD | GDS82738 | 1614920380 | GDS82847 |
| A4533503500 | GDS82518 | H1B53B436FB | GDS82576 | 05085180AB | GDS82646 | 52123764AE | GDS82738 | 9806153180 | GDS82847 |
| A4533506000 | GDS82518 | H1B53B436FC | GDS82576 | 05085180AF | GDS82646 | 68238841AA | GDS82738 | 9813091280 | GDS82847 |
| 396002998R | GDS82519 | H1B53B436FD | GDS82576 | 5085180AB | GDS82646 | 68238841AB | GDS82738 | 51885862 | GDS82848 |
| 396008196R | GDS82519 | H1B53B436FE | GDS82576 | 5085180AC | GDS82646 | 68238841AD | GDS82738 | 5188586246307542 | GDS82848 |
| 4533503600 | GDS82519 | H1B53B436FF | GDS82576 | 5085180AD | GDS82646 | 68265870AA | GDS82738 | 52134274 | GDS82848 |
| 4533506100 | GDS82519 | 1809733 | GDS82577 | 5085180AE | GDS82646 | 68265870AB | GDS82738 | 5213427446307542 | GDS82848 |
| A4533503600 | GDS82519 | 2048643 | GDS82577 | 5085180AF | GDS82646 | 68265870AF | GDS82738 | 71797816 | GDS82848 |
| A4533506100 | GDS82519 | EV613B437GA | GDS82577 | 5085180AG | GDS82646 | 68271587AA | GDS82738 | 7179781646307542 | GDS82848 |
| 13468852 | GDS82520 | RMBV613B437L1B | GDS82577 | 4342030020 | GDS82658 | 68271587AB | GDS82738 | 71797819 | GDS82848 |
| 39040806 | GDS82520 | 13334703 | GDS82579 | 4342030021 | GDS82658 | 68292307AA | GDS82738 | 7179781946307542 | GDS82848 |
| 5374146 | GDS82520 | 13367770 | GDS82579 | 4342030040 | GDS82658 | 68292307AB | GDS82738 | 51820349 | GDS82849 |
| 95520679 | GDS82520 | 13371620 | GDS82579 | 2203200XG47XA | GDS82664 | 1004978200 | GDS82756 | 5182034946307542 | GDS82849 |
| 95524079 | GDS82520 | 13480585 | GDS82579 | 2203200XG85XA | GDS82665 | IB52203010 | GDS82756 | 51955479 | GDS82849 |
| GG3025600 | GDS82523 | 10281286 | GDS82582 | 2203100XG85XA | GDS82666 | 1004978300 | GDS82757 | 5195547946307542 | GDS82849 |
| GG3025600A | GDS82523 | 10950351 | GDS82582 | 2403200XKW09B | GDS82667 | IB52203020 | GDS82757 | 71797018 | GDS82849 |
| GG3025600B | GDS82523 | 10281285 | GDS82583 | 2303200XKW09A | GDS82668 | 3099825 | GDS82767 | 7179701846307542 | GDS82849 |
| GG3025600C | GDS82523 | 10950350 | GDS82583 | 2403100XKW09B | GDS82669 | 19183748 | GDS82769 | 1783752 | GDS82850 |
| GG3025600D | GDS82523 | 391006609R | GDS82600 | 2303100XKW09A | GDS82670 | 4341001140 | GDS82769 | 1841612 | GDS82850 |
| GG3025600E | GDS82523 | 8200866827 | GDS82600 | 2203100XY23XA | GDS82671 | 30783109 | GDS82776 | 1882117 | GDS82850 |
| GG3025600R0E | GDS82523 | 4341030020 | GDS82602 | 2203100XG47XA | GDS82672 | 36000243 | GDS82776 | 2066186 | GDS82850 |
| GG3725600 | GDS82523 | 4341030021 | GDS82602 | 44306T7WA02 | GDS82679 | 36000538 | GDS82776 | DV6P3B436NA | GDS82850 |
| GG3725600A | GDS82523 | 4341030050 | GDS82602 | 44306T7WA03 | GDS82679 | 8252056 | GDS82776 | EV6P3B436NA | GDS82850 |
| GG3725600B | GDS82523 | 28421FJ000 | GDS82605 | 44306T8NT03 | GDS82679 | 8603700 | GDS82776 | EV6P3B436NB | GDS82850 |
| GG3725600C | GDS82523 | 495003F800 | GDS82606 | 44306T8NT030M1 | GDS82679 | P30783109 | GDS82776 | RMDV6P3B436N1A | GDS82850 |
| GG3725600D | GDS82523 | 42311S2A951 | GDS82607 | FL3Z3A428A | GDS82683 | 5201800355270992 | GDS82783 | 1783754 | GDS82851 |
| GG3725600E | GDS82523 | 42310S2A951 | GDS82608 | GL3Z3A428A | GDS82683 | 52061593 | GDS82783 | 1841614 | GDS82851 |
| GG3725600F | GDS82523 | 51936050 | GDS82613 | JL3Z3A428A | GDS82683 | 5206159355270992 | GDS82783 | DV6P3B437BA | GDS82851 |
| 43420F4040 | GDS82528 | 52088372 | GDS82613 | FL3Z3A427A | GDS82684 | 5212959255270992 | GDS82783 | RMDV6P3B437B1A | GDS82851 |
| 43410F4050 | GDS82529 | 68287866AA | GDS82613 | GL343A428AB | GDS82684 | 49501M0200 | GDS82788 | 495001W100 | GDS82852 |
| 4410280J10 | GDS82536 | 71797464 | GDS82613 | GL3Z3A427A | GDS82684 | 49501M4200 | GDS82788 | 2236025 | GDS82853 |
| 4410280J11 | GDS82536 | K68287866AA | GDS82613 | JL3Z3A427A | GDS82684 | 13420981 | GDS82790 | 2510247 | GDS82853 |
| 1014024856 | GDS82547 | K68287866AB | GDS82613 | ML3Z3A427A | GDS82684 | 39013544 | GDS82790 | JT763B437AB | GDS82853 |
| 101402485601661 | GDS82547 | 414008 | GDS82614 | ML3Z3A427B | GDS82684 | 39040799 | GDS82790 | JT763B437AC | GDS82853 |
| 4082006100 | GDS82547 | 414018 | GDS82614 | 3815A215 | GDS82701 | 39107232 | GDS82790 | 2235990 | GDS82854 |
| 4082006100661 | GDS82547 | 94560855 | GDS82614 | 3815A487 | GDS82701 | 39129502 | GDS82790 | 2510245 | GDS82854 |
| 3910100Q6K | GDS82548 | 95090829 | GDS82614 | CD260022 | GDS82701 | 95522375 | GDS82790 | JT763B436AB | GDS82854 |
| 3910100Q7C | GDS82548 | 95522312 | GDS82614 | 52083441 | GDS82706 | 95524087 | GDS82790 | JT763B436AC | GDS82854 |
| 391013827R | GDS82548 | 13334711 | GDS82616 | 495003F750 | GDS82709 | 95527520 | GDS82790 | 2234732 | GDS82855 |

| COMPETITOR | G-AP Ref. | COMPETITOR | G-AP Ref. | COMPETITOR | G-AP Ref. | COMPETITOR | G-AP Ref. | COMPETITOR | G-AP Ref. |
|---|---|---|---|---|---|---|---|---|---|
| OE | | H1B53B436BC | GDS82978 | 1J0407272NN | GDS83004 | 1J0407272CS | GDS83011 | RMYM213B437BB | GDS83022 |
| | | H1B53B436BD | GDS82978 | 1J0407452CX | GDS83004 | 1J0407272CT | GDS83011 | RMYM2J3B437BB | GDS83022 |
| 2253907 | GDS82855 | H1B53B436BE | GDS82978 | 1J0407452DX | GDS83004 | 1J0407272DK | GDS83011 | YM213B437BB | GDS83022 |
| 2346540 | GDS82855 | H1B53B436BF | GDS82978 | 1J0407452MX | GDS83004 | 1J0407272FC | GDS83011 | YM213B437BC | GDS83022 |
| 2454859 | GDS82855 | H1B53B436BG | GDS82978 | 1J0407452V | GDS83004 | 1J0407272FE | GDS83011 | YM213B473BC | GDS83022 |
| 2537224 | GDS82855 | 49500C7400 | GDS82979 | 1J0407452X | GDS83004 | 1J0407272FK | GDS83011 | 1109009 | GDS83023 |
| 2677852 | GDS82855 | 49501C7400 | GDS82980 | 1J0407454CX | GDS83004 | 1J0407272GF | GDS83011 | 1125045 | GDS83023 |
| JX673B437HAD | GDS82855 | 495004A100 | GDS82983 | 3A0407272X | GDS83004 | 1J0407272GL | GDS83011 | 1132488 | GDS83023 |
| JX673B437HAE | GDS82855 | 28321FL010 | GDS82987 | JZW407272GX | GDS83004 | 1J0407272KN | GDS83011 | 1133415 | GDS83023 |
| JX673B437HAF | GDS82855 | 28321SG010 | GDS82987 | 3BD407271 | GDS83005 | 1J0407272KQ | GDS83011 | 1233602 | GDS83023 |
| JX673B437HAG | GDS82855 | 396001HC0C | GDS82990 | 8D0407271AQ | GDS83005 | 1J0407272KR | GDS83011 | 1334642 | GDS83023 |
| JX673B437HAH | GDS82855 | 396001HC1C | GDS82990 | 8D0407451AV | GDS83005 | 1J0407272NB | GDS83011 | 1334647 | GDS83023 |
| 2234734 | GDS82856 | 396004BA0A | GDS82990 | 8D0407451AX | GDS83005 | 1J0407272NK | GDS83011 | 1754221 | GDS83023 |
| 2253906 | GDS82856 | 3815A065 | GDS82991 | 1HM407271A | GDS83006 | 1J0407272NQ | GDS83011 | 7M0407451A | GDS83023 |
| 2346538 | GDS82856 | 3815A479 | GDS82991 | 1J0407271AF | GDS83006 | 1J0407418P | GDS83011 | 7M0407451AV | GDS83023 |
| 2537195 | GDS82856 | BJ323B437CA | GDS82992 | 1J0407271AP | GDS83006 | 1J0407452FX | GDS83011 | 7M3407271 | GDS83023 |
| JX673B436HAC | GDS82856 | EJ323B437CA | GDS82992 | 1J0407271C | GDS83006 | 1J0407452GX | GDS83011 | 7M3407271F | GDS83023 |
| JX673B436HAD | GDS82856 | EJ323B437CB | GDS82992 | 1J0407271FN | GDS83006 | 1J0407452HX | GDS83011 | 7M3407271M | GDS83023 |
| JX673B436HAE | GDS82856 | EJ323B437CC | GDS82992 | 1J0407271H | GDS83006 | 1J0407452JX | GDS83011 | 7M3407271N | GDS83023 |
| JX673B436HAF | GDS82856 | EJ323B437CD | GDS82992 | 1J0407271JD | GDS83006 | 1J0407452PX | GDS83011 | 7M3407271P | GDS83023 |
| 49560D3090 | GDS82857 | EJ323B437CE | GDS82992 | 1J0407271KH | GDS83006 | 8N0407272D | GDS83011 | 7M3407271PX | GDS83023 |
| 0374516 | GDS82858 | LR024758 | GDS82992 | 1J0407271PQ | GDS83006 | 8N0407452BX | GDS83011 | 7M3407451A | GDS83023 |
| 13126307 | GDS82858 | LR048489 | GDS82992 | 1J0407271QG | GDS83006 | 3BD407271A | GDS83012 | 7M3407451AV | GDS83023 |
| 374516 | GDS82858 | LR061604 | GDS82992 | 1J0407451AV | GDS83006 | 8D0407271AC | GDS83012 | 7M3407451AX | GDS83023 |
| 495602S050 | GDS82862 | LR117057 | GDS82992 | 1J0407451AX | GDS83006 | 8D0407271BE | GDS83012 | 7M3407451BV | GDS83023 |
| 1773304101 | GDS82867 | LR125148 | GDS82992 | 1J0407451QX | GDS83006 | 8D0407271DK | GDS83012 | 7M3407451BX | GDS83023 |
| A1773304101 | GDS82867 | LR125163 | GDS82992 | 1J0407453DV | GDS83006 | 8D0407271DM | GDS83012 | 7M3407761 | GDS83023 |
| 13400099 | GDS82868 | LR139088 | GDS82992 | 1J0407453DX | GDS83006 | 8D0407417H | GDS83012 | 7M3407761X | GDS83023 |
| 495602S650 | GDS82876 | LR149102 | GDS82992 | JZW407271GX | GDS83006 | 8D0407451DV | GDS83012 | REYM213B437A1C | GDS83023 |
| 7185847 | GDS82920 | LR180070 | GDS82992 | 8D0407272AN | GDS83007 | 8D0407451DX | GDS83012 | RMYM213B437AC | GDS83023 |
| 99808405 | GDS82920 | RMEJ323B437CB | GDS82992 | 8D0407272BJ | GDS83007 | 8D0407271AL | GDS83015 | RMYM2J3B437AB | GDS83023 |
| 6393300501 | GDS82923 | RMEJ323B437CC | GDS82992 | 8D0407272CL | GDS83007 | 8D0407271BC | GDS83015 | YM213B437A | GDS83023 |
| A6393300501 | GDS82923 | 0K63B25500 | GDS82994 | 8D0407272DJ | GDS83007 | 8D0407271CM | GDS83015 | YM213B437AB | GDS83023 |
| 381642S770 | GDS82924 | 0K63B25500A | GDS82994 | 8D0407272DP | GDS83007 | 8D0407271EA | GDS83015 | YM213B437AC | GDS83023 |
| 2E0501206C | GDS82925 | 0K63B25600 | GDS82995 | 8D0407452BV | GDS83007 | 8D0407271ED | GDS83015 | 4E0407272P | GDS83025 |
| 2E0501205C | GDS82926 | 0K63B25600A | GDS82995 | 8D0407452BX | GDS83007 | 8D0407271EM | GDS83015 | 4E0407452AX | GDS83025 |
| 4410271L30 | GDS82967 | 3BD407272 | GDS83001 | 8D0407452FV | GDS83007 | 8D0407451JX | GDS83015 | 4F0407271N | GDS83025 |
| 4410271L31 | GDS82967 | 8D0407272AQ | GDS83001 | 8D0407452FX | GDS83007 | 8D0407451SX | GDS83015 | 4F0407271T | GDS83025 |
| 4410271L32 | GDS82967 | 8D0407452AV | GDS83001 | 3B0407271N | GDS83008 | 8D0407453CX | GDS83015 | 4F0407451CX | GDS83025 |
| 4410271L33 | GDS82967 | 8D0407452AX | GDS83001 | 3B0407271NX | GDS83008 | 4B0407271AP | GDS83019 | 4F0407451EX | GDS83025 |
| 4410171L30 | GDS82968 | 8D0407271AP | GDS83002 | 8D0407271AJ | GDS83008 | 4B0407271F | GDS83019 | 4F0407272BX | GDS83026 |
| 4410171L31 | GDS82968 | 8D0407271BA | GDS83002 | 8D0407271BB | GDS83008 | 4B0407451EX | GDS83019 | 4F0407272CX | GDS83026 |
| 4410171L32 | GDS82968 | 8D0407271DL | GDS83002 | 8D0407271DT | GDS83008 | 4B0407451GX | GDS83019 | 4F0407272H | GDS83026 |
| 4410171L33 | GDS82968 | 8D0407451V | GDS83002 | 8D0407271EC | GDS83008 | 4D0407272H | GDS83019 | 4F0407272N | GDS83026 |
| FTF12550X | GDS82973 | 8D0407451X | GDS83002 | 8D0407271EF | GDS83008 | 4D0407272S | GDS83019 | 4F0407272T | GDS83026 |
| 2112461 | GDS82977 | 8D0407453AX | GDS83002 | 8D0407271EH | GDS83008 | 4D0407452X | GDS83019 | 4F0407452BX | GDS83026 |
| 2127967 | GDS82977 | 895407271D | GDS83003 | 8D0407271EL | GDS83008 | 4B0407272AP | GDS83020 | 4F0407452CX | GDS83026 |
| 2173828 | GDS82977 | 8A0407271AE | GDS83003 | 8D0407451CV | GDS83008 | 4B0407272F | GDS83020 | 4F0407452EX | GDS83026 |
| 2182301 | GDS82977 | 8A0407271H | GDS83003 | 8D0407451CX | GDS83008 | 4B0407272S | GDS83020 | 4F0407452N | GDS83026 |
| 2219698 | GDS82977 | 8A0407271J | GDS83003 | 8D0407451LX | GDS83008 | 4B0407418E | GDS83020 | 8D0407271AM | GDS83036 |
| 2313975 | GDS82977 | 8A0407271JX | GDS83003 | 8D0407451QX | GDS83008 | 4B0407452EX | GDS83020 | 8D0407271BF | GDS83036 |
| 2393811 | GDS82977 | 1J0407272 | GDS83004 | 8D0407453EV | GDS83008 | 4B0407452GX | GDS83020 | 8D0407271DN | GDS83036 |
| 2530303 | GDS82977 | 1J0407272AC | GDS83004 | 8D0407453EX | GDS83008 | 4B0407452QX | GDS83020 | 8D0407451GX | GDS83036 |
| H1B53B437AA | GDS82977 | 1J0407272AG | GDS83004 | 8D0407453HX | GDS83008 | 4D0407272AF | GDS83020 | 8D0407271AK | GDS83037 |
| H1B53B437BC | GDS82977 | 1J0407272AH | GDS83004 | 8D0407453JX | GDS83008 | 4D0407272J | GDS83020 | 8D0407451KX | GDS83037 |
| H1B53B437BD | GDS82977 | 1J0407272AT | GDS83004 | JZW407449QX | GDS83008 | 4D0407452AX | GDS83020 | 8D0407452GX | GDS83038 |
| H1B53B437BE | GDS82977 | 1J0407272BK | GDS83004 | JZW407449SX | GDS83008 | 1124358 | GDS83022 | 8A0501203E | GDS83039 |
| H1B53B437BF | GDS82977 | 1J0407272BN | GDS83004 | JZW407449TX | GDS83008 | 1132489 | GDS83022 | 8A0501203J | GDS83039 |
| H1B53B437BG | GDS82977 | 1J0407272BR | GDS83004 | 8D0407272AN | GDS83009 | 1254277 | GDS83022 | 8A0501203JX | GDS83039 |
| H1B53B437BH | GDS82977 | 1J0407272C | GDS83004 | 8D0407272BJ | GDS83009 | 7M307271Q | GDS83022 | 8D0407271AH | GDS83040 |
| H1B53B437BJ | GDS82977 | 1J0407272CX | GDS83004 | 8D0407272CL | GDS83009 | 7M3407271A | GDS83022 | 8D0407451EV | GDS83040 |
| 2112441 | GDS82978 | 1J0407272DB | GDS83004 | 8D0407272DJ | GDS83009 | 7M3407271E | GDS83022 | 8D0407451EX | GDS83040 |
| 2127966 | GDS82978 | 1J0407272EA | GDS83004 | 8D0407272DP | GDS83009 | 7M3407271Q | GDS83022 | 8D0407272AH | GDS83041 |
| 2182297 | GDS82978 | 1J0407272EL | GDS83004 | 8D0407452BV | GDS83009 | 7M3407271QX | GDS83022 | 8D0407452EX | GDS83041 |
| 2313995 | GDS82978 | 1J0407272JK | GDS83004 | 8D0407452BX | GDS83009 | 7M3407451V | GDS83022 | 8E0407271AB | GDS83043 |
| 2403010 | GDS82978 | 1J0407272MP | GDS83004 | 8D0407452FX | GDS83009 | 7M3407451X | GDS83022 | 8E0407451AX | GDS83043 |
| 2530299 | GDS82978 | 1J0407272ND | GDS83004 | 1J0407272CQ | GDS83011 | 7M3407761A | GDS83022 | 895407272F | GDS83044 |
| H1B53B436AA | GDS82978 | 1J0407272NF | GDS83004 | 1J0407272CR | GDS83011 | 7M3407761AX | GDS83022 | 8A0407272AT | GDS83044 |

| COMPETITOR | G-AP Ref. | COMPETITOR | G-AP Ref. | COMPETITOR | G-AP Ref. | COMPETITOR | G-AP Ref. | COMPETITOR | G-AP Ref. |
|---|---|---|---|---|---|---|---|---|---|
| OE | | 8E0407272S | GDS83058 | 44305TLAH00 | GDS83081 | DG913B436JF | GDS83140 | A2123302101 | GDS83179 |
| | | 8E0407452EX | GDS83058 | 3815A465 | GDS83099 | DG913B436JG | GDS83140 | A2123305801 | GDS83179 |
| 1J0407272AB | GDS83046 | 8E0407452GX | GDS83058 | 2203200XS56XB | GDS83100 | DG913B436JH | GDS83140 | A212330580164 | GDS83179 |
| 1J0407272AP | GDS83046 | 8E0407452JX | GDS83058 | 42310TLAA01 | GDS83102 | DG913B436JJ | GDS83140 | A2123306001 | GDS83179 |
| 1J0407272BL | GDS83046 | 8E0407452PX | GDS83058 | 42311TLAA01 | GDS83103 | DG913B436JK | GDS83140 | A212330600180 | GDS83179 |
| 1J0407272BM | GDS83046 | 8ED0407272 | GDS83058 | 4342006B30 | GDS83108 | 1885154 | GDS83141 | 391002304R | GDS83184 |
| 1J0407272BQ | GDS83046 | 8ED407272 | GDS83058 | 4342033330 | GDS83108 | 1943307 | GDS83141 | 391010905R | GDS83185 |
| 1J0407272DA | GDS83046 | 480407271BS | GDS83060 | 1610137080 | GDS83109 | 2032952 | GDS83141 | 391009398R | GDS83189 |
| 1J0407272F | GDS83046 | 480407271DG | GDS83060 | 1617300580 | GDS83109 | 2147238 | GDS83141 | 391018508R | GDS83190 |
| 1J0407272M | GDS83046 | 4A0407271BF | GDS83060 | 1675952180 | GDS83109 | E1G13B436DC | GDS83141 | 30735564 | GDS83191 |
| 1J0407452AV | GDS83046 | 4A0407271BS | GDS83060 | 9677570880 | GDS83109 | E1G13B436DD | GDS83141 | 36000386 | GDS83191 |
| 1J0407452AX | GDS83046 | 4A0407271CA | GDS83060 | 9811176480 | GDS83109 | E1G13B436DE | GDS83141 | 36051044 | GDS83191 |
| 1J0407452BV | GDS83046 | 4A0407271DA | GDS83060 | 9834840980 | GDS83109 | E1G13B436DF | GDS83141 | 8603436 | GDS83191 |
| 1J0407452BX | GDS83046 | 4A0407271DG | GDS83060 | 1613306680 | GDS83110 | 2123502310 | GDS83148 | 8603882 | GDS83191 |
| 1J0407452EX | GDS83046 | 4A0407451AX | GDS83060 | 1675952080 | GDS83110 | A2123502310 | GDS83148 | 391011681R | GDS83192 |
| 3B0407272N | GDS83048 | 4A0407451X | GDS83060 | 9808771480 | GDS83110 | 391004EB2A | GDS83150 | 396004761R | GDS83192 |
| 3B0407272NX | GDS83048 | 4A0407272BF | GDS83061 | 9834841080 | GDS83110 | 391014EB2A | GDS83151 | 8201413313 | GDS83192 |
| 8D0407271BP | GDS83048 | 4A0407272BS | GDS83061 | 1647577480 | GDS83112 | 49600D7000 | GDS83156 | 391000797R | GDS83193 |
| 8D0407271EJ | GDS83048 | 4A0407272CA | GDS83061 | 1675963380 | GDS83112 | 33207609351 | GDS83157 | 391005302R | GDS83193 |
| 8D0407272AK | GDS83048 | 4A0407272DA | GDS83061 | 9825391880 | GDS83112 | 33207609352 | GDS83158 | 44305TR0J90 | GDS83195 |
| 8D0407272AL | GDS83048 | 4A0407272DG | GDS83061 | 9836034380 | GDS83112 | 5H224B457CB | GDS83159 | 44305TR0J91 | GDS83195 |
| 8D0407272BC | GDS83048 | 4A0407452X | GDS83061 | 1647577780 | GDS83113 | 5H224B457CC | GDS83159 | FTD52550X | GDS83196 |
| 8D0407272CM | GDS83048 | 6Q0407271AK | GDS83063 | 1675887680 | GDS83113 | LR047285 | GDS83159 | FTD52550XA | GDS83196 |
| 8D0407272DR | GDS83048 | 6Q0407271AL | GDS83063 | 9825392980 | GDS83113 | LR047288 | GDS83159 | FTT52550X | GDS83196 |
| 8D0407272EA | GDS83048 | 6Q0407271AS | GDS83063 | 9836046480 | GDS83113 | LR071933 | GDS83159 | FTD52560X | GDS83197 |
| 8D0407272ED | GDS83048 | 6Q0407271AT | GDS83063 | 1647577580 | GDS83114 | LR072071 | GDS83159 | FTD52560XA | GDS83197 |
| 8D0407418C | GDS83048 | 6Q0407451DX | GDS83063 | 9825392880 | GDS83114 | TOB500260 | GDS83159 | 4473302000 | GDS83200 |
| 8D0407418F | GDS83048 | 6Q0407451EV | GDS83063 | 1647577680 | GDS83115 | TOB500280 | GDS83159 | A4473302000 | GDS83200 |
| 8D0407452JX | GDS83048 | 6Q0407451EX | GDS83063 | 9825390980 | GDS83115 | 5H224B457BB | GDS83160 | 495014D500 | GDS83201 |
| 8D0407452RX | GDS83048 | 6Q0407451X | GDS83063 | 1647577280 | GDS83116 | 5H224B457BC | GDS83160 | 495004D500 | GDS83203 |
| 8D0407453X | GDS83048 | 6QE407271G | GDS83063 | 9825391080 | GDS83116 | LR047284 | GDS83160 | 80A407271E | GDS83206 |
| 8D0407454AX | GDS83048 | JZW407271HX | GDS83063 | 3815A569 | GDS83117 | LR047286 | GDS83160 | 80A407271G | GDS83206 |
| 8D0407454EX | GDS83048 | 4B0407271AS | GDS83066 | 496012S000 | GDS83118 | LR072063 | GDS83160 | 80D407271 | GDS83206 |
| JZW407452AX | GDS83048 | 4B0407271BB | GDS83066 | 49501G6300 | GDS83132 | LR072065 | GDS83160 | 31325854 | GDS83207 |
| 4A0407271BG | GDS83050 | 4B0407271BC | GDS83066 | 49500G6300 | GDS83133 | TOB500250 | GDS83160 | 31437621 | GDS83207 |
| 4A0407272AS | GDS83050 | 4B0407271T | GDS83066 | 3815A464 | GDS83134 | TOB500270 | GDS83160 | 32240323 | GDS83207 |
| 4A0407272BD | GDS83050 | 4B0407451AX | GDS83066 | 3815A538 | GDS83134 | 391004BB0B | GDS83163 | 32336203 | GDS83207 |
| 4A0407272CR | GDS83050 | 4B0407451PX | GDS83066 | 3815A363 | GDS83135 | 391004BB8E | GDS83163 | 36003640 | GDS83207 |
| 4A0407272DF | GDS83050 | 4B0407451RX | GDS83066 | 3815A517 | GDS83135 | 391006MA0C | GDS83163 | 36010127 | GDS83207 |
| 4A0407452FX | GDS83050 | 4B0407451SX | GDS83066 | 3815A539 | GDS83135 | 391006MA0E | GDS83163 | 36010221 | GDS83207 |
| 4A0407272BH | GDS83051 | 4B3407271B | GDS83066 | 13356124 | GDS83136 | FTH72550X | GDS83168 | 36011782 | GDS83207 |
| 4A0407272DC | GDS83051 | 4B3407271G | GDS83066 | 13356125 | GDS83136 | 1890673 | GDS83169 | 36012827 | GDS83207 |
| 4A0407272DE | GDS83051 | 4B3407271J | GDS83066 | 5374056 | GDS83136 | 2355695 | GDS83169 | 50794568 | GDS83207 |
| 4A0407452EX | GDS83051 | 4B3407451AX | GDS83066 | 5374057 | GDS83136 | 2455213 | GDS83169 | 31325852 | GDS83208 |
| 8E0407271AA | GDS83052 | 1610561580 | GDS83067 | 95520471 | GDS83136 | 2552743 | GDS83169 | 36003638 | GDS83208 |
| 8E0407271BE | GDS83052 | 9806699880 | GDS83067 | 95520637 | GDS83136 | FV613B437AA | GDS83169 | 36010126 | GDS83208 |
| 8E0407271BF | GDS83052 | 1647577380 | GDS83068 | 1440106080 | GDS83137 | FV663B437AA | GDS83169 | 36010571 | GDS83208 |
| 8E0407271BR | GDS83052 | 9825391780 | GDS83068 | 1607019180 | GDS83137 | FV663B437AB | GDS83169 | 36011773 | GDS83208 |
| 8E0407271T | GDS83052 | 9836034280 | GDS83068 | SU001A0278 | GDS83137 | FV663B437AC | GDS83169 | 50694325 | GDS83208 |
| 8E0407451HX | GDS83052 | 4341050011 | GDS83069 | 4473305000 | GDS83138 | FTH72560X | GDS83172 | 13321163 | GDS83209 |
| 8E0407451NX | GDS83052 | 4341050012 | GDS83069 | 4473305400 | GDS83138 | BJ323B436CA | GDS83177 | 13335160 | GDS83209 |
| 8E0407451PX | GDS83052 | 4341050013 | GDS83069 | A4473305000 | GDS83138 | LR024754 | GDS83177 | 374687 | GDS83209 |
| 8E0407451X | GDS83052 | 4341050014 | GDS83069 | A4473305400 | GDS83138 | LR125168 | GDS83177 | 374903 | GDS83209 |
| 8E0407453AX | GDS83052 | 4342050010 | GDS83070 | 4473301900 | GDS83139 | 2123301100 | GDS83179 | 375903 | GDS83209 |
| 8E0407271AH | GDS83057 | 4342050011 | GDS83070 | 4473304900 | GDS83139 | 212330110080 | GDS83179 | 95520555 | GDS83209 |
| 8E0407271AT | GDS83057 | 4342050012 | GDS83070 | 4473305300 | GDS83139 | 2123301501 | GDS83179 | 4700644 | GDS83210 |
| 8E0407271BQ | GDS83057 | 3910072J10 | GDS83071 | A4473301900 | GDS83139 | 2123301701 | GDS83179 | 9204528 | GDS83210 |
| 8E0407271S | GDS83057 | 72J10 | GDS83071 | A4473304900 | GDS83139 | 2123301901 | GDS83179 | 1643500010 | GDS83211 |
| 8E0407451EX | GDS83057 | 9826944080 | GDS83074 | A4473305300 | GDS83139 | 2123302101 | GDS83179 | 1643502510 | GDS83211 |
| 8E0407451GX | GDS83057 | YL01323180 | GDS83074 | 1860244 | GDS83140 | 2123305801 | GDS83179 | A1643500010 | GDS83211 |
| 8E0407451JX | GDS83057 | 9826944180 | GDS83075 | 1865548 | GDS83140 | 212330580164 | GDS83179 | A1643502510 | GDS83211 |
| 8E0407453X | GDS83057 | YL01323280 | GDS83075 | 1944498 | GDS83140 | 2123306001 | GDS83179 | 391003824R | GDS83212 |
| 8ED407271 | GDS83057 | 1637186980 | GDS83076 | 2032794 | GDS83140 | 212330600180 | GDS83179 | 391004EA0A | GDS83212 |
| 8E0407272 | GDS83058 | 9811934080 | GDS83076 | 2162878 | GDS83140 | A2123301100 | GDS83179 | 391004EA0B | GDS83212 |
| 8E0407272AH | GDS83058 | YL00335880 | GDS83076 | 2448654 | GDS83140 | A212330110080 | GDS83179 | 391004PC0A | GDS83212 |
| 8E0407272AR | GDS83058 | 1637186880 | GDS83077 | 2492060 | GDS83140 | A2123301501 | GDS83179 | 391004PC0B | GDS83212 |
| 8E0407272AT | GDS83058 | 9811933980 | GDS83077 | DG913B436JD | GDS83140 | A2123301701 | GDS83179 | 04668919AA | GDS83213 |
| 8E0407272GX | GDS83058 | YL00335780 | GDS83077 | DG913B436JE | GDS83140 | A2123301901 | GDS83179 | 04668921AA | GDS83213 |

| COMPETITOR | G-AP Ref. | COMPETITOR | G-AP Ref. | COMPETITOR | G-AP Ref. | COMPETITOR | G-AP Ref. | COMPETITOR | G-AP Ref. |
|---|---|---|---|---|---|---|---|---|---|
| OE | | 374886 | GDS83228 | 3C0407452HX | GDS83266 | 5Q0407271CC | GDS83294 | 7E0407272AR | GDS83296 |
| | | 42311S10A00 | GDS83229 | 5Q0407272EQ | GDS83266 | 5Q0407271CD | GDS83294 | 7E0407272B | GDS83296 |
| 4668919AA | GDS83213 | 42311S10A50 | GDS83229 | 5Q0407452X | GDS83266 | 5Q0407761GX | GDS83294 | 7E0407272P | GDS83296 |
| 4668921AA | GDS83213 | 2053300003 | GDS83231 | 5Q0407762GX | GDS83266 | 5Q0407761HX | GDS83294 | 7E0407272PX | GDS83296 |
| RL668919AA | GDS83213 | 2053303806 | GDS83231 | 5N0407764H | GDS83269 | 5Q0407761RX | GDS83294 | 7E0407272T | GDS83296 |
| 05189279AA | GDS83214 | 2053305306 | GDS83231 | 5N0407764HX | GDS83269 | IK0407271CP | GDS83294 | 7E0407452HX | GDS83296 |
| 5189279AA | GDS83214 | 2053308406 | GDS83231 | 4F0407271H | GDS83271 | JZW407271CX | GDS83294 | 7E0407452X | GDS83296 |
| RL189279AA | GDS83214 | A2053300003 | GDS83231 | 4F0407451B | GDS83271 | JZW407271DX | GDS83294 | 811407271M | GDS83297 |
| RX189279AA | GDS83214 | A2053303806 | GDS83231 | 4F0407451BX | GDS83271 | JZW407271EX | GDS83294 | 895407272D | GDS83297 |
| 5189278AA | GDS83215 | A2053305306 | GDS83231 | 8K0407271AK | GDS83273 | 1K0407271BJ | GDS83295 | 8A0407272AE | GDS83297 |
| R5189278AA | GDS83215 | A2053308406 | GDS83231 | 8K0407271D | GDS83273 | 1K0407271BN | GDS83295 | 8A0407272H | GDS83297 |
| 1610843280 | GDS83216 | 3AA407271 | GDS83236 | 8K0407271E | GDS83273 | 1K0407271EE | GDS83295 | 8A0407272J | GDS83297 |
| 9807280280 | GDS83216 | 3AA407451X | GDS83236 | 8K0407271F | GDS83273 | 1K0407271ES | GDS83295 | 8A0407272JX | GDS83297 |
| 1610843980 | GDS83217 | 3C0407271AP | GDS83236 | 8K0407271Q | GDS83273 | 1K0407271HG | GDS83295 | 8A0407452X | GDS83297 |
| 1666723280 | GDS83217 | 3C0407271E | GDS83236 | 8K0407451AV | GDS83273 | 1K0407271HM | GDS83295 | 8E0407271AG | GDS83298 |
| 9807280380 | GDS83217 | 3C0407271S | GDS83236 | 8K0407451AX | GDS83273 | 1K0407271KH | GDS83295 | 8E0407451DX | GDS83298 |
| 9829387980 | GDS83217 | 3C0407451AX | GDS83236 | 8K0407451DX | GDS83273 | 1K0407271KJ | GDS83295 | 7L6407271 | GDS83300 |
| 1610205780 | GDS83218 | 4Z7407271E | GDS83239 | 8K0407451KX | GDS83273 | 1K0407271LJ | GDS83295 | 7L6407271B | GDS83300 |
| 1610205880 | GDS83218 | 4Z7407451AX | GDS83239 | 8KD407271A | GDS83273 | 1K0407271MB | GDS83295 | 7L6407271BV | GDS83300 |
| 9670725780 | GDS83218 | 4Z7407272E | GDS83240 | 1483808 | GDS83288 | 1K0407271MC | GDS83295 | 7L6407271BX | GDS83300 |
| 9677914880 | GDS83218 | 4Z7407452AX | GDS83240 | 1667957 | GDS83288 | 1K0407271NP | GDS83295 | 7L6407271C | GDS83300 |
| 31367198 | GDS83219 | 1K0407271BT | GDS83241 | 1788209 | GDS83288 | 1K0407271NQ | GDS83295 | 7L6407271D | GDS83300 |
| 36010170 | GDS83219 | 1K0407271KF | GDS83241 | 1840165 | GDS83288 | 1K0407271NR | GDS83295 | 7L6407271DX | GDS83300 |
| 31367199 | GDS83220 | 1K0407271PG | GDS83241 | 7G913B437BC | GDS83288 | 1K0407271PB | GDS83295 | 7L6407271G | GDS83300 |
| 36010171 | GDS83220 | 1K0407453MX | GDS83241 | 7G913B437BD | GDS83288 | 1K0407271PC | GDS83295 | 7L6407271GX | GDS83300 |
| 1890672 | GDS83221 | 1K0407453X | GDS83241 | 7G913B437BE | GDS83288 | 1K0407271TH | GDS83295 | 1K0407271ET | GDS83302 |
| 2355687 | GDS83221 | 3C0407271T | GDS83241 | RM7G913B437B2E | GDS83288 | 1K0407451DX | GDS83295 | 1K0407271MA | GDS83302 |
| 2552785 | GDS83221 | 3C0407271TX | GDS83241 | 1483807 | GDS83289 | 1K0407451TX | GDS83295 | 1K0407453AX | GDS83302 |
| FV613B436DA | GDS83221 | 7E0407272AA | GDS83246 | 1667941 | GDS83289 | 1K0407453BX | GDS83295 | 8N0407271E | GDS83304 |
| FV663B436DA | GDS83221 | 7E0407272AN | GDS83246 | 1788206 | GDS83289 | 1K0407453DX | GDS83295 | 8N0407451X | GDS83304 |
| FV663B436DB | GDS83221 | 7E0407272BK | GDS83246 | 1840137 | GDS83289 | 1K0407453HX | GDS83295 | 4F0407271J | GDS83305 |
| 1890675 | GDS83222 | 7E0407272MX | GDS83246 | 7G913B436BD | GDS83289 | 1K0407453JX | GDS83295 | 4F0407451X | GDS83305 |
| 2355701 | GDS83222 | 7E0407272R | GDS83246 | 7G913B436BE | GDS83289 | 1K0407761HX | GDS83295 | 8E0407271AR | GDS83310 |
| 2455215 | GDS83222 | 7E0407452BX | GDS83246 | 7G913B436BF | GDS83289 | 1K0407761SX | GDS83295 | 8E0407451QX | GDS83310 |
| 2552767 | GDS83222 | 7E0407452FX | GDS83246 | RM7G913B436B2F | GDS83289 | 1K0407761TX | GDS83295 | 1K0407272EN | GDS83313 |
| FV613B437DA | GDS83222 | 7E0407452LX | GDS83246 | 3D0407271F | GDS83290 | 2K0407271G | GDS83295 | 1K0407272PL | GDS83313 |
| FV663B437DA | GDS83222 | 7H0407272AJ | GDS83246 | 3D0407271FX | GDS83290 | 2K0407271GX | GDS83295 | 1K0407272PM | GDS83313 |
| FV663B437DB | GDS83222 | 7H0407272BC | GDS83246 | 4F0407271G | GDS83290 | 3AB407271 | GDS83295 | 1K0407272RB | GDS83313 |
| FV663B437DC | GDS83222 | 7H0407272BK | GDS83246 | 4F0407451AX | GDS83290 | 3C0407271AH | GDS83295 | 1K0407272TM | GDS83313 |
| 1860260 | GDS83223 | 7H0407272CH | GDS83246 | 8K0407271AH | GDS83291 | 3C0407271AJ | GDS83295 | 1K0407454DX | GDS83313 |
| 1865556 | GDS83223 | 7H0407272S | GDS83246 | 8K0407271AJ | GDS83291 | 3C0407271BD | GDS83295 | 1K0407764CX | GDS83313 |
| 1944495 | GDS83223 | 7H0407452NV | GDS83246 | 8K0407451HX | GDS83291 | 3C0407271BP | GDS83295 | 1K0407764LX | GDS83313 |
| 2032793 | GDS83223 | 7H0407452NX | GDS83246 | 8K0407451L | GDS83291 | 3C0407451FX | GDS83295 | 1K0407764QX | GDS83313 |
| 2163260 | GDS83223 | 7H0407452SX | GDS83246 | 8K0407451LX | GDS83291 | 3C8407271 | GDS83295 | 3AA407272 | GDS83313 |
| 2452563 | GDS83223 | 7H0407452TX | GDS83246 | 7E0407271AB | GDS83293 | 5C0407271CB | GDS83295 | 3AA407452X | GDS83313 |
| 2492064 | GDS83223 | 7H0407452V | GDS83246 | 7E0407271G | GDS83293 | 5N0407761F | GDS83295 | 3Q0407272BD | GDS83313 |
| DG913B437JD | GDS83223 | 7H0407452X | GDS83246 | 7E0407271L | GDS83293 | 5N0407761FX | GDS83295 | 3Q0407764AX | GDS83313 |
| DG913B437JE | GDS83223 | 7H0498104F | GDS83246 | 7E0407271P | GDS83293 | 5N0407763D | GDS83295 | 5C0407272AA | GDS83313 |
| DG913B437JF | GDS83223 | 4D0407271H | GDS83249 | 7E0407451AX | GDS83293 | 5N0407763DX | GDS83295 | 5K0407272A | GDS83313 |
| DG913B437JG | GDS83223 | 4D0407271S | GDS83249 | 7E0407451EX | GDS83293 | 5N0407763G | GDS83295 | 5K0407272C | GDS83313 |
| DG913B437JH | GDS83223 | 4D0407451BX | GDS83249 | 7E0407451NX | GDS83293 | 5N0407763GX | GDS83295 | 5K0407452CX | GDS83313 |
| DG913B437JJ | GDS83223 | 7E0407272AB | GDS83261 | 7LA407271E | GDS83293 | 5N0407763N | GDS83295 | 5K0407762BX | GDS83313 |
| DG913B437JK | GDS83223 | 7E0407272AH | GDS83261 | 1K0407271AT | GDS83294 | 5Q0407271AP | GDS83295 | 5Q0407272BM | GDS83313 |
| 46308229 | GDS83224 | 7E0407272AP | GDS83261 | 1K0407271CP | GDS83294 | 5Q0407271AQ | GDS83295 | 5Q0407272DD | GDS83313 |
| 4630822971738960 | GDS83224 | 7E0407272N | GDS83261 | 1K0407271DR | GDS83294 | 5Q0407271BM | GDS83295 | 5Q0407272E | GDS83313 |
| 46308233 | GDS83224 | 7E0407272NV | GDS83261 | 1K0407271HN | GDS83294 | 5Q0407271BN | GDS83295 | 5Q0407272F | GDS83313 |
| 71791762 | GDS83224 | 7E0407272NX | GDS83261 | 1K0407271LP | GDS83294 | 5Q0407271H | GDS83295 | 5Q0407762FX | GDS83313 |
| 71791764 | GDS83224 | 7E0407272S | GDS83261 | 1K0407451CX | GDS83294 | 5Q0407761AX | GDS83295 | 5Q0407762JX | GDS83313 |
| 13307208 | GDS83226 | 7E0407452CX | GDS83261 | 1K0407451FX | GDS83294 | 5Q0407761KX | GDS83295 | 5Q0407762KX | GDS83313 |
| 13335155 | GDS83226 | 7E0407452GX | GDS83261 | 1K0407451KX | GDS83294 | 5Q0407761PX | GDS83295 | 5Q0407762RX | GDS83313 |
| 374899 | GDS83226 | 7E0407452MX | GDS83261 | 1K0407763EX | GDS83294 | 5Q0407763AX | GDS83295 | 7N0407764A | GDS83313 |
| 95520541 | GDS83226 | 4410182A00 | GDS83264 | 1K0407763FX | GDS83294 | 5Q0407763X | GDS83295 | 7N0407764AX | GDS83313 |
| 13335156 | GDS83227 | 4410184A00 | GDS83264 | 1Q0407271A | GDS83294 | 5QM407271E | GDS83295 | 7N0407764C | GDS83313 |
| 374900 | GDS83227 | 1K0407272CR | GDS83266 | 1Q0407271AX | GDS83294 | 7N0407761N | GDS83295 | 7N0407764CX | GDS83313 |
| 95520511 | GDS83227 | 1K0407272JF | GDS83266 | 2K0407271AX | GDS83294 | 7N0407761NX | GDS83295 | 7N0407764N | GDS83313 |
| 13250839 | GDS83228 | 1K0407272QK | GDS83266 | 3C0407271AE | GDS83294 | 7N0407763 | GDS83295 | 7N0407764NX | GDS83313 |
| 13335136 | GDS83228 | 1K0407452TX | GDS83266 | 3C0407451BX | GDS83294 | 7N0407763X | GDS83295 | 7N0407764Q | GDS83313 |
| 374566 | GDS83228 | 1K0407454MX | GDS83266 | 3C0407451GX | GDS83294 | JZW407271BX | GDS83295 | 7N0407764QX | GDS83313 |

| COMPETITOR | G-AP Ref. | COMPETITOR | G-AP Ref. | COMPETITOR | G-AP Ref. | COMPETITOR | G-AP Ref. | COMPETITOR | G-AP Ref. |
|---|---|---|---|---|---|---|---|---|---|
| OE | | 1Q0407272B | GDS83354 | 1K0407453CX | GDS83381 | 31272542 | GDS83406 | 42311TX4A01 | GDS83455 |
| | | 1Q0407272BX | GDS83354 | 1K0407761JX | GDS83381 | 31367556 | GDS83406 | 42310TX4A01 | GDS83456 |
| 8R0407271 | GDS83316 | 1Q0407272C | GDS83354 | 1K0407763X | GDS83381 | 36001182 | GDS83406 | 44306TX4A00 | GDS83457 |
| 8R0407271B | GDS83316 | 1Q0407272CX | GDS83354 | 3Q0407271AC | GDS83381 | 36002545 | GDS83406 | 44306TX4A01 | GDS83457 |
| 8R0407271BX | GDS83316 | 3AA407272A | GDS83354 | 3Q0407271AD | GDS83381 | 36012418 | GDS83406 | 44305TX4A01 | GDS83458 |
| 1K0407271BD | GDS83318 | 3AA407452AX | GDS83354 | 3Q0407271AM | GDS83381 | 9013300001 | GDS83407 | 495012V200 | GDS83466 |
| 1K0407271PH | GDS83318 | 3C0407452BX | GDS83354 | 3Q0407761LX | GDS83381 | A9013300001 | GDS83407 | 8251773 | GDS83472 |
| 1K0407451RX | GDS83318 | 5Q0407272BT | GDS83354 | 3Q0407761MX | GDS83381 | 2103500802 | GDS83408 | 8603788 | GDS83472 |
| 1K0407453KX | GDS83318 | 5Q0407272J | GDS83354 | 3Q0407761SX | GDS83381 | 2103508710 | GDS83408 | 391001148R | GDS83477 |
| 1K0407271AR | GDS83319 | 5Q0407762AX | GDS83354 | 561407271R | GDS83381 | A2103500802 | GDS83408 | 391004751R | GDS83477 |
| 1K0407271DH | GDS83319 | 5Q0407762HX | GDS83354 | 4G0407271G | GDS83382 | A2103508710 | GDS83408 | 496002M300 | GDS83479 |
| 1K0407271GG | GDS83319 | 7N0407764D | GDS83354 | 4H0407271K | GDS83382 | 2053503919 | GDS83409 | 496003M000 | GDS83479 |
| 1K0407272GS | GDS83319 | 7N0407764DX | GDS83354 | 02G409335B | GDS83383 | 205350391964 | GDS83409 | 496502M300 | GDS83480 |
| 1K0407272HC | GDS83319 | 7N0407764R | GDS83354 | 09A409356A | GDS83383 | 2053508113 | GDS83409 | 496503M000 | GDS83480 |
| 1K0407451BX | GDS83319 | 7N0407764RX | GDS83354 | 09B409356 | GDS83383 | A2053503919 | GDS83409 | 496503M800 | GDS83480 |
| 1K0407451MX | GDS83319 | 1K0407272BR | GDS83355 | GG2825500E | GDS83386 | A205350391964 | GDS83409 | 496002J100 | GDS83483 |
| 8K0407271S | GDS83321 | 1K0407452RX | GDS83355 | GG2825500R0H | GDS83386 | A2053508113 | GDS83409 | 496002J400 | GDS83483 |
| 8K0407451EX | GDS83321 | 7E0407271AC | GDS83360 | GG3125500A | GDS83386 | 391003TA0A | GDS83410 | 496002J410 | GDS83483 |
| 8J0407272AA | GDS83322 | 7E0407271R | GDS83360 | GG3125500C | GDS83386 | 391003TA0B | GDS83410 | 4593449AA | GDS83484 |
| 8J0407272K | GDS83322 | 7E0407271S | GDS83360 | GG3125500E | GDS83386 | 391003RA1A | GDS83411 | 4593466AA | GDS83484 |
| 8J0407272N | GDS83322 | 7E0407271SX | GDS83360 | GG3125500F | GDS83386 | 391013RA1A | GDS83412 | 5017654AA | GDS83484 |
| 8J0407272S | GDS83322 | 7E0407451CX | GDS83360 | GG3125500G | GDS83386 | 3815A570 | GDS83413 | RX017654AA | GDS83484 |
| 8J0407452BX | GDS83322 | 7E0407451MX | GDS83360 | GG3125500H | GDS83386 | 391009EL0B | GDS83414 | 7E0407276Q | GDS83496 |
| 8J0407452DX | GDS83322 | 7E0407276M | GDS83361 | FG0125600D | GDS83387 | 39100EL10B | GDS83414 | 7E0407454FX | GDS83496 |
| 8J0407452FX | GDS83322 | 7E0407276S | GDS83361 | FR012560X | GDS83387 | 30735136 | GDS83415 | 7E0407454SX | GDS83496 |
| 8J0407452X | GDS83322 | 7E0407454AX | GDS83361 | 13302767 | GDS83389 | 8251794 | GDS83415 | 7E0407761D | GDS83496 |
| 8J0407762K | GDS83322 | 7E0407454LX | GDS83361 | 374869 | GDS83389 | 8601383 | GDS83415 | 7LA407272D | GDS83496 |
| 8N0407272E | GDS83322 | 7E0407761F | GDS83361 | 95520559 | GDS83389 | 8602569 | GDS83415 | 7LA407452DX | GDS83496 |
| 8N0407452X | GDS83322 | 8E0407271BJ | GDS83363 | 95520560 | GDS83389 | 8603805 | GDS83415 | 7E0407274E | GDS83497 |
| 3Q0407271BA | GDS83323 | 8E0407451LX | GDS83363 | 95524444 | GDS83389 | 32738R | GDS83416 | 7E0407274H | GDS83497 |
| 3Q0407763AX | GDS83323 | 8E0407271BG | GDS83364 | 1675006 | GDS83391 | 32738S | GDS83416 | 7E0407451JX | GDS83497 |
| 8K0407271R | GDS83328 | 8E0407451RX | GDS83364 | 1803626 | GDS83391 | 3273EL | GDS83416 | 7E0407451QX | GDS83497 |
| 8K0407451GX | GDS83328 | 8K0501203M | GDS83367 | 8G913B436BB | GDS83391 | 9642877080 | GDS83416 | 7LA407271F | GDS83497 |
| 4F0272452AX | GDS83329 | 8K0501203MX | GDS83367 | RM8G913B436B1B | GDS83391 | MR580504 | GDS83417 | 1135458800 | GDS83498 |
| 4F0407272G | GDS83329 | 4N0501203 | GDS83368 | 1380034 | GDS83397 | MN168518 | GDS83418 | 5AEV2203020 | GDS83498 |
| 6R0407761 | GDS83330 | 8R0501203C | GDS83368 | 1417222 | GDS83397 | MN180244 | GDS83418 | 4342002590 | GDS83500 |
| 6R0407761X | GDS83330 | 8R0501203CX | GDS83368 | 1424195 | GDS83397 | BJ323B437DA | GDS83419 | 4342002591 | GDS83500 |
| 8N0407271J | GDS83339 | 5N0407764G | GDS83369 | 1431396 | GDS83397 | BJ323B437DB | GDS83419 | 4342005150 | GDS83501 |
| 8N0407451BX | GDS83339 | 5N0407764GX | GDS83369 | 1437736 | GDS83397 | LR024759 | GDS83419 | 4342005151 | GDS83501 |
| 8N0407272Q | GDS83340 | 5N0407764K | GDS83369 | 1667774 | GDS83397 | LR061554 | GDS83419 | 8251761 | GDS83502 |
| 8N0407452CX | GDS83340 | 5N0407764KX | GDS83369 | 1788208 | GDS83397 | LR125161 | GDS83419 | 8601579 | GDS83502 |
| 8K0407271C | GDS83345 | 5N0407764M | GDS83369 | 1840157 | GDS83397 | RMBJ323B437DB | GDS83419 | 8602610 | GDS83502 |
| 8K0407271P | GDS83345 | 5N0407764MX | GDS83369 | 6G913B437AA | GDS83397 | BJ323B436DA | GDS83420 | 8689239 | GDS83502 |
| 8K0407451FX | GDS83345 | 5N0407764N | GDS83369 | 6G913B437BA | GDS83397 | BJ323B436DB | GDS83420 | 9445904 | GDS83502 |
| 8K0407451V | GDS83345 | 5N0407764NX | GDS83369 | 6G913B437BB | GDS83397 | LR024755 | GDS83420 | 434100E230 | GDS83510 |
| 8K0407451X | GDS83345 | 5N0407764Q | GDS83369 | 6G913B437BC | GDS83397 | LR061603 | GDS83420 | 434100E231 | GDS83510 |
| 1K0407272BM | GDS83346 | 5N0407764QX | GDS83369 | 6G913B437BD | GDS83397 | LR125165 | GDS83420 | 434100E390 | GDS83510 |
| 1K0407272KB | GDS83346 | 5N0407764R | GDS83369 | 6G913B437BE | GDS83397 | RMBJ323B436DB | GDS83420 | 4578777AA | GDS83512 |
| 1K0407272MA | GDS83346 | 5N0407764RX | GDS83369 | 6G913B437BF | GDS83397 | 49501D9130 | GDS83440 | 4578777AB | GDS83512 |
| 1K0407454TV | GDS83346 | 5N0407764S | GDS83369 | RM6G913B437B2F | GDS83397 | 31609806467 | GDS83442 | FTA32560X | GDS83513 |
| 1K0407454TX | GDS83346 | 5N0407764SX | GDS83369 | 4341042190 | GDS83399 | 9809171 | GDS83442 | FTA32550X | GDS83514 |
| 1K0407762FX | GDS83346 | JZW407272FX | GDS83369 | 4341042191 | GDS83399 | 04668420AC | GDS83444 | 3272VW | GDS83515 |
| 8E0407271BA | GDS83347 | 8K0407271AF | GDS83371 | 3273LW | GDS83400 | 4668420AC | GDS83444 | 3272VX | GDS83515 |
| 8E0407451KX | GDS83347 | 8K0407271AL | GDS83371 | 3273LX | GDS83400 | 4668918AA | GDS83444 | 9685525580 | GDS83515 |
| 1K0407454NX | GDS83349 | 8K0407451JX | GDS83371 | 3273RS | GDS83400 | 4668920AA | GDS83444 | 3273WJ | GDS83516 |
| 7E0407272AE | GDS83353 | 1K0407271BK | GDS83373 | 3273RT | GDS83400 | 4668936AA | GDS83444 | 3273WK | GDS83516 |
| 7E0407272AQ | GDS83353 | 1K0407271DQ | GDS83373 | 52123890AA | GDS83401 | 4668936AB | GDS83444 | 9685524880 | GDS83516 |
| 7E0407272BC | GDS83353 | 1K0407451GX | GDS83373 | 49501J9400 | GDS83402 | 4668936AC | GDS83444 | 391004GB0A | GDS83519 |
| 7E0407272C | GDS83353 | 1K0407451LX | GDS83373 | 49600C5000 | GDS83403 | 22813176 | GDS83445 | 391004HK0A | GDS83519 |
| 7E0407272Q | GDS83353 | 2K0407271F | GDS83373 | 49601C5000 | GDS83404 | 22813177 | GDS83445 | 44306TF0N00 | GDS83521 |
| 7E0407452AX | GDS83353 | 2K0407271FX | GDS83373 | 31259761 | GDS83405 | 92238377 | GDS83445 | 44306TF0N01 | GDS83521 |
| 7E0407452JX | GDS83353 | 5Q0407271CB | GDS83373 | 31325101 | GDS83405 | 92246759 | GDS83445 | 44306TM8A00 | GDS83521 |
| 7E0407452RX | GDS83353 | 5Q0407761FX | GDS83373 | 31367535 | GDS83405 | 22813178 | GDS83446 | 28021AC280 | GDS83522 |
| 1K0407272QF | GDS83354 | 1K0407271FB | GDS83381 | 36001403 | GDS83405 | 92246760 | GDS83446 | 28021AC281 | GDS83522 |
| 1K0407762QX | GDS83354 | 1K0407271HL | GDS83381 | 36002543 | GDS83405 | 1607237480 | GDS83447 | 51983794 | GDS83523 |
| 1K0407764EX | GDS83354 | 1K0407271KB | GDS83381 | 36012414 | GDS83405 | 9800389280 | GDS83447 | 52061594 | GDS83523 |
| 1Q0407272A | GDS83354 | 1K0407271KT | GDS83381 | 36051318 | GDS83405 | 1607237380 | GDS83448 | 51983847 | GDS83524 |
| 1Q0407272AX | GDS83354 | 1K0407271LH | GDS83381 | 30783070 | GDS83406 | 9800389380 | GDS83448 | 52061590 | GDS83524 |

| COMPETITOR | G-AP Ref. | COMPETITOR | G-AP Ref. | COMPETITOR | G-AP Ref. | COMPETITOR | G-AP Ref. | COMPETITOR | G-AP Ref. |
|---|---|---|---|---|---|---|---|---|---|
| OE | | 8602918 | GDS83582 | 391014PD1A | GDS83621 | 495012V300 | GDS83654 | A1773301801 | GDS83682 |
| | | 8603313 | GDS83582 | 84138328 | GDS83622 | 2533307900 | GDS83655 | 5QF407272 | GDS83683 |
| BB5Z3B436S | GDS83540 | 8603886 | GDS83582 | 84527907 | GDS83622 | 2533308000 | GDS83655 | 5QF407272K | GDS83683 |
| BB5Z3B436V | GDS83540 | 86038866 | GDS83582 | 84675880 | GDS83622 | A2533307900 | GDS83655 | 5QF407762EX | GDS83683 |
| DB5Z3B436A | GDS83540 | 44305TLCA01 | GDS83583 | 95525702 | GDS83622 | A2533308000 | GDS83655 | 5QF407762X | GDS83683 |
| DB5Z3B436B | GDS83540 | 44306TLCA01 | GDS83584 | 95529523 | GDS83622 | 3910100Q7F | GDS83656 | 5QF407271 | GDS83684 |
| FB533B436JA | GDS83540 | FTH82550X | GDS83585 | 95530298 | GDS83622 | 391015656R | GDS83656 | 5QF407271H | GDS83684 |
| FB5Z3B436C | GDS83540 | 396014GA0A | GDS83586 | 49500D7180 | GDS83623 | 391005516R | GDS83659 | 5QF407761BX | GDS83684 |
| FB5Z3B436D | GDS83540 | 396014GB0A | GDS83586 | 49500H8300 | GDS83624 | 4341008091 | GDS83660 | 8J0407761 | GDS83684 |
| FB5Z3B436H | GDS83540 | 3815A386 | GDS83606 | 49500G6400 | GDS83625 | 4341008092 | GDS83660 | 8J0407761X | GDS83684 |
| TX1110 | GDS83540 | 1618043280 | GDS83607 | 49501G6400 | GDS83626 | 31367193 | GDS83661 | 1183302600 | GDS83685 |
| 423400E050 | GDS83547 | 9811176780 | GDS83607 | 2133504702 | GDS83627 | 36010165 | GDS83661 | 1183303501 | GDS83685 |
| 4234048120 | GDS83547 | 1609610480 | GDS83608 | 2133509601 | GDS83627 | 36010336 | GDS83661 | 1773301500 | GDS83685 |
| 423400E060 | GDS83548 | 1613306580 | GDS83608 | 2533503705 | GDS83627 | 36051321 | GDS83661 | 1773303202 | GDS83685 |
| 4234048130 | GDS83548 | 9677916280 | GDS83608 | A2133504702 | GDS83627 | 1612466980 | GDS83663 | 1773303903 | GDS83685 |
| CPLA4K138AE | GDS83549 | 9811176880 | GDS83608 | A2133509601 | GDS83627 | 3556452 | GDS83663 | A1183302600 | GDS83685 |
| CPLA4K138CA | GDS83549 | 97034903803 | GDS83611 | A2533503705 | GDS83627 | 9810710780 | GDS83663 | A1183303501 | GDS83685 |
| LR069090 | GDS83549 | 97034903804 | GDS83611 | FTF22550X | GDS83628 | 9820471180 | GDS83663 | A1773301500 | GDS83685 |
| LR078570 | GDS83549 | 97034903806 | GDS83611 | 391017989R | GDS83632 | SU001B2116 | GDS83663 | A1773303202 | GDS83685 |
| LR161701 | GDS83549 | 97034903807 | GDS83611 | FTC3147 | GDS83633 | 434200E150 | GDS83664 | A1773303903 | GDS83685 |
| 396004GB0A | GDS83550 | 97034903808 | GDS83611 | FTC3149 | GDS83633 | 434200E151 | GDS83664 | 44305T5A000 | GDS83687 |
| FTF12560X | GDS83554 | 5Q0407272DK | GDS83612 | TDB000190 | GDS83633 | 52123658AA | GDS83667 | 44305T5A010 | GDS83687 |
| 1459740 | GDS83555 | 5Q0407272DN | GDS83612 | TDB500290 | GDS83633 | 52123658AB | GDS83667 | 44306T5A000 | GDS83688 |
| 1727460 | GDS83555 | 5Q0407762SX | GDS83612 | 434200D660 | GDS83635 | 52123694AB | GDS83667 | 44306T5A010 | GDS83688 |
| 1826470 | GDS83555 | 5Q0407764EX | GDS83612 | 434100D670 | GDS83636 | 68248718AA | GDS83667 | 10375719 | GDS83689 |
| 1840135 | GDS83555 | 3Q0407272BJ | GDS83613 | 36000512 | GDS83637 | 68248718AB | GDS83667 | 4410154P11 | GDS83689 |
| 7G913B436AA | GDS83555 | 3Q0407272BK | GDS83613 | 31367192 | GDS83640 | 68248718AD | GDS83667 | 4410154P12 | GDS83689 |
| 7G913B436AB | GDS83555 | 3Q0407272CE | GDS83613 | 36010164 | GDS83640 | 68248718AE | GDS83667 | FTD72560X | GDS83702 |
| 7G913B436AC | GDS83555 | 3Q0407762QX | GDS83613 | 36010167 | GDS83640 | 68257064AA | GDS83667 | FTD72560XA | GDS83702 |
| RM7G913B436A2C | GDS83555 | 3Q0407764BX | GDS83613 | 36012747 | GDS83640 | 68257064AB | GDS83667 | FTD72550X | GDS83703 |
| 396001BB0A | GDS83556 | 3Q0407764CX | GDS83613 | 49501C8400 | GDS83641 | 68257064AC | GDS83667 | FTD72550XA | GDS83703 |
| 39600EG000 | GDS83556 | 5N0407766K | GDS83613 | 391012511R | GDS83644 | 68257064AE | GDS83667 | 49500H9100 | GDS83706 |
| 39600EG00A | GDS83556 | 3642357 | GDS83614 | 1613732480 | GDS83645 | 68342109AA | GDS83667 | 49501H9100 | GDS83707 |
| 396011BB0A | GDS83557 | 95524998 | GDS83614 | 9800387380 | GDS83645 | 4342007080 | GDS83669 | 2112465 | GDS83708 |
| 396011ND0A | GDS83557 | 9808800680 | GDS83614 | 9806459180 | GDS83645 | 46307521 | GDS83670 | 2115369 | GDS83708 |
| 39601EG00A | GDS83557 | 3642358 | GDS83615 | 1613966680 | GDS83646 | 46307523 | GDS83671 | 2182302 | GDS83708 |
| 3273SZ | GDS83558 | 95524999 | GDS83615 | 9808076180 | GDS83646 | 4630752346307522 | GDS83671 | 2313979 | GDS83708 |
| 3273TA | GDS83558 | 9808800780 | GDS83615 | 2209573 | GDS83647 | 46307735 | GDS83671 | 2391976 | GDS83708 |
| 51783825 | GDS83558 | 1610205280 | GDS83616 | 2236189 | GDS83647 | 4630773546307522 | GDS83671 | H1B53B437CA | GDS83708 |
| 4233017190 | GDS83559 | 1610205580 | GDS83616 | 2256828 | GDS83647 | 71787405 | GDS83671 | H1B53B437CB | GDS83708 |
| 4233017191 | GDS83559 | 3550078 | GDS83616 | 2435410 | GDS83647 | 7178740546307522 | GDS83671 | H1B53B437CC | GDS83708 |
| 391013130R | GDS83561 | 95526663 | GDS83616 | 2520758 | GDS83647 | 71791719 | GDS83671 | H1B53B437CD | GDS83708 |
| 391019962R | GDS83561 | 9670289080 | GDS83616 | 2553946 | GDS83647 | 7179171946307522 | GDS83671 | 2112451 | GDS83709 |
| 30783118 | GDS83564 | 9677561480 | GDS83616 | 2677859 | GDS83647 | 71791721 | GDS83671 | 2182298 | GDS83709 |
| 36000508 | GDS83564 | 9820471280 | GDS83616 | JX673B436CAB | GDS83647 | 7179172146307522 | GDS83671 | 2313981 | GDS83709 |
| 391005RD0B | GDS83568 | SU001B2115 | GDS83616 | JX673B436CAC | GDS83647 | 8E0501203B | GDS83672 | 2391977 | GDS83709 |
| 391015RD0B | GDS83569 | 1610133080 | GDS83617 | JX673B436CAD | GDS83647 | 8E0501203BX | GDS83672 | H1B53B436CA | GDS83709 |
| EJ324B402BA | GDS83574 | 9677915180 | GDS83617 | JX673B436CAE | GDS83647 | 51887291 | GDS83673 | H1B53B436CB | GDS83709 |
| EJ324B402BB | GDS83574 | 1613306480 | GDS83618 | JX673B436CAF | GDS83647 | 51933681 | GDS83673 | H1B53B436CC | GDS83709 |
| LR049835 | GDS83574 | 9809528380 | GDS83618 | JX673B436CAG | GDS83647 | 52130453 | GDS83673 | H1B53B436CD | GDS83709 |
| LR062317 | GDS83574 | 2112463 | GDS83619 | JX673B436CAH | GDS83647 | 391003ZM0B | GDS83674 | 31605A2E013 | GDS83712 |
| BJ324B402AB | GDS83575 | 2112471 | GDS83619 | 2133504400 | GDS83648 | 20977318 | GDS83675 | 31607642109 | GDS83712 |
| BJ324B402AC | GDS83575 | 2182303 | GDS83619 | 2133505100 | GDS83648 | 23301165 | GDS83675 | 31608643383 | GDS83712 |
| LR024763 | GDS83575 | 2270541 | GDS83619 | A2133504400 | GDS83648 | 84228346 | GDS83675 | 31605A2E014 | GDS83713 |
| LR048490 | GDS83575 | 2313991 | GDS83619 | A2133505100 | GDS83648 | 2053303906 | GDS83679 | 31607642108 | GDS83713 |
| LR061904 | GDS83575 | 2393809 | GDS83619 | FTC3146 | GDS83650 | 2053304406 | GDS83679 | 31608657704 | GDS83713 |
| 20977316 | GDS83580 | 2522101 | GDS83619 | FTC3148 | GDS83650 | 2053308306 | GDS83679 | BB5Z3B437B | GDS83716 |
| 23171460 | GDS83580 | H1B53B437FB | GDS83619 | TDB000180 | GDS83650 | 2053309902 | GDS83679 | BB5Z3B437E | GDS83716 |
| 23301162 | GDS83580 | H1B53B437FC | GDS83619 | TDB500280 | GDS83650 | A2053303906 | GDS83679 | BB5Z3B437G | GDS83716 |
| 20977317 | GDS83581 | H1B53B437FD | GDS83619 | 49500C8400 | GDS83651 | A2053304406 | GDS83679 | DB5Z3B437A | GDS83716 |
| 23171461 | GDS83581 | H1B53B437FE | GDS83619 | 1613966780 | GDS83652 | A2053308306 | GDS83679 | DB5Z3B437B | GDS83716 |
| 23301163 | GDS83581 | H1B53B437FF | GDS83619 | 9808076080 | GDS83652 | A2053309902 | GDS83679 | FB533B437DA | GDS83716 |
| 30651696 | GDS83582 | H1B53B437FG | GDS83619 | 84257940 | GDS83653 | AA533B437AA | GDS83680 | FB5Z3B437A | GDS83716 |
| 30681388 | GDS83582 | 391004EB1A | GDS83620 | 84527910 | GDS83653 | AA5Z3B437A | GDS83680 | FB5Z3B437B | GDS83716 |
| 30735280 | GDS83582 | 391004EB1ARE | GDS83620 | 84675883 | GDS83653 | DG1Z3B437A | GDS83680 | TX572 | GDS83716 |
| 30735889 | GDS83582 | 391004PD1A | GDS83620 | 84754485 | GDS83653 | DG1Z3B437E | GDS83680 | TX606 | GDS83716 |
| 36051049 | GDS83582 | 391008967R | GDS83620 | 95525676 | GDS83653 | DG1Z3B437F | GDS83680 | TX628 | GDS83716 |
| 8602530 | GDS83582 | 391014EB1A | GDS83621 | 95530301 | GDS83653 | 1773301801 | GDS83682 | TX733 | GDS83716 |

| COMPETITOR | G-AP Ref. | COMPETITOR | G-AP Ref. | COMPETITOR | G-AP Ref. | COMPETITOR | G-AP Ref. | COMPETITOR | G-AP Ref. |
|---|---|---|---|---|---|---|---|---|---|
| OE | | JX673B436DAA | GDS83740 | 1727121 | GDS83779 | 2338331 | GDS83811 | 6R0407764FX | GDS83843 |
| | | JX673B436DAB | GDS83740 | 1782563 | GDS83779 | K1B63B437AA | GDS83811 | 2303100XKV09A | GDS83850 |
| TX737 | GDS83716 | JX673B436DAC | GDS83740 | 1793821 | GDS83779 | K1B63B437AB | GDS83811 | 2303100XKV09B | GDS83850 |
| TX777 | GDS83716 | JX673B436DAD | GDS83740 | 1841536 | GDS83779 | 4578600AA | GDS83812 | 13403129 | GDS83852 |
| TX846 | GDS83716 | JX673B436DAE | GDS83740 | CC113B436BA | GDS83779 | 4578600AB | GDS83812 | 95522373 | GDS83852 |
| BB5Z3B436AB | GDS83717 | JX673B436FAB | GDS83740 | CC113B436BB | GDS83779 | 68193750AA | GDS83812 | 13461590 | GDS83853 |
| BB5Z3B436N | GDS83717 | JX673B436FAC | GDS83740 | RMCC113B436B1A | GDS83779 | R4578600AA | GDS83812 | 39083853 | GDS83853 |
| BB5Z3B436T | GDS83717 | JX673B436FAD | GDS83740 | RMCC113B436B1B | GDS83779 | 25946578 | GDS83815 | 39108243 | GDS83853 |
| BB5Z3B436X | GDS83717 | JX673B436FAE | GDS83740 | 4410279J60 | GDS83780 | 4802978 | GDS83815 | 95522385 | GDS83853 |
| TX843 | GDS83717 | 2133504602 | GDS83741 | 71746603 | GDS83780 | 4819361 | GDS83815 | 95524085 | GDS83853 |
| 42311S9AA00 | GDS83720 | 2133507707 | GDS83741 | 8251774 | GDS83781 | 4820491 | GDS83815 | 95527518 | GDS83853 |
| 42311SCAE50 | GDS83720 | 2533509206 | GDS83741 | 8601391 | GDS83781 | 95299895 | GDS83815 | 13461589 | GDS83854 |
| 42310S9AA00 | GDS83721 | A2133504602 | GDS83741 | 8602573 | GDS83781 | 95480033 | GDS83815 | 39108242 | GDS83854 |
| 49500A0000 | GDS83722 | A2133507707 | GDS83741 | 8602841 | GDS83781 | 95520483 | GDS83815 | 95522383 | GDS83854 |
| 49500M4000 | GDS83722 | A2533509206 | GDS83741 | 8603790 | GDS83781 | 25946579 | GDS83816 | 95527273 | GDS83854 |
| 495002J000 | GDS83723 | 2533302200 | GDS83742 | 9181540 | GDS83781 | 4802979 | GDS83816 | 05273558AB | GDS83857 |
| 49500G6000 | GDS83724 | 2533305601 | GDS83742 | 2533301300 | GDS83782 | 4819409 | GDS83816 | 05273558AC | GDS83857 |
| 49501G6000 | GDS83725 | A2533302200 | GDS83742 | 2533302000 | GDS83782 | 4820448 | GDS83816 | 05273558AD | GDS83857 |
| 39100JG04B | GDS83726 | A2533305601 | GDS83742 | A2533301300 | GDS83782 | 95299896 | GDS83816 | 05273558AE | GDS83857 |
| 39101ET000 | GDS83729 | 2133502411 | GDS83743 | A2533302000 | GDS83782 | 95480034 | GDS83816 | 05273558AF | GDS83857 |
| 39100ET000 | GDS83730 | 2133505000 | GDS83743 | 391002279R | GDS83783 | 95520469 | GDS83816 | 05273558AG | GDS83857 |
| 4342008071 | GDS83732 | 2133507807 | GDS83743 | 391006913R | GDS83783 | 84138318 | GDS83817 | 5273558AB | GDS83857 |
| 4342008072 | GDS83732 | 2533509106 | GDS83743 | 2533305501 | GDS83784 | 84257941 | GDS83817 | 5273558AC | GDS83857 |
| 4342008040 | GDS83733 | A2133502411 | GDS83743 | A2533305501 | GDS83784 | 84527912 | GDS83817 | 5273558AD | GDS83857 |
| 4342008090 | GDS83733 | A2133505000 | GDS83743 | 4342007070 | GDS83785 | 84675885 | GDS83817 | 5273558AE | GDS83857 |
| 4342008091 | GDS83733 | A2133507807 | GDS83743 | 49501D3010 | GDS83786 | 95525672 | GDS83817 | 5273558AF | GDS83857 |
| 4341008050 | GDS83734 | A2533509106 | GDS83743 | 49501D3030 | GDS83786 | 95528997 | GDS83817 | 5273558AG | GDS83857 |
| 4341008120 | GDS83734 | 49500F2300 | GDS83745 | 49501D7030 | GDS83786 | 95530302 | GDS83817 | 1608419380 | GDS83858 |
| 4341008200 | GDS83734 | 49500F3100 | GDS83745 | 2043501910 | GDS83792 | 84138325 | GDS83818 | 9803968480 | GDS83858 |
| 4341008201 | GDS83734 | 49501F2300 | GDS83746 | 2043502810 | GDS83792 | 84527913 | GDS83818 | 9816308780 | GDS83858 |
| 434100W200 | GDS83735 | 49501F3150 | GDS83746 | 2043508223 | GDS83792 | 84675886 | GDS83818 | 1611524180 | GDS83861 |
| 434100W250 | GDS83735 | 4342021070 | GDS83751 | A2043501910 | GDS83792 | 95525700 | GDS83818 | 9677477180 | GDS83861 |
| 434100W350 | GDS83735 | 4342042080 | GDS83751 | A2043508223 | GDS83792 | 95529586 | GDS83818 | 1611524380 | GDS83862 |
| 4341008171 | GDS83736 | 495002E810 | GDS83753 | 2043504010 | GDS83793 | 95530303 | GDS83818 | 9677477080 | GDS83862 |
| 4341008172 | GDS83736 | 495012E810 | GDS83754 | A2043504010 | GDS83793 | 44305SZTG00 | GDS83819 | 52010996 | GDS83863 |
| 2209579 | GDS83739 | 495002J500 | GDS83759 | 2053501909 | GDS83794 | 44305SZTG01 | GDS83819 | 52044588 | GDS83863 |
| 2235726 | GDS83739 | 495012J500 | GDS83760 | 2053503102 | GDS83794 | 44305TK6A00 | GDS83819 | 52052451 | GDS83863 |
| 2250340 | GDS83739 | 49501H5000 | GDS83762 | 2053504019 | GDS83794 | 44305TK6A01 | GDS83819 | 51936052 | GDS83864 |
| 2256164 | GDS83739 | 49501H5010 | GDS83762 | 205350401964 | GDS83794 | 44305TR3A51 | GDS83819 | 52010998 | GDS83864 |
| 2266440 | GDS83739 | 49501Q0300 | GDS83762 | 2053508602 | GDS83794 | 44305TR3A52 | GDS83819 | 52088371 | GDS83864 |
| 2304230 | GDS83739 | 49500H5000 | GDS83763 | A2053501909 | GDS83794 | 495001H110 | GDS83821 | 71797768 | GDS83864 |
| 2304333 | GDS83739 | 49500H5010 | GDS83763 | A2053503102 | GDS83794 | 495011H110 | GDS83822 | 71797871 | GDS83864 |
| 2454849 | GDS83739 | 391004692R | GDS83764 | A2053504019 | GDS83794 | 495011H111 | GDS83822 | 49500M0400 | GDS83867 |
| 2454853 | GDS83739 | 391006995R | GDS83765 | A2053508602 | GDS83794 | 49501H8300 | GDS83823 | 49501M0400 | GDS83868 |
| 2537146 | GDS83739 | 49500F2100 | GDS83766 | FTD62550X | GDS83801 | GDB12560XA | GDS83824 | 4130008B02 | GDS83869 |
| 2537160 | GDS83739 | 49500M6200 | GDS83766 | FTD62550XA | GDS83801 | 2Q0407272N | GDS83825 | 495002K600 | GDS83870 |
| 2679009 | GDS83739 | 495002W630 | GDS83767 | 10322607 | GDS83802 | 2Q0407452AX | GDS83825 | 495002K610 | GDS83870 |
| JX673B437DAA | GDS83739 | 49501F2100 | GDS83768 | 2313951 | GDS83805 | 7711368623 | GDS83826 | 495002K620 | GDS83870 |
| JX673B437DAB | GDS83739 | 49501M6200 | GDS83768 | H1B53B436DD | GDS83805 | 8200486092 | GDS83826 | 495002K620SJ | GDS83870 |
| JX673B437DAC | GDS83739 | 495012W680 | GDS83769 | 1613489780 | GDS83806 | 391004605R | GDS83827 | 495002K630 | GDS83870 |
| JX673B437DAD | GDS83739 | 20997646 | GDS83771 | 1613732280 | GDS83806 | 391011313R | GDS83828 | 2033300200 | GDS83871 |
| JX673B437DAE | GDS83739 | 22816826 | GDS83771 | 9800387480 | GDS83806 | 391017093R | GDS83829 | 2033300701 | GDS83871 |
| JX673B437DAF | GDS83739 | 25958185 | GDS83771 | 9806459280 | GDS83806 | 391006653R | GDS83830 | A2033300701 | GDS83871 |
| JX673B437FAB | GDS83739 | 374927 | GDS83771 | 1609763880 | GDS83807 | 391000897R | GDS83831 | 2033300100 | GDS83872 |
| JX673B437FAC | GDS83739 | 95520563 | GDS83771 | 1611524280 | GDS83807 | 391011905R | GDS83832 | 2033300300 | GDS83872 |
| JX673B437FAD | GDS83739 | XR86853 | GDS83772 | 9677209780 | GDS83807 | 391002171R | GDS83833 | 2033300801 | GDS83872 |
| JX673B437FAE | GDS83739 | XW4W4K138AA | GDS83772 | 9677476580 | GDS83807 | 391017448R | GDS83834 | A2033300100 | GDS83872 |
| JX673B437FAF | GDS83739 | XR86855 | GDS83773 | 1610276080 | GDS83808 | 4410179JG0 | GDS83835 | A2033300300 | GDS83872 |
| JX673B437FAG | GDS83739 | XW4W4K139AA | GDS83773 | 9804894580 | GDS83808 | 43410F4070 | GDS83836 | A2033300801 | GDS83872 |
| 2209575 | GDS83740 | 43410F4060 | GDS83774 | 1610276180 | GDS83809 | 44306TR0H90 | GDS83838 | 49501H5210 | GDS83873 |
| 2235724 | GDS83740 | 1614919980 | GDS83775 | 9804894680 | GDS83809 | 44306TR0H91 | GDS83838 | GDB12550XA | GDS83874 |
| 2250334 | GDS83740 | 9809837980 | GDS83775 | 2112467 | GDS83810 | 44306TR0H92 | GDS83838 | 8200725506 | GDS83875 |
| 2256161 | GDS83740 | 43420F4050 | GDS83776 | 2178211 | GDS83810 | 44306TR0J90 | GDS83838 | 8201030260 | GDS83875 |
| 2266435 | GDS83740 | 391015201R | GDS83777 | 2313983 | GDS83810 | 4341005270 | GDS83840 | 391005876R | GDS83876 |
| 2304227 | GDS83740 | 4153600900 | GDS83777 | H1B53B437DA | GDS83810 | 4341005330 | GDS83840 | 391015184R | GDS83877 |
| 2304326 | GDS83740 | A4153600900 | GDS83777 | H1B53B437DB | GDS83810 | 6R0407763F | GDS83842 | 8200908694 | GDS83878 |
| 2537175 | GDS83740 | 1614919880 | GDS83778 | H1B53B437DD | GDS83810 | 6R0407763FX | GDS83842 | 8200908696 | GDS83879 |
| 2537189 | GDS83740 | 9809837880 | GDS83778 | 2272657 | GDS83811 | 6R0407764F | GDS83843 | 4342048130 | GDS83880 |

| COMPETITOR | G-AP Ref. | COMPETITOR | G-AP Ref. | COMPETITOR | G-AP Ref. | COMPETITOR | G-AP Ref. | COMPETITOR | G-AP Ref. |
|---|---|---|---|---|---|---|---|---|---|
| OE | | 95525670 | GDS83927 | 391003LM0A | GDS83940 | JZW407451CX | GDS83973 | 391011CA0A | GDS83995 |
| | | 95527422 | GDS83927 | 391003LM0B | GDS83940 | 51821105 | GDS83974 | 391011CA0B | GDS83995 |
| 4342048160 | GDS83880 | 95528876 | GDS83927 | 391003RZ0C | GDS83940 | 51933673 | GDS83974 | 423300C010 | GDS83997 |
| 4341048130 | GDS83881 | 95530304 | GDS83927 | 1608957880 | GDS83941 | 52056184 | GDS83974 | 423400C010 | GDS83998 |
| 4341048180 | GDS83881 | 1459743 | GDS83928 | 1696780 | GDS83941 | 50521847 | GDS83975 | 4233050070 | GDS83999 |
| 8252055 | GDS83882 | 1826471 | GDS83928 | 9803959680 | GDS83941 | 50545413 | GDS83975 | 4234050070 | GDS84000 |
| 8689220 | GDS83882 | 1840164 | GDS83928 | 3715A098 | GDS83944 | 10263870 | GDS83976 | 42310S10A00 | GDS84001 |
| 3715A097 | GDS83886 | 7G913B437AA | GDS83928 | 3715A099 | GDS83945 | 50522036 | GDS83976 | 42310S10A50 | GDS84001 |
| BJ323B436BA | GDS83888 | 7G913B437AB | GDS83928 | 31607593040 | GDS83946 | 50545417 | GDS83976 | CPLA3N129AB | GDS84004 |
| J9C1682 | GDS83888 | RM7G913B437A2B | GDS83928 | 31607618678 | GDS83946 | 71796638 | GDS83976 | CPLA3N129AC | GDS84004 |
| J9C19865 | GDS83888 | FV613B436CA | GDS83929 | 7593040 | GDS83946 | 391013ZM0B | GDS83977 | DPLA3N129BB | GDS84004 |
| J9C33B436BA | GDS83888 | FV6Z3B436A | GDS83929 | 7618678 | GDS83946 | 2053509808 | GDS83978 | DPLA3N129BD | GDS84004 |
| J9C33B436BC | GDS83888 | 49501A0000 | GDS83930 | 1677686280 | GDS83947 | 2053509908 | GDS83978 | LR034532 | GDS84004 |
| LR024753 | GDS83888 | 49501M4000 | GDS83930 | 3642361 | GDS83947 | A2053509808 | GDS83978 | LR041970 | GDS84004 |
| LR125170 | GDS83888 | 391013552R | GDS83931 | 95525002 | GDS83947 | A2053509908 | GDS83978 | LR045440 | GDS84004 |
| RMBJ323B436BA | GDS83888 | 391019232R | GDS83931 | 9813122880 | GDS83947 | 1773302300 | GDS83979 | LR064252 | GDS84004 |
| 2203200BS02 | GDS83889 | 391000849R | GDS83932 | DG9Z3B437AF | GDS83950 | A1773302300 | GDS83979 | LR161125 | GDS84004 |
| B511F2501010301 | GDS83889 | 391008720R | GDS83932 | DG9Z3B437C | GDS83950 | 1773302200 | GDS83980 | RMDPLA3N129BD | GDS84004 |
| 2203100BS02 | GDS83890 | 8201156861 | GDS83932 | DG9Z3B437H | GDS83950 | A1773302200 | GDS83980 | 1910976 | GDS84005 |
| B511F2501010201 | GDS83890 | 28321VA010 | GDS83933 | DG9Z3B437X | GDS83950 | 4M0501204K | GDS83981 | F1F13B436PB | GDS84005 |
| 28421SG020 | GDS83893 | 2N0407272H | GDS83935 | TX624 | GDS83950 | 4M0501204R | GDS83981 | F1FZ3B436A | GDS84005 |
| 8200896393 | GDS83897 | 2N0407272K | GDS83935 | TX710 | GDS83950 | 1J0407271GH | GDS83982 | 1910977 | GDS84006 |
| 8983929650 | GDS83898 | 2N0407272M | GDS83935 | TX817 | GDS83950 | 1J0407271JE | GDS83982 | F1F13B437PB | GDS84006 |
| 495012J000 | GDS83899 | 2N0407272R | GDS83935 | FV613B437CA | GDS83951 | 1J0407271PR | GDS83982 | F1FZ3B437A | GDS84006 |
| 10322606 | GDS83900 | 2N0407452AV | GDS83935 | FV6Z3B437A | GDS83951 | 1J0407453CX | GDS83982 | 1613396280 | GDS84007 |
| 6G9N3B436ME | GDS83901 | 2N0407452AX | GDS83935 | GF092550X | GDS83960 | 1J0407272GK | GDS83983 | 1677686080 | GDS84007 |
| LR002619 | GDS83901 | 2N0407452CV | GDS83935 | GF092550XA | GDS83960 | 1J0407272HS | GDS83983 | 3642359 | GDS84007 |
| LR125178 | GDS83901 | 2N0407452CX | GDS83935 | GP062550X | GDS83960 | 1J0407272NG | GDS83983 | 95525000 | GDS84007 |
| RM6G9N3B436ME | GDS83901 | 65391066012 | GDS83935 | GP182550X | GDS83960 | 1J0407454AX | GDS83983 | 9809710080 | GDS84007 |
| 10320428 | GDS83906 | 65391066018 | GDS83935 | GP182550XA | GDS83960 | 4M0501201B | GDS83984 | 391010516R | GDS84008 |
| 1614305680 | GDS83906 | 65391066064 | GDS83935 | GP182550XB | GDS83960 | 4M0501201F | GDS83984 | 391007345R | GDS84009 |
| 1614306280 | GDS83906 | 65391066071 | GDS83935 | GP182550XC | GDS83960 | 4M0501203K | GDS83984 | 2Q0407271BL | GDS84011 |
| 1614305480 | GDS83907 | 65391066072 | GDS83935 | 49500H5210 | GDS83961 | 13250844 | GDS83986 | 2Q0407451AX | GDS84011 |
| 1614306080 | GDS83907 | 65391069012 | GDS83935 | 49500H5200 | GDS83962 | 13335137 | GDS83986 | 36000514 | GDS84012 |
| 44305T5A900 | GDS83910 | 65391069034 | GDS83935 | 49500H5300 | GDS83963 | 374578 | GDS83986 | LR034535 | GDS84013 |
| 4342044070 | GDS83911 | 2N0407272AB | GDS83936 | 49500H6900 | GDS83963 | 374887 | GDS83986 | LR053790 | GDS84013 |
| 39100HV80A | GDS83912 | 2N0407272L | GDS83936 | 49501H5200 | GDS83964 | 95520659 | GDS83986 | LR069102 | GDS84013 |
| 391002659R | GDS83913 | 2N0407272N | GDS83936 | 49501H5300 | GDS83965 | 95520673 | GDS83986 | LR073345 | GDS84013 |
| 3910000Q7F | GDS83914 | 2N0407272S | GDS83936 | 49500H5310 | GDS83966 | 6C0407271AC | GDS83988 | LR161703 | GDS84013 |
| 391001155R | GDS83914 | 2N0407452BX | GDS83936 | 49501H5310 | GDS83967 | 6C0407271AE | GDS83988 | 391001CA0A | GDS84014 |
| 44306T5A900 | GDS83916 | 2N0407452DX | GDS83936 | 33207641213 | GDS83968 | 6C0407451BX | GDS83988 | 391001CA0B | GDS84014 |
| 39101HV80A | GDS83917 | 65391066092 | GDS83936 | EBJ95MBE341B | GDS83968 | 68289652AA | GDS83990 | 52123739AB | GDS84015 |
| 39101HV80B | GDS83917 | 2N0407271H | GDS83937 | 1609609680 | GDS83969 | 68289652AB | GDS83990 | 52123739AC | GDS84015 |
| 4410186G00 | GDS83918 | 2N0407271L | GDS83937 | 9677916180 | GDS83969 | 68299152AA | GDS83990 | 52123739AD | GDS84015 |
| 4410186G01 | GDS83918 | 2N0407271P | GDS83937 | 1608420180 | GDS83970 | 68265869AA | GDS83991 | 52123739AE | GDS84015 |
| 4410186G02 | GDS83918 | 2N0407271R | GDS83937 | 9671572880 | GDS83970 | 68265869AB | GDS83991 | 52123739AF | GDS84015 |
| 13207052 | GDS83922 | 2N0407451BV | GDS83937 | 9816309280 | GDS83970 | 68265869AF | GDS83991 | 53429490 | GDS84015 |
| 4708032 | GDS83922 | 2N0407451BX | GDS83937 | 496012S010 | GDS83971 | 68271585AA | GDS83991 | 4578601AA | GDS84016 |
| 33207641212 | GDS83925 | 2N0407451DX | GDS83937 | 7H0407271A | GDS83973 | 68271585AB | GDS83991 | 68193751AA | GDS84016 |
| 1534882 | GDS83926 | 65391066015 | GDS83937 | 7H0407271AB | GDS83973 | 68299151AA | GDS83991 | 1663501010 | GDS84017 |
| 1565594 | GDS83926 | 65391066063 | GDS83937 | 7H0407271AD | GDS83973 | 2043679 | GDS83992 | 1663508000 | GDS84017 |
| 1838456 | GDS83926 | 65391066070 | GDS83937 | 7H0407271AG | GDS83973 | 2065394 | GDS83992 | A1663501010 | GDS84017 |
| 30681132 | GDS83926 | 65391066095 | GDS83937 | 7H0407271AJ | GDS83973 | 2479908 | GDS83992 | A1663508000 | GDS84017 |
| 31259504 | GDS83926 | 65391069035 | GDS83937 | 7H0407271AM | GDS83973 | 5181490 | GDS83992 | 2133502611 | GDS84018 |
| 36000156 | GDS83926 | 65391069067 | GDS83937 | 7H0407271AT | GDS83973 | CV613B436HC | GDS83992 | 2133504600 | GDS84018 |
| 36000931 | GDS83926 | 2N0407271F | GDS83938 | 7H0407271J | GDS83973 | CV613B436HD | GDS83992 | 2533509504 | GDS84018 |
| 50393540 | GDS83926 | 2N0407271J | GDS83938 | 7H0407271L | GDS83973 | CV613B436HE | GDS83992 | A2133502611 | GDS84018 |
| 6G9N4B402BA | GDS83926 | 2N0407271K | GDS83938 | 7H0407271M | GDS83973 | CV613B436HF | GDS83992 | A2133504600 | GDS84018 |
| AG9N4B402AA | GDS83926 | 2N0407271N | GDS83938 | 7H0407271R | GDS83973 | CV613B436HG | GDS83992 | A2533509504 | GDS84018 |
| P31259504 | GDS83926 | 2N0407271Q | GDS83938 | 7H0407271S | GDS83973 | CV6Z3B436AJ | GDS83992 | 51939962 | GDS84019 |
| RL6G9N4B402BX | GDS83926 | 2N0407451AX | GDS83938 | 7H0407451BV | GDS83973 | CV6Z3B436AP | GDS83992 | 52062976 | GDS84019 |
| RMAG9N4B402A1A | GDS83926 | 2N0407451CV | GDS83938 | 7H0407451BX | GDS83973 | CV6Z3B436AU | GDS83992 | 68246628AA | GDS84019 |
| 84138317 | GDS83927 | 2N0407451CX | GDS83938 | 7H0407451EV | GDS83973 | CV6Z3B436AX | GDS83992 | 68356613AA | GDS84019 |
| 84242562 | GDS83927 | 65391066011 | GDS83938 | 7H0407451EX | GDS83973 | CV6Z3B436B | GDS83992 | 71797797 | GDS84019 |
| 84257939 | GDS83927 | 65391066061 | GDS83938 | 7H0407451F | GDS83973 | LR048485 | GDS83993 | K68246628AA | GDS84019 |
| 84337384 | GDS83927 | 65391066069 | GDS83938 | 7H0407451FX | GDS83973 | LR061600 | GDS83993 | K68356613AA | GDS84019 |
| 84527914 | GDS83927 | 65391069013 | GDS83938 | 7H0407451HX | GDS83973 | LR149106 | GDS83993 | 5QF407272J | GDS84020 |
| 84675887 | GDS83927 | 65391069065 | GDS83938 | 7H0407453X | GDS83973 | 496002S010 | GDS83994 | 5QF407762AX | GDS84020 |

| COMPETITOR | G-AP Ref. | COMPETITOR | G-AP Ref. | COMPETITOR | G-AP Ref. | COMPETITOR | G-AP Ref. | COMPETITOR | G-AP Ref. |
|---|---|---|---|---|---|---|---|---|---|
| OE | | 31608482286 | GDS84087 | 13432212 | GDS84125 | K68290567AA | GDS84182 | 31608639519 | GDS84216 |
| | | 31608611942 | GDS84087 | 5374138 | GDS84125 | K68290567AB | GDS84182 | 31608639521 | GDS84216 |
| 04578885AB | GDS84021 | 49501K4000 | GDS84089 | 95520579 | GDS84125 | 1266999600 | GDS84183 | 31608657289 | GDS84216 |
| 04578885AC | GDS84021 | 49501Q4000 | GDS84089 | 3642360 | GDS84126 | MEEC2203010 | GDS84183 | 31608657291 | GDS84216 |
| 4578885AB | GDS84021 | 49525Q4000 | GDS84089 | 95525001 | GDS84126 | 49501F2200 | GDS84184 | 31608664675 | GDS84216 |
| 4578885AC | GDS84021 | 49500K4000 | GDS84090 | 9809710280 | GDS84126 | 49501F3050 | GDS84184 | 31608683333 | GDS84216 |
| R4578885AC | GDS84021 | 49500Q4000 | GDS84090 | 3642362 | GDS84129 | 49501M7400 | GDS84184 | 31609846769 | GDS84216 |
| FTH12560X | GDS84025 | 49526Q4000 | GDS84090 | 95525003 | GDS84129 | 49500F2200 | GDS84185 | 31609884747 | GDS84216 |
| FTH22550X | GDS84026 | 1890670 | GDS84091 | 9813328680 | GDS84129 | 2Q0407271BM | GDS84187 | 31609884749 | GDS84216 |
| 104411900D | GDS84027 | 2355683 | GDS84091 | 4410279J70 | GDS84130 | 2Q0407271DD | GDS84187 | AT866467502 | GDS84216 |
| 153667000B | GDS84027 | 2455190 | GDS84091 | 391003142R | GDS84131 | 2Q0407451HX | GDS84187 | 2123501910 | GDS84217 |
| 104416100D | GDS84028 | 2552737 | GDS84091 | 391014807R | GDS84132 | 2Q0407451LX | GDS84187 | A2123501910 | GDS84217 |
| 104416400A | GDS84028 | FV613B436AA | GDS84091 | 391018503R | GDS84132 | 49501H8360 | GDS84188 | 2133304805 | GDS84218 |
| 0374810 | GDS84029 | FV663B436AA | GDS84091 | 49500K0220 | GDS84134 | 49500H8360 | GDS84189 | 2133309902 | GDS84218 |
| 13245905 | GDS84029 | FV663B436AB | GDS84091 | 49501J9200 | GDS84135 | J9C23044 | GDS84191 | A2133304805 | GDS84218 |
| 374810 | GDS84029 | FV663B436AC | GDS84091 | 49501K0220 | GDS84135 | J9C39447 | GDS84191 | A2133309902 | GDS84218 |
| 95520691 | GDS84029 | 1EA501202E | GDS84092 | 4342002F50 | GDS84136 | K8D23B436CB | GDS84191 | 2133303503 | GDS84219 |
| 2Q0407272BK | GDS84030 | 1EA501202G | GDS84092 | 391000823R | GDS84137 | K8D23B436CC | GDS84191 | 2133308105 | GDS84219 |
| 4341033360 | GDS84037 | 1EA501202H | GDS84092 | 391001267R | GDS84137 | LR135950 | GDS84191 | A2133303503 | GDS84219 |
| 4341042300 | GDS84037 | 1EA501204D | GDS84092 | 4473302300 | GDS84138 | LR180091 | GDS84191 | A2133308105 | GDS84219 |
| FTH12550X | GDS84044 | 1EA501204DX | GDS84092 | 4473304800 | GDS84138 | J9C20939 | GDS84192 | 31608486201 | GDS84220 |
| FTH52550X | GDS84046 | 1EA501204G | GDS84092 | A4473302300 | GDS84138 | J9C22851 | GDS84192 | 31608486204 | GDS84220 |
| 391000090R | GDS84047 | 1EA501204GX | GDS84092 | A4473304800 | GDS84138 | J9C33B436AB | GDS84192 | 31605A2E044 | GDS84221 |
| 391018882R | GDS84048 | 1EA501204P | GDS84092 | 391011319R | GDS84139 | J9C33B436AC | GDS84192 | 31608681524 | GDS84221 |
| RTA62560X | GDS84052 | 1EA501201E | GDS84093 | 391011486R | GDS84140 | J9C33B436AD | GDS84192 | 31608689362 | GDS84221 |
| 04578884AC | GDS84059 | 1EA501201G | GDS84093 | 8201055632 | GDS84140 | J9C33B436AE | GDS84192 | 31605A2E043 | GDS84222 |
| 4578884AB | GDS84059 | 1EA501203D | GDS84093 | 10281282 | GDS84147 | J9C39445 | GDS84192 | 31605A2E047 | GDS84222 |
| 4578884AC | GDS84059 | 1EA501203DX | GDS84093 | 10438089 | GDS84148 | LR113619 | GDS84192 | 31608681523 | GDS84222 |
| R4578884AC | GDS84059 | 1EA501203G | GDS84093 | 10719315 | GDS84148 | LR134609 | GDS84192 | 31608681529 | GDS84222 |
| 496002Y010 | GDS84062 | 1EA501203GX | GDS84093 | 10438090 | GDS84149 | LR135949 | GDS84192 | 31608689361 | GDS84222 |
| 496002Y010SJ | GDS84062 | 1EA501203P | GDS84093 | 10719314 | GDS84149 | LR180089 | GDS84192 | 31608689365 | GDS84222 |
| RTA62550X | GDS84063 | 49500F6100 | GDS84094 | 10233400 | GDS84151 | J9C1446 | GDS84193 | 31605A2E048 | GDS84223 |
| 4234048100 | GDS84064 | 49500F6100SJ | GDS84094 | 10296401 | GDS84151 | J9C15403 | GDS84193 | 31608681530 | GDS84223 |
| 4234048101 | GDS84064 | 49500G8100 | GDS84094 | 10233398 | GDS84152 | J9C23043 | GDS84193 | 31608689366 | GDS84223 |
| 4342048150 | GDS84065 | 4KE501203D | GDS84099 | 10296400 | GDS84152 | J9C39444 | GDS84193 | 1773302801 | GDS84224 |
| 4342048170 | GDS84065 | 4KE501203F | GDS84099 | 10486542 | GDS84153 | J9C1683 | GDS84194 | A1773302801 | GDS84224 |
| 4341048150 | GDS84066 | 49501D4450 | GDS84105 | 10273829 | GDS84154 | J9C33B437AA | GDS84194 | 1773309900 | GDS84225 |
| 49500H5100 | GDS84072 | 49500C2400 | GDS84106 | 10281281 | GDS84155 | 391011986R | GDS84195 | A1773309900 | GDS84225 |
| 49500H5110 | GDS84072 | 495002S210 | GDS84110 | 49501G4000 | GDS84164 | 391016654R | GDS84195 | 1773309800 | GDS84226 |
| 49501H5100 | GDS84073 | 495002S210SJ | GDS84110 | 49500G4000 | GDS84165 | 391016807R | GDS84195 | A1773309800 | GDS84226 |
| 4341006C20 | GDS84074 | 4410179J60 | GDS84111 | 49500S1000 | GDS84166 | 51993490 | GDS84198 | 1773300001 | GDS84227 |
| 4341033380 | GDS84074 | 71747566 | GDS84111 | 49500S1500 | GDS84166 | 71797033 | GDS84198 | 1773300203 | GDS84227 |
| 49501C8200 | GDS84075 | 4341075010 | GDS84112 | 49501S1060 | GDS84167 | 52050099 | GDS84202 | 1773303501 | GDS84227 |
| 49501H9000 | GDS84075 | 4341075011 | GDS84112 | 49501S1150 | GDS84168 | 71797655 | GDS84202 | 1773309000 | GDS84227 |
| 49500C8200 | GDS84076 | 434100W100 | GDS84113 | 49500S1100 | GDS84169 | 5Q0407272DH | GDS84203 | A1773300001 | GDS84227 |
| 49500H9000 | GDS84076 | 1675962380 | GDS84114 | 1633144180 | GDS84170 | 5Q0407764MX | GDS84203 | A1773300203 | GDS84227 |
| FTH62550X | GDS84077 | 9836054280 | GDS84114 | 3555146 | GDS84170 | 1663303300 | GDS84205 | A1773303501 | GDS84227 |
| FTH62550XA | GDS84077 | 391001458R | GDS84115 | 9815636180 | GDS84170 | 1663303400 | GDS84205 | A1773309000 | GDS84227 |
| 4342033340 | GDS84078 | 391009206R | GDS84115 | SU001A9645 | GDS84170 | A1663303300 | GDS84205 | 1183301800 | GDS84228 |
| 13207053 | GDS84079 | 391012636R | GDS84116 | 49501CM000 | GDS84171 | A1663303400 | GDS84205 | 1773300101 | GDS84228 |
| 4708033 | GDS84079 | 391013297R | GDS84116 | 49500CM000 | GDS84172 | 4341002C40 | GDS84206 | 1773300700 | GDS84228 |
| 30783104 | GDS84080 | 4KE407271 | GDS84117 | 1642341980 | GDS84174 | 49501J7130 | GDS84207 | 1773309700 | GDS84228 |
| 31280870 | GDS84080 | 4KE407271B | GDS84117 | 9824878280 | GDS84174 | 49500J7130 | GDS84208 | A1183301800 | GDS84228 |
| 36000510 | GDS84080 | 391013NF1A | GDS84118 | 49501F2000 | GDS84175 | 49501H8450 | GDS84209 | A1773300101 | GDS84228 |
| 36001217 | GDS84080 | 391015SA1A | GDS84118 | 49501G4500 | GDS84175 | 49500H8450 | GDS84210 | A1773300700 | GDS84228 |
| 50634614 | GDS84080 | 391015SA1C | GDS84118 | 49500G4600 | GDS84176 | 495001H111 | GDS84211 | A1773309700 | GDS84228 |
| 1608419980 | GDS84081 | C9B043NF1C | GDS84118 | 49500F2000 | GDS84177 | 44305S5B950 | GDS84214 | 1773302101 | GDS84229 |
| 9803968580 | GDS84081 | 391001946R | GDS84119 | 49500G4500 | GDS84177 | 31605A01E84 | GDS84215 | 1773302701 | GDS84229 |
| 9816308880 | GDS84081 | 391003980R | GDS84119 | 49501G4600 | GDS84178 | 31608639520 | GDS84215 | A1773302101 | GDS84229 |
| 13321164 | GDS84082 | 391005002R | GDS84119 | 4341002E10 | GDS84179 | 31608657292 | GDS84215 | A1773302701 | GDS84229 |
| 13335161 | GDS84082 | 391009373R | GDS84119 | 2Q0407271F | GDS84181 | 31608664676 | GDS84215 | 1773300702 | GDS84230 |
| 374686 | GDS84082 | 391009996R | GDS84119 | 2Q0407451CX | GDS84181 | 31608683334 | GDS84215 | 1773303001 | GDS84230 |
| 374904 | GDS84082 | 4KE501204B | GDS84120 | 51935908 | GDS84182 | 31609846770 | GDS84215 | 1773303102 | GDS84230 |
| 95520543 | GDS84082 | 4KE501204C | GDS84120 | 52028390 | GDS84182 | 31609884748 | GDS84215 | 1773303803 | GDS84230 |
| 374648 | GDS84083 | 4KE501204D | GDS84120 | 68249357AA | GDS84182 | 31609884750 | GDS84215 | A1773300702 | GDS84230 |
| 93189676 | GDS84083 | 4KE501203 | GDS84121 | 68283038AA | GDS84182 | 33208664676 | GDS84215 | A1773303001 | GDS84230 |
| 95520681 | GDS84083 | 4KE501203B | GDS84121 | 68290567AA | GDS84182 | AU866467602 | GDS84215 | A1773303102 | GDS84230 |
| 31605A2E056 | GDS84087 | 4KE501203E | GDS84121 | 68290567AB | GDS84182 | 31605A01E83 | GDS84216 | A1773303803 | GDS84230 |

| COMPETITOR | G-AP Ref. | COMPETITOR | G-AP Ref. | COMPETITOR | G-AP Ref. | COMPETITOR | G-AP Ref. | COMPETITOR | G-AP Ref. |
|---|---|---|---|---|---|---|---|---|---|
| OE | | 13348258 | GDS84292 | SU001A9448 | GDS84336 | 52044145 | GDS84385 | GD712550XB | GDS84419 |
| | | 374922 | GDS84292 | SU001B1904 | GDS84336 | GT0L2550X | GDS84386 | 495012W050 | GDS84420 |
| 4234042060 | GDS84231 | 1693605600 | GDS84300 | 2Q0407272CP | GDS84337 | GP312560XA | GDS84389 | 1642344480 | GDS84423 |
| 423300R050 | GDS84232 | 169360560080 | GDS84300 | 2Q0407272F | GDS84337 | GP312560XB | GDS84389 | 9827832680 | GDS84423 |
| 4233042080 | GDS84232 | 1693701572 | GDS84300 | 2Q0407452HX | GDS84337 | GP312560XC | GDS84389 | 10226904 | GDS84427 |
| 1608900680 | GDS84233 | 1693702772 | GDS84300 | 2Q0407452NX | GDS84337 | GP312560XD | GDS84389 | 11020730 | GDS84427 |
| 1608900780 | GDS84233 | 1693705572 | GDS84300 | 4341048120 | GDS84338 | GP312560XE | GDS84389 | 99634903801 | GDS84428 |
| 3272SJ | GDS84233 | 169370557280 | GDS84300 | 4341048170 | GDS84338 | GP312560XF | GDS84389 | 99634903810 | GDS84428 |
| 3272SK | GDS84233 | 1693706372 | GDS84300 | 3210002AVN1000 | GDS84339 | 496002J150 | GDS84390 | 99634903811 | GDS84428 |
| 51783853 | GDS84233 | A1693701572 | GDS84300 | 3210001AVN1001 | GDS84340 | 496002J450 | GDS84390 | 99633202407 | GDS84429 |
| 51930014 | GDS84233 | A1693702772 | GDS84300 | 3210002ARD0200 | GDS84341 | 496002J460 | GDS84390 | 99633202418 | GDS84429 |
| 2Q0407271AS | GDS84235 | A1693705572 | GDS84300 | 3210001ARD0200 | GDS84342 | 1673301501 | GDS84392 | 99633202425 | GDS84429 |
| 2Q0407271DE | GDS84235 | A1693706372 | GDS84300 | 391000166R | GDS84343 | 1673308801 | GDS84392 | 496003M800 | GDS84441 |
| 2Q0407451MX | GDS84235 | 391003NF1A | GDS84301 | 4342042260 | GDS84344 | A1673301501 | GDS84392 | 495001C450 | GDS84444 |
| 2Q0407451NX | GDS84235 | 391005SA1A | GDS84301 | 4342048180 | GDS84344 | A1673308801 | GDS84392 | 495001C451 | GDS84444 |
| 3910000Q8A | GDS84236 | 2048631 | GDS84303 | 4341042331 | GDS84345 | 1673301401 | GDS84393 | 391003491R | GDS84449 |
| 391007254R | GDS84236 | G1FY3B436TA | GDS84303 | 3815A482 | GDS84346 | 1673308701 | GDS84393 | 391004279R | GDS84449 |
| 5Q0407271CQ | GDS84237 | G1FZ3B436A | GDS84303 | 495014D100 | GDS84348 | 167330870164 | GDS84393 | 1673301301 | GDS84450 |
| 5Q0407271DG | GDS84237 | G1FZ3B436E | GDS84303 | 495014D101 | GDS84348 | A1673301401 | GDS84393 | 1673308601 | GDS84450 |
| 5Q0407271EA | GDS84237 | 2303101XKM01A | GDS84310 | 495004D100 | GDS84349 | A1673308701 | GDS84393 | 167330860164 | GDS84450 |
| 5Q0407763GX | GDS84237 | 2303100XKM01A | GDS84311 | 495004D101 | GDS84349 | A167330870164 | GDS84393 | A1673301301 | GDS84450 |
| 5Q0407763HX | GDS84237 | 1677230080 | GDS84314 | 495004D102 | GDS84349 | 1617416480 | GDS84394 | A1673308601 | GDS84450 |
| 391016789R | GDS84239 | 9836232080 | GDS84314 | 8944230371 | GDS84350 | 9817720480 | GDS84394 | A167330860164 | GDS84450 |
| 44010S10C50 | GDS84240 | 2Q0407272CN | GDS84315 | 8973613430 | GDS84350 | 9839513280 | GDS84394 | 1673301201 | GDS84451 |
| 44305S10C00 | GDS84240 | 2Q0407272T | GDS84315 | 2087690 | GDS84353 | 1617416580 | GDS84395 | 1673308501 | GDS84451 |
| 44305S10C51 | GDS84240 | 2Q0407452CX | GDS84315 | GV613B436AA | GDS84353 | 1631735380 | GDS84395 | A1673301201 | GDS84451 |
| 391009375R | GDS84241 | 2Q0407452MX | GDS84315 | FT0H2550X | GDS84355 | 1675953280 | GDS84395 | A1673308501 | GDS84451 |
| 391014GB0A | GDS84242 | 2Q0407271BA | GDS84317 | FT0J2550X | GDS84355 | 9817720580 | GDS84395 | FTC92550X | GDS84453 |
| 391014HK1A | GDS84242 | 2Q0407451KX | GDS84317 | 3210002ARD0100 | GDS84356 | 9821573080 | GDS84395 | 28421SC000 | GDS84455 |
| 3910100Q7K | GDS84243 | 49501A8050 | GDS84318 | 3210001ARD0100 | GDS84357 | 9839512780 | GDS84395 | 28421SC001 | GDS84455 |
| 391019506R | GDS84243 | 49501A8050SJ | GDS84318 | 3210002AFC0000 | GDS84358 | 1614919680 | GDS84397 | 28421SC002 | GDS84455 |
| 391007937R | GDS84244 | 49501E6050 | GDS84318 | 3210001AFC0000 | GDS84359 | 1614920580 | GDS84397 | 2Q0407272BR | GDS84456 |
| 391008208R | GDS84244 | 49500A8000 | GDS84319 | 495014U250 | GDS84360 | 9806153080 | GDS84397 | 2Q0407452X | GDS84456 |
| 8201055635 | GDS84244 | 49500A8000SJ | GDS84319 | 49501H8260 | GDS84361 | 9813092180 | GDS84397 | 1610205680 | GDS84457 |
| 3910000Q7M | GDS84245 | 49500E6000 | GDS84319 | 49500H8260 | GDS84362 | 49501J7230 | GDS84398 | 3649679 | GDS84457 |
| 391002592R | GDS84245 | 49500E6000SJ | GDS84319 | 1631813280 | GDS84363 | 49500J7230 | GDS84399 | 95526664 | GDS84457 |
| 3910100Q7J | GDS84246 | 2203200BE50 | GDS84322 | 9819435780 | GDS84363 | GT002550X | GDS84400 | 9806677980 | GDS84457 |
| 391011887R | GDS84246 | 2203100BE50 | GDS84323 | 49500H8350 | GDS84364 | GT002560X | GDS84401 | 9806699780 | GDS84457 |
| 391016337R | GDS84246 | 391004FA1A | GDS84325 | 49501H8350 | GDS84365 | FTC12560X | GDS84402 | 51877234 | GDS84458 |
| 1773301002 | GDS84247 | 391005SN0A | GDS84325 | 49501H8150 | GDS84366 | FTC12550X | GDS84403 | 52065091 | GDS84458 |
| 1773301601 | GDS84247 | 5C0407271AP | GDS84330 | 49500H8150 | GDS84367 | 49501G4400 | GDS84404 | 71799864 | GDS84458 |
| A1773301002 | GDS84247 | 1938194 | GDS84331 | 49501H8250 | GDS84368 | 49500G4400 | GDS84405 | 2Q0407271BJ | GDS84459 |
| A1773301601 | GDS84247 | 2025170 | GDS84331 | 49500H8250 | GDS84369 | 49501G3000 | GDS84406 | 2Q0407451X | GDS84459 |
| 1773305300 | GDS84248 | 2115976 | GDS84331 | 4342076010 | GDS84370 | 49500G3000 | GDS84407 | 13320254 | GDS84460 |
| A1773305300 | GDS84248 | 2171527 | GDS84331 | 49501F2500 | GDS84371 | 5WA407271G | GDS84408 | 13432216 | GDS84460 |
| 391019386R | GDS84251 | 2514487 | GDS84331 | 49501G4700 | GDS84371 | 5WA407451X | GDS84408 | 13486867 | GDS84460 |
| 8944230381 | GDS84256 | 2552741 | GDS84331 | 49500F2500 | GDS84372 | 28421FE130 | GDS84409 | 1677187580 | GDS84460 |
| 8973613440 | GDS84256 | FV613B436BB | GDS84331 | 49500G4700 | GDS84372 | 28421FE131 | GDS84409 | 374872 | GDS84460 |
| 5QF407272N | GDS84257 | FV613B436BC | GDS84331 | 49501G4100 | GDS84373 | 2Q0407272BP | GDS84410 | 5374142 | GDS84460 |
| 5QF407762DX | GDS84257 | FV613B436BD | GDS84331 | 49501J9000 | GDS84373 | 2Q0407452FX | GDS84410 | 5374194 | GDS84460 |
| 3910000Q7D | GDS84260 | FV613B436BE | GDS84331 | 31608643184 | GDS84374 | 2Q0407271BG | GDS84411 | 95520481 | GDS84460 |
| 391002670R | GDS84260 | FV613B436BF | GDS84331 | 31608680338 | GDS84374 | 2Q0407451EX | GDS84411 | 95520482 | GDS84460 |
| 8201425287 | GDS84260 | FV663B436BA | GDS84331 | 31608643183 | GDS84375 | 5QN407272Q | GDS84412 | 95520771 | GDS84460 |
| 1677230180 | GDS84261 | 3273ZA | GDS84332 | 31608680337 | GDS84375 | 5QN407272AF | GDS84413 | 495012K670 | GDS84461 |
| 9836232180 | GDS84261 | 3273ZC | GDS84332 | 49501G4200 | GDS84376 | 5QN407272J | GDS84413 | 495012K670SJ | GDS84461 |
| 31608486202 | GDS84269 | 9672587380 | GDS84332 | 49500G4200 | GDS84377 | 5QN407271C | GDS84414 | 495002K670 | GDS84462 |
| 31608486205 | GDS84269 | 9672959880 | GDS84332 | 49500G4100 | GDS84378 | 5QN407271K | GDS84414 | 495002K670SJ | GDS84462 |
| 2533301401 | GDS84270 | 3272YH | GDS84333 | 49500J9000 | GDS84378 | GD712560X | GDS84415 | 49501T9020 | GDS84463 |
| A2533301401 | GDS84270 | 3272YJ | GDS84333 | 4342002F10 | GDS84379 | GD712560XA | GDS84415 | 49500T9010 | GDS84464 |
| 391009804R | GDS84276 | 9672959780 | GDS84333 | 4342002J30 | GDS84379 | GD712560XB | GDS84415 | GP342560X | GDS84470 |
| 4410170L00 | GDS84283 | 1642341880 | GDS84335 | 4341002A10 | GDS84380 | 5Q0407272EB | GDS84416 | FTD82550X | GDS84474 |
| 391005742R | GDS84285 | 9824359680 | GDS84335 | 4341002C20 | GDS84380 | 5Q0407764GX | GDS84416 | FTD82550XA | GDS84474 |
| 36051050 | GDS84286 | 1611143080 | GDS84336 | 51929167 | GDS84382 | 5Q0407272ED | GDS84417 | 2217864 | GDS84475 |
| 8602689 | GDS84286 | 1667425780 | GDS84336 | 51948165 | GDS84382 | 5Q0407764HX | GDS84417 | 2310002 | GDS84475 |
| 8602727 | GDS84286 | 1675956180 | GDS84336 | 52134271 | GDS84382 | 28421FE120 | GDS84418 | JB3G3A428BB | GDS84475 |
| 8603312 | GDS84286 | 3555188 | GDS84336 | 3815A683 | GDS84383 | 28421FE121 | GDS84418 | JB3G3A428BC | GDS84475 |
| 8603880 | GDS84286 | 9809527980 | GDS84336 | 4130034001 | GDS84384 | GD712550X | GDS84419 | 2217846 | GDS84476 |
| 10239820 | GDS84292 | 9815636080 | GDS84336 | 51877830 | GDS84385 | GD712550XA | GDS84419 | JB3G3A427BB | GDS84476 |

| COMPETITOR | G-AP Ref. | COMPETITOR | G-AP Ref. | COMPETITOR | G-AP Ref. | COMPETITOR | G-AP Ref. | COMPETITOR | G-AP Ref. |
|---|---|---|---|---|---|---|---|---|---|
| OE | | GP182560XB | GDS84520 | 4K0407271C | GDS84560 | 9809528180 | GDS84582 | 760501203DX | GDS84639 |
| | | GP182560XC | GDS84520 | 4K0407271P | GDS84560 | 9815636280 | GDS84582 | 3273TY | GDS84640 |
| GT0L2560X | GDS84489 | GP182560XD | GDS84520 | 3815A684 | GDS84561 | SU001A9449 | GDS84582 | 3273TZ | GDS84640 |
| 3Q0407272CD | GDS84498 | GP182560XE | GDS84520 | 2Q0407272BS | GDS84562 | SU001B1905 | GDS84582 | 3273VQ | GDS84640 |
| 3Q0407764JX | GDS84498 | GP182560XF | GDS84520 | 2Q0407452DX | GDS84562 | 10416555 | GDS84583 | 3273VR | GDS84640 |
| 2209577 | GDS84499 | 7H0407272AD | GDS84521 | 2Q0407271AQ | GDS84563 | 1253820200 | GDS84584 | 9685084680 | GDS84640 |
| 2236190 | GDS84499 | 7H0407272AM | GDS84521 | 2Q0407271BQ | GDS84563 | SA2H2203010 | GDS84584 | 9685085280 | GDS84640 |
| 2256830 | GDS84499 | 7H0407272BF | GDS84521 | 2Q0407271CA | GDS84563 | 10416556 | GDS84585 | 33201227221 | GDS85001 |
| 2435405 | GDS84499 | 7H0407272BM | GDS84521 | 2Q0407451JX | GDS84563 | 49501Q2800 | GDS84587 | 33201227222 | GDS85001 |
| 2520759 | GDS84499 | 7H0407452EV | GDS84521 | 2Q0407451PX | GDS84563 | 49500Q2800 | GDS84588 | 33211226047 | GDS85001 |
| 2553952 | GDS84499 | 7H0407452EX | GDS84521 | EJ323B436CA | GDS84565 | 8981472451 | GDS84591 | 33211226668 | GDS85001 |
| 2678223 | GDS84499 | 7H0407452MX | GDS84521 | EJ323B436CB | GDS84565 | 8981472452 | GDS84591 | 33211226720 | GDS85001 |
| JX673B437CAB | GDS84499 | 4342002F30 | GDS84522 | LR048487 | GDS84565 | 98147245 | GDS84591 | 33211227032 | GDS85002 |
| JX673B437CAC | GDS84499 | 2087692 | GDS84523 | LR061598 | GDS84565 | 1149136200 | GDS84595 | 33211227597 | GDS85002 |
| JX673B437CAD | GDS84499 | GV613B437AA | GDS84523 | LR149107 | GDS84565 | S6DM2203020A | GDS84595 | 33211227606 | GDS85002 |
| JX673B437CAE | GDS84499 | 43420K0060 | GDS84524 | RMEJ323B436CB | GDS84565 | 1149136100 | GDS84596 | 33211229392 | GDS85002 |
| JX673B437CAF | GDS84499 | 31608607265 | GDS84525 | GT0D2550X | GDS84566 | 1169194900 | GDS84596 | 33211229493 | GDS85002 |
| JX673B437CAG | GDS84499 | 31608643373 | GDS84525 | GT0D2560X | GDS84567 | S6DM2203010A | GDS84596 | 33211229587 | GDS85002 |
| JX673B437CAH | GDS84499 | 31607646830 | GDS84526 | 10666957 | GDS84570 | SEH2203010 | GDS84596 | 33217529905 | GDS85002 |
| 30735123 | GDS84500 | 31608643374 | GDS84526 | 10700133 | GDS84571 | 1081451500 | GDS84597 | 33211227912 | GDS85006 |
| 30783087 | GDS84500 | GT0B2550X | GDS84527 | 391019563R | GDS84576 | F3T2203020 | GDS84597 | 33211229235 | GDS85006 |
| 36000523 | GDS84500 | GT0B2560X | GDS84528 | 391016661R | GDS84577 | 1081451000 | GDS84598 | 33211229624 | GDS85006 |
| 8252039 | GDS84500 | FT082550XA | GDS84530 | 2234730 | GDS84578 | F3T2203010 | GDS84598 | 33211229645 | GDS85006 |
| 8601965 | GDS84500 | FT082550XB | GDS84530 | 2454835 | GDS84578 | 1253820100 | GDS84601 | 33211229665 | GDS85006 |
| 8602585 | GDS84500 | FT082550XC | GDS84530 | 2581504 | GDS84578 | SA2H2203020 | GDS84601 | 33211226905 | GDS85007 |
| 8603798 | GDS84500 | FT0N2550X | GDS84530 | JX673B436GAC | GDS84578 | 2203200CD03AA | GDS84602 | 33211227404 | GDS85007 |
| 8689221 | GDS84500 | FT0N2550XA | GDS84530 | JX673B436GAD | GDS84578 | S311F2501010302AA | GDS84602 | 33211227591 | GDS85007 |
| 9445912 | GDS84500 | FT0N2550XB | GDS84530 | JX673B436GAF | GDS84578 | 2203100CD03AA | GDS84603 | 33211229300 | GDS85007 |
| 5Q3407272A | GDS84501 | 2223300902 | GDS84534 | 1611142680 | GDS84579 | S311F2501010202AA | GDS84603 | 33211229427 | GDS85007 |
| 5Q3407271A | GDS84502 | 2223306700 | GDS84534 | 1667765080 | GDS84579 | 1103360100 | GDS84605 | 33211229428 | GDS85007 |
| 5Q0407272EE | GDS84503 | A2223300902 | GDS84534 | 1675955380 | GDS84579 | 1127923700 | GDS84605 | 33211229472 | GDS85007 |
| 5Q0407272FJ | GDS84503 | A2223306700 | GDS84534 | 3550541 | GDS84579 | HA2203020 | GDS84605 | 33211229473 | GDS85007 |
| 5Q0407764JX | GDS84503 | 31325584 | GDS84535 | 6001080086 | GDS84579 | HA2203020B | GDS84605 | 33211227172 | GDS85014 |
| 5Q0407764PX | GDS84504 | 36003151 | GDS84535 | 6001080161 | GDS84579 | 1103353400 | GDS84606 | 33211229494 | GDS85017 |
| 5Q3407272 | GDS84504 | 36003734 | GDS84535 | 95526681 | GDS84579 | 1146406500 | GDS84606 | 33211229588 | GDS85017 |
| 5Q0407763JX | GDS84505 | 36011779 | GDS84535 | 9677914480 | GDS84579 | HA2203010 | GDS84606 | 31607505004 | GDS85018 |
| 5Q3407271 | GDS84505 | 31325586 | GDS84536 | 9815636380 | GDS84579 | HA2203010B | GDS84606 | 31607505006 | GDS85018 |
| 3Q0407272CA | GDS84510 | 36003149 | GDS84536 | 9837946780 | GDS84579 | 391001279R | GDS84609 | 31607561342 | GDS85018 |
| 3Q0407272DS | GDS84510 | 36010574 | GDS84536 | SU001B1906 | GDS84579 | 391005153R | GDS84609 | 31607565314 | GDS85018 |
| 3Q0407764DX | GDS84510 | 36011772 | GDS84536 | 2094714 | GDS84580 | 2Q0407272AA | GDS84612 | 33201229141 | GDS85021 |
| 51877829 | GDS84511 | 50167266 | GDS84541 | 2209408 | GDS84580 | 2Q0407271AT | GDS84613 | 33201229374 | GDS85021 |
| 52044144 | GDS84511 | 50565111 | GDS84541 | 2236235 | GDS84580 | 2Q0407272CK | GDS84614 | 33201229441 | GDS85021 |
| FT082560XA | GDS84513 | 53489835 | GDS84541 | 2454833 | GDS84580 | 10619630 | GDS84615 | 33201229449 | GDS85021 |
| FT0J2560X | GDS84513 | 50167268 | GDS84542 | JX673B436EAA | GDS84580 | 10619629 | GDS84616 | 33211229141 | GDS85021 |
| FT0N2560X | GDS84513 | 50565103 | GDS84542 | JX673B436EAB | GDS84580 | 3815A459 | GDS84619 | 33217533445 | GDS85022 |
| FT022560X | GDS84514 | 53489834 | GDS84542 | JX673B436EAC | GDS84580 | 3815A486 | GDS84620 | 33217537715 | GDS85022 |
| FT022560XA | GDS84514 | 1611621080 | GDS84550 | JX673B436EAD | GDS84580 | 1783749 | GDS84621 | 33217547073 | GDS85022 |
| 9103300900 | GDS84515 | 9809149380 | GDS84550 | 2094704 | GDS84581 | 1841609 | GDS84621 | 33217547075 | GDS85022 |
| 9103303800 | GDS84515 | 13334716 | GDS84551 | 2209409 | GDS84581 | DV6P3B436CA | GDS84621 | 33217533446 | GDS85023 |
| A9103300900 | GDS84515 | 13355111 | GDS84551 | 2234736 | GDS84581 | RMDV6P3B436C1A | GDS84621 | 33217537716 | GDS85023 |
| A9103303800 | GDS84515 | 39069611 | GDS84551 | 2236236 | GDS84581 | 31609806468 | GDS84622 | 33217547074 | GDS85023 |
| 9103300400 | GDS84516 | 13306339 | GDS84552 | 2454851 | GDS84581 | 1783755 | GDS84623 | 33217547076 | GDS85023 |
| 9103303900 | GDS84516 | 13334725 | GDS84552 | 2454857 | GDS84581 | 1841615 | GDS84623 | 31602752245 | GDS85024 |
| A9103300400 | GDS84516 | 39069610 | GDS84552 | 2537230 | GDS84581 | DV6P3B437CA | GDS84623 | 31602756793 | GDS85024 |
| A9103303900 | GDS84516 | 4K0407271F | GDS84553 | 2581497 | GDS84581 | RMDV6P3B437C1A | GDS84623 | 31604853931 | GDS85024 |
| 9103301100 | GDS84517 | 4K0407271Q | GDS84553 | JX673B437EAA | GDS84581 | 391011804R | GDS84624 | 31607589763 | GDS85024 |
| 9103303700 | GDS84517 | 4N0407271 | GDS84553 | JX673B437EAB | GDS84581 | 391002354R | GDS84625 | 31607609211 | GDS85024 |
| A9103301100 | GDS84517 | 4N0407271F | GDS84553 | JX673B437EAC | GDS84581 | 391006890R | GDS84626 | 31608605469 | GDS85024 |
| A9103303700 | GDS84517 | 4N0407271N | GDS84553 | JX673B437EAD | GDS84581 | 391013701R | GDS84627 | 31607531722 | GDS85025 |
| 9103301000 | GDS84518 | 4341076010 | GDS84554 | JX673B437GAC | GDS84581 | 10784999 | GDS84628 | 31607533216 | GDS85025 |
| 9103303500 | GDS84518 | 4K0407271B | GDS84556 | JX673B437GAD | GDS84581 | 10784998 | GDS84629 | 31607574866 | GDS85025 |
| A9103301000 | GDS84518 | 4K0407271G | GDS84556 | JX673B437GAE | GDS84581 | 3815A584 | GDS84631 | 31607576103 | GDS85025 |
| A9103303500 | GDS84518 | 1642344380 | GDS84557 | JX673B437GAF | GDS84581 | 3815A583 | GDS84632 | 31607505003 | GDS85029 |
| 36001022 | GDS84519 | 9825384180 | GDS84557 | 1612862980 | GDS84582 | 10347970 | GDS84636 | 31607505005 | GDS85029 |
| 36001063 | GDS84519 | 2Q0407271AJ | GDS84558 | 1667764980 | GDS84582 | 10935366 | GDS84637 | 31607561341 | GDS85029 |
| 36001368 | GDS84519 | 2Q0407451DX | GDS84558 | 3550544 | GDS84582 | 10715587 | GDS84638 | 31607565313 | GDS85029 |
| 36012426 | GDS84519 | 1642344280 | GDS84559 | 6001080088 | GDS84582 | 4M0501201D | GDS84639 | 33217523960 | GDS85036 |
| GP182560X | GDS84520 | 9825384080 | GDS84559 | 9675108480 | GDS84582 | 4M0501203D | GDS84639 | 33217523964 | GDS85036 |

| COMPETITOR | G-AP Ref. | COMPETITOR | G-AP Ref. | COMPETITOR | G-AP Ref. | COMPETITOR | G-AP Ref. | COMPETITOR | G-AP Ref. |
|---|---|---|---|---|---|---|---|---|---|
| OE | | 33211229497 | GDS85051 | 33211229748 | GDS85064 | 31601229673 | GDS85075 | 33207581027 | GDS85112 |
| | | 33211229591 | GDS85051 | 33211229749 | GDS85064 | 31607503537 | GDS85075 | 33207581029 | GDS85112 |
| 33217525822 | GDS85036 | 33211229707 | GDS85051 | 33207597677 | GDS85066 | 31601229674 | GDS85076 | 33207630183 | GDS85112 |
| 33217547070 | GDS85036 | 33217512143 | GDS85051 | 33207597681 | GDS85066 | 31607503538 | GDS85076 | 33207630187 | GDS85112 |
| 33217547072 | GDS85036 | 33217518431 | GDS85051 | 33207622853 | GDS85066 | 2513300601 | GDS85077 | 33207581028 | GDS85113 |
| 33217547628 | GDS85036 | 33217530965 | GDS85051 | 33207624205 | GDS85066 | A2513300601 | GDS85077 | 33207581030 | GDS85113 |
| 33217552562 | GDS85036 | 31607545125 | GDS85052 | 33207629301 | GDS85066 | 31603450564 | GDS85078 | 33207630184 | GDS85113 |
| 33217553562 | GDS85036 | 31607553945 | GDS85052 | 33208680347 | GDS85066 | 31603450566 | GDS85078 | 33207630186 | GDS85113 |
| 33217561792 | GDS85036 | 31607622883 | GDS85052 | 33208680351 | GDS85066 | 31607524046 | GDS85078 | 33207581021 | GDS85114 |
| 33247547072 | GDS85036 | 31608631751 | GDS85052 | 33207597674 | GDS85067 | 31607529202 | GDS85078 | 33207614289 | GDS85114 |
| 33217523959 | GDS85037 | 31607531721 | GDS85053 | 33207597678 | GDS85067 | 33207545098 | GDS85081 | 33207581022 | GDS85115 |
| 33217523963 | GDS85037 | 31607533215 | GDS85053 | 33207597682 | GDS85067 | 33207564126 | GDS85081 | 33207606568 | GDS85115 |
| 33217525821 | GDS85037 | 31607574869 | GDS85053 | 33207622854 | GDS85067 | 33207564127 | GDS85081 | 33207614290 | GDS85115 |
| 33217547069 | GDS85037 | 31607576106 | GDS85053 | 33207624206 | GDS85067 | 33208603102 | GDS85081 | 33207566075 | GDS85116 |
| 33217547071 | GDS85037 | 3815A201 | GDS85058 | 33207628252 | GDS85067 | 33208609838 | GDS85081 | 33207566087 | GDS85116 |
| 33217547627 | GDS85037 | 4543300401 | GDS85058 | 33207629302 | GDS85067 | 33207529217 | GDS85082 | 33207598031 | GDS85117 |
| 33217553561 | GDS85037 | 4543301101 | GDS85058 | 33208680348 | GDS85067 | 33207559076 | GDS85082 | 33207598037 | GDS85117 |
| 33217561791 | GDS85037 | 4543302501 | GDS85058 | 33208680350 | GDS85067 | 33207568730 | GDS85082 | 33207598041 | GDS85117 |
| 33207553559 | GDS85039 | A4543300401 | GDS85058 | 2513301301 | GDS85068 | 33207568738 | GDS85082 | 33207614492 | GDS85118 |
| 33207559085 | GDS85039 | A4543301101 | GDS85058 | 2513301701 | GDS85068 | 33207572419 | GDS85082 | 33207598036 | GDS85119 |
| 33207561795 | GDS85039 | A4543302501 | GDS85058 | 2513301801 | GDS85068 | 33207572420 | GDS85082 | 33207598035 | GDS85120 |
| 33207580325 | GDS85039 | APMR980747 | GDS85058 | 251330180180 | GDS85068 | 33207572424 | GDS85082 | 33207598032 | GDS85121 |
| 33207580945 | GDS85039 | MR582021 | GDS85058 | 2513301901 | GDS85068 | 33207578720 | GDS85082 | 33207598038 | GDS85121 |
| 33207599521 | GDS85039 | MR980747 | GDS85058 | 2513302001 | GDS85068 | 33217527322 | GDS85082 | 33207598042 | GDS85121 |
| 33207599533 | GDS85039 | PMR980747 | GDS85058 | 251330200180 | GDS85068 | 33217529217 | GDS85082 | 33207580772 | GDS85122 |
| 33207604591 | GDS85039 | 1643300801 | GDS85060 | 2513302101 | GDS85068 | 33217532266 | GDS85082 | 33207587792 | GDS85122 |
| 33207604599 | GDS85039 | 1643302001 | GDS85060 | A2513301301 | GDS85068 | 33217547821 | GDS85082 | 31607607938 | GDS85123 |
| 33217527027 | GDS85039 | 164330200180 | GDS85060 | A2513301701 | GDS85068 | 33217559076 | GDS85082 | 31607622914 | GDS85123 |
| 33217533449 | GDS85039 | 1643302301 | GDS85060 | A2513301801 | GDS85068 | 4543300701 | GDS85083 | 31607629880 | GDS85123 |
| 33217553559 | GDS85039 | 1643302701 | GDS85060 | A2513301901 | GDS85068 | 4543301201 | GDS85083 | 31608631746 | GDS85123 |
| 33217553563 | GDS85039 | 1643302901 | GDS85060 | A2513302101 | GDS85068 | A4543300701 | GDS85083 | 31607544435 | GDS85124 |
| 33217561783 | GDS85039 | 1643303101 | GDS85060 | 33207524041 | GDS85069 | A4543301201 | GDS85083 | 31607558949 | GDS85124 |
| 31602752251 | GDS85041 | A1643300801 | GDS85060 | 33217529917 | GDS85069 | MR582022 | GDS85083 | 31607544436 | GDS85125 |
| 31602756341 | GDS85041 | A1643302001 | GDS85060 | 33207564128 | GDS85070 | MR980748 | GDS85083 | 31607558950 | GDS85125 |
| 31604853485 | GDS85041 | A1643302301 | GDS85060 | 33208603103 | GDS85070 | PMR980748 | GDS85083 | 7529390 | GDS85125 |
| 31607589767 | GDS85041 | A1643302701 | GDS85060 | 33208609839 | GDS85070 | 33207604601 | GDS85085 | 31609806465 | GDS85126 |
| 31608605473 | GDS85041 | A1643302901 | GDS85060 | 31602752248 | GDS85071 | 33217533453 | GDS85085 | 9809169 | GDS85126 |
| 33207566232 | GDS85042 | A1643303101 | GDS85060 | 31602756274 | GDS85071 | 33217561789 | GDS85085 | 33209806477 | GDS85127 |
| 33211229496 | GDS85042 | 1643301901 | GDS85061 | 31602756340 | GDS85071 | 31602752246 | GDS85086 | 33209813707 | GDS85127 |
| 33211229498 | GDS85042 | 164330190180 | GDS85061 | 31604853484 | GDS85071 | 31602756794 | GDS85086 | 31609806470 | GDS85128 |
| 33211229592 | GDS85042 | 1643302101 | GDS85061 | 31607585382 | GDS85071 | 31604853932 | GDS85086 | 9809174 | GDS85128 |
| 33211229708 | GDS85042 | 1643302401 | GDS85061 | 31607596060 | GDS85071 | 31607589764 | GDS85086 | 31609806466 | GDS85129 |
| 33217512142 | GDS85042 | 1643302801 | GDS85061 | 31607599564 | GDS85071 | 31607609212 | GDS85086 | 9809170 | GDS85129 |
| 33217518432 | GDS85042 | 1643303001 | GDS85061 | 31607616142 | GDS85071 | 31608605468 | GDS85086 | 31602753398 | GDS85130 |
| 31607545126 | GDS85043 | 1643303201 | GDS85061 | 31608605466 | GDS85071 | 33207524042 | GDS85093 | 31602756796 | GDS85130 |
| 31607553946 | GDS85043 | A1643301901 | GDS85061 | 31608605470 | GDS85071 | 33217529918 | GDS85093 | 31604853934 | GDS85130 |
| 31607622884 | GDS85043 | A1643302101 | GDS85061 | 33207520487 | GDS85073 | 7L8501201 | GDS85098 | 31607589766 | GDS85130 |
| 31607629882 | GDS85043 | A1643302401 | GDS85061 | 33207521630 | GDS85073 | 7L8501201X | GDS85098 | 31607599262 | GDS85130 |
| 31608631750 | GDS85043 | A1643302801 | GDS85061 | 33207572429 | GDS85073 | 33207566067 | GDS85101 | 31607616144 | GDS85130 |
| 31602752252 | GDS85045 | A1643303001 | GDS85061 | 33207572430 | GDS85073 | 6H424B457BA | GDS85104 | 31608605472 | GDS85130 |
| 31602756276 | GDS85045 | A1643303201 | GDS85061 | 33207572431 | GDS85073 | TOB500320 | GDS85104 | 31602753397 | GDS85131 |
| 31602756342 | GDS85045 | 31217540115 | GDS85062 | 33207572432 | GDS85073 | 6H424B457AA | GDS85105 | 31602756795 | GDS85131 |
| 31604853486 | GDS85045 | 33203415955 | GDS85062 | 33207572683 | GDS85073 | TOB500310 | GDS85105 | 31604853933 | GDS85131 |
| 31607589768 | GDS85045 | 33203417391 | GDS85062 | 33207604602 | GDS85073 | 7L8501201B | GDS85106 | 31607576079 | GDS85131 |
| 31608605474 | GDS85045 | 33207524043 | GDS85062 | 33217521630 | GDS85073 | 7L8501201BX | GDS85106 | 31607589765 | GDS85131 |
| 33207568471 | GDS85046 | 33207537607 | GDS85062 | 33217526745 | GDS85073 | 33207597673 | GDS85107 | 31607599263 | GDS85131 |
| 31607502731 | GDS85047 | 33213420709 | GDS85062 | 33217533452 | GDS85073 | 33207628251 | GDS85107 | 31608605471 | GDS85131 |
| 31607505199 | GDS85047 | 33213428179 | GDS85062 | 33217559073 | GDS85073 | 33207634461 | GDS85107 | 31609806469 | GDS85132 |
| 31607502732 | GDS85048 | 33217529913 | GDS85062 | 33217561790 | GDS85073 | 33207839468 | GDS85108 | 33207559086 | GDS85134 |
| 31607505200 | GDS85048 | 33217540115 | GDS85062 | 7521630 | GDS85073 | 33212229728 | GDS85108 | 33207561796 | GDS85134 |
| 33207500916 | GDS85049 | 31602752247 | GDS85063 | 7521630AI02 | GDS85073 | 33207597686 | GDS85109 | 33207580326 | GDS85134 |
| 33207500917 | GDS85049 | 31602756339 | GDS85063 | 31217540116 | GDS85074 | 33207597690 | GDS85109 | 33207580946 | GDS85134 |
| 33207500914 | GDS85050 | 31604853483 | GDS85063 | 33203415956 | GDS85074 | 33207640260 | GDS85109 | 33207591596 | GDS85134 |
| 33207500915 | GDS85050 | 31607585381 | GDS85063 | 33207524044 | GDS85074 | 33207597685 | GDS85110 | 33207599522 | GDS85134 |
| 7500914AI05 | GDS85050 | 31607596059 | GDS85063 | 33207537608 | GDS85074 | 33207597689 | GDS85110 | 33207599534 | GDS85134 |
| 33211226904 | GDS85051 | 31608605467 | GDS85063 | 33213428180 | GDS85074 | 33207640261 | GDS85110 | 33207604592 | GDS85134 |
| 33211227585 | GDS85051 | 33201229377 | GDS85064 | 33217529914 | GDS85074 | 33207566074 | GDS85111 | 33207604600 | GDS85134 |
| 33211229495 | GDS85051 | 33201229380 | GDS85064 | 33217540116 | GDS85074 | 33207566086 | GDS85111 | 33207605486 | GDS85134 |

| COMPETITOR | G-AP Ref. | COMPETITOR | G-AP Ref. | COMPETITOR | G-AP Ref. | COMPETITOR | G-AP Ref. | COMPETITOR | G-AP Ref. |
|---|---|---|---|---|---|---|---|---|---|
| OE | | 4820719 | GDS86075 | 96870388 | GDS88013 | 4880212AG | GDS88137 | 04593448AB | GDS89033 |
| | | 95299892 | GDS86075 | 2650112001 | GDS88016 | 4880212AH | GDS88137 | 05017653AA | GDS89033 |
| 33217527028 | GDS85134 | 95480030 | GDS86075 | 4342020111 | GDS88016 | 68193908AA | GDS88137 | 4593448AA | GDS89033 |
| 33217533448 | GDS85134 | 95520627 | GDS86075 | 4342020112 | GDS88016 | 68193908AB | GDS88137 | 4593448AB | GDS89033 |
| 33217553560 | GDS85134 | 25892341 | GDS86076 | 4342020113 | GDS88016 | 68193908AC | GDS88137 | 5017653AA | GDS89033 |
| 33217553564 | GDS85134 | 4802973 | GDS86076 | 04641883AD | GDS88024 | R4880212AG | GDS88137 | RL017653AA | GDS89033 |
| 33217561784 | GDS85134 | 4819609 | GDS86076 | 4641981K | GDS88024 | 52036361 | GDS88160 | RX017653AA | GDS89033 |
| 33207591595 | GDS85135 | 4820720 | GDS86076 | 4660981 | GDS88024 | 94750309 | GDS88160 | 4641964AA | GDS89039 |
| 33207605485 | GDS85135 | 95299893 | GDS86076 | 4808125 | GDS88024 | 96852712 | GDS88160 | 4808568L | GDS89039 |
| 33207566231 | GDS85136 | 95480031 | GDS86076 | 4808135 | GDS88024 | 95154419 | GDS88164 | 4808578 | GDS89039 |
| 33207581015 | GDS85137 | 95520581 | GDS86076 | 4808873 | GDS88024 | 95157491 | GDS88164 | 4808578L | GDS89039 |
| 33207581017 | GDS85137 | 2303201K85 | GDS86107 | 4808883 | GDS88024 | 95199674 | GDS88164 | 4808580 | GDS89039 |
| 33207647027 | GDS85137 | 68227837AA | GDS86113 | 4808883J | GDS88024 | 95226870 | GDS88164 | 4808580K | GDS89039 |
| 33207581016 | GDS85139 | 68227837AB | GDS86113 | 4808965 | GDS88024 | 95975620 | GDS88164 | 4641971AA | GDS89050 |
| 33207581018 | GDS85139 | 68227837AC | GDS86113 | 4808971 | GDS88024 | 96684370 | GDS88164 | 4641971AC | GDS89050 |
| 33207647026 | GDS85139 | 68227837AE | GDS86113 | 4808971K | GDS88024 | 94790609 | GDS88165 | 4641970AA | GDS89051 |
| 33207614493 | GDS85142 | 15234645 | GDS87009 | P4808883 | GDS88024 | 95154420 | GDS88165 | 4641970AC | GDS89051 |
| 33212282669 | GDS85144 | 15919080 | GDS87009 | 96257822 | GDS88059 | 95157492 | GDS88165 | P4808580 | GDS89066 |
| 33212283956 | GDS85144 | 88957153 | GDS87009 | 4410186Z00 | GDS88071 | 95199665 | GDS88165 | 04641883AA | GDS89067 |
| 33212283455 | GDS85145 | 89060354 | GDS87009 | 95981834 | GDS88071 | 95199667 | GDS88165 | 04641883AE | GDS89067 |
| 33212283457 | GDS85145 | 15234646 | GDS87010 | 96238259 | GDS88071 | 95226871 | GDS88165 | RX641883AE | GDS89067 |
| 33207637444 | GDS85147 | 15919079 | GDS87010 | 95981833 | GDS88072 | 95962904 | GDS88165 | 04668706AB | GDS89073 |
| 33207637445 | GDS85148 | 88957152 | GDS87010 | 96238258 | GDS88072 | 95975621 | GDS88165 | 05274806AB | GDS89073 |
| 33204567167 | GDS85149 | 89060355 | GDS87010 | 13250828 | GDS88077 | 04641855AA | GDS89004 | 05274806AC | GDS89073 |
| 33207564558 | GDS85149 | 10396861 | GDS87018 | 13335132 | GDS88077 | 04641855AC | GDS89004 | 4668706AB | GDS89073 |
| 33207582141 | GDS85149 | 22776827 | GDS87018 | 374415 | GDS88077 | 04641855AD | GDS89004 | 5274806AB | GDS89073 |
| 33212282116 | GDS85150 | 2223306800 | GDS87029 | 374883 | GDS88077 | 04641855AE | GDS89004 | 5274806AC | GDS89073 |
| 33207580771 | GDS85151 | A2223306800 | GDS87029 | 95520675 | GDS88077 | 04641881AA | GDS89004 | RL274806AC | GDS89073 |
| 33207587791 | GDS85151 | 495602B050 | GDS87061 | 3273CY | GDS88082 | 4641855AA | GDS89004 | RX274806AC | GDS89073 |
| 26079789 | GDS86016 | 495602B050SJ | GDS87061 | 3273CZ | GDS88082 | 4641855AC | GDS89004 | 05274807AB | GDS89074 |
| 8260797890 | GDS86016 | 495602B070 | GDS87061 | 3273TJ | GDS88082 | 4641855AD | GDS89004 | 05274807AC | GDS89074 |
| 10424904 | GDS86028 | 44500SWAA00 | GDS87071 | 3273TK | GDS88082 | 4641855AE | GDS89004 | 05274807AD | GDS89074 |
| 19153645 | GDS86028 | 44500SDAA00 | GDS87073 | 9644193580 | GDS88082 | 4641881AA | GDS89004 | 5274807AB | GDS89074 |
| 88964159 | GDS86028 | 49560S0100 | GDS87074 | 9645219180 | GDS88082 | 4641975 | GDS89004 | 5274807AC | GDS89074 |
| 10424906 | GDS86029 | 3220H06ED1PA01 | GDS87076 | 9683117980 | GDS88082 | 4641981 | GDS89004 | 5274807AD | GDS89074 |
| 19153644 | GDS86029 | 49560C5480 | GDS87080 | 4804567 | GDS88093 | 4641981AB | GDS89004 | 05273545AB | GDS89079 |
| 89047673 | GDS86029 | 495602S150 | GDS87082 | 95520523 | GDS88093 | 4660487 | GDS89004 | 05273545AC | GDS89079 |
| 96549103 | GDS86058 | 44500S6MJ00 | GDS87086 | 96624721 | GDS88093 | RX641855AE | GDS89004 | 05273545AD | GDS89079 |
| 96549104 | GDS86059 | 44500SCVA10 | GDS87086 | 4804568 | GDS88094 | 04641856AD | GDS89005 | 05273545AE | GDS89079 |
| 5374205 | GDS86064 | 10181306 | GDS87088 | 95520505 | GDS88094 | 04641856AE | GDS89005 | 5273545AB | GDS89079 |
| 94522010 | GDS86064 | 10181307 | GDS87089 | 96624722 | GDS88094 | 04641856AF | GDS89005 | 5273545AC | GDS89079 |
| 94531933 | GDS86064 | 10719318 | GDS87089 | 13306341 | GDS88095 | 04641882AA | GDS89005 | 5273545AD | GDS89079 |
| 94560847 | GDS86064 | 495602P000 | GDS87090 | 13334727 | GDS88095 | 04641882AD | GDS89005 | 5273545AE | GDS89079 |
| 95090842 | GDS86064 | 495602S060 | GDS87091 | 13271511 | GDS88107 | 04641882AE | GDS89005 | 68067361AA | GDS89079 |
| 95522389 | GDS86064 | 495602S000 | GDS87092 | 13334701 | GDS88107 | 04641882AF | GDS89005 | 68067361AB | GDS89079 |
| 5374027 | GDS86065 | 495602S100 | GDS87093 | 13334704 | GDS88107 | 4641856AA | GDS89005 | R8067361AB | GDS89079 |
| 5374157 | GDS86065 | FG0325700B | GDS87094 | 13271512 | GDS88108 | 4641856AC | GDS89005 | 05273546AB | GDS89080 |
| 5374200 | GDS86065 | FG0325700C | GDS87094 | 13271534 | GDS88108 | 4641856AD | GDS89005 | 05273546AC | GDS89080 |
| 94522003 | GDS86065 | FG0325700D | GDS87094 | 13334702 | GDS88108 | 4641856AE | GDS89005 | 05273546AD | GDS89080 |
| 94522004 | GDS86065 | FG0325700E | GDS87094 | 13334712 | GDS88108 | 4641856AF | GDS89005 | 05273546AE | GDS89080 |
| 94522005 | GDS86065 | 49560P2270 | GDS87095 | 13371624 | GDS88108 | 4641882AA | GDS89005 | 05273546AF | GDS89080 |
| 94522006 | GDS86065 | 4817345 | GDS87101 | 13386322 | GDS88108 | 4641882AD | GDS89005 | 5273546AB | GDS89080 |
| 94560848 | GDS86065 | 96624751 | GDS87101 | 52123584AA | GDS88118 | 4641882AE | GDS89005 | 5273546AC | GDS89080 |
| 94560849 | GDS86065 | 10619631 | GDS87104 | 52123584AB | GDS88118 | 4641882AF | GDS89005 | 5273546AD | GDS89080 |
| 94560850 | GDS86065 | 49560B1100 | GDS87109 | 95154416 | GDS88119 | 4808538 | GDS89005 | 5273546AE | GDS89080 |
| 94560851 | GDS86065 | 49560D2100 | GDS87109 | 95199673 | GDS88119 | 4808568 | GDS89005 | 5273546AF | GDS89080 |
| 9503344 | GDS86065 | 10947261 | GDS87110 | 13306340 | GDS88128 | 05012457AA | GDS89016 | 68079566AA | GDS89080 |
| 95090838 | GDS86065 | 11007976 | GDS87124 | 13334726 | GDS88128 | 05012457AB | GDS89016 | K05273546AD | GDS89080 |
| 95090839 | GDS86065 | 374324 | GDS88011 | 04880212AC | GDS88137 | 05012457AC | GDS89016 | K05273546AE | GDS89080 |
| 95090843 | GDS86065 | 374771 | GDS88011 | 04880212AD | GDS88137 | 5012457AA | GDS89016 | K05273546AF | GDS89080 |
| 95390015 | GDS86065 | 90538605 | GDS88011 | 04880212AE | GDS88137 | 5012457AB | GDS89016 | P05273546AB | GDS89080 |
| 95390016 | GDS86065 | 9117410 | GDS88011 | 04880212AF | GDS88137 | 5012457AC | GDS89016 | P05273546AC | GDS89080 |
| 95390018 | GDS86065 | 93184260 | GDS88011 | 04880212AG | GDS88137 | R2073978AC | GDS89016 | P05273546AD | GDS89080 |
| 95520815 | GDS86065 | 42702796 | GDS88012 | 04880212AH | GDS88137 | 5066020AA | GDS89018 | P05273546AE | GDS89080 |
| 95520816 | GDS86065 | 96485019 | GDS88012 | 4880212AC | GDS88137 | 5066024AA | GDS89018 | P05273546AF | GDS89080 |
| 25892340 | GDS86075 | 96870387 | GDS88012 | 4880212AD | GDS88137 | 52111778AB | GDS89018 | 04641884AB | GDS89082 |
| 4802972 | GDS86075 | 42702795 | GDS88013 | 4880212AE | GDS88137 | R2111778AB | GDS89018 | 04641884AC | GDS89082 |
| 4819608 | GDS86075 | 96485020 | GDS88013 | 4880212AF | GDS88137 | 04593448AA | GDS89033 | 04641884AD | GDS89082 |

| COMPETITOR | G-AP Ref. | COMPETITOR | G-AP Ref. | COMPETITOR | G-AP Ref. | COMPETITOR | G-AP Ref. | COMPETITOR | G-AP Ref. |
|---|---|---|---|---|---|---|---|---|---|
| OE | | 4994092 | GDS99042 | 391001510R | GDS99071 | YM213B436AD | GDS99120 | 7711135951 | GDS99188 |
| | | 5083615 | GDS99042 | 7711135416 | GDS99071 | TDB104990 | GDS99133 | 8200351248 | GDS99188 |
| 04641884AE | GDS89082 | 9T163B436AA | GDS99042 | 7711135417 | GDS99071 | TDB104980 | GDS99134 | 8200379235 | GDS99188 |
| 4641884AB | GDS89082 | 9T193B436AA | GDS99042 | 8200167522 | GDS99071 | 32727H | GDS99135 | 0003234V006000000 | GDS99190 |
| 4641884AC | GDS89082 | 9T1Z3B436A | GDS99042 | 8200167536 | GDS99071 | 32728H | GDS99135 | 0003234V007000000 | GDS99190 |
| 4641884AD | GDS89082 | RL2T143B436AX | GDS99042 | 8200246665 | GDS99071 | 44010S10A50 | GDS99146 | 0003234V009000000 | GDS99190 |
| 4641884AE | GDS89082 | RL2T143B436CX | GDS99042 | 8200264665 | GDS99071 | 3910000Q0A | GDS99151 | 0003234V010 | GDS99190 |
| RX641884AE | GDS89082 | RM2T143B436A1H | GDS99042 | 8200264668 | GDS99071 | 3910000QAK | GDS99151 | 0003234V010000000 | GDS99190 |
| 5273532AC | GDS89084 | RM2T143B436AC | GDS99042 | 8200300713 | GDS99071 | 7711135283 | GDS99151 | 0003234V011 | GDS99190 |
| 5273532AD | GDS89084 | RM2T143B436AD | GDS99042 | 8200613827 | GDS99071 | 8200042773 | GDS99151 | 0003234V011000000 | GDS99190 |
| 5273532AE | GDS89084 | RM2T143B436C1F | GDS99042 | 8200626038 | GDS99071 | 8200169288 | GDS99151 | 0009852V001000000 | GDS99190 |
| 5273532AF | GDS89084 | RM2T143B436CB | GDS99042 | 8200661558 | GDS99071 | 8200499895 | GDS99151 | 0009852V002000000 | GDS99190 |
| 1387847 | GDS98001 | RM2T143B436CC | GDS99042 | 8201235817 | GDS99071 | 374510 | GDS99157 | 0009852V003000000 | GDS99190 |
| 6C114364AA | GDS98001 | RM9T163B436A1A | GDS99042 | 4410162J20 | GDS99080 | 374512 | GDS99157 | 3234V010 | GDS99190 |
| 7180038 | GDS98002 | 1026902 | GDS99044 | 4410162J21 | GDS99080 | 93299246 | GDS99157 | AQ0003234V011000000 | GDS99190 |
| 99808404 | GDS98002 | 1030971 | GDS99044 | 4410163J20 | GDS99080 | 93299248 | GDS99157 | Q0003234V0010000000 | GDS99190 |
| 4231160241 | GDS98004 | 1040540 | GDS99044 | 4410163J21 | GDS99080 | 93299250 | GDS99157 | Q0003234V006000000 | GDS99190 |
| 4231160242 | GDS98004 | 1048977 | GDS99044 | 4410163J22 | GDS99080 | 95520711 | GDS99157 | Q0003234V007000000 | GDS99190 |
| 02E409343D | GDS98006 | 1059533 | GDS99044 | 4410263B11 | GDS99095 | 8200531844 | GDS99169 | Q0003234V009000000 | GDS99190 |
| 02E409355D | GDS98006 | 1061242 | GDS99044 | 4342005200 | GDS99101 | 1135075 | GDS99175 | Q0003234V010000000 | GDS99190 |
| 0C9409344C | GDS98007 | 1063414 | GDS99044 | 4342005300 | GDS99101 | 1139963 | GDS99175 | Q0003234V011000000 | GDS99190 |
| 3273Z0 | GDS99003 | 1076089 | GDS99044 | 4341005370 | GDS99106 | 1754452 | GDS99175 | Q0009852V001000000 | GDS99190 |
| 3273Z1 | GDS99003 | 1689907 | GDS99044 | 4341005371 | GDS99106 | 1M5O3B436AA | GDS99175 | Q0009852V002000000 | GDS99190 |
| 32722Q | GDS99006 | 97FG3A427BA | GDS99044 | 4341005720 | GDS99106 | 1M5O3B436AB | GDS99175 | Q0009852V003000000 | GDS99190 |
| 32723Q | GDS99006 | 97FG3A427BB | GDS99044 | 4342005310 | GDS99107 | 2M5V3B436AA | GDS99175 | 0003233V006000000 | GDS99191 |
| 3272Q | GDS99006 | 97FG3A427BC | GDS99044 | 4342005311 | GDS99107 | 2M5Z3B436AA | GDS99175 | 0003233V007000000 | GDS99191 |
| 3273Q | GDS99006 | 97FG3A427CA | GDS99044 | 4342005320 | GDS99107 | 4327010 | GDS99175 | 0003233V009000000 | GDS99191 |
| 32737H | GDS99010 | 97FG3A427CB | GDS99044 | 3BD407272A | GDS99108 | RM2M5V3B436A1A | GDS99175 | 0003233V010000000 | GDS99191 |
| 32737J | GDS99010 | 98FG3A427AA | GDS99044 | 8D0407272AC | GDS99108 | C2S24982 | GDS99176 | 0003233V011 | GDS99191 |
| 9635484580 | GDS99010 | 98FG3A427AAA | GDS99044 | 8D0407272BE | GDS99108 | C2S29730 | GDS99176 | 0003233V011000000 | GDS99191 |
| 3272E3 | GDS99025 | R97FX3219EA | GDS99044 | 8D0407272DK | GDS99108 | C2S39944 | GDS99176 | 0009853V001000000 | GDS99191 |
| 32721H | GDS99037 | RE97FX3219E1A | GDS99044 | 8D0407272DM | GDS99108 | C2S40434 | GDS99176 | 0009853V002000000 | GDS99191 |
| 32723G | GDS99037 | 46307324 | GDS99048 | 8D0407418H | GDS99108 | C2S51198 | GDS99176 | 0009853V003000000 | GDS99191 |
| 3272W2 | GDS99037 | 71782984 | GDS99048 | 8D0407452DV | GDS99108 | C2S6659 | GDS99176 | AQ0003233V011000000 | GDS99191 |
| 1328362 | GDS99042 | 46307149 | GDS99049 | 8D0407452DX | GDS99108 | C2S29732 | GDS99177 | Q0003233V006000000 | GDS99191 |
| 1328363 | GDS99042 | 7782543 | GDS99049 | 8D0407272AP | GDS99111 | C2S39945 | GDS99177 | Q0003233V007000000 | GDS99191 |
| 1383753 | GDS99042 | 495012E200 | GDS99053 | 8D0407272BA | GDS99111 | C2S40435 | GDS99177 | Q0003233V009000000 | GDS99191 |
| 1383754 | GDS99042 | 495012E201 | GDS99053 | 8D0407272DL | GDS99111 | C2S51185 | GDS99177 | Q0003233V010000000 | GDS99191 |
| 1417748 | GDS99042 | 4950117000 | GDS99056 | 8D0407452V | GDS99111 | C2S6660 | GDS99177 | Q0003233V011000000 | GDS99191 |
| 1417749 | GDS99042 | 4950117050 | GDS99056 | 8D0407452X | GDS99111 | 4529634 | GDS99178 | Q0009853V001000000 | GDS99191 |
| 1451463 | GDS99042 | 4950017000 | GDS99057 | 8D0407454X | GDS99111 | 1370695 | GDS99179 | Q0009853V002000000 | GDS99191 |
| 1451464 | GDS99042 | 4950017050 | GDS99057 | 1H0407272AA | GDS99112 | 1385393 | GDS99179 | Q0009853V003000000 | GDS99191 |
| 1477380 | GDS99042 | GD402550XA | GDS99064 | 1H0407272C | GDS99112 | 1417889 | GDS99179 | 1370697 | GDS99194 |
| 1477381 | GDS99042 | GD402550XB | GDS99064 | 1H0407272CV | GDS99112 | 1434481 | GDS99179 | 1370698 | GDS99194 |
| 1501261 | GDS99042 | GD402550XC | GDS99064 | 1H0407272CX | GDS99112 | 1496580 | GDS99179 | 1385391 | GDS99194 |
| 1501262 | GDS99042 | 3474799 | GDS99069 | 1H0407272P | GDS99112 | 1782557 | GDS99179 | 1385392 | GDS99194 |
| 1600418 | GDS99042 | 374799 | GDS99069 | 1H0407272PX | GDS99112 | 6C113B437BA | GDS99179 | 1417887 | GDS99194 |
| 1600419 | GDS99042 | 391010737R | GDS99070 | 1H0407272S | GDS99112 | 6C113B437BB | GDS99179 | 1417888 | GDS99194 |
| 1754379 | GDS99042 | 391017096R | GDS99070 | 1H0407272SX | GDS99112 | 6C113B437BC | GDS99179 | 1434479 | GDS99194 |
| 1804602 | GDS99042 | 391017569R | GDS99070 | JZW407449MX | GDS99115 | 6C113B437BD | GDS99179 | 1445100 | GDS99194 |
| 1804604 | GDS99042 | 7711135422 | GDS99070 | 1H0407271C | GDS99116 | 6C113B437BE | GDS99179 | 1495672 | GDS99194 |
| 2T143B346CC | GDS99042 | 7711135423 | GDS99070 | 1H0407271CX | GDS99116 | 7C113B436AB | GDS99179 | 1496579 | GDS99194 |
| 2T143B436AB | GDS99042 | 7711368284 | GDS99070 | 1H0407271G | GDS99116 | RM6C113B437B2E | GDS99179 | 1782551 | GDS99194 |
| 2T143B436AC | GDS99042 | 7711368895 | GDS99070 | 1H0407271GX | GDS99116 | 4341052110 | GDS99180 | 1782553 | GDS99194 |
| 2T143B436AD | GDS99042 | 7711497634 | GDS99070 | 1116018 | GDS99120 | 434200D020 | GDS99181 | 6C113B436BC | GDS99194 |
| 2T143B436AE | GDS99042 | 8200167535 | GDS99070 | 1121066 | GDS99120 | 4342052050 | GDS99181 | 6C113B436BD | GDS99194 |
| 2T143B436AF | GDS99042 | 8200264664 | GDS99070 | 1132479 | GDS99120 | 4342052110 | GDS99181 | 6C113B436BE | GDS99194 |
| 2T143B436AG | GDS99042 | 8200264667 | GDS99070 | 1254276 | GDS99120 | 4410286G00 | GDS99184 | 6C113B436DA | GDS99194 |
| 2T143B436AH | GDS99042 | 8200283030 | GDS99070 | 7M3407272B | GDS99120 | 7711135822 | GDS99186 | 6C113B436DB | GDS99194 |
| 2T143B436CA | GDS99042 | 8200356803 | GDS99070 | 7M3407272C | GDS99120 | 7711368444 | GDS99186 | 6C113B436DC | GDS99194 |
| 2T143B436CB | GDS99042 | 8200388506 | GDS99070 | 7M3407272E | GDS99120 | 7711368898 | GDS99186 | 6C113B436DD | GDS99194 |
| 2T143B436CC | GDS99042 | 8200432514 | GDS99070 | 7M3407272EX | GDS99120 | 8200216626 | GDS99186 | 6C113B436DE | GDS99194 |
| 2T143B436CD | GDS99042 | 8200511116 | GDS99070 | 7M3407272G | GDS99120 | 8200276407 | GDS99186 | 7C113B436AA | GDS99194 |
| 2T143B436CE | GDS99042 | 8200511122 | GDS99070 | 7M3407272GX | GDS99120 | 8200302824 | GDS99186 | RM6C113B436B2E | GDS99194 |
| 2T143B436CF | GDS99042 | 8200623807 | GDS99070 | 7M3407452V | GDS99120 | 8200531908 | GDS99186 | RM6C113B436D2E | GDS99194 |
| 4371788 | GDS99042 | 8200626043 | GDS99070 | 7M3407452X | GDS99120 | 8200531910 | GDS99186 | 3272FG | GDS99195 |
| 4490557 | GDS99042 | 8200661557 | GDS99070 | RMYM2J3B436AC | GDS99120 | 8200531915 | GDS99186 | 3272FH | GDS99195 |
| 4511905 | GDS99042 | 8200690053 | GDS99070 | YM213B436AC | GDS99120 | 8200623767 | GDS99186 | 3272FL | GDS99195 |

| COMPETITOR | G-AP Ref. | COMPETITOR | G-AP Ref. | COMPETITOR | G-AP Ref. | COMPETITOR | G-AP Ref. | COMPETITOR | G-AP Ref. |
|---|---|---|---|---|---|---|---|---|---|
| OE | | 3273NQ | GDS99214 | A9063300001 | GDS99290 | | | | |
| | | 71791561 | GDS99214 | A9063300201 | GDS99290 | | | | |
| 3272FN | GDS99195 | 71792561 | GDS99214 | A906330020164 | GDS99290 | | | | |
| 3272KL | GDS99195 | SU001A0969 | GDS99214 | 43420B1020 | GDS99294 | | | | |
| 3272KN | GDS99195 | 31603450563 | GDS99215 | | | | | | |
| 3272LP | GDS99195 | 31603450565 | GDS99215 | | | | | | |
| 3272LQ | GDS99195 | 31607524045 | GDS99215 | | | | | | |
| 9642426680 | GDS99195 | 31607529201 | GDS99215 | | | | | | |
| 9642600180 | GDS99195 | 4950007050 | GDS99216 | | | | | | |
| 3273FG | GDS99196 | 4950007060 | GDS99216 | | | | | | |
| 3273FH | GDS99196 | 8200352042 | GDS99217 | | | | | | |
| 3273JY | GDS99196 | 88957151 | GDS99226 | | | | | | |
| 3273JZ | GDS99196 | 391015402R | GDS99228 | | | | | | |
| 9642426780 | GDS99196 | 391017321R | GDS99228 | | | | | | |
| 9642600080 | GDS99196 | 391019600R | GDS99228 | | | | | | |
| 3273GZ | GDS99197 | 4153600115 | GDS99228 | | | | | | |
| 3273HA | GDS99197 | 4153600615 | GDS99228 | | | | | | |
| 3273NT | GDS99197 | 8200597305 | GDS99228 | | | | | | |
| 3273NV | GDS99197 | 8200687739 | GDS99228 | | | | | | |
| 3273RN | GDS99197 | 8201235754 | GDS99228 | | | | | | |
| 3273RP | GDS99197 | A4153600115 | GDS99228 | | | | | | |
| 391008H310 | GDS99198 | A4153600615 | GDS99228 | | | | | | |
| 391008H515 | GDS99198 | 8200687740 | GDS99229 | | | | | | |
| 33212228156 | GDS99199 | 8201235167 | GDS99229 | | | | | | |
| 33212228513 | GDS99199 | 13271519 | GDS99246 | | | | | | |
| 5393038 | GDS99200 | 13334708 | GDS99246 | | | | | | |
| 5532718 | GDS99200 | 13386316 | GDS99246 | | | | | | |
| 7711135420 | GDS99201 | 39069605 | GDS99246 | | | | | | |
| 8200198016 | GDS99201 | 39069627 | GDS99246 | | | | | | |
| 24430493 | GDS99204 | 13271549 | GDS99247 | | | | | | |
| 24430495 | GDS99205 | 13334715 | GDS99247 | | | | | | |
| 31367153 | GDS99211 | 13371622 | GDS99247 | | | | | | |
| 36001531 | GDS99211 | 13386317 | GDS99247 | | | | | | |
| 36002892 | GDS99211 | 39069606 | GDS99247 | | | | | | |
| 1380033 | GDS99212 | 3273KJ | GDS99271 | | | | | | |
| 1424194 | GDS99212 | 3273KK | GDS99271 | | | | | | |
| 1431395 | GDS99212 | 3273PZ | GDS99271 | | | | | | |
| 1437705 | GDS99212 | 3273QA | GDS99271 | | | | | | |
| 1437735 | GDS99212 | 9684678580 | GDS99271 | | | | | | |
| 1459738 | GDS99212 | 3272KW | GDS99272 | | | | | | |
| 1460786 | GDS99212 | 3272KX | GDS99272 | | | | | | |
| 1460803 | GDS99212 | 4234012060 | GDS99275 | | | | | | |
| 1460805 | GDS99212 | 4234012061 | GDS99275 | | | | | | |
| 1667811 | GDS99212 | 4234012062 | GDS99275 | | | | | | |
| 1670061 | GDS99212 | 495004D301 | GDS99278 | | | | | | |
| 1788201 | GDS99212 | 31601493977 | GDS99285 | | | | | | |
| 1788202 | GDS99212 | 31607514475 | GDS99285 | | | | | | |
| 1840132 | GDS99212 | 31607518237 | GDS99285 | | | | | | |
| 1840133 | GDS99212 | 3910000Q0C | GDS99286 | | | | | | |
| 6G913B436BD | GDS99212 | 3910100Q2D | GDS99286 | | | | | | |
| 6G913B436BE | GDS99212 | 3910100Q4D | GDS99286 | | | | | | |
| 6G913B436BF | GDS99212 | 4417083 | GDS99286 | | | | | | |
| 6G913B436DA | GDS99212 | 4421271 | GDS99286 | | | | | | |
| 6G913B436DB | GDS99212 | 8200414939 | GDS99286 | | | | | | |
| 6G913B436DC | GDS99212 | 8200776522 | GDS99286 | | | | | | |
| 6G913B436DD | GDS99212 | 8200776533 | GDS99286 | | | | | | |
| 6G913B436EA | GDS99212 | 8201187929 | GDS99286 | | | | | | |
| 6G913B436EB | GDS99212 | 820187929 | GDS99286 | | | | | | |
| 6G913B436EC | GDS99212 | 93169683 | GDS99286 | | | | | | |
| 6G913B436FC | GDS99212 | 93189873 | GDS99286 | | | | | | |
| 6G913B436FD | GDS99212 | 95507091 | GDS99286 | | | | | | |
| 6G913B436FE | GDS99212 | 31607514001 | GDS99288 | | | | | | |
| RM6G913B436B2F | GDS99212 | 31607518239 | GDS99288 | | | | | | |
| RM6G913B436F2E | GDS99212 | 31607574871 | GDS99288 | | | | | | |
| 1497188080 | GDS99214 | 31607576107 | GDS99288 | | | | | | |
| 1497188088 | GDS99214 | 9063300001 | GDS99290 | | | | | | |
| 1497199080 | GDS99214 | 9063300201 | GDS99290 | | | | | | |
| 3273NP | GDS99214 | 906330020164 | GDS99290 | | | | | | |

# New applications (compared with catalogue 2026)

| G-AP Ref. | G-AP Ref. | G-AP Ref. | G-AP Ref. | G-AP Ref. | G-AP Ref. | G-AP Ref. |
|---|---|---|---|---|---|---|
| GCI10024 | GCI57123 | GCI81753 | GCI82888 | GCI83748 | GCI83909 | GCI84030 |
| GCI10054 | GCI57160 | GCI81761 | GCI82889 | GCI83763 | GCI83914 | GCI84031 |
| GCI10070 | GCI59127 | GCI81764 | GCI82900 | GCI83768 | GCI83915 | GCI84032 |
| GCI10095 | GCI59168 | GCI81766 | GCI82902 | GCI83769 | GCI83916 | GCI84033 |
| GCI10096 | GCI59246 | GCI81778 | GCI82903 | GCI83771 | GCI83918 | GCI84035 |
| GCI10139 | GCI60004 | GCI81788 | GCI82910 | GCI83773 | GCI83919 | GCI84036 |
| GCI10142 | GCI61051 | GCI81789 | GCI83031 | GCI83776 | GCI83920 | GCI84039 |
| GCI10143 | GCI62027 | GCI81801 | GCI83032 | GCI83777 | GCI83921 | GCI84040 |
| GCI10144 | GCI68004 | GCI81850 | GCI83033 | GCI83781 | GCI83922 | GCI84042 |
| GCI14034 | GCI75015 | GCI81852 | GCI83037 | GCI83782 | GCI83925 | GCI84043 |
| GCI14035 | GCI75025 | GCI81859 | GCI83041 | GCI83784 | GCI83935 | GCI84044 |
| GCI14038 | GCI75040 | GCI81868 | GCI83090 | GCI83786 | GCI83944 | GCI84045 |
| GCI15012 | GCI75042 | GCI81870 | GCI83098 | GCI83789 | GCI83945 | GCI84046 |
| GCI16003 | GCI75043 | GCI81874 | GCI83099 | GCI83793 | GCI83949 | GCI84047 |
| GCI16004 | GCI75044 | GCI81877 | GCI83100 | GCI83795 | GCI83953 | GCI84049 |
| GCI17016 | GCI75050 | GCI81878 | GCI83101 | GCI83796 | GCI83954 | GCI84050 |
| GCI17043 | GCI81023 | GCI81886 | GCI83102 | GCI83797 | GCI83955 | GCI84051 |
| GCI17055 | GCI81042 | GCI81887 | GCI83103 | GCI83799 | GCI83956 | GCI84053 |
| GCI17057 | GCI81079 | GCI81892 | GCI83105 | GCI83800 | GCI83957 | GCI84054 |
| GCI17063 | GCI81081 | GCI81893 | GCI83106 | GCI83801 | GCI83958 | GCI84055 |
| GCI17083 | GCI81085 | GCI81898 | GCI83107 | GCI83802 | GCI83960 | GCI84056 |
| GCI17084 | GCI81156 | GCI81899 | GCI83108 | GCI83804 | GCI83962 | GCI84057 |
| GCI17091 | GCI81162 | GCI81901 | GCI83109 | GCI83805 | GCI83966 | GCI84058 |
| GCI17093 | GCI81163 | GCI81914 | GCI83183 | GCI83807 | GCI83967 | GCI84059 |
| GCI17096 | GCI81164 | GCI81915 | GCI83184 | GCI83808 | GCI83968 | GCI84060 |
| GCI18101 | GCI81169 | GCI81929 | GCI83191 | GCI83810 | GCI83969 | GCI84063 |
| GCI18140 | GCI81173 | GCI81940 | GCI83192 | GCI83811 | GCI83970 | GCI84064 |
| GCI18190 | GCI81196 | GCI81941 | GCI83194 | GCI83812 | GCI83971 | GCI84066 |
| GCI18264 | GCI81299 | GCI81944 | GCI83195 | GCI83813 | GCI83973 | GCI84067 |
| GCI18265 | GCI81329 | GCI81945 | GCI83213 | GCI83814 | GCI83974 | GCI84068 |
| GCI18272 | GCI81349 | GCI81946 | GCI83214 | GCI83818 | GCI83975 | GCI84069 |
| GCI18275 | GCI81351 | GCI81947 | GCI83215 | GCI83819 | GCI83976 | GCI84070 |
| GCI18276 | GCI81372 | GCI81948 | GCI83220 | GCI83820 | GCI83977 | GCI84073 |
| GCI18278 | GCI81402 | GCI81961 | GCI83236 | GCI83821 | GCI83979 | GCI84077 |
| GCI18279 | GCI81415 | GCI81962 | GCI83265 | GCI83822 | GCI83980 | GCI84080 |
| GCI18282 | GCI81417 | GCI81963 | GCI83267 | GCI83823 | GCI83983 | GCI84081 |
| GCI18283 | GCI81480 | GCI81969 | GCI83293 | GCI83824 | GCI83984 | GCI84082 |
| GCI18286 | GCI81481 | GCI81973 | GCI83363 | GCI83825 | GCI83985 | GCI84088 |
| GCI21023 | GCI81492 | GCI81978 | GCI83367 | GCI83826 | GCI83986 | GCI85005 |
| GCI21039 | GCI81534 | GCI82106 | GCI83453 | GCI83836 | GCI83987 | GCI85019 |
| GCI21065 | GCI81551 | GCI82107 | GCI83454 | GCI83837 | GCI83988 | GCI85077 |
| GCI23040 | GCI81561 | GCI82124 | GCI83467 | GCI83843 | GCI83989 | GCI86030 |
| GCI24110 | GCI81562 | GCI82127 | GCI83490 | GCI83850 | GCI83991 | GCI88058 |
| GCI27053 | GCI81566 | GCI82128 | GCI83511 | GCI83851 | GCI83992 | GCI88070 |
| GCI34032 | GCI81580 | GCI82189 | GCI83523 | GCI83852 | GCI83993 | GCO10151 |
| GCI34052 | GCI81595 | GCI82251 | GCI83558 | GCI83853 | GCI83994 | GCO10199 |
| GCI34085 | GCI81603 | GCI82278 | GCI83560 | GCI83858 | GCI83996 | GCO14100 |
| GCI34111 | GCI81613 | GCI82310 | GCI83561 | GCI83859 | GCI83997 | GCO17047 |
| GCI34158 | GCI81624 | GCI82415 | GCI83582 | GCI83863 | GCI83998 | GCO17075 |
| GCI39092 | GCI81627 | GCI82420 | GCI83583 | GCI83866 | GCI84005 | GCO18200 |
| GCI41112 | GCI81628 | GCI82666 | GCI83604 | GCI83868 | GCI84006 | GCO18234 |
| GCI41179 | GCI81641 | GCI82667 | GCI83606 | GCI83869 | GCI84010 | GCO18245 |
| GCI41186 | GCI81644 | GCI82749 | GCI83607 | GCI83873 | GCI84014 | GCO18262 |
| GCI41189 | GCI81649 | GCI82787 | GCI83609 | GCI83880 | GCI84015 | GCO18265 |
| GCI44025 | GCI81665 | GCI82788 | GCI83610 | GCI83886 | GCI84016 | GCO18276 |
| GCI45011 | GCI81666 | GCI82865 | GCI83662 | GCI83898 | GCI84017 | GCO18281 |
| GCI45020 | GCI81667 | GCI82872 | GCI83663 | GCI83899 | GCI84018 | GCO18293 |
| GCI45038 | GCI81670 | GCI82882 | GCI83689 | GCI83900 | GCI84020 | GCO18315 |
| GCI48009 | GCI81701 | GCI82883 | GCI83693 | GCI83904 | GCI84021 | GCO18321 |
| GCI50123 | GCI81735 | GCI82884 | GCI83713 | GCI83905 | GCI84022 | GCO18323 |
| GCI51029 | GCI81737 | GCI82885 | GCI83717 | GCI83906 | GCI84023 | GCO18325 |
| GCI57053 | GCI81740 | GCI82886 | GCI83742 | GCI83907 | GCI84025 | GCO18331 |
| GCI57082 | GCI81751 | GCI82887 | GCI83743 | GCI83908 | GCI84029 | GCO24117 |

# New applications (compared with catalogue 2026)

| G-AP Ref. | G-AP Ref. | G-AP Ref. | G-AP Ref. | G-AP Ref. | G-AP Ref. | G-AP Ref. |
|---|---|---|---|---|---|---|
| GCO34233 | GCO82275 | GCO83711 | GCO83893 | GDS24276 | GDS50624 | GDS57085 |
| GCO34237 | GCO82277 | GCO83718 | GDS12003 | GDS24277 | GDS51043 | GDS57102 |
| GCO41402 | GCO82315 | GCO83727 | GDS12014 | GDS24324 | GDS51067 | GDS57128 |
| GCO44009 | GCO82357 | GCO83734 | GDS12028 | GDS24417 | GDS56024 | GDS57148 |
| GCO44021 | GCO82424 | GCO83743 | GDS12029 | GDS24459 | GDS56052 | GDS57149 |
| GCO50186 | GCO82519 | GCO83750 | GDS14075 | GDS24498 | GDS56055 | GDS57151 |
| GCO56017 | GCO82816 | GCO83757 | GDS14087 | GDS24499 | GDS56061 | GDS57185 |
| GCO56061 | GCO82828 | GCO83766 | GDS15019 | GDS24546 | GDS56064 | GDS57240 |
| GCO57212 | GCO82880 | GCO83767 | GDS15042 | GDS24564 | GDS56087 | GDS57286 |
| GCO59211 | GCO82895 | GCO83768 | GDS15057 | GDS27015 | GDS56094 | GDS57301 |
| GCO59235 | GCO82896 | GCO83769 | GDS16005 | GDS27016 | GDS56114 | GDS57336 |
| GCO59378 | GCO82898 | GCO83778 | GDS16015 | GDS27076 | GDS56115 | GDS57339 |
| GCO61082 | GCO82899 | GCO83781 | GDS17069 | GDS27088 | GDS56124 | GDS57340 |
| GCO68010 | GCO82900 | GCO83783 | GDS17207 | GDS27089 | GDS56125 | GDS57344 |
| GCO69005 | GCO82905 | GCO83784 | GDS17208 | GDS27199 | GDS56126 | GDS57345 |
| GCO75019 | GCO82911 | GCO83785 | GDS17212 | GDS27238 | GDS56137 | GDS57412 |
| GCO75020 | GCO83155 | GCO83786 | GDS17213 | GDS27239 | GDS56138 | GDS57421 |
| GCO75026 | GCO83159 | GCO83787 | GDS17214 | GDS28008 | GDS56139 | GDS57422 |
| GCO75035 | GCO83164 | GCO83795 | GDS17231 | GDS28026 | GDS56141 | GDS57428 |
| GCO81018 | GCO83168 | GCO83807 | GDS17232 | GDS31001 | GDS56142 | GDS57429 |
| GCO81028 | GCO83169 | GCO83808 | GDS18088 | GDS31005 | GDS56144 | GDS57443 |
| GCO81097 | GCO83170 | GCO83809 | GDS18299 | GDS31009 | GDS56145 | GDS57455 |
| GCO81101 | GCO83171 | GCO83810 | GDS18346 | GDS31010 | GDS56146 | GDS57479 |
| GCO81102 | GCO83198 | GCO83811 | GDS18347 | GDS32007 | GDS56147 | GDS57489 |
| GCO81284 | GCO83204 | GCO83813 | GDS18392 | GDS34057 | GDS56148 | GDS57500 |
| GCO81305 | GCO83211 | GCO83814 | GDS18393 | GDS34090 | GDS56149 | GDS57505 |
| GCO81364 | GCO83224 | GCO83817 | GDS18410 | GDS34102 | GDS56150 | GDS57563 |
| GCO81448 | GCO83227 | GCO83818 | GDS18477 | GDS34116 | GDS56151 | GDS57571 |
| GCO81455 | GCO83293 | GCO83820 | GDS18483 | GDS34189 | GDS56152 | GDS57577 |
| GCO81583 | GCO83388 | GCO83821 | GDS18485 | GDS34192 | GDS56159 | GDS57578 |
| GCO81585 | GCO83408 | GCO83822 | GDS18491 | GDS34203 | GDS56160 | GDS57584 |
| GCO81650 | GCO83433 | GCO83826 | GDS18492 | GDS34204 | GDS56182 | GDS57596 |
| GCO81656 | GCO83487 | GCO83827 | GDS18494 | GDS34241 | GDS56183 | GDS57613 |
| GCO81660 | GCO83493 | GCO83829 | GDS18495 | GDS34267 | GDS56195 | GDS57614 |
| GCO81667 | GCO83505 | GCO83830 | GDS18505 | GDS35019 | GDS56196 | GDS57615 |
| GCO81695 | GCO83507 | GCO83831 | GDS18506 | GDS35023 | GDS56197 | GDS57618 |
| GCO81697 | GCO83543 | GCO83832 | GDS18507 | GDS35065 | GDS56198 | GDS57619 |
| GCO81791 | GCO83616 | GCO83833 | GDS18508 | GDS39036 | GDS56213 | GDS57620 |
| GCO81795 | GCO83620 | GCO83835 | GDS18510 | GDS39136 | GDS56214 | GDS57622 |
| GCO81799 | GCO83632 | GCO83838 | GDS18511 | GDS39146 | GDS56225 | GDS57623 |
| GCO81812 | GCO83638 | GCO83844 | GDS18514 | GDS39173 | GDS56250 | GDS57624 |
| GCO81962 | GCO83639 | GCO83845 | GDS18516 | GDS39174 | GDS56251 | GDS57625 |
| GCO81964 | GCO83645 | GCO83846 | GDS19015 | GDS39206 | GDS56252 | GDS57626 |
| GCO81969 | GCO83656 | GCO83848 | GDS19017 | GDS39207 | GDS56263 | GDS57628 |
| GCO81970 | GCO83664 | GCO83852 | GDS21067 | GDS39230 | GDS56293 | GDS57629 |
| GCO81972 | GCO83671 | GCO83853 | GDS21122 | GDS39300 | GDS56319 | GDS57635 |
| GCO81994 | GCO83672 | GCO83854 | GDS22002 | GDS39323 | GDS56360 | GDS57636 |
| GCO81995 | GCO83674 | GCO83858 | GDS22008 | GDS39324 | GDS56366 | GDS57637 |
| GCO82027 | GCO83676 | GCO83859 | GDS22009 | GDS41096 | GDS56409 | GDS57640 |
| GCO82035 | GCO83680 | GCO83860 | GDS23012 | GDS41146 | GDS56439 | GDS57641 |
| GCO82048 | GCO83682 | GCO83861 | GDS23095 | GDS41176 | GDS56546 | GDS57645 |
| GCO82073 | GCO83683 | GCO83862 | GDS23101 | GDS41416 | GDS56552 | GDS57651 |
| GCO82074 | GCO83684 | GCO83863 | GDS23214 | GDS41478 | GDS56722 | GDS57652 |
| GCO82108 | GCO83686 | GCO83864 | GDS23215 | GDS41507 | GDS56723 | GDS57653 |
| GCO82109 | GCO83695 | GCO83865 | GDS23268 | GDS41541 | GDS56742 | GDS57654 |
| GCO82110 | GCO83696 | GCO83866 | GDS24074 | GDS44090 | GDS56786 | GDS57655 |
| GCO82111 | GCO83697 | GCO83867 | GDS24087 | GDS44101 | GDS56819 | GDS57656 |
| GCO82112 | GCO83698 | GCO83869 | GDS24152 | GDS44106 | GDS56921 | GDS57660 |
| GCO82139 | GCO83703 | GCO83871 | GDS24165 | GDS45088 | GDS56922 | GDS57661 |
| GCO82141 | GCO83704 | GCO83876 | GDS24193 | GDS45214 | GDS56975 | GDS57662 |
| GCO82142 | GCO83707 | GCO83877 | GDS24201 | GDS46007 | GDS56976 | GDS57663 |
| GCO82154 | GCO83708 | GCO83882 | GDS24225 | GDS50294 | GDS57050 | GDS57664 |
| GCO82160 | GCO83710 | GCO83884 | GDS24274 | GDS50552 | GDS57084 | GDS57665 |

# New applications (compared with catalogue 2026)

| G-AP Ref. | G-AP Ref. | G-AP Ref. | G-AP Ref. | G-AP Ref. | G-AP Ref. | G-AP Ref. |
|---|---|---|---|---|---|---|
| GDS57666 | GDS57800 | GDS57917 | GDS58057 | GDS58196 | GDS58308 | GDS61339 |
| GDS57667 | GDS57801 | GDS57918 | GDS58058 | GDS58197 | GDS58309 | GDS62057 |
| GDS57668 | GDS57802 | GDS57919 | GDS58059 | GDS58198 | GDS58315 | GDS62087 |
| GDS57669 | GDS57810 | GDS57920 | GDS58060 | GDS58199 | GDS58316 | GDS62144 |
| GDS57679 | GDS57811 | GDS57926 | GDS58061 | GDS58200 | GDS58317 | GDS75024 |
| GDS57680 | GDS57816 | GDS57933 | GDS58063 | GDS58202 | GDS58318 | GDS75025 |
| GDS57685 | GDS57817 | GDS57935 | GDS58065 | GDS58203 | GDS58319 | GDS75026 |
| GDS57686 | GDS57818 | GDS57936 | GDS58066 | GDS58206 | GDS58320 | GDS75027 |
| GDS57692 | GDS57819 | GDS57937 | GDS58068 | GDS58207 | GDS58321 | GDS75040 |
| GDS57693 | GDS57820 | GDS57941 | GDS58072 | GDS58208 | GDS58325 | GDS75041 |
| GDS57697 | GDS57821 | GDS57945 | GDS58073 | GDS58209 | GDS58328 | GDS75059 |
| GDS57698 | GDS57823 | GDS57946 | GDS58074 | GDS58210 | GDS58329 | GDS75061 |
| GDS57699 | GDS57825 | GDS57947 | GDS58075 | GDS58211 | GDS58330 | GDS75062 |
| GDS57703 | GDS57826 | GDS57948 | GDS58077 | GDS58212 | GDS58333 | GDS75063 |
| GDS57705 | GDS57830 | GDS57949 | GDS58078 | GDS58213 | GDS58334 | GDS81049 |
| GDS57706 | GDS57831 | GDS57950 | GDS58079 | GDS58215 | GDS58335 | GDS81075 |
| GDS57707 | GDS57832 | GDS57952 | GDS58080 | GDS58219 | GDS58336 | GDS81102 |
| GDS57708 | GDS57833 | GDS57953 | GDS58081 | GDS58220 | GDS58337 | GDS81103 |
| GDS57709 | GDS57834 | GDS57954 | GDS58090 | GDS58223 | GDS58338 | GDS81134 |
| GDS57712 | GDS57835 | GDS57955 | GDS58091 | GDS58224 | GDS58339 | GDS81256 |
| GDS57715 | GDS57839 | GDS57958 | GDS58092 | GDS58225 | GDS58344 | GDS81257 |
| GDS57716 | GDS57840 | GDS57959 | GDS58093 | GDS58226 | GDS58346 | GDS81258 |
| GDS57717 | GDS57841 | GDS57960 | GDS58094 | GDS58227 | GDS58347 | GDS81259 |
| GDS57718 | GDS57842 | GDS57961 | GDS58095 | GDS58230 | GDS58348 | GDS81260 |
| GDS57719 | GDS57843 | GDS57962 | GDS58098 | GDS58233 | GDS58349 | GDS81267 |
| GDS57720 | GDS57844 | GDS57965 | GDS58099 | GDS58235 | GDS58367 | GDS81268 |
| GDS57721 | GDS57852 | GDS57966 | GDS58101 | GDS58236 | GDS58372 | GDS81269 |
| GDS57722 | GDS57853 | GDS57967 | GDS58102 | GDS58237 | GDS59017 | GDS81270 |
| GDS57723 | GDS57864 | GDS57968 | GDS58109 | GDS58238 | GDS59027 | GDS81271 |
| GDS57724 | GDS57865 | GDS57969 | GDS58110 | GDS58239 | GDS59101 | GDS81272 |
| GDS57725 | GDS57867 | GDS57970 | GDS58111 | GDS58242 | GDS59117 | GDS81274 |
| GDS57726 | GDS57868 | GDS57972 | GDS58112 | GDS58243 | GDS59126 | GDS81275 |
| GDS57728 | GDS57869 | GDS57973 | GDS58113 | GDS58244 | GDS59127 | GDS81278 |
| GDS57735 | GDS57870 | GDS57974 | GDS58114 | GDS58246 | GDS59146 | GDS81324 |
| GDS57739 | GDS57875 | GDS57975 | GDS58115 | GDS58248 | GDS59150 | GDS81330 |
| GDS57741 | GDS57876 | GDS57976 | GDS58116 | GDS58249 | GDS59159 | GDS81331 |
| GDS57742 | GDS57877 | GDS57978 | GDS58117 | GDS58251 | GDS59160 | GDS81345 |
| GDS57748 | GDS57878 | GDS57979 | GDS58118 | GDS58252 | GDS59163 | GDS81421 |
| GDS57749 | GDS57879 | GDS57981 | GDS58120 | GDS58253 | GDS59212 | GDS81425 |
| GDS57751 | GDS57880 | GDS57982 | GDS58121 | GDS58254 | GDS59223 | GDS81463 |
| GDS57752 | GDS57882 | GDS57983 | GDS58122 | GDS58255 | GDS59224 | GDS81480 |
| GDS57753 | GDS57883 | GDS57984 | GDS58123 | GDS58256 | GDS59278 | GDS81502 |
| GDS57756 | GDS57884 | GDS57985 | GDS58124 | GDS58257 | GDS59325 | GDS81537 |
| GDS57760 | GDS57885 | GDS57986 | GDS58125 | GDS58258 | GDS59369 | GDS81538 |
| GDS57766 | GDS57886 | GDS57988 | GDS58126 | GDS58259 | GDS59372 | GDS81576 |
| GDS57767 | GDS57887 | GDS57989 | GDS58128 | GDS58261 | GDS59375 | GDS81604 |
| GDS57771 | GDS57888 | GDS57995 | GDS58130 | GDS58262 | GDS59376 | GDS81622 |
| GDS57772 | GDS57894 | GDS57996 | GDS58131 | GDS58265 | GDS59383 | GDS81624 |
| GDS57774 | GDS57897 | GDS57998 | GDS58132 | GDS58266 | GDS59393 | GDS81625 |
| GDS57776 | GDS57898 | GDS57999 | GDS58133 | GDS58267 | GDS59401 | GDS81626 |
| GDS57777 | GDS57899 | GDS58026 | GDS58134 | GDS58282 | GDS59415 | GDS81627 |
| GDS57778 | GDS57900 | GDS58040 | GDS58135 | GDS58284 | GDS59425 | GDS81639 |
| GDS57779 | GDS57901 | GDS58041 | GDS58136 | GDS58296 | GDS59510 | GDS81640 |
| GDS57780 | GDS57904 | GDS58042 | GDS58137 | GDS58297 | GDS59511 | GDS81645 |
| GDS57787 | GDS57905 | GDS58043 | GDS58139 | GDS58298 | GDS59545 | GDS81646 |
| GDS57790 | GDS57906 | GDS58044 | GDS58140 | GDS58299 | GDS59546 | GDS81688 |
| GDS57791 | GDS57907 | GDS58045 | GDS58142 | GDS58300 | GDS59653 | GDS81719 |
| GDS57792 | GDS57910 | GDS58046 | GDS58190 | GDS58302 | GDS59712 | GDS81720 |
| GDS57793 | GDS57912 | GDS58047 | GDS58191 | GDS58303 | GDS59713 | GDS81728 |
| GDS57794 | GDS57913 | GDS58048 | GDS58192 | GDS58304 | GDS60034 | GDS81757 |
| GDS57797 | GDS57914 | GDS58049 | GDS58193 | GDS58305 | GDS61107 | GDS81759 |
| GDS57798 | GDS57915 | GDS58054 | GDS58194 | GDS58306 | GDS61226 | GDS81765 |
| GDS57799 | GDS57916 | GDS58056 | GDS58195 | GDS58307 | GDS61336 | GDS81768 |

# New applications (compared with catalogue 2026)

| G-AP Ref. | G-AP Ref. | G-AP Ref. | G-AP Ref. | G-AP Ref. | G-AP Ref. | G-AP Ref. |
|---|---|---|---|---|---|---|
| GDS81769 | GDS82510 | GDS83076 | GDS89051 | | | |
| GDS81770 | GDS82513 | GDS83077 | GDS98004 | | | |
| GDS81771 | GDS82547 | GDS83081 | GDS98006 | | | |
| GDS81775 | GDS82555 | GDS83100 | GDS98007 | | | |
| GDS81864 | GDS82556 | GDS83136 | GDS99056 | | | |
| GDS81953 | GDS82557 | GDS83148 | GDS99057 | | | |
| GDS81954 | GDS82558 | GDS83156 | GDS99198 | | | |
| GDS81959 | GDS82559 | GDS83206 | GDS99294 | | | |
| GDS82000 | GDS82563 | GDS83239 | | | | |
| GDS82037 | GDS82564 | GDS83240 | | | | |
| GDS82040 | GDS82569 | GDS83249 | | | | |
| GDS82041 | GDS82570 | GDS83386 | | | | |
| GDS82104 | GDS82579 | GDS83397 | | | | |
| GDS82105 | GDS82582 | GDS83416 | | | | |
| GDS82106 | GDS82583 | GDS83498 | | | | |
| GDS82107 | GDS82606 | GDS83510 | | | | |
| GDS82116 | GDS82607 | GDS83513 | | | | |
| GDS82117 | GDS82608 | GDS83514 | | | | |
| GDS82120 | GDS82616 | GDS83540 | | | | |
| GDS82121 | GDS82634 | GDS83568 | | | | |
| GDS82122 | GDS82646 | GDS83569 | | | | |
| GDS82171 | GDS82664 | GDS83680 | | | | |
| GDS82172 | GDS82665 | GDS83735 | | | | |
| GDS82192 | GDS82666 | GDS83857 | | | | |
| GDS82193 | GDS82667 | GDS83870 | | | | |
| GDS82194 | GDS82668 | GDS83889 | | | | |
| GDS82195 | GDS82669 | GDS83890 | | | | |
| GDS82196 | GDS82670 | GDS84195 | | | | |
| GDS82197 | GDS82671 | GDS84427 | | | | |
| GDS82200 | GDS82672 | GDS84541 | | | | |
| GDS82201 | GDS82683 | GDS84542 | | | | |
| GDS82250 | GDS82684 | GDS84570 | | | | |
| GDS82261 | GDS82709 | GDS84571 | | | | |
| GDS82272 | GDS82731 | GDS84584 | | | | |
| GDS82294 | GDS82733 | GDS84595 | | | | |
| GDS82295 | GDS82734 | GDS84596 | | | | |
| GDS82296 | GDS82756 | GDS84597 | | | | |
| GDS82299 | GDS82757 | GDS84598 | | | | |
| GDS82300 | GDS82767 | GDS84601 | | | | |
| GDS82305 | GDS82783 | GDS84602 | | | | |
| GDS82311 | GDS82790 | GDS84603 | | | | |
| GDS82338 | GDS82797 | GDS84605 | | | | |
| GDS82340 | GDS82844 | GDS84606 | | | | |
| GDS82342 | GDS82846 | GDS84628 | | | | |
| GDS82405 | GDS82848 | GDS84629 | | | | |
| GDS82419 | GDS82849 | GDS84636 | | | | |
| GDS82451 | GDS82850 | GDS84637 | | | | |
| GDS82455 | GDS82852 | GDS84638 | | | | |
| GDS82477 | GDS82858 | GDS85122 | | | | |
| GDS82478 | GDS82967 | GDS85145 | | | | |
| GDS82479 | GDS82968 | GDS85151 | | | | |
| GDS82480 | GDS82994 | GDS86016 | | | | |
| GDS82497 | GDS82995 | GDS86075 | | | | |
| GDS82498 | GDS83037 | GDS86076 | | | | |
| GDS82499 | GDS83038 | GDS87010 | | | | |
| GDS82500 | GDS83039 | GDS87061 | | | | |
| GDS82501 | GDS83040 | GDS87076 | | | | |
| GDS82502 | GDS83041 | GDS87109 | | | | |
| GDS82503 | GDS83069 | GDS87110 | | | | |
| GDS82504 | GDS83070 | GDS87124 | | | | |
| GDS82507 | GDS83071 | GDS88118 | | | | |
| GDS82508 | GDS83074 | GDS88128 | | | | |
| GDS82509 | GDS83075 | GDS89033 | | | | |

LinkedIn

Facebook